CATERPILLAR®

SEBP4572-13
July 2009

RUTHZIL TRATOR COMERCIAL DE PEÇAS LTDA 11 97083-6812 ROLANDO

Parts Manual

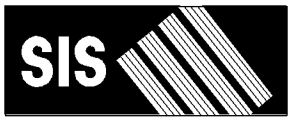

See "General Information" for New Parts Manual Features.

D5K XL & LGP Track Type Tractors

JLF1-Up (Machine)
WWW1-Up (Machine)
YYY1-Up (Machine)
C4E1-Up (Engine)
JMJ1-Up (Ripper)
JAG1-Up (Winch)

Powered By C4.4 Engine
This Parts Manual is also available on Compact Disc (CD-ROM) - Caterpillar Form No. SERP4572.

Product and Dealer Information

Note: For product identification plate locations, see the section “Product Identification Information” in the Operation and Maintenance Manual.

Delivery Date: _____

Product Information

Model: _____

Product Identification Number: _____

Engine Serial Number: _____

Transmission Serial Number: _____

Generator Serial Number: _____

Attachment Serial Numbers: _____

Attachment Information: _____

Customer Equipment Number: _____

Dealer Equipment Number: _____

Dealer Information

Name: _____ Branch: _____

Address: _____

_____

_____

	Dealer Contact	Phone Number	Hours
Sales:	_____	_____	_____
Parts:	_____	_____	_____
Service:	_____	_____	_____

MEMORANDA

TABLE OF CONTENTS

Name	Page
GENERAL INFORMATION	A4
REPAIR ALTERNATIVES	A7
SUPPLEMENTAL COOLANT ADDITIVES	A8
MAINTENANCE PARTS	A9
INDEX	A12
MACHINE ARRANGEMENT	1
CHASSIS AR	1
COMMON AR	2
ENGINE ARRANGEMENT	4
ENGINE AR-PRIMARY	4
INSTALLATION AR-ENGINE	5
BASIC ENGINE	6
BELT TENSIONER GP	6
CAMSHAFT GP	10
COVER GP-CYLINDER HEAD	11
COVER GP-VALVE MECHANISM	12
CRANKSHAFT GP	14
CYLINDER BLOCK GP	17
CYLINDER HEAD AS	20
CYLINDER HEAD GP	22
DRIVE GP-AUXILIARY	23
DRIVE GP-FAN	24
DRIVE GP-PUMP	25
FLYWHEEL GP	26
GEAR GP-FRONT	27
HOUSING GP-FLYWHEEL	29
LIFTING GP-ENGINE	30
MOUNTING GP-ENGINE	31
PAN GP-OIL	32
PISTON & ROD GP	34
PLUG GP-CYLINDER HEAD	35
PLUG GP-ENGINE	36
ROCKER ARM GP	37
SUPPORT GP-ENGINE & XMSN	38
SUPPRESSION AR-SOUND	39
VALVE MECHANISM GP	41
LUBRICATION SYSTEM	43
FILLER GP-ENGINE OIL	43
FILTER GP-ENGINE OIL	44
PUMP GP-ENGINE OIL	45
VALVE GP-FLUID SAMPLING	46
COOLING SYSTEM	47
CONNECTION GP-WATER	47
COOLER GP-ENGINE OIL	49
FAN GP-BLOWER	53
PUMP GP-WATER	54
RADIATOR & HYD OIL COOLER GP	58
TANK GP-COOLANT	60
AIR INLET AND EXHAUST SYSTEM	61
AIR CLEANER GP	61
MUFFLER GP	62
TURBOCHARGER GP	63
FUEL SYSTEM	66
FILTER GP-FUEL	66
FILTER GP-PRIMARY FUEL	69
INJECTOR GP-FUEL	71
LINES GP-FUEL	73
PUMP & MTG GP-UNIT INJ HYD	86
PUMP GP-FUEL INJECTION	88
TANK GP-FUEL	114
VALVE GP-CHECK	117
ELECTRICAL AND STARTING SYSTEM	118
ALTERNATOR GP-CHARGING	118
BATTERY & WIRING GP	120
CABLE AS-COILED	135
CONTROL GP-ENGINE ELECTRONIC	136
CONTROL GP-UNPROGRAMMED	137
ELECTRONICS GP-IMPLEMENT	138
ELECTRONICS GP-MACHINE	138
GLOW PLUG GP	139
GRADE CONTROL AR	140
GRADE CONTROL AR-LASER	141
GRADE CONTROL AR-SATELLITE	142
HARNESS AS-ENGINE	144
HEATER GP-JACKET WATER	146
INSTALLATION GP-COMMUNICATION	147
INSTALLATION GP-SECURITY	153
LAMP GP-FLOOD	155
LIGHTING GP-FLOOD	158
MAST GP	162
MOUNTING GP-GRADE CONTROL	163
MOUNTING GP-RECEIVER	166
PANEL GP-FUSE	168
RADIO GP-COMMUNICATION	174
RECEIVER GP-LASER	174
RECEIVER GP-SATELLITE	174
RELAY GP	177
SENSOR GP-POSITION	178
SENSOR GP-PRESSURE	179
SENSOR GP-SPEED	180
SERVICE GP-COMMUNICATION	182
STARTING AID GP-ETHER	183
STARTING MOTOR GP-ELECTRIC	185
SWITCH GP-DISCONNECT	186
SWITCH GP-ROTARY	187
WARNING GP-BACKUP	188
WIRING GP-AIR CONDITIONER	190
WIRING GP-CAB	191

TABLE OF CONTENTS

Name	Page
WIRING GP-ELECTROHYDRAULIC	210
WIRING GP-ENGINE	212
WIRING GP-GRADE CONTROL	219
WIRING GP-PLATFORM	240
POWER TRAIN	246
ACTUATOR GP-PUMP	246
BRAKE GP-PARKING	247
DRIVE AR	249
DRIVE GP-FINAL	250
DRIVE GP-HYDROSTATIC	252
FILTER GP-OIL	253
HEAD GP-PUMP	254
LINES GP-HYDROSTATIC	255
LINES GP-POWER TRAIN COOLER	258
LINES GP-TRANSMISSION OIL	264
MANIFOLD & LINES GP-CONTROL	277
MANIFOLD GP-CONTROL	283
MOTOR GP-PISTON	284
MOUNTING GP-PUMP	287
POWER TRAIN AR	288
PUMP GP-CHARGE	289
PUMP GP-PISTON	291
ROTATING GP-MOTOR	300
ROTATING GP-PUMP	301
SEGMENT GP-SPROCKET	305
VALVE GP-FLUSHING	307
VALVE GP-PILOT	308
VALVE GP-SOLENOID	309
FRAME AND BODY	313
CASE & FRAME GP	313
COUNTERWEIGHT GP-FRONT	315
COVER GP-ACCESS	316
DRAWBAR GP	317
ENCLOSURE GP-PLATFORM	318
FRAME GP	320
GRILL AR-RADIATOR	324
GUARD GP-BOTTOM	326
GUARD GP-BRUSH	327
GUARD GP-FRONT	329
GUARD GP-RADIATOR	330
GUARD GP-REAR	331
HITCH GP-TOWING	335
HOOD & GUARD GP	336
LINER GP-SOUND SUPPRESSION	341
SCREEN GP	350
SWEEP GP	351
UNDERCARRIAGE	353
ADJUSTMENT GP-HYDRAULIC TRACK	353
GUARD GP-IDLER	355
GUARD GP-TRACK GUIDE	359
GUARD GP-TRACK ROLLER	366
IDLER GP-FRONT	368
IDLER GP-TRACK	371
LINK AS-TRACK	374
LINK AS-TRACK BOX	376
ROLLER GP-TRACK	377
ROLLER GP-TRACK CARRIER	380
ROLLER GP-TRACK-DOUBLE FLANGE	383
ROLLER GP-TRACK-SINGLE FLANGE	384
SPRING GP-RECOIL	385
TRACK AR	386
TRACK GP	388
UNDERCARRIAGE AR	392
STEERING AND BRAKING SYSTEM	393
ACTUATOR GP-PUMP	393
BRAKE GP-SERVICE & PARKING	394
PUMP GP-CHARGE	395
ROTATING GP-MOTOR	396
HYDRAULIC SYSTEM	397
CYLINDER GP-ANGLING	397
CYLINDER GP-BULLDOZER LIFT	398
CYLINDER GP-RIPPER	400
CYLINDER GP-TILT	402
HYDRAULIC AR	404
LINES GP-ANGLE & TILT	406
LINES GP-HYDRAULIC	414
LINES GP-PRESSURE TEST	417
LINES GP-PUMP	419
LINES GP-REAR ATTACHMENT	423
LINES GP-RIPPER	427
MANIFOLD GP-VALVE	429
PUMP GP-GEAR	430
TANK GP-HYDRAULIC	431
VALVE & MTG GP-IMPLEMENT CONT	434
VALVE GP-BANK 3	436
VALVE GP-BANK 4	438
VALVE GP-CONTROL	440
VALVE GP-RELIEF	450
IMPLEMENTS	455
C-FRAME GP-POWER ANGLING	455
LINK GP-PITCH	457
OPERATOR STATION	459
ACCESSORY GP-CAB	459
ACCUMULATOR GP-REFRIGERANT	463
ADJUSTER GP-SEAT	464
AIR CONDITIONER & MOUNTING GP	465
AIR CONDITIONER GP	468
ARM GP-SEAT SUSPENSION	471
ARMREST GP	474
COMPRESSOR & MTG GP-REFRIG	478
COMPRESSOR GP-REFRIGERANT	479

TABLE OF CONTENTS

Name	Page
CONDENSER GP-REFRIGERANT	480
CONSOLE GP-CONTROL	482
CONSOLE GP	484
CONSOLE GP-OPERATOR	485
CONTROL & MTG GP-PEDAL	487
CONTROL GP-HANDLE	488
CONTROL GP-JOYSTICK	493
CONTROL GP-RIPPER	498
COVER GP-CAB	500
COVER GP-CONSOLE	507
DISPLAY GP-MONITOR	510
DOOR GP-CAB	511
HEATER GP-CAB	521
INSTALLATION GP-RADIO	527
INSTRUMENT GP	528
LINES GP-AIR CONDITIONER	532
LINES GP-HEATER	535
LITERATURE GP	537
MIRROR GP-REAR VIEW	538
MONITOR AS	539
MOTOR GP-WINDOW WIPER	540
MOUNTING GP-CAB	544
MOUNTING GP-RADIO	545
PAN GP-BACKREST	546
PAN GP-SEAT	548
PEDAL GP-GOVERNOR & BRAKE	549
RECLINER GP-SEAT	551
ROPS AR	552
ROPS AR-ENCLOSED	554
SCREEN GP-CAB	555
SCREEN GP-PROTECTION	556
SEAT & SUPPORT GP	558
SEAT BELT GP	559
SEAT GP	560
SEAT GP-SUSPENSION	572
SUPPORT GP-HYDRAULIC CONTROL	579
SUPPORT GP-STEERING CONTROL	581
SUSPENSION GP-SEAT	583
WASHER GP-WINDOW	587
WINDOW GP-CAB	589
WIPER GP-WINDOW	593
WORK TOOLS	595
BLADE AR-PWR ANGLE & TILT	595
BLADE GP-ANGLING	600
BRAKE & PLANETARY GP-WINCH	617
CASE GP-WINCH	619
CLUTCH & GEAR GP-WINCH	620
CONTROL GP-WINCH	621
DRIVE AR-WINCH	632
EDGE GP-BIT & CUTTING	633
EDGE-CUTTING	636
FILTER GP-OIL	637
GEAR GP-WINCH	638
GEAR GP-WINCH TRANSFER	640
LINES GP-WINCH	641
MOTOR & MTG GP-WINCH	645
MOUNTING GP-MAST	647
MOUNTING GP-RIPPER	648
MOUNTING GP-WINCH	649
PLANETARY GP-WINCH	652
RIPPER AR	653
RIPPER GP	654
SHAFT GP-WINCH DRUM	655
TOOTH GP-RIPPER	657
VALVE & LINES GP-WINCH	658
WINCH AR	660
SERVICE EQUIPMENT AND SUPPLIES	661
FILM GP	661
LOCK GP-VANDALISM	663
PLATE & FILM GP	664
PART NUMBER INDEX	B1

GENERAL INFORMATION

1. MACHINE IDENTIFICATION

Caterpillar machines are identified by Product Identification Numbers (PIN). Some components included in a machine may be identified by Serial Numbers (S/N). Typical components that will be serialized include engines, transmissions, bulldozers, and rippers. The machine and engine are further identified by arrangement numbers and in some cases modification numbers. These numbers are shown on the product identification plate(s) and on the master plate in the operator's compartment.

Caterpillar dealers need all of these numbers to determine accurate parts identification.

SIS *New Feature*

Effective First Quarter 2001 the Caterpillar Product Identification Number (PIN) changed from 8 to 17 characters. In an effort to provide uniform equipment identification, Caterpillar and other construction equipment manufacturers are moving to comply with the latest version of the product identification numbering standard. Non-road machine PINs are defined by ISO 10261. The new PIN format will apply to all Caterpillar machines and generator sets. The PIN plates and frame marking will display the 17 character PIN. The new format will look like the following:

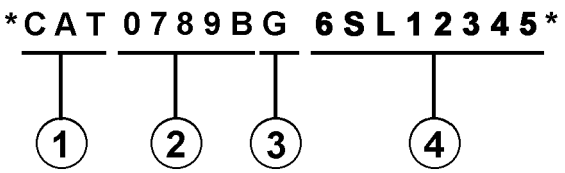

Where:

1. Caterpillar's World Manufacturing Code (characters 1-3)

2. Machine Descriptor (characters 4-8)

3. Check Character (character 9)

4. Machine Indicator Section (MIS) or Product Sequence Number (characters 10-17). These were previously referred to as the Serial Number.

Machines and generator sets produced before First Quarter 2001 will maintain their 8 character PIN format.

Components such as engines, transmissions, axles, etc. and work tools will continue to use an 8 character Serial Number (S/N).

2. ORDERING PARTS

⚠ WARNING

When replacement parts are required for this product Caterpillar recommends using Caterpillar replacement parts or parts with equivalent specifications including, but not limited to, physical dimensions, type, strength and material.

Failure to heed this warning can lead to premature failures, product damage, personal injury or death.

Quality Caterpillar replacement parts are available from Caterpillar dealers throughout the world. Their parts inventories are up to date and include all parts normally required to protect your investment in Caterpillar machines. Dealers may offer repair kits or remanufactured parts to allow selection of the most effective repair alternative for a particular situation. When ordering parts, your order should specify the quantity, part number, part name, and the serial number/product identification number of the machine for which the parts are needed.

3. PARTS MANUAL ORGANIZATION

Product information in this manual is presented as "information elements" that represent all of the components for the specific model. Engine Arrangement and Seat Group are examples of information elements. The information elements are organized alphabetically by part name and secondarily by part number within each major section of the manual.

4. TABLE OF CONTENTS

A table of contents (TOC) is found at the beginning of the manual. The TOC lists each section of the manual with a complete list of all information elements organized as they appear in the manual. Page numbers are provided for quick reference to detailed parts identification illustrations and serviceable consist lists.

5. MAINTENANCE PARTS INDEX

The Maintenance Parts Index, located near the beginning of the manual, references most frequently used maintenance part numbers, providing description, quantity, usage and page number. This information is organized alphabetically by part description.

6. INDEX

The index located near the front of the manual is an alphabetical listing of all information elements included in the manual. Page numbers are provided for quick reference to detailed parts identification illustrations and serviceable consist lists.

7. PART NUMBER INDEX

A numerical index listing all part numbers and the corresponding page number(s) appears at the back of the manual.

8. CAPTIONS

Captions located at the beginning of each information element identify the part number and part name along with additional descriptive information. PIN and S/N information found in each caption should be used to select correct information for a specific machine. Field replacement options, identification of optional attachment components, and where used ("part of") information is also provided.

The first line of a caption is shown in larger type font to indicate the beginning of an information element. Captions for additional pages that may be required to illustrate an information element will be shown in standard type font and will include the term *(contd.)* .

9. NON-SERVICED PARTS

In some instances it is necessary to display non-serviced parts that are a link to a lower level serviceable consist lists. These non-serviced part numbers are shown in *italic* type indicating that they are not available.

10. PARTS LIST REFERENCE NUMBERS

Numbers shown in the Ref No column correspond to numbers used in the associated graphic(s). An alphabetic suffix may be added to a reference number to identify lower level consist items. Numbers shown in the Graphic Ref column refer to the graphic number identifier displayed in the lower left corner of each illustration. The Graphic Ref number may be used in combination with the item Ref No to determine the correct part number. There may be intentional omission of a Ref No in a consist list as information is updated to reflect the latest serviceable part numbers.

11. INDENTED PART NAMES

When a part name is indented in a parts list, it is part of (included in) the group or assembly under which it is indented.

12. ILLUSTRATION REFERENCE LETTERS

When necessary, illustrations contain reference letters (A, B, C etc.) that are intended to track lines and harnesses from one point to another. They are also used to show where to reconnect illustrations that have been separated.

13. ABBREVIATIONS AND SYMBOLS

O.D. – Outside Diameter
I.D. – Inside Diameter
A – Not Part Of This Group
B – Use As Required
C – Change From Previous Type
D – Order By The Meter
E – Order By The Centimeter
F – Not Shown
G – Order By The Inch
I – Refer To Hydraulic Information System
M – Metric Part
R – Remfg Part May Be Available
Y – Separate Illustration
Z – Not Serviced Separately

SIS *New Feature*

14. DESCRIPTION OF TYPE CHANGES

Type - A type is defined as any configuration change that requires an additional Information Element for an Arrangement, Group, or Assembly. If serial number breaks for types are not available, a type # (Type 1, Type 2, etc.) will be displayed in the caption. These "type" changes are identified with a "C" note (change from previous type) in the Parts List. Only the "types" that apply to this Parts Manual will be included. Additional types may exist causing "C" notes to appear on an Information Element when no other types are shown.

15.<END>

This symbol indicates the end of an information element.

NOTE:

Continuing improvement and advancement of product design may cause changes to your machine which may not be included in this publication. Whenever a question arises regarding your caterpillar product or this publication, please consult your caterpillar dealer for the latest available information.

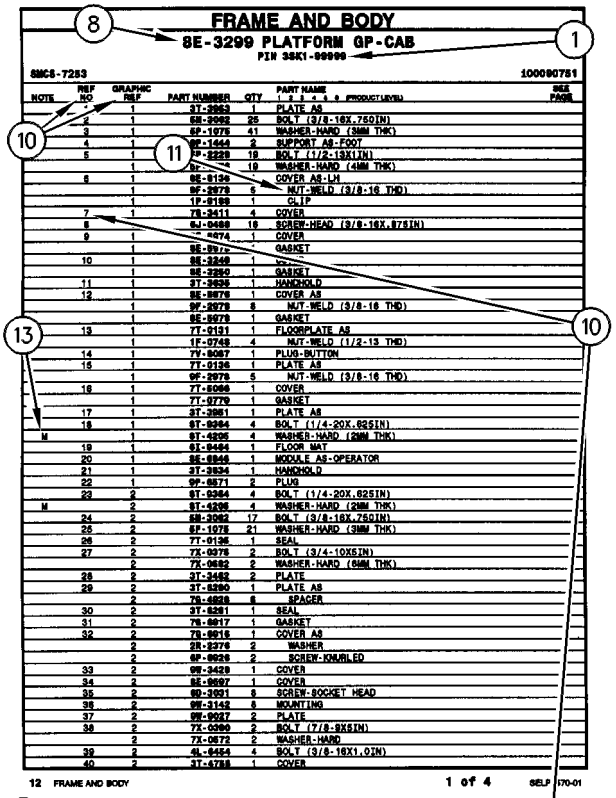
FRAME AND BODY
8E-3299 PLATFORM GP-CAB
PIN 3SK1-99999
SMCS-7283
100090751
1
8
10
11
13
10
12 FRAME AND BODY
1 of 4
SELP4570-01

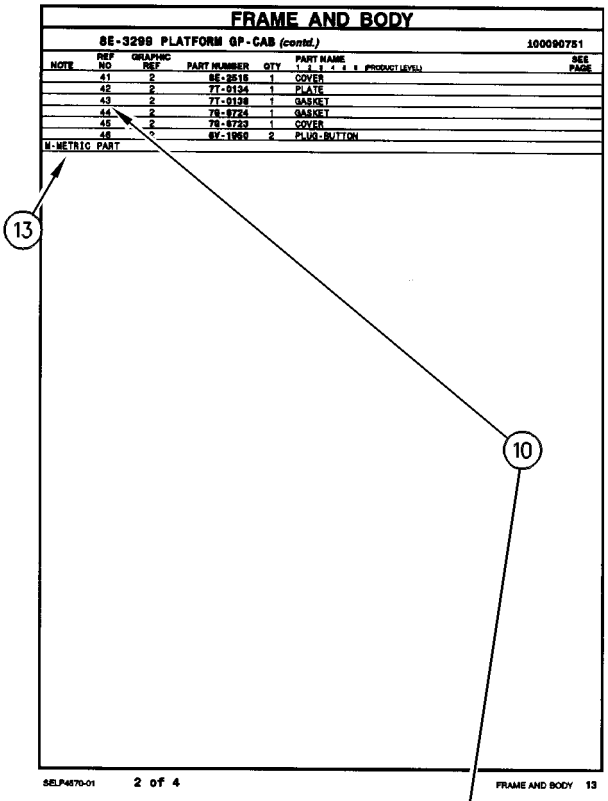
FRAME AND BODY
8E-3299 PLATFORM GP-CAB (contd.)
100090751
13
10
M-METRIC PART
SELP4570-01
2 of 4
FRAME AND BODY 13

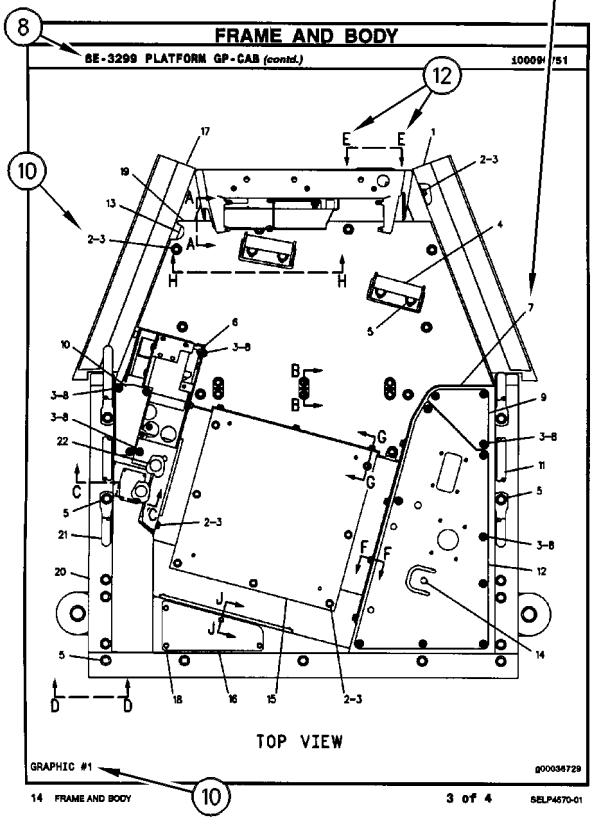
FRAME AND BODY
8E-3299 PLATFORM GP-CAB (contd.)
100090751
8
12
10
TOP VIEW
GRAPHIC #1
g00036729
14 FRAME AND BODY
10
3 of 4
SELP4570-01

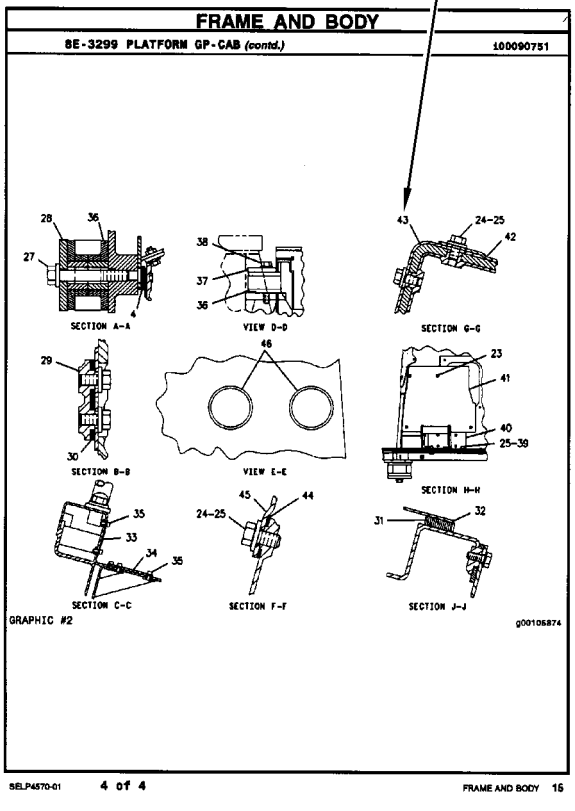
FRAME AND BODY
8E-3299 PLATFORM GP-CAB (contd.)
100090751
SECTION A-A
VIEW D-D
SECTION G-G
SECTION B-B
VIEW E-E
SECTION H-H
SECTION C-C
SECTION F-F
SECTION J-J
GRAPHIC #2
g00105874
SELP4570-01
4 of 4
FRAME AND BODY 15

REPAIR ALTERNATIVES

REMANUFACTURED COMPONENTS

As an option when making repairs consider Caterpillar Remanufactured Components. Components that are available through the Caterpillar Remanufactured Program are identified three ways in the parts book:

- with the letter R in the note field of the parts list
- with an R* at the beginning of the first line of the caption
- with an *R at the end of the first line of the caption

Typical components included in the Remanufacturing Program include:

ALTERNATORS
CONNECTING RODS
CRANKSHAFTS - UNDERSIZE
CRANKSHAFTS - UPGRADE TO NEW
CYLINDER HEADS
ELECTRONIC CONTROL MODULES (ECM)
ELECTRONIC SENSORS
FUEL INJECTORS
FUEL NOZZLES
FUEL PUMPS
GOVERNORS
OIL PUMPS
PISTONS
SHORT BLOCKS
STARTERS
TURBOCHARGERS - COMPLETE
TURBOCHARGER CARTRIDGES
WATER PUMPS

Caterpillar Remanufactured engines for many engine arrangements are also available.

SUPPLEMENTAL COOLANT ADDITIVES

CUSTOMER BENEFITS:

Protects against cavitation, foam, erosion, corrosion, and scale buildup in cooling systems.

- Provides measured coolant conditioner.

DESCRIPTION:

Additives deplete from the coolant with normal operation. For this reason, Supplemental Coolant Additives (SCA) must be added to all heavy duty coolants at regular intervals. In addition, when not using a fully formulated, pre-charged antifreeze, like Caterpillar's DEAC, an initial charge of SCA must be added to the cooling system. The amount of SCA added to the system is dependent on the capacity of the system.

The SCA for initial fill is provided as a liquid. SCA's for maintenance intervals are available in liquid form and as a spin-on element. (No Spin-on available for 3600 Family of Engines)

NOTE:

The amount of SCA added at initial fill is not the same as the amount added at maintenance intervals.

The coolant additive elements can be used with any ethylene or propylene glycol type antifreeze which meets ASTM D4985 or ASTM D5345 Specifications.

NOTE:

For use with standard heavy duty coolant only, not for use with Extended Life Coolant.

PARTS NEEDED:

Cooling System Capacity		Liquid SCA at Initial Fill	Liquid SCA at Maintenance*	Spin-on SCA Maintenance Element*
Liters	Gallons			
22-30	(6-8)	3P-2044 (1)	6V-3542 (1)	111-2370 (1)
30-38	(8-10)	3P-2044 (1) 6V-3542 (1)	111-2372 (1)	111-2369 (1)
38-49	(10-13)	3P-2044 (1) 8T-1589 (1)	111-2372 (1)	111-2369 (1)
49-64	(13-17)	3P-2044 (2)	8T-1589 (1)	9N-3368 (1)
64-83	(17-22)	3P-2044 (2) 8T-1589 (1)	111-2372 (1) 6V-3542 (1)	111-2371 (1)
83-114	(22-30)	3P-2044 (3) 8T-1589 (1)	3P-2044 (1)	9N-3718 (1)
114-163	(30-43)	3P-2044 (5)	3P-2044 (1) 6V-3542 (1)	111-2371 (2)
163-242	(43-64)	3P-2044 (8)	3P-2044 (2)	9N-3718 (2)

** Normal maintenance period is 250 hrs. See your Operation and Maintenance Manual for complete coolant maintenance instructions.*

( ) Indicates quantity required.

MAINTENANCE PARTS

DESCRIPTION	PART NUMBER	QTY	WHERE USED	PAGE
AIR INLET AND EXHAUST SYSTEM				
FILTER ELEMENT-AIR (PRIMARY)	293-4053	1	AIR CLEANER GP	61
FILTER ELEMENT-AIR (SECONDARY)	227-7449	1	AIR CLEANER GP	61
BASIC ENGINE				
BATTERY (12-VOLT, MAINTENANCE FREE, WET)	9X-3404	2	DRIVE GP-PUMP	25
BELT-SERPENTINE	298-5874	1	BELT TENSIONER GP	6
	298-5880	1	BELT TENSIONER GP	7
	309-6666	1	BELT TENSIONER GP	8
BREATHER (CRANKCASE)	298-4547	1	COVER GP-VALVE MECHANISM	12
GASKET-VALVE COVER (CYLINDER HEAD)	298-4546	1	COVER GP-VALVE MECHANISM	12
PLUG-DRAIN (ENGINE OIL)	7C-0351	2	PAN GP-OIL	32
COOLING SYSTEM				
CAP AS-COOLANT TANK	251-3227	1	TANK GP-COOLANT	60
GASKET-WATER REGULATOR (TEMPERATURE)	281-8744	1	CONNECTION GP-WATER	47
		1	CONNECTION GP-WATER	48
HOSE-RADIATOR (LOWER)	255-1344	1	RADIATOR & HYD OIL COOLER GP	58
HOSE-RADIATOR (UPPER)	255-1343	1	RADIATOR & HYD OIL COOLER GP	58
REGULATOR AS-WATER TEMPERATURE (CONNECTOR INCLUDED)	277-2974	1	CONNECTION GP-WATER	47

MAINTENANCE PARTS

DESCRIPTION	PART NUMBER	QTY	WHERE USED	PAGE
ELECTRICAL AND STARTING SYSTEM				
BATTERY (12-VOLT, MAINTENANCE FREE, WET)	9X-3404	2	BATTERY & WIRING GP	120
CIRCUIT BREAKER AS (105-AMPERE)	171-2212	1	PANEL GP-FUSE	168
		1	PANEL GP-FUSE	171
CIRCUIT BREAKER AS (20-AMPERE)	173-3175	2	PANEL GP-FUSE	168
		2	PANEL GP-FUSE	171
CIRCUIT BREAKER AS (35-AMPERE) (LONG RANGE)	229-8377	1	WIRING GP-CAB	197
		1	WIRING GP-CAB	207
ELEMENT AS-JACKET WATER HEATER (120-VOLT, 1000-WATT)	219-3273	1	HEATER GP-JACKET WATER	146
FUSE (10-AMPERE)	113-8490	8	PANEL GP-FUSE	168
		8	PANEL GP-FUSE	171
FUSE (15-AMPERE)	113-8491	13	PANEL GP-FUSE	171
FUSE (20-AMPERE)	113-8492	5	PANEL GP-FUSE	171
FUSE (30-AMPERE)	124-3548	2	PANEL GP-FUSE	168
	274-9872	1	RELAY GP	177
FUSE (50-AMPERE)	274-9877	1	RELAY GP	177
GLOW PLUG (12-VOLT)	292-9880	4	GLOW PLUG GP	139
KEY (BATTERY DISCONNECT)	8H-5306	1	SWITCH GP-DISCONNECT	186
KEY AS-ELECTRONIC (SECURITY)	206-5162	2	INSTALLATION GP-SECURITY	153
LAMP (12-VOLT) (MINIATURE)	210-8754	1	WIRING GP-CAB	191
		1	WIRING GP-CAB	194
		1	WIRING GP-CAB	197
LAMP (12-VOLT, 55-WATT) (FLOODLIGHT)	9W-0607	1	LAMP GP-FLOOD	155
		1	LAMP GP-FLOOD	156
		1	LAMP GP-FLOOD	157
ENGINE ARRANGEMENT				
FILTER AS-ENGINE OIL	7W-2326	1	INSTALLATION AR-ENGINE	5
FRAME AND BODY				
CAP-FILLER (HYDRAULIC TANK)	7H-1447	1	ENCLOSURE GP-PLATFORM	318
CAP-FUEL FILLER (LOCKABLE)	276-1243	1	ENCLOSURE GP-PLATFORM	318
FILTER ELEMENT-BREATHER (FUEL CAP)	279-9876	1	ENCLOSURE GP-PLATFORM	318
FUEL SYSTEM				
FILTER AS-WATER SEP & FUEL	308-7298	1	FILTER GP-FUEL	66
		1	FILTER GP-FUEL	68
FILTER-FUEL (ULTRA HIGH EFFICIENCY)	289-0600	1	FILTER GP-PRIMARY FUEL	69
	299-8229	1	FILTER GP-FUEL	67
		1	FILTER GP-PRIMARY FUEL	70
HYDRAULIC SYSTEM				
FILTER ELEMENT-BREATHER (HYDRAULIC TANK)	9R-9925	2	TANK GP-HYDRAULIC	431
SCREEN-SUCTION (HYDRAULIC TANK)	322-9703	1	TANK GP-HYDRAULIC	433

MAINTENANCE PARTS

DESCRIPTION	PART NUMBER	QTY	WHERE USED	PAGE
LUBRICATION SYSTEM				
CAP-OIL FILLER (ENGINE)	130-9888	1	FILLER GP-ENGINE OIL	43
FILTER AS-ENGINE OIL	7W-2326	1	FILTER GP-ENGINE OIL	44
OPERATOR STATION				
BLADE AS-WIPER (450-MM) (DOOR, LH)	125-8175	1	DOOR GP-CAB	513
		1	DOOR GP-CAB	518
BLADE AS-WIPER (450-MM) (DOOR, RH)	125-8175	1	DOOR GP-CAB	511
		1	DOOR GP-CAB	516
BLADE AS-WIPER (500-MM) (FRONT)	5C-8811	1	WIPER GP-WINDOW	593
BLADE AS-WIPER (500-MM) (REAR)	146-6433	1	WIPER GP-WINDOW	593
CAP-VENTED (WINDOW WASHER TANK)	209-4482	1	WASHER GP-WINDOW	587
FILTER ELEMENT-CAB AIR (STANDARD EFFICIENCY)	209-8217	1	AIR CONDITIONER GP	468
FILTER GP-CAB AIR (STANDARD EFFICIENCY) (LOW RESTRICTION MEDIA)	266-7765	1	AIR CONDITIONER & MOUNTING GP	465
SEAT BELT GP (RETRACTABLE)	272-2272	1	SEAT GP-SUSPENSION	575
		1	SEAT GP-SUSPENSION	576
		1	SEAT GP-SUSPENSION	577
		1	SEAT GP-SUSPENSION	578
POWER TRAIN				
BATTERY (12-VOLT, MAINTENANCE FREE, WET)	9X-3404	2	DRIVE AR	249
FILTER-OIL (ADVANCED EFFICIENCY)	1G-8878	1	FILTER GP-OIL	253
FILTER-OIL (ADVANCED EFFICIENCY) (TRANSMISSION)	1G-8878	1	LINES GP-TRANSMISSION OIL	264
PLUG-MAGNETIC (FINAL DRIVE OIL DRAIN)	126-8921	1	DRIVE GP-FINAL	250
SCREEN-FILTER (PILOT)	236-5157	1	VALVE GP-SOLENOID	309
		1	VALVE GP-SOLENOID	311
WORK TOOLS				
BATTERY (12-VOLT, MAINTENANCE FREE)	263-9574	2	DRIVE AR-WINCH	632
BATTERY (12-VOLT, MAINTENANCE FREE, WET)	9X-3404	2	DRIVE AR-WINCH	632
BATTERY GP (12-VOLT, MAINTENANCE FREE, WET)	115-2422	1	DRIVE AR-WINCH	632
FILTER-OIL (ADVANCED EFFICIENCY)	144-6691	1	FILTER GP-OIL	637

INDEX

Name	Page
A	
ACCESSORY GP-CAB–EROPS	459
ACCESSORY GP-CAB–OROPS	461
ACCUMULATOR GP-REFRIGERANT–WITH DESICCANT	463
ACTUATOR GP-PUMP–PROPEL	246
ACTUATOR GP-PUMP–SERVO	393
ADJUSTER GP-SEAT	464
ADJUSTMENT GP-HYDRAULIC TRACK	353 354
AIR CLEANER GP	61
AIR COMPRESSOR GP-SEAT	583
AIR CONDITIONER & MOUNTING GP	465
AIR CONDITIONER GP	468
ALTERNATOR GP-CHARGING	118 119
ARM GP-SEAT SUSPENSION–CENTER	471
ARM GP-SEAT SUSPENSION–OUTER, LH	473
ARM GP-SEAT SUSPENSION–OUTER, RH	472
ARM GP-WINDOW WIPER (DOOR, LH)	513
ARM GP-WINDOW WIPER (DOOR, RH)	511
ARM GP-WINDOW WIPER (FRONT)	593
ARM GP-WINDOW WIPER (REAR)	593
ARM GP-WINDOW WIPER (RH)	516
ARM GP-WINDOW WIPER (WET)	518
ARMREST GP–LH	474
ARMREST GP–RH	476
B	
BASE GP-VALVE COVER & INJ HARN	12
BATTERY & WIRING GP	120 124 127 131
BATTERY (12-VOLT, MAINTENANCE FREE)	632
BATTERY (12-VOLT, MAINTENANCE FREE, WET)	25 120 249 632
BATTERY GP	25 249 632
BATTERY GP (12-VOLT, MAINTENANCE FREE, WET)	632
BELT TENSIONER GP	7 8 9
BELT TENSIONER GP–FAN	6
BELT-SERPENTINE	6 7 8
BLADE AR-PWR ANGLE & TILT	596 598 599
BLADE AR-PWR ANGLE & TILT–FORESTRY	598
BLADE AR-PWR ANGLE & TILT–LGP	595 596
BLADE AR-PWR ANGLE & TILT–LGP GRADE CONTROL	597
BLADE AR-PWR ANGLE & TILT–LGP, GRADE CONTROL	597
BLADE AR-PWR ANGLE & TILT–XL	595 596
BLADE AR-PWR ANGLE & TILT–XL GRADE CONTROL	597 598
BLADE AS-WIPER (450-MM) (DOOR, LH)	513 518
BLADE AS-WIPER (450-MM) (DOOR, RH)	511 516
BLADE AS-WIPER (500-MM) (FRONT)	593
BLADE AS-WIPER (500-MM) (REAR)	593
BLADE GP-ANGLING	615
BLADE GP-ANGLING–FORESTRY	614
BLADE GP-ANGLING–GRADE CONTROL	616
BLADE GP-ANGLING–LOW GROUND PRESSURE	600 602 604 607 609 611
BLADE GP-ANGLING–XL GRADE CONTROL	601 603 605 606 608 610 612 613
BLOCK GP-HYDRAULIC	410
BRAKE & PLANETARY GP-WINCH	617 618
BRAKE GP-PARKING	247 248
BRAKE GP-SERVICE & PARKING	394
BREATHER (CRANKCASE)	12
C	
C-FRAME GP-POWER ANGLING–TILT	455
CABLE AS-COILED–LASER RECEIVER–ACCUGRADE	135
CAMSHAFT GP	10
CAP AS-COOLANT TANK	60
CAP GP-FUEL FILLER (LOCKABLE, VENTED)	318

INDEX

Name	Page
CAP-FILLER (HYDRAULIC TANK)	318
CAP-FUEL FILLER (LOCKABLE)	318
CAP-OIL FILLER (ENGINE)	43
CAP-VENTED (WINDOW WASHER TANK)	587
CASE & FRAME GP	313
CASE GP-WINCH	619
CHASSIS AR	1
	2
CIRCUIT BREAKER AS (105-AMPERE)	168
	171
CIRCUIT BREAKER AS (20-AMPERE)	168
	171
CIRCUIT BREAKER AS (35-AMPERE) (LONG RANGE)	197
	207
CLUTCH & GEAR GP-WINCH	620
COMMON AR	2
	3
COMPRESSOR & MTG GP-REFRIG	478
COMPRESSOR GP-REFRIGERANT	479
CONDENSER GP-REFRIGERANT	480
CONNECTION GP-WATER	47
	48
CONSOLE GP–LH	484
CONSOLE GP-CONTROL–LH	482
CONSOLE GP-OPERATOR–LH	486
CONSOLE GP-OPERATOR–RH	485
CONTROL & MTG GP-PEDAL–GOVERNOR, BRAKE	487
CONTROL GP-ENGINE ELECTRONIC	136
CONTROL GP-HANDLE–BULLDOZER CONTROL	489
CONTROL GP-HANDLE–GRADE CONTROL	490
CONTROL GP-HANDLE–LH	491
CONTROL GP-HANDLE–RIPPER, WINCH	492
CONTROL GP-HANDLE–WINCH	488
CONTROL GP-JOYSTICK–BULLDOZER	494
	497
CONTROL GP-JOYSTICK–GRADE CONTROL, RH	493
	496
CONTROL GP-JOYSTICK–LH	495
CONTROL GP-RIPPER	498
CONTROL GP-UNPROGRAMMED	622
	625
	628
CONTROL GP-UNPROGRAMMED (CHASSIS)	240
	243
CONTROL GP-UNPROGRAMMED (PRODUCT LINK 300)	137
CONTROL GP-UNPROGRAMMED (RIPPER)	498
CONTROL GP-UNPROGRAMMED (WINCH)	630
CONTROL GP-UNPROGRAMMED–PRODUCT LINK 300	137
CONTROL GP-WINCH	621
	624
	627
	630
	631
COOLER GP-ENGINE OIL	49
	51
	52
COUNTERWEIGHT GP-FRONT	315
COVER GP-ACCESS	316
COVER GP-CAB–EROPS	502
	504
COVER GP-CAB–OROPS	500
COVER GP-CONSOLE–OROPS	508
COVER GP-CONSOLE–STANDARD	507
COVER GP-CYLINDER HEAD	11
COVER GP-VALVE MECHANISM	12
CRANKSHAFT GP	14
	15
CYLINDER BLOCK GP	17
	18
CYLINDER GP-ANGLING	397
CYLINDER GP-BULLDOZER LIFT–LH	399
CYLINDER GP-BULLDOZER LIFT–RH	398
CYLINDER GP-RIPPER–LH	401
CYLINDER GP-RIPPER–RH	400
CYLINDER GP-TILT	402
	403
CYLINDER HEAD AS	20
CYLINDER HEAD GP	22

D

Name	Page
DISPLAY GP-MONITOR (CD610)	510
DISPLAY GP-MONITOR (CD700)	510
DISPLAY GP-MONITOR–CD610	510
DISPLAY GP-MONITOR–CD700	510
DOOR GP-CAB–LH	513
	518
DOOR GP-CAB–RH	511
	516
DRAWBAR GP	317
DRIVE AR–AUXILIARY	249
DRIVE AR–HYDROSTATIC	249
DRIVE AR–STANDARD	249
DRIVE AR-WINCH	632
DRIVE AR-WINCH–HYDRAULIC	632
DRIVE GP-AUXILIARY	23
DRIVE GP-FAN	24
DRIVE GP-FINAL	250
DRIVE GP-HYDROSTATIC	252
DRIVE GP-PUMP–AUXILIARY	25
DRIVE GP-PUMP–HYDRAULIC	25
DRIVE GP-PUMP–STANDARD	25

INDEX

Name	Page
E	
EDGE GP-BIT & CUTTING	633, 634, 636
EDGE GP-BIT & CUTTING–LEVEL CUT	635
EDGE-CUTTING	636
ELECTRONICS GP-IMPLEMENT–ACCUGRADE	138
ELECTRONICS GP-MACHINE	138
ELECTRONICS GP-MACHINE–POWER TRAIN	138
ELEMENT AS-JACKET WATER HEATER (120-VOLT, 1000-WATT)	146
ENCLOSURE GP-PLATFORM	318
ENGINE AR-PRIMARY	4
EXTENSION GP-BACKREST (CLOTH)	560, 564
EXTENSION GP-BACKREST (VINYL)	567
F	
FAN GP-BLOWER	53
FILLER GP-ENGINE OIL	43
FILM GP	661, 662
FILM-FUSE PANEL	168, 172
FILM-IDENTIFICATION (CAT)	331
FILM-IDENTIFICATION (ELECTRICAL POWER)	169, 172
FILM-IDENTIFICATION (IGNITION SWITCH)	153
FILM-IDENTIFICATION (IGNITION SWITCH, READ OMM)	153
FILM-IDENTIFICATION (POWER RECEPTACLE, 12-VOLT)	664, 665, 667, 668, 669, 671
FILM-IDENTIFICATION (REFRIGERANT CONDENSER)	468
FILM-IDENTIFICATION (REFRIGERANT CONDENSER) (HEATER)	521
FILM-IDENTIFICATION (REFRIGERANT CONDENSER) (REFRIGERANT CONDENSER)	480
FILM-IDENTIFICATION (SERIAL NUMBER)	583
FILM-INFORMATION (ARMREST ADJUSTMENT)	579, 581
FILM-INFORMATION (PRODUCT LINK, READ OMM)	151
FILM-INSTRUCTION (BULLDOZER CONTROL)	500, 502, 504, 508
FILM-INSTRUCTION (BULLDOZER, STER, CRUISE CNTL)	210
FILM-INSTRUCTION (HVAC WATER, DRAINING, FILLING)	469, 521
FILM-INSTRUCTION (KEY START SWITCH)	528, 530
FILM-INSTRUCTION (MACHINE SECURITY, CONSOLE)	153
FILM-INSTRUCTION (RIPPER CONTROL)	498
FILM-INSTRUCTION (SEAT ADJUSTMENT)	583
FILM-INSTRUCTION (WINCH CONTROL)	621, 624, 627
FILM-INSTRUCTION (WINDOW CLEANING, READ OMM)	516, 518
FILM-PANEL (EROPS) (RH)	530
FILM-PANEL (OROPS) (RH)	528
FILM-REFLECTOR (ROUND RED REFLECTIVE)	39, 664, 665, 667, 668
FILM-WARNING (BLADE, DO NOT CLIMB, READ OMM)	647
FILM-WARNING (LASER TRANSMITTER)	647
FILM-WARNING (PRODUCT LINK 300, U.S.)	151
FILM-WARNING (PRODUCT LINK, READ OMM)	151
FILTER AS-ENGINE OIL	5, 44
FILTER AS-WATER SEP & FUEL	66, 68
FILTER ELEMENT-AIR (PRIMARY)	61
FILTER ELEMENT-AIR (SECONDARY)	61
FILTER ELEMENT-BREATHER (FUEL CAP)	318
FILTER ELEMENT-BREATHER (HYDRAULIC TANK)	431
FILTER ELEMENT-CAB AIR (STANDARD EFFICIENCY)	468
FILTER GP-CAB AIR (STANDARD EFFICIENCY) (LOW RESTRICTION MEDIA)	465
FILTER GP-ENGINE OIL	44
FILTER GP-FUEL	66, 67, 68
FILTER GP-OIL (REAR)	264
FILTER GP-OIL–FRONT	253

INDEX

Name	Page
FILTER GP-OIL–HYDRAULIC	637
FILTER GP-PRIMARY FUEL	69
	70
FILTER-FUEL (ULTRA HIGH EFFICIENCY)	67
	69
	70
FILTER-OIL (ADVANCED EFFICIENCY)	253
	637
FILTER-OIL (ADVANCED EFFICIENCY) (TRANSMISSION)	264
FINAL DRIVE GP	250
FITTING GP-HYDRAULIC	264
	267
	269
	275
	641
FLOOR MAT-FRONT	500
	502
	504
	508
FLOOR MAT-REAR	500
	502
	504
	508
FLYWHEEL GP	26
FRAME GP	320
	322
FUSE (10-AMPERE)	168
	171
FUSE (15-AMPERE)	171
FUSE (20-AMPERE)	171
FUSE (30-AMPERE)	168
	177
FUSE (50-AMPERE)	177

G

GASKET-VALVE COVER (CYLINDER HEAD)	12
GASKET-WATER REGULATOR (TEMPERATURE)	47
	48
GAUGE AS-OIL LEVEL (DIPSTICK) (ENGINE)	32
GEAR GP-FRONT	27
GEAR GP-WINCH	638
GEAR GP-WINCH TRANSFER	640
GLOW PLUG (12-VOLT)	139
GLOW PLUG GP	139
GRADE CONTROL AR–EROPS	140
	141
GRADE CONTROL AR–OROPS	140
	141
GRADE CONTROL AR-LASER–ACCUGRADE, DUAL	142
GRADE CONTROL AR-LASER–ACCUGRADE, SINGLE	141
GRADE CONTROL AR-SATELLITE–ACCUGRADE, DUAL GNSS	142
GRADE CONTROL AR-SATELLITE–ACCUGRADE, DUAL GPS	142
GRADE CONTROL AR-SATELLITE–ACCUGRADE, SINGLE GNSS	143
GRADE CONTROL AR-SATELLITE–ACCUGRADE, SINGLE GPS	143
GRILL AR-RADIATOR–HEAVY-DUTY	325
GRILL AR-RADIATOR–STANDARD	324
GUARD GP-BOTTOM	326
GUARD GP-BRUSH–OPEN ROPS	327
GUARD GP-FRONT	329
GUARD GP-IDLER	355
	357
GUARD GP-RADIATOR	330
GUARD GP-REAR	331
	333
	334
GUARD GP-TRACK GUIDE–CENTER	361
	362
GUARD GP-TRACK GUIDE–REAR	359
GUARD GP-TRACK GUIDE–SYSTEMONE	364
GUARD GP-TRACK GUIDE–SYSTEMONE, FRONT	363
GUARD GP-TRACK ROLLER–SEALED, LUBRICATED	366
GUARD GP-TRACK ROLLER–SYSTEMONE	367
GUARD GP-VANDALISM	500
	508

H

HARNESS AS-ALARM	189
HARNESS AS-CAB (DASH)	192
	194
	197
	201
	204
	207
HARNESS AS-CAB (OROPS)	207
HARNESS AS-CAB (ROOF)	191
	194
	197
HARNESS AS-CHASSIS	120
	124
	127
	131
HARNESS AS-CONSOLE	198
HARNESS AS-CONSOLE (EROPS)	191
	194
HARNESS AS-CONSOLE (GRADE CONTROL)	220
	224
	229

INDEX

Name	Page
	234
	237
HARNESS AS-CONSOLE (OROPS)	201
	204
HARNESS AS-CONTROL	147
	149
	221
	231
HARNESS AS-CONTROL (PLATFORM)	627
HARNESS AS-DASH	226
HARNESS AS-DASH (GRADE CONTROL)	219
	225
	230
	234
	237
HARNESS AS-ENGINE	144
	216
HARNESS AS-ENGINE (FUEL INJECTION)	12
HARNESS AS-FRONT (GRADE CONTROL)	219
	224
	229
HARNESS AS-HEATER (SEAT)	577
	578
HARNESS AS-HOOD (GRADE CONTROL)	219
	224
	229
HARNESS AS-LIGHTING (OROPS)	201
	204
	207
HARNESS AS-MONITOR	221
	225
	230
HARNESS AS-MOTOR (BLOWER)	468
	521
HARNESS AS-MOTOR (CONDENSER FAN)	480
HARNESS AS-PANEL	168
HARNESS AS-PANEL (FUSE PANEL)	171
HARNESS AS-PLATFORM	240
	243
HARNESS AS-PUMP (WINCH)	621
	624
	627
HARNESS AS-PUMP (WINDOW WASHER)	587
HARNESS AS-RADIO (GRADE CONTROL)	219
	226
	231
	234
	238
HARNESS AS-SENSOR (ARMREST, LH)	210
HARNESS AS-SENSOR (ARMREST, RH)	210
HARNESS AS-SENSOR (GRADE CONTROL)	220
	225
	230
HARNESS AS-SWITCH	190
HARNESS AS-SWITCH (DOOR, LH)	513
	518
HARNESS AS-SWITCH (DOOR, RH)	511
	516
HARNESS AS-SWITCH (HEATED SEAT)	560
	564
	567
HARNESS AS-VALVE	121
	124
	127
	131
HARNESS AS-VALVE (SEAT AIR COMPRESSOR)	583
HARNESS AS-WIRING	153
	212
HARNESS AS-WIRING (MAST)	162
HARNESS AS-WIRING (POWER SUPPLY MODULE)	219
	224
	229
	234
	237
HARNESS AS-WIRING (PRODUCT LINK)	151
HARNESS AS-WIRING (RECEIVER, LH)	220
	225
	230
HARNESS AS-WIRING (RECEIVER, RH)	220
	225
	230
HARNESS AS-WORK TOOL	498
HARNESS AS-WORK TOOL (PLATFORM)	621
	624
HARNESS AS-WORK TOOL (WINCH)	621
	624
	627
HEAD GP-PUMP	254
HEATER GP-CAB	521
	524
	525
HEATER GP-CAB–OPEN ROPS	526
HEATER GP-JACKET WATER	146
HITCH GP-TOWING	335
HOOD & GUARD GP	336
HOOD & GUARD GP–SOUND SUPPRESSION	339
HOSE-RADIATOR (LOWER)	58
HOSE-RADIATOR (UPPER)	58
HOUSING GP-FLYWHEEL	29
HYDRAULIC AR	404
	405
HYDRAULIC AR–3-BANK	404
HYDRAULIC AR–4-BANK	404
	405

INDEX

Name	Page
I	
IDLER GP-FRONT	368
	369
IDLER GP-TRACK	371
	372
	373
INJECTOR GP-FUEL	71
	72
INSTALLATION AR-ENGINE	5
INSTALLATION GP-COMMUNICATION–PRODUCT LINK 121SR	151
INSTALLATION GP-COMMUNICATION–PRODUCT LINK 321SR	147
	149
INSTALLATION GP-RADIO	527
INSTALLATION GP-SECURITY	153
INSTRUMENT GP–EROPS	530
INSTRUMENT GP–OROPS	528
K	
KEY (BATTERY DISCONNECT)	186
KEY AS-ELECTRONIC (SECURITY)	153
KIT-SENSOR (AIR PRESSURE)	99
	104
	109
KIT-SENSOR (COOLANT TEMPERATURE)	99
	104
	109
KIT-SENSOR (ENGINE OIL PRESSURE)	99
	104
	109
KIT-SENSOR (ENGINE SPEED)	99
	104
	109
L	
LAMP (12-VOLT) (MINIATURE)	191
	194
	197
LAMP (12-VOLT, 55-WATT) (FLOODLIGHT)	155
	156
	157
LAMP GP-DOME (12-VOLT)	191
	194
	197
LAMP GP-FLOOD	155
	156
	157
LIFTING GP-ENGINE	30
LIGHTING GP-FLOOD	158
	159
	160
	161
LINER GP-SOUND SUPPRESSION–FRAME	341
	342
	346
LINES GP-AIR CONDITIONER	532
LINES GP-ANGLE & TILT	406
	410
LINES GP-FUEL	73
	74
	77
	80
	83
	84
	85
LINES GP-HEATER	535
LINES GP-HYDRAULIC	414
LINES GP-HYDROSTATIC	255
	256
	257
LINES GP-POWER TRAIN COOLER	258
	260
	262
LINES GP-PRESSURE TEST	417
LINES GP-PUMP	419
	421
LINES GP-REAR ATTACHMENT	423
	425
LINES GP-RIPPER	427
LINES GP-TRANSMISSION OIL–CASE DRAIN	267
	269
	275
LINES GP-TRANSMISSION OIL–CHARGE	264
LINES GP-TRANSMISSION OIL–CONTROL	271
	273
LINES GP-WINCH	641
LINK AS-TRACK	375
LINK AS-TRACK BOX–SYSTEMONE	376
LINK AS-TRACK–SYSTEMONE	374
LINK GP-ADJUSTABLE	513
	518
LINK GP-PITCH	457
LITERATURE GP–MACHINE	537
LOCK GP-VANDALISM	663
M	
MANIFOLD & LINES GP-CONTROL	277
	280
MANIFOLD GP-CONTROL	283
MANIFOLD GP-VALVE–OUTLET	429
MAST GP–LASER RECEIVER	162
MAST GP–SATELLITE RECEIVER	162
MAT-REAR	504
MIRROR GP-REAR VIEW–LH	538

INDEX

Name	Page
MODULE GP-INTERFACE (KEY)	153
MONITOR AS–LIGHT BAR	539
MONITOR GP-OPERATOR (INSTRUMENT CLUSTER)	528, 530
MOTOR & MTG GP-WINCH	645
MOTOR GP-PISTON	285
MOTOR GP-PISTON–WINCH	284
MOTOR GP-WINDOW WIPER	540, 541
MOTOR GP-WINDOW WIPER–FRONT	543
MOTOR GP-WINDOW WIPER–REAR	542
MOUNTING GP-CAB	544
MOUNTING GP-ENGINE	31
MOUNTING GP-ETHER CANISTER	183
MOUNTING GP-GRADE CONTROL	163, 165
MOUNTING GP-MAST–LASER RECEIVER	647
MOUNTING GP-MAST–SATELLITE RECEIVER	647
MOUNTING GP-PUMP	287
MOUNTING GP-RADIO–GRADE CONTROL	545
MOUNTING GP-RECEIVER–MAST	166
MOUNTING GP-RIPPER	648
MOUNTING GP-WINCH	649, 651
MUFFLER GP	62

P

Name	Page
PADLOCK GP	331, 663
PADLOCK GP (LITERATURE COMPARTMENT)	537
PAN GP-BACKREST–HEATED SEAT	547
PAN GP-BACKREST–LUMBAR	546
PAN GP-OIL	32
PAN GP-SEAT	560, 564, 567
PAN GP-SEAT–HEATED SEAT	548
PANEL GP-FUSE	168, 171
PEDAL GP-GOVERNOR & BRAKE	549
PISTON & ROD GP	34
PLANETARY GP-WINCH	652
PLATE & FILM GP	664, 665, 666, 668, 669, 670
PLUG GP-CYLINDER HEAD	35
PLUG GP-ENGINE	36
PLUG-DRAIN (ENGINE OIL)	32
PLUG-MAGNETIC (FINAL DRIVE OIL DRAIN)	250
POWER TRAIN AR	288
PROTECTION GP-FUEL SYSTEM	69, 70, 89, 94, 99, 104, 109
PROTECTION GP-FUEL SYSTEM (LINE, LOW PRESSURE)	67, 74, 77, 80, 83, 84, 85
PULLEY GP-ENGINE	23
PUMP & MTG GP-UNIT INJ HYD	86, 87
PUMP GP-CHARGE–HYSTAT PROPEL	289, 290, 395
PUMP GP-ENGINE OIL	45
PUMP GP-FUEL INJECTION	88, 89, 94, 99, 104, 109
PUMP GP-FUEL TRANSFER	86, 87, 88
PUMP GP-GEAR	430
PUMP GP-GEAR–IMPLEMENT	430
PUMP GP-PISTON–DOUBLE	294
PUMP GP-PISTON–FRONT	295
PUMP GP-PISTON–REAR	296, 298
PUMP GP-PISTON–SLIPPER	293
PUMP GP-PISTON–WINCH	291
PUMP GP-WATER	54, 56

R

Name	Page
RADIATOR & HYD OIL COOLER GP	58
RADIO GP-COMMUNICATION–PRODUCT LINK 121SR	174
RECEIVER GP-LASER (LR410)	174
RECEIVER GP-LASER–DUAL	174
RECEIVER GP-LASER–SINGLE	174
RECEIVER GP-SATELLITE–ACCUGRADE, UPGRADE FROM GPS TO GNSS	176

INDEX

Name	Page
RECEIVER GP-SATELLITE–DUAL GNSS, MS990	175
RECEIVER GP-SATELLITE–DUAL GPS, MS980	175
RECEIVER GP-SATELLITE–SINGLE GNSS, MS990	175
RECEIVER GP-SATELLITE–SINGLE GPS, MS980	174
RECLINER GP-SEAT	551
REGULATOR AS-WATER TEMPERATURE (CONNECTOR INCLUDED)	47
RELAY AS (12-VOLT) (BLOWER)	192 195 198 202 205 208
RELAY AS (12-VOLT) (FRONT LIGHTS)	168 171
RELAY AS (12-VOLT) (HORN)	168 171
RELAY AS (12-VOLT) (REAR LIGHTS)	168 171
RELAY AS (12-VOLT) (REFRIGERANT CONDENSER)	480
RELAY AS (12-VOLT) (START)	212
RELAY GP (12-VOLT) (STARTING AID HEATER)	212
RELAY GP–POWER, 3–STARTING AID HEATER	177
RESISTOR GP	469 521
RIPPER AR	653
RIPPER GP	654
ROCKER ARM GP	37
ROLLER GP-TRACK	377
ROLLER GP-TRACK CARRIER	380
ROLLER GP-TRACK CARRIER–HEAVY-DUTY, SYSTEMONE	382
ROLLER GP-TRACK–SEALED, LUBRICATED	379
ROLLER GP-TRACK–SYSTEMONE	378
ROLLER GP-TRACK-DOUBLE FLANGE	383
ROLLER GP-TRACK-SINGLE FLANGE	384
ROPS AR–EROPS	552 553
ROPS AR–OROPS	552 553
ROPS AR-ENCLOSED–EROPS	554
ROTATING GP-MOTOR–HYSTAT PROPEL	300
ROTATING GP-MOTOR–IMPLEMENT	396
ROTATING GP-PUMP–IMPLEMENT	303
ROTATING GP-PUMP–REAR	304
ROTATING GP-PUMP–SLIPPER	301
ROTATING GP-PUMP–VIBRATORY	302

S

Name	Page
SCREEN GP–FRONT	350
SCREEN GP-CAB–OROPS	555
SCREEN GP-PROTECTION–EROPS	557
SCREEN GP-PROTECTION–SIDES	556
SCREEN-FILTER (PILOT)	309 311
SCREEN-SUCTION (HYDRAULIC TANK)	433
SEAL GP-DUO-CONE	250 372 382
SEAT & SUPPORT GP–VINYL, HEATED	558
SEAT BELT GP (RETRACTABLE)	575 576 577 578
SEAT BELT GP–RETRACTABLE	559
SEAT GP–CLOTH	564
SEAT GP–CLOTH, HEATED	560
SEAT GP–HEATED SEAT	570
SEAT GP–VINYL	567
SEAT GP-SUSPENSION–CLOTH	573 575
SEAT GP-SUSPENSION–CLOTH, HEATED	574 577
SEAT GP-SUSPENSION–VINYL	572 576
SEAT GP-SUSPENSION–VINYL, HEATED	578
SEGMENT GP-SPROCKET	305 306
SEGMENT GP-SPROCKET (NON-SEGMENTED)	392
SENDER AS-FUEL LEVEL	121 125 128 132
SENSOR AS-ANGLE (AS400TC)	143
SENSOR AS-POSITION (BULLDOZER CONTROL)	493 494 496 497
SENSOR AS-SPEED (ENGINE)	212
SENSOR GP-POSITION	178
SENSOR GP-POSITION (STEERING)	495 549
SENSOR GP-PRESSURE	179
SENSOR GP-PRESSURE (HYDROSTATIC DRIVE)	121 125 128 132
SENSOR GP-PRESSURE (WINCH OIL)	621 624

INDEX

Name	Page
	627
SENSOR GP-SPEED	99
	104
	180
	181
SENSOR GP-SPEED (FUEL PUMP)	86
SENSOR GP-SPEED (SECONDARY, TIMING)	87
	88
SENSOR GP-SPEED (TRACK, LH)	132
SENSOR GP-SPEED (TRACK, RH)	120
	124
	128
	132
SENSOR GP-TEMPERATURE (HYDRAULIC OIL)	121
	124
	127
	131
SENSOR-PRESSURE (FUEL RAIL PRESSURE)	94
	99
	104
	109
SENSOR-PRESSURE (FUEL)	66
	68
SENSOR-TEMPERATURE (AIR)	94
	99
	104
	109
SERVICE GP-COMMUNICATION (PRODUCT LINK 300)	149
SERVICE GP-COMMUNICATION–PRODUCT LINK 300	182
SHAFT GP-MOTOR	300
SHAFT GP-WINCH DRUM	655
SOFTWARE GP-COMMUNICATION (PRODUCT LINK 121SR)	174
SOFTWARE GP-COMMUNICATION (PRODUCT LINK 300)	182
SOFTWARE GP-MACHINE	138
SOLENOID (AIR FUEL RATIO CONTROL)	63
SOLENOID AS (PILOT VALVE)	308
	309
	311
SOLENOID AS (WINCH PUMP)	309
	311
SPRING GP-RECOIL	385
STARTING AID GP-ETHER	183
STARTING MOTOR GP-ELECTRIC	185
SUPPORT GP-ENGINE & XMSN	38
SUPPORT GP-HYDRAULIC CONTROL–RH	579
SUPPORT GP-STEERING CONTROL–LH	581
SUPPRESSION AR-SOUND	39
	40
SUSPENSION GP-SEAT	583
SWEEP GP–FRONT	351
SWEEP GP–REAR	352
SWITCH (12-VOLT) (SEAT HEATER ON, OFF)	560
SWITCH (SEAT HEATER ON, OFF)	548
SWITCH AS (LOWER LIMIT)	162
SWITCH AS (UPPER LIMIT)	162
SWITCH AS (WORK LIGHTS)	528
	530
SWITCH AS-LIMIT (GOVERNOR, BRAKE PEDAL)	549
SWITCH AS-LIMIT (PLUNGER)	564
	567
SWITCH AS-LIMIT (SEAT ADJUSTMENT)	548
	560
SWITCH AS-MAGNETIC (MAIN POWER RELAY)	168
	171
SWITCH AS-PRESSURE (HYDRAULIC OIL FILTER)	637
SWITCH AS-PRESSURE (POWER TRAIN OIL FILTER BYPASS)	264
SWITCH AS-PRESSURE (PRESSURE DIFFERENTIAL)	253
SWITCH AS-PRESSURE (REFRIGERANT COMPR, HIGH SIDE)	190
SWITCH AS-ROCKER (4TH VALVE)	630
	631
SWITCH AS-ROCKER (AIR CONDITIONER)	530
SWITCH AS-ROCKER (ENGINE SPEED CONTROL)	39
SWITCH AS-ROCKER (FRONT WIPER)	530
SWITCH AS-ROCKER (IMPLEMENT LOCKOUT)	528
	530
SWITCH AS-ROCKER (PARKING BRAKE)	528
	530
SWITCH AS-ROCKER (REAR WIPER)	530
SWITCH AS-ROCKER (SIDE WIPER, LEFT)	530
SWITCH AS-ROCKER (SIDE WIPER, RIGHT)	530
SWITCH AS-ROCKER (WINCH BRAKE OFF)	621
	624
	627
SWITCH AS-ROCKER (WINCH FREE SPOOL)	621
	624
	627
SWITCH AS-START (KEY)	528
	530
SWITCH GP-DISCONNECT–BATTERY	186
SWITCH GP-ROTARY–THROTTLE POSITION	187
SWITCH-PRESSURE (AIR CLEANER)	61

INDEX

Name	Page
T	
TANK GP-COOLANT	60
TANK GP-EXPANSION (COOLANT)	60
TANK GP-FUEL	114, 116
TANK GP-HYDRAULIC	431, 433
TANK GP-WINDOW WASHER	587
TOOTH GP-RIPPER	657
TRACK AR	386
TRACK AR–SYSTEMONE	387
TRACK GP	390
TRACK GP–2-REQUIRED, SYSTEM ONE	392
TRACK GP–2-REQUIRED, SYSTEMONE	388, 390
TRACK GP–SEALED, LUBRICATED	391
TRACK GP–SYSTEMONE	389, 391
TURBOCHARGER GP	63
U	
UNDERCARRIAGE AR–SEALED, LUBRICATED	392
UNDERCARRIAGE AR–SYSTEMONE	392
V	
VALVE & LINES GP-WINCH	658
VALVE & MTG GP-IMPLEMENT CONT	435
VALVE & MTG GP-IMPLEMENT CONT–STANDARD	434
VALVE AS-RELIEF	109
VALVE GP-BANK 3	436
VALVE GP-BANK 4–IMPLEMENT	438
VALVE GP-CAB HEATER	525, 526
VALVE GP-CHECK	117
VALVE GP-CHECK (LOAD CONTROL)	423, 425
VALVE GP-CONTROL	443, 446, 448
VALVE GP-CONTROL–ANGLE	441
VALVE GP-CONTROL–AUXILIARY	442
VALVE GP-CONTROL–BLADE LIFT	440
VALVE GP-CONTROL–TILT	445
VALVE GP-FLOW CONTROL (WINCH)	658
VALVE GP-FLUID SAMPLING	46
VALVE GP-FLUSHING–HYDROSTATIC DRIVE	307
VALVE GP-LOAD CONTROL	423
VALVE GP-MAKEUP (ANGLE)	441, 445
VALVE GP-MAKEUP (AUXILIARY)	442
VALVE GP-MAKEUP (BLADE LIFT)	440
VALVE GP-PILOT–HYDROSTATIC DRIVE	308
VALVE GP-RELIEF (AUXILIARY)	442
VALVE GP-RELIEF (BLADE LIFT)	440
VALVE GP-RELIEF (LOAD CONTROL)	423
VALVE GP-RELIEF (PUMP HEAD)	254
VALVE GP-RELIEF (REFRIGERANT COMPRESSOR)	479
VALVE GP-RELIEF–CHARGE PRESSURE	450, 452
VALVE GP-RELIEF–CROSSOVER	454
VALVE GP-RELIEF–PRESSURE OVERRIDE–HYDROSTATIC PUMP	451
VALVE GP-SOLENOID (ANGLE)	441, 445
VALVE GP-SOLENOID (AUXILIARY)	442
VALVE GP-SOLENOID (BLADE LIFT)	440
VALVE GP-SOLENOID (MOTOR, 2-SPEED)	283
VALVE GP-SOLENOID (WINCH)	658
VALVE GP-SOLENOID–SERVO	309, 311
VALVE MECHANISM GP	41
VALVE-RELIEF (WINCH)	620
W	
WARNING GP-BACKUP	188, 189
WASHER GP-WINDOW	587
WINCH AR	660
WINDOW GP-CAB	589, 590
WINDOW GP-CAB–LH	592
WINDOW GP-CAB–RH	591
WIPER GP-WINDOW	593
WIRING GP-AIR CONDITIONER	190
WIRING GP-CAB–EROPS	191, 194, 197
WIRING GP-CAB–OROPS	201, 204, 207
WIRING GP-ELECTROHYDRAULIC	210
WIRING GP-ENGINE	212, 216, 217
WIRING GP-GRADE CONTROL–BASE	234, 237
WIRING GP-GRADE CONTROL–FULL	219, 224, 229
WIRING GP-PLATFORM	240, 243

MEMORANDA

MACHINE ARRANGEMENT

244-7380 CHASSIS AR

S/N: WWW1-UP

PART OF 244-7374 COMMON AR

SMCS-7000 **i03408066**

NOTE	PART NUMBER	QTY	PART NAME 1 2 3 4 5 6 (PRODUCT LEVEL)	SEE PAGE
Y	*245-6017*	1	BATTERY & WIRING GP	120
Y	*255-2142*	1	C-FRAME GP-POWER ANGLING	455
Y	*324-0670*	1	CONTROL & MTG GP-PEDAL (GOVERNOR, BRAKE)	487
Y	*244-7512*	1	ENCLOSURE GP-PLATFORM	318
Y	*244-7391*	1	FILM GP	661
Y	*244-7400*	1	FRAME GP	320
Y	*254-8902*	1	GUARD GP-BOTTOM	326
Y	*254-7757*	1	GUARD GP-RADIATOR	330
Y	*244-7482*	1	LINES GP-FUEL	73
Y	*255-4241*	1	LINES GP-HEATER	535
Y	*254-3169*	1	MOUNTING GP-CAB	544
Y	*244-7408*	1	TANK GP-FUEL	114
Y	*245-6027*	1	WIRING GP-ELECTROHYDRAULIC	210
Y	*245-6019*	1	WIRING GP-ENGINE	212
Y	*245-6020*	1	WIRING GP-PLATFORM	240

Y-SEPARATE ILLUSTRATION

<END>

244-7381 CHASSIS AR

S/N: YYY1-UP

PART OF 244-7375 COMMON AR

SMCS-7000 **i03408064**

NOTE	PART NUMBER	QTY	PART NAME 1 2 3 4 5 6 (PRODUCT LEVEL)	SEE PAGE
Y	*245-6017*	1	BATTERY & WIRING GP	120
Y	*255-2142*	1	C-FRAME GP-POWER ANGLING	455
Y	*324-0670*	1	CONTROL & MTG GP-PEDAL (GOVERNOR, BRAKE)	487
Y	*244-7512*	1	ENCLOSURE GP-PLATFORM	318
Y	*244-7486*	1	FILM GP	662
Y	*244-7401*	1	FRAME GP	322
Y	*254-8902*	1	GUARD GP-BOTTOM	326
Y	*254-7757*	1	GUARD GP-RADIATOR	330
Y	*244-7482*	1	LINES GP-FUEL	73
Y	*255-4241*	1	LINES GP-HEATER	535
Y	*254-3169*	1	MOUNTING GP-CAB	544
Y	*244-7408*	1	TANK GP-FUEL	114
Y	*245-6027*	1	WIRING GP-ELECTROHYDRAULIC	210
Y	*245-6019*	1	WIRING GP-ENGINE	212
Y	*245-6020*	1	WIRING GP-PLATFORM	240

Y-SEPARATE ILLUSTRATION

<END>

MACHINE ARRANGEMENT

282-5328 CHASSIS AR

S/N: JLF1-UP

PART OF 282-5326 COMMON AR

SMCS-7000 **i03440482**

NOTE	PART NUMBER	QTY	PART NAME 1 2 3 4 5 6 (PRODUCT LEVEL)	SEE PAGE
Y	*245-6017*	1	BATTERY & WIRING GP	120
Y	*255-2142*	1	C-FRAME GP-POWER ANGLING	455
Y	*244-7403*	1	CASE & FRAME GP	313
Y	*324-0670*	1	CONTROL & MTG GP-PEDAL (GOVERNOR, BRAKE)	487
Y	*244-7512*	1	ENCLOSURE GP-PLATFORM	318
Y	*244-7486*	1	FILM GP	662
Y	*254-8902*	1	GUARD GP-BOTTOM	326
Y	*254-7757*	1	GUARD GP-RADIATOR	330
Y	*244-7482*	1	LINES GP-FUEL	73
Y	*255-4241*	1	LINES GP-HEATER	535
Y	*254-3169*	1	MOUNTING GP-CAB	544
Y	*244-7408*	1	TANK GP-FUEL	114
Y	*245-6027*	1	WIRING GP-ELECTROHYDRAULIC	210
Y	*245-6019*	1	WIRING GP-ENGINE	212
Y	*245-6020*	1	WIRING GP-PLATFORM	240

Y-SEPARATE ILLUSTRATION

<END>

244-7374 COMMON AR

S/N: WWW1-UP

SMCS-7000 **i02630197**

NOTE	PART NUMBER	QTY	PART NAME 1 2 3 4 5 6 (PRODUCT LEVEL)	SEE PAGE
Y	*244-7380*	1	CHASSIS AR	1
Y	*244-7387*	1	ELECTRONICS GP-MACHINE	138
Y	**254-9233**	1	ENGINE AR-PRIMARY	4
Y	*244-7385*	1	HYDRAULIC AR	404
Y	*244-7386*	1	INSTALLATION AR-ENGINE	5
Y	*244-7447*	1	POWER TRAIN AR	288

Y-SEPARATE ILLUSTRATION

<END>

244-7375 COMMON AR

S/N: YYY1-UP

SMCS-7000 **i02630199**

NOTE	PART NUMBER	QTY	PART NAME 1 2 3 4 5 6 (PRODUCT LEVEL)	SEE PAGE
Y	*244-7381*	1	CHASSIS AR	1
Y	*244-7387*	1	ELECTRONICS GP-MACHINE	138
Y	**254-9233**	1	ENGINE AR-PRIMARY	4
Y	*244-7385*	1	HYDRAULIC AR	404
Y	*244-7386*	1	INSTALLATION AR-ENGINE	5
Y	*244-7383*	1	POWER TRAIN AR	288

Y-SEPARATE ILLUSTRATION

<END>

MACHINE ARRANGEMENT

282-5326 COMMON AR

S/N: JLF1-UP

SMCS-7000 **i02882973**

NOTE	PART NUMBER	QTY	PART NAME 1 2 3 4 5 6 (PRODUCT LEVEL)	SEE PAGE
Y	*282-5328*	1	CHASSIS AR	2
Y	*244-7387*	1	ELECTRONICS GP-MACHINE	138
Y	**254-9233**	1	ENGINE AR-PRIMARY	4
Y	*317-2808*	1	HYDRAULIC AR	405
Y	*244-7386*	1	INSTALLATION AR-ENGINE	5
Y	*286-3236*	1	POWER TRAIN AR	288

Y-SEPARATE ILLUSTRATION

<END>

ENGINE ARRANGEMENT

254-9233 ENGINE AR-PRIMARY

S/N: C4E1-UP
65 BRAKE KW (87 BHP) AT 2000 RPM
PART OF 244-7374, 244-7375, 282-5326 COMMON AR

SMCS-1000 **i03339583**

NOTE	PART NUMBER	QTY	PART NAME 1 2 3 4 5 6 (PRODUCT LEVEL)	SEE PAGE
Y	*303-5774*	1	ALTERNATOR GP-CHARGING	118
			S/N: C4E1-173	
Y	*317-9776*	1	ALTERNATOR GP-CHARGING	119
			S/N: C4E174-UP	
Y	*304-3648*	1	CAMSHAFT GP	10
Y	*301-8243*	1	CONNECTION GP-WATER	47
			—OR—	
Y	*334-2314*	1	CONNECTION GP-WATER	48
Y	*304-3650*	1	CONTROL GP-ENGINE ELECTRONIC	136
Y	*298-5099*	1	COOLER GP-ENGINE OIL	49
Y	*304-3658*	1	COVER GP-CYLINDER HEAD	11
Y	*320-2369*	1	COVER GP-VALVE MECHANISM	12
Y	*304-3642*	1	CRANKSHAFT GP	14
Y	*304-3641*	1	CYLINDER BLOCK GP	17
Y	*304-3645*	1	CYLINDER HEAD GP	22
Y	*306-8855*	1	DRIVE GP-AUXILIARY	23
Y	*303-5770*	1	DRIVE GP-FAN	24
Y	*314-3960*	1	FILLER GP-ENGINE OIL	43
Y	*298-5100*	1	FILTER GP-ENGINE OIL	44
Y	*298-5123*	1	FILTER GP-PRIMARY FUEL	69
			S/N: C4E1-173	
Y	*320-1332*	1	FILTER GP-FUEL	67
			S/N: C4E174-UP	
Y	*304-3654*	1	FLYWHEEL GP	26
Y	*298-5110*	1	GEAR GP-FRONT	27
Y	*304-3660*	1	GLOW PLUG GP	139
Y	*303-5767*	1	HOUSING GP-FLYWHEEL	29
Y	*298-5127*	1	LIFTING GP-ENGINE	30
Y	*304-3659*	1	LINES GP-FUEL (LOW)	74
Y	*304-3662*	1	LINES GP-FUEL	83
Y	*304-3661*	1	MOUNTING GP-ENGINE	31
Y	*304-3656*	1	PAN GP-OIL	32
Y	*304-3643*	1	PISTON & ROD GP	34
Y	*298-5129*	1	PLUG GP-CYLINDER HEAD (TEMPERATURE)	35
Y	*304-3663*	1	PLUG GP-ENGINE	36
Y	*298-5112*	1	PUMP GP-ENGINE OIL	45
Y	*304-3649*	1	PUMP GP-FUEL INJECTION	89
Y	*298-5105*	1	PUMP GP-WATER	54
Y	*304-3655*	1	STARTING MOTOR GP-ELECTRIC	185
Y	*304-3657*	1	TURBOCHARGER GP	63
Y	*304-5617*	1	VALVE GP-FLUID SAMPLING (OIL)	46
Y	*304-3647*	1	VALVE MECHANISM GP	41
Y	*299-5092*	1	WIRING GP-ENGINE	216
	298-5894	1	CYLINDER BLOCK AS-SHORT	
	305-8452	1	ELECTRONICS GP-ENGINE RATINGS	

Y-SEPARATE ILLUSTRATION

ENGINE ARRANGEMENT

244-7386 INSTALLATION AR-ENGINE

S/N: JLF1-UP; WWW1-UP; YYY1-UP

PART OF 244-7374, 244-7375, 282-5326 COMMON AR

SMCS-1000 **i03601030**

NOTE	PART NUMBER	QTY	PART NAME 1 2 3 4 5 6 (PRODUCT LEVEL)	SEE PAGE
Y	*244-7427*	1	AIR CLEANER GP	61
Y	*244-7428*	1	FAN GP-BLOWER	53
Y	*254-8954*	1	MUFFLER GP	62
Y	*244-7430*	1	RADIATOR & HYD OIL COOLER GP	58
Y	*244-7431*	1	SUPPORT GP-ENGINE & XMSN	38
Y	*254-3256*	1	TANK GP-COOLANT	60
	283-3426	1	PAN AS-OIL	
	5P-6718	1	SEAL-O-RING	
	7W-2326	1	FILTER AS-ENGINE OIL	
	159-5255	1	ADAPTER	
	3K-0360	1	SEAL-O-RING	
	6V-7238	1	VALVE-SHUTOFF	

Y-SEPARATE ILLUSTRATION

BASIC ENGINE

260-9294 BELT TENSIONER GP–FAN

S/N: JLF1-UP; WWW1-UP; YYY1-UP
PART OF 244-7475, 244-7476 ROPS AR
AN ATTACHMENT

SMCS-1358 **i02882983**

NOTE	REF NO	GRAPHIC REF	PART NUMBER	QTY	PART NAME 1 2 3 4 5 6 (PRODUCT LEVEL)	SEE PAGE
	1	1	**261-0376**	1	BELT TENSIONER	
	2	1	**261-0423**	1	PLATE	
	3	1	**261-0428**	1	PULLEY AS-IDLER	
M		1	**307-2242**	1	BOLT (M10X1.5X45-MM)	
	4	1	**283-4148**	1	PULLEY	
	5	1	**298-5874**	1	BELT-SERPENTINE	
M	6	1	**6I-0593**	3	BOLT (M10X1.5X30-MM)	

M-METRIC PART

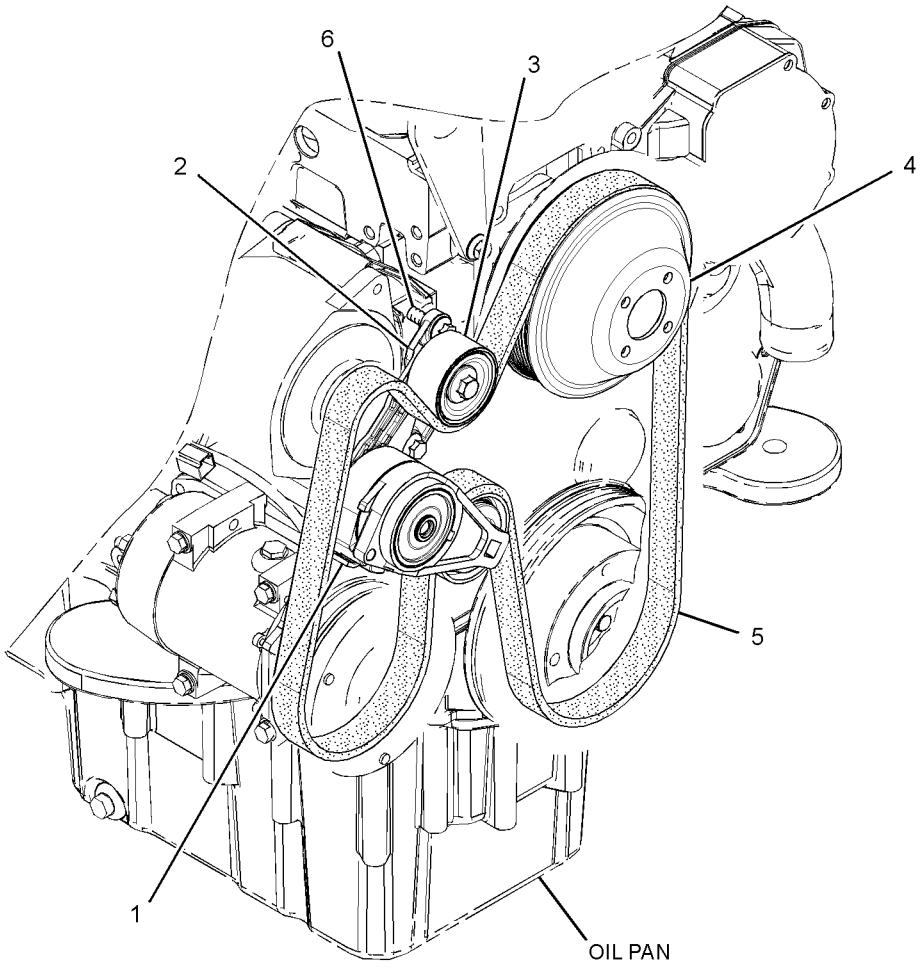

GRAPHIC #1 **<END>** g01440105

BASIC ENGINE

260-9295 BELT TENSIONER GP

S/N: JLF1-UP; WWW1-UP; YYY1-UP
PART OF 282-4898, 282-4899 ROPS AR-ENCLOSED
AN ATTACHMENT

SMCS-1358 **i02882981**

NOTE	REF NO	GRAPHIC REF	PART NUMBER	QTY	PART NAME 1 2 3 4 5 6 (PRODUCT LEVEL)	SEE PAGE
	1	1	**298-5880**	1	BELT-SERPENTINE	
	2	1	**261-0376**	1	BELT TENSIONER	
	3	1	**261-0423**	1	PLATE	
	4	1	**261-0428**	1	PULLEY AS-IDLER	
M		1	**307-2242**	1	BOLT (M10X1.5X45-MM)	
	5	1	**284-1026**	1	PULLEY	
M	6	1	**6I-0593**	3	BOLT (M10X1.5X30-MM)	

M-METRIC PART

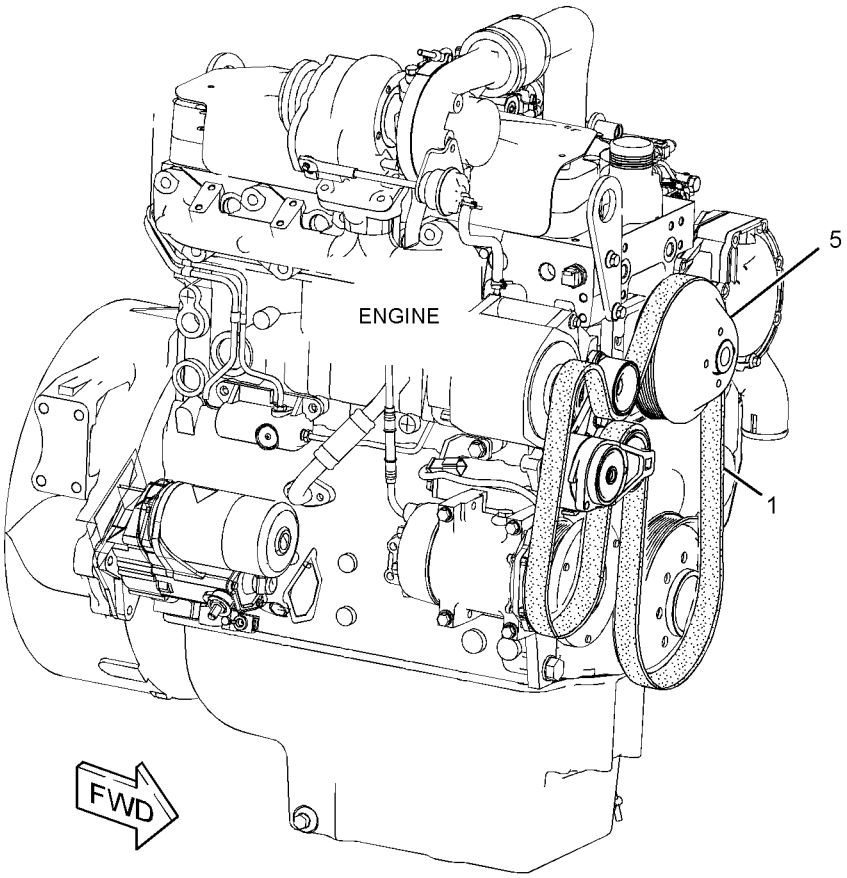

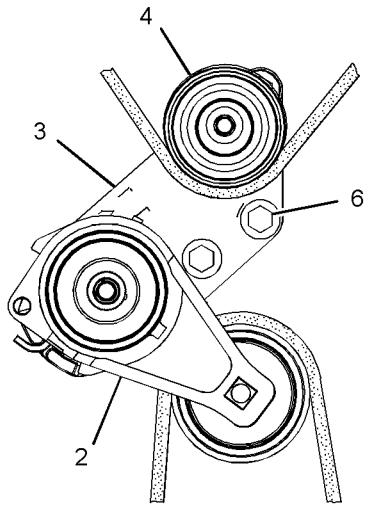

FRONT VIEW OF ENGINE

GRAPHIC #1 **<END>** g01523833

BASIC ENGINE

260-9501 BELT TENSIONER GP

S/N: JLF1-UP; WWW1-UP; YYY1-UP
PART OF 244-7474 ROPS AR
AN ATTACHMENT

SMCS-1358 **i02882982**

NOTE	REF NO	GRAPHIC REF	PART NUMBER	QTY	PART NAME 1 2 3 4 5 6 (PRODUCT LEVEL)	SEE PAGE
	1	1	**261-0371**	1	PLATE	
	2	1	**261-0406**	1	BELT TENSIONER	
	3	1	**283-4148**	1	PULLEY	
	4	1	**309-6666**	1	BELT-SERPENTINE	
M	5	1	**6I-0593**	3	BOLT (M10X1.5X30-MM)	

M-METRIC PART

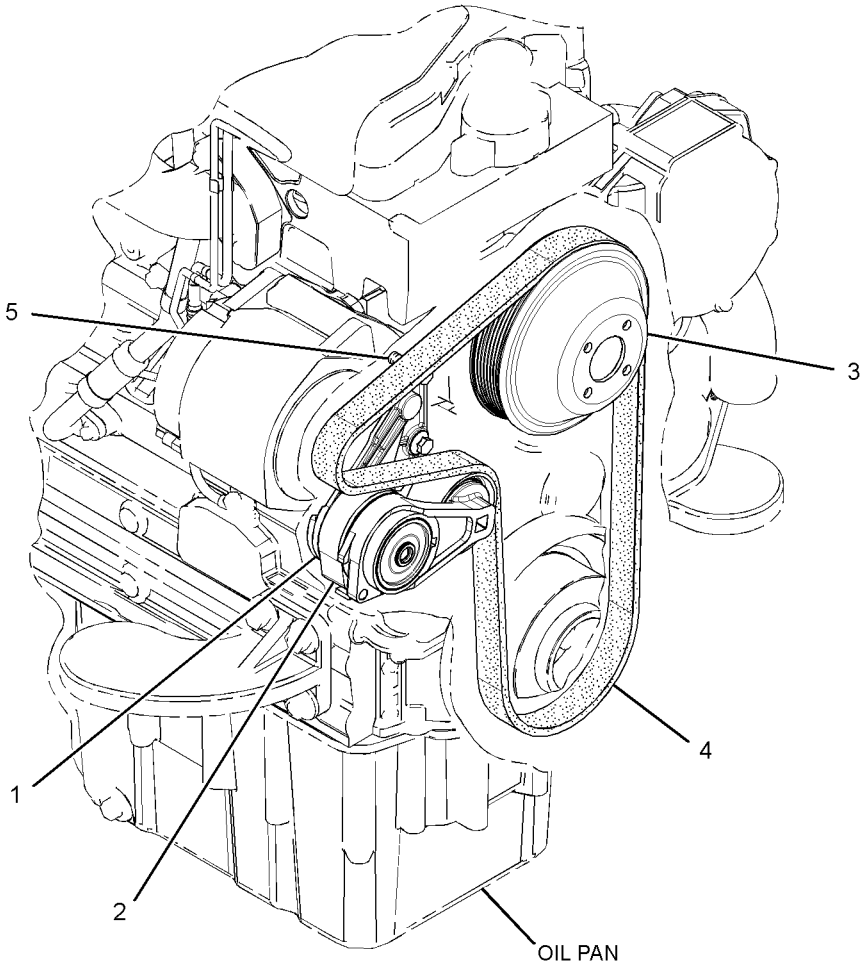

GRAPHIC #1 **<END>** g01440924

261-0369 BELT TENSIONER GP

S/N: JLF1-UP; WWW1-UP; YYY1-UP
PART OF 282-4897 ROPS AR
AN ATTACHMENT

SMCS-1358 **i02865225**

NOTE	REF NO	GRAPHIC REF	PART NUMBER	QTY	PART NAME 1 2 3 4 5 6 (PRODUCT LEVEL)	SEE PAGE
	1	1	**261-0371**	1	PLATE	
	2	1	**316-0446**	1	BELT-SERPENTINE	
	3	1	**261-0406**	1	BELT TENSIONER	
	4	1	**284-1026**	1	PULLEY	
M	5	1	**6I-0593**	3	BOLT (M10X1.5X30-MM)	

M-METRIC PART

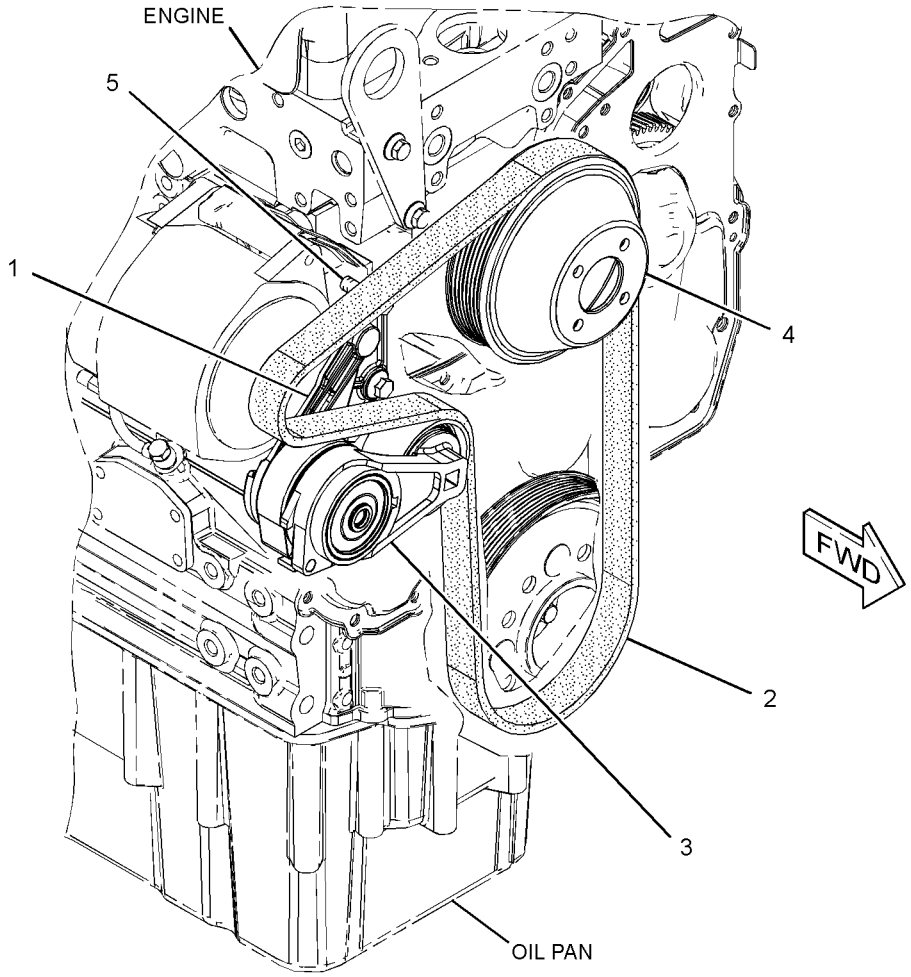

GRAPHIC #1 **<END>** g01527819

BASIC ENGINE

304-3648 CAMSHAFT GP

S/N: C4E1-UP

PART OF 254-9233 ENGINE AR-PRIMARY

SMCS-1210 **i02857647**

NOTE	REF NO	GRAPHIC REF	PART NUMBER	QTY	PART NAME 1 2 3 4 5 6 (PRODUCT LEVEL)	SEE PAGE
	1	1	**315-3384**	8	TAPPET	
	2	1	**278-5126**	8	PUSHROD	
	3	1	**306-2330**	1	CAMSHAFT AS	
	3A	1	**1B-8736**	1	KEY-WOODRUFF	

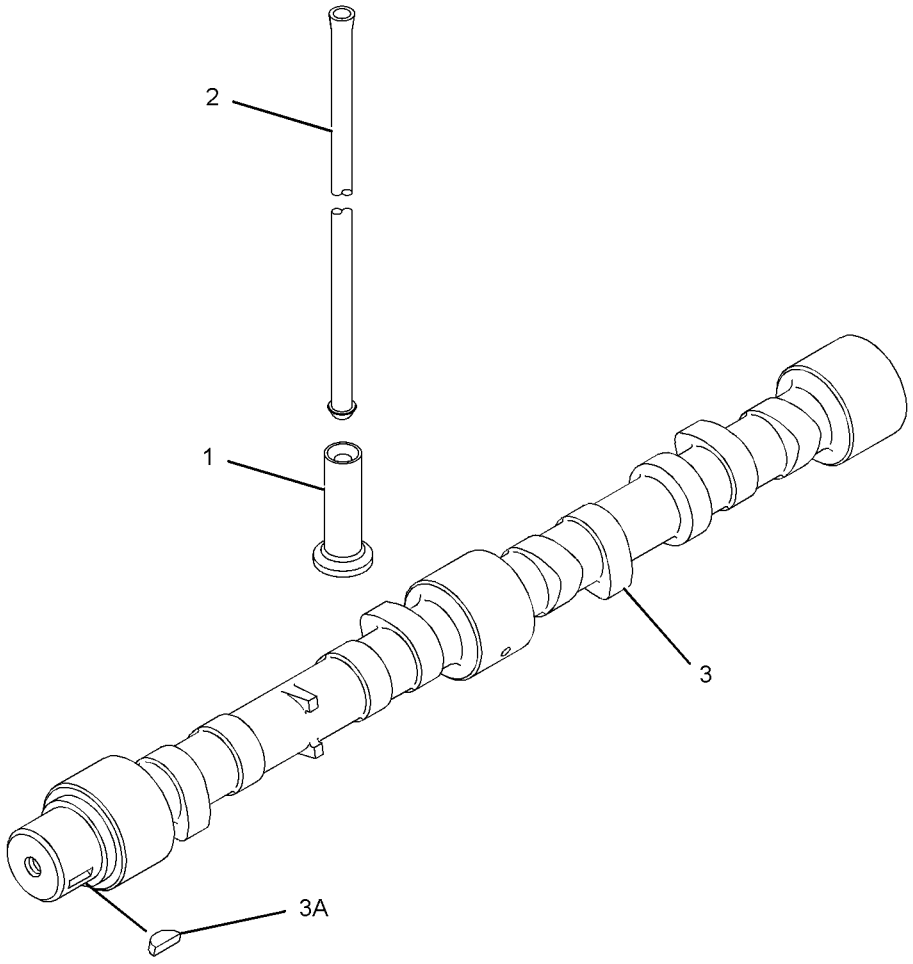

GRAPHIC #1 **<END>** g01304671

304-3658 COVER GP-CYLINDER HEAD

S/N: C4E1-UP

PART OF 254-9233 ENGINE AR-PRIMARY

SMCS-1100 **i02654864**

NOTE	REF NO	GRAPHIC REF	PART NUMBER	QTY	PART NAME 1 2 3 4 5 6 (PRODUCT LEVEL)	SEE PAGE
M	1	1	**6I-0217**	4	BOLT (M8X1.25X20-MM)	
	2	1	**6I-0572**	4	BOLT (M8X1.25X20-MM)	
	3	1	**114-2579**	2	GASKET	
	4	1	**115-1162**	2	PLATE	

M-METRIC PART

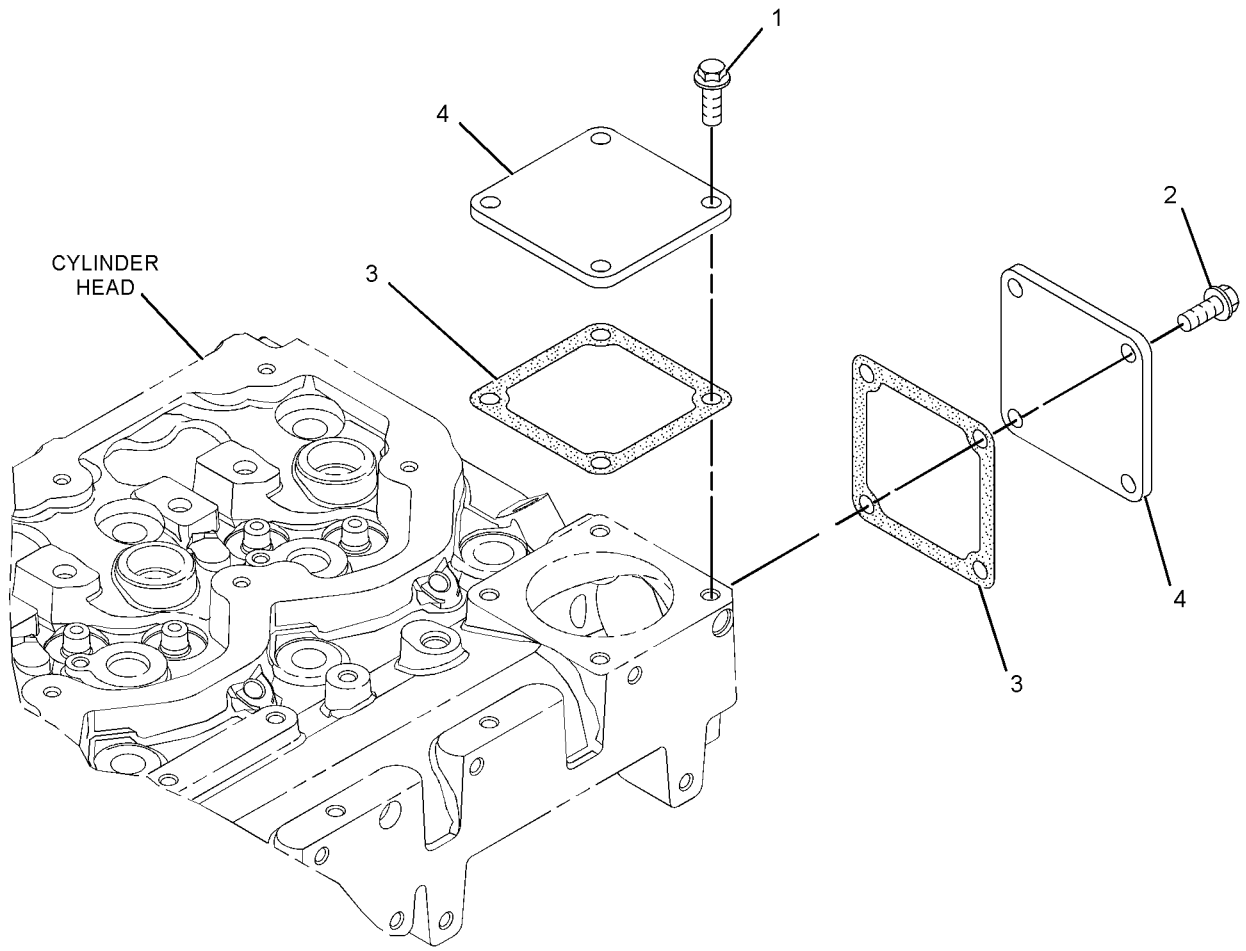

GRAPHIC #1 **<END>** g01340480

BASIC ENGINE

320-2369 COVER GP-VALVE MECHANISM

S/N: C4E1-UP

PART OF 254-9233 ENGINE AR-PRIMARY

SMCS-1107 **i03586762**

NOTE	REF NO	GRAPHIC REF	PART NUMBER	QTY	PART NAME 1 2 3 4 5 6 (PRODUCT LEVEL)	SEE PAGE
	1	1	**7C-1281**	1	BRACKET	
	3	1	**6I-0846**	3	BOLT (M6X1X14-MM)	
	4	1	**5D-1026**	1	CLAMP-HOSE	
	5	1	**162-1565**	1	SPRING (CRANKCASE BREATHER HOSE)	
	6	1	**320-9921**	1	HOSE	
	7	1	**277-5031**	7	BOLT-SPECIAL (SHOULDER)	
	8	1	**277-5067**	4	SLEEVE	
	10	1	**298-4550**	4	BOLT-SPECIAL (SHOULDER)	
	11	1	**298-4551**	1	BASE GP-VALVE COVER & INJ HARN	
	11A	1	**277-5064**	2	SEAL-O-RING	
	11B	1	**277-5065**	2	CLIP	
	11C	1	**285-1973**	2	HARNESS AS-ENGINE (FUEL INJECTION)	
					(EACH INCLUDES)	
		1	**316-9351**	1	FASTENER-SPECIAL	
		1	**180-9339**	4	PIN-CONNECTOR (14-GA TO 18-GA)	
		1	**113-4630**	1	RECEPTACLE AS-CONNECTOR (4-PIN)	
		1	**3E-3377**	1	WEDGE-RECEPTACLE LOCK (4-PIN)	
	11D	1	**298-4552**	1	GASKET (VALVE MECHANISM BASE)	
	12	1	**303-5781**	1	COVER AS-CYLINDER HEAD	
	12A	1	**295-1042**	4	SCREW-TAPPING	
	12B	1	**298-4546**	1	GASKET-VALVE COVER (CYLINDER HEAD)	
	12C	1	**298-4547**	1	BREATHER (CRANKCASE)	
	12D	1	**298-4548**	1	SEPARATOR-OIL	
	12E	1	**298-4549**	1	SEAL-O-RING	
	13	1	**320-2360**	1	HEAT SHIELD	
	14	1	**320-2362**	1	WASHER	
	15	1	**320-2361**	2	WASHER	
	16	1	**343-8096**	1	CLIP	

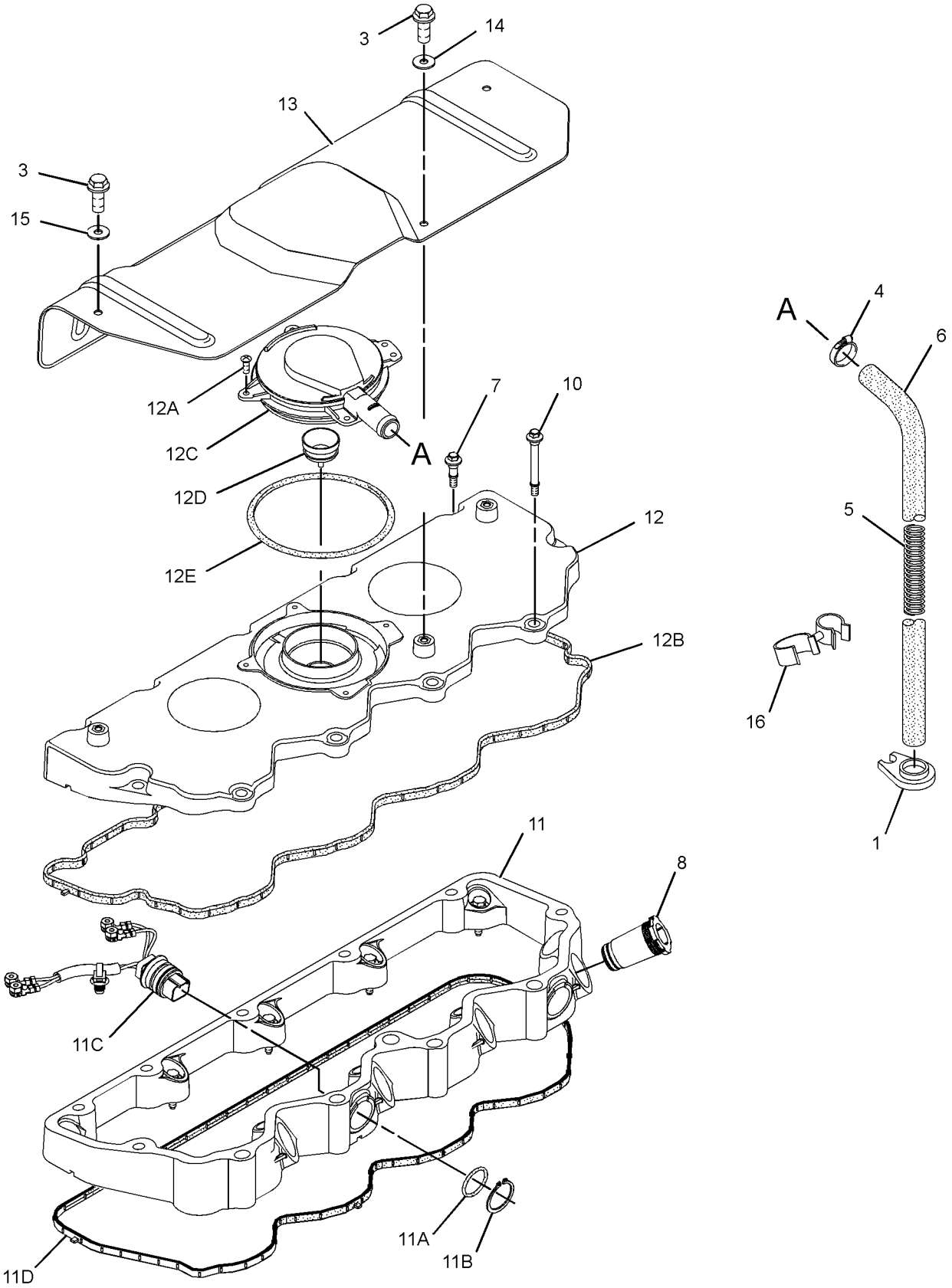

GRAPHIC #1 **<END>** g01626405

BASIC ENGINE

304-3642 CRANKSHAFT GP

S/N: C4E1-UP

PART OF 254-9233 ENGINE AR-PRIMARY

SMCS-1202 **i03399180**

NOTE	REF NO	GRAPHIC REF	PART NUMBER	QTY	PART NAME 1 2 3 4 5 6 (PRODUCT LEVEL)	SEE PAGE
Y	1	1	**330-1736**	1	CRANKSHAFT GP	15
	2	1	**276-7394**	3	BOLT	
	3	1	**341-4028**	1	RING-TIMING	

Y-SEPARATE ILLUSTRATION

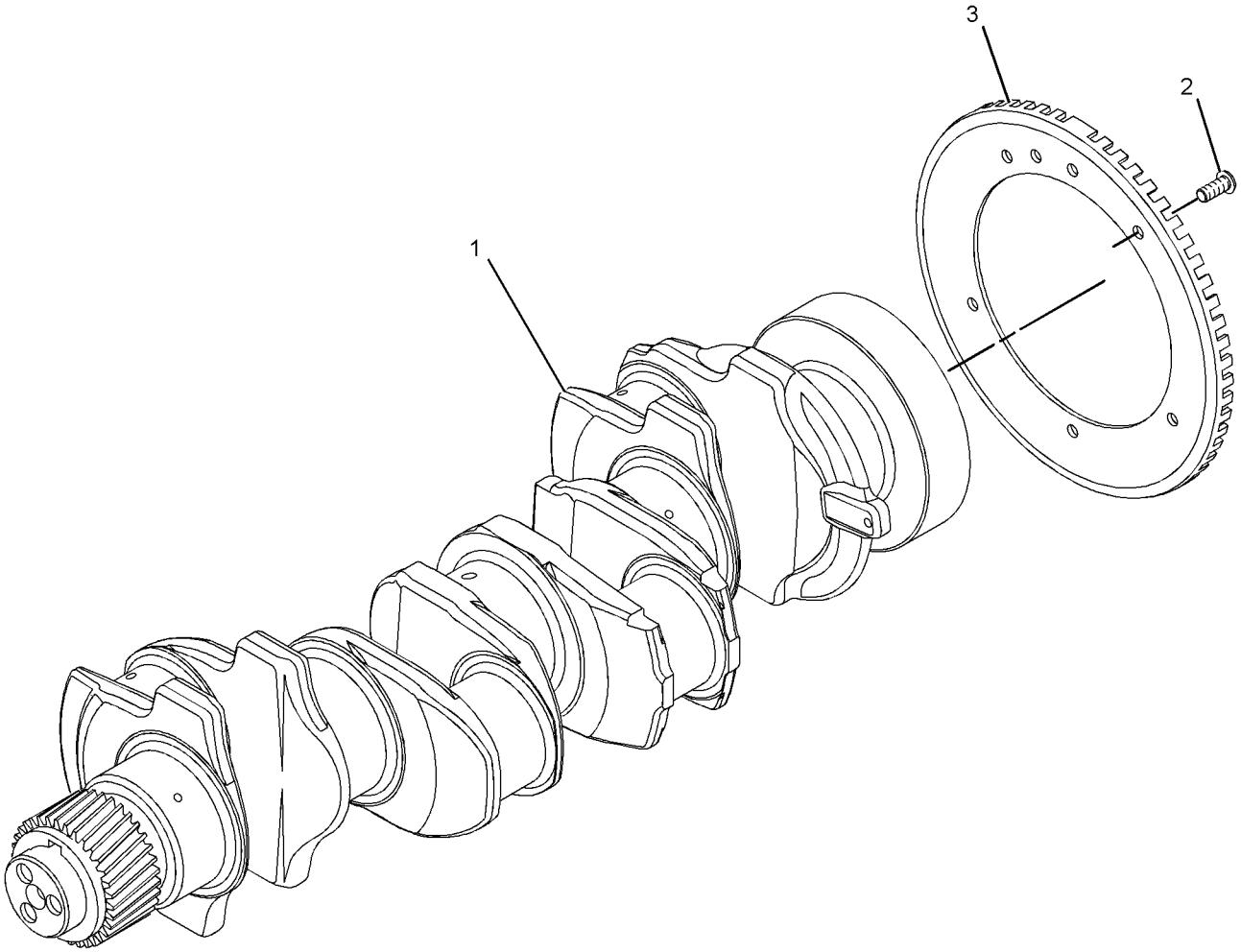

GRAPHIC #1 **<END>** g01763713

330-1736 CRANKSHAFT GP

S/N: C4E1-UP

PART OF 304-3642 CRANKSHAFT GP

SMCS-1202 **i03419135**

NOTE	REF NO	GRAPHIC REF	PART NUMBER	QTY	PART NAME 1 2 3 4 5 6 (PRODUCT LEVEL)	SEE PAGE
	1	1	**1B-8736**	1	KEY-WOODRUFF	
	2	1	**032-9090**	2	WASHER-THRUST (STANDARD-UPPER)	
AB		1	**067-6873**		WASHER-THRUST (0.18-MM OS)	
	3	1	**032-9091**	2	WASHER-THRUST (STANDARD-LOWER)	
AB		1	**067-6874**		WASHER-THRUST (0.18-MM OS)	
	4	1	**216-8314**	1	GEAR-CRANKSHAFT (34-TEETH)	
	5	1	**225-7772**	1	BEARING SET-MAIN (STANDARD)	
AB		1	**233-3784**		KIT-CRANKSHAFT BEARING (0.010-IN US ID)	
AB		1	**233-3785**		KIT-CRANKSHAFT BEARING (0.020-IN US ID)	
AB		1	**233-3786**		KIT-CRANKSHAFT BEARING (0.030-IN US ID)	
	6	1	**339-8780**	1	DOWEL	
	7	1	**298-4524**	1	KIT-BEARING	

A-NOT PART OF THIS GROUP
B-USE AS REQUIRED

330-1736 CRANKSHAFT GP *(contd.)* i03419135

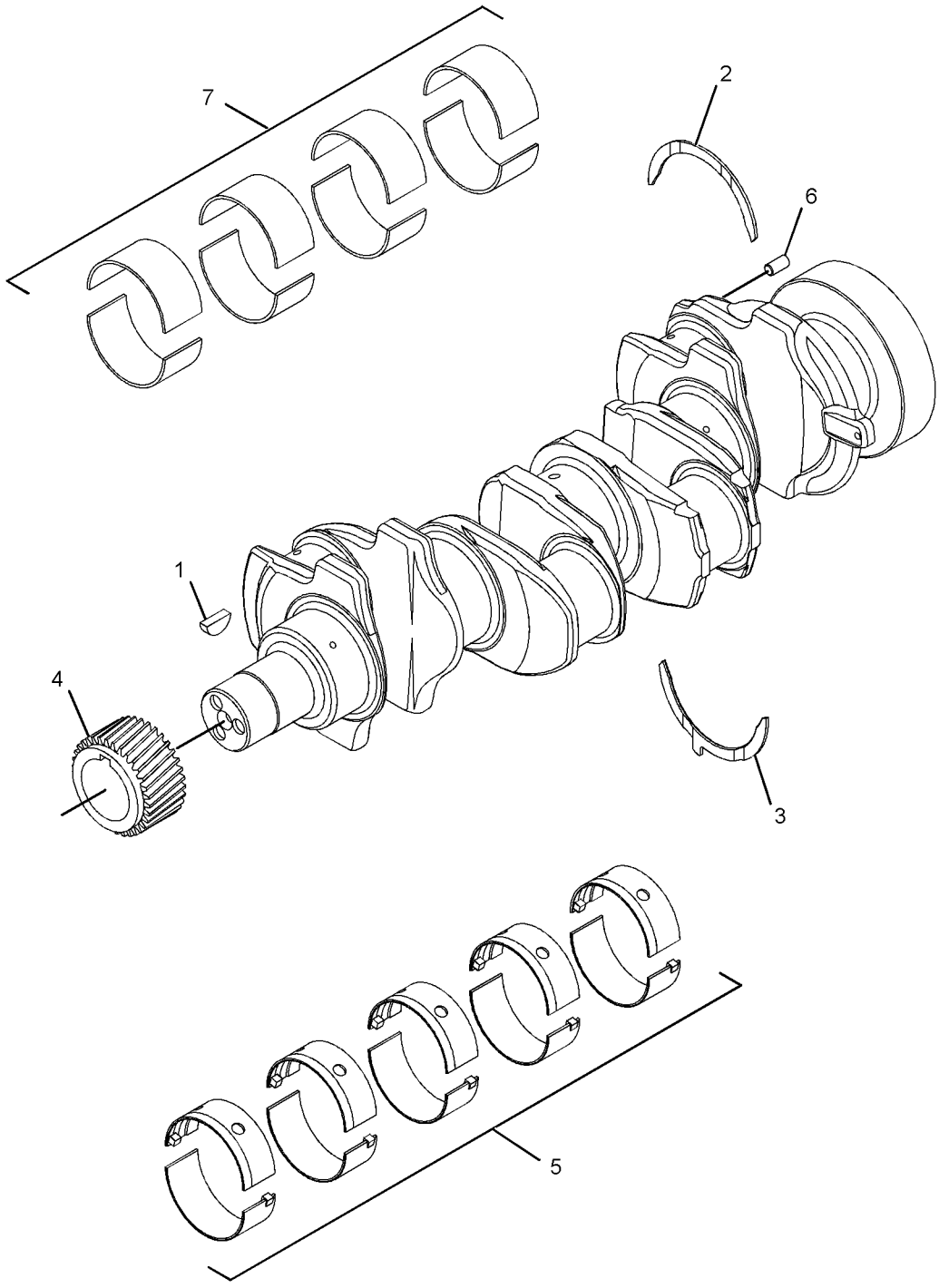

GRAPHIC #1 **<END>** g01541418

BASIC ENGINE

304-3641 CYLINDER BLOCK GP

S/N: C4E1-UP

PART OF 254-9233 ENGINE AR-PRIMARY

SMCS-1201 **i03190979**

NOTE	REF NO	GRAPHIC REF	PART NUMBER	QTY	PART NAME 1 2 3 4 5 6 (PRODUCT LEVEL)	SEE PAGE
M	1	1	**209-9219**	10	BOLT (M8X1.25X16-MM)	
	2	1	**232-7449**	1	HOUSING AS	
Y	3	1	**330-4789**	1	CYLINDER BLOCK GP	18

M-METRIC PART
Y-SEPARATE ILLUSTRATION

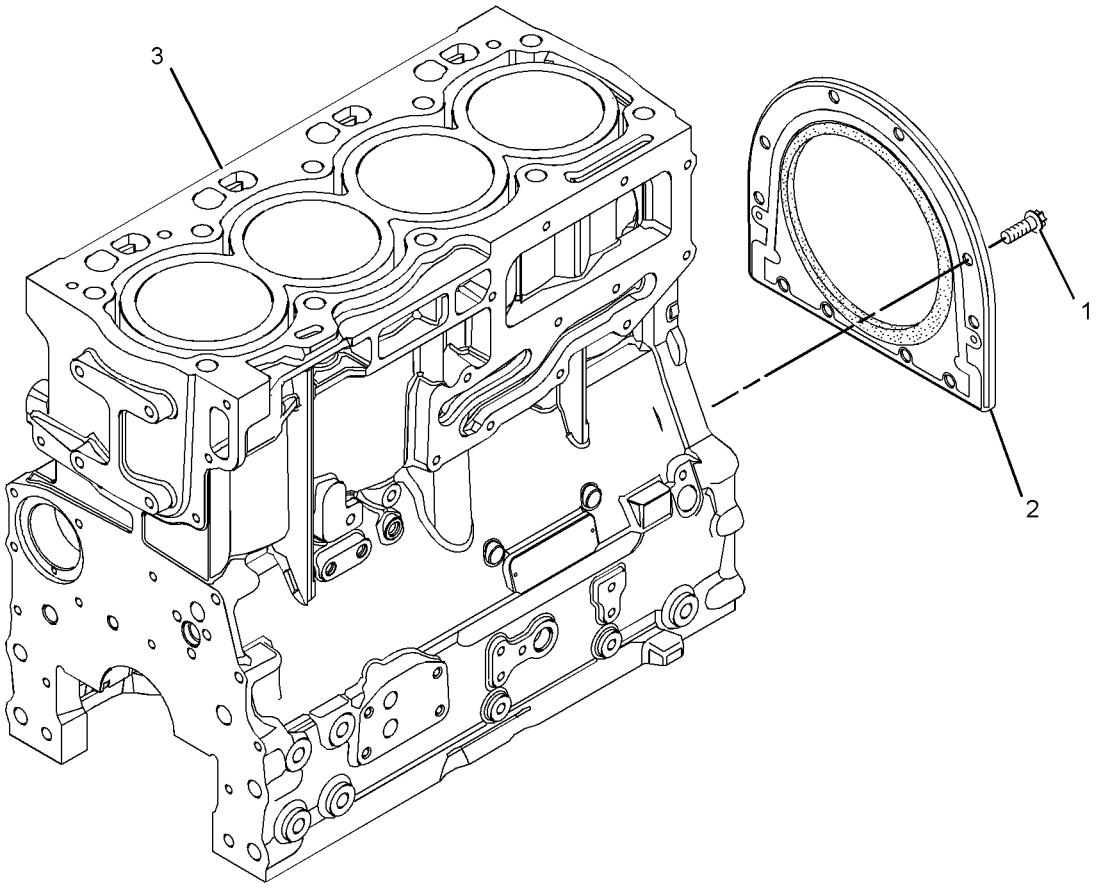

GRAPHIC #1 **<END>** g01630054

BASIC ENGINE

330-4789 CYLINDER BLOCK GP

S/N: C4E1-UP

PART OF 304-3641 CYLINDER BLOCK GP

SMCS-1201 **i03192960**

NOTE	REF NO	GRAPHIC REF	PART NUMBER	QTY	PART NAME 1 2 3 4 5 6 (PRODUCT LEVEL)	SEE PAGE
M	1	1	**6I-0645**	4	BOLT (M8X1.25X25-MM)	
	2	1	**6I-0646**	1	BOLT (M10X1.5X14-MM)	
	3	1	**035-8063**	1	PLUG	
	4	1	**035-8068**	10	BOLT (5/8-18X3.75-IN)	
	5	1	**067-6002**	10	DOWEL	
	6	1	**067-6006**	1	PLUG	
	7	1	**067-6043**	1	PLUG-SIDE	
M	8	1	**100-4841**	4	BOLT (M6X1X10-MM)	
	9	1	**185-0884**	2	DOWEL	
	10	1	**214-3203**	1	WASHER (SEALING)	
	11	1	**225-8858**	1	PLUG	
	12	1	**232-7440**	1	BEARING	
	13	1	**232-7596**	1	PLUG	
	14	1	**232-7597**	2	PLUG	
	15	1	**232-7599**	1	PLUG	
	16	1	**233-9408**	1	GASKET	
	17	1	**252-6318**	1	PLATE	
	18	1	**276-5605**	4	JET AS-PISTON COOLING	

M-METRIC PART

330-4789 **CYLINDER BLOCK GP** *(contd.)* **i03192960**

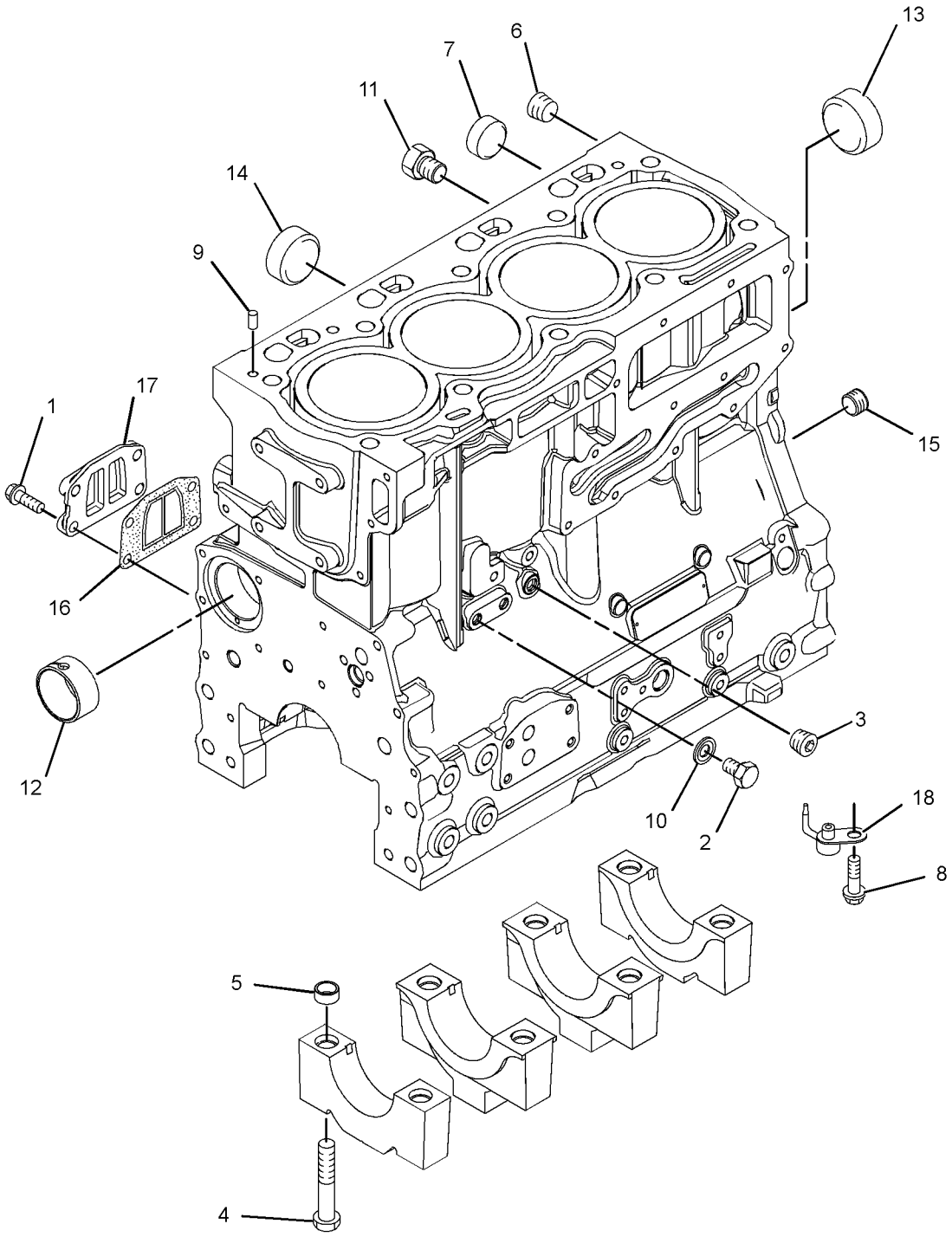

GRAPHIC #1 **<END>** g01586142

BASIC ENGINE

298-4526 CYLINDER HEAD AS

S/N: C4E1-UP

PART OF 304-3645 CYLINDER HEAD GP

SMCS-1100, 1101 **i03536397**

NOTE	REF NO	GRAPHIC REF	PART NUMBER	QTY	PART NAME 1 2 3 4 5 6 (PRODUCT LEVEL)	SEE PAGE
	1	1	**2B-0858**	2	PLUG-PIPE	
	2	1	**199-9751**	1	SEAL-O-RING	
	3	1	**232-1322**	1	PLUG	
	4	1	**276-8116**	4	PLUG-CORE	
	5	1	**276-8117**	9	PLUG-CORE	
	6	1	**309-6678**	8	VALVE-INLET	
	7	1	**276-8123**	32	RETAINER	
	8	1	**339-9637**	8	VALVE-EXHAUST	
	9	1	**299-5511**	16	SEAL-VALVE STEM	
	10	1	**276-8133**	16	CAP-VALVE	
	11	1	**295-6661**	1	PLUG	
	12	1	**298-4527**	1	PLUG-CORE	
	13	1	**298-4528**	1	PLUG-CORE	
	14	1	**298-4530**	16	SPRING-VALVE	

298-4526 CYLINDER HEAD AS *(contd.)* **i03536397**

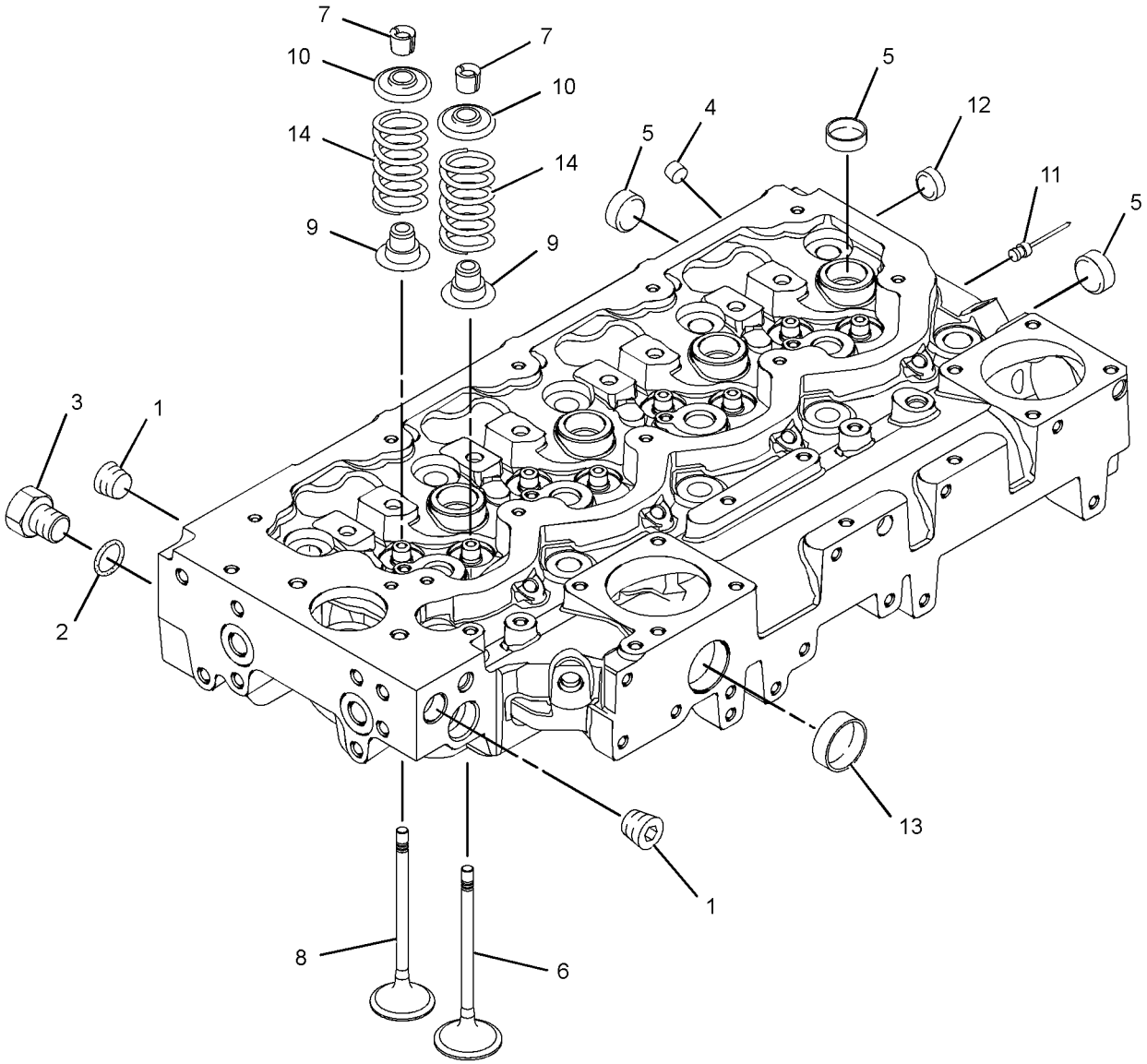

GRAPHIC #1 **<END>** g01305364

BASIC ENGINE

304-3645 CYLINDER HEAD GP

S/N: C4E1-UP

PART OF 254-9233 ENGINE AR-PRIMARY

SMCS-1100 **i02845314**

NOTE	REF NO	GRAPHIC REF	PART NUMBER	QTY	PART NAME 1 2 3 4 5 6 (PRODUCT LEVEL)	SEE PAGE
	1	1	**225-5501**	10	BOLT (M15X1.5X137-MM)	
Y	2	1	**298-4526**	1	CYLINDER HEAD AS	20
	3	1	**310-8520**	1	GASKET-CYLINDER HEAD	

Y-SEPARATE ILLUSTRATION

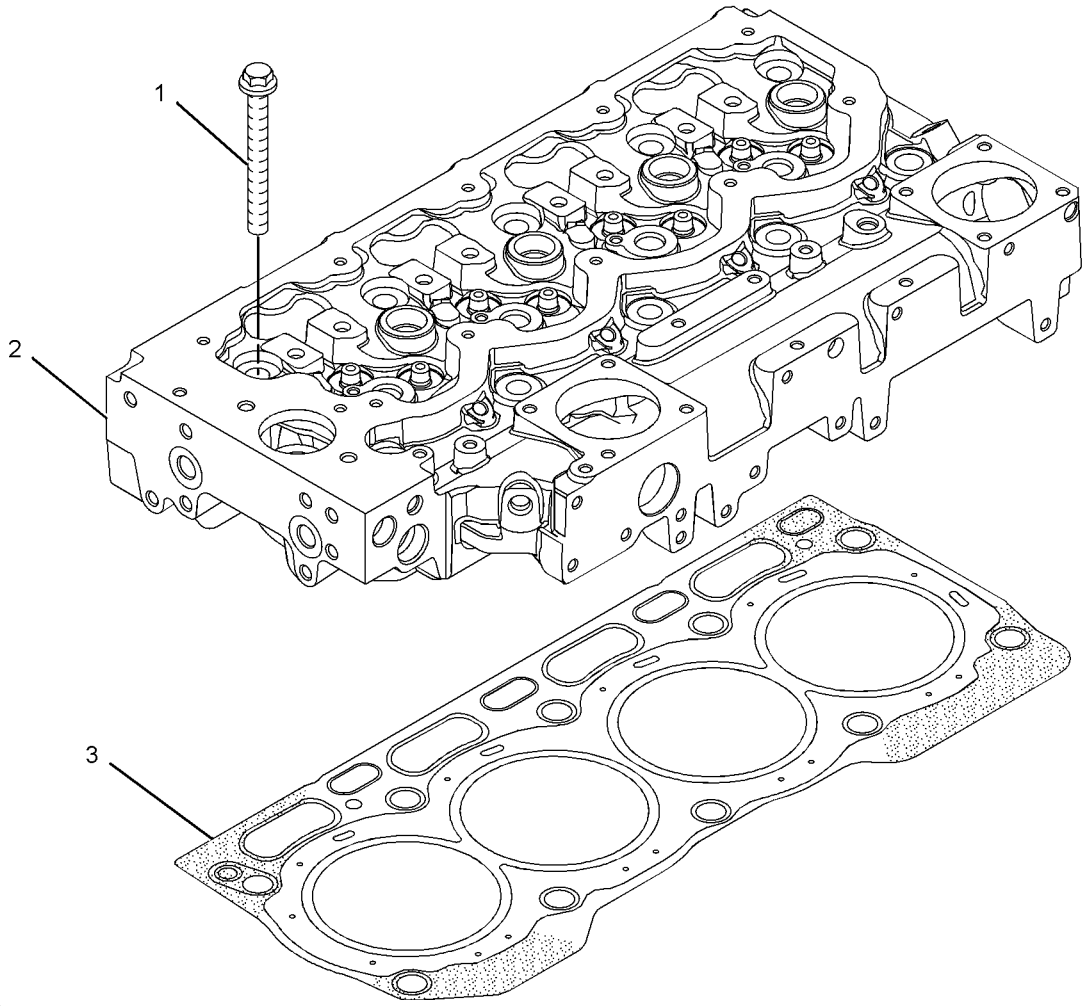

GRAPHIC #1 **<END>** g01307654

306-8855 DRIVE GP-AUXILIARY

S/N: C4E1-UP

PART OF 254-9233 ENGINE AR-PRIMARY

SMCS-1207 **i02724410**

NOTE	REF NO	GRAPHIC REF	PART NUMBER	QTY	PART NAME 1 2 3 4 5 6 (PRODUCT LEVEL)	SEE PAGE
	1	1	**286-7848**	1	PULLEY GP-ENGINE	
	2	1	**306-8857**	1	HUB	
M	3	1	**102-9941**	3	BOLT (M12X1.75X25-MM)	
	4	1	**6I-0501**	1	BLOCK	
	5	1	**7W-4634**	3	BOLT (7/16-20X1.5-IN)	

M-METRIC PART

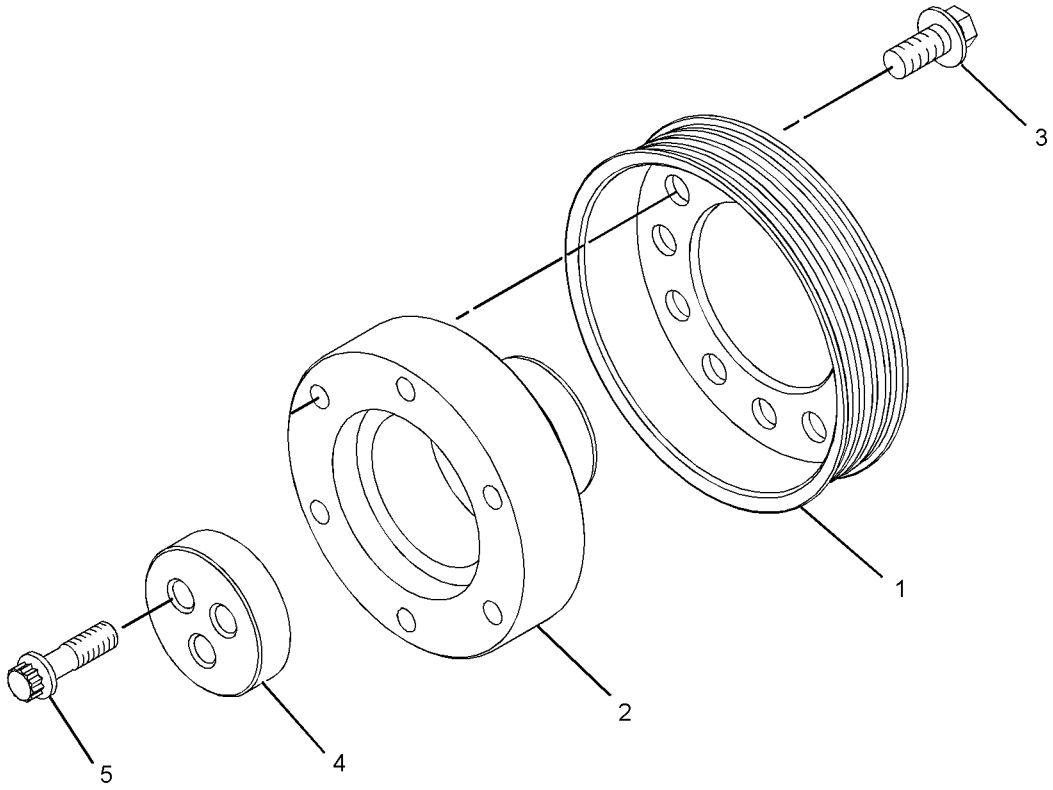

GRAPHIC #1 **<END>** g01377208

BASIC ENGINE

303-5770 DRIVE GP-FAN

S/N: C4E1-UP

PART OF 254-9233 ENGINE AR-PRIMARY

SMCS-1359 **i02974925**

NOTE	REF NO	GRAPHIC REF	PART NUMBER	QTY	PART NAME 1 2 3 4 5 6 (PRODUCT LEVEL)	SEE PAGE
	1	1	**326-1880**	1	HOUSING-FAN DRIVE	
	2	1	**251-2437**	1	PLATE	
	3	1	**111-0859**	8	BOLT (M10X1.5X35-MM)	

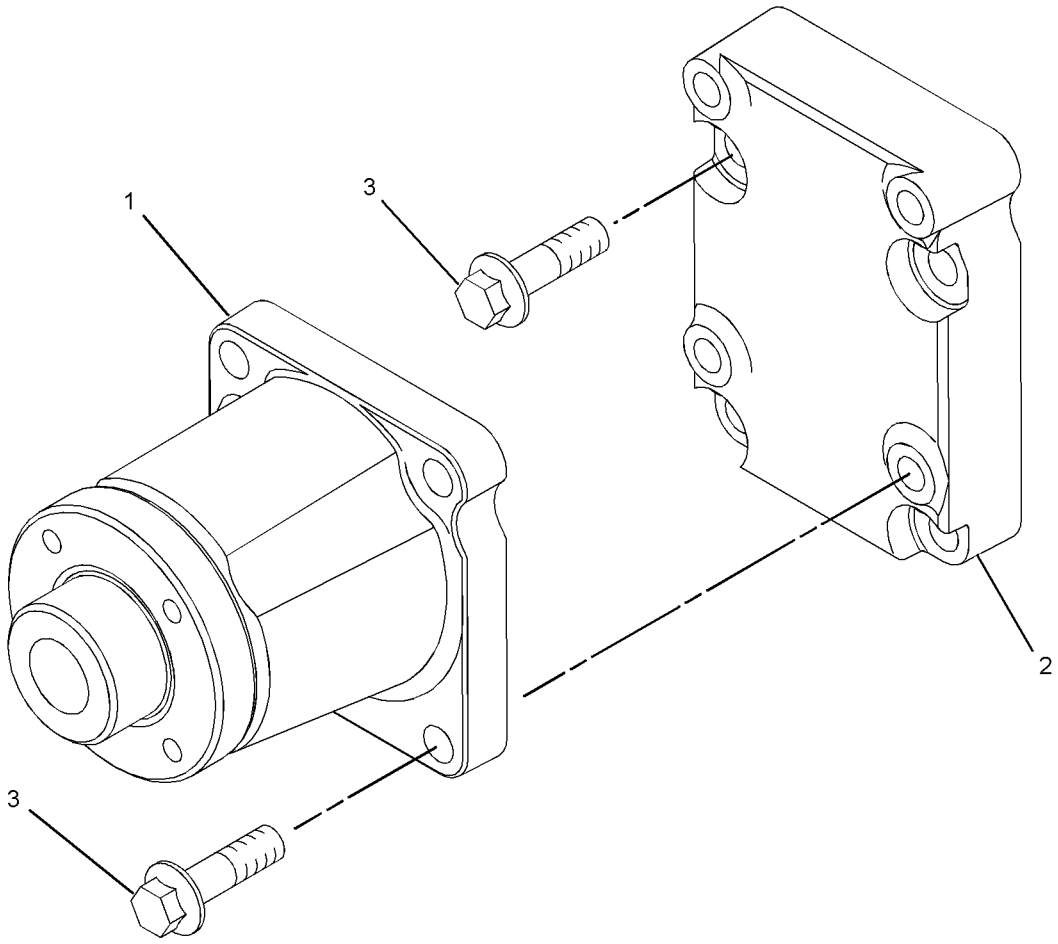

GRAPHIC #1 **<END>** g01340877

BASIC ENGINE

244-7451 DRIVE GP-PUMP—AUXILIARY

S/N: JLF1-UP; WWW1-UP; YYY1-UP
CANNOT BE USED WITH 256-3738—PAGE 660
AN ATTACHMENT

SMCS-1207, 3108 **i02817247**

NOTE	PART NUMBER	QTY	PART NAME 1 2 3 4 5 6 (PRODUCT LEVEL)	SEE PAGE
Y	*244-7505*	1	LINES GP-HYDROSTATIC	255
Y	**254-9099**	1	PUMP GP-PISTON	293
	311-0300	1	BATTERY GP	
	9X-3404	2	BATTERY (12-VOLT, MAINTENANCE FREE, WET)	

Y-SEPARATE ILLUSTRATION

<END>

244-7455 DRIVE GP-PUMP—HYDRAULIC

S/N: JLF1-UP; WWW1-UP; YYY1-UP
FOR USE WITH 244-7517—PAGE 651, REQUIRES ONE OF THE FOLLOWING, 282-4899, 272-9770, 272-9780. CANNOT BE USED WITH 244-7471—PAGE 404, 244-7433—PAGE 335, 262-4407—PAGE 653
AN ATTACHMENT

SMCS-1207, 3108 **i02817316**

NOTE	PART NUMBER	QTY	PART NAME 1 2 3 4 5 6 (PRODUCT LEVEL)	SEE PAGE
Y	*244-7504*	1	CONTROL GP-WINCH	621
Y	*244-7505*	1	LINES GP-HYDROSTATIC	255
Y	*255-1151*	1	LINES GP-WINCH	641
Y	*281-3997*	1	MIRROR GP-REAR VIEW	538
Y	*217-2004*	1	MOUNTING GP-PUMP	287
Y	**254-1379**	1	PUMP GP-PISTON	291
Y	**254-9099**	1	PUMP GP-PISTON	293
	311-0300	1	BATTERY GP	
	9X-3404	2	BATTERY (12-VOLT, MAINTENANCE FREE, WET)	

Y-SEPARATE ILLUSTRATION

<END>

291-5099 DRIVE GP-PUMP—STANDARD

S/N: JLF1-UP
CANNOT BE USED WITH 244-7422 LINES GP-PUMP, 244-7517 MOUNTING GP-WINCH, 256-3738 WINCH AR
AN ATTACHMENT

SMCS-1207, 3108 **i03408084**

NOTE	PART NUMBER	QTY	PART NAME 1 2 3 4 5 6 (PRODUCT LEVEL)	SEE PAGE
Y	*286-8053*	1	LINES GP-HYDROSTATIC	256
Y	*254-9100*	1	PUMP GP-PISTON	294
	311-0300	1	BATTERY GP	
	9X-3404	2	BATTERY (12-VOLT, MAINTENANCE FREE, WET)	

Y-SEPARATE ILLUSTRATION

<END>

BASIC ENGINE

304-3654 FLYWHEEL GP

S/N: C4E1-UP

PART OF 254-9233 ENGINE AR-PRIMARY

SMCS-1156 **i02654847**

NOTE	REF NO	GRAPHIC REF	PART NUMBER	QTY	PART NAME 1 2 3 4 5 6 (PRODUCT LEVEL)	SEE PAGE
	1	1	**103-6131**	1	FLYWHEEL AS	
	1A	1	**033-7687**	1	RING-STARTING MOTOR (126-TEETH)	
	2	1	**0S-1603**	6	BOLT (1/2-20X1.5-IN)	
	3	1	**5P-8245**	6	WASHER-HARD (13.5X25.5X3-MM THK)	

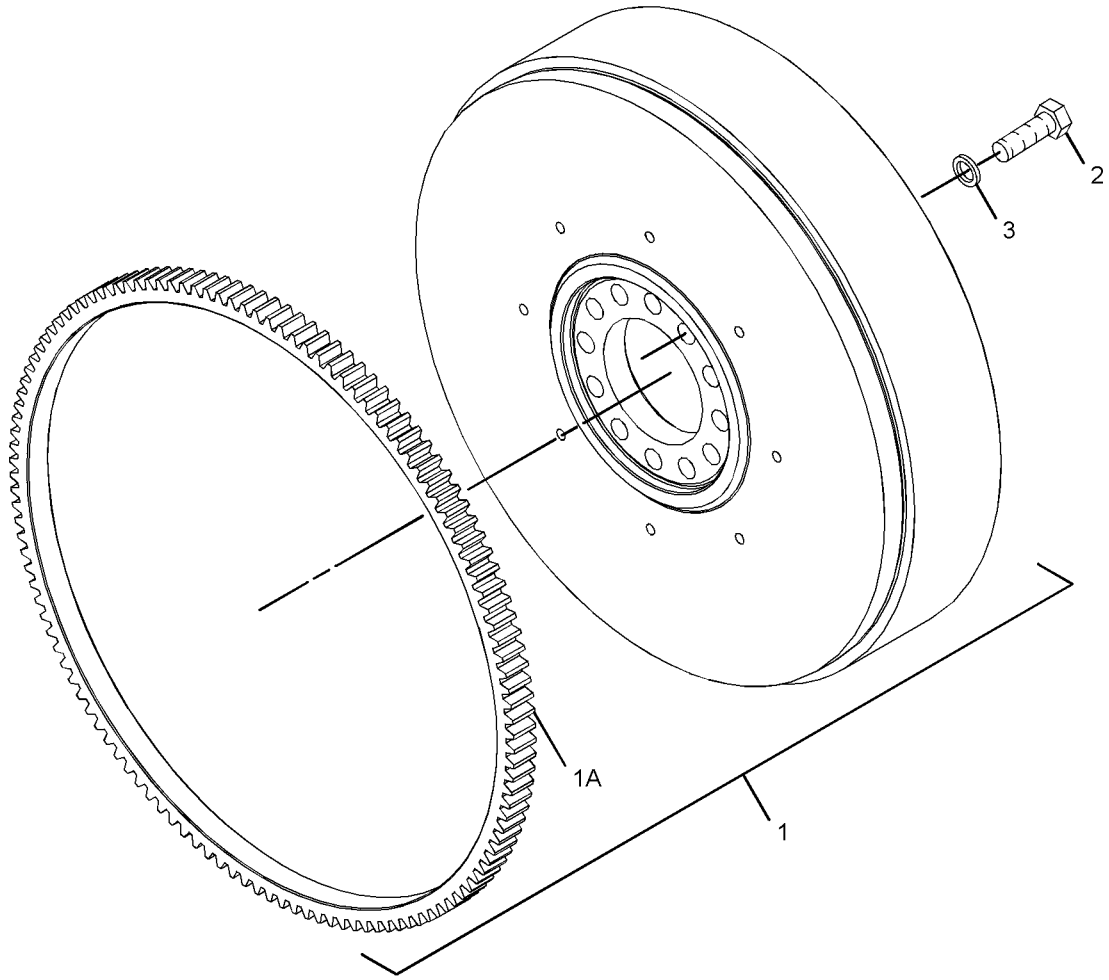

GRAPHIC #1 **<END>** g01280683

BASIC ENGINE

298-5110 GEAR GP-FRONT

S/N: C4E1-UP

PART OF 254-9233 ENGINE AR-PRIMARY

SMCS-1151, 1162, 1206 **i02918670**

NOTE	REF NO	GRAPHIC REF	PART NUMBER	QTY	PART NAME 1 2 3 4 5 6 (PRODUCT LEVEL)	SEE PAGE
M	1	1	**6I-0217**	6	BOLT (M8X1.25X20-MM)	
M	2	1	**6I-0645**	4	BOLT (M8X1.25X25-MM)	
M	3	1	**6I-0650**	3	BOLT (M10X1.5X65-MM)	
	4	1	**7C-4616**	1	BOLT (M12X1.75X45-MM)	
	5	1	**067-6179**	1	DOWEL	
M	6	1	**100-3751**	5	BOLT (M8X1.25X65-MM)	
M	7	1	**100-4830**	1	BOLT (M10X1.5X20-MM)	
M	8	1	**101-3895**	2	BOLT (M8X1.25X35-MM)	
M	9	1	**124-3815**	9	BOLT (M8X16X1.25-MM)	
	10	1	**133-1011**	1	WASHER	
	11	1	**216-8634**	1	GEAR-CAMSHAFT (68-TEETH)	
	12	1	**226-8767**	1	COVER AS-FRONT	
	12A	1	**226-8766**	1	GASKET-COVER	
	13	1	**232-3666**	1	WASHER-THRUST	
	14	1	**251-4336**	1	GEAR AS-IDLER (73-TEETH)	
	15	1	**277-3012**	1	GASKET-COVER (HOUSING)	
	16	1	**324-0444**	1	HUB-IDLER GEAR	
	17	1	**288-0422**	1	SEAL-OIL	
	18	1	**323-3515**	1	HOUSING-FRONT	
	19	1	**295-1711**	1	PLATE-RETAINING	

M-METRIC PART

298-5110 **GEAR GP-FRONT** *(contd.)* **i02918670**

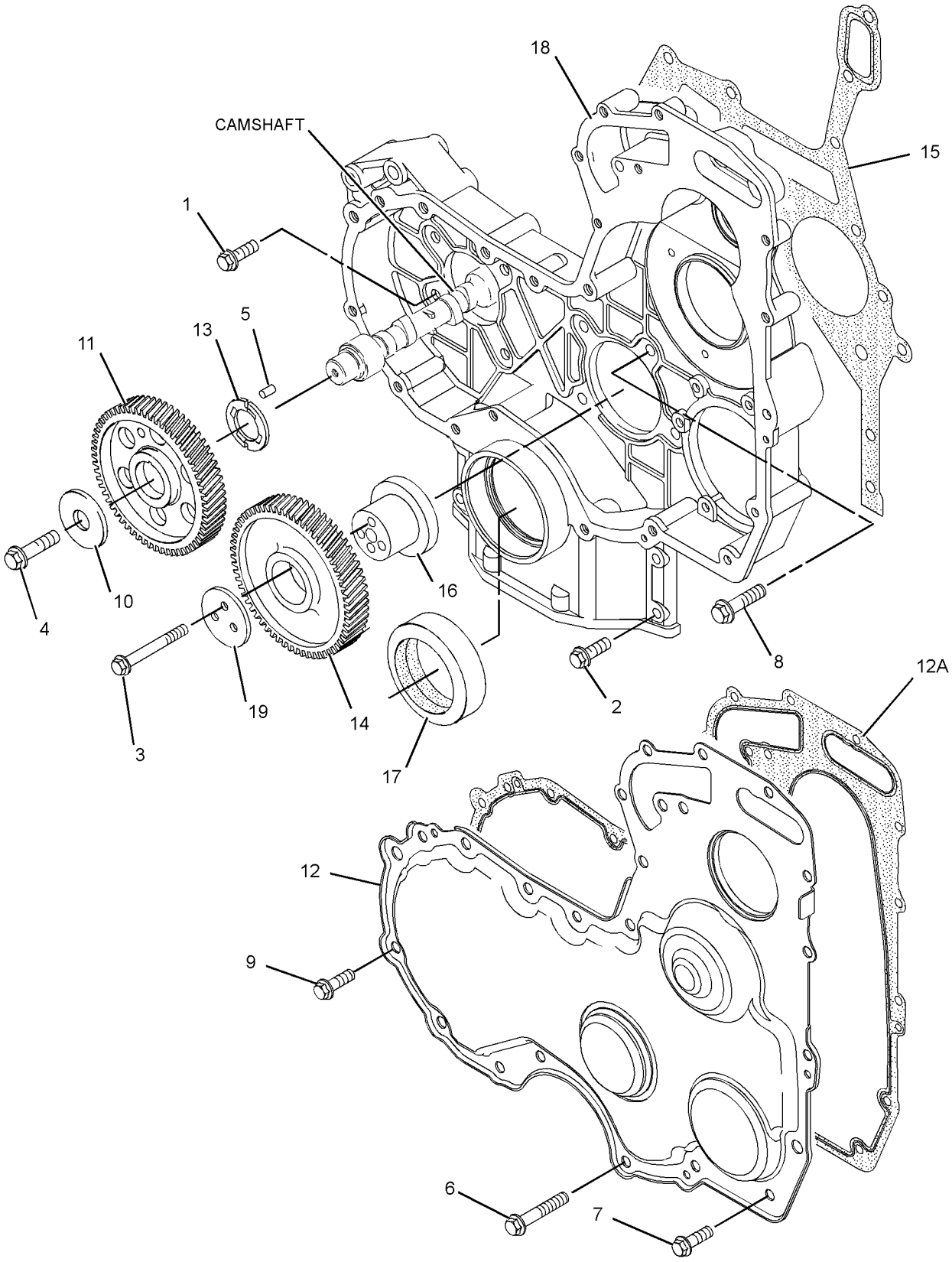

GRAPHIC #1 **<END>** g01304618

BASIC ENGINE

303-5767 HOUSING GP-FLYWHEEL

S/N: C4E1-UP

PART OF 254-9233 ENGINE AR-PRIMARY

SMCS-1157 **i02654865**

NOTE	REF NO	GRAPHIC REF	PART NUMBER	QTY	PART NAME 1 2 3 4 5 6 (PRODUCT LEVEL)	SEE PAGE
M	1	1	**6I-0423**	2	BOLT (M12X1.75X30-MM)	
	2	1	**6I-0847**	2	PLUG	
	3	1	**7W-1176**	1	PLATE-COVER	
	4	1	**7W-4642**	1	SHIELD-DUST	
	5	1	**287-8597**	2	DOWEL	
	6	1	**114-4363**	2	BOLT (M8X1.25X12-MM)	
	7	1	**101-3617**	3	PLUG	
M	8	1	**121-0883**	6	BOLT (M10X1.5X30-MM)	
	9	1	**220-8631**	1	HOUSING-FLYWHEEL	

M-METRIC PART

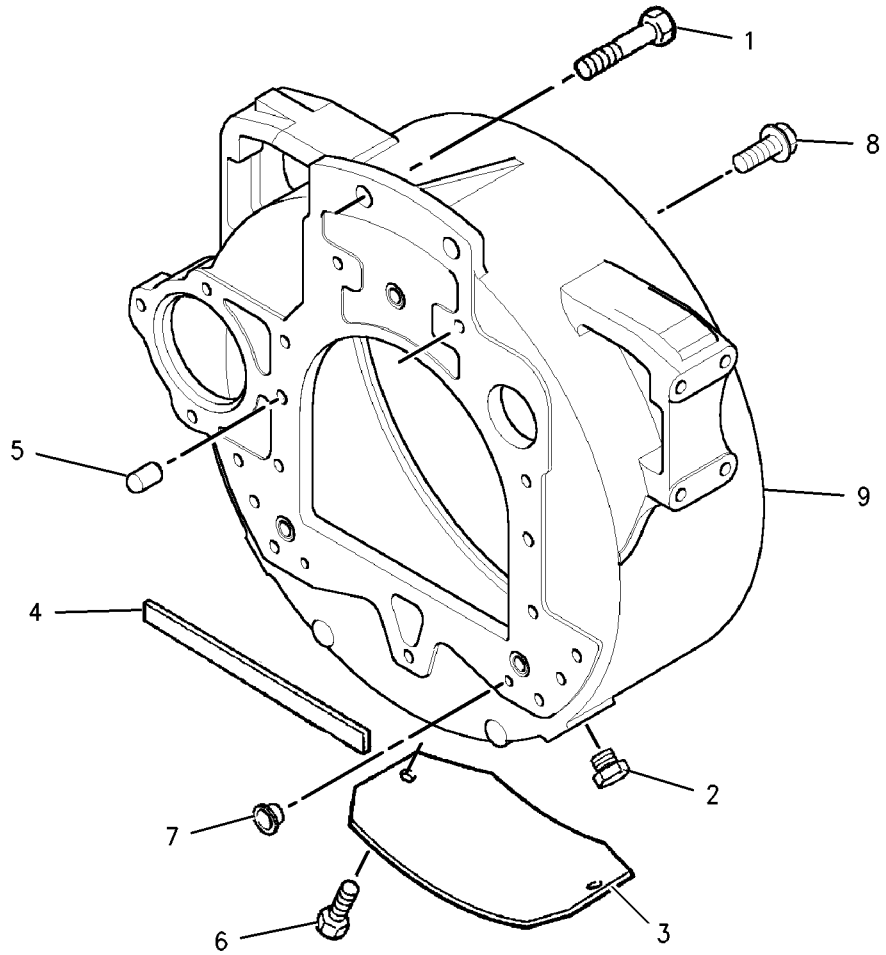

GRAPHIC #1 **<END>** g00902549

298-5127 LIFTING GP-ENGINE

S/N: C4E1-UP

PART OF 254-9233 ENGINE AR-PRIMARY

SMCS-1122 **i02604370**

NOTE	REF NO	GRAPHIC REF	PART NUMBER	QTY	PART NAME 1 2 3 4 5 6 (PRODUCT LEVEL)	SEE PAGE
	1	1	**279-9651**	1	PLATE-LIFTING	
M	2	1	**6I-0654**	4	BOLT (M10X1.5X25-MM)	
	3	1	**298-4604**	1	PLATE-LIFTING	

M-METRIC PART

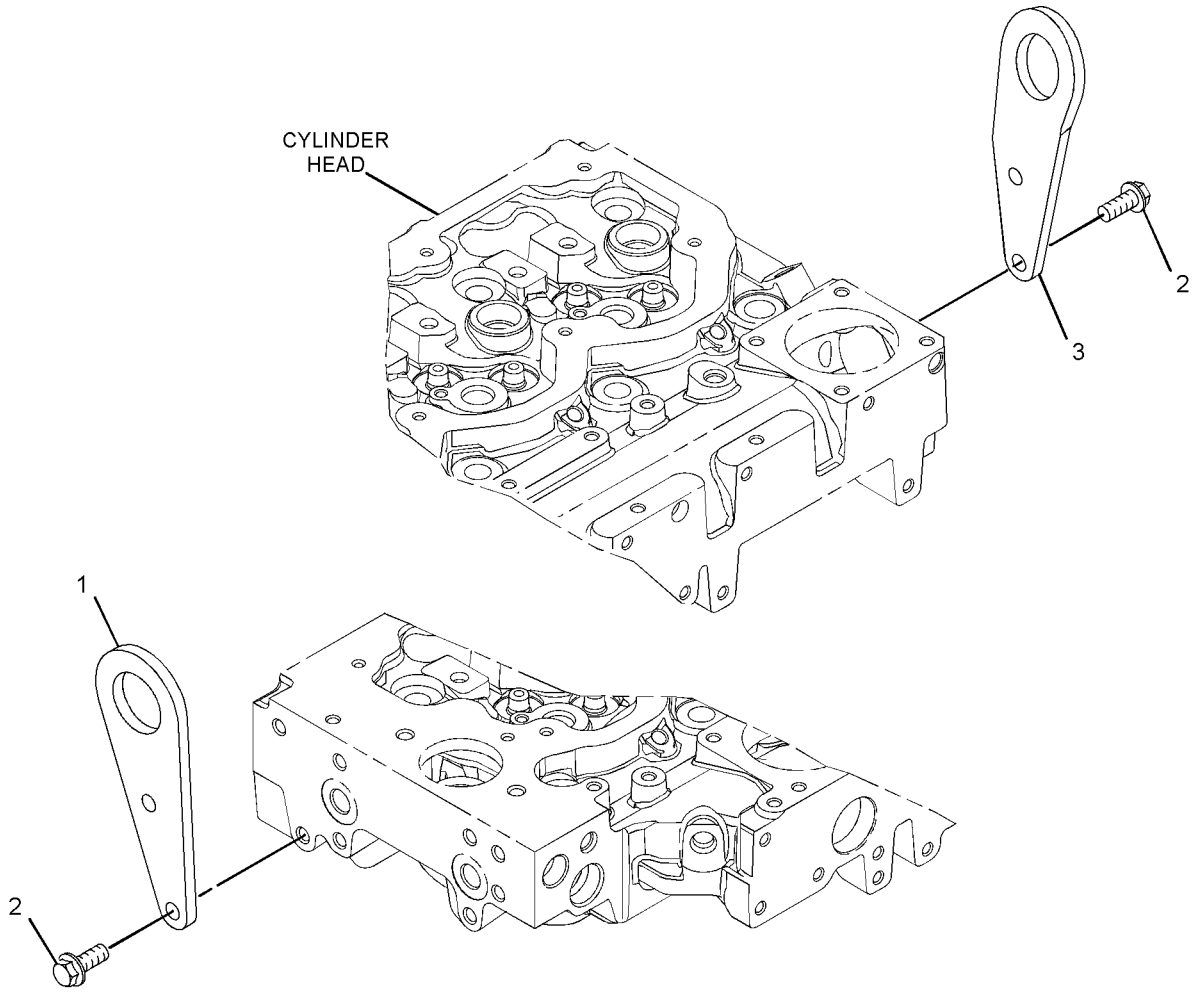

GRAPHIC #1 **<END>** g01305506

BASIC ENGINE

304-3661 MOUNTING GP-ENGINE

S/N: C4E1-UP

PART OF 254-9233 ENGINE AR-PRIMARY

SMCS-1152, 1153, 1154 **i02654852**

NOTE	REF NO	GRAPHIC REF	PART NUMBER	QTY	PART NAME 1 2 3 4 5 6 (PRODUCT LEVEL)	SEE PAGE
	1	1	**6H-3616**	4	PLUG-PROTECTION	
	2	1	**101-2987**	6	PLUG	
	3	1	**195-2136**	8	STUD	
	4	1	**195-2221**	8	NUT (M12X1.75-THD)	
	5	1	**304-3711**	2	MOUNT-ENGINE	

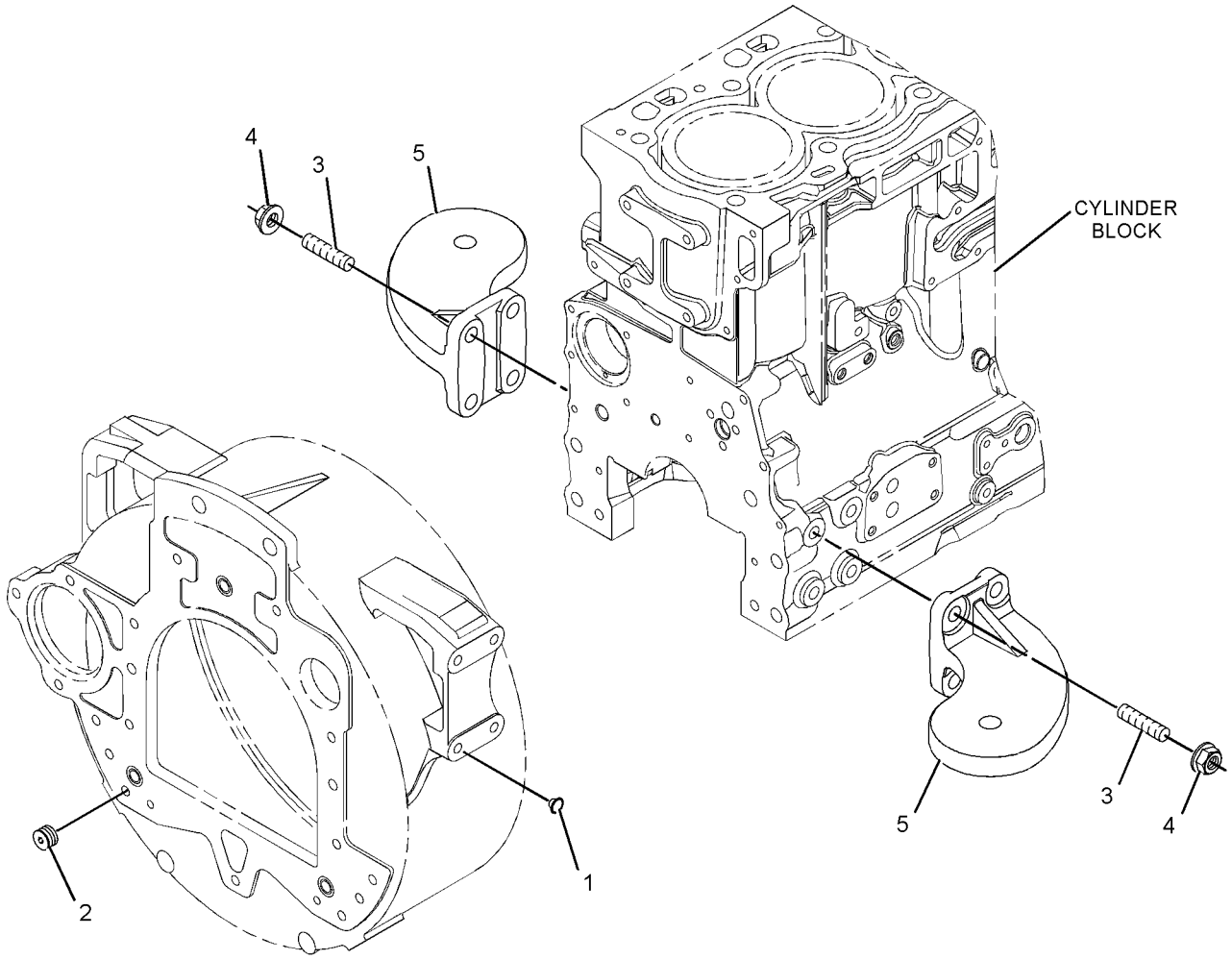

GRAPHIC #1 **<END>** g01340741

BASIC ENGINE

304-3656 PAN GP-OIL

S/N: C4E1-UP

PART OF 254-9233 ENGINE AR-PRIMARY

SMCS-1302 **i02776129**

NOTE	REF NO	GRAPHIC REF	PART NUMBER	QTY	PART NAME 1 2 3 4 5 6 (PRODUCT LEVEL)	SEE PAGE
	1	1	**304-3698**	1	TUBE-OIL SUCTION	
	2	1	**067-6213**	1	GASKET	
M	3	1	**6I-0260**	2	BOLT (M8X1.25X25-MM)	
	4	1	**304-3692**	1	TUBE AS-OIL LEVEL	
	4A	1	**187-0555**	1	CLIP	
	5	1	**304-3693**	1	GAUGE AS-OIL LEVEL (DIPSTICK) (ENGINE)	
	6	1	**6I-1497**	1	SEAL	
	7	1	**304-3695**	1	BRACKET	
	8	1	**6I-0846**	1	BOLT (M6X1X14-MM)	
M	9	1	**124-3815**	1	BOLT (M8X16X1.25-MM)	
	10	1	**306-5911**	1	PAN GP-OIL	
	10A	1	**7C-1224**	2	INSERT	
	11	1	**225-6005**	1	GASKET	
	12	1	**230-8094**	1	BRIDGE	
M	13	1	**6I-0363**	2	BOLT (M6X1X20-MM)	
	14	1	**185-7149**	4	BOLT	
	15	1	**7C-0351**	2	PLUG-DRAIN (ENGINE OIL)	
	16	1	**275-9883**	2	SEAL	
	17	1	**6I-0292**	12	BOLT	
	18	1	**152-6730**	4	BOLT (M8X1.25X120-MM)	

M-METRIC PART

304-3656 **PAN GP-OIL** *(contd.)* **i02776129**

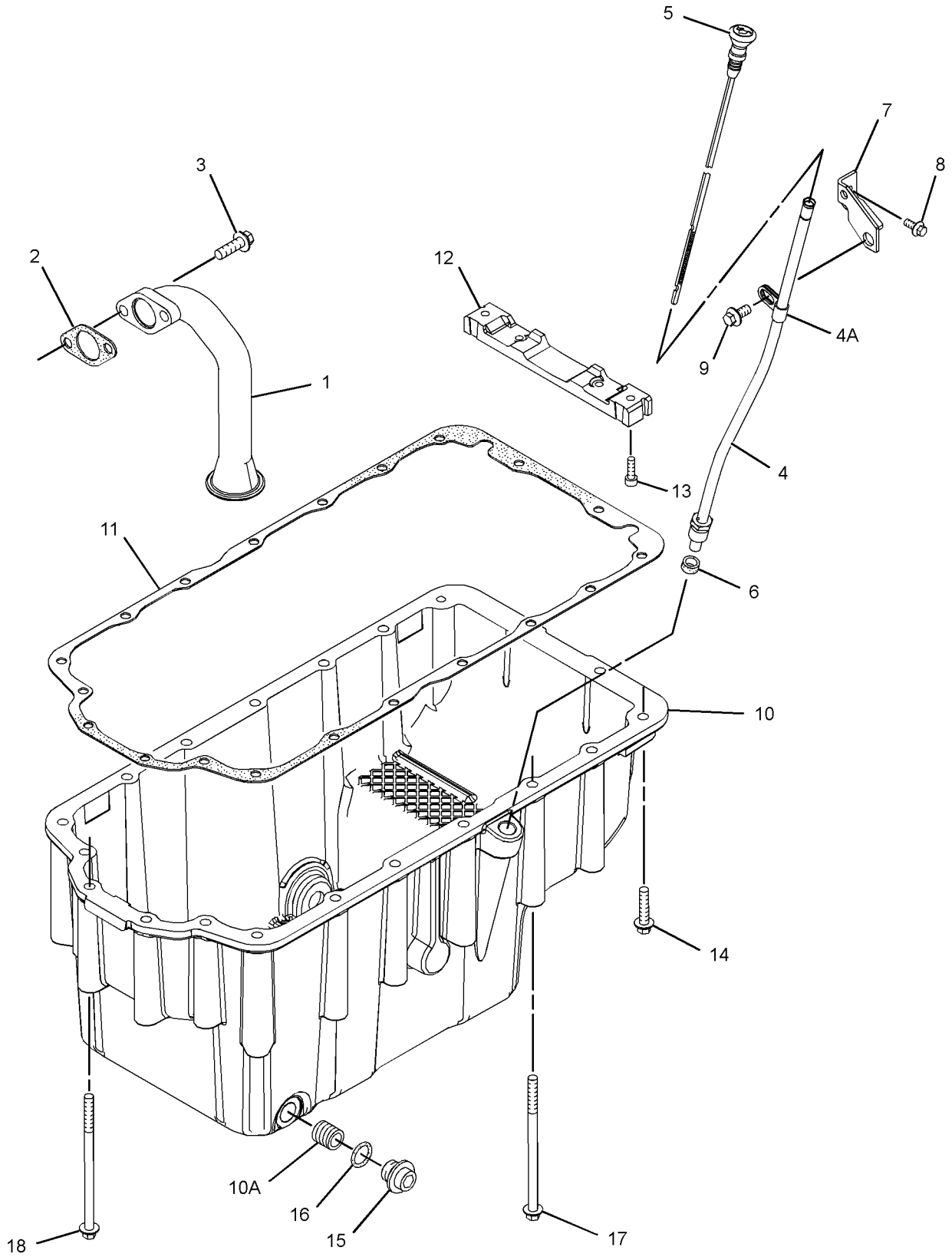

GRAPHIC #1 **<END>** g01351082

BASIC ENGINE

304-3643 PISTON & ROD GP

S/N: C4E1-UP

PART OF 254-9233 ENGINE AR-PRIMARY

SMCS-1225 **i02845313**

NOTE	REF NO	GRAPHIC REF	PART NUMBER	QTY	PART NAME 1 2 3 4 5 6 (PRODUCT LEVEL)	SEE PAGE
BJ	1	1	**225-5441**	4	ROD AS-CONNECTING (LENGTH L)	
					—OR—	
BJ		1	**225-5451**	4	ROD AS-CONNECTING (LENGTH K)	
					—OR—	
BJ		1	**225-5453**	4	ROD AS-CONNECTING (LENGTH J)	
					—OR—	
BJ		1	**225-5454**	4	ROD AS-CONNECTING (LENGTH H)	
					—OR—	
BJ		1	**225-5458**	4	ROD AS-CONNECTING (LENGTH G)	
					—OR—	
BJ		1	**225-5459**	4	ROD AS-CONNECTING (LENGTH F)	
					(EACH INCLUDES)	
	1A	1	**225-5438**	1	BUSHING	
	1B	1	**225-5439**	2	BOLT-SPECIAL (CONNECTING ROD)	
	2	1	**310-9269**	4	PISTON AS	
					(EACH INCLUDES)	
	2A	1	**124-3536**	2	RING-RETAINING	
	2B	1	**276-7476**	1	KIT-PISTON RING	

B-USE AS REQUIRED
J-ENSURE THAT CORRECT ROD LENGTH IS FITTED

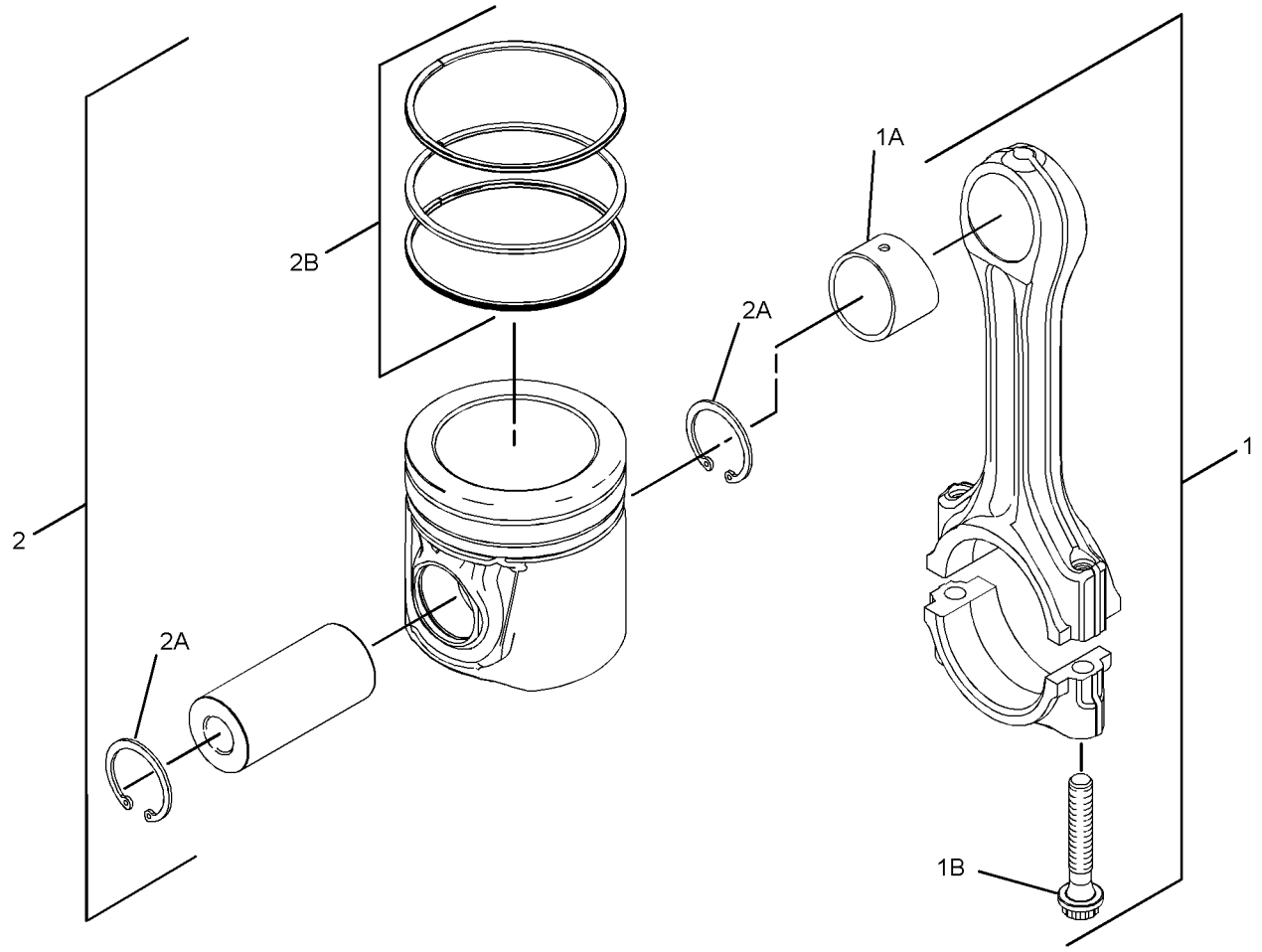

GRAPHIC #1 **<END>** g01369796

298-5129 PLUG GP-CYLINDER HEAD

S/N: C4E1-UP

PART OF 254-9233 ENGINE AR-PRIMARY

SMCS-1100, 1101 **i02604328**

NOTE	REF NO	GRAPHIC REF	PART NUMBER	QTY	PART NAME 1 2 3 4 5 6 (PRODUCT LEVEL)	SEE PAGE
	1	1	**232-1322**	1	PLUG	
	2	1	**199-9751**	1	SEAL-O-RING	

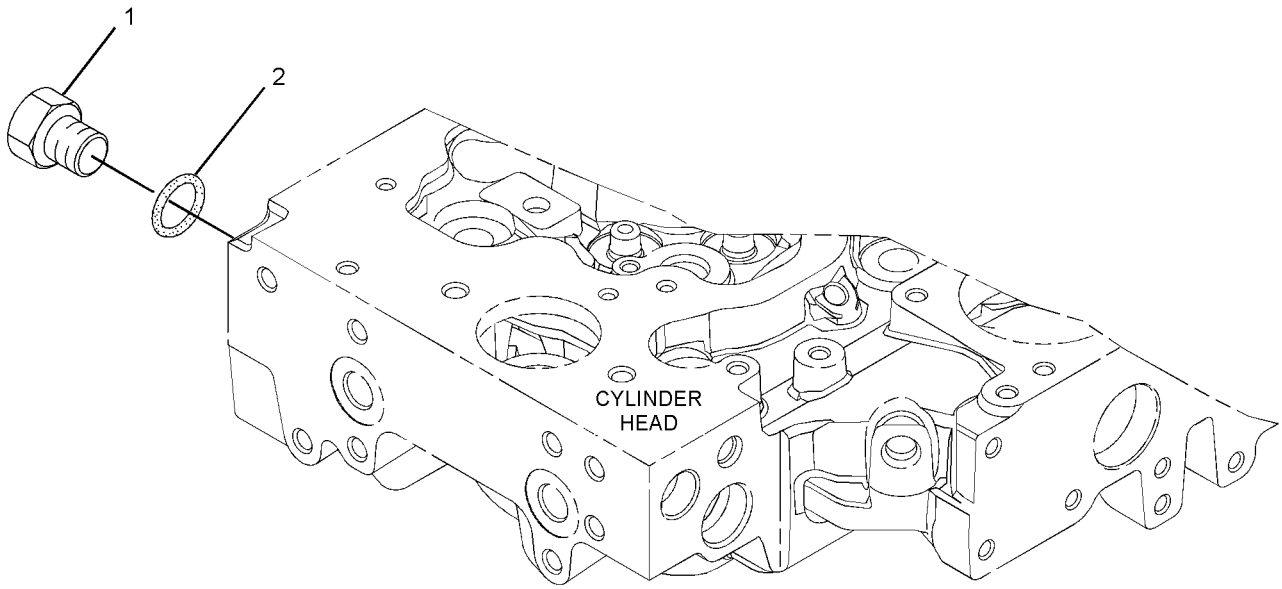

GRAPHIC #1 **<END>** g01305536

304-3663 PLUG GP-ENGINE

S/N: C4E1-UP

PART OF 254-9233 ENGINE AR-PRIMARY

SMCS-1000 **i02654272**

NOTE	REF NO	GRAPHIC REF	PART NUMBER	QTY	PART NAME 1 2 3 4 5 6 (PRODUCT LEVEL)	SEE PAGE
	1	1	**2B-0858**	1	PLUG-PIPE	
	2	1	**7W-4669**	1	ADAPTER	
	3	1	**134-3856**	1	ELBOW	

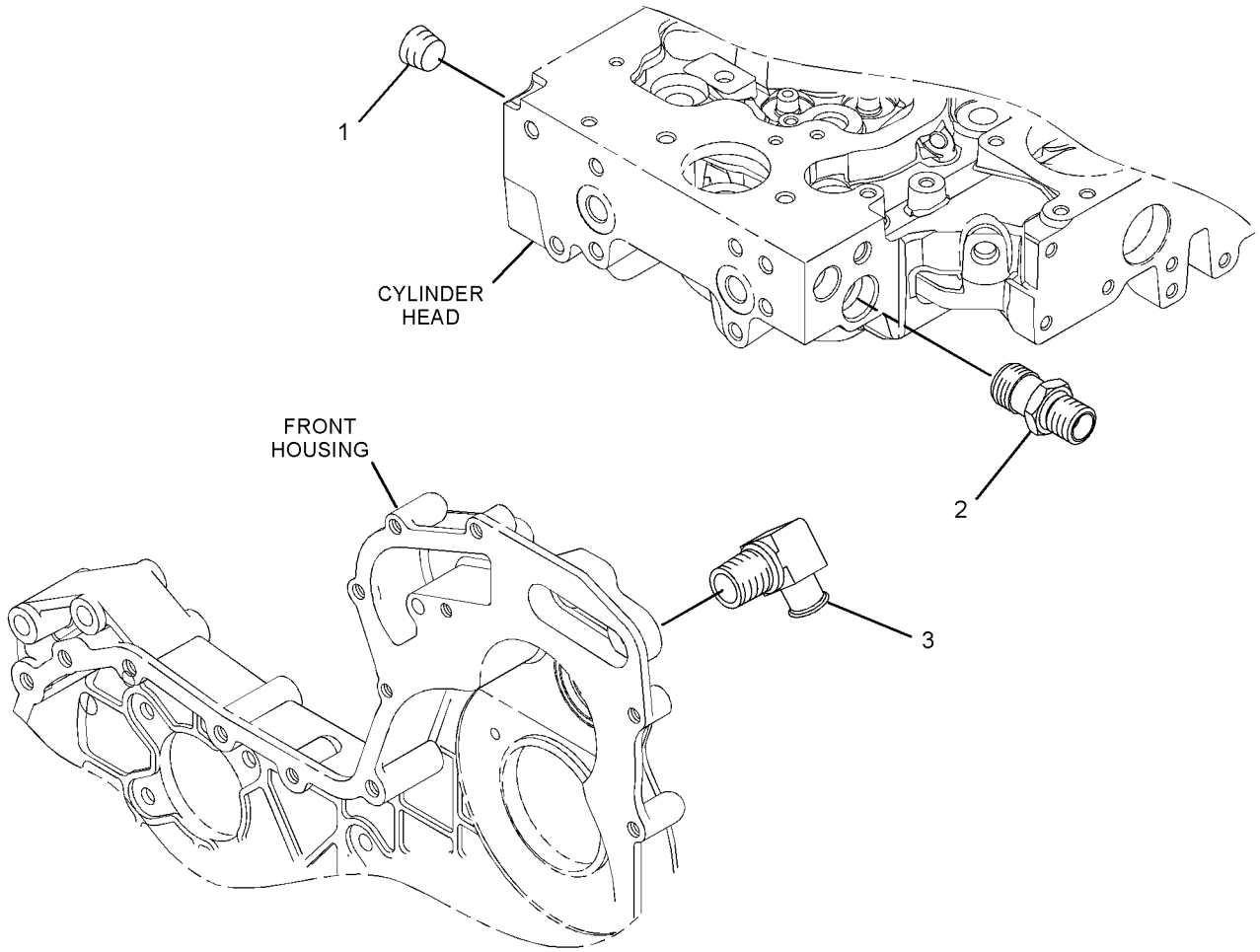

GRAPHIC #1 **<END>** g01346476

298-4533 ROCKER ARM GP

S/N: C4E1-UP

PART OF 304-3647 VALVE MECHANISM GP

SMCS-1123 **i03607223**

NOTE	REF NO	GRAPHIC REF	PART NUMBER	QTY	PART NAME 1 2 3 4 5 6 (PRODUCT LEVEL)	SEE PAGE
	1	1	**276-9200**	2	PLUG-SHAFT END	
	2	1	**276-9201**	1	CLIP	
	3	1	**276-9206**	3	SPRING-SHAFT	
	4	1	**276-9207**	1	SPRING-SHAFT	
	5	1	**278-5111**	4	ROCKER ARM AS	
	5A	1	**276-9230**	1	NUT	
	5B	1	**278-5113**	1	ADJUSTING SCREW (TORX)	
	6	1	**278-5112**	4	ROCKER ARM AS	
	6A	1	**276-9230**	1	NUT	
	6B	1	**278-5113**	1	ADJUSTING SCREW (TORX)	
	7	1	**280-1912**	4	BRACKET	
	8	1	**280-1913**	4	RETAINER	
	9	1	**280-1914**	8	BOLT (M8X1.25X55-MM)	

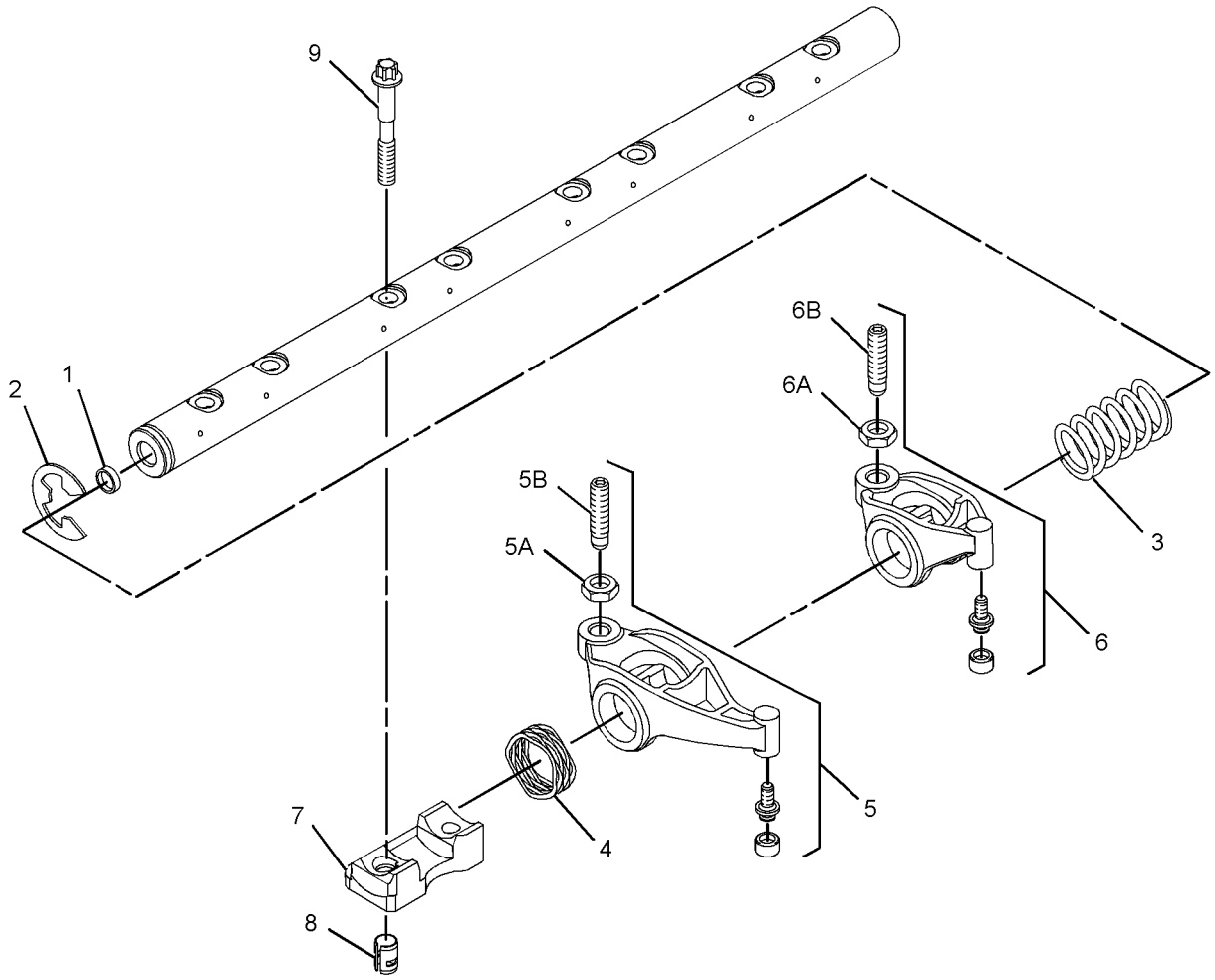

GRAPHIC #1 **<END>** g01532745

244-7431 SUPPORT GP-ENGINE & XMSN

S/N: JLF1-UP; WWW1-UP; YYY1-UP
PART OF 244-7386 INSTALLATION AR-ENGINE

SMCS-1153, 1154, 3082 **i03004929**

NOTE	REF NO	GRAPHIC REF	PART NUMBER	QTY	PART NAME 1 2 3 4 5 6 (PRODUCT LEVEL)	SEE PAGE
	1	1	**9W-9915**	4	MOUNT AS	
	2	1	**9W-9952**	2	WASHER (16.75X86X8-MM THK)	
	3	1	**9W-9953**	4	SLEEVE	
	4	1	**199-6928**	2	PLATE AS	
					(EACH INCLUDES)	
M		1	**9X-6269**	1	NUT-WELD (M16X2-THD)	
	5	1	**327-4444**	2	PLATE AS	
M	6	1	**8T-4174**	4	BOLT (M16X2X120-MM)	
	7	1	**9X-8257**	4	WASHER (17.5X30X3.5-MM THK)	

M-METRIC PART

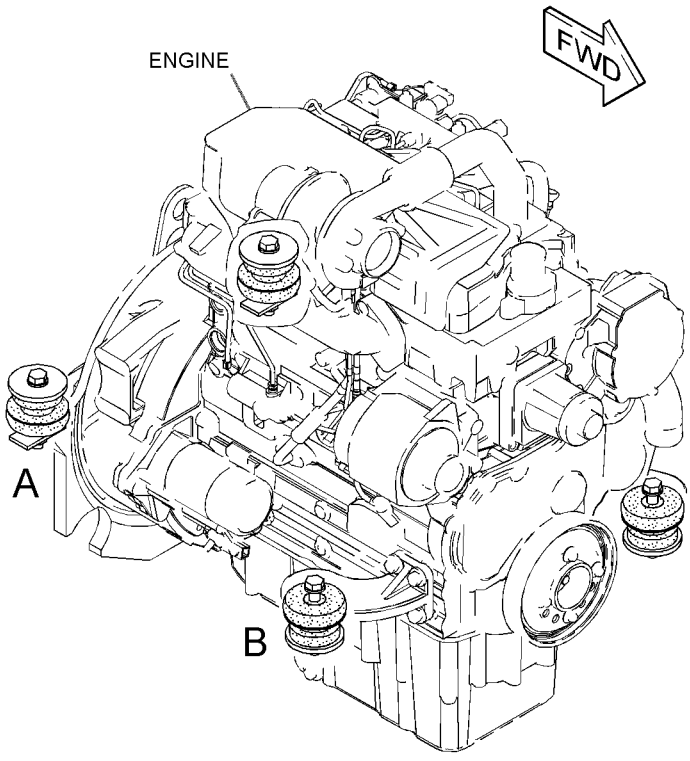

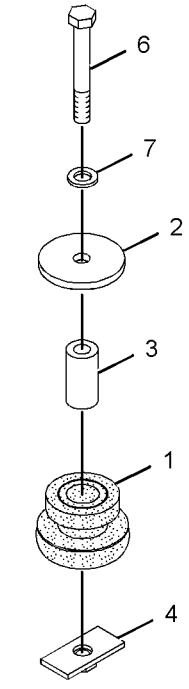

VIEW OF AREA A
(EXPLODED)

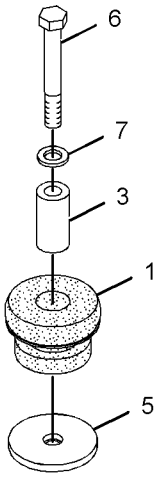

VIEW OF AREA B
(EXPLODED)

GRAPHIC #1 **<END>** g01577774

244-7479 SUPPRESSION AR-SOUND

S/N: JLF1-UP; WWW1-UP; YYY1-UP
AN ATTACHMENT

SMCS-1801 **i03601088**

NOTE	PART NUMBER	QTY	PART NAME 1 2 3 4 5 6 (PRODUCT LEVEL)	SEE PAGE
Y	*255-1431*	1	HOOD & GUARD GP	336
	311-7070	1	SWITCH AS-ROCKER (ENGINE SPEED CONTROL)	
	111-7899	1	GASKET	
Y-SEPARATE ILLUSTRATION				

<END>

244-7489 SUPPRESSION AR-SOUND

S/N: WWW1-UP; YYY1-UP
AN ATTACHMENT

SMCS-1801 **i03601089**

NOTE	PART NUMBER	QTY	PART NAME 1 2 3 4 5 6 (PRODUCT LEVEL)	SEE PAGE
Y	*255-1452*	1	HOOD & GUARD GP (SOUND SUPPRESSION)	339
Y	*319-5537*	1	LINER GP-SOUND SUPPRESSION (FRAME)	342
	311-7070	1	SWITCH AS-ROCKER (ENGINE SPEED CONTROL)	
	111-7899	1	GASKET	
	190-5386	2	FILM-REFLECTOR (ROUND RED REFLECTIVE)	
Y-SEPARATE ILLUSTRATION				

<END>

244-7492 SUPPRESSION AR-SOUND

S/N: JLF1-UP; WWW1-UP; YYY1-UP
NACD
FOR USE WITH 244-7395—PAGE 392
AN ATTACHMENT

SMCS-1801 **i03601090**

NOTE	PART NUMBER	QTY	PART NAME 1 2 3 4 5 6 (PRODUCT LEVEL)	SEE PAGE
Y	*255-1452*	1	HOOD & GUARD GP	339
Y	*319-5537*	1	LINER GP-SOUND SUPPRESSION	342
	311-7070	1	SWITCH AS-ROCKER (ENGINE SPEED CONTROL)	
	111-7899	1	GASKET	
Y-SEPARATE ILLUSTRATION				

<END>

BASIC ENGINE

244-7494 SUPPRESSION AR-SOUND

S/N: JLF1-UP; WWW1-UP; YYY1-UP

AN ATTACHMENT

SMCS-1801 **i02966154**

NOTE	PART NUMBER	QTY	PART NAME 1 2 3 4 5 6 (PRODUCT LEVEL)	SEE PAGE
Y	*255-1452*	1	HOOD & GUARD GP	339
Y	*244-7499*	1	LINER GP-SOUND SUPPRESSION	341
			-OR-	
Y	*319-5537*	1	LINER GP-SOUND SUPPRESSION	342
	165-0311	1	PLUG	

Y-SEPARATE ILLUSTRATION

<END>

304-3647 VALVE MECHANISM GP

S/N: C4E1-UP

PART OF 254-9233 ENGINE AR-PRIMARY

SMCS-1102, 1121, 1123 **i03592584**

NOTE	REF NO	GRAPHIC REF	PART NUMBER	QTY	PART NAME 1 2 3 4 5 6 (PRODUCT LEVEL)	SEE PAGE
	1	1	**339-3397**	8	LINK	
Y	2	1	**298-4533**	1	ROCKER ARM GP	37

Y-SEPARATE ILLUSTRATION

304-3647 **VALVE MECHANISM GP** *(contd.)* **i03592584**

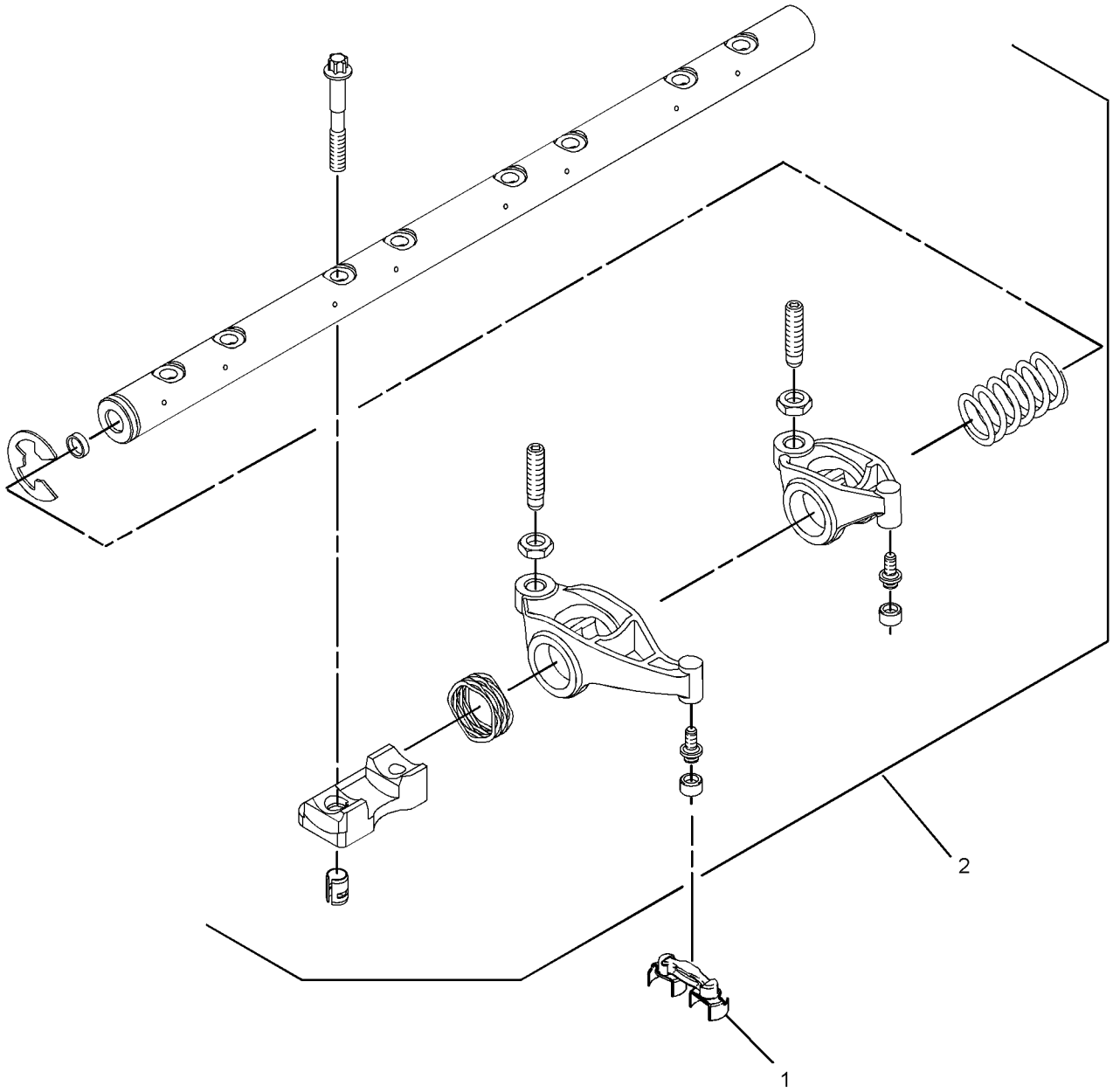

GRAPHIC #1 **<END>** g01932396

314-3960 FILLER GP-ENGINE OIL

S/N: C4E1-UP

PART OF 254-9233 ENGINE AR-PRIMARY

SMCS-1316 **i02912410**

NOTE	REF NO	GRAPHIC REF	PART NUMBER	QTY	PART NAME 1 2 3 4 5 6 (PRODUCT LEVEL)	SEE PAGE
M	1	1	**6I-0217**	1	BOLT (M8X1.25X20-MM)	
M	2	1	**6I-0254**	1	BOLT (M8X1.25X30-MM)	
	3	1	**317-9299**	2	BOLT	
	4	1	**6I-4374**	1	BOLT (M8X1.25X60-MM)	
	5	1	**280-1430**	1	GASKET	
	6	1	**317-3775**	1	FILLER GP-ENGINE OIL	
	6A	1	**306-2337**	1	SEAL-O-RING	
	7	1	**305-7398**	1	WASHER	
	8	1	**314-3956**	1	FILLER AS-OIL (ENGINE)	
	8A	1	**130-9888**	1	CAP-OIL FILLER (ENGINE)	
	8B	1	**113-1504**	1	SEAL-O-RING	
	9	1	**314-3957**	1	BRACKET	

M-METRIC PART

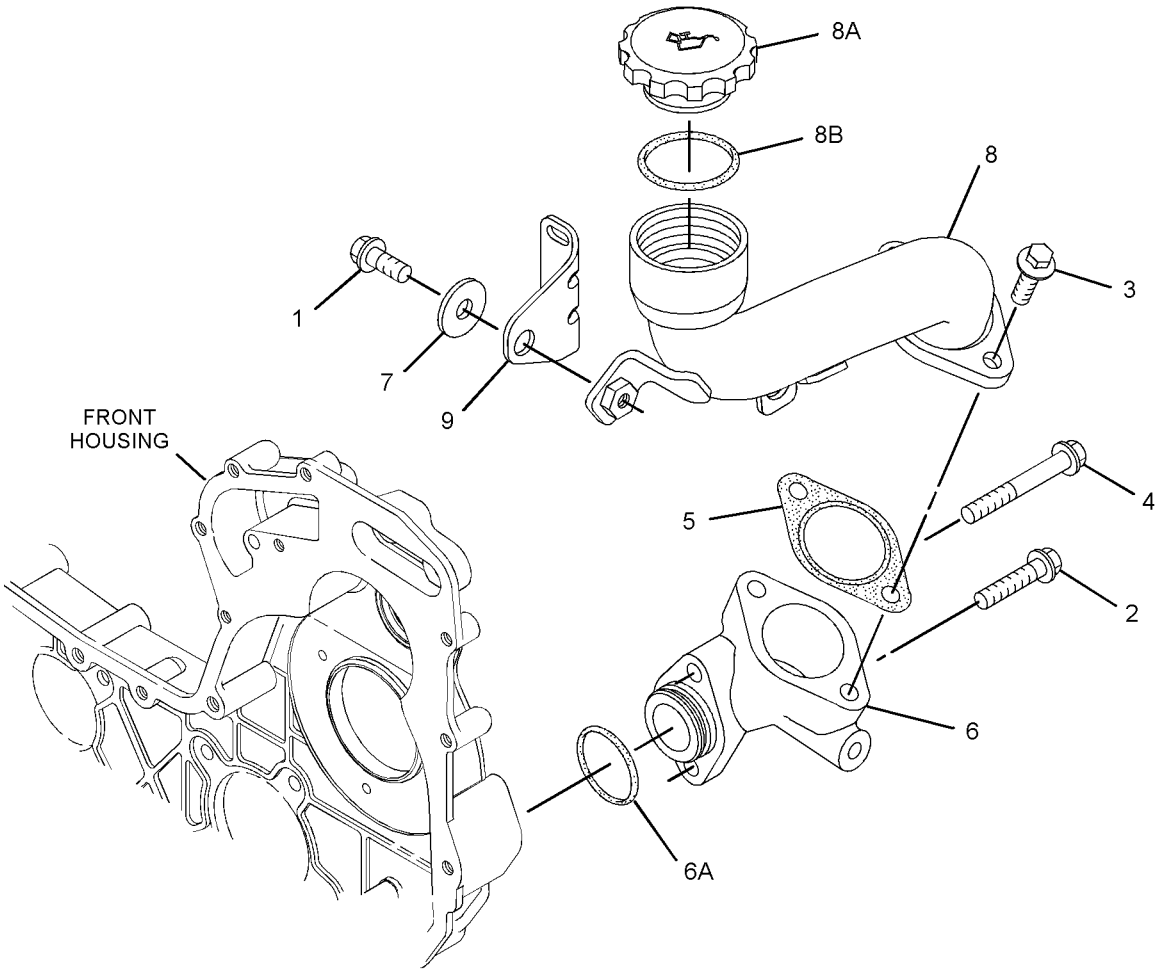

GRAPHIC #1 **<END>** g01397374

LUBRICATION SYSTEM

298-5100 FILTER GP-ENGINE OIL

S/N: C4E1-UP

PART OF 254-9233 ENGINE AR-PRIMARY

SMCS-1306, 1308 **i02604360**

NOTE	REF NO	GRAPHIC REF	PART NUMBER	QTY	PART NAME 1 2 3 4 5 6 (PRODUCT LEVEL)	SEE PAGE
	1	1	**7W-2326**	1	FILTER AS-ENGINE OIL	

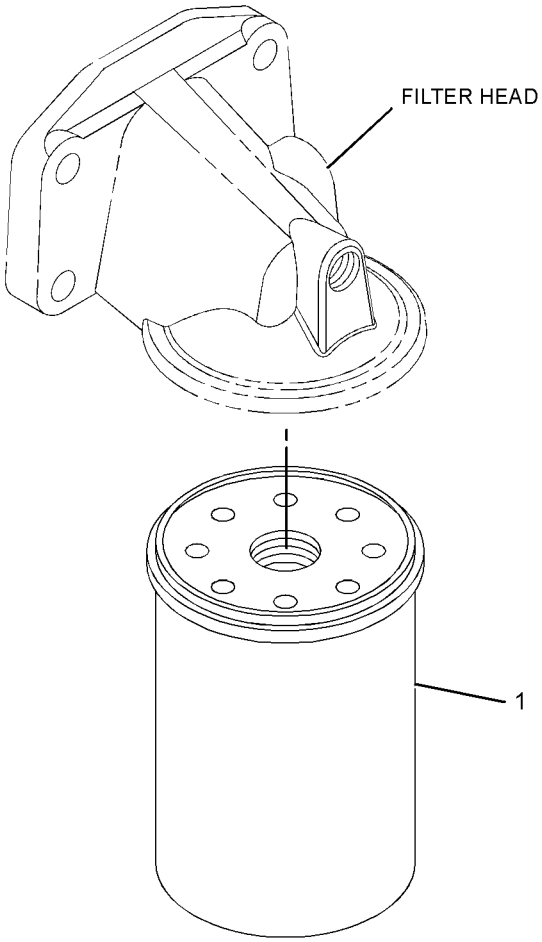

GRAPHIC #1 **<END>** g01304792

298-5112 PUMP GP-ENGINE OIL

S/N: C4E1-UP

PART OF 254-9233 ENGINE AR-PRIMARY

SMCS-1304, 1315 **i02604340**

NOTE	REF NO	GRAPHIC REF	PART NUMBER	QTY	PART NAME 1 2 3 4 5 6 (PRODUCT LEVEL)	SEE PAGE
	1	1	**225-8329**	1	PUMP AS-ENGINE OIL	
M	2	1	**100-4461**	5	BOLT (M10X1.50X50-MM)	

M-METRIC PART

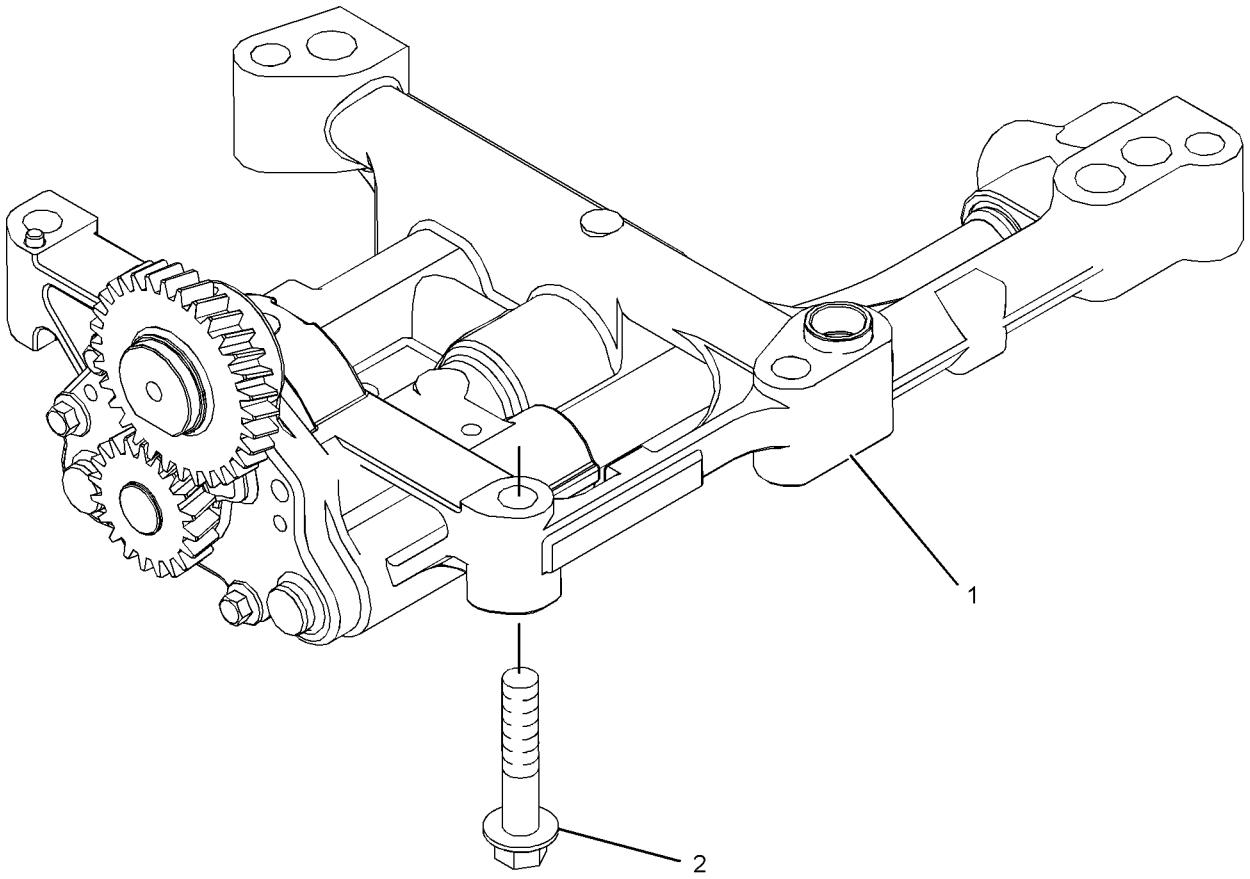

GRAPHIC #1 **<END>** g01304952

LUBRICATION SYSTEM

304-5617 VALVE GP-FLUID SAMPLING

S/N: C4E1-UP

PART OF 254-9233 ENGINE AR-PRIMARY

SMCS-7542 **i02801742**

NOTE	REF NO	GRAPHIC REF	PART NUMBER	QTY	PART NAME 1 2 3 4 5 6 (PRODUCT LEVEL)	SEE PAGE
	1	1	**8C-3445**	1	CAP-DUST	
	2	1	**035-8063**	1	PLUG	
	3	1	**216-9633**	1	VALVE AS-FLUID SAMPLING	

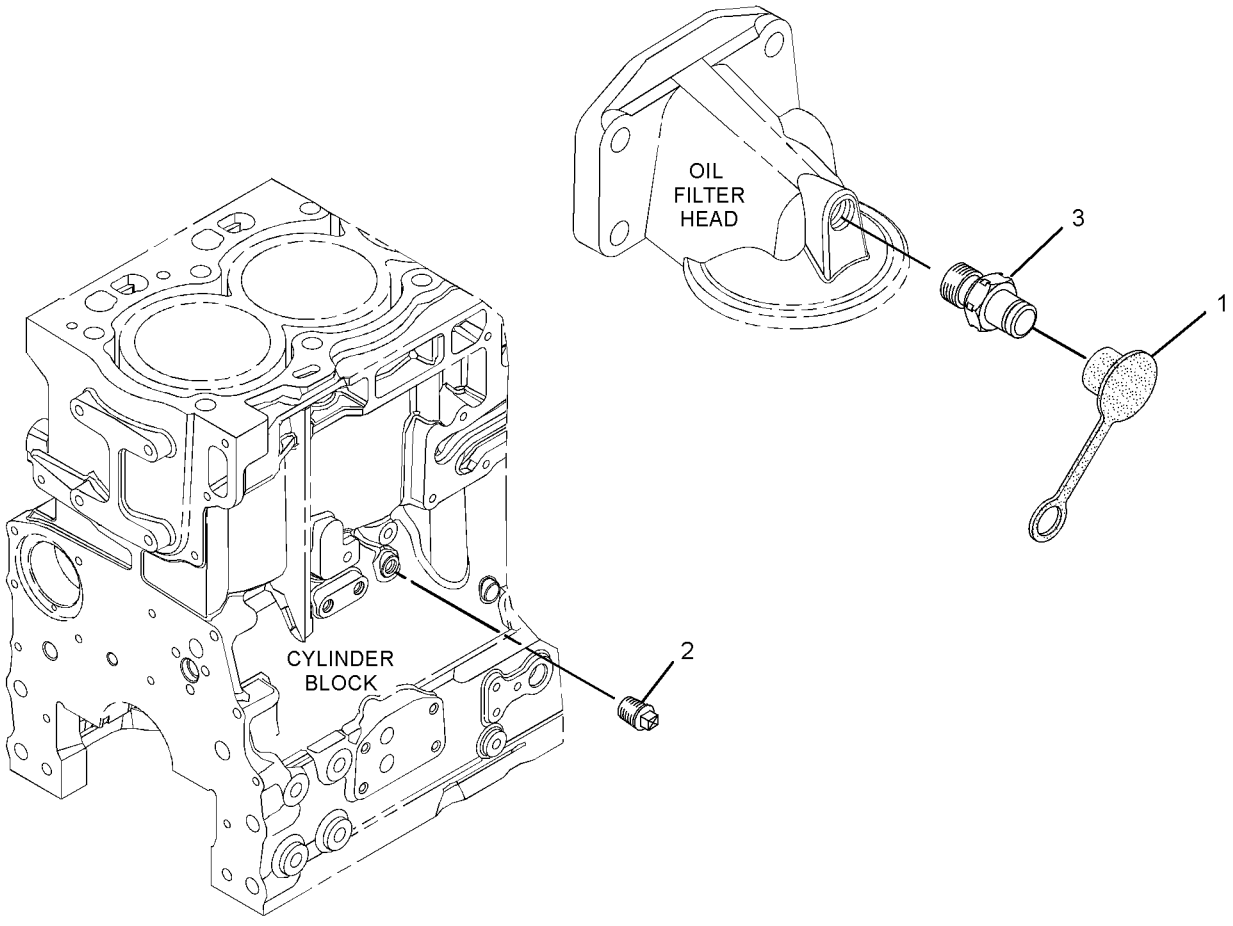

GRAPHIC #1 **<END>** g01438099

301-8243 CONNECTION GP-WATER

S/N: C4E1-UP

PART OF 254-9233 ENGINE AR-PRIMARY

SMCS-1380 **i03437232**

NOTE	REF NO	GRAPHIC REF	PART NUMBER	QTY	PART NAME 1 2 3 4 5 6 (PRODUCT LEVEL)	SEE PAGE
	1	1	**123-2899**	2	BOLT (M10X1.5X40-MM)	
	2	1	**277-2974**	1	REGULATOR AS-WATER TEMPERATURE (CONNECTOR INCLUDED)	
	3	1	**281-8744**	1	GASKET-WATER REGULATOR (TEMPERATURE)	

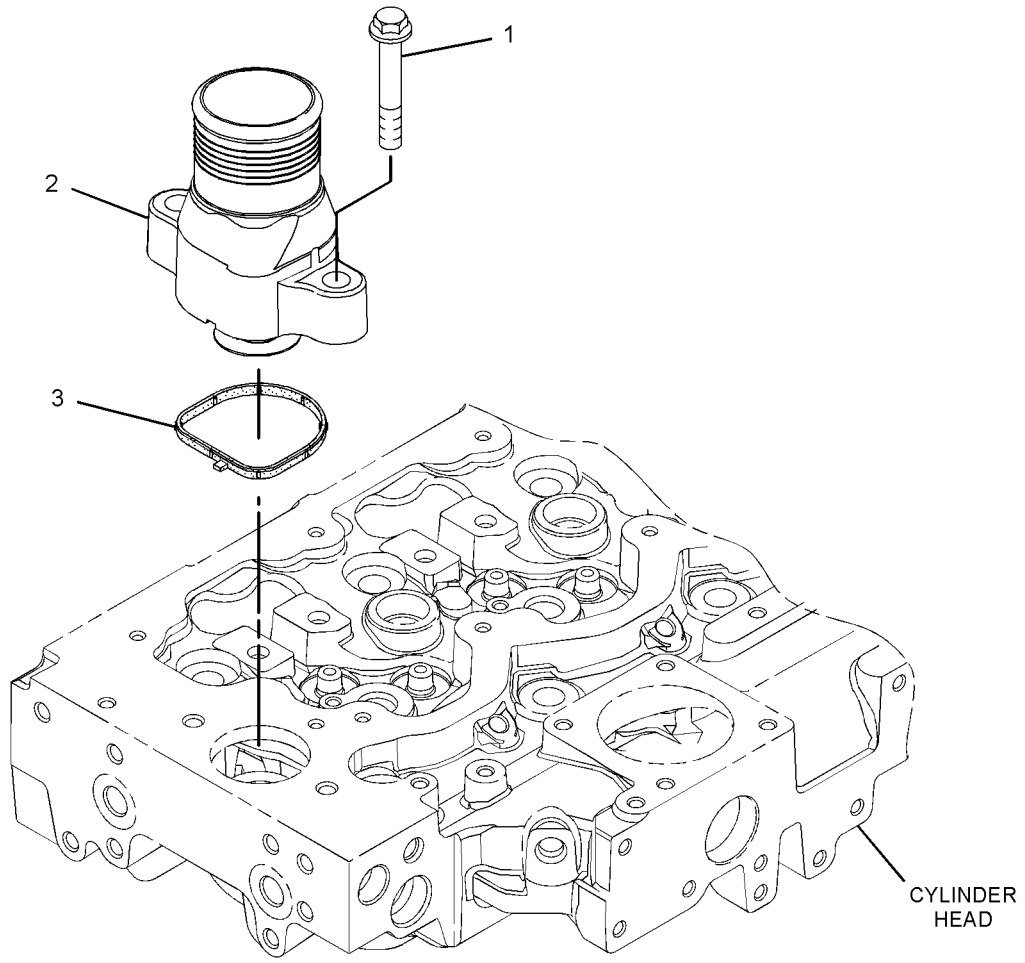

GRAPHIC #1 **<END>** g01371208

COOLING SYSTEM

334-2314 CONNECTION GP-WATER

S/N: C4E174-UP

PART OF 254-9233 ENGINE AR-PRIMARY

SMCS-1380 **i03437244**

NOTE	REF NO	GRAPHIC REF	PART NUMBER	QTY	PART NAME 1 2 3 4 5 6 (PRODUCT LEVEL)	SEE PAGE
	1	1	**123-2899**	2	BOLT (M10X1.5X40-MM)	
	2	1	**281-8744**	1	GASKET-WATER REGULATOR (TEMPERATURE)	
	3	1	**334-1401**	1	HOUSING-REGULATOR (WATER TEMPERATURE)	

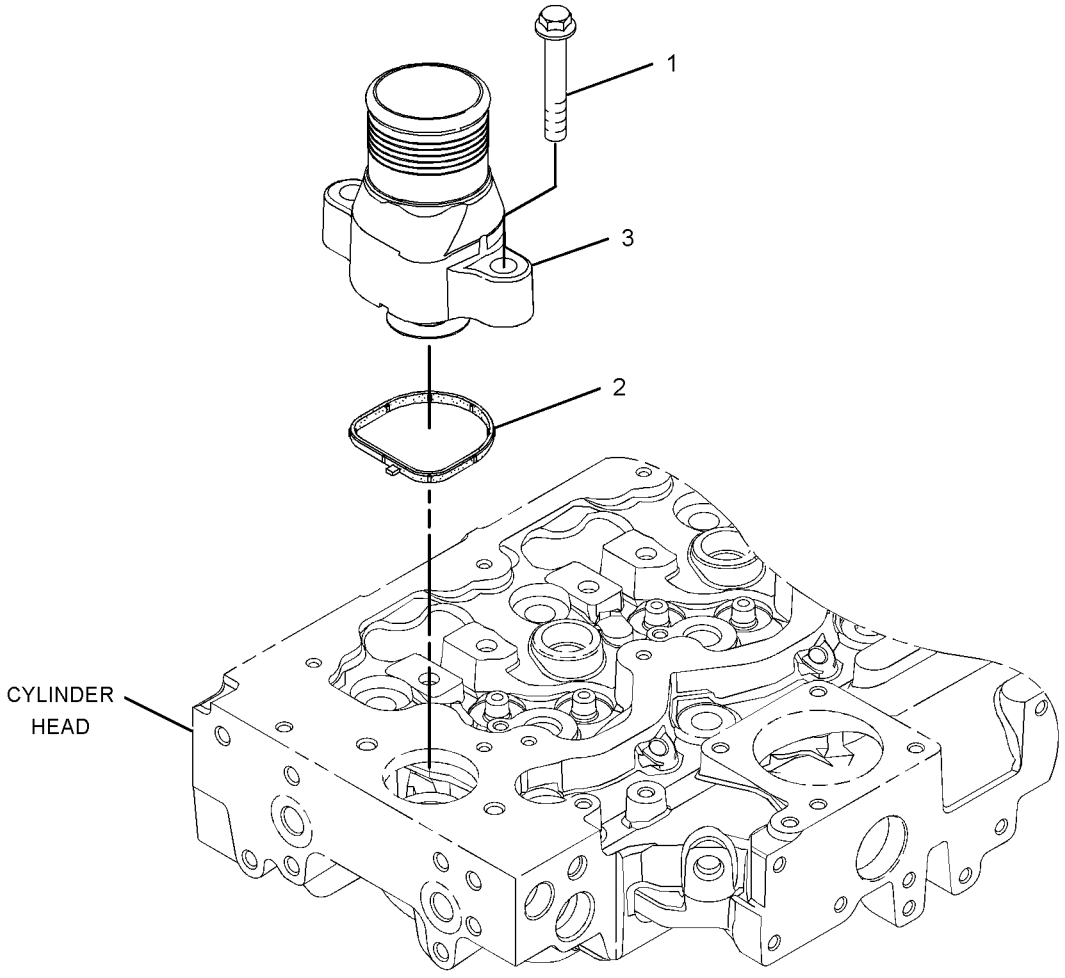

GRAPHIC #1 **<END>** g01699980

298-5099 COOLER GP-ENGINE OIL

S/N: C4E1-UP

PART OF 254-9233 ENGINE AR-PRIMARY

TYPE 1

SMCS-1378 **i02604345**

NOTE	REF NO	GRAPHIC REF	PART NUMBER	QTY	PART NAME 1 2 3 4 5 6 (PRODUCT LEVEL)	SEE PAGE
	1	1	**6I-0572**	4	BOLT (M8X1.25X20-MM)	
M	2	1	**6I-0645**	4	BOLT (M8X1.25X25-MM)	
	3	1	**225-7944**	2	GASKET	
	4	1	**232-3751**	1	PLATE	
	5	1	**249-0974**	1	HEAD AS-OIL FILTER	
	6	1	**298-4553**	1	COOLER AS-OIL (ENGINE)	
	6A	1	**298-4558**	1	COOLER-OIL (ENGINE)	
	6B	1	**298-4559**	1	GASKET	
	6C	1	**298-4560**	2	GASKET	
	6D	1	**6I-1090**	5	BOLT (M8X1.25X40-MM)	
	6E	1	**101-3771**	2	BOLT	
M	6F	1	**6I-0217**	1	BOLT (M8X1.25X20-MM)	
M	6G	1	**6I-0260**	8	BOLT (M8X1.25X25-MM)	

M-METRIC PART

298-5099 **COOLER GP-ENGINE OIL** *(contd.)* **i02604345**

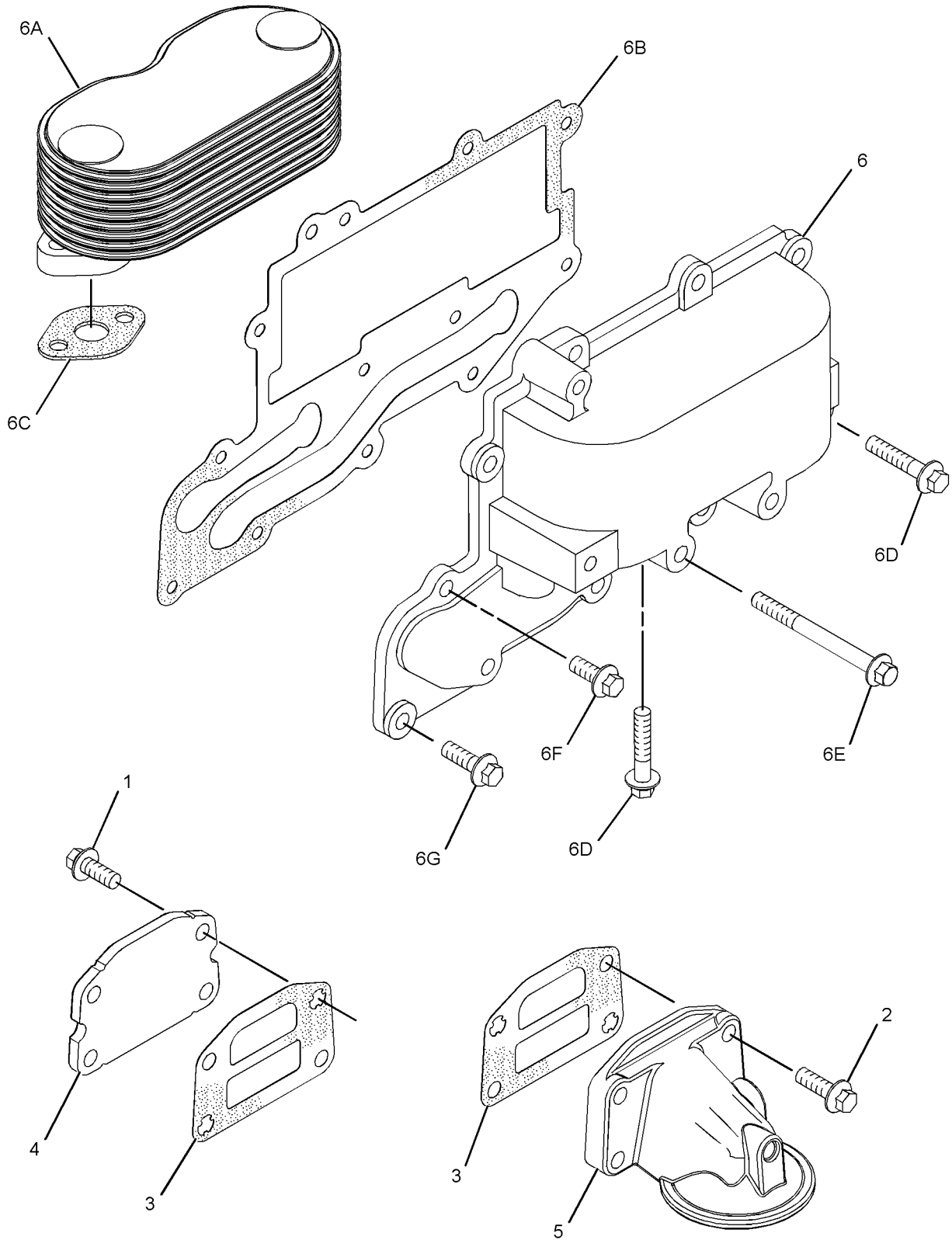

GRAPHIC #1 **<END>** g01304480

298-5099 COOLER GP-ENGINE OIL

S/N: C4E1-UP
PART OF 254-9233 ENGINE AR-PRIMARY
TYPE 2

SMCS-1378 **i03196665**

NOTE	REF NO	GRAPHIC REF	PART NUMBER	QTY	PART NAME 1 2 3 4 5 6 (PRODUCT LEVEL)	SEE PAGE
	1	1	**6I-0572**	4	BOLT (M8X1.25X20-MM)	
M	2	1	**6I-0645**	4	BOLT (M8X1.25X25-MM)	
	3	1	**225-7944**	2	GASKET	
	4	1	**232-3751**	1	PLATE	
	5	1	**249-0974**	1	HEAD AS-OIL FILTER	
CY	6	1	**334-4960**	1	COOLER GP-ENGINE OIL	52

C-CHANGE FROM PREVIOUS TYPE
M-METRIC PART
Y-SEPARATE ILLUSTRATION

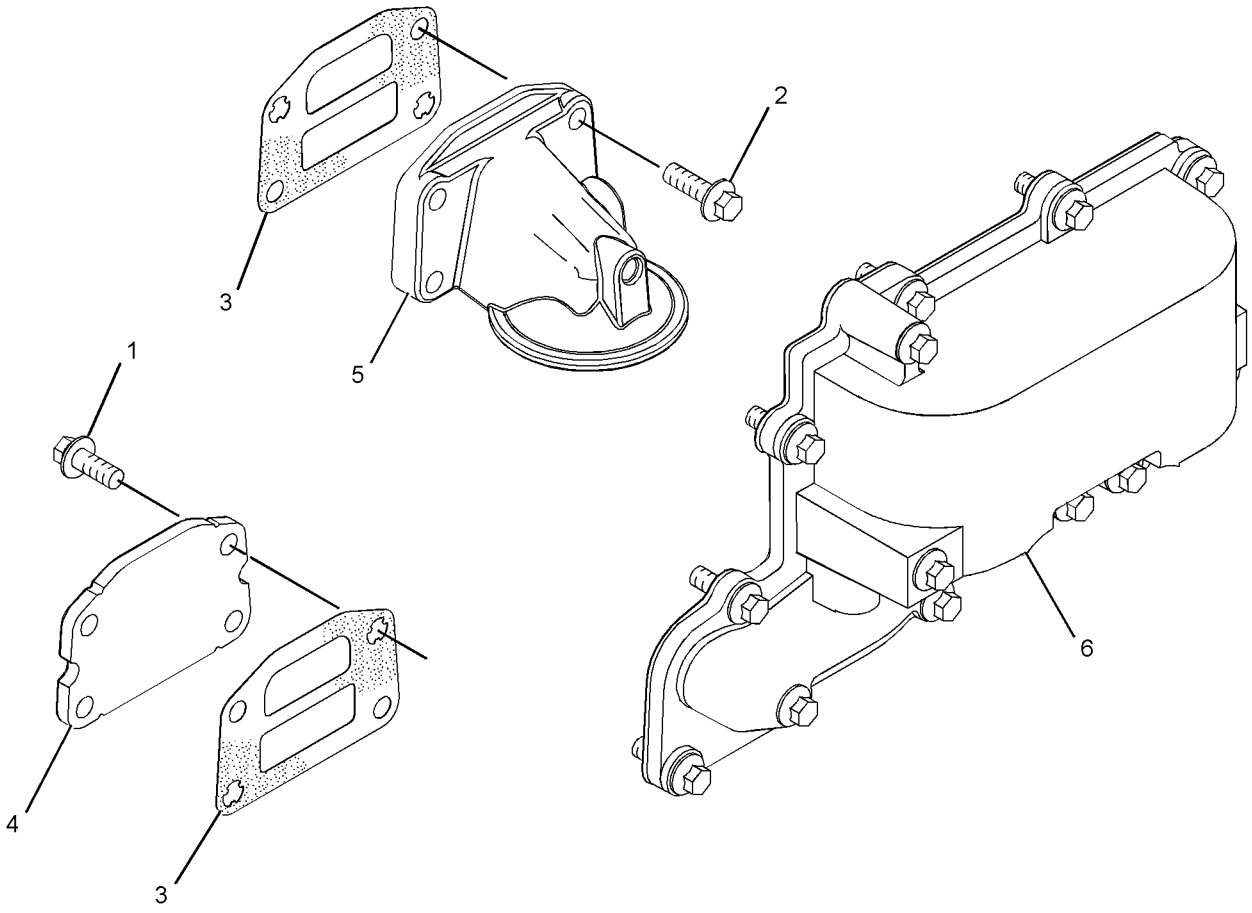

GRAPHIC #1 **<END>** g01636493

COOLING SYSTEM

334-4960 COOLER GP-ENGINE OIL

S/N: C4E1-UP

PART OF 298-5099 COOLER GP-ENGINE OIL

SMCS-1378 **i03314410**

NOTE	REF NO	GRAPHIC REF	PART NUMBER	QTY	PART NAME 1 2 3 4 5 6 (PRODUCT LEVEL)	SEE PAGE
M	1	1	**6I-0217**	1	BOLT (M8X1.25X20-MM)	
M	2	1	**6I-0260**	8	BOLT (M8X1.25X25-MM)	
	3	1	**6I-1090**	5	BOLT (M8X1.25X40-MM)	
M	4	1	**100-3751**	2	BOLT (M8X1.25X65-MM)	
	5	1	**298-4558**	1	COOLER-OIL (ENGINE)	
	6	1	**298-4559**	1	GASKET	
	7	1	**298-4560**	1	GASKET	

M-METRIC PART

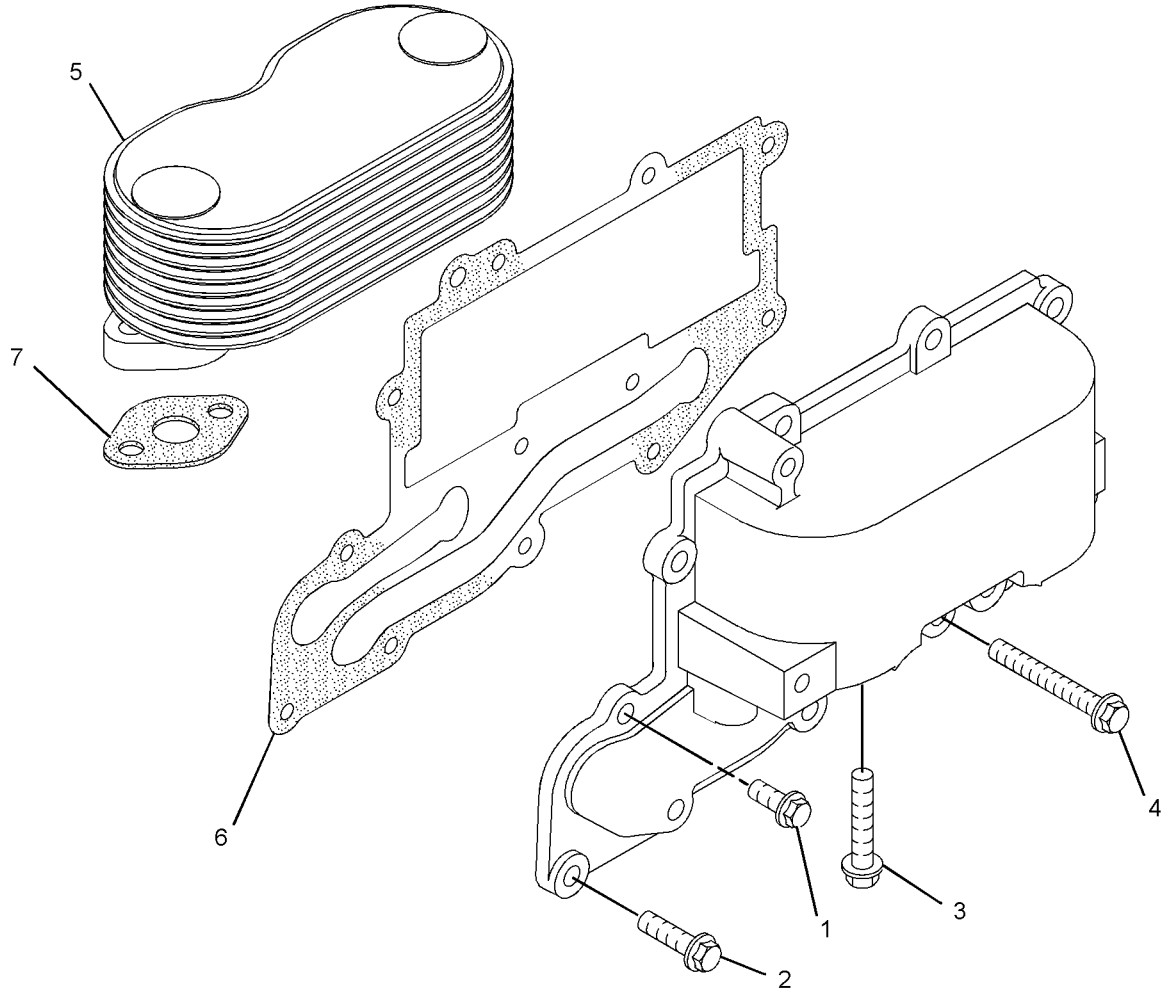

GRAPHIC #1 **<END>** g01630974

244-7428 FAN GP-BLOWER

S/N: JLF1-UP; WWW1-UP; YYY1-UP
PART OF 244-7386 INSTALLATION AR-ENGINE

SMCS-1356, 1360 **i02882848**

NOTE	REF NO	GRAPHIC REF	PART NUMBER	QTY	PART NAME 1 2 3 4 5 6 (PRODUCT LEVEL)	SEE PAGE
	1	1	**207-2554**	1	SPACER-FAN	
	2	1	**253-8060**	1	GUARD AS-FAN	
	3	1	**316-1441**	1	FAN AS-BLOWER (6-BLADES)	
	4	1	**5P-4116**	8	WASHER-HARD (8.8X20.5X2-MM THK)	
M	5	1	**7X-2539**	4	BOLT (M8X1.25X110-MM)	
M	6	1	**8T-4200**	4	BOLT (M8X1.25X16-MM)	

M-METRIC PART

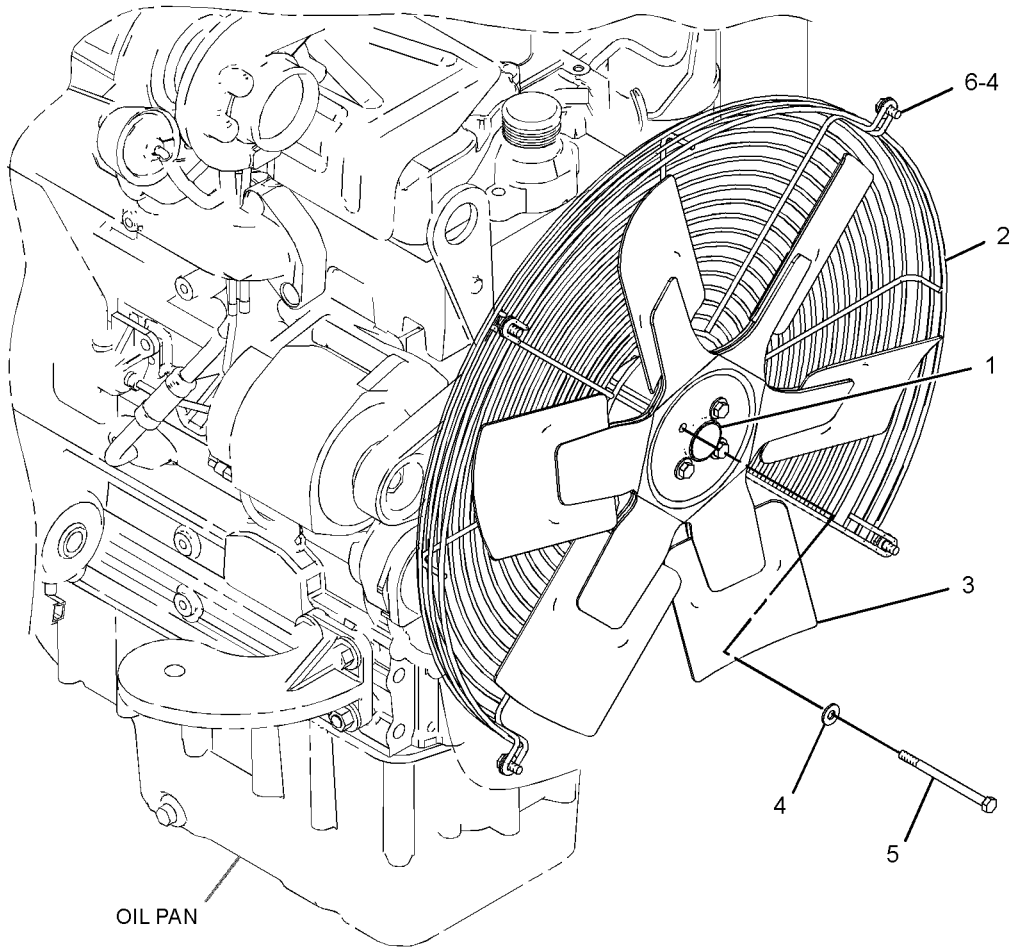

GRAPHIC #1 **<END>** g01441522

COOLING SYSTEM

298-5105 PUMP GP-WATER

S/N: C4E1-UP

PART OF 254-9233 ENGINE AR-PRIMARY

TYPE 1

SMCS-1361 **i02685560**

NOTE	REF NO	GRAPHIC REF	PART NUMBER	QTY	PART NAME 1 2 3 4 5 6 (PRODUCT LEVEL)	SEE PAGE
M	1	1	**6I-0217**	2	BOLT (M8X1.25X20-MM)	
M	2	1	**6I-0254**	2	BOLT (M8X1.25X30-MM)	
	3	1	**113-8129**	7	BOLT (M8X75-MM)	
	4	1	**307-9843**	1	PUMP GP-WATER	
	4A	1	**278-3242**	2	BOLT-FLANGE HEAD	
	4B	1	**287-7430**	1	GASKET-COVER	
	4C	1	**225-8019**	1	GASKET	
	5	1	**277-2925**	1	CONNECTION AS	
	5A	1	**225-7738**	1	SEAL-O-RING	
	5B	1	**277-2923**	1	GASKET	

M-METRIC PART

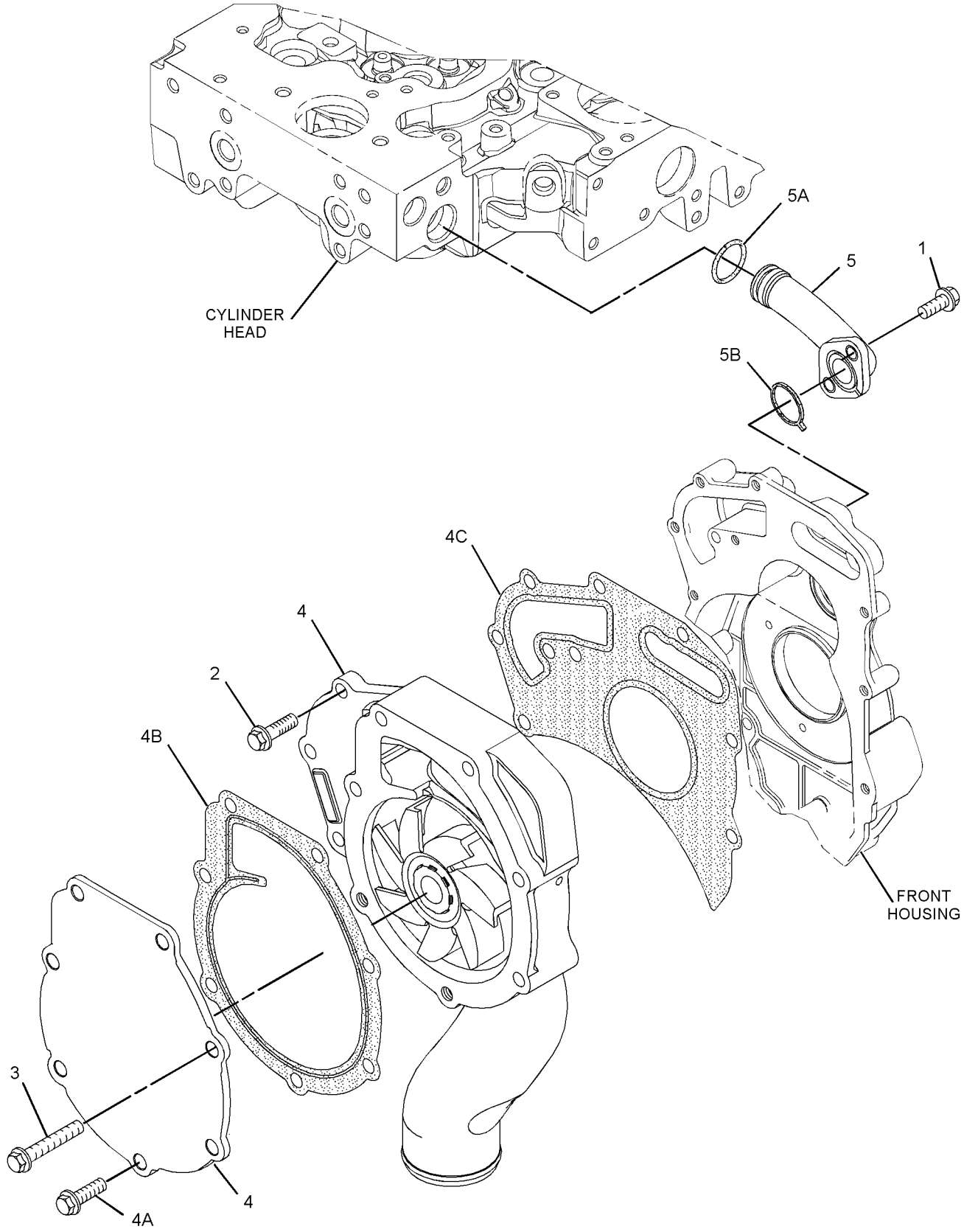

GRAPHIC #1 **<END>** g01305584

COOLING SYSTEM

298-5105 PUMP GP-WATER

S/N: C4E1-UP
PART OF 254-9233 ENGINE AR-PRIMARY
TYPE 2

SMCS-1361 **i02997525**

NOTE	REF NO	GRAPHIC REF	PART NUMBER	QTY	PART NAME 1 2 3 4 5 6 (PRODUCT LEVEL)	SEE PAGE
M	1	1	**6I-0217**	2	BOLT (M8X1.25X20-MM)	
M	2	1	**6I-0254**	2	BOLT (M8X1.25X30-MM)	
	3	1	**113-8129**	7	BOLT (M8X75-MM)	
C	4	1	**322-9662**	1	PUMP GP-WATER	
	4A	1	**225-8019**	1	GASKET	
	5	1	**277-2925**	1	CONNECTION AS	
	5A	1	**225-7738**	1	SEAL-O-RING	
	5B	1	**277-2923**	1	GASKET	

C-CHANGE FROM PREVIOUS TYPE
M-METRIC PART

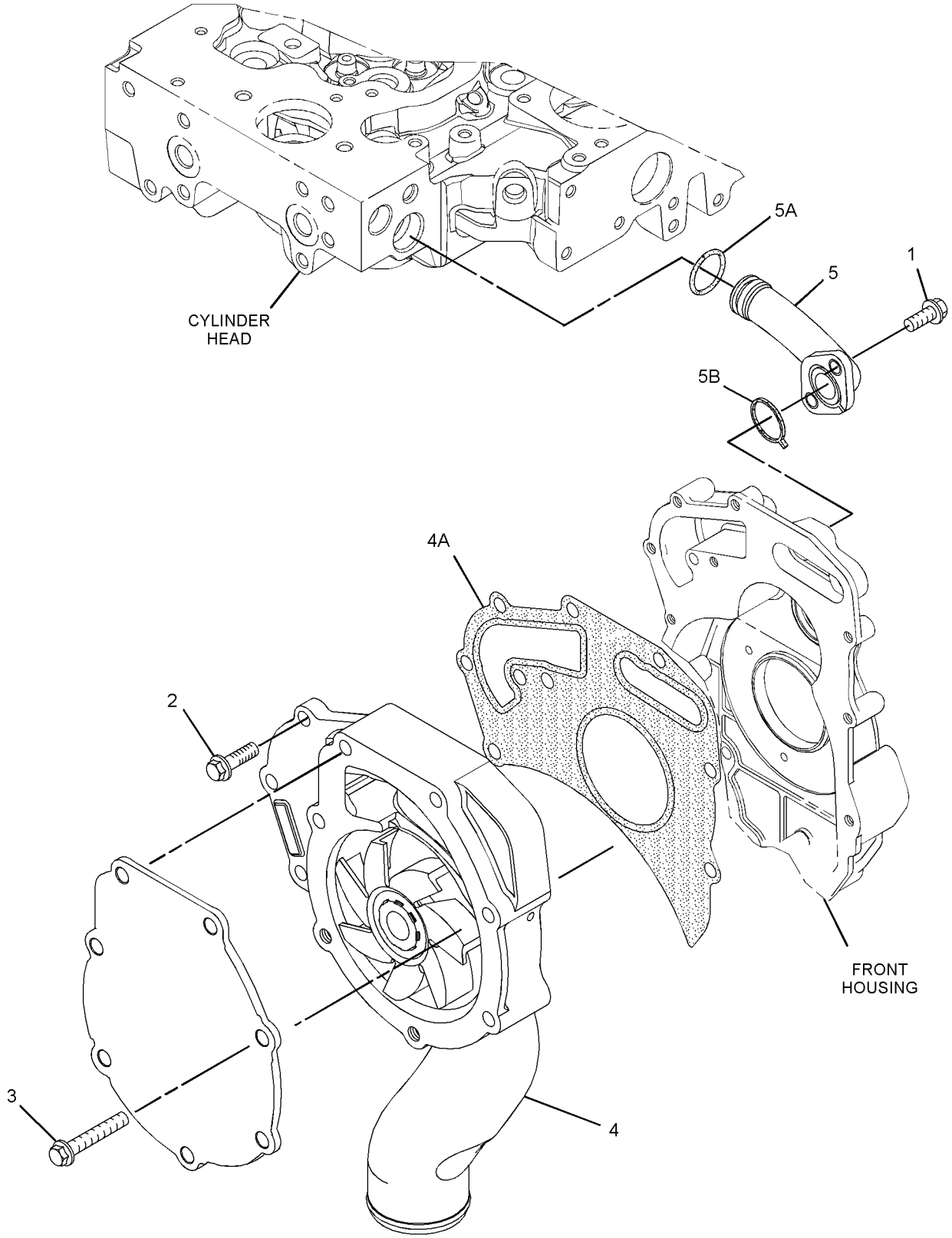

GRAPHIC #1 **<END>** g01521947

COOLING SYSTEM

244-7430 RADIATOR & HYD OIL COOLER GP

S/N: JLF1-UP; WWW1-UP; YYY1-UP
PART OF 244-7386 INSTALLATION AR-ENGINE

SMCS-1353, 1374 **i03601140**

NOTE	REF NO	GRAPHIC REF	PART NUMBER	QTY	PART NAME 1 2 3 4 5 6 (PRODUCT LEVEL)	SEE PAGE
	1	1	**6V-7238**	1	VALVE-SHUTOFF (RADIATOR DRAIN)	
	2	1	**069-4269**	1	STEM	
	3	1	**247-7954**	1	FITTING	
	4	1	**140-4829**	1	SEAL	
	5	1	**214-7457**	4	CLAMP	
	6	1	**223-0189**	2	MOUNT AS	
	7	1	**8S-9378**	2	MOUNT-FLEXIBLE	
	8	1	**253-1218**	1	COOLER AS	
	9	1	**255-1343**	1	HOSE-RADIATOR (UPPER)	
	10	1	**255-1344**	1	HOSE-RADIATOR (LOWER)	
	11	1	**258-9982**	1	SHROUD AS-FAN	
	12	1	**285-6627**	2	PLATE AS	
	13	1	**198-4777**	4	WASHER-HARD (11X25X10-MM THK)	
	14	1	**3D-2824**	1	SEAL-O-RING	
	15	1	**3K-0360**	1	SEAL-O-RING	
	16	1	**7G-8839**	6	SPACER (13.5X57X6-MM THK)	
	17	1	**7X-7729**	4	WASHER (11X25X3-MM THK)	
	18	1	**8T-4121**	2	WASHER-HARD (11X21X2.5-MM THK)	
M	19	1	**8T-4137**	6	BOLT (M10X1.5X20-MM)	
M	20	1	**8T-4185**	4	BOLT (M10X1.5X50-MM)	
M	21	1	**8T-4189**	4	BOLT (M8X1.25X20-MM)	
	22	1	**8T-4224**	4	WASHER-HARD (8.8X16X2-MM THK)	
M	23	1	**8T-4910**	2	BOLT (M12X1.75X60-MM)	
M	24	1	**8T-6868**	2	BOLT (M12X1.75X80-MM)	
D	25	1	**5P-8309**		SEAL (0.8-M EACH)	
D	25A	1	**5P-8309**		SEAL (0.7-M EACH)	

D-ORDER BY THE METER
M-METRIC PART

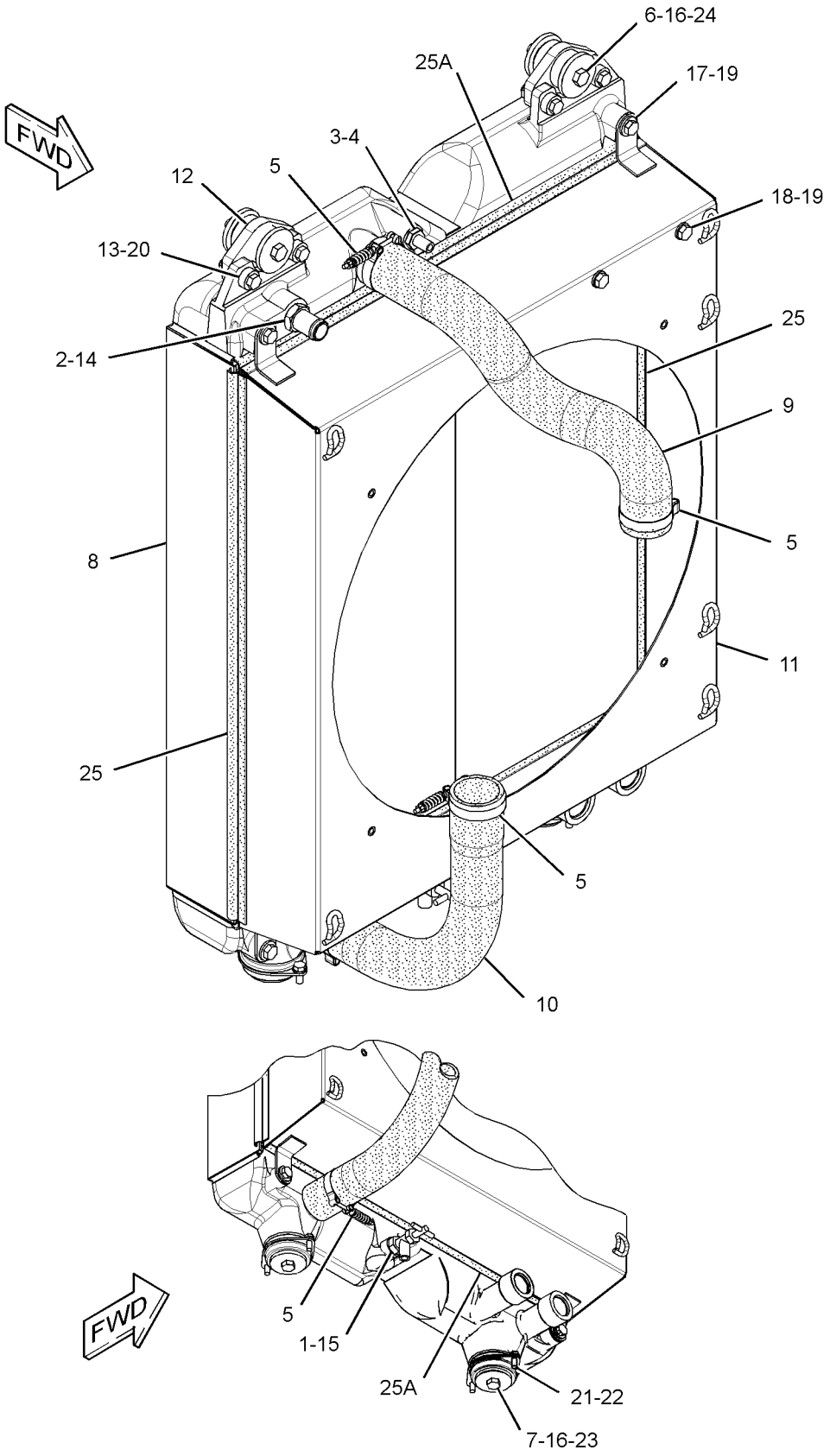

GRAPHIC #1 **<END>** g01622261

COOLING SYSTEM

254-3256 TANK GP-COOLANT

S/N: JLF1-UP; WWW1-UP; YYY1-UP
4.3-LITERS (1.14-GALLONS)
PART OF 244-7386 INSTALLATION AR-ENGINE

SMCS-1377 **i02883871**

NOTE	REF NO	GRAPHIC REF	PART NUMBER	QTY	PART NAME 1 2 3 4 5 6 (PRODUCT LEVEL)	SEE PAGE
	1	1	**2S-3440**	2	CLAMP-HOSE	
	2	1	**3S-2093**	3	STRAP-CABLE	
	3	1	**5D-1026**	2	CLAMP-HOSE	
	4	1	**247-1385**	1	TANK GP-EXPANSION (COOLANT)	
		1	**251-3227**	1	CAP AS-COOLANT TANK	
	5	1	**260-0633**	1	PLATE	
	6	1	**293-4381**	1	HOSE	
	7	1	**5P-4116**	2	WASHER-HARD (8.8X20.5X2-MM THK)	
	8	1	**8T-4121**	2	WASHER-HARD (11X21X2.5-MM THK)	
M	9	1	**8T-4136**	2	BOLT (M10X1.5X25-MM)	
M	10	1	**8T-4200**	2	BOLT (M8X1.25X16-MM)	
E	11	1	**9X-2133**		HOSE (43-CM)	
E	12	1	**8C-3681**		HOSE (120-CM)	

E-ORDER BY THE CENTIMETER
M-METRIC PART

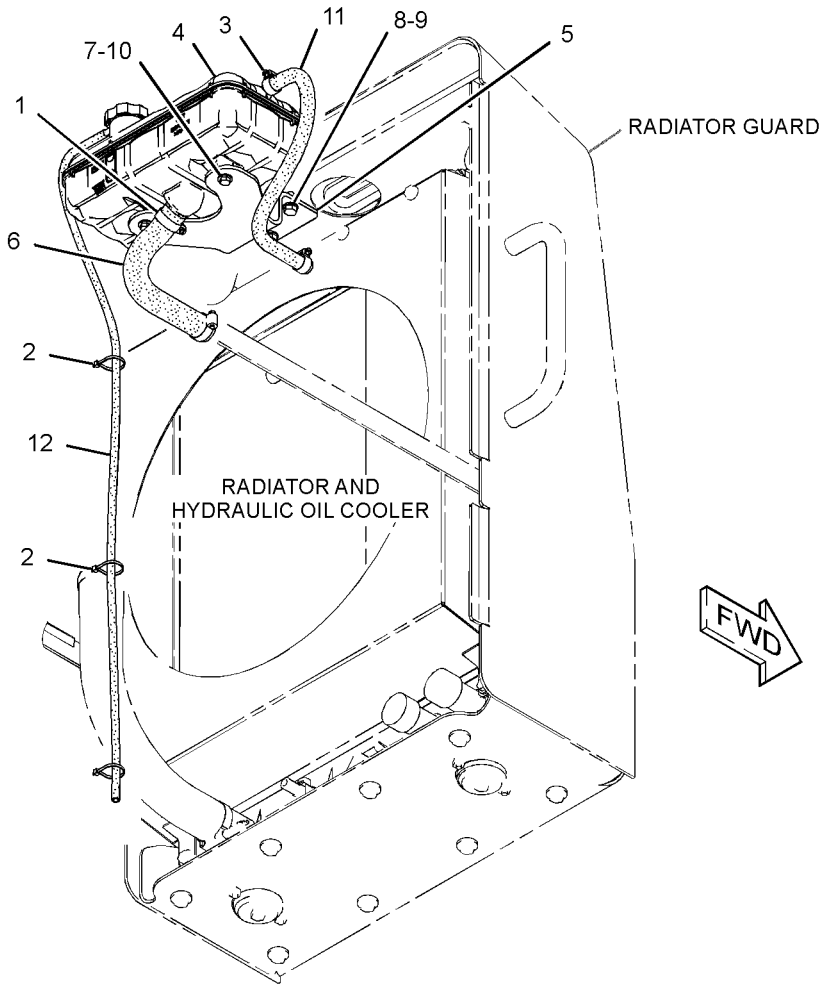

GRAPHIC #1 **<END>** g01330792

AIR INLET AND EXHAUST SYSTEM

244-7427 AIR CLEANER GP

S/N: JLF1-UP; WWW1-UP; YYY1-UP

PART OF 244-7386 INSTALLATION AR-ENGINE

SMCS-1051, 1054 **i03166021**

NOTE	REF NO	GRAPHIC REF	PART NUMBER	QTY	PART NAME 1 2 3 4 5 6 (PRODUCT LEVEL)	SEE PAGE
	1	1	**5P-0598**	2	CLAMP-HOSE	
	2	1	**127-4471**	3	CLAMP-HOSE	
	3	1	**159-0186**	1	CLAMP-HOSE	
	4	1	**224-9476**	1	AIR CLEANER GP	
		1	**227-7446**	1	COVER	
		1	**293-4053**	1	FILTER ELEMENT-AIR (PRIMARY)	
		1	**227-7449**	1	FILTER ELEMENT-AIR (SECONDARY)	
		1	**262-9786**	1	FRAME	
	5	1	**247-9730**	1	VALVE AS-CHECK (AIR CLEANER)	
	6	1	**254-1087**	1	HOSE-AIR	
	7	1	**254-1090**	1	HOSE-AIR	
	8	1	**254-3257**	1	BRACKET AS	
	9	1	**260-0631**	1	HOSE	
	10	1	**260-0634**	1	TUBE	
	11	1	**276-4836**	1	SWITCH-PRESSURE (AIR CLEANER)	
	12	1	**5P-4116**	2	WASHER-HARD (8.8X20.5X2-MM THK)	
	13	1	**8T-4121**	4	WASHER-HARD (11X21X2.5-MM THK)	
M	14	1	**8T-4137**	4	BOLT (M10X1.5X20-MM)	
M	15	1	**8T-4189**	2	BOLT (M8X1.25X20-MM)	

M-METRIC PART

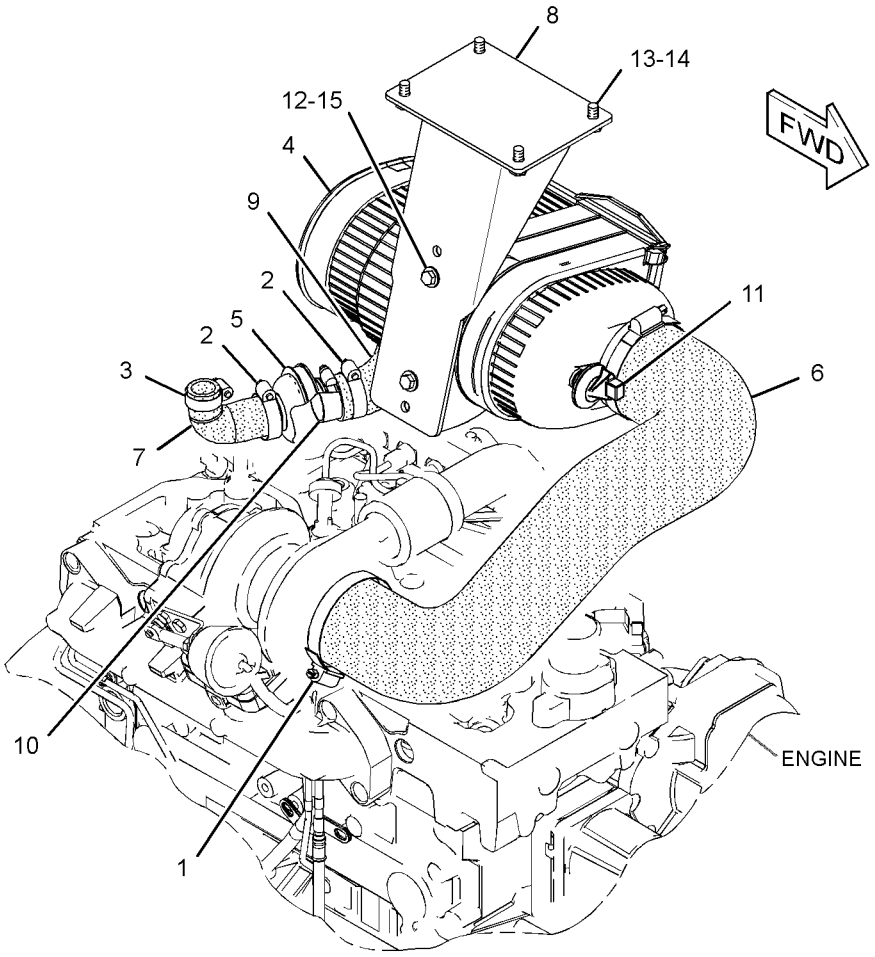

GRAPHIC #1 **<END>** g01331054

AIR INLET AND EXHAUST SYSTEM

254-8954 MUFFLER GP

S/N: JLF1-UP; WWW1-UP; YYY1-UP

PART OF 244-7386 INSTALLATION AR-ENGINE

SMCS-1062 **i02635708**

NOTE	REF NO	GRAPHIC REF	PART NUMBER	QTY	PART NAME 1 2 3 4 5 6 (PRODUCT LEVEL)	SEE PAGE
	1	1	**6I-0364**	3	STUD (M10X1.5X30-MM)	
	2	1	**6I-0563**	3	NUT (M10X1.5-THD)	
	3	1	**7E-3870**	1	CLAMP-MUFFLER (BENT BOLT)	
	4	1	**236-2507**	2	CLAMP AS	
	5	1	**246-4960**	1	PIPE-EXTENSION	
	6	1	**255-1204**	1	PLATE	
	7	1	**291-5505**	1	MUFFLER AS	
	8	1	**7X-7729**	8	WASHER (11X25X3-MM THK)	
	9	1	**8T-4121**	6	WASHER-HARD (11X21X2.5-MM THK)	
M	10	1	**8T-4133**	4	NUT (M10X1.5-THD)	
M	11	1	**8T-4195**	10	BOLT (M10X1.5X30-MM)	

M-METRIC PART

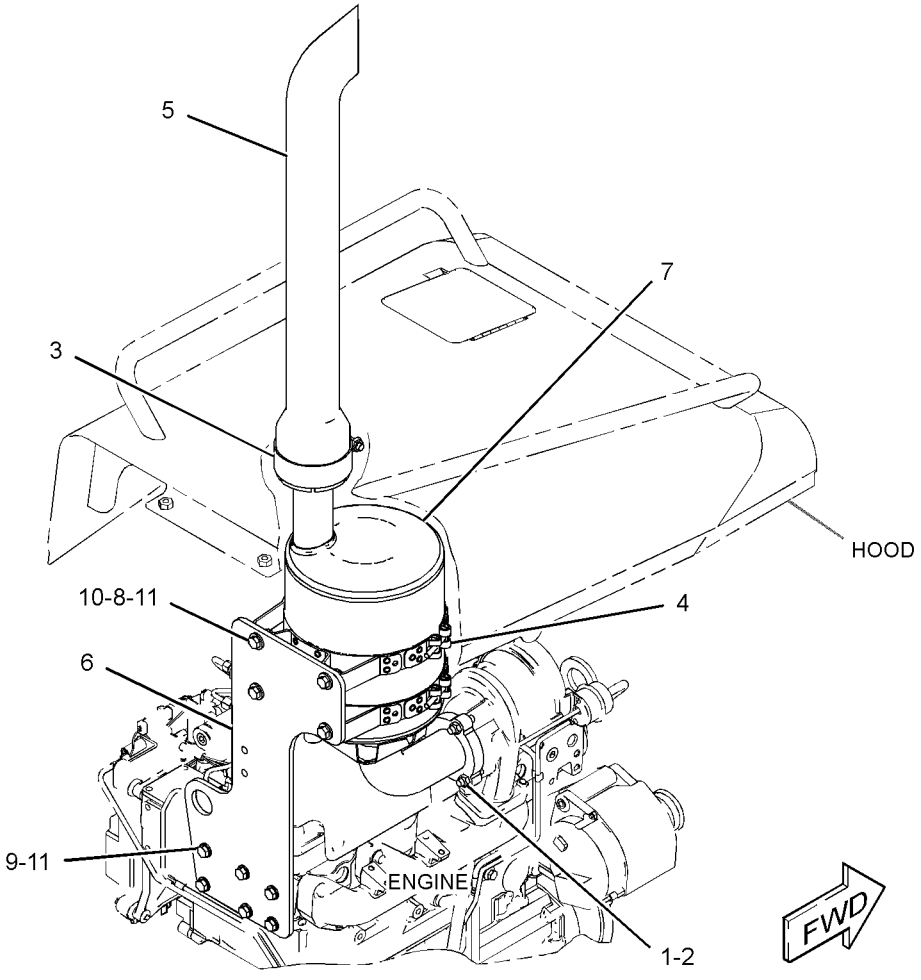

GRAPHIC #1 **<END>** g01334041

AIR INLET AND EXHAUST SYSTEM

304-3657 TURBOCHARGER GP

S/N: C4E1-UP

PART OF 254-9233 ENGINE AR-PRIMARY

SMCS-1052, 1053 **i03089786**

NOTE	REF NO	GRAPHIC REF	PART NUMBER	QTY	PART NAME 1 2 3 4 5 6 (PRODUCT LEVEL)	SEE PAGE
M	1	1	**6I-0217**	2	BOLT (M8X1.25X20-MM)	
M	2	2	**6I-0260**	4	BOLT (M8X1.25X25-MM)	
M	3	1	**6I-0593**	1	BOLT (M10X1.5X30-MM)	
M	4	1	**6I-0654**	1	BOLT (M10X1.5X25-MM)	
	5	2	**6I-0817**	1	ADAPTER	
	6	2	**6I-4200**	2	BOLT (M10X1.5X16-MM)	
	7	2	**9Y-9381**	1	WASHER-HARD	
M	8	2	**100-4830**	1	BOLT (M10X1.5X20-MM)	
	9	1	**106-8916**	2	BOLT (M6X16-MM)	
	10	1	**123-4038**	1	SPACER	
	11	2	**266-7092**	2	CLAMP-HOSE	
	12	1	**172-4325**	1	SPACER	
	13	1	**225-8533**	1	GASKET	
	14	1	**225-8534**	1	GASKET	
	15	2	**234-3030**	1	GASKET	
	16	1	**238-8292**	1	BOLT-FLANGE HEAD	
	17	2	**263-5376**	1	HOSE	
	18	1	**278-0361**	7	BOLT (M10X1.5X45-MM)	
	19	2	**294-7375**	1	SOLENOID (AIR FUEL RATIO CONTROL)	
	20	1	**298-4570**	1	GASKET-EXHAUST MANIFOLD	
	21	2	**303-2116**	6	CLIP	
	22	1	**303-5786**	1	TUBE AS-TURBOCHARGER OIL (SUPPLY)	
	22A	1	**220-7163**	1	CLIP	
	22B	1	**225-8524**	2	BOLT-SPECIAL (BANJO)	
	22C	1	**225-8526**	4	WASHER (10.4X13.75X1.37-MM THK)	
	23	1	**303-5787**	1	TUBE AS-TURBOCHARGER OIL (DRAIN)	
	23A	1	**103-2135**	1	CLIP	
	24	1	**303-5788**	1	MANIFOLD-EXHAUST	
	25	2	**303-5793**	1	TUBE AS	
	25A	2	**4B-8774**	1	NUT-FLARED	
	25B	2	**032-8047**	1	FERRULE	
	25C	2	**278-0316**	2	CLIP	
	25D	2	**298-4576**	1	CLIP	
	25E	2	**300-6520**	1	HOSE AS	
	25F	2	**107-2348**	2	CLIP	
	26	1	**316-0468**	1	TURBOCHARGER	
	27	2	**304-3702**	1	TUBE-CROSSOVER	
	28	2	**304-3704**	1	TUBE AS	
	28A	2	**133-9469**	2	CLIP	
	28B	2	**035-8014**	1	NUT (7/16-IN)	
	28C	2	**032-8047**	1	FERRULE	
	28D	2	**032-8191**	1	NUT	
	29	1	**6I-0563**	4	NUT (M10X1.5-THD)	
	30	1	**194-5390**	1	GASKET-MANIFOLD	
	31	1	**147-5553**	4	STUD	
	32	2	**127-8165**	1	SPACER	

M-METRIC PART

304-3657 **TURBOCHARGER GP** *(contd.)* **i03089786**

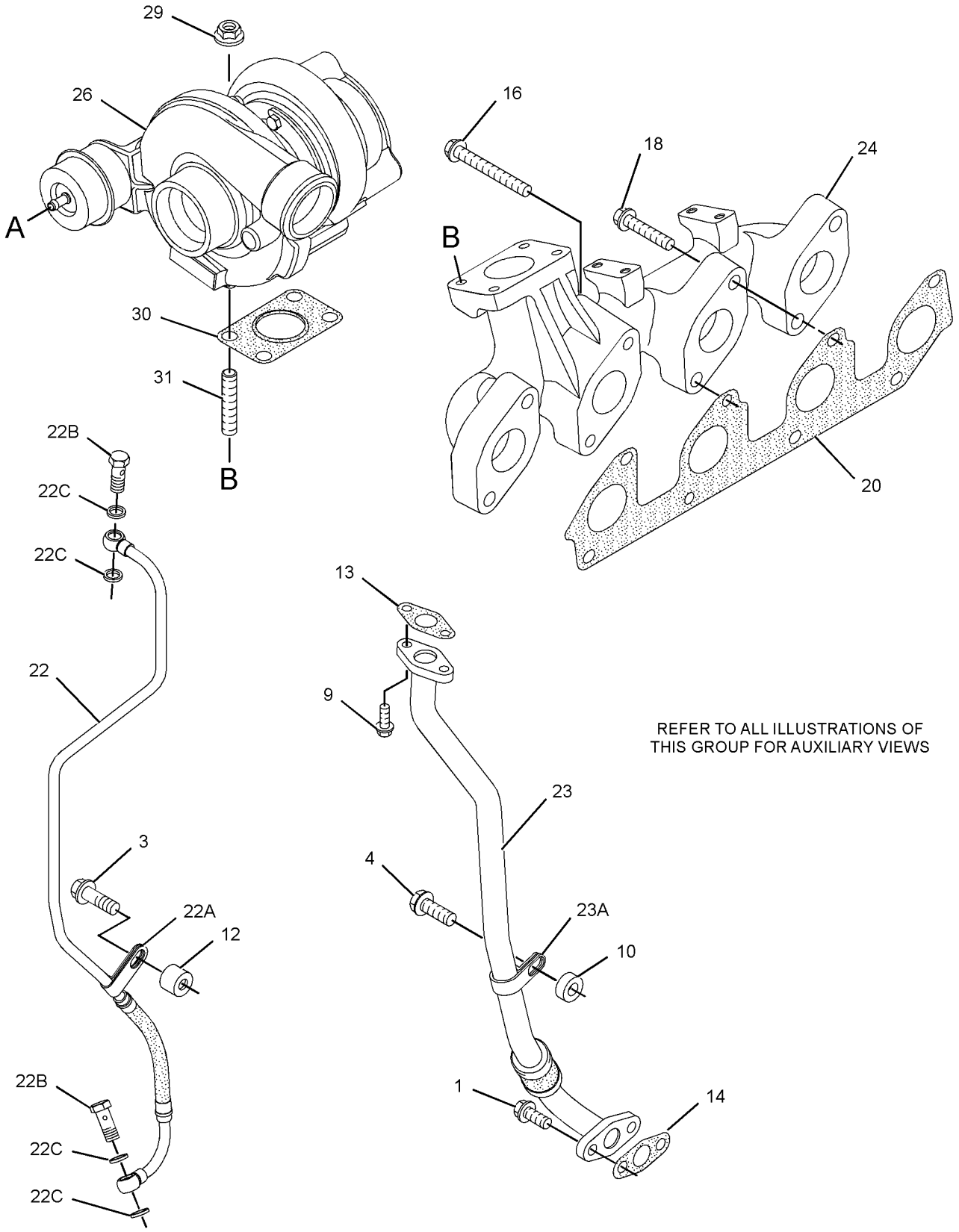

GRAPHIC #1

g01429325

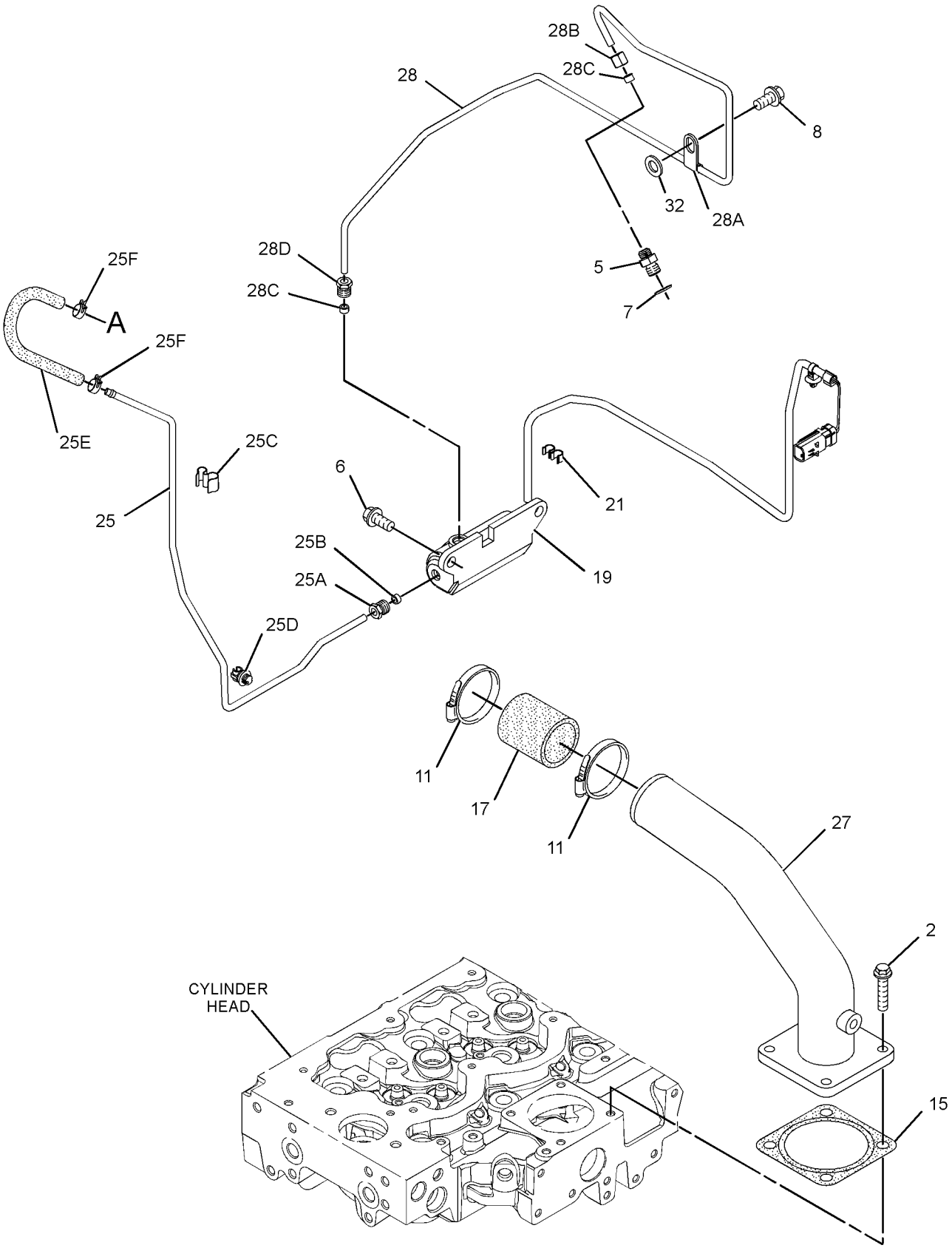

GRAPHIC #2 **<END>** g01686694

FUEL SYSTEM

318-8063 FILTER GP-FUEL

S/N: C4E1-5303

PART OF 304-3662 LINES GP-FUEL

SMCS-1261 **i03438003**

NOTE	REF NO	GRAPHIC REF	PART NUMBER	QTY	PART NAME 1 2 3 4 5 6 (PRODUCT LEVEL)	SEE PAGE
	1	1	**333-5435**	1	BOLT AS	
	2	1	**313-1663**	1	SENSOR-PRESSURE (FUEL)	
	3	1	**333-9693**	1	KIT-CONNECTION	
	4	1	**333-9694**	1	BOOT-SEAL	
	5	1	**308-7298**	1	FILTER AS-WATER SEP & FUEL	
	6	1	**310-5912**	1	BOWL AS	
F			**220-8678**	1	SEAL-RING	

F-NOT SHOWN

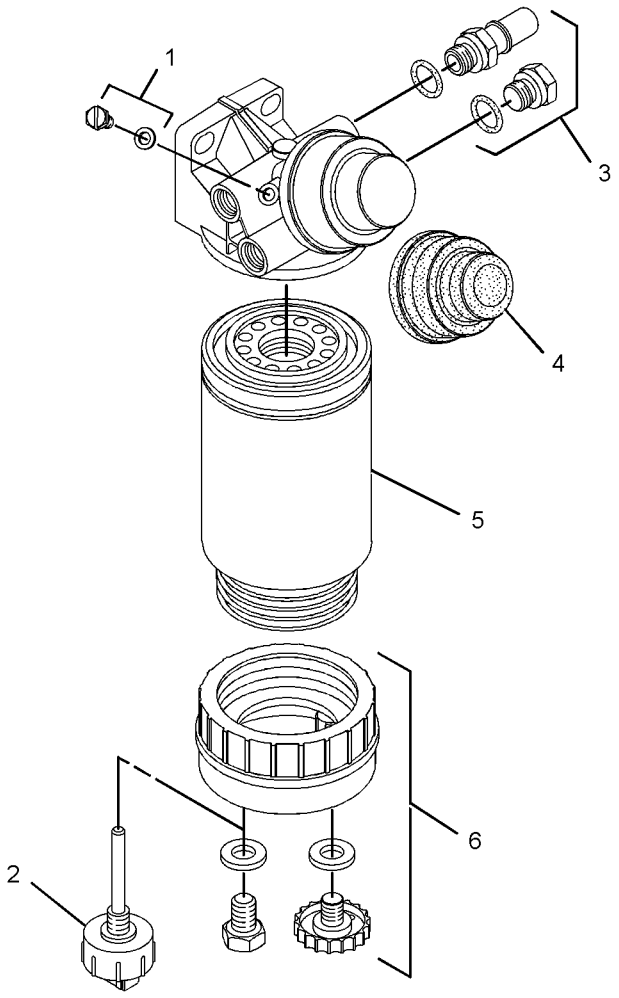

GRAPHIC #1 **<END>** g01621581

320-1332 FILTER GP-FUEL

S/N: C4E174-UP

PART OF 254-9233 ENGINE AR-PRIMARY

SMCS-1261 **i02877153**

NOTE	REF NO	GRAPHIC REF	PART NUMBER	QTY	PART NAME 1 2 3 4 5 6 (PRODUCT LEVEL)	SEE PAGE
	1	1	**311-2376**	1	FILTER AS-FUEL (FUEL)	
	1A	1	**299-8229**	1	FILTER-FUEL (ULTRA HIGH EFFICIENCY)	
F			**278-4138**	1	PROTECTION GP-FUEL SYSTEM (LINE, LOW PRESSURE)	

F-NOT SHOWN

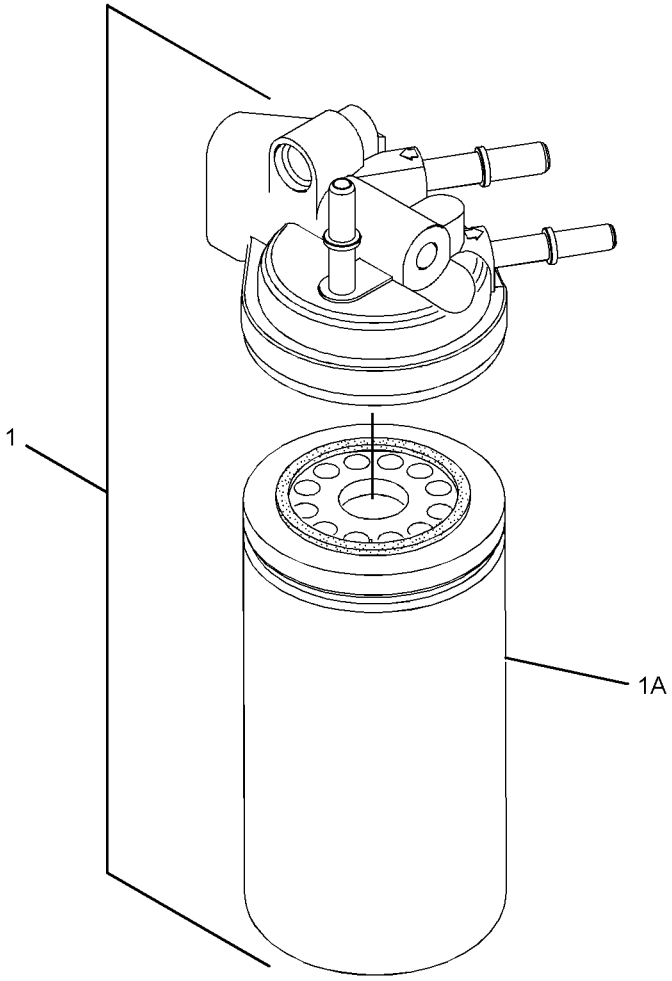

GRAPHIC #1

<END>

g01370317

334-0808 FILTER GP-FUEL

S/N: C4E5304-UP

PART OF 304-3662 LINES GP-FUEL

SMCS-1261 **i03438020**

NOTE	REF NO	GRAPHIC REF	PART NUMBER	QTY	PART NAME 1 2 3 4 5 6 (PRODUCT LEVEL)	SEE PAGE
	1	1	**308-7576**	1	FILTER GP-WATER SEP & FUEL	
	1A	1	**308-7298**	1	FILTER AS-WATER SEP & FUEL	
	1B	1	**310-5912**	1	BOWL AS	
	2	1	**313-1663**	1	SENSOR-PRESSURE (FUEL)	
	3	1	**333-5435**	1	BOLT AS	
	4	1	**333-9693**	1	KIT-CONNECTION	
	5	1	**333-9694**	1	BOOT-SEAL	

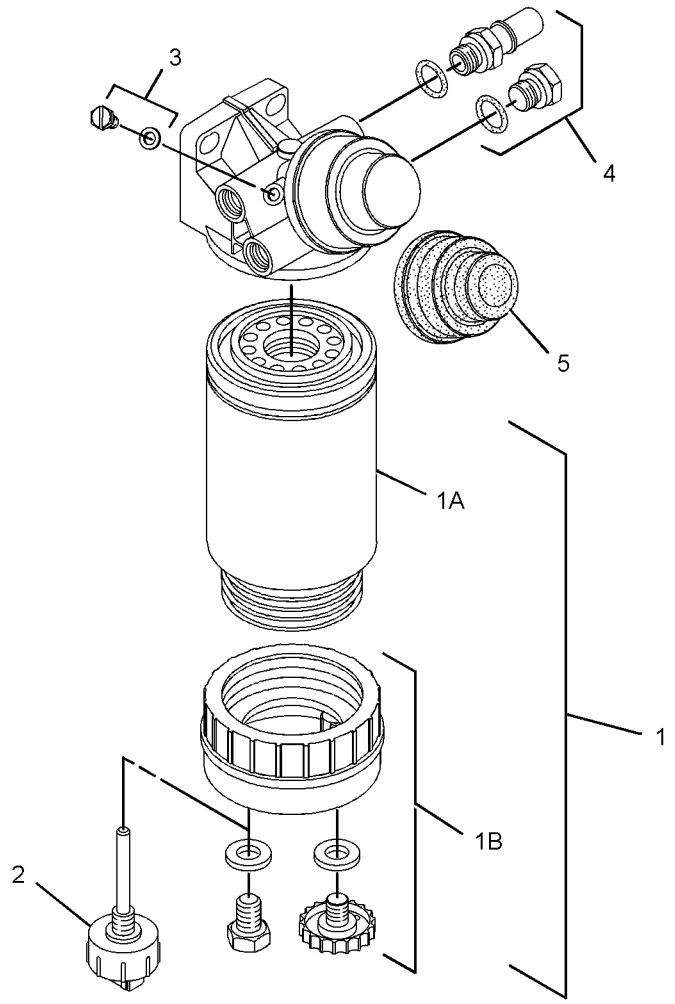

GRAPHIC #1 **<END>** g01719340

298-5123 FILTER GP-PRIMARY FUEL

S/N: C4E1-49

PART OF 254-9233 ENGINE AR-PRIMARY

SMCS-1260, 1261 **i02896281**

NOTE	REF NO	GRAPHIC REF	PART NUMBER	QTY	PART NAME 1 2 3 4 5 6 (PRODUCT LEVEL)	SEE PAGE
	1	1	**298-4603**	1	FILTER AS-FUEL (PRIMARY)	
	1A	1	**289-0600**	1	FILTER-FUEL (ULTRA HIGH EFFICIENCY)	
F			**278-4138**	1	PROTECTION GP-FUEL SYSTEM	

F-NOT SHOWN

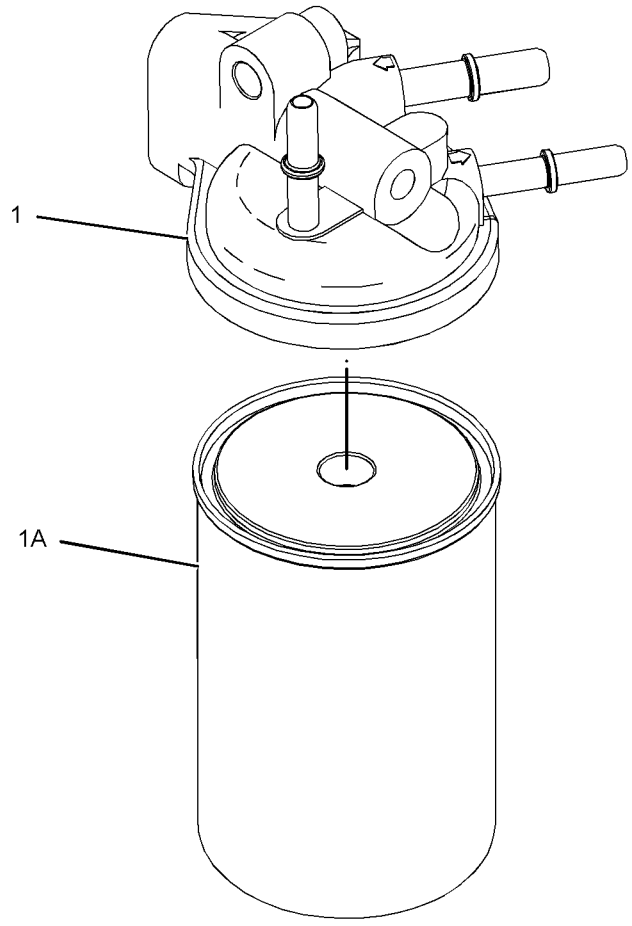

GRAPHIC #1 **<END>** g01304976

298-5123 FILTER GP-PRIMARY FUEL

S/N: C4E50-173

PART OF 254-9233 ENGINE AR-PRIMARY

SMCS-1260, 1261 **i03021825**

NOTE	REF NO	GRAPHIC REF	PART NUMBER	QTY	PART NAME 1 2 3 4 5 6 (PRODUCT LEVEL)	SEE PAGE
	1	1	**311-2376**	1	FILTER AS-FUEL	
	1A	1	**299-8229**	1	FILTER-FUEL (ULTRA HIGH EFFICIENCY)	
F			**278-4138**	1	PROTECTION GP-FUEL SYSTEM	

F-NOT SHOWN

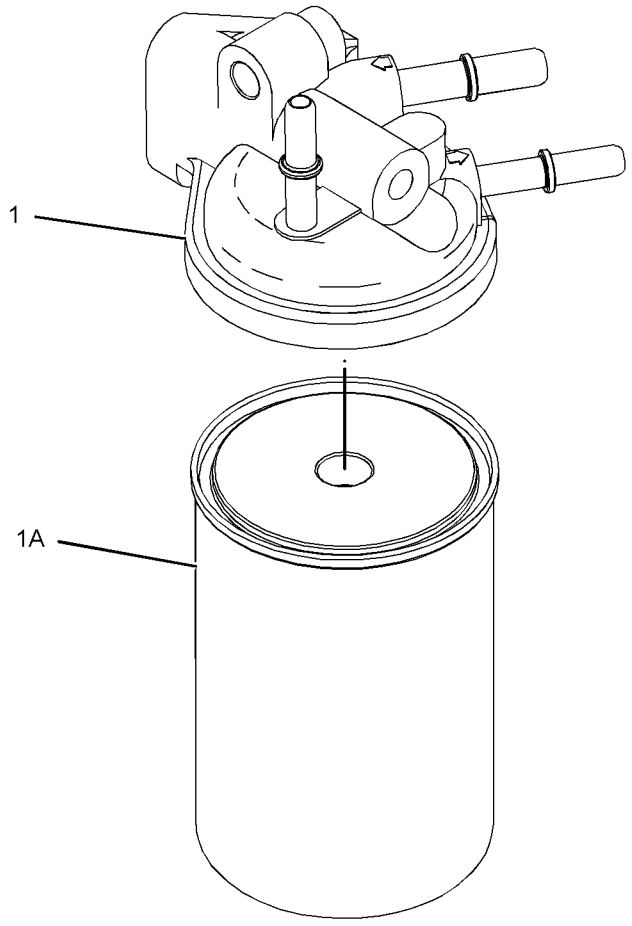

GRAPHIC #1 **<END>** g01304976

292-3778 INJECTOR GP-FUEL

S/N: C4E1-3159

PART OF 304-3649 PUMP GP-FUEL INJECTION

SMCS-1251, 1254, 1290 **i02720134**

NOTE	REF NO	GRAPHIC REF	PART NUMBER	QTY	PART NAME 1 2 3 4 5 6 (PRODUCT LEVEL)	SEE PAGE
	1	1	**287-7637**	1	WASHER	
	2	1	**274-1639**	1	SEAL	

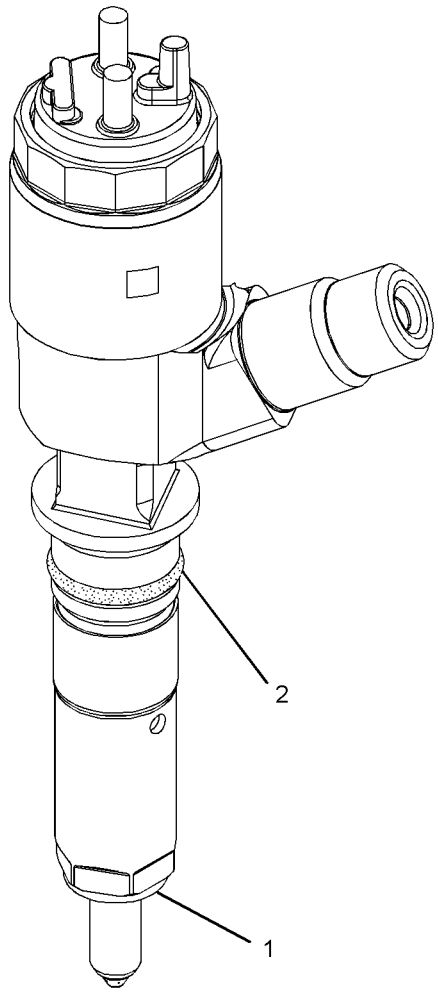

GRAPHIC #1 **<END>** g01321917

FUEL SYSTEM

320-0677 INJECTOR GP-FUEL

S/N: C4E1-UP

PART OF 304-3649 PUMP GP-FUEL INJECTION

SMCS-1251, 1254, 1290 **i02966445**

NOTE	REF NO	GRAPHIC REF	PART NUMBER	QTY	PART NAME 1 2 3 4 5 6 (PRODUCT LEVEL)	SEE PAGE
	1	1	**287-7637**	1	WASHER	
	2	1	**274-1639**	1	SEAL	

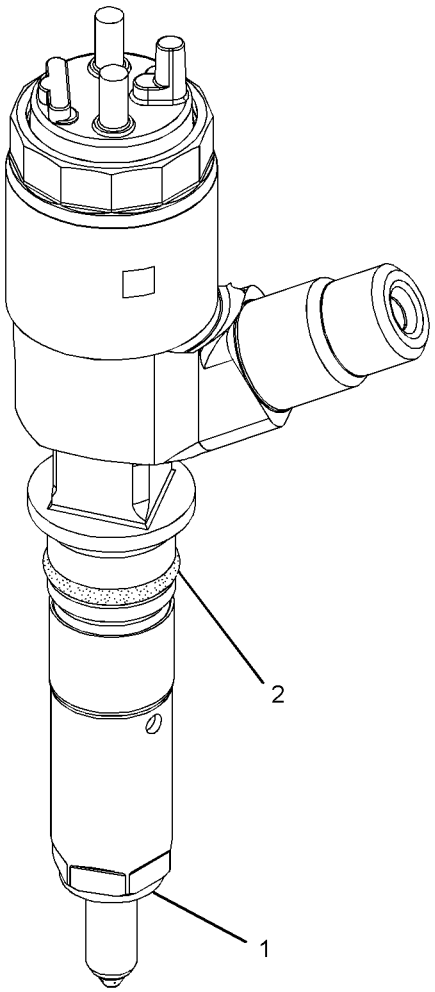

GRAPHIC #1 **<END>** g01321917

244-7482 LINES GP-FUEL

S/N: JLF1-UP; WWW1-UP; YYY1-UP

PART OF 244-7380, 244-7381, 282-5328 CHASSIS AR

SMCS-1274 **i03350183**

NOTE	REF NO	GRAPHIC REF	PART NUMBER	QTY	PART NAME 1 2 3 4 5 6 (PRODUCT LEVEL)	SEE PAGE
	1	1	**1P-4278**	8	CLAMP-HOSE	
	2	1	**7K-1181**	2	STRAP-CABLE	
	3	1	**8T-6725**	1	CONNECTOR	
	4	1	**238-1844**	1	ELBOW (SWIVEL)	
	5	1	**263-1431**	1	TUBE	
	6	1	**263-1432**	1	TUBE	
	7	1	**119-5708**	3	CLIP	
	10	1	**5K-8451**	4	CLIP	
	11	1	**5P-4116**	3	WASHER-HARD (8.8X20.5X2-MM THK)	
	12	1	**5P-9085**	3	CLIP	
	13	1	**6V-8397**	1	SEAL-O-RING	
	14	1	**8T-4121**	2	WASHER-HARD (11X21X2.5-MM THK)	
M	15	1	**8T-4137**	2	BOLT (M10X1.5X20-MM)	
M	17	1	**8T-4200**	3	BOLT (M8X1.25X16-MM)	
	19	1	**8T-6850**	1	SEAL-O-RING	
E	20	1	**5P-1442**		HOSE (97-CM)	
E	20A	1	**5P-1442**		HOSE (77-CM)	
E	21	1	**5P-1420**		HOSE (66.8-CM)	
E	21A	1	**5P-1420**		HOSE (80-CM)	

E-ORDER BY THE CENTIMETER
M-METRIC PART

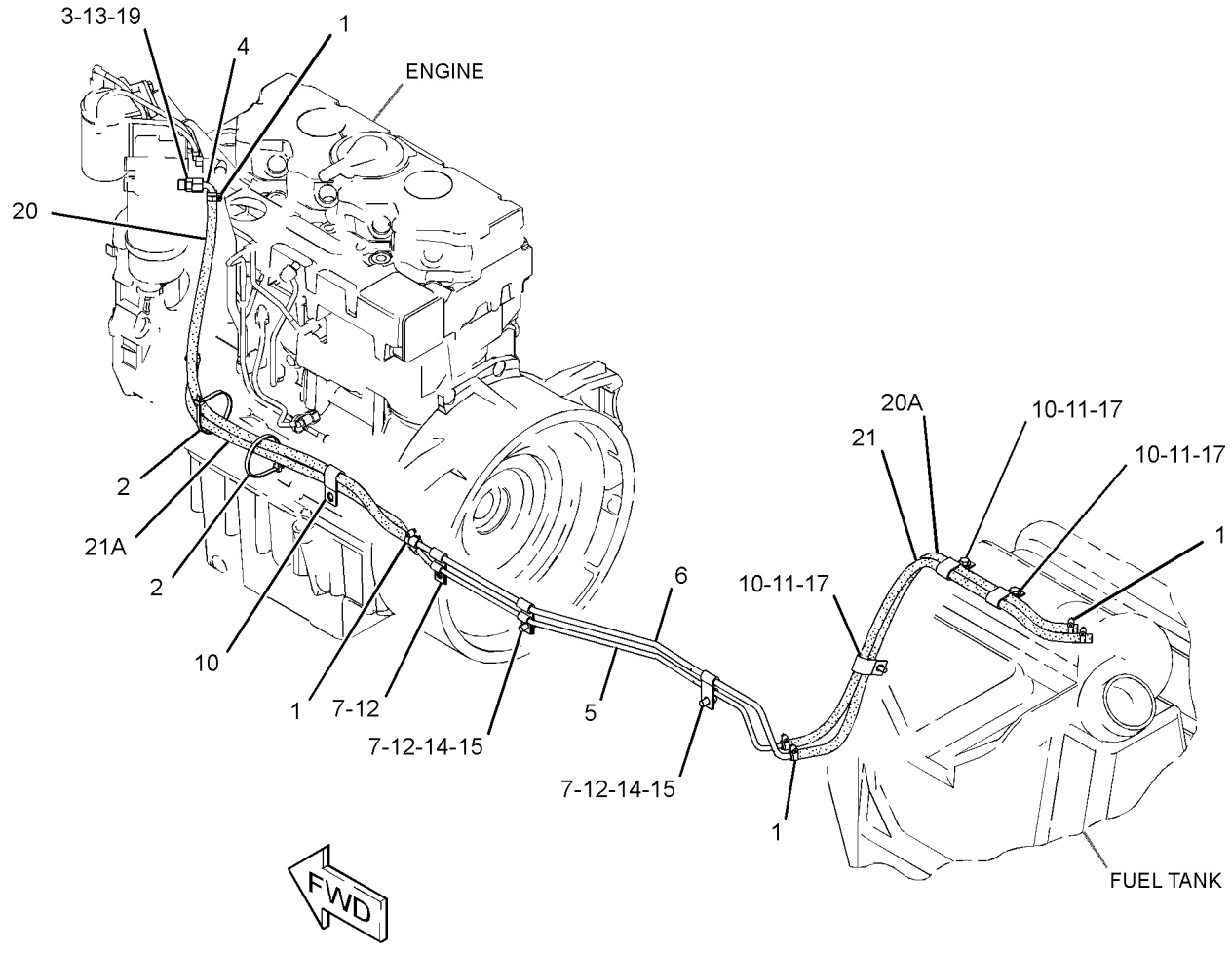

GRAPHIC #1 **<END>** g01704646

FUEL SYSTEM

304-3659 LINES GP-FUEL

S/N: C4E1-642

PART OF 254-9233 ENGINE AR-PRIMARY

SMCS-1274 **i03304669**

NOTE	REF NO	GRAPHIC REF	PART NUMBER	QTY	PART NAME 1 2 3 4 5 6 (PRODUCT LEVEL)	SEE PAGE
M	1	2	**6I-0217**	2	BOLT (M8X1.25X20-MM)	
M	2	2	**6I-0260**	1	BOLT (M8X1.25X25-MM)	
	3	2	**6I-4709**	1	BOLT (M8X1.25X100-MM)	
M	4	1,2	**124-3815**	4	BOLT (M8X16X1.25-MM)	
	5	2	**215-9509**	1	FITTING (QUICK DISCONNECT, FEMALE)	
	7	2	**232-1115**	2	CLIP-PIPE	
	9	2	**277-6165**	1	CONNECTION-FUEL	
	11	1	**308-7571**	1	TUBE AS	
	11A	1	**295-4670**	2	BOLT-SPECIAL (BANJO)	
	11B	1	**317-8476**	4	WASHER-SEAL	
	12	1	**304-3706**	1	TUBE	
	13	1	**304-3707**	1	TUBE	
	14	2	**304-3708**	1	TUBE	
	15	2	**314-2892**	1	BRACKET	
	16	1	**324-1482**	1	BRACKET	
	17	2	**324-1481**	1	BRACKET	
F			**234-3063**	1	CLIP	
F			**278-4138**	1	PROTECTION GP-FUEL SYSTEM (LINE, LOW PRESSURE)	

F-NOT SHOWN
M-METRIC PART

304-3659 **LINES GP-FUEL** *(contd.)* **i03304669**

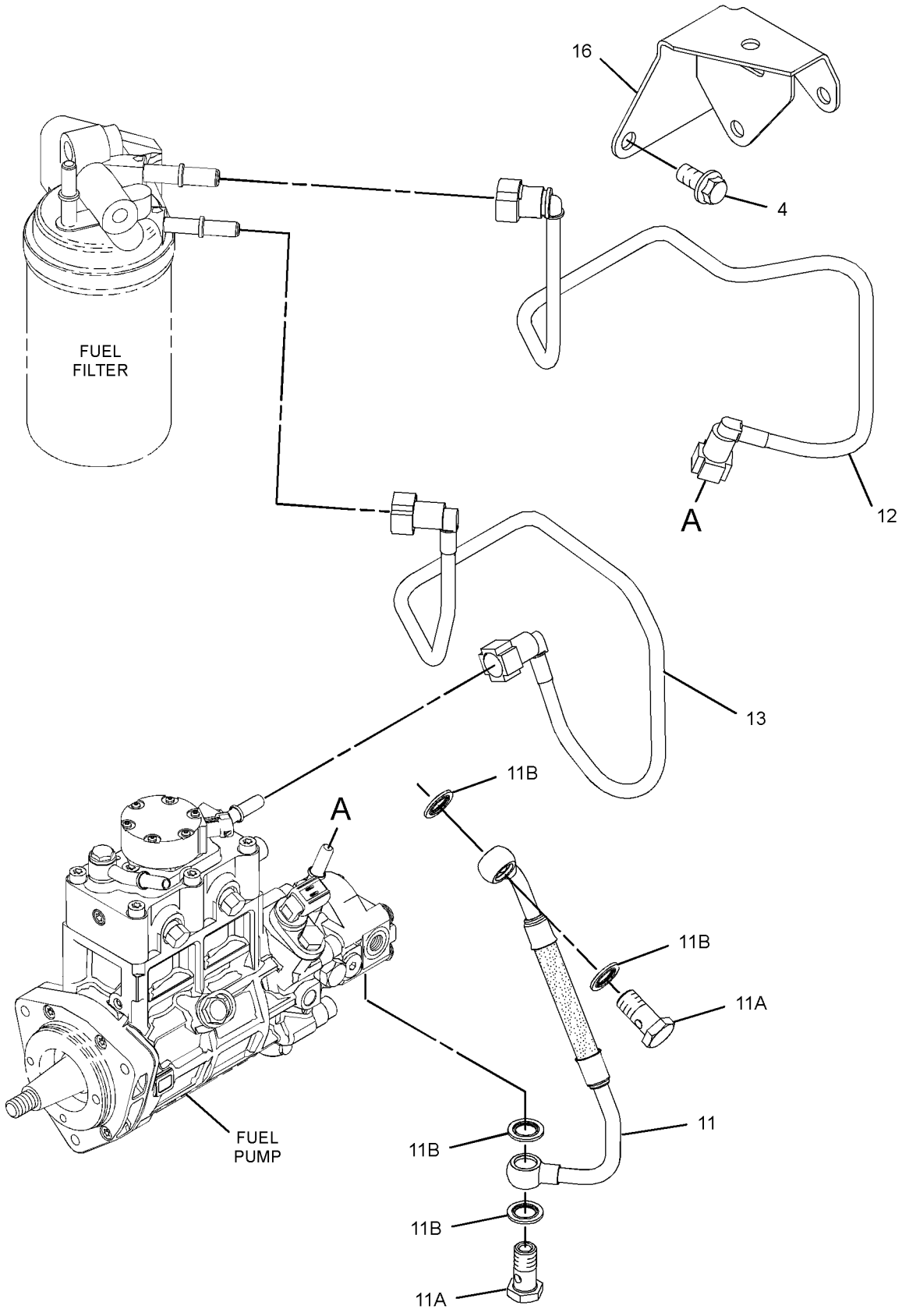

GRAPHIC #1 g01709713

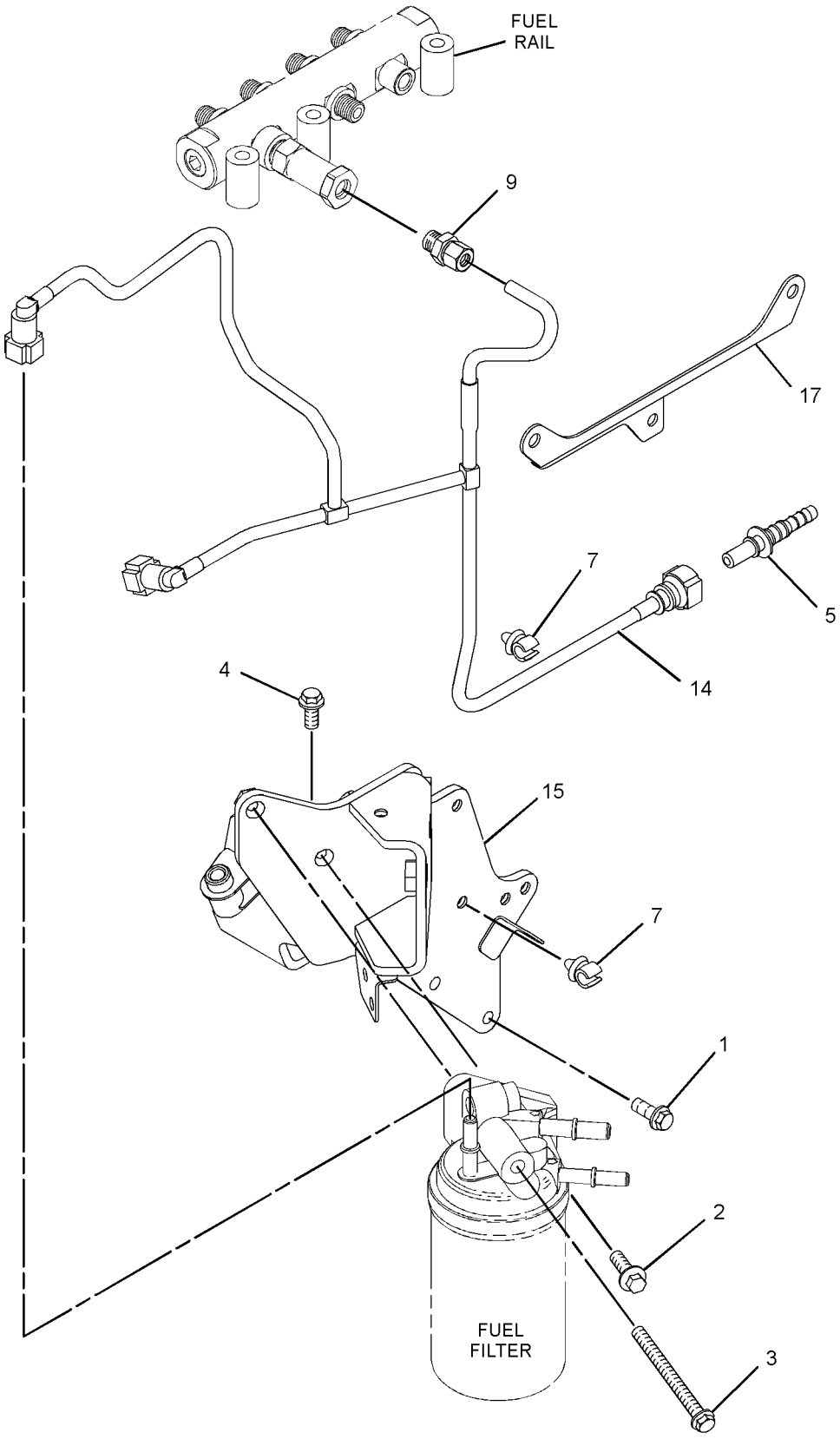

GRAPHIC #2 **<END>** g01709714

FUEL SYSTEM

304-3659 LINES GP-FUEL

S/N: C4E643-6228

PART OF 254-9233 ENGINE AR-PRIMARY

SMCS-1274 **i03348261**

NOTE	REF NO	GRAPHIC REF	PART NUMBER	QTY	PART NAME 1 2 3 4 5 6 (PRODUCT LEVEL)	SEE PAGE
M	1	1	**6I-0217**	2	BOLT (M8X1.25X20-MM)	
M	2	1	**6I-0260**	1	BOLT (M8X1.25X25-MM)	
	3	1	**6I-4709**	1	BOLT (M8X1.25X100-MM)	
M	4	1,2	**124-3815**	4	BOLT (M8X16X1.25-MM)	
	5	1	**215-9509**	1	FITTING (QUICK DISCONNECT, FEMALE)	
	7	1	**232-1115**	2	CLIP-PIPE	
	9	1	**277-6165**	1	CONNECTION-FUEL	
	11	2	**308-7571**	1	TUBE AS	
	11A	2	**295-4670**	2	BOLT-SPECIAL (BANJO)	
	11B	2	**317-8476**	4	WASHER-SEAL	
	12	2	**304-3706**	1	TUBE	
	13	2	**304-3707**	1	TUBE	
	14	1	**304-3708**	1	TUBE	
	15	1	**314-2892**	1	BRACKET	
	16	2	**324-1482**	1	BRACKET	
	17	1	**324-1481**	1	BRACKET	
BCM	18	1	**100-4830**	2	BOLT (M10X1.5X20-MM)	
BC	19	1	**335-5782**	1	BRACKET	
F			**234-3063**	1	CLIP	
F			**278-4138**	1	PROTECTION GP-FUEL SYSTEM (LINE, LOW PRESSURE)	

B-USE AS REQUIRED
C-CHANGE FROM PREVIOUS TYPE
F-NOT SHOWN
M-METRIC PART

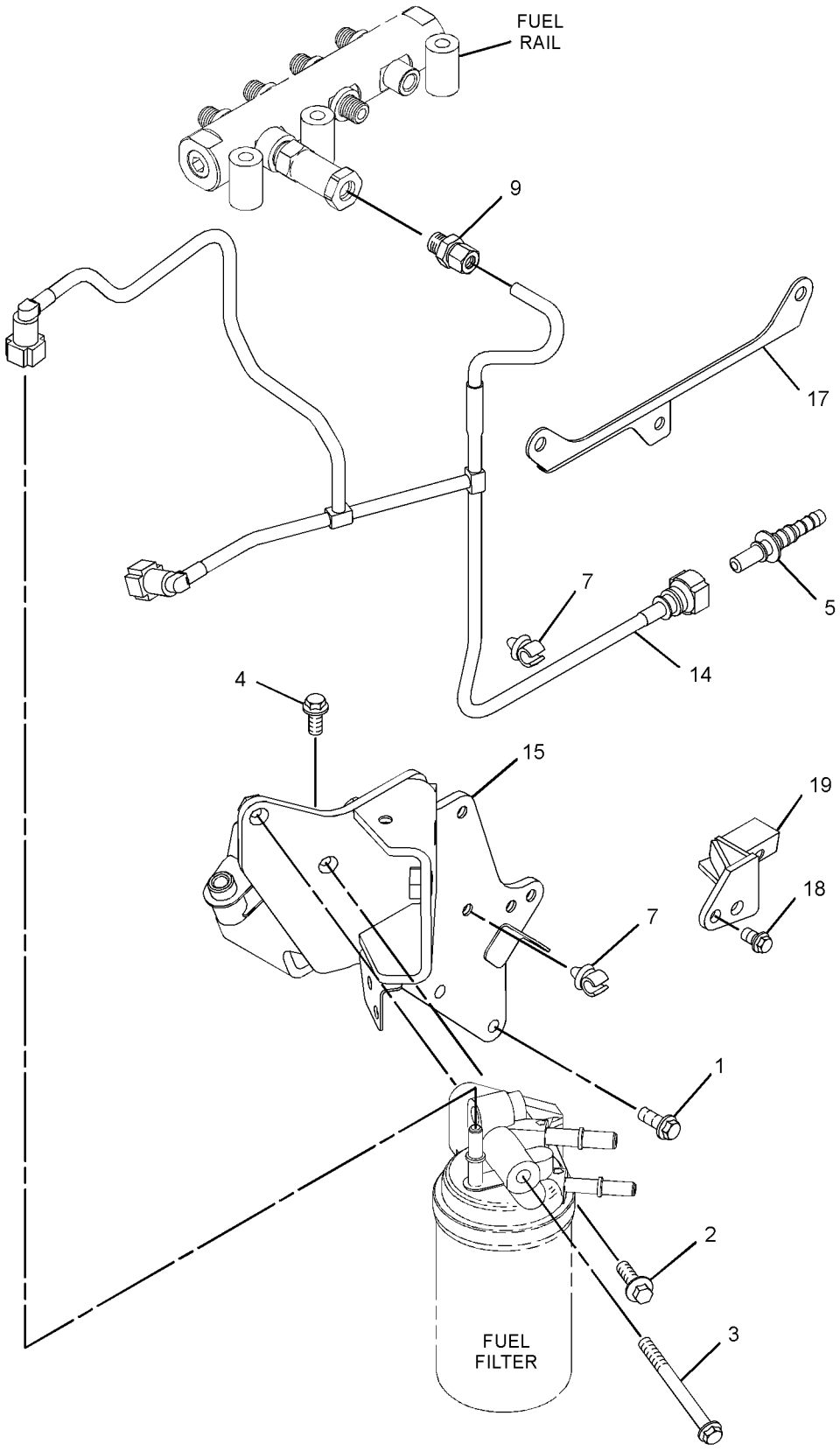

GRAPHIC #1

g01735953

304-3659 **LINES GP-FUEL** *(contd.)* **i03348261**

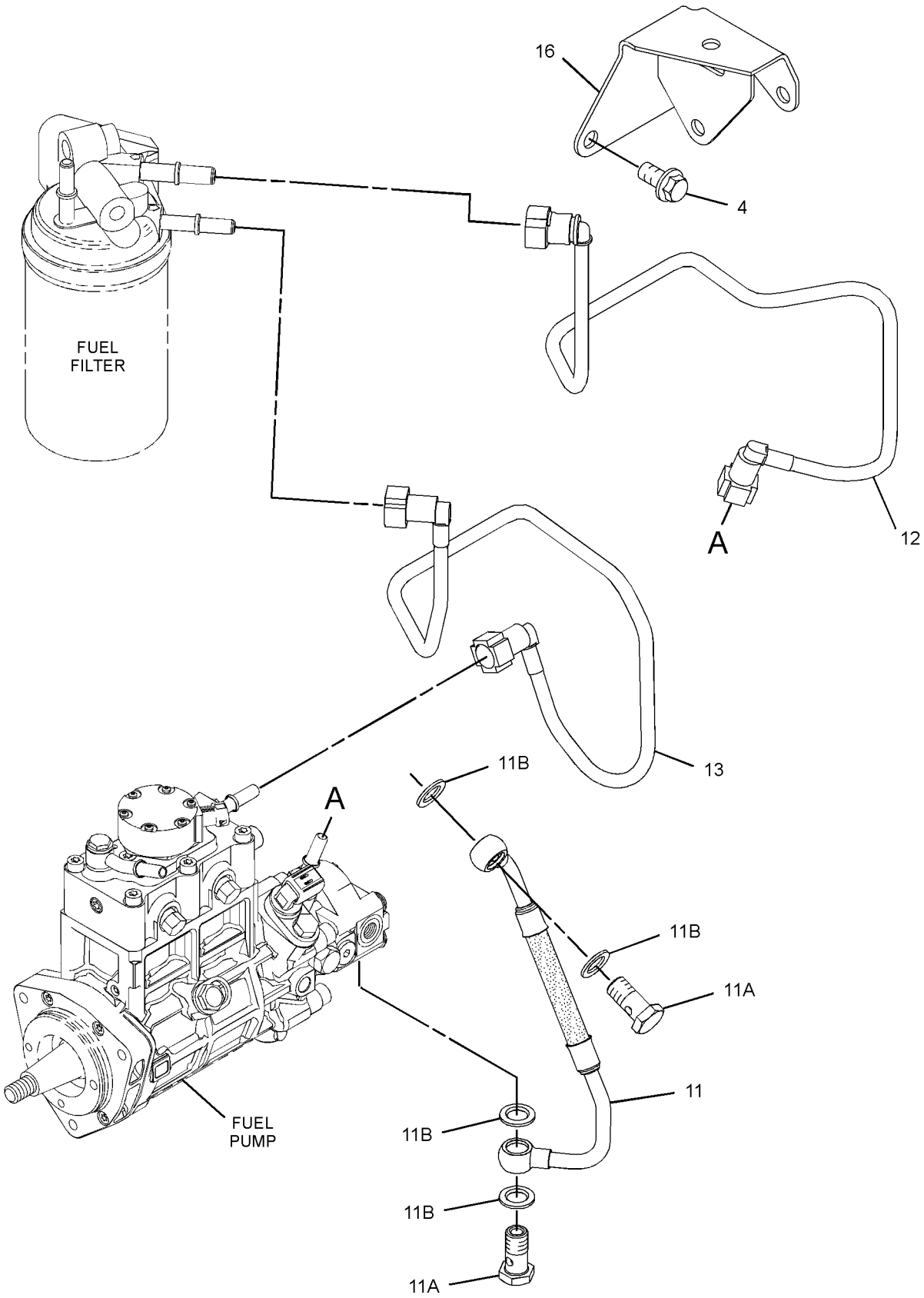

GRAPHIC #2

<END>

g01735954

FUEL SYSTEM

304-3659 LINES GP-FUEL

S/N: C4E6229-UP

PART OF 254-9233 ENGINE AR-PRIMARY

SMCS-1274 **i03348267**

NOTE	REF NO	GRAPHIC REF	PART NUMBER	QTY	PART NAME 1 2 3 4 5 6 (PRODUCT LEVEL)	SEE PAGE
CM	1	2	**6I-0217**	3	BOLT (M8X1.25X20-MM)	
M	2	2	**6I-0260**	1	BOLT (M8X1.25X25-MM)	
	3	2	**6I-4709**	1	BOLT (M8X1.25X100-MM)	
CM	4	2	**124-3815**	2	BOLT (M8X16X1.25-MM)	
	5	2	**215-9509**	1	FITTING (QUICK DISCONNECT, FEMALE)	
	9	2	**277-6165**	1	CONNECTION-FUEL	
	11	1	**308-7571**	1	TUBE AS	
	11A	1	**295-4670**	2	BOLT-SPECIAL (BANJO)	
	11B	1	**317-8476**	4	WASHER-SEAL	
C	12	1	**338-8071**	1	TUBE AS	
	12A	1	**329-1197**	2	CLIP-PIPE	
C	13	1	**338-8072**	1	TUBE AS	
	13A	1	**329-1197**	2	CLIP-PIPE	
C	14	2	**338-8070**	1	TUBE AS	
	14A	2	**329-1197**	3	CLIP-PIPE	
C	17	2	**338-8075**	1	BRACKET AS	
	17A	2	**289-2478**	1	CLIP	
C	19	2	**338-8069**	1	BRACKET	
C	20	1,2	**106-8916**	4	BOLT (M6X16-MM)	
CM	21	1	**100-4841**	2	BOLT (M6X1X10-MM)	
F			**278-4138**	4	PROTECTION GP-FUEL SYSTEM (LINE, LOW PRESSURE)	

C-CHANGE FROM PREVIOUS TYPE
F-NOT SHOWN
M-METRIC PART

304-3659 **LINES GP-FUEL** *(contd.)* **i03348267**

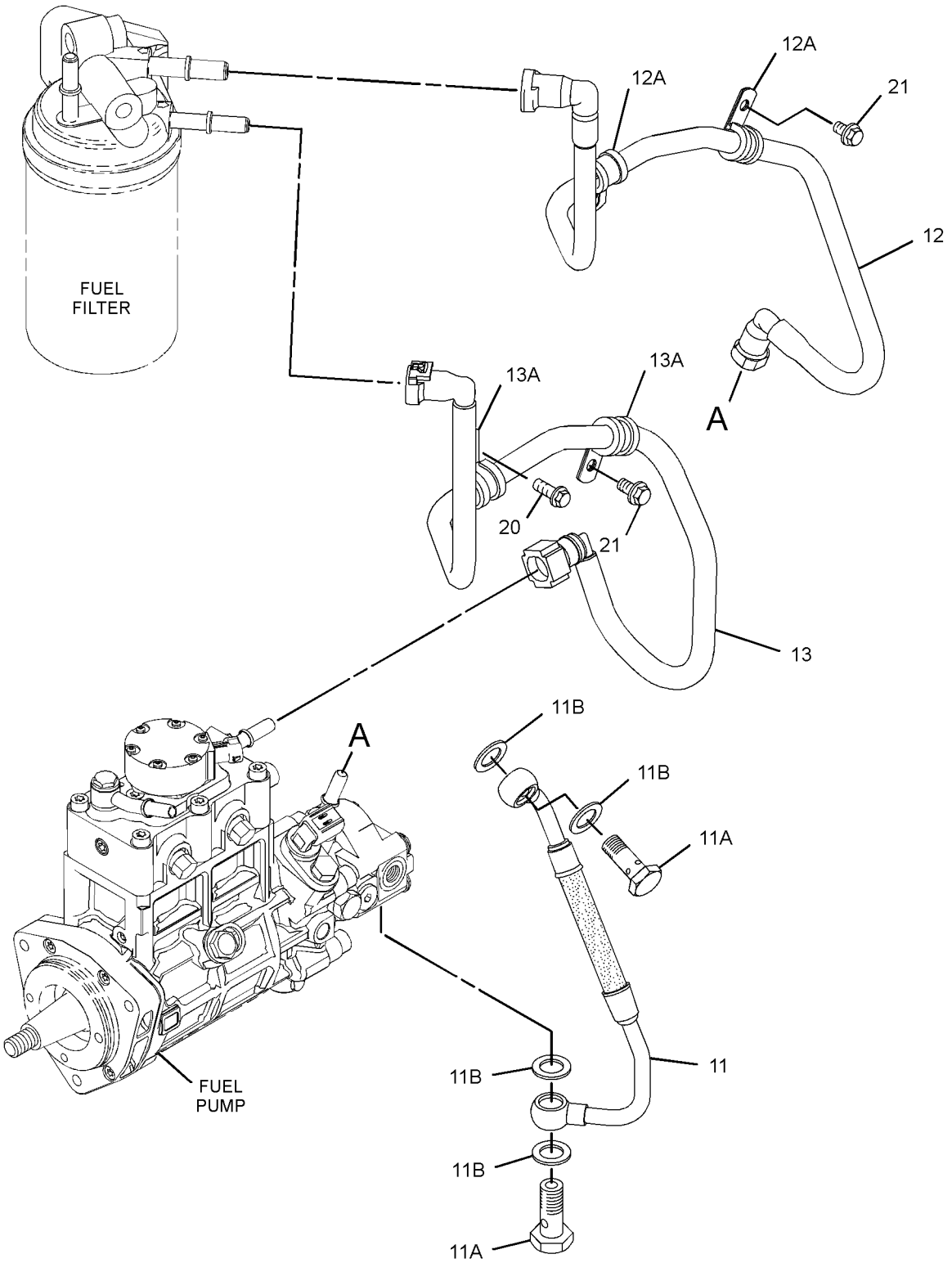

GRAPHIC #1 g01735134

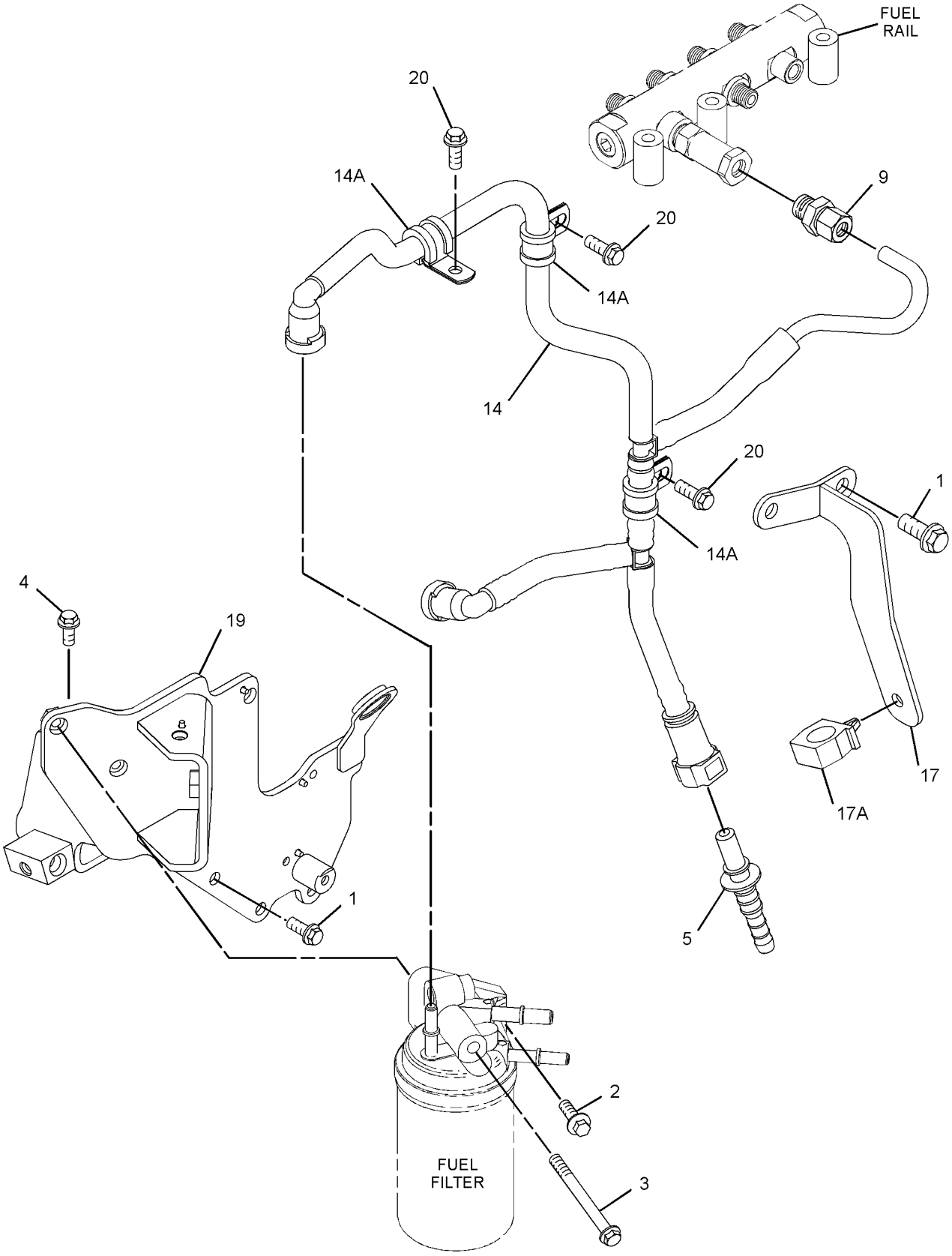

GRAPHIC #2

<END>

g01735135

FUEL SYSTEM

304-3662 LINES GP-FUEL

S/N: C4E1-5303

PART OF 254-9233 ENGINE AR-PRIMARY

SMCS-1274 **i03153881**

NOTE	REF NO	GRAPHIC REF	PART NUMBER	QTY	PART NAME 1 2 3 4 5 6 (PRODUCT LEVEL)	SEE PAGE
M	1	1	**6I-0593**	2	BOLT (M10X1.5X30-MM)	
Y	2	1	**318-8063**	1	FILTER GP-FUEL	66
	3	1	**304-3713**	1	TUBE	
BF			**278-4138**	1	PROTECTION GP-FUEL SYSTEM (LINE, LOW PRESSURE)	

B-USE AS REQUIRED
F-NOT SHOWN
M-METRIC PART
Y-SEPARATE ILLUSTRATION

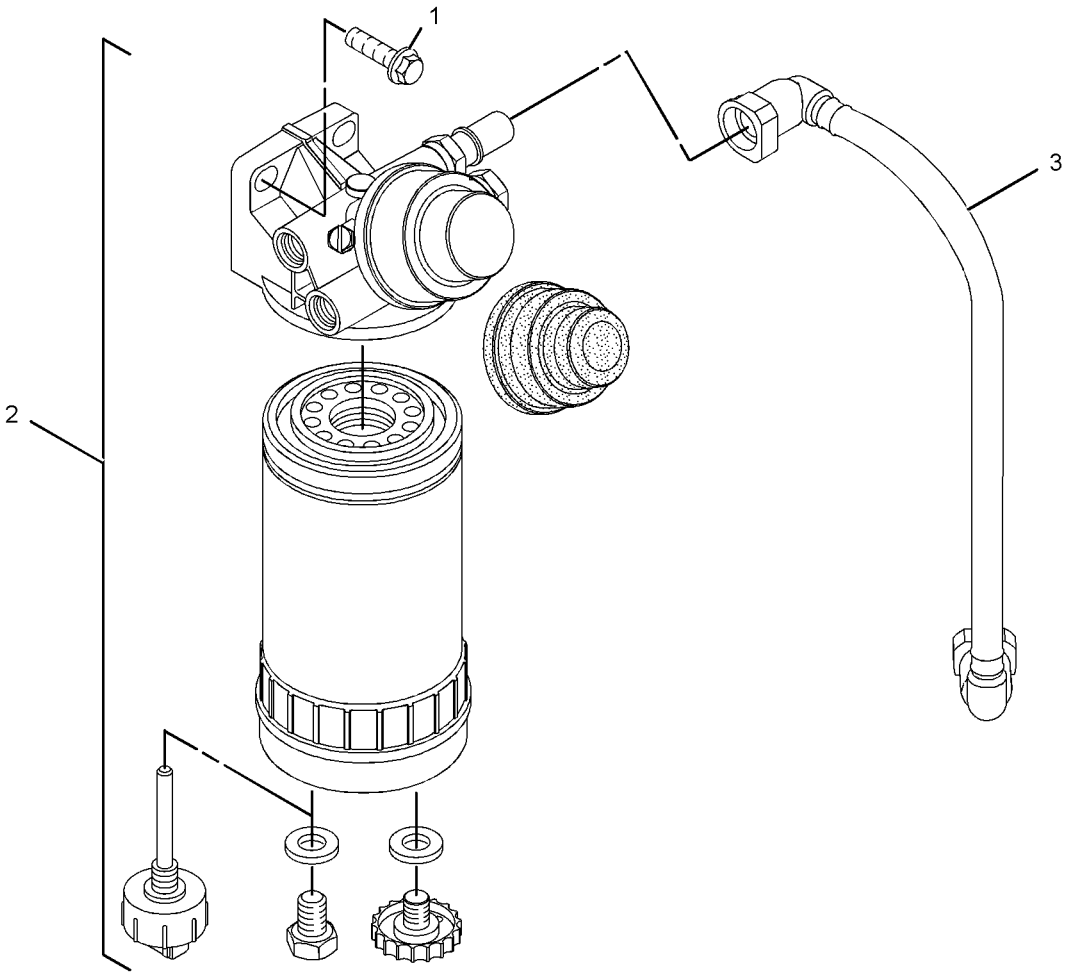

GRAPHIC #1 **<END>** g01621684

FUEL SYSTEM

304-3662 LINES GP-FUEL

S/N: C4E5304-6228

PART OF 254-9233 ENGINE AR-PRIMARY

SMCS-1274 **i03339480**

NOTE	REF NO	GRAPHIC REF	PART NUMBER	QTY	PART NAME 1 2 3 4 5 6 (PRODUCT LEVEL)	SEE PAGE
M	1	1	**6I-0593**	2	BOLT (M10X1.5X30-MM)	
CY	2	1	**334-0808**	1	FILTER GP-FUEL	68
	3	1	**304-3713**	1	TUBE	
BF			**278-4138**	1	PROTECTION GP-FUEL SYSTEM (LINE, LOW PRESSURE)	

B-USE AS REQUIRED
C-CHANGE FROM PREVIOUS TYPE
F-NOT SHOWN
M-METRIC PART
Y-SEPARATE ILLUSTRATION

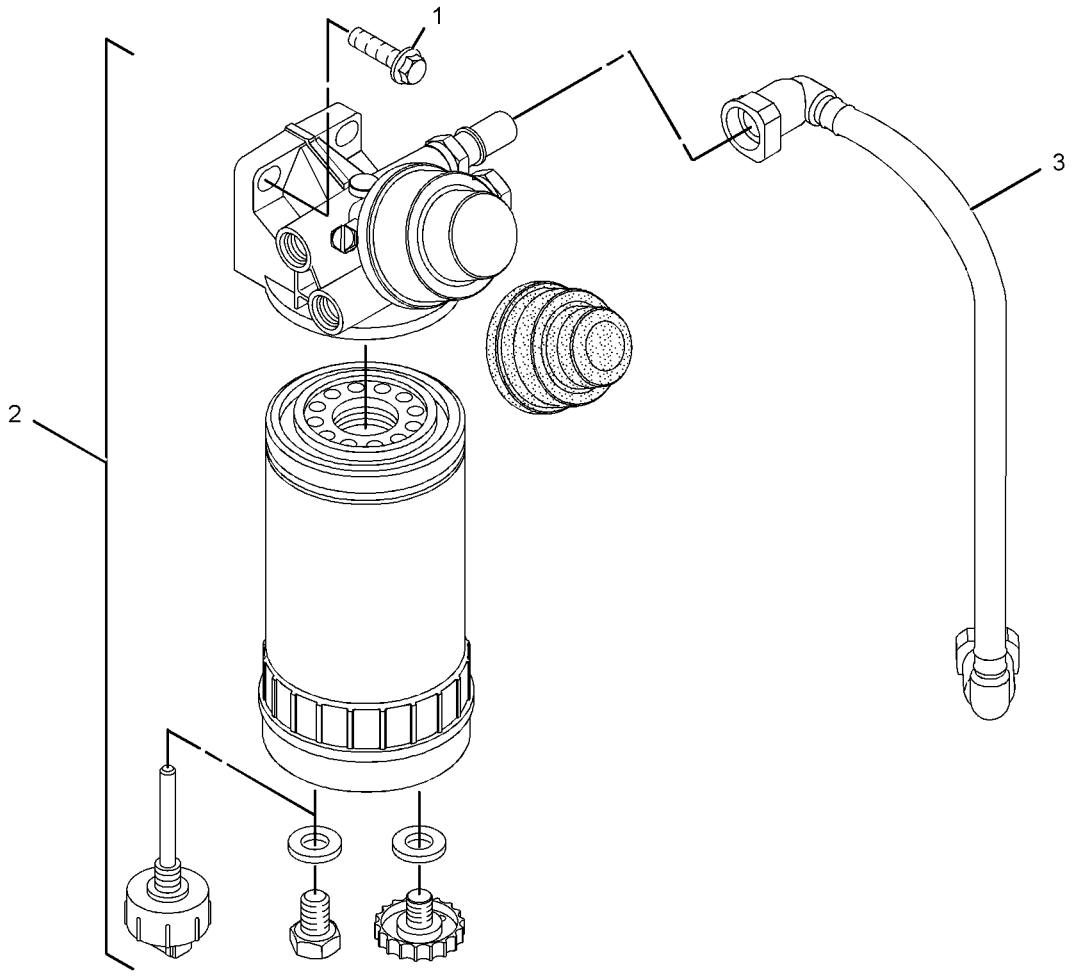

GRAPHIC #1 **<END>** g01621684

FUEL SYSTEM

304-3662 LINES GP-FUEL

S/N: C4E6229-UP

PART OF 254-9233 ENGINE AR-PRIMARY

SMCS-1274 **i03360840**

NOTE	REF NO	GRAPHIC REF	PART NUMBER	QTY	PART NAME 1 2 3 4 5 6 (PRODUCT LEVEL)	SEE PAGE
M	1	1	**6I-0593**	2	BOLT (M10X1.5X30-MM)	
CY	2	1	**334-0808**	1	FILTER GP-FUEL	68
	3	1	**338-8085**	1	TUBE AS	
BF			**278-4138**	1	PROTECTION GP-FUEL SYSTEM (LINE, LOW PRESSURE)	

B-USE AS REQUIRED
C-CHANGE FROM PREVIOUS TYPE
F-NOT SHOWN
M-METRIC PART
Y-SEPARATE ILLUSTRATION

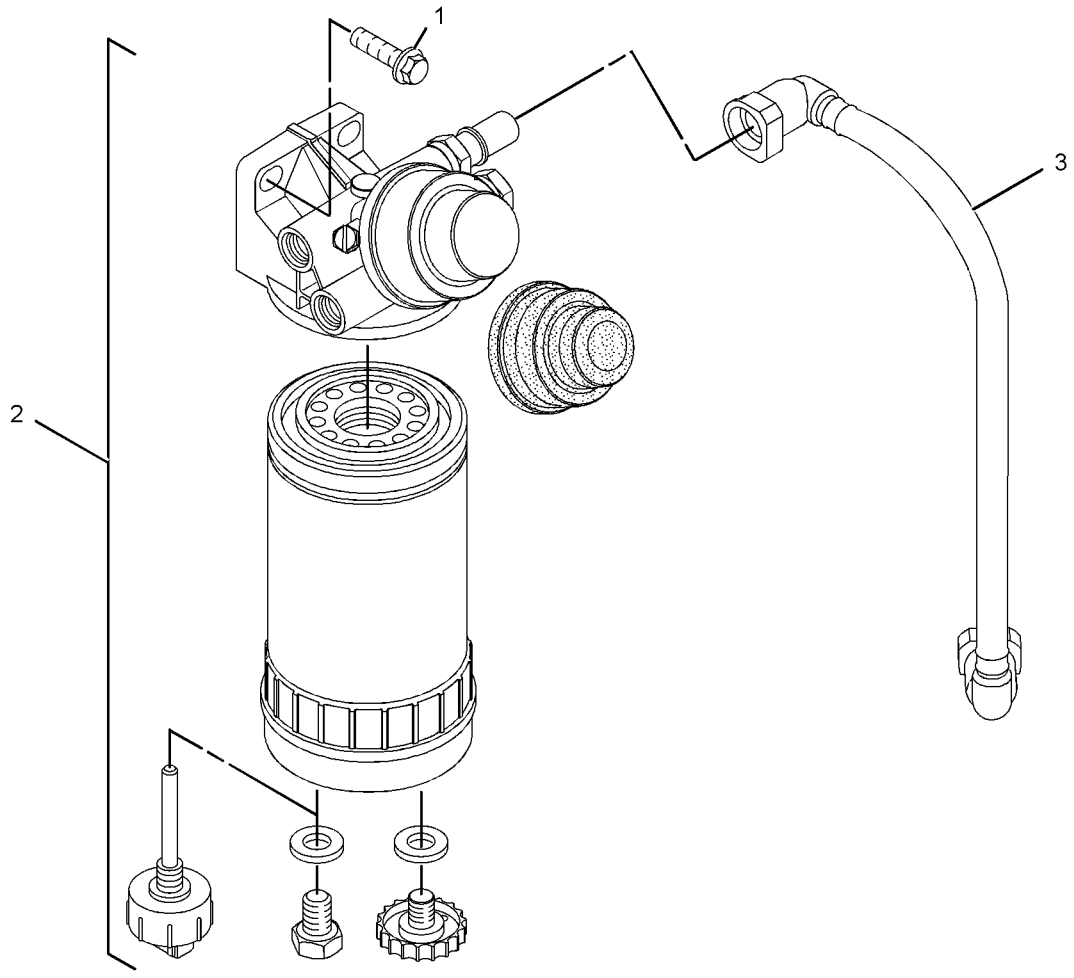

GRAPHIC #1 **<END>** g01621684

FUEL SYSTEM

295-9125 PUMP & MTG GP-UNIT INJ HYD*R

S/N: C4E1-UP

PART OF 304-3649 PUMP GP-FUEL INJECTION

SMCS-1714 **i02906550**

NOTE	REF NO	GRAPHIC REF	PART NUMBER	QTY	PART NAME 1 2 3 4 5 6 (PRODUCT LEVEL)	SEE PAGE
M	1	1	**5A-3604**	5	BOLT-SOCKET HEAD (M8X1.25X25-MM)	
	2	1	**238-0120**	1	SENSOR GP-SPEED (FUEL PUMP)	
	3	1	**117-1385**	1	SEAL-O-RING	
	4	1	**6D-7889**	1	SEAL-O-RING	
	5	1	**295-4801**	1	NUT (M14X1.5-THD)	
	6	1	**296-3542**	1	LOCKWASHER	
	7	1	**228-7100**	1	SEAL-O-RING	
	8	1	**248-1066**	1	FITTING-FUEL	
	9	1	**293-0249**	1	PUMP GP-FUEL TRANSFER	
	10	1	**247-6020**	1	SEAL	
M	11	1	**8T-4200**	1	BOLT (M8X1.25X16-MM)	

M-METRIC PART

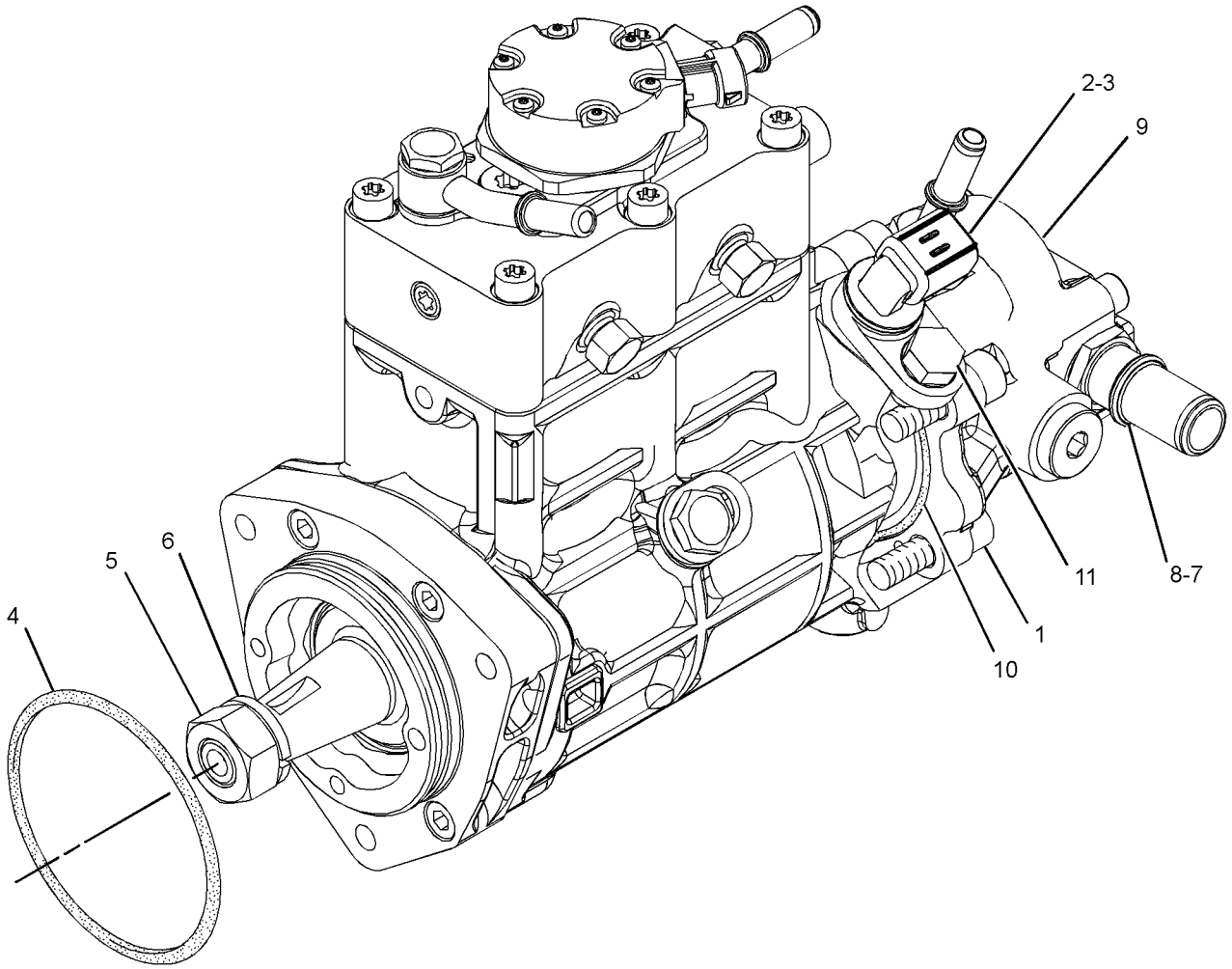

GRAPHIC #1 **<END>** g01447455

324-0532 PUMP & MTG GP-UNIT INJ HYD*R

S/N: C4E1-UP

PART OF 304-3649 PUMP GP-FUEL INJECTION

SMCS-1714 **i03552387**

NOTE	REF NO	GRAPHIC REF	PART NUMBER	QTY	PART NAME 1 2 3 4 5 6 (PRODUCT LEVEL)	SEE PAGE
	1	1	**228-0172**	2	FITTING-FUEL	
	2	1	**228-7100**	3	SEAL-O-RING	
	3	1	**238-0120**	1	SENSOR GP-SPEED (SECONDARY, TIMING)	
	4	1	**247-6019**	2	SEAL	
	5	1	**248-1066**	1	FITTING-FUEL	
	6	1	**293-0249**	1	PUMP GP-FUEL TRANSFER	
	7	1	*295-0189*	1	CONNECTOR AS	
	7A	1	**8C-3076**	1	SEAL-O-RING	
	8	1	**295-4801**	1	NUT (M14X1.5-THD) (M14X1.5 THD)	
	9	1	**296-3542**	1	LOCKWASHER	
	10	1	**117-1385**	1	SEAL-O-RING	
M	11	1	**5A-3604**	5	BOLT-SOCKET HEAD (M8X1.25X25-MM)	
	12	1	**334-2932**	1	SEAL-O-RING	
	13	1	**8L-2779**	4	SEAL-O-RING	
M	14	1	**8T-4200**	1	BOLT (M8X1.25X16-MM)	

M-METRIC PART

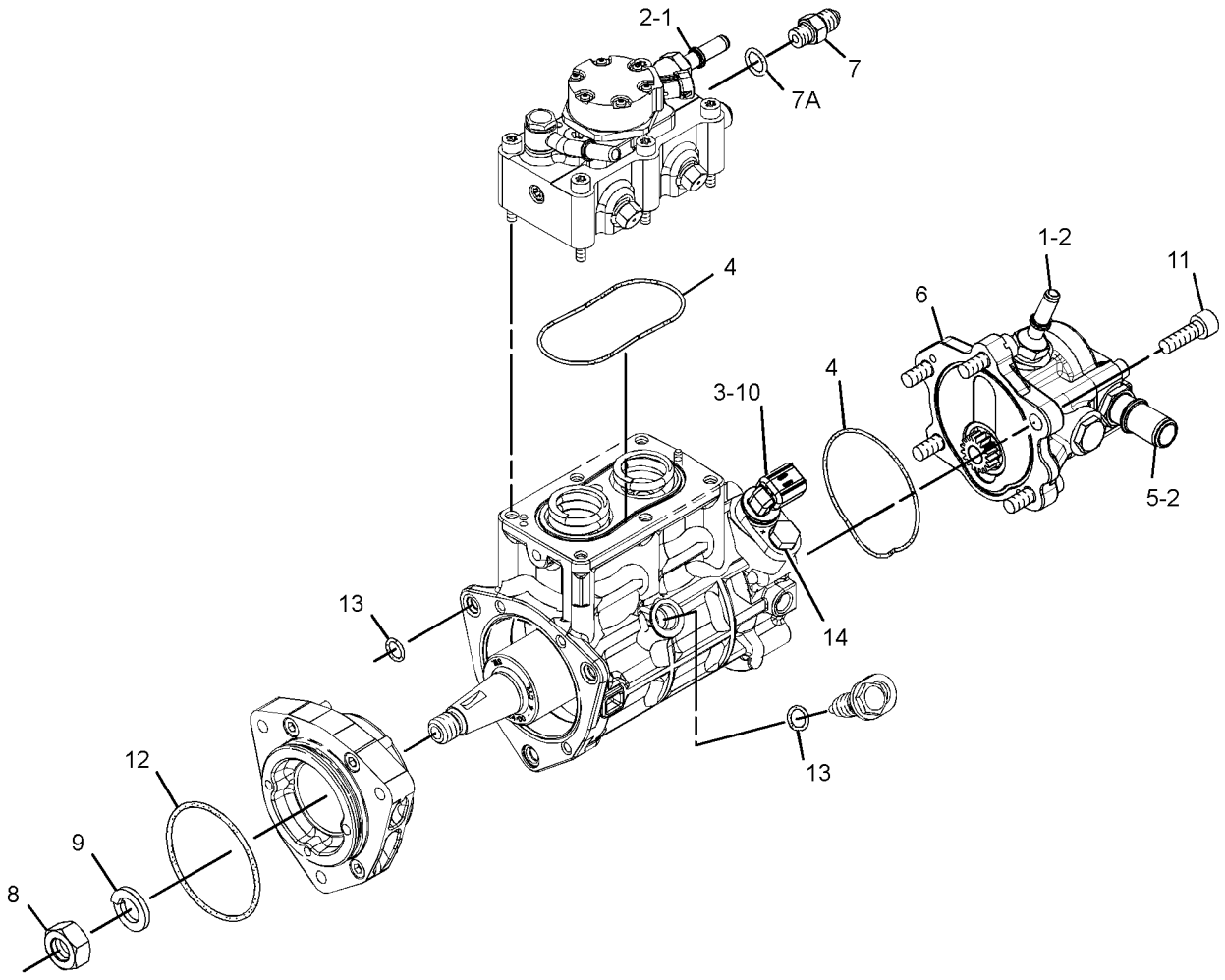

GRAPHIC #1 **<END>** g01620557

283-2271 PUMP GP-FUEL INJECTION

S/N: C4E1-UP

PART OF 304-3649 PUMP GP-FUEL INJECTION

SMCS-1251, 1290 **i03327681**

NOTE	REF NO	GRAPHIC REF	PART NUMBER	QTY	PART NAME 1 2 3 4 5 6 (PRODUCT LEVEL)	SEE PAGE
M	1	1	**5A-3604**	5	BOLT-SOCKET HEAD (M8X1.25X25-MM)	
	2	1	**238-0120**	1	SENSOR GP-SPEED (SECONDARY, TIMING)	
	3	1	**117-1385**	1	SEAL-O-RING	
	4	1	**6D-7889**	1	SEAL-O-RING	
	5	1	**277-1950**	1	NUT	
	6	1	**277-1949**	1	WASHER	
	7	1	**228-7100**	1	SEAL-O-RING	
	8	1	**248-1066**	1	FITTING-FUEL	
	9	1	**293-0249**	1	PUMP GP-FUEL TRANSFER	
	10	1	**247-6019**	1	SEAL	
M	11	1	**8T-4200**	1	BOLT (M8X1.25X16-MM)	

M-METRIC PART

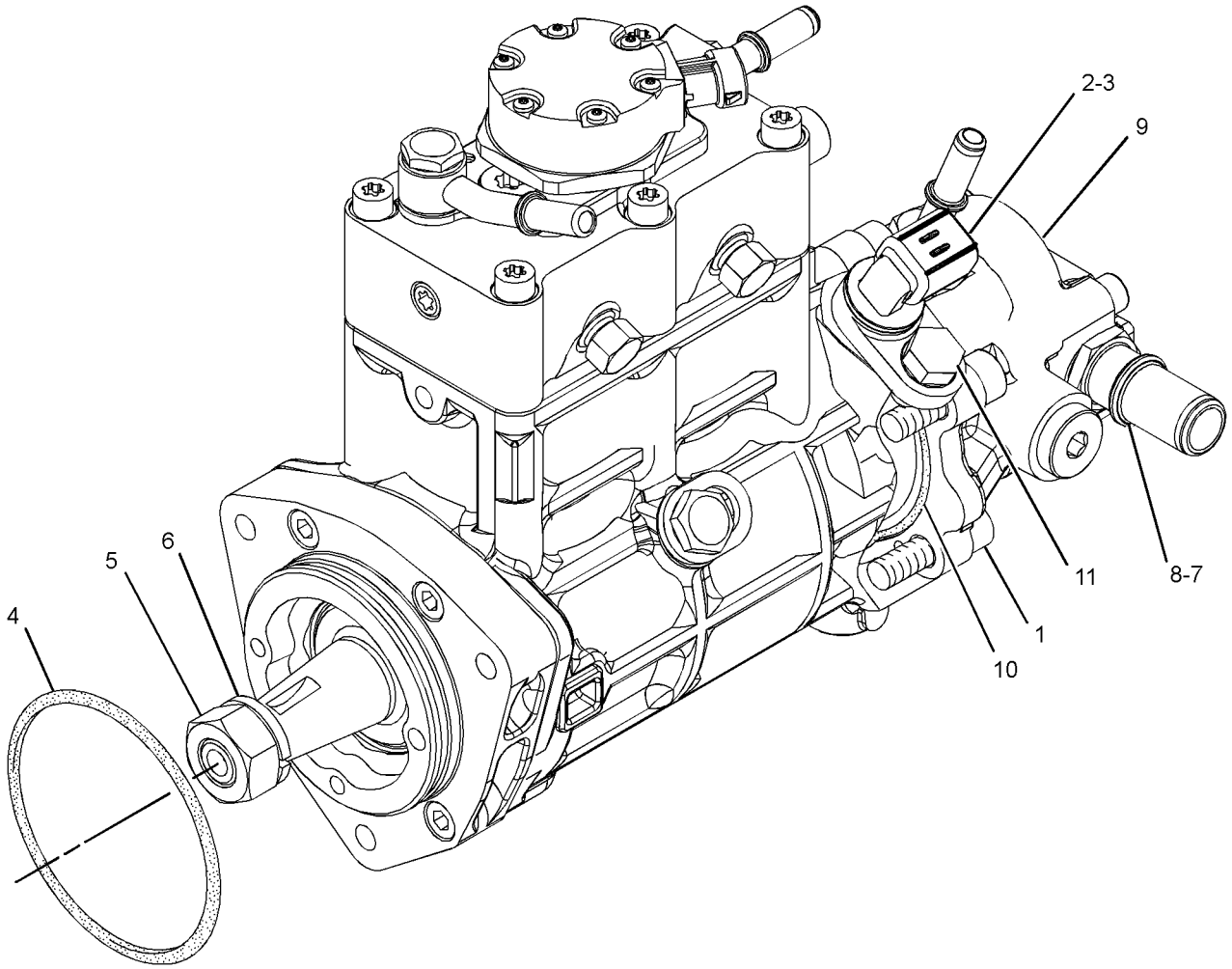

GRAPHIC #1 **<END>** g01447455

FUEL SYSTEM

304-3649 PUMP GP-FUEL INJECTION

S/N: C4E1-UP

PART OF 254-9233 ENGINE AR-PRIMARY

SMCS-1251, 1290 **i02770303**

NOTE	REF NO	GRAPHIC REF	PART NUMBER	QTY	PART NAME 1 2 3 4 5 6 (PRODUCT LEVEL)	SEE PAGE
M	1	1	**6I-0260**	3	BOLT (M8X1.25X25-MM)	
	2	1	**6I-0455**	3	BOLT (M8X1.25X55-MM)	
	3	2	**6I-0572**	4	BOLT (M8X1.25X20-MM)	
	4	2	**7W-2632**	1	WASHER (8.5X16.8X1.6-MM THK)	
	5	3	**035-8017**	2	UNION	
	6	3	**067-6264**	2	FITTING-FLARED	
	7	3	**067-6265**	2	FITTING-BRASS	
M	8	1	**100-4830**	1	BOLT (M10X1.5X20-MM)	
M	9	1	**101-3895**	4	BOLT (M8X1.25X35-MM)	
M	10	1,3	**124-3815**	4	BOLT (M8X16X1.25-MM)	
	11	2	**141-8584**	4	BOLT (M8X1.25X50-MM)	
	12	2	**155-0576**	8	MOUNT-ISOLATION	
	13	1	**160-0162**	2	WASHER	
	14	3	**199-9252**	1	SEAL-O-RING	
	15	2	**217-0099**	4	SPACER (8.2X25X2-MM THK)	
	16	2	**217-8477**	1	CLIP	
	17	1	**230-8989**	1	GEAR-FUEL PUMP (68-TEETH)	
	18	1	**232-3149**	6	WASHER (8.35X16.85X1.55-MM THK)	
	20	2	**268-6678**	1	BRACKET AS	
		1	**260-3719**	1	BRACKET	
	20A	1	**260-3939**		SCREW-HEX HEAD	
	21	2	**268-6677**	1	BRACKET AS	
		1	**260-3718**	1	BRACKET	
	21A	1	**260-3939**	1	SCREW-HEX HEAD	
	22	1	**308-8425**	1	RAIL AS-FUEL	
	23	1	**278-5168**	4	CLAMP-INJECTOR	
	24	1	**278-5170**	4	BOLT	
	25	2	**278-5203**	4	SPACER	
	27	3	**278-5225**	1	KIT-SENSOR (ENGINE OIL PRESSURE)	
	27A	3	**278-5226**	1	SEAL-O-RING	
	28	3	**278-5228**	1	KIT-SENSOR (ENGINE SPEED)	
	28A	3	**278-5227**	1	SEAL-O-RING	
	29	3	**278-5273**	1	KIT-SENSOR (AIR PRESSURE)	
	29A	3	**199-9252**	1	SEAL-O-RING	
	30	3	**278-5307**	1	KIT-SENSOR (COOLANT TEMPERATURE)	
	30A	3	**199-9267**	1	SEAL-O-RING	
	31	1	**278-5308**	1	KIT-SENSOR (FUEL RAIL PRESSURE)	
	31A	1	**278-5309**	1	WASHER	
Y	32	1	**292-3778**	4	INJECTOR GP-FUEL	71
Y	33	1	**283-2271**	1	PUMP GP-FUEL INJECTION	88
	34	1	**298-4535**	1	BRACKET-SUPPORT	
	35	1	**298-4536**	1	BRACKET-MOUNTING	
	36	1	**298-4537**	1	TUBE AS	
	37	1	**298-4538**	1	TUBE AS (CYL NO. 1)	
	38	1	**298-4539**	1	TUBE AS (CYL NO. 2)	
	39	1	**298-4540**	1	TUBE AS (CYL NO. 3)	
	40	1	**298-4541**	1	TUBE AS (CYL NO. 4)	
	41	1	**298-4542**	1	TUBE AS	
	42	1	**298-4543**	1	BOLT	
	43	2	**298-4544**	1	BRACKET MOUNTING	
	44	3	**304-3687**	1	SENSOR-AIR TEMPERATURE	
	44A	3	**278-5226**	1	SEAL-O-RING	
	45	3	**304-3688**	1	TUBE	
	46	3	**304-3689**	1	ADAPTER	
F			**278-4138**	4	PROTECTION GP-FUEL SYSTEM	

304-3649 **PUMP GP-FUEL INJECTION** *(contd.)* **i02770303**

F-NOT SHOWN
M-METRIC PART
Y-SEPARATE ILLUSTRATION

304-3649 **PUMP GP-FUEL INJECTION** *(contd.)* **i02770303**

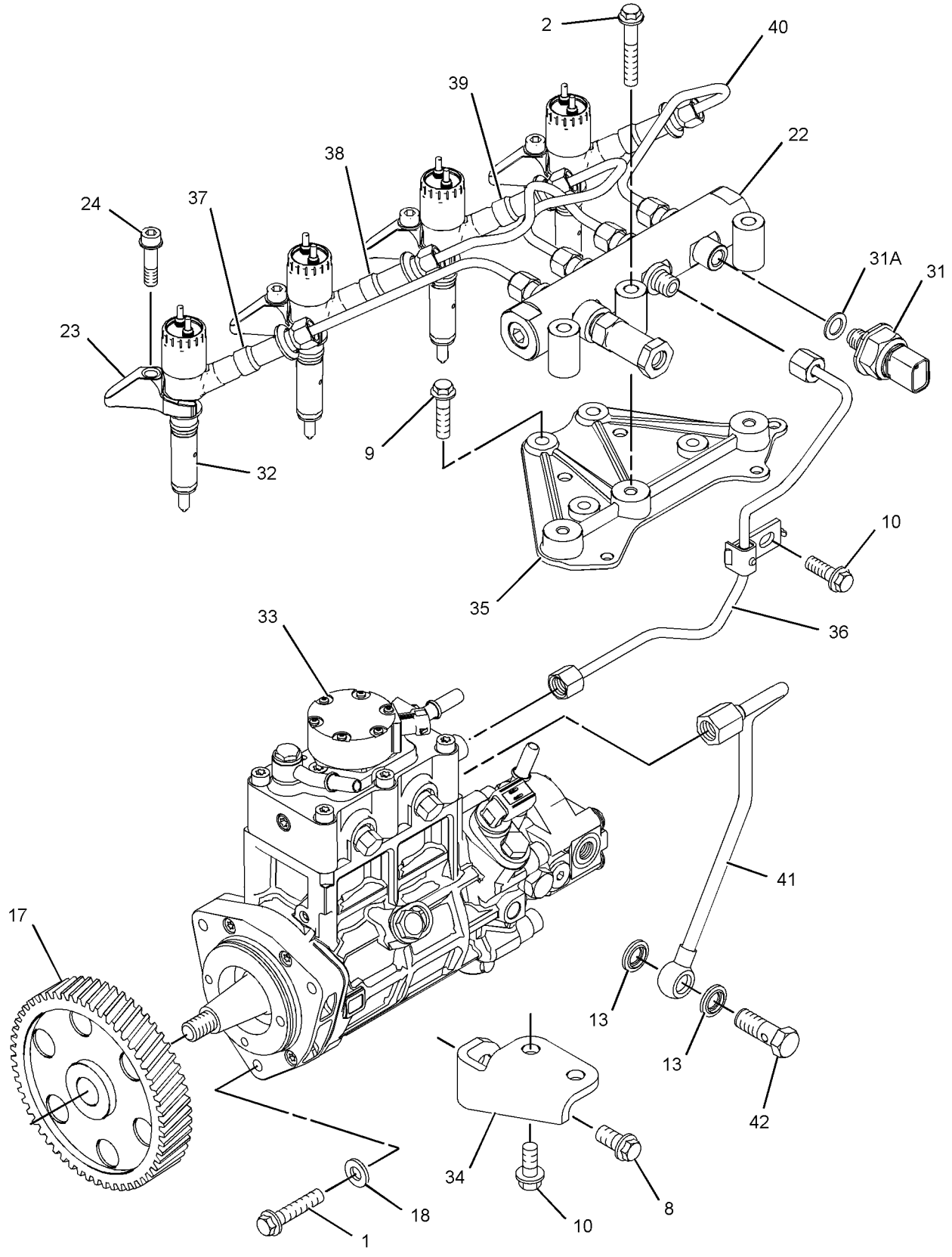

GRAPHIC #1 g01379219

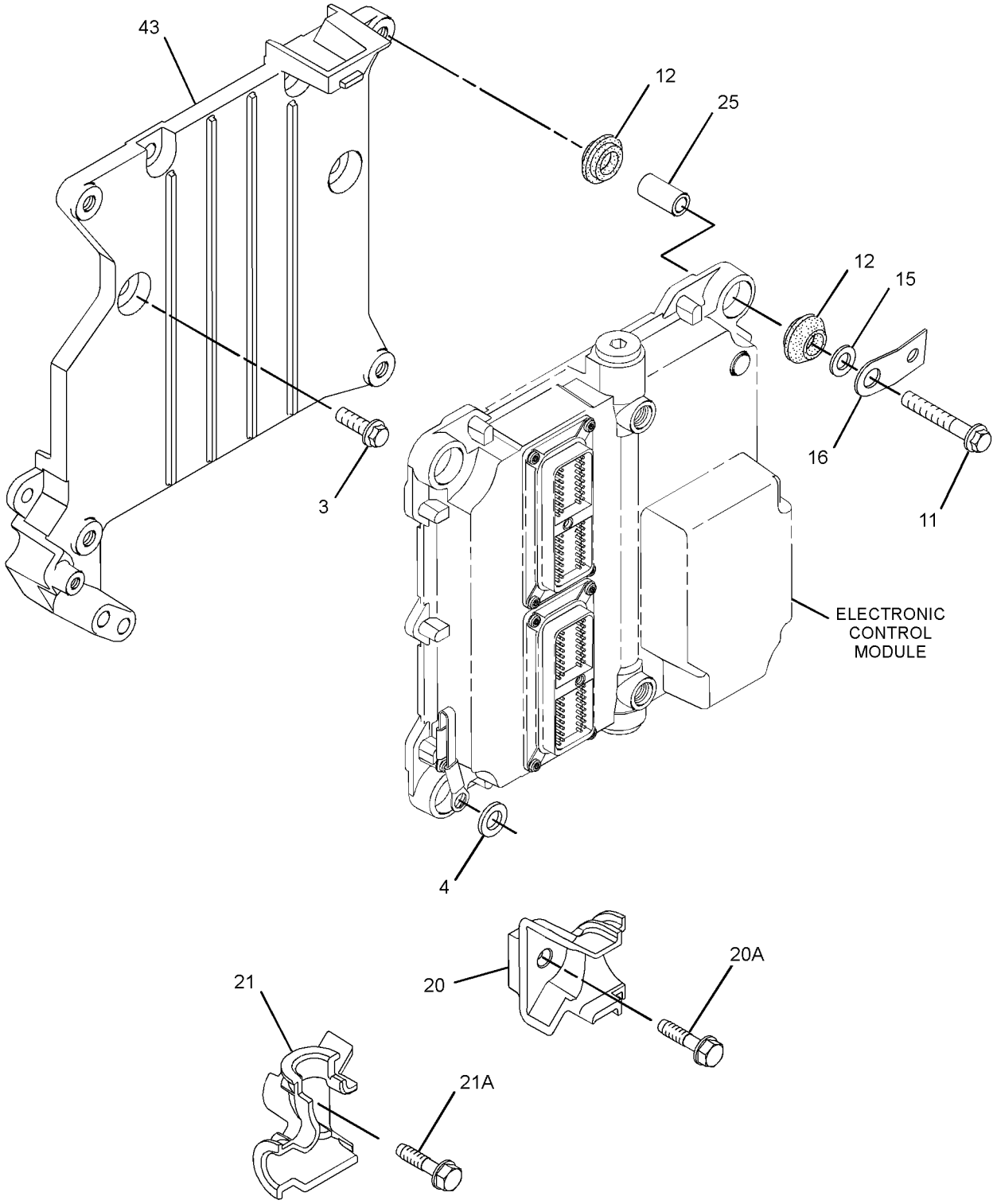

GRAPHIC #2 g01379222

304-3649 **PUMP GP-FUEL INJECTION** *(contd.)* **i02770303**

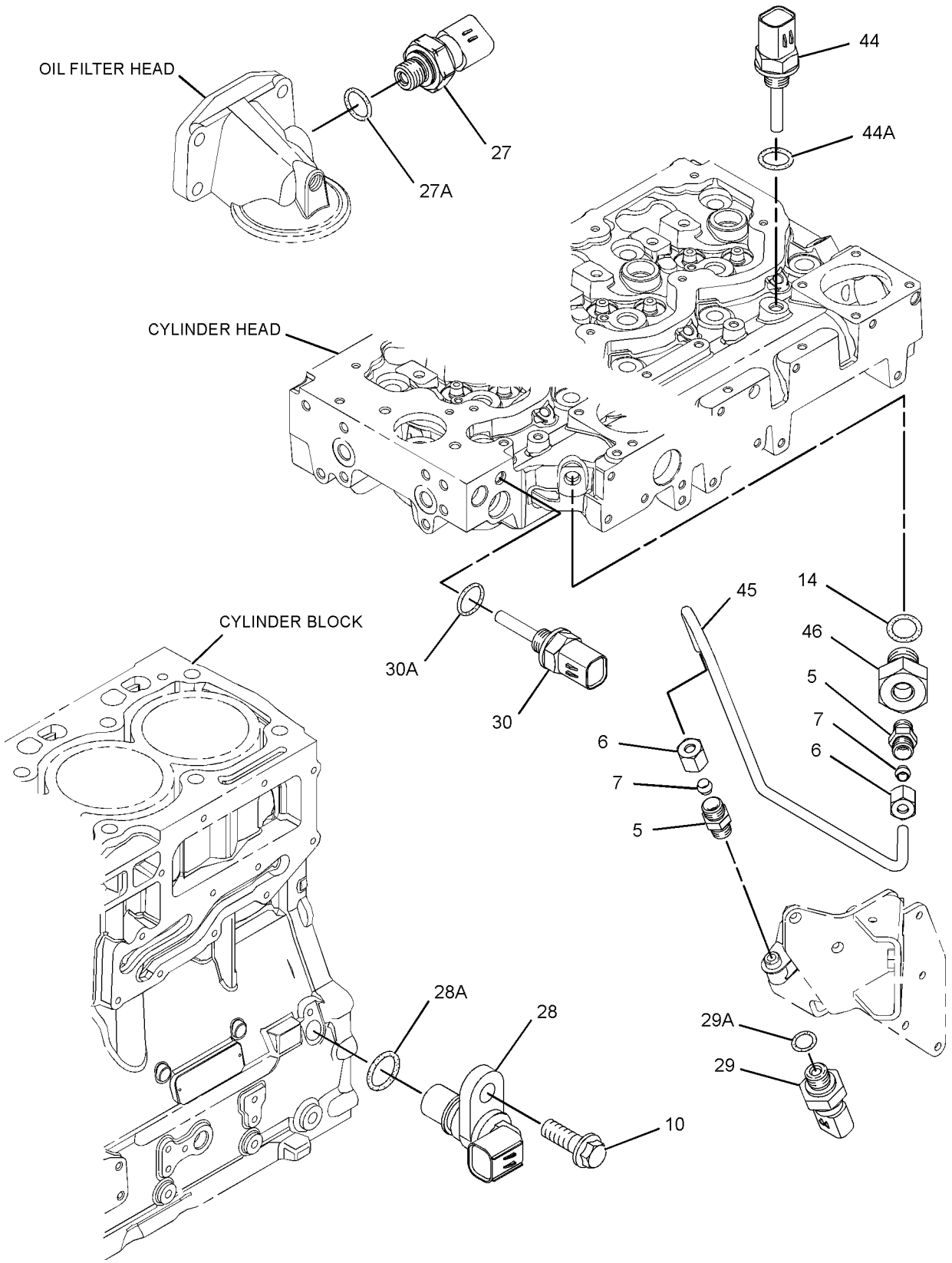

GRAPHIC #3 **<END>** g01342211

FUEL SYSTEM

304-3649 PUMP GP-FUEL INJECTION

S/N: C4E1-3159

PART OF 254-9233 ENGINE AR-PRIMARY

SMCS-1251, 1290 **i03438063**

NOTE	REF NO	GRAPHIC REF	PART NUMBER	QTY	PART NAME 1 2 3 4 5 6 (PRODUCT LEVEL)	SEE PAGE
M	1	1	**6I-0260**	3	BOLT (M8X1.25X25-MM)	
	2	1	**6I-0455**	3	BOLT (M8X1.25X55-MM)	
	3	2	**6I-0572**	4	BOLT (M8X1.25X20-MM)	
	4	2	**7W-2632**	1	WASHER (8.5X16.8X1.6-MM THK)	
	5	3	**035-8017**	2	UNION	
	6	3	**067-6264**	2	FITTING-FLARED	
	7	3	**067-6265**	2	FITTING-BRASS	
M	8	1	**100-4830**	1	BOLT (M10X1.5X20-MM)	
M	9	1	**101-3895**	4	BOLT (M8X1.25X35-MM)	
M	10	1,3	**124-3815**	4	BOLT (M8X16X1.25-MM)	
	11	2	**141-8584**	4	BOLT (M8X1.25X50-MM)	
C	12	2	**300-6714**	8	MOUNT	
	13	1	**160-0162**	2	WASHER	
	14	3	**199-9252**	1	SEAL-O-RING	
	15	2	**217-0099**	4	SPACER (8.2X25X2-MM THK)	
	16	2	**217-8477**	1	CLIP	
	17	1	**230-8989**	1	GEAR-FUEL PUMP (68-TEETH)	
	18	1	**232-3149**	3	WASHER (8.35X16.85X1.55-MM THK)	
	20	2	**268-6678**	1	BRACKET AS	
	20A	2	**260-3939**		SCREW-HEX HEAD	
	21	2	**268-6677**	1	BRACKET AS	
	21A	2	**260-3939**	1	SCREW-HEX HEAD	
	22	1	**308-8425**	1	RAIL AS-FUEL	
	23	1	**278-5168**	4	CLAMP-INJECTOR	
	24	1	**278-5170**	4	BOLT	
	25	2	**278-5203**	4	SPACER	
	27	3	**278-5225**	1	KIT-SENSOR (ENGINE OIL PRESSURE)	
	27A	3	**278-5226**	1	SEAL-O-RING	
C	28	3	**311-3858**	1	KIT-SENSOR (ENGINE SPEED)	
	28A	3	**274-1639**	1	SEAL	
	29	3	**278-5273**	1	KIT-SENSOR (AIR PRESSURE)	
	29A	3	**199-9252**	1	SEAL-O-RING	
	30	3	**278-5307**	1	KIT-SENSOR (COOLANT TEMPERATURE)	
	30A	3	**199-9267**	1	SEAL-O-RING	
C	31	1	**311-6342**	1	SENSOR-PRESSURE (FUEL RAIL PRESSURE)	
	31A	1	**309-8006**	1	WASHER	
Y	32	1	**292-3778**	4	INJECTOR GP-FUEL	71
YR	33	1	**295-9125**	1	PUMP & MTG GP-UNIT INJ HYD	86
	34	1	**298-4535**	1	BRACKET-SUPPORT	
	35	1	**298-4536**	1	BRACKET-MOUNTING	
	36	1	**298-4537**	1	TUBE AS	
	37	1	**298-4538**	1	TUBE AS (CYL NO. 1)	
	38	1	**298-4539**	1	TUBE AS (CYL NO. 2)	
	39	1	**298-4540**	1	TUBE AS (CYL NO. 3)	
	40	1	**298-4541**	1	TUBE AS (CYL NO. 4)	
	41	1	**298-4542**	1	TUBE AS	
	42	1	**298-4543**	1	BOLT	
	43	2	**317-3144**	1	BRACKET	
C	44	3	**313-2455**	1	SENSOR-TEMPERATURE (AIR)	
	44A	3	**278-5226**	1	SEAL-O-RING	
	45	3	**304-3688**	1	TUBE	
	46	3	**304-3689**	1	ADAPTER	
F			**278-4138**	4	PROTECTION GP-FUEL SYSTEM	

C-CHANGE FROM PREVIOUS TYPE
F-NOT SHOWN
M-METRIC PART
R-REMFG PART MAY BE AVAILABLE
Y-SEPARATE ILLUSTRATION

304-3649 **PUMP GP-FUEL INJECTION** *(contd.)* **i03438063**

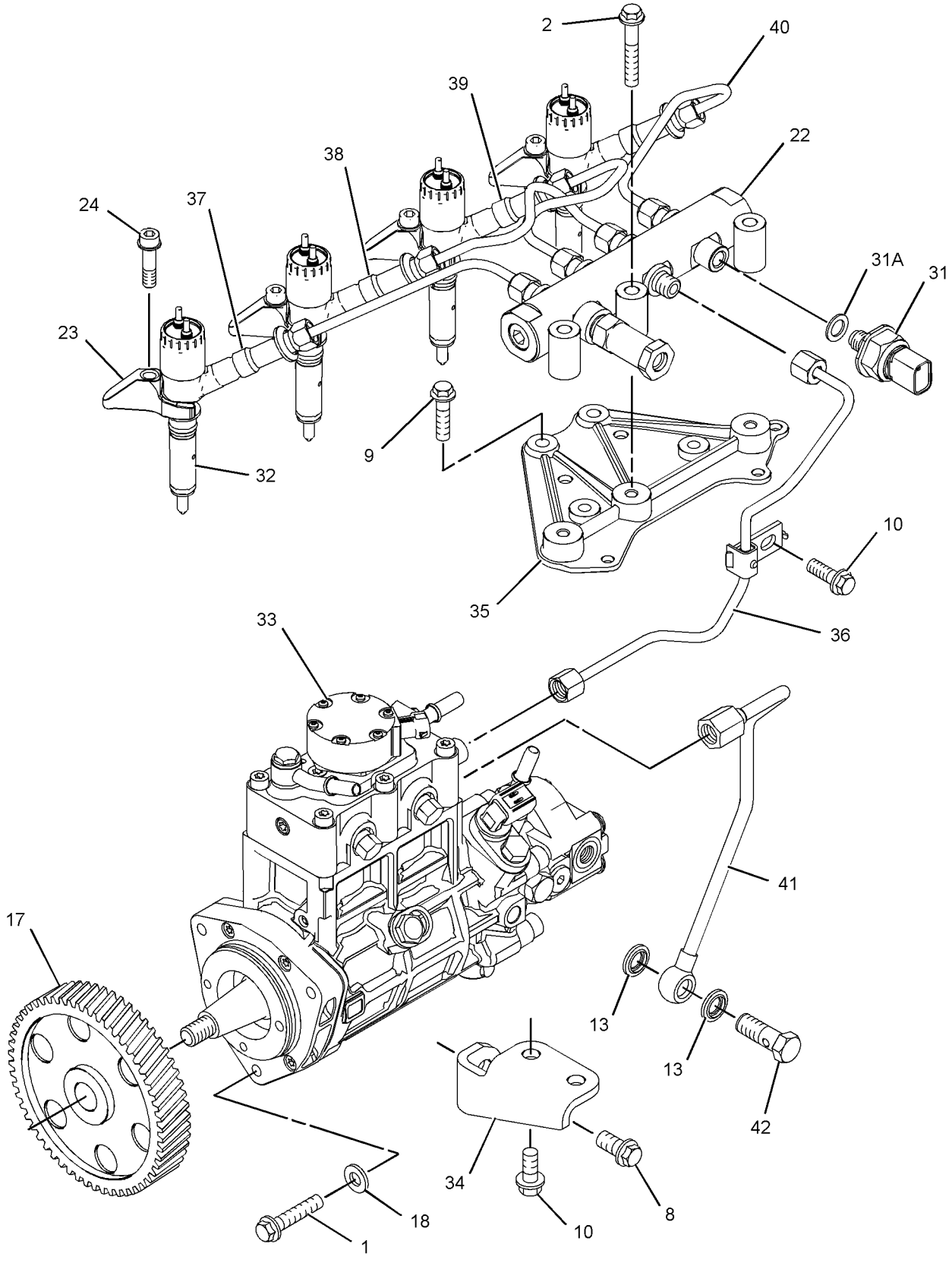

GRAPHIC #1 g01379219

304-3649 **PUMP GP-FUEL INJECTION** *(contd.)* **i03438063**

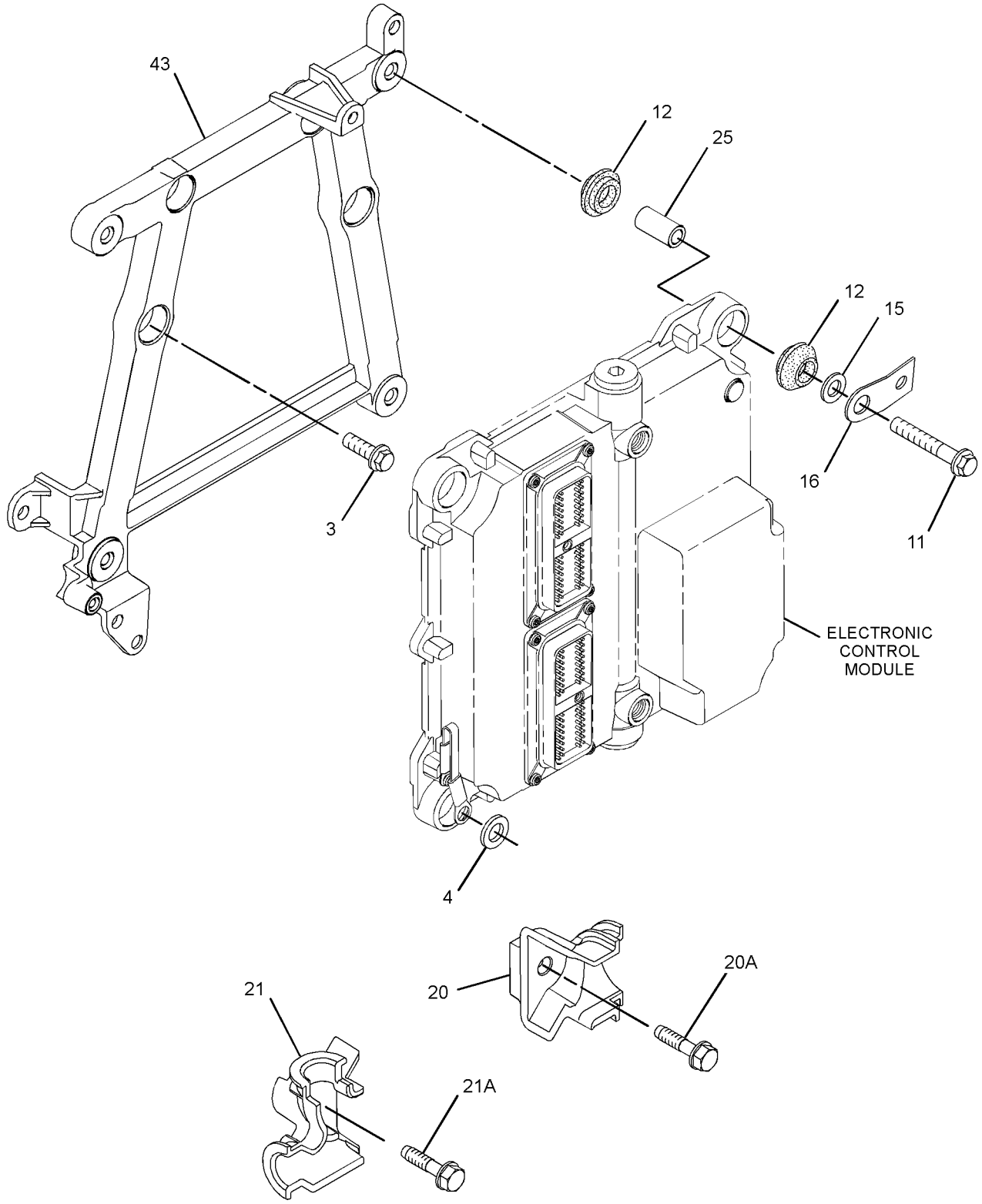

GRAPHIC #2 g01431297

304-3649 **PUMP GP-FUEL INJECTION** *(contd.)* **i03438063**

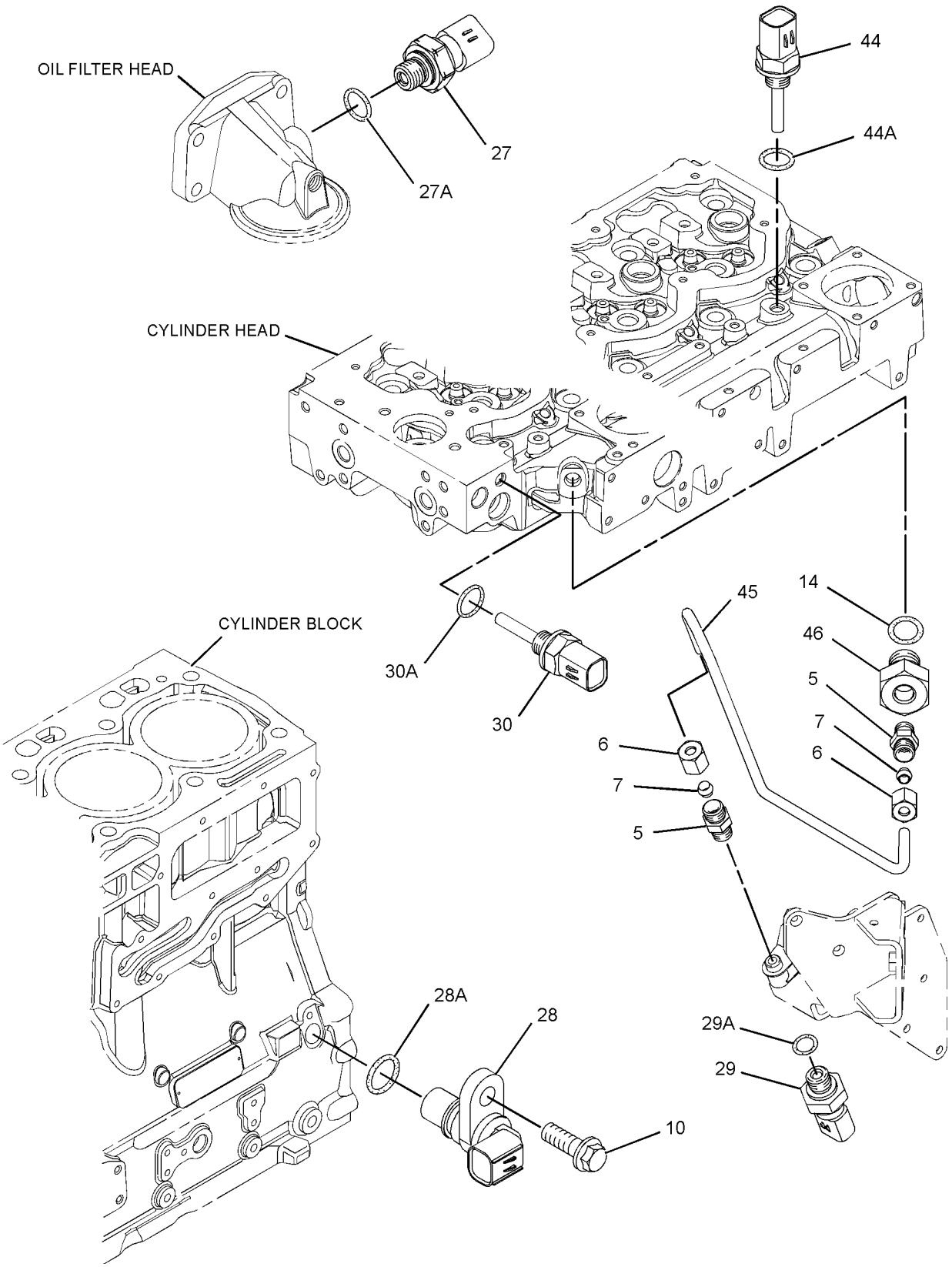

GRAPHIC #3 **<END>** g01342211

FUEL SYSTEM

304-3649 PUMP GP-FUEL INJECTION

S/N: C4E3160-5057

PART OF 254-9233 ENGINE AR-PRIMARY

SMCS-1251, 1290 **i03438064**

NOTE	REF NO	GRAPHIC REF	PART NUMBER	QTY	PART NAME 1 2 3 4 5 6 (PRODUCT LEVEL)	SEE PAGE
M	1	1	**6I-0260**	3	BOLT (M8X1.25X25-MM)	
	2	1	**6I-0455**	3	BOLT (M8X1.25X55-MM)	
	3	2	**6I-0572**	4	BOLT (M8X1.25X20-MM)	
	4	2	**7W-2632**	1	WASHER (8.5X16.8X1.6-MM THK)	
	5	3	**035-8017**	2	UNION	
	6	3	**067-6264**	2	FITTING-FLARED	
	7	3	**067-6265**	2	FITTING-BRASS	
M	8	1	**100-4830**	1	BOLT (M10X1.5X20-MM)	
M	9	1	**101-3895**	4	BOLT (M8X1.25X35-MM)	
M	10	1,3	**124-3815**	4	BOLT (M8X16X1.25-MM)	
	11	2	**141-8584**	4	BOLT (M8X1.25X50-MM)	
	12	2	**300-6714**	8	MOUNT	
	13	1	**160-0162**	2	WASHER	
	14	3	**199-9252**	1	SEAL-O-RING	
	15	2	**217-0099**	5	SPACER (8.2X25X2-MM THK)	
	16	2	**217-8477**	1	CLIP	
	17	1	**230-8989**	1	GEAR-FUEL PUMP (68-TEETH)	
	18	1	**232-3149**	3	WASHER (8.35X16.85X1.55-MM THK)	
	20	2	**268-6678**	1	BRACKET AS	
	20A	2	**260-3939**		SCREW-HEX HEAD	
	21	2	**268-6677**	1	BRACKET AS	
	21A	2	**260-3939**	1	SCREW-HEX HEAD	
C	22	1	**311-6632**	1	RAIL AS-FUEL	
	23	1	**278-5168**	4	CLAMP-INJECTOR	
	24	1	**278-5170**	4	BOLT	
	25	2	**278-5203**	4	SPACER	
	27	3	**278-5225**	1	KIT-SENSOR (ENGINE OIL PRESSURE)	
	27A	3	**199-9267**	1	SEAL-O-RING	
	28	3	**311-3858**	1	KIT-SENSOR (ENGINE SPEED)	
	28A	3	**274-1639**	1	SEAL	
		3	**238-0120**	1	SENSOR GP-SPEED	
	29	3	**278-5273**	1	KIT-SENSOR (AIR PRESSURE)	
	29A	3	**199-9252**	1	SEAL-O-RING	
	30	3	**278-5307**	1	KIT-SENSOR (COOLANT TEMPERATURE)	
	30A	3	**199-9267**	1	SEAL-O-RING	
	31	1	**311-6342**	1	SENSOR-PRESSURE (FUEL RAIL PRESSURE)	
	31A	1	**309-8006**	1	WASHER	
CYR	32	1	**320-0677**	4	INJECTOR GP-FUEL	72
YR	33	1	**324-0532**	1	PUMP & MTG GP-UNIT INJ HYD	87
	34	1	**298-4535**	1	BRACKET-SUPPORT	
	35	1	**298-4536**	1	BRACKET-MOUNTING	
	36	1	**322-3744**	1	TUBE	
	37	1	**322-3745**	1	TUBE (CYL NO. 1) (CYL NO. 1)	
	38	1	**322-3746**	1	TUBE (CYL NO. 2) (CYL NO. 2)	
	39	1	**322-3747**	1	TUBE (CYL NO. 3) (CYL NO. 3)	
	40	1	**322-3748**	1	TUBE (CYL NO. 4) (CYL NO. 4)	
	41	1	**298-4542**	1	TUBE AS	
	42	1	**298-4543**	1	BOLT	
	43	2	**317-3144**	1	BRACKET	
	44	3	**313-2455**	1	SENSOR-TEMPERATURE (AIR)	
	44A	3	**278-5226**	1	SEAL-O-RING	
	45	3	**304-3688**	1	TUBE	
	46	3	**304-3689**	1	ADAPTER	
F			**278-4138**	4	PROTECTION GP-FUEL SYSTEM	

C-CHANGE FROM PREVIOUS TYPE
F-NOT SHOWN
M-METRIC PART
R-REMFG PART MAY BE AVAILABLE
Y-SEPARATE ILLUSTRATION

304-3649 **PUMP GP-FUEL INJECTION** *(contd.)* **i03438064**

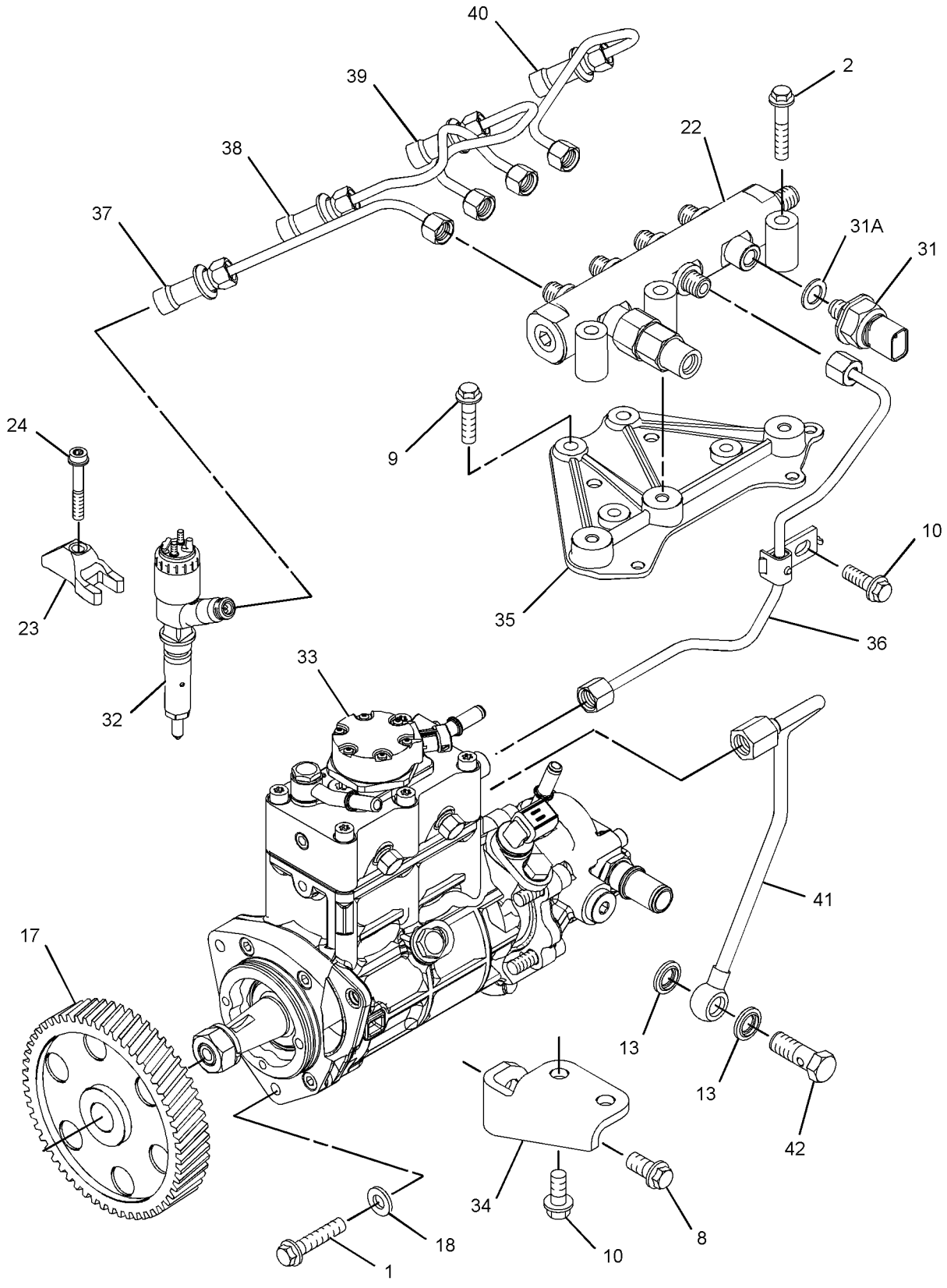

GRAPHIC #1 g01681533

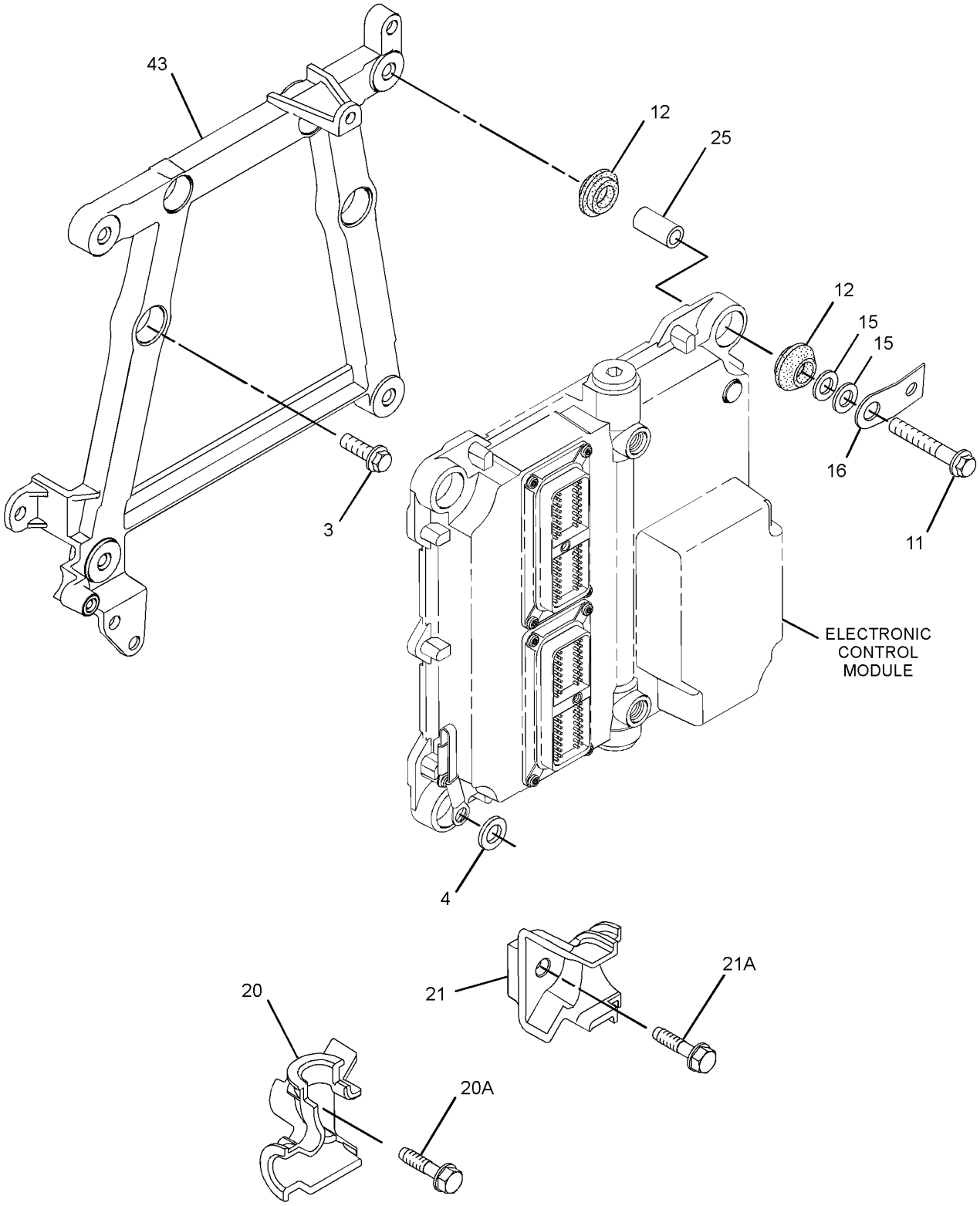

GRAPHIC #2 g01681917

304-3649 **PUMP GP-FUEL INJECTION** *(contd.)* **i03438064**

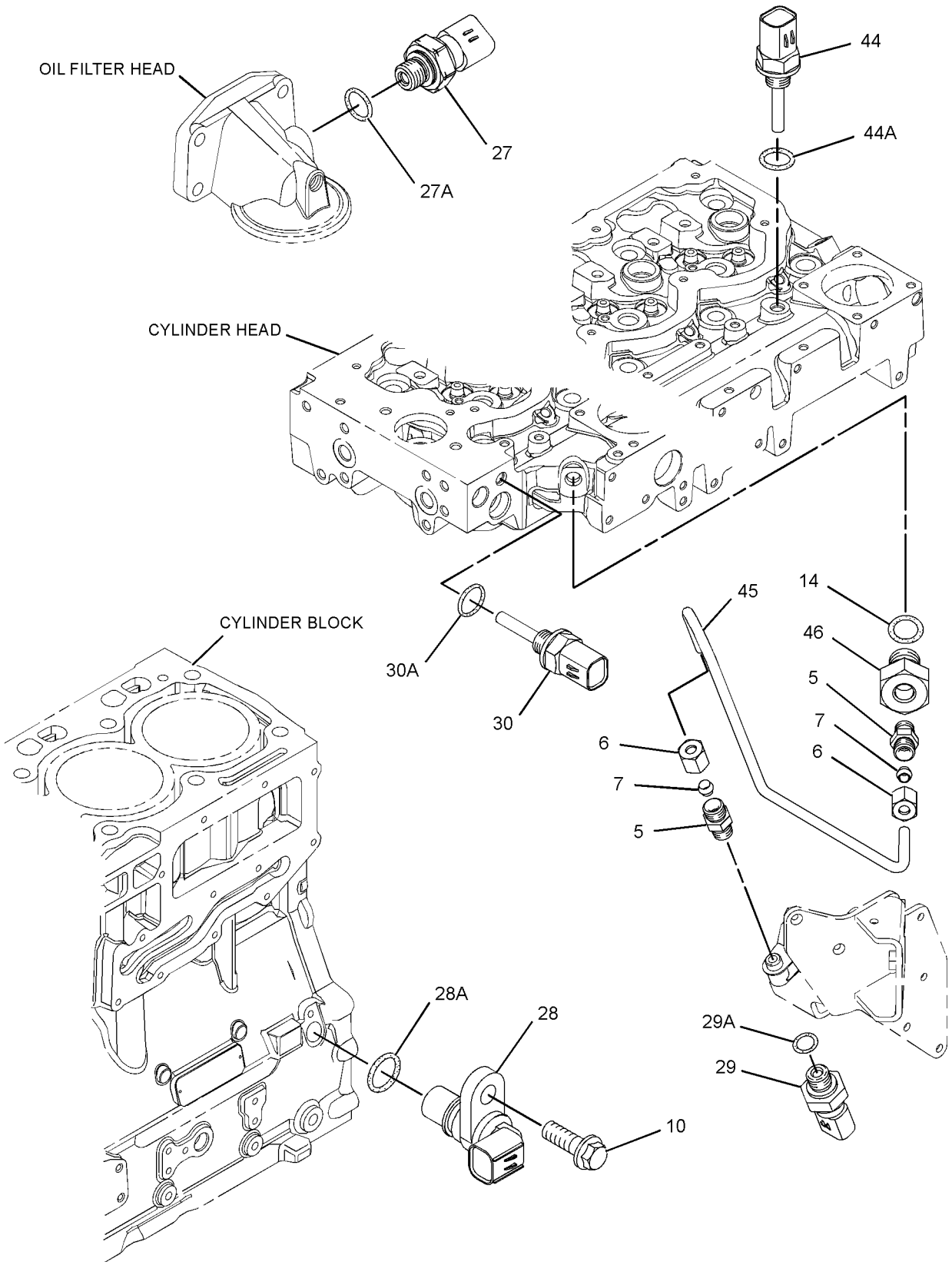

GRAPHIC #3 **<END>** g01342211

FUEL SYSTEM

304-3649 PUMP GP-FUEL INJECTION

S/N: C4E5058-6228

PART OF 254-9233 ENGINE AR-PRIMARY

SMCS-1251, 1290 **i03438061**

NOTE	REF NO	GRAPHIC REF	PART NUMBER	QTY	PART NAME 1 2 3 4 5 6 (PRODUCT LEVEL)	SEE PAGE
M	1	1	**6I-0260**	3	BOLT (M8X1.25X25-MM)	
	2	1	**6I-0455**	3	BOLT (M8X1.25X55-MM)	
	3	2	**6I-0572**	4	BOLT (M8X1.25X20-MM)	
	4	2	**7W-2632**	1	WASHER (8.5X16.8X1.6-MM THK)	
	5	3	**035-8017**	2	UNION	
	6	3	**067-6264**	2	FITTING-FLARED	
	7	3	**067-6265**	2	FITTING-BRASS	
M	8	1	**100-4830**	1	BOLT (M10X1.5X20-MM)	
M	9	1	**101-3895**	4	BOLT (M8X1.25X35-MM)	
M	10	1,3	**124-3815**	4	BOLT (M8X16X1.25-MM)	
	11	2	**141-8584**	4	BOLT (M8X1.25X50-MM)	
	12	2	**300-6714**	8	MOUNT	
	13	1	**160-0162**	2	WASHER	
	14	3	**199-9252**	1	SEAL-O-RING	
	15	2	**217-0099**	5	SPACER (8.2X25X2-MM THK)	
	16	2	**217-8477**	1	CLIP	
	17	1	**230-8989**	1	GEAR-FUEL PUMP (68-TEETH)	
	18	1	**232-3149**	3	WASHER (8.35X16.85X1.55-MM THK)	
	20	2	**268-6678**	1	BRACKET AS	
	20A	2	**260-3939**		SCREW-HEX HEAD	
	21	2	**268-6677**	1	BRACKET AS	
	21A	2	**260-3939**	1	SCREW-HEX HEAD	
	22	1	**311-6632**	1	RAIL AS-FUEL	
	23	1	**278-5168**	4	CLAMP-INJECTOR	
	24	1	**278-5170**	4	BOLT	
	25	2	**278-5203**	4	SPACER	
	27	3	**278-5225**	1	KIT-SENSOR (ENGINE OIL PRESSURE)	
	27A	3	**199-9267**	1	SEAL-O-RING	
	28	3	**311-3858**	1	KIT-SENSOR (ENGINE SPEED)	
	28A	3	**274-1639**	1	SEAL	
		3	**238-0120**	1	SENSOR GP-SPEED	
	29	3	**278-5273**	1	KIT-SENSOR (AIR PRESSURE)	
	29A	3	**199-9252**	1	SEAL-O-RING	
	30	3	**278-5307**	1	KIT-SENSOR (COOLANT TEMPERATURE)	
	30A	3	**199-9267**	1	SEAL-O-RING	
	31	1	**311-6342**	1	SENSOR-PRESSURE (FUEL RAIL PRESSURE)	
	31A	1	**309-8006**	1	WASHER	
YR	32	1	**320-0677**	4	INJECTOR GP-FUEL	72
YR	33	1	**324-0532**	1	PUMP & MTG GP-UNIT INJ HYD	87
	34	1	**298-4535**	1	BRACKET-SUPPORT	
	35	1	**298-4536**	1	BRACKET-MOUNTING	
	36	1	**322-3744**	1	TUBE	
	37	1	**322-3745**	1	TUBE (CYL NO. 1) (CYL NO. 1)	
	38	1	**322-3746**	1	TUBE (CYL NO. 2) (CYL NO. 2)	
C	39	1	**333-4732**	1	LINE-FUEL INJECTION (CYL NO. 3) (CYL NO. 3)	
C	40	1	**333-4733**	1	LINE-FUEL INJECTION (CYL NO. 4) (CYL NO. 4)	
	41	1	**298-4542**	1	TUBE AS	
	42	1	**298-4543**	1	BOLT	
	43	2	**317-3144**	1	BRACKET	
	44	3	**313-2455**	1	SENSOR-TEMPERATURE (AIR)	
	44A	3	**278-5226**	1	SEAL-O-RING	
	45	3	**304-3688**	1	TUBE	
	46	3	**304-3689**	1	ADAPTER	
F			**278-4138**	4	PROTECTION GP-FUEL SYSTEM	

C-CHANGE FROM PREVIOUS TYPE
F-NOT SHOWN
M-METRIC PART
R-REMFG PART MAY BE AVAILABLE
Y-SEPARATE ILLUSTRATION

304-3649 **PUMP GP-FUEL INJECTION** *(contd.)* **i03438061**

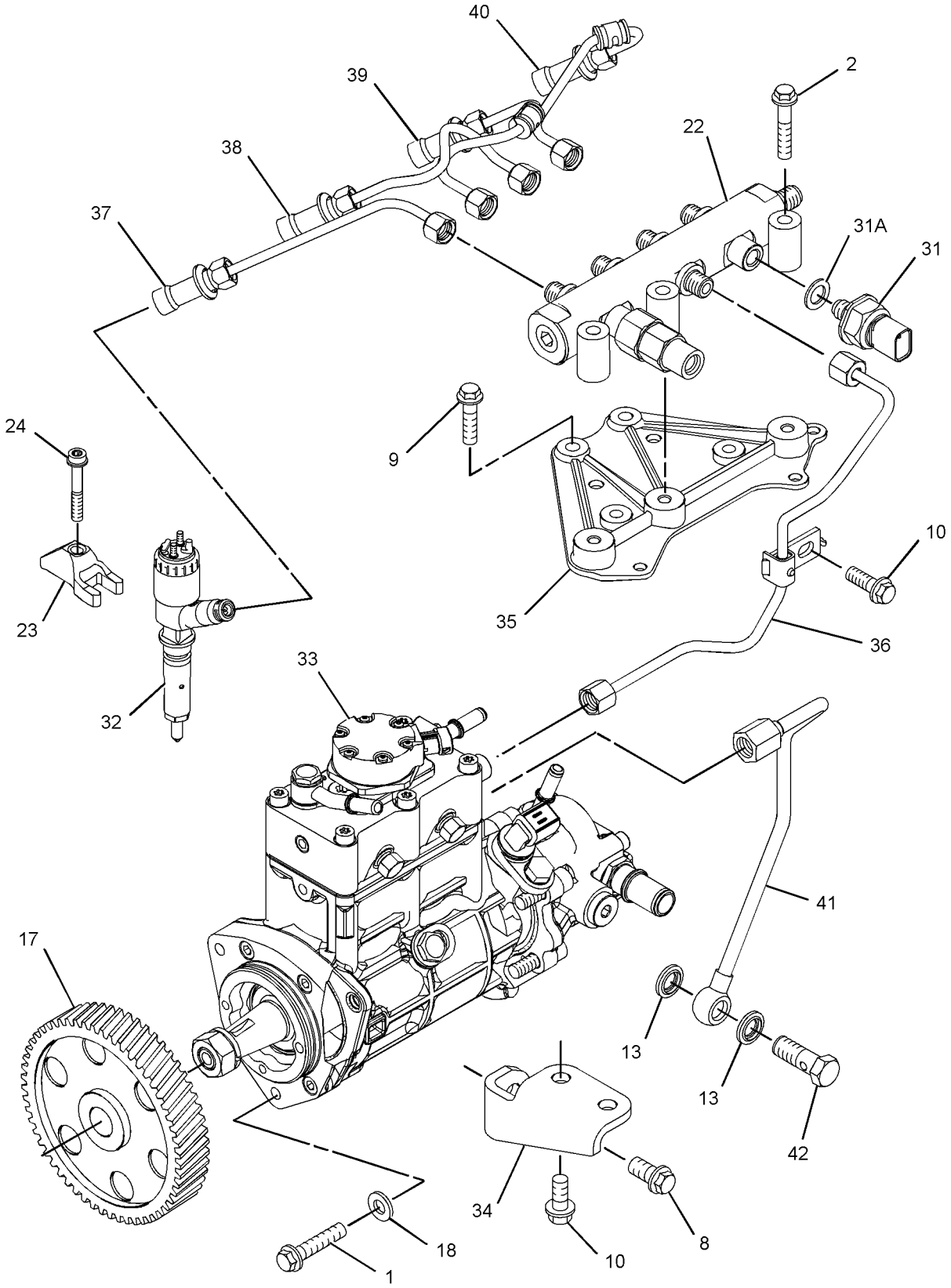

GRAPHIC #1 g01704629

304-3649 **PUMP GP-FUEL INJECTION** *(contd.)* **i03438061**

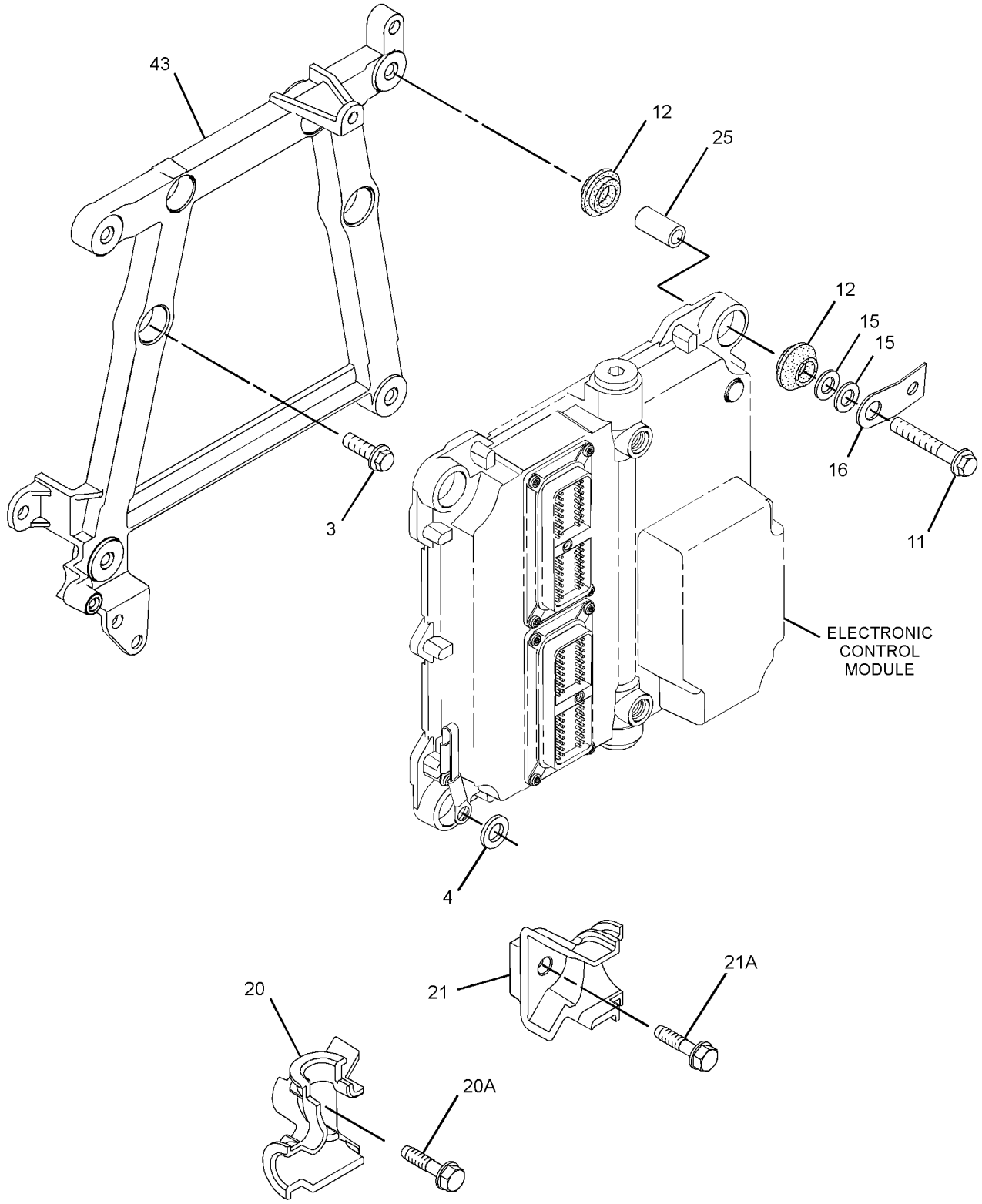

GRAPHIC #2 g01681917

304-3649 **PUMP GP-FUEL INJECTION** *(contd.)* **i03438061**

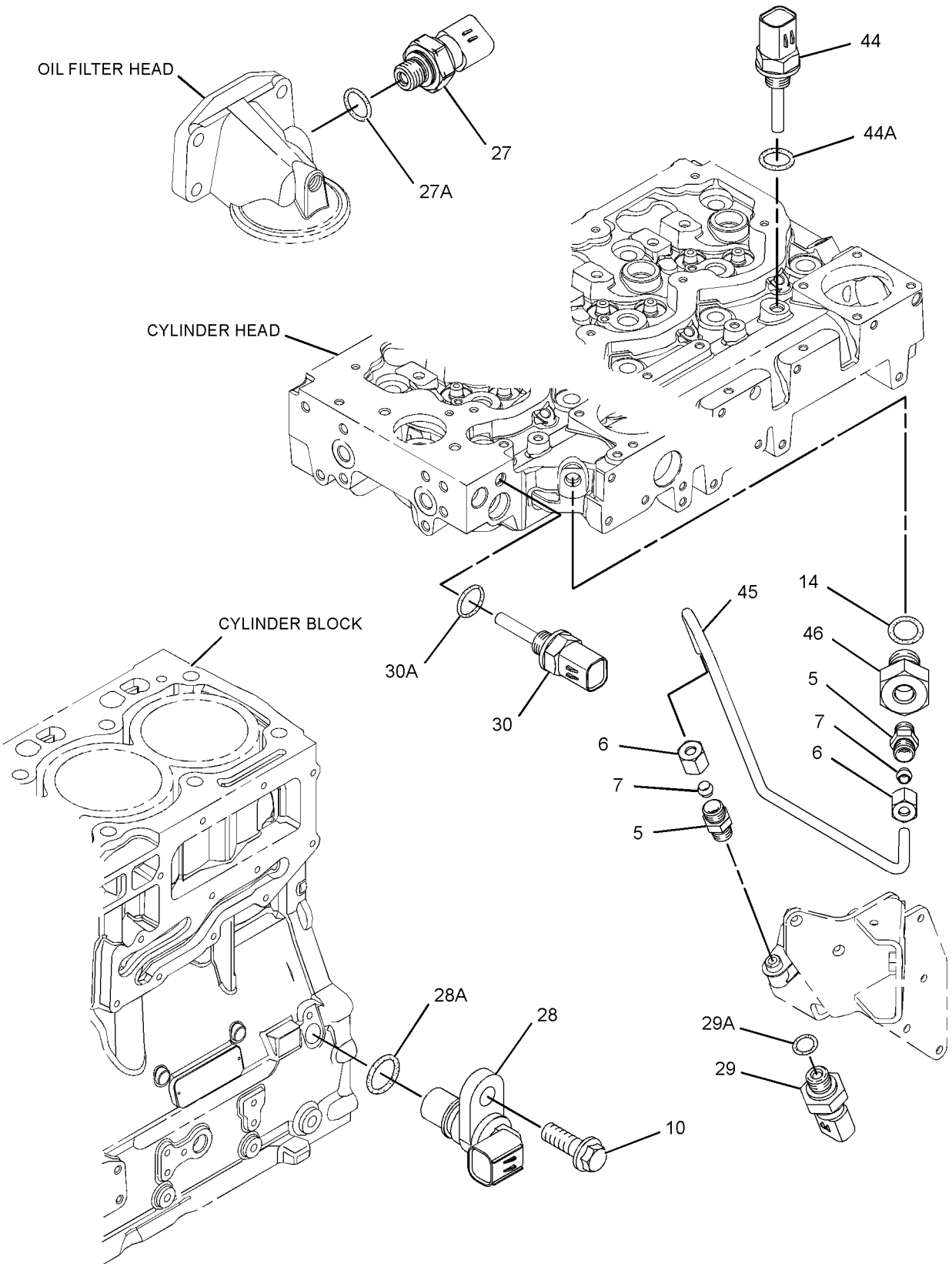

GRAPHIC #3 **<END>** g01342211

304-3649 PUMP GP-FUEL INJECTION

S/N: C4E6229-UP

PART OF 254-9233 ENGINE AR-PRIMARY

SMCS-1251, 1290 **i03544284**

NOTE	REF NO	GRAPHIC REF	PART NUMBER	QTY	PART NAME 1 2 3 4 5 6 (PRODUCT LEVEL)	SEE PAGE
M	1	1	**6I-0260**	3	BOLT (M8X1.25X25-MM)	
	2	1	**6I-0455**	3	BOLT (M8X1.25X55-MM)	
	3	2	**6I-0572**	4	BOLT (M8X1.25X20-MM)	
	4	2	**7W-2632**	1	WASHER (8.5X16.8X1.6-MM THK)	
	5	3	**035-8017**	2	UNION	
	6	3	**067-6264**	2	FITTING-FLARED	
	7	3	**067-6265**	2	FITTING-BRASS	
M	8	1	**100-4830**	1	BOLT (M10X1.5X20-MM)	
M	9	1	**101-3895**	4	BOLT (M8X1.25X35-MM)	
M	10	1,3	**124-3815**	4	BOLT (M8X16X1.25-MM)	
	11	2	**141-8584**	4	BOLT (M8X1.25X50-MM)	
	12	2	**300-6714**	8	MOUNT	
	13	1	**160-0162**	2	WASHER	
	14	3	**199-9252**	1	SEAL-O-RING	
	15	2	**217-0099**	5	SPACER (8.2X25X2-MM THK)	
	17	1	**230-8989**	1	GEAR-FUEL PUMP (68-TEETH)	
	18	1	**232-3149**	3	WASHER (8.35X16.85X1.55-MM THK)	
	20	2	**268-6678**	1	BRACKET AS	
	20A	2	**260-3939**	1	SCREW-HEX HEAD	
	21	2	**268-6677**	1	BRACKET AS	
	21A	2	**260-3939**	1	SCREW-HEX HEAD	
	22	1	**311-6632**	1	RAIL AS-FUEL	
	22A	1	**305-5291**	1	VALVE AS-RELIEF	
	23	1	**278-5168**	4	CLAMP-INJECTOR	
	24	1	**278-5170**	4	BOLT	
	25	2	**278-5203**	4	SPACER	
	27	3	**278-5225**	1	KIT-SENSOR (ENGINE OIL PRESSURE)	
	27A	3	**199-9267**	1	SEAL-O-RING	
	28	3	**311-3858**	1	KIT-SENSOR (ENGINE SPEED)	
	28A	3	**274-1639**	1	SEAL	
	29	3	**278-5273**	1	KIT-SENSOR (AIR PRESSURE)	
	29A	3	**199-9252**	1	SEAL-O-RING	
	30	3	**278-5307**	1	KIT-SENSOR (COOLANT TEMPERATURE)	
	30A	3	**199-9267**	1	SEAL-O-RING	
	31	1	**311-6342**	1	SENSOR-PRESSURE (FUEL RAIL PRESSURE)	
	31A	1	**309-8006**	1	WASHER	
YR	32	1	**320-0677**	4	INJECTOR GP-FUEL	72
YR	33	1	**324-0532**	1	PUMP & MTG GP-UNIT INJ HYD	87
	34	1	**298-4535**	1	BRACKET-SUPPORT	
	35	1	**337-3573**	1	BRACKET	
	36	1	**337-3574**	1	TUBE	
	37	1	**322-3745**	1	TUBE (CYL NO. 1)	
	38	1	**322-3746**	1	TUBE (CYL NO. 2)	
	39	1	**333-4732**	1	LINE-FUEL INJECTION (CYL NO. 3)	
	40	1	**333-4733**	1	LINE-FUEL INJECTION (CYL NO. 4)	
	41	1	**298-4542**	1	TUBE AS	
	42	1	**298-4543**	1	BOLT	
	43	2	**317-3144**	1	BRACKET	
	44	3	**313-2455**	1	SENSOR-TEMPERATURE (AIR)	
	44A	3	**278-5226**	1	SEAL-O-RING	
C	45	3	**335-8266**	1	TUBE	
	46	3	**304-3689**	1	ADAPTER	
F			**278-4138**	4	PROTECTION GP-FUEL SYSTEM	

C-CHANGE FROM PREVIOUS TYPE
F-NOT SHOWN
M-METRIC PART
R-REMFG PART MAY BE AVAILABLE
Y-SEPARATE ILLUSTRATION

304-3649 **PUMP GP-FUEL INJECTION** *(contd.)* **i03544284**

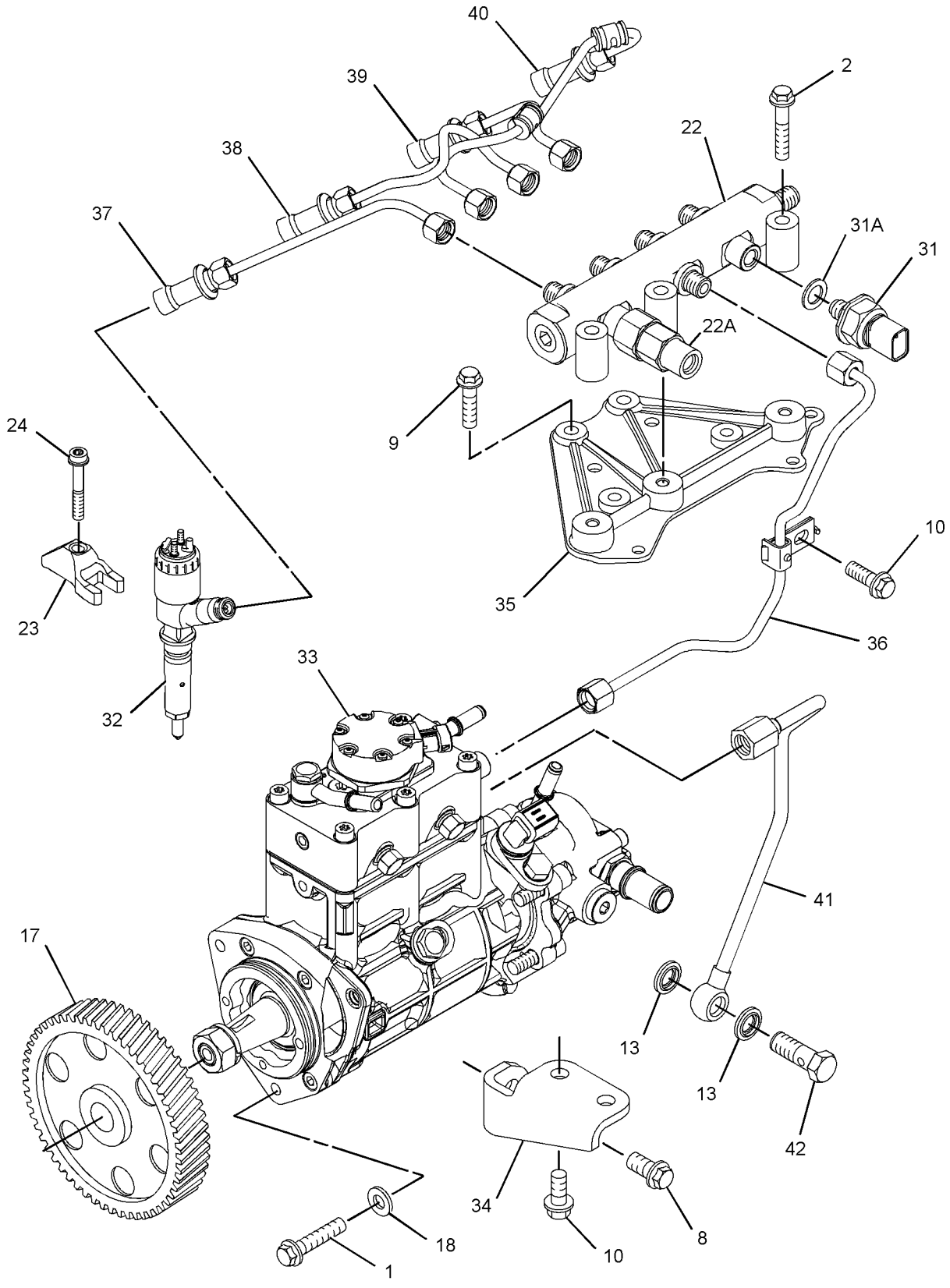

GRAPHIC #1 g01763875

304-3649 **PUMP GP-FUEL INJECTION** *(contd.)* **i03544284**

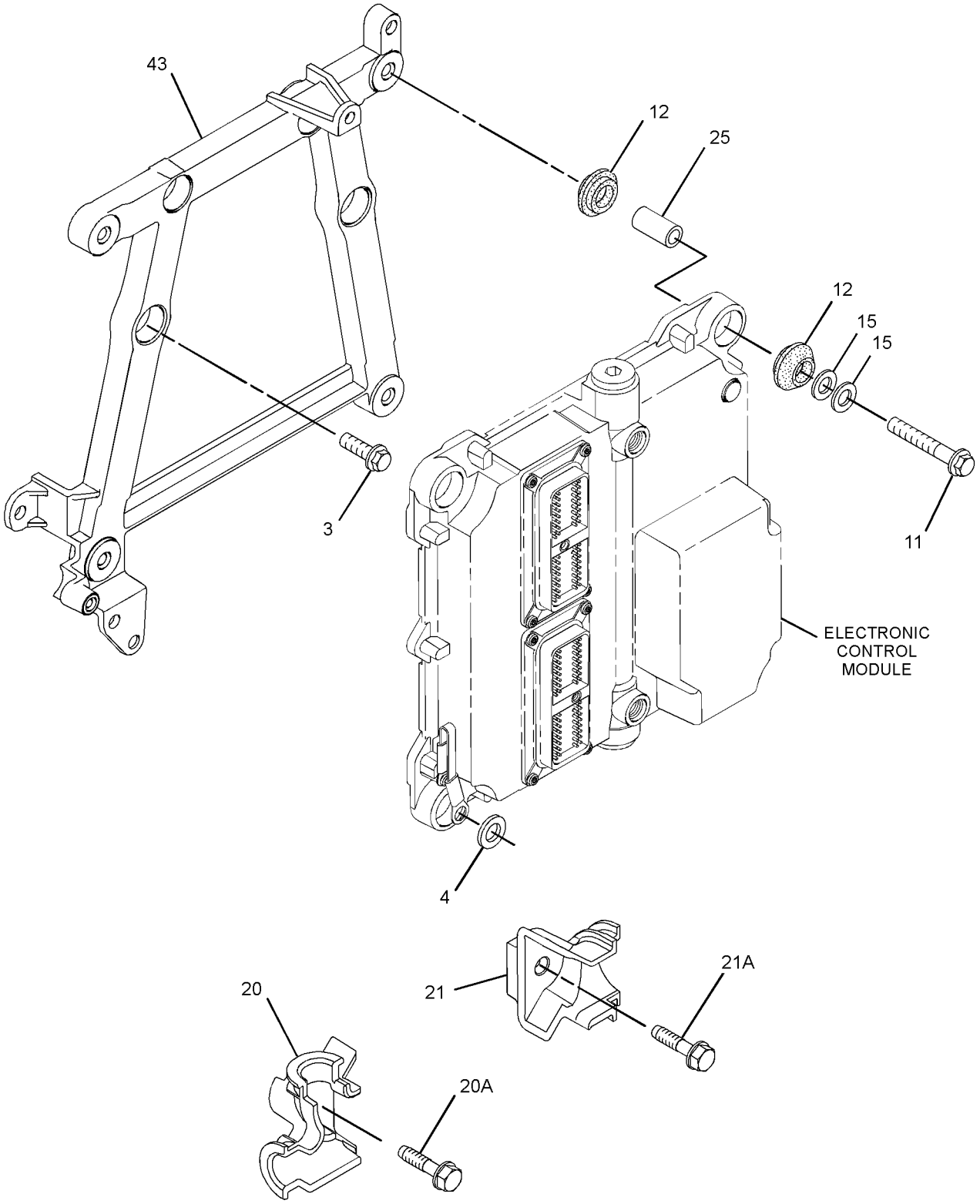

GRAPHIC #2 g01934254

304-3649 **PUMP GP-FUEL INJECTION** *(contd.)* **i03544284**

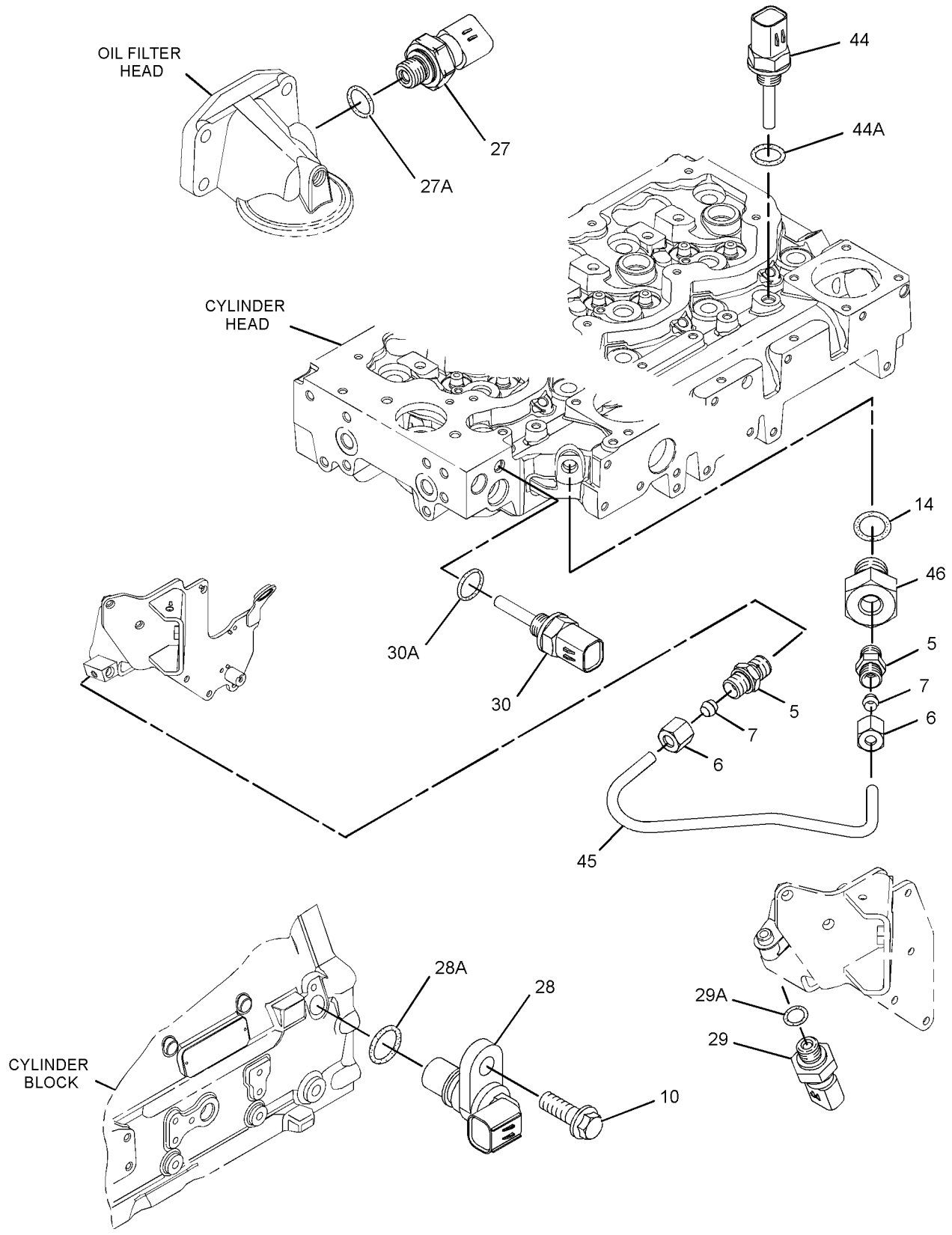

GRAPHIC #3 **<END>** g01719281

FUEL SYSTEM

244-7408 TANK GP-FUEL

S/N: JLF1-UP; WWW1-UP; YYY1-UP
195-LITERS (51.51-GALLONS)
PART OF 244-7380, 244-7381, 282-5328 CHASSIS AR

SMCS-1273 **i02895051**

NOTE	REF NO	GRAPHIC REF	PART NUMBER	QTY	PART NAME 1 2 3 4 5 6 (PRODUCT LEVEL)	SEE PAGE
	1	1	**9M-6738**	2	CLAMP-HOSE	
	2	1	**151-2110**	1	GASKET	
M	3	1	**160-8744**	2	BOLT (M10X1.5X65-MM)	
	4	1	**256-2268**	2	STRAP AS	
D	5	1	**6V-2495**		SEAL (0.54-M)	
D	5A	1	**6V-2495**		SEAL (0.14-M)	
D	5B	1	**6V-2495**		SEAL (0.2-M)	
D	5C	1	**6V-2495**		SEAL (0.5-M EACH)	
	6	1	**260-0083**	1	FLANGE AS-FUEL TANK	
	7	1	**285-6704**	1	HOSE	
Y	8	1	**287-1962**	1	TANK GP-FUEL	116
M	9	1	**095-0736**	5	SCREW-MACHINE (M5X0.8X10-MM)	
	10	1	**5P-1076**	2	WASHER-HARD (13.5X30X4-MM THK)	
	11	1	**8T-0328**	5	WASHER-HARD (5.5X10X1-MM THK)	
	12	1	**8T-4121**	2	WASHER-HARD (11X21X2.5-MM THK)	
M	13	1	**8T-4179**	2	BOLT (M12X1.75X20-MM)	
E	14	1	**5P-6442**		HOSE (35-CM)	
E	15	1	**136-1955**		HOSE (29-CM)	
	16	1	**140-4765**	2	CLAMP-HOSE	

D-ORDER BY THE METER
E-ORDER BY THE CENTIMETER
M-METRIC PART
Y-SEPARATE ILLUSTRATION

244-7408 **TANK GP-FUEL** *(contd.)* **i02895051**

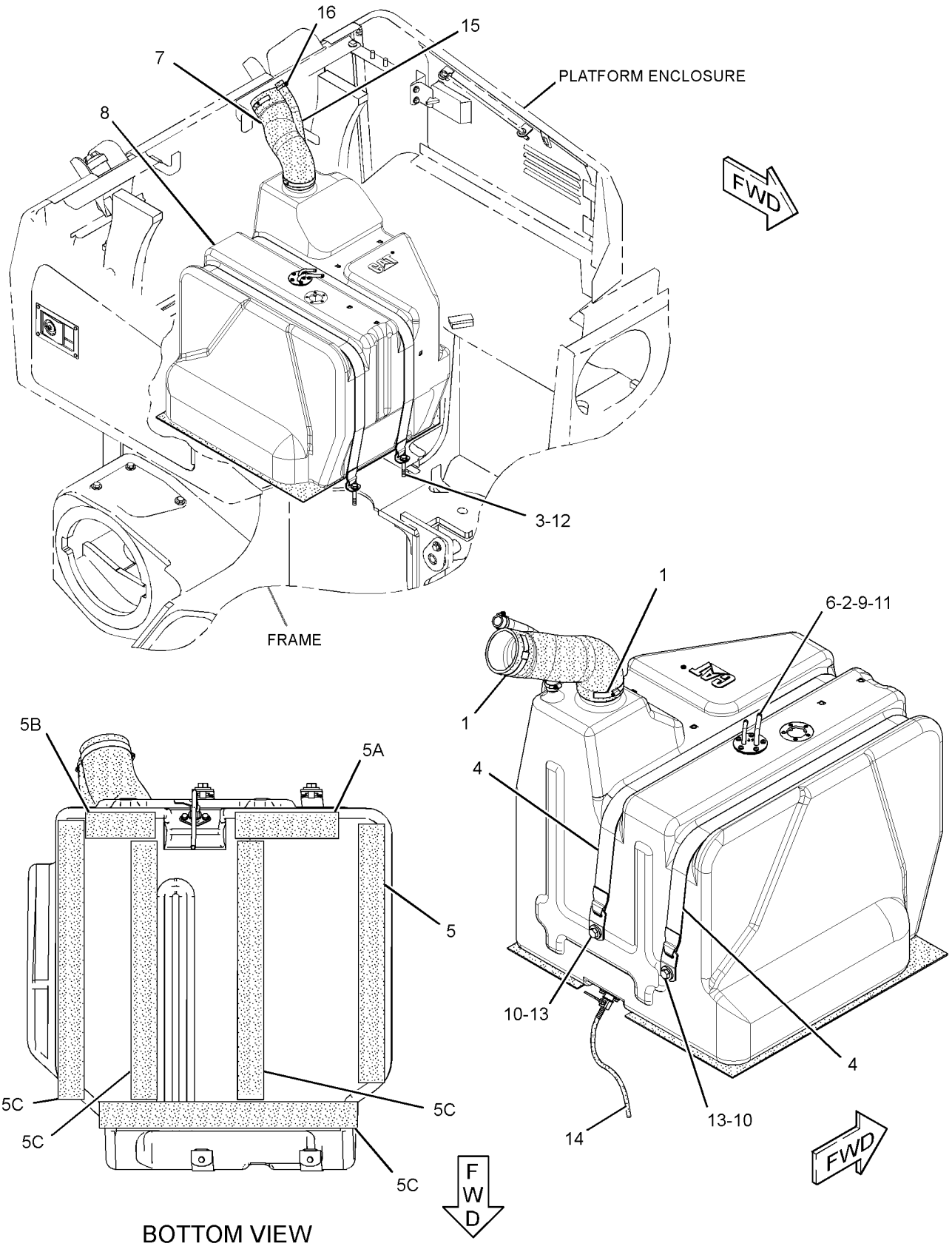

GRAPHIC #1

<END>

g01424493

FUEL SYSTEM

287-1962 TANK GP-FUEL

S/N: JLF1-UP; WWW1-UP; YYY1-UP
PART OF 244-7408 TANK GP-FUEL

SMCS-1273 **i03601785**

NOTE	REF NO	GRAPHIC REF	PART NUMBER	QTY	PART NAME 1 2 3 4 5 6 (PRODUCT LEVEL)	SEE PAGE
	1	1	**4J-5268**	1	SEAL-O-RING	
	2	1	**175-4614**	1	VALVE AS (FUEL TANK)	
	3	1	**233-4065**	1	FLANGE AS	
	4	1	**287-1965**	1	TANK AS-FUEL	
M	5	1	**8T-4970**	2	BOLT (M6X1X14-MM)	
	6	1	**9X-8256**	2	WASHER (6.6X12X2-MM THK)	

M-METRIC PART

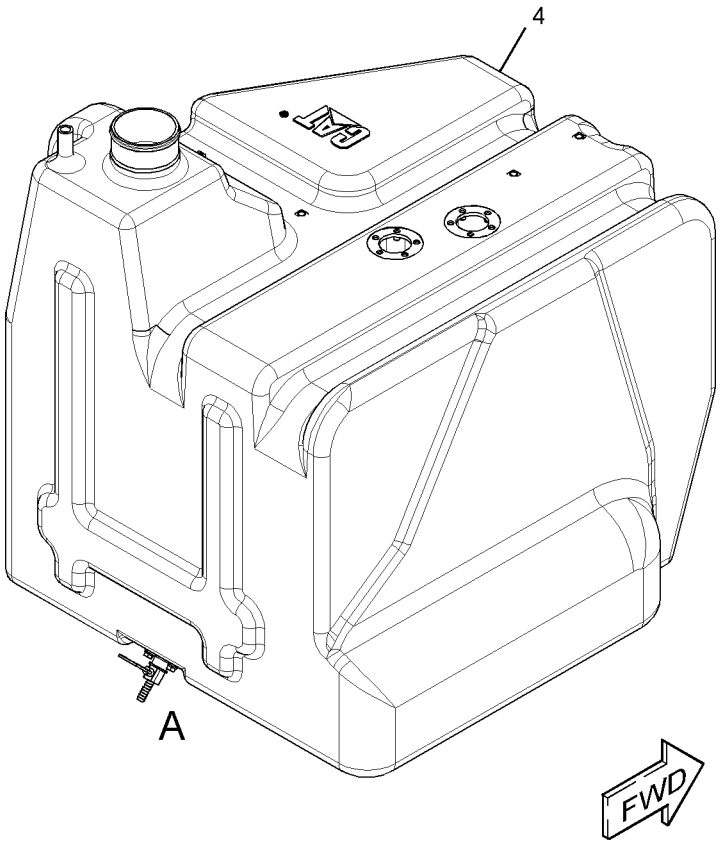

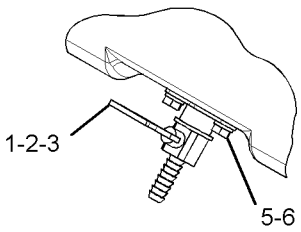

VIEW OF AREA A

GRAPHIC #1 **<END>** g01376271

301-7890 VALVE GP-CHECK

S/N: JLF1-UP; WWW1-UP; YYY1-UP
PART OF 254-1354 MOTOR GP-PISTON

SMCS-1262, 5067 **i02663226**

NOTE	REF NO	GRAPHIC REF	PART NUMBER	QTY	PART NAME 1 2 3 4 5 6 (PRODUCT LEVEL)	SEE PAGE
	1	1	**033-6039**	1	SEAL-O-RING	
	2	1	**242-0262**	1	RING-BACKUP	
	3	1	**269-4676**	1	SEAL-O-RING	

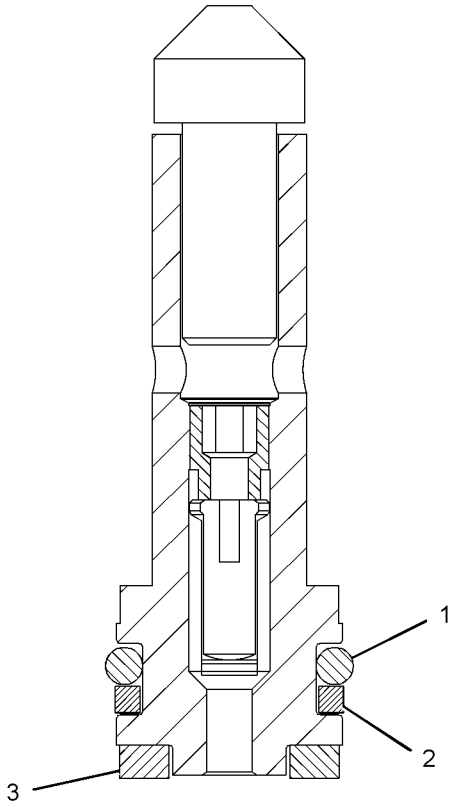

GRAPHIC #1 **<END>** g01332617

ELECTRICAL AND STARTING SYSTEM

303-5774 ALTERNATOR GP-CHARGING

S/N: C4E1-UP

PART OF 254-9233 ENGINE AR-PRIMARY

SMCS-1405 **i03583308**

NOTE	REF NO	GRAPHIC REF	PART NUMBER	QTY	PART NAME 1 2 3 4 5 6 (PRODUCT LEVEL)	SEE PAGE
	1	1	**346-9825**	1	ALTERNATOR GP-CHARGING	
	2	1	**289-8311**	1	BRACKET-ALTERNATOR	
M	3	1	**140-8783**	2	BOLT (M10X1.5X45-MM)	
M	4	1	**6I-0650**	1	BOLT (M10X1.5X65-MM)	
	5	1	**100-8451**	1	BOLT (M8X1.25X130-MM)	
	6	1	**113-6349**	1	NUT (M12X1.75X93-MM)	
M	7	1	**6I-0260**	1	BOLT (M8X1.25X25-MM)	
	8	1	**261-0371**	1	PLATE	
M	9	1	**6I-0593**	3	BOLT (M10X1.5X30-MM)	
	10	1	**261-0406**	1	BELT TENSIONER	
	11	1	**284-3425**	1	PULLEY-ALTERNATOR	

M-METRIC PART

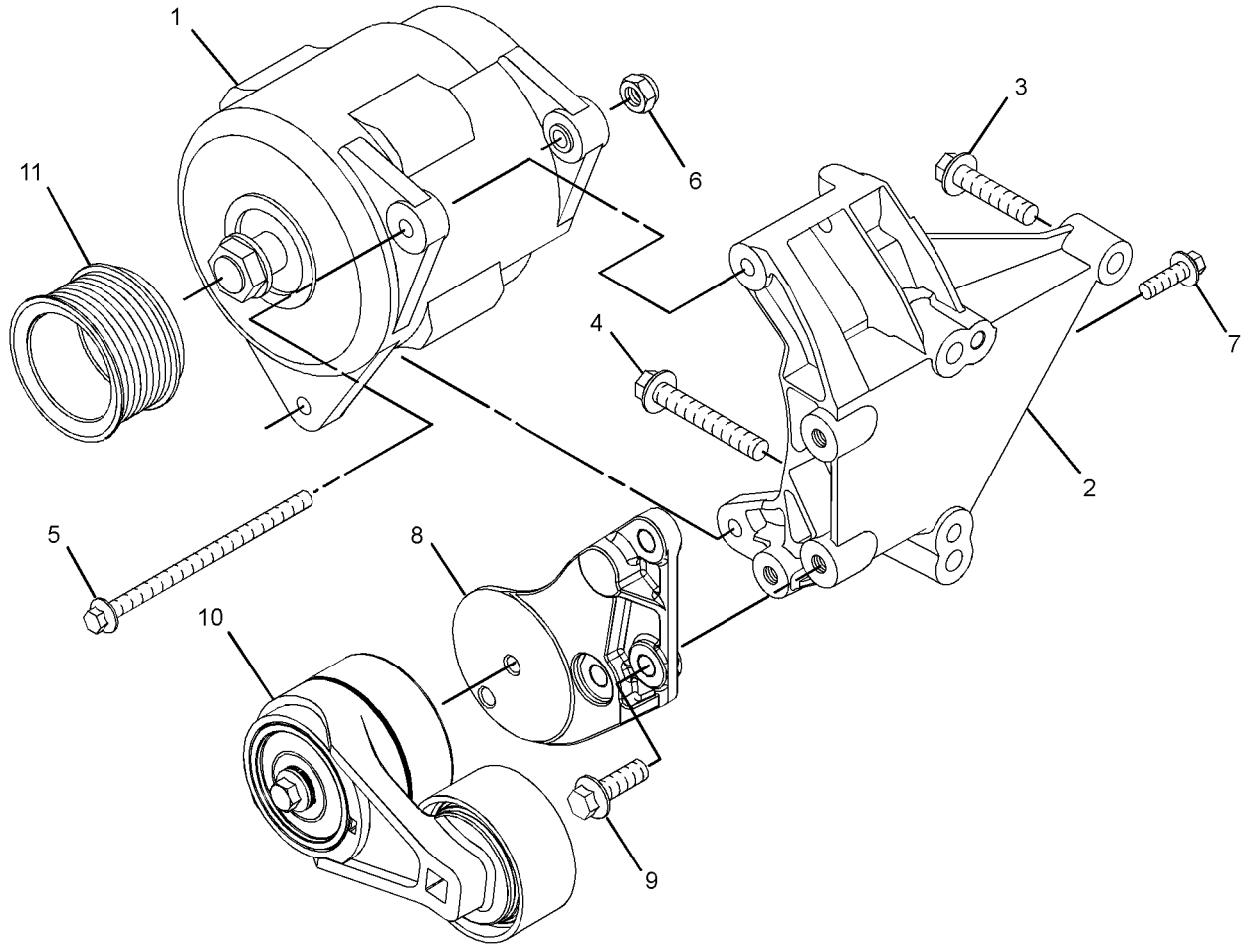

GRAPHIC #1 **<END>** g01442411

ELECTRICAL AND STARTING SYSTEM

317-9776 ALTERNATOR GP-CHARGING

S/N: C4E1-UP

PART OF 254-9233 ENGINE AR-PRIMARY

SMCS-1405 **i03635369**

NOTE	REF NO	GRAPHIC REF	PART NUMBER	QTY	PART NAME 1 2 3 4 5 6 (PRODUCT LEVEL)	SEE PAGE
M	1	1	**6I-0260**	1	BOLT (M8X1.25X25-MM)	
M	2	1	**6I-0650**	1	BOLT (M10X1.5X65-MM)	
	3	1	**100-8451**	1	BOLT (M8X1.25X130-MM)	
	4	1	**113-6349**	1	NUT (M12X1.75X93-MM)	
M	5	1	**140-8783**	2	BOLT (M10X1.5X45-MM)	
	7	1	**346-9825**	1	ALTERNATOR GP-CHARGING	
	8	1	**284-3425**	1	PULLEY-ALTERNATOR	
	9	1	**305-7881**	1	BRACKET AS-ALTERNATOR	
	9A	1	**161-9820**	2	PIN	

M-METRIC PART

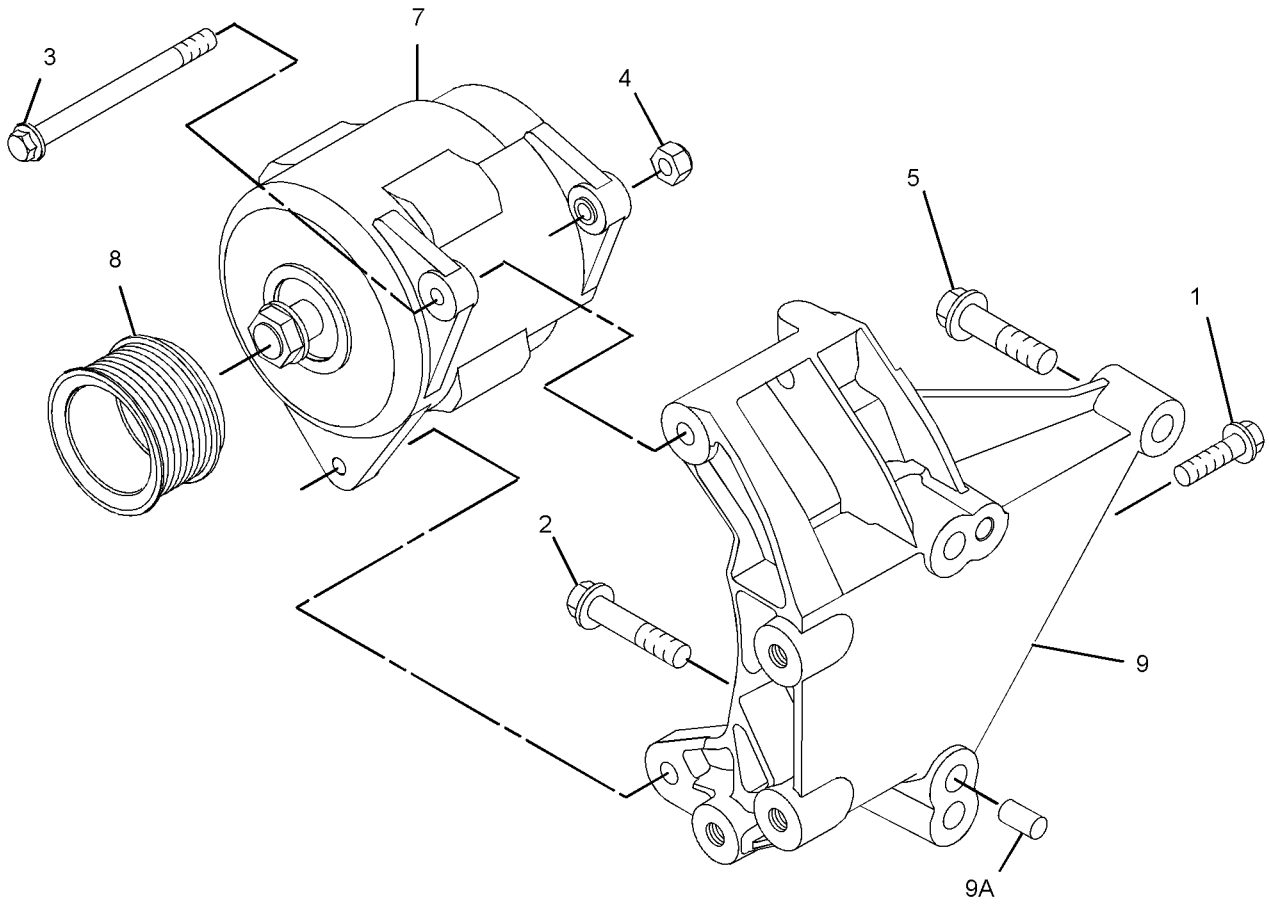

GRAPHIC #1 **<END>** g01953021

ELECTRICAL AND STARTING SYSTEM

245-6017 BATTERY & WIRING GP

S/N: JLF1-UP; WWW1-UP; YYY1-UP
PART OF 244-7380, 244-7381, 282-5328 CHASSIS AR
TYPE 1

SMCS-1401, 1402, 1408 **i03590560**

NOTE	REF NO	GRAPHIC REF	PART NUMBER	QTY	PART NAME 1 2 3 4 5 6 (PRODUCT LEVEL)	SEE PAGE
	1	1	**3E-8320**	1	PLATE-INSTRUCTION (BATTERY) (DISCONNECT SWITCH)	
	2	1	**7K-1181**	32	STRAP-CABLE	
Y	3	1	**7N-0718**	1	SWITCH GP-DISCONNECT (BATTERY) (12-VOLT)	186
	4	1	**9X-3404**	2	BATTERY (12-VOLT, MAINTENANCE FREE, WET)	
D	5	1	**8T-3425**		CHANNEL-TRIM (0.1-M EACH)	
	6	1	**128-5531**	4	CLAMP-HALF	
	7	1	**151-2110**	1	GASKET	
Y	8	1	*183-4584*	2	SENSOR GP-SPEED (TRACK, RH)	180
	9	1	**196-7007**	4	ROD	
	10	1	**220-0230**	1	ALARM AS (BACKUP)	
		1	**102-8802**	1	KIT-RECEPTACLE (2-PIN)	
					(INCLUDES RECEPTACLE AS & WEDGE)	
D		1	**5P-5623**		WIRE-ELECTRICAL (16-GA, BLACK) (0.4-M EACH)	
		1	**186-3735**	2	PIN-CONNECTOR (16-GA TO 18-GA)	
E		1	**9X-1813**		SLEEVE (29-CM)	
	11	1	**245-6037**	1	HARNESS AS-CHASSIS	
		1	**155-2255**	1	KIT-CONNECTING PLUG (12-PIN)	
		1	**155-2270**	3	KIT-CONNECTING PLUG (2-PIN)	
		1	**155-2271**	2	KIT-CONNECTING PLUG (4-PIN)	
		1	**155-2257**	1	KIT-CONNECTING PLUG (12-PIN)	
		1	**155-2274**	1	KIT-CONNECTING PLUG (6-PIN)	
					(EACH PLUG KIT INCLUDES PLUG AS, WEDGE & INTERFACE SEAL)	
		1	**230-4011**	2	PLUG AS-CONNECTOR (2-PIN)	
					(EACH INCLUDES)	
		1	**264-7029**	1	SEAL-CONNECTOR	
		1	**237-0227**	1	PLUG AS-CONNECTOR (3-PIN)	
		1	**264-7030**	1	SEAL-CONNECTOR	
		1	**8T-8737**	8	PLUG-SEAL	
		1	**102-8805**	1	KIT-RECEPTACLE (6-PIN)	
					(INCLUDES RECEPTACLE AS & WEDGE)	
		1	**9X-3402**	7	SOCKET-CONNECTOR (16-GA TO 18-GA)	
		1	**180-9340**	17	SOCKET-CONNECTOR (14-GA TO 18-GA)	
		1	**186-3736**	25	SOCKET-CONNECTOR (16-GA TO 18-GA)	
		1	**3S-2093**	5	STRAP-CABLE	
		1	**5P-1476**	2	TERMINAL-FORK (14-GA TO 16-GA, NO. 10 SCREW)	
E		1	**125-7874**		TUBE-HEAT SHRINK (5.72-MM DIA) (20-CM)	
E		1	**125-7875**		TUBE-HEAT SHRINK (7.44-MM DIA) (5-CM)	
	12	1	**249-9017**	1	CABLE AS	
		1	**1S-7252**	1	TERMINAL-CABLE (00-GA, 3/8-IN BOLT)	
		1	**3L-6513**	1	TERMINAL (FOR 1/2-IN BOLT)	
B		1	**1P-0810**		TAPE-ELECTRICAL	
E		1	**8C-3056**		CABLE (2-GA, RED) (50-CM)	
E		1	**5P-0761**		CABLE (00-GA, RED) (120-CM)	
		1	**3S-2093**	2	STRAP-CABLE	
		1	**8N-0869**	1	COVER-TERMINAL (RED)	
		1	**8T-8827**	1	BOOT (RED) (RED)	
	13	1	**249-9018**	1	CABLE AS	
		1	**249-9042**	1	TERMINAL-BATTERY	
		1	**1M-6119**	1	BOLT (5/16-18X1.375-IN)	
		1	**1M-6120**	1	NUT (5/16-18-THD)	
		1	**269-7682**	1	COVER-TERMINAL	
E		1	**5P-0747**		CABLE (00-GA, BLACK) (226-CM)	

245-6017 **BATTERY & WIRING GP** *(contd.)* **i03590560**

NOTE	REF NO	GRAPHIC REF	PART NUMBER	QTY	PART NAME 1 2 3 4 5 6 (PRODUCT LEVEL)	SEE PAGE
		1	**1S-7252**	1	TERMINAL-CABLE (00-GA, 3/8-IN BOLT)	
		1	**3S-2093**	1	STRAP-CABLE	
		1	**6T-0465**	1	COVER-TERMINAL (BLACK)	
	14	1	**249-9019**	1	CABLE AS	
E		1	**5P-0747**		CABLE (00-GA, BLACK) (29-CM)	
		1	**1S-7251**	1	TERMINAL-CABLE (00-GA, 1/2-IN BOLT)	
		1	**1S-7252**	1	TERMINAL-CABLE (00-GA, 3/8-IN BOLT)	
	15	1	**249-9024**	1	HARNESS AS-VALVE	
		1	**186-3735**	10	PIN-CONNECTOR (16-GA TO 18-GA)	
		1	**155-2270**	7	KIT-CONNECTING PLUG (2-PIN)	
					(EACH INCLUDES PLUG AS, WEDGE & INTERFACE SEAL)	
		1	**8T-8737**	2	PLUG-SEAL	
		1	**102-8801**	1	KIT-RECEPTACLE (12-PIN)	
					(EACH INCLUDES RECEPTACLE AS & WEDGE)	
		1	**186-3736**	14	SOCKET-CONNECTOR (16-GA TO 18-GA)	
E		1	**125-7874**		TUBE-HEAT SHRINK (5.72-MM DIA) (5-CM)	
E		1	**125-7875**		TUBE-HEAT SHRINK (7.44-MM DIA) (5-CM)	
	16	1	**249-9074**	1	BRACKET AS	
	17	1	**254-8895**	1	BRACKET AS	
	18	1	**257-8924**	1	SENDER AS-FUEL LEVEL	
		1	**186-3735**	1	PIN-CONNECTOR (16-GA TO 18-GA)	
		1	**9X-3401**	1	PIN-CONNECTOR (16-GA TO 18-GA)	
		1	**230-4012**	1	RECEPTACLE AS-CONNECTOR (2-PIN)	
	19	1	**269-7653**	1	CLIP	
	20	1	**269-7658**	1	CABLE AS	
		1	**1S-7251**	1	TERMINAL-CABLE (00-GA, 1/2-IN BOLT)	
E		1	**5P-0761**		CABLE (00-GA, RED) (84-CM)	
		1	**8N-0869**	1	COVER-TERMINAL (RED)	
		1	**283-3436**	1	COVER-TERMINAL (RED)	
	21	1	**269-7674**	1	BRACKET AS	
	22	1	**269-7678**	1	CLIP	
	23	1	**269-7680**	2	CLIP	
M	24	1	**095-0736**	5	SCREW-MACHINE (M5X0.8X10-MM)	
	25	1	**124-0174**	1	CLIP	
M	26	1	**191-8920**	4	BOLT-SOCKET HEAD (M6X1X12-MM)	
	27	1	**238-0112**	1	SENSOR GP-TEMPERATURE (HYDRAULIC OIL)	
	28	1	**261-0420**	1	SENSOR GP-PRESSURE (HYDROSTATIC DRIVE)	
	29	1	**3J-1907**	1	SEAL-O-RING	
	30	1	**3J-5696**	1	PIPE	
	31	1	**4P-7581**	1	CLIP	
	32	1	**277-1873**	1	CLIP	
M	33	1	**5C-7261**	4	NUT (M8X1.25-THD)	
	34	1	**5K-8451**	1	CLIP	
	35	1	**5P-4116**	10	WASHER-HARD (8.8X20.5X2-MM THK)	
	36	1	**107-4749**	2	PLATE	
	37	1	**6D-3479**	9	CLIP	
	38	1	**6V-9028**	1	SEAL-O-RING	
M	39	1	**7X-2534**	4	BOLT (M6X1X50-MM)	
	40	1	**7X-7729**	1	WASHER (11X25X3-MM THK)	
	41	1	**8T-0328**	5	WASHER-HARD (5.5X10X1-MM THK)	
	42	1	**8T-4121**	11	WASHER-HARD (11X21X2.5-MM THK)	
M	43	1	**8T-4137**	2	BOLT (M10X1.5X20-MM)	
M	44	1	**8T-4179**	3	BOLT (M12X1.75X20-MM)	
M	45	1	**8T-4186**	1	BOLT (M10X1.5X40-MM)	
M	46	1	**8T-4191**	9	BOLT (M10X1.5X16-MM)	
M	47	1	**8T-4200**	6	BOLT (M8X1.25X16-MM)	
	48	1	**8T-4223**	3	WASHER-HARD (13.5X25.5X3-MM THK)	
	49	1	**8T-4224**	1	WASHER-HARD (8.8X16X2-MM THK)	
	50	1	**9X-8256**	4	WASHER (6.6X12X2-MM THK)	

245-6017 **BATTERY & WIRING GP** *(contd.)* **i03590560**

NOTE	REF NO	GRAPHIC REF	PART NUMBER	QTY	PART NAME 1 2 3 4 5 6 (PRODUCT LEVEL)	SEE PAGE
	51	1	**287-2654**	1	STRAP-LIFTING	

B-USE AS REQUIRED
D-ORDER BY THE METER
E-ORDER BY THE CENTIMETER
M-METRIC PART
Y-SEPARATE ILLUSTRATION

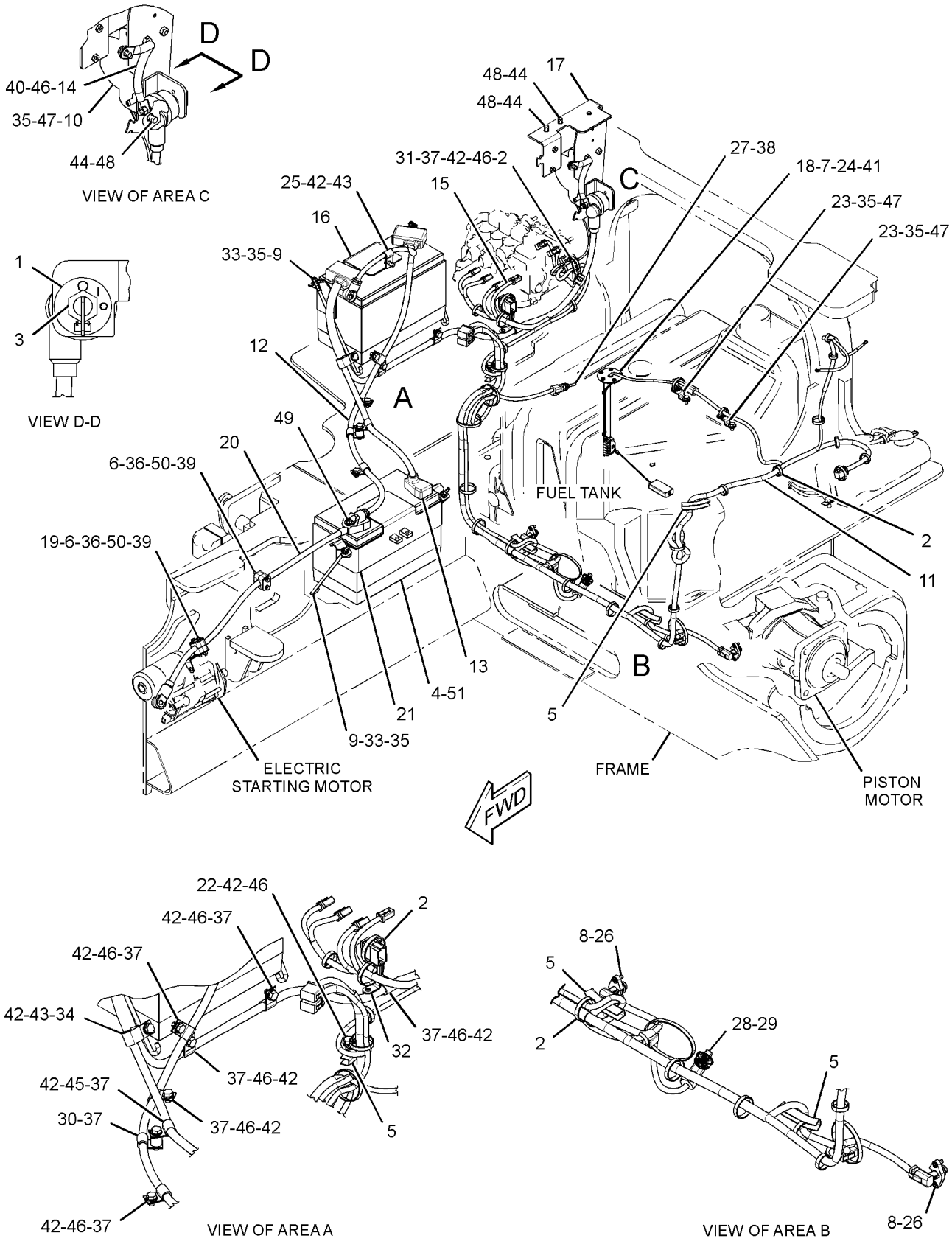

GRAPHIC #1 **<END>** g01372582

ELECTRICAL AND STARTING SYSTEM

245-6017 BATTERY & WIRING GP

S/N: JLF1-UP; WWW1-UP; YYY1-UP
PART OF 244-7380, 244-7381, 282-5328 CHASSIS AR
TYPE 2

SMCS-1401, 1402, 1408 **i03590667**

NOTE	REF NO	GRAPHIC REF	PART NUMBER	QTY	PART NAME 1 2 3 4 5 6 (PRODUCT LEVEL)	SEE PAGE
	1	1	**3E-8320**	1	PLATE-INSTRUCTION (BATTERY) (DISCONNECT SWITCH)	
C	2	1	**7K-1181**	36	STRAP-CABLE	
Y	3	1	**7N-0718**	1	SWITCH GP-DISCONNECT (BATTERY) (12-VOLT)	186
C	4	1	**8T-1887**	1	CLIP (SLOT)	
C	5	1	**8T-1888**	1	CLIP (TAB)	
C	6	1	**8X-5489**	1	SLEEVE	
C	7	1	**128-5531**	2	CLAMP-HALF	
	8	1	**151-2110**	1	GASKET	
Y	9	1	*183-4584*	2	SENSOR GP-SPEED (TRACK, RH)	180
	10	1	**196-7007**	4	ROD	
	11	1	**238-0112**	1	SENSOR GP-TEMPERATURE (HYDRAULIC OIL)	
	12	1	**245-6037**	1	HARNESS AS-CHASSIS	
		1	**155-2255**	1	KIT-CONNECTING PLUG (12-PIN)	
		1	**155-2270**	3	KIT-CONNECTING PLUG (2-PIN)	
		1	**155-2271**	2	KIT-CONNECTING PLUG (4-PIN)	
		1	**155-2257**	1	KIT-CONNECTING PLUG (12-PIN)	
		1	**155-2274**	1	KIT-CONNECTING PLUG (6-PIN)	
					(EACH PLUG KIT INCLUDES PLUG AS, WEDGE & INTERFACE SEAL)	
		1	**230-4011**	2	PLUG AS-CONNECTOR (2-PIN)	
					(EACH INCLUDES)	
		1	**264-7029**	1	SEAL-CONNECTOR	
		1	**237-0227**	1	PLUG AS-CONNECTOR (3-PIN)	
		1	**264-7030**	1	SEAL-CONNECTOR	
		1	**8T-8737**	8	PLUG-SEAL	
		1	**102-8805**	1	KIT-RECEPTACLE (6-PIN)	
					(INCLUDES RECEPTACLE AS & WEDGE)	
		1	**9X-3402**	7	SOCKET-CONNECTOR (16-GA TO 18-GA)	
		1	**180-9340**	17	SOCKET-CONNECTOR (14-GA TO 18-GA)	
		1	**186-3736**	25	SOCKET-CONNECTOR (16-GA TO 18-GA)	
		1	**3S-2093**	5	STRAP-CABLE	
		1	**5P-1476**	2	TERMINAL-FORK (14-GA TO 16-GA, NO. 10 SCREW)	
E		1	**125-7874**		TUBE-HEAT SHRINK (5.72-MM DIA) (20-CM)	
E		1	**125-7875**		TUBE-HEAT SHRINK (7.44-MM DIA) (5-CM)	
	13	1	**249-9017**	1	CABLE AS	
		1	**3L-6513**	1	TERMINAL (FOR 1/2-IN BOLT)	
		1	**1S-7252**	1	TERMINAL-CABLE (00-GA, 3/8-IN BOLT)	
E		1	**8C-3056**		CABLE (2-GA, RED) (50-CM)	
E		1	**5P-0761**		CABLE (00-GA, RED) (120-CM)	
		1	**3S-2093**	2	STRAP-CABLE	
		1	**8N-0869**	1	COVER-TERMINAL (RED)	
		1	**8T-8827**	1	BOOT (RED) (RED)	
	14	1	**249-9018**	1	CABLE AS	
		1	**249-9042**	1	TERMINAL-BATTERY	
		1	**1M-6119**	1	BOLT (5/16-18X1.375-IN)	
		1	**1M-6120**	1	NUT (5/16-18-THD)	
		1	**269-7682**	1	COVER-TERMINAL	
E		1	**5P-0747**		CABLE (00-GA, BLACK) (226-CM)	
		1	**1S-7252**	1	TERMINAL-CABLE (00-GA, 3/8-IN BOLT)	
		1	**3S-2093**	1	STRAP-CABLE	
		1	**6T-0465**	1	COVER-TERMINAL (BLACK)	
	15	1	**249-9024**	1	HARNESS AS-VALVE	
		1	**186-3735**	10	PIN-CONNECTOR (16-GA TO 18-GA)	

245-6017 **BATTERY & WIRING GP** *(contd.)* **i03590667**

NOTE	REF NO	GRAPHIC REF	PART NUMBER	QTY	PART NAME 1 2 3 4 5 6 (PRODUCT LEVEL)	SEE PAGE
		1	**155-2270**	7	KIT-CONNECTING PLUG (2-PIN)	
					(EACH INCLUDES PLUG AS, WEDGE & INTERFACE SEAL)	
		1	**8T-8737**	2	PLUG-SEAL	
		1	**102-8801**	1	KIT-RECEPTACLE (12-PIN)	
					(EACH INCLUDES RECEPTACLE AS & WEDGE)	
		1	**186-3736**	14	SOCKET-CONNECTOR (16-GA TO 18-GA)	
E		1	**125-7874**		TUBE-HEAT SHRINK (5.72-MM DIA) (5-CM)	
E		1	**125-7875**		TUBE-HEAT SHRINK (7.44-MM DIA) (5-CM)	
	16	1	**249-9074**	1	BRACKET AS	
	17	1	**257-8924**	1	SENDER AS-FUEL LEVEL	
		1	**186-3735**	1	PIN-CONNECTOR (16-GA TO 18-GA)	
		1	**9X-3401**	1	PIN-CONNECTOR (16-GA TO 18-GA)	
		1	**230-4012**	1	RECEPTACLE AS-CONNECTOR (2-PIN)	
	18	1	**269-7658**	1	CABLE AS	
		1	**1S-7251**	1	TERMINAL-CABLE (00-GA, 1/2-IN BOLT)	
E		1	**5P-0761**		CABLE (00-GA, RED) (84-CM)	
		1	**8N-0869**	1	COVER-TERMINAL (RED)	
		1	**283-3436**	1	COVER-TERMINAL (RED)	
	19	1	**269-7674**	1	BRACKET AS	
	20	1	**269-7678**	1	CLIP	
	21	1	**269-7680**	2	CLIP	
C	22	1	**311-0306**	1	CLIP AS	
C	23	1	**311-0307**	1	CABLE AS	
		1	**1S-7251**	1	TERMINAL-CABLE (00-GA, 1/2-IN BOLT)	
		1	**1S-7252**	1	TERMINAL-CABLE (00-GA, 3/8-IN BOLT)	
E		1	**5P-0747**		CABLE (00-GA, BLACK) (25-CM)	
M	24	1	**095-0736**	5	SCREW-MACHINE (M5X0.8X10-MM)	
	25	1	**124-0174**	1	CLIP	
M	26	1	**191-8920**	4	BOLT-SOCKET HEAD (M6X1X12-MM)	
	27	1	**261-0420**	1	SENSOR GP-PRESSURE (HYDROSTATIC DRIVE)	
	28	1	**277-1873**	1	CLIP	
	29	1	**3J-1907**	1	SEAL-O-RING	
	30	1	**3J-5696**	1	PIPE	
C	31	1	**3S-2093**	1	STRAP-CABLE	
	32	1	**4P-7581**	1	CLIP	
M	33	1	**5C-7261**	4	NUT (M8X1.25-THD)	
	34	1	**5K-8451**	1	CLIP	
C	35	1	**5P-4116**	6	WASHER-HARD (8.8X20.5X2-MM THK)	
C	36	1	**107-4749**	1	PLATE	
	37	1	**6D-3479**	9	CLIP	
	38	1	**6V-9028**	1	SEAL-O-RING	
CM	39	1	**7X-2534**	2	BOLT (M6X1X50-MM)	
	40	1	**7X-7729**	1	WASHER (11X25X3-MM THK)	
	41	1	**8T-0328**	5	WASHER-HARD (5.5X10X1-MM THK)	
C	42	1	**8T-4121**	12	WASHER-HARD (11X21X2.5-MM THK)	
CM	43	1	**8T-4133**	1	NUT (M10X1.5-THD)	
M	44	1	**8T-4137**	2	BOLT (M10X1.5X20-MM)	
M	45	1	**8T-4186**	1	BOLT (M10X1.5X40-MM)	
M	46	1	**8T-4191**	9	BOLT (M10X1.5X16-MM)	
CM	47	1	**8T-4200**	2	BOLT (M8X1.25X16-MM)	
	48	1	**8T-4224**	1	WASHER-HARD (8.8X16X2-MM THK)	
C	49	1	**9X-8256**	2	WASHER (6.6X12X2-MM THK)	
D	50	1	**8T-3425**		CHANNEL-TRIM (0.1-M EACH)	

C-CHANGE FROM PREVIOUS TYPE
D-ORDER BY THE METER
E-ORDER BY THE CENTIMETER
M-METRIC PART
Y-SEPARATE ILLUSTRATION

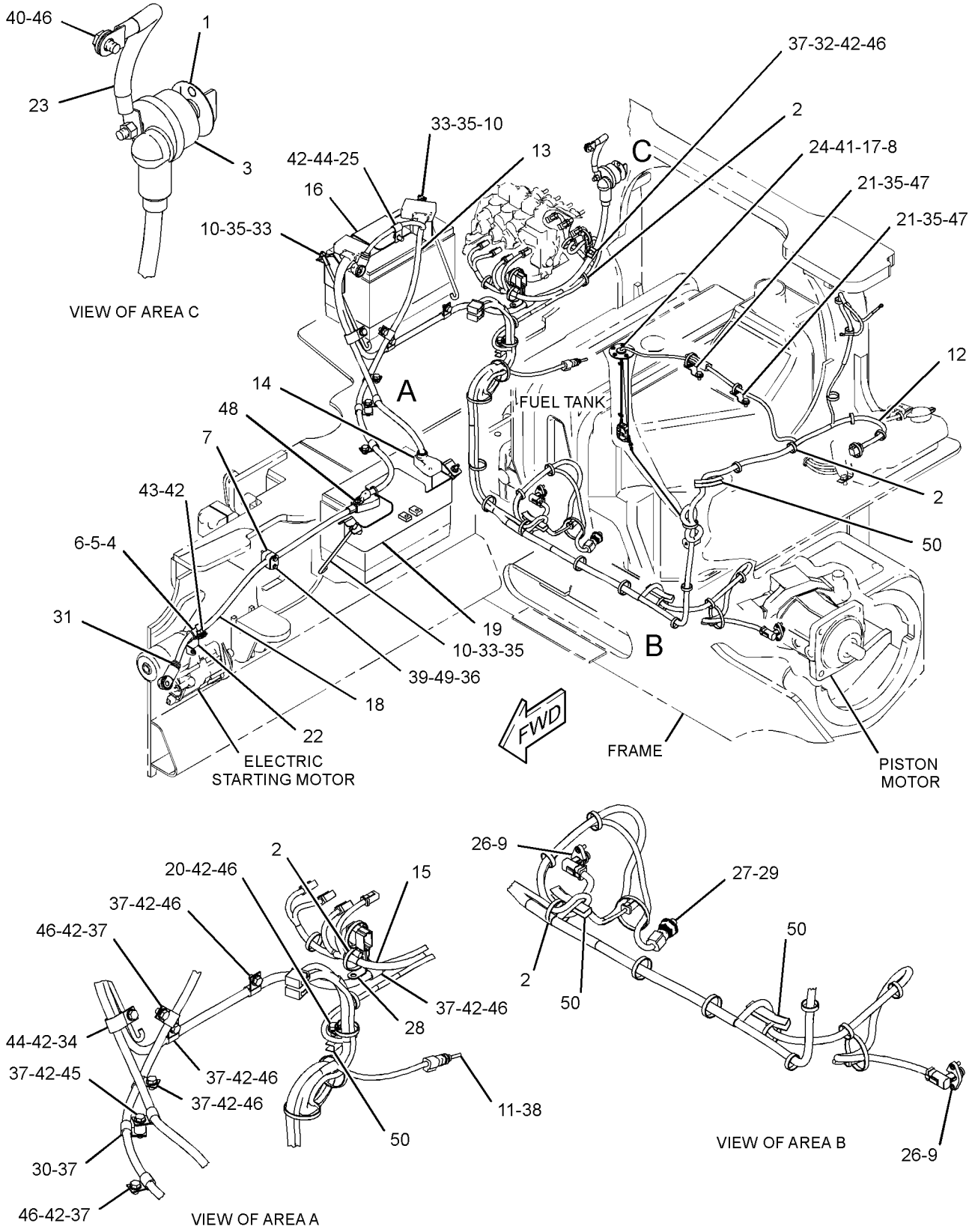

GRAPHIC #1 **<END>** g01614453

ELECTRICAL AND STARTING SYSTEM

245-6017 BATTERY & WIRING GP

S/N: JLF1-UP; WWW1-UP; YYY1-UP
PART OF 244-7380, 244-7381, 282-5328 CHASSIS AR
TYPE 3

SMCS-1401, 1402, 1408 **i03590680**

NOTE	REF NO	GRAPHIC REF	PART NUMBER	QTY	PART NAME 1 2 3 4 5 6 (PRODUCT LEVEL)	SEE PAGE
	1	2	**3E-8320**	1	PLATE-INSTRUCTION (BATTERY) (DISCONNECT SWITCH)	
	2	1,2	**7K-1181**	37	STRAP-CABLE	
Y	3	2	**7N-0718**	1	SWITCH GP-DISCONNECT (BATTERY) (12-VOLT)	186
	4	1,2	**8T-1887**	2	CLIP (SLOT)	
	5	1,2	**8T-1888**	2	CLIP (TAB)	
	6	1	**8X-5489**	1	SLEEVE	
	7	1	**128-5531**	2	CLAMP-HALF	
	8	1	**151-2110**	1	GASKET	
	9	2	**196-7007**	4	ROD	
	10	2	**238-0112**	1	SENSOR GP-TEMPERATURE (HYDRAULIC OIL)	
	11	1	**245-6037**	1	HARNESS AS-CHASSIS	
		1	**155-2255**	1	KIT-CONNECTING PLUG (12-PIN)	
		1	**155-2270**	3	KIT-CONNECTING PLUG (2-PIN)	
		1	**155-2271**	2	KIT-CONNECTING PLUG (4-PIN)	
		1	**155-2257**	1	KIT-CONNECTING PLUG (12-PIN)	
		1	**155-2274**	1	KIT-CONNECTING PLUG (6-PIN)	
					(EACH PLUG KIT INCLUDES PLUG AS, WEDGE & INTERFACE SEAL)	
		1	**230-4011**	2	PLUG AS-CONNECTOR (2-PIN)	
					(EACH INCLUDES)	
		1	**264-7029**	1	SEAL-CONNECTOR	
		1	**237-0227**	1	PLUG AS-CONNECTOR (3-PIN)	
		1	**264-7030**	1	SEAL-CONNECTOR	
		1	**8T-8737**	8	PLUG-SEAL	
		1	**102-8805**	1	KIT-RECEPTACLE (6-PIN)	
					(INCLUDES RECEPTACLE AS & WEDGE)	
		1	**9X-3402**	7	SOCKET-CONNECTOR (16-GA TO 18-GA)	
		1	**180-9340**	17	SOCKET-CONNECTOR (14-GA TO 18-GA)	
		1	**186-3736**	25	SOCKET-CONNECTOR (16-GA TO 18-GA)	
		1	**3S-2093**	5	STRAP-CABLE	
		1	**5P-1476**	2	TERMINAL-FORK (14-GA TO 16-GA, NO. 10 SCREW)	
E		1	**125-7874**		TUBE-HEAT SHRINK (5.72-MM DIA) (20-CM)	
E		1	**125-7875**		TUBE-HEAT SHRINK (7.44-MM DIA) (5-CM)	
	12	1	**249-9017**	1	CABLE AS	
		1	**3L-6513**	1	TERMINAL (FOR 1/2-IN BOLT)	
		1	**1S-7252**	1	TERMINAL-CABLE (00-GA, 3/8-IN BOLT)	
E		1	**8C-3056**		CABLE (2-GA, RED) (50-CM)	
E		1	**5P-0761**		CABLE (00-GA, RED) (120-CM)	
		1	**3S-2093**	2	STRAP-CABLE	
		1	**8N-0869**	1	COVER-TERMINAL (RED)	
		1	**8T-8827**	1	BOOT (RED) (RED)	
	13	1	**249-9018**	1	CABLE AS	
		1	**249-9042**	1	TERMINAL-BATTERY	
		1	**1M-6119**	1	BOLT (5/16-18X1.375-IN)	
		1	**1M-6120**	1	NUT (5/16-18-THD)	
		1	**269-7682**	1	COVER-TERMINAL	
E		1	**5P-0747**		CABLE (00-GA, BLACK) (226-CM)	
		1	**1S-7252**	1	TERMINAL-CABLE (00-GA, 3/8-IN BOLT)	
		1	**3S-2093**	1	STRAP-CABLE	
		1	**6T-0465**	1	COVER-TERMINAL (BLACK)	
	14	2	**249-9024**	1	HARNESS AS-VALVE	
		1	**186-3735**	10	PIN-CONNECTOR (16-GA TO 18-GA)	

245-6017 **BATTERY & WIRING GP** *(contd.)* **i03590680**

NOTE	REF NO	GRAPHIC REF	PART NUMBER	QTY	PART NAME 1 2 3 4 5 6 (PRODUCT LEVEL)	SEE PAGE
		1	**155-2270**	7	KIT-CONNECTING PLUG (2-PIN)	
					(EACH INCLUDES PLUG AS, WEDGE & INTERFACE SEAL)	
		1	**8T-8737**	2	PLUG-SEAL	
		1	**102-8801**	1	KIT-RECEPTACLE (12-PIN)	
					(EACH INCLUDES RECEPTACLE AS & WEDGE)	
		1	**186-3736**	14	SOCKET-CONNECTOR (16-GA TO 18-GA)	
E		1	**125-7874**		TUBE-HEAT SHRINK (5.72-MM DIA) (5-CM)	
E		1	**125-7875**		TUBE-HEAT SHRINK (7.44-MM DIA) (5-CM)	
	15	2	**249-9074**	1	BRACKET AS	
	16	1	**257-8924**	1	SENDER AS-FUEL LEVEL	
		1	**186-3735**	1	PIN-CONNECTOR (16-GA TO 18-GA)	
		1	**9X-3401**	1	PIN-CONNECTOR (16-GA TO 18-GA)	
		1	**230-4012**	1	RECEPTACLE AS-CONNECTOR (2-PIN)	
	17	1	**269-7658**	1	CABLE AS	
		1	**1S-7251**	1	TERMINAL-CABLE (00-GA, 1/2-IN BOLT)	
E		1	**5P-0761**		CABLE (00-GA, RED) (84-CM)	
		1	**8N-0869**	1	COVER-TERMINAL (RED)	
		1	**283-3436**	1	COVER-TERMINAL (RED)	
	18	2	**269-7674**	1	BRACKET AS	
	19	2	**269-7678**	1	CLIP	
	20	1	**269-7680**	2	CLIP	
	21	1	**311-0306**	1	CLIP AS	
	22	2	**311-0307**	1	CABLE AS	
		2	**1S-7251**	1	TERMINAL-CABLE (00-GA, 1/2-IN BOLT)	
		2	**1S-7252**	1	TERMINAL-CABLE (00-GA, 3/8-IN BOLT)	
E		2	**5P-0747**		CABLE (00-GA, BLACK) (25-CM)	
CY	23	2	**319-6491**	2	SENSOR GP-SPEED (TRACK, RH)	181
M	24	1	**095-0736**	5	SCREW-MACHINE (M5X0.8X10-MM)	
M	25	2	**191-8920**	4	BOLT-SOCKET HEAD (M6X1X12-MM)	
	26	2	**261-0420**	1	SENSOR GP-PRESSURE (HYDROSTATIC DRIVE)	
	27	2	**277-1873**	1	CLIP	
	28	2	**3J-1907**	1	SEAL-O-RING	
	29	2	**3J-5696**	1	PIPE	
	30	1	**3S-2093**	1	STRAP-CABLE	
	31	2	**4P-7581**	1	CLIP	
CM	32	2	**5C-7261**	8	NUT (M8X1.25-THD)	
	33	2	**5K-8451**	1	CLIP	
	34	1,2	**5P-4116**	6	WASHER-HARD (8.8X20.5X2-MM THK)	
	35	1	**107-4749**	1	PLATE	
	36	2	**6D-3479**	9	CLIP	
	37	2	**6V-9028**	1	SEAL-O-RING	
M	38	1	**7X-2534**	2	BOLT (M6X1X50-MM)	
M	39	1	**7X-2536**	2	BOLT (M8X1.25X14-MM)	
	40	2	**7X-7729**	1	WASHER (11X25X3-MM THK)	
	41	1	**8T-0328**	5	WASHER-HARD (5.5X10X1-MM THK)	
	42	1,2	**8T-4121**	12	WASHER-HARD (11X21X2.5-MM THK)	
M	43	1	**8T-4133**	1	NUT (M10X1.5-THD)	
M	44	2	**8T-4137**	1	BOLT (M10X1.5X20-MM)	
M	45	2	**8T-4186**	1	BOLT (M10X1.5X40-MM)	
M	46	2	**8T-4191**	9	BOLT (M10X1.5X16-MM)	
M	47	2	**8T-4195**	1	BOLT (M10X1.5X30-MM)	
	48	2	**8T-4224**	1	WASHER-HARD (8.8X16X2-MM THK)	
	49	2	**8W-8909**	1	SLEEVE	
	50	1	**9X-8256**	2	WASHER (6.6X12X2-MM THK)	
D	51	1,2	**8T-3425**		CHANNEL-TRIM (0.1-M EACH)	

245-6017 **BATTERY & WIRING GP** *(contd.)* **i03590680**

C-CHANGE FROM PREVIOUS TYPE
D-ORDER BY THE METER
E-ORDER BY THE CENTIMETER
M-METRIC PART
Y-SEPARATE ILLUSTRATION

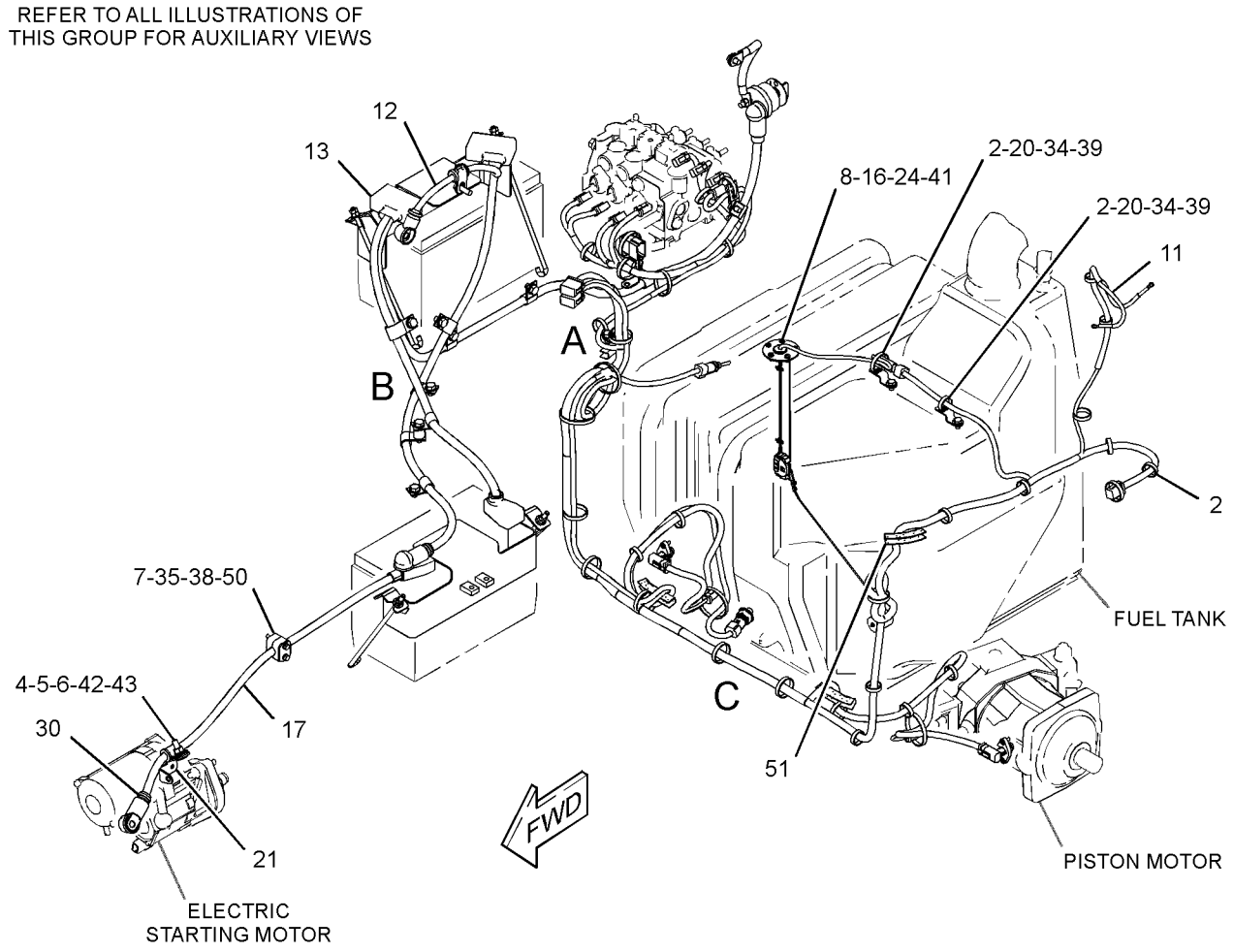

GRAPHIC #1 g01694283

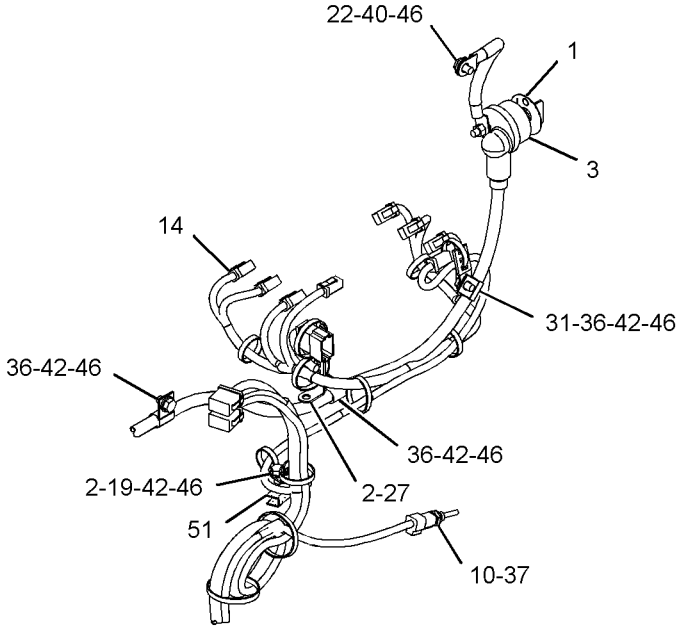

VIEW OF AREA A

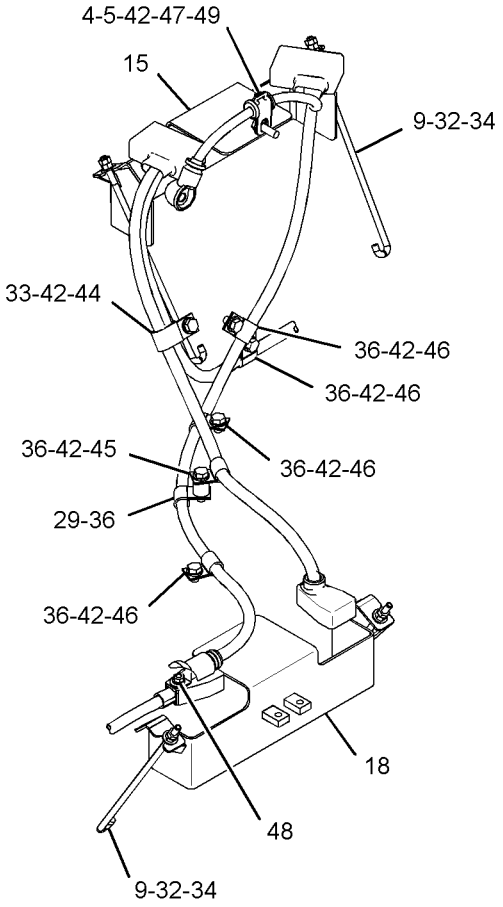

VIEW OF AREA B

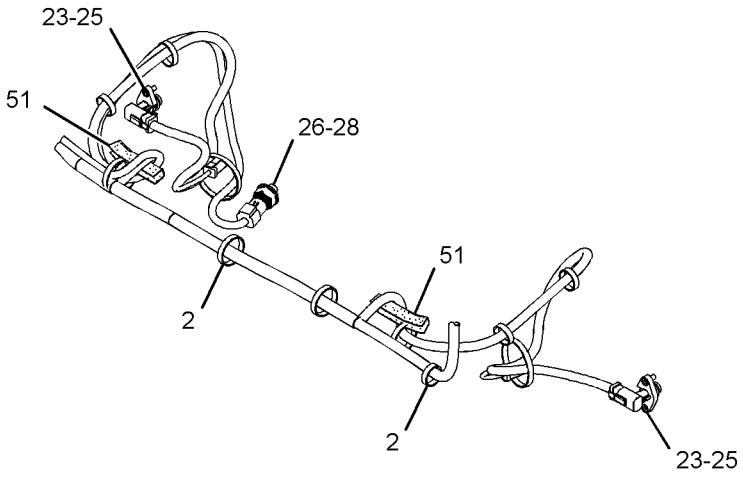

VIEW OF AREA C

GRAPHIC #2 **<END>** g01694285

ELECTRICAL AND STARTING SYSTEM

245-6017 BATTERY & WIRING GP

S/N: JLF1-UP; WWW1-UP; YYY1-UP
PART OF 244-7380, 244-7381, 282-5328 CHASSIS AR
TYPE 4

SMCS-1401, 1402, 1408 **i03590760**

NOTE	REF NO	GRAPHIC REF	PART NUMBER	QTY	PART NAME 1 2 3 4 5 6 (PRODUCT LEVEL)	SEE PAGE
	1	2	**3E-8320**	1	PLATE-INSTRUCTION (BATTERY) (DISCONNECT SWITCH)	
C	2	1,2	**7K-1181**	38	STRAP-CABLE	
Y	3	2	**7N-0718**	1	SWITCH GP-DISCONNECT (BATTERY) (12-VOLT)	186
	4	1,2	**8T-1887**	2	CLIP (SLOT)	
	5	1,2	**8T-1888**	2	CLIP (TAB)	
	6	1	**8X-5489**	1	SLEEVE	
	7	1	**128-5531**	2	CLAMP-HALF	
	8	1	**151-2110**	1	GASKET	
	9	2	**196-7007**	4	ROD	
	10	2	**238-0112**	1	SENSOR GP-TEMPERATURE (HYDRAULIC OIL)	
	11	1	**245-6037**	1	HARNESS AS-CHASSIS	
		1	**155-2255**	1	KIT-CONNECTING PLUG (12-PIN)	
		1	**155-2270**	3	KIT-CONNECTING PLUG (2-PIN)	
		1	**155-2271**	2	KIT-CONNECTING PLUG (4-PIN)	
		1	**155-2257**	1	KIT-CONNECTING PLUG (12-PIN)	
		1	**155-2274**	1	KIT-CONNECTING PLUG (6-PIN)	
					(EACH PLUG KIT INCLUDES PLUG AS, WEDGE & INTERFACE SEAL)	
		1	**230-4011**	2	PLUG AS-CONNECTOR (2-PIN)	
					(EACH INCLUDES)	
		1	**264-7029**	1	SEAL-CONNECTOR	
		1	**237-0227**	1	PLUG AS-CONNECTOR (3-PIN)	
		1	**264-7030**	1	SEAL-CONNECTOR	
		1	**8T-8737**	8	PLUG-SEAL	
		1	**102-8805**	1	KIT-RECEPTACLE (6-PIN)	
					(INCLUDES RECEPTACLE AS & WEDGE)	
		1	**9X-3402**	7	SOCKET-CONNECTOR (16-GA TO 18-GA)	
		1	**180-9340**	17	SOCKET-CONNECTOR (14-GA TO 18-GA)	
		1	**186-3736**	25	SOCKET-CONNECTOR (16-GA TO 18-GA)	
		1	**3S-2093**	5	STRAP-CABLE	
		1	**5P-1476**	2	TERMINAL-FORK (14-GA TO 16-GA, NO. 10 SCREW)	
E		1	**125-7874**		TUBE-HEAT SHRINK (5.72-MM DIA) (20-CM)	
E		1	**125-7875**		TUBE-HEAT SHRINK (7.44-MM DIA) (5-CM)	
	12	1	**249-9017**	1	CABLE AS	
		1	**3L-6513**	1	TERMINAL (FOR 1/2-IN BOLT)	
		1	**1S-7252**	1	TERMINAL-CABLE (00-GA, 3/8-IN BOLT)	
E		1	**8C-3056**		CABLE (2-GA, RED) (50-CM)	
E		1	**5P-0761**		CABLE (00-GA, RED) (120-CM)	
		1	**3S-2093**	2	STRAP-CABLE	
		1	**8N-0869**	1	COVER-TERMINAL (RED)	
		1	**8T-8827**	1	BOOT (RED) (RED)	
	13	1	**249-9018**	1	CABLE AS	
		1	**249-9042**	1	TERMINAL-BATTERY	
		1	**1M-6119**	1	BOLT (5/16-18X1.375-IN)	
		1	**1M-6120**	1	NUT (5/16-18-THD)	
		1	**269-7682**	1	COVER-TERMINAL	
E		1	**5P-0747**		CABLE (00-GA, BLACK) (226-CM)	
		1	**1S-7252**	1	TERMINAL-CABLE (00-GA, 3/8-IN BOLT)	
		1	**3S-2093**	1	STRAP-CABLE	
		1	**6T-0465**	1	COVER-TERMINAL (BLACK)	
	14	2	**249-9024**	1	HARNESS AS-VALVE	
		1	**186-3735**	10	PIN-CONNECTOR (16-GA TO 18-GA)	

245-6017 **BATTERY & WIRING GP** *(contd.)* **i03590760**

NOTE	REF NO	GRAPHIC REF	PART NUMBER	QTY	PART NAME 1 2 3 4 5 6 (PRODUCT LEVEL)	SEE PAGE
		1	**155-2270**	7	KIT-CONNECTING PLUG (2-PIN)	
					(EACH INCLUDES PLUG AS, WEDGE & INTERFACE SEAL)	
		1	**8T-8737**	2	PLUG-SEAL	
		1	**102-8801**	1	KIT-RECEPTACLE (12-PIN)	
					(EACH INCLUDES RECEPTACLE AS & WEDGE)	
		1	**186-3736**	14	SOCKET-CONNECTOR (16-GA TO 18-GA)	
E		1	**125-7874**		TUBE-HEAT SHRINK (5.72-MM DIA) (5-CM)	
E		1	**125-7875**		TUBE-HEAT SHRINK (7.44-MM DIA) (5-CM)	
	15	2	**249-9074**	1	BRACKET AS	
	16	1	**257-8924**	1	SENDER AS-FUEL LEVEL	
		1	**186-3735**	1	PIN-CONNECTOR (16-GA TO 18-GA)	
		1	**9X-3401**	1	PIN-CONNECTOR (16-GA TO 18-GA)	
		1	**230-4012**	1	RECEPTACLE AS-CONNECTOR (2-PIN)	
	17	1	**269-7658**	1	CABLE AS	
		1	**1S-7251**	1	TERMINAL-CABLE (00-GA, 1/2-IN BOLT)	
E		1	**5P-0761**		CABLE (00-GA, RED) (84-CM)	
		1	**8N-0869**	1	COVER-TERMINAL (RED)	
		1	**283-3436**	1	COVER-TERMINAL (RED)	
	18	2	**269-7674**	1	BRACKET AS	
	19	2	**269-7678**	1	CLIP	
	20	1	**269-7680**	2	CLIP	
	21	1	**311-0306**	1	CLIP AS	
	22	2	**311-0307**	1	CABLE AS	
		2	**1S-7251**	1	TERMINAL-CABLE (00-GA, 1/2-IN BOLT)	
		2	**1S-7252**	1	TERMINAL-CABLE (00-GA, 3/8-IN BOLT)	
E		2	**5P-0747**		CABLE (00-GA, BLACK) (25-CM)	
Y	23	2	**319-6491**	1	SENSOR GP-SPEED (TRACK, RH)	181
Y	23A	2	**319-6491**	1	SENSOR GP-SPEED (TRACK, LH)	181
M	24	1	**095-0736**	5	SCREW-MACHINE (M5X0.8X10-MM)	
M	25	2	**191-8920**	4	BOLT-SOCKET HEAD (M6X1X12-MM)	
	26	2	**261-0420**	1	SENSOR GP-PRESSURE (HYDROSTATIC DRIVE)	
	27	2	**277-1873**	1	CLIP	
	28	2	**3J-1907**	1	SEAL-O-RING	
C	29	2	**204-2281**	1	STRAP-TIE	
	30	1	**3S-2093**	1	STRAP-CABLE	
	31	2	**4P-7581**	1	CLIP	
M	32	2	**5C-7261**	8	NUT (M8X1.25-THD)	
	33	2	**5K-8451**	1	CLIP	
	34	1,2	**5P-4116**	6	WASHER-HARD (8.8X20.5X2-MM THK)	
	35	1	**107-4749**	1	PLATE	
C	36	2	**6D-3479**	10	CLIP	
	37	2	**6V-9028**	1	SEAL-O-RING	
M	38	1	**7X-2534**	2	BOLT (M6X1X50-MM)	
M	39	1	**7X-2536**	2	BOLT (M8X1.25X14-MM)	
	40	2	**7X-7729**	1	WASHER (11X25X3-MM THK)	
	41	1	**8T-0328**	5	WASHER-HARD (5.5X10X1-MM THK)	
	42	1,2	**8T-4121**	12	WASHER-HARD (11X21X2.5-MM THK)	
M	43	1	**8T-4133**	1	NUT (M10X1.5-THD)	
M	44	2	**8T-4137**	1	BOLT (M10X1.5X20-MM)	
CM	45	2	**8T-4196**	2	BOLT (M10X1.5X35-MM)	
CM	46	2	**8T-4191**	8	BOLT (M10X1.5X16-MM)	
M	47	2	**8T-4195**	1	BOLT (M10X1.5X30-MM)	
	48	2	**8T-4224**	1	WASHER-HARD (8.8X16X2-MM THK)	
	49	2	**8W-8909**	1	SLEEVE	
	50	1	**9X-8256**	2	WASHER (6.6X12X2-MM THK)	
D	51	1,2	**8T-3425**		CHANNEL-TRIM (0.1-M EACH)	
CY	52	2	*318-8136*	1	WARNING GP-BACKUP	189
C	53	2	**154-2302**	2	SPACER (11X20X15-MM THK)	

C-CHANGE FROM PREVIOUS TYPE
D-ORDER BY THE METER
E-ORDER BY THE CENTIMETER
M-METRIC PART
Y-SEPARATE ILLUSTRATION

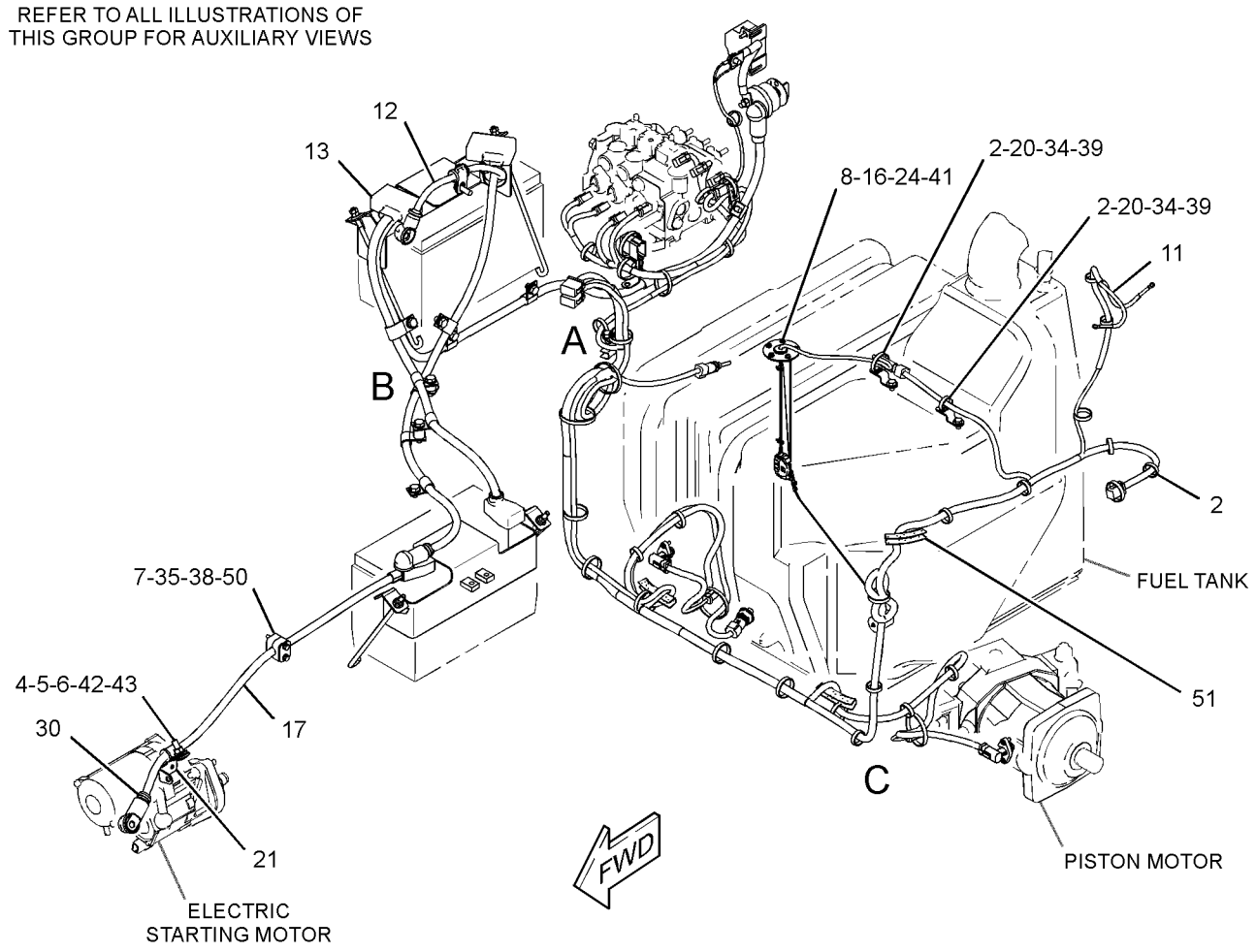

GRAPHIC #1 g01717180

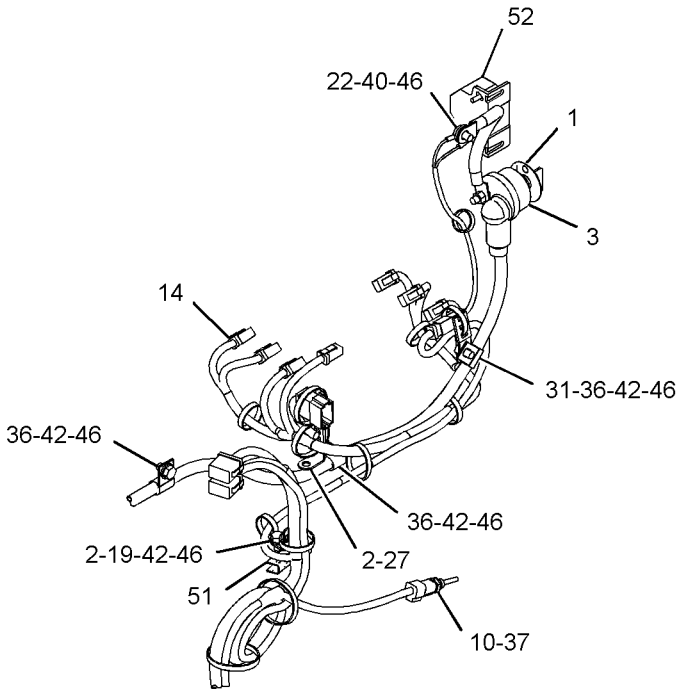

VIEW OF AREA A

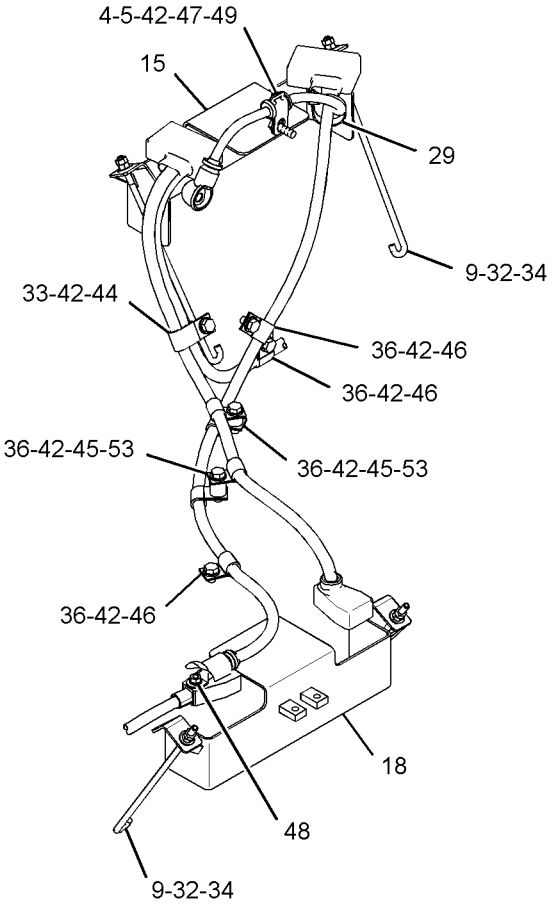

VIEW OF AREA B

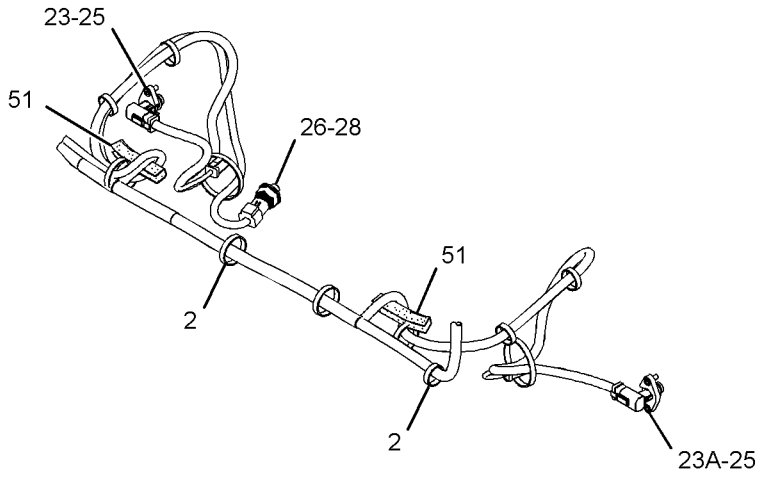

VIEW OF AREA C

GRAPHIC #2 **<END>** g01717193

292-0294 CABLE AS-COILED–LASER RECEIVER–ACCUGRADE

S/N: JLF1-UP; WWW1-UP; YYY1-UP
FIELD INSTALLATION

SMCS-1408 **i02977940**

NOTE	REF NO	GRAPHIC REF	PART NUMBER	QTY	PART NAME 1 2 3 4 5 6 (PRODUCT LEVEL)	SEE PAGE
	1	1	**311-4863**	1	CABLE AS-COILED (MAST)	

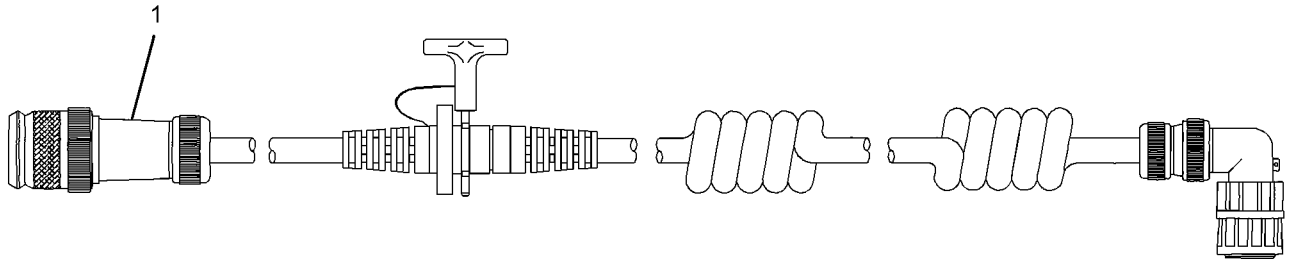

GRAPHIC #1 **<END>** g01458178

ELECTRICAL AND STARTING SYSTEM

304-3650 CONTROL GP-ENGINE ELECTRONIC

S/N: C4E1-UP

PART OF 254-9233 ENGINE AR-PRIMARY

SMCS-1901 **i03190840**

NOTE	REF NO	GRAPHIC REF	PART NUMBER	QTY	PART NAME 1 2 3 4 5 6 (PRODUCT LEVEL)	SEE PAGE
	1	1	**331-7540**	1	CONTROL GP-UNPROGRAMMED	

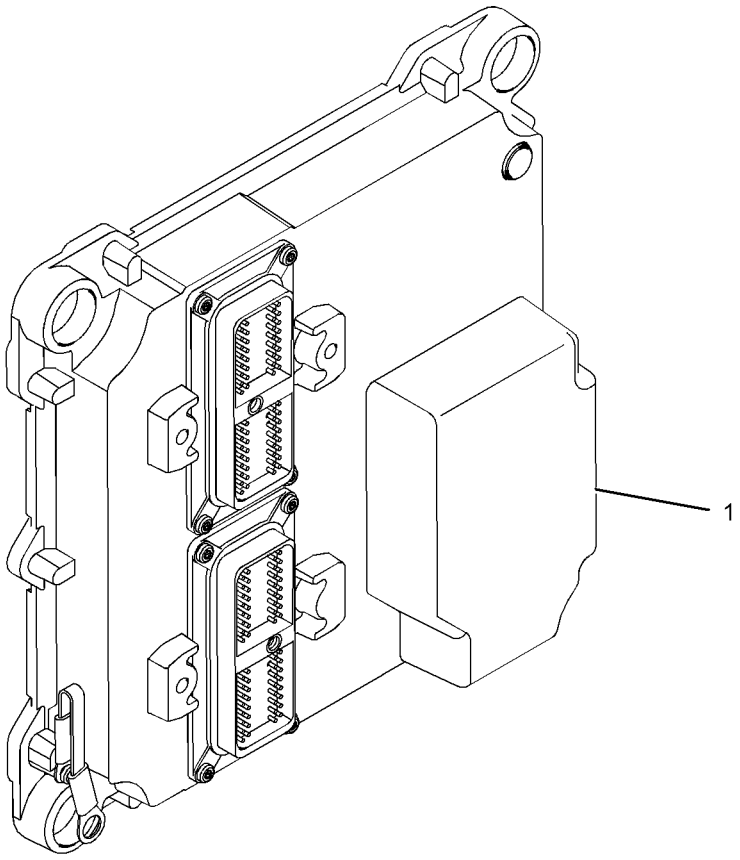

GRAPHIC #1 **<END>** g01342227

239-9954 CONTROL GP-UNPROGRAMMED–PRODUCT LINK 300

S/N: JLF1-UP; WWW1-UP; YYY1-UP
PART OF 268-4699 SERVICE GP-COMMUNICATION
AN ATTACHMENT

SMCS-7610 **i03121725**

NOTE	REF NO	GRAPHIC REF	PART NUMBER	QTY	PART NAME 1 2 3 4 5 6 (PRODUCT LEVEL)	SEE PAGE
	1	1	**285-1133**	1	CONTROL GP-UNPROGRAMMED (PRODUCT LINK 300)	
	1A	1	**7X-6315**	1	STRAP AS-GROUND	
	1B	1	**126-7574**	1	SCREW-PAN HEAD (8-32X9.52-MM)	
	1C	1	**134-4126**	1	WASHER (4.52X8.28X0.76-MM THK)	

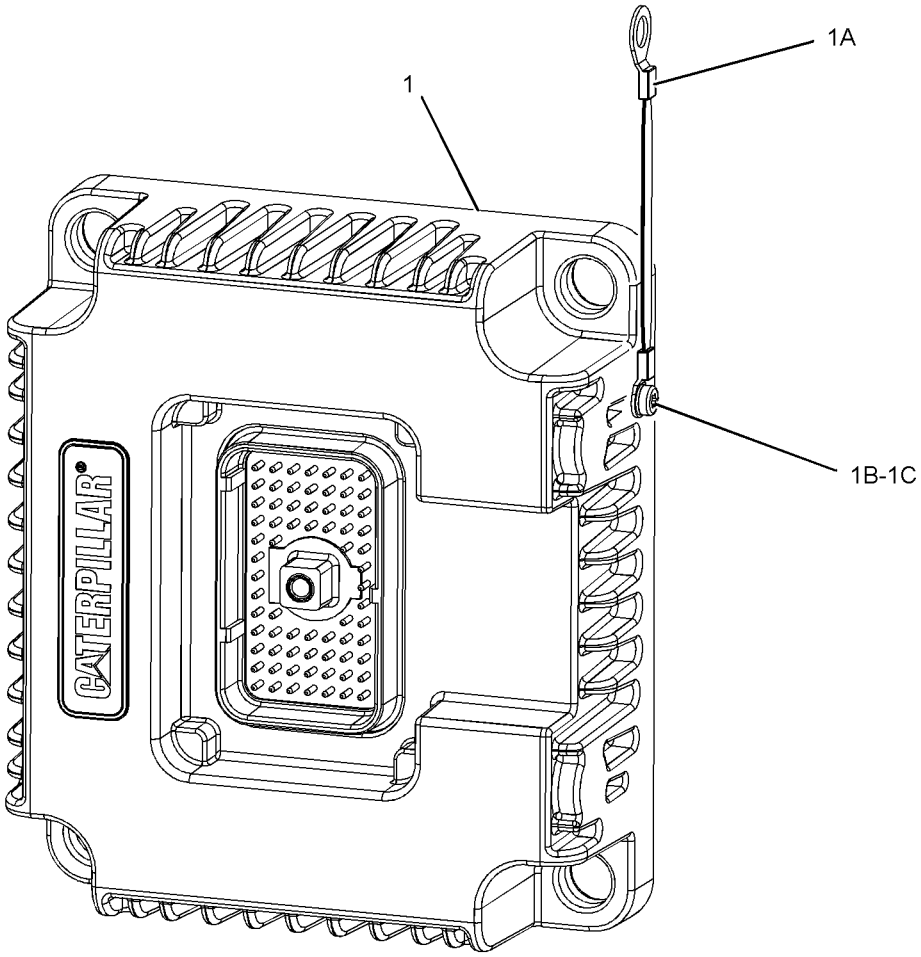

GRAPHIC #1 **<END>** g01377625

303-4685 ELECTRONICS GP-IMPLEMENT—ACCUGRADE

S/N: WWW1-UP; YYY1-UP
AN ATTACHMENT

SMCS-5701, 7610, 7620 **i02694194**

NOTE	PART NUMBER	QTY	PART NAME 1 2 3 4 5 6 (PRODUCT LEVEL)	SEE PAGE
J	**303-4221**	1	CONFIGURATION-PREMIUM	
J-DLR INSTALL CONFIG:IRM:EES03-01				

<END>

244-7387 ELECTRONICS GP-MACHINE

S/N: JLF1-UP; WWW1-UP; YYY1-UP
PART OF 244-7374, 244-7375, 282-5326 COMMON AR

SMCS-7610, 7620 **i02652035**

NOTE	PART NUMBER	QTY	PART NAME 1 2 3 4 5 6 (PRODUCT LEVEL)	SEE PAGE
Y	*284-0825*	1	ELECTRONICS GP-MACHINE (POWERTRAIN)	138
Y-SEPARATE ILLUSTRATION				

<END>

284-0825 ELECTRONICS GP-MACHINE—POWER TRAIN

S/N: JLF1-UP; WWW1-UP; YYY1-UP
PART OF 244-7387 ELECTRONICS GP-MACHINE

SMCS-7610, 7620 **i03592915**

NOTE	PART NUMBER	QTY	PART NAME 1 2 3 4 5 6 (PRODUCT LEVEL)	SEE PAGE
	317-0657	1	SOFTWARE GP-MACHINE	
			S/N: WWW1-544; YYY1-518; JLF1-197	
	338-0841	1	SOFTWARE GP-MACHINE	
			S/N: WWW545-UP; YYY519-UP; JLF198-UP	

<END>

304-3660 GLOW PLUG GP

S/N: C4E1-UP

PART OF 254-9233 ENGINE AR-PRIMARY

SMCS-1412 **i02654914**

NOTE	REF NO	GRAPHIC REF	PART NUMBER	QTY	PART NAME 1 2 3 4 5 6 (PRODUCT LEVEL)	SEE PAGE
	1	1	**292-3462**	1	PLUG	
	2	1	**292-9880**	4	GLOW PLUG (12-VOLT)	
	3	1	**298-5772**	1	BAR	

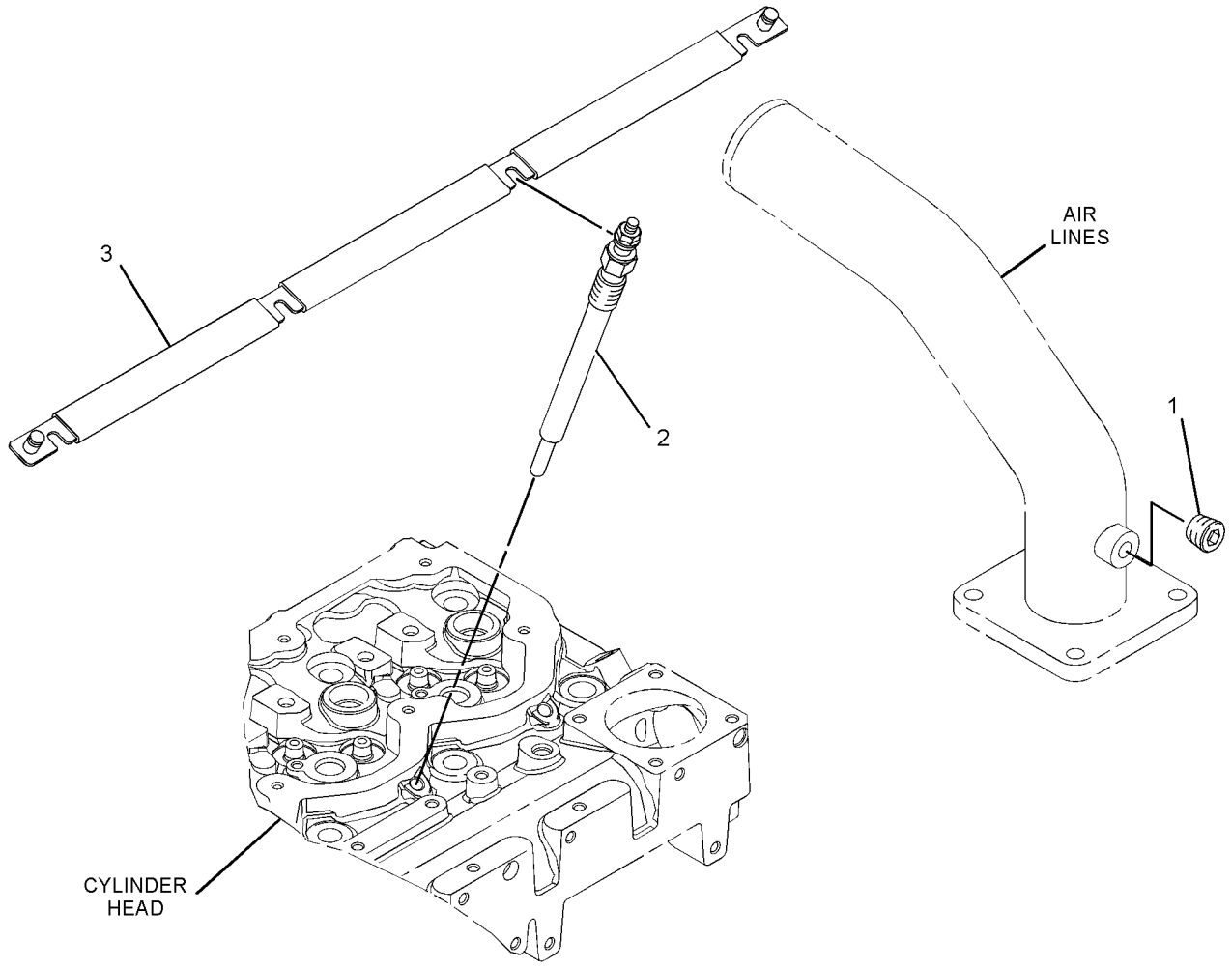

GRAPHIC #1 **<END>** g01342262

296-5751 GRADE CONTROL AR—OROPS

S/N: JLF1-UP; WWW1-UP; YYY1-UP

AN ATTACHMENT

SMCS-7220 **i03154763**

NOTE	PART NUMBER	QTY	PART NAME 1 2 3 4 5 6 (PRODUCT LEVEL)	SEE PAGE
Y	**274-4646**	1	CONTROL GP-JOYSTICK (BULLDOZER)	494
			—OR—	
Y	**328-0895**	1	CONTROL GP-JOYSTICK (BULLDOZER)	497
Y	*255-4230*	1	COVER GP-CAB (OROPS)	500

Y-SEPARATE ILLUSTRATION

<END>

296-5752 GRADE CONTROL AR—EROPS

S/N: JLF1-UP; WWW1-UP; YYY1-UP

AN ATTACHMENT

SMCS-7220 **i03155140**

NOTE	PART NUMBER	QTY	PART NAME 1 2 3 4 5 6 (PRODUCT LEVEL)	SEE PAGE
Y	**274-4646**	1	CONTROL GP-JOYSTICK (BULLDOZER)	494
			—OR—	
Y	**328-0895**	1	CONTROL GP-JOYSTICK (BULLDOZER)	497
Y	*255-4231*	1	COVER GP-CAB (EROPS)	502

Y-SEPARATE ILLUSTRATION

<END>

296-5753 GRADE CONTROL AR—OROPS

S/N: JLF1-UP; WWW1-UP; YYY1-UP

AN ATTACHMENT

SMCS-7220 **i03155160**

NOTE	PART NUMBER	QTY	PART NAME 1 2 3 4 5 6 (PRODUCT LEVEL)	SEE PAGE
Y	**274-4645**	1	CONTROL GP-JOYSTICK (GRADE CONTROL)	493
			—OR—	
Y	**328-0894**	1	CONTROL GP-JOYSTICK (GRADE CONTROL)	496
Y	*255-4230*	1	COVER GP-CAB (OROPS)	500
Y	*249-9040*	1	WIRING GP-GRADE CONTROL (BASE)	234

Y-SEPARATE ILLUSTRATION

<END>

296-5754 GRADE CONTROL AR—EROPS

S/N: JLF1-UP; WWW1-UP; YYY1-UP

AN ATTACHMENT

SMCS-7220 **i03155180**

NOTE	PART NUMBER	QTY	PART NAME 1 2 3 4 5 6 (PRODUCT LEVEL)	SEE PAGE
Y	**274-4645**	1	CONTROL GP-JOYSTICK (GRADE CONTROL)	493
			—OR—	
Y	**328-0894**	1	CONTROL GP-JOYSTICK (GRADE CONTROL)	496
Y	*255-4231*	1	COVER GP-CAB (EROPS)	502
Y	*249-9040*	1	WIRING GP-GRADE CONTROL (BASE)	234

Y-SEPARATE ILLUSTRATION

<END>

296-5755 GRADE CONTROL AR—OROPS

S/N: JLF1-UP; WWW1-UP; YYY1-UP
FOR USE WITH BLADE AR-DOZER, GRADE CONTROL
AN ATTACHMENT

SMCS-7220 **i03155183**

NOTE	PART NUMBER	QTY	PART NAME 1 2 3 4 5 6 (PRODUCT LEVEL)	SEE PAGE
Y	**274-4645**	1	CONTROL GP-JOYSTICK (GRADE CONTROL)	493
			—OR—	
Y	**328-0894**	1	CONTROL GP-JOYSTICK (GRADE CONTROL)	496
Y	*285-0330*	1	COVER GP-CONSOLE (OROPS)	508
Y	*255-4260*	1	MOUNTING GP-GRADE CONTROL	163
Y	*245-6029*	1	WIRING GP-GRADE CONTROL (FULL)	219
Y-SEPARATE ILLUSTRATION				

<END>

296-5756 GRADE CONTROL AR—EROPS

S/N: JLF1-UP; WWW1-UP; YYY1-UP
FOR USE WITH BLADE AR-DOZER, GRADE CONTROL
AN ATTACHMENT

SMCS-7220 **i03155185**

NOTE	PART NUMBER	QTY	PART NAME 1 2 3 4 5 6 (PRODUCT LEVEL)	SEE PAGE
Y	**274-4645**	1	CONTROL GP-JOYSTICK (GRADE CONTROL)	493
			—OR—	
Y	**328-0894**	1	CONTROL GP-JOYSTICK (GRADE CONTROL)	496
Y	*285-0331*	1	COVER GP-CAB (EROPS)	504
Y	*255-4260*	1	MOUNTING GP-GRADE CONTROL	163
Y	*245-6029*	1	WIRING GP-GRADE CONTROL (FULL)	219
Y-SEPARATE ILLUSTRATION				

<END>

292-0293 GRADE CONTROL AR-LASER—ACCUGRADE, SINGLE

S/N: JLF1-UP; WWW1-UP; YYY1-UP
FOR USE WITH K SERIES, N SERIES, R SERIES, T SERIES TRACK TYPE TRACTOR
FIELD INSTALLATION

SMCS-7220 **i03121784**

NOTE	PART NUMBER	QTY	PART NAME 1 2 3 4 5 6 (PRODUCT LEVEL)	SEE PAGE
Y	**292-0309**	1	DISPLAY GP-MONITOR (CD610)	510
Y	**292-0281**	1	MAST GP (LASER RECEIVER) (GRADE CONTROL)	162
Y	**239-9950**	1	RECEIVER GP-LASER (SINGLE) (GRADE CONTROL)	174
Y-SEPARATE ILLUSTRATION				

<END>

292-0312 GRADE CONTROL AR-LASER–ACCUGRADE, DUAL

S/N: JLF1-UP; WWW1-UP; YYY1-UP
FOR USE WITH TRACK TYPE TRACTOR
FIELD INSTALLATION

SMCS-7220 **i03631772**

NOTE	PART NUMBER	QTY	PART NAME 1 2 3 4 5 6 (PRODUCT LEVEL)	SEE PAGE
Y	*292-0309*	1	DISPLAY GP-MONITOR (CD610)	510
Y	**292-0281**	2	MAST GP (LASER RECEIVER)	162
Y	*292-0285*	2	RECEIVER GP-LASER (DUAL) (GRADE CONTROL)	174
	235-4587	1	CASE-PLASTIC	

Y-SEPARATE ILLUSTRATION

<END>

290-5570 GRADE CONTROL AR-SATELLITE–ACCUGRADE, DUAL GPS

S/N: JLF1-UP; WWW1-UP; YYY1-UP
REPLACED BY 290-5571–PAGE 142. FOR USE WITH TRACK TYPE TRACTOR
FIELD INSTALLATION

SMCS-7220 **i02852359**

NOTE	PART NUMBER	QTY	PART NAME 1 2 3 4 5 6 (PRODUCT LEVEL)	SEE PAGE
Y	*286-0134*	1	DISPLAY GP-MONITOR (CD700)	510
Y	*292-0290*	2	MAST GP (SATELLITE RECEIVER)	162
Y	**286-9124**	3	MONITOR AS (LIGHT BAR)	539
Y	*292-0296*	1	MOUNTING GP-GRADE CONTROL	165
Y	*286-0137*	1	RECEIVER GP-SATELLITE (DUAL GPS, MS980)	175
	254-9136	2	CABLE-COILED (RECEIVER)	

Y-SEPARATE ILLUSTRATION

<END>

290-5571 GRADE CONTROL AR-SATELLITE–ACCUGRADE, DUAL GNSS

S/N: JLF1-UP; WWW1-UP; YYY1-UP
FOR USE WITH TRACK TYPE TRACTOR
FIELD INSTALLATION

SMCS-7220 **i02906355**

NOTE	PART NUMBER	QTY	PART NAME 1 2 3 4 5 6 (PRODUCT LEVEL)	SEE PAGE
Y	*286-0134*	1	DISPLAY GP-MONITOR (CD700)	510
Y	*292-0290*	2	MAST GP (SATELLITE RECEIVER)	162
Y	**286-9124**	3	MONITOR AS (LIGHT BAR)	539
Y	*292-0296*	1	MOUNTING GP-GRADE CONTROL	165
Y	*292-0291*	1	RECEIVER GP-SATELLITE (DUAL GNSS, MS990)	175
	311-4862	2	CABLE-COILED (RECEIVER)	

Y-SEPARATE ILLUSTRATION

<END>

292-0279 GRADE CONTROL AR-SATELLITE–
ACCUGRADE, SINGLE GPS
S/N: JLF1-UP
REPLACED BY 292-0280–PAGE 143. FOR USE WITH TRACK TYPE TRACTOR
FIELD INSTALLATION

SMCS-7220 **i03613859**

NOTE	PART NUMBER	QTY	PART NAME 1 2 3 4 5 6 (PRODUCT LEVEL)	SEE PAGE
Y	*286-0134*	1	DISPLAY GP-MONITOR (CD700)	510
Y	*292-0290*	1	MAST GP (SATELLITE RECEIVER)	162
Y	**286-9124**	3	MONITOR AS (LIGHT BAR)	539
Y	*292-0296*	1	MOUNTING GP-GRADE CONTROL	165
Y	*286-0136*	1	RECEIVER GP-SATELLITE (SINGLE GPS, MS980)	174
	276-6146	1	SENSOR AS-ANGLE (AS400TC)	
	254-9951	1	CABLE-COILED (ANGLE SENSOR)	
	254-9136	1	CABLE-COILED (RECEIVER)	
Y-SEPARATE ILLUSTRATION				

<END>

292-0280 GRADE CONTROL AR-SATELLITE–
ACCUGRADE, SINGLE GNSS
S/N: JLF1-UP; WWW1-UP; YYY1-UP
FOR USE WITH TRACK TYPE TRACTOR
FIELD INSTALLATION

SMCS-7220 **i03635374**

NOTE	PART NUMBER	QTY	PART NAME 1 2 3 4 5 6 (PRODUCT LEVEL)	SEE PAGE
Y	**286-0134**	1	DISPLAY GP-MONITOR (CD700)	510
Y	**286-9124**	3	MONITOR AS (LIGHT BAR)	539
Y	*292-0296*	1	MOUNTING GP-GRADE CONTROL	165
Y	*292-0303*	1	MOUNTING GP-MAST (SATELLITE RECEIVER)	647
Y	**292-0292**	1	RECEIVER GP-SATELLITE (SINGLE GNSS, MS990)	175
	248-1500	1	MAST AS (SATELLITE RECEIVER)	
	276-6146	1	SENSOR AS-ANGLE (AS400TC)	
	311-4862	1	CABLE-COILED (RECEIVER)	
	311-4864	1	CABLE-COILED (ANGLE SENSOR)	
Y-SEPARATE ILLUSTRATION				

<END>

245-6040 HARNESS AS-ENGINE

S/N: JLF1-UP; WWW1-UP; YYY1-UP
PART OF 245-6019 WIRING GP-ENGINE

SMCS-1403, 1408 **i03482581**

NOTE	REF NO	GRAPHIC REF	PART NUMBER	QTY	PART NAME 1 2 3 4 5 6 (PRODUCT LEVEL)	SEE PAGE
F		1	**8T-8737**	16	PLUG-SEAL	
F		1	**9X-1054**	1	PLUG AS-CONNECTOR (4-PIN)	
F		1	**9X-1055**	2	TERMINAL-RECEPTACLE	
F		1	**9X-1056**	2	TERMINAL-RECEPTACLE (14-GA TO 16-GA)	
F		1	**119-3662**		TUBE-HEAT SHRINK (10.85-MM DIA) (7-CM)	
F		1	**125-7874**		TUBE-HEAT SHRINK (5.72-MM DIA) (15-CM)	
F		1	**125-7875**		TUBE-HEAT SHRINK (7.44-MM DIA) (15-CM)	
F		1	**134-2540**	1	RESISTOR AS (3-PIN)	
F		1	**155-2265**	1	KIT-CONNECTING PLUG (8-PIN)	
					(INCLUDES PLUG AS AND WEDGE)	
F		1	**167-3693**	1	PLUG AS-CONNECTOR (31-PIN)	
F		1	**176-1477**	1	PLUG AS	
F		1	**176-1522**	5	SEAL	
F		1	**230-4011**	1	PLUG AS-CONNECTOR (2-PIN)	
F		1	**238-9397**	1	RESISTOR AS	
F		1	**245-1042**	1	PLUG AS-CONNECTOR (64-PIN)	
F		1	**245-1044**	2	LOCK-CONNECTOR	
F		1	**245-1045**	1	COVER	
F		1	**245-1048**	44	PLUG-CONNECTOR	

F-NOT SHOWN

245-6040 **HARNESS AS-ENGINE** *(contd.)* **i03482581**

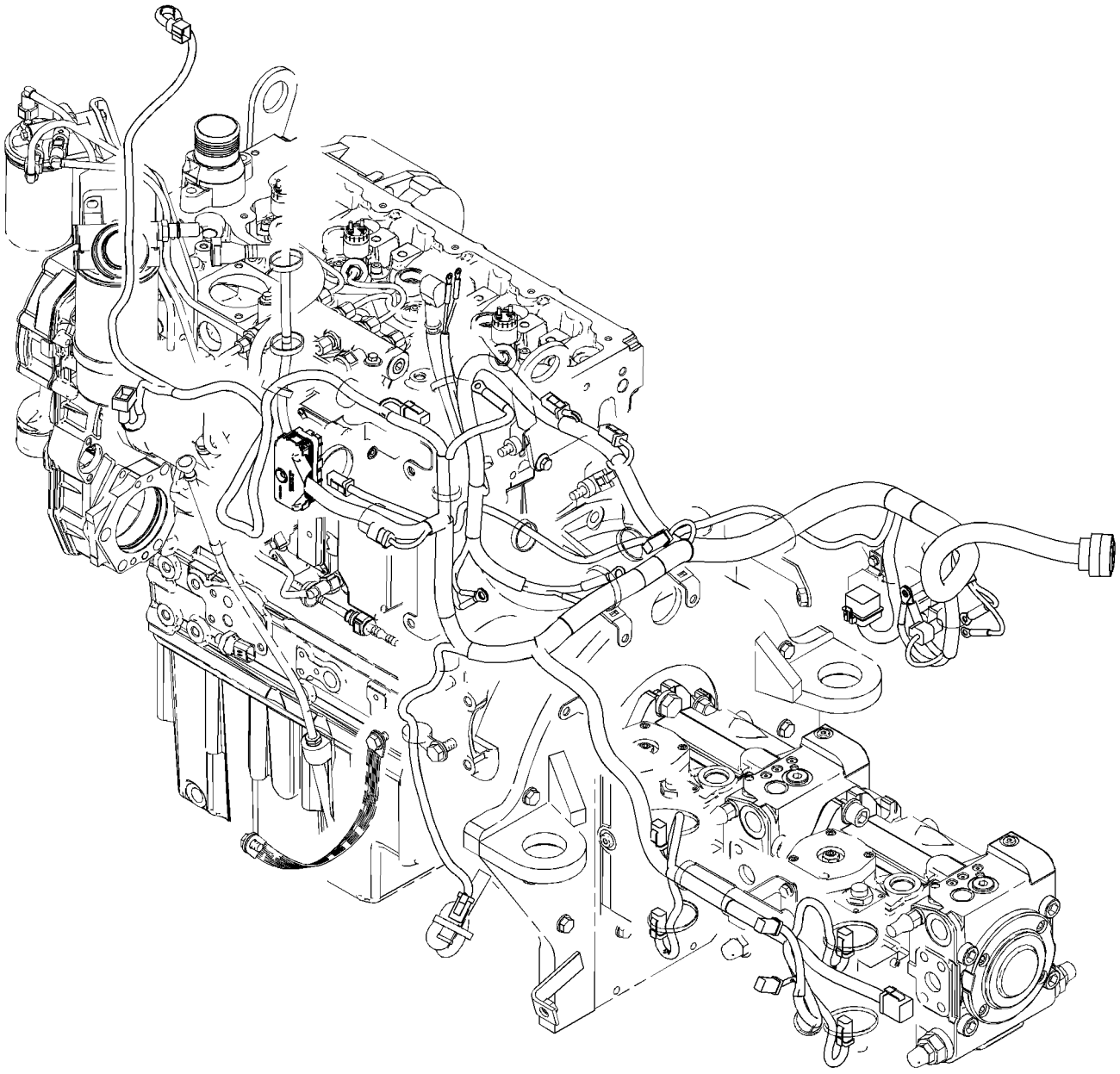

GRAPHIC #1 **<END>** g01830674

253-5391 HEATER GP-JACKET WATER

S/N: JLF1-UP; WWW1-UP; YYY1-UP
AN ATTACHMENT

SMCS-1383 **i02644587**

NOTE	REF NO	GRAPHIC REF	PART NUMBER	QTY	PART NAME 1 2 3 4 5 6 (PRODUCT LEVEL)	SEE PAGE
	1	1	**7K-1181**	2	STRAP-CABLE	
	2	1	**130-0165**	1	RECEPTACLE AS (FLUSH MOUNT)	
	3	1	**231-3054**	1	HEATER GP-JACKET WATER	
		1	**219-3273**	1	ELEMENT AS-JACKET WATER HEATER (120-VOLT, 1000-WATT)	
		1	**133-3413**	1	KIT-SEAL (WATER JACKET)	
					(KIT INCLUDES RINGS, SPACER & SEAL)	
		1	**133-6517**	1	CAP AS-DUST	
		1	**231-3052**	1	CORD AS	
	4	1	**253-6168**	1	PLATE AS	
	5	1	**4P-7581**	2	CLIP	
	6	1	**8T-4121**	2	WASHER-HARD (11X21X2.5-MM THK)	
M	7	1	**8T-4195**	2	BOLT (M10X1.5X30-MM)	

M-METRIC PART

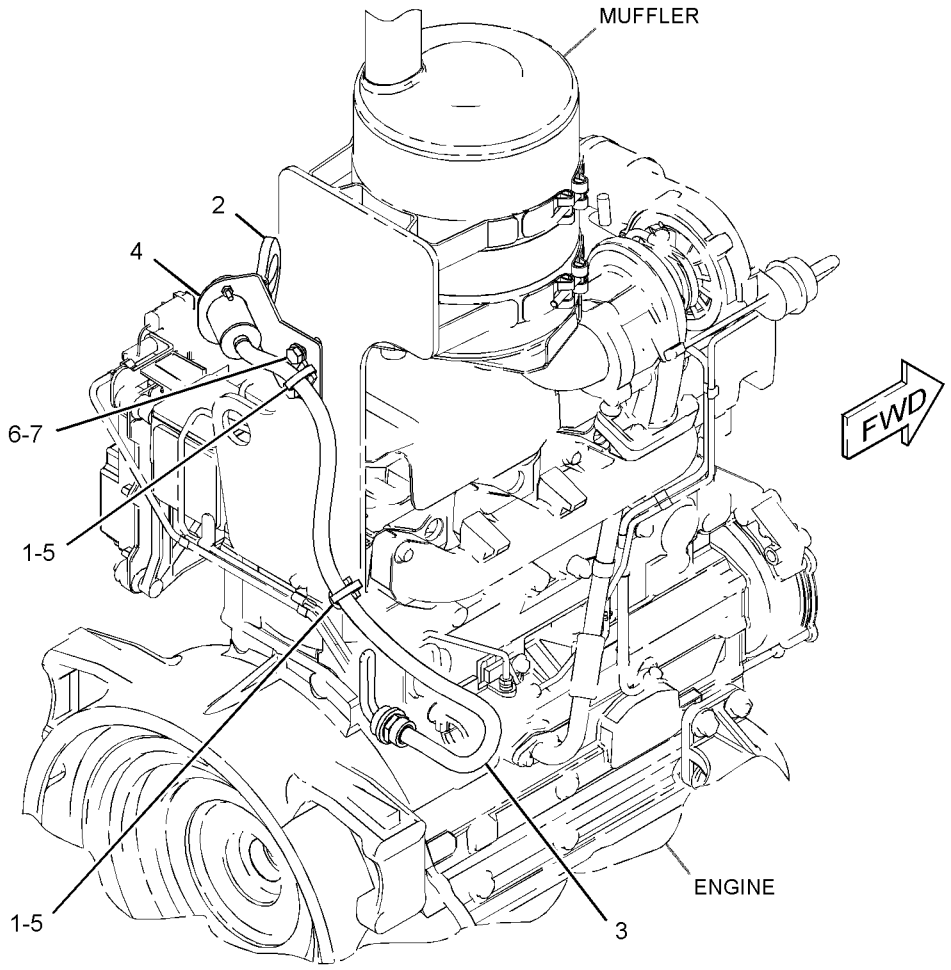

GRAPHIC #1 **<END>** g01329099

249-9029 INSTALLATION GP-COMMUNICATION–

PRODUCT LINK 321SR

S/N: JLF1-UP; WWW1-UP; YYY1-UP

CANNOT BE USED WITH 249-9068–PAGE 151

AN ATTACHMENT

TYPE 1

SMCS-7606 **i03588204**

NOTE	REF NO	GRAPHIC REF	PART NUMBER	QTY	PART NAME 1 2 3 4 5 6 (PRODUCT LEVEL)	SEE PAGE
	1	1	**7K-1181**	1	STRAP-CABLE	
	2	1	**8C-5607**	8	MOUNT-ISOLATION	
	3	1	**8C-5608**	4	SPACER (6.5X9.5X25.4-MM THK)	
	4	1	**249-9035**	1	HARNESS AS-CONTROL	
		1	**9X-3401**	5	PIN-CONNECTOR (16-GA TO 18-GA)	
		1	**186-3735**	3	PIN-CONNECTOR (16-GA TO 18-GA)	
		1	**155-2255**	1	KIT-CONNECTING PLUG (12-PIN)	
		1	**155-2270**	1	KIT-CONNECTING PLUG (2-PIN)	
					(EACH PLUG KIT INCLUDES PLUG AS, WEDGE & INTERFACE SEAL)	
		1	**160-7690**	1	PLUG AS-CONNECTOR (70-PIN)	
		1	**8T-8737**	66	PLUG-SEAL	
		1	**102-8801**	1	KIT-RECEPTACLE (12-PIN)	
					(INCLUDES RECEPTACLE AS & WEDGE)	
		1	**9X-3402**	6	SOCKET-CONNECTOR (16-GA TO 18-GA)	
		1	**186-3736**	3	SOCKET-CONNECTOR (16-GA TO 18-GA)	
		1	**126-1766**	13	SOCKET-CONNECTOR (14-GA TO 18-GA)	
B		1	**141-8061**		TAPE	
E		1	**125-7874**		TUBE-HEAT SHRINK (5.72-MM DIA) (20-CM)	
Y	5	1	*249-9068*	1	INSTALLATION GP-COMMUNICATION (PRODUCT LINK 121SR)	151
Y	6	1	**268-4699**	1	SERVICE GP-COMMUNICATION (PRODUCT LINK 300)	182
	7	1	**132-5789**	1	CLIP	
	8	1	**2A-2677**	1	SPACER (10.7X17.14X19.05-MM THK)	
M	9	1	**6V-2315**	3	BOLT (M6X1X35-MM)	
M	10	1	**7X-2535**	1	BOLT (M6X1X60-MM)	
	11	1	**9X-6165**	5	WASHER (6.5X22X2.5-MM THK)	

B-USE AS REQUIRED
E-ORDER BY THE CENTIMETER
M-METRIC PART
Y-SEPARATE ILLUSTRATION

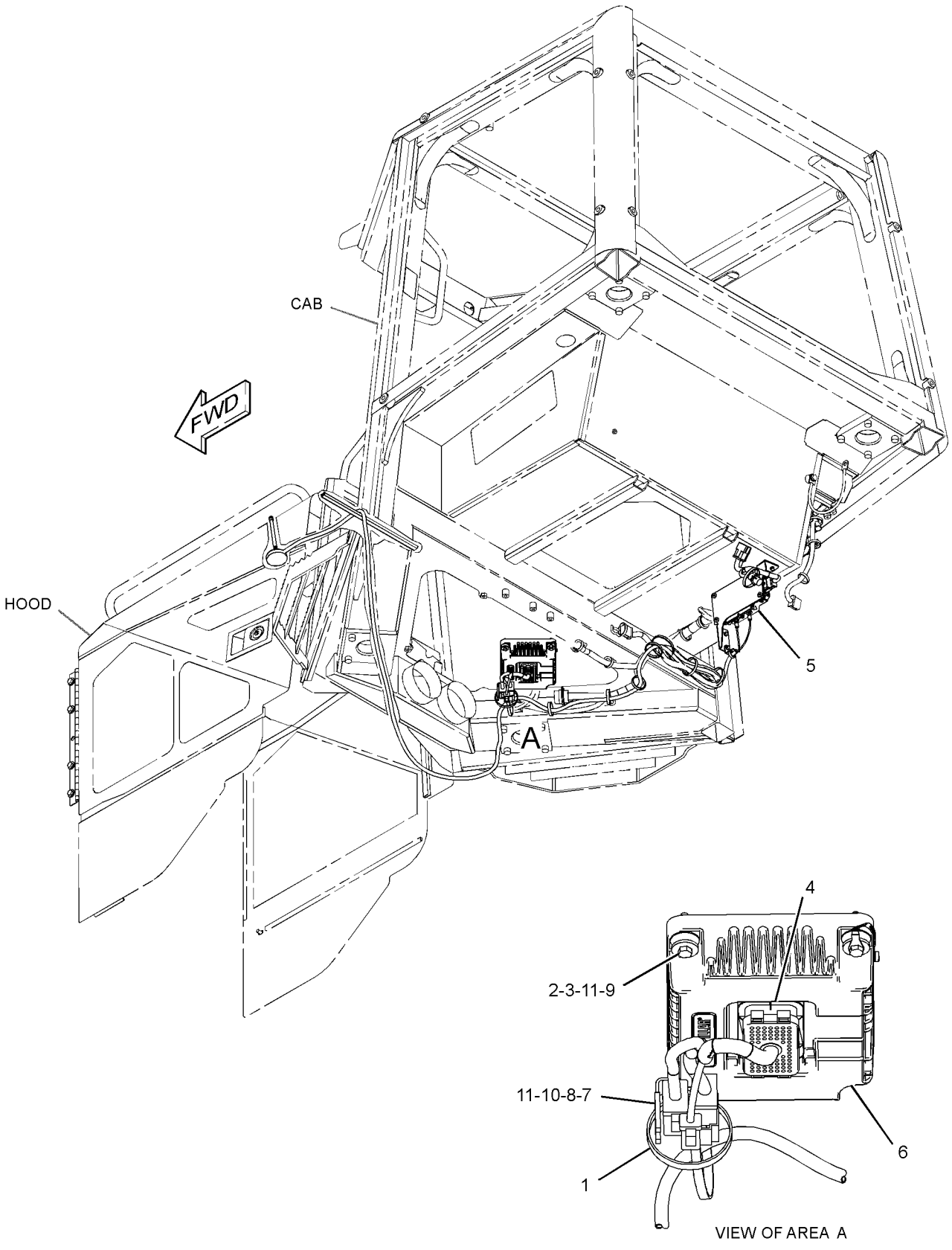

GRAPHIC #1 **<END>** g01346263

249-9029 INSTALLATION GP-COMMUNICATION–

PRODUCT LINK 321SR

S/N: JLF1-UP; WWW1-UP; YYY1-UP

CANNOT BE USED WITH 249-9068–PAGE 151

AN ATTACHMENT

TYPE 2

SMCS-7606 **i03588437**

NOTE	REF NO	GRAPHIC REF	PART NUMBER	QTY	PART NAME 1 2 3 4 5 6 (PRODUCT LEVEL)	SEE PAGE
	1	1	**7K-1181**	1	STRAP-CABLE	
	2	1	**8C-5607**	8	MOUNT-ISOLATION	
	3	1	**8C-5608**	4	SPACER (6.5X9.5X25.4-MM THK)	
	4	1	**249-9035**	1	HARNESS AS-CONTROL	
		1	**9X-3401**	5	PIN-CONNECTOR (16-GA TO 18-GA)	
		1	**186-3735**	3	PIN-CONNECTOR (16-GA TO 18-GA)	
		1	**155-2255**	1	KIT-CONNECTING PLUG (12-PIN)	
		1	**155-2270**	1	KIT-CONNECTING PLUG (2-PIN)	
					(EACH PLUG KIT INCLUDES PLUG AS, WEDGE & INTERFACE SEAL)	
		1	**160-7690**	1	PLUG AS-CONNECTOR (70-PIN)	
		1	**8T-8737**	66	PLUG-SEAL	
		1	**102-8801**	1	KIT-RECEPTACLE (12-PIN)	
					(INCLUDES RECEPTACLE AS & WEDGE)	
		1	**9X-3402**	6	SOCKET-CONNECTOR (16-GA TO 18-GA)	
		1	**186-3736**	3	SOCKET-CONNECTOR (16-GA TO 18-GA)	
		1	**126-1766**	13	SOCKET-CONNECTOR (14-GA TO 18-GA)	
B		1	**141-8061**		TAPE	
E		1	**125-7874**		TUBE-HEAT SHRINK (5.72-MM DIA) (20-CM)	
Y	5	1	*249-9068*	1	INSTALLATION GP-COMMUNICATION	151
	6	1	**311-8376**	1	SERVICE GP-COMMUNICATION (PRODUCT LINK 300)	
	7	1	**132-5789**	1	CLIP	
	8	1	**2A-2677**	1	SPACER (10.7X17.14X19.05-MM THK)	
M	9	1	**6V-2315**	3	BOLT (M6X1X35-MM)	
M	10	1	**7X-2535**	1	BOLT (M6X1X60-MM)	
	11	1	**9X-6165**	5	WASHER (6.5X22X2.5-MM THK)	

B-USE AS REQUIRED
E-ORDER BY THE CENTIMETER
M-METRIC PART
Y-SEPARATE ILLUSTRATION

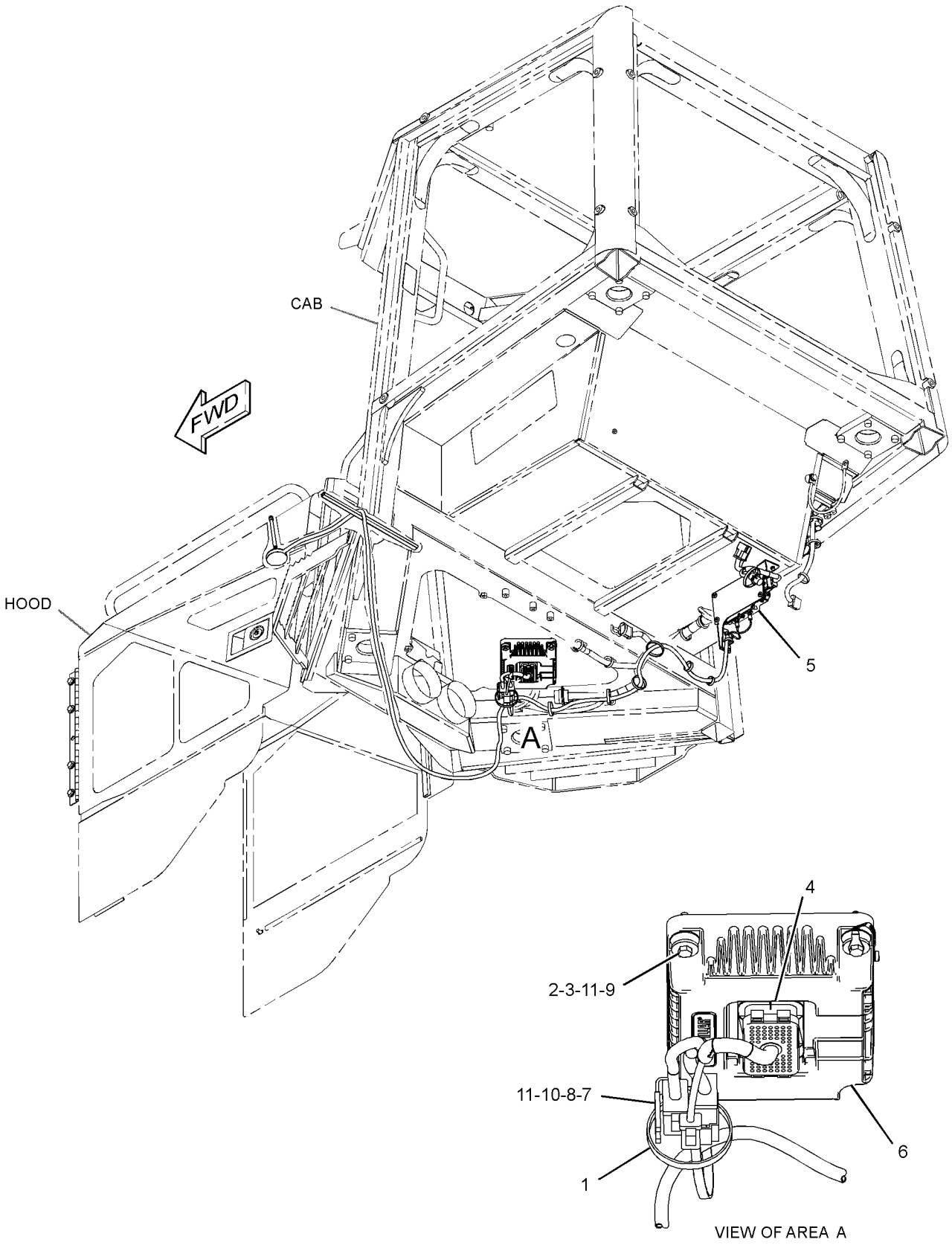

GRAPHIC #1 **<END>** g01408692

249-9068 INSTALLATION GP-COMMUNICATION–

PRODUCT LINK 121SR

S/N: JLF1-UP; WWW1-UP; YYY1-UP

PART OF 249-9029 INSTALLATION GP-COMMUNICATION

CANNOT BE USED WITH 249-9029–PAGE 147

AN ATTACHMENT

SMCS-7606 **i03632356**

NOTE	REF NO	GRAPHIC REF	PART NUMBER	QTY	PART NAME 1 2 3 4 5 6 (PRODUCT LEVEL)	SEE PAGE
	1	1	**7K-1181**	9	STRAP-CABLE	
	2	1	**249-9069**	1	HARNESS AS-WIRING (PRODUCT LINK)	
		1	**100-5805**	1	CAP-RECEPTACLE	
		1	**186-3735**	12	PIN-CONNECTOR (16-GA TO 18-GA)	
		1	**155-2255**	1	KIT-CONNECTING PLUG (12-PIN)	
					(INCLUDES PLUG AS, WEDGE & INTERFACE SEAL)	
		1	**8T-8737**	8	PLUG-SEAL	
		1	**102-8802**	1	KIT-RECEPTACLE (2-PIN)	
		1	**102-8801**	1	KIT-RECEPTACLE (12-PIN)	
					(EACH RECEPTACLE KIT INCLUDES RECEPTACLE AS & WEDGE)	
		1	**9X-4813**	1	RECEPTACLE AS-CONNECTOR (3-PIN)	
		1	**186-3736**	9	SOCKET-CONNECTOR (16-GA TO 18-GA)	
E		1	**125-7874**		TUBE-HEAT SHRINK (5.72-MM DIA) (15-CM)	
B	3	1	**260-7653**	1	FILM-WARNING (PRODUCT LINK, READ OMM)	
					–OR–	
B		1	**260-7652**	1	FILM-WARNING (PRODUCT LINK 300, U.S.)	
E	4	1	**3E-6600**		SEAL (40-CM)	
Y	5	1	**263-9088**	1	RADIO GP-COMMUNICATION (PRODUCT LINK 121SR)	174
	6	1	**269-7650**	1	PLATE AS	
	7	1	**156-6175**	1	CLIP	
	8	1	**310-2392**	1	ANTENNA AS (MAGNETIC MOUNT, PRODUCT LINK)	
		1	**301-0589**	1	ANTENNA (FLEXIBLE)	
M	9	1	**8C-3210**	7	BOLT (M6X1X16-MM)	
	10	1	**9X-8256**	7	WASHER (6.6X12X2-MM THK)	
	11	1	**307-0047**	1	FILM-INFORMATION (PRODUCT LINK, READ OMM)	

B-USE AS REQUIRED
E-ORDER BY THE CENTIMETER
M-METRIC PART
Y-SEPARATE ILLUSTRATION

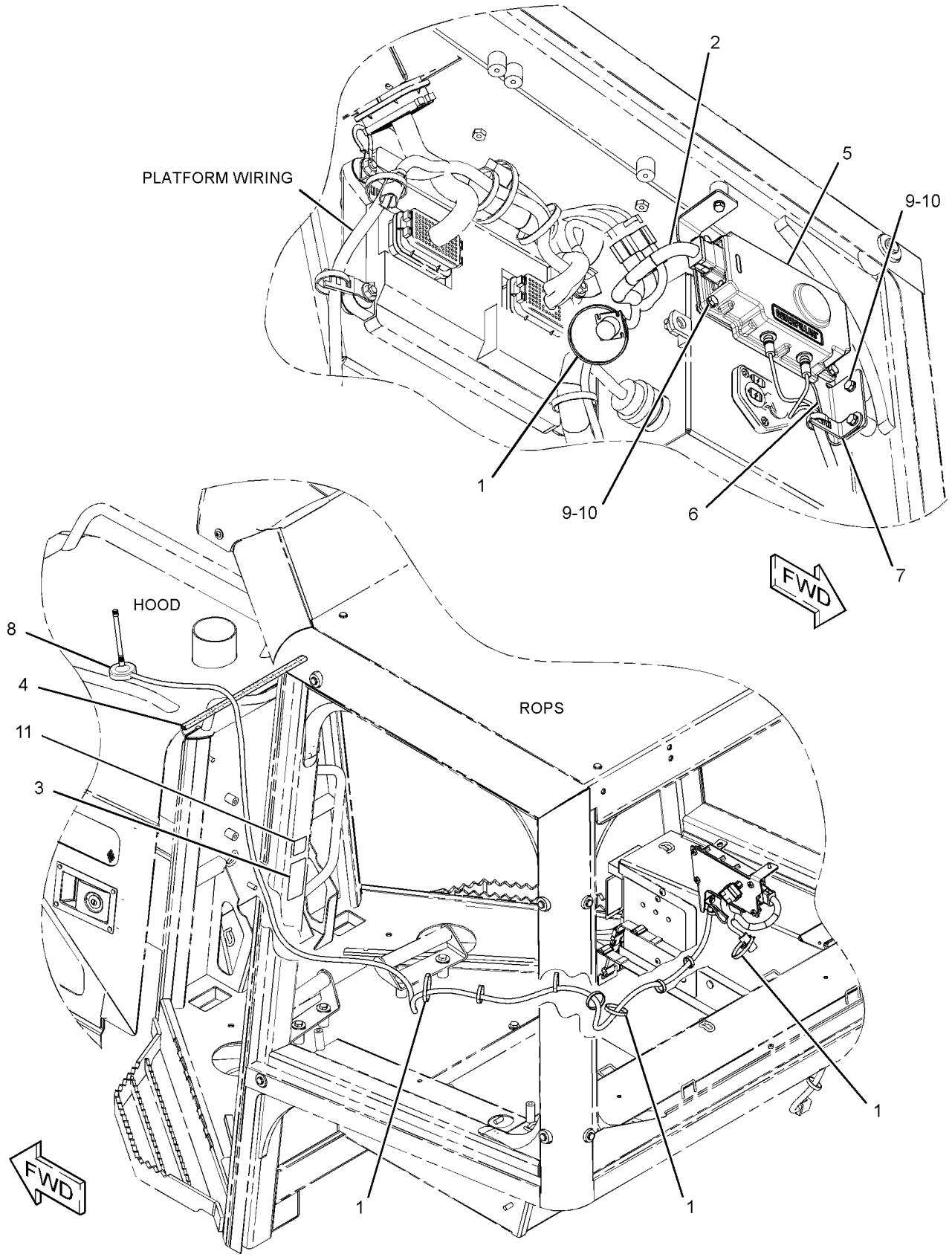

GRAPHIC #1 **<END>** g01621858

245-6028 INSTALLATION GP-SECURITY

S/N: JLF1-UP; WWW1-UP; YYY1-UP

AN ATTACHMENT

SMCS-7631 **i03591303**

NOTE	REF NO	GRAPHIC REF	PART NUMBER	QTY	PART NAME 1 2 3 4 5 6 (PRODUCT LEVEL)	SEE PAGE
	1	1	**7K-1181**	2	STRAP-CABLE	
	2	1	**8C-5607**	4	MOUNT-ISOLATION	
	3	1	**8C-5608**	2	SPACER (6.5X9.5X25.4-MM THK)	
	4	1	**206-5162**	2	KEY AS-ELECTRONIC (SECURITY)	
	5	1	*206-5203*	1	COIL AS (EXCITER)	
		1	**102-8802**	1	KIT-RECEPTACLE (2-PIN)	
					(INCLUDES RECEPTACLE AS & WEDGE)	
		1	**198-5389**	1	FILM-IDENTIFICATION (IGNITION SWITCH)	
		1	**205-8257**	1	COIL AS (EXCITER)	
D		1	**5P-5677**		WIRE (18-GA, BLACK) (0.4-M)	
		1	**186-3735**	2	PIN-CONNECTOR (16-GA TO 18-GA)	
	6	1	**218-0404**	1	MODULE GP-INTERFACE (KEY)	
		1	**6V-6715**	1	SCREW-PAN HEAD (4-20X0.25-IN)	
		1	**8C-3095**	1	SEAL-O-RING	
	7	1	**219-6314**	2	KEY RING (IDENTIFICATION)	
M	8	1	**7X-2533**	2	BOLT (M6X1X35-MM)	
	9	1	**249-9028**	1	HARNESS AS-WIRING	
		1	**186-3735**	4	PIN-CONNECTOR (16-GA TO 18-GA)	
		1	**155-2265**	1	KIT-CONNECTING PLUG (8-PIN)	
		1	**155-2270**	1	KIT-CONNECTING PLUG (2-PIN)	
					(EACH INCLUDES PLUG AS, WEDGE & INTERFACE SEAL)	
		1	**8T-8737**	1	PLUG-SEAL	
		1	**102-8806**	1	KIT-RECEPTACLE (8-PIN)	
					(INCLUDES RECEPTACLE AS & WEDGE)	
		1	**186-3736**	8	SOCKET-CONNECTOR (16-GA TO 18-GA)	
	10	1	**9X-6165**	2	WASHER (6.5X22X2.5-MM THK)	
	11	1	**292-2558**	1	FILM-IDENTIFICATION (IGNITION SWITCH, READ OMM)	
	12	1	**205-0826**	1	FILM-INSTRUCTION (MACHINE SECURITY, CONSOLE)	

D-ORDER BY THE METER
M-METRIC PART

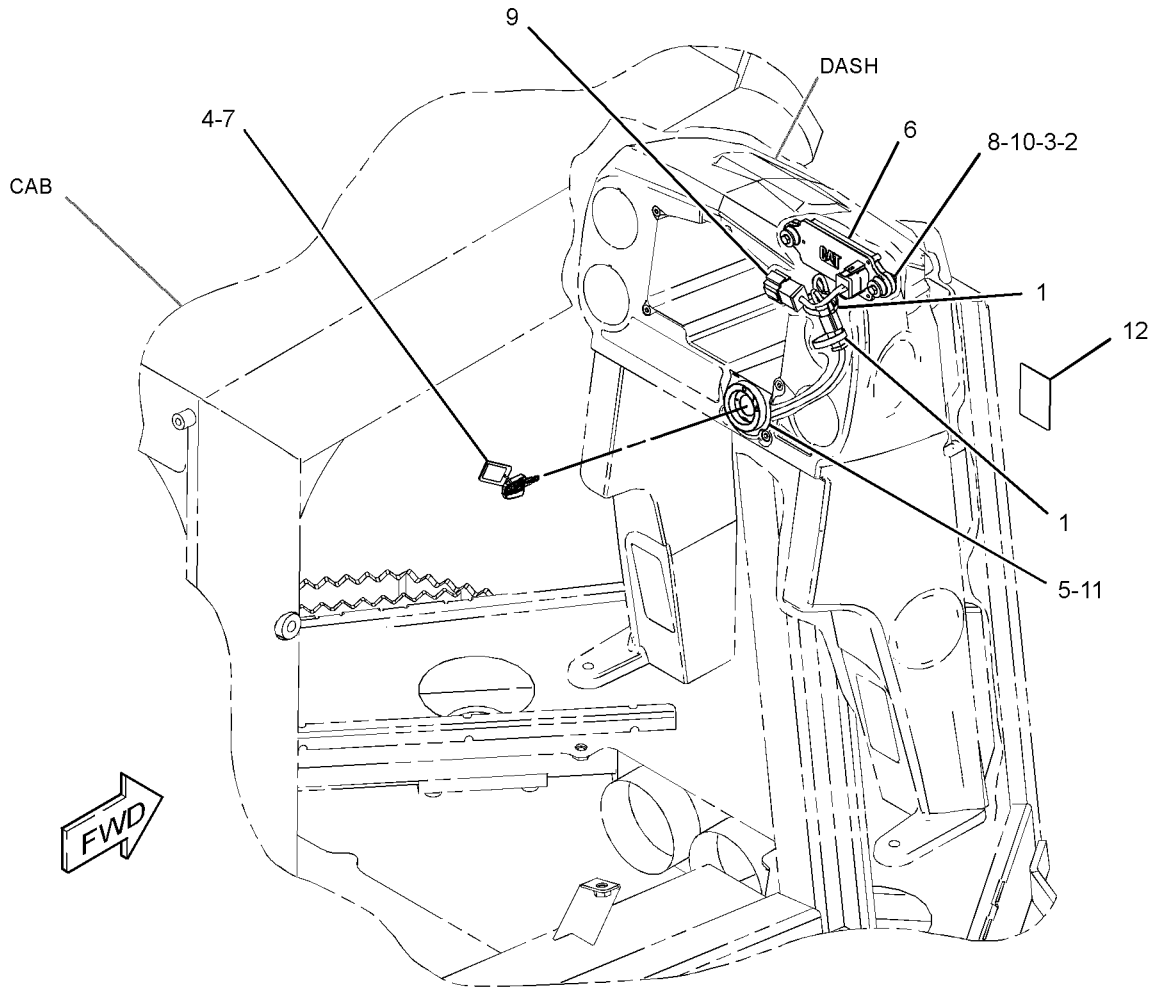

GRAPHIC #1 **<END>** g01923083

154-7986 LAMP GP-FLOOD

S/N: JLF1-UP; WWW1-UP
12-VOLT
PART OF 269-7696 LIGHTING GP-FLOOD
AN ATTACHMENT

SMCS-1434 **i02853324**

NOTE	REF NO	GRAPHIC REF	PART NUMBER	QTY	PART NAME 1 2 3 4 5 6 (PRODUCT LEVEL)	SEE PAGE
	1	1	**9W-0607**	1	LAMP (12-VOLT, 55-WATT) (FLOODLIGHT)	
	2	1	**155-5354**	1	LENS AS	
	3	1	**155-5355**	1	BODY AS	
M	4	1	**6V-9189**	1	LOCKNUT (M8X1.25-THD)	
M	5	1	**8T-4195**	1	BOLT (M10X1.5X30-MM)	
M	6	1	**7X-0818**	1	BOLT (M8X1.25X45-MM)	

M-METRIC PART

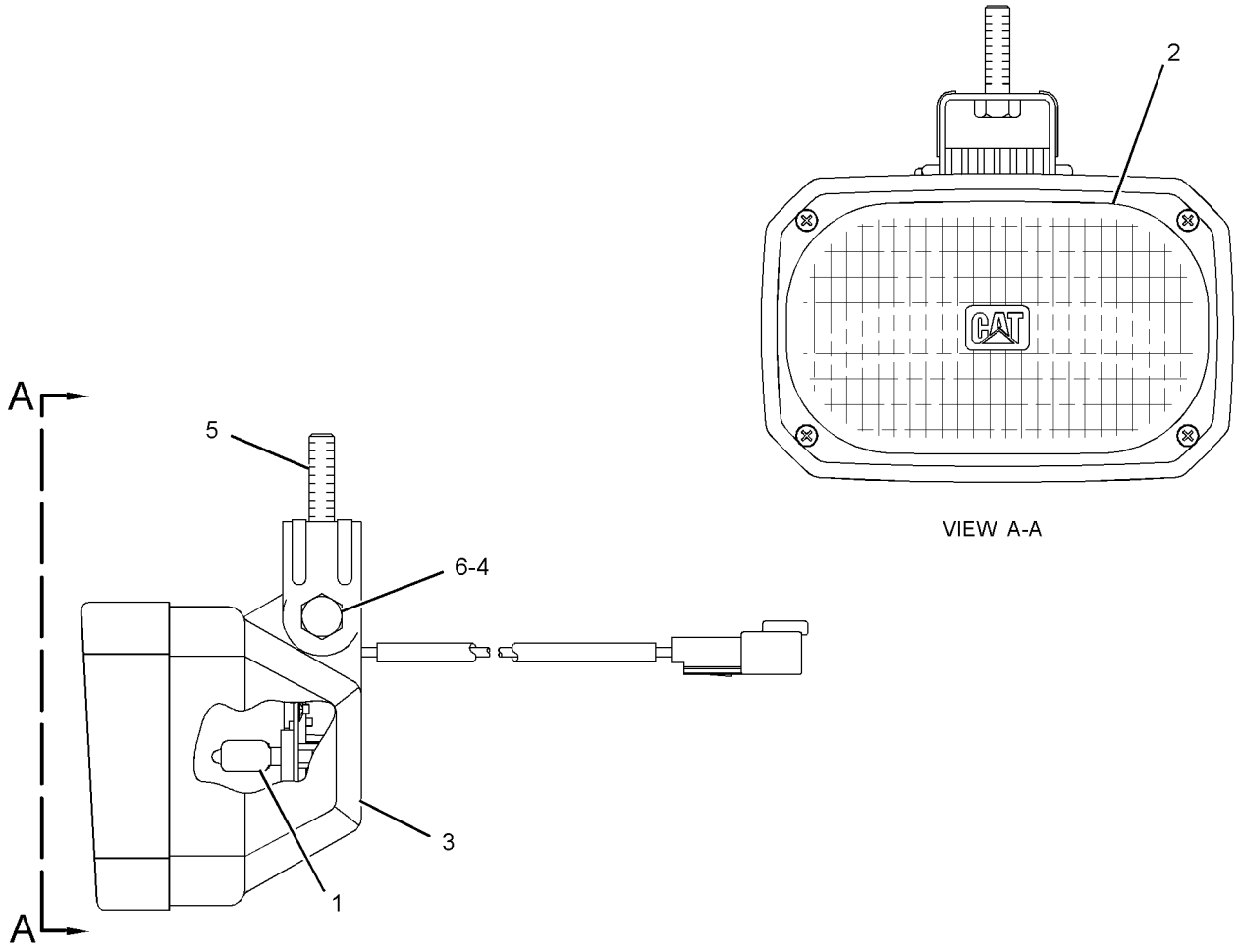

GRAPHIC #1 **<END>** g01408594

240-0101 LAMP GP-FLOOD

S/N: JLF1-UP; WWW1-UP; YYY1-UP
12-VOLT
PART OF 269-7695 LIGHTING GP-FLOOD, 245-6021, 245-6047 WIRING GP-CAB
AN ATTACHMENT

SMCS-1434 **i02650482**

NOTE	REF NO	GRAPHIC REF	PART NUMBER	QTY	PART NAME 1 2 3 4 5 6 (PRODUCT LEVEL)	SEE PAGE
	1	1	**9W-0607**	1	LAMP (12-VOLT, 55-WATT) (FLOODLIGHT)	
	2	1	**9X-4244**	2	SCREW-SPECIAL	
	3	1	**202-6611**	1	LENS AS	
	4	1	**240-0124**	1	BODY AS	
	5	1	**164-7556**	1	BRACKET (LAMP RETAINING)	

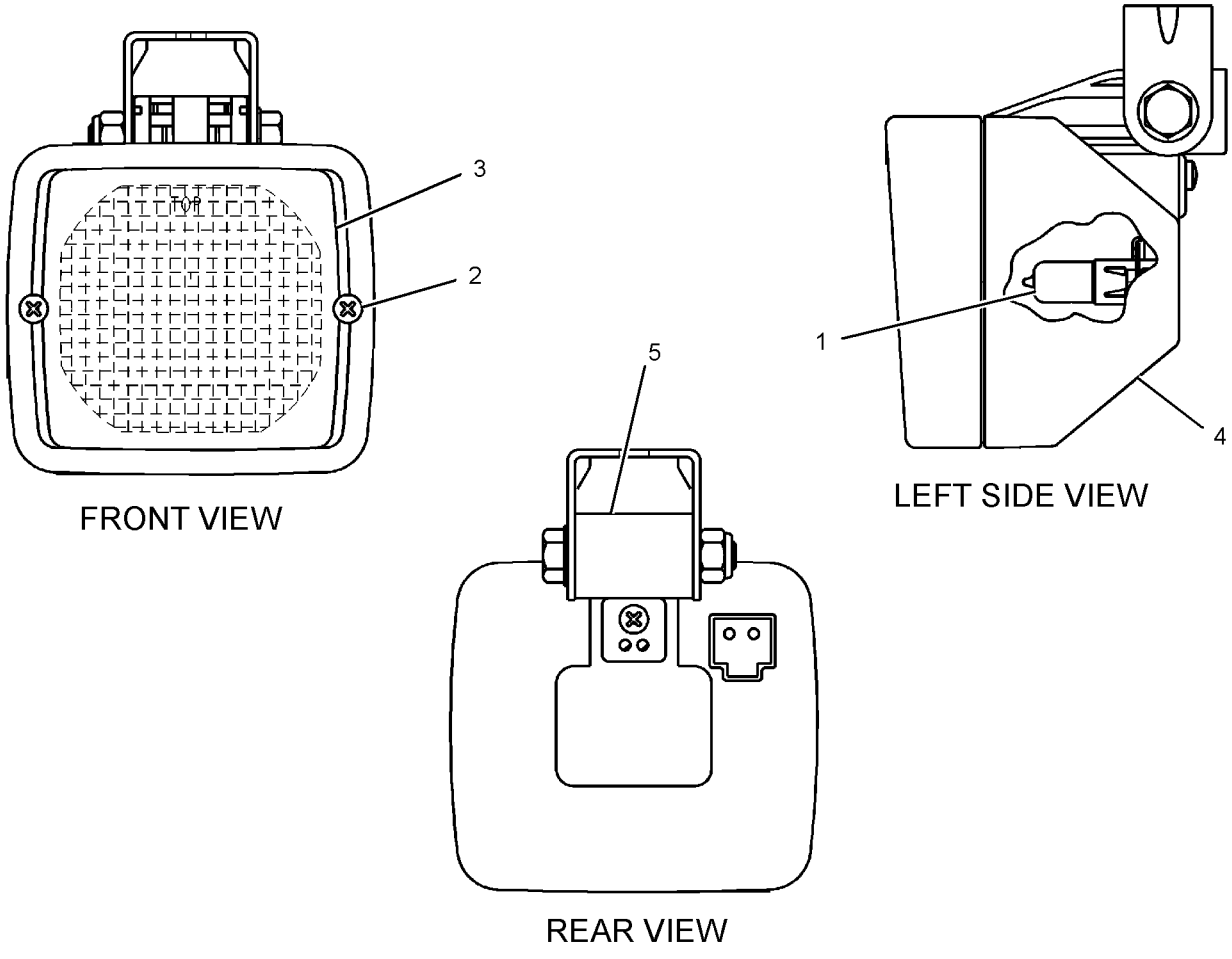

GRAPHIC #1 **<END>** g01333595

240-0102 LAMP GP-FLOOD

S/N: JLF1-UP; WWW1-UP; YYY1-UP
12-VOLT
PART OF 269-7695, 269-7696 LIGHTING GP-FLOOD, 245-6021, 245-6047 WIRING GP-CAB
AN ATTACHMENT

SMCS-1434 **i02668665**

NOTE	REF NO	GRAPHIC REF	PART NUMBER	QTY	PART NAME 1 2 3 4 5 6 (PRODUCT LEVEL)	SEE PAGE
	1	1	**9W-0607**	1	LAMP (12-VOLT, 55-WATT) (FLOODLIGHT)	
	2	1	**9X-4244**	2	SCREW-SPECIAL	
	3	1	**202-6614**	1	LENS AS	
	4	1	**240-0124**	1	BODY AS (FLOODLIGHT)	
	5	1	**164-7556**	1	BRACKET (LAMP RETAINING)	

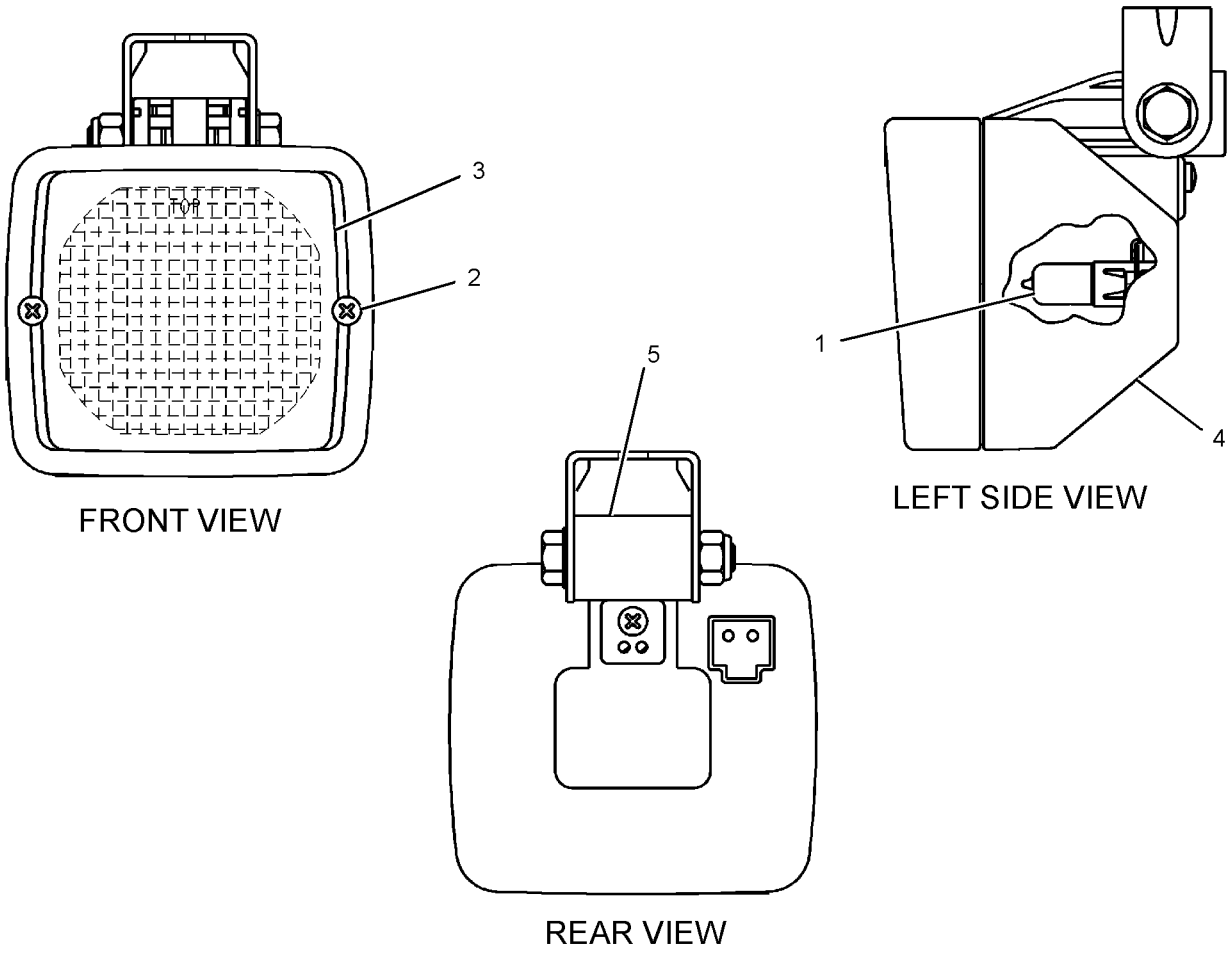

GRAPHIC #1 **<END>** g01341506

269-7695 LIGHTING GP-FLOOD

S/N: JLF1-UP; WWW1-UP; YYY1-UP
AN ATTACHMENT
TYPE 1

SMCS-1434 **i02833619**

NOTE	REF NO	GRAPHIC REF	PART NUMBER	QTY	PART NAME 1 2 3 4 5 6 (PRODUCT LEVEL)	SEE PAGE
Y	1	1	**240-0101**	2	LAMP GP-FLOOD (12-VOLT) (LONG RANGE)	156
Y	2	1	**240-0102**	4	LAMP GP-FLOOD (12-VOLT)	157
M	3	1	**8T-4189**	4	BOLT (M8X1.25X20-MM)	
	4	1	**8T-4224**	6	WASHER-HARD (8.8X16X2-MM THK)	
M	5	1	**8T-7547**	2	BOLT (M8X1.25X30-MM)	

M-METRIC PART
Y-SEPARATE ILLUSTRATION

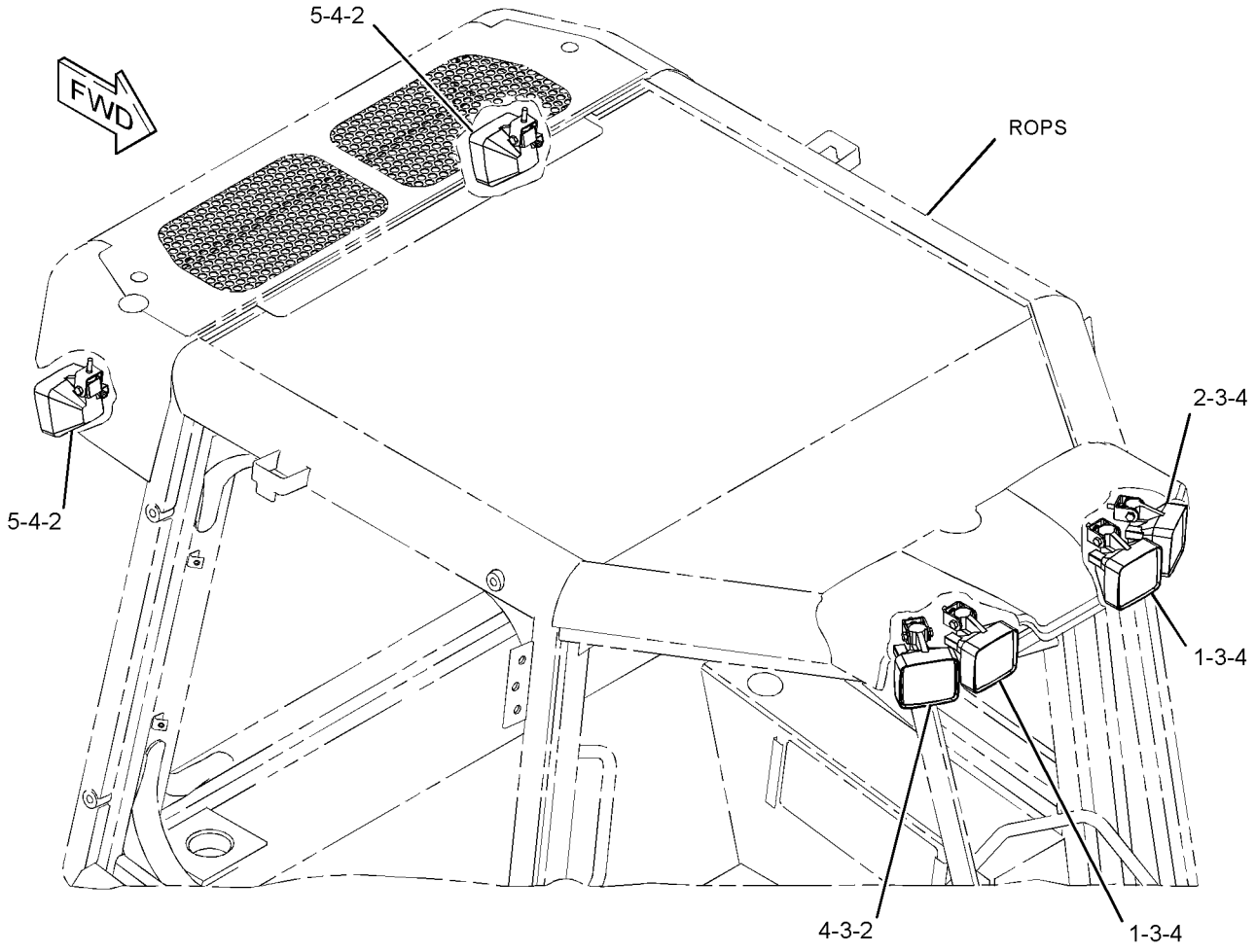

GRAPHIC #1 **<END>** g01406834

269-7695 LIGHTING GP-FLOOD

S/N: JLF1-UP; WWW1-UP; YYY1-UP
AN ATTACHMENT
TYPE 2

SMCS-1434 **i02895385**

NOTE	REF NO	GRAPHIC REF	PART NUMBER	QTY	PART NAME 1 2 3 4 5 6 (PRODUCT LEVEL)	SEE PAGE
Y	1	1	**240-0101**	2	LAMP GP-FLOOD (12-VOLT) (LONG RANGE)	156
Y	2	1	**240-0102**	4	LAMP GP-FLOOD (12-VOLT)	157
CM	3	1	**8T-4189**	6	BOLT (M8X1.25X20-MM)	
	4	1	**8T-4224**	6	WASHER-HARD (8.8X16X2-MM THK)	

C-CHANGE FROM PREVIOUS TYPE
M-METRIC PART
Y-SEPARATE ILLUSTRATION

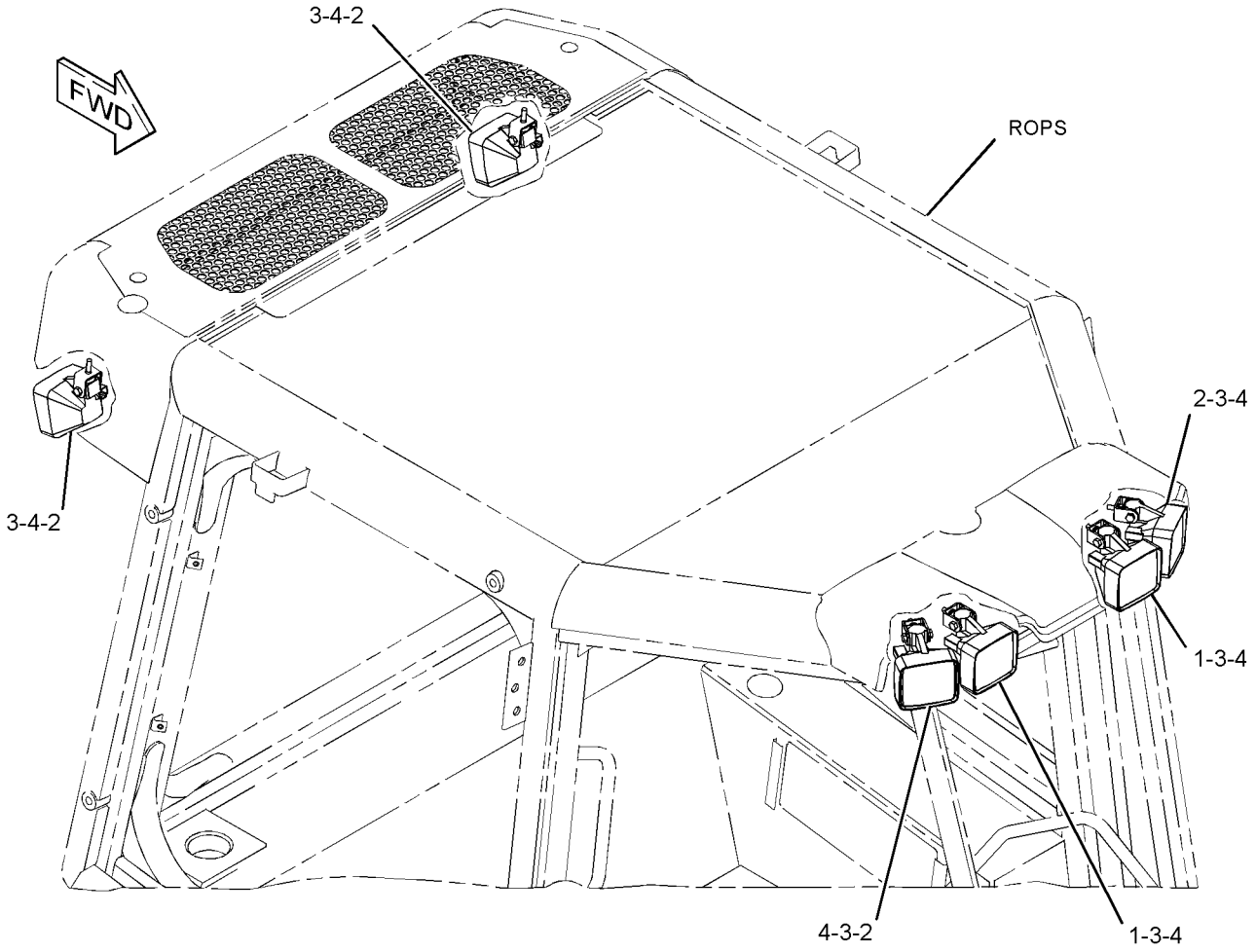

GRAPHIC #1 **<END>** g01441996

269-7696 LIGHTING GP-FLOOD

S/N: JLF1-UP; WWW1-UP
AN ATTACHMENT
TYPE 1

SMCS-1434 **i02865265**

NOTE	REF NO	GRAPHIC REF	PART NUMBER	QTY	PART NAME 1 2 3 4 5 6 (PRODUCT LEVEL)	SEE PAGE
Y	1	1	**154-7986**	2	LAMP GP-FLOOD (12-VOLT)	155
Y	2	1	**240-0102**	1	LAMP GP-FLOOD (12-VOLT)	157
M	3	1	**6V-7744**	2	LOCKNUT (M10X1.5-THD)	
	4	1	**8T-4121**	2	WASHER-HARD (11X21X2.5-MM THK)	
	5	1	**8T-4224**	1	WASHER-HARD (8.8X16X2-MM THK)	
M	6	1	**8T-4189**	1	BOLT (M8X1.25X20-MM)	

M-METRIC PART
Y-SEPARATE ILLUSTRATION

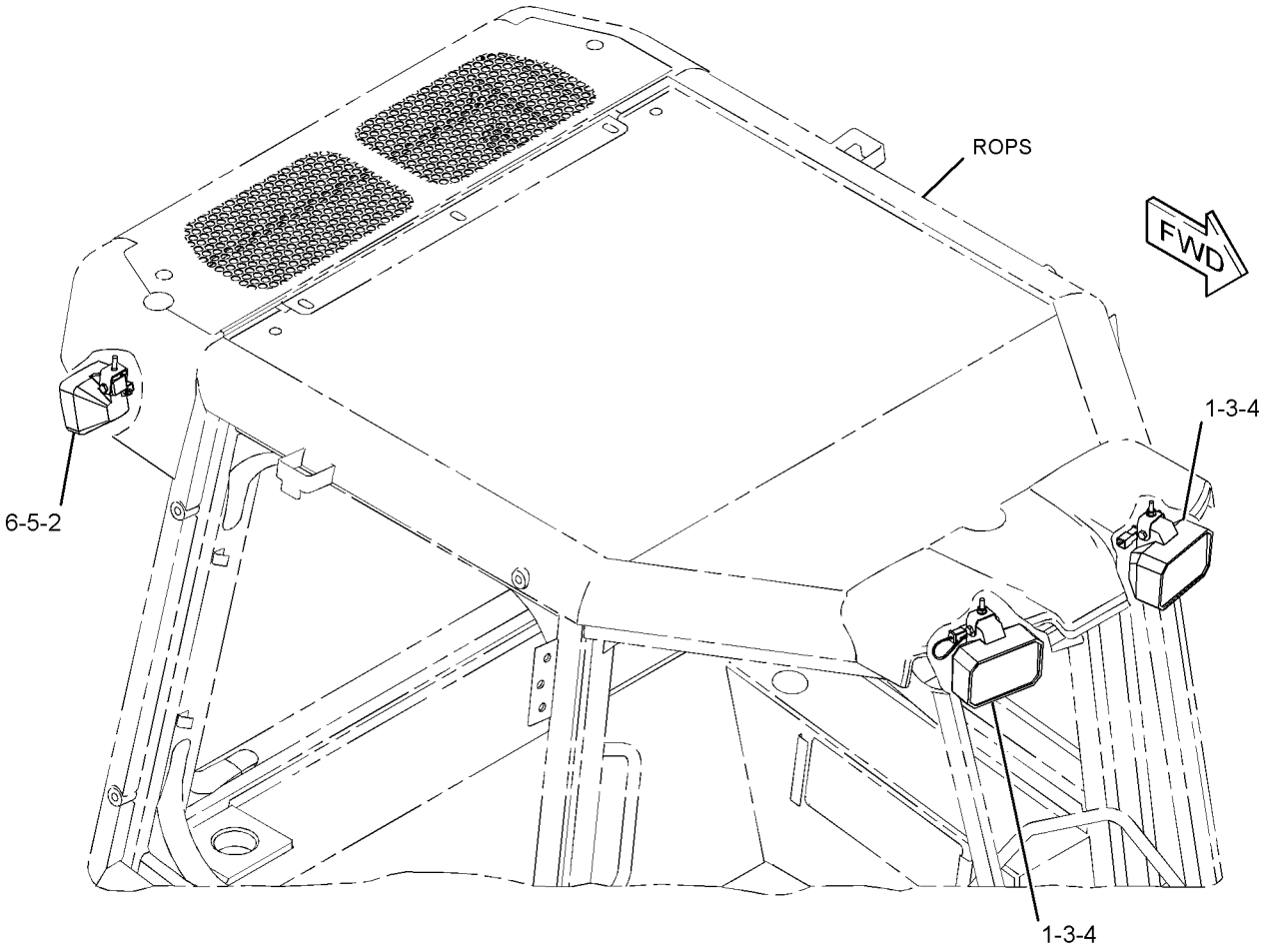

GRAPHIC #1 **<END>** g01406866

269-7696 LIGHTING GP-FLOOD

S/N: JLF1-UP; WWW1-UP
AN ATTACHMENT
TYPE 2

SMCS-1434 **i02895159**

NOTE	REF NO	GRAPHIC REF	PART NUMBER	QTY	PART NAME 1 2 3 4 5 6 (PRODUCT LEVEL)	SEE PAGE
Y	1	1	**154-7986**	2	LAMP GP-FLOOD (12-VOLT)	155
CY	2	1	**240-0102**	2	LAMP GP-FLOOD (12-VOLT)	157
M	3	1	**6V-7744**	2	LOCKNUT (M10X1.5-THD)	
	4	1	**8T-4121**	2	WASHER-HARD (11X21X2.5-MM THK)	
C	5	1	**8T-4224**	2	WASHER-HARD (8.8X16X2-MM THK)	
CM	6	1	**8T-4189**	2	BOLT (M8X1.25X20-MM)	

C-CHANGE FROM PREVIOUS TYPE
M-METRIC PART
Y-SEPARATE ILLUSTRATION

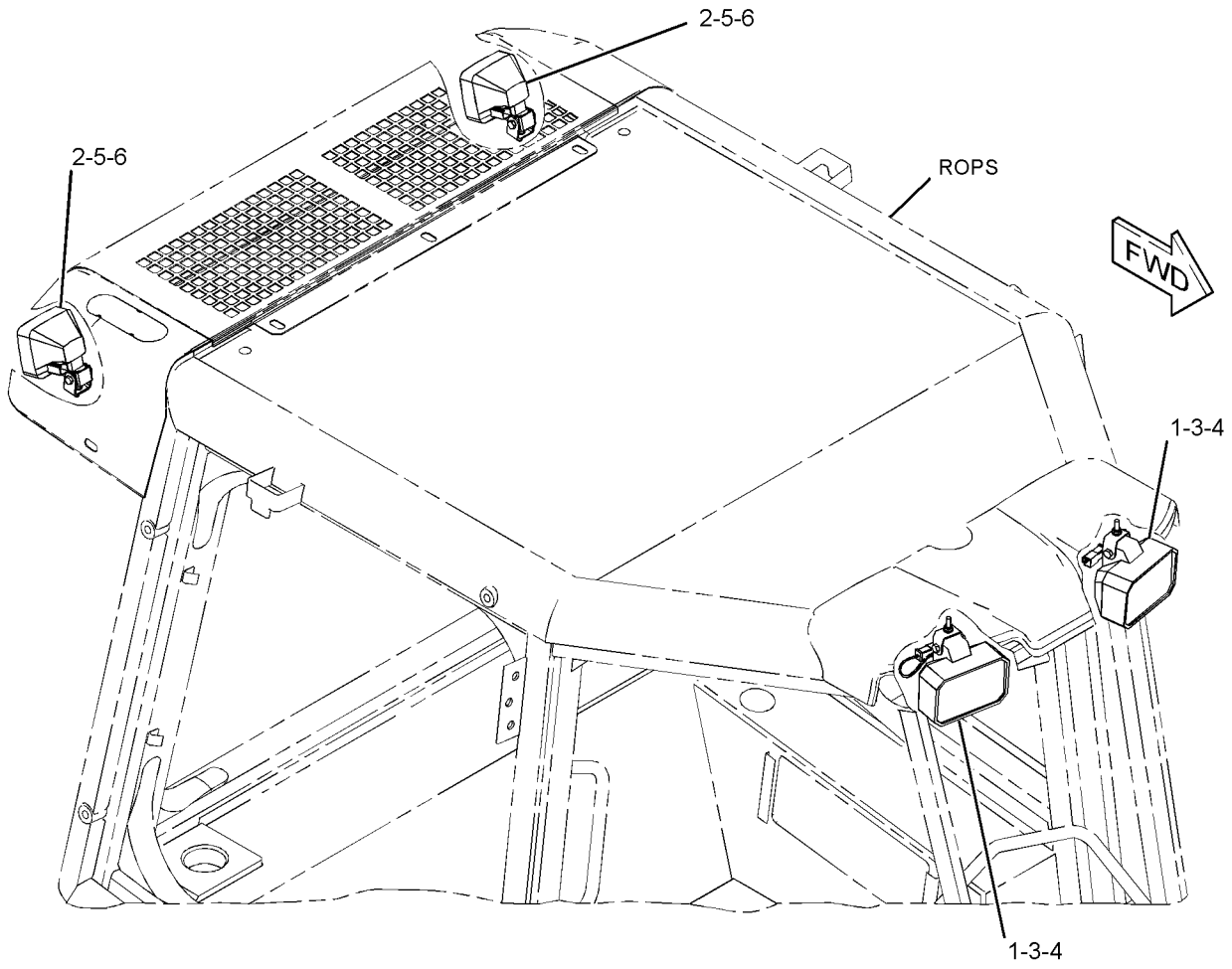

GRAPHIC #1 **<END>** g01441998

226-2333 MAST GP—LASER RECEIVER

S/N: JLF1-UP; WWW1-UP; YYY1-UP
PART OF 292-0281 MAST GP

SMCS-79NS **i03588632**

NOTE	PART NUMBER	QTY	PART NAME 1 2 3 4 5 6 (PRODUCT LEVEL)	SEE PAGE
	256-5732	1	HARNESS AS-WIRING (MAST)	
	256-4580	1	MOTOR AS	
	256-4579	1	SCREW AS	
	256-5720	1	SWITCH AS (UPPER LIMIT)	
	256-5721	1	SWITCH AS (LOWER LIMIT)	
	256-4581	1	BUSHING	
	256-4582	1	GEAR (141-TEETH)	
	256-5722	1	GEAR (15-TEETH)	
	260-6480	1	RING-SNAP	
	260-6478	1	SEAL-O-RING	
	256-5719	1	SEAL-WIPER	
			AVAILABLE REPAIR KIT(S):	
	295-8930	1	KIT-CIRCUIT BOARD	
			(INCLUDES BOARD AS, SCREWS, LOCKWASHERS, LOCTITE & GREASE)	
A	**245-4747**	1	KIT-ADAPTER (MAST)	
			(INCLUDES ADAPTER, BOLTS & WASHER)	
			(FOR USE WITH LR400 RECEIVER)	

A-NOT PART OF THIS GROUP

<END>

292-0281 MAST GP—LASER RECEIVER

S/N: JLF1-UP; WWW1-UP; YYY1-UP
PART OF 292-0293, 292-0312 GRADE CONTROL AR-LASER

SMCS-79NS **i03091092**

NOTE	PART NUMBER	QTY	PART NAME 1 2 3 4 5 6 (PRODUCT LEVEL)	SEE PAGE
Y	**226-2333**	1	MAST GP (LASER RECEIVER)	162
Y	*292-0302*	1	MOUNTING GP-MAST (LASER RECEIVER)	647
Y	**234-9970**	1	MOUNTING GP-RECEIVER (MAST)	166

Y-SEPARATE ILLUSTRATION

<END>

292-0290 MAST GP—SATELLITE RECEIVER

S/N: JLF1-UP; WWW1-UP; YYY1-UP
PART OF 290-5570, 290-5571, 292-0279 GRADE CONTROL AR-SATELLITE

SMCS-79NS **i02732261**

NOTE	PART NUMBER	QTY	PART NAME 1 2 3 4 5 6 (PRODUCT LEVEL)	SEE PAGE
Y	*292-0303*	1	MOUNTING GP-MAST (SATELLITE RECEIVER)	647
	248-1500	1	MAST AS	

Y-SEPARATE ILLUSTRATION

<END>

255-4260 MOUNTING GP-GRADE CONTROL

S/N: JLF1-UP; WWW1-UP; YYY1-UP
PART OF 296-5755, 296-5756 GRADE CONTROL AR
AN ATTACHMENT

SMCS-7220 **i02847072**

NOTE	REF NO	GRAPHIC REF	PART NUMBER	QTY	PART NAME 1 2 3 4 5 6 (PRODUCT LEVEL)	SEE PAGE
	1	1	**9M-5617**	1	GROMMET	
	2	1	**255-4261**	2	HINGE AS	
	3	1	**283-9900**	1	LATCH AS (COMPRESSION)	
	4	1	**283-9901**	1	CAM	
	5	1	**314-2573**	1	BASE AS	
		1	**314-2574**	2	INSERT-THREADED	
	6	1	**314-3011**	1	BRACKET AS (LH)	
	7	1	**314-3012**	1	BRACKET AS (RH)	
	8	1	**314-3013**	1	MOUNTING AS	
	9	1	**314-3014**	1	COVER	
	10	1	**314-3026**	1	PIN	
M	11	1	**174-8131**	2	SCREW-TRUSS HEAD (M4X0.7X12-MM)	
	12	1	**198-9706**	2	SCREW-TRUSS HEAD (M5X0.8X16-MM)	
M	13	1	**3E-4313**	10	SCREW-BUTTON HEAD (M4X0.7X8-MM)	
M	14	1	**5C-2890**	4	NUT (M6X1-THD)	
M	15	1	**5C-8312**	6	NUT (M4X0.7-THD)	
M	16	1	**6V-4298**	4	BOLT (M5X0.8X16-MM)	
M	17	1	**7I-2272**	4	BOLT (M5X0.8X12-MM)	
M	18	1	**7X-2619**	4	BOLT (M6X1X10-MM)	
M	19	1	**9X-2042**	3	SCREW-TRUSS HEAD (M6X1X12-MM)	
	20	1	**9X-8256**	4	WASHER (6.6X12X2-MM THK)	
E	21	1	**3E-3892**		SEAL (19-CM)	
E	22	1	**8C-7332**		TRIM-EDGE (30-CM)	

E-ORDER BY THE CENTIMETER
M-METRIC PART

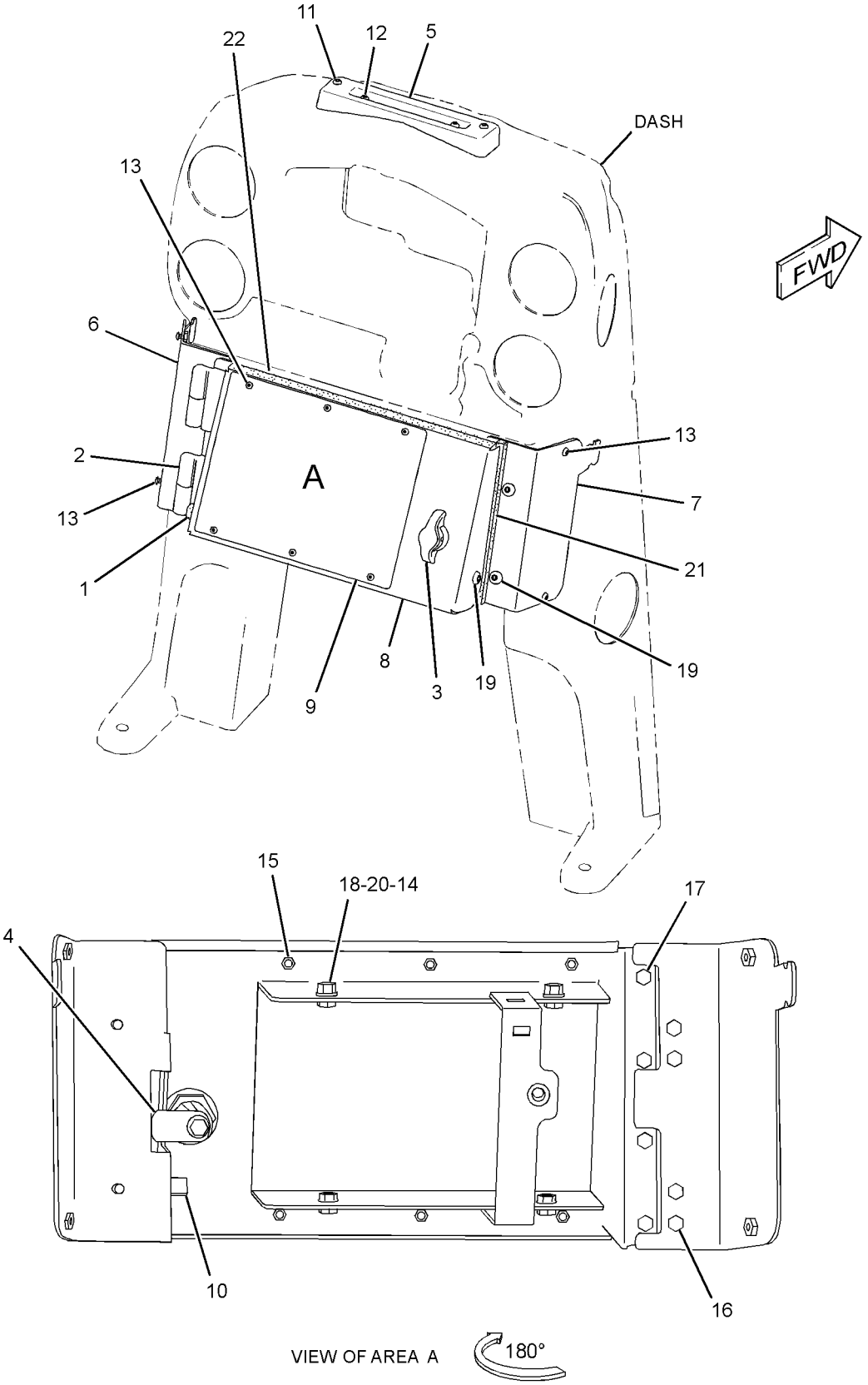

GRAPHIC #1 **<END>** g01419827

292-0296 MOUNTING GP-GRADE CONTROL

S/N: JLF1-UP; WWW1-UP; YYY1-UP

PART OF 290-5570, 290-5571, 292-0279, 292-0280 GRADE CONTROL AR-SATELLITE

SMCS-7220 **i03415601**

NOTE	PART NUMBER	QTY	PART NAME 1 2 3 4 5 6 (PRODUCT LEVEL)	SEE PAGE
Y	*259-4746*	1	MOUNTING GP-RADIO (GRADE CONTROL)	545
M	**143-6020**	2	BOLT-SOCKET HEAD (M6X1X75-MM)	
	2V-8259	3	GROMMET	
	2Y-5429	3	GROMMET	
M	**8T-2659**	6	LOCKNUT (M4X0.7-THD)	
M	**5C-2890**	2	NUT (M6X1-THD)	
	230-5008	3	PLUG AS-CONNECTOR (4-PIN)	
	8T-8737	3	PLUG-SEAL	
M	**9X-1046**	8	SCREW (M4X0.7X18-MM)	
	104-2091	6	SCREW-FLAT HEAD (NO 6X0.5-IN)	
	9X-3402	9	SOCKET-CONNECTOR (16-GA TO 18-GA)	
	4B-4863	12	WASHER (4.7X11X1.2-MM THK)	
	9X-8256	2	WASHER (6.6X12X2-MM THK)	

M-METRIC PART
Y-SEPARATE ILLUSTRATION

<END>

234-9970 MOUNTING GP-RECEIVER–MAST

S/N: JLF1-UP; WWW1-UP; YYY1-UP
PART OF 292-0281 MAST GP

SMCS-7009, 7010 **i02294016**

NOTE	REF NO	GRAPHIC REF	PART NUMBER	QTY	PART NAME 1 2 3 4 5 6 (PRODUCT LEVEL)	SEE PAGE
	1	2	**253-8967**	1	ROD-THREADED	
	2	2	**253-8969**	1	BRACKET	
	3	2	**237-4132**	4	MOUNT-FLEXIBLE	
	4	1	**237-4133**	2	GASKET	
	5	1	**237-4134**	1	CLAMP	
	6	1	**237-4135**	1	MOUNT-FLEXIBLE	
	7	2	**237-7252**	1	BOLT (3/4-16X1.25-IN)	
	8	2	**3B-4508**	4	LOCKWASHER	
	9	2	**3B-4512**	1	LOCKWASHER	
	10	2	**4M-6425**	2	BOLT (5/16-18X1-IN)	
	11	2	**5W-1437**	2	LOCKWASHER	
	12	2	**8T-9383**	2	BOLT (1/2-13X0.75-IN)	
	13	2	**9B-0453**	2	LOCKWASHER	
	14	2	**253-8981**	4	ROD-THREADED	
	15	2	**6V-8188**	6	NUT (1/2-13-THD)	

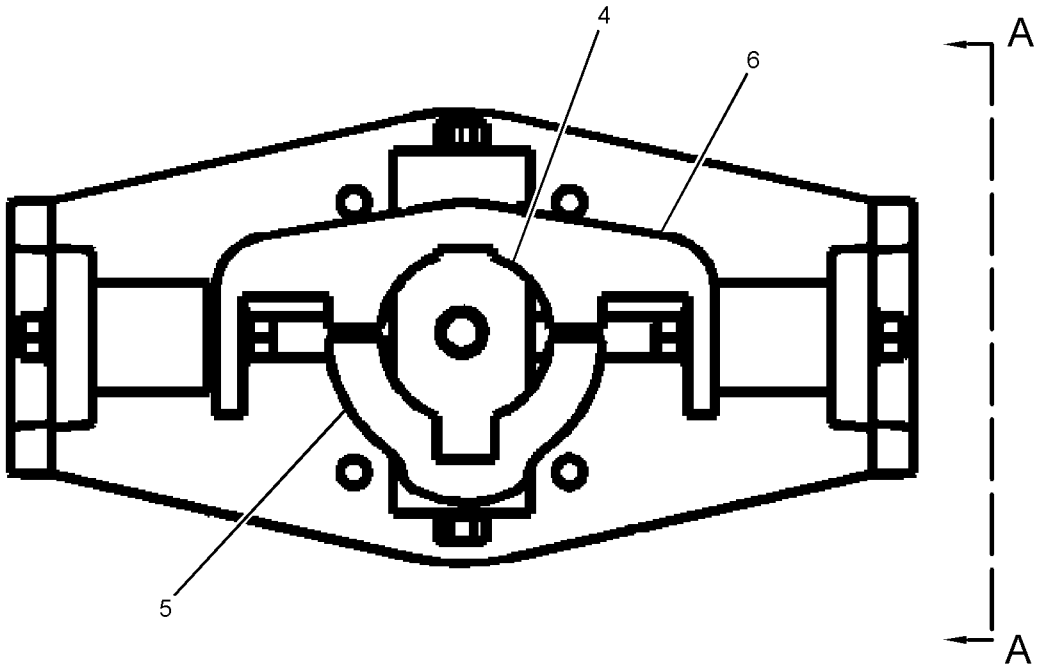

REFER TO ALL ILLUSTRATIONS OF
THIS GROUP FOR AUXILIARY VIEWS

GRAPHIC #1 g01186401

234-9970 **MOUNTING GP-RECEIVER** *(contd.)* **i02294016**

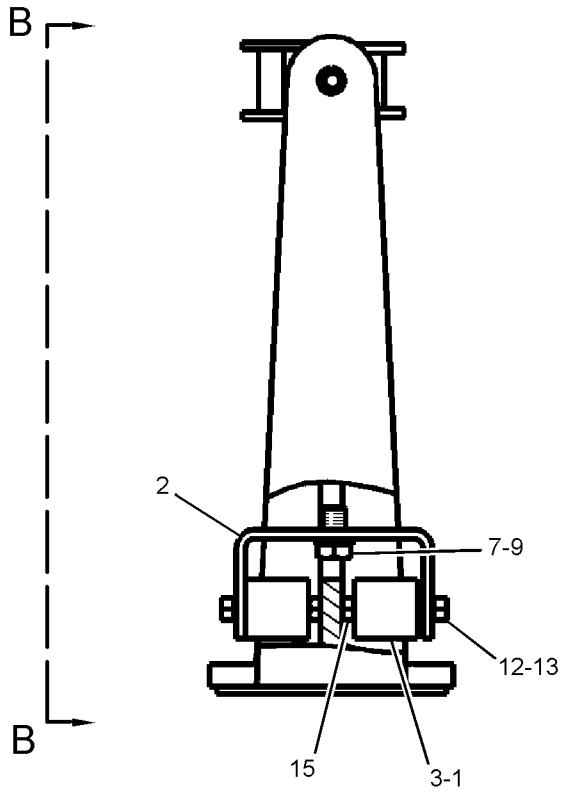

VIEW A-A

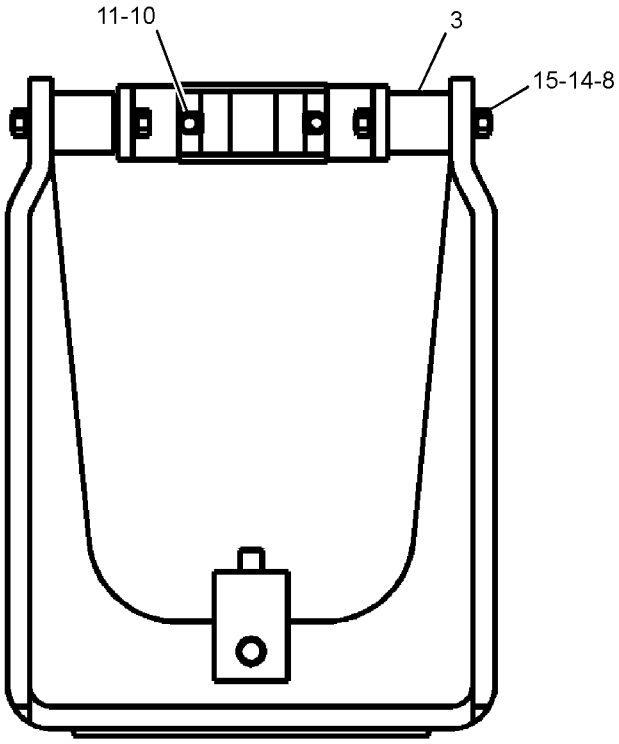

VIEW B-B

GRAPHIC #2 **<END>** g01186365

ELECTRICAL AND STARTING SYSTEM

249-9023 PANEL GP-FUSE

S/N: JLF1-UP; WWW1-UP; YYY1-UP
PART OF 245-6020 WIRING GP-PLATFORM
TYPE 1

SMCS-1417 **i03588102**

NOTE	REF NO	GRAPHIC REF	PART NUMBER	QTY	PART NAME 1 2 3 4 5 6 (PRODUCT LEVEL)	SEE PAGE
	1	1	**7K-1181**	8	STRAP-CABLE	
	2	1	**116-7471**	1	PULLER-MINIFUSE	
	3	1	**171-2212**	1	CIRCUIT BREAKER AS (105-AMPERE)	
		1	**6V-8187**	2	NUT (1/4-28-THD)	
		1	**8T-4205**	2	WASHER-HARD (7.2X14.5X2-MM THK)	
		1	**253-2111**	2	LOCKWASHER	
	4	1	**172-4863**	1	JUNCTION BLOCK	
	5	1	**241-8367**	1	SWITCH AS-MAGNETIC (MAIN POWER RELAY)	
		1	**155-2270**	1	KIT-CONNECTING PLUG (2-PIN)	
					(INCLUDES PLUG AS & WEDGE)	
		1	**4F-2294**	2	NUT-JAM (5/16-24-THD)	
		1	**186-3736**	2	SOCKET-CONNECTOR (16-GA TO 18-GA)	
	6	1	**245-6034**	1	BAR-BUS	
	7	1	**245-6036**	1	PLATE AS	
	8	1	**249-9020**	1	BAR-BUS	
	9	1	**249-9021**	1	BOX AS-FUSE	
	10	1	**249-9026**	1	HARNESS AS-PANEL	
		1	**124-9636**	2	BLOCK-MINIFUSE	
		1	**173-3175**	2	CIRCUIT BREAKER AS (20-AMPERE)	
		1	**264-5425**	1	CAP AS-PROTECTION	
		1	**124-3548**	2	FUSE (30-AMPERE)	
		1	**113-8490**	8	FUSE (10-AMPERE)	
		1	**113-8291**	12	PLATE-WARNING-ROPS/FOPS	
		1	**113-8292**	6	PLATE-WARNING-ROPS/FOPS	
		1	**124-9637**	2	LOCK-MINIFUSE	
		1	**211-0052**	2	NUT (1-11/16-18-THD)	
		1	**9X-3401**	8	PIN-CONNECTOR (16-GA TO 18-GA)	
		1	**186-3735**	8	PIN-CONNECTOR (16-GA TO 18-GA)	
		1	**9W-0852**	4	PIN-CONNECTOR (14-GA)	
		1	**9X-1054**	3	PLUG AS-CONNECTOR (4-PIN)	
		1	**8T-8737**	9	PLUG-SEAL	
		1	**102-8802**	1	KIT-RECEPTACLE (2-PIN)	
		1	**197-7259**	1	RECEPTACLE AS-CONNECTOR (19-PIN)	
		1	**225-3861**	1	RECEPTACLE AS (31-PIN)	
		1	**9W-1951**	1	RECEPTACLE-CONNECTOR (9-PIN)	
		1	**186-3736**	10	SOCKET-CONNECTOR (16-GA TO 18-GA)	
		1	**9W-0844**	20	SOCKET-CONNECTOR (14-GA)	
		1	**128-4168**	1	TERMINAL AS	
		1	**2L-8052**	2	TERMINAL (6-GA, 3/8-IN)	
		1	**116-4160**	13	TERMINAL-BLADE (12-GA TO 14-GA)	
		1	**116-4161**	10	TERMINAL-BLADE (16-GA TO 18-GA)	
		1	**113-5100**	8	TERMINAL-BUS	
		1	**9X-1056**	12	TERMINAL-RECEPTACLE (14-GA TO 16-GA)	
E		1	**125-7874**		TUBE-HEAT SHRINK (5.72-MM DIA) (40-CM)	
E		1	**125-7875**		TUBE-HEAT SHRINK (7.44-MM DIA) (5-CM)	
		1	**128-4249**	2	LOCKWASHER	
	11	1	**269-7647**	1	BAR-BUS	
	12	1	**269-7654**	1	PLATE AS	
	13	1	**269-7662**	1	PLATE AS	
	14	1	**269-7690**	1	SEAL	
	15	1	**115-1615**	1	RELAY AS (12-VOLT) (REAR LIGHTS)	
	15A	1	**115-1615**	1	RELAY AS (12-VOLT) (FRONT LIGHTS)	
	15B	1	**115-1615**	1	RELAY AS (12-VOLT) (HORN)	
M	16	1	**191-8920**	3	BOLT-SOCKET HEAD (M6X1X12-MM)	
	17	1	**311-0312**	1	FILM-FUSE PANEL	

249-9023 **PANEL GP-FUSE** ***(contd.)*** **i03588102**

NOTE	REF NO	GRAPHIC REF	PART NUMBER	QTY	PART NAME 1 2 3 4 5 6 (PRODUCT LEVEL)	SEE PAGE
	18	1	**269-7661**	1	FILM-IDENTIFICATION (ELECTRICAL POWER)	
M	19	1	**5C-2890**	3	NUT (M6X1-THD)	
	20	1	**6V-7978**	2	SCREW-MACHINE (10-32X0.375-IN)	
M	21	1	**7X-2548**	2	BOLT (M12X1.75X16-MM)	
	22	1	**8T-4121**	1	WASHER-HARD (11X21X2.5-MM THK)	
M	23	1	**8T-4138**	4	BOLT (M6X1X20-MM)	
M	24	1	**8T-4171**	2	BOLT (M6X1X12-MM)	
M	25	1	**8T-4191**	1	BOLT (M10X1.5X16-MM)	
	26	1	**8T-4205**	2	WASHER-HARD (7.2X14.5X2-MM THK)	
	27	1	**8T-4223**	2	WASHER-HARD (13.5X25.5X3-MM THK)	
M	28	1	**9X-2043**	2	SCREW-TRUSS HEAD (M6X1X14-MM)	
	29	1	**9X-8256**	7	WASHER (6.6X12X2-MM THK)	
E	30	1	**103-2543**		SEAL (3-CM)	

E-ORDER BY THE CENTIMETER
M-METRIC PART

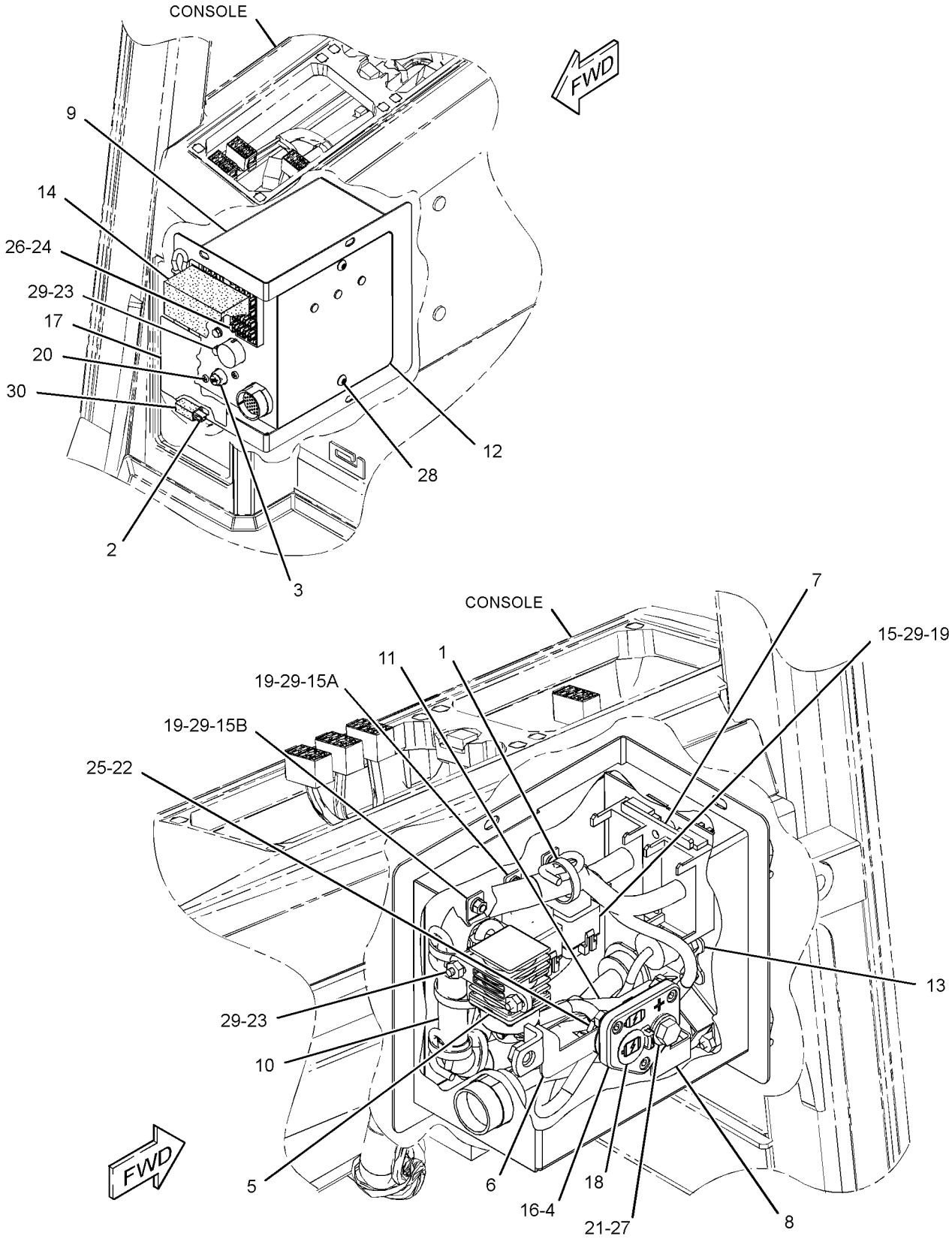

GRAPHIC #1 **<END>** g01663777

249-9023 PANEL GP-FUSE

S/N: JLF1-UP; WWW1-UP; YYY1-UP
PART OF 245-6020 WIRING GP-PLATFORM
TYPE 2

SMCS-1417 **i03587863**

NOTE	REF NO	GRAPHIC REF	PART NUMBER	QTY	PART NAME 1 2 3 4 5 6 (PRODUCT LEVEL)	SEE PAGE
	1	1	**7K-1181**	8	STRAP-CABLE	
	2	1	**116-7471**	1	PULLER-MINIFUSE	
	3	1	**171-2212**	1	CIRCUIT BREAKER AS (105-AMPERE)	
		1	**6V-8187**	2	NUT (1/4-28-THD)	
		1	**8T-4205**	2	WASHER-HARD (7.2X14.5X2-MM THK)	
		1	**253-2111**	2	LOCKWASHER	
	4	1	**172-4863**	1	JUNCTION BLOCK	
	5	1	**241-8367**	1	SWITCH AS-MAGNETIC (MAIN POWER RELAY)	
		1	**155-2270**	1	KIT-CONNECTING PLUG (2-PIN)	
					(INCLUDES PLUG AS, WEDGE & INTERFACE SEAL)	
		1	**4F-2294**	2	NUT-JAM (5/16-24-THD)	
		1	**186-3736**	2	SOCKET-CONNECTOR (16-GA TO 18-GA)	
	6	1	**245-6034**	1	BAR-BUS	
	7	1	**245-6036**	1	PLATE AS	
	8	1	**249-9020**	1	BAR-BUS	
	9	1	**249-9021**	1	BOX AS-FUSE	
C	10	1	**318-6095**	1	HARNESS AS-PANEL (FUSE PANEL)	
		1	**124-9636**	2	BLOCK-MINIFUSE	
		1	**173-3175**	2	CIRCUIT BREAKER AS (20-AMPERE)	
		1	**264-5425**	1	CAP AS-PROTECTION	
		1	**113-8490**	8	FUSE (10-AMPERE)	
		1	**113-8491**	13	FUSE (15-AMPERE)	
		1	**113-8492**	5	FUSE (20-AMPERE)	
		1	**124-9637**	2	LOCK-MINIFUSE	
		1	**211-0052**	2	NUT (1-11/16-18-THD)	
		1	**9X-3401**	8	PIN-CONNECTOR (16-GA TO 18-GA)	
		1	**186-3735**	8	PIN-CONNECTOR (16-GA TO 18-GA)	
		1	**9W-0852**	4	PIN-CONNECTOR (14-GA)	
		1	**9X-1054**	3	PLUG AS-CONNECTOR (4-PIN)	
		1	**8T-8737**	6	PLUG-SEAL	
		1	**102-8802**	1	KIT-RECEPTACLE (2-PIN)	
					(INCLUDES RECEPTACLE AS & WEDGE)	
		1	**197-7259**	1	RECEPTACLE AS-CONNECTOR (19-PIN)	
		1	**225-3861**	1	RECEPTACLE AS (31-PIN)	
		1	**9W-1951**	1	RECEPTACLE-CONNECTOR (9-PIN)	
		1	**186-3736**	10	SOCKET-CONNECTOR (16-GA TO 18-GA)	
		1	**9W-0844**	20	SOCKET-CONNECTOR (14-GA)	
		1	**128-4168**	1	TERMINAL AS	
		1	**9F-3965**	1	TERMINAL	
		1	**2L-8052**	2	TERMINAL (6-GA, 3/8-IN)	
		1	**116-4160**	16	TERMINAL-BLADE (12-GA TO 14-GA)	
		1	**116-4161**	10	TERMINAL-BLADE (16-GA TO 18-GA)	
		1	**113-5100**	8	TERMINAL-BUS	
		1	**9X-1056**	12	TERMINAL-RECEPTACLE (14-GA TO 16-GA)	
E		1	**125-7874**		TUBE-HEAT SHRINK (5.72-MM DIA) (40-CM)	
E		1	**125-7875**		TUBE-HEAT SHRINK (7.44-MM DIA) (5-CM)	
		1	**128-4249**	2	LOCKWASHER	
	11	1	**269-7647**	1	BAR-BUS	
	12	1	**269-7654**	1	PLATE AS	
	13	1	**269-7662**	1	PLATE AS	
	14	1	**269-7690**	1	SEAL	
	15	1	**115-1615**	1	RELAY AS (12-VOLT) (REAR LIGHTS)	
	15A	1	**115-1615**	1	RELAY AS (12-VOLT) (FRONT LIGHTS)	
	15B	1	**115-1615**	1	RELAY AS (12-VOLT) (HORN)	

249-9023 **PANEL GP-FUSE** ***(contd.)*** **i03587863**

NOTE	REF NO	GRAPHIC REF	PART NUMBER	QTY	PART NAME 1 2 3 4 5 6 (PRODUCT LEVEL)	SEE PAGE
M	16	1	**191-8920**	3	BOLT-SOCKET HEAD (M6X1X12-MM)	
C	17	1	**318-6096**	1	FILM-FUSE PANEL	
	18	1	**269-7661**	1	FILM-IDENTIFICATION (ELECTRICAL POWER)	
M	19	1	**5C-2890**	3	NUT (M6X1-THD)	
	20	1	**6V-7978**	2	SCREW-MACHINE (10-32X0.375-IN)	
M	21	1	**7X-2548**	2	BOLT (M12X1.75X16-MM)	
	22	1	**8T-4121**	1	WASHER-HARD (11X21X2.5-MM THK)	
M	23	1	**8T-4138**	4	BOLT (M6X1X20-MM)	
M	24	1	**8T-4171**	2	BOLT (M6X1X12-MM)	
M	25	1	**8T-4191**	1	BOLT (M10X1.5X16-MM)	
	26	1	**8T-4205**	2	WASHER-HARD (7.2X14.5X2-MM THK)	
	27	1	**8T-4223**	2	WASHER-HARD (13.5X25.5X3-MM THK)	
M	28	1	**9X-2042**	2	SCREW-TRUSS HEAD (M6X1X12-MM)	
	29	1	**9X-8256**	7	WASHER (6.6X12X2-MM THK)	
E	30	1	**103-2543**		SEAL (3-CM)	

C-CHANGE FROM PREVIOUS TYPE
E-ORDER BY THE CENTIMETER
M-METRIC PART

249-9023 **PANEL GP-FUSE** *(contd.)* **i03587863**

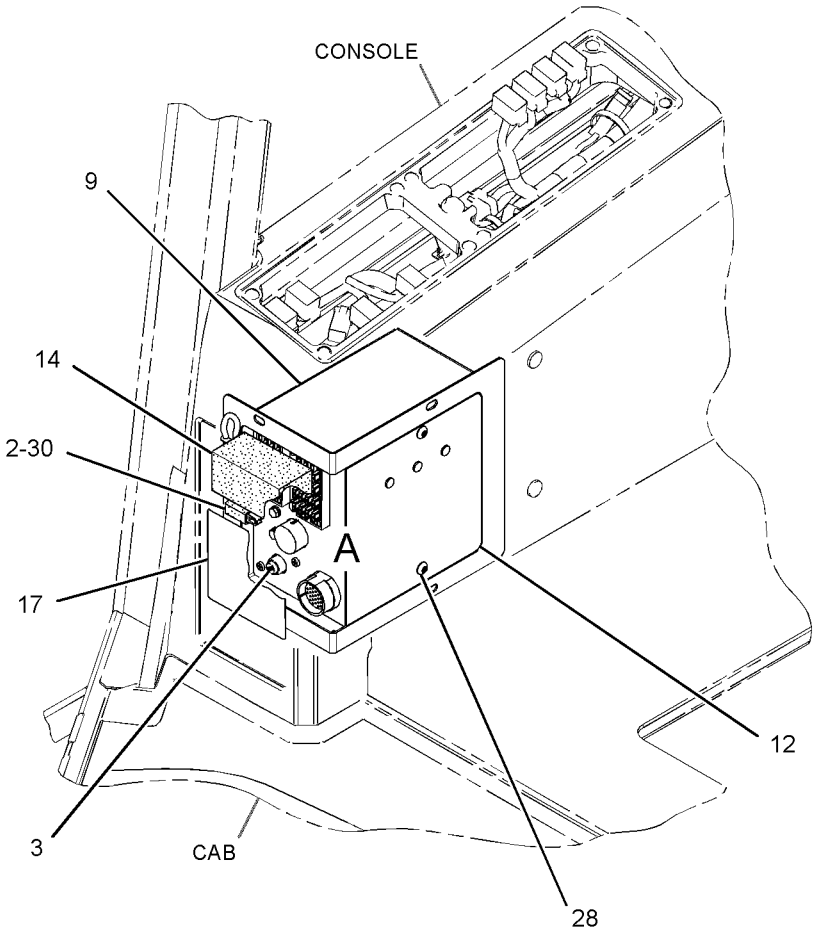

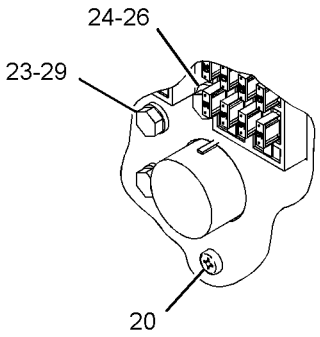

VIEW OF AREA A



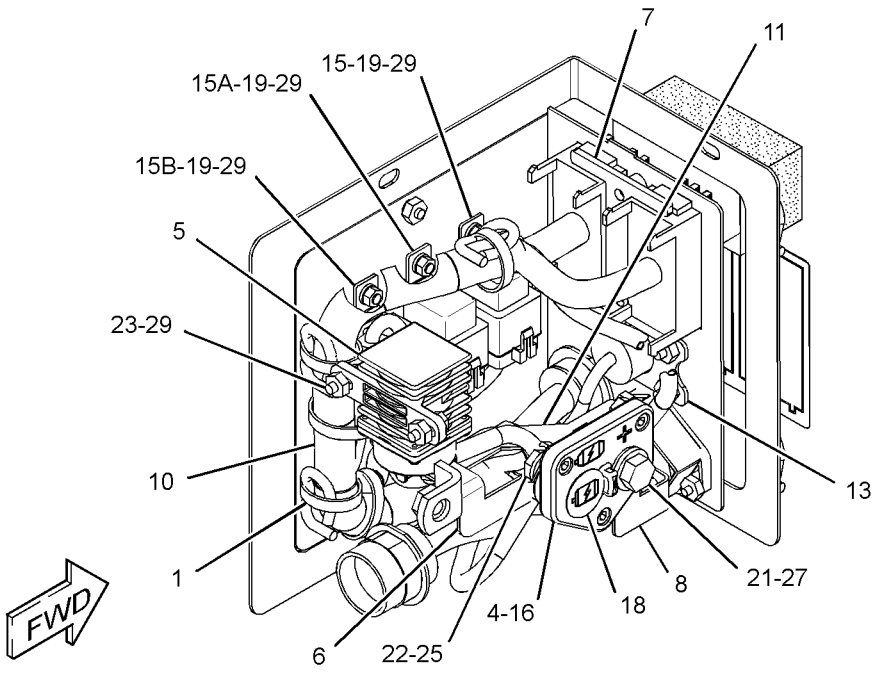

GRAPHIC #1 **<END>** g01712176

263-9088 RADIO GP-COMMUNICATION—PRODUCT LINK 121SR

S/N: JLF1-UP; WWW1-UP; YYY1-UP
PART OF 249-9068 INSTALLATION GP-COMMUNICATION
AN ATTACHMENT

SMCS-733T **i03570580**

NOTE	PART NUMBER	QTY	PART NAME 1 2 3 4 5 6 (PRODUCT LEVEL)	SEE PAGE
	330-3408	1	SOFTWARE GP-COMMUNICATION (PRODUCT LINK 121SR)	

<END>

239-9950 RECEIVER GP-LASER—SINGLE

S/N: JLF1-UP; WWW1-UP; YYY1-UP
PART OF 292-0293 GRADE CONTROL AR-LASER

SMCS-7009 **i03122065**

NOTE	PART NUMBER	QTY	PART NAME 1 2 3 4 5 6 (PRODUCT LEVEL)	SEE PAGE
	253-8329	1	RECEIVER GP-LASER (LR410)	
	276-0764	1	CABLE-COILED (LASER RECEIVER)	
	257-1729	1	CASE-CARRYING	

<END>

292-0285 RECEIVER GP-LASER—DUAL

S/N: JLF1-UP; WWW1-UP; YYY1-UP
PART OF 292-0312 GRADE CONTROL AR-LASER

SMCS-7009 **i02676969**

NOTE	PART NUMBER	QTY	PART NAME 1 2 3 4 5 6 (PRODUCT LEVEL)	SEE PAGE
	276-0764	1	CABLE-COILED (LASER RECEIVER)	
	253-8329	1	RECEIVER GP-LASER (LR410)	

<END>

286-0136 RECEIVER GP-SATELLITE—SINGLE GPS, MS980

S/N: JLF1-UP
PART OF 292-0279 GRADE CONTROL AR-SATELLITE

SMCS-7010 **i03615525**

NOTE	PART NUMBER	QTY	PART NAME 1 2 3 4 5 6 (PRODUCT LEVEL)	SEE PAGE
	252-9628	1	BRACKET AS (RECEIVER)	
	8R-1803	5	WASHER (10.5X18X1-MM THK)	
M	**8T-9388**	4	BOLT (M10X1.5X25-MM)	
	113-0693	5	LOCKWASHER	
	289-8449	1	HANDLE AS	
	244-1717	1	RECEIVER AS-SATELLITE (GPS, MS980)	
	255-0939	1	CASE-PLASTIC (RECEIVER)	

M-METRIC PART

<END>

286-0137 RECEIVER GP-SATELLITE—DUAL GPS, MS980

S/N: JLF1-UP; WWW1-UP; YYY1-UP
PART OF 290-5570 GRADE CONTROL AR-SATELLITE

SMCS-7010 **i03615540**

NOTE	PART NUMBER	QTY	PART NAME 1 2 3 4 5 6 (PRODUCT LEVEL)	SEE PAGE
	252-9628	2	BRACKET AS (RECEIVER)	
			(EACH INCLUDES)	
	8R-1803	5	WASHER (10.5X18X1-MM THK)	
M	**8T-9388**	4	BOLT (M10X1.5X25-MM)	
	113-0693	5	LOCKWASHER	
	289-8449	1	HANDLE AS	
	244-1717	2	RECEIVER AS-SATELLITE (GPS, MS980)	
	255-0939	1	CASE-PLASTIC (RECEIVER)	

M-METRIC PART

<END>

292-0291 RECEIVER GP-SATELLITE—DUAL GNSS, MS990

S/N: JLF1-UP; WWW1-UP; YYY1-UP
PART OF 290-5571 GRADE CONTROL AR-SATELLITE

SMCS-7010 **i02906352**

NOTE	PART NUMBER	QTY	PART NAME 1 2 3 4 5 6 (PRODUCT LEVEL)	SEE PAGE
	252-9628	2	BRACKET AS (RECEIVER)	
			(EACH INCLUDES)	
	8R-1803	5	WASHER (10.5X18X1-MM THK)	
M	**8T-9388**	4	BOLT (M10X1.5X25-MM)	
	113-0693	5	LOCKWASHER	
	289-8449	1	HANDLE AS	
	291-1913	2	RECEIVER AS-SATELLITE (GNSS, MS990)	
	255-0939	1	CASE-PLASTIC (RECEIVER)	
	286-3017	2	HANDLE (RECEIVER)	

M-METRIC PART

<END>

292-0292 RECEIVER GP-SATELLITE—SINGLE GNSS, MS990

S/N: JLF1-UP; WWW1-UP; YYY1-UP
PART OF 292-0280 GRADE CONTROL AR-SATELLITE

SMCS-7010 **i03322960**

NOTE	PART NUMBER	QTY	PART NAME 1 2 3 4 5 6 (PRODUCT LEVEL)	SEE PAGE
	252-9628	1	BRACKET AS (RECEIVER)	
	8R-1803	5	WASHER (10.5X18X1-MM THK)	
M	**8T-9388**	4	BOLT (M10X1.5X25-MM)	
	113-0693	5	LOCKWASHER	
	289-8449	1	HANDLE AS	
R	**291-1913**	1	RECEIVER AS-SATELLITE (GNSS, MS990)	
	255-0939	1	CASE-PLASTIC (RECEIVER)	
	286-3017	1	HANDLE (RECEIVER)	

M-METRIC PART
R-REMFG PART MAY BE AVAILABLE

<END>

300-2118 RECEIVER GP-SATELLITE–
ACCUGRADE, UPGRADE FROM GPS TO GNSS
S/N: JLF1-UP; WWW1-UP
FIELD INSTALLATION

SMCS-7010 **i02741319**

NOTE	PART NUMBER	QTY	PART NAME 1 2 3 4 5 6 (PRODUCT LEVEL)	SEE PAGE
	291-1913	1	RECEIVER AS-SATELLITE (GNSS, MS990)	

<END>

275-0490 RELAY GP–POWER, 3–STARTING AID HEATER

S/N: JLF1-UP; WWW1-UP; YYY1-UP
12-VOLT
PART OF 245-6019 WIRING GP-ENGINE

SMCS-4493 **i03408686**

NOTE	REF NO	GRAPHIC REF	PART NUMBER	QTY	PART NAME 1 2 3 4 5 6 (PRODUCT LEVEL)	SEE PAGE
	1		**1H-3244**	2	LOCKWASHER	
M	2		**5C-2890**	2	NUT (M6X1-THD)	
M	3		**5C-7261**	1	NUT (M8X1.25-THD)	
	4		**8T-4205**	2	WASHER-HARD (7.2X14.5X2-MM THK)	
	5		**8T-4224**	1	WASHER-HARD (8.8X16X2-MM THK)	
	6		**267-5211**	1	SEAL	
	7		**267-5213**	1	COVER (FUSE)	
	8		**274-9872**	1	FUSE (30-AMPERE)	
	9		**274-9877**	1	FUSE (50-AMPERE)	

M-METRIC PART

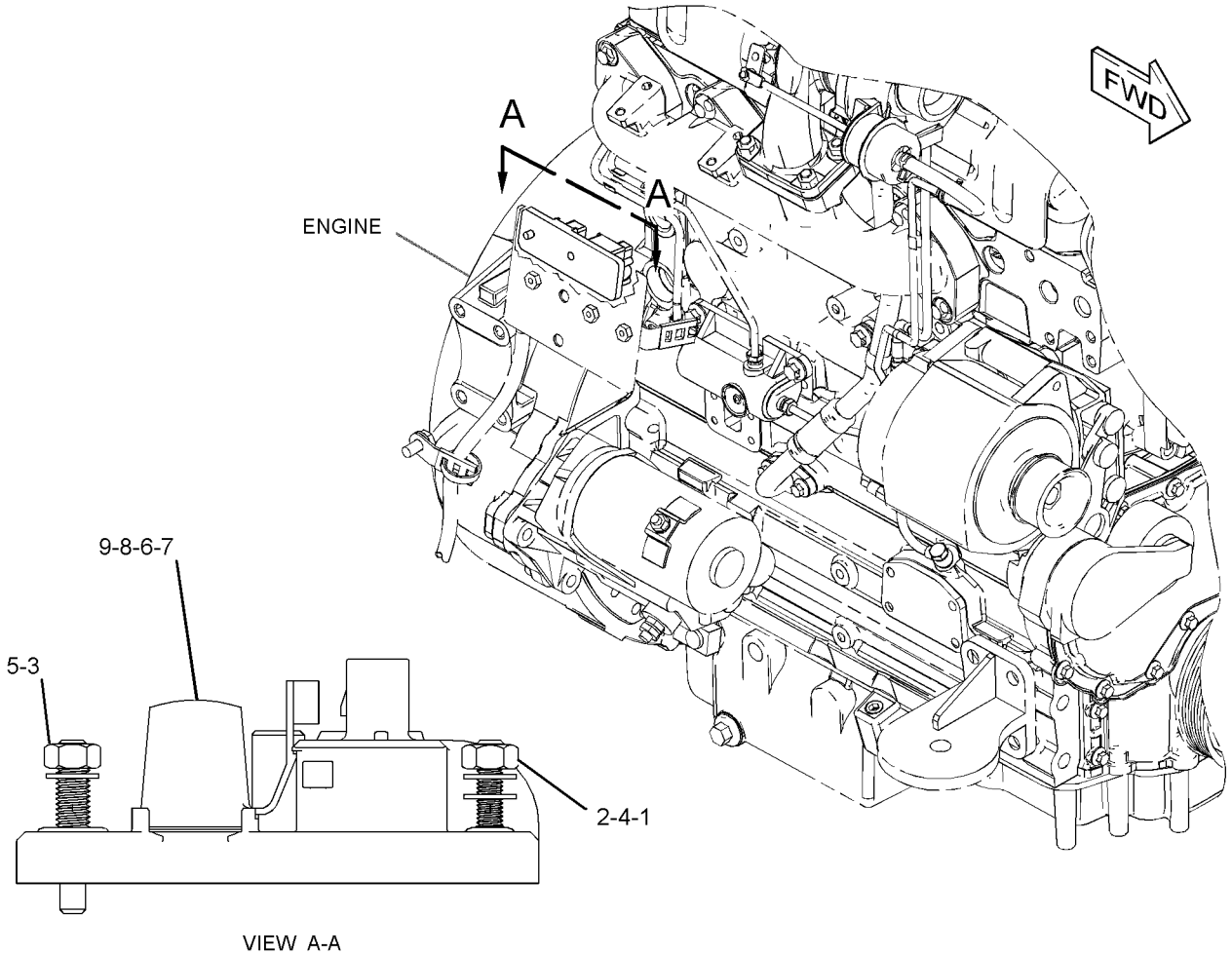

VIEW A-A

GRAPHIC #1 **<END>** g01341108

284-8207 SENSOR GP-POSITION

S/N: JLF1-UP; WWW1-UP; YYY1-UP
PART OF 290-4835 CONTROL GP-JOYSTICK

SMCS-1905, 1911, 430S **i02724886**

NOTE	REF NO	GRAPHIC REF	PART NUMBER	QTY	PART NAME 1 2 3 4 5 6 (PRODUCT LEVEL)	SEE PAGE
	1	1	**284-8208**	1	SHAFT-ADAPTER	
	2	1	**102-8805**	1	KIT-RECEPTACLE (6-PIN)	
					(INCLUDES RECEPTACLE AS & WEDGE)	
	3	1	**186-3735**	4	PIN-CONNECTOR (16-GA TO 18-GA)	
	4	1	**8T-8737**	2	PLUG-SEAL	

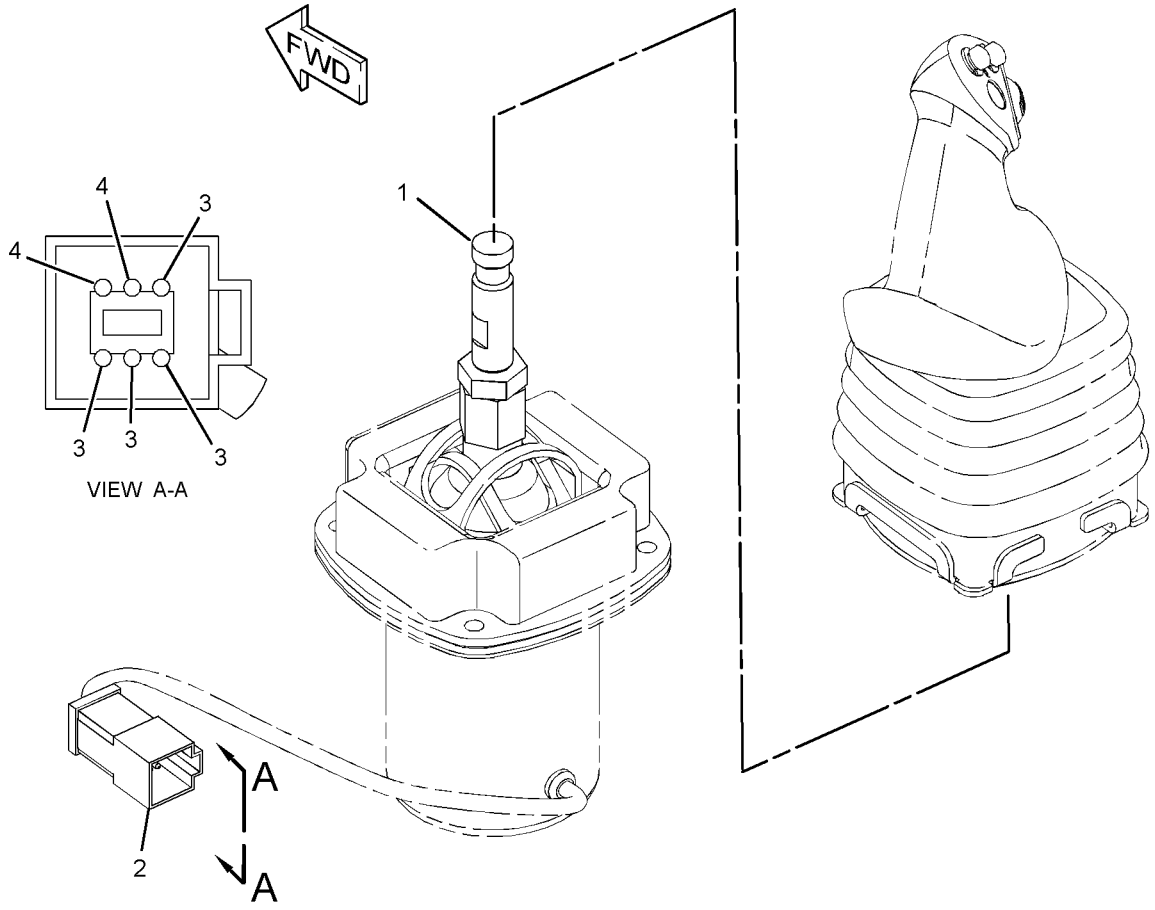

GRAPHIC #1 **<END>** g01328459

214-6863 SENSOR GP-PRESSURE

S/N: JLF1-UP; WWW1-UP; YYY1-UP
PART OF 244-7504 CONTROL GP-WINCH
AN ATTACHMENT

SMCS-1718, 1916, 1917, 1923, 1924, 1925 **i01990672**

NOTE	REF NO	GRAPHIC REF	PART NUMBER	QTY	PART NAME 1 2 3 4 5 6 (PRODUCT LEVEL)	SEE PAGE
	1	1	**155-2260**	1	KIT-CONNECTING PLUG (3-PIN)	
					(INCLUDES PLUG AS & WEDGE)	
	2	1	**180-9340**	3	SOCKET-CONNECTOR	
	3	1	**155-2276**	1	WEDGE-PLUG LOCK (3-PIN)	

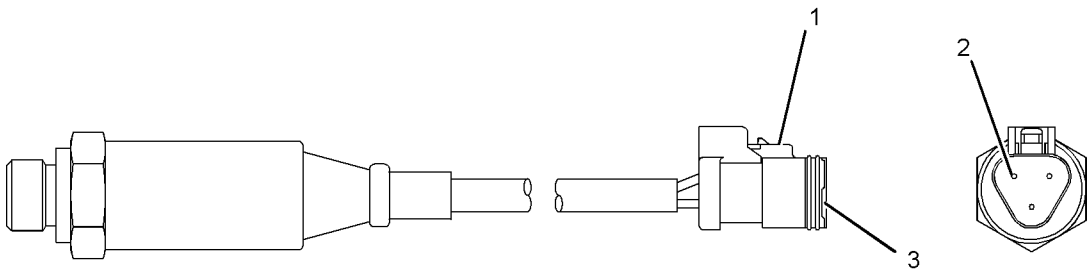

GRAPHIC #1 **<END>** g01035358

183-4584 SENSOR GP-SPEED

S/N: JLF1-UP; WWW1-UP; YYY1-UP
PART OF 245-6017 BATTERY & WIRING GP

SMCS-1907 **i01990496**

NOTE	REF NO	GRAPHIC REF	PART NUMBER	QTY	PART NAME 1 2 3 4 5 6 (PRODUCT LEVEL)	SEE PAGE
	1	1	**6J-2245**	1	SEAL-O-RING	

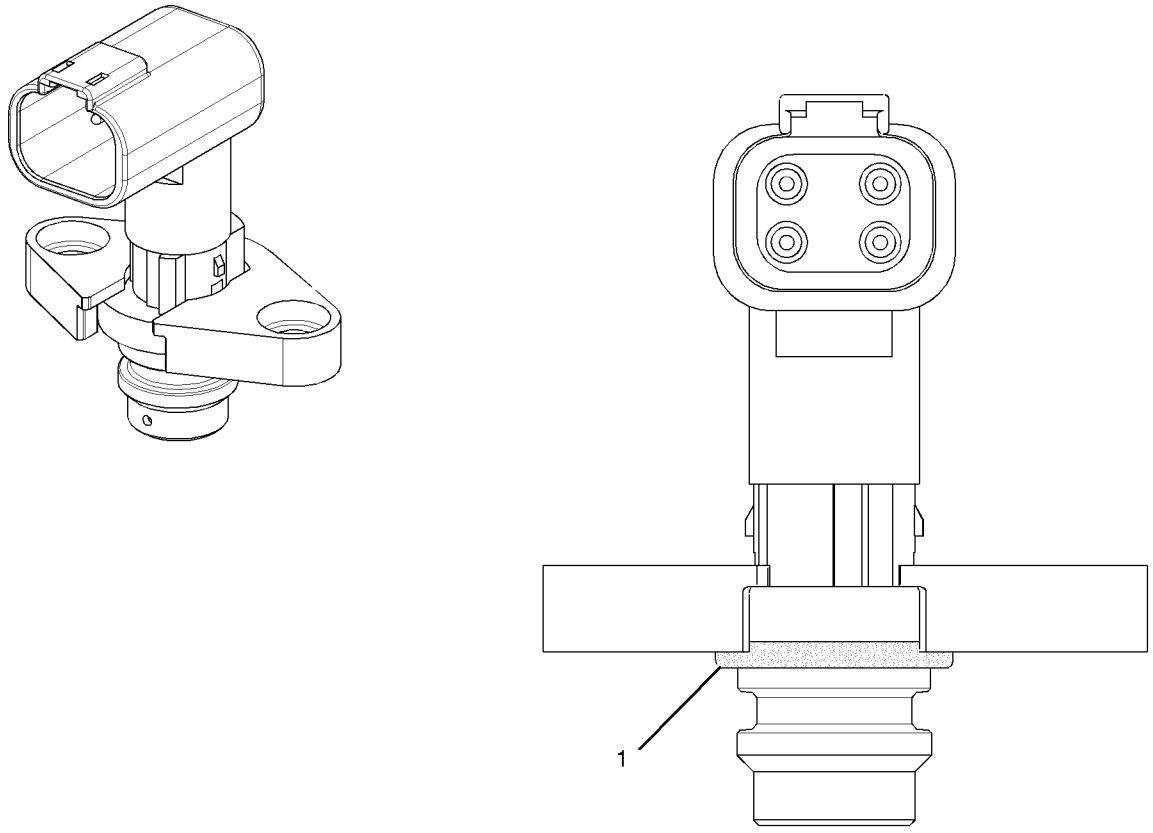

GRAPHIC #1 **<END>** g01031645

319-6491 SENSOR GP-SPEED

S/N: JLF1-UP; WWW1-UP; YYY1-UP
PART OF 245-6017 BATTERY & WIRING GP

SMCS-1907 **i03415582**

NOTE	REF NO	GRAPHIC REF	PART NUMBER	QTY	PART NAME 1 2 3 4 5 6 (PRODUCT LEVEL)	SEE PAGE
	1	1	**6J-2245**	1	SEAL-O-RING	

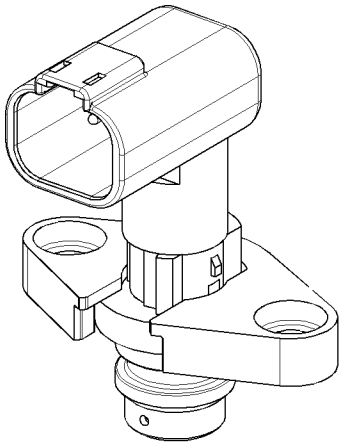

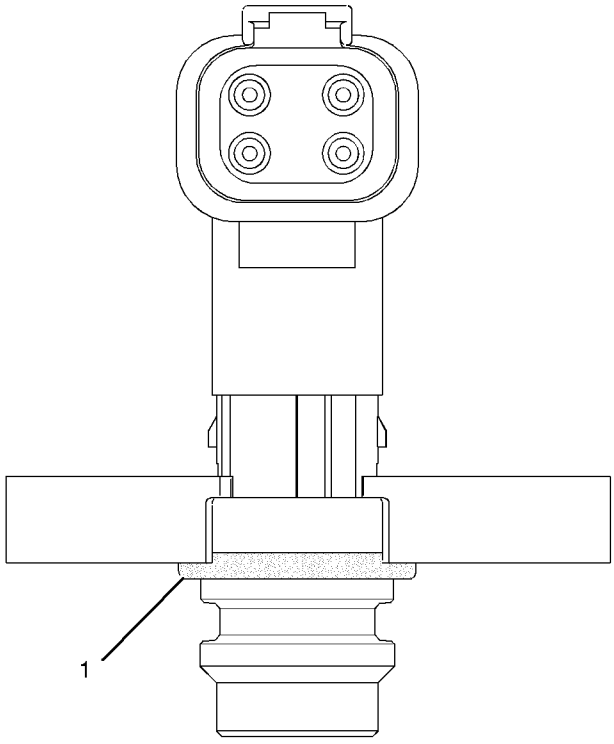

GRAPHIC #1 **<END>** g01031645

268-4699 SERVICE GP-COMMUNICATION—PRODUCT LINK 300

S/N: JLF1-UP; WWW1-UP; YYY1-UP
PART OF 249-9029 INSTALLATION GP-COMMUNICATION
AN ATTACHMENT

SMCS-7606 **i03637859**

NOTE	PART NUMBER	QTY	PART NAME 1 2 3 4 5 6 (PRODUCT LEVEL)	SEE PAGE
Y	**239-9954**	1	CONTROL GP-UNPROGRAMMED (PRODUCT LINK 300) (COMMUNICATION)	137
	268-4698	1	SOFTWARE GP-COMMUNICATION (PRODUCT LINK 300)	

Y-SEPARATE ILLUSTRATION

<END>

245-6026 STARTING AID GP-ETHER

S/N: JLF1-UP; WWW1-UP; YYY1-UP
AN ATTACHMENT

SMCS-1456 **i03639871**

NOTE	REF NO	GRAPHIC REF	PART NUMBER	QTY	PART NAME 1 2 3 4 5 6 (PRODUCT LEVEL)	SEE PAGE
	1	1	**3S-2093**	1	STRAP-CABLE	
	2	1	**241-4194**	1	FITTING AS (CONTROL)	
		1	**236-4545**	1	NUT-SLEEVE (5/16-24-THD)	
	3	1	**273-5070**	1	VALVE AS-ETHER START (12-VOLT)	
		1	**7N-9801**	1	GASKET	
		1	**102-8802**	1	KIT-RECEPTACLE (2-PIN)	
					(INCLUDES RECEPTACLE AS & WEDGE)	
		1	**186-3735**	2	PIN-CONNECTOR (16-GA TO 18-GA)	
	4	1	*276-6597*	1	MOUNTING GP-ETHER CANISTER	
		1	**236-8013**	1	BRACKET	
		1	**276-6596**	1	CLAMP	
	5	1	**285-3329**	1	ATOMIZER AS (ETHER)	
		1	**236-4545**	1	NUT-SLEEVE (5/16-24-THD)	
M	6	1	**8T-4189**	3	BOLT (M8X1.25X20-MM)	
	7	1	**8T-4224**	3	WASHER-HARD (8.8X16X2-MM THK)	
D	8	1	**5P-5630**		TUBE (1-M)	
E	9	1	**211-5358**		CONDUIT-FLEXIBLE (40-CM)	
A		1	**7N-0296**	1	CYLINDER AS-ETHER	
					(MUST BE PROCURED LOCALLY FROM YOUR CATERPILLAR DEALER)	

A-NOT PART OF THIS GROUP
D-ORDER BY THE METER
E-ORDER BY THE CENTIMETER
M-METRIC PART

245-6026 **STARTING AID GP-ETHER** *(contd.)* **i03639871**

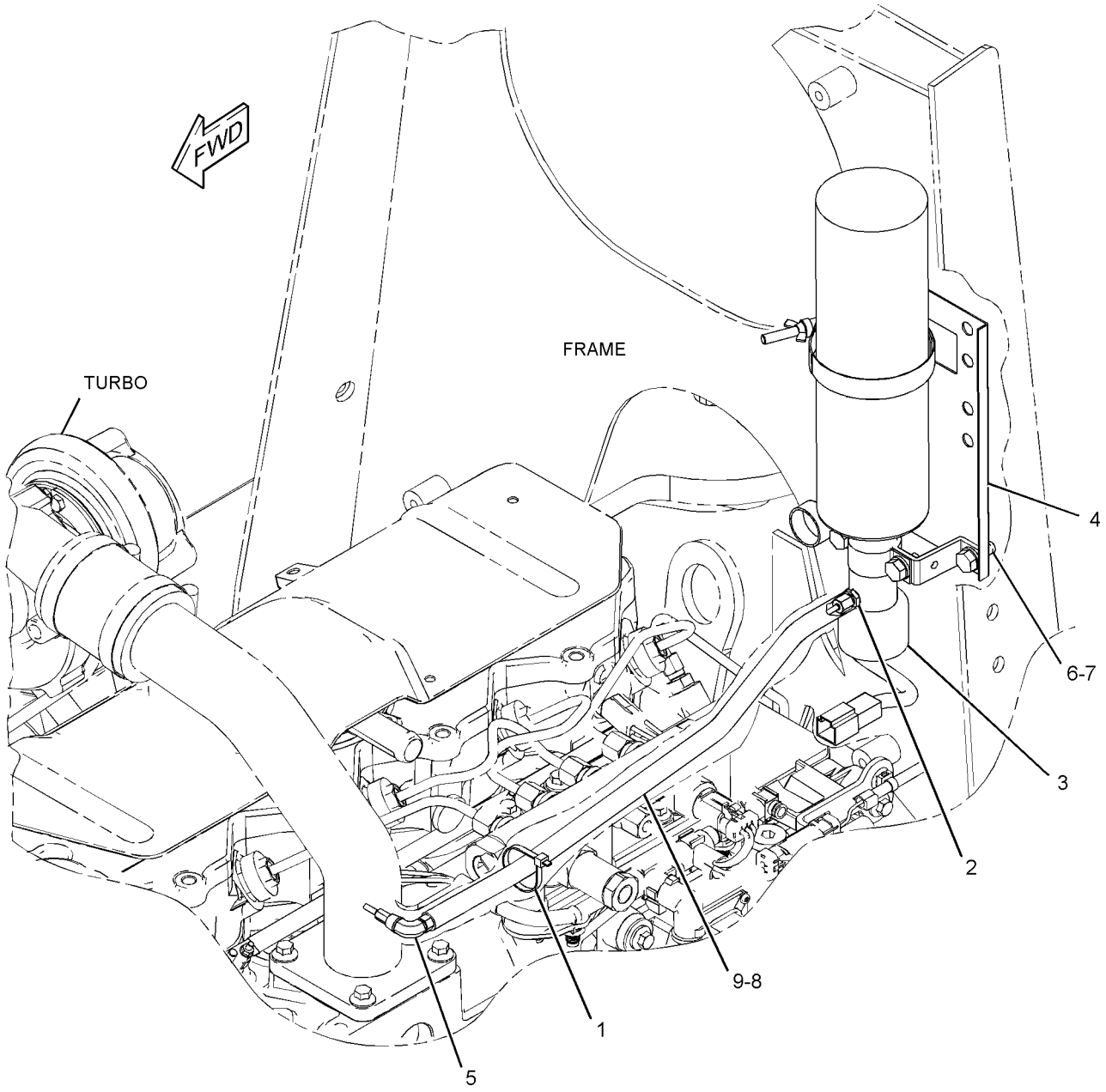

GRAPHIC #1 **<END>** g01440908

304-3655 STARTING MOTOR GP-ELECTRIC

S/N: C4E1-UP

PART OF 254-9233 ENGINE AR-PRIMARY

SMCS-1453 **i02902110**

NOTE	REF NO	GRAPHIC REF	PART NUMBER	QTY	PART NAME 1 2 3 4 5 6 (PRODUCT LEVEL)	SEE PAGE
	1	1	**7W-4540**	1	SPACER	
	2	1	**128-1599**	3	STUD (M10X1.5X50-MM)	
	3	1	**6I-0594**	3	NUT (M10X1.5-THD)	
	4	1	**300-4415**	1	STARTING MOTOR GP-ELECTRIC	

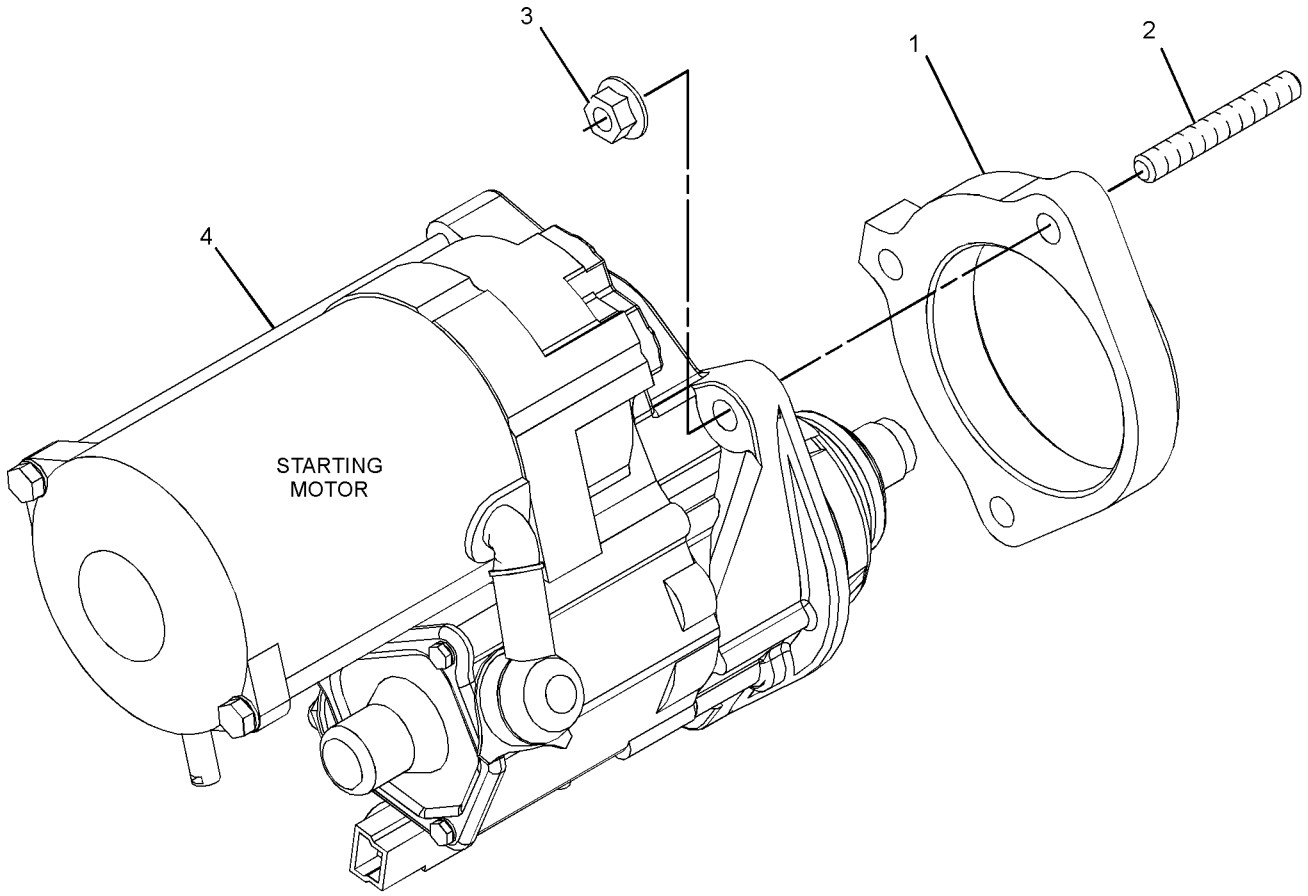

GRAPHIC #1 **<END>** g01384280

7N-0718 SWITCH GP-DISCONNECT–BATTERY

S/N: JLF1-UP; WWW1-UP; YYY1-UP
12-VOLT
PART OF 245-6017 BATTERY & WIRING GP

SMCS-1411 **i02459121**

NOTE	REF NO	GRAPHIC REF	PART NUMBER	QTY	PART NAME 1 2 3 4 5 6 (PRODUCT LEVEL)	SEE PAGE
	1	1	**8H-5306**	1	KEY (BATTERY DISCONNECT)	
	2	1	**8H-5303**	1	NUT (3/4-16-THD)	
	3	1	**2H-3922**	2	LOCKWASHER	
	4	1	**9F-5644**	2	LOCKWASHER	
	5	1	**6F-7045**	2	NUT-FULL (3/8-24-THD)	

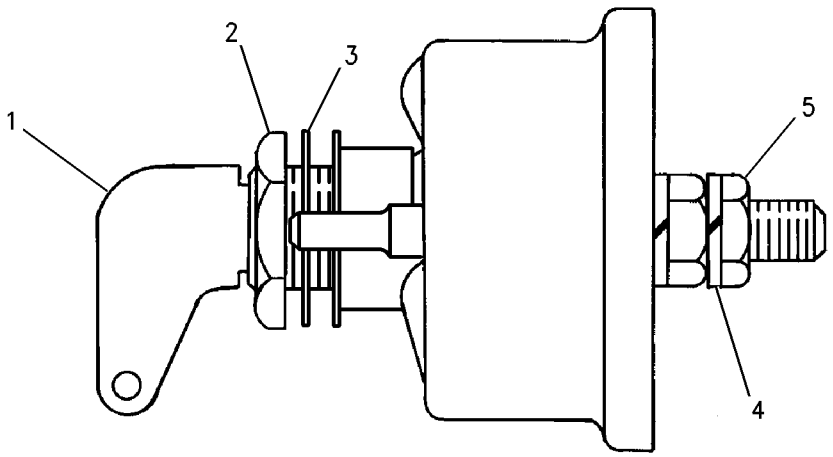

GRAPHIC #1 **<END>** g00715584

106-0107 SWITCH GP-ROTARY–THROTTLE POSITION

S/N: JLF1-UP; WWW1-UP; YYY1-UP
PART OF 245-6022, 245-6039 INSTRUMENT GP
AN ATTACHMENT

SMCS-7332 **i03301800**

NOTE	REF NO	GRAPHIC REF	PART NUMBER	QTY	PART NAME 1 2 3 4 5 6 (PRODUCT LEVEL)	SEE PAGE
	1	1	**102-8805**	1	KIT-RECEPTACLE (6-PIN)	
					(INCLUDES RECEPTACLE AS & WEDGE)	
	3	1	**8T-8737**	1	PLUG-SEAL	
	4	1	**144-1636**	5	PIN-CONNECTOR (14-GA TO 18-GA)	
M	5	1	**7Y-5458**	1	NUT (M12X1-THD)	
	6	1	**7Y-5464**	1	WASHER (12.2X15.4X0.5-MM THK)	
	7	1	**106-0210**	1	SEAL	

M-METRIC PART

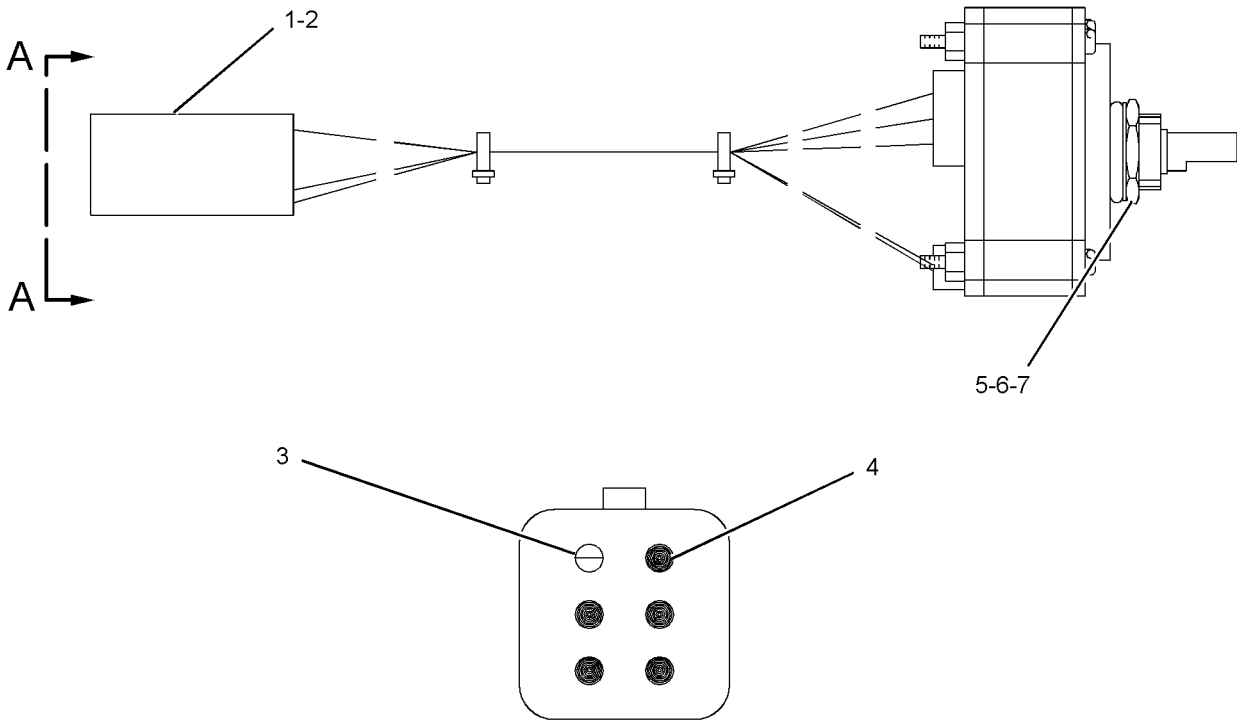

VIEW A-A

GRAPHIC #1 **<END>** g01098706

318-8135 WARNING GP-BACKUP

S/N: JLF1-UP; WWW1-UP; YYY1-UP
PART OF 312-1035 GUARD GP-REAR
AN ATTACHMENT

SMCS-7406 **i03601403**

NOTE	REF NO	GRAPHIC REF	PART NUMBER	QTY	PART NAME 1 2 3 4 5 6 (PRODUCT LEVEL)	SEE PAGE
	1	1	**220-0230**	1	ALARM AS (BACKUP)	
		1	**102-8802**	1	KIT-RECEPTACLE (2-PIN)	
					(INCLUDES RECEPTACLE AS & WEDGE)	
D		1	**5P-5623**		WIRE-ELECTRICAL (16-GA, BLACK) (0.4-M EACH)	
		1	**186-3735**	2	PIN-CONNECTOR (16-GA TO 18-GA)	
E		1	**9X-1813**		SLEEVE (29-CM)	
	2	1	**5P-4116**	4	WASHER-HARD (8.8X20.5X2-MM THK)	
M	3	1	**8T-4200**	4	BOLT (M8X1.25X16-MM)	
E	4	1	**128-8423**		SEAL (29-CM)	

D-ORDER BY THE METER
E-ORDER BY THE CENTIMETER
M-METRIC PART

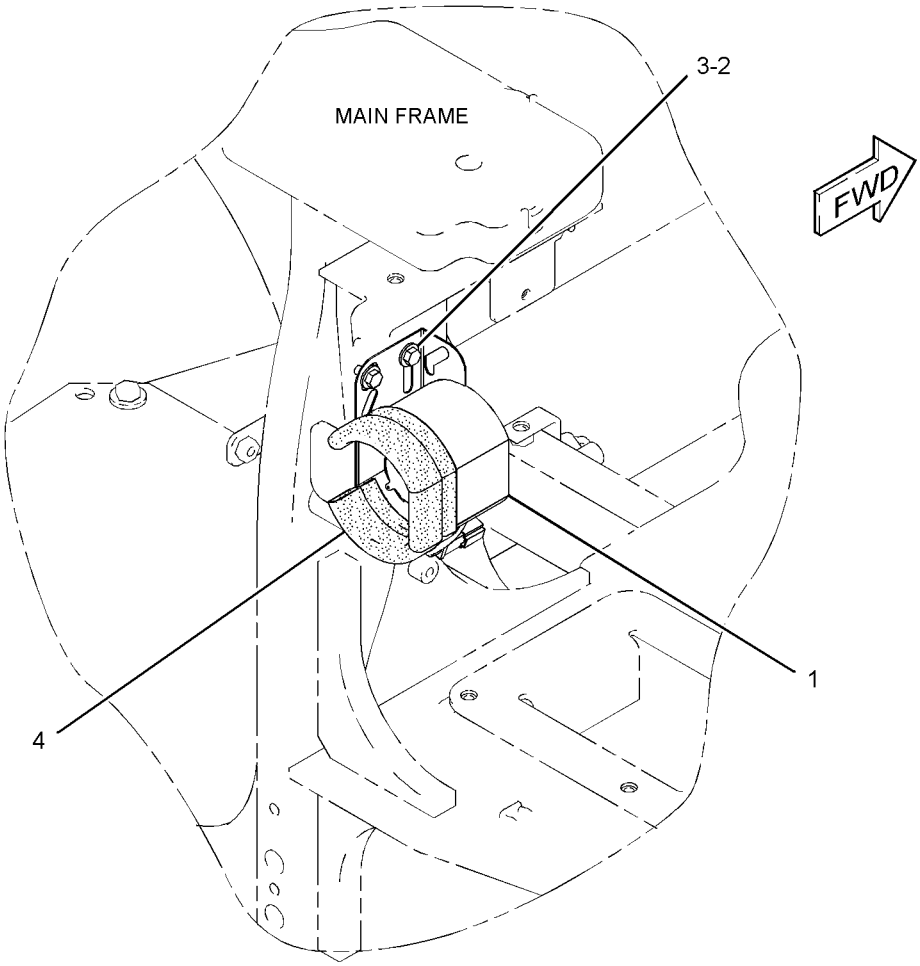

GRAPHIC #1 **<END>** g01441596

318-8136 WARNING GP-BACKUP

S/N: JLF1-UP; WWW1-UP; YYY1-UP
PART OF 245-6017 BATTERY & WIRING GP

SMCS-7406 **i03601425**

NOTE	REF NO	GRAPHIC REF	PART NUMBER	QTY	PART NAME 1 2 3 4 5 6 (PRODUCT LEVEL)	SEE PAGE
	1	1	**170-0950**	1	ALARM AS (BACKUP)	
		1	**4B-2043**	2	NUT (8-32-THD)	
	2	1	**269-7686**	1	HARNESS AS-ALARM	
		1	**186-3735**	2	PIN-CONNECTOR (16-GA TO 18-GA)	
		1	**102-8802**	1	KIT-RECEPTACLE (2-PIN)	
					(INCLUDES RECEPTACLE AS & WEDGE)	
		1	**9G-3186**	2	TERMINAL-FORK (18-GA TO 22-GA, NO. 8 SCREW)	
B		1	**1P-0810**		TAPE-ELECTRICAL	
M	3	1	**8T-4138**	2	BOLT (M6X1X20-MM)	
	4	1	**9X-8256**	2	WASHER (6.6X12X2-MM THK)	

B-USE AS REQUIRED
M-METRIC PART

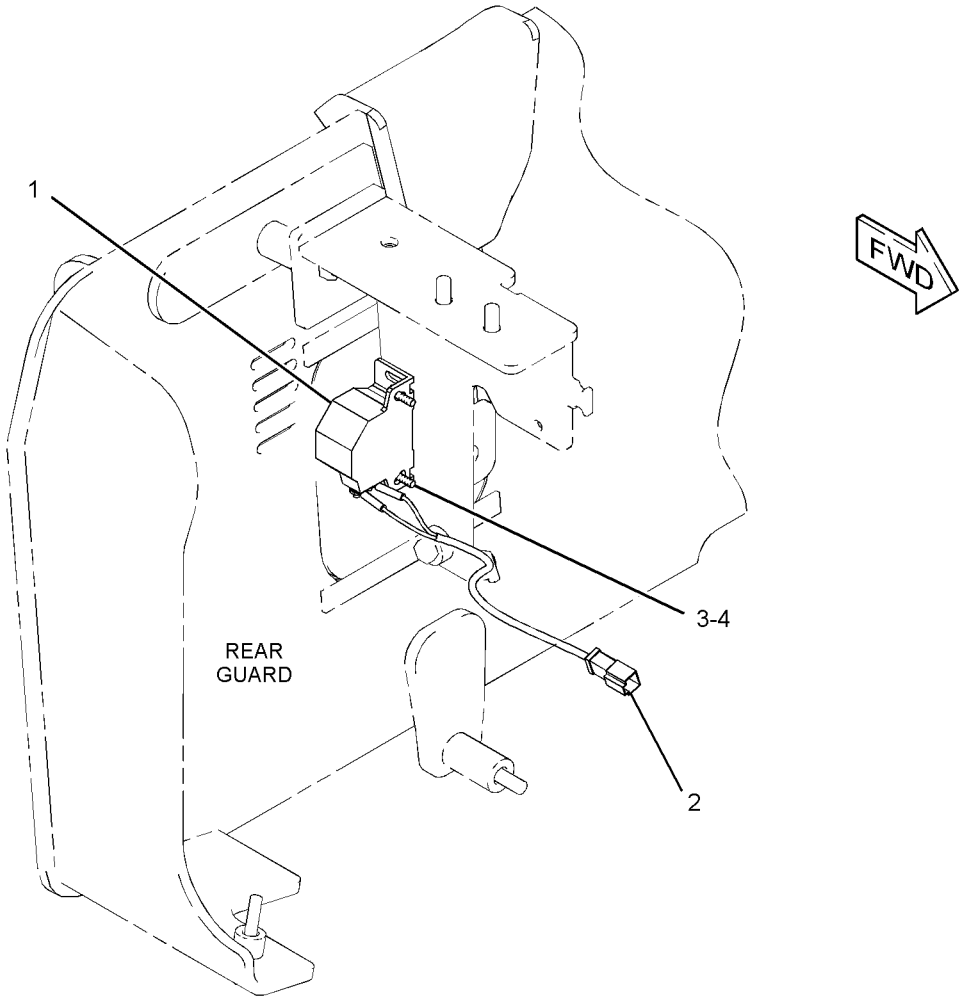

GRAPHIC #1 **<END>** g01651953

245-6024 WIRING GP-AIR CONDITIONER

S/N: JLF1-UP; WWW1-UP; YYY1-UP
PART OF 254-3210 AIR CONDITIONER & MOUNTING GP
AN ATTACHMENT

SMCS-1408, 7320 **i03597181**

NOTE	REF NO	GRAPHIC REF	PART NUMBER	QTY	PART NAME 1 2 3 4 5 6 (PRODUCT LEVEL)	SEE PAGE
	1	1	**7K-1181**	6	STRAP-CABLE	
	2	1	**236-6923**	1	SWITCH AS-PRESSURE (REFRIGERANT COMPR, HIGH SIDE)	
	3	1	**249-9048**	1	HARNESS AS-SWITCH	
		1	**9W-0852**	2	PIN-CONNECTOR (14-GA)	
		1	**155-2270**	2	KIT-CONNECTING PLUG (2-PIN)	
					(EACH INCLUDES PLUG AS, WEDGE & INTERFACE SEAL)	
		1	**168-4999**	1	PLUG-CONNECTOR	
		1	**102-8802**	1	KIT-RECEPTACLE (2-PIN)	
					(INCLUDES RECEPTACLE AS & WEDGE)	
		1	**100-6674**	2	SEAL-CONNECTOR	
		1	**186-3736**	4	SOCKET-CONNECTOR (16-GA TO 18-GA)	
		1	**305-5362**	2	TERMINAL AS (18-GA)	
		1	**189-3158**	1	SUPPRESSOR-ARC	
E		1	**125-7874**		TUBE-HEAT SHRINK (5.72-MM DIA) (5-CM)	
E		1	**125-7875**		TUBE-HEAT SHRINK (7.44-MM DIA) (5-CM)	
	4	1	**4P-8134**	1	CLIP	
	5	1	**9X-7378**	1	SEAL-O-RING	

E-ORDER BY THE CENTIMETER

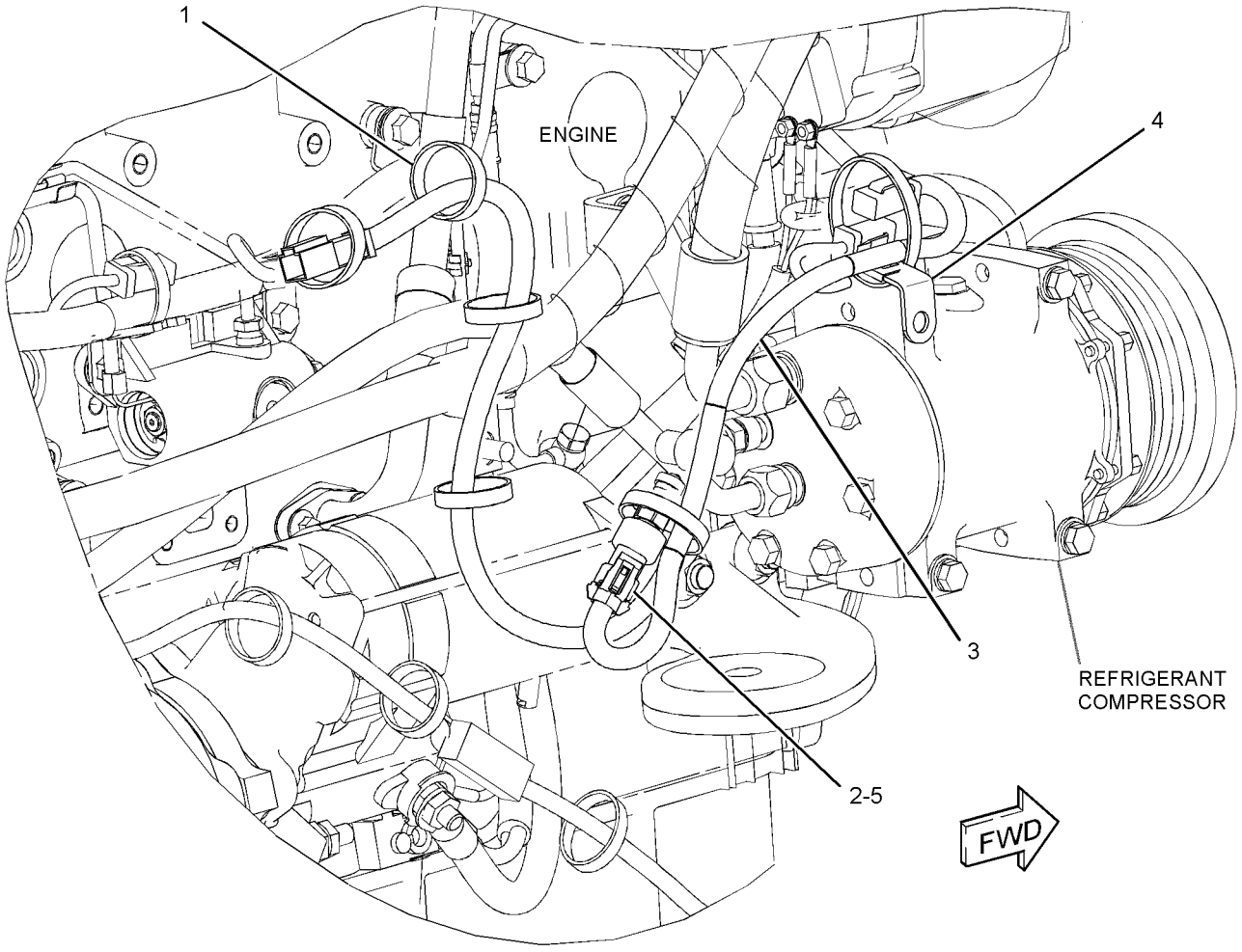

GRAPHIC #1 **<END>** g01346312

245-6021 WIRING GP-CAB–EROPS

S/N: JLF1-UP; WWW1-UP; YYY1-UP
PART OF 282-4898, 282-4899 ROPS AR-ENCLOSED
AN ATTACHMENT
TYPE 1

SMCS-1408, 7301 **i03595561**

NOTE	REF NO	GRAPHIC REF	PART NUMBER	QTY	PART NAME 1 2 3 4 5 6 (PRODUCT LEVEL)	SEE PAGE
	1	1	**7K-1181**	72	STRAP-CABLE	
	2	1	**7T-8894**	1	GROMMET	
	3	1	**7T-8895**	1	GROMMET	
	4	1	**084-4277**	1	LAMP GP-DOME (12-VOLT)	
		1	**210-8754**	1	LAMP (12-VOLT) (MINIATURE)	
Y	5	1	**240-0101**	2	LAMP GP-FLOOD (12-VOLT) (LONG RANGE)	156
	6	1	**245-6042**	1	HARNESS AS-CONSOLE (EROPS)	
		1	**186-3735**	16	PIN-CONNECTOR (16-GA TO 18-GA)	
		1	**9W-0852**	31	PIN-CONNECTOR (14-GA)	
		1	**9X-3401**	53	PIN-CONNECTOR (16-GA TO 18-GA)	
					–OR–	
		1	**126-1767**	53	PIN-CONNECTOR (14-GA)	
		1	**9X-1054**	1	PLUG AS-CONNECTOR (4-PIN)	
		1	**155-2255**	4	KIT-CONNECTING PLUG (12-PIN)	
		1	**155-2256**	1	KIT-CONNECTING PLUG (12-PIN)	
					(EACH PLUG KIT INCLUDES PLUG AS, WEDGE & INTERFACE SEAL)	
		1	**8T-8737**	45	PLUG-SEAL	
		1	**102-8804**	1	KIT-RECEPTACLE (4-PIN)	
		1	**102-8806**	1	KIT-RECEPTACLE (8-PIN)	
		1	**102-8801**	1	KIT-RECEPTACLE (12-PIN)	
					(EACH RECEPTACLE KIT INCLUDES RECEPTACLE AS & WEDGE)	
		1	**186-3736**	28	SOCKET-CONNECTOR (16-GA TO 18-GA)	
		1	**9W-0844**	28	SOCKET-CONNECTOR (14-GA)	
		1	**2L-8069**	2	TERMINAL (2-GA TO 10-GA)	
		1	**2L-8079**	2	TERMINAL (14-GA TO 16-GA)	
		1	**5P-4571**	2	TERMINAL-BLADE (14-GA TO 16-GA)	
		1	**091-2436**	66	TERMINAL-BLADE (18-GA TO 22-GA)	
		1	**104-1995**	16	TERMINAL-BLADE (14-GA TO 18-GA)	
		1	**9X-1055**	2	TERMINAL-RECEPTACLE	
		1	**9X-1056**	2	TERMINAL-RECEPTACLE (14-GA TO 16-GA)	
E		1	**119-3662**		TUBE-HEAT SHRINK (10.85-MM DIA) (33-CM)	
E		1	**125-7874**		TUBE-HEAT SHRINK (5.72-MM DIA) (65-CM)	
E		1	**125-7875**		TUBE-HEAT SHRINK (7.44-MM DIA) (35-CM)	
	7	1	**245-6043**	1	HARNESS AS-CAB (ROOF)	
		1	**274-3774**	3	CAP-CONNECTOR	
		1	**213-0139**	4	PIN	
		1	**186-3735**	2	PIN-CONNECTOR (16-GA TO 18-GA)	
		1	**9W-0852**	6	PIN-CONNECTOR (14-GA)	
		1	**155-2265**	2	KIT-CONNECTING PLUG (8-PIN)	
		1	**155-2270**	7	KIT-CONNECTING PLUG (2-PIN)	
		1	**177-9656**	1	KIT-CONNECTING PLUG (4-PIN)	
					(EACH PLUG KIT INCLUDES PLUG AS, WEDGE & INTERFACE SEAL)	
		1	**230-5008**	2	PLUG AS-CONNECTOR (4-PIN)	
		1	**8T-8737**	11	PLUG-SEAL	
		1	**102-8806**	1	KIT-RECEPTACLE (8-PIN)	
					(INCLUDES RECEPTACLE AS & WEDGE)	
		1	**274-3778**	1	CAP-SEAL	
		1	**186-3736**	19	SOCKET-CONNECTOR (16-GA TO 18-GA)	
		1	**9W-0844**	8	SOCKET-CONNECTOR (14-GA)	
		1	**9X-3402**	8	SOCKET-CONNECTOR (16-GA TO 18-GA)	
		1	**8L-8413**	52	STRAP-CABLE	

245-6021 **WIRING GP-CAB** *(contd.)* **i03595561**

NOTE	REF NO	GRAPHIC REF	PART NUMBER	QTY	PART NAME 1 2 3 4 5 6 (PRODUCT LEVEL)	SEE PAGE
		1	**2L-8052**	1	TERMINAL (6-GA, 3/8-IN)	
		1	**2L-8079**	1	TERMINAL (14-GA TO 16-GA)	
		1	**5P-4571**	4	TERMINAL-BLADE (14-GA TO 16-GA)	
		1	**9R-9442**	2	TERMINAL	
E		1	**119-3662**		TUBE-HEAT SHRINK (10.85-MM DIA) (7-CM)	
E		1	**125-7874**		TUBE-HEAT SHRINK (5.72-MM DIA) (20-CM)	
E		1	**125-7875**		TUBE-HEAT SHRINK (7.44-MM DIA) (15-CM)	
	8	1	**245-6044**	1	HARNESS AS-CAB (DASH)	
		1	**186-3735**	11	PIN-CONNECTOR (16-GA TO 18-GA)	
		1	**155-2265**	1	KIT-CONNECTING PLUG (8-PIN)	
		1	**155-2260**	2	KIT-CONNECTING PLUG (3-PIN)	
		1	**155-2271**	2	KIT-CONNECTING PLUG (4-PIN)	
					(EACH PLUG KIT INCLUDES PLUG AS, WEDGE & INTERFACE SEAL)	
		1	**230-4009**	1	PLUG AS-CONNECTOR (12-PIN)	
		1	**8T-8737**	21	PLUG-SEAL	
		1	**102-8806**	1	KIT-RECEPTACLE (8-PIN)	
		1	**102-8801**	1	KIT-RECEPTACLE (12-PIN)	
					(EACH RECEPTACLE KIT INCLUDES RECEPTACLE AS & WEDGE)	
		1	**134-2540**	1	RESISTOR AS (3-PIN)	
		1	**186-3736**	15	SOCKET-CONNECTOR (16-GA TO 18-GA)	
		1	**9X-3402**	7	SOCKET-CONNECTOR (16-GA TO 18-GA)	
		1	**8L-8413**	19	STRAP-CABLE	
		1	**5P-4571**	2	TERMINAL-BLADE (14-GA TO 16-GA)	
E		1	**125-7874**		TUBE-HEAT SHRINK (5.72-MM DIA) (35-CM)	
	9	1	**115-1615**	1	RELAY AS (12-VOLT) (BLOWER)	
	10	1	**132-5789**	1	CLIP	
Y	11	1	**240-0102**	4	LAMP GP-FLOOD (12-VOLT)	157
	12	1	**1V-6688**	1	GROMMET	
	13	1	**4P-7581**	1	CLIP	
	14	1	**4P-8134**	1	CLIP	
	15	1	**8T-4121**	2	WASHER-HARD (11X21X2.5-MM THK)	
M	16	1	**8T-4138**	5	BOLT (M6X1X20-MM)	
M	17	1	**8T-4189**	4	BOLT (M8X1.25X20-MM)	
M	18	1	**8T-4191**	2	BOLT (M10X1.5X16-MM)	
	20	1	**8T-4224**	6	WASHER-HARD (8.8X16X2-MM THK)	
M	21	1	**8T-7547**	2	BOLT (M8X1.25X30-MM)	
	22	1	**9D-3768**	2	GROMMET	
	23	1	**9X-7345**	3	GROMMET	
	24	1	**9X-8256**	5	WASHER (6.6X12X2-MM THK)	
E	25	1	**3E-6600**		SEAL (3-CM EACH)	
M	26	1	**5C-9553**	3	BOLT (M6X1X16-MM)	
	27	1	**5P-4115**	3	WASHER-HARD (7.2X19X2-MM THK)	

E-ORDER BY THE CENTIMETER
M-METRIC PART
Y-SEPARATE ILLUSTRATION

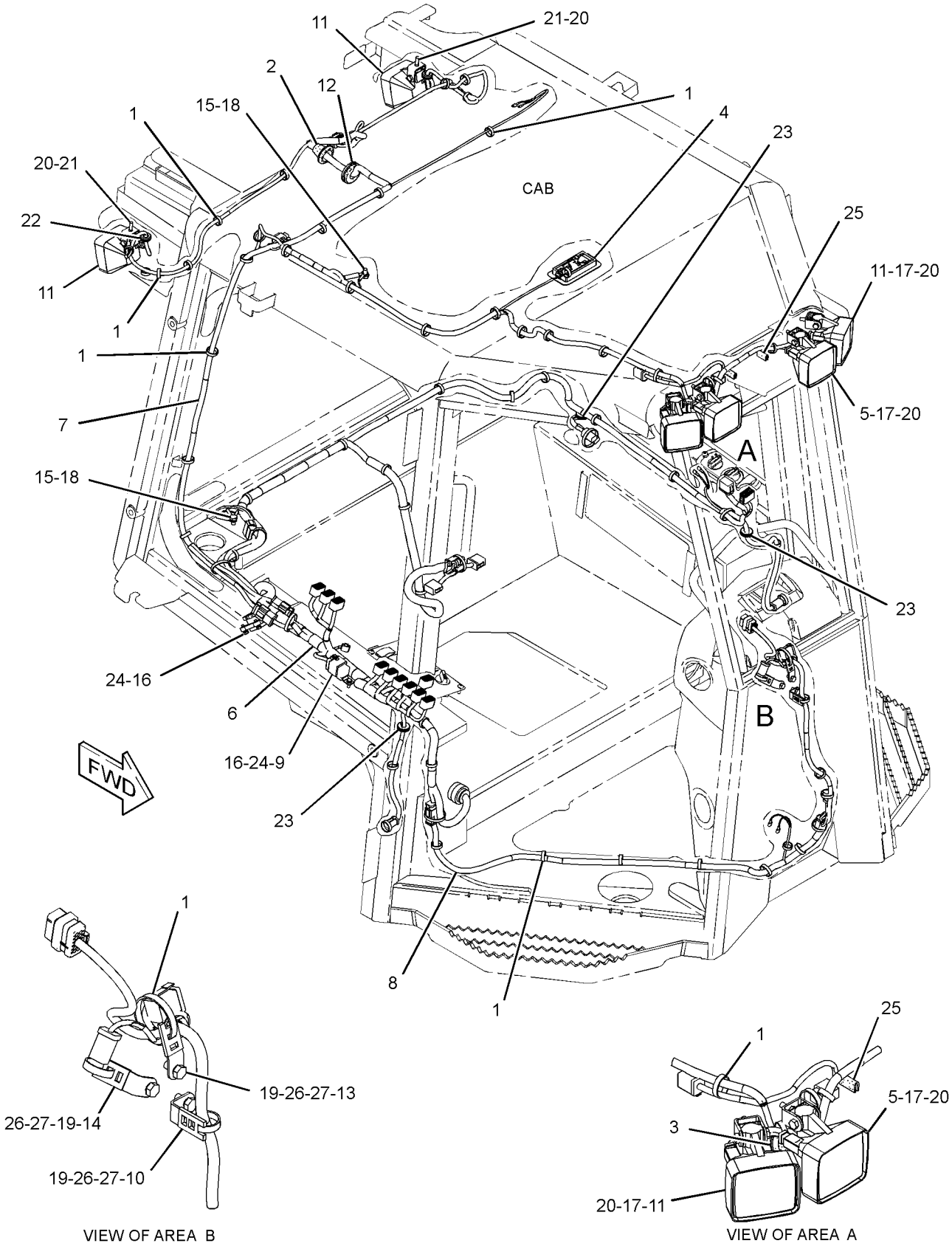

GRAPHIC #1 **<END>** g01365665

245-6021 WIRING GP-CAB–EROPS

S/N: JLF1-UP; WWW1-UP; YYY1-UP
PART OF 244-7475, 244-7476 ROPS AR, 282-4898, 282-4899 ROPS AR-ENCLOSED AN ATTACHMENT
TYPE 2

SMCS-1408, 7301 **i03595617**

NOTE	REF NO	GRAPHIC REF	PART NUMBER	QTY	PART NAME 1 2 3 4 5 6 (PRODUCT LEVEL)	SEE PAGE
	1	1	**7K-1181**	72	STRAP-CABLE	
	2	1	**7T-8894**	1	GROMMET	
	3	1	**7T-8895**	1	GROMMET	
	4	1	**084-4277**	1	LAMP GP-DOME (12-VOLT)	
		1	**210-8754**	1	LAMP (12-VOLT) (MINIATURE)	
	5	1	**245-6043**	1	HARNESS AS-CAB (ROOF)	
		1	**274-3774**	3	CAP-CONNECTOR	
		1	**213-0139**	4	PIN	
		1	**186-3735**	2	PIN-CONNECTOR (16-GA TO 18-GA)	
		1	**9W-0852**	6	PIN-CONNECTOR (14-GA)	
		1	**155-2265**	2	KIT-CONNECTING PLUG (8-PIN)	
		1	**155-2270**	7	KIT-CONNECTING PLUG (2-PIN)	
		1	**177-9656**	1	KIT-CONNECTING PLUG (4-PIN)	
					(EACH PLUG KIT INCLUDES PLUG AS, WEDGE & INTERFACE SEAL)	
		1	**230-5008**	2	PLUG AS-CONNECTOR (4-PIN)	
		1	**8T-8737**	11	PLUG-SEAL	
		1	**102-8806**	1	KIT-RECEPTACLE (8-PIN)	
					(INCLUDES RECEPTACLE AS & WEDGE)	
		1	**274-3778**	1	CAP-SEAL	
		1	**186-3736**	19	SOCKET-CONNECTOR (16-GA TO 18-GA)	
		1	**9W-0844**	8	SOCKET-CONNECTOR (14-GA)	
		1	**9X-3402**	8	SOCKET-CONNECTOR (16-GA TO 18-GA)	
		1	**8L-8413**	52	STRAP-CABLE	
		1	**2L-8052**	1	TERMINAL (6-GA, 3/8-IN)	
		1	**2L-8079**	1	TERMINAL (14-GA TO 16-GA)	
		1	**5P-4571**	4	TERMINAL-BLADE (14-GA TO 16-GA)	
		1	**9R-9442**	2	TERMINAL	
E		1	**119-3662**		TUBE-HEAT SHRINK (10.85-MM DIA) (7-CM)	
E		1	**125-7874**		TUBE-HEAT SHRINK (5.72-MM DIA) (20-CM)	
E		1	**125-7875**		TUBE-HEAT SHRINK (7.44-MM DIA) (15-CM)	
	6	1	**245-6044**	1	HARNESS AS-CAB (DASH)	
		1	**186-3735**	11	PIN-CONNECTOR (16-GA TO 18-GA)	
		1	**155-2265**	1	KIT-CONNECTING PLUG (8-PIN)	
		1	**155-2260**	2	KIT-CONNECTING PLUG (3-PIN)	
		1	**155-2271**	2	KIT-CONNECTING PLUG (4-PIN)	
					(EACH PLUG KIT INCLUDES PLUG AS, WEDGE & INTERFACE SEAL)	
		1	**230-4009**	1	PLUG AS-CONNECTOR (12-PIN)	
		1	**8T-8737**	21	PLUG-SEAL	
		1	**102-8806**	1	KIT-RECEPTACLE (8-PIN)	
		1	**102-8801**	1	KIT-RECEPTACLE (12-PIN)	
					(EACH RECEPTACLE KIT INCLUDES RECEPTACLE AS & WEDGE)	
		1	**134-2540**	1	RESISTOR AS (3-PIN)	
		1	**186-3736**	15	SOCKET-CONNECTOR (16-GA TO 18-GA)	
		1	**9X-3402**	7	SOCKET-CONNECTOR (16-GA TO 18-GA)	
		1	**8L-8413**	19	STRAP-CABLE	
		1	**5P-4571**	2	TERMINAL-BLADE (14-GA TO 16-GA)	
E		1	**125-7874**		TUBE-HEAT SHRINK (5.72-MM DIA) (35-CM)	
C	7	1	**311-0292**	1	HARNESS AS-CONSOLE (EROPS)	
		1	**228-5856**	13	CONNECTOR	
		1	**213-0139**	4	PIN	
		1	**186-3735**	16	PIN-CONNECTOR (16-GA TO 18-GA)	

245-6021 **WIRING GP-CAB** ***(contd.)*** **i03595617**

NOTE	REF NO	GRAPHIC REF	PART NUMBER	QTY	PART NAME 1 2 3 4 5 6 (PRODUCT LEVEL)	SEE PAGE
		1	**9W-0852**	31	PIN-CONNECTOR (14-GA)	
		1	**9X-3401**	59	PIN-CONNECTOR (16-GA TO 18-GA)	
					—OR—	
		1	**126-1767**	59	PIN-CONNECTOR (14-GA)	
		1	**9X-1054**	1	PLUG AS-CONNECTOR (4-PIN)	
		1	**155-2255**	4	KIT-CONNECTING PLUG (12-PIN)	
		1	**155-2256**	1	KIT-CONNECTING PLUG (12-PIN)	
		1	**155-2265**	1	KIT-CONNECTING PLUG (8-PIN)	
		1	**155-2260**	1	KIT-CONNECTING PLUG (3-PIN)	
		1	**155-2270**	1	KIT-CONNECTING PLUG (2-PIN)	
		1	**155-2271**	4	KIT-CONNECTING PLUG (4-PIN)	
		1	**155-2274**	1	KIT-CONNECTING PLUG (6-PIN)	
		1	**177-9656**	1	KIT-CONNECTING PLUG (4-PIN)	
					(EACH PLUG KIT INCLUDES PLUG AS, WEDGE & INTERFACE SEAL)	
		1	**225-3854**	1	PLUG AS	
		1	**8T-8737**	39	PLUG-SEAL	
		1	**102-8804**	1	KIT-RECEPTACLE (4-PIN)	
		1	**102-8806**	1	KIT-RECEPTACLE (8-PIN)	
		1	**102-8801**	1	KIT-RECEPTACLE (12-PIN)	
					(EACH RECEPTACLE KIT INCLUDES RECEPTACLE AS & WEDGE)	
		1	**214-4208**	1	RECEPTACLE AS-CONNECTOR (70-PIN)	
		1	**186-3736**	28	SOCKET-CONNECTOR (16-GA TO 18-GA)	
		1	**9W-0844**	28	SOCKET-CONNECTOR (14-GA)	
		1	**180-9340**	19	SOCKET-CONNECTOR (14-GA TO 18-GA)	
		1	**2L-8069**	2	TERMINAL (2-GA TO 10-GA)	
		1	**2L-8079**	2	TERMINAL (14-GA TO 16-GA)	
		1	**5P-4571**	2	TERMINAL-BLADE (14-GA TO 16-GA)	
		1	**091-2436**	80	TERMINAL-BLADE (18-GA TO 22-GA)	
		1	**104-1995**	16	TERMINAL-BLADE (14-GA TO 18-GA)	
		1	**9X-1055**	2	TERMINAL-RECEPTACLE	
		1	**9X-1056**	2	TERMINAL-RECEPTACLE (14-GA TO 16-GA)	
E		1	**119-3662**		TUBE-HEAT SHRINK (10.85-MM DIA) (26-CM)	
E		1	**125-7874**		TUBE-HEAT SHRINK (5.72-MM DIA) (65-CM)	
E		1	**125-7875**		TUBE-HEAT SHRINK (7.44-MM DIA) (40-CM)	
	8	1	**115-1615**	1	RELAY AS (12-VOLT) (BLOWER)	
	9	1	**132-5789**	1	CLIP	
	10	1	**1V-6688**	1	GROMMET	
	11	1	**4P-7581**	1	CLIP	
	12	1	**4P-8134**	1	CLIP	
M	13	1	**5C-9553**	3	BOLT (M6X1X16-MM)	
	14	1	**5P-4115**	3	WASHER-HARD (7.2X19X2-MM THK)	
	15	1	**8T-4121**	2	WASHER-HARD (11X21X2.5-MM THK)	
M	16	1	**8T-4138**	5	BOLT (M6X1X20-MM)	
M	17	1	**8T-4191**	2	BOLT (M10X1.5X16-MM)	
	18	1	**9X-7345**	3	GROMMET	
	19	1	**9X-8256**	5	WASHER (6.6X12X2-MM THK)	
E	20	1	**3E-6600**		SEAL (3-CM EACH)	

C-CHANGE FROM PREVIOUS TYPE
E-ORDER BY THE CENTIMETER
M-METRIC PART

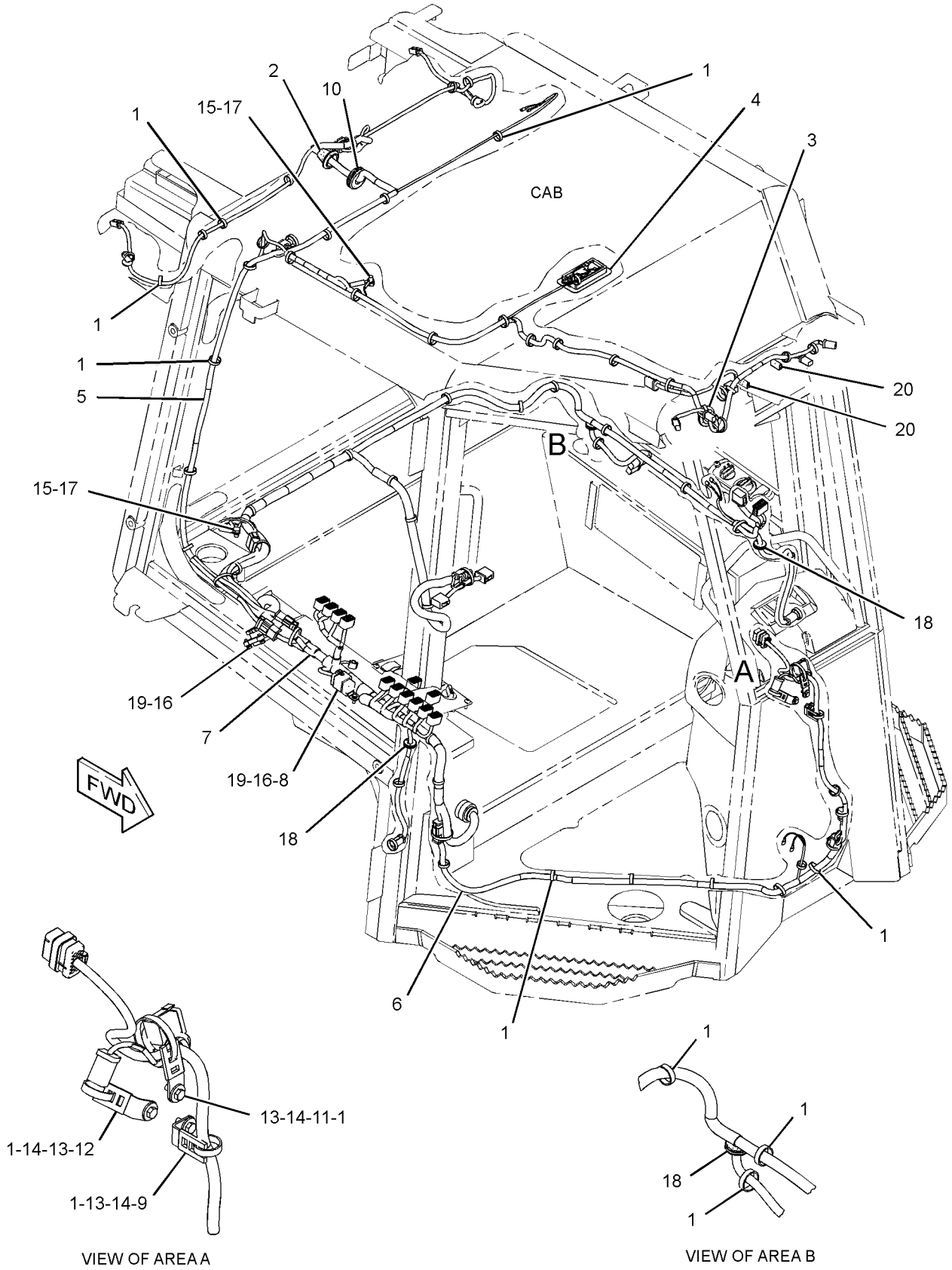

GRAPHIC #1 **<END>** g01736533

245-6021 WIRING GP-CAB–EROPS

S/N: JLF1-UP; WWW1-UP; YYY1-UP
PART OF 244-7475, 244-7476 ROPS AR, 282-4898, 282-4899 ROPS AR-ENCLOSED
AN ATTACHMENT
TYPE 3

SMCS-1408, 7301 **i03592949**

NOTE	REF NO	GRAPHIC REF	PART NUMBER	QTY	PART NAME 1 2 3 4 5 6 (PRODUCT LEVEL)	SEE PAGE
C	1	1	**7K-1181**	76	STRAP-CABLE	
	2	1	**7T-8894**	1	GROMMET	
	3	1	**7T-8895**	1	GROMMET	
	4	1	**084-4277**	1	LAMP GP-DOME (12-VOLT)	
		1	**210-8754**	1	LAMP (12-VOLT) (MINIATURE)	
C	5	1	**229-8377**	1	CIRCUIT BREAKER AS (35-AMPERE) (LONG RANGE)	
		1	**6V-8378**	2	NUT (10-32-THD)	
		1	**8F-1434**	2	LOCKWASHER	
		1	**8T-0328**	2	WASHER-HARD (5.5X10X1-MM THK)	
	6	1	**245-6043**	1	HARNESS AS-CAB (ROOF)	
		1	**274-3774**	3	CAP-CONNECTOR	
		1	**213-0139**	4	PIN	
		1	**186-3735**	2	PIN-CONNECTOR (16-GA TO 18-GA)	
		1	**9W-0852**	6	PIN-CONNECTOR (14-GA)	
		1	**155-2265**	2	KIT-CONNECTING PLUG (8-PIN)	
		1	**155-2270**	7	KIT-CONNECTING PLUG (2-PIN)	
		1	**177-9656**	1	KIT-CONNECTING PLUG (4-PIN)	
					(EACH PLUG KIT INCLUDES PLUG AS, WEDGE & INTERFACE SEAL)	
		1	**230-5008**	2	PLUG AS-CONNECTOR (4-PIN)	
		1	**8T-8737**	11	PLUG-SEAL	
		1	**102-8806**	1	KIT-RECEPTACLE (8-PIN)	
					(INCLUDES RECEPTACLE AS & WEDGE)	
		1	**274-3778**	1	CAP-SEAL	
		1	**186-3736**	19	SOCKET-CONNECTOR (16-GA TO 18-GA)	
		1	**9W-0844**	8	SOCKET-CONNECTOR (14-GA)	
		1	**9X-3402**	8	SOCKET-CONNECTOR (16-GA TO 18-GA)	
		1	**8L-8413**	52	STRAP-CABLE	
		1	**2L-8052**	1	TERMINAL (6-GA, 3/8-IN)	
		1	**2L-8079**	1	TERMINAL (14-GA TO 16-GA)	
		1	**5P-4571**	4	TERMINAL-BLADE (14-GA TO 16-GA)	
		1	**9R-9442**	2	TERMINAL	
E		1	**119-3662**		TUBE-HEAT SHRINK (10.85-MM DIA) (7-CM)	
E		1	**125-7874**		TUBE-HEAT SHRINK (5.72-MM DIA) (20-CM)	
E		1	**125-7875**		TUBE-HEAT SHRINK (7.44-MM DIA) (15-CM)	
	7	1	**245-6044**	1	HARNESS AS-CAB (DASH)	
		1	**186-3735**	11	PIN-CONNECTOR (16-GA TO 18-GA)	
		1	**155-2265**	1	KIT-CONNECTING PLUG (8-PIN)	
		1	**155-2260**	2	KIT-CONNECTING PLUG (3-PIN)	
		1	**155-2271**	2	KIT-CONNECTING PLUG (4-PIN)	
					(EACH PLUG KIT INCLUDES PLUG AS, WEDGE & INTERFACE SEAL)	
		1	**230-4009**	1	PLUG AS-CONNECTOR (12-PIN)	
		1	**8T-8737**	21	PLUG-SEAL	
		1	**102-8806**	1	KIT-RECEPTACLE (8-PIN)	
		1	**102-8801**	1	KIT-RECEPTACLE (12-PIN)	
					(EACH RECEPTACLE KIT INCLUDES RECEPTACLE AS & WEDGE)	
		1	**134-2540**	1	RESISTOR AS (3-PIN)	
		1	**186-3736**	15	SOCKET-CONNECTOR (16-GA TO 18-GA)	
		1	**9X-3402**	7	SOCKET-CONNECTOR (16-GA TO 18-GA)	
		1	**8L-8413**	19	STRAP-CABLE	
		1	**5P-4571**	2	TERMINAL-BLADE (14-GA TO 16-GA)	
E		1	**125-7874**		TUBE-HEAT SHRINK (5.72-MM DIA) (35-CM)	

245-6021 **WIRING GP-CAB** *(contd.)* **i03592949**

NOTE	REF NO	GRAPHIC REF	PART NUMBER	QTY	PART NAME 1 2 3 4 5 6 (PRODUCT LEVEL)	SEE PAGE
C	8	1	**318-6093**	1	HARNESS AS-CONSOLE	
		1	**228-5856**	13	CONNECTOR	
		1	**213-0139**	4	PIN	
		1	**186-3735**	16	PIN-CONNECTOR (16-GA TO 18-GA)	
		1	**9W-0852**	31	PIN-CONNECTOR (14-GA)	
		1	**9X-3401**	59	PIN-CONNECTOR (16-GA TO 18-GA)	
					—OR—	
		1	**126-1767**	59	PIN-CONNECTOR (14-GA)	
		1	**9X-1054**	2	PLUG AS-CONNECTOR (4-PIN)	
		1	**155-2255**	4	KIT-CONNECTING PLUG (12-PIN)	
		1	**155-2256**	1	KIT-CONNECTING PLUG (12-PIN)	
		1	**155-2265**	1	KIT-CONNECTING PLUG (8-PIN)	
		1	**155-2260**	1	KIT-CONNECTING PLUG (3-PIN)	
		1	**155-2270**	1	KIT-CONNECTING PLUG (2-PIN)	
		1	**155-2274**		KIT-CONNECTING PLUG (6-PIN)	
		1	**177-9656**	1	KIT-CONNECTING PLUG (4-PIN)	
		1	**155-2271**	4	KIT-CONNECTING PLUG (4-PIN)	
					(EACH PLUG KIT INCLUDES PLUG AS, WEDGE & INTERFACE SEAL)	
		1	**225-3854**	1	PLUG AS	
		1	**8T-8737**	39	PLUG-SEAL	
		1	**102-8804**	1	KIT-RECEPTACLE (4-PIN)	
		1	**102-8806**	1	KIT-RECEPTACLE (8-PIN)	
		1	**102-8801**	1	KIT-RECEPTACLE (12-PIN)	
					(EACH RECEPTACLE KIT INCLUDES RECEPTACLE AS & WEDGE)	
		1	**214-4208**	1	RECEPTACLE AS-CONNECTOR (70-PIN)	
		1	**186-3736**	27	SOCKET-CONNECTOR (16-GA TO 18-GA)	
		1	**9W-0844**	29	SOCKET-CONNECTOR (14-GA)	
		1	**180-9340**	19	SOCKET-CONNECTOR (14-GA TO 18-GA)	
B		1	**141-8061**		TAPE	
		1	**2L-8069**	2	TERMINAL (2-GA TO 10-GA)	
		1	**2L-8079**	2	TERMINAL (14-GA TO 16-GA)	
		1	**5P-4571**	2	TERMINAL-BLADE (14-GA TO 16-GA)	
		1	**2L-8066**	2	TERMINAL-RING (10-GA TO 12-GA, NO. 10 SCREW)	
		1	**091-2436**	79	TERMINAL-BLADE (18-GA TO 22-GA)	
		1	**104-1995**	17	TERMINAL-BLADE (14-GA TO 18-GA)	
		1	**9X-1055**	6	TERMINAL-RECEPTACLE	
		1	**9X-1056**	2	TERMINAL-RECEPTACLE (14-GA TO 16-GA)	
E		1	**119-3662**		TUBE-HEAT SHRINK (10.85-MM DIA) (26-CM)	
E		1	**125-7874**		TUBE-HEAT SHRINK (5.72-MM DIA) (70-CM)	
E		1	**125-7875**		TUBE-HEAT SHRINK (7.44-MM DIA) (40-CM)	
	9	1	**115-1615**	2	RELAY AS (12-VOLT) (BLOWER)	
	10	1	**132-5789**	1	CLIP	
CM	11	1	**213-7315**	2	SCREW-TRUSS HEAD (M4X0.7X25-MM)	
	12	1	**1V-6688**	1	GROMMET	
	13	1	**4P-7581**	1	CLIP	
	14	1	**4P-8134**	1	CLIP	
M	15	1	**5C-9553**	3	BOLT (M6X1X16-MM)	
	16	1	**5P-4115**	3	WASHER-HARD (7.2X19X2-MM THK)	
	17	1	**8T-4121**	2	WASHER-HARD (11X21X2.5-MM THK)	
M	18	1	**8T-4138**	5	BOLT (M6X1X20-MM)	
M	19	1	**8T-4191**	2	BOLT (M10X1.5X16-MM)	
	20	1	**9X-7345**	3	GROMMET	
	21	1	**9X-8256**	5	WASHER (6.6X12X2-MM THK)	
CJ	22	1	**5P-5923**		SEAL (1-DM)	
E	23	1	**3E-6600**		SEAL (3-CM EACH)	

245-6021 **WIRING GP-CAB** ***(contd.)*** **i03592949**

B-USE AS REQUIRED
C-CHANGE FROM PREVIOUS TYPE
E-ORDER BY THE CENTIMETER
J-ORDER BY THE DECIMETER
M-METRIC PART

245-6021 **WIRING GP-CAB** *(contd.)* **i03592949**

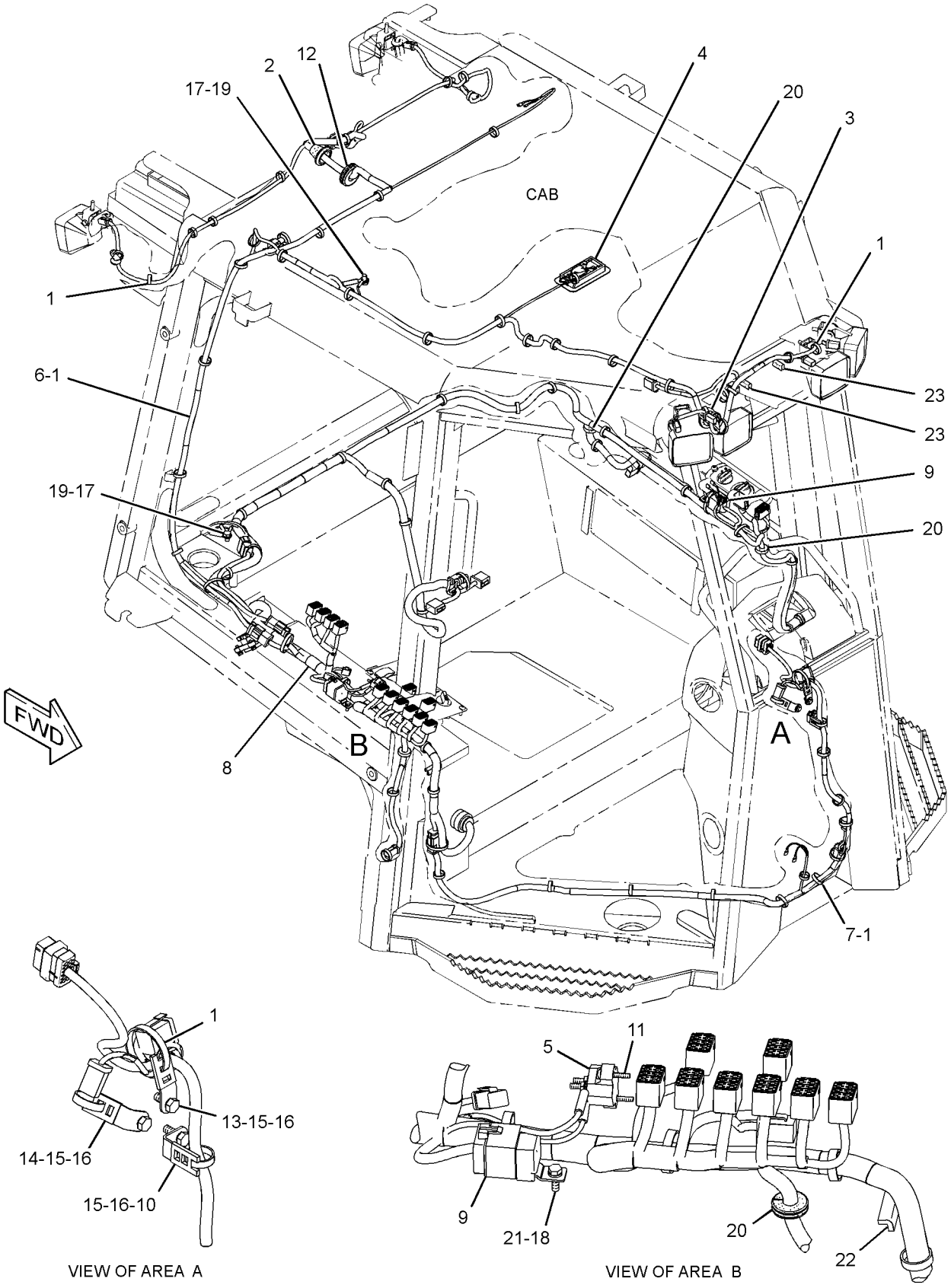

GRAPHIC #1 **<END>** g01687700

245-6047 WIRING GP-CAB–OROPS

S/N: JLF1-UP; WWW1-UP; YYY1-UP
PART OF 244-7474, 282-4897 ROPS AR
AN ATTACHMENT
TYPE 1

SMCS-1408, 7301 **i03588462**

NOTE	REF NO	GRAPHIC REF	PART NUMBER	QTY	PART NAME 1 2 3 4 5 6 (PRODUCT LEVEL)	SEE PAGE
	1	1	**7K-1181**	52	STRAP-CABLE	
	2	1	**7T-8895**	1	GROMMET	
Y	3	1	**240-0101**	2	LAMP GP-FLOOD (12-VOLT) (LONG RANGE)	156
	4	1	**245-6023**	1	HARNESS AS-CONSOLE (OROPS)	
		1	**186-3735**	10	PIN-CONNECTOR (16-GA TO 18-GA)	
		1	**9W-0852**	18	PIN-CONNECTOR (14-GA)	
		1	**9X-3401**	51	PIN-CONNECTOR (16-GA TO 18-GA)	
					–OR–	
		1	**126-1767**	51	PIN-CONNECTOR (14-GA)	
		1	**9X-1054**	1	PLUG AS-CONNECTOR (4-PIN)	
		1	**155-2255**	4	KIT-CONNECTING PLUG (12-PIN)	
		1	**155-2256**	1	KIT-CONNECTING PLUG (12-PIN)	
		1	**155-2260**	1	KIT-CONNECTING PLUG (3-PIN)	
		1	**155-2270**	1	KIT-CONNECTING PLUG (2-PIN)	
		1	**155-2271**	2	KIT-CONNECTING PLUG (4-PIN)	
		1	**155-2274**	1	KIT-CONNECTING PLUG (6-PIN)	
					(EACH PLUG KIT INCLUDES PLUG AS, WEDGE & INTERFACE SEAL)	
		1	**8T-8737**	62	PLUG-SEAL	
		1	**102-8802**	1	KIT-RECEPTACLE (2-PIN)	
		1	**102-8804**	1	KIT-RECEPTACLE (4-PIN)	
		1	**102-8801**	1	KIT-RECEPTACLE (12-PIN)	
					(EACH RECEPTACLE KIT INCLUDES RECEPTACLE AS & WEDGE)	
		1	**186-3736**	42	SOCKET-CONNECTOR (16-GA TO 18-GA)	
		1	**9W-0844**	15	SOCKET-CONNECTOR (14-GA)	
		1	**2L-8069**	2	TERMINAL (2-GA TO 10-GA)	
		1	**2L-8079**	2	TERMINAL (14-GA TO 16-GA)	
		1	**5P-4571**	2	TERMINAL-BLADE (14-GA TO 16-GA)	
		1	**091-2436**	40	TERMINAL-BLADE (18-GA TO 22-GA)	
		1	**104-1995**	2	TERMINAL-BLADE (14-GA TO 18-GA)	
		1	**9X-1055**	2	TERMINAL-RECEPTACLE	
		1	**9X-1056**	2	TERMINAL-RECEPTACLE (14-GA TO 16-GA)	
E		1	**119-3662**		TUBE-HEAT SHRINK (10.85-MM DIA) (26-CM)	
E		1	**125-7874**		TUBE-HEAT SHRINK (5.72-MM DIA) (30-CM)	
E		1	**125-7875**		TUBE-HEAT SHRINK (7.44-MM DIA) (20-CM)	
	5	1	**245-6032**	1	HARNESS AS-LIGHTING (OROPS)	
		1	**274-3774**	3	CAP-CONNECTOR	
		1	**155-2270**	7	KIT-CONNECTING PLUG (2-PIN)	
					(INCLUDES PLUG AS, WEDGE & INTERFACE SEAL)	
		1	**186-3736**	12	SOCKET-CONNECTOR (16-GA TO 18-GA)	
		1	**9W-0844**	2	SOCKET-CONNECTOR (14-GA)	
		1	**3T-4696**	1	TERMINAL (10-GA)	
E		1	**125-7874**		TUBE-HEAT SHRINK (5.72-MM DIA) (15-CM)	
E		1	**125-7875**		TUBE-HEAT SHRINK (7.44-MM DIA) (5-CM)	
	6	1	**245-6044**	1	HARNESS AS-CAB (DASH)	
		1	**186-3735**	11	PIN-CONNECTOR (16-GA TO 18-GA)	
		1	**155-2265**	1	KIT-CONNECTING PLUG (8-PIN)	
		1	**155-2260**	2	KIT-CONNECTING PLUG (3-PIN)	
		1	**155-2271**	2	KIT-CONNECTING PLUG (4-PIN)	
					(EACH PLUG KIT INCLUDES PLUG AS, WEDGE & INTERFACE SEAL)	
		1	**230-4009**	1	PLUG AS-CONNECTOR (12-PIN)	

245-6047 **WIRING GP-CAB** *(contd.)* **i03588462**

NOTE	REF NO	GRAPHIC REF	PART NUMBER	QTY	PART NAME 1 2 3 4 5 6 (PRODUCT LEVEL)	SEE PAGE
		1	**8T-8737**	21	PLUG-SEAL	
		1	**102-8806**	1	KIT-RECEPTACLE (8-PIN)	
		1	**102-8801**	1	KIT-RECEPTACLE (12-PIN)	
					(EACH RECEPTACLE KIT INCLUDES RECEPTACLE AS & WEDGE)	
		1	**134-2540**	1	RESISTOR AS (3-PIN)	
		1	**186-3736**	15	SOCKET-CONNECTOR (16-GA TO 18-GA)	
		1	**9X-3402**	7	SOCKET-CONNECTOR (16-GA TO 18-GA)	
		1	**8L-8413**	19	STRAP-CABLE	
		1	**5P-4571**	2	TERMINAL-BLADE (14-GA TO 16-GA)	
E		1	**125-7874**		TUBE-HEAT SHRINK (5.72-MM DIA) (35-CM)	
	7	1	**115-1615**	1	RELAY AS (12-VOLT) (BLOWER)	
	8	1	**132-5789**	1	CLIP	
Y	9	1	**240-0102**	4	LAMP GP-FLOOD (12-VOLT)	157
	10	1	**4P-7581**	1	CLIP	
	11	1	**4P-8134**	1	CLIP	
	12	1	**8T-4121**	2	WASHER-HARD (11X21X2.5-MM THK)	
M	13	1	**8T-4138**	5	BOLT (M6X1X20-MM)	
M	14	1	**8T-4189**	6	BOLT (M8X1.25X20-MM)	
M	15	1	**8T-4191**	2	BOLT (M10X1.5X16-MM)	
	17	1	**8T-4224**	6	WASHER-HARD (8.8X16X2-MM THK)	
	18	1	**9X-7345**	1	GROMMET	
	19	1	**9X-8256**	5	WASHER (6.6X12X2-MM THK)	
M	20	1	**5C-9553**	3	BOLT (M6X1X16-MM)	
	21	1	**5P-4115**	3	WASHER-HARD (7.2X19X2-MM THK)	

E-ORDER BY THE CENTIMETER
M-METRIC PART
Y-SEPARATE ILLUSTRATION

245-6047 **WIRING GP-CAB** *(contd.)* **i03588462**

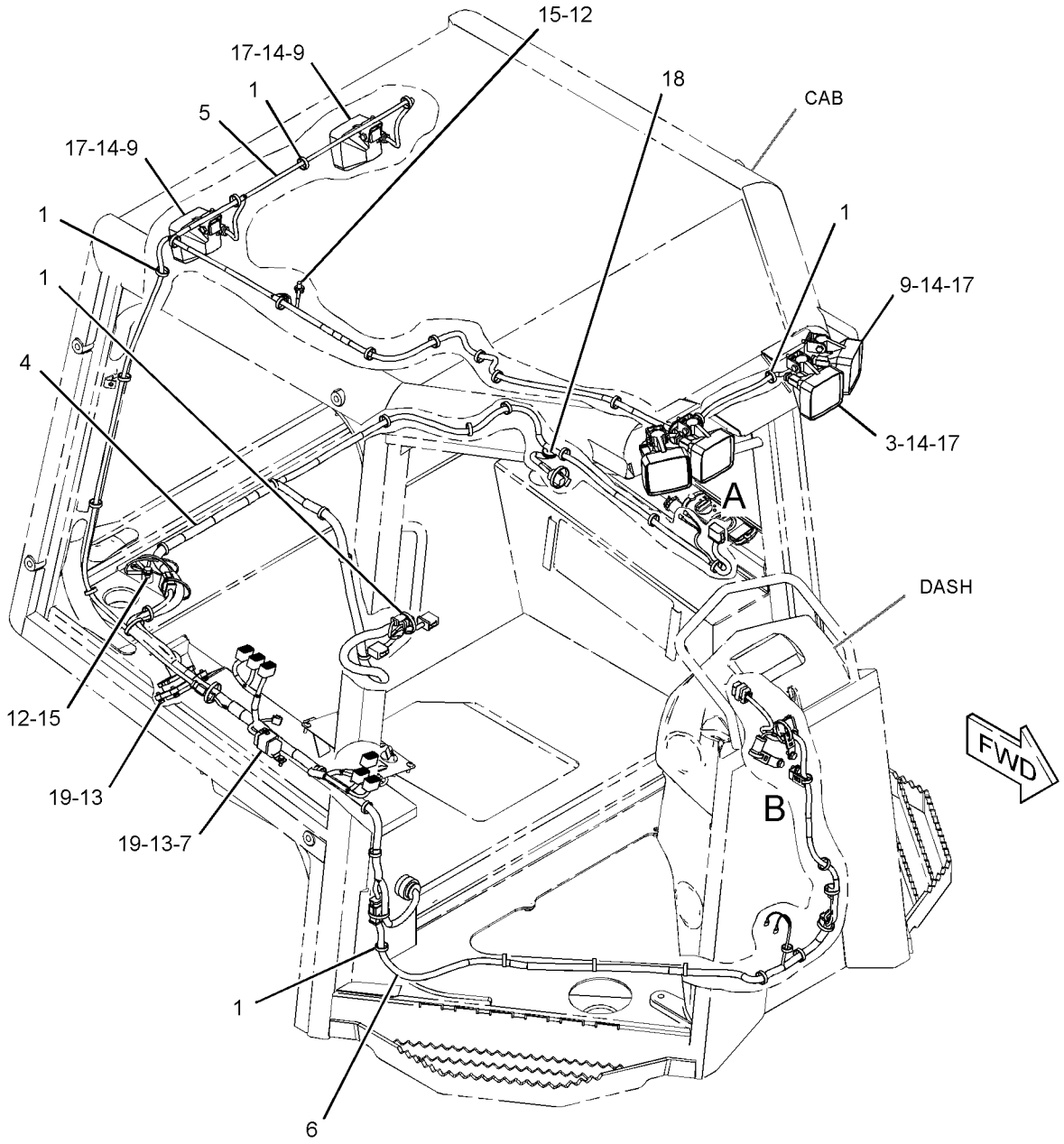

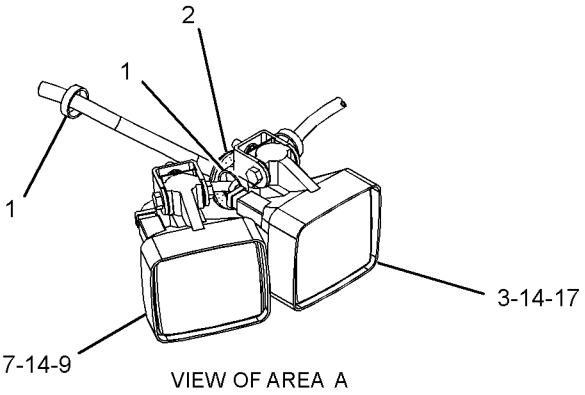

VIEW OF AREA A

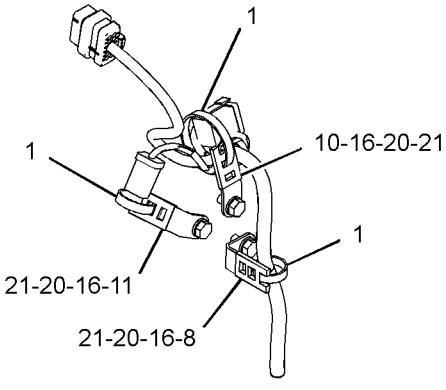

VIEW OF AREA B

GRAPHIC #1 **<END>** g01365610

245-6047 WIRING GP-CAB–OROPS

S/N: JLF1-UP; WWW1-UP; YYY1-UP
PART OF 244-7474, 282-4897 ROPS AR
AN ATTACHMENT
TYPE 2

SMCS-1408, 7301 **i03590503**

NOTE	REF NO	GRAPHIC REF	PART NUMBER	QTY	PART NAME 1 2 3 4 5 6 (PRODUCT LEVEL)	SEE PAGE
C	1	1	**7K-1181**	53	STRAP-CABLE	
	2	1	**7T-8895**	1	GROMMET	
	3	1	**245-6032**	1	HARNESS AS-LIGHTING (OROPS)	
		1	**274-3774**	3	CAP-CONNECTOR	
		1	**155-2270**	7	KIT-CONNECTING PLUG (2-PIN)	
					(INCLUDES PLUG AS, WEDGE & INTERFACE SEAL)	
		1	**186-3736**	12	SOCKET-CONNECTOR (16-GA TO 18-GA)	
		1	**9W-0844**	2	SOCKET-CONNECTOR (14-GA)	
		1	**3T-4696**	1	TERMINAL (10-GA)	
E		1	**125-7874**		TUBE-HEAT SHRINK (5.72-MM DIA) (15-CM)	
E		1	**125-7875**		TUBE-HEAT SHRINK (7.44-MM DIA) (5-CM)	
	4	1	**245-6044**	1	HARNESS AS-CAB (DASH)	
		1	**186-3735**	11	PIN-CONNECTOR (16-GA TO 18-GA)	
		1	**155-2265**	1	KIT-CONNECTING PLUG (8-PIN)	
		1	**155-2260**	2	KIT-CONNECTING PLUG (3-PIN)	
		1	**155-2271**	2	KIT-CONNECTING PLUG (4-PIN)	
					(EACH PLUG KIT INCLUDES PLUG AS, WEDGE & INTERFACE SEAL)	
		1	**230-4009**	1	PLUG AS-CONNECTOR (12-PIN)	
		1	**8T-8737**	21	PLUG-SEAL	
		1	**102-8806**	1	KIT-RECEPTACLE (8-PIN)	
		1	**102-8801**	1	KIT-RECEPTACLE (12-PIN)	
					(EACH RECEPTACLE KIT INCLUDES RECEPTACLE AS & WEDGE)	
		1	**134-2540**	1	RESISTOR AS (3-PIN)	
		1	**186-3736**	15	SOCKET-CONNECTOR (16-GA TO 18-GA)	
		1	**9X-3402**	7	SOCKET-CONNECTOR (16-GA TO 18-GA)	
		1	**8L-8413**	19	STRAP-CABLE	
		1	**5P-4571**	2	TERMINAL-BLADE (14-GA TO 16-GA)	
E		1	**125-7874**		TUBE-HEAT SHRINK (5.72-MM DIA) (35-CM)	
C	5	1	**311-0293**	1	HARNESS AS-CONSOLE (OROPS)	
		1	**228-5856**	8	CONNECTOR	
		1	**213-0139**	4	PIN	
		1	**186-3735**	10	PIN-CONNECTOR (16-GA TO 18-GA)	
		1	**9W-0852**	18	PIN-CONNECTOR (14-GA)	
		1	**9X-3401**	57	PIN-CONNECTOR (16-GA TO 18-GA)	
		1	**126-1767**	57	PIN-CONNECTOR (14-GA)	
		1	**9X-1054**	1	PLUG AS-CONNECTOR (4-PIN)	
		1	**155-2255**	4	KIT-CONNECTING PLUG (12-PIN)	
		1	**155-2256**	1	KIT-CONNECTING PLUG (12-PIN)	
		1	**155-2260**	1	KIT-CONNECTING PLUG (3-PIN)	
		1	**155-2270**	1	KIT-CONNECTING PLUG (2-PIN)	
		1	**155-2271**	2	KIT-CONNECTING PLUG (4-PIN)	
		1	**155-2274**	1	KIT-CONNECTING PLUG (6-PIN)	
		1	**177-9656**	1	KIT-CONNECTING PLUG (4-PIN)	
					(EACH PLUG KIT INCLUDES PLUG AS, WEDGE & INTERFACE SEAL)	
		1	**225-3854**	1	PLUG AS	
		1	**8T-8737**	56	PLUG-SEAL	
		1	**102-8802**	1	KIT-RECEPTACLE (2-PIN)	
		1	**102-8804**	1	KIT-RECEPTACLE (4-PIN)	
					(EACH RECEPTACLE KIT INCLUDES RECEPTACLE AS & WEDEGE)	
		1	**214-4208**	1	RECEPTACLE AS-CONNECTOR (70-PIN)	

245-6047 **WIRING GP-CAB** ***(contd.)*** **i03590503**

NOTE	REF NO	GRAPHIC REF	PART NUMBER	QTY	PART NAME 1 2 3 4 5 6 (PRODUCT LEVEL)	SEE PAGE
		1	**186-3736**	42	SOCKET-CONNECTOR (16-GA TO 18-GA)	
		1	**9W-0844**	15	SOCKET-CONNECTOR (14-GA)	
		1	**2L-8069**	2	TERMINAL (2-GA TO 10-GA)	
		1	**2L-8079**	2	TERMINAL (14-GA TO 16-GA)	
		1	**5P-4571**	2	TERMINAL-BLADE (14-GA TO 16-GA)	
		1	**091-2436**	54	TERMINAL-BLADE (18-GA TO 22-GA)	
		1	**104-1995**	2	TERMINAL-BLADE (14-GA TO 18-GA)	
		1	**9X-1055**	2	TERMINAL-RECEPTACLE	
		1	**9X-1056**	2	TERMINAL-RECEPTACLE (14-GA TO 16-GA)	
E		1	**119-3662**		TUBE-HEAT SHRINK (10.85-MM DIA) (26-CM)	
E		1	**125-7874**		TUBE-HEAT SHRINK (5.72-MM DIA) (30-CM)	
E		1	**125-7875**		TUBE-HEAT SHRINK (7.44-MM DIA) (20-CM)	
	6	1	**115-1615**	1	RELAY AS (12-VOLT) (BLOWER)	
	7	1	**132-5789**	1	CLIP	
	8	1	**4P-7581**	1	CLIP	
	9	1	**4P-8134**	1	CLIP	
M	10	1	**5C-9553**	3	BOLT (M6X1X16-MM)	
	11	1	**5P-4115**	3	WASHER-HARD (7.2X19X2-MM THK)	
	12	1	**8T-4121**	2	WASHER-HARD (11X21X2.5-MM THK)	
M	13	1	**8T-4138**	5	BOLT (M6X1X20-MM)	
M	14	1	**8T-4191**	2	BOLT (M10X1.5X16-MM)	
	15	1	**9X-7345**	1	GROMMET	
	16	1	**9X-8256**	5	WASHER (6.6X12X2-MM THK)	

C-CHANGE FROM PREVIOUS TYPE
E-ORDER BY THE CENTIMETER
M-METRIC PART

245-6047 **WIRING GP-CAB** *(contd.)* **i03590503**

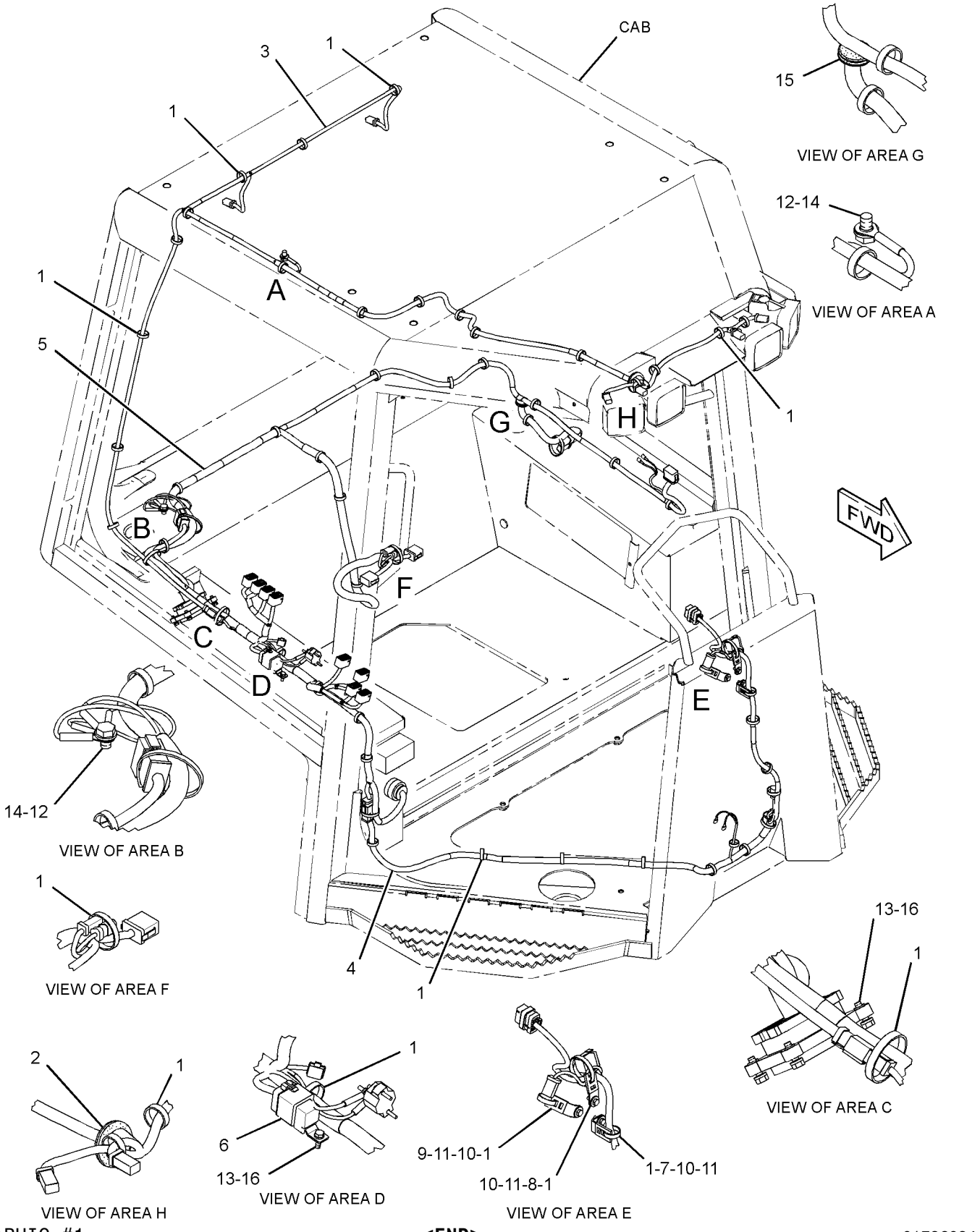

GRAPHIC #1 **<END>** g01736034

245-6047 WIRING GP-CAB–OROPS

S/N: JLF1-UP; WWW1-UP; YYY1-UP
PART OF 244-7474, 282-4897 ROPS AR
AN ATTACHMENT
TYPE 3

SMCS-1408, 7301 **i03590607**

NOTE	REF NO	GRAPHIC REF	PART NUMBER	QTY	PART NAME 1 2 3 4 5 6 (PRODUCT LEVEL)	SEE PAGE
C	1	1	**7K-1181**	55	STRAP-CABLE	
	2	1	**7T-8895**	1	GROMMET	
C	3	1	**229-8377**	1	CIRCUIT BREAKER AS (35-AMPERE) (LONG RANGE)	
		1	**6V-8378**	2	NUT (10-32-THD)	
		1	**8F-1434**	2	LOCKWASHER	
		1	**8T-0328**	2	WASHER-HARD (5.5X10X1-MM THK)	
C	4	1	**318-6094**	1	HARNESS AS-CAB (OROPS)	
		1	**228-5856**	8	CONNECTOR	
		1	**213-0139**	4	PIN	
		1	**186-3735**	10	PIN-CONNECTOR (16-GA TO 18-GA)	
		1	**9W-0852**	18	PIN-CONNECTOR (14-GA)	
		1	**9X-3401**	57	PIN-CONNECTOR (16-GA TO 18-GA)	
					–OR–	
		1	**126-1767**	57	PIN-CONNECTOR (14-GA)	
		1	**9X-1054**	1	PLUG AS-CONNECTOR (4-PIN)	
		1	**155-2255**	4	KIT-CONNECTING PLUG (12-PIN)	
		1	**155-2256**	1	KIT-CONNECTING PLUG (12-PIN)	
		1	**155-2260**	1	KIT-CONNECTING PLUG (3-PIN)	
		1	**155-2270**	1	KIT-CONNECTING PLUG (2-PIN)	
		1	**155-2272**	2	PLUG AS-CONNECTOR (4-PIN)	
		1	**155-2274**	1	KIT-CONNECTING PLUG (6-PIN)	
		1	**177-9656**	1	KIT-CONNECTING PLUG (4-PIN)	
		1	**225-3854**	1	PLUG AS	
		1	**8T-8737**	56	PLUG-SEAL	
		1	**102-8802**	1	KIT-RECEPTACLE (2-PIN)	
		1	**102-8804**	1	KIT-RECEPTACLE (4-PIN)	
		1	**102-8801**	1	KIT-RECEPTACLE (12-PIN)	
		1	**214-4208**	1	RECEPTACLE AS-CONNECTOR (70-PIN)	
		1	**186-3736**	42	SOCKET-CONNECTOR (16-GA TO 18-GA)	
		1	**9W-0844**	15	SOCKET-CONNECTOR (14-GA)	
B		1	**141-8061**		TAPE	
		1	**2L-8069**	2	TERMINAL (2-GA TO 10-GA)	
		1	**2L-8079**	2	TERMINAL (14-GA TO 16-GA)	
		1	**5P-4571**	2	TERMINAL-BLADE (14-GA TO 16-GA)	
		1	**2L-8066**	2	TERMINAL-RING (10-GA TO 12-GA, NO. 10 SCREW)	
		1	**091-2436**	54	TERMINAL-BLADE (18-GA TO 22-GA)	
		1	**104-1995**	2	TERMINAL-BLADE (14-GA TO 18-GA)	
		1	**9X-1055**	2	TERMINAL-RECEPTACLE	
	5	1	**245-6032**	1	HARNESS AS-LIGHTING (OROPS)	
		1	**274-3774**	3	CAP-CONNECTOR	
		1	**155-2270**	7	KIT-CONNECTING PLUG (2-PIN)	
					(INCLUDES PLUG AS, WEDGE & INTERFACE SEAL)	
		1	**186-3736**	12	SOCKET-CONNECTOR (16-GA TO 18-GA)	
		1	**9W-0844**	2	SOCKET-CONNECTOR (14-GA)	
		1	**3T-4696**	1	TERMINAL (10-GA)	
E		1	**125-7874**		TUBE-HEAT SHRINK (5.72-MM DIA) (15-CM)	
E		1	**125-7875**		TUBE-HEAT SHRINK (7.44-MM DIA) (5-CM)	
	6	1	**245-6044**	1	HARNESS AS-CAB (DASH)	
		1	**186-3735**	11	PIN-CONNECTOR (16-GA TO 18-GA)	
		1	**155-2265**	1	KIT-CONNECTING PLUG (8-PIN)	
		1	**155-2260**	2	KIT-CONNECTING PLUG (3-PIN)	

245-6047 **WIRING GP-CAB** ***(contd.)*** **i03590607**

NOTE	REF NO	GRAPHIC REF	PART NUMBER	QTY	PART NAME 1 2 3 4 5 6 (PRODUCT LEVEL)	SEE PAGE
		1	**155-2271**	2	KIT-CONNECTING PLUG (4-PIN)	
					(EACH PLUG KIT INCLUDES PLUG AS, WEDGE & INTERFACE SEAL)	
		1	**230-4009**	1	PLUG AS-CONNECTOR (12-PIN)	
		1	**8T-8737**	21	PLUG-SEAL	
		1	**102-8806**	1	KIT-RECEPTACLE (8-PIN)	
		1	**102-8801**	1	KIT-RECEPTACLE (12-PIN)	
					(EACH RECEPTACLE KIT INCLUDES RECEPTACLE AS & WEDGE)	
		1	**134-2540**	1	RESISTOR AS (3-PIN)	
		1	**186-3736**	15	SOCKET-CONNECTOR (16-GA TO 18-GA)	
		1	**9X-3402**	7	SOCKET-CONNECTOR (16-GA TO 18-GA)	
		1	**8L-8413**	19	STRAP-CABLE	
		1	**5P-4571**	2	TERMINAL-BLADE (14-GA TO 16-GA)	
E		1	**125-7874**		TUBE-HEAT SHRINK (5.72-MM DIA) (35-CM)	
	7	1	**115-1615**	1	RELAY AS (12-VOLT) (BLOWER)	
	8	1	**132-5789**	1	CLIP	
	9	1	**5P-4115**	3	WASHER-HARD (7.2X19X2-MM THK)	
	10	1	**4P-7581**	1	CLIP	
	11	1	**4P-8134**	1	CLIP	
	12	1	**8T-4121**	2	WASHER-HARD (11X21X2.5-MM THK)	
M	13	1	**8T-4138**	5	BOLT (M6X1X20-MM)	
CM	14	1	**213-7315**	2	SCREW-TRUSS HEAD (M4X0.7X25-MM)	
M	15	1	**8T-4191**	2	BOLT (M10X1.5X16-MM)	
CD	16	1	**5P-0801**		SEAL (0.1-M)	
C	17	1	**3S-2093**	2	STRAP-CABLE	
	18	1	**9X-7345**	1	GROMMET	
	19	1	**9X-8256**	5	WASHER (6.6X12X2-MM THK)	
M	20	1	**5C-9553**	3	BOLT (M6X1X16-MM)	

B-USE AS REQUIRED
C-CHANGE FROM PREVIOUS TYPE
D-ORDER BY THE METER
E-ORDER BY THE CENTIMETER
M-METRIC PART

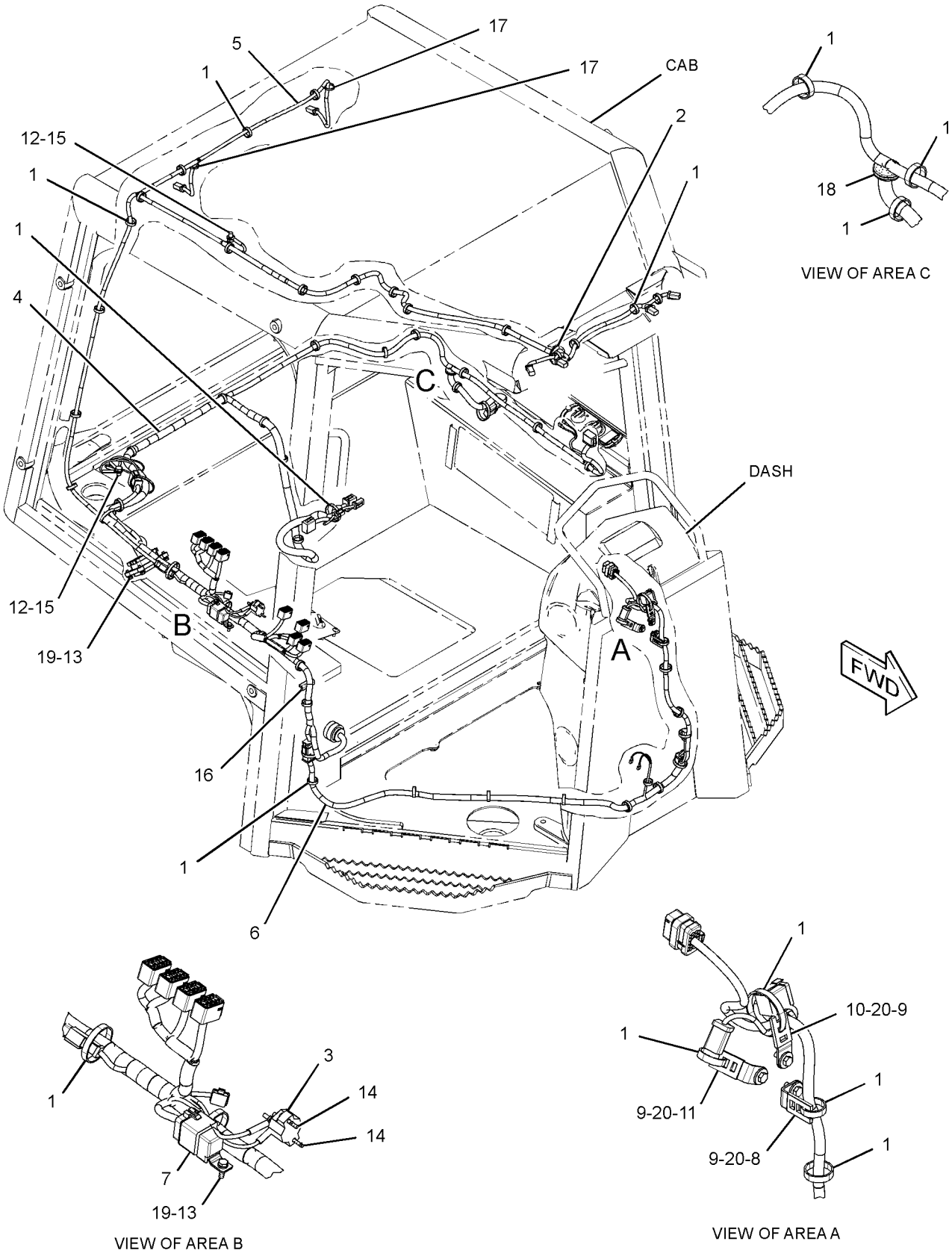

GRAPHIC #1 **<END>** g01733574

ELECTRICAL AND STARTING SYSTEM

245-6027 WIRING GP-ELECTROHYDRAULIC

S/N: JLF1-UP; WWW1-UP; YYY1-UP

PART OF 244-7380, 244-7381, 282-5328 CHASSIS AR

SMCS-5734 **i03597163**

NOTE	REF NO	GRAPHIC REF	PART NUMBER	QTY	PART NAME 1 2 3 4 5 6 (PRODUCT LEVEL)	SEE PAGE
	1	1	**7K-1181**	16	STRAP-CABLE	
M	2	1	**112-6646**	4	LOCKNUT (M6X1-THD)	
	3	1	**130-5300**	2	CLIP	
	4	1	**269-7656**	1	HARNESS AS-SENSOR (ARMREST, LH)	
		1	**9X-3401**	9	PIN-CONNECTOR (16-GA TO 18-GA)	
					—OR—	
		1	**126-1767**	9	PIN-CONNECTOR (14-GA)	
		1	**155-2274**	1	KIT-CONNECTING PLUG (6-PIN)	
					(INCLUDES PLUG AS, WEDGE & INTERFACE SEAL)	
		1	**230-4009**	1	PLUG AS-CONNECTOR (12-PIN)	
		1	**264-7034**	1	SEAL-CONNECTOR	
		1	**8T-8737**	10	PLUG-SEAL	
		1	**102-8801**	1	KIT-RECEPTACLE (12-PIN)	
					(INCLUDES RECEPTACLE AS & WEDGE)	
		1	**9X-3402**	7	SOCKET-CONNECTOR (16-GA TO 18-GA)	
		1	**180-9340**	4	SOCKET-CONNECTOR (14-GA TO 18-GA)	
E		1	**125-7874**		TUBE-HEAT SHRINK (5.72-MM DIA) (10-CM)	
	5	1	**269-7657**	1	HARNESS AS-SENSOR (ARMREST, RH)	
		1	**9X-3401**	10	PIN-CONNECTOR (16-GA TO 18-GA)	
					—OR—	
		1	**126-1767**	10	PIN-CONNECTOR (14-GA)	
		1	**230-4009**	1	PLUG AS-CONNECTOR (12-PIN)	
		1	**230-5010**	1	PLUG AS-CONNECTOR (6-PIN)	
					(EACH PLUG AS CONNECTOR INCLUDES)	
		1	**264-7032**	1	SEAL-CONNECTOR	
		1	**8T-8737**	8	PLUG-SEAL	
		1	**190-7614**	1	KIT-RECEPTACLE (12-PIN)	
					(INCLUDES RECEPTACLE AS & WEDGE)	
		1	**9X-3402**	12	SOCKET-CONNECTOR (16-GA TO 18-GA)	
E		1	**125-7874**		TUBE-HEAT SHRINK (5.72-MM DIA) (10-CM)	
	6	1	**270-7882**	1	FILM-INSTRUCTION (BULLDOZER, STER, CRUISE CNTL)	
Y	7	1	**290-4835**	1	CONTROL GP-JOYSTICK (STEERING, TRANSMISSION)	495
	8	1	**132-5789**	1	CLIP	
	9	1	**4P-7428**	2	CLIP	
M	10	1	**5C-7261**	3	NUT (M8X1.25-THD)	
M	11	1	**3E-8020**	4	SCREW-TRUSS HEAD (M6X1X25-MM)	
	12	1	**8T-4224**	3	WASHER-HARD (8.8X16X2-MM THK)	
M	13	1	**8T-4908**	3	BOLT (M8X1.25X25-MM)	
	14	1	**4P-7581**	2	CLIP	

E-ORDER BY THE CENTIMETER
M-METRIC PART
Y-SEPARATE ILLUSTRATION

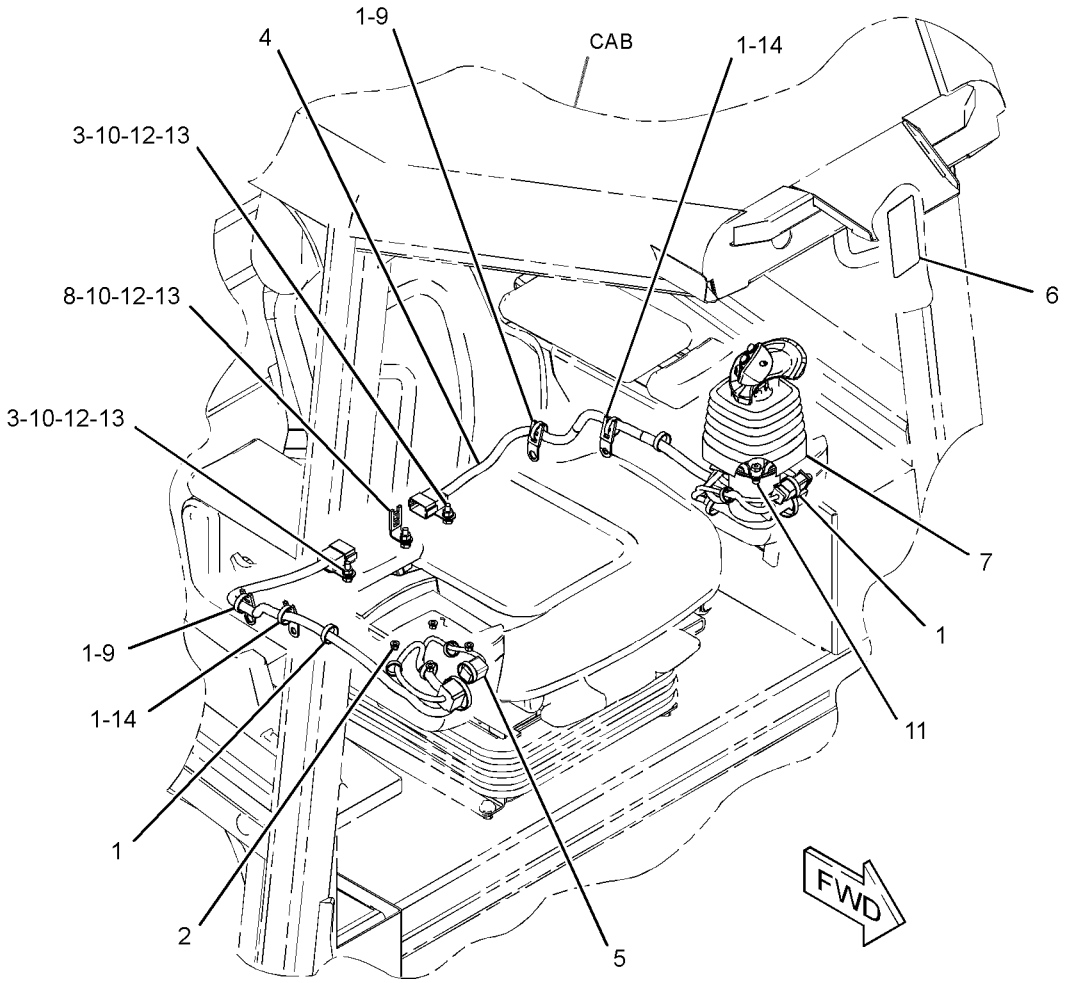

GRAPHIC #1 **<END>** g01689446

ELECTRICAL AND STARTING SYSTEM

245-6019 WIRING GP-ENGINE

S/N: JLF1-UP; WWW1-UP; YYY1-UP

PART OF 244-7380, 244-7381, 282-5328 CHASSIS AR

SMCS-1000, 1408 **i03595800**

NOTE	REF NO	GRAPHIC REF	PART NUMBER	QTY	PART NAME 1 2 3 4 5 6 (PRODUCT LEVEL)	SEE PAGE
D	1	2	**6V-1359**		SEAL (0.1-M)	
	2	1	**7G-1060**	1	STRAP AS-GROUND	
	3	1,2	**7K-1181**	55	STRAP-CABLE	
	4	1	**8T-8799**	3	BOOT	
D	5	1	**8T-3425**		CHANNEL-TRIM (0.1-M)	
	6	1	**116-6680**	1	SENSOR AS-SPEED (ENGINE)	
E		1	**9X-1386**		SLEEVE (14-CM)	
		1	**171-5349**	1	STRAP-MARKER	
		1	**9X-3401**	2	PIN-CONNECTOR (16-GA TO 18-GA)	
					—OR—	
		1	**126-1767**	2	PIN-CONNECTOR (14-GA)	
		1	**102-8802**	1	KIT-RECEPTACLE (2-PIN)	
					(INCLUDES RECEPTACLE AS & WEDGE)	
	7	1,2	**204-2281**	2	STRAP-TIE	
	8	2	**243-5027**	1	NUT AS (M6X1-THD)	
Y	9	2	**245-6040**	1	HARNESS AS-ENGINE	144
	10	2	**249-9072**	1	CABLE AS (ALTERNATOR)	
E		2	**8C-3056**		CABLE (2-GA, RED) (59-CM)	
	11	2	**269-7648**	1	HARNESS AS-WIRING	
		2	**9W-0852**	2	PIN-CONNECTOR (14-GA)	
		2	**155-2270**	1	KIT-CONNECTING PLUG (2-PIN)	
					(INCLUDES PLUG AS, WEDGE & INTERFACE SEAL)	
		2	**102-8802**	1	KIT-RECEPTACLE (2-PIN)	
					(INCLUDES RECEPTACLE AS & WEDGE)	
		2	**9W-0844**	2	SOCKET-CONNECTOR (14-GA)	
	12	1	**269-7652**	1	PLATE AS	
	13	1	**269-7669**	1	PLATE	
	14	1	**269-7677**	1	PLATE	
	15	2	**301-9819**	1	BRACKET AS	
	16	1	**115-1615**	1	RELAY AS (12-VOLT) (START)	
	17	1	**164-9425**	1	HORN AS (24-VOLT, LOW TONE)	
	18	1,2	**204-8000**	2	MOUNT (TIE WRAP)	
Y	19	1	**275-0490**	1	RELAY GP (12-VOLT) (STARTING AID HEATER)	177
	20	1	**1H-3244**	2	LOCKWASHER	
	21	1	**1L-5081**	1	SPACER (0.41X0.75X0.56-IN THK)	
	22	1	**3S-2093**	5	STRAP-CABLE	
	23	1	**4P-7428**	1	CLIP	
	24	1	**4P-7429**	1	CLIP	
	25	1,2	**4P-7581**	3	CLIP	
	26	1,2	**4P-8134**	8	CLIP	
M	27	2	**5C-2874**	2	NUT (M5X0.8-THD)	
M	28	1	**5C-2890**	3	NUT (M6X1-THD)	
M	29	1	**5C-7261**	1	NUT (M8X1.25-THD)	
	30	2	**5P-8439**	2	GROMMET	
	31	1	**7X-0579**	1	WASHER-HARD (8.8X25.5X2-MM THK)	
M	32	1	**7X-2536**	1	BOLT (M8X1.25X14-MM)	
M	33	1	**191-7503**	1	BOLT (M12X1.75X16-MM)	
	34	1	**7X-7729**	1	WASHER (11X25X3-MM THK)	
	35	2	**8F-1434**	2	LOCKWASHER	
	36	2	**8T-0328**	2	WASHER-HARD (5.5X10X1-MM THK)	
	37	1,2	**8T-4121**	9	WASHER-HARD (11X21X2.5-MM THK)	
M	38	1,2	**8T-4136**	2	BOLT (M10X1.5X25-MM)	
M	39	1	**8T-4137**	1	BOLT (M10X1.5X20-MM)	
M	40	1,2	**8T-4191**	5	BOLT (M10X1.5X16-MM)	
M	41	1,2	**8T-4192**	4	BOLT (M12X1.75X25-MM)	

245-6019 **WIRING GP-ENGINE** *(contd.)* **i03595800**

NOTE	REF NO	GRAPHIC REF	PART NUMBER	QTY	PART NAME 1 2 3 4 5 6 (PRODUCT LEVEL)	SEE PAGE
M	42	1	**8T-4199**	1	BOLT (M8X1.25X12-MM)	
	43	1,2	**8T-4223**	5	WASHER-HARD (13.5X25.5X3-MM THK)	
	44	1	**8T-4224**	3	WASHER-HARD (8.8X16X2-MM THK)	
M	45	1	**8T-4971**	1	BOLT (M6X1X30-MM)	
M	46	1	**9X-2480**	1	BOLT (M6X1X45-MM)	
	47	1	**9X-8256**	4	WASHER (6.6X12X2-MM THK)	
E	48	2	**7I-7439**		GUARD (48-CM)	
	49	2	**091-0081**	2	SPACER (10.5X20X10-MM THK)	
M	50	2	**8T-4186**	1	BOLT (M10X1.5X40-MM)	
M	51	2	**8T-4196**	1	BOLT (M10X1.5X35-MM)	

D-ORDER BY THE METER
E-ORDER BY THE CENTIMETER
M-METRIC PART
Y-SEPARATE ILLUSTRATION

245-6019 **WIRING GP-ENGINE** *(contd.)* **i03595800**

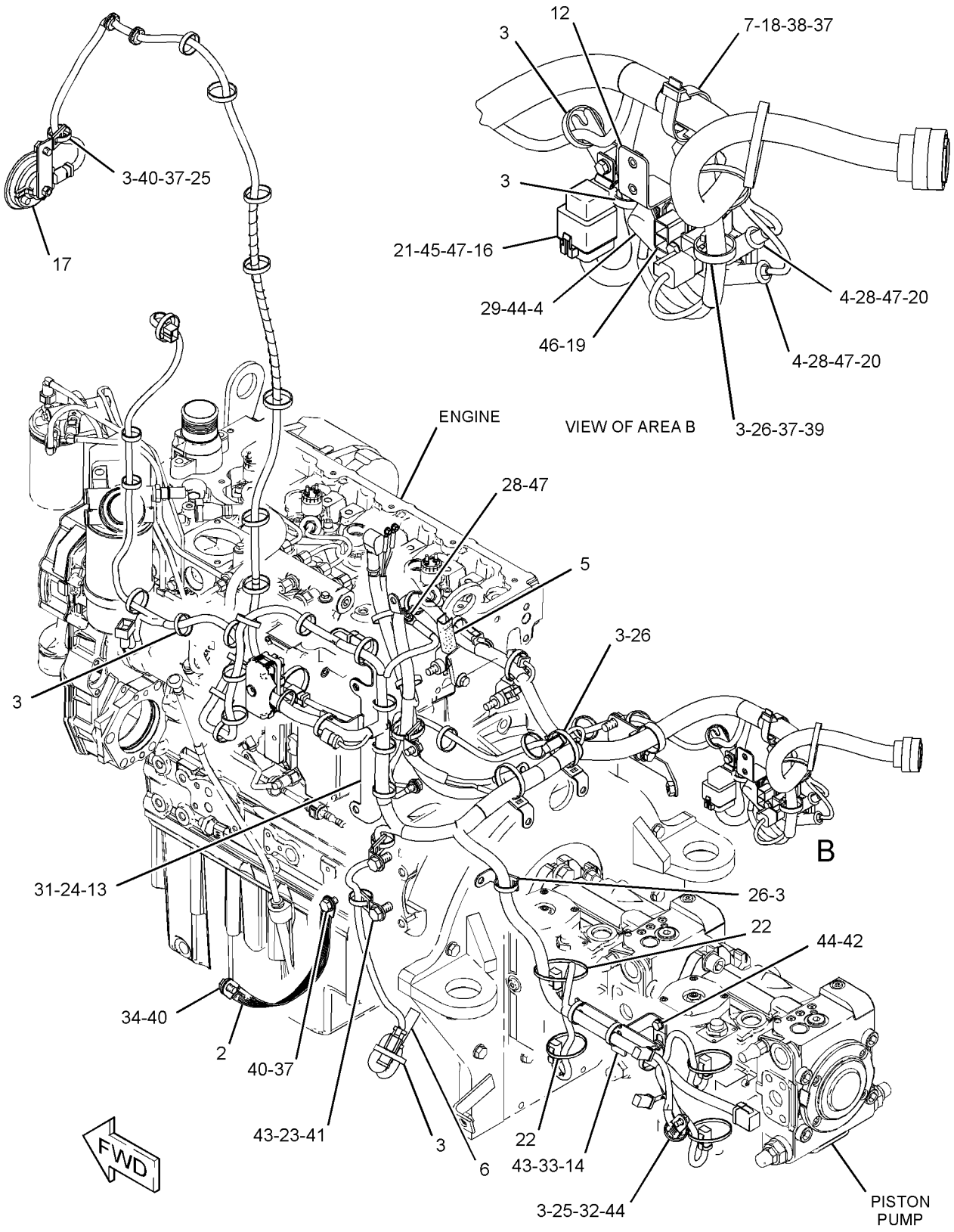

GRAPHIC #1 g01613693

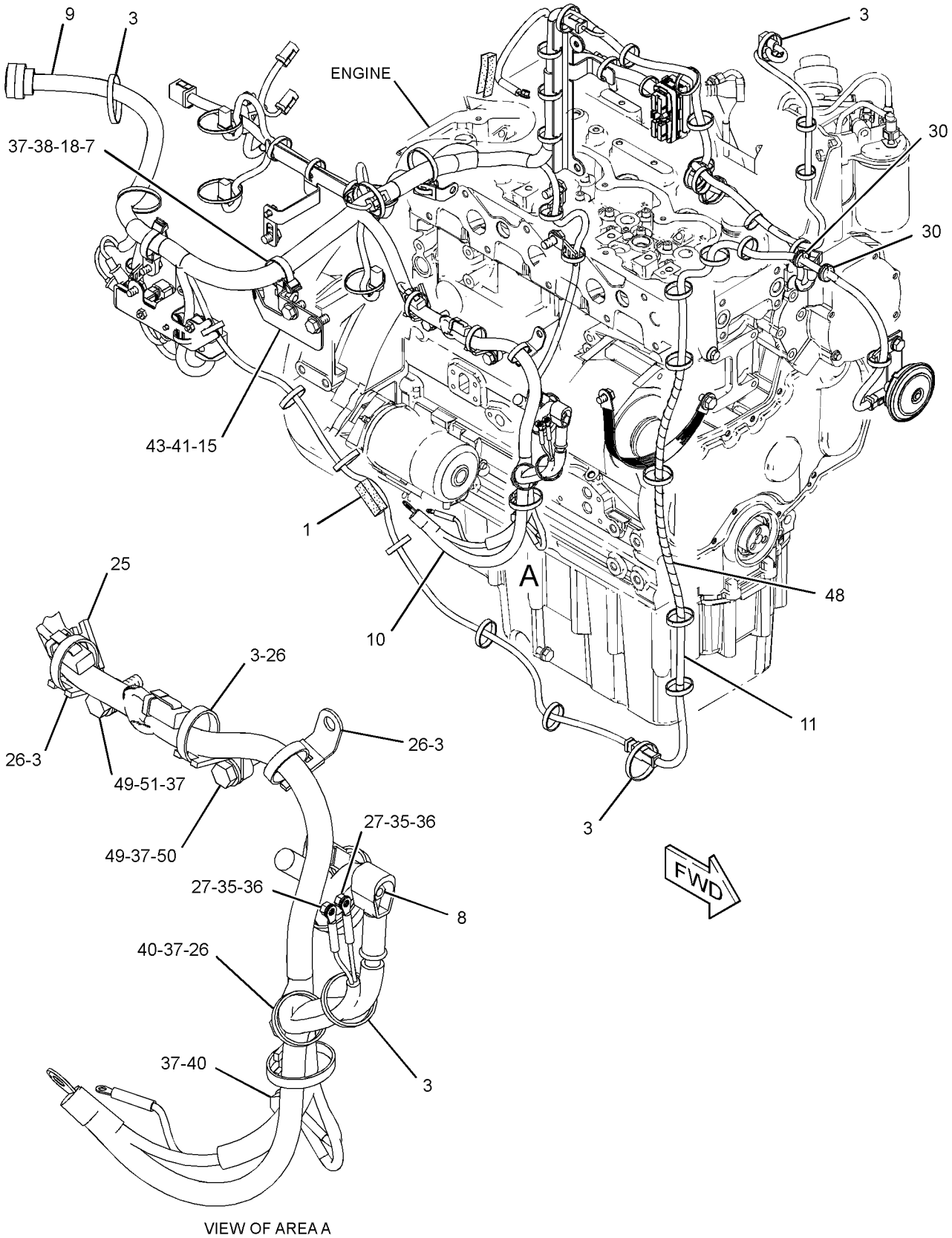

VIEW OF AREA A

GRAPHIC #2 **<END>** g01527798

ELECTRICAL AND STARTING SYSTEM

299-5092 WIRING GP-ENGINE

S/N: C4E1-238

PART OF 254-9233 ENGINE AR-PRIMARY

SMCS-1000, 1408 **i02656765**

NOTE	REF NO	GRAPHIC REF	PART NUMBER	QTY	PART NAME 1 2 3 4 5 6 (PRODUCT LEVEL)	SEE PAGE
	1	1	**288-0526**	1	HARNESS AS-ENGINE	
	2	1	**298-4605**	1	BRACKET	
M	3	1	**124-3815**	3	BOLT (M8X16X1.25-MM)	
	4	1	**217-8477**	1	CLIP	
	5	1	**298-4606**	1	BRACKET	
	6	1	**298-4607**	1	BRACKET	
	7	1	**217-9039**	3	STRAP-CABLE	

M-METRIC PART

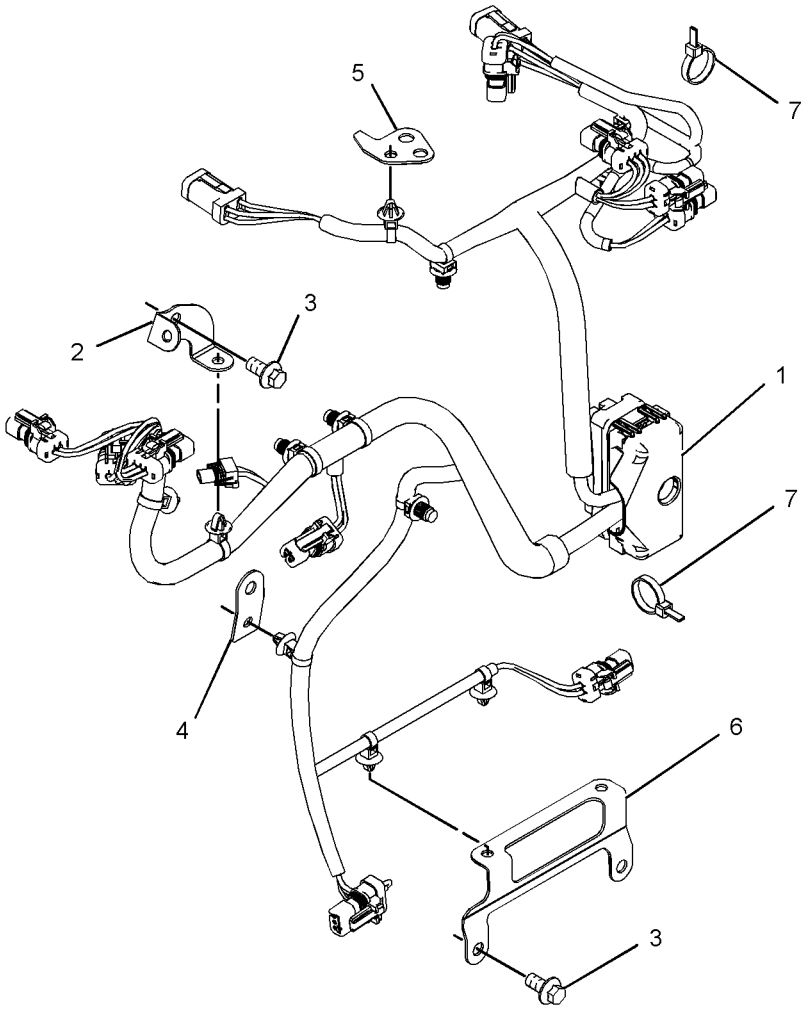

GRAPHIC #1 **<END>** g01337588

299-5092 WIRING GP-ENGINE

S/N: C4E239-UP

PART OF 254-9233 ENGINE AR-PRIMARY

SMCS-1000, 1408 **i03568854**

NOTE	REF NO	GRAPHIC REF	PART NUMBER	QTY	PART NAME 1 2 3 4 5 6 (PRODUCT LEVEL)	SEE PAGE
CM	1	1	**124-3815**	1	BOLT (M8X16X1.25-MM)	
	2	1	**217-9039**	3	STRAP-CABLE	
	3	1	**346-1449**	1	BRACKET	
C	4	1	**304-5165**	1	HARNESS AS-ENGINE	

C-CHANGE FROM PREVIOUS TYPE
M-METRIC PART

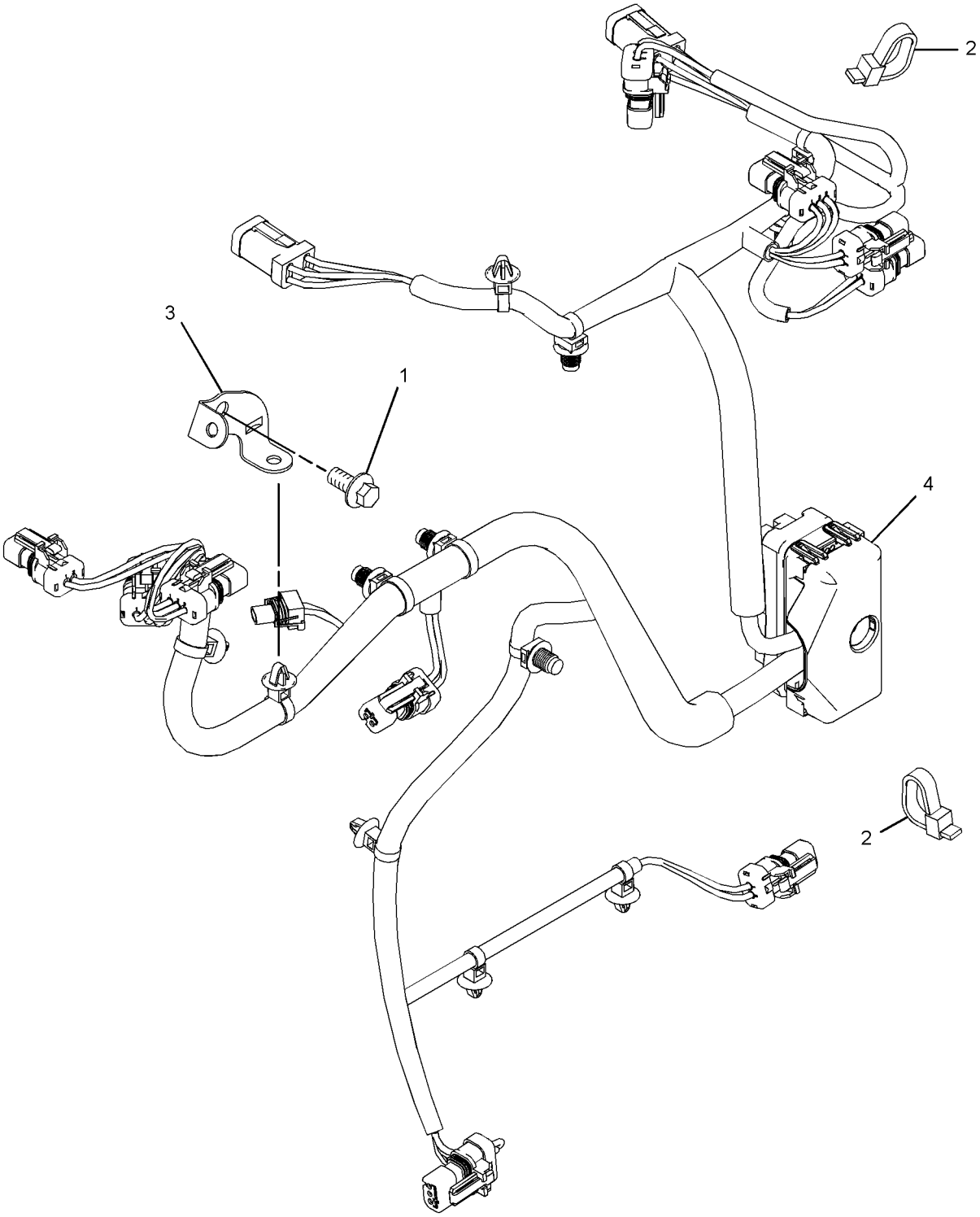

GRAPHIC #1 **<END>** g01922053

245-6029 WIRING GP-GRADE CONTROL–FULL

S/N: JLF1-170; WWW1-157; YYY1-163
PART OF 296-5755, 296-5756 GRADE CONTROL AR
AN ATTACHMENT

SMCS-1408 **i03590723**

NOTE	REF NO	GRAPHIC REF	PART NUMBER	QTY	PART NAME 1 2 3 4 5 6 (PRODUCT LEVEL)	SEE PAGE
	1	1,2	**7K-1181**	64	STRAP-CABLE	
	2	1	**8C-5607**	6	MOUNT-ISOLATION	
	3	1	**8C-5608**	3	SPACER (6.5X9.5X25.4-MM THK)	
	4	2	**132-8487**	3	NUT-RING	
	5	2	**167-8712**	1	ALARM	
	6	2	**226-9169**	1	MODULE AS-POWER SUPPLY	
	7	2	**236-8826**	3	BOSS (1-1/8-18XO.708-IN)	
	8	1	**245-6030**	1	HARNESS AS-DASH (GRADE CONTROL)	
		1	**9X-3401**	6	PIN-CONNECTOR (16-GA TO 18-GA)	
		1	**186-3735**	4	PIN-CONNECTOR (16-GA TO 18-GA)	
		1	**9W-0852**	2	PIN-CONNECTOR (14-GA)	
		1	**230-7254**	18	PIN-CONNECTOR	
		1	**155-2255**	1	KIT-CONNECTING PLUG (12-PIN)	
		1	**155-2256**	1	KIT-CONNECTING PLUG (12-PIN)	
		1	**155-2265**	1	KIT-CONNECTING PLUG (8-PIN)	
		1	**155-2260**	2	KIT-CONNECTING PLUG (3-PIN)	
					(EACH PLUG KIT INCLUDES PLUG AS, WEDGE & INTERFACE SEAL)	
		1	**230-5008**	3	PLUG AS-CONNECTOR (4-PIN)	
		1	**8T-8737**	44	PLUG-SEAL	
		1	**102-8801**	2	KIT-RECEPTACLE (12-PIN)	
		1	**190-7614**	1	KIT-RECEPTACLE (12-PIN)	
					(EACH RECEPTACLE KIT INCLUDES RECEPTACLE AS & WEDGE)	
		1	**134-2540**	2	RESISTOR AS (3-PIN)	
		1	**230-5009**	3	RECEPTACLE AS-CONNECTOR (4-PIN)	
		1	**9X-3402**	6	SOCKET-CONNECTOR (16-GA TO 18-GA)	
		1	**186-3736**	6	SOCKET-CONNECTOR (16-GA TO 18-GA)	
		1	**9X-3402**	12	SOCKET-CONNECTOR (16-GA TO 18-GA)	
		1	**5P-2321**	2	TERMINAL-FORK (14-GA TO 16-GA, NO. 6 SCREW)	
E		1	**125-7874**		TUBE-HEAT SHRINK (5.72-MM DIA) (45-CM)	
	9	1	**249-9025**	1	HARNESS AS-RADIO (GRADE CONTROL)	
		1	**155-2255**	1	KIT-CONNECTING PLUG (12-PIN)	
					(INCLUDES PLUG AS, WEDGE & INTERFACE SEAL)	
		1	**167-8987**	1	PLUG AS-CONNECTOR (8-PIN)	
		1	**8T-8737**	6	PLUG-SEAL	
		1	**9X-3402**	4	SOCKET-CONNECTOR (16-GA TO 18-GA)	
		1	**9W-0844**	2	SOCKET-CONNECTOR (14-GA)	
	10	2	**249-9030**	1	HARNESS AS-WIRING (POWER SUPPLY MODULE)	
		2	**9W-0844**	7	SOCKET-CONNECTOR (14-GA)	
		2	**3R-9965**	1	PLUG AS-CONNECTOR (8-PIN)	
		2	**6D-5257**	1	PLUG AS-CONNECTOR (8-PIN)	
		2	**8T-8737**	5	PLUG-SEAL	
		2	**102-8801**	1	KIT-RECEPTACLE (12-PIN)	
					(INCLUDES RECEPTACLE AS & WEDGE)	
E		2	**125-7874**		TUBE-HEAT SHRINK (5.72-MM DIA) (5-CM)	
	11	1	**249-9031**	1	HARNESS AS-FRONT (GRADE CONTROL)	
		1	**155-2265**	2	KIT-CONNECTING PLUG (8-PIN)	
					(EACH INCLUDES PLUG AS, WEDGE & INTERFACE SEAL)	
		1	**9X-3402**	8	SOCKET-CONNECTOR (16-GA TO 18-GA)	
		1	**9W-0844**	8	SOCKET-CONNECTOR (14-GA)	
	12	1	**249-9032**	1	HARNESS AS-HOOD (GRADE CONTROL)	
		1	**9X-3401**	4	PIN-CONNECTOR (16-GA TO 18-GA)	
		1	**186-3735**	4	PIN-CONNECTOR (16-GA TO 18-GA)	

245-6029 **WIRING GP-GRADE CONTROL** *(contd.)* **i03590723**

NOTE	REF NO	GRAPHIC REF	PART NUMBER	QTY	PART NAME 1 2 3 4 5 6 (PRODUCT LEVEL)	SEE PAGE
		1	**9W-0852**	9	PIN-CONNECTOR (14-GA)	
		1	**155-2265**	1	KIT-CONNECTING PLUG (8-PIN)	
		1	**155-2260**	2	KIT-CONNECTING PLUG (3-PIN)	
		1	**155-2271**	1	KIT-CONNECTING PLUG (4-PIN)	
					(EACH PLUG KIT INCLUDES PLUG AS, WEDGE & INTERFACE SEAL)	
		1	**8T-8737**	9	PLUG-SEAL	
		1	**102-8804**	1	KIT-RECEPTACLE (4-PIN)	
		1	**102-8806**	1	KIT-RECEPTACLE (8-PIN)	
		1	**102-8801**	1	KIT-RECEPTACLE (12-PIN)	
					(EACH RECEPTACLE KIT INCLUDES RECEPTACLE AS & WEDGE)	
		1	**134-2540**	2	RESISTOR AS (3-PIN)	
		1	**186-3736**	10	SOCKET-CONNECTOR (16-GA TO 18-GA)	
		1	**9W-0844**	6	SOCKET-CONNECTOR (14-GA)	
E		1	**119-3662**		TUBE-HEAT SHRINK (10.85-MM DIA) (7-CM)	
E		1	**125-7874**		TUBE-HEAT SHRINK (5.72-MM DIA) (60-CM)	
E		1	**125-7875**		TUBE-HEAT SHRINK (7.44-MM DIA) (60-CM)	
	13	1	**249-9033**	1	HARNESS AS-CONSOLE (GRADE CONTROL)	
		1	**8C-6354**	1	CAP-RECEPTACLE	
		1	**9X-3401**	10	PIN-CONNECTOR (16-GA TO 18-GA)	
		1	**186-3735**	10	PIN-CONNECTOR (16-GA TO 18-GA)	
		1	**9W-0852**	2	PIN-CONNECTOR (14-GA)	
		1	**155-2255**	2	KIT-CONNECTING PLUG (12-PIN)	
					(INCLUDES PLUG AS, WEDGE & INTERFACE SEAL)	
		1	**253-2695**	1	PLUG AS-CONNECTOR	
		1	**8T-8737**	12	PLUG-SEAL	
		1	**102-8806**	1	KIT-RECEPTACLE (8-PIN)	
		1	**102-8801**	1	KIT-RECEPTACLE (12-PIN)	
					(EACH RECEPTACLE KIT INCLUDES RECEPTACLE AS & WEDGE)	
		1	**8T-8736**	1	RECEPTACLE-CONNECTOR (9-PIN)	
		1	**9X-3402**	13	SOCKET-CONNECTOR (16-GA TO 18-GA)	
		1	**9W-0844**	6	SOCKET-CONNECTOR (14-GA)	
B		1	**141-8061**		TAPE	
E		1	**125-7874**		TUBE-HEAT SHRINK (5.72-MM DIA) (40-CM)	
E		1	**125-7875**		TUBE-HEAT SHRINK (7.44-MM DIA) (10-CM)	
	14	2	**249-9034**	1	HARNESS AS-SENSOR (GRADE CONTROL)	
		2	**228-3323**	1	CLIP-SPRING	
		2	**186-3735**	2	PIN-CONNECTOR (16-GA TO 18-GA)	
		2	**9W-0852**	2	PIN-CONNECTOR (14-GA)	
		2	**102-8804**	1	KIT-RECEPTACLE (4-PIN)	
					(INCLUDES RECEPTACLE AS & WEDGE)	
	15	2	**249-9049**	1	HARNESS AS-WIRING (RECEIVER, LH)	
		2	**228-3323**	1	CLIP-SPRING	
		2	**186-3735**	4	PIN-CONNECTOR (16-GA TO 18-GA)	
		2	**9W-0852**	4	PIN-CONNECTOR (14-GA)	
		2	**102-8806**	1	KIT-RECEPTACLE (8-PIN)	
					(INCLUDES RECEPTACLE AS & WEDGE)	
	16	2	**249-9050**	1	HARNESS AS-WIRING (RECEIVER, RH)	
		2	**228-3323**	1	CLIP-SPRING	
		2	**155-2255**	1	KIT-CONNECTING PLUG (12-PIN)	
					(INCLUDES PLUG AS, WEDGE & INTERFACE SEAL)	
		2	**8T-8737**	3	PLUG-SEAL	
		2	**186-3736**	4	SOCKET-CONNECTOR (16-GA TO 18-GA)	
		2	**9W-0844**	5	SOCKET-CONNECTOR (14-GA)	
	17	2	**249-9077**	1	PLATE AS	
	18	1	**257-7501**	1	PLATE AS	

245-6029 **WIRING GP-GRADE CONTROL** *(contd.)* **i03590723**

NOTE	REF NO	GRAPHIC REF	PART NUMBER	QTY	PART NAME 1 2 3 4 5 6 (PRODUCT LEVEL)	SEE PAGE
	19	1	**264-4510**	1	BRACKET AS	
	20	1	**269-7664**	1	BRACKET AS	
	21	2	**269-7676**	1	HARNESS AS-MONITOR	
		2	**186-3735**	2	PIN-CONNECTOR (16-GA TO 18-GA)	
		2	**147-1444**	1	PLUG AS-CONNECTOR (70-PIN)	
		2	**155-2255**	1	KIT-CONNECTING PLUG (12-PIN)	
		2	**155-2256**	1	KIT-CONNECTING PLUG (12-PIN)	
					(EACH PLUG KIT INCLUDES PLUG AS, WEDGE & INTERFACE SEAL)	
		2	**8T-8737**	87	PLUG-SEAL	
		2	**102-8801**	1	KIT-RECEPTACLE (12-PIN)	
		2	**190-7614**	1	KIT-RECEPTACLE (12-PIN)	
					(EACH RECEPTACLE KIT INCLUDES RECEPTACLE AS & WEDGE)	
		2	**186-3736**	2	SOCKET-CONNECTOR (16-GA TO 18-GA)	
		2	**9X-3402**	14	SOCKET-CONNECTOR (16-GA TO 18-GA)	
E		2	**125-7874**		TUBE-HEAT SHRINK (5.72-MM DIA) (5-CM)	
	22	2	**269-7687**	1	HARNESS AS-CONTROL	
		2	**155-2255**	1	KIT-CONNECTING PLUG (12-PIN)	
		2	**155-2256**	1	KIT-CONNECTING PLUG (12-PIN)	
					(EACH PLUG KIT INCLUDES PLUG AS, WEDGE & INTERFACE SEAL)	
		2	**180-5305**	1	PLUG AS-CONNECTOR	
		2	**8T-8737**	9	PLUG-SEAL	
		2	**186-3736**	1	SOCKET-CONNECTOR (16-GA TO 18-GA)	
E		2	**125-7875**		TUBE-HEAT SHRINK (7.44-MM DIA) (5-CM)	
	23	2	**096-5962**	12	WASHER-HARD (3.4X7X0.8-MM THK)	
M	24	2	**117-6952**	3	SCREW (M8X1.25X30-MM)	
	25	2	**132-5789**	2	CLIP	
	26	2	**2D-0388**	1	GROMMET	
	27	2	**7R-3029**	3	CAP-DUST	
M	28	2	**7X-2553**	1	BOLT (M16X2X40-MM)	
M	29	1	**8C-8451**	3	BOLT (M6X1X40-MM)	
	30	2	**033-4818**	12	SCREW-MACHINE	
	31	2	**8T-4121**	4	WASHER-HARD (11X21X2.5-MM THK)	
	32	2	**8T-4122**	1	WASHER-HARD (17X32X3.5-MM THK)	
M	33	2	**8T-4186**	2	BOLT (M10X1.5X40-MM)	
M	34	2	**8T-4195**	2	BOLT (M10X1.5X30-MM)	
M	35	2	**8T-4200**	2	BOLT (M8X1.25X16-MM)	
	36	1	**8T-4205**	6	WASHER-HARD (7.2X14.5X2-MM THK)	
	37	2	**8T-4224**	8	WASHER-HARD (8.8X16X2-MM THK)	
M	38	2	**8T-4908**	4	BOLT (M8X1.25X25-MM)	
D	39	2	**8T-3426**		CHANNEL-TRIM (1-M)	
E	40	2	**109-2013**		GUARD (49-CM)	
D	41	1	**6V-1359**		SEAL (0.1-M)	
E	42	1	**3E-6600**		SEAL (31-CM)	
E	42A	2	**3E-6600**		SEAL (32-CM)	
E	42B	2	**3E-6600**		SEAL (3-CM)	

B-USE AS REQUIRED
D-ORDER BY THE METER
E-ORDER BY THE CENTIMETER
M-METRIC PART

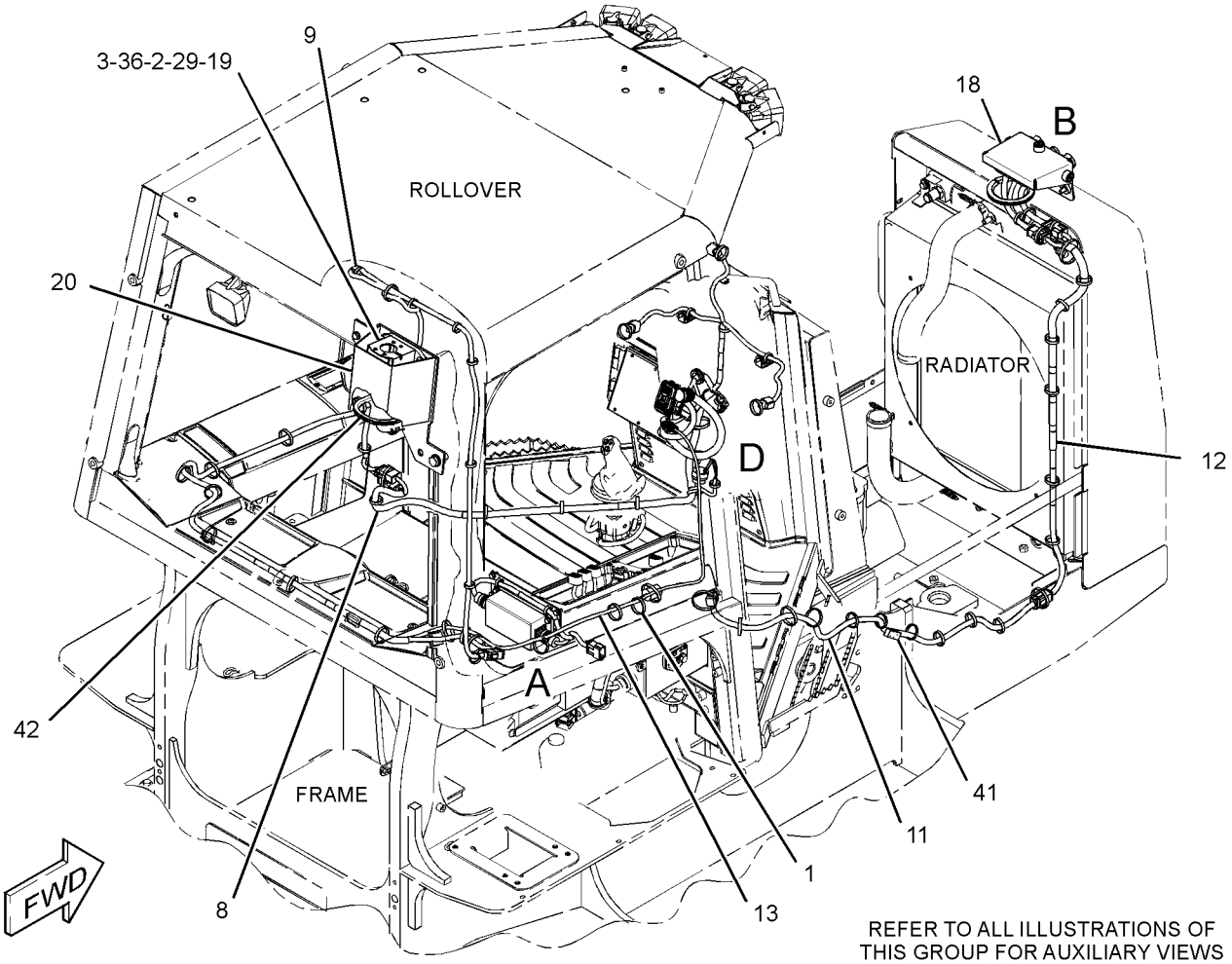

REFER TO ALL ILLUSTRATIONS OF THIS GROUP FOR AUXILIARY VIEWS

GRAPHIC #1

g01380519

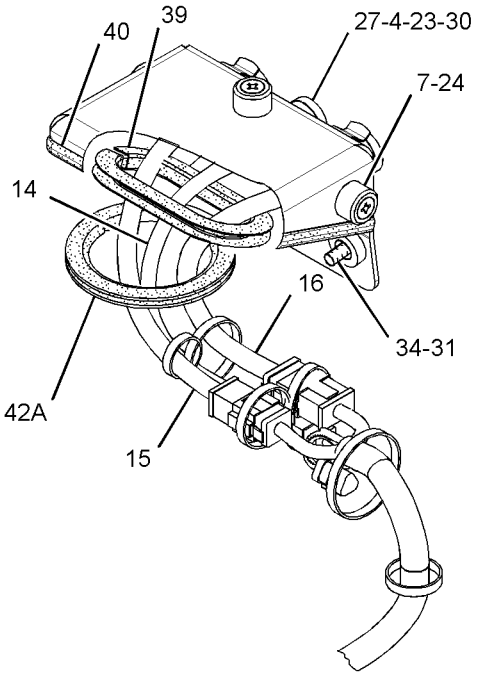

VIEW OF AREA B

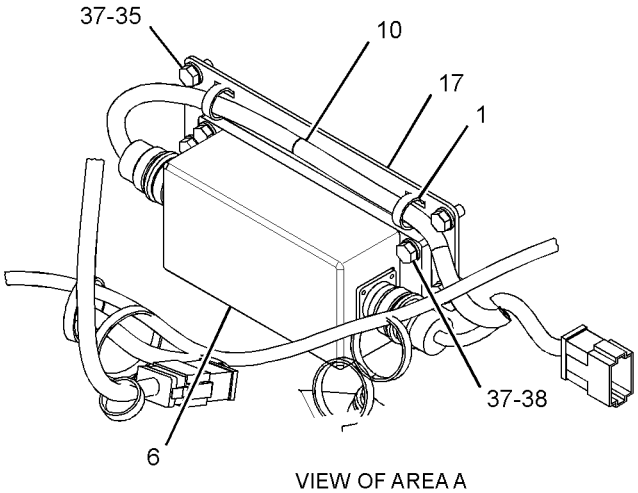

VIEW OF AREA A

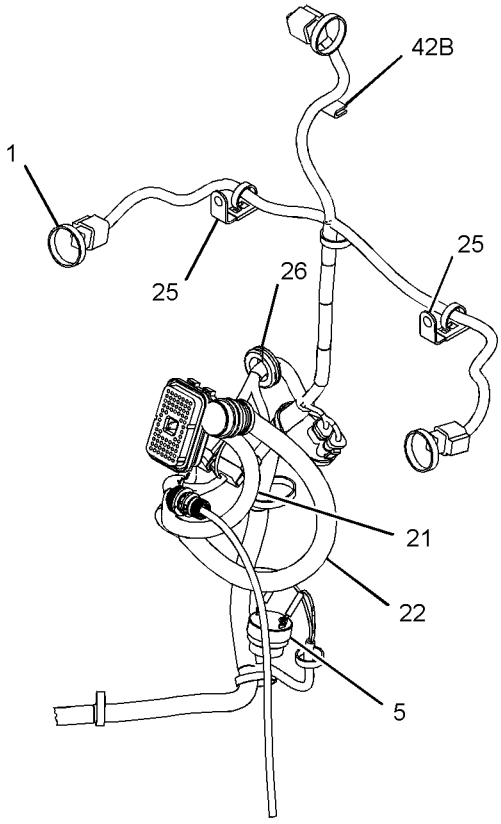

VIEW OF AREA D

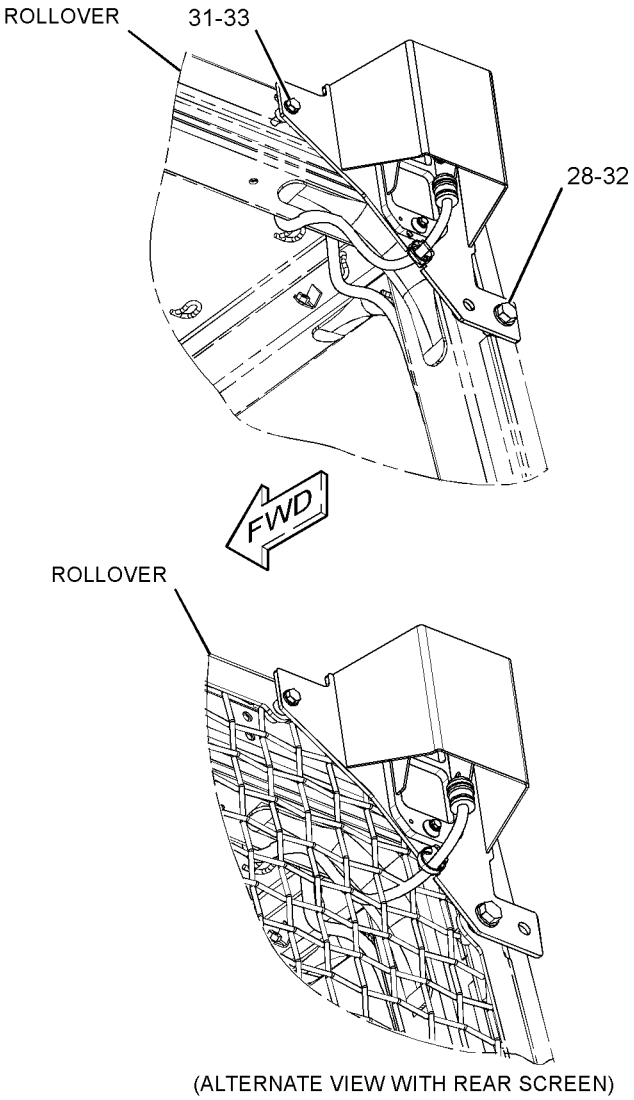

(ALTERNATE VIEW WITH REAR SCREEN)

GRAPHIC #2 **<END>** g01380575

245-6029 WIRING GP-GRADE CONTROL–FULL

S/N: JLF171-UP; WWW158-UP; YYY164-UP
PART OF 296-5755, 296-5756 GRADE CONTROL AR
AN ATTACHMENT
TYPE 1

SMCS-1408 **i03592853**

NOTE	REF NO	GRAPHIC REF	PART NUMBER	QTY	PART NAME 1 2 3 4 5 6 (PRODUCT LEVEL)	SEE PAGE
C	1	1,2	**7K-1181**	65	STRAP-CABLE	
	2	2	**8C-5607**	6	MOUNT-ISOLATION	
	3	2	**8C-5608**	3	SPACER (6.5X9.5X25.4-MM THK)	
C	4	2	**8T-8737**	24	PLUG-SEAL	
C	5	2	**130-5300**	4	CLIP	
	6	2	**132-8487**	3	NUT-RING	
	7	2	**167-8712**	1	ALARM	
C	8	2	**190-7615**	1	KIT-RECEPTACLE (12-PIN)	
					(INCLUDES RECEPTACLE AS & WEDGE)	
	9	2	**226-9169**	1	MODULE AS-POWER SUPPLY	
	10	2	**236-8826**	3	BOSS (1-1/8-18X0.708-IN)	
	11	2	**249-9030**	1	HARNESS AS-WIRING (POWER SUPPLY MODULE)	
		2	**9W-0844**	7	SOCKET-CONNECTOR (14-GA)	
		2	**3R-9965**	1	PLUG AS-CONNECTOR (8-PIN)	
		2	**6D-5257**	1	PLUG AS-CONNECTOR (8-PIN)	
		2	**8T-8737**	5	PLUG-SEAL	
		2	**102-8801**	1	KIT-RECEPTACLE (12-PIN)	
					(INCLUDES RECEPTACLE AS & WEDGE)	
E		2	**125-7874**		TUBE-HEAT SHRINK (5.72-MM DIA) (5-CM)	
	12	1	**249-9031**	1	HARNESS AS-FRONT (GRADE CONTROL)	
		1	**155-2265**	2	KIT-CONNECTING PLUG (8-PIN)	
					(EACH INCLUDES PLUG AS, WEDGE & INTERFACE SEAL)	
		1	**9X-3402**	8	SOCKET-CONNECTOR (16-GA TO 18-GA)	
		1	**9W-0844**	8	SOCKET-CONNECTOR (14-GA)	
	13	1	**249-9032**	1	HARNESS AS-HOOD (GRADE CONTROL)	
		1	**9X-3401**	4	PIN-CONNECTOR (16-GA TO 18-GA)	
		1	**186-3735**	4	PIN-CONNECTOR (16-GA TO 18-GA)	
		1	**9W-0852**	9	PIN-CONNECTOR (14-GA)	
		1	**155-2265**	1	KIT-CONNECTING PLUG (8-PIN)	
		1	**155-2260**	2	KIT-CONNECTING PLUG (3-PIN)	
		1	**155-2271**	1	KIT-CONNECTING PLUG (4-PIN)	
					(EACH PLUG KIT INCLUDES PLUG AS, WEDGE & INTERFACE SEAL)	
		1	**8T-8737**	9	PLUG-SEAL	
		1	**102-8804**	1	KIT-RECEPTACLE (4-PIN)	
		1	**102-8806**	1	KIT-RECEPTACLE (8-PIN)	
		1	**102-8801**	1	KIT-RECEPTACLE (12-PIN)	
					(EACH RECEPTACLE KIT INCLUDES RECEPTACLE AS & WEDGE)	
		1	**134-2540**	2	RESISTOR AS (3-PIN)	
		1	**186-3736**	10	SOCKET-CONNECTOR (16-GA TO 18-GA)	
		1	**9W-0844**	6	SOCKET-CONNECTOR (14-GA)	
E		1	**119-3662**		TUBE-HEAT SHRINK (10.85-MM DIA) (7-CM)	
E		1	**125-7874**		TUBE-HEAT SHRINK (5.72-MM DIA) (60-CM)	
E		1	**125-7875**		TUBE-HEAT SHRINK (7.44-MM DIA) (60-CM)	
	14	1	**249-9033**	1	HARNESS AS-CONSOLE (GRADE CONTROL)	
		1	**8C-6354**	1	CAP-RECEPTACLE	
		1	**9X-3401**	10	PIN-CONNECTOR (16-GA TO 18-GA)	
		1	**186-3735**	10	PIN-CONNECTOR (16-GA TO 18-GA)	
		1	**9W-0852**	2	PIN-CONNECTOR (14-GA)	
		1	**155-2255**	2	KIT-CONNECTING PLUG (12-PIN)	
					(INCLUDES PLUG AS, WEDGE & INTERFACE SEAL)	

245-6029 **WIRING GP-GRADE CONTROL** *(contd.)* **i03592853**

NOTE	REF NO	GRAPHIC REF	PART NUMBER	QTY	PART NAME 1 2 3 4 5 6 (PRODUCT LEVEL)	SEE PAGE
		1	**253-2695**	1	PLUG AS-CONNECTOR	
		1	**8T-8737**	12	PLUG-SEAL	
		1	**102-8806**	1	KIT-RECEPTACLE (8-PIN)	
		1	**102-8801**	1	KIT-RECEPTACLE (12-PIN)	
					(EACH RECEPTACLE KIT INCLUDES RECEPTACLE AS & WEDGE)	
		1	**8T-8736**	1	RECEPTACLE-CONNECTOR (9-PIN)	
		1	**9X-3402**	13	SOCKET-CONNECTOR (16-GA TO 18-GA)	
		1	**9W-0844**	6	SOCKET-CONNECTOR (14-GA)	
B		1	**141-8061**		TAPE	
E		1	**125-7874**		TUBE-HEAT SHRINK (5.72-MM DIA) (40-CM)	
E		1	**125-7875**		TUBE-HEAT SHRINK (7.44-MM DIA) (10-CM)	
	15	2	**249-9034**	1	HARNESS AS-SENSOR (GRADE CONTROL)	
		2	**228-3323**	1	CLIP-SPRING	
		2	**186-3735**	2	PIN-CONNECTOR (16-GA TO 18-GA)	
		2	**9W-0852**	2	PIN-CONNECTOR (14-GA)	
		2	**102-8804**	1	KIT-RECEPTACLE (4-PIN)	
					(INCLUDES RECEPTACLE AS & WEDGE)	
	16	2	**249-9049**	1	HARNESS AS-WIRING (RECEIVER, LH)	
		2	**228-3323**	1	CLIP-SPRING	
		2	**186-3735**	4	PIN-CONNECTOR (16-GA TO 18-GA)	
		2	**9W-0852**	4	PIN-CONNECTOR (14-GA)	
		2	**102-8806**	1	KIT-RECEPTACLE (8-PIN)	
					(INCLUDES RECEPTACLE AS & WEDGE)	
	17	2	**249-9050**	1	HARNESS AS-WIRING (RECEIVER, RH)	
		2	**228-3323**	1	CLIP-SPRING	
		2	**155-2255**	1	KIT-CONNECTING PLUG (12-PIN)	
					(INCLUDES PLUG AS, WEDGE & INTERFACE SEAL)	
		2	**8T-8737**	3	PLUG-SEAL	
		2	**186-3736**	4	SOCKET-CONNECTOR (16-GA TO 18-GA)	
		2	**9W-0844**	5	SOCKET-CONNECTOR (14-GA)	
	18	2	**249-9077**	1	PLATE AS	
	19	2	**257-7501**	1	PLATE AS	
	20	2	**264-4510**	1	BRACKET AS	
	21	2	**269-7664**	1	BRACKET AS	
C	22	1	**311-0295**	1	HARNESS AS-DASH (GRADE CONTROL)	
		1	**186-3735**	1	PIN-CONNECTOR (16-GA TO 18-GA)	
		1	**9W-0852**	2	PIN-CONNECTOR (14-GA)	
		1	**9X-3401**	6	PIN-CONNECTOR (16-GA TO 18-GA)	
					—OR—	
		1	**126-1767**	6	PIN-CONNECTOR (14-GA)	
		1	**155-2255**	1	KIT-CONNECTING PLUG (12-PIN)	
		1	**155-2257**	1	KIT-CONNECTING PLUG (12-PIN)	
		1	**155-2265**	1	KIT-CONNECTING PLUG (8-PIN)	
		1	**155-2260**	2	KIT-CONNECTING PLUG (3-PIN)	
					(EACH PLUG KIT INCLUDES PLUG AS, WEDGE & INTERFACE SEAL)	
		1	**230-5008**	3	PLUG AS-CONNECTOR (4-PIN)	
		1	**8T-8737**	24	PLUG-SEAL	
		1	**102-8801**	1	KIT-RECEPTACLE (12-PIN)	
					(INCLUDES RECEPTACLE AS & WEDGE)	
		1	**134-2540**	2	RESISTOR AS (3-PIN)	
		1	**230-5009**	3	RECEPTACLE AS-CONNECTOR (4-PIN)	
		1	**9X-3402**	12	SOCKET-CONNECTOR (16-GA TO 18-GA)	
		1	**180-9340**	10	SOCKET-CONNECTOR (14-GA TO 18-GA)	
		1	**5P-2321**	2	TERMINAL-FORK (14-GA TO 16-GA, NO. 6 SCREW)	
E		1	**125-7874**		TUBE-HEAT SHRINK (5.72-MM DIA) (45-CM)	
C	23	2	**311-0297**	1	HARNESS AS-MONITOR	
		2	**230-7254**	13	PIN-CONNECTOR	

245-6029 **WIRING GP-GRADE CONTROL** *(contd.)* **i03592853**

NOTE	REF NO	GRAPHIC REF	PART NUMBER	QTY	PART NAME 1 2 3 4 5 6 (PRODUCT LEVEL)	SEE PAGE
		2	**147-1444**	1	PLUG AS-CONNECTOR (70-PIN)	
		2	**159-9322**	1	SEAL-O-RING	
		2	**8T-8737**	67	PLUG-SEAL	
		2	**102-8801**	1	KIT-RECEPTACLE (12-PIN)	
		2	**190-7615**	1	KIT-RECEPTACLE (12-PIN)	
					(EACH RECEPTACLE KIT INCLUDES RECEPTACLE AS & WEDGE)	
		2	**9X-3402**	14	SOCKET-CONNECTOR (16-GA TO 18-GA)	
B		2	**141-8061**		TAPE	
E		2	**125-7874**		TUBE-HEAT SHRINK (5.72-MM DIA) (5-CM)	
C	24	2	**311-0298**	1	HARNESS AS-DASH	
		2	**230-7254**	15	PIN-CONNECTOR	
		2	**8T-8737**	9	PLUG-SEAL	
		2	**102-8801**	1	KIT-RECEPTACLE (12-PIN)	
		2	**190-7615**	1	KIT-RECEPTACLE (12-PIN)	
					(EACH RECEPTACLE KIT INCLUDES RECEPTACLE AS & WEDGE)	
B		2	**141-8061**		TAPE	
E		2	**125-7875**		TUBE-HEAT SHRINK (7.44-MM DIA) (5-CM)	
	25	2	**096-5962**	12	WASHER-HARD (3.4X7X0.8-MM THK)	
M	26	2	**117-6952**	3	SCREW (M8X1.25X30-MM)	
	27	2	**132-5789**	2	CLIP	
C	28	2	**133-6934**	1	SPACER (11X20X25-MM THK)	
C	29	1	**311-0305**	1	HARNESS AS-RADIO (GRADE CONTROL)	
		1	**155-2255**	1	KIT-CONNECTING PLUG (12-PIN)	
					(INCLUDES PLUG AS, WEDGE & INTERFACE SEAL)	
		1	**167-8987**	1	PLUG AS-CONNECTOR (8-PIN)	
		1	**8T-8737**	4	PLUG-SEAL	
		1	**9W-0844**	2	SOCKET-CONNECTOR (14-GA)	
		1	**180-9340**	6	SOCKET-CONNECTOR (14-GA TO 18-GA)	
	30	2	**2D-0388**	1	GROMMET	
C	31	2	**102-8801**	1	KIT-RECEPTACLE (12-PIN)	
					(INCLUDES RECEPTACLE AS & WEDGE)	
C	32	2	**4P-8134**	1	CLIP	
CM	33	2	**5C-9553**	1	BOLT (M6X1X16-MM)	
	34	2	**7R-3029**	3	CAP-DUST	
M	35	2	**7X-2553**	1	BOLT (M16X2X40-MM)	
M	36	2	**8C-8451**	3	BOLT (M6X1X40-MM)	
	37	2	**033-4818**	12	SCREW-MACHINE	
C	38	2	**8T-4121**	6	WASHER-HARD (11X21X2.5-MM THK)	
	39	2	**8T-4122**	1	WASHER-HARD (17X32X3.5-MM THK)	
CM	40	2	**8T-4137**	1	BOLT (M10X1.5X20-MM)	
CM	41	2	**8T-4185**	1	BOLT (M10X1.5X50-MM)	
M	42	2	**8T-4186**	2	BOLT (M10X1.5X40-MM)	
M	43	2	**8T-4195**	2	BOLT (M10X1.5X30-MM)	
M	44	2	**8T-4200**	2	BOLT (M8X1.25X16-MM)	
	45	2	**8T-4205**	6	WASHER-HARD (7.2X14.5X2-MM THK)	
	46	2	**8T-4224**	8	WASHER-HARD (8.8X16X2-MM THK)	
M	47	2	**8T-4908**	4	BOLT (M8X1.25X25-MM)	
C	48	2	**9X-8256**	1	WASHER (6.6X12X2-MM THK)	
D	49	2	**8T-3426**		CHANNEL-TRIM (1-M)	
CE	50	1	**7Y-5074**		GUARD-HOSE (48-CM)	
E	51	2	**109-2013**		GUARD (49-CM)	
D	52	1	**6V-1359**		SEAL (0.1-M)	
E	53	2	**3E-6600**		SEAL (31-CM)	
E	53A	2	**3E-6600**		SEAL (32-CM)	
E	53B	2	**3E-6600**		SEAL (3-CM)	

245-6029 **WIRING GP-GRADE CONTROL** *(contd.)* **i03592853**

B-USE AS REQUIRED
C-CHANGE FROM PREVIOUS TYPE
D-ORDER BY THE METER
E-ORDER BY THE CENTIMETER
M-METRIC PART

REFER TO ALL ILLUSTRATIONS OF
THIS GROUP FOR AUXILIARY VIEWS

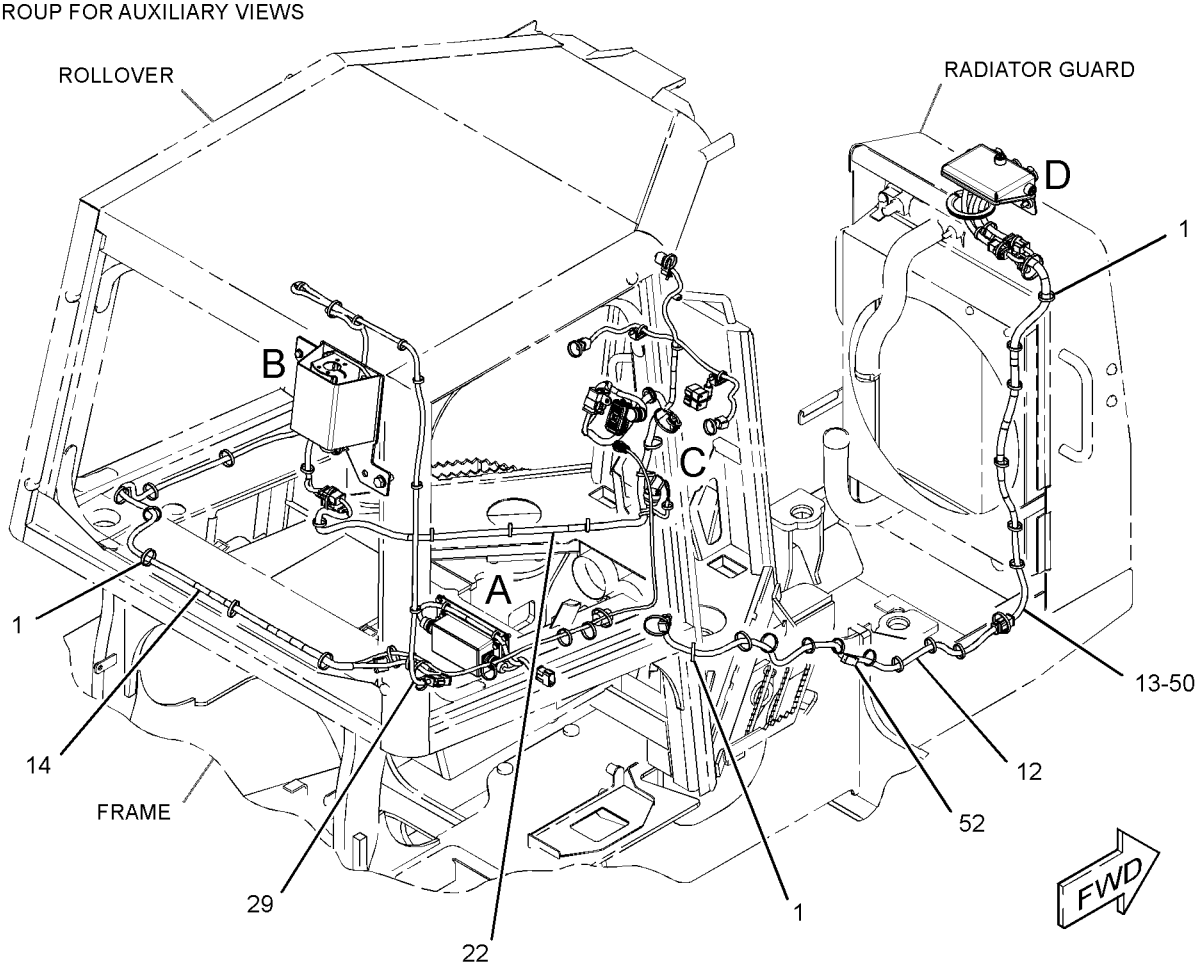

GRAPHIC #1 g01572135

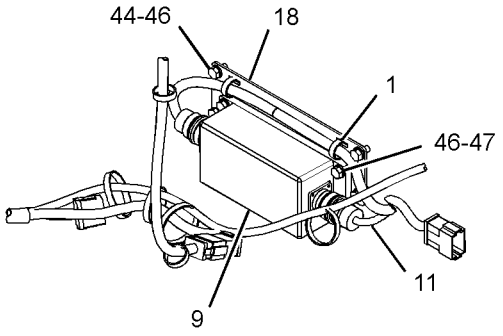

VIEW OF AREA A

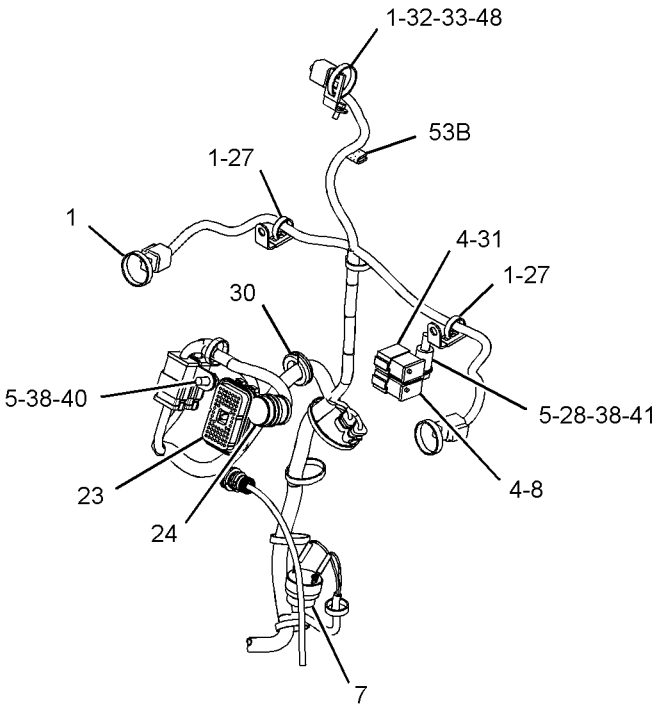

VIEW OF AREA C

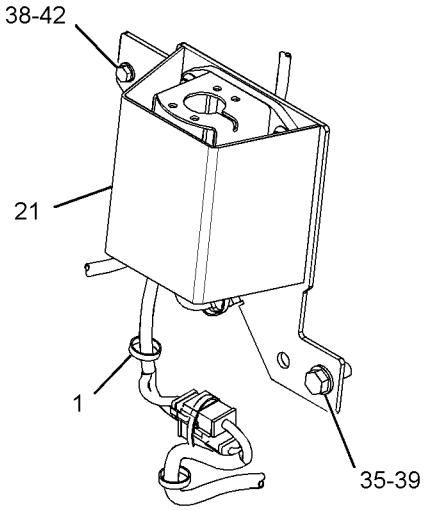

VIEW OF AREA B

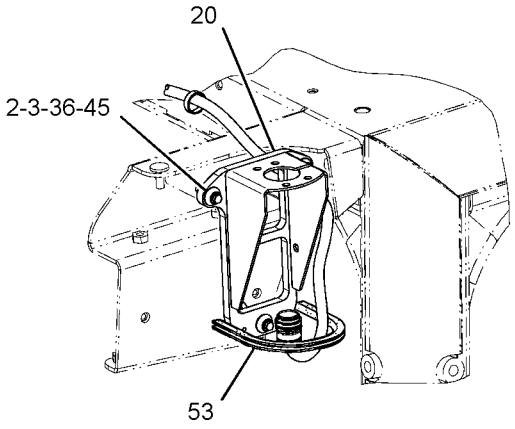

VIEW OF AREA B
(ALTERNATE VIEW ENCLOSED ROPS)

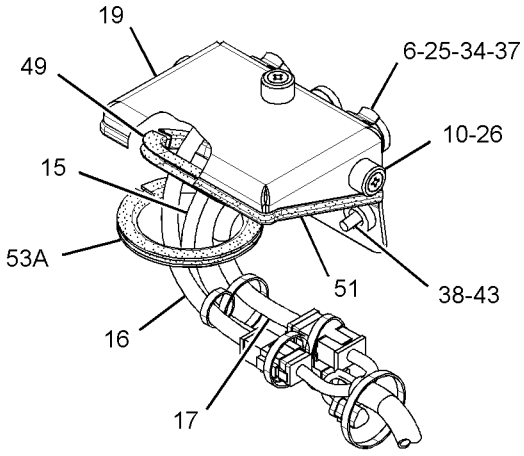

VIEW OF AREA D

GRAPHIC #2 **<END>** g01572138

ELECTRICAL AND STARTING SYSTEM

245-6029 WIRING GP-GRADE CONTROL–FULL

S/N: JLF171-UP; WWW158-UP; YYY164-UP
PART OF 296-5755, 296-5756 GRADE CONTROL AR
AN ATTACHMENT
TYPE 2

SMCS-1408 **i03597450**

NOTE	REF NO	GRAPHIC REF	PART NUMBER	QTY	PART NAME 1 2 3 4 5 6 (PRODUCT LEVEL)	SEE PAGE
	1	1,2	**7K-1181**	65	STRAP-CABLE	
	4	2	**8T-8737**	24	PLUG-SEAL	
	5	2	**130-5300**	4	CLIP	
	6	2	**132-8487**	3	NUT-RING	
	7	2	**167-8712**	1	ALARM	
	8	2	**190-7615**	1	KIT-RECEPTACLE (12-PIN)	
					(INCLUDES RECEPTACLE AS & WEDGE)	
	9	2	**226-9169**	1	MODULE AS-POWER SUPPLY	
	10	2	**236-8826**	3	BOSS (1-1/8-18XO.708-IN)	
	11	2	**249-9030**	1	HARNESS AS-WIRING (POWER SUPPLY MODULE)	
		2	**9W-0844**	7	SOCKET-CONNECTOR (14-GA)	
		2	**3R-9965**	1	PLUG AS-CONNECTOR (8-PIN)	
		2	**6D-5257**	1	PLUG AS-CONNECTOR (8-PIN)	
		2	**8T-8737**	5	PLUG-SEAL	
		2	**102-8801**	1	KIT-RECEPTACLE (12-PIN)	
					(INCLUDES RECEPTACLE AS & WEDGE)	
E		2	**125-7874**		TUBE-HEAT SHRINK (5.72-MM DIA) (5-CM)	
	12	1	**249-9031**	1	HARNESS AS-FRONT (GRADE CONTROL)	
		1	**155-2265**	2	KIT-CONNECTING PLUG (8-PIN)	
					(EACH INCLUDES PLUG AS, WEDGE & INTERFACE SEAL)	
		1	**9X-3402**	8	SOCKET-CONNECTOR (16-GA TO 18-GA)	
		1	**9W-0844**	8	SOCKET-CONNECTOR (14-GA)	
	13	1	**249-9032**	1	HARNESS AS-HOOD (GRADE CONTROL)	
		1	**9X-3401**	4	PIN-CONNECTOR (16-GA TO 18-GA)	
		1	**186-3735**	4	PIN-CONNECTOR (16-GA TO 18-GA)	
		1	**9W-0852**	9	PIN-CONNECTOR (14-GA)	
		1	**155-2265**	1	KIT-CONNECTING PLUG (8-PIN)	
		1	**155-2260**	2	KIT-CONNECTING PLUG (3-PIN)	
		1	**155-2271**	1	KIT-CONNECTING PLUG (4-PIN)	
					(EACH PLUG KIT INCLUDES PLUG AS, WEDGE & INTERFACE SEAL)	
		1	**8T-8737**	9	PLUG-SEAL	
		1	**102-8804**	1	KIT-RECEPTACLE (4-PIN)	
		1	**102-8806**	1	KIT-RECEPTACLE (8-PIN)	
		1	**102-8801**	1	KIT-RECEPTACLE (12-PIN)	
					(EACH RECEPTACLE KIT INCLUDES RECEPTACLE AS & WEDGE)	
		1	**134-2540**	2	RESISTOR AS (3-PIN)	
		1	**186-3736**	10	SOCKET-CONNECTOR (16-GA TO 18-GA)	
		1	**9W-0844**	6	SOCKET-CONNECTOR (14-GA)	
E		1	**119-3662**		TUBE-HEAT SHRINK (10.85-MM DIA) (7-CM)	
E		1	**125-7874**		TUBE-HEAT SHRINK (5.72-MM DIA) (60-CM)	
E		1	**125-7875**		TUBE-HEAT SHRINK (7.44-MM DIA) (60-CM)	
	14	1	**249-9033**	1	HARNESS AS-CONSOLE (GRADE CONTROL)	
		1	**8C-6354**	1	CAP-RECEPTACLE	
		1	**9X-3401**	10	PIN-CONNECTOR (16-GA TO 18-GA)	
		1	**186-3735**	10	PIN-CONNECTOR (16-GA TO 18-GA)	
		1	**9W-0852**	2	PIN-CONNECTOR (14-GA)	
		1	**155-2255**	2	KIT-CONNECTING PLUG (12-PIN)	
					(INCLUDES PLUG AS, WEDGE & INTERFACE SEAL)	
		1	**253-2695**	1	PLUG AS-CONNECTOR	
		1	**8T-8737**	12	PLUG-SEAL	

245-6029 **WIRING GP-GRADE CONTROL** *(contd.)* **i03597450**

NOTE	REF NO	GRAPHIC REF	PART NUMBER	QTY	PART NAME 1 2 3 4 5 6 (PRODUCT LEVEL)	SEE PAGE
		1	**102-8806**	1	KIT-RECEPTACLE (8-PIN)	
		1	**102-8801**	1	KIT-RECEPTACLE (12-PIN)	
					(EACH RECEPTACLE KIT INCLUDES RECEPTACLE AS & WEDGE)	
		1	**8T-8736**	1	RECEPTACLE-CONNECTOR (9-PIN)	
		1	**9X-3402**	13	SOCKET-CONNECTOR (16-GA TO 18-GA)	
		1	**9W-0844**	6	SOCKET-CONNECTOR (14-GA)	
B		1	**141-8061**		TAPE	
E		1	**125-7874**		TUBE-HEAT SHRINK (5.72-MM DIA) (40-CM)	
E		1	**125-7875**		TUBE-HEAT SHRINK (7.44-MM DIA) (10-CM)	
	15	2	**249-9034**	1	HARNESS AS-SENSOR (GRADE CONTROL)	
		2	**228-3323**	1	CLIP-SPRING	
		2	**186-3735**	2	PIN-CONNECTOR (16-GA TO 18-GA)	
		2	**9W-0852**	2	PIN-CONNECTOR (14-GA)	
		2	**102-8804**	1	KIT-RECEPTACLE (4-PIN)	
					(INCLUDES RECEPTACLE AS & WEDGE)	
	16	2	**249-9049**	1	HARNESS AS-WIRING (RECEIVER, LH)	
		2	**228-3323**	1	CLIP-SPRING	
		2	**186-3735**	4	PIN-CONNECTOR (16-GA TO 18-GA)	
		2	**9W-0852**	4	PIN-CONNECTOR (14-GA)	
		2	**102-8806**	1	KIT-RECEPTACLE (8-PIN)	
					(INCLUDES RECEPTACLE AS & WEDGE)	
	17	2	**249-9050**	1	HARNESS AS-WIRING (RECEIVER, RH)	
		2	**228-3323**	1	CLIP-SPRING	
		2	**155-2255**	1	KIT-CONNECTING PLUG (12-PIN)	
					(INCLUDES PLUG AS, WEDGE & INTERFACE SEAL)	
		2	**8T-8737**	3	PLUG-SEAL	
		2	**186-3736**	4	SOCKET-CONNECTOR (16-GA TO 18-GA)	
		2	**9W-0844**	5	SOCKET-CONNECTOR (14-GA)	
	18	2	**249-9077**	1	PLATE AS	
	19	2	**257-7501**	1	PLATE AS	
C	21	2	**311-0311**	1	BRACKET AS	
	22	1	**311-0295**	1	HARNESS AS-DASH (GRADE CONTROL)	
		1	**186-3735**	1	PIN-CONNECTOR (16-GA TO 18-GA)	
		1	**9W-0852**	2	PIN-CONNECTOR (14-GA)	
		1	**9X-3401**	6	PIN-CONNECTOR (16-GA TO 18-GA)	
					—OR—	
		1	**126-1767**	6	PIN-CONNECTOR (14-GA)	
		1	**155-2255**	1	KIT-CONNECTING PLUG (12-PIN)	
		1	**155-2257**	1	KIT-CONNECTING PLUG (12-PIN)	
		1	**155-2265**	1	KIT-CONNECTING PLUG (8-PIN)	
		1	**155-2260**	2	KIT-CONNECTING PLUG (3-PIN)	
					(EACH PLUG KIT INCLUDES PLUG AS, WEDGE & INTERFACE SEAL)	
		1	**230-5008**	3	PLUG AS-CONNECTOR (4-PIN)	
		1	**8T-8737**	24	PLUG-SEAL	
		1	**102-8801**	1	KIT-RECEPTACLE (12-PIN)	
					(INCLUDES RECEPTACLE AS & WEDGE)	
		1	**134-2540**	2	RESISTOR AS (3-PIN)	
		1	**230-5009**	3	RECEPTACLE AS-CONNECTOR (4-PIN)	
		1	**9X-3402**	12	SOCKET-CONNECTOR (16-GA TO 18-GA)	
		1	**180-9340**	10	SOCKET-CONNECTOR (14-GA TO 18-GA)	
		1	**5P-2321**	2	TERMINAL-FORK (14-GA TO 16-GA, NO. 6 SCREW)	
E		1	**125-7874**		TUBE-HEAT SHRINK (5.72-MM DIA) (45-CM)	
	23	2	**311-0297**	1	HARNESS AS-MONITOR	
		2	**230-7254**	13	PIN-CONNECTOR	
		2	**147-1444**	1	PLUG AS-CONNECTOR (70-PIN)	
		2	**159-9322**	1	SEAL-O-RING	
		2	**8T-8737**	67	PLUG-SEAL	

245-6029 **WIRING GP-GRADE CONTROL** *(contd.)* **i03597450**

NOTE	REF NO	GRAPHIC REF	PART NUMBER	QTY	PART NAME 1 2 3 4 5 6 (PRODUCT LEVEL)	SEE PAGE
		2	**102-8801**	1	KIT-RECEPTACLE (12-PIN)	
		2	**190-7615**	1	KIT-RECEPTACLE (12-PIN)	
					(EACH RECEPTACLE KIT INCLUDES RECEPTACLE AS & WEDGE)	
		2	**9X-3402**	14	SOCKET-CONNECTOR (16-GA TO 18-GA)	
B		2	**141-8061**		TAPE	
E		2	**125-7874**		TUBE-HEAT SHRINK (5.72-MM DIA) (5-CM)	
	24	2	**327-6133**	1	HARNESS AS-CONTROL	
		2	**230-7254**	15	PIN-CONNECTOR	
		2	**8T-8737**	9	PLUG-SEAL	
		2	**102-8801**	1	KIT-RECEPTACLE (12-PIN)	
		2	**190-7615**	1	KIT-RECEPTACLE (12-PIN)	
					(EACH RECEPTACLE KIT INCLUDES RECEPTACLE AS & WEDGE)	
B		2	**141-8061**		TAPE	
E		2	**125-7874**		TUBE-HEAT SHRINK (5.72-MM DIA) (5-CM)	
E		2	**125-7875**		TUBE-HEAT SHRINK (7.44-MM DIA) (5-CM)	
	25	2	**096-5962**	12	WASHER-HARD (3.4X7X0.8-MM THK)	
M	26	2	**117-6952**	3	SCREW (M8X1.25X30-MM)	
	27	2	**132-5789**	2	CLIP	
	28	2	**133-6934**	1	SPACER (11X20X25-MM THK)	
	29	1	**311-0305**	1	HARNESS AS-RADIO (GRADE CONTROL)	
		1	**155-2255**	1	KIT-CONNECTING PLUG (12-PIN)	
					(INCLUDES PLUG AS, WEDGE & INTERFACE SEAL)	
		1	**167-8987**	1	PLUG AS-CONNECTOR (8-PIN)	
		1	**8T-8737**	4	PLUG-SEAL	
		1	**9W-0844**	2	SOCKET-CONNECTOR (14-GA)	
		1	**180-9340**	6	SOCKET-CONNECTOR (14-GA TO 18-GA)	
	30	2	**2D-0388**	1	GROMMET	
	31	2	**102-8801**	1	KIT-RECEPTACLE (12-PIN)	
					(INCLUDES RECEPTACLE AS & WEDGE)	
	32	2	**4P-8134**	1	CLIP	
M	33	2	**5C-9553**	1	BOLT (M6X1X16-MM)	
	34	2	**7R-3029**	3	CAP-DUST	
M	35	2	**7X-2553**	1	BOLT (M16X2X40-MM)	
	37	2	**033-4818**	12	SCREW-MACHINE	
	38	2	**8T-4121**	6	WASHER-HARD (11X21X2.5-MM THK)	
	39	2	**8T-4122**	1	WASHER-HARD (17X32X3.5-MM THK)	
M	40	2	**8T-4137**	1	BOLT (M10X1.5X20-MM)	
M	41	2	**8T-4185**	1	BOLT (M10X1.5X50-MM)	
M	42	2	**8T-4186**	2	BOLT (M10X1.5X40-MM)	
M	43	2	**8T-4195**	2	BOLT (M10X1.5X30-MM)	
M	44	2	**8T-4200**	2	BOLT (M8X1.25X16-MM)	
	46	2	**8T-4224**	8	WASHER-HARD (8.8X16X2-MM THK)	
M	47	2	**8T-4908**	4	BOLT (M8X1.25X25-MM)	
	48	2	**9X-8256**	1	WASHER (6.6X12X2-MM THK)	
D	49	2	**8T-3426**		CHANNEL-TRIM (0.33-M)	
E	50	1	**7Y-5074**		GUARD-HOSE (48-CM)	
E	51	2	**109-2013**		GUARD (49-CM)	
D	52	1	**6V-1359**		SEAL (0.1-M)	
E	53	2	**3E-6600**		SEAL (31-CM)	
E	53A	2	**3E-6600**		SEAL (32-CM)	
E	53B	2	**3E-6600**		SEAL (3-CM)	

B-USE AS REQUIRED
C-CHANGE FROM PREVIOUS TYPE
D-ORDER BY THE METER
E-ORDER BY THE CENTIMETER
M-METRIC PART

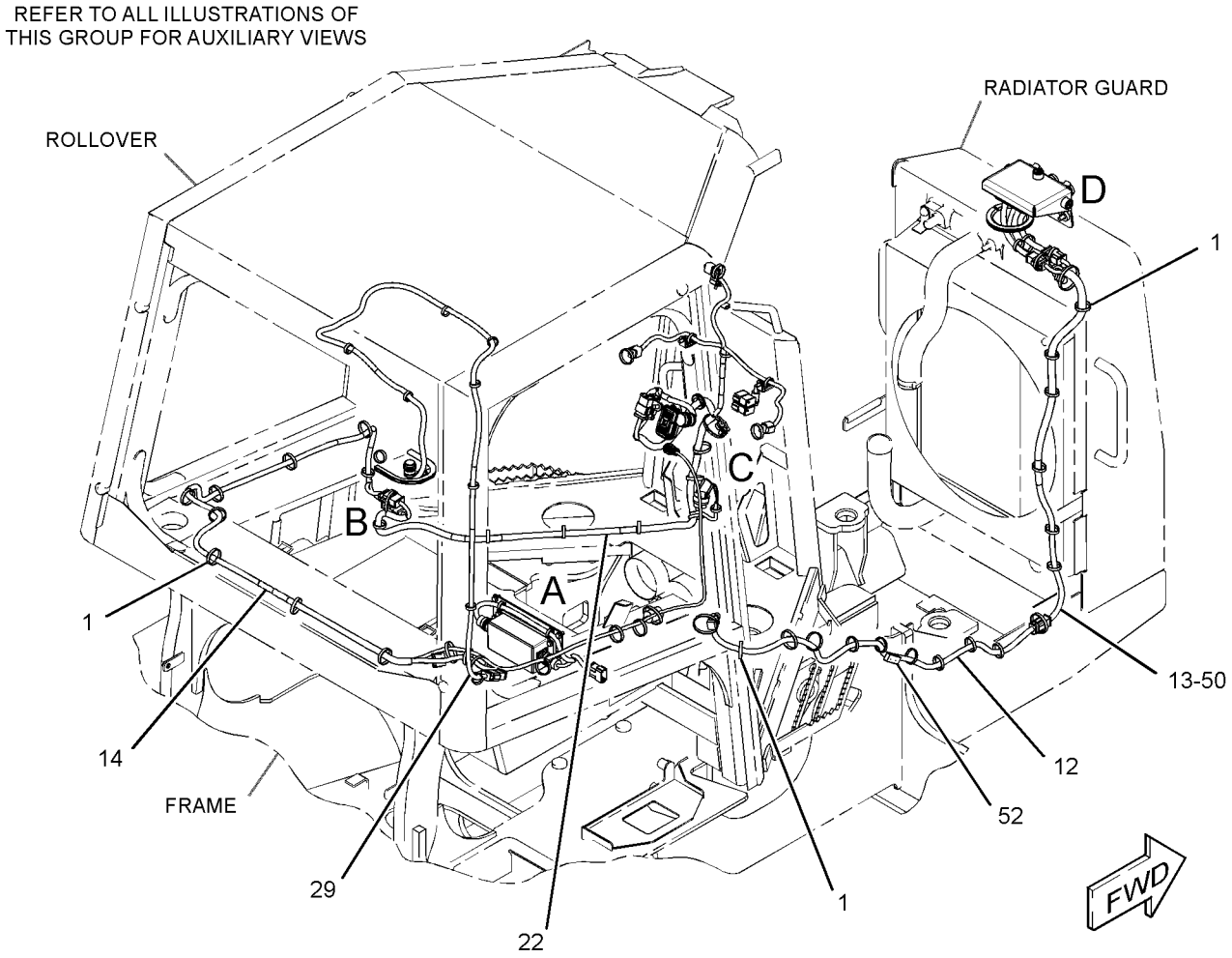

GRAPHIC #1 g01577053

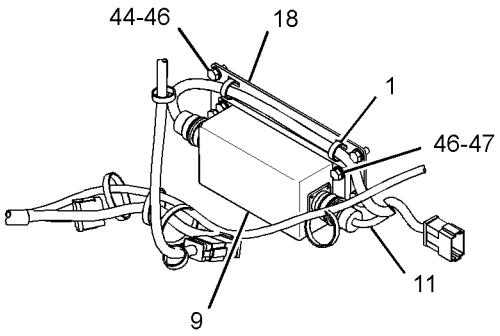

VIEW OF AREA A

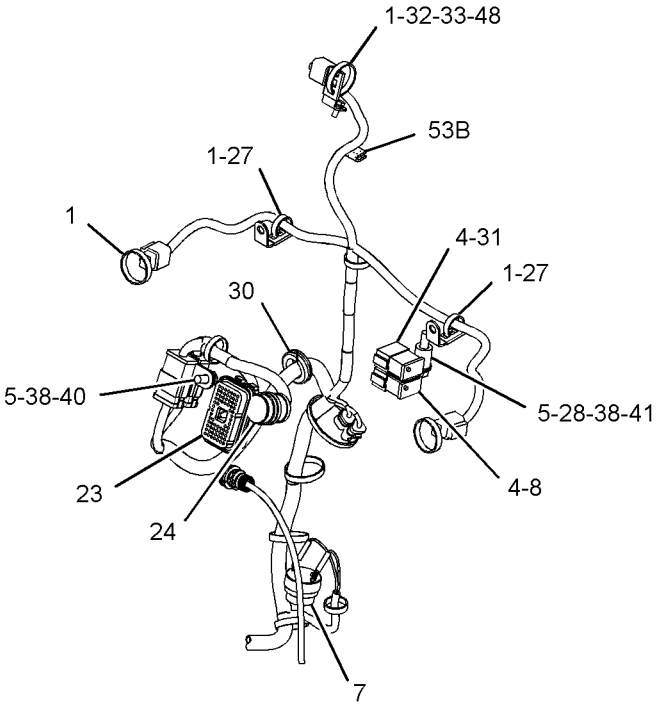

VIEW OF AREA C

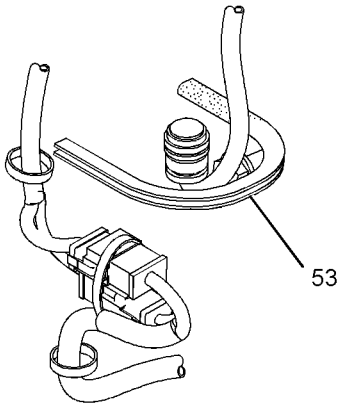

VIEW OF AREA B

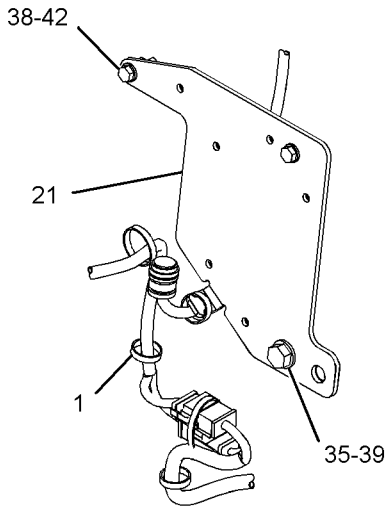

VIEW OF AREA B
(ALTERNATE ROPS CAB MOUNTING)

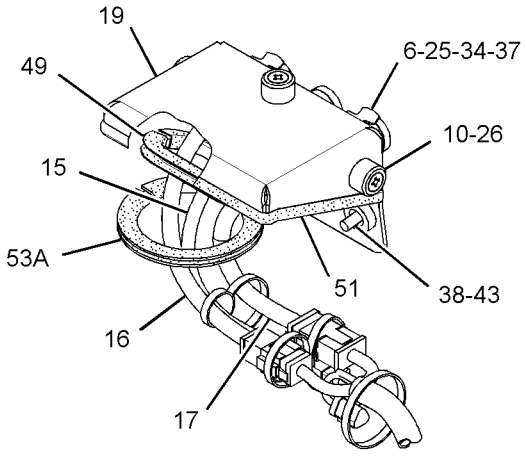

VIEW OF AREA D

GRAPHIC #2 **<END>** g01577054

ELECTRICAL AND STARTING SYSTEM

249-9040 WIRING GP-GRADE CONTROL–BASE

S/N: JLF1-UP; WWW1-UP; YYY1-UP
PART OF 296-5753, 296-5754 GRADE CONTROL AR
AN ATTACHMENT
TYPE 1

SMCS-1408 **i03595744**

NOTE	REF NO	GRAPHIC REF	PART NUMBER	QTY	PART NAME 1 2 3 4 5 6 (PRODUCT LEVEL)	SEE PAGE
	1	1	**7K-1181**	42	STRAP-CABLE	
	2	1	**167-8712**	1	ALARM	
	3	1	**226-9169**	1	MODULE AS-POWER SUPPLY	
	4	1	**245-6030**	1	HARNESS AS-DASH (GRADE CONTROL)	
		1	**9X-3401**	6	PIN-CONNECTOR (16-GA TO 18-GA)	
		1	**186-3735**	4	PIN-CONNECTOR (16-GA TO 18-GA)	
		1	**9W-0852**	2	PIN-CONNECTOR (14-GA)	
		1	**230-7254**	18	PIN-CONNECTOR	
		1	**155-2255**	1	KIT-CONNECTING PLUG (12-PIN)	
		1	**155-2256**	1	KIT-CONNECTING PLUG (12-PIN)	
		1	**155-2265**	1	KIT-CONNECTING PLUG (8-PIN)	
		1	**155-2260**	2	KIT-CONNECTING PLUG (3-PIN)	
					(EACH PLUG KIT INCLUDES PLUG AS, WEDGE & INTERFACE SEAL)	
		1	**230-5008**	3	PLUG AS-CONNECTOR (4-PIN)	
		1	**8T-8737**	44	PLUG-SEAL	
		1	**102-8801**	2	KIT-RECEPTACLE (12-PIN)	
		1	**190-7614**	1	KIT-RECEPTACLE (12-PIN)	
					(EACH RECEPTACLE KIT INCLUDES RECEPTACLE AS & WEDGE)	
		1	**134-2540**	2	RESISTOR AS (3-PIN)	
		1	**230-5009**	3	RECEPTACLE AS-CONNECTOR (4-PIN)	
		1	**9X-3402**	6	SOCKET-CONNECTOR (16-GA TO 18-GA)	
		1	**186-3736**	6	SOCKET-CONNECTOR (16-GA TO 18-GA)	
		1	**9X-3402**	12	SOCKET-CONNECTOR (16-GA TO 18-GA)	
		1	**5P-2321**	2	TERMINAL-FORK (14-GA TO 16-GA, NO. 6 SCREW)	
E		1	**125-7874**		TUBE-HEAT SHRINK (5.72-MM DIA) (45-CM)	
	5	1	**249-9025**	1	HARNESS AS-RADIO (GRADE CONTROL)	
		1	**155-2255**	1	KIT-CONNECTING PLUG (12-PIN)	
					(INCLUDES PLUG AS, WEDGE & INTERFACE SEAL)	
		1	**167-8987**	1	PLUG AS-CONNECTOR (8-PIN)	
		1	**8T-8737**	6	PLUG-SEAL	
		1	**9X-3402**	4	SOCKET-CONNECTOR (16-GA TO 18-GA)	
		1	**9W-0844**	2	SOCKET-CONNECTOR (14-GA)	
		1	**155-2255**	1	KIT-CONNECTING PLUG (12-PIN)	
					(INCLUDES PLUG AS, WEDGE, & INTERFACE SEAL)	
		1	**167-8987**	1	PLUG AS-CONNECTOR (8-PIN)	
	6	1	**249-9030**	1	HARNESS AS-WIRING (POWER SUPPLY MODULE)	
		1	**9W-0852**	7	PIN-CONNECTOR (14-GA)	
		1	**3R-9965**	1	PLUG AS-CONNECTOR (8-PIN)	
		1	**6D-5257**	1	PLUG AS-CONNECTOR (8-PIN)	
		1	**8T-8737**	5	PLUG-SEAL	
		1	**102-8801**	1	KIT-RECEPTACLE (12-PIN)	
					(INCLUDES RECEPTACLE AS & WEDGE)	
E		1	**125-7874**		TUBE-HEAT SHRINK (5.72-MM DIA) (5-CM)	
	7	1	**249-9033**	1	HARNESS AS-CONSOLE (GRADE CONTROL)	
		1	**186-3735**	10	PIN-CONNECTOR (16-GA TO 18-GA)	
		1	**9W-0852**	2	PIN-CONNECTOR (14-GA)	
		1	**155-2255**	2	KIT-CONNECTING PLUG (12-PIN)	
					(EACH INCLUDES PLUG AS, WEDGE & INTERFACE SEAL)	
		1	**253-2695**	1	PLUG AS-CONNECTOR	
		1	**8T-8737**	12	PLUG-SEAL	

249-9040 **WIRING GP-GRADE CONTROL** *(contd.)* **i03595744**

NOTE	REF NO	GRAPHIC REF	PART NUMBER	QTY	PART NAME 1 2 3 4 5 6 (PRODUCT LEVEL)	SEE PAGE
		1	**102-8806**	1	KIT-RECEPTACLE (8-PIN)	
		1	**102-8801**	1	KIT-RECEPTACLE (12-PIN)	
					(EACH RECEPTACLE KIT INCLUDES RECEPTACLE AS & WEDGE)	
		1	**8T-8736**	1	RECEPTACLE-CONNECTOR (9-PIN)	
		1	**9X-3402**	13	SOCKET-CONNECTOR (16-GA TO 18-GA)	
		1	**9W-0844**	6	SOCKET-CONNECTOR (14-GA)	
B		1	**141-8061**		TAPE	
E		1	**125-7874**		TUBE-HEAT SHRINK (5.72-MM DIA) (40-CM)	
E		1	**125-7875**		TUBE-HEAT SHRINK (7.44-MM DIA) (10-CM)	
	8	1	**249-9077**	1	PLATE AS	
	9	1	**132-5789**	2	CLIP	
	10	1	**2D-0388**	1	GROMMET	
M	11	1	**8T-4200**	6	BOLT (M8X1.25X16-MM)	
	12	1	**8T-4224**	10	WASHER-HARD (8.8X16X2-MM THK)	
M	13	1	**8T-4908**	4	BOLT (M8X1.25X25-MM)	
E	14	1	**3E-6600**		SEAL (3-CM)	

B-USE AS REQUIRED
E-ORDER BY THE CENTIMETER
M-METRIC PART

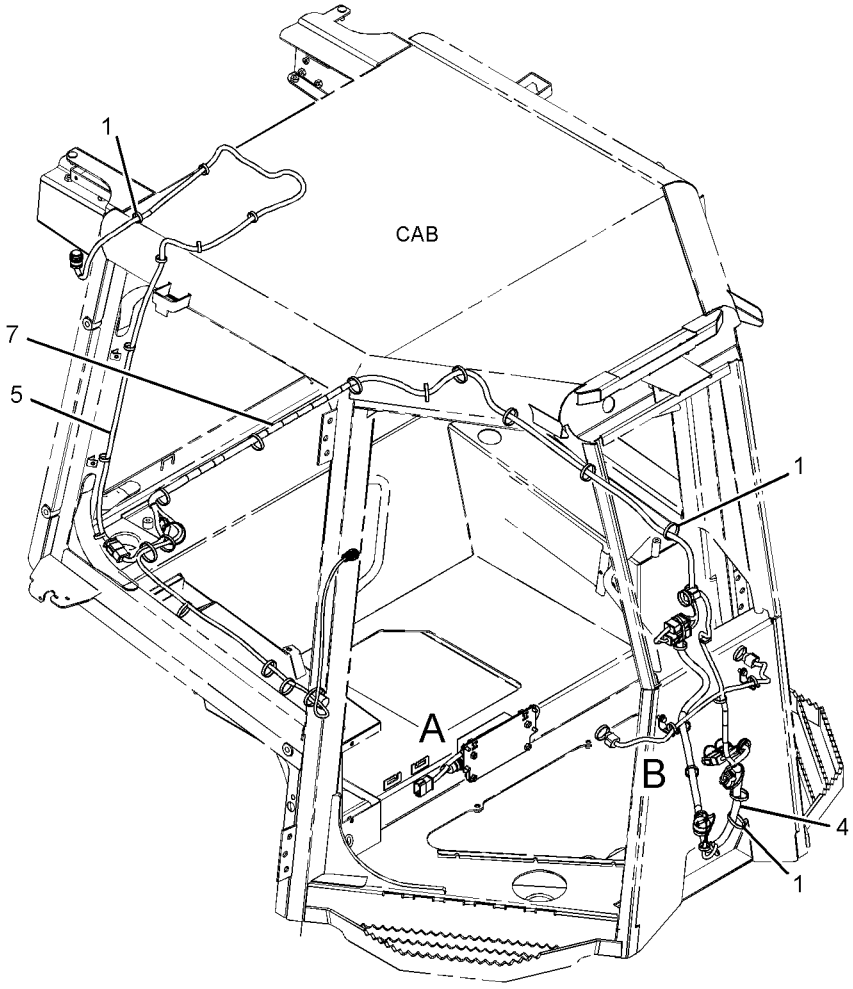



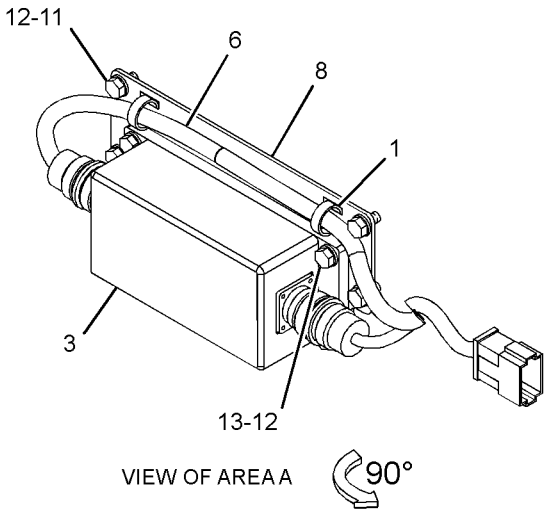

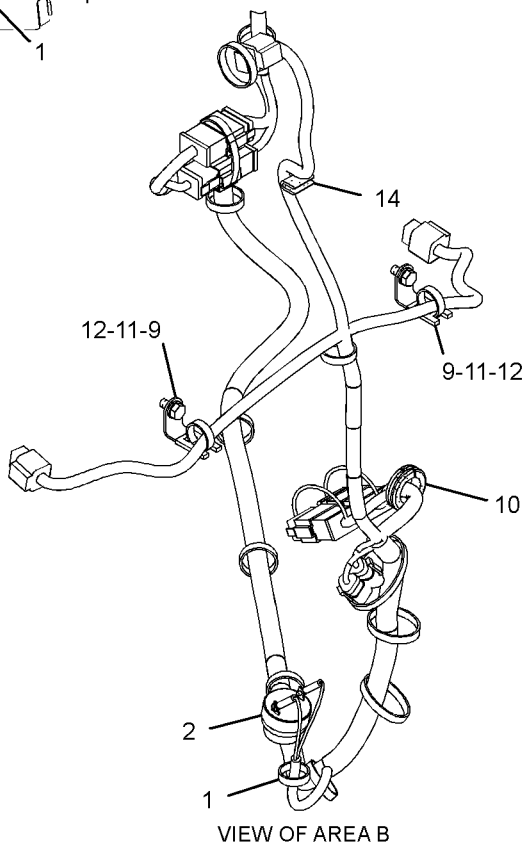

GRAPHIC #1 **<END>** g01376975

ELECTRICAL AND STARTING SYSTEM

249-9040 WIRING GP-GRADE CONTROL–BASE

S/N: JLF1-UP; WWW1-UP; YYY1-UP
PART OF 296-5753, 296-5754 GRADE CONTROL AR
AN ATTACHMENT
TYPE 2

SMCS-1408 **i03595660**

NOTE	REF NO	GRAPHIC REF	PART NUMBER	QTY	PART NAME 1 2 3 4 5 6 (PRODUCT LEVEL)	SEE PAGE
C	1	1	**7K-1181**	39	STRAP-CABLE	
C	2	1	**8T-8737**	24	PLUG-SEAL	
	3	1	**167-8712**	1	ALARM	
C	4	1	**190-7615**	1	KIT-RECEPTACLE (12-PIN)	
					(INCLUDES RECEPTACLE AS & WEDGE)	
	5	1	**226-9169**	1	MODULE AS-POWER SUPPLY	
	6	1	**249-9030**	1	HARNESS AS-WIRING (POWER SUPPLY MODULE)	
		1	**9W-0852**	7	PIN-CONNECTOR (14-GA)	
		1	**3R-9965**	1	PLUG AS-CONNECTOR (8-PIN)	
		1	**6D-5257**	1	PLUG AS-CONNECTOR (8-PIN)	
		1	**8T-8737**	5	PLUG-SEAL	
		1	**102-8801**	1	KIT-RECEPTACLE (12-PIN)	
					(INCLUDES RECEPTACLE AS & WEDGE)	
E		1	**125-7874**		TUBE-HEAT SHRINK (5.72-MM DIA) (5-CM)	
	7	1	**249-9033**	1	HARNESS AS-CONSOLE (GRADE CONTROL)	
		1	**186-3735**	10	PIN-CONNECTOR (16-GA TO 18-GA)	
		1	**9W-0852**	2	PIN-CONNECTOR (14-GA)	
		1	**155-2255**	2	KIT-CONNECTING PLUG (12-PIN)	
					(EACH INCLUDES PLUG AS, WEDGE & INTERFACE SEAL)	
		1	**253-2695**	1	PLUG AS-CONNECTOR	
		1	**8T-8737**	12	PLUG-SEAL	
		1	**102-8806**	1	KIT-RECEPTACLE (8-PIN)	
		1	**102-8801**	1	KIT-RECEPTACLE (12-PIN)	
					(EACH RECEPTACLE KIT INCLUDES RECEPTACLE AS & WEDGE)	
		1	**8T-8736**	1	RECEPTACLE-CONNECTOR (9-PIN)	
		1	**9X-3402**	13	SOCKET-CONNECTOR (16-GA TO 18-GA)	
		1	**9W-0844**	6	SOCKET-CONNECTOR (14-GA)	
B		1	**141-8061**		TAPE	
E		1	**125-7874**		TUBE-HEAT SHRINK (5.72-MM DIA) (40-CM)	
E		1	**125-7875**		TUBE-HEAT SHRINK (7.44-MM DIA) (10-CM)	
	8	1	**249-9077**	1	PLATE AS	
C	9	1	**311-0295**	1	HARNESS AS-DASH (GRADE CONTROL)	
		1	**186-3735**	1	PIN-CONNECTOR (16-GA TO 18-GA)	
		1	**9W-0852**	2	PIN-CONNECTOR (14-GA)	
		1	**9X-3401**	6	PIN-CONNECTOR (16-GA TO 18-GA)	
					–OR–	
		1	**126-1767**	6	PIN-CONNECTOR (14-GA)	
		1	**155-2255**	1	KIT-CONNECTING PLUG (12-PIN)	
		1	**155-2257**	1	KIT-CONNECTING PLUG (12-PIN)	
		1	**155-2265**	1	KIT-CONNECTING PLUG (8-PIN)	
		1	**155-2260**	2	KIT-CONNECTING PLUG (3-PIN)	
					(EACH PLUG KIT INCLUDES PLUG AS, WEDGE & INTERFACE SEAL)	
		1	**230-5008**	3	PLUG AS-CONNECTOR (4-PIN)	
		1	**8T-8737**	24	PLUG-SEAL	
		1	**102-8801**	1	KIT-RECEPTACLE (12-PIN)	
					(INCLUDES RECEPTACLE AS & WEDGE)	
		1	**134-2540**	2	RESISTOR AS (3-PIN)	
		1	**230-5009**	3	RECEPTACLE AS-CONNECTOR (4-PIN)	
		1	**9X-3402**	12	SOCKET-CONNECTOR (16-GA TO 18-GA)	
		1	**180-9340**	10	SOCKET-CONNECTOR (14-GA TO 18-GA)	
		1	**5P-2321**	2	TERMINAL-FORK (14-GA TO 16-GA, NO. 6 SCREW)	

249-9040 **WIRING GP-GRADE CONTROL** *(contd.)* **i03595660**

NOTE	REF NO	GRAPHIC REF	PART NUMBER	QTY	PART NAME 1 2 3 4 5 6 (PRODUCT LEVEL)	SEE PAGE
E		1	**125-7874**		TUBE-HEAT SHRINK (5.72-MM DIA) (45-CM)	
	10	1	**132-5789**	2	CLIP	
C	11	1	**311-0305**	1	HARNESS AS-RADIO (GRADE CONTROL)	
		1	**155-2255**	1	KIT-CONNECTING PLUG (12-PIN)	
					(INCLUDES PLUG AS, WEDGE & INTERFACE SEAL)	
		1	**167-8987**	1	PLUG AS-CONNECTOR (8-PIN)	
		1	**8T-8737**	4	PLUG-SEAL	
		1	**9W-0844**	2	SOCKET-CONNECTOR (14-GA)	
		1	**180-9340**	6	SOCKET-CONNECTOR (14-GA TO 18-GA)	
C	12	1	**102-8801**	1	KIT-RECEPTACLE (12-PIN)	
					(INCLUDES RECEPTACLE AS & WEDGE)	
CM	13	1	**8T-4200**	4	BOLT (M8X1.25X16-MM)	
C	14	1	**8T-4224**	8	WASHER-HARD (8.8X16X2-MM THK)	
M	15	1	**8T-4908**	4	BOLT (M8X1.25X25-MM)	

B-USE AS REQUIRED
C-CHANGE FROM PREVIOUS TYPE
E-ORDER BY THE CENTIMETER
M-METRIC PART

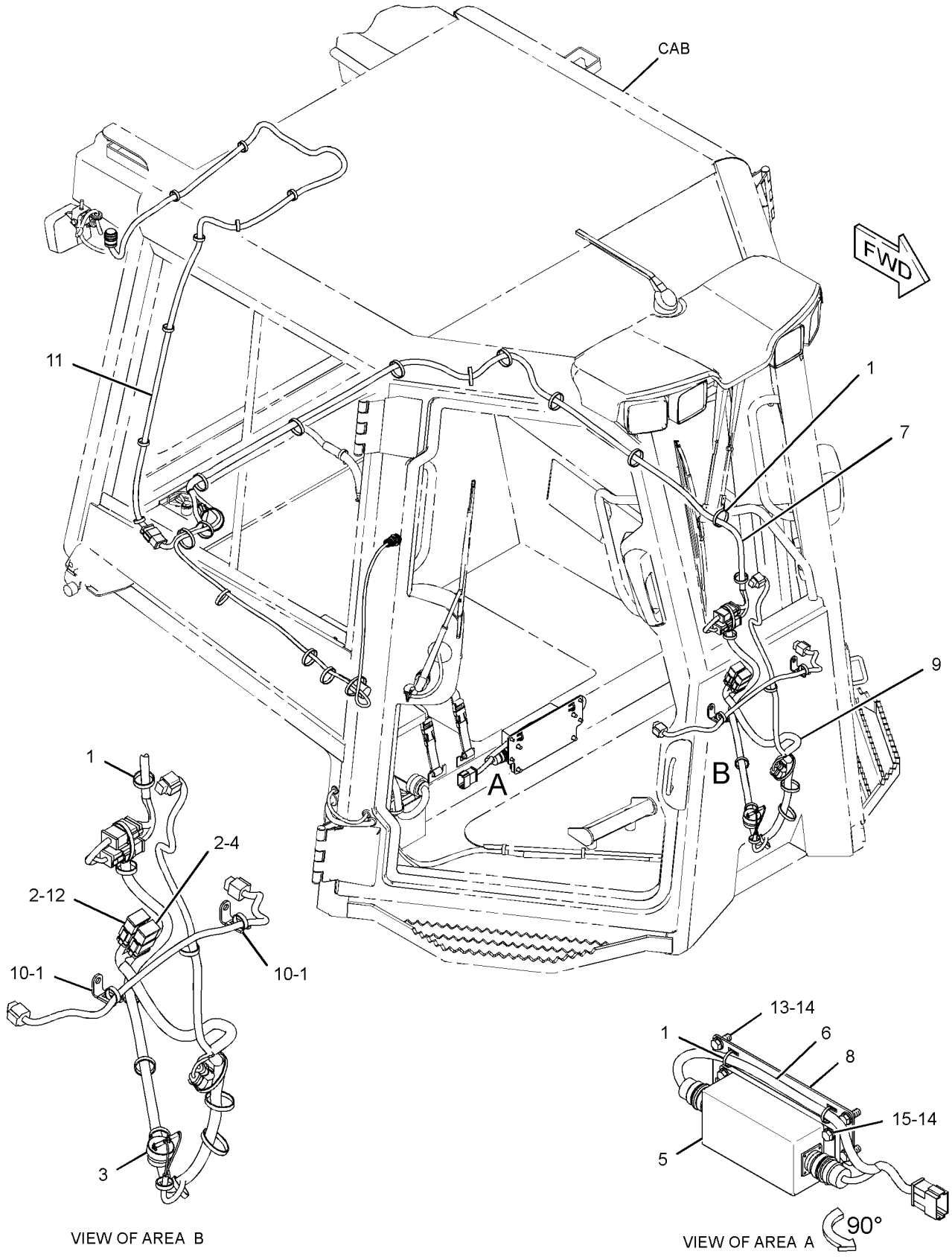

GRAPHIC #1

<END>

g01738474

ELECTRICAL AND STARTING SYSTEM

245-6020 WIRING GP-PLATFORM

S/N: JLF1-UP; WWW1-UP; YYY1-UP
PART OF 244-7380, 244-7381, 282-5328 CHASSIS AR
TYPE 1

SMCS-1408 **i03597161**

NOTE	REF NO	GRAPHIC REF	PART NUMBER	QTY	PART NAME 1 2 3 4 5 6 (PRODUCT LEVEL)	SEE PAGE
	1	1	**6I-1418**	4	SPACER (8.2X12.7X28.7-MM THK)	
	2	1	**7G-1060**	1	STRAP AS-GROUND	
	3	1	**7K-1181**	17	STRAP-CABLE	
	4	1	**8T-9655**	8	MOUNT-ISOLATION	
	5	1	**130-5300**	2	CLIP	
	6	1	**201-1024**	1	BRACKET	
	7	1	**311-0294**	1	HARNESS AS-PLATFORM	
		1	**126-1774**	2	COVER-CONNECTOR	
		1	**211-0052**	1	NUT (1-11/16-18-THD)	
		1	**213-0139**	5	PIN	
		1	**186-3735**	14	PIN-CONNECTOR (16-GA TO 18-GA)	
		1	**9W-0852**	4	PIN-CONNECTOR (14-GA)	
		1	**9X-3401**	62	PIN-CONNECTOR (16-GA TO 18-GA)	
					—OR—	
		1	**126-1767**	62	PIN-CONNECTOR (14-GA)	
		1	**147-1445**	1	PLUG AS-CONNECTOR (70-PIN)	
		1	**147-1446**	1	PLUG AS-CONNECTOR (70-PIN)	
		1	**155-2255**	5	KIT-CONNECTING PLUG (12-PIN)	
		1	**155-2265**	3	KIT-CONNECTING PLUG (8-PIN)	
		1	**155-2260**	1	KIT-CONNECTING PLUG (3-PIN)	
		1	**155-2270**		KIT-CONNECTING PLUG (2-PIN)	
					(EACH PLUG KIT INCLUDES PLUG AS, WEDGE & INTERFACE SEAL)	
		1	**160-7690**	1	PLUG AS-CONNECTOR (70-PIN)	
		1	**159-9322**	1	SEAL-O-RING	
		1	**197-7261**	1	PLUG AS-CONNECTOR (19-PIN)	
		1	**8T-8737**	141	PLUG-SEAL	
		1	**102-8802**	2	KIT-RECEPTACLE (2-PIN)	
		1	**102-8803**	1	KIT-RECEPTACLE (3-PIN)	
		1	**102-8806**	3	KIT-RECEPTACLE (8-PIN)	
		1	**102-8801**	5	KIT-RECEPTACLE (12-PIN)	
		1	**190-7615**	1	KIT-RECEPTACLE (12-PIN)	
					(EACH RECEPTACLE KIT INCLUDES RECEPTACLE AS & WEDGE)	
		1	**167-3692**	1	RECEPTACLE AS-CONNECTOR (31-PIN)	
		1	**186-3736**	22	SOCKET-CONNECTOR (16-GA TO 18-GA)	
		1	**9W-0844**	8	SOCKET-CONNECTOR (14-GA)	
		1	**9X-3402**	174	SOCKET-CONNECTOR (16-GA TO 18-GA)	
		1	**180-9340**	24	SOCKET-CONNECTOR (14-GA TO 18-GA)	
		1	**8L-8413**	15	STRAP-CABLE	
		1	**9X-6772**	4	STRAP-CABLE	
		1	**3T-4696**	1	TERMINAL (10-GA)	
		1	**2L-8079**	1	TERMINAL (14-GA TO 16-GA)	
E		1	**119-3662**		TUBE-HEAT SHRINK (10.85-MM DIA) (13-CM)	
E		1	**125-7874**		TUBE-HEAT SHRINK (5.72-MM DIA) (125-CM)	
E		1	**125-7875**		TUBE-HEAT SHRINK (7.44-MM DIA) (15-CM)	
		1	**128-4249**	1	LOCKWASHER	
Y	8	1	*249-9023*	1	PANEL GP-FUSE	168
R	9	1	**262-1408**	1	CONTROL GP-UNPROGRAMMED (CHASSIS)	
	10	1	**269-7680**	1	CLIP	
M	11	1	**127-2170**	4	SCREW-TRUSS HEAD (M8X1.25X20-MM)	
	12	1	**132-5789**	1	CLIP	
	13	1	**4P-7581**	1	CLIP	
	14	1	**4P-8134**	2	CLIP	
M	15	1	**5C-7261**	4	NUT (M8X1.25-THD)	

245-6020 **WIRING GP-PLATFORM** *(contd.)* **i03597161**

NOTE	REF NO	GRAPHIC REF	PART NUMBER	QTY	PART NAME 1 2 3 4 5 6 (PRODUCT LEVEL)	SEE PAGE
	16	1	**5P-4116**	4	WASHER-HARD (8.8X20.5X2-MM THK)	
	17	1	**8T-4121**	4	WASHER-HARD (11X21X2.5-MM THK)	
M	18	1	**8T-4133**	1	NUT (M10X1.5-THD)	
M	19	1	**8T-4191**	3	BOLT (M10X1.5X16-MM)	

E-ORDER BY THE CENTIMETER
M-METRIC PART
R-REMFG PART MAY BE AVAILABLE
Y-SEPARATE ILLUSTRATION

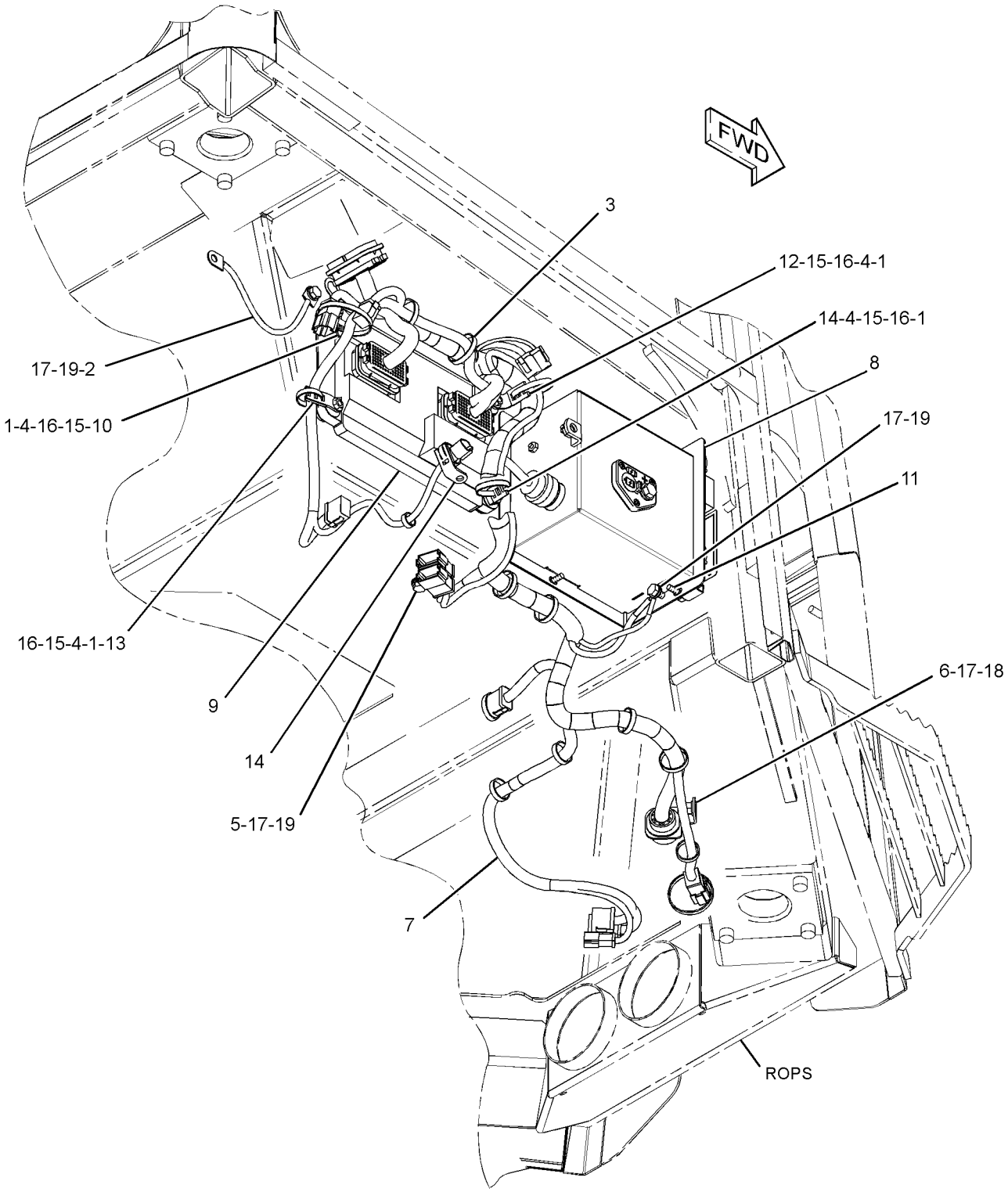

GRAPHIC #1 **<END>** g01517236

245-6020 WIRING GP-PLATFORM

S/N: JLF1-UP; WWW1-UP; YYY1-UP
PART OF 244-7380, 244-7381, 282-5328 CHASSIS AR
TYPE 2

SMCS-1408 **i03597122**

NOTE	REF NO	GRAPHIC REF	PART NUMBER	QTY	PART NAME 1 2 3 4 5 6 (PRODUCT LEVEL)	SEE PAGE
	1	1	**6I-1418**	4	SPACER (8.2X12.7X28.7-MM THK)	
	2	1	**7G-1060**	1	STRAP AS-GROUND	
C	3	1	**7K-1181**	20	STRAP-CABLE	
	4	1	**8T-9655**	8	MOUNT-ISOLATION	
	5	1	**130-5300**	2	CLIP	
	6	1	**201-1024**	1	BRACKET	
	7	1	**311-0294**	1	HARNESS AS-PLATFORM	
		1	**126-1774**	2	COVER-CONNECTOR	
		1	**211-0052**	1	NUT (1-11/16-18-THD)	
		1	**213-0139**	5	PIN	
		1	**186-3735**	14	PIN-CONNECTOR (16-GA TO 18-GA)	
		1	**9W-0852**	4	PIN-CONNECTOR (14-GA)	
		1	**9X-3401**	62	PIN-CONNECTOR (16-GA TO 18-GA)	
					—OR—	
		1	**126-1767**	62	PIN-CONNECTOR (14-GA)	
		1	**147-1445**	1	PLUG AS-CONNECTOR (70-PIN)	
		1	**147-1446**	1	PLUG AS-CONNECTOR (70-PIN)	
		1	**155-2255**	5	KIT-CONNECTING PLUG (12-PIN)	
		1	**155-2265**	3	KIT-CONNECTING PLUG (8-PIN)	
		1	**155-2260**	1	KIT-CONNECTING PLUG (3-PIN)	
		1	**155-2270**		KIT-CONNECTING PLUG (2-PIN)	
					(EACH PLUG KIT INCLUDES PLUG AS, WEDGE & INTERFACE SEAL)	
		1	**160-7690**	1	PLUG AS-CONNECTOR (70-PIN)	
		1	**159-9322**	1	SEAL-O-RING	
		1	**197-7261**	1	PLUG AS-CONNECTOR (19-PIN)	
		1	**8T-8737**	141	PLUG-SEAL	
		1	**102-8802**	2	KIT-RECEPTACLE (2-PIN)	
		1	**102-8803**	1	KIT-RECEPTACLE (3-PIN)	
		1	**102-8806**	3	KIT-RECEPTACLE (8-PIN)	
		1	**102-8801**	5	KIT-RECEPTACLE (12-PIN)	
		1	**190-7615**	1	KIT-RECEPTACLE (12-PIN)	
					(EACH RECEPTACLE KIT INCLUDES RECEPTACLE AS & WEDGE)	
		1	**167-3692**	1	RECEPTACLE AS-CONNECTOR (31-PIN)	
		1	**186-3736**	22	SOCKET-CONNECTOR (16-GA TO 18-GA)	
		1	**9W-0844**	8	SOCKET-CONNECTOR (14-GA)	
		1	**9X-3402**	174	SOCKET-CONNECTOR (16-GA TO 18-GA)	
		1	**180-9340**	24	SOCKET-CONNECTOR (14-GA TO 18-GA)	
		1	**8L-8413**	15	STRAP-CABLE	
		1	**9X-6772**	4	STRAP-CABLE	
		1	**3T-4696**	1	TERMINAL (10-GA)	
		1	**2L-8079**	1	TERMINAL (14-GA TO 16-GA)	
E		1	**119-3662**		TUBE-HEAT SHRINK (10.85-MM DIA) (13-CM)	
E		1	**125-7874**		TUBE-HEAT SHRINK (5.72-MM DIA) (125-CM)	
E		1	**125-7875**		TUBE-HEAT SHRINK (7.44-MM DIA) (15-CM)	
		1	**128-4249**	1	LOCKWASHER	
Y	8	1	*249-9023*	1	PANEL GP-FUSE	168
CR	9	1	**304-5687**	1	CONTROL GP-UNPROGRAMMED (CHASSIS)	
	10	1	**269-7680**	1	CLIP	
M	11	1	**127-2170**	4	SCREW-TRUSS HEAD (M8X1.25X20-MM)	
	12	1	**132-5789**	1	CLIP	
	13	1	**4P-7581**	1	CLIP	
	14	1	**4P-8134**	2	CLIP	
M	15	1	**5C-7261**	4	NUT (M8X1.25-THD)	

245-6020 **WIRING GP-PLATFORM** *(contd.)* **i03597122**

NOTE	REF NO	GRAPHIC REF	PART NUMBER	QTY	PART NAME 1 2 3 4 5 6 (PRODUCT LEVEL)	SEE PAGE
	16	1	**5P-4116**	4	WASHER-HARD (8.8X20.5X2-MM THK)	
	17	1	**8T-4121**	4	WASHER-HARD (11X21X2.5-MM THK)	
M	18	1	**8T-4133**	1	NUT (M10X1.5-THD)	
M	19	1	**8T-4191**	3	BOLT (M10X1.5X16-MM)	

C-CHANGE FROM PREVIOUS TYPE
E-ORDER BY THE CENTIMETER
M-METRIC PART
R-REMFG PART MAY BE AVAILABLE
Y-SEPARATE ILLUSTRATION

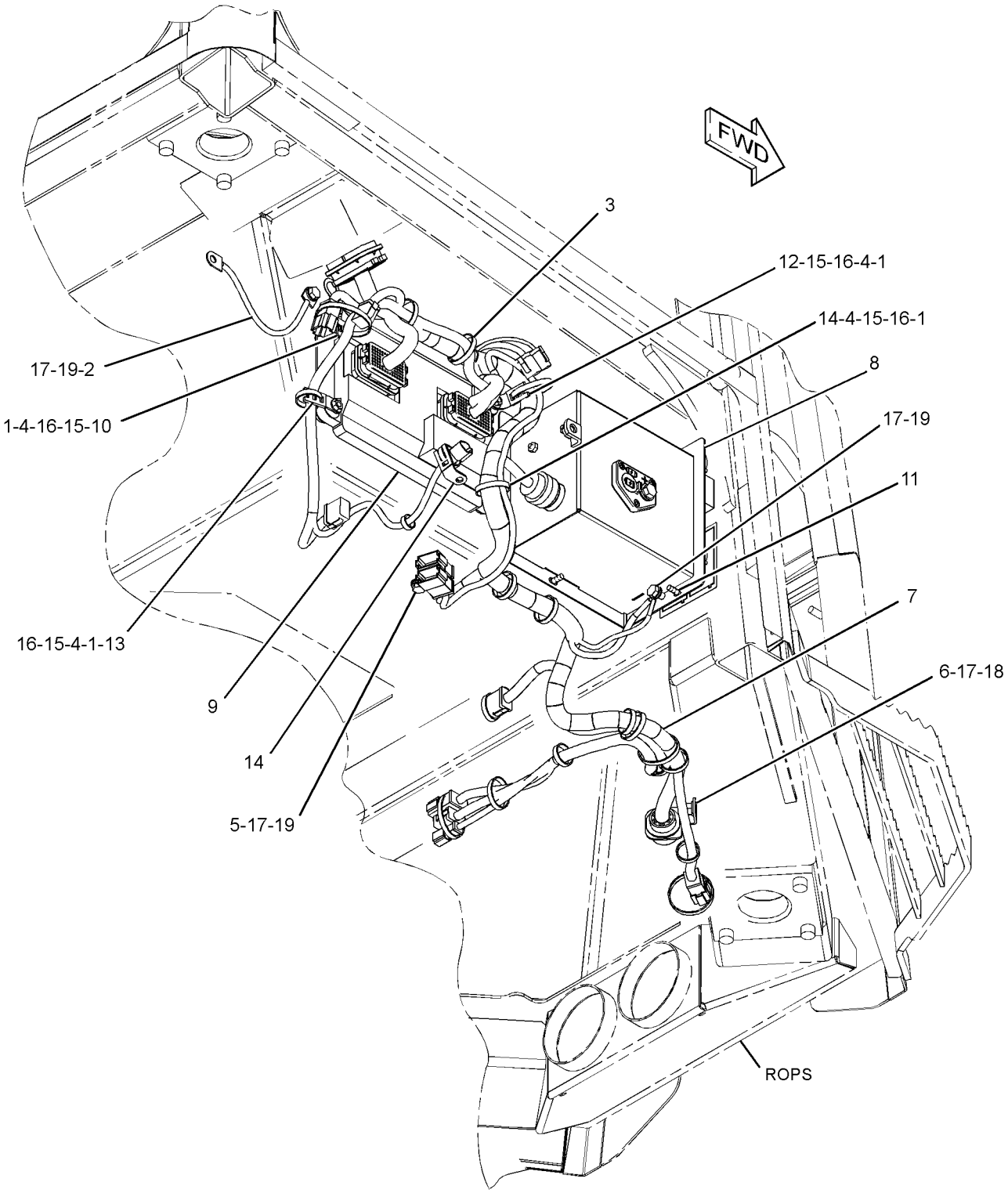

GRAPHIC #1 **<END>** g01618197

234-8821 ACTUATOR GP-PUMP–PROPEL

S/N: JLF1-UP; WWW1-UP; YYY1-UP
PART OF 289-6388, 289-6389, 289-6390 PUMP GP-PISTON
AN ATTACHMENT

SMCS-5078 **i02583844**

NOTE	REF NO	GRAPHIC REF	PART NUMBER	QTY	PART NAME 1 2 3 4 5 6 (PRODUCT LEVEL)	SEE PAGE
	1	1	**004-1964**	2	SEAL-O-RING	
	2	1	**188-7790**	2	RING-GUIDE	
	3	1	**188-7791**	2	RING	
	4	1	**188-7568**	1	COVER	
	5	1	**188-7569**	1	COVER	
M	6	1	**188-7789**	1	NUT (M12X1.5-THD)	
M	7	1	**8T-0269**	8	BOLT-SOCKET HEAD (M6X1X20-MM)	

M-METRIC PART

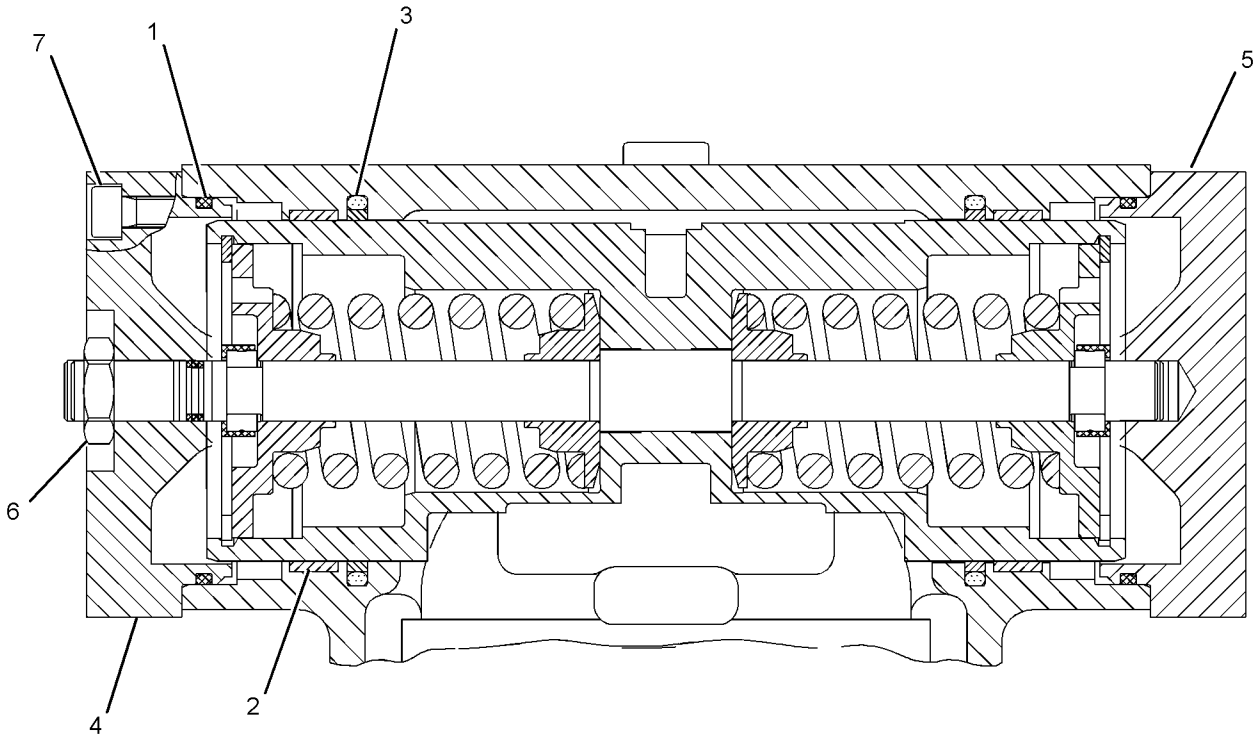

GRAPHIC #1 **<END>** g01010836

244-7616 BRAKE GP-PARKING

S/N: JLF1-UP; WWW1-UP; YYY1-UP
PART OF 244-7383, 244-7447, 286-3236 POWER TRAIN AR
TYPE 1

SMCS-4267 **i02912371**

NOTE	REF NO	GRAPHIC REF	PART NUMBER	QTY	PART NAME 1 2 3 4 5 6 (PRODUCT LEVEL)	SEE PAGE
	1	1	**5E-8178**	16	SPRING	
	2	1	**7X-9261**	1	RETAINER	
	3	1	**249-5656**	1	SHAFT	
	4	1	**249-5661**	1	HOUSING	
	5	1	**249-5663**	1	KIT-DISC	
					(INCLUDES DISCS-ROTATING, DISCS-STATIONARY, PINS & DISC-PRIMARY)	
	6	1	**249-5665**	1	KIT-BEARING (BRAKE)	
					(INCLUDES BEARINGS-BALL, RINGS-RETAINING & SEALS-LIP)	
	7	1	**249-5666**	1	PISTON	
	8	1	**249-5670**	1	HOUSING	
	9	1	**303-0462**	1	KIT-SEAL	
					(INCLUDES GASKET, PACKING & SEAL-O-RING)	
M	10	1	**095-0658**	2	BOLT-SOCKET HEAD (M10X1.5X70-MM)	
	12	1	**9F-2247**	2	PLUG-PIPE	

M-METRIC PART

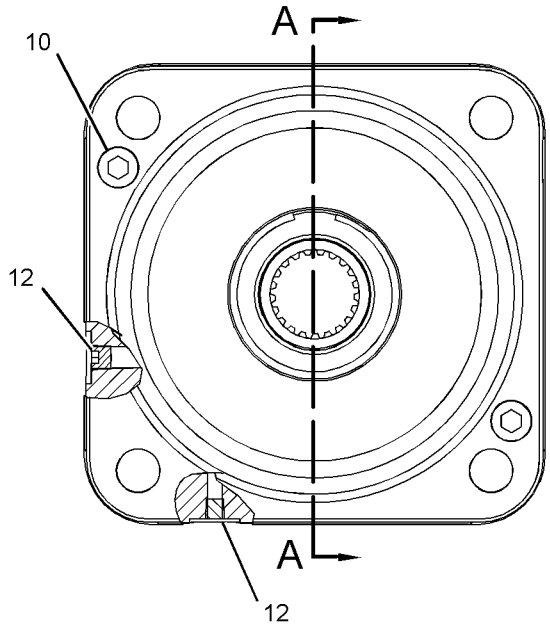

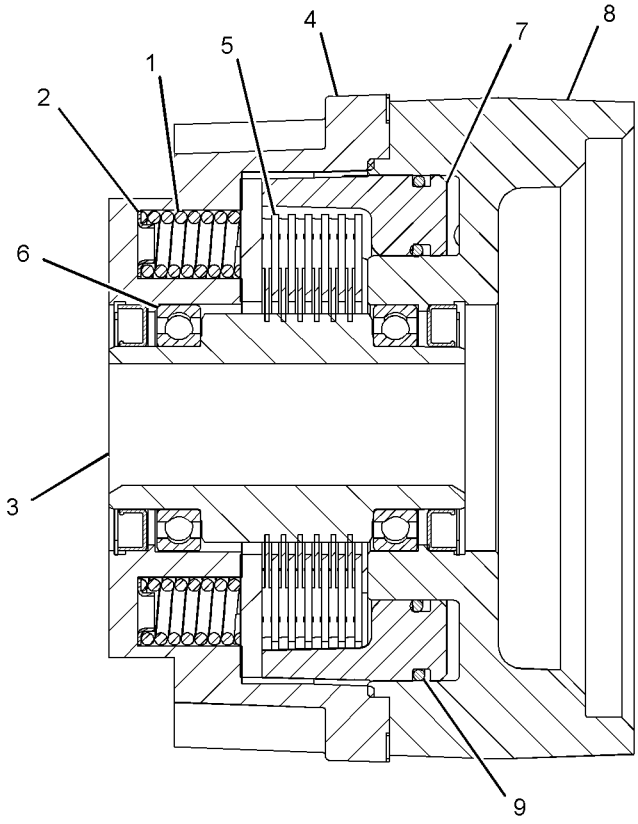

SECTION A-A

GRAPHIC #1 **<END>** g01526754

244-7616 BRAKE GP-PARKING

S/N: JLF1-UP; WWW1-UP; YYY1-UP
PART OF 244-7383, 244-7447, 286-3236 POWER TRAIN AR
TYPE 2

SMCS-4267 **i02934570**

NOTE	REF NO	GRAPHIC REF	PART NUMBER	QTY	PART NAME 1 2 3 4 5 6 (PRODUCT LEVEL)	SEE PAGE
	1	1	**5E-8178**	16	SPRING	
	2	1	**7X-9261**	1	RETAINER	
C	3	1	**303-0465**	1	SHAFT	
	4	1	**249-5663**	1	KIT-DISC	
					(INCLUDES DISCS-ROTATING, DISCS-STATIONARY, PINS & DISC-PRIMARY)	
C	5	1	**303-0464**	1	KIT-BEARING (BRAKE)	
					(INCLUDES BEARINGS-BALL, RINGS-RETAINING & SEALS-LIP)	
	6	1	**249-5666**	1	PISTON	
	7	1	**303-0462**	1	KIT-SEAL	
					(INCLUDES GASKET, PACKING & SEAL-O-RING)	
M	8	1	**095-0658**	2	BOLT-SOCKET HEAD (M10X1.5X70-MM)	
	9	1	**9F-2247**	2	PLUG-PIPE	

C-CHANGE FROM PREVIOUS TYPE
M-METRIC PART

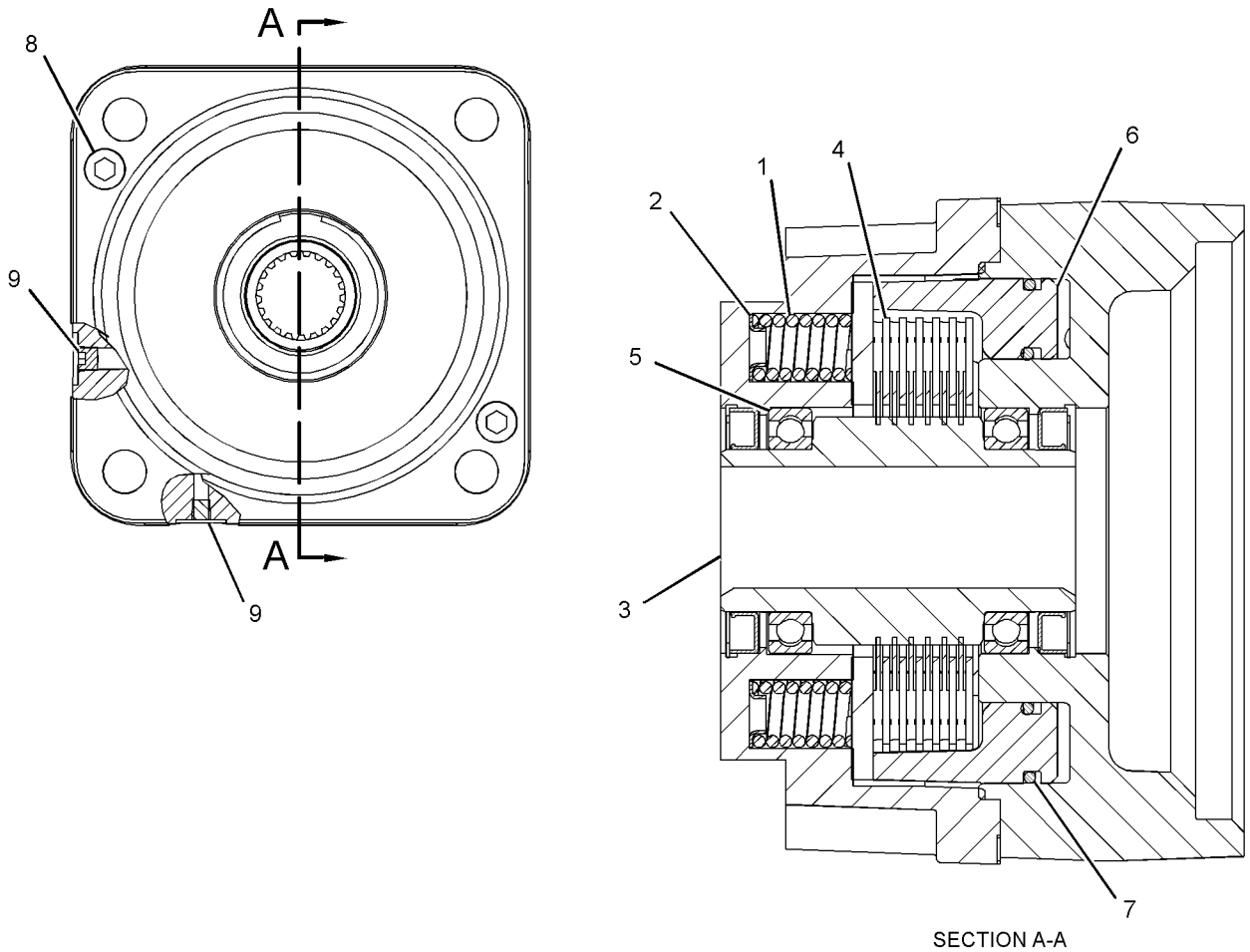

SECTION A-A

GRAPHIC #1 **<END>** g01576794

291-5096 DRIVE AR—STANDARD

S/N: WWW1-UP; YYY1-UP

CANNOT BE USED WITH 244-7472—PAGE 405, 244-7517—PAGE 651, 256-3738—PAGE 660

AN ATTACHMENT

SMCS-5158 **i02834013**

NOTE	PART NUMBER	QTY	PART NAME 1 2 3 4 5 6 (PRODUCT LEVEL)	SEE PAGE
Y	*289-0255*	1	LINES GP-HYDROSTATIC	257
Y	*254-9100*	1	PUMP GP-PISTON (DOUBLE PISTON)	294
	311-0300	1	BATTERY GP	
	9X-3404	2	BATTERY (12-VOLT, MAINTENANCE FREE, WET)	
Y-SEPARATE ILLUSTRATION				

<END>

292-0123 DRIVE AR—AUXILIARY

S/N: JLF1-UP

CANNOT BE USED WITH 256-3738—PAGE 660

AN ATTACHMENT

SMCS-5158 **i02700320**

NOTE	PART NUMBER	QTY	PART NAME 1 2 3 4 5 6 (PRODUCT LEVEL)	SEE PAGE
Y	*286-8053*	1	LINES GP-HYDROSTATIC	256
Y	**254-9099**	1	PUMP GP-PISTON (SLIPPER)	293
Y-SEPARATE ILLUSTRATION				

<END>

292-0125 DRIVE AR—HYDROSTATIC

S/N: JLF1-UP

FOR USE WITH ONE OF THE FOLLOWING SELECTIONS, 282-4899—PAGE 554, 272-9770—PAGE 555, 272-9780—PAGE 557. CANNOT BE USED WITH 244-7471—PAGE 404, 244-7433—PAGE 335, 262-4407—PAGE 653, 244-7517—PAGE 651

AN ATTACHMENT

SMCS-5158 **i02700332**

NOTE	PART NUMBER	QTY	PART NAME 1 2 3 4 5 6 (PRODUCT LEVEL)	SEE PAGE
Y	*244-7504*	1	CONTROL GP-WINCH	621
Y	*286-8053*	1	LINES GP-HYDROSTATIC	256
Y	*255-1151*	1	LINES GP-WINCH	641
Y	*217-2004*	1	MOUNTING GP-PUMP	287
Y	**254-1379**	1	PUMP GP-PISTON (WINCH)	291
Y	**254-9099**	1	PUMP GP-PISTON (SLIPPER)	293
Y-SEPARATE ILLUSTRATION				

<END>

POWER TRAIN

244-1530 DRIVE GP-FINAL

S/N: JLF1-UP; WWW1-UP; YYY1-UP

PART OF 244-7383, 244-7447, 286-3236 POWER TRAIN AR

SMCS-4050 **i03194804**

NOTE	REF NO	GRAPHIC REF	PART NUMBER	QTY	PART NAME 1 2 3 4 5 6 (PRODUCT LEVEL)	SEE PAGE
	1	1	**6V-0330**	2	CUP-BEARING (TAPERED ROLLER)	
	2	1	**6Y-0859**	1	SEAL GP-DUO-CONE	
		1	**1M-9011**	2	RING-TORIC	
	3	1	**7Y-0223**	3	SHAFT-PLANETARY	
	4	1	**7Y-0225**	3	SHAFT-PLANETARY	
	5	1	**7Y-1433**	1	CARRIER	
	6	1	**7Y-1434**	1	SPACER (40X69.5X6-MM THK)	
	7	1	**7Y-1558**	1	SPACER (90X119.6X7.5-MM THK)	
	8	1	**8T-0072**	2	CONE-BEARING	
	9	1	**303-0463**	1	PLUG	
	10	1	**094-0611**	6	WASHER (47.3X76X1-MM THK)	
	11	1	**094-0616**	3	BEARING AS-ROLLER	
M	12	1	**094-1528**	6	WASHER (53X84X1-MM THK)	
	13	1	**095-0891**	6	PIN-SPRING	
M	14	1	**113-8216**	4	STUD-TAPERLOCK	
	15	1	**113-9769**	1	RETAINER	
	16	1	**126-8921**	1	PLUG-MAGNETIC (FINAL DRIVE OIL DRAIN)	
		1	**9S-8008**	1	PLUG-O-RING	
	17	1	**322-0304**	1	GEAR-SUN (13-TEETH)	
	18	1	**244-1516**	1	GEAR-SUN (17-TEETH)	
	19	1	**244-1518**	3	GEAR-PLANETARY (30-TEETH)	
	20	1	**244-1522**	1	GEAR-COUPLING (55-TEETH)	
	21	1	**244-1524**	1	SPINDLE	
	22	1	**246-6190**	1	CARRIER	
	23	1	**247-1459**	3	GEAR-PLANETARY (44-TEETH)	
	24	1	**248-0732**	6	BEARING AS-ROLLER	
	25	1	**271-7780**	1	COVER	
	26	1	**272-2317**	1	GEAR-RING (79-TEETH)	
	27	1	**289-5885**	1	HUB	
M	28	1	**095-1277**	2	SETSCREW-SOCKET	
M	29	1	**099-0169**	18	BOLT (M16X2X55-MM)	
	30	1	**3D-2824**	1	SEAL-O-RING	
	31	1	**5P-3864**	1	SEAL-O-RING	
	32	1	**6D-0692**	1	SEAL-O-RING	
	33	1	**7J-6285**	1	SEAL-O-RING	
	34	1	**7M-8485**	1	SEAL-O-RING	
M	35	1	**7X-2568**	16	BOLT (M20X2.5X180-MM)	
	36	1	**8T-4123**	16	WASHER (22X35X3.5-MM THK)	
M	37	1	**8T-4132**	4	NUT (M16X2-THD)	
M	38	1	**8T-4194**	9	BOLT (M12X1.75X50-MM)	
	39	1	**9S-9334**	1	PLUG-O-RING (STRAIGHT THREAD O-RING)	
	40	1	**9X-8257**	22	WASHER (17.5X30X3.5-MM THK)	
B	41	1	**1U-8846**		SEALANT-GASKET	

B-USE AS REQUIRED
M-METRIC PART

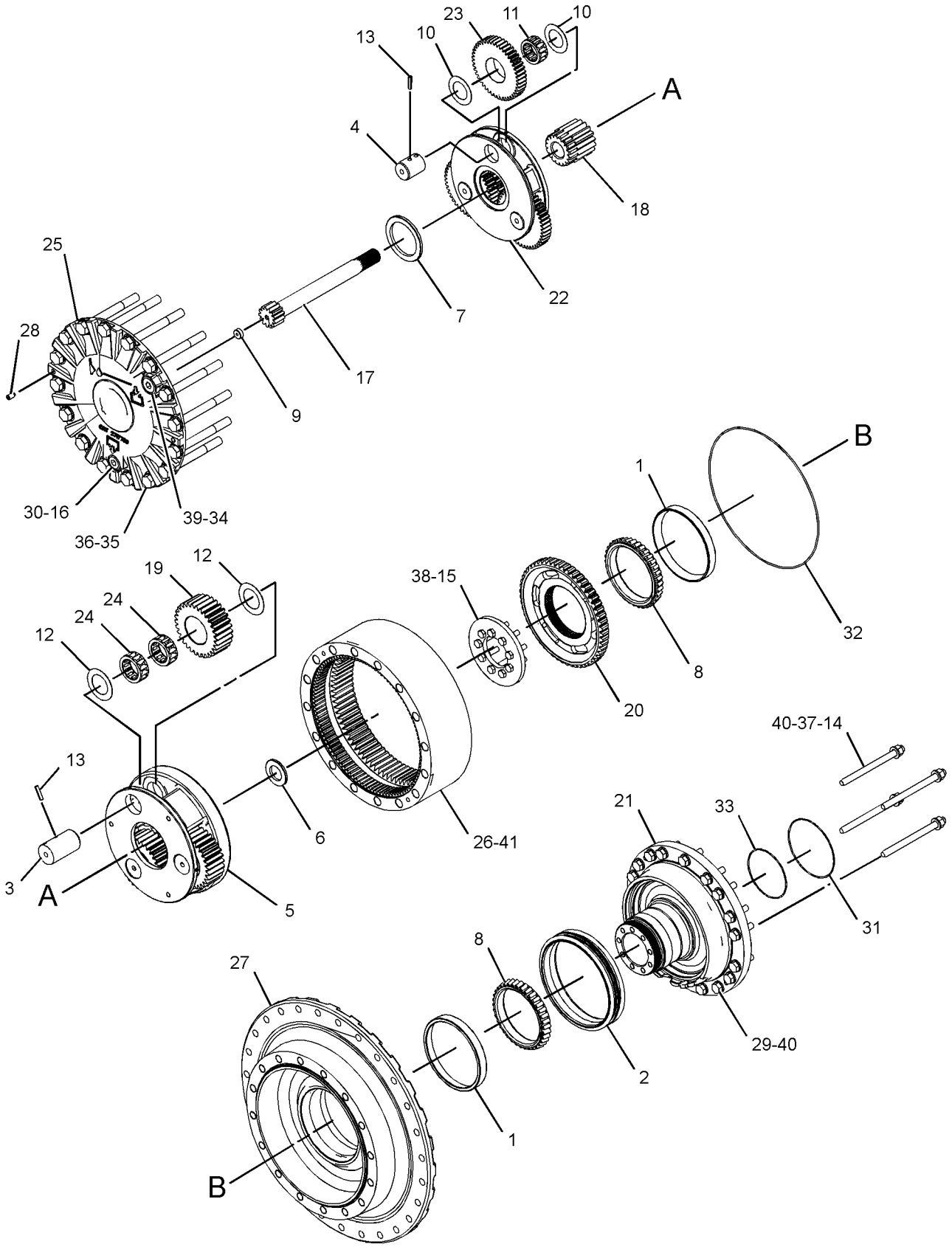

GRAPHIC #1 **<END>** g01333181

244-7410 DRIVE GP-HYDROSTATIC

S/N: JLF1-UP; WWW1-UP; YYY1-UP

PART OF 244-7383, 244-7447, 286-3236 POWER TRAIN AR

SMCS-3159, 4350 **i02677604**

NOTE	REF NO	GRAPHIC REF	PART NUMBER	QTY	PART NAME 1 2 3 4 5 6 (PRODUCT LEVEL)	SEE PAGE
	1	1	**102-1733**	1	FLANGE-NYLON	
	2	1	**261-4748**	1	PLATE AS	
	3	1	**273-6319**	1	HUB	
M	4	1	**099-0169**	2	BOLT (M16X2X55-MM)	
	5	1	**1L-9062**	8	BOLT (3/8-24X1.5-IN)	
M	6	1	**3E-4319**	4	STUD-TAPERLOCK	
	7	1	**3E-4356**	2	WASHER-HARD (17.5X30X6-MM THK)	
	8	1	**8T-4121**	12	WASHER-HARD (11X21X2.5-MM THK)	
M	9	1	**8T-4196**	12	BOLT (M10X1.5X35-MM)	
	10	1	**8T-4223**	4	WASHER-HARD (13.5X25.5X3-MM THK)	
M	11	1	**8T-4244**	4	NUT (M12X1.75-THD)	

M-METRIC PART

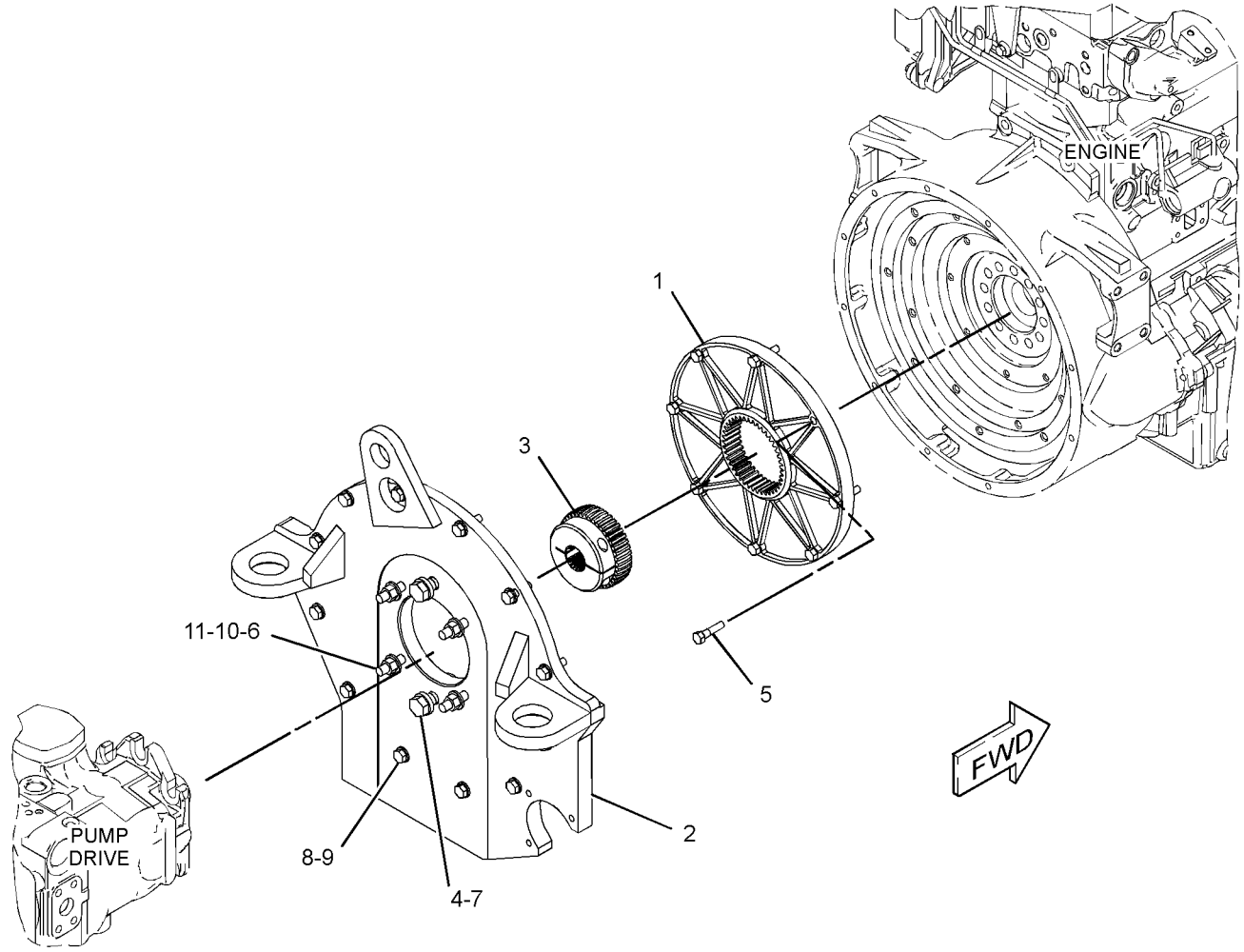

GRAPHIC #1 **<END>** g01345994

212-9363 FILTER GP-OIL—FRONT

S/N: JLF1-UP; WWW1-UP; YYY1-UP

PART OF 254-9054 LINES GP-TRANSMISSION OIL

SMCS-3004, 3067 **i01966259**

NOTE	REF NO	GRAPHIC REF	PART NUMBER	QTY	PART NAME 1 2 3 4 5 6 (PRODUCT LEVEL)	SEE PAGE
	1	1	**1G-8878**	1	FILTER-OIL (ADVANCED EFFICIENCY)	
	2	1	**8C-3446**	1	VALVE-FLUID SAMPLING (HYDRAULIC OIL FILTER)	
	3	1	**8C-3451**	1	CAP-DUST	
	4	1	**134-0404**	1	SWITCH AS-PRESSURE (PRESSURE DIFFERENTIAL)	
	5	1	**3J-1907**	1	SEAL-O-RING	
	6	1	**3J-7354**	1	SEAL-O-RING	

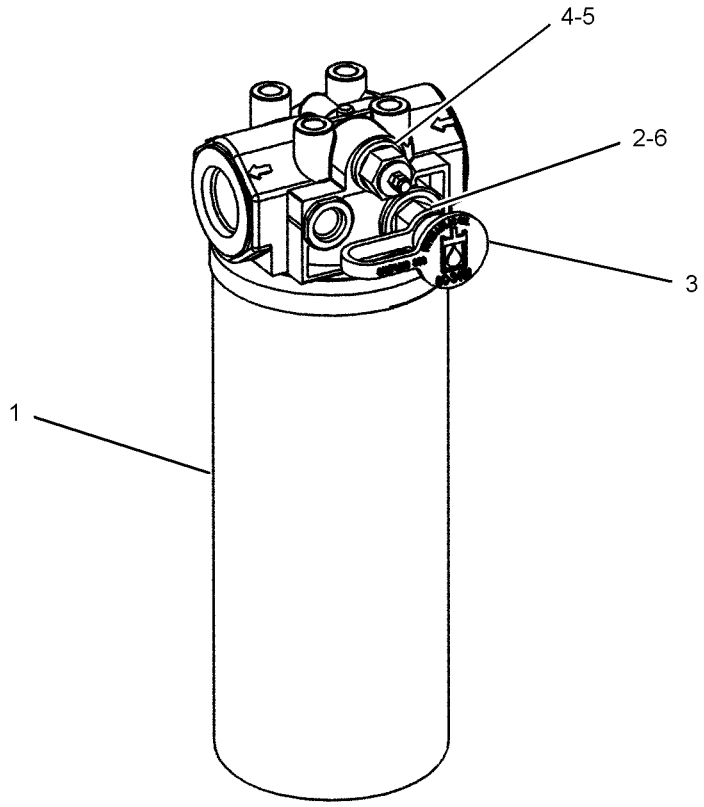

GRAPHIC #1 **<END>** g01022392

296-6708 HEAD GP-PUMP

S/N: JLF1-UP; WWW1-UP; YYY1-UP
PART OF 289-6388, 289-6389, 289-6390 PUMP GP-PISTON
AN ATTACHMENT

SMCS-3202, 5070 **i02730306**

NOTE	REF NO	GRAPHIC REF	PART NUMBER	QTY	PART NAME 1 2 3 4 5 6 (PRODUCT LEVEL)	SEE PAGE
M	1	1	**223-8990**	4	BOLT-SOCKET HEAD (M16X2X90-MM)	
	2	1	**1G-7407**	2	VALVE GP-RELIEF (PUMP HEAD)	
Y	3	1	**6E-4402**	1	VALVE GP-RELIEF (CHARGE PRESSURE)	450
	4	1	**9S-8002**	1	PLUG-O-RING	
	5	1	**3J-7354**	1	SEAL-O-RING	
	6	1	**126-1477**	1	BUSHING-COUPLING	
	7	1	**123-7559**	1	BUSHING	
	8	1	**123-7560**	1	BEARING-BUSHING	
	9	1	**6S-3002**	1	SEAL-O-RING	
	10	1	**123-7575**	1	SCREW-LOCK	
	11	1	**123-7576**	1	SEAL-O-RING	
	12	1	**081-3801**	1	PLUG AS	
M	13	1	**123-2017**	1	PLUG	

M-METRIC PART
Y-SEPARATE ILLUSTRATION

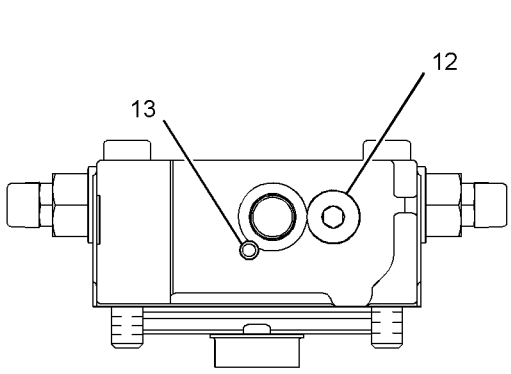

VIEW B-B

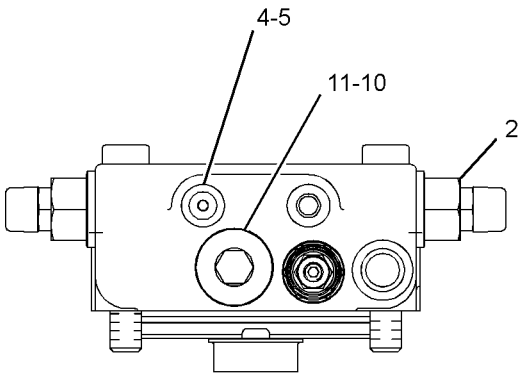

VIEW A-A

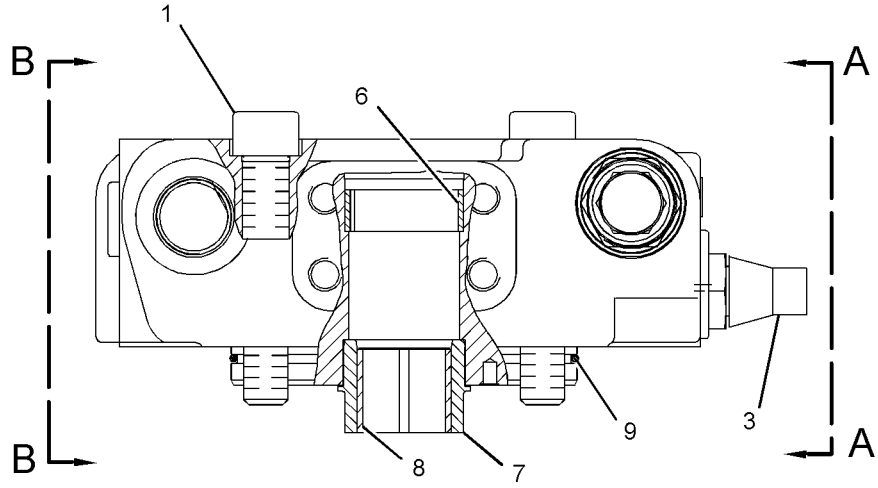

GRAPHIC #1 **<END>** g01378978

244-7505 LINES GP-HYDROSTATIC

S/N: JLF1-UP; WWW1-UP; YYY1-UP
PART OF 244-7451, 244-7455 DRIVE GP-PUMP
AN ATTACHMENT

SMCS-3154 **i02843728**

NOTE	REF NO	GRAPHIC REF	PART NUMBER	QTY	PART NAME 1 2 3 4 5 6 (PRODUCT LEVEL)	SEE PAGE
I	1	1	**261-4267**	1	HOSE AS	
I	2	1	**261-4268**	1	HOSE AS	
I	3	1	**261-4269**	1	HOSE AS	
I	4	1	**261-4270**	1	HOSE AS	
	5	1	**1P-3703**	8	SEAL-RECTANGULAR	
	6	1	**6V-0400**	16	FLANGE-HALF	
	7	1	**7G-3832**	2	GROMMET	
	8	1	**7G-3833**	2	CLIP (TAB)	
	9	1	**7G-3834**	2	CLIP (SLOT)	
M	10	1	**8T-4183**	2	BOLT (M12X1.75X40-MM)	
M	11	1	**8T-4184**	32	BOLT (M12X1.75X45-MM)	
	12	1	**8T-4223**	34	WASHER-HARD (13.5X25.5X3-MM THK)	

I-REFER TO HYDRAULIC INFORMATION SYSTEM
M-METRIC PART

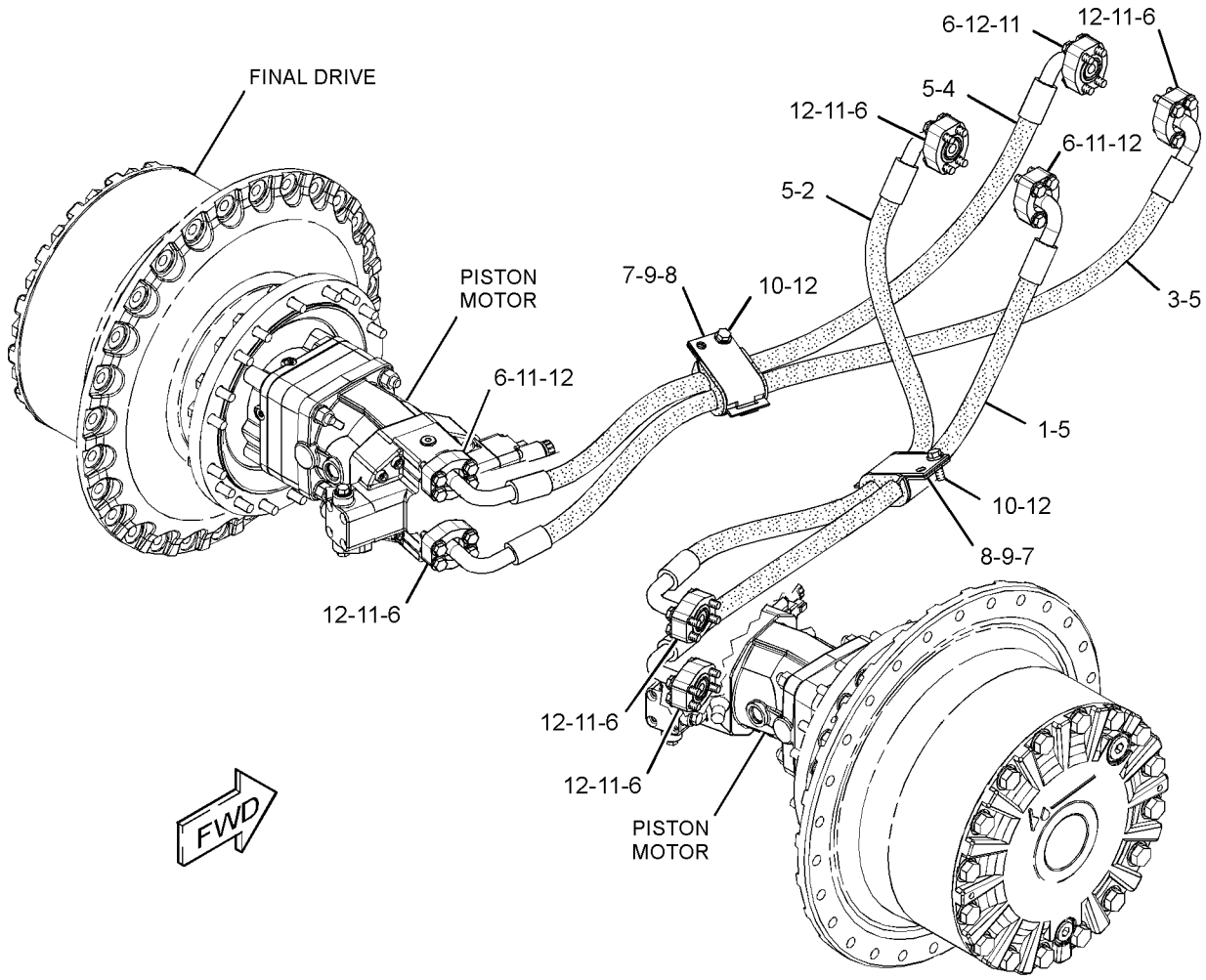

GRAPHIC #1 **<END>** g01422340

286-8053 LINES GP-HYDROSTATIC

S/N: JLF1-UP

PART OF 292-0123, 292-0125 DRIVE AR, 300-8545, 300-8546 DRIVE AR-WINCH, 291-5099 DRIVE GP-PUMP

AN ATTACHMENT

SMCS-3154 **i02700334**

NOTE	REF NO	GRAPHIC REF	PART NUMBER	QTY	PART NAME 1 2 3 4 5 6 (PRODUCT LEVEL)	SEE PAGE
I	1	1	**287-8659**	1	HOSE AS	
I	2	1	**287-8660**	1	HOSE AS	
I	3	1	**287-8661**	1	HOSE AS	
I	4	1	**287-8662**	1	HOSE AS	
	5	1	**1P-3703**	8	SEAL-RECTANGULAR	
	6	1	**6V-0400**	16	FLANGE-HALF	
	7	1	**7G-3832**	2	GROMMET	
	8	1	**7G-3833**	2	CLIP (TAB)	
	9	1	**7G-3834**	2	CLIP (SLOT)	
M	10	1	**8T-4183**	2	BOLT (M12X1.75X40-MM)	
M	11	1	**8T-4184**	32	BOLT (M12X1.75X45-MM)	
	12	1	**8T-4223**	34	WASHER-HARD (13.5X25.5X3-MM THK)	

I-REFER TO HYDRAULIC INFORMATION SYSTEM
M-METRIC PART

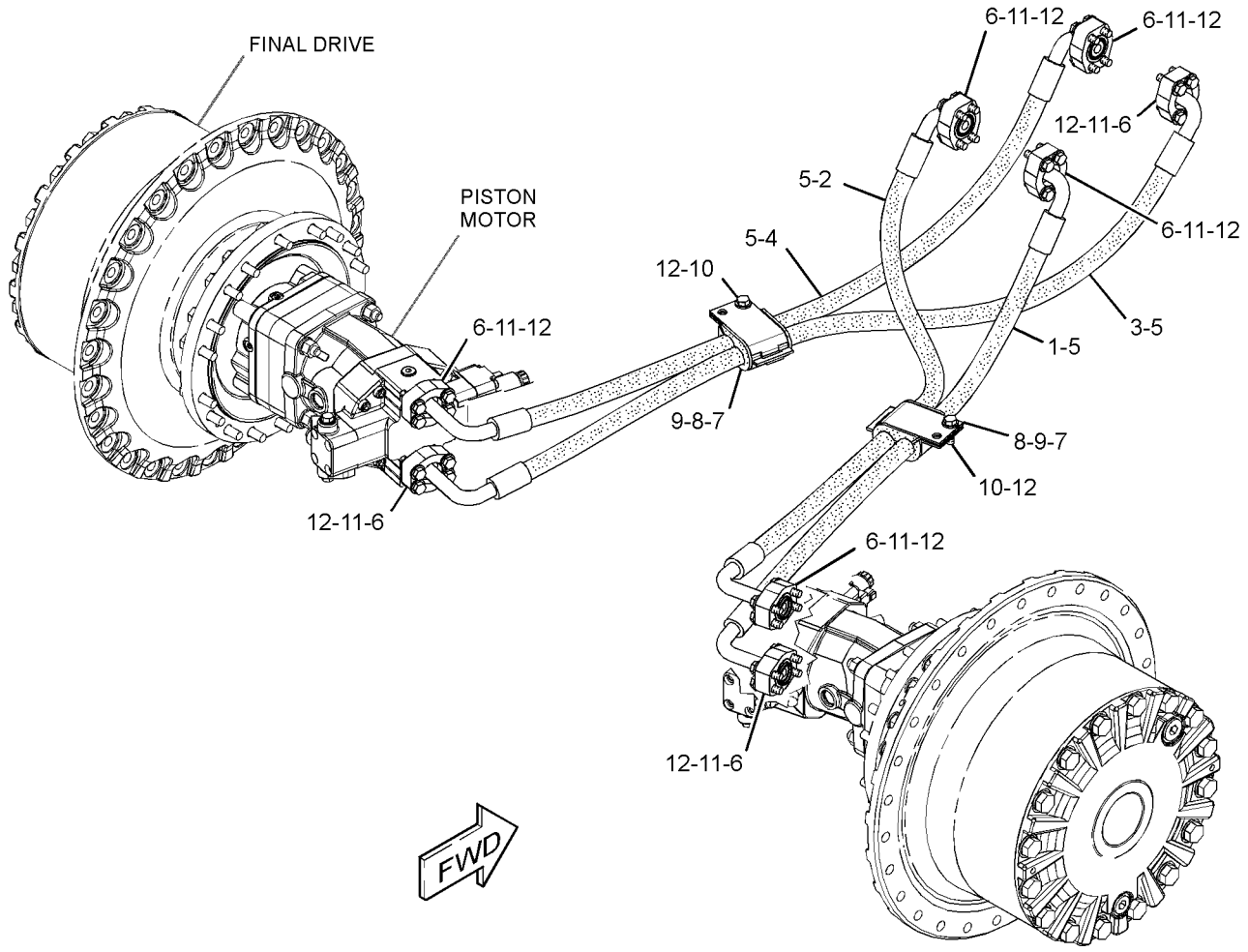

GRAPHIC #1 **<END>** g01378506

289-0255 LINES GP-HYDROSTATIC

S/N: WWW1-UP; YYY1-UP
PART OF 291-5096 DRIVE AR
AN ATTACHMENT

SMCS-3154 **i02699938**

NOTE	REF NO	GRAPHIC REF	PART NUMBER	QTY	PART NAME 1 2 3 4 5 6 (PRODUCT LEVEL)	SEE PAGE
I	1	1	**289-0250**	1	HOSE AS	
I	2	1	**289-0251**	1	HOSE AS	
I	3	1	**289-0252**	1	HOSE AS	
I	4	1	**289-0256**	1	HOSE AS	
	5	1	**1P-3703**	8	SEAL-RECTANGULAR	
	6	1	**6V-0400**	16	FLANGE-HALF	
	7	1	**7G-3832**	2	GROMMET	
	8	1	**7G-3833**	2	CLIP (TAB)	
	9	1	**7G-3834**	2	CLIP (SLOT)	
M	10	1	**8T-4183**	2	BOLT (M12X1.75X40-MM)	
M	11	1	**8T-4184**	32	BOLT (M12X1.75X45-MM)	
	12	1	**8T-4223**	34	WASHER-HARD (13.5X25.5X3-MM THK)	

I-REFER TO HYDRAULIC INFORMATION SYSTEM
M-METRIC PART

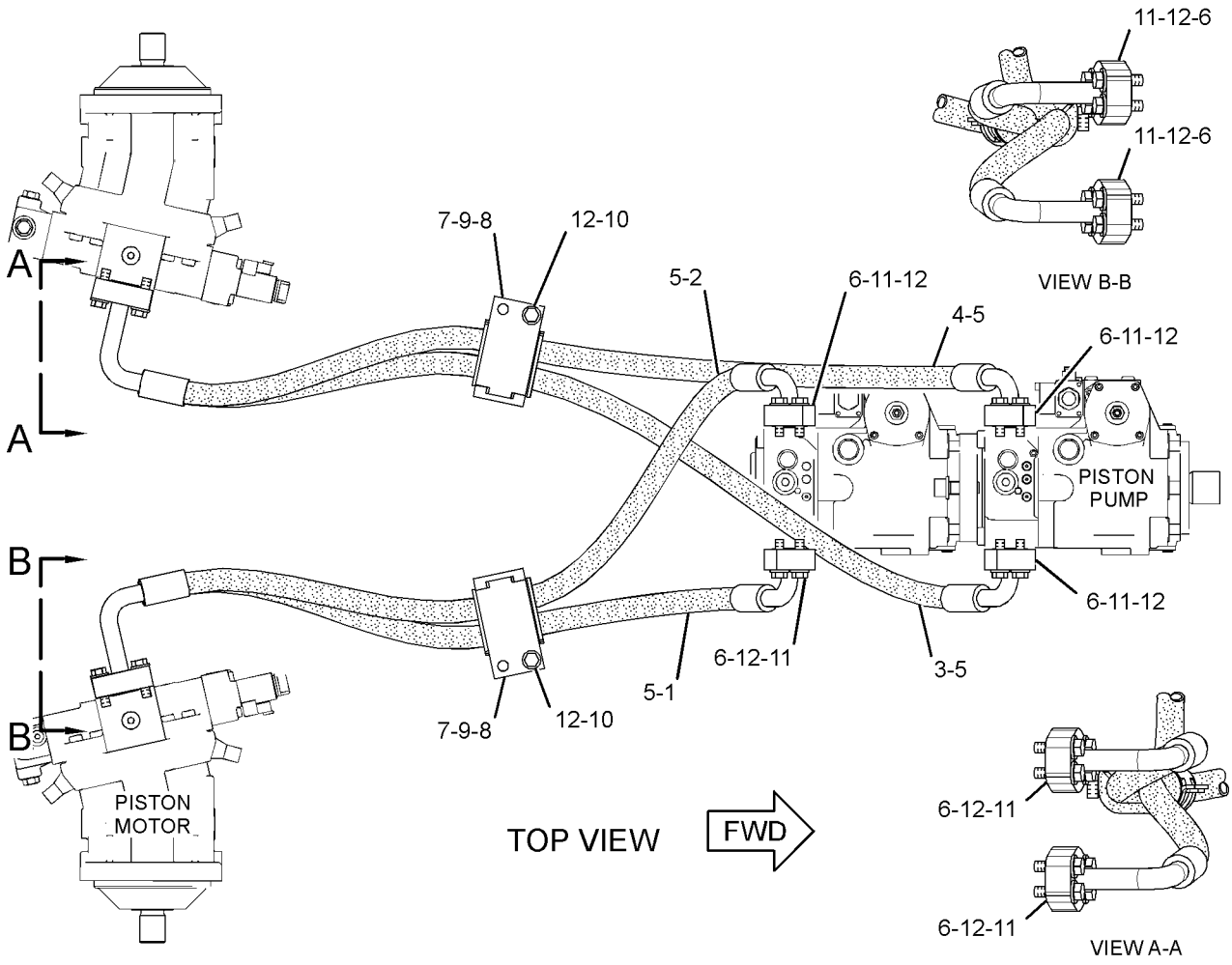

GRAPHIC #1 **<END>** g01373728

244-7417 LINES GP-POWER TRAIN COOLER

S/N: YYY1-UP

PART OF 244-7383 POWER TRAIN AR

SMCS-1375, 3016 **i02956630**

NOTE	REF NO	GRAPHIC REF	PART NUMBER	QTY	PART NAME 1 2 3 4 5 6 (PRODUCT LEVEL)	SEE PAGE
I	1	1	**203-1926**	2	HOSE AS	
I	2	1	**261-1108**	2	HOSE AS	
I	3	1	**261-1124**	1	HOSE AS	
	4	1	**261-8501**	1	TUBE AS	
	5	1	**261-8502**	1	TUBE AS	
	6	1	**272-3483**	1	TUBE AS	
I	7	1	**272-3536**	1	HOSE AS	
	8	1	*148-8318*	1	CONNECTOR AS (RIGHT MOTOR)	
		1	**3K-0360**	1	SEAL-O-RING	
		1	**6V-8397**	1	SEAL-O-RING	
		1	**6V-8634**	1	CONNECTOR	
	9	1	*148-8364*	1	ELBOW AS (MOTOR BEARING)	
		1	**3K-0360**	1	SEAL-O-RING	
		1	**6V-8398**	1	SEAL-O-RING	
		1	**6V-8625**	1	ELBOW	
	10	1	*148-8428*	1	TEE AS (LEFT MOTOR)	
		1	**3K-0360**	1	SEAL-O-RING	
		1	**6V-8398**	2	SEAL-O-RING	
		1	**6V-8782**	1	TEE	
	11	1	*153-6242*	1	CONNECTOR AS (LEFT SIDE)	
	11A	1	*153-6242*	1	CONNECTOR AS (RIGHT SIDE)	
					(EACH CONNECTOR AS INCLUDES)	
		1	**6V-9746**	1	SEAL-O-RING	
		1	**7M-8485**	1	SEAL-O-RING	
		1	**8T-0197**	1	CONNECTOR	
	12	1	**3D-2824**	2	SEAL-O-RING	
	13	1	**4H-7655**	4	CLAMP-TUBE	
	14	1	**5D-0718**	1	CLIP	
	15	1	**5K-5338**	2	CLIP	
	16	1	**6V-8397**	1	SEAL-O-RING	
	17	1	**6V-9746**	6	SEAL-O-RING	
	18	1	**7X-7729**	1	WASHER (11X25X3-MM THK)	
	19	1	**8T-4121**	4	WASHER-HARD (11X21X2.5-MM THK)	
M	20	1	**8T-4136**	3	BOLT (M10X1.5X25-MM)	
M	21	1	**8T-4137**	2	BOLT (M10X1.5X20-MM)	
	22	1	**8T-9023**	2	CONNECTOR-O-RING	

I-REFER TO HYDRAULIC INFORMATION SYSTEM
M-METRIC PART

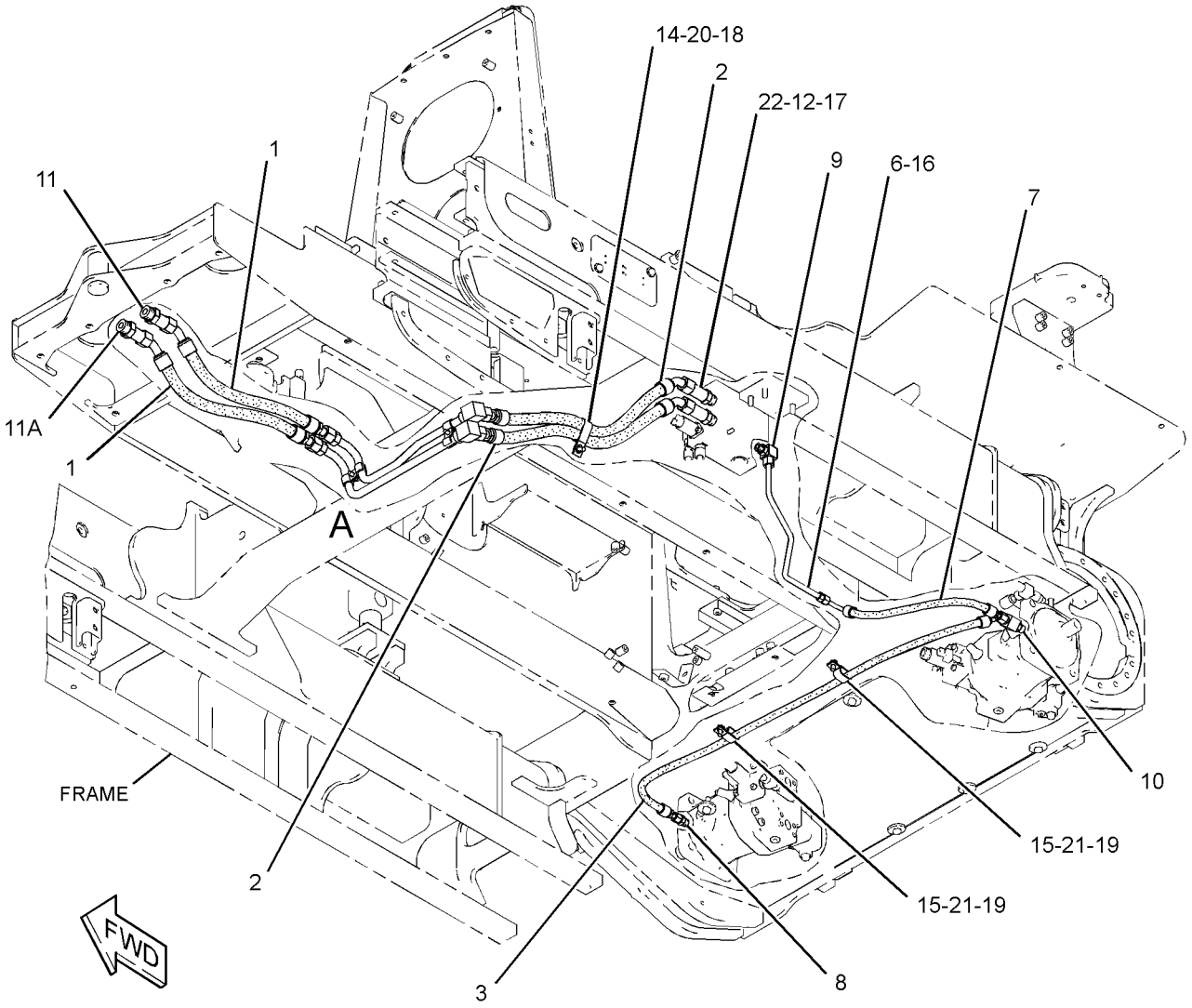

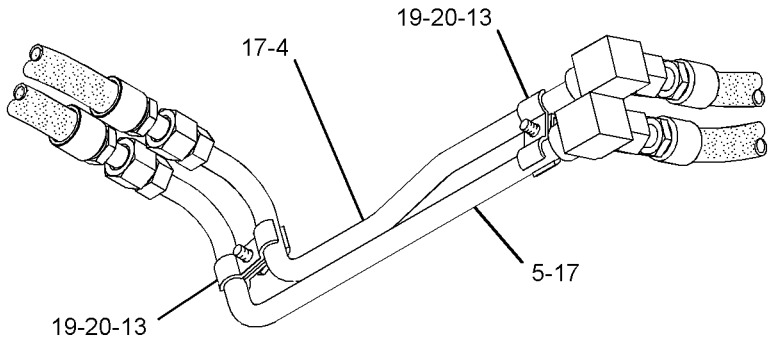

VIEW OF AREA A

GRAPHIC #1 **<END>** g01524786

286-8055 LINES GP-POWER TRAIN COOLER

S/N: JLF1-UP

PART OF 286-3236 POWER TRAIN AR

SMCS-1375, 3016 **i02696941**

NOTE	REF NO	GRAPHIC REF	PART NUMBER	QTY	PART NAME 1 2 3 4 5 6 (PRODUCT LEVEL)	SEE PAGE
I	1	1	**203-1926**	2	HOSE AS	
I	2	1	**261-1108**	2	HOSE AS	
	3	1	**261-8501**	1	TUBE AS	
	4	1	**261-8502**	1	TUBE AS	
	5	1	**272-3483**	1	TUBE AS	
I	6	1	**292-9739**	1	HOSE AS	
I	7	1	**292-9740**	1	HOSE AS	
	8	1	*148-8318*	1	CONNECTOR AS	
		1	**6V-8634**	1	CONNECTOR	
		1	**3K-0360**	1	SEAL-O-RING	
		1	**6V-8397**	1	SEAL-O-RING	
	9	1	*148-8364*	1	ELBOW AS	
		1	**6V-8625**	1	ELBOW	
		1	**3K-0360**	1	SEAL-O-RING	
		1	**6V-8398**	1	SEAL-O-RING	
	10	1	*148-8428*	1	TEE AS	
		1	**6V-8782**	1	TEE	
		1	**3K-0360**	1	SEAL-O-RING	
		1	**6V-8398**	2	SEAL-O-RING	
	11	1	*153-6242*	2	CONNECTOR AS	
					(EACH INCLUDES)	
		1	**8T-0197**	1	CONNECTOR	
		1	**6V-9746**	1	SEAL-O-RING	
		1	**7M-8485**	1	SEAL-O-RING	
	12	1	**3D-2824**	2	SEAL-O-RING	
	13	1	**4H-7655**	4	CLAMP-TUBE	
	14	1	**5D-0718**	1	CLIP	
	15	1	**5K-5338**	2	CLIP	
	16	1	**6V-8397**	1	SEAL-O-RING	
	17	1	**6V-9746**	6	SEAL-O-RING	
	18	1	**7X-7729**	1	WASHER (11X25X3-MM THK)	
	19	1	**8T-4121**	4	WASHER-HARD (11X21X2.5-MM THK)	
M	20	1	**8T-4136**	3	BOLT (M10X1.5X25-MM)	
M	21	1	**8T-4137**	2	BOLT (M10X1.5X20-MM)	
	22	1	**8T-9023**	2	CONNECTOR-O-RING	

I-REFER TO HYDRAULIC INFORMATION SYSTEM
M-METRIC PART

286-8055 **LINES GP-POWER TRAIN COOLER** *(contd.)* **i02696941**

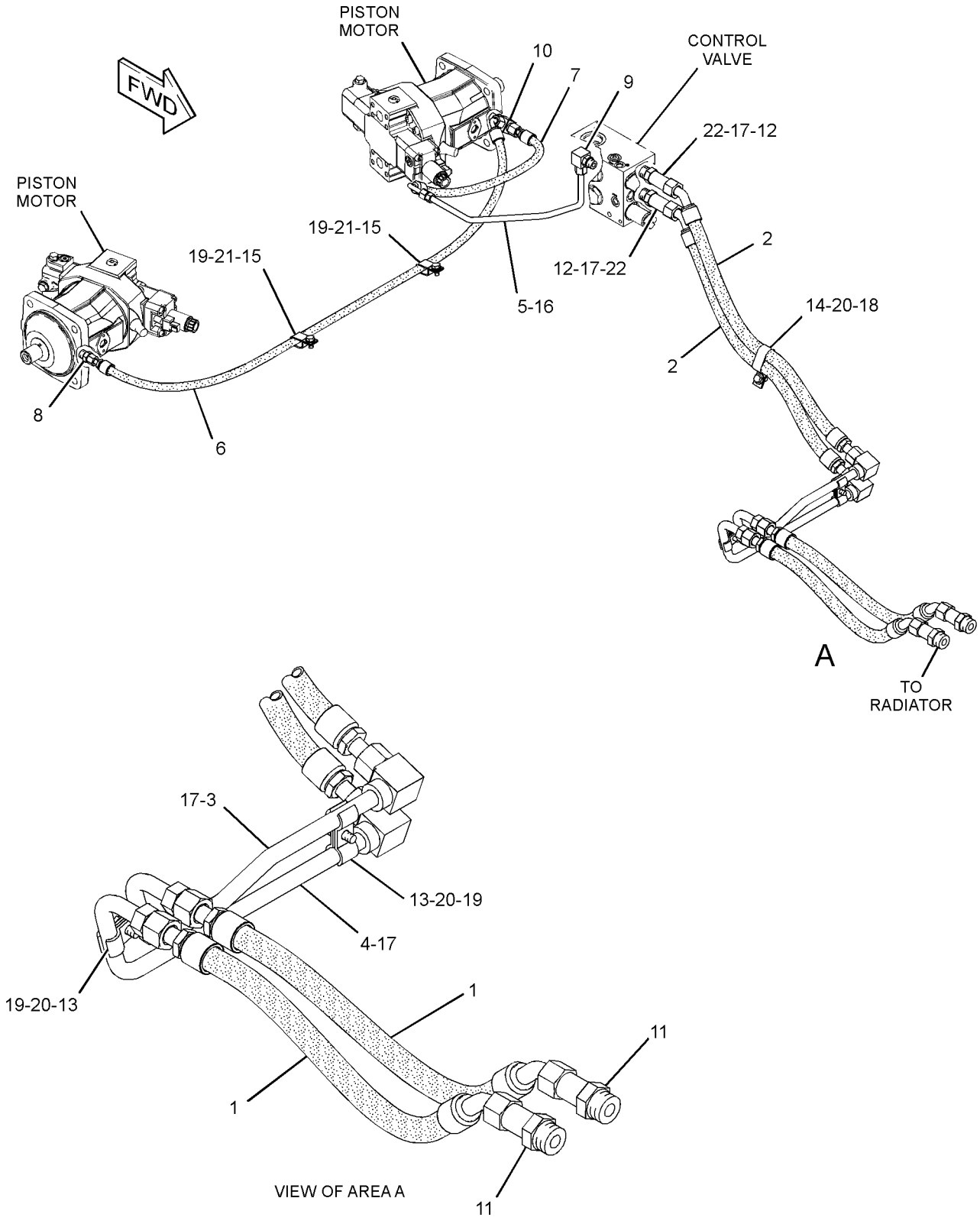

GRAPHIC #1 **<END>** g01374214

306-2089 LINES GP-POWER TRAIN COOLER

S/N: WWW1-UP

PART OF 244-7447 POWER TRAIN AR

SMCS-1375, 3016 **i02963626**

NOTE	REF NO	GRAPHIC REF	PART NUMBER	QTY	PART NAME 1 2 3 4 5 6 (PRODUCT LEVEL)	SEE PAGE
I	1	1	**161-6573**	1	HOSE AS	
I	2	1	**203-1926**	2	HOSE AS	
I	3	1	**261-1108**	2	HOSE AS	
	4	1	**261-8501**	1	TUBE AS	
	5	1	**261-8502**	1	TUBE AS	
	6	1	**272-3483**	1	TUBE AS	
I	7	1	**306-2091**	1	HOSE AS	
	8	1	*148-8318*	1	CONNECTOR AS (RIGHT MOTOR)	
		1	**3K-0360**	1	SEAL-O-RING	
		1	**6V-8397**	1	SEAL-O-RING	
		1	**6V-8634**	1	CONNECTOR	
	9	1	*148-8364*	1	ELBOW AS	
		1	**3K-0360**	1	SEAL-O-RING	
		1	**6V-8398**	1	SEAL-O-RING	
		1	**6V-8625**	1	ELBOW	
	10	1	*148-8428*	1	TEE AS (LEFT MOTOR)	
		1	**3K-0360**	1	SEAL-O-RING	
		1	**6V-8398**	2	SEAL-O-RING	
		1	**6V-8782**	1	TEE	
	11	1	*153-6242*	1	CONNECTOR AS (LEFT SIDE)	
	11A	1	*153-6242*	1	CONNECTOR AS (RIGHT SIDE)	
					(EACH CONNECTOR AS INCLUDES)	
		1	**6V-9746**	1	SEAL-O-RING	
		1	**7M-8485**	1	SEAL-O-RING	
		1	**8T-0197**	1	CONNECTOR	
	12	1	**3D-2824**	2	SEAL-O-RING	
	13	1	**4H-7655**	4	CLAMP-TUBE	
	14	1	**5D-0718**	1	CLIP	
	15	1	**5K-5338**	2	CLIP	
	16	1	**6V-8397**	1	SEAL-O-RING	
	17	1	**6V-9746**	6	SEAL-O-RING	
	18	1	**7X-7729**	1	WASHER (11X25X3-MM THK)	
	19	1	**8T-4121**	4	WASHER-HARD (11X21X2.5-MM THK)	
M	20	1	**8T-4136**	3	BOLT (M10X1.5X25-MM)	
M	21	1	**8T-4137**	2	BOLT (M10X1.5X20-MM)	
	22	1	**8T-9023**	2	CONNECTOR-O-RING	

I-REFER TO HYDRAULIC INFORMATION SYSTEM
M-METRIC PART

306-2089 **LINES GP-POWER TRAIN COOLER** *(contd.)* **i02963626**

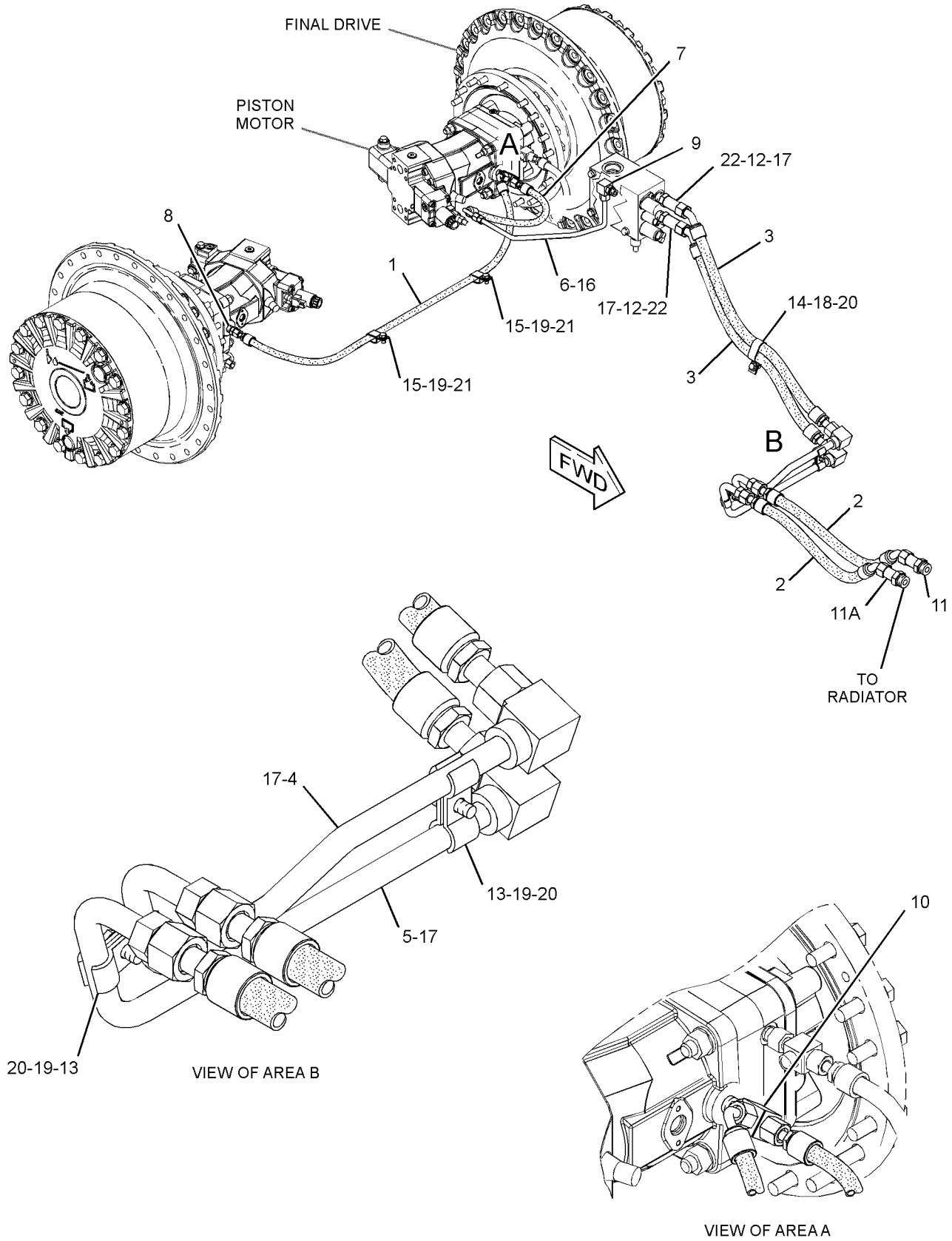

GRAPHIC #1 **<END>** g01375456

254-9054 LINES GP-TRANSMISSION OIL—CHARGE

S/N: JLF1-UP; WWW1-UP; YYY1-UP

PART OF 244-7383, 244-7447, 286-3236 POWER TRAIN AR

SMCS-3016, 3154 **i02762980**

NOTE	REF NO	GRAPHIC REF	PART NUMBER	QTY	PART NAME 1 2 3 4 5 6 (PRODUCT LEVEL)	SEE PAGE
	1	1	**3E-2345**	1	TEE-O-RING	
	2	1	**6V-0852**	2	CAP-DUST	
	3	1	**8T-4984**	2	CLAMP-HOSE	
	4	1	**9U-7000**	4	FITTING GP-HYDRAULIC	
	5	1	**196-1803**	1	FILTER GP-OIL (REAR)	
		1	**1G-8878**	1	FILTER-OIL (ADVANCED EFFICIENCY) (TRANSMISSION)	
		1	**3J-1907**	1	SEAL-O-RING	
		1	**134-0404**	1	SWITCH AS-PRESSURE (POWER TRAIN OIL FILTER BYPASS)	
	6	1	**197-7611**	1	BLOCK AS	
Y	7	1	**212-9363**	1	FILTER GP-OIL (FRONT)	253
	8	1	**216-1338**	1	HOSE	
	9	1	**218-2148**	1	ELBOW	
	10	1	**245-5082**	1	GUARD	
	11	1	**256-7758**	1	BRACKET AS	
	12	1	**256-7761**	1	HOSE	
	13	1	**261-1106**	1	HOSE	
	14	1	*262-0481*	1	CLAMP GP-HYDRAULIC LINES	
		1	**8I-6686**	1	CLAMP	
		1	**262-0482**	1	CLAMP-DOUBLE	
	15	1	**263-0975**	1	PLATE AS	
	16	1	**284-7822**	1	HOSE AS	
	17	1	**284-7823**	1	HOSE AS	
	18	1	**284-7824**	1	HOSE AS	
	19	1	**284-7825**	1	HOSE AS	
	20	1	**119-5917**	1	CLIP	
	21	1	*148-8322*	1	CONNECTOR AS	
		1	**2M-9780**	1	SEAL-O-RING	
		1	**6V-8640**	1	CONNECTOR	
		1	**6V-9746**	1	SEAL-O-RING	
	22	1	*148-8327*	1	CONNECTOR AS	
		1	**3D-2824**	1	SEAL-O-RING	
		1	**6V-8637**	1	CONNECTOR	
		1	**6V-9746**	1	SEAL-O-RING	
	23	1	*148-8341*	1	CONNECTOR AS	
		1	**3D-2824**	1	SEAL-O-RING	
		1	**6V-8713**	1	CONNECTOR	
		1	**7J-9108**	1	SEAL-O-RING	
	24	1	*148-8347*	2	ELBOW AS	
					(EACH INCLUDES)	
		1	**3D-2824**	1	SEAL-O-RING	
		1	**6V-9007**	1	ELBOW	
		1	**6V-9746**	1	SEAL-O-RING	
	25	1	*148-8392*	1	ELBOW AS	
		1	**6V-9746**	1	SEAL-O-RING	
		1	**6V-9853**	1	ELBOW	
	26	1	*164-5567*	1	COUPLER AS-QUICK DISCONNECT	
		1	**3J-1907**	1	SEAL-O-RING	
		1	**6V-3965**	1	FITTING (QUICK DISCONNECT)	
	27	1	*164-5616*	1	PLUG AS	
		1	**2S-4078**	1	SEAL-O-RING	
		1	**9S-6130**	1	PLUG	
	28	1	*153-6244*	1	ELBOW AS	
		1	**2M-9780**	1	SEAL-O-RING	
		1	**6V-9746**	1	SEAL-O-RING	

254-9054 LINES GP-TRANSMISSION OIL *(contd.)* i02762980

NOTE	REF NO	GRAPHIC REF	PART NUMBER	QTY	PART NAME 1 2 3 4 5 6 (PRODUCT LEVEL)	SEE PAGE
		1	**8T-5389**	1	ELBOW	
	29	1	**2S-4078**	4	SEAL-O-RING	
	30	1	**3D-2824**	2	SEAL-O-RING	
	31	1	**5D-0718**	3	CLIP	
	32	1	**6V-9746**	2	SEAL-O-RING	
M	33	1	**7X-2543**	3	BOLT (M10X1.5X120-MM)	
	34	1	**7X-7729**	6	WASHER (11X25X3-MM THK)	
	35	1	**8T-3613**	1	VALVE AS-PRESSURE (TEST)	
	36	1	**8T-4121**	14	WASHER-HARD (11X21X2.5-MM THK)	
M	37	1	**8T-4136**	4	BOLT (M10X1.5X25-MM)	
M	38	1	**8T-4137**	2	BOLT (M10X1.5X20-MM)	
M	39	1	**8T-4195**	11	BOLT (M10X1.5X30-MM)	
	40	1	**8T-4983**	4	CLAMP-HOSE	

M-METRIC PART
Y-SEPARATE ILLUSTRATION

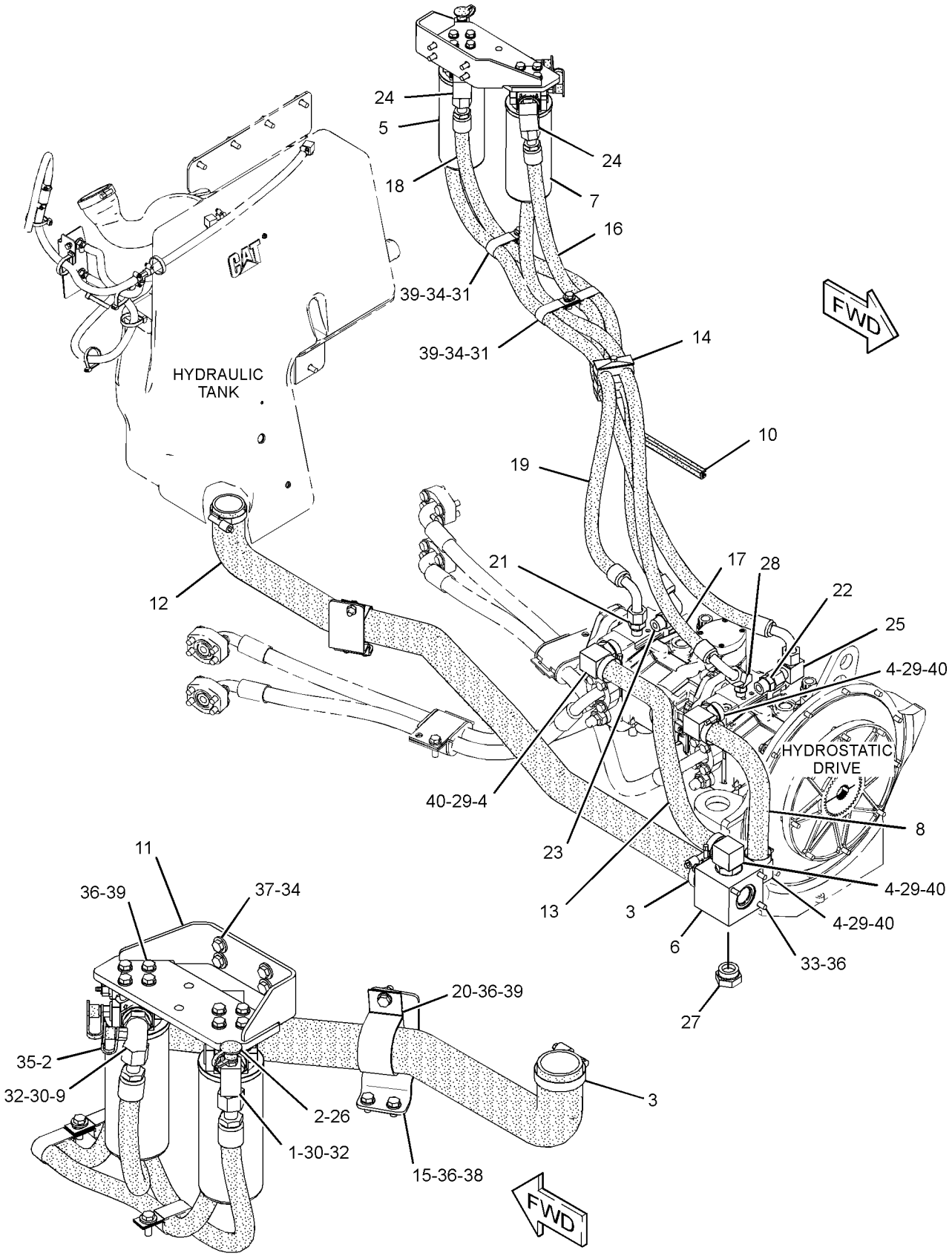

GRAPHIC #1 **<END>** g01335591

254-9055 LINES GP-TRANSMISSION OIL—CASE DRAIN

S/N: YYY1-UP

PART OF 244-7383 POWER TRAIN AR

SMCS-3016, 3154 **i02920652**

NOTE	REF NO	GRAPHIC REF	PART NUMBER	QTY	PART NAME 1 2 3 4 5 6 (PRODUCT LEVEL)	SEE PAGE
	1	1	**6V-5258**	1	ADAPTER	
	2	1	**6V-9171**	1	NUT-BULKHEAD (1-3/16-12-THD)	
	3	1	**9U-7000**	1	FITTING GP-HYDRAULIC	
	4	1	**257-1105**	1	HOSE	
	5	1	**257-1107**	1	TUBE AS	
I	6	1	**261-8533**	1	HOSE AS	
	7	1	**283-4932**	1	TUBE AS	
I	8	1	**284-4923**	1	HOSE AS	
	9	1	**289-0120**	1	TUBE AS	
I	10	1	**294-1064**	1	HOSE AS	
	11	1	**139-1398**	1	CLIP	
	12	1	*148-8317*	2	CONNECTOR AS	
					(EACH INCLUDES)	
		1	**3D-2824**	1	SEAL-O-RING	
		1	**5K-9090**	1	SEAL-O-RING	
		1	**6V-8714**	1	CONNECTOR	
	13	1	*148-8327*	2	CONNECTOR AS	
					(EACH INCLUDES)	
		1	**3D-2824**	1	SEAL-O-RING	
		1	**6V-8637**	1	CONNECTOR	
		1	**6V-9746**	1	SEAL-O-RING	
	14	1	*148-8352*	1	ELBOW AS	
		1	**5K-9090**	1	SEAL-O-RING	
		1	**6V-9854**	1	ELBOW	
	15	1	*148-8357*	1	ELBOW AS	
		1	**5K-9090**	1	SEAL-O-RING	
		1	**6V-9008**	1	ELBOW	
		1	**7M-8485**	1	SEAL-O-RING	
	16	1	*148-8450*	1	TEE AS	
		1	**3E-7443**	1	TEE-UNION	
		1	**5K-9090**	1	SEAL-O-RING	
		1	**6V-9746**	2	SEAL-O-RING	
	17	1	**158-0851**	1	CLIP	
	18	1	*164-6858*	1	TEE AS	
		1	**5K-9090**	2	SEAL-O-RING	
		1	**6V-8778**	1	TEE-FACE SEAL	
		1	**7M-8485**	1	SEAL-O-RING	
	19	1	**2S-4078**	1	SEAL-O-RING	
	20	1	**3D-2824**	1	SEAL-O-RING	
	21	1	**6V-9746**	2	SEAL-O-RING	
	22	1	**6V-9832**	1	CAP AS (AUX HYD FUNCTION)	
	23	1	**7X-7958**	1	CLAMP-HOSE	
	24	1	**8T-1887**	1	CLIP (SLOT)	
	25	1	**8T-1888**	1	CLIP (TAB)	
	26	1	**8T-4121**	1	WASHER-HARD (11X21X2.5-MM THK)	
M	27	1	**8T-4137**	1	BOLT (M10X1.5X20-MM)	
M	28	1	**8T-4200**	1	BOLT (M8X1.25X16-MM)	
	29	1	**8T-4224**	2	WASHER-HARD (8.8X16X2-MM THK)	
	30	1	**8T-4983**	1	CLAMP-HOSE	
M	31	1	**8T-4189**	1	BOLT (M8X1.25X20-MM)	

I-REFER TO HYDRAULIC INFORMATION SYSTEM
M-METRIC PART

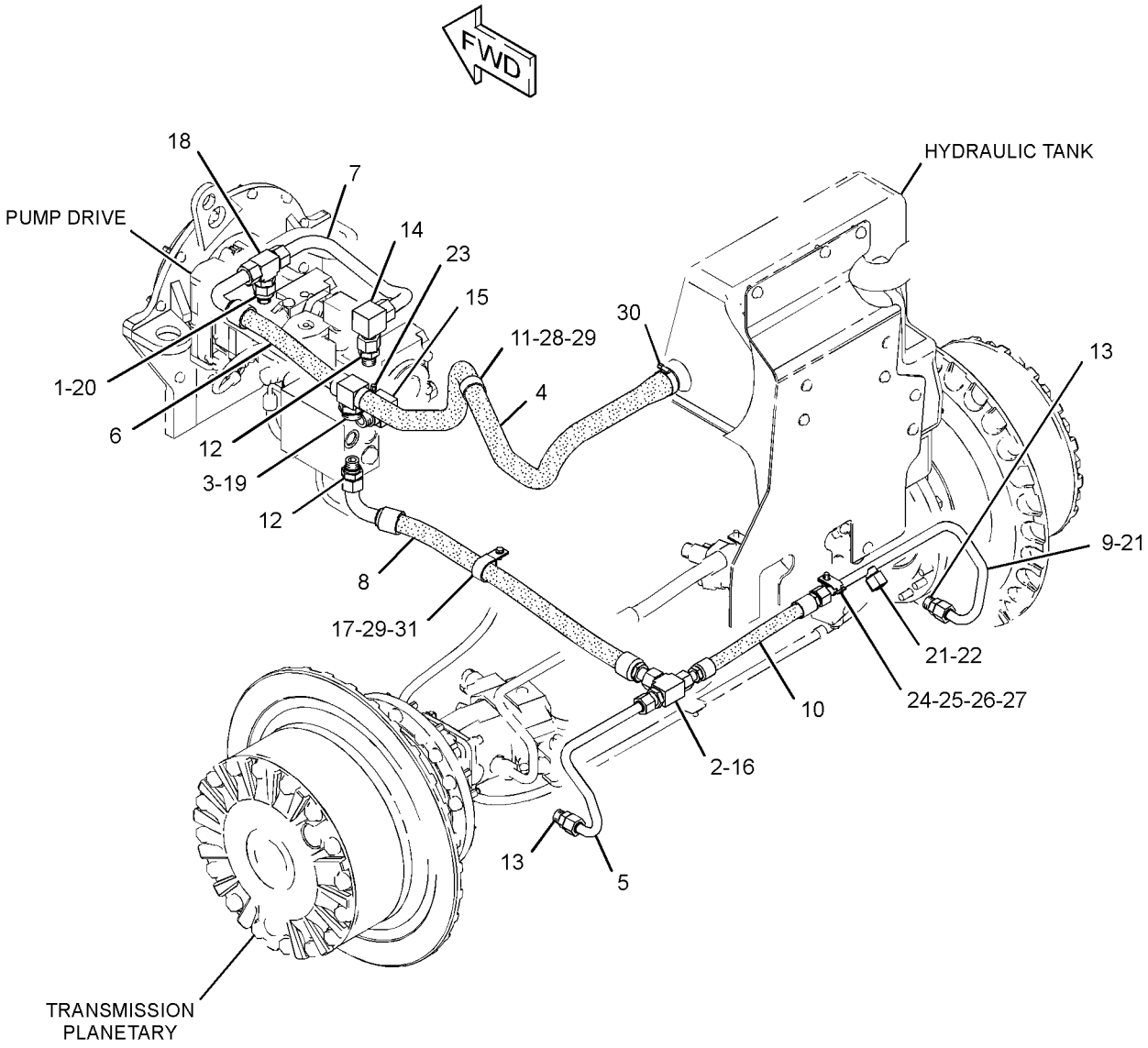

GRAPHIC #1 **<END>** g01534035

263-0985 LINES GP-TRANSMISSION OIL—CASE DRAIN

S/N: WWW1-UP

PART OF 244-7447 POWER TRAIN AR

SMCS-3016, 3154 **i02920671**

NOTE	REF NO	GRAPHIC REF	PART NUMBER	QTY	PART NAME 1 2 3 4 5 6 (PRODUCT LEVEL)	SEE PAGE
	1	1	**6V-5258**	1	ADAPTER	
	2	1	**6V-9171**	1	NUT-BULKHEAD (1-3/16-12-THD)	
	3	1	**9U-7000**	1	FITTING GP-HYDRAULIC	
	4	1	**257-1105**	1	HOSE	
I	5	1	**261-8533**	1	HOSE AS	
	6	1	**263-0987**	1	TUBE AS	
	7	1	**283-4932**	1	TUBE AS	
I	8	1	**284-4923**	1	HOSE AS	
I	9	1	**294-1067**	1	HOSE AS	
	10	1	**294-1070**	1	TUBE AS	
	11	1	**139-1398**	1	CLIP	
	12	1	*148-8317*	2	CONNECTOR AS	
					(EACH INCLUDES)	
		1	**3D-2824**	1	SEAL-O-RING	
		1	**5K-9090**	1	SEAL-O-RING	
		1	**6V-8714**	1	CONNECTOR	
	13	1	*148-8327*	2	CONNECTOR AS	
					(EACH INCLUDES)	
		1	**3D-2824**	1	SEAL-O-RING	
		1	**6V-8637**	1	CONNECTOR	
		1	**6V-9746**	1	SEAL-O-RING	
	14	1	*148-8352*	1	ELBOW AS	
		1	**5K-9090**	1	SEAL-O-RING	
		1	**6V-9854**	1	ELBOW	
	15	1	*148-8357*	1	ELBOW AS	
		1	**5K-9090**	1	SEAL-O-RING	
		1	**6V-9008**	1	ELBOW	
		1	**7M-8485**	1	SEAL-O-RING	
	16	1	*148-8450*	1	TEE AS	
		1	**3E-7443**	1	TEE-UNION	
		1	**5K-9090**	1	SEAL-O-RING	
		1	**6V-9746**	2	SEAL-O-RING	
	17	1	**158-0851**	1	CLIP	
	18	1	*164-6858*	1	TEE AS	
		1	**5K-9090**	2	SEAL-O-RING	
		1	**6V-8778**	1	TEE-FACE SEAL	
		1	**7M-8485**	1	SEAL-O-RING	
	19	1	**2S-4078**	1	SEAL-O-RING	
	20	1	**3D-2824**	1	SEAL-O-RING	
	21	1	**6V-9746**	2	SEAL-O-RING	
	22	1	**6V-9832**	1	CAP AS	
	23	1	**7X-7958**	1	CLAMP-HOSE	
	24	1	**8T-1887**	1	CLIP (SLOT)	
	25	1	**8T-1888**	1	CLIP (TAB)	
	26	1	**8T-4121**	1	WASHER-HARD (11X21X2.5-MM THK)	
M	27	1	**8T-4137**	1	BOLT (M10X1.5X20-MM)	
M	28	1	**8T-4200**	1	BOLT (M8X1.25X16-MM)	
	29	1	**8T-4224**	2	WASHER-HARD (8.8X16X2-MM THK)	
	30	1	**8T-4983**	1	CLAMP-HOSE	
M	31	1	**8T-4189**	1	BOLT (M8X1.25X20-MM)	

I-REFER TO HYDRAULIC INFORMATION SYSTEM
M-METRIC PART

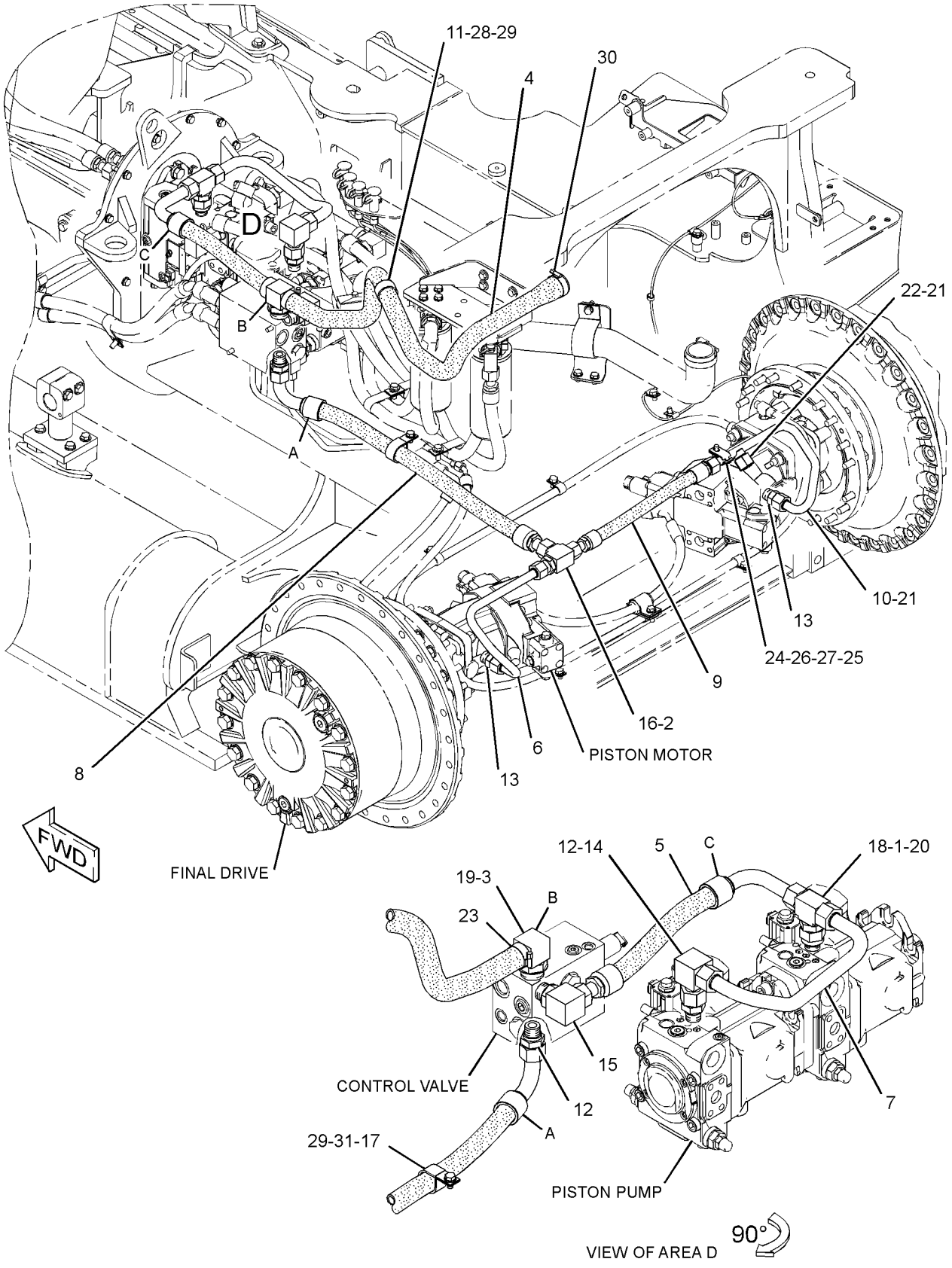

GRAPHIC #1 **<END>** g01522065

286-8057 LINES GP-TRANSMISSION OIL–CONTROL

S/N: JLF1-UP

PART OF 286-3236 POWER TRAIN AR

TYPE 1

SMCS-3016, 3154 **i02696946**

NOTE	REF NO	GRAPHIC REF	PART NUMBER	QTY	PART NAME 1 2 3 4 5 6 (PRODUCT LEVEL)	SEE PAGE
I	1	1	**107-9388**	1	HOSE AS	
I	2	1	**163-3917**	1	HOSE AS	
	3	1	*164-9640*	2	CONNECTOR AS	
					(EACH INCLUDES)	
		1	**145-2237**	1	CONNECTOR	
		1	**3J-1907**	1	SEAL-O-RING	
		1	**4J-5477**	1	SEAL-O-RING	
I	4	1	**261-6818**	1	HOSE AS	
	5	1	**272-3481**	1	TUBE AS	
Y	6	1	**274-6747**	1	MANIFOLD GP-CONTROL	283
I	7	1	**281-5791**	1	HOSE AS	
	8	1	*295-9265*	1	TEE AS	
		1	**6V-9843**	1	TEE-SWIVEL	
		1	**6V-8397**	2	SEAL-O-RING	
I	9	1	**305-5021**	1	HOSE AS	
I	10	1	**306-2095**	1	HOSE AS	
	11	1	**092-3635**	1	CONNECTOR	
	12	1	*148-8368*	2	ELBOW AS	
					(EACH INCLUDES)	
		1	**6V-8627**	1	ELBOW	
		1	**3J-1907**	1	SEAL-O-RING	
		1	**4J-5477**	1	SEAL-O-RING	
	13	1	*148-8378*	1	ELBOW AS	
		1	**6V-8724**	1	ELBOW	
		1	**3J-1907**	1	SEAL-O-RING	
		1	**6V-8397**	1	SEAL-O-RING	
	14	1	*148-8424*	1	TEE AS	
		1	**8T-8902**	1	TEE	
		1	**6V-8397**	1	SEAL-O-RING	
	15	1	*148-8433*	1	TEE AS	
		1	**6V-9836**	1	TEE-SWIVEL	
		1	**6V-8397**	2	SEAL-O-RING	
	16	1	*148-8443*	1	TEE AS	
		1	**7X-2459**	1	TEE-O-RING	
		1	**3J-1907**	1	SEAL-O-RING	
		1	**6V-8397**	1	SEAL-O-RING	
	17	1	*150-4043*	1	CONNECTOR AS	
		1	**6V-9873**	1	CONNECTOR	
		1	**3J-1907**	1	SEAL-O-RING	
		1	**6V-8398**	1	SEAL-O-RING	
	18	1	*155-7327*	2	CONNECTOR AS	
					(EACH INCLUDES)	
		1	**6V-8636**	1	CONNECTOR	
		1	**3J-1907**	1	SEAL-O-RING	
		1	**5H-8853**	1	SEAL-O-RING	
	19	1	*164-5605*	1	CONNECTOR AS	
		1	**8T-0076**	1	CONNECTOR	
		1	**3K-0360**	1	SEAL-O-RING	
		1	**6V-8397**	1	SEAL-O-RING	
	20	1	**2H-0435**	2	CLAMP	
	21	1	**3K-0360**	1	SEAL-O-RING	
	22	1	**5P-7462**	1	CLIP (SLOT)	
	23	1	**5P-7463**	1	CLIP (TAB)	
	24	1	**6V-0683**	1	GROMMET	
	25	1	**6V-8397**	2	SEAL-O-RING	

286-8057 **LINES GP-TRANSMISSION OIL** *(contd.)* **i02696946**

NOTE	REF NO	GRAPHIC REF	PART NUMBER	QTY	PART NAME 1 2 3 4 5 6 (PRODUCT LEVEL)	SEE PAGE
M	26	1	**7X-2543**	3	BOLT (M10X1.5X120-MM)	
	27	1	**8T-4121**	2	WASHER-HARD (11X21X2.5-MM THK)	
M	28	1	**8T-4195**	2	BOLT (M10X1.5X30-MM)	
	29	1	**8T-7934**	3	WASHER-HARD (11X21X5-MM THK)	

I-REFER TO HYDRAULIC INFORMATION SYSTEM
M-METRIC PART
Y-SEPARATE ILLUSTRATION

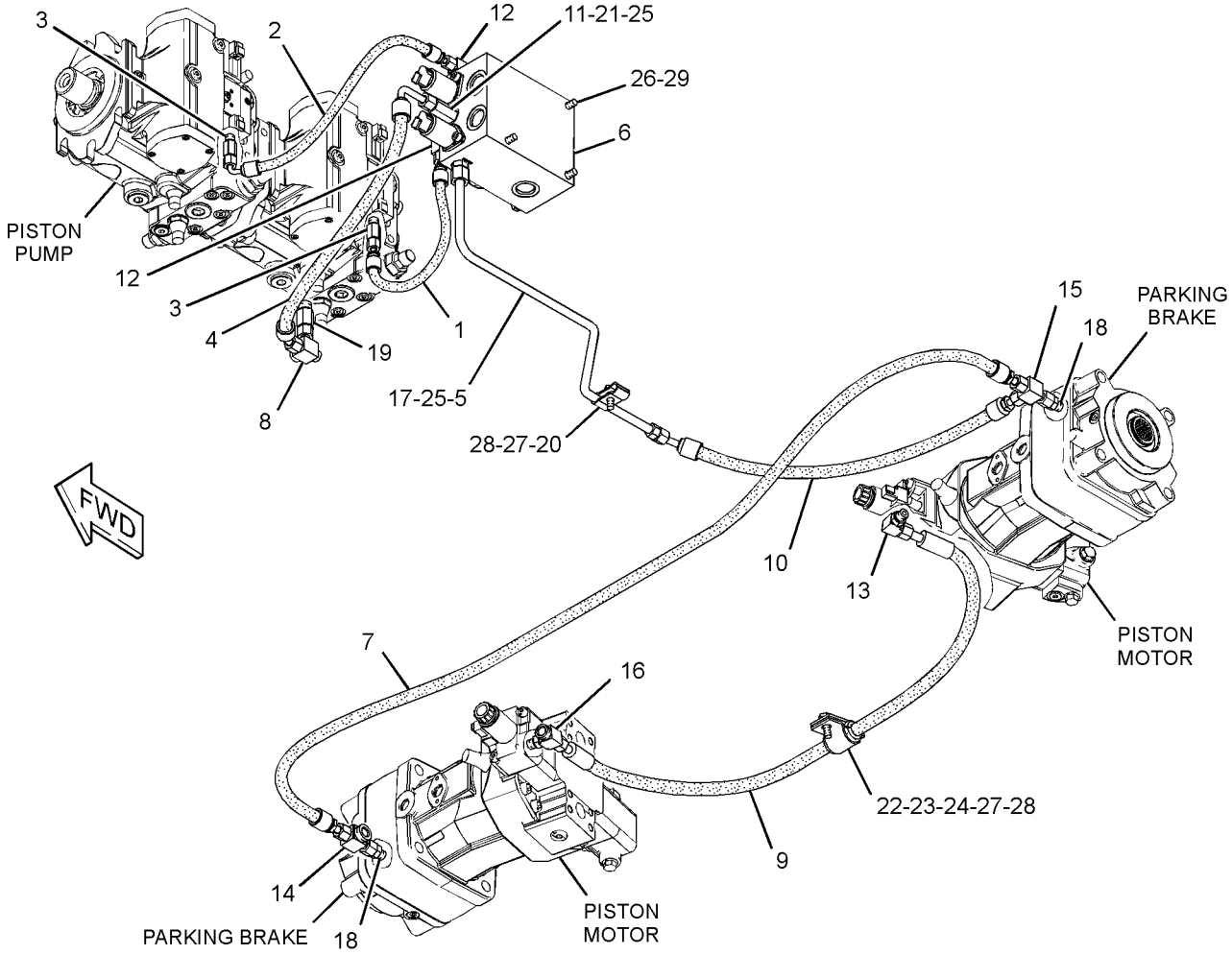

GRAPHIC #1 **<END>** g01374608

286-8057 LINES GP-TRANSMISSION OIL–CONTROL

S/N: JLF1-UP
PART OF 286-3236 POWER TRAIN AR
TYPE 2

SMCS-3016, 3154 **i03635679**

NOTE	REF NO	GRAPHIC REF	PART NUMBER	QTY	PART NAME 1 2 3 4 5 6 (PRODUCT LEVEL)	SEE PAGE
I	1	1	**107-9388**	1	HOSE AS	
I	2	1	**163-3917**	1	HOSE AS	
	3	1	*164-9640*	2	CONNECTOR AS	
					(EACH INCLUDES)	
		1	**145-2237**	1	CONNECTOR	
		1	**3J-1907**	1	SEAL-O-RING	
		1	**4J-5477**	1	SEAL-O-RING	
I	4	1	**261-6818**	1	HOSE AS	
	5	1	**272-3481**	1	TUBE AS	
Y	6	1	**274-6747**	1	MANIFOLD GP-CONTROL	283
I	7	1	**131-5483**	1	HOSE AS	
C	8	1	**315-9855**	1	CROSS AS	
I	9	1	**305-5021**	1	HOSE AS	
I	10	1	**306-2095**	1	HOSE AS	
	11	1	**092-3635**	1	CONNECTOR	
	12	1	*148-8368*	2	ELBOW AS	
					(EACH INCLUDES)	
		1	**6V-8627**	1	ELBOW	
		1	**3J-1907**	1	SEAL-O-RING	
		1	**4J-5477**	1	SEAL-O-RING	
	13	1	*148-8378*	1	ELBOW AS	
		1	**6V-8724**	1	ELBOW	
		1	**3J-1907**	1	SEAL-O-RING	
		1	**6V-8397**	1	SEAL-O-RING	
	14	1	*148-8424*	1	TEE AS	
		1	**8T-8902**	1	TEE	
		1	**6V-8397**	1	SEAL-O-RING	
	15	1	*148-8433*	1	TEE AS	
		1	**6V-9836**	1	TEE-SWIVEL	
		1	**6V-8397**	2	SEAL-O-RING	
	17	1	*150-4043*	1	CONNECTOR AS	
		1	**6V-9873**	1	CONNECTOR	
		1	**3J-1907**	1	SEAL-O-RING	
		1	**6V-8398**	1	SEAL-O-RING	
	18	1	*155-7327*	2	CONNECTOR AS	
					(EACH INCLUDES)	
		1	**6V-8636**	1	CONNECTOR	
		1	**3J-1907**	1	SEAL-O-RING	
		1	**5H-8853**	1	SEAL-O-RING	
	19	1	*164-5605*	1	CONNECTOR AS	
		1	**8T-0076**	1	CONNECTOR	
		1	**3K-0360**	1	SEAL-O-RING	
		1	**6V-8397**	1	SEAL-O-RING	
	20	1	**2H-0435**	2	CLAMP	
	21	1	**3K-0360**	1	SEAL-O-RING	
	22	1	**5P-7462**	1	CLIP (SLOT)	
	23	1	**5P-7463**	1	CLIP (TAB)	
	24	1	**6V-0683**	1	GROMMET	
	25	1	**6V-8397**	3	SEAL-O-RING	
M	26	1	**7X-2543**	3	BOLT (M10X1.5X120-MM)	
	27	1	**8T-4121**	2	WASHER-HARD (11X21X2.5-MM THK)	
M	28	1	**8T-4195**	2	BOLT (M10X1.5X30-MM)	
	29	1	**8T-7934**	3	WASHER-HARD (11X21X5-MM THK)	
	30	1	**341-0083**	1	CONNECTOR	
	31	1	**7X-2459**	1	TEE-O-RING	

286-8057 **LINES GP-TRANSMISSION OIL** *(contd.)* **i03635679**

NOTE	REF NO	GRAPHIC REF	PART NUMBER	QTY	PART NAME 1 2 3 4 5 6 (PRODUCT LEVEL)	SEE PAGE
	32	1	**3J-1907**	2	SEAL-O-RING	

C-CHANGE FROM PREVIOUS TYPE
I-REFER TO HYDRAULIC INFORMATION SYSTEM
M-METRIC PART
Y-SEPARATE ILLUSTRATION

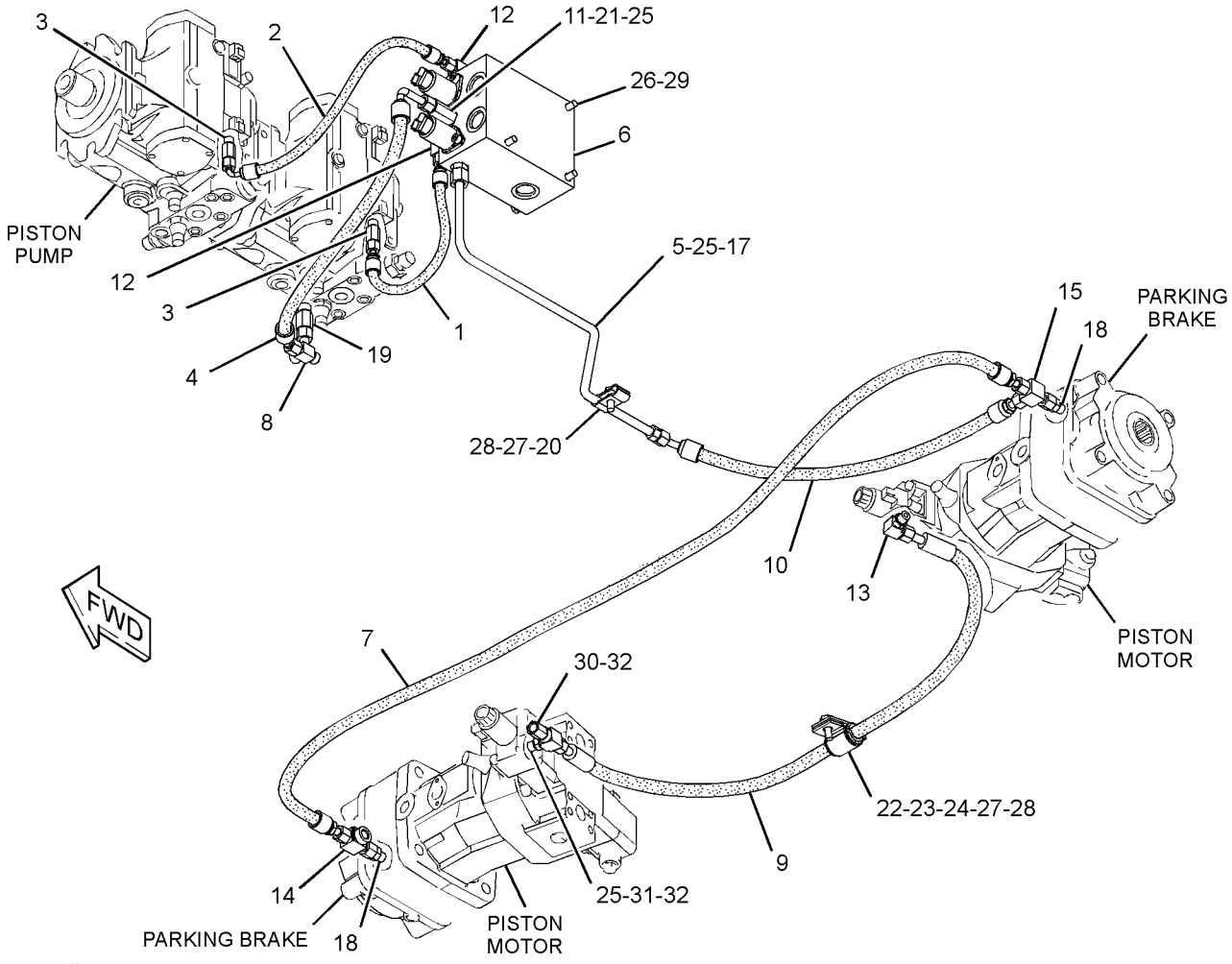

GRAPHIC #1 **<END>** g01952778

286-8059 LINES GP-TRANSMISSION OIL—CASE DRAIN

S/N: JLF1-UP

PART OF 286-3236 POWER TRAIN AR

SMCS-3016, 3154 **i02921479**

NOTE	REF NO	GRAPHIC REF	PART NUMBER	QTY	PART NAME 1 2 3 4 5 6 (PRODUCT LEVEL)	SEE PAGE
	1	1	**6V-5258**	1	ADAPTER	
	2	1	**6V-9171**	1	NUT-BULKHEAD (1-3/16-12-THD)	
	3	1	**9U-7000**	1	FITTING GP-HYDRAULIC	
	4	1	**257-1105**	1	HOSE	
I	5	1	**261-8533**	1	HOSE AS	
	6	1	**283-4932**	1	TUBE AS	
I	7	1	**284-4923**	1	HOSE AS	
	8	1	**287-8667**	1	TUBE AS	
I	9	1	**294-1067**	1	HOSE AS	
	10	1	**294-1069**	1	TUBE AS	
	11	1	**139-1398**	1	CLIP	
	12	1	*148-8317*	2	CONNECTOR AS	
					(EACH INCLUDES)	
		1	**3D-2824**	1	SEAL-O-RING	
		1	**5K-9090**	1	SEAL-O-RING	
		1	**6V-8714**	1	CONNECTOR	
	13	1	*148-8327*	2	CONNECTOR AS	
					(EACH INCLUDES)	
		1	**3D-2824**	1	SEAL-O-RING	
		1	**6V-8637**	1	CONNECTOR	
		1	**6V-9746**	1	SEAL-O-RING	
	14	1	*148-8352*	1	ELBOW AS	
		1	**5K-9090**	1	SEAL-O-RING	
		1	**6V-9854**	1	ELBOW	
	15	1	*148-8357*	1	ELBOW AS	
		1	**5K-9090**	1	SEAL-O-RING	
		1	**6V-9008**	1	ELBOW	
		1	**7M-8485**	1	SEAL-O-RING	
	16	1	*148-8450*	1	TEE AS	
		1	**3E-7443**	1	TEE-UNION	
		1	**5K-9090**	1	SEAL-O-RING	
		1	**6V-9746**	2	SEAL-O-RING	
	17	1	**158-0851**	1	CLIP	
	18	1	*164-6858*	1	TEE AS	
		1	**5K-9090**	2	SEAL-O-RING	
		1	**6V-8778**	1	TEE-FACE SEAL	
		1	**7M-8485**	1	SEAL-O-RING	
	19	1	**2S-4078**	1	SEAL-O-RING	
	20	1	**3D-2824**	1	SEAL-O-RING	
	21	1	**6V-9746**	2	SEAL-O-RING	
	22	1	**6V-9832**	1	CAP AS	
	23	1	**7X-7958**	1	CLAMP-HOSE	
	24	1	**8T-1887**	1	CLIP (SLOT)	
	25	1	**8T-1888**	1	CLIP (TAB)	
	26	1	**8T-4121**	1	WASHER-HARD (11X21X2.5-MM THK)	
M	27	1	**8T-4137**	1	BOLT (M10X1.5X20-MM)	
M	28	1	**8T-4200**	1	BOLT (M8X1.25X16-MM)	
	29	1	**8T-4224**	2	WASHER-HARD (8.8X16X2-MM THK)	
	30	1	**8T-4983**	1	CLAMP-HOSE	
M	31	1	**8T-4189**	1	BOLT (M8X1.25X20-MM)	

I-REFER TO HYDRAULIC INFORMATION SYSTEM
M-METRIC PART

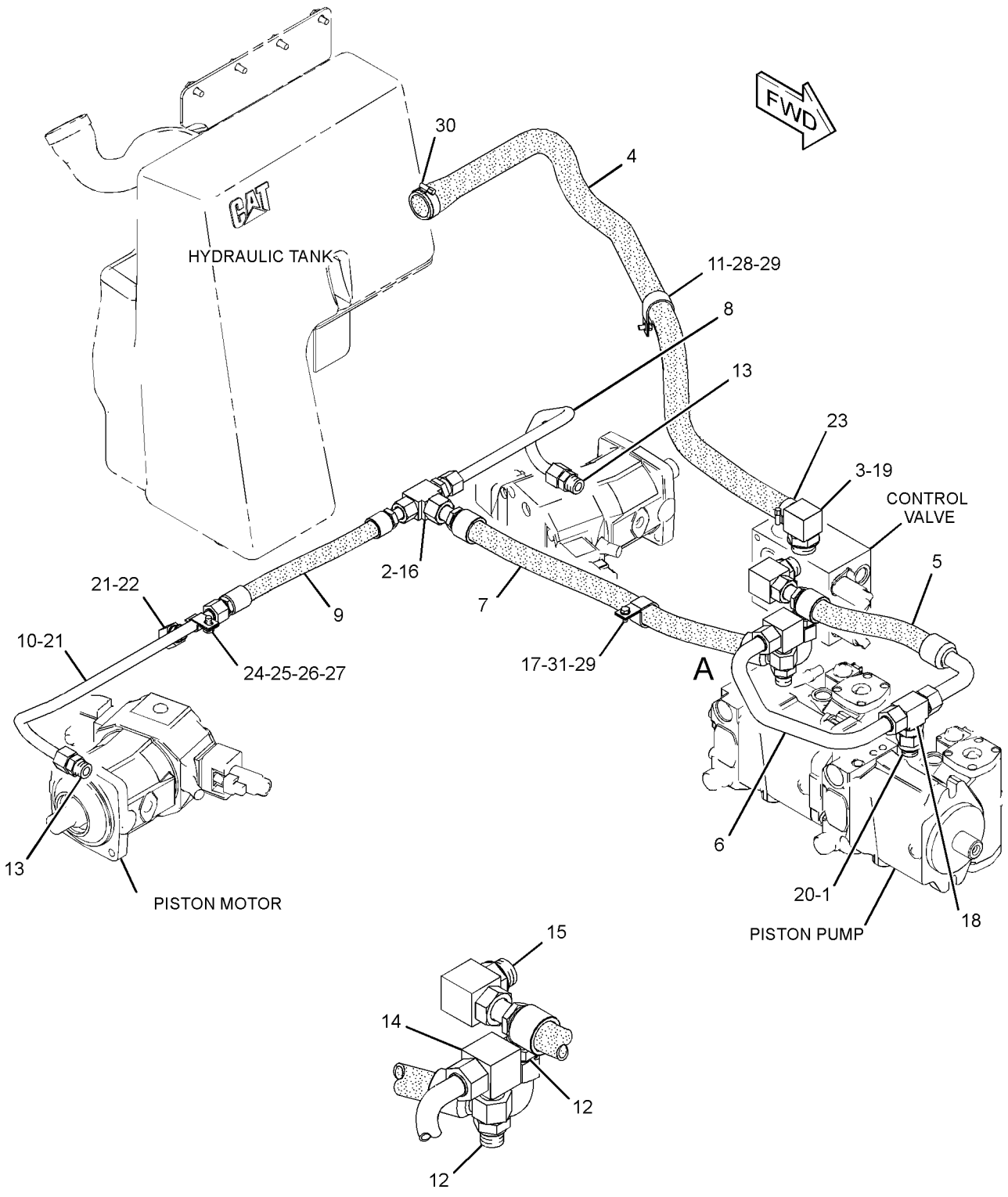

GRAPHIC #1 **<END>** g01526433

254-9057 MANIFOLD & LINES GP-CONTROL

S/N: YYY1-UP

PART OF 244-7383 POWER TRAIN AR

TYPE 1

SMCS-5264 **i02685098**

NOTE	REF NO	GRAPHIC REF	PART NUMBER	QTY	PART NAME 1 2 3 4 5 6 (PRODUCT LEVEL)	SEE PAGE
I	1	1	**107-9388**	1	HOSE AS	
I	2	1	**159-5902**	1	HOSE AS	
I	3	1	**162-1750**	1	HOSE AS	
I	4	1	**163-3917**	1	HOSE AS	
	5	1	*164-9640*	2	CONNECTOR AS	
					(EACH INCLUDES)	
		1	**145-2237**	1	CONNECTOR	
		1	**3J-1907**	1	SEAL-O-RING	
		1	**4J-5477**	1	SEAL-O-RING	
I	6	1	**261-6818**	1	HOSE AS	
	7	1	**272-3481**	1	TUBE AS	
Y	8	1	**274-6747**	1	MANIFOLD GP-CONTROL	283
	9	1	*295-9265*	1	TEE AS	
		1	**6V-9843**	1	TEE-SWIVEL	
		1	**6V-8397**	2	SEAL-O-RING	
I	10	1	**305-5019**	1	HOSE AS	
	11	1	**092-3635**	1	CONNECTOR	
	12	1	*148-8368*	2	ELBOW AS	
					(EACH INCLUDES)	
		1	**6V-8627**	1	ELBOW	
		1	**3J-1907**	1	SEAL-O-RING	
		1	**4J-5477**	1	SEAL-O-RING	
	13	1	*148-8378*	1	ELBOW AS	
		1	**6V-8724**	1	ELBOW	
		1	**3J-1907**	1	SEAL-O-RING	
		1	**6V-8397**	1	SEAL-O-RING	
	14	1	*148-8424*	1	TEE AS	
		1	**8T-8902**	1	TEE	
		1	**6V-8397**	1	SEAL-O-RING	
	15	1	*148-8433*	1	TEE AS	
		1	**6V-9836**	1	TEE-SWIVEL	
		1	**6V-8397**	2	SEAL-O-RING	
	16	1	*148-8443*	1	TEE AS	
		1	**7X-2459**	1	TEE-O-RING	
		1	**3J-1907**	1	SEAL-O-RING	
		1	**6V-8397**	1	SEAL-O-RING	
	17	1	*150-4043*	1	CONNECTOR AS	
		1	**6V-9873**	1	CONNECTOR	
		1	**3J-1907**	1	SEAL-O-RING	
		1	**6V-8398**	1	SEAL-O-RING	
	18	1	*155-7327*	2	CONNECTOR AS	
					(EACH INCLUDES)	
		1	**6V-8636**	1	CONNECTOR	
		1	**3J-1907**	1	SEAL-O-RING	
		1	**5H-8853**	1	SEAL-O-RING	
	19	1	*164-5605*	1	CONNECTOR AS	
		1	**8T-0076**	1	CONNECTOR	
		1	**3K-0360**	1	SEAL-O-RING	
		1	**6V-8397**	1	SEAL-O-RING	
	20	1	**2H-0435**	2	CLAMP	
	21	1	**3K-0360**	1	SEAL-O-RING	
	22	1	**5P-7462**	1	CLIP (SLOT)	
	23	1	**5P-7463**	1	CLIP (TAB)	
	24	1	**6V-0683**	1	GROMMET	
	25	1	**6V-8397**	2	SEAL-O-RING	

254-9057 MANIFOLD & LINES GP-CONTROL *(contd.)* i02685098

NOTE	REF NO	GRAPHIC REF	PART NUMBER	QTY	PART NAME 1 2 3 4 5 6 (PRODUCT LEVEL)	SEE PAGE
M	26	1	**7X-2543**	3	BOLT (M10X1.5X120-MM)	
	27	1	**8T-4121**	2	WASHER-HARD (11X21X2.5-MM THK)	
M	28	1	**8T-4195**	2	BOLT (M10X1.5X30-MM)	
	29	1	**8T-7934**	3	WASHER-HARD (11X21X5-MM THK)	

I-REFER TO HYDRAULIC INFORMATION SYSTEM
M-METRIC PART
Y-SEPARATE ILLUSTRATION

254-9057 **MANIFOLD & LINES GP-CONTROL** *(contd.)* **i02685098**

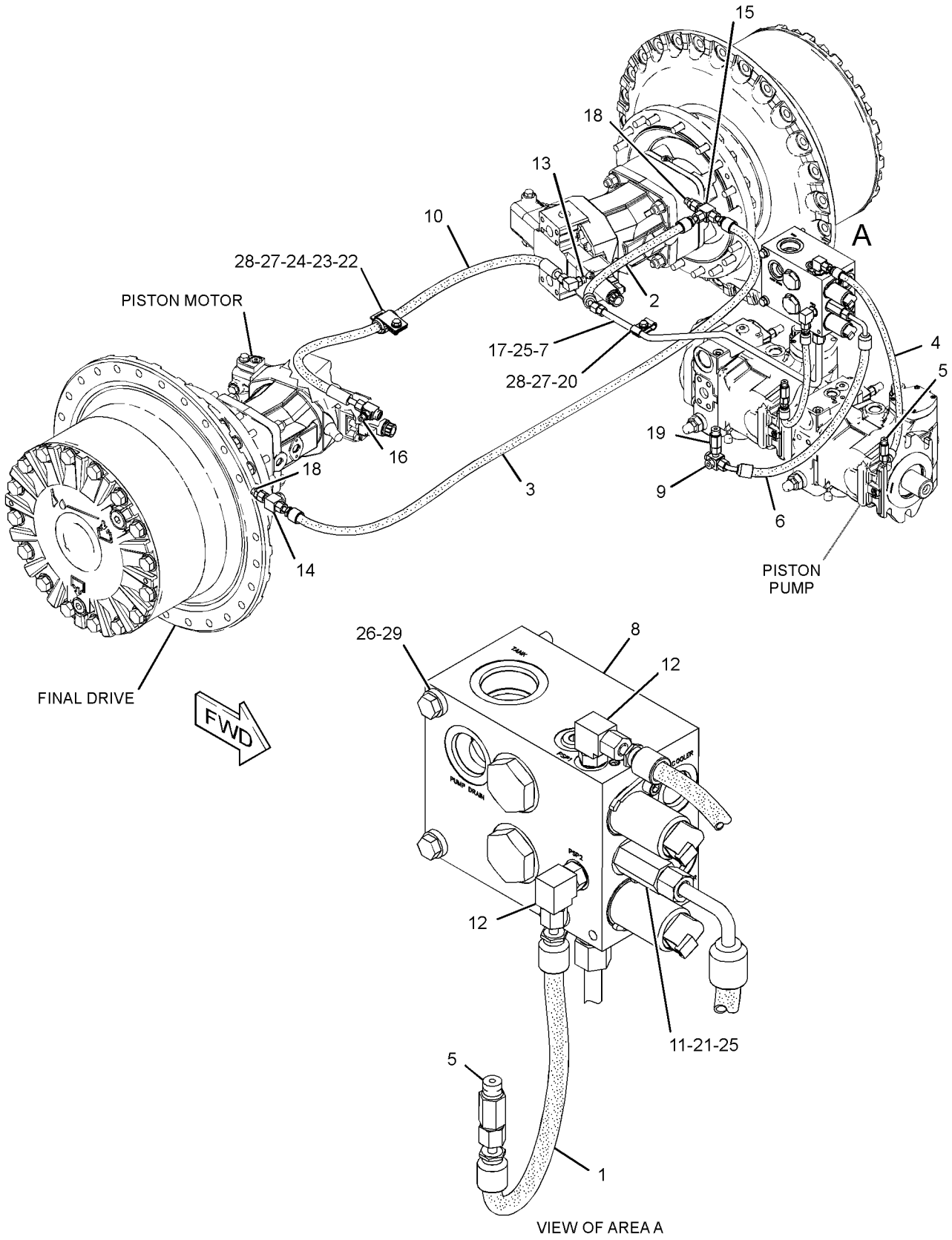

GRAPHIC #1 **<END>** g01376952

POWER TRAIN

254-9057 MANIFOLD & LINES GP-CONTROL

S/N: YYY1-UP

PART OF 244-7383 POWER TRAIN AR

TYPE 2

SMCS-5264 **i03362903**

NOTE	REF NO	GRAPHIC REF	PART NUMBER	QTY	PART NAME 1 2 3 4 5 6 (PRODUCT LEVEL)	SEE PAGE
I	1	1	**107-9388**	1	HOSE AS	
I	2	1	**159-5902**	1	HOSE AS	
I	3	1	**329-8172**	1	HOSE AS	
I	4	1	**163-3917**	1	HOSE AS	
	5	1	*164-9640*	2	CONNECTOR AS	
					(EACH INCLUDES)	
		1	**145-2237**	1	CONNECTOR	
		1	**3J-1907**	1	SEAL-O-RING	
		1	**4J-5477**	1	SEAL-O-RING	
I	6	1	**261-6818**	1	HOSE AS	
	7	1	**272-3481**	1	TUBE AS	
Y	8	1	**274-6747**	1	MANIFOLD GP-CONTROL	283
C	9	1	**315-9855**	1	CROSS AS	
I	10	1	**305-5019**	1	HOSE AS	
	11	1	**092-3635**	1	CONNECTOR	
	12	1	*148-8368*	2	ELBOW AS	
					(EACH INCLUDES)	
		1	**6V-8627**	1	ELBOW	
		1	**3J-1907**	1	SEAL-O-RING	
		1	**4J-5477**	1	SEAL-O-RING	
	13	1	*148-8378*	1	ELBOW AS	
		1	**6V-8724**	1	ELBOW	
		1	**3J-1907**	1	SEAL-O-RING	
		1	**6V-8397**	1	SEAL-O-RING	
	14	1	*148-8424*	1	TEE AS	
		1	**8T-8902**	1	TEE	
		1	**6V-8397**	1	SEAL-O-RING	
	15	1	*148-8433*	1	TEE AS	
		1	**6V-9836**	1	TEE-SWIVEL	
		1	**6V-8397**	2	SEAL-O-RING	
	16	1	*148-8443*	1	TEE AS	
		1	**7X-2459**	1	TEE-O-RING	
		1	**3J-1907**	1	SEAL-O-RING	
		1	**6V-8397**	1	SEAL-O-RING	
	17	1	*150-4043*	1	CONNECTOR AS	
		1	**6V-9873**	1	CONNECTOR	
		1	**3J-1907**	1	SEAL-O-RING	
		1	**6V-8398**	1	SEAL-O-RING	
	18	1	*155-7327*	2	CONNECTOR AS	
					(EACH INCLUDES)	
		1	**6V-8636**	1	CONNECTOR	
		1	**3J-1907**	1	SEAL-O-RING	
		1	**5H-8853**	1	SEAL-O-RING	
	19	1	*164-5605*	1	CONNECTOR AS	
		1	**8T-0076**	1	CONNECTOR	
		1	**3K-0360**	1	SEAL-O-RING	
		1	**6V-8397**	1	SEAL-O-RING	
	20	1	**2H-0435**	2	CLAMP	
	21	1	**3K-0360**	1	SEAL-O-RING	
	22	1	**5P-7462**	1	CLIP (SLOT)	
	23	1	**5P-7463**	1	CLIP (TAB)	
	24	1	**6V-0683**	1	GROMMET	
	25	1	**6V-8397**	2	SEAL-O-RING	
M	26	1	**7X-2543**	3	BOLT (M10X1.5X120-MM)	
	27	1	**8T-4121**	2	WASHER-HARD (11X21X2.5-MM THK)	

254-9057 **MANIFOLD & LINES GP-CONTROL** *(contd.)* **i03362903**

NOTE	REF NO	GRAPHIC REF	PART NUMBER	QTY	PART NAME 1 2 3 4 5 6 (PRODUCT LEVEL)	SEE PAGE
M	28	1	**8T-4195**	2	BOLT (M10X1.5X30-MM)	
	29	1	**8T-7934**	3	WASHER-HARD (11X21X5-MM THK)	

C-CHANGE FROM PREVIOUS TYPE
I-REFER TO HYDRAULIC INFORMATION SYSTEM
M-METRIC PART
Y-SEPARATE ILLUSTRATION

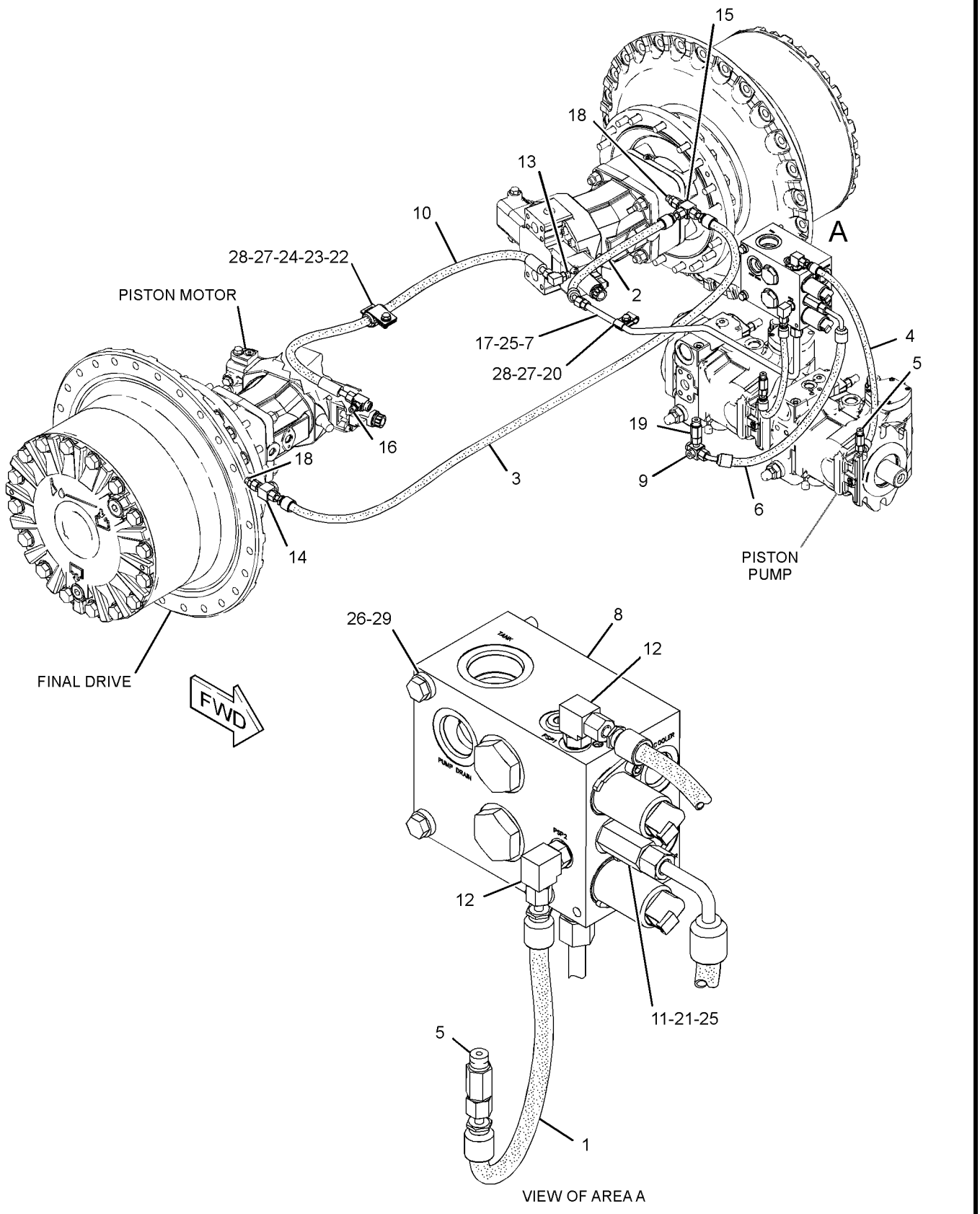

GRAPHIC #1 **<END>** g01376952

274-6747 MANIFOLD GP-CONTROL

S/N: JLF1-UP; WWW1-UP; YYY1-UP

PART OF 286-8057 LINES GP-TRANSMISSION OIL, 254-9057 MANIFOLD & LINES GP-CONTROL, 271-9179, 322-6508, 322-6509 VALVE GP-CONTROL

SMCS-5264 **i03408128**

NOTE	REF NO	GRAPHIC REF	PART NUMBER	QTY	PART NAME 1 2 3 4 5 6 (PRODUCT LEVEL)	SEE PAGE
M	1	1	**8T-1158**	2	BOLT-SOCKET HEAD (M8X1.25X20-MM)	
	2	1	**105-4593**	2	POPPET	
	3	1	**212-6603**	2	PLUG AS	
					(EACH INCLUDES)	
		1	**6V-8978**	1	SEAL-O-RING	
	4	1	**245-1181**	2	FLANGE	
J	5	1	**252-4734**	2	VALVE GP-SOLENOID (MOTOR, 2-SPEED)	
	6	1	**263-9560**	1	SPRING	
	7	1	**263-9561**	1	SPRING	
					AVAILABLE REPAIR KIT(S):	
J			**245-1912**	1	KIT-SEAL (SOLENOID VALVE)	
					(INCLUDES SEAL-O-RINGS)	

J-KIT MARKED J SERVICES PARTS MARKED J
M-METRIC PART

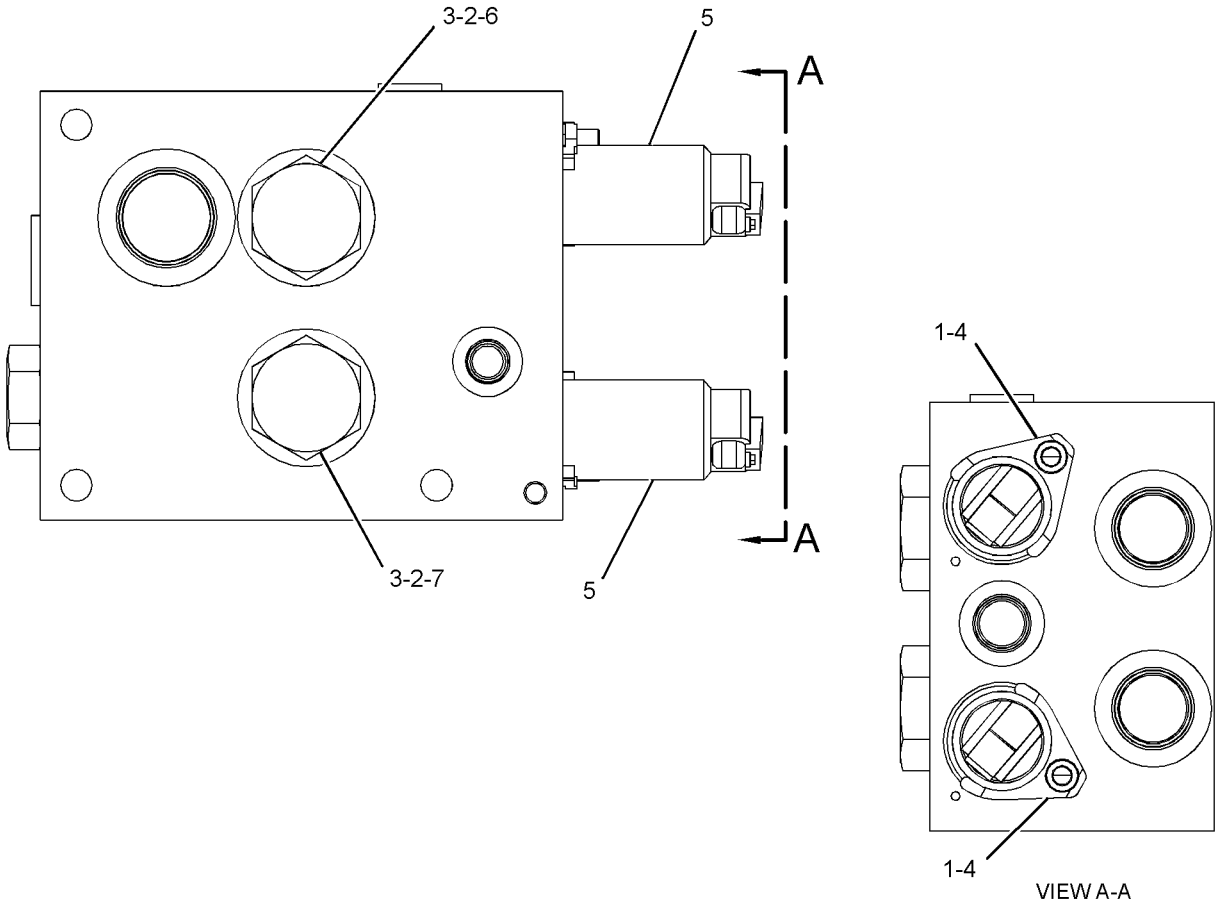

GRAPHIC #1 **<END>** g01358074

200-1729 MOTOR GP-PISTON–WINCH

S/N: JLF1-UP; WWW1-UP; YYY1-UP
PART OF 208-5549 MOTOR & MTG GP-WINCH
AN ATTACHMENT

SMCS-4351, 5058 **i01923371**

NOTE	REF NO	GRAPHIC REF	PART NUMBER	QTY	PART NAME 1 2 3 4 5 6 (PRODUCT LEVEL)	SEE PAGE
	1	1	**2H-9247**	1	SEAL-O-RING	
	2	1	**191-3539**	2	NUT-SEAL	
	3	1	**9S-8006**	1	PLUG-O-RING	
	4	1	**6V-4589**	1	SEAL-O-RING	
	5	1	**8T-9598**	1	RING-RETAINING	
	6	1	**6E-5063**	2	CAP AS	
	7	1	**133-8739**	1	SEAL-LIP TYPE	
	8	1	**9S-8008**	1	PLUG-O-RING	
	9	1	**6V-5050**	1	SEAL-O-RING	
	10	1	**9S-8004**	3	PLUG-O-RING	
	11	1	**6V-5049**	3	SEAL-O-RING	
	12	1	**141-0305**	1	SETSCREW	
M	13	1	**096-4900**	1	SETSCREW-SOCKET	

M-METRIC PART

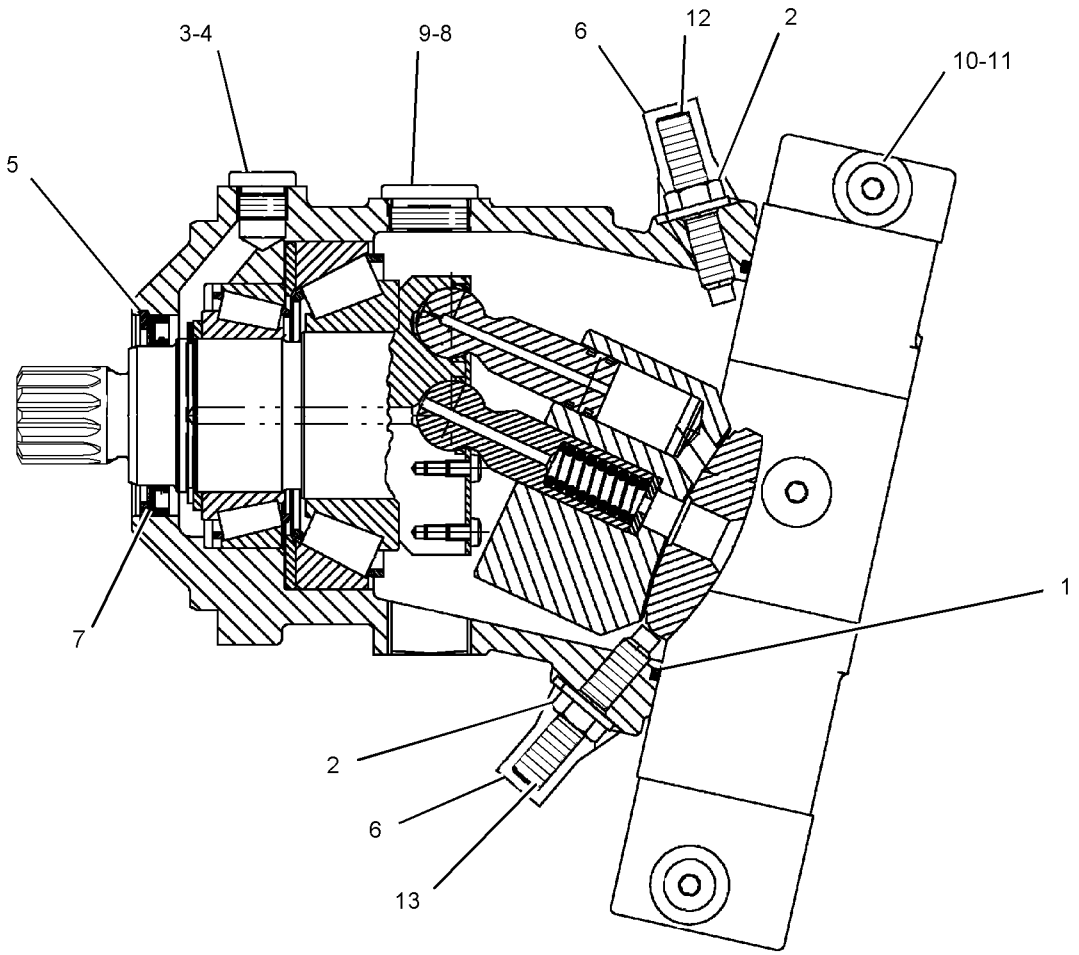

GRAPHIC #1 **<END>** g01009333

254-1354 MOTOR GP-PISTON*R

S/N: JLF1-UP; WWW1-UP; YYY1-UP

PART OF 244-7383, 244-7447, 286-3236 POWER TRAIN AR

SMCS-4351 **i03607660**

NOTE	REF NO	GRAPHIC REF	PART NUMBER	QTY	PART NAME 1 2 3 4 5 6 (PRODUCT LEVEL)	SEE PAGE
Y	1	1	**199-1088**	1	ROTATING GP-MOTOR (HYSTAT PROPEL)	300
Y	2	1	**293-5442**	1	VALVE GP-PILOT (SERVO) (HYDROSTATIC DRIVE)	308
Y	3	1	**293-5448**	1	VALVE GP-FLUSHING (HYDROSTATIC DRIVE)	307
Y	4	1	**301-7890**	2	VALVE GP-CHECK (HYDROSTATIC DRIVE)	117
M	5	1	**6V-8200**	8	BOLT-SOCKET HEAD (M12X1.75X35-MM)	
	6	1	**124-9940**	1	PISTON	
	7	1	**123-5782**	1	PIN	
	8	1	**138-4181**	1	PISTON	
	9	1	**123-2016**	1	PIN	
	10	1	**123-5787**	2	SEAT	
	11	1	**258-0129**	6	SEAL-O-RING	
	12	1	**138-4182**	3	SEAL	
	13	1	**123-5800**	2	PLUG	
	14	1	**2W-1145**	1	RING-RETAINING	
	15	1	**124-9913**	1	SEAL-SHAFT	
	16	1	**124-9914**	1	SHIM (3-MM THK)	
	17	1	**6F-4718**	1	SEAL-O-RING	
M	18	1	**9X-8483**	1	SETSCREW-SOCKET (M12X1.75X80-MM)	
M	19	1	**6E-3283**	2	LOCKNUT (M12X1.75-THD)	
M	20	1	**9X-8482**	1	SETSCREW-SOCKET (M12X1.75X70-MM)	
	21	1	**128-8981**	2	CAP	
	22	1	**120-4394**	1	PLUG-BREAK OFF	

PARTS SHOWN IN GRAPHIC(S) WITHOUT A REFERENCE NUMBER ARE NOT SERVICED SEPARATELY

M-METRIC PART
Y-SEPARATE ILLUSTRATION

254-1354 MOTOR GP-PISTON *(contd.)* i03607660

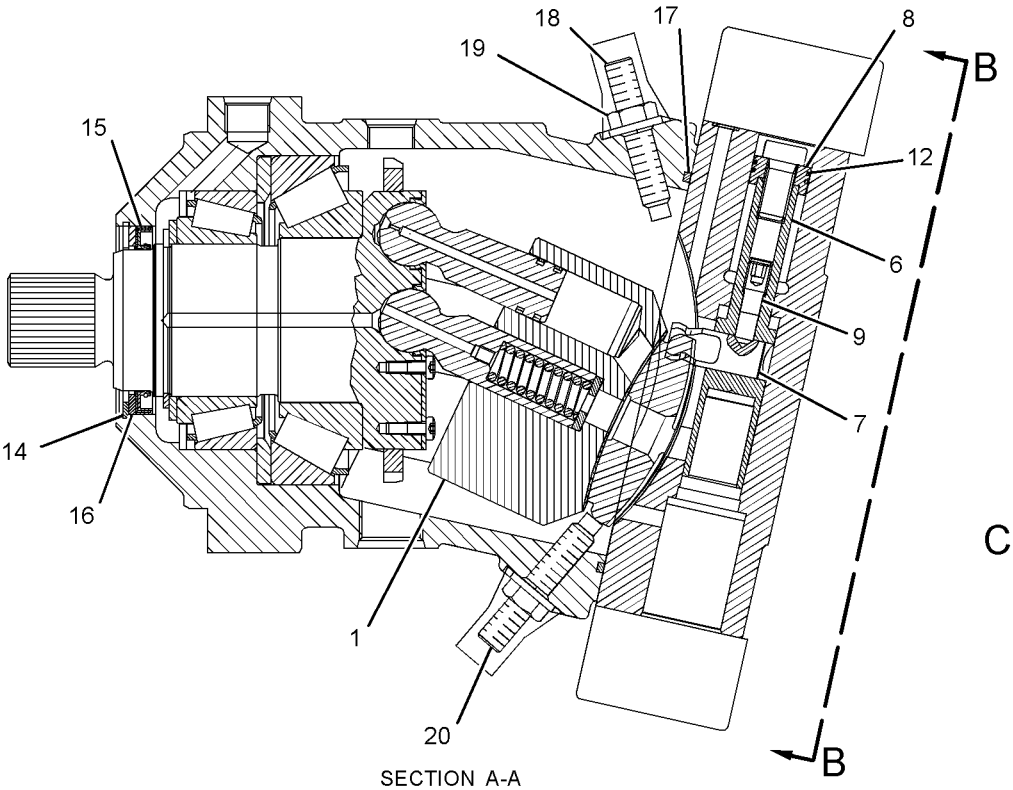

SECTION A-A

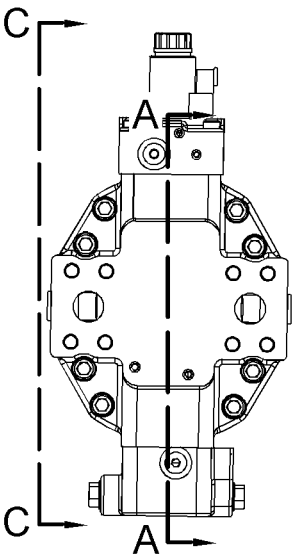

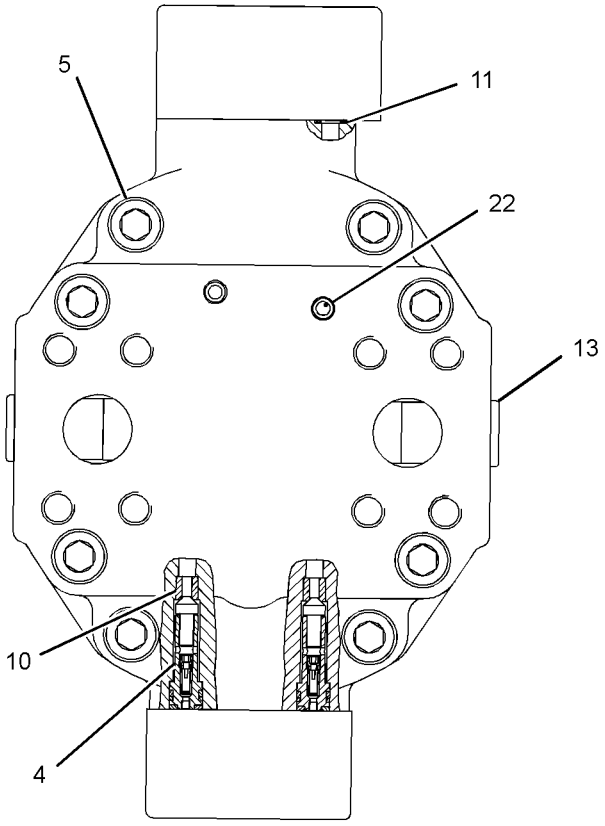

VIEW B-B

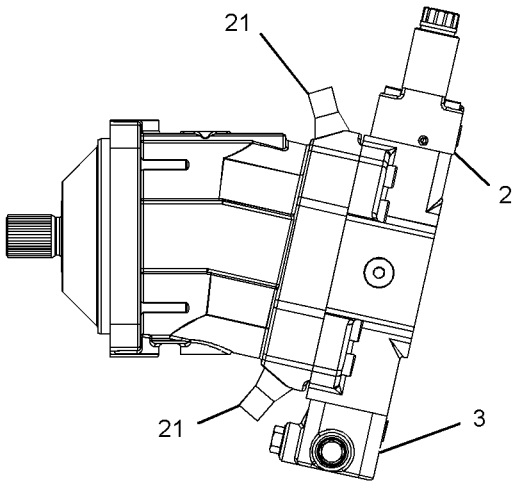

VIEW C-C

GRAPHIC #1 **<END>** g01343678

217-2004 MOUNTING GP-PUMP

S/N: JLF1-UP; WWW1-UP; YYY1-UP

PART OF 292-0125 DRIVE AR, 300-8546 DRIVE AR-WINCH, 244-7455 DRIVE GP-PUMP AN ATTACHMENT

SMCS-5070, 5084 **i01937074**

NOTE	REF NO	GRAPHIC REF	PART NUMBER	QTY	PART NAME 1 2 3 4 5 6 (PRODUCT LEVEL)	SEE PAGE
	1	1	**3E-4356**	2	WASHER-HARD (17.5X30X6-MM THK)	
	2	1	**7J-6285**	1	SEAL-O-RING	
M	3	1	**8T-7338**	2	BOLT (M16X2X45-MM)	

M-METRIC PART

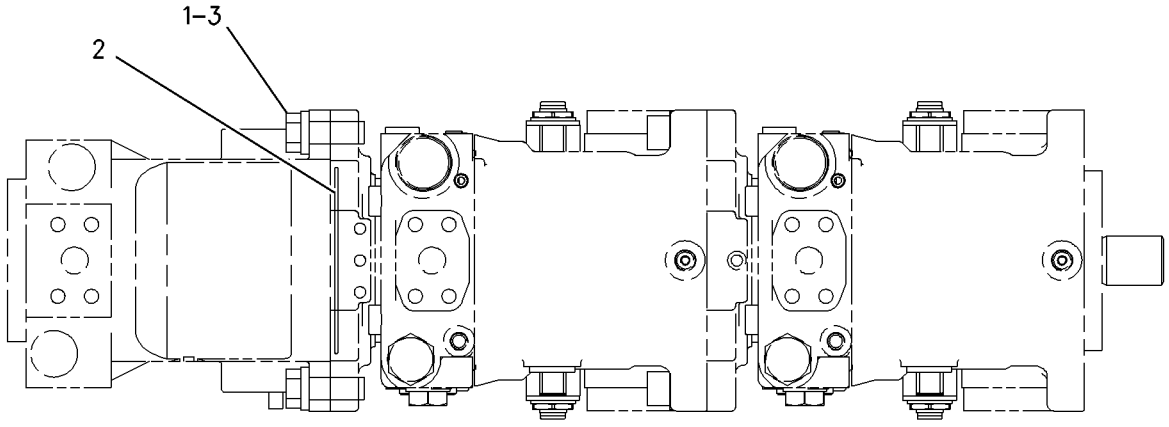

GRAPHIC #1 **<END>** g00876400

POWER TRAIN

244-7383 POWER TRAIN AR

S/N: YYY1-UP

PART OF 244-7375 COMMON AR

SMCS-3000, 4000 **i02652018**

NOTE	PART NUMBER	QTY	PART NAME 1 2 3 4 5 6 (PRODUCT LEVEL)	SEE PAGE
Y	*244-7616*	2	BRAKE GP-PARKING	247
Y	*244-7410*	1	DRIVE GP-HYDROSTATIC	252
Y	*244-1530*	2	DRIVE GP-FINAL	250
Y	*244-7417*	1	LINES GP-POWER TRAIN COOLER	258
Y	*254-9098*	1	LINES GP-PRESSURE TEST	417
Y	*254-9054*	1	LINES GP-TRANSMISSION OIL (CHARGE)	264
Y	*254-9055*	1	LINES GP-TRANSMISSION OIL (CASE DRAIN)	267
YR	**254-1354**	2	MOTOR GP-PISTON	285
Y	*254-9057*	1	MANIFOLD & LINES GP-CONTROL	277

R-REMFG PART MAY BE AVAILABLE
Y-SEPARATE ILLUSTRATION

<END>

244-7447 POWER TRAIN AR

S/N: WWW1-UP

PART OF 244-7374 COMMON AR

SMCS-3000, 4000 **i03601443**

NOTE	PART NUMBER	QTY	PART NAME 1 2 3 4 5 6 (PRODUCT LEVEL)	SEE PAGE
Y	*244-7616*	2	BRAKE GP-PARKING	247
Y	*244-1530*	2	DRIVE GP-FINAL	250
Y	*244-7410*	1	DRIVE GP-HYDROSTATIC	252
Y	*306-2089*	1	LINES GP-POWER TRAIN COOLER	262
Y	*254-9098*	1	LINES GP-PRESSURE TEST	417
Y	*254-9054*	1	LINES GP-TRANSMISSION OIL (CHARGE)	264
Y	*263-0985*	1	LINES GP-TRANSMISSION OIL (CASE DRAIN)	269
YR	**254-1354**	2	MOTOR GP-PISTON	285
Y	*271-9179*	1	VALVE GP-CONTROL	443

R-REMFG PART MAY BE AVAILABLE
Y-SEPARATE ILLUSTRATION

<END>

286-3236 POWER TRAIN AR

S/N: JLF1-UP

PART OF 282-5326 COMMON AR

SMCS-3000, 4000 **i02723905**

NOTE	PART NUMBER	QTY	PART NAME 1 2 3 4 5 6 (PRODUCT LEVEL)	SEE PAGE
Y	*244-7616*	2	BRAKE GP-PARKING	247
Y	*244-7410*	1	DRIVE GP-HYDROSTATIC	252
Y	*244-1530*	2	FINAL DRIVE GP	250
Y	*286-8055*	1	LINES GP-POWER TRAIN COOLER	260
Y	*254-9098*	1	LINES GP-PRESSURE TEST	417
Y	*254-9054*	1	LINES GP-TRANSMISSION OIL (CHARGE)	264
Y	*286-8057*	1	LINES GP-TRANSMISSION OIL (CONTROL)	271
Y	*286-8059*	1	LINES GP-TRANSMISSION OIL (CASE DRAIN)	275
Y	**254-1354**	2	MOTOR GP-PISTON	285

Y-SEPARATE ILLUSTRATION

<END>

293-5441 PUMP GP-CHARGE–HYSTAT PROPEL

S/N: JLF1-UP; WWW1-UP; YYY1-UP
PART OF 289-6388, 289-6389 PUMP GP-PISTON
AN ATTACHMENT

SMCS-3204 **i03408124**

NOTE	REF NO	GRAPHIC REF	PART NUMBER	QTY	PART NAME 1 2 3 4 5 6 (PRODUCT LEVEL)	SEE PAGE
	1	1	**235-0588**	1	PLATE-WEAR	
	2	1	**126-1477**	1	BUSHING-COUPLING	
	3	1	**145-0961**	1	COUPLING	
	4	1	**117-7296**	1	KEY-SHAFT	
	5	1	**145-0909**	1	RING	
M	6	1	**8T-1159**	4	BOLT-SOCKET HEAD (M10X1.5X25-MM)	
M	7	1	**8T-2395**	8	BOLT-SOCKET HEAD (M8X1.25X16-MM)	
	8	1	**123-7598**	8	SEAL-BONDED	
	9	1	**123-7597**	2	SEAL-O-RING	
	10	1	**7J-6285**	1	SEAL-O-RING	
	11	1	**123-7602**	1	SEAL-O-RING	
	12	1	**246-5804**	2	PLUG (LOCATING)	

M-METRIC PART

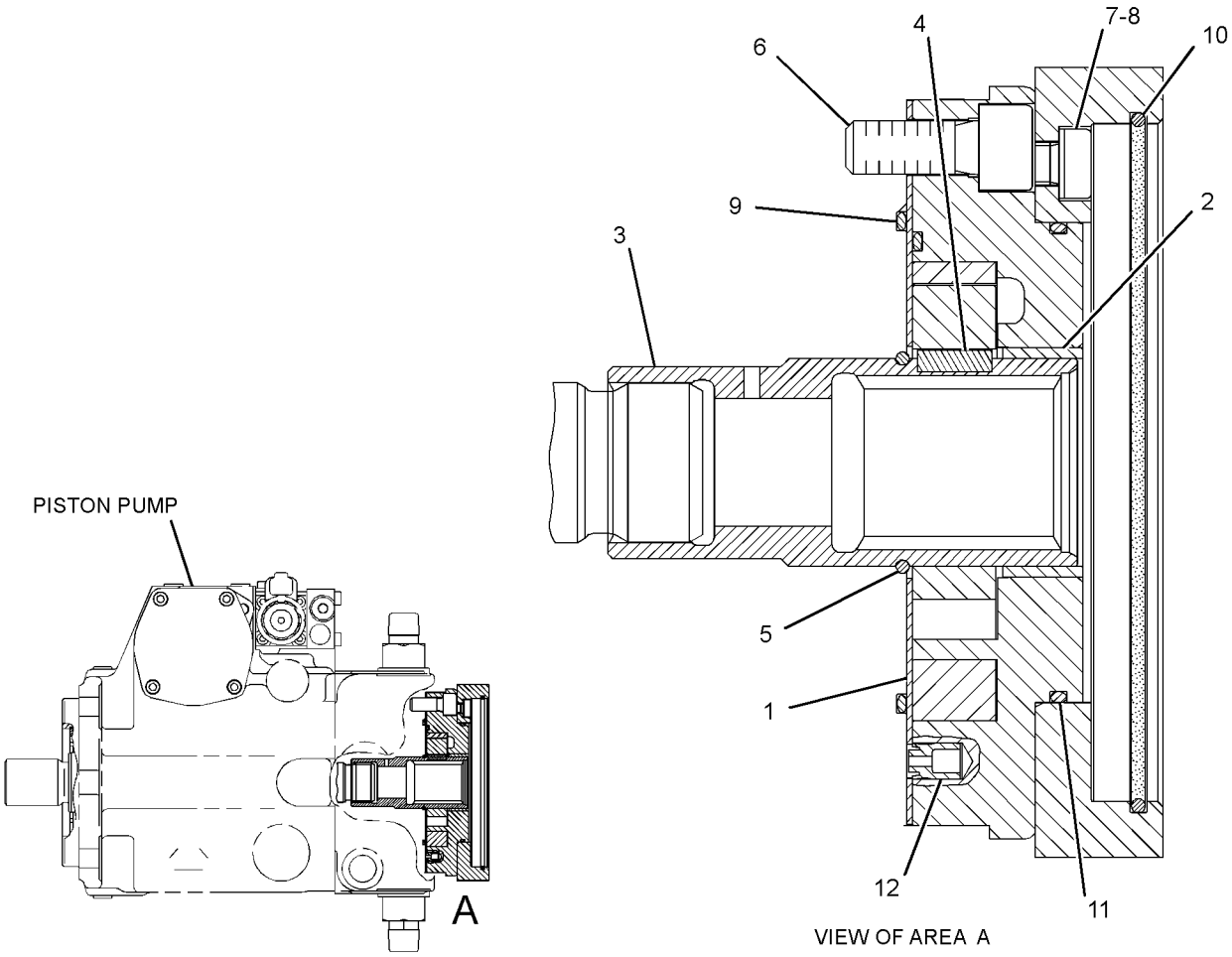

GRAPHIC #1 **<END>** g01374916

293-5443 PUMP GP-CHARGE–HYSTAT PROPEL

S/N: JLF1-UP; WWW1-UP; YYY1-UP
PART OF 289-6390 PUMP GP-PISTON
AN ATTACHMENT

SMCS-3204 **i02747291**

NOTE	REF NO	GRAPHIC REF	PART NUMBER	QTY	PART NAME 1 2 3 4 5 6 (PRODUCT LEVEL)	SEE PAGE
	1	1	**235-0588**	1	PLATE-WEAR	
	2	1	**123-7597**	2	SEAL-O-RING	
	3	1	**126-1477**	1	BUSHING-COUPLING	
	4	1	**117-7296**	1	KEY-SHAFT	
	5	1	**145-0909**	1	RING	
M	6	1	**8T-1159**	4	BOLT-SOCKET HEAD (M10X1.5X25-MM)	
	7	1	**246-5804**	2	PLUG	

M-METRIC PART

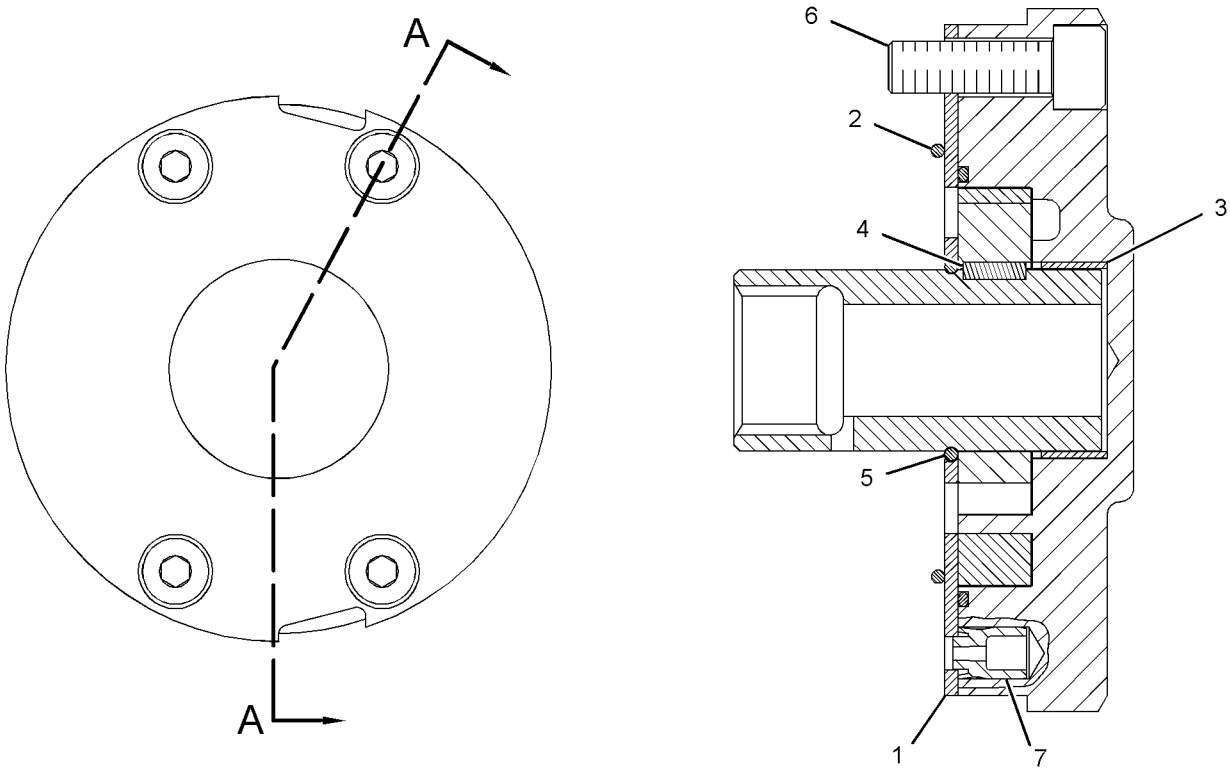

SECTION A-A

GRAPHIC #1 **<END>** g01376821

254-1379 PUMP GP-PISTON—WINCH

S/N: JLF1-UP; WWW1-UP; YYY1-UP

PART OF 292-0125 DRIVE AR, 300-8546 DRIVE AR-WINCH, 244-7455 DRIVE GP-PUMP AN ATTACHMENT

SMCS-3203 **i03607661**

NOTE	REF NO	GRAPHIC REF	PART NUMBER	QTY	PART NAME 1 2 3 4 5 6 (PRODUCT LEVEL)	SEE PAGE
Y	1	1	**293-5445**	1	ROTATING GP-PUMP (IMPLEMENT)	303
Y	2	1	**293-5450**	1	VALVE GP-SOLENOID (SERVO)	309
Y	3	1	**212-7032**	1	ACTUATOR GP-PUMP (SERVO)	393
Y	4	1	**177-7122**	1	VALVE GP-RELIEF (CHARGE PRESSURE)	452
Y	5	1	**212-7037**	1	PUMP GP-CHARGE (HYSTAT PROPEL)	395
	6	1	**9S-8002**	7	PLUG-O-RING	
	7	1	**3J-7354**	7	SEAL-O-RING	
	8	1	**9S-8004**	1	PLUG-O-RING	
	9	1	**3J-1907**	1	SEAL-O-RING	
	10	1	**2M-9780**	1	SEAL-O-RING	
	11	1	**9S-8006**	1	PLUG-O-RING	
	12	1	**167-6805**	2	PIN	
	13	1	**122-9718**	1	PIN	
	14	1	**9T-3928**	1	PLUG AS	
J	15	1	**187-8001**	1	SEAL	
	16	1	**6E-4350**	1	PIN	
Y	17	1	**154-9445**	1	VALVE GP-RELIEF (HYDROSTATIC PUMP)	451
	18	1	**112-4629**	1	SCREW	
	19	1	**117-7236**	1	PLUG	
	20	1	**126-5676**	1	BUSHING	
	21	1	**126-5677**	1	BUSHING	
	22	1	**126-5678**	1	BUSHING	
M	23	1	**108-3819**	4	BOLT-SOCKET HEAD (M12X1.75X70-MM)	
	24	1	**112-4640**	2	PIN	
	25	1	**7J-6285**	1	SEAL-O-RING	
	26	1	**087-4772**	3	PLUG-O-RING	
	27	1	**161-6154**	2	SEAL-O-RING	
M	28	1	**1G-3176**	1	SCREW-LOCK (M8-THD)	
	29	1	**106-0699**	1	PLUG (METRIC)	
	30	1	**6V-5326**	1	SEAL-O-RING	
	31	1	**9T-3726**	2	PLUG	
	32	1	**202-7704**	1	PLUG	
Y	33	1	**212-7035**	2	VALVE GP-RELIEF (CROSSOVER)	454

J-INCLUDED IN PLUG AS
M-METRIC PART
Y-SEPARATE ILLUSTRATION

254-1379 PUMP GP-PISTON *(contd.)* i03607661

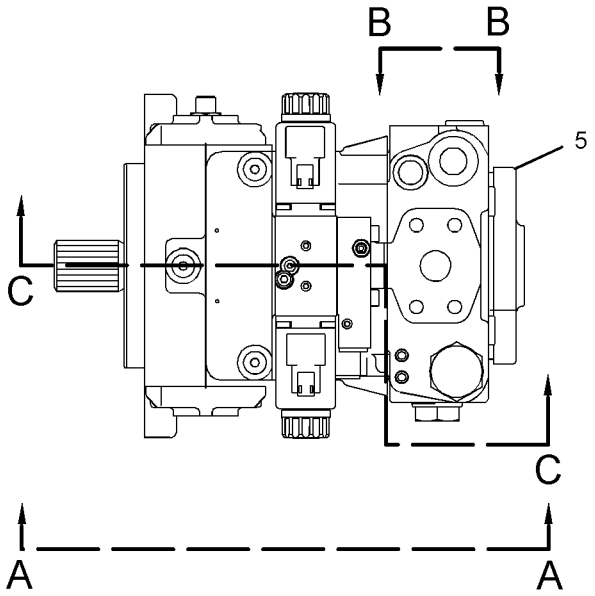

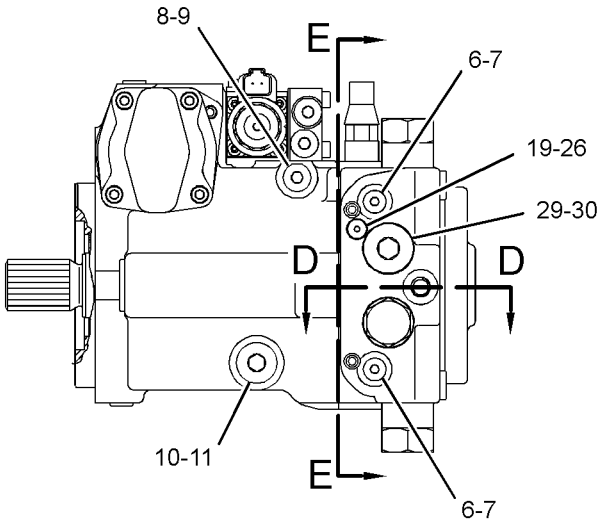

VIEW A-A

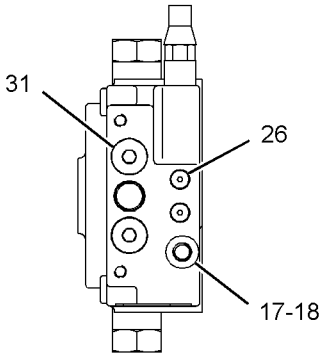

VIEW B-B

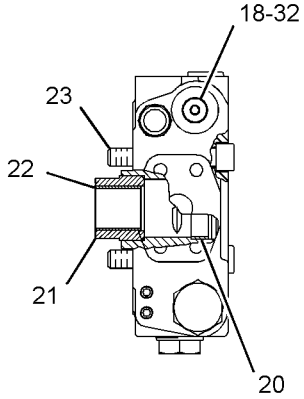

SECTION D-D

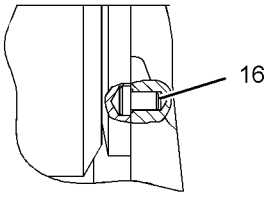

SECTION F-F

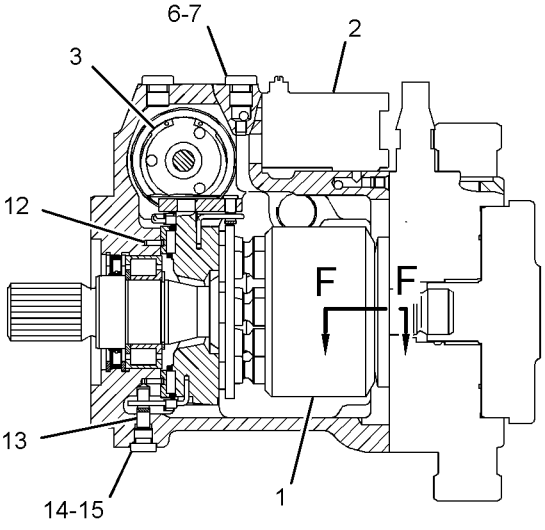

SECTION C-C

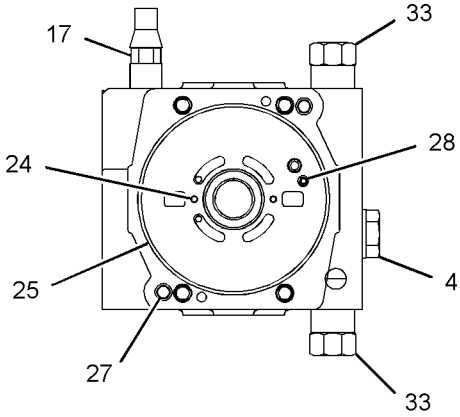

SECTION E-E

GRAPHIC #1 **<END>** g01380986

254-9099 PUMP GP-PISTON–SLIPPER

S/N: JLF1-UP; WWW1-UP; YYY1-UP
PART OF 292-0123, 292-0125 DRIVE AR, 300-8545, 300-8546 DRIVE AR-WINCH, 244-7451, 244-7455 DRIVE GP-PUMP
AN ATTACHMENT

SMCS-3203 **i03607662**

NOTE	REF NO	GRAPHIC REF	PART NUMBER	QTY	PART NAME 1 2 3 4 5 6 (PRODUCT LEVEL)	SEE PAGE
Y	1	1	**289-6388**	1	PUMP GP-PISTON (FRONT)	295
Y	2	1	**289-6389**	1	PUMP GP-PISTON (REAR)	296
M	3	1	**8T-6594**	2	BOLT-SOCKET HEAD (M16X2X35-MM)	
	4	1	**9X-8257**	2	WASHER (17.5X30X3.5-MM THK)	

M-METRIC PART
Y-SEPARATE ILLUSTRATION

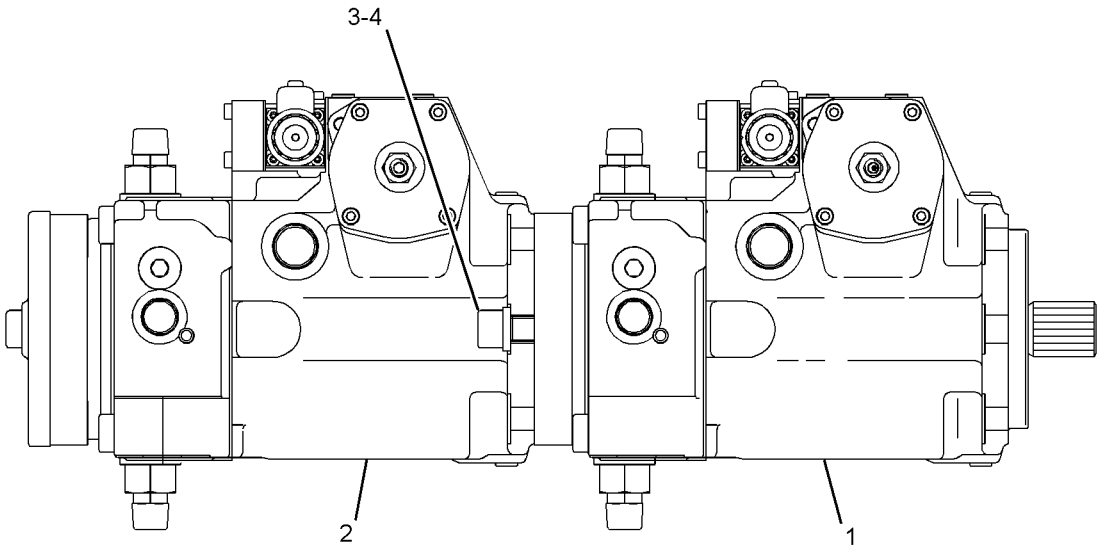

GRAPHIC #1 **<END>** g01378658

254-9100 PUMP GP-PISTON—DOUBLE

S/N: JLF1-UP; WWW1-UP; YYY1-UP
SLIPPER
PART OF 291-5096 DRIVE AR, 291-5099 DRIVE GP-PUMP
CANNOT BE USED WITH 244-7472 HYDRAULIC AR, 282-3788 HYDRAULIC AR, 244-7517 MOUNTING GP-WINCH, 256-3738 WINCH AR
AN ATTACHMENT

SMCS-3203 **i03607664**

NOTE	REF NO	GRAPHIC REF	PART NUMBER	QTY	PART NAME 1 2 3 4 5 6 (PRODUCT LEVEL)	SEE PAGE
Y	1	1	**289-6388**	1	PUMP GP-PISTON (FRONT)	295
Y	2	1	**289-6390**	1	PUMP GP-PISTON (REAR)	298
M	3	1	**8T-6594**	2	BOLT-SOCKET HEAD (M16X2X35-MM)	
	4	1	**9X-8257**	2	WASHER (17.5X30X3.5-MM THK)	

M-METRIC PART
Y-SEPARATE ILLUSTRATION

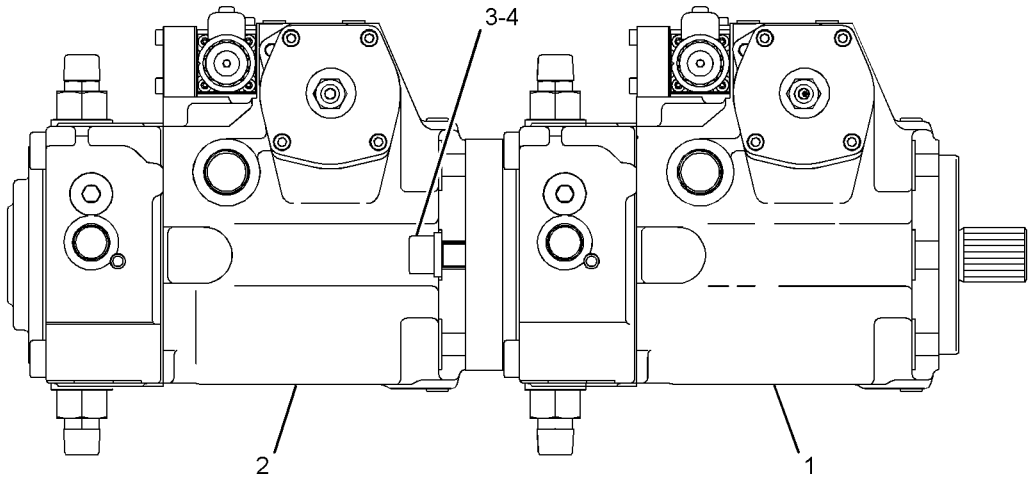

TOP VIEW FWD

GRAPHIC #1 **<END>** g01376586

289-6388 PUMP GP-PISTON–FRONT

S/N: JLF1-UP; WWW1-UP; YYY1-UP
PART OF 254-9099, 254-9100 PUMP GP-PISTON
AN ATTACHMENT

SMCS-3203 **i03607665**

NOTE	REF NO	GRAPHIC REF	PART NUMBER	QTY	PART NAME 1 2 3 4 5 6 (PRODUCT LEVEL)	SEE PAGE
Y	1	1	**256-8778**	1	ROTATING GP-PUMP	301
Y	2	1	**234-8821**	1	ACTUATOR GP-PUMP	246
	3	1	**9S-8002**	3	PLUG-O-RING (STRAIGHT THREAD O-RING)	
	4	1	**3J-7354**	3	SEAL-O-RING	
Y	5	1	**293-5441**	1	PUMP GP-CHARGE (HYSTAT PROPEL)	289
	6	1	**130-7806**	2	ROD	
	7	1	**142-9436**	1	BEARING AS	
	8	1	**142-9440**	1	BEARING AS (SWASHPLATE)	
	9	1	**167-6805**	2	PIN	
	10	1	**126-1638**	2	PIN-JOINT	
	11	1	**9T-3928**	2	PLUG AS	
					(EACH INCLUDES)	
		1	**187-8001**	1	SEAL	
	12	1	**6E-4350**	1	PIN	
	13	1	**120-4394**	1	PLUG-BREAK OFF	
Y	14	1	**293-5452**	1	VALVE GP-SOLENOID (SERVO)	311
Y	15	1	*296-6708*	1	HEAD GP-PUMP	254

Y-SEPARATE ILLUSTRATION

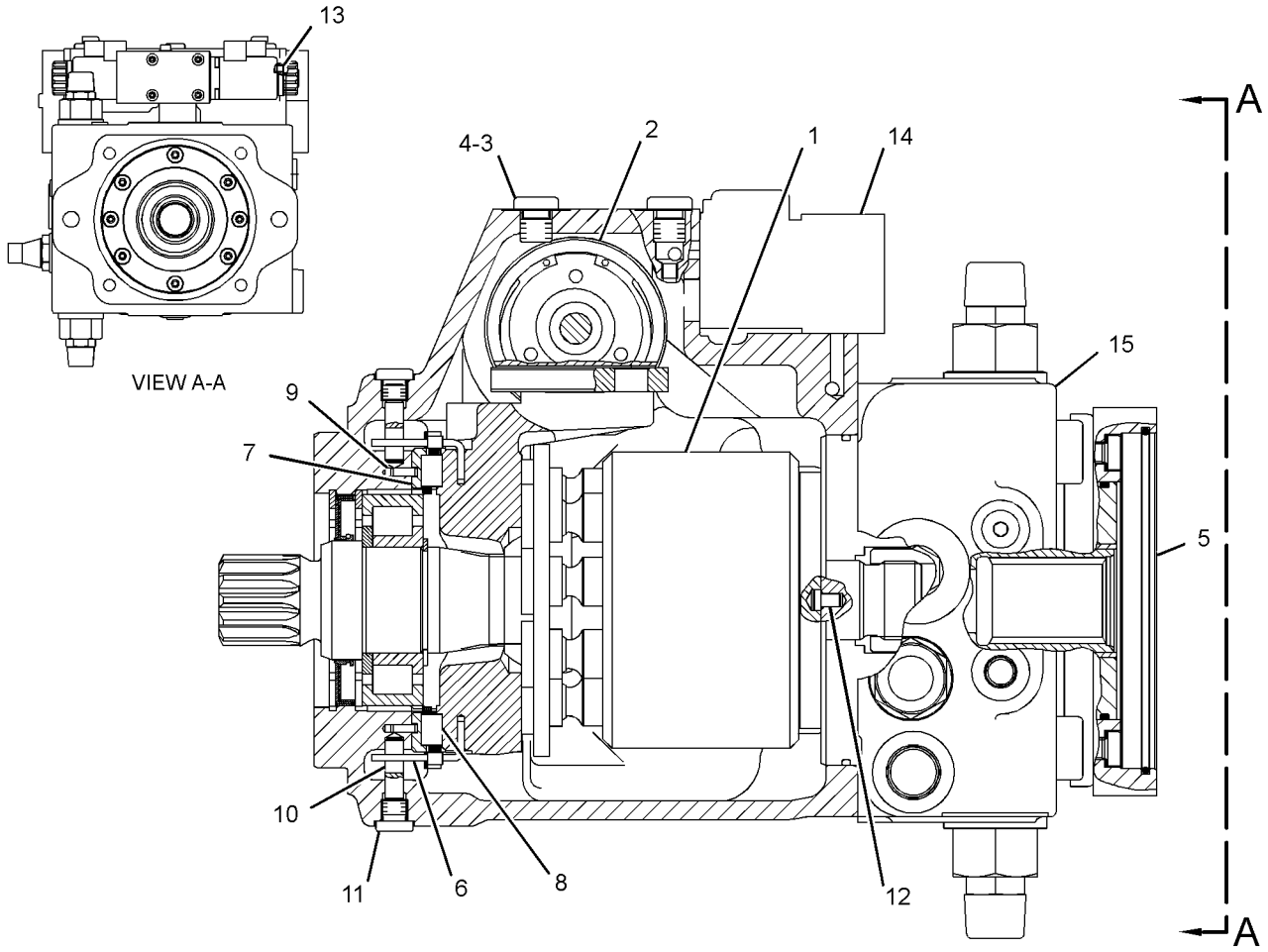

GRAPHIC #1 **<END>** g01374143

289-6389 PUMP GP-PISTON–REAR

S/N: JLF1-UP; WWW1-UP; YYY1-UP
PART OF 254-9099 PUMP GP-PISTON
AN ATTACHMENT

SMCS-3203 **i03607666**

NOTE	REF NO	GRAPHIC REF	PART NUMBER	QTY	PART NAME 1 2 3 4 5 6 (PRODUCT LEVEL)	SEE PAGE
Y	1	1	**305-1511**	1	ROTATING GP-PUMP (REAR)	304
Y	2	1	**234-8821**	1	ACTUATOR GP-PUMP	246
	3	1	**9S-8002**	3	PLUG-O-RING (STRAIGHT THREAD O-RING)	
	4	1	**3J-7354**	3	SEAL-O-RING	
Y	5	1	**293-5441**	1	PUMP GP-CHARGE (HYSTAT PROPEL)	289
Y	6	1	**296-6708**	1	HEAD GP-PUMP	254
Y	7	1	**293-5452**	1	VALVE GP-SOLENOID (SERVO)	311
	8	1	**120-4394**	1	PLUG-BREAK OFF	
	9	1	**167-6805**	2	PIN	
	10	1	**126-1638**	2	PIN-JOINT	
	11	1	**9T-3928**	2	PLUG AS	
					(EACH INCLUDES)	
		1	**187-8001**	1	SEAL	
	12	1	**6E-4350**	1	PIN	

Y-SEPARATE ILLUSTRATION

289-6389 PUMP GP-PISTON *(contd.)* **i03607666**

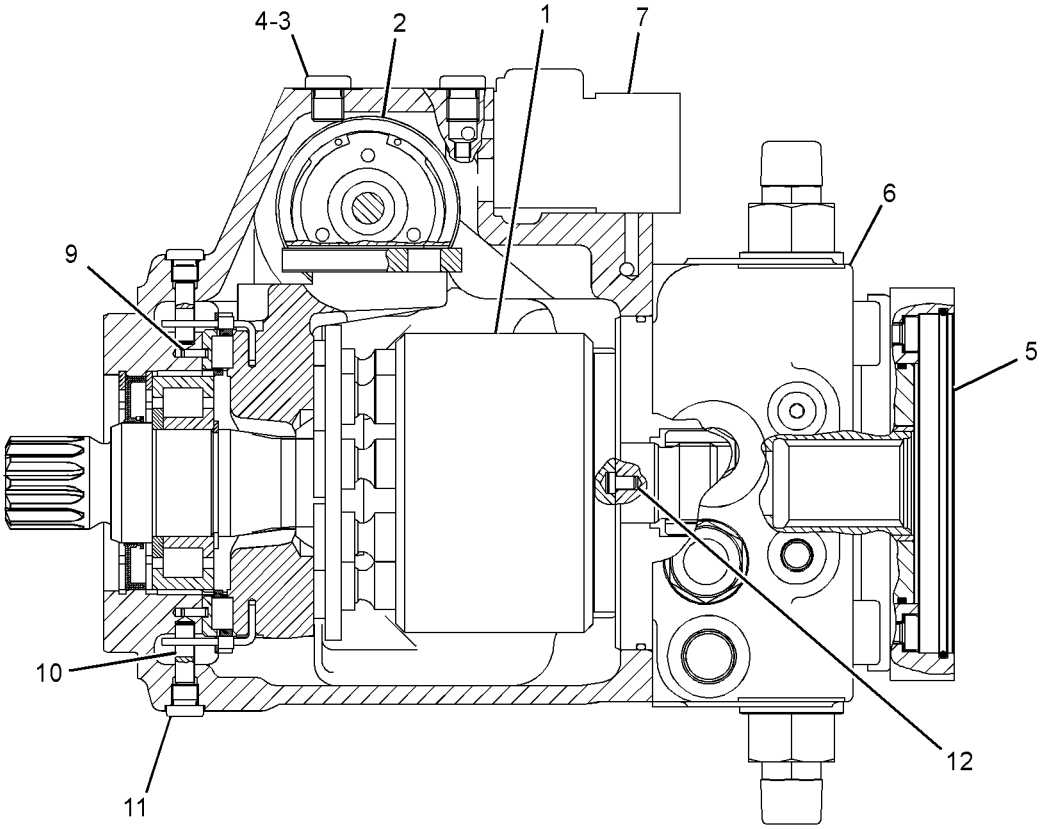

SECTION A-A

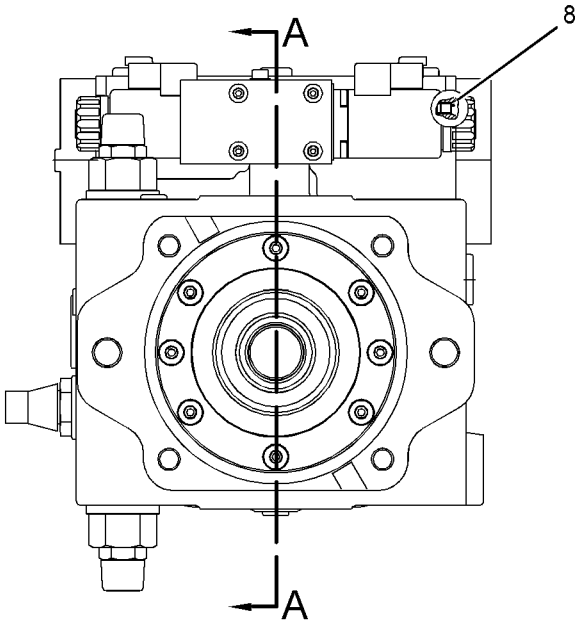

GRAPHIC #1 **<END>** g01386095

289-6390 PUMP GP-PISTON–REAR

S/N: JLF1-UP; WWW1-UP; YYY1-UP
PART OF 254-9100 PUMP GP-PISTON
AN ATTACHMENT

SMCS-3203 **i03607667**

NOTE	REF NO	GRAPHIC REF	PART NUMBER	QTY	PART NAME 1 2 3 4 5 6 (PRODUCT LEVEL)	SEE PAGE
Y	1	1	**305-1511**	1	ROTATING GP-PUMP (REAR)	304
Y	2	1	**234-8821**	1	ACTUATOR GP-PUMP	246
	3	1	**9S-8002**	3	PLUG-O-RING (STRAIGHT THREAD O-RING)	
	4	1	**3J-7354**	3	SEAL-O-RING	
Y	5	1	**293-5443**	1	PUMP GP-CHARGE (HYSTAT PROPEL)	290
	6	1	**167-6805**	2	PIN	
	7	1	**126-1638**	2	PIN-JOINT	
	8	1	**9T-3928**	2	PLUG AS	
					(EACH INCLUDES)	
		1	**187-8001**	1	SEAL	
	9	1	**6E-4350**	1	PIN	
	10	1	**120-4394**	1	PLUG-BREAK OFF	
Y	11	1	**293-5452**	1	VALVE GP-SOLENOID (SERVO)	311
Y	12	1	*296-6708*	1	HEAD GP-PUMP	254

Y-SEPARATE ILLUSTRATION

289-6390 PUMP GP-PISTON *(contd.)* **i03607667**

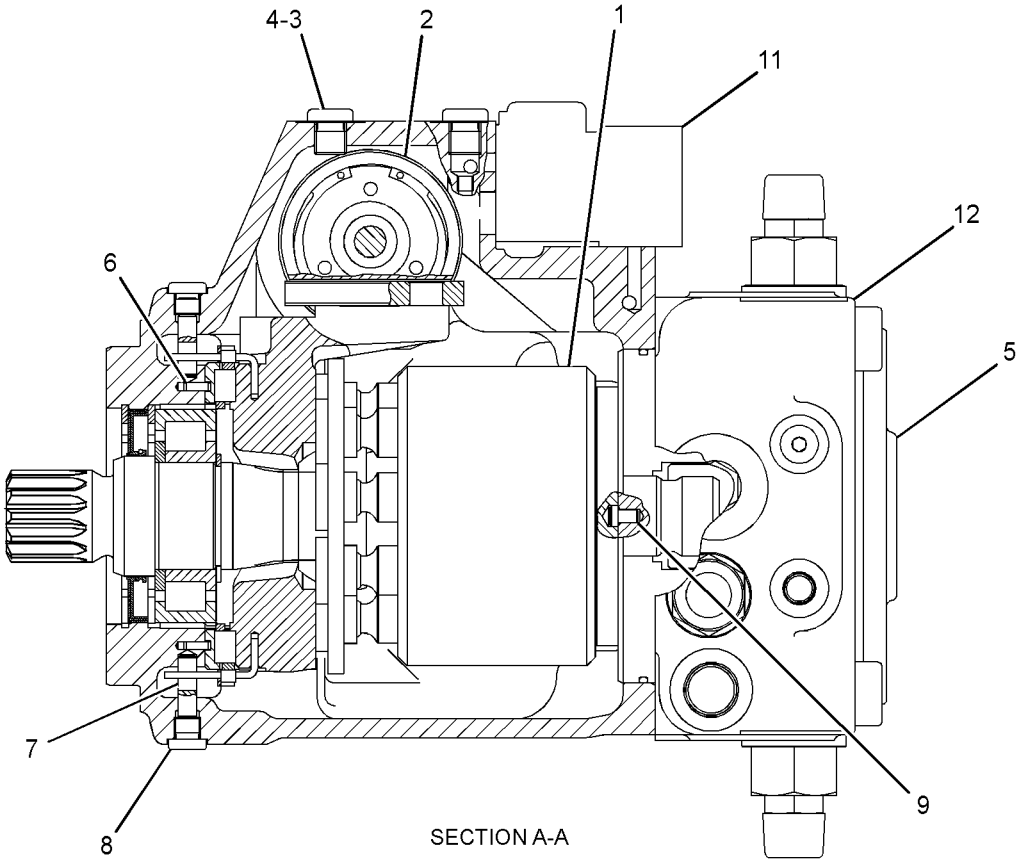

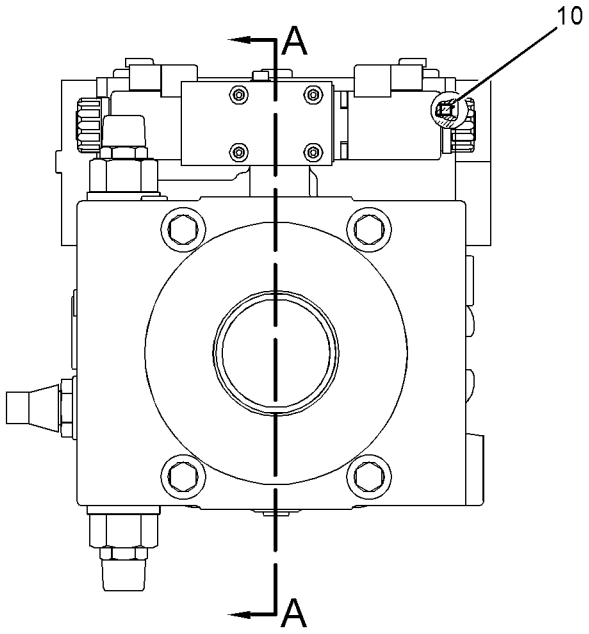

GRAPHIC #1 **<END>** g01386117

199-1088 ROTATING GP-MOTOR–HYSTAT PROPEL

S/N: JLF1-UP; WWW1-UP; YYY1-UP

PART OF 254-1354 MOTOR GP-PISTON

SMCS-5058 **i03415586**

NOTE	REF NO	GRAPHIC REF	PART NUMBER	QTY	PART NAME 1 2 3 4 5 6 (PRODUCT LEVEL)	SEE PAGE
M	1	1	**113-4419**	14	SCREW-SPECIAL (M5X0.8X8-MM)	
	2	1	**216-8716**	1	SHAFT GP-MOTOR	
B	3	1	**124-9932**	1	SHIM (3.5-MM THK)	
B	4	1	**124-9933**	1	SHIM (3.6-MM THK)	
B	5	1	**124-9934**	1	SHIM (3.7-MM THK)	
B	6	1	**124-9935**	1	SHIM (3.8-MM THK)	
B	7	1	**124-9936**	1	SHIM (3.9-MM THK)	
B	8	1	**124-9937**	1	SHIM (4-MM THK)	
					PARTS SHOWN IN GRAPHIC(S) WITHOUT A REFERENCE NUMBER ARE NOT SERVICED SEPARATELY	

B-USE AS REQUIRED
M-METRIC PART

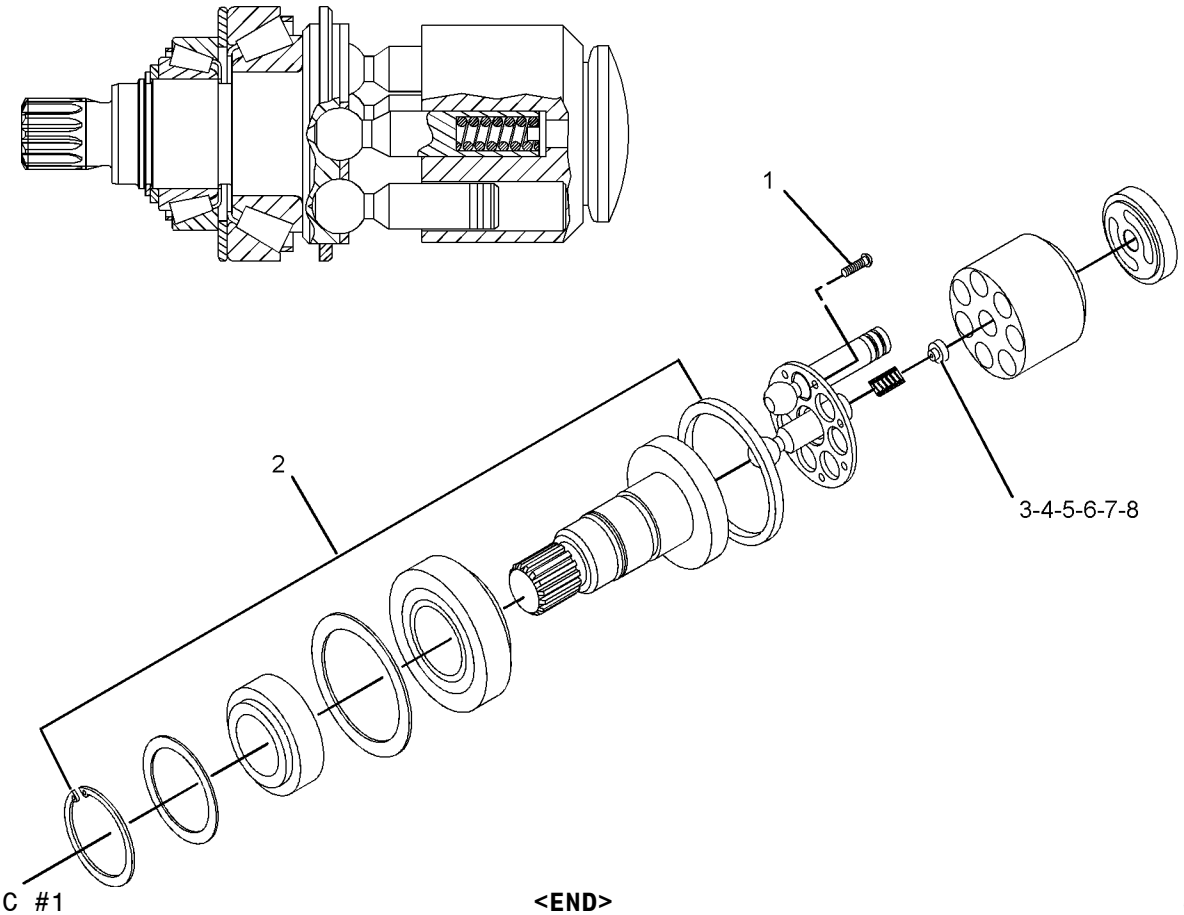

GRAPHIC #1 **<END>** g01010939

256-8778 ROTATING GP-PUMP–SLIPPER

S/N: JLF1-UP; WWW1-UP; YYY1-UP
PART OF 289-6388 PUMP GP-PISTON
AN ATTACHMENT

SMCS-5070 **i02891603**

NOTE	REF NO	GRAPHIC REF	PART NUMBER	QTY	PART NAME 1 2 3 4 5 6 (PRODUCT LEVEL)	SEE PAGE
	1	1	**159-9854**	2	RING-RETAINING	
	2	1	**201-5382**	1	SEAL-SHAFT	
	3	1	**142-9439**	1	BEARING AS	
	4	1	**6V-5201**	1	RING-RETAINING	
	5	1	**256-9358**	1	PLATE-CONTROL	
Y	6	1	**256-9357**	1	ROTATING GP-PUMP (HYDRAULIC)	302
					PARTS SHOWN IN GRAPHIC(S) WITHOUT A REFERENCE NUMBER ARE NOT SERVICED SEPARATELY	

Y-SEPARATE ILLUSTRATION

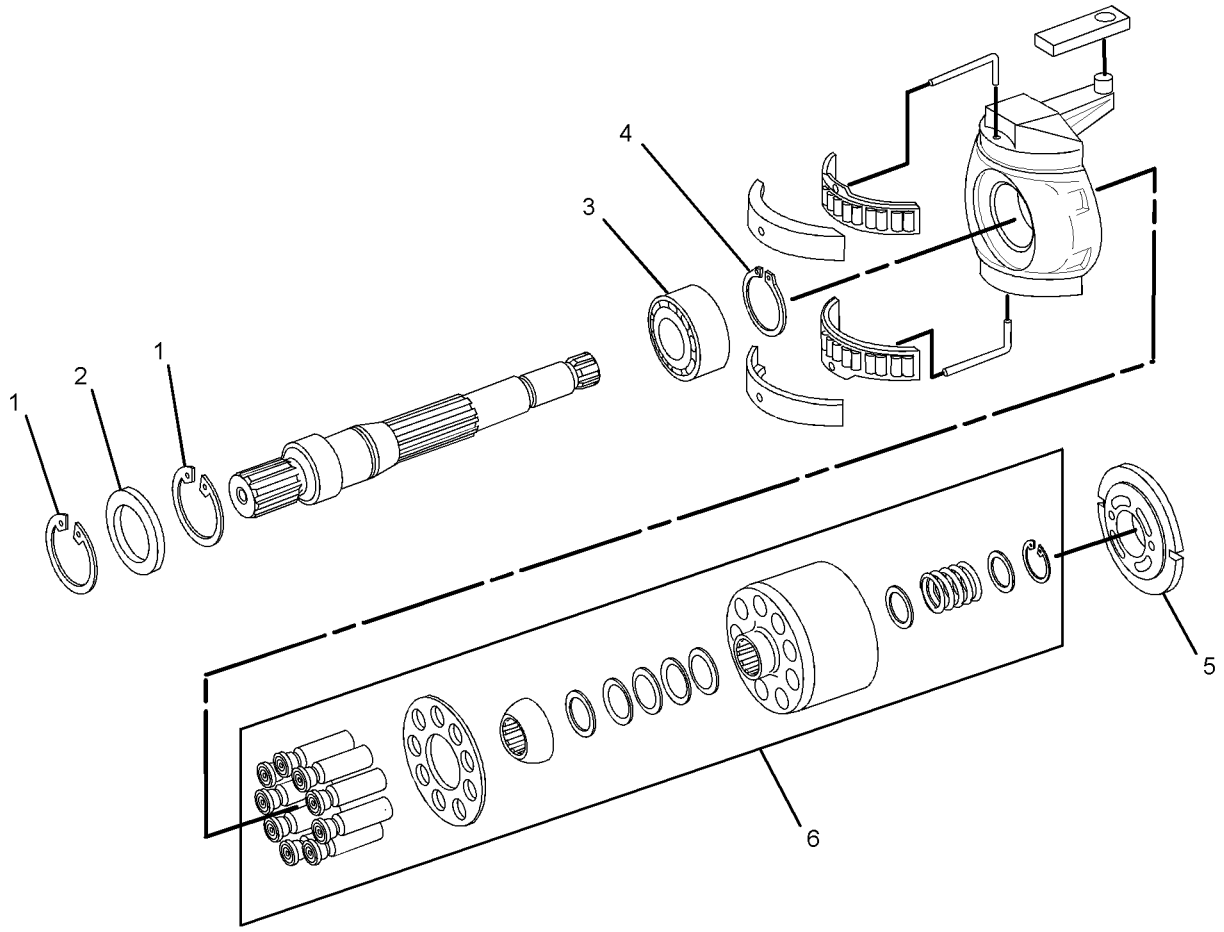

GRAPHIC #1 **<END>** g01442938

256-9357 ROTATING GP-PUMP–VIBRATORY

S/N: JLF1-UP; WWW1-UP; YYY1-UP
PART OF 256-8778, 305-1511 ROTATING GP-PUMP
AN ATTACHMENT

SMCS-5070 **i02891599**

NOTE	REF NO	GRAPHIC REF	PART NUMBER	QTY	PART NAME 1 2 3 4 5 6 (PRODUCT LEVEL)	SEE PAGE
M	1	1	**142-9437**	2	WASHER (30.7X44X3-MM THK)	
	2	1	**9X-2857**	1	RING-RETAINING	
	3	1	**142-9434**	1	PLATE-RETAINER	
	4	1	**142-9425**	9	PISTON AS	
	5	1	**287-3789**	1	BARREL AS	
	6	1	**142-9438**	1	SPRING-COIL	
	7	1	**142-9426**	1	SPRING AS	
	8	1	**142-9435**	1	BALL	
					PARTS SHOWN IN GRAPHIC(S) WITHOUT A REFERENCE NUMBER ARE NOT SERVICED SEPARATELY	

M-METRIC PART

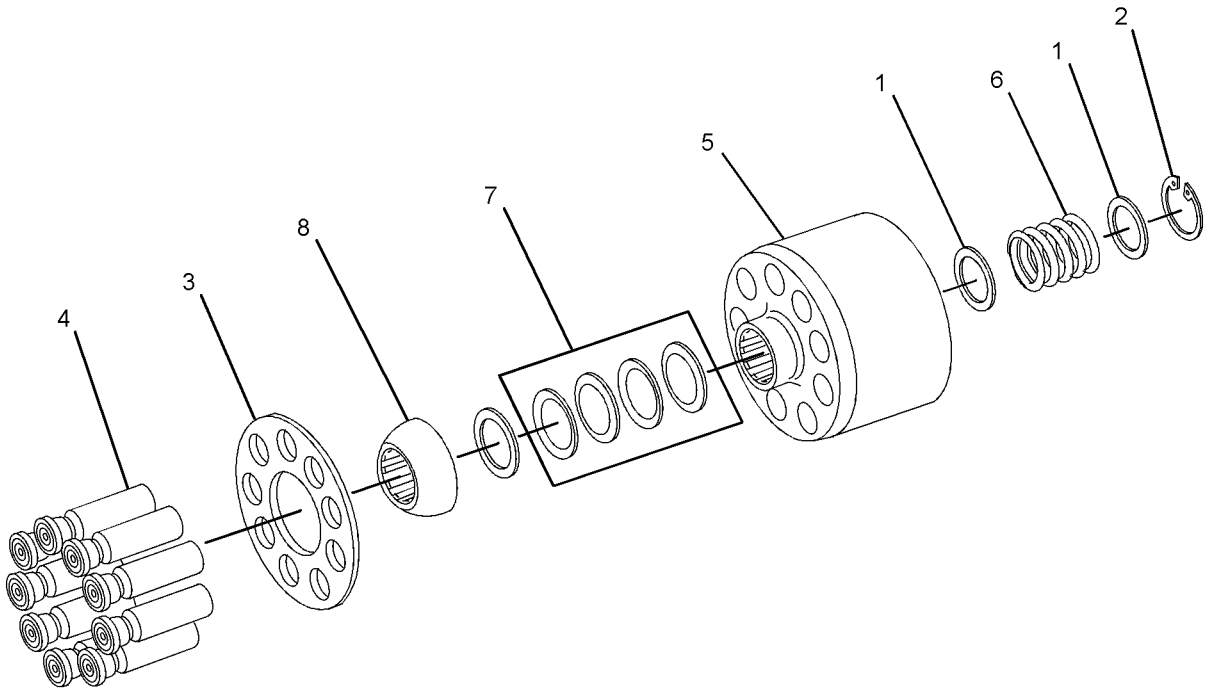

GRAPHIC #1 **<END>** g01442941

293-5445 ROTATING GP-PUMP–IMPLEMENT

S/N: JLF1-UP; WWW1-UP; YYY1-UP
PART OF 254-1379 PUMP GP-PISTON
AN ATTACHMENT

SMCS-5070 **i02680392**

NOTE	REF NO	GRAPHIC REF	PART NUMBER	QTY	PART NAME 1 2 3 4 5 6 (PRODUCT LEVEL)	SEE PAGE
Y	1	1	**280-7343**	1	ROTATING GP-MOTOR (BASIC)	396
	2	1	**212-7044**	1	SHAFT-DRIVE	
	3	1	**1G-3410**	1	WIRE (ROD)	
	4	1	**126-5637**	1	WIRE (ROD)	
	5	1	**126-5640**	1	BEARING-ROLLER	
	6	1	**126-5643**	1	CAGE	
	7	1	**081-3698**	1	BEARING	
	8	1	**108-3565**	1	CLIP	
	9	1	**204-1452**	2	RING-RETAINING	
	10	1	**233-9744**	1	SEAL-LIP TYPE	

Y-SEPARATE ILLUSTRATION

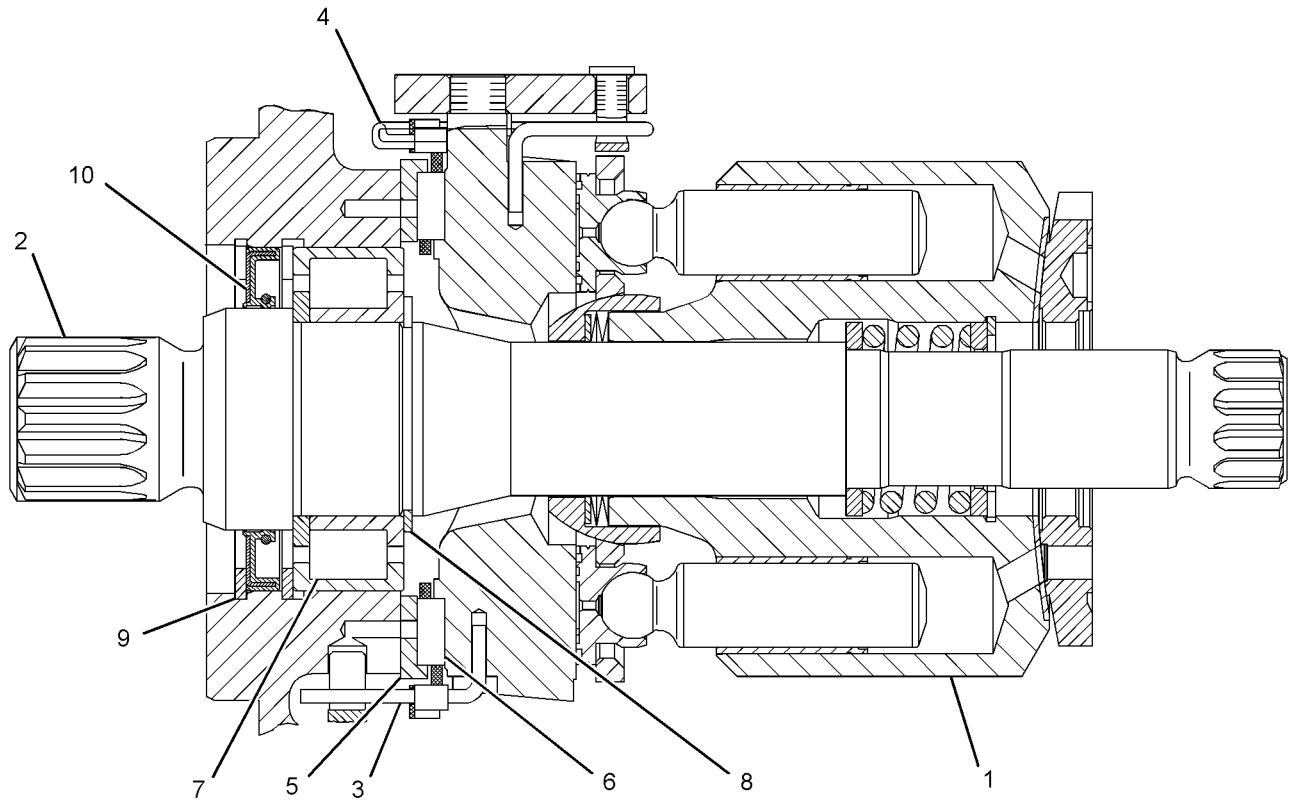

GRAPHIC #1 **<END>** g01358095

305-1511 ROTATING GP-PUMP–REAR

S/N: JLF1-UP; WWW1-UP; YYY1-UP
PART OF 289-6389, 289-6390 PUMP GP-PISTON
AN ATTACHMENT

SMCS-5070 **i02891604**

NOTE	REF NO	GRAPHIC REF	PART NUMBER	QTY	PART NAME 1 2 3 4 5 6 (PRODUCT LEVEL)	SEE PAGE
	1	1	**6V-5201**	1	RING-RETAINING	
	2	1	**256-9358**	1	PLATE-CONTROL	
	3	1	**142-9439**	1	BEARING AS	
	4	1	**145-1824**	1	SHAFT-PUMP	
	5	1	**159-9854**	2	RING-RETAINING	
	6	1	**142-9440**	1	BEARING AS (SWASHPLATE)	
	7	1	**142-9427**	1	SWASHPLATE	
	8	1	**126-1403**	1	PLATE-ADJUSTMENT	
	9	1	**201-5382**	1	SEAL-SHAFT	
	10	1	**142-9436**	1	BEARING AS	
B	11	1	**142-9430**	1	SHIM (1.2-MM THK)	
B	12	1	**142-9431**	1	SHIM (1-MM THK)	
B	13	1	**142-9432**	1	SHIM (0.8-MM THK)	
B	14	1	**142-9433**	1	SHIM (0.6-MM THK)	
	15	1	**130-7806**	2	ROD	
Y	16	1	**256-9357**	1	ROTATING GP-PUMP (HYDRAULIC)	302

B-USE AS REQUIRED
Y-SEPARATE ILLUSTRATION

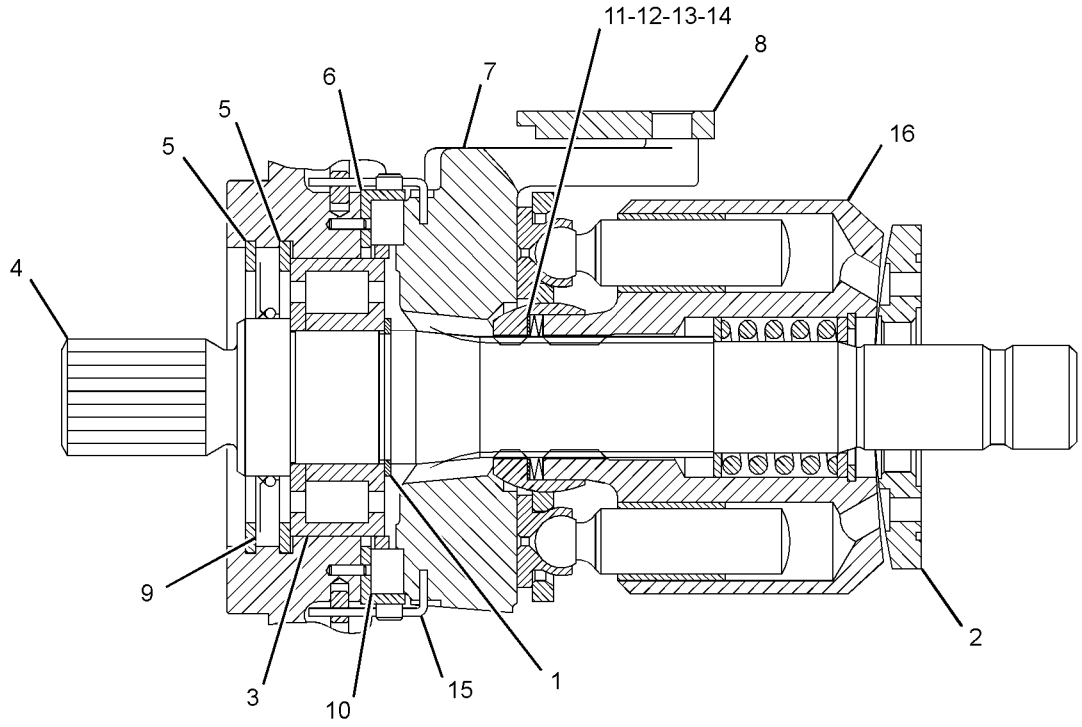

GRAPHIC #1 **<END>** g01384807

258-9791 SEGMENT GP-SPROCKET

S/N: JLF1-UP; WWW1-UP; YYY1-UP
PART OF 244-7395 UNDERCARRIAGE AR
AN ATTACHMENT

SMCS-4155 **i02746525**

NOTE	REF NO	GRAPHIC REF	PART NUMBER	QTY	PART NAME 1 2 3 4 5 6 (PRODUCT LEVEL)	SEE PAGE
	1	1	**6V-4316**	27	WASHER-HARD (18.25X35X3.5-MM THK)	
	2	1	**258-9788**	1	SEGMENT-SPROCKET	
	3	1	**6V-0937**	27	BOLT (5/8-18X2.1-IN)	
	4	1	**7H-3607**	27	NUT (5/8-18-THD)	

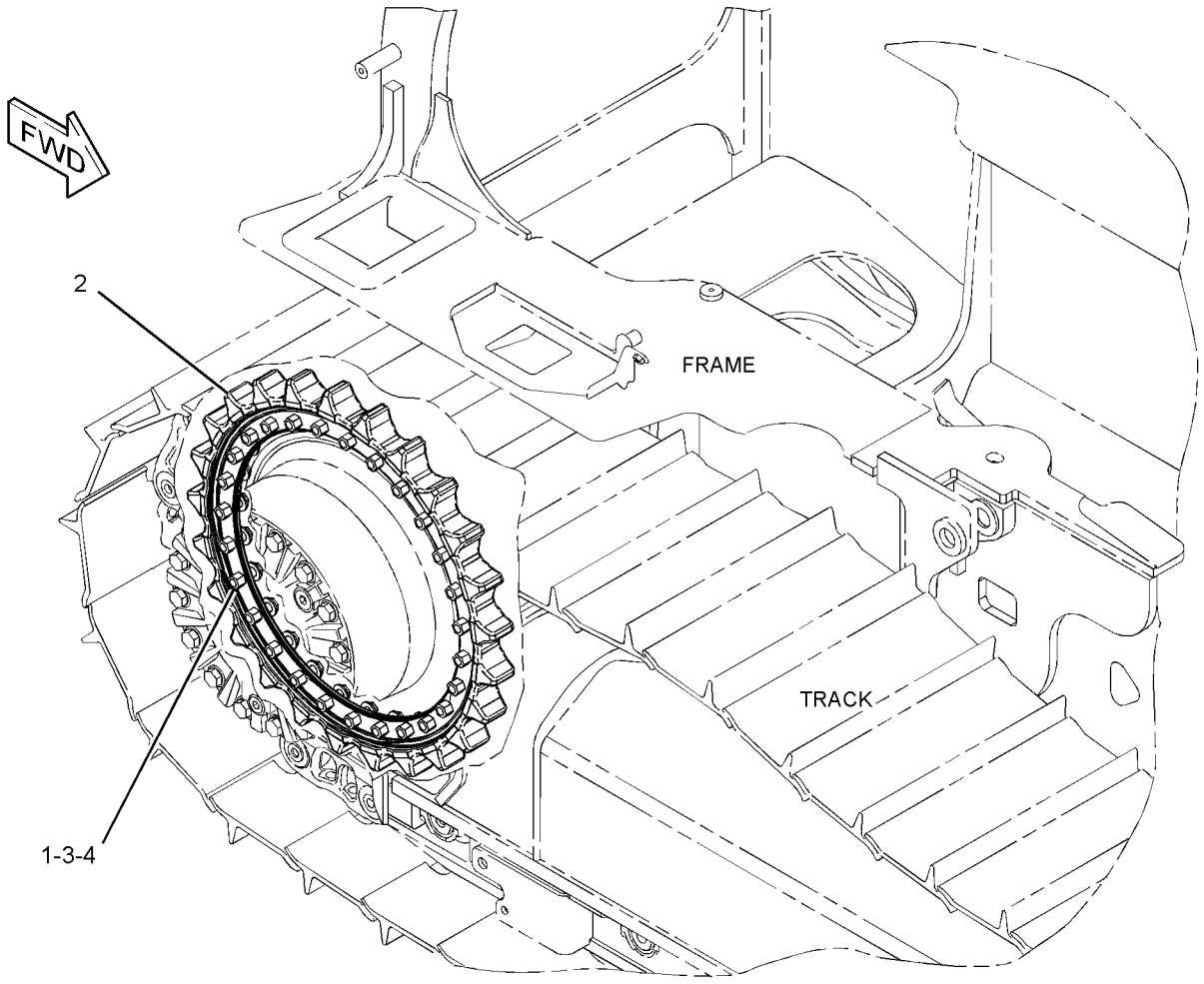

GRAPHIC #1 **<END>** g01376517

POWER TRAIN

278-2360 SEGMENT GP-SPROCKET

S/N: JLF1-UP; WWW1-UP; YYY1-UP
PART OF 283-1534 UNDERCARRIAGE AR
AN ATTACHMENT

SMCS-4155 **i02662500**

NOTE	REF NO	GRAPHIC REF	PART NUMBER	QTY	PART NAME 1 2 3 4 5 6 (PRODUCT LEVEL)	SEE PAGE
	1	1	**6V-4316**	27	WASHER-HARD	
	2	1	**278-2358**	3	SEGMENT-SPROCKET	
	3	1	**278-2359**	3	SEGMENT-SPROCKET	
	4	1	**6V-0937**	27	BOLT (5/8-18X2.1-IN)	
	5	1	**7H-3607**	27	NUT (5/8-18-THD)	

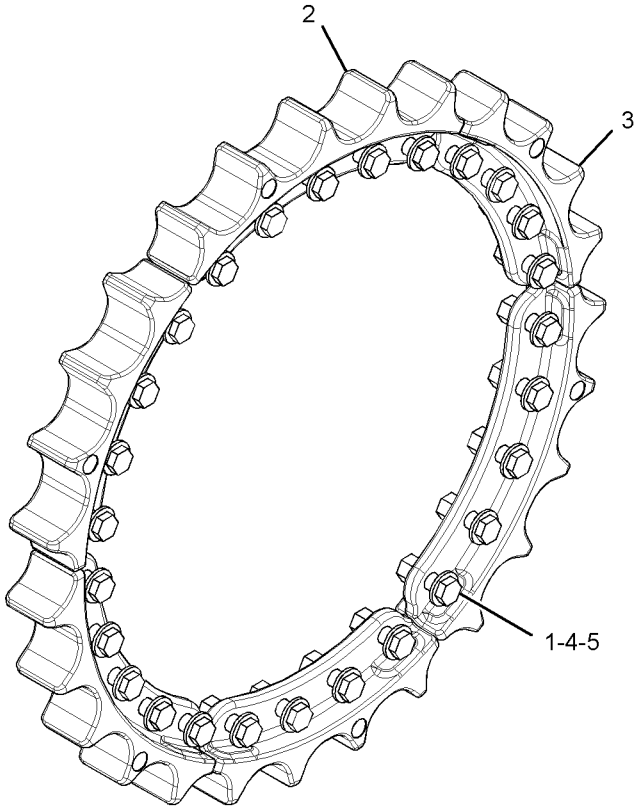

GRAPHIC #1 **<END>** g01344158

293-5448 VALVE GP-FLUSHING—HYDROSTATIC DRIVE

S/N: JLF1-UP; WWW1-UP; YYY1-UP
PART OF 254-1354 MOTOR GP-PISTON

SMCS-5066 **i03415580**

NOTE	REF NO	GRAPHIC REF	PART NUMBER	QTY	PART NAME 1 2 3 4 5 6 (PRODUCT LEVEL)	SEE PAGE
	1	1	**3J-1907**	2	SEAL-O-RING	
	2	1	**6V-8351**	1	SEAL-O-RING	
	3	1	**9S-8004**	2	PLUG-O-RING	
	4	1	**107-3117**	2	SEAL-O-RING	
B	5	1	**124-9904**	1	SHIM (1-MM THK)	
B	6	1	**124-9905**	1	SHIM (0.3-MM THK)	
B	7	1	**124-9906**	1	SHIM (0.5-MM THK)	
	8	1	**124-9908**	1	ORIFICE	
M	9	1	**129-3181**	4	BOLT-SOCKET HEAD (M10X1.5X55-MM)	
	10	1	**170-5715**	1	SEAL-O-RING	

B-USE AS REQUIRED
M-METRIC PART

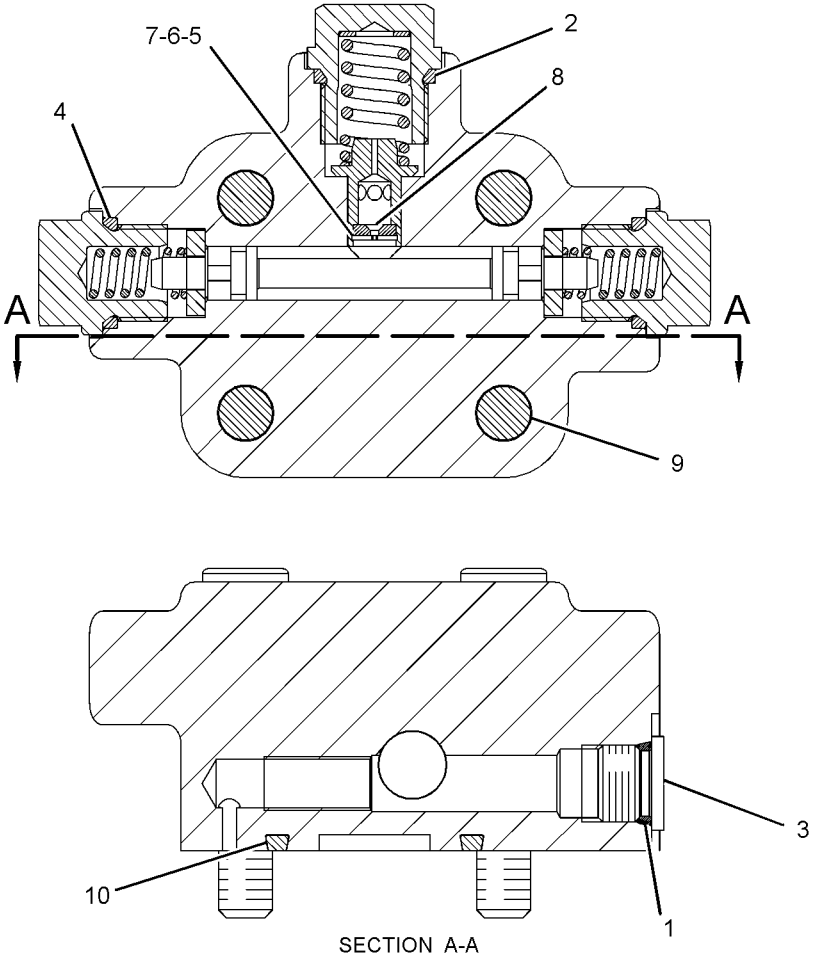

SECTION A-A

GRAPHIC #1 **<END>** g01340186

293-5442 VALVE GP-PILOT—HYDROSTATIC DRIVE

S/N: JLF1-UP; WWW1-UP; YYY1-UP
PART OF 254-1354 MOTOR GP-PISTON

SMCS-5059 **i02719456**

NOTE	REF NO	GRAPHIC REF	PART NUMBER	QTY	PART NAME 1 2 3 4 5 6 (PRODUCT LEVEL)	SEE PAGE
M	1	1	**8T-0338**	4	BOLT-SOCKET HEAD (M8X1.25X45-MM)	
	2	1	**9S-8004**	1	PLUG-O-RING (STRAIGHT THREAD O-RING)	
	3	1	**3J-1907**	1	SEAL-O-RING	
	4	1	**6V-1250**	1	SEAL-O-RING	
	5	1	**9T-3853**	1	LOCKNUT	
	6	1	**123-9769**	2	PLUG	
	7	1	**269-4669**	1	SOLENOID AS (PILOT VALVE)	
		1	**217-3875**	1	SEAL-O-RING	
	8	1	**9T-4367**	1	CAP AS	

M-METRIC PART

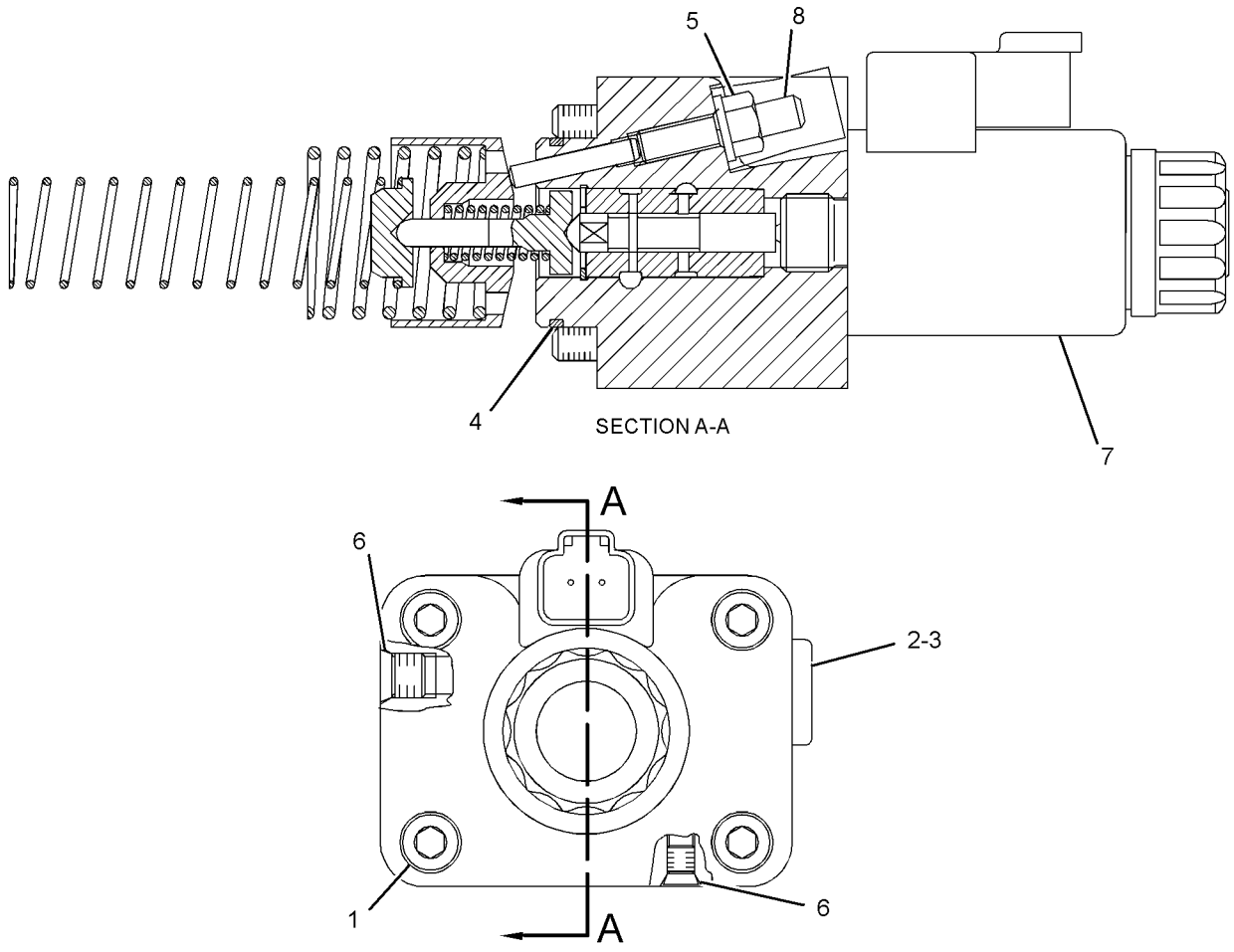

GRAPHIC #1 **<END>** g01358079

293-5450 VALVE GP-SOLENOID–SERVO

S/N: JLF1-UP; WWW1-UP; YYY1-UP
PART OF 254-1379 PUMP GP-PISTON
AN ATTACHMENT

SMCS-4282, 5479 **i02833434**

NOTE	REF NO	GRAPHIC REF	PART NUMBER	QTY	PART NAME 1 2 3 4 5 6 (PRODUCT LEVEL)	SEE PAGE
	1	1	**269-4669**	1	SOLENOID AS (PILOT VALVE)	
		1	**217-3875**	1	SEAL-O-RING	
	2	1	**209-3565**	1	SEAL	
	3	1	**277-6631**	1	SPRING	
	4	1	**196-4253**	1	GASKET	
	5	1	**296-6705**	1	SOLENOID AS (WINCH PUMP)	
		1	**217-3875**	1	SEAL-O-RING	
		1	**247-7054**	1	COLLAR-LOCKING	
M	6	1	**8T-2922**	4	BOLT-SOCKET HEAD (M6X1X65-MM)	
M	7	1	**8C-6965**	1	BOLT-SOCKET HEAD (M6X1X45-MM)	
M	8	1	**099-0822**	8	BOLT-SOCKET HEAD (M5X0.8X10-MM)	
	9	1	**6J-3134**	1	SEAL-O-RING	
	10	1	**085-7539**	2	SEAL-O-RING	
	11	1	**196-4254**	2	SPRING	
	12	1	**6H-9691**	1	SEAL-O-RING	
	13	1	**215-8011**	1	BOLT-SPECIAL	
	14	1	**215-8010**	1	SHIM (3-MM THK)	
	15	1	**9S-8004**	1	PLUG-O-RING	
	16	1	**3J-1907**	1	SEAL-O-RING	
	17	1	**236-5157**	1	SCREEN-FILTER (PILOT)	
	18	1	**123-7583**	1	ORIFICE	

M-METRIC PART

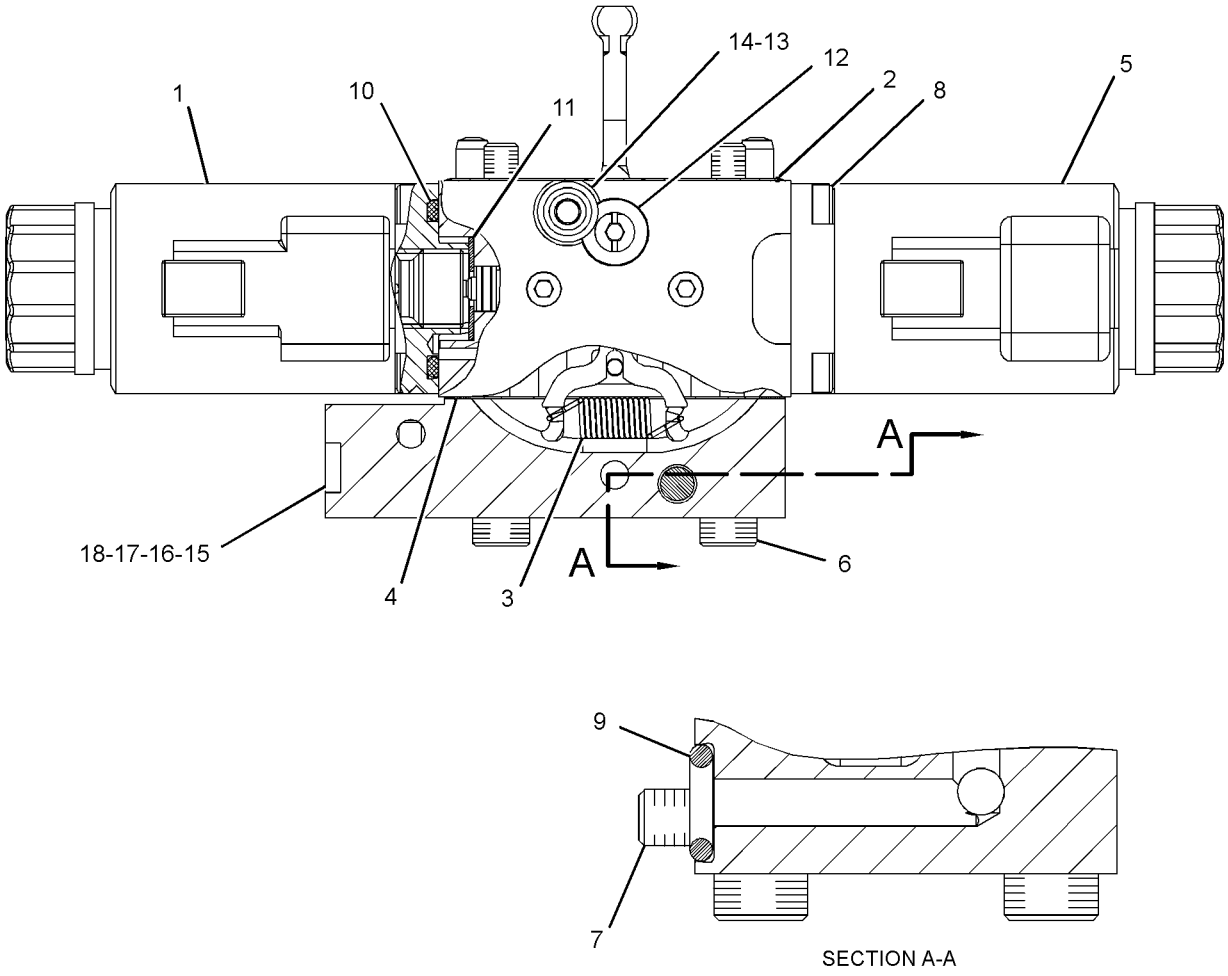

GRAPHIC #1 **<END>** g01358140

293-5452 VALVE GP-SOLENOID–SERVO

S/N: JLF1-UP; WWW1-UP; YYY1-UP
PART OF 289-6388, 289-6389, 289-6390 PUMP GP-PISTON
AN ATTACHMENT

SMCS-4282, 5479 **i03601821**

NOTE	REF NO	GRAPHIC REF	PART NUMBER	QTY	PART NAME 1 2 3 4 5 6 (PRODUCT LEVEL)	SEE PAGE
	1	1	**269-4669**	1	SOLENOID AS (PILOT VALVE)	
		1	**217-3875**	1	SEAL-O-RING	
	2	1	**209-3565**	1	SEAL	
	3	1	**277-6631**	1	SPRING	
	4	1	**196-4253**	1	GASKET	
	5	1	**296-6705**	1	SOLENOID AS (WINCH PUMP)	
		1	**217-3875**	1	SEAL-O-RING	
		1	**247-7054**	1	COLLAR-LOCKING	
M	6	1	**8T-2922**	4	BOLT-SOCKET HEAD (M6X1X65-MM)	
M	7	1	**8C-6965**	1	BOLT-SOCKET HEAD (M6X1X45-MM)	
M	8	1	**099-0822**	8	BOLT-SOCKET HEAD (M5X0.8X10-MM)	
	9	1	**6J-3134**	1	SEAL-O-RING	
	10	1	**085-7539**	2	SEAL-O-RING	
	11	1	**196-4254**	2	SPRING	
	12	1	**6H-9691**	1	SEAL-O-RING	
	13	1	**215-8011**	1	BOLT-SPECIAL	
	14	1	**215-8010**	1	SHIM (3-MM THK)	
	15	1	**9S-8004**	1	PLUG-O-RING	
	16	1	**3J-1907**	1	SEAL-O-RING	
	17	1	**236-5157**	1	SCREEN-FILTER (PILOT)	

M-METRIC PART

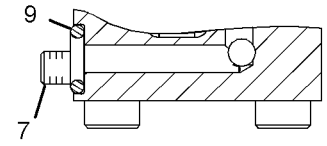

SECTION A-A

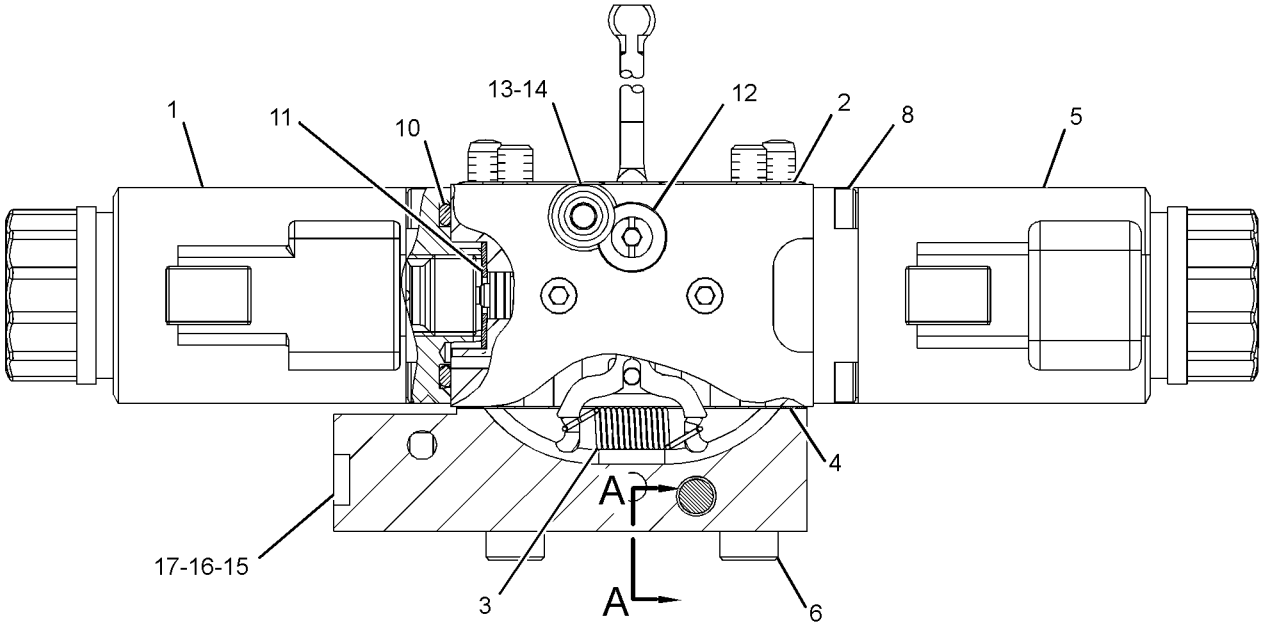

GRAPHIC #1 **<END>** g01374185

244-7403 CASE & FRAME GP

S/N: JLF1-UP

PART OF 282-5328 CHASSIS AR

SMCS-7051 **i03443720**

NOTE	REF NO	GRAPHIC REF	PART NUMBER	QTY	PART NAME 1 2 3 4 5 6 (PRODUCT LEVEL)	SEE PAGE
	1	1	**254-8880**	1	SUPPORT AS (HOOD)	
	2	1	**256-2269**	1	PLATE AS	
	3	1	**262-5866**	2	COVER	
Y	4	1	*262-5868*	2	COVER GP-ACCESS	316
	5	1	**264-5014**	2	BRACKET AS	
	6	1	**271-2734**	2	PIN AS	
	7	1	**276-2432**	1	COVER	
	8	1	**276-2433**	1	COVER	
	9	1	**287-7944**	1	FRAME AS	
	10	1	**293-6148**	1	PLATE	
	11	1	**5P-1076**	17	WASHER-HARD (13.5X30X4-MM THK)	
	12	1	**7X-7729**	10	WASHER (11X25X3-MM THK)	
M	13	1	**8T-4137**	2	BOLT (M10X1.5X20-MM)	
M	14	1	**8T-4179**	2	BOLT (M12X1.75X20-MM)	
M	15	1	**8T-4956**	19	BOLT (M12X1.75X35-MM)	
M	16	1	**8T-4184**	8	BOLT (M12X1.75X45-MM)	
M	17	1	**8T-4196**	8	BOLT (M10X1.5X35-MM)	
	18	1	**8T-4223**	12	WASHER-HARD (13.5X25.5X3-MM THK)	
M	19	1	**8T-4910**	4	BOLT (M12X1.75X60-MM)	
M	20	1	**8T-4139**	4	BOLT (M12X1.75X30-MM)	
E	21	1	**123-3827**		SEAL (198-CM)	
	22	1	**7X-0590**	8	WASHER-HARD (13.5X44.5X6-MM THK)	
	23	1	**211-5941**	8	SPACER (13.9X21.3X8-MM THK)	

E-ORDER BY THE CENTIMETER
M-METRIC PART
Y-SEPARATE ILLUSTRATION

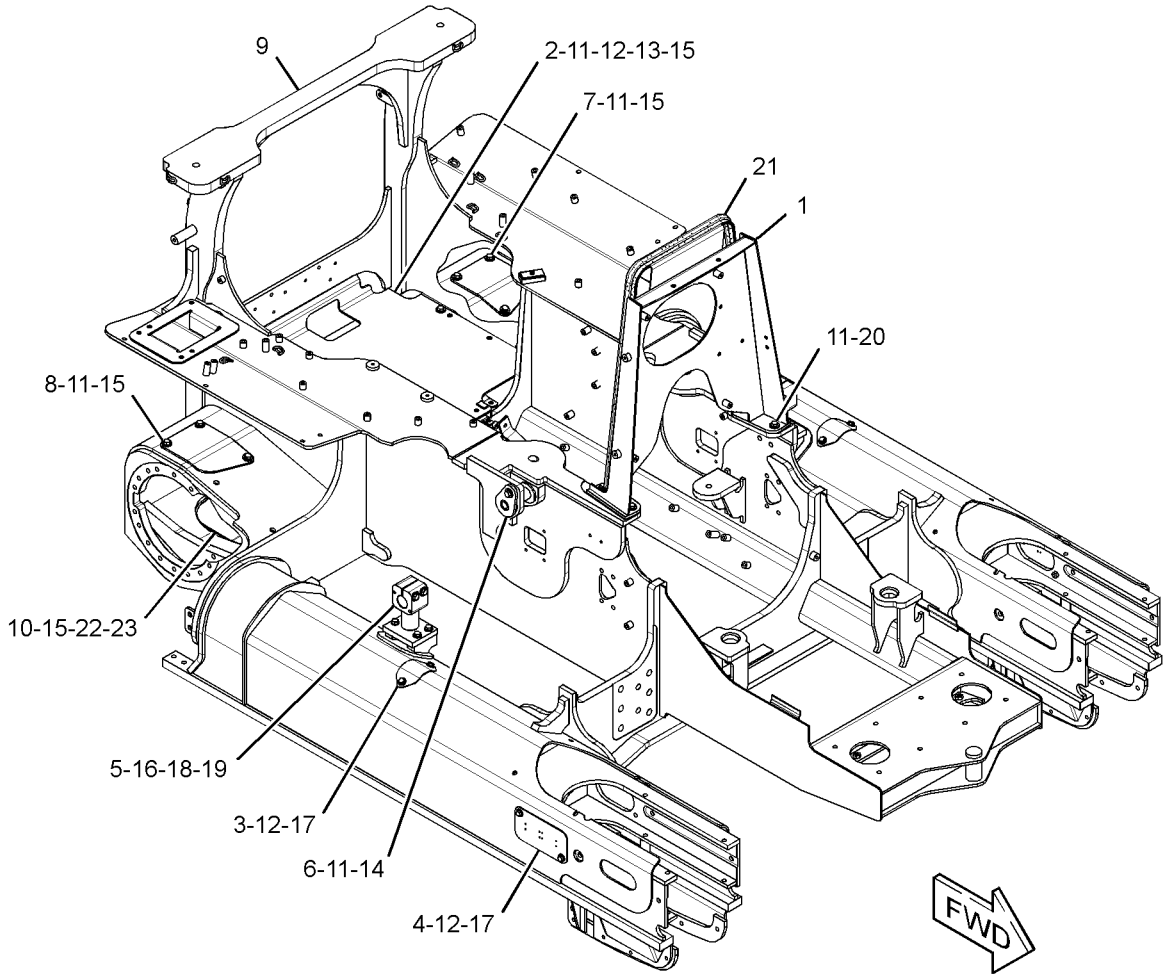

GRAPHIC #1 **<END>** g01808434

244-7516 COUNTERWEIGHT GP-FRONT

S/N: JLF1-UP; WWW1-UP; YYY1-UP
300.3-KG (662-LB)
CANNOT BE USED WITH 244-7503–PAGE 329
AN ATTACHMENT

SMCS-7056 **i02918950**

NOTE	REF NO	GRAPHIC REF	PART NUMBER	QTY	PART NAME 1 2 3 4 5 6 (PRODUCT LEVEL)	SEE PAGE
	1	1	**256-8796**	1	COUNTERWEIGHT	
	2	1	**258-2111**	2	CAP	
	3	1	**198-4767**	8	WASHER-HARD (13.5X30X12-MM THK)	
M	4	1	**8T-5041**	4	BOLT (M12X1.75X120-MM)	
M	5	1	**8T-6868**	4	BOLT (M12X1.75X80-MM)	

M-METRIC PART

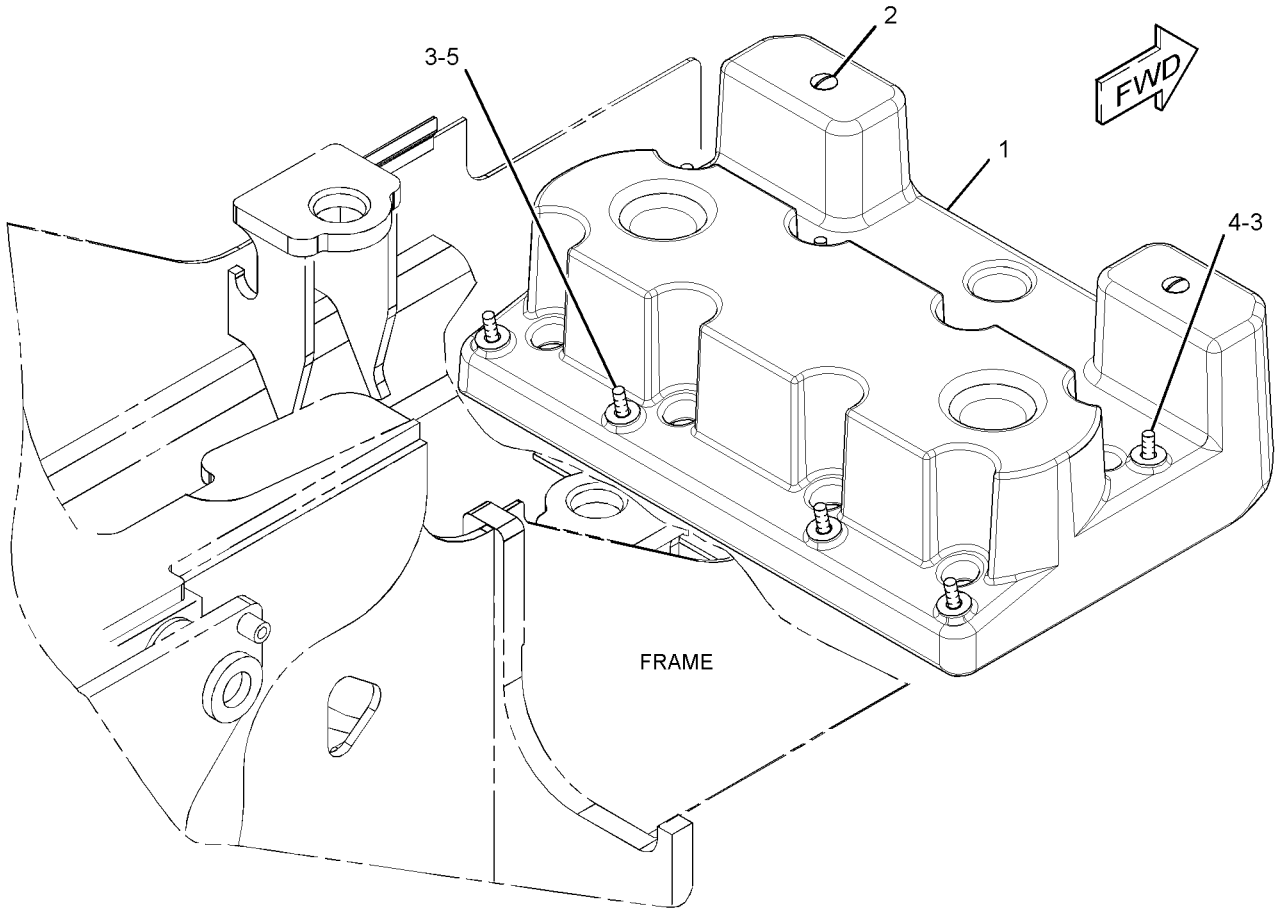

GRAPHIC #1 **<END>** g01578013

262-5868 COVER GP-ACCESS

S/N: JLF1-UP; WWW1-UP; YYY1-UP

PART OF 244-7403 CASE & FRAME GP, 244-7400, 244-7401 FRAME GP

SMCS-726A **i02819890**

NOTE	REF NO	GRAPHIC REF	PART NUMBER	QTY	PART NAME 1 2 3 4 5 6 (PRODUCT LEVEL)	SEE PAGE
	1	1	**7B-3028**	8	SCREW-DRIVE (NO 4X0.187-IN)	
	2	1	**262-5867**	1	COVER	

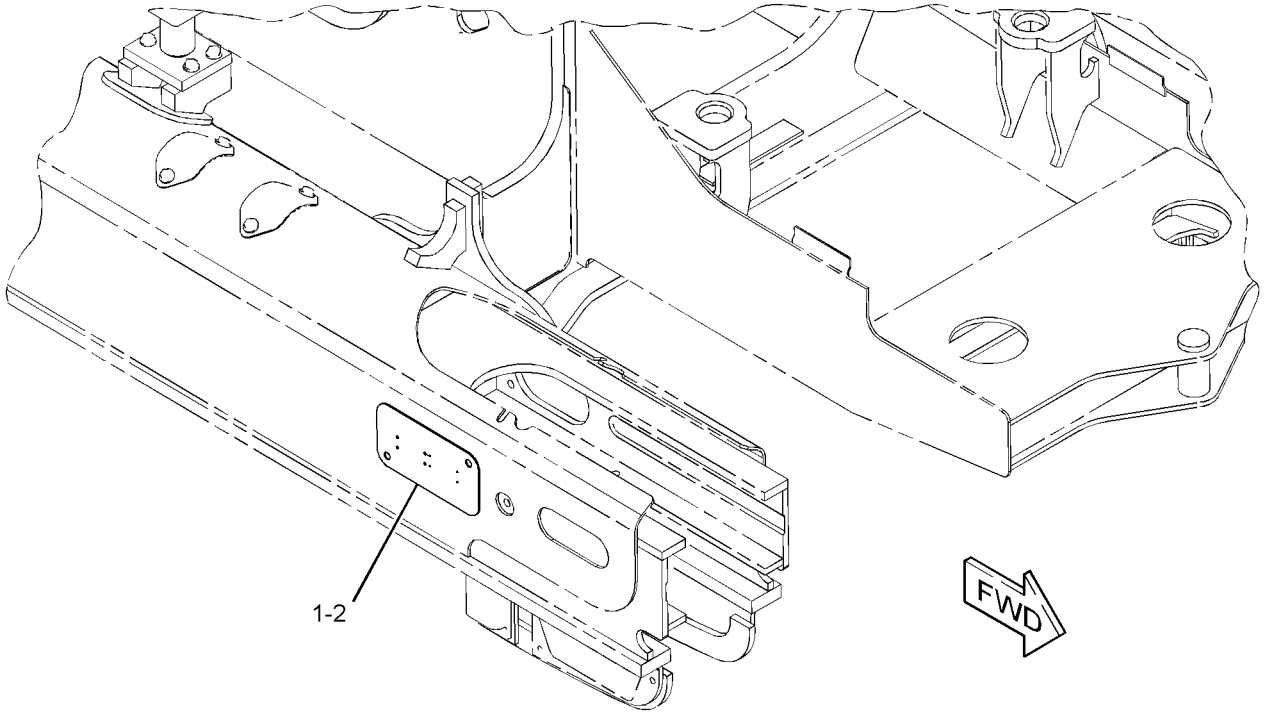

GRAPHIC #1 **<END>** g01407524

244-7434 DRAWBAR GP

S/N: JLF1-UP; WWW1-UP; YYY1-UP

CANNOT BE USED WITH 244-7433—PAGE 335, 262-4407—PAGE 653, 244-7517—PAGE 651 AN ATTACHMENT

SMCS-7105, 7119 **i02816025**

NOTE	REF NO	GRAPHIC REF	PART NUMBER	QTY	PART NAME 1 2 3 4 5 6 (PRODUCT LEVEL)	SEE PAGE
	1	1	**5G-0792**	1	PIN	
	2	1	**5P-8837**	1	LOCK PIN	
	3	1	**299-4116**	1	DRAWBAR AS	
	4	1	**299-3903**	1	PLATE AS	
	5	1	**274-7990**	1	PLATE-COVER	
	6	1	**198-4782**	4	WASHER-HARD (26X47X12-MM THK)	
	7	1	**5P-1076**	4	WASHER-HARD (13.5X30X4-MM THK)	
	8	1	**8T-4121**	4	WASHER-HARD (11X21X2.5-MM THK)	
M	9	1	**8T-4137**	7	BOLT (M10X1.5X20-MM)	
M	10	1	**8T-4139**	4	BOLT (M12X1.75X30-MM)	
M	11	1	**8T-5878**	4	BOLT (M24X3X80-MM)	
	12	1	**8T-4222**	3	WASHER-PLATED (11X32X2.5-MM THK)	

M-METRIC PART

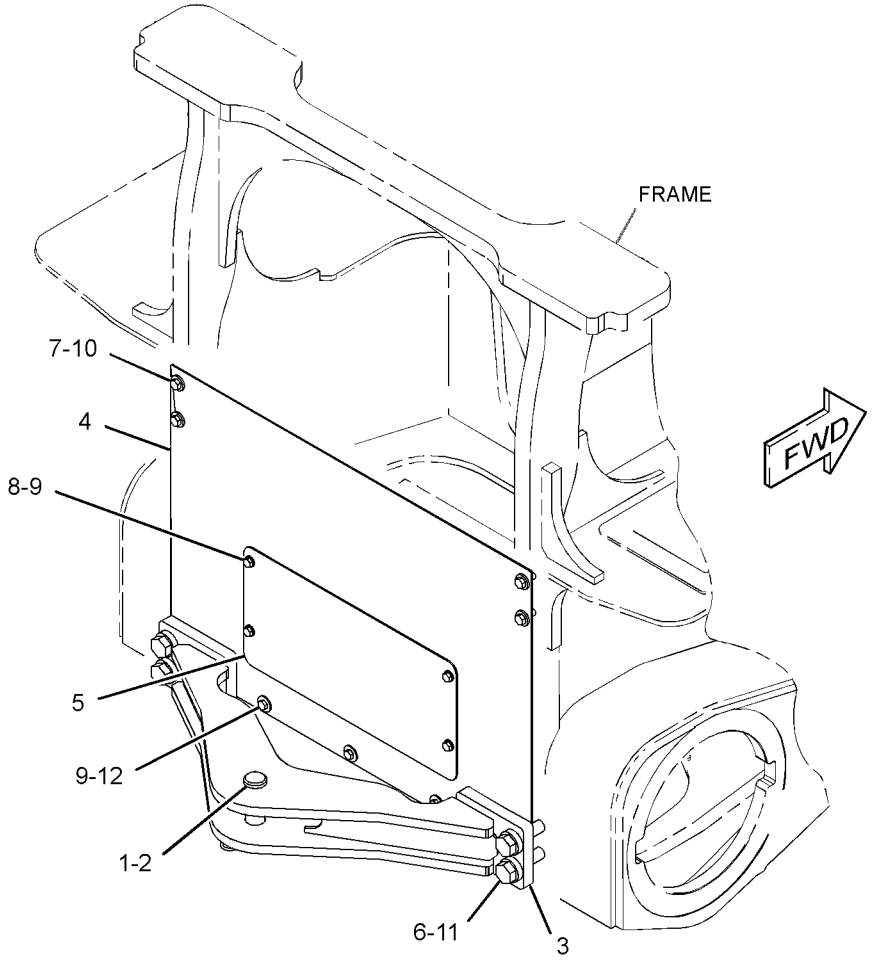

GRAPHIC #1 **<END>** g01406695

FRAME AND BODY

244-7512 ENCLOSURE GP-PLATFORM

S/N: JLF1-UP; WWW1-UP; YYY1-UP

PART OF 244-7380, 244-7381, 282-5328 CHASSIS AR

SMCS-7253, 7301 **i02997434**

NOTE	REF NO	GRAPHIC REF	PART NUMBER	QTY	PART NAME 1 2 3 4 5 6 (PRODUCT LEVEL)	SEE PAGE
	1	1	**6H-5139**	1	PLATE-PRESSURE	
	2	1	**7H-1447**	1	CAP-FILLER (HYDRAULIC TANK)	
	3	1	**306-4998**	1	CAP GP-FUEL FILLER (LOCKABLE, VENTED)	
		1	**276-1243**	1	CAP-FUEL FILLER (LOCKABLE)	
		1	**279-9876**	1	FILTER ELEMENT-BREATHER (FUEL CAP)	
		1	**278-5684**	1	PLATE	
B	4	1	**216-0143**	4	SHIM (1-MM THK)	
	5	1	**256-2271**	1	ENCLOSURE AS	
	6	1	**256-2272**	1	ENCLOSURE AS	
	7	1	**260-0088**	2	BRACKET	
	10	1	**274-1923**	2	LOCK AS	
J	11	1	**275-0572**	1	LATCH AS	
	12	1	**275-0571**	1	CAM-LATCH	
	14	1	**301-7301**	1	ENCLOSURE AS	
	15	1	**301-7302**	1	FILLER AS	
	16	1	**301-7303**	1	FILLER AS	
	18	1	**4B-9782**	1	BALL	
M	20	1	**5C-2890**	8	NUT (M6X1-THD)	
	21	1	**5P-4116**	4	WASHER-HARD (8.8X20.5X2-MM THK)	
	22	1	**7X-7729**	20	WASHER (11X25X3-MM THK)	
M	23	1	**8T-4137**	8	BOLT (M10X1.5X20-MM)	
M	25	1	**8T-4195**	12	BOLT (M10X1.5X30-MM)	
M	27	1	**8T-7547**	4	BOLT (M8X1.25X30-MM)	
	28	1	**9H-6454**	1	GASKET	
	29	1	**9X-8256**	8	WASHER (6.6X12X2-MM THK)	
	30	1	**191-0286**	1	WASHER (23X32X1.6-MM THK)	
D	31	1	**8T-5372**		SEAL (0.16-M EACH)	

B-USE AS REQUIRED
D-ORDER BY THE METER
J-REQUIERS 5P-8500 KEY
M-METRIC PART

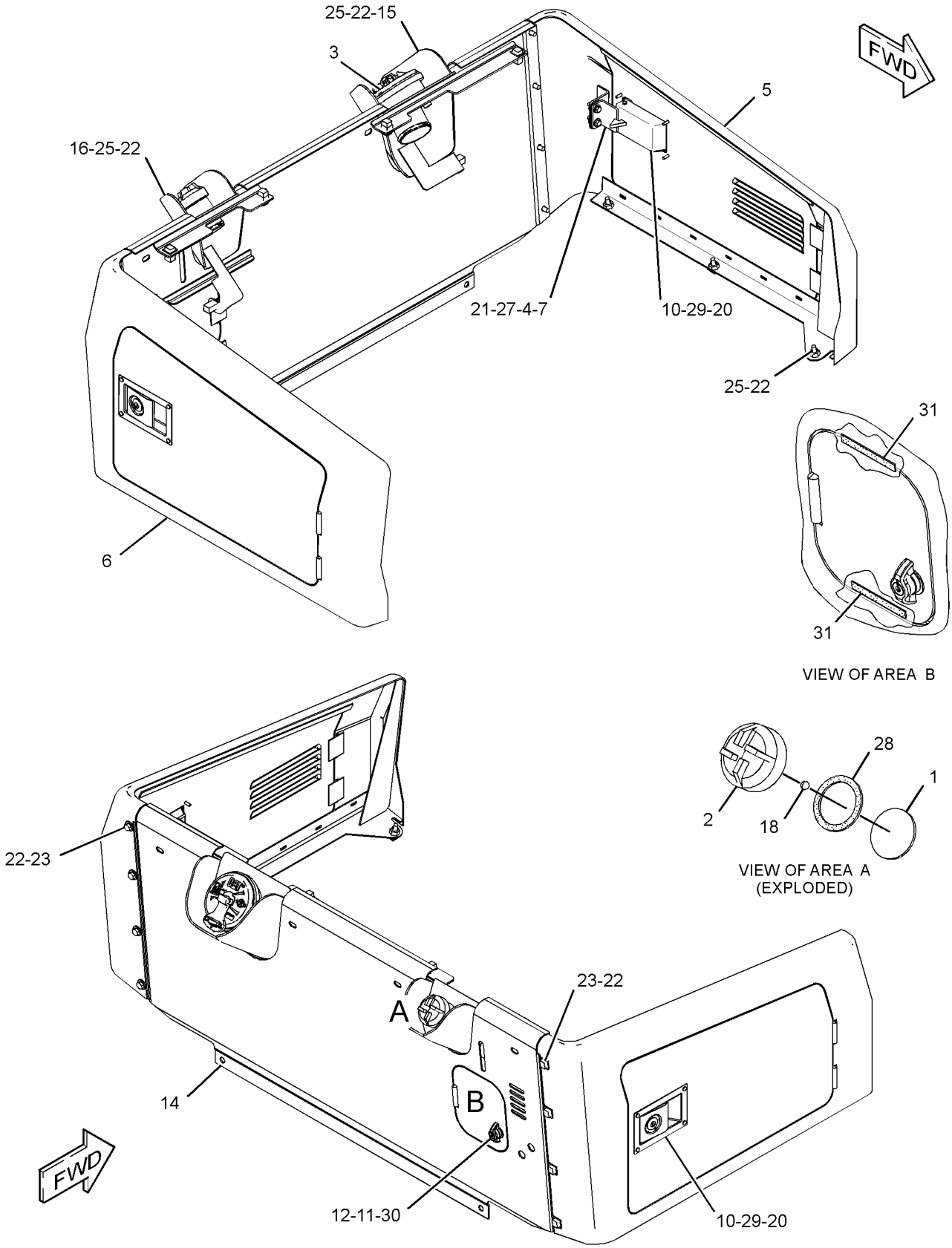

GRAPHIC #1 **<END>** g01408597

FRAME AND BODY

244-7400 FRAME GP

S/N: WWW1-UP

PART OF 244-7380 CHASSIS AR

SMCS-7050, 7051 **i03443500**

NOTE	REF NO	GRAPHIC REF	PART NUMBER	QTY	PART NAME 1 2 3 4 5 6 (PRODUCT LEVEL)	SEE PAGE
	1	1	**254-8754**	1	FRAME AS	
	2	1	**254-8880**	1	SUPPORT AS (HOOD)	
	3	1	**256-2269**	1	PLATE AS	
	4	1	**262-5866**	2	COVER	
Y	5	1	*262-5868*	2	COVER GP-ACCESS	316
	6	1	**264-5014**	2	BRACKET AS	
	7	1	**271-2734**	2	PIN AS	
	8	1	**293-6146**	1	PLATE	
	9	1	**5P-1076**	11	WASHER-HARD (13.5X30X4-MM THK)	
	10	1	**7X-7729**	10	WASHER (11X25X3-MM THK)	
M	11	1	**8T-4137**	2	BOLT (M10X1.5X20-MM)	
M	12	1	**8T-4179**	2	BOLT (M12X1.75X20-MM)	
M	13	1	**8T-4139**	4	BOLT (M12X1.75X30-MM)	
M	14	1	**8T-4184**	8	BOLT (M12X1.75X45-MM)	
M	15	1	**8T-4196**	8	BOLT (M10X1.5X35-MM)	
	16	1	**8T-4223**	12	WASHER-HARD (13.5X25.5X3-MM THK)	
M	17	1	**8T-4910**	4	BOLT (M12X1.75X60-MM)	
M	18	1	**8T-4956**	13	BOLT (M12X1.75X35-MM)	
E	19	1	**123-3827**		SEAL (198-CM)	
	20	1	**7X-0590**	8	WASHER-HARD (13.5X44.5X6-MM THK)	
	21	1	**211-5941**	8	SPACER (13.9X21.3X8-MM THK)	

E-ORDER BY THE CENTIMETER
M-METRIC PART
Y-SEPARATE ILLUSTRATION

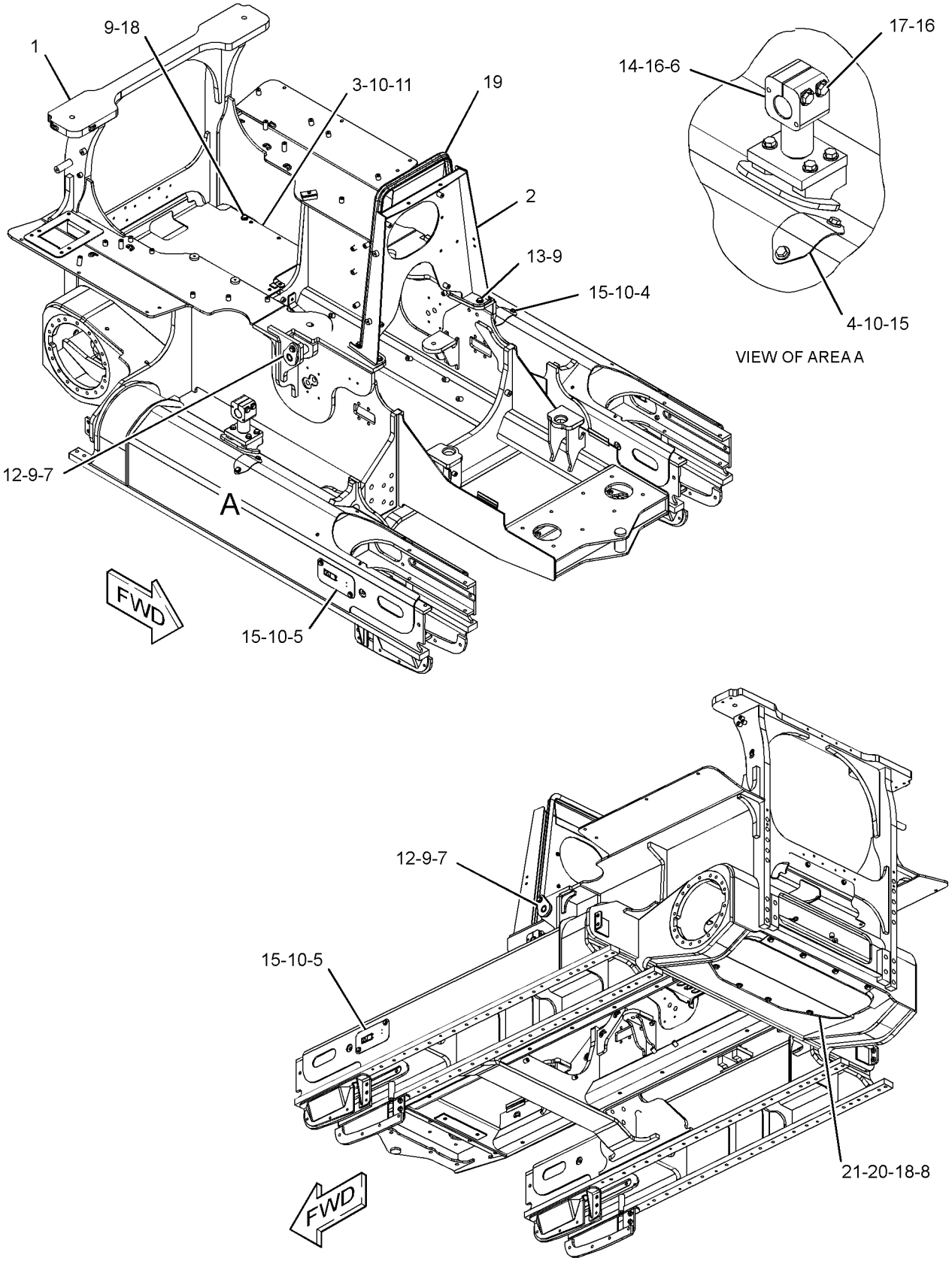

GRAPHIC #1 **<END>** g01808337

FRAME AND BODY

244-7401 FRAME GP

S/N: YYY1-UP

PART OF 244-7381 CHASSIS AR

SMCS-7050, 7051 **i03443661**

NOTE	REF NO	GRAPHIC REF	PART NUMBER	QTY	PART NAME 1 2 3 4 5 6 (PRODUCT LEVEL)	SEE PAGE
	1	1	**211-5941**	8	SPACER (13.9X21.3X8-MM THK)	
	2	1	**254-8755**	1	FRAME AS	
	3	1	**254-8880**	1	SUPPORT AS (HOOD)	
	4	1	**256-2269**	1	PLATE AS	
	5	1	**262-5866**	2	COVER	
Y	6	1	*262-5868*	2	COVER GP-ACCESS	316
	7	1	**264-5014**	2	BRACKET AS	
	8	1	**271-2734**	2	PIN AS	
	9	1	**276-2432**	1	COVER	
	10	1	**276-2433**	1	COVER	
	11	1	**293-6147**	1	PLATE	
	12	1	**5P-1076**	17	WASHER-HARD (13.5X30X4-MM THK)	
	13	1	**7X-0590**	8	WASHER-HARD (13.5X44.5X6-MM THK)	
	14	1	**7X-7729**	10	WASHER (11X25X3-MM THK)	
M	15	1	**8T-4137**	2	BOLT (M10X1.5X20-MM)	
M	16	1	**8T-4179**	2	BOLT (M12X1.75X20-MM)	
M	17	1	**8T-4184**	8	BOLT (M12X1.75X45-MM)	
M	18	1	**8T-4196**	8	BOLT (M10X1.5X35-MM)	
	19	1	**8T-4223**	12	WASHER-HARD (13.5X25.5X3-MM THK)	
M	20	1	**8T-4910**	4	BOLT (M12X1.75X60-MM)	
M	21	1	**8T-4956**	19	BOLT (M12X1.75X35-MM)	
E	22	1	**123-3827**		SEAL (198-CM)	
M	23	1	**8T-4139**	4	BOLT (M12X1.75X30-MM)	

E-ORDER BY THE CENTIMETER
M-METRIC PART
Y-SEPARATE ILLUSTRATION

244-7401 **FRAME GP** ***(contd.)*** **i03443661**

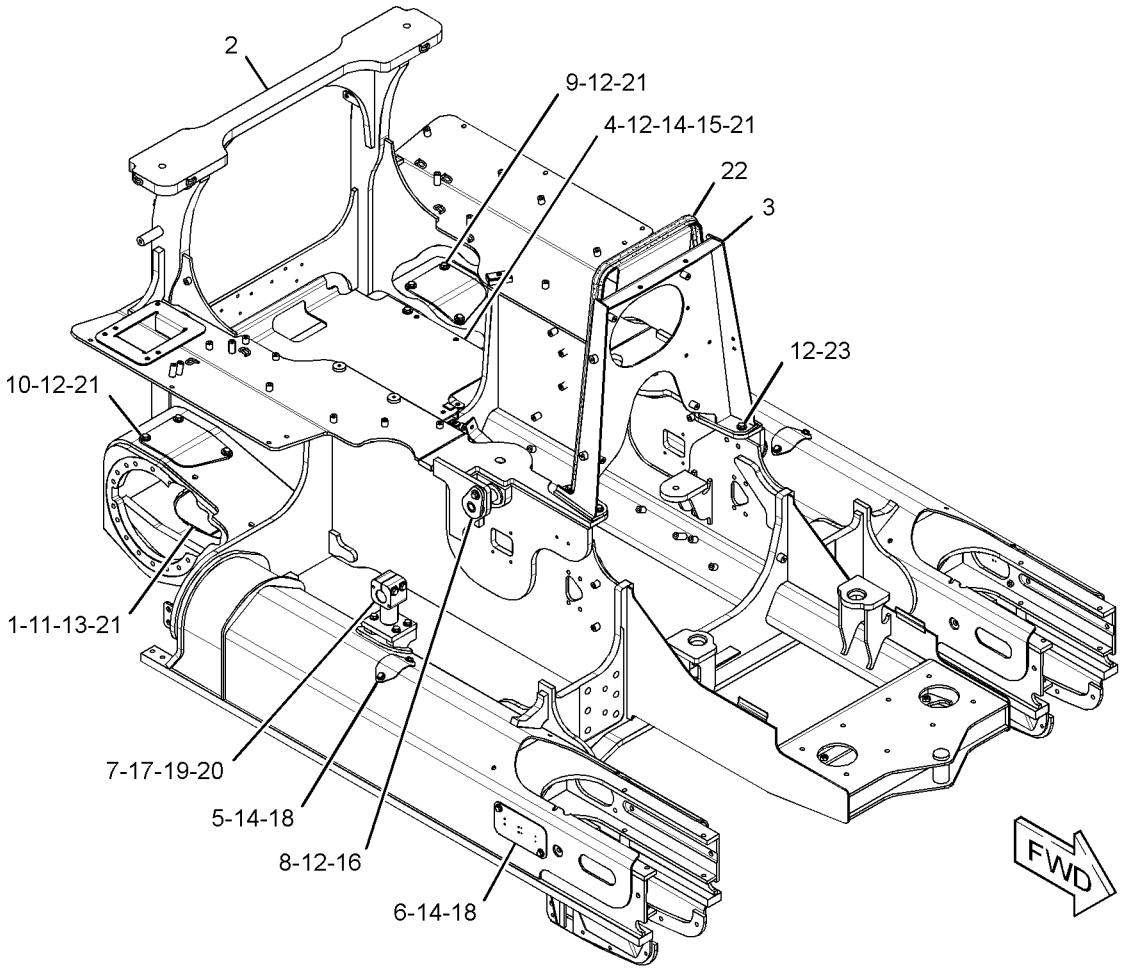

GRAPHIC #1 **<END>** g01808373

244-7436 GRILL AR-RADIATOR—STANDARD

S/N: JLF1-UP; WWW1-UP; YYY1-UP
CANNOT BE USED WITH 244-7437—PAGE 325
AN ATTACHMENT

SMCS-7170 **i02636667**

NOTE	REF NO	GRAPHIC REF	PART NUMBER	QTY	PART NAME 1 2 3 4 5 6 (PRODUCT LEVEL)	SEE PAGE
	1	1	**254-7754**	1	GRILL AS	
	2	1	**7X-7729**	6	WASHER (11X25X3-MM THK)	
M	3	1	**8T-4186**	6	BOLT (M10X1.5X40-MM)	

M-METRIC PART

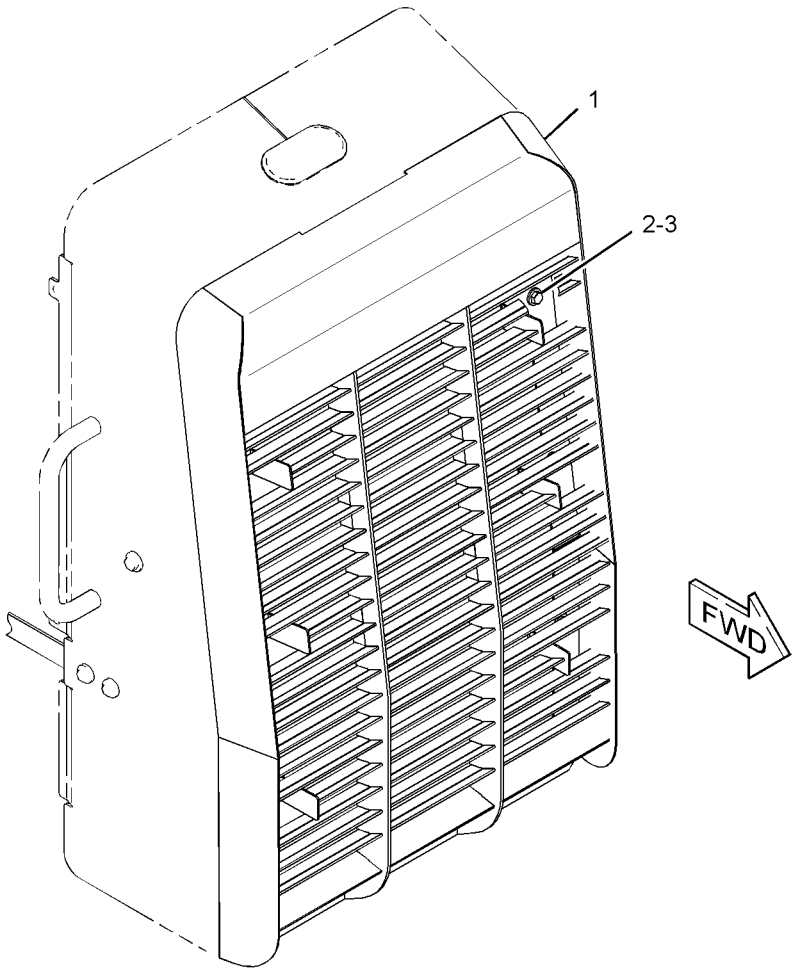

GRAPHIC #1 **<END>** g01330877

244-7437 GRILL AR-RADIATOR—HEAVY-DUTY

S/N: JLF1-UP; WWW1-UP; YYY1-UP
CANNOT BE USED WITH 244-7436—PAGE 324
AN ATTACHMENT

SMCS-7170 **i03331501**

NOTE	REF NO	GRAPHIC REF	PART NUMBER	QTY	PART NAME 1 2 3 4 5 6 (PRODUCT LEVEL)	SEE PAGE
	1	1	**327-0948**	1	GRILL AS	
	2	1	**7X-7729**	6	WASHER (11X25X3-MM THK)	
M	3	1	**8T-4186**	6	BOLT (M10X1.5X40-MM)	

M-METRIC PART

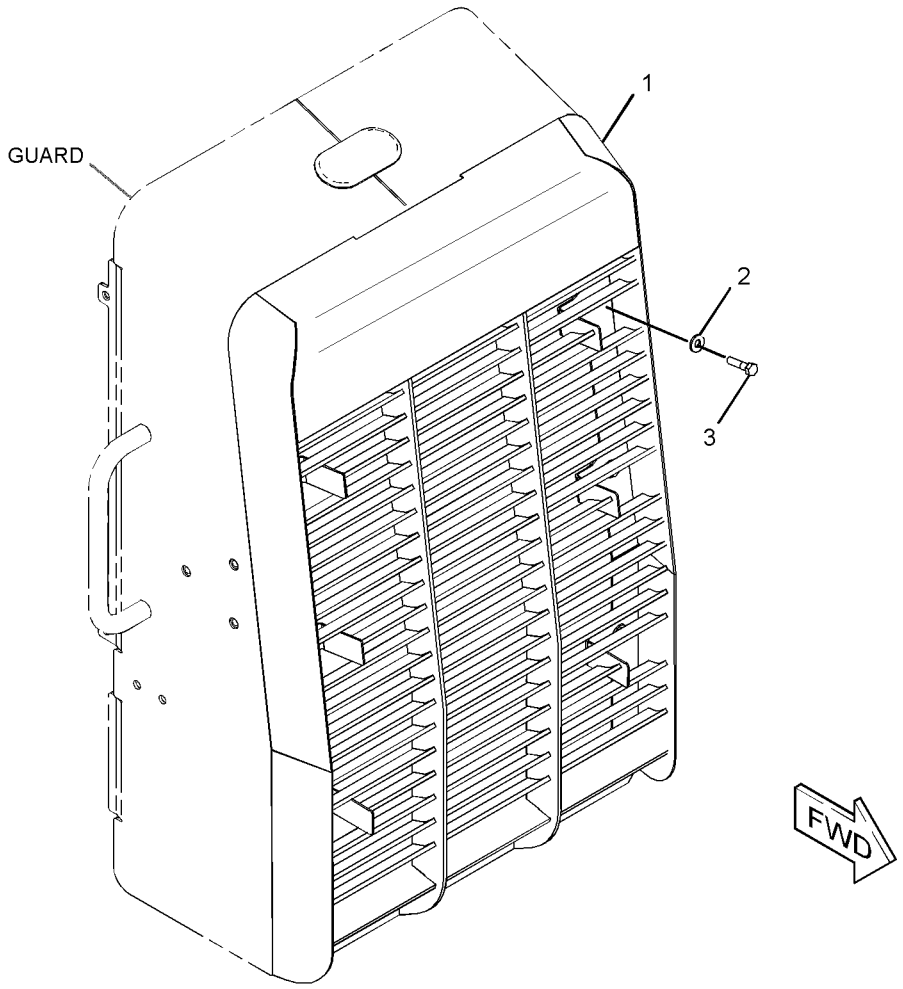

GRAPHIC #1 **<END>** g01333618

254-8902 GUARD GP-BOTTOM

S/N: JLF1-UP; WWW1-UP; YYY1-UP

PART OF 244-7380, 244-7381, 282-5328 CHASSIS AR

SMCS-7153 **i03408702**

NOTE	REF NO	GRAPHIC REF	PART NUMBER	QTY	PART NAME 1 2 3 4 5 6 (PRODUCT LEVEL)	SEE PAGE
	1	1	**211-5941**	8	SPACER (13.9X21.3X8-MM THK)	
	2	1	**254-8858**	2	PLATE-COVER	
	3	1	**254-8905**	1	PLATE AS (REAR)	
	4	1	**254-8906**	1	PLATE AS (FRONT)	
	5	1	**5P-1076**	12	WASHER-HARD (13.5X30X4-MM THK)	
	6	1	**7X-0590**	8	WASHER-HARD (13.5X44.5X6-MM THK)	
M	7	1	**8T-4956**	20	BOLT (M12X1.75X35-MM)	

M-METRIC PART

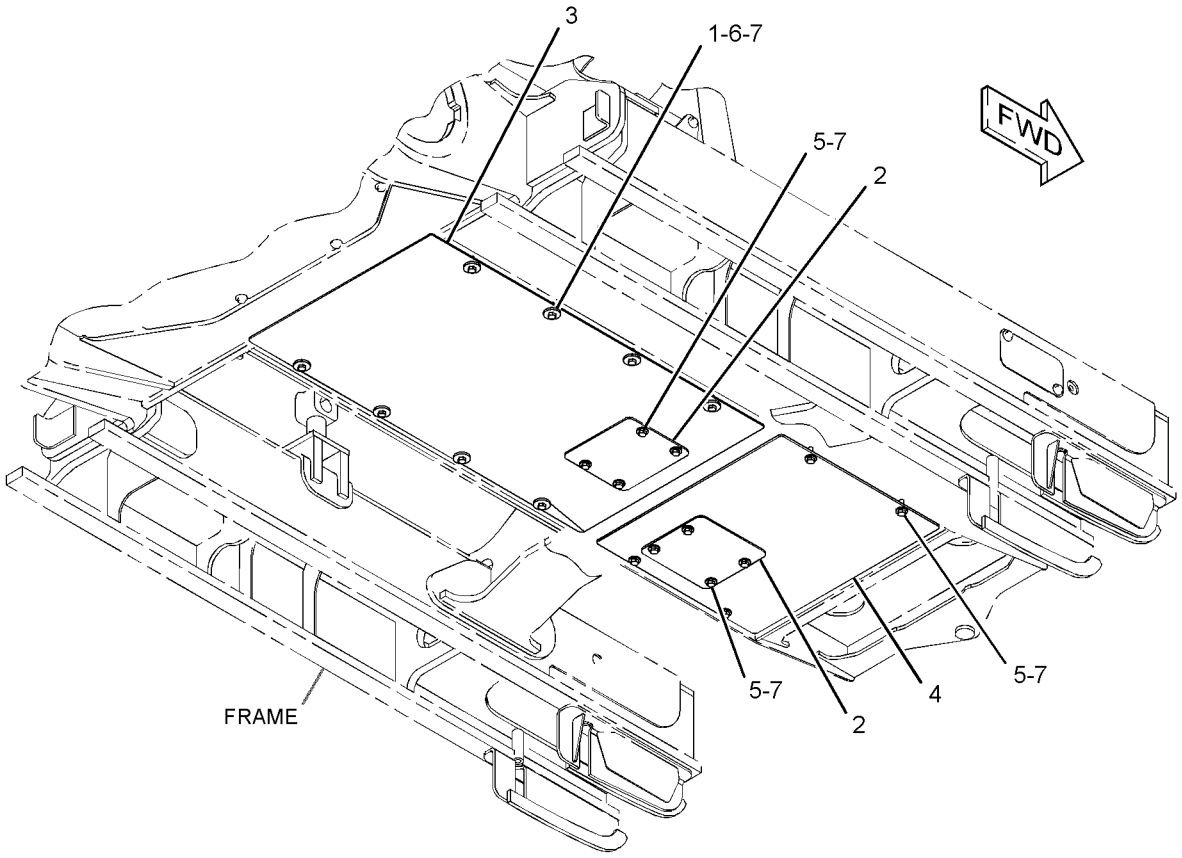

GRAPHIC #1 **<END>** g01330533

255-4276 GUARD GP-BRUSH—OPEN ROPS

S/N: JLF1-UP; WWW1-UP; YYY1-UP
DOOR, FRONT
FOR USE WITH CANOPY AR, CAB AR
AN ATTACHMENT

SMCS-7158 **i03634655**

NOTE	REF NO	GRAPHIC REF	PART NUMBER	QTY	PART NAME 1 2 3 4 5 6 (PRODUCT LEVEL)	SEE PAGE
B	1	1	**8T-0318**	6	SHIM (0.8-MM THK)	
	2	1	**114-9284**	6	BUMPER	
	3	1	**123-0380**	2	SHIELD-STRIKER	
	4	1	**187-0413**	2	STRIKER	
Y	5	1	**262-2923**	1	SCREEN GP (FRONT)	350
	6	1	**262-2925**	1	GUARD AS (RH)	
		1	**5G-8871**	2	BOSS (M6X1-THD)	
M		1	**8T-3597**	4	NUT-WELD (M12X1.75-THD)	
M		1	**8T-3612**	1	NUT-WELD (M8X1.25-THD)	
	7	1	**262-2930**	4	HINGE	
					(EACH INCLUDES)	
M		1	**8T-3612**	1	NUT-WELD (M8X1.25-THD)	
	8	1	**263-7360**	1	GUARD AS (LH)	
	9	1	**276-0062**	1	PLATE AS (LH)	
	10	1	**276-0063**	1	PLATE AS (RH)	
					(EACH PLATE AS INCLUDES)	
M		1	**8T-3612**	1	NUT-WELD (M8X1.25-THD)	
	11	1	**147-1076**	2	CYLINDER AS-GAS	
M	12	1	**5C-7261**	6	NUT (M8X1.25-THD)	
	13	1	**5P-1076**	18	WASHER-HARD (13.5X30X4-MM THK)	
	14	1	**5P-4116**	10	WASHER-HARD (8.8X20.5X2-MM THK)	
	15	1	**8T-4121**	4	WASHER-HARD (11X21X2.5-MM THK)	
M	16	1	**8T-4139**	16	BOLT (M12X1.75X30-MM)	
M	17	1	**8T-4189**	8	BOLT (M8X1.25X20-MM)	
M	18	1	**8T-4195**	4	BOLT (M10X1.5X30-MM)	
	19	1	**8T-4224**	6	WASHER-HARD (8.8X16X2-MM THK)	
M	20	1	**8T-4244**	2	NUT (M12X1.75-THD)	
	21	1	**281-3974**	4	BUMPER	
M	22	1	**5C-2890**	4	NUT (M6X1-THD)	

B-USE AS REQUIRED
M-METRIC PART
Y-SEPARATE ILLUSTRATION

255-4276 **GUARD GP-BRUSH** *(contd.)* **i03634655**

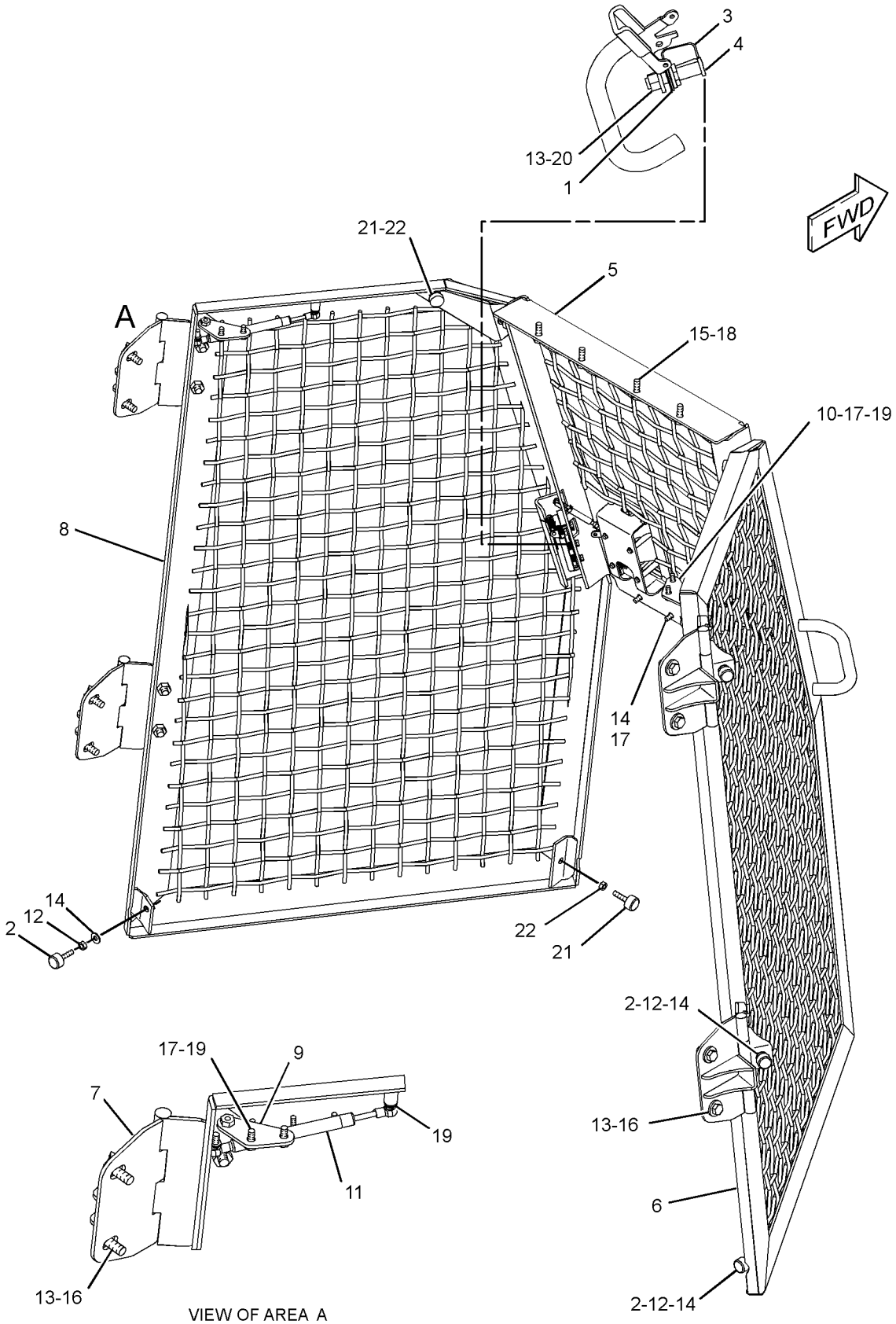

VIEW OF AREA A

GRAPHIC #1 **<END>** g01407366

244-7503 GUARD GP-FRONT

S/N: JLF1-UP; WWW1-UP; YYY1-UP
CANNOT BE USED WITH 244-7516—PAGE 315
AN ATTACHMENT

SMCS-7167 **i02636797**

NOTE	REF NO	GRAPHIC REF	PART NUMBER	QTY	PART NAME 1 2 3 4 5 6 (PRODUCT LEVEL)	SEE PAGE
	1	1	**254-8919**	1	PLATE	
	2	1	**5P-1076**	8	WASHER-HARD (13.5X30X4-MM THK)	
M	3	1	**8T-4956**	8	BOLT (M12X1.75X35-MM)	

M-METRIC PART

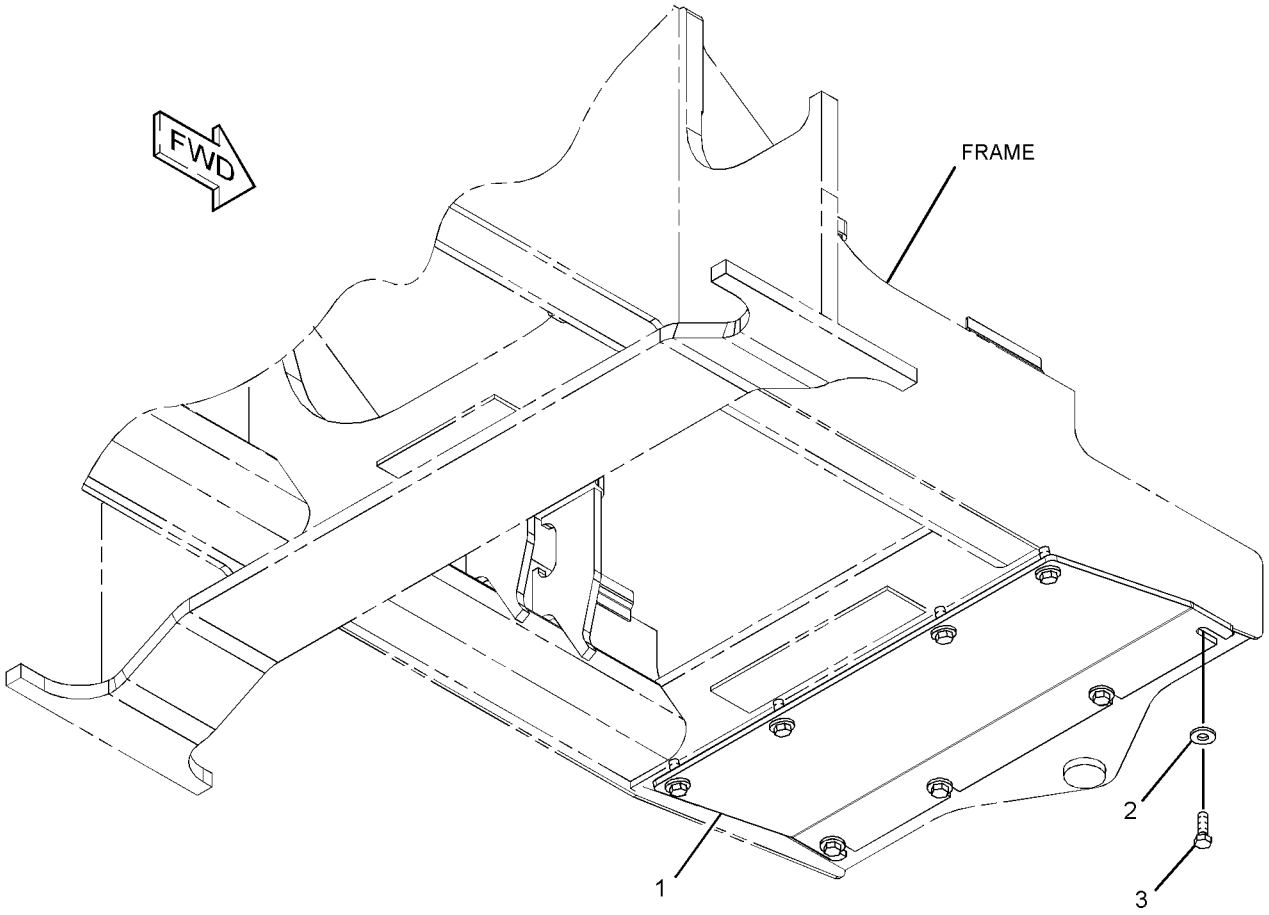

GRAPHIC #1 **<END>** g01326851

254-7757 GUARD GP-RADIATOR

S/N: JLF1-UP; WWW1-UP; YYY1-UP

PART OF 244-7380, 244-7381, 282-5328 CHASSIS AR

SMCS-7155 **i02883048**

NOTE	REF NO	GRAPHIC REF	PART NUMBER	QTY	PART NAME 1 2 3 4 5 6 (PRODUCT LEVEL)	SEE PAGE
	1	1	**254-7760**	1	GUARD AS	
	2	1	**254-8045**	1	PLUG	
	3	1	**5P-1076**	14	WASHER-HARD (13.5X30X4-MM THK)	
M	4	1	**8T-4139**	8	BOLT (M12X1.75X30-MM)	
M	5	1	**8T-4179**	6	BOLT (M12X1.75X20-MM)	
D	6	1	**8T-3426**		CHANNEL-TRIM (0.125-M EACH)	
D	7	1	**5P-5931**		SEAL (0.8-M EACH)	
D	7A	1	**5P-5931**		SEAL (0.71-M)	
D	7B	1	**5P-5931**		SEAL (0.7-M)	
D	8	1	**8T-5372**		SEAL (0.52-M)	
D	8A	1	**8T-5372**		SEAL (0.12-M)	
E	9	1	**3E-6600**		SEAL (12.5-CM)	
E	10	1	**3E-3805**		SEAL (10-CM EACH)	

D-ORDER BY THE METER
E-ORDER BY THE CENTIMETER
M-METRIC PART

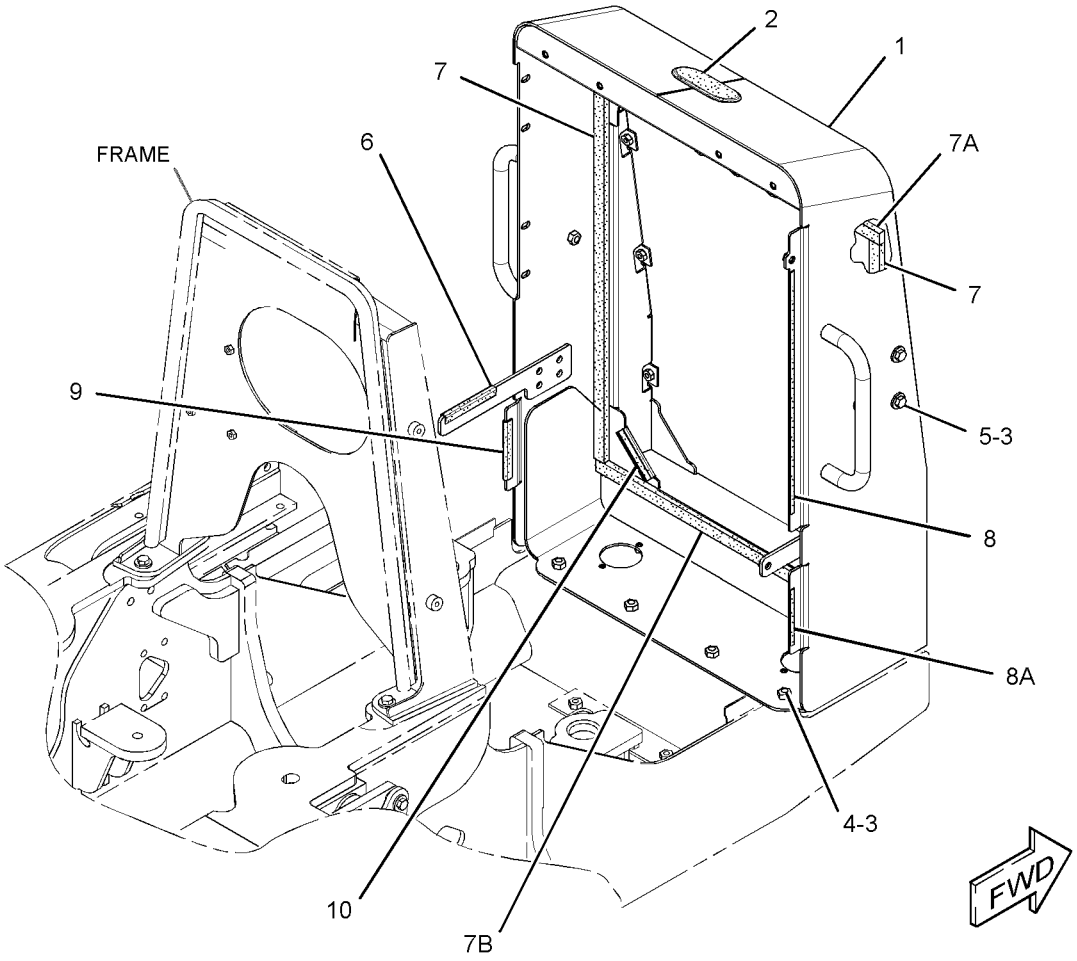

GRAPHIC #1 **<END>** g01468207

311-8644 GUARD GP-REAR

S/N: JLF1-UP; WWW1-UP; YYY1-UP
CANNOT BE USED WITH 312-1035—PAGE 333
AN ATTACHMENT

SMCS-7187 **i03032971**

NOTE	REF NO	GRAPHIC REF	PART NUMBER	QTY	PART NAME 1 2 3 4 5 6 (PRODUCT LEVEL)	SEE PAGE
	1	1	**5G-6504**	2	LUG	
	2	1	**246-2641**	1	PADLOCK GP	
		1	**5P-8500**	1	KEY	
	3	1	**299-3240**	1	FILM-IDENTIFICATION (CAT)	
	4	1	**311-8305**	1	GUARD AS	
	5	1	**311-8306**	1	PLATE AS	
	6	1	**311-8307**	1	BRACKET AS	
	7	1	**311-8643**	1	BRACKET AS	
M		1	**8T-3490**	2	NUT-WELD (M10X1.5-THD)	
	8	1	**198-4777**	8	WASHER-HARD (11X25X10-MM THK)	
	9	1	**198-4778**	7	WASHER-HARD (13.5X30X12-MM THK)	
M	11	1	**7X-2543**	4	BOLT (M10X1.5X120-MM)	
M	12	1	**7X-2549**	2	BOLT (M12X1.75X100-MM)	
M	13	1	**8T-4138**	2	BOLT (M6X1X20-MM)	
M	14	1	**8T-4183**	4	BOLT (M12X1.75X40-MM)	
M	15	1	**8T-4186**	2	BOLT (M10X1.5X40-MM)	
M	17	1	**8T-4956**	1	BOLT (M12X1.75X35-MM)	
M	18	1	**8T-5005**	2	BOLT (M10X1.5X70-MM)	
	19	1	**9X-8256**	2	WASHER (6.6X12X2-MM THK)	
	20	1	**318-6522**	1	SEAL	
	22	1	**158-7864**	1	FILM-IDENTIFICATION (HYDRAULIC OIL)	

M-METRIC PART

311-8644 **GUARD GP-REAR** *(contd.)* **i03032971**

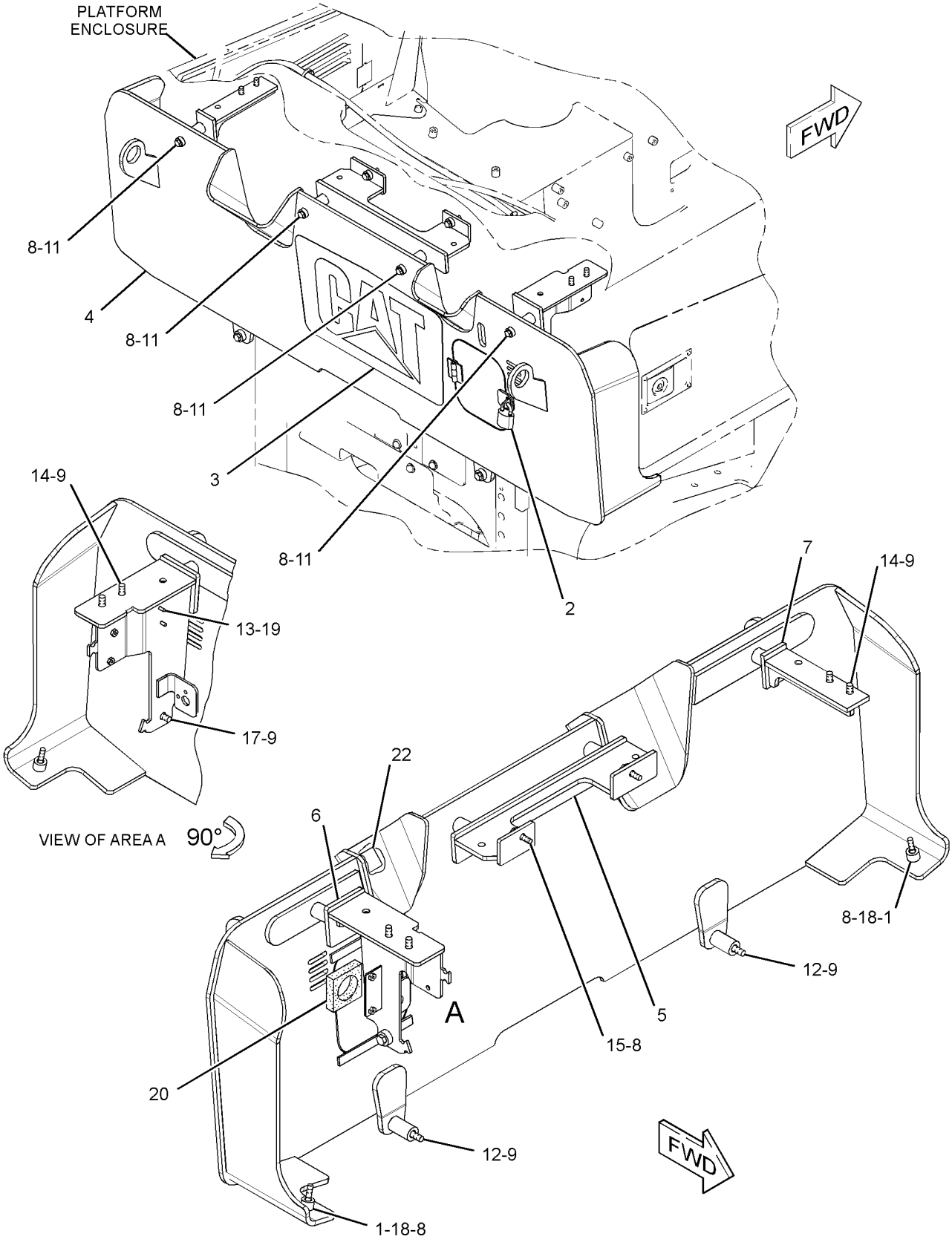

GRAPHIC #1 **<END>** g01706933

312-1035 GUARD GP-REAR

S/N: JLF1-UP; WWW1-UP; YYY1-UP
CANNOT BE USED WITH 311-8644—PAGE 331
AN ATTACHMENT
TYPE 1

SMCS-7187 **i02873281**

NOTE	REF NO	GRAPHIC REF	PART NUMBER	QTY	PART NAME 1 2 3 4 5 6 (PRODUCT LEVEL)	SEE PAGE
	1	1	**7K-1181**	1	STRAP-CABLE	
	2	1	**254-8895**	1	BRACKET AS	
	3	1	**260-0089**	1	BRACKET AS	
	4	1	**301-7299**	1	BRACKET AS	
Y	5	1	*318-8135*	1	WARNING GP-BACKUP	188
	6	1	**7X-7729**	6	WASHER (11X25X3-MM THK)	
M	7	1	**8T-4137**	4	BOLT (M10X1.5X20-MM)	
M	8	1	**8T-4139**	2	BOLT (M12X1.75X30-MM)	
M	9	1	**8T-4179**	3	BOLT (M12X1.75X20-MM)	
M	10	1	**8T-4195**	2	BOLT (M10X1.5X30-MM)	
	11	1	**8T-4223**	5	WASHER-HARD (13.5X25.5X3-MM THK)	

M-METRIC PART
Y-SEPARATE ILLUSTRATION

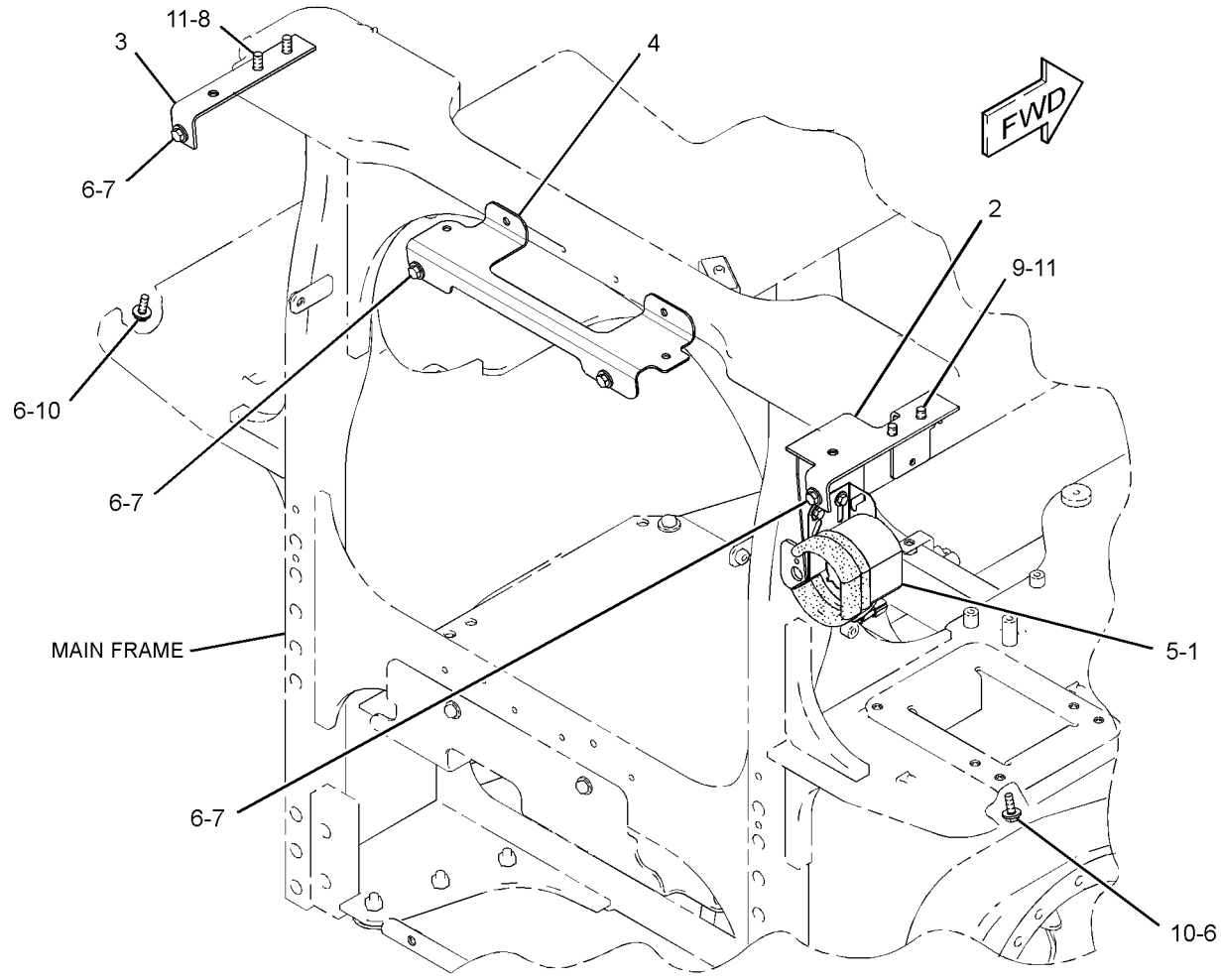

GRAPHIC #1 **<END>** g01442051

312-1035 GUARD GP-REAR

S/N: JLF1-UP; WWW1-UP; YYY1-UP
CANNOT BE USED WITH 311-8644—PAGE 331
AN ATTACHMENT
TYPE 2

SMCS-7187 **i03290916**

NOTE	REF NO	GRAPHIC REF	PART NUMBER	QTY	PART NAME 1 2 3 4 5 6 (PRODUCT LEVEL)	SEE PAGE
	1	1	**260-0089**	1	BRACKET AS	
	2	1	**301-7299**	1	BRACKET AS	
C	3	1	**318-6129**	1	BRACKET AS	
	4	1	**7X-7729**	6	WASHER (11X25X3-MM THK)	
M	5	1	**8T-4137**	4	BOLT (M10X1.5X20-MM)	
M	6	1	**8T-4139**	2	BOLT (M12X1.75X30-MM)	
M	7	1	**8T-4179**	3	BOLT (M12X1.75X20-MM)	
M	8	1	**8T-4195**	2	BOLT (M10X1.5X30-MM)	
	9	1	**8T-4223**	5	WASHER-HARD (13.5X25.5X3-MM THK)	

C-CHANGE FROM PREVIOUS TYPE
M-METRIC PART

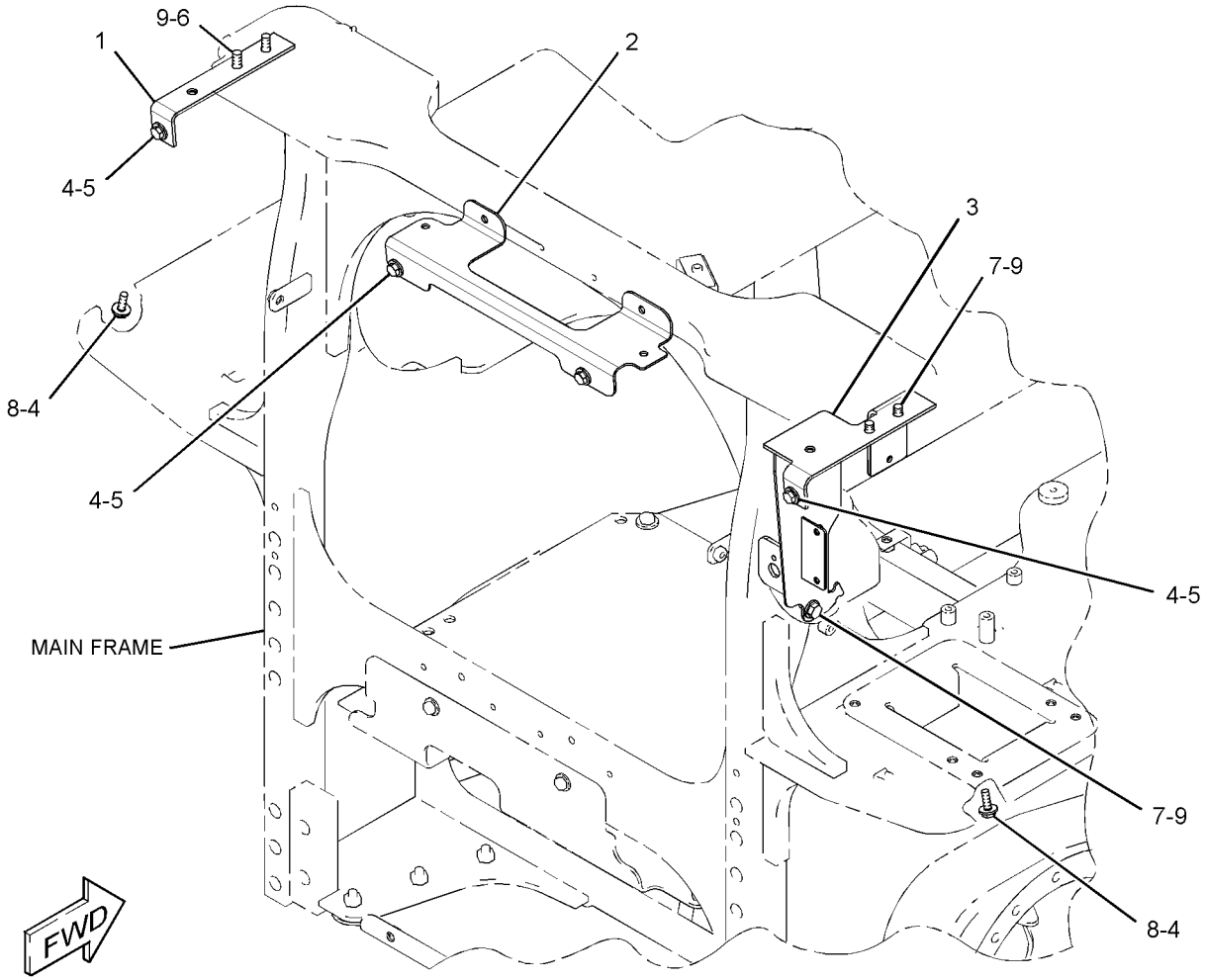

GRAPHIC #1 **<END>** g01711500

244-7433 HITCH GP-TOWING

S/N: JLF1-UP; WWW1-UP; YYY1-UP

CANNOT BE USED WITH 244-7517—PAGE 651, 244-7434—PAGE 317, 262-4407—PAGE 653

AN ATTACHMENT

SMCS-7100 **i02818602**

NOTE	REF NO	GRAPHIC REF	PART NUMBER	QTY	PART NAME 1 2 3 4 5 6 (PRODUCT LEVEL)	SEE PAGE
	1	1	**5G-0792**	1	PIN	
	2	1	**5P-8837**	1	LOCK PIN	
	3	1	**274-7990**	1	PLATE-COVER	
	4	1	**299-3902**	1	DRAWBAR AS	
	5	1	**299-3903**	1	PLATE AS	
	6	1	**5P-1076**	4	WASHER-HARD (13.5X30X4-MM THK)	
M	7	1	**7X-2576**	4	BOLT (M24X3X70-MM)	
	8	1	**8T-4121**	4	WASHER-HARD (11X21X2.5-MM THK)	
M	9	1	**8T-4137**	7	BOLT (M10X1.5X20-MM)	
M	10	1	**8T-4139**	4	BOLT (M12X1.75X30-MM)	
	11	1	**8T-4167**	4	WASHER-HARD (26X44X4-MM THK)	
	12	1	**8T-4222**	3	WASHER-PLATED (11X32X2.5-MM THK)	

M-METRIC PART

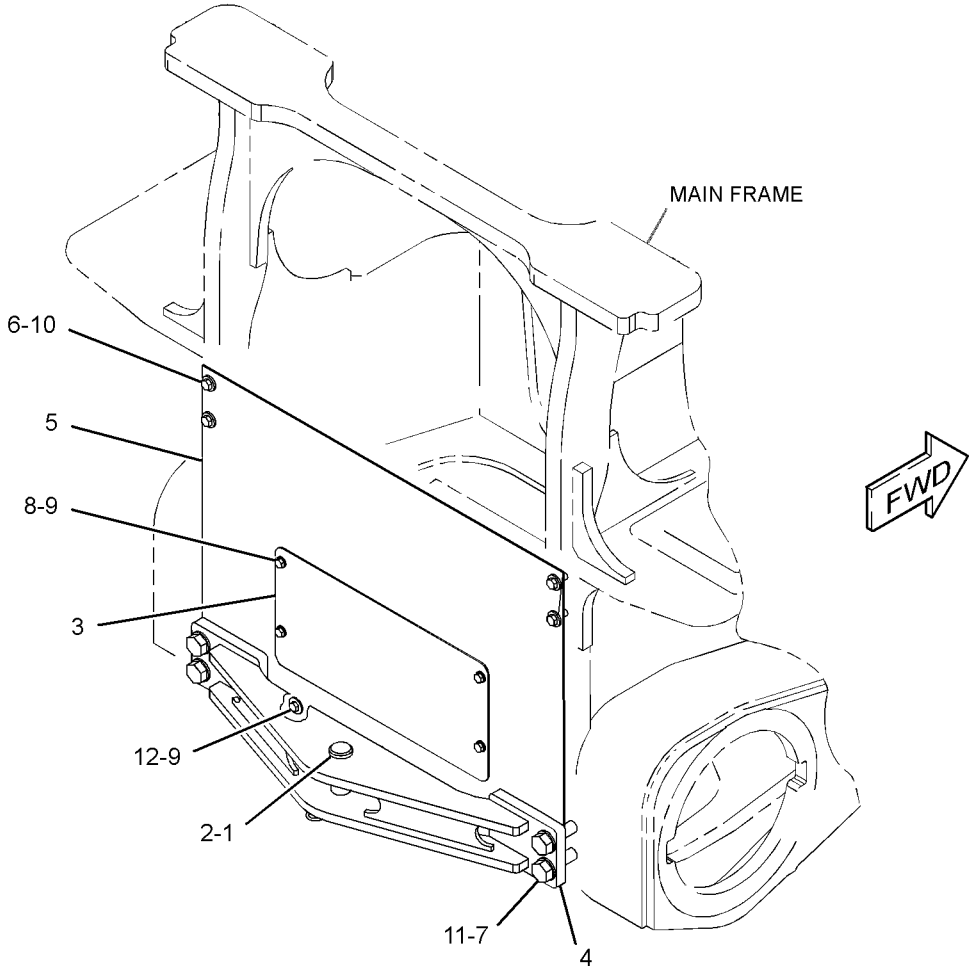

GRAPHIC #1 **<END>** g01408601

FRAME AND BODY

255-1431 HOOD & GUARD GP

S/N: JLF1-UP; WWW1-UP; YYY1-UP
PART OF 244-7479 SUPPRESSION AR-SOUND
AN ATTACHMENT

SMCS-7251 **i02920658**

NOTE	REF NO	GRAPHIC REF	PART NUMBER	QTY	PART NAME 1 2 3 4 5 6 (PRODUCT LEVEL)	SEE PAGE
	1	1	**255-1433**	1	HOOD AS	
	2	2	**255-1450**	1	PANEL AS (RH)	
	3	2	**255-1455**	1	DOOR AS (LH)	
	4	2	**255-1539**	1	PANEL AS (LH)	
	5	1	**264-3010**	1	LATCH AS	
	6	1	**264-3011**	1	STRIKER AS	
	7	1	**264-3014**	1	PLATE AS	
	8	1	**264-3017**	1	ROD AS	
J	9	2	**274-1923**	1	LOCK AS	
	10	2	**198-4777**	4	WASHER-HARD (11X25X10-MM THK)	
	11	1	**4M-7470**	2	GROMMET	
M	12	2	**5C-2890**	4	NUT (M6X1-THD)	
	13	1	**5P-4116**	2	WASHER-HARD (8.8X20.5X2-MM THK)	
	14	1,2	**7X-7729**	9	WASHER (11X25X3-MM THK)	
M	15	1,2	**8T-4137**	8	BOLT (M10X1.5X20-MM)	
M	16	1	**8T-4138**	2	BOLT (M6X1X20-MM)	
M	17	2	**8T-4186**	6	BOLT (M10X1.5X40-MM)	
M	18	1	**8T-4189**	2	BOLT (M8X1.25X20-MM)	
M	19	1	**8T-4195**	3	BOLT (M10X1.5X30-MM)	
	20	1,2	**9X-8256**	6	WASHER (6.6X12X2-MM THK)	
	21	2	**254-7761**	1	PLATE AS (LH)	
D	22	1	**5P-7483**		SEAL (0.2-M EACH)	
D	22A	2	**5P-7483**		SEAL (0.43-M)	
E	23	1,2	**3E-6600**		SEAL (12.5-CM EACH)	
E	23A	1,2	**3E-6600**		SEAL (60-CM EACH)	
E	23B	1	**3E-6600**		SEAL (30-CM)	
E	23C	1	**3E-6600**		SEAL (25-CM)	
	24	1	**8T-4222**	4	WASHER-PLATED (11X32X2.5-MM THK)	

D-ORDER BY THE METER
E-ORDER BY THE CENTIMETER
J-REQUIRES CORPORATE KEY
M-METRIC PART

255-1431 **HOOD & GUARD GP** *(contd.)* **i02920658**

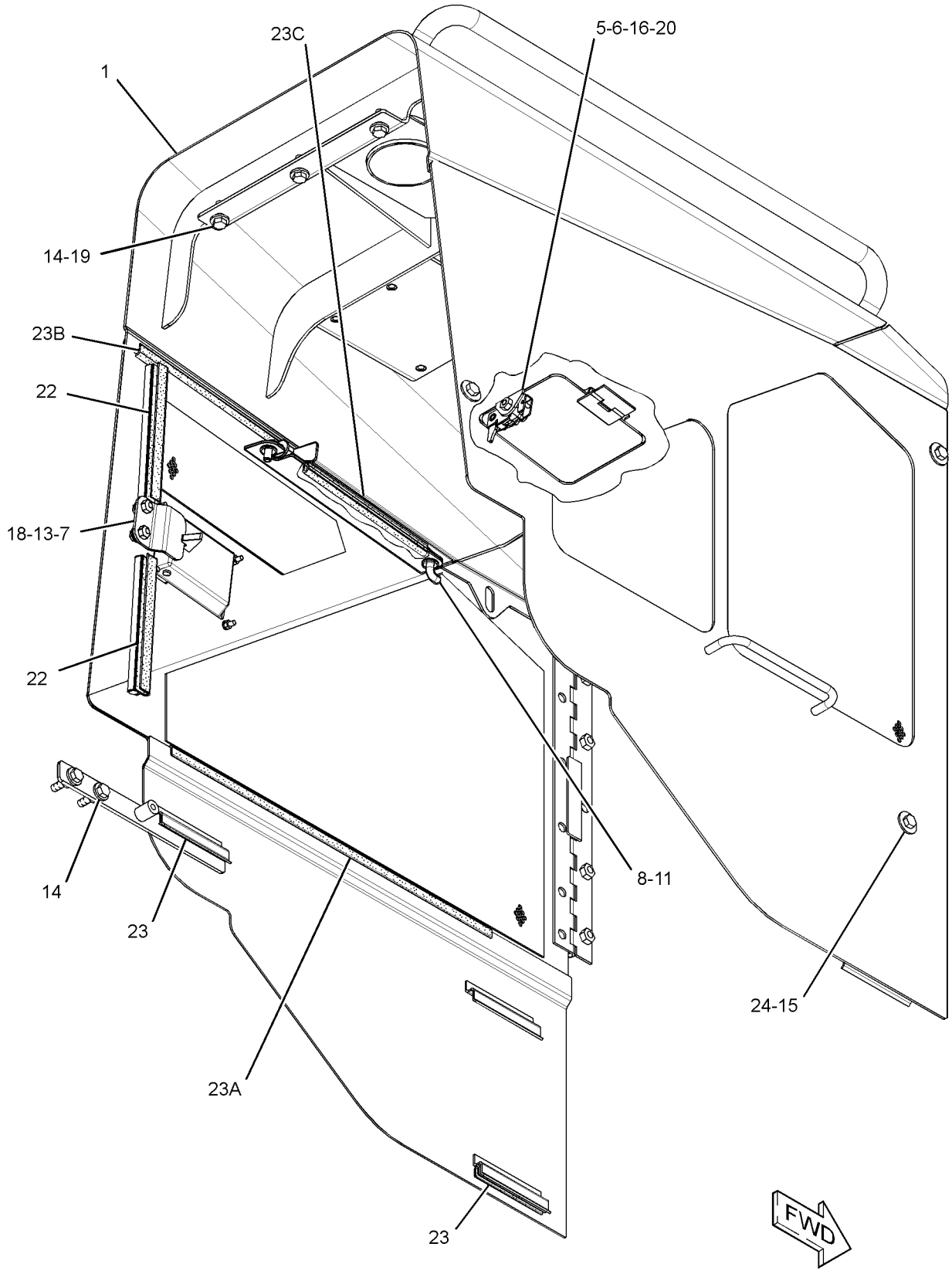

GRAPHIC #1 g01514204

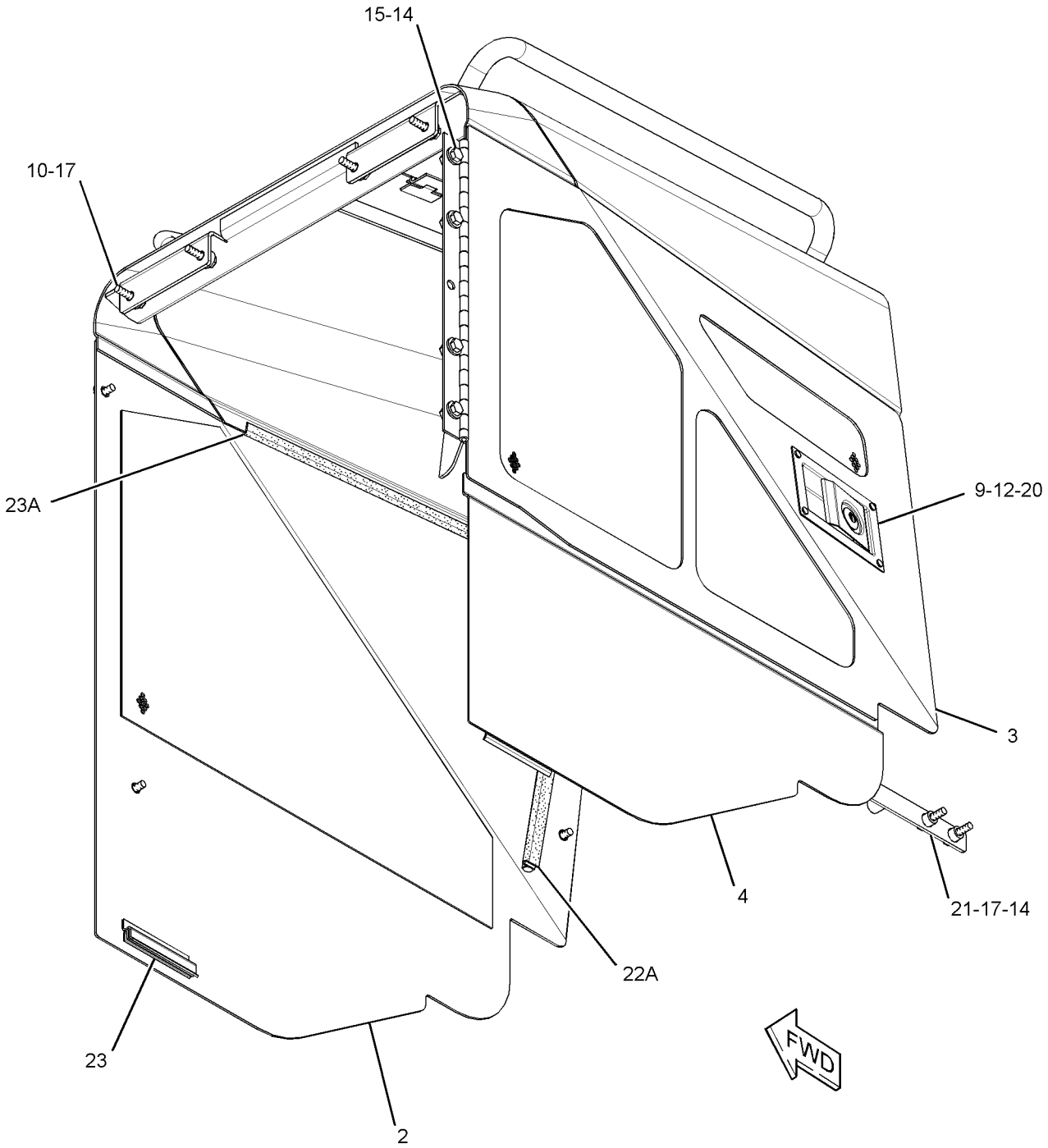

GRAPHIC #2 **<END>** g01514205

255-1452 HOOD & GUARD GP—SOUND SUPPRESSION

S/N: JLF1-UP; WWW1-UP; YYY1-UP
PART OF 244-7489, 244-7492, 244-7494 SUPPRESSION AR-SOUND
AN ATTACHMENT

SMCS-7251 **i02913459**

NOTE	REF NO	GRAPHIC REF	PART NUMBER	QTY	PART NAME 1 2 3 4 5 6 (PRODUCT LEVEL)	SEE PAGE
	1	1	**6P-2216**	14	CAP	
	2	1	**255-1453**	1	HOOD AS	
	3	1	**255-1539**	1	PANEL AS (LH)	
	4	1	**255-6642**	1	PANEL AS (RH)	
	5	1	**255-6644**	1	DOOR AS-ACCESS (LH)	
	6	1	**262-4324**	1	LINER (LH)	
	7	1	**262-4325**	1	LINER (LH)	
	8	1	**262-4326**	1	LINER (LH)	
	9	1	**262-4328**	1	LINER (RH)	
	10	1	**262-4329**	1	LINER (RH)	
	11	1	**263-3483**	1	LINER (RH)	
	12	1	**264-3010**	1	LATCH AS	
	13	1	**264-3011**	1	STRIKER AS	
	14	1	**264-3014**	1	PLATE AS	
	15	1	**264-3017**	1	ROD AS	
	16	1	**264-3019**	1	LINER (LH)	
	17	1	**274-1923**	1	LOCK AS	
	18	1	**198-4777**	4	WASHER-HARD (11X25X10-MM THK)	
	19	1	**4M-7470**	2	GROMMET	
M	20	1	**5C-2890**	4	NUT (M6X1-THD)	
	21	1	**5P-4116**	2	WASHER-HARD (8.8X20.5X2-MM THK)	
	22	1	**7X-7729**	9	WASHER (11X25X3-MM THK)	
M	23	1	**8T-4137**	8	BOLT (M10X1.5X20-MM)	
M	24	1	**8T-4138**	2	BOLT (M6X1X20-MM)	
M	25	1	**8T-4186**	6	BOLT (M10X1.5X40-MM)	
M	26	1	**8T-4189**	2	BOLT (M8X1.25X20-MM)	
M	27	1	**8T-4195**	3	BOLT (M10X1.5X30-MM)	
	28	1	**9X-8256**	6	WASHER (6.6X12X2-MM THK)	
D	29	1	**5P-7483**		SEAL (0.2-M EACH)	
D	29A	1	**5P-7483**		SEAL (0.43-M)	
	31	1	**254-7761**	1	PLATE AS (LH)	
E	32	1	**3E-6600**		SEAL (12.5-CM EACH)	
E	32A	1	**3E-6600**		SEAL (60-CM EACH)	
E	32B	1	**3E-6600**		SEAL (30-CM)	
E	32C	1	**3E-6600**		SEAL (25-CM)	
	33	1	**8T-4222**	4	WASHER-PLATED (11X32X2.5-MM THK)	

D-ORDER BY THE METER
E-ORDER BY THE CENTIMETER
M-METRIC PART

255-1452 **HOOD & GUARD GP** *(contd.)* **i02913459**

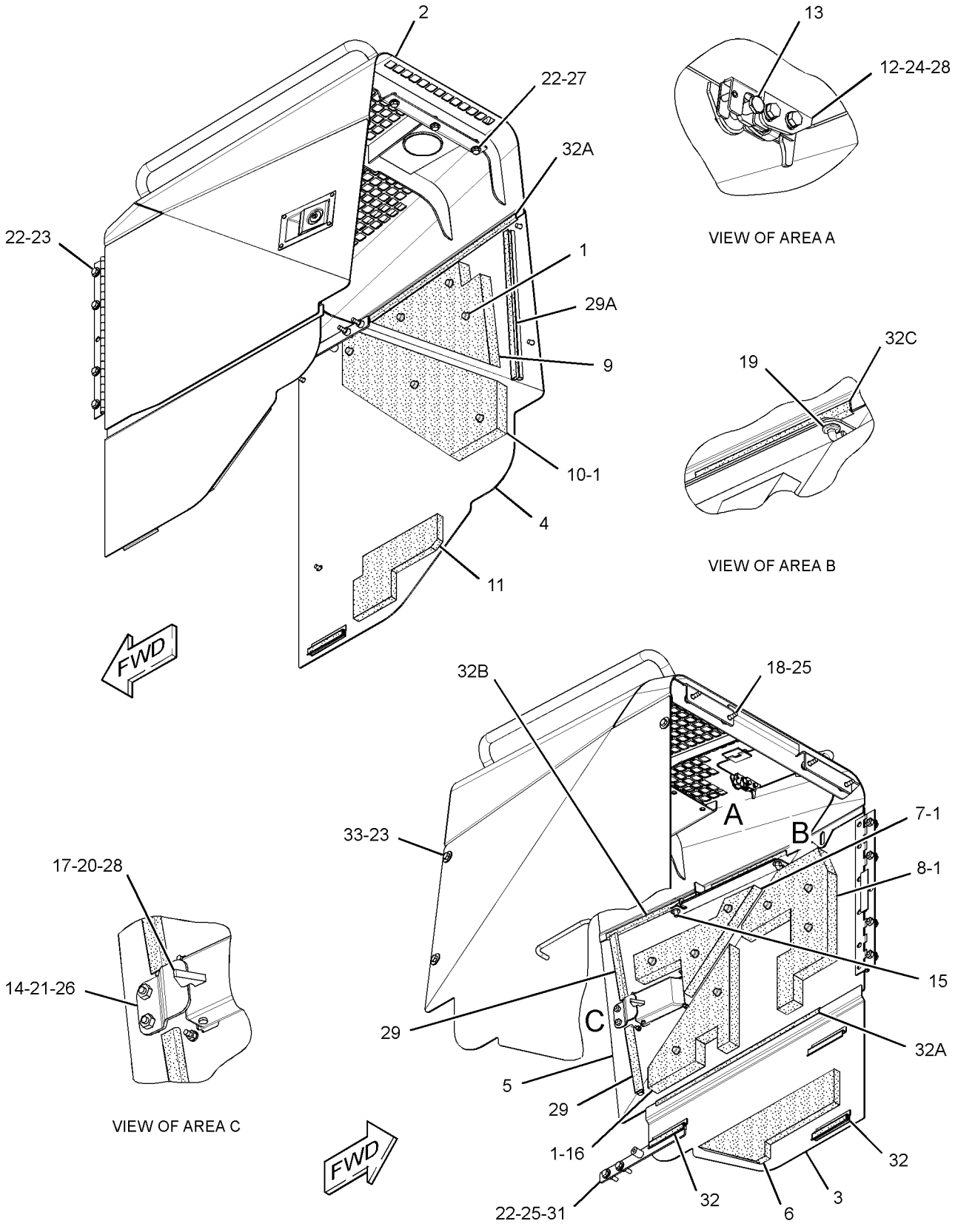

GRAPHIC #1 **<END>** g01459062

244-7499 LINER GP-SOUND SUPPRESSION–FRAME

S/N: JLF1-UP; WWW1-UP; YYY1-UP
PART OF 244-7494 SUPPRESSION AR-SOUND
AN ATTACHMENT

SMCS-7329 **i02883086**

NOTE	REF NO	GRAPHIC REF	PART NUMBER	QTY	PART NAME 1 2 3 4 5 6 (PRODUCT LEVEL)	SEE PAGE
	1	1	**262-9274**	2	LINER	
	2	1	**262-9275**	1	LINER	
	3	1	**262-9276**	1	LINER	
	4	1	**262-9277**	1	LINER	
	5	1	**262-9278**	4	LINER	
	6	1	**262-9279**	4	LINER	
	7	1	**264-5003**	10	LINER	
	8	1	**264-5004**	1	LINER	
	9	1	**264-5007**	7	LINER	
	10	1	**264-5009**	6	LINER	
	11	1	**264-5010**	1	LINER	
	12	1	**264-5011**	1	LINER	
	13	1	**7X-0603**	4	WASHER-HARD (9.9X35X2.5-MM THK)	
M	14	1	**8T-4189**	4	BOLT (M8X1.25X20-MM)	

M-METRIC PART

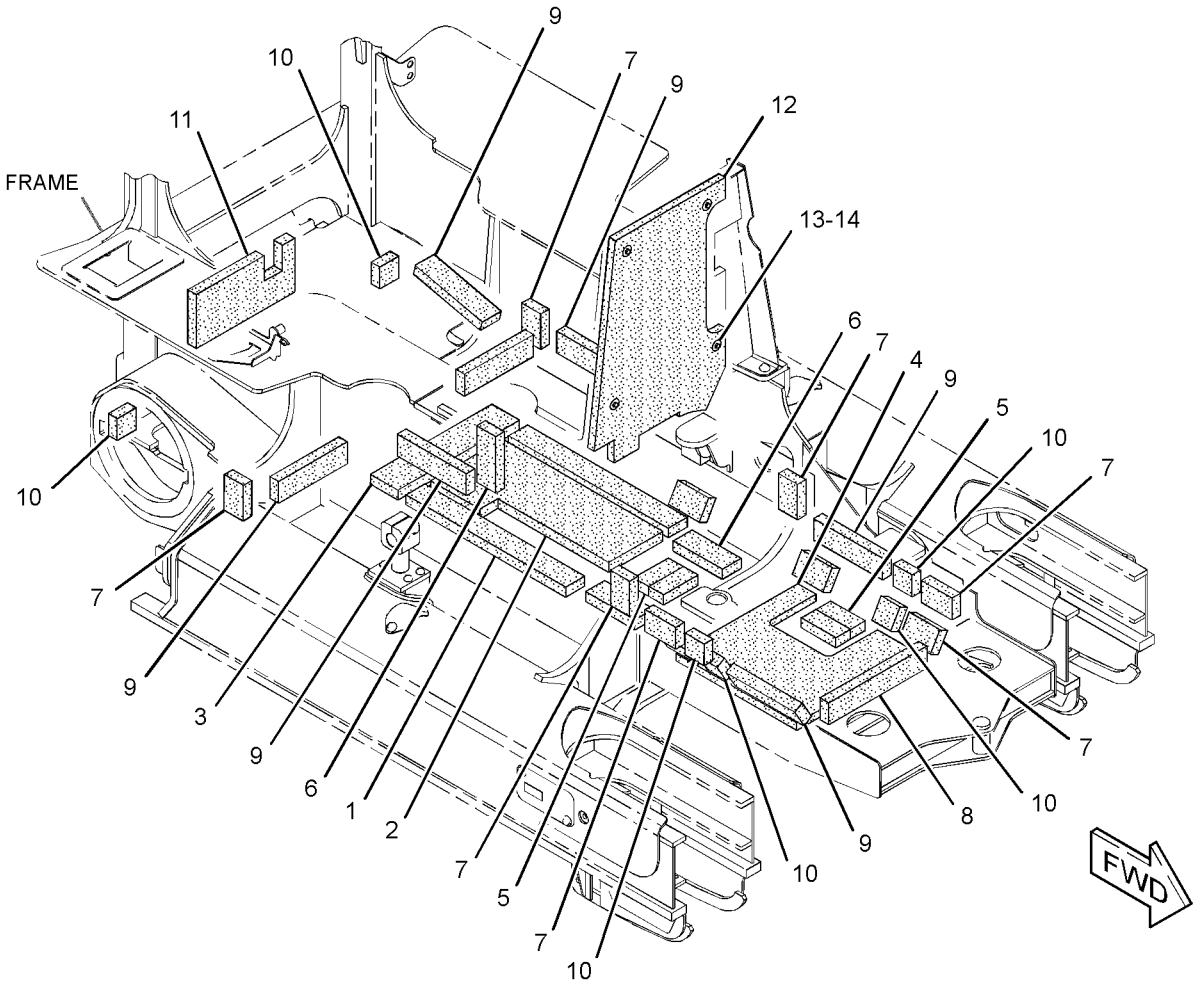

GRAPHIC #1 **<END>** g01438253

319-5537 LINER GP-SOUND SUPPRESSION—FRAME

S/N: JLF1-UP; WWW1-UP; YYY1-UP
PART OF 244-7489, 244-7492, 244-7494 SUPPRESSION AR-SOUND
AN ATTACHMENT
TYPE 1

SMCS-7329 **i03099981**

NOTE	REF NO	GRAPHIC REF	PART NUMBER	QTY	PART NAME 1 2 3 4 5 6 (PRODUCT LEVEL)	SEE PAGE
	1	2	**262-9274**	2	LINER	
	2	2	**262-9275**	1	LINER	
	3	2	**262-9276**	1	LINER	
	4	2	**262-9277**	1	LINER	
	5	1,2	**262-9278**	5	LINER	
	6	1,2,3	**262-9279**	6	LINER	
	7	1,2	**264-5003**	9	LINER	
	8	2	**264-5004**	1	LINER	
	9	1,2,3	**264-5007**	9	LINER	
	11	1,2	**264-5009**	10	LINER	
	12	3	**264-5010**	1	LINER	
	13	1	**264-5011**	1	LINER	
	14	2	**319-5538**	1	LINER	
	15	2	**319-5539**	1	LINER	
	16	2	**319-5540**	1	LINER	
	17	2,3	**319-5541**	2	LINER	
	18	2	**319-5542**	1	LINER	
	19	1	**319-5543**	1	LINER	
	20	1,2	**319-5544**	2	LINER	
	21	2	**319-5545**	1	LINER	
	22	3	**319-5546**	1	LINER	
	23	1	**7X-0603**	4	WASHER-HARD (9.9X35X2.5-MM THK)	
M	24	1	**8T-4189**	4	BOLT (M8X1.25X20-MM)	

M-METRIC PART

REFER TO ALL ILLUSTRATIONS OF
THIS GROUP FOR AUXILIARY VIEWS

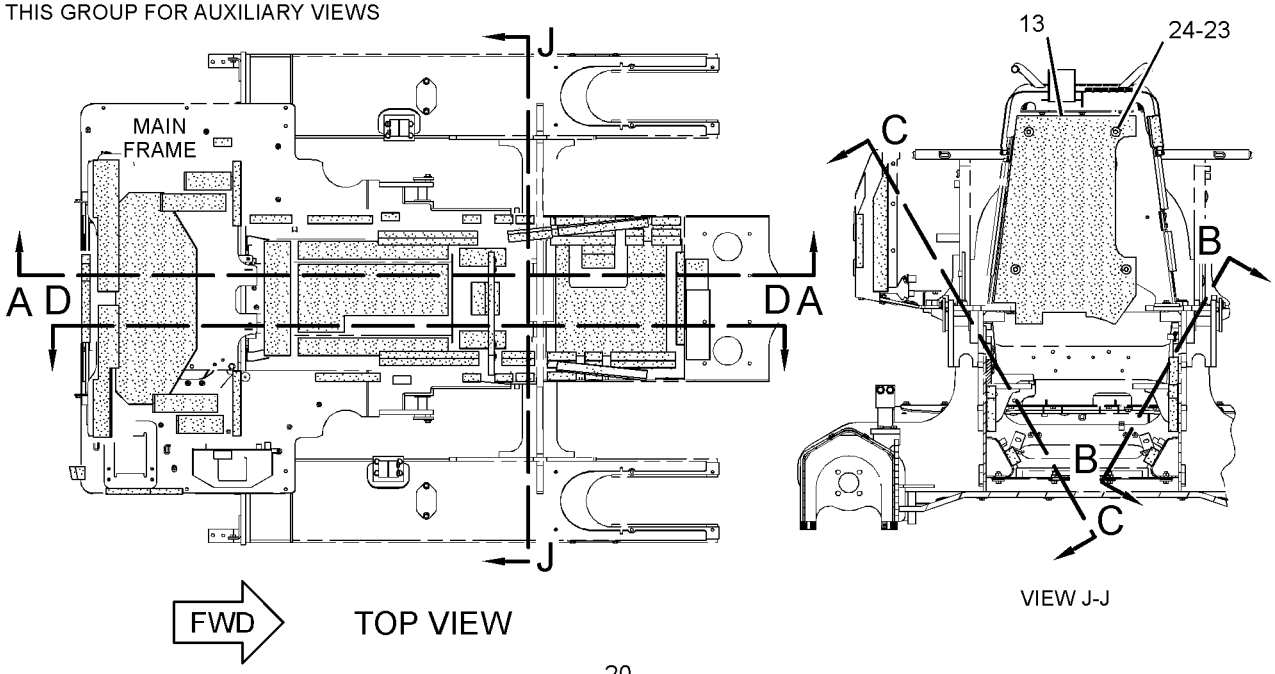

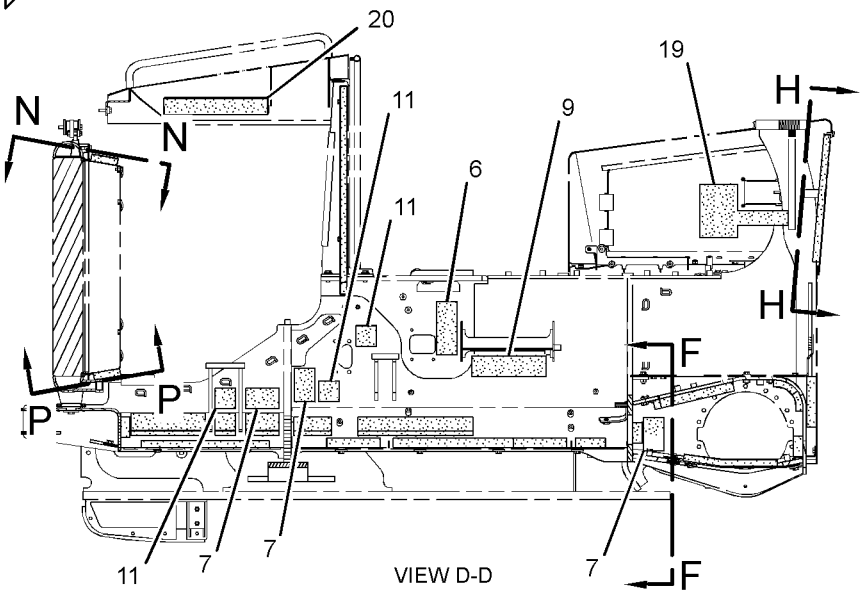

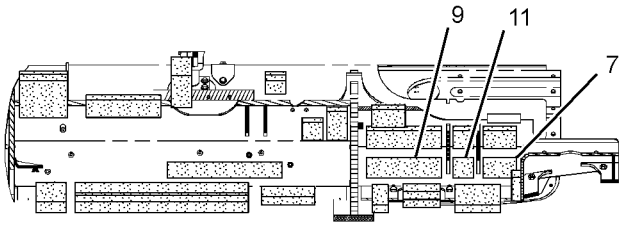

VIEW B-B

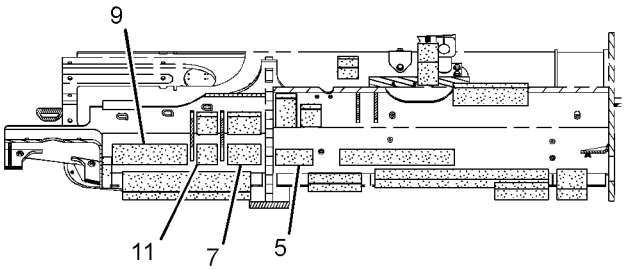

VIEW C-C

GRAPHIC #1

g01727773

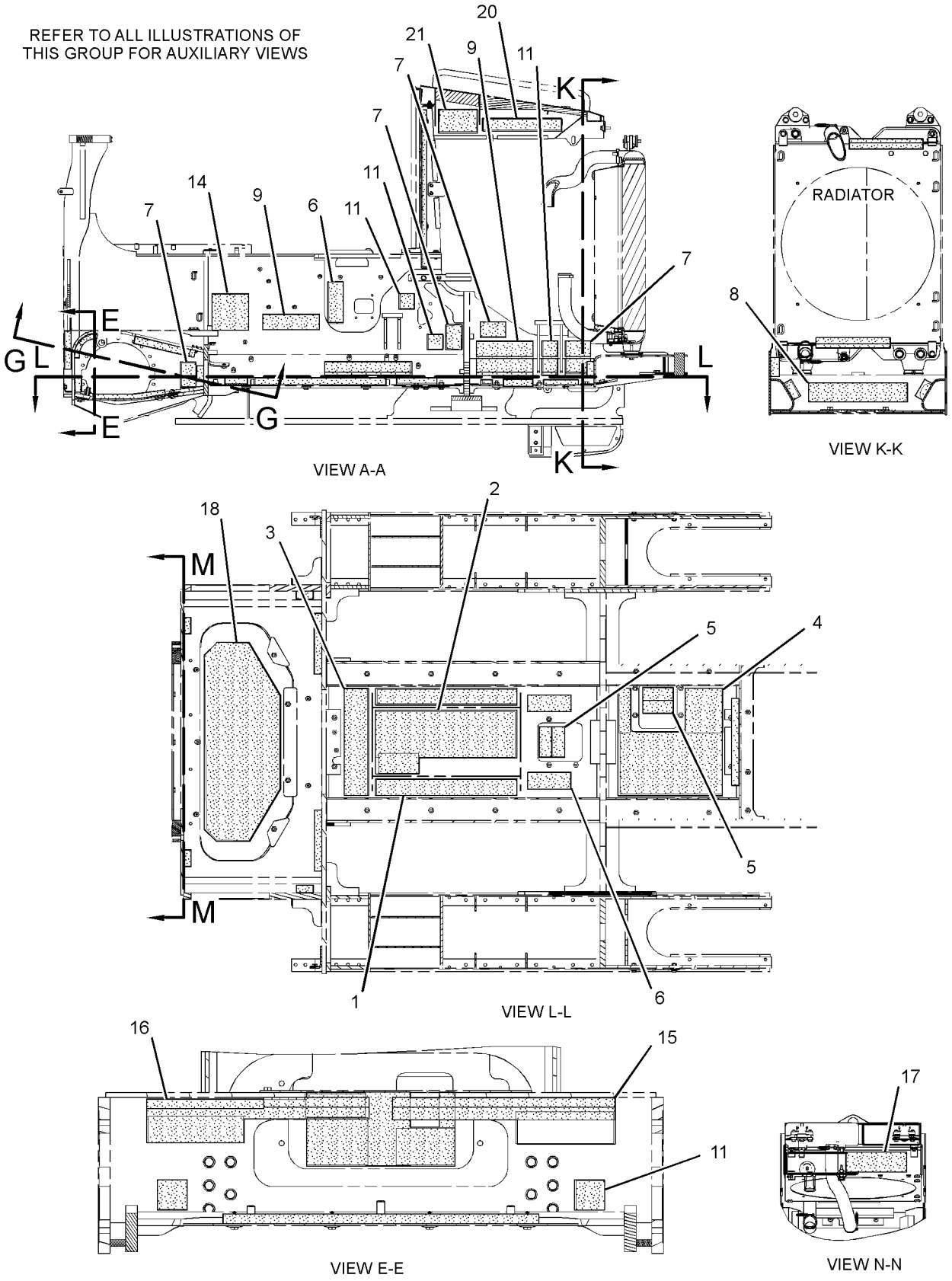

GRAPHIC #2

g01727774

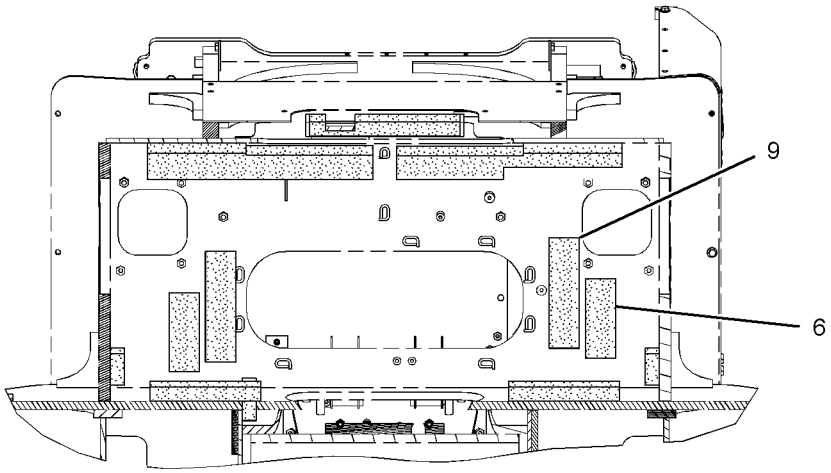

VIEW G-G

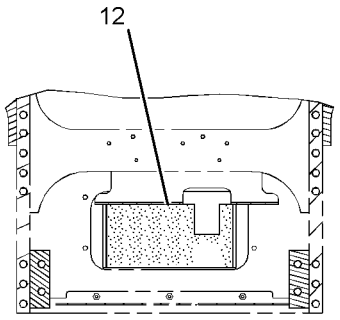

VIEW M-M

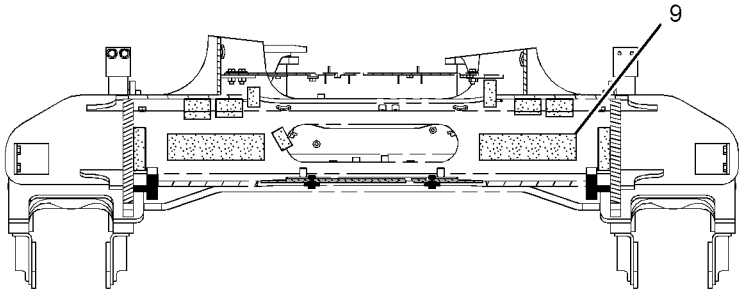

VIEW F-F

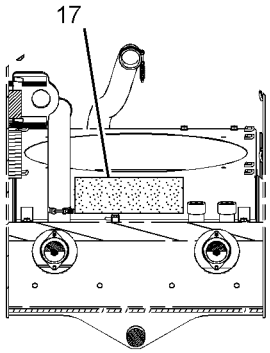

VIEW P-P

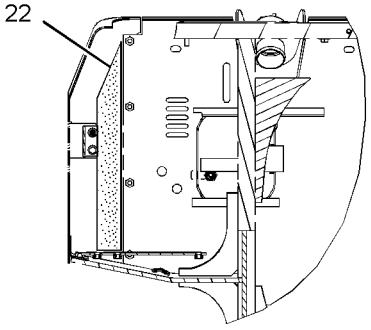

VIEW H-H

GRAPHIC #3 **<END>** g01727873

319-5537 LINER GP-SOUND SUPPRESSION–FRAME

S/N: JLF1-UP; WWW1-UP; YYY1-UP
PART OF 244-7489, 244-7492, 244-7494 SUPPRESSION AR-SOUND
AN ATTACHMENT
TYPE 2

SMCS-7329 **i02966461**

NOTE	REF NO	GRAPHIC REF	PART NUMBER	QTY	PART NAME 1 2 3 4 5 6 (PRODUCT LEVEL)	SEE PAGE
	1	2	**262-9274**	2	LINER	
	2	2	**262-9275**	1	LINER	
	3	2	**262-9276**	1	LINER	
	4	2	**262-9277**	1	LINER	
	5	1,2	**262-9278**	5	LINER	
	6	1,2,3	**262-9279**	6	LINER	
	7	1,2	**264-5003**	9	LINER	
	8	2	**264-5004**	1	LINER	
	9	1,2,3	**264-5007**	9	LINER	
	11	1,2	**264-5009**	10	LINER	
	12	3	**264-5010**	1	LINER	
	13	1	**264-5011**	1	LINER	
	14	2	**319-5538**	1	LINER	
	15	2	**319-5539**	1	LINER	
	16	2	**319-5540**	1	LINER	
	17	2,3	**319-5541**	2	LINER	
	18	2	**319-5542**	1	LINER	
	19	1	**319-5543**	1	LINER	
	20	1,2	**319-5544**	2	LINER	
	21	2	**319-5545**	1	LINER	
	22	3	**319-5546**	1	LINER	
	23	1	**7X-0603**	4	WASHER-HARD (9.9X35X2.5-MM THK)	
M	24	1	**8T-4189**	4	BOLT (M8X1.25X20-MM)	

M-METRIC PART

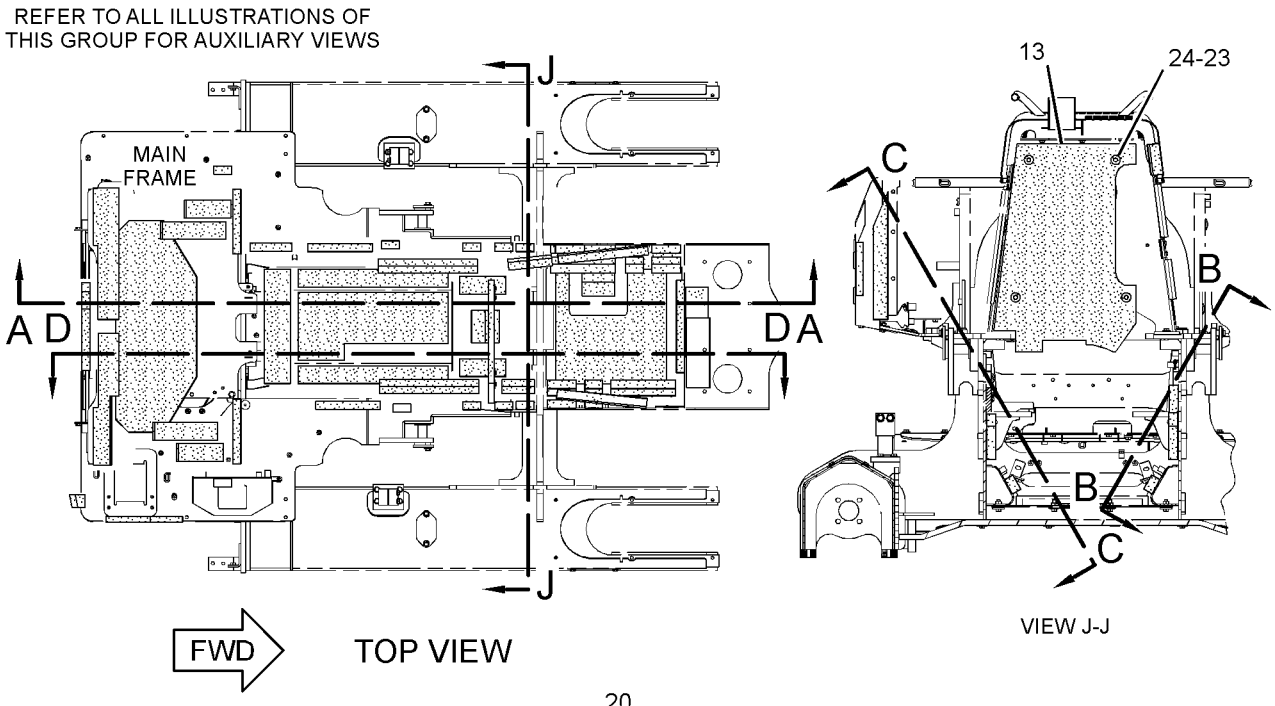

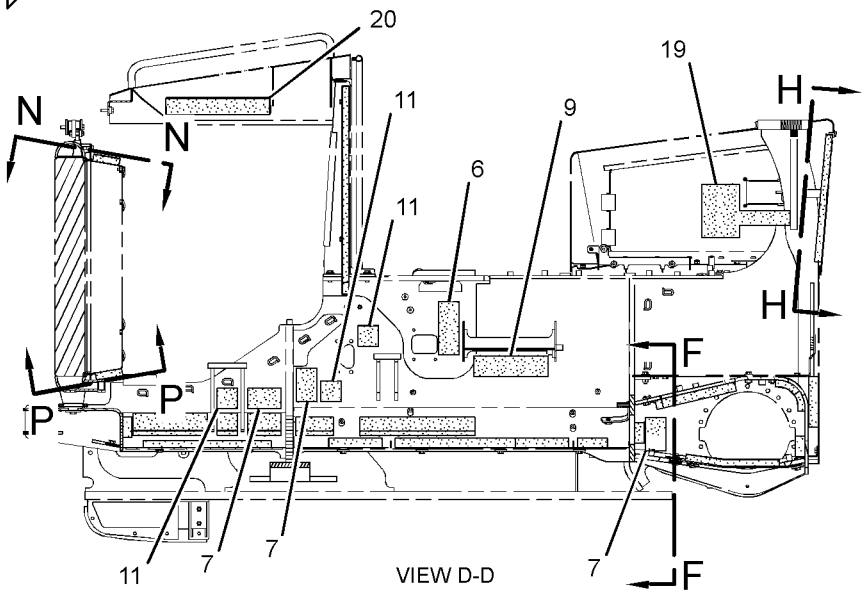

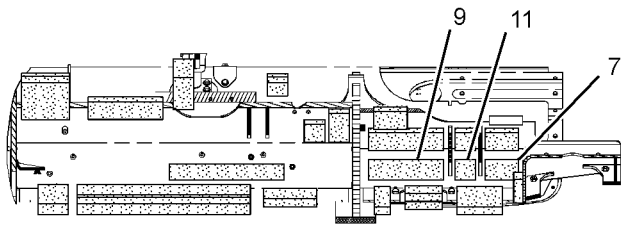

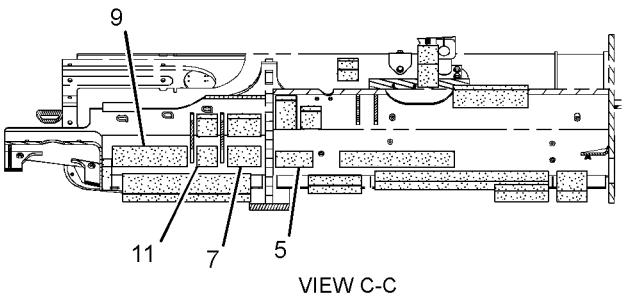

GRAPHIC #1

g01727773

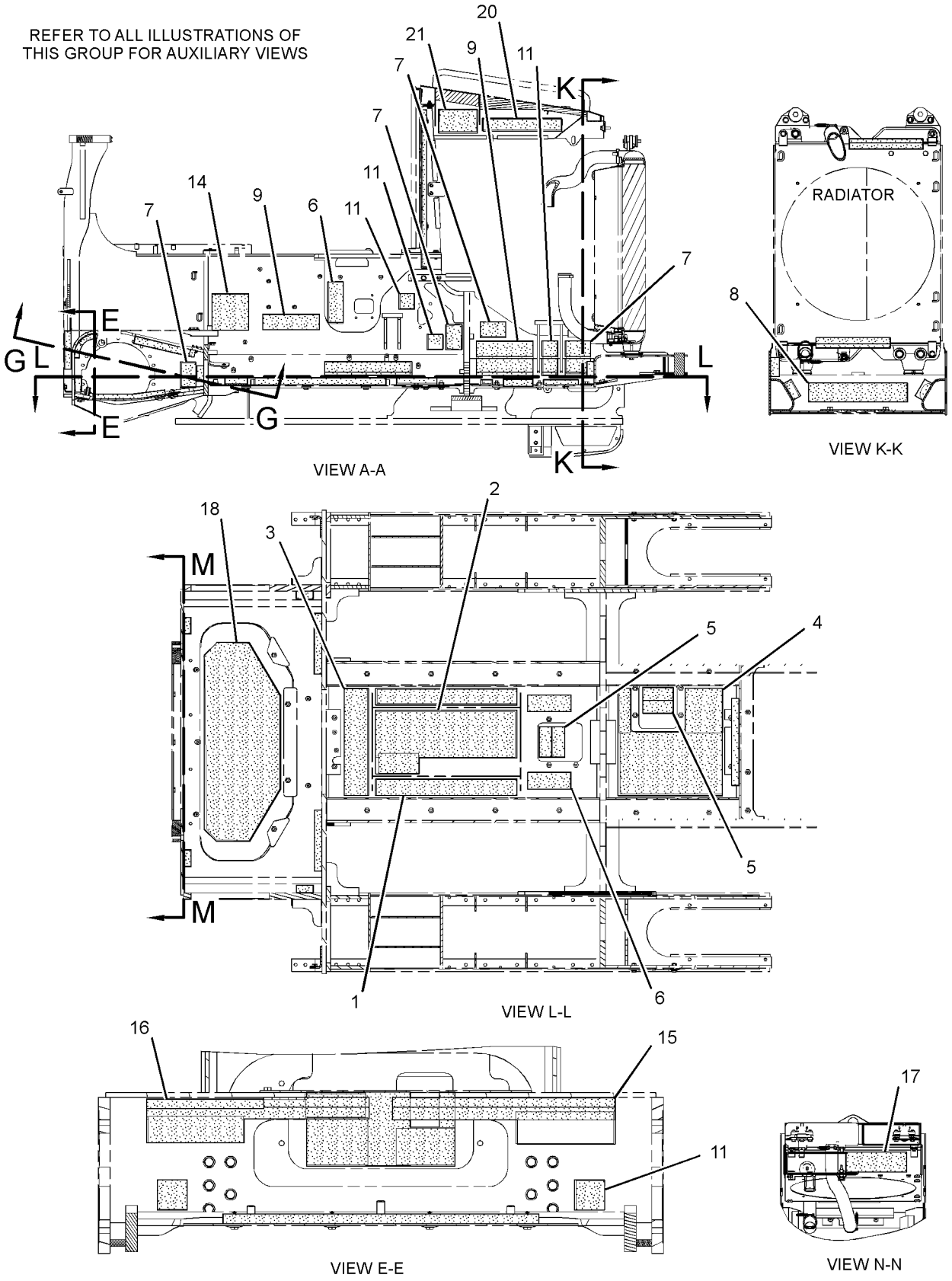

GRAPHIC #2

g01727774

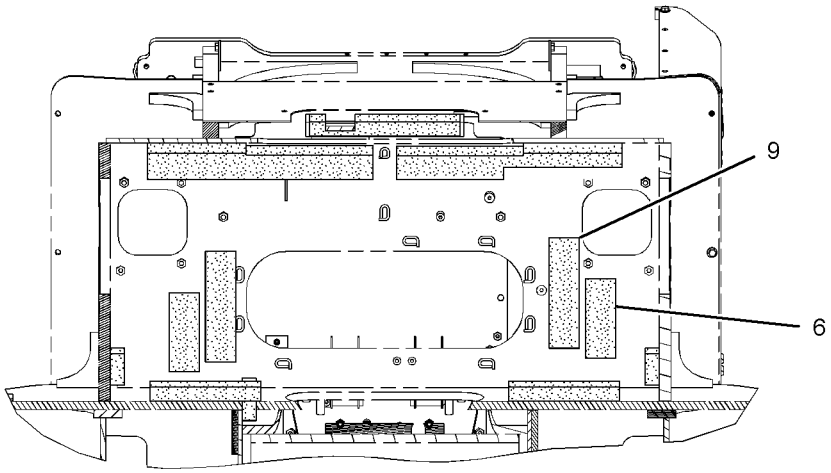

VIEW G-G

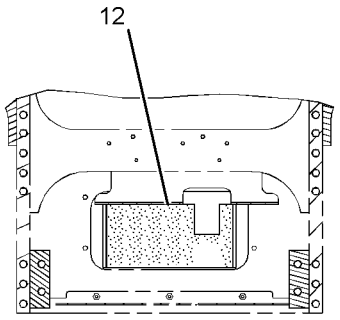

VIEW M-M

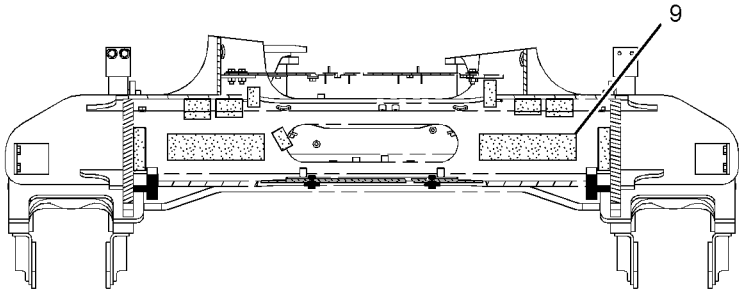

VIEW F-F

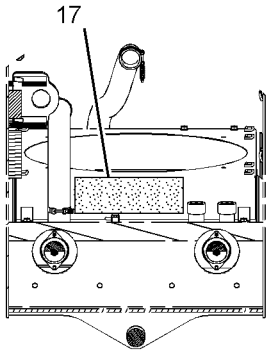

VIEW P-P

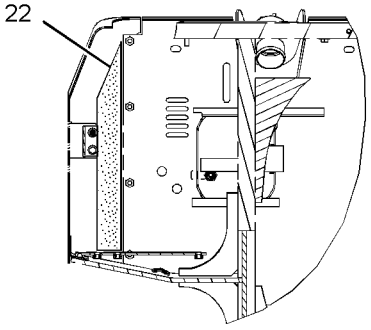

VIEW H-H

GRAPHIC #3 **<END>** g01727873

FRAME AND BODY

262-2923 SCREEN GP–FRONT

S/N: JLF1-UP; WWW1-UP; YYY1-UP
PART OF 255-4276 GUARD GP-BRUSH
AN ATTACHMENT

SMCS-7165 **i02682723**

NOTE	REF NO	GRAPHIC REF	PART NUMBER	QTY	PART NAME 1 2 3 4 5 6 (PRODUCT LEVEL)	SEE PAGE
M	1	1	**6V-7357**	8	BOLT (M6X1X25-MM)	
	2	1	**172-2384**	1	LATCH AS-ROTARY (LH)	
	3	1	**172-2385**	1	LATCH AS-ROTARY (RH)	
	4	1	**267-8655**	1	GUARD AS-FRONT	
J	5	1	**297-3275**	1	HANDLE AS (RH)	
J	6	1	**297-3274**	1	HANDLE AS (LH)	
	7	1	**297-3272**	1	ROD AS (LH)	
		1	**6V-8185**	1	NUT (1/4-20-THD)	
		1	**108-5471**	1	CLEVIS	
	8	1	**6V-7636**	4	PIN AS-SPRING	
M	9	1	**8T-4180**	8	SCREW-MACHINE (M5X0.8X20-MM)	
	10	1	**9X-8256**	8	WASHER (6.6X12X2-MM THK)	
	11	1	**297-3273**	1	ROD AS (RH)	
		1	**6V-8185**	1	NUT (1/4-20-THD)	
		1	**108-5471**	1	CLEVIS	

J-REQUIRES 5P-8500 KEY
M-METRIC PART

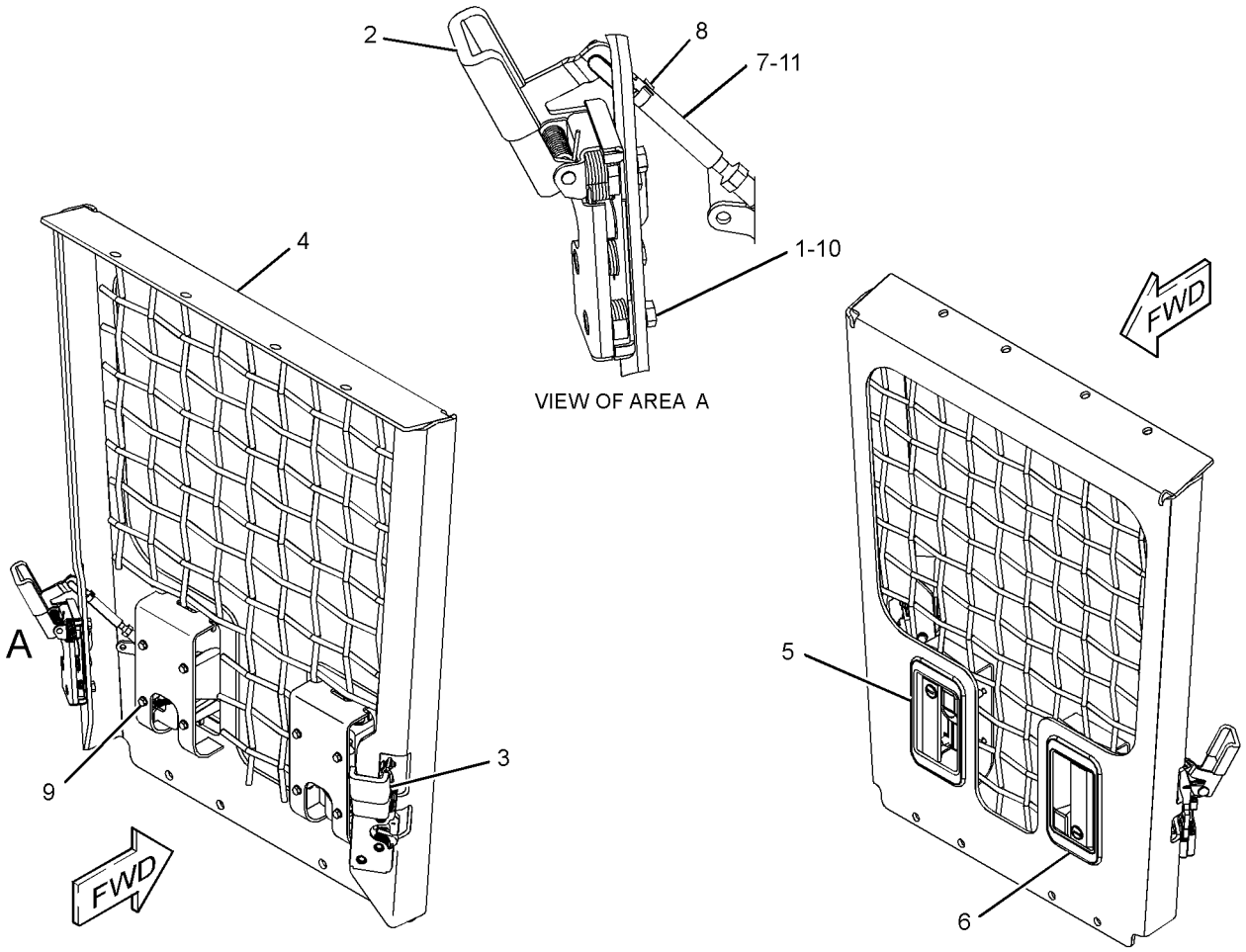

GRAPHIC #1 **<END>** g01294727

FRAME AND BODY

244-7467 SWEEP GP–FRONT

S/N: JLF1-UP; WWW1-UP; YYY1-UP

AN ATTACHMENT

SMCS-7162 **i02708948**

NOTE	REF NO	GRAPHIC REF	PART NUMBER	QTY	PART NAME 1 2 3 4 5 6 (PRODUCT LEVEL)	SEE PAGE
	1	1	**5V-0500**	16	WASHER (16.5X75X6-MM THK)	
	2	1	**217-5807**	4	MOUNT	
	4	1	**260-9289**	1	SUPPORT (RH)	
	5	1	**260-9290**	1	SUPPORT (LH)	
	6	1	**260-9291**	2	PLATE	
	7	1	**261-8095**	1	PLATE	
	8	1	**261-8096**	1	PLATE	
M	9	1	**096-4885**	14	LOCKNUT (M16X2-THD)	
	10	1	**3V-9244**	18	WASHER (16.5X50X5-MM THK)	
M	11	1	**7X-2553**	2	BOLT (M16X2X40-MM)	
M	12	1	**7X-2555**	4	BOLT (M16X2X80-MM)	
M	13	1	**8T-4174**	4	BOLT (M16X2X120-MM)	
M	14	1	**8T-4183**	6	BOLT (M12X1.75X40-MM)	
	15	1	**306-8892**	1	SWEEP AS (RH)	
	16	1	**306-5054**	1	SWEEP AS (LH)	
	17	1	**306-5053**	1	TUBE AS	
M	18	1	**8T-4175**	2	BOLT (M16X2X90-MM)	
M	19	1	**8T-4173**	6	BOLT (M16X2X110-MM)	

M-METRIC PART

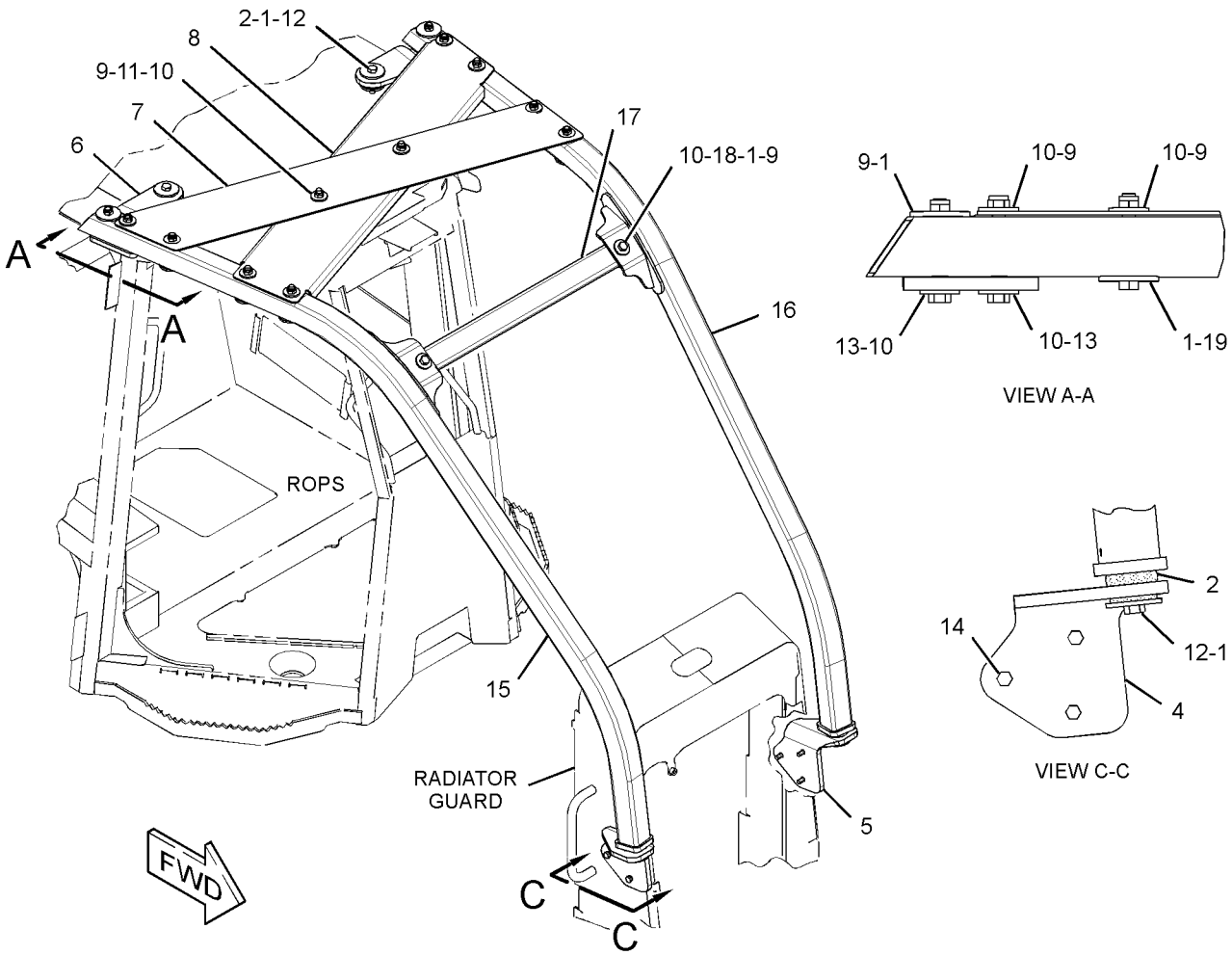

GRAPHIC #1

<END>

g01372536

244-7468 SWEEP GP–REAR

S/N: JLF1-UP; WWW1-UP; YYY1-UP
FOR USE WITH 244-7467–PAGE 351
AN ATTACHMENT

SMCS-7162 **i03408701**

NOTE	REF NO	GRAPHIC REF	PART NUMBER	QTY	PART NAME 1 2 3 4 5 6 (PRODUCT LEVEL)	SEE PAGE
	1	1	**301-7305**	4	SPACER (16.5X75X13.5-MM THK)	
	2	1	**260-9293**	1	SWEEP AS	
	3	1	**3V-9244**	4	WASHER (16.5X50X5-MM THK)	
M	4	1	**8T-4140**	4	BOLT (M16X2X60-MM)	

M-METRIC PART

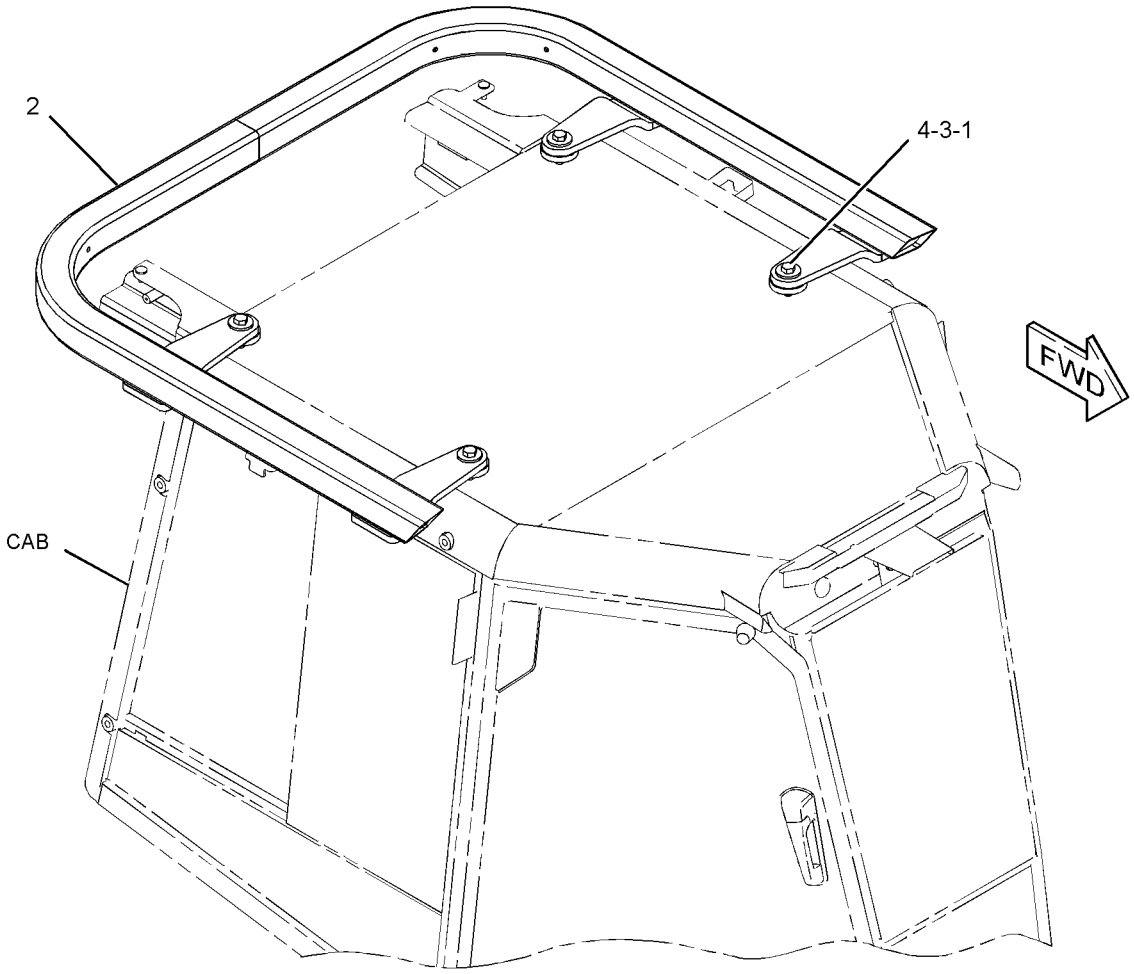

GRAPHIC #1 **<END>** g01329111

254-0665 ADJUSTMENT GP-HYDRAULIC TRACK

S/N: JLF1-181; WWW1-411; YYY1-421
PART OF 254-0595, 285-3475 IDLER GP-FRONT
AN ATTACHMENT

SMCS-4157 **i03601830**

NOTE	REF NO	GRAPHIC REF	PART NUMBER	QTY	PART NAME 1 2 3 4 5 6 (PRODUCT LEVEL)	SEE PAGE
	1	1	**2S-5926**	1	VALVE-RELIEF (RECOIL SPRING OIL)	
	2	1	**3G-3259**	1	SEAL AS	
	3	1	**4T-5613**	1	RING-WEAR	
	4	1	**190-8609**	1	VALVE-FILL (RECOIL SPRING OIL)	
	5	1	**229-9382**	1	SEAL-WIPER	
	6	1	**231-0070**	2	WASHER-SPECIAL	
	7	1	**254-0602**	1	YOKE	
	8	1	**254-0649**	1	PLUNGER	
	9	1	**293-9150**	1	GUARD	
	10	1	**2S-4078**	1	SEAL-O-RING	
M	11	1	**5C-9553**	2	BOLT (M6X1X16-MM)	
	12	1	**9S-8010**	1	PLUG	
	13	1	**9X-8256**	2	WASHER (6.6X12X2-MM THK)	

M-METRIC PART

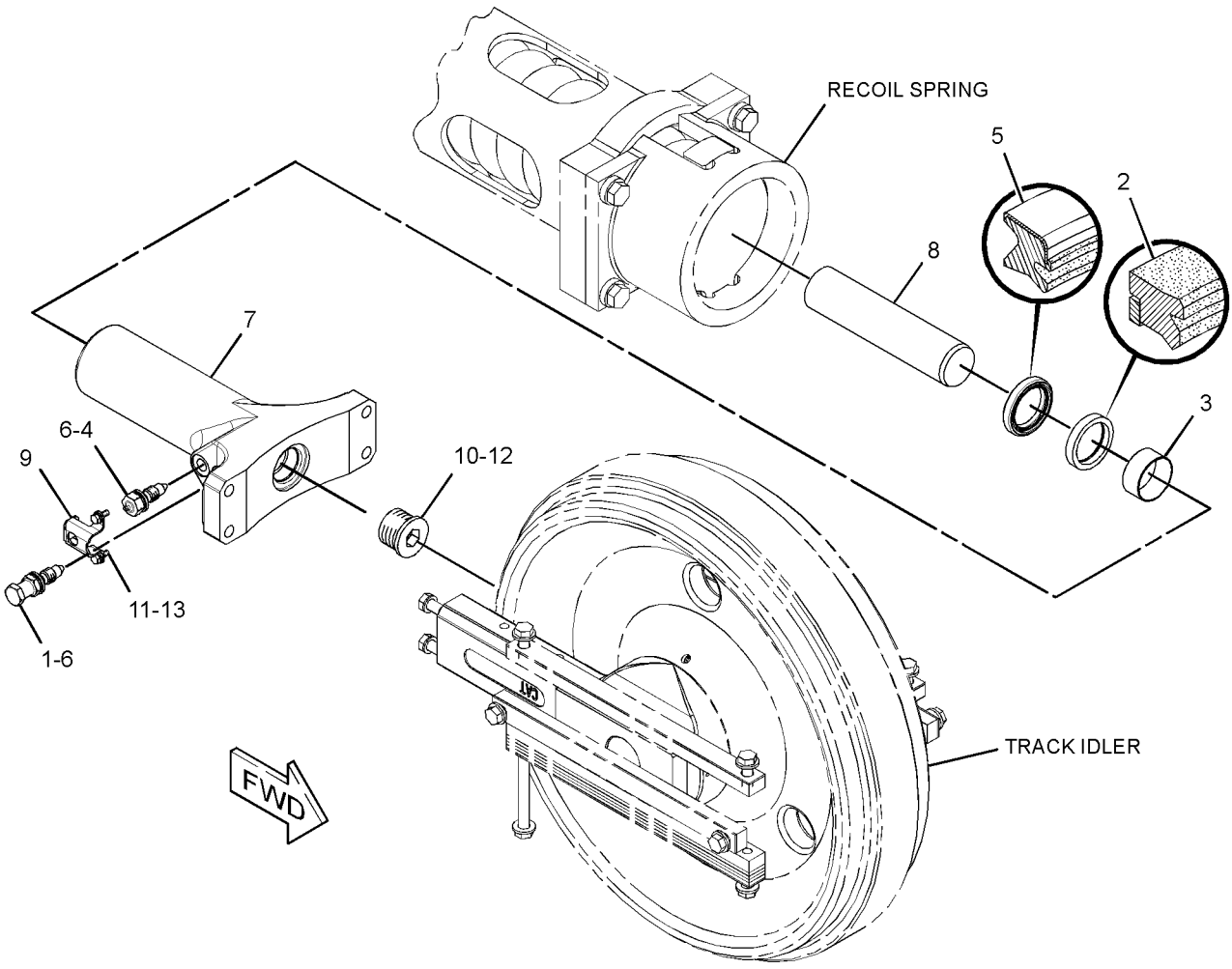

GRAPHIC #1 **<END>** g01614094

254-0665 ADJUSTMENT GP-HYDRAULIC TRACK

S/N: JLF182-UP; WWW412-UP; YYY422-UP
PART OF 254-0595, 285-3475 IDLER GP-FRONT
AN ATTACHMENT

SMCS-4157 **i03601832**

NOTE	REF NO	GRAPHIC REF	PART NUMBER	QTY	PART NAME 1 2 3 4 5 6 (PRODUCT LEVEL)	SEE PAGE
	1	1	**2S-5926**	1	VALVE-RELIEF (RECOIL SPRING OIL)	
	2	1	**3G-3259**	1	SEAL AS	
	3	1	**4T-5613**	1	RING-WEAR	
	4	1	**190-8609**	1	VALVE-FILL (RECOIL SPRING OIL)	
	5	1	**229-9382**	1	SEAL-WIPER	
	6	1	**231-0070**	2	WASHER-SPECIAL	
	7	1	**254-0602**	1	YOKE	
	8	1	**254-0649**	1	PLUNGER	
	9	1	**293-9150**	1	GUARD	
C	10	1	*148-8406*	1	PLUG AS	
		1	**7M-8485**	1	SEAL-O-RING	
		1	**9S-9334**	1	PLUG-O-RING	
M	11	1	**5C-9553**	2	BOLT (M6X1X16-MM)	
	12	1	**9X-8256**	2	WASHER (6.6X12X2-MM THK)	

C-CHANGE FROM PREVIOUS TYPE
M-METRIC PART

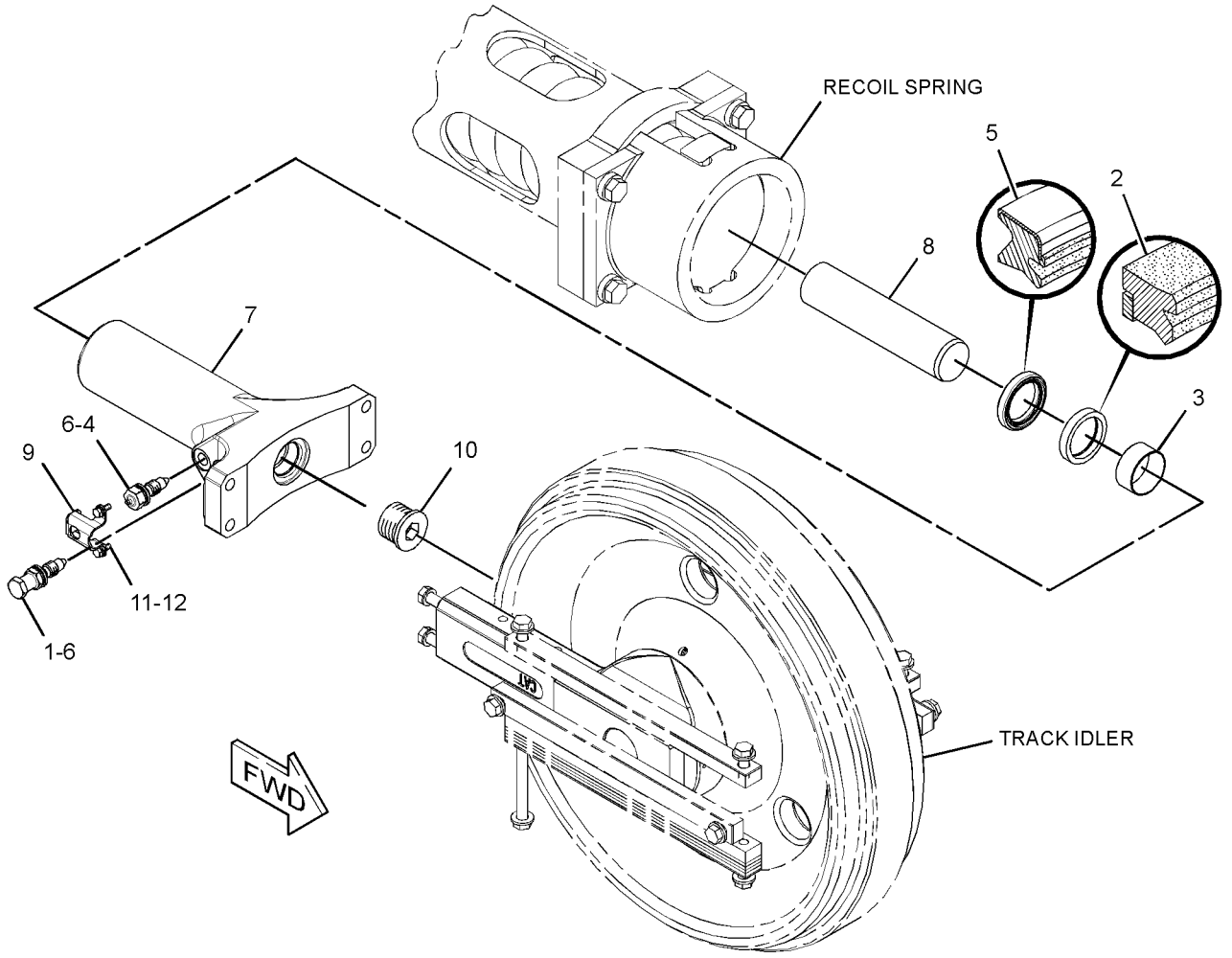

GRAPHIC #1 **<END>** g01406735

244-7420 GUARD GP-IDLER

S/N: JLF1-UP; WWW1-UP; YYY1-UP
PART OF 244-7395 UNDERCARRIAGE AR
AN ATTACHMENT

SMCS-7169 **i02819892**

NOTE	REF NO	GRAPHIC REF	PART NUMBER	QTY	PART NAME 1 2 3 4 5 6 (PRODUCT LEVEL)	SEE PAGE
	1	1	**290-2700**	2	PLATE AS	
					(EACH INCLUDES)	
M		1	**8T-5413**	2	STUD-WELD (M10X1.5X25-MM OAL)	
	2	1	**305-1466**	2	BRACKET AS	
					(EACH INCLUDES)	
M		1	**8T-3597**	3	NUT-WELD (M12X1.75-THD)	
	3	1	**305-1469**	2	BRACKET AS	
					(EACH INCLUDES)	
M		1	**8T-3597**	3	NUT-WELD (M12X1.75-THD)	
	4	1	**305-1471**	2	BRACKET AS	
	5	1	**305-1473**	2	BRACKET AS	
	6	1	**305-1474**	2	GUARD	
	7	1	**305-1475**	4	PLATE	
	8	1	**7X-0584**	8	WASHER-HARD (13.5X20.5X2-MM THK)	
	9	1	**7X-7729**	8	WASHER (11X25X3-MM THK)	
M	10	1	**8T-4133**	4	NUT (M10X1.5-THD)	
M	11	1	**8T-4139**	4	BOLT (M12X1.75X30-MM)	
M	12	1	**8T-4184**	8	BOLT (M12X1.75X45-MM)	
M	13	1	**8T-4192**	8	BOLT (M12X1.75X25-MM)	
M	14	1	**8T-4195**	4	BOLT (M10X1.5X30-MM)	
	15	1	**8T-4223**	20	WASHER-HARD (13.5X25.5X3-MM THK)	
M	16	1	**8T-4956**	8	BOLT (M12X1.75X35-MM)	

M-METRIC PART

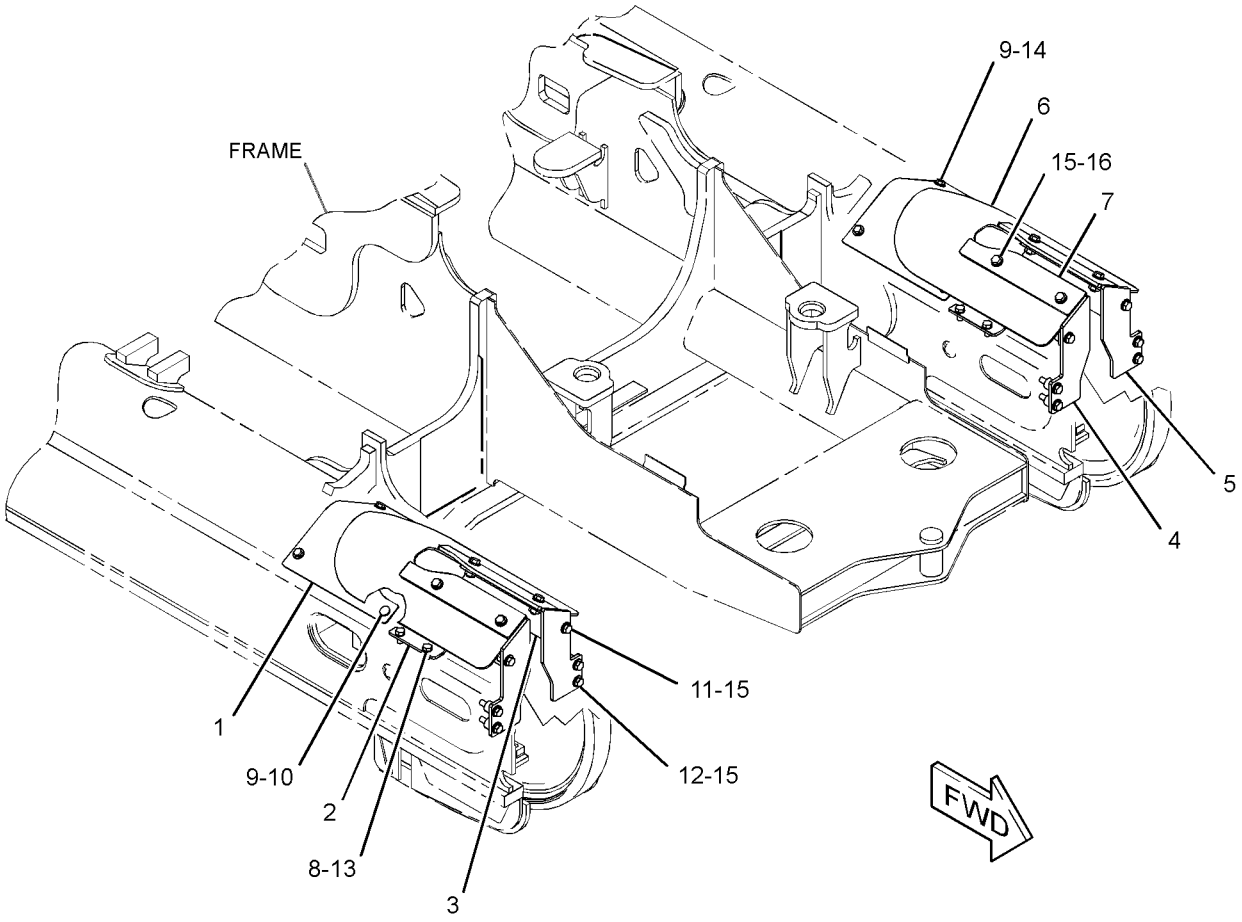

GRAPHIC #1 **<END>** g01407264

262-5875 GUARD GP-IDLER

S/N: JLF1-UP; WWW1-UP; YYY1-UP
PART OF 283-1534 UNDERCARRIAGE AR
AN ATTACHMENT

SMCS-7169 **i02819888**

NOTE	REF NO	GRAPHIC REF	PART NUMBER	QTY	PART NAME 1 2 3 4 5 6 (PRODUCT LEVEL)	SEE PAGE
	1	1	**290-2700**	2	PLATE AS	
					(EACH INCLUDES)	
M		1	**8T-5413**	2	STUD-WELD (M10X1.5X25-MM OAL)	
	2	1	**305-1456**	2	BRACKET AS	
					(EACH INCLUDES)	
M		1	**8T-3597**	3	NUT-WELD (M12X1.75-THD)	
	3	1	**305-1458**	2	BRACKET AS	
					(EACH INCLUDES)	
M		1	**8T-3597**	3	NUT-WELD (M12X1.75-THD)	
	4	1	**305-1460**	2	BRACKET AS	
	5	1	**305-1462**	2	BRACKET AS	
	6	1	**305-1463**	2	GUARD	
	7	1	**305-1464**	2	PLATE	
	8	1	**305-1465**	2	PLATE	
	9	1	**7X-0584**	8	WASHER-HARD (13.5X20.5X2-MM THK)	
	10	1	**7X-7729**	8	WASHER (11X25X3-MM THK)	
M	11	1	**8T-4133**	4	NUT (M10X1.5-THD)	
M	12	1	**8T-4139**	4	BOLT (M12X1.75X30-MM)	
M	13	1	**8T-4184**	8	BOLT (M12X1.75X45-MM)	
M	14	1	**8T-4192**	8	BOLT (M12X1.75X25-MM)	
M	15	1	**8T-4195**	4	BOLT (M10X1.5X30-MM)	
	16	1	**8T-4223**	20	WASHER-HARD (13.5X25.5X3-MM THK)	
M	17	1	**8T-4956**	8	BOLT (M12X1.75X35-MM)	

M-METRIC PART

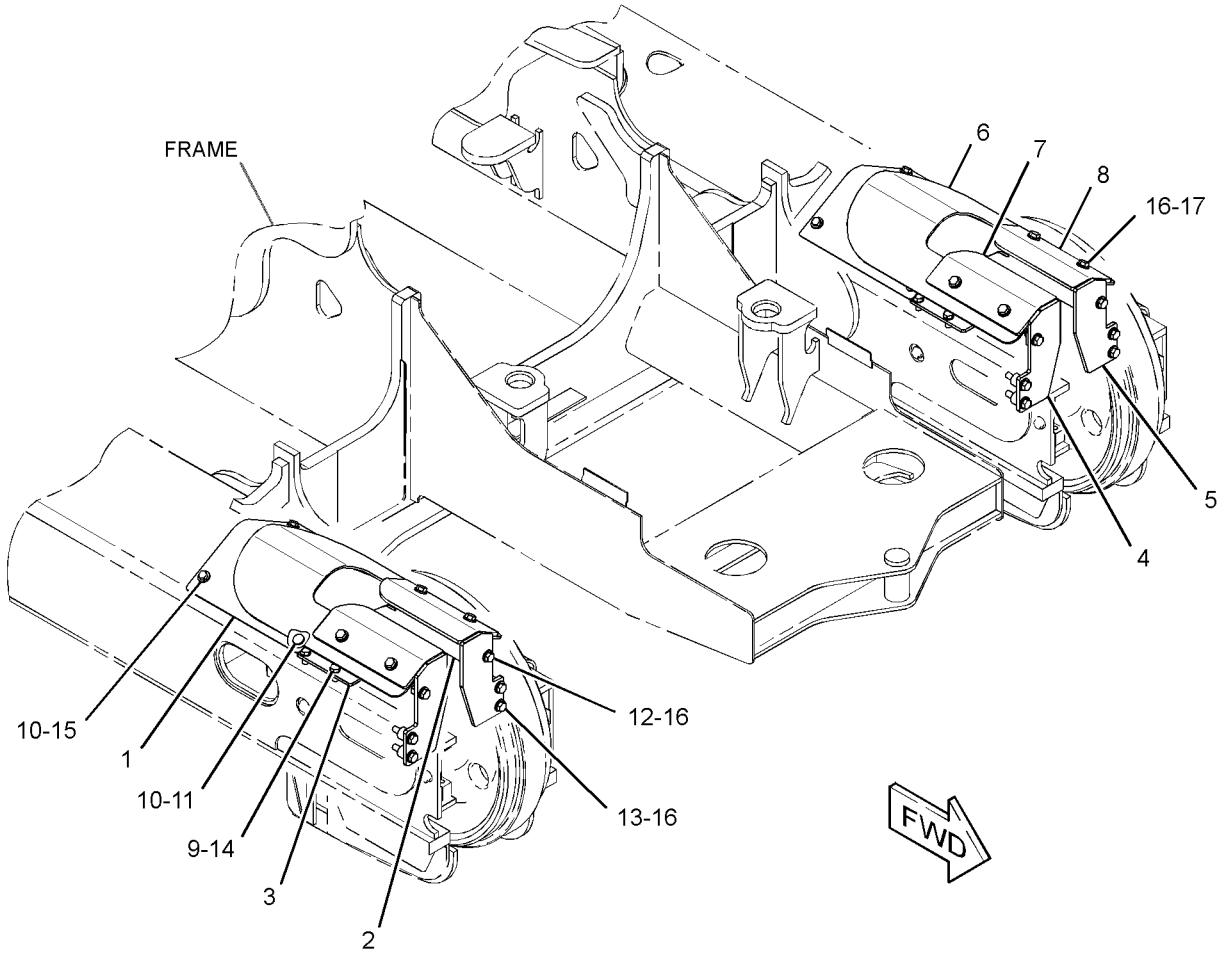

GRAPHIC #1 **<END>** g01407251

244-7425 GUARD GP-TRACK GUIDE–REAR

S/N: JLF1-UP; WWW1-UP; YYY1-UP
SALT
PART OF 283-1534 UNDERCARRIAGE AR
AN ATTACHMENT

SMCS-4177 **i02680384**

NOTE	REF NO	GRAPHIC REF	PART NUMBER	QTY	PART NAME 1 2 3 4 5 6 (PRODUCT LEVEL)	SEE PAGE
	1	1	**254-0669**	1	GUARD AS	
M		1	**8T-3597**	2	NUT-WELD (M12X1.75-THD)	
	2	1	**254-0681**	1	GUARD AS	
M		1	**8T-3597**	1	NUT-WELD (M12X1.75-THD)	
	3	1	**262-5877**	1	GUARD AS	
M		1	**8T-3597**	1	NUT-WELD (M12X1.75-THD)	
	4	1	**262-5878**	1	GUARD AS	
M		1	**8T-3597**	2	NUT-WELD (M12X1.75-THD)	
	5	1	**263-8365**	1	GUARD AS	
	6	1	**263-8366**	1	GUARD AS	
	7	1	**286-7211**	1	GUARD AS	
M		1	**8T-3597**	1	NUT-WELD (M12X1.75-THD)	
	8	1	**286-7212**	1	GUARD AS	
M		1	**8T-3597**	1	NUT-WELD (M12X1.75-THD)	
	9	1	**5P-1076**	12	WASHER-HARD (13.5X30X4-MM THK)	
	10	1	**8T-4122**	12	WASHER-HARD (17X32X3.5-MM THK)	
M	11	1	**8T-4139**	8	BOLT (M12X1.75X30-MM)	
M	12	1	**8T-4173**	12	BOLT (M16X2X110-MM)	
M	13	1	**8T-4183**	4	BOLT (M12X1.75X40-MM)	

M-METRIC PART

244-7425 **GUARD GP-TRACK GUIDE** *(contd.)* **i02680384**

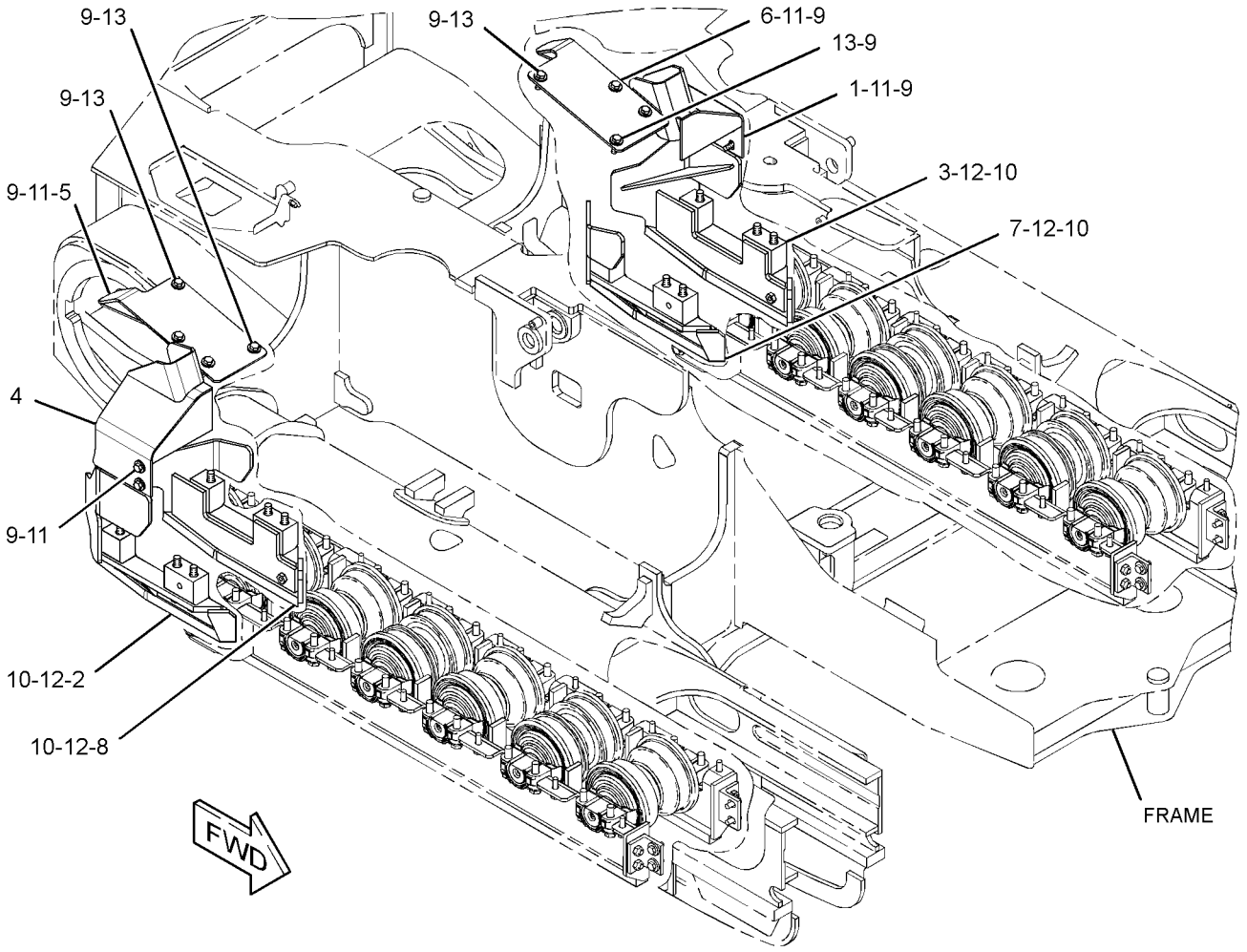

GRAPHIC #1 **<END>** g01346807

282-3665 GUARD GP-TRACK GUIDE–CENTER

S/N: JLF1-UP; WWW1-UP; YYY1-UP

FOR USE WITH SYSTEMONE UNDERCARRIAGE. CANNOT BE USED WITH GUARD GP - TRACK ROLLER (FULL LENGTH) AN ATTACHMENT

SMCS-4177 **i02819889**

NOTE	REF NO	GRAPHIC REF	PART NUMBER	QTY	PART NAME 1 2 3 4 5 6 (PRODUCT LEVEL)	SEE PAGE
	1	1	**276-1755**	2	GUARD AS	
	2	1	**198-4778**	8	WASHER-HARD (13.5X30X12-MM THK)	
M	3	1	**8T-4194**	8	BOLT (M12X1.75X50-MM)	

M-METRIC PART

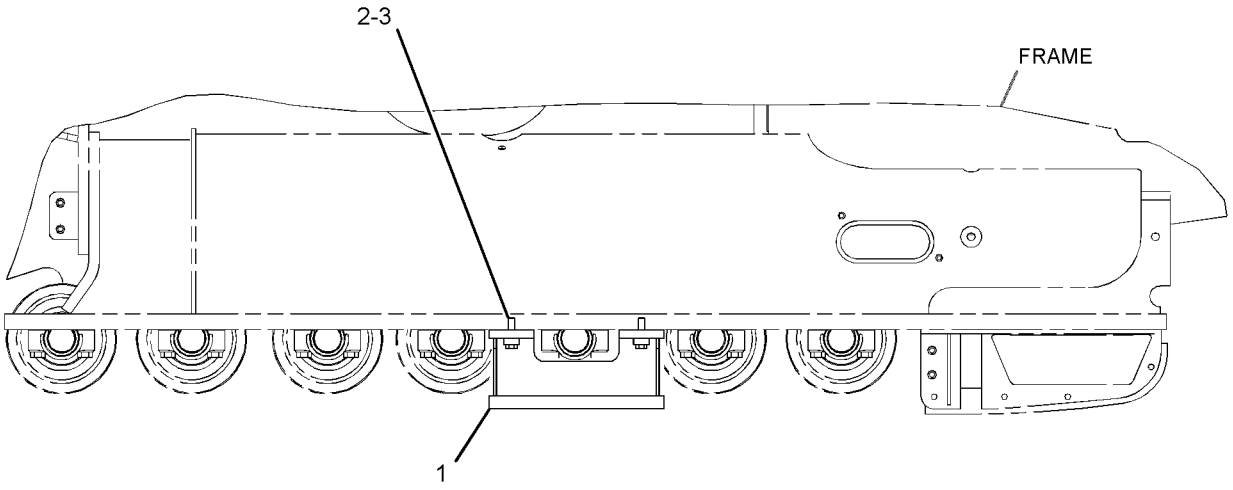

RIGHT SIDE VIEW

GRAPHIC #1 **<END>** g01407238

282-3675 GUARD GP-TRACK GUIDE–CENTER

S/N: JLF1-UP; WWW1-UP; YYY1-UP
SEALED, LUBRICATED
FOR USE WITH SEALED, LUBRICATED UNDERCARRIAGE. CANNOT BE USED WITH GUARD GP-TRACK ROLLER (FULL LENGTH)
AN ATTACHMENT

SMCS-4177 **i02665807**

NOTE	REF NO	GRAPHIC REF	PART NUMBER	QTY	PART NAME 1 2 3 4 5 6 (PRODUCT LEVEL)	SEE PAGE
	1	1	**282-3679**	2	GUARD AS	
	2	1	**198-4778**	8	WASHER-HARD (13.5X30X12-MM THK)	
M	3	1	**8T-4194**	8	BOLT (M12X1.75X50-MM)	

M-METRIC PART

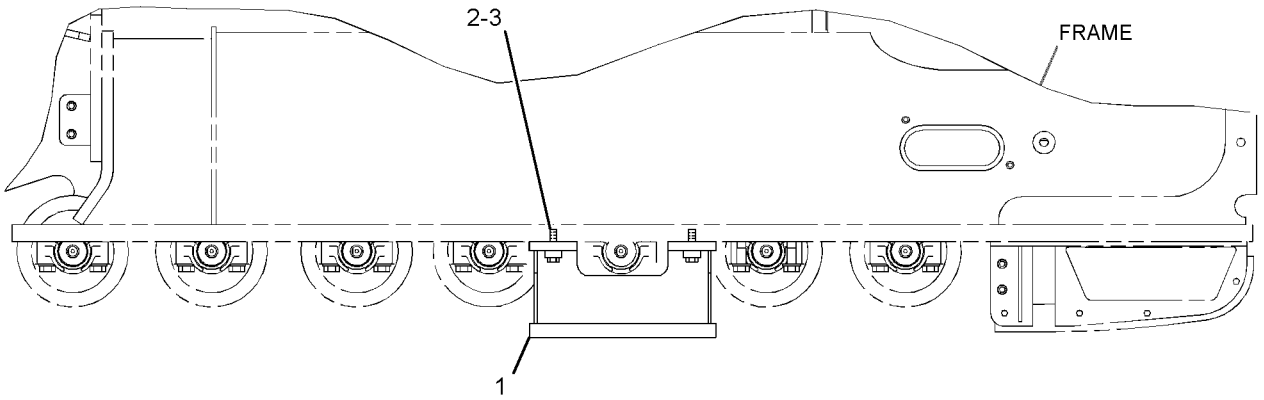

RIGHT SIDE VIEW

GRAPHIC #1 **<END>** g01340733

282-3705 GUARD GP-TRACK GUIDE—SYSTEMONE, FRONT

S/N: JLF1-UP; WWW1-UP; YYY1-UP
PART OF 244-7395 UNDERCARRIAGE AR
AN ATTACHMENT

SMCS-4177 **i02819991**

NOTE	REF NO	GRAPHIC REF	PART NUMBER	QTY	PART NAME 1 2 3 4 5 6 (PRODUCT LEVEL)	SEE PAGE
	1	1	**310-7375**	2	PLATE	
	2	1	**310-7376**	2	PLATE	
M	3	1	**8T-0722**	16	BOLT-LOCKING (M10X1.5X30-MM)	
	4	1	**8T-4121**	16	WASHER-HARD (11X21X2.5-MM THK)	

M-METRIC PART

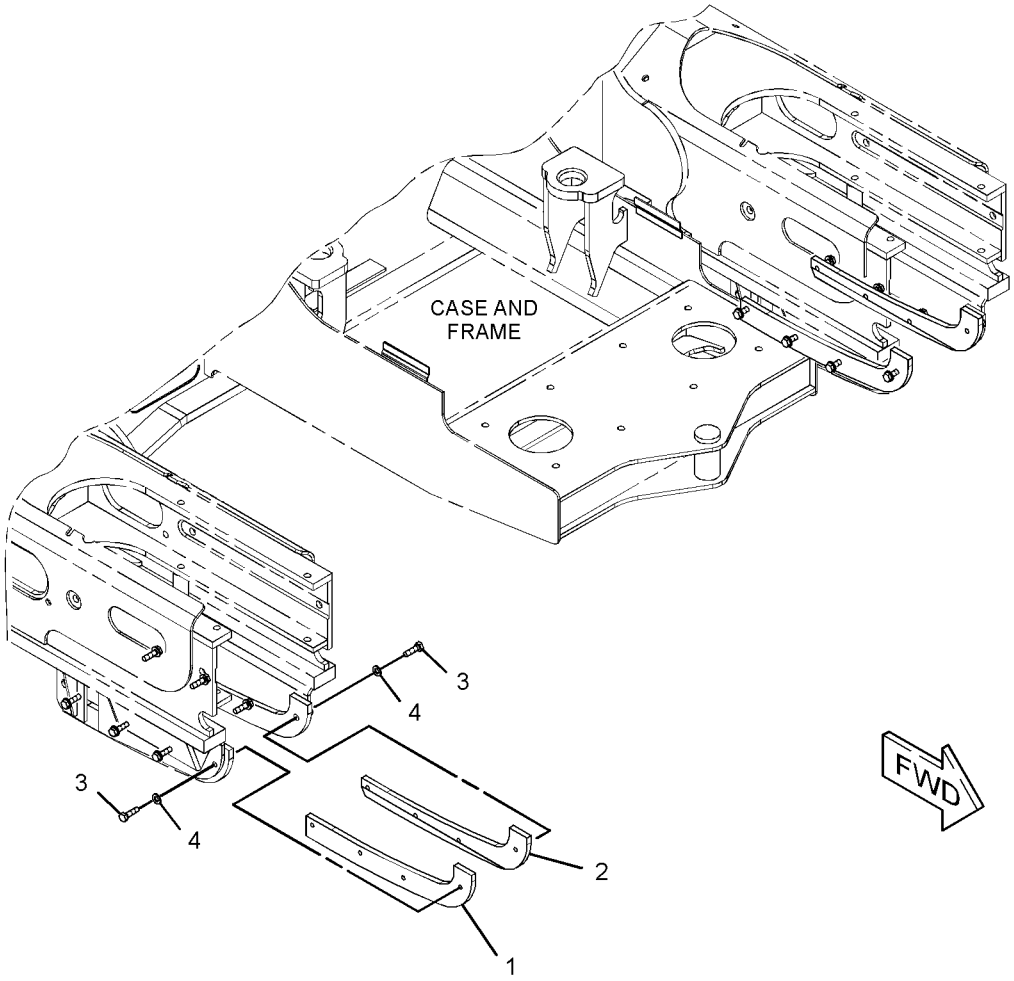

GRAPHIC #1 **<END>** g01372646

282-3715 GUARD GP-TRACK GUIDE—SYSTEMONE

S/N: JLF1-UP; WWW1-UP; YYY1-UP
FULL LENGTH
PART OF 244-7395 UNDERCARRIAGE AR
AN ATTACHMENT

SMCS-4177 **i02819946**

NOTE	REF NO	GRAPHIC REF	PART NUMBER	QTY	PART NAME 1 2 3 4 5 6 (PRODUCT LEVEL)	SEE PAGE
	1	1	**254-0669**	1	GUARD AS	
M		1	**8T-3597**	2	NUT-WELD (M12X1.75-THD)	
	2	1	**262-5878**	1	GUARD AS	
M		1	**8T-3597**	2	NUT-WELD (M12X1.75-THD)	
	3	1	**263-8365**	1	GUARD AS	
	4	1	**263-8366**	1	GUARD AS	
	5	1	**285-7499**	1	GUARD AS	
M		1	**8T-3597**	1	NUT-WELD (M12X1.75-THD)	
	6	1	**285-7502**	1	GUARD AS	
M		1	**8T-3597**	1	NUT-WELD (M12X1.75-THD)	
	7	1	**285-7505**	1	GUARD AS	
M		1	**8T-3597**	1	NUT-WELD (M12X1.75-THD)	
	8	1	**285-7511**	1	GUARD AS	
M		1	**8T-3597**	1	NUT-WELD (M12X1.75-THD)	
	9	1	**5P-1076**	12	WASHER-HARD (13.5X30X4-MM THK)	
	10	1	**8T-4122**	12	WASHER-HARD (17X32X3.5-MM THK)	
M	11	1	**8T-4139**	8	BOLT (M12X1.75X30-MM)	
M	12	1	**8T-4173**	12	BOLT (M16X2X110-MM)	
M	13	1	**8T-4183**	4	BOLT (M12X1.75X40-MM)	

M-METRIC PART

282-3715 **GUARD GP-TRACK GUIDE** *(contd.)* **i02819946**

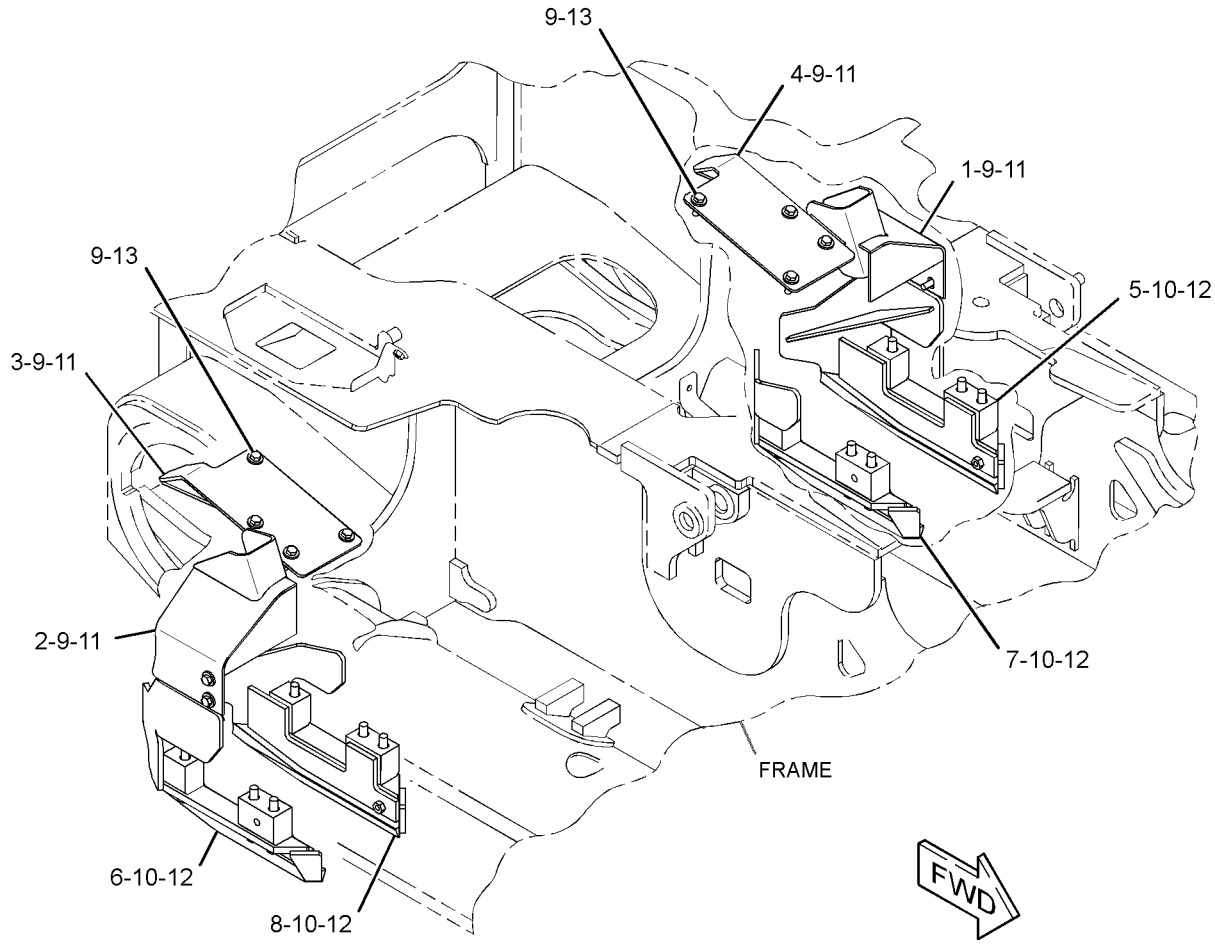

GRAPHIC #1 **<END>** g01407178

244-7525 GUARD GP-TRACK ROLLER–SEALED, LUBRICATED

S/N: JLF1-UP; WWW1-UP; YYY1-UP
FULL LENGTH
FOR USE WITH SEALED, LUBRICATED UNDERCARRIAGE. CANNOT BE USED WITH GUARD GP-TRACK GUIDE (CENTER)
AN ATTACHMENT

SMCS-7152 **i02816022**

NOTE	REF NO	GRAPHIC REF	PART NUMBER	QTY	PART NAME 1 2 3 4 5 6 (PRODUCT LEVEL)	SEE PAGE
	1	1	**263-2009**	2	GUARD AS	
	2	1	**263-2010**	2	GUARD AS	
	3	1	**145-5181**	24	SPACER (13.5X25X12-MM THK)	
	4	1	**5P-1076**	8	WASHER-HARD (13.5X30X4-MM THK)	
	5	1	**7X-0550**	4	WASHER-HARD (13.5X32X5-MM THK)	
M	6	1	**7X-2553**	4	BOLT (M16X2X40-MM)	
	7	1	**8T-4122**	4	WASHER-HARD (17X32X3.5-MM THK)	
M	8	1	**8T-4139**	8	BOLT (M12X1.75X30-MM)	
M	9	1	**8T-4176**	4	BOLT (M12X1.75X90-MM)	
M	10	1	**8T-4184**	24	BOLT (M12X1.75X45-MM)	

M-METRIC PART

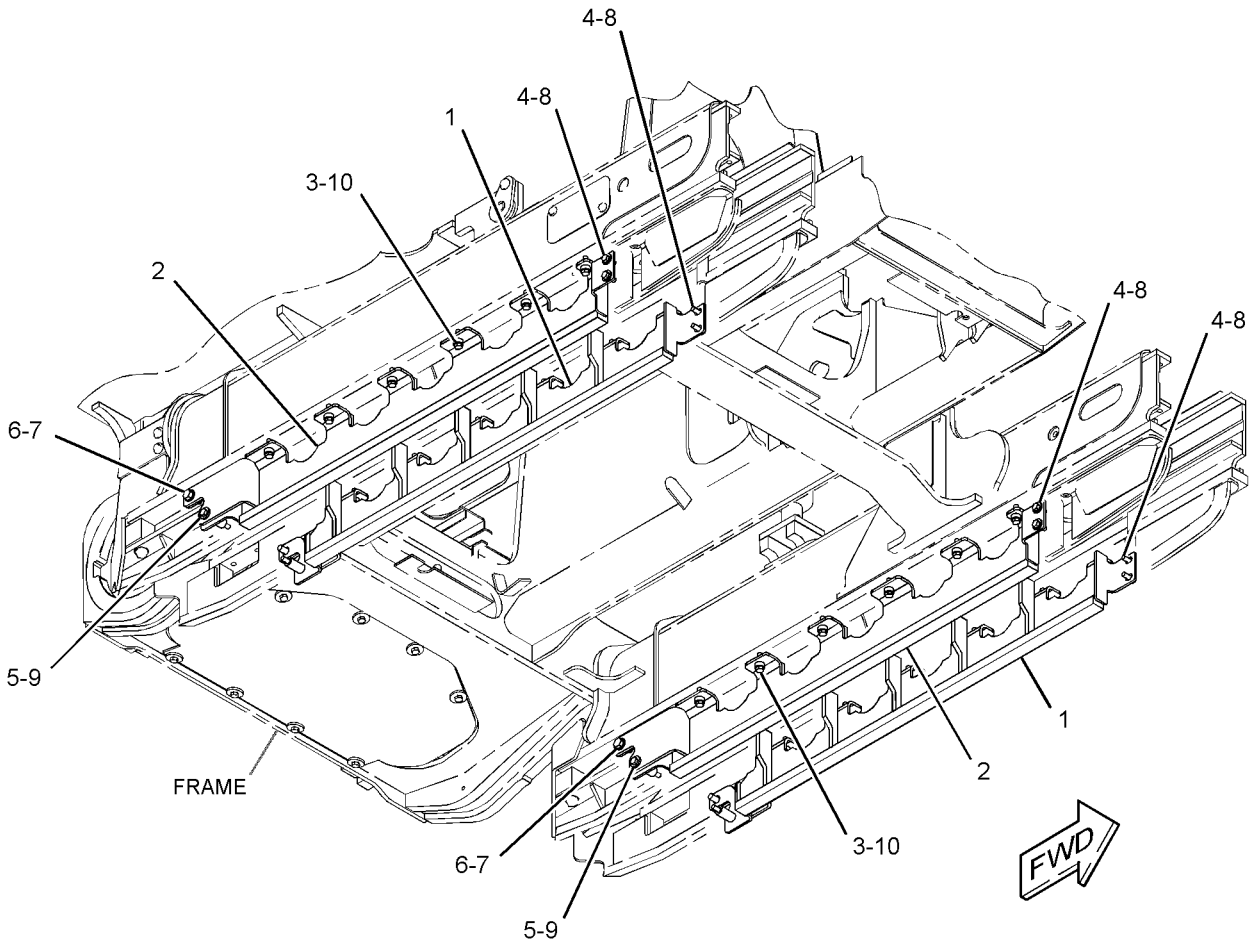

GRAPHIC #1 **<END>** g01407077

282-3685 GUARD GP-TRACK ROLLER–SYSTEMONE

S/N: JLF1-UP; WWW1-UP; YYY1-UP
FULL LENGTH
FOR USE WITH SYSTEMONE UNDERCARRIAGE. CANNOT BE USED WITH GUARD GP-TRACK GUIDE (CENTER)
AN ATTACHMENT

SMCS-7152 **i02816021**

NOTE	REF NO	GRAPHIC REF	PART NUMBER	QTY	PART NAME 1 2 3 4 5 6 (PRODUCT LEVEL)	SEE PAGE
	1	1	**286-1858**	2	GUARD AS	
	2	1	**286-1859**	2	GUARD AS	
	3	1	**145-5181**	24	SPACER (13.5X25X12-MM THK)	
	4	1	**5P-1076**	8	WASHER-HARD (13.5X30X4-MM THK)	
	5	1	**7X-0550**	4	WASHER-HARD (13.5X32X5-MM THK)	
M	6	1	**7X-2553**	4	BOLT (M16X2X40-MM)	
	7	1	**8T-4122**	4	WASHER-HARD (17X32X3.5-MM THK)	
M	8	1	**8T-4139**	8	BOLT (M12X1.75X30-MM)	
M	9	1	**8T-4176**	4	BOLT (M12X1.75X90-MM)	
M	10	1	**8T-4184**	24	BOLT (M12X1.75X45-MM)	

M-METRIC PART

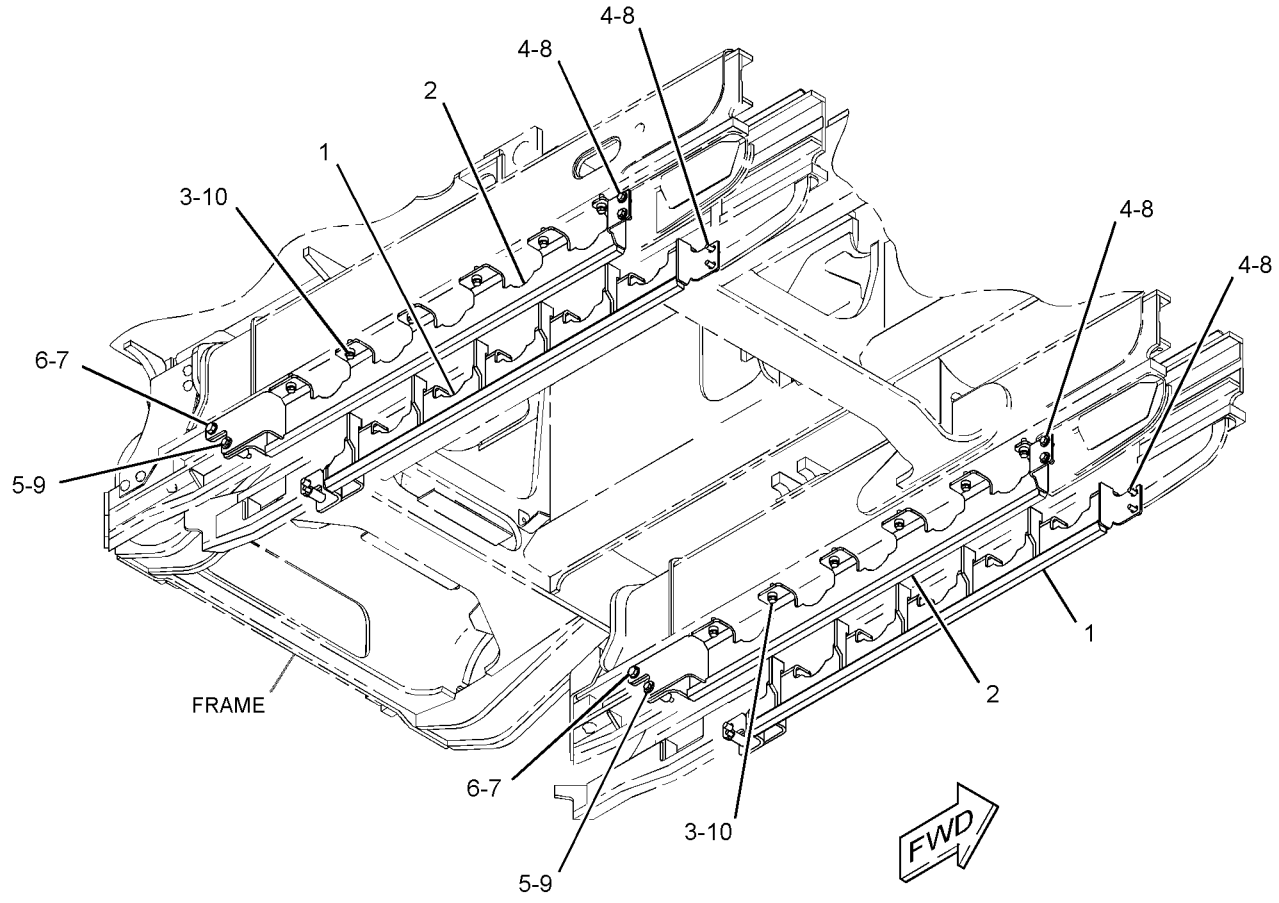

GRAPHIC #1 **<END>** g01406887

UNDERCARRIAGE

254-0595 IDLER GP-FRONT

S/N: JLF1-UP; WWW1-UP; YYY1-UP
PART OF 244-7395 UNDERCARRIAGE AR
AN ATTACHMENT

SMCS-4159 **i02675695**

NOTE	REF NO	GRAPHIC REF	PART NUMBER	QTY	PART NAME 1 2 3 4 5 6 (PRODUCT LEVEL)	SEE PAGE
Y	1	1	*254-0605*	2	SPRING GP-RECOIL	385
Y	2	1	*254-0615*	2	IDLER GP-TRACK	371
Y	3	1	*254-0665*	2	ADJUSTMENT GP-HYDRAULIC TRACK	353
	4	1	**285-3471**	12	STRIP-WEAR	
	5	1	**285-3472**	16	STRIP-WEAR	
	6	1	**285-3473**	12	STRIP-WEAR	
	7	1	**198-4780**	8	WASHER-HARD (17.5X32X8-MM THK)	
	8	1	**7X-0584**	8	WASHER-HARD (13.5X20.5X2-MM THK)	
M	9	1	**8T-4184**	8	BOLT (M12X1.75X45-MM)	
M	10	1	**8T-4192**	8	BOLT (M12X1.75X25-MM)	
M	11	1	**8T-4193**	8	BOLT (M16X2X50-MM)	
M	12	1	**8T-4194**	8	BOLT (M12X1.75X50-MM)	
	13	1	**8T-4223**	24	WASHER-HARD (13.5X25.5X3-MM THK)	
M	14	1	**8T-4956**	4	BOLT (M12X1.75X35-MM)	
M	15	1	**8T-5001**	4	BOLT (M12X1.75X130-MM)	

M-METRIC PART
Y-SEPARATE ILLUSTRATION

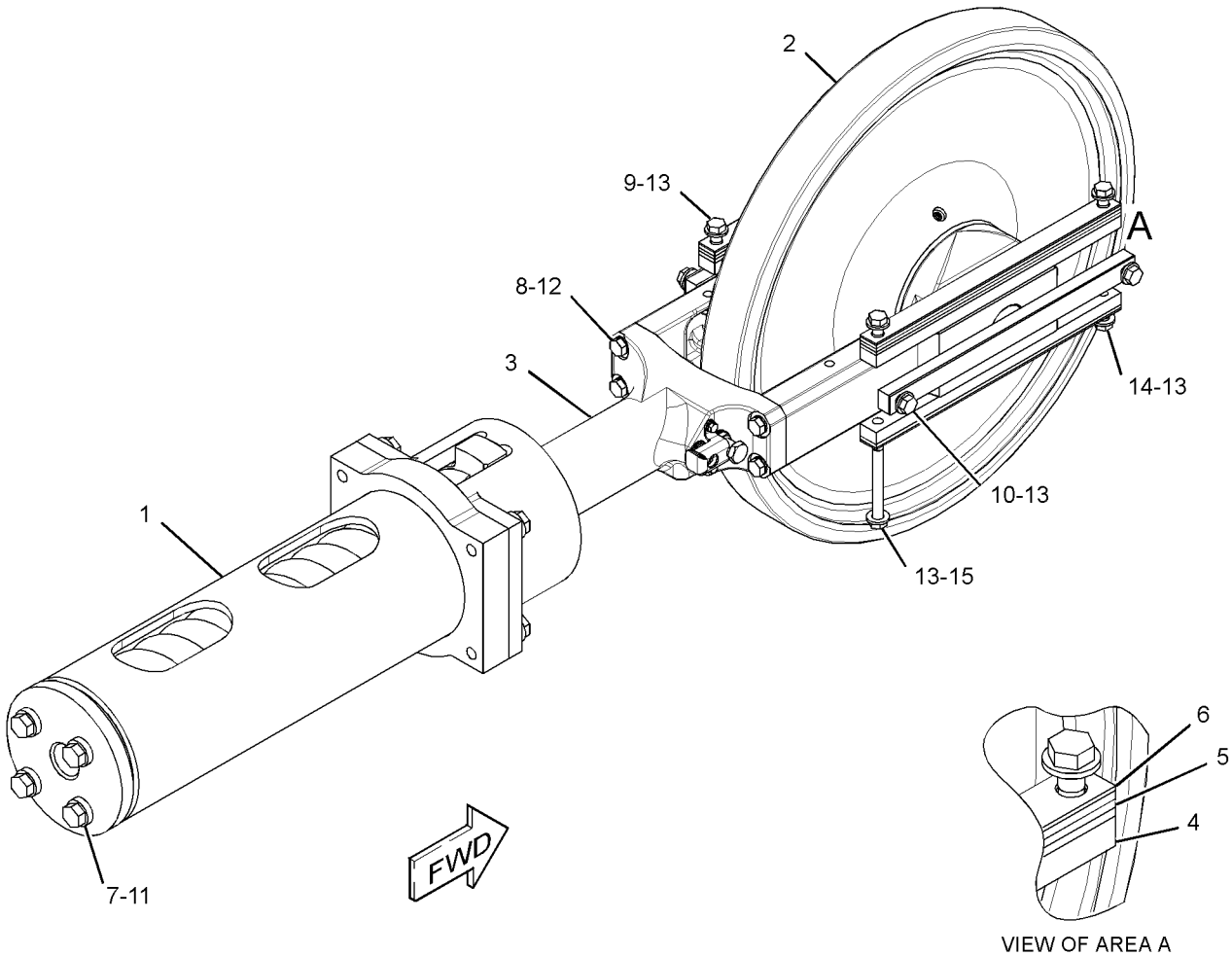

GRAPHIC #1 **<END>** g01354350

285-3475 IDLER GP-FRONT

S/N: JLF1-UP; WWW1-UP; YYY1-UP
PART OF 283-1534 UNDERCARRIAGE AR
AN ATTACHMENT

SMCS-4159 **i02921245**

NOTE	REF NO	GRAPHIC REF	PART NUMBER	QTY	PART NAME 1 2 3 4 5 6 (PRODUCT LEVEL)	SEE PAGE
Y	1	1	*254-0605*	2	SPRING GP-RECOIL	385
Y	2	1	*254-0665*	2	ADJUSTMENT GP-HYDRAULIC TRACK	353
	3	1	**285-3471**	12	STRIP-WEAR	
	4	1	**285-3472**	16	STRIP-WEAR	
	5	1	**285-3473**	12	STRIP-WEAR	
Y	6	1	*285-3476*	2	IDLER GP-TRACK	372
	7	1	**198-4780**	8	WASHER-HARD (17.5X32X8-MM THK)	
	8	1	**7X-0584**	8	WASHER-HARD (13.5X20.5X2-MM THK)	
M	9	1	**8T-4184**	4	BOLT (M12X1.75X45-MM)	
M	10	1	**8T-4192**	8	BOLT (M12X1.75X25-MM)	
M	11	1	**8T-4193**	8	BOLT (M16X2X50-MM)	
M	12	1	**8T-4194**	8	BOLT (M12X1.75X50-MM)	
	13	1	**8T-4223**	12	WASHER-HARD (13.5X25.5X3-MM THK)	
M	14	1	**8T-4183**	8	BOLT (M12X1.75X40-MM)	
M	15	1	**8T-5412**	4	BOLT (M12X1.75X140-MM)	
	16	1	**8T-7971**	12	WASHER-HARD (13.5X25.5X5-MM THK)	

M-METRIC PART
Y-SEPARATE ILLUSTRATION

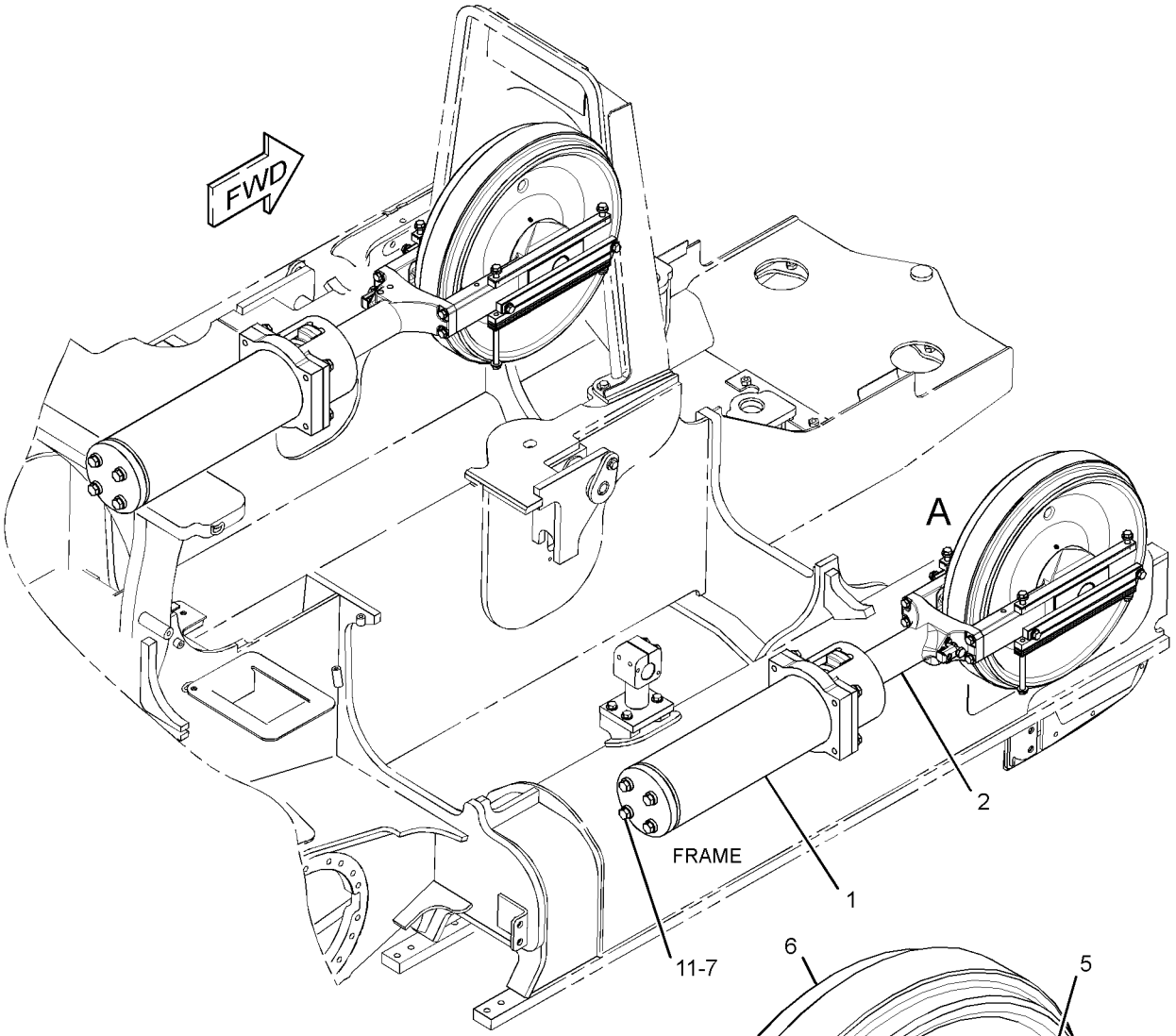

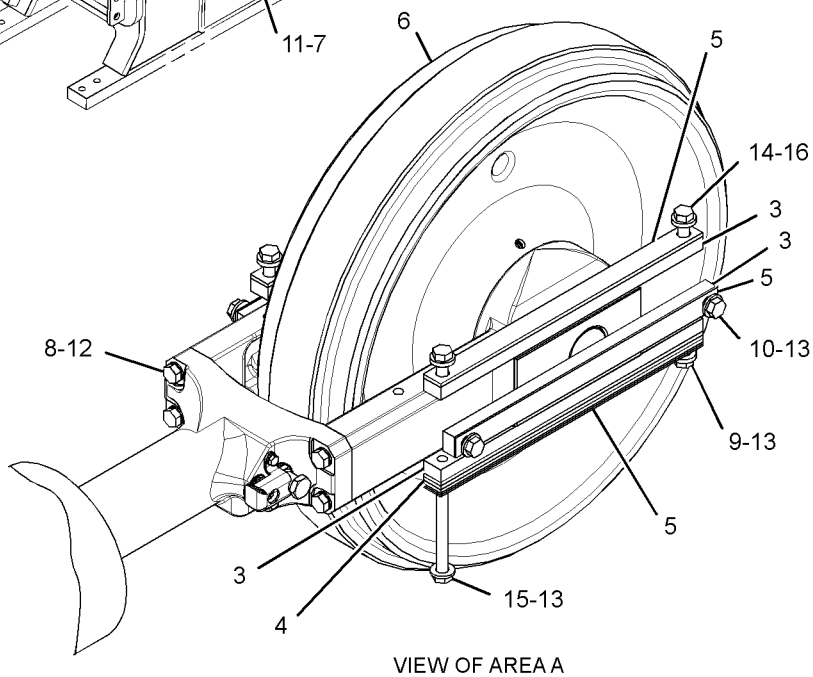

VIEW OF AREA A

GRAPHIC #1 **<END>** g01507785

254-0615 IDLER GP-TRACK

S/N: JLF1-UP; WWW1-UP; YYY1-UP
PART OF 254-0595 IDLER GP-FRONT
AN ATTACHMENT

SMCS-4159 **i02883076**

NOTE	REF NO	GRAPHIC REF	PART NUMBER	QTY	PART NAME 1 2 3 4 5 6 (PRODUCT LEVEL)	SEE PAGE
	1	1	**027-3873**	2	PIN-SPRING	
	2	1	**109-0885**	2	SEAL GP-DUO-CONE	
					(EACH INCLUDES)	
		1	**6Y-2270**	2	RING-SEALING	
	3	1	**254-0635**	2	BEARING-IDLER	
	4	1	**254-0645**	1	SHAFT	
	5	1	**261-4472**	1	IDLER & BEARING AS	
	6	1	**7F-8267**	2	SEAL-O-RING	
	7	1	**9F-2247**	1	PLUG-PIPE	

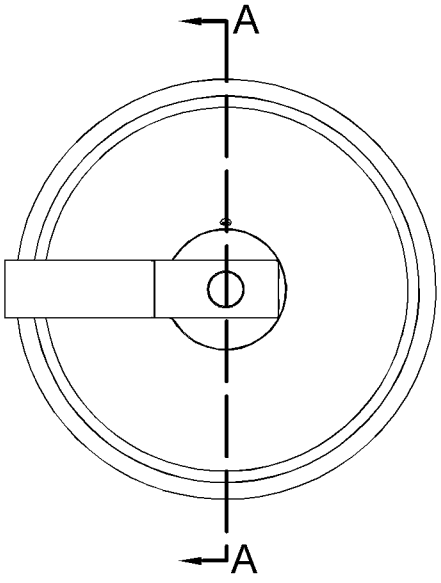

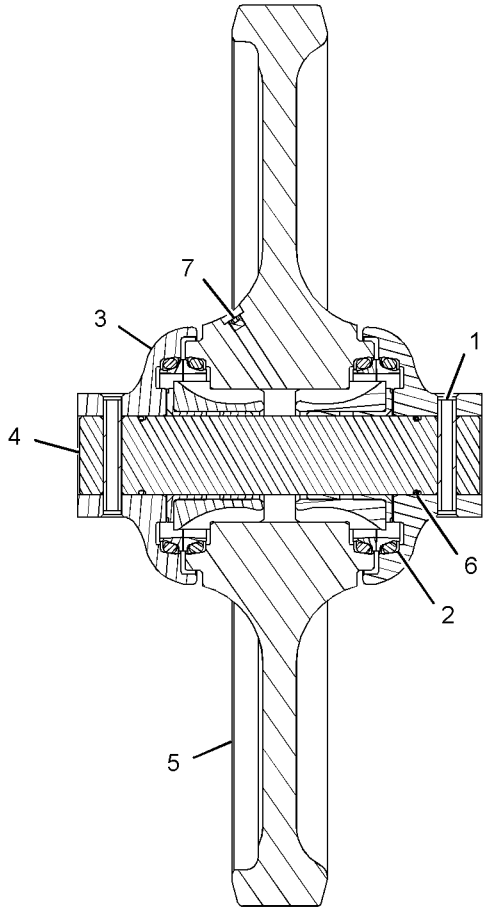

SECTION A-A

GRAPHIC #1 **<END>** g01346339

285-3476 IDLER GP-TRACK

S/N: JLF1-UP; WWW1-UP; YYY1-UP
PART OF 285-3475 IDLER GP-FRONT
AN ATTACHMENT
TYPE 1

SMCS-4159 **i02680712**

NOTE	REF NO	GRAPHIC REF	PART NUMBER	QTY	PART NAME 1 2 3 4 5 6 (PRODUCT LEVEL)	SEE PAGE
	1	1	**027-3873**	2	PIN-SPRING	
	2	1	**148-3533**	2	SEAL GP-DUO-CONE	
					(EACH INCLUDES)	
		1	**160-6631**	1	RING-TORIC	
	3	1	**254-0635**	2	BEARING-IDLER	
	4	1	**254-0645**	1	SHAFT	
	5	1	**262-2093**	1	IDLER & BEARING AS	
	6	1	**7F-8267**	2	SEAL-O-RING	
	7	1	**9F-2247**	1	PLUG-PIPE	

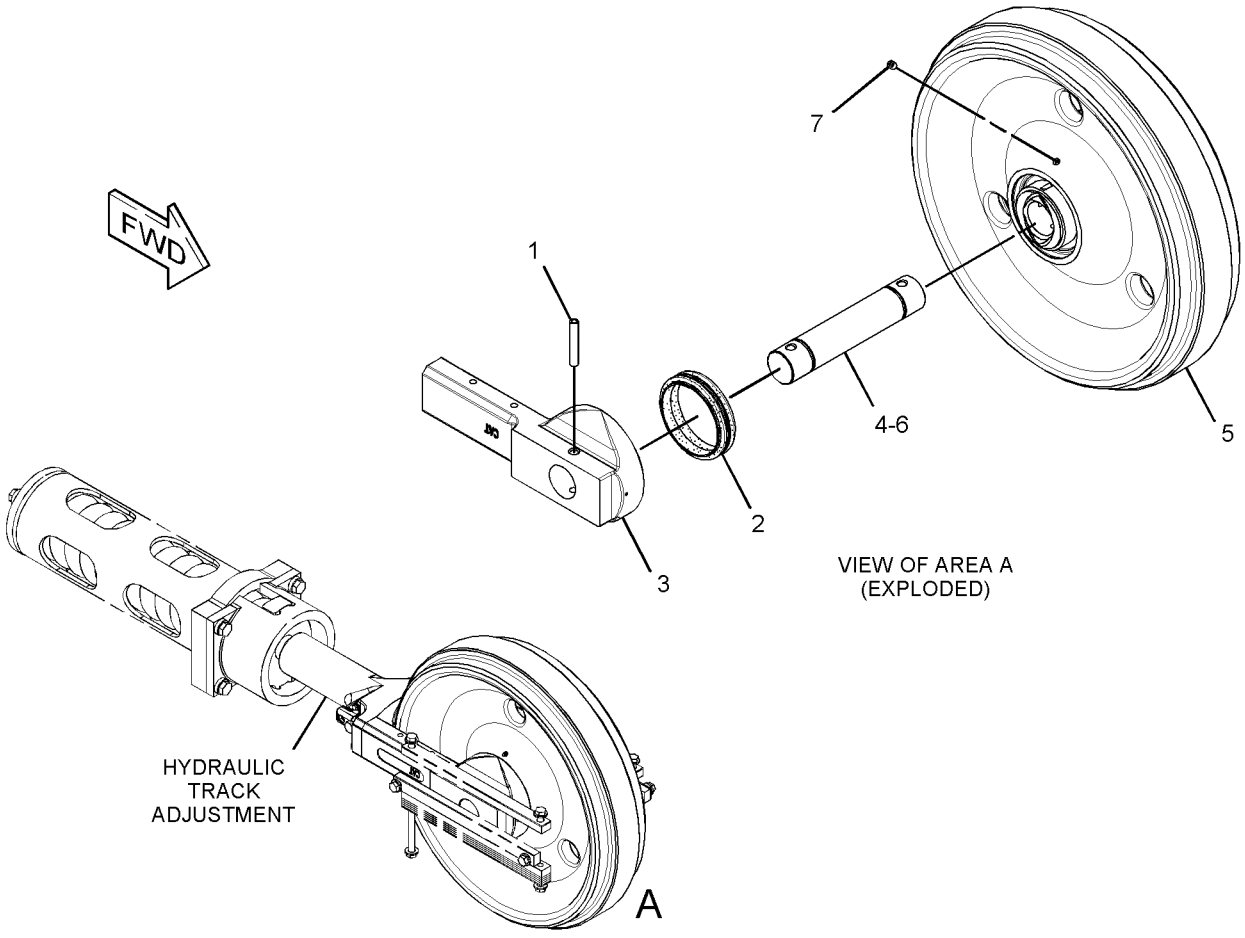

GRAPHIC #1 **<END>** g01357147

285-3476 IDLER GP-TRACK

S/N: JLF1-UP; WWW1-UP; YYY1-UP
PART OF 285-3475 IDLER GP-FRONT
AN ATTACHMENT
TYPE 2

SMCS-4159 **i02895352**

NOTE	REF NO	GRAPHIC REF	PART NUMBER	QTY	PART NAME 1 2 3 4 5 6 (PRODUCT LEVEL)	SEE PAGE
	1	1	**027-3873**	2	PIN-SPRING	
C	2	1	**109-0885**	2	SEAL GP-DUO-CONE	
					(EACH INCLUDES)	
		1	**6Y-2270**	2	RING-SEALING	
	3	1	**254-0635**	2	BEARING-IDLER	
	4	1	**254-0645**	1	SHAFT	
	5	1	**262-2093**	1	IDLER & BEARING AS	
	5A	1	**243-5321**	2	BEARING AS	
	6	1	**7F-8267**	2	SEAL-O-RING	
	7	1	**9F-2247**	1	PLUG-PIPE	

C-CHANGE FROM PREVIOUS TYPE

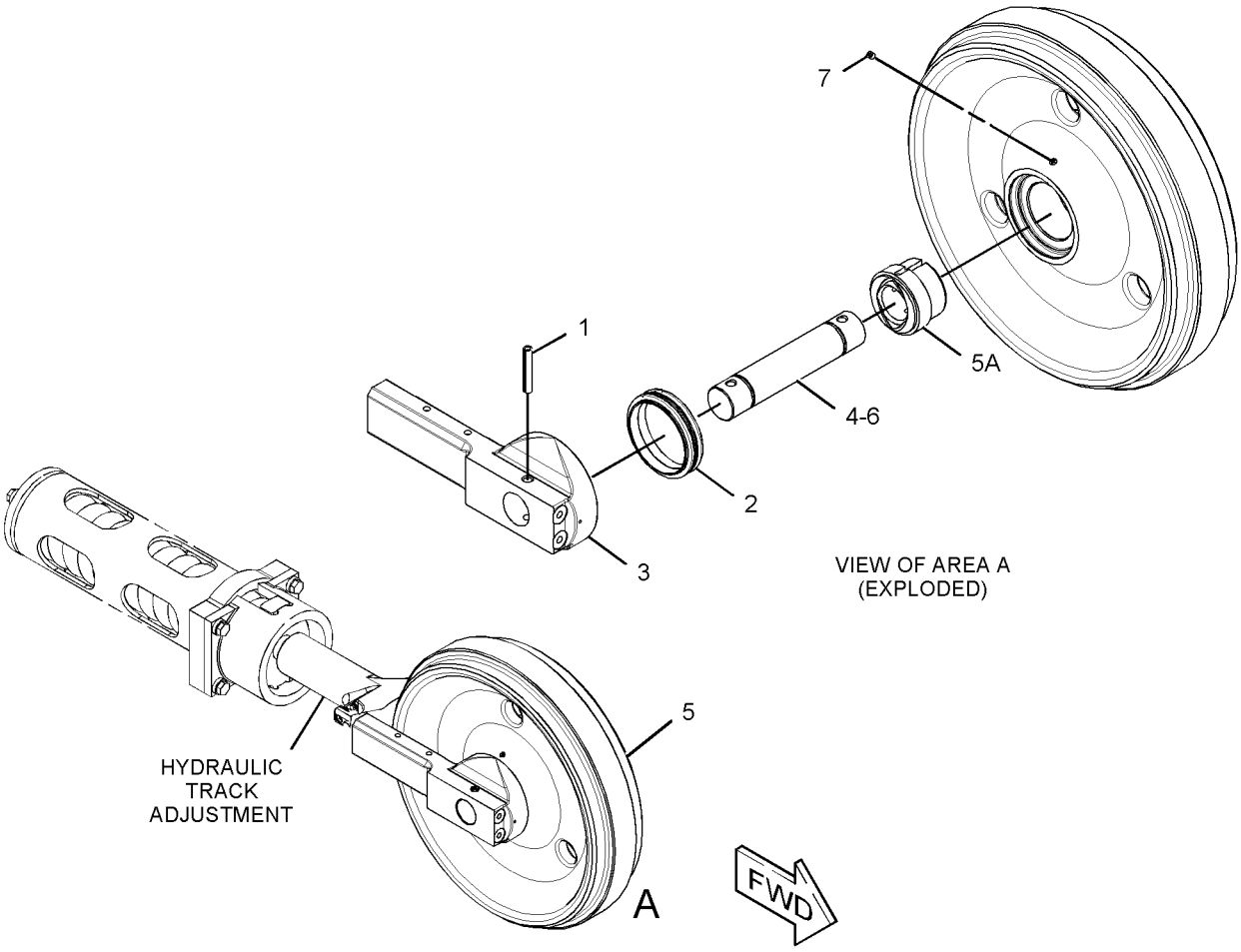

GRAPHIC #1 **<END>** g01469783

235-2535 LINK AS-TRACK–SYSTEMONE

S/N: JLF1-UP; WWW1-UP; YYY1-UP
36-JOINTS. SEALED, LUBRICATED
PART OF 235-2548, 235-2557, 260-6774, 260-6775, 260-6776, 288-1721, 327-5830
TRACK GP
FOR USE WITH SYSTEMONE ROLLERS, GUARDS, GUIDESTRIPS
AN ATTACHMENT

SMCS-4169, 4171 **i02697376**

NOTE	REF NO	GRAPHIC REF	PART NUMBER	QTY	PART NAME 1 2 3 4 5 6 (PRODUCT LEVEL)	SEE PAGE
	1	1	**235-2529**	34	LINK-TRACK	
	2	1	**302-5927**	18	LINK AS-TRACK BOX	

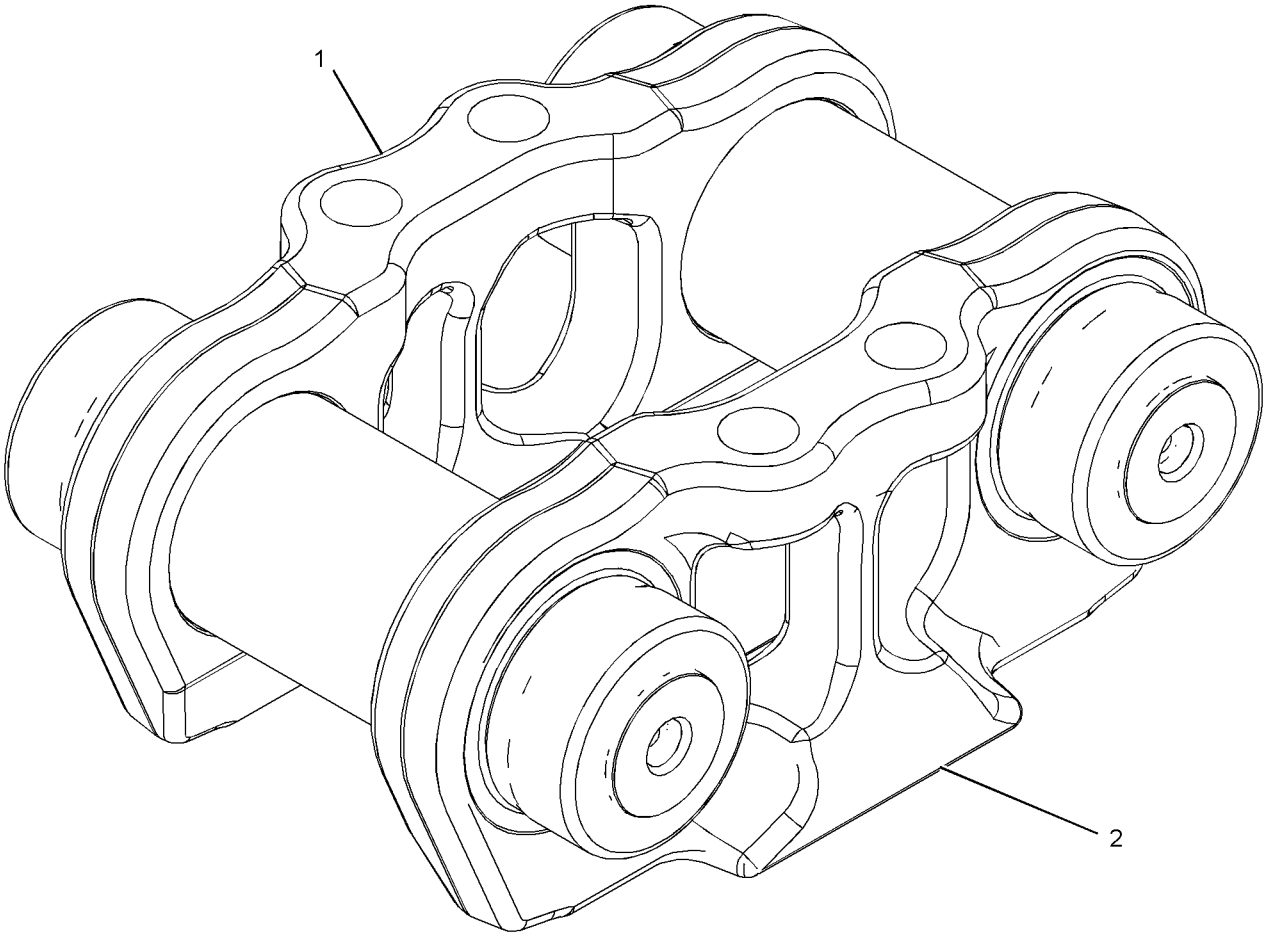

GRAPHIC #1 **<END>** g01353716

289-0270 LINK AS-TRACK

S/N: JLF1-UP; WWW1-UP; YYY1-UP
40-JOINTS. SEALED, LUBRICATED
PART OF 286-2945, 286-2946, 288-1719, 288-1720 TRACK GP
AN ATTACHMENT

SMCS-4169, 4171 **i02644537**

NOTE	REF NO	GRAPHIC REF	PART NUMBER	QTY	PART NAME 1 2 3 4 5 6 (PRODUCT LEVEL)	SEE PAGE
	1	1	**6Y-0473**	40	PLUG-CLEAR	
	2	1	**5G-2247**	40	STOPPER-RUBBER	
	3	1	**6Y-6486**	80	RING-THRUST	
	4	1	**250-4000**	80	SEAL AS	
	5	1	**6Y-9261**	39	LINK-TRACK (RH)	
	6	1	**6Y-9262**	39	LINK-TRACK (LH)	
	7	1	**9G-8585**	1	LINK-TRACK MASTER (BUSHING END, RH)	
	8	1	**9G-8586**	1	LINK-TRACK MASTER (BUSHING END, LH)	
	9	1	**6Y-9263**	1	LINK-TRACK MASTER (PIN END, RH)	
	10	1	**6Y-9264**	1	LINK-TRACK MASTER (PIN END, LH)	
	11	1	**224-3959**	40	BUSHING-TRACK	
	12	1	**160-7816**	40	PIN-TRACK	

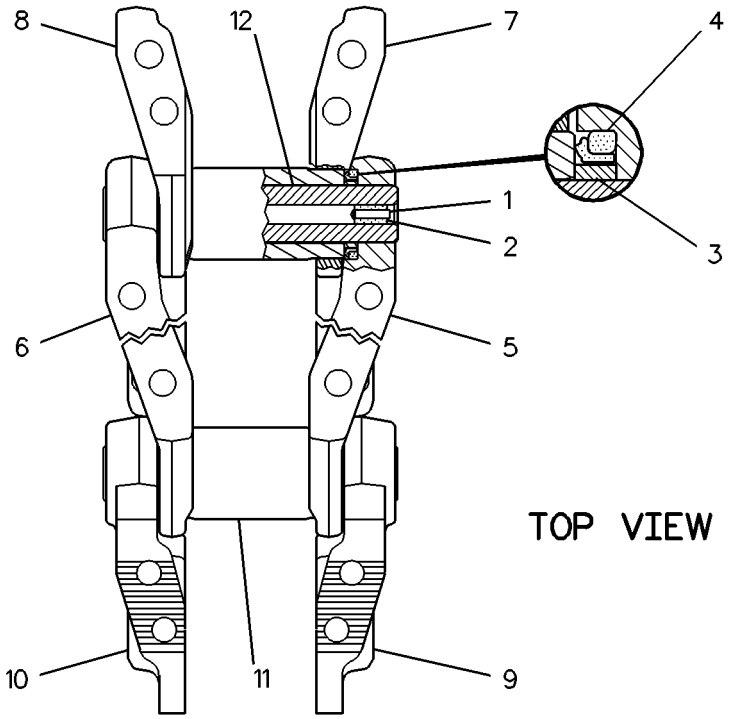

GRAPHIC #1 **<END>** g00223295

264-9766 LINK AS-TRACK BOX–SYSTEMONE

S/N: WWW1-UP; YYY1-UP
70%-WORN. SEALED, LUBRICATED,
FIELD REPLACEMENT FOR 311-6643 LINK AS THAT IS MORE THAN 70% WORN
FIELD INSTALLATION

SMCS-4169 **i02701859**

NOTE	REF NO	GRAPHIC REF	PART NUMBER	QTY	PART NAME 1 2 3 4 5 6 (PRODUCT LEVEL)	SEE PAGE
					INDIVIDUAL PARTS ARE NOT SERVICED SEPERATELY	

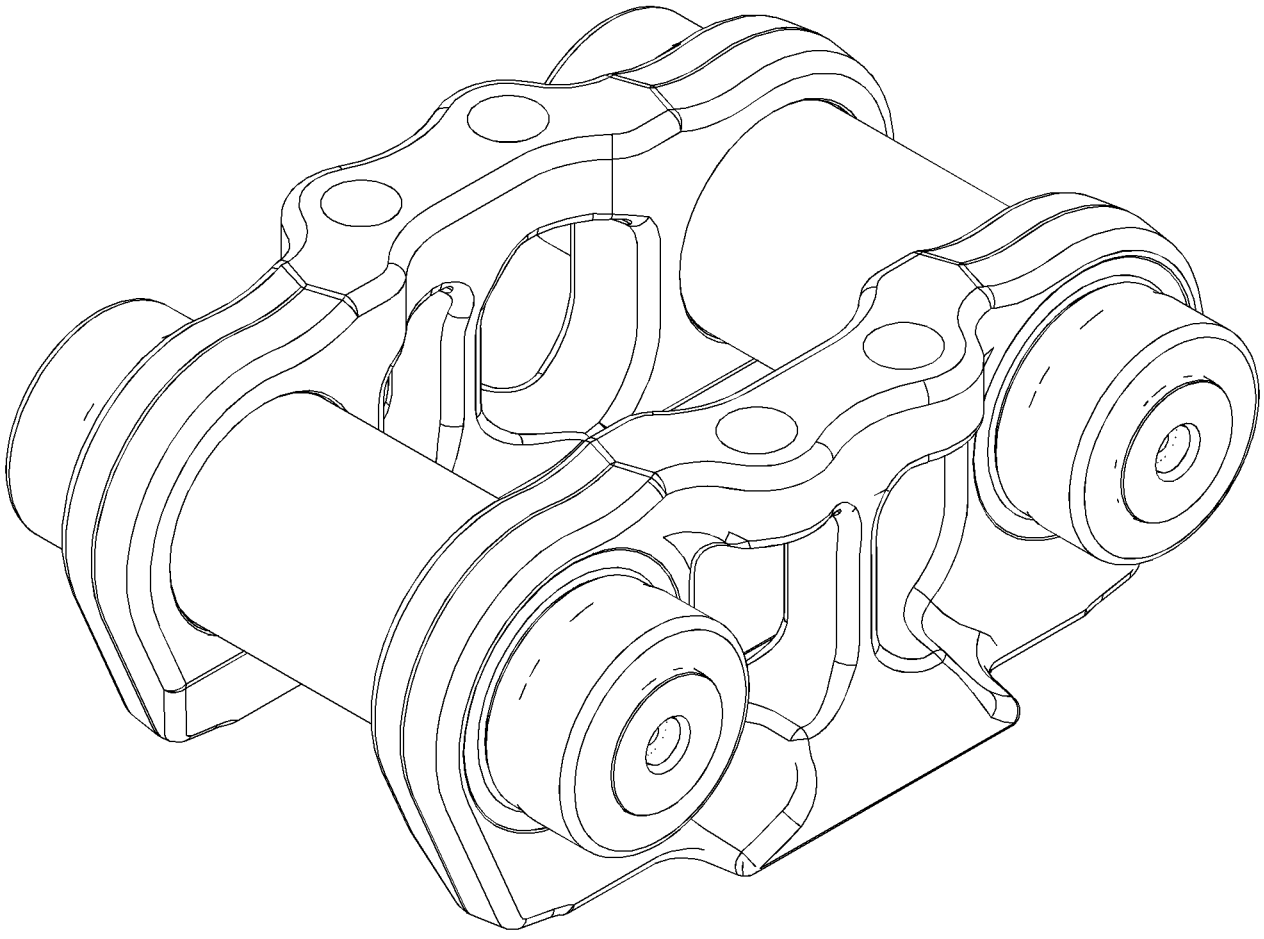

GRAPHIC #1 **<END>** g01193491

237-8201 ROLLER GP-TRACK

S/N: JLF1-UP; WWW1-UP; YYY1-UP
PART OF 282-8805 ROLLER GP-TRACK
AN ATTACHMENT

SMCS-4180 **i03615607**

NOTE	REF NO	GRAPHIC REF	PART NUMBER	QTY	PART NAME 1 2 3 4 5 6 (PRODUCT LEVEL)	SEE PAGE
R	1	1	**2M-2858**	2	SEAL GP-DUO-CONE	
					(EACH INCLUDES)	
		1	**1M-3097**	2	RING-SEALING	
	2	1	**6H-7382**	2	RING-LOCK	
	3	1	*6Y-0454*	1	STOP AS	
		1	**6Y-0473**	1	PLUG-CLEAR	
		1	**7G-4332**		STOPPER	
	4	1	**124-8248**	2	BUSHING AS	
					(EACH INCLUDES)	
		1	**7K-1089**	1	BUSHING-TERMINAL	
	5	1	**131-7239**	1	SHAFT-TRACK ROLLER	
	6	1	**7F-8267**	2	SEAL-O-RING	
	7	1	**243-4517**	2	COLLAR	
	8	1	**1H-8128**	2	SEAL-O-RING	
	9	1	**6V-6768**	2	RING-RETAINING	

R-REMFG PART MAY BE AVAILABLE

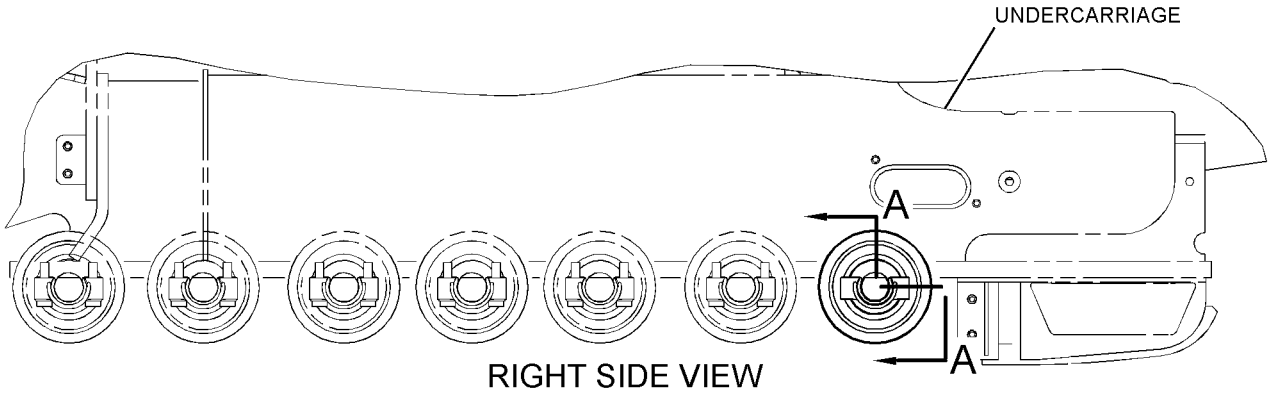

RIGHT SIDE VIEW

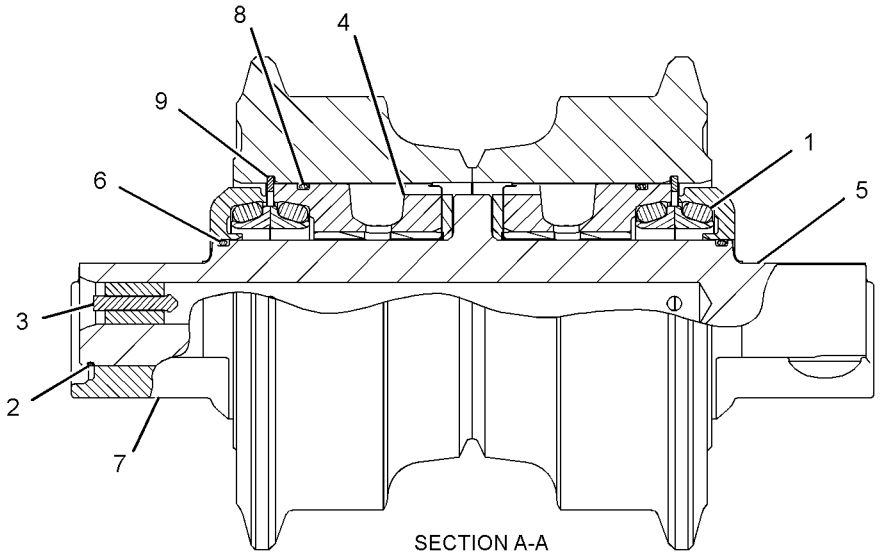

SECTION A-A

GRAPHIC #1 **<END>** g01943649

282-8805 ROLLER GP-TRACK–SYSTEMONE

S/N: JLF1-UP; WWW1-UP; YYY1-UP
PART OF 244-7395 UNDERCARRIAGE AR
AN ATTACHMENT

SMCS-4180 **i02674839**

NOTE	REF NO	GRAPHIC REF	PART NUMBER	QTY	PART NAME 1 2 3 4 5 6 (PRODUCT LEVEL)	SEE PAGE
Y	1	1	**237-8201**	14	ROLLER GP-TRACK	377
	2	1	**5P-8247**	56	WASHER-HARD (17X32X3.5-MM THK)	
M	3	1	**8T-0357**	56	BOLT (M16X2X70-MM)	

M-METRIC PART
Y-SEPARATE ILLUSTRATION

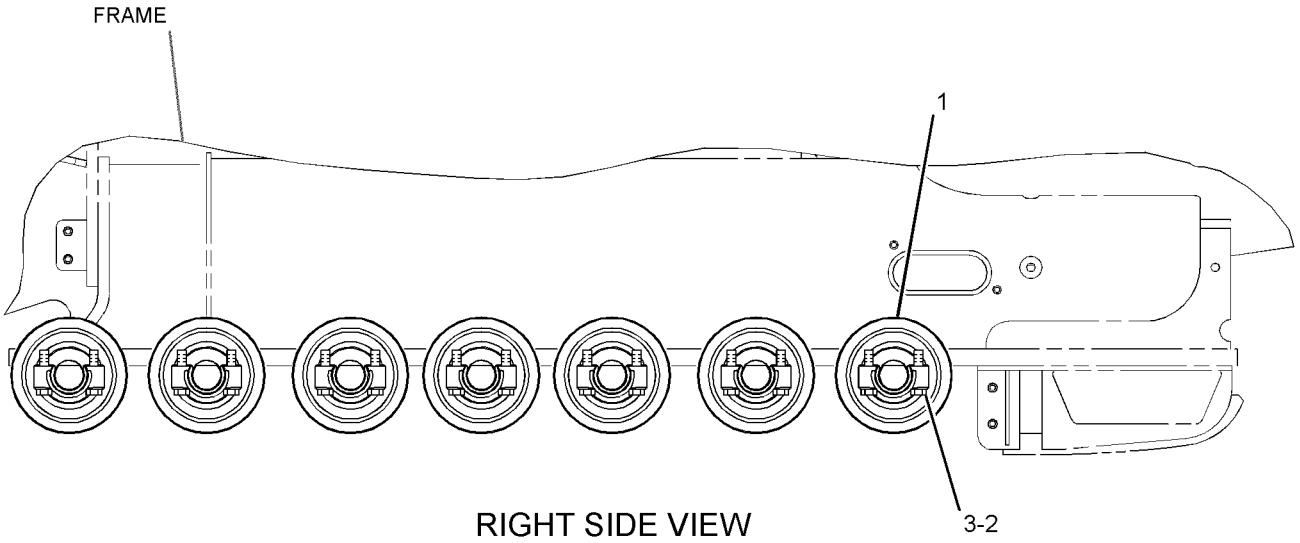

RIGHT SIDE VIEW

GRAPHIC #1 **<END>** g01344132

283-1535 ROLLER GP-TRACK–SEALED, LUBRICATED

S/N: JLF1-UP; WWW1-UP; YYY1-UP
PART OF 283-1534 UNDERCARRIAGE AR
AN ATTACHMENT

SMCS-4180 **i02819975**

NOTE	REF NO	GRAPHIC REF	PART NUMBER	QTY	PART NAME 1 2 3 4 5 6 (PRODUCT LEVEL)	SEE PAGE
YR	1	1,1	*124-8237*	8	ROLLER GP-TRACK-SINGLE FLANGE	384
YR	2	1	*124-8240*	6	ROLLER GP-TRACK-DOUBLE FLANGE	383
	3	1	**5P-8247**	56	WASHER-HARD (17X32X3.5-MM THK)	
M	4	1	**8T-0357**	56	BOLT (M16X2X70-MM)	

M-METRIC PART
R-REMFG PART MAY BE AVAILABLE
Y-SEPARATE ILLUSTRATION

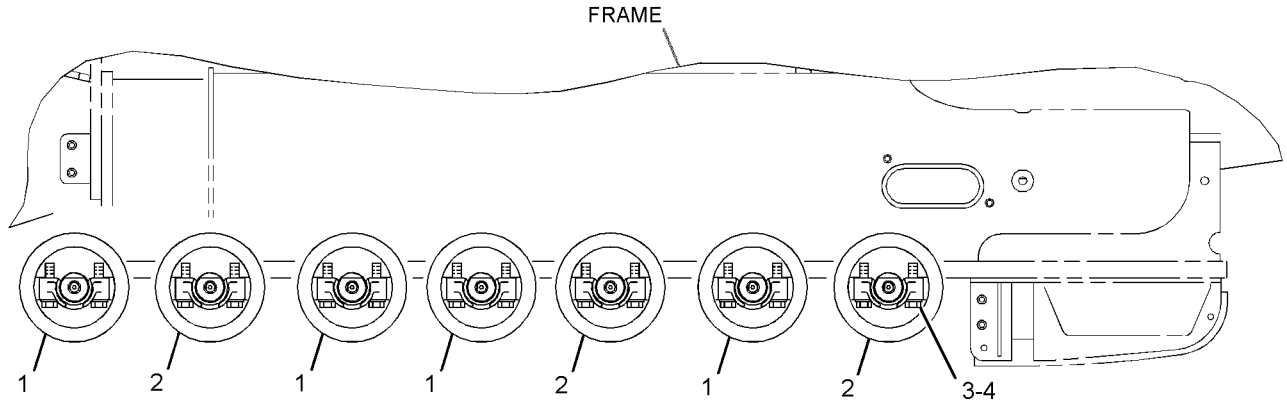

RIGHT SIDE VIEW

GRAPHIC #1 **<END>** g01407110

UNDERCARRIAGE

6K-9880 ROLLER GP-TRACK CARRIER

S/N: JLF1-UP; WWW1-UP; YYY1-UP
PART OF 283-1534 UNDERCARRIAGE AR
AN ATTACHMENT

SMCS-4154 **i01060267**

NOTE	REF NO	GRAPHIC REF	PART NUMBER	QTY	PART NAME 1 2 3 4 5 6 (PRODUCT LEVEL)	SEE PAGE
	1	1	**1M-7914**	1	RING-RETAINING	
	2	1	**1M-7918**	1	COLLAR AS-END	
	3	1	**1M-4291**	2	DOWEL	
	4	1	**1H-9696**	1	SEAL-O-RING	
R	5	1	**2M-2858**	1	SEAL GP-DUO-CONE	
	6	1	**1M-3097**	2	RING-SEALING (RUBBER)	
	7	1	**1M-8735**	2	CONE-BEARING	
	8	1	**1M-8736**	2	CUP-BEARING	
	9	1	**6K-9861**	1	SHAFT-ROLLER	
C	10	1	**9W-6174**	1	ROLLER AS-TRACK	
	11	1	**2P-0347**	1	PLUG	
	12	1	**1S-8947**	1	SEAL-O-RING	
	13	1	**0L-1351**	3	BOLT (3/8-16X0.875-IN)	
	14	1	**6K-9860**	1	PLATE-RETAINER	
	15	1	**3K-6638**	1	COVER-ROLLER	
	16	1	**5H-8848**	1	SEAL-O-RING	
	17	1	**6V-4791**	2	BOLT (3/8-24X0.75-IN)	
	18	1	**5M-2894**	3	WASHER-HARD (10.2X18.5X2.5-MM THK)	

C-CHANGE FROM PREVIOUS TYPE
R-REMFG PART MAY BE AVAILABLE

6K-9880 ROLLER GP-TRACK CARRIER *(contd.)* i01060267

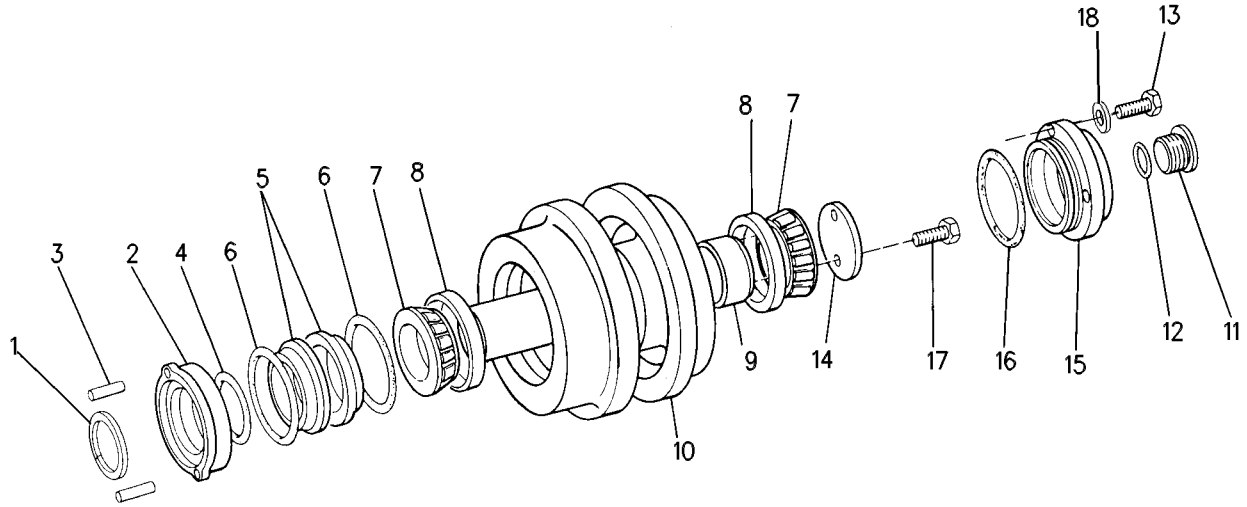

GRAPHIC #1 **<END>** g00559025

227-5971 ROLLER GP-TRACK CARRIER–

HEAVY-DUTY, SYSTEMONE

S/N: JLF1-UP; WWW1-UP; YYY1-UP

PART OF 244-7395 UNDERCARRIAGE AR

AN ATTACHMENT

SMCS-4154 **i03615608**

NOTE	REF NO	GRAPHIC REF	PART NUMBER	QTY	PART NAME 1 2 3 4 5 6 (PRODUCT LEVEL)	SEE PAGE
	1	1	**8P-6188**	1	PLATE-RETAINER	
	2	1	**9W-2146**	1	PLUG	
	3	1	**9W-5224**	1	SEAL GP-DUO-CONE	
	4	1	**217-6359**	1	COLLAR	
	5	1	**241-8494**	2	BEARING AS-TAPERED ROLLER	
M	6	1	**192-4744**	2	BOLT (M10X1.5X20-MM)	

M-METRIC PART

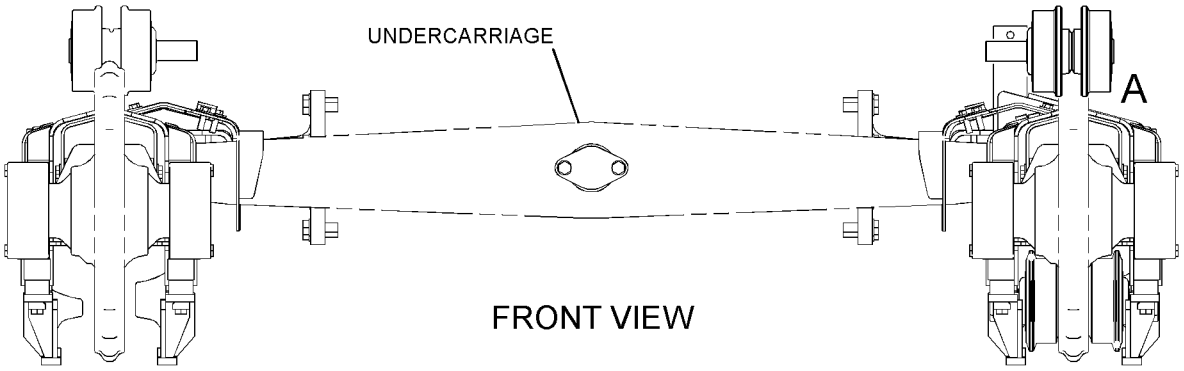

FRONT VIEW

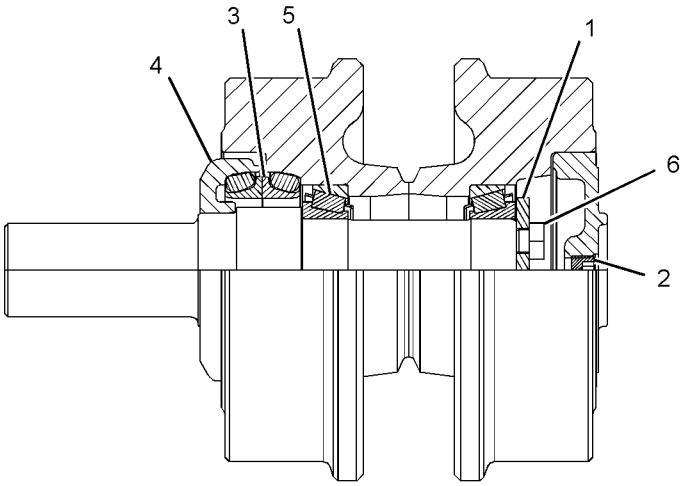

VIEW OF AREA A
(SECTIONED)

GRAPHIC #1

<END>

g01943615

124-8240 ROLLER GP-TRACK-DOUBLE FLANGE*R

S/N: JLF1-UP; WWW1-UP; YYY1-UP
PART OF 283-1535 ROLLER GP-TRACK
AN ATTACHMENT

SMCS-4180 **i03602101**

NOTE	REF NO	GRAPHIC REF	PART NUMBER	QTY	PART NAME 1 2 3 4 5 6 (PRODUCT LEVEL)	SEE PAGE
	1	1	**6H-7382**	2	RING-LOCK	
	2	1	**131-7239**	1	SHAFT-TRACK ROLLER	
	3	1	**132-1951**	2	COLLAR-TRACK ROLLER END	
	4	1	**6V-6768**	2	RING-RETAINING	
	5	1	**1H-8128**	2	SEAL-O-RING	
	6	1	**124-8241**	1	RIM AS-DOUBLE FLANGE	
	7	1	**124-8248**	2	BUSHING AS	
					(EACH INCLUDES)	
		1	**9B-2289**	2	PIN	
		1	**7K-1089**	1	BUSHING-TERMINAL	
R	8	1	**2M-2858**	2	SEAL GP-DUO-CONE	
					(EACH INCLUDES)	
		1	**1M-3097**	2	RING-SEALING	
	9	1	**7F-8267**	2	SEAL-O-RING	
	10	1	**6Y-0454**	1	STOP AS	
		1	**6Y-0473**	1	PLUG-CLEAR	
		1	**7G-4332**	1	STOPPER	

R-REMFG PART MAY BE AVAILABLE

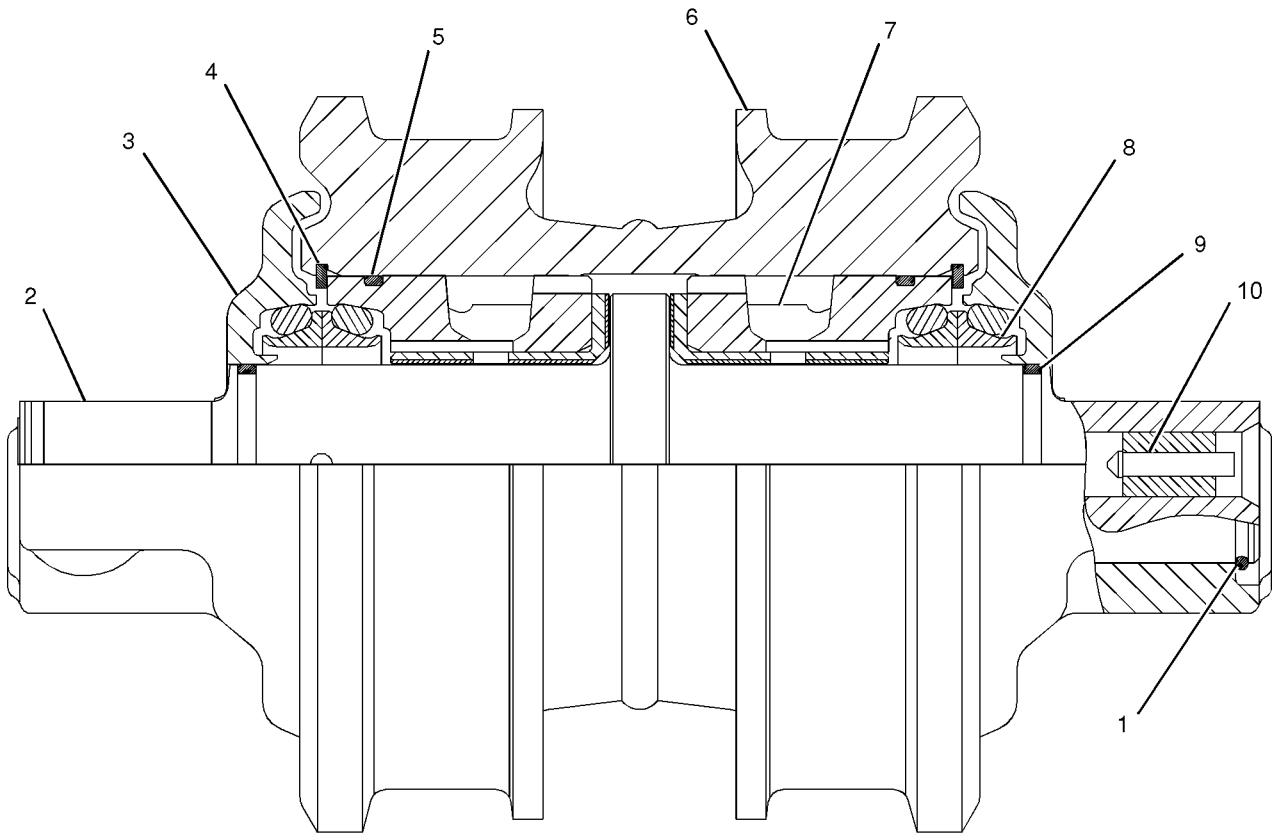

GRAPHIC #1 **<END>** g01022848

124-8237 ROLLER GP-TRACK-SINGLE FLANGE*R

S/N: JLF1-UP; WWW1-UP; YYY1-UP
PART OF 283-1535 ROLLER GP-TRACK
AN ATTACHMENT

SMCS-4180 **i03602161**

NOTE	REF NO	GRAPHIC REF	PART NUMBER	QTY	PART NAME 1 2 3 4 5 6 (PRODUCT LEVEL)	SEE PAGE
	1	1	**132-1951**	2	COLLAR-TRACK ROLLER END	
	2	1	**131-7239**	1	SHAFT-TRACK ROLLER	
R	3	1	**2M-2858**	2	SEAL GP-DUO-CONE	
					(EACH INCLUDES)	
		1	**1M-3097**	2	RING-SEALING	
	4	1	**6V-6768**	2	RING-RETAINING	
	5	1	**1H-8128**	2	SEAL-O-RING	
	6	1	**124-8238**	1	RIM AS-SINGLE FLANGE	
	7	1	**124-8248**	2	BUSHING AS	
					(EACH INCLUDES)	
		1	**9B-2289**	2	PIN	
		1	**7K-1089**	1	BUSHING-TERMINAL	
	8	1	**7F-8267**	2	SEAL-O-RING	
	9	1	**6H-7382**	2	RING-LOCK	
	10	1	**6Y-0454**	1	STOP AS	
		1	**6Y-0473**	1	PLUG-CLEAR	
		1	**7G-4332**	1	STOPPER	

R-REMFG PART MAY BE AVAILABLE

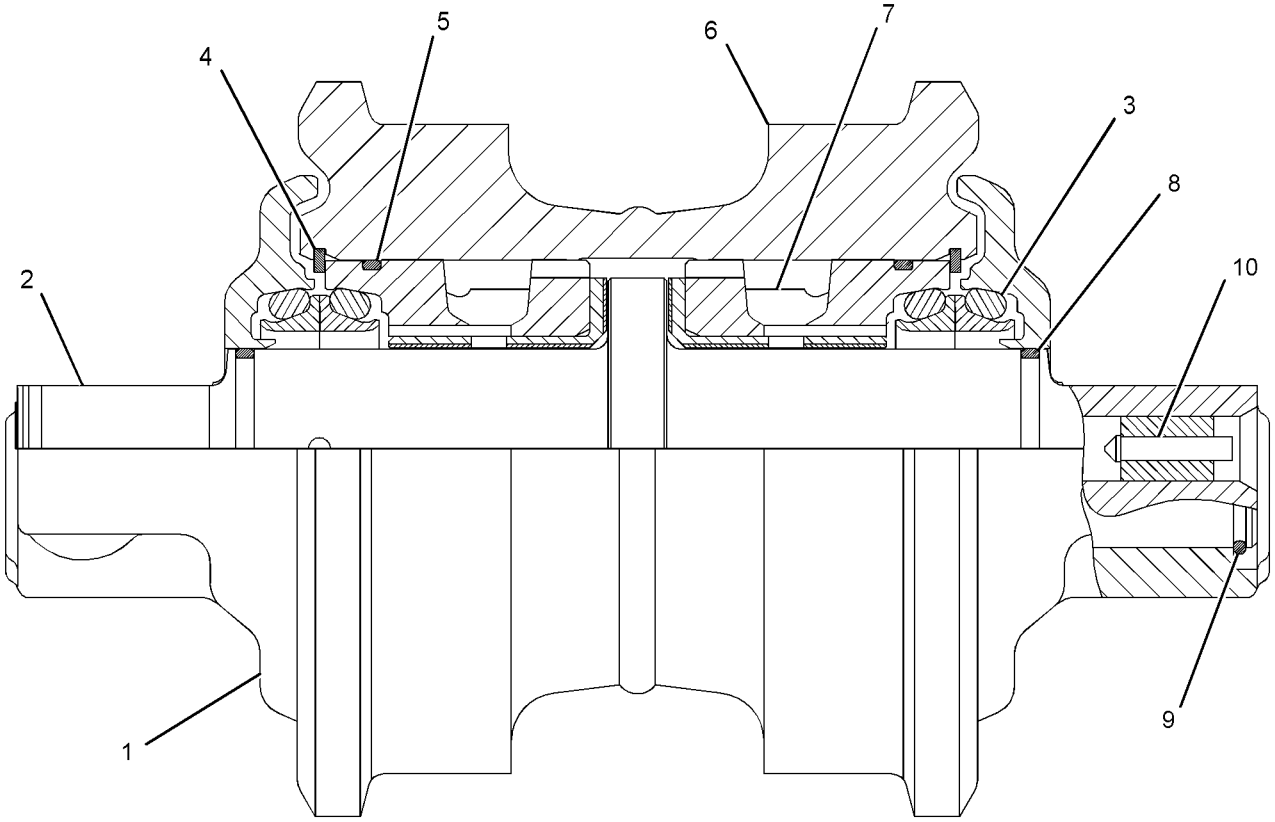

GRAPHIC #1 **<END>** g01407130

254-0605 SPRING GP-RECOIL

S/N: JLF1-UP; WWW1-UP; YYY1-UP
PART OF 254-0595, 285-3475 IDLER GP-FRONT
AN ATTACHMENT

SMCS-4158 **i02679917**

NOTE	REF NO	GRAPHIC REF	PART NUMBER	QTY	PART NAME 1 2 3 4 5 6 (PRODUCT LEVEL)	SEE PAGE
	1	1	**254-0625**	1	SPRING-RECOIL	
	2	1	**303-0455**	1	TUBE AS	
	3	1	**303-0458**	1	PLUG	
	4	1	**303-0459**	1	FLANGE	
	5	1	**198-4780**	4	WASHER-HARD (17.5X32X8-MM THK)	
M	6	1	**8T-4140**	4	BOLT (M16X2X60-MM)	

M-METRIC PART

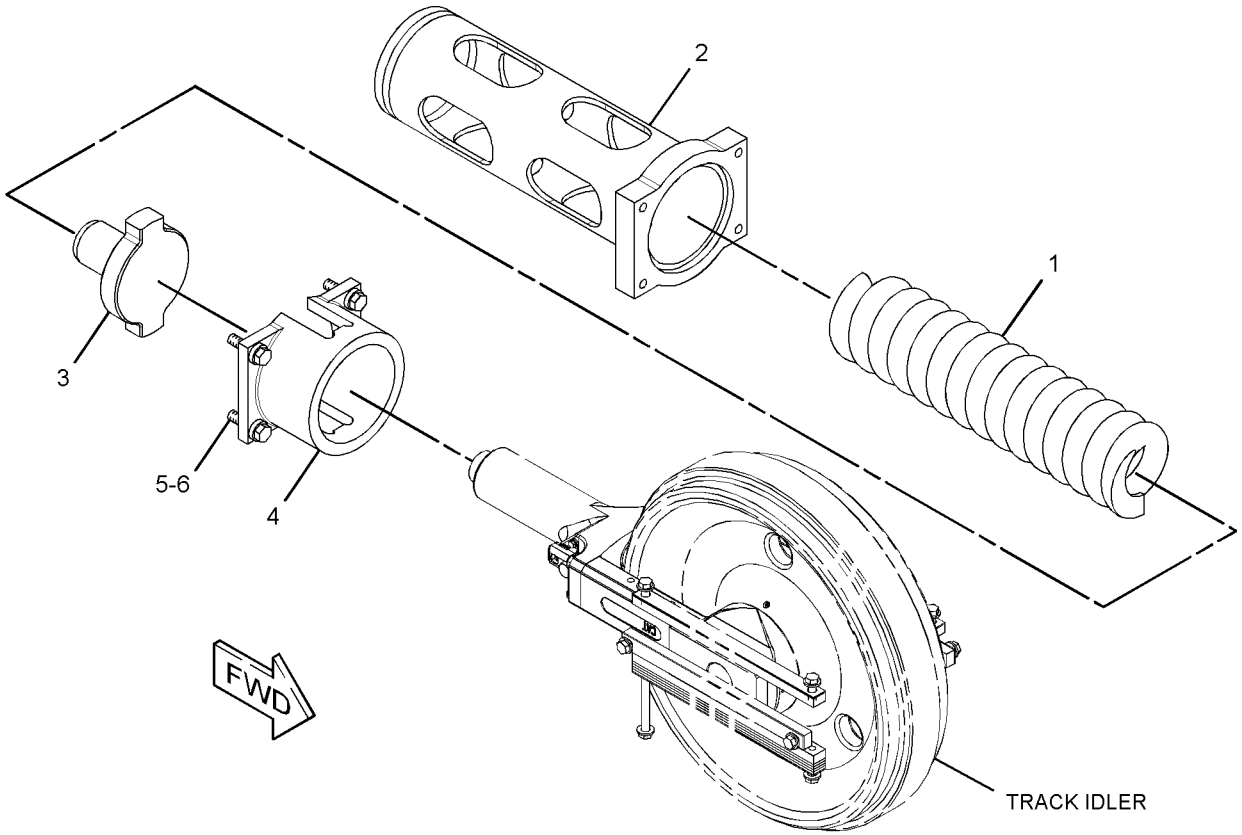

GRAPHIC #1 **<END>** g01349736

UNDERCARRIAGE

286-4302 TRACK AR

S/N: JLF1-UP
760-MM (29.72-IN) GROUSER SHOE. SELF-CLEANING GROUSER SHOE, SEALED, LUBRICATED
FOR USE WITH 283-1534—PAGE 392
AN ATTACHMENT

SMCS-4170 **i02644084**

NOTE	PART NUMBER	QTY	PART NAME 1 2 3 4 5 6 (PRODUCT LEVEL)	SEE PAGE
Y	*288-1720*	2	TRACK GP	391
Y-SEPARATE ILLUSTRATION				

<END>

286-4305 TRACK AR

S/N: WWW1-UP; YYY1-UP
510-MM (20.08-IN) GROUSER SHOE. MODERATE SERVICE, SEALED, LUBRICATED
FOR USE WITH 283-1534—PAGE 392
AN ATTACHMENT

SMCS-4170 **i02644085**

NOTE	PART NUMBER	QTY	PART NAME 1 2 3 4 5 6 (PRODUCT LEVEL)	SEE PAGE
Y	*286-2945*	2	TRACK GP	390
Y-SEPARATE ILLUSTRATION				

<END>

286-4307 TRACK AR

S/N: JLF1-UP
760-MM (29.92-IN) GROUSER SHOE. MODERATE SERVICE, SEALED, LUBRICATED
FOR USE WITH 283-1534—PAGE 392
AN ATTACHMENT

SMCS-4170 **i02644554**

NOTE	PART NUMBER	QTY	PART NAME 1 2 3 4 5 6 (PRODUCT LEVEL)	SEE PAGE
Y	*288-1719*	2	TRACK GP	391
Y-SEPARATE ILLUSTRATION				

<END>

286-4310 TRACK AR

S/N: YYY1-UP
660-MM (25.98-IN) GROUSER SHOE. MODERATE SERVICE, SEALED, LUBRICATED
FOR USE WITH 283-1534—PAGE 392
AN ATTACHMENT

SMCS-4170 **i02644059**

NOTE	PART NUMBER	QTY	PART NAME 1 2 3 4 5 6 (PRODUCT LEVEL)	SEE PAGE
Y	*286-2946*	2	TRACK GP	390
Y-SEPARATE ILLUSTRATION				

<END>

UNDERCARRIAGE

286-4315 TRACK AR—SYSTEMONE

S/N: WWW1-UP; YYY1-UP
510-MM (20-IN) GROUSER SHOE. MODERATE SERVICE
FOR USE WITH 244-7395—PAGE 392
AN ATTACHMENT

SMCS-4170 **i02682671**

NOTE	PART NUMBER	QTY	PART NAME 1 2 3 4 5 6 (PRODUCT LEVEL)	SEE PAGE
Y	*235-2557*	2	TRACK GP	388
Y-SEPARATE ILLUSTRATION				

<END>

286-4317 TRACK AR—SYSTEMONE

S/N: JLF1-UP
760-MM (29.92-IN) GROUSER SHOE. MODERATE SERVICE
FOR USE WITH 244-7395—PAGE 392
AN ATTACHMENT

SMCS-4170 **i02644087**

NOTE	PART NUMBER	QTY	PART NAME 1 2 3 4 5 6 (PRODUCT LEVEL)	SEE PAGE
Y	*288-1721*	2	TRACK GP	391
Y-SEPARATE ILLUSTRATION				

<END>

286-4320 TRACK AR—SYSTEMONE

S/N: YYY1-UP
660-MM (25.98-IN) GROUSER SHOE. MODERATE SERVICE
FOR USE WITH 244-7395—PAGE 392
AN ATTACHMENT

SMCS-4170 **i02650122**

NOTE	PART NUMBER	QTY	PART NAME 1 2 3 4 5 6 (PRODUCT LEVEL)	SEE PAGE
Y	*235-2548*	2	TRACK GP	388
Y-SEPARATE ILLUSTRATION				

<END>

326-8247 TRACK AR—SYSTEMONE

S/N: WWW1-UP
FOR USE WITH 244-7395—PAGE 392
AN ATTACHMENT

SMCS-4170 **i02977583**

NOTE	PART NUMBER	QTY	PART NAME 1 2 3 4 5 6 (PRODUCT LEVEL)	SEE PAGE
Y	*327-5830*	2	TRACK GP (SYSTEMONE)	392
Y-SEPARATE ILLUSTRATION				

<END>

235-2548 TRACK GP–2-REQUIRED, SYSTEMONE

S/N: YYY1-UP
660-MM (25.98-IN) GROUSER SHOE. MODERATE SERVICE, SEALED, LUBRICATED
PART OF 286-4320 TRACK AR
AN ATTACHMENT

SMCS-4170 **i02650820**

NOTE	PART NUMBER	QTY	PART NAME 1 2 3 4 5 6 (PRODUCT LEVEL)	SEE PAGE
Y	**235-2535**	1	LINK AS-TRACK	374
M	**238-0472**	144	BOLT-TRACK (M18X1.5X59-MM, SYSTEMONE)	
	235-2529	2	LINK-TRACK	
M	**238-0473**	144	NUT-TRACK (M18X1.5-THD, SYSTEMONE)	
	235-2555	36	SHOE-TRACK	

M-METRIC PART
Y-SEPARATE ILLUSTRATION

<END>

235-2557 TRACK GP–2-REQUIRED, SYSTEMONE

S/N: WWW1-UP; YYY1-UP
510-MM (20-IN) GROUSER SHOE. SEALED, LUBRICATED, MODERATE SERVICE
PART OF 286-4315 TRACK AR
AN ATTACHMENT

SMCS-4170 **i02682607**

NOTE	PART NUMBER	QTY	PART NAME 1 2 3 4 5 6 (PRODUCT LEVEL)	SEE PAGE
Y	**235-2535**	1	LINK AS-TRACK	374
M	**238-0472**	144	BOLT-TRACK (M18X1.5X59-MM, SYSTEMONE)	
	235-2529	2	LINK-TRACK	
M	**238-0473**	144	NUT-TRACK (M18X1.5-THD, SYSTEMONE)	
	235-2554	36	SHOE-TRACK	

M-METRIC PART
Y-SEPARATE ILLUSTRATION

<END>

260-6774 TRACK GP—SYSTEMONE

S/N: YYY1-UP

660-MM (25.98-IN) GROUSER SHOE. MODERATE SERVICE, SEALED, LUBRICATED, CLAMP MASTER

FOR USE WITH SYSTEMONE ROLLERS, GUARDS, GUIDESTRIPS

FIELD INSTALLATION

SMCS-4170 **i02694191**

NOTE	PART NUMBER	QTY	PART NAME 1 2 3 4 5 6 (PRODUCT LEVEL)	SEE PAGE
Y	**235-2535**	1	LINK AS-TRACK (SYSTEMONE)	374
M	**238-0472**	140	BOLT-TRACK (M18X1.5X59-MM, SYSTEMONE)	
	254-0227	4	BOLT-TRACK MASTER (M18X1.5X93-MM, SYSTEMONE)	
	235-2621	2	LINK-TRACK MASTER	
M	**238-0473**	140	NUT-TRACK (M18X1.5-THD, SYSTEMONE)	
	235-2555	35	SHOE-TRACK	
	260-6762	1	SHOE-TRACK MASTER	

M-METRIC PART
Y-SEPARATE ILLUSTRATION

<END>

260-6775 TRACK GP—SYSTEMONE

S/N: WWW1-UP

510-MM (20.08-IN) GROUSER SHOE. MODERATE SERVICE, SEALED, LUBRICATED, CLAMP MASTER

FOR USE WITH SYSEMONE ROLLERS, GUARDS, GUIDESTRIPS

FIELD INSTALLATION

SMCS-4170 **i02697349**

NOTE	PART NUMBER	QTY	PART NAME 1 2 3 4 5 6 (PRODUCT LEVEL)	SEE PAGE
Y	**235-2535**	1	LINK AS-TRACK (SYSTEMONE)	374
M	**238-0472**	140	BOLT-TRACK (M18X1.5X59-MM, SYSTEMONE)	
	254-0227	4	BOLT-TRACK MASTER (M18X1.5X93-MM, SYSTEMONE)	
	235-2621	2	LINK-TRACK MASTER	
M	**238-0473**	140	NUT-TRACK (M18X1.5-THD, SYSTEMONE)	
	235-2554	36	SHOE-TRACK	

M-METRIC PART
Y-SEPARATE ILLUSTRATION

<END>

UNDERCARRIAGE

260-6776 TRACK GP—2-REQUIRED, SYSTEMONE

S/N: WWW1-UP
460-MM (18.11-IN) GROUSER SHOE. SEALED, LUBRICATED, MODERATE SERVICE, CLAMP MASTER
FOR USE WITH SYSTEMONE ROLLERS, GUARDS, GUIDESTRIPS
FIELD INSTALLATION

SMCS-4170 **i02697347**

NOTE	PART NUMBER	QTY	PART NAME 1 2 3 4 5 6 (PRODUCT LEVEL)	SEE PAGE
Y	**235-2535**	1	LINK AS-TRACK (SYSTEMONE)	374
M	**238-0472**	140	BOLT-TRACK (M18X1.5X59-MM, SYSTEMONE)	
	254-0227	4	BOLT-TRACK MASTER (M18X1.5X93-MM, SYSTEMONE)	
	235-2621	2	LINK-TRACK MASTER	
M	**238-0473**	140	NUT-TRACK (M18X1.5-THD, SYSTEMONE)	
	235-2553	36	SHOE-TRACK	

M-METRIC PART
Y-SEPARATE ILLUSTRATION

<END>

286-2945 TRACK GP

S/N: WWW1-UP; YYY1-UP
510-MM (20.08-IN) GROUSER SHOE. SEALED, LUBRICATED, MODERATE SERVICE
PART OF 286-4305 TRACK AR
AN ATTACHMENT

SMCS-4170 **i02644056**

NOTE	PART NUMBER	QTY	PART NAME 1 2 3 4 5 6 (PRODUCT LEVEL)	SEE PAGE
Y	**289-0270**	1	LINK AS-TRACK	375
	9G-3110	156	BOLT-TRACK (5/8-18X2.26-IN)	
	3T-8601	2	BOLT-TRACK MASTER (5/8-18X2.63-IN)	
	9G-8592	2	BOLT-TRACK MASTER (5/8-18X3.26-IN)	
	1M-1408	156	NUT (5/8-18-THD)	
	8E-9812	40	SHOE-TRACK	

Y-SEPARATE ILLUSTRATION

<END>

286-2946 TRACK GP

S/N: YYY1-UP
660-MM (25.98-IN) GROUSER SHOE. SEALED, LUBRICATED, MODERATE SERVICE
PART OF 286-4310 TRACK AR
AN ATTACHMENT

SMCS-4170 **i03602166**

NOTE	PART NUMBER	QTY	PART NAME 1 2 3 4 5 6 (PRODUCT LEVEL)	SEE PAGE
Y	**289-0270**	1	LINK AS-TRACK	375
	9G-3110	156	BOLT-TRACK (5/8-18X2.26-IN)	
	3T-8601	2	BOLT-TRACK MASTER (5/8-18X2.63-IN)	
	9G-8592	2	BOLT-TRACK MASTER (5/8-18X3.26-IN)	
	1M-1408	156	NUT (5/8-18-THD)	
	6I-9573	40	SHOE-TRACK	

Y-SEPARATE ILLUSTRATION

<END>

288-1719 TRACK GP—SEALED, LUBRICATED

S/N: JLF1-UP
760-MM (29.92-IN) GROUSER SHOE. 2-REQUIRED, MODERATE SERVICE
PART OF 286-4307 TRACK AR
AN ATTACHMENT

SMCS-4170 **i02644489**

NOTE	PART NUMBER	QTY	PART NAME 1 2 3 4 5 6 (PRODUCT LEVEL)	SEE PAGE
Y	**289-0270**	1	LINK AS-TRACK	375
	9G-3110	156	BOLT-TRACK (5/8-18X2.26-IN)	
	3T-8601	2	BOLT-TRACK MASTER (5/8-18X2.63-IN)	
	9G-8592	2	BOLT-TRACK MASTER (5/8-18X3.26-IN)	
	1M-1408	156	NUT (5/8-18-THD)	
	216-6286	40	SHOE-TRACK	

Y-SEPARATE ILLUSTRATION

<END>

288-1720 TRACK GP—SEALED, LUBRICATED

S/N: JLF1-UP
770-MM (30.31-IN) GROUSER SHOE. 2-REQUIRED, SELF-CLEANING GROUSER SHOE
PART OF 286-4302 TRACK AR
AN ATTACHMENT

SMCS-4170 **i02644149**

NOTE	PART NUMBER	QTY	PART NAME 1 2 3 4 5 6 (PRODUCT LEVEL)	SEE PAGE
Y	**289-0270**	1	LINK AS-TRACK	375
	3T-3884	78	BOLT-TRACK	
	9G-3110	78	BOLT-TRACK (5/8-18X2.26-IN)	
	3T-3889	2	BOLT-TRACK MASTER (5/8-18X4-IN)	
	9G-8592	2	BOLT-TRACK MASTER (5/8-18X3.26-IN)	
	1M-1408	156	NUT (5/8-18-THD)	
	6T-0232	40	SHOE-TRACK	

Y-SEPARATE ILLUSTRATION

<END>

288-1721 TRACK GP—SYSTEMONE

S/N: JLF1-UP
760-MM (29.92-IN) GROUSER SHOE. SEALED, LUBRICATED, MODERATE SERVICE
PART OF 286-4317 TRACK AR
FOR USE WITH SYSTEMONE ROLLERS, GUARDS AND GUIDESTRIPS
AN ATTACHMENT

SMCS-4170 **i02644150**

NOTE	PART NUMBER	QTY	PART NAME 1 2 3 4 5 6 (PRODUCT LEVEL)	SEE PAGE
Y	**235-2535**	1	LINK AS-TRACK (SYSTEMONE)	374
M	**238-0472**	144	BOLT-TRACK (M18X1.5X59-MM, SYSTEMONE)	
	235-2529	2	LINK-TRACK	
M	**238-0473**	144	NUT-TRACK (M18X1.5-THD, SYSTEMONE)	
	235-2534	36	SHOE-TRACK	

M-METRIC PART
Y-SEPARATE ILLUSTRATION

<END>

UNDERCARRIAGE

327-5830 TRACK GP—2-REQUIRED, SYSTEM ONE

S/N: WWW1-UP
510-MM (20-IN) GROUSER SHOE. SEALED, LUBRICATED, EXTREME SERVICE
PART OF 326-8247 TRACK AR
FOR USE WITH SYSTEMONE ROLLERS, GUARDS, GUIDESTRIPS
AN ATTACHMENT

SMCS-4170 **i02977641**

NOTE	PART NUMBER	QTY	PART NAME 1 2 3 4 5 6 (PRODUCT LEVEL)	SEE PAGE
Y	**235-2535**	1	LINK AS-TRACK (SYSTEMONE)	374
M	**238-0472**	144	BOLT-TRACK (M18X1.5X59-MM, SYSTEMONE)	
	235-2529	2	LINK-TRACK	
M	**238-0473**	144	NUT-TRACK (M18X1.5-THD, SYSTEMONE)	
	277-2238	36	SHOE-TRACK	

M-METRIC PART
Y-SEPARATE ILLUSTRATION

<END>

244-7395 UNDERCARRIAGE AR—SYSTEMONE

S/N: JLF1-UP; WWW1-UP; YYY1-UP
AN ATTACHMENT

SMCS-4150 **i02834021**

NOTE	PART NUMBER	QTY	PART NAME 1 2 3 4 5 6 (PRODUCT LEVEL)	SEE PAGE
Y	*244-7420*	1	GUARD GP-IDLER	355
Y	*282-3705*	1	GUARD GP-TRACK GUIDE (SYSTEMONE, FRONT)	363
Y	*282-3715*	1	GUARD GP-TRACK GUIDE (SYSTEMONE)	364
Y	*254-0595*	1	IDLER GP-FRONT	368
Y	*282-8805*	1	ROLLER GP-TRACK (SYSTEMONE)	378
Y	**227-5971**	2	ROLLER GP-TRACK CARRIER (HEAVY-DUTY, SYSTEMONE)	382
Y	*258-9791*	2	SEGMENT GP-SPROCKET (NON-SEGMENTED)	305

Y-SEPARATE ILLUSTRATION

<END>

283-1534 UNDERCARRIAGE AR—SEALED, LUBRICATED

S/N: JLF1-UP; WWW1-UP; YYY1-UP
FOR USE WITH SEALED, LUBRICATED TRACK GROUP
AN ATTACHMENT

SMCS-4150 **i02834023**

NOTE	PART NUMBER	QTY	PART NAME 1 2 3 4 5 6 (PRODUCT LEVEL)	SEE PAGE
Y	*262-5875*	1	GUARD GP-IDLER	357
Y	*244-7425*	1	GUARD GP-TRACK GUIDE (REAR)	359
Y	*285-3475*	1	IDLER GP-FRONT	369
Y	*283-1535*	1	ROLLER GP-TRACK (SEALED, LUBRICATED)	379
Y	**6K-9880**	2	ROLLER GP-TRACK CARRIER	380
Y	*278-2360*	2	SEGMENT GP-SPROCKET	306

Y-SEPARATE ILLUSTRATION

<END>

212-7032 ACTUATOR GP-PUMP–SERVO

S/N: JLF1-UP; WWW1-UP; YYY1-UP
PART OF 254-1379 PUMP GP-PISTON
AN ATTACHMENT

SMCS-5078 **i01936506**

NOTE	REF NO	GRAPHIC REF	PART NUMBER	QTY	PART NAME 1 2 3 4 5 6 (PRODUCT LEVEL)	SEE PAGE
	1	1	**8T-7000**	2	SEAL	
	2	1	**159-8246**	2	RING	
	3	1	**159-8247**	2	RING	

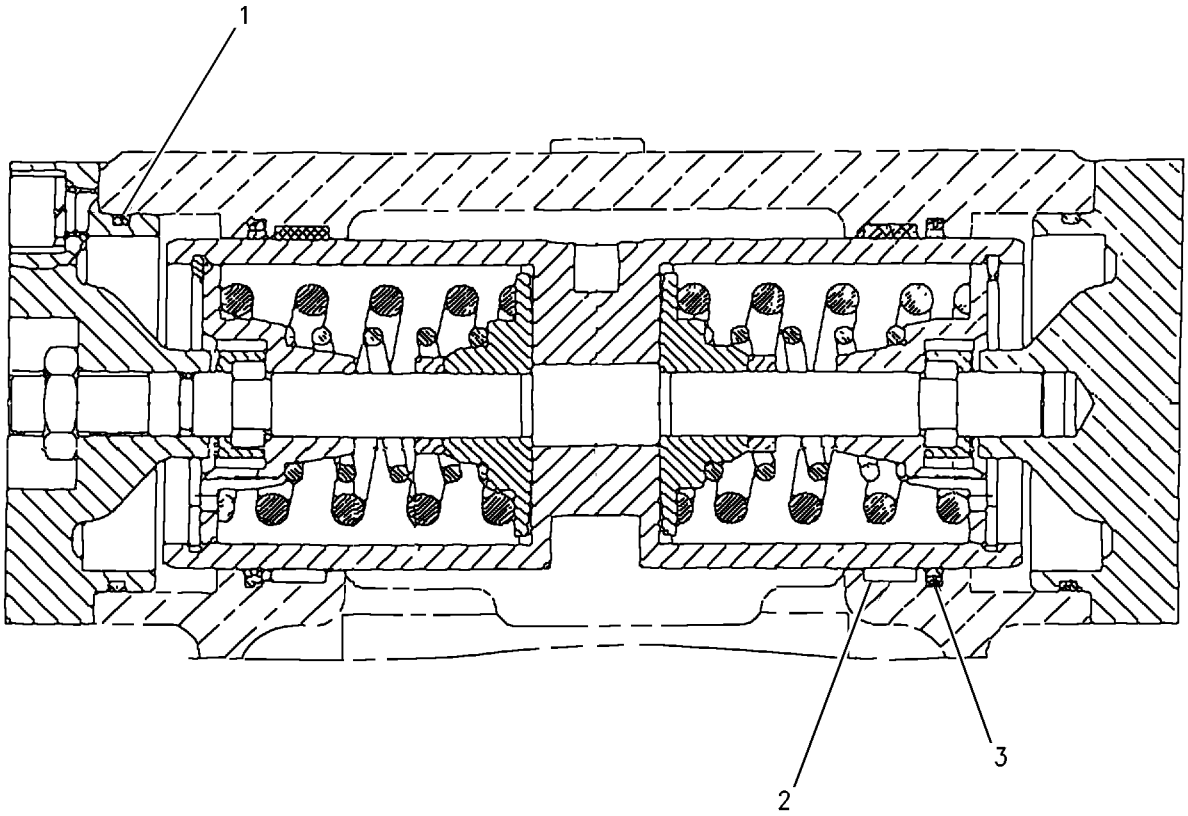

GRAPHIC #1 **<END>** g00836060

STEERING AND BRAKING SYSTEM

309-5075 BRAKE GP-SERVICE & PARKING

S/N: JLF1-UP; WWW1-UP; YYY1-UP
PART OF 309-5091 BRAKE & PLANETARY GP-WINCH
AN ATTACHMENT

SMCS-4251, 4255, 4267 **i02718214**

NOTE	REF NO	GRAPHIC REF	PART NUMBER	QTY	PART NAME 1 2 3 4 5 6 (PRODUCT LEVEL)	SEE PAGE
	1	1	**129-7321**	6	DISC-FRICTION	
	2	1	**203-6618**	1	HOUSING (BRAKE)	
	3	1	**203-6620**	1	PLATE	
	4	1	**203-6621**	1	SEAL	
	5	1	**203-6623**	7	DISC-BRAKE	
	6	1	**203-6626**	1	RETAINER (BRAKE)	
	7	1	**211-8215**	8	SPRING	
	8	1	**211-8216**	1	SPACER (SPRING)	
	9	1	**211-8217**	1	PISTON	
	10	1	**3Y-9267**	1	BALL	
	11	1	**6V-4495**	1	RING-RETAINING	
	12	1	**8M-4704**	1	SEAL-O-RING	

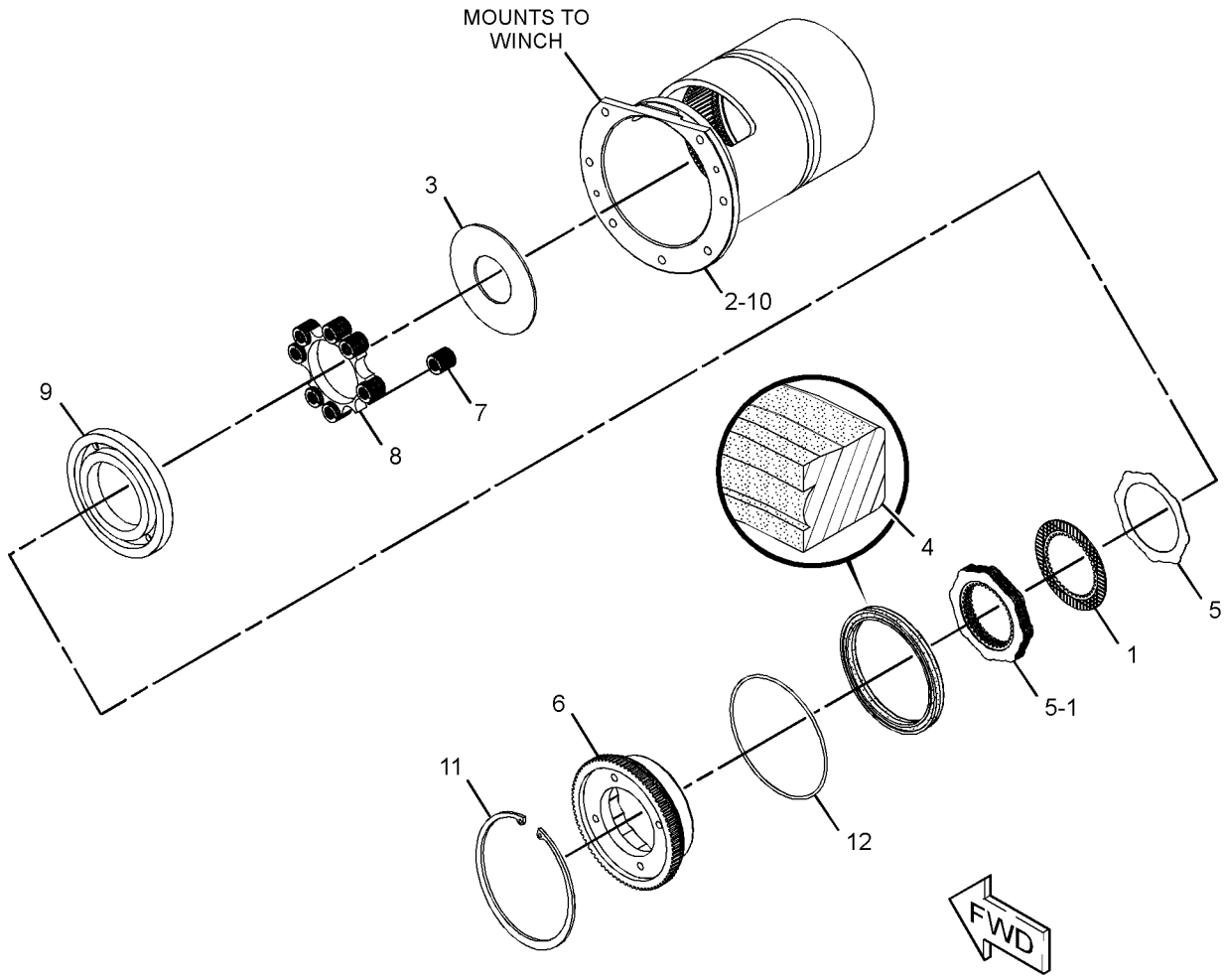

GRAPHIC #1 **<END>** g01375429

212-7037 PUMP GP-CHARGE–HYSTAT PROPEL

S/N: JLF1-UP; WWW1-UP; YYY1-UP
PART OF 254-1379 PUMP GP-PISTON
AN ATTACHMENT

SMCS-3204 **i01937023**

NOTE	REF NO	GRAPHIC REF	PART NUMBER	QTY	PART NAME 1 2 3 4 5 6 (PRODUCT LEVEL)	SEE PAGE
M	1	1	**171-2039**	4	BOLT-SOCKET HEAD (M8X1.25X30-MM)	
	2	1	**117-7278**	1	BUSHING	
	3	1	**5W-1437**	4	LOCKWASHER	
	4	1	**117-7322**	2	SEAL-RING	
	5	1	**126-5709**	1	PLATE	

M-METRIC PART

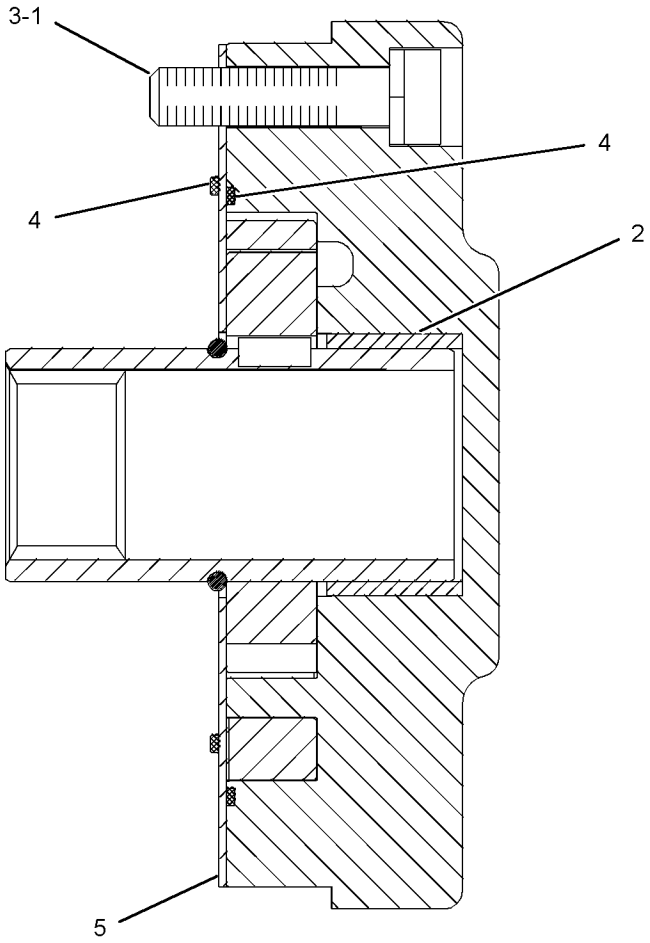

GRAPHIC #1 **<END>** g01011104

280-7343 ROTATING GP-MOTOR–IMPLEMENT

S/N: JLF1-UP; WWW1-UP; YYY1-UP
PART OF 293-5445 ROTATING GP-PUMP
AN ATTACHMENT

SMCS-5058 **i02680383**

NOTE	REF NO	GRAPHIC REF	PART NUMBER	QTY	PART NAME 1 2 3 4 5 6 (PRODUCT LEVEL)	SEE PAGE
	1	1	**126-5632**	9	PISTON	
	2	1	**126-5638**	1	PLATE-RETAINER	
	3	1	**126-5639**	1	RETAINER	
	4	1	**127-4195**	1	SHIM (1.2-MM THK)	
	5	1	**127-4196**	1	SHIM (1-MM THK)	
	6	1	**127-4197**	1	SHIM (0.8-MM THK)	
	7	1	**127-4198**	1	SHIM (0.6-MM THK)	
	8	1	**126-5633**	1	SPRING-CUP	
	9	1	**126-5641**	2	SHIM (3-MM THK)	
	10	1	**126-5642**	1	SPRING	
	11	1	**8T-9597**	1	RING-RETAINING	
					PARTS SHOWN IN GRAPHIC(S) WITHOUT A REFERENCE NUMBER ARE NOT SERVICED SEPARATELY	

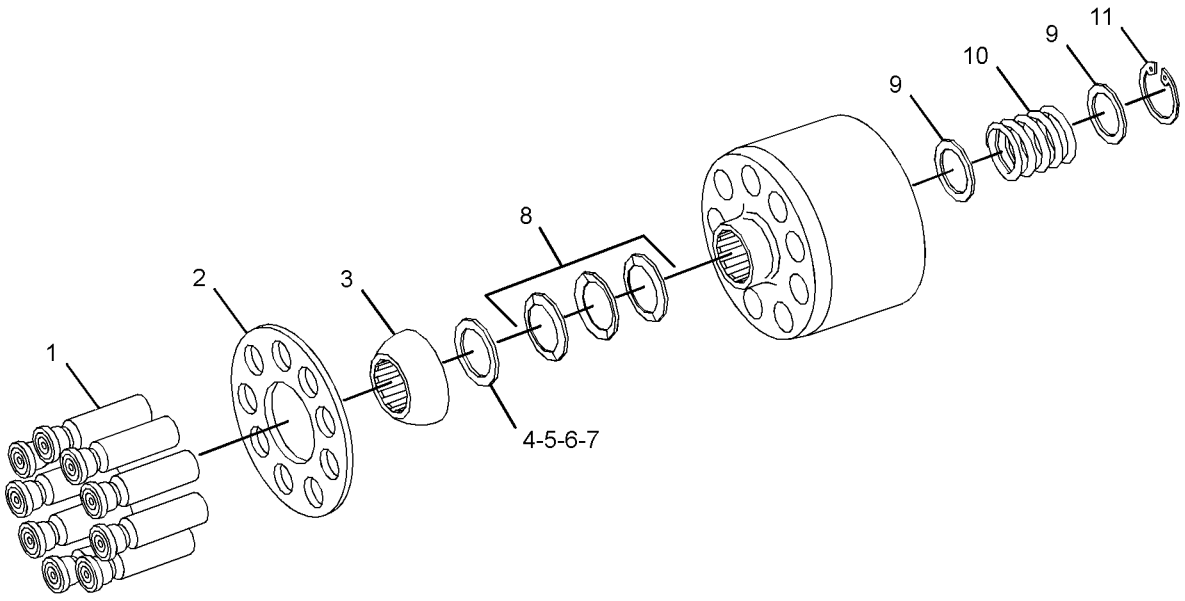

GRAPHIC #1 **<END>** g01348406

263-3745 CYLINDER GP-ANGLING

S/N: WWW1-UP; YYY1-UP
76.2-MM(3-IN)BORE X 399.9-MM(15.74-IN)STROKE
PART OF 244-7385 HYDRAULIC AR

SMCS-5101 **i02635319**

NOTE	REF NO	GRAPHIC REF	PART NUMBER	QTY	PART NAME 1 2 3 4 5 6 (PRODUCT LEVEL)	SEE PAGE
	1	1	**3B-8489**	2	FITTING-GREASE	
	2	1	**191-6159**	1	HEAD	
	3	1	**239-2170**	1	PISTON	
	4	1	**263-3746**	1	CYLINDER AS	
	5	1	**263-3748**	1	ROD AS	
	6	1	**167-2186**	1	SEAL AS-BUFFER	
	7	1	**167-2294**	1	SEAL-U-CUP	
	8	1	**1H-7339**	1	SEAL-O-RING	
	9	1	**226-8202**	1	SEAL-WIPER	
	10	1	**4T-6780**	1	RING-WEAR	
	11	1	**5H-8848**	1	SEAL-O-RING	
	12	1	**6J-1972**	1	SEAL AS	
	13	1	**6J-5730**	1	LOCKNUT (1-1/8-12-THD)	
	14	1	**6J-5731**	1	RING-BACKUP	
	15	1	**6J-5733**	1	RING-WEAR	

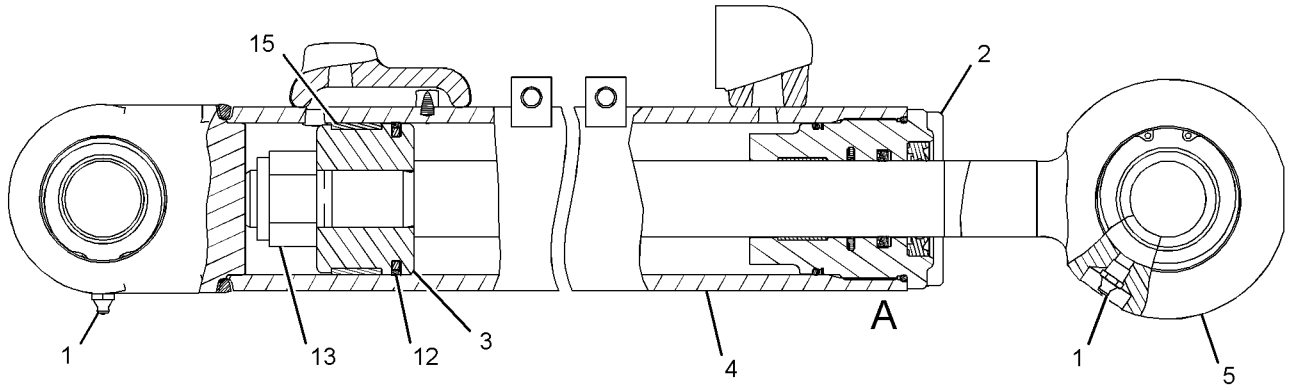

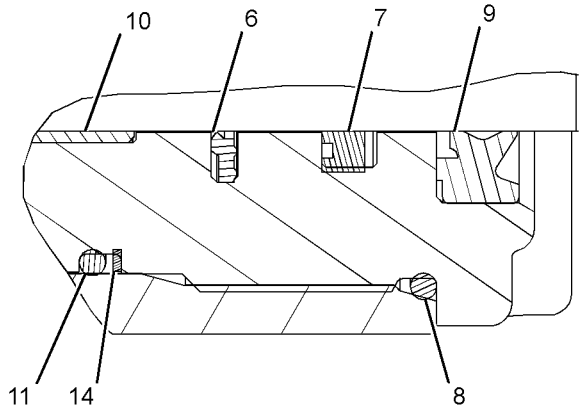

VIEW OF AREA A

GRAPHIC #1 **<END>** g01323641

HYDRAULIC SYSTEM

263-4068 CYLINDER GP-BULLDOZER LIFT–RH

S/N: JLF1-UP; WWW1-UP; YYY1-UP
88.9-MM(3.5-IN)BORE X 353.9-MM(13.93-IN)STROKE
PART OF 244-7385, 317-2808 HYDRAULIC AR

SMCS-5102 **i03602240**

NOTE	REF NO	GRAPHIC REF	PART NUMBER	QTY	PART NAME 1 2 3 4 5 6 (PRODUCT LEVEL)	SEE PAGE
	1	1	**3B-8489**	1	FITTING-GREASE	
	2	1	**7J-9886**	1	PISTON	
	3	1	**7J-9887**	1	CROWN	
	4	1	**221-0375**	1	HEAD	
	5	1	**263-4069**	1	CYLINDER AS-HYDRAULIC (RH)	
	6	1	**263-4072**	1	ROD AS	
		1	**263-3181**	1	BEARING-SLEEVE	
	7	1	**167-2186**	1	SEAL AS-BUFFER	
	8	1	**167-2294**	1	SEAL-U-CUP	
	9	1	**226-8202**	1	SEAL-WIPER	
	10	1	**2H-3931**	1	SEAL-O-RING	
	11	1	**4J-9224**	1	RING-BACKUP	
	12	1	**4T-6780**	1	RING-WEAR	
	13	1	**4T-8054**	1	SEAL AS	
	14	1	**7J-5639**	1	BOLT-LOCKING (1-14X2.5-IN)	
	15	1	**7J-9885**	1	RING-WEAR	
	16	1	**8J-7415**	1	WASHER-HARD (28X51X4.5-MM THK)	

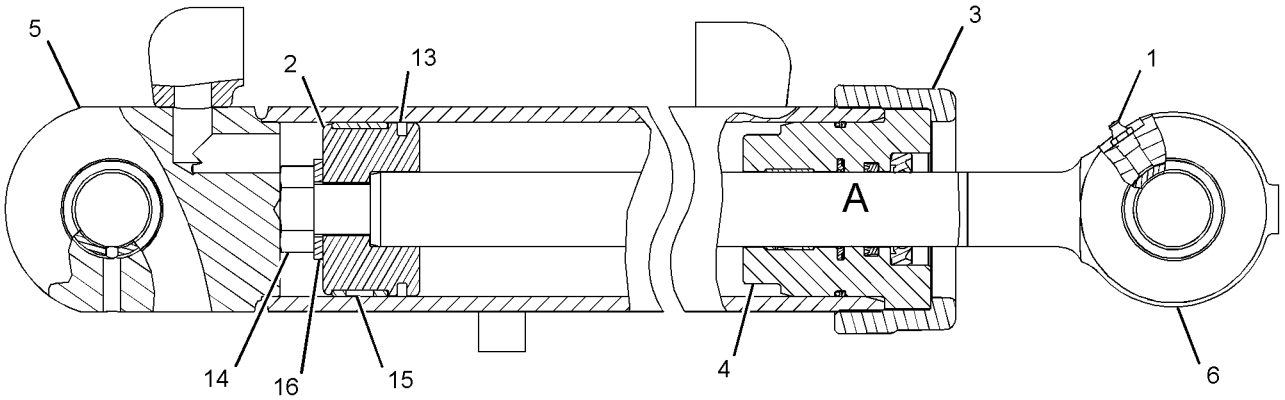

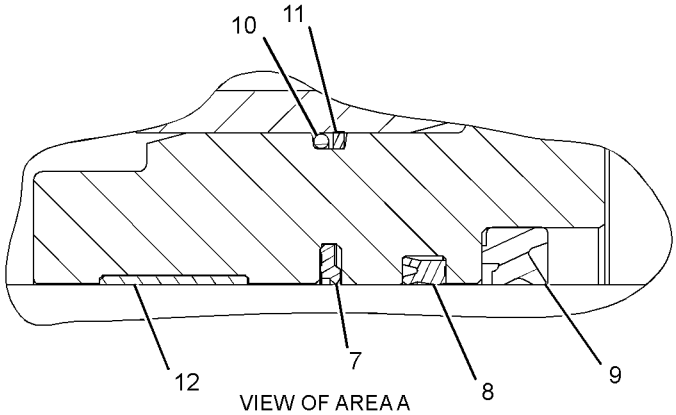

VIEW OF AREA A

GRAPHIC #1 **<END>** g01323459

276-4667 CYLINDER GP-BULLDOZER LIFT–LH

S/N: JLF1-UP; WWW1-UP; YYY1-UP
88.9-MM(3.5-IN)BORE X 353.9-MM (13.93-IN)STROKE
PART OF 244-7385, 317-2808 HYDRAULIC AR

SMCS-5102 **i03408126**

NOTE	REF NO	GRAPHIC REF	PART NUMBER	QTY	PART NAME 1 2 3 4 5 6 (PRODUCT LEVEL)	SEE PAGE
	1	1	**3B-8489**	1	FITTING-GREASE	
	2	1	**7J-9886**	1	PISTON	
	3	1	**7J-9887**	1	CROWN	
	4	1	**221-0375**	1	HEAD	
	5	1	**263-4072**	1	ROD AS	
		1	**263-3181**	1	BEARING-SLEEVE	
	6	1	**276-4668**	1	CYLINDER AS	
	7	1	**167-2186**	1	SEAL AS-BUFFER	
	8	1	**167-2294**	1	SEAL-U-CUP	
	9	1	**226-8202**	1	SEAL-WIPER	
	10	1	**2H-3931**	1	SEAL-O-RING	
	11	1	**4J-9224**	1	RING-BACKUP	
	12	1	**4T-6780**	1	RING-WEAR	
	13	1	**4T-8054**	1	SEAL AS	
	14	1	**7J-5639**	1	BOLT-LOCKING (1-14X2.5-IN)	
	15	1	**7J-9885**	1	RING-WEAR	
	16	1	**8J-7415**	1	WASHER-HARD (28X51X4.5-MM THK)	

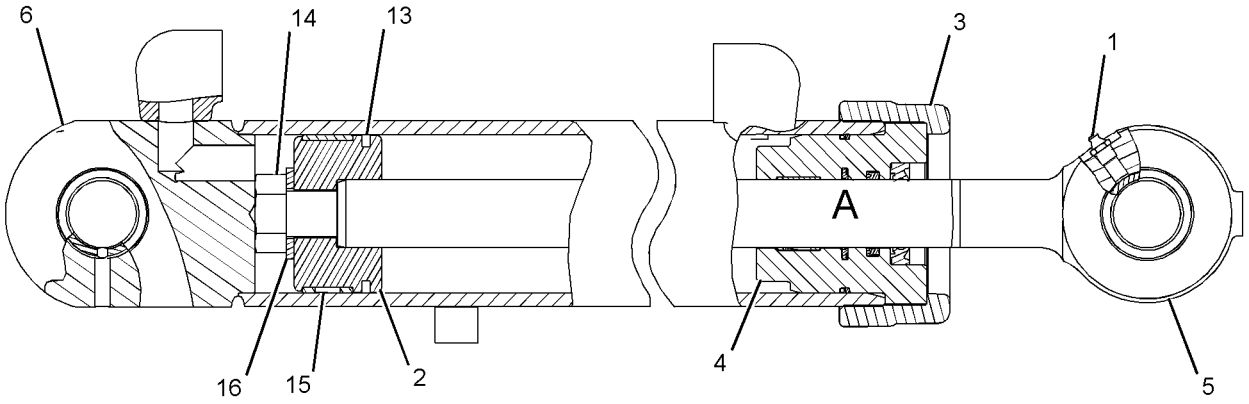

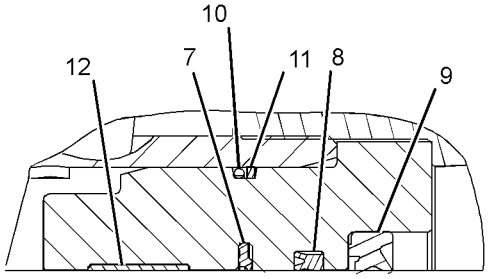

VIEW OF AREA A

GRAPHIC #1 **<END>** g01329089

HYDRAULIC SYSTEM

262-4415 CYLINDER GP-RIPPER–RH

S/N: JLF1-UP; WWW1-UP; YYY1-UP
76.2-MM (3-IN) BORE X 205.1-MM (8.08-IN) STROKE
PART OF 262-4407 RIPPER AR
AN ATTACHMENT

SMCS-5352, 5356 **i02650133**

NOTE	REF NO	GRAPHIC REF	PART NUMBER	QTY	PART NAME 1 2 3 4 5 6 (PRODUCT LEVEL)	SEE PAGE
	1	1	**3B-8489**	2	FITTING-GREASE	
	2	1	**8J-0553**	1	PISTON	
	3	1	**191-6159**	1	HEAD	
	4	1	**193-1546**	1	ROD AS	
		1	**7K-6365**	1	BEARING-SLEEVE	
	5	1	**262-4416**	1	CYLINDER AS-HYDRAULIC (RH)	
	6	1	**167-2186**	1	SEAL AS-BUFFER	
	7	1	**167-2294**	1	SEAL-U-CUP	
	8	1	**1H-7339**	1	SEAL-O-RING	
	9	1	**226-8202**	1	SEAL-WIPER	
	10	1	**4T-6780**	1	RING-WEAR	
	11	1	**5H-8848**	1	SEAL-O-RING	
	12	1	**5P-8250**	1	WASHER (28X49X5-MM THK)	
	13	1	**6J-1972**	1	SEAL AS	
	14	1	**6J-5731**	1	RING-BACKUP	
	15	1	**6J-5733**	1	RING-WEAR	
	16	1	**7J-5639**	1	BOLT-LOCKING (1-14X2.5-IN)	

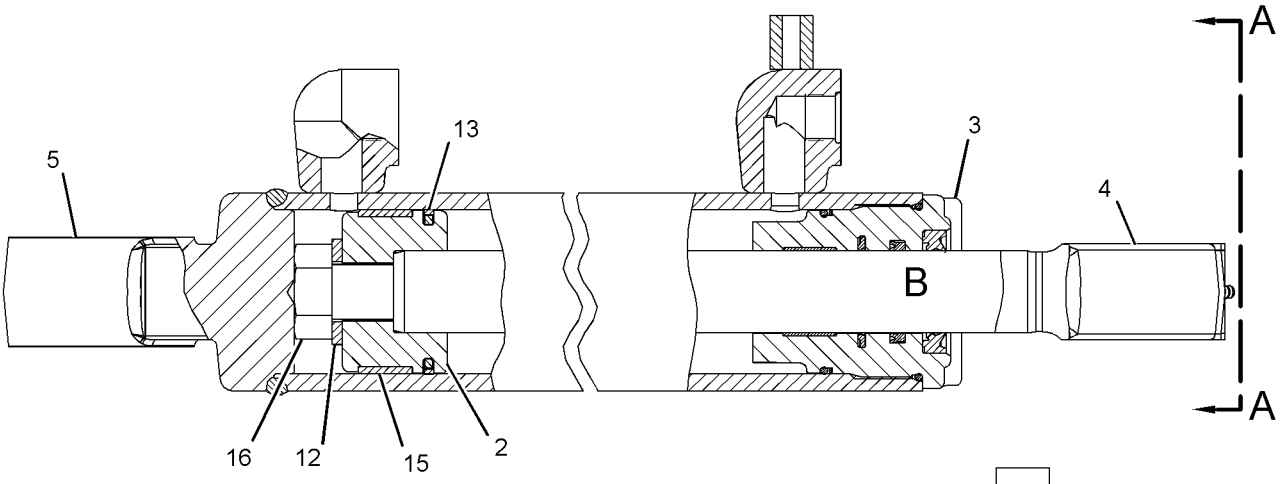

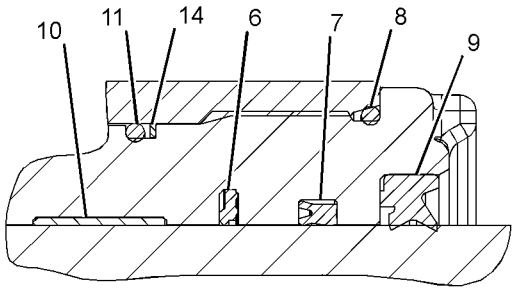

VIEW OF AREA B

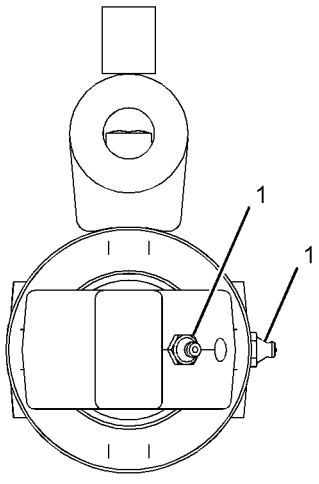

VIEW A-A

GRAPHIC #1 **<END>** g01333544

262-4418 CYLINDER GP-RIPPER–LH

S/N: JLF1-UP; WWW1-UP; YYY1-UP
76.2-MM (3-IN) BORE X 205.1-MM (8.08-IN) STROKE
PART OF 262-4407 RIPPER AR
AN ATTACHMENT

SMCS-5352, 5356 **i02650134**

NOTE	REF NO	GRAPHIC REF	PART NUMBER	QTY	PART NAME 1 2 3 4 5 6 (PRODUCT LEVEL)	SEE PAGE
	1	1	**3B-8489**	2	FITTING-GREASE	
	2	1	**8J-0553**	1	PISTON	
	3	1	**191-6159**	1	HEAD	
	4	1	**193-1546**	1	ROD AS	
		1	**7K-6365**	1	BEARING-SLEEVE	
	5	1	**262-9253**	1	CYLINDER AS-HYDRAULIC (LH)	
	6	1	**167-2186**	1	SEAL AS-BUFFER	
	7	1	**167-2294**	1	SEAL-U-CUP	
	8	1	**1H-7339**	1	SEAL-O-RING	
	9	1	**226-8202**	1	SEAL-WIPER	
	10	1	**4T-6780**	1	RING-WEAR	
	11	1	**5H-8848**	1	SEAL-O-RING	
	12	1	**5P-8250**	1	WASHER (28X49X5-MM THK)	
	13	1	**6J-1972**	1	SEAL AS	
	14	1	**6J-5731**	1	RING-BACKUP	
	15	1	**6J-5733**	1	RING-WEAR	
	16	1	**7J-5639**	1	BOLT-LOCKING (1-14X2.5-IN)	

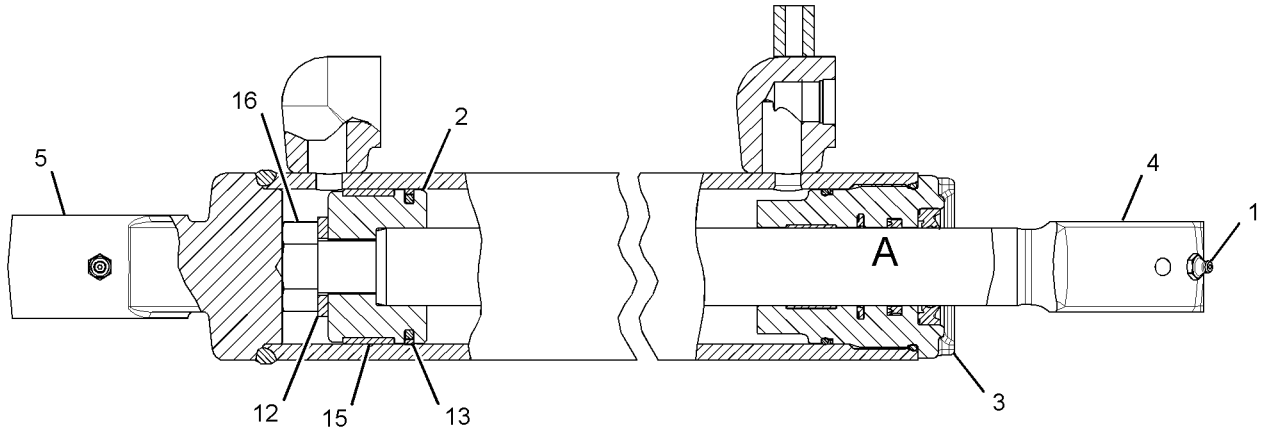

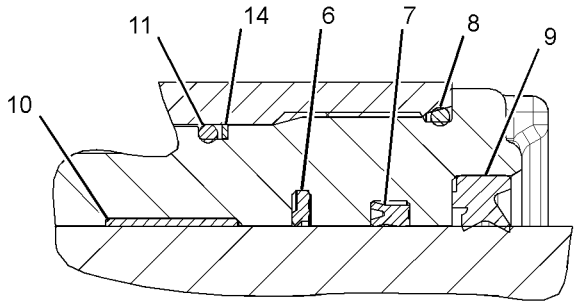

VIEW OF AREA A

GRAPHIC #1 **<END>** g01333967

HYDRAULIC SYSTEM

263-5008 CYLINDER GP-TILT

S/N: JLF1-UP; WWW1-UP; YYY1-UP
88.9-MM(3.5-IN)BORE X 144.6-MM(5.69-IN)STROKE
PART OF 244-7385, 317-2808 HYDRAULIC AR

SMCS-5104 **i03408127**

NOTE	REF NO	GRAPHIC REF	PART NUMBER	QTY	PART NAME 1 2 3 4 5 6 (PRODUCT LEVEL)	SEE PAGE
	1	1	**3B-8489**	2	FITTING-GREASE	
	2	1	**7J-9886**	1	PISTON	
	3	1	**7J-9887**	1	CROWN	
	4	1	**221-0375**	1	HEAD	
	5	1	**263-5009**	1	CYLINDER AS	
	6	1	**263-5013**	1	ROD AS	
		1	**1L-4775**	2	RING-RETAINING	
		1	**4D-0298**	1	BEARING	
	7	1	**167-2186**	1	SEAL AS-BUFFER	
	8	1	**167-2294**	1	SEAL-U-CUP	
	9	1	**226-8202**	1	SEAL-WIPER	
	10	1	**2H-3931**	1	SEAL-O-RING	
	11	1	**4J-9224**	1	RING-BACKUP	
	12	1	**4T-6780**	1	RING-WEAR	
	13	1	**4T-8054**	1	SEAL AS	
	14	1	**7J-5639**	1	BOLT-LOCKING (1-14X2.5-IN)	
	15	1	**7J-9885**	1	RING-WEAR	
	16	1	**8J-7415**	1	WASHER-HARD (28X51X4.5-MM THK)	

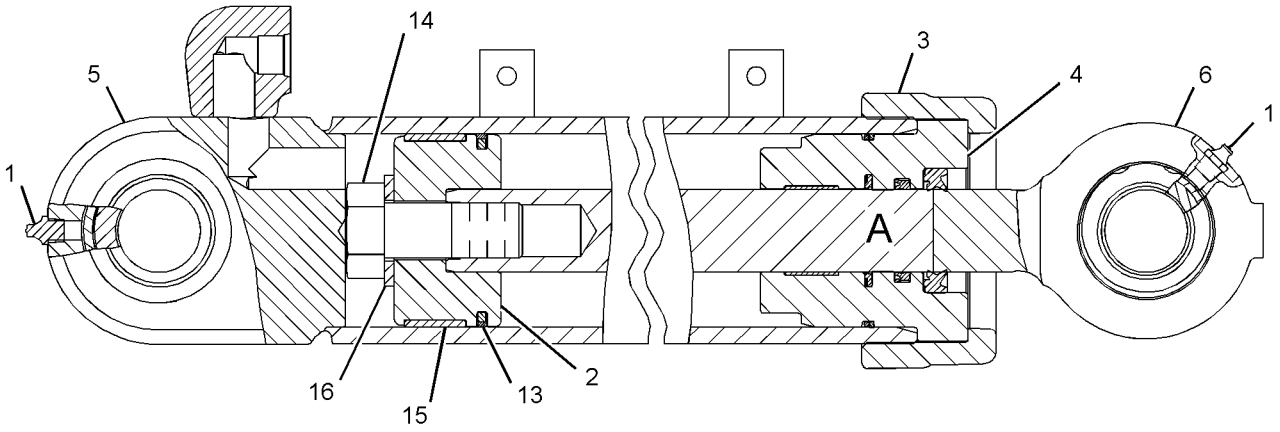

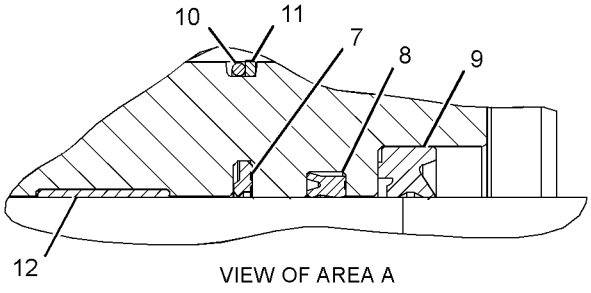

VIEW OF AREA A

GRAPHIC #1 **<END>** g01329772

HYDRAULIC SYSTEM

316-9205 CYLINDER GP-TILT

S/N: JLF1-UP
76.2-MM (3-IN) BORE X 434-MM (17.09-IN) STROKE
PART OF 317-2808 HYDRAULIC AR

SMCS-5104 **i02889158**

NOTE	REF NO	GRAPHIC REF	PART NUMBER	QTY	PART NAME 1 2 3 4 5 6 (PRODUCT LEVEL)	SEE PAGE
	1	1	**3B-8489**	2	FITTING-GREASE	
	2	1	**191-6159**	1	HEAD	
	3	1	**239-2170**	1	PISTON	
	4	1	**263-3746**	1	CYLINDER AS	
	5	1	**316-9198**	1	ROD AS	
	6	1	**167-2186**	1	SEAL AS-BUFFER	
	7	1	**167-2294**	1	SEAL-U-CUP	
	8	1	**1H-7339**	1	SEAL-O-RING	
	9	1	**226-8202**	1	SEAL-WIPER	
	10	1	**4T-6780**	1	RING-WEAR	
	11	1	**5H-8848**	1	SEAL-O-RING	
	12	1	**6J-1972**	1	SEAL AS	
	13	1	**6J-5730**	1	LOCKNUT (1-1/8-12-THD)	
	14	1	**6J-5731**	1	RING-BACKUP	
	15	1	**6J-5733**	1	RING-WEAR	

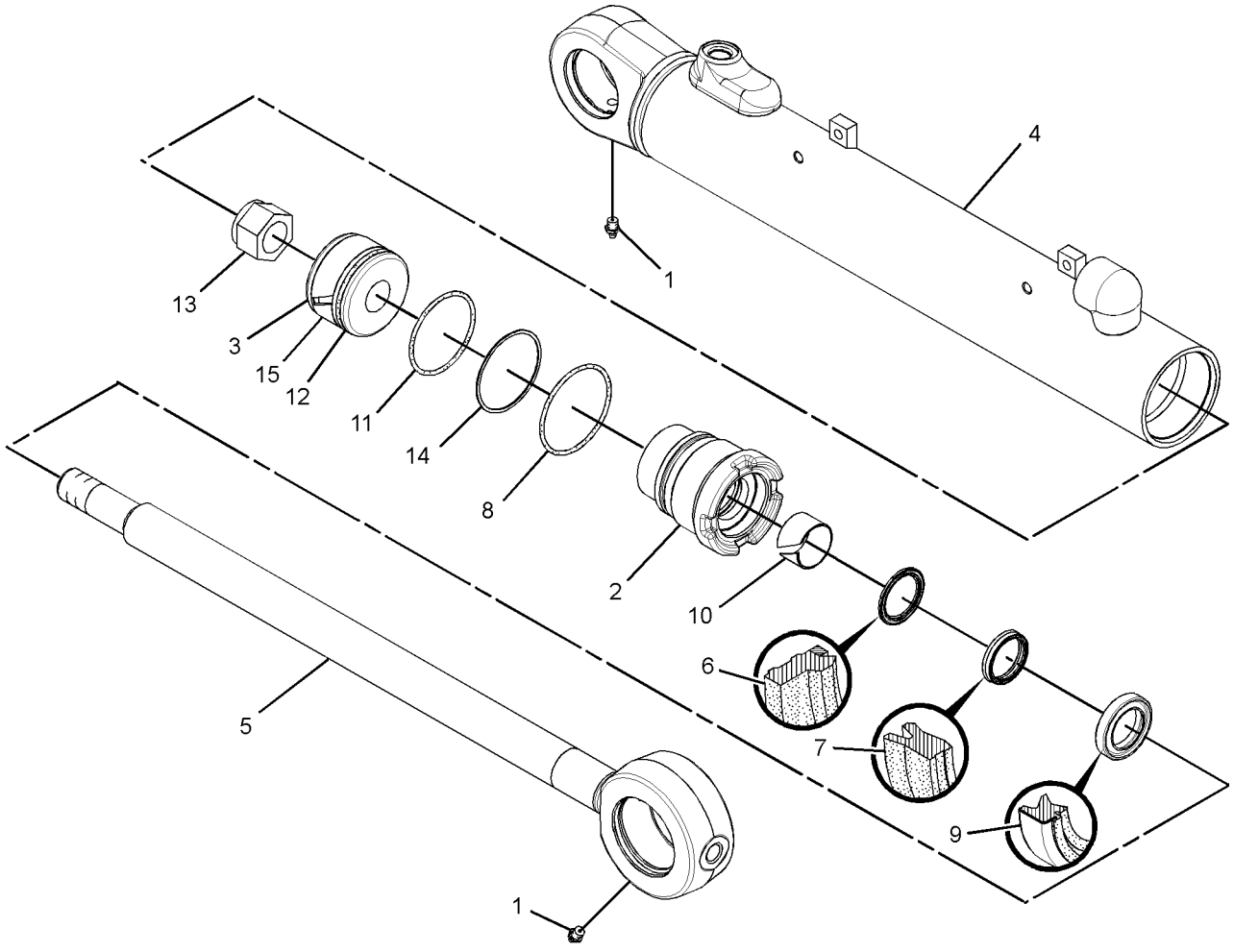

GRAPHIC #1 **<END>** g01569494

HYDRAULIC SYSTEM

244-7385 HYDRAULIC AR

S/N: WWW1-UP; YYY1-UP
PART OF 244-7374, 244-7375 COMMON AR

SMCS-5050 **i03607682**

NOTE	PART NUMBER	QTY	PART NAME 1 2 3 4 5 6 (PRODUCT LEVEL)	SEE PAGE
Y	**263-3745**	2	CYLINDER GP-ANGLING	397
Y	**276-4667**	1	CYLINDER GP-BULLDOZER LIFT (LH)	399
Y	**263-4068**	1	CYLINDER GP-BULLDOZER LIFT (RH)	398
Y	**263-5008**	1	CYLINDER GP-TILT	402
Y	*244-7452*	1	PUMP GP-GEAR (IMPLEMENT)	430
Y	*244-7426*	1	TANK GP-HYDRAULIC	431

Y-SEPARATE ILLUSTRATION

<END>

244-7470 HYDRAULIC AR—3-BANK

S/N: JLF1-UP; WWW1-UP; YYY1-UP
CANNOT BE USED WITH 262-4407—PAGE 653
AN ATTACHMENT

SMCS-5050 **i03633296**

NOTE	PART NUMBER	QTY	PART NAME 1 2 3 4 5 6 (PRODUCT LEVEL)	SEE PAGE
Y	*269-7665*	1	COVER GP-CONSOLE (STANDARD)	507
Y	*254-1452*	1	LINES GP-ANGLE & TILT	406
Y	*254-1453*	1	LINES GP-HYDRAULIC (3 CIRCUITS)	414
Y	*283-3514*	1	LINES GP-PUMP	421
Y	*254-1386*	1	VALVE & MTG GP-IMPLEMENT CONT (STANDARD)	434

Y-SEPARATE ILLUSTRATION

<END>

244-7471 HYDRAULIC AR—4-BANK

S/N: JLF1-UP; WWW1-UP; YYY1-UP
CANNOT BE USED WITH HYDRAULIC WINCH PUMP DRIVE ARRANGEMENT, WINCH MOUNTING GROUP, WINCH ARRANGEMENT
AN ATTACHMENT

SMCS-5050 **i02679277**

NOTE	PART NUMBER	QTY	PART NAME 1 2 3 4 5 6 (PRODUCT LEVEL)	SEE PAGE
Y	*249-9051*	1	CONTROL GP-RIPPER	498
Y	*254-1452*	1	LINES GP-ANGLE & TILT	406
Y	*254-1453*	1	LINES GP-HYDRAULIC	414
Y	*276-2988*	1	LINES GP-PUMP	419
Y	*254-1460*	1	LINES GP-REAR ATTACHMENT	423
Y	*281-3997*	1	MIRROR GP-REAR VIEW	538
Y	*254-1457*	1	VALVE & MTG GP-IMPLEMENT CONT	435

Y-SEPARATE ILLUSTRATION

<END>

244-7472 HYDRAULIC AR—4-BANK

S/N: JLF1-UP; WWW1-UP; YYY1-UP
WINCH
FOR USE WITH 244-7455—PAGE 25. CANNOT BE USED WITH 244-7451—PAGE 25, 244-7433—PAGE 335, 244-7434—PAGE 317, 262-4407—PAGE 653
AN ATTACHMENT

SMCS-5050 **i02679454**

NOTE	PART NUMBER	QTY	PART NAME 1 2 3 4 5 6 (PRODUCT LEVEL)	SEE PAGE
Y	*249-9052*	1	CONTROL GP-WINCH	630
Y	*254-1452*	1	LINES GP-ANGLE & TILT	406
Y	*254-1453*	1	LINES GP-HYDRAULIC	414
Y	*276-2988*	1	LINES GP-PUMP	419
Y	*254-1460*	1	LINES GP-REAR ATTACHMENT	423
Y	*254-1457*	1	VALVE & MTG GP-IMPLEMENT CONT	435
Y-SEPARATE ILLUSTRATION				

<END>

317-2808 HYDRAULIC AR

S/N: JLF1-UP
PART OF 282-5326 COMMON AR

SMCS-5050 **i03607683**

NOTE	PART NUMBER	QTY	PART NAME 1 2 3 4 5 6 (PRODUCT LEVEL)	SEE PAGE
Y	**263-4068**	1	CYLINDER GP-BULLDOZER LIFT (RH)	398
Y	**276-4667**	1	CYLINDER GP-BULLDOZER LIFT (LH)	399
Y	**263-5008**	1	CYLINDER GP-TILT	402
Y	**316-9205**	2	CYLINDER GP-TILT (ANGLE)	403
Y	*244-7452*	1	PUMP GP-GEAR (IMPLEMENT)	430
Y	*244-7426*	1	TANK GP-HYDRAULIC	431
Y-SEPARATE ILLUSTRATION				

<END>

HYDRAULIC SYSTEM

254-1452 LINES GP-ANGLE & TILT

S/N: JLF1-UP; WWW1-UP; YYY1-UP
PART OF 244-7470, 244-7471, 244-7472 HYDRAULIC AR
AN ATTACHMENT

SMCS-5057, 5101, 5104 **i02815285**

NOTE	REF NO	GRAPHIC REF	PART NUMBER	QTY	PART NAME 1 2 3 4 5 6 (PRODUCT LEVEL)	SEE PAGE
I	1	1	**9R-4692**	1	HOSE AS	
	2	2	**184-1137**	2	PLATE	
	3	2	**184-1138**	2	CLAMP	
I	4	1	**229-4995**	1	HOSE AS	
I	5	1	**241-9643**	1	HOSE AS	
	6	2	*260-9171*	6	CONNECTOR AS	
					(EACH INCLUDES)	
		2	**3J-1907**	1	SEAL-O-RING	
		2	**6V-8397**	1	SEAL-O-RING	
		2	**8T-9041**	1	CONNECTOR	
I	7	2	**263-4154**	2	HOSE AS	
	8	2	**263-4914**	1	GUARD	
	9	1	**263-4915**	2	PLATE AS	
I	10	1	**274-6538**	1	HOSE AS	
I	11	1	**276-4672**	1	HOSE AS	
I	12	1	**283-3191**	1	HOSE AS	
	13	2	**289-0100**	4	TUBE AS	
	14	2	**289-0102**	2	TUBE AS	
I	15	1	**289-0104**	2	HOSE AS	
I	16	1	**289-0105**	1	HOSE AS	
I	17	1	**289-0106**	1	HOSE AS	
I	18	1	**289-0107**	2	HOSE AS	
	19	1	**293-3820**	1	COVER AS (RH)	
	20	1	**293-3821**	1	COVER AS (LH)	
	21	2	**300-2121**	2	BLOCK	
I	22	1	**301-9295**	2	HOSE AS	
I	23	1	**301-9300**	4	HOSE AS	
	24	2	**303-1888**	1	TUBE AS	
	25	2	**303-1889**	1	TUBE AS	
	26	2	**303-1892**	2	BRACKET	
	27	2	**303-1893**	2	PLATE AS	
	28	1	**303-1905**	1	TUBE AS	
	29	1	**303-1906**	1	TUBE AS	
	30	1	**303-1907**	1	TUBE AS	
	31	1	**303-1908**	1	TUBE AS	
	32	1	**303-1909**	1	TUBE AS	
I	33	1	**303-1910**	1	HOSE AS	
I	34	1	**303-6575**	1	HOSE AS	
	35	2	**033-8248**	2	CLIP	
	36	1,2	**100-4336**	4	CLIP	
	37	1,2	*148-8318*	4	CONNECTOR AS	
					(EACH INCLUDES)	
		1,2	**3K-0360**	1	SEAL-O-RING	
		1,2	**6V-8397**	1	SEAL-O-RING	
		1,2	**6V-8634**	1	CONNECTOR (SEAL)	
	38	2	*148-8336*	2	CONNECTOR AS	
					(EACH INCLUDES)	
		2	**3J-1907**	1	SEAL-O-RING	
		2	**6V-8397**	1	SEAL-O-RING	
		2	**6V-8636**	1	CONNECTOR (SEAL)	
	39	2	*148-8365*	2	ELBOW AS	
					(EACH INCLUDES)	
		2	**3J-1907**	1	SEAL-O-RING	
		2	**6V-8398**	1	SEAL-O-RING	
		2	**8T-6876**	1	ELBOW (90-DEG)	

254-1452 **LINES GP-ANGLE & TILT** *(contd.)* **i02815285**

NOTE	REF NO	GRAPHIC REF	PART NUMBER	QTY	PART NAME 1 2 3 4 5 6 (PRODUCT LEVEL)	SEE PAGE
	40	1,2	*148-8374*	2	ELBOW AS	
					(EACH INCLUDES)	
		1,2	**3K-0360**	1	SEAL-O-RING	
		1,2	**6V-8397**	1	SEAL-O-RING	
		1,2	**6V-8723**	1	ELBOW (90-DEG)	
	41	2	*150-4044*	2	CONNECTOR AS	
					(EACH INCLUDES)	
		2	**3J-1907**	1	SEAL-O-RING	
		2	**6V-8397**	1	SEAL-O-RING	
		2	**8T-1779**	1	CONNECTOR (SEAL)	
	42	1,2	**1S-0994**	8	CLIP	
	43	2	**2H-0435**	2	CLAMP	
	44	1,2	**3B-8489**	4	FITTING-GREASE	
	45	1	**3B-8822**	2	ELBOW	
	46	2	**5P-7462**	3	CLIP (SLOT)	
	47	2	**5P-7463**	3	CLIP (TAB)	
	48	2	**6V-0683**	3	GROMMET	
	49	1,2	**6V-8397**	20	SEAL-O-RING	
	50	1,2	**6V-8398**	3	SEAL-O-RING	
	51	2	**6V-8936**	2	REDUCER	
	52	1	**7J-9108**	6	SEAL-O-RING	
	53	1,2	**7X-7729**	5	WASHER (11X25X3-MM THK)	
	54	2	**8L-5008**	4	ELBOW-PIPE	
	55	2	**8T-1885**	2	CLIP (SLOT)	
	56	2	**8T-1886**	2	CLIP (TAB)	
	57	1,2	**8T-4121**	55	WASHER-HARD (11X21X2.5-MM THK)	
M	58	1,2	**8T-4136**	17	BOLT (M10X1.5X25-MM)	
M	59	1,2	**8T-4137**	24	BOLT (M10X1.5X20-MM)	
M	60	2	**8T-4186**	8	BOLT (M10X1.5X40-MM)	
M	61	2	**8T-4191**	6	BOLT (M10X1.5X16-MM)	
M	62	1,2	**8T-4195**	5	BOLT (M10X1.5X30-MM)	
	63	1	**9M-9162**	8	CLAMP	

I-REFER TO HYDRAULIC INFORMATION SYSTEM
M-METRIC PART

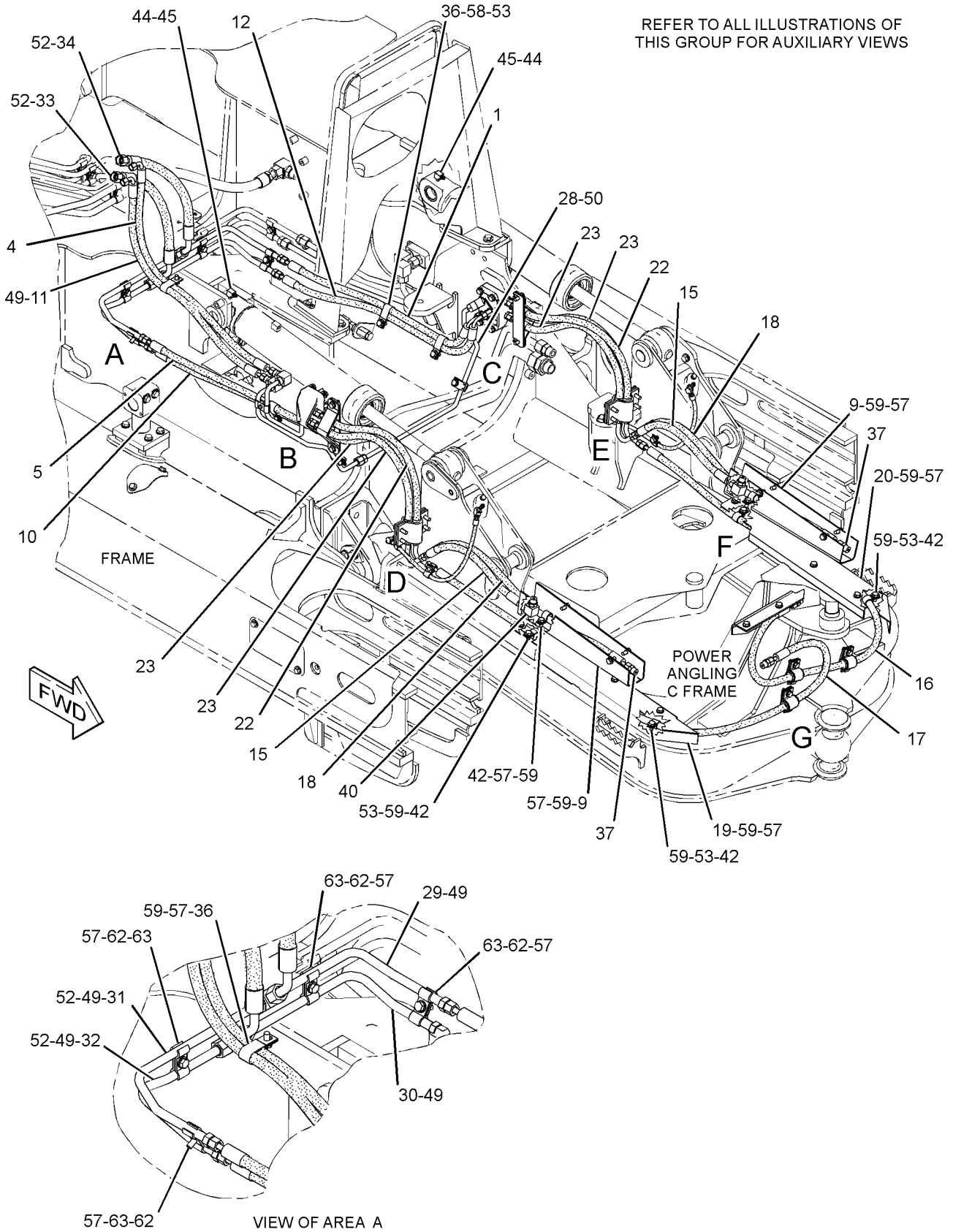

GRAPHIC #1

g01346364

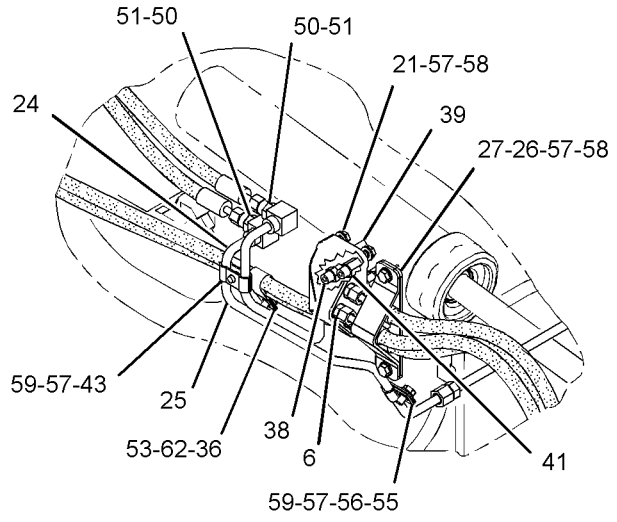

VIEW OF AREA B

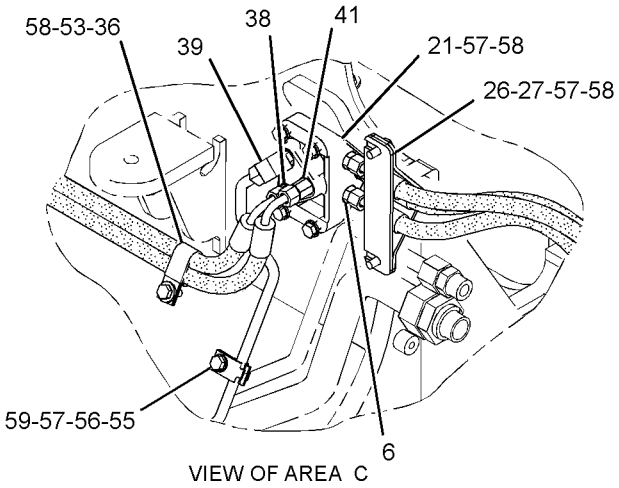

VIEW OF AREA C

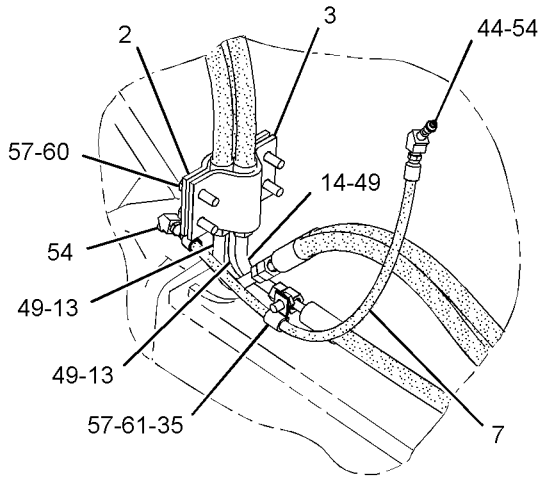

VIEW OF AREA D

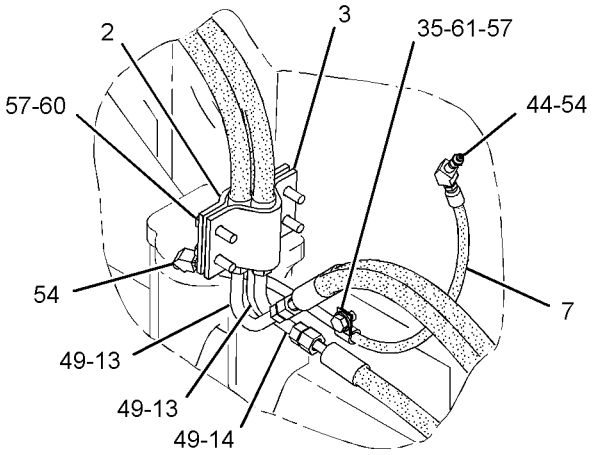

VIEW OF AREA E

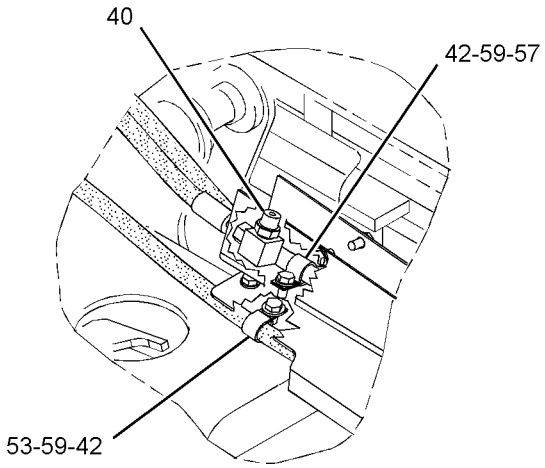

VIEW OF AREA F

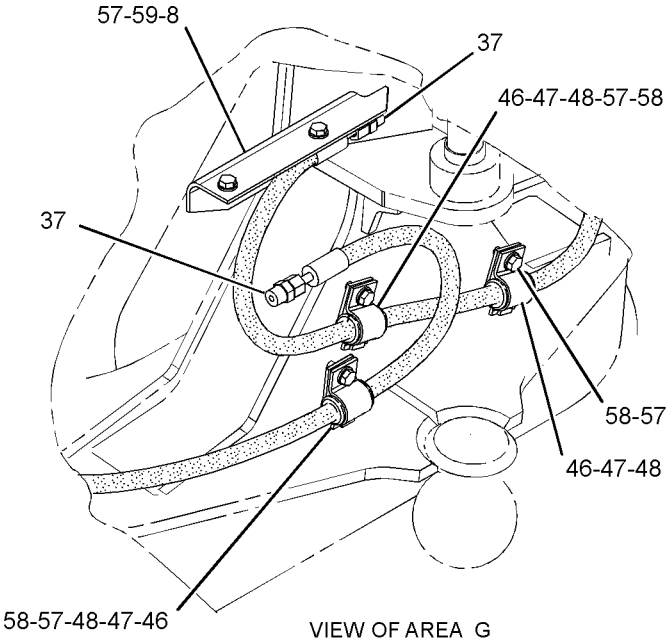

VIEW OF AREA G

GRAPHIC #2 **<END>** g01346688

HYDRAULIC SYSTEM

320-0466 LINES GP-ANGLE & TILT

S/N: WWW1-UP; YYY1-UP
FIELD INSTALLATION

SMCS-5057, 5101, 5104 **i03373380**

NOTE	REF NO	GRAPHIC REF	PART NUMBER	QTY	PART NAME 1 2 3 4 5 6 (PRODUCT LEVEL)	SEE PAGE
I	1	1	**7T-9105**	1	HOSE AS	
I	2	1	**9U-3430**	2	HOSE AS	
	3	1,2	**184-1137**	2	PLATE	
	4	1,2	**184-1138**	2	CLAMP	
	5	1	*260-9171*	2	CONNECTOR AS	
					(EACH INCLUDES)	
		1	**3J-1907**	1	SEAL-O-RING	
		1	**6V-8397**	1	SEAL-O-RING	
		1	**8T-9041**	1	CONNECTOR	
I	6	1	**261-8495**	1	HOSE AS	
I	7	1,2	**263-4154**	2	HOSE AS	
	8	2	**263-4914**	1	GUARD	
	9	2	**263-4915**	2	PLATE AS	
I	10	1	**272-1750**	2	HOSE AS	
	11	1	**283-4935**	1	TUBE AS	
	12	1	**283-4942**	1	TUBE AS	
	13	1	*289-0099*	2	BLOCK GP-HYDRAULIC	
					(EACH INCLUDES)	
		1	**272-3022**	1	BLOCK	
		1	*148-8407*	4	PLUG AS	
					(EACH INCLUDES)	
		1	**3J-1907**	1	SEAL-O-RING	
		1	**9S-4191**	1	PLUG-O-RING	
	14	1,2	**289-0100**	4	TUBE AS	
I	15	1	**289-0101**	4	HOSE AS	
	16	1,2	**289-0102**	2	TUBE AS	
I	17	1	**289-0103**	2	HOSE AS	
I	18	1,2	**289-0104**	2	HOSE AS	
I	19	1	**289-0105**	1	HOSE AS	
I	20	1	**289-0106**	1	HOSE AS	
I	21	1,2	**289-0107**	2	HOSE AS	
	22	2	**293-3820**	1	COVER AS	
	23	2	**293-3821**	1	COVER AS	
	24	2	**303-1906**	1	TUBE AS	
	25	2	**303-1907**	1	TUBE AS	
	26	2	**303-1908**	1	TUBE AS	
	27	2	**303-1909**	1	TUBE AS	
I	28	1	**320-0464**	1	HOSE AS	
I	29	1	**320-0465**	1	HOSE AS	
	30	1,2	**033-8248**	2	CLIP	
	31	1	**100-4336**	4	CLIP	
	32	2	*148-8318*	4	CONNECTOR AS	
					(EACH INCLUDES)	
		2	**3K-0360**	1	SEAL-O-RING	
		2	**6V-8397**	1	SEAL-O-RING	
		2	**6V-8634**	1	CONNECTOR	
	33	2	*148-8374*	2	ELBOW AS	
					(EACH INCLUDES)	
		2	**3K-0360**	1	SEAL-O-RING	
		2	**6V-8397**	1	SEAL-O-RING	
		2	**6V-8723**	1	ELBOW	
	34	1	*148-8378*	4	ELBOW AS	
					(EACH INCLUDES)	
		1	**3J-1907**	1	SEAL-O-RING	
		1	**6V-8397**	1	SEAL-O-RING	
		1	**6V-8724**	1	ELBOW	

320-0466 **LINES GP-ANGLE & TILT** *(contd.)* **i03373380**

NOTE	REF NO	GRAPHIC REF	PART NUMBER	QTY	PART NAME 1 2 3 4 5 6 (PRODUCT LEVEL)	SEE PAGE
	35	1	*150-4044*	6	CONNECTOR AS	
					(EACH INCLUDES)	
		1	**3J-1907**	1	SEAL-O-RING	
		1	**6V-8397**	1	SEAL-O-RING	
		1	**8T-1779**	1	CONNECTOR	
	36	2	**1S-0994**	6	CLIP	
	37	1,2	**3B-8489**	4	FITTING-GREASE	
	38	1	**3B-8822**	2	ELBOW	
	39	2	**5P-7462**	3	CLIP (SLOT)	
	40	2	**5P-7463**	3	CLIP (TAB)	
	41	1	**5P-9297**	3	CLIP	
	42	2	**6V-0683**	3	GROMMET	
	43	1,2	**6V-8397**	20	SEAL-O-RING	
	44	1,2	**7J-9108**	6	SEAL-O-RING	
	45	1,2	**7X-7729**	8	WASHER (11X25X3-MM THK)	
	46	1,2	**8L-5008**	4	ELBOW-PIPE	
	47	1	**8S-0948**	1	CLIP	
	48	1,2	**8T-4121**	46	WASHER-HARD (11X21X2.5-MM THK)	
M	49	1,2	**8T-4136**	6	BOLT (M10X1.5X25-MM)	
M	50	1,2	**8T-4137**	23	BOLT (M10X1.5X20-MM)	
M	51	1	**8T-4186**	8	BOLT (M10X1.5X40-MM)	
M	52	1,2	**8T-4191**	3	BOLT (M10X1.5X16-MM)	
M	53	1,2	**8T-4195**	6	BOLT (M10X1.5X30-MM)	
M	54	1	**8T-4196**	8	BOLT (M10X1.5X35-MM)	
	55	2	**9M-9162**	8	CLAMP	

I-REFER TO HYDRAULIC INFORMATION SYSTEM
M-METRIC PART

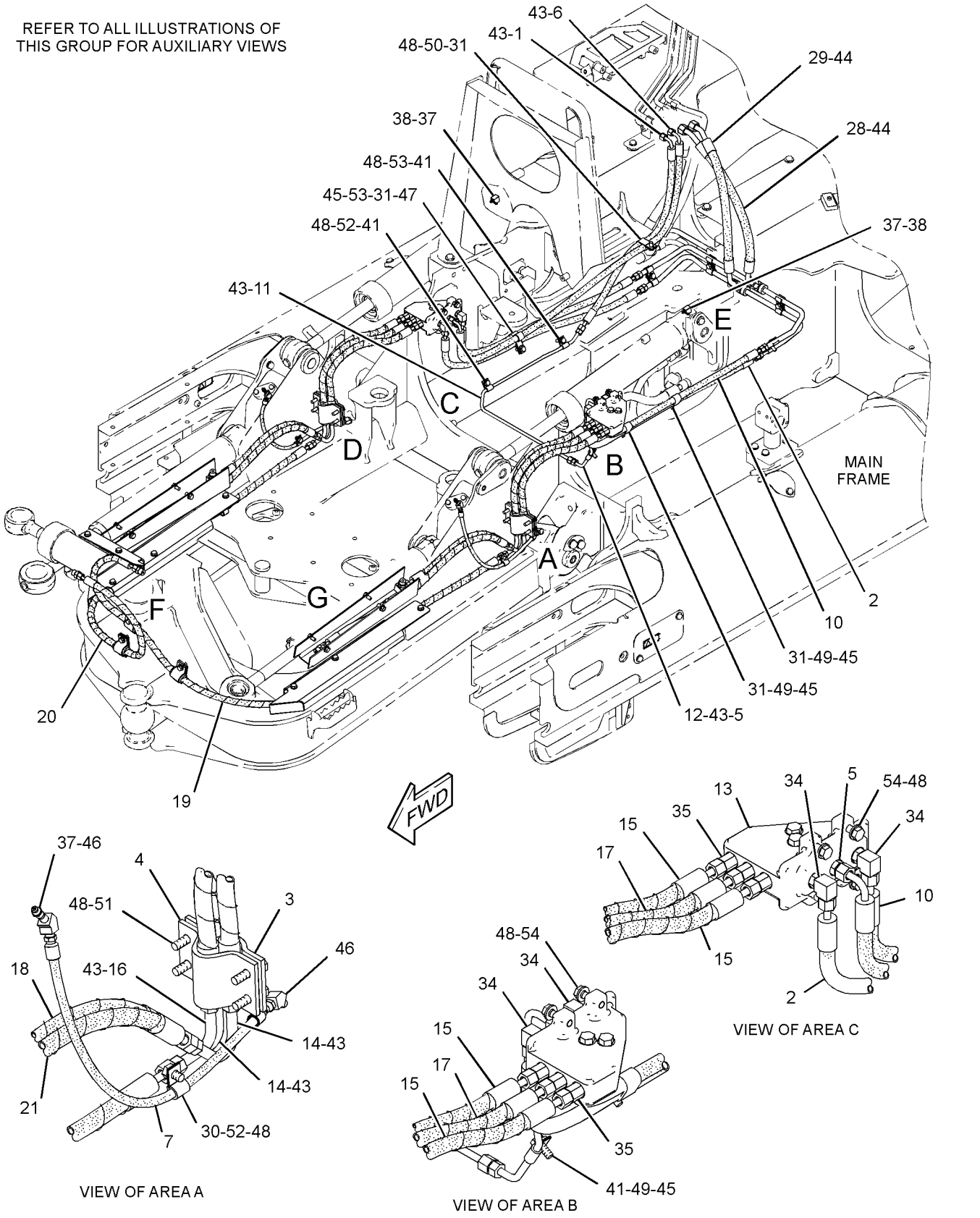

GRAPHIC #1 g01718474

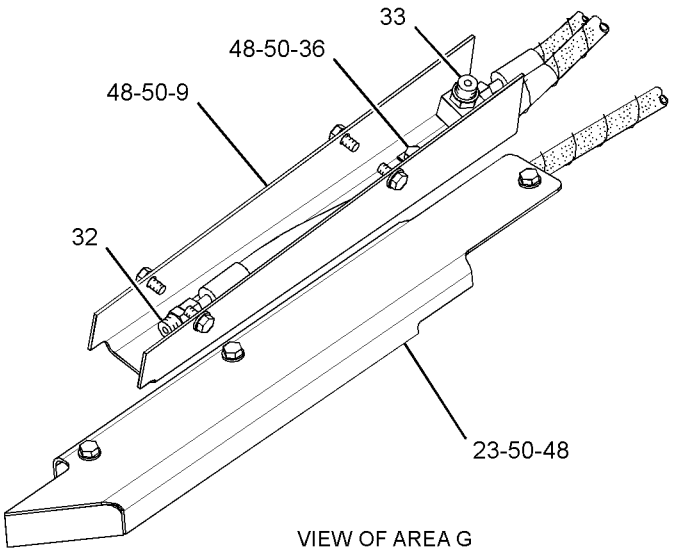

VIEW OF AREA G

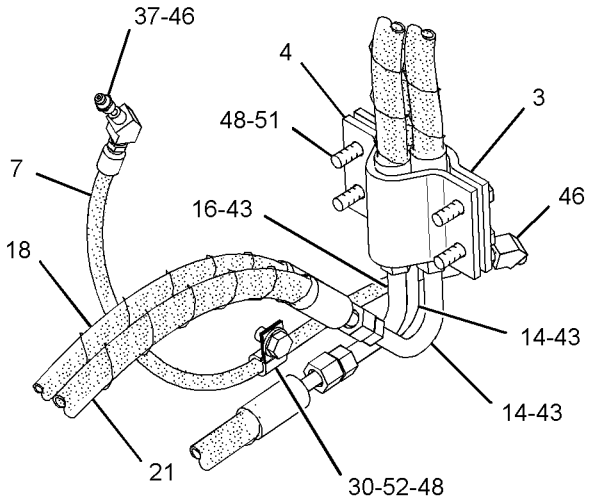

VIEW OF AREA D

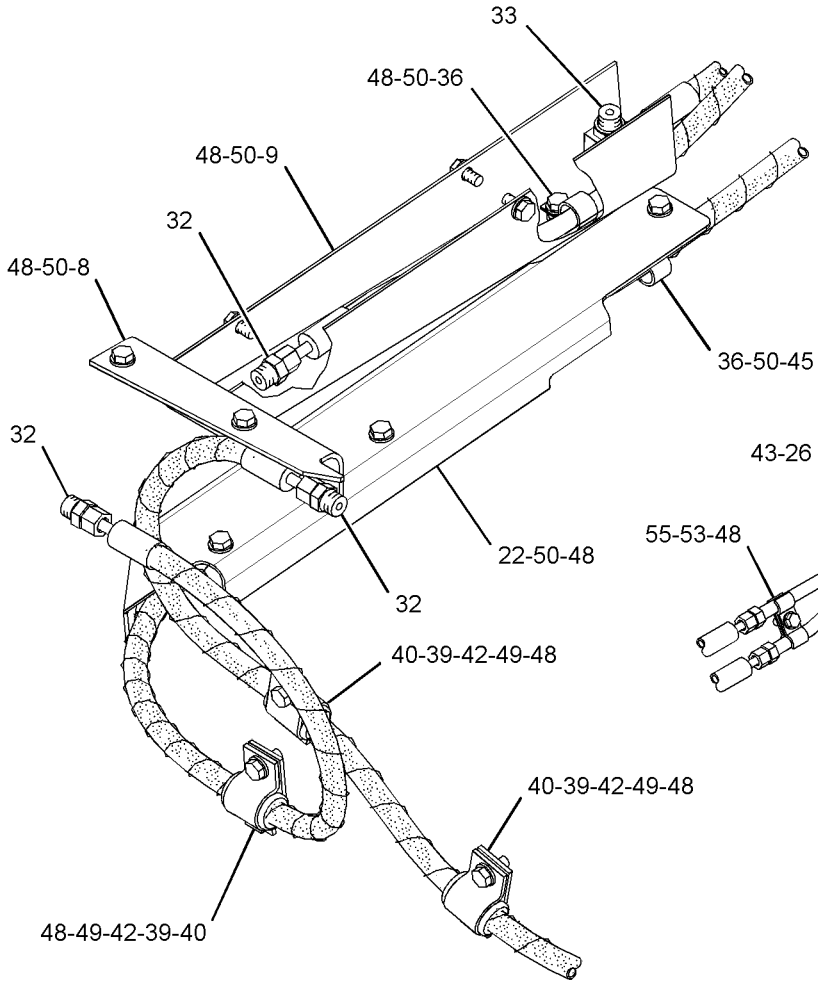

VIEW OF AREA F

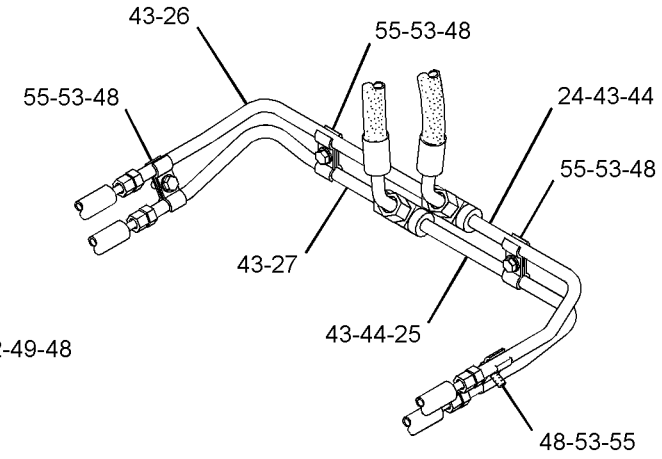

VIEW OF AREA E

GRAPHIC #2 **<END>** g01728413

HYDRAULIC SYSTEM

254-1453 LINES GP-HYDRAULIC

S/N: JLF1-UP; WWW1-UP; YYY1-UP
PART OF 244-7470, 244-7471, 244-7472 HYDRAULIC AR
AN ATTACHMENT

SMCS-5057 **i02677933**

NOTE	REF NO	GRAPHIC REF	PART NUMBER	QTY	PART NAME 1 2 3 4 5 6 (PRODUCT LEVEL)	SEE PAGE
	1	1	**256-7753**	1	TUBE AS	
	2	1	**257-1096**	1	TUBE AS	
	3	1	**257-1099**	1	TUBE AS	
	4	1	**272-3540**	1	BRACKET AS	
	5	1	**285-4312**	2	BLOCK AS	
I	6	1	**285-4313**	2	HOSE AS	
I	7	1	**285-4314**	2	HOSE AS	
	8	1	**301-9281**	1	TUBE AS	
	9	1	**301-9282**	1	TUBE AS	
	10	1	**301-9283**	1	TUBE AS	
	11	1	**301-9293**	1	TUBE AS	
	12	1	**301-9294**	1	TUBE AS	
	13	1	**303-1898**	1	TUBE AS	
	14	1	**303-1899**	1	TUBE AS	
	15	1	**303-1900**	1	TUBE AS	
	16	1	**303-1901**	1	TUBE AS	
I	17	1	**303-1902**	1	HOSE AS	
I	18	1	**303-1903**	1	HOSE AS	
	19	1	*148-8315*	8	CONNECTOR AS	
					(EACH INCLUDES)	
		1	**2M-9780**	1	SEAL-O-RING	
		1	**6V-8642**	1	CONNECTOR	
		1	**7J-9108**	1	SEAL-O-RING	
	20	1	*148-8340*	2	CONNECTOR AS	
					(EACH INCLUDES)	
		1	**3K-0360**	1	SEAL-O-RING	
		1	**6V-8398**	1	SEAL-O-RING	
		1	**6V-8639**	1	CONNECTOR	
	21	1	*148-8342*	2	CONNECTOR AS	
					(EACH INCLUDES)	
		1	**3K-0360**	1	SEAL-O-RING	
		1	**6V-8632**	1	CONNECTOR	
		1	**7J-9108**	1	SEAL-O-RING	
	22	1	*148-8345*	2	CONNECTOR AS	
					(EACH INCLUDES)	
		1	**2M-9780**	1	SEAL-O-RING	
		1	**6V-8398**	1	SEAL-O-RING	
		1	**6V-8638**	1	CONNECTOR	
	23	1	*148-8358*	2	ELBOW AS	
					(EACH INCLUDES)	
		1	**2M-9780**	1	SEAL-O-RING	
		1	**6V-8398**	1	SEAL-O-RING	
		1	**6V-8624**	1	ELBOW	
	24	1	*148-8390*	2	ELBOW AS	
					(EACH INCLUDES)	
		1	**2M-9780**	1	SEAL-O-RING	
		1	**6V-8626**	1	ELBOW	
		1	**7J-9108**	1	SEAL-O-RING	
	25	1	*148-8393*	2	ELBOW AS	
					(EACH INCLUDES)	
		1	**6V-9852**	1	ELBOW	
		1	**7J-9108**	1	SEAL-O-RING	
	26	1	**2H-0435**	2	CLAMP	
	27	1	**7J-9108**	8	SEAL-O-RING	
	28	1	**7X-7729**	2	WASHER (11X25X3-MM THK)	

254-1453 **LINES GP-HYDRAULIC** *(contd.)* **i02677933**

NOTE	REF NO	GRAPHIC REF	PART NUMBER	QTY	PART NAME 1 2 3 4 5 6 (PRODUCT LEVEL)	SEE PAGE
	29	1	**8T-4121**	13	WASHER-HARD (11X21X2.5-MM THK)	
M	30	1	**8T-4136**	3	BOLT (M10X1.5X25-MM)	
M	31	1	**8T-4137**	4	BOLT (M10X1.5X20-MM)	
M	32	1	**8T-4191**	2	BOLT (M10X1.5X16-MM)	
M	33	1	**8T-4196**	6	BOLT (M10X1.5X35-MM)	
	34	1	**9M-9162**	12	CLAMP	

I-REFER TO HYDRAULIC INFORMATION SYSTEM
M-METRIC PART

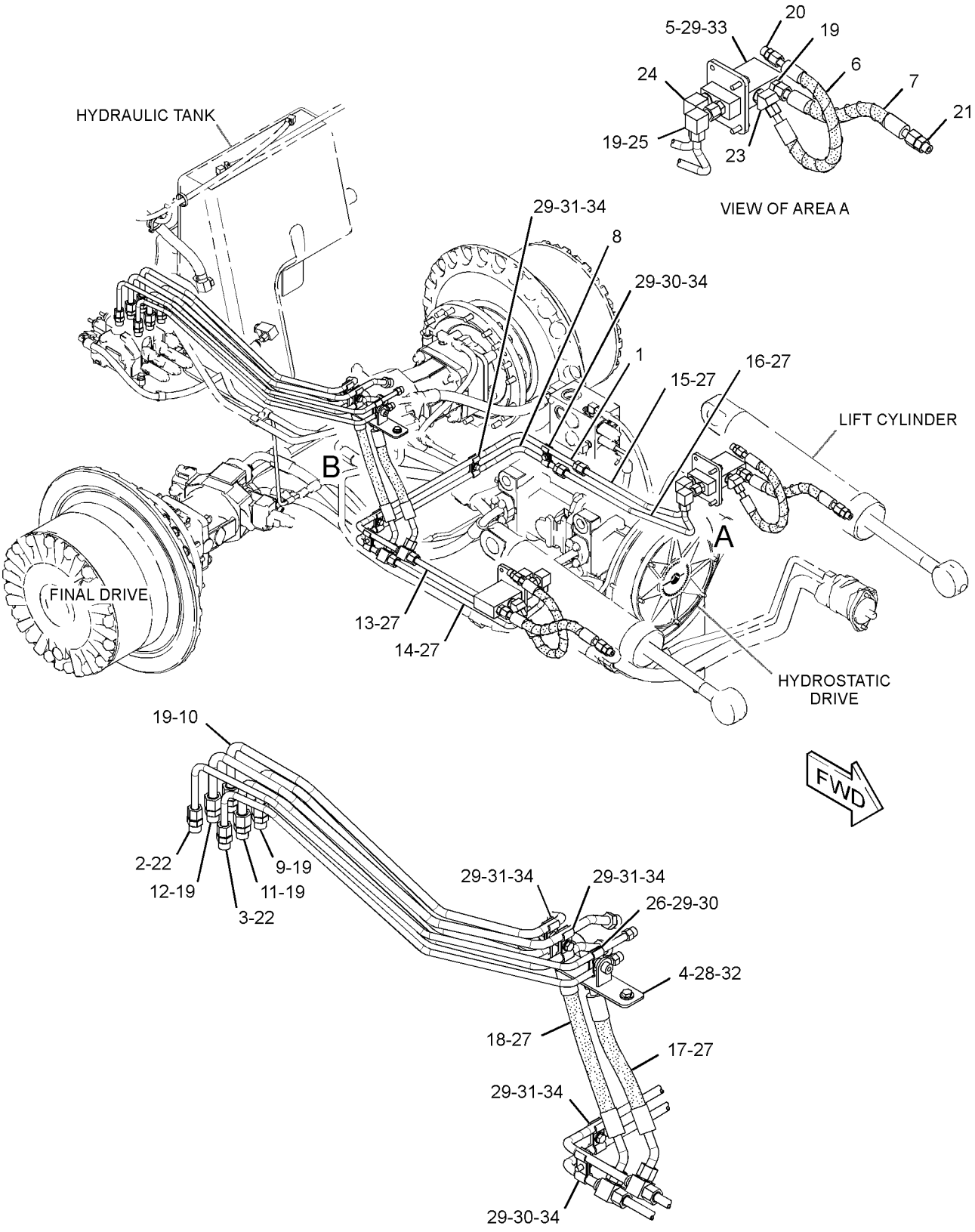

GRAPHIC #1 **<END>** g01346354

254-9098 LINES GP-PRESSURE TEST

S/N: JLF1-UP; WWW1-UP; YYY1-UP

PART OF 244-7383, 244-7447, 286-3236 POWER TRAIN AR

SMCS-5057 **i02718181**

NOTE	REF NO	GRAPHIC REF	PART NUMBER	QTY	PART NAME 1 2 3 4 5 6 (PRODUCT LEVEL)	SEE PAGE
	1	1	**6V-0852**	4	CAP-DUST	
	2	1	**7X-7945**	4	ADAPTER	
	3	1	**111-4837**	1	CLIP	
	4	1	**187-3547**	2	COUPLER AS-QUICK DISCONNECT	
	5	1	**187-9008**	2	CAP-DUST	
	6	1	**193-3973**	1	STRAP-CABLE	
	7	1	*241-6215*	1	ELBOW AS	
		1	**3J-1907**	1	SEAL-O-RING	
		1	**6V-8076**	1	ELBOW	
	8	1	**263-0968**	1	HOSE AS	
	9	1	**263-0969**	1	HOSE AS	
	10	1	**263-0970**	1	HOSE AS	
	11	1	**283-9797**	1	PLATE	
	12	1	**303-5951**	1	HOSE AS	
	13	1	*148-8318*	1	CONNECTOR AS	
		1	**3K-0360**	1	SEAL-O-RING	
		1	**6V-8397**	1	SEAL-O-RING	
		1	**6V-8634**	1	CONNECTOR	
	14	1	*148-8369*	2	ELBOW AS	
					(EACH INCLUDES)	
		1	**3J-7354**	1	SEAL-O-RING	
		1	**4J-5477**	1	SEAL-O-RING	
		1	**6V-8628**	1	ELBOW	
	15	1	*148-8434*	1	TEE AS	
		1	**6V-8397**	2	SEAL-O-RING	
		1	**6V-9843**	1	TEE-SWIVEL	
	16	1	**2P-1279**	4	LOCKNUT (9/16-18-THD)	
	17	1	**3J-1907**	6	SEAL-O-RING	
	18	1	**4J-5477**	4	SEAL-O-RING	
	19	1	**5P-4116**	1	WASHER-HARD (8.8X20.5X2-MM THK)	
	20	1	**6K-8179**	2	CLIP	
	21	1	**6V-3965**	1	FITTING (QUICK DISCONNECT) (IMPLEMENT VALVE, P PORT)	
	21A	1	**6V-3965**	1	FITTING (QUICK DISCONNECT) (RIGHT MOTOR, BRAKE PRESS PORT)	
	21B	1	**6V-3965**	1	FITTING (QUICK DISCONNECT) (FRONT PUMP, G PORT)	
	21C	1	**6V-3965**	1	FITTING (QUICK DISCONNECT) (REAR PUMP, G PORT)	
M	22	1	**7X-2621**	1	BOLT (M10X1.5X12-MM)	
	23	1	**8T-4121**	3	WASHER-HARD (11X21X2.5-MM THK)	
M	24	1	**8T-4137**	2	BOLT (M10X1.5X20-MM)	
M	25	1	**8T-4189**	1	BOLT (M8X1.25X20-MM)	

M-METRIC PART

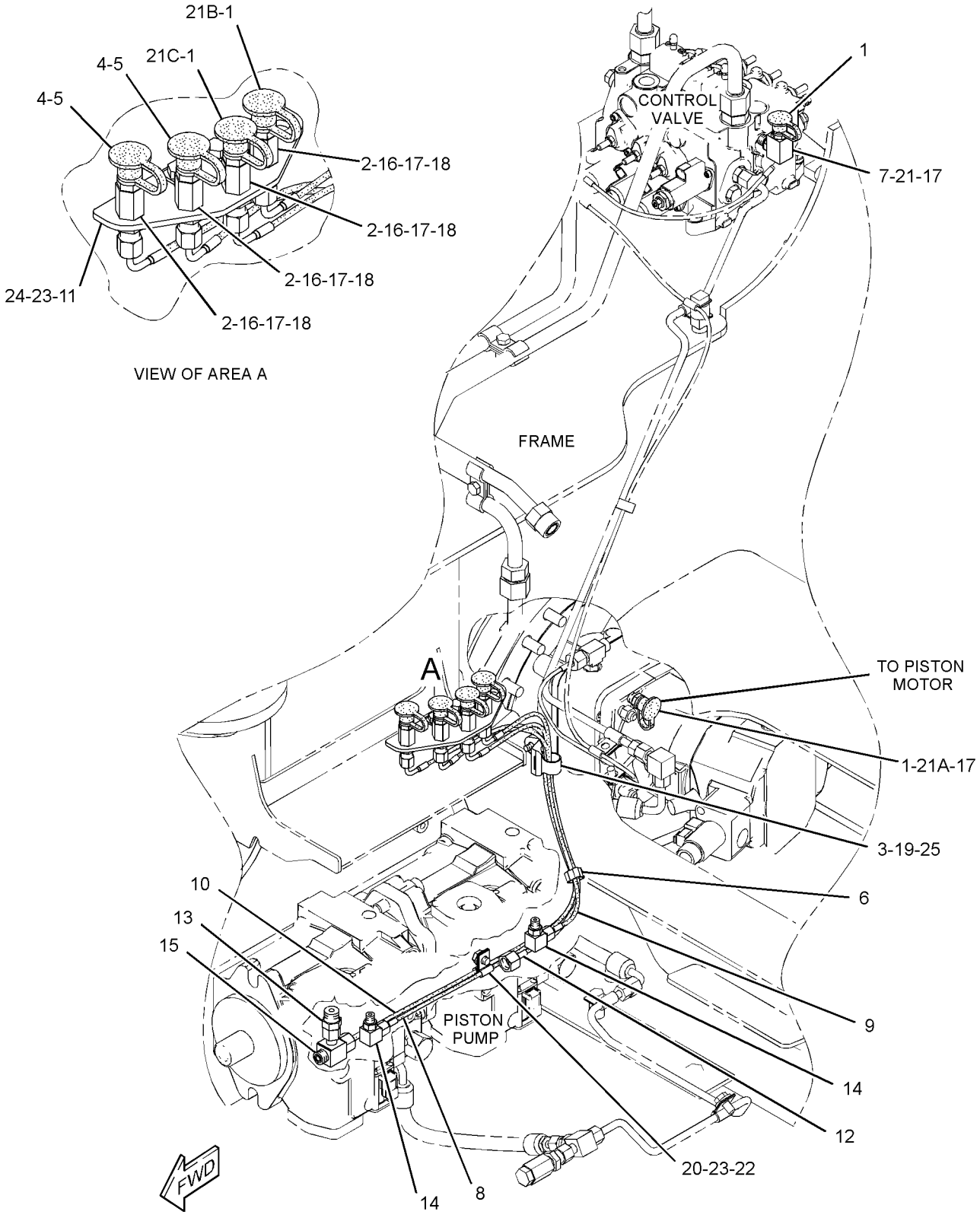

GRAPHIC #1 **<END>** g01373413

HYDRAULIC SYSTEM

276-2988 LINES GP-PUMP

S/N: JLF1-UP; WWW1-UP; YYY1-UP
PART OF 244-7471, 244-7472 HYDRAULIC AR
AN ATTACHMENT

SMCS-5057 **i02882855**

NOTE	REF NO	GRAPHIC REF	PART NUMBER	QTY	PART NAME 1 2 3 4 5 6 (PRODUCT LEVEL)	SEE PAGE
	1	1	**1Y-3818**	1	VALVE-DRAIN	
	2	1	**119-5708**	1	CLIP	
I	3	1	**163-4520**	1	HOSE AS	
	4	1	*205-4132*	1	CONNECTOR AS	
		1	**8T-8985**	1	CONNECTOR	
		1	**2S-4078**	1	SEAL-O-RING	
		1	**8T-0315**	1	SEAL-O-RING	
I	5	1	**240-2589**	1	HOSE AS	
	6	1	**257-1108**	1	TUBE AS	
I	7	1	**306-2100**	1	HOSE AS	
	8	1	**261-8505**	1	TUBE AS	
	9	1	**261-8506**	1	TUBE AS	
	10	1	**263-9720**	1	TUBE AS	
	11	1	*268-1507*	1	CONNECTOR AS	
		1	**268-1506**	1	CONNECTOR	
		1	**7M-8485**	1	SEAL-O-RING	
		1	**8T-0315**	1	SEAL-O-RING	
I	12	1	*272-3030*	1	HOSE AS	
	13	1	**276-4670**	1	TUBE AS	
	14	1	**282-5064**	1	TUBE AS	
	15	1	**303-1904**	1	TUBE AS	
	16	1	**303-6595**	1	TUBE AS	
I	17	1	**303-6598**	1	HOSE AS	
	18	1	**308-7677**	1	CONNECTOR-FILTER	
	19	1	*148-8327*	3	CONNECTOR AS	
					(EACH INCLUDES)	
		1	**6V-8637**	1	CONNECTOR	
		1	**3D-2824**	1	SEAL-O-RING	
		1	**6V-9746**	1	SEAL-O-RING	
	20	1	*148-8336*	3	CONNECTOR AS	
					(EACH INCLUDES)	
		1	**6V-8636**	1	CONNECTOR	
		1	**3J-1907**	1	SEAL-O-RING	
		1	**6V-8397**	1	SEAL-O-RING	
	21	1	*148-8347*	1	ELBOW AS	
		1	**6V-9007**	1	ELBOW	
		1	**3D-2824**	1	SEAL-O-RING	
		1	**6V-9746**	1	SEAL-O-RING	
	22	1	*148-8383*	1	ELBOW AS	
		1	**8T-1683**	1	ELBOW	
		1	**3K-0360**	1	SEAL-O-RING	
		1	**6V-8397**	1	SEAL-O-RING	
	23	1	**3J-1907**	1	SEAL-O-RING	
	24	1	**4H-7655**	2	CLAMP-TUBE	
	25	1	**5P-9297**	3	CLIP	
	26	1	**6V-8397**	2	SEAL-O-RING	
	27	1	**6V-9746**	4	SEAL-O-RING	
	28	1	**7X-7729**	2	WASHER (11X25X3-MM THK)	
	29	1	**8M-2773**	2	CLIP	
	30	1	**8T-1887**	2	CLIP (SLOT)	
	31	1	**8T-1888**	2	CLIP (TAB)	
	32	1	**8T-4121**	8	WASHER-HARD (11X21X2.5-MM THK)	
M	33	1	**8T-4136**	2	BOLT (M10X1.5X25-MM)	
M	34	1	**8T-4137**	7	BOLT (M10X1.5X20-MM)	
M	35	1	**8T-4191**	1	BOLT (M10X1.5X16-MM)	

276-2988 **LINES GP-PUMP** *(contd.)* **i02882855**

I-REFER TO HYDRAULIC INFORMATION SYSTEM
M-METRIC PART

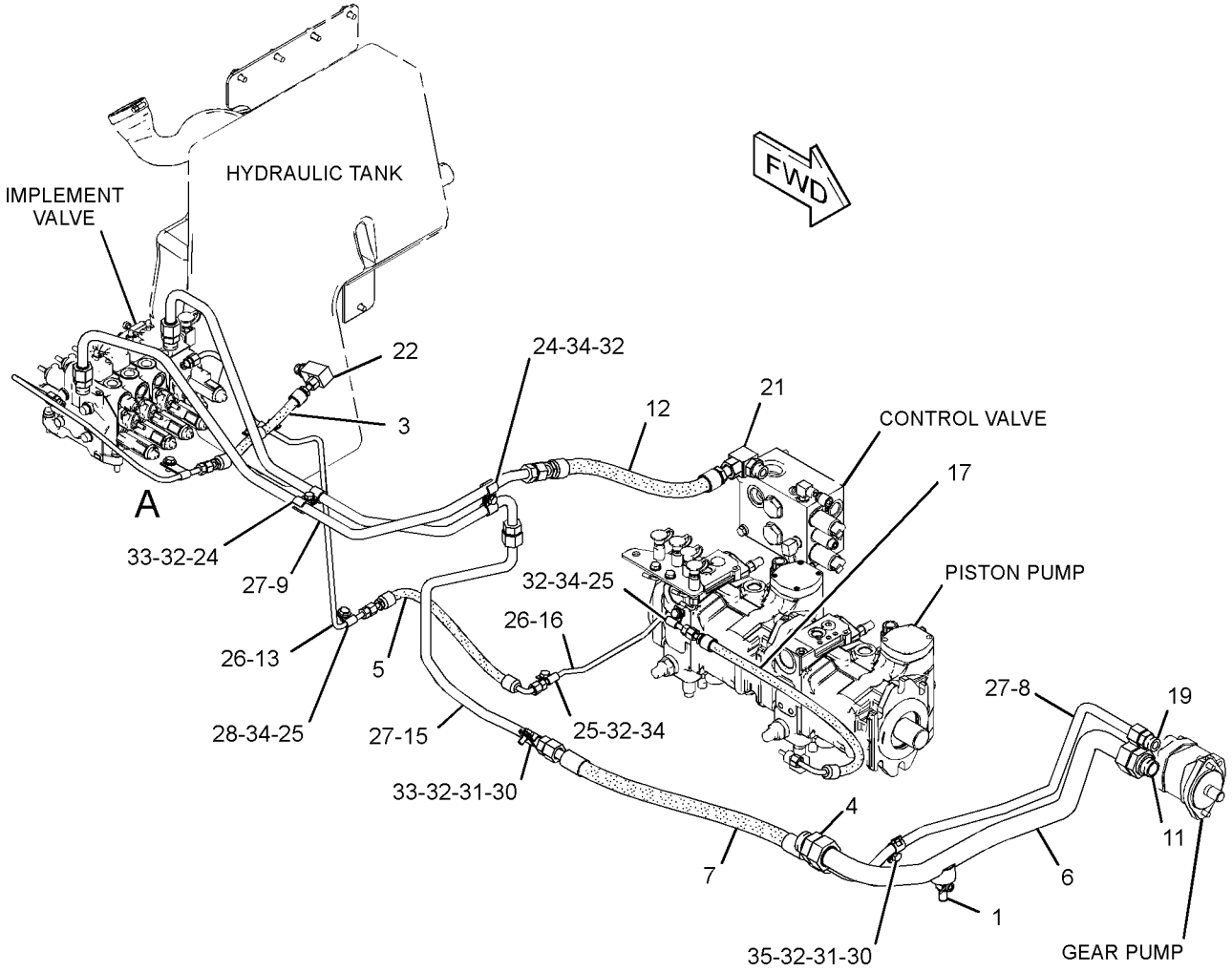

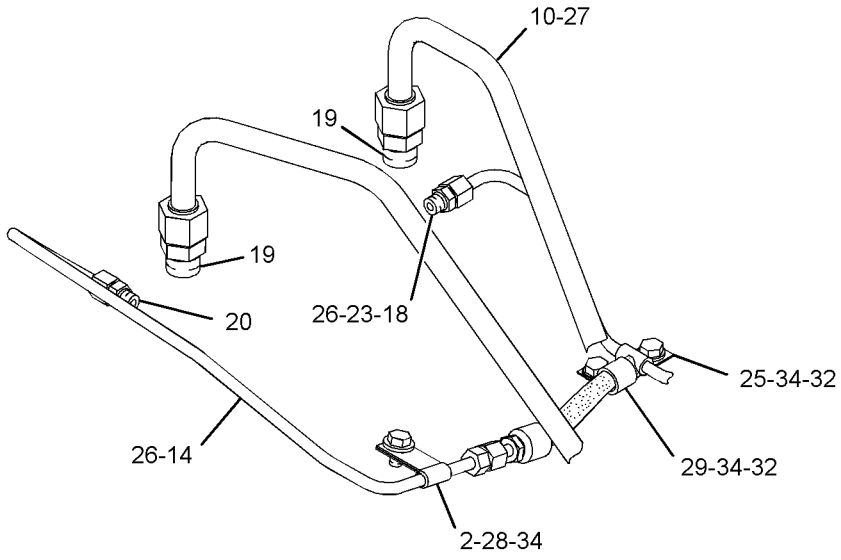

VIEW OF AREA A

GRAPHIC #1 **<END>** g01446078

HYDRAULIC SYSTEM

283-3514 LINES GP-PUMP

S/N: JLF1-UP; WWW1-UP; YYY1-UP
PART OF 244-7470 HYDRAULIC AR
AN ATTACHMENT

SMCS-5057 **i02865267**

NOTE	REF NO	GRAPHIC REF	PART NUMBER	QTY	PART NAME 1 2 3 4 5 6 (PRODUCT LEVEL)	SEE PAGE
	1	1	**1Y-3818**	1	VALVE-DRAIN (PUMP LINES)	
	2	1	*205-4132*	1	CONNECTOR AS	
		1	**2S-4078**	1	SEAL-O-RING	
		1	**8T-0315**	1	SEAL-O-RING	
		1	**8T-8985**	1	CONNECTOR	
I	3	1	**240-2589**	1	HOSE AS	
	4	1	**257-1108**	1	TUBE AS	
I	5	1	**306-2100**	1	HOSE AS	
	6	1	**261-8505**	1	TUBE AS	
	7	1	**263-9720**	1	TUBE AS	
	8	1	*268-1507*	1	CONNECTOR AS	
		1	**7M-8485**	1	SEAL-O-RING	
		1	**8T-0315**	1	SEAL-O-RING	
		1	**268-1506**	1	CONNECTOR	
I	9	1	**272-3030**	1	HOSE AS	
	10	1	**276-4670**	1	TUBE AS	
	11	1	**283-3515**	1	TUBE AS	
I	12	1	**283-3516**	1	HOSE AS	
	13	1	**303-1904**	1	TUBE AS	
	14	1	**303-6595**	1	TUBE AS	
I	15	1	**303-6598**	1	HOSE AS	
	16	1	**308-7677**	1	CONNECTOR-FILTER	
	17	1	*148-8327*	3	CONNECTOR AS	
					(EACH INCLUDES)	
		1	**3D-2824**	1	SEAL-O-RING	
		1	**6V-8637**	1	CONNECTOR	
		1	**6V-9746**	1	SEAL-O-RING	
	18	1	*148-8336*	1	CONNECTOR AS	
		1	**3J-1907**	1	SEAL-O-RING	
		1	**6V-8397**	1	SEAL-O-RING	
		1	**6V-8636**	1	CONNECTOR	
	19	1	*148-8347*	1	ELBOW AS	
		1	**3D-2824**	1	SEAL-O-RING	
		1	**6V-9007**	1	ELBOW	
		1	**6V-9746**	1	SEAL-O-RING	
	20	1	*148-8367*	1	ELBOW AS	
		1	**6V-8397**	1	SEAL-O-RING	
		1	**6V-9850**	1	ELBOW	
	21	1	*148-8383*	1	ELBOW AS	
		1	**3K-0360**	1	SEAL-O-RING	
		1	**6V-8397**	1	SEAL-O-RING	
		1	**8T-1683**	1	ELBOW	
	22	1	**3J-1907**	1	SEAL-O-RING	
	23	1	**4H-7655**	4	CLAMP-TUBE	
	24	1	**5P-9297**	4	CLIP	
	25	1	**6V-8397**	4	SEAL-O-RING	
	26	1	**6V-9746**	4	SEAL-O-RING	
	27	1	**7X-7729**	1	WASHER (11X25X3-MM THK)	
	28	1	**8M-2773**	2	CLIP	
	29	1	**8T-1887**	2	CLIP (SLOT)	
	30	1	**8T-1888**	2	CLIP (TAB)	
	31	1	**8T-4121**	9	WASHER-HARD (11X21X2.5-MM THK)	
M	32	1	**8T-4136**	2	BOLT (M10X1.5X25-MM)	
M	33	1	**8T-4137**	7	BOLT (M10X1.5X20-MM)	
M	34	1	**8T-4191**	1	BOLT (M10X1.5X16-MM)	

283-3514 **LINES GP-PUMP** *(contd.)* **i02865267**

I-REFER TO HYDRAULIC INFORMATION SYSTEM
M-METRIC PART

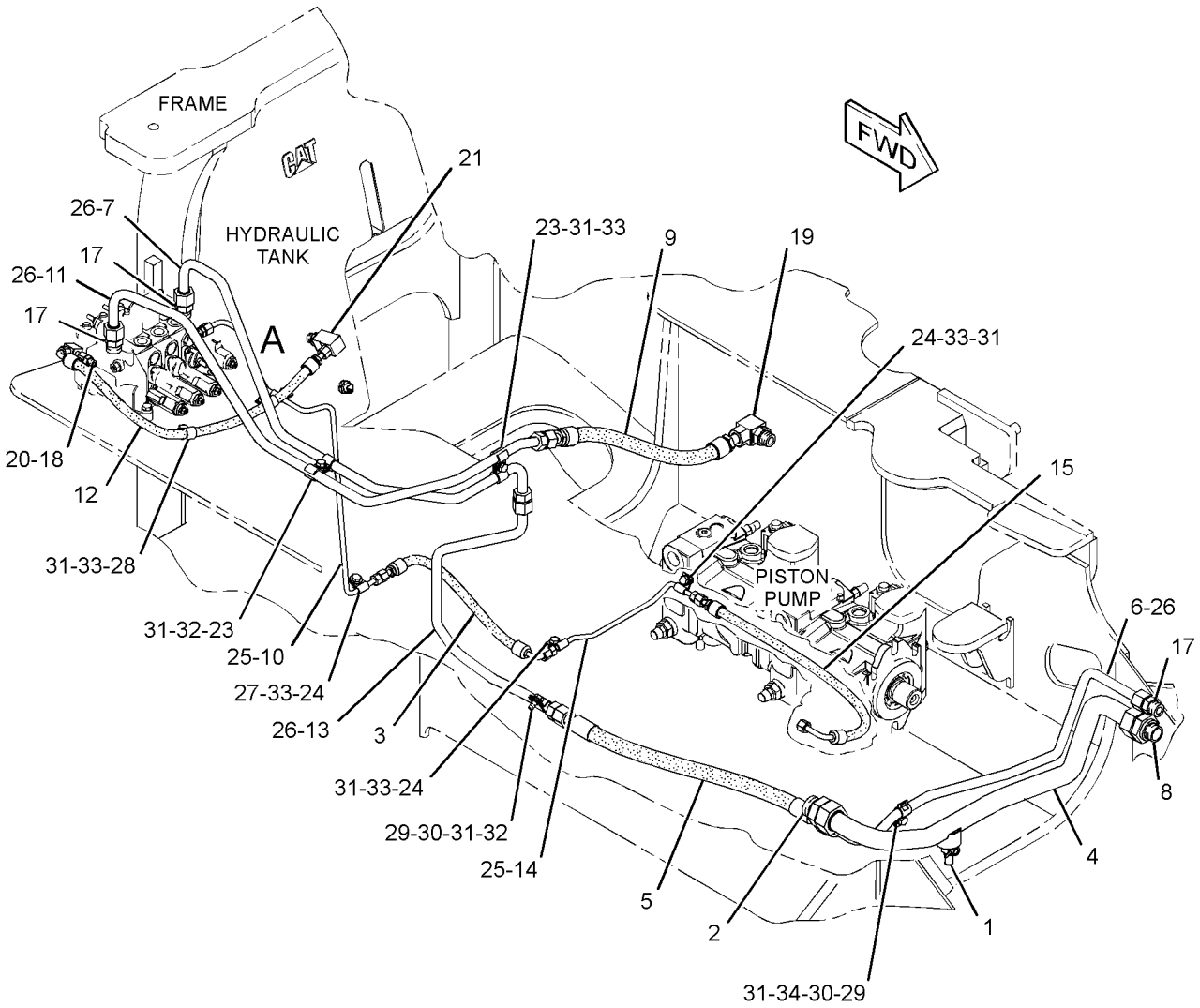

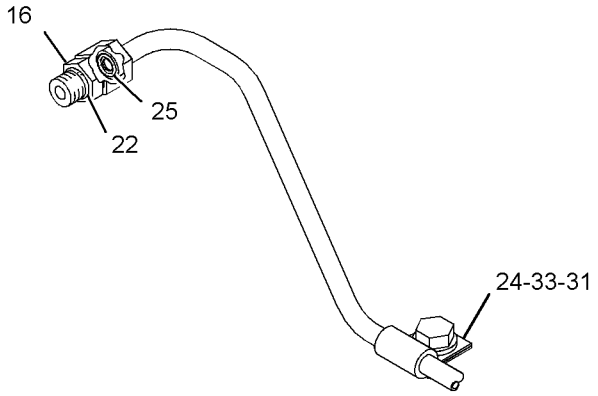

VIEW OF AREA A
(HOSE AND TUBE
REMOVED FOR CLARITY)

GRAPHIC #1 **<END>** g01438329

254-1460 LINES GP-REAR ATTACHMENT

S/N: JLF1-UP; WWW1-UP; YYY1-UP
PART OF 244-7471, 244-7472 HYDRAULIC AR
AN ATTACHMENT
TYPE 1

SMCS-5057 **i02679288**

NOTE	REF NO	GRAPHIC REF	PART NUMBER	QTY	PART NAME 1 2 3 4 5 6 (PRODUCT LEVEL)	SEE PAGE
I	1	1	**237-2598**	1	HOSE AS	
I	2	1	**259-0122**	1	HOSE AS	
I	3	1	**272-0343**	1	HOSE AS	
	4	1	**292-3480**	1	VALVE GP-LOAD CONTROL	
		1	**295-4695**	1	VALVE GP-RELIEF (LOAD CONTROL)	
		1	**148-9364**	1	VALVE GP-CHECK (LOAD CONTROL)	
	5	1	*148-8345*	3	CONNECTOR AS	
					(EACH INCLUDES)	
		1	**2M-9780**	1	SEAL-O-RING	
		1	**6V-8398**	1	SEAL-O-RING	
		1	**6V-8638**	1	CONNECTOR	
	6	1	*148-8375*	2	ELBOW AS	
					(EACH INCLUDES)	
		1	**6V-8398**	2	SEAL-O-RING	
		1	**6V-8981**	1	ELBOW	
	7	1	**2M-9780**	1	SEAL-O-RING	
	8	1	**6V-8398**	1	SEAL-O-RING	
	9	1	**6V-8721**	1	ELBOW	
	10	1	**6V-9169**	2	NUT-BULKHEAD (13/16-16-THD)	
	11	1	**6V-9830**	2	CAP AS (AUX HYD FUNCTION)	
M	12	1	**7X-2535**	2	BOLT (M6X1X60-MM)	
	13	1	**9X-8256**	2	WASHER (6.6X12X2-MM THK)	

I-REFER TO HYDRAULIC INFORMATION SYSTEM
M-METRIC PART

254-1460 **LINES GP-REAR ATTACHMENT** *(contd.)* **i02679288**

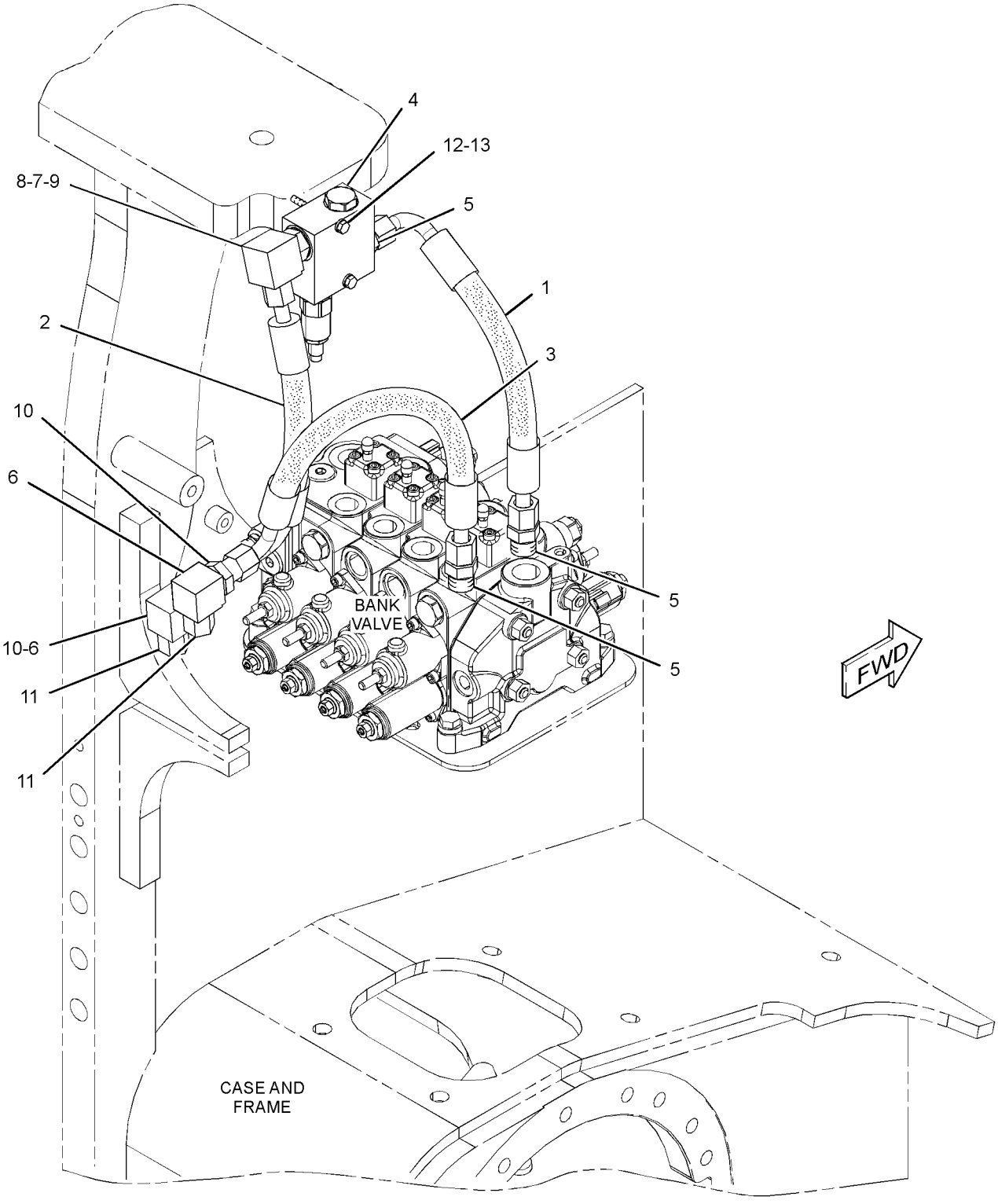

GRAPHIC #1 **<END>** g01362499

HYDRAULIC SYSTEM

254-1460 LINES GP-REAR ATTACHMENT

S/N: JLF1-UP; WWW1-UP; YYY1-UP
PART OF 244-7471, 244-7472 HYDRAULIC AR
AN ATTACHMENT
TYPE 2

SMCS-5057 **i03149707**

NOTE	REF NO	GRAPHIC REF	PART NUMBER	QTY	PART NAME 1 2 3 4 5 6 (PRODUCT LEVEL)	SEE PAGE
I	1	1	**237-2598**	1	HOSE AS	
I	2	1	**259-0122**	1	HOSE AS	
I	3	1	**272-0343**	1	HOSE AS	
C	4	1	**319-6909**	1	VALVE GP-LOAD CONTROL	
		1	**319-1824**	1	VALVE GP-RELIEF (LOAD CONTROL)	
		1	**148-9364**	1	VALVE GP-CHECK (LOAD CONTROL)	
	5	1	*148-8345*	3	CONNECTOR AS	
					(EACH INCLUDES)	
		1	**2M-9780**	1	SEAL-O-RING	
		1	**6V-8398**	1	SEAL-O-RING	
		1	**6V-8638**	1	CONNECTOR	
	6	1	*148-8375*	2	ELBOW AS	
					(EACH INCLUDES)	
		1	**6V-8398**	2	SEAL-O-RING	
		1	**6V-8981**	1	ELBOW	
	7	1	**2M-9780**	1	SEAL-O-RING	
	8	1	**6V-8398**	1	SEAL-O-RING	
	9	1	**6V-8721**	1	ELBOW	
	10	1	**6V-9169**	2	NUT-BULKHEAD (13/16-16-THD)	
	11	1	**6V-9830**	2	CAP AS (AUX HYD FUNCTION)	
M	12	1	**7X-2535**	2	BOLT (M6X1X60-MM)	
	13	1	**9X-8256**	2	WASHER (6.6X12X2-MM THK)	

C-CHANGE FROM PREVIOUS TYPE
I-REFER TO HYDRAULIC INFORMATION SYSTEM
M-METRIC PART

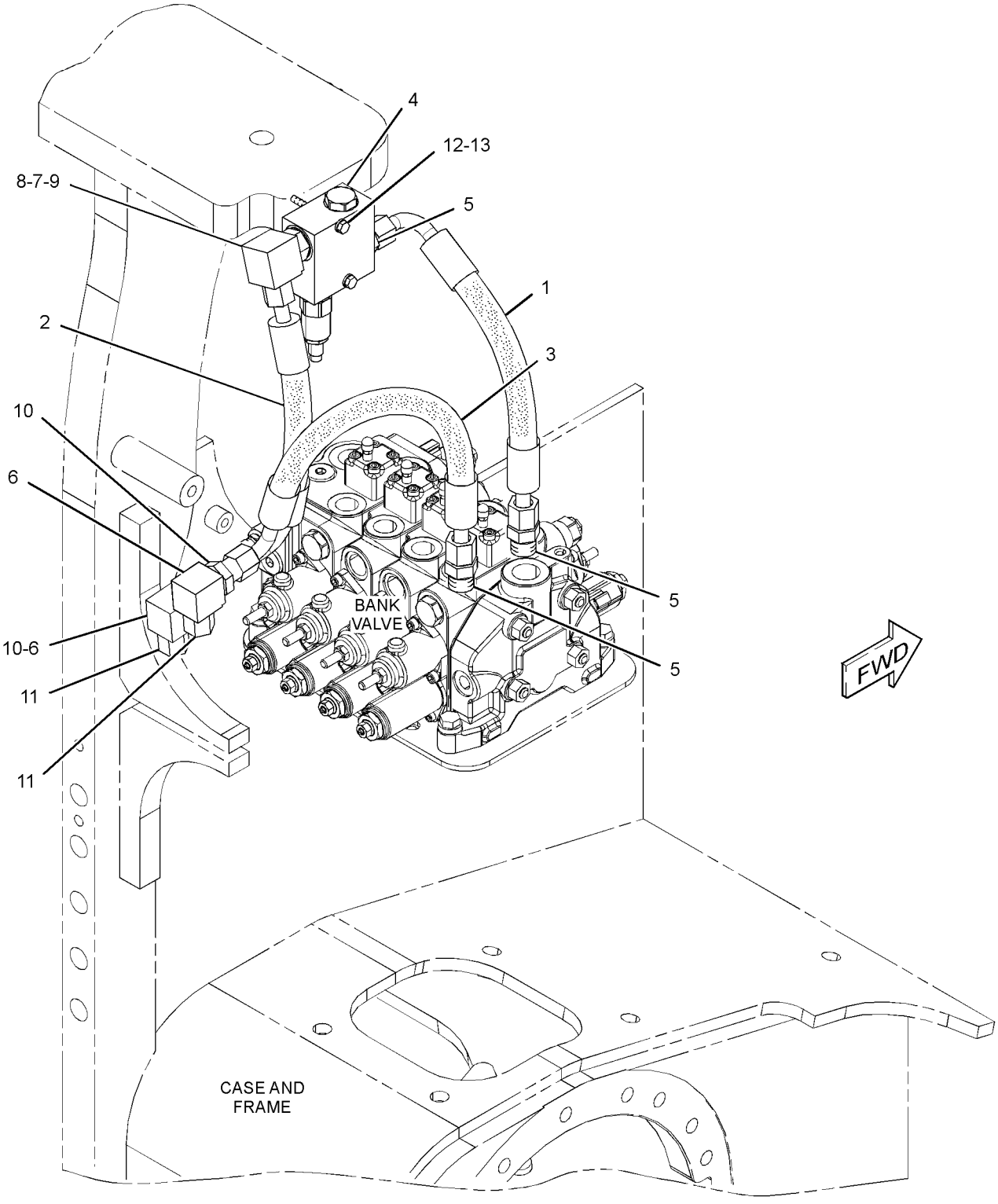

GRAPHIC #1 **<END>** g01362499

HYDRAULIC SYSTEM

263-3323 LINES GP-RIPPER

S/N: JLF1-UP; WWW1-UP; YYY1-UP
PART OF 262-4407 RIPPER AR
AN ATTACHMENT

SMCS-5057, 5352, 5356 **i02882979**

NOTE	REF NO	GRAPHIC REF	PART NUMBER	QTY	PART NAME 1 2 3 4 5 6 (PRODUCT LEVEL)	SEE PAGE
I	1	1	**194-0627**	2	HOSE AS	
I	2	1	**194-0628**	2	HOSE AS	
	3	1	**264-3888**	1	TUBE AS	
	4	1	**264-3889**	1	TUBE AS	
	5	1	**264-3890**	1	PLATE AS	
	6	1	**264-3891**	1	PLATE	
	7	1	**264-6941**	1	BRACKET AS	
	8	1	**283-6370**	2	TUBE AS	
	9	1	*148-8315*	2	CONNECTOR AS	
					(EACH INCLUDES)	
		1	**2M-9780**	1	SEAL-O-RING	
		1	**6V-8642**	1	CONNECTOR	
		1	**7J-9108**	1	SEAL-O-RING	
	10	1	*148-8345*	2	CONNECTOR AS	
					(EACH INCLUDES)	
		1	**2M-9780**	1	SEAL-O-RING	
		1	**6V-8398**	1	SEAL-O-RING	
		1	**6V-8638**	1	CONNECTOR	
	11	1	*148-8375*	2	ELBOW AS	
					(EACH INCLUDES)	
		1	**6V-8398**	2	SEAL-O-RING	
		1	**6V-8981**	1	ELBOW	
	12	1	*150-4037*	2	TEE AS	
					(EACH INCLUDES)	
		1	**6V-8398**	2	SEAL-O-RING	
		1	**6V-9844**	1	TEE-SWIVEL	
M	13	1	**5C-7261**	1	NUT (M8X1.25-THD)	
	14	1	**6V-8398**	2	SEAL-O-RING	
	15	1	**6V-9169**	2	NUT-BULKHEAD (13/16-16-THD)	
	16	1	**7X-7729**	5	WASHER (11X25X3-MM THK)	
	17	1	**8B-9424**	2	CLAMP	
	18	1	**8T-1895**	4	CLIP (SLOT)	
	19	1	**8T-1896**	4	CLIP (TAB)	
	20	1	**8T-4121**	6	WASHER-HARD (11X21X2.5-MM THK)	
M	21	1	**8T-4136**	11	BOLT (M10X1.5X25-MM)	
	23	1	**8T-4224**	2	WASHER-HARD (8.8X16X2-MM THK)	
M	24	1	**8T-4908**	1	BOLT (M8X1.25X25-MM)	
	25	1	**9R-1004**	2	CLIP (TAB)	
	26	1	**9R-1005**	2	CLIP (SLOT)	

I-REFER TO HYDRAULIC INFORMATION SYSTEM
M-METRIC PART

263-3323 **LINES GP-RIPPER** *(contd.)* **i02882979**

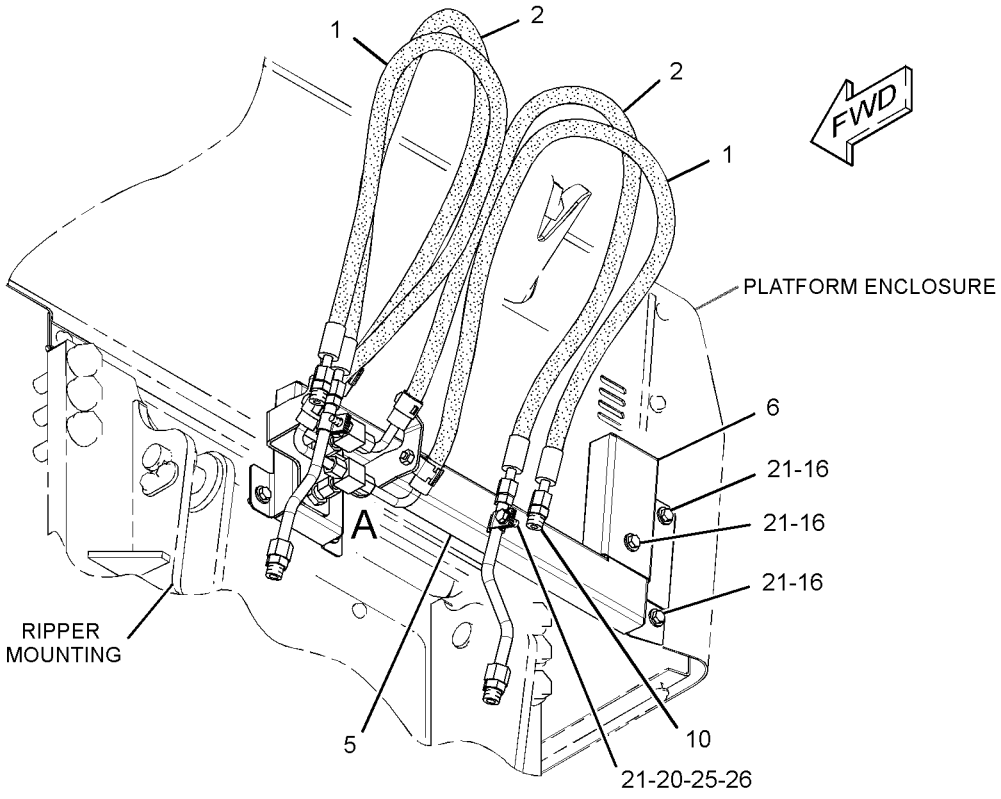

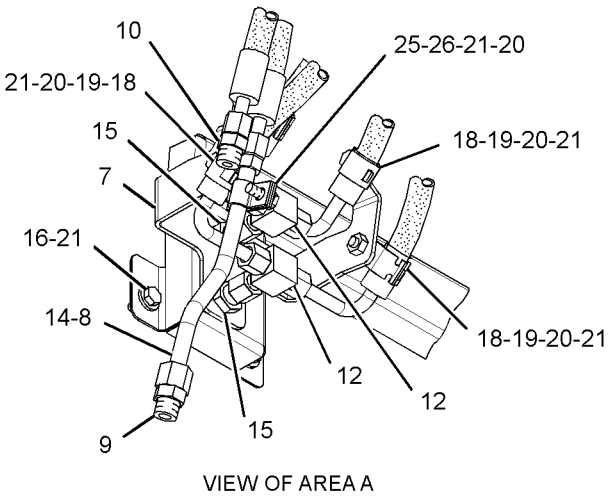

VIEW OF AREA A

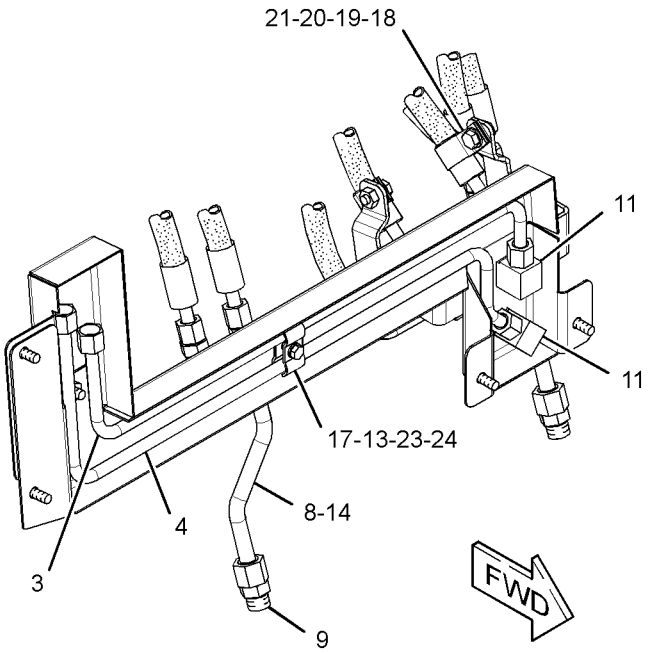

GRAPHIC #1 **<END>** g01520727

269-1087 MANIFOLD GP-VALVE–OUTLET

S/N: JLF1-UP; WWW1-UP; YYY1-UP
PART OF 254-1450 VALVE GP-BANK 3, 254-1451 VALVE GP-BANK 4
AN ATTACHMENT

SMCS-5264 **i03634806**

NOTE	REF NO	GRAPHIC REF	PART NUMBER	QTY	PART NAME 1 2 3 4 5 6 (PRODUCT LEVEL)	SEE PAGE
					(NO SERVICED PARTS)	

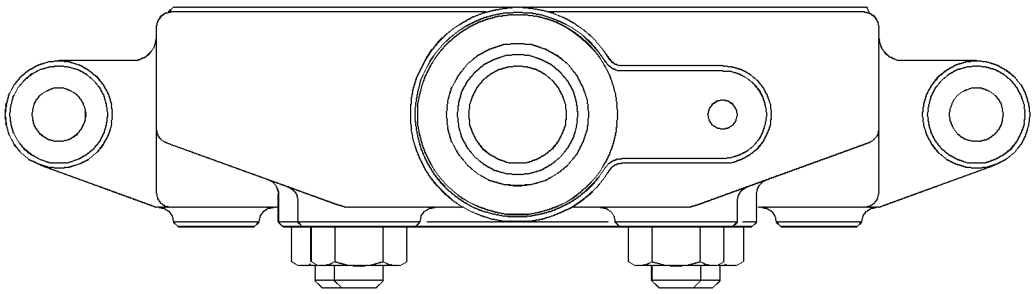

GRAPHIC #1 **<END>** g01776457

HYDRAULIC SYSTEM

244-7452 PUMP GP-GEAR–IMPLEMENT

S/N: JLF1-UP; WWW1-UP; YYY1-UP
PART OF 244-7385, 317-2808 HYDRAULIC AR

SMCS-5073 **i02630331**

NOTE	REF NO	GRAPHIC REF	PART NUMBER	QTY	PART NAME 1 2 3 4 5 6 (PRODUCT LEVEL)	SEE PAGE
	1	1	**6D-1004**	1	GASKET	
J	2	1	**269-0004**	1	PUMP GP-GEAR	
	3	1	**8T-4121**	2	WASHER-HARD (11X21X2.5-MM THK)	
M	4	1	**9X-6032**	2	BOLT-SOCKET HEAD (M10X1.5X30-MM)	
					AVAILABLE REPAIR KIT(S):	
J			**138-8381**	1	KIT-SEAL (GEAR PUMP)	
					(INCLUDES SEALS & RETAINING RING)	

J-KIT MARKED J SERVICES PART MARKED J
M-METRIC PART

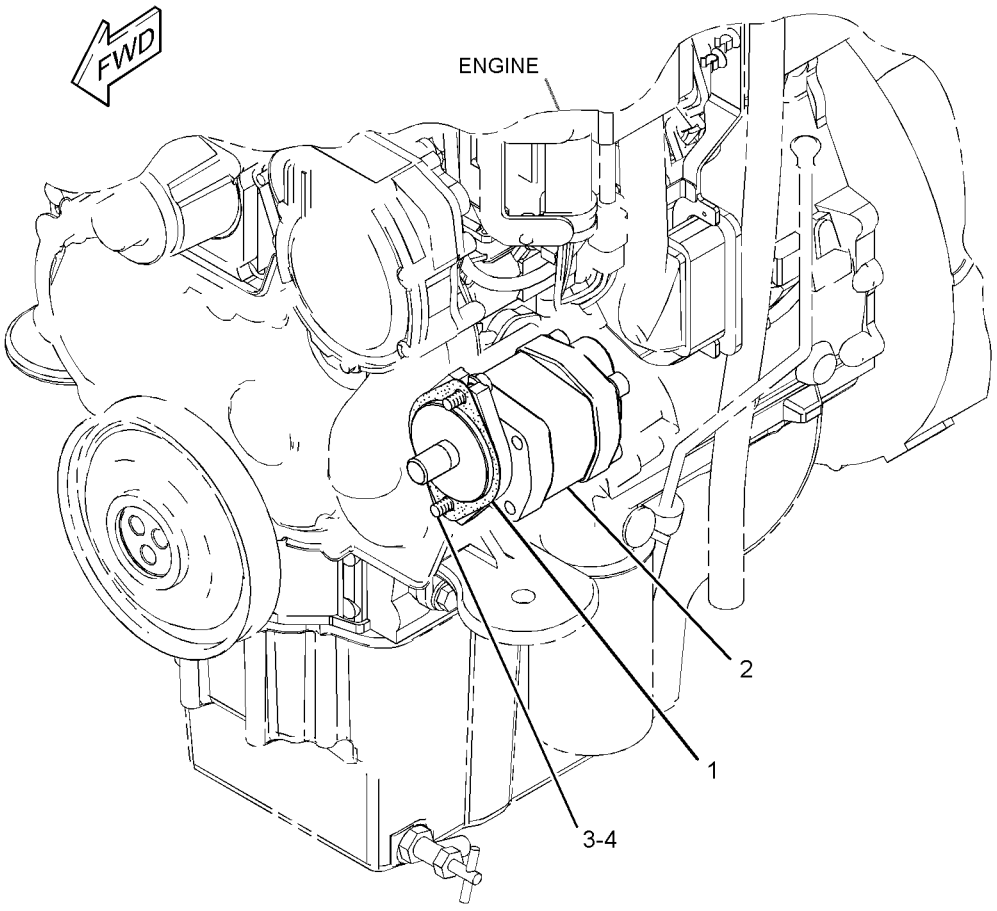

GRAPHIC #1 **<END>** g01331076

244-7426 TANK GP-HYDRAULIC

S/N: JLF1-UP; WWW1-UP; YYY1-UP
PART OF 244-7385, 317-2808 HYDRAULIC AR

SMCS-5056 **i03602316**

NOTE	REF NO	GRAPHIC REF	PART NUMBER	QTY	PART NAME 1 2 3 4 5 6 (PRODUCT LEVEL)	SEE PAGE
	1	1	**1P-4278**	10	CLAMP-HOSE	
	2	1	**7K-1181**	11	STRAP-CABLE	
	3	1	**8T-2173**	1	CONNECTOR-HOSE	
	5	1	**187-5086**	1	TEE	
	6	1	**9R-9925**	2	FILTER ELEMENT-BREATHER (HYDRAULIC TANK)	
Y	7	1	*244-7440*	1	TANK GP-HYDRAULIC	433
	8	1	**255-1152**	1	BRACKET AS	
	9	1	**284-2885**	1	HOSE	
	10	1	**291-9247**	1	BRACKET AS	
E	11	1	**5P-1442**		HOSE (139.2-CM)	
E	11A	1	**5P-1442**		HOSE (59-CM)	
E	11B	1	**5P-1442**		HOSE (104-CM)	
E	11C	1	**5P-1442**		HOSE (106-CM)	
D	12	1	**6V-2495**		SEAL (0.2-M EACH)	
M	13	1	**5C-9553**	2	BOLT (M6X1X16-MM)	
	14	1	**7X-7729**	14	WASHER (11X25X3-MM THK)	
M	15	1	**8T-4136**	4	BOLT (M10X1.5X25-MM)	
M	16	1	**8T-4137**	4	BOLT (M10X1.5X20-MM)	
M	17	1	**8T-4191**	6	BOLT (M10X1.5X16-MM)	
	18	1	**8T-4984**	1	CLAMP-HOSE	
	19	1	**8T-6703**	1	CLAMP-HOSE	
	20	1	**9X-8256**	2	WASHER (6.6X12X2-MM THK)	
	21	1	**314-9768**	1	GAUGE-SIGHT	
	22	1	**8T-9402**	2	CLAMP-HOSE	
E	23	1	**5P-0743**		HOSE (32-CM)	

D-ORDER BY THE METER
E-ORDER BY THE CENTIMETER
M-METRIC PART
Y-SEPARATE ILLUSTRATION

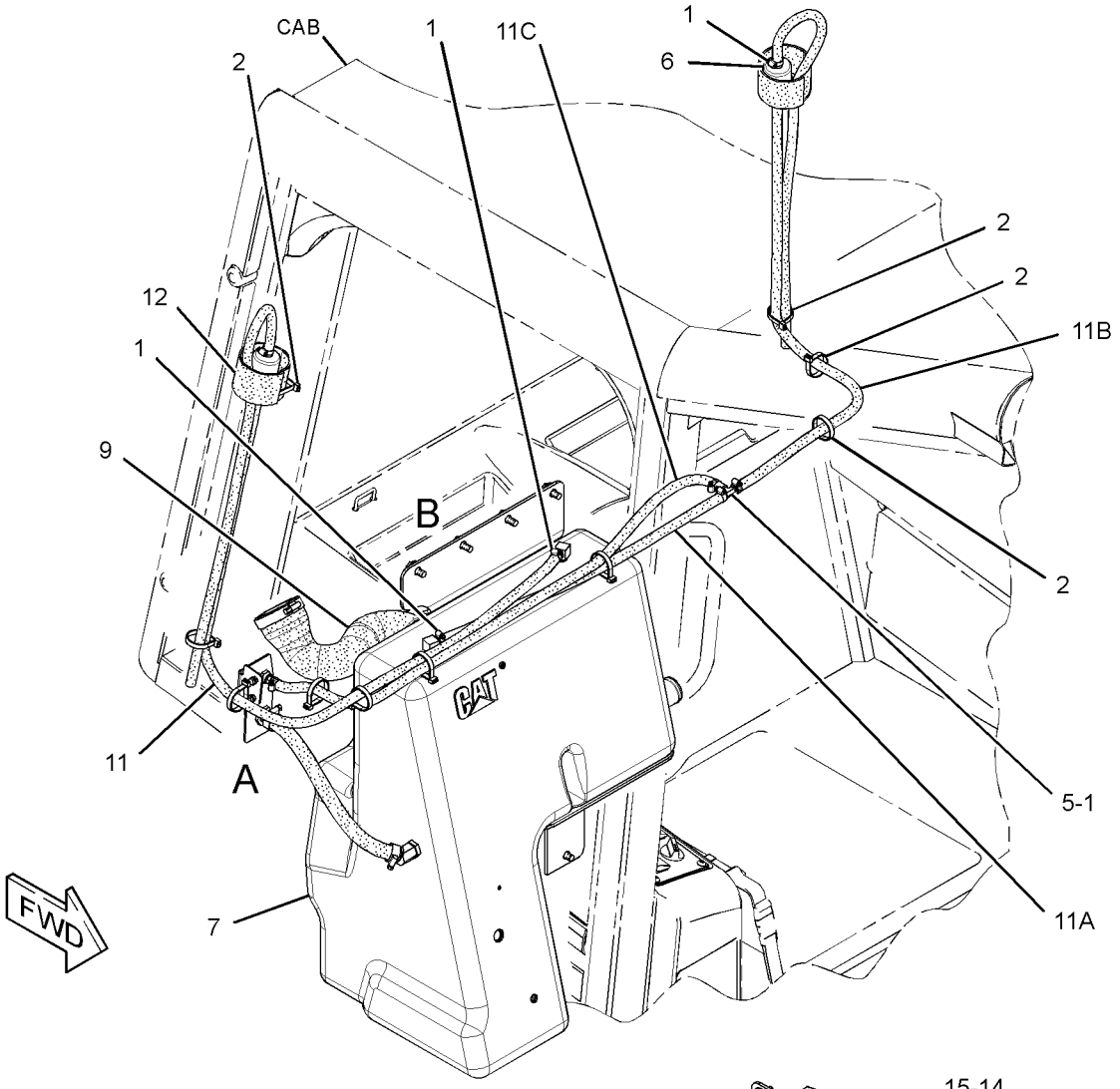

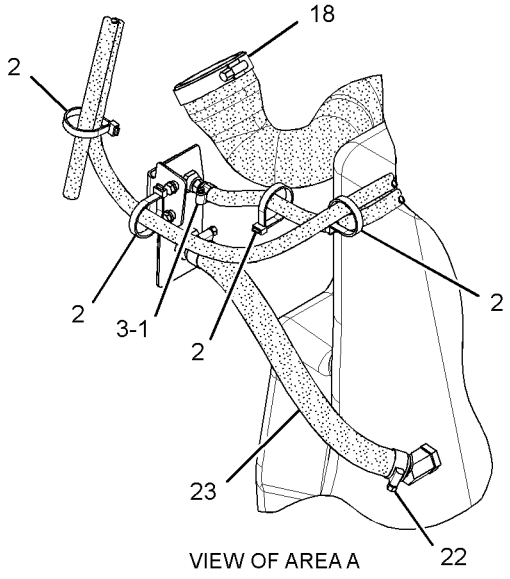

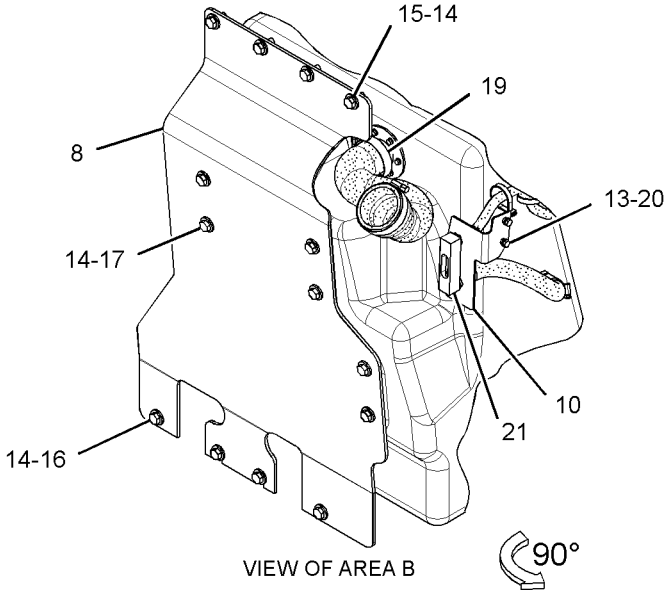

GRAPHIC #1 **<END>** g01733673

244-7440 TANK GP-HYDRAULIC

S/N: JLF1-UP; WWW1-UP; YYY1-UP
59.5- LITERS (15.72-GALLONS)
PART OF 244-7426 TANK GP-HYDRAULIC

SMCS-5056 **i02918747**

NOTE	REF NO	GRAPHIC REF	PART NUMBER	QTY	PART NAME 1 2 3 4 5 6 (PRODUCT LEVEL)	SEE PAGE
	1	1	**3E-4091**	2	ELBOW	
	2	1	**7F-8267**	1	SEAL-O-RING	
	3	1	**132-3056**	1	SEAL-O-RING	
	4	1	**194-4864**	1	ELBOW	
	5	1	**322-9703**	1	SCREEN-SUCTION (HYDRAULIC TANK)	
	6	1	**255-1155**	1	TANK AS-HYDRAULIC	
	7	1	**256-7752**	1	COVER AS	
	8	1	**284-3705**	1	TUBE AS	
	9	1	**3J-7354**	2	SEAL-O-RING	
	10	1	**6V-4589**	1	SEAL-O-RING	
M	11	1	**8T-0288**	6	BOLT (M5X0.8X12-MM)	
	12	1	**8T-0328**	6	WASHER-HARD (5.5X10X1-MM THK)	
M	13	1	**8T-4200**	6	BOLT (M8X1.25X16-MM)	
	14	1	**8T-4224**	6	WASHER-HARD (8.8X16X2-MM THK)	

M-METRIC PART

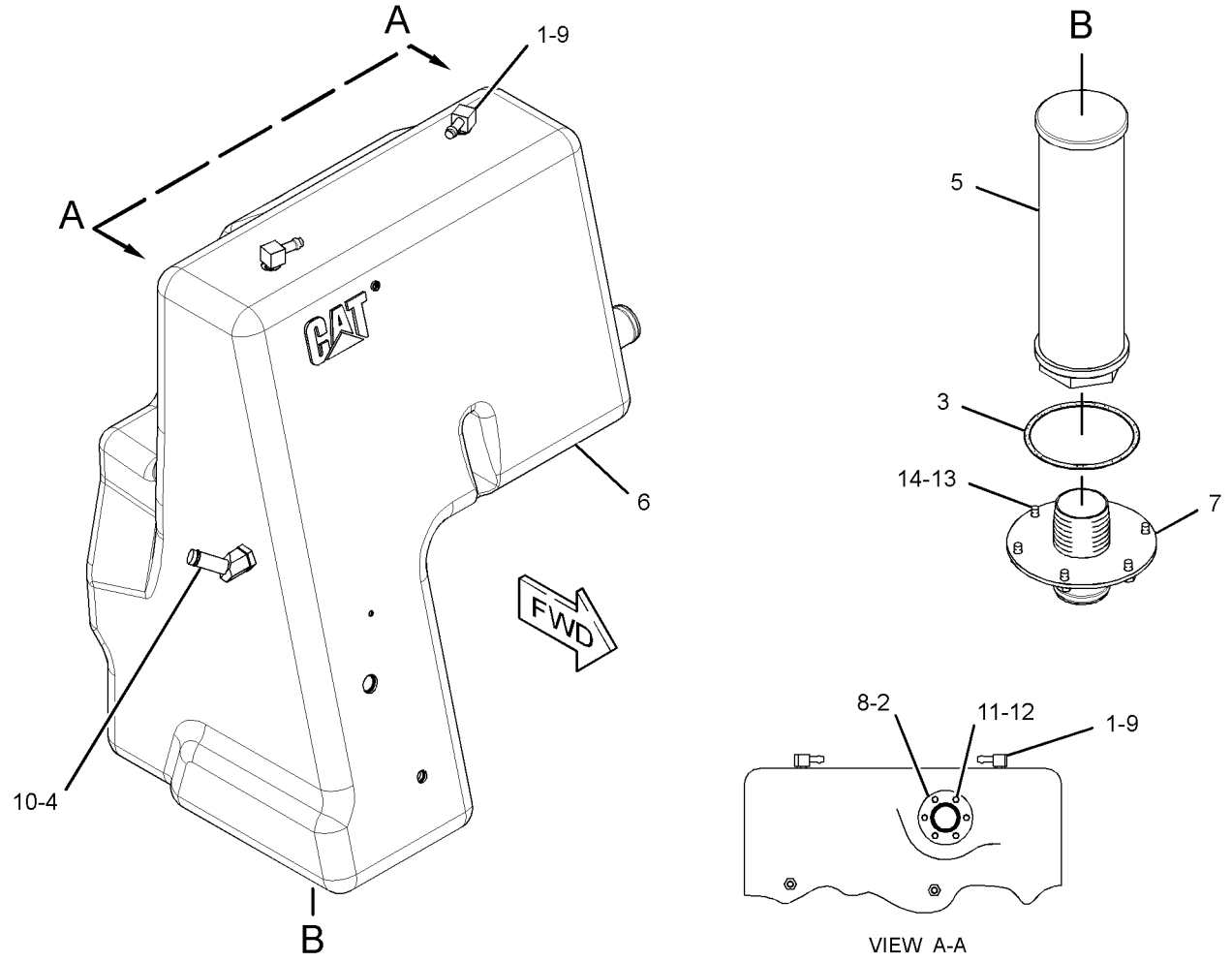

GRAPHIC #1 **<END>** g01407076

254-1386 VALVE & MTG GP-IMPLEMENT CONT–STANDARD

S/N: JLF1-UP; WWW1-UP; YYY1-UP
PART OF 244-7470 HYDRAULIC AR
AN ATTACHMENT

SMCS-5051 **i02819289**

NOTE	REF NO	GRAPHIC REF	PART NUMBER	QTY	PART NAME 1 2 3 4 5 6 (PRODUCT LEVEL)	SEE PAGE
Y	1	1	**254-1450**	1	VALVE GP-BANK 3	436
M	2	1	**8T-4182**	3	BOLT (M10X1.5X45-MM)	
	3	1	**8T-7934**	3	WASHER-HARD (11X21X5-MM THK)	

M-METRIC PART
Y-SEPARATE ILLUSTRATION

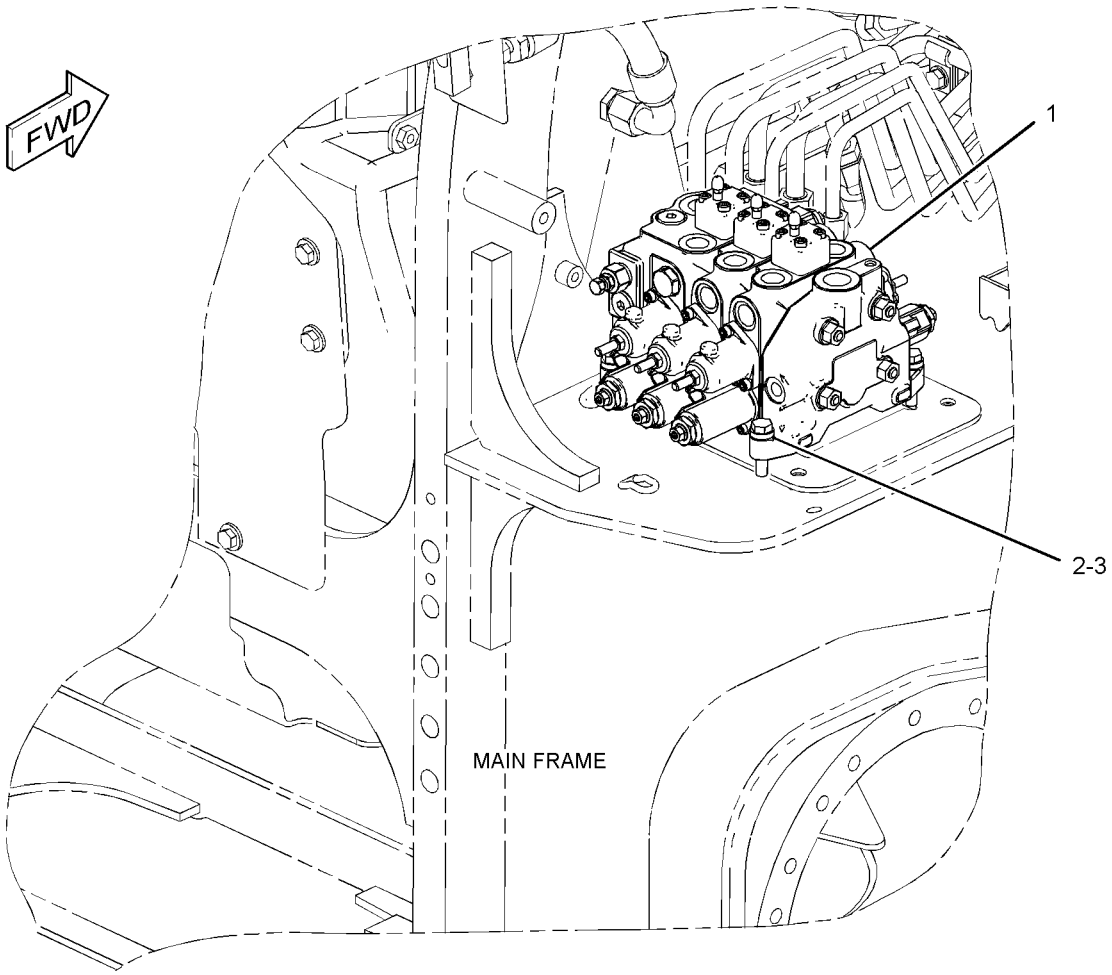

GRAPHIC #1 **<END>** g01373994

254-1457 VALVE & MTG GP-IMPLEMENT CONT

S/N: JLF1-UP; WWW1-UP; YYY1-UP
PART OF 244-7471, 244-7472 HYDRAULIC AR
AN ATTACHMENT

SMCS-5051 **i02679428**

NOTE	REF NO	GRAPHIC REF	PART NUMBER	QTY	PART NAME 1 2 3 4 5 6 (PRODUCT LEVEL)	SEE PAGE
Y	1	1	**254-1451**	1	VALVE GP-BANK 4 (IMPLEMENT)	438
M	2	1	**8T-4182**	3	BOLT (M10X1.5X45-MM)	
	3	1	**8T-7934**	3	WASHER-HARD (11X21X5-MM THK)	

M-METRIC PART
Y-SEPARATE ILLUSTRATION

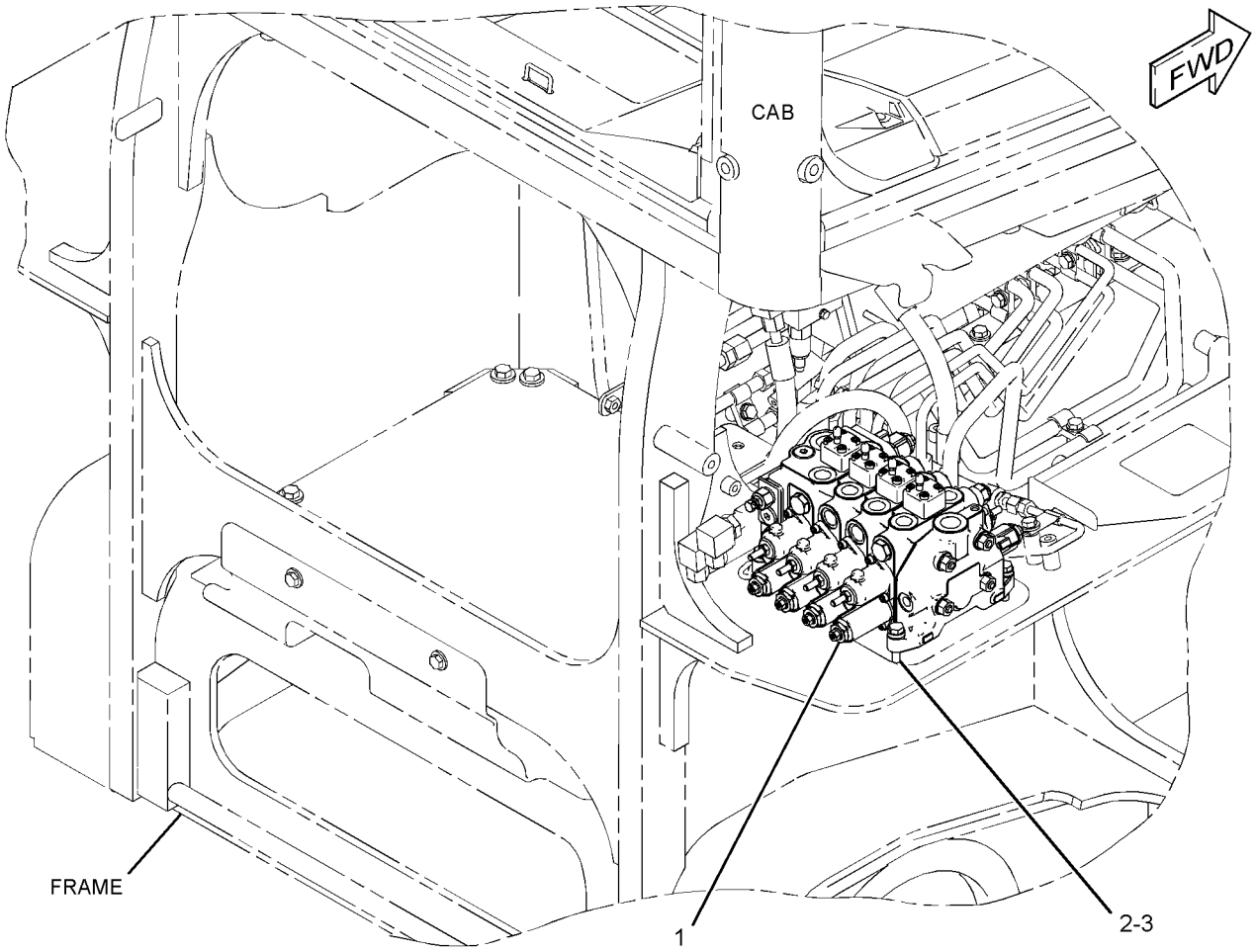

GRAPHIC #1 **<END>** g01379603

HYDRAULIC SYSTEM

254-1450 VALVE GP-BANK 3

S/N: JLF1-UP; WWW1-UP; YYY1-UP
PART OF 254-1386 VALVE & MTG GP-IMPLEMENT CONT
AN ATTACHMENT

SMCS-5051 **i02766861**

NOTE	REF NO	GRAPHIC REF	PART NUMBER	QTY	PART NAME 1 2 3 4 5 6 (PRODUCT LEVEL)	SEE PAGE
Y	1	1	**269-1084**	1	VALVE GP-CONTROL (BLADE LIFT)	440
Y	2	1	**269-1085**	1	VALVE GP-CONTROL (ANGLE)	441
Y	3	1	**304-1139**	1	VALVE GP-CONTROL (TILT)	445
Y	4	1	**269-1087**	1	MANIFOLD GP-VALVE (OUTLET)	429
	5	1	**123-4363**	4	ROD	
M	6	1	**189-3396**	4	NUT (M10X1.5-THD)	
	7	1	**095-1574**	24	SEAL-O-RING	
	8	1	**095-1590**	9	SEAL-O-RING	
	9	1	**095-1586**	3	SEAL-O-RING	

M-METRIC PART
Y-SEPARATE ILLUSTRATION

254-1450 VALVE GP-BANK 3 *(contd.)* **i02766861**

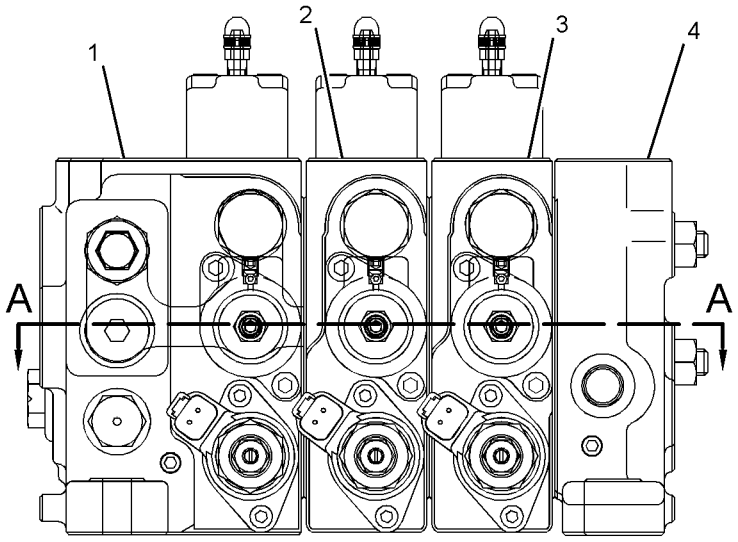

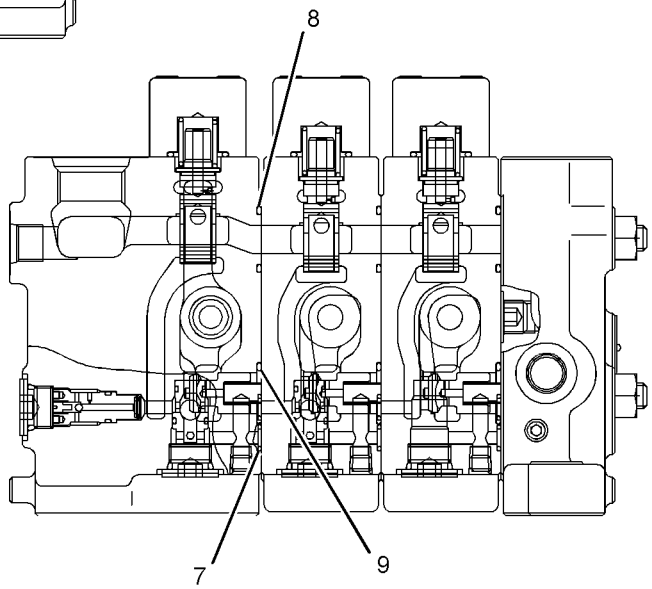

SECTION B-B

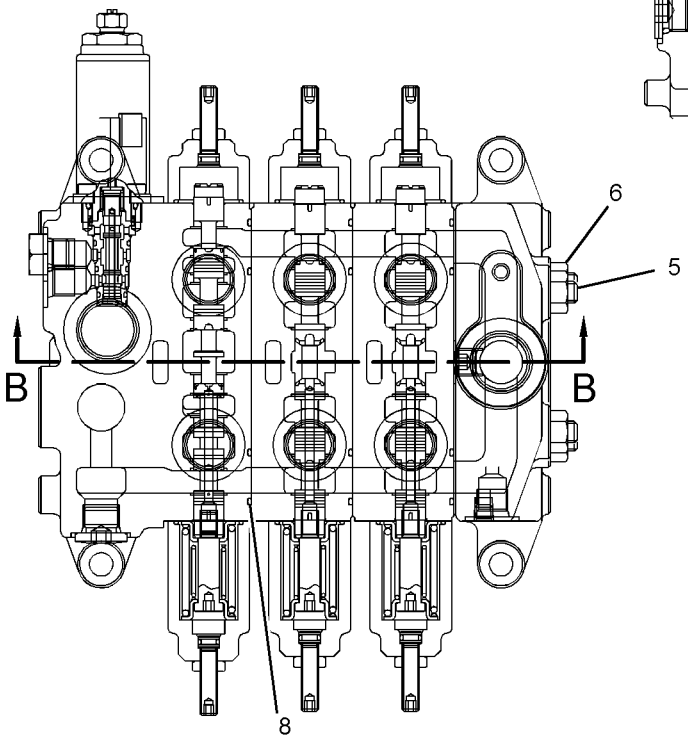

SECTION A-A

GRAPHIC #1 **<END>** g01380588

254-1451 VALVE GP-BANK 4—IMPLEMENT

S/N: JLF1-UP; WWW1-UP; YYY1-UP
PART OF 254-1457 VALVE & MTG GP-IMPLEMENT CONT
AN ATTACHMENT

SMCS-5051 **i03351539**

NOTE	REF NO	GRAPHIC REF	PART NUMBER	QTY	PART NAME 1 2 3 4 5 6 (PRODUCT LEVEL)	SEE PAGE
Y	1	1	**269-1084**	1	VALVE GP-CONTROL (BLADE LIFT)	440
Y	2	1	**269-1085**	1	VALVE GP-CONTROL (ANGLE)	441
Y	3	1	**304-1139**	1	VALVE GP-CONTROL (TILT)	445
Y	4	1	**269-1086**	1	VALVE GP-CONTROL (AUXILIARY, RIPPER)	442
Y	5	1	**269-1087**	1	MANIFOLD GP-VALVE (OUTLET) (AUXILIARY)	429
	6	1	**9R-0699**	4	ROD	
M	7	1	**189-3396**	4	NUT (M10X1.5-THD)	
	8	1	**095-1574**	32	SEAL-O-RING	
	9	1	**095-1590**	12	SEAL-O-RING	
	10	1	**095-1586**	4	SEAL-O-RING	

M-METRIC PART
Y-SEPARATE ILLUSTRATION

254-1451 VALVE GP-BANK 4 *(contd.)* **i03351539**

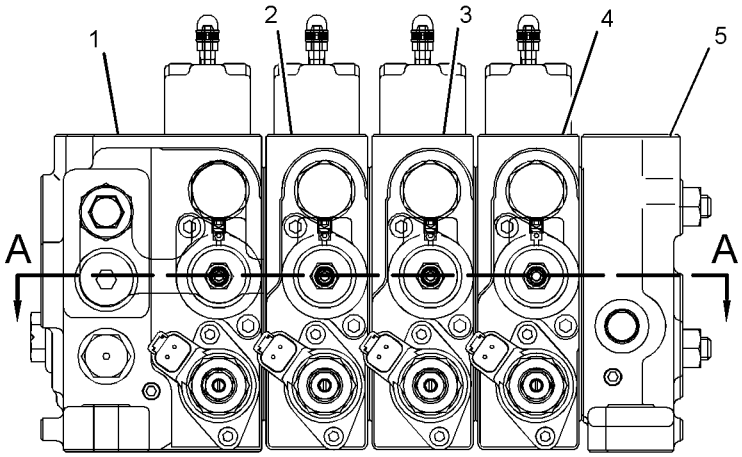

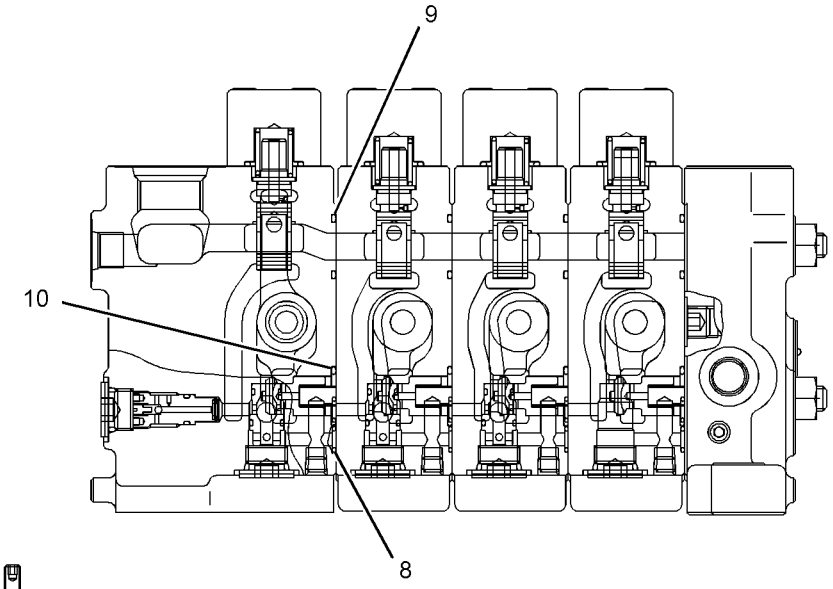

SECTION B-B

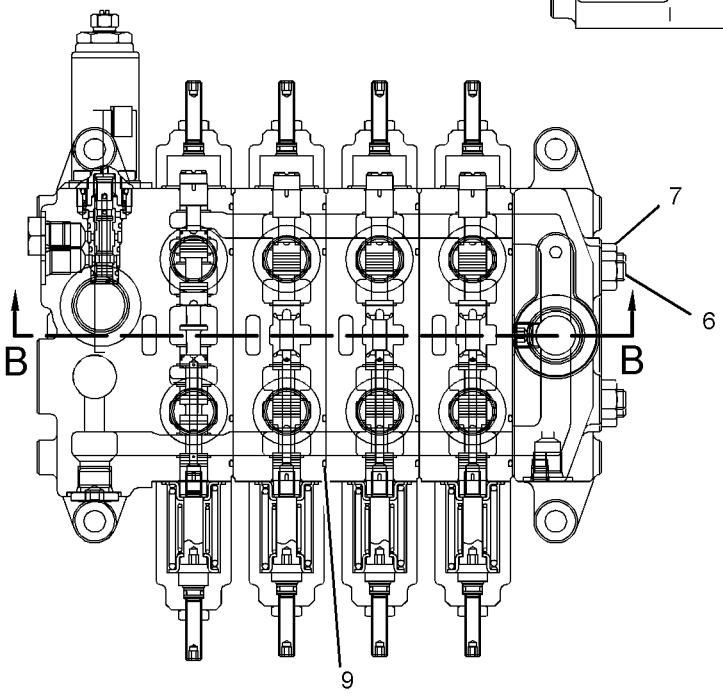

SECTION A-A

GRAPHIC #1 **<END>** g01380603

HYDRAULIC SYSTEM

269-1084 VALVE GP-CONTROL–BLADE LIFT

S/N: JLF1-UP; WWW1-UP; YYY1-UP
PART OF 254-1450 VALVE GP-BANK 3, 254-1451 VALVE GP-BANK 4
AN ATTACHMENT

SMCS-5051 **i02817693**

NOTE	REF NO	GRAPHIC REF	PART NUMBER	QTY	PART NAME 1 2 3 4 5 6 (PRODUCT LEVEL)	SEE PAGE
	1	1	**304-1140**	1	VALVE GP-RELIEF (BLADE LIFT)	
	2	1	**304-1141**	1	VALVE GP-SOLENOID (BLADE LIFT)	
	3	1	**304-1142**	2	VALVE GP-SOLENOID (BLADE LIFT)	
	4	1	**304-1144**	1	KIT-COVER	
					(INCLUDES COVER, VALVE, CAP, SEAL & BOLTS)	
	5	1	**304-1147**	2	VALVE GP-MAKEUP (BLADE LIFT)	
	6	1	**304-1149**	1	KIT-COVER	
					(INCLUDES COVER, SEALS, SCREWS, BALL & NUT)	
	7	1	**304-1150**	1	KIT-COVER	
					(INCLUDES COVER, SEALS, SCREWS, BALL & NUT)	
M	8	1	**8T-0269**	4	BOLT-SOCKET HEAD (M6X1X20-MM)	
M	9	1	**099-2374**	6	BOLT-SOCKET HEAD (M5X0.8X12-MM)	
	10	1	**304-1156**	1	RESOLVER	

M-METRIC PART

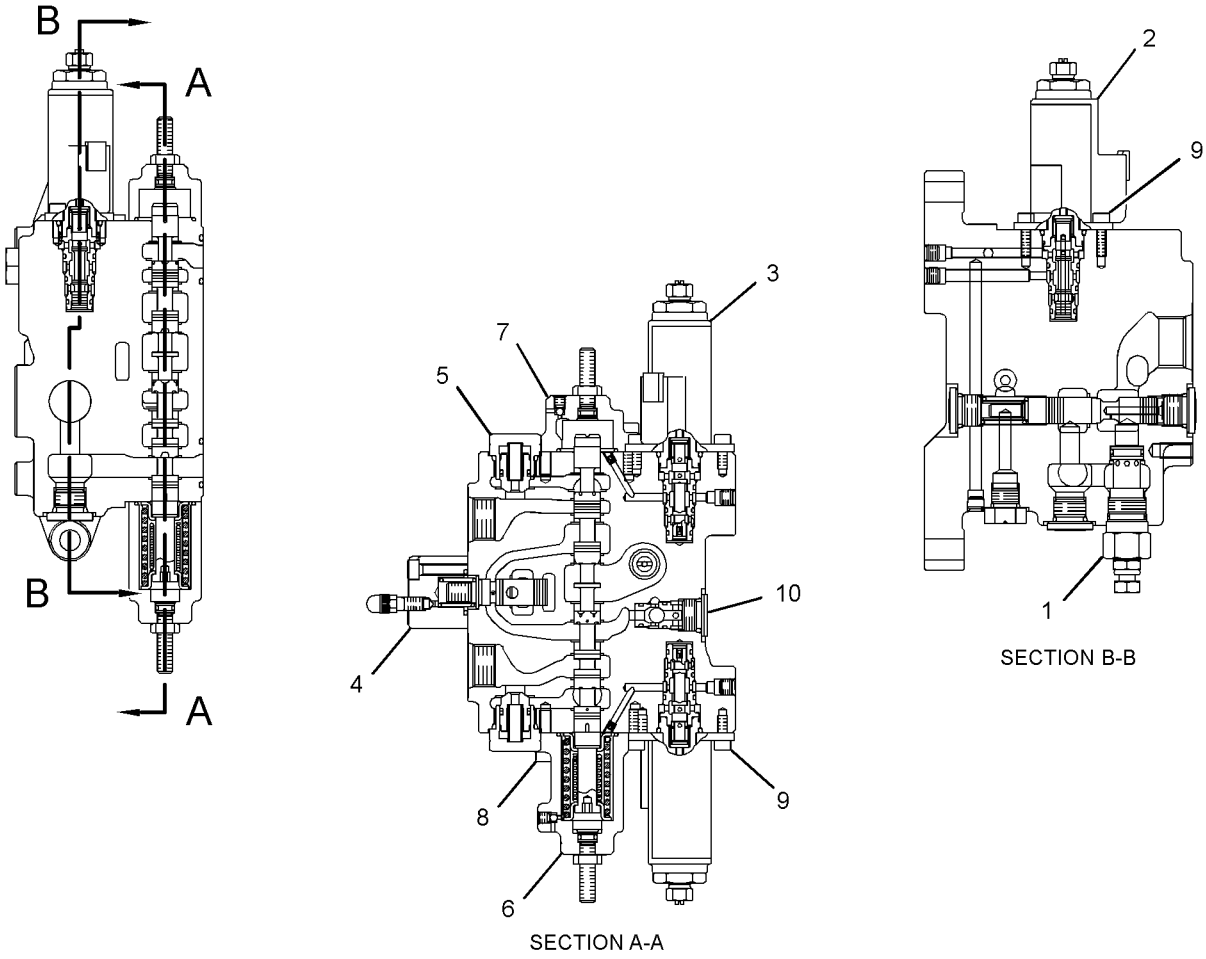

SECTION A-A

SECTION B-B

GRAPHIC #1 **<END>** g01406867

269-1085 VALVE GP-CONTROL–ANGLE

S/N: JLF1-UP; WWW1-UP; YYY1-UP
PART OF 254-1450 VALVE GP-BANK 3, 254-1451 VALVE GP-BANK 4
AN ATTACHMENT

SMCS-5051 **i02817687**

NOTE	REF NO	GRAPHIC REF	PART NUMBER	QTY	PART NAME 1 2 3 4 5 6 (PRODUCT LEVEL)	SEE PAGE
	1	1	**304-1142**	2	VALVE GP-SOLENOID (ANGLE)	
	2	1	**304-1145**	1	KIT-COVER (COMPENSATOR)	
					(INCLUDES COVER, VALVE, CAP, SEAL & BOLTS)	
	3	1	**304-1147**	2	VALVE GP-MAKEUP (ANGLE)	
	4	1	**304-1150**	1	KIT-COVER	
					(INCLUDES COVER, SEALS, SCREWS, BALL & NUT)	
	5	1	**304-1151**	1	KIT-COVER	
					(INCLUDES COVER, SEALS, SCREWS, BALL & NUT)	
M	6	1	**8T-0269**	4	BOLT-SOCKET HEAD (M6X1X20-MM)	
M	7	1	**099-2374**	4	BOLT-SOCKET HEAD (M5X0.8X12-MM)	
	8	1	**304-1156**	1	RESOLVER	

M-METRIC PART

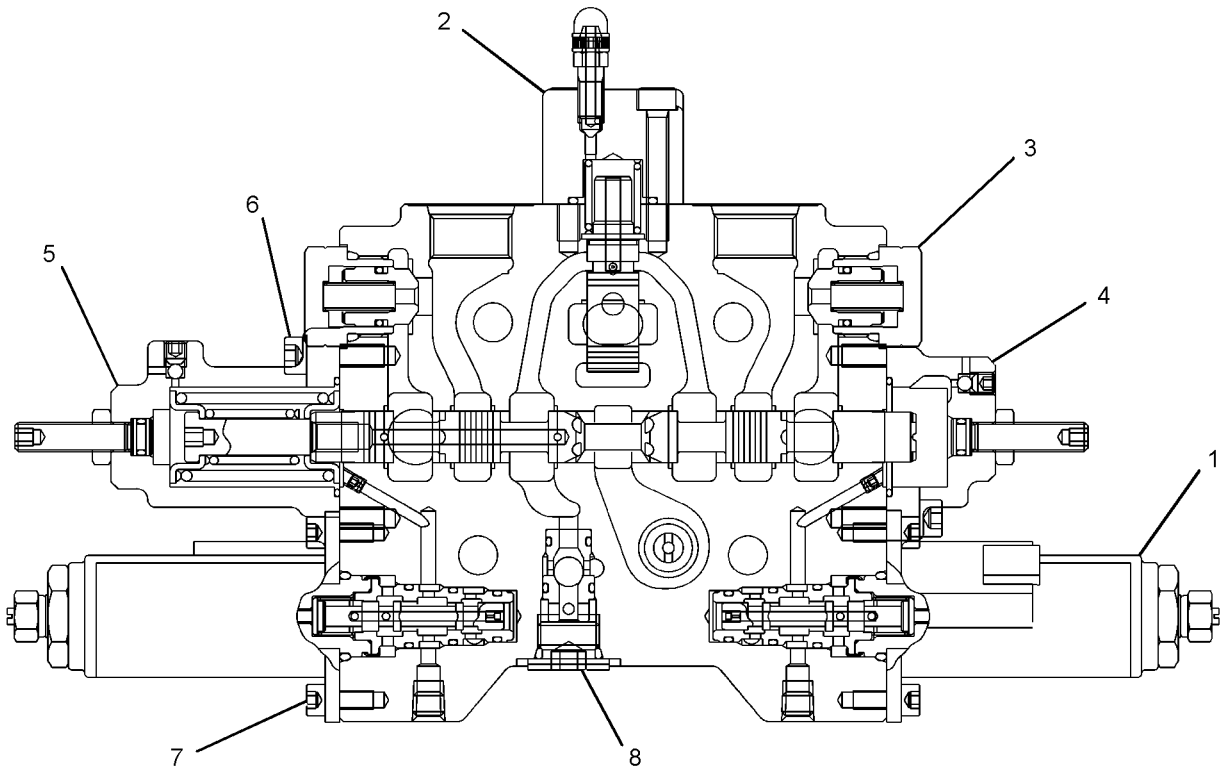

GRAPHIC #1 **<END>** g01407053

HYDRAULIC SYSTEM

269-1086 VALVE GP-CONTROL–AUXILIARY

S/N: JLF1-UP; WWW1-UP; YYY1-UP
PART OF 254-1451 VALVE GP-BANK 4
AN ATTACHMENT

SMCS-5051 **i02817770**

NOTE	REF NO	GRAPHIC REF	PART NUMBER	QTY	PART NAME 1 2 3 4 5 6 (PRODUCT LEVEL)	SEE PAGE
	1	1	**304-1142**	2	VALVE GP-SOLENOID (AUXILIARY)	
	2	1	**304-1145**	1	KIT-COVER (COMPENSATOR)	
					(INCLUDES COVER, VALVE, CAP, SEAL, & BOLTS)	
	3	1	**304-1147**	1	VALVE GP-MAKEUP (AUXILIARY)	
	4	1	**304-1150**	1	KIT-COVER	
					(INCLUDES COVER, SEALS, SCREWS, BALL, & NUT)	
	5	1	**304-1151**	1	KIT-COVER	
					(INCLUDES COVER, SEALS, SCREWS, BALL, & NUT)	
	6	1	**304-1152**	1	VALVE GP-RELIEF (AUXILIARY)	
M	7	1	**8T-0269**	4	BOLT-SOCKET HEAD (M6X1X20-MM)	
M	8	1	**099-2374**	4	BOLT-SOCKET HEAD (M5X0.8X12-MM)	
	9	1	**304-1156**	1	RESOLVER	

M-METRIC PART

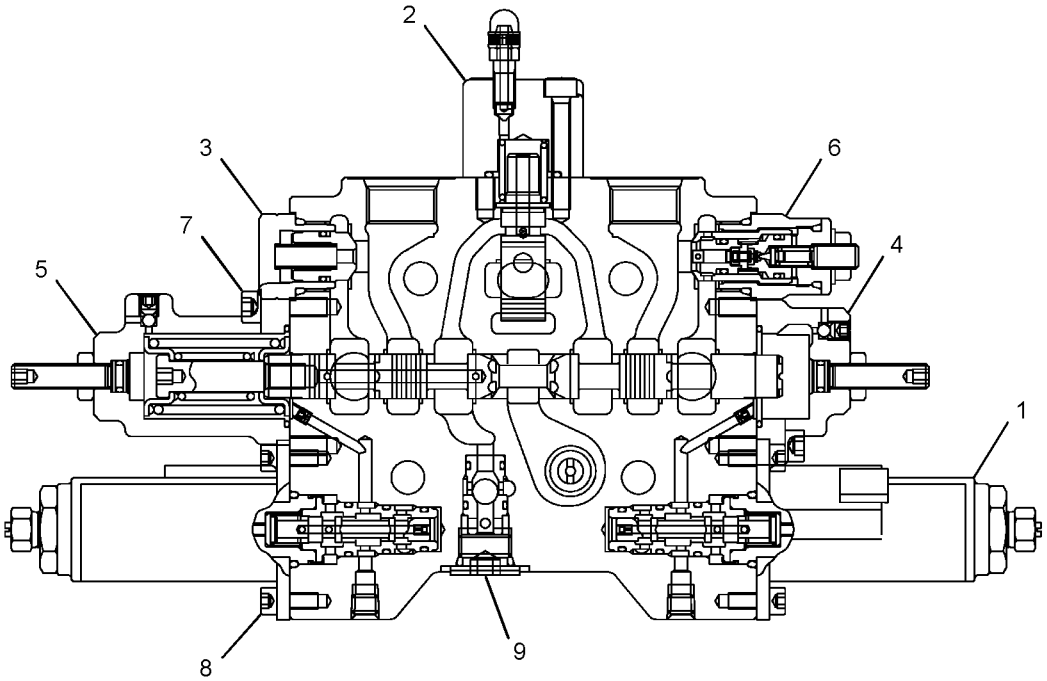

GRAPHIC #1 **<END>** g01408684

HYDRAULIC SYSTEM

271-9179 VALVE GP-CONTROL

S/N: WWW1-UP

PART OF 244-7447 POWER TRAIN AR

SMCS-5051 **i02683056**

NOTE	REF NO	GRAPHIC REF	PART NUMBER	QTY	PART NAME 1 2 3 4 5 6 (PRODUCT LEVEL)	SEE PAGE
I	1	1	**7T-1159**	1	HOSE AS	
I	2	1	**163-3917**	1	HOSE AS	
I	3	1	**169-6972**	1	HOSE AS	
I	4	1	**261-6818**	1	HOSE AS	
	5	1	**272-3481**	1	TUBE AS	
I	6	1	**274-1532**	1	HOSE AS	
I	7	1	**274-1535**	1	HOSE AS	
Y	8	1	**274-6747**	1	MANIFOLD GP-CONTROL	283
	9	1	**295-9265**	1	TEE AS	
		1	**6V-8397**	2	SEAL-O-RING	
		1	**6V-9843**	1	TEE-SWIVEL	
	10	1	**092-3635**	1	CONNECTOR	
	11	1	*148-8318*	1	CONNECTOR AS	
		1	**3K-0360**	1	SEAL-O-RING	
		1	**6V-8397**	1	SEAL-O-RING	
		1	**6V-8634**	1	CONNECTOR	
	12	1	*148-8325*	2	CONNECTOR AS	
					(EACH INCLUDES)	
		1	**3J-1907**	1	SEAL-O-RING	
		1	**4J-5477**	1	SEAL-O-RING	
		1	**6V-8641**	1	CONNECTOR	
	13	1	*148-8368*	2	ELBOW AS	
					(EACH INCLUDES)	
		1	**3J-1907**	1	SEAL-O-RING	
		1	**4J-5477**	1	SEAL-O-RING	
		1	**6V-8627**	1	ELBOW	
	14	1	*148-8378*	1	ELBOW AS	
		1	**3J-1907**	1	SEAL-O-RING	
		1	**6V-8397**	1	SEAL-O-RING	
		1	**6V-8724**	1	ELBOW	
	15	1	*148-8439*	2	TEE AS	
					(EACH INCLUDES)	
		1	**3J-1907**	1	SEAL-O-RING	
		1	**6V-8397**	2	SEAL-O-RING	
		1	**6V-8774**	1	TEE	
	16	1	*148-8443*	1	TEE AS	
		1	**3J-1907**	1	SEAL-O-RING	
		1	**6V-8397**	1	SEAL-O-RING	
		1	**7X-2459**	1	TEE-O-RING	
	17	1	*150-4043*	1	CONNECTOR AS	
		1	**3J-1907**	1	SEAL-O-RING	
		1	**6V-8398**	1	SEAL-O-RING	
		1	**6V-9873**	1	CONNECTOR	
	18	1	**2H-0435**	2	CLAMP	
	19	1	**3K-0360**	1	SEAL-O-RING	
	20	1	**5P-7462**	1	CLIP (SLOT)	
	21	1	**5P-7463**	1	CLIP (TAB)	
	22	1	**6V-0683**	1	GROMMET	
	23	1	**6V-8397**	2	SEAL-O-RING	
M	24	1	**7X-2543**	3	BOLT (M10X1.5X120-MM)	
	25	1	**8M-2773**	3	CLIP	
	26	1	**8T-4121**	4	WASHER-HARD (11X21X2.5-MM THK)	
M	27	1	**8T-4191**	2	BOLT (M10X1.5X16-MM)	
M	28	1	**8T-4195**	2	BOLT (M10X1.5X30-MM)	
	29	1	**8T-7934**	3	WASHER-HARD (11X21X5-MM THK)	

271-9179 **VALVE GP-CONTROL** *(contd.)* **i02683056**

I-REFER TO HYDRAULIC INFORMATION SYSTEM
M-METRIC PART
Y-SEPARATE ILLUSTRATION

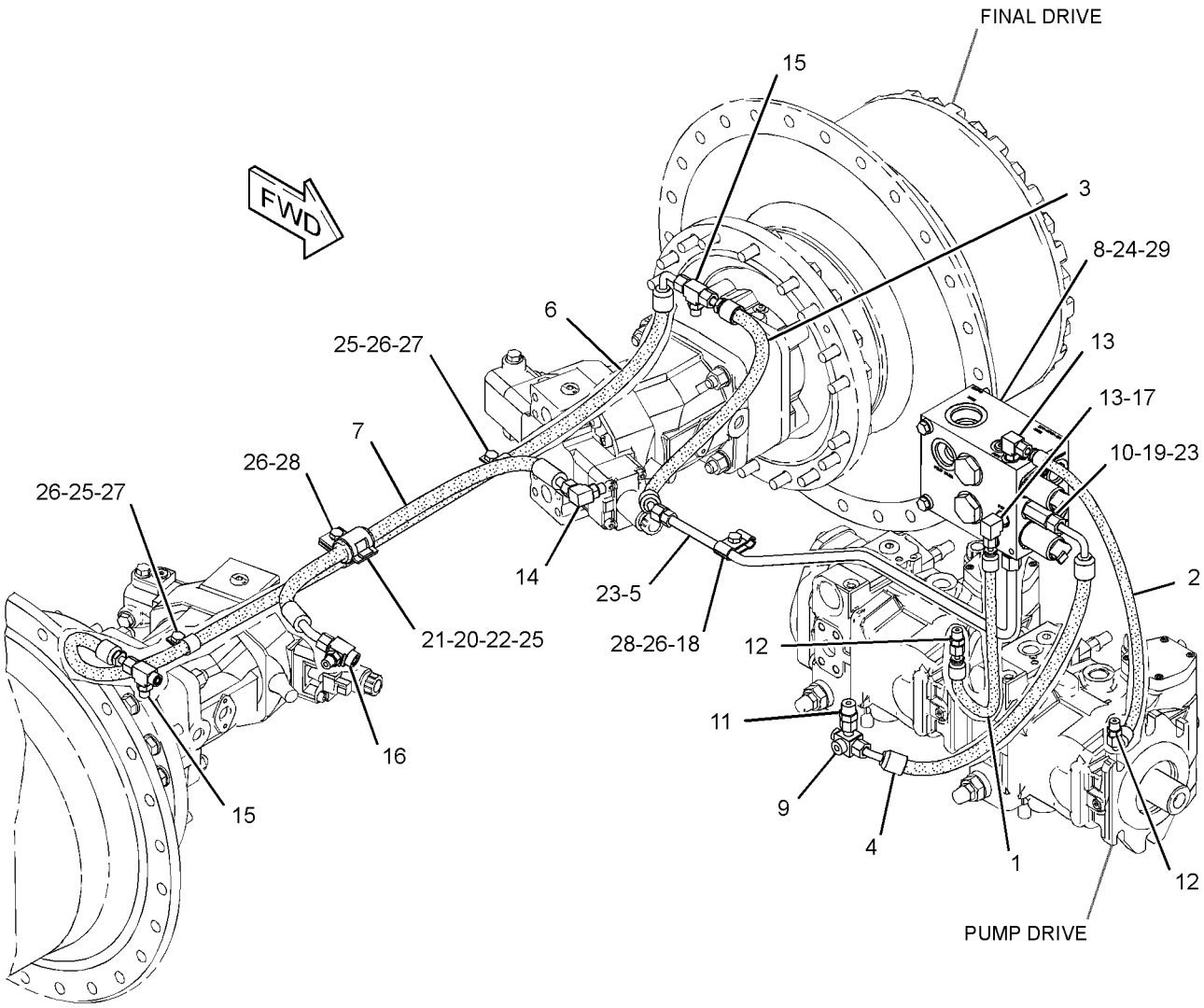

GRAPHIC #1 **<END>** g01352838

304-1139 VALVE GP-CONTROL–TILT

S/N: JLF1-UP; WWW1-UP; YYY1-UP
PART OF 254-1450 VALVE GP-BANK 3, 254-1451 VALVE GP-BANK 4
AN ATTACHMENT

SMCS-5051 **i02968001**

NOTE	REF NO	GRAPHIC REF	PART NUMBER	QTY	PART NAME 1 2 3 4 5 6 (PRODUCT LEVEL)	SEE PAGE
	1	1	**304-1143**	2	VALVE GP-SOLENOID (ANGLE)	
	2	1	**304-1145**	1	KIT-COVER	
					(INCLUDES COVER, VALVE, CAP, SEAL, & BOLTS)	
	3	1	**304-1147**	2	VALVE GP-MAKEUP (ANGLE)	
	4	1	**304-1150**	1	KIT-COVER	
	5	1	**304-1151**	1	KIT-COVER	
					(EACH KIT INCLUDES COVER, SEALS, SCREWS, BALL, & NUT)	
M	6	1	**8T-0269**	4	BOLT-SOCKET HEAD (M6X1X20-MM)	
M	7	1	**099-2374**	4	BOLT-SOCKET HEAD (M5XO.8X12-MM)	
	8	1	**304-1156**	1	RESOLVER	

M-METRIC PART

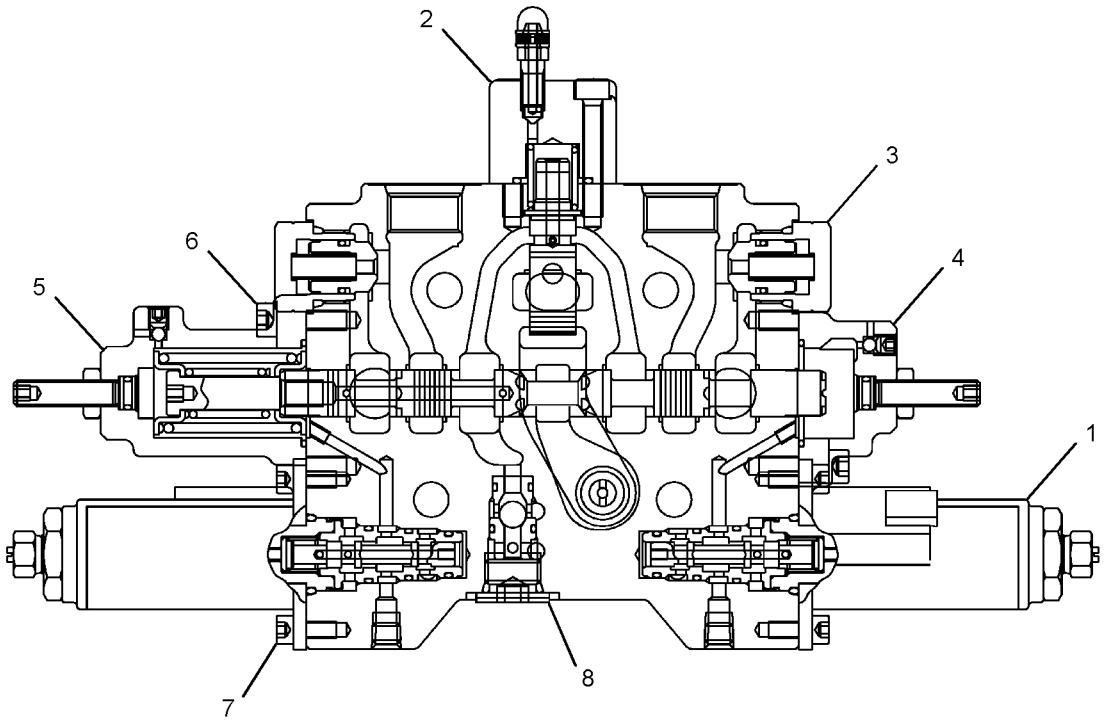

GRAPHIC #1 **<END>** g01408658

HYDRAULIC SYSTEM

322-6508 VALVE GP-CONTROL

S/N: WWW1-UP

FIELD INSTALLATION

SMCS-5051 **i03005569**

NOTE	REF NO	GRAPHIC REF	PART NUMBER	QTY	PART NAME 1 2 3 4 5 6 (PRODUCT LEVEL)	SEE PAGE
I	1	1	**7T-1159**	1	HOSE AS	
I	2	1	**163-3917**	1	HOSE AS	
I	3	1	**169-6972**	1	HOSE AS	
I	4	1	**261-6818**	1	HOSE AS	
	5	1	**272-3481**	1	TUBE AS	
I	6	1	**274-1532**	1	HOSE AS	
I	7	1	**274-1535**	1	HOSE AS	
Y	8	1	**274-6747**	1	MANIFOLD GP-CONTROL	283
	9	1	**315-9855**	1	CROSS AS	
	10	1	**092-3635**	1	CONNECTOR	
	11	1	*148-8325*	2	CONNECTOR AS	
					(EACH INCLUDES)	
		1	**3J-1907**	1	SEAL-O-RING	
		1	**4J-5477**	1	SEAL-O-RING	
		1	**6V-8641**	1	CONNECTOR	
	12	1	*148-8368*	2	ELBOW AS	
					(EACH INCLUDES)	
		1	**3J-1907**	1	SEAL-O-RING	
		1	**4J-5477**	1	SEAL-O-RING	
		1	**6V-8627**	1	ELBOW	
	13	1	*148-8378*	1	ELBOW AS	
		1	**3J-1907**	1	SEAL-O-RING	
		1	**6V-8397**	1	SEAL-O-RING	
		1	**6V-8724**	1	ELBOW	
	14	1	*148-8439*	1	TEE AS	
		1	**3J-1907**	1	SEAL-O-RING	
		1	**6V-8397**	2	SEAL-O-RING	
		1	**6V-8774**	1	TEE	
	15	1	*148-8443*	2	TEE AS	
					(EACH INCLUDES)	
		1	**3J-1907**	1	SEAL-O-RING	
		1	**6V-8397**	1	SEAL-O-RING	
		1	**7X-2459**	1	TEE-O-RING	
	16	1	*150-4043*	1	CONNECTOR AS	
		1	**3J-1907**	1	SEAL-O-RING	
		1	**6V-8398**	1	SEAL-O-RING	
		1	**6V-9873**	1	CONNECTOR	
	17	1	*164-5605*	1	CONNECTOR AS	
		1	**3K-0360**	1	SEAL-O-RING	
		1	**6V-8397**	1	SEAL-O-RING	
		1	**8T-0076**	1	CONNECTOR	
	18	1	**2H-0435**	2	CLAMP	
	19	1	**3K-0360**	1	SEAL-O-RING	
	20	1	**5P-7462**	1	CLIP (SLOT)	
	21	1	**5P-7463**	1	CLIP (TAB)	
	22	1	**6V-0683**	1	GROMMET	
	23	1	**6V-8397**	2	SEAL-O-RING	
M	24	1	**7X-2543**	3	BOLT (M10X1.5X120-MM)	
	25	1	**8M-2773**	3	CLIP	
	26	1	**8T-4121**	4	WASHER-HARD (11X21X2.5-MM THK)	
M	27	1	**8T-4191**	2	BOLT (M10X1.5X16-MM)	
M	28	1	**8T-4195**	2	BOLT (M10X1.5X30-MM)	
	29	1	**8T-7934**	3	WASHER-HARD (11X21X5-MM THK)	

I-REFER TO HYDRAULIC INFORMATION SYSTEM
M-METRIC PART
Y-SEPARATE ILLUSTRATION

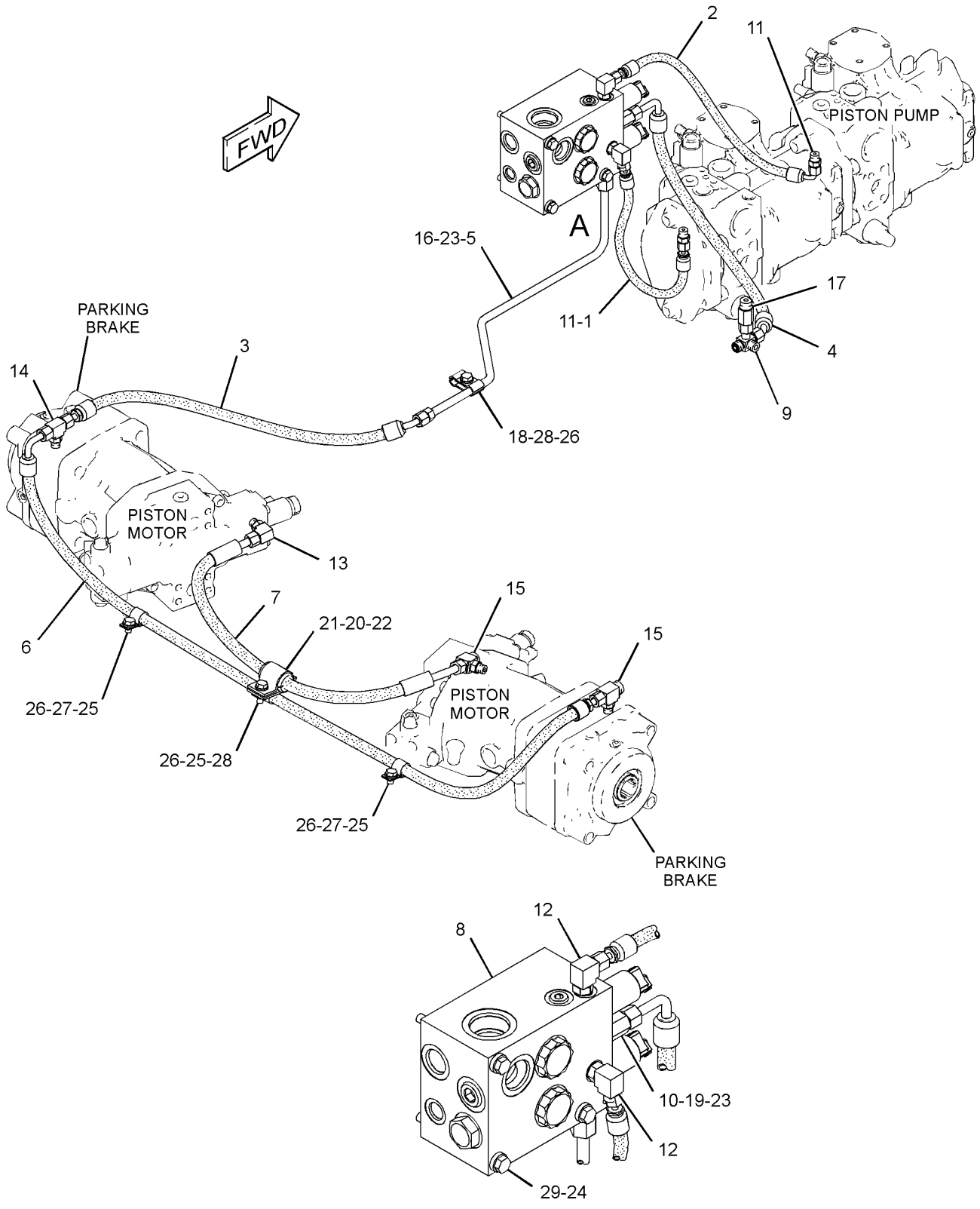

VIEW OF AREA A

GRAPHIC #1 **<END>** g01525903

HYDRAULIC SYSTEM

322-6509 VALVE GP-CONTROL

S/N: YYY1-UP

FIELD INSTALLATION

SMCS-5051 **i03005664**

NOTE	REF NO	GRAPHIC REF	PART NUMBER	QTY	PART NAME 1 2 3 4 5 6 (PRODUCT LEVEL)	SEE PAGE
I	1	1	**7T-1159**	1	HOSE AS	
I	2	1	**163-3917**	1	HOSE AS	
I	3	1	**261-1104**	1	HOSE AS	
I	4	1	**261-6818**	1	HOSE AS	
I	5	1	**263-0982**	1	HOSE AS	
	6	1	**272-3481**	1	TUBE AS	
Y	7	1	**274-6747**	1	MANIFOLD GP-CONTROL	283
I	8	1	**285-4317**	1	HOSE AS	
	9	1	**315-9855**	1	CROSS AS	
	10	1	**092-3635**	1	CONNECTOR	
	11	1	*148-8318*	1	CONNECTOR AS	
		1	**3K-0360**	1	SEAL-O-RING	
		1	**6V-8397**	1	SEAL-O-RING	
		1	**6V-8634**	1	CONNECTOR	
	12	1	*148-8325*	2	CONNECTOR AS	
					(EACH INCLUDES)	
		1	**3J-1907**	1	SEAL-O-RING	
		1	**4J-5477**	1	SEAL-O-RING	
		1	**6V-8641**	1	CONNECTOR	
	13	1	*148-8368*	2	ELBOW AS	
					(EACH INCLUDES)	
		1	**3J-1907**	1	SEAL-O-RING	
		1	**4J-5477**	1	SEAL-O-RING	
		1	**6V-8627**	1	ELBOW	
	14	1	*148-8378*	1	ELBOW AS	
		1	**3J-1907**	1	SEAL-O-RING	
		1	**6V-8397**	1	SEAL-O-RING	
		1	**6V-8724**	1	ELBOW	
	15	1	*148-8439*	1	TEE AS	
		1	**3J-1907**	1	SEAL-O-RING	
		1	**6V-8397**	2	SEAL-O-RING	
		1	**6V-8774**	1	TEE	
	16	1	*148-8443*	2	TEE AS	
					(EACH INCLUDES)	
		1	**3J-1907**	1	SEAL-O-RING	
		1	**6V-8397**	1	SEAL-O-RING	
		1	**7X-2459**	1	TEE-O-RING	
	17	1	*150-4043*	1	CONNECTOR AS	
		1	**3J-1907**	1	SEAL-O-RING	
		1	**6V-8398**	1	SEAL-O-RING	
		1	**6V-9873**	1	CONNECTOR	
	18	1	**2H-0435**	2	CLAMP	
	19	1	**3K-0360**	1	SEAL-O-RING	
	20	1	**5P-7462**	1	CLIP (SLOT)	
	21	1	**5P-7463**	1	CLIP (TAB)	
	22	1	**6V-0683**	1	GROMMET	
	23	1	**6V-8397**	2	SEAL-O-RING	
M	24	1	**7X-2543**	3	BOLT (M10X1.5X120-MM)	
	25	1	**8M-2773**	3	CLIP	
	26	1	**8T-4121**	4	WASHER-HARD (11X21X2.5-MM THK)	
M	27	1	**8T-4136**	1	BOLT (M10X1.5X25-MM)	
M	28	1	**8T-4191**	2	BOLT (M10X1.5X16-MM)	
M	29	1	**8T-4195**	1	BOLT (M10X1.5X30-MM)	
	30	1	**8T-7934**	3	WASHER-HARD (11X21X5-MM THK)	

322-6509 **VALVE GP-CONTROL** *(contd.)* **i03005664**

I-REFER TO HYDRAULIC INFORMATION SYSTEM
M-METRIC PART
Y-SEPARATE ILLUSTRATION

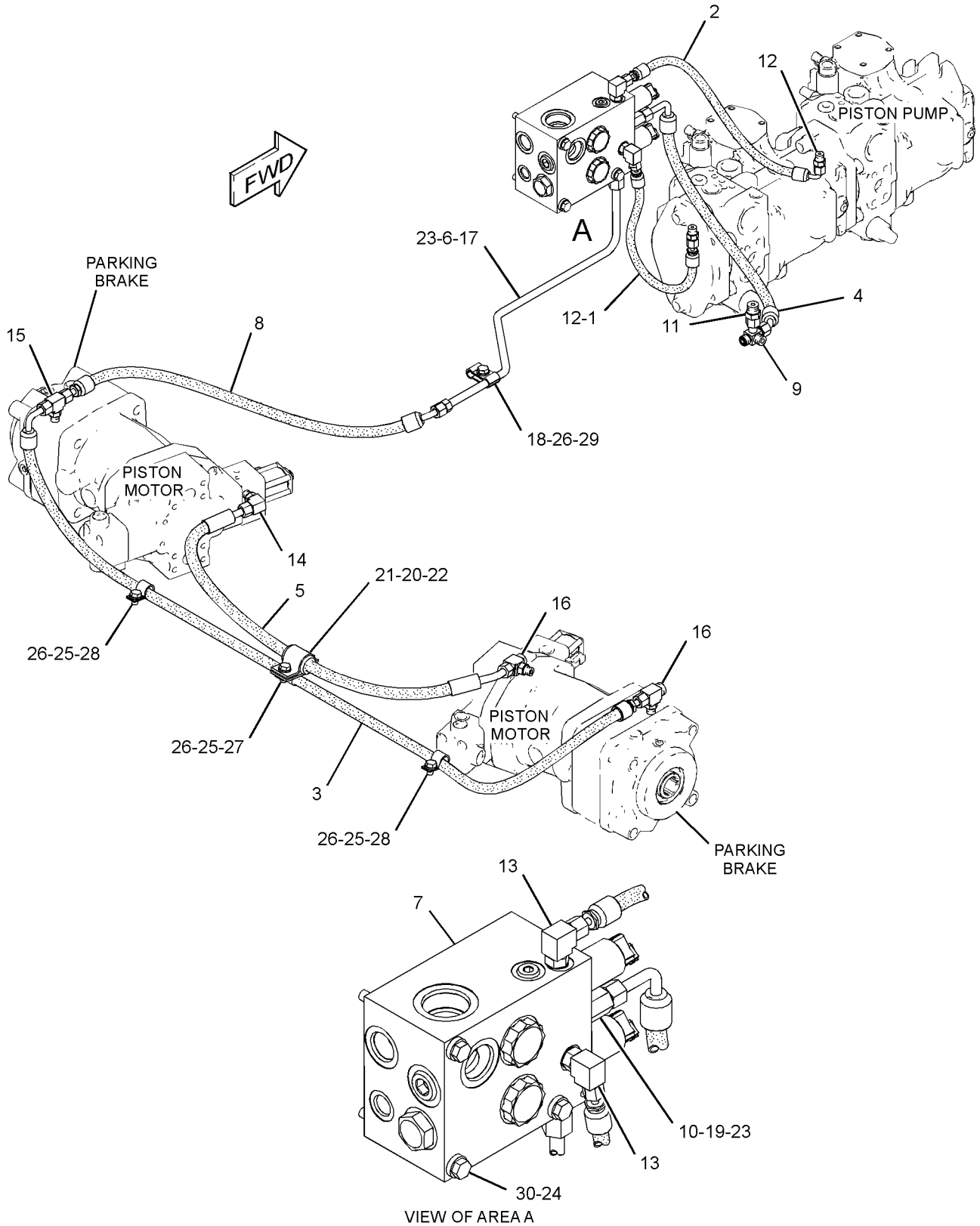

GRAPHIC #1 **<END>** g01525905

6E-4402 VALVE GP-RELIEF–CHARGE PRESSURE

S/N: JLF1-UP; WWW1-UP; YYY1-UP
PART OF 296-6708 HEAD GP-PUMP
AN ATTACHMENT

SMCS-5069, 5117 **i02591010**

NOTE	REF NO	GRAPHIC REF	PART NUMBER	QTY	PART NAME 1 2 3 4 5 6 (PRODUCT LEVEL)	SEE PAGE
	1	1	**202-2342**	1	SPRING	
	2	1	**6E-4404**	1	VALVE-POPPET	
	3	1	**183-8410**	1	SCREW	
	4	1	**6E-4403**	1	PLUG	
M	5	1	**6E-4240**	1	NUT-SEALING (M10X1-THD)	
	6	1	**6V-8352**	1	SEAL-O-RING	
	7	1	**167-7715**	1	RETAINER-SPRING	

M-METRIC PART

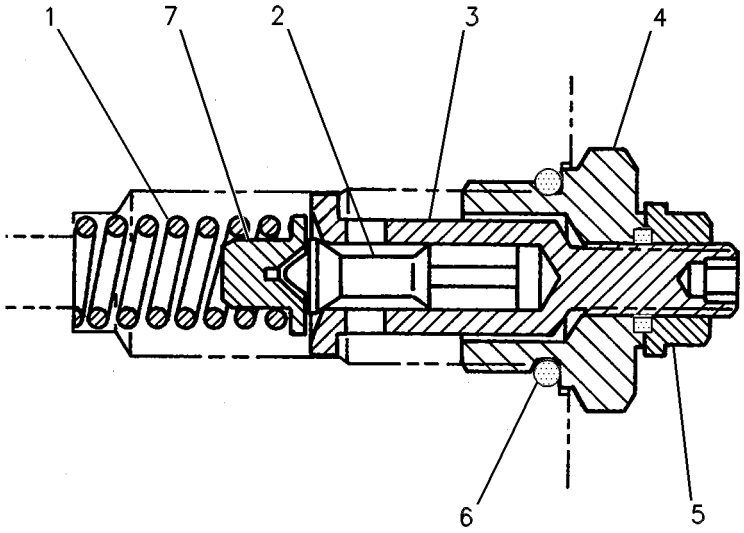

GRAPHIC #1 **<END>** g00252131

154-9445 VALVE GP-RELIEF–PRESSURE OVERRIDE–

HYDROSTATIC PUMP

S/N: JLF1-UP; WWW1-UP; YYY1-UP

PART OF 254-1379 PUMP GP-PISTON

AN ATTACHMENT

SMCS-5069, 5117 **i03408141**

NOTE	REF NO	GRAPHIC REF	PART NUMBER	QTY	PART NAME 1 2 3 4 5 6 (PRODUCT LEVEL)	SEE PAGE
J	1	1	**7Y-5219**	1	SEAL-O-RING	
J	2	1	**6V-5586**	1	SEAL-O-RING	
JM	3	1	**6E-1607**	1	LOCKNUT-SEALING	
					AVAILABLE REPAIR KIT(S):	
J			**122-9363**	1	KIT-SEAL (RELIEF VALVE)	

J-KIT MARKED J SERVICES PART(S) MARKED J
M-METRIC PART

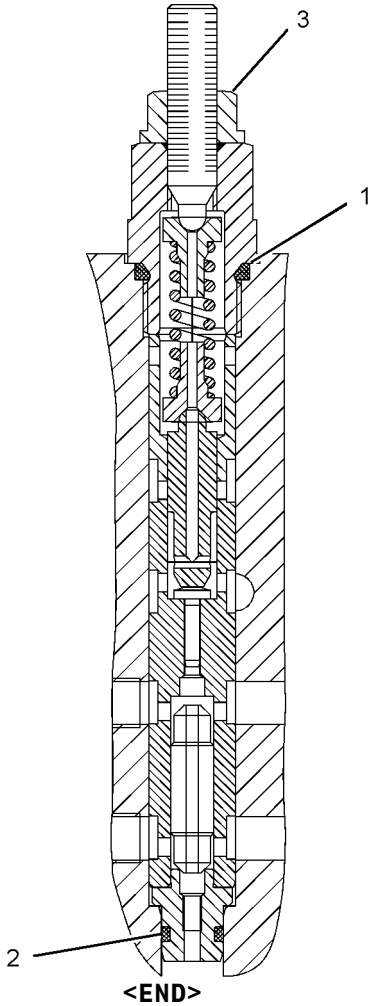

GRAPHIC #1 **<END>** g01011120

HYDRAULIC SYSTEM

177-7122 VALVE GP-RELIEF—CHARGE PRESSURE

S/N: JLF1-UP; WWW1-UP; YYY1-UP
PART OF 254-1379 PUMP GP-PISTON
AN ATTACHMENT

SMCS-5069, 5117 **i03482774**

NOTE	REF NO	GRAPHIC REF	PART NUMBER	QTY	PART NAME 1 2 3 4 5 6 (PRODUCT LEVEL)	SEE PAGE
	1	1	**6E-4404**	1	VALVE-POPPET	
	2	1	**167-7715**	1	RETAINER-SPRING	
	3	1	**112-4645**	1	SPRING	
	4	1	**6V-8352**	1	SEAL-O-RING	
	5	1	**112-4647**	1	SHIM (0.3-MM THK)	
	6	1	**177-7747**	1	RING	
					PARTS SHOWN IN GRAPHIC(S) WITHOUT A REFERENCE NUMBER ARE NOT SERVICED SEPARATELY	
					AVAILABLE REPAIR KIT(S):	
			215-7697	1	KIT-SHIM (INCLUDES 4-SHIMS)	

177-7122 **VALVE GP-RELIEF** *(contd.)* **i03482774**

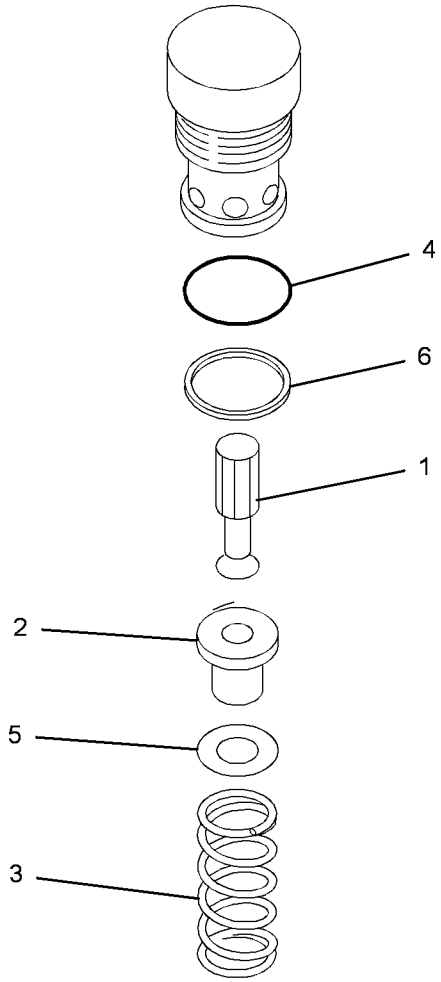

GRAPHIC #1 **<END>** g01422347

212-7035 VALVE GP-RELIEF–CROSSOVER

S/N: JLF1-UP; WWW1-UP; YYY1-UP
PART OF 254-1379 PUMP GP-PISTON
AN ATTACHMENT

SMCS-5069, 5117 **i02832199**

NOTE	REF NO	GRAPHIC REF	PART NUMBER	QTY	PART NAME 1 2 3 4 5 6 (PRODUCT LEVEL)	SEE PAGE
	1	1	**6V-5326**	1	SEAL-O-RING	
	2	1	**167-7713**	1	RING-BACKUP	

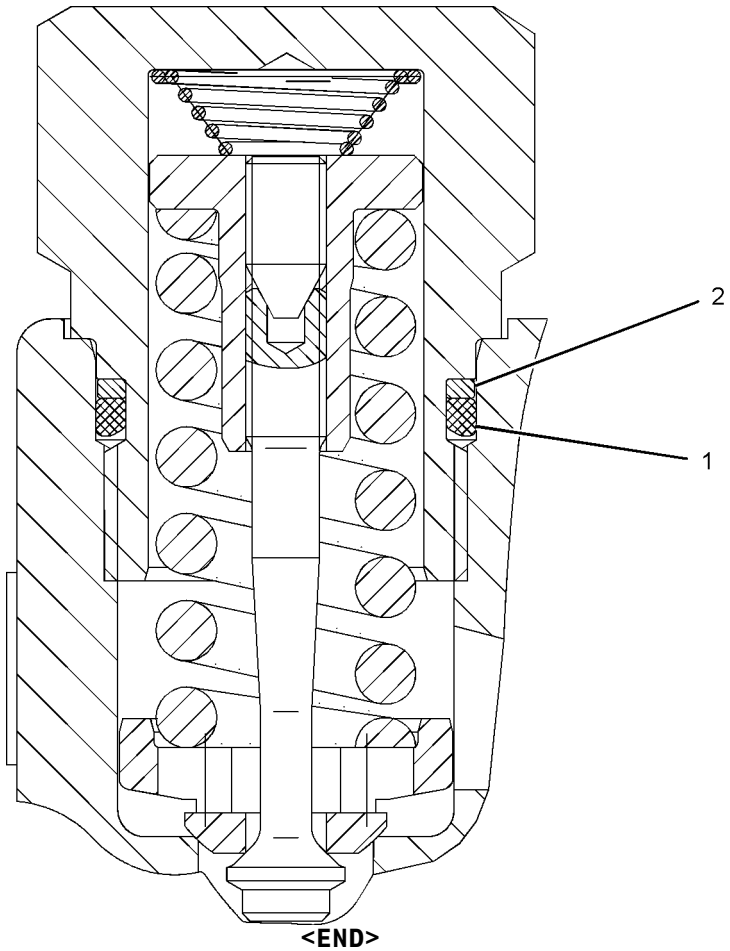

GRAPHIC #1 **<END>** g01024349

255-2142 C-FRAME GP-POWER ANGLING–TILT

S/N: JLF1-UP; WWW1-UP; YYY1-UP

PART OF 244-7380, 244-7381, 282-5328 CHASSIS AR

SMCS-6063 **i03329521**

NOTE	REF NO	GRAPHIC REF	PART NUMBER	QTY	PART NAME 1 2 3 4 5 6 (PRODUCT LEVEL)	SEE PAGE
	1	1	**8J-0729**	1	RETAINER	
	2	1	**8J-0928**	1	PIN	
	3	1	**150-0353**	6	SPACER (38.3X44.45X14-MM THK)	
	4	1	**183-1176**	2	BEARING (SLEEVE)	
	5	1	**183-1178**	4	WASHER-THRUST	
	6	1	**255-2100**	4	PIN AS	
	7	1	**255-2114**	1	BEARING (LH)	
	8	1	**255-2122**	1	BEARING (RH)	
	9	1	**255-2805**	1	FRAME AS	
	10	1	**262-3104**	2	BAR	
	11	1	**262-7686**	12	BOLT (M20X2.5X65-MM)	
	12	1	**283-7697**	2	BOSS	
	13	1	**299-7704**	2	PIN	
	14	1	**198-4781**	12	WASHER-HARD (22X40X10-MM THK)	
	15	1	**7K-9206**	4	SEAL-LIP TYPE	
M	16	1	**7X-2537**	4	BOLT (M8X1.25X35-MM)	
M	17	1	**7X-2553**	4	BOLT (M16X2X40-MM)	
M	18	1	**8T-4192**	4	BOLT (M12X1.75X25-MM)	
M	19	1	**8T-4195**	1	BOLT (M10X1.5X30-MM)	
	20	1	**8T-4223**	4	WASHER-HARD (13.5X25.5X3-MM THK)	
	21	1	**8T-4224**	4	WASHER-HARD (8.8X16X2-MM THK)	
	22	1	**9X-8257**	4	WASHER (17.5X30X3.5-MM THK)	

M-METRIC PART

255-2142 **C-FRAME GP-POWER ANGLING** *(contd.)* **i03329521**

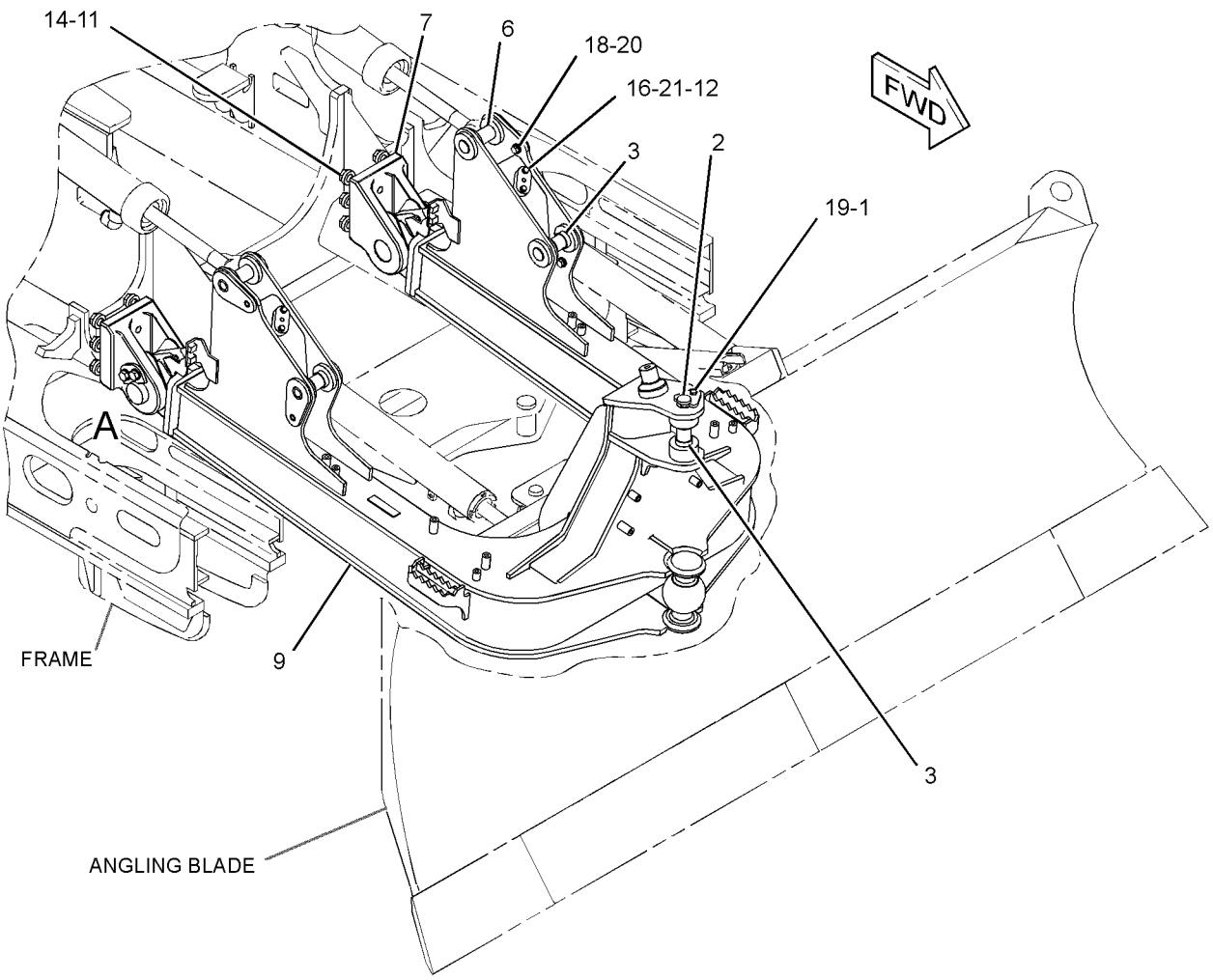

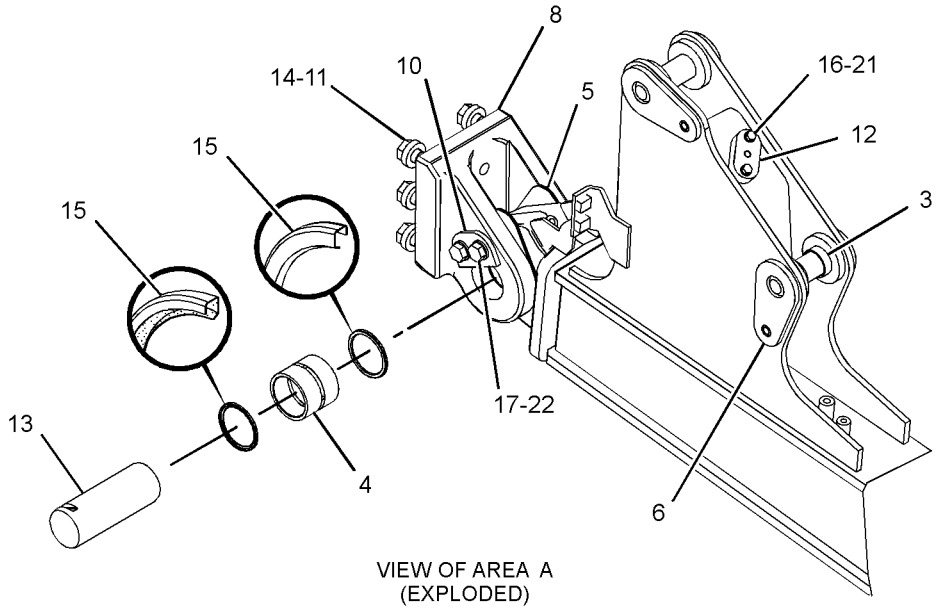

VIEW OF AREA A
(EXPLODED)

GRAPHIC #1 **<END>** g01330573

255-1357 LINK GP-PITCH

S/N: JLF1-UP; WWW1-UP; YYY1-UP
PART OF 255-1355, 255-1394, 255-1413, 255-1425, 255-1470, 255-1486, 255-1502, 255-2368, 255-2372, 255-2375, 255-2378, 255-2381, 255-2385, 255-2390, 255-2393, 312-8350, 312-8360 BLADE AR-PWR ANGLE & TILT AN ATTACHMENT

SMCS-6079, 6081 **i02638046**

NOTE	REF NO	GRAPHIC REF	PART NUMBER	QTY	PART NAME 1 2 3 4 5 6 (PRODUCT LEVEL)	SEE PAGE
	1	1	**4D-4431**	2	BEARING-ALIGNING	
	2	1	**9V-4460**	2	SPACER (13X50X18-MM THK)	
	3	1	**150-5123**	1	BOSS AS (1-1/2-6X3.64-IN, LH)	
	4	1	**150-6215**	1	BOSS AS (1-1/2-6X3.95-IN, RH)	
	5	1	**179-8232**	1	LOCKPIN	
	6	1	**216-4251**	1	PIN	
	7	1	**255-1359**	1	BAR AS	
	8	1	**255-1361**	1	COVER AS	
	9	1	**2H-5549**	2	RING-RETAINING	
	10	1	**3B-8489**	4	FITTING-GREASE	
	11	1	**5M-6214**	1	PLUG-PIPE	
	12	1	**7D-1649**	2	WASHER-HARD (13.5X32X5-MM THK)	
M	13	1	**8T-4194**	2	BOLT (M12X1.75X50-MM)	

M-METRIC PART

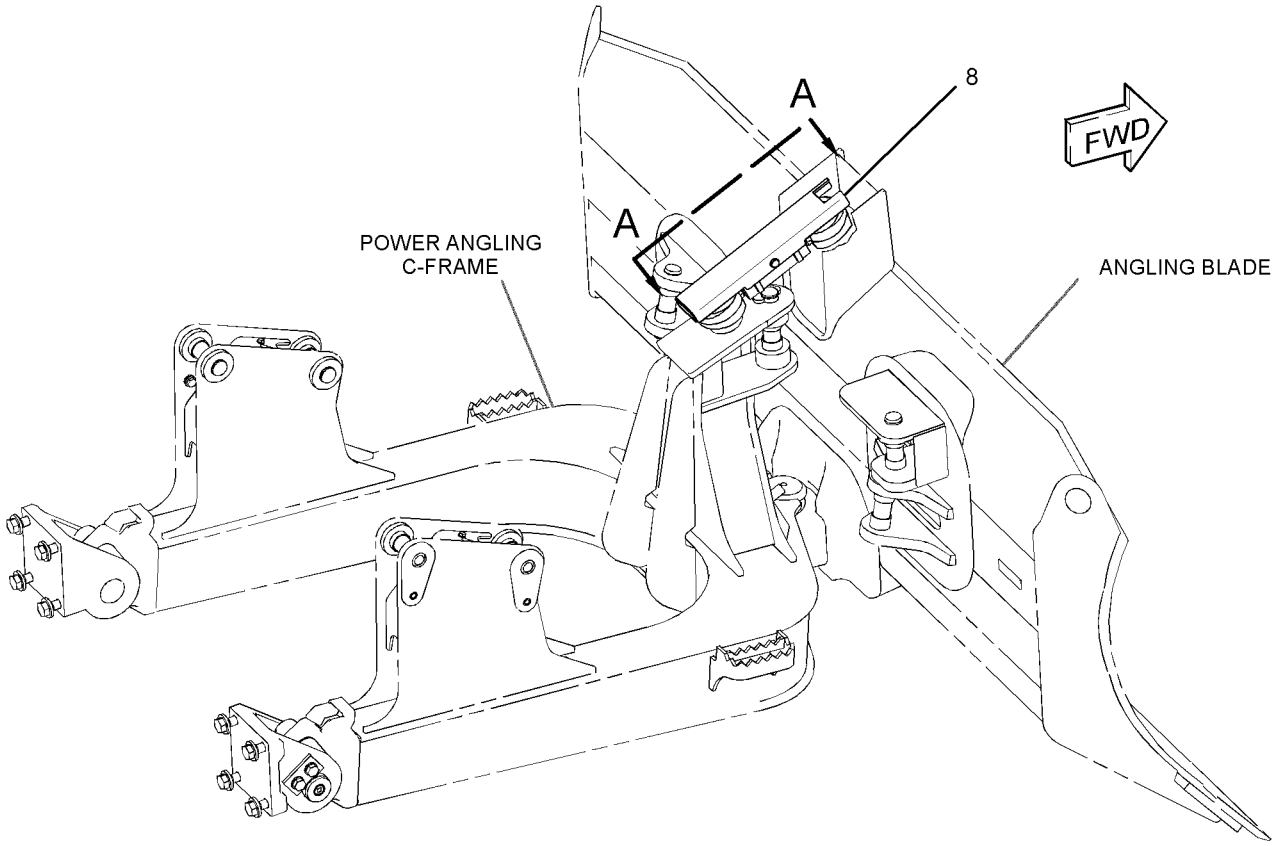

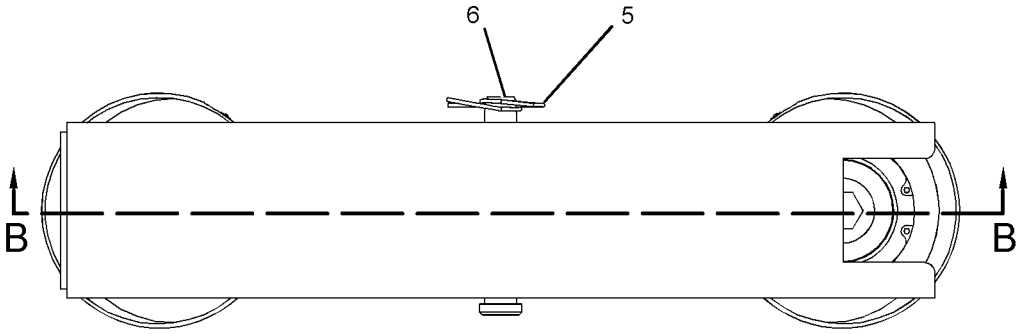

VIEW A-A

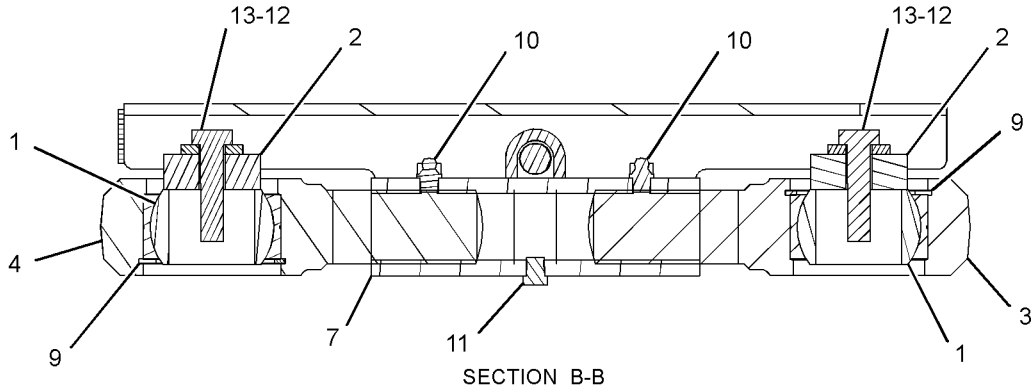

SECTION B-B

GRAPHIC #1 **<END>** g01330487

OPERATOR STATION

255-4239 ACCESSORY GP-CAB–EROPS

S/N: JLF1-UP; WWW1-UP; YYY1-UP

PART OF 244-7475, 244-7476 ROPS AR, 282-4898, 282-4899 ROPS AR-ENCLOSED AN ATTACHMENT

SMCS-1408, 1421, 7301 **i02907420**

NOTE	REF NO	GRAPHIC REF	PART NUMBER	QTY	PART NAME 1 2 3 4 5 6 (PRODUCT LEVEL)	SEE PAGE
	1	1	**180-3153**	1	LATCH AS-DOOR (ROTARY) (RH)	
	2	1	**180-3154**	1	LATCH AS-DOOR (ROTARY) (LH)	
	3	1	**263-3013**	19	CAP	
	4	1	**254-3183**	2	HINGE AS	
	5	1	**254-3204**	4	COVER (LH)	
	6	1	**255-4235**	1	HINGE AS (RH)	
	7	1	**255-4236**	1	HINGE AS (LH)	
					(EACH HINGE AS INCLUDES)	
M		1	**6V-9632**	2	NUT-WELD (M6X1-THD)	
M		1	**8T-3597**	3	NUT-WELD (M12X1.75-THD)	
	8	1	**255-4258**	1	PLATE AS	
	9	1	**259-1060**	1	COVER AS (LIGHT)	
	10	1	**271-2773**	1	SUPPORT AS-FOOT (LH)	
	11	1	**271-2774**	1	SUPPORT AS-FOOT (RH)	
	12	1	**281-3986**	1	PLATE AS	
	13	1	**281-7631**	2	STRIKER	
	14	1	**9X-6165**	5	WASHER (6.5X22X2.5-MM THK)	
	15	1	**178-2593**	2	BUMPER	
M	16	1	**5C-7261**	4	NUT (M8X1.25-THD)	
	17	1	**5P-1076**	12	WASHER-HARD (13.5X30X4-MM THK)	
	18	1	**7G-4824**	2	STRAP	
	19	1	**7X-7729**	4	WASHER (11X25X3-MM THK)	
	20	1	**8E-7791**	2	STRAP	
M	21	1	**8T-4137**	8	BOLT (M10X1.5X20-MM)	
M	22	1	**8T-4138**	8	BOLT (M6X1X20-MM)	
M	23	1	**8T-4139**	12	BOLT (M12X1.75X30-MM)	
	24	1	**8T-4222**	4	WASHER-PLATED (11X32X2.5-MM THK)	
M	25	1	**8T-4171**	5	BOLT (M6X1X12-MM)	
M	26	1	**9X-2045**	8	SCREW-TRUSS HEAD (M6X1X20-MM)	
	27	1	**9X-8256**	8	WASHER (6.6X12X2-MM THK)	

M-METRIC PART

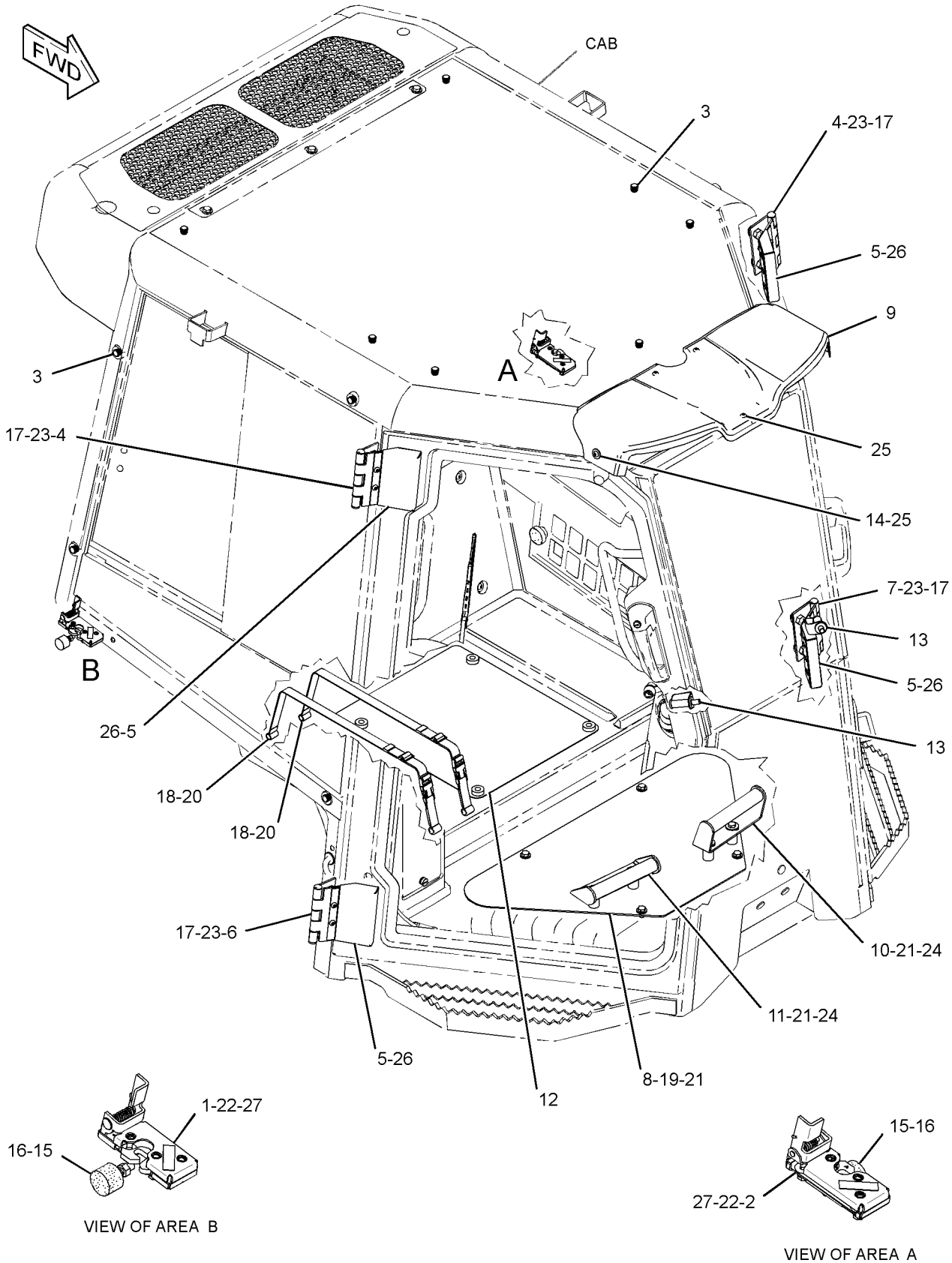

GRAPHIC #1 **<END>** g01349337

OPERATOR STATION

255-4240 ACCESSORY GP-CAB–OROPS

S/N: JLF1-UP; WWW1-UP; YYY1-UP
PART OF 244-7474, 282-4897 ROPS AR
AN ATTACHMENT

SMCS-1408, 1421, 7301 **i02882985**

NOTE	REF NO	GRAPHIC REF	PART NUMBER	QTY	PART NAME 1 2 3 4 5 6 (PRODUCT LEVEL)	SEE PAGE
	1	1	**263-3013**	19	CAP	
	2	1	**255-4258**	1	PLATE AS	
	3	1	**259-1060**	1	COVER AS (LIGHT)	
	4	1	**271-2773**	1	SUPPORT AS-FOOT (LH)	
	5	1	**271-2774**	1	SUPPORT AS-FOOT (RH)	
	6	1	**281-3986**	1	PLATE AS	
	7	1	**7G-4824**	2	STRAP	
	8	1	**7X-7729**	4	WASHER (11X25X3-MM THK)	
	9	1	**8E-7791**	2	STRAP	
M	10	1	**8T-4137**	8	BOLT (M10X1.5X20-MM)	
	11	1	**8T-4222**	4	WASHER-PLATED (11X32X2.5-MM THK)	
M	12	1	**8T-4171**	5	BOLT (M6X1X12-MM)	
	13	1	**9X-6165**	5	WASHER (6.5X22X2.5-MM THK)	

M-METRIC PART

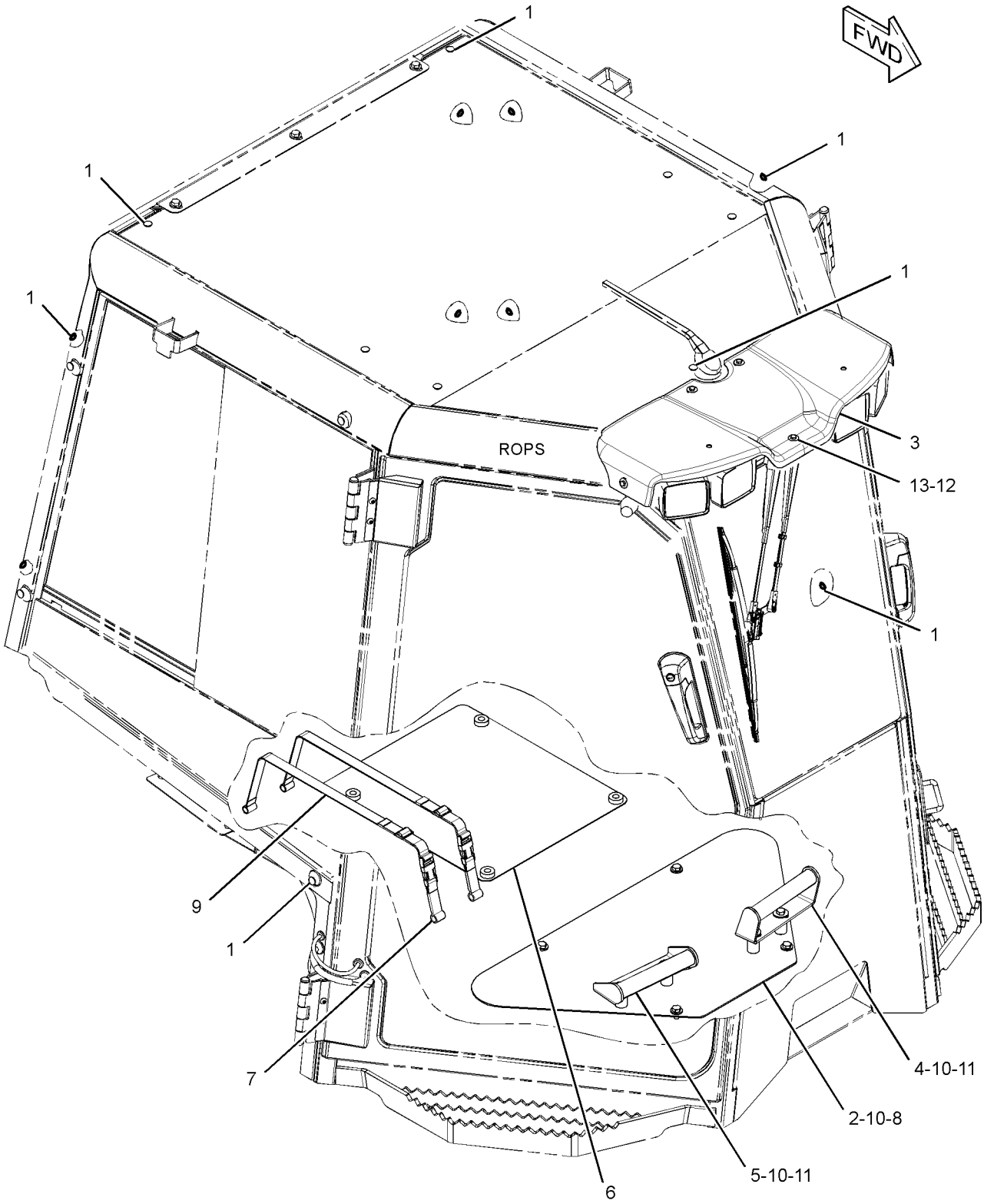

GRAPHIC #1 **<END>** g01458841

OPERATOR STATION

176-3900 ACCUMULATOR GP-REFRIGERANT—WITH DESICCANT

S/N: JLF1-UP; WWW1-UP; YYY1-UP
PART OF 257-9819 LINES GP-AIR CONDITIONER
AN ATTACHMENT

SMCS-7320 **i02195254**

NOTE	REF NO	GRAPHIC REF	PART NUMBER	QTY	PART NAME 1 2 3 4 5 6 (PRODUCT LEVEL)	SEE PAGE
					(NO SERVICED PARTS)	

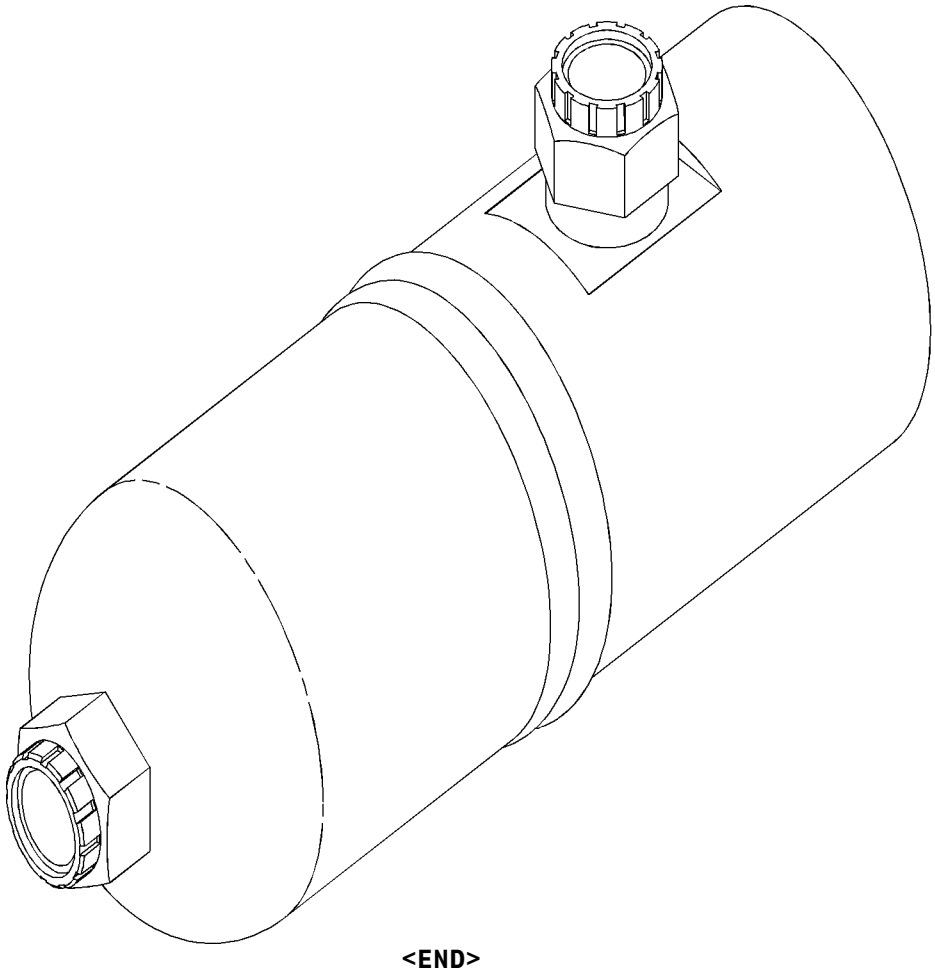

GRAPHIC #1 **<END>** g01035076

OPERATOR STATION

294-7779 ADJUSTER GP-SEAT

S/N: JLF1-UP; WWW1-UP; YYY1-UP
PART OF 301-0147 SEAT GP
AN ATTACHMENT

SMCS-7321 **i02673127**

NOTE	REF NO	GRAPHIC REF	PART NUMBER	QTY	PART NAME 1 2 3 4 5 6 (PRODUCT LEVEL)	SEE PAGE
	1	1	**4B-4276**	2	WASHER (7X16X1.6-MM THK)	
	2	1	**4V-8256**	2	SPRING	
	3	1	**132-0338**	4	WASHER-PLASTIC (13X31.7X0.8-MM THK)	
	4	1	**249-2844**	2	WASHER (12.7X31.7X1-MM THK)	
	5	1	**262-0779**	1	LATCH	
	6	1	**262-0780**	1	LATCH	
	7	1	**262-0781**	1	ROD	
	8	1	**262-0785**	1	LEVER	
	9	1	**262-0786**	2	BOLT-SHOULDER (3/8-16X0.49-IN)	
	10	1	**262-0787**	1	ROD	
	11	1	**293-2915**	1	LEVER	
	12	1	**293-9380**	1	ROD	
	13	1	**293-9381**	1	PLATE AS	
	14	1	**5V-1496**	2	RETAINER	
	15	1	**7Y-0468**	2	PIN-SPRING	

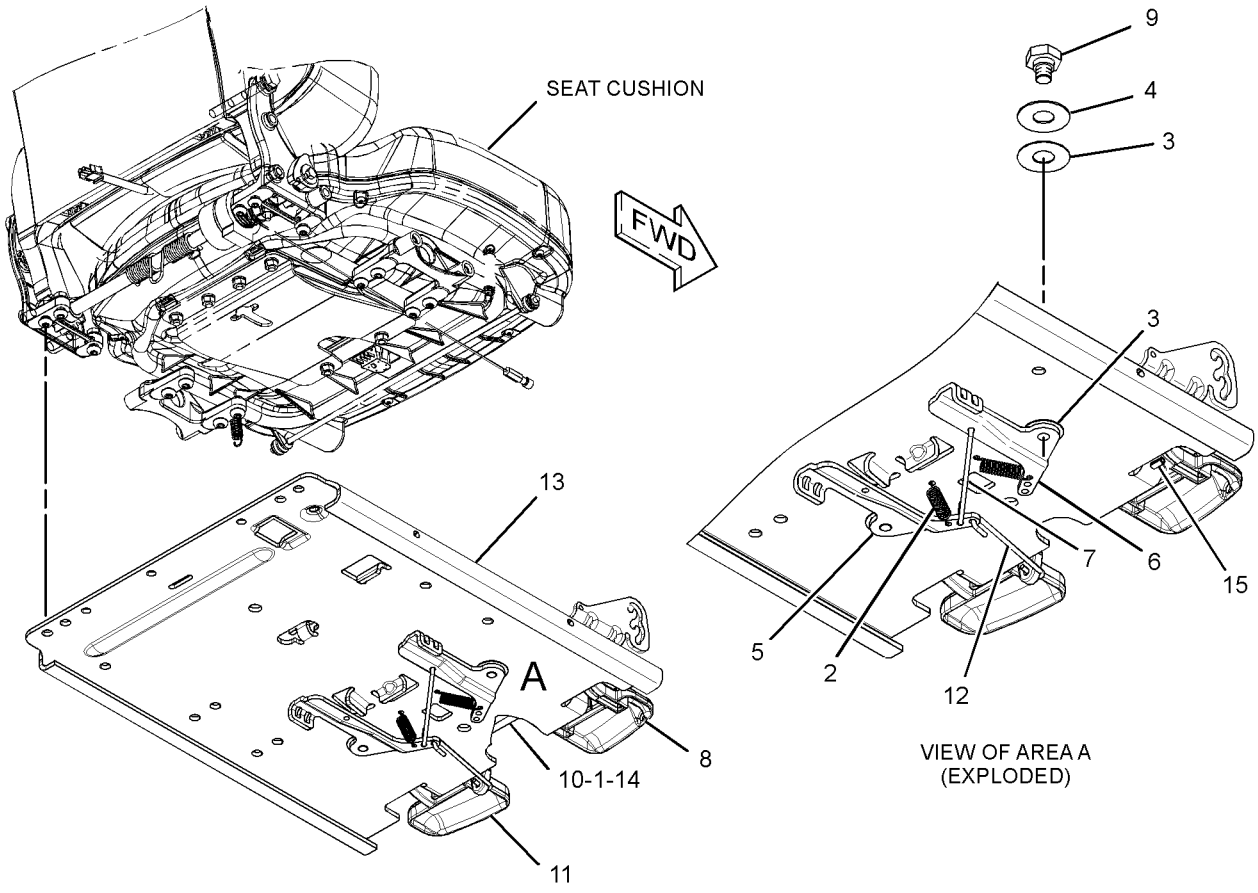

GRAPHIC #1 **<END>** g01345862

OPERATOR STATION

254-3210 AIR CONDITIONER & MOUNTING GP

S/N: JLF1-UP; WWW1-UP; YYY1-UP

PART OF 244-7475, 244-7476 ROPS AR, 282-4898, 282-4899 ROPS AR-ENCLOSED AN ATTACHMENT

SMCS-7320 **i02883074**

NOTE	REF NO	GRAPHIC REF	PART NUMBER	QTY	PART NAME 1 2 3 4 5 6 (PRODUCT LEVEL)	SEE PAGE
	1	2	**3S-2093**	1	STRAP-CABLE	
Y	2	2	**180-5927**	1	CONDENSER GP-REFRIGERANT	480
Y	3	2	*245-6024*	1	WIRING GP-AIR CONDITIONER	190
	4	2	**247-6648**	1	GRID	
	5	2	**315-6737**	1	COVER AS (LH)	
	6	2	**315-6735**	1	COVER AS (RH)	
Y	7	1	*252-4502*	1	AIR CONDITIONER GP	468
	8	1	**315-6738**	1	COVER AS	
	9	1	**254-3196**	1	HOSE	
	10	1	**254-3199**	1	HOSE	
	11	1	**254-3200**	1	GASKET	
	12	1	**254-3201**	1	DUCT-AIR	
		1	**6C-3680**	4	RIVET-POP	
Y	13	2	*255-3696*	1	COMPRESSOR & MTG GP-REFRIG	478
	14	1	**255-5153**	1	COVER-FILTER	
Y	15	1	*257-9819*	1	LINES GP-AIR CONDITIONER	532
	16	1	**266-7765**	1	FILTER GP-CAB AIR (STANDARD EFFICIENCY) (LOW RESTRICTION MEDIA)	
	17	2	**281-4005**	1	PLATE	
	18	1	**288-3657**	2	THUMBSCREW (M6X1X10-MM)	
	19	1	**300-3665**	4	GROMMET	
	20	1	**5P-0597**	2	CLAMP-HOSE	
	21	1	**5P-0599**	4	CLAMP-BAND	
M	22	1	**6V-7744**	3	LOCKNUT (M10X1.5-THD)	
	23	1,2	**7X-7729**	21	WASHER (11X25X3-MM THK)	
M	24	1,2	**8T-4137**	14	BOLT (M10X1.5X20-MM)	
M	25	2	**8T-4189**	4	BOLT (M8X1.25X20-MM)	
M	26	2	**8T-4195**	4	BOLT (M10X1.5X30-MM)	
	27	2	**8T-4224**	4	WASHER-HARD (8.8X16X2-MM THK)	
H	28	1	**242-4885**		HOSE (2-DM)	

H-ORDER BY THE DECIMETER
M-METRIC PART
Y-SEPARATE ILLUSTRATION

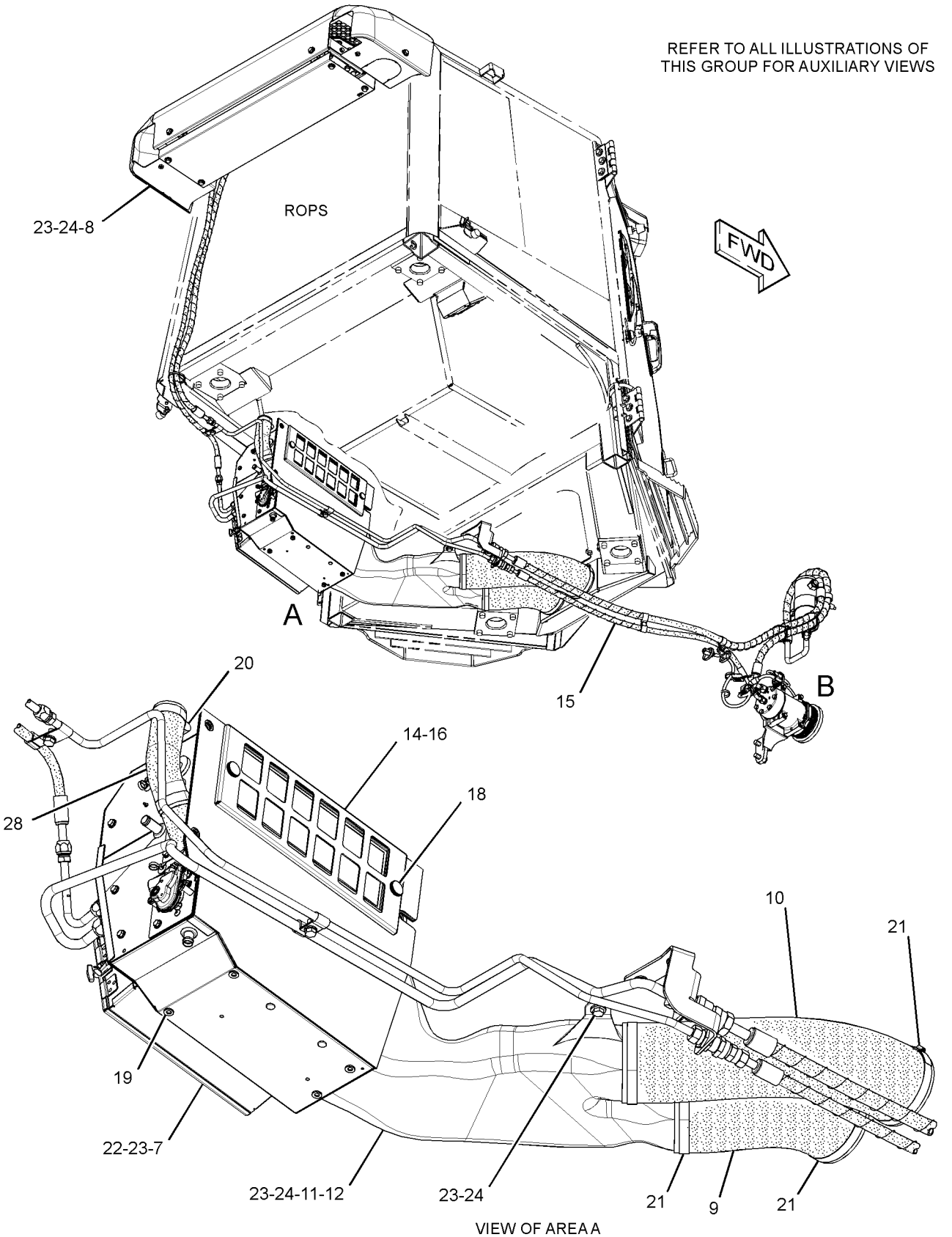

VIEW OF AREA A

GRAPHIC #1

g01527799

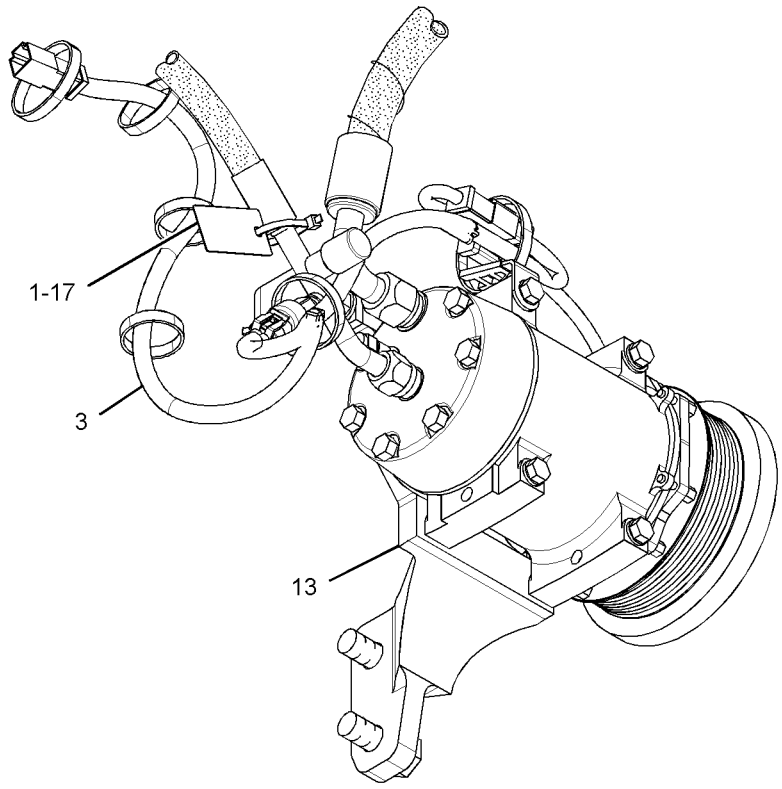

VIEW OF AREA B

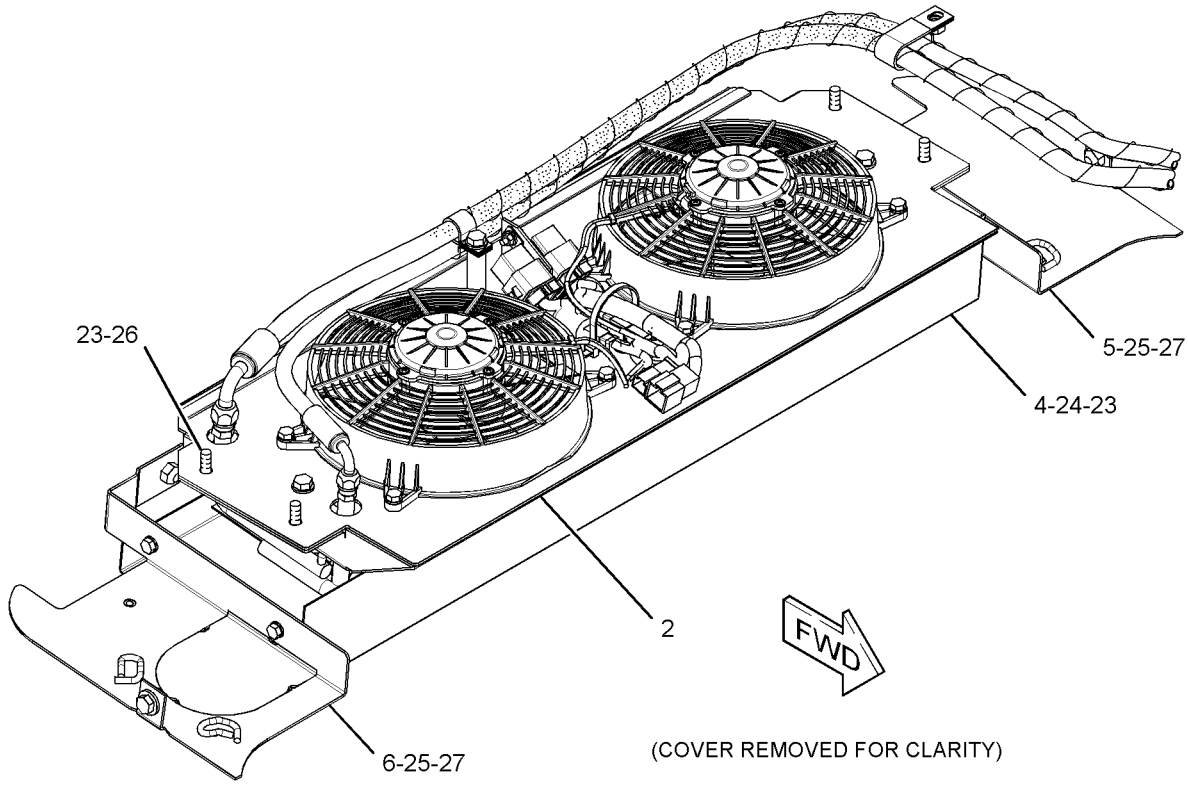

(COVER REMOVED FOR CLARITY)

GRAPHIC #2 **<END>** g01527800

OPERATOR STATION

252-4502 AIR CONDITIONER GP

S/N: JLF1-UP; WWW1-UP; YYY1-UP
PART OF 254-3210 AIR CONDITIONER & MOUNTING GP
AN ATTACHMENT

SMCS-7320 **i03595884**

NOTE	REF NO	GRAPHIC REF	PART NUMBER	QTY	PART NAME 1 2 3 4 5 6 (PRODUCT LEVEL)	SEE PAGE
	1	1	**3E-5464**	1	THERMOSTAT (HVAC)	
	2	1	**3S-2093**	3	STRAP-CABLE	
	3	1	**8C-3756**	1	FILM-IDENTIFICATION (REFRIGERANT CONDENSER)	
	4	1	**111-4015**	1	GROMMET	
	5	1	**131-3093**	1	BUSHING	
	6	1	**133-8714**	1	GROMMET	
	7	1	**134-3518**	2	TIE-PUSH MOUNT	
	8	1	**151-5650**	2	PLUG	
	9	1	**153-6932**	1	GASKET	
	10	1	**209-8217**	1	FILTER ELEMENT-CAB AIR (STANDARD EFFICIENCY)	
	11	1	**248-6772**	2	SCREW-MACHINE (8-16X7.75-IN)	
	12	1	**255-6210**	1	COIL AS-EVAPORATOR	
	13	1	**256-0761**	1	CASE AS-AIR CONDITIONER	
	14	1	**256-0762**	1	PLATE AS	
	15	1	**256-0768**	1	PLATE AS	
M		1	**6V-9632**	6	NUT-WELD (M6X1-THD)	
M		1	**9X-2032**	2	NUT-WELD (M4X0.7-THD)	
	16	1	**256-0770**	1	PLATE AS	
M		1	**6V-9632**	6	NUT-WELD (M6X1-THD)	
M		1	**9X-2032**	2	NUT-WELD (M4X0.7-THD)	
	17	1	**262-2814**	1	PLATE AS	
	18	1	**265-9620**	1	ACTUATOR (ELECTRONIC)	
	19	1	**266-7145**	1	DUCT AS	
	20	1	**275-6707**	2	GROMMET	
	21	1	**276-4299**	1	HARNESS AS-MOTOR (BLOWER)	
		1	**6T-6505**	7	HOUSING-RECEPTACLE (BLADE, POSITIVE LOCK)	
		1	**7T-0093**	4	PIN-CONNECTOR	
		1	**186-3735**	3	PIN-CONNECTOR (16-GA TO 18-GA)	
		1	**9W-0852**	1	PIN-CONNECTOR (14-GA)	
		1	**155-2271**	1	KIT-CONNECTING PLUG (4-PIN)	
		1	**177-9648**	1	KIT-CONNECTING PLUG (2-PIN)	
					(EACH PLUG KIT INCLUDES PLUG AS, WEDGE & INTERFACE SEAL)	
		1	**8T-8737**	1	PLUG-SEAL	
		1	**102-8804**	1	KIT-RECEPTACLE (4-PIN)	
					(INCLUDES RECEPTACLE AS & WEDGE)	
		1	**177-9651**	1	LOCK	
		1	*177-9652*	1	SEAL-RECEPTACLE	
		1	**7T-0094**	2	SOCKET-CONNECTOR	
		1	**126-1766**	2	SOCKET-CONNECTOR (14-GA TO 18-GA)	
		1	**126-1766**		SOCKET-CONNECTOR (14-GA TO 18-GA)	
		1	**9X-3402**	3	SOCKET-CONNECTOR (16-GA TO 18-GA)	
		1	**8T-9850**	3	TERMINAL-BLADE	
		1	**6T-6506**	4	TERMINAL (BLADE, POSITIVE LOCK)	
E		1	**125-7875**		TUBE-HEAT SHRINK (7.44-MM DIA) (5-CM)	
		1	**102-8804**	1	KIT-RECEPTACLE (4-PIN)	
		1	**177-9653**	1	KIT-RECEPTACLE (4-PIN)	
					(EACH RECEPTACLE KIT INCLUDES RECEPTACLE AS & WEDGE)	
		1	**6T-6506**	1	TERMINAL (BLADE, POSITIVE LOCK)	
E		1	**119-3662**		TUBE-HEAT SHRINK (10.85-MM DIA) (7-CM)	
	22	1	**277-7113**	1	PLATE AS	
	23	1	**277-7114**	2	PLUG	
	24	1	**277-7115**	1	BLOWER AS	
	25	1	**277-9966**	1	PLATE AS	

252-4502 AIR CONDITIONER GP *(contd.)* i03595884

NOTE	REF NO	GRAPHIC REF	PART NUMBER	QTY	PART NAME 1 2 3 4 5 6 (PRODUCT LEVEL)	SEE PAGE
Y	26	1	**277-9969**	1	HEATER GP-CAB	525
	27	1	**318-0815**	1	PLATE AS	
	28	1	**278-3354**	1	FILM-INSTRUCTION (HVAC WATER, DRAINING, FILLING)	
	29	1	*282-3475*	1	RESISTOR GP	
		1	**280-9453**	3	SCREW-SELF-TAPPING (NO 6X0.375-IN)	
		1	**282-3481**	1	PLATE AS	
		1	**284-8773**	1	RESISTOR AS	
	30	1	**282-3653**	1	BRACKET	
M	31	1	**283-8651**	7	BOLT (M4X0.7X10-MM)	
	32	1	**096-6166**	4	WASHER-HARD (4.5X9X1-MM THK)	
	33	1	**3B-4501**	2	LOCKWASHER	
	34	1	**4P-7581**	1	CLIP	
M	35	1	**5C-9553**	21	BOLT (M6X1X16-MM)	
	36	1	**8C-8514**	2	SCREW-MACHINE (8-32X0.375-IN)	
	37	1	**8T-4121**	1	WASHER-HARD (11X21X2.5-MM THK)	
M	38	1	**8T-4137**	1	BOLT (M10X1.5X20-MM)	
	39	1	**8T-4205**	21	WASHER-HARD (7.2X14.5X2-MM THK)	
D	40	1	**6V-2496**		SEAL (2-M)	
					AVAILABLE REPAIR KIT(S):	
			285-8553	1	KIT-GASKET (AIR CONDITIONER)	
					(INCLUDES GASKETS)	

D-ORDER BY THE METER
E-ORDER BY THE CENTIMETER
M-METRIC PART
Y-SEPARATE ILLUSTRATION

252-4502 AIR CONDITIONER GP *(contd.)* i03595884

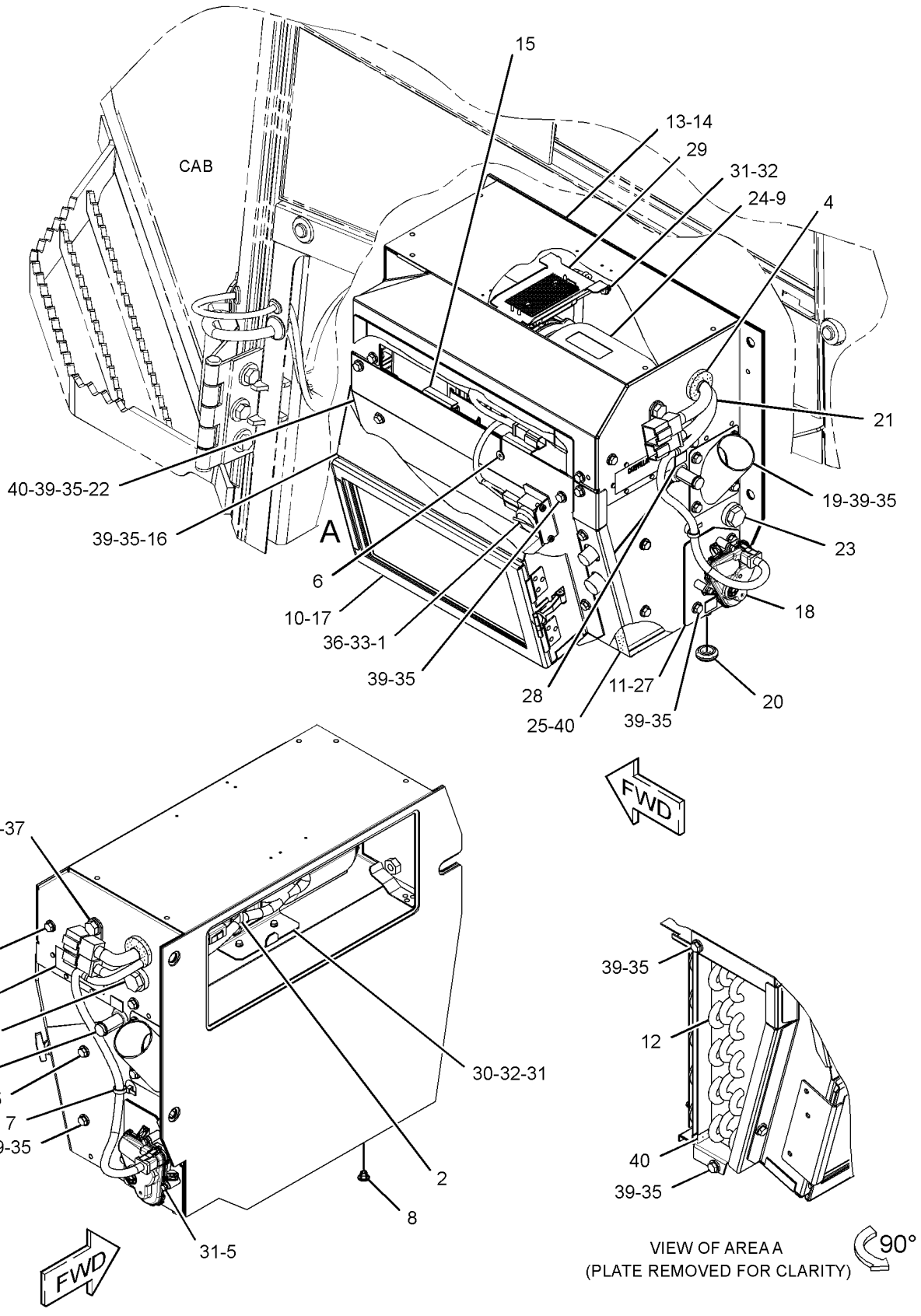

GRAPHIC #1 **<END>** g01738153

291-7980 ARM GP-SEAT SUSPENSION–CENTER

S/N: JLF1-UP; WWW1-UP; YYY1-UP
PART OF 316-8368 SUSPENSION GP-SEAT
AN ATTACHMENT

SMCS-7324 **i02891542**

NOTE	REF NO	GRAPHIC REF	PART NUMBER	QTY	PART NAME 1 2 3 4 5 6 (PRODUCT LEVEL)	SEE PAGE
	1	1	**291-7981**	1	ARM AS (INNER, RH)	
	2	1	**291-7984**	1	ARM AS (INNER, LH)	
	3	1	**291-7986**	1	PLATE AS	
	4	1	**291-7989**	2	PLATE	
	5	1	**291-7990**	2	BEARING	
	6	1	**291-7992**	1	SHAFT	
	7	1	**291-8030**	1	SPACER (19.3X25.4X225-MM THK)	
	8	1	**291-9310**	2	BELT-TETHER	
	9	1	**2B-2695**	4	BOLT (5/16-18X0.875-IN)	
	10	1	**6V-8189**	4	NUT (5/16-18-THD)	
	11	1	**6V-8801**	4	NUT (3/8-16-THD)	
	12	1	**7X-0289**	4	BOLT (3/8-16X1.875-IN)	
	13	1	**8T-4896**	8	WASHER-HARD (10.2X18.5X2.5-MM THK)	
	14	1	**9S-5282**	4	WASHER-HARD (8.8X14.5X2-MM THK)	
	15	1	**313-2794**	1	CLIP	

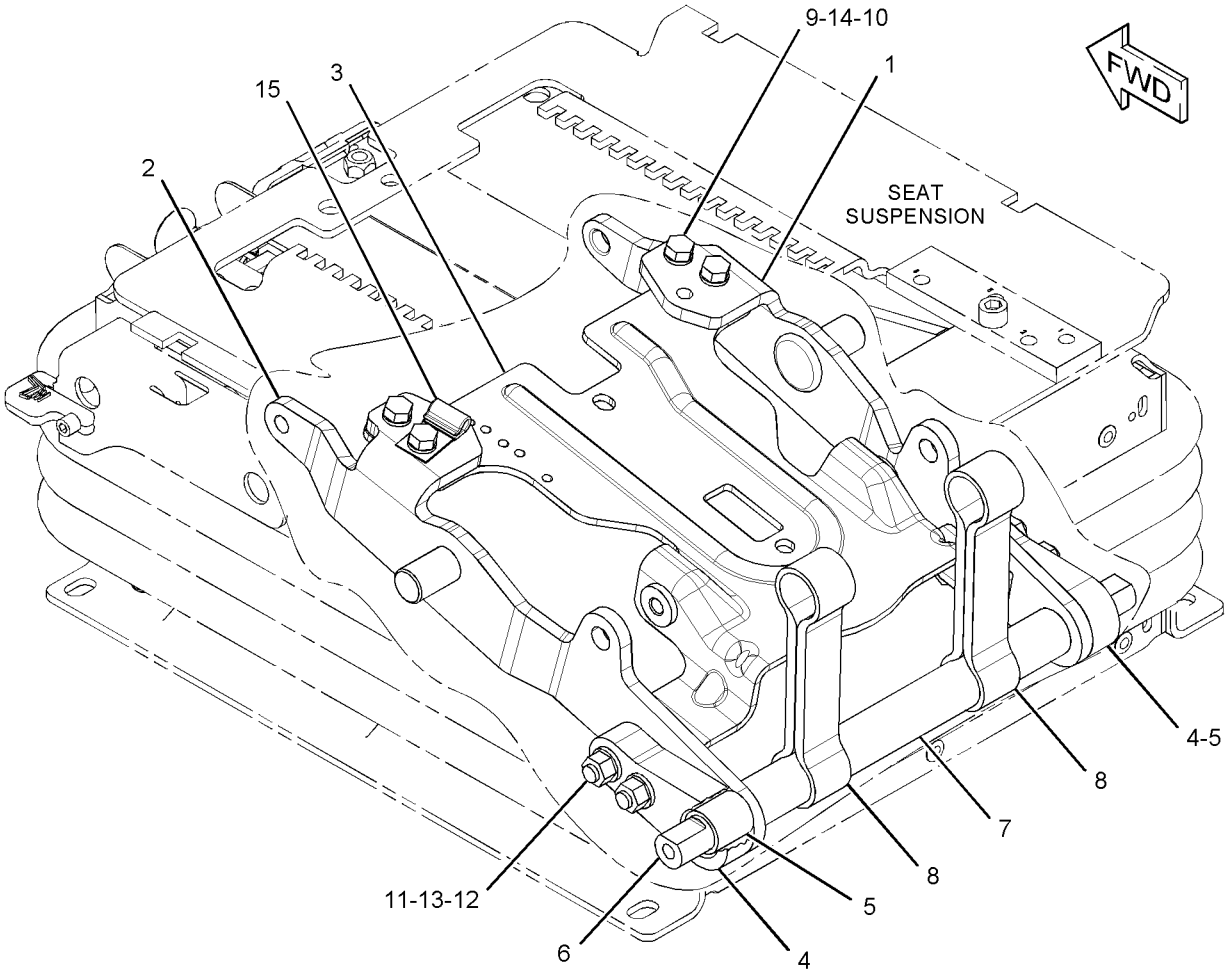

GRAPHIC #1 **<END>** g01445899

OPERATOR STATION

291-8004 ARM GP-SEAT SUSPENSION—OUTER, RH

S/N: JLF1-UP; WWW1-UP; YYY1-UP
PART OF 316-8368 SUSPENSION GP-SEAT
AN ATTACHMENT

SMCS-7324 **i03098048**

NOTE	REF NO	GRAPHIC REF	PART NUMBER	QTY	PART NAME 1 2 3 4 5 6 (PRODUCT LEVEL)	SEE PAGE
	1	1	**291-7990**	1	BEARING	
	2	1	**291-8005**	1	ARM AS (OUTER, RH)	
	3	1	**291-8008**	1	SPACER	
M	4	1	**5C-7261**	2	NUT (M8X1.25-THD)	
M	5	1	**8T-4197**	2	BOLT (M8X1.25X40-MM)	
	6	1	**8T-4224**	4	WASHER-HARD (8.8X16X2-MM THK)	

M-METRIC PART

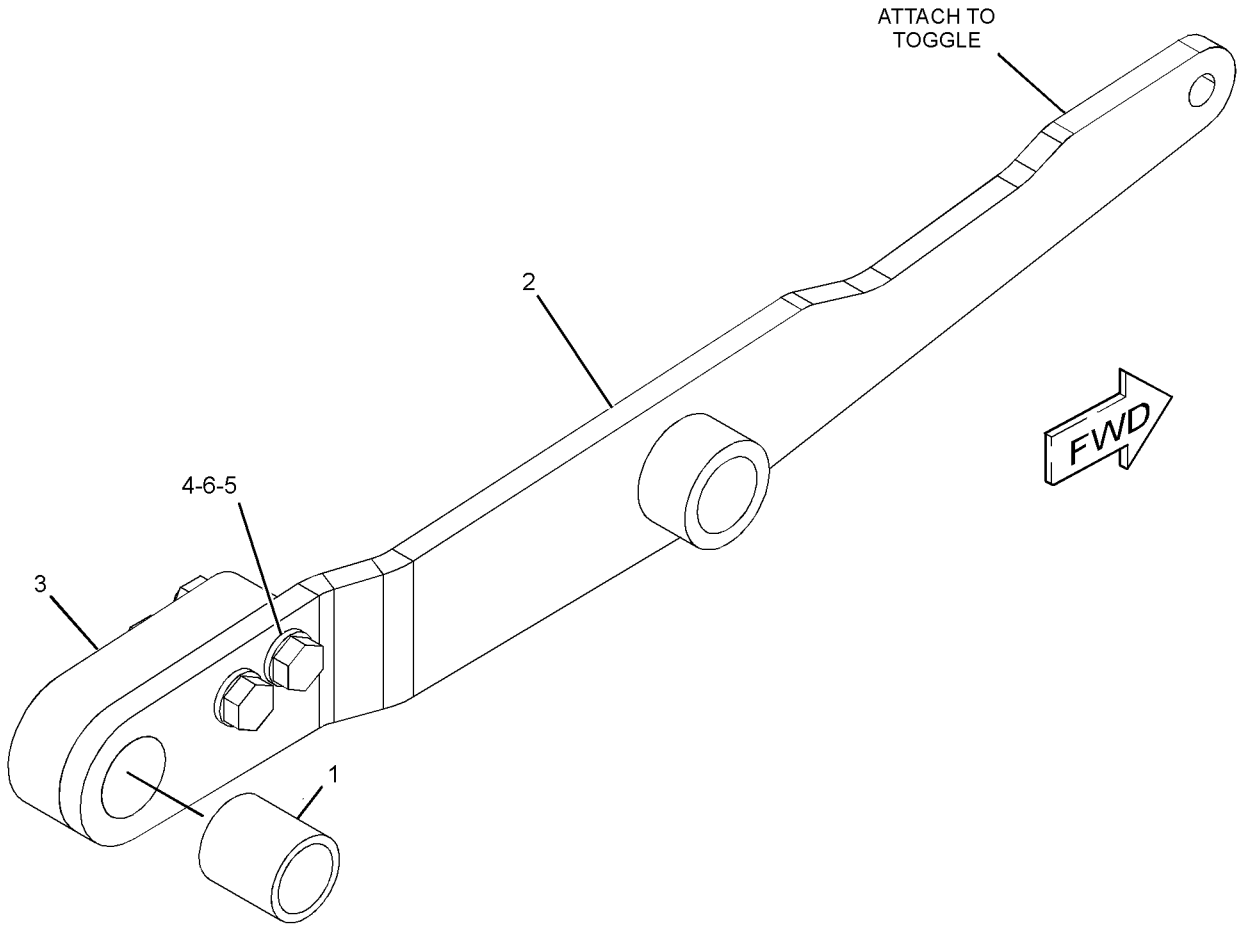

GRAPHIC #1 **<END>** g01578696

291-8011 ARM GP-SEAT SUSPENSION–OUTER, LH

S/N: JLF1-UP; WWW1-UP; YYY1-UP
PART OF 316-8368 SUSPENSION GP-SEAT
AN ATTACHMENT

SMCS-7324 **i03098049**

NOTE	REF NO	GRAPHIC REF	PART NUMBER	QTY	PART NAME 1 2 3 4 5 6 (PRODUCT LEVEL)	SEE PAGE
	1	1	**291-7990**	1	BEARING	
	2	1	**291-8008**	1	SPACER	
	3	1	**291-8012**	1	ARM (OUTER, LH)	
M	4	1	**5C-7261**	2	NUT (M8X1.25-THD)	
M	5	1	**8T-4197**	2	BOLT (M8X1.25X40-MM)	
	6	1	**8T-4224**	4	WASHER-HARD (8.8X16X2-MM THK)	

M-METRIC PART

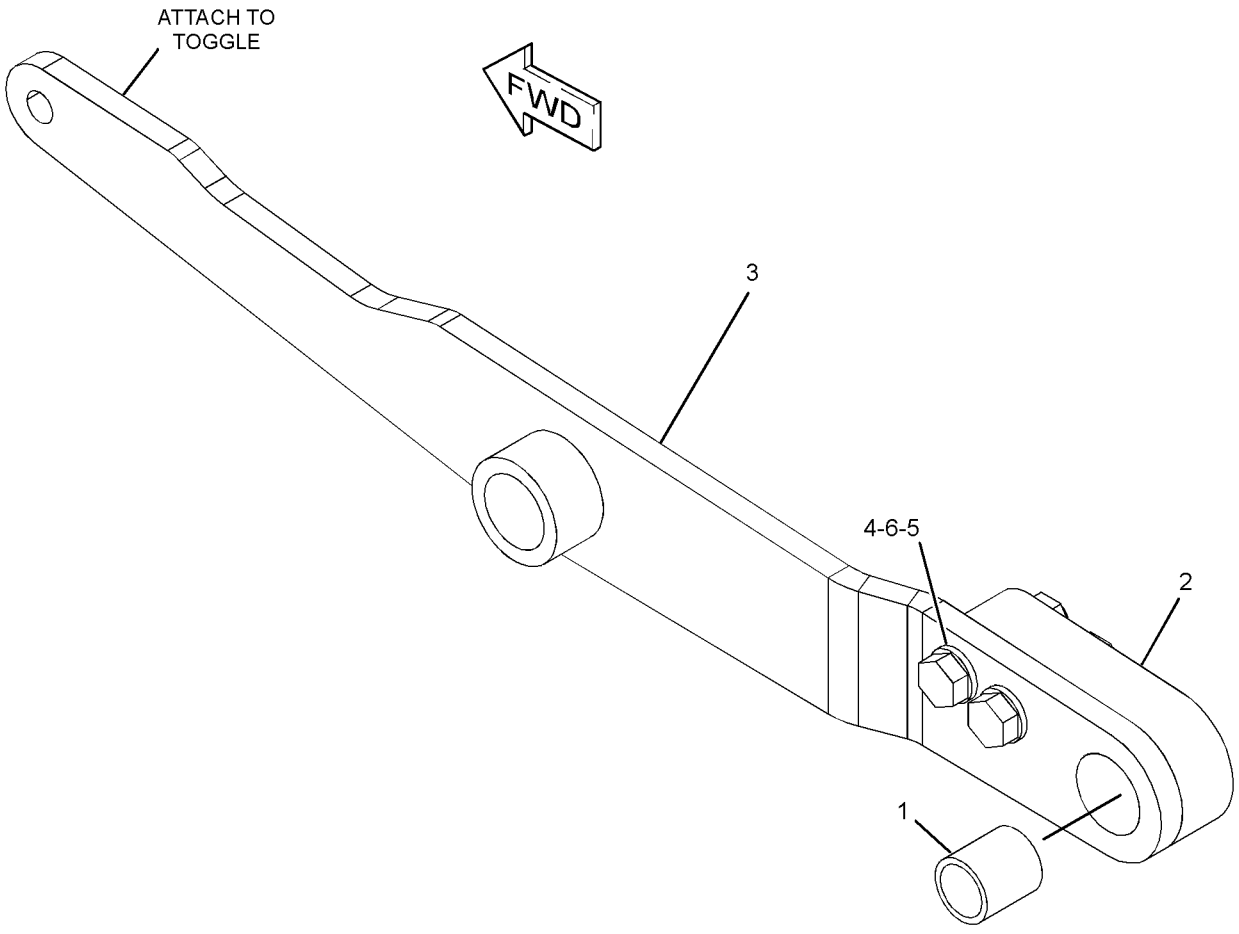

GRAPHIC #1 **<END>** g01578695

OPERATOR STATION

280-9679 ARMREST GP–LH

S/N: JLF1-UP; WWW1-UP; YYY1-UP
PART OF 255-4242 SEAT & SUPPORT GP, 255-4250, 255-4251, 255-4252 SEAT GP-SUSPENSION
AN ATTACHMENT

SMCS-7307, 7312 **i02650812**

NOTE	REF NO	GRAPHIC REF	PART NUMBER	QTY	PART NAME 1 2 3 4 5 6 (PRODUCT LEVEL)	SEE PAGE
	1	1	**253-8798**	2	KNOB	
	2	1	**268-9378**	1	BRACKET	
	3	1	**282-2035**	1	CUSHION AS (LH)	
	4	1	**282-2036**	1	CUSHION AS	
	5	1	**282-6690**	1	COVER	
	6	1	**282-6692**	1	COVER (LH)	
	7	1	**282-6702**	1	BRACKET AS (LH)	
M		1	**6V-9632**	3	NUT-WELD (M6X1-THD)	
	8	1	**282-6708**	1	BRACKET AS	
M		1	**6V-9632**	2	NUT-WELD (M6X1-THD)	
	9	1	**282-6710**	1	BRACKET AS	
M		1	**6V-9632**	2	NUT-WELD (M6X1-THD)	
Y	10	1	*284-7059*	1	SUPPORT GP-STEERING CONTROL (LH)	581
	11	1	**284-7649**	1	BRACKET	
M	12	1	**127-2170**	9	SCREW-TRUSS HEAD (M8X1.25X20-MM)	
	13	1	**7X-0578**	2	WASHER-HARD (10.2X32X2.5-MM THK)	
M	14	1	**7X-2546**	1	BOLT (M10X1.5X180-MM)	
	15	1	**8T-4121**	4	WASHER-HARD (11X21X2.5-MM THK)	
M	16	1	**8T-4178**	2	BOLT (M10X1.5X90-MM)	
M	17	1	**8T-6685**	1	BOLT (M10X1.5X110-MM)	
M	18	1	**9X-2041**	1	SCREW-TRUSS HEAD (M10X1.5X20-MM)	
M	19	1	**9X-2042**	4	SCREW-TRUSS HEAD (M6X1X12-MM)	
M	20	1	**9X-2043**	2	SCREW-TRUSS HEAD (M6X1X14-MM)	
M	21	1	**9X-2044**	4	SCREW-TRUSS HEAD (M6X1X16-MM)	
M	22	1	**9X-2045**	2	SCREW-TRUSS HEAD (M6X1X20-MM)	

M-METRIC PART
Y-SEPARATE ILLUSTRATION

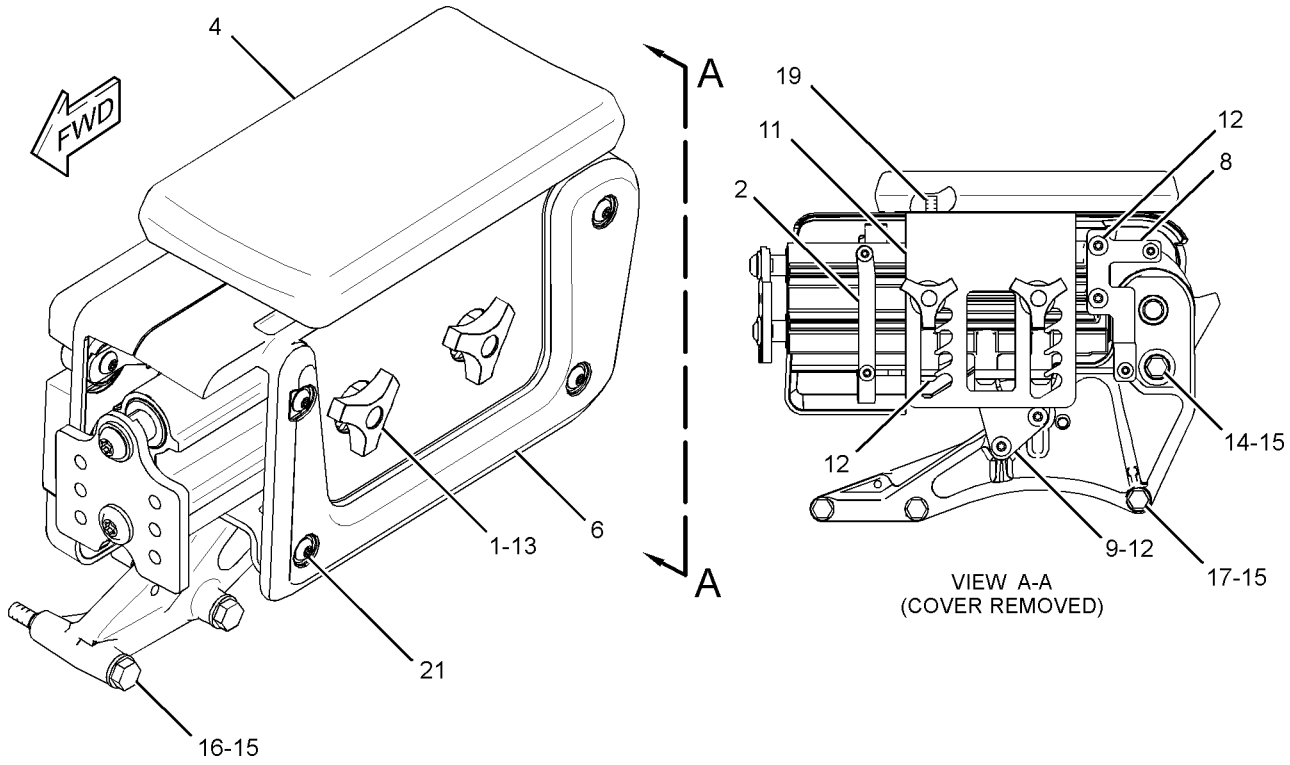

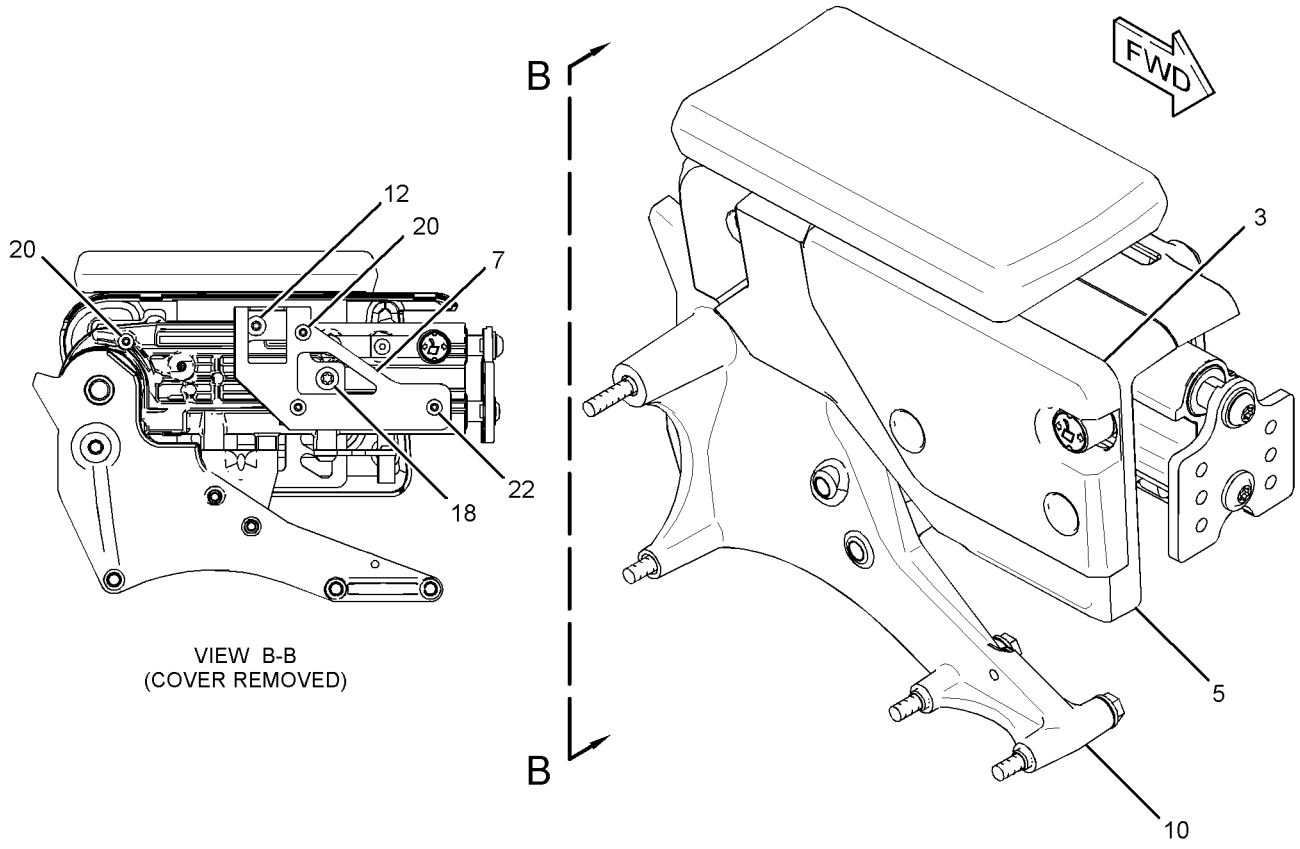

GRAPHIC #1 **<END>** g01304612

OPERATOR STATION

284-7054 ARMREST GP–RH

S/N: JLF1-UP; WWW1-UP; YYY1-UP
PART OF 255-4242 SEAT & SUPPORT GP, 255-4250, 255-4251, 255-4252 SEAT GP-SUSPENSION
AN ATTACHMENT

SMCS-7307, 7312 **i02833325**

NOTE	REF NO	GRAPHIC REF	PART NUMBER	QTY	PART NAME 1 2 3 4 5 6 (PRODUCT LEVEL)	SEE PAGE
	1	1	**253-8798**	2	KNOB	
	2	1	**268-9382**	1	BRACKET	
	3	1	**282-2034**	1	CUSHION AS (RH)	
	4	1	**282-2036**	1	CUSHION AS	
	5	1	**282-6689**	1	COVER	
	6	1	**282-6691**	1	COVER (RH)	
	7	1	**282-6701**	1	BRACKET AS (RH)	
	8	1	**282-6707**	1	BRACKET AS	
	9	1	**282-6709**	1	BRACKET AS	
Y	10	1	**284-7055**	1	SUPPORT GP-HYDRAULIC CONTROL (RH)	579
	11	1	**284-7648**	1	BRACKET	
M	12	1	**127-2170**	9	SCREW-TRUSS HEAD (M8X1.25X20-MM)	
	13	1	**7X-0578**	2	WASHER-HARD (10.2X32X2.5-MM THK)	
M	14	1	**7X-2546**	1	BOLT (M10X1.5X180-MM)	
	15	1	**8T-4121**	4	WASHER-HARD (11X21X2.5-MM THK)	
M	16	1	**8T-4178**	2	BOLT (M10X1.5X90-MM)	
M	17	1	**8T-6685**	1	BOLT (M10X1.5X110-MM)	
M	18	1	**9X-2041**	1	SCREW-TRUSS HEAD (M10X1.5X20-MM)	
M	19	1	**9X-2042**	4	SCREW-TRUSS HEAD (M6X1X12-MM)	
M	20	1	**9X-2043**	2	SCREW-TRUSS HEAD (M6X1X14-MM)	
M	21	1	**9X-2044**	4	SCREW-TRUSS HEAD (M6X1X16-MM)	
M	22	1	**9X-2045**	2	SCREW-TRUSS HEAD (M6X1X20-MM)	
	23	1	**314-3472**	1	SPACER (10.67X17.46X12-MM THK)	

M-METRIC PART
Y-SEPARATE ILLUSTRATION

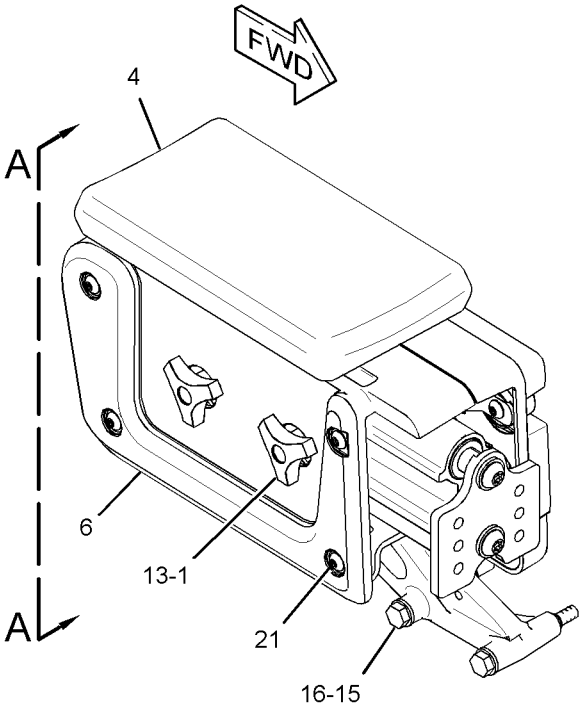

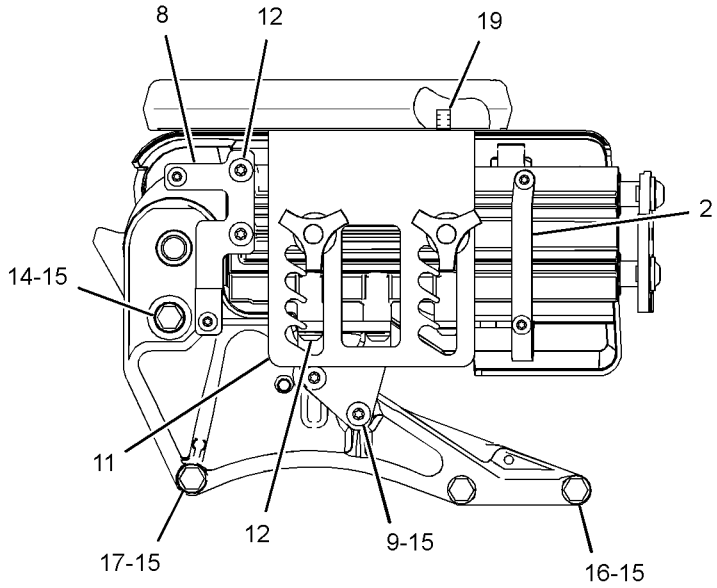

VIEW A-A
(COVER REMOVED)

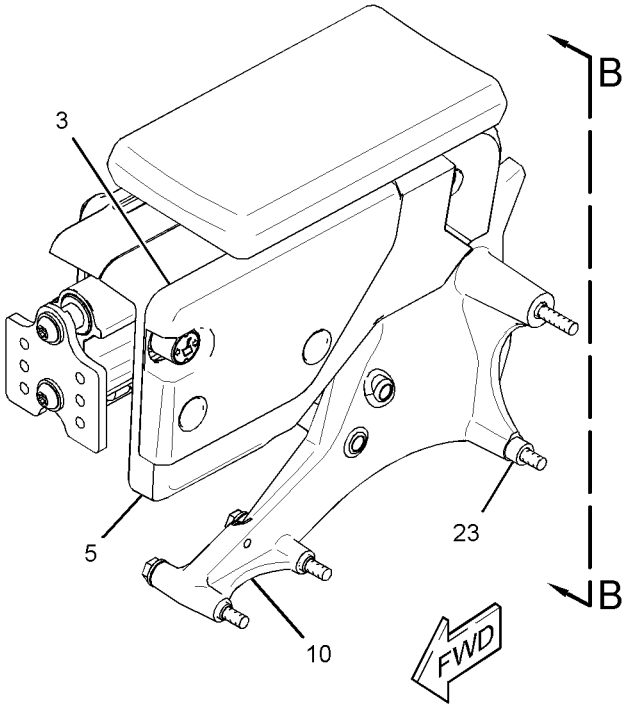

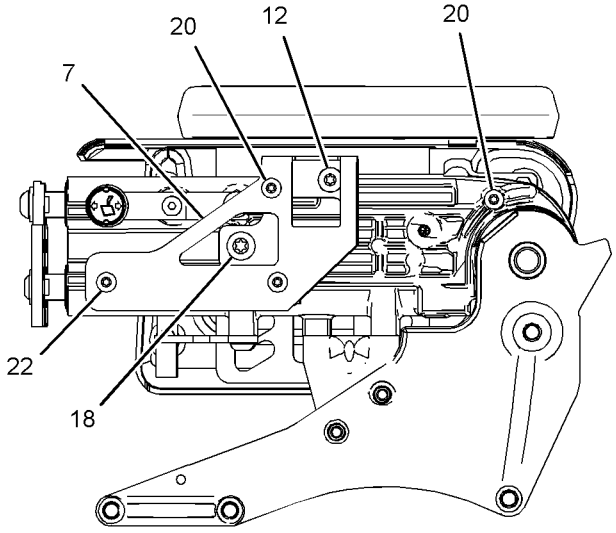

VIEW B-B
(COVER REMOVED)

GRAPHIC #1 **<END>** g01414585

OPERATOR STATION

255-3696 COMPRESSOR & MTG GP-REFRIG

S/N: JLF1-UP; WWW1-UP; YYY1-UP
PART OF 254-3210 AIR CONDITIONER & MOUNTING GP
AN ATTACHMENT

SMCS-1802 **i02678237**

NOTE	REF NO	GRAPHIC REF	PART NUMBER	QTY	PART NAME 1 2 3 4 5 6 (PRODUCT LEVEL)	SEE PAGE
Y	1	1	**178-9570**	1	COMPRESSOR GP-REFRIGERANT	479
	2	1	**261-0372**	1	BRACKET	
	3	1	**261-0373**	1	BRACKET	
M	4	1	**7X-2538**	4	BOLT (M8X1.25X100-MM)	
M	5	1	**7X-2553**	2	BOLT (M16X2X40-MM)	
	6	1	**8T-4121**	2	WASHER-HARD (11X21X2.5-MM THK)	
M	7	1	**8T-4136**	1	BOLT (M10X1.5X25-MM)	
M	8	1	**8T-4195**	1	BOLT (M10X1.5X30-MM)	
	9	1	**8T-4224**	4	WASHER-HARD (8.8X16X2-MM THK)	
	10	1	**9X-8257**	2	WASHER (17.5X30X3.5-MM THK)	

M-METRIC PART
Y-SEPARATE ILLUSTRATION

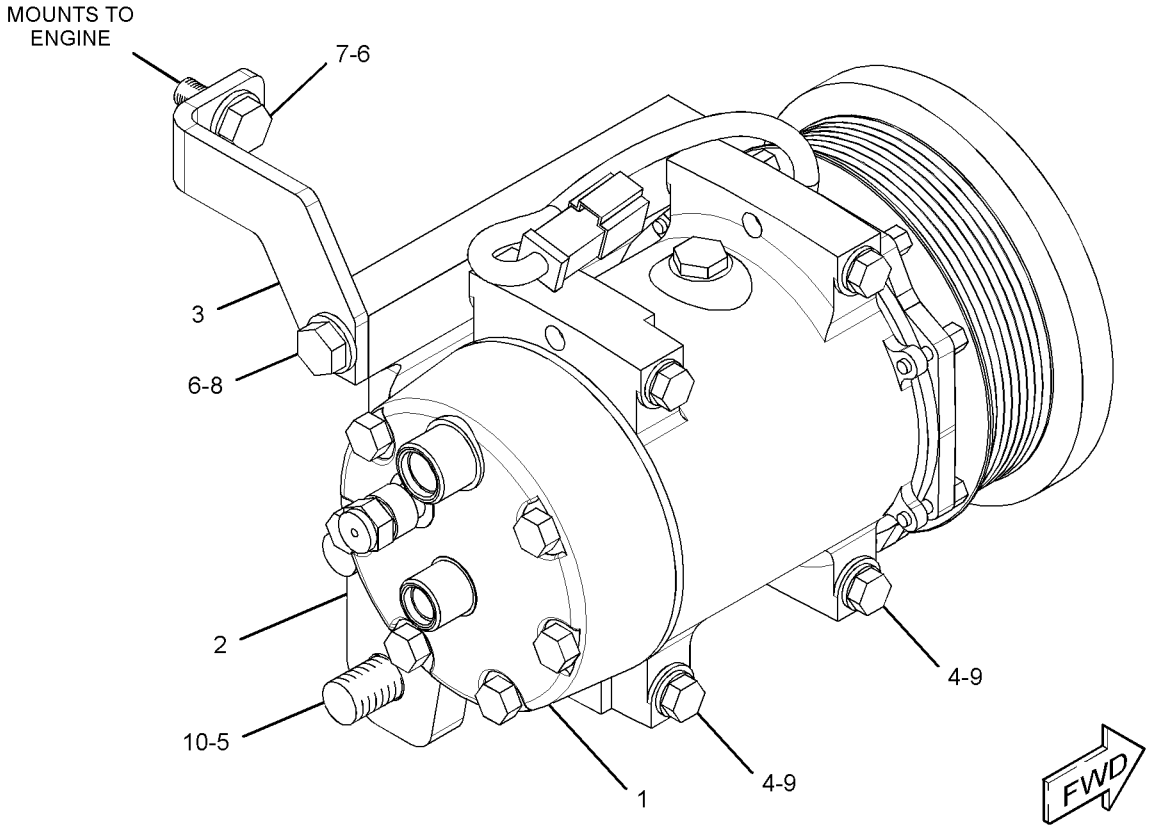

GRAPHIC #1 **<END>** g01348437

OPERATOR STATION

178-9570 COMPRESSOR GP-REFRIGERANT

S/N: JLF1-UP; WWW1-UP; YYY1-UP
PART OF 255-3696 COMPRESSOR & MTG GP-REFRIG
AN ATTACHMENT

SMCS-1802 **i02223461**

NOTE	REF NO	GRAPHIC REF	PART NUMBER	QTY	PART NAME 1 2 3 4 5 6 (PRODUCT LEVEL)	SEE PAGE
	1	1	**102-8802**	1	KIT-RECEPTACLE (2-PIN)	
					(INCLUDES RECEPTACLE AS AND WEDGE)	
	2	1	**7T-4532**	1	PLUG AS	
	3	1	**114-3469**	1	VALVE GP-RELIEF (REFRIGERANT COMPRESSOR)	
	3A	1	**9X-7378**	1	SEAL-O-RING	

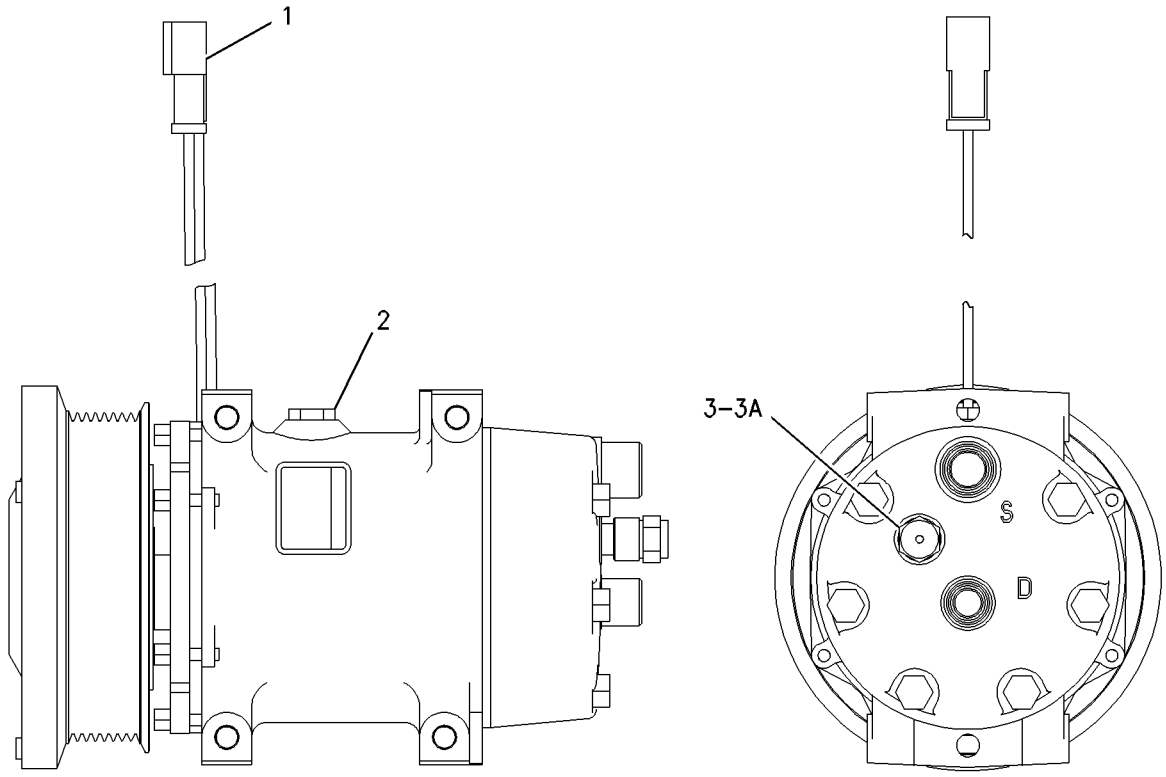

GRAPHIC #1 **<END>** g01005404

OPERATOR STATION

180-5927 CONDENSER GP-REFRIGERANT

S/N: JLF1-UP; WWW1-UP; YYY1-UP
PART OF 254-3210 AIR CONDITIONER & MOUNTING GP
AN ATTACHMENT

SMCS-1805 **i03574881**

NOTE	REF NO	GRAPHIC REF	PART NUMBER	QTY	PART NAME 1 2 3 4 5 6 (PRODUCT LEVEL)	SEE PAGE
	1	1	**7K-1181**	1	STRAP-CABLE	
	2	1	**8C-3756**	1	FILM-IDENTIFICATION (REFRIGERANT CONDENSER) (REFRIGERANT CONDENSER)	
	3	1	**115-1615**	2	RELAY AS (12-VOLT) (REFRIGERANT CONDENSER)	
	4	1	**175-2539**	1	CASE AS	
	6	1	**304-3716**	2	FAN AS (5-BLADE)	
					(EACH INCLUDES)	
		1	**177-9645**	1	KIT-RECEPTACLE (2-PIN)	
					(INCLUDES RECEPTACLE AS & WEDGE)	
	7	1	**185-4303**	1	HARNESS AS-MOTOR (CONDENSER FAN)	
		1	**7T-0093**	4	PIN-CONNECTOR	
		1	**144-1636**	1	PIN-CONNECTOR (14-GA TO 18-GA)	
		1	**9X-1054**	2	PLUG AS-CONNECTOR (4-PIN)	
		1	**155-2270**	1	KIT-CONNECTING PLUG (2-PIN)	
					(INCLUDES PLUG AS, WEDGE & INTERFACE SEAL)	
		1	**177-9648**	2	KIT-CONNECTING PLUG (2-PIN)	
					(EACH INCLUDES PLUG AS, WEDGE & INTERFACE SEAL)	
		1	**8T-8737**	1	PLUG-SEAL	
		1	**102-8802**	1	KIT-RECEPTACLE (2-PIN)	
					(INCLUDES RECEPTACLE AS & WEDGE)	
		1	**177-9653**	1	KIT-RECEPTACLE (4-PIN)	
					(INCLUDES RECEPTACLE AS & WEDGE)	
		1	**7T-0094**	4	SOCKET-CONNECTOR	
		1	**126-1766**	2	SOCKET-CONNECTOR (14-GA TO 18-GA)	
		1	**189-3158**	1	SUPPRESSOR-ARC	
	8	1	**199-7698**	1	COIL AS (CONDENSER)	
M	9	1	**5C-2890**	1	NUT (M6X1-THD)	
M	10	1	**8T-4138**	1	BOLT (M6X1X20-MM)	
	11	1	**8T-4224**	8	WASHER-HARD (8.8X16X2-MM THK)	
	12	1	**8T-4121**	6	WASHER-HARD (11X21X2.5-MM THK)	
M	13	1	**8T-4137**	6	BOLT (M10X1.5X20-MM)	
	14	1	**8T-4205**	2	WASHER-HARD (7.2X14.5X2-MM THK)	
M	15	1	**8T-4908**	8	BOLT (M8X1.25X25-MM)	
D	16	1	**5P-5673**		SEAL (0.78-M EACH)	
D	16A	1	**5P-5673**		SEAL (0.16-M)	
D	16B	1	**5P-5673**		SEAL (0.2-M)	
E	17	1	**126-8472**		SEAL (79-CM)	

D-ORDER BY THE METER
E-ORDER BY THE CENTIMETER
M-METRIC PART

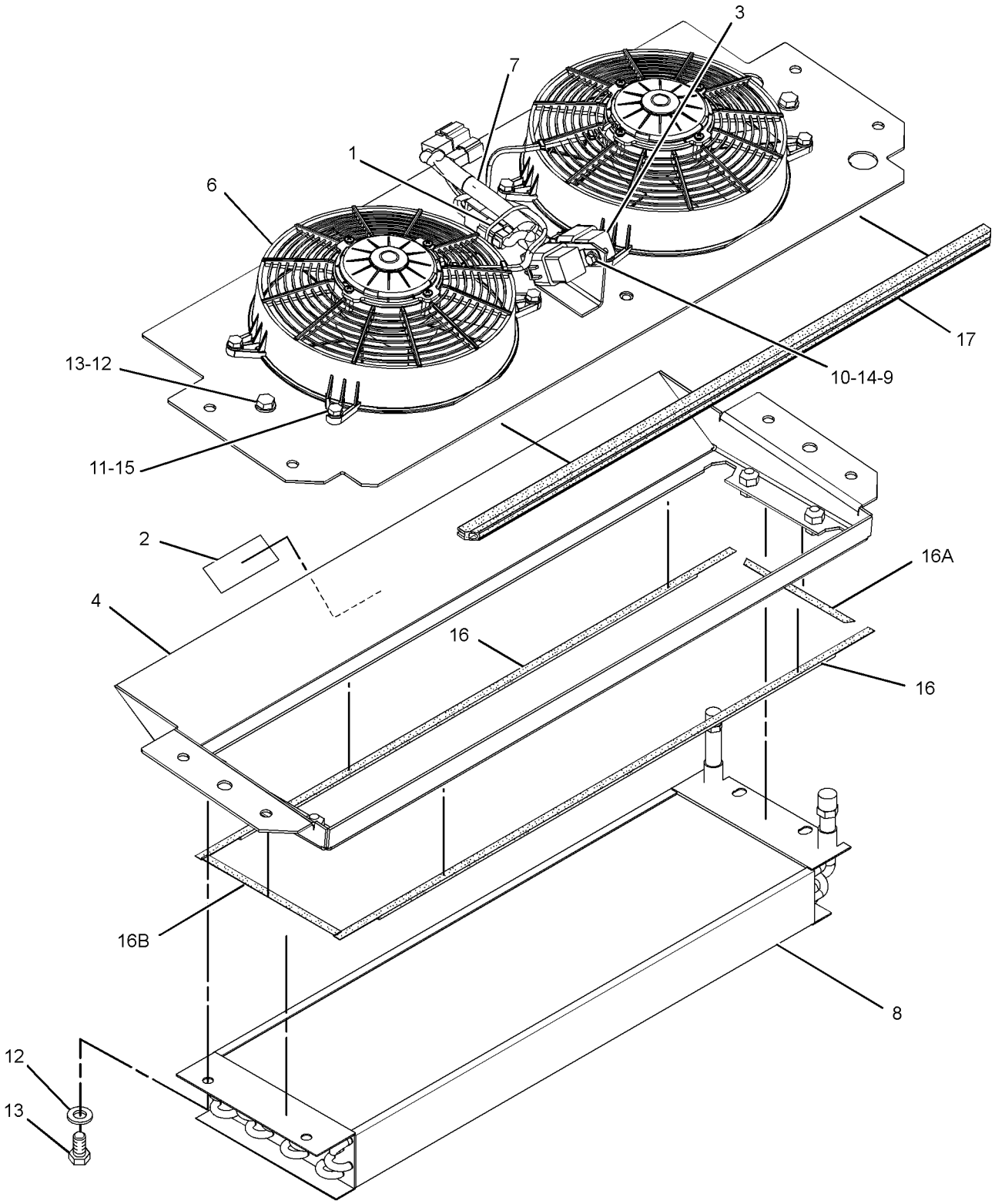

GRAPHIC #1 **<END>** g01185778

OPERATOR STATION

314-3003 CONSOLE GP-CONTROL–LH

S/N: JLF1-UP; WWW1-UP; YYY1-UP
PART OF 255-4231, 285-0331 COVER GP-CAB
AN ATTACHMENT

SMCS-5258 **i02852224**

NOTE	REF NO	GRAPHIC REF	PART NUMBER	QTY	PART NAME 1 2 3 4 5 6 (PRODUCT LEVEL)	SEE PAGE
	1	1	**188-8846**	1	LATCH AS	
	2	1	**258-6387**	1	HINGE AS	
	3	1	**297-1464**	11	INSERT-THREADED (M4X0.7-THD)	
M	4	1	**297-1466**	3	INSERT-THREADED (M6X1-THD)	
	5	1	**314-3005**	1	CONSOLE (LH)	
	6	1	**314-3007**	1	DOOR	
M	7	1	**138-8454**	11	SCREW-TRUSS HEAD (M4X0.7X10-MM)	

M-METRIC PART

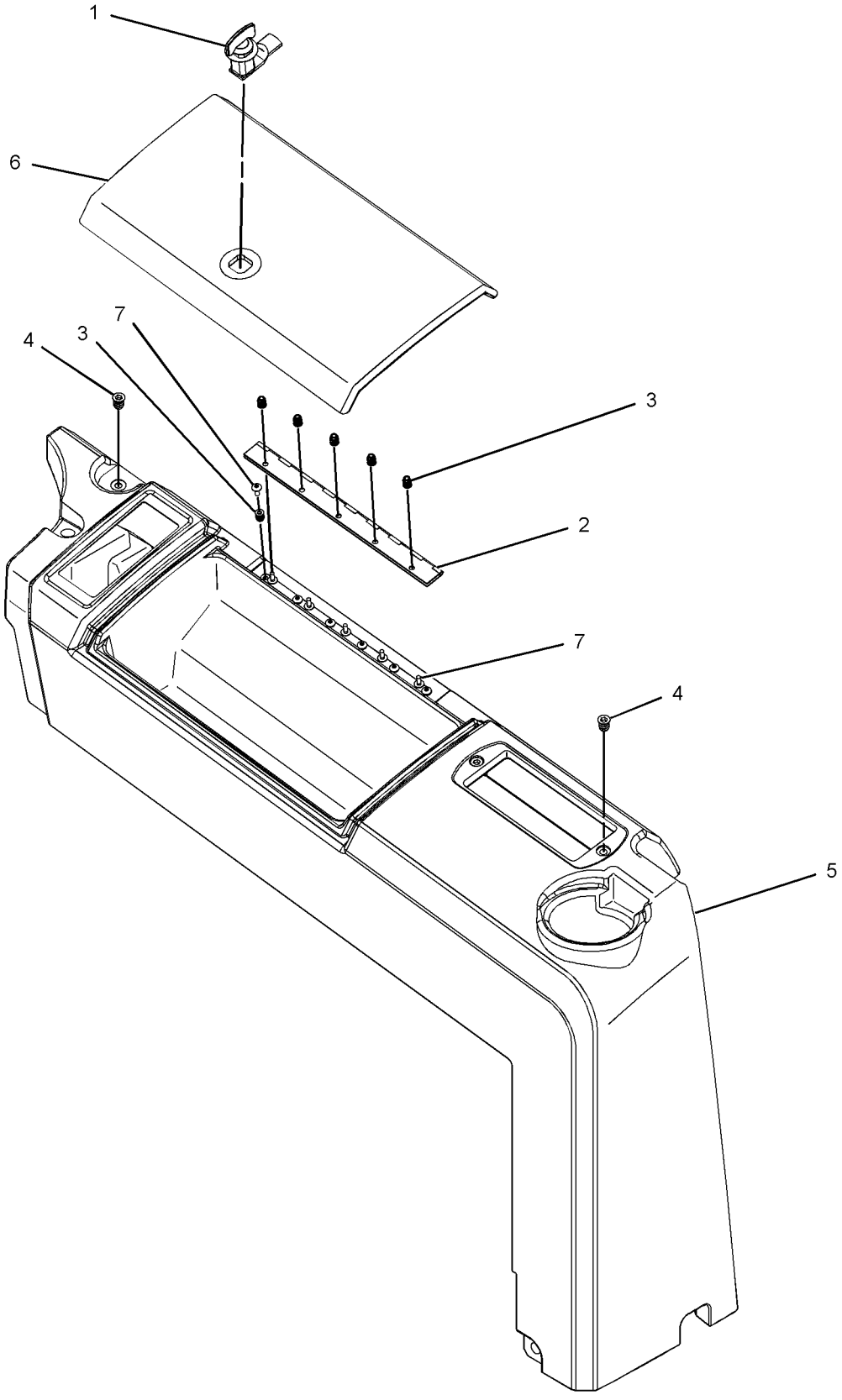

GRAPHIC #1 **<END>** g01423643

OPERATOR STATION

314-3004 CONSOLE GP–LH

S/N: JLF1-UP; WWW1-UP; YYY1-UP
PART OF 255-4230 COVER GP-CAB, 285-0330 COVER GP-CONSOLE
AN ATTACHMENT

SMCS-5258 **i02890496**

NOTE	REF NO	GRAPHIC REF	PART NUMBER	QTY	PART NAME 1 2 3 4 5 6 (PRODUCT LEVEL)	SEE PAGE
	1	1	**188-8846**	1	LATCH AS	
	2	1	**258-6387**	1	HINGE AS	
	3	1	**297-1464**	11	INSERT-THREADED (M4X0.7-THD)	
M	4	1	**297-1466**	3	INSERT-THREADED (M6X1-THD)	
	6	1	**314-3007**	1	DOOR	
M	7	1	**138-8454**	11	SCREW-TRUSS HEAD (M4X0.7X10-MM)	

M-METRIC PART

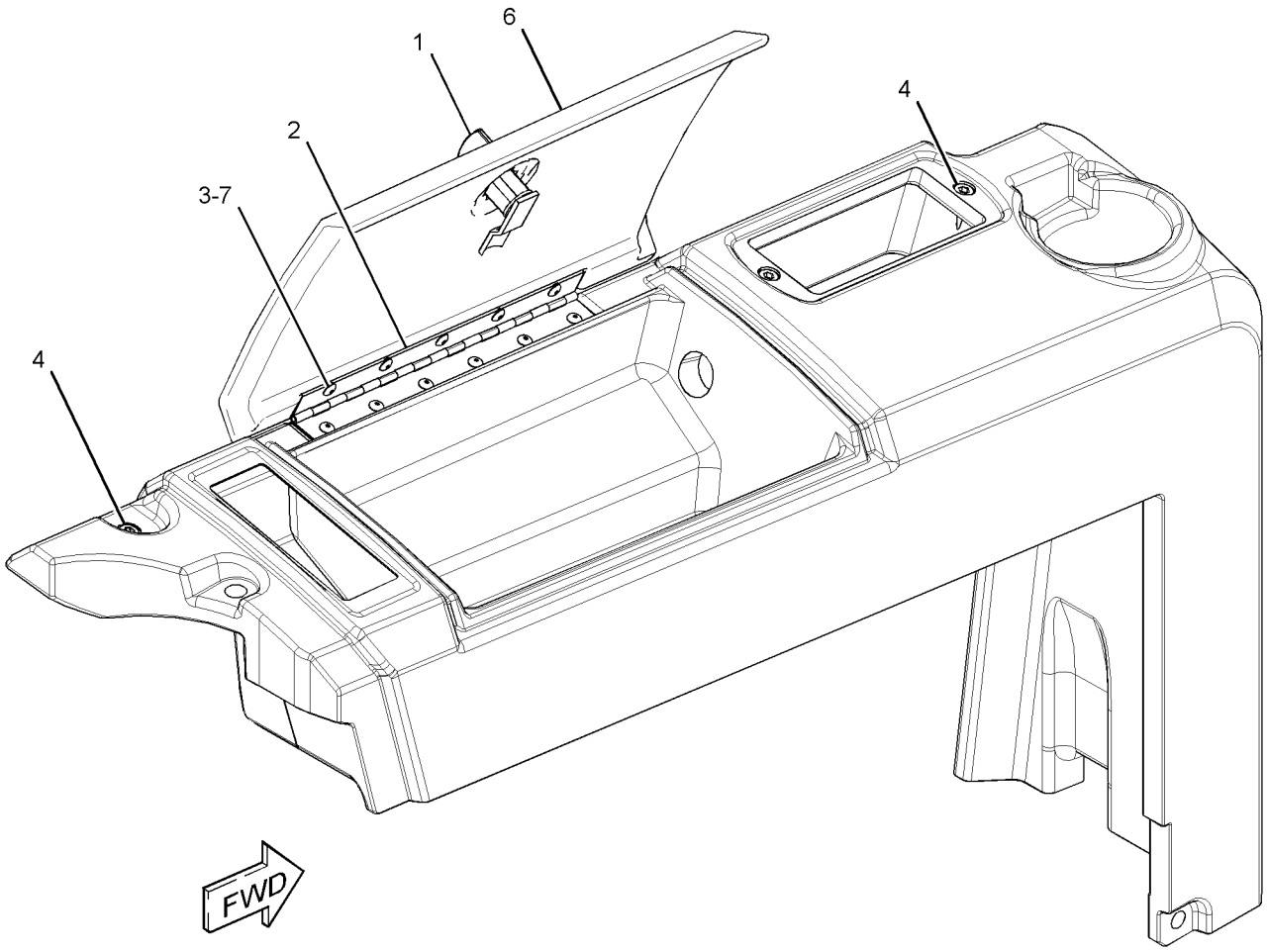

GRAPHIC #1 **<END>** g01447659

268-9351 CONSOLE GP-OPERATOR–RH

S/N: JLF1-UP; WWW1-UP; YYY1-UP
PART OF 255-4242 SEAT & SUPPORT GP, 255-4250, 255-4251, 255-4252 SEAT GP-SUSPENSION
AN ATTACHMENT

SMCS-5258, 7451 **i02685626**

NOTE	REF NO	GRAPHIC REF	PART NUMBER	QTY	PART NAME 1 2 3 4 5 6 (PRODUCT LEVEL)	SEE PAGE
	1	1	**280-9440**	1	CUSHION AS	
	2	1	**280-9680**	1	BRACKET AS	
	3	1	**280-9896**	1	COVER AS	
M	4	1	**6V-3940**	4	BOLT (M8X1.25X25-MM)	
	5	1	**7X-0578**	1	WASHER-HARD (10.2X32X2.5-MM THK)	
	6	1	**9M-1974**	4	WASHER-HARD (8.8X16X2-MM THK)	
M	7	1	**9X-2043**	10	SCREW-TRUSS HEAD (M6X1X14-MM)	
D	8	1	**6V-3987**		SEAL (0.1-M EACH)	
	9	1	**280-9441**	1	BRACKET	
	10	1	**280-9442**	1	BRACKET AS	
	11	1	**280-9444**	1	KNOB	
	12	1	**280-9897**	1	COVER	

D-ORDER BY THE METER
M-METRIC PART

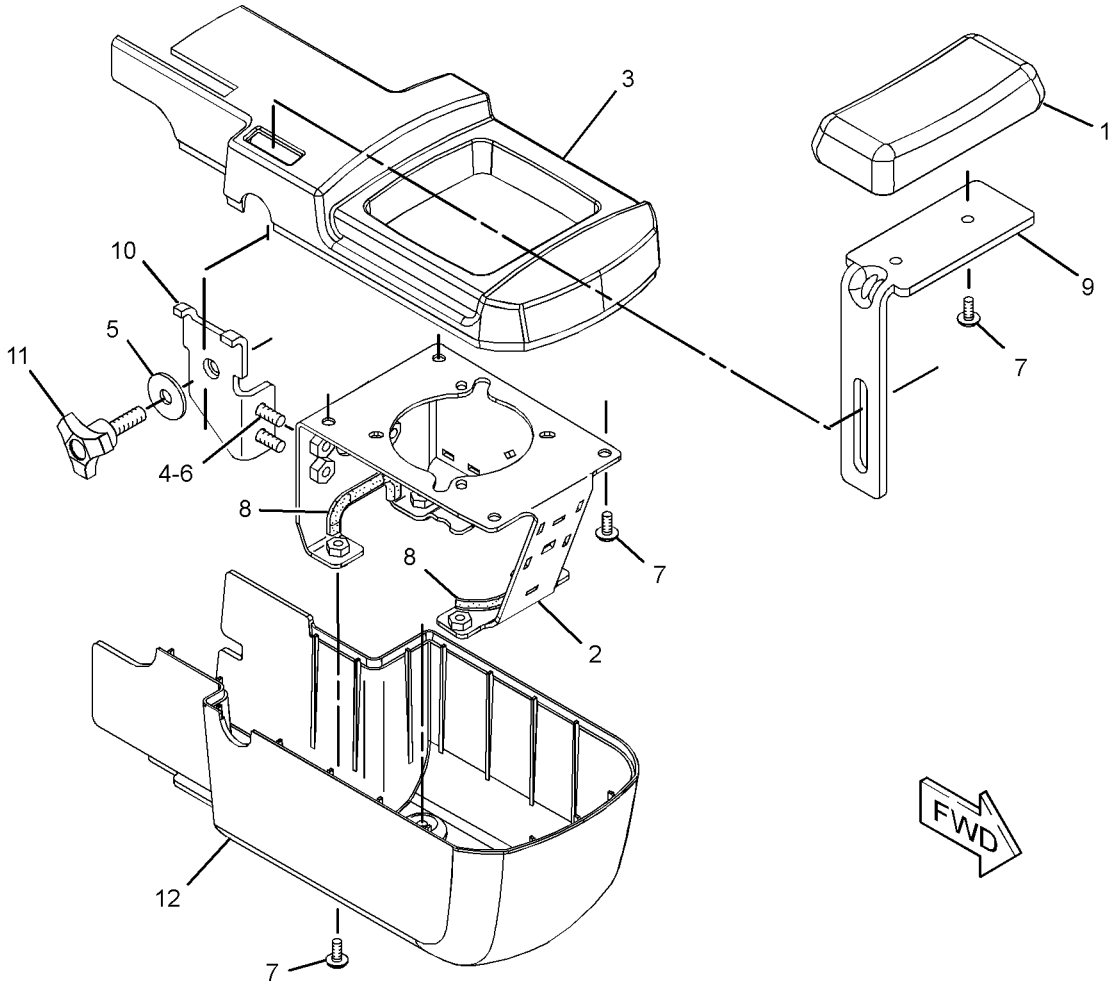

GRAPHIC #1 **<END>** g01314510

OPERATOR STATION

268-9352 CONSOLE GP-OPERATOR—LH

S/N: JLF1-UP; WWW1-UP; YYY1-UP
PART OF 255-4242 SEAT & SUPPORT GP, 255-4250, 255-4251, 255-4252 SEAT GP-SUSPENSION
AN ATTACHMENT

SMCS-5258, 7451 **i02685888**

NOTE	REF NO	GRAPHIC REF	PART NUMBER	QTY	PART NAME 1 2 3 4 5 6 (PRODUCT LEVEL)	SEE PAGE
	1	1	**280-9440**	1	CUSHION AS	
	2	1	**280-9441**	1	BRACKET	
	3	1	**280-9443**	1	BRACKET AS	
M		1	**8T-3490**	1	NUT-WELD (M10X1.5-THD)	
	4	1	**280-9444**	1	KNOB	
	5	1	**280-9898**	1	BRACKET AS	
	6	1	**280-9899**	1	COVER AS	
	7	1	**280-9900**	1	COVER	
M	8	1	**6V-3940**	4	BOLT (M8X1.25X25-MM)	
	9	1	**7X-0578**	1	WASHER-HARD (10.2X32X2.5-MM THK)	
	10	1	**9M-1974**	4	WASHER-HARD (8.8X16X2-MM THK)	
M	11	1	**9X-2043**	10	SCREW-TRUSS HEAD (M6X1X14-MM)	
D	12	1	**6V-3987**		SEAL (0.7-M)	
D	12A	1	**6V-3987**		SEAL (0.7-M)	

D-ORDER BY THE METER
M-METRIC PART

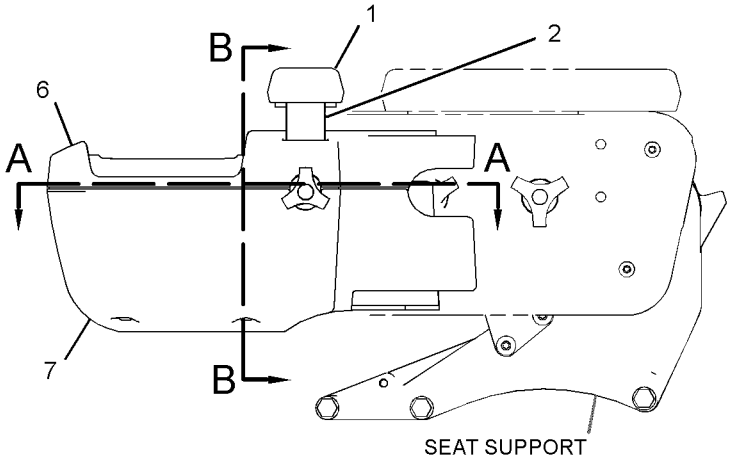

LEFT SIDE VIEW

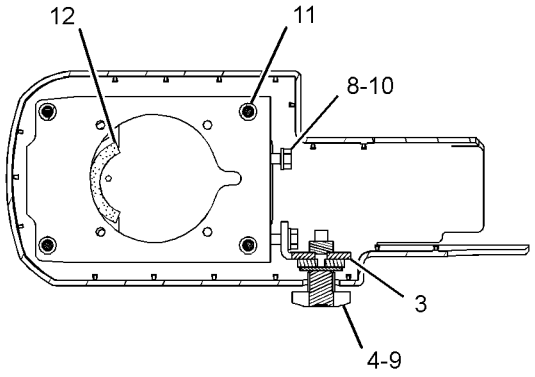

SECTION A-A

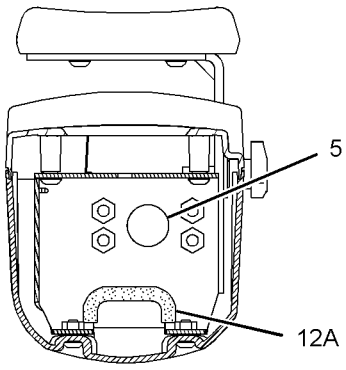

SECTION B-B

GRAPHIC #1 **<END>** g01366441

OPERATOR STATION

324-0670 CONTROL & MTG GP-PEDAL–GOVERNOR, BRAKE

S/N: JLF1-UP; WWW1-UP; YYY1-UP

PART OF 244-7380, 244-7381, 282-5328 CHASSIS AR

SMCS-5462 **i02970961**

NOTE	REF NO	GRAPHIC REF	PART NUMBER	QTY	PART NAME 1 2 3 4 5 6 (PRODUCT LEVEL)	SEE PAGE
Y	1	1	*324-0669*	1	PEDAL GP-GOVERNOR & BRAKE	549
	2	1	**7X-7729**	3	WASHER (11X25X3-MM THK)	
M	3	1	**8T-4133**	3	NUT (M10X1.5-THD)	

M-METRIC PART
Y-SEPARATE ILLUSTRATION

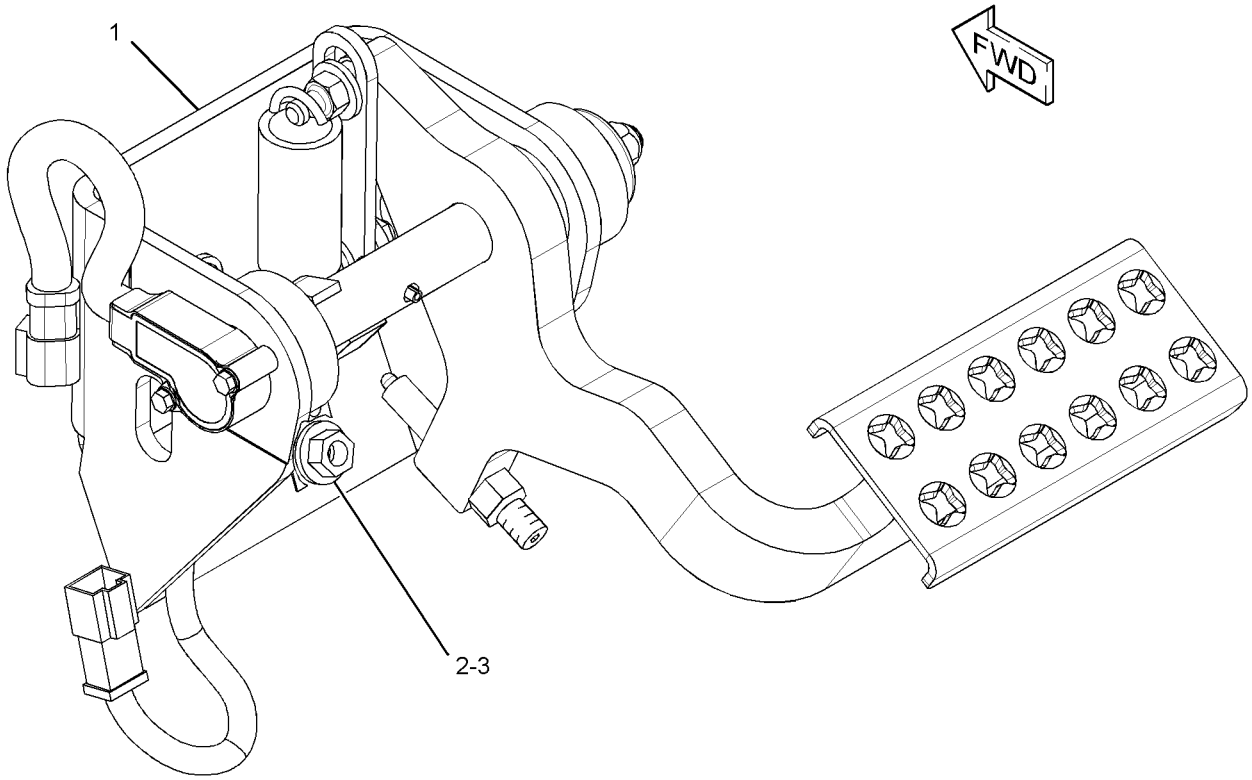

GRAPHIC #1 **<END>** g01618459

OPERATOR STATION

252-4559 CONTROL GP-HANDLE—WINCH

S/N: JLF1-170; WWW1-157; YYY1-UP
PART OF 244-7504 CONTROL GP-WINCH
FIELD REPLACEMENT FOR 307-4673 CONTROL GP-HANDLE
AN ATTACHMENT

SMCS-5063, 5705 **i03408142**

NOTE	REF NO	GRAPHIC REF	PART NUMBER	QTY	PART NAME 1 2 3 4 5 6 (PRODUCT LEVEL)	SEE PAGE
	1	1	**151-9274**	1	KIT-RECEPTACLE (4-PIN)	
					(INCLUDES RECEPTACLE AS & WEDGE)	
	2	1	**278-8974**	1	KNOB	
	3	1	**278-8965**	1	BOOT	
	4	1	**278-8967**	1	RETAINER-BOOT	
M	5	1	**278-8970**	4	SCREW (M3X10X6-MM)	

M-METRIC PART

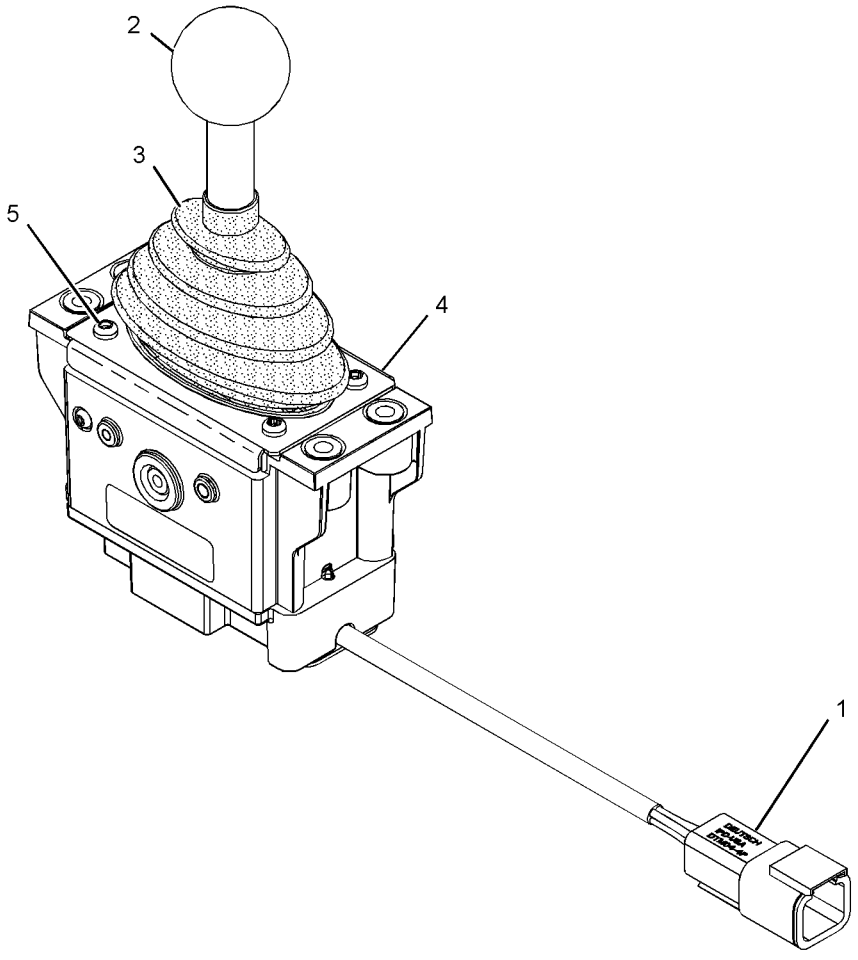

GRAPHIC #1 **<END>** g01195083

266-7631 CONTROL GP-HANDLE–BULLDOZER CONTROL

S/N: JLF1-UP; WWW1-UP; YYY1-UP
PART OF 274-4646, 328-0895 CONTROL GP-JOYSTICK
AN ATTACHMENT

SMCS-5063, 5705 **i03513285**

NOTE	REF NO	GRAPHIC REF	PART NUMBER	QTY	PART NAME 1 2 3 4 5 6 (PRODUCT LEVEL)	SEE PAGE
M	1	1	**299-2214**	2	SETSCREW (M6X1X12-MM)	
	2	1	**260-6728**	1	RECEPTACLE AS-CONNECTOR (12-PIN)	
	3	1	**186-3735**	7	PIN-CONNECTOR (16-GA TO 18-GA)	
	4	1	**8T-8737**	5	PLUG-SEAL	
	5	1	**144-0331**	1	CAP-PUSH BUTTON (YELLOW)	

M-METRIC PART

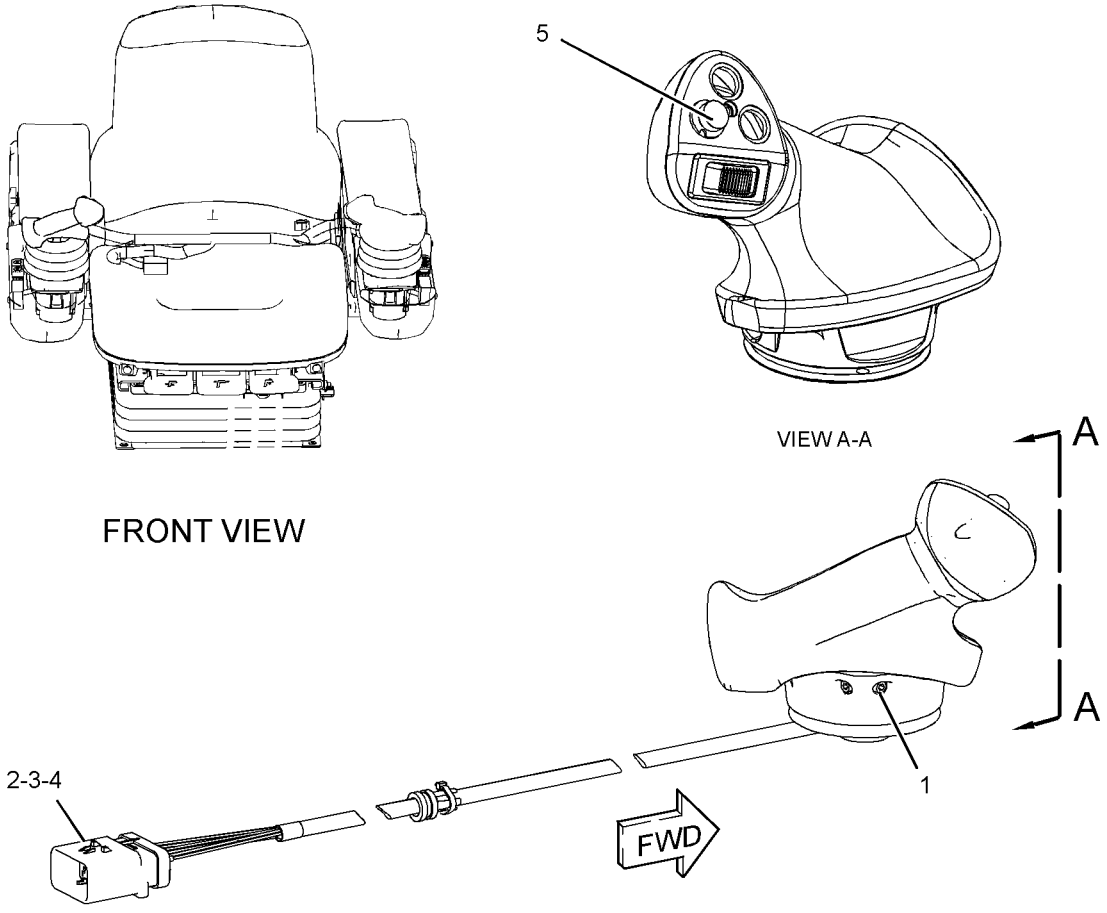

GRAPHIC #1 **<END>** g01863293

OPERATOR STATION

266-7632 CONTROL GP-HANDLE—GRADE CONTROL

S/N: JLF1-UP; WWW1-UP; YYY1-UP
PART OF 274-4645, 328-0894 CONTROL GP-JOYSTICK
AN ATTACHMENT

SMCS-5063, 5705 **i03528323**

NOTE	REF NO	GRAPHIC REF	PART NUMBER	QTY	PART NAME 1 2 3 4 5 6 (PRODUCT LEVEL)	SEE PAGE
M	1	1	**299-2214**	2	SETSCREW (M6X1X12-MM)	
	2	1	**260-6728**	1	RECEPTACLE AS-CONNECTOR (12-PIN)	
	3	1	**186-3735**	11	PIN-CONNECTOR (16-GA TO 18-GA)	
	4	1	**8T-8737**	1	PLUG-SEAL	
	5	1	**144-0331**	1	CAP-PUSH BUTTON (YELLOW)	
	6	1	**220-8355**	2	CAP-PUSH BUTTON (BLACK)	

M-METRIC PART

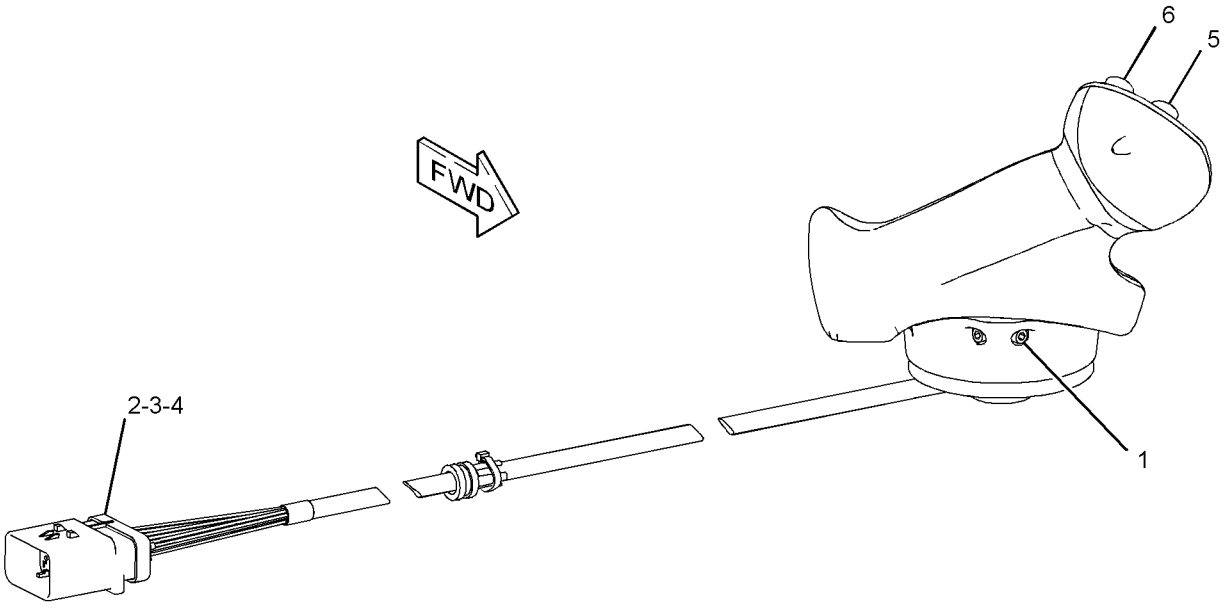

GRAPHIC #1 **<END>** g01893133

OPERATOR STATION

266-7634 CONTROL GP-HANDLE–LH

S/N: JLF1-UP; WWW1-UP; YYY1-UP
PART OF 290-4835 CONTROL GP-JOYSTICK

SMCS-5063, 5705 **i03513300**

NOTE	REF NO	GRAPHIC REF	PART NUMBER	QTY	PART NAME 1 2 3 4 5 6 (PRODUCT LEVEL)	SEE PAGE
	1	1	**260-6728**	1	RECEPTACLE AS-CONNECTOR (12-PIN)	
	2	1	**186-3735**	9	PIN-CONNECTOR (16-GA TO 18-GA)	
	3	1	**8T-8737**	3	PLUG-SEAL	
M	4	1	**299-2214**	2	SETSCREW (M6X1X12-MM)	
	5	1	**144-0331**	1	CAP-PUSH BUTTON (YELLOW)	
	6	1	**220-8355**	1	CAP-PUSH BUTTON (BLACK)	

M-METRIC PART

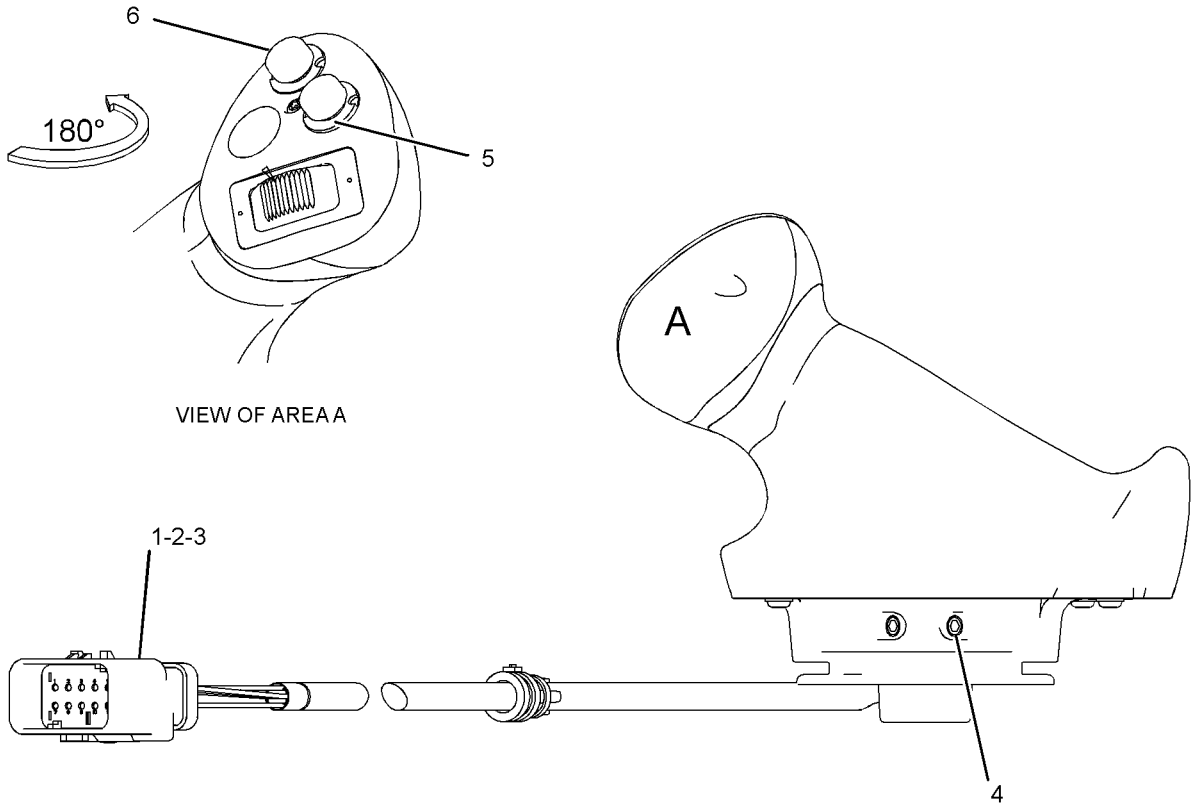

FRONT VIEW

GRAPHIC #1 **<END>** g01869054

OPERATOR STATION

307-4673 CONTROL GP-HANDLE—RIPPER, WINCH

S/N: JLF1-UP; WWW1-UP; YYY1-UP
PART OF 249-9051 CONTROL GP-RIPPER, 244-7504 CONTROL GP-WINCH
AN ATTACHMENT

SMCS-5063, 5705 **i02707095**

NOTE	REF NO	GRAPHIC REF	PART NUMBER	QTY	PART NAME 1 2 3 4 5 6 (PRODUCT LEVEL)	SEE PAGE
	1	1	**151-9274**	1	KIT-RECEPTACLE (4-PIN)	
					(INCLUDES RECEPTACLE AS & WEDGE)	
	2	1	**278-8974**	1	KNOB	
	3	1	**278-8965**	1	BOOT	
	4	1	**278-8967**	1	RETAINER-BOOT	
M	5	1	**278-8970**	4	SCREW (M3X10X6-MM)	

M-METRIC PART

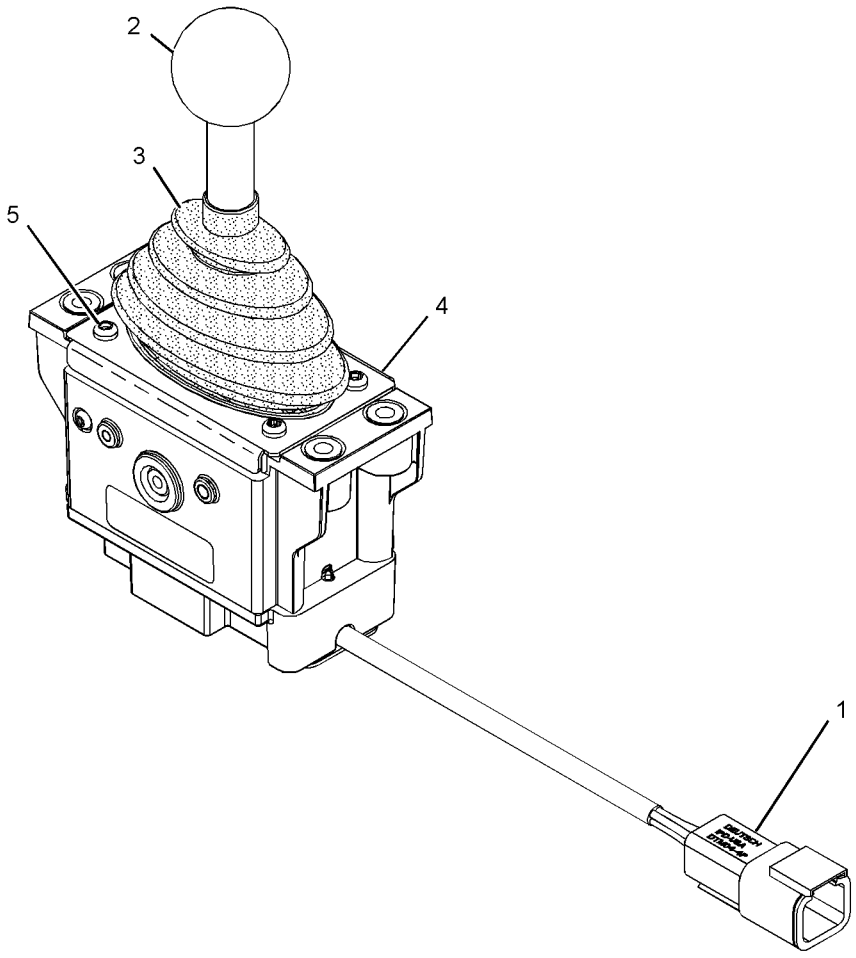

GRAPHIC #1 **<END>** g01195083

274-4645 CONTROL GP-JOYSTICK–GRADE CONTROL, RH

S/N: JLF1-UP; WWW1-UP; YYY1-UP
PART OF 296-5753, 296-5754, 296-5755, 296-5756 GRADE CONTROL AR
AN ATTACHMENT

SMCS-5705 **i02833641**

NOTE	REF NO	GRAPHIC REF	PART NUMBER	QTY	PART NAME 1 2 3 4 5 6 (PRODUCT LEVEL)	SEE PAGE
	1	1	**253-9544**	1	SENSOR AS-POSITION (BULLDOZER CONTROL)	
	1A	1	**230-5011**	1	RECEPTACLE AS-CONNECTOR (6-PIN)	
	1B	1	**186-3735**	6	PIN-CONNECTOR (16-GA TO 18-GA)	
Y	2	1	**266-7632**	1	CONTROL GP-HANDLE (GRADE CONTROL)	490
	3	1	**285-0151**	1	BOOT	
	5	1	**186-3735**	11	PIN-CONNECTOR (16-GA TO 18-GA)	
	6	1	**260-6728**	1	RECEPTACLE AS-CONNECTOR (12-PIN)	
	7	1	**8T-8737**	1	PLUG-SEAL	
M	8	1	**299-2214**	2	SETSCREW (M6X1X12-MM)	
	9	1	**8L-8413**	3	STRAP-CABLE	

M-METRIC PART
Y-SEPARATE ILLUSTRATION

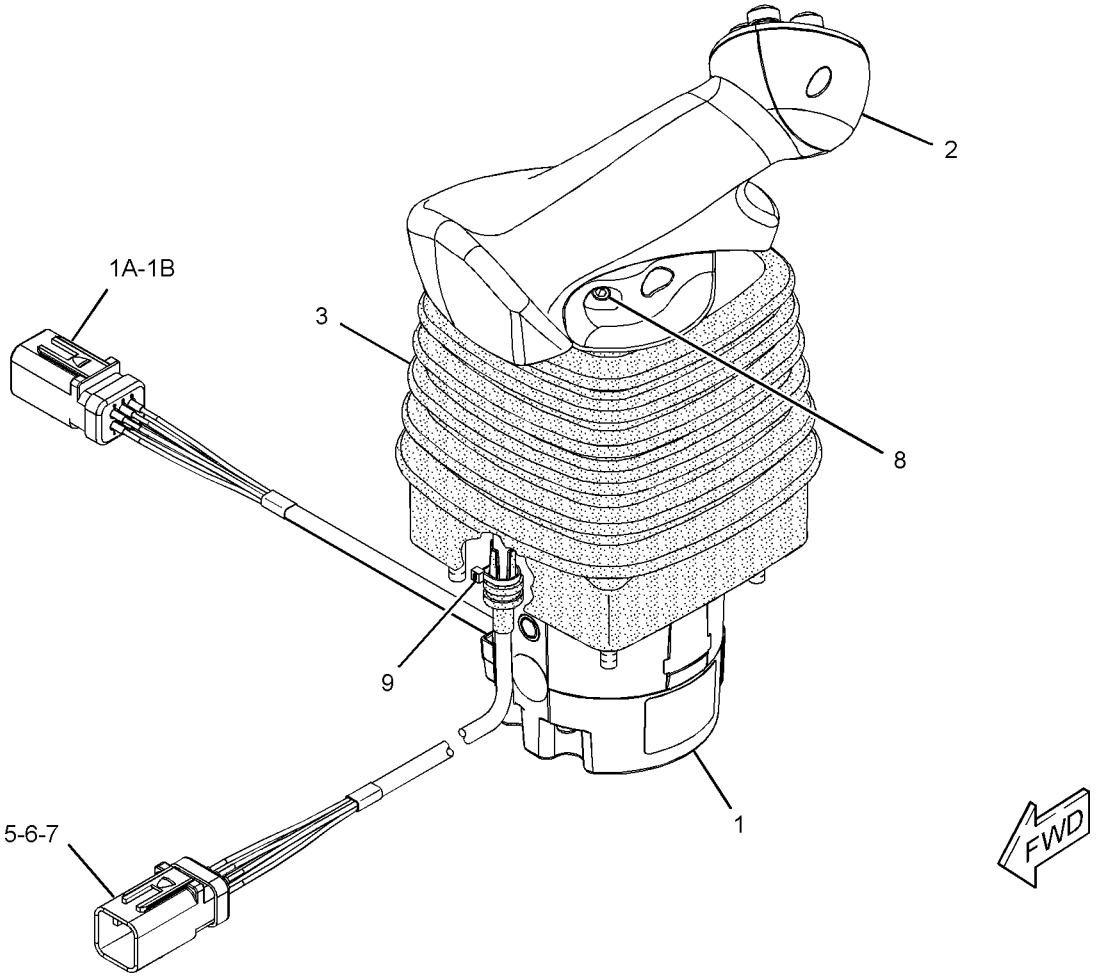

GRAPHIC #1 **<END>** g01414464

OPERATOR STATION

274-4646 CONTROL GP-JOYSTICK–BULLDOZER

S/N: JLF1-UP; WWW1-UP; YYY1-UP
PART OF 296-5751, 296-5752 GRADE CONTROL AR
AN ATTACHMENT

SMCS-5705 **i02903007**

NOTE	REF NO	GRAPHIC REF	PART NUMBER	QTY	PART NAME 1 2 3 4 5 6 (PRODUCT LEVEL)	SEE PAGE
	1	1	**253-9544**	1	SENSOR AS-POSITION (BULLDOZER CONTROL)	
	1A	1	**186-3735**	6	PIN-CONNECTOR (16-GA TO 18-GA)	
	1B	1	**230-5011**	1	RECEPTACLE AS-CONNECTOR (6-PIN)	
Y	2	1	**266-7631**	1	CONTROL GP-HANDLE (BULLDOZER CONTROL)	489
	3	1	**285-0151**	1	BOOT	
	5	1	**186-3735**	7	PIN-CONNECTOR (16-GA TO 18-GA)	
	6	1	**260-6728**	1	RECEPTACLE AS-CONNECTOR (12-PIN)	
	7	1	**8T-8737**	5	PLUG-SEAL	
M	8	1	**299-2214**	2	SETSCREW (M6X1X12-MM)	
	9	1	**8L-8413**	3	STRAP-CABLE	

M-METRIC PART
Y-SEPARATE ILLUSTRATION

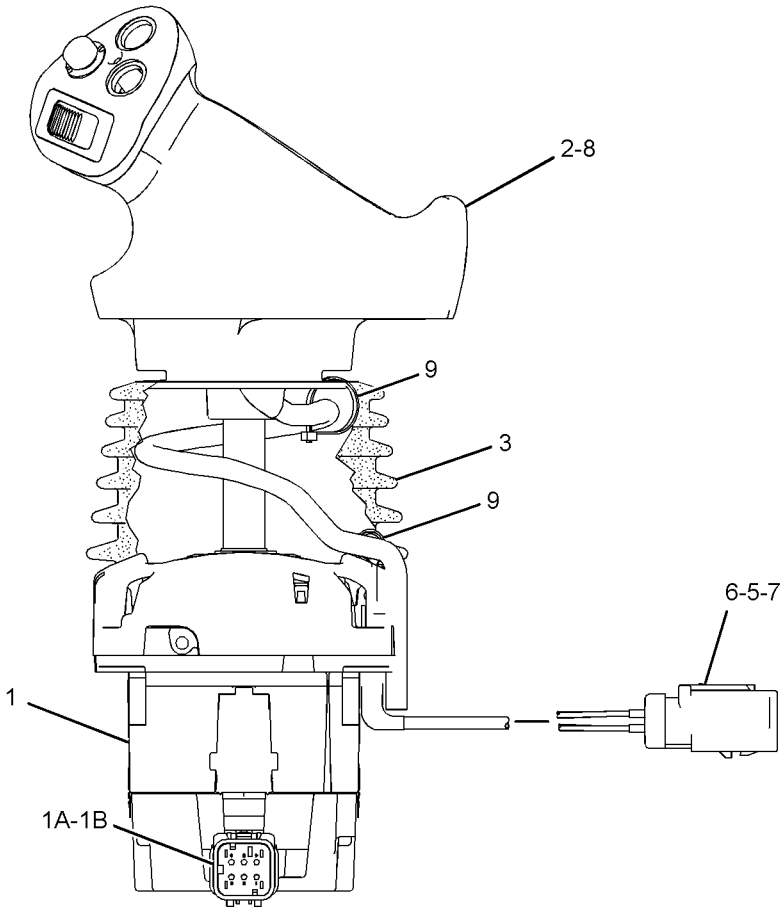

REAR VIEW

GRAPHIC #1 **<END>** g01422964

OPERATOR STATION

290-4835 CONTROL GP-JOYSTICK–LH

S/N: JLF1-UP; WWW1-UP; YYY1-UP

PART OF 245-6027 WIRING GP-ELECTROHYDRAULIC

SMCS-5705 **i03513286**

NOTE	REF NO	GRAPHIC REF	PART NUMBER	QTY	PART NAME 1 2 3 4 5 6 (PRODUCT LEVEL)	SEE PAGE
Y	1	1	**266-7634**	1	CONTROL GP-HANDLE (STEERING, TRANSMISSION)	491
Y	2	1	**284-8207**	1	SENSOR GP-POSITION (STEERING)	178
	3	1	**285-0151**	1	BOOT	
	4	1	**286-2968**	1	BRACKET AS	
M		1	**6V-9632**	4	NUT-WELD (M6X1-THD)	
M	5	1	**299-2214**	2	SETSCREW (M6X1X12-MM)	
	6	1	**260-6728**	1	RECEPTACLE AS-CONNECTOR (12-PIN)	
	7	1	**102-8805**	1	KIT-RECEPTACLE (6-PIN)	
					(INCLUDES RECEPTACLE AS & WEDGE)	
	8	1	**186-3735**	15	PIN-CONNECTOR (16-GA TO 18-GA)	
	9	1	**8T-8737**	3	PLUG-SEAL	
	10	1	**284-8208**	1	SHAFT-ADAPTER	
	11	1	**8L-8413**	1	STRAP-CABLE	
	12	1	**144-0331**	1	CAP-PUSH BUTTON (YELLOW)	
	13	1	**220-8355**	1	CAP-PUSH BUTTON (BLACK)	

M-METRIC PART
Y-SEPARATE ILLUSTRATION

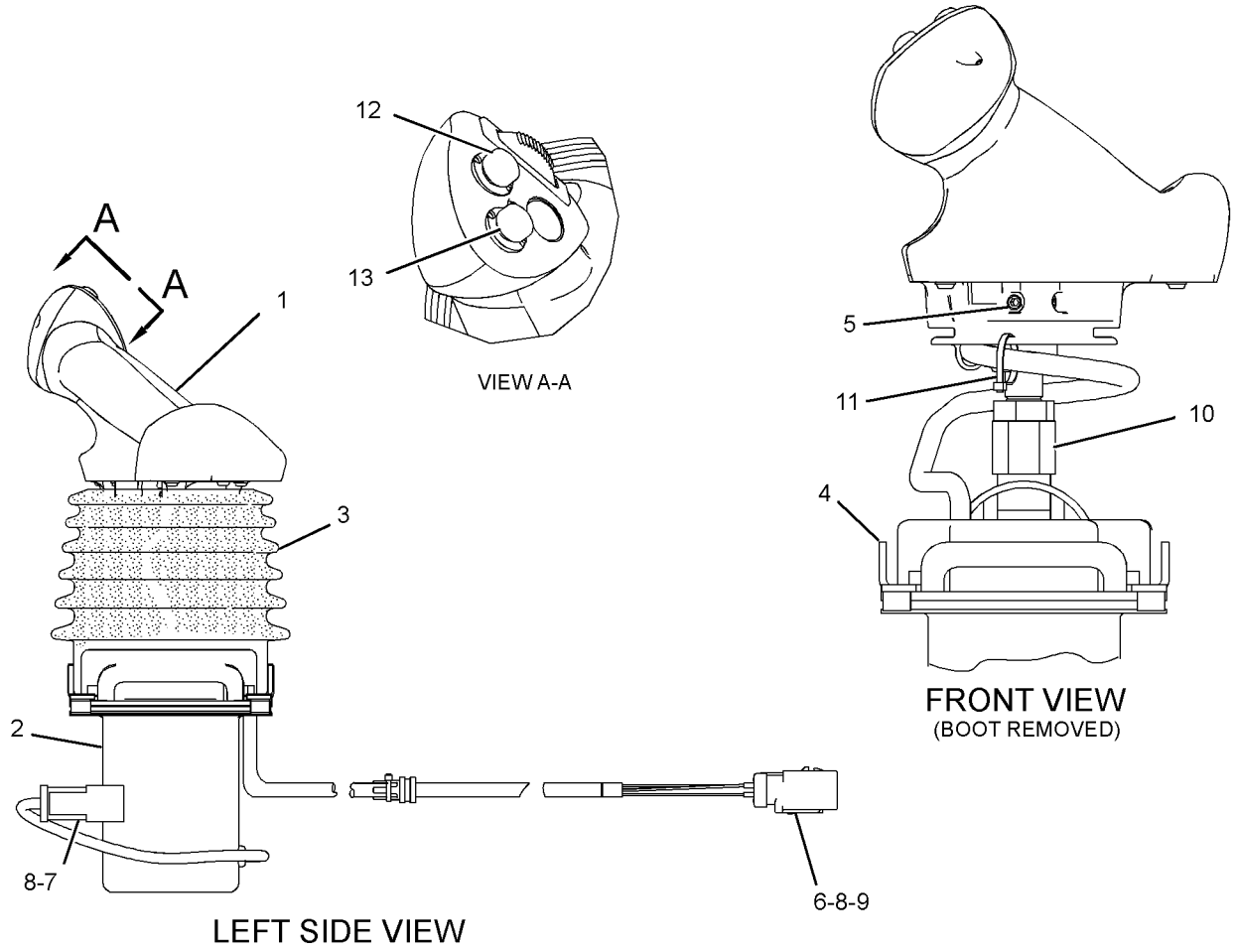

GRAPHIC #1 **<END>** g01900800

OPERATOR STATION

328-0894 CONTROL GP-JOYSTICK—GRADE CONTROL, RH

S/N: JLF1-UP; WWW1-UP; YYY1-UP
PART OF 296-5753, 296-5754, 296-5755, 296-5756 GRADE CONTROL AR AN ATTACHMENT

SMCS-5705 **i03603102**

NOTE	REF NO	GRAPHIC REF	PART NUMBER	QTY	PART NAME 1 2 3 4 5 6 (PRODUCT LEVEL)	SEE PAGE
	1	1	**328-0893**	1	SENSOR AS-POSITION (BULLDOZER CONTROL)	
		1	**186-3735**	6	PIN-CONNECTOR (16-GA TO 18-GA)	
		1	**230-5011**	1	RECEPTACLE AS-CONNECTOR (6-PIN)	
Y	2	1	**266-7632**	1	CONTROL GP-HANDLE (GRADE CONTROL)	490
	3	1	**285-0151**	1	BOOT	
	4	1	**230-5011**	1	RECEPTACLE AS-CONNECTOR (6-PIN)	
	5	1	**186-3735**	17	PIN-CONNECTOR (16-GA TO 18-GA)	
	6	1	**260-6728**	1	RECEPTACLE AS-CONNECTOR (12-PIN)	
	7	1	**8T-8737**	1	PLUG-SEAL	
M	8	1	**299-2214**	2	SETSCREW (M6X1X12-MM)	
	9	1	**8L-8413**	3	STRAP-CABLE	
	10	1	**144-0331**	1	CAP-PUSH BUTTON (YELLOW)	
	11	1	**220-8355**	2	CAP-PUSH BUTTON (BLACK)	

M-METRIC PART
Y-SEPARATE ILLUSTRATION

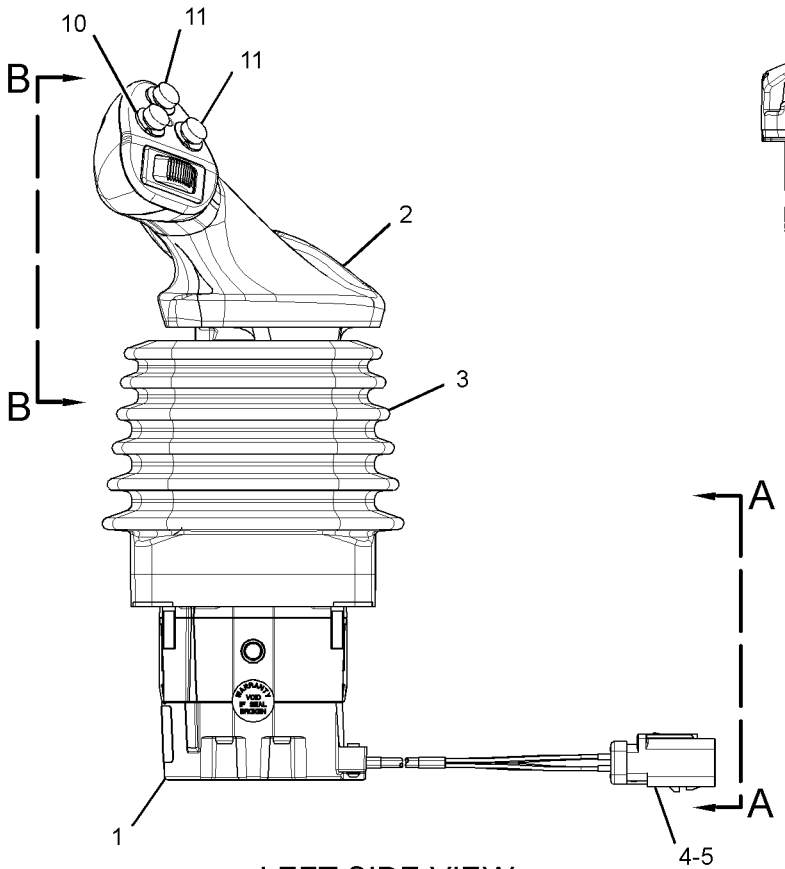

LEFT SIDE VIEW

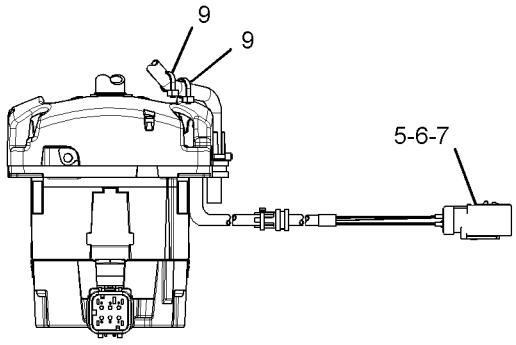

VIEW A-A
(BOOT REMOVED FOR CLARITY)

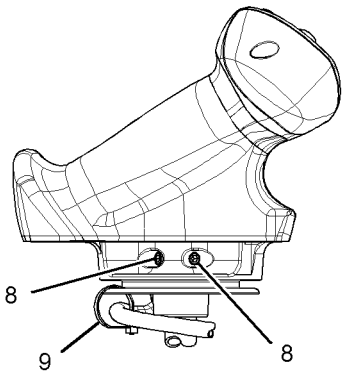

VIEW B-B
(BOOT REMOVED FOR CLARITY)

GRAPHIC #1 **<END>** g01622556

OPERATOR STATION

328-0895 CONTROL GP-JOYSTICK–BULLDOZER

S/N: JLF1-UP; WWW1-UP; YYY1-UP
PART OF 296-5751, 296-5752 GRADE CONTROL AR
AN ATTACHMENT

SMCS-5705 **i03603106**

NOTE	REF NO	GRAPHIC REF	PART NUMBER	QTY	PART NAME 1 2 3 4 5 6 (PRODUCT LEVEL)	SEE PAGE
	1	1	**328-0893**	1	SENSOR AS-POSITION (BULLDOZER CONTROL)	
		1	**186-3735**	6	PIN-CONNECTOR (16-GA TO 18-GA)	
		1	**230-5011**	1	RECEPTACLE AS-CONNECTOR (6-PIN)	
Y	2	1	**266-7631**	1	CONTROL GP-HANDLE (BULLDOZER CONTROL)	489
	3	1	**285-0151**	1	BOOT	
	4	1	**230-5011**	1	RECEPTACLE AS-CONNECTOR (6-PIN)	
	5	1	**186-3735**	13	PIN-CONNECTOR (16-GA TO 18-GA)	
	6	1	**260-6728**	1	RECEPTACLE AS-CONNECTOR (12-PIN)	
	7	1	**8T-8737**	5	PLUG-SEAL	
M	8	1	**299-2214**	2	SETSCREW (M6X1X12-MM)	
	9	1	**8L-8413**	3	STRAP-CABLE	
	10	1	**144-0331**	1	CAP-PUSH BUTTON (YELLOW)	

M-METRIC PART
Y-SEPARATE ILLUSTRATION

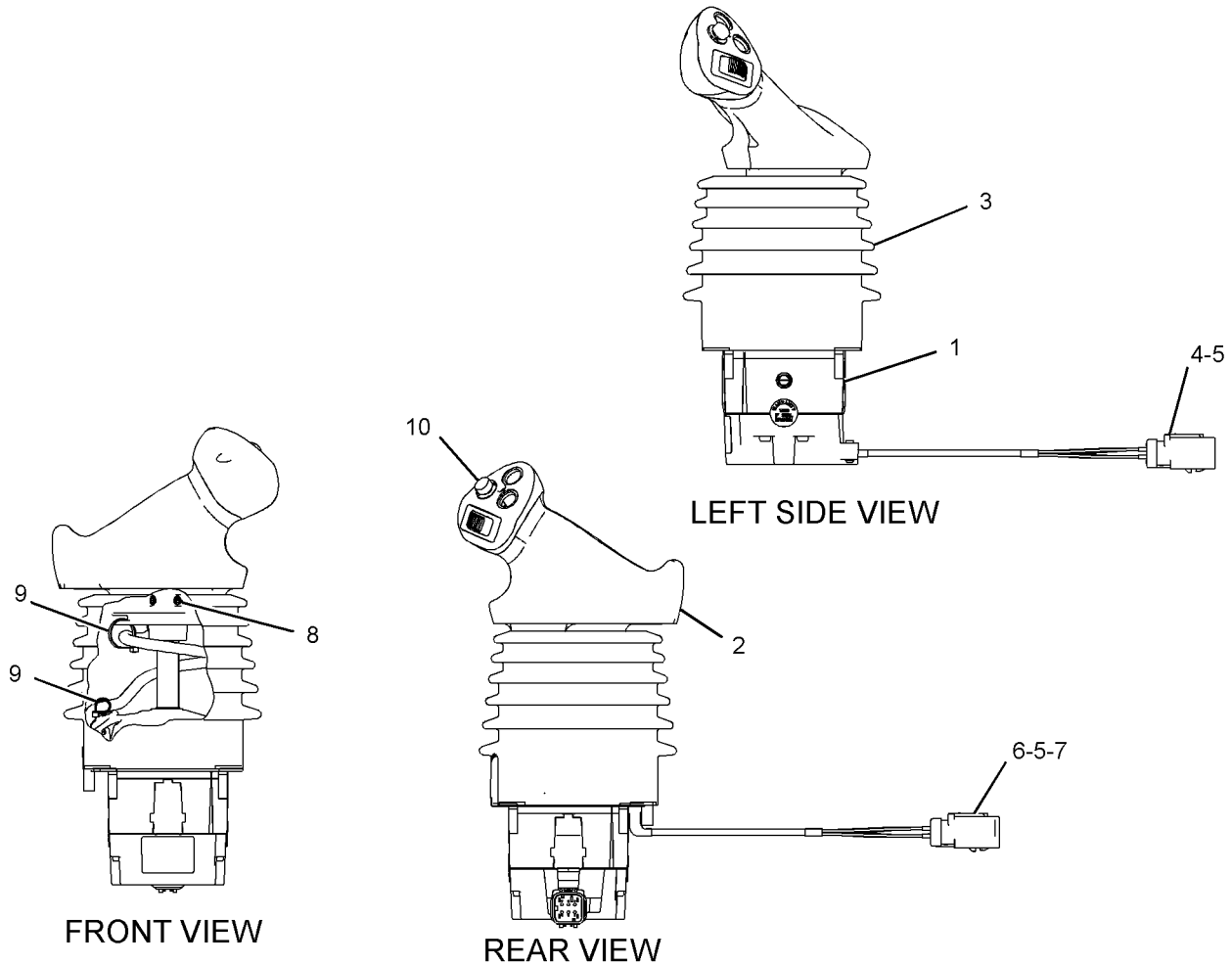

GRAPHIC #1

<END>

g01622537

OPERATOR STATION

249-9051 CONTROL GP-RIPPER

S/N: JLF1-UP; WWW1-UP; YYY1-UP
PART OF 244-7471 HYDRAULIC AR
AN ATTACHMENT

SMCS-5357 **i03603109**

NOTE	REF NO	GRAPHIC REF	PART NUMBER	QTY	PART NAME 1 2 3 4 5 6 (PRODUCT LEVEL)	SEE PAGE
	1	1	**7K-1181**	10	STRAP-CABLE	
	2	1	**165-0311**	4	PLUG	
	3	1	**249-9079**	1	PLATE AS	
	4	1	**266-9005**	1	FILM-INSTRUCTION (RIPPER CONTROL)	
	5	1	**269-7697**	1	HARNESS AS-WORK TOOL	
		1	**274-3777**	1	CAP-CONNECTOR	
		1	**9X-3401**	7	PIN-CONNECTOR (16-GA TO 18-GA)	
					—OR—	
		1	**126-1767**	7	PIN-CONNECTOR (14-GA)	
		1	**155-2265**	1	KIT-CONNECTING PLUG (8-PIN)	
		1	**155-2270**	2	KIT-CONNECTING PLUG (2-PIN)	
		1	**155-2274**	1	KIT-CONNECTING PLUG (6-PIN)	
					(EACH PLUG KIT INCLUDES PLUG AS, WEDGE & INTERFACE SEAL)	
		1	**230-4009**	2	PLUG AS-CONNECTOR (12-PIN)	
					(EACH INCLUDES)	
		1	**264-7034**	1	SEAL-CONNECTOR	
		1	**231-2296**	2	PLUG AS-CONNECTOR (8-PIN)	
					(EACH INCLUDES)	
		1	**264-7033**	1	SEAL-CONNECTOR	
		1	**8T-8737**	51	PLUG-SEAL	
		1	**102-8802**	2	KIT-RECEPTACLE (2-PIN)	
		1	**102-8806**	1	KIT-RECEPTACLE (8-PIN)	
					(EACH RECEPTACLE KIT INCLUDES RECEPTACLE AS & WEDGE)	
		1	**230-4010**	2	RECEPTACLE AS-CONNECTOR (12-PIN)	
		1	**231-2301**	1	RECEPTACLE AS-CONNECTOR (8-PIN)	
		1	**186-3736**	1	SOCKET-CONNECTOR (16-GA TO 18-GA)	
		1	**9W-0844**	2	SOCKET-CONNECTOR (14-GA)	
		1	**9X-3402**	26	SOCKET-CONNECTOR (16-GA TO 18-GA)	
		1	**180-9340**	15	SOCKET-CONNECTOR (14-GA TO 18-GA)	
E		1	**125-7874**		TUBE-HEAT SHRINK (5.72-MM DIA) (25-CM)	
Y	6	1	**307-4673**	1	CONTROL GP-HANDLE (RIPPER, WINCH)	492
	7	1	**311-0296**	1	BRACKET	
	8	1	**156-6175**	2	CLIP	
R	9	1	**300-3631**	1	CONTROL GP-UNPROGRAMMED (RIPPER)	
M	10	1	**7X-2534**	2	BOLT (M6X1X50-MM)	
M	11	1	**8T-4138**	2	BOLT (M6X1X20-MM)	
M	12	1	**9X-2045**	8	SCREW-TRUSS HEAD (M6X1X20-MM)	
	13	1	**9X-8256**	4	WASHER (6.6X12X2-MM THK)	

E-ORDER BY THE CENTIMETER
M-METRIC PART
R-REMFG PART MAY BE AVAILABLE
Y-SEPARATE ILLUSTRATION

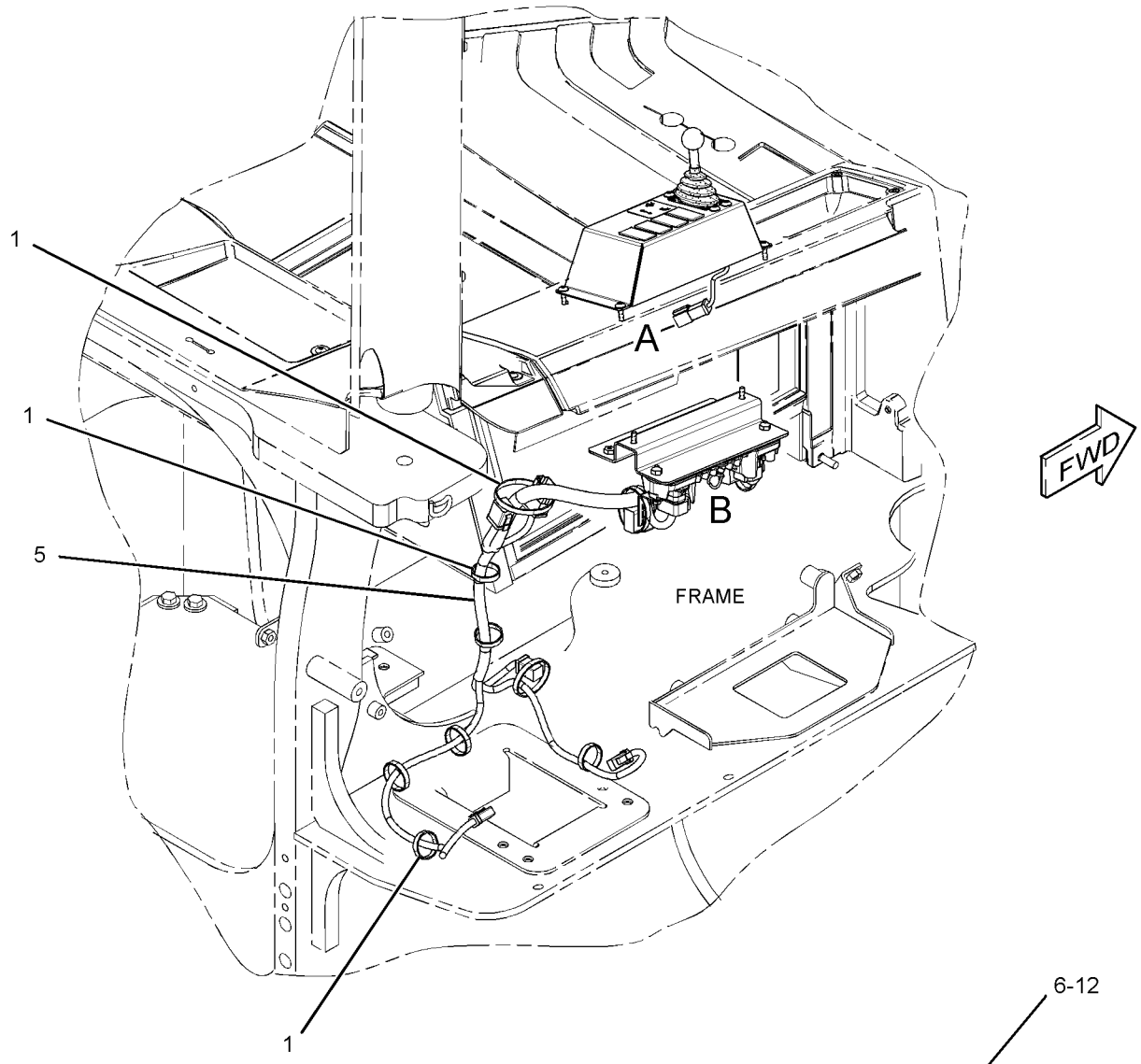

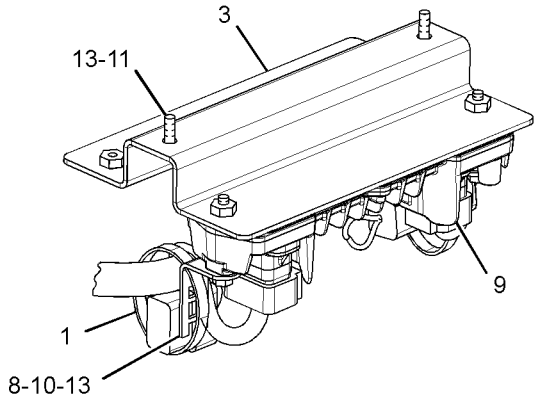

VIEW OF AREA B

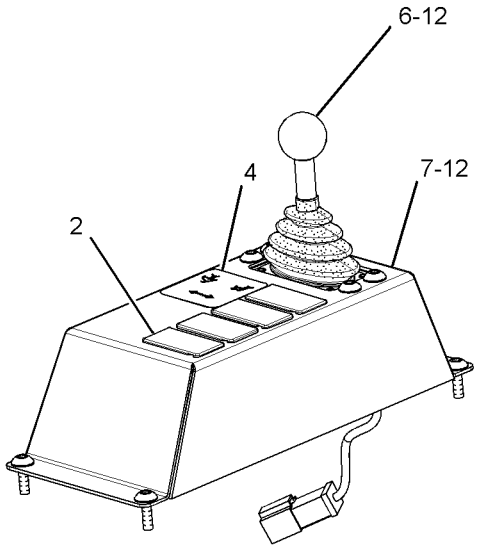

VIEW OF AREA A

GRAPHIC #1 **<END>** g01441539

OPERATOR STATION

255-4230 COVER GP-CAB—OROPS

S/N: JLF1-UP; WWW1-UP; YYY1-UP
PART OF 296-5751, 296-5753 GRADE CONTROL AR
AN ATTACHMENT

SMCS-7301 **i03292470**

NOTE	REF NO	GRAPHIC REF	PART NUMBER	QTY	PART NAME 1 2 3 4 5 6 (PRODUCT LEVEL)	SEE PAGE
	1	1	**164-0850**	1	LEVER	
	2	1	**164-8474**	4	LOUVER AS-VENT	
M	3	1	**225-3322**	1	SCREW-TRUSS HEAD (M6X1X10-MM)	
	4	1	**226-0331**	1	CAM-LOCK	
	5	1	**270-7881**	1	FILM-INSTRUCTION (BULLDOZER CONTROL)	
	6	1	**281-3964**	1	TREAD-RUBBER	
	7	1	**281-3965**	1	TREAD-RUBBER	
	8	1	**281-4004**	1	HEADLINER	
	9	1	**281-4007**	1	BRACKET AS	
	10	1	**283-9902**	1	HANDLE AS	
	11	1	**283-9909**	1	MIRROR AS	
	12	1	**284-3754**	1	FLOOR MAT-FRONT	
	13	1	**288-0884**	1	COVER-POST	
	14	1	**311-5950**	1	FLOOR MAT-REAR	
	15	1	**314-3001**	1	DASH AS	
M		1	**297-1465**	9	INSERT-THREADED (M5X0.8-THD)	
M		1	**297-1466**	14	INSERT-THREADED (M6X1-THD)	
	16	1	**314-3002**	1	CONSOLE AS (RH)	
M		1	**297-1466**	11	INSERT-THREADED (M6X1-THD)	
Y	17	1	**314-3004**	1	CONSOLE GP (LH)	484
	18	1	**314-3009**	1	PLATE	
	19	1	**314-3016**	1	PLATE	
	20	1	**314-3017**	1	PLATE	
	21	1	**314-3019**	1	GUARD GP-VANDALISM	
	22	1	**314-3020**	1	PLATE	
	23	1	**314-3021**	1	PLATE	
	24	1	**314-3025**	2	THUMBSCREW	
M	25	1	**128-2136**	4	SCREW-TRUSS HEAD (M6X1X16-MM)	
	26	1	**198-9706**	4	SCREW-TRUSS HEAD (M5X0.8X16-MM)	
	27	1	**275-6710**	2	RETAINER (PUSH ON)	
M	28	1	**5C-9553**	4	BOLT (M6X1X16-MM)	
	29	1	**5P-4115**	4	WASHER-HARD (7.2X19X2-MM THK)	
J	30	1	**5P-9000**	1	LOCK AS-CYLINDER	
	31	1	**7X-7729**	13	WASHER (11X25X3-MM THK)	
	32	1	**8T-4121**	1	WASHER-HARD (11X21X2.5-MM THK)	
M	33	1	**8T-4133**	2	NUT (M10X1.5-THD)	
M	34	1	**8T-4186**	7	BOLT (M10X1.5X40-MM)	
	35	1	**8T-4205**	1	WASHER-HARD (7.2X14.5X2-MM THK)	
	36	1	**8T-4223**	1	WASHER-HARD (13.5X25.5X3-MM THK)	
M	37	1	**9X-2040**	7	SCREW-TRUSS HEAD (M10X1.5X25-MM)	
M	38	1	**9X-2042**	7	SCREW-TRUSS HEAD (M6X1X12-MM)	
M	39	1	**9X-2045**	6	SCREW-TRUSS HEAD (M6X1X20-MM)	
	40	1	**9X-6165**	2	WASHER (6.5X22X2.5-MM THK)	
E	41	1	**3E-3892**		SEAL (28-CM)	
E	42	1	**8C-7332**		TRIM-EDGE (29-CM)	
	43	1	**325-0701**	1	BRACKET	

E-ORDER BY THE CENTIMETER
J-REQUIRES CORPORATE KEY
M-METRIC PART
Y-SEPARATE ILLUSTRATION

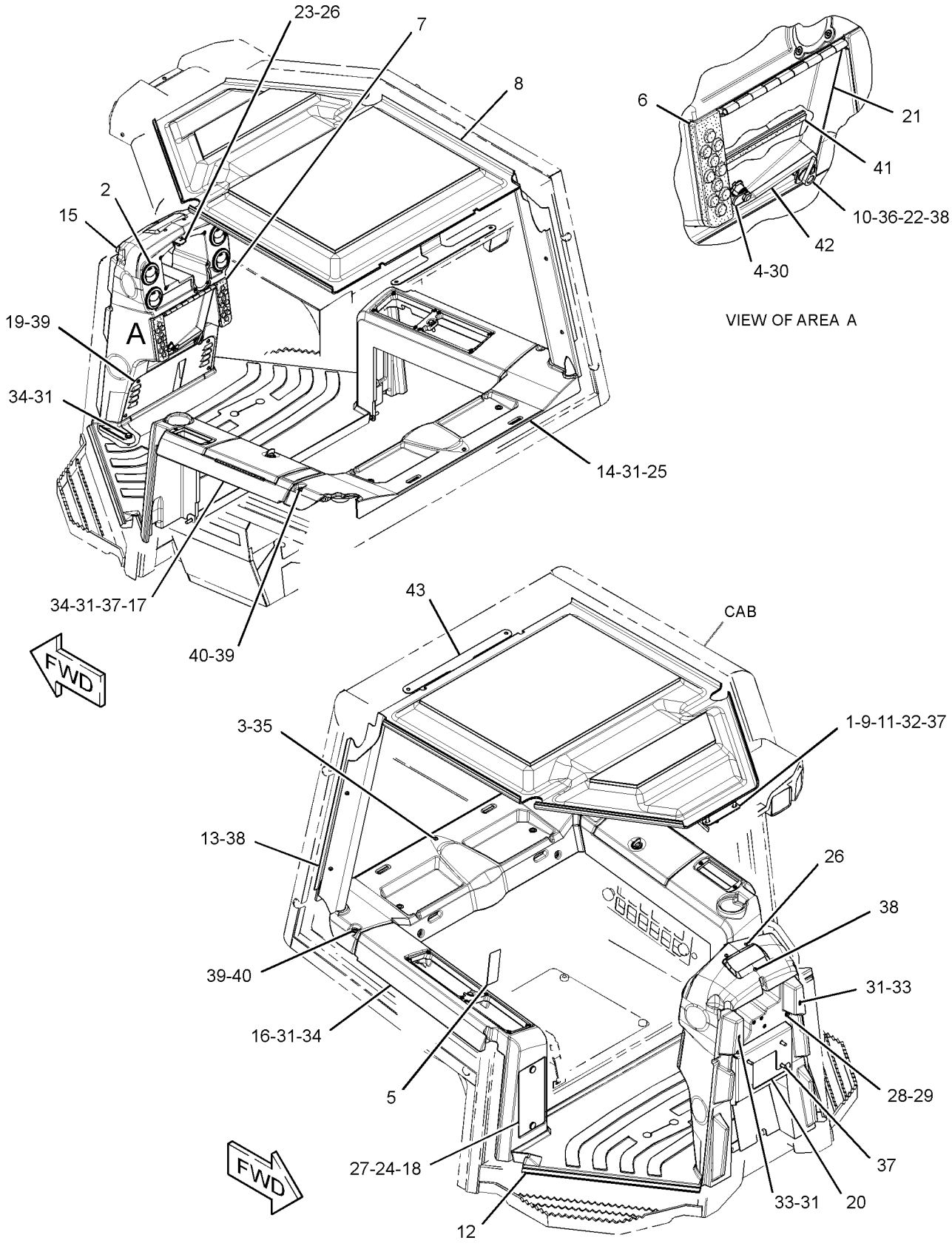

GRAPHIC #1

<END>

g01733073

OPERATOR STATION

255-4231 COVER GP-CAB—EROPS

S/N: JLF1-UP; WWW1-UP; YYY1-UP
PART OF 296-5752, 296-5754 GRADE CONTROL AR
AN ATTACHMENT

SMCS-7301 **i03586761**

NOTE	REF NO	GRAPHIC REF	PART NUMBER	QTY	PART NAME 1 2 3 4 5 6 (PRODUCT LEVEL)	SEE PAGE
	1	1	**110-0885**	1	BUMPER	
	2	1	**154-7951**	12	SPACER	
	3	1	**164-0850**	1	LEVER	
	4	1	**164-8474**	8	LOUVER AS-VENT	
	5	1	**188-8846**	1	LATCH AS	
M	6	1	**225-3322**	1	SCREW-TRUSS HEAD (M6X1X10-MM)	
	9	1	**254-3206**	1	FLOOR MAT-REAR	
	10	1	**255-4233**	1	HEADLINER	
	11	1	**255-8384**	1	COVER-RADIO	
	12	1	**255-8386**	1	COVER	
	13	1	**270-7881**	1	FILM-INSTRUCTION (BULLDOZER CONTROL)	
	14	1	**281-3964**	1	TREAD-RUBBER	
	15	1	**281-3965**	1	TREAD-RUBBER	
	16	1	**281-4007**	1	BRACKET AS	
	17	1	**283-9909**	1	MIRROR AS	
	18	1	**284-3753**	1	MAT-REAR	
	19	1	**284-3754**	1	FLOOR MAT-FRONT	
	20	1	**288-0884**	1	COVER-POST	
	21	1	**314-3000**	1	DASH AS	
M		1	**297-1465**	7	INSERT-THREADED (M5X0.8-THD)	
M		1	**297-1466**	14	INSERT-THREADED (M6X1-THD)	
	22	1	**314-3002**	1	CONSOLE AS (RH)	
M		1	**297-1466**	11	INSERT-THREADED (M6X1-THD)	
Y	23	1	**314-3003**	1	CONSOLE GP (LH)	482
	24	1	**314-3009**	1	PLATE	
	25	1	**314-3016**	1	PLATE	
	26	1	**314-3017**	1	PLATE	
	27	1	**314-3018**	1	BOX AS	
	28	1	**314-3022**	1	BOX AS-STORAGE	
	29	1	**314-3023**	1	PLATE AS	
M		1	**8T-3612**	1	NUT-WELD (M8X1.25-THD)	
	30	1	**314-3025**	2	THUMBSCREW (M6X1X16-MM)	
M	31	1	**127-2170**	15	SCREW-TRUSS HEAD (M8X1.25X20-MM)	
M	32	1	**128-2136**	6	SCREW-TRUSS HEAD (M6X1X16-MM)	
	33	1	**275-6710**	2	RETAINER	
M	34	1	**5C-9553**	4	BOLT (M6X1X16-MM)	
	35	1	**5P-4115**	4	WASHER-HARD (7.2X19X2-MM THK)	
	36	1	**7X-7729**	15	WASHER (11X25X3-MM THK)	
	37	1	**8T-4121**	1	WASHER-HARD (11X21X2.5-MM THK)	
M	38	1	**8T-4133**	2	NUT (M10X1.5-THD)	
M	39	1	**8T-4186**	7	BOLT (M10X1.5X40-MM)	
	40	1	**8T-4205**	1	WASHER-HARD (7.2X14.5X2-MM THK)	
	41	1	**104-2091**	4	SCREW-FLAT HEAD (NO 6X0.5-IN)	
M	42	1	**9X-2040**	7	SCREW-TRUSS HEAD (M10X1.5X25-MM)	
M	43	1	**9X-2042**	10	SCREW-TRUSS HEAD (M6X1X12-MM)	
M	44	1	**9X-2045**	11	SCREW-TRUSS HEAD (M6X1X20-MM)	
	45	1	**9X-6165**	2	WASHER (6.5X22X2.5-MM THK)	
D	46	1	**5P-5639**		SEAL (0.1-M)	
D	47	1	**5P-5969**		SEAL (0.3-M)	
	48	1	**198-9706**	2	SCREW-TRUSS HEAD (M5X0.8X16-MM)	
	49	1	**8Y-6388**	2	LOUVER AS-VENT	

D-ORDER BY THE METER
M-METRIC PART
Y-SEPARATE ILLUSTRATION

255-4231 **COVER GP-CAB** *(contd.)* **i03586761**

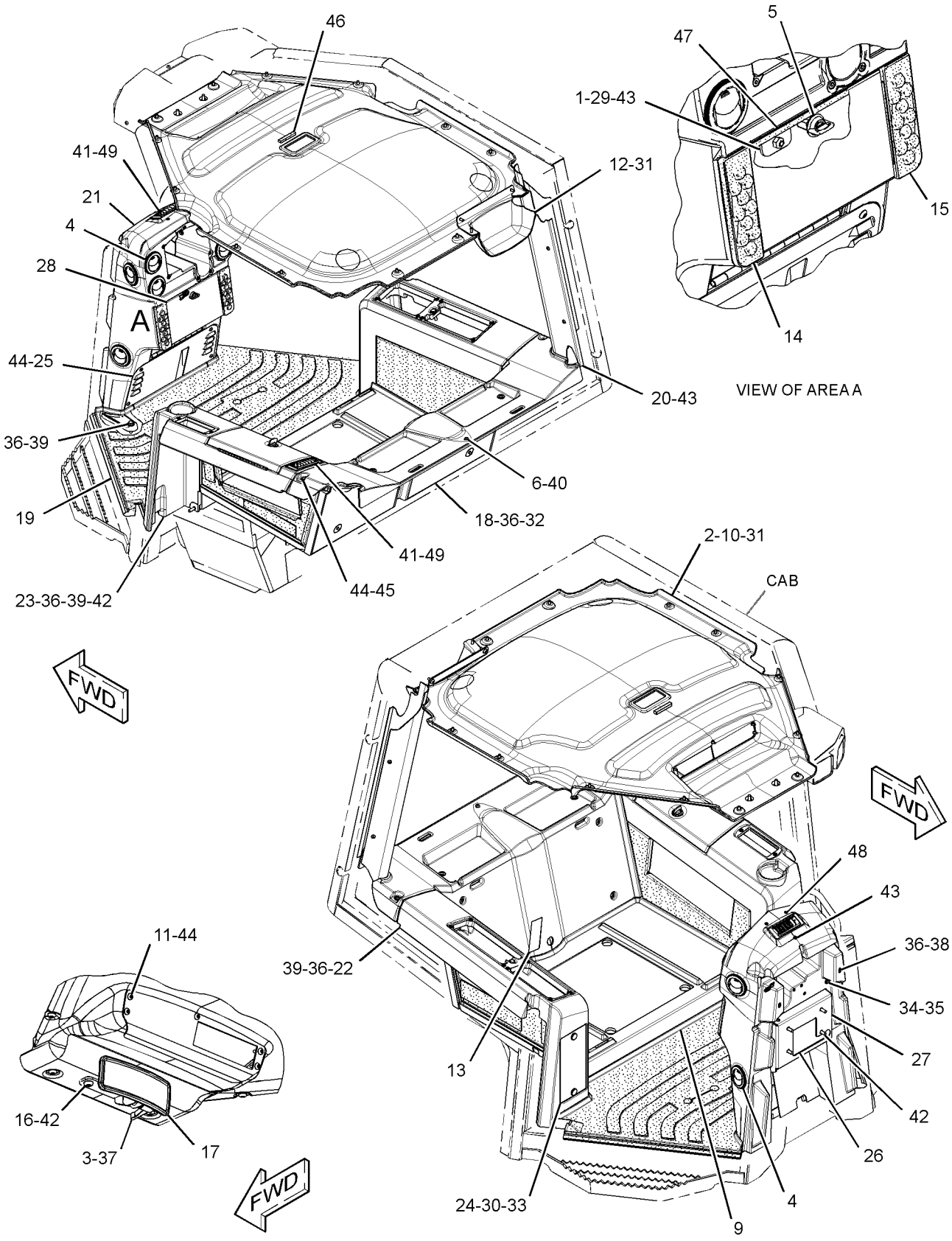

GRAPHIC #1 **<END>** g01864003

OPERATOR STATION

285-0331 COVER GP-CAB—EROPS

S/N: JLF1-UP; WWW1-UP; YYY1-UP
PART OF 296-5756 GRADE CONTROL AR
AN ATTACHMENT

SMCS-7301 **i02882860**

NOTE	REF NO	GRAPHIC REF	PART NUMBER	QTY	PART NAME 1 2 3 4 5 6 (PRODUCT LEVEL)	SEE PAGE
	1	1	**154-7951**	12	SPACER	
	2	2	**164-8474**	8	LOUVER AS-VENT	
M	3	1	**225-3322**	1	SCREW-TRUSS HEAD (M6X1X10-MM)	
	4	1	**314-3009**	1	PLATE	
	5	2	**198-9706**	2	SCREW-TRUSS HEAD (M5X0.8X16-MM)	
	6	1,2	**104-2091**	4	SCREW-FLAT HEAD (NO 6X0.5-IN)	
	7	1	**254-3206**	1	FLOOR MAT-REAR	
	8	1	**255-4233**	1	HEADLINER	
	9	2	**255-8384**	1	COVER-RADIO	
	10	1	**255-8386**	1	COVER (WIPER)	
	11	1	**272-5584**	1	FILM-INSTRUCTION (BULLDOZER CONTROL)	
	12	2	**314-3016**	1	PLATE	
	13	1	**314-3017**	1	PLATE	
	14	2	**314-3018**	1	BOX AS	
	15	2	**314-3024**	1	PLATE	
	16	1	**314-3002**	1	CONSOLE AS (RH)	
M		1	**297-1466**	11	INSERT-THREADED (M6X1-THD)	
Y	17	1	**314-3003**	1	CONSOLE GP (LH)	482
	18	1	**284-3753**	1	MAT-REAR	
	19	1	**284-3754**	1	FLOOR MAT-FRONT	
	20	1	**288-0884**	1	COVER-POST	
	21	2	**281-4007**	1	BRACKET AS	
	22	1	**314-3025**	2	THUMBSCREW	
	23	2	**314-3000**	1	DASH AS	
M		2	**297-1465**	7	INSERT-THREADED (M5X0.8-THD)	
M		2	**297-1466**	14	INSERT-THREADED (M6X1-THD)	
M	24	1	**127-2170**	15	SCREW-TRUSS HEAD (M8X1.25X20-MM)	
M	25	1	**128-2136**	6	SCREW-TRUSS HEAD (M6X1X16-MM)	
	26	1	**275-6710**	2	RETAINER	
	27	1	**9X-6165**	2	WASHER (6.5X22X2.5-MM THK)	
	28	1,2	**7X-7729**	15	WASHER (11X25X3-MM THK)	
	29	2	**283-9909**	1	MIRROR AS	
M	30	1	**8T-4133**	2	NUT (M10X1.5-THD)	
M	31	1,2	**8T-4186**	7	BOLT (M10X1.5X40-MM)	
M	32	1	**5C-9553**	4	BOLT (M6X1X16-MM)	
	33	1	**5P-4115**	4	WASHER-HARD (7.2X19X2-MM THK)	
	34	1,2	**8Y-6388**	2	LOUVER AS-VENT	
M	35	1,2	**9X-2040**	7	SCREW-TRUSS HEAD (M10X1.5X25-MM)	
M	36	1,2	**9X-2042**	7	SCREW-TRUSS HEAD (M6X1X12-MM)	
M	37	1,2	**9X-2045**	11	SCREW-TRUSS HEAD (M6X1X20-MM)	
D	38	1	**5P-5639**		SEAL (0.1-M)	
E	39	2	**8C-7332**		TRIM-EDGE (28-CM EACH)	
	40	2	**164-0850**	1	LEVER	
	41	2	**8T-4121**	1	WASHER-HARD (11X21X2.5-MM THK)	
	42	1	**8T-4205**	1	WASHER-HARD (7.2X14.5X2-MM THK)	

D-ORDER BY THE METER
E-ORDER BY THE CENTIMETER
M-METRIC PART
Y-SEPARATE ILLUSTRATION

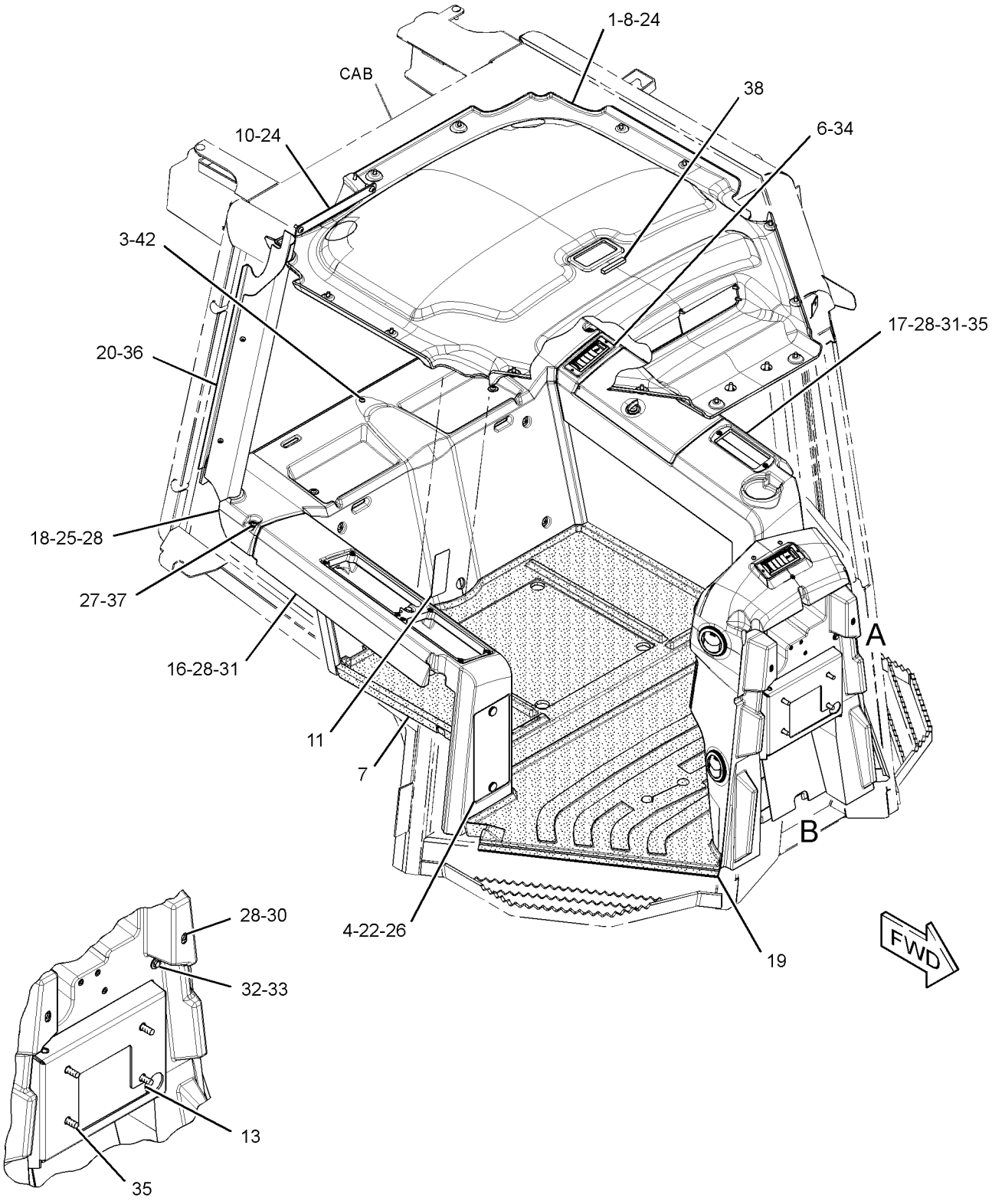

VIEW OF AREA A

REFER TO ALL ILLUSTRATIONS OF THIS GROUP FOR AUXILIARY VIEWS

GRAPHIC #1

g01743053

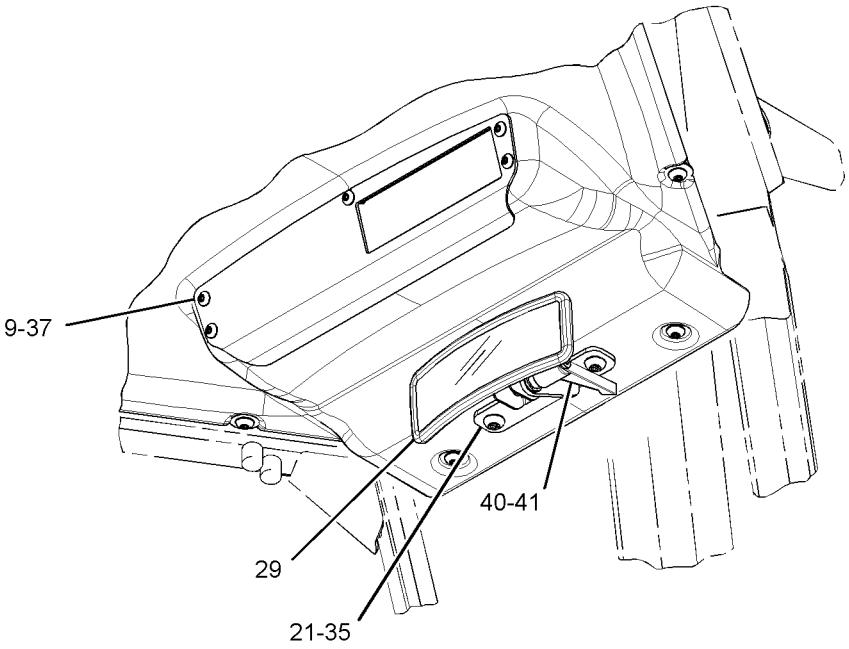

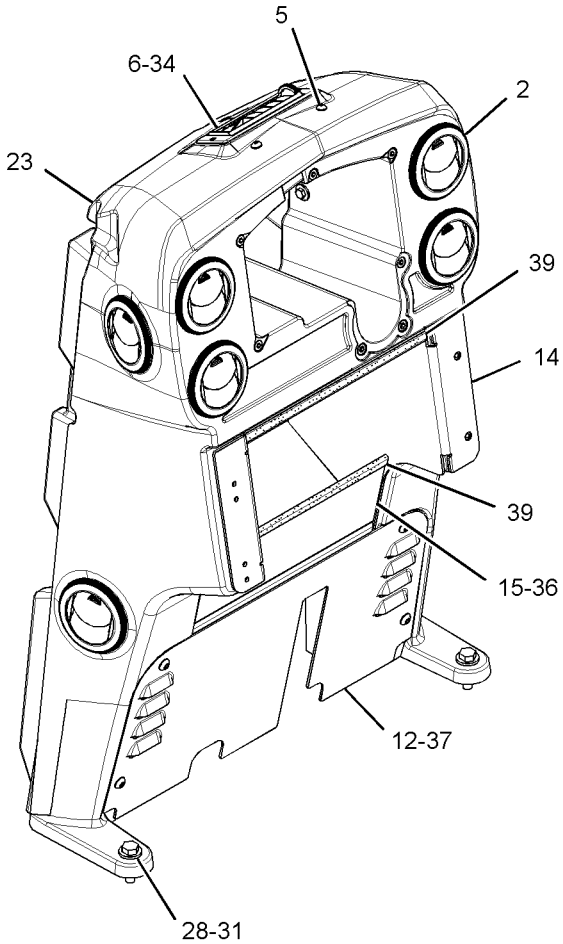



VIEW OF AREA B 

GRAPHIC #2 **<END>** g01743075

OPERATOR STATION

269-7665 COVER GP-CONSOLE–STANDARD

S/N: JLF1-UP; WWW1-UP; YYY1-UP
PART OF 244-7470 HYDRAULIC AR
AN ATTACHMENT

SMCS-5258 **i03630961**

NOTE	REF NO	GRAPHIC REF	PART NUMBER	QTY	PART NAME 1 2 3 4 5 6 (PRODUCT LEVEL)	SEE PAGE
	1	1	**251-4056**	1	PLATE	
M	2	1	**9X-2045**	4	SCREW-TRUSS HEAD (M6X1X20-MM)	

M-METRIC PART

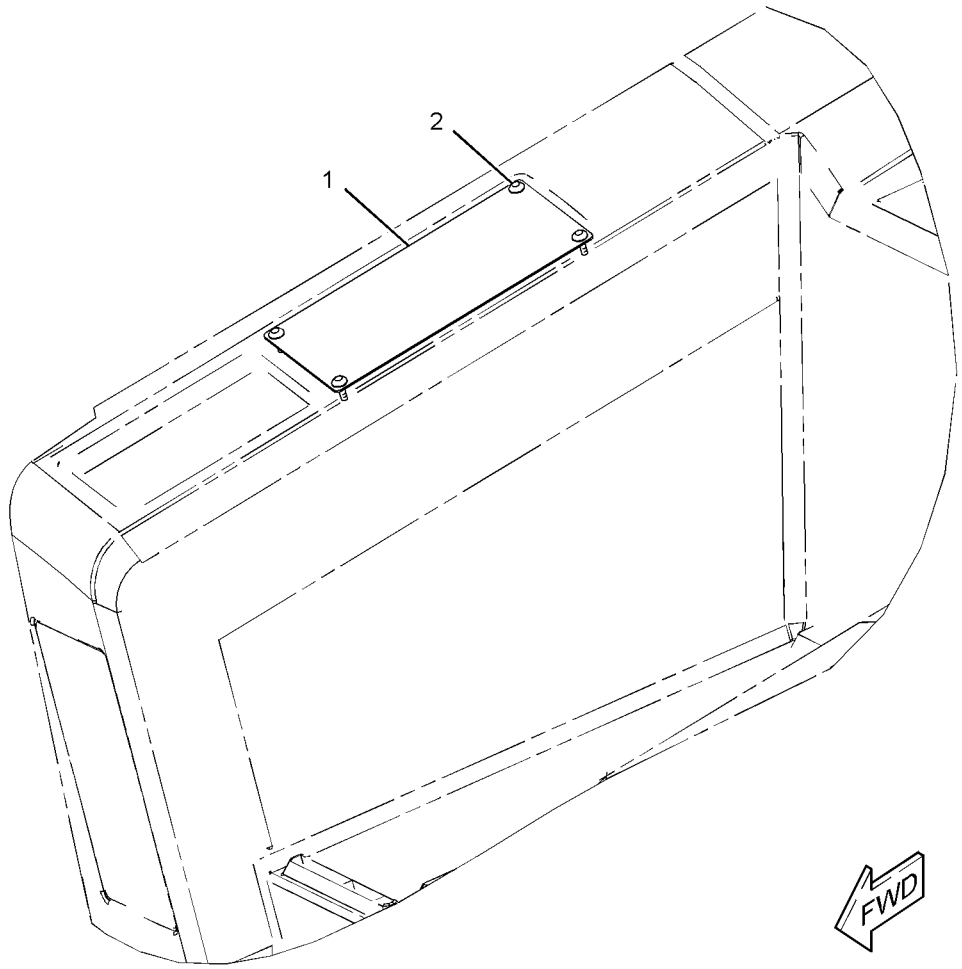

GRAPHIC #1 **<END>** g01948602

OPERATOR STATION

285-0330 COVER GP-CONSOLE–OROPS

S/N: JLF1-UP; WWW1-UP; YYY1-UP
PART OF 296-5755 GRADE CONTROL AR
AN ATTACHMENT

SMCS-5258 **i03603120**

NOTE	REF NO	GRAPHIC REF	PART NUMBER	QTY	PART NAME 1 2 3 4 5 6 (PRODUCT LEVEL)	SEE PAGE
	1	1	**164-0850**	1	LEVER	
	2	1	**164-8474**	4	LOUVER AS-VENT	
M	3	1	**225-3322**	1	SCREW-TRUSS HEAD (M6X1X10-MM)	
	4	1	**226-0331**	1	CAM-LOCK	
	5	1	**314-3009**	1	PLATE	
	7	1	**314-3015**	1	PLATE	
	8	1	**272-5584**	1	FILM-INSTRUCTION (BULLDOZER CONTROL)	
	9	1	**314-3016**	1	PLATE	
	10	1	**314-3017**	1	PLATE	
	11	1	**314-3019**	1	GUARD GP-VANDALISM	
	12	1	**314-3021**	1	PLATE	
	13	1	**281-4004**	1	HEADLINER	
	14	1	**281-4007**	1	BRACKET AS	
	15	1	**283-9902**	1	HANDLE AS	
	16	1	**283-9909**	1	MIRROR AS	
	17	1	**314-3002**	1	CONSOLE AS (RH)	
M		1	**297-1466**	11	INSERT-THREADED (M6X1-THD)	
	18	1	**311-5950**	1	FLOOR MAT-REAR	
	19	1	**284-3754**	1	FLOOR MAT-FRONT	
	20	1	**288-0884**	1	COVER-POST	
	21	1	**314-3025**	2	THUMBSCREW (M6X1X16-MM)	
Y	22	1	**314-3004**	1	CONSOLE GP (LH)	484
	23	1	**314-3001**	1	DASH AS	
M		1	**297-1465**	11	INSERT-THREADED (M5X0.8-THD)	
M		1	**297-1466**	13	INSERT-THREADED (M6X1-THD)	
M	24	1	**128-2136**	4	SCREW-TRUSS HEAD (M6X1X16-MM)	
	25	1	**198-9706**	4	SCREW-TRUSS HEAD (M5X0.8X16-MM)	
	26	1	**275-6710**	2	RETAINER	
M	28	1	**5C-9553**	4	BOLT (M6X1X16-MM)	
	29	1	**5P-4115**	4	WASHER-HARD (7.2X19X2-MM THK)	
J	30	1	**5P-9000**	1	LOCK AS-CYLINDER	
	31	1	**7X-7729**	13	WASHER (11X25X3-MM THK)	
	32	1	**8T-4121**	1	WASHER-HARD (11X21X2.5-MM THK)	
M	33	1	**8T-4133**	2	NUT (M10X1.5-THD)	
M	34	1	**8T-4186**	7	BOLT (M10X1.5X40-MM)	
	35	1	**8T-4223**	1	WASHER-HARD (13.5X25.5X3-MM THK)	
M	36	1	**9X-2040**	7	SCREW-TRUSS HEAD (M10X1.5X25-MM)	
M	37	1	**9X-2042**	7	SCREW-TRUSS HEAD (M6X1X12-MM)	
M	38	1	**9X-2045**	6	SCREW-TRUSS HEAD (M6X1X20-MM)	
E	39	1	**8C-7332**		TRIM-EDGE (29-CM)	
	40	1	**9X-6165**	2	WASHER (6.5X22X2.5-MM THK)	
	41	1	**8T-4205**	1	WASHER-HARD (7.2X14.5X2-MM THK)	
	42	1	**325-0701**	1	BRACKET	

E-ORDER BY THE CENTIMETER
J-REQUIRES CORPORATE KEY
M-METRIC PART
Y-SEPARATE ILLUSTRATION

285-0330 **COVER GP-CONSOLE** *(contd.)* **i03603120**

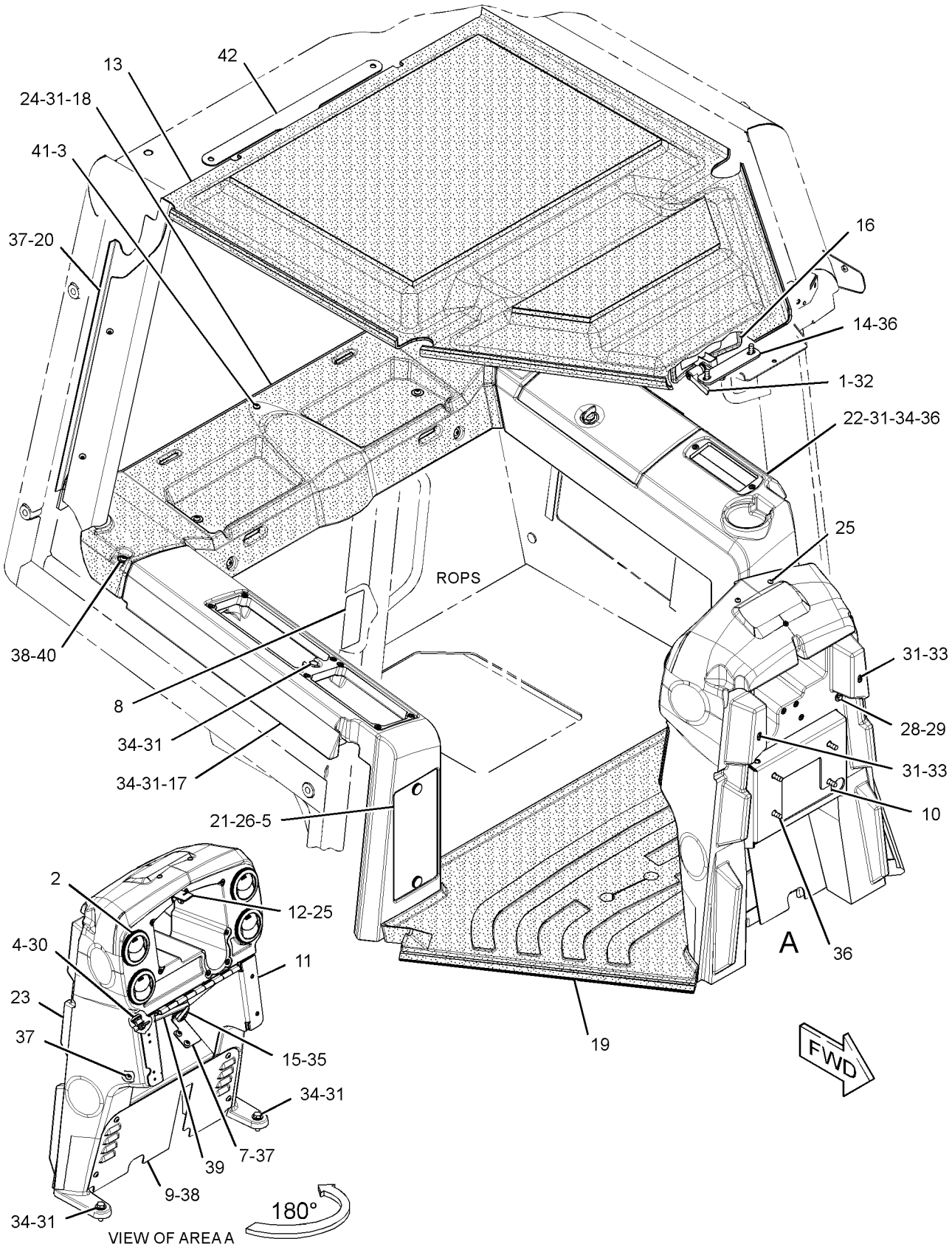

GRAPHIC #1 **<END>** g01734914

OPERATOR STATION

286-0134 DISPLAY GP-MONITOR—CD700

S/N: JLF1-UP; WWW1-UP; YYY1-UP

PART OF 290-5570, 290-5571, 292-0279, 292-0280 GRADE CONTROL AR-SATELLITE

SMCS-7490 **i03622974**

NOTE	PART NUMBER	QTY	PART NAME 1 2 3 4 5 6 (PRODUCT LEVEL)	SEE PAGE
R	**244-1716**	1	DISPLAY GP-MONITOR (CD700)	
	283-4426	1	CARD AS-MEMORY (FLASH)	
	194-8031	1	ADAPTER (COMPACT)	
M	**8T-4171**	6	BOLT (M6X1X12-MM)	
	292-0311	1	CASE-CARRYING	
M	**8T-0285**	6	SCREW-MACHINE (M4X0.7X12-MM)	
	9X-8256	6	WASHER (6.6X12X2-MM THK)	
	096-6166	6	WASHER-HARD (4.5X9X1-MM THK)	

M-METRIC PART
R-REMFG PART MAY BE AVAILABLE

<END>

292-0309 DISPLAY GP-MONITOR—CD610

S/N: JLF1-UP; WWW1-UP; YYY1-UP

PART OF 292-0293, 292-0312 GRADE CONTROL AR-LASER

SMCS-7490 **i03335060**

NOTE	PART NUMBER	QTY	PART NAME 1 2 3 4 5 6 (PRODUCT LEVEL)	SEE PAGE
	283-9530	1	DISPLAY GP-MONITOR (CD610)	
M	**7X-2619**	6	BOLT (M6X1X10-MM)	
	292-0311	1	CASE-CARRYING	
	8T-4205	6	WASHER-HARD (7.2X14.5X2-MM THK)	

M-METRIC PART

<END>

OPERATOR STATION

255-4271 DOOR GP-CAB—RH

S/N: JLF1-UP; WWW1-UP; YYY1-UP
PART OF 244-7475 ROPS AR, 282-4898 ROPS AR-ENCLOSED
AN ATTACHMENT

SMCS-7308 **i03588481**

NOTE	REF NO	GRAPHIC REF	PART NUMBER	QTY	PART NAME 1 2 3 4 5 6 (PRODUCT LEVEL)	SEE PAGE
	1	1	**320-8448**	2	CAP-NUT	
	2	1	**249-9061**	1	HARNESS AS-SWITCH (DOOR, RH)	
		1	**9W-0852**	4	PIN-CONNECTOR (14-GA)	
		1	**230-5008**	1	PLUG AS-CONNECTOR (4-PIN)	
		1	**264-7031**	1	SEAL-CONNECTOR	
		1	**9X-3402**	4	SOCKET-CONNECTOR (16-GA TO 18-GA)	
J	3	1	**252-1862**	1	HANDLE AS (PULL)	
	4	1	**252-1863**	1	GASKET	
	5	1	**255-4256**	1	STRIKER AS (RH)	
Y	6	1	**261-7993**	1	MOTOR GP-WINDOW WIPER	541
	7	1	**262-1997**	1	ARM GP-WINDOW WIPER (DOOR, RH)	
		1	**305-9192**	1	NOZZLE AS-WASHER	
	8	1	**266-9299**	1	FRAME AS-DOOR (RH)	
M		1	**6V-9632**	6	NUT-WELD (M6X1-THD)	
M		1	**8T-3597**	6	NUT-WELD (M12X1.75-THD)	
	9	1	**266-9303**	1	COVER	
	10	1	**269-2887**	1	LATCH AS-DOOR (ROTARY)	
	11	1	**269-2890**	1	CLEVIS	
	12	1	**269-2892**	2	PIN	
	13	1	**272-1622**	1	ROD AS	
		1	**108-5471**	1	CLEVIS	
	14	1	**272-1623**	1	BELLCRANK AS	
E	15	1	**133-3234**		SEAL (420-CM)	
	16	1	**281-4002**	1	PLUG	
	17	1	**281-4136**	1	COVER-LATCH (RH)	
	18	1	**281-4140**	1	WINDOW (DOOR, RH)	
	19	1	**287-0548**	1	STICKER-DOOR SEAL	
	20	1	**125-8175**	1	BLADE AS-WIPER (450-MM) (DOOR, RH)	
M	21	1	**131-3540**	2	LOCKNUT (M8X1.25-THD)	
	22	1	**102-8804**	1	KIT-RECEPTACLE (4-PIN)	
					(INCLUDES RECEPTACLE AS & WEDGE)	
	24	1	**4D-0012**	1	GROMMET	
	25	1	**4E-1384**	1	BUMPER-CONICAL (STUD)	
M	26	1	**5C-7261**	1	NUT (M8X1.25-THD)	
	27	1	**5P-1076**	6	WASHER-HARD (13.5X30X4-MM THK)	
	28	1	**5P-8441**	1	GROMMET	
	29	1	**6V-7636**	1	PIN AS-SPRING	
M	30	1	**8C-6802**	4	SCREW-FLAT HEAD (6X1X26.3-MM)	
M	31	1	**8T-4183**	6	BOLT (M12X1.75X40-MM)	
	32	1	**8T-4224**	2	WASHER-HARD (8.8X16X2-MM THK)	
M	33	1	**8T-4971**	3	BOLT (M6X1X30-MM)	
	34	1	**8T-5400**	1	CONNECTOR AS	
	35	1	**8T-6902**	2	CLIP	
M	36	1	**9X-2042**	3	SCREW-TRUSS HEAD (M6X1X12-MM)	
M	37	1	**9X-2045**	5	SCREW-TRUSS HEAD (M6X1X20-MM)	
	38	1	**9X-8267**	3	WASHER (6.6X12X2-MM THK)	
E	39	1	**144-0195**		HOSE (26-CM)	
	40	1	**7K-1181**	1	STRAP-CABLE	

E-ORDER BY THE CENTIMETER
J-REQUIRES CORPORATE KEY
M-METRIC PART
Y-SEPARATE ILLUSTRATION

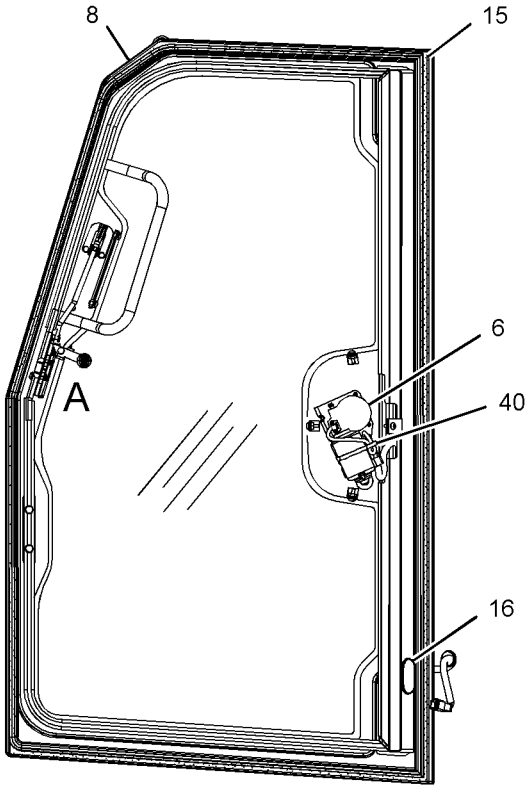

LEFT SIDE VIEW
(COVERS REMOVED FOR CLARITY)

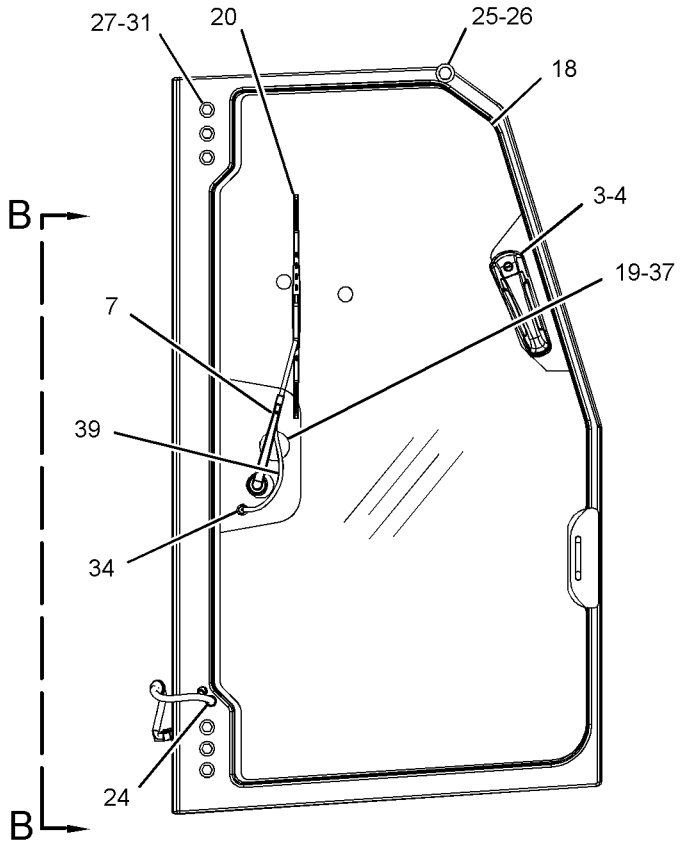

RIGHT SIDE VIEW

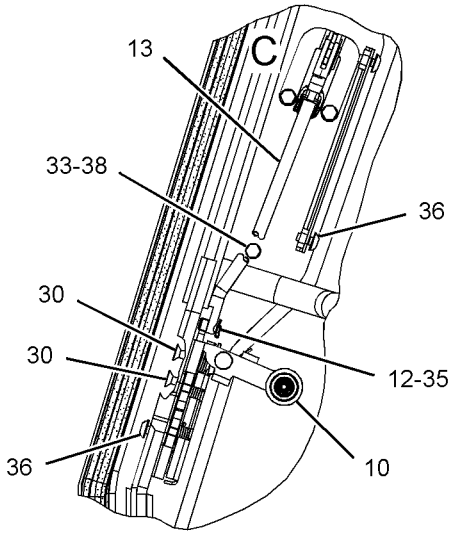

VIEW OF AREA A

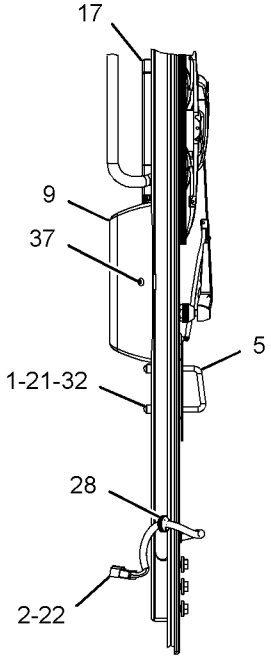

VIEW B-B

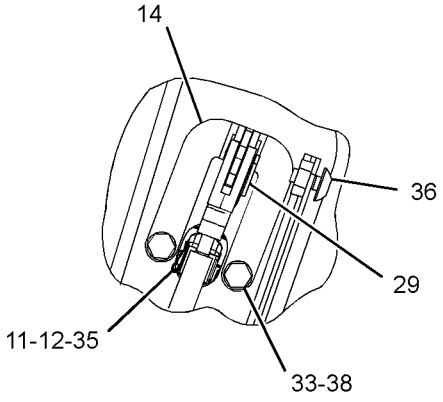

VIEW OF AREA C

GRAPHIC #1 **<END>** g01657556

OPERATOR STATION

255-4272 DOOR GP-CAB—LH

S/N: JLF1-UP; WWW1-UP; YYY1-UP
PART OF 244-7475 ROPS AR, 282-4898 ROPS AR-ENCLOSED
AN ATTACHMENT

SMCS-7308 **i03635054**

NOTE	REF NO	GRAPHIC REF	PART NUMBER	QTY	PART NAME 1 2 3 4 5 6 (PRODUCT LEVEL)	SEE PAGE
	1	1	**320-8448**	2	CAP-NUT	
	2	2	**247-6613**	1	FRAME AS-DOOR (LH)	
M		1	**6V-9632**	6	NUT-WELD (M6X1-THD)	
M		1	**8T-3597**	6	NUT-WELD (M12X1.75-THD)	
	3	2	**249-9060**	1	HARNESS AS-SWITCH (DOOR, LH)	
		2	**9W-0852**	4	PIN-CONNECTOR (14-GA)	
		2	**230-5008**	1	PLUG AS-CONNECTOR (4-PIN)	
		2	**264-7031**	1	SEAL-CONNECTOR	
		2	**9X-3402**	4	SOCKET-CONNECTOR (16-GA TO 18-GA)	
J	4	1	**252-1862**	1	HANDLE AS	
	5	1	**252-1863**	1	GASKET	
	6	1	**255-4255**	1	STRIKER AS (LH)	
Y	7	2	**261-7992**	1	MOTOR GP-WINDOW WIPER	540
	8	1	**262-1998**	1	ARM GP-WINDOW WIPER (DOOR, LH)	
		1	**305-9192**	1	NOZZLE AS-WASHER	
	9	2	**266-9303**	1	COVER	
	10	2	**269-2888**	1	LINK GP-ADJUSTABLE	
		2	**108-5471**	1	CLEVIS	
	11	2	**269-2890**	1	CLEVIS	
	12	2	**269-2892**	2	PIN	
	13	2	**272-1623**	1	BELLCRANK AS	
	14	2	**133-3234**	1	SEAL	
	15	2	**281-4002**	1	PLUG	
	16	2	**281-4137**	1	COVER-LATCH	
	17	1	**281-4141**	1	WINDOW	
	18	1	**287-0548**	1	STICKER-DOOR SEAL	
	19	1	**125-8175**	1	BLADE AS-WIPER (450-MM) (DOOR, LH)	
M	20	1	**131-3540**	2	LOCKNUT (M8X1.25-THD)	
	21	2	**269-2886**	1	LATCH AS-DOOR (ROTARY)	
	22	2	**102-8804**	1	KIT-RECEPTACLE (4-PIN)	
					(INCLUDES RECEPTACLE AS & WEDGE)	
	24	1	**4D-0012**	1	GROMMET	
	25	2	**4E-1384**	1	BUMPER-CONICAL	
M	26	2	**5C-7261**	1	NUT (M8X1.25-THD)	
	27	1	**5P-1076**	6	WASHER-HARD (13.5X30X4-MM THK)	
	28	2	**5P-8441**	1	GROMMET	
	29	2	**6V-7636**	1	PIN AS-SPRING	
M	30	2	**8C-6802**	4	SCREW-FLAT HEAD (6X1X26.3-MM)	
M	31	1	**8T-4183**	6	BOLT (M12X1.75X40-MM)	
	32	1	**8T-4224**	2	WASHER-HARD (8.8X16X2-MM THK)	
M	33	2	**8T-4971**	3	BOLT (M6X1X30-MM)	
	34	1	**8T-5400**	1	CONNECTOR AS	
	35	2	**8T-6902**	2	CLIP	
M	36	2	**9X-2042**	3	SCREW-TRUSS HEAD (M6X1X12-MM)	
M	37	1,2	**9X-2045**	5	SCREW-TRUSS HEAD (M6X1X20-MM)	
	38	2	**9X-8267**	3	WASHER (6.6X12X2-MM THK)	
E	39	1	**144-0195**		HOSE (26-CM)	
	40	2	**7K-1181**	1	STRAP-CABLE	

E-ORDER BY THE CENTIMETER
J-REQUIRES CORPORATE KEY
M-METRIC PART
Y-SEPARATE ILLUSTRATION

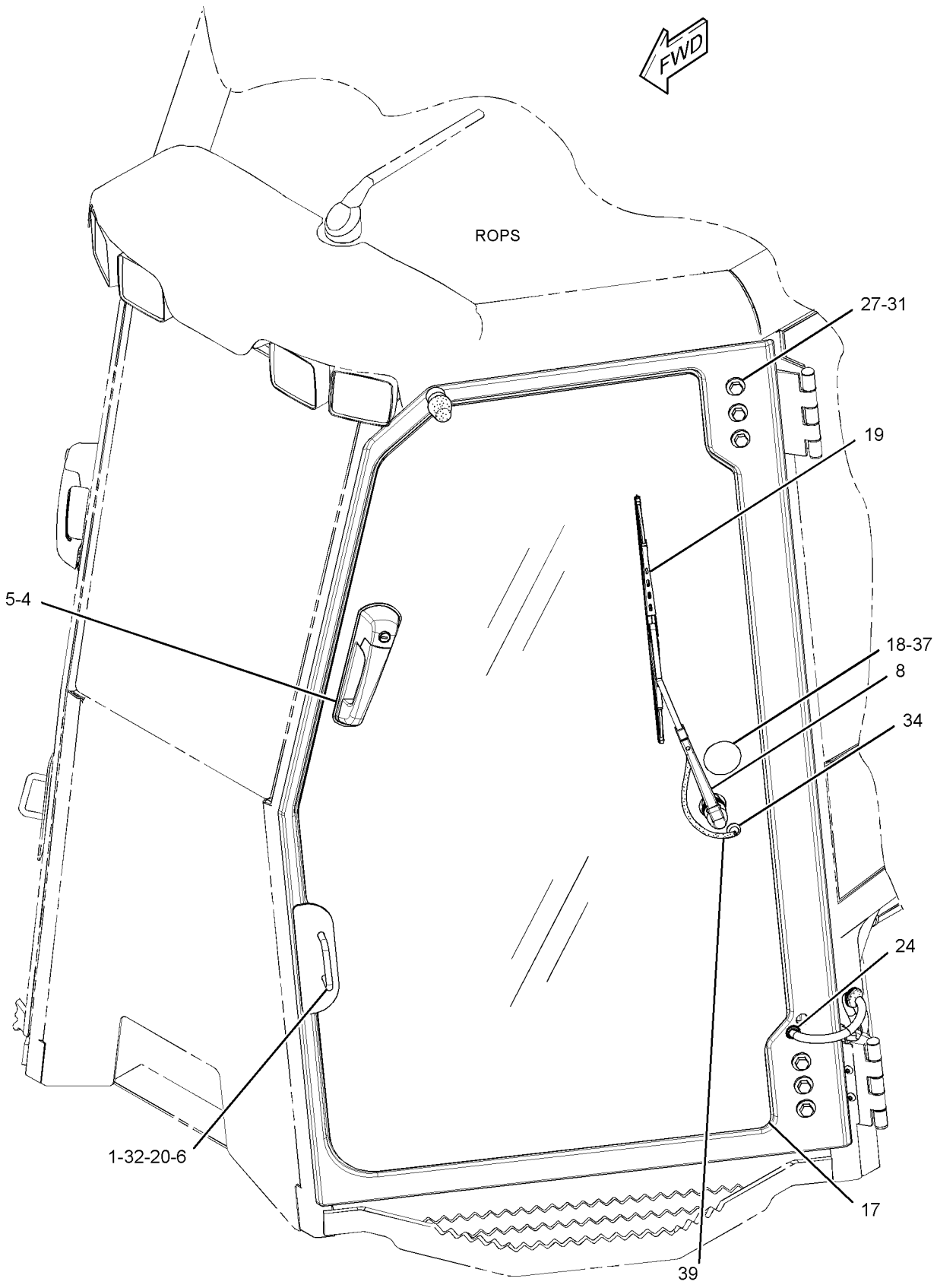

GRAPHIC #1 g01369456

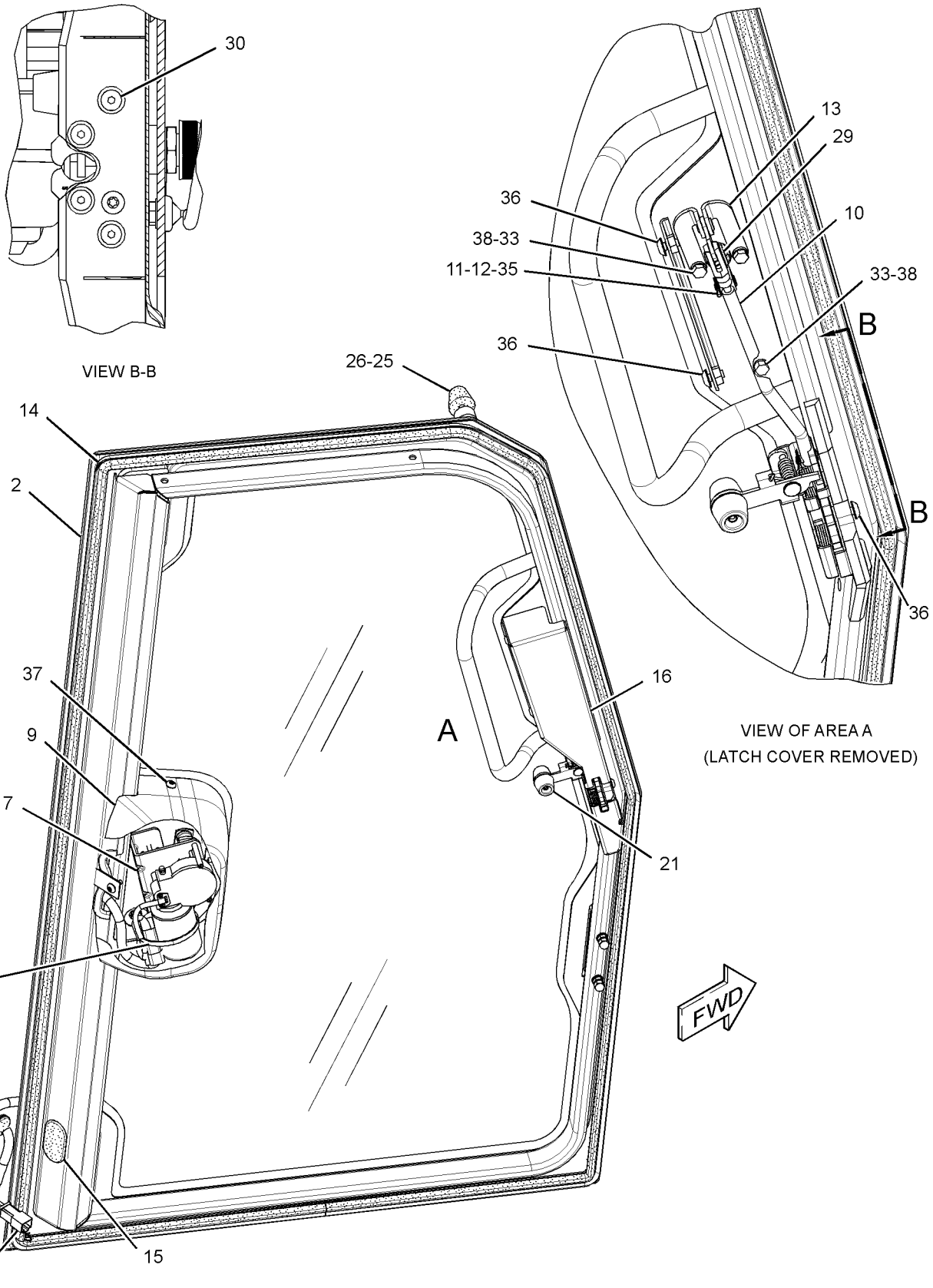

GRAPHIC #2

<END>

g01376422

OPERATOR STATION

255-4273 DOOR GP-CAB—RH

S/N: JLF1-UP; WWW1-UP; YYY1-UP
PART OF 244-7476 ROPS AR, 282-4899 ROPS AR-ENCLOSED
AN ATTACHMENT

SMCS-7308 **i03588564**

NOTE	REF NO	GRAPHIC REF	PART NUMBER	QTY	PART NAME 1 2 3 4 5 6 (PRODUCT LEVEL)	SEE PAGE
	1	1	**223-9818**	1	FILM-INSTRUCTION (WINDOW CLEANING, READ OMM)	
	2	1	**249-9061**	1	HARNESS AS-SWITCH (DOOR, RH)	
		1	**9W-0852**	4	PIN-CONNECTOR (14-GA)	
		1	**230-5008**	1	PLUG AS-CONNECTOR (4-PIN)	
		1	**264-7031**	1	SEAL-CONNECTOR	
		1	**9X-3402**	4	SOCKET-CONNECTOR (16-GA TO 18-GA)	
J	3	1	**252-1862**	1	HANDLE AS	
	4	1	**252-1863**	1	GASKET	
	5	1	**255-4256**	1	STRIKER AS (RH)	
Y	6	1	**261-7993**	1	MOTOR GP-WINDOW WIPER	541
	7	1	**262-1997**	1	ARM GP-WINDOW WIPER (RH)	
		1	**305-9192**	1	NOZZLE AS-WASHER	
	8	1	**266-9299**	1	FRAME AS-DOOR (RH)	
	9	1	**266-9303**	1	COVER	
	10	1	**269-2887**	1	LATCH AS-DOOR (ROTARY)	
	11	1	**269-2890**	1	CLEVIS	
	12	1	**269-2892**	2	PIN	
	13	1	**133-3234**	1	SEAL (RH)	
	14	1	**281-4002**	1	PLUG	
	15	1	**281-4136**	1	COVER-LATCH (RH)	
	16	1	**281-4150**	1	WINDOW (RH)	
	17	1	**287-0548**	1	STICKER-DOOR SEAL	
	18	1	**290-6180**	3	SPACER (7X11X5-MM THK)	
	19	1	**125-8175**	1	BLADE AS-WIPER (450-MM) (DOOR, RH)	
M	20	1	**131-3540**	2	LOCKNUT (M8X1.25-THD)	
	21	1	**272-1622**	1	ROD AS (LINK)	
		1	**108-5471**	1	CLEVIS	
	22	1	**272-1623**	1	BELLCRANK AS	
	23	1	**102-8804**	1	KIT-RECEPTACLE (4-PIN)	
					(INCLUDES RECEPTACLE AS & WEDGE)	
	24	1	**9X-8267**	3	WASHER (6.6X12X2-MM THK)	
	25	1	**4D-0012**	1	GROMMET	
	26	1	**4E-1384**	1	BUMPER-CONICAL (STUD)	
	27	1	**4I-4872**	2	SPACER (8.6X18X5-MM THK)	
M	28	1	**5C-7261**	1	NUT (M8X1.25-THD)	
	29	1	**5P-1076**	6	WASHER-HARD (13.5X30X4-MM THK)	
	30	1	**5P-8441**	1	GROMMET	
	31	1	**6V-7636**	1	PIN AS-SPRING	
M	32	1	**7X-2533**	3	BOLT (M6X1X35-MM)	
M	33	1	**8C-6802**	4	SCREW-FLAT HEAD (6X1X26.3-MM)	
M	34	1	**8T-4183**	6	BOLT (M12X1.75X40-MM)	
	35	1	**8T-4224**	2	WASHER-HARD (8.8X16X2-MM THK)	
	36	1	**8T-6902**	2	CLIP	
M	37	1	**9X-2042**	3	SCREW-TRUSS HEAD (M6X1X12-MM)	
M	38	1	**9X-2045**	5	SCREW-TRUSS HEAD (M6X1X20-MM)	
E	39	1	**144-0195**		HOSE (26-CM)	
	40	1	**8T-5400**	1	CONNECTOR AS	
	41	1	**7K-1181**	1	STRAP-CABLE	
	42	1	**320-8448**	2	CAP-NUT	

E-ORDER BY THE CENTIMETER
J-REQUIRES CORPORATE KEY
M-METRIC PART
Y-SEPARATE ILLUSTRATION

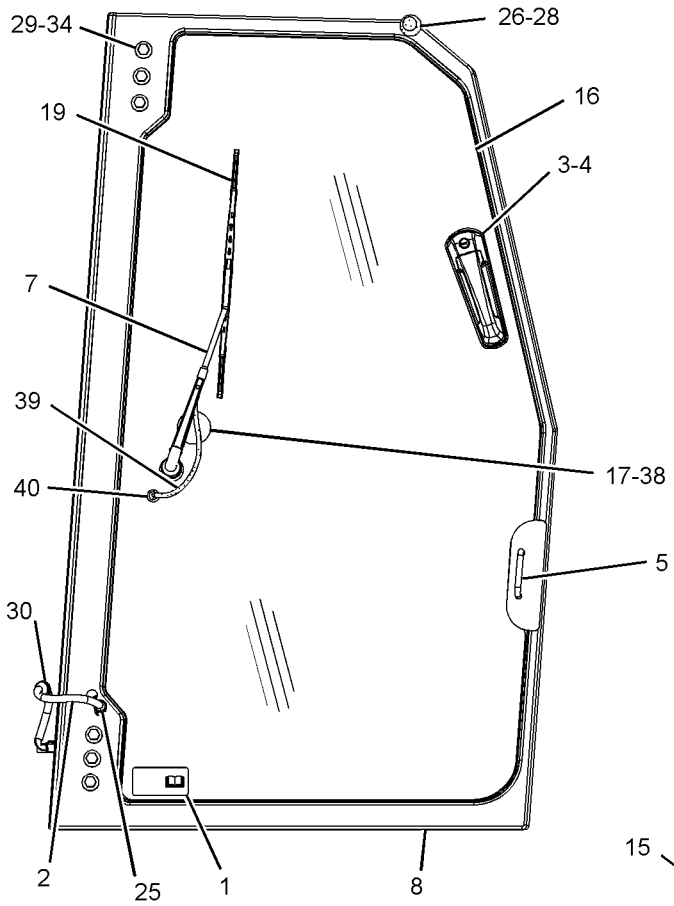

RIGHT SIDE VIEW

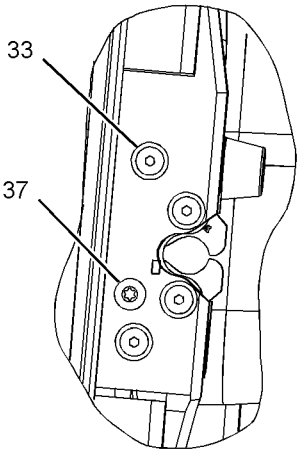

SECTION B-B

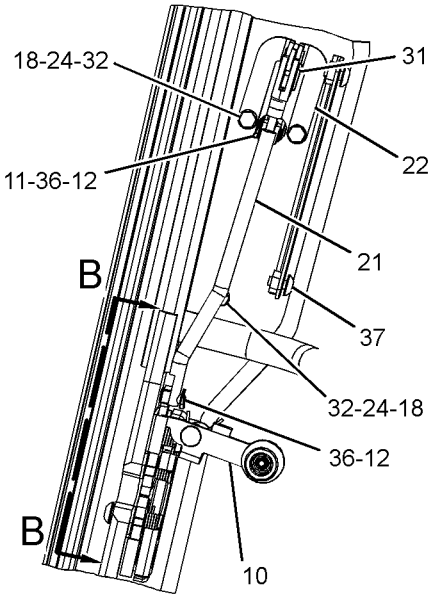

VIEW OF AREA A
(LATCH COVER REMOVED
FOR CLARITY)

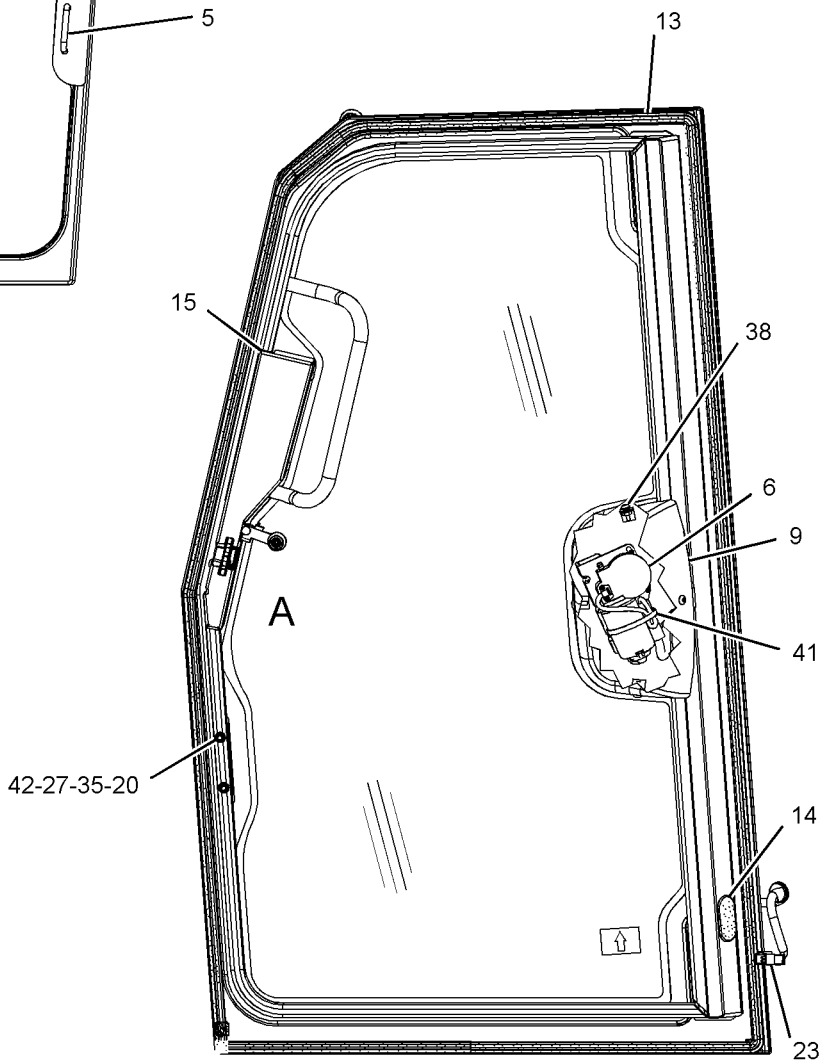

LEFT SIDE VIEW
(INSIDE DOOR)

GRAPHIC #1

<END>

g01700893

OPERATOR STATION

255-4274 DOOR GP-CAB—LH

S/N: JLF1-UP; WWW1-UP; YYY1-UP
PART OF 244-7476 ROPS AR, 282-4899 ROPS AR-ENCLOSED
AN ATTACHMENT

SMCS-7308 **i03635053**

NOTE	REF NO	GRAPHIC REF	PART NUMBER	QTY	PART NAME 1 2 3 4 5 6 (PRODUCT LEVEL)	SEE PAGE
	1	1	**223-9818**	1	FILM-INSTRUCTION (WINDOW CLEANING, READ OMM)	
	2	1	**247-6613**	1	FRAME AS-DOOR (LH)	
M		1	**6V-9632**	6	NUT-WELD (M6X1-THD)	
M		1	**8T-3597**	6	NUT-WELD (M12X1.75-THD)	
	3	1	**249-9060**	1	HARNESS AS-SWITCH (DOOR, LH)	
		1	**9W-0852**	4	PIN-CONNECTOR (14-GA)	
		1	**230-5008**	1	PLUG AS-CONNECTOR (4-PIN)	
		1	**264-7031**	1	SEAL-CONNECTOR	
		1	**9X-3402**	4	SOCKET-CONNECTOR (16-GA TO 18-GA)	
		1	**230-5008**	1	PLUG AS-CONNECTOR (4-PIN)	
J	4	1	**252-1862**	1	HANDLE AS	
	5	1	**252-1863**	1	GASKET	
	6	1	**255-4255**	1	STRIKER AS (LH)	
Y	7	1	**261-7992**	1	MOTOR GP-WINDOW WIPER	540
	8	1	**262-1998**	1	ARM GP-WINDOW WIPER (WET)	
		1	**305-9192**	1	NOZZLE AS-WASHER	
	9	1	**266-9303**	1	COVER	
	10	1	**269-2890**	1	CLEVIS	
	11	1	**269-2892**	2	PIN	
E	12	1	**133-3234**		SEAL (430-CM)	
	13	1	**281-4002**	1	PLUG	
	14	1	**281-4137**	1	COVER-LATCH	
	15	1	**281-4151**	1	WINDOW	
	16	1	**287-0548**	1	STICKER-DOOR SEAL	
	17	1	**290-6180**	3	SPACER (7X11X5-MM THK)	
	18	1	**125-8175**	1	BLADE AS-WIPER (450-MM) (DOOR, LH)	
M	19	1	**131-3540**	2	LOCKNUT (M8X1.25-THD)	
	20	1	**269-2886**	1	LATCH AS-DOOR (ROTARY)	
	21	1	**269-2888**	1	LINK GP-ADJUSTABLE	
		1	**108-5471**	1	CLEVIS	
	22	1	**272-1623**	1	BELLCRANK AS	
	23	1	**102-8804**	1	KIT-RECEPTACLE (4-PIN)	
					(INCLUDES RECEPTACLE AS & WEDGE)	
	24	1	**9X-8267**	3	WASHER (6.6X12X2-MM THK)	
	25	1	**4D-0012**	1	GROMMET	
	26	1	**4E-1384**	1	BUMPER-CONICAL	
	27	1	**4I-4872**	2	SPACER (8.6X18X5-MM THK)	
M	28	1	**5C-7261**	1	NUT (M8X1.25-THD)	
	29	1	**5P-1076**	6	WASHER-HARD (13.5X30X4-MM THK)	
	30	1	**5P-8441**	1	GROMMET	
	31	1	**6V-7636**	1	PIN AS-SPRING	
M	32	1	**7X-2533**	3	BOLT (M6X1X35-MM)	
M	33	1	**8C-6802**	4	SCREW-FLAT HEAD (6X1X26.3-MM)	
M	34	1	**8T-4183**	6	BOLT (M12X1.75X40-MM)	
	35	1	**8T-4224**	2	WASHER-HARD (8.8X16X2-MM THK)	
	36	1	**8T-6902**	2	CLIP	
M	37	1	**9X-2042**	3	SCREW-TRUSS HEAD (M6X1X12-MM)	
M	38	1	**9X-2045**	5	SCREW-TRUSS HEAD (M6X1X20-MM)	
	39	1	**7K-1181**	1	STRAP-CABLE	
	40	1	**8T-5400**	1	CONNECTOR AS	
E	41	1	**144-0195**		HOSE (26-CM)	
	42	1	**320-8448**	2	CAP-NUT	

E-ORDER BY THE CENTIMETER
J-REQUIRES CORPORATE KEY
M-METRIC PART
Y-SEPARATE ILLUSTRATION

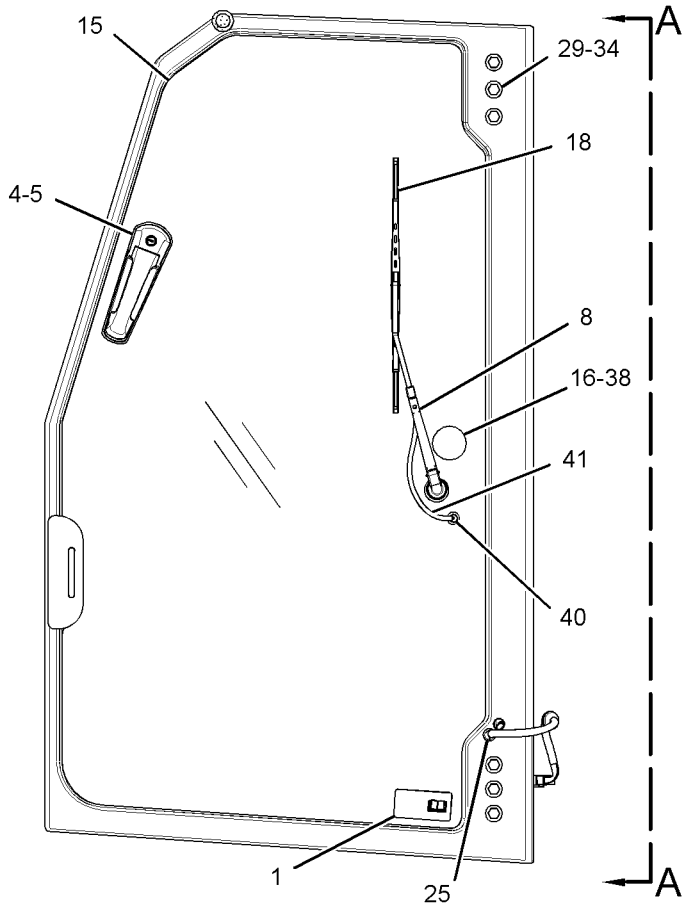

LEFT SIDE VIEW

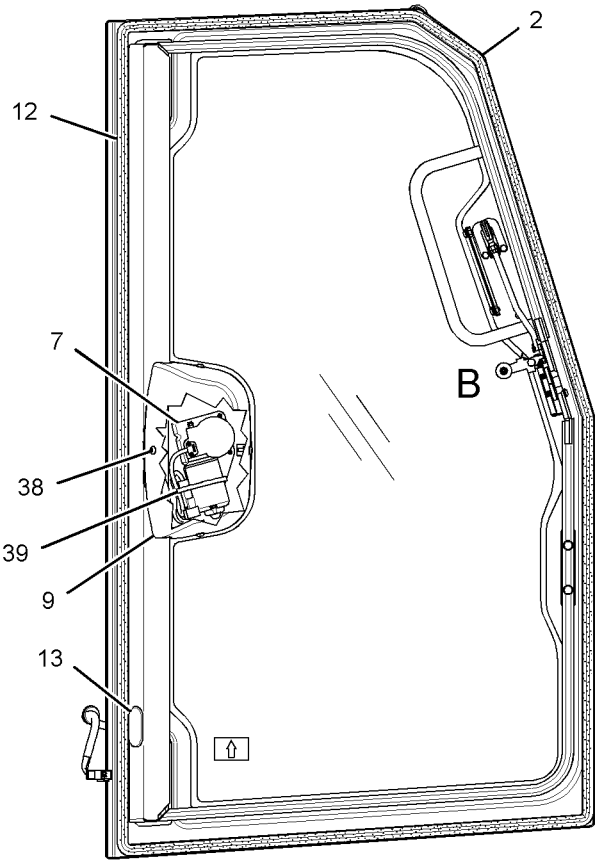

RIGHT SIDE VIEW
(LATCH COVER REMOVED FOR CLARITY)

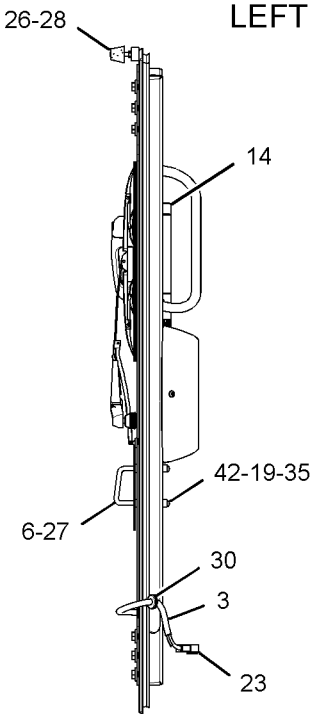

VIEW A-A

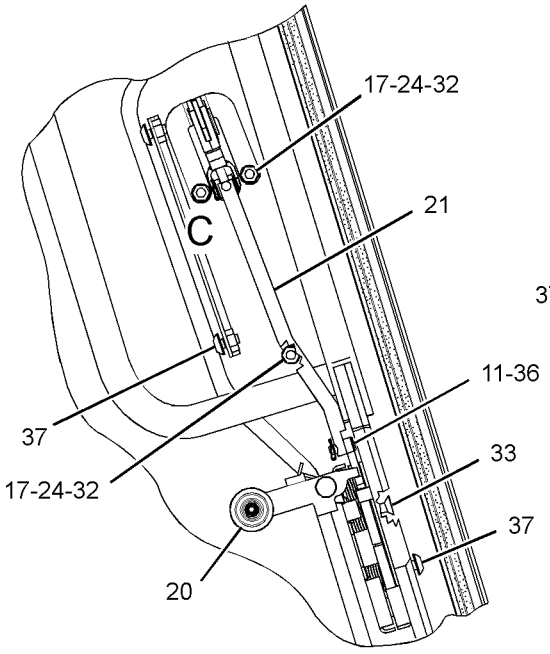

VIEW OF AREA B

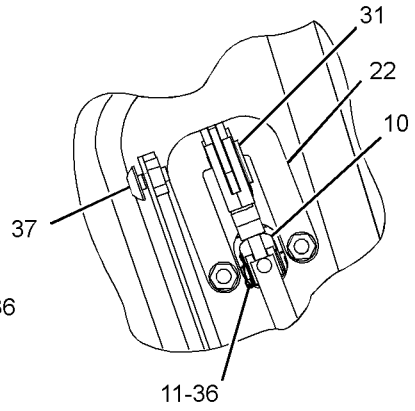

VIEW OF AREA C

GRAPHIC #1

<END>

g01736477

OPERATOR STATION

252-4504 HEATER GP-CAB

S/N: JLF1-UP; WWW1-UP; YYY1-UP
PART OF 254-3190 HEATER GP-CAB
AN ATTACHMENT

SMCS-7304 **i02913156**

NOTE	REF NO	GRAPHIC REF	PART NUMBER	QTY	PART NAME 1 2 3 4 5 6 (PRODUCT LEVEL)	SEE PAGE
	1	2	**289-2134**	1	PLATE AS	
	2	2	**3S-2093**	3	STRAP-CABLE	
	3	2	**8C-3756**	1	FILM-IDENTIFICATION (REFRIGERANT CONDENSER) (HEATER)	
	4	2	**111-4015**	1	GROMMET	
	5	2	**4P-7581**	1	CLIP	
	6	2	**131-3093**	1	BUSHING	
	7	2	**134-3518**	2	TIE-PUSH MOUNT	
	8	1	**151-5650**	2	PLUG	
	9	2	**248-6772**	2	SCREW-MACHINE (8-16X7.75-IN)	
	10	2	**256-0761**	1	CASE AS-AIR CONDITIONER	
	11	2	**256-0768**	1	PLATE AS	
M		2	**6V-9632**	6	NUT-WELD (M6X1-THD)	
M		2	**9X-2032**	2	NUT-WELD (M4X0.7-THD)	
J	12	2	**262-2815**	1	GASKET	
	13	2	**265-9620**	1	ACTUATOR (ELECTRONIC)	
	14	1,2	**275-6707**	2	GROMMET	
	15	2	**276-4299**	1	HARNESS AS-MOTOR (BLOWER)	
E		2	**119-3662**		TUBE-HEAT SHRINK (10.85-MM DIA) (7-CM)	
		2	**102-8804**	1	KIT-RECEPTACLE (4-PIN)	
		2	**177-9653**	1	KIT-RECEPTACLE (4-PIN)	
					(EACH RECEPTACLE KIT INCLUDES RECEPTACLE AS & WEDGE)	
		2	**155-2271**	1	KIT-CONNECTING PLUG (4-PIN)	
		2	**177-9648**	1	KIT-CONNECTING PLUG (2-PIN)	
					(EACH PLUG KIT INCLUDES PLUG AS & WEDGE)	
	16	2	**277-7112**	1	PLATE	
	17	2	**277-7114**	2	PLUG	
	18	2	**277-7115**	1	BLOWER AS	
J	19	2	**277-9958**	1	GASKET	
J	20	2	**277-9959**	1	GASKET	
J	21	2	**277-9960**	1	GASKET	
J	22	2	**277-9962**	1	GASKET	
J	23	2	**277-9964**	1	GASKET	
	24	2	**318-0815**	1	PLATE AS	
	25	2	**278-3354**	1	FILM-INSTRUCTION (HVAC WATER, DRAINING, FILLING)	
	26	2	*282-3475*	1	RESISTOR GP	
		2	**280-9453**	3	SCREW-SELF-TAPPING (NO 6X0.375-IN)	
		2	**282-3481**	1	PLATE AS	
		2	**284-8773**	1	RESISTOR AS	
	27	2	**282-3653**	1	BRACKET	
M	28	2	**283-8651**	7	BOLT (M4X0.7X10-MM)	
	29	1	**285-7974**	1	PLATE AS	
	30	1	**289-4795**	1	PLATE AS	
	31	2	**096-6166**	4	WASHER-HARD (4.5X9X1-MM THK)	
J	32	1	**285-8548**	1	GASKET	
Y	33	1	*289-2123*	1	HEATER GP-CAB	526
	34	1	**300-4098**	4	CAP	
M	35	1,2	**5C-9553**	16	BOLT (M6X1X16-MM)	
	36	2	**8T-4121**	1	WASHER-HARD (11X21X2.5-MM THK)	
M	37	2	**8T-4137**	1	BOLT (M10X1.5X20-MM)	
	38	1,2	**8T-4205**	16	WASHER-HARD (7.2X14.5X2-MM THK)	
D	39	1	**6V-2496**		SEAL (0.27-M EACH)	
D	39A	1	**6V-2496**		SEAL (0.04-M)	

252-4504 HEATER GP-CAB *(contd.)* i02913156

NOTE	REF NO	GRAPHIC REF	PART NUMBER	QTY	PART NAME 1 2 3 4 5 6 (PRODUCT LEVEL)	SEE PAGE
D	39B	1	**6V-2496**		SEAL (0.26-M)	
D	39C	2	**6V-2496**		SEAL (0.15-M EACH)	
	40	2	**153-6932**	1	GASKET	
					AVAILABLE REPAIR KIT(S):	
J			**285-8554**	1	KIT-SEAL (HEATER)	
					(INCLUDES GASKETS)	

D-ORDER BY THE METER
E-ORDER BY THE CENTIMETER
J-KIT MARKED J SERVICES PARTS MARKED J
M-METRIC PART
Y-SEPARATE ILLUSTRATION

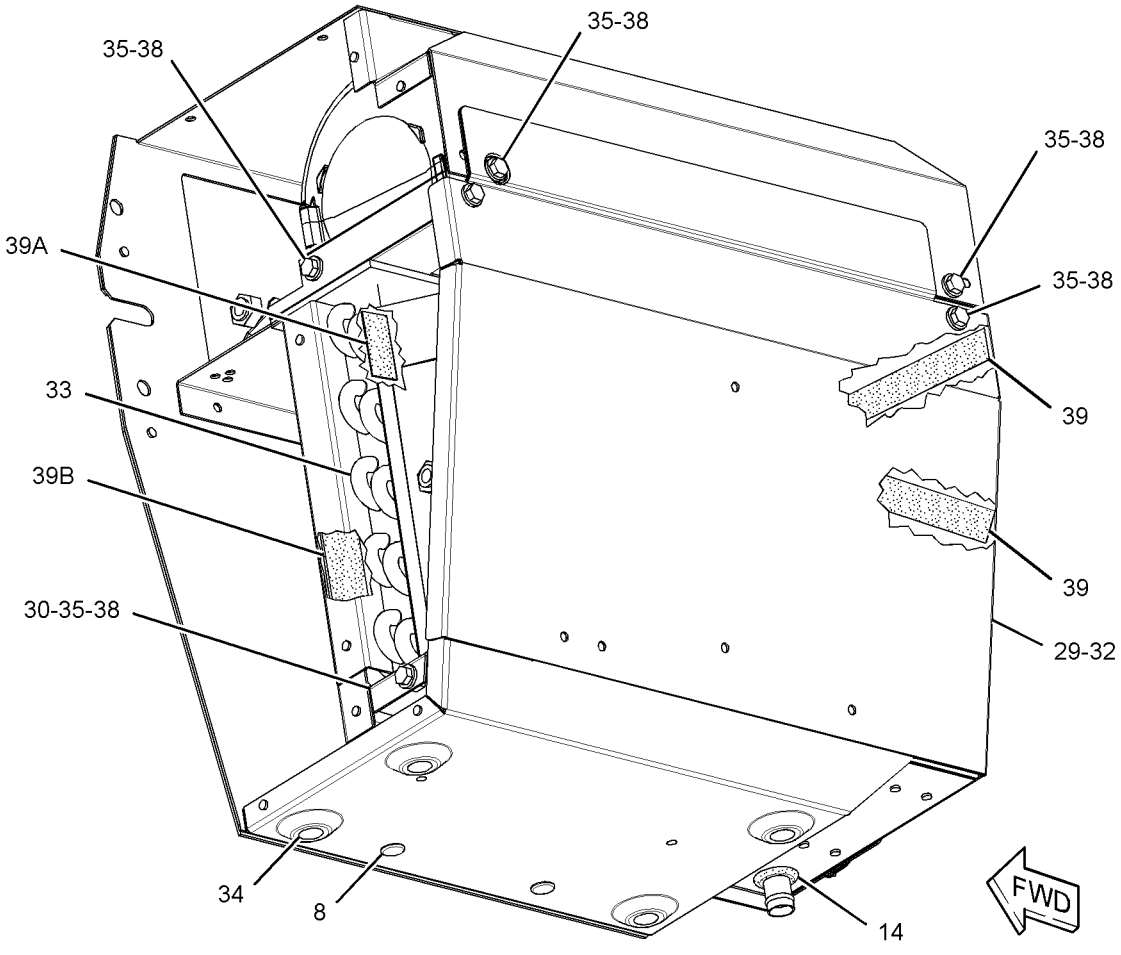

(COVER REMOVED FOR CLARITY)

GRAPHIC #1 g01733294

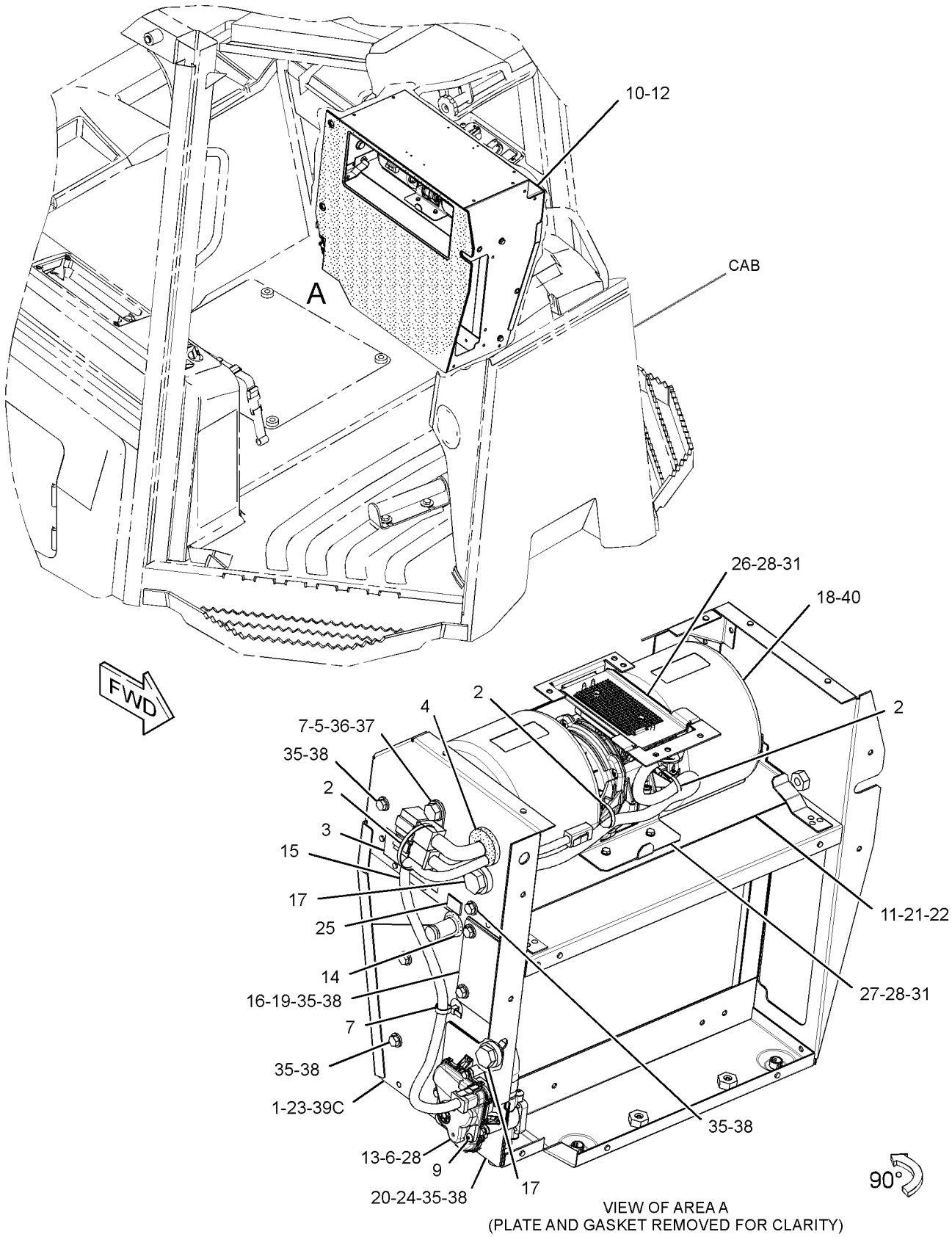

VIEW OF AREA A
(PLATE AND GASKET REMOVED FOR CLARITY)

GRAPHIC #2 **<END>** g01733295

OPERATOR STATION

254-3190 HEATER GP-CAB

S/N: JLF1-UP; WWW1-UP; YYY1-UP
PART OF 244-7474, 282-4897 ROPS AR
AN ATTACHMENT

SMCS-7304 **i03413680**

NOTE	REF NO	GRAPHIC REF	PART NUMBER	QTY	PART NAME 1 2 3 4 5 6 (PRODUCT LEVEL)	SEE PAGE
	1	1	**121-2761**	1	GRILL-AIR FILTER (CAB)	
Y	2	1	*252-4504*	1	HEATER GP-CAB	521
	3	1	**254-3196**	1	HOSE	
	4	1	**254-3199**	1	HOSE	
	5	1	**254-3200**	1	GASKET	
	6	1	**254-3201**	1	DUCT-AIR	
		1	**6C-3680**	4	RIVET-POP	
	7	1	**287-8437**	1	PLATE AS	
M		1	**6V-9632**	4	NUT-WELD (M6X1-THD)	
M	8	1	**288-3663**	4	THUMBSCREW (M6X1X25-MM)	
	9	1	**5P-0599**	4	CLAMP-BAND	
M	10	1	**6V-7744**	3	LOCKNUT (M10X1.5-THD)	
	11	1	**7X-7729**	6	WASHER (11X25X3-MM THK)	
M	12	1	**8T-4137**	3	BOLT (M10X1.5X20-MM)	
M	13	1	**9X-2042**	2	SCREW-TRUSS HEAD (M6X1X12-MM)	
D	14	1	**5P-5639**		SEAL (1.4-M)	

D-ORDER BY THE METER
M-METRIC PART
Y-SEPARATE ILLUSTRATION

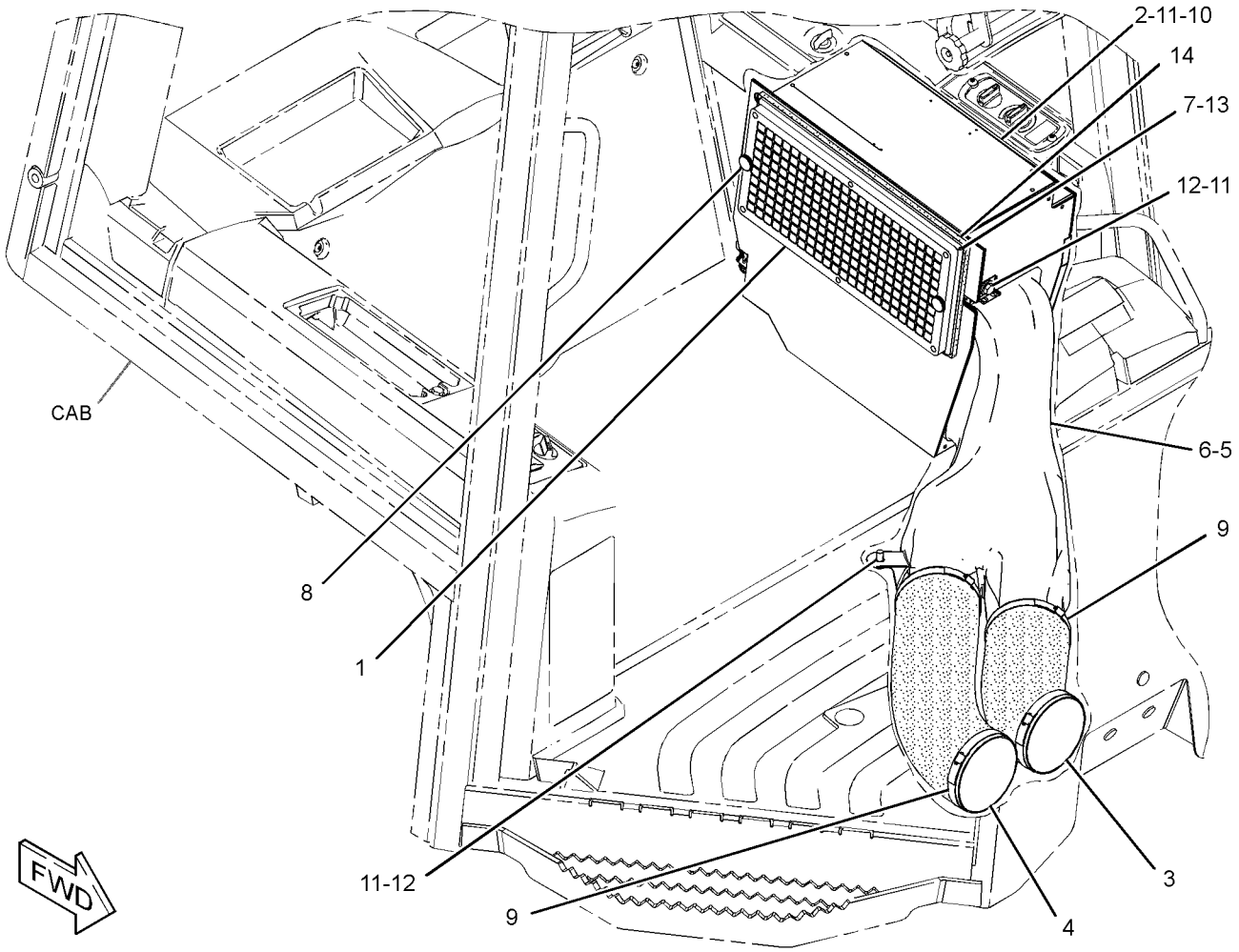

GRAPHIC #1 **<END>** g01341608

OPERATOR STATION

277-9969 HEATER GP-CAB

S/N: JLF1-UP; WWW1-UP; YYY1-UP
PART OF 252-4502 AIR CONDITIONER GP
AN ATTACHMENT

SMCS-7304 **i02835013**

NOTE	REF NO	GRAPHIC REF	PART NUMBER	QTY	PART NAME 1 2 3 4 5 6 (PRODUCT LEVEL)	SEE PAGE
	1	1	**8T-0154**	2	CLAMP-HOSE	
	2	1	**277-9968**	1	VALVE GP-CAB HEATER	
	3	1	**287-6657**	1	COIL AS-HEATER	
	4	1	**291-3803**	1	HOSE	

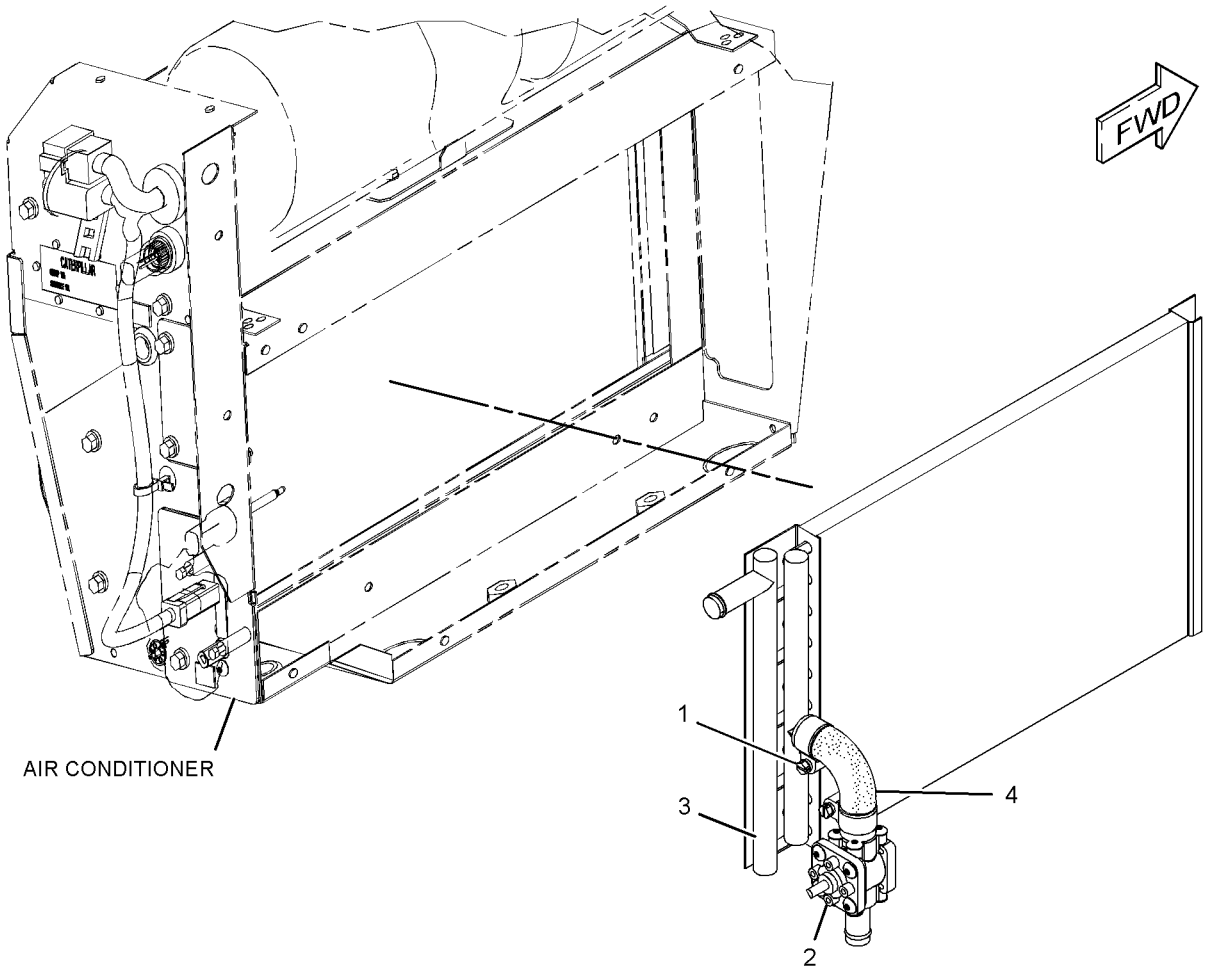

GRAPHIC #1 **<END>** g01417376

OPERATOR STATION

289-2123 HEATER GP-CAB–OPEN ROPS

S/N: JLF1-UP; WWW1-UP; YYY1-UP
PART OF 252-4504 HEATER GP-CAB
AN ATTACHMENT

SMCS-7304 **i02694994**

NOTE	REF NO	GRAPHIC REF	PART NUMBER	QTY	PART NAME 1 2 3 4 5 6 (PRODUCT LEVEL)	SEE PAGE
	1	1	**8T-0154**	2	CLAMP-HOSE	
	2	1	**277-9968**	1	VALVE GP-CAB HEATER	
	3	1	**289-2122**	1	COIL AS-HEATER	
	4	1	**291-3803**	1	HOSE	

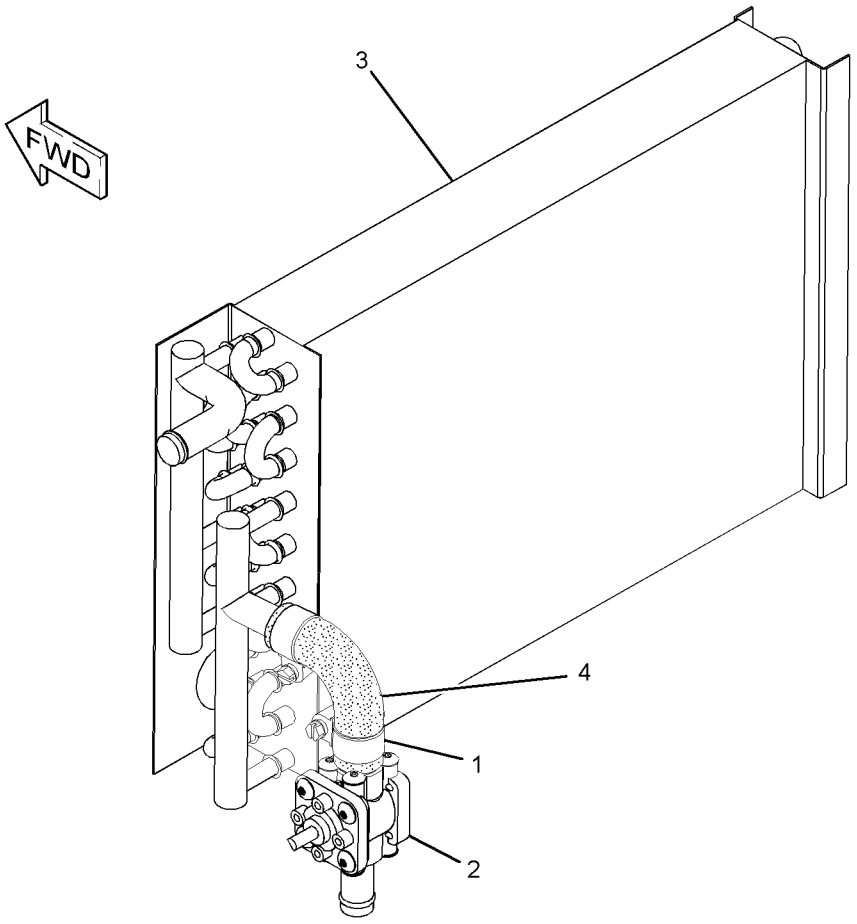

GRAPHIC #1 **<END>** g01304601

OPERATOR STATION

247-6505 INSTALLATION GP-RADIO

S/N: JLF1-UP; WWW1-UP; YYY1-UP
PART OF 244-7475, 244-7476 ROPS AR, 282-4898, 282-4899 ROPS AR-ENCLOSED
AN ATTACHMENT

SMCS-7338 **i02681033**

NOTE	REF NO	GRAPHIC REF	PART NUMBER	QTY	PART NAME 1 2 3 4 5 6 (PRODUCT LEVEL)	SEE PAGE
	1	1	**6C-3431**	1	ANTENNA	
	2	1	**6T-7695**	2	SPEAKER AS-RADIO	
	3	1	**9U-8263**	1	COVER	
	4	1	**226-0150**	1	WASHER-RUBBER	
	5	1	**226-0151**	1	SPACER	
	6	1	**6C-9081**	2	LOCKWASHER	
M	7	1	**138-8454**	8	SCREW-TRUSS HEAD (M4X0.7X10-MM)	
M	8	1	**5C-2874**	1	NUT (M5X0.8-THD)	
	9	1	**8K-1433**	1	GROMMET	
M	10	1	**160-8754**	1	BOLT (M5X0.8X40-MM)	
	11	1	**140-4722**	1	NUT (M5X0.8-THD)	

M-METRIC PART

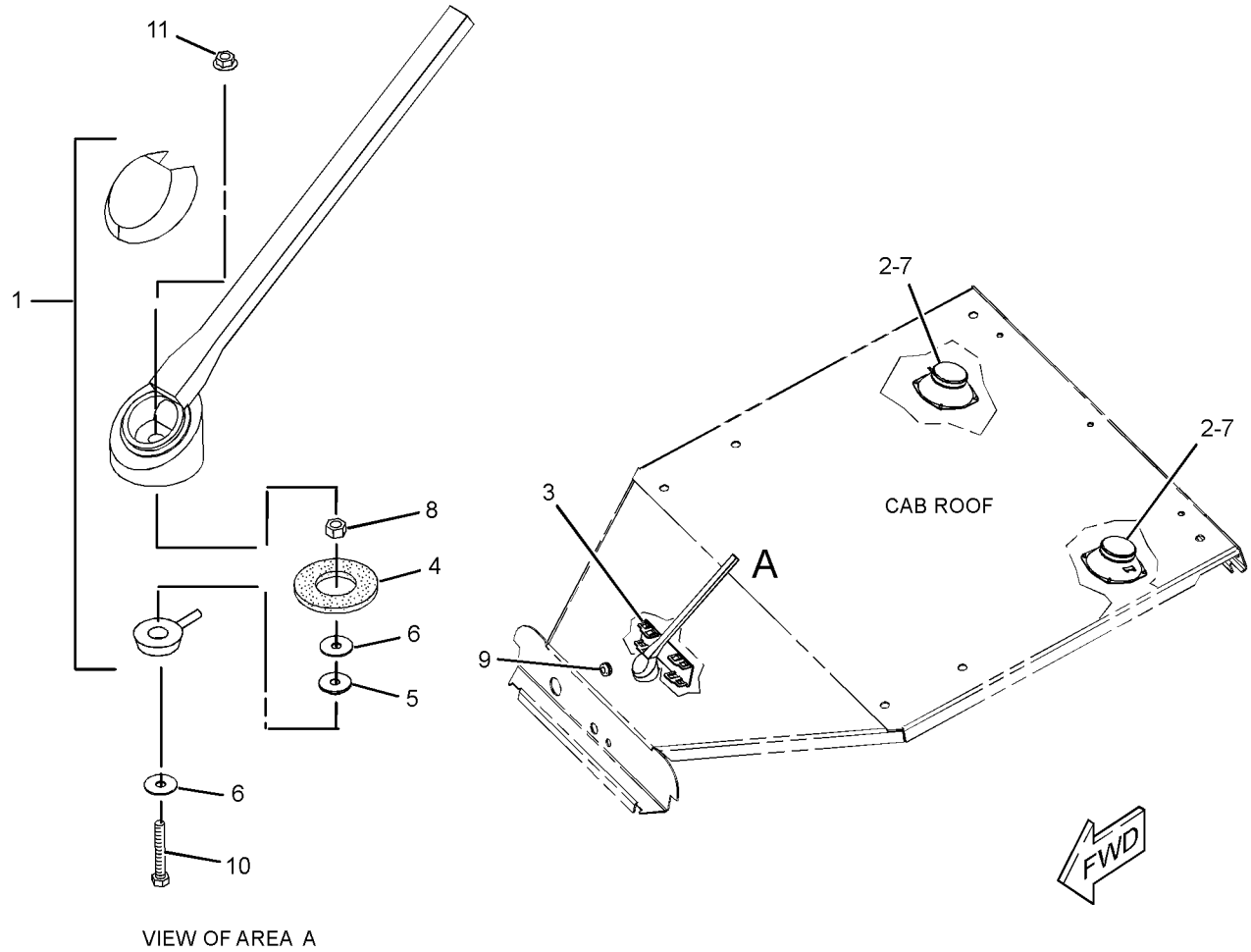

GRAPHIC #1 **<END>** g01319703

OPERATOR STATION

245-6022 INSTRUMENT GP–OROPS

S/N: JLF1-UP; WWW1-UP; YYY1-UP
PART OF 244-7474, 282-4897 ROPS AR
AN ATTACHMENT

SMCS-7450, 7451 **i03635064**

NOTE	REF NO	GRAPHIC REF	PART NUMBER	QTY	PART NAME 1 2 3 4 5 6 (PRODUCT LEVEL)	SEE PAGE
Y	1	1	**106-0107**	1	SWITCH GP-ROTARY (THROTTLE POSITION)	187
	2	1	**110-6109**	1	KNOB-CONTROL (THROTTLE SWITCH)	
	3	1	**110-7887**	1	SWITCH AS-START (KEY)	
		1	**7T-6799**	1	NUT-MOUNTING (1-32-THD)	
		1	**102-8804**	1	KIT-RECEPTACLE (4-PIN)	
					(INCLUDES RECEPTACLE AS & WEDGE)	
		1	**186-3735**	4	PIN-CONNECTOR (16-GA TO 18-GA)	
	4	1	**165-0311**	2	PLUG	
	5	1	**178-7539**	1	RECEPTACLE AS (POWER SUPPLY)	
	6	1	**180-6615**	1	SWITCH AS (WORK LIGHTS)	
	7	1	**190-8478**	1	SWITCH AS-ROCKER (PARKING BRAKE)	
					(EACH SWITCH AS INCLUDES)	
		1	**111-7899**	1	GASKET	
B	8	1	**218-0651**	1	FILM-INSTRUCTION (KEY START SWITCH)	
	9	1	**232-1792**	1	HORN (ALARM)	
	10	1	**245-6033**	1	SWITCH AS-ROCKER (IMPLEMENT LOCKOUT)	
		1	**111-7899**	1	GASKET	
	11	1	**254-4091**	1	MONITOR GP-OPERATOR (INSTRUMENT CLUSTER)	
	12	1	**311-0299**	1	PLATE (RH SWITCH)	
	13	1	**311-0303**	1	FILM-PANEL (OROPS) (RH)	
	14	1	**269-7675**	1	BRACKET	
	15	1	**314-3010**	1	PLATE	
M	16	1	**263-5928**	5	SCREW-TRUSS HEAD (M5X0.8X25-MM)	
	17	1	**267-5239**	1	PANEL-CONTROL (TEMPERATURE)	
		1	**271-7312**	1	KNOB (TEMPERATURE CONTROL)	
		1	**285-7415**	1	KNOB (BLOWER FAN SPEED)	
	18	1	**8T-4121**	1	WASHER-HARD (11X21X2.5-MM THK)	
M	19	1	**8T-4136**	1	BOLT (M10X1.5X25-MM)	
M	20	1	**9X-2045**	8	SCREW-TRUSS HEAD (M6X1X20-MM)	

B-USE AS REQUIRED
M-METRIC PART
Y-SEPARATE ILLUSTRATION

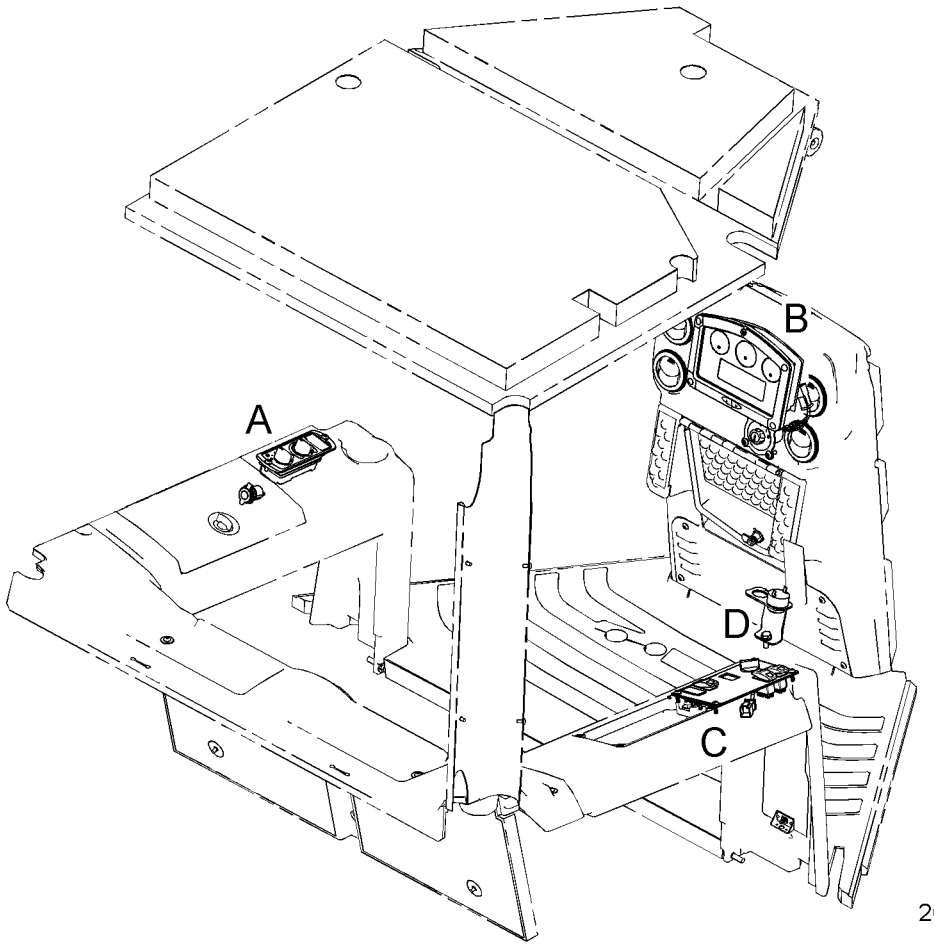

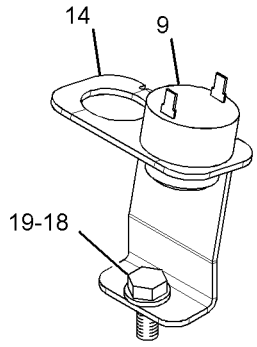

VIEW OF AREA D

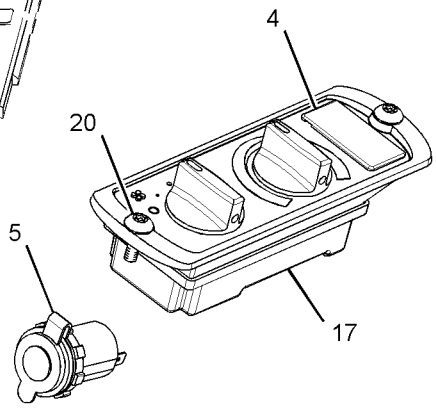

VIEW OF AREA A

FWD

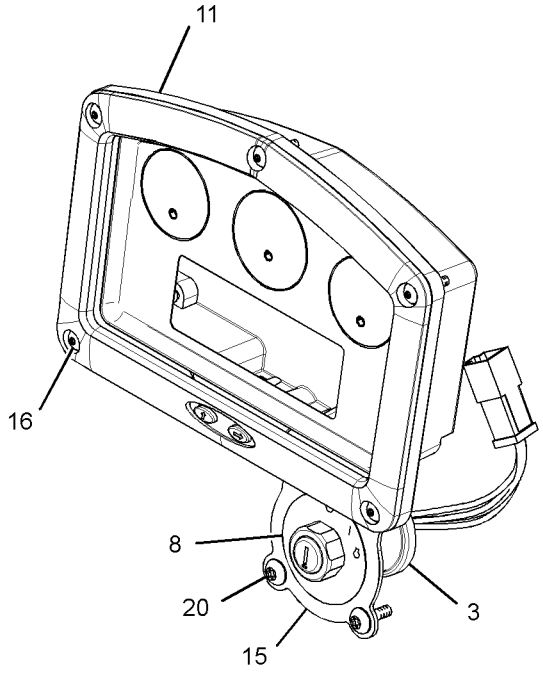

VIEW OF AREA B

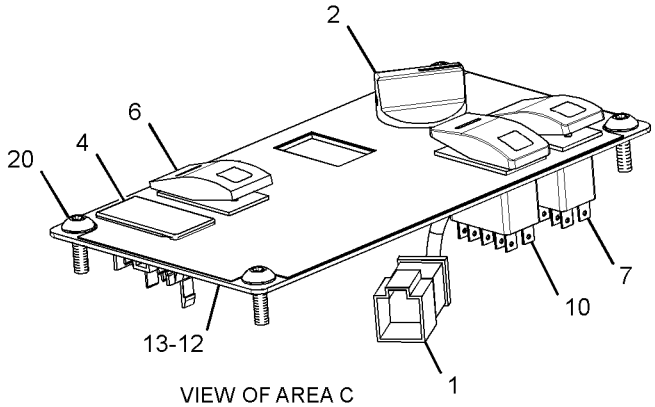

VIEW OF AREA C

GRAPHIC #1 **<END>** g01422587

OPERATOR STATION

245-6039 INSTRUMENT GP—EROPS

S/N: JLF1-UP; WWW1-UP; YYY1-UP
PART OF 244-7475, 244-7476 ROPS AR, 282-4898, 282-4899 ROPS AR-ENCLOSED AN ATTACHMENT

SMCS-7450, 7451 **i03635070**

NOTE	REF NO	GRAPHIC REF	PART NUMBER	QTY	PART NAME 1 2 3 4 5 6 (PRODUCT LEVEL)	SEE PAGE
Y	1	1	**106-0107**	1	SWITCH GP-ROTARY (THROTTLE POSITION)	187
	2	1	**110-6109**	1	KNOB-CONTROL (THROTTLE SWITCH)	
	3	1	**110-7887**	1	SWITCH AS-START (KEY)	
		1	**7T-6799**	1	NUT-MOUNTING (1-32-THD)	
		1	**102-8804**	1	KIT-RECEPTACLE (4-PIN)	
					(INCLUDES RECEPTACLE AS & WEDGE)	
		1	**186-3735**	4	PIN-CONNECTOR (16-GA TO 18-GA)	
	4	1	**178-7539**	1	RECEPTACLE AS (POWER SUPPLY)	
	5	1	**180-6615**	1	SWITCH AS (WORK LIGHTS)	
	6	1	**190-8478**	1	SWITCH AS-ROCKER (PARKING BRAKE)	
	7	1	**202-2284**	1	SWITCH AS-ROCKER (AIR CONDITIONER)	
					(EACH SWITCH AS INCLUDES)	
		1	**111-7899**	1	GASKET	
	8	1	**232-1792**	1	HORN	
B	9	1	**218-0651**	1	FILM-INSTRUCTION (KEY START SWITCH)	
	10	1	**237-9154**	1	SWITCH AS-ROCKER (FRONT WIPER)	
	11	1	**237-9157**	1	SWITCH AS-ROCKER (REAR WIPER)	
					(EACH SWITCH AS INCLUDES)	
		1	**111-7899**	1	GASKET	
M	12	1	**9X-2045**	8	SCREW-TRUSS HEAD (M6X1X20-MM)	
	13	1	**245-6033**	1	SWITCH AS-ROCKER (IMPLEMENT LOCKOUT)	
		1	**111-7899**	1	GASKET	
	14	1	**254-4091**	1	MONITOR GP-OPERATOR (INSTRUMENT CLUSTER)	
	15	1	**311-0299**	1	PLATE	
	16	1	**311-0304**	1	FILM-PANEL (EROPS) (RH)	
	17	1	**269-7675**	1	BRACKET	
	18	1	**314-3010**	1	PLATE	
M	19	1	**263-5928**	5	SCREW-TRUSS HEAD (M5X0.8X25-MM)	
	20	1	**267-5239**	1	PANEL-CONTROL	
		1	**271-7312**	1	KNOB (TEMPERATURE CONTROL)	
		1	**285-7415**	1	KNOB (BLOWER FAN SPEED)	
	21	1	**8T-4121**	1	WASHER-HARD (11X21X2.5-MM THK)	
M	22	1	**8T-4136**	1	BOLT (M10X1.5X25-MM)	
	23	1	**237-9158**	1	SWITCH AS-ROCKER (SIDE WIPER, LEFT)	
	23A	1	**237-9158**	1	SWITCH AS-ROCKER (SIDE WIPER, RIGHT)	
					(EACH SWITCH AS INCLUDES)	
		1	**111-7899**	1	GASKET	
	25	1	**165-0311**	1	PLUG	

B-USE AS REQUIRED
M-METRIC PART
Y-SEPARATE ILLUSTRATION

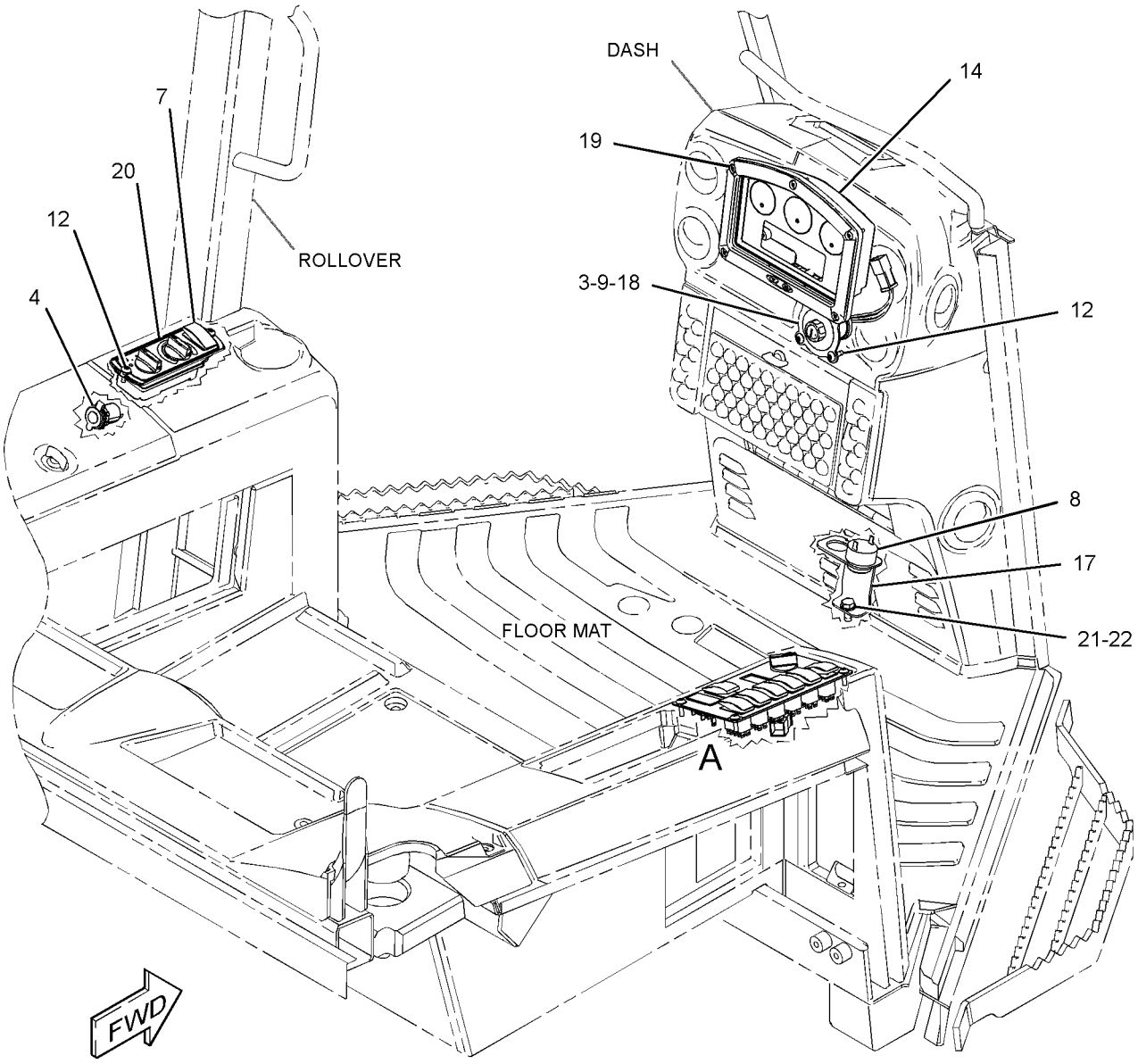

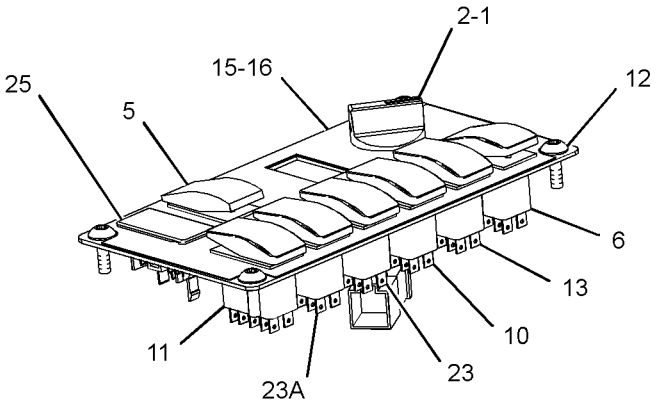

VIEW OF AREA A

GRAPHIC #1 **<END>** g01471693

OPERATOR STATION

257-9819 LINES GP-AIR CONDITIONER

S/N: JLF1-UP; WWW1-UP; YYY1-UP
PART OF 254-3210 AIR CONDITIONER & MOUNTING GP
AN ATTACHMENT

SMCS-1808 **i03210792**

NOTE	REF NO	GRAPHIC REF	PART NUMBER	QTY	PART NAME 1 2 3 4 5 6 (PRODUCT LEVEL)	SEE PAGE
	1	1	**3E-6909**	1	CLIP	
	2	1	**5P-3928**	1	COUPLING AS-REFRIGERANT (SELF SEALING)	
		1	**107-4395**	1	VALVE AS	
		1	**107-4396**	1	GASKET	
	3	1	**5P-3929**	1	COUPLING AS-REFRIGERANT (SELF SEALING)	
		1	**8F-9206**	1	SEAL-O-RING	
		1	**107-4397**	1	VALVE AS	
	4	1	**5P-3948**	1	COUPLING AS-REFRIGERANT (SELF SEALING)	
		1	**7F-8607**	1	SEAL-O-RING	
		1	**107-4399**	1	VALVE AS	
	5	1	**5P-4106**	1	NUT (1-7/16-16-THD)	
	6	1	**6P-5239**	1	SPACER (0.5X0.688X1.92-IN THK)	
	7	1	**7K-1181**	3	STRAP-CABLE	
	8	1	**7K-3176**	1	COUPLING AS-REFRIGERANT (SELF SEALING)	
		1	**107-4393**	1	VALVE AS	
		1	**107-4394**	1	GASKET	
	9	1	**7K-3304**	1	NUT-JAM (1-20-THD)	
	10	1	**101-8296**	2	CLIP	
Y	11	1	**176-3900**	1	ACCUMULATOR GP-REFRIGERANT (WITH DESICCANT)	463
	12	1	**102-7886**	2	SLEEVE	
I	13	1	**260-9505**	1	HOSE AS	
I	14	1	**260-9506**	1	HOSE AS	
	15	1	**261-8090**	1	TUBE AS-ORIFICE	
	16	1	**301-6061**	1	BRACKET	
	17	1	**301-6062**	1	HOSE AS	
I	18	1	**301-6063**	1	HOSE AS	
	19	1	**301-6064**	1	HOSE AS	
	20	1	**301-6065**	1	TUBE AS	
	21	1	**301-6066**	1	TUBE AS	
	22	1	**174-5907**	1	CLIP	
	24	1	**5P-4107**	1	WASHER (38.48X63.5X1.4-MM THK)	
	25	1	**6D-1641**	1	CLIP	
	26	1	**6D-4246**	2	CLIP	
	27	1	**6K-8178**	1	CLIP	
	28	1	**7B-1598**	1	CLIP	
	29	1	**8T-4121**	11	WASHER-HARD (11X21X2.5-MM THK)	
M	30	1	**8T-4133**	1	NUT (M10X1.5-THD)	
M	31	1	**8T-4137**	4	BOLT (M10X1.5X20-MM)	
M	32	1	**8T-4198**	2	BOLT (M10X1.5X100-MM)	
M	33	1	**8T-5005**	1	BOLT (M10X1.5X70-MM)	
	34	1	**9M-8406**	1	CLIP	
	35	1	**9X-7380**	1	SEAL-O-RING	
	36	1	**9X-7381**	5	SEAL-O-RING	
	37	1	**9X-7382**	2	SEAL-O-RING	
	38	1	**9X-7383**	4	SEAL-O-RING	
	39	1	**9X-7384**	2	SEAL-O-RING	
	40	1	**9X-8250**	3	CLIP	
D	41	1	**6V-5817**		CONDUIT-FLEXIBLE (0.6-M)	
D	41A	1	**6V-5817**		CONDUIT-FLEXIBLE (0.7-M)	
D	41B	1	**6V-5817**		CONDUIT-FLEXIBLE (0.8-M)	
D	42	1	**6V-5818**		CONDUIT-FLEXIBLE (0.6-M)	
D	42A	1	**6V-5818**		CONDUIT-FLEXIBLE (2.2-M)	
D	42B	1	**6V-5818**		CONDUIT-FLEXIBLE (2.1-M)	
D	43	1	**6V-2495**		SEAL (0.3-M)	
	44	1	**307-1592**	1	PLATE AS	

257-9819 **LINES GP-AIR CONDITIONER** *(contd.)* **i03210792**

NOTE	REF NO	GRAPHIC REF	PART NUMBER	QTY	PART NAME 1 2 3 4 5 6 (PRODUCT LEVEL)	SEE PAGE
M	45	1	**8T-4136**	3	BOLT (M10X1.5X25-MM)	

D-ORDER BY THE METER
I-REFER TO HYDRAULIC INFORMATION SYSTEM
M-METRIC PART
Y-SEPARATE ILLUSTRATION

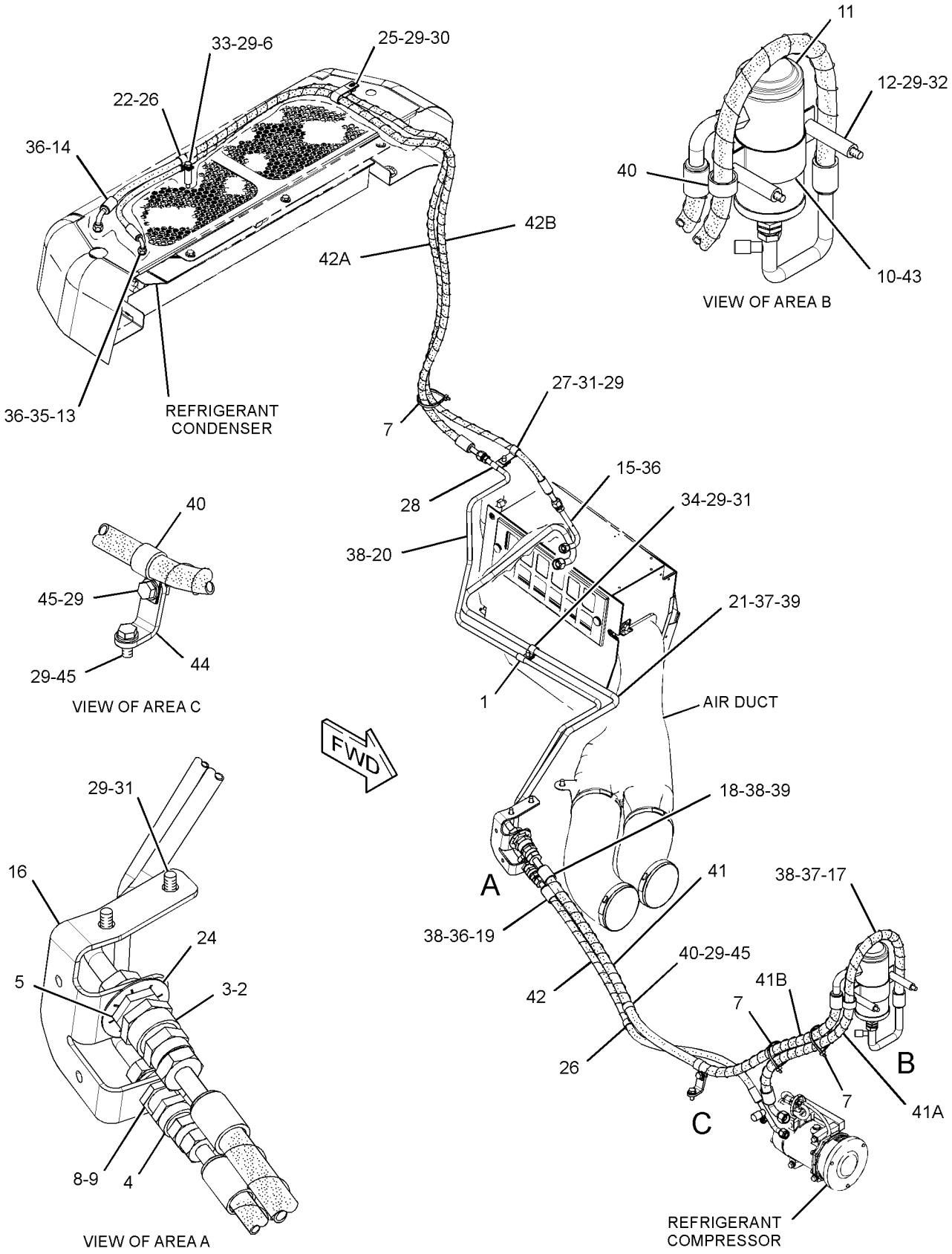

GRAPHIC #1 **<END>** g01637376

OPERATOR STATION

255-4241 LINES GP-HEATER

S/N: JLF1-UP; WWW1-UP; YYY1-UP

PART OF 244-7380, 244-7381, 282-5328 CHASSIS AR

SMCS-7304 **i02895418**

NOTE	REF NO	GRAPHIC REF	PART NUMBER	QTY	PART NAME 1 2 3 4 5 6 (PRODUCT LEVEL)	SEE PAGE
	1	1	**5D-1026**	6	CLAMP-HOSE	
	2	1	**260-9285**	1	TUBE	
	3	1	**260-9286**	1	TUBE	
	4	1	**307-1590**	1	HOSE	
	5	1	**307-1591**	1	PLATE AS	
	6	1	**2B-0941**	1	SPACER (10.5X19X19-MM THK)	
	7	1	**3E-4321**	4	CLIP	
	8	1	**7M-8798**	1	CLIP	
	9	1	**7X-7729**	1	WASHER (11X25X3-MM THK)	
	10	1	**8T-4121**	7	WASHER-HARD (11X21X2.5-MM THK)	
M	11	1	**8T-4136**	4	BOLT (M10X1.5X25-MM)	
M	12	1	**8T-4137**	3	BOLT (M10X1.5X20-MM)	
M	13	1	**8T-4186**	1	BOLT (M10X1.5X40-MM)	
M	14	1	**8T-4189**	1	BOLT (M8X1.25X20-MM)	
	15	1	**8T-4224**	1	WASHER-HARD (8.8X16X2-MM THK)	
	16	1	**9M-8406**	7	CLIP	
	17	1	**9X-2488**	2	CLAMP-HOSE	
D	18	1	**6V-5817**		CONDUIT-FLEXIBLE (0.2-M)	
D	18A	1	**6V-5817**		CONDUIT-FLEXIBLE (0.1-M)	
E	19	1	**5P-0767**		HOSE (149-CM)	
E	19A	1	**5P-0767**		HOSE (127.3-CM)	
E	19B	1	**5P-0767**		HOSE (42.4-CM)	

D-ORDER BY THE METER
E-ORDER BY THE CENTIMETER
M-METRIC PART

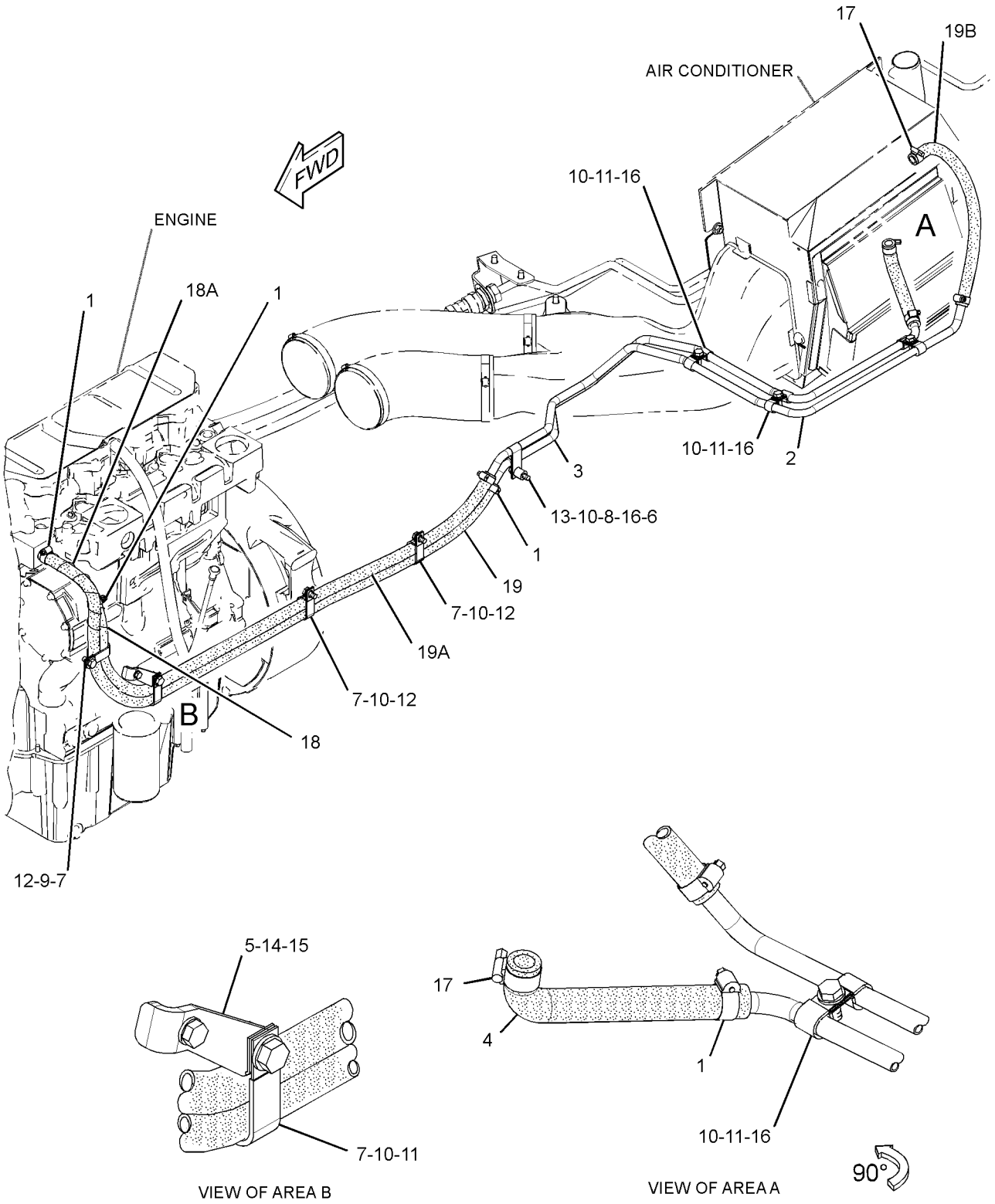

GRAPHIC #1 **<END>** g01525215

OPERATOR STATION

6V-1971 LITERATURE GP—MACHINE

S/N: WWW1-UP; YYY1-UP

PART OF 244-7510, 244-7511, 286-5019, 286-5020, 288-3628, 288-3629 PLATE & FILM GP

AN ATTACHMENT

SMCS-7300, 7400 **i02485092**

NOTE	PART NUMBER	QTY	PART NAME 1 2 3 4 5 6 (PRODUCT LEVEL)	SEE PAGE
	246-2641	1	PADLOCK GP (LITERATURE COMPARTMENT)	
	5P-8500	2	KEY	

<END>

OPERATOR STATION

281-3997 MIRROR GP-REAR VIEW—LH

S/N: JLF1-UP; WWW1-UP; YYY1-UP
PART OF 300-8546 DRIVE AR-WINCH, 244-7455 DRIVE GP-PUMP, 244-7471 HYDRAULIC AR
AN ATTACHMENT

SMCS-7319 **i02819620**

NOTE	REF NO	GRAPHIC REF	PART NUMBER	QTY	PART NAME 1 2 3 4 5 6 (PRODUCT LEVEL)	SEE PAGE
	1	1	**281-3998**	1	MIRROR AS	
M	2	1	**3E-8020**	1	SCREW-TRUSS HEAD (M6X1X25-MM)	

M-METRIC PART

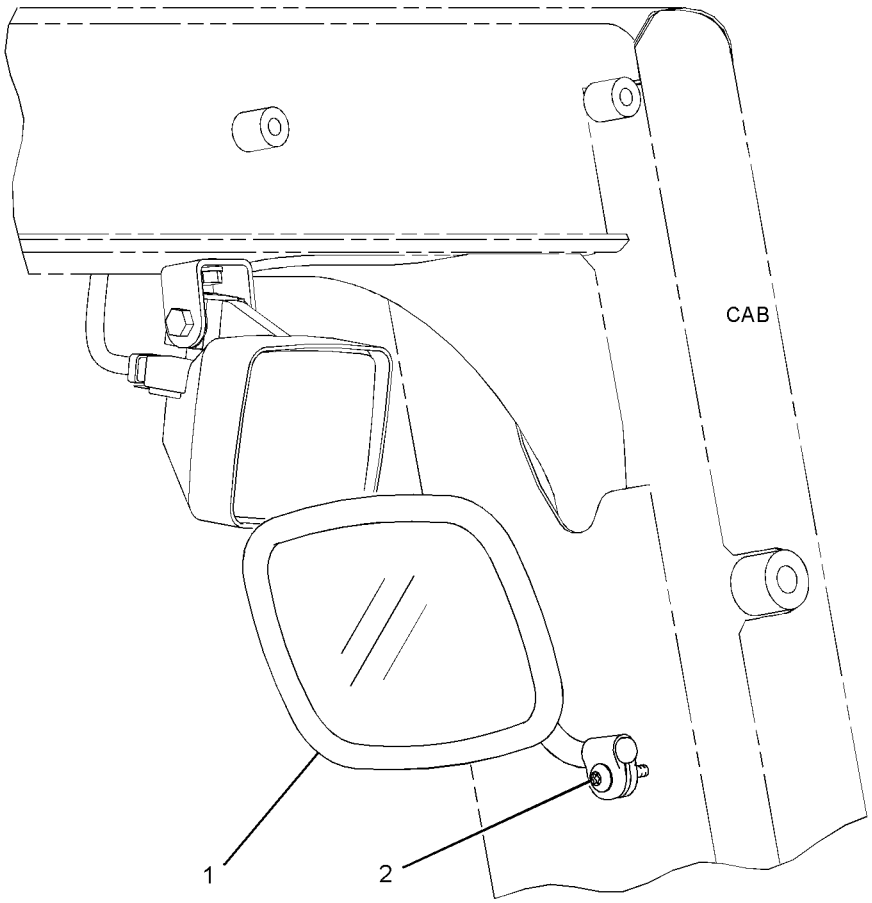

REAR VIEW
(LOWER LEFT)

GRAPHIC #1 **<END>** g01373435

286-9124 MONITOR AS—LIGHT BAR

S/N: JLF1-UP; WWW1-UP; YYY1-UP

PART OF 290-5570, 290-5571, 292-0279, 292-0280 GRADE CONTROL AR-SATELLITE

SMCS-7431 **i02618892**

NOTE	REF NO	GRAPHIC REF	PART NUMBER	QTY	PART NAME 1 2 3 4 5 6 (PRODUCT LEVEL)	SEE PAGE
	1	1	**230-5009**	1	RECEPTACLE AS-CONNECTOR (4-PIN)	
	2	1	**9X-3402**	3	SOCKET-CONNECTOR (16-GA TO 18-GA)	
	3	1	**8T-8737**	1	PLUG-SEAL	

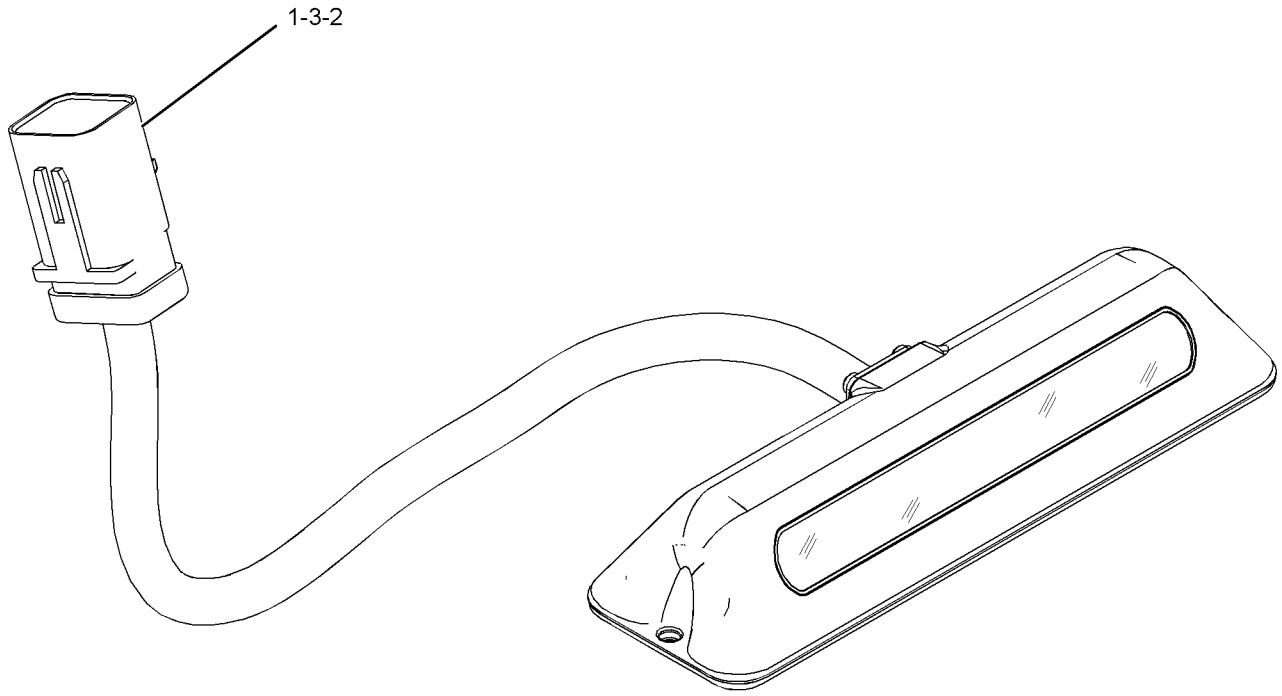

GRAPHIC #1 **<END>** g01313338

OPERATOR STATION

261-7992 MOTOR GP-WINDOW WIPER

S/N: JLF1-UP; WWW1-UP; YYY1-UP
12-VOLT
PART OF 255-4272, 255-4274 DOOR GP-CAB
AN ATTACHMENT

SMCS-7305 **i02681117**

NOTE	REF NO	GRAPHIC REF	PART NUMBER	QTY	PART NAME 1 2 3 4 5 6 (PRODUCT LEVEL)	SEE PAGE
	1	1	**206-5823**	1	CAP	
	2	1	**270-1907**	1	MOTOR GP-WINDOW WIPER	
		1	**186-3735**	4	PIN-CONNECTOR (16-GA TO 18-GA)	
		1	**230-5009**	1	RECEPTACLE AS-CONNECTOR (4-PIN)	
	3	1	**3F-9556**	1	LOCKWASHER	
M	4	1	**5C-7261**	1	NUT (M8X1.25-THD)	

M-METRIC PART

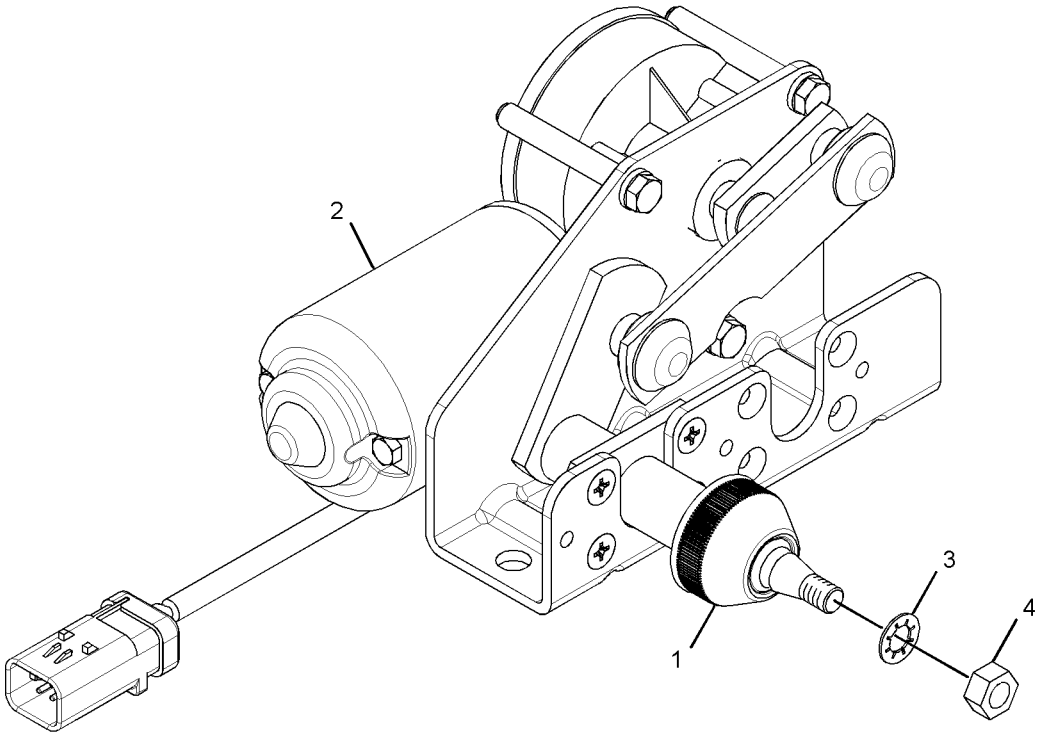

GRAPHIC #1 **<END>** g01354070

261-7993 MOTOR GP-WINDOW WIPER

S/N: JLF1-UP; WWW1-UP; YYY1-UP
12-VOLT
PART OF 255-4271, 255-4273 DOOR GP-CAB
AN ATTACHMENT

SMCS-7305 **i02680681**

NOTE	REF NO	GRAPHIC REF	PART NUMBER	QTY	PART NAME 1 2 3 4 5 6 (PRODUCT LEVEL)	SEE PAGE
	1	1	**206-5823**	1	CAP	
	2	1	**270-1907**	1	MOTOR GP-WINDOW WIPER	
		1	**186-3735**	4	PIN-CONNECTOR (16-GA TO 18-GA)	
		1	**230-5009**	1	RECEPTACLE AS-CONNECTOR (4-PIN)	
	3	1	**3F-9556**	1	LOCKWASHER	
M	4	1	**5C-7261**	1	NUT (M8X1.25-THD)	

M-METRIC PART

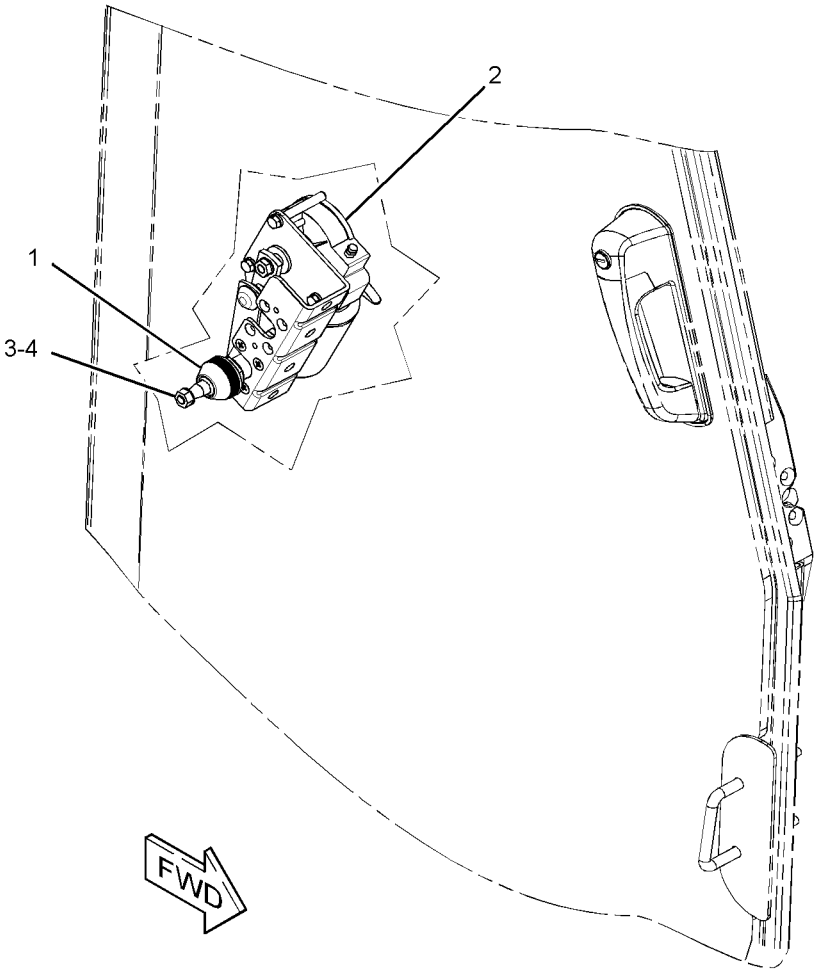

GRAPHIC #1 **<END>** g01375962

OPERATOR STATION

261-7996 MOTOR GP-WINDOW WIPER–REAR

S/N: JLF1-UP; WWW1-UP; YYY1-UP
12-VOLT
PART OF 255-4228 WIPER GP-WINDOW
AN ATTACHMENT

SMCS-7305 **i02648771**

NOTE	REF NO	GRAPHIC REF	PART NUMBER	QTY	PART NAME 1 2 3 4 5 6 (PRODUCT LEVEL)	SEE PAGE
	1	1	**186-3735**	4	PIN-CONNECTOR (16-GA TO 18-GA)	
	2	1	**230-5009**	1	RECEPTACLE AS-CONNECTOR (4-PIN)	
	3	1	**263-3823**	1	CAP-WIPER	
	4	1	**3F-9556**	1	LOCKWASHER	
M	5	1	**5C-7261**	1	NUT (M8X1.25-THD)	

M-METRIC PART

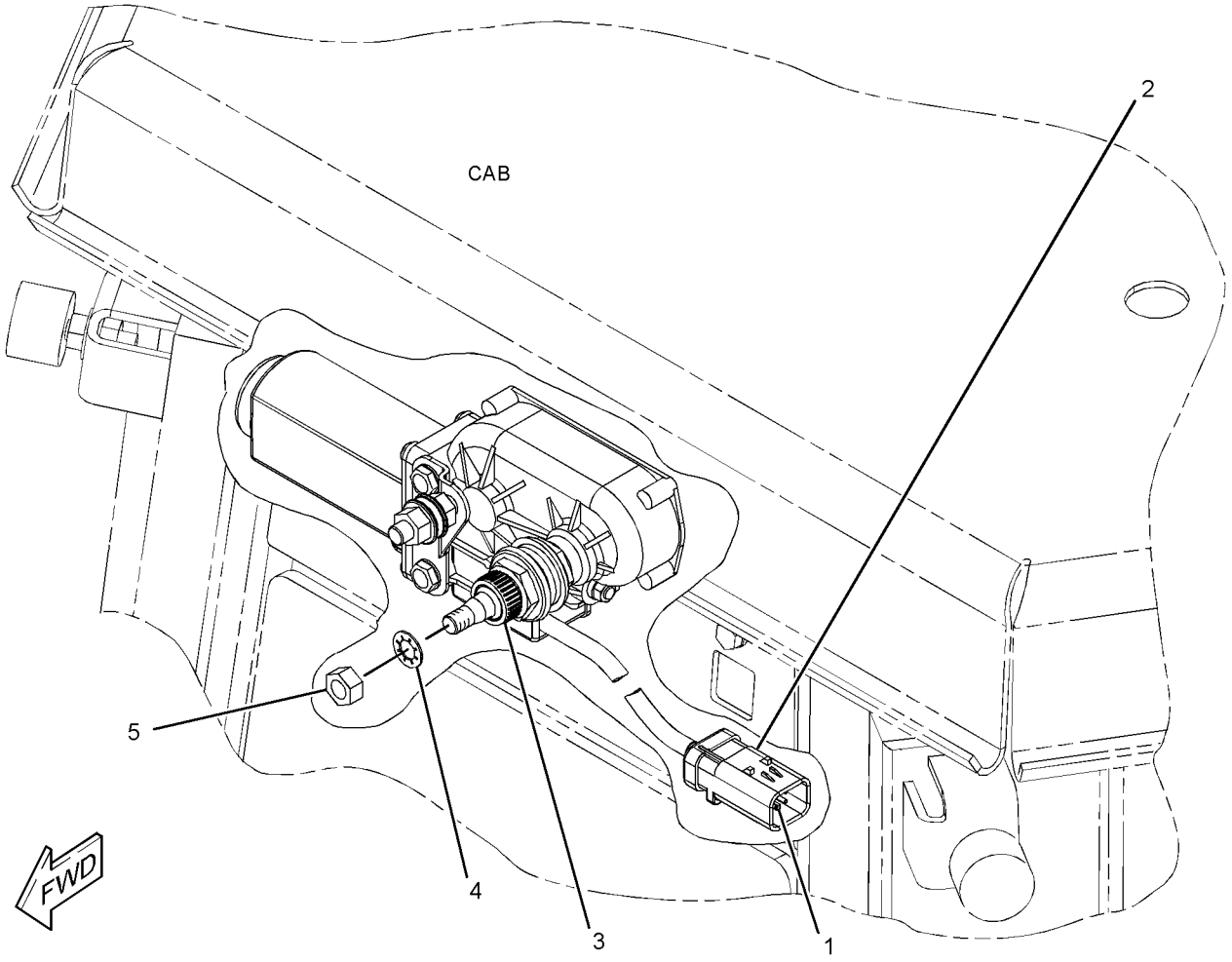

GRAPHIC #1 **<END>** g01330381

262-0319 MOTOR GP-WINDOW WIPER–FRONT

S/N: JLF1-UP; WWW1-UP; YYY1-UP
12-VOLT
PART OF 255-4228 WIPER GP-WINDOW
AN ATTACHMENT

SMCS-7305 **i02648776**

NOTE	REF NO	GRAPHIC REF	PART NUMBER	QTY	PART NAME 1 2 3 4 5 6 (PRODUCT LEVEL)	SEE PAGE
	1	1	**186-3735**	4	PIN-CONNECTOR (16-GA TO 18-GA)	
	2	1	**230-5009**	1	RECEPTACLE AS-CONNECTOR (4-PIN)	
	3	1	**263-3823**	1	CAP-WIPER	
	4	1	**3F-9556**	1	LOCKWASHER	
M	5	1	**5C-7261**	1	NUT (M8X1.25-THD)	

M-METRIC PART

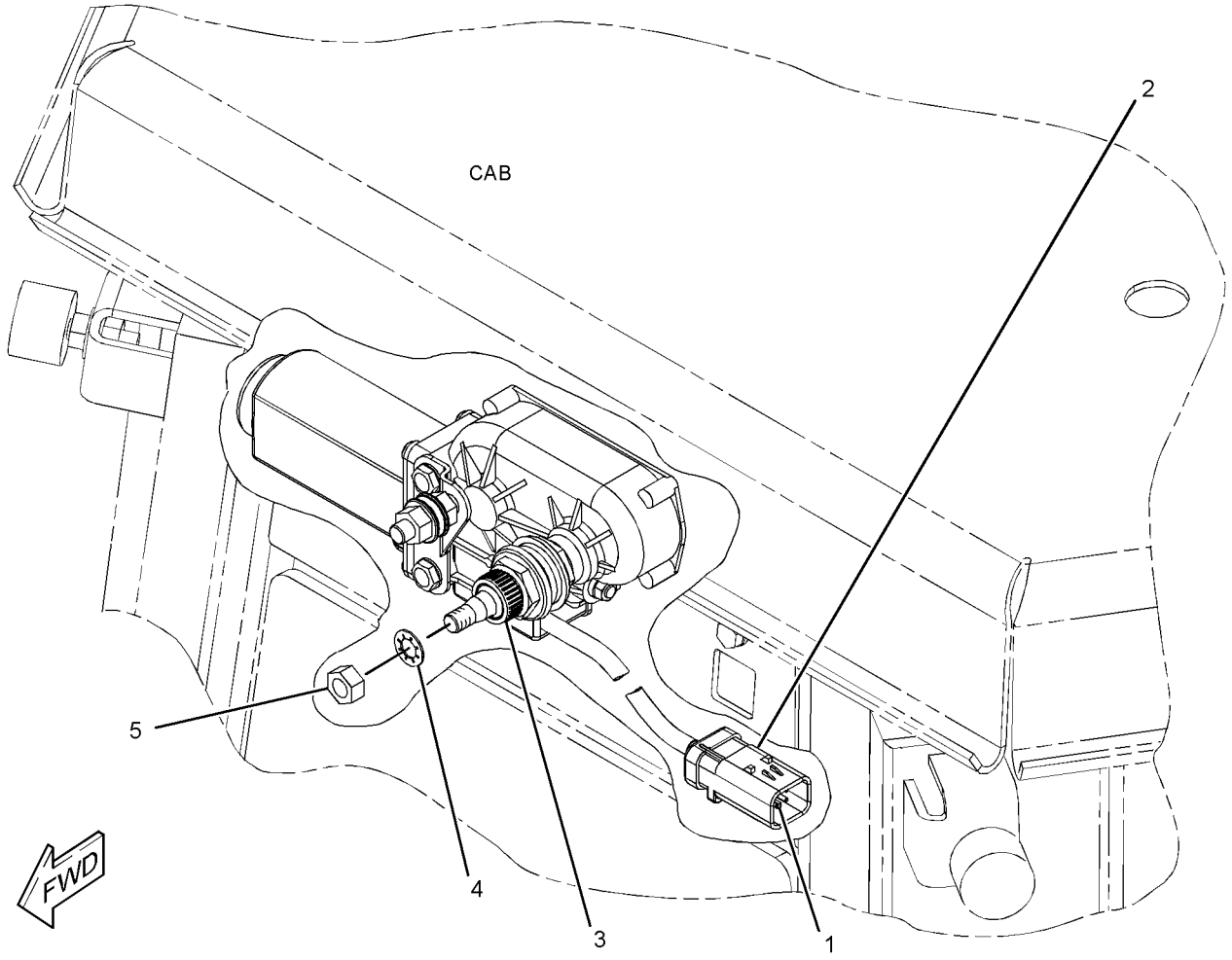

GRAPHIC #1 **<END>** g01330381

OPERATOR STATION

254-3169 MOUNTING GP-CAB

S/N: JLF1-UP; WWW1-UP; YYY1-UP

PART OF 244-7380, 244-7381, 282-5328 CHASSIS AR

SMCS-7266, 7301 **i02819622**

NOTE	REF NO	GRAPHIC REF	PART NUMBER	QTY	PART NAME 1 2 3 4 5 6 (PRODUCT LEVEL)	SEE PAGE
	1	1	**117-8131**	8	MOUNT AS (CAB)	
	2	1	**255-4280**	4	WASHER (25X134X12-MM THK)	
	3	1	**3E-4898**	4	SLEEVE	
M	4	1	**7X-2465**	2	BOLT (M24X3X180-MM)	
M	5	1	**8C-3290**	2	BOLT (M24X3X150-MM)	
	6	1	**126-8928**	4	WASHER-HARD (26X40X8-MM THK)	

M-METRIC PART

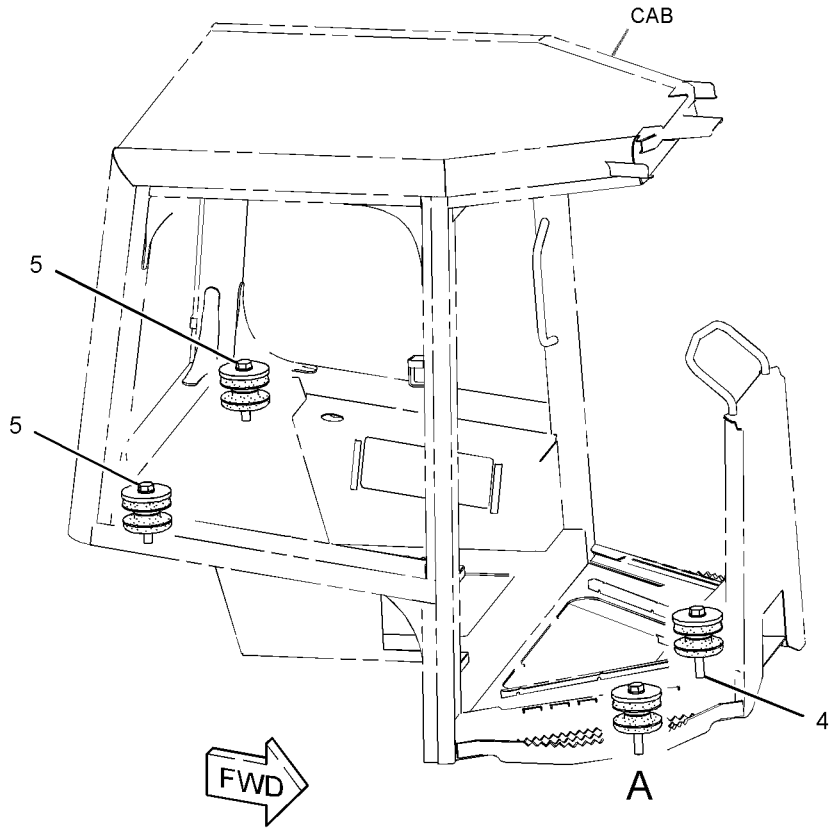

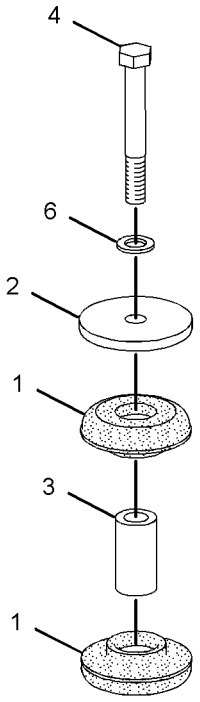

VIEW OF AREA A
(EXPLODED)

GRAPHIC #1 **<END>** g01330632

259-4746 MOUNTING GP-RADIO–GRADE CONTROL

S/N: JLF1-UP; WWW1-UP; YYY1-UP

PART OF 292-0296 MOUNTING GP-GRADE CONTROL

SMCS-7338 **i02514096**

NOTE	REF NO	GRAPHIC REF	PART NUMBER	QTY	PART NAME 1 2 3 4 5 6 (PRODUCT LEVEL)	SEE PAGE
	1	1	**8C-5607**	6	MOUNT-ISOLATION	
	2	1	**8C-5608**	3	SPACER (6.5X9.5X25.4-MM THK)	
	3	1	**140-7480**	1	BRACKET-MOUNTING	
	4	1	**167-8610**	1	BRACKET AS	
	5	1	**5S-7349**	2	BOLT (1/4-20X0.5-IN)	
	6	1	**8T-4205**	2	WASHER-HARD (7.2X14.5X2-MM THK)	
M	7	1	**9X-2480**	3	BOLT (M6X1X45-MM)	
	8	1	**9X-6165**	3	WASHER (6.5X22X2.5-MM THK)	
BJM	9	1	**7X-2533**	3	BOLT (M6X1X35-MM)	

B-USE AS REQUIRED
J-TO BE USED ON HYDRAULIC EXCAVATOR
M-METRIC PART

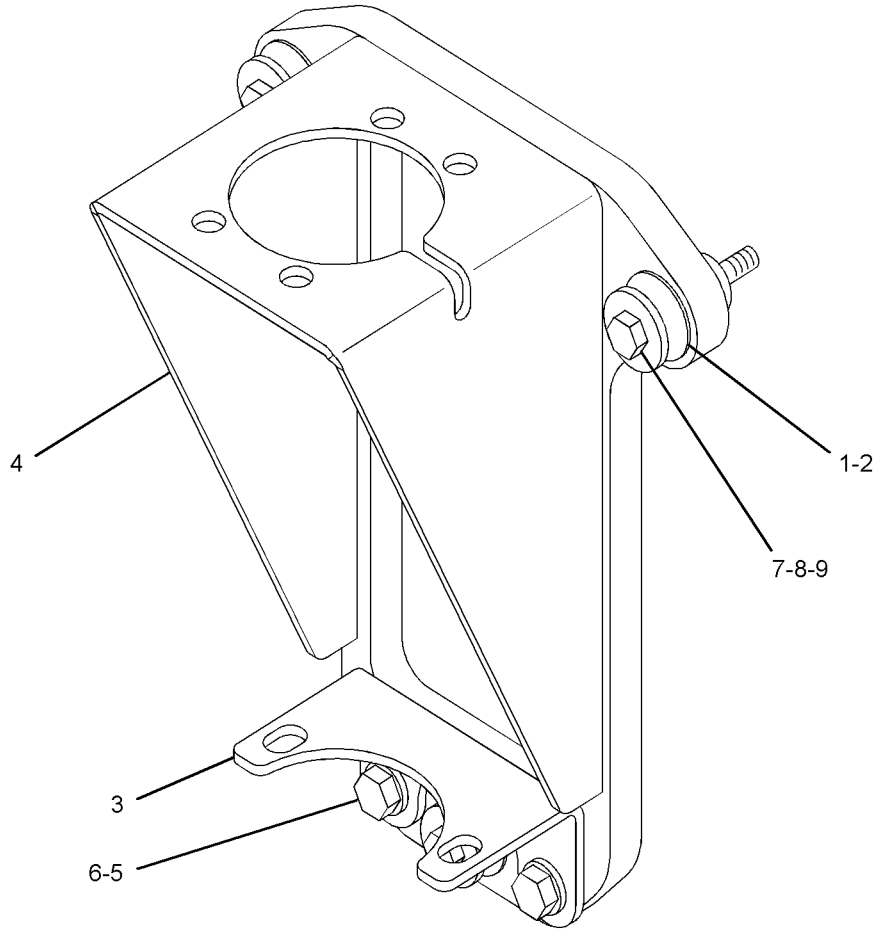

GRAPHIC #1 **<END>** g01259563

OPERATOR STATION

292-6402 PAN GP-BACKREST–LUMBAR

S/N: JLF1-UP; WWW1-UP; YYY1-UP
PART OF 301-0143 PAN GP-BACKREST, 295-4433, 295-4434, 295-4436 SEAT GP
AN ATTACHMENT

SMCS-7312 **i03095783**

NOTE	REF NO	GRAPHIC REF	PART NUMBER	QTY	PART NAME 1 2 3 4 5 6 (PRODUCT LEVEL)	SEE PAGE
	1	1	**5P-7957**	1	LANYARD	
	2	1	**136-1543**	1	PLATE AS-LUMBAR	
	3	1	**173-2052**	1	RETAINER	
	4	1	**178-7907**	1	HOLDER	
	5	1	**261-5694**	1	PAN AS-BACKREST	
	6	1	**322-3161**	1	SPRING	
	7	1	**4K-9429**	8	RIVET-POP	

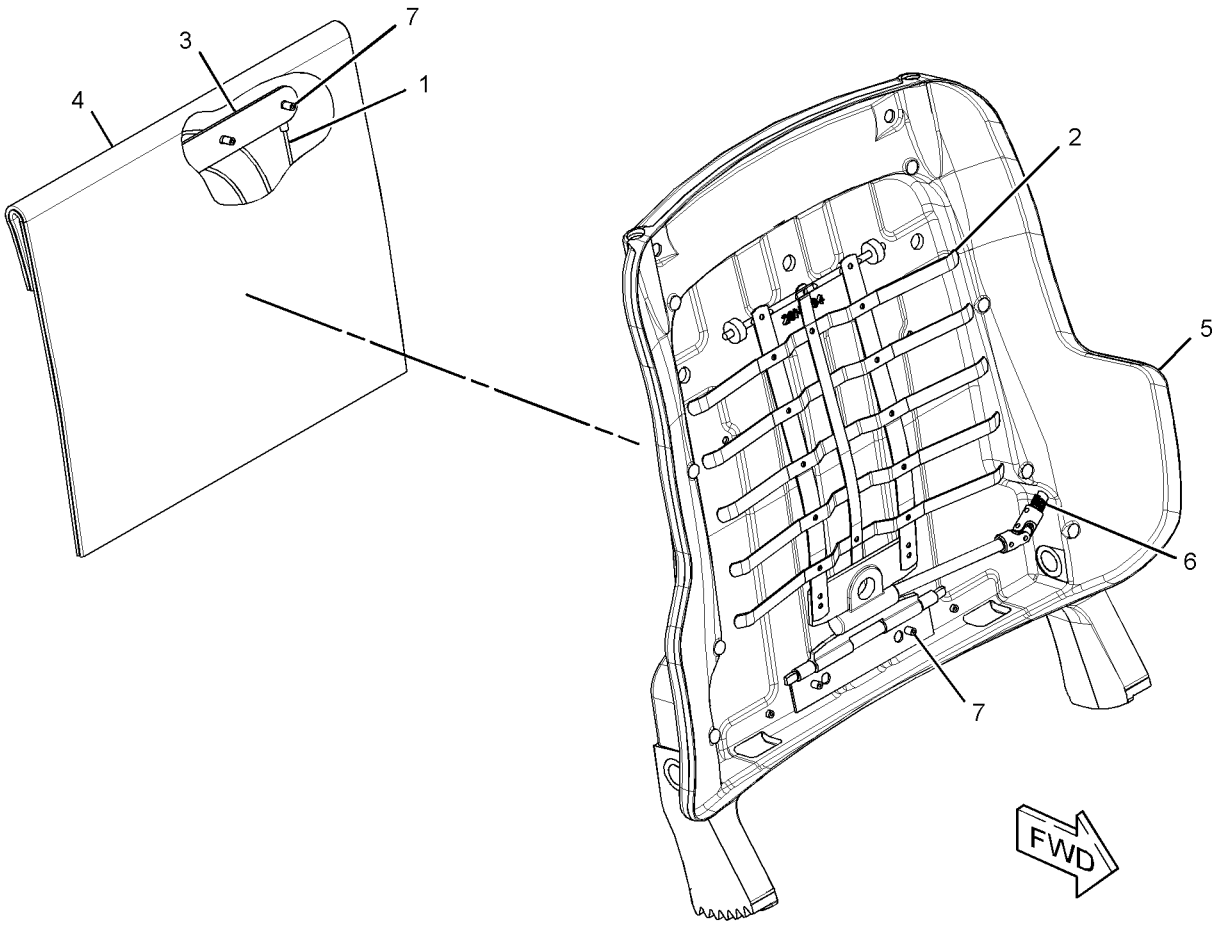

GRAPHIC #1 **<END>** g01577333

OPERATOR STATION

301-0143 PAN GP-BACKREST—HEATED SEAT

S/N: JLF1-UP; WWW1-UP; YYY1-UP
PART OF 301-0147 SEAT GP
AN ATTACHMENT

SMCS-7312 **i03408183**

NOTE	REF NO	GRAPHIC REF	PART NUMBER	QTY	PART NAME 1 2 3 4 5 6 (PRODUCT LEVEL)	SEE PAGE
	1	1	**164-4883**	1	KNOB-LUMBAR	
	2	1	**218-2529**	3	PLUG	
Y	3	1	**292-6402**	1	PAN GP-BACKREST (LUMBAR)	546
	4	1	**301-0145**	1	CUSHION AS-BACK (VINYL, HEATED)	
	5	1	**5P-0537**	2	WASHER-HARD (7.2X14.5X2-MM THK)	
	6	1	**6V-8969**	2	SCREW-BUTTON HEAD (1/4-20X0.5-IN)	
	7	1	**8T-7566**	1	PIN-SPRING	

Y-SEPARATE ILLUSTRATION

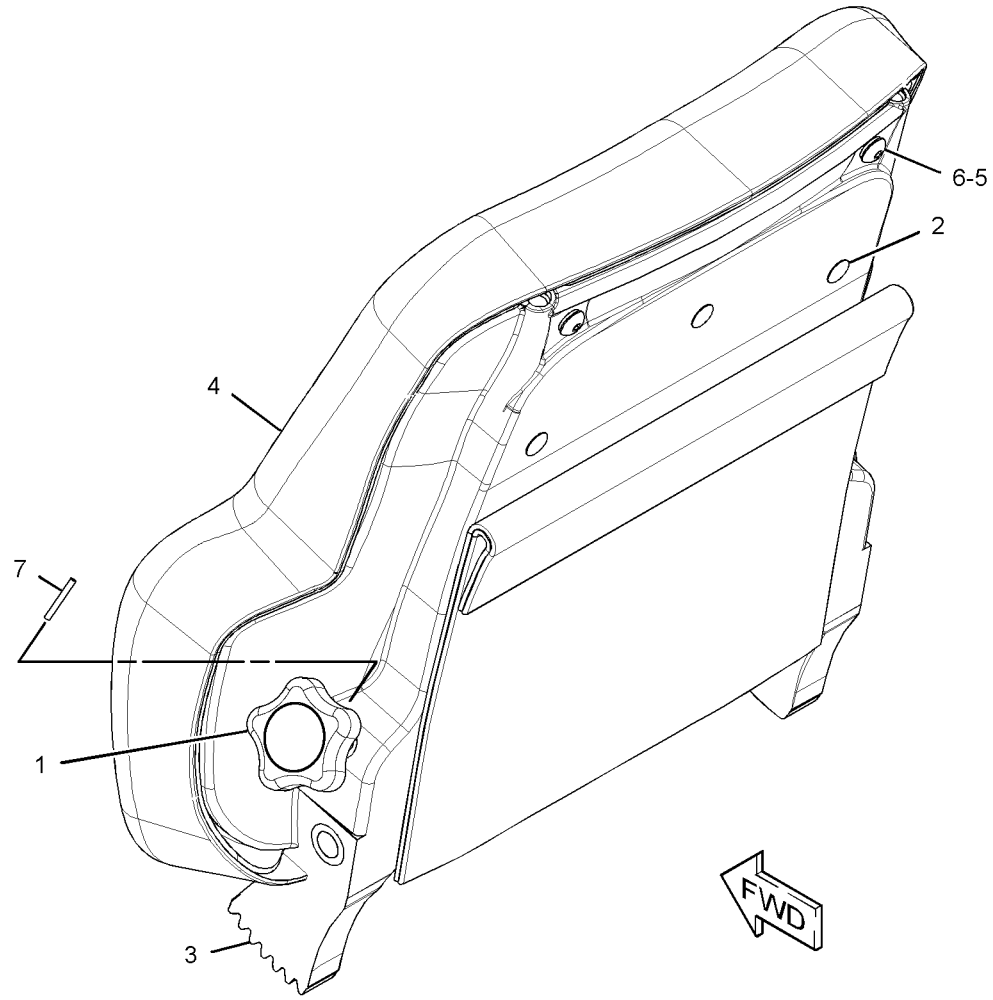

GRAPHIC #1 **<END>** g01354387

301-0144 PAN GP-SEAT–HEATED SEAT

S/N: JLF1-UP; WWW1-UP; YYY1-UP
12-VOLT
PART OF 301-0147 SEAT GP
AN ATTACHMENT

SMCS-7312 **i03438106**

NOTE	REF NO	GRAPHIC REF	PART NUMBER	QTY	PART NAME 1 2 3 4 5 6 (PRODUCT LEVEL)	SEE PAGE
	1	1	**216-0814**	1	SWITCH AS-LIMIT (SEAT ADJUSTMENT)	
	2	1	**267-5159**	1	SPRING	
	3	1	**267-5160**	1	PLATE	
	4	1	**320-5176**	1	SWITCH (SEAT HEATER ON, OFF)	
	5	1	**294-7139**	1	PAN GP-SEAT	
M		1	**5C-7261**	6	NUT (M8X1.25-THD)	
		1	**8T-4224**	6	WASHER-HARD (8.8X16X2-MM THK)	
M		1	**127-2170**	6	SCREW-TRUSS HEAD (M8X1.25X20-MM)	
	6	1	**301-0146**	1	CUSHION AS-SEAT (VINYL, HEATED)	
M	7	1	**7Y-7388**	6	SCREW-BUTTON HEAD (M5X0.8X12-MM)	

M-METRIC PART

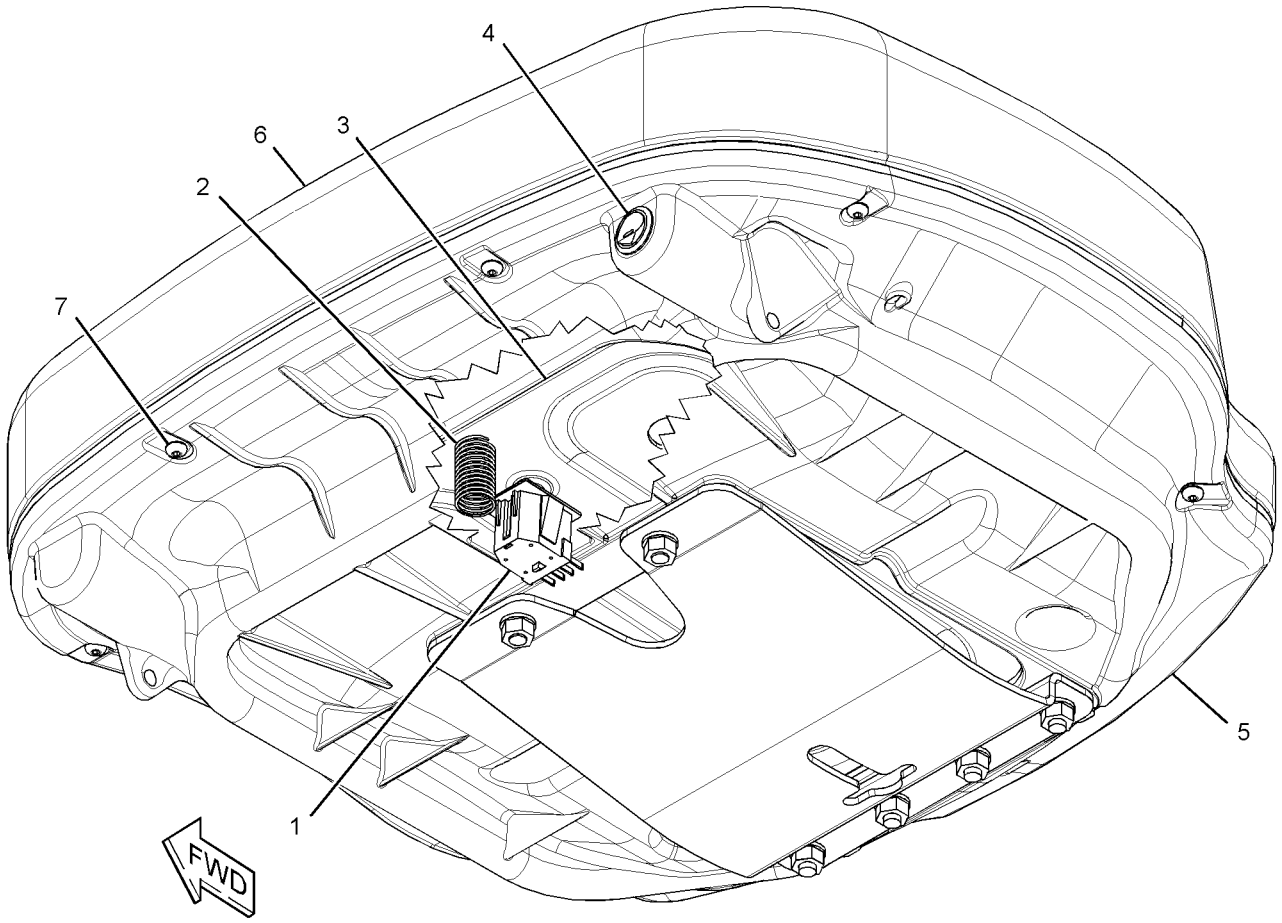

GRAPHIC #1 **<END>** g01354444

OPERATOR STATION

324-0669 PEDAL GP-GOVERNOR & BRAKE

S/N: JLF1-UP; WWW1-UP; YYY1-UP

PART OF 324-0670 CONTROL & MTG GP-PEDAL

SMCS-4122 **i03439227**

NOTE	REF NO	GRAPHIC REF	PART NUMBER	QTY	PART NAME 1 2 3 4 5 6 (PRODUCT LEVEL)	SEE PAGE
	1	1	**5P-9209**	2	BEARING AS-NEEDLE	
	2	1	**111-3780**	1	SPRING	
	3	1	**111-3781**	2	BOLT-ANCHOR (M10X1.5X23-MM)	
	4	1	**145-3405**	2	SPACER (10.3X16.7X8-MM THK)	
	5	1	**191-3587**	1	SWITCH AS-LIMIT (GOVERNOR, BRAKE PEDAL)	
		1	**9G-3695**	1	PLUG	
		1	**102-8804**	1	KIT-RECEPTACLE (4-PIN)	
					(INCLUDES RECEPTACLE AS & WEDGE)	
		1	**186-3735**	3	PIN-CONNECTOR (16-GA TO 18-GA)	
	6	1	**252-8930**	1	SUPPORT AS-PEDAL	
	7	1	**252-8933**	1	SHAFT	
	8	1	**267-5639**	1	LINK	
	9	1	**287-2169**	1	PAD	
	10	1	**296-9891**	1	PEDAL AS	
		1	**4S-8264**	2	RIVET-POP	
		1	**148-2714**	1	SPRING	
	11	1	**096-6166**	4	WASHER-HARD (4.5X9X1-MM THK)	
	12	1	**138-1645**	1	PIN-SPRING	
	13	1	**266-1470**	1	SENSOR GP-POSITION (STEERING)	
		1	**102-8803**	1	KIT-RECEPTACLE (3-PIN)	
					(INCLUDES RECEPTACLE AS & WEDGE)	
E		1	**9X-1813**		SLEEVE (13-CM)	
		1	**180-9339**	3	PIN-CONNECTOR (14-GA TO 18-GA)	
M	14	1	**3C-6969**	2	NUT (M3X0.5-THD)	
	15	1	**3W-3321**	1	PLUNGER AS	
	16	1	**5D-0998**	6	SPRING-DISC	
	17	1	**6S-3859**	1	WASHER (0.562X1.75X0.063-IN THK)	
	18	1	**6V-0894**	1	SEAL-O-RING	
M	19	1	**6V-2314**	2	BOLT (M5X0.8X35-MM)	
M	20	1	**6V-7687**	1	LOCKNUT (M12X1.75-THD)	
	21	1	**6V-8188**	1	NUT (1/2-13-THD)	
M	22	1	**6V-9325**	2	SCREW-MACHINE (M3X0.5X30-MM)	
	23	1	**7X-7729**	3	WASHER (11X25X3-MM THK)	
	24	1	**8T-0328**	2	WASHER-HARD (5.5X10X1-MM THK)	
M	25	1	**8T-4133**	1	NUT (M10X1.5-THD)	
	26	1	**8T-7971**	1	WASHER-HARD (13.5X25.5X5-MM THK)	
	27	1	**6S-3900**	1	SEAT	

E-ORDER BY THE CENTIMETER
M-METRIC PART

324-0669 **PEDAL GP-GOVERNOR & BRAKE** *(contd.)* **i03439227**

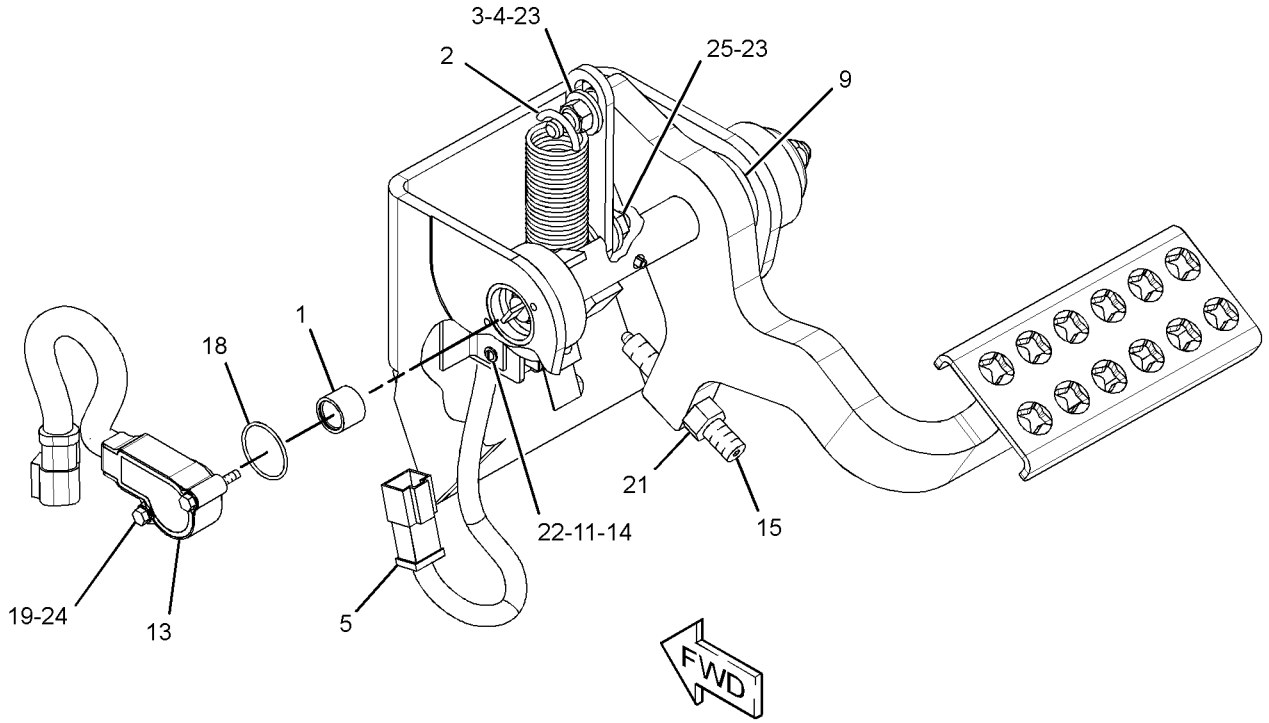

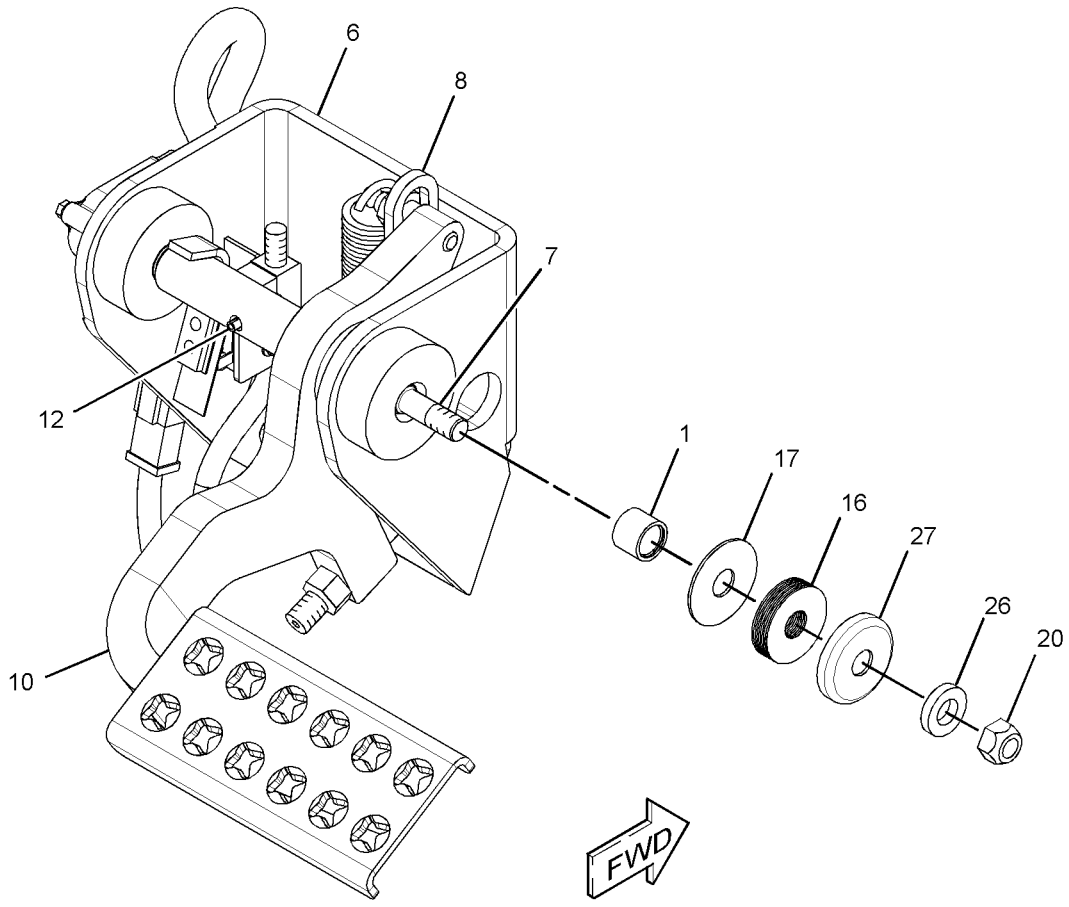

GRAPHIC #1 **<END>** g01711437

OPERATOR STATION

262-0766 RECLINER GP-SEAT

S/N: JLF1-UP; WWW1-UP; YYY1-UP
PART OF 301-0147 SEAT GP
AN ATTACHMENT

SMCS-7312 **i02696027**

NOTE	REF NO	GRAPHIC REF	PART NUMBER	QTY	PART NAME 1 2 3 4 5 6 (PRODUCT LEVEL)	SEE PAGE
	1	1	**262-0767**	1	BRACKET AS (LH)	
	2	1	**262-0769**	1	BRACKET AS (RH)	
					(EACH BRACKET AS INCLUDES)	
		1	**262-0771**	1	BEARING AS	
	3	1	**262-0772**	1	SHAFT AS	
		1	**282-0557**	1	SPRING	
		1	**2K-9111**	2	PIN-SPRING	
		1	**8T-0277**	1	PIN-SPRING	
		1	**3E-4333**	1	KEY-WOODRUFF	
		1	**256-4959**	1	SLIDER AS	
		1	**262-0789**	1	CABLE AS	

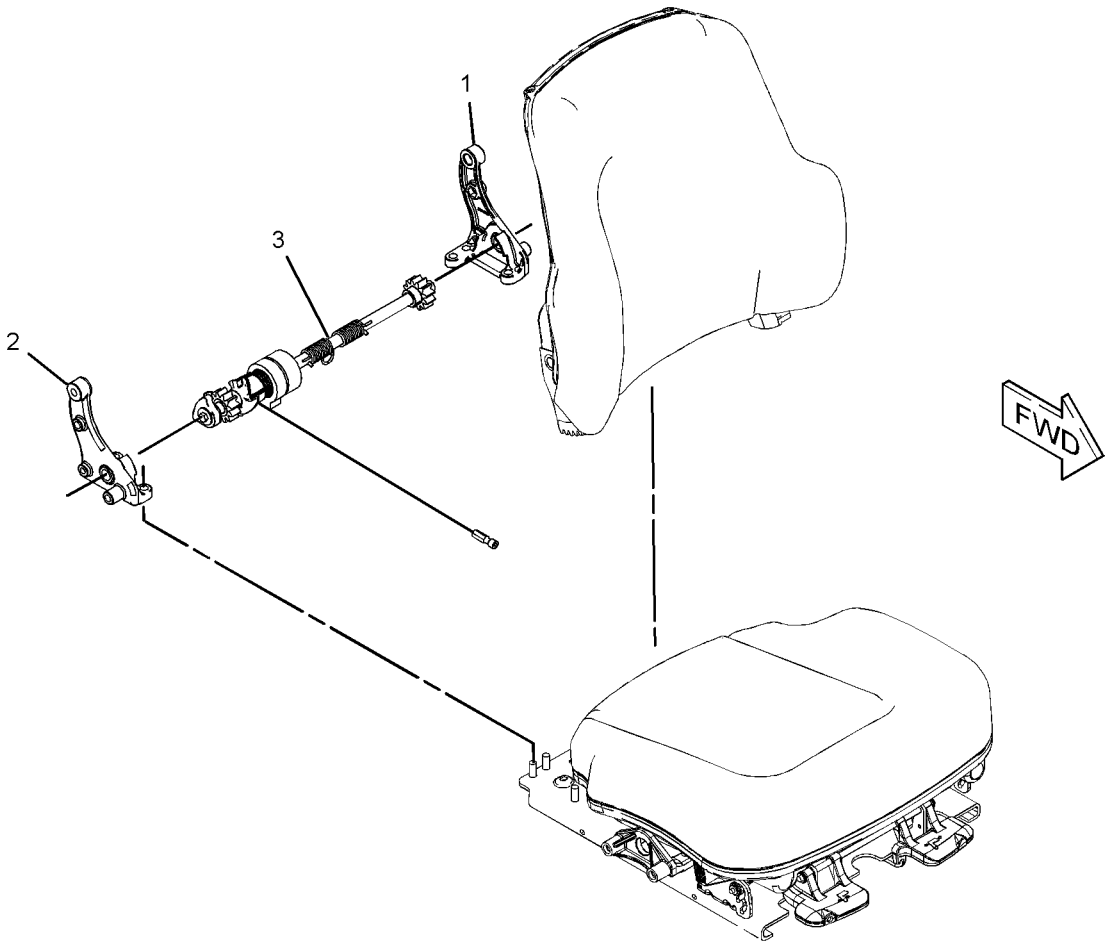

GRAPHIC #1 **<END>** g01303028

OPERATOR STATION

244-7474 ROPS AR—OROPS

S/N: JLF1-UP; WWW1-UP; YYY1-UP
AN ATTACHMENT

SMCS-7177 **i02647982**

NOTE	PART NUMBER	QTY	PART NAME 1 2 3 4 5 6 (PRODUCT LEVEL)	SEE PAGE
Y	*255-4240*	1	ACCESSORY GP-CAB (OROPS)	461
Y	*260-9501*	1	BELT TENSIONER GP	8
Y	*254-3190*	1	HEATER GP-CAB	524
Y	*245-6022*	1	INSTRUMENT GP (OROPS)	528
Y	*245-6047*	1	WIRING GP-CAB (OROPS)	201
	254-3170	1	ROLLOVER AS (ORPS)	
M	**9R-2672**	2	BOSS (M10X1.5X20-MM)	

M-METRIC PART
Y-SEPARATE ILLUSTRATION

<END>

244-7475 ROPS AR—EROPS

S/N: JLF1-UP; WWW1-UP; YYY1-UP
AN ATTACHMENT

SMCS-7177 **i02681181**

NOTE	PART NUMBER	QTY	PART NAME 1 2 3 4 5 6 (PRODUCT LEVEL)	SEE PAGE
Y	*255-4239*	1	ACCESSORY GP-CAB	459
Y	*254-3210*	1	AIR CONDITIONER & MOUNTING GP	465
Y	*260-9294*	1	BELT TENSIONER GP	6
Y	*255-4271*	1	DOOR GP-CAB (RH)	511
Y	*255-4272*	1	DOOR GP-CAB (LH)	513
Y	**247-6505**	1	INSTALLATION GP-RADIO	527
Y	*245-6039*	1	INSTRUMENT GP	530
Y	*255-4229*	1	WASHER GP-WINDOW	587
Y	*247-6503*	1	WINDOW GP-CAB	589
Y	*255-4228*	1	WIPER GP-WINDOW	593
Y	*245-6021*	1	WIRING GP-CAB	191
	254-3180	1	ROLLOVER AS	

Y-SEPARATE ILLUSTRATION

<END>

OPERATOR STATION

244-7476 ROPS AR—EROPS

S/N: JLF1-UP; WWW1-UP; YYY1-UP
360 DEGREE GUARDING
AN ATTACHMENT

SMCS-7177 **i02668675**

NOTE	PART NUMBER	QTY	PART NAME 1 2 3 4 5 6 (PRODUCT LEVEL)	SEE PAGE
Y	*255-4239*	1	ACCESSORY GP-CAB	459
Y	*254-3210*	1	AIR CONDITIONER & MOUNTING GP	465
Y	*260-9294*	1	BELT TENSIONER GP (FAN)	6
Y	*255-4273*	1	DOOR GP-CAB (RH)	516
Y	*255-4274*	1	DOOR GP-CAB (LH)	518
Y	**247-6505**	1	INSTALLATION GP-RADIO	527
Y	*245-6039*	1	INSTRUMENT GP	530
Y	*250-1699*	1	SCREEN GP-PROTECTION (SIDES)	556
Y	*272-9780*	1	SCREEN GP-PROTECTION	557
Y	*255-4229*	1	WASHER GP-WINDOW	587
Y	*255-4275*	1	WINDOW GP-CAB	590
Y	*255-4228*	1	WIPER GP-WINDOW	593
Y	*245-6021*	1	WIRING GP-CAB	191
	254-3180	1	ROLLOVER AS	

Y-SEPARATE ILLUSTRATION

<END>

282-4897 ROPS AR—OROPS

S/N: JLF1-UP; WWW1-UP; YYY1-UP
AN ATTACHMENT

SMCS-7177 **i03415604**

NOTE	PART NUMBER	QTY	PART NAME 1 2 3 4 5 6 (PRODUCT LEVEL)	SEE PAGE
Y	*255-4240*	1	ACCESSORY GP-CAB (OROPS)	461
Y	*261-0369*	1	BELT TENSIONER GP	9
Y	*254-3190*	1	HEATER GP-CAB	524
Y	*245-6022*	1	INSTRUMENT GP (OROPS)	528
Y	*245-6047*	1	WIRING GP-CAB (OROPS)	201
	254-3170	1	ROLLOVER AS (OROPS)	

Y-SEPARATE ILLUSTRATION

<END>

OPERATOR STATION

282-4898 ROPS AR-ENCLOSED—EROPS

S/N: JLF1-UP; WWW1-UP; YYY1-UP

AN ATTACHMENT

SMCS-7301 **i02834131**

NOTE	PART NUMBER	QTY	PART NAME 1 2 3 4 5 6 (PRODUCT LEVEL)	SEE PAGE
Y	*255-4239*	1	ACCESSORY GP-CAB (EROPS)	459
Y	*254-3210*	1	AIR CONDITIONER & MOUNTING GP	465
Y	*260-9295*	1	BELT TENSIONER GP	7
Y	*255-4271*	1	DOOR GP-CAB (RH)	511
Y	*255-4272*	1	DOOR GP-CAB (LH)	513
Y	**247-6505**	1	INSTALLATION GP-RADIO	527
Y	*245-6039*	1	INSTRUMENT GP	530
Y	*255-4229*	1	WASHER GP-WINDOW	587
Y	*247-6503*	1	WINDOW GP-CAB	589
Y	*255-4228*	1	WIPER GP-WINDOW	593
Y	*245-6021*	1	WIRING GP-CAB	191
	254-3180	1	ROLLOVER AS	

Y-SEPARATE ILLUSTRATION

<END>

282-4899 ROPS AR-ENCLOSED—EROPS

S/N: JLF1-UP; WWW1-UP; YYY1-UP

360 DEGREE GUARDING

AN ATTACHMENT

SMCS-7301 **i02834132**

NOTE	PART NUMBER	QTY	PART NAME 1 2 3 4 5 6 (PRODUCT LEVEL)	SEE PAGE
Y	*255-4239*	1	ACCESSORY GP-CAB (EROPS)	459
Y	*254-3210*	1	AIR CONDITIONER & MOUNTING GP	465
Y	*260-9295*	1	BELT TENSIONER GP	7
Y	*255-4273*	1	DOOR GP-CAB (RH)	516
Y	*255-4274*	1	DOOR GP-CAB (LH)	518
Y	**247-6505**	1	INSTALLATION GP-RADIO	527
Y	*245-6039*	1	INSTRUMENT GP	530
Y	*250-1699*	1	SCREEN GP-PROTECTION (SIDES)	556
Y	*272-9780*	1	SCREEN GP-PROTECTION	557
Y	*255-4229*	1	WASHER GP-WINDOW	587
Y	*255-4275*	1	WINDOW GP-CAB	590
Y	*255-4228*	1	WIPER GP-WINDOW	593
Y	*245-6021*	1	WIRING GP-CAB	191
	254-3180	1	ROLLOVER AS	

Y-SEPARATE ILLUSTRATION

<END>

OPERATOR STATION

272-9770 SCREEN GP-CAB–OROPS

S/N: JLF1-UP; WWW1-UP; YYY1-UP
REAR
FOR USE WITH CANOPY, ROPS
AN ATTACHMENT

SMCS-7165, 7301 **i03637904**

NOTE	REF NO	GRAPHIC REF	PART NUMBER	QTY	PART NAME 1 2 3 4 5 6 (PRODUCT LEVEL)	SEE PAGE
	1	1	**302-5320**	1	SCREEN AS-CAB	
M		1	**8T-3490**	2	NUT-WELD (M10X1.5-THD)	
M		1	**9X-6269**	1	NUT-WELD (M16X2-THD)	
M	2	1	**7X-2552**	4	BOLT (M16X2X30-MM)	
	3	1	**8T-4122**	4	WASHER-HARD (17X32X3.5-MM THK)	

M-METRIC PART

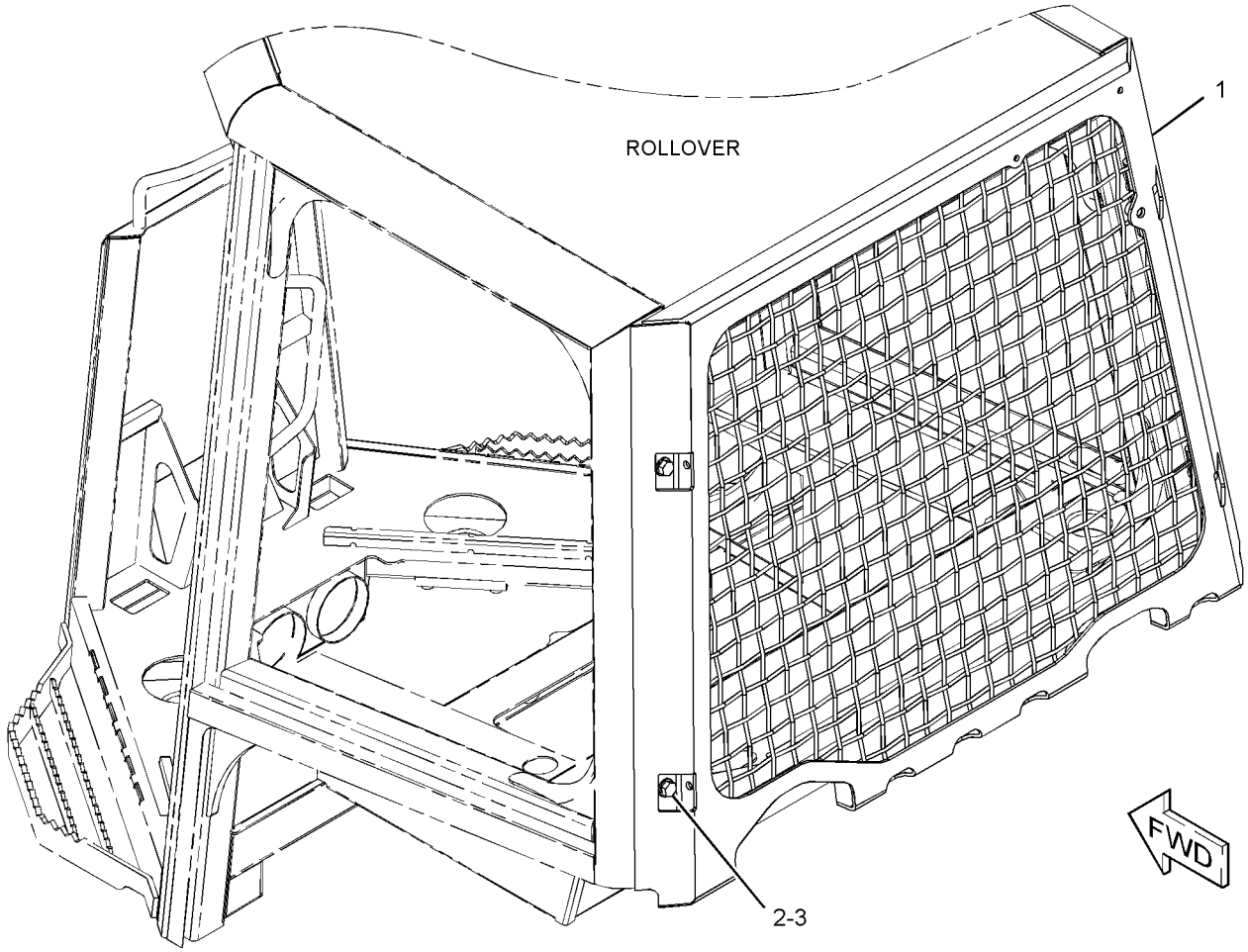

GRAPHIC #1 **<END>** g01333901

OPERATOR STATION

250-1699 SCREEN GP-PROTECTION–SIDES

S/N: JLF1-UP; WWW1-UP; YYY1-UP
PART OF 244-7476 ROPS AR, 282-4899 ROPS AR-ENCLOSED
AN ATTACHMENT

SMCS-7165 **i03635050**

NOTE	REF NO	GRAPHIC REF	PART NUMBER	QTY	PART NAME 1 2 3 4 5 6 (PRODUCT LEVEL)	SEE PAGE
	1	1	**252-0552**	1	SCREEN AS (RH)	
	2	1	**252-0553**	1	SCREEN AS (LH)	
					(EACH SCREEN AS INCLUDES)	
M		1	**8T-3597**	4	NUT-WELD (M12X1.75-THD)	
M	3	1	**7X-2553**	6	BOLT (M16X2X40-MM)	
M	4	1	**7X-2554**	2	BOLT (M16X2X70-MM)	
	5	1	**9X-8257**	8	WASHER (17.5X30X3.5-MM THK)	

M-METRIC PART

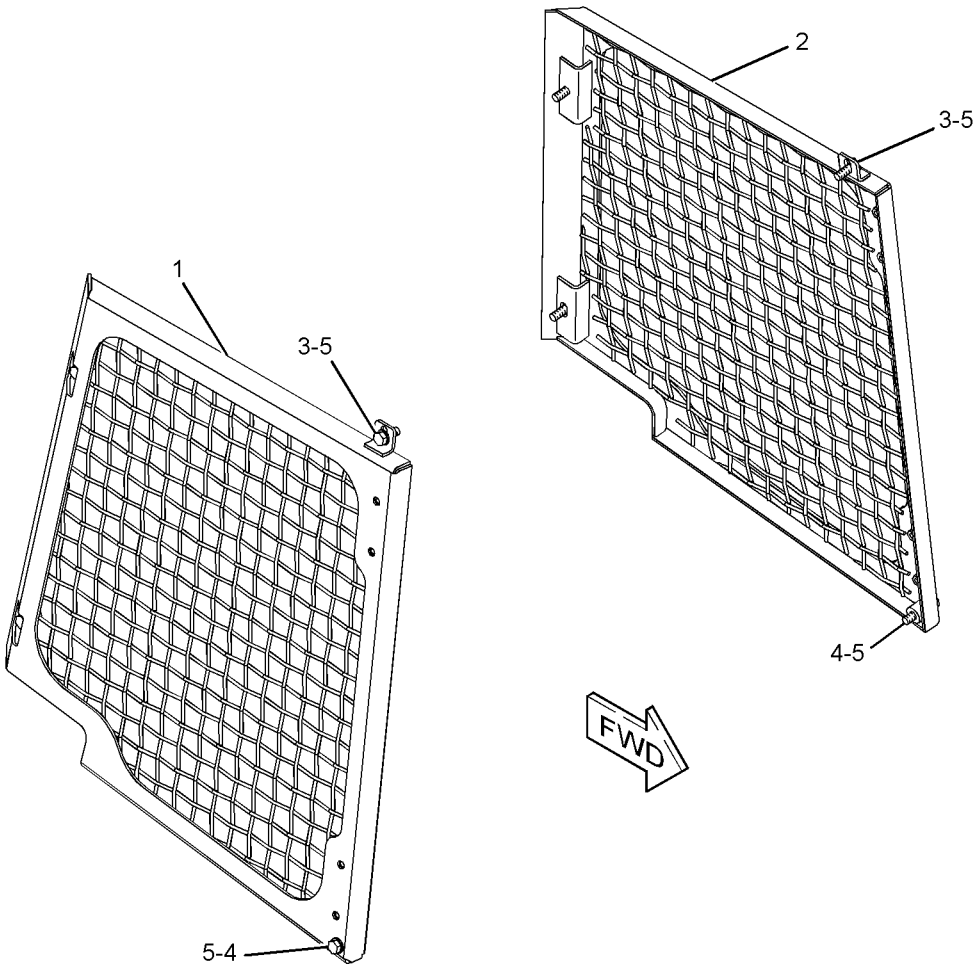

GRAPHIC #1 **<END>** g01202762

272-9780 SCREEN GP-PROTECTION–EROPS

S/N: JLF1-UP; WWW1-UP; YYY1-UP
PART OF 244-7476 ROPS AR, 282-4899 ROPS AR-ENCLOSED
FOR USE WITH CABS, ROPS
AN ATTACHMENT

SMCS-7165 **i03635049**

NOTE	REF NO	GRAPHIC REF	PART NUMBER	QTY	PART NAME 1 2 3 4 5 6 (PRODUCT LEVEL)	SEE PAGE
	1	1	**5P-0372**	3	LOCK PIN	
	2	1	**8E-7840**	1	CLIP	
	3	1	**9M-5732**	1	RIVET-POP	
	4	1	**252-5459**	1	ROD AS	
		1	**7X-0599**	1	WASHER-HARD (13X20X2-MM THK)	
	5	1	**252-6803**	2	HINGE	
	6	1	**302-5323**	1	SCREEN AS-CAB	
	7	1	**6S-9277**	2	PIN	
M	8	1	**7X-2552**	4	BOLT (M16X2X30-MM)	
	9	1	**8T-4122**	4	WASHER-HARD (17X32X3.5-MM THK)	

M-METRIC PART

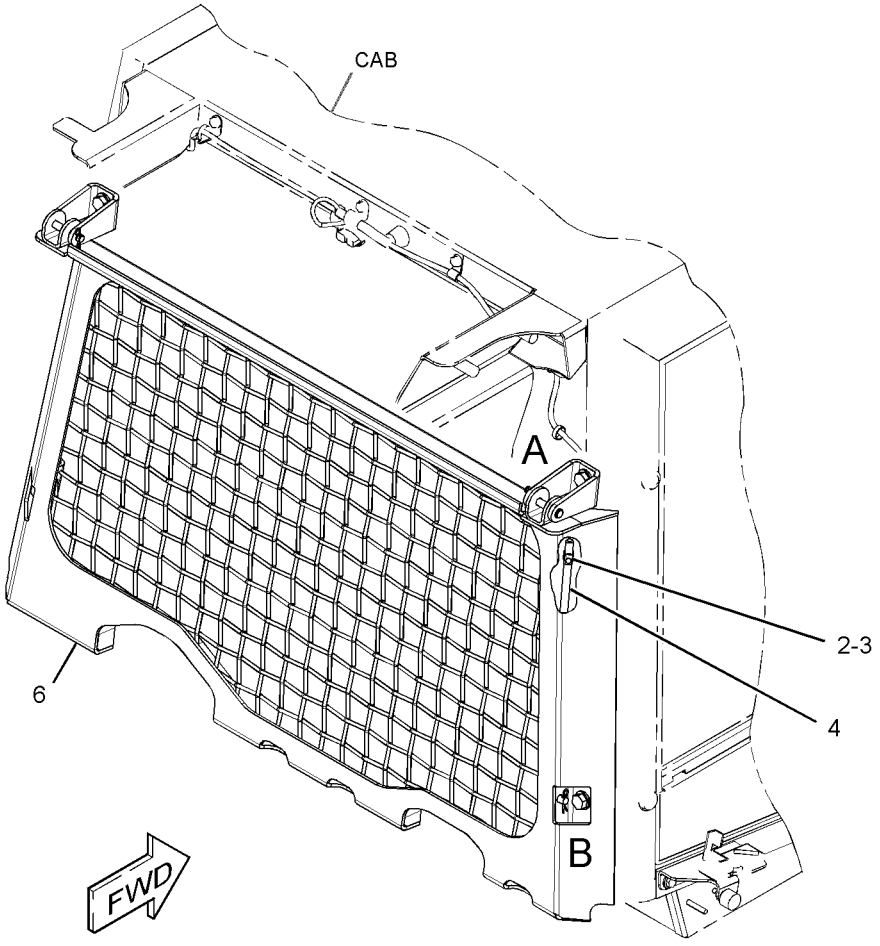

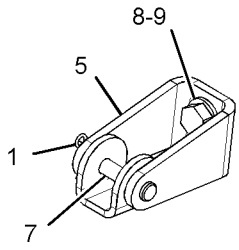

VIEW OF AREA A

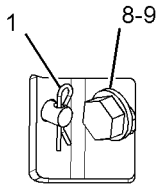

VIEW OF AREA B

GRAPHIC #1 **<END>** g01407099

OPERATOR STATION

255-4242 SEAT & SUPPORT GP—VINYL, HEATED

S/N: JLF1-UP; WWW1-UP; YYY1-UP

CANNOT BE USED WITH 255-4250—PAGE 572, 255-4251—PAGE 573, 255-4252—PAGE 574

AN ATTACHMENT

SMCS-7312 **i02834136**

NOTE	REF NO	GRAPHIC REF	PART NUMBER	QTY	PART NAME 1 2 3 4 5 6 (PRODUCT LEVEL)	SEE PAGE
Y	1	1	*268-9351*	1	CONSOLE GP-OPERATOR (RH)	485
Y	2	1	*268-9352*	1	CONSOLE GP-OPERATOR (LH)	486
Y	3	1	*280-9679*	1	ARMREST GP (LH)	474
Y	4	1	*284-7054*	1	ARMREST GP (RH)	476
Y	5	1	*301-0148*	1	SEAT GP-SUSPENSION (VINYL, HEATED)	578
	6	1	**7X-7729**	4	WASHER (11X25X3-MM THK)	
M	7	1	**8T-4186**	4	BOLT (M10X1.5X40-MM)	

M-METRIC PART
Y-SEPARATE ILLUSTRATION

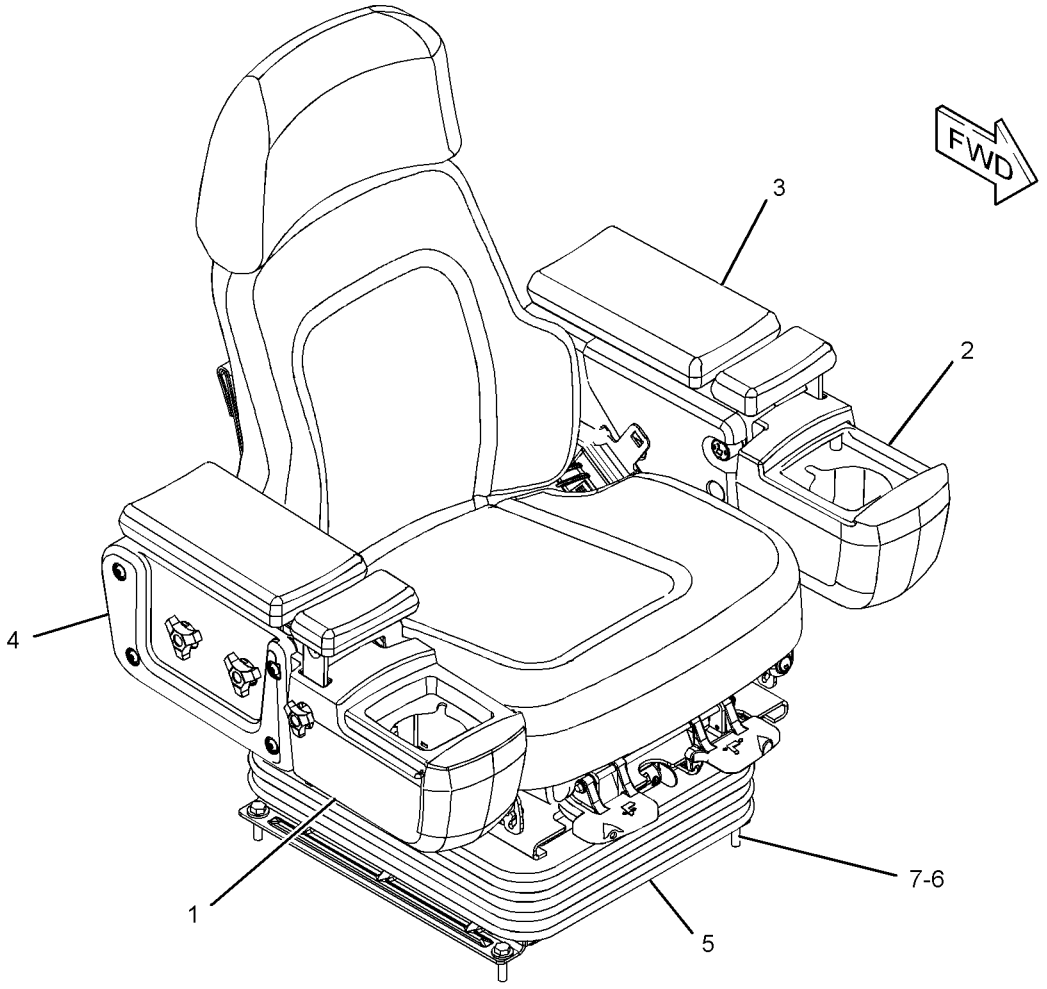

GRAPHIC #1 **<END>** g01354437

OPERATOR STATION

272-2272 SEAT BELT GP–RETRACTABLE

S/N: JLF1-UP; WWW1-UP; YYY1-UP
PART OF 255-8846, 257-4959, 272-8111, 301-0148 SEAT GP-SUSPENSION
AN ATTACHMENT

SMCS-7327 **i02760027**

NOTE	REF NO	GRAPHIC REF	PART NUMBER	QTY	PART NAME 1 2 3 4 5 6 (PRODUCT LEVEL)	SEE PAGE
	1	1	**275-7803**	1	SPACER (11.7X19.8X25.4-MM THK)	
	2	1	**0T-0489**	2	BOLT (7/16-20X2-IN)	
	3	1	**8T-5360**	2	WASHER (12X22.5X2.5-MM THK)	

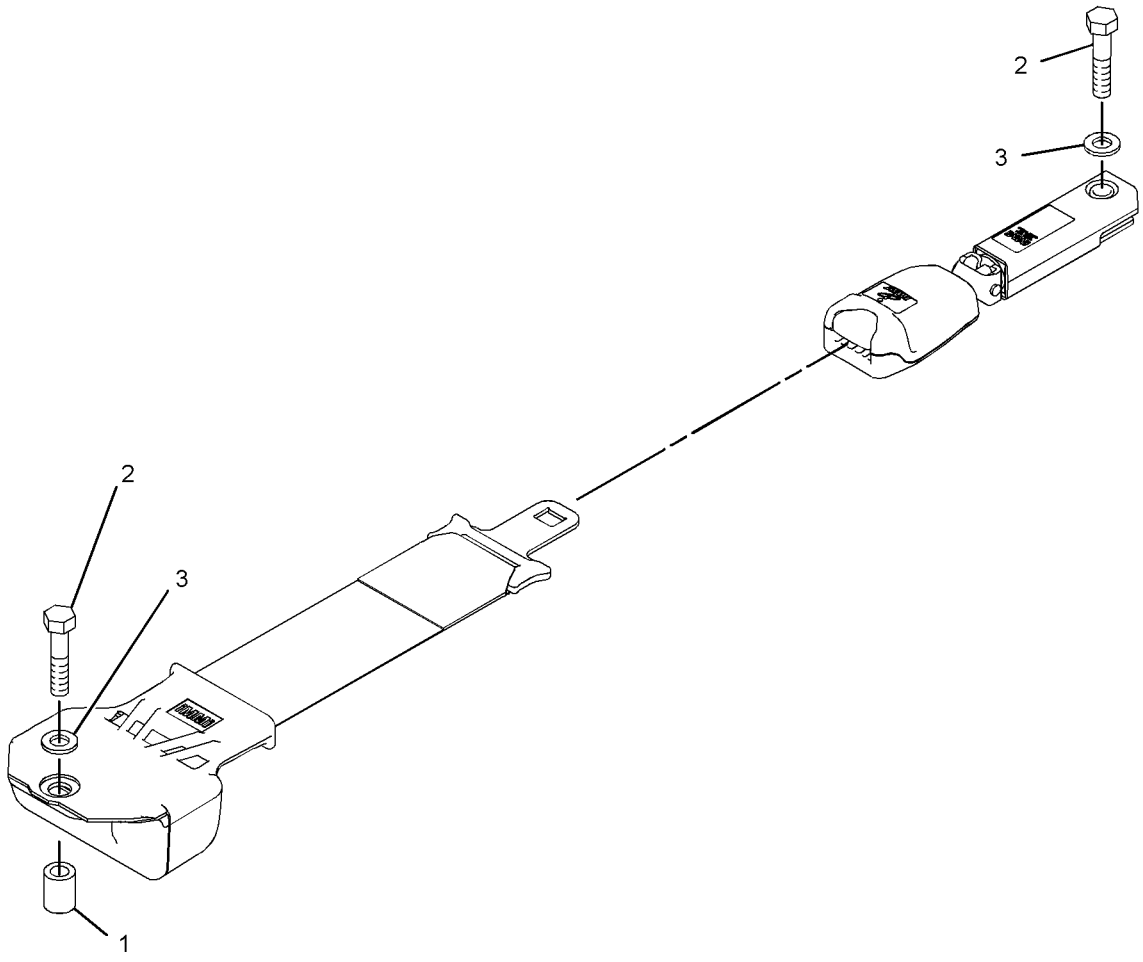

GRAPHIC #1 **<END>** g01382730

OPERATOR STATION

295-4433 SEAT GP—CLOTH, HEATED

S/N: JLF1-UP; WWW1-UP; YYY1-UP
PART OF 272-8111 SEAT GP-SUSPENSION
AN ATTACHMENT

SMCS-7312 **i03610004**

NOTE	REF NO	GRAPHIC REF	PART NUMBER	QTY	PART NAME 1 2 3 4 5 6 (PRODUCT LEVEL)	SEE PAGE
	1	1	**4V-8256**	2	SPRING	
	2	2	**132-0338**	4	WASHER-PLASTIC (13X31.7X0.8-MM THK)	
	3	1	**143-1288**	6	LOCKNUT-FLANGE (3/8-16-THD)	
	4	1	**164-4883**	1	KNOB-LUMBAR	
	5	1	**171-1230**	6	SCREW-BUTTON HEAD (3/8-16X1-IN)	
	6	2	**216-0814**	1	SWITCH AS-LIMIT (SEAT ADJUSTMENT)	
	7	1	**218-2529**	3	PLUG	
	8	1	**229-1494**	1	EXTENSION GP-BACKREST (CLOTH)	
		1	**117-4491**	1	ROD	
	9	2	**249-2844**	2	WASHER (12.7X31.7X1-MM THK)	
	10	1	**262-0767**	1	BRACKET AS (LH)	
	11	1	**262-0769**	1	BRACKET AS (RH)	
	12	2	**262-0772**	1	SHAFT AS	
		2	**2K-9111**	2	PIN-SPRING	
		2	**3E-4333**	1	KEY-WOODRUFF	
		2	**8T-0277**	1	PIN-SPRING	
		2	**256-4959**	1	SLIDER AS	
		2	**262-0789**	1	CABLE AS	
	13	1	**262-0779**	1	LATCH (LH)	
	14	1	**262-0780**	1	LATCH (RH)	
	15	1	**262-0781**	1	ROD	
	16	2	**262-0785**	1	LEVER (RH)	
	17	2	**262-0786**	2	BOLT-SHOULDER (3/8-16X0.49-IN)	
	18	2	**262-0787**	1	ROD	
	19	2	**267-5147**	2	BRACKET	
	20	2	**267-5159**	1	SPRING	
	21	2	**267-5160**	1	PLATE	
	22	1	**267-9319**	1	STOP	
	23	2	**276-3642**	1	SHAFT	
	24	2	**276-3644**	1	NUT-SPECIAL	
	25	1	**282-0554**	1	SWITCH (12-VOLT) (SEAT HEATER ON, OFF)	
	26	1	**282-0558**	1	CUSHION AS-SEAT (CLOTH, HEATED)	
	27	1	**282-0561**	1	CUSHION AS-BACK (CLOTH, HEATED)	
	28	1	**285-2372**	1	HARNESS AS-SWITCH (HEATED SEAT)	
		1	**102-8803**	1	KIT-RECEPTACLE (3-PIN) (INCLUDES RECEPTACLE AS & WEDGE)	
		1	**9X-3401**	3	PIN-CONNECTOR (16-GA TO 18-GA)	
		1	**113-9807**	1	TERMINAL-RECEPTACLE	
		1	**122-4395**	3	TERMINAL	
Y	29	1	*292-6402*	1	PAN GP-BACKREST (LUMBAR)	546
	30	2	**293-2915**	1	LEVER (LH)	
	31	2	**293-9379**	1	ROD	
	32	1	**293-9380**	1	ROD	
	33	1	**293-9381**	1	PLATE AS	
	34	2	**293-9665**	2	SPRING	
	35	2	**294-7139**	1	PAN GP-SEAT	
	36	2	**295-6472**	4	WASHER (7X19X2-MM THK)	
	40	1	**031-0214**	1	BOLT-LOCKING (1/4-20X0.5-IN)	
	41	1	**101-2867**	1	WASHER-HARD (7.2X25X2-MM THK)	
M	42	1	**238-0251**	8	SCREW-BUTTON HEAD (M10X1.5X25-MM)	
	43	2	**5T-7486**	2	RETAINER-SPRING	
	44	2	**5V-1496**	2	RETAINER	
	45	1	**6V-8969**	2	SCREW-BUTTON HEAD (1/4-20X0.5-IN)	
	46	2	**7Y-0468**	2	PIN-SPRING	
M	47	2	**7Y-7388**	6	SCREW-BUTTON HEAD (M5X0.8X12-MM)	

295-4433 **SEAT GP** *(contd.)* **i03610004**

NOTE	REF NO	GRAPHIC REF	PART NUMBER	QTY	PART NAME 1 2 3 4 5 6 (PRODUCT LEVEL)	SEE PAGE
M	48	2	**8T-4133**	1	NUT (M10X1.5-THD)	
	49	1	**8T-4205**	2	WASHER-HARD (7.2X14.5X2-MM THK)	
	50	1	**8T-7566**	1	PIN-SPRING	
	51	2	**9F-5975**	1	BOLT (5/16-18X0.75-IN)	
	52	2	**9T-5241**	4	WASHER (9.53X18X1-MM THK)	

M-METRIC PART
Y-SEPARATE ILLUSTRATION

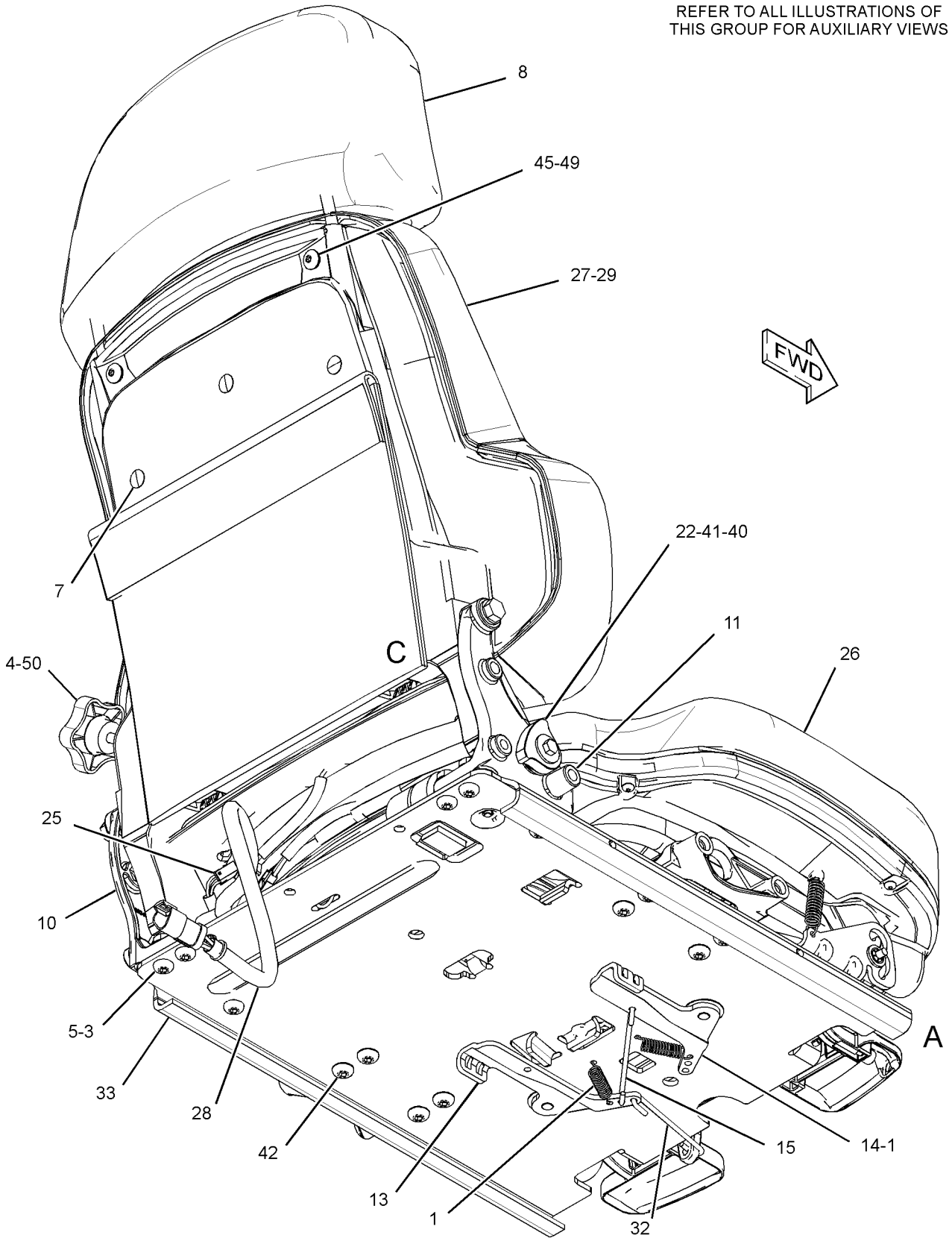

GRAPHIC #1

g01954058

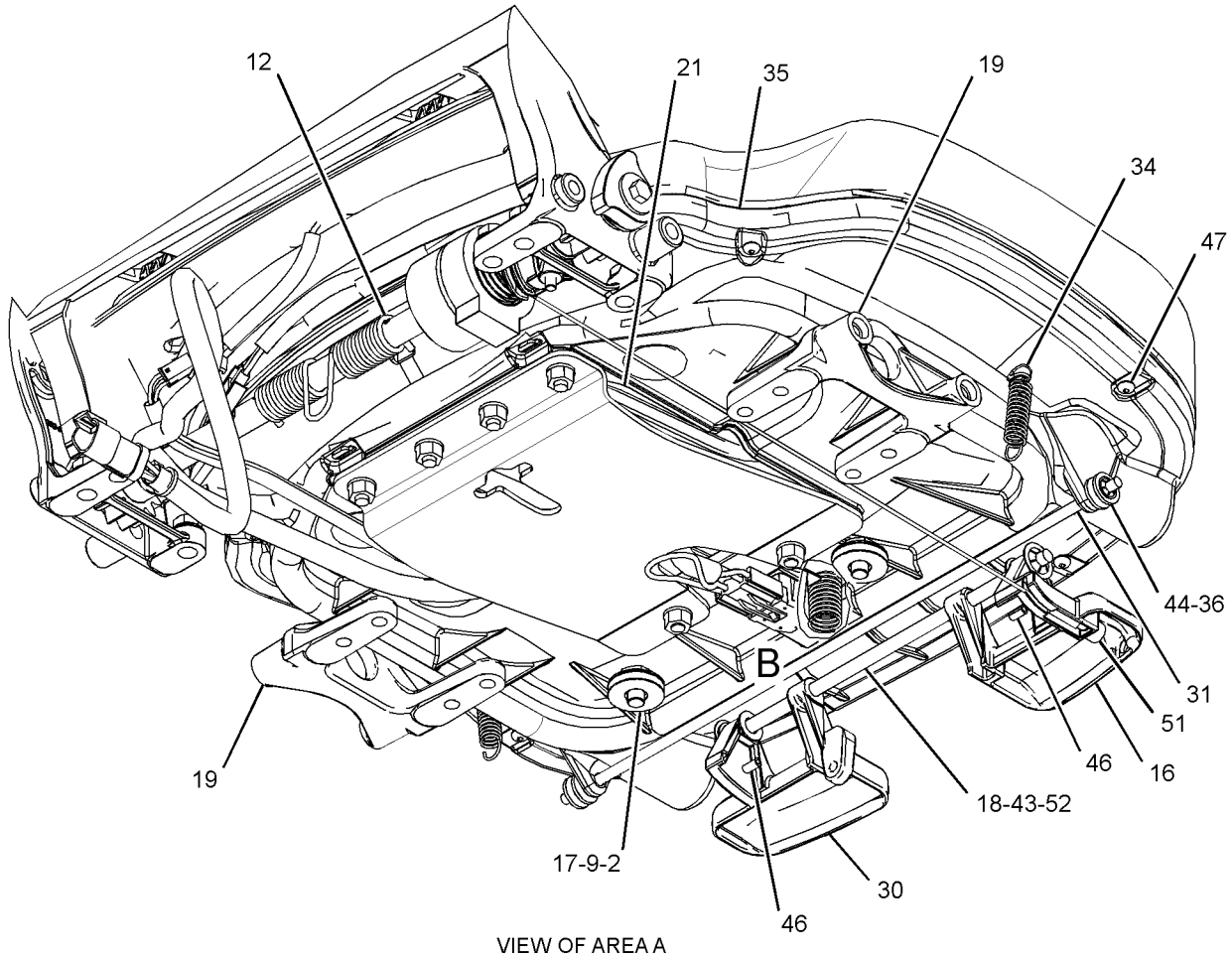

VIEW OF AREA A
(PLATE REMOVED FOR CLARITY)

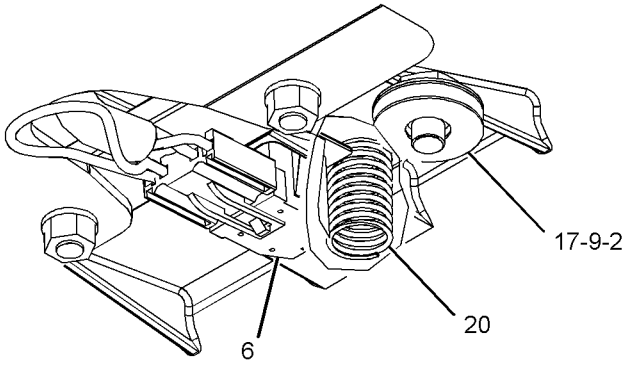

VIEW OF AREA B

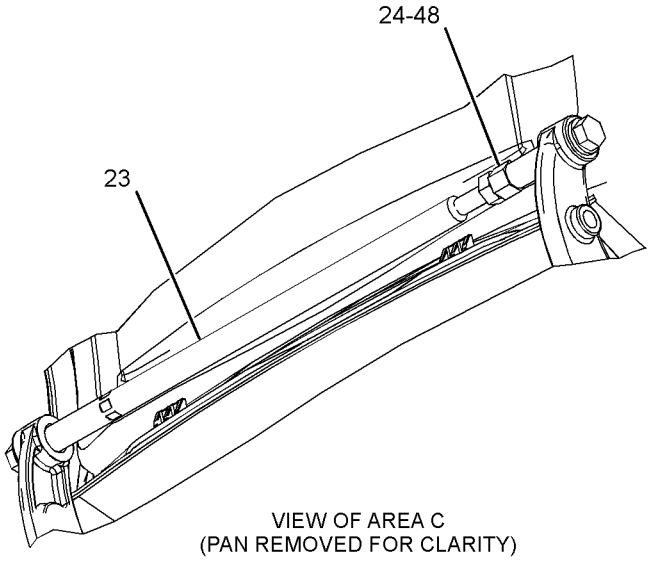

VIEW OF AREA C
(PAN REMOVED FOR CLARITY)

GRAPHIC #2 **<END>** g01954059

OPERATOR STATION

295-4434 SEAT GP–CLOTH

S/N: JLF1-UP; WWW1-UP; YYY1-UP
PART OF 255-8846 SEAT GP-SUSPENSION
AN ATTACHMENT

SMCS-7312 **i03636553**

NOTE	REF NO	GRAPHIC REF	PART NUMBER	QTY	PART NAME 1 2 3 4 5 6 (PRODUCT LEVEL)	SEE PAGE
	1	1	**4V-8256**	2	SPRING	
	2	1	**132-0338**	4	WASHER-PLASTIC (13X31.7X0.8-MM THK)	
	3	1	**143-1288**	6	LOCKNUT-FLANGE (3/8-16-THD)	
	4	1	**164-4883**	1	KNOB-LUMBAR	
	5	1	**171-1230**	6	SCREW-BUTTON HEAD (3/8-16X1-IN)	
	6	1	**216-0814**	1	SWITCH AS-LIMIT (PLUNGER)	
	7	1	**218-2529**	3	PLUG	
	8	1	**229-1494**	1	EXTENSION GP-BACKREST (CLOTH)	
	9	1	**249-2844**	2	WASHER (12.7X31.7X1-MM THK)	
	10	1	**262-0767**	1	BRACKET AS (LH)	
	11	1	**262-0769**	1	BRACKET AS (RH)	
	12	1	**262-0772**	1	SHAFT AS (RECLINER)	
		1	**2K-9111**	2	PIN-SPRING	
		1	**3E-4333**	1	KEY-WOODRUFF	
		1	**8T-0277**	1	PIN-SPRING	
		1	**256-4959**	1	SLIDER AS	
		1	**262-0789**	1	CABLE AS	
	13	1	**262-0779**	1	LATCH (LH)	
	14	1	**262-0780**	1	LATCH (RH)	
	15	1	**262-0781**	1	ROD	
	16	1	**262-0785**	1	LEVER (RH)	
	17	1	**262-0786**	2	BOLT-SHOULDER (3/8-16X0.49-IN)	
	18	1	**262-0787**	1	ROD	
	19	1	**267-5147**	2	BRACKET	
	20	1	**267-5159**	1	SPRING	
	21	1	**267-5160**	1	PLATE	
	22	1	**267-9319**	1	STOP	
	23	1	**276-3642**	1	SHAFT	
	24	1	**276-3644**	1	NUT-SPECIAL	
	25	1	**277-8103**	1	PLUG	
	26	1	**277-8589**	1	CUSHION AS-SEAT (CLOTH)	
	27	1	**278-7528**	1	CUSHION AS-BACK (CLOTH)	
	28	1	**285-2372**	1	HARNESS AS-SWITCH (HEATED SEAT)	
		1	**9X-3401**	3	PIN-CONNECTOR (16-GA TO 18-GA)	
		1	**102-8803**	1	KIT-RECEPTACLE (3-PIN) (INCLUDES RECEPTACLE AS & WEDGE)	
		1	**122-4395**	3	TERMINAL	
		1	**113-9807**	1	TERMINAL-RECEPTACLE	
Y	29	1	*292-6402*	1	PAN GP-BACKREST (LUMBAR)	546
	30	1	**293-2915**	1	LEVER (LH)	
	31	1	**293-9379**	1	ROD	
	32	1	**293-9380**	1	ROD	
	33	1	**293-9381**	1	PLATE AS	
	34	1	**293-9665**	2	SPRING	
	35	1	**294-7139**	1	PAN GP-SEAT	
M		1	**5C-7261**	6	NUT (M8X1.25-THD)	
		1	**8T-4224**	6	WASHER-HARD (8.8X16X2-MM THK)	
M		1	**127-2170**	6	SCREW-TRUSS HEAD (M8X1.25X20-MM)	
	36	1	**295-6472**	4	WASHER (7X19X2-MM THK)	
	40	1	**031-0214**	1	BOLT-LOCKING (1/4-20X0.5-IN)	
	41	1	**101-2867**	1	WASHER-HARD (7.2X25X2-MM THK)	
M	42	1	**238-0251**	8	SCREW-BUTTON HEAD (M10X1.5X25-MM)	
M	43	1	**8T-4133**	1	NUT (M10X1.5-THD)	
	44	1	**8T-4205**	2	WASHER-HARD (7.2X14.5X2-MM THK)	
	45	1	**5T-7486**	2	RETAINER-SPRING	

295-4434 SEAT GP *(contd.)* i03636553

NOTE	REF NO	GRAPHIC REF	PART NUMBER	QTY	PART NAME 1 2 3 4 5 6 (PRODUCT LEVEL)	SEE PAGE
	46	1	**5V-1496**	2	RETAINER	
	47	1	**6V-8969**	2	SCREW-BUTTON HEAD (1/4-20X0.5-IN)	
	48	1	**7Y-0468**	2	PIN-SPRING	
M	49	1	**7Y-7388**	6	SCREW-BUTTON HEAD (M5X0.8X12-MM)	
	50	1	**8T-7566**	1	PIN-SPRING	
	51	1	**9F-5975**	1	BOLT (5/16-18X0.75-IN)	
	52	1	**9T-5241**	4	WASHER (9.53X18X1-MM THK)	

M-METRIC PART
Y-SEPARATE ILLUSTRATION

295-4434 SEAT GP *(contd.)* i03636553

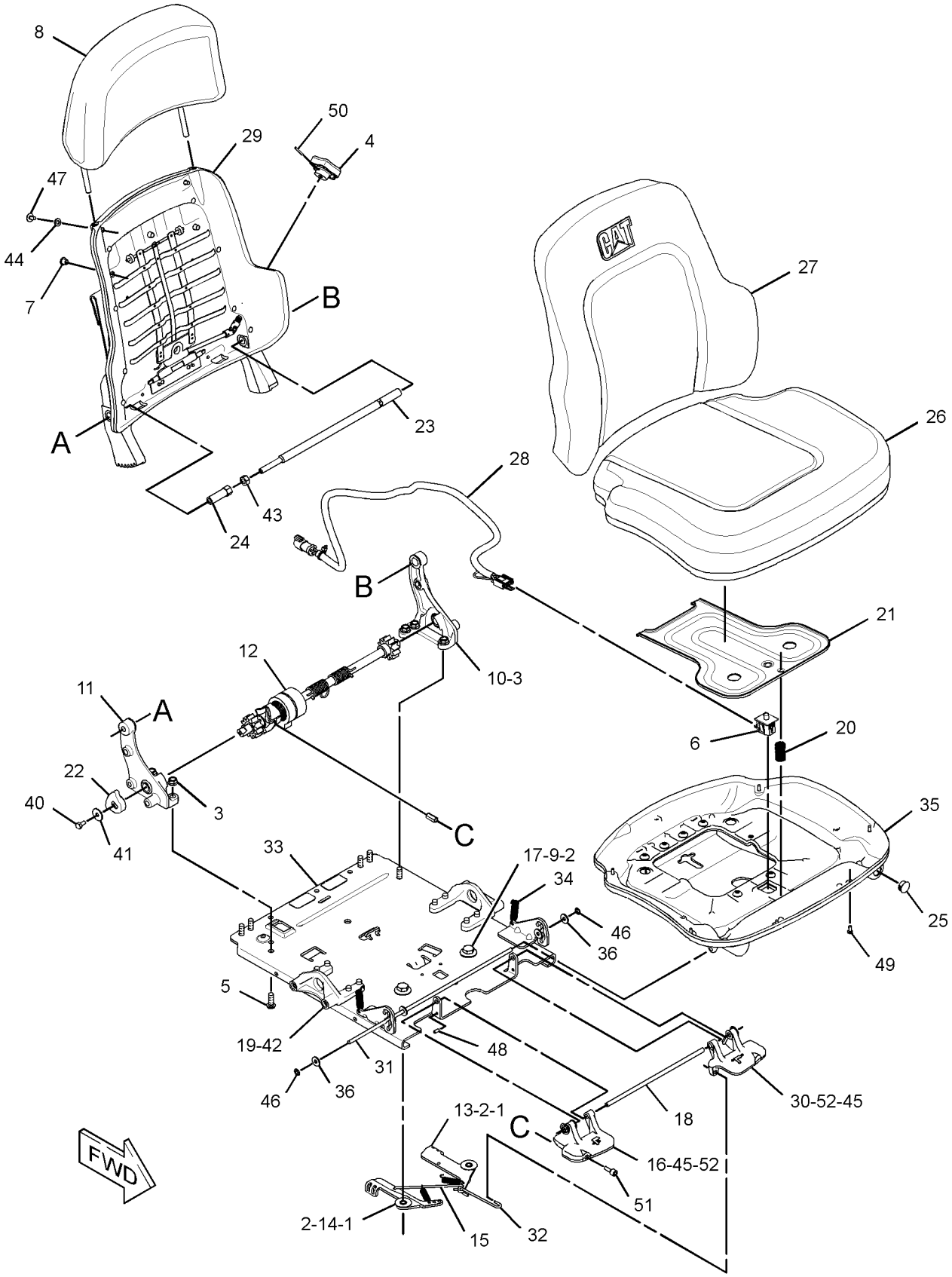

GRAPHIC #1 **<END>** g01812203

OPERATOR STATION

295-4436 SEAT GP—VINYL

S/N: JLF1-UP; WWW1-UP; YYY1-UP
MANUAL TILT
PART OF 257-4959 SEAT GP-SUSPENSION
AN ATTACHMENT

SMCS-7312 **i03636510**

NOTE	REF NO	GRAPHIC REF	PART NUMBER	QTY	PART NAME 1 2 3 4 5 6 (PRODUCT LEVEL)	SEE PAGE
	1	1	**4V-8256**	2	SPRING	
	2	1	**132-0338**	4	WASHER-PLASTIC (13X31.7X0.8-MM THK)	
	3	1	**143-1288**	6	LOCKNUT-FLANGE (3/8-16-THD)	
	4	1	**164-4883**	1	KNOB-LUMBAR	
	5	1	**171-1230**	6	SCREW-BUTTON HEAD (3/8-16X1-IN)	
	6	1	**173-3083**	1	EXTENSION GP-BACKREST (VINYL)	
	7	1	**216-0814**	1	SWITCH AS-LIMIT (PLUNGER)	
	8	1	**218-2529**	3	PLUG	
	9	1	**249-2844**	2	WASHER (12.7X31.7X1-MM THK)	
	10	1	**262-0767**	1	BRACKET AS (LH)	
	11	1	**262-0769**	1	BRACKET AS (RH)	
	12	1	**262-0772**	1	SHAFT AS	
		1	**2K-9111**	2	PIN-SPRING	
		1	**3E-4333**	1	KEY-WOODRUFF	
		1	**8T-0277**	1	PIN-SPRING	
		1	**256-4959**	1	SLIDER AS	
		1	**262-0789**	1	CABLE AS	
	13	1	**262-0779**	1	LATCH (LH)	
	14	1	**262-0780**	1	LATCH (RH)	
	15	1	**262-0781**	1	ROD	
	16	1	**262-0785**	1	LEVER (RH)	
	17	1	**262-0786**	2	BOLT-SHOULDER (3/8-16X0.49-IN)	
	18	1	**262-0787**	1	ROD	
	19	1	**267-5147**	2	BRACKET	
	20	1	**267-5159**	1	SPRING	
	21	1	**267-5160**	1	PLATE	
	22	1	**267-9319**	1	STOP	
	23	1	**276-3642**	1	SHAFT	
	24	1	**276-3644**	1	NUT-SPECIAL	
	25	1	**277-8103**	1	PLUG	
	26	1	**278-6935**	1	CUSHION AS-BACKREST (VINYL)	
	27	1	**278-6936**	1	CUSHION AS-SEAT (VINYL)	
	28	1	**285-2372**	1	HARNESS AS-SWITCH (HEATED SEAT)	
		1	**9X-3401**	3	PIN-CONNECTOR (16-GA TO 18-GA)	
		1	**102-8803**	1	KIT-RECEPTACLE (3-PIN)	
					(INCLUDES RECEPTACLE AS & WEDGE)	
		1	**122-4395**	3	TERMINAL	
		1	**113-9807**	1	TERMINAL-RECEPTACLE	
Y	29	1	*292-6402*	1	PAN GP-BACKREST (LUMBAR)	546
	30	1	**293-2915**	1	LEVER (LH)	
	31	1	**293-9379**	1	ROD	
	32	1	**293-9380**	1	ROD	
	33	1	**293-9381**	1	PLATE AS	
	34	1	**293-9665**	2	SPRING	
	35	1	**294-7139**	1	PAN GP-SEAT	
M		1	**5C-7261**	6	NUT (M8X1.25-THD)	
		1	**8T-4224**	6	WASHER-HARD (8.8X16X2-MM THK)	
M		1	**127-2170**	6	SCREW-TRUSS HEAD (M8X1.25X20-MM)	
	36	1	**295-6472**	4	WASHER (7X19X2-MM THK)	
	40	1	**031-0214**	1	BOLT-LOCKING (1/4-20X0.5-IN)	
	41	1	**101-2867**	1	WASHER-HARD (7.2X25X2-MM THK)	
M	42	1	**238-0251**	8	SCREW-BUTTON HEAD (M10X1.5X25-MM)	
	43	1	**5T-7486**	2	RETAINER-SPRING	
	44	1	**5V-1496**	2	RETAINER	

295-4436 **SEAT GP** *(contd.)* **i03636510**

NOTE	REF NO	GRAPHIC REF	PART NUMBER	QTY	PART NAME 1 2 3 4 5 6 (PRODUCT LEVEL)	SEE PAGE
	45	1	**6V-8969**	2	SCREW-BUTTON HEAD (1/4-20X0.5-IN)	
	46	1	**7Y-0468**	2	PIN-SPRING	
M	47	1	**7Y-7388**	6	SCREW-BUTTON HEAD (M5X0.8X12-MM)	
M	48	1	**8T-4133**	1	NUT (M10X1.5-THD)	
	49	1	**8T-4205**	2	WASHER-HARD (7.2X14.5X2-MM THK)	
	50	1	**8T-7566**	1	PIN-SPRING	
	51	1	**9F-5975**	1	BOLT (5/16-18X0.75-IN)	
	52	1	**9T-5241**	4	WASHER (9.53X18X1-MM THK)	

M-METRIC PART
Y-SEPARATE ILLUSTRATION

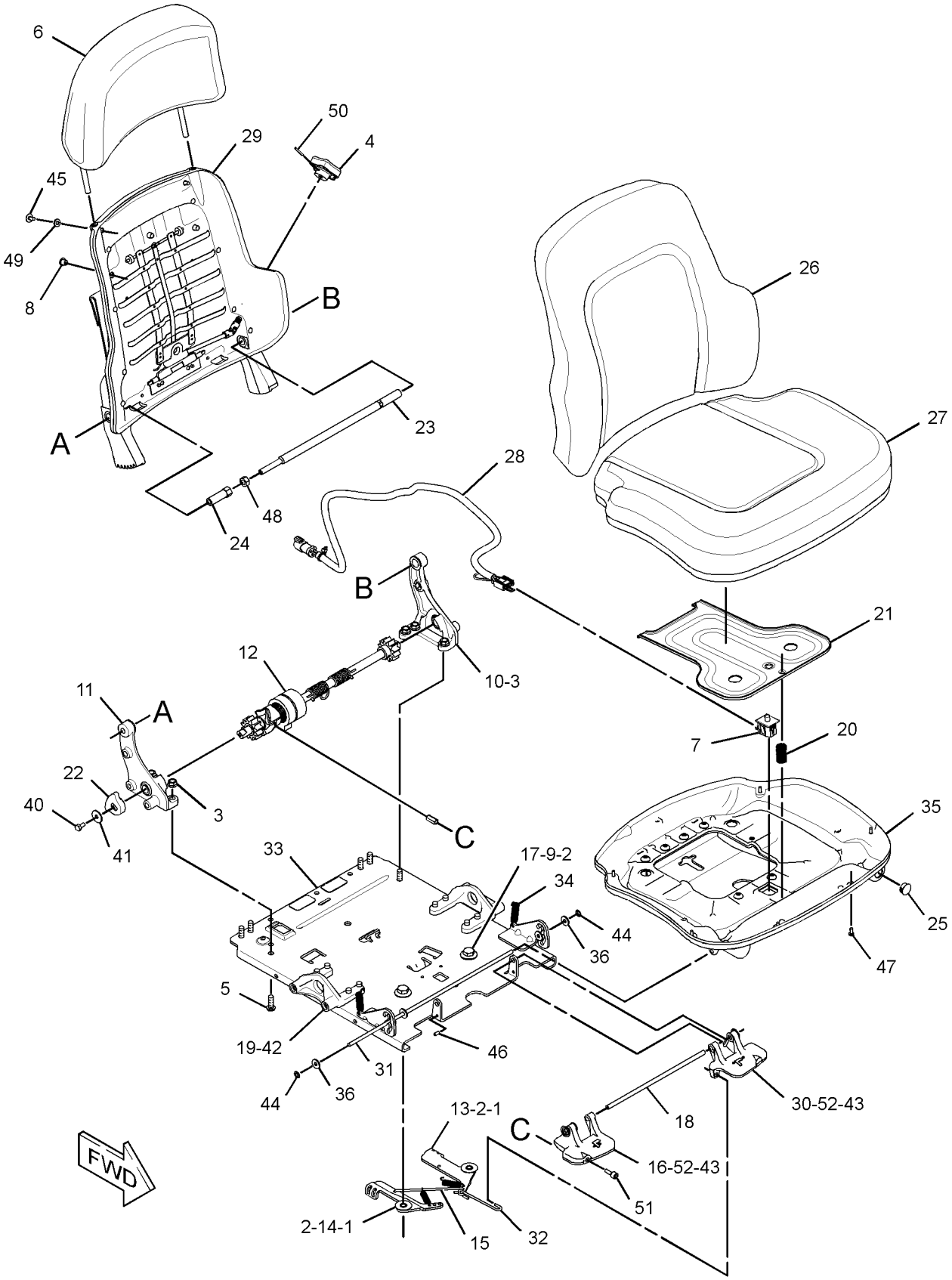

GRAPHIC #1 **<END>** g01812005

OPERATOR STATION

301-0147 SEAT GP—HEATED SEAT

S/N: JLF1-UP; WWW1-UP; YYY1-UP
PART OF 301-0148 SEAT GP-SUSPENSION
AN ATTACHMENT

SMCS-7312 **i02685906**

NOTE	REF NO	GRAPHIC REF	PART NUMBER	QTY	PART NAME 1 2 3 4 5 6 (PRODUCT LEVEL)	SEE PAGE
	1	1	**143-1288**	6	LOCKNUT-FLANGE (3/8-16-THD)	
	2	1	**171-1230**	6	SCREW-BUTTON HEAD (3/8-16X1-IN)	
Y	3	1	*262-0766*	1	RECLINER GP-SEAT	551
	4	1	**267-5147**	2	BRACKET	
	5	1	**267-9319**	1	STOP	
	6	1	**276-3642**	1	SHAFT	
	7	1	**276-3644**	1	NUT-SPECIAL	
	8	1	**293-9379**	1	ROD	
	9	1	**293-9665**	2	SPRING	
Y	10	1	*294-7779*	1	ADJUSTER GP-SEAT	464
	11	1	**295-6472**	4	WASHER (7X19X2-MM THK)	
Y	12	1	*301-0143*	1	PAN GP-BACKREST (HEATED SEAT)	547
Y	13	1	*301-0144*	1	PAN GP-SEAT (HEATED SEAT)	548
	14	1	**031-0214**	1	BOLT-LOCKING (1/4-20X0.5-IN)	
	15	1	**101-2867**	1	WASHER-HARD (7.2X25X2-MM THK)	
	16	1	**200-8790**	2	WASHER-HARD (7.2X17.5X2-MM THK)	
M	17	1	**2Y-5829**	1	NUT (M10X1.5-THD)	
	18	1	**5V-1496**	2	RETAINER	
	19	1	**6F-7418**	1	BOLT-SOCKET HEAD (5/16-18X1.25-IN)	
M	20	1	**8C-8585**	8	SCREW-BUTTON HEAD (M10X1.5X20-MM)	
	21	1	**8T-4121**	2	WASHER-HARD (11X21X2.5-MM THK)	
M	22	1	**8T-4196**	2	BOLT (M10X1.5X35-MM)	

M-METRIC PART
Y-SEPARATE ILLUSTRATION

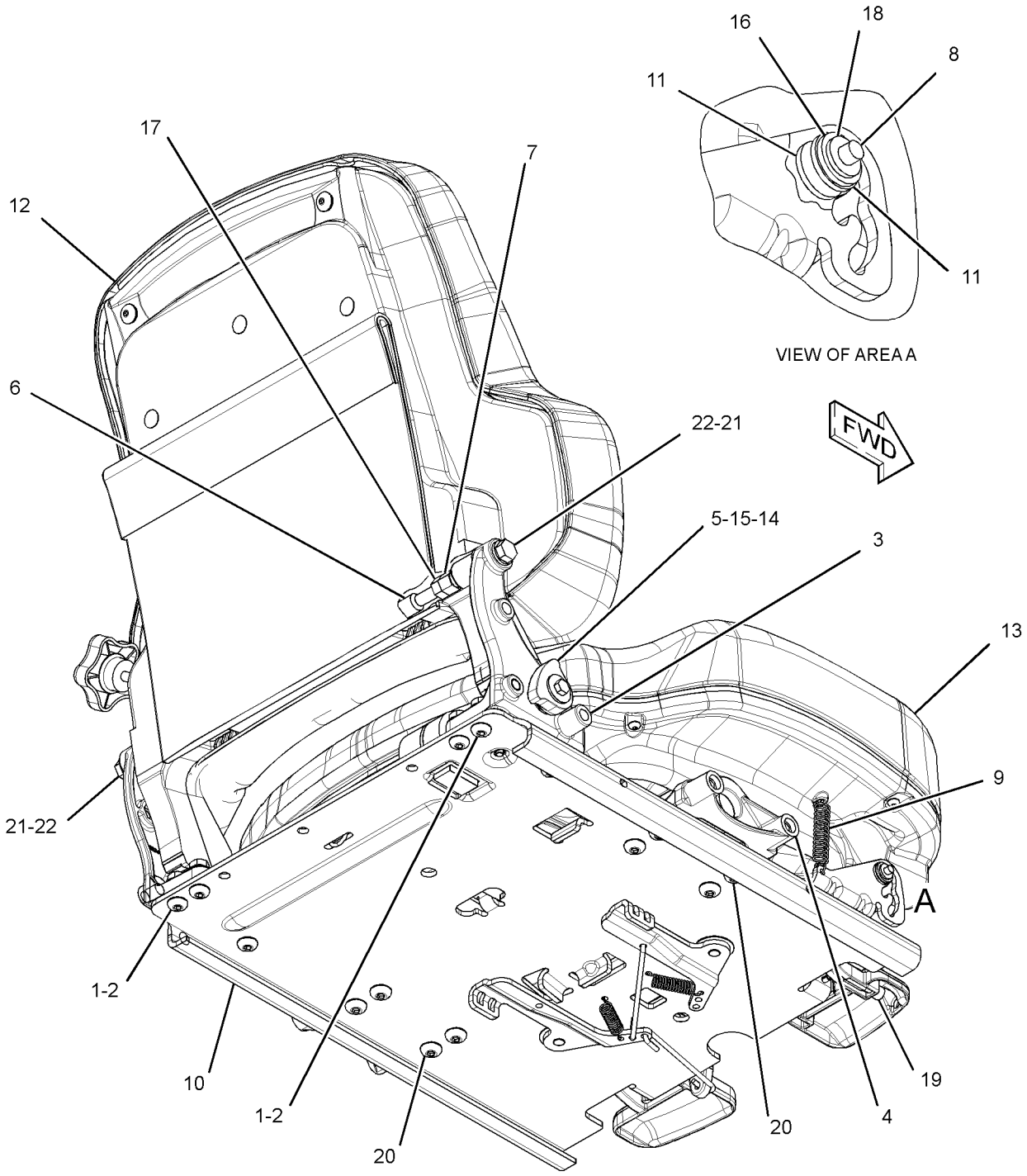

GRAPHIC #1 **<END>** g01373734

OPERATOR STATION

255-4250 SEAT GP-SUSPENSION—VINYL

S/N: JLF1-UP; WWW1-UP; YYY1-UP
FOR USE WITH 244-7474—PAGE 552
AN ATTACHMENT

SMCS-7321, 7324, 7336 **i03408221**

NOTE	REF NO	GRAPHIC REF	PART NUMBER	QTY	PART NAME 1 2 3 4 5 6 (PRODUCT LEVEL)	SEE PAGE
Y	1	1	*257-4959*	1	SEAT GP-SUSPENSION (VINYL)	576
Y	2	1	*268-9351*	1	CONSOLE GP-OPERATOR (RH)	485
Y	3	1	*268-9352*	1	CONSOLE GP-OPERATOR (LH)	486
Y	4	1	*280-9679*	1	ARMREST GP (LH)	474
Y	5	1	*284-7054*	1	ARMREST GP (RH)	476
	6	1	**7X-7729**	4	WASHER (11X25X3-MM THK)	
M	7	1	**8T-4186**	4	BOLT (M10X1.5X40-MM)	

M-METRIC PART
Y-SEPARATE ILLUSTRATION

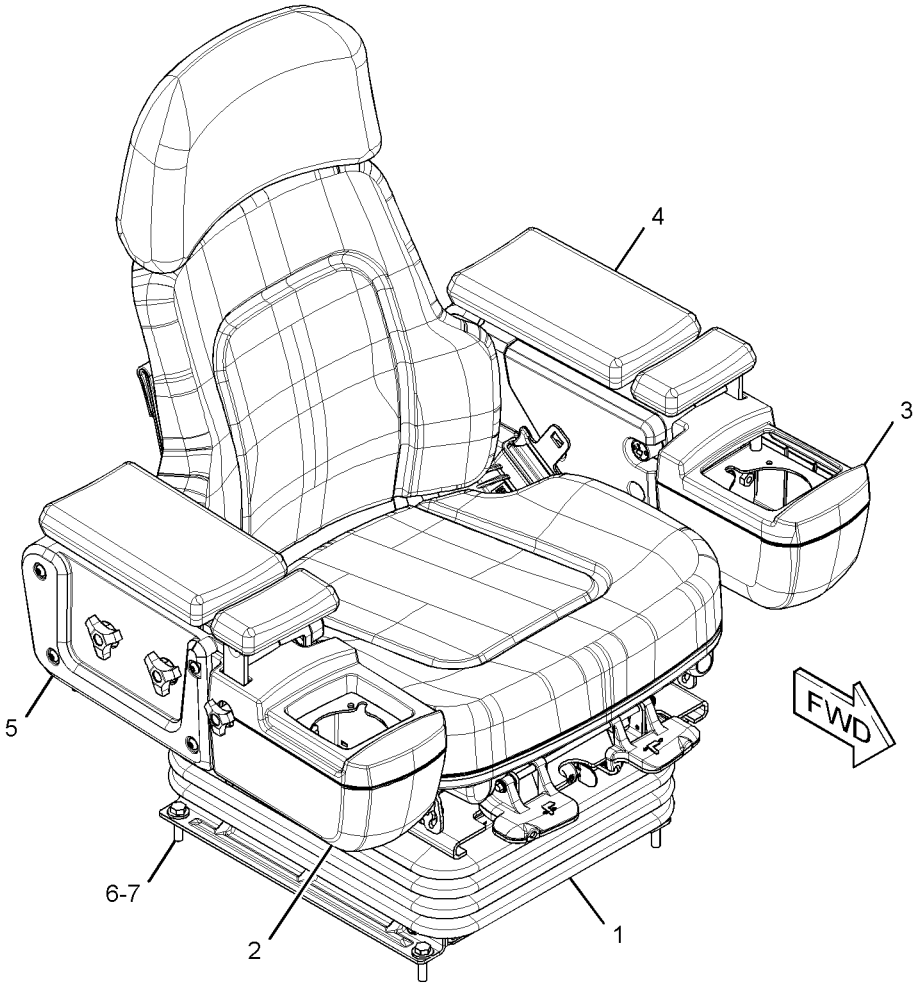

GRAPHIC #1 **<END>** g01365748

255-4251 SEAT GP-SUSPENSION—CLOTH

S/N: JLF1-UP; WWW1-UP; YYY1-UP

FOR USE WITH 244-7475—PAGE 552, 244-7476—PAGE 553, ENCLOSED ROPS. CANNOT BE USED WITH ANY OTHER SEAT GROUP

AN ATTACHMENT

SMCS-7321, 7324, 7336 **i03408224**

NOTE	REF NO	GRAPHIC REF	PART NUMBER	QTY	PART NAME 1 2 3 4 5 6 (PRODUCT LEVEL)	SEE PAGE
Y	1	1	*255-8846*	1	SEAT GP-SUSPENSION (CLOTH)	575
Y	2	1	*268-9351*	1	CONSOLE GP-OPERATOR (RH)	485
Y	3	1	*268-9352*	1	CONSOLE GP-OPERATOR (LH)	486
Y	4	1	*280-9679*	1	ARMREST GP (LH)	474
Y	5	1	*284-7054*	1	ARMREST GP (RH)	476
	6	1	**7X-7729**	4	WASHER (11X25X3-MM THK)	
M	7	1	**8T-4195**	4	BOLT (M10X1.5X30-MM)	

M-METRIC PART
Y-SEPARATE ILLUSTRATION

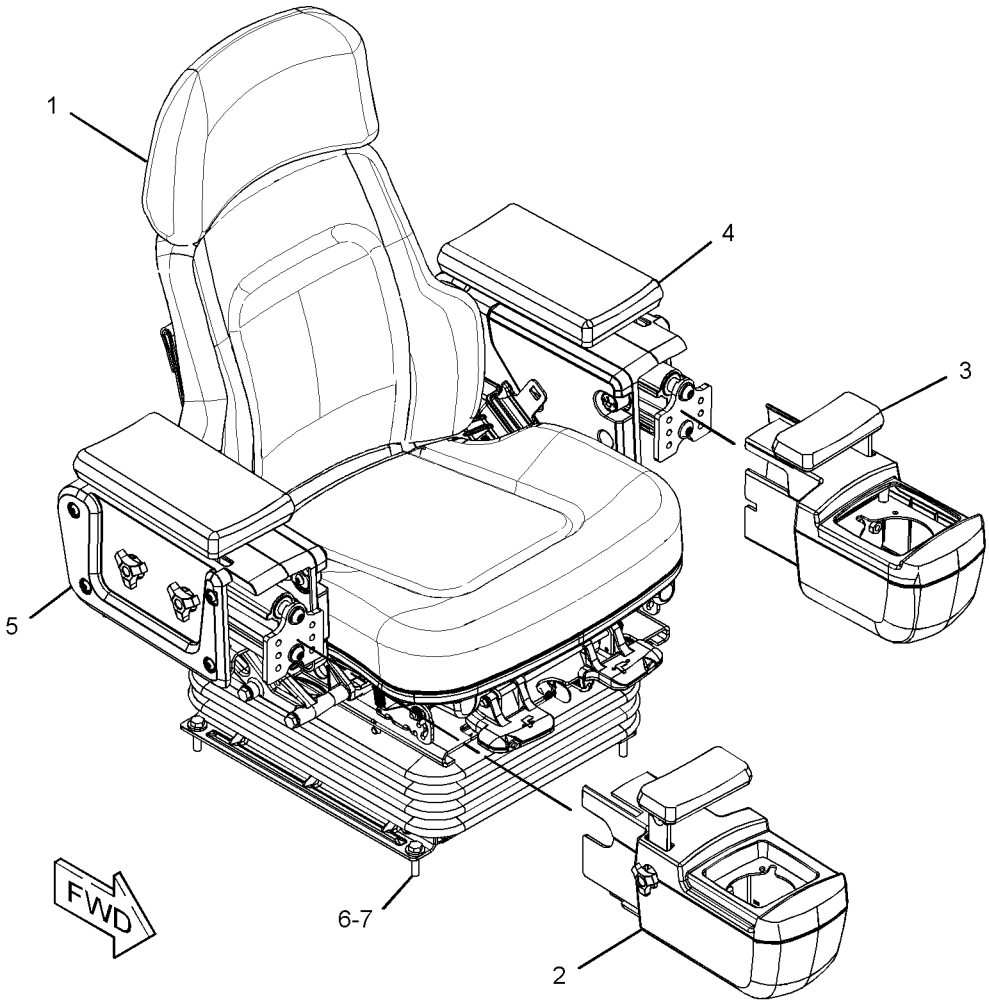

GRAPHIC #1 **<END>** g01352919

OPERATOR STATION

255-4252 SEAT GP-SUSPENSION—CLOTH, HEATED

S/N: JLF1-UP; WWW1-UP; YYY1-UP

FOR USE WITH 244-7475—PAGE 552, 244-7476—PAGE 553, ENCLOSED ROPS. CANNOT BE USED WITH ANY OTHER SEAT GROUP AN ATTACHMENT

SMCS-7321, 7324, 7336 **i03408228**

NOTE	REF NO	GRAPHIC REF	PART NUMBER	QTY	PART NAME 1 2 3 4 5 6 (PRODUCT LEVEL)	SEE PAGE
Y	1	1	*268-9351*	1	CONSOLE GP-OPERATOR (RH)	485
Y	2	1	*268-9352*	1	CONSOLE GP-OPERATOR (LH)	486
Y	3	1	*272-8111*	1	SEAT GP-SUSPENSION (CLOTH, HEATED)	577
Y	4	1	*280-9679*	1	ARMREST GP (LH)	474
Y	5	1	*284-7054*	1	ARMREST GP (RH)	476
	6	1	**7X-7729**	4	WASHER (11X25X3-MM THK)	
M	7	1	**8T-4186**	4	BOLT (M10X1.5X40-MM)	

M-METRIC PART
Y-SEPARATE ILLUSTRATION

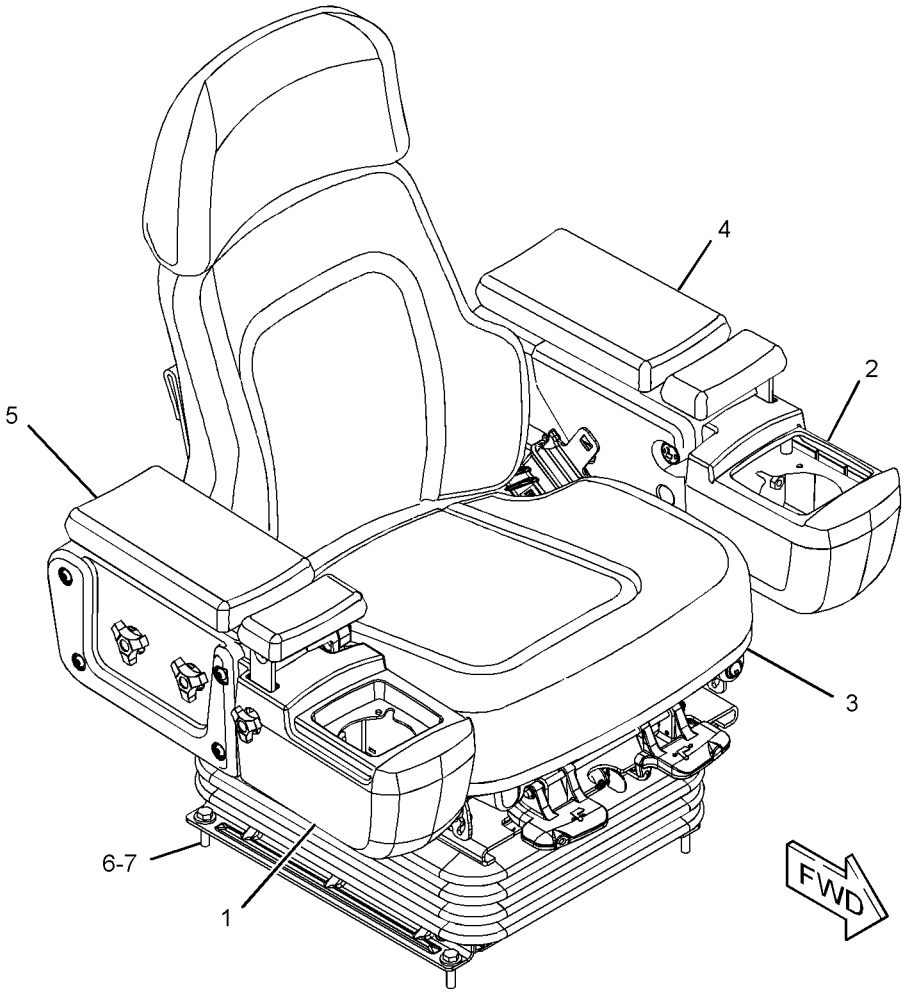

GRAPHIC #1 **<END>** g01366871

255-8846 SEAT GP-SUSPENSION—CLOTH

S/N: JLF1-UP; WWW1-UP; YYY1-UP
PART OF 255-4251 SEAT GP-SUSPENSION
AN ATTACHMENT

SMCS-7321, 7324, 7336 **i03301089**

NOTE	REF NO	GRAPHIC REF	PART NUMBER	QTY	PART NAME 1 2 3 4 5 6 (PRODUCT LEVEL)	SEE PAGE
J	1	1	**161-9289**	4	BLOCK-SLIDER	
J	2	1	**173-5787**	4	SETSCREW (1/4-20-THD)	
J	3	1	**203-7703**	2	WASHER-HARD (10.2X22.22X2.38-MM THK)	
	4	1	**8L-8413**	1	STRAP-CABLE (PLASTIC)	
Y	5	1	**272-2272**	1	SEAT BELT GP (RETRACTABLE)	559
Y	6	1	**295-4434**	1	SEAT GP (CLOTH)	564
Y	7	1	*316-8368*	1	SUSPENSION GP-SEAT	583
J	8	1	**4F-4879**	1	BOLT (3/8-16X0.5-IN)	
					AVAILABLE REPAIR KIT(S):	
J			**173-7035**	1	KIT-SLIDER BLOCK (SUSPENSION SEAT)	

J-KIT MARKED J SERVICES PARTS MARKED J
Y-SEPARATE ILLUSTRATION

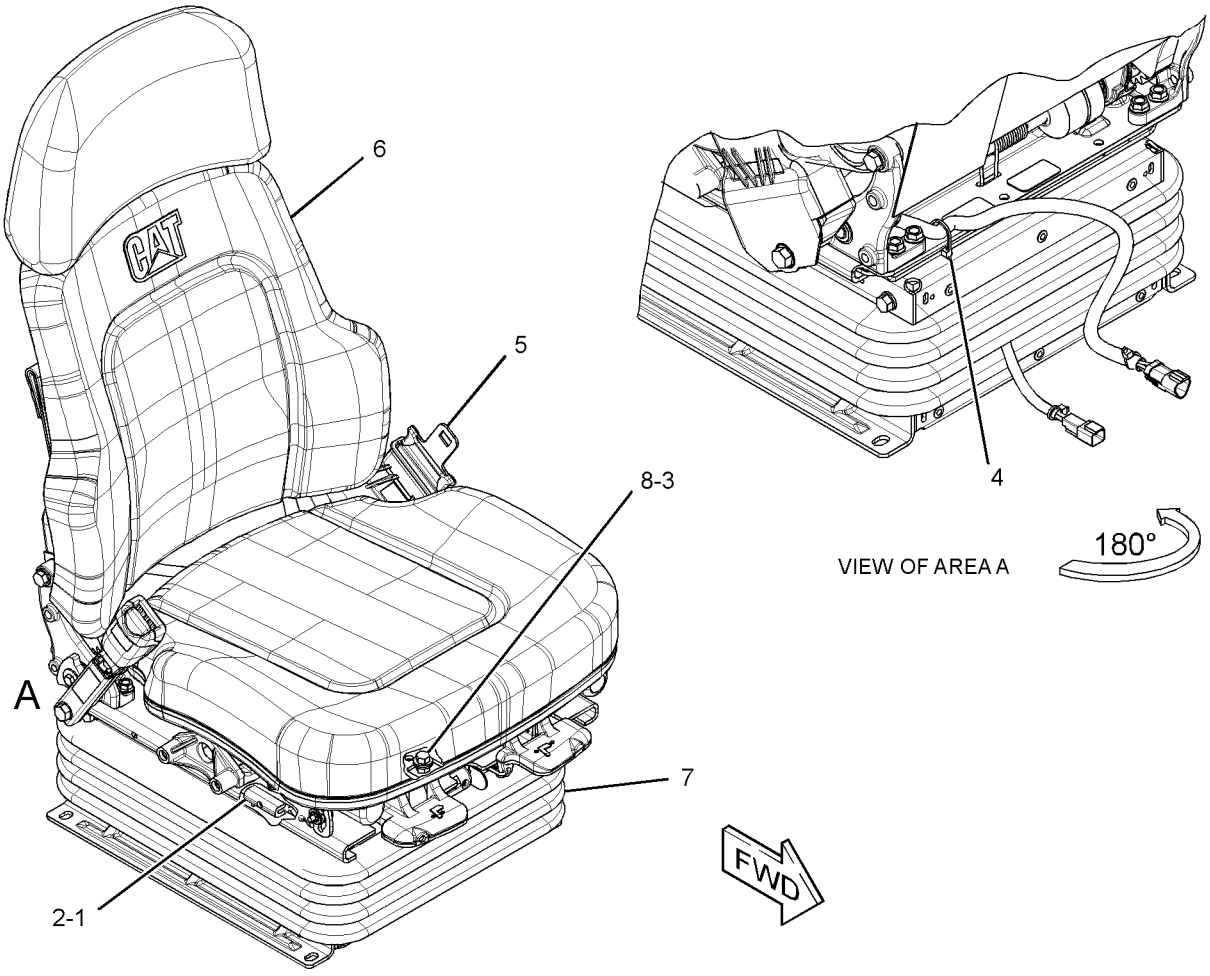

GRAPHIC #1 **<END>** g01716635

OPERATOR STATION

257-4959 SEAT GP-SUSPENSION—VINYL

S/N: JLF1-UP; WWW1-UP; YYY1-UP
PART OF 255-4250 SEAT GP-SUSPENSION
AN ATTACHMENT

SMCS-7321, 7324, 7336 **i03160843**

NOTE	REF NO	GRAPHIC REF	PART NUMBER	QTY	PART NAME 1 2 3 4 5 6 (PRODUCT LEVEL)	SEE PAGE
	1	1	**8L-8413**	1	STRAP-CABLE	
J	2	1	**173-5787**	4	SETSCREW (1/4-20-THD)	
J	3	1	**203-7703**	2	WASHER-HARD (10.2X22.22X2.38-MM THK)	
Y	4	1	**272-2272**	1	SEAT BELT GP (RETRACTABLE)	559
Y	5	1	*295-4436*	1	SEAT GP (VINYL)	567
Y	6	1	*316-8368*	1	SUSPENSION GP-SEAT	583
J	7	1	**4F-4879**	1	BOLT (3/8-16X0.5-IN)	
					AVAILABLE REPAIR KIT(S):	
J			**173-7035**	1	KIT-SLIDER BLOCK (SUSPENSION SEAT)	
					(INCLUDES BLOCK)	

J-KIT MARKED J SERVICES PARTS MARKED J
Y-SEPARATE ILLUSTRATION

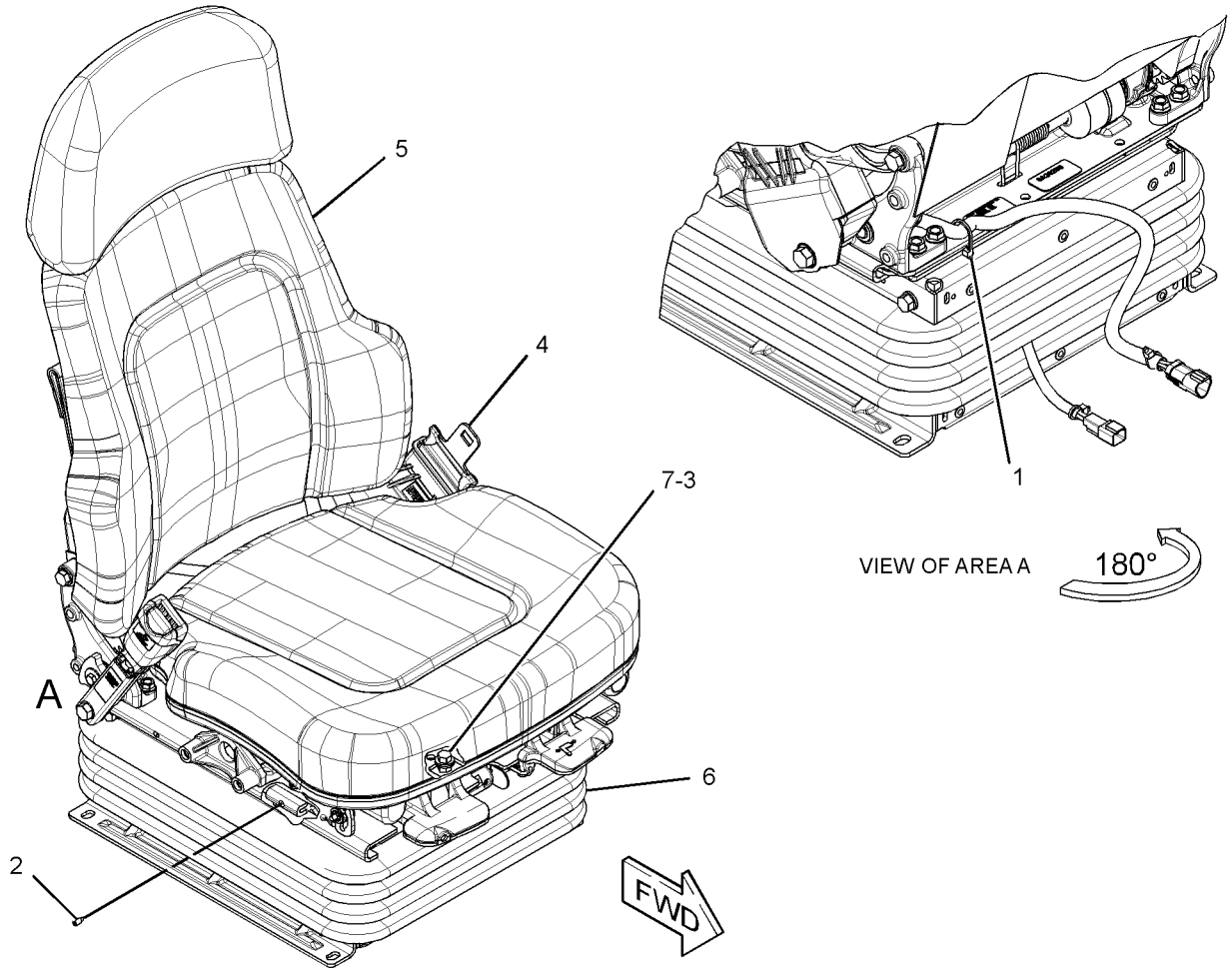

GRAPHIC #1 **<END>** g01707266

OPERATOR STATION

272-8111 SEAT GP-SUSPENSION—CLOTH, HEATED

S/N: JLF1-UP; WWW1-UP; YYY1-UP
PART OF 255-4252 SEAT GP-SUSPENSION
AN ATTACHMENT

SMCS-7321, 7324, 7336 **i03587865**

NOTE	REF NO	GRAPHIC REF	PART NUMBER	QTY	PART NAME 1 2 3 4 5 6 (PRODUCT LEVEL)	SEE PAGE
	1	1	**241-5786**	1	HARNESS AS-HEATER (SEAT)	
J	2	1	**173-5787**	4	SETSCREW (1/4-20-THD)	
J	3	1	**203-7703**	2	WASHER-HARD (10.2X22.22X2.38-MM THK)	
	4	1	**8L-8413**	1	STRAP-CABLE	
Y	5	1	**272-2272**	1	SEAT BELT GP (RETRACTABLE)	559
Y	6	1	*295-4433*	1	SEAT GP (CLOTH, HEATED)	560
Y	7	1	*316-8368*	1	SUSPENSION GP-SEAT	583
J	8	1	**4F-4879**	1	BOLT (3/8-16X0.5-IN)	
					AVAILABLE REPAIR KIT(S):	
J			**173-7035**	1	KIT-SLIDER BLOCK (SUSPENSION SEAT)	
					(ALSO INCLUDES SLIDER BLOCKS)	

J-KIT MARKED J SERVICES PARTS MARKED J
Y-SEPARATE ILLUSTRATION

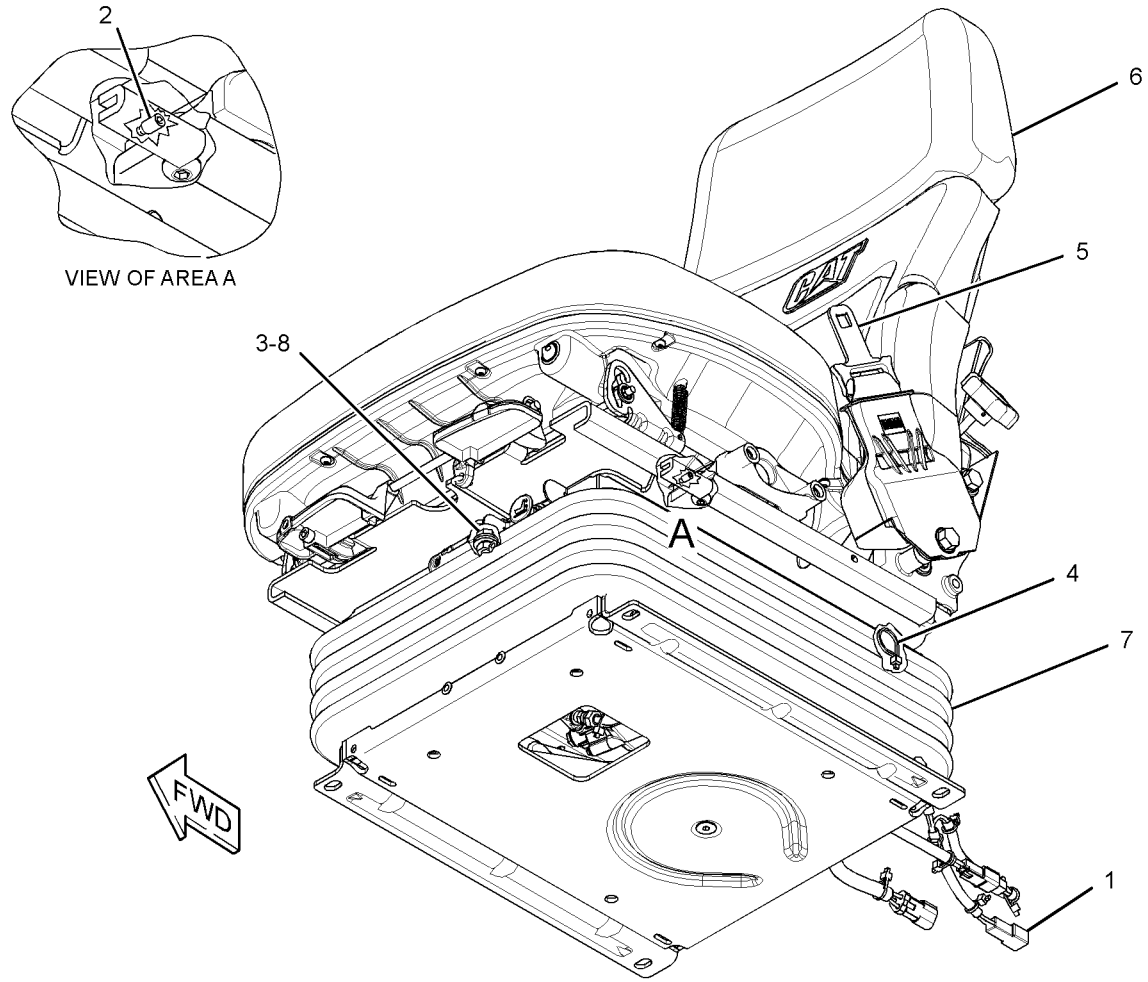

GRAPHIC #1 **<END>** g01919173

OPERATOR STATION

301-0148 SEAT GP-SUSPENSION—VINYL, HEATED

S/N: JLF1-UP; WWW1-UP; YYY1-UP
PART OF 255-4242 SEAT & SUPPORT GP
AN ATTACHMENT

SMCS-7321, 7324, 7336 **i03587845**

NOTE	REF NO	GRAPHIC REF	PART NUMBER	QTY	PART NAME 1 2 3 4 5 6 (PRODUCT LEVEL)	SEE PAGE
	1	1	**8L-8413**	1	STRAP-CABLE	
	2	1	**241-5786**	1	HARNESS AS-HEATER (SEAT)	
J	3	1	**173-5787**	4	SETSCREW (1/4-20-THD)	
J	4	1	**203-7703**	2	WASHER-HARD (10.2X22.22X2.38-MM THK)	
Y	5	1	**272-2272**	1	SEAT BELT GP (RETRACTABLE)	559
Y	6	1	*316-8368*	1	SUSPENSION GP-SEAT	583
Y	7	1	**301-0147**	1	SEAT GP (HEATED SEAT)	570
J	8	1	**4F-4879**	1	BOLT (3/8-16X0.5-IN)	
					AVAILABLE REPAIR KIT(S):	
J			**173-7035**	1	KIT-SLIDER BLOCK (SUSPENSION SEAT)	
					(ALSO INCLUDES SLIDER BLOCKS)	

J-KIT MARKED J SERVICES PARTS MARKED J
Y-SEPARATE ILLUSTRATION

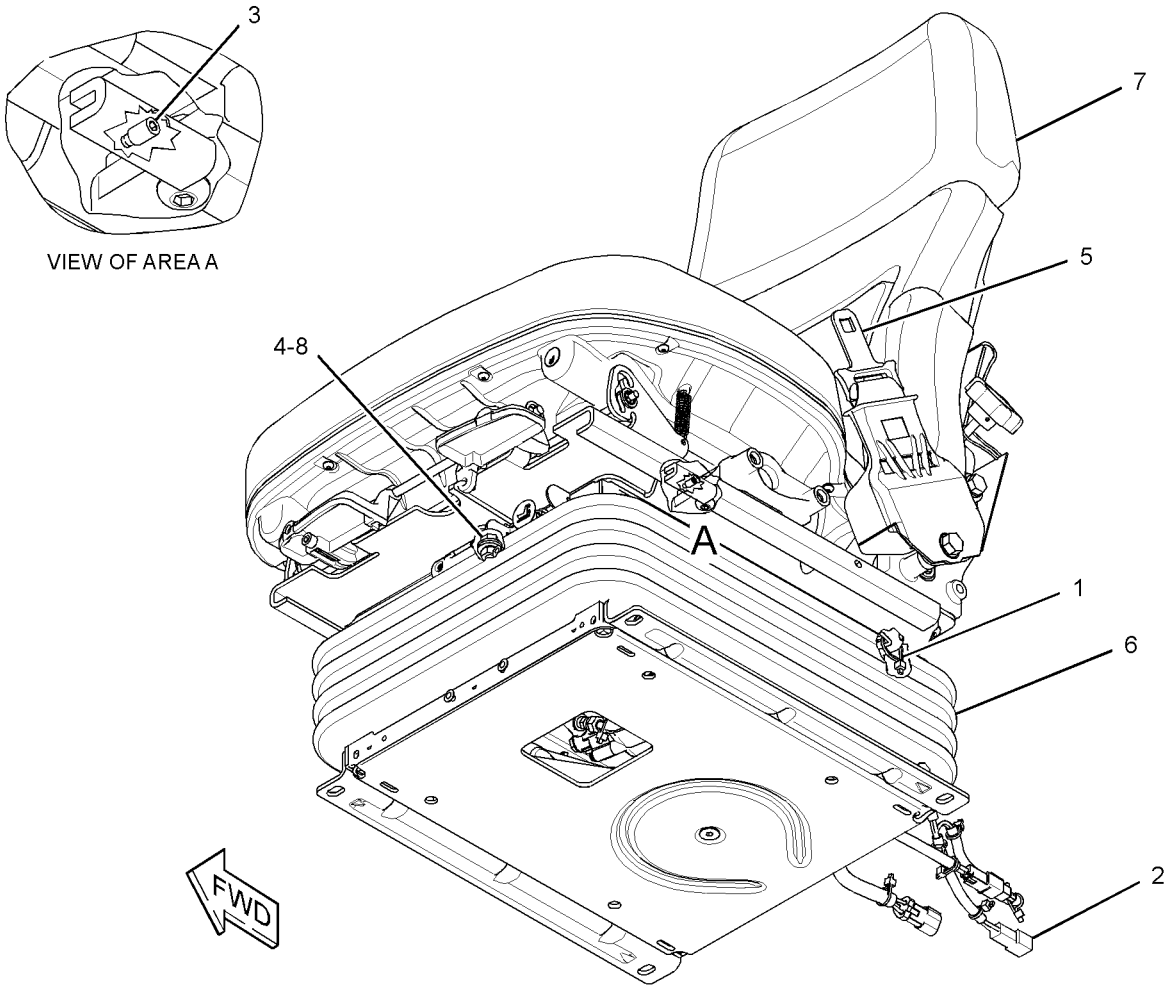

GRAPHIC #1 **<END>** g01919397

OPERATOR STATION

284-7055 SUPPORT GP-HYDRAULIC CONTROL—RH

S/N: JLF1-UP; WWW1-UP; YYY1-UP
PART OF 284-7054 ARMREST GP
AN ATTACHMENT

SMCS-5258 **i03253002**

NOTE	REF NO	GRAPHIC REF	PART NUMBER	QTY	PART NAME 1 2 3 4 5 6 (PRODUCT LEVEL)	SEE PAGE
	1	1	**1W-7117**	2	DOWEL-HOLLOW	
	2	1	**161-2398**	2	SEAL-LIP TYPE	
	3	1	**244-2095**	1	ROD	
	4	1	**244-2109**	1	ROD-ADJUSTMENT	
	5	1	**244-2115**	1	PIN	
	6	1	**266-3214**	1	PIN (ADJUSTMENT)	
	7	1	**267-9552**	2	SPACER (19X76X.8-MM THK)	
	8	1	**267-9553**	1	SPACER (7X12.5X6.5-MM THK)	
	9	1	**267-9554**	2	BEARING	
	10	1	**267-9555**	2	BEARING	
	11	1	**267-9556**	2	BEARING	
	12	1	**267-9834**	1	PLATE	
	13	1	**280-3512**	1	HOUSING (ADJUSTER)	
	14	1	**280-3514**	1	SUPPORT-ARM	
	15	1	**6F-9974**	2	PLUG-CORE	
	16	1	**282-2033**	1	BUTTON-PUSH	
	17	1	**282-6695**	1	BRACKET	
	18	1	**289-2073**	1	FILM-INFORMATION (ARMREST ADJUSTMENT)	
	19	1	**3E-4353**	2	WASHER-HARD (11X25X3-MM THK)	
	20	1	**7D-7453**	1	SETSCREW (1/4-20-THD)	
	21	1	**7D-9708**	1	BOLT-SHOULDER (5/16-18X0.88-IN)	
M	22	1	**9X-2040**	2	SCREW-TRUSS HEAD (M10X1.5X25-MM)	
M	23	1	**9X-2043**	1	SCREW-TRUSS HEAD (M6X1X14-MM)	

M-METRIC PART

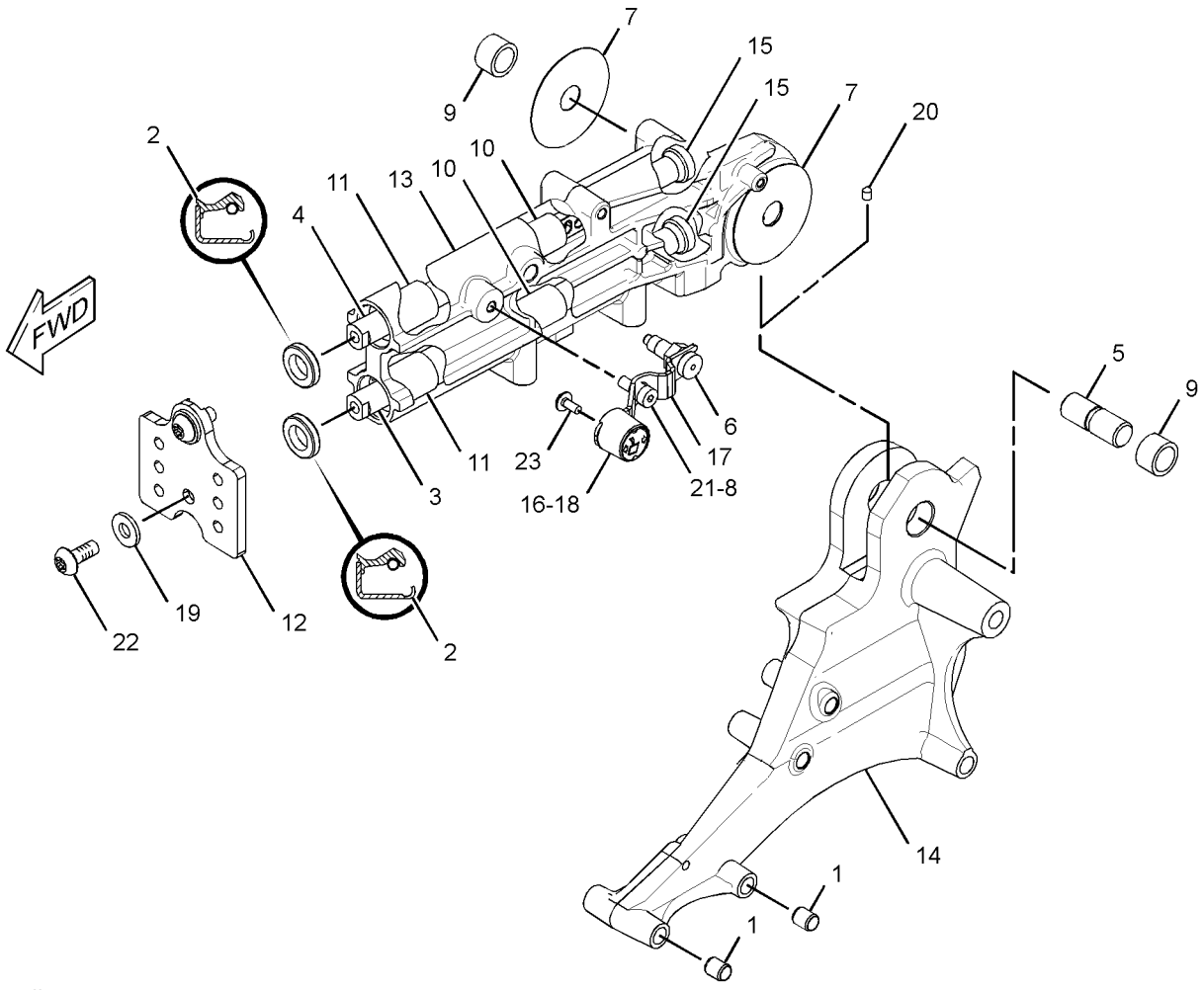

GRAPHIC #1 **<END>** g01662613

OPERATOR STATION

284-7059 SUPPORT GP-STEERING CONTROL—LH

S/N: JLF1-UP; WWW1-UP; YYY1-UP
PART OF 280-9679 ARMREST GP
AN ATTACHMENT

SMCS-5258 **i03301501**

NOTE	REF NO	GRAPHIC REF	PART NUMBER	QTY	PART NAME 1 2 3 4 5 6 (PRODUCT LEVEL)	SEE PAGE
	1	1	**1W-7117**	2	DOWEL-HOLLOW	
	2	1	**161-2398**	2	SEAL-LIP TYPE	
	3	1	**244-2095**	1	ROD	
	4	1	**244-2109**	1	ROD-ADJUSTMENT	
	5	1	**244-2115**	1	PIN	
	6	1	**266-3214**	1	PIN	
	7	1	**267-9552**	2	SPACER (19X76X.8-MM THK)	
	8	1	**267-9553**	1	SPACER (7X12.5X6.5-MM THK)	
	9	1	**267-9554**	2	BEARING	
	10	1	**267-9555**	2	BEARING	
	11	1	**267-9556**	2	BEARING	
	12	1	**267-9834**	1	PLATE	
	13	1	**280-3513**	1	HOUSING	
	14	1	**280-3515**	1	SUPPORT-ARM (LH)	
	15	1	**6F-9974**	2	PLUG-CORE	
	16	1	**282-2033**	1	BUTTON-PUSH	
	17	1	**282-6695**	1	BRACKET	
	18	1	**289-2073**	1	FILM-INFORMATION (ARMREST ADJUSTMENT)	
	19	1	**3E-4353**	2	WASHER-HARD (11X25X3-MM THK)	
	20	1	**7D-7453**	1	SETSCREW (1/4-20-THD)	
	21	1	**7D-9708**	1	BOLT-SHOULDER (5/16-18XO.88-IN)	
M	22	1	**9X-2040**	2	SCREW-TRUSS HEAD (M10X1.5X25-MM)	
M	23	1	**9X-2043**	1	SCREW-TRUSS HEAD (M6X1X14-MM)	

M-METRIC PART

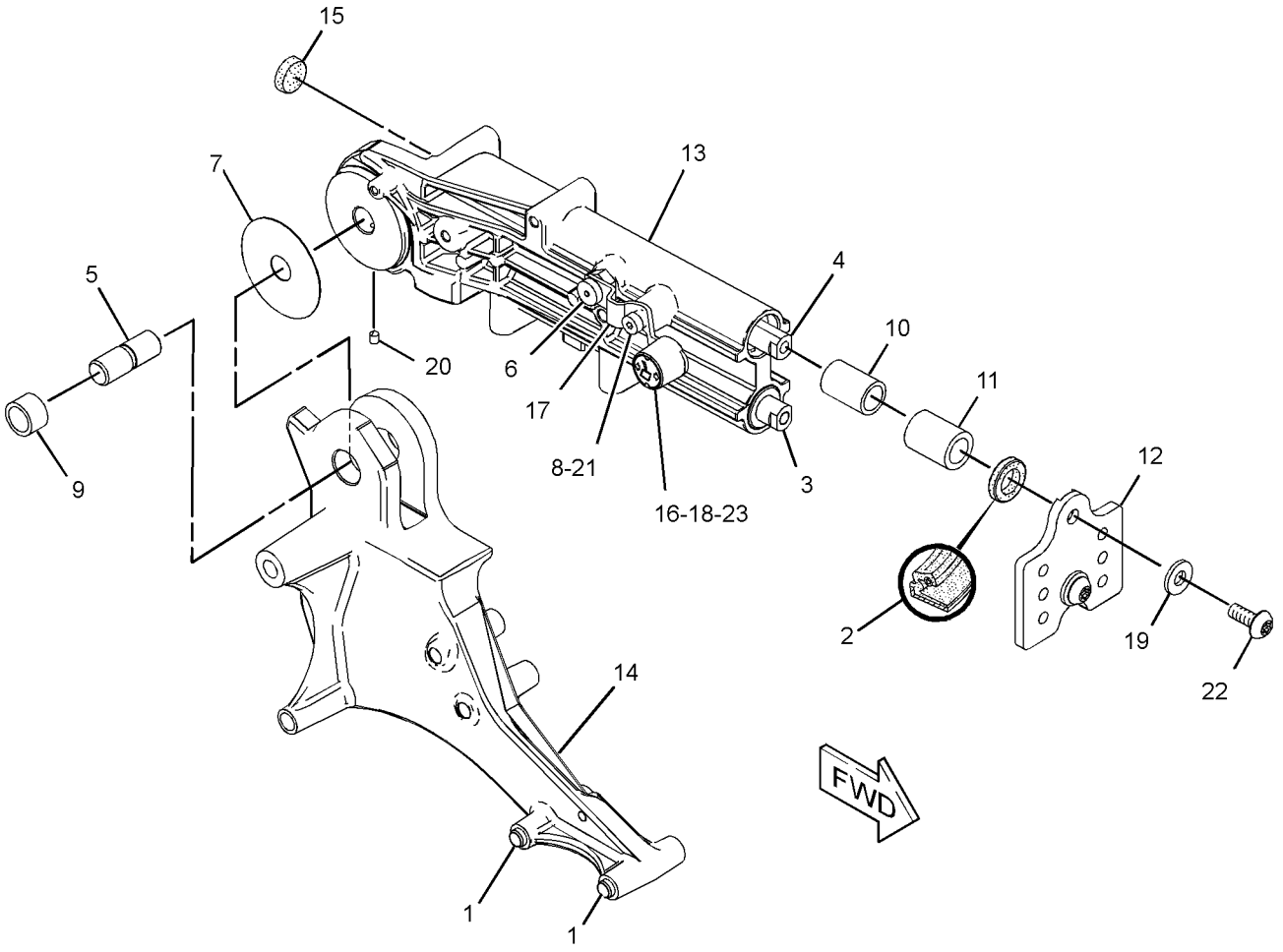

GRAPHIC #1 **<END>** g01303992

OPERATOR STATION

316-8368 SUSPENSION GP-SEAT

S/N: JLF1-UP; WWW1-UP; YYY1-UP

PART OF 255-8846, 257-4959, 272-8111, 301-0148 SEAT GP-SUSPENSION

AN ATTACHMENT

SMCS-7324 **i03587867**

NOTE	REF NO	GRAPHIC REF	PART NUMBER	QTY	PART NAME 1 2 3 4 5 6 (PRODUCT LEVEL)	SEE PAGE
	1	2	**3P-9900**	1	WASHER (10.5X30X3-MM THK)	
	2	2	**4V-8577**	8	BEARING	
	3	1	**7L-0688**	2	BOLT-SOCKET HEAD (10-24X1.2-IN)	
	4	1	**8L-8413**	9	STRAP-CABLE	
	5	1	**031-0249**	2	LOCKNUT (10-24-THD)	
	6	1	**101-0003**	22	FASTENER	
	7	1	**145-0326**	1	FILM-INSTRUCTION (SEAT ADJUSTMENT)	
	8	1	**164-1234**	1	PLATE	
	9	1	**169-7380**	1	BOLT-SOCKET HEAD (3/8-16X0.375-IN)	
	10	1	**186-5107**	2	SCREW-DRIVE (NO 8X1.25-IN)	
	11	1	**192-7795**	1	BOOT	
	13	1	**192-7805**	1	HARNESS AS-VALVE (SEAT AIR COMPRESSOR)	
E		1	**211-5358**		CONDUIT-FLEXIBLE (64-CM)	
		1	**186-3735**	2	PIN-CONNECTOR (16-GA TO 18-GA)	
		1	**102-8802**	1	KIT-RECEPTACLE (2-PIN)	
					(INCLUDES RECEPTACLE AS & WEDGE)	
		1	**5P-4571**	2	TERMINAL-BLADE (14-GA TO 16-GA)	
	14	1	**192-7810**	1	SPRING AS-AIR	
		1	**5P-4423**	1	ELBOW	
		1	**163-1135**	1	SPRING	
	15	2	**192-7820**	1	BUMPER	
	17	2	**213-5167**	1	ROD	
	18	1	**213-5168**	1	ARM-INDICATOR	
	19	1	**213-5169**	1	HOUSING	
	20	2	**218-7252**	1	RETAINER	
	21	1	**237-3943**	1	BRACKET	
	22	2	**251-2360**	1	TOGGLE AS (LOWER)	
	23	2	**251-2362**	1	TOGGLE AS (UPPER)	
	24	1	**261-7487**	1	AIR COMPRESSOR GP-SEAT	
	25	1	**291-7972**	1	HOUSING AS	
Y	26	2	*291-7980*	1	ARM GP-SEAT SUSPENSION (CENTER)	471
	27	1	**291-7993**	4	WASHER (20X40X2-MM THK)	
Y	28	1	*291-8004*	1	ARM GP-SEAT SUSPENSION (OUTER, RH)	472
	29	1	**291-8010**	2	BEARING	
Y	30	1	*291-8011*	1	ARM GP-SEAT SUSPENSION (OUTER, LH)	473
	31	1	**291-8014**	1	HOUSING AS	
	32	2	**291-8019**	2	SHAFT	
	33	1	**291-8026**	1	SHAFT	
	34	1	**291-8027**	4	BLOCK	
	35	2	**291-8028**	4	BLOCK	
	36	1	**291-8031**	1	SPACER (19.3X25.4X212.4-MM THK)	
	37	2	**291-8032**	1	BUMPER	
	38	2	**308-3554**	1	SPACER (9.9X28.4X3.2-MM THK)	
	39	2	**308-3555**	1	SPACER (7.1X25.4X1.4-MM THK)	
	40	1	**308-8642**	1	FILM-IDENTIFICATION (SERIAL NUMBER)	
	41	2	**314-5274**	1	SHAFT	
	42	2	**314-5275**	1	SHAFT	
	43	1	**108-4311**	1	SCREW-MACHINE (3/8-16X0.75-IN)	
	44	1,2	**2K-4973**	8	LOCKNUT (3/8-16-THD)	
	45	2	**3E-9865**	2	LOCKNUT (1/4-20-THD)	
	46	1	**4D-7794**	1	CLIP	
	47	1	**4L-6454**	4	BOLT (3/8-16X1-IN)	
M	48	2	**5C-2890**	2	NUT (M6X1-THD)	
	49	1,2	**8T-4224**	16	WASHER-HARD (8.8X16X2-MM THK)	
	50	1,2	**8T-4896**	12	WASHER-HARD (10.2X18.5X2.5-MM THK)	

316-8368 **SUSPENSION GP-SEAT** *(contd.)* **i03587867**

NOTE	REF NO	GRAPHIC REF	PART NUMBER	QTY	PART NAME 1 2 3 4 5 6 (PRODUCT LEVEL)	SEE PAGE
M	51	1,2	**8T-7547**	16	BOLT (M8X1.25X30-MM)	
	52	1	**8T-9371**	1	BOLT (3/8-16X0.5-IN)	
BE	53	1	**211-5358**		CONDUIT-FLEXIBLE (64-CM)	
BD	54	1	**5P-6010**		TUBE (1-M)	
					AVAILABLE REPAIR KIT(S):	
			192-7799	1	KIT-AIR VALVE	
					(INCLUDES PARTS MARKED J IN GRAPHICS)	
			192-7848	2	KIT-SHOCK ABSORBER (SUSPENSION SEAT)	
					(EACH KIT INCLUDES PARTS MARKED L IN GRAPHICS)	

B-USE AS REQUIRED
D-ORDER BY THE METER
E-ORDER BY THE CENTIMETER
M-METRIC PART
Y-SEPARATE ILLUSTRATION

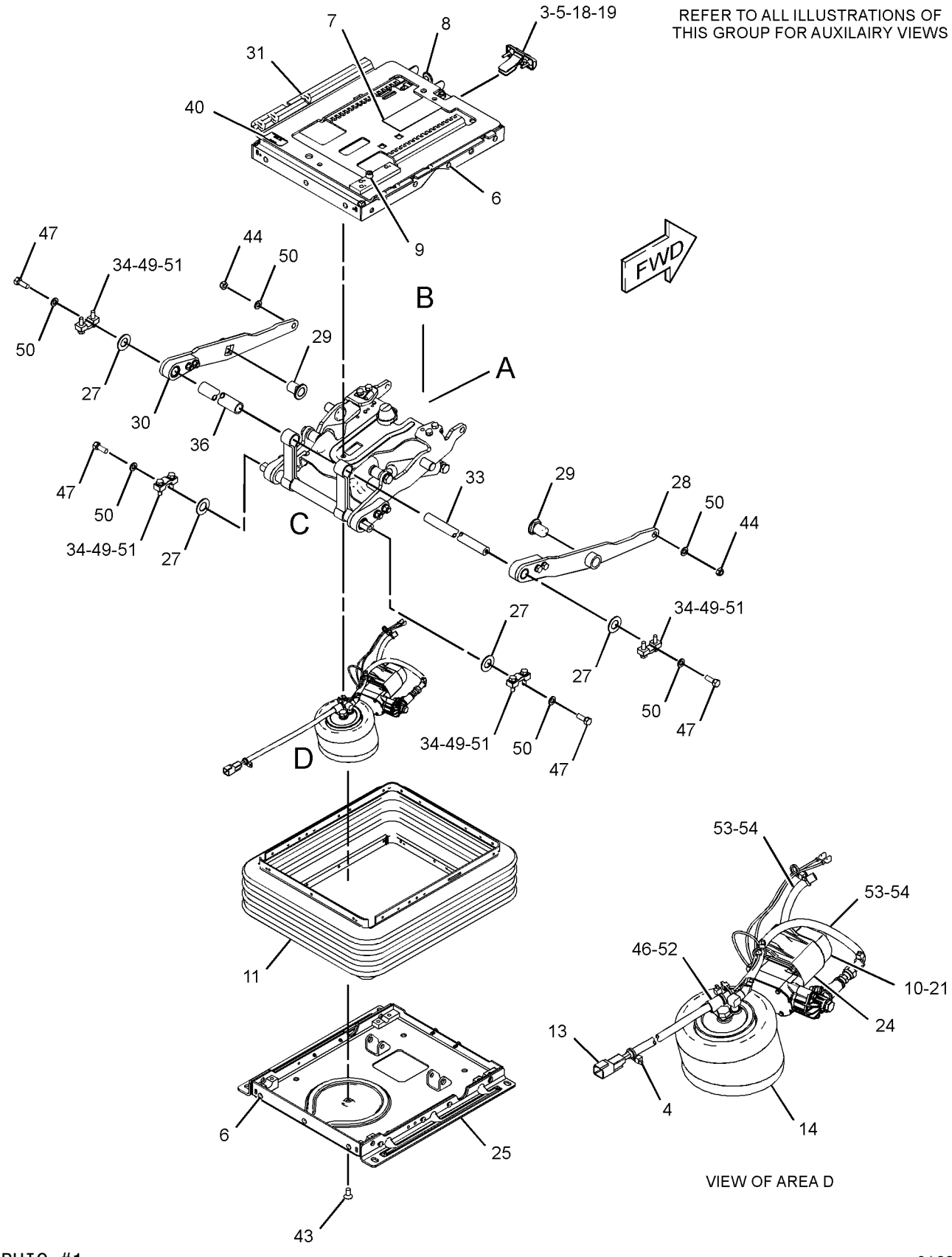

GRAPHIC #1

g01624152

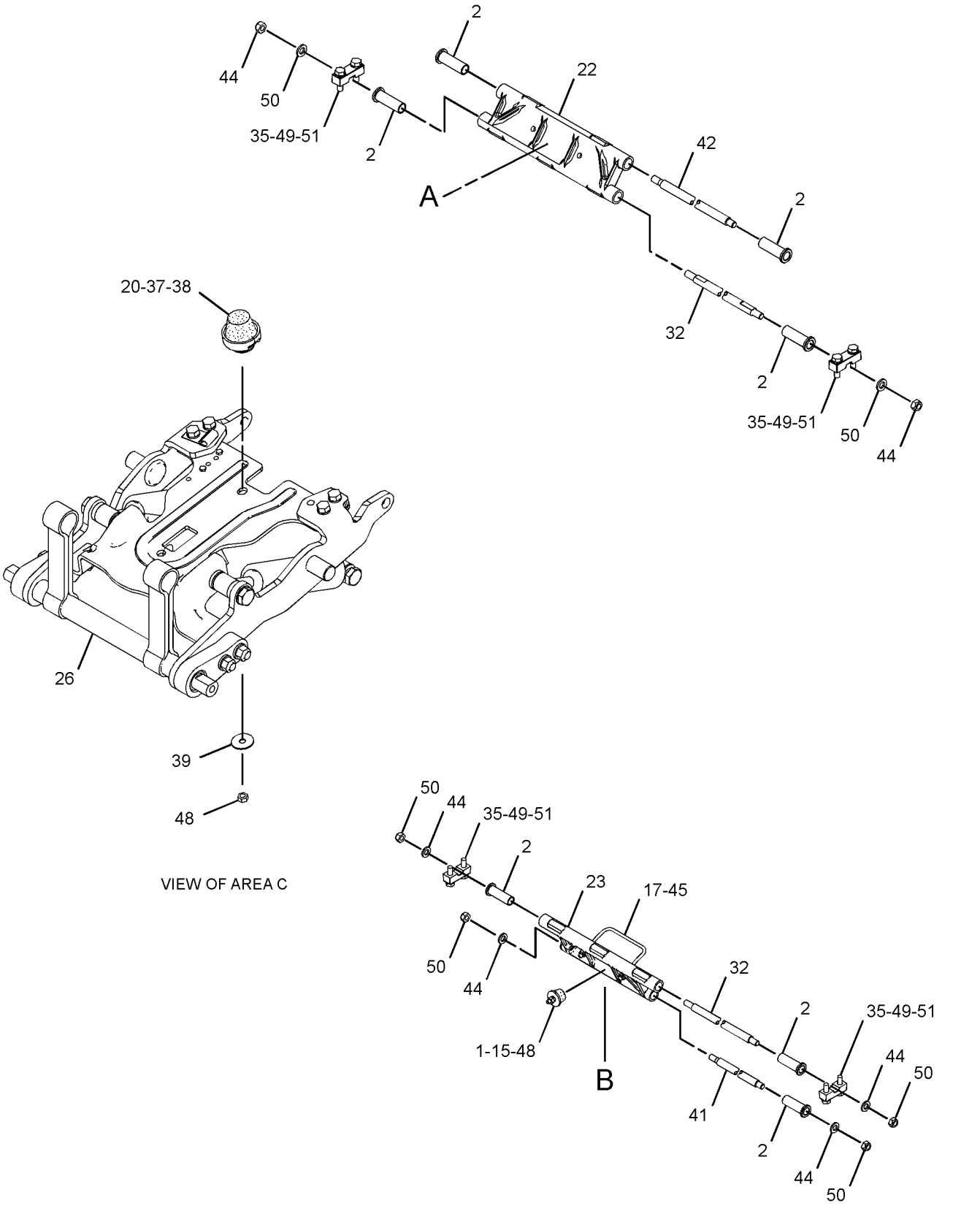

GRAPHIC #2 **<END>** g01624494

OPERATOR STATION

255-4229 WASHER GP-WINDOW

S/N: JLF1-UP; WWW1-UP; YYY1-UP
PART OF 244-7475, 244-7476 ROPS AR, 282-4898, 282-4899 ROPS AR-ENCLOSED
AN ATTACHMENT

SMCS-7306 **i03595841**

NOTE	REF NO	GRAPHIC REF	PART NUMBER	QTY	PART NAME 1 2 3 4 5 6 (PRODUCT LEVEL)	SEE PAGE
	1	1	**7K-1181**	3	STRAP-CABLE	
B	2	1	**7X-7927**		TAPE-IDENTIFICATION (LETTER A)	
B	3	1	**7X-7928**		TAPE-IDENTIFICATION (LETTER B)	
B	4	1	**7X-7929**		TAPE-IDENTIFICATION (LETTER C)	
B	5	1	**7X-7930**		TAPE-IDENTIFICATION (LETTER D)	
	6	1	**249-9062**	1	HARNESS AS-PUMP (WINDOW WASHER)	
		1	**123-7615**	4	CONNECTOR	
		1	**186-3735**	5	PIN-CONNECTOR (16-GA TO 18-GA)	
		1	**8T-8737**	1	PLUG-SEAL	
		1	**102-8805**	1	KIT-RECEPTACLE (6-PIN)	
					(INCLUDES RECEPTACLE AS & WEDGE)	
		1	**6V-0491**	8	TERMINAL-BLADE	
E		1	**125-7875**		TUBE-HEAT SHRINK (7.44-MM DIA) (5-CM)	
	7	1	**251-5977**	1	BRACKET	
	8	1	**280-9162**	1	TANK GP-WINDOW WASHER	
	8A	1	**209-4481**	4	PUMP AS	
	8B	1	**209-4482**	1	CAP-VENTED (WINDOW WASHER TANK)	
	9	1	**3S-2093**	2	STRAP-CABLE	
	10	1	**8T-4121**	2	WASHER-HARD (11X21X2.5-MM THK)	
M	11	1	**8T-4137**	2	BOLT (M10X1.5X20-MM)	
E	12	1	**144-0195**		HOSE (30-CM)	
E	12A	1	**144-0195**		HOSE (25-CM)	
E	12B	1	**144-0195**		HOSE (20-CM)	
E	12C	1	**144-0195**		HOSE (16-CM)	
D	13	1	**6V-2496**		SEAL (0.4-M)	
D	13A	1	**6V-2496**		SEAL (0.25-M EACH)	

B-USE AS REQUIRED
D-ORDER BY THE METER
E-ORDER BY THE CENTIMETER
M-METRIC PART

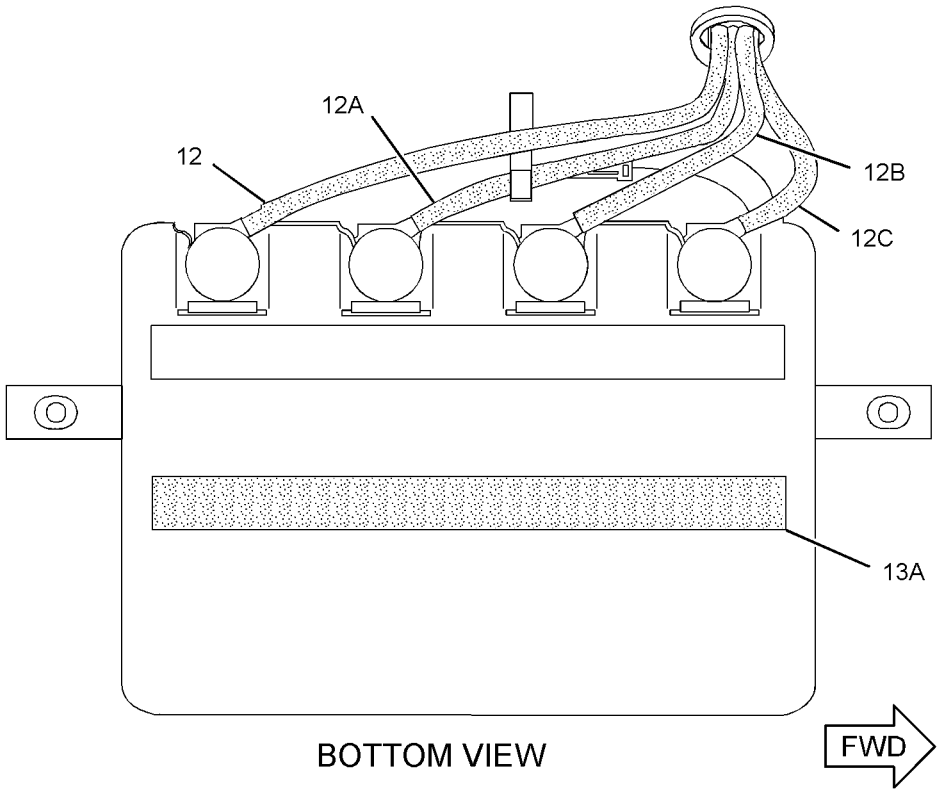

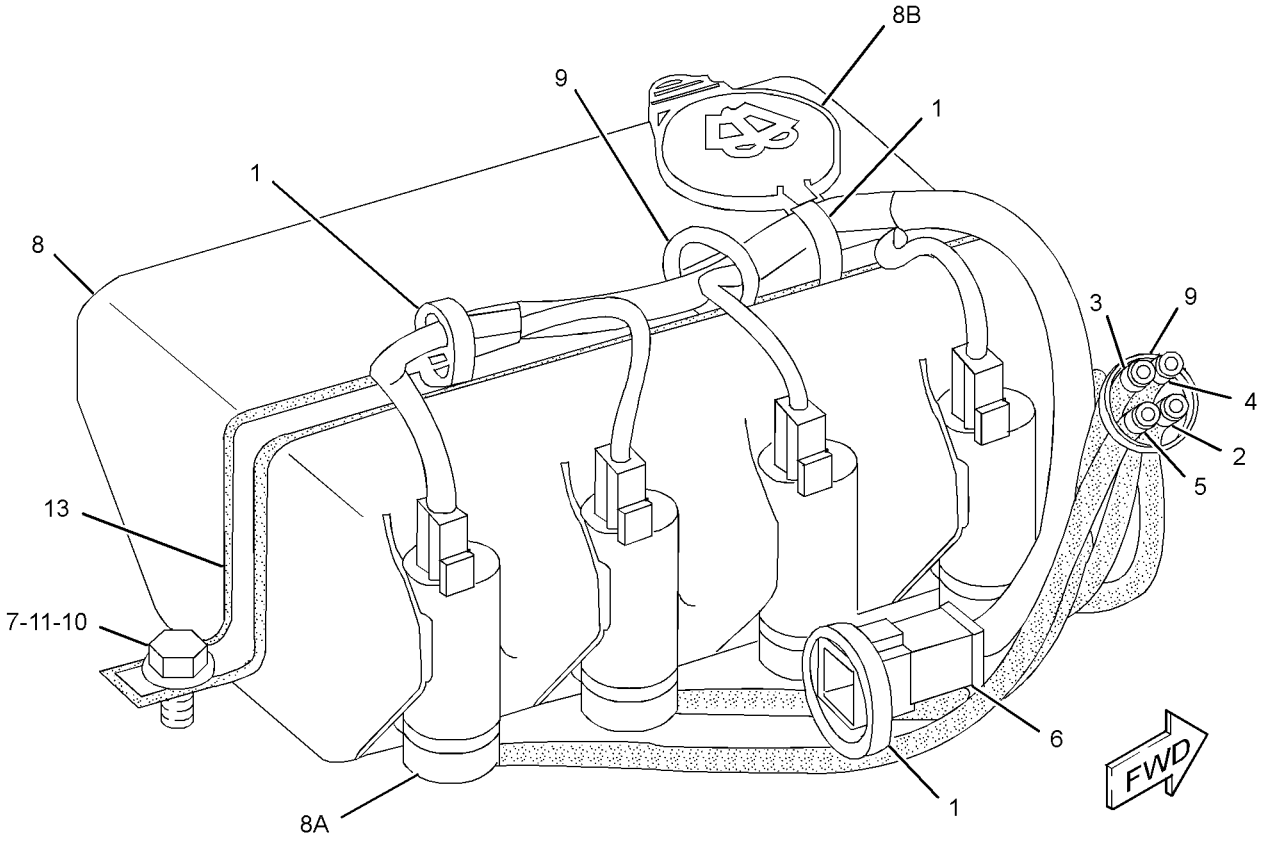

GRAPHIC #1 **<END>** g01730974

OPERATOR STATION

247-6503 WINDOW GP-CAB

S/N: JLF1-UP; WWW1-UP; YYY1-UP
PART OF 244-7475 ROPS AR, 282-4898 ROPS AR-ENCLOSED
AN ATTACHMENT

SMCS-7310 **i03442441**

NOTE	REF NO	GRAPHIC REF	PART NUMBER	QTY	PART NAME 1 2 3 4 5 6 (PRODUCT LEVEL)	SEE PAGE
	1	1	**247-6582**	1	GLASS-FRONT	
	2	1	**247-6583**	1	GLASS-REAR	
Y	3	1	*259-4405*	1	WINDOW GP-CAB (LH)	592
Y	4	1	*259-4403*	1	WINDOW GP-CAB (RH)	591

Y-SEPARATE ILLUSTRATION

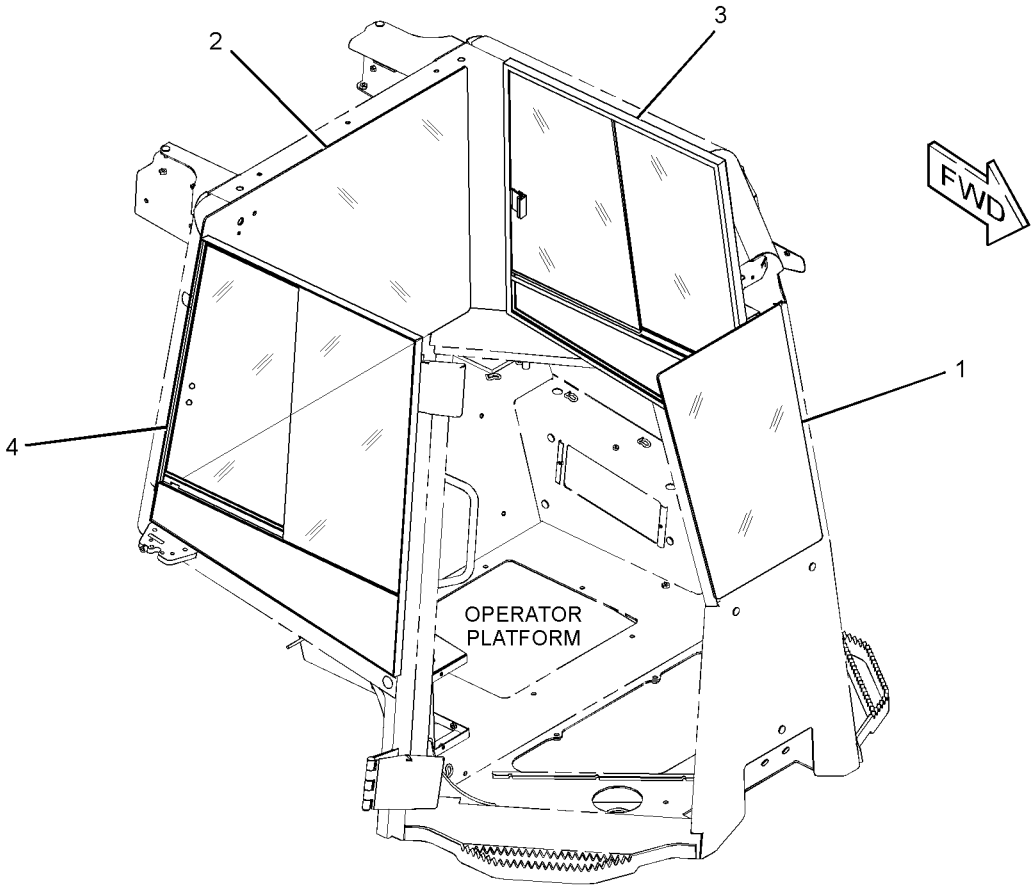

GRAPHIC #1 **<END>** g01301019

OPERATOR STATION

255-4275 WINDOW GP-CAB

S/N: JLF1-UP; WWW1-UP; YYY1-UP
PART OF 244-7476 ROPS AR, 282-4899 ROPS AR-ENCLOSED
AN ATTACHMENT

SMCS-7310 **i03603263**

NOTE	REF NO	GRAPHIC REF	PART NUMBER	QTY	PART NAME 1 2 3 4 5 6 (PRODUCT LEVEL)	SEE PAGE
	1	1	**247-6583**	1	GLASS-REAR	
	2	1	**255-4279**	1	WINDOW-FRONT (POLYCARBONATE)	
Y	3	1	**259-4403**	1	WINDOW GP-CAB (RH)	591
Y	4	1	**259-4405**	1	WINDOW GP-CAB (LH)	592

Y-SEPARATE ILLUSTRATION

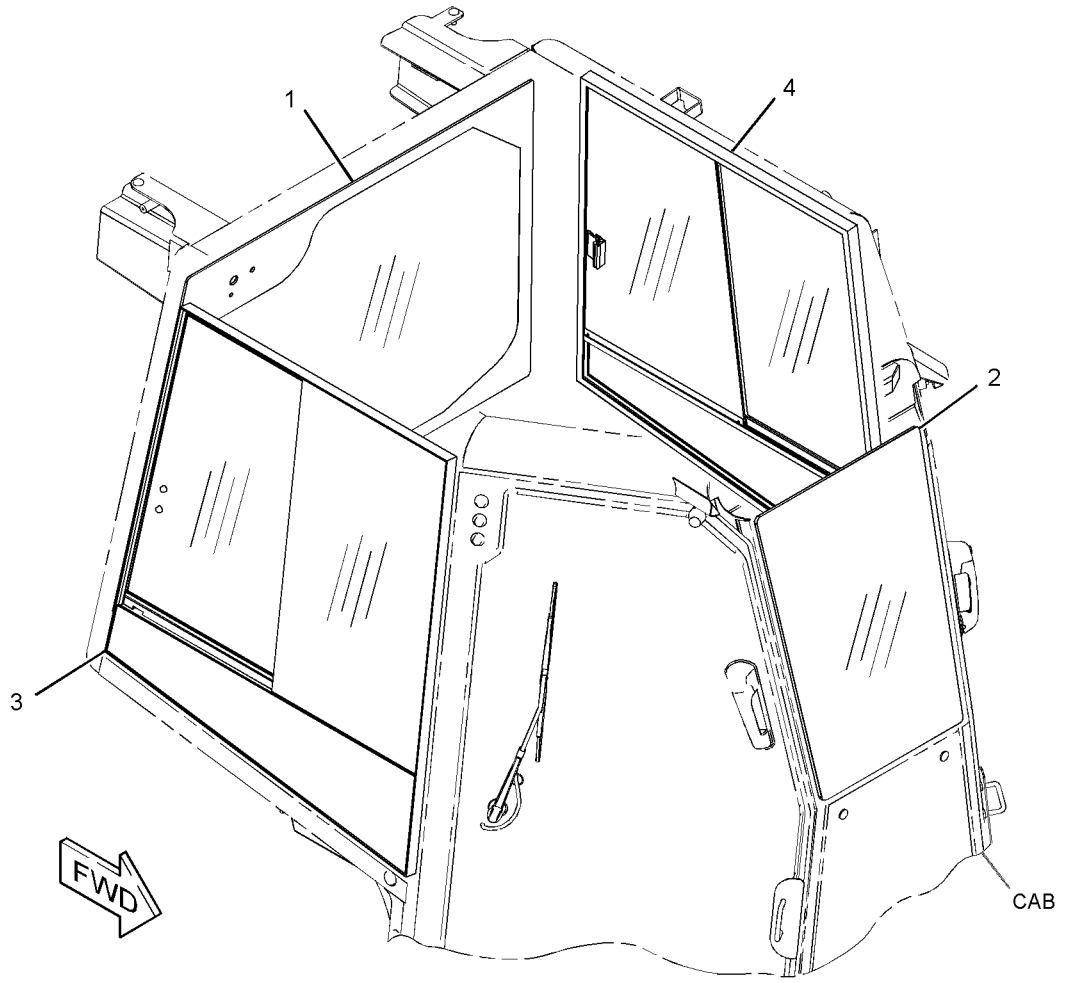

GRAPHIC #1 **<END>** g01380929

OPERATOR STATION

259-4403 WINDOW GP-CAB–RH

S/N: JLF1-UP; WWW1-UP; YYY1-UP
PART OF 247-6503, 255-4275 WINDOW GP-CAB
FIELD REPLACEMENT FOR 247-6580 WINDOW GP-CAB
AN ATTACHMENT

SMCS-7310 **i02994803**

NOTE	REF NO	GRAPHIC REF	PART NUMBER	QTY	PART NAME 1 2 3 4 5 6 (PRODUCT LEVEL)	SEE PAGE
	1	1	**6C-4016**	1	CAP	
	2	1	**212-4219**	1	KNOB	
	3	1	**302-2136**	1	CATCH AS	
E	4	1	**137-2170**		SEAL (77-CM)	
E	4A	1	**137-2170**		SEAL (78-CM)	
E	5	1	**191-3040**		SEAL (8-CM)	
	6	1	**301-5701**	1	GLASS	
	7	1	**264-8899**	1	GLASS	
	8	1	**264-8900**	1	GLASS	
	9	1	**295-4039**	2	BLOCK-SLIDER	
E	10	1	**264-8901**		SEAL (47-CM)	
E	11	1	**286-4407**		WEATHERSTRIP (75-CM EACH)	
	12	1	**145-9087**	1	CUSHION	
M	13	1	**5C-2874**	2	NUT (M5X0.8-THD)	
	14	1	**8R-0275**	2	CAP	
	15	1	**9R-4024**	2	BUSHING-TERMINAL	

E-ORDER BY THE CENTIMETER
M-METRIC PART

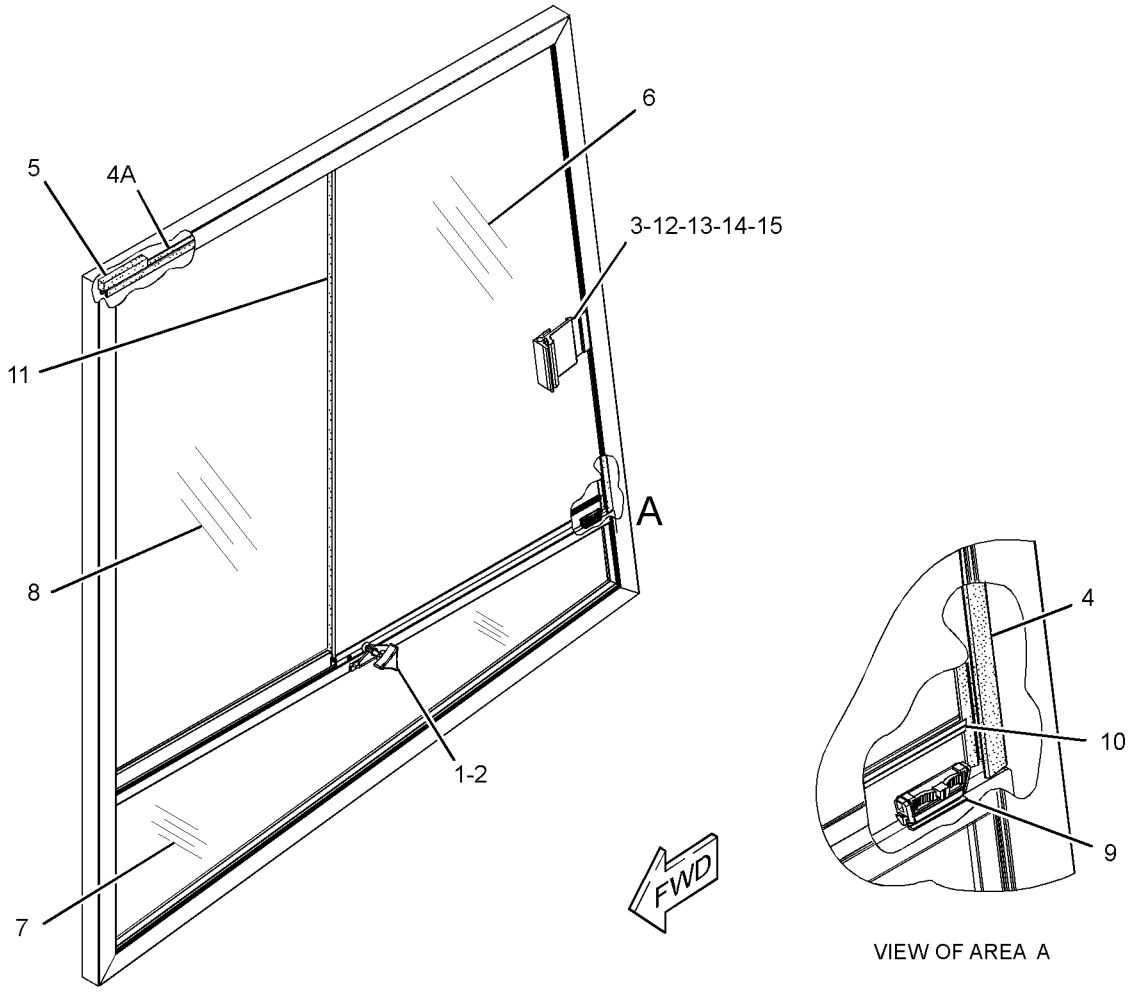

GRAPHIC #1 **<END>** g01520280

OPERATOR STATION

259-4405 WINDOW GP-CAB—LH

S/N: JLF1-UP; WWW1-UP; YYY1-UP
PART OF 247-6503, 255-4275 WINDOW GP-CAB
FIELD REPLACEMENT FOR 247-6581 WINDOW GP-CAB
AN ATTACHMENT

SMCS-7310 **i02994503**

NOTE	REF NO	GRAPHIC REF	PART NUMBER	QTY	PART NAME 1 2 3 4 5 6 (PRODUCT LEVEL)	SEE PAGE
	1	1	**6C-4016**	1	CAP	
	2	1	**212-4219**	1	KNOB	
	3	1	**302-2136**	1	CATCH AS	
E	4	1	**137-2170**		SEAL (77-CM)	
E	4A	1	**137-2170**		SEAL (78-CM)	
E	5	1	**191-3040**		SEAL (8-CM)	
	6	1	**301-5700**	1	GLASS	
	7	1	**295-4037**	1	GLASS (LH)	
	8	1	**264-8900**	1	GLASS	
	9	1	**295-4039**	2	BLOCK-SLIDER	
E	10	1	**264-8901**		SEAL (47-CM)	
E	11	1	**286-4407**		WEATHERSTRIP (75-CM EACH)	
	12	1	**145-9087**	1	CUSHION	
M	13	1	**5C-2874**	2	NUT (M5XO.8-THD)	
	14	1	**8R-0275**	2	CAP	
	15	1	**9R-4024**	2	BUSHING-TERMINAL	

E-ORDER BY THE CENTIMETER
M-METRIC PART

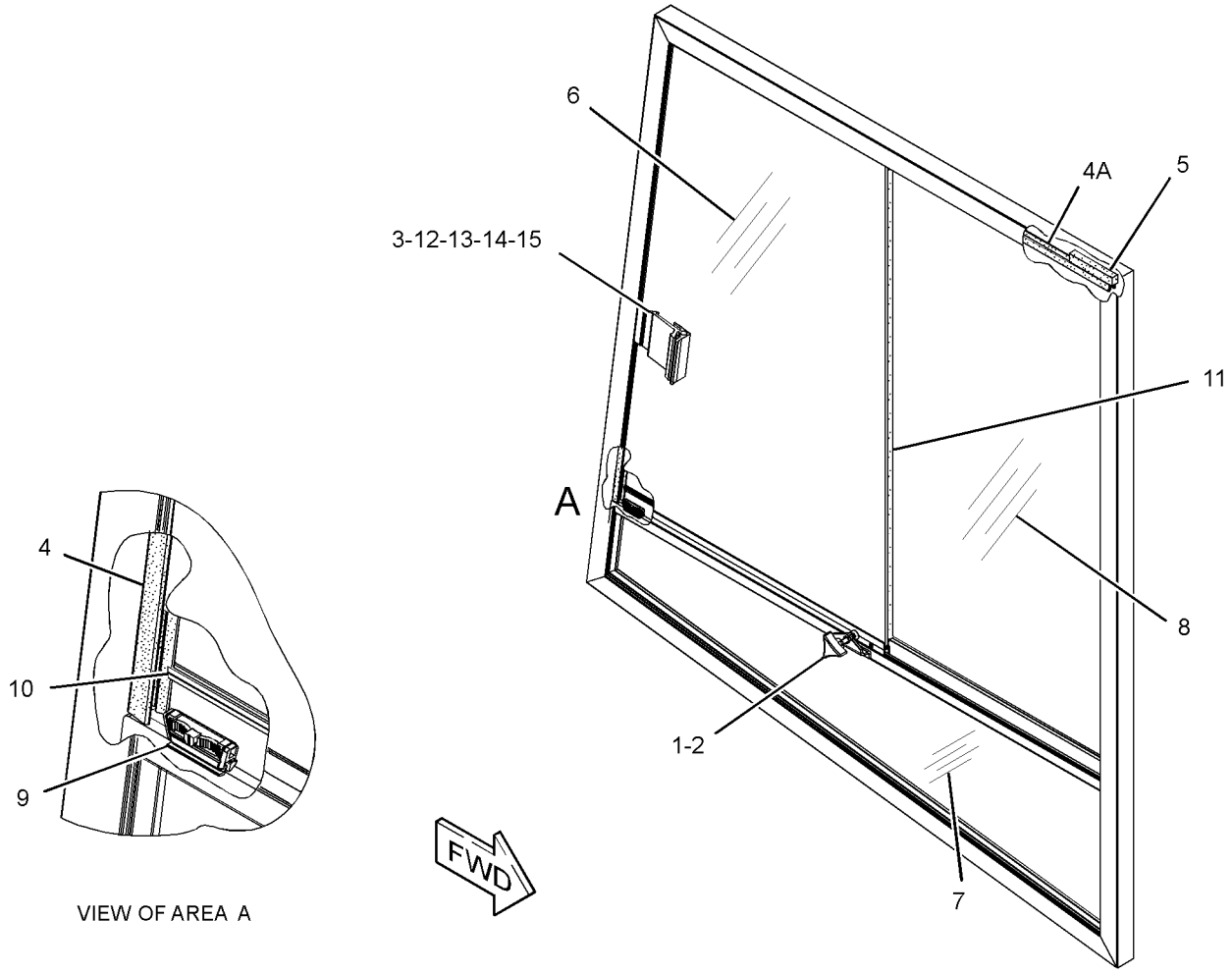

GRAPHIC #1 **<END>** g01519939

OPERATOR STATION

255-4228 WIPER GP-WINDOW

S/N: JLF1-UP; WWW1-UP; YYY1-UP
PART OF 244-7475, 244-7476 ROPS AR, 282-4898, 282-4899 ROPS AR-ENCLOSED
AN ATTACHMENT

SMCS-7305 **i03408380**

NOTE	REF NO	GRAPHIC REF	PART NUMBER	QTY	PART NAME 1 2 3 4 5 6 (PRODUCT LEVEL)	SEE PAGE
Y	1	1	**261-7996**	1	MOTOR GP-WINDOW WIPER (REAR)	542
Y	2	1	**262-0319**	1	MOTOR GP-WINDOW WIPER (FRONT)	543
	3	1	**263-2135**	1	ARM GP-WINDOW WIPER (FRONT)	
		1	**240-8666**	2	CLIP (WASHER HOSE)	
		1	**136-3191**	1	NOZZLE AS-WASHER	
E		1	**194-5171**		HOSE (60-CM)	
	4	1	**266-3701**	1	ARM GP-WINDOW WIPER (REAR)	
		1	**305-9192**	1	NOZZLE AS-WASHER	
E		1	**194-5171**		HOSE (50-CM)	
	5	1	**3S-2093**	20	STRAP-CABLE	
	6	1	**317-5316**	2	GROMMET	
	7	1	**5C-8811**	1	BLADE AS-WIPER (500-MM) (FRONT)	
	8	1	**7Y-3474**	4	VALVE AS-CHECK (WINDOW WASHER)	
	9	1	**8T-5400**	2	CONNECTOR AS	
	10	1	**9D-8508**	4	GROMMET	
B	11	1	**7X-7927**		TAPE-IDENTIFICATION (LETTER A)	
B	12	1	**7X-7928**		TAPE-IDENTIFICATION (LETTER B)	
B	13	1	**7X-7929**		TAPE-IDENTIFICATION (LETTER C)	
B	14	1	**7X-7930**		TAPE-IDENTIFICATION (LETTER D)	
E	15	1	**144-0195**		HOSE (212-CM)	
E	15A	1	**144-0195**		HOSE (302-CM)	
E	15B	1	**144-0195**		HOSE (400-CM)	
E	15C	1	**144-0195**		HOSE (550-CM)	
	16	1	**146-6433**	1	BLADE AS-WIPER (500-MM) (REAR)	

B-USE AS REQUIRED
E-ORDER BY THE CENTIMETER
Y-SEPARATE ILLUSTRATION

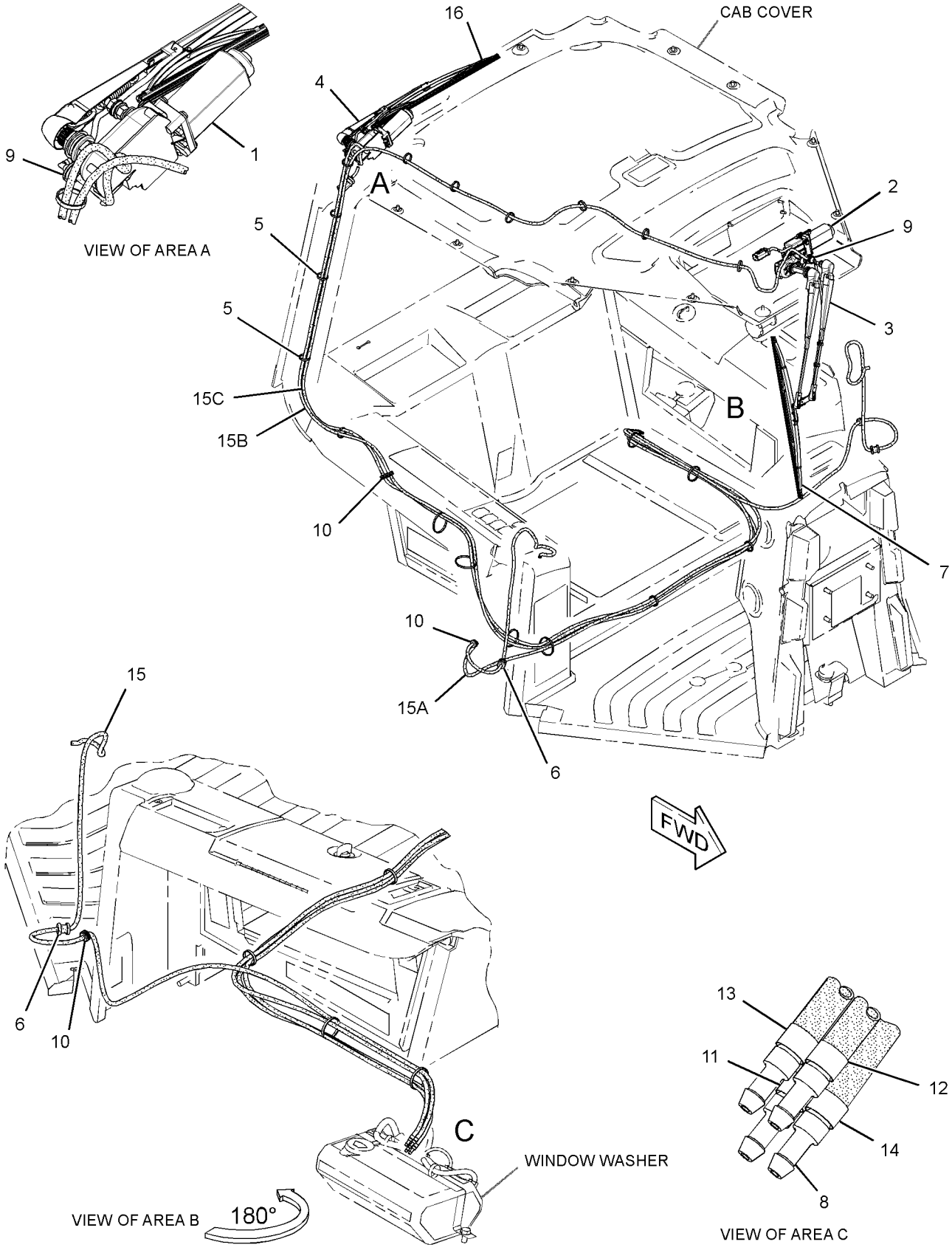

GRAPHIC #1 **<END>** g01701754

255-1355 BLADE AR-PWR ANGLE & TILT–LGP

S/N: JLF1-UP; WWW1-UP; YYY1-UP
3149-MM (124-INCH) BLADE
AN ATTACHMENT

SMCS-6050 **i02833724**

NOTE	PART NUMBER	QTY	PART NAME 1 2 3 4 5 6 (PRODUCT LEVEL)	SEE PAGE
Y	*255-1362*	1	BLADE GP-ANGLING (LOW GROUND PRESSURE)	600
Y	*255-1357*	1	LINK GP-PITCH	457
Y-SEPARATE ILLUSTRATION				

<END>

255-1394 BLADE AR-PWR ANGLE & TILT–XL

S/N: JLF1-UP; WWW1-UP; YYY1-UP
2646-MM (104.2-INCH) BLADE
AN ATTACHMENT

SMCS-6050 **i02833726**

NOTE	PART NUMBER	QTY	PART NAME 1 2 3 4 5 6 (PRODUCT LEVEL)	SEE PAGE
Y	*255-1395*	1	BLADE GP-ANGLING (XL GRADE CONTROL)	601
Y	*255-1357*	1	LINK GP-PITCH	457
Y-SEPARATE ILLUSTRATION				

<END>

255-1413 BLADE AR-PWR ANGLE & TILT–LGP

S/N: JLF1-UP; WWW1-UP; YYY1-UP
3149-MM (124-INCH) BLADE
AN ATTACHMENT

SMCS-6050 **i02833728**

NOTE	PART NUMBER	QTY	PART NAME 1 2 3 4 5 6 (PRODUCT LEVEL)	SEE PAGE
Y	*255-1414*	1	BLADE GP-ANGLING (LOW GROUND PRESSURE)	602
Y	*255-1357*	1	LINK GP-PITCH	457
Y-SEPARATE ILLUSTRATION				

<END>

255-1425 BLADE AR-PWR ANGLE & TILT–XL

S/N: JLF1-UP; WWW1-UP; YYY1-UP
2782-MM (109.5-INCH) BLADE
AN ATTACHMENT

SMCS-6050 **i02833730**

NOTE	PART NUMBER	QTY	PART NAME 1 2 3 4 5 6 (PRODUCT LEVEL)	SEE PAGE
Y	*255-1427*	1	BLADE GP-ANGLING (XL GRADE CONTROL)	603
Y	*255-1357*	1	LINK GP-PITCH	457
Y-SEPARATE ILLUSTRATION				

<END>

255-1470 BLADE AR-PWR ANGLE & TILT–LGP

S/N: JLF1-UP; WWW1-UP; YYY1-UP
3220-MM (126.8-INCH) BLADE
AN ATTACHMENT

SMCS-6050 **i02833731**

NOTE	PART NUMBER	QTY	PART NAME 1 2 3 4 5 6 (PRODUCT LEVEL)	SEE PAGE
Y	*255-1471*	1	BLADE GP-ANGLING (LOW GROUND PRESSURE)	604
Y	*255-1357*	1	LINK GP-PITCH	457
Y-SEPARATE ILLUSTRATION				

<END>

255-1486 BLADE AR-PWR ANGLE & TILT

S/N: JLF1-UP; WWW1-UP; YYY1-UP
2921-MM (115-IN) BLADE
AN ATTACHMENT

SMCS-6050 **i02833733**

NOTE	PART NUMBER	QTY	PART NAME 1 2 3 4 5 6 (PRODUCT LEVEL)	SEE PAGE
Y	*255-1487*	1	BLADE GP-ANGLING (XL GRADE CONTROL)	605
Y	*255-1357*	1	LINK GP-PITCH	457
Y-SEPARATE ILLUSTRATION				

<END>

255-1502 BLADE AR-PWR ANGLE & TILT–XL

S/N: JLF1-UP; WWW1-UP; YYY1-UP
2886-MM (113.6-INCH) BLADE
AN ATTACHMENT

SMCS-6050 **i02833734**

NOTE	PART NUMBER	QTY	PART NAME 1 2 3 4 5 6 (PRODUCT LEVEL)	SEE PAGE
Y	*255-1503*	1	BLADE GP-ANGLING (XL GRADE CONTROL)	606
Y	*255-1357*	1	LINK GP-PITCH	457
Y-SEPARATE ILLUSTRATION				

<END>

255-2368 BLADE AR-PWR ANGLE & TILT–LGP

S/N: JLF1-UP; WWW1-UP; YYY1-UP
3145.6-MM (123.8-INCH) BLADE
AN ATTACHMENT

SMCS-6050 **i02833735**

NOTE	PART NUMBER	QTY	PART NAME 1 2 3 4 5 6 (PRODUCT LEVEL)	SEE PAGE
Y	*255-2370*	1	BLADE GP-ANGLING (LOW GROUND PRESSURE)	607
Y	*255-1357*	1	LINK GP-PITCH	457
Y-SEPARATE ILLUSTRATION				

<END>

255-2372 BLADE AR-PWR ANGLE & TILT–XL GRADE CONTROL

S/N: JLF1-UP; WWW1-UP; YYY1-UP
2646-MM (104.2-INCH) BLADE
AN ATTACHMENT

SMCS-6050 **i02833736**

NOTE	PART NUMBER	QTY	PART NAME 1 2 3 4 5 6 (PRODUCT LEVEL)	SEE PAGE
Y	*255-2373*	1	BLADE GP-ANGLING (XL GRADE CONTROL)	608
Y	*255-1357*	1	LINK GP-PITCH	457

Y-SEPARATE ILLUSTRATION

<END>

255-2375 BLADE AR-PWR ANGLE & TILT–LGP, GRADE CONTROL

S/N: JLF1-UP; WWW1-UP; YYY1-UP
3149-MM(124-INCH)BLADE
AN ATTACHMENT

SMCS-6050 **i02833737**

NOTE	PART NUMBER	QTY	PART NAME 1 2 3 4 5 6 (PRODUCT LEVEL)	SEE PAGE
Y	*255-2376*	1	BLADE GP-ANGLING (LOW GROUND PRESSURE)	609
Y	*255-1357*	1	LINK GP-PITCH	457

Y-SEPARATE ILLUSTRATION

<END>

255-2378 BLADE AR-PWR ANGLE & TILT–XL GRADE CONTROL

S/N: JLF1-UP; WWW1-UP; YYY1-UP
2782-MM (109.5-INCH) BLADE
AN ATTACHMENT

SMCS-6050 **i02833738**

NOTE	PART NUMBER	QTY	PART NAME 1 2 3 4 5 6 (PRODUCT LEVEL)	SEE PAGE
Y	*255-2379*	1	BLADE GP-ANGLING (XL GRADE CONTROL)	610
Y	*255-1357*	1	LINK GP-PITCH	457

Y-SEPARATE ILLUSTRATION

<END>

255-2381 BLADE AR-PWR ANGLE & TILT–LGP GRADE CONTROL

S/N: JLF1-UP; WWW1-UP; YYY1-UP
3220-MM (126.8-INCH) BLADE
AN ATTACHMENT

SMCS-6050 **i02833739**

NOTE	PART NUMBER	QTY	PART NAME 1 2 3 4 5 6 (PRODUCT LEVEL)	SEE PAGE
Y	*255-2383*	1	BLADE GP-ANGLING (LOW GROUND PRESSURE)	611
Y	*255-1357*	1	LINK GP-PITCH	457

Y-SEPARATE ILLUSTRATION

<END>

WORK TOOLS

255-2385 BLADE AR-PWR ANGLE & TILT

S/N: JLF1-UP; WWW1-UP; YYY1-UP
2921-MM (115-INCH) BLADE
AN ATTACHMENT

SMCS-6050 **i02833745**

NOTE	PART NUMBER	QTY	PART NAME 1 2 3 4 5 6 (PRODUCT LEVEL)	SEE PAGE
Y	*255-2386*	1	BLADE GP-ANGLING (XL GRADE CONTROL)	612
Y	*255-1357*	1	LINK GP-PITCH	457

Y-SEPARATE ILLUSTRATION

<END>

255-2390 BLADE AR-PWR ANGLE & TILT—XL GRADE CONTROL

S/N: JLF1-UP; WWW1-UP; YYY1-UP
2886-MM (113.6-INCH) BLADE
AN ATTACHMENT

SMCS-6050 **i02833746**

NOTE	PART NUMBER	QTY	PART NAME 1 2 3 4 5 6 (PRODUCT LEVEL)	SEE PAGE
Y	*255-2391*	1	BLADE GP-ANGLING (XL GRADE CONTROL)	613
Y	*255-1357*	1	LINK GP-PITCH	457

Y-SEPARATE ILLUSTRATION

<END>

255-2393 BLADE AR-PWR ANGLE & TILT—FORESTRY

S/N: JLF1-UP; WWW1-UP; YYY1-UP
2886-MM (113.6-INCH) BLADE
AN ATTACHMENT

SMCS-6050 **i02833747**

NOTE	PART NUMBER	QTY	PART NAME 1 2 3 4 5 6 (PRODUCT LEVEL)	SEE PAGE
Y	*255-2394*	1	BLADE GP-ANGLING (FORESTRY)	614
Y	*255-1357*	1	LINK GP-PITCH	457

Y-SEPARATE ILLUSTRATION

<END>

312-8350 BLADE AR-PWR ANGLE & TILT

S/N: JLF1-UP; WWW1-UP; YYY1-UP
2921-MM(115-IN)
AN ATTACHMENT

SMCS-6050 **i02864411**

NOTE	PART NUMBER	QTY	PART NAME 1 2 3 4 5 6 (PRODUCT LEVEL)	SEE PAGE
Y	*312-8351*	1	BLADE GP-ANGLING	615
Y	*255-1357*	1	LINK GP-PITCH	457

Y-SEPARATE ILLUSTRATION

<END>

312-8360 BLADE AR-PWR ANGLE & TILT

S/N: JLF1-UP; WWW1-UP; YYY1-UP
2921-MM(115-IN)
AN ATTACHMENT

SMCS-6050 **i02873082**

NOTE	PART NUMBER	QTY	PART NAME 1 2 3 4 5 6 (PRODUCT LEVEL)	SEE PAGE
Y	*312-8361*	1	BLADE GP-ANGLING	616
Y	*255-1357*	1	LINK GP-PITCH	457

Y-SEPARATE ILLUSTRATION

<END>

WORK TOOLS

255-1362 BLADE GP-ANGLING—LOW GROUND PRESSURE

S/N: JLF1-UP; WWW1-UP; YYY1-UP
PART OF 255-1355 BLADE AR-PWR ANGLE & TILT
AN ATTACHMENT

SMCS-6052, 6060 **i02637757**

NOTE	REF NO	GRAPHIC REF	PART NUMBER	QTY	PART NAME 1 2 3 4 5 6 (PRODUCT LEVEL)	SEE PAGE
	1	1	**6Y-1421**	3	PIN	
Y	2	1	*6Y-5838*	1	EDGE GP-BIT & CUTTING	633
	3	1	**8J-0729**	3	RETAINER	
	4	1	**150-0351**	2	SPACER (38.3X44.45X20.8-MM THK)	
	5	1	**150-0352**	4	SPACER (38.30X44.45X27.3-MM THK)	
	6	1	**179-5755**	1	CAP-BEARING	
B	7	1	**183-5297**	26	SHIM (0.8-MM THK)	
	8	1	**255-1365**	1	BLADE AS-ANGLING	
	9	1	**225-0098**	4	BOLT (M20X2.5X140-MM)	
	10	1	**8T-3282**	4	WASHER-HARD (22X35X3.5-MM THK)	
M	11	1	**8T-4195**	3	BOLT (M10X1.5X30-MM)	

B-USE AS REQUIRED
M-METRIC PART
Y-SEPARATE ILLUSTRATION

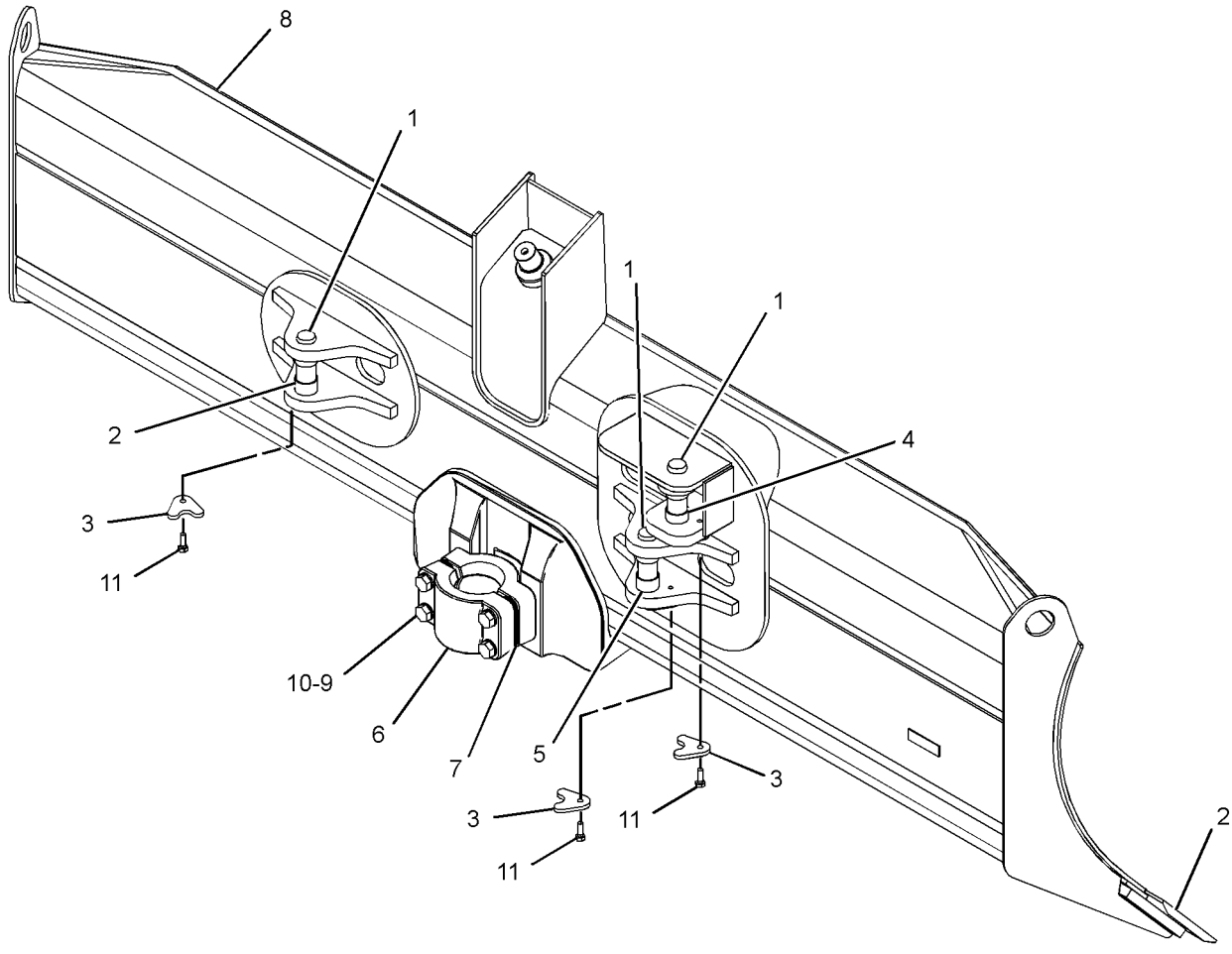

GRAPHIC #1 **<END>** g01330203

255-1395 BLADE GP-ANGLING–XL GRADE CONTROL

S/N: JLF1-UP; WWW1-UP; YYY1-UP
PART OF 255-1394 BLADE AR-PWR ANGLE & TILT
AN ATTACHMENT

SMCS-6052, 6060 **i02638061**

NOTE	REF NO	GRAPHIC REF	PART NUMBER	QTY	PART NAME 1 2 3 4 5 6 (PRODUCT LEVEL)	SEE PAGE
	1	1	**6Y-1421**	3	PIN	
	2	1	**8J-0729**	3	RETAINER	
	3	1	**150-0351**	2	SPACER (38.3X44.45X20.8-MM THK)	
	4	1	**150-0352**	4	SPACER (38.30X44.45X27.3-MM THK)	
	5	1	**179-5755**	1	CAP-BEARING	
B	6	1	**183-5297**	26	SHIM (0.8-MM THK)	
	7	1	**255-1397**	1	BLADE AS-ANGLING	
Y	8	1	*255-1426*	1	EDGE GP-BIT & CUTTING (LEVEL CUT)	635
	9	1	**225-0098**	4	BOLT (M20X2.5X140-MM)	
	10	1	**8T-3282**	4	WASHER-HARD (22X35X3.5-MM THK)	
M	11	1	**8T-4195**	3	BOLT (M10X1.5X30-MM)	

B-USE AS REQUIRED
M-METRIC PART
Y-SEPARATE ILLUSTRATION

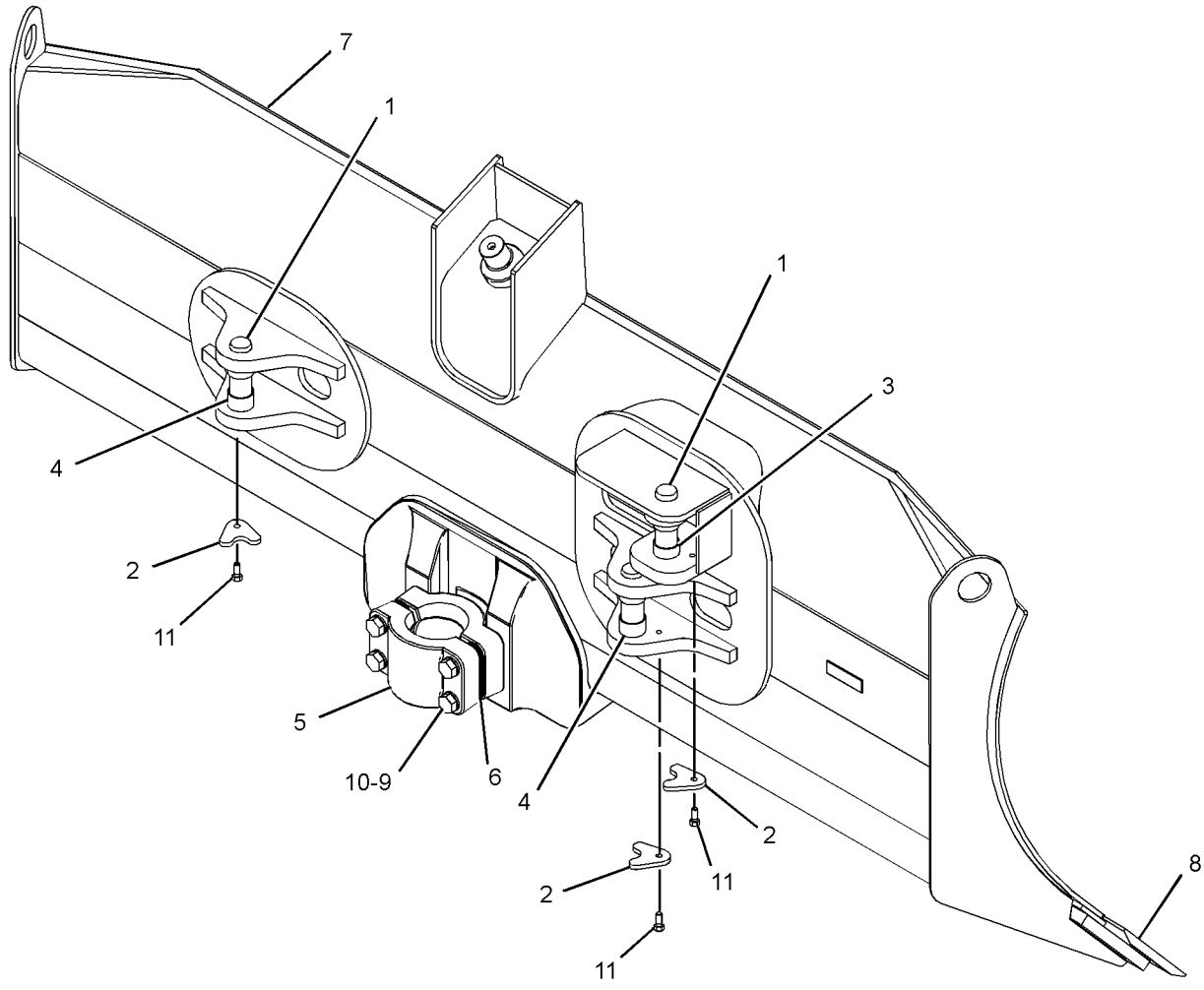

GRAPHIC #1 **<END>** g01330216

WORK TOOLS

255-1414 BLADE GP-ANGLING—LOW GROUND PRESSURE

S/N: JLF1-UP; WWW1-UP; YYY1-UP
PART OF 255-1413 BLADE AR-PWR ANGLE & TILT
AN ATTACHMENT

SMCS-6052, 6060 **i02638047**

NOTE	REF NO	GRAPHIC REF	PART NUMBER	QTY	PART NAME 1 2 3 4 5 6 (PRODUCT LEVEL)	SEE PAGE
	1	1	**6Y-1421**	3	PIN	
Y	2	1	*6Y-5838*	1	EDGE GP-BIT & CUTTING	633
	3	1	**8J-0729**	3	RETAINER	
	4	1	**150-0351**	2	SPACER (38.3X44.45X20.8-MM THK)	
	5	1	**150-0352**	4	SPACER (38.30X44.45X27.3-MM THK)	
	6	1	**179-5755**	1	CAP-BEARING	
B	7	1	**183-5297**	26	SHIM (0.8-MM THK)	
	8	1	**255-1415**	1	BLADE AS-ANGLING	
	9	1	**225-0098**	4	BOLT (M20X2.5X140-MM)	
	10	1	**8T-3282**	4	WASHER-HARD (22X35X3.5-MM THK)	
M	11	1	**8T-4195**	3	BOLT (M10X1.5X30-MM)	

B-USE AS REQUIRED
M-METRIC PART
Y-SEPARATE ILLUSTRATION

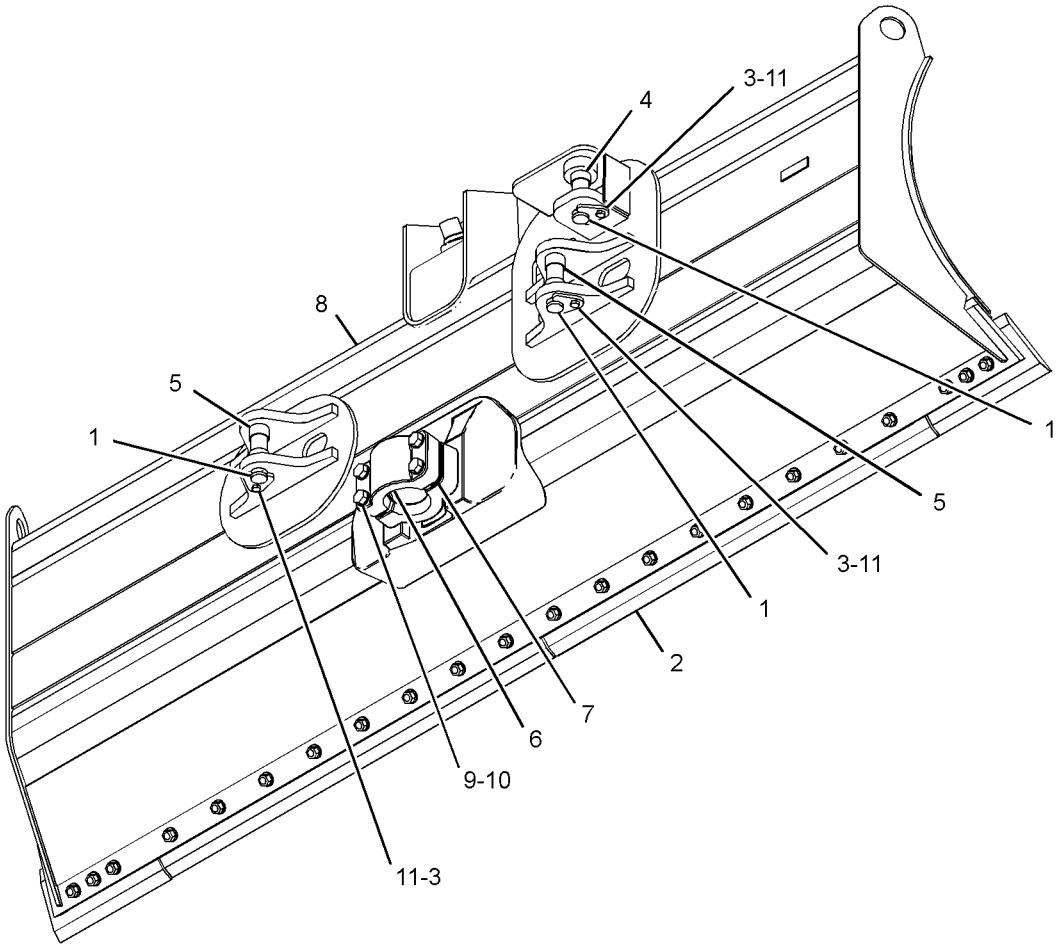

GRAPHIC #1 **<END>** g01330361

255-1427 BLADE GP-ANGLING–XL GRADE CONTROL

S/N: JLF1-UP; WWW1-UP; YYY1-UP
PART OF 255-1425 BLADE AR-PWR ANGLE & TILT
AN ATTACHMENT

SMCS-6052, 6060 **i02833741**

NOTE	REF NO	GRAPHIC REF	PART NUMBER	QTY	PART NAME 1 2 3 4 5 6 (PRODUCT LEVEL)	SEE PAGE
	1	1	**6Y-1421**	3	PIN	
	2	1	**8J-0729**	3	RETAINER	
	3	1	**150-0351**	2	SPACER (38.3X44.45X20.8-MM THK)	
	4	1	**150-0352**	4	SPACER (38.30X44.45X27.3-MM THK)	
	5	1	**179-5755**	1	CAP-BEARING	
B	6	1	**183-5297**	26	SHIM (0.8-MM THK)	
Y	7	1	*255-1428*	1	EDGE GP-BIT & CUTTING (LEVEL CUT)	635
	8	1	**255-1430**	1	BLADE AS-ANGLING	
	9	1	**225-0098**	4	BOLT (M20X2.5X140-MM)	
	10	1	**8T-3282**	4	WASHER-HARD (22X35X3.5-MM THK)	
M	11	1	**8T-4195**	3	BOLT (M10X1.5X30-MM)	

B-USE AS REQUIRED
M-METRIC PART
Y-SEPARATE ILLUSTRATION

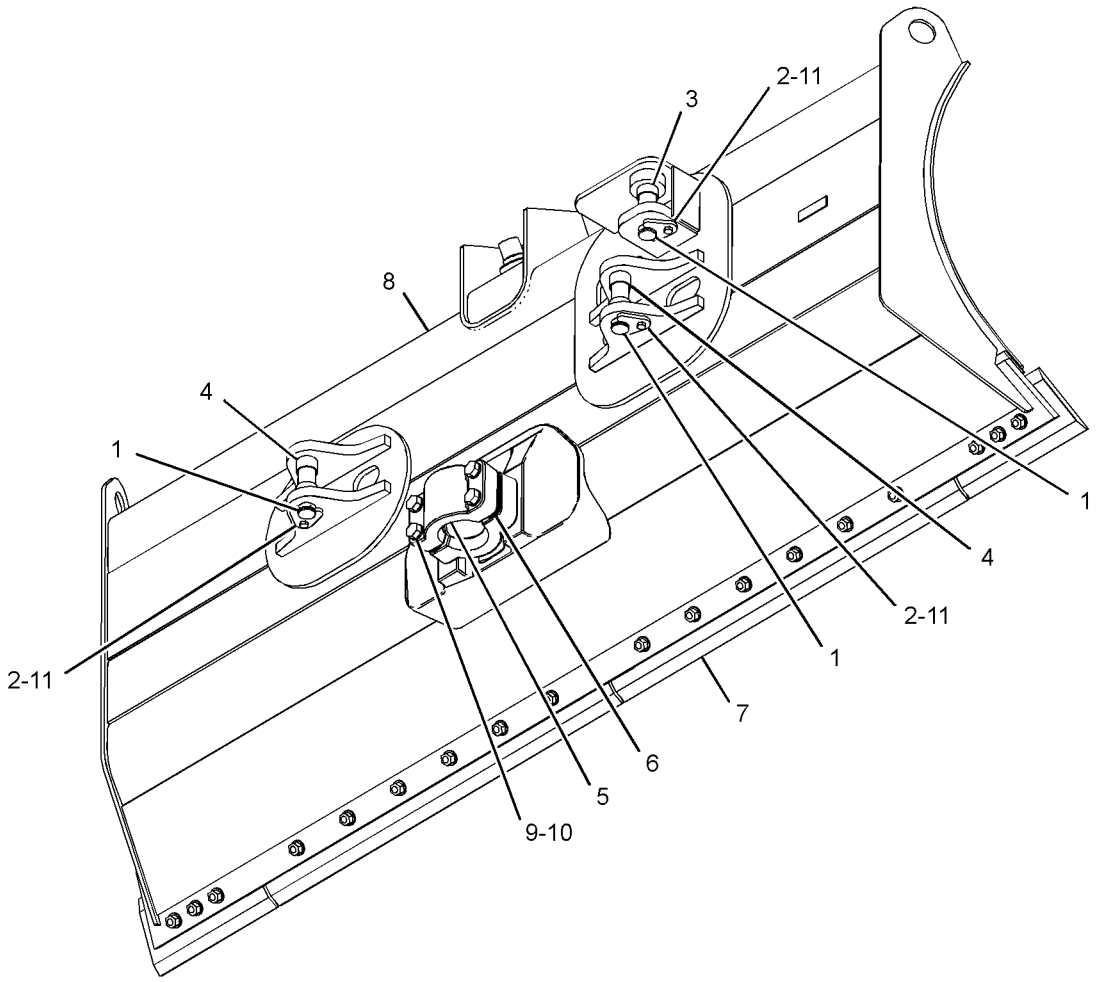

GRAPHIC #1 **<END>** g01330341

255-1471 BLADE GP-ANGLING—LOW GROUND PRESSURE

S/N: JLF1-UP; WWW1-UP; YYY1-UP
PART OF 255-1470 BLADE AR-PWR ANGLE & TILT
AN ATTACHMENT

SMCS-6052, 6060 **i02833743**

NOTE	REF NO	GRAPHIC REF	PART NUMBER	QTY	PART NAME 1 2 3 4 5 6 (PRODUCT LEVEL)	SEE PAGE
	1	1	**6Y-1421**	3	PIN	
	2	1	**8J-0729**	3	RETAINER	
	3	1	**150-0351**	2	SPACER (38.3X44.45X20.8-MM THK)	
	4	1	**150-0352**	4	SPACER (38.30X44.45X27.3-MM THK)	
	5	1	**179-5755**	1	CAP-BEARING	
B	6	1	**183-5297**	26	SHIM (0.8-MM THK)	
Y	7	1	*255-1472*	1	EDGE GP-BIT & CUTTING (LEVEL CUT)	635
	8	1	**255-1475**	1	BLADE AS-ANGLING	
	9	1	**225-0098**	4	BOLT (M20X2.5X140-MM)	
	10	1	**8T-3282**	4	WASHER-HARD (22X35X3.5-MM THK)	
M	11	1	**8T-4195**	3	BOLT (M10X1.5X30-MM)	

B-USE AS REQUIRED
M-METRIC PART
Y-SEPARATE ILLUSTRATION

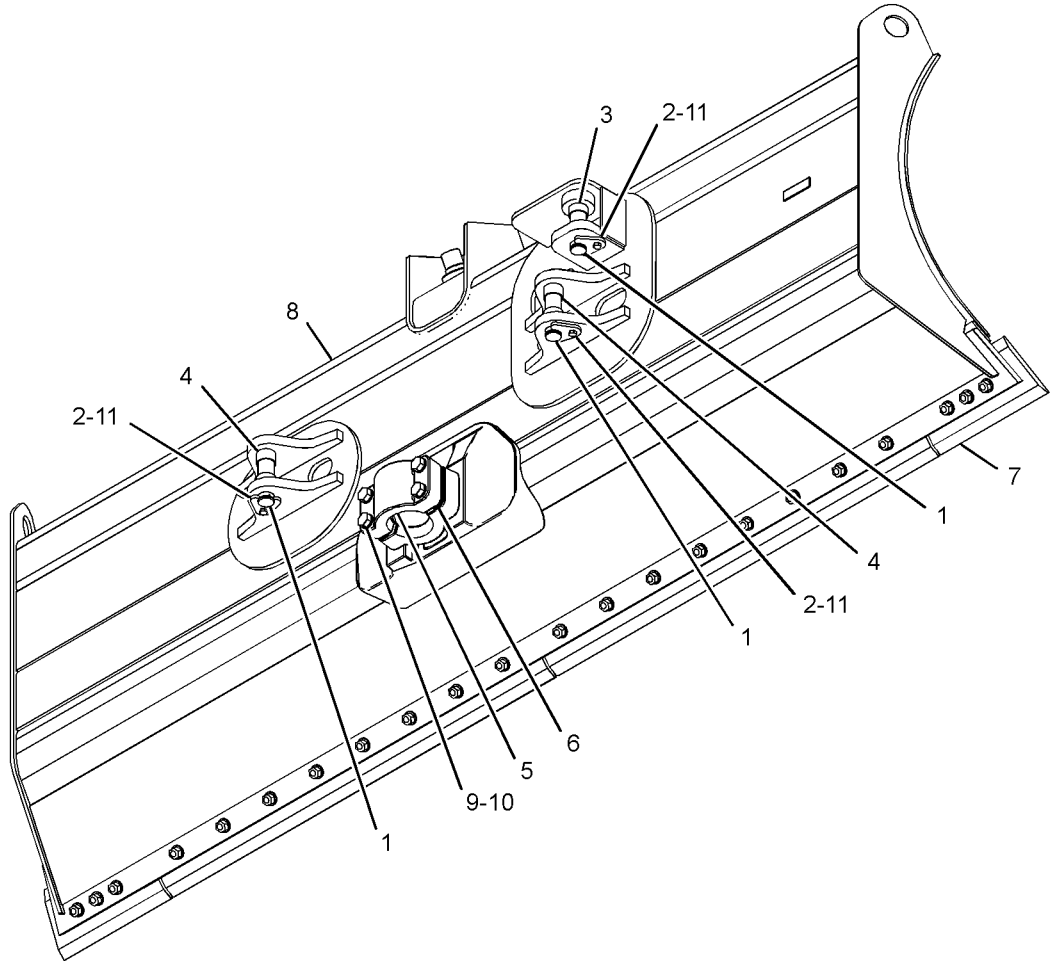

GRAPHIC #1 **<END>** g01330866

255-1487 BLADE GP-ANGLING–XL GRADE CONTROL

S/N: JLF1-UP; WWW1-UP; YYY1-UP
PART OF 255-1486 BLADE AR-PWR ANGLE & TILT
AN ATTACHMENT

SMCS-6052, 6060 **i02642309**

NOTE	REF NO	GRAPHIC REF	PART NUMBER	QTY	PART NAME 1 2 3 4 5 6 (PRODUCT LEVEL)	SEE PAGE
	1	1	**6Y-1421**	3	PIN	
	2	1	**8J-0729**	3	RETAINER	
	3	1	**150-0351**	2	SPACER (38.3X44.45X20.8-MM THK)	
	4	1	**150-0352**	4	SPACER (38.30X44.45X27.3-MM THK)	
Y	5	1	*179-2897*	1	EDGE GP-BIT & CUTTING	634
	6	1	**179-5755**	1	CAP-BEARING	
B	7	1	**183-5297**	26	SHIM (0.8-MM THK)	
	8	1	**255-1490**	1	BLADE AS-ANGLING	
	9	1	**225-0098**	4	BOLT (M20X2.5X140-MM)	
	10	1	**8T-3282**	4	WASHER-HARD (22X35X3.5-MM THK)	
M	11	1	**8T-4195**	3	BOLT (M10X1.5X30-MM)	

B-USE AS REQUIRED
M-METRIC PART
Y-SEPARATE ILLUSTRATION

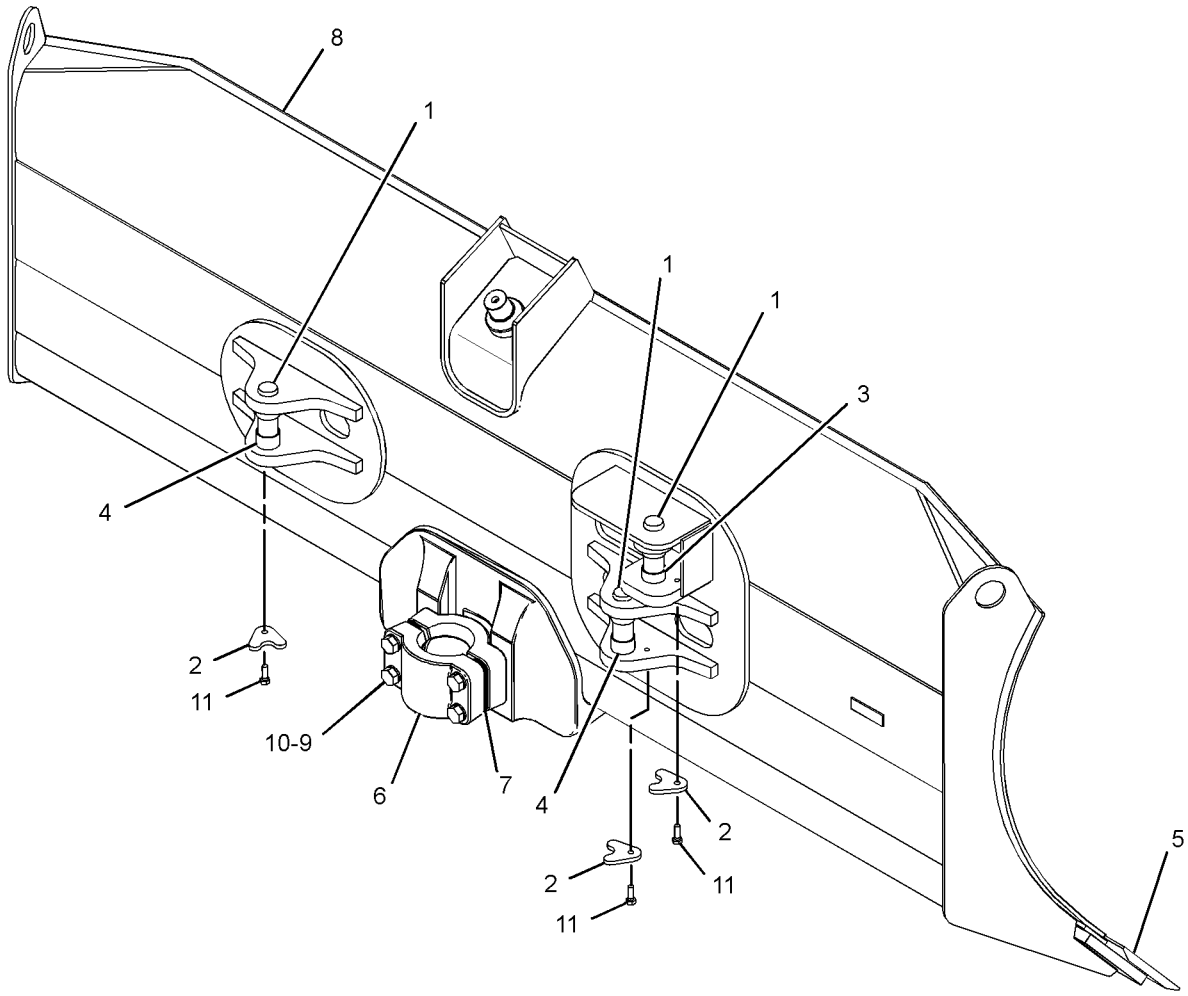

GRAPHIC #1 **<END>** g01330259

255-1503 BLADE GP-ANGLING–XL GRADE CONTROL

S/N: JLF1-UP; WWW1-UP; YYY1-UP
PART OF 255-1502 BLADE AR-PWR ANGLE & TILT
AN ATTACHMENT

SMCS-6052, 6060 **i03586665**

NOTE	REF NO	GRAPHIC REF	PART NUMBER	QTY	PART NAME 1 2 3 4 5 6 (PRODUCT LEVEL)	SEE PAGE
	1	1	**6Y-1421**	3	PIN	
	2	1	**8J-0729**	3	RETAINER	
	3	1	**150-0351**	2	SPACER (38.3X44.45X20.8-MM THK)	
	4	1	**150-0352**	4	SPACER (38.30X44.45X27.3-MM THK)	
	5	1	**179-5755**	1	CAP-BEARING	
B	6	1	**183-5297**	26	SHIM (0.8-MM THK)	
Y	7	1	*255-1501*	1	EDGE GP-BIT & CUTTING	636
	8	1	**331-0163**	1	BLADE AS-ANGLING	
	9	1	**225-0098**	4	BOLT (M20X2.5X140-MM)	
	10	1	**8T-3282**	4	WASHER-HARD (22X35X3.5-MM THK)	
M	11	1	**8T-4195**	3	BOLT (M10X1.5X30-MM)	

B-USE AS REQUIRED
M-METRIC PART
Y-SEPARATE ILLUSTRATION

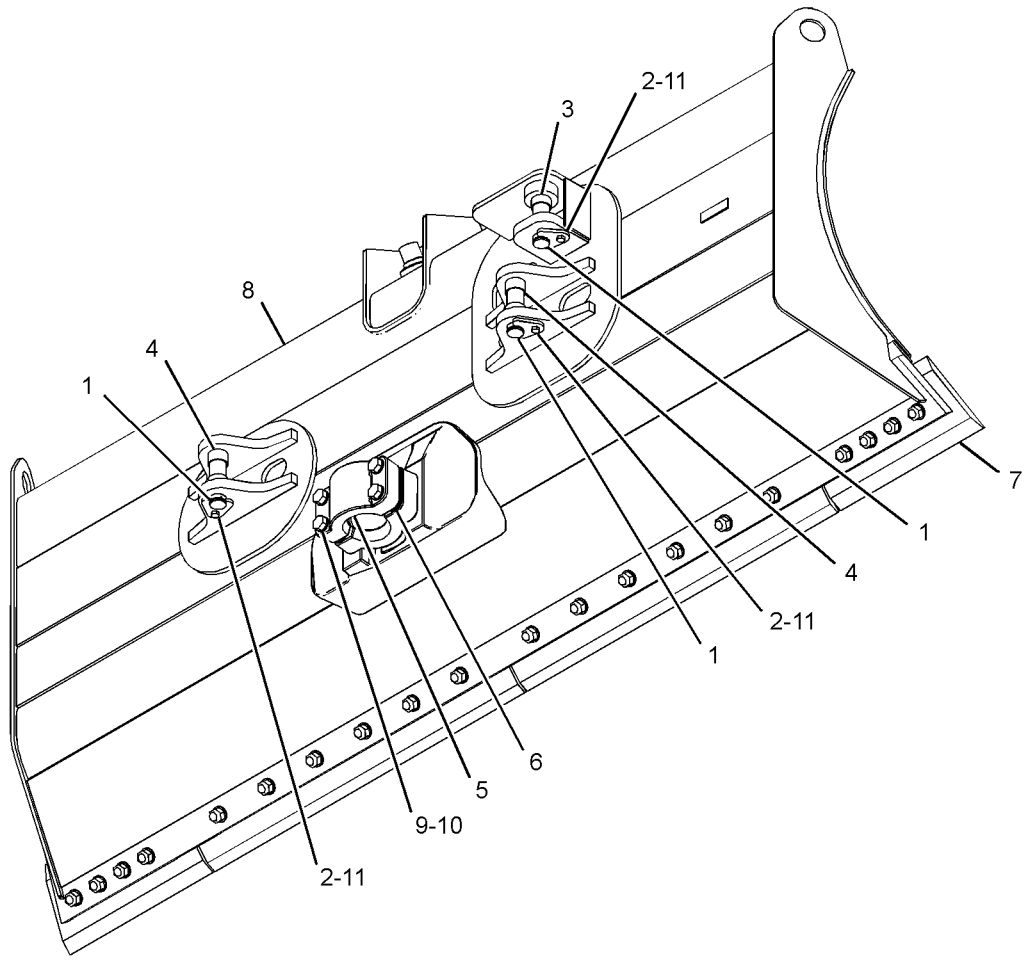

GRAPHIC #1 **<END>** g01331081

255-2370 BLADE GP-ANGLING—LOW GROUND PRESSURE

S/N: JLF1-UP; WWW1-UP; YYY1-UP
PART OF 255-2368 BLADE AR-PWR ANGLE & TILT
AN ATTACHMENT

SMCS-6052, 6060 **i02883043**

NOTE	REF NO	GRAPHIC REF	PART NUMBER	QTY	PART NAME 1 2 3 4 5 6 (PRODUCT LEVEL)	SEE PAGE
	1	1	**6Y-1421**	3	PIN	
Y	2	1	*6Y-5838*	1	EDGE GP-BIT & CUTTING	633
	3	1	**8J-0729**	3	RETAINER	
	4	1	**150-0351**	2	SPACER (38.3X44.45X20.8-MM THK)	
	5	1	**150-0352**	4	SPACER (38.30X44.45X27.3-MM THK)	
	6	1	**179-5755**	1	CAP-BEARING	
B	7	1	**183-5297**	26	SHIM (0.8-MM THK)	
	8	1	**255-2371**	1	BLADE AS-ANGLING	
	9	1	**225-0098**	4	BOLT (M20X2.5X140-MM)	
	10	1	**8T-3282**	4	WASHER-HARD (22X35X3.5-MM THK)	
M	11	1	**8T-4195**	3	BOLT (M10X1.5X30-MM)	
M	12	1	**5C-9553**	4	BOLT (M6X1X16-MM)	
	13	1	**9X-8256**	4	WASHER (6.6X12X2-MM THK)	

B-USE AS REQUIRED
M-METRIC PART
Y-SEPARATE ILLUSTRATION

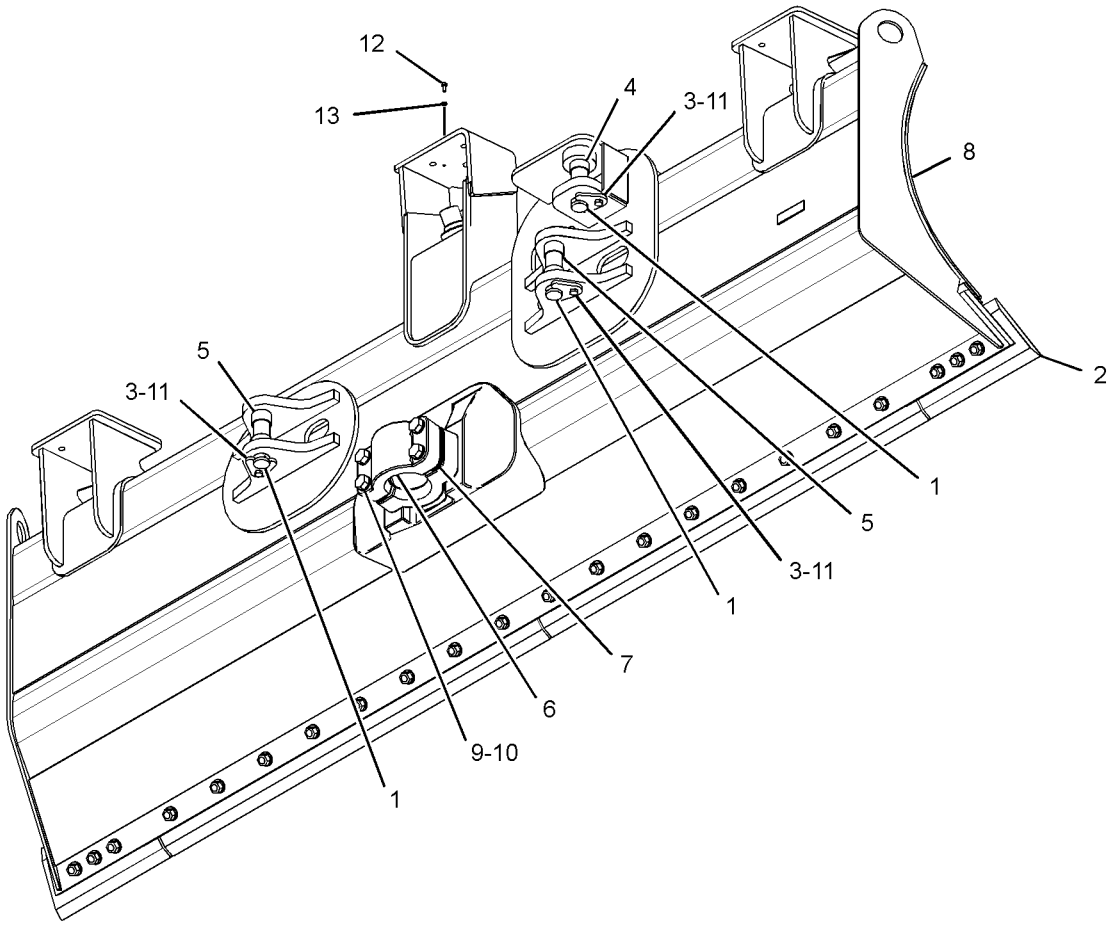

GRAPHIC #1 **<END>** g01441524

255-2373 BLADE GP-ANGLING–XL GRADE CONTROL

S/N: JLF1-UP; WWW1-UP; YYY1-UP
PART OF 255-2372 BLADE AR-PWR ANGLE & TILT
AN ATTACHMENT

SMCS-6052, 6060 **i02883044**

NOTE	REF NO	GRAPHIC REF	PART NUMBER	QTY	PART NAME 1 2 3 4 5 6 (PRODUCT LEVEL)	SEE PAGE
	1	1	**6Y-1421**	3	PIN	
	2	1	**8J-0729**	3	RETAINER	
	3	1	**150-0351**	2	SPACER (38.3X44.45X20.8-MM THK)	
	4	1	**150-0352**	4	SPACER (38.30X44.45X27.3-MM THK)	
	5	1	**179-5755**	1	CAP-BEARING	
B	6	1	**183-5297**	26	SHIM (0.8-MM THK)	
Y	7	1	*255-1426*	1	EDGE GP-BIT & CUTTING (LEVEL CUT)	635
	8	1	**255-2374**	1	BLADE AS-ANGLING	
	9	1	**225-0098**	4	BOLT (M20X2.5X140-MM)	
	10	1	**8T-3282**	4	WASHER-HARD (22X35X3.5-MM THK)	
M	11	1	**8T-4195**	3	BOLT (M10X1.5X30-MM)	
M	12	1	**5C-9553**	4	BOLT (M6X1X16-MM)	
	13	1	**9X-8256**	4	WASHER (6.6X12X2-MM THK)	

B-USE AS REQUIRED
M-METRIC PART
Y-SEPARATE ILLUSTRATION

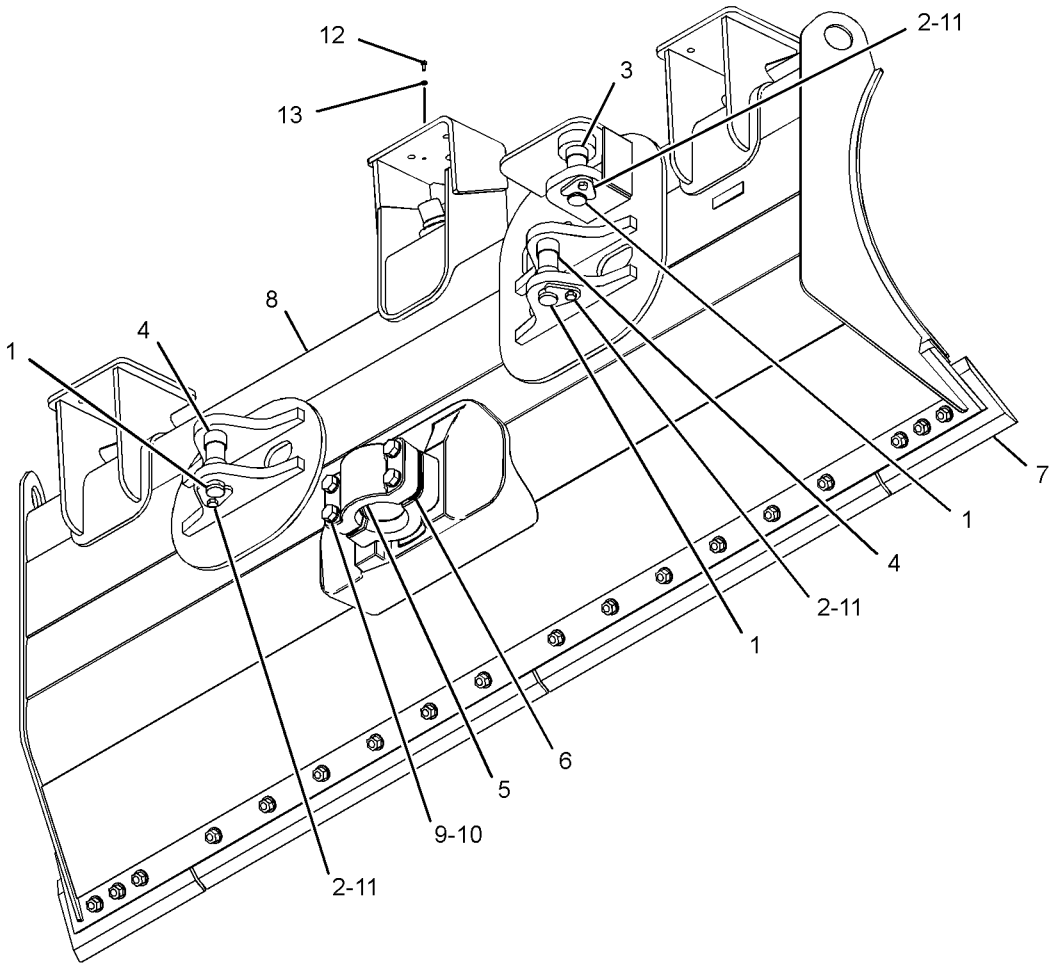

GRAPHIC #1 **<END>** g01441561

255-2376 BLADE GP-ANGLING—LOW GROUND PRESSURE

S/N: JLF1-UP; WWW1-UP; YYY1-UP
PART OF 255-2375 BLADE AR-PWR ANGLE & TILT
AN ATTACHMENT

SMCS-6052, 6060 **i02883055**

NOTE	REF NO	GRAPHIC REF	PART NUMBER	QTY	PART NAME 1 2 3 4 5 6 (PRODUCT LEVEL)	SEE PAGE
	1	1	**6Y-1421**	3	PIN	
Y	2	1	*6Y-5838*	1	EDGE GP-BIT & CUTTING	633
	3	1	**8J-0729**	3	RETAINER	
	4	1	**150-0351**	2	SPACER (38.3X44.45X20.8-MM THK)	
	5	1	**150-0352**	4	SPACER (38.30X44.45X27.3-MM THK)	
	6	1	**179-5755**	1	CAP-BEARING	
B	7	1	**183-5297**	26	SHIM (0.8-MM THK)	
	8	1	**255-2377**	1	BLADE AS-ANGLING	
	9	1	**225-0098**	4	BOLT (M20X2.5X140-MM)	
	10	1	**8T-3282**	4	WASHER-HARD (22X35X3.5-MM THK)	
M	11	1	**8T-4195**	3	BOLT (M10X1.5X30-MM)	
M	12	1	**5C-9553**	4	BOLT (M6X1X16-MM)	
	13	1	**9X-8256**	4	WASHER (6.6X12X2-MM THK)	

B-USE AS REQUIRED
M-METRIC PART
Y-SEPARATE ILLUSTRATION

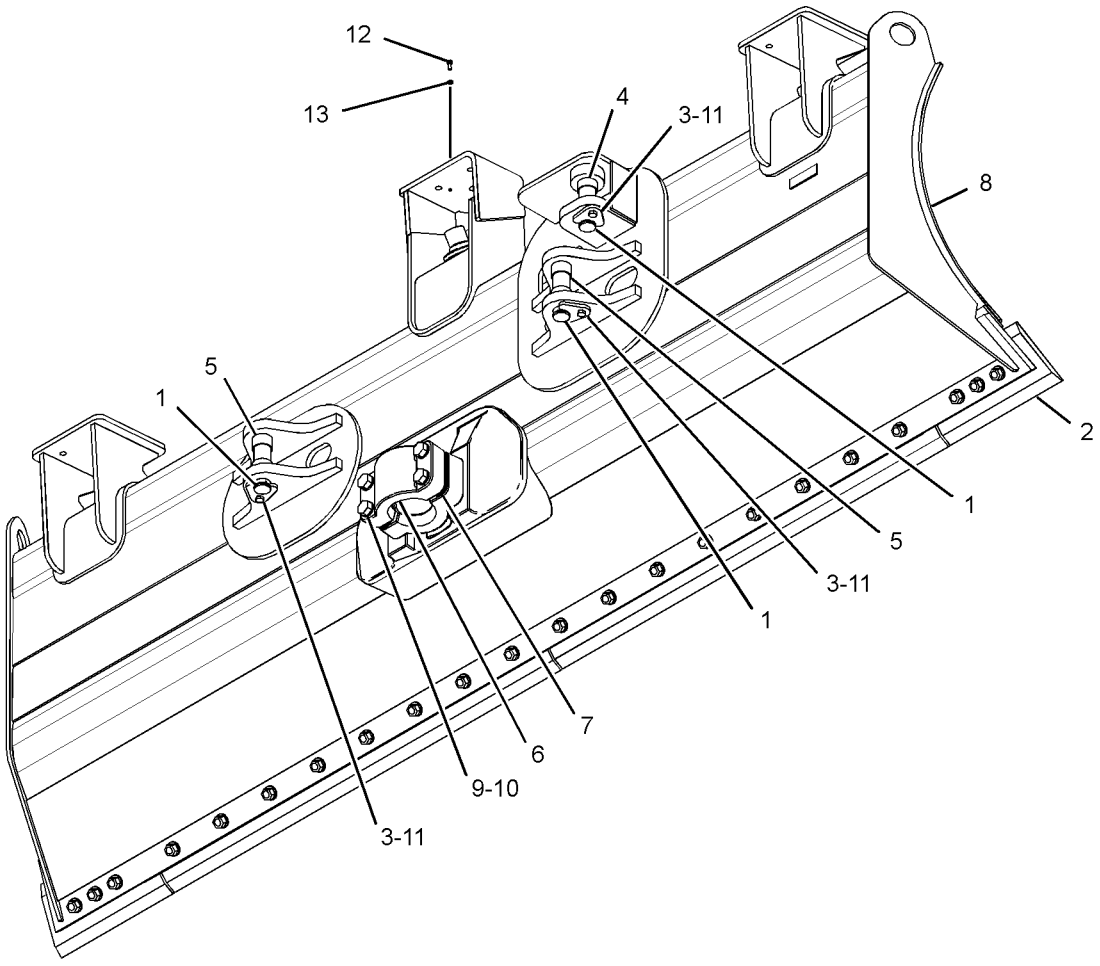

GRAPHIC #1 **<END>** g01441546

255-2379 BLADE GP-ANGLING–XL GRADE CONTROL

S/N: JLF1-UP; WWW1-UP; YYY1-UP
PART OF 255-2378 BLADE AR-PWR ANGLE & TILT
AN ATTACHMENT

SMCS-6052, 6060 **i02883054**

NOTE	REF NO	GRAPHIC REF	PART NUMBER	QTY	PART NAME 1 2 3 4 5 6 (PRODUCT LEVEL)	SEE PAGE
	1	1	**6Y-1421**	3	PIN	
	2	1	**8J-0729**	3	RETAINER	
	3	1	**150-0351**	2	SPACER (38.3X44.45X20.8-MM THK)	
	4	1	**150-0352**	4	SPACER (38.30X44.45X27.3-MM THK)	
	5	1	**179-5755**	1	CAP-BEARING	
B	6	1	**183-5297**	26	SHIM (0.8-MM THK)	
Y	7	1	*255-1428*	1	EDGE GP-BIT & CUTTING (LEVEL CUT)	635
	8	1	**255-2380**	1	BLADE AS-ANGLING	
	9	1	**225-0098**	4	BOLT (M20X2.5X140-MM)	
	10	1	**8T-3282**	4	WASHER-HARD (22X35X3.5-MM THK)	
M	11	1	**8T-4195**	3	BOLT (M10X1.5X30-MM)	
M	12	1	**5C-9553**	4	BOLT (M6X1X16-MM)	
	13	1	**9X-8256**	4	WASHER (6.6X12X2-MM THK)	

B-USE AS REQUIRED
M-METRIC PART
Y-SEPARATE ILLUSTRATION

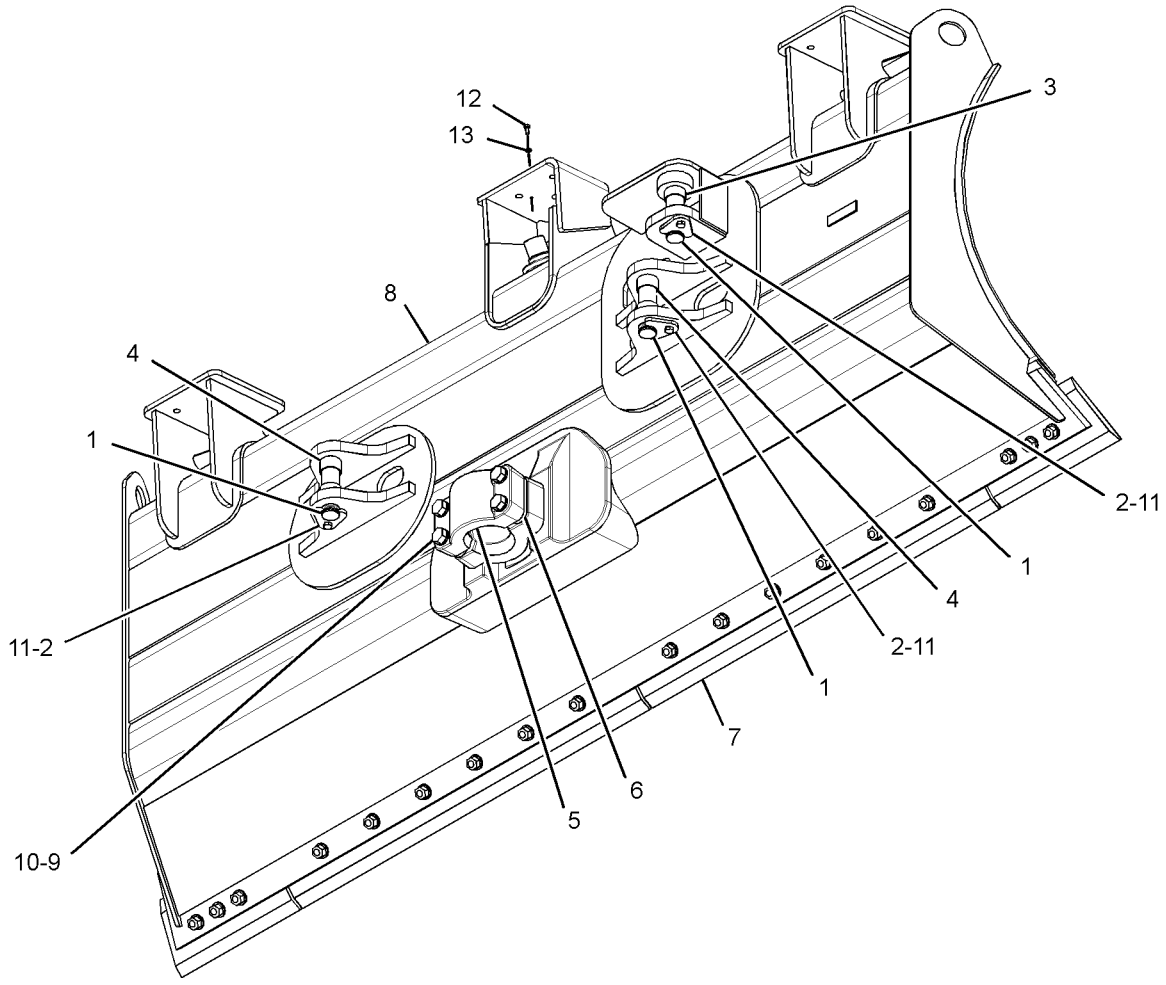

GRAPHIC #1 **<END>** g01439315

255-2383 BLADE GP-ANGLING—LOW GROUND PRESSURE

S/N: JLF1-UP; WWW1-UP; YYY1-UP
PART OF 255-2381 BLADE AR-PWR ANGLE & TILT
AN ATTACHMENT

SMCS-6052, 6060 **i02883053**

NOTE	REF NO	GRAPHIC REF	PART NUMBER	QTY	PART NAME 1 2 3 4 5 6 (PRODUCT LEVEL)	SEE PAGE
	1	1	**6Y-1421**	3	PIN	
	2	1	**8J-0729**	3	RETAINER	
	3	1	**150-0351**	2	SPACER (38.3X44.45X20.8-MM THK)	
	4	1	**150-0352**	4	SPACER (38.30X44.45X27.3-MM THK)	
	5	1	**179-5755**	1	CAP-BEARING	
B	6	1	**183-5297**	26	SHIM (0.8-MM THK)	
Y	7	1	*255-1472*	1	EDGE GP-BIT & CUTTING (LEVEL CUT)	635
	8	1	**255-2384**	1	BLADE AS-ANGLING	
	9	1	**225-0098**	4	BOLT (M20X2.5X140-MM)	
	10	1	**8T-3282**	4	WASHER-HARD (22X35X3.5-MM THK)	
M	11	1	**8T-4195**	3	BOLT (M10X1.5X30-MM)	
M	12	1	**5C-9553**	4	BOLT (M6X1X16-MM)	
	13	1	**9X-8256**	4	WASHER (6.6X12X2-MM THK)	

B-USE AS REQUIRED
M-METRIC PART
Y-SEPARATE ILLUSTRATION

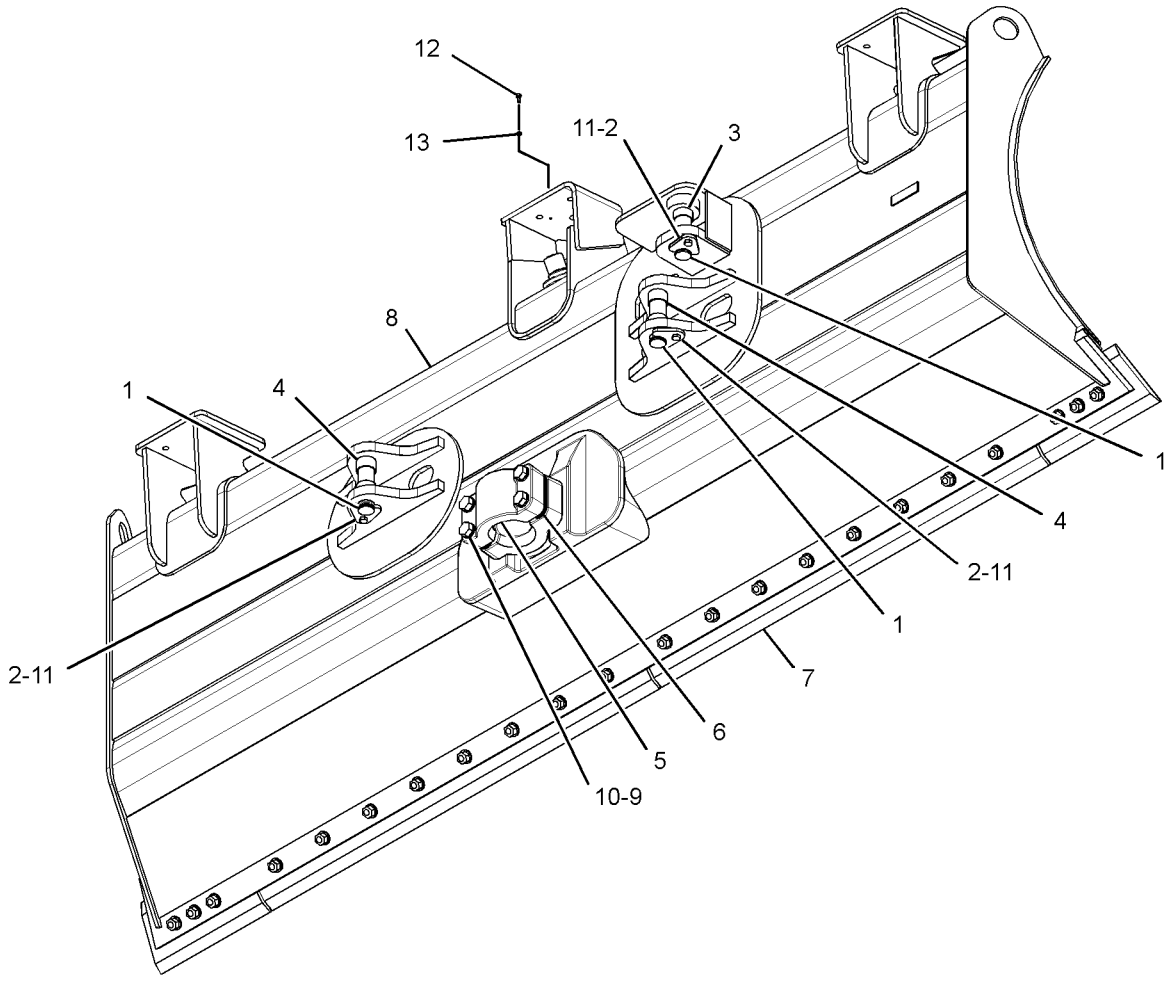

GRAPHIC #1 **<END>** g01439631

255-2386 BLADE GP-ANGLING–XL GRADE CONTROL

S/N: JLF1-UP; WWW1-UP; YYY1-UP
PART OF 255-2385 BLADE AR-PWR ANGLE & TILT
AN ATTACHMENT

SMCS-6052, 6060 **i02883052**

NOTE	REF NO	GRAPHIC REF	PART NUMBER	QTY	PART NAME 1 2 3 4 5 6 (PRODUCT LEVEL)	SEE PAGE
	1	1	**6Y-1421**	3	PIN	
	2	1	**8J-0729**	3	RETAINER	
	3	1	**150-0351**	2	SPACER (38.3X44.45X20.8-MM THK)	
	4	1	**150-0352**	4	SPACER (38.30X44.45X27.3-MM THK)	
Y	5	1	*179-2897*	1	EDGE GP-BIT & CUTTING	634
	6	1	**179-5755**	1	CAP-BEARING	
B	7	1	**183-5297**	26	SHIM (0.8-MM THK)	
	8	1	**255-2387**	1	BLADE AS-ANGLING	
	9	1	**225-0098**	4	BOLT (M20X2.5X140-MM)	
	10	1	**8T-3282**	4	WASHER-HARD (22X35X3.5-MM THK)	
M	11	1	**8T-4195**	3	BOLT (M10X1.5X30-MM)	
M	12	1	**5C-9553**	4	BOLT (M6X1X16-MM)	
	13	1	**9X-8256**	4	WASHER (6.6X12X2-MM THK)	

B-USE AS REQUIRED
M-METRIC PART
Y-SEPARATE ILLUSTRATION

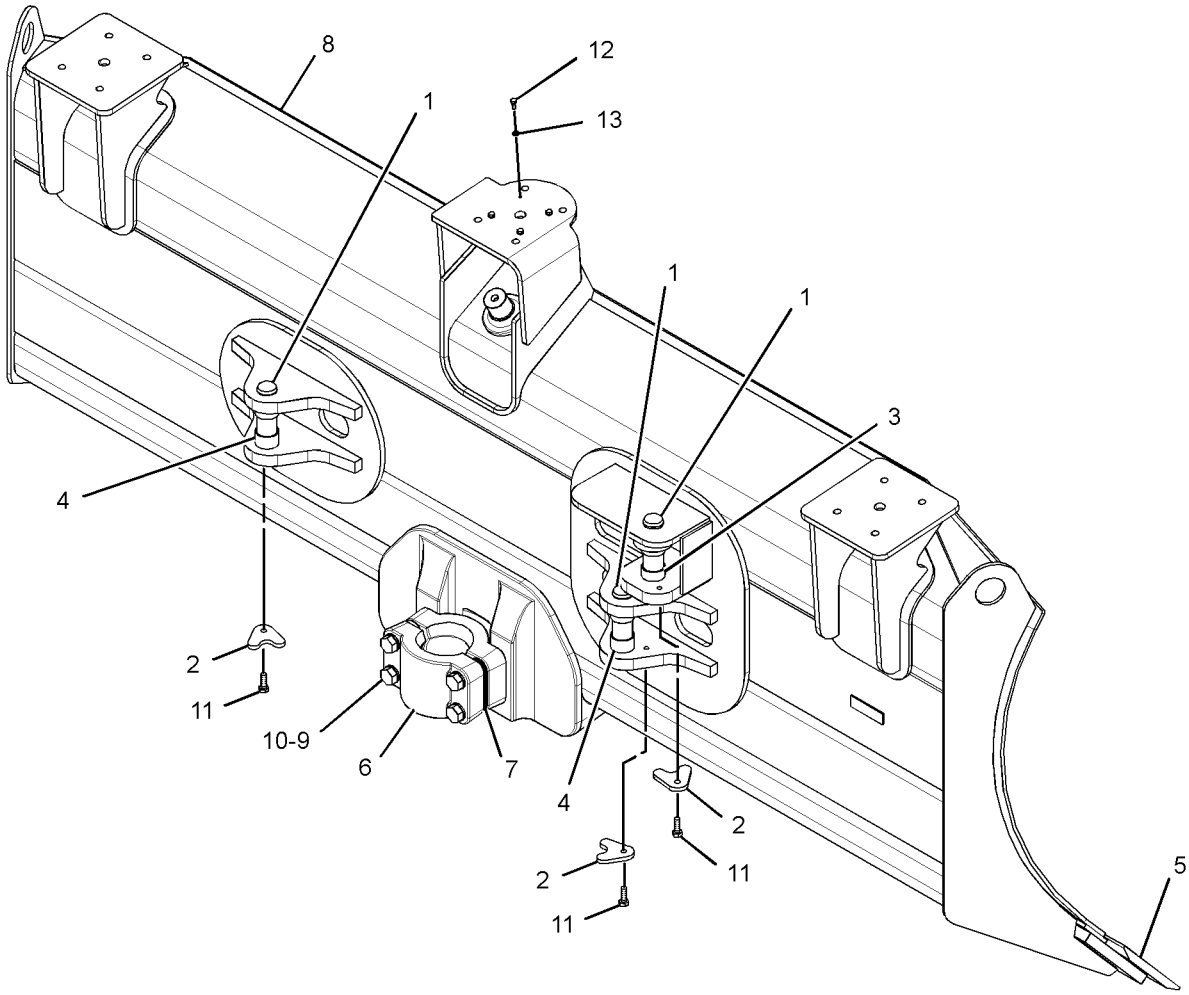

GRAPHIC #1 **<END>** g01439665

255-2391 BLADE GP-ANGLING–XL GRADE CONTROL

S/N: JLF1-UP; WWW1-UP; YYY1-UP
PART OF 255-2390 BLADE AR-PWR ANGLE & TILT
AN ATTACHMENT

SMCS-6052, 6060 **i03586666**

NOTE	REF NO	GRAPHIC REF	PART NUMBER	QTY	PART NAME 1 2 3 4 5 6 (PRODUCT LEVEL)	SEE PAGE
	1	1	**6Y-1421**	3	PIN	
	2	1	**8J-0729**	3	RETAINER	
	3	1	**150-0351**	2	SPACER (38.3X44.45X20.8-MM THK)	
	4	1	**150-0352**	4	SPACER (38.30X44.45X27.3-MM THK)	
	5	1	**179-5755**	1	CAP-BEARING	
B	6	1	**183-5297**	26	SHIM (0.8-MM THK)	
Y	7	1	*255-1501*	1	EDGE GP-BIT & CUTTING (ANGLE BLADE)	636
	8	1	**331-0177**	1	BLADE AS-ANGLING (GRADE CONTROL)	
		1	**8P-9770**	1	PLATE	
		1	**331-0163**	1	BLADE AS-ANGLING	
	9	1	**225-0098**	4	BOLT (M20X2.5X140-MM)	
	10	1	**8T-3282**	4	WASHER-HARD (22X35X3.5-MM THK)	
M	11	1	**8T-4195**	3	BOLT (M10X1.5X30-MM)	
M	12	1	**5C-9553**	4	BOLT (M6X1X16-MM)	
	13	1	**9X-8256**	4	WASHER (6.6X12X2-MM THK)	

B-USE AS REQUIRED
M-METRIC PART
Y-SEPARATE ILLUSTRATION

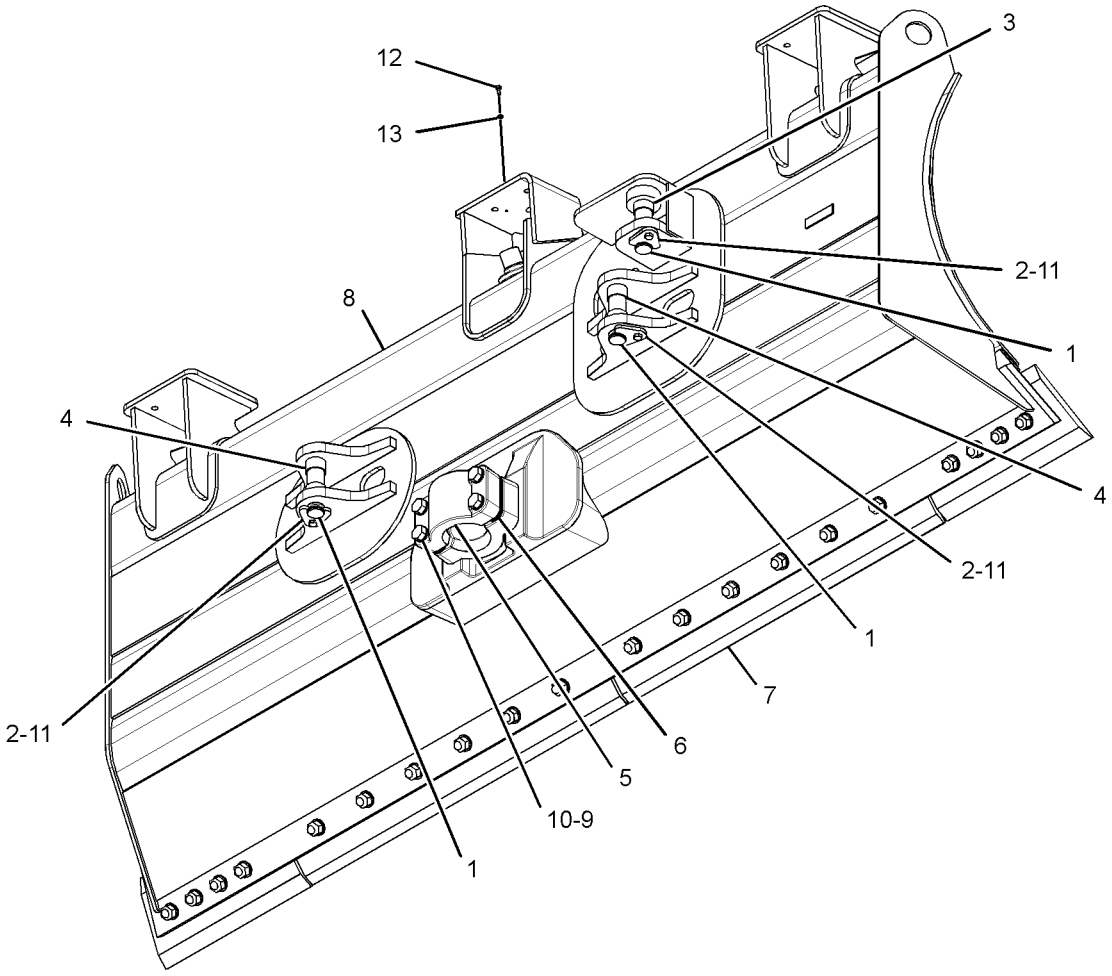

GRAPHIC #1 **<END>** g01439680

WORK TOOLS

255-2394 BLADE GP-ANGLING—FORESTRY

S/N: JLF1-UP; WWW1-UP; YYY1-UP
PART OF 255-2393 BLADE AR-PWR ANGLE & TILT
AN ATTACHMENT

SMCS-6052, 6060 **i03586667**

NOTE	REF NO	GRAPHIC REF	PART NUMBER	QTY	PART NAME 1 2 3 4 5 6 (PRODUCT LEVEL)	SEE PAGE
	1	1	**6Y-1421**	3	PIN	
	2	1	**8J-0729**	3	RETAINER	
	3	1	**150-0351**	2	SPACER (38.3X44.45X20.8-MM THK)	
	4	1	**150-0352**	4	SPACER (38.30X44.45X27.3-MM THK)	
	5	1	**179-5755**	1	CAP-BEARING	
B	6	1	**183-5297**	26	SHIM (0.8-MM THK)	
Y	7	1	*255-1501*	1	EDGE GP-BIT & CUTTING (ANGLE BLADE)	636
	8	1	**331-0180**	1	BLADE AS-ANGLING	
	9	1	**225-0098**	4	BOLT (M20X2.5X140-MM)	
	10	1	**8T-3282**	4	WASHER-HARD (22X35X3.5-MM THK)	
M	11	1	**8T-4195**	3	BOLT (M10X1.5X30-MM)	

B-USE AS REQUIRED
M-METRIC PART
Y-SEPARATE ILLUSTRATION

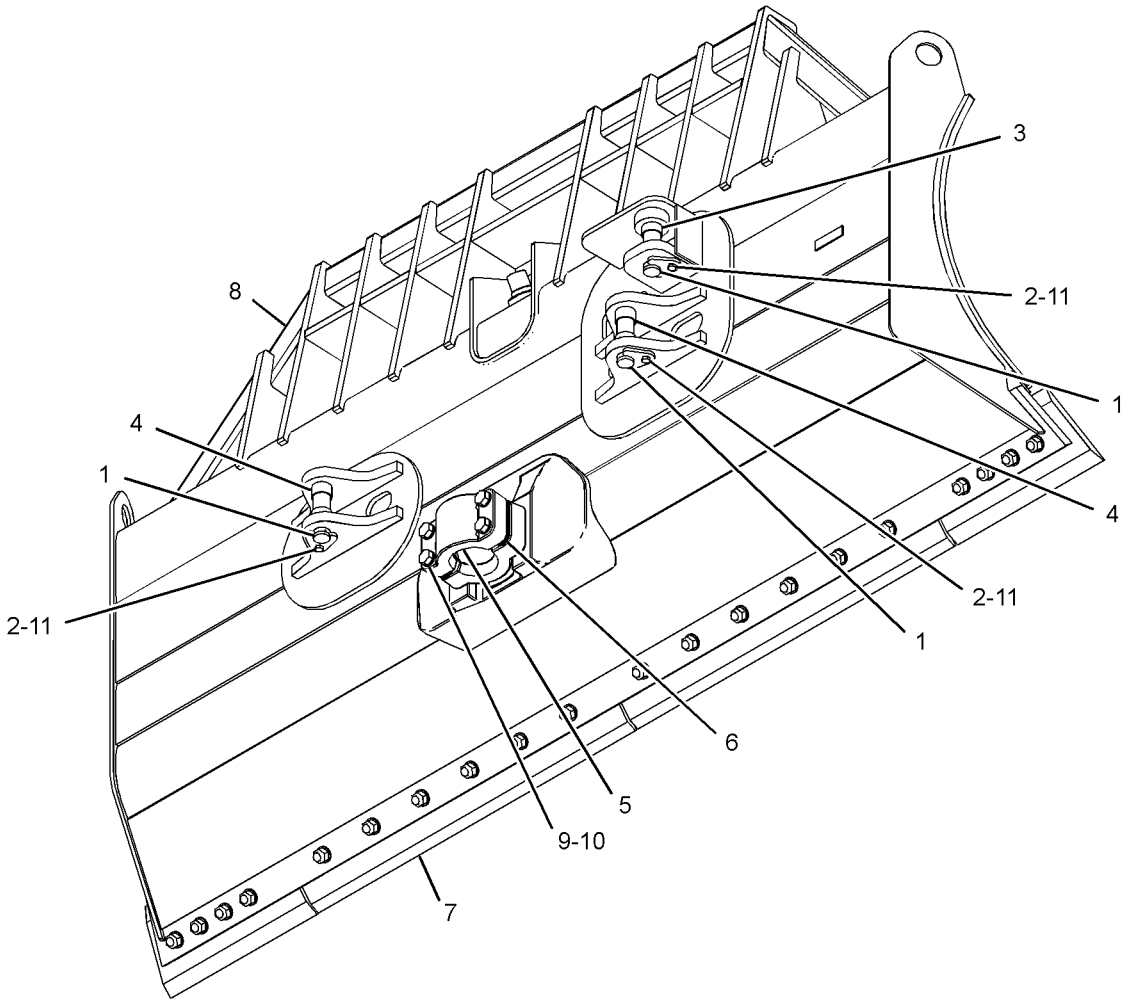

GRAPHIC #1 **<END>** g01329058

312-8351 BLADE GP-ANGLING

S/N: JLF1-UP; WWW1-UP; YYY1-UP
PART OF 312-8350 BLADE AR-PWR ANGLE & TILT
AN ATTACHMENT

SMCS-6052, 6060 **i02864422**

NOTE	REF NO	GRAPHIC REF	PART NUMBER	QTY	PART NAME 1 2 3 4 5 6 (PRODUCT LEVEL)	SEE PAGE
	1	1	**6Y-1421**	3	PIN	
	2	1	**8J-0729**	3	RETAINER	
	3	1	**150-0351**	2	SPACER (38.3X44.45X20.8-MM THK)	
	4	1	**150-0352**	4	SPACER (38.30X44.45X27.3-MM THK)	
Y	5	1	*179-2897*	1	EDGE GP-BIT & CUTTING	634
B	7	1	**183-5297**	26	SHIM (0.8-MM THK)	
	8	1	**312-8352**	1	BLADE AS-ANGLING	
	8A	1	**179-5755**	1	CAP-BEARING	
	8B	1	**8P-9770**	1	PLATE	
	9	1	**225-0098**	4	BOLT (M20X2.5X140-MM)	
	10	1	**8T-3282**	4	WASHER-HARD (22X35X3.5-MM THK)	
M	11	1	**8T-4195**	3	BOLT (M10X1.5X30-MM)	

B-USE AS REQUIRED
M-METRIC PART
Y-SEPARATE ILLUSTRATION

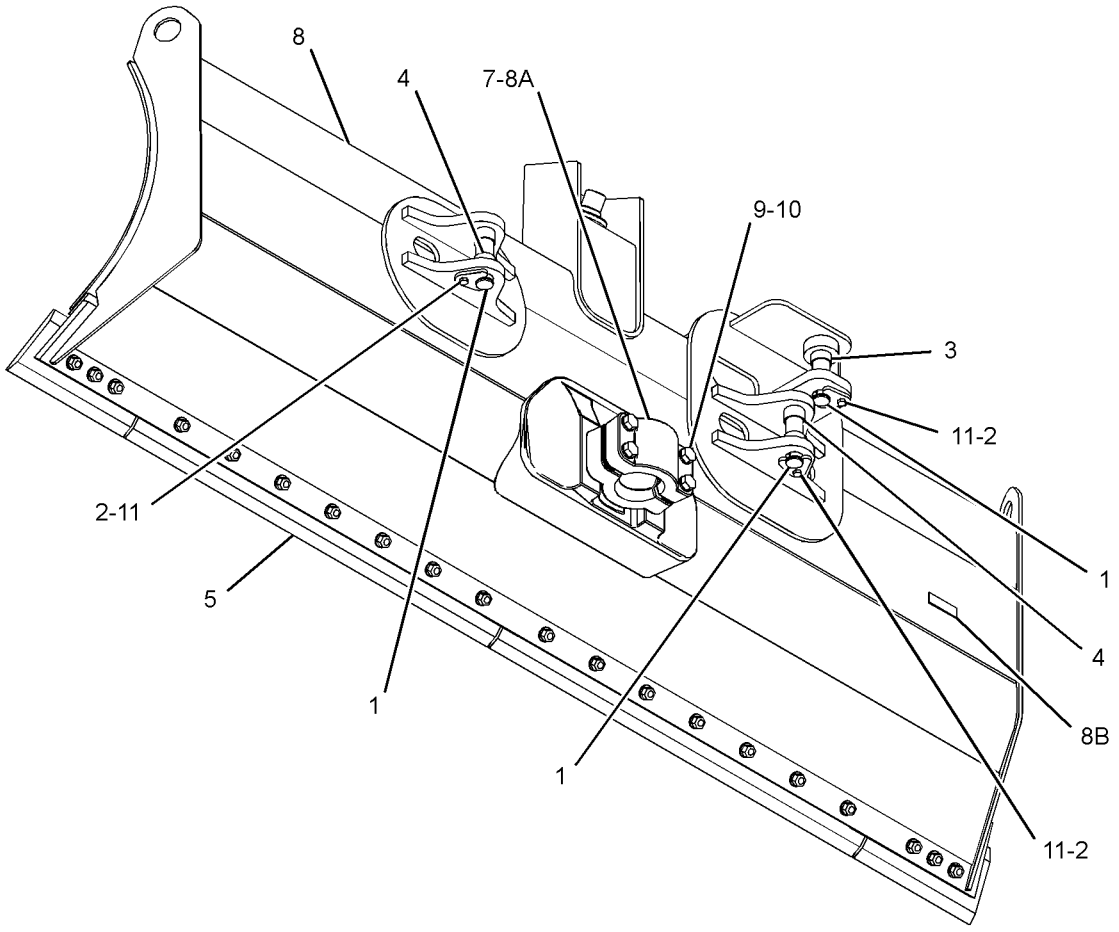

GRAPHIC #1 **<END>** g01435215

WORK TOOLS

312-8361 BLADE GP-ANGLING—GRADE CONTROL

S/N: JLF1-UP; WWW1-UP; YYY1-UP
PART OF 312-8360 BLADE AR-PWR ANGLE & TILT
AN ATTACHMENT

SMCS-6052, 6060 **i02873098**

NOTE	REF NO	GRAPHIC REF	PART NUMBER	QTY	PART NAME 1 2 3 4 5 6 (PRODUCT LEVEL)	SEE PAGE
	1	1	**6Y-1421**	3	PIN	
	2	1	**8J-0729**	3	RETAINER	
	3	1	**150-0351**	2	SPACER (38.3X44.45X20.8-MM THK)	
	4	1	**150-0352**	4	SPACER (38.30X44.45X27.3-MM THK)	
Y	5	1	*179-2897*	1	EDGE GP-BIT & CUTTING	634
	6	1	**179-5755**	1	CAP-BEARING	
B	7	1	**183-5297**	26	SHIM (0.8-MM THK)	
	8	1	**312-8362**	1	BLADE AS-ANGLING	
	9	1	**225-0098**	4	BOLT (M20X2.5X140-MM)	
M	10	1	**5C-9553**	4	BOLT (M6X1X16-MM)	
	11	1	**8T-3282**	4	WASHER-HARD (22X35X3.5-MM THK)	
M	12	1	**8T-4195**	3	BOLT (M10X1.5X30-MM)	
	13	1	**9X-8256**	4	WASHER (6.6X12X2-MM THK)	

B-USE AS REQUIRED
M-METRIC PART
Y-SEPARATE ILLUSTRATION

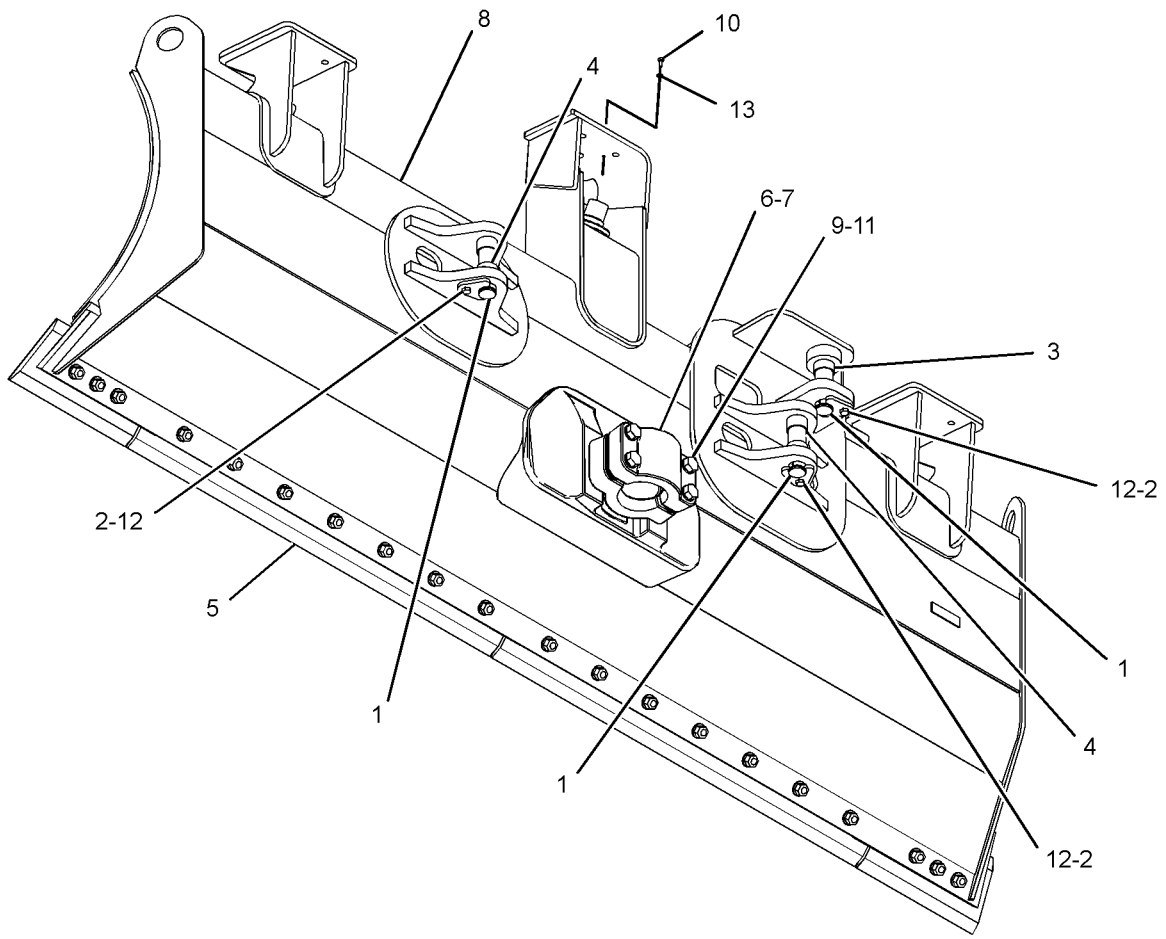

GRAPHIC #1 **<END>** g01435667

309-5090 BRAKE & PLANETARY GP-WINCH

S/N: JLF1-UP; WWW1-UP; YYY1-UP
PART OF 256-3738 WINCH AR
AN ATTACHMENT

SMCS-5165 **i02718222**

NOTE	REF NO	GRAPHIC REF	PART NUMBER	QTY	PART NAME 1 2 3 4 5 6 (PRODUCT LEVEL)	SEE PAGE
	1	1	**149-5461**	2	SEAL-O-RING	
Y	2	1	*309-5091*	1	BRAKE & PLANETARY GP-WINCH	618
	3	1	**3K-0360**	1	SEAL-O-RING	
	4	1	**7X-0288**	7	BOLT (3/8-16X1.625-IN)	
	5	1	**8T-4896**	7	WASHER-HARD (10.2X18.5X2.5-MM THK)	
	6	1	**9S-8005**	1	PLUG-O-RING	

Y-SEPARATE ILLUSTRATION

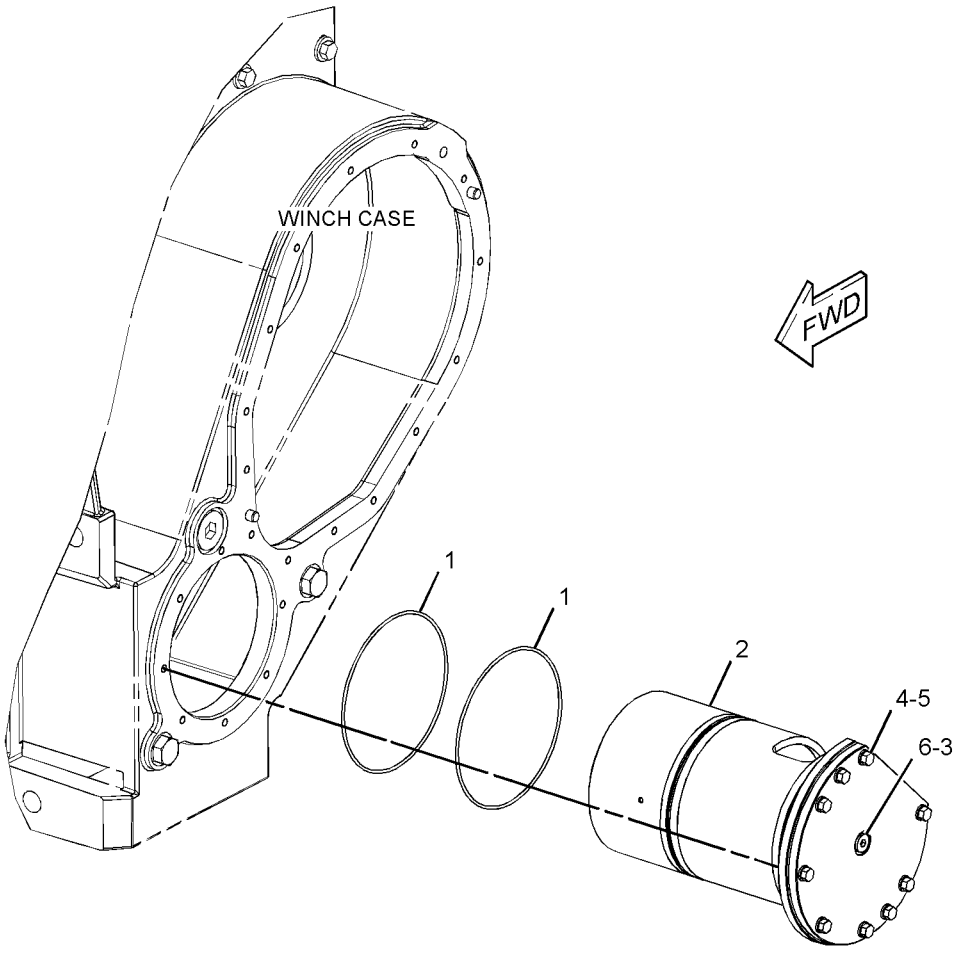

GRAPHIC #1 **<END>** g01378942

WORK TOOLS

309-5091 BRAKE & PLANETARY GP-WINCH

S/N: JLF1-UP; WWW1-UP; YYY1-UP
PART OF 309-5090 BRAKE & PLANETARY GP-WINCH
AN ATTACHMENT

SMCS-5165 **i02718215**

NOTE	REF NO	GRAPHIC REF	PART NUMBER	QTY	PART NAME 1 2 3 4 5 6 (PRODUCT LEVEL)	SEE PAGE
	1	1	**8C-3312**	1	RING-RETAINING	
	2	1	**203-6631**	1	SHAFT	
Y	3	1	*211-8169*	1	PLANETARY GP-WINCH	652
Y	4	1	*211-8171*	1	GEAR GP-WINCH TRANSFER	640
	5	1	**211-8753**	1	COUPLING-MOTOR	
	6	1	**211-8754**	1	RING-THRUST	
Y	7	1	*309-5075*	1	BRAKE GP-SERVICE & PARKING	394
	8	1	**4L-6454**	2	BOLT (3/8-16X1-IN)	
	9	1	**8T-4896**	2	WASHER-HARD (10.2X18.5X2.5-MM THK)	

Y-SEPARATE ILLUSTRATION

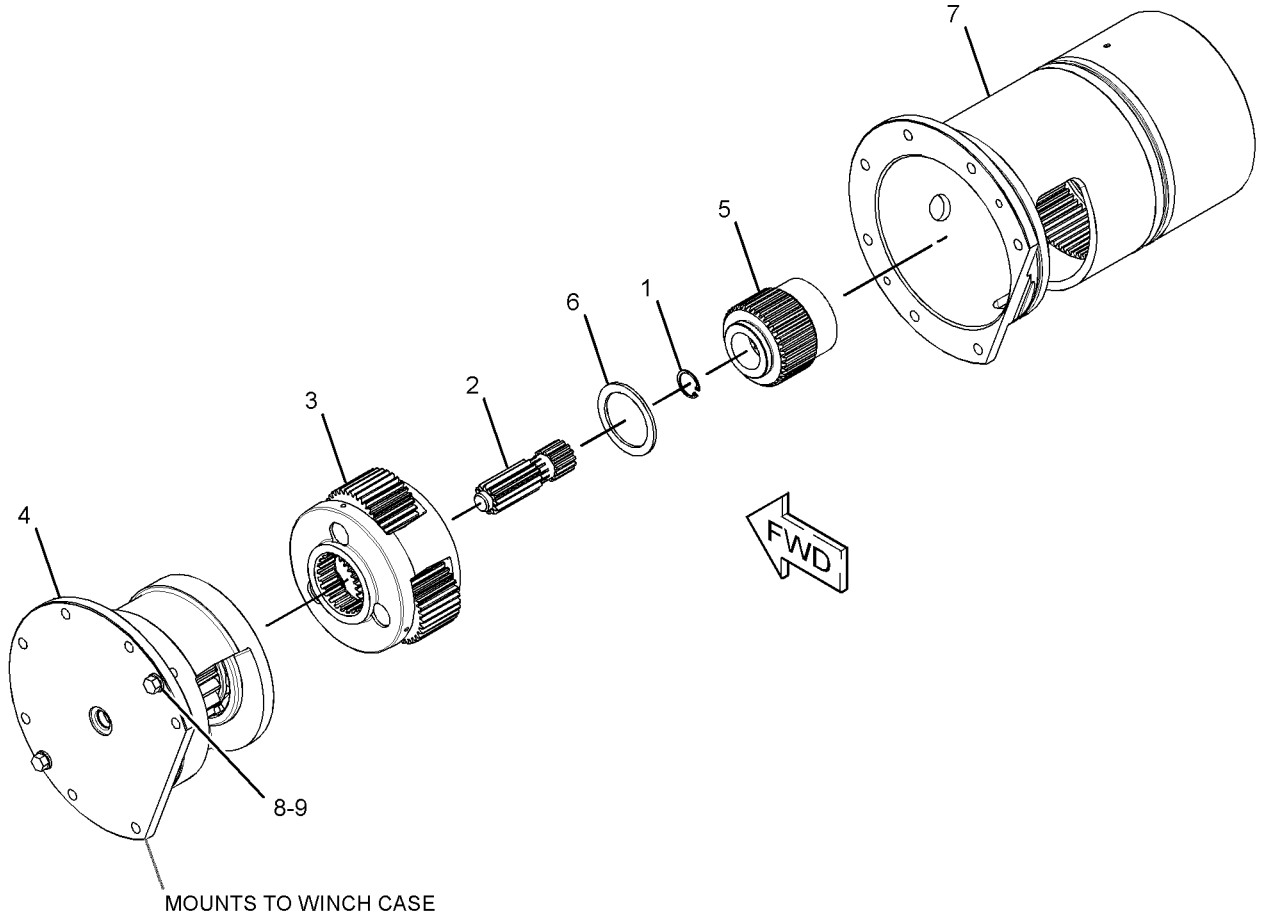

GRAPHIC #1 **<END>** g01374600

208-5546 CASE GP-WINCH

S/N: JLF1-UP; WWW1-UP; YYY1-UP
PART OF 256-3738 WINCH AR
AN ATTACHMENT

SMCS-5163 **i02719597**

NOTE	REF NO	GRAPHIC REF	PART NUMBER	QTY	PART NAME 1 2 3 4 5 6 (PRODUCT LEVEL)	SEE PAGE
C	1	1	**5P-9436**	2	PLUG	
	2	1	**8C-6868**	1	CONNECTOR	
	3	1	**203-6608**	1	BLOCK	
	4	1	**203-6609**	1	BLOCK	
C	5	1	**293-0777**	1	TUBE AS	
C	6	1	**293-0778**	1	CASE AS	
	7	1	**053-1578**	2	DOWEL	
C	8	1	**3D-2824**	2	SEAL-O-RING	
	9	1	**5P-1076**	4	WASHER-HARD (13.5X30X4-MM THK)	
	10	1	**6V-8397**	4	SEAL-O-RING	
	11	1	**6V-8994**	1	UNION (BULKHEAD)	
	12	1	**6V-9850**	1	ELBOW (SWIVEL)	
	13	1	**7J-9108**	1	SEAL-O-RING	
	14	1	**8T-8919**	4	BOLT (1/2-13X1.75-IN)	
C	15	1	**9S-8010**	1	PLUG	
C	16	1	**2S-4078**	1	SEAL-O-RING	

C-CHANGE FROM PREVIOUS TYPE

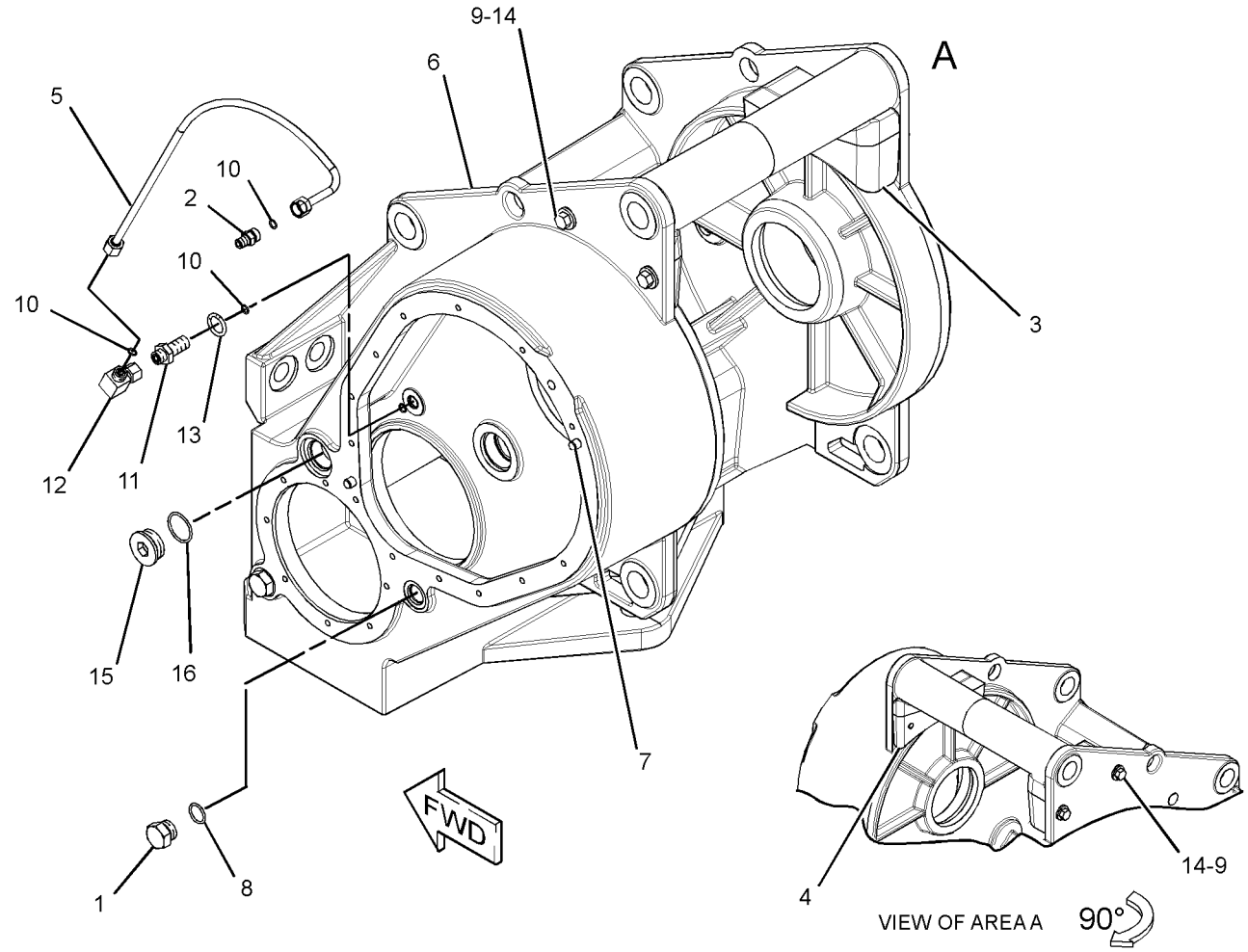

GRAPHIC #1 **<END>** g01378935

WORK TOOLS

208-5552 CLUTCH & GEAR GP-WINCH

S/N: JLF1-UP; WWW1-UP; YYY1-UP
PART OF 256-3738 WINCH AR
AN ATTACHMENT

SMCS-5167 **i03380332**

NOTE	REF NO	GRAPHIC REF	PART NUMBER	QTY	PART NAME 1 2 3 4 5 6 (PRODUCT LEVEL)	SEE PAGE
	1	1	**6U-1989**	1	VALVE-RELIEF (WINCH)	
	2	1	**161-6422**	1	CLUTCH-FREESPOOL (34-TEETH)	
	3	1	**162-0175**	1	SPRING	
	4	1	**162-0180**	1	RING	
	5	1	**162-2766**	1	RING-BACKUP	
	6	1	**172-0307**	1	PISTON AS	
	7	1	**203-6640**	1	GASKET	
	8	1	**211-1856**	1	COVER-GEAR	
	9	1	**3B-8489**	1	FITTING-GREASE	
	10	1	**3H-3385**	1	SEAL-O-RING	
	11	1	**3J-7354**	1	SEAL-O-RING	
	12	1	**8M-4986**	1	SEAL-O-RING	
	13	1	**8T-4896**	14	WASHER-HARD (10.2X18.5X2.5-MM THK)	
	14	1	**9B-7237**	14	BOLT (3/8-16X1.25-IN)	
	15	1	**9S-8002**	1	PLUG-O-RING	

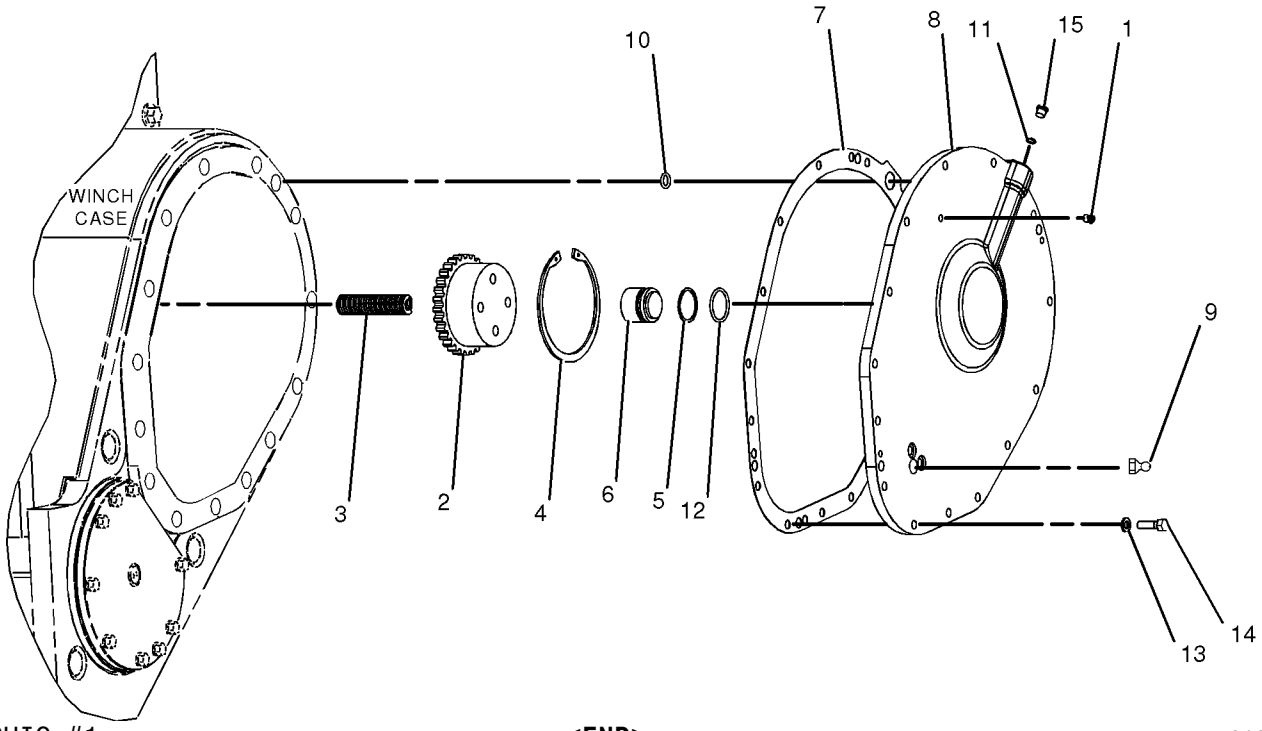

GRAPHIC #1 **<END>** g01009246

244-7504 CONTROL GP-WINCH

S/N: JLF1-170; WWW1-157; YYY1-UP

PART OF 292-0125 DRIVE AR, 300-8546 DRIVE AR-WINCH, 244-7455 DRIVE GP-PUMP

AN ATTACHMENT

SMCS-5161, 5170 **i03590460**

NOTE	REF NO	GRAPHIC REF	PART NUMBER	QTY	PART NAME 1 2 3 4 5 6 (PRODUCT LEVEL)	SEE PAGE
	1	1	**7K-1181**	29	STRAP-CABLE	
	2	1	**165-0311**	1	PLUG	
	3	1	**249-9065**	1	HARNESS AS-WORK TOOL (WINCH)	
		1	**9X-3401**	6	PIN-CONNECTOR (16-GA TO 18-GA)	
		1	**155-2270**	3	KIT-CONNECTING PLUG (2-PIN)	
					(EACH INCLUDES PLUG AS, WEDGE & INTERFACE SEAL)	
		1	**8T-8737**	6	PLUG-SEAL	
		1	**102-8802**	3	KIT-RECEPTACLE (2-PIN)	
		1	**102-8805**	1	KIT-RECEPTACLE (6-PIN)	
					(EACH RECEPTACLE KIT INCLUDES RECEPTACLE AS & WEDGE)	
		1	**9X-3402**	6	SOCKET-CONNECTOR (16-GA TO 18-GA)	
	4	1	**249-9067**	1	WIRE AS	
	5	1	**266-9006**	1	FILM-INSTRUCTION (WINCH CONTROL)	
	6	1	**269-7667**	1	HARNESS AS-PUMP (WINCH)	
		1	**9X-3401**	10	PIN-CONNECTOR (16-GA TO 18-GA)	
		1	**155-2270**	2	KIT-CONNECTING PLUG (2-PIN)	
					(EACH INCLUDES PLUG AS, WEDGE & INTERFACE SEAL)	
		1	**8T-8737**	1	PLUG-SEAL	
		1	**102-8803**	1	KIT-RECEPTACLE (3-PIN)	
		1	**102-8806**	1	KIT-RECEPTACLE (8-PIN)	
					(EACH RECEPTACLE KIT INCLUDES RECEPTACLE AS & WEDGE)	
		1	**9X-3402**	4	SOCKET-CONNECTOR (16-GA TO 18-GA)	
	7	1	**269-7668**	1	BRACKET	
	8	1	**269-7677**	1	PLATE	
	9	1	**156-6175**	2	CLIP	
Y	10	1	**214-6863**	1	SENSOR GP-PRESSURE (WINCH OIL)	179
	11	1	**249-9037**	1	SWITCH AS-ROCKER (WINCH FREE SPOOL)	
	12	1	**249-9047**	1	SWITCH AS-ROCKER (WINCH BRAKE OFF)	
					(EACH SWITCH AS-ROCKER INCLUDES)	
		1	**111-7899**	1	GASKET	
Y	13	1	*252-4559*	1	CONTROL GP-HANDLE (WINCH)	488
	14	1	**269-7683**	1	HARNESS AS-WORK TOOL (PLATFORM)	
		1	**155-2270**	2	KIT-CONNECTING PLUG (2-PIN)	
		1	**155-2265**	1	KIT-CONNECTING PLUG (8-PIN)	
		1	**155-2274**	1	KIT-CONNECTING PLUG (6-PIN)	
					(EACH PLUG KIT INCLUDES PLUG AS, WEDGE & INTERFACE SEAL)	
		1	**230-4009**	2	PLUG AS-CONNECTOR (12-PIN)	
					(EACH INCLUDES)	
		1	**264-7034**	1	SEAL-CONNECTOR	
		1	**231-2296**	2	PLUG AS-CONNECTOR (8-PIN)	
					(EACH INCLUDES)	
		1	**264-7033**	1	SEAL-CONNECTOR	
		1	**102-8805**	2	KIT-RECEPTACLE (6-PIN)	
					(EACH INCLUDES RECEPTACLE AS & WEDGE)	
		1	**230-4010**	2	RECEPTACLE AS-CONNECTOR (12-PIN)	
		1	**231-2301**	1	RECEPTACLE AS-CONNECTOR (8-PIN)	
		1	**9X-3401**	7	PIN-CONNECTOR (16-GA TO 18-GA)	
					-OR-	
		1	**126-1767**	7	PIN-CONNECTOR (14-GA)	
		1	**8T-8737**	51	PLUG-SEAL	
		1	**9X-3402**	26	SOCKET-CONNECTOR (16-GA TO 18-GA)	

244-7504 **CONTROL GP-WINCH** *(contd.)* **i03590460**

NOTE	REF NO	GRAPHIC REF	PART NUMBER	QTY	PART NAME 1 2 3 4 5 6 (PRODUCT LEVEL)	SEE PAGE
		1	**180-9340**	15	SOCKET-CONNECTOR (14-GA TO 18-GA)	
		1	**186-3736**	1	SOCKET-CONNECTOR (16-GA TO 18-GA)	
		1	**9W-0844**	2	SOCKET-CONNECTOR (14-GA)	
E		1	**125-7874**		TUBE-HEAT SHRINK (5.72-MM DIA) (25-CM)	
R	15	1	**300-3631**	1	CONTROL GP-UNPROGRAMMED	
	16	1	**3J-1907**	1	SEAL-O-RING	
	17	1	**3J-7354**	1	SEAL-O-RING	
	18	1	**3S-2093**	2	STRAP-CABLE	
M	19	1	**7X-2534**	2	BOLT (M6X1X50-MM)	
M	20	1	**7X-2548**	1	BOLT (M12X1.75X16-MM)	
	21	1	**8T-2353**	1	ADAPTER (STRAIGHT THREAD O-RING)	
	22	1	**8T-4223**	1	WASHER-HARD (13.5X25.5X3-MM THK)	
M	23	1	**9X-2045**	8	SCREW-TRUSS HEAD (M6X1X20-MM)	
	24	1	**9X-8256**	2	WASHER (6.6X12X2-MM THK)	

E-ORDER BY THE CENTIMETER
M-METRIC PART
R-REMFG PART MAY BE AVAILABLE
Y-SEPARATE ILLUSTRATION

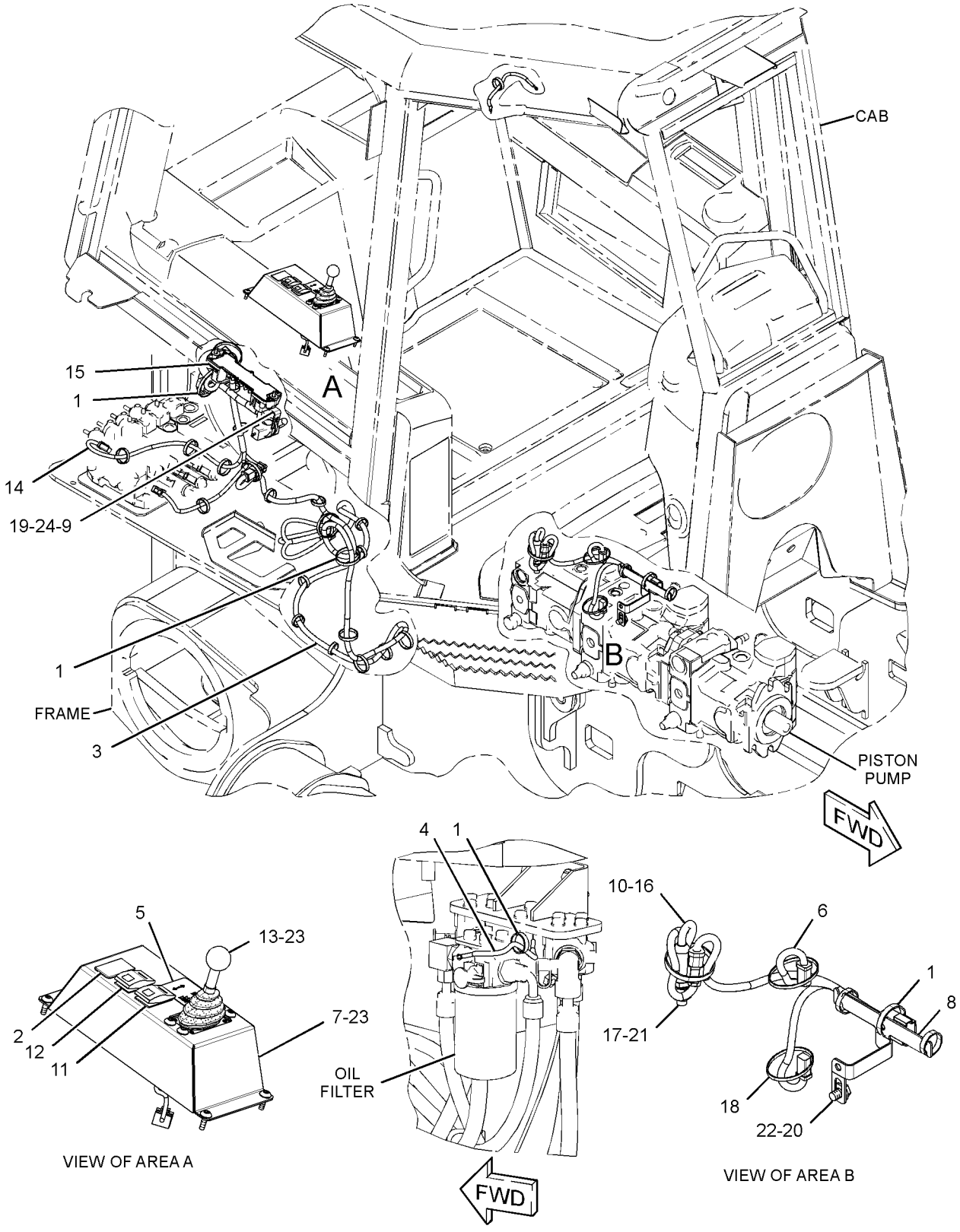

GRAPHIC #1 **<END>** g01378559

WORK TOOLS

244-7504 CONTROL GP-WINCH

S/N: JLF171-UP; WWW158-UP; YYY1-UP
PART OF 292-0125 DRIVE AR, 300-8546 DRIVE AR-WINCH, 244-7455 DRIVE GP-PUMP
AN ATTACHMENT
TYPE 1

SMCS-5161, 5170 **i03590500**

NOTE	REF NO	GRAPHIC REF	PART NUMBER	QTY	PART NAME 1 2 3 4 5 6 (PRODUCT LEVEL)	SEE PAGE
	1	1	**7K-1181**	29	STRAP-CABLE	
C	2	1	**165-0311**	2	PLUG	
	3	1	**249-9065**	1	HARNESS AS-WORK TOOL (WINCH)	
		1	**9X-3401**	6	PIN-CONNECTOR (16-GA TO 18-GA)	
		1	**155-2270**	3	KIT-CONNECTING PLUG (2-PIN)	
					(EACH INCLUDES PLUG AS, WEDGE & INTERFACE SEAL)	
		1	**8T-8737**	6	PLUG-SEAL	
		1	**102-8802**	3	KIT-RECEPTACLE (2-PIN)	
		1	**102-8805**	1	KIT-RECEPTACLE (6-PIN)	
					(EACH RECEPTACLE KIT INCLUDES RECEPTACLE AS & WEDGE)	
		1	**9X-3402**	6	SOCKET-CONNECTOR (16-GA TO 18-GA)	
	4	1	**249-9067**	1	WIRE AS	
	5	1	**266-9006**	1	FILM-INSTRUCTION (WINCH CONTROL)	
	6	1	**269-7667**	1	HARNESS AS-PUMP (WINCH)	
		1	**9X-3401**	10	PIN-CONNECTOR (16-GA TO 18-GA)	
		1	**155-2270**	2	KIT-CONNECTING PLUG (2-PIN)	
					(EACH INCLUDES PLUG AS, WEDGE & INTERFACE SEAL)	
		1	**8T-8737**	1	PLUG-SEAL	
		1	**102-8803**	1	KIT-RECEPTACLE (3-PIN)	
		1	**102-8806**	1	KIT-RECEPTACLE (8-PIN)	
					(EACH RECEPTACLE KIT INCLUDES RECEPTACLE AS & WEDGE)	
		1	**9X-3402**	4	SOCKET-CONNECTOR (16-GA TO 18-GA)	
C	7	1	**311-0296**	1	BRACKET	
	8	1	**269-7677**	1	PLATE	
	9	1	**156-6175**	2	CLIP	
Y	10	1	**214-6863**	1	SENSOR GP-PRESSURE (WINCH OIL)	179
	11	1	**249-9037**	1	SWITCH AS-ROCKER (WINCH FREE SPOOL)	
	12	1	**249-9047**	1	SWITCH AS-ROCKER (WINCH BRAKE OFF)	
					(EACH SWITCH AS-ROCKER INCLUDES)	
		1	**111-7899**	1	GASKET	
CY	13	1	**307-4673**	1	CONTROL GP-HANDLE (WINCH)	492
C	14	1	**269-7697**	1	HARNESS AS-WORK TOOL (PLATFORM)	
		1	**274-3777**	1	CAP-CONNECTOR	
		1	**155-2270**	2	KIT-CONNECTING PLUG (2-PIN)	
		1	**155-2265**	1	KIT-CONNECTING PLUG (8-PIN)	
		1	**155-2274**	1	KIT-CONNECTING PLUG (6-PIN)	
					(EACH PLUG KIT INCLUDES PLUG AS, WEDGE & INTERFACE SEAL)	
		1	**230-4009**	2	PLUG AS-CONNECTOR (12-PIN)	
					(EACH INCLUDES)	
		1	**264-7034**	1	SEAL-CONNECTOR	
		1	**231-2296**	2	PLUG AS-CONNECTOR (8-PIN)	
					(EACH INCLUDES)	
		1	**264-7033**	1	SEAL-CONNECTOR	
		1	**102-8802**	2	KIT-RECEPTACLE (2-PIN)	
		1	**102-8806**	2	KIT-RECEPTACLE (8-PIN)	
					(EACH RECEPTACLE KIT INCLUDES RECEPTACLE AS & WEDGE)	
		1	**230-4010**	2	RECEPTACLE AS-CONNECTOR (12-PIN)	
		1	**231-2301**	1	RECEPTACLE AS-CONNECTOR (8-PIN)	

244-7504 **CONTROL GP-WINCH** *(contd.)* **i03590500**

NOTE	REF NO	GRAPHIC REF	PART NUMBER	QTY	PART NAME 1 2 3 4 5 6 (PRODUCT LEVEL)	SEE PAGE
		1	**9X-3401**	7	PIN-CONNECTOR (16-GA TO 18-GA)	
					-OR-	
		1	**126-1767**	7	PIN-CONNECTOR (14-GA)	
		1	**8T-8737**	51	PLUG-SEAL	
		1	**9X-3402**	26	SOCKET-CONNECTOR (16-GA TO 18-GA)	
		1	**180-9340**	15	SOCKET-CONNECTOR (14-GA TO 18-GA)	
		1	**186-3736**	1	SOCKET-CONNECTOR (16-GA TO 18-GA)	
		1	**9W-0844**	2	SOCKET-CONNECTOR (14-GA)	
E		1	**125-7874**		TUBE-HEAT SHRINK (5.72-MM DIA) (25-CM)	
R	15	1	**300-3631**	1	CONTROL GP-UNPROGRAMMED	
	16	1	**3J-1907**	1	SEAL-O-RING	
	17	1	**3J-7354**	1	SEAL-O-RING	
	18	1	**3S-2093**	2	STRAP-CABLE	
M	19	1	**7X-2534**	2	BOLT (M6X1X50-MM)	
M	20	1	**7X-2548**	1	BOLT (M12X1.75X16-MM)	
	21	1	**8T-2353**	1	ADAPTER	
	22	1	**8T-4223**	1	WASHER-HARD (13.5X25.5X3-MM THK)	
M	23	1	**9X-2045**	8	SCREW-TRUSS HEAD (M6X1X20-MM)	
	24	1	**9X-8256**	4	WASHER (6.6X12X2-MM THK)	
	25	1	**249-9079**	1	PLATE AS	
M	26	1	**8T-4138**	2	BOLT (M6X1X20-MM)	

C-CHANGE FROM PREVIOUS TYPE
E-ORDER BY THE CENTIMETER
M-METRIC PART
R-REMFG PART MAY BE AVAILABLE
Y-SEPARATE ILLUSTRATION

244-7504 **CONTROL GP-WINCH** *(contd.)* **i03590500**

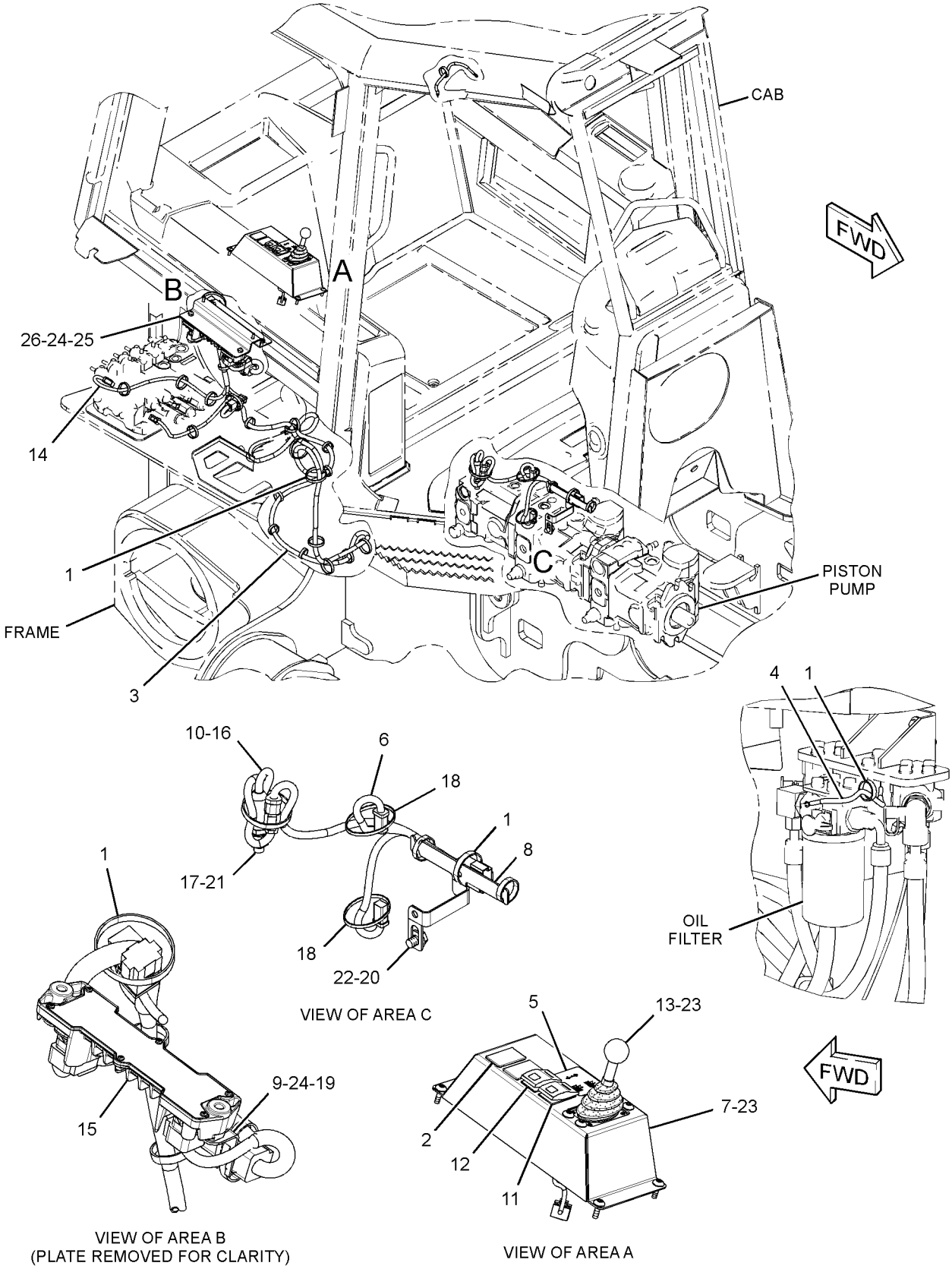

GRAPHIC #1 **<END>** g01502582

WORK TOOLS

244-7504 CONTROL GP-WINCH

S/N: JLF171-UP; WWW158-UP; YYY1-UP
PART OF 292-0125 DRIVE AR, 300-8546 DRIVE AR-WINCH, 244-7455 DRIVE GP-PUMP
AN ATTACHMENT
TYPE 2

SMCS-5161, 5170 **i03590520**

NOTE	REF NO	GRAPHIC REF	PART NUMBER	QTY	PART NAME 1 2 3 4 5 6 (PRODUCT LEVEL)	SEE PAGE
C	1	1	**7K-1181**	27	STRAP-CABLE	
	2	1	**165-0311**	2	PLUG	
	3	1	**249-9065**	1	HARNESS AS-WORK TOOL (WINCH)	
		1	**9X-3401**	6	PIN-CONNECTOR (16-GA TO 18-GA)	
		1	**155-2270**	3	KIT-CONNECTING PLUG (2-PIN)	
					(EACH INCLUDES PLUG AS, WEDGE & INTERFACE SEAL)	
		1	**8T-8737**	6	PLUG-SEAL	
		1	**102-8802**	3	KIT-RECEPTACLE (2-PIN)	
		1	**102-8805**	1	KIT-RECEPTACLE (6-PIN)	
					(EACH RECEPTACLE KIT INCLUDES RECEPTACLE AS & WEDGE)	
		1	**9X-3402**	6	SOCKET-CONNECTOR (16-GA TO 18-GA)	
	4	1	**249-9067**	1	WIRE AS	
	5	1	**266-9006**	1	FILM-INSTRUCTION (WINCH CONTROL)	
	6	1	**269-7667**	1	HARNESS AS-PUMP (WINCH)	
		1	**9X-3401**	10	PIN-CONNECTOR (16-GA TO 18-GA)	
		1	**155-2270**	2	KIT-CONNECTING PLUG (2-PIN)	
					(EACH INCLUDES PLUG AS, WEDGE & INTERFACE SEAL)	
		1	**8T-8737**	1	PLUG-SEAL	
		1	**102-8803**	1	KIT-RECEPTACLE (3-PIN)	
		1	**102-8806**	1	KIT-RECEPTACLE (8-PIN)	
					(EACH RECEPTACLE KIT INCLUDES RECEPTACLE AS & WEDGE)	
		1	**9X-3402**	4	SOCKET-CONNECTOR (16-GA TO 18-GA)	
	7	1	**311-0296**	1	BRACKET	
	8	1	**269-7677**	1	PLATE	
C	9	1	**155-0576**	8	MOUNT-ISOLATION	
Y	10	1	**214-6863**	1	SENSOR GP-PRESSURE (WINCH OIL)	179
	11	1	**249-9037**	1	SWITCH AS-ROCKER (WINCH FREE SPOOL)	
	12	1	**249-9047**	1	SWITCH AS-ROCKER (WINCH BRAKE OFF)	
					(EACH SWITCH AS-ROCKER INCLUDES)	
		1	**111-7899**	1	GASKET	
Y	13	1	**307-4673**	1	CONTROL GP-HANDLE (WINCH)	492
C	14	1	**311-0302**	1	HARNESS AS-CONTROL (PLATFORM)	
		1	**126-1774**	1	COVER-CONNECTOR	
		1	**186-3735**	3	PIN-CONNECTOR (16-GA TO 18-GA)	
		1	**9W-0852**	1	PIN-CONNECTOR (14-GA)	
		1	**8L-8413**	2	STRAP-CABLE	
E		1	**119-3662**		TUBE-HEAT SHRINK (10.85-MM DIA) (11-CM)	
		1	**155-2270**	2	KIT-CONNECTING PLUG (2-PIN)	
		1	**155-2265**	1	KIT-CONNECTING PLUG (8-PIN)	
		1	**155-2274**	1	KIT-CONNECTING PLUG (6-PIN)	
					(EACH PLUG KIT INCLUDES PLUG AS, WEDGE & INTERFACE SEAL)	
		1	**160-7689**	1	PLUG AS-CONNECTOR (70-PIN)	
					(EACH INCLUDES)	
		1	**159-9322**	1	SEAL-O-RING	
		1	**102-8802**	2	KIT-RECEPTACLE (2-PIN)	
		1	**102-8806**	1	KIT-RECEPTACLE (8-PIN)	
		1	**102-8805**	1	KIT-RECEPTACLE (6-PIN)	
					(EACH RECEPTACLE KIT INCLUDES RECEPTACLE AS & WEDGE)	
		1	**8T-8737**	61	PLUG-SEAL	

244-7504 **CONTROL GP-WINCH** *(contd.)* **i03590520**

NOTE	REF NO	GRAPHIC REF	PART NUMBER	QTY	PART NAME 1 2 3 4 5 6 (PRODUCT LEVEL)	SEE PAGE
		1	**9X-3402**	24	SOCKET-CONNECTOR (16-GA TO 18-GA)	
		1	**180-9340**	15	SOCKET-CONNECTOR (14-GA TO 18-GA)	
		1	**186-3736**	1	SOCKET-CONNECTOR (16-GA TO 18-GA)	
		1	**9W-0844**	2	SOCKET-CONNECTOR (14-GA)	
E		1	**125-7874**		TUBE-HEAT SHRINK (5.72-MM DIA) (5-CM)	
C	15	1	**311-0263**	1	CONTROL GP-UNPROGRAMMED	
	16	1	**3J-1907**	1	SEAL-O-RING	
	17	1	**3J-7354**	1	SEAL-O-RING	
	18	1	**3S-2093**	2	STRAP-CABLE	
CM	19	1	**5C-7261**	4	NUT (M8X1.25-THD)	
M	20	1	**7X-2548**	1	BOLT (M12X1.75X16-MM)	
	21	1	**8T-2353**	1	ADAPTER	
	22	1	**8T-4223**	1	WASHER-HARD (13.5X25.5X3-MM THK)	
M	23	1	**9X-2045**	8	SCREW-TRUSS HEAD (M6X1X20-MM)	
C	24	1	**9X-8256**	2	WASHER (6.6X12X2-MM THK)	
C	25	1	**269-7666**	1	PLATE AS	
M	26	1	**8T-4138**	2	BOLT (M6X1X20-MM)	
C	27	1	**9N-0869**	4	WASHER-HARD (8.8X25.5X2-MM THK)	
C	28	1	**6I-1418**	4	SPACER (8.2X12.7X28.7-MM THK)	

C-CHANGE FROM PREVIOUS TYPE
E-ORDER BY THE CENTIMETER
M-METRIC PART
Y-SEPARATE ILLUSTRATION

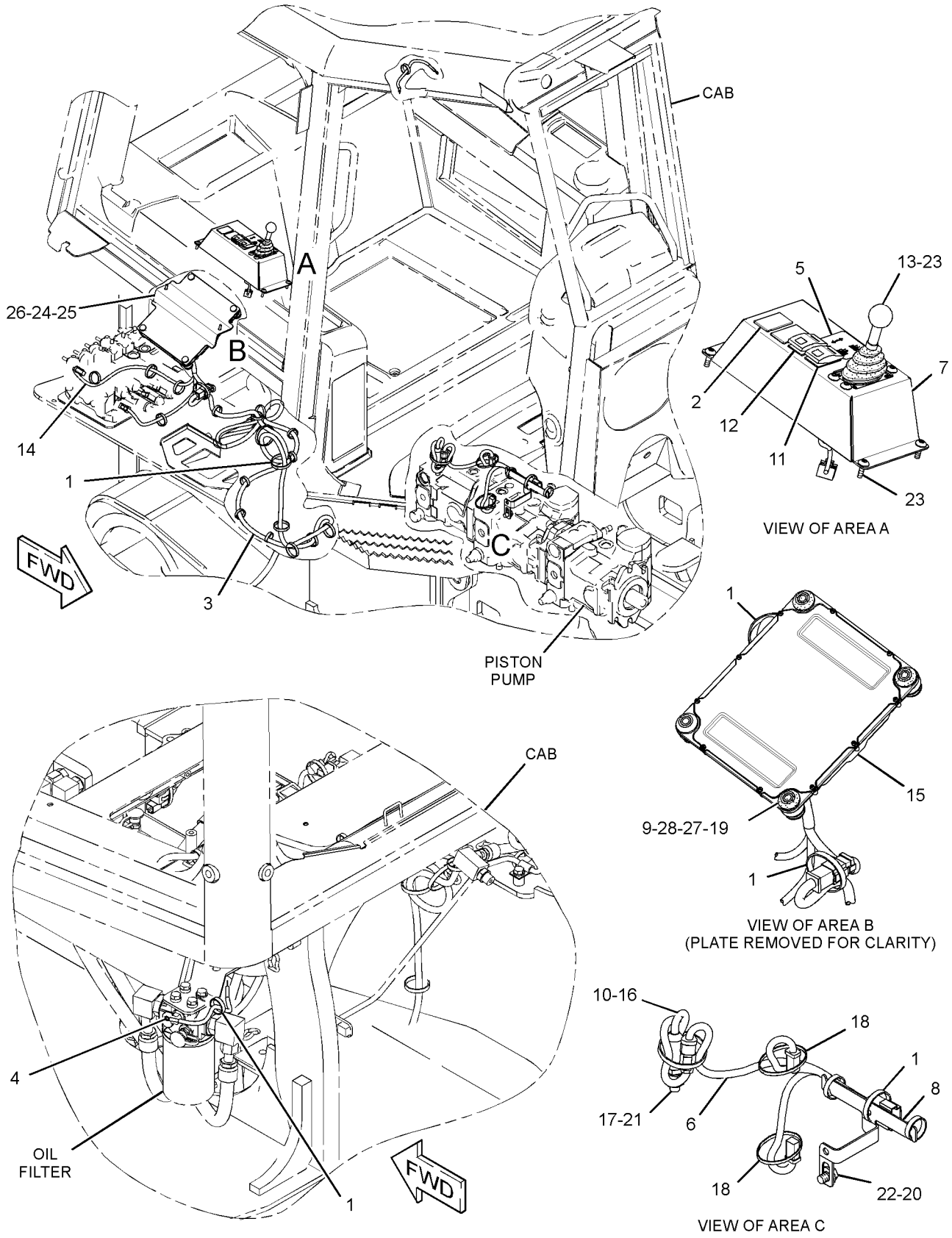

GRAPHIC #1 **<END>** g01739715

WORK TOOLS

249-9052 CONTROL GP-WINCH

S/N: JLF1-UP; WWW1-UP; YYY1-UP
PART OF 244-7472 HYDRAULIC AR
AN ATTACHMENT
TYPE 1

SMCS-5161, 5170 **i03603530**

NOTE	REF NO	GRAPHIC REF	PART NUMBER	QTY	PART NAME 1 2 3 4 5 6 (PRODUCT LEVEL)	SEE PAGE
	1	1	**249-9079**	1	PLATE AS	
	2	1	**156-6175**	2	CLIP	
	3	1	**249-9022**	1	SWITCH AS-ROCKER (4TH VALVE)	
		1	**111-7899**	1	GASKET	
R	4	1	**300-3631**	1	CONTROL GP-UNPROGRAMMED (WINCH)	
M	5	1	**7X-2534**	2	BOLT (M6X1X50-MM)	
M	6	1	**8T-4138**	2	BOLT (M6X1X20-MM)	
	7	1	**9X-8256**	4	WASHER (6.6X12X2-MM THK)	
	8	1	**165-0311**	1	PLUG	

M-METRIC PART
R-REMFG PART MAY BE AVAILABLE

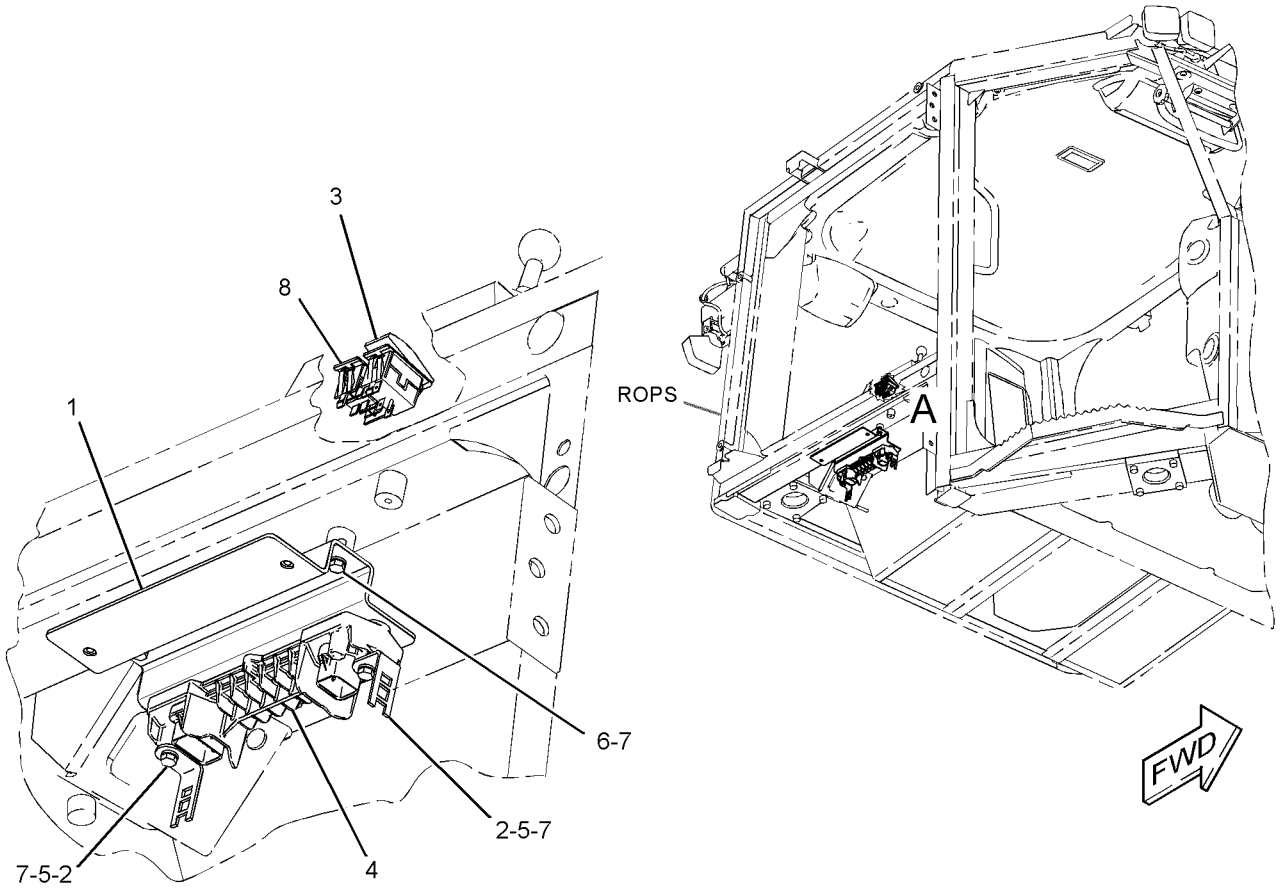

VIEW OF AREA A

GRAPHIC #1 **<END>** g01406890

WORK TOOLS

249-9052 CONTROL GP-WINCH

S/N: JLF1-UP; WWW1-UP; YYY1-UP
PART OF 244-7472 HYDRAULIC AR
AN ATTACHMENT
TYPE 2

SMCS-5161, 5170 **i03603562**

NOTE	REF NO	GRAPHIC REF	PART NUMBER	QTY	PART NAME 1 2 3 4 5 6 (PRODUCT LEVEL)	SEE PAGE
	1	1	**249-9022**	1	SWITCH AS-ROCKER (4TH VALVE)	
		1	**111-7899**	1	GASKET	

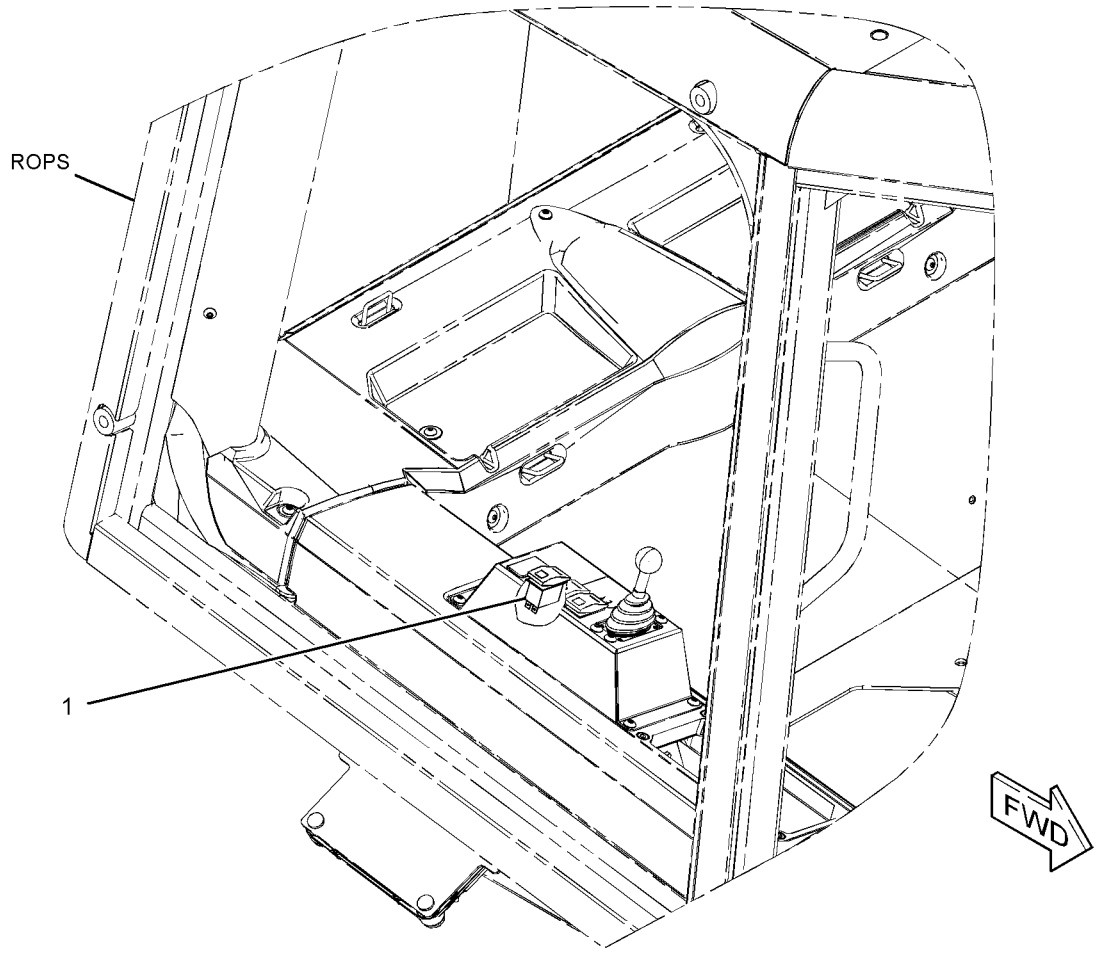

GRAPHIC #1 **<END>** g01617893

WORK TOOLS

300-8545 DRIVE AR-WINCH—HYDRAULIC

S/N: JLF1-UP

CANNOT BE USED WITH 256-3738—PAGE 660, 244-7472—PAGE 405

AN ATTACHMENT

SMCS-5165 **i02889012**

NOTE	PART NUMBER	QTY	PART NAME 1 2 3 4 5 6 (PRODUCT LEVEL)	SEE PAGE
Y	*286-8053*	1	LINES GP-HYDROSTATIC	256
Y	**254-9099**	1	PUMP GP-PISTON (SLIPPER)	293
	311-0300	1	BATTERY GP	
	263-9574	2	BATTERY (12-VOLT, MAINTENANCE FREE)	

Y-SEPARATE ILLUSTRATION

<END>

300-8546 DRIVE AR-WINCH

S/N: JLF1-UP

FOR USE WITH 244-7517—PAGE 651. CANNOT BE USED WITH 244-7471—PAGE 404, 244-7433—PAGE 335, 244-7434—PAGE 317, 262-4407—PAGE 653

AN ATTACHMENT

SMCS-5165 **i02884031**

NOTE	PART NUMBER	QTY	PART NAME 1 2 3 4 5 6 (PRODUCT LEVEL)	SEE PAGE
Y	*244-7504*	1	CONTROL GP-WINCH	621
Y	*286-8053*	1	LINES GP-HYDROSTATIC	256
Y	*255-1151*	1	LINES GP-WINCH	641
Y	*281-3997*	1	MIRROR GP-REAR VIEW	538
Y	*217-2004*	1	MOUNTING GP-PUMP	287
Y	**254-1379**	1	PUMP GP-PISTON	291
Y	**254-9099**	1	PUMP GP-PISTON	293
B	**9X-3404**	2	BATTERY (12-VOLT, MAINTENANCE FREE, WET)	
			- OR -	
B	**115-2422**	1	BATTERY GP (12-VOLT, MAINTENANCE FREE, WET)	

B-USE AS REQUIRED
Y-SEPARATE ILLUSTRATION

<END>

WORK TOOLS

6Y-5838 EDGE GP-BIT & CUTTING

S/N: JLF1-UP; WWW1-UP; YYY1-UP
PART OF 255-1362, 255-1414, 255-2370, 255-2376 BLADE GP-ANGLING
AN ATTACHMENT

SMCS-6801, 6804 **i02826960**

NOTE	REF NO	GRAPHIC REF	PART NUMBER	QTY	PART NAME 1 2 3 4 5 6 (PRODUCT LEVEL)	SEE PAGE
	1	1	**6Y-5839**	1	BIT-END (RH)	
	2	1	**4T-6232**	2	EDGE-CUTTING	
	3	1	**3F-5108**	22	BOLT-PLOW (5/8-11X2.25-IN)	
	4	1	**5P-8247**	22	WASHER-HARD (17X32X3.5-MM THK)	
	5	1	**4K-0367**	22	NUT-FULL (5/8-11-THD)	
	6	1	**6Y-5840**	1	BIT-END (LH)	

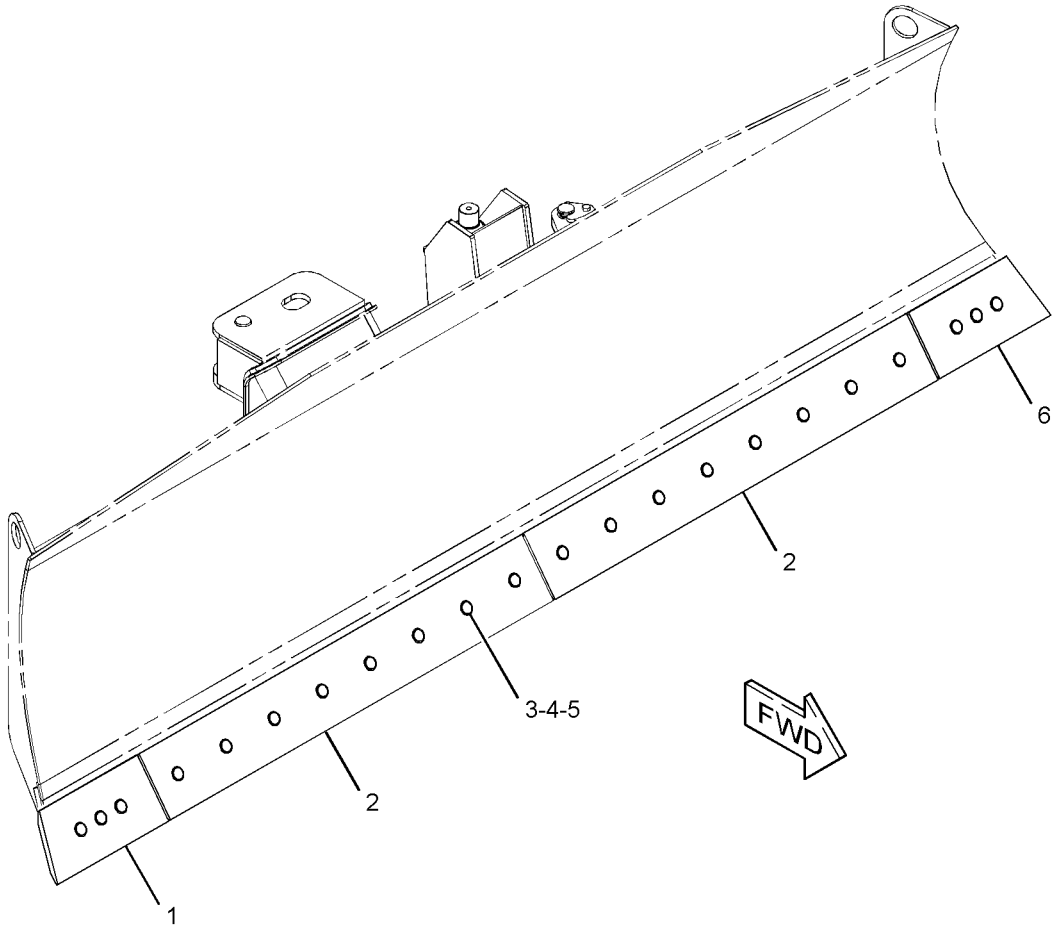

GRAPHIC #1 **<END>** g01410733

179-2897 EDGE GP-BIT & CUTTING

S/N: JLF1-UP; WWW1-UP; YYY1-UP
PART OF 255-1487, 255-2386, 312-8351, 312-8361 BLADE GP-ANGLING
AN ATTACHMENT

SMCS-6801, 6804 **i02826961**

NOTE	REF NO	GRAPHIC REF	PART NUMBER	QTY	PART NAME 1 2 3 4 5 6 (PRODUCT LEVEL)	SEE PAGE
	1	1	**6Y-5839**	1	BIT-END (RH)	
	2	1	**6Y-5840**	1	BIT-END (LH)	
	3	1	**3F-5108**	20	BOLT-PLOW (5/8-11X2.25-IN)	
	4	1	**157-7338**	2	EDGE-CUTTING	
	5	1	**4K-0367**	20	NUT-FULL (5/8-11-THD)	
	6	1	**5P-8247**	20	WASHER-HARD (17X32X3.5-MM THK)	

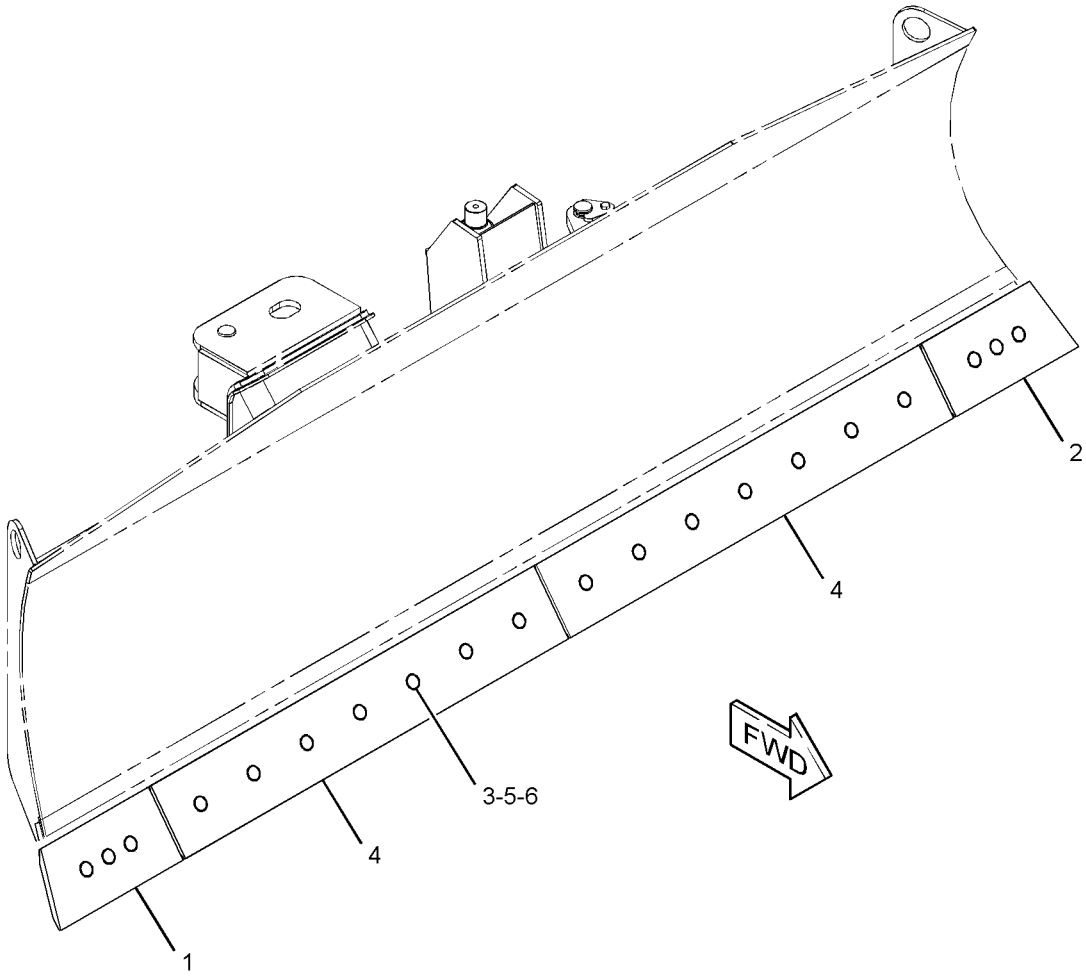

GRAPHIC #1 **<END>** g01410711

255-1426 EDGE GP-BIT & CUTTING—LEVEL CUT

S/N: JLF1-UP; WWW1-UP; YYY1-UP
PART OF 255-1395, 255-2373 BLADE GP-ANGLING
AN ATTACHMENT

SMCS-6801, 6804 **i02636077**

NOTE	PART NUMBER	QTY	PART NAME 1 2 3 4 5 6 (PRODUCT LEVEL)	SEE PAGE
	6Y-5839	1	BIT-END (RH)	
	6Y-5840	1	BIT-END (LH)	
	3F-5108	18	BOLT-PLOW (5/8-11X2.25-IN)	
	140-6836	2	EDGE-CUTTING	
	4K-0367	18	NUT-FULL (5/8-11-THD)	
	5P-8247	18	WASHER-HARD (17X32X3.5-MM THK)	

<END>

255-1428 EDGE GP-BIT & CUTTING—LEVEL CUT

S/N: JLF1-UP; WWW1-UP; YYY1-UP
PART OF 255-1427, 255-2379 BLADE GP-ANGLING
AN ATTACHMENT

SMCS-6801, 6804 **i02638119**

NOTE	PART NUMBER	QTY	PART NAME 1 2 3 4 5 6 (PRODUCT LEVEL)	SEE PAGE
	6Y-5839	1	BIT-END (RH)	
	6Y-5840	1	BIT-END (LH)	
	3F-5108	18	BOLT-PLOW (5/8-11X2.25-IN)	
	255-1429	2	EDGE-CUTTING	
	4K-0367	18	NUT-FULL (5/8-11-THD)	
	5P-8247	18	WASHER-HARD (17X32X3.5-MM THK)	

<END>

255-1472 EDGE GP-BIT & CUTTING—LEVEL CUT

S/N: JLF1-UP; WWW1-UP; YYY1-UP
PART OF 255-1471, 255-2383 BLADE GP-ANGLING
AN ATTACHMENT

SMCS-6801, 6804 **i02638912**

NOTE	PART NUMBER	QTY	PART NAME 1 2 3 4 5 6 (PRODUCT LEVEL)	SEE PAGE
	6Y-5839	1	BIT-END (RH)	
	6Y-5840	1	BIT-END (LH)	
	3F-5108	22	BOLT-PLOW (5/8-11X2.25-IN)	
	255-1474	2	EDGE-CUTTING	
	4K-0367	22	NUT-FULL (5/8-11-THD)	
	5P-8247	22	WASHER-HARD (17X32X3.5-MM THK)	

<END>

WORK TOOLS

255-1501 EDGE GP-BIT & CUTTING

S/N: JLF1-UP; WWW1-UP; YYY1-UP
PART OF 255-1503, 255-2391, 255-2394 BLADE GP-ANGLING
AN ATTACHMENT

SMCS-6801, 6804 **i02636086**

NOTE	PART NUMBER	QTY	PART NAME 1 2 3 4 5 6 (PRODUCT LEVEL)	SEE PAGE
	8E-7078	1	BIT-END (LH)	
	8E-7079	1	BIT-END (RH)	
	5J-4771	20	BOLT-PLOW (3/4-10X2.75-IN)	
	255-1505	2	EDGE-CUTTING	
	2J-3506	20	NUT-FULL (3/4-10-THD)	
	5P-8248	20	WASHER-HARD (20X36.5X3.5-MM THK)	

<END>

255-1505 EDGE-CUTTING

S/N: JLF1-UP; WWW1-UP; YYY1-UP
AN ATTACHMENT

SMCS-6801 **i02688955**

NOTE	PART NUMBER	QTY	PART NAME 1 2 3 4 5 6 (PRODUCT LEVEL)	SEE PAGE
			(NO SERVICED PARTS)	

<END>

201-2744 FILTER GP-OIL–HYDRAULIC

S/N: JLF1-UP; WWW1-UP; YYY1-UP
PART OF 255-1151 LINES GP-WINCH
AN ATTACHMENT

SMCS-5177 **i03577307**

NOTE	REF NO	GRAPHIC REF	PART NUMBER	QTY	PART NAME 1 2 3 4 5 6 (PRODUCT LEVEL)	SEE PAGE
	1	1	**6V-0852**	1	CAP-DUST	
	2	1	**6V-3965**	1	FITTING (QUICK DISCONNECT)	
	3	1	**134-0404**	1	SWITCH AS-PRESSURE (HYDRAULIC OIL FILTER)	
	4	1	**144-6691**	1	FILTER-OIL (ADVANCED EFFICIENCY)	
	5	1	**3J-1907**	2	SEAL-O-RING	

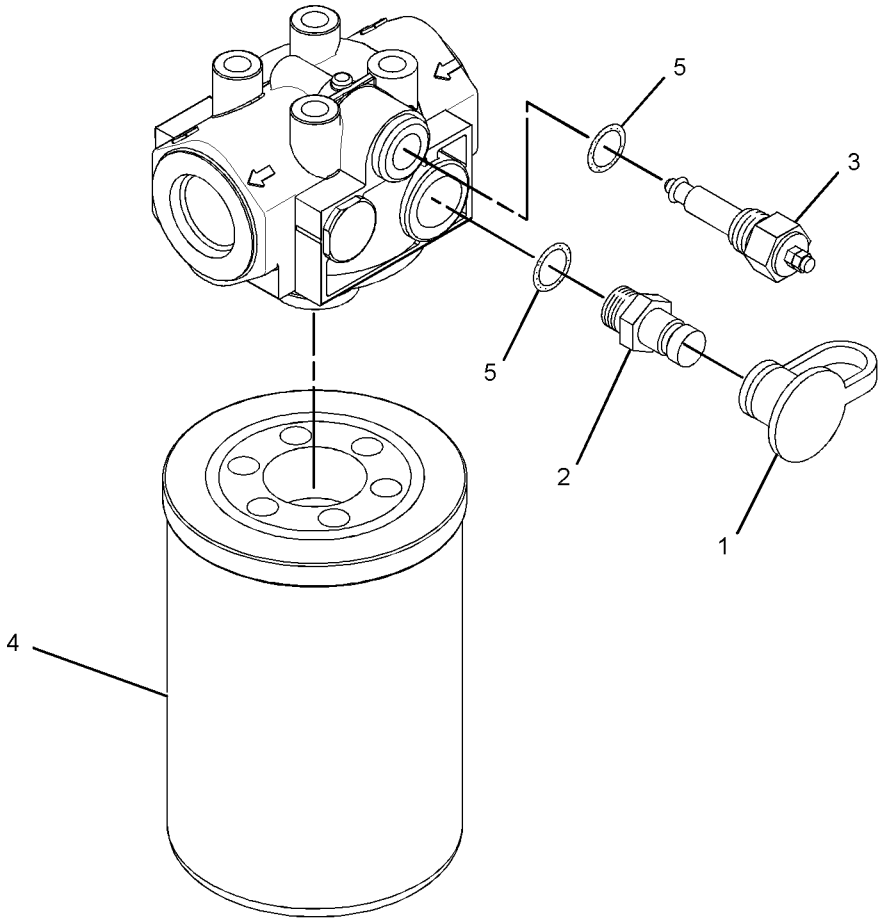

GRAPHIC #1 **<END>** g01910473

WORK TOOLS

208-5551 GEAR GP-WINCH

S/N: JLF1-UP; WWW1-UP; YYY1-UP
PART OF 256-3738 WINCH AR
AN ATTACHMENT

SMCS-5165 **i03577309**

NOTE	REF NO	GRAPHIC REF	PART NUMBER	QTY	PART NAME 1 2 3 4 5 6 (PRODUCT LEVEL)	SEE PAGE
	1	1	**5S-6174**	3	BEARING	
	2	1	**119-1616**	1	RING	
	3	1	**119-2195**	1	RING	
	4	1	**123-4410**	2	SPACER (2X2.75X0.125-IN THK) (3.18MM THK)	
	5	1	**129-7301**	1	SEAL-O-RING	
	6	1	**161-6424**	1	GEAR	
	7	1	**161-6425**	1	GEAR	
	8	1	**161-6427**	1	GEAR	
	9	1	**161-8041**	1	WASHER (100.5X125X3.5-MM THK)	
	10	1	**162-0178**	2	BALL BEARING	
	11	1	**162-0179**	1	RING	
	12	1	**162-2772**	1	RING	
	13	1	**172-2437**	1	BEARING AS-NEEDLE	
	14	1	**203-6639**	1	SHAFT-GEAR	
	15	1	**1M-7914**	1	RING-RETAINING	
	16	1	**4L-9337**	2	BOLT (3/8-16X1.5-IN)	
	17	1	**8T-4896**	2	WASHER-HARD (10.2X18.5X2.5-MM THK)	

208-5551 **GEAR GP-WINCH** *(contd.)* **i03577309**

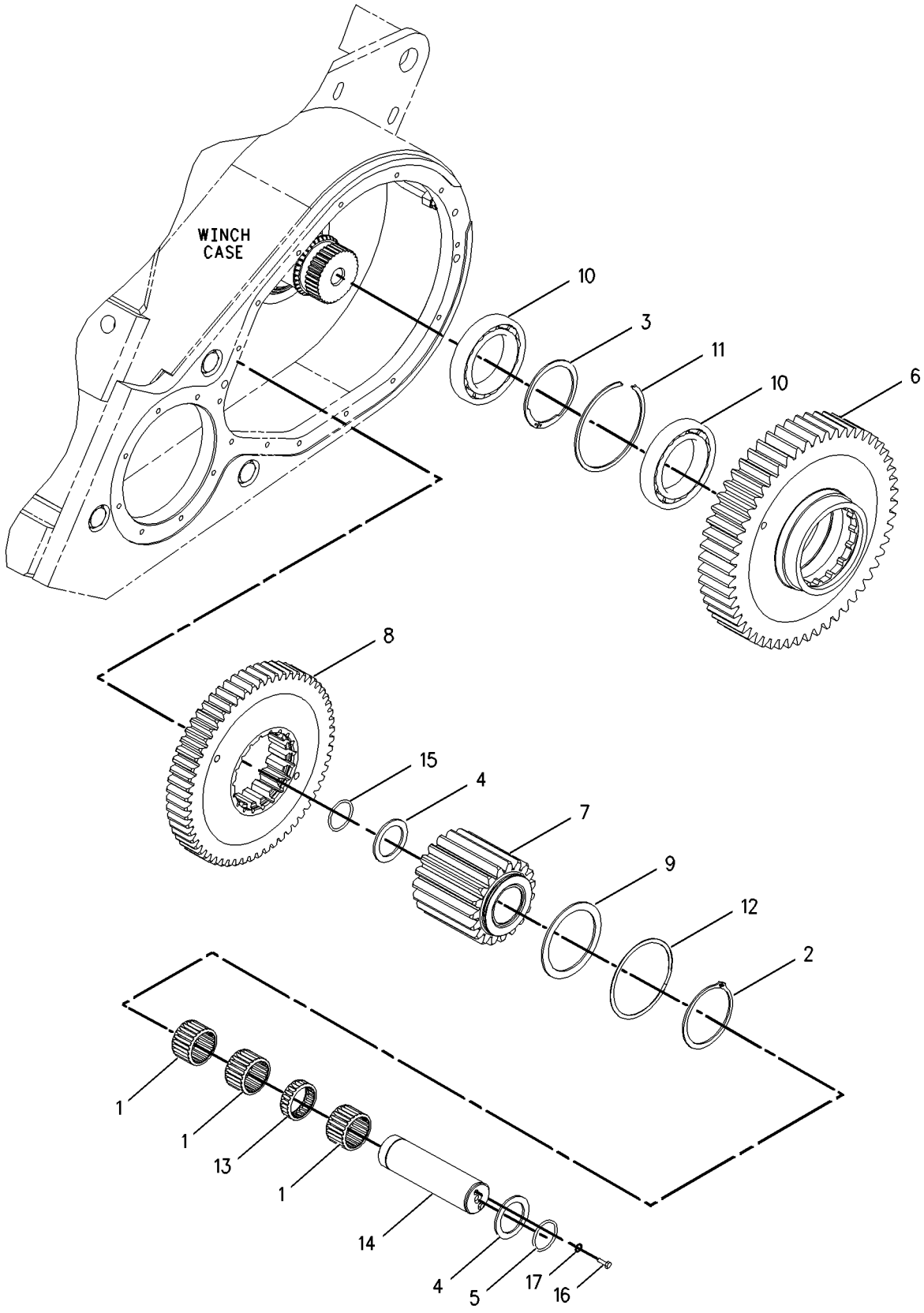

GRAPHIC #1 **<END>** g00826409

WORK TOOLS

211-8171 GEAR GP-WINCH TRANSFER

S/N: JLF1-UP; WWW1-UP; YYY1-UP
PART OF 309-5091 BRAKE & PLANETARY GP-WINCH
AN ATTACHMENT

SMCS-5165 **i01921731**

NOTE	REF NO	GRAPHIC REF	PART NUMBER	QTY	PART NAME 1 2 3 4 5 6 (PRODUCT LEVEL)	SEE PAGE
	1	1	**1F-2771**	1	BALL BEARING	
	2	1	**1S-3743**	1	BALL BEARING	
	3	1	**203-6632**	1	CARRIER-BEARING	
	4	1	**203-6633**	1	GEAR-PINION (16-TEETH)	
	5	1	**9F-1399**	1	SEAL-O-RING	

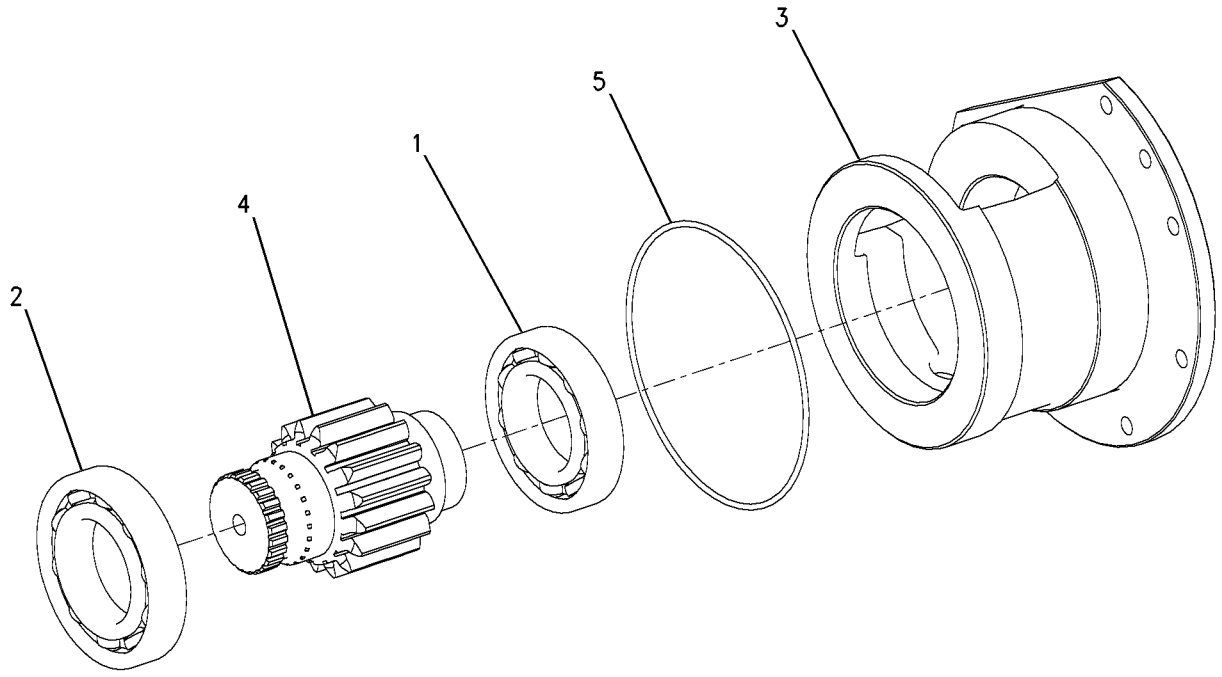

GRAPHIC #1 **<END>** g00833216

WORK TOOLS

255-1151 LINES GP-WINCH

S/N: JLF1-UP; WWW1-UP; YYY1-UP

PART OF 292-0125 DRIVE AR, 300-8546 DRIVE AR-WINCH, 244-7455 DRIVE GP-PUMP

AN ATTACHMENT

SMCS-5179 **i02883047**

NOTE	REF NO	GRAPHIC REF	PART NUMBER	QTY	PART NAME 1 2 3 4 5 6 (PRODUCT LEVEL)	SEE PAGE
	1	2	**6V-0852**	1	CAP-DUST	
	2	2	**7K-1181**	5	STRAP-CABLE	
	3	2	**7X-7945**	1	ADAPTER	
	4	1,2	**8T-4983**	2	CLAMP-HOSE	
	5	1	**9U-7000**	1	FITTING GP-HYDRAULIC	
	6	1	**9V-6589**	2	CLAMP-DOUBLE	
	7	1	**102-8705**	1	PLATE	
	8	2	**122-1951**	2	COVER	
	9	2	*164-9640*	1	CONNECTOR AS	
		2	**3J-1907**	1	SEAL-O-RING	
		2	**4J-5477**	1	SEAL-O-RING	
		2	**145-2237**	1	CONNECTOR	
	10	2	**173-3323**	1	ADAPTER	
	11	2	**200-6345**	2	MOUNT (DUAL SWIVEL)	
Y	12	1	**201-2744**	1	FILTER GP-OIL (HYDRAULIC)	637
	13	1	**206-0452**	1	PLATE	
	14	1	**221-3329**	1	HOSE	
I	15	1	**316-0629**	1	HOSE AS	
I	16	1	**263-2214**	1	HOSE AS	
I	17	2	**264-9742**	1	HOSE AS	
	18	1	**265-2166**	1	BRACKET AS	
	19	2	**276-8181**	1	HOSE AS	
I	20	1	**313-7228**	1	HOSE AS	
I	21	1	**277-7092**	1	HOSE AS	
I	22	1	**277-7093**	1	HOSE AS	
	23	2	**282-5062**	1	BRACKET AS	
	24	2	**282-5069**	1	TUBE AS	
I	25	2	**313-7227**	1	HOSE AS	
I	26	2	**294-1063**	1	HOSE AS	
	27	1	**132-7551**	3	SPACER (11X19X6-MM THK)	
	28	2	*148-8315*	1	CONNECTOR AS	
		2	**2M-9780**	1	SEAL-O-RING	
		2	**6V-8642**	1	CONNECTOR	
		2	**7J-9108**	1	SEAL-O-RING	
	29	2	*148-8336*	1	CONNECTOR AS	
		2	**3J-1907**	1	SEAL-O-RING	
		2	**6V-8397**	1	SEAL-O-RING	
		2	**6V-8636**	1	CONNECTOR	
	30	2	*148-8341*	1	CONNECTOR AS	
		2	**3D-2824**	1	SEAL-O-RING	
		2	**6V-8713**	1	CONNECTOR	
		2	**7J-9108**	1	SEAL-O-RING	
	31	2	*148-8342*	2	CONNECTOR AS	
					(EACH INCLUDES)	
		2	**3K-0360**	1	SEAL-O-RING	
		2	**6V-8632**	1	CONNECTOR	
		2	**7J-9108**	1	SEAL-O-RING	
	33	2	*148-8369*	1	ELBOW AS	
		2	**3J-7354**	1	SEAL-O-RING	
		2	**4J-5477**	1	SEAL-O-RING	
		2	**6V-8628**	1	ELBOW	
	34	1	*148-8382*	2	ELBOW AS	
					(EACH INCLUDES)	
		1	**3D-2824**	1	SEAL-O-RING	
		1	**7J-9108**	1	SEAL-O-RING	

255-1151 **LINES GP-WINCH** *(contd.)* **i02883047**

NOTE	REF NO	GRAPHIC REF	PART NUMBER	QTY	PART NAME 1 2 3 4 5 6 (PRODUCT LEVEL)	SEE PAGE
		1	**8T-0404**	1	ELBOW	
	35	2	*148-8433*	1	TEE AS	
		2	**6V-8397**	2	SEAL-O-RING	
		2	**6V-9836**	1	TEE-SWIVEL	
	36	2	*164-5581*	1	PLUG AS	
		2	**6V-9511**	1	PLUG (1-3/16-12-THD)	
		2	**6V-9746**	1	SEAL-O-RING	
	37	2	*165-4934*	1	PLUG AS	
		2	**6V-8397**	1	SEAL-O-RING	
		2	**6V-9508**	1	PLUG	
	38	2	**1P-3702**	4	SEAL-RECTANGULAR	
	39	2	**2P-1279**	1	LOCKNUT (9/16-18-THD)	
	40	1	**2S-4078**	1	SEAL-O-RING	
	41	2	**3J-1907**	1	SEAL-O-RING	
	42	2	**4J-5477**	1	SEAL-O-RING	
	43	1	**4P-7581**	1	CLIP	
	44	2	**5P-7466**	2	CLIP (SLOT)	
	45	2	**5P-7467**	2	CLIP (TAB)	
	46	2	**5P-8112**	2	GROMMET	
	47	2	**5P-9297**	1	CLIP	
	48	1	**6D-1641**	1	CLIP	
	49	2	**6D-3479**	3	CLIP	
	50	2	**6V-3965**	1	FITTING (QUICK DISCONNECT)	
	51	2	**6V-8397**	1	SEAL-O-RING	
	52	2	**7M-8485**	1	SEAL-O-RING	
	53	2	**7N-0900**	1	SPACER (0.423X0.675X2.38-IN)	
	55	1,2	**8T-4121**	24	WASHER-HARD (11X21X2.5-MM THK)	
M	56	2	**8T-4133**	12	NUT (M10X1.5-THD)	
M	57	1,2	**8T-4136**	4	BOLT (M10X1.5X25-MM)	
M	58	2	**8T-4137**	4	BOLT (M10X1.5X20-MM)	
M	59	2	**8T-4172**	1	BOLT (M10X1.5X80-MM)	
M	60	2	**8T-4182**	12	BOLT (M10X1.5X45-MM)	
M	61	2	**8T-4183**	2	BOLT (M12X1.75X40-MM)	
M	62	1	**8T-4195**	2	BOLT (M10X1.5X30-MM)	
	63	2	**8T-4223**	4	WASHER-HARD (13.5X25.5X3-MM THK)	
M	64	2	**8T-4244**	2	NUT (M12X1.75-THD)	
M	65	2	**8T-6466**	4	BOLT (M10X1.5X60-MM)	
	66	2	**8T-9403**	8	FLANGE-HALF	
	67	2	**7X-7729**	4	WASHER (11X25X3-MM THK)	
	68	1	**154-4891**	1	BOLT-STACKING (M8X1.25X49-MM)	
	69	1	**139-1398**	1	CLIP	
M	70	1	**8T-7329**	1	BOLT (M8X1.25X55-MM)	
M	71	1	**8T-4200**	1	BOLT (M8X1.25X16-MM)	

I-REFER TO HYDRAULIC INFORMATION SYSTEM
M-METRIC PART
Y-SEPARATE ILLUSTRATION

REFER TO ALL ILLUSTRATIONS OF
THIS GROUP FOR AUXILIARY VIEWS

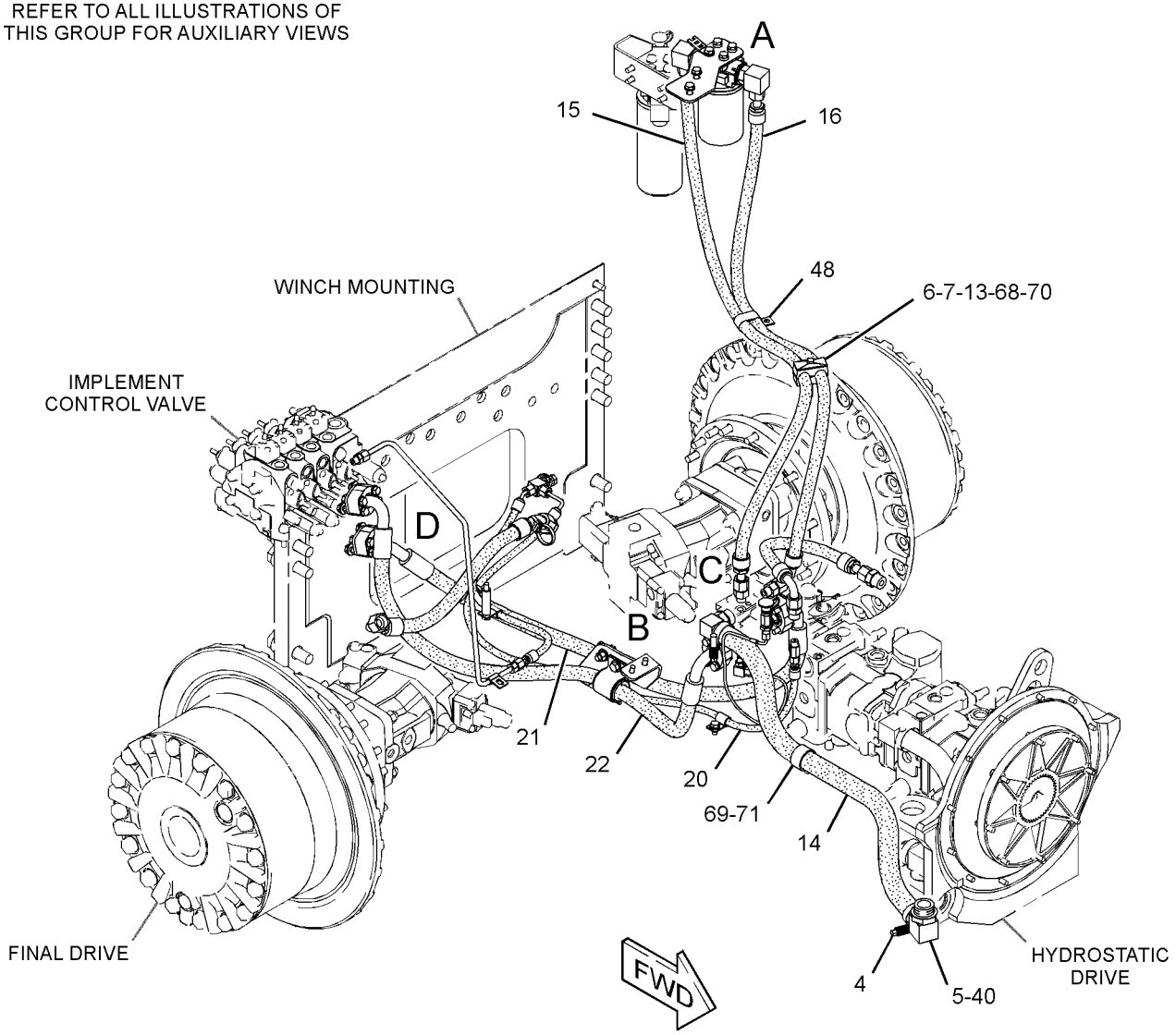

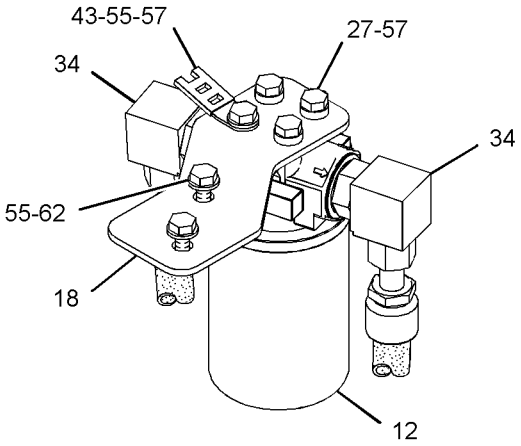

VIEW OF AREA A

GRAPHIC #1

g01696655

255-1151 **LINES GP-WINCH** *(contd.)* **i02883047**

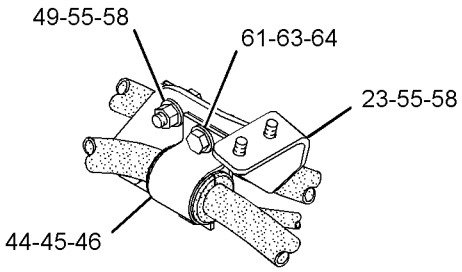

VIEW OF AREA B

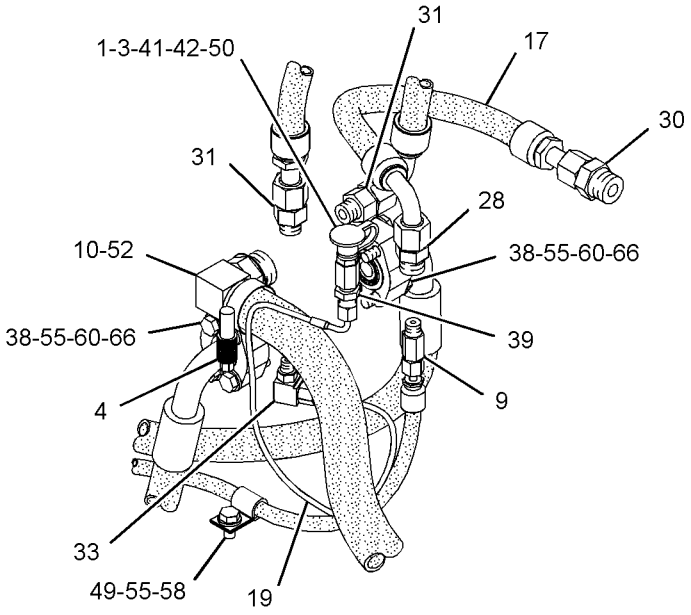

VIEW OF AREA C

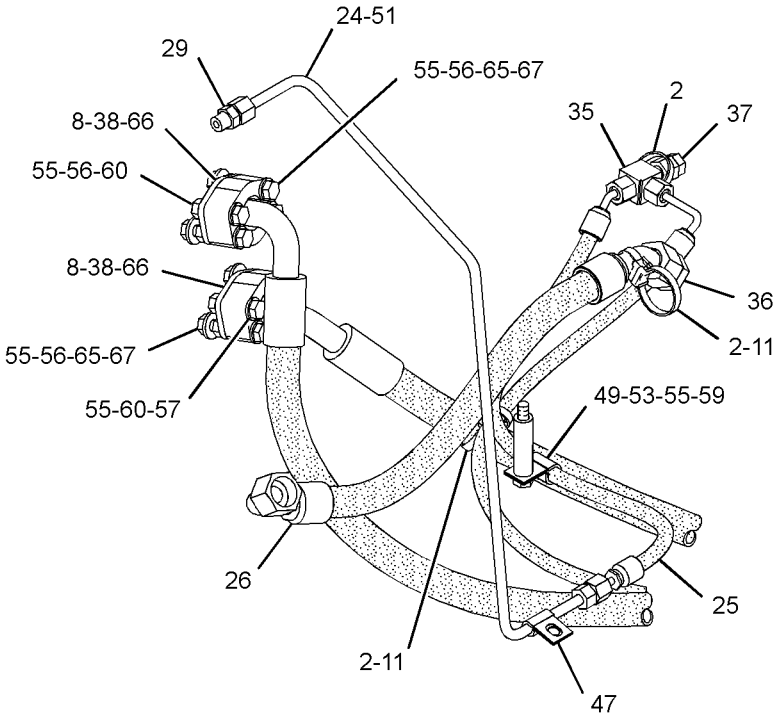

VIEW OF AREA D

GRAPHIC #2 **<END>** g01696656

WORK TOOLS

208-5549 MOTOR & MTG GP-WINCH

S/N: JLF1-UP; WWW1-UP; YYY1-UP
PART OF 256-3738 WINCH AR
AN ATTACHMENT

SMCS-5058, 5163 **i03603601**

NOTE	REF NO	GRAPHIC REF	PART NUMBER	QTY	PART NAME 1 2 3 4 5 6 (PRODUCT LEVEL)	SEE PAGE
Y	1	1	**200-1729**	1	MOTOR GP-PISTON (WINCH)	284
	2	1	**3D-2824**	1	SEAL-O-RING	
	3	1	**3H-8430**	1	SETSCREW (3/8-16X0.75-IN)	
	4	1	**4S-5898**	1	SEAL-O-RING	
	5	1	**6V-8637**	1	CONNECTOR	
	6	1	**6V-9746**	1	SEAL-O-RING	
	7	1	**8T-4223**	4	WASHER-HARD (13.5X25.5X3-MM THK)	
	8	1	**8T-8919**	4	BOLT (1/2-13X1.75-IN)	

Y-SEPARATE ILLUSTRATION

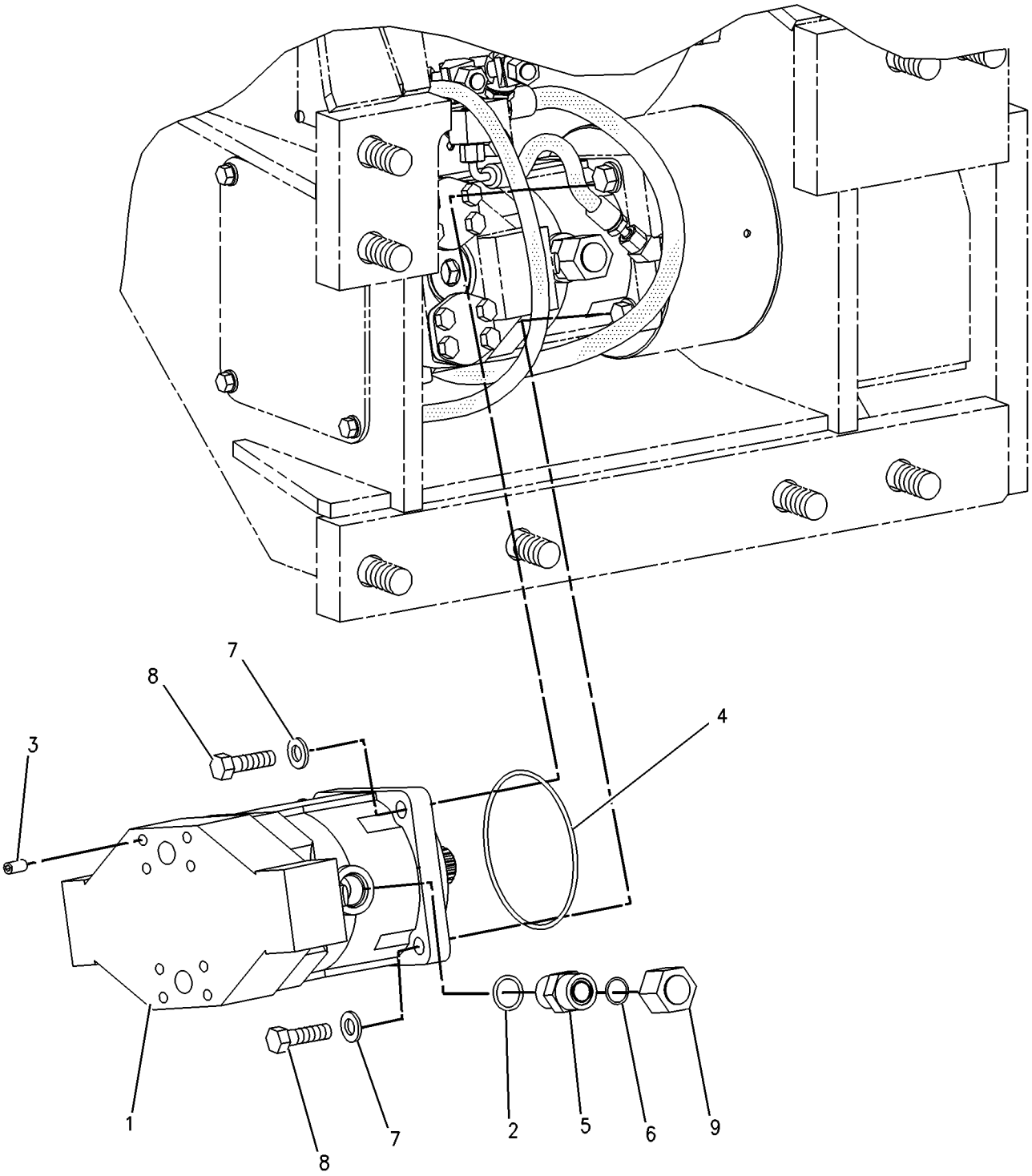

GRAPHIC #1 **<END>** g00833026

292-0302 MOUNTING GP-MAST—LASER RECEIVER

S/N: JLF1-UP; WWW1-UP; YYY1-UP

PART OF 292-0281 MAST GP

SMCS-79NS **i02622638**

NOTE	PART NUMBER	QTY	PART NAME 1 2 3 4 5 6 (PRODUCT LEVEL)	SEE PAGE
M	**8T-4648**	4	BOLT (M12X1.75X70-MM)	
	237-7552	3	FILM-WARNING (LASER TRANSMITTER)	
	252-8744	1	FILM-WARNING (BLADE, DO NOT CLIMB, READ OMM)	
M	**8T-4244**	4	NUT (M12X1.75-THD)	
	8T-4223	8	WASHER-HARD (13.5X25.5X3-MM THK)	

M-METRIC PART

<END>

292-0303 MOUNTING GP-MAST—SATELLITE RECEIVER

S/N: JLF1-UP; WWW1-UP; YYY1-UP

PART OF 292-0280 GRADE CONTROL AR-SATELLITE, 292-0290 MAST GP

SMCS-79NS **i03128391**

NOTE	PART NUMBER	QTY	PART NAME 1 2 3 4 5 6 (PRODUCT LEVEL)	SEE PAGE
M	**8T-4648**	4	BOLT (M12X1.75X70-MM)	
	252-8744	1	FILM-WARNING (BLADE, DO NOT CLIMB, READ OMM)	
M	**8T-4244**	4	NUT (M12X1.75-THD)	
	8T-4223	8	WASHER-HARD (13.5X25.5X3-MM THK)	

M-METRIC PART

<END>

WORK TOOLS

258-4961 MOUNTING GP-RIPPER

S/N: JLF1-UP; WWW1-UP; YYY1-UP
PART OF 262-4407 RIPPER AR
AN ATTACHMENT

SMCS-6165, 6310, 6324 **i02818569**

NOTE	REF NO	GRAPHIC REF	PART NUMBER	QTY	PART NAME 1 2 3 4 5 6 (PRODUCT LEVEL)	SEE PAGE
	1	1	**7P-2358**	2	PIN	
	2	1	**170-6631**	4	BAR	
	3	1	**188-3538**	4	PIN	
	4	1	**254-8859**	1	PLATE AS	
	5	1	**258-4962**	1	PLATE AS	
	6	1	**258-4971**	1	PLATE	
	7	1	**198-4782**	14	WASHER-HARD (26X47X12-MM THK)	
	8	1	**5P-1076**	2	WASHER-HARD (13.5X30X4-MM THK)	
M	9	1	**6V-7687**	2	LOCKNUT (M12X1.75-THD)	
M	10	1	**7X-2550**	2	BOLT (M12X1.75X110-MM)	
M	11	1	**7X-2577**	14	BOLT (M24X3X90-MM)	
	12	1	**8T-4121**	4	WASHER-HARD (11X21X2.5-MM THK)	
M	13	1	**8T-4136**	4	BOLT (M10X1.5X25-MM)	
M	14	1	**8T-4139**	2	BOLT (M12X1.75X30-MM)	
M	15	1	**8T-4192**	8	BOLT (M12X1.75X25-MM)	
	16	1	**8T-4223**	8	WASHER-HARD (13.5X25.5X3-MM THK)	
	17	1	**5P-8837**	1	LOCK PIN	
	18	1	**161-9570**	1	PIN	

M-METRIC PART

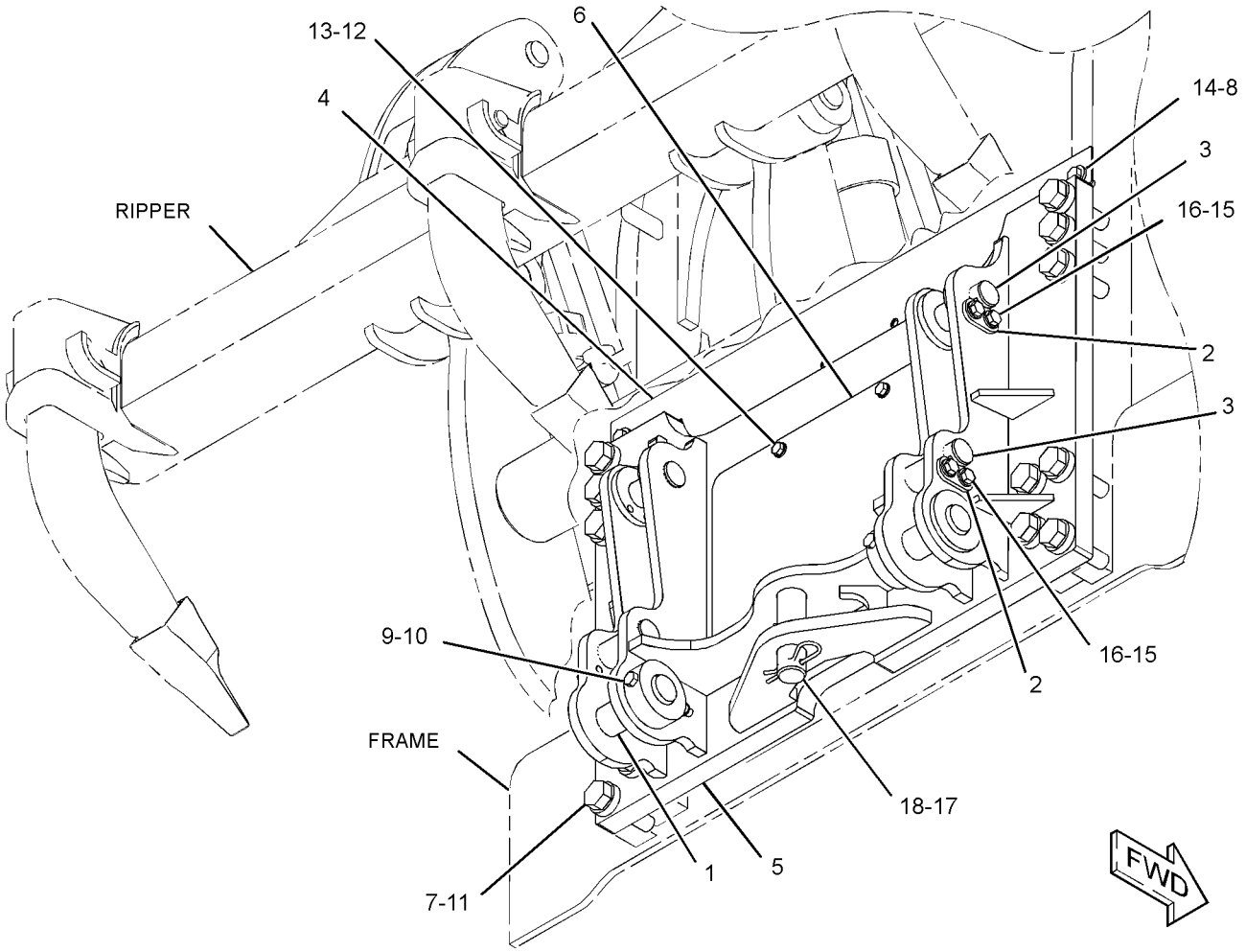

GRAPHIC #1 **<END>** g01408632

WORK TOOLS

208-5553 MOUNTING GP-WINCH

S/N: JLF1-UP; WWW1-UP; YYY1-UP
PART OF 256-3738 WINCH AR
AN ATTACHMENT

SMCS-5163 **i01923450**

NOTE	REF NO	GRAPHIC REF	PART NUMBER	QTY	PART NAME 1 2 3 4 5 6 (PRODUCT LEVEL)	SEE PAGE
	1	1	**3B-4641**	2	PIN-COTTER	
	2	1	**138-2456**	1	PLATE	
	3	1	**212-4757**	1	PIN-DRAWBAR	
	4	1	**7H-4543**	4	SCREW-TAPPING (10-16X0.375-IN)	
	5	1	**8T-4167**	8	WASHER-HARD (26X44X4-MM THK)	
M	6	1	**8T-5878**	8	BOLT (M24X3X80-MM)	

M-METRIC PART

208-5553 **MOUNTING GP-WINCH** *(contd.)* **i01923450**

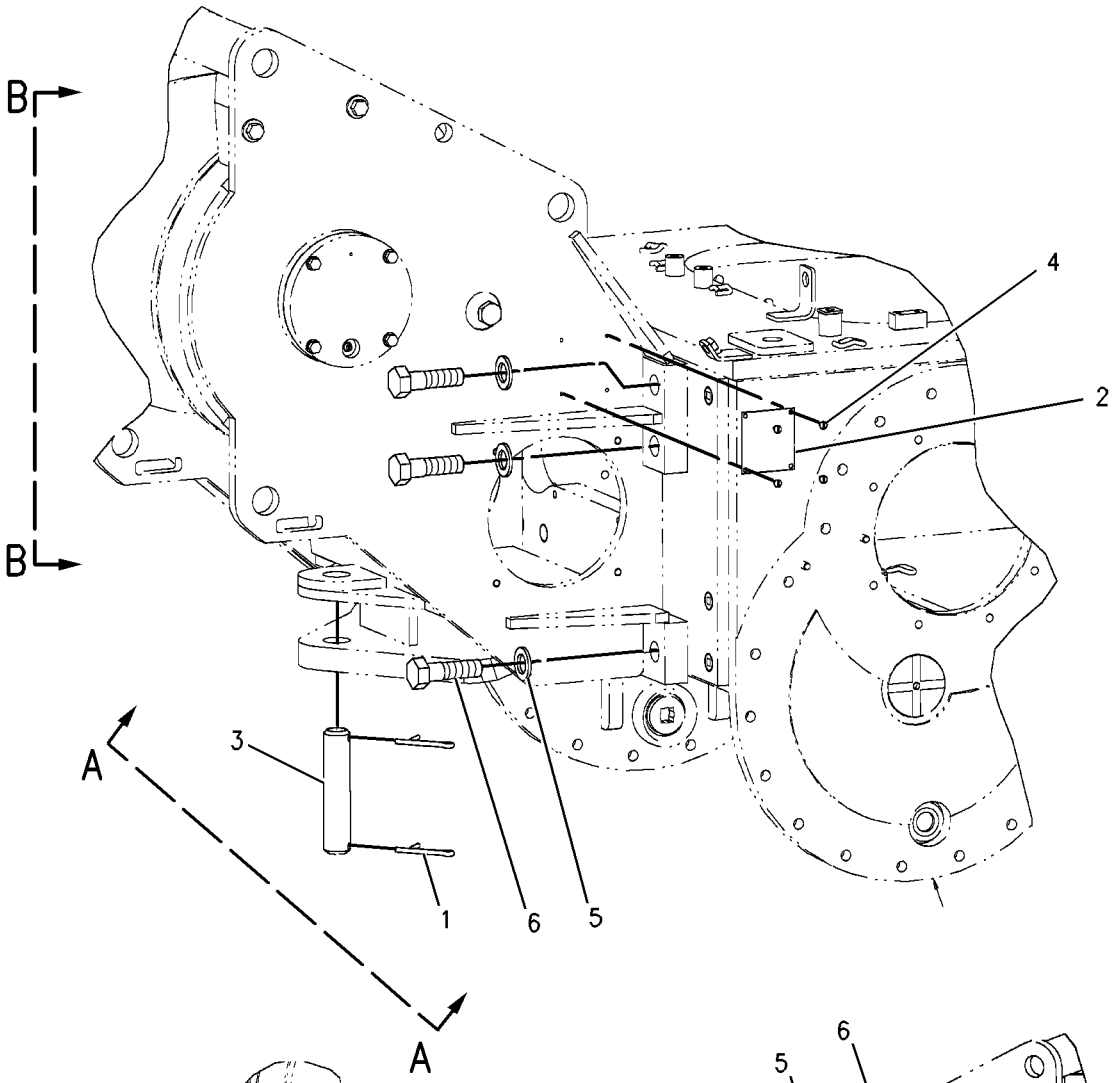

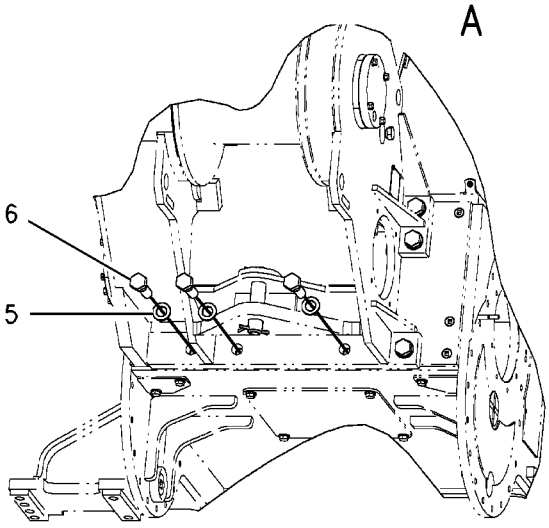

VIEW A-A

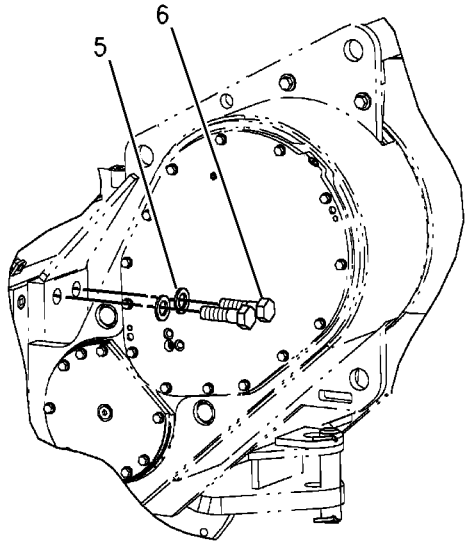

VIEW B-B

GRAPHIC #1 **<END>** g00833294

244-7517 MOUNTING GP-WINCH

S/N: JLF1-UP; WWW1-UP; YYY1-UP

CANNOT BE USED WITH 244-7433—PAGE 335, 244-7434—PAGE 317, 262-4407—PAGE 653 AN ATTACHMENT

SMCS-5163 **i02710524**

NOTE	REF NO	GRAPHIC REF	PART NUMBER	QTY	PART NAME 1 2 3 4 5 6 (PRODUCT LEVEL)	SEE PAGE
	1	1	**198-0918**	8	PLUG	
	2	1	**244-7518**	1	PLATE AS	
	4	1	**254-8859**	1	PLATE AS	
	5	1	**198-4782**	14	WASHER-HARD (26X47X12-MM THK)	
	6	1	**5P-1076**	2	WASHER-HARD (13.5X30X4-MM THK)	
M	7	1	**7X-2577**	14	BOLT (M24X3X90-MM)	
	8	1	**8T-4121**	8	WASHER-HARD (11X21X2.5-MM THK)	
M	9	1	**8T-4137**	8	BOLT (M10X1.5X20-MM)	
M	10	1	**8T-4139**	2	BOLT (M12X1.75X30-MM)	
	11	1	**303-6582**	1	PLATE	
	12	1	**299-8874**	1	PLATE AS	

M-METRIC PART

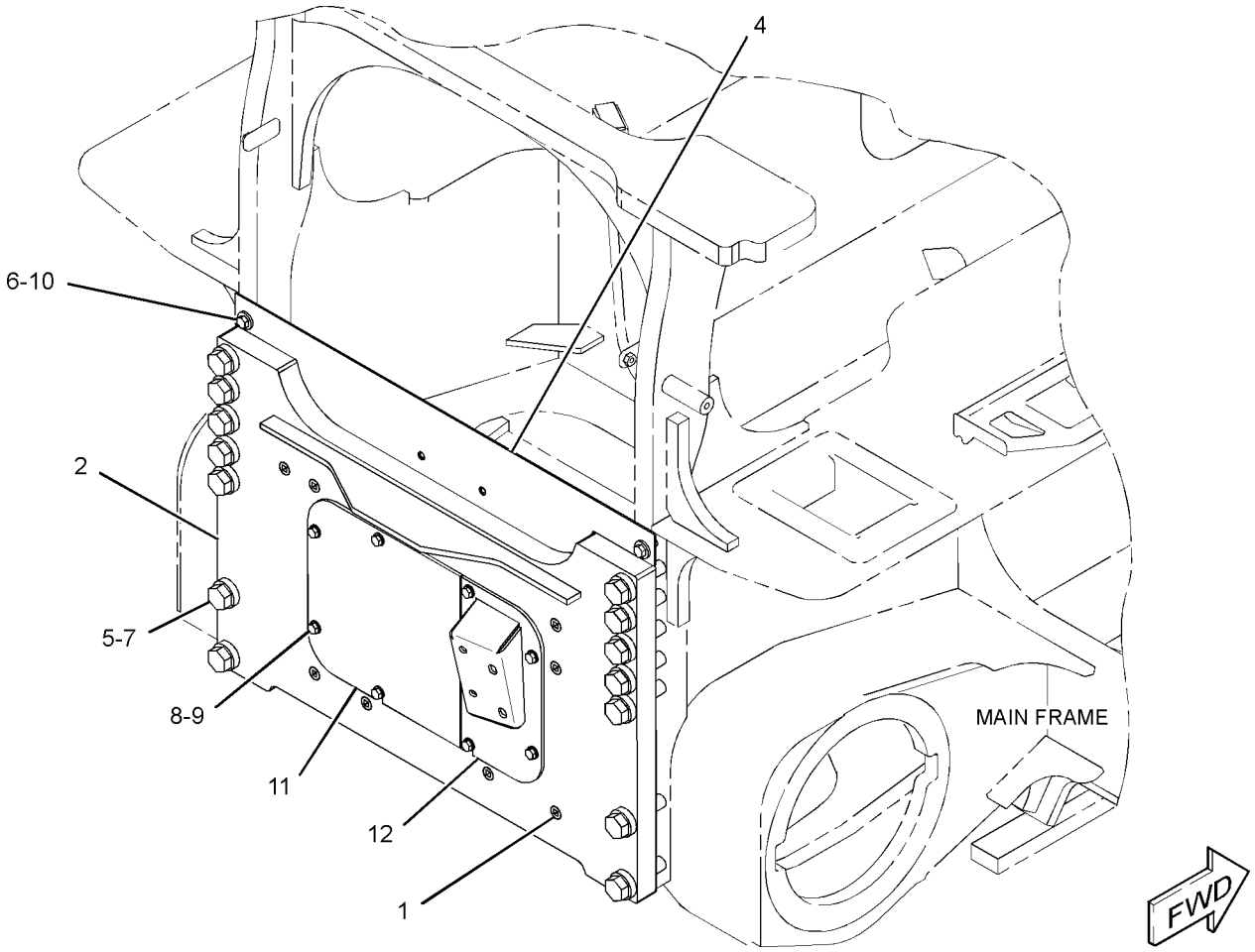

GRAPHIC #1 **<END>** g01364263

WORK TOOLS

211-8169 PLANETARY GP-WINCH

S/N: JLF1-UP; WWW1-UP; YYY1-UP
PART OF 309-5091 BRAKE & PLANETARY GP-WINCH
AN ATTACHMENT

SMCS-5165 **i02833721**

NOTE	REF NO	GRAPHIC REF	PART NUMBER	QTY	PART NAME 1 2 3 4 5 6 (PRODUCT LEVEL)	SEE PAGE
	1	1	**129-7286**	6	BEARING	
	2	1	**129-7307**	6	RACE	
	3	1	**203-6629**	1	CARRIER-PLANETARY	
	4	1	**203-6630**	3	GEAR-PLANETARY (34-TEETH)	
	5	1	**211-9023**	3	SPACER-BEARING	
	6	1	**211-9024**	3	SHAFT	
	7	1	**4H-8380**	3	PIN-SPRING	

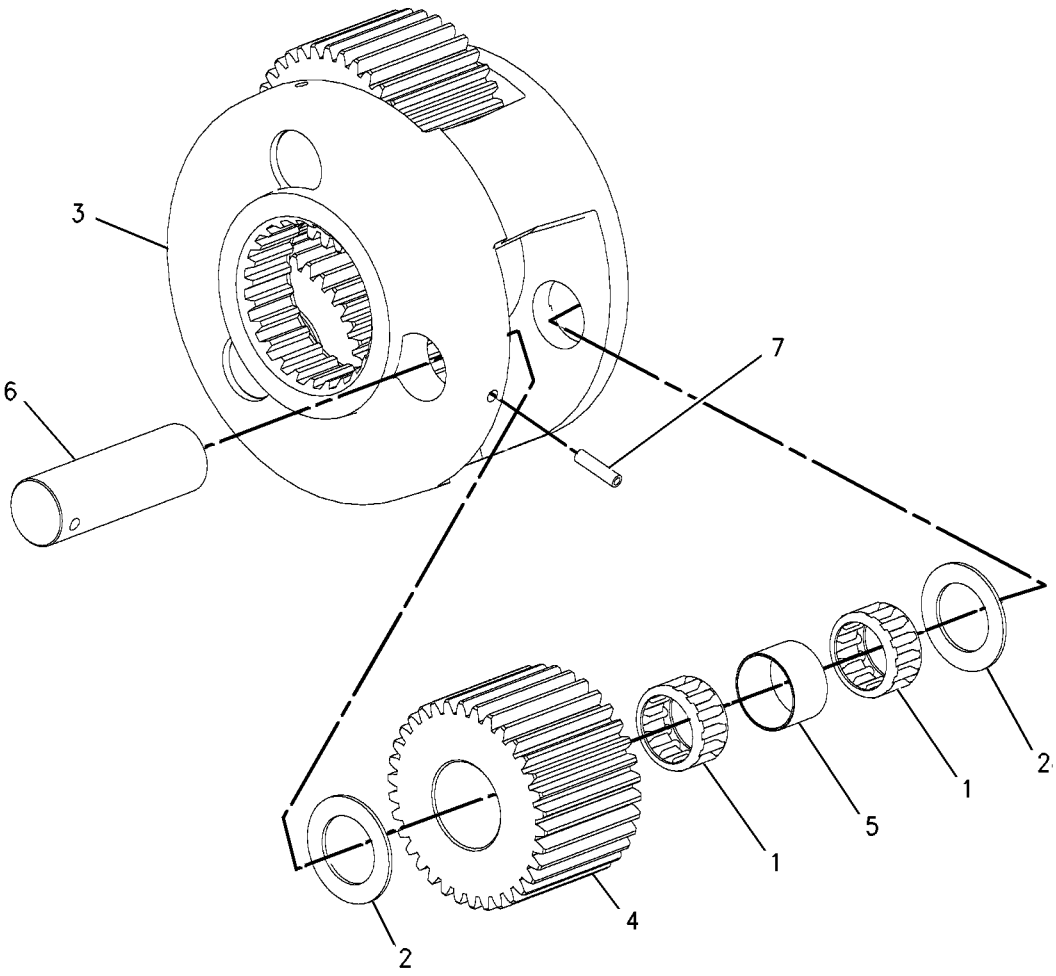

GRAPHIC #1 **<END>** g00833226

WORK TOOLS

262-4407 RIPPER AR

S/N: JLF1-UP; WWW1-UP; YYY1-UP

CANNOT BE USED WITH 244-7433—PAGE 335, 244-7434—PAGE 317, 244-7517—PAGE 651

AN ATTACHMENT

SMCS-6310 **i02833725**

NOTE	PART NUMBER	QTY	PART NAME 1 2 3 4 5 6 (PRODUCT LEVEL)	SEE PAGE
Y	**262-4415**	1	CYLINDER GP-RIPPER (RH)	400
Y	**262-4418**	1	CYLINDER GP-RIPPER (LH)	401
Y	*263-3323*	1	LINES GP-RIPPER	427
Y	*258-4961*	1	MOUNTING GP-RIPPER	648
Y	*262-4408*	1	RIPPER GP (LH)	654

Y-SEPARATE ILLUSTRATION

<END>

WORK TOOLS

262-4408 RIPPER GP

S/N: JLF1-UP; WWW1-UP; YYY1-UP
PART OF 262-4407 RIPPER AR
AN ATTACHMENT

SMCS-6310, 6325 **i02650132**

NOTE	REF NO	GRAPHIC REF	PART NUMBER	QTY	PART NAME 1 2 3 4 5 6 (PRODUCT LEVEL)	SEE PAGE
	1	1	**5G-5069**	4	PIN	
	2	1	**8J-7008**	2	PIN	
Y	3	1	*9J-1137*	3	TOOTH GP-RIPPER	657
	4	1	**170-6631**	4	BAR	
	5	1	**186-6529**	2	LINK	
	6	1	**262-4409**	1	LINK AS	
	7	1	**262-4411**	1	CARRIAGE AS	
	8	1	**3B-8489**	8	FITTING-GREASE	
M	9	1	**6V-7744**	2	LOCKNUT (M10X1.5-THD)	
M	10	1	**8T-4192**	8	BOLT (M12X1.75X25-MM)	
	11	1	**8T-4223**	8	WASHER-HARD (13.5X25.5X3-MM THK)	
M	12	1	**8T-6685**	2	BOLT (M10X1.5X110-MM)	

M-METRIC PART
Y-SEPARATE ILLUSTRATION

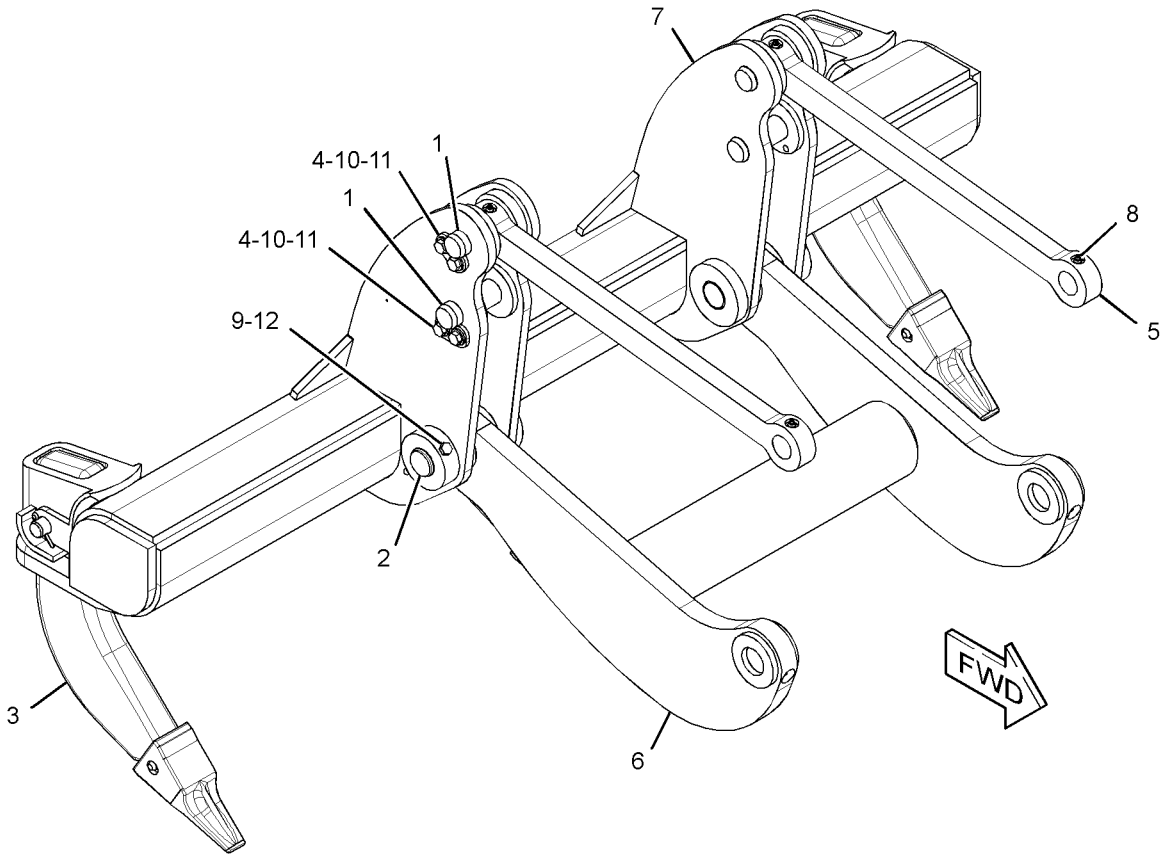

GRAPHIC #1 **<END>** g01333623

208-5547 SHAFT GP-WINCH DRUM

S/N: JLF1-UP; WWW1-UP; YYY1-UP
PART OF 256-3738 WINCH AR
AN ATTACHMENT

SMCS-5165 **i01921229**

NOTE	REF NO	GRAPHIC REF	PART NUMBER	QTY	PART NAME 1 2 3 4 5 6 (PRODUCT LEVEL)	SEE PAGE
	1	1	**1J-4034**	2	SEAL-LIP TYPE	
	2	1	**1P-3934**	2	CUP-BEARING	
	3	1	**1P-3935**	2	CONE-BEARING	
	4	1	**2H-3786**	1	NUT-JAM (1-14-THD)	
	5	1	**161-6417**	1	DISC-BRAKE	
	6	1	**203-6610**	1	DRUM-CABLE	
	7	1	**203-6612**	1	BEARING-SLEEVE	
	8	1	**203-6614**	1	SHAFT-DRUM	
	9	1	**203-6615**	1	GASKET	
	10	1	**203-6637**	1	HOUSING-SPRING	
	11	1	**203-6641**	1	SPRING	
	12	1	**211-0388**	1	COVER-BEARING	
	13	1	**211-0394**	1	BOLT (5/16-18X0.4-IN)	
	14	1	**211-0395**	1	LOCKNUT-BEARING	
	15	1	**211-0396**	2	WASHER	
	16	1	**211-0397**	1	KEY	
	17	1	**3B-8489**	1	FITTING-GREASE	
	18	1	**4L-9337**	4	BOLT (3/8-16X1.5-IN)	
	19	1	**7F-2122**	1	SEAL-O-RING	
	20	1	**8T-4896**	4	WASHER-HARD (10.2X18.5X2.5-MM THK)	
	21	1	**219-7935**	1	PLATE	
	22	1	**5M-3062**	1	BOLT (3/8-16X0.75-IN)	

208-5547 **SHAFT GP-WINCH DRUM** *(contd.)* **i01921229**

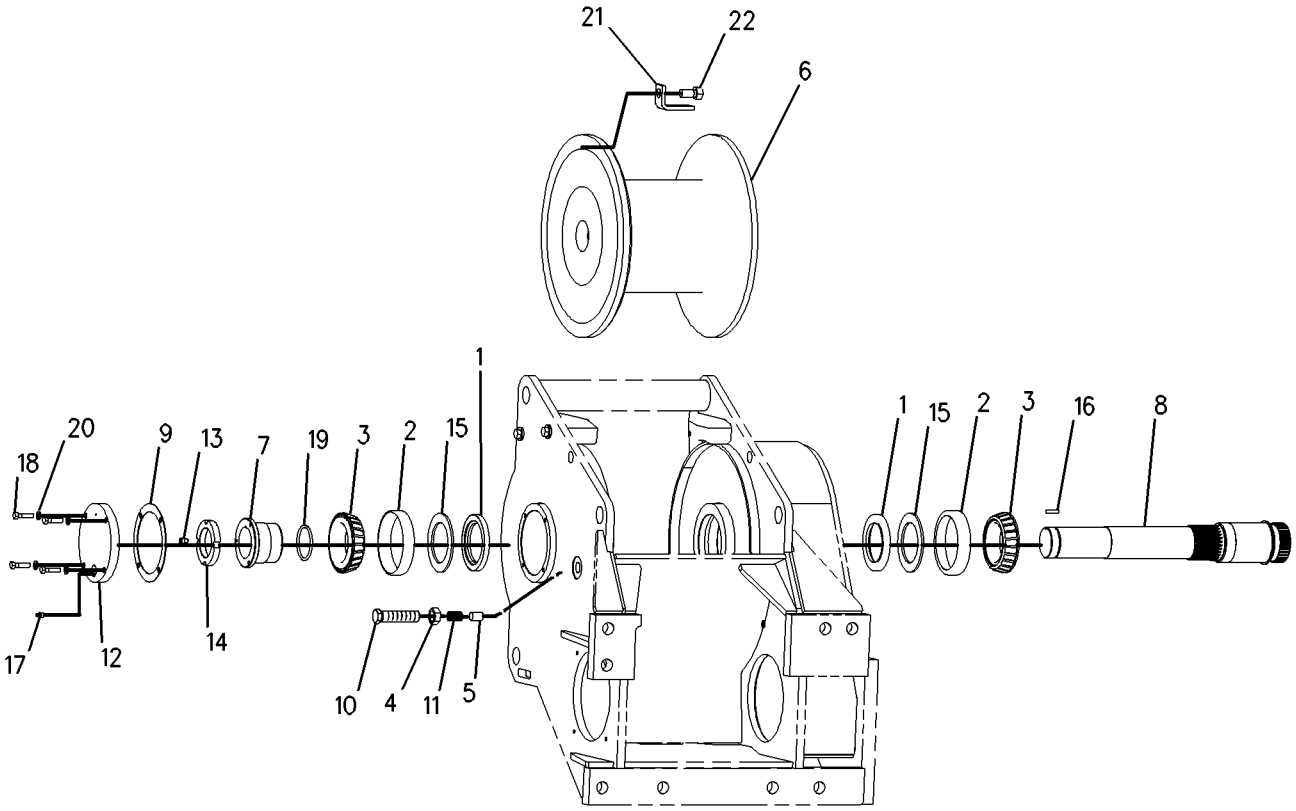

GRAPHIC #1 **<END>** g01005331

WORK TOOLS

9J-1137 TOOTH GP-RIPPER

S/N: JLF1-UP; WWW1-UP; YYY1-UP
PART OF 262-4408 RIPPER GP
AN ATTACHMENT

SMCS-6808, 6810 **i01925355**

NOTE	REF NO	GRAPHIC REF	PART NUMBER	QTY	PART NAME 1 2 3 4 5 6 (PRODUCT LEVEL)	SEE PAGE
	1	1	**3B-4630**	2	PIN-COTTER	
	2	1	**3G-6049**	1	PIN	
	3	1	**1U-1257**	1	SHANK-RIPPER	
	4	1	**149-5733**	1	RETAINER AS (G.E.T.)	
	5	1	**9J-4259**	1	TIP-PENETRATION	
	6	1	**132-4763**	1	PIN	

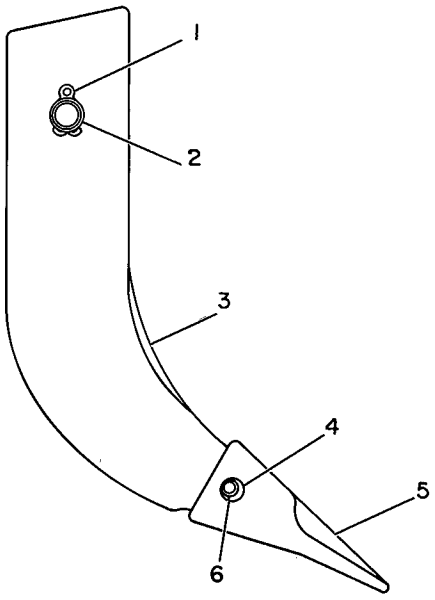

GRAPHIC #1 **<END>** g00145703

WORK TOOLS

256-3739 VALVE & LINES GP-WINCH

S/N: JLF1-UP; WWW1-UP; YYY1-UP
PART OF 256-3738 WINCH AR
AN ATTACHMENT

SMCS-5163 **i03603683**

NOTE	REF NO	GRAPHIC REF	PART NUMBER	QTY	PART NAME 1 2 3 4 5 6 (PRODUCT LEVEL)	SEE PAGE
	1	1	**8T-4896**	4	WASHER-HARD (10.2X18.5X2.5-MM THK)	
	2	1	**122-1951**	2	COVER	
	3	1	**152-8368**	1	HOSE AS	
	4	1	**152-8369**	1	HOSE AS	
	5	1	**152-9105**	1	HOSE AS	
	6	1	**200-1311**	1	VALVE GP-FLOW CONTROL (WINCH)	
	7	1	**212-6023**	1	COVER	
I	8	1	**212-6989**	1	HOSE AS	
	9	1	**264-3709**	1	VALVE GP-SOLENOID (WINCH)	
	10	1	*148-8316*	1	CONNECTOR AS	
		1	**3J-7354**	1	SEAL-O-RING	
		1	**4J-5477**	1	SEAL-O-RING	
		1	**6V-8647**	1	CONNECTOR	
	11	1	*148-8336*	1	CONNECTOR AS	
		1	**3J-1907**	1	SEAL-O-RING	
		1	**6V-8397**	1	SEAL-O-RING	
		1	**6V-8636**	1	CONNECTOR	
	12	1	*148-8368*	2	ELBOW AS	
					(EACH INCLUDES)	
		1	**3J-1907**	1	SEAL-O-RING	
		1	**4J-5477**	1	SEAL-O-RING	
		1	**6V-8627**	1	ELBOW	
	13	1	*148-8369*	1	ELBOW AS	
		1	**3J-7354**	1	SEAL-O-RING	
		1	**4J-5477**	1	SEAL-O-RING	
		1	**6V-8628**	1	ELBOW	
	14	1	*148-8378*	2	ELBOW AS	
					(EACH INCLUDES)	
		1	**3J-1907**	1	SEAL-O-RING	
		1	**6V-8397**	1	SEAL-O-RING	
		1	**6V-8724**	1	ELBOW	
	15	1	*148-8385*	1	ELBOW AS	
		1	**3J-7354**	1	SEAL-O-RING	
		1	**4J-5477**	1	SEAL-O-RING	
		1	**6V-9000**	1	ELBOW	
	16	1	*205-3692*	1	ELBOW AS	
		1	**2M-9780**	1	SEAL-O-RING	
		1	**6V-8397**	1	SEAL-O-RING	
		1	**9X-2134**	1	ELBOW	
	17	1	**1Y-7574**	3	BOLT-HEAD (3/8-16X2.5-IN)	
	18	1	**4J-5267**	1	SEAL-O-RING	
	19	1	**4L-6454**	4	BOLT (3/8-16X1-IN)	
	20	1	**4S-9002**	6	BOLT-12 POINT HEAD (3/8-16X3-IN)	
	21	1	**5F-1678**	2	SEAL-O-RING	
	22	1	**6V-9829**	1	CAP AS	
M	23	1	**8T-4137**	8	BOLT (M10X1.5X20-MM)	

I-REFER TO HYDRAULIC INFORMATION SYSTEM
M-METRIC PART

256-3739 **VALVE & LINES GP-WINCH** *(contd.)* **i03603683**

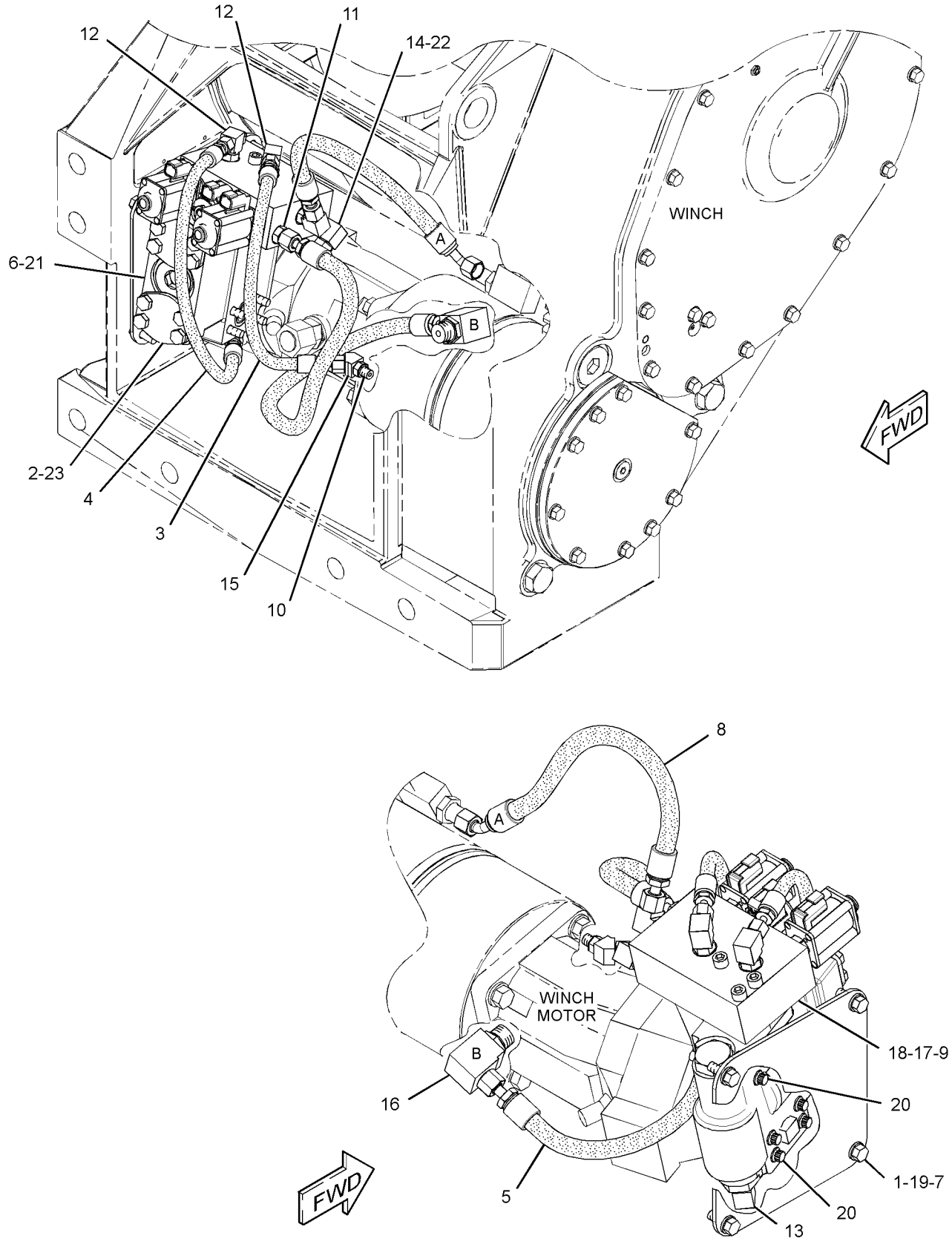

GRAPHIC #1 **<END>** g01330403

WORK TOOLS

256-3738 WINCH AR

S/N: JLF1-UP; WWW1-UP; YYY1-UP
FOR USE WITH 244-7517—PAGE 651, 244-7455—PAGE 25
AN ATTACHMENT

SMCS-5163 **i02718216**

NOTE	PART NUMBER	QTY	PART NAME 1 2 3 4 5 6 (PRODUCT LEVEL)	SEE PAGE
Y	*309-5090*	1	BRAKE & PLANETARY GP-WINCH	617
Y	*208-5546*	1	CASE GP-WINCH	619
Y	*208-5552*	1	CLUTCH & GEAR GP-WINCH	620
Y	*208-5551*	1	GEAR GP-WINCH	638
Y	*208-5549*	1	MOTOR & MTG GP-WINCH	645
Y	*208-5553*	1	MOUNTING GP-WINCH	649
Y	*208-5547*	1	SHAFT GP-WINCH DRUM	655
Y	*256-3739*	1	VALVE & LINES GP-WINCH	658

Y-SEPARATE ILLUSTRATION

<END>

SERVICE EQUIPMENT AND SUPPLIES

244-7391 FILM GP

S/N: WWW1-UP

PART OF 244-7380 CHASSIS AR

SMCS-7000 **i02667321**

NOTE	REF NO	GRAPHIC REF	PART NUMBER	QTY	PART NAME 1 2 3 4 5 6 (PRODUCT LEVEL)	SEE PAGE
	1	1	**299-3238**	1	FILM-IDENTIFICATION (CAT, RH)	
	2	1	**299-3237**	1	FILM-IDENTIFICATION (CAT, LH)	
	3	1	**299-3257**	1	FILM-IDENTIFICATION (D5K XL, RH)	
	4	1	**299-3256**	1	FILM-IDENTIFICATION (D5K XL, LH)	
	5	1	**277-8365**	1	FILM-IDENTIFICATION (CATERPILLAR)	
	6	1	**299-3240**	1	FILM-IDENTIFICATION (CAT)	
	7	1	**253-0861**	2	FILM-INFORMATION (CAT POWER, ACERT TECHNOLOGY)	

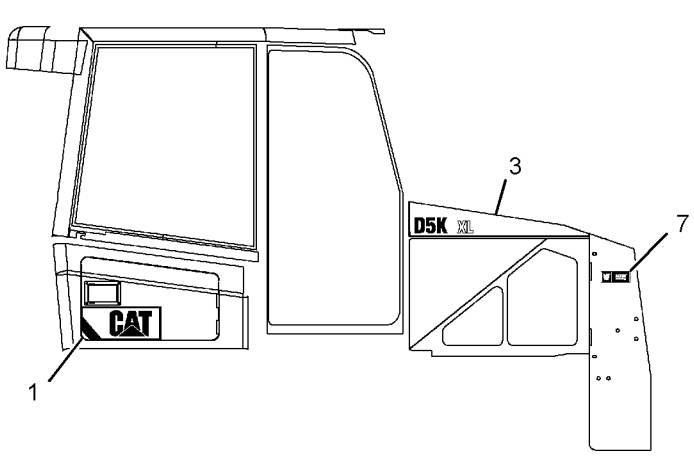

RIGHT SIDE VIEW

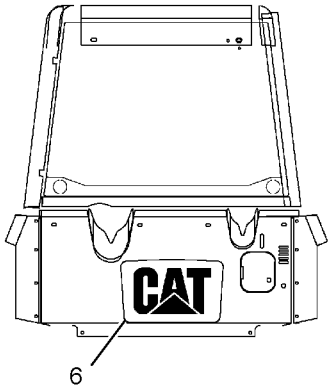

REAR VIEW

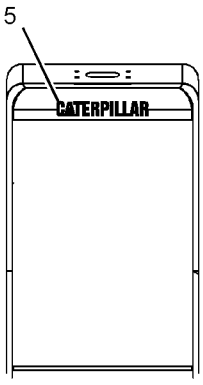

VIEW A-A

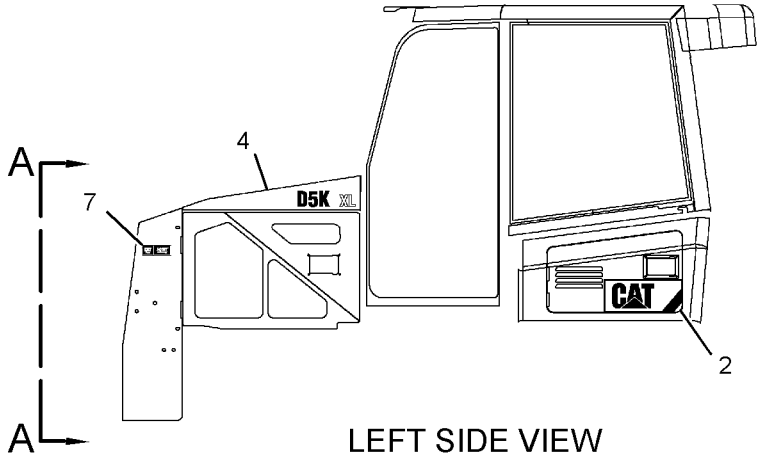

LEFT SIDE VIEW

GRAPHIC #1

<END>

g01340763

SERVICE EQUIPMENT AND SUPPLIES

244-7486 FILM GP

S/N: JLF1-UP; YYY1-UP

PART OF 244-7381, 282-5328 CHASSIS AR

SMCS-7000 **i02675949**

NOTE	REF NO	GRAPHIC REF	PART NUMBER	QTY	PART NAME 1 2 3 4 5 6 (PRODUCT LEVEL)	SEE PAGE
	1	1	**299-3238**	1	FILM-IDENTIFICATION (CAT, RH)	
	2	1	**299-3237**	1	FILM-IDENTIFICATION (CAT, LH)	
	3	1	**299-3254**	1	FILM-IDENTIFICATION (D5K LGP, RH)	
	4	1	**299-3253**	1	FILM-IDENTIFICATION (D5K LGP, LH)	
	5	1	**277-8365**	1	FILM-IDENTIFICATION (CATERPILLAR)	
	6	1	**299-3240**	1	FILM-IDENTIFICATION (CAT)	
	7	1	**253-0861**	2	FILM-INFORMATION (CAT POWER, ACERT TECHNOLOGY)	

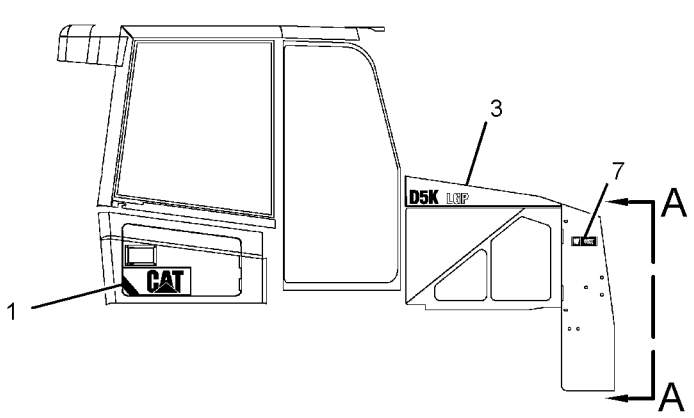

RIGHT SIDE VIEW

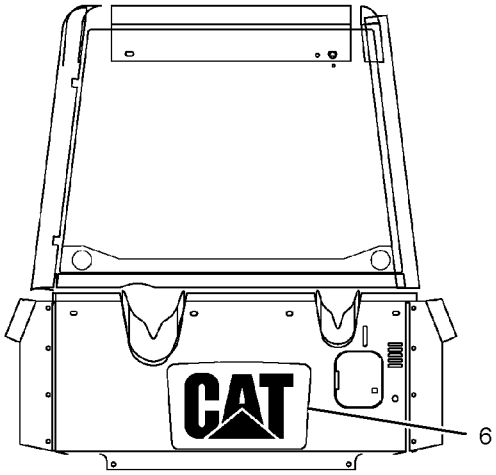

REAR VIEW

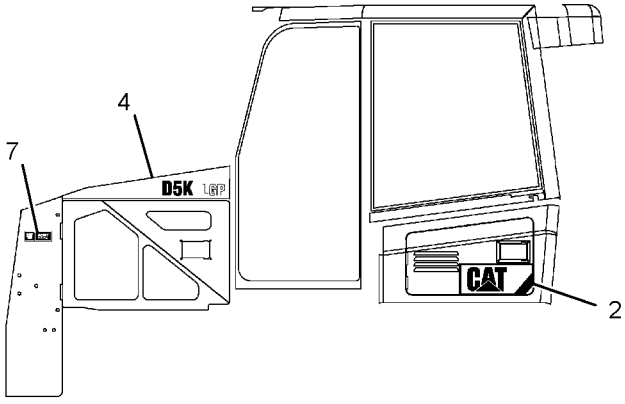

LEFT SIDE VIEW

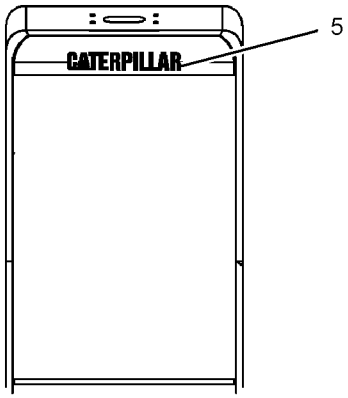

VIEW A-A

GRAPHIC #1 **<END>** g01345479

SERVICE EQUIPMENT AND SUPPLIES

260-9502 LOCK GP-VANDALISM

S/N: WWW1-UP; YYY1-UP

PART OF 244-7510, 244-7511, 286-5019, 286-5020 PLATE & FILM GP

AN ATTACHMENT

SMCS-7315 **i02647770**

NOTE	REF NO	GRAPHIC REF	PART NUMBER	QTY	PART NAME 1 2 3 4 5 6 (PRODUCT LEVEL)	SEE PAGE
	1	1	**5D-1911**	1	COVER-HYDRAULIC CAP	
	2	1	**246-2641**	2	PADLOCK GP	
					(EACH INCLUDES)	
		1	**5P-8500**	1	KEY	
	3	1	**9M-7394**	1	LEVER	
	4	1	**1L-5072**	1	DOWEL	
	5	1	**2J-7761**	1	RING-RETAINING	

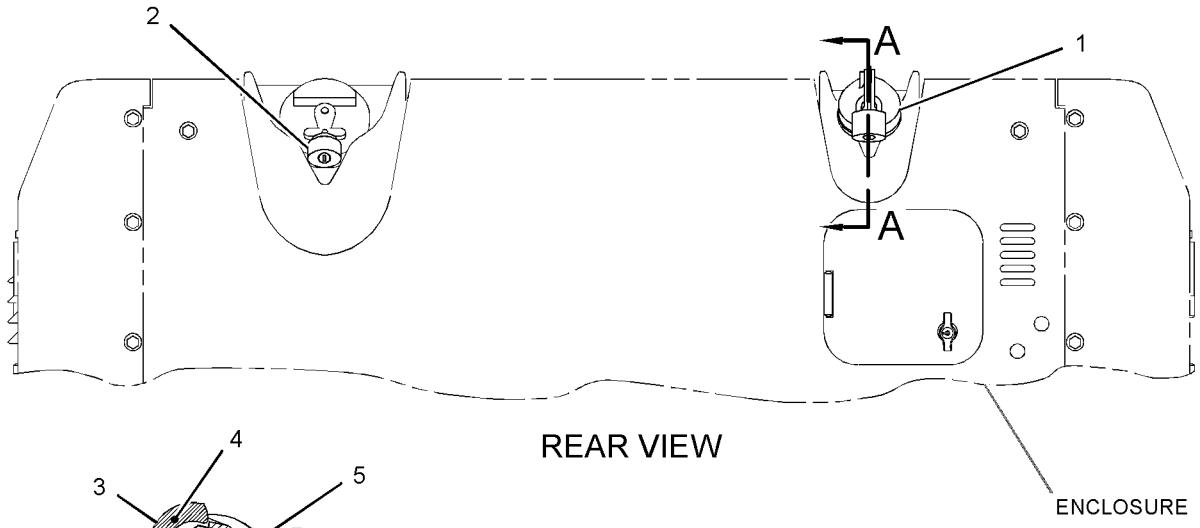

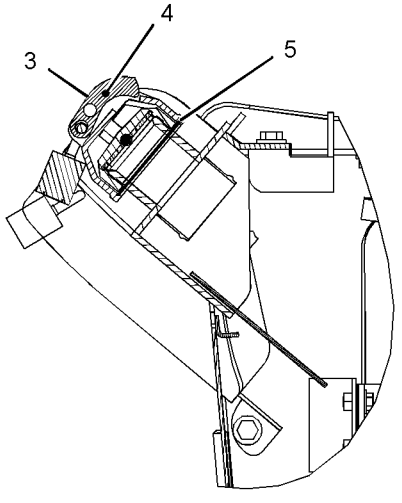

SECTION A-A

GRAPHIC #1 **<END>** g01330314

SERVICE EQUIPMENT AND SUPPLIES

244-7510 PLATE & FILM GP

S/N: WWW1-UP; YYY1-UP

AN ATTACHMENT

SMCS-7557, 7563 **i03607500**

NOTE	PART NUMBER	QTY	PART NAME 1 2 3 4 5 6 (PRODUCT LEVEL)	SEE PAGE
Y	*6V-1971*	1	LITERATURE GP	537
			(IN POCKET ON BACK OF SEAT)	
Y	*260-9502*	1	LOCK GP-VANDALISM	663
	239-6987	1	PLATE-SERIAL NUMBER (MACHINE) (CASE, FRAME)	
			(ON OUTSIDE OF LH PLATE OF FRAME NEAR REAR OF MACHINE)	
	239-6989	1	PLATE-SERIAL NUMBER (MACHINE) (PRODUCT IDENTIFICATION)	
			(ON OUTSIDE OF LH PLATE OF FRAME NEAR REAR OF MACHINE)	
	291-4256	4	PLATE-WARNING (HIGH PRESS CYLINDER, READ OMM)	
			(ON TRACK ADJUST COVER PLATES; FASTEN TO COVER PLATE WITH RIVETS IN COVER GP; MOUNTED AFTER PAINTING)	
	169-2876	1	FILM-IDENTIFICATION (POWER RECEPTACLE, 12-VOLT)	
			(ON INSIDE OF REAR RH SIDE ENCLOSURE DOOR NEAR DOOR HINGE)	
	286-8141	1	FILM-IDENTIFICATION (COMPACT INSTRUMENT CLUSTER)	
			(ON INSIDE OF GLOVEBOX DOOR)	
	287-2016	1	FILM-IDENTIFICATION (TEST PORT, READ OMM)	
			(ON THE TEST PORT PLATE NEAR THE HYSTAT PUMPS)	
	334-4603	1	FILM-INFORMATION (HYDO ADVANCED 10)	
			(ON REAR ENCLOSURE BELOW HYDRAULIC TANK FILLER NECK)	
	1P-2807	4	FILM-INFORMATION (LIFT EYE LOCATION)	
			(2-ON TRACK ROLLER FRAME, BETWEEN FRONT IDLER & FRONT ROLLER)	
			(2-ON TRACK ROLLER FRAME, BETWEEN REAR SPROCKET & LAST ROLLER)	
	7X-7644	5	FILM-INFORMATION (TIE-DOWN)	
			(2-ON TRACK ROLLER FRAME, BETWEEN FRONT IDLER & FRONT ROLLER)	
			(2-ON TRACK ROLLER FRAME, BETWEEN REAR SPROCKET & LAST ROLLER)	
			(1-ABOVE RETRIEVAL HITCH)	
	134-7258	1	FILM-INFORMATION (EXTENDED LIFE COOLANT,READ OMM)	
			(ON UNDERSIDE OF RADIATOR FILL DOOR)	
	167-7270	2	FILM-INSTRUCTION (NO STEP)	
			(CENTERED ON TOP OF BOTH ANGLE CYLINDERS)	
	291-4261	1	FILM-INSTRUCTION (DUAL BATTERY, READ OMM)	
			(ON INSIDE OF REAR RH SIDE ENCLOSURE DOOR NEAR DOOR HINGE)	
	291-1094	1	FILM-INSTRUCTION (SERVICE POINTS)	
			(ON INSIDE OF REAR LH SIDE ENCLOSURE DOOR)	
	190-5386	2	FILM-REFLECTOR (ROUND RED REFLECTIVE)	
			(ON GUSSETS NEXT TO REAR ROPS POSTS ON OROPS OR ON LOWER CORNERS OF REAR WINDOW ON EROPS	
			OR ON LOWER CORNERS OF REAR SCREEN IF INSTALLED)	
	219-0305	1	FILM-WARNING (NO WELD, NO DRILL, READ OMM)	
			(ON LH SIDE REAR ROPS "C" POST)	
	224-8945	1	FILM-WARNING (DO NOT USE ETHER, U.S)	

244-7510 **PLATE & FILM GP** *(contd.)* **i03607500**

NOTE	PART NUMBER	QTY	PART NAME 1 2 3 4 5 6 (PRODUCT LEVEL)	SEE PAGE
			(ON AIR CLEANER BODY NEAR AIR INLET)	
	225-0313	1	FILM-WARNING (JUMP START, READ OMM)	
			(ON INSIDE OF REAR RH SIDE ENCLOSURE DOOR NEAR DOOR HINGE)	
	227-7391	1	FILM-WARNING (SEAT BELT, INTERNATIONAL)	
			(ON THE REAR SURFACE OF THE LH SIDE ROPS "B" POST ABOVE THE JOYSTICK CONTROL FILM)	
	228-2615	1	FILM-WARNING (UNIVERSAL, U.S.)	
			(ON REAR SURFACE OF RH SIDE ROPS "B" POST ABOVE JOYSTICK CONTROL FILM)	
	259-4401	1	FILM-WARNING (HOT FLUID UND PRESS, READ OMM)	
			(ON SHUNT BOTTLE CAP)	
	262-7082	1	FILM-WARNING (ROPS, FOPS, READ OMM)	
			(ON LH SIDE REAR ROPS "C" POST)	
Y-SEPARATE ILLUSTRATION				

<END>

244-7511 PLATE & FILM GP

S/N: YYY1-UP

AN ATTACHMENT

SMCS-7557, 7563 **i03607501**

NOTE	PART NUMBER	QTY	PART NAME 1 2 3 4 5 6 (PRODUCT LEVEL)	SEE PAGE
Y	*6V-1971*	1	LITERATURE GP	537
			(IN POCKET ON BACK OF SEAT)	
Y	*260-9502*	1	LOCK GP-VANDALISM	663
	239-6989	1	PLATE-SERIAL NUMBER (MACHINE) (PRODUCT IDENTIFICATION)	
			(ON OUTSIDE OF LH PLATE OF FRAME NEAR REAR OF MACHINE)	
	291-4256	4	PLATE-WARNING (HIGH PRESS CYLINDER, READ OMM)	
			(ON TRACK ADJUST COVER PLATES; FASTEN TO COVER PLATE WITH RIVETS IN COVER GP; MOUNTED AFTER PAINTING)	
	287-2016	1	FILM-IDENTIFICATION (TEST PORT, READ OMM)	
			(ON THE TEST PORT PLATE NEAR THE HYSTAT PUMPS)	
	190-5386	2	FILM-REFLECTOR (ROUND RED REFLECTIVE)	
			(ON GUSSETS NEXT TO REAR ROPS POSTS ON OROPS OR ON LOWER CORNERS OF REAR WINDOW ON EROPS	
			OR ON LOWER CORNERS OF REAR SCREEN IF INSTALLED)	
	287-2017	1	FILM-IDENTIFICATION (TEST PORT, READ OMM)	
			(ON TEST PORT PLATE IN REAR RHS ENCLOSURE)	
	286-8141	1	FILM-IDENTIFICATION (COMPACT INSTRUMENT CLUSTER)	
			(ON INSIDE OF GLOVEBOX DOOR)	
	169-2876	1	FILM-IDENTIFICATION (POWER RECEPTACLE, 12-VOLT)	
			(ON INSIDE OF REAR RHS ENCLOSURE DOOR NEAR DOOR HINGE)	
	1P-2807	4	FILM-INFORMATION (LIFT EYE LOCATION)	
			(2-ON TRACK ROLLER FRAME, BETWEEN FRONT IDLER & FRONT ROLLER)	
			(2-ON TRACK ROLLER FRAME, BETWEEN REAR SPROCKET & LAST ROLLER)	
	7X-7644	5	FILM-INFORMATION (TIE-DOWN)	

244-7511 **PLATE & FILM GP** *(contd.)* **i03607501**

NOTE	PART NUMBER	QTY	PART NAME 1 2 3 4 5 6 (PRODUCT LEVEL)	SEE PAGE
			(2-ON TRACK ROLLER FRAME, BETWEEN FRONT IDLER & FRONT ROLLER)	
			(2-ON TRACK ROLLER FRAME, BETWEEN REAR SPROCKET & LAST ROLLER)	
			(1 - ABOVE RETRIEVAL HITCH)	
	134-7258	1	FILM-INFORMATION (EXTENDED LIFE COOLANT,READ OMM)	
			(ON UNDERSIDE OF RADIATOR FILL DOOR)	
	167-7270	2	FILM-INSTRUCTION (NO STEP)	
			(CENTERED ON TOP OF BOTH ANGLE CYLINDERS)	
	158-7864	1	FILM-IDENTIFICATION (HYDRAULIC OIL)	
			(ON REAR ENCLOSURE BELOW HYDRAULIC TANK FILLER NECK)	
	291-4261	1	FILM-INSTRUCTION (DUAL BATTERY, READ OMM)	
			(ON INSIDE OF REAR RHS ENCLOSURE DOOR NEAR DOOR HINGE)	
	291-1094	1	FILM-INSTRUCTION (SERVICE POINTS)	
			(ON INSIDE OF REAR LHS ENCLOSURE DOOR)	
	219-0305	1	FILM-WARNING (NO WELD, NO DRILL, READ OMM)	
			(ON LHS REAR ROPS "C" POST)	
	224-8945	1	FILM-WARNING (DO NOT USE ETHER, U.S)	
			(ON AIR CLEANER BODY NEAR AIR INLET)	
	225-0313	1	FILM-WARNING (JUMP START, READ OMM)	
			(ON INSIDE OF REAR RHS ENCLOSURE DOOR NEAR DOOR HINGE)	
	227-7391	1	FILM-WARNING (SEAT BELT, INTERNATIONAL)	
			(ON THE REAR SURFACE OF THE LHS ROPS "B" POST ABOVE THE JOYSTICK CONTROL FILM)	
	228-2615	1	FILM-WARNING (UNIVERSAL, U.S.)	
			(ON REAR SURFACE OF RHS ROPS "B" POST ABOVE JOYSTICK CONTROL FILM)	
	259-4401	1	FILM-WARNING (HOT FLUID UND PRESS, READ OMM)	
			(ON SHUNT BOTTLE CAP)	
	262-7082	1	FILM-WARNING (ROPS, FOPS, READ OMM)	
			(ON LHS REAR ROPS "C" POST)	

Y-SEPARATE ILLUSTRATION

<END>

286-5019 PLATE & FILM GP

S/N: WWW1-UP

AN ATTACHMENT

SMCS-7557, 7563 **i03607502**

NOTE	PART NUMBER	QTY	PART NAME 1 2 3 4 5 6 (PRODUCT LEVEL)	SEE PAGE
Y	*6V-1971*	1	LITERATURE GP	537
			(IN POCKET ON BACK OF SEAT)	
Y	*260-9502*	1	LOCK GP-VANDALISM	663
	239-6989	1	PLATE-SERIAL NUMBER (MACHINE) (PRODUCT IDENTIFICATION)	
			(ON OUTSIDE OF LH PLATE OF FRAME NEAR REAR OF MACHINE)	
	291-4256	4	PLATE-WARNING (HIGH PRESS CYLINDER, READ OMM)	
			(ON TRACK ADJUST COVER PLATES)	
	287-2016	1	FILM-IDENTIFICATION (TEST PORT, READ OMM)	
			(ON THE TEST PORT PLATE NEAR THE HYDROSTATIC PUMPS)	

286-5019 **PLATE & FILM GP** ***(contd.)*** **i03607502**

NOTE	PART NUMBER	QTY	PART NAME 1 2 3 4 5 6 (PRODUCT LEVEL)	SEE PAGE
	169-2876	1	FILM-IDENTIFICATION (POWER RECEPTACLE, 12-VOLT)	
			(ON INSIDE OF REAR RH SIDE ENCLOSURE DOOR NEAR DOOR HINGE)	
	190-5386	2	FILM-REFLECTOR (ROUND RED REFLECTIVE)	
			(ON GUSSETS NEXT TO REAR ROPS POSTS ON OROPS OR ON LOWER CORNERS OR REAR WINDOW ON EROPS OR ON LOWER CORNERS OF REAR	
			SCREEN IF INSTALLED)	
	287-2017	1	FILM-IDENTIFICATION (TEST PORT, READ OMM)	
			(ON TEST PORT PLATE IN REAR RH SIDE ENCLOSURE)	
	286-8141	1	FILM-IDENTIFICATION (COMPACT INSTRUMENT CLUSTER)	
			(ON INSIDE OF GLOVEBOX DOOR)	
	1P-2807	4	FILM-INFORMATION (LIFT EYE LOCATION)	
			(2-ON TRACK ROLLER FRAME, BETWEEN FRONT IDLER & FRONT ROLLER)	
			(2-ON TRACK ROLLER FRAME, BETWEEN REAR SPROCKET & LAST ROLLER)	
	7X-7644	5	FILM-INFORMATION (TIE-DOWN)	
			(2-ON TRACK ROLLER FRAME, BETWEEN FRONT IDLER & FRONT ROLLER)	
			(2-ON TRACK ROLLER FRAME, BETWEEN REAR SPROCKET & LAST ROLLER)	
			(1 - ABOVE RETRIEVAL HITCH)	
	134-7258	1	FILM-INFORMATION (EXTENDED LIFE COOLANT,READ OMM)	
			(ON UNDERSIDE OF RADIATOR FILL DOOR)	
	158-7864	1	FILM-IDENTIFICATION (HYDRAULIC OIL)	
			(ON THE REAR ENCLOSURE BELOW HYDRAULIC TANK FILLER NECK)	
	167-7270	2	FILM-INSTRUCTION (NO STEP)	
			(ON TOP OF BOTH ANGLE CYLINDERS)	
	291-4261	1	FILM-INSTRUCTION (DUAL BATTERY, READ OMM)	
			(ON INSIDE OF REAR RH SIDE ENCLOSURE DOOR NEAR DOOR HINGE)	
	291-1094	1	FILM-INSTRUCTION (SERVICE POINTS)	
			(ON INSIDE OF REAR LH SIDE ENCLOSURE DOOR)	
	219-0305	1	FILM-WARNING (NO WELD, NO DRILL, READ OMM)	
			(ON LH SIDE REAR ROPS "C" POST)	
	224-8946	1	FILM-WARNING (NO ETHER SPRAY/AIR INTK, INTL)	
			(ON AIR CLEANER BODY NEAR AIR INLET)	
	225-0312	1	FILM-WARNING (JUMP START, READ OMM)	
			(ON INSIDE OF REAR RH SIDE ENCLOSURE DOOR NEAR DOOR HINGE)	
	227-7391	1	FILM-WARNING (SEAT BELT, INTERNATIONAL)	
			(ON THE REAR SURFACE OF THE LH SIDE ROPS "B" POST ABOVE THE JOYSTICK CONTROL FILM)	
	228-2616	1	FILM-WARNING (UNIVERSAL, READ OMM, INTL)	
			(ON REAR SURFACE OF RH SIDE ROPS "B" POST ABOVE JOYSTICK CONTROL FILM)	
	259-4402	1	FILM-WARNING (HOT FLUID UNDER PRESSURE)	
			(ON SHUNT BOTTLE CAP)	
	262-7082	1	FILM-WARNING (ROPS, FOPS, READ OMM)	
			(ON LH SIDE REAR ROPS "C" POST)	

Y-SEPARATE ILLUSTRATION

<END>

SERVICE EQUIPMENT AND SUPPLIES

286-5020 PLATE & FILM GP

S/N: WWW1-UP; YYY1-UP

AN ATTACHMENT

SMCS-7557, 7563 **i03607540**

NOTE	PART NUMBER	QTY	PART NAME 1 2 3 4 5 6 (PRODUCT LEVEL)	SEE PAGE
Y	*6V-1971*	1	LITERATURE GP	537
			(IN POCKET ON BACK OF SEAT)	
Y	*260-9502*	1	LOCK GP-VANDALISM	663
	239-6989	1	PLATE-SERIAL NUMBER (MACHINE) (PRODUCT IDENTIFICATION)	
			(ON OUTSIDE OF LH PLATE OF FRAME NEAR REAR OF MACHINE)	
	239-6987	1	PLATE-SERIAL NUMBER (MACHINE) (CASE, FRAME)	
			(ON OUTSIDE OF LH PLATE OF FRAME NEAR REAR OF MACHINE)	
	291-4256	4	PLATE-WARNING (HIGH PRESS CYLINDER, READ OMM)	
			(ON TRACK ADJUST COVER PLATES)	
	287-2016	1	FILM-IDENTIFICATION (TEST PORT, READ OMM)	
			(ON THE TEST PORT PLATE NEAR THE HYDROSTATIC PUMPS)	
	169-2876	1	FILM-IDENTIFICATION (POWER RECEPTACLE, 12-VOLT)	
			(ON INSIDE OF REAR RH SIDE ENCLOSURE DOOR NEAR DOOR HINGE)	
	286-8141	1	FILM-IDENTIFICATION (COMPACT INSTRUMENT CLUSTER)	
			(ON INSIDE OF GLOVEBOX DOOR)	
	334-4603	1	FILM-INFORMATION (HYDO ADVANCED 10)	
			(ON THE REAR ENCLOSURE BELOW HYDRAULIC TANK FILLER NECK)	
	1P-2807	4	FILM-INFORMATION (LIFT EYE LOCATION)	
			(2-ON TRACK ROLLER FRAME, BETWEEN FRONT IDLER & FRONT ROLLER)	
			(2-ON TRACK ROLLER FRAME, BETWEEN REAR SPROCKET & LAST ROLLER)	
	7X-7644	5	FILM-INFORMATION (TIE-DOWN)	
			(2-ON TRACK ROLLER FRAME, BETWEEN FRONT IDLER & FRONT ROLLER)	
			(2-ON TRACK ROLLER FRAME, BETWEEN REAR SPROCKET & LAST ROLLER)	
			(1 - ABOVE RETRIEVAL HITCH)	
	134-7258	1	FILM-INFORMATION (EXTENDED LIFE COOLANT,READ OMM)	
			(ON UNDERSIDE OF RADIATOR FILL DOOR)	
	167-7270	2	FILM-INSTRUCTION (NO STEP)	
			(ON TOP OF BOTH ANGLE CYLINDERS)	
	291-4261	1	FILM-INSTRUCTION (DUAL BATTERY, READ OMM)	
			(ON INSIDE OF REAR RH SIDE ENCLOSURE DOOR NEAR DOOR HINGE)	
	291-1094	1	FILM-INSTRUCTION (SERVICE POINTS)	
			(ON INSIDE OF REAR LH SIDE ENCLOSURE DOOR)	
	190-5386	2	FILM-REFLECTOR (ROUND RED REFLECTIVE)	
			(ON GUSSETS NEXT TO REAR ROPS POSTS ON OROPS OR ON LOWER CORNERS OF REAR WINDOW ON EROPS OR ON LOWER CORNERS OF REAR	
			SCREEN IF INSTALLED)	
	219-0305	1	FILM-WARNING (NO WELD, NO DRILL, READ OMM)	
			(ON LH SIDE REAR ROPS "C" POST)	
	224-8946	1	FILM-WARNING (NO ETHER SPRAY/AIR INTK, INTL)	
			(ON AIR CLEANER BODY NEAR AIR INLET)	
	225-0312	1	FILM-WARNING (JUMP START, READ OMM)	

286-5020 **PLATE & FILM GP** *(contd.)* **i03607540**

NOTE	PART NUMBER	QTY	PART NAME 1 2 3 4 5 6 (PRODUCT LEVEL)	SEE PAGE
			(ON INSIDE OF REAR RH SIDE ENCLOSURE DOOR NEAR DOOR HINGE)	
	227-7391	1	FILM-WARNING (SEAT BELT, INTERNATIONAL)	
			(ON THE REAR SURFACE OF THE LH SIDE ROPS "B" POST ABOVE THE JOYSTICK CONTROL FILM)	
	228-2616	1	FILM-WARNING (UNIVERSAL, READ OMM, INTL)	
			(ON REAR SURFACE OF RH SIDE ROPS "B" POST ABOVE JOYSTICK CONTROL FILM)	
	259-4402	1	FILM-WARNING (HOT FLUID UNDER PRESSURE)	
			(ON SHUNT BOTTLE CAP)	
	262-7082	1	FILM-WARNING (ROPS, FOPS, READ OMM)	
			(ON LH SIDE REAR ROPS "C" POST)	
Y-SEPARATE ILLUSTRATION				

<END>

288-3628 PLATE & FILM GP

S/N: WWW1-UP; YYY1-UP

AN ATTACHMENT

SMCS-7557, 7563 **i03586785**

NOTE	PART NUMBER	QTY	PART NAME 1 2 3 4 5 6 (PRODUCT LEVEL)	SEE PAGE
Y	*6V-1971*	1	LITERATURE GP	537
			(IN POCKET ON BACK OF SEAT)	
	239-6987	1	PLATE-SERIAL NUMBER (MACHINE) (CASE, FRAME)	
			(ON OUTSIDE OF LH PLATE OF FRAME NEAR REAR OF MACHINE)	
	239-6989	1	PLATE-SERIAL NUMBER (MACHINE) (PRODUCT IDENTIFICATION)	
			(ON OUTSIDE OF LH PLATE OF FRAME NEAR REAR OF MACHINE)	
	173-5701	4	PLATE-WARNING (READ OMM)	
			(ON TRACK ADJUST COVER PLATES; FASTEN TO COVER PLATE WITH RIVETS IN COVER GP; MOUNTED AFTER PAINTING)	
	169-2876	1	FILM-IDENTIFICATION (POWER RECEPTACLE, 12-VOLT)	
			(ON INSIDE OF REAR RH SIDE ENCLOSURE DOOR NEAR DOOR HINGE)	
	286-8141	1	FILM-IDENTIFICATION (COMPACT INSTRUMENT CLUSTER)	
			(ON INSIDE OF GLOVEBOX DOOR)	
	287-2016	1	FILM-IDENTIFICATION (TEST PORT, READ OMM)	
			(ON TEST PORT PLATE NEAR HYSTAT PUMPS)	
	334-4603	1	FILM-INFORMATION (HYDO ADVANCED 10)	
			(ON REAR ENCLOSURE BELOW HYDRAULIC TANK FILLER NECK)	
	1P-2807	4	FILM-INFORMATION (LIFT EYE LOCATION)	
			(2-ON TRACK ROLLER FRAME, BETWEEN FRONT IDLER & FRONT ROLLER)	
			(2-ON TRACK ROLLER FRAME, BETWEEN REAR SPROCKET & LAST ROLLER)	
	7X-7644	5	FILM-INFORMATION (TIE-DOWN)	
			(2-ON TRACK ROLLER FRAME, BETWEEN FRONT IDLER & FRONT ROLLER)	
			(2-ON TRACK ROLLER FRAME, BETWEEN REAR SPROCKET & LAST ROLLER)	
			(1-ABOVE RETRIEVAL HITCH)	

288-3628 **PLATE & FILM GP** *(contd.)* **i03586785**

NOTE	PART NUMBER	QTY	PART NAME 1 2 3 4 5 6 (PRODUCT LEVEL)	SEE PAGE
	134-7258	1	FILM-INFORMATION (EXTENDED LIFE COOLANT,READ OMM)	
			(ON UNDERSIDE OF RADIATOR FILL DOOR)	
	291-9334	1	FILM-INSTRUCTION (DIESEL FUEL)	
			(ON REAR ENCLOSURE BELOW FUEL TANK FILLER NECK)	
	291-4261	1	FILM-INSTRUCTION (DUAL BATTERY, READ OMM)	
			(ON INSIDE OF REAR RH SIDE ENCLOSURE DOOR NEAR DOOR HINGE)	
	291-1094	1	FILM-INSTRUCTION (SERVICE POINTS)	
			(ON INSIDE OF REAR LH SIDE ENCLOSURE DOOR)	
	219-3133	1	FILM-NOTICE (REFRIGERANT)	
			(ON LHS REAR ROPS "C" POST)	
	160-6817	1	FILM-WARNING (READ OMM)	
			(ON REAR SURFACE OF RH SIDE ROPS "B" POST ABOVE JOYSTICK CONTROL FILM)	
	160-6841	1	FILM-WARNING (BELT, STOP ROTATION)	
			(ON LH SIDE OF FAN SHROUD)	
	160-6842	2	FILM-WARNING (NO STEP)	
			(CENTERED ON TOP OF BOTH ANGLE CYLINDERS)	
	219-0305	1	FILM-WARNING (NO WELD, NO DRILL, READ OMM)	
			(ON LH SIDE REAR ROPS "C" POST)	
	224-8946	1	FILM-WARNING (NO ETHER SPRAY/AIR INTK, INTL)	
			(ON AIR CLEANER BODY NEAR AIR INLET)	
	227-7391	1	FILM-WARNING (SEAT BELT, INTERNATIONAL)	
			(ON REAR SURFACE OF LH SIDE ROPS "B" POST ABOVE JOYSTICK CONTROL FILM)	
	298-5074	1	FILM-WARNING (FIRE HAZARD, READ OMM)	
			(ON REAR SURFACE OF RH SIDE ROPS "B" POST ABOVE JOYSTICK CONTROL FILM)	
	262-7082	1	FILM-WARNING (ROPS, FOPS, READ OMM)	
			(ON LH SIDE REAR ROPS "C" POST)	
	225-0312	1	FILM-WARNING (JUMP START, READ OMM)	
			(ON INSIDE OF REAR RH SIDE ENCLOSURE DOOR NEAR DOOR HINGE)	
	160-6833	1	FILM-WARNING (SHOCK HAZARD, READ OMM)	
			(ON INSIDE OF REAR RH SIDE ENCLOSURE DOOR NEAR DOOR HINGE)	
	160-6869	1	FILM-WARNING (NO REPAIR)	
			(ON A/C ACCUMULATOR)	
	312-7461	1	FILM-WARNING (CRUSH HAZARD, STAY BACK)	
			(ON REAR SURFACE OF RHS ROPS "B" POST ABOVE JOYSTICK CONTROL FILM)	
	173-5700	1	FILM-WARNING (CRUSH HAZARD, READ OMM)	
			(ON REAR OF VEHICLE)	
	160-6836	1	FILM-WARNING (NO STEP)	
			(ON TOP OF RADIATOR GUARD)	
	259-4402	1	FILM-WARNING (HOT FLUID UNDER PRESSURE)	
			(ON SHUNT BOTTLE CAP)	

Y-SEPARATE ILLUSTRATION

<END>

288-3629 PLATE & FILM GP

S/N: YYY1-UP

AN ATTACHMENT

SMCS-7557, 7563 **i03607503**

NOTE	PART NUMBER	QTY	PART NAME 1 2 3 4 5 6 (PRODUCT LEVEL)	SEE PAGE
Y	*6V-1971*	1	LITERATURE GP	537

288-3629 **PLATE & FILM GP** *(contd.)* **i03607503**

NOTE	PART NUMBER	QTY	PART NAME 1 2 3 4 5 6 (PRODUCT LEVEL)	SEE PAGE
			(IN POCKET ON BACK OF SEAT)	
	239-6989	1	PLATE-SERIAL NUMBER (MACHINE) (PRODUCT IDENTIFICATION)	
			(ON OUTSIDE OF LH PLATE OF FRAME NEAR REAR OF MACHINE)	
	173-5701	4	PLATE-WARNING (READ OMM)	
			(ON TRACK ADJUST COVER PLATES)	
	169-2876	1	FILM-IDENTIFICATION (POWER RECEPTACLE, 12-VOLT)	
			(ON INSIDE OF REAR RHS ENCLOSURE DOOR NEAR DOOR HINGE)	
	286-8141	1	FILM-IDENTIFICATION (COMPACT INSTRUMENT CLUSTER)	
			(ON INSIDE OF GLOVEBOX DOOR)	
	287-2016	1	FILM-IDENTIFICATION (TEST PORT, READ OMM)	
			(ON THE TEST PORT PLATE NEAR THE HYSTAT PUMPS)	
	287-2017	1	FILM-IDENTIFICATION (TEST PORT, READ OMM)	
			(ON TEST PORT PLATE IN REAR RHS ENCLOSURE)	
	1P-2807	4	FILM-INFORMATION (LIFT EYE LOCATION)	
			(2-ON TRACK ROLLER FRAME, BETWEEN FRONT IDLER & FRONT ROLLER)	
			(2-ON TRACK ROLLER FRAME, BETWEEN REAR SPROCKET & LAST ROLLER)	
	7X-7644	5	FILM-INFORMATION (TIE-DOWN)	
			(2-ON TRACK ROLLER FRAME, BETWEEN FRONT IDLER & FRONT ROLLER)	
			(2-ON TRACK ROLLER FRAME, BETWEEN REAR SPROCKET & LAST ROLLER)	
			(1-ABOVE RETRIEVAL HITCH)	
	134-7258	1	FILM-INFORMATION (EXTENDED LIFE COOLANT,READ OMM)	
			(ON UNDERSIDE OF RADIATOR FILL DOOR)	
	158-7864	1	FILM-IDENTIFICATION (HYDRAULIC OIL)	
			(ON REAR ENCLOSURE BELOW HYDRAULIC TANK FILLER NECK)	
	291-4261	1	FILM-INSTRUCTION (DUAL BATTERY, READ OMM)	
			(ON INSIDE OF REAR RHS ENCLOSURE DOOR NEAR DOOR HINGE)	
	291-9334	1	FILM-INSTRUCTION (DIESEL FUEL)	
			(ON REAR ENCLOSURE BELOW FUEL TANK FILLER NECK)	
	291-1094	1	FILM-INSTRUCTION (SERVICE POINTS)	
			(ON INSIDE OF REAR LHS ENCLOSURE DOOR)	
	219-3133	1	FILM-NOTICE (REFRIGERANT)	
			(ON LHS REAR ROPS "C" POST)	
	160-6817	1	FILM-WARNING (READ OMM)	
			(ON REAR SURFACE OF RHS ROPS "B" POST ABOVE JOYSTICK CONTROL FILM)	
	160-6833	1	FILM-WARNING (SHOCK HAZARD, READ OMM)	
			(ON INSIDE OF REAR RHS ENCLOSURE DOOR NEAR DOOR HINGE)	
	160-6836	1	FILM-WARNING (NO STEP)	
			(ON TOP OF RADIATOR GUARD)	
	160-6841	2	FILM-WARNING (BELT, STOP ROTATION)	
			(ON BOTH SIDES OF FAN SHROUD)	
	160-6842	2	FILM-WARNING (NO STEP)	
			(CENTERED ON TOP OF BOTH ANGLE CYLINDERS)	
	160-6869	1	FILM-WARNING (NO REPAIR)	
			(ON A/C ACCUMULATOR)	

288-3629 **PLATE & FILM GP** *(contd.)* **i03607503**

NOTE	PART NUMBER	QTY	PART NAME 1 2 3 4 5 6 (PRODUCT LEVEL)	SEE PAGE
	173-5699	1	FILM-WARNING (READ OMM)	
			(ON TOP OF DASH)	
	173-5700	1	FILM-WARNING (CRUSH HAZARD, READ OMM)	
			(ON REAR OF VEHICLE)	
	219-0305	1	FILM-WARNING (NO WELD, NO DRILL, READ OMM)	
			(ON LHS REAR ROPS "C" POST)	
	224-8946	1	FILM-WARNING (NO ETHER SPRAY/AIR INTK, INTL)	
			(ON AIR CLEANER BODY NEAR AIR INLET)	
	225-0312	1	FILM-WARNING (JUMP START, READ OMM)	
			(ON INSIDE OF REAR RHS ENCLOSURE DOOR NEAR DOOR HINGE)	
	227-7391	1	FILM-WARNING (SEAT BELT, INTERNATIONAL)	
			(ON THE REAR SURFACE OF THE LHS ROPS "B" POST ABOVE THE JOYSTICK CONTROL FILM)	
	259-4402	1	FILM-WARNING (HOT FLUID UNDER PRESSURE)	
			(ON SHUNT BOTTLE CAP)	
	262-7082	1	FILM-WARNING (ROPS, FOPS, READ OMM)	
			(ON LHS REAR ROPS "C" POST)	
	298-5074	1	FILM-WARNING (FIRE HAZARD, READ OMM)	
			(ON REAR SURFACE OF RHS ROPS "B" POST ABOVE JOYSTICK CONTROL FILM)	
Y-SEPARATE ILLUSTRATION				

<END>

PART NUMBER INDEX

Part	Page
0	
0L-1351	380
0S-1603	26
0T-0489	559
1	
1B-8736	10
	15
1F-2771	640
1G-3176	291
1G-3410	303
1G-7407	254
1G-8878	253
	264
1H-3244	177
	212
1H-7339	397
	400
	401
	403
1H-8128	377
	383
	384
1H-9696	380
1J-4034	655
1L-4775	402
1L-5072	663
1L-5081	212
1L-9062	252
1M-1408	390
	391
1M-3097	377
	380
	383
	384
1M-4291	380
1M-6119	120
	124
	127
	131
1M-6120	120
	124
	127
	131
1M-7914	380
	638
1M-7918	380
1M-8735	380
1M-8736	380
1M-9011	250
1P-0810	120
	189
1P-2807	664
	665
	667
	668
	669
	671
1P-3702	642
1P-3703	255
	256
	257
1P-3934	655
1P-3935	655
1P-4278	73
	431
1S-0994	407
	411
1S-3743	640
1S-7251	121
	125
	128
	132
1S-7252	120
	121
	124
	125
	127
	128
	131
	132
1S-8947	380
1U-1257	657
1U-8846	250
1V-6688	192
	195
	198
1W-7117	579
	581
1Y-3818	419
	421
1Y-7574	658
2	
2A-2677	147
	149
2B-0858	20
	36
2B-0941	535
2B-2695	471
2D-0388	221
	226
	231
	235
2H-0435	271
	273
	277
	280
	407
	414
	443
	446
	448
2H-3786	655
2H-3922	186
2H-3931	398
	399
	402
2H-5549	457
2H-9247	284
2J-3506	636
2J-7761	663
2K-4973	583
2K-9111	551
	560
	564
	567
2L-8052	168
	171
	192
	194
	197
2L-8066	198
	207
2L-8069	191
	195
	198
	201
	205
	207
2L-8079	191
	192
	194
	195
	197
	198
	201
	205
	207
	240
	243
2M-2858	377
	380
	383
	384
2M-9780	264
	291
	414
	423
	425
	427
	641
	658
2P-0347	380
2P-1279	417
	642
2S-3440	60
2S-4078	264
	265
	267
	269
	275
	353
	419
	421
	619
	642
2S-5926	353
	354
2V-8259	165
2W-1145	285
2Y-5429	165
2Y-5829	570
3	
3B-4501	469
3B-4508	166
3B-4512	166
3B-4630	657
3B-4641	649
3B-8489	397
	398
	399
	400
	401
	402
	403
	407
	411
	457
	620
	654
	655
3B-8822	407
	411
3C-6969	549
3D-2824	58
	250
	258
	260
	262
	264
	265
	267
	269
	275
	419
	421
	619
	641
	645
3E-2345	264
3E-3377	12
3E-3805	330
3E-3892	163
	500
3E-4091	433
3E-4313	163
3E-4319	252
3E-4321	535
3E-4333	551
	560
	564
	567
3E-4353	579
	581
3E-4356	252
	287
3E-4898	544
3E-5464	468
3E-6600	151
	192
	195
	198
	221
	226
	231
	235
	330
	336
	339
3E-6909	532
3E-7443	267

► **PRIMARY REFERENCE**

PART NUMBER INDEX

Part	Page
	269
	275
3E-8020	210
	538
3E-8320	120
	124
	127
	131
3E-9865	583
3F-5108	633
	634
	635
3F-9556	540
	541
	542
	543
3G-3259	353
	354
3G-6049	657
3H-3385	620
3H-8430	645
3J-1907	121
	125
	128
	132
	253
	264
	271
	273
	274
	277
	280
	291
	307
	308
	309
	311
	406
	407
	410
	411
	417
	419
	421
	443
	446
	448
	622
	625
	628
	637
	641
	642
	658
3J-5696	121
	125
	128
3J-7354	253
	254
	291
	295
	296
	298
	417
	433
	620
	622
	625
	628
	641
	658
3K-0360	5
	58
	258
	260
	262
	271
	273
	277
	280
	406
	407
	410
	414
	417
	419
	421
	443
	446
	448
	617
	641
3K-6638	380
3L-6513	120
	124
	127
	131
3P-9900	583
3R-9965	219
	224
	229
	234
	237
3S-2093	60
	120
	121
	124
	125
	127
	128
	131
	132
	183
	208
	212
	465
	468
	521
	587
	593
	622
	625
	628
3T-3884	391
3T-3889	391
3T-4696	201
	204
	207
	240
	243
3T-8601	390
	391
3V-9244	351
	352
3W-3321	549
3Y-9267	394

4

Part	Page
4B-2043	189
4B-4276	464
4B-4863	165
4B-8774	63
4B-9782	318
4D-0012	511
	513
	516
	518
4D-0298	402
4D-4431	457
4D-7794	583
4E-1384	511
	513
	516
	518
4F-2294	168
	171
4F-4879	575
	576
	577
	578
4H-7655	258
	260
	262
	419
	421
4H-8380	652
4I-4872	516
	518
4J-5267	658
4J-5268	116
4J-5477	271
	273
	277
	280
	417
	443
	446
	448
	641
	642
	658
4J-9224	398
	399
	402
4K-0367	633
	634
	635
4K-9429	546
4L-6454	583
	618
	658
4L-9337	638
	655
4M-6425	166
4M-7470	336
	339
4P-7428	210
	212
4P-7429	212
4P-7581	121
	125
	128
	132
	146
	192
	195
	198
	202
	205
	208
	210
	212
	240
	243
	469
	521
	642
4P-8134	190
	192
	195
	198
	202
	205
	208
	212
	226
	231
	240
	243
4S-5898	645
4S-8264	549
4S-9002	658
4T-5613	353
	354
4T-6232	633
4T-6780	397
	398
	399
	400
	401
	402
	403
4T-8054	398
	399
	402
4V-8256	464
	560
	564
	567
4V-8577	583

5

Part	Page
5A-3604	86
	87
	88
5C-2874	212

PART NUMBER INDEX

Part	Page	Part	Page	Part	Page	Part	Page
	527		612		128		244
	591		613		131		318
	592		616		132		327
5C-2890	163	5D-0718	258	5P-0767	535		336
	165		260	5P-0801	208		339
	169		262	5P-1076	114		417
	172		265		313	5P-4423	583
	177	5D-0998	549		317	5P-4571	191
	212	5D-1026	12		320		192
	318		60		322		194
	327		535		326		195
	336	5D-1911	663		327		197
	339	5E-8178	247		329		198
	480		248		330		201
	583	5F-1678	658		335		202
5C-7261	121	5G-0792	317		359		204
	125		335		364		205
	128	5G-2247	375		366		207
	132	5G-5069	654		367		208
	177	5G-6504	331		459		583
	210	5G-8871	327		511	5P-5623	120
	212	5H-8848	380		513		188
	240		397		516	5P-5630	183
	243		400		518	5P-5639	502
	327		401		619		504
	427		403		648		524
	459	5H-8853	271		651	5P-5673	480
	472		273	5P-1420	73	5P-5677	153
	473		277	5P-1442	73	5P-5923	198
	511		280		431	5P-5931	330
	513	5J-4771	636	5P-1476	120	5P-5969	502
	516	5K-5338	258		124	5P-6010	584
	518		260		127	5P-6442	114
	540		262		131	5P-6718	5
	541	5K-8451	73	5P-2321	219	5P-7462	271
	542		121		225		273
	543		125		230		277
	548		128		234		280
	564		132		237		407
	567	5K-9090	267	5P-3864	250		411
	628		269	5P-3928	532		443
5C-8312	163		275	5P-3929	532		446
5C-8811	593	5M-2894	380	5P-3948	532		448
5C-9553	192	5M-3062	655	5P-4106	532	5P-7463	271
	195	5M-6214	457	5P-4107	532		273
	198	5P-0372	557	5P-4115	192		277
	202	5P-0537	547		195		280
	205	5P-0597	465		198		407
	208	5P-0598	61		202		411
	226	5P-0599	465		205		443
	231		524		208		446
	353	5P-0743	431		500		448
	354	5P-0747	120		502	5P-7466	642
	431		121		504	5P-7467	642
	469		124		508	5P-7483	336
	500		125	5P-4116	53		339
	502		127		60	5P-7957	546
	504		128		61	5P-8112	642
	508		131		73	5P-8245	26
	521		132		121	5P-8247	378
	607	5P-0761	120		125		379
	608		121		128		633
	609		124		132		634
	610		125		188		635
	611		127		241	5P-8248	636

► **PRIMARY REFERENCE**

PART NUMBER INDEX

Part	Page
5P-8250	400
	401
5P-8309	58
5P-8439	212
5P-8441	511
	513
	516
	518
5P-8500	331
	537
	663
5P-8837	317
	335
	648
5P-9000	500
	508
5P-9085	73
5P-9209	549
5P-9297	411
	419
	421
	642
5P-9436	619
5S-6174	638
5S-7349	545
5T-7486	560
	564
	567
5V-0500	351
5V-1496	464
	560
	565
	567
	570
5W-1437	166
	395
6	
6C-3431	527
6C-3680	465
	524
6C-4016	591
	592
6C-9081	527
6D-0692	250
6D-1004	430
6D-1641	532
	642
6D-3479	121
	125
	128
	132
	642
6D-4246	532
6D-5257	219
	224
	229
	234
	237
6D-7889	86
	88
6E-1607	451
6E-3283	285
6E-4240	450
6E-4350	291
	295
	296
	298
6E-4402	254
	▶450
6E-4403	450
6E-4404	450
	452
6E-5063	284
6F-4718	285
6F-7045	186
6F-7418	570
6F-9974	579
	581
6H-3616	31
6H-5139	318
6H-7382	377
	383
	384
6H-9691	309
	311
6I-0217	11
	27
	43
	49
	52
	54
	56
	63
	74
	77
	80
6I-0254	43
	54
	56
6I-0260	32
	49
	52
	63
	74
	77
	80
6I-0292	32
6I-0363	32
6I-0364	62
6I-0423	29
6I-0455	89
	94
	99
	104
	109
6I-0501	23
6I-0563	62
	63
6I-0572	11
	49
	51
	89
	94
	99
	104
	109
6I-0593	6
	7
	8
	9
	63
	83
	84
	85
	118
6I-0594	185
6I-0645	18
	27
	49
	51
6I-0646	18
6I-0650	27
	118
	119
6I-0654	30
	63
6I-0817	63
6I-0846	12
	32
6I-0847	29
6I-1090	49
	52
6I-1418	240
	243
	628
6I-1497	32
6I-4200	63
6I-4374	43
6I-4709	74
	77
	80
6I-9573	390
6J-1972	397
	400
	401
	403
6J-2245	180
	181
6J-3134	309
	311
6J-5730	397
	403
6J-5731	397
	400
	401
	403
6J-5733	397
	400
	401
	403
6K-8178	532
6K-8179	417
6K-9860	380
6K-9861	380
6K-9880	▶380
	392
6P-2216	339
6P-5239	532
6S-3002	254
6S-3859	549
6S-3900	549
6S-9277	557
6T-0232	391
6T-0465	121
	124
	127
	131
6T-6505	468
6T-6506	468
6T-7695	527
6U-1989	620
6V-0330	250
6V-0400	255
	256
	257
6V-0491	587
6V-0683	271
	273
	277
	280
	407
	411
	443
	446
	448
6V-0852	264
	417
	637
	641
6V-0894	549
6V-0937	305
	306
6V-1250	308
6V-1359	212
	221
	226
	231
6V-1971	▶537
	664
	665
	666
	668
	669
	670
6V-2314	549
6V-2315	147
	149
6V-2495	114
	431
	532
6V-2496	469
	521
	522
	587
6V-3940	485
	486
6V-3965	264
	417
	637
	642

▶ **PRIMARY REFERENCE**

PART NUMBER INDEX

Part	Page	Part	Page	Part	Page	Part	Page
6V-3987	485		407		267		125
	486		410		269		128
6V-4298	163		411		275		132
6V-4316	305		417		419	6V-9169	423
	306		419		421		425
6V-4495	394		421		645		427
6V-4589	284		443	6V-8638	414	6V-9171	267
	433		446		423		269
6V-4791	380		448		425		275
6V-5049	284		619		427	6V-9189	155
6V-5050	284		641	6V-8639	414	6V-9325	549
6V-5201	301		642	6V-8640	264	6V-9508	642
	304		658	6V-8641	443	6V-9511	642
6V-5258	267	6V-8398	258		446	6V-9632	459
	269		260		448		468
	275		262	6V-8642	414		474
6V-5326	291		271		427		495
	454		273		641		511
6V-5586	451		277	6V-8647	658		513
6V-5817	532		280	6V-8713	264		518
	535		406		641		521
6V-5818	532		407	6V-8714	267		524
6V-6715	153		414		269	6V-9746	258
6V-6768	377		423		275		260
	383		425	6V-8721	423		262
	384		427		425		264
6V-7238	5		443	6V-8723	407		265
	58		446		410		267
6V-7357	350		448	6V-8724	271		269
6V-7636	350	6V-8624	414		273		275
	511	6V-8625	258		277		419
	513		260		280		421
	516		262		410		642
	518	6V-8626	414		443		645
6V-7687	549	6V-8627	271		446	6V-9829	658
	648		273		448	6V-9830	423
6V-7744	160		277		658		425
	161		280	6V-8774	443	6V-9832	267
	465		443		446		269
	524		446		448		275
	654		448	6V-8778	267	6V-9836	271
6V-7978	169		658		269		273
	172	6V-8628	417		275		277
6V-8076	417		641	6V-8782	258		280
6V-8185	350		658		260		642
6V-8187	168	6V-8632	414		262	6V-9843	271
	171		641	6V-8801	471		277
6V-8188	166	6V-8634	258	6V-8936	407		417
	549		260	6V-8969	547		443
6V-8189	471		262		560	6V-9844	427
6V-8200	285		406		565	6V-9850	421
6V-8351	307		410		568		619
6V-8352	450		417	6V-8978	283	6V-9852	414
	452		443	6V-8981	423	6V-9853	264
6V-8378	197		448		425	6V-9854	267
	207	6V-8636	271		427		269
6V-8397	73		273	6V-8994	619		275
	258		277	6V-9000	658	6V-9873	271
	260		280	6V-9007	264		273
	262		406		419		277
	271		419		421		280
	273		421	6V-9008	267		443
	277		641		269		446
	280		658		275		448
	406	6V-8637	264	6V-9028	121	6Y-0454	377

► **PRIMARY REFERENCE**

PART NUMBER INDEX

Part	Page
	383
	384
6Y-0473	375
	377
	383
	384
6Y-0859	250
6Y-1421	600
	601
	602
	603
	604
	605
	606
	607
	608
	609
	610
	611
	612
	613
	614
	615
	616
6Y-2270	371
	373
6Y-5838	600
	602
	607
	609
	▶633
6Y-5839	633
	634
	635
6Y-5840	633
	634
	635
6Y-6486	375
6Y-9261	375
6Y-9262	375
6Y-9263	375
6Y-9264	375

7

Part	Page
7B-1598	532
7B-3028	316
7C-0351	32
7C-1224	32
7C-1281	12
7C-4616	27
7D-1649	457
7D-7453	579
	581
7D-9708	579
	581
7E-3870	62
7F-2122	655
7F-8267	371
	372
	373
	377
	383
	384
7F-8607	532
7G-1060	212
	240
	243
7G-3832	255
	256
	257
7G-3833	255
	256
	257
7G-3834	255
	256
	257
7G-4332	377
	383
	384
7G-4824	459
	461
7G-8839	58
7H-1447	318
7H-3607	305
	306
7H-4543	649
7I-2272	163
7I-7439	213
7J-5639	398
	399
	400
	401
	402
7J-6285	250
	287
	289
	291
7J-9108	264
	407
	411
	414
	427
	619
	641
7J-9885	398
	399
	402
7J-9886	398
	399
	402
7J-9887	398
	399
	402
7K-1089	377
	383
	384
7K-1181	73
	120
	124
	127
	131
	146
	147
	149
	151
	153
	168
	171
	190
	191
	194
	197
	201
	204
	207
	210
	212
	219
	224
	229
	234
	237
	240
	243
	333
	431
	480
	498
	511
	513
	516
	518
	532
	587
	621
	624
	627
	641
7K-3176	532
7K-3304	532
7K-6365	400
	401
7K-9206	455
7L-0688	583
7M-8485	250
	258
	260
	262
	267
	269
	275
	354
	419
	421
	642
7M-8798	535
7N-0296	183
7N-0718	120
	124
	127
	131
	▶186
7N-0900	642
7N-9801	183
7P-2358	648
7R-3029	221
	226
	231
7T-0093	468
	480
7T-0094	468
	480
7T-1159	443
	446
	448
7T-4532	479
7T-6799	528
	530
7T-8894	191
	194
	197
7T-8895	191
	194
	197
	201
	204
	207
7T-9105	410
7W-1176	29
7W-2326	5
	44
7W-2632	89
	94
	99
	104
	109
7W-4540	185
7W-4634	23
7W-4642	29
7W-4669	36
7X-0288	617
7X-0289	471
7X-0550	366
	367
7X-0578	474
	476
	485
	486
7X-0579	212
7X-0584	355
	357
	368
	369
7X-0590	313
	320
	322
	326
7X-0599	557
7X-0603	341
	342
	346
7X-0818	155
7X-2459	271
	273
	277
	280
	443
	446
	448
7X-2465	544
7X-2533	153
	516
	518
	545
7X-2534	121
	125
	128

▶ **PRIMARY REFERENCE**

PART NUMBER INDEX

Part	Page	Part	Page	Part	Page	Part	Page
	132		132	7Y-3474	593		461
	498		212	7Y-5074	226	8E-7840	557
	622		258		231	8E-9812	390
	625		260	7Y-5219	451	8F-1434	197
	630		262	7Y-5458	187		207
7X-2535	147		265	7Y-5464	187		212
	149		313	7Y-7388	548	8F-9206	532
	423		318		560	8H-5303	186
	425		320		565	8H-5306	186
7X-2536	128		322		568	8I-6686	264
	132		324			8J-0553	400
	212		325				401
7X-2537	455		333	**8**		8J-0729	455
7X-2538	478		334				600
7X-2539	53		336	8B-9424	427		601
7X-2543	265		339	8C-3056	120		602
	272		355		124		603
	273		357		127		604
	278		407		131		605
	280		411		212		606
	331		414	8C-3076	87		607
	443		419	8C-3095	153		608
	446		421	8C-3210	151		609
	448		427	8C-3290	544		610
7X-2546	474		431	8C-3312	618		611
	476		459	8C-3445	46		612
7X-2548	169		461	8C-3446	253		613
	172		465	8C-3451	253		614
	622		487	8C-3681	60		615
	625		500	8C-3756	468		616
	628		502		480	8J-0928	455
7X-2549	331		504		521	8J-7008	654
7X-2550	648		508	8C-5607	147	8J-7415	398
7X-2552	555		524		149		399
	557		535		153		402
7X-2553	221		549		219	8K-1433	527
	226		558		224	8L-2779	87
	231		572		545	8L-5008	407
	351		573	8C-5608	147		411
	366		574		149	8L-8413	191
	367		642		153		192
	455	7X-7927	587		219		194
	478		593		224		197
	556	7X-7928	587		545		202
7X-2554	556		593	8C-6354	220		204
7X-2555	351	7X-7929	587		224		208
7X-2568	250		593		229		240
7X-2576	335	7X-7930	587	8C-6802	511		243
7X-2577	648		593		513		493
	651	7X-7945	417		516		494
7X-2619	163		641		518		495
	510	7X-7958	267	8C-6868	619		496
7X-2621	417		269	8C-6965	309		497
7X-6315	137		275		311		575
7X-7644	664	7X-9261	247	8C-7332	163		576
	665		248		500		577
	667	7Y-0223	250		504		578
	668	7Y-0225	250		508		583
	669	7Y-0468	464	8C-8451	221		627
	671		560		226	8M-2773	419
7X-7729	58		565	8C-8514	469		421
	62		568	8C-8585	570		443
	121	7Y-1433	250	8E-7078	636		446
	125	7Y-1434	250	8E-7079	636		448
	128	7Y-1558	250	8E-7791	459	8M-4704	394

► **PRIMARY REFERENCE**

PART NUMBER INDEX

Part	Page
8M-4986	620
8N-0869	120
	121
	124
	125
	127
	128
	131
	132
8P-6188	382
8P-9770	613
	615
8R-0275	591
	592
8R-1803	174
	175
8S-0948	411
8S-9378	58
8T-0072	250
8T-0076	271
	273
	277
	280
	446
8T-0154	525
	526
8T-0197	258
	260
	262
8T-0269	246
	440
	441
	442
	445
8T-0277	551
	560
	564
	567
8T-0285	510
8T-0288	433
8T-0315	419
	421
8T-0318	327
8T-0328	114
	121
	125
	128
	132
	197
	207
	212
	433
	549
8T-0338	308
8T-0357	378
	379
8T-0404	642
8T-0722	363
8T-1158	283
8T-1159	289
	290
8T-1683	419
	421
8T-1779	407
	411
8T-1885	407
8T-1886	407
8T-1887	124
	127
	131
	267
	269
	275
	419
	421
8T-1888	124
	127
	131
	267
	269
	275
	419
	421
8T-1895	427
8T-1896	427
8T-2173	431
8T-2353	622
	625
	628
8T-2395	289
8T-2659	165
8T-2922	309
	311
8T-3282	600
	601
	602
	603
	604
	605
	606
	607
	608
	609
	610
	611
	612
	613
	614
	615
	616
8T-3425	120
	125
	128
	132
	212
8T-3426	221
	226
	231
	330
8T-3490	331
	486
	555
8T-3597	327
	355
	357
	359
	364
	459
	511
	513
	518
	556
8T-3612	327
	502
8T-3613	265
8T-4121	58
	60
	61
	62
	73
	114
	121
	125
	128
	132
	146
	160
	161
	169
	172
	192
	195
	198
	202
	205
	208
	212
	221
	226
	231
	241
	244
	252
	258
	260
	262
	265
	267
	269
	272
	273
	275
	278
	280
	317
	327
	335
	363
	407
	411
	415
	417
	419
	421
	427
	430
	443
	446
	448
	469
	474
	476
	478
	480
	500
	502
	504
	508
	521
	528
	530
	532
	535
	570
	587
	642
	648
	651
8T-4122	221
	226
	231
	359
	364
	366
	367
	555
	557
8T-4123	250
8T-4132	250
8T-4133	62
	125
	128
	132
	241
	244
	355
	357
	487
	500
	502
	504
	508
	532
	549
	561
	564
	568
	642
8T-4136	60
	212
	258
	260
	262
	265
	407
	411
	415
	417
	419
	421
	427
	431
	448
	478
	528
	530
	533
	535
	642
	648
8T-4137	58

PART NUMBER INDEX

Part	Page	Part	Page	Part	Page	Part	Page
	61		317		313		205
	73		320		320		208
	121		322		322		212
	125		327		355		241
	128		330		357		244
	132		333		366		407
	212		334		367		411
	226		335		368		415
	231		355		369		419
	258		357	8T-4185	58		421
	260		359		226		431
	262		364		231		443
	265		366	8T-4186	121		446
	267		367		125		448
	269		459		128	8T-4192	212
	275		648		213		355
	313		651		221		357
	317	8T-4140	352		226		368
	318		385		231		369
	320	8T-4167	335		324		455
	322		649		325		648
	333	8T-4171	169		331		654
	334		172		336	8T-4193	368
	335		459		339		369
	336		461		407	8T-4194	250
	339		510		411		361
	407	8T-4172	642		500		362
	411	8T-4173	351		502		368
	415		359		504		369
	417		364		508		457
	419	8T-4174	38		535	8T-4195	62
	421		351		558		128
	431	8T-4175	351		572		132
	459	8T-4176	366		574		146
	461		367	8T-4189	58		155
	465	8T-4178	474		61		221
	469		476		158		226
	480	8T-4179	114		159		231
	521		121		160		265
	524		313		161		272
	532		320		183		273
	535		322		192		278
	587		330		202		281
	642		333		267		318
	651		334		269		327
	658	8T-4180	350		275		333
8T-4138	169	8T-4182	434		327		334
	172		435		336		336
	189		642		339		339
	192	8T-4183	255		341		355
	195		256		342		357
	198		257		346		407
	202		331		417		411
	205		351		465		443
	208		359		535		446
	331		364	8T-4191	121		448
	336		369		125		455
	339		511		128		465
	459		513		132		478
	480		516		169		573
	498		518		172		600
	625		642		192		601
	628	8T-4184	255		195		602
	630		256		198		603
8T-4139	313		257		202		604

► **PRIMARY REFERENCE**

PART NUMBER INDEX

Part	Page	Part	Page	Part	Page	Part	Page
	605		335		511		518
	606		336		513		593
	607		339		516	8T-5412	369
	608		459		518	8T-5413	355
	609		461		535		357
	610	8T-4223	121		548	8T-5878	317
	611		169		564		649
	612		172		567	8T-6466	642
	613		213		583	8T-6594	293
	614		252	8T-4244	252		294
	615		255		327	8T-6685	474
	616		256		642		476
	642		257		647		654
8T-4196	132		313	8T-4648	647	8T-6703	431
	213		320	8T-4896	471	8T-6725	73
	252		322		583	8T-6850	73
	313		333		617	8T-6868	58
	320		334		618		315
	322		355		620	8T-6876	406
	411		357		638	8T-6902	511
	415		368		655		513
	570		369		658		516
8T-4197	472		455	8T-4908	210		518
	473		500		221	8T-7000	393
8T-4198	532		508		226	8T-7329	642
8T-4199	213		622		231	8T-7338	287
8T-4200	53		625		235	8T-7547	158
	60		628		238		192
	73		642		427		318
	86		645		480		584
	87		647	8T-4910	58	8T-7566	547
	88		648		313		561
	121		654		320		565
	125	8T-4224	58		322		568
	188		121	8T-4956	313	8T-7934	272
	221		125		320		273
	226		128		322		278
	231		132		326		281
	235		158		329		434
	238		159		331		435
	267		160		355		443
	269		161		357		446
	275		177		368		448
	433		183	8T-4970	116	8T-7971	369
	642		192	8T-4971	213		549
8T-4205	168		202		511	8T-8736	220
	169		210		513		225
	171		213	8T-4983	265		230
	172		221		267		235
	177		226		269		237
	221		231		275	8T-8737	120
	226		235		641		121
	469		238	8T-4984	264		124
	480		267		431		125
	500		269	8T-5001	368		127
	502		275	8T-5005	331		128
	504		327		532		131
	508		427	8T-5041	315		132
	510		433	8T-5360	559		144
	521		455	8T-5372	318		147
	545		465		330		149
	561		472	8T-5389	265		151
	564		473	8T-5400	511		153
	568		478		513		165
8T-4222	317		480		516		168

PART NUMBER INDEX

Part	Page	Part	Page	Part	Page	Part	Page
	171	8T-9383	166	9R-2672	552		212
	178	8T-9388	174	9R-4024	591		219
	187		175		592		220
	191	8T-9402	431	9R-4692	406		224
	192	8T-9403	642	9R-9442	192		225
	194	8T-9597	396		194		226
	195	8T-9598	284		197		229
	197	8T-9655	240	9R-9925	431		230
	198		243	9S-4191	410		231
	201	8T-9850	468	9S-5282	471		234
	202	8W-8909	128	9S-6130	264		235
	204		132	9S-8002	254		237
	207	8X-5489	124		291		238
	208		127		295		240
	210		131		296		243
	219	8Y-6388	502		298		498
	220		504		620		622
	221			9S-8004	284		625
	224				291		628
	225	**9**			307	9W-0852	168
	226				308		171
	229	9B-0453	166		309		190
	230	9B-2289	383		311		191
	231		384	9S-8005	617		194
	234	9B-7237	620	9S-8006	284		195
	237	9D-3768	192		291		197
	238	9D-8508	593	9S-8008	250		198
	240	9F-1399	640		284		201
	243	9F-2247	247	9S-8010	353		204
	468		248		619		207
	480		371	9S-9334	250		212
	489		372		354		219
	490		373	9T-3726	291		220
	491	9F-3965	171	9T-3853	308		224
	493	9F-5644	186	9T-3928	291		225
	494	9F-5975	561		295		229
	495		565		296		230
	496		568		298		234
	497	9G-3110	390	9T-4367	308		237
	498		391	9T-5241	561		240
	539	9G-3186	189		565		243
	587	9G-3695	549		568		468
	621	9G-8585	375	9U-3430	410		511
	624	9G-8586	375	9U-7000	264		513
	625	9G-8592	390		267		516
	627		391		269		518
8T-8799	212	9H-6454	318		275		627
8T-8827	120	9J-1137	654		641	9W-1951	168
	124		▶657	9U-8263	527		171
	127	9J-4259	657	9V-4460	457	9W-2146	382
	131	9M-1974	485	9V-6589	641	9W-5224	382
8T-8902	271		486	9W-0607	155	9W-6174	380
	273	9M-5617	163		156	9W-9915	38
	277	9M-5732	557		157	9W-9952	38
	280	9M-6738	114	9W-0844	168	9W-9953	38
8T-8919	619	9M-7394	663		171	9X-1046	165
	645	9M-8406	532		191	9X-1054	144
8T-8985	419		535		194		168
	421	9M-9162	407		195		171
8T-9023	258		411		197		191
	260		415		198		195
	262	9N-0869	628		201		198
8T-9041	406	9R-0699	438		204		201
	410	9R-1004	427		205		204
8T-9371	584	9R-1005	427		207		207

▶ **PRIMARY REFERENCE**

PART NUMBER INDEX

Part	Page
	480
9X-1055	144
	191
	195
	198
	201
	205
	207
9X-1056	144
	168
	171
	191
	195
	198
	201
	205
9X-1386	212
9X-1813	120
	188
	549
9X-2032	468
	521
9X-2040	500
	502
	504
	508
	579
	581
9X-2041	474
	476
9X-2042	163
	172
	474
	476
	500
	502
	504
	508
	511
	513
	516
	518
	524
9X-2043	169
	474
	476
	485
	486
	579
	581
9X-2044	474
	476
9X-2045	459
	474
	476
	498
	500
	502
	504
	507
	508
	511
	513
	516
	518
	528
	530
	622
	625
	628
9X-2133	60
9X-2134	658
9X-2480	213
	545
9X-2488	535
9X-2857	302
9X-3401	121
	125
	128
	132
	147
	149
	168
	171
	191
	195
	198
	201
	204
	207
	210
	212
	219
	220
	224
	225
	229
	230
	234
	237
	240
	243
	498
	560
	564
	567
	621
	624
	625
	627
9X-3402	120
	124
	127
	131
	147
	149
	165
	191
	192
	194
	197
	202
	204
	208
	210
	219
	220
	221
	224
	225
	226
	229
	230
	231
	234
	235
	237
	240
	243
	468
	498
	511
	513
	516
	518
	539
	621
	624
	625
	627
	628
9X-3404	25
	120
	249
	632
9X-4244	156
	157
9X-4813	151
9X-6032	430
9X-6165	147
	149
	153
	459
	461
	500
	502
	504
	508
	545
9X-6269	38
	555
9X-6772	240
	243
9X-7345	192
	195
	198
	202
	205
	208
9X-7378	190
	479
9X-7380	532
9X-7381	532
9X-7382	532
9X-7383	532
9X-7384	532
9X-8250	532
9X-8256	116
	121
	125
	128
	132
	151
	163
	165
	169
	172
	189
	192
	195
	198
	202
	205
	208
	213
	226
	231
	318
	331
	336
	339
	350
	353
	354
	423
	425
	431
	459
	498
	510
	607
	608
	609
	610
	611
	612
	613
	616
	622
	625
	628
	630
9X-8257	38
	250
	293
	294
	455
	478
	556
9X-8267	511
	513
	516
	518
9X-8482	285
9X-8483	285
9Y-9381	63
	532
	532
0	
	532
004-1964	246
027-3873	371
	372
	373
031-0214	560
	564
	567
	570
031-0249	583
032-8047	63

► **PRIMARY REFERENCE**

PART NUMBER INDEX

Part	Page
032-8191	63
032-9090	15
032-9091	15
033-4818	221
	226
	231
033-6039	117
033-7687	26
033-8248	406
	410
035-8014	63
035-8017	89
	94
	99
	104
	109
035-8063	18
	46
035-8068	18
053-1578	619
067-6002	18
067-6006	18
067-6043	18
067-6179	27
067-6213	32
067-6264	89
	94
	99
	104
	109
067-6265	89
	94
	99
	104
	109
067-6873	15
067-6874	15
069-4269	58
081-3698	303
081-3801	254
084-4277	191
	194
	197
085-7539	309
	311
087-4772	291
091-0081	213
091-2436	191
	195
	198
	201
	205
	207
092-3635	271
	273
	277
	280
	443
	446
	448
094-0611	250
094-0616	250
094-1528	250
095-0658	247
	248
095-0736	114
	121
	125
	128
	132
095-0891	250
095-1277	250
095-1574	436
	438
095-1586	436
	438
095-1590	436
	438
096-4885	351
096-4900	284
096-5962	221
	226
	231
096-6166	469
	510
	521
	549
099-0169	250
	252
099-0822	309
	311
099-2374	440
	441
	442
	445

1

Part	Page
100-3751	27
	52
100-4336	406
	410
100-4461	45
100-4830	27
	63
	77
	89
	94
	99
	104
100-4841	18
	80
100-5805	151
100-6674	190
100-8451	118
	119
101-0003	583
101-2867	560
	564
	567
	570
101-2987	31
101-3617	29
101-3771	49
101-3895	27
	89
	94
	99
	104
	109
101-8296	532
102-1733	252
102-7886	532
102-8705	641
102-8801	121
	125
	128
	132
	147
	149
	151
	191
	192
	194
	195
	197
	198
	201
	204
	207
	212
	240
	243
	479
	480
	498
	583
	621
	624
	627
102-8802	120
	151
	153
	168
	171
	183
	188
	189
	190
	201
	204
	207
	212
	240
	243
	479
	480
	498
	583
	621
	624
	627
102-8803	240
	243
	549
102-8804	191
	195
	198
	201
	204
	207
	220
	224
	225
	229
	230
	468
	511
	513
	516
	518
	521
	528
	530
	549
102-8805	120
	124
	127
	131
	178
	187
	495
	587
	621
	624
	627
102-8806	153
	191
	192
	194
	195
	197
	198
	202
	204
	208
	220
	224
	225
	229
	230
	235
	237
	240
	243
	498
	621
	624
	627
102-9941	23
103-2135	63
103-2543	169
	172
103-6131	26
	560
	564
	567
	621
	624
	627
102-8804	191
	195
	198
	201
	204
	207
	220
	224
	225
	229
	230
	468
	511
	513
	516
	518
	521
	528
	530
	549
102-8805	120
	124
	127
	131
	178
	187
	495
	587
	621
	624
	627
102-8806	153
	191
	192
	194
	195
	197
	198
	202
	204
	208
	220
	224
	225
	229
	230
	235
	237
	240
	243
	498
	621
	624
	627
102-9941	23
103-2135	63
103-2543	169
	172
103-6131	26

► **PRIMARY REFERENCE**

PART NUMBER INDEX

Part	Page	Part	Page	Part	Page	Part	Page
104-1995	191	112-4629	291	119-3662	144		77
	195	112-4640	291		191		80
	198	112-4645	452		192		89
	201	112-4647	452		194		94
	205	112-6646	210		195		99
	207	113-0693	174		197		104
104-2091	165		175		198		109
	502	113-1504	43		201		216
	504	113-4419	300		205		217
105-4593	283	113-4630	12		220	124-8237	379
106-0107	▶187	113-5100	168		224		▶384
	528		171		229	124-8238	384
	530	113-6349	118		240	124-8240	379
106-0210	187		119		243		▶383
106-0699	291	113-8129	54		468	124-8241	383
106-8916	63		56		521	124-8248	377
	80	113-8216	250		627		383
107-2348	63	113-8291	168	119-5708	73		384
107-3117	307	113-8292	168		419	124-9636	168
107-4393	532	113-8490	168	119-5917	264		171
107-4394	532		171	120-4394	285	124-9637	168
107-4395	532	113-8491	171		295		171
107-4396	532	113-8492	171		296	124-9904	307
107-4397	532	113-9769	250		298	124-9905	307
107-4399	532	113-9807	560	121-0883	29	124-9906	307
107-4749	121		564	121-2761	524	124-9908	307
	125		567	122-1951	641	124-9913	285
	128	114-2579	11		658	124-9914	285
	132	114-3469	479	122-4395	560	124-9932	300
107-9388	271	114-4363	29		564	124-9933	300
	273	114-9284	327		567	124-9934	300
	277	115-1162	11	122-9363	451	124-9935	300
	280	115-1615	168	122-9718	291	124-9936	300
108-3565	303		171	123-0380	327	124-9937	300
108-3819	291		192	123-2016	285	124-9940	285
108-4311	583		195	123-2017	254	125-7874	120
108-5471	350		198	123-2899	47		121
	511		202		48		124
	513		205	123-3827	313		125
	516		208		320		127
	518		212		322		128
109-0885	371		480	123-4038	63		131
	373	115-2422	632	123-4363	436		132
109-2013	221	116-4160	168	123-4410	638		144
	226		171	123-5782	285		147
	231	116-4161	168	123-5787	285		149
110-0885	502		171	123-5800	285		151
110-6109	528	116-6680	212	123-7559	254		168
	530	116-7471	168	123-7560	254		171
110-7887	528		171	123-7575	254		190
	530	117-1385	86	123-7576	254		191
111-0859	24		87	123-7583	309		192
111-3780	549		88	123-7597	289		194
111-3781	549	117-4491	560		290		195
111-4015	468	117-6952	221	123-7598	289		197
	521		226	123-7602	289		198
111-4837	417		231	123-7615	587		201
111-7899	39	117-7236	291	123-9769	308		202
	528	117-7278	395	124-0174	121		204
	530	117-7296	289		125		205
	621		290	124-3536	34		207
	624	117-7322	395	124-3548	168		208
	627	117-8131	544	124-3815	27		210
	630	119-1616	638		32		219
	631	119-2195	638		74		220

▶ **PRIMARY REFERENCE**

PART NUMBER INDEX

Part	Page	Part	Page	Part	Page	Part	Page
	221		149	128-5531	120	133-6934	226
	224		468		124		231
	225		480		127	133-8714	468
	226	126-1767	191		131	133-8739	284
	229		195	128-8423	188	133-9469	63
	230		198	128-8981	285	134-0404	253
	231		201	129-3181	307		264
	234		204	129-7286	652		637
	235		207	129-7301	638	134-2540	144
	237		210	129-7307	652		192
	238		212	129-7321	394		194
	240		225	130-0165	146		197
	243		230	130-5300	210		202
	498		237		224		204
	622		240		229		208
	625		243		240		219
	628		498		243		220
125-7875	120		621	130-7806	295		224
	121		625		304		225
	124	126-1774	240	130-9888	43		229
	125		243	131-3093	468		230
	127		627		521		234
	128	126-5632	396	131-3540	511		237
	131	126-5633	396		513	134-3518	468
	132	126-5637	303		516		521
	144	126-5638	396		518	134-3856	36
	168	126-5639	396	131-5483	273	134-4126	137
	171	126-5640	303	131-7239	377	134-7258	664
	190	126-5641	396		383		666
	191	126-5642	396		384		667
	192	126-5643	303	132-0338	464		668
	194	126-5676	291		560		670
	195	126-5677	291		564		671
	197	126-5678	291		567	136-1543	546
	198	126-5709	395	132-1951	383	136-1955	114
	201	126-7574	137		384	136-3191	593
	204	126-8472	480	132-3056	433	137-2170	591
	205	126-8921	250	132-4763	657		592
	207	126-8928	544	132-5789	147	138-1645	549
	220	127-2170	240		149	138-2456	649
	221		243		192	138-4181	285
	224		474		195	138-4182	285
	225		476		198	138-8381	430
	226		502		202	138-8454	482
	229		504		205		484
	230		548		208		527
	231		564		210	139-1398	267
	235		567		221		269
	237	127-4195	396		226		275
	240	127-4196	396		231		642
	243	127-4197	396		235	140-4722	527
	468	127-4198	396		238	140-4765	114
	587	127-4471	61		240	140-4829	58
125-8175	511	127-8165	63		243	140-6836	635
	513	128-1599	185	132-7551	641	140-7480	545
	516	128-2136	500	132-8487	219	140-8783	118
	518		502		224		119
126-1403	304		504		229	141-0305	284
126-1477	254		508	133-1011	27	141-8061	147
	289	128-4168	168	133-3234	511		149
	290		171		513		198
126-1638	295	128-4249	168		516		207
	296		171		518		220
	298		240	133-3413	146		225
126-1766	147		243	133-6517	146		226

► **PRIMARY REFERENCE**

PART NUMBER INDEX

Part	Page	Part	Page	Part	Page	Part	Page
	230		230		280		605
	231	147-1445	240		443		606
	235		243		446		607
	237	147-1446	240		448		608
141-8584	89		243		658		609
	94	147-5553	63	148-8369	417		610
	99	148-2714	549		641		611
	104	148-3533	372		658		612
	109	148-8315	414	148-8374	407		613
142-9425	302		427		410		614
142-9426	302		641	148-8375	423		615
142-9427	304	148-8316	658		425		616
142-9430	304	148-8317	267		427	150-0352	600
142-9431	304		269	148-8378	271		601
142-9432	304		275		273		602
142-9433	304	148-8318	258		277		603
142-9434	302		260		280		604
142-9435	302		262		410		605
142-9436	295		406		443		606
	304		410		446		607
142-9437	302		417		448		608
142-9438	302		443		658		609
142-9439	301		448	148-8382	641		610
	304	148-8322	264	148-8383	419		611
142-9440	295	148-8325	443		421		612
	304		446	148-8385	658		613
143-1288	560		448	148-8390	414		614
	564	148-8327	264	148-8392	264		615
	567		267	148-8393	414		616
	570		269	148-8406	354	150-0353	455
143-6020	165		275	148-8407	410	150-4037	427
144-0195	511		419	148-8424	271	150-4043	271
	513		421		273		273
	516	148-8336	406		277		277
	518		419		280		280
	587		421	148-8428	258		443
	593		641		260		446
144-0331	489		658		262		448
	490	148-8340	414	148-8433	271	150-4044	407
	491	148-8341	264		273		411
	495		641		277	150-5123	457
	496	148-8342	414		280	150-6215	457
	497		641		642	151-2110	114
144-1636	187	148-8345	414	148-8434	417		120
	480		423	148-8439	443		124
144-6691	637		425		446		127
145-0326	583		427		448		131
145-0909	289	148-8347	264	148-8443	271	151-5650	468
	290		419		277		521
145-0961	289		421		280	151-9274	488
145-1824	304	148-8352	267		443		492
145-2237	271		269		446	152-6730	32
	273		275		448	152-8368	658
	277	148-8357	267	148-8450	267	152-8369	658
	280		269		269	152-9105	658
	641		275		275	153-6242	258
145-3405	549	148-8358	414	148-9364	423		260
145-5181	366	148-8364	258		425		262
	367		260	149-5461	617	153-6244	264
145-9087	591		262	149-5733	657	153-6932	468
	592	148-8365	406	150-0351	600		522
146-6433	593	148-8367	421		601	154-2302	132
147-1076	327	148-8368	271		602	154-4891	642
147-1444	221		273		603	154-7951	502
	226		277		604		504

PART NUMBER INDEX

Part	Page
154-7986	▶155
	160
	161
154-9445	291
	▶451
155-0576	89
	627
155-2255	120
	124
	127
	131
	147
	149
	151
	191
	195
	198
	201
	204
	207
	219
	220
	221
	224
	225
	226
	229
	230
	231
	234
	237
	238
	240
	243
155-2256	191
	195
	198
	201
	204
	207
	219
	221
	234
155-2257	120
	124
	127
	131
	225
	230
	237
155-2260	179
	192
	194
	195
	197
	198
	201
	204
	207
	219
	220
	224
	225
	229
	230
	234
	237
	238
	240
	243
155-2265	144
	153
	191
	192
	194
	195
	197
	198
	201
	204
	207
	219
	220
	224
	225
	229
	230
	234
	237
	240
	243
	480
	498
	621
	624
	627
155-2270	120
	121
	124
	125
	127
	128
	131
	132
	147
	149
	153
	168
	171
	190
	191
	194
	195
	197
	198
	201
	204
	207
	212
	240
	243
	480
	498
	621
	624
	627
155-2271	120
	124
	127
	131
	192
	194
155-2272	207
155-2274	120
	124
	127
	131
	195
	198
	201
	204
	207
	210
	498
	621
	624
	627
155-2276	179
155-5354	155
155-5355	155
155-7327	271
	273
	277
	280
156-6175	151
	498
	621
	624
	630
157-7338	634
158-0851	267
	269
	275
158-7864	331
	666
	667
	671
159-0186	61
159-5255	5
159-5902	277
	280
159-8246	393
159-8247	393
159-9322	226
	230
	240
	243
	627
159-9854	301
	304
160-0162	89
	94
	99
	104
	109
160-6631	372
160-6817	670
	671
160-6833	670
	671
160-6836	670
	671
160-6841	670
	671
160-6842	670
	671
160-6869	670
	671
160-7689	627
160-7690	147
	149
	240
	243
160-7816	375
160-8744	114
160-8754	527
161-2398	579
	581
161-6154	291
161-6417	655
161-6422	620
161-6424	638
161-6425	638
161-6427	638
161-6573	262
161-8041	638
161-9289	575
161-9570	648
161-9820	119
162-0175	620
162-0178	638
162-0179	638
162-0180	620
162-1565	12
162-1750	277
162-2766	620
162-2772	638
163-1135	583
163-3917	271
	273
	277
	280
	443
	446
	448
163-4520	419
164-0850	500
	502
	504
	508
164-1234	583
164-4883	547
	560
	564
	567
164-5567	264
164-5581	642
164-5605	271
	273
	277
	280

▶ **PRIMARY REFERENCE**

PART NUMBER INDEX

Part	Page
	446
164-5616	264
164-6858	267
	269
	275
164-7556	156
	157
164-8474	500
	502
	504
	508
164-9425	212
164-9640	271
	273
	277
	280
	641
165-0311	40
	498
	528
	530
	621
	624
	627
	630
165-4934	642
167-2186	397
	398
	399
	400
	401
	402
	403
167-2294	397
	398
	399
	400
	401
	402
	403
167-3692	240
	243
167-3693	144
167-6805	291
	295
	296
	298
167-7270	664
	666
	667
	668
167-7713	454
167-7715	450
	452
167-8610	545
167-8712	219
	224
	229
	234
	237
167-8987	219
	226
	231
	234
	238
168-4999	190
169-2876	664
	665
	667
	668
	669
	671
169-6972	443
	446
169-7380	583
170-0950	189
170-5715	307
170-6631	648
	654
171-1230	560
	564
	567
	570
171-2039	395
171-2212	168
	171
171-5349	212
172-0307	620
172-2384	350
172-2385	350
172-2437	638
172-4325	63
172-4863	168
	171
173-2052	546
173-3083	567
173-3175	168
	171
173-3323	641
173-5699	672
173-5700	670
	672
173-5701	669
	671
173-5787	575
	576
	577
	578
173-7035	575
	576
	577
	578
174-5907	532
174-8131	163
175-2539	480
175-4614	116
176-1477	144
176-1522	144
176-3900	▶463
	532
177-7122	291
	▶452
177-7747	452
177-9645	480
177-9648	468
	480
	521
177-9651	468
177-9652	468
177-9653	468
	480
	521
177-9656	191
	194
	195
	197
	198
	204
	207
178-2593	459
178-7539	528
	530
178-7907	546
178-9570	478
	▶479
179-2897	605
	612
	615
	616
	▶634
179-5755	600
	601
	602
	603
	604
	605
	606
	607
	608
	609
	610
	611
	612
	613
	614
	615
	616
179-8232	457
180-3153	459
180-3154	459
180-5305	221
180-5927	465
	▶480
180-6615	528
	530
180-9339	12
	549
180-9340	120
	124
	127
	131
	179
	195
	198
	210
	225
	226
	230
	231
	237
	238
	240
	243
	498
	622
	625
	628
183-1176	455
183-1178	455
183-4584	120
	124
	▶180
183-5297	600
	601
	602
	603
	604
	605
	606
	607
	608
	609
	610
	611
	612
	613
	614
	615
	616
183-8410	450
184-1137	406
	410
184-1138	406
	410
185-0884	18
185-4303	480
185-7149	32
186-3735	120
	121
	124
	125
	127
	128
	131
	132
	147
	149
	151
	153
	168
	171
	178
	183
	188
	189
	191
	192
	194
	197
	198
	201
	204
	207
	219
	220
	221
	224
	225
	229
	230

▶ **PRIMARY REFERENCE**

PART NUMBER INDEX

Part	Page	Part	Page	Part	Page	Part	Page
	234	186-6529	654	192-7848	584	**2**	
	237	187-0413	327	193-1546	400		
	240	187-0555	32		401	200-1311	658
	243	187-3547	417	193-3973	417	200-1729	▶284
	468	187-5086	431	194-0627	427		645
	489	187-8001	291	194-0628	427	200-6345	641
	490		295	194-4864	433	200-8790	570
	491		296	194-5171	593	201-1024	240
	493		298	194-5390	63		243
	494	187-9008	417	194-8031	510	201-2744	▶637
	495	188-3538	648	195-2136	31		641
	496	188-7568	246	195-2221	31	201-5382	301
	497	188-7569	246	196-1803	264		304
	528	188-7789	246	196-4253	309	202-2284	530
	530	188-7790	246		311	202-2342	450
	540	188-7791	246	196-4254	309	202-6611	156
	541	188-8846	482		311	202-6614	157
	542		484	196-7007	120	202-7704	291
	543		502		124	203-1926	258
	549	189-3158	190		127		260
	583		480		131		262
	587	189-3396	436	197-7259	168	203-6608	619
	627		438		171	203-6609	619
186-3736	120	190-5386	39	197-7261	240	203-6610	655
	121		664		243	203-6612	655
	124		665	197-7611	264	203-6614	655
	125		667	198-0918	651	203-6615	655
	127		668	198-4767	315	203-6618	394
	128	190-7614	210	198-4777	58	203-6620	394
	131		219		331	203-6621	394
	132		221		336	203-6623	394
	147		234		339	203-6626	394
	149	190-7615	224	198-4778	331	203-6629	652
	151		226		361	203-6630	652
	153		229		362	203-6631	618
	168		231	198-4780	368	203-6632	640
	171		237		369	203-6633	640
	190		240		385	203-6637	655
	191		243	198-4781	455	203-6639	638
	192	190-8478	528	198-4782	317	203-6640	620
	194		530		648	203-6641	655
	195	190-8609	353		651	203-7703	575
	197		354	198-5389	153		576
	198	191-0286	318	198-9706	163		577
	201	191-3040	591		500		578
	202		592		502	204-1452	303
	204	191-3539	284		504	204-2281	132
	205	191-3587	549		508		212
	207	191-6159	397	199-1088	285	204-8000	212
	208		400		▶300	205-0826	153
	219		401	199-6928	38	205-3692	658
	220		403	199-7698	480	205-4132	419
	221	191-7503	212	199-9252	89		421
	224	191-8920	121		94	205-8257	153
	225		125		99	206-0452	641
	229		128		104	206-5162	153
	230		132		109	206-5203	153
	234		168	199-9267	89	206-5823	540
	240		172		94		541
	243	192-4744	382		99	207-2554	53
	498	192-7795	583		104	208-5546	▶619
	622	192-7799	584		109		660
	625	192-7805	583	199-9751	20	208-5547	▶655
	628	192-7810	583		35		660
186-5107	583	192-7820	583			208-5549	▶645

PART NUMBER INDEX

Part	Page
	660
208-5551	▶638
	660
208-5552	▶620
	660
208-5553	▶649
	660
209-3565	309
	311
209-4481	587
209-4482	587
209-8217	468
209-9219	17
210-8754	191
	194
	197
211-0052	168
	171
	240
	243
211-0388	655
211-0394	655
211-0395	655
211-0396	655
211-0397	655
211-1856	620
211-5358	183
	583
	584
211-5941	313
	320
	322
	326
211-8169	618
	▶652
211-8171	618
	▶640
211-8215	394
211-8216	394
211-8217	394
211-8753	618
211-8754	618
211-9023	652
211-9024	652
212-4219	591
	592
212-4757	649
212-6023	658
212-6603	283
212-6989	658
212-7032	291
	▶393
212-7035	291
	▶454
212-7037	291
	▶395
212-7044	303
212-9363	▶253
	264
213-0139	191
	194
	197
	198
	204
	207
	240
	243
213-5167	583
213-5168	583
213-5169	583
213-7315	198
	208
214-3203	18
214-4208	195
	198
	204
	207
214-6863	▶179
	621
	624
	627
214-7457	58
215-7697	452
215-8010	309
	311
215-8011	309
	311
215-9509	74
	77
	80
216-0143	318
216-0814	548
	560
	564
	567
216-1338	264
216-4251	457
216-6286	391
216-8314	15
216-8634	27
216-8716	300
216-9633	46
217-0099	89
	94
	99
	104
	109
217-2004	25
	249
	▶287
	632
217-3875	308
	309
	311
217-5807	351
217-6359	382
217-8477	89
	94
	99
	104
	216
217-9039	216
	217
218-0404	153
218-0651	528
	530
218-2148	264
218-2529	547
	560
	564
	567
218-7252	583
219-0305	664
	666
	667
	668
	670
	672
219-3133	670
	671
219-3273	146
219-6314	153
219-7935	655
220-0230	120
	188
220-7163	63
220-8355	490
	491
	495
	496
220-8631	29
220-8678	66
221-0375	398
	399
	402
221-3329	641
223-0189	58
223-8990	254
223-9818	516
	518
224-3959	375
224-8945	664
	666
224-8946	667
	668
	670
	672
224-9476	61
225-0098	600
	601
	602
	603
	604
	605
	606
	607
	608
	609
	610
	611
	612
	613
	614
	615
	616
225-0312	667
	668
	670
	672
225-0313	665
	666
225-3322	500
	502
	504
	508
225-3854	195
	198
	204
	207
225-3861	168
	171
225-5438	34
225-5439	34
225-5441	34
225-5451	34
225-5453	34
225-5454	34
225-5458	34
225-5459	34
225-5501	22
225-6005	32
225-7738	54
	56
225-7772	15
225-7944	49
	51
225-8019	54
	56
225-8329	45
225-8524	63
225-8526	63
225-8533	63
225-8534	63
225-8858	18
226-0150	527
226-0151	527
226-0331	500
	508
226-2333	162
226-8202	397
	398
	399
	400
	401
	402
	403
226-8766	27
226-8767	27
226-9169	219
	224
	229
	234
	237
227-5971	▶382
	392
227-7391	665
	666
	667
	669
	670
	672
227-7446	61
227-7449	61
228-0172	87
228-2615	665
	666
228-2616	667
	669
228-3323	220
	225

▶ **PRIMARY REFERENCE**

PART NUMBER INDEX

Part	Page
	230
228-5856	194
	198
	204
	207
228-7100	86
	87
	88
229-1494	560
	564
229-4995	406
229-8377	197
	207
229-9382	353
	354
230-4009	192
	194
	197
	201
	204
	208
	210
	498
	621
	624
230-4010	498
	621
	624
230-4011	120
	124
	127
	131
	144
230-4012	121
	125
	128
	132
230-5008	165
	191
	194
	197
	219
	225
	230
	234
	237
	511
	513
	516
	518
230-5009	219
	225
	230
	234
	237
	539
	540
	541
	542
	543
230-5010	210
230-5011	493
	494
	496
	497
230-7254	219
	225
	226
	230
	231
	234
230-8094	32
230-8989	89
	94
	99
	104
	109
231-0070	353
	354
231-2296	498
	621
	624
231-2301	498
	621
	624
231-3052	146
231-3054	146
232-1115	74
	77
232-1322	20
	35
232-1792	528
	530
232-3149	89
	94
	99
	104
	109
232-3666	27
232-3751	49
	51
232-7440	18
232-7449	17
232-7596	18
232-7597	18
232-7599	18
233-3784	15
233-3785	15
233-3786	15
233-4065	116
233-9408	18
233-9744	303
234-3030	63
234-3063	74
	77
234-8821	▶246
	295
	296
	298
234-9970	162
	▶166
235-0588	289
	290
235-2529	374
	388
	391
235-2534	391
235-2535	▶374
	388
	389
	390
	391
	392
235-2548	387
	▶388
235-2553	390
235-2554	388
	389
235-2555	388
	389
235-2557	387
	▶388
235-2621	389
	390
235-4587	142
236-2507	62
236-4545	183
236-5157	309
	311
236-6923	190
236-8013	183
236-8826	219
	224
	229
237-0227	120
	124
	127
	131
237-2598	423
	425
237-3943	583
237-4132	166
237-4133	166
237-4134	166
237-4135	166
237-7252	166
237-7552	647
237-8201	▶377
	378
237-9154	530
237-9157	530
237-9158	530
238-0112	121
	124
	127
	131
238-0120	86
	87
	88
	99
	104
238-0251	560
	564
	567
238-0472	388
	389
	390
	391
	392
238-0473	388
	389
	390
	391
	392
238-1844	73
238-8292	63
238-9397	144
239-2170	397
	403
239-6987	664
	668
	669
239-6989	664
	665
	666
	668
	669
	671
239-9950	141
	▶174
239-9954	▶137
	182
240-0101	▶156
	158
	159
	191
	201
240-0102	▶157
	158
	159
	160
	161
	192
	202
240-0124	156
	157
240-2589	419
	421
240-8666	593
241-4194	183
241-5786	577
	578
241-6215	417
241-8367	168
	171
241-8494	382
241-9643	406
242-0262	117
242-4885	465
243-4517	377
243-5027	212
243-5321	373
244-1516	250
244-1518	250
244-1522	250
244-1524	250
244-1530	▶250
	288
244-1716	510
244-1717	174
	175
244-2095	579
	581
244-2109	579
	581
244-2115	579
	581
244-7374	▶2
244-7375	▶2

▶ **PRIMARY REFERENCE**

PART NUMBER INDEX

Part	Page
244-7380	▶1
	2
244-7381	▶1
	2
244-7383	2
	▶288
244-7385	2
	▶404
244-7386	2
	3
	▶5
244-7387	2
	3
	▶138
244-7391	1
	▶661
244-7395	▶392
244-7400	1
	▶320
244-7401	1
	▶322
244-7403	2
	▶313
244-7408	1
	2
	▶114
244-7410	▶252
	288
244-7417	▶258
	288
244-7420	▶355
	392
244-7425	▶359
	392
244-7426	404
	405
	▶431
244-7427	5
	▶61
244-7428	5
	▶53
244-7430	5
	▶58
244-7431	5
	▶38
244-7433	▶335
244-7434	▶317
244-7436	▶324
244-7437	▶325
244-7440	431
	▶433
244-7447	2
	▶288
244-7451	▶25
244-7452	404
	405
	▶430
244-7455	▶25
244-7467	▶351
244-7468	▶352
244-7470	▶404
244-7471	▶404
244-7472	▶405
244-7474	▶552
244-7475	▶552
244-7476	▶553
244-7479	▶39
244-7482	1
	2
	▶73
244-7486	1
	2
	▶662
244-7489	▶39
244-7492	▶39
244-7494	▶40
244-7499	40
	▶341
244-7503	▶329
244-7504	25
	249
	▶621
	▶624
	▶627
	632
244-7505	25
	▶255
244-7510	▶664
244-7511	▶665
244-7512	1
	2
	▶318
244-7516	▶315
244-7517	▶651
244-7518	651
244-7525	▶366
244-7616	▶247
	▶248
	288
245-1042	144
245-1044	144
245-1045	144
245-1048	144
245-1181	283
245-1912	283
245-4747	162
245-5082	264
245-6017	1
	2
	▶120
	▶124
	▶127
	▶131
245-6019	1
	2
	▶212
245-6020	1
	2
	▶240
	▶243
245-6021	▶191
	▶194
	▶197
	552
	553
	554
245-6022	▶528
	552
	553
245-6023	201
245-6024	▶190
	465
245-6026	▶183
245-6027	1
	2
	▶210
245-6028	▶153
245-6029	141
	▶219
	▶224
	▶229
245-6030	219
	234
245-6032	201
	204
	207
245-6033	528
	530
245-6034	168
	171
245-6036	168
	171
245-6037	120
	124
	127
	131
245-6039	▶530
	552
	553
	554
245-6040	▶144
	212
245-6042	191
245-6043	191
	194
	197
245-6044	192
	194
	197
	201
	204
	207
245-6047	▶201
	▶204
	▶207
	552
	553
246-2641	331
	537
	663
246-4960	62
246-5804	289
	290
246-6190	250
247-1385	60
247-1459	250
247-6019	87
	88
247-6020	86
247-6503	552
	554
	▶589
247-6505	▶527
	552
	553
	554
247-6582	589
247-6583	589
	590
247-6613	513
	518
247-6648	465
247-7054	309
	311
247-7954	58
247-9730	61
248-0732	250
248-1066	86
	87
	88
248-1500	143
	162
248-6772	468
	521
249-0974	49
	51
249-2844	464
	560
	564
	567
249-5656	247
249-5661	247
249-5663	247
	248
249-5665	247
249-5666	247
	248
249-5670	247
249-9017	120
	124
	127
	131
249-9018	120
	124
	127
	131
249-9019	121
249-9020	168
	171
249-9021	168
	171
249-9022	630
	631
249-9023	▶168
	▶171
	240
	243
249-9024	121
	124
	127
	131
249-9025	219
	234
249-9026	168
249-9028	153
249-9029	▶147
	▶149
249-9030	219
	224
	229

▶ PRIMARY REFERENCE

PART NUMBER INDEX

Part	Page	Part	Page	Part	Page	Part	Page
	234		230	254-0595	▶368		524
	237		235		392	254-3199	465
249-9031	219		237	254-0602	353		524
	224	249-9079	498		354	254-3200	465
	229		625	254-0605	368		524
249-9032	219		630		369	254-3201	465
	224	250-1699	553		▶385		524
	229		554	254-0615	368	254-3204	459
249-9033	220		▶556		▶371	254-3206	502
	224	250-4000	375	254-0625	385		504
	229	251-2360	583	254-0635	371	254-3210	▶465
	234	251-2362	583		372		552
	237	251-2437	24		373		553
249-9034	220	251-3227	60	254-0645	371		554
	225	251-4056	507		372	254-3256	5
	230	251-4336	27		373		▶60
249-9035	147	251-5977	587	254-0649	353	254-3257	61
	149	252-0552	556		354	254-4091	528
249-9037	621	252-0553	556	254-0665	▶353		530
	624	252-1862	511		▶354	254-7754	324
	627		513		368	254-7757	1
249-9040	140		516		369		2
	▶234		518	254-0669	359		▶330
	▶237	252-1863	511		364	254-7760	330
249-9042	120		513	254-0681	359	254-7761	336
	124		516	254-1087	61		339
	127		518	254-1090	61	254-8045	330
	131	252-4502	465	254-1354	▶285	254-8754	320
249-9047	621		▶468		288	254-8755	322
	624	252-4504	▶521	254-1379	25	254-8858	326
	627		524		249	254-8859	648
249-9048	190	252-4559	▶488		▶291		651
249-9049	220		621		632	254-8880	313
	225	252-4734	283	254-1386	404		320
	230	252-5459	557		▶434		322
249-9050	220	252-6318	18	254-1450	434	254-8895	121
	225	252-6803	557		▶436		333
	230	252-8744	647	254-1451	435	254-8902	1
249-9051	404	252-8930	549		▶438		2
	▶498	252-8933	549	254-1452	404		▶326
249-9052	405	252-9628	174		405	254-8905	326
	▶630		175		▶406	254-8906	326
	▶631	253-0861	661	254-1453	404	254-8919	329
249-9060	513		662		405	254-8954	5
	518	253-1218	58		▶414		▶62
249-9061	511	253-2111	168	254-1457	404	254-9054	▶264
	516		171		405		288
249-9062	587	253-2695	220		▶435	254-9055	▶267
249-9065	621		225	254-1460	404		288
	624		229		405	254-9057	▶277
	627		234		▶423		▶280
249-9067	621		237		▶425		288
	624	253-5391	▶146	254-3169	1	254-9098	288
	627	253-6168	146		2		▶417
249-9068	147	253-8060	53		▶544	254-9099	25
	149	253-8329	174	254-3170	552		249
	▶151	253-8798	474		553		▶293
249-9069	151		476	254-3180	552		632
249-9072	212	253-8967	166		553	254-9100	25
249-9074	121	253-8969	166		554		249
	125	253-8981	166	254-3183	459		▶294
	128	253-9544	493	254-3190	▶524	254-9136	142
	132		494		552		143
249-9077	220	254-0227	389		553	254-9233	2
	225		390	254-3196	465		3

▶ **PRIMARY REFERENCE**

PART NUMBER INDEX

Part	Page
	▶4
254-9951	143
255-0939	174
	175
255-1151	25
	249
	632
	▶641
255-1152	431
255-1155	433
255-1204	62
255-1343	58
255-1344	58
255-1355	▶595
255-1357	▶457
	595
	596
	597
	598
	599
255-1359	457
255-1361	457
255-1362	595
	▶600
255-1365	600
255-1394	▶595
255-1395	595
	▶601
255-1397	601
255-1413	▶595
255-1414	595
	▶602
255-1415	602
255-1425	▶595
255-1426	601
	608
	▶635
255-1427	595
	▶603
255-1428	603
	610
	▶635
255-1429	635
255-1430	603
255-1431	39
	▶336
255-1433	336
255-1450	336
255-1452	39
	40
	▶339
255-1453	339
255-1455	336
255-1470	▶596
255-1471	596
	▶604
255-1472	604
	611
	▶635
255-1474	635
255-1475	604
255-1486	▶596
255-1487	596
	▶605
255-1490	605
255-1501	606
	613
	614
	▶636
255-1502	▶596
255-1503	596
	▶606
255-1505	▶636
255-1539	336
	339
255-2100	455
255-2114	455
255-2122	455
255-2142	1
	2
	▶455
255-2368	▶596
255-2370	596
	▶607
255-2371	607
255-2372	▶597
255-2373	597
	▶608
255-2374	608
255-2375	▶597
255-2376	597
	▶609
255-2377	609
255-2378	▶597
255-2379	597
	▶610
255-2380	610
255-2381	▶597
255-2383	597
	▶611
255-2384	611
255-2385	▶598
255-2386	598
	▶612
255-2387	612
255-2390	▶598
255-2391	598
	▶613
255-2393	▶598
255-2394	598
	▶614
255-2805	455
255-3696	465
	▶478
255-4228	552
	553
	554
255-4229	552
	553
	554
	▶587
255-4230	140
	▶500
255-4231	140
	▶502
255-4233	502
	504
255-4235	459
255-4236	459
255-4239	▶459
	552
	553
	554
255-4240	▶461
	552
	553
255-4241	1
	2
	▶535
255-4242	▶558
255-4250	▶572
255-4251	▶573
255-4252	▶574
255-4255	513
	518
255-4256	511
	516
255-4258	459
	461
255-4260	141
	▶163
255-4261	163
255-4271	▶511
	552
	554
255-4272	▶513
	552
	554
255-4273	▶516
	553
	554
255-4274	▶518
	553
	554
255-4275	553
	554
	▶590
255-4276	▶327
255-4279	590
255-4280	544
255-5153	465
255-6210	468
255-6642	339
255-6644	339
255-8384	502
	504
255-8386	502
	504
255-8846	573
	▶575
256-0761	468
	521
256-0762	468
256-0768	468
	521
256-0770	468
256-2268	114
256-2269	313
	320
	322
256-2271	318
256-2272	318
256-3738	▶660
256-3739	▶658
	660
256-4579	162
256-4580	162
256-4581	162
256-4582	162
256-4959	551
	560
	564
	567
256-5719	162
256-5720	162
256-5721	162
256-5722	162
256-5732	162
256-7752	433
256-7753	414
256-7758	264
256-7761	264
256-8778	295
	▶301
256-8796	315
256-9357	301
	▶302
	304
256-9358	301
	304
257-1096	414
257-1099	414
257-1105	267
	269
	275
257-1107	267
257-1108	419
	421
257-1729	174
257-4959	572
	▶576
257-7501	220
	225
	230
257-8924	121
	125
	128
	132
257-9819	465
	▶532
258-0129	285
258-2111	315
258-4961	▶648
	653
258-4962	648
258-4971	648
258-6387	482
	484
258-9788	305
258-9791	▶305
	392
258-9982	58
259-0122	423
	425
259-1060	459
	461
259-4401	665
	666
259-4402	667

▶ **PRIMARY REFERENCE**

PART NUMBER INDEX

Part	Page
	669
	670
	672
259-4403	589
	590
	▶591
259-4405	589
	590
	▶592
259-4746	165
	▶545
260-0083	114
260-0088	318
260-0089	333
	334
260-0631	61
260-0633	60
260-0634	61
260-3718	89
260-3719	89
260-3939	89
	94
	99
	104
	109
260-6478	162
260-6480	162
260-6728	489
	490
	491
	493
	494
	495
	496
	497
260-6762	389
260-6774	▶389
260-6775	▶389
260-6776	▶390
260-7652	151
260-7653	151
260-9171	406
	410
260-9285	535
260-9286	535
260-9289	351
260-9290	351
260-9291	351
260-9293	352
260-9294	▶6
	552
	553
260-9295	▶7
	554
260-9501	▶8
	552
260-9502	▶663
	664
	665
	666
	668
260-9505	532
260-9506	532
261-0369	▶9
	553
261-0371	8
	9
	118
261-0372	478
261-0373	478
261-0376	6
	7
261-0406	8
	9
	118
261-0420	121
	125
	128
	132
261-0423	6
	7
261-0428	6
	7
261-1104	448
261-1106	264
261-1108	258
	260
	262
261-1124	258
261-4267	255
261-4268	255
261-4269	255
261-4270	255
261-4472	371
261-4748	252
261-5694	546
261-6818	271
	273
	277
	280
	443
	446
	448
261-7487	583
261-7992	513
	518
	▶540
261-7993	511
	516
	▶541
261-7996	▶542
	593
261-8090	532
261-8095	351
261-8096	351
261-8495	410
261-8501	258
	260
	262
261-8502	258
	260
	262
261-8505	419
	421
261-8506	419
261-8533	267
	269
	275
262-0319	▶543
	593
262-0481	264
262-0482	264
262-0766	▶551
	570
262-0767	551
	560
	564
	567
262-0769	551
	560
	564
	567
262-0771	551
262-0772	551
	560
	564
	567
262-0779	464
	560
	564
	567
262-0780	464
	560
	564
	567
262-0781	464
	560
	564
	567
262-0785	464
	560
	564
	567
262-0786	464
	560
	564
	567
262-0787	464
	560
	564
	567
262-0789	551
	560
	564
	567
262-1408	240
262-1997	511
	516
262-1998	513
	518
262-2093	372
	373
262-2814	468
262-2815	521
262-2923	327
	▶350
262-2925	327
262-2930	327
262-3104	455
262-4324	339
262-4325	339
262-4326	339
262-4328	339
262-4329	339
262-4407	▶653
262-4408	653
	▶654
262-4409	654
262-4411	654
262-4415	▶400
	653
262-4416	400
262-4418	▶401
	653
262-5866	313
	320
	322
262-5867	316
262-5868	313
	▶316
	320
	322
262-5875	▶357
	392
262-5877	359
262-5878	359
	364
262-7082	665
	666
	667
	669
	670
	672
262-7686	455
262-9253	401
262-9274	341
	342
	346
262-9275	341
	342
	346
262-9276	341
	342
	346
262-9277	341
	342
	346
262-9278	341
	342
	346
262-9279	341
	342
	346
262-9786	61
263-0968	417
263-0969	417
263-0970	417
263-0975	264
263-0982	448
263-0985	▶269
	288
263-0987	269
263-1431	73
263-1432	73
263-2009	366
263-2010	366
263-2135	593
263-2214	641
263-3013	459
	461

▶ **PRIMARY REFERENCE**

PART NUMBER INDEX

Part	Page
263-3181	398
	399
263-3323	▶427
	653
263-3483	339
263-3745	▶397
	404
263-3746	397
	403
263-3748	397
263-3823	542
	543
263-4068	▶398
	404
	405
263-4069	398
263-4072	398
	399
263-4154	406
	410
263-4914	406
	410
263-4915	406
	410
263-5008	▶402
	404
	405
263-5009	402
263-5013	402
263-5376	63
263-5928	528
	530
263-7360	327
263-8365	359
	364
263-8366	359
	364
263-9088	151
	▶174
263-9560	283
263-9561	283
263-9574	632
263-9720	419
	421
264-3010	336
	339
264-3011	336
	339
264-3014	336
	339
264-3017	336
	339
264-3019	339
264-3709	658
264-3888	427
264-3889	427
264-3890	427
264-3891	427
264-4510	221
	225
264-5003	341
	342
	346
264-5004	341
	342
	346
264-5007	341
	342
	346
264-5009	341
	342
	346
264-5010	341
	342
	346
264-5011	341
	342
	346
264-5014	313
	320
	322
264-5425	168
	171
264-6941	427
264-7029	120
	124
	127
	131
264-7030	120
	124
	127
	131
264-7031	511
	513
	516
	518
264-7032	210
264-7033	498
	621
	624
264-7034	210
	498
	621
	624
264-8899	591
264-8900	591
	592
264-8901	591
	592
264-9742	641
264-9766	▶376
265-2166	641
265-9620	468
	521
266-1470	549
266-3214	579
	581
266-3701	593
266-7092	63
266-7145	468
266-7631	▶489
	494
	497
266-7632	▶490
	493
	496
266-7634	▶491
	495
266-7765	465
266-9005	498
266-9006	621
	624
	627
266-9299	511
	516
266-9303	511
	513
	516
	518
267-5147	560
	564
	567
	570
267-5159	548
	560
	564
	567
267-5160	548
	560
	564
	567
267-5211	177
267-5213	177
267-5239	528
	530
267-5639	549
267-8655	350
267-9319	560
	564
	567
	570
267-9552	579
	581
267-9553	579
	581
267-9554	579
	581
267-9555	579
	581
267-9556	579
	581
267-9834	579
	581
268-1506	419
	421
268-1507	419
	421
268-4698	182
268-4699	147
	▶182
268-6677	89
	94
	99
	104
	109
268-6678	89
	94
	99
	104
	109
268-9351	▶485
	558
	572
	573
	574
268-9352	▶486
	558
	572
	573
	574
268-9378	474
268-9382	476
269-0004	430
269-1084	436
	438
	▶440
269-1085	436
	438
	▶441
269-1086	438
	▶442
269-1087	▶429
	436
	438
269-2886	513
	518
269-2887	511
	516
269-2888	513
	518
269-2890	511
	513
	516
	518
269-2892	511
	513
	516
	518
269-4669	308
	309
	311
269-4676	117
269-7647	168
	171
269-7648	212
269-7650	151
269-7652	212
269-7653	121
269-7654	168
	171
269-7656	210
269-7657	210
269-7658	121
	125
	128
	132
269-7661	169
	172
269-7662	168
	171
269-7664	221
	225
269-7665	404
	▶507
269-7666	628
269-7667	621
	624
	627
269-7668	621
269-7669	212

▶ **PRIMARY REFERENCE**

PART NUMBER INDEX

Part	Page
269-7674	121
	125
	128
	132
269-7675	528
	530
269-7676	221
269-7677	212
	621
	624
	627
269-7678	121
	125
	128
	132
269-7680	121
	125
	128
	132
	240
	243
269-7682	120
	124
	127
	131
269-7683	621
269-7686	189
269-7687	221
269-7690	168
	171
269-7695	▶158
	▶159
269-7696	▶160
	▶161
269-7697	498
	624
270-1907	540
	541
270-7881	500
	502
270-7882	210
271-2734	313
	320
	322
271-2773	459
	461
271-2774	459
	461
271-7312	528
	530
271-7780	250
271-9179	288
	▶443
272-0343	423
	425
272-1622	511
	516
272-1623	511
	513
	516
	518
272-1750	410
272-2272	▶559
	575
	576
	577
	578
272-2317	250
272-3022	410
272-3030	419
	421
272-3481	271
	273
	277
	280
	443
	446
	448
272-3483	258
	260
	262
272-3536	258
272-3540	414
272-5584	504
	508
272-8111	574
	▶577
272-9770	▶555
272-9780	553
	554
	▶557
273-5070	183
273-6319	252
274-1532	443
	446
274-1535	443
	446
274-1639	71
	72
	94
	99
	104
	109
274-1923	318
	336
	339
274-3774	191
	194
	197
	201
	204
	207
274-3777	498
	624
274-3778	191
	194
	197
274-4645	140
	141
	▶493
274-4646	140
	▶494
274-6538	406
274-6747	271
	273
	277
	280
	▶283
	443
	446
	448
274-7990	317
	335
274-9872	177
274-9877	177
275-0490	▶177
	212
275-0571	318
275-0572	318
275-6707	468
	521
275-6710	500
	502
	504
	508
275-7803	559
275-9883	32
276-0062	327
276-0063	327
276-0764	174
276-1243	318
276-1755	361
276-2432	313
	322
276-2433	313
	322
276-2988	404
	405
	▶419
276-3642	560
	564
	567
	570
276-3644	560
	564
	567
	570
276-4299	468
	521
276-4667	▶399
	404
	405
276-4668	399
276-4670	419
	421
276-4672	406
276-4836	61
276-5605	18
276-6146	143
276-6596	183
276-6597	183
276-7394	14
276-7476	34
276-8116	20
276-8117	20
276-8123	20
276-8133	20
276-8181	641
276-9200	37
276-9201	37
276-9206	37
276-9207	37
276-9230	37
277-1873	121
	125
	128
	132
277-1949	88
277-1950	88
277-2238	392
277-2923	54
	56
277-2925	54
	56
277-2974	47
277-3012	27
277-5031	12
277-5064	12
277-5065	12
277-5067	12
277-6165	74
	77
	80
277-6631	309
	311
277-7092	641
277-7093	641
277-7112	521
277-7113	468
277-7114	468
	521
277-7115	468
	521
277-8103	564
	567
277-8365	661
	662
277-8589	564
277-9958	521
277-9959	521
277-9960	521
277-9962	521
277-9964	521
277-9966	468
277-9968	525
277-9969	469
	▶525
278-0316	63
278-0361	63
278-2358	306
278-2359	306
278-2360	▶306
	392
278-3242	54
278-3354	469
	521
278-4138	67
	69
	70
	74
	77
	80
	83
	84
	85
	89
	94
	99
	104

▶ **PRIMARY REFERENCE**

PART NUMBER INDEX

Part	Page	Part	Page	Part	Page	Part	Page
	109	280-3515	581		581	283-6370	427
278-5111	37	280-7343	303	282-2034	476	283-7697	455
278-5112	37		▶396	282-2035	474	283-8651	469
278-5113	37	280-9162	587	282-2036	474		521
278-5126	10	280-9440	485		476	283-9530	510
278-5168	89		486	282-3475	469	283-9797	417
	94	280-9441	485		521	283-9900	163
	99		486	282-3481	469	283-9901	163
	104	280-9442	485		521	283-9902	500
	109	280-9443	486	282-3653	469		508
278-5170	89	280-9444	485		521	283-9909	500
	94		486	282-3665	▶361		502
	99	280-9453	469	282-3675	▶362		504
	104		521	282-3679	362		508
	109	280-9679	▶474	282-3685	▶367	284-0825	▶138
278-5203	89		558	282-3705	▶363	284-1026	7
	94		572		392		9
	99		573	282-3715	▶364	284-2885	431
	104		574		392	284-3425	118
	109	280-9680	485	282-4897	▶553		119
278-5225	89	280-9896	485	282-4898	▶554	284-3705	433
	94	280-9897	485	282-4899	▶554	284-3753	502
	99	280-9898	486	282-5062	641		504
	104	280-9899	486	282-5064	419	284-3754	500
	109	280-9900	486	282-5069	641		502
278-5226	89	281-3964	500	282-5326	▶3		504
	94		502	282-5328	▶2		508
	99	281-3965	500		3	284-4923	267
	104		502	282-6689	476		269
	109	281-3974	327	282-6690	474		275
278-5227	89	281-3986	459	282-6691	476	284-7054	▶476
278-5228	89		461	282-6692	474		558
278-5273	89	281-3997	25	282-6695	579		572
	94		404		581		573
	99		▶538	282-6701	476		574
	104		632	282-6702	474	284-7055	476
	109	281-3998	538	282-6707	476		▶579
278-5307	89	281-4002	511	282-6708	474	284-7059	474
	94		513	282-6709	476		▶581
	99		516	282-6710	474	284-7648	476
	104		518	282-8805	▶378	284-7649	474
	109	281-4004	500		392	284-7822	264
278-5308	89		508	283-1534	▶392	284-7823	264
278-5309	89	281-4005	465	283-1535	▶379	284-7824	264
278-5684	318	281-4007	500		392	284-7825	264
278-6935	567		502	283-2271	▶88	284-8207	▶178
278-6936	567		504		89		495
278-7528	564		508	283-3191	406	284-8208	178
278-8965	488	281-4136	511	283-3426	5		495
	492		516	283-3436	121	284-8773	469
278-8967	488	281-4137	513		125		521
	492		518		128	285-0151	493
278-8970	488	281-4140	511		132		494
	492	281-4141	513	283-3514	404		495
278-8974	488	281-4150	516		▶421		496
	492	281-4151	518	283-3515	421		497
279-9651	30	281-5791	271	283-3516	421	285-0330	141
279-9876	318	281-7631	459	283-4148	6		▶508
280-1430	43	281-8744	47		8	285-0331	141
280-1912	37		48	283-4426	510		▶504
280-1913	37	282-0554	560	283-4932	267	285-1133	137
280-1914	37	282-0557	551		269	285-1973	12
280-3512	579	282-0558	560		275	285-2372	560
280-3513	581	282-0561	560	283-4935	410		564
280-3514	579	282-2033	579	283-4942	410		567

▶ **PRIMARY REFERENCE**

PART NUMBER INDEX

Part	Page
285-3329	183
285-3471	368
	369
285-3472	368
	369
285-3473	368
	369
285-3475	▶369
	392
285-3476	369
	▶372
	▶373
285-4312	414
285-4313	414
285-4314	414
285-4317	448
285-6627	58
285-6704	114
285-7415	528
	530
285-7499	364
285-7502	364
285-7505	364
285-7511	364
285-7974	521
285-8548	521
285-8553	469
285-8554	522
286-0134	142
	143
	▶510
286-0136	143
	▶174
286-0137	142
	▶175
286-1858	367
286-1859	367
286-2945	386
	▶390
286-2946	386
	▶390
286-2968	495
286-3017	175
286-3236	3
	▶288
286-4302	▶386
286-4305	▶386
286-4307	▶386
286-4310	▶386
286-4315	▶387
286-4317	▶387
286-4320	▶387
286-4407	591
	592
286-5019	▶666
286-5020	▶668
286-7211	359
286-7212	359
286-7848	23
286-8053	25
	249
	▶256
	632
286-8055	▶260
	288
286-8057	▶271
	▶273
	288
286-8059	▶275
	288
286-8141	664
	665
	667
	668
	669
	671
286-9124	142
	143
	▶539
287-0548	511
	513
	516
	518
287-1962	114
	▶116
287-1965	116
287-2016	664
	665
	666
	668
	669
	671
287-2017	665
	667
	671
287-2169	549
287-2654	122
287-3789	302
287-6657	525
287-7430	54
287-7637	71
	72
287-7944	313
287-8437	524
287-8597	29
287-8659	256
287-8660	256
287-8661	256
287-8662	256
287-8667	275
288-0422	27
288-0526	216
288-0884	500
	502
	504
	508
288-1719	386
	▶391
288-1720	386
	▶391
288-1721	387
	▶391
288-3628	▶669
288-3629	▶670
288-3657	465
288-3663	524
289-0099	410
289-0100	406
	410
289-0101	410
289-0102	406
	410
289-0103	410
289-0104	406
	410
289-0105	406
	410
289-0106	406
	410
289-0107	406
	410
289-0120	267
289-0250	257
289-0251	257
289-0252	257
289-0255	249
	▶257
289-0256	257
289-0270	▶375
	390
	391
289-0600	69
289-2073	579
	581
289-2122	526
289-2123	521
	▶526
289-2134	521
289-2478	80
289-4795	521
289-5885	250
289-6388	293
	294
	▶295
289-6389	293
	▶296
289-6390	294
	▶298
289-8311	118
289-8449	174
	175
290-2700	355
	357
290-4835	210
	▶495
290-5570	▶142
290-5571	▶142
290-6180	516
	518
291-1094	664
	666
	667
	668
	670
	671
291-1913	175
	176
291-3803	525
	526
291-4256	664
	665
	666
	668
291-4261	664
	666
	667
291-5096	▶249
291-5099	▶25
291-5505	62
291-7972	583
291-7980	▶471
	583
291-7981	471
291-7984	471
291-7986	471
291-7989	471
291-7990	471
	472
	473
291-7992	471
291-7993	583
291-8004	▶472
	583
291-8005	472
291-8008	472
	473
291-8010	583
291-8011	▶473
	583
291-8012	473
291-8014	583
291-8019	583
291-8026	583
291-8027	583
291-8028	583
291-8030	471
291-8031	583
291-8032	583
291-9247	431
291-9310	471
291-9334	670
	671
292-0123	▶249
292-0125	▶249
292-0279	▶143
292-0280	▶143
292-0281	141
	142
	▶162
292-0285	142
	▶174
292-0290	142
	143
	▶162
292-0291	142
	▶175
292-0292	143
	▶175
292-0293	▶141
292-0294	▶135
292-0296	142
	143
	▶165
292-0302	162
	▶647
292-0303	143
	162

▶ **PRIMARY REFERENCE**

PART NUMBER INDEX

Part	Page
	▶647
292-0309	141
	142
	▶510
292-0311	510
292-0312	▶142
292-2558	153
292-3462	139
292-3480	423
292-3778	▶71
	89
	94
292-6402	▶546
	547
	560
	564
	567
292-9739	260
292-9740	260
292-9880	139
293-0249	86
	87
	88
293-0777	619
293-0778	619
293-2915	464
	560
	564
	567
293-3820	406
	410
293-3821	406
	410
293-4053	61
293-4381	60
293-5441	▶289
	295
	296
293-5442	285
	▶308
293-5443	▶290
	298
293-5445	291
	▶303
293-5448	285
	▶307
293-5450	291
	▶309
293-5452	295
	296
	298
	▶311
293-6146	320
293-6147	322
293-6148	313
293-9150	353
	354
293-9379	560
	564
	567
	570
293-9380	464
	560
	564
	567
293-9381	464
	560
	564
	567
293-9665	560
	564
	567
294-1063	641
294-1064	267
294-1067	269
	275
294-1069	275
294-1070	269
294-7139	548
	560
	564
	567
294-7375	63
294-7779	▶464
	570
295-0189	87
295-1042	12
295-1711	27
295-4037	592
295-4039	591
	592
295-4433	▶560
	577
295-4434	▶564
	575
295-4436	▶567
	576
295-4670	74
	77
	80
295-4695	423
295-4801	86
	87
295-6472	560
	564
	567
	570
295-6661	20
295-8930	162
295-9125	▶86
	94
295-9265	271
	277
	443
296-3542	86
	87
296-5751	▶140
296-5752	▶140
296-5753	▶140
296-5754	▶140
296-5755	▶141
296-5756	▶141
296-6705	309
	311
296-6708	▶254
	295
	296
	298
296-9891	549
297-1464	482
	484
297-1465	500
	502
	504
	508
297-1466	482
	484
	500
	502
	504
	508
297-3272	350
297-3273	350
297-3274	350
297-3275	350
298-4524	15
298-4526	▶20
	22
298-4527	20
298-4528	20
298-4530	20
298-4533	▶37
	41
298-4535	89
	94
	99
	104
	109
298-4536	89
	94
	99
	104
298-4537	89
	94
298-4538	89
	94
298-4539	89
	94
298-4540	89
	94
298-4541	89
	94
298-4542	89
	94
	99
	104
	109
298-4543	89
	94
	99
	104
	109
298-4544	89
298-4546	12
298-4547	12
298-4548	12
298-4549	12
298-4550	12
298-4551	12
298-4552	12
298-4553	49
298-4558	49
	52
298-4559	49
	52
298-4560	49
	52
298-4570	63
298-4576	63
298-4603	69
298-4604	30
298-4605	216
298-4606	216
298-4607	216
298-5074	670
	672
298-5099	4
	▶49
	▶51
298-5100	4
	▶44
298-5105	4
	▶54
	▶56
298-5110	4
	▶27
298-5112	4
	▶45
298-5123	4
	▶69
	▶70
298-5127	4
	▶30
298-5129	4
	▶35
298-5772	139
298-5874	6
298-5880	7
298-5894	4
299-2214	489
	490
	491
	493
	494
	495
	496
	497
299-3237	661
	662
299-3238	661
	662
299-3240	331
	661
	662
299-3253	662
299-3254	662
299-3256	661
299-3257	661
299-3902	335
299-3903	317
	335
299-4116	317
299-5092	4
	▶216
	▶217
299-5511	20
299-7704	455
299-8229	67
	70

▶ **PRIMARY REFERENCE**

PART NUMBER INDEX

Part	Page
299-8874	651
3	
300-2118	▶176
300-2121	406
300-3631	498
	622
	625
	630
300-3665	465
300-4098	521
300-4415	185
300-6520	63
300-6714	94
	99
	104
	109
300-8545	▶632
300-8546	▶632
301-0143	▶547
	570
301-0144	▶548
	570
301-0145	547
301-0146	548
301-0147	▶570
	578
301-0148	558
	▶578
301-0589	151
301-5700	592
301-5701	591
301-6061	532
301-6062	532
301-6063	532
301-6064	532
301-6065	532
301-6066	532
301-7299	333
	334
301-7301	318
301-7302	318
301-7303	318
301-7305	352
301-7890	▶117
	285
301-8243	4
	▶47
301-9281	414
301-9282	414
301-9283	414
301-9293	414
301-9294	414
301-9295	406
301-9300	406
301-9819	212
302-2136	591
	592
302-5320	555
302-5323	557
302-5927	374
303-0455	385
303-0458	385
303-0459	385
303-0462	247
	248
303-0463	250
303-0464	248
303-0465	248
303-1888	406
303-1889	406
303-1892	406
303-1893	406
303-1898	414
303-1899	414
303-1900	414
303-1901	414
303-1902	414
303-1903	414
303-1904	419
	421
303-1905	406
303-1906	406
	410
303-1907	406
	410
303-1908	406
	410
303-1909	406
	410
303-1910	406
303-2116	63
303-4221	138
303-4685	▶138
303-5767	4
	▶29
303-5770	4
	▶24
303-5774	4
	▶118
303-5781	12
303-5786	63
303-5787	63
303-5788	63
303-5793	63
303-5951	417
303-6575	406
303-6582	651
303-6595	419
	421
303-6598	419
	421
304-1139	436
	438
	▶445
304-1140	440
304-1141	440
304-1142	440
	441
	442
304-1143	445
304-1144	440
304-1145	441
	442
	445
304-1147	440
	441
	442
	445
304-1149	440
304-1150	440
	441
	442
	445
304-1151	441
	442
	445
304-1152	442
304-1156	440
	441
	442
	445
304-3641	4
	▶17
304-3642	4
	▶14
304-3643	4
	▶34
304-3645	4
	▶22
304-3647	4
	▶41
304-3648	4
	▶10
304-3649	4
	▶89
	▶94
	▶99
	▶104
	▶109
304-3650	4
	▶136
304-3654	4
	▶26
304-3655	4
	▶185
304-3656	4
	▶32
304-3657	4
	▶63
304-3658	4
	▶11
304-3659	4
	▶74
	▶77
	▶80
304-3660	4
	▶139
304-3661	4
	▶31
304-3662	4
	▶83
	▶84
	▶85
304-3663	4
	▶36
304-3687	89
304-3688	89
	94
	99
	104
304-3689	89
	94
	99
	104
304-3692	32
304-3693	32
304-3695	32
304-3698	32
304-3702	63
304-3704	63
304-3706	74
	77
304-3707	74
	77
304-3708	74
	77
304-3711	31
304-3713	83
	84
304-3716	480
304-5165	217
304-5617	4
	▶46
304-5687	243
305-1456	357
305-1458	357
305-1460	357
305-1462	357
305-1463	357
305-1464	357
305-1465	357
305-1466	355
305-1469	355
305-1471	355
305-1473	355
305-1474	355
305-1475	355
305-1511	296
	298
	▶304
305-5019	277
	280
305-5021	271
	273
305-5291	109
305-5362	190
305-7398	43
305-7881	119
305-8452	4
305-9192	511
	513
	516
	518
	593
306-2089	▶262
	288
306-2091	262
306-2095	271
	273
306-2100	419
	421
306-2330	10
306-2337	43
306-4998	318
306-5053	351
306-5054	351

▶ **PRIMARY REFERENCE**

PART NUMBER INDEX

Part	Page	Part	Page	Part	Page	Part	Page
306-5911	32		249		77		280
306-8855	4		632	314-3000	502		446
	▶23	311-0302	627		504		448
306-8857	23	311-0303	528	314-3001	500	316-0446	9
306-8892	351	311-0304	530		508	316-0468	63
307-0047	151	311-0305	226	314-3002	500	316-0629	641
307-1590	535		231		502	316-1441	53
307-1591	535		238		504	316-8368	575
307-1592	532	311-0306	125		508		576
307-2242	6		128	314-3003	▶482		577
	7		132		502		578
307-4673	▶492	311-0307	125		504		▶583
	498		128	314-3004	▶484	316-9198	403
	624		132		500	316-9205	▶403
	627	311-0311	230		508		405
307-9843	54	311-0312	168	314-3005	482	316-9351	12
308-3554	583	311-2376	67	314-3007	482	317-0657	138
308-3555	583		70		484	317-2808	3
308-7298	66	311-3858	94	314-3009	500		▶405
	68		99		502	317-3144	94
308-7571	74		104		504		99
	77		109		508		104
	80	311-4862	142	314-3010	528		109
308-7576	68		143		530	317-3775	43
308-7677	419	311-4863	135	314-3011	163	317-5316	593
	421	311-4864	143	314-3012	163	317-8476	74
308-8425	89	311-5950	500	314-3013	163		77
	94		508	314-3014	163		80
308-8642	583	311-6342	94	314-3015	508	317-9299	43
309-5075	▶394		99	314-3016	500	317-9776	4
	618		104		502		▶119
309-5090	▶617		109		504	318-0815	469
	660	311-6632	99		508		521
309-5091	617		104	314-3017	500	318-6093	198
	▶618		109		502	318-6094	207
309-6666	8	311-7070	39		504	318-6095	171
309-6678	20	311-8305	331		508	318-6096	172
309-8006	94	311-8306	331	314-3018	502	318-6129	334
	99	311-8307	331		504	318-6522	331
	104	311-8376	149	314-3019	500	318-8063	▶66
	109	311-8643	331		508		83
310-2392	151	311-8644	▶331	314-3020	500	318-8135	▶188
310-5912	66	312-1035	▶333	314-3021	500		333
	68		▶334		508	318-8136	132
310-7375	363	312-7461	670	314-3022	502		▶189
310-7376	363	312-8350	▶598	314-3023	502	319-1824	425
310-8520	22	312-8351	598	314-3024	504	319-5537	39
310-9269	34		▶615	314-3025	500		40
311-0263	628	312-8352	615		502		▶342
311-0292	194	312-8360	▶599		504		▶346
311-0293	204	312-8361	599		508	319-5538	342
311-0294	240		▶616	314-3026	163		346
	243	312-8362	616	314-3472	476	319-5539	342
311-0295	225	313-1663	66	314-3956	43		346
	230		68	314-3957	43	319-5540	342
	237	313-2455	94	314-3960	4		346
311-0296	498		99		▶43	319-5541	342
	624		104	314-5274	583		346
	627		109	314-5275	583	319-5542	342
311-0297	225	313-2794	471	314-9768	431		346
	230	313-7227	641	315-3384	10	319-5543	342
311-0298	226	313-7228	641	315-6735	465		346
311-0299	528	314-2573	163	315-6737	465	319-5544	342
	530	314-2574	163	315-6738	465		346
311-0300	25	314-2892	74	315-9855	273	319-5545	342

▶ **PRIMARY REFERENCE**

PART NUMBER INDEX

Part	Page	Part	Page	Part	Page	Part	Page
	346		▶392				
319-5546	342	327-6133	231				
	346	328-0893	496				
319-6491	128		497				
	132	328-0894	140				
	▶181		141				
319-6909	425		▶496				
320-0464	410	328-0895	140				
320-0465	410		▶497				
320-0466	▶410	329-1197	80				
320-0677	▶72	329-8172	280				
	99	330-1736	14				
	104		▶15				
	109	330-3408	174				
320-1332	4	330-4789	17				
	▶67		▶18				
320-2360	12	331-0163	606				
320-2361	12		613				
320-2362	12	331-0177	613				
320-2369	4	331-0180	614				
	▶12	331-7540	136				
320-5176	548	333-4732	104				
320-8448	511		109				
	513	333-4733	104				
	516		109				
	518	333-5435	66				
320-9921	12		68				
322-0304	250	333-9693	66				
322-3161	546		68				
322-3744	99	333-9694	66				
	104		68				
322-3745	99	334-0808	▶68				
	104		84				
	109		85				
322-3746	99	334-1401	48				
	104	334-2314	4				
	109		▶48				
322-3747	99	334-2932	87				
322-3748	99	334-4603	664				
322-6508	▶446		668				
322-6509	▶448		669				
322-9662	56	334-4960	51				
322-9703	433		▶52				
323-3515	27	335-5782	77				
324-0444	27	335-8266	109				
324-0532	▶87	337-3573	109				
	99	337-3574	109				
	104	338-0841	138				
	109	338-8069	80				
324-0669	487	338-8070	80				
	▶549	338-8071	80				
324-0670	1	338-8072	80				
	2	338-8075	80				
	▶487	338-8085	85				
324-1481	74	339-3397	41				
	77	339-8780	15				
324-1482	74	339-9637	20				
	77	341-0083	273				
325-0701	500	341-4028	14				
	508	343-8096	12				
326-1880	24	346-1449	217				
326-8247	▶387	346-9825	118				
327-0948	325		119				
327-4444	38						
327-5830	387						

▶ **PRIMARY REFERENCE**

MEMORANDA



© 2009 CATERPILLAR
ALL RIGHTS
RESERVED

CAT, CATERPILLAR, THEIR RESPECTIVE LOGOS, “CATERPILLAR YELLOW” AND THE POWER EDGE TRADE DRESS, AS WELL AS CORPORATE AND PRODUCT IDENTITY USED HEREIN, ARE TRADEMARKS OF CATERPILLAR AND MAY NOT BE USED WITHOUT PERMISSION.

PRINTED IN
U.S.A.