M0064988-00 (en-us)
February 2016

RUTHZIL TRATOR COMERCIAL DE PEÇAS LTDA 11 97083-6812 ROLANDO

Parts Manual

D5R2 XL Track-Type Tractor

R5A1-UP (Machine)
E7A1-UP (Engine)
RC51-UP (Transmission)
RT51-UP (Ripper)
T6P1-UP (Torque Converter)
RA51-UP (Angle Blade)
TR51-UP (Blade)

Powered By C7.1 Engine

Product and Dealer Information

Note: For product identification plate locations, see the section “Product Identification Information” in the Operation and Maintenance Manual.

Delivery Date: _____

Product Information

Model: _____

Product Identification Number: _____

Engine Serial Number: _____

Transmission Serial Number: _____

Generator Serial Number: _____

Attachment Serial Numbers: _____

Attachment Information: _____

Customer Equipment Number: _____

Dealer Equipment Number: _____

Dealer Information

Name: _____ Branch: _____

Address: _____

_____

_____

	Dealer Contact	Phone Number	Hours
Sales:	_____	_____	_____
Parts:	_____	_____	_____
Service:	_____	_____	_____

MEMORANDA

TABLE OF CONTENTS

NAME	PAGE
GENERAL INFORMATION	A5
REPAIR ALTERNATIVES	A8
SUPPLEMENTAL COOLANT ADDITIVES	A9
MAINTENANCE PARTS	A10
INDEX	A13
MACHINE ARRANGEMENT	1
CHASSIS AR	1
COMMON AR	1
WASTE HANDLING AR	2
ENGINE ARRANGEMENT	3
ENGINE AR-PRIMARY	3
INSTALLATION AR-ENGINE	4
BASIC ENGINE	5
BRACKET GP-MOUNTING	5
CAMSHAFT GP	6
COVER GP-VALVE MECHANISM	7
CRANKSHAFT GP	8
CYLINDER BLOCK AS	9
CYLINDER BLOCK GP	10
CYLINDER HEAD AS	11
CYLINDER HEAD GP	12
DRAIN GP-OIL	13
DRIVE GP-FAN	14
FLYWHEEL GP	17
HOUSING GP-FLYWHEEL	18
HOUSING GP-FRONT	19
JET GP-PISTON COOLING	21
LIFTING GP-ENGINE	22
MOUNTING GP-ENGINE	23
PAN GP-OIL	25
PISTON & ROD GP	27
PLUG GP-CYLINDER BLOCK	29
PLUG GP-ENGINE	30
PULLEY GP-AUXILIARY DRIVE	31
PULLEY GP-CRANKSHAFT	32
PULLEY GP-IDLER	33
ROCKER ARM GP	35
LUBRICATION SYSTEM	38
FILLER GP-ENGINE OIL	38
FILTER GP-ENGINE OIL	39
FUMES DISPOSAL GP	40
GAUGE GP-OIL LEVEL (DIPSTICK)	41
OIL CHANGE GP-HIGH SPEED	42
PUMP GP-ENGINE OIL	44
VALVE GP-FLUID SAMPLING	45
COOLING SYSTEM	46
BASE GP-OIL COOLER & FILTER	46
CONNECTION GP-WATER	47
COOLER GP-ENGINE OIL	48
COOLING GP	49
FAN GP-BLOWER	50
FAN GP-REVERSIBLE	51
LINES GP-WATER	52
PUMP GP-WATER	54
AIR INLET AND EXHAUST SYSTEM	55
AIR CLEANER GP	55
LINES GP-AIR	57
LINES GP-TURBOCHARGER AIR	59
MANIFOLD GP-EXHAUST	60
MANIFOLD GP-INLET	61
MUFFLER GP	62
PIPE GP-EXHAUST	63
PRECLEANER GP	64
TURBOCHARGER GP	66
FUEL SYSTEM	68
FILTER GP-FUEL	68
INJECTOR GP-FUEL	72
LINES GP-FUEL	73
LINES GP-FUEL FILTER	84
LINES GP-FUEL INJECTION	86
PUMP GP-FUEL INJECTION	88
PUMP GP-FUEL PRIMING	90
PUMP GP-FUEL PRM & PRIM FILTER	91
RAIL GP-FUEL	92
TANK GP-FUEL	93
ELECTRICAL AND STARTING SYSTEM	95
ALARM GP	95
ALTERNATOR GP-CHARGING	96
BATTERY GP	97
BLOCK GP-JUNCTION	101
CONTROL GP-ELECTRONIC	102
CONTROL GP-ENGINE ELECTRONIC	103
CONTROL GP-POWER TRAIN	104
ELECTRONICS AR-MACHINE	105
ELECTRONICS GP-COMMUNICATION	106
ELECTRONICS GP-IMPLEMENT	107
ELECTRONICS GP-MACHINE	107
ELECTRONICS GP-MONITOR	107
HARNESS AS-CAB	107
HARNESS AS-CHASSIS	113
HARNESS AS-CONTROL	113
HARNESS AS-DASH	115
HARNESS AS-ENGINE	116
HARNESS AS-FRONT	118
HARNESS AS-HEATER & AIR COND	118
HARNESS AS-LIGHTING	119

TABLE OF CONTENTS

NAME	PAGE
HARNESS AS-PLATFORM	121
HARNESS AS-REAR LIGHTING	122
HARNESS AS-SENSOR	123
HARNESS AS-TRANSMISSION	123
HARNESS AS-VALVE	124
HARNESS AS-WIRING	124
HEATER GP-FUEL	126
HEATER GP-JACKET WATER	130
INSTALLATION GP-COMMUNICATION	131
LAMP GP-DOME	141
LAMP GP-FLOOD	142
LIGHTING GP-FLOOD	147
MOUNTING GP-ELECTRONIC CONTROL	162
RADIO GP-COMMUNICATION	163
SENSOR GP-ENGINE	165
SENSOR GP-POSITION	166
SENSOR GP-SPEED	169
SENSOR GP-TEMPERATURE	171
STARTING AID GP	172
STARTING AID GP-ETHER	173
STARTING MOTOR GP-ELECTRIC	175
SWITCH GP-DISCONNECT	176
SWITCH GP-MAGNETIC	177
SWITCH GP-PRESSURE	179
SWITCH GP-PUSH BUTTON	180
SWITCH GP-ROTARY	181
VALVE GP-ETHER STARTING	182
WIRING GP-CAB	183
WIRING GP-CHASSIS	197
WIRING GP-ENGINE	203
POWER TRAIN	207
ACCUMULATOR GP	207
AXLE GP	209
BRAKE & DIFFERENTIAL DRIVE GP	210
BRAKE & PLANETARY GP	214
CASE AS-TRANSMISSION	216
CONTROL GP-STEERING & XMSN	217
CONTROL GP-TRANSMISSION HYD	218
DRAIN GP-ECOLOGY	220
DRIVE AR-FINAL	221
DRIVE GP-FINAL	224
FILTER GP-OIL	230
GEAR GP-BEVEL & TRANSFER	232
LINES GP-POWER TRAIN OIL	236
MANIFOLD GP-TRANSMISSION	243
MOUNTING GP-FINAL DRIVE	244
MOUNTING GP-TORQUE CONVERTER	245
MOUNTING GP-TRANSMISSION	246
PLANETARY GP-TRANSMISSION	247
POWER TRAIN AR	253
PUMP GP-GEAR	254
SEGMENT GP-SPROCKET	257
SHAFT GP-DRIVE	258
TORQUE CONVERTER & HOUSING GP	259
TORQUE CONVERTER GP	261
TRANSMISSION AR	263
UNIVERSAL JOINT GP	264
VALVE GP-MODULATING	265
VALVE GP-RELIEF	270
FRAME AND BODY	273
BAFFLE GP-RADIATOR	273
BAR GP-STRIKER	275
BOX GP-BATTERY	280
BOX GP-STORAGE	282
CASE & FRAME GP	283
DRAWBAR GP	285
ENCLOSURE GP	286
ENCLOSURE GP-ENGINE	288
FENDER GP	292
GRID GP-SAND BLAST ERODING	293
GRILL GP-RADIATOR	294
GUARD GP-BOTTOM	296
GUARD GP-ENGINE	299
GUARD GP-FUEL TANK	300
GUARD GP-RADIATOR	304
GUARD GP-TRANSMISSION	305
HANDHOLD GP	306
KIT-MOUNTING	307
LATCH GP	308
PLUG GP	309
SEAL GP-WASTE HANDLING	310
SWEEP GP	312
UNDERCARRIAGE	314
BAR GP-EQUALIZER	314
CAP GP-TRACK IDLER	316
FRAME GP-TELESCOPING RECOIL	320
GUARD GP-TRACK GUIDE	326
GUARD GP-TRACK ROLLER	328
IDLER GP-FRONT	329
IDLER GP-TRACK	331
LINK AS-TRACK	332
MOUNTING GP-CARRIER ROLLER	334
PIVOT BAR GP	335
ROLLER GP-TRACK CARRIER	336
ROLLER GP-TRACK-DOUBLE FLANGE	337
ROLLER GP-TRACK-SINGLE FLANGE	341
SCRAPER GP-IDLER	343
STRIKER GP-REAR	344
TRACK ADJUSTER & RECOIL GP	346
TRACK AR	348
TRACK GP	353
UNDERCARRIAGE AR	358

TABLE OF CONTENTS

NAME	PAGE
STEERING AND BRAKING SYSTEM	363
CONTROL GP-PARKING BRAKE	363
FILTER GP-OIL	364
LINES GP-STEERING	365
VALVE & MTG GP-CONTROL	368
VALVE GP-BRAKE CONTROL	369
VALVE GP-CONTROL	371
VALVE GP-SOLENOID	373
HYDRAULIC SYSTEM	375
ACCUMULATOR GP-HYDRAULIC	375
ACCUMULATOR GP-PILOT OIL	376
ACTUATOR GP-PUMP	377
BARREL GP-MOTOR	378
COOLER GP-HYDRAULIC OIL	379
CYLINDER & LINES GP	380
CYLINDER GP-BULLDOZER LIFT	384
CYLINDER GP-RIPPER	386
CYLINDER GP-TILT	388
HEAD GP-PUMP	390
HYDRAULIC AR	392
HYDRAULIC AR-2 VALVE	392
HYDRAULIC AR-3 VALVE	392
LINES GP-LIFT CYLINDER	393
LINES GP-PILOT	395
LINES GP-PUMP	400
LINES GP-RIPPER	403
LINES GP-TILT CYLINDER	407
MOTOR & MOUNTING GP	411
MOTOR GP-PISTON	412
MOUNTING GP-CYLINDER	413
PUMP & MOUNTING GP	415
PUMP GP-CHARGE	418
PUMP GP-PISTON	419
ROTATING GP-MOTOR	423
ROTATING GP-PUMP	425
TANK & MTG GP-HYDRAULIC	428
TANK GP-HYDRAULIC	429
VALVE & MTG GP-CONTROL	431
VALVE GP-BANK 2	433
VALVE GP-BANK 3	435
VALVE GP-CONTROL	437
VALVE GP-FLUSHING	440
VALVE GP-MANIFOLD & RELIEF	441
VALVE GP-PILOT	442
VALVE GP-PILOT CARTRIDGE	445
VALVE GP-PUMP CONTROL	447
VALVE GP-RELIEF	450
IMPLEMENTS	454
BRACE GP-BULLDOZER	454
C-FRAME AS	456
C-FRAME GP-POWER ANGLING	457
INSTALLATION AR-BULLDOZER	458
LINES GP-GREASE	460
PUSH ARM GP	462
TRUNNION GP-BULLDOZER	464
OPERATOR STATION	465
ADJUSTER GP-SEAT	465
AIR CONDITIONER & MOUNTING GP	466
AIR CONDITIONER GP	468
ARM GP-WINDOW WIPER	470
CAB AR	474
CAB AR-ENCLOSED ROPS	475
CANOPY AR	476
COMPRESSOR GP-REFRIGERANT	477
CONDENSER & MTG GP-REFRIGERANT	479
CONDENSER GP-REFRIGERANT	480
CONTROL & MTG GP-PEDAL	482
CONTROL GP-AIR & TEMPERATURE	483
CONTROL GP-HANDLE	484
CONTROL GP-JOYSTICK	489
CONTROL GP-PILOT OPERATED HYD	490
CONTROL GP-THROTTLE	492
COVER GP-CAB	493
DOOR GP-CAB	495
FAN GP-CIRCULATING	500
FILTER GP-CAB AIR	501
HEATER & MTG GP-CAB	503
HOUSING GP-SEAT SUSPENSION	505
INSTALLATION GP-RADIO	508
KIT-HANDLE	509
KIT-SEAT CUSHION	510
KIT-SHOCK ABSORBER	511
LINER GP-CAB	513
LINES GP-AIR CONDITIONER	518
LINES GP-HEATER	521
MIRROR GP-REAR VIEW	523
MOTOR GP-WINDOW WIPER	525
MOUNTING GP-ROPS	529
PAN GP-BACKREST	531
PEDAL GP-GOVERNOR & BRAKE	534
RECLINER GP-SEAT	535
ROPS GP	536
SCREEN GP-PROTECTION	540
SEAT & MOUNTING GP	554
SEAT BELT GP	556
SEAT GP	557
SEAT GP-SUSPENSION	567
SUSPENSION GP-SEAT	570
TANK GP-WINDOW WASHER	575
WINDOW GP-CAB	578
WIPER GP-WINDOW	588
WORK TOOLS	591
BIT-END	591
BLADE & EDGE GP-ANGLING	595

TABLE OF CONTENTS

NAME	PAGE
BLADE & EDGE GP-SEMI-UNIVERSAL	596
BLADE AS-SEMI-UNIVERSAL	597
EDGE GP-BIT & CUTTING	599
MOUNTING GP-RIPPER	601
RIPPER AR	602
RIPPER GP	603
TIP GP-RIPPER	605
TOOTH GP-RIPPER	606
SERVICE EQUIPMENT AND SUPPLIES	608
FILM GP	608
PLATE & FILM GP	611
PLATE GP-CERTIFICATION	618
PART NUMBER INDEX	B1

1. MACHINE IDENTIFICATION

Cat machines are identified by Product Identification Numbers (PIN). Some components included in a machine may be identified by Serial Numbers (S/N). Typical components that will be serialized include engines, transmissions, bulldozers, and rippers. The machine and engine are further identified by arrangement numbers and in some cases modification numbers. These numbers are shown on the product identification plate(s) and on the master plate in the operator's compartment.

Cat dealers need all of these numbers to determine accurate parts identification.

Effective First Quarter 2001 the Cat Product Identification Number (PIN) changed from 8 to 17 characters. In an effort to provide uniform equipment identification, Caterpillar and other construction equipment manufacturers are moving to comply with the latest version of the product identification numbering standard. Non-road machine PINs are defined by ISO 10261. The new PIN format will apply to all Cat machines and generator sets. The PIN plates and frame marking will display the 17 character PIN. The new format will look like the following:

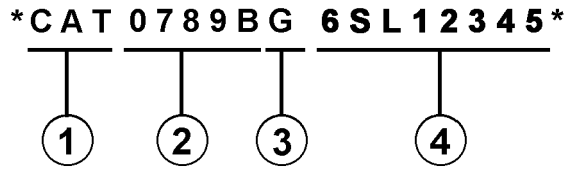

Where:

1. Caterpillar's World Manufacturing Code (characters 1-3)

2. Machine Descriptor (characters 4-8)

3. Check Character (character 9)

4. Machine Indicator Section (MIS) or Product Sequence Number (characters 10-17). These were previously referred to as the Serial Number.

Machines and generator sets produced before First Quarter 2001 will maintain their 8 character PIN format.

Components such as engines, transmissions, axles, etc. and work tools will continue to use an 8 character Serial Number (S/N).

2. ORDERING PARTS

⚠ WARNING

When replacement parts are required for this product Caterpillar recommends using Caterpillar replacement parts or parts with equivalent specifications including, but not limited to, physical dimensions, type, strength and material.

Failure to heed this warning can lead to premature failures, product damage, personal injury or death.

Quality Cat replacement parts are available from Cat dealers throughout the world. Their parts inventories are up to date and include all parts normally required to protect your investment in Cat machines. Dealers may offer repair kits or remanufactured parts to allow selection of the most effective repair alternative for a particular situation. When ordering parts, your order should specify the quantity, part number, part name, and the serial number/product identification number of the machine for which the parts are needed.

3. PARTS MANUAL ORGANIZATION

Product information in this manual is presented as "information elements" that represent all of the components for the specific model. Engine Arrangement and Seat Group are examples of information elements. The information elements are organized alphabetically by part name and secondarily by part number within each major section of the manual.

4. TABLE OF CONTENTS

A table of contents (TOC) is found at the beginning of the manual. The TOC lists each section of the manual with a complete list of all information elements organized as they appear in the manual. Page numbers are provided for quick reference to detailed parts identification illustrations and serviceable consist lists.

5. MAINTENANCE PARTS INDEX

The Maintenance Parts Index, located near the beginning of the manual, references most frequently used maintenance part numbers, providing description, quantity, usage and page number. This information is organized alphabetically by part description.

6. INDEX

The index located near the front of the manual is an alphabetical listing of all information elements included in the manual. Page numbers are provided for quick reference to detailed parts identification illustrations and serviceable consist lists.

7. PART NUMBER INDEX

A numerical index listing all part numbers and the corresponding page number(s) appears at the back of the manual.

8. CAPTIONS

Captions located at the beginning of each information element identify the part number and part name along with additional descriptive information. PIN and S/N information found in each caption should be used to select correct information for a specific machine. Field replacement options, identification of optional attachment components, and where used ("part of") information is also provided.

The first line of a caption is shown in larger type font to indicate the beginning of an information element. Captions for additional pages that may be required to illustrate an information element will be shown in standard type font and will include the term (contd.).

9. NON-SERVICED PARTS

In some instances it is necessary to display non-serviced parts that are a link to a lower level serviceable consist lists. These non-serviced part numbers are shown in italic type indicating that they are not available.

10. PARTS LIST REFERENCE NUMBERS

Numbers shown in the Ref No column correspond to numbers used in the associated graphic(s). An alphabetic suffix may be added to a reference number to identify lower level consist items. Numbers shown in the Graphic Ref column refer to the graphic number identifier displayed in the lower left corner of each illustration. The Graphic Ref number may be used in combination with the item Ref No to determine the correct part number. There may be intentional omission of a Ref No in a consist list as information is updated to reflect the latest serviceable part numbers.

11. INDENTED PART NAMES

When a part name is indented in a parts list, it is part of (included in) the group or assembly under which it is indented.

12. ILLUSTRATION REFERENCE LETTERS

When necessary, illustrations contain reference letters (A, B, C etc.) that are intended to track lines and harnesses from one point to another. They are also used to show where to reconnect illustrations that have been separated.

13. ABBREVIATIONS AND SYMBOLS

O.D. – Outside Diameter
I.D. – Inside Diameter
A – Not Part Of This Group
B – Use As Required
C – Change From Previous Type
D – Order By The Meter
E – Order By The Centimeter
F – Not Shown
G – Order By The Inch
I – Refer To Hydraulic Information System
M – Metric Part
R – Remfg Part May Be Available
Y – Separate Illustration
Z – Not Serviced Separately

14. DESCRIPTION OF TYPE CHANGES

Type - A type is defined as any configuration change that requires an additional Information Element for an Arrangement, Group, or Assembly. If serial number breaks for types are not available, a type # (Type 1, Type 2, etc.) will be displayed in the caption. These "type" changes are identified with a "C" note (change from previous type) in the Parts List. Only the "types" that apply to this Parts Manual will be included. Additional types may exist causing "C" notes to appear on an Information Element when no other types are shown.

15.<END>

This symbol indicates the end of an information element.

NOTE:

Continuing improvement and advancement of product design may cause changes to your machine which may not be included in this publication. Whenever a question arises regarding your Cat product or this publication, please consult your Cat dealer for the latest available information.

FRAME AND BODY

8E-3299 PLATFORM GP-CAB

PIN 38K1-99999

8MC6-7253 100090751

NOTE	REF NO	GRAPHIC REF	PART NUMBER	QTY	PART NAME (1 2 3 4 5 6 PRODUCT LEVEL)	SEE PAGE
	1	1	3T-3963	1	PLATE AS	
	2	1	5H-2062	25	BOLT (3/8-16X.750IN)	
	3	1	6P-1075	41	WASHER-HARD (3MM THK)	
	4	1	9F-1444	2	SUPPORT AS-FOOT	
	5	1	5P-2229	19	BOLT (1/2-13X1IN)	
		1	9z-	19	WASHER-HARD (4MM THK)	
	6	1	9E-8134		COVER AS-LH	
		1	9F-2979	6	NUT-WELD (3/8-16 THD)	
		1	1F-9189	1	CLIP	
	7	1	7S-2411	4	COVER	
	8		5J-0468	19	SCREW-HEAD (3/8-16X.87SIN)	
	9	1	9E-0974	1	COVER	
		1	9E-8975		GASKET	
	10	1	9E-3248	1		
		1	9E-3250	1	GASKET	
	11	1	3T-3930	1	HANDHOLD	
	12	1	9E-8978	1	COVER AS	
		1	9F-2979	6	NUT-WELD (3/8-16 THD)	
		1	9E-8979	1	GASKET	
	13	1	7T-0131	1	FLOORPLATE AS	
		1	1F-0748	4	NUT-WELD (1/2-13 THD)	
	14	1	7V-8067	1	PLUG-BUTTON	
	15	1	7T-0136	1	PLATE AS	
		1	9F-2979	5	NUT-WELD (3/8-16 THD)	
	16	1	7T-8066	1	COVER	
		1	7T-0779	1	GASKET	
	17	1	3T-3951	1	PLATE AS	
	18	1	9T-9364	4	BOLT (1/4-20X.62SIN)	
M		1	9T-4236	4	WASHER-HARD (2MM THK)	
	19	1	6I-8464	1	FLOOR MAT	
	20	1	9E-8946	1	MODULE AS-OPERATOR	
	21	1	3T-3934	1	HANDHOLD	
	22	1	9P-8571	2	PLUG	
	23	2	9T-9364	4	BOLT (1/4-20X.62SIN)	
M		2	9T-4236	4	WASHER-HARD (2MM THK)	
	24	2	5H-2062	17	BOLT (3/8-16X.750IN)	
	25	2	6P-1075	21	WASHER-HARD (3MM THK)	
	26	2	7T-0136	1	SEAL	
	27	2	7X-0375	2	BOLT (3/4-10X5IN)	
		2	7X-0682	2	WASHER-HARD (6MM THK)	
	28	2	3T-3482	2	PLATE	
	29	2	3T-8290	1	PLATE AS	
		2	7S-4028	6	SPACER	
	30	2	3T-8281	1	SEAL	
	31	2	7S-8017	1	GASKET	
	32	2	7S-8016	1	COVER AS	
		2	2R-2376	2	WASHER	
		2	6P-0626	2	SCREW-KNURLED	
	33	2	9W-3429	1	COVER	
	34	2	8E-9697	1	COVER	
	35	2	9D-3091	8	SCREW-SOCKET HEAD	
	36	2	9W-3142	8	MOUNTING	
	37	2	9W-9527	2	PLATE	
	38	2	7X-0390	2	BOLT (7/8-9X6IN)	
		2	7X-0672	2	WASHER-HARD	
	39	2	4L-8454	4	BOLT (3/8-16X1.0IN)	
	40	2	3T-4788	1	COVER	

12 FRAME AND BODY 1 of 4 SELP4570-01

FRAME AND BODY

8E-3299 PLATFORM GP-CAB (contd.)

100090751

NOTE	REF NO	GRAPHIC REF	PART NUMBER	QTY	PART NAME (1 2 3 4 5 6 PRODUCT LEVEL)	SEE PAGE
	41	2	8E-2515	1	COVER	
	42	2	7T-0134	1	PLATE	
	43	2	7T-0128	1	GASKET	
	44	2	7S-8724	1	GASKET	
	45	2	7S-8723	1	COVER	
	46	2	6V-1960	2	PLUG-BUTTON	

M-METRIC PART

SELP4570-01 2 of 4 FRAME AND BODY 13

FRAME AND BODY

8E-3299 PLATFORM GP-CAB (contd.)

100090751

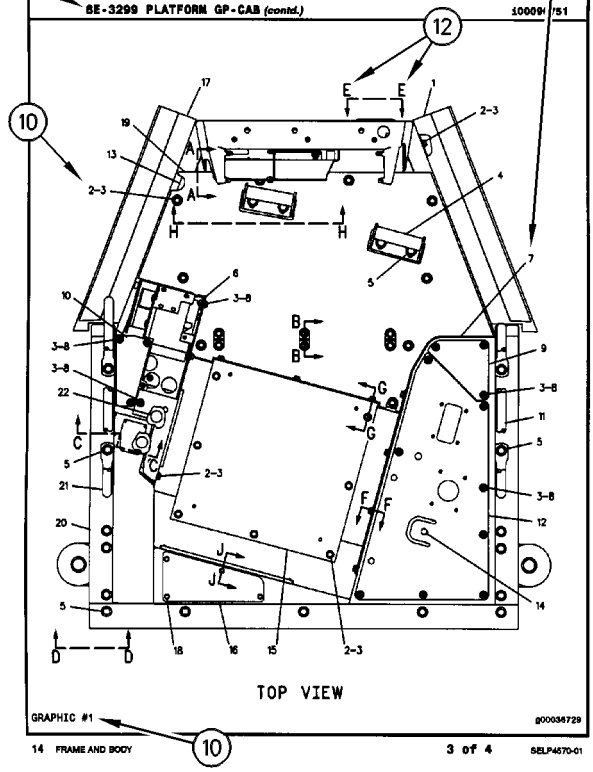

14 FRAME AND BODY 3 of 4 SELP4570-01

FRAME AND BODY

8E-3299 PLATFORM GP-CAB (contd.)

100090751

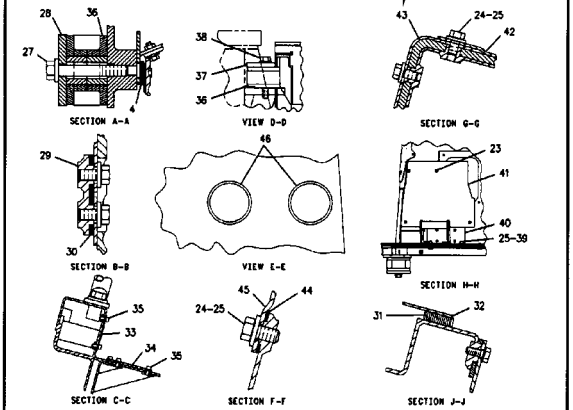

SELP4570-01 4 of 4 FRAME AND BODY 15

REMANUFACTURED COMPONENTS

As an option when making repairs consider Cat Remanufactured Components. Components that are available through the Cat Remanufactured Program are identified three ways in the parts book:

- with the letter R in the note field of the parts list
- with an R* at the beginning of the first line of the caption
- with an *R at the end of the first line of the caption

Typical components included in the Remanufacturing Program include:

ALTERNATORS
CONNECTING RODS
CRANKSHAFTS - UNDERSIZE
CRANKSHAFTS - UPGRADE TO NEW
CYLINDER HEADS
ELECTRONIC CONTROL MODULES (ECM)
ELECTRONIC SENSORS
FUEL INJECTORS
FUEL NOZZLES
FUEL PUMPS
GOVERNORS
OIL PUMPS
PISTONS
SHORT BLOCKS
STARTERS
TURBOCHARGERS - COMPLETE
TURBOCHARGER CARTRIDGES
WATER PUMPS

Cat Remanufactured engines for many engine arrangements are also available.

SUPPLEMENTAL COOLANT ADDITIVES

CUSTOMER BENEFITS:

Protects against cavitation, foam, erosion, corrosion, and scale buildup in cooling systems.

- Provides measured coolant conditioner.

DESCRIPTION:

Additives deplete from the coolant with normal operation. For this reason, Supplemental Coolant Additives (SCA) must be added to all heavy duty coolants at regular intervals. In addition, when not using a fully formulated, pre-charged antifreeze, like Cat DEAC, an initial charge of SCA must be added to the cooling system. The amount of SCA added to the system is dependent on the capacity of the system.

The SCA for initial fill is provided as a liquid. SCA's for maintenance intervals are available in liquid form and as a spin-on element. (No Spin-on available for 3600 Family of Engines)

NOTE:

The amount of SCA added at initial fill is not the same as the amount added at maintenance intervals.

The coolant additive elements can be used with any ethylene or propylene glycol type antifreeze which meets ASTM D4985 or ASTM D5345 Specifications.

NOTE:

For use with standard heavy duty coolant only, not for use with Extended Life Coolant.

PARTS NEEDED:

Cooling System Capacity		Liquid SCA at Initial Fill	Liquid SCA at Maintenance*	Spin-on SCA Maintenance Element*
Liters	Gallons			
22-30	(6-8)	3P-2044 (1)	6V-3542 (1)	111-2370 (1)
30-38	(8-10)	3P-2044 (1) 6V-3542 (1)	111-2372 (1)	111-2369 (1)
38-49	(10-13)	3P-2044 (1) 8T-1589 (1)	111-2372 (1)	111-2369 (1)
49-64	(13-17)	3P-2044 (2)	8T-1589 (1)	9N-3368 (1)
64-83	(17-22)	3P-2044 (2) 8T-1589 (1)	111-2372 (1) 6V-3542 (1)	111-2371 (1)
83-114	(22-30)	3P-2044 (3) 8T-1589 (1)	3P-2044 (1)	9N-3718 (1)
114-163	(30-43)	3P-2044 (5)	3P-2044 (1) 6V-3542 (1)	111-2371 (2)
163-242	(43-64)	3P-2044 (8)	3P-2044 (2)	9N-3718 (2)

* Normal maintenance period is 250 hrs. See your Operation and Maintenance Manual for complete coolant maintenance instructions.

( ) Indicates quantity required.

MAINTENANCE PARTS

DESCRIPTION	PART NUMBER	QTY	WHERE USED	PAGE
AIR INLET AND EXHAUST SYSTEM				
FILTER ELEMENT-AIR (PRIMARY)	346-6693	1	AIR CLEANER GP	55
		1	PRECLEANER GP	64
FILTER ELEMENT-AIR (SECONDARY)	346-6694	1	AIR CLEANER GP	55
		1	PRECLEANER GP	64
BASIC ENGINE				
BELT-SERPENTINE	185-5872	1	PULLEY GP-IDLER	33
		1	PULLEY GP-IDLER	34
GASKET (VALVE COVER)	388-0536	1	COVER GP-VALVE MECHANISM	7
SEAL (VALVE COVER)	376-4761	1	COVER GP-VALVE MECHANISM	7
COOLING SYSTEM				
CAP AS-RADIATOR	332-4175	1	COOLING GP	49
GASKET-FILTER	277-2526	1	BASE GP-OIL COOLER & FILTER	46
GASKET-WATER REGULATOR (TEMPERATURE)	281-8744	1	CONNECTION GP-WATER	47
REGULATOR AS-WATER TEMPERATURE (INCLUDES CONNECTOR)	417-7782	1	CONNECTION GP-WATER	47
ELECTRICAL AND STARTING SYSTEM				
CAP AS-FILLER (7/8-9-THD)	123-1373	6	BATTERY GP	97
		6	BATTERY GP	99
CAP AS-FILLER (M18X2-MM)	461-5232	6	BATTERY GP	97
CIRCUIT BREAKER AS (60-AMPERE) (GLOW PLUG)	171-2208	1	WIRING GP-CHASSIS	197
FILTER (ETHER START)	358-4889	1	VALVE GP-ETHER STARTING	182
FUSE (10-AMPERE)	113-8490	4	WIRING GP-CAB	183
		4	WIRING GP-CAB	189
FUSE (15-AMPERE)	113-8491	16	WIRING GP-CAB	183
		16	WIRING GP-CAB	189
GLOW PLUG (24-VOLT)	462-2235	6	STARTING AID GP	172
KEY (BATTERY DISCONNECT)	8H-5306	1	SWITCH GP-DISCONNECT	176
LAMP (24-VOLT) (DOME LIGHT)	7N-9943	1	LAMP GP-DOME	141
LAMP-HALOGEN (24-VOLT, 70-WATT)	351-9918	1	LAMP GP-FLOOD	142
		1	LAMP GP-FLOOD	143
		1	LAMP GP-FLOOD	144
		1	LAMP GP-FLOOD	145
FRAME AND BODY				
PLUG-DRAIN (DRAIN)	106-8187	1	CASE & FRAME GP	283
FUEL SYSTEM				
CAP AS-FUEL (LOCKABLE, VENTED)	349-7059	1	TANK GP-FUEL	94
FILTER AS-WATER SEP & FUEL	439-5037	1	FILTER GP-FUEL	69
FILTER AS-WATER SEP & FUEL (ULTRA HIGH EFFICIENCY)	438-5386	1	PUMP GP-FUEL PRM & PRIM FILTER	91

MAINTENANCE PARTS

DESCRIPTION	PART NUMBER	QTY	WHERE USED	PAGE
FILTER ELEMENT-FUEL	360-8960	1	FILTER GP-FUEL	68
STRAINER-FUEL (FUEL TANK)	9P-7121	1	TANK GP-FUEL	94
HYDRAULIC SYSTEM				
CAP-FILLER (HYDRAULIC OIL)	7H-1447	1	TANK GP-HYDRAULIC	429
PLUG-DRAIN (HYDRAULIC OIL)	9J-7031	1	TANK GP-HYDRAULIC	429
SCREEN (HYDRAULIC TANK)	6E-1752	2	TANK GP-HYDRAULIC	429
STRAINER AS-OIL (HYDRAULIC)	5D-7927	1	TANK GP-HYDRAULIC	429
LUBRICATION SYSTEM				
CAP AS-OIL FILLER	369-3867	1	FILLER GP-ENGINE OIL	38
FILTER-ENGINE OIL	462-1171	1	FILTER GP-ENGINE OIL	39
OPERATOR STATION				
BLADE AS-WIPER (350-MM)	6V-5849	3	WIPER GP-WINDOW	588
BLADE AS-WIPER (500-MM)	146-6433	1	WIPER GP-WINDOW	588
CAP-VENTED (WINDOW WASHER TANK)	322-4964	1	TANK GP-WINDOW WASHER	576
CIRCUIT BREAKER AS (15-AMPERE)	6T-3643	1	AIR CONDITIONER & MOUNTING GP	466
CIRCUIT BREAKER AS (15-AMPERE) (AIR CONDITIONER)	6T-3643	1	HEATER & MTG GP-CAB	503
DRYER-REFRIGERANT (RECEIVER)	106-5534	1	LINES GP-AIR CONDITIONER	518
FILTER ELEMENT-CAB AIR (STANDARD EFFICIENCY)	112-7448	1	AIR CONDITIONER & MOUNTING GP	466
		1	HEATER & MTG GP-CAB	503
SEAL-INTEGRAL (1/2-IN)	327-0282	3	LINES GP-AIR CONDITIONER	518
SEAL-INTEGRAL (1/2-IN) (REFRIGERANT, HIGH SIDE)	327-0282	1	AIR CONDITIONER GP	468
SEAL-INTEGRAL (3/4-IN)	327-0283	1	LINES GP-AIR CONDITIONER	518
SEAL-INTEGRAL (3/4-IN) (REFRIGERANT, LOW SIDE)	327-0283	1	AIR CONDITIONER GP	468
SEAT BELT GP (RETRACTABLE, 3-IN)	222-0345	1	SEAT & MOUNTING GP	554
		1	SEAT & MOUNTING GP	555
		1	SEAT GP	559
POWER TRAIN				
BREATHER AS (POWER TRAIN)	9G-5127	1	LINES GP-POWER TRAIN OIL	236
CAP AS-OIL FILLER (POWER TRAIN)	2W-6225	1	LINES GP-POWER TRAIN OIL	236
FILTER ELEMENT AS-OIL (POWER TRAIN)	337-5270	1	FILTER GP-OIL	231
FILTER-MAGNETIC (POWER TRAIN OIL)	8S-9129	1	LINES GP-POWER TRAIN OIL	236
GASKET-COVER	8P-0058	1	PLANETARY GP-TRANSMISSION	249
PLUG-DRAIN	321-8665	1	DRAIN GP-ECOLOGY	220
PLUG-MAGNETIC (FINAL DRIVE, OIL CHECK, FILL)	6V-0439	1	DRIVE GP-FINAL	224
		1	DRIVE GP-FINAL	228
PLUG-MAGNETIC (FINAL DRIVE)	6V-0439	1	DRIVE GP-FINAL	226

MAINTENANCE PARTS

DESCRIPTION	PART NUMBER	QTY	WHERE USED	PAGE
SCREEN AS	3T-6471	1	TORQUE CONVERTER & HOUSING GP	259
SCREEN-SUCTION (POWER TRAIN OIL)	8S-9130	1	LINES GP-POWER TRAIN OIL	236
STEERING AND BRAKING SYSTEM				
FILTER ELEMENT AS-OIL	389-1076	1	FILTER GP-OIL	364

INDEX

NAME PAGE

A

ACCUMULATOR GP (BRAKE) 369 371
ACCUMULATOR GP (CHARGED) 236
ACCUMULATOR GP-HYDRAULIC–CHARGED . . . 375
ACCUMULATOR GP-PILOT OIL–UNCHARGED 376
ACCUMULATOR GP–CHARGED 207
ACCUMULATOR GP–UNCHARGED 208
ACTUATOR GP-PUMP 377
ADJUSTER GP-SEAT 465
AIR CLEANER GP 55
AIR CONDITIONER & MOUNTING GP 466
AIR CONDITIONER GP 468
ALARM GP 95
ALTERNATOR GP-CHARGING 96
ALTERNATOR GP-CHARGING (24-VOLT, 115-AMPERE) 96
ARM GP-WINDOW WIPER 472
ARM GP-WINDOW WIPER–DOOR, LH 471
ARM GP-WINDOW WIPER–DOOR, RH 470
ARM GP-WINDOW WIPER–FRONT 473
AXLE GP 209

B

BAFFLE GP-RADIATOR 273
BAR GP-EQUALIZER 314 315
BAR GP-STRIKER 275 278
BAR GP-STRIKER–HEAVY-DUTY 277
BARREL GP-MOTOR–STEERING 378
BASE GP-OIL COOLER & FILTER 46
BATTERY GP 99
BATTERY GP (12-VOLT, MAINTENANCE FREE, WET) 97 99
BATTERY GP–HEAVY-DUTY 97
BELT-SERPENTINE 33 34
BIT-END–LH 592 594
BIT-END–RH 591 593
BLADE & EDGE GP-ANGLING–WASTE HANDLING 595
BLADE & EDGE GP-SEMI-UNIVERSAL 596
BLADE AS-SEMI-UNIVERSAL 597
BLADE AS-WIPER (350-MM) 588
BLADE AS-WIPER (500-MM) 588
BLOCK GP-JUNCTION 101
BOX GP-BATTERY 280
BOX GP-STORAGE–SHOVEL 282
BRACE GP-BULLDOZER–HYDRAULIC TILT 454
BRACKET GP-MOUNTING 5
BRAKE & DIFFERENTIAL DRIVE GP 210
BRAKE & PLANETARY GP 214
BREATHER AS (POWER TRAIN) 236
BRIDGE GP-VALVE 37

C

C-FRAME AS 456
C-FRAME GP-POWER ANGLING 457
CAB AR 474 475
CAB AR-ENCLOSED ROPS 475
CAMSHAFT GP 6
CANOPY AR–HEATED 476
CAP AS-FILLER (7/8-9-THD) 97 99
CAP AS-FILLER (M18X2-MM) 97
CAP AS-FUEL (LOCKABLE, VENTED) 94
CAP AS-OIL FILLER 38
CAP AS-OIL FILLER (POWER TRAIN) 236
CAP AS-RADIATOR 49
CAP GP-TRACK IDLER–FRONT, LH 316
CAP GP-TRACK IDLER–FRONT, RH 317
CAP GP-TRACK IDLER–REAR, LH 319
CAP GP-TRACK IDLER–REAR, RH 318
CAP-FILLER (HYDRAULIC OIL) 429
CAP-VENTED (WINDOW WASHER TANK) 576
CASE & FRAME GP 283 284
CASE AS-TRANSMISSION 216
CHASSIS AR 1
CIRCUIT BREAKER AS (15-AMPERE) 466
CIRCUIT BREAKER AS (15-AMPERE) (AIR CONDITIONER) 503
CIRCUIT BREAKER AS (60-AMPERE) (GLOW PLUG) 197
COMMON AR 1
COMPRESSOR GP-REFRIGERANT 477 478
CONDENSER & MTG GP-REFRIGERANT 479
CONDENSER GP-REFRIGERANT 480
CONNECTING ROD GP 27
CONNECTION GP-AIR 61
CONNECTION GP-WATER 47
CONTROL & MTG GP-PEDAL–GOVERNOR, BRAKE 482
CONTROL GP-AIR & TEMPERATURE 483
CONTROL GP-ELECTRONIC 102
CONTROL GP-ENGINE ELECTRONIC 103
CONTROL GP-HANDLE 484 485 487
CONTROL GP-JOYSTICK–STEERING, TRANSMISSION 489
CONTROL GP-PARKING BRAKE 363
CONTROL GP-PILOT OPERATED HYD 490 491
CONTROL GP-POWER TRAIN–AUTOSHIFT 104
CONTROL GP-STEERING & XMSN 217
CONTROL GP-THROTTLE 492
CONTROL GP-TRANSMISSION HYD 218
CONTROL GP-UNPROGRAMMED (ELECTRONIC) (IMPLEMENT) 183

INDEX

NAME PAGE

CONTROL GP-UNPROGRAMMED (ELECTRONIC) (MACHINE). 189
COOLER GP-ENGINE OIL 48
COOLER GP-HYDRAULIC OIL 379
COOLING GP 49
CORE AS-OIL COOLER 49
CORE AS-OIL COOLER (HYDRAULIC) 379
CORE AS-RADIATOR. 49
COVER GP-ACCESS 248
COVER GP-BATTERY 280
COVER GP-CAB 493
COVER GP-VALVE MECHANISM. 7
CRANKSHAFT GP. 8
CYLINDER & LINES GP–BULLDOZER, LH 382
CYLINDER & LINES GP–BULLDOZER, RH. 380
CYLINDER BLOCK AS. 9
CYLINDER BLOCK GP 10
CYLINDER GP-BULLDOZER LIFT 384
CYLINDER GP-RIPPER 386
CYLINDER GP-TILT–BULLDOZER 388
CYLINDER HEAD AS. 11
CYLINDER HEAD GP. 12

D

DOOR GP-CAB (LH). 495
DOOR GP-CAB–LH 495
DOOR GP-CAB–RH. 497
DRAIN GP-ECOLOGY 220
DRAIN GP-OIL 13
DRAWBAR GP 285
DRIVE AR-FINAL 221
223
DRIVE AR-FINAL–COLD WEATHER 222
DRIVE GP-FAN 14
15
16
DRIVE GP-FINAL. 226
228
DRIVE GP-FINAL–COLD WEATHER 224
DRYER-REFRIGERANT (RECEIVER). 518

E

EDGE GP-BIT & CUTTING. 599
600
ELECTRONICS AR-MACHINE 105
ELECTRONICS GP-COMMUNICATION–PLE601 NETWORK MANAGER. 106
ELECTRONICS GP-IMPLEMENT. 107
ELECTRONICS GP-MACHINE 107
ELECTRONICS GP-MONITOR–DISPLAY 107
ELECTRONICS GP-MONITOR–MACHINE CONTROL 107
ENCLOSURE GP. 286
287
ENCLOSURE GP-ENGINE 288
ENGINE AR-PRIMARY 3

NAME PAGE

EXTENSION GP-BACKREST (CLOTH) 559
565
EXTENSION GP-BACKREST (VINYL) 564

F

FAN GP-BLOWER. 50
FAN GP-CIRCULATING 500
FAN GP-CIRCULATING (24-VOLT). 500
FAN GP-REVERSIBLE 51
FENDER GP 292
FILLER GP-ENGINE OIL. 38
FILM GP. 608
609
610
FILM-CERTIFICATION (PL631) 164
FILM-IDENTIFICATION (CAT). 184
610
FILM-IDENTIFICATION (CIRCUIT BREAKER) . . . 466
503
FILM-IDENTIFICATION (CONTROL PANEL) 197
FILM-IDENTIFICATION (FUSE PANEL). 184
189
FILM-IDENTIFICATION (GROUP NO., SEQUENCE NO.) 480
FILM-IDENTIFICATION (HYDRAULIC ACCUMULATOR) 375
376
FILM-IDENTIFICATION (JOYSTICK CONTROL) (TRANSMISSION CONTROL). 487
FILM-IDENTIFICATION (LABEL) 102
FILM-IDENTIFICATION (OPERATOR) 184
190
FILM-IDENTIFICATION (SHOVEL MOUNTING, READ OMM) 307
FILM-IDENTIFICATION (WATER HEATER) 130
FILM-IDENTIFICATION (WINDOW WIPER CONTROLS) 183
FILM-INFORMATION (PL641 CELLULAR) 163
FILM-INFORMATION (READ OMM) 609
FILM-INFORMATION (SERIAL NUMBER). 164
FILM-INSTRUCTION (BULLDOZER CONTROL). 612
614
616
FILM-INSTRUCTION (KEY START SWITCH) . . . 183
189
FILM-INSTRUCTION (READ OMM, STEERING) 609
FILM-INSTRUCTION (RIPPER CONTROL). 490
FILM-INSTRUCTION (SEAT ADJUSTMENT) 570
572
FILM-WARNING (DO NOT SPRAY, READ OMM). 611
FILM-WARNING (HIGH PRESSURE, READ OMM, INTL) 609
FILM-WARNING (HIGH PRESSURE, READ OMM). 207
208

INDEX

NAME PAGE

FILM-WARNING (PRODUCT LINK RADIO, INTL) . . . 131, 134, 137, 139
FILM-WARNING (RECOIL SPRING) . . . 320, 322
FILM-WARNING (UNIVERSAL WARNING) . . . 611
FILTER (ETHER START) . . . 182
FILTER AS-WATER SEP & FUEL . . . 69
FILTER AS-WATER SEP & FUEL (ULTRA HIGH EFFICIENCY) . . . 91
FILTER ELEMENT AS-OIL . . . 364
FILTER ELEMENT AS-OIL (POWER TRAIN) . . . 231
FILTER ELEMENT-AIR (PRIMARY) . . . 55, 64
FILTER ELEMENT-AIR (SECONDARY) . . . 55, 64
FILTER ELEMENT-CAB AIR (STANDARD EFFICIENCY) . . . 466, 503
FILTER ELEMENT-FUEL . . . 68
FILTER GP-CAB AIR . . . 501, 502
FILTER GP-ENGINE OIL . . . 39
FILTER GP-FUEL . . . 68, 69, 70, 71
FILTER GP-OIL . . . 231, 364
FILTER GP-OIL–MEDIUM PRESSURE . . . 230
FILTER-ENGINE OIL . . . 39
FILTER-MAGNETIC (POWER TRAIN OIL) . . . 236
FLOOR MAT AS . . . 493
FLYWHEEL GP . . . 17
FRAME GP-TELESCOPING RECOIL–LH . . . 322, 324
FRAME GP-TELESCOPING RECOIL–RH . . . 320, 325
FUMES DISPOSAL GP . . . 40
FUSE (10-AMPERE) . . . 183, 189
FUSE (15-AMPERE) . . . 183, 189

G

GASKET (VALVE COVER) . . . 7
GASKET-COVER . . . 249
GASKET-FILTER . . . 46
GASKET-WATER REGULATOR (TEMPERATURE) . . . 47
GAUGE GP-OIL LEVEL (DIPSTICK) . . . 41
GAUGE-OIL LEVEL (DIPSTICK) (POWER TRAIN) . . . 236
GAUGE-SIGHT (HYDRAULIC OIL) . . . 429
GEAR GP-BEVEL & TRANSFER . . . 232
GLOW PLUG (24-VOLT) . . . 172
GRID GP-SAND BLAST ERODING . . . 293
GRILL GP-RADIATOR . . . 294
GRILL GP-RADIATOR–HEAVY DUTY . . . 295
GUARD GP-BOTTOM . . . 296, 297
GUARD GP-ENGINE . . . 299
GUARD GP-ENGINE (LH) . . . 299
GUARD GP-ENGINE (RH) . . . 288
GUARD GP-FUEL TANK . . . 285, 300, 301, 303, 309, 344
GUARD GP-RADIATOR . . . 304
GUARD GP-TILT CYLINDER . . . 458
GUARD GP-TRACK GUIDE . . . 326
GUARD GP-TRACK GUIDE–HEAVY-DUTY . . . 327
GUARD GP-TRACK ROLLER . . . 328
GUARD GP-TRANSMISSION–REAR . . . 305

H

HANDHOLD GP . . . 306
HARNESS AS-CAB . . . 107, 108
HARNESS AS-CAB–FRONT . . . 110
HARNESS AS-CAB–FUSE BLOCK . . . 109
HARNESS AS-CAB–LH . . . 111
HARNESS AS-CAB–REAR . . . 112
HARNESS AS-CHASSIS . . . 113
HARNESS AS-CONTROL–PRODUCT LINK . . . 113, 114
HARNESS AS-DASH . . . 115
HARNESS AS-ENGINE . . . 116, 117
HARNESS AS-FRONT . . . 118
HARNESS AS-FRONT LIGHTING . . . 157, 160
HARNESS AS-FUEL TANK . . . 197
HARNESS AS-HEATER . . . 569
HARNESS AS-HEATER & AIR COND . . . 118, 480
HARNESS AS-LIGHTING . . . 120
HARNESS AS-LIGHTING–CAB, REAR . . . 121
HARNESS AS-LIGHTING–CANOPY . . . 119
HARNESS AS-LIGHTING–CYLINDER . . . 119, 120
HARNESS AS-PLATFORM . . . 121, 206, 468
HARNESS AS-REAR LIGHTING . . . 122
HARNESS AS-SENSOR . . . 123
HARNESS AS-STARTING AID . . . 172, 203
HARNESS AS-SWITCH . . . 518
HARNESS AS-SWITCH (WITH SWITCH) (SEAT HEATER) . . . 565
HARNESS AS-TRANSMISSION . . . 123, 218
HARNESS AS-VALVE . . . 124

INDEX

NAME PAGE

HARNESS AS-VALVE (SEAT AIR COMPRESSOR) . . . 572
HARNESS AS-WIRING (CRANK WITHOUT INJECT) . . . 197
HARNESS AS-WIRING–SEAT . . . 125
HARNESS AS-WIRING–WINDOW WASHER . . . 124
HEAD GP-PUMP–STEERING . . . 390
HEATER & MTG GP-CAB . . . 503
HEATER GP-FUEL . . . 126
HEATER GP-JACKET WATER . . . 130
HOUSING GP-FLYWHEEL . . . 18
HOUSING GP-FRONT . . . 19
HOUSING GP-SEAT SUSPENSION . . . 505
HYDRAULIC AR . . . 392
HYDRAULIC AR-2 VALVE–BULLDOZER . . . 392
HYDRAULIC AR-3 VALVE–BULLDOZER, RIPPER . . . 392

I

IDLER GP-BELT (ALTERNATOR, REFRIGERANT COMPR) . . . 33, 34
IDLER GP-FRONT . . . 329
IDLER GP-TRACK . . . 331
INDICATOR AS (AIR FILTER) . . . 203
INJECTOR GP-FUEL . . . 72
INSTALLATION AR-BULLDOZER–ANGLING . . . 459
INSTALLATION AR-BULLDOZER–SEMI-UNIVERSAL . . . 458
INSTALLATION AR-ENGINE . . . 4
INSTALLATION GP-COMMUNICATION–PL631 SATELLITE . . . 131
INSTALLATION GP-COMMUNICATION–PL641 CELLULAR . . . 139
INSTALLATION GP-COMMUNICATION–PLE641 CELLULAR . . . 134
INSTALLATION GP-COMMUNICATION–PLE641 +PL631 . . . 137
INSTALLATION GP-RADIO . . . 508

J

JET GP-PISTON COOLING . . . 21

K

KEY (BATTERY DISCONNECT) . . . 176
KIT-HANDLE . . . 509
KIT-MOUNTING–SHOVEL . . . 307
KIT-SEAT CUSHION . . . 510
KIT-SHOCK ABSORBER . . . 511

L

LAMP (24-VOLT) (DOME LIGHT) . . . 141
LAMP GP-DOME–WITH SWITCH . . . 141
LAMP GP-FLOOD . . . 142, 143, 144, 145
LAMP GP-FLOOD–LED . . . 146
LAMP-HALOGEN (24-VOLT, 70-WATT) . . . 142, 143, 144, 145
LATCH GP . . . 308
LIFTING GP-ENGINE . . . 22
LIGHTING GP-FLOOD–CAB, CYLINDER . . . 149, 151, 155
LIGHTING GP-FLOOD–CANOPY, CYLINDER . . . 147, 153
LIGHTING GP-FLOOD–SWEEP . . . 157, 160
LINER GP-CAB . . . 513, 516
LINES GP-AIR . . . 57
LINES GP-AIR CONDITIONER–ROPS MOUNTED . . . 518
LINES GP-FUEL . . . 73, 76, 77, 78, 79, 80, 84
LINES GP-FUEL FILTER . . . 84
LINES GP-FUEL INJECTION . . . 86, 87
LINES GP-GREASE . . . 460
LINES GP-HEATER . . . 521
LINES GP-LIFT CYLINDER . . . 393
LINES GP-PILOT . . . 395, 398
LINES GP-POWER TRAIN OIL . . . 236
LINES GP-PUMP . . . 400
LINES GP-RIPPER . . . 403, 405
LINES GP-STEERING . . . 365
LINES GP-TILT CYLINDER–BULLDOZER . . . 407, 409
LINES GP-TURBOCHARGER AIR . . . 59
LINES GP-WATER . . . 52
LINK AS-TRACK–HEAVY-DUTY . . . 332
LITERATURE GP (STANDARD CAB) . . . 474, 475, 476

M

MANIFOLD GP-EXHAUST . . . 60
MANIFOLD GP-INLET . . . 61
MANIFOLD GP-TRANSMISSION . . . 243
MIRROR GP-REAR VIEW . . . 523
MIRROR GP-REAR VIEW–LH . . . 524
MOTOR & MOUNTING GP–STEERING . . . 411

INDEX

NAME PAGE

MOTOR GP-PISTON–STEERING 412
MOTOR GP-WINDOW WIPER. 525
526
528
MOTOR GP-WINDOW WIPER–REAR 527
MOUNTING GP-CARRIER ROLLER. 334
MOUNTING GP-CYLINDER. 413
MOUNTING GP-ELECTRONIC CONTROL 162
MOUNTING GP-ENGINE 23
24
MOUNTING GP-FINAL DRIVE 244
MOUNTING GP-RIPPER 601
MOUNTING GP-ROPS 529
530
MOUNTING GP-TORQUE CONVERTER. 245
MOUNTING GP-TRANSMISSION 246
MUFFLER GP. 62

O

OIL CHANGE GP-HIGH SPEED 42

P

PADLOCK GP. 126
277
344
612
614
616
PAN GP-BACKREST. 531
532
533
PAN GP-OIL 25
26
PEDAL GP-GOVERNOR & BRAKE 534
PIPE GP-EXHAUST. 63
PISTON & ROD GP 27
PIVOT BAR GP 335
PLANETARY GP-TRANSMISSION 247
PLATE & FILM GP 602
611
612
PLATE & FILM GP–COLD WEATHER 614
PLATE & FILM GP–HIGH AMBIENT 616
PLATE GP-CERTIFICATION 618
PLATE-CERTIFICATION (MACHINE) 618
PLATE-SERIAL NUMBER 259
596
PLATE-SERIAL NUMBER (BLADE) 595
PLATE-SERIAL NUMBER (RIPPER). 602
PLATE-SERIAL NUMBER (TRANSMISSION). . . . 247
PLATE-WARNING (HIGH PRESSURE CYLINDER) 320
322
PLATE-WARNING (RECOIL SPRING) 324
325
PLUG GP. 309
PLUG GP-CYLINDER BLOCK 29

NAME PAGE

PLUG GP-ENGINE 30
PLUG-DRAIN. 220
PLUG-DRAIN (DRAIN) 283
PLUG-DRAIN (HYDRAULIC OIL). 429
PLUG-MAGNETIC (FINAL DRIVE, OIL CHECK, FILL) 224
228
PLUG-MAGNETIC (FINAL DRIVE) 226
POWER TRAIN AR. 253
PRECLEANER GP. 64
PULLEY GP-AUXILIARY DRIVE 31
PULLEY GP-CRANKSHAFT 32
PULLEY GP-IDLER 33
34
PUMP & MOUNTING GP–IMPLEMENT. 415
PUMP & MOUNTING GP–STEERING 416
PUMP GP-CHARGE–STEERING 418
PUMP GP-ENGINE OIL 44
PUMP GP-FUEL INJECTION 88
89
PUMP GP-FUEL PRIMING 90
PUMP GP-FUEL PRM & PRIM FILTER 91
PUMP GP-GEAR 256
PUMP GP-GEAR–3-SECTION 254
PUMP GP-PISTON–IMPLEMENT. 419
PUMP GP-PISTON–STEERING 421
PUMP GP-WATER. 54
PUSH ARM GP 462

R

RADIO GP-COMMUNICATION–PL631 SATELLITE. 164
RADIO GP-COMMUNICATION–PL641E CELLULAR. 163
RAIL GP-FUEL 92
RECLINER GP-SEAT 535
REGULATOR AS-WATER TEMPERATURE (INCLUDES CONNECTOR). 47
REGULATOR-OIL TEMPERATURE (THERMOSTAT, POWER TRAIN). 49
RELAY AS (24-VOLT) (CONDENSER) 480
RELAY AS (24-VOLT) (WINDOW WIPERS) 183
190
RIPPER AR. 602
RIPPER GP. 603
ROCKER ARM GP 35
37
ROLLER GP-TRACK CARRIER. 336
ROLLER GP-TRACK-DOUBLE FLANGE 338
339
ROLLER GP-TRACK-DOUBLE FLANGE–HEAVY-DUTY. 337
340
ROLLER GP-TRACK-SINGLE FLANGE. 341
342
ROPS GP. 536
538
ROTATING GP-MOTOR–STEERING. 423

NAME PAGE

ROTATING GP-PUMP–IMPLEMENT CONTROL 425
ROTATING GP-PUMP–STEERING 426

S

SCRAPER GP-IDLER 343
SCREEN (HYDRAULIC TANK). 429
SCREEN AS 259
SCREEN GP-PROTECTION 540
542
543
544
547
SCREEN GP-PROTECTION–LH. 550
553
SCREEN GP-PROTECTION–REAR. 546
SCREEN GP-PROTECTION–RH 548
552
SCREEN-SUCTION (POWER TRAIN OIL) 236
SEAL (VALVE COVER) 7
SEAL GP-DUO-CONE. 226
228
329
337
338
341
SEAL GP-WASTE HANDLING 310
SEAL-CRANKSHAFT (REAR) 18
SEAL-INTEGRAL (1/2-IN). 518
SEAL-INTEGRAL (1/2-IN) (REFRIGERANT, HIGH SIDE) 468
SEAL-INTEGRAL (3/4-IN). 518
SEAL-INTEGRAL (3/4-IN) (REFRIGERANT, LOW SIDE) 468
SEAT & MOUNTING GP–CLOTH, HEATED 555
SEAT & MOUNTING GP–VINYL 554
SEAT BELT GP 556
SEAT BELT GP (RETRACTABLE, 3-IN) 554
555
559
SEAT GP-SUSPENSION–CLOTH 567
SEAT GP-SUSPENSION–CLOTH, HEATED, AIR 569
SEAT GP-SUSPENSION–VINYL 568
SEAT GP–CLOTH 557
559
563
SEAT GP–CLOTH, HEATED. 565
SEAT GP–VINYL 561
564
SEGMENT GP-SPROCKET. 257
SENDER AS-FUEL LEVEL 93
SENSOR (FUEL RAIL PRESSURE) 92
SENSOR GP-ENGINE 3
165
SENSOR GP-LIQUID LEVEL 69
73
SENSOR GP-LIQUID LEVEL (FUEL) 80

NAME PAGE

SENSOR GP-POSITION. 166
167
168
SENSOR GP-POSITION (DECELERATOR) 534
SENSOR GP-POSITION (FORWARD, NEUTRAL, REVERSE) 487
SENSOR GP-POSITION (ROTARY) (SERVICE BRAKE). 534
SENSOR GP-POSITION (STEERING) 489
SENSOR GP-PRESSURE (ENGINE OIL) 165
SENSOR GP-PRESSURE (INLET MANIFOLD AIR) 165
SENSOR GP-SPEED 170
SENSOR GP-SPEED (ENGINE) 165
SENSOR GP-SPEED (STEERING MOTOR) 197
SENSOR GP-SPEED–MAGNETIC, HIGH OUTPUT 169
SENSOR GP-TEMPERATURE 171
SENSOR-TEMPERATURE 171
SENSOR-TEMPERATURE (AIR INLET MANIFOLD) 165
SENSOR-TEMPERATURE (COOLANT) 165
SENSOR-TEMPERATURE (HYDRAULIC OIL) . . . 202
SENSOR-TEMPERATURE (TRANSMISSION) . . . 202
SHAFT GP-DRIVE 258
SOFTWARE GP-IMPLEMENT. 107
SOFTWARE GP-MACHINE 107
SOFTWARE GP-MONITOR (CELLULAR) 163
SOFTWARE GP-MONITOR (DISPLAY) 107
SOFTWARE GP-MONITOR (MACHINE CONTROL). 107
SOFTWARE GP-MONITOR (SATELLITE RADIO) 164
SOLENOID. 61
SOLENOID AS (PUMP CONTROL VALVE) 448
STARTING AID GP. 172
STARTING AID GP-ETHER 173
STARTING MOTOR GP-ELECTRIC 175
STARTING MOTOR GP-ELECTRIC (24-VOLT) 175
STRAINER AS-OIL (HYDRAULIC). 429
STRAINER-FUEL (FUEL TANK) 94
STRIKER GP-REAR–WASTE HANDLING 344
SUPPORT GP-LINES 84
SUSPENSION GP-SEAT 570
SUSPENSION GP-SEAT–AIR. 572
SWEEP GP 312
SWITCH AS (POWER TRAIN). 104
SWITCH AS (SPEED CONTROL). 492
SWITCH AS-LIMIT (SERVICE BRAKE PEDAL) 534
SWITCH AS-PRESSURE (HIGH, LOW) 518
SWITCH AS-PRESSURE (OIL) 364
SWITCH AS-PUSH BUTTON (DISPLAY MODES) 183
189
SWITCH AS-PUSH BUTTON (DOWNSHIFT) 487
SWITCH AS-PUSH BUTTON (UPSHIFT) 487
SWITCH AS-ROCKER (24-VOLT) (AIR CONDITIONER ON, OFF) 483

NAME PAGE

SWITCH AS-ROCKER (24-VOLT) (FLOODLIGHT, FRONT). 183
SWITCH AS-ROCKER (24-VOLT) (FLOODLIGHTS, REAR) 183
SWITCH AS-ROCKER (24-VOLT) (FRONT WORK LIGHT). 190
SWITCH AS-ROCKER (24-VOLT) (IMPLEMENT LOCKOUT) 183
189
SWITCH AS-ROCKER (24-VOLT) (REAR WORK LIGHTS) 190
SWITCH AS-ROCKER (PARKING BRAKE ON, OFF) 485
SWITCH AS-START (KEY) 183
189
SWITCH GP-DISCONNECT (BATTERY) 199
SWITCH GP-DISCONNECT–BATTERY 176
SWITCH GP-LIMIT (STEERING) 487
SWITCH GP-MAGNETIC 177
178
SWITCH GP-PRESSURE. 179
SWITCH GP-PUSH BUTTON 180
SWITCH GP-PUSH BUTTON (FUEL PRIMING PUMP). 197
SWITCH GP-ROTARY 181
SWITCH-TEMPERATURE (HVAC) (AIR CONDITIONER) 468

T

TANK & MTG GP-HYDRAULIC 428
TANK GP-FUEL 93
94
TANK GP-HYDRAULIC. 429
TANK GP-WINDOW WASHER. 575
576
TIP GP-RIPPER 605
TOOTH GP-RIPPER 606
TOOTH GP-RIPPER–CURVED. 607
TORQUE CONVERTER & HOUSING GP–WITH HOUSING. 259
TORQUE CONVERTER GP 261
TRACK ADJUSTER & RECOIL GP 346
TRACK AR–HEAVY-DUTY. 348
349
350
351
352
TRACK GP–2-REQUIRED, HEAVY-DUTY. 353
354
355
356
357
TRANSMISSION AR 263
TRUNNION GP-BULLDOZER 464
TURBOCHARGER GP 66

U

UNDERCARRIAGE AR. 360
361
UNDERCARRIAGE AR–HEAVY DUTY. 358
UNDERCARRIAGE AR–HEAVY-DUTY 362
UNDERCARRIAGE AR–HEAVY-DUTY, WASTE HANDLING. 359
UNIVERSAL JOINT GP 264

V

VALVE & MTG GP-CONTROL. 431
432
VALVE & MTG GP-CONTROL–BRAKE. 368
VALVE AS-PRESSURE RELIEF (REFRIGERANT COMPRESSOR) 477
VALVE GP-BANK 2–BULLDOZER. 433
VALVE GP-BANK 3–BULLDOZER, RIPPER. 435
VALVE GP-BRAKE CONTROL. 369
VALVE GP-CHECK 400
437
439
VALVE GP-CONTROL (IMPLEMENT, STEERING, BRAKE). 369
371
VALVE GP-CONTROL (TILT) 433
435
VALVE GP-CONTROL–BRAKE. 371
VALVE GP-CONTROL–BULLDOZER LIFT 437
VALVE GP-CONTROL–RIPPER. 439
VALVE GP-ETHER STARTING 182
VALVE GP-FLUID SAMPLING 45
52
237
365
VALVE GP-FLUSHING–STEERING. 440
VALVE GP-MANIFOLD & RELIEF 441
VALVE GP-MANUAL (OVERRIDE CONTROL). 437
VALVE GP-MODULATING. 265
266
267
268
269
VALVE GP-PILOT CARTRIDGE. 445
446
VALVE GP-PILOT–BLADE CONTROL 442
VALVE GP-PILOT–RIPPER. 444
VALVE GP-PRESSURE REDUCING (BRAKE) . . 369
371
VALVE GP-PUMP CONTROL–PRESSURE, FLOW COMPENSATOR 447
VALVE GP-PUMP CONTROL–STEERING 448
VALVE GP-RELIEF 270
271
390
451
452
453

NAME PAGE

VALVE GP-RELIEF (DIRECT OPERATED) 441
VALVE GP-RELIEF (LIFT). 437
VALVE GP-RELIEF–PRESSURE OVERRIDE. . . . 450
VALVE GP-SHUTOFF. 52
VALVE GP-SOLENOID. 373
374
VALVE GP-SOLENOID (24-VOLT) (HYDRAULIC LOCKOUT). 369
371
VALVE GP-SOLENOID (24-VOLT) (PILOT SHUTOFF) 441
VALVE GP-SOLENOID (BRAKE). 369
371
VALVE-RELIEF 236

W

WASTE HANDLING AR. 2
WINDOW GP-CAB. 578
582
WINDOW GP-CAB–LH 580
586
WINDOW GP-CAB–RH. 581
584
WIPER GP-WINDOW 588
WIRING GP-CAB 183
189
WIRING GP-CHASSIS 197
202
WIRING GP-ENGINE 203
206

MACHINE ARRANGEMENT

391-9522 CHASSIS AR

S/N: R5A1-UP

PART OF 391-9502 COMMON AR

SMCS-7000 **i06517601**

NOTE	PART NUMBER	QTY	PART NAME 1 2 3 4 5 6 (PRODUCT LEVEL)	SEE PAGE
Y	*422-8595*	1	BOX GP-BATTERY	280
Y	*482-8608*	1	CASE & FRAME GP	283
Y	*422-8608*	1	ENCLOSURE GP	286
Y	*422-8498*	1	ENCLOSURE GP-ENGINE	288
Y	*422-8497*	1	FENDER GP	292
Y	*423-8834*	1	GUARD GP-RADIATOR	304
Y	*455-8286*	1	HANDHOLD GP	306
Y	*423-3663*	1	MOUNTING GP-ROPS	530
Y	*422-8551*	1	TANK GP-FUEL	93
Y	*394-4834*	1	WIRING GP-CHASSIS	197

Y - SEPARATE ILLUSTRATION

<END>

391-9502 COMMON AR

S/N: R5A1-UP

SMCS-7000 **i06559699**

NOTE	PART NUMBER	QTY	PART NAME 1 2 3 4 5 6 (PRODUCT LEVEL)	SEE PAGE
Y	*391-9522*	1	CHASSIS AR	1
Y	*453-9497*	1	ELECTRONICS AR-MACHINE	105
Y	**393-4098**	1	ENGINE AR-PRIMARY	3
Y	*391-9519*	1	FILM GP	608
Y	*391-9505*	1	HYDRAULIC AR	392
Y	*391-9510*	1	INSTALLATION AR-ENGINE	4
Y	*391-9508*	1	POWER TRAIN AR	253

Y - SEPARATE ILLUSTRATION

<END>

478-6541 WASTE HANDLING AR

S/N: R5A1-UP

AN ATTACHMENT

SMCS-7000 **i06554754**

NOTE	REF NO	GRAPHIC REF	PART NUMBER	QTY	PART NAME 1 2 3 4 5 6 (PRODUCT LEVEL)	SEE PAGE
Y	1	1	*474-4764*	1	SEAL GP-WASTE HANDLING	310
	2	1	**478-6546**	1	CASE & FRAME AS	
	3	1	**478-6547**	1	GUARD AS-RADIATOR	

Y - SEPARATE ILLUSTRATION

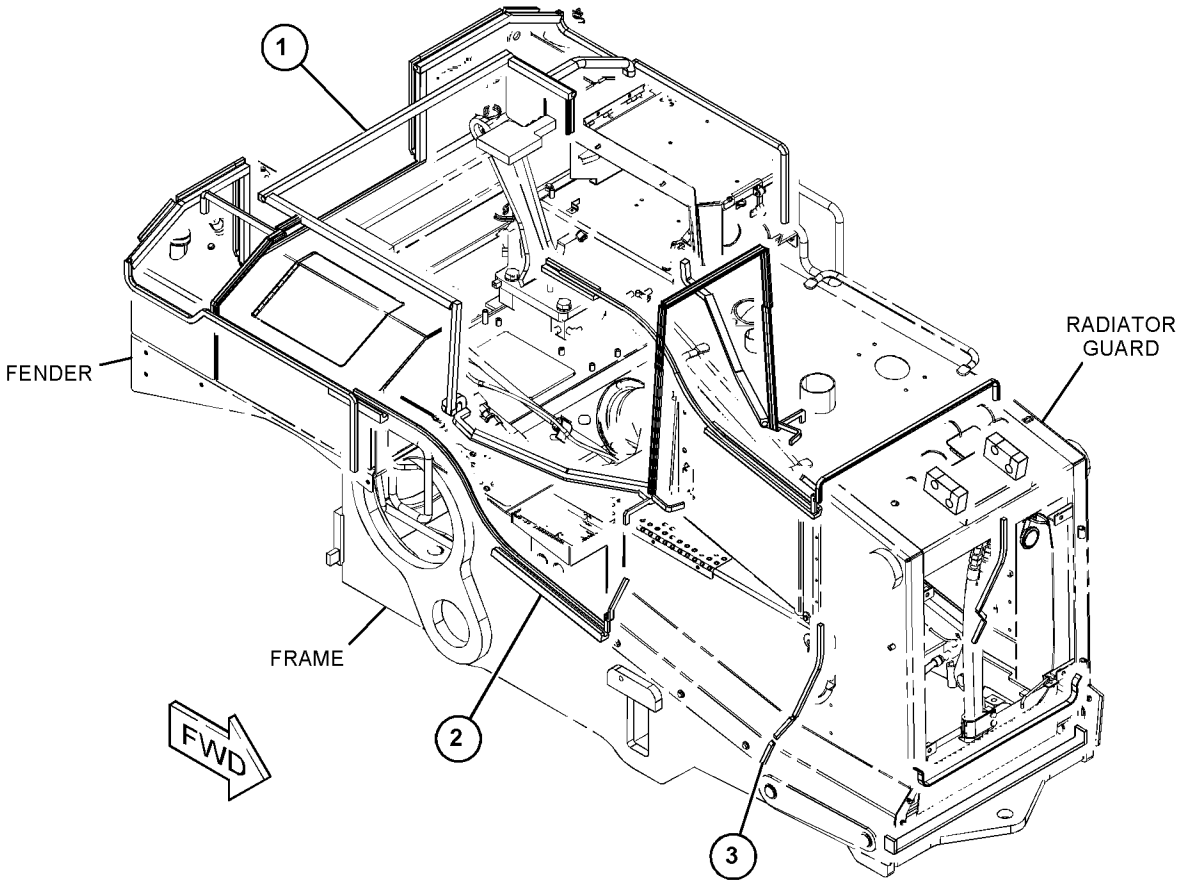

GRAPHIC #1 <END> g06024705

393-4098 ENGINE AR-PRIMARY

S/N: E7A1-UP
129 BRAKE KW (173 BHP) AT 2200 RPM
PART OF 391-9502 COMMON AR

SMCS-1000 **i06560418**

NOTE	PART NUMBER	QTY	PART NAME 1 2 3 4 5 6 (PRODUCT LEVEL)	SEE PAGE
Y	*437-9860*	1	ALTERNATOR GP-CHARGING	96
Y	*346-0099*	1	BASE GP-OIL COOLER & FILTER	46
Y	*433-6938*	1	BRACKET GP-MOUNTING (BREATHER)	5
Y	*396-2615*	1	CAMSHAFT GP	6
Y	*373-3607*	1	CONNECTION GP-WATER	47
Y	*371-2537*	1	CONTROL GP-ENGINE ELECTRONIC	103
Y	*389-3346*	1	COVER GP-VALVE MECHANISM	7
Y	*374-6300*	1	CRANKSHAFT GP	8
Y	*390-0854*	1	CYLINDER BLOCK GP	10
Y	*385-2572*	1	CYLINDER HEAD GP	12
Y	*378-8166*	1	DRAIN GP-OIL	13
Y	*439-1143*	1	DRIVE GP-FAN	16
Y	*419-6603*	1	FILLER GP-ENGINE OIL	38
Y	*415-5625*	1	FILM GP	610
Y	*346-0220*	1	FILTER GP-ENGINE OIL	39
Y	*453-7163*	1	FILTER GP-FUEL	71
Y	*345-9030*	1	FLYWHEEL GP	17
Y	*378-0625*	1	GAUGE GP-OIL LEVEL (DIPSTICK)	41
Y	*345-8846*	1	HOUSING GP-FLYWHEEL	18
Y	*371-2716*	1	HOUSING GP-FRONT	19
Y	*371-2483*	1	INJECTOR GP-FUEL	72
Y	*371-2478*	1	JET GP-PISTON COOLING	21
Y	*371-2740*	1	LIFTING GP-ENGINE	22
Y	*426-3312*	1	LINES GP-FUEL FILTER	84
Y	*416-7808*	1	MANIFOLD GP-EXHAUST	60
Y	*391-5523*	1	MANIFOLD GP-INLET	61
Y	*395-0112*	1	MOUNTING GP-ELECTRONIC CONTROL	162
Y	*346-1510*	1	MOUNTING GP-ENGINE	23
Y	*371-2544*	1	PAN GP-OIL	25
Y	*374-6301*	1	PISTON & ROD GP	27
Y	*378-8167*	1	PLATE & FILM GP	611
Y	*374-9295*	1	PLUG GP-CYLINDER BLOCK	29
Y	*346-2908*	1	PLUG GP-ENGINE	30
Y	*460-7921*	1	PULLEY GP-AUXILIARY DRIVE	31
Y	*459-4219*	1	PULLEY GP-CRANKSHAFT	32
Y	*462-6685*	1	PUMP GP-ENGINE OIL	44
Y	*391-4811*	1	PUMP GP-FUEL INJECTION	89
Y	*372-2297*	1	PUMP GP-WATER	54
Y	*394-9639*	1	RAIL GP-FUEL	92
Y	*371-2480*	1	ROCKER ARM GP	37
Y	*395-0110*	1	SENSOR GP-ENGINE	165
Y	*395-0114*	1	STARTING AID GP	172
Y	*392-2022*	1	STARTING MOTOR GP-ELECTRIC	175
Y	*416-2523*	1	TURBOCHARGER GP	66
Y	*371-2745*	1	VALVE GP-FLUID SAMPLING	45

393-4098 **ENGINE AR-PRIMARY (**contd.**)** **i06560418**

NOTE	PART NUMBER	QTY	PART NAME 1 2 3 4 5 6 (PRODUCT LEVEL)	SEE PAGE
Y	*395-0113*	1	WIRING GP-ENGINE	206
	448-4762	1	ELECTRONICS GP-ENGINE	

Y - SEPARATE ILLUSTRATION

<END>

391-9510 INSTALLATION AR-ENGINE

S/N: R5A1-UP

PART OF 391-9502 COMMON AR

SMCS-1000 **i06519628**

NOTE	PART NUMBER	QTY	PART NAME 1 2 3 4 5 6 (PRODUCT LEVEL)	SEE PAGE
Y	*422-7012*	1	BAFFLE GP-RADIATOR	273
Y	*422-7003*	1	COOLER GP-HYDRAULIC OIL	379
Y	*422-7017*	1	DRIVE GP-FAN	14
Y	*430-5635*	1	FUMES DISPOSAL GP	40
Y	*422-7019*	1	LINES GP-AIR	57
Y	*424-4628*	1	LINES GP-HEATER	521
Y	*422-7020*	1	LINES GP-WATER	52
Y	*421-3789*	1	MOUNTING GP-ENGINE	24
Y	*424-4619*	1	MUFFLER GP	62
Y	*424-4621*	1	PIPE GP-EXHAUST	63
Y	*422-7013*	1	COOLING GP	49
Y	*394-4835*	1	WIRING GP-ENGINE	203

Y - SEPARATE ILLUSTRATION

<END>

433-6938 BRACKET GP-MOUNTING

S/N: E7A1-UP

PART OF 393-4098 ENGINE AR-PRIMARY

SMCS-0635 **i06560499**

NOTE	REF NO	GRAPHIC REF	PART NUMBER	QTY	PART NAME 1 2 3 4 5 6 (PRODUCT LEVEL)	SEE PAGE
	1	1	**105-2740**	3	BOLT	
M	2	1	**124-3815**	3	BOLT (M8X1.25X16-MM)	
	3	1	**428-7042**	1	BRACKET	

M - METRIC PART

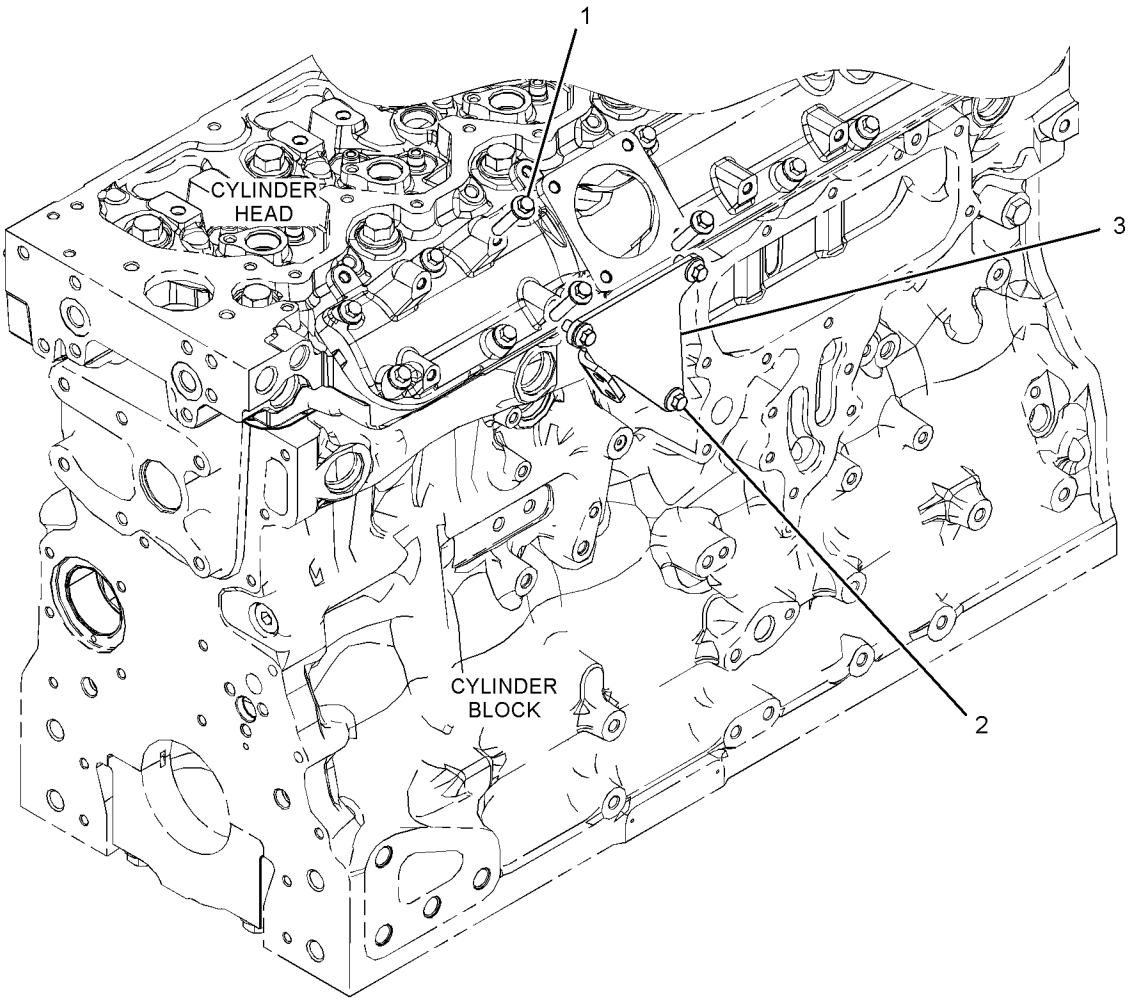

GRAPHIC #1 <END> g03578440

396-2615 CAMSHAFT GP

S/N: E7A1-UP

PART OF 393-4098 ENGINE AR-PRIMARY

SMCS-1210 **i06560489**

NOTE	REF NO	GRAPHIC REF	PART NUMBER	QTY	PART NAME 1 2 3 4 5 6 (PRODUCT LEVEL)	SEE PAGE
	1	1	**278-5125**	12	TAPPET	
	2	1	**396-8795**	1	CAMSHAFT GP	
	2A	1	**067-6135**	1	KEY-WOODRUFF	
	3	1	**319-8426**	12	PUSHROD	

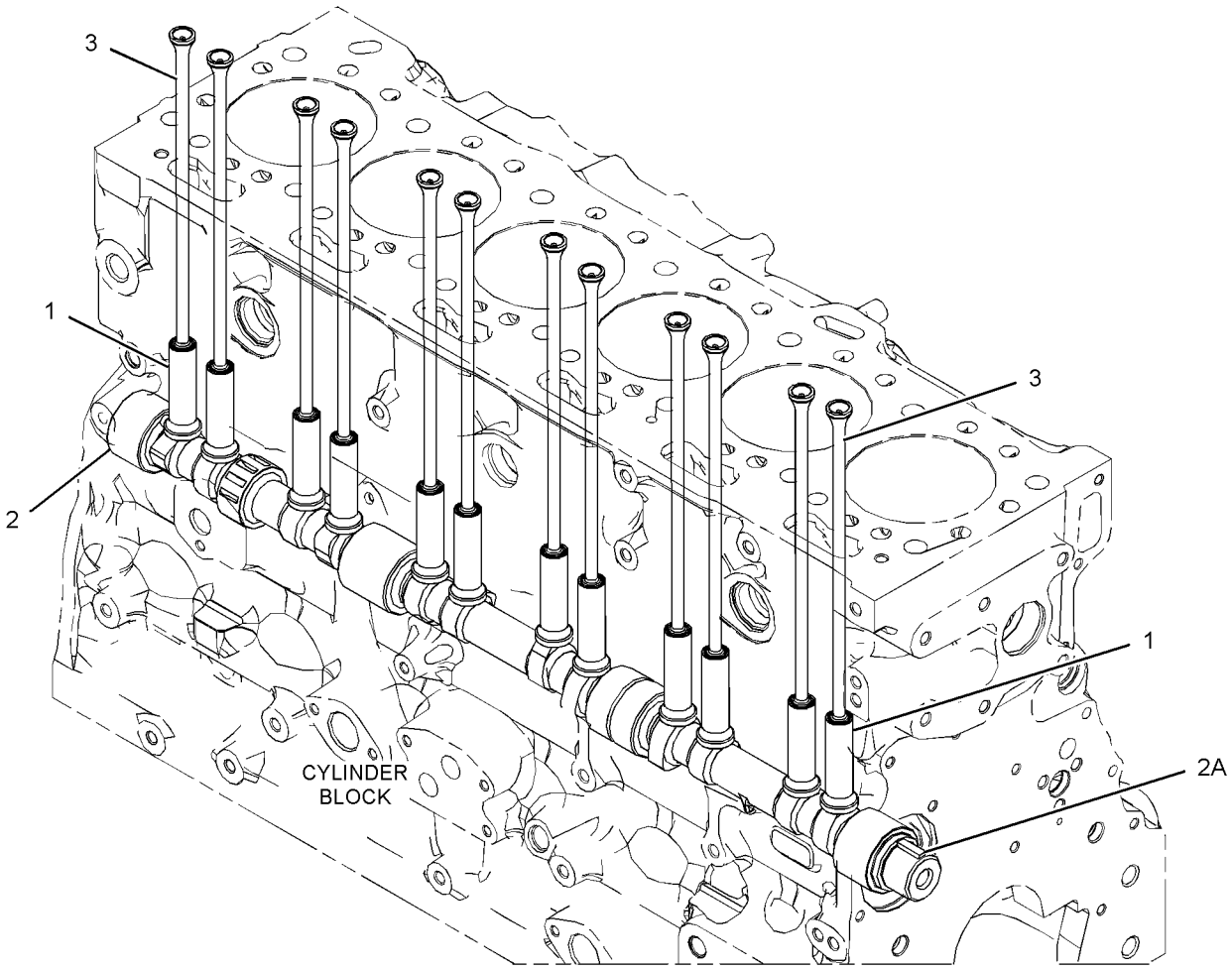

GRAPHIC #1 <END> g03380150

389-3346 COVER GP-VALVE MECHANISM

S/N: E7A1-UP

PART OF 393-4098 ENGINE AR-PRIMARY

SMCS-1107 **i06560475**

NOTE	REF NO	GRAPHIC REF	PART NUMBER	QTY	PART NAME 1 2 3 4 5 6 (PRODUCT LEVEL)	SEE PAGE
M	1	1	**101-3895**	9	BOLT (M8X1.25X35-MM)	
	2	1	**103-5705**	6	BOLT (M8X1.25X110-MM)	
	3	1	**383-1382**	1	COVER GP-VALVE MECHANISM	
	3A	1	**195-9245**	3	SCREW (M4X0.7X10-MM)	
	3B	1	**376-4761**	1	SEAL (VALVE COVER)	
	3C	1	**380-9615**	1	BREATHER (VALVE MECHANISM)	
	3D	1	**383-1383**	1	COVER-VALVE MECHANISM	
	4	1	**388-0536**	1	GASKET (VALVE COVER)	
	5	1	**461-3440**	1	COVER-BASE	
M	6	1	**6I-0217**	14	BOLT (M8X1.25X20-MM)	

M - METRIC PART

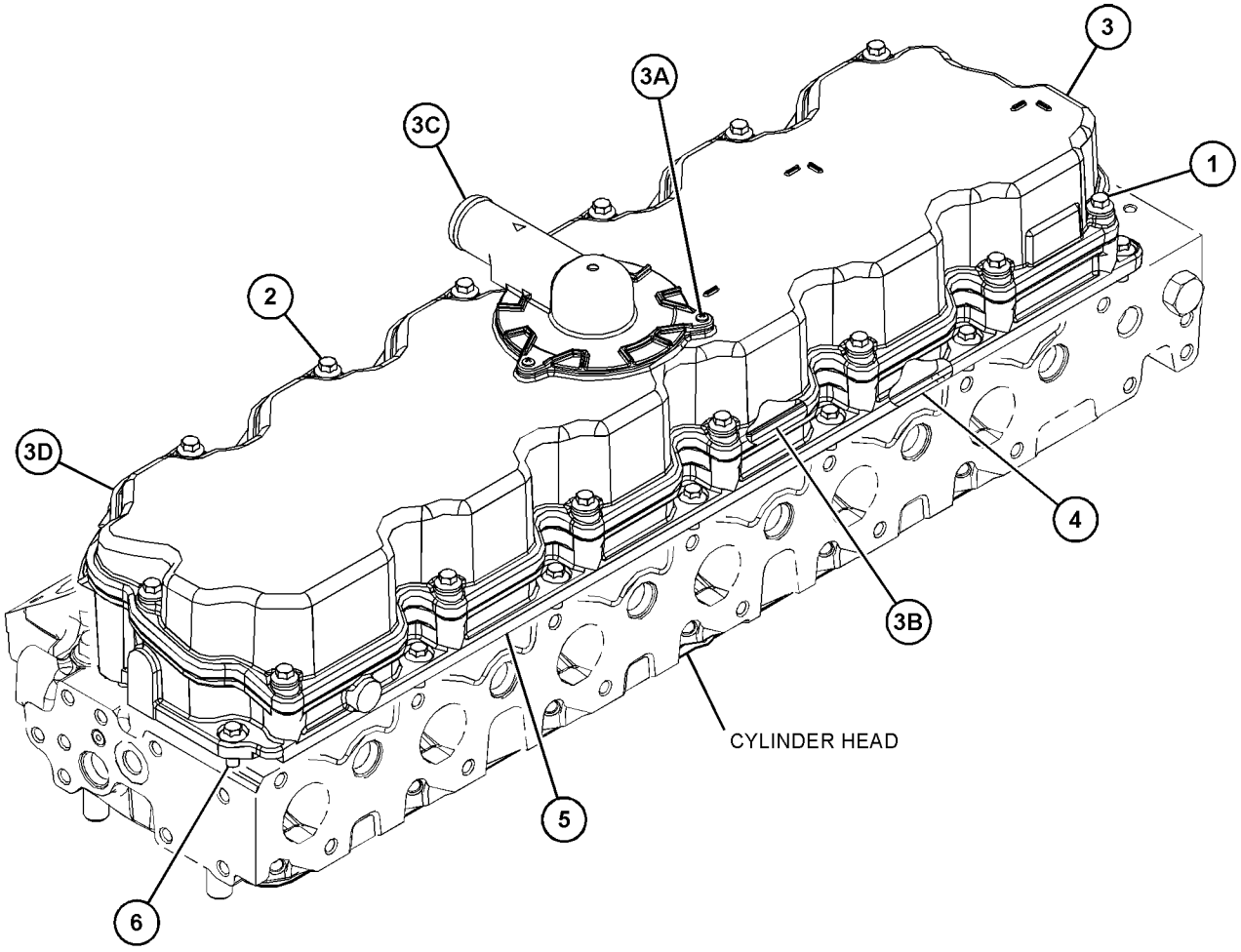

GRAPHIC #1 <END> g03741084

374-6300 CRANKSHAFT GP

S/N: E7A1-UP

PART OF 393-4098 ENGINE AR-PRIMARY

SMCS-1202 **i06560465**

NOTE	REF NO	GRAPHIC REF	PART NUMBER	QTY	PART NAME 1 2 3 4 5 6 (PRODUCT LEVEL)	SEE PAGE
P	1	1	*317-5485*	7	BEARING	
P	2	1	*317-5486*	7	BEARING	
	3	1	**339-8780**	1	DOWEL	
J	4	1	**363-0559**	2	WASHER-THRUST	
	5	1	**376-4074**	1	CRANKSHAFT	
	6	1	**376-4078**	1	DISC-TIMING	
	7	1	**067-6135**	1	KEY-WOODRUFF	
	8	1	**276-7391**	1	GEAR (34-TEETH)	
	9	1	**276-7394**	3	SCREW (M6X1XX12-MM)	
					AVAILABLE REPAIR KIT(S):	
P			**360-1978**	1	KIT-BEARING (STANDARD)	
					(INCLUDES BEARINGS)	
J			**364-5145**	1	KIT-WASHER (STANDARD)	
					(INCLUDES WASHERS)	

J - KIT MARKED J SERVICES PART(S) MARKED J
P - KIT MARKED P SERVICES PART(S) MARKED P

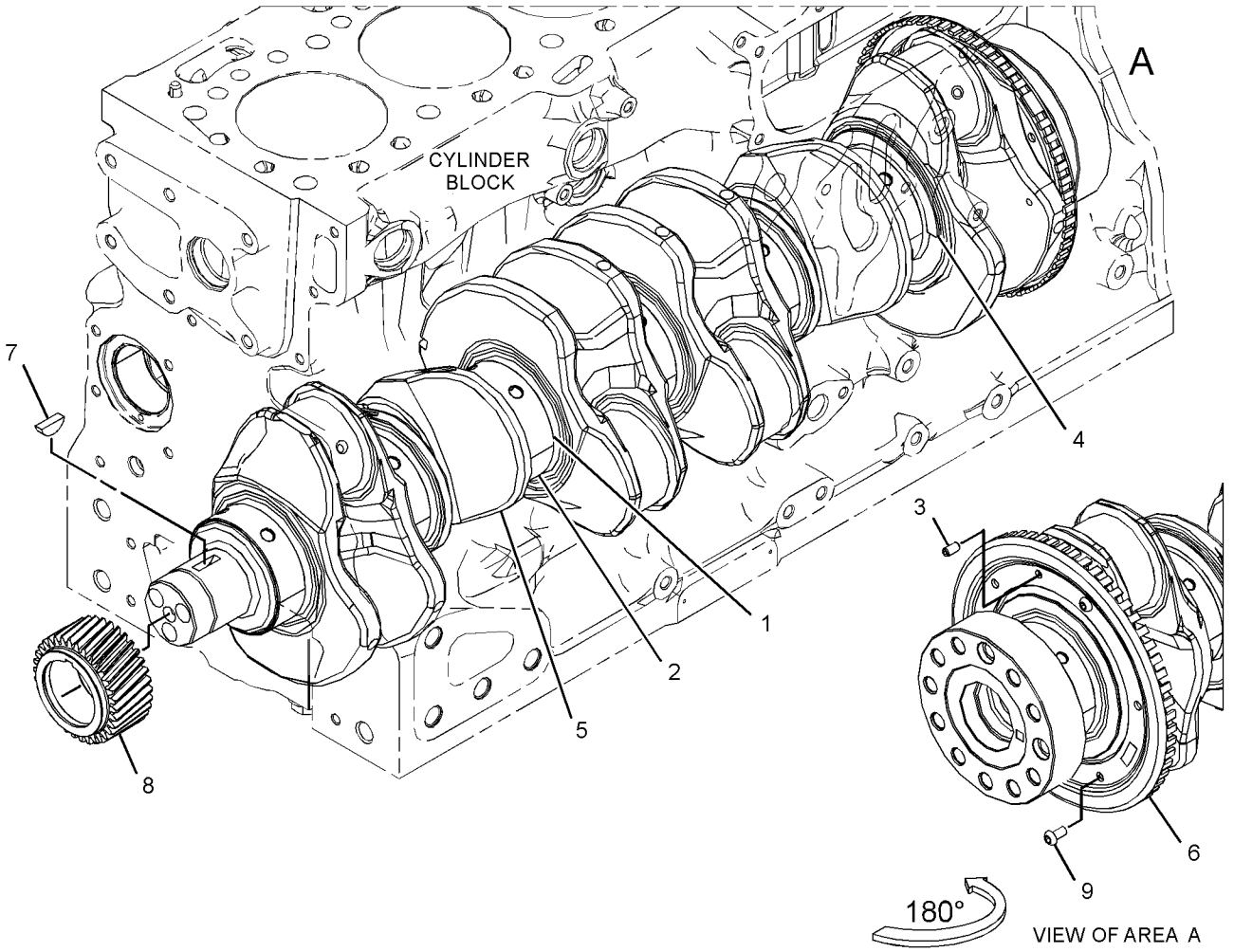

GRAPHIC #1 <END> g03115317

383-3581 CYLINDER BLOCK AS

S/N: E7A1-UP

PART OF 390-0854 CYLINDER BLOCK GP

SMCS-1201 **i06567564**

NOTE	REF NO	GRAPHIC REF	PART NUMBER	QTY	PART NAME 1 2 3 4 5 6 (PRODUCT LEVEL)	SEE PAGE
	1	1	**232-7597**	4	PLUG	
	2	1	**276-5602**	2	PLUG-CORE	
	3	1	**232-7596**	1	PLUG	
	4	1	**067-6043**	7	PLUG-SIDE	
	5	1	**067-6823**	1	PLUG	
	6	1	**185-0884**	2	DOWEL	
	7	1	**225-8858**	2	PLUG	
	8	1	**232-7599**	2	PLUG	
	9	1	**276-5600**	14	BOLT-SPECIAL (BEARING CAP)	
	10	1	**331-6835**	2	PLUG-SEAL	

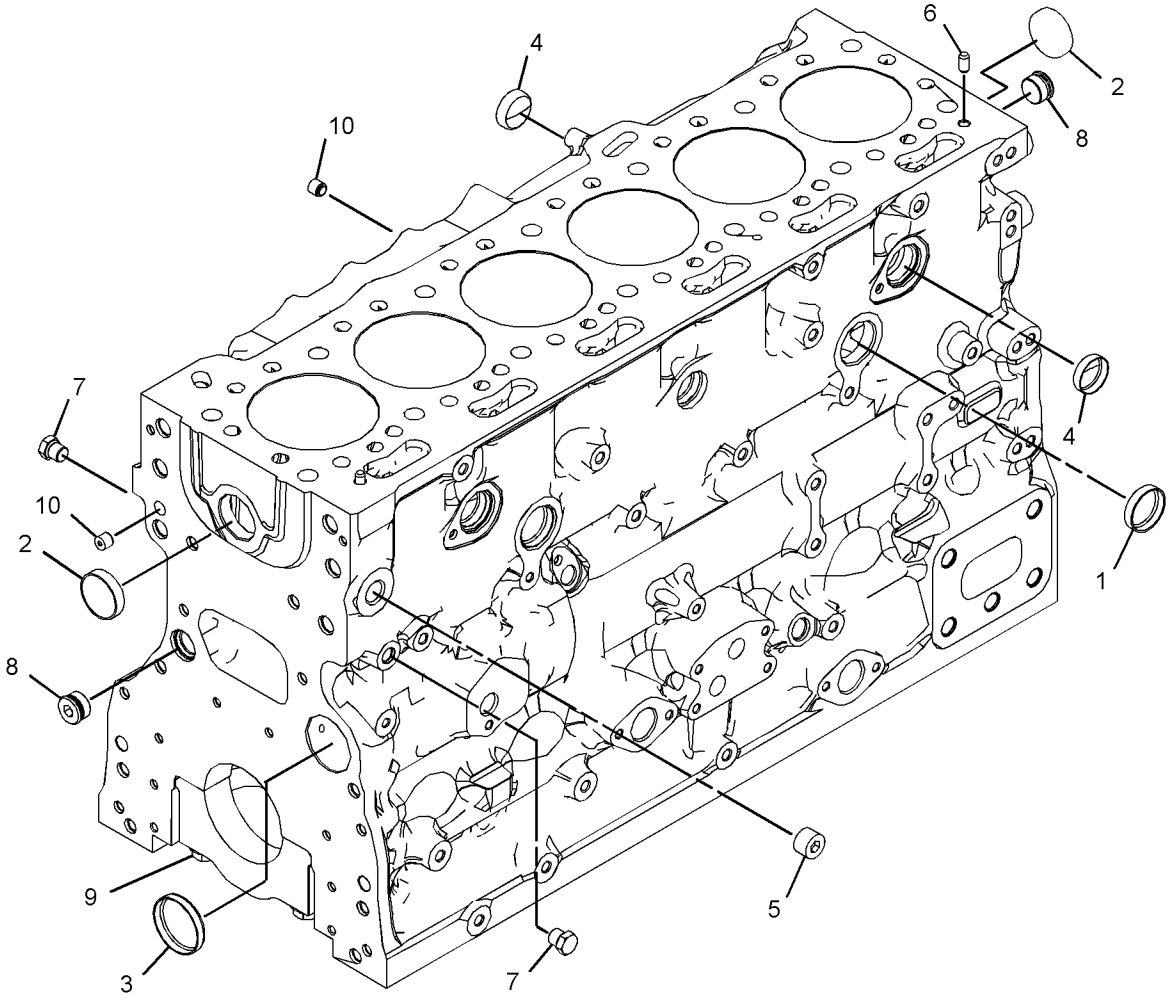

GRAPHIC #1 <END> g03351937

390-0854 CYLINDER BLOCK GP

S/N: E7A1-UP

PART OF 393-4098 ENGINE AR-PRIMARY

SMCS-1201 **i06560477**

NOTE	REF NO	GRAPHIC REF	PART NUMBER	QTY	PART NAME 1 2 3 4 5 6 (PRODUCT LEVEL)	SEE PAGE
	1	1	**276-5603**	1	SEAL-O-RING	
Y	2	1	*383-3581*	1	CYLINDER BLOCK AS	9
M	3	1	**209-9219**	10	BOLT (M8X1.25X16-MM)	
	4	1	**232-7449**	1	HOUSING AS	
	5	1	**232-1322**	1	PLUG	

M - METRIC PART
Y - SEPARATE ILLUSTRATION

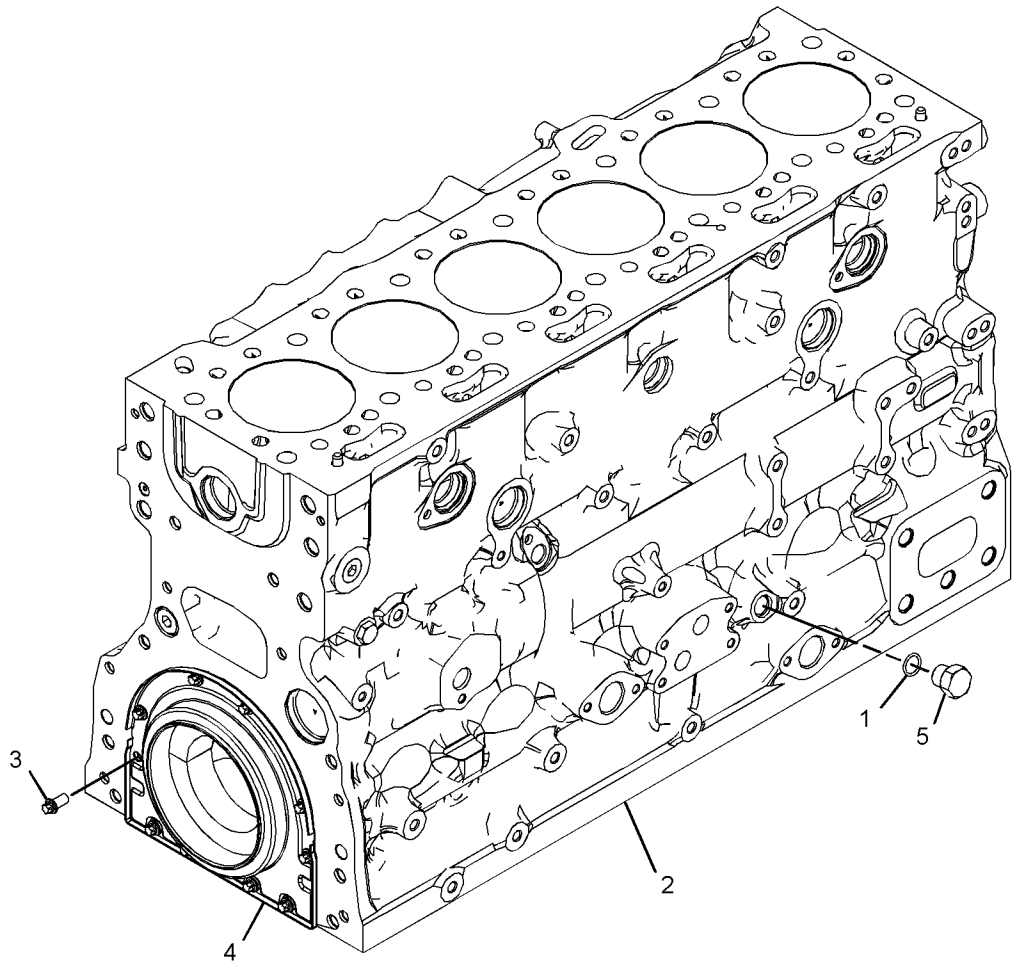

GRAPHIC #1 <END> g03384924

384-5313 CYLINDER HEAD AS

S/N: E7A1-UP

PART OF 385-2572 CYLINDER HEAD GP

SMCS-1100, 1101

i06567586

NOTE	REF NO	GRAPHIC REF	PART NUMBER	QTY	PART NAME 1 2 3 4 5 6 (PRODUCT LEVEL)	SEE PAGE
	1	1	**276-8116**	6	PLUG-CORE	
	2	1	**377-0400**	12	INSERT-VALVE SEAT (EXHAUST)	
	3	1	**377-0399**	12	INSERT-VALVE SEAT (INTAKE)	
	4	1	**276-8117**	13	PLUG-CORE	

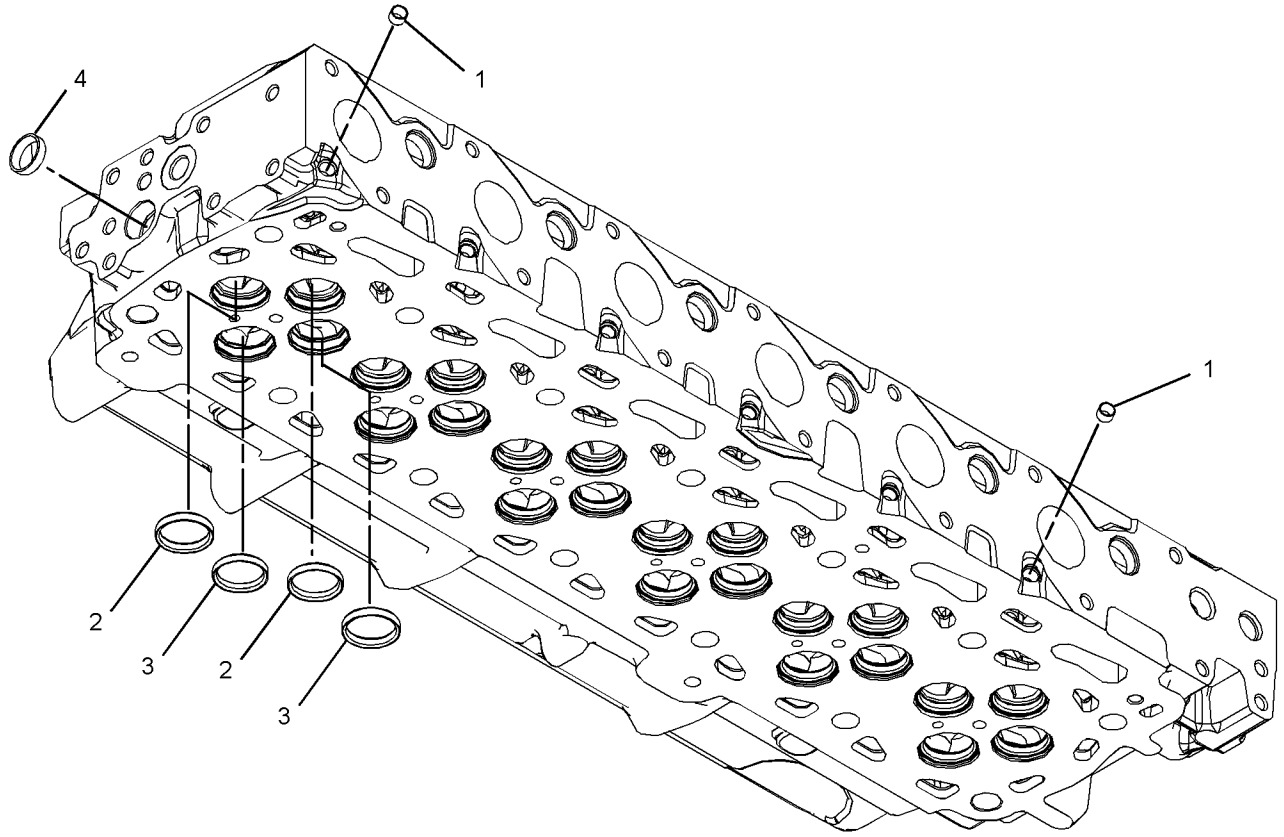

GRAPHIC #1 <END> g03379426

385-2572 CYLINDER HEAD GP

S/N: E7A1-UP

PART OF 393-4098 ENGINE AR-PRIMARY

SMCS-1100 **i06560473**

NOTE	REF NO	GRAPHIC REF	PART NUMBER	QTY	PART NAME 1 2 3 4 5 6 (PRODUCT LEVEL)	SEE PAGE
	1	1	**199-9751**	1	SEAL-O-RING	
Y	2	1	**384-5313**	1	CYLINDER HEAD AS	11
	3	1	**388-4707**	1	GASKET-CYLINDER HEAD	
	4	1	**232-1322**	1	PLUG	
	5	1	**276-8134**	14	BOLT-SPECIAL (CYLINDER HEAD)	
	6	1	**277-4302**	2	DOWEL	
	7	1	**295-6661**	1	PLUG	

Y - SEPARATE ILLUSTRATION

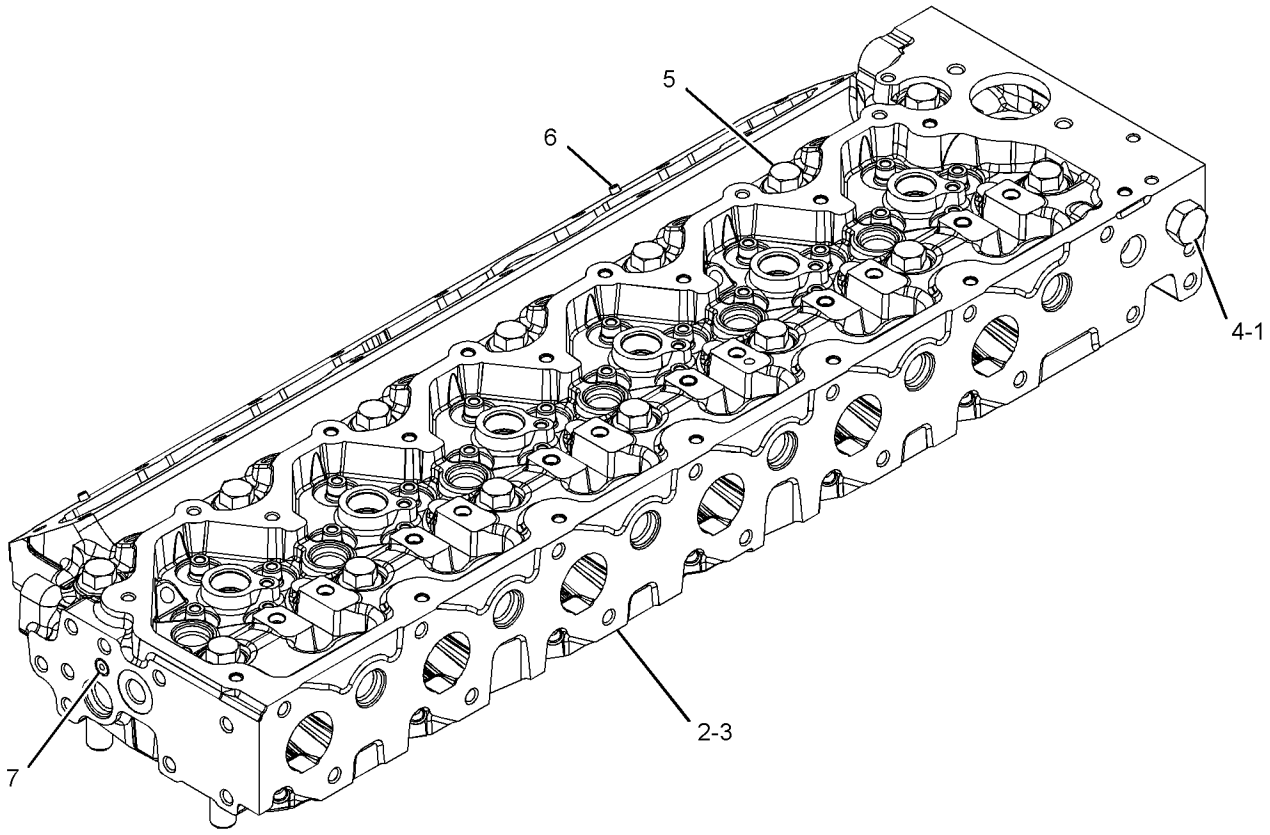

GRAPHIC #1 <END> g03379427

378-8166 DRAIN GP-OIL

S/N: E7A1-UP

PART OF 393-4098 ENGINE AR-PRIMARY

SMCS-1302 **i06560470**

NOTE	REF NO	GRAPHIC REF	PART NUMBER	QTY	PART NAME 1 2 3 4 5 6 (PRODUCT LEVEL)	SEE PAGE
	1	1	**6V-7238**	1	VALVE-SHUTOFF	
	2	1	**3K-0360**	1	SEAL-O-RING	

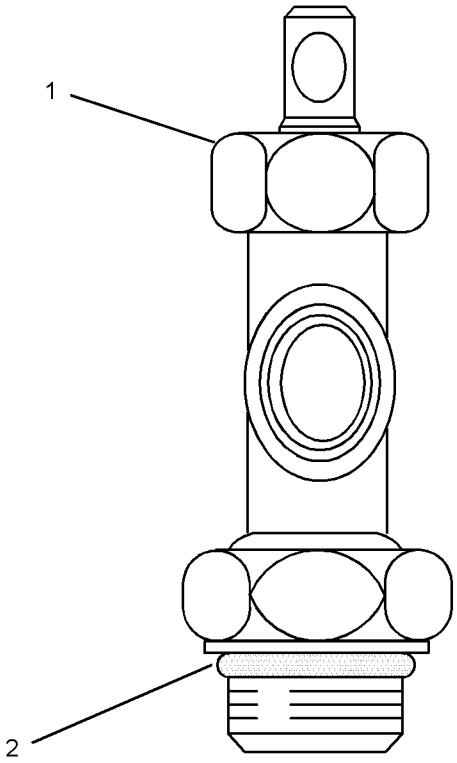

GRAPHIC #1 <END> g03457400

422-7017 DRIVE GP-FAN

S/N: R5A1-UP

PART OF 391-9510 INSTALLATION AR-ENGINE

SMCS-1359 **i06559702**

NOTE	REF NO	GRAPHIC REF	PART NUMBER	QTY	PART NAME 1 2 3 4 5 6 (PRODUCT LEVEL)	SEE PAGE
Y	1	1	**430-9307**	1	DRIVE GP-FAN	15
	2	1	**8T-4121**	5	WASHER-HARD (11X21X2.5-MM THK)	
M	3	1	**8T-4196**	5	BOLT (M10X1.5X35-MM)	

M - METRIC PART
Y - SEPARATE ILLUSTRATION

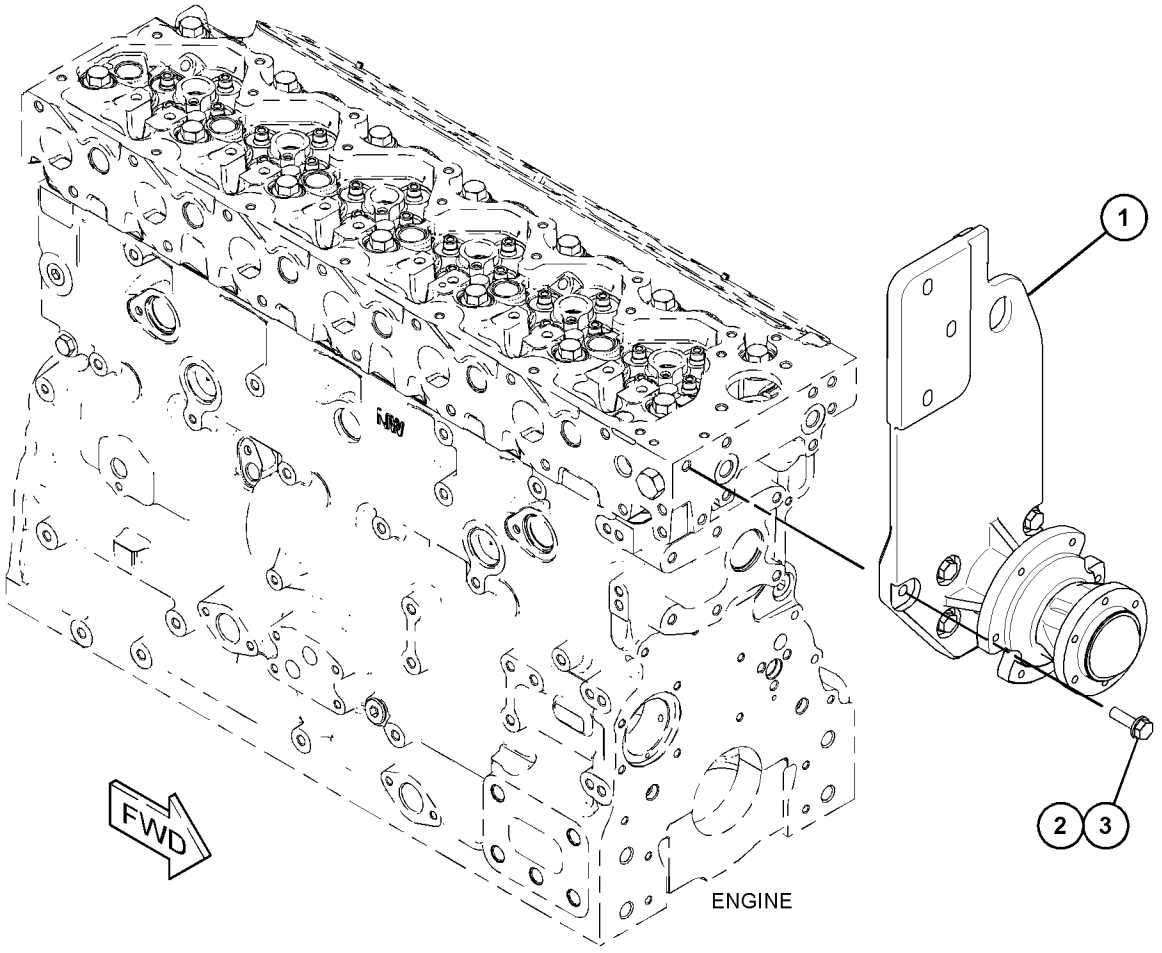

GRAPHIC #1 <END> g06023484

430-9307 DRIVE GP-FAN

S/N: R5A1-UP

PART OF 422-7017 DRIVE GP-FAN

SMCS-1359 **i06554672**

NOTE	REF NO	GRAPHIC REF	PART NUMBER	QTY	PART NAME 1 2 3 4 5 6 (PRODUCT LEVEL)	SEE PAGE
	1	1	**4W-1203**	2	CUP-BEARING	
	2	1	**4W-1204**	2	CONE-BEARING	
	3	1	**4W-2042**	1	SPACER (35.3X45.5X38.331-MM THK)	
	4	1	**5S-9062**	1	SPACER (35.032X50.8X15.88-MM THK)	
	5	1	**7C-8370**	1	CAP-DUST	
	6	1	**7C-8634**	1	PLATE	
	7	1	**348-5027**	1	HUB	
	8	1	**430-9306**	1	PLATE AS	
M	9	1	**8T-5041**	1	BOLT (M12X1.75X120-MM)	
	10	1	**6V-9748**	1	SEAL-LIP TYPE	

M - METRIC PART

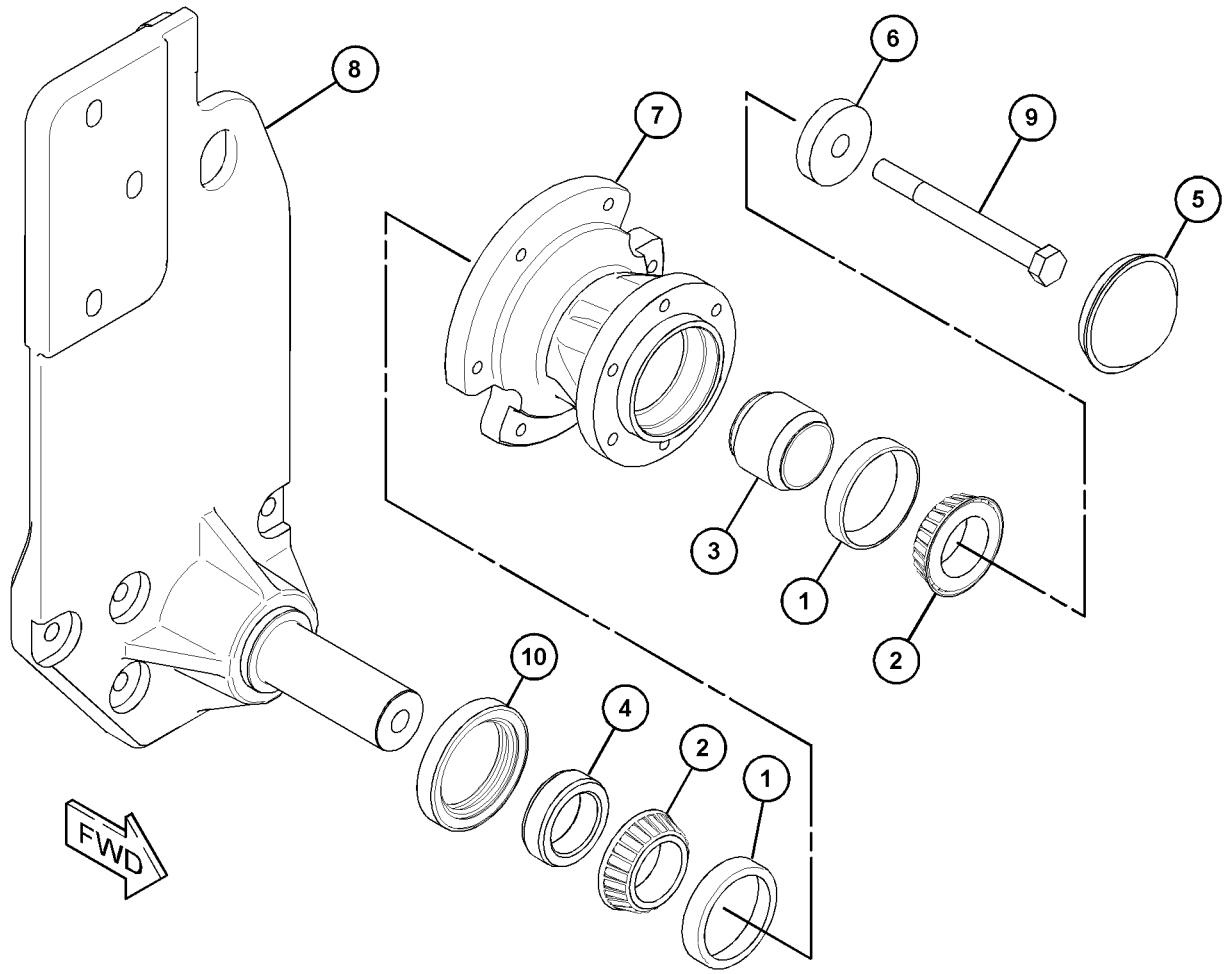

GRAPHIC #1 <END> g06023541

439-1143 DRIVE GP-FAN

S/N: E7A1-UP

PART OF 393-4098 ENGINE AR-PRIMARY

SMCS-1359 **i06563742**

NOTE	REF NO	GRAPHIC REF	PART NUMBER	QTY	PART NAME 1 2 3 4 5 6 (PRODUCT LEVEL)	SEE PAGE
	1	1	**337-6324**	1	PULLEY	
	2	1	**377-9087**	1	BELT TENSIONER	

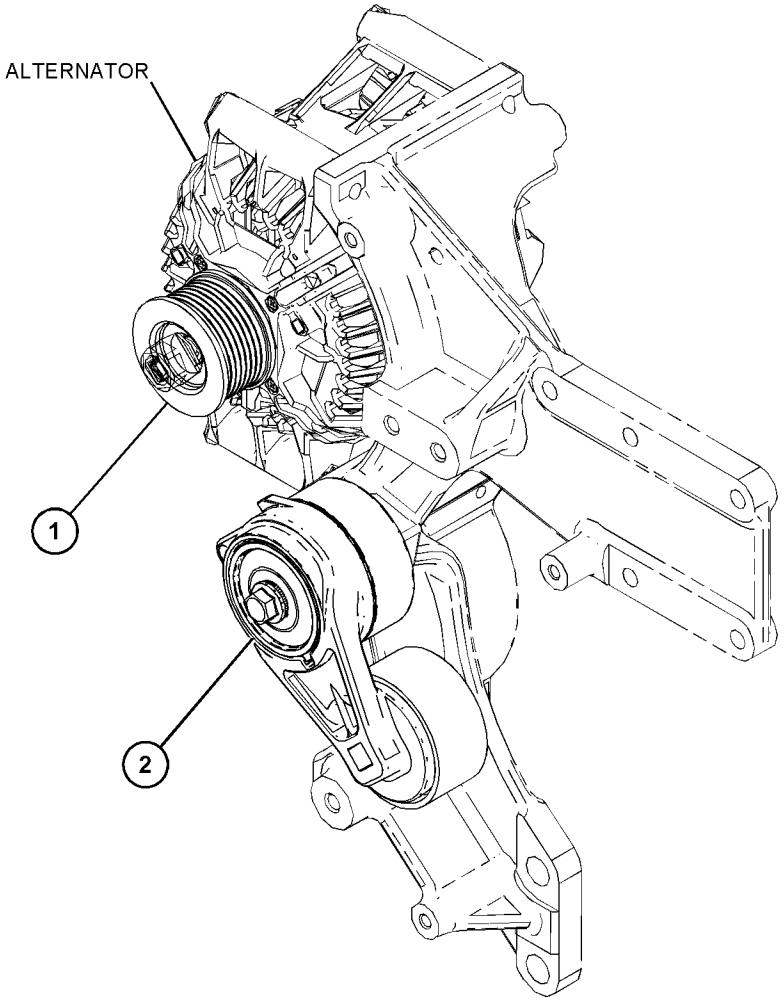

GRAPHIC #1 <END> g06034764

345-9030 FLYWHEEL GP

S/N: E7A1-UP

PART OF 393-4098 ENGINE AR-PRIMARY

SMCS-1156 **i06563733**

NOTE	REF NO	GRAPHIC REF	PART NUMBER	QTY	PART NAME 1 2 3 4 5 6 (PRODUCT LEVEL)	SEE PAGE
	1	1	**145-4911**	12	WASHER	
	2	1	**279-9254**	12	BOLT	
	3	1	**291-3791**	1	FLYWHEEL AS	
		1	**277-0588**	1	GEAR-STARTING MOTOR RING (134-TEETH)	

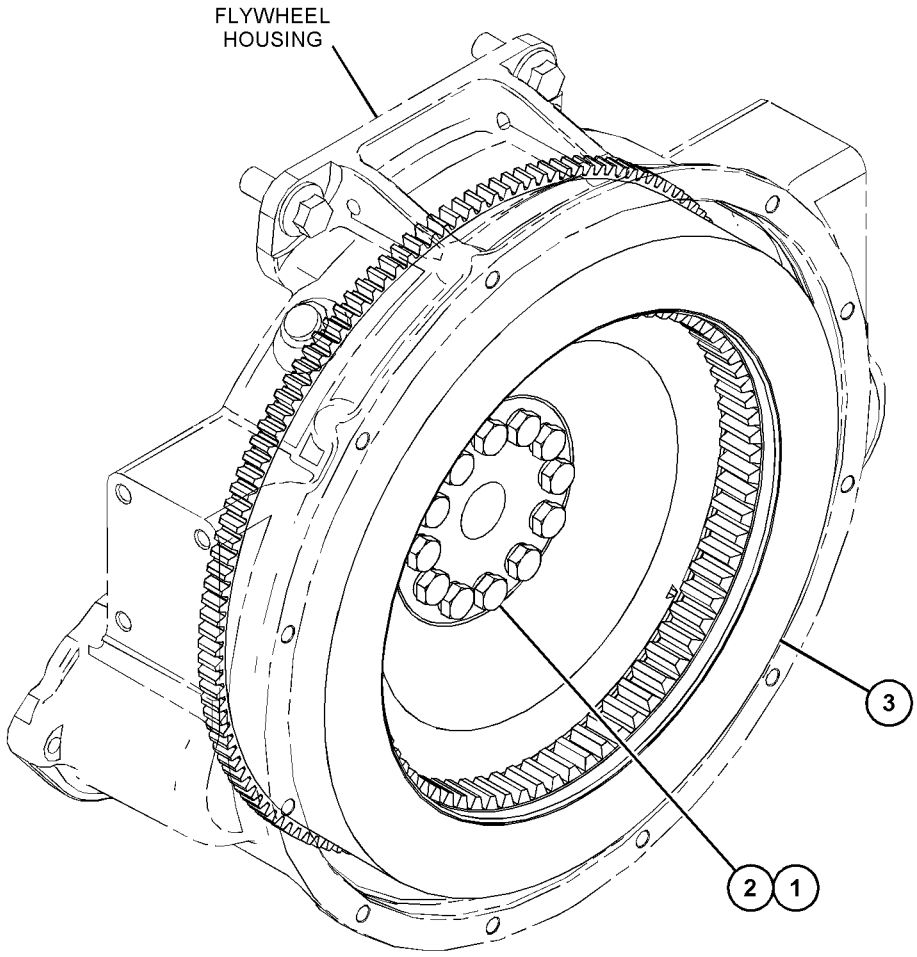

GRAPHIC #1 <END> g06034642

345-8846 HOUSING GP-FLYWHEEL

S/N: E7A1-UP

PART OF 393-4098 ENGINE AR-PRIMARY

SMCS-1157 **i06560509**

NOTE	REF NO	GRAPHIC REF	PART NUMBER	QTY	PART NAME 1 2 3 4 5 6 (PRODUCT LEVEL)	SEE PAGE
	1	1	**277-0116**	1	SEAL-CRANKSHAFT (REAR)	
	2	1	**283-4662**	2	BOLT-FLANGE HEAD	
	3	1	**287-8597**	2	DOWEL	
	4	1	**288-6974**	4	BOLT	
	5	1	**288-6975**	2	BOLT (M16X2X40-MM)	
	6	1	**302-6112**	1	GASKET	
	7	1	**384-8322**	2	HUB	
	8	1	**366-6614**	1	HOUSING-FLYWHEEL	
	9	1	**393-4006**	1	GASKET	
	10	1	**1W-6735**	1	COVER-FLYWHEEL HOUSING	
M	11	1	**7E-7606**	4	BOLT (M10X1.5X16-MM)	

M - METRIC PART

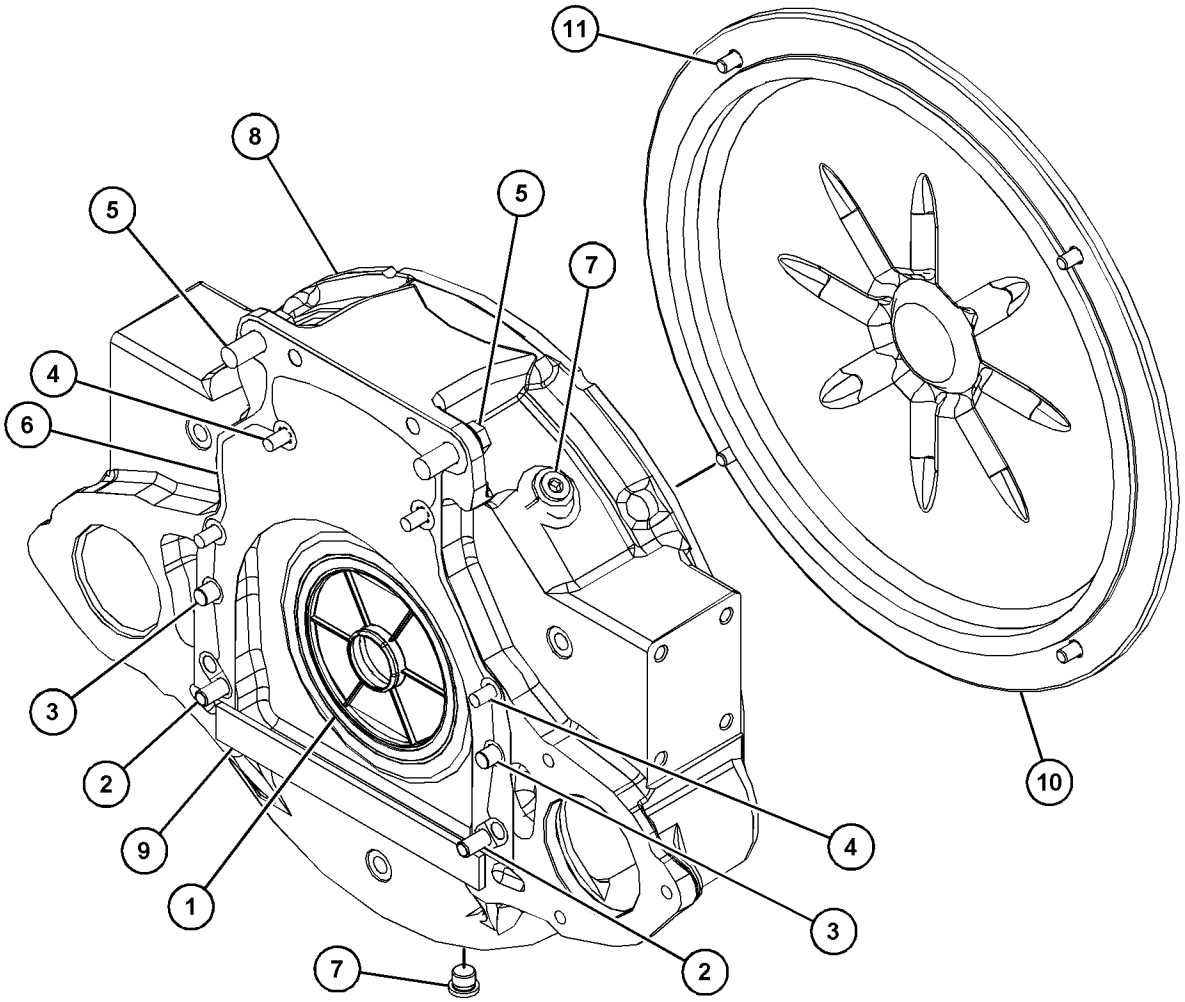

GRAPHIC #1 <END> g06009727

371-2716 HOUSING GP-FRONT

S/N: E7A1-UP

PART OF 393-4098 ENGINE AR-PRIMARY

SMCS-1151, 1162, 1206 **i06560455**

NOTE	REF NO	GRAPHIC REF	PART NUMBER	QTY	PART NAME 1 2 3 4 5 6 (PRODUCT LEVEL)	SEE PAGE
M	1	1	**6I-0217**	6	BOLT (M8X1.25X20-MM)	
M	2	1	**6I-0645**	4	BOLT (M8X1.25X25-MM)	
M	3	1	**6I-0650**	3	BOLT (M10X1.5X65-MM)	
M	4	1	**7C-4616**	1	BOLT (M12X1.75X45-MM)	
	5	1	**067-6179**	1	DOWEL	
M	6	1	**100-3751**	5	BOLT (M8X1.25X65-MM)	
M	7	1	**101-3895**	2	BOLT (M8X1.25X35-MM)	
M	8	1	**124-3815**	10	BOLT (M8X1.25X16-MM)	
	9	1	**133-1011**	1	WASHER	
	10	1	**216-8634**	1	GEAR-CAMSHAFT (68-TEETH)	
	11	1	**232-3657**	1	COVER AS-FRONT	
	11A	1	**225-8287**	1	GASKET	
	12	1	**232-3666**	1	WASHER-THRUST	
	13	1	**277-3012**	1	GASKET-COVER	
	14	1	**277-3013**	1	SEAL	
	15	1	**324-0444**	1	HUB-IDLER GEAR	
	16	1	**346-0407**	1	GEAR-IDLER	
	17	1	**346-0408**	1	PLATE	
	18	1	**386-2112**	1	CASE-GEAR	

M - METRIC PART

371-2716 **HOUSING GP-FRONT (**contd.**)** **i06560455**

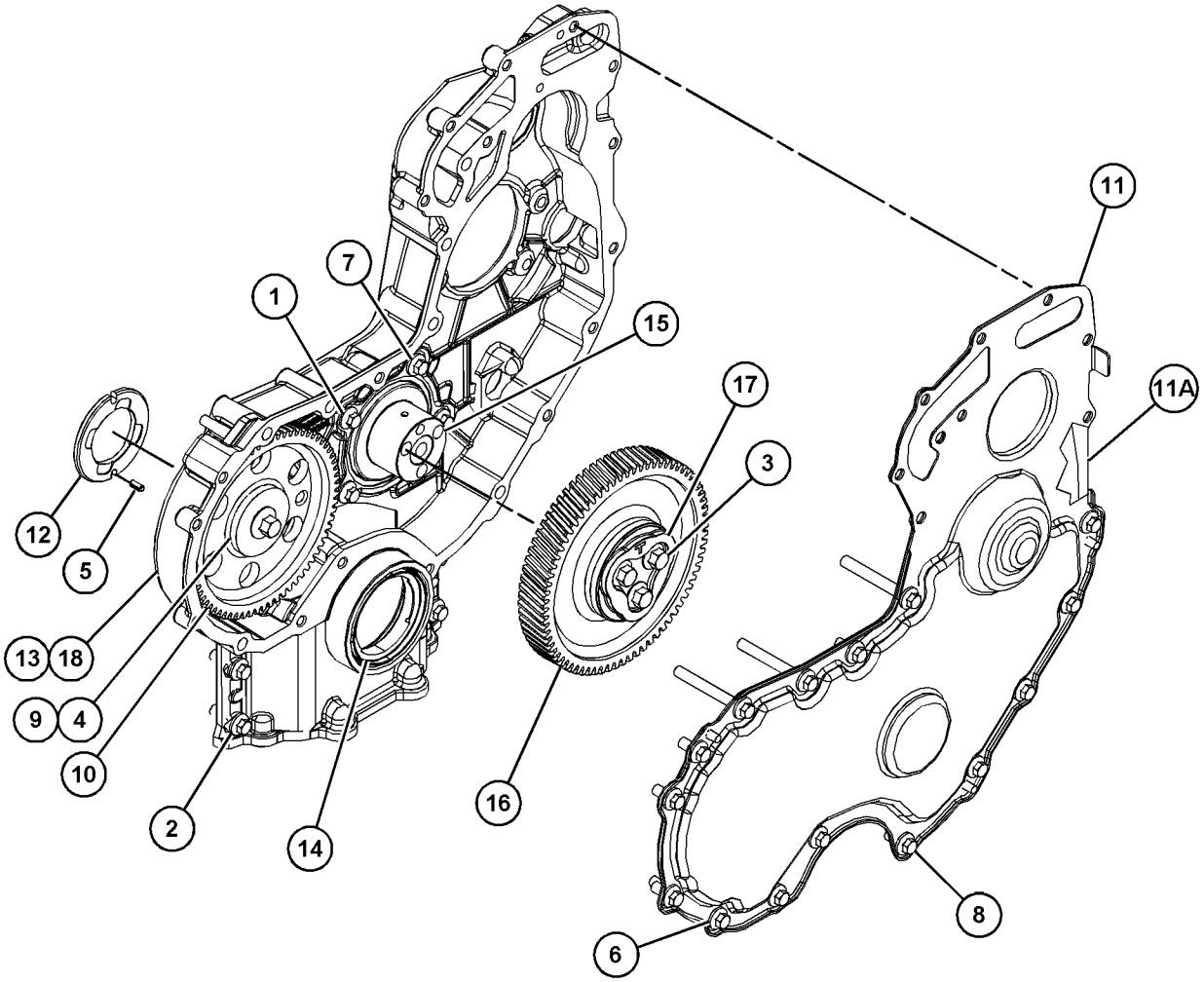

GRAPHIC #1 <END> g03483004

371-2478 JET GP-PISTON COOLING

S/N: E7A1-UP

PART OF 393-4098 ENGINE AR-PRIMARY

SMCS-1331 **i06560449**

NOTE	REF NO	GRAPHIC REF	PART NUMBER	QTY	PART NAME 1 2 3 4 5 6 (PRODUCT LEVEL)	SEE PAGE
M	1	1	**100-4841**	6	BOLT (M6X1X10-MM)	
	2	1	**329-3796**	6	TUBE AS-OIL JET	

M - METRIC PART

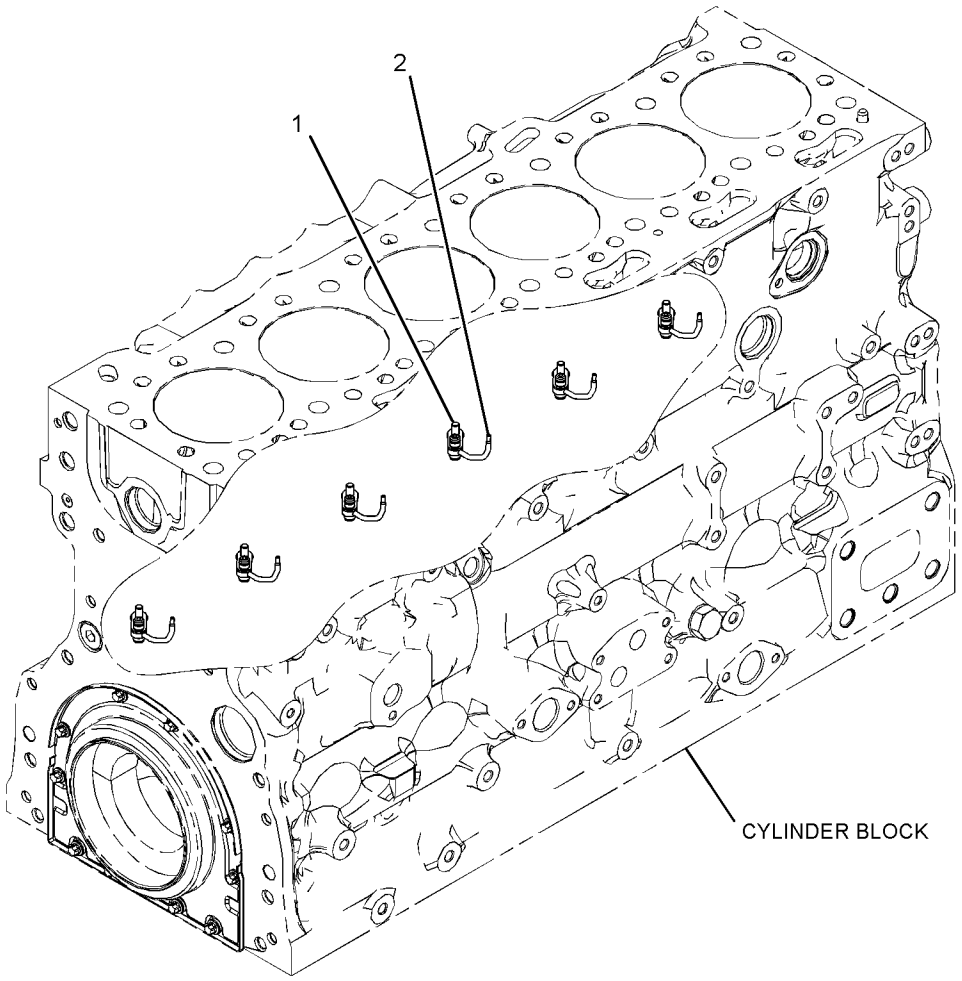

GRAPHIC #1 <END> g03378569

371-2740 LIFTING GP-ENGINE

S/N: E7A1-UP

PART OF 393-4098 ENGINE AR-PRIMARY

SMCS-1122 **i06560457**

NOTE	REF NO	GRAPHIC REF	PART NUMBER	QTY	PART NAME 1 2 3 4 5 6 (PRODUCT LEVEL)	SEE PAGE
	1	1	**279-9651**	1	PLATE-LIFTING	
	2	1	**304-5062**	1	BRACKET	
M	3	1	**6I-0654**	2	BOLT (M10X1.5X25-MM)	
M	4	1	**123-2899**	4	BOLT (M10X1.5X40-MM)	
	5	1	**415-1604**	1	BRACKET-LIFTING	

M - METRIC PART

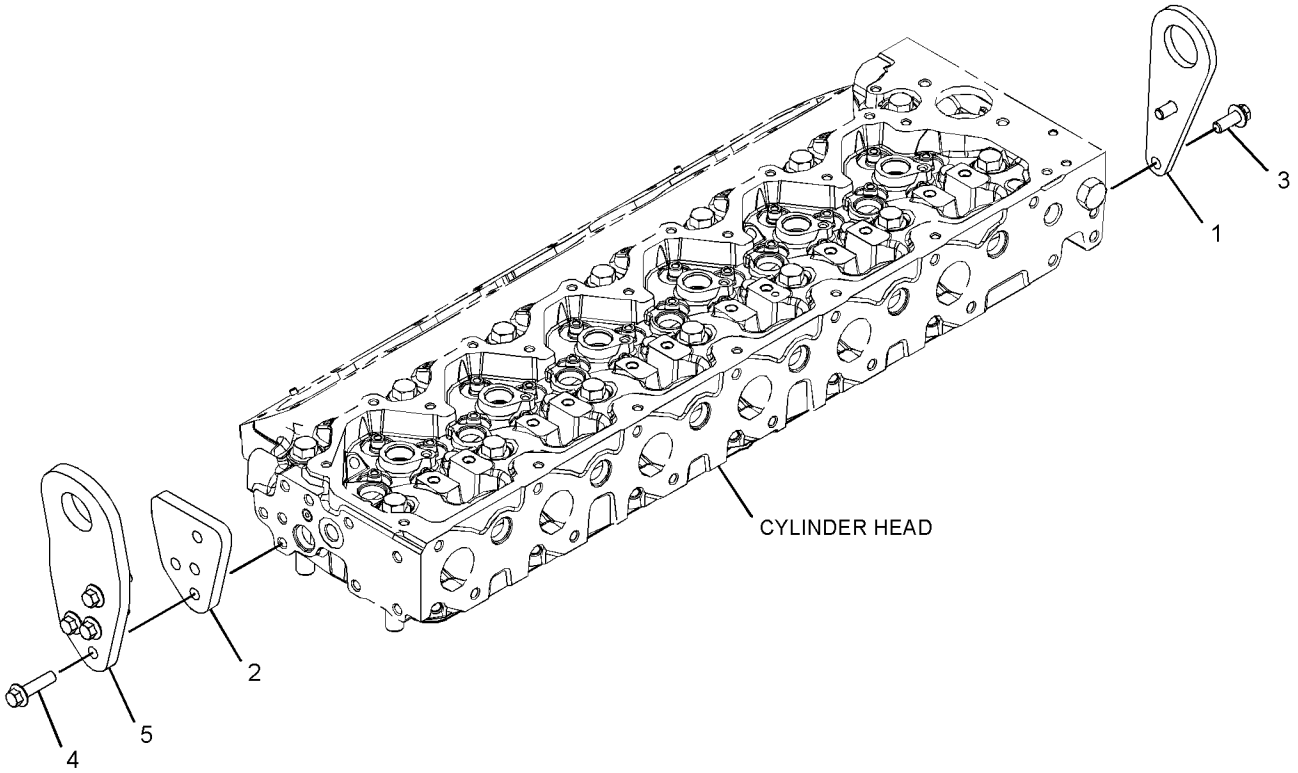

GRAPHIC #1 <END> g03456846

346-1510 MOUNTING GP-ENGINE

S/N: E7A1-UP

PART OF 393-4098 ENGINE AR-PRIMARY

SMCS-1152, 1153, 1154

i06560445

NOTE	REF NO	GRAPHIC REF	PART NUMBER	QTY	PART NAME 1 2 3 4 5 6 (PRODUCT LEVEL)	SEE PAGE
	1	1	**283-8301**	2	BOLT	
M	2	1	**283-8302**	6	BOLT (M16X2X80-MM)	
	3	1	**277-4490**	2	BRACKET-MOUNTING	

M - METRIC PART

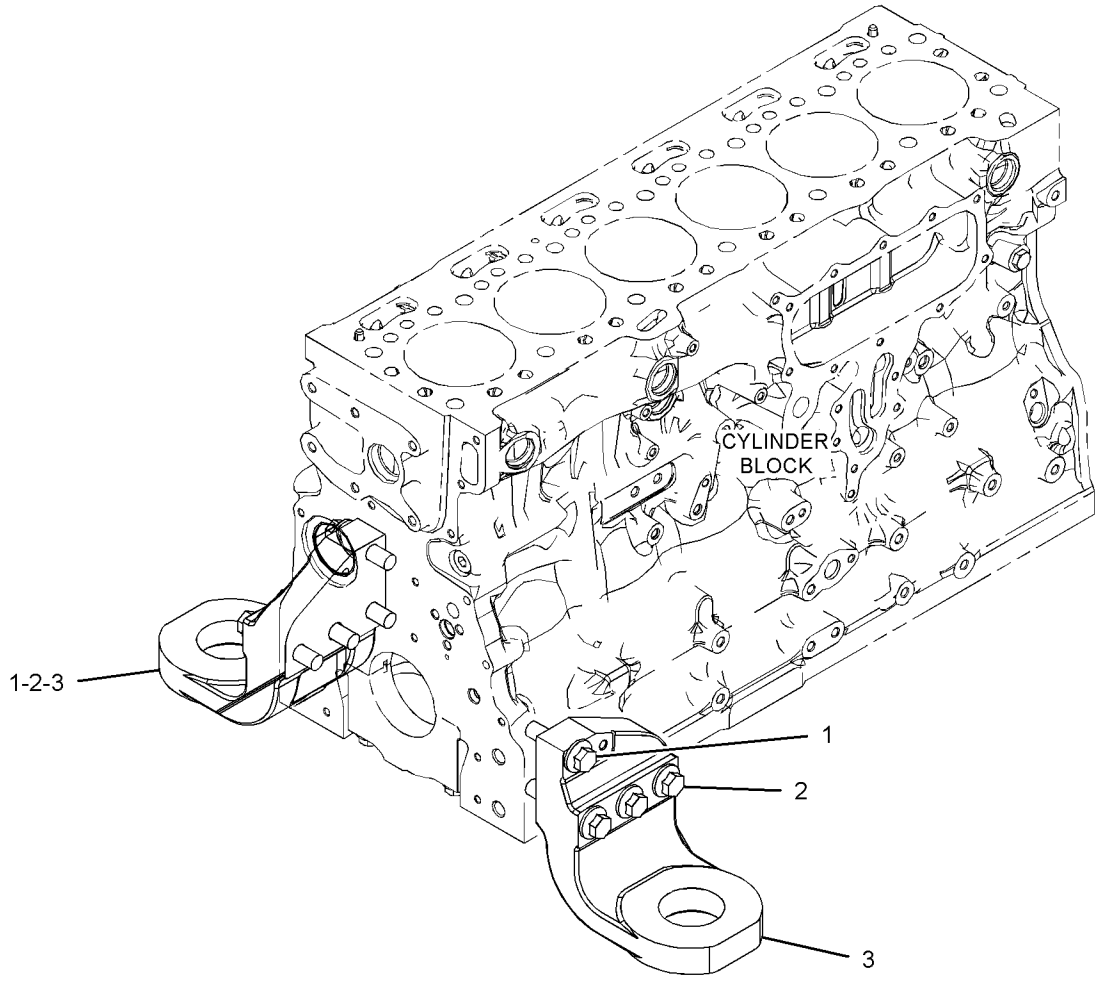

GRAPHIC #1

<END>

g03507641

421-3789 MOUNTING GP-ENGINE

S/N: R5A1-UP

PART OF 391-9510 INSTALLATION AR-ENGINE

SMCS-1152, 1153, 1154 **i06521194**

NOTE	REF NO	GRAPHIC REF	PART NUMBER	QTY	PART NAME 1 2 3 4 5 6 (PRODUCT LEVEL)	SEE PAGE
	1	1	**9W-9930**	2	MOUNT AS	
	2	1	**9W-9940**	2	MOUNT AS	
	3	1	**450-8020**	2	SUPPORT-ENGINE	
	4	1	**252-0080**	2	WASHER (25X144X12-MM THK)	
M	5	1	**8C-3290**	2	BOLT (M24X3X150-MM)	
	6	1	**8T-4123**	2	WASHER (3.62X5.75X0.375-MM THK)	
	7	1	**8T-4167**	2	WASHER-HARD (26X44X4-MM THK)	
	8	1	**8T-4223**	8	WASHER-HARD (13.5X25.5X3-MM THK)	
M	9	1	**8T-4910**	4	BOLT (M12X1.75X60-MM)	
M	10	1	**8T-6381**	2	BOLT (M20X2.5X120-MM)	
M	11	1	**8T-6868**	4	BOLT (M12X1.75X80-MM)	
	12	1	**9W-6582**	2	SLEEVE	
	13	1	**9W-6584**	2	WASHER (20.5X114X10-MM THK)	
	14	1	**9W-7385**	2	SLEEVE	

M - METRIC PART

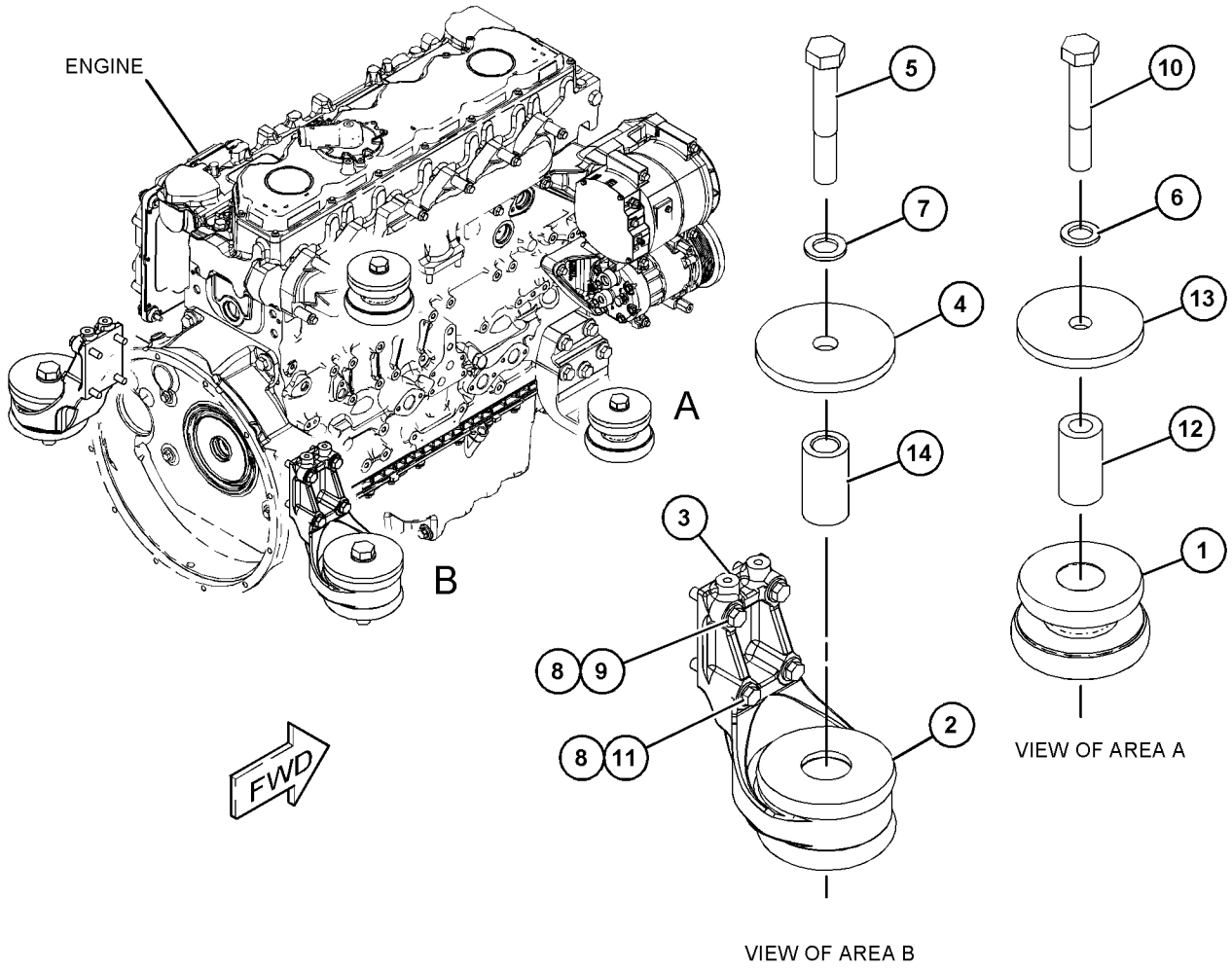

GRAPHIC #1 <END> g03877820

371-2544 PAN GP-OIL

S/N: E7A1-UP

PART OF 393-4098 ENGINE AR-PRIMARY

SMCS-1302 **i06563770**

NOTE	REF NO	GRAPHIC REF	PART NUMBER	QTY	PART NAME 1 2 3 4 5 6 (PRODUCT LEVEL)	SEE PAGE
	1	1	**230-8094**	1	BRIDGE	
M	2	1	**6I-0217**	29	BOLT (M8X1.25X20-MM)	
M	3	1	**6I-0260**	2	BOLT (M8X1.25X25-MM)	
M	4	1	**6I-0363**	2	BOLT (M6X1X20-MM)	
M	5	1	**6I-0572**	2	BOLT (M8X1.25X20-MM)	
	6	1	**351-4749**	1	GASKET-OIL PAN	
Y	7	1	**377-4718**	1	PAN GP-OIL	26
M	8	1	**6I-0654**	1	BOLT (M10X1.5X25-MM)	
	9	1	**275-9897**	1	BRACKET	
	10	1	**280-1384**	1	TUBE AS-OIL SUCTION	
	10A	1	**236-5511**	1	CLIP-PIPE	
	11	1	**6I-4681**	1	GASKET	

M - METRIC PART
Y - SEPARATE ILLUSTRATION

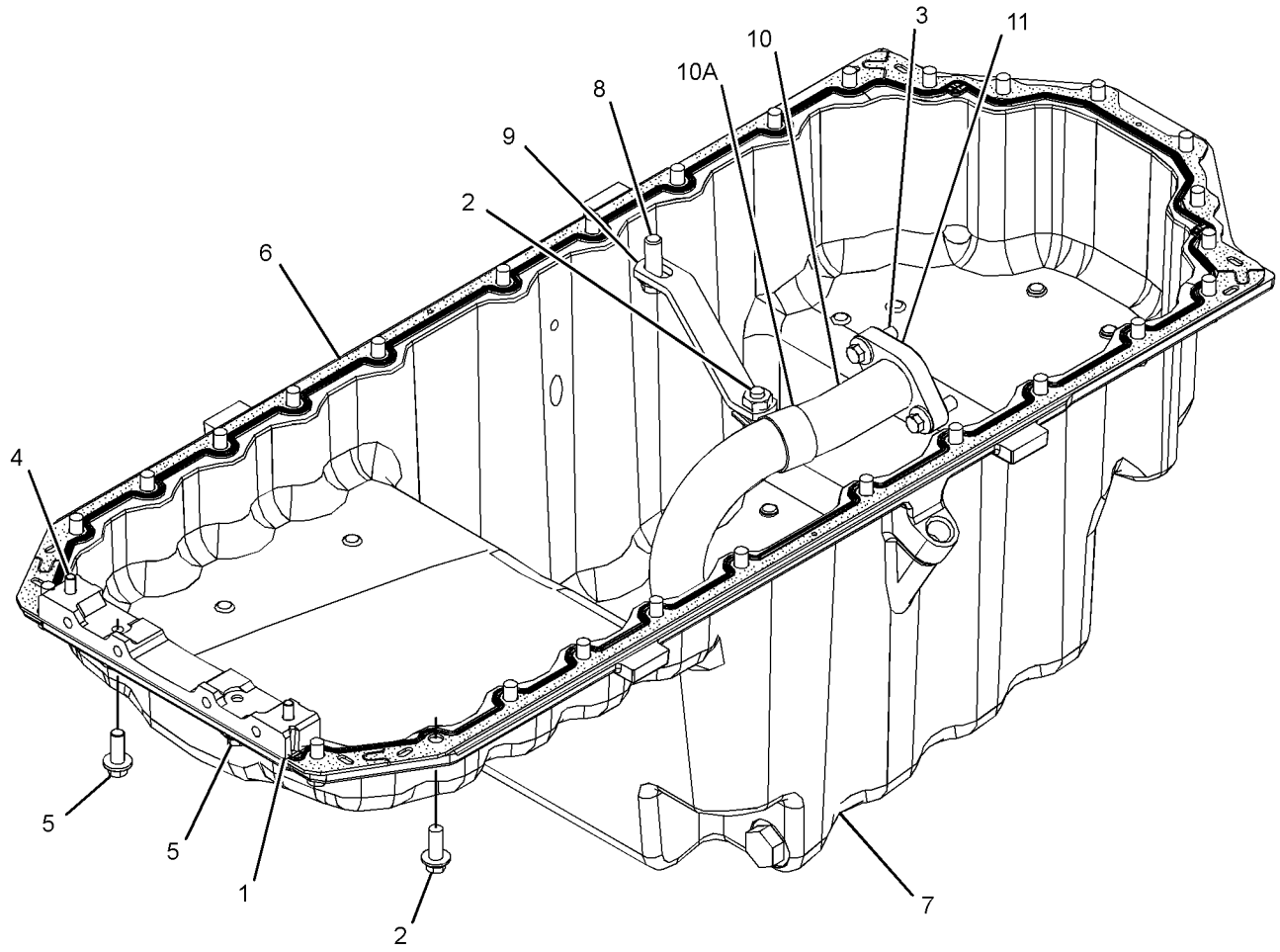

GRAPHIC #1 <END> g03110796

377-4718 PAN GP-OIL

S/N: E7A1-UP

PART OF 371-2544 PAN GP-OIL

SMCS-1302 **i06567578**

NOTE	REF NO	GRAPHIC REF	PART NUMBER	QTY	PART NAME 1 2 3 4 5 6 (PRODUCT LEVEL)	SEE PAGE
	1	1	**8L-2786**	2	SEAL-O-RING	
	2	1	**9S-4185**	2	PLUG	

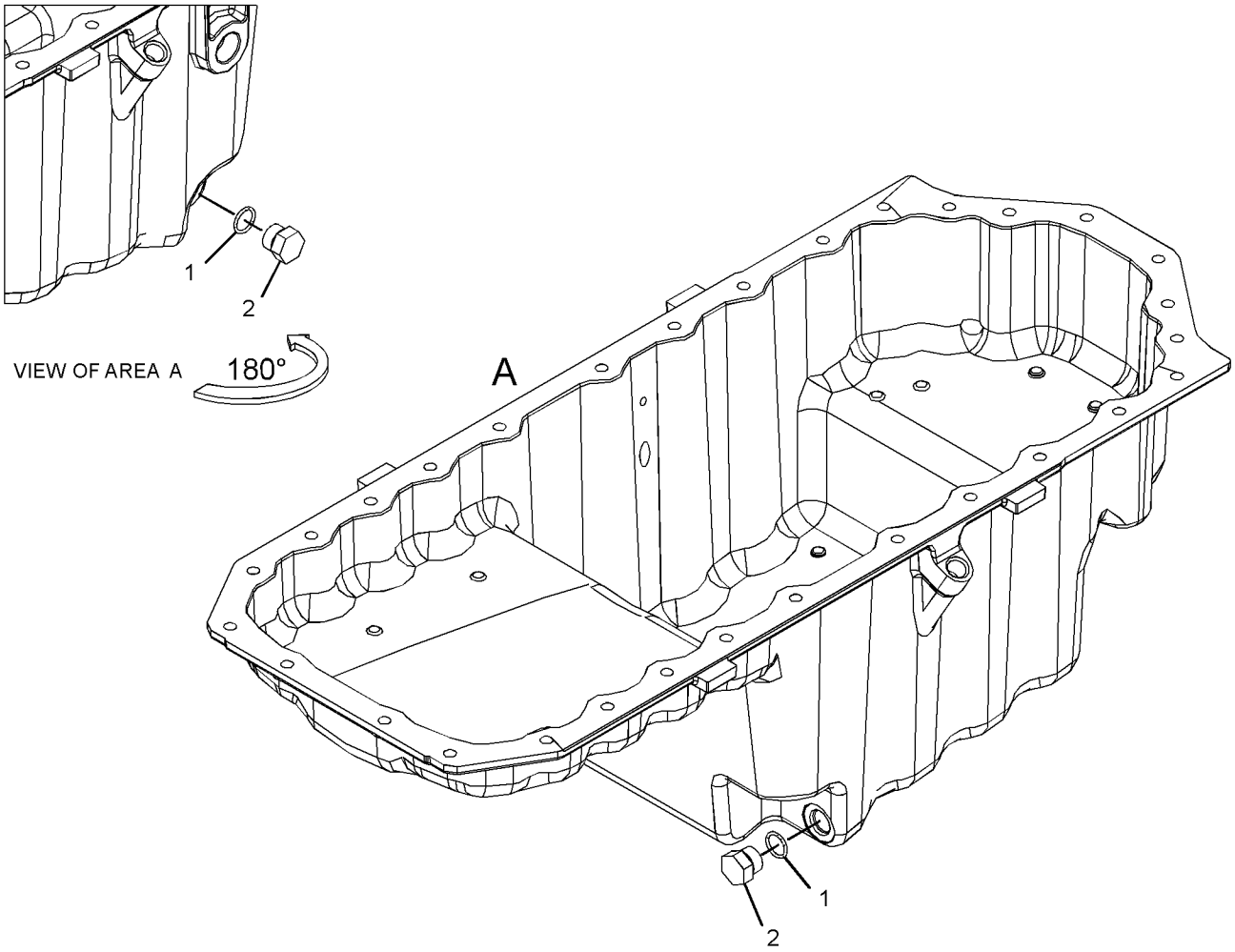

GRAPHIC #1 <END> g03371776

374-6301 PISTON & ROD GP

S/N: E7A1-UP

PART OF 393-4098 ENGINE AR-PRIMARY

SMCS-1225 **i06560466**

NOTE	REF NO	GRAPHIC REF	PART NUMBER	QTY	PART NAME 1 2 3 4 5 6 (PRODUCT LEVEL)	SEE PAGE
	1	1	**331-0290**	6	CONNECTING ROD GP	
					(EACH INCLUDES)	
		1	**276-7478**	1	BUSHING	
		1	**323-9312**	2	BOLT (M10X1X50-MM)	
	2	1	**450-5996**	6	PISTON GP	
J	3	1	*317-5482*	6	BEARING (UPPER)	
J	4	1	*317-5483*	6	BEARING (LOWER)	
L	5	1	**124-3536**	12	RING-RETAINING	
					AVAILABLE REPAIR KIT(S):	
J			**360-1564**	1	KIT-BEARING (CONNECTING ROD) (PISTON)	
					(INCLUDES 6 UPPER HALF & 6 LOWER HALF BEARINGS)	
BJ			**458-7918**		KIT-BEARING (0.25-MM US) (0.25-MM US)	
BJ			**458-7939**		KIT-BEARING (0.50-MM US) (0.50-MM US)	
BJ			**458-7940**		KIT-BEARING (0.75-MM US) (0.75-MM US)	
			443-9543	1	KIT-RING	
					(INCLUDES RINGS)	
L			**444-2190**	1	KIT-PISTON	
					(INCLUDES PISTON, RINGS, & PIN)	

B - USE AS REQUIRED
J - KIT MARKED J SERVICES PART(S) MARKED J
L - KIT MARKED L SERVICES PART(S) MARKED L

374-6301 **PISTON & ROD GP (**contd.**)** **i06560466**

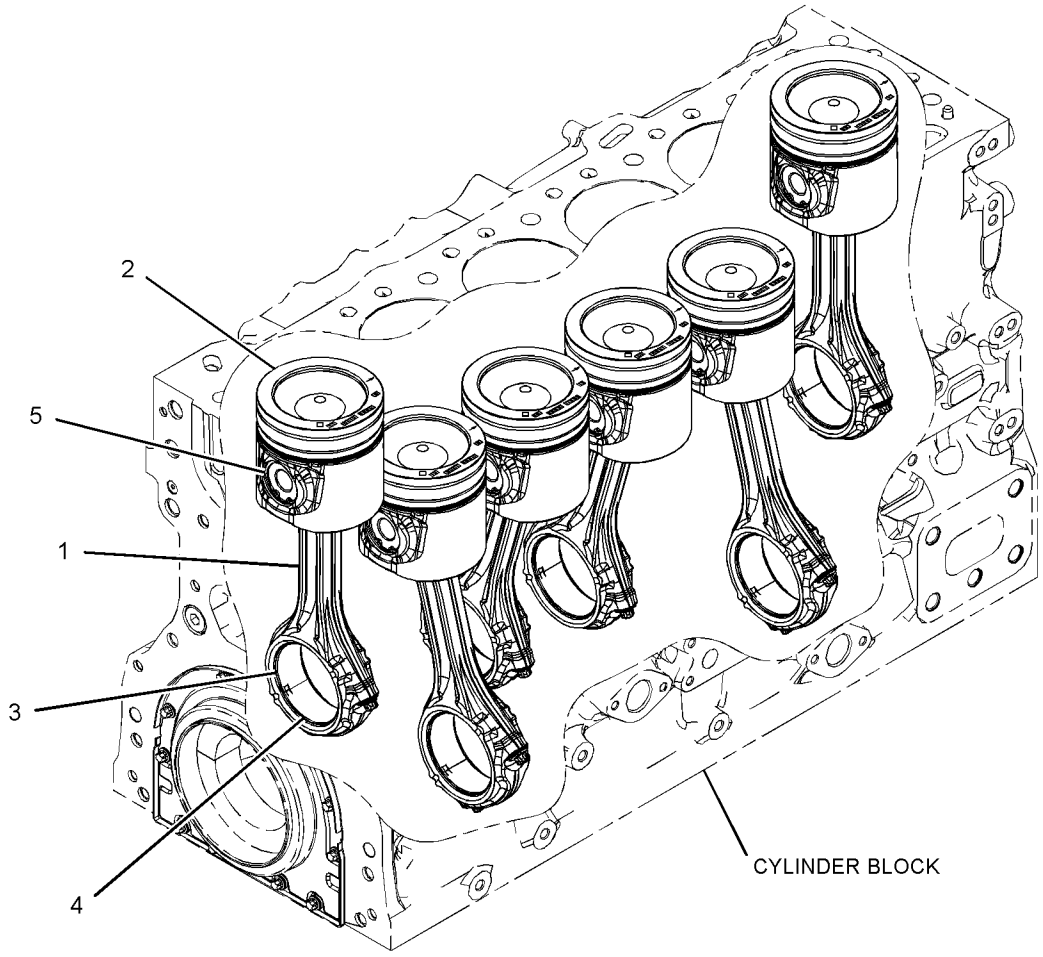

GRAPHIC #1 <END> g03658318

374-9295 PLUG GP-CYLINDER BLOCK

S/N: E7A1-UP

PART OF 393-4098 ENGINE AR-PRIMARY

SMCS-1201 **i06560468**

NOTE	REF NO	GRAPHIC REF	PART NUMBER	QTY	PART NAME 1 2 3 4 5 6 (PRODUCT LEVEL)	SEE PAGE
	1	1	**277-4223**	1	PLUG	

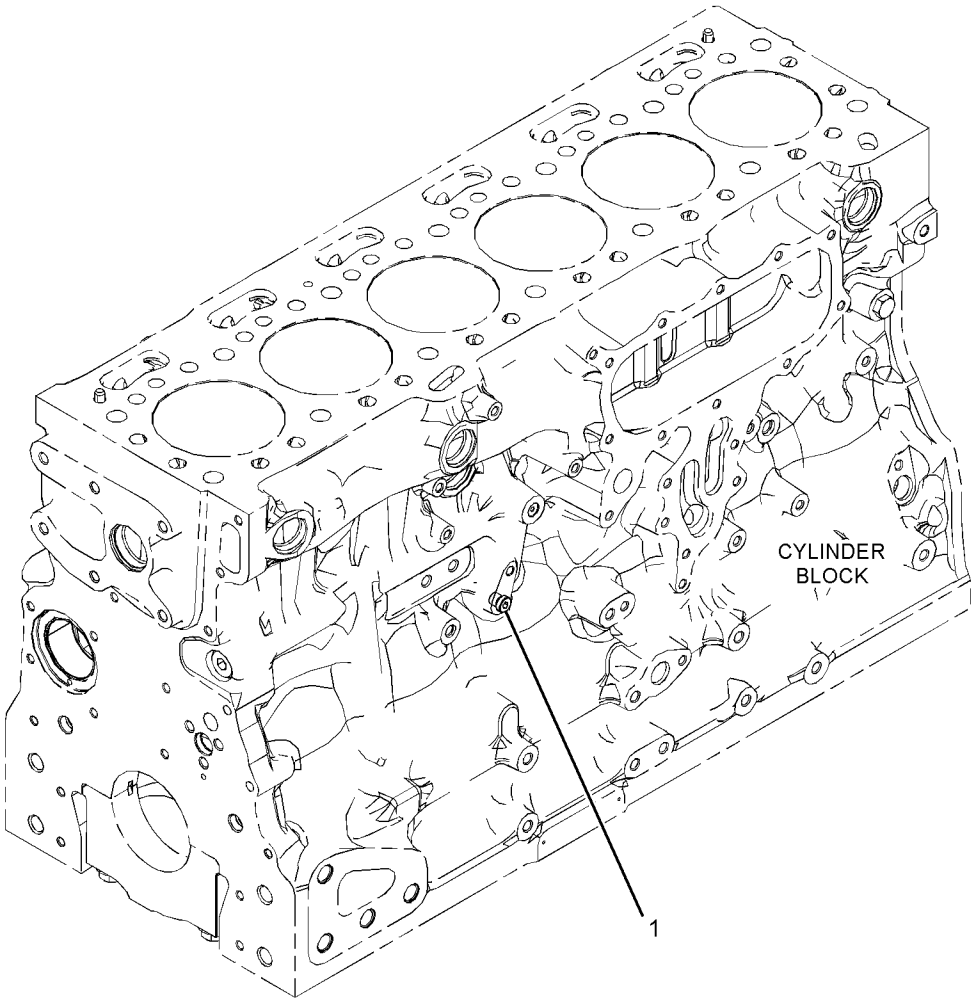

GRAPHIC #1 <END> g03483538

346-2908 PLUG GP-ENGINE

S/N: E7A1-UP

PART OF 393-4098 ENGINE AR-PRIMARY

SMCS-1000 **i06560448**

NOTE	REF NO	GRAPHIC REF	PART NUMBER	QTY	PART NAME 1 2 3 4 5 6 (PRODUCT LEVEL)	SEE PAGE
	1	1	**067-6823**	3	PLUG	

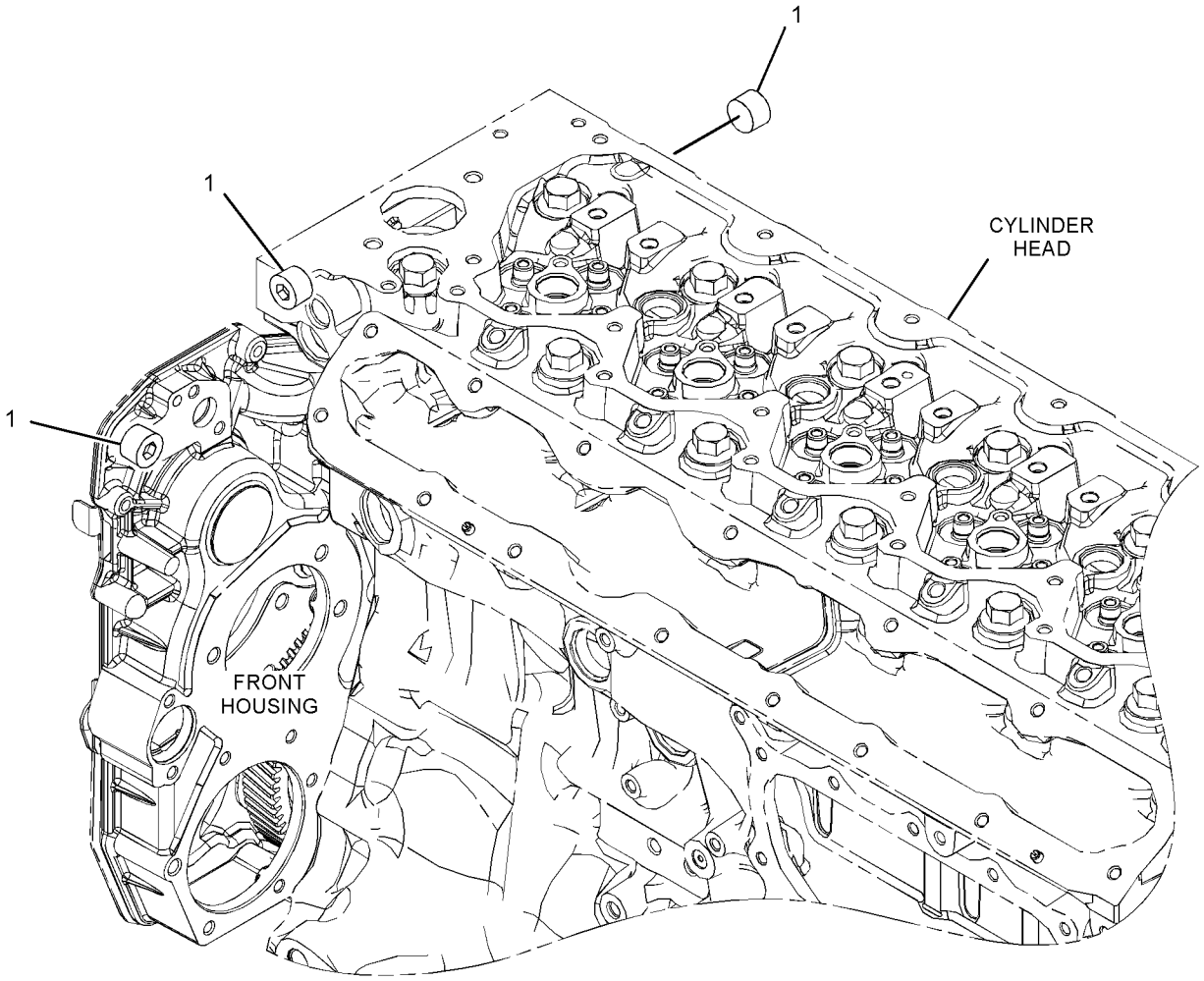

GRAPHIC #1 <END> g03380722

460-7921 PULLEY GP-AUXILIARY DRIVE

S/N: E7A1-UP

PART OF 393-4098 ENGINE AR-PRIMARY

SMCS-1205, 1207

i06563719

NOTE	REF NO	GRAPHIC REF	PART NUMBER	QTY	PART NAME 1 2 3 4 5 6 (PRODUCT LEVEL)	SEE PAGE
	1	1	**283-4662**	6	BOLT-FLANGE HEAD	

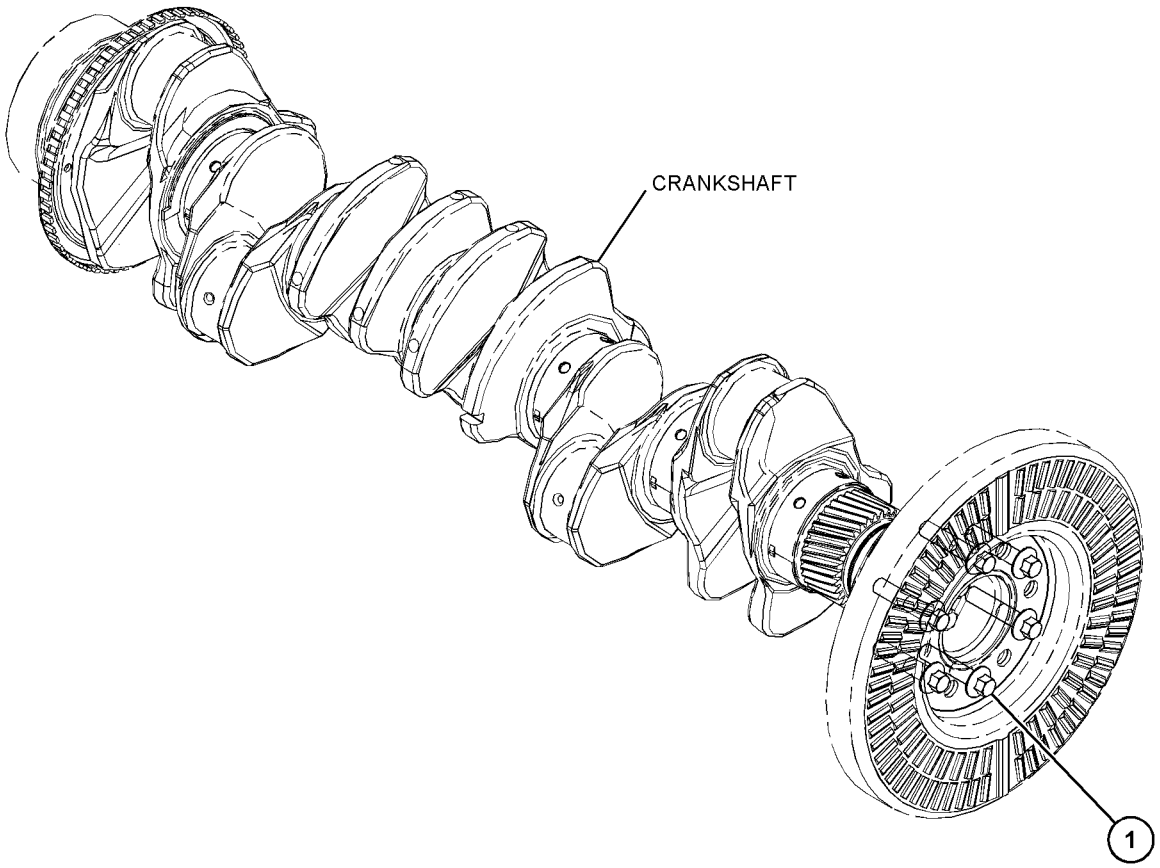

GRAPHIC #1 <END> g06034612

459-4219 PULLEY GP-CRANKSHAFT

S/N: E7A1-UP

PART OF 393-4098 ENGINE AR-PRIMARY

SMCS-1205 **i06563717**

NOTE	REF NO	GRAPHIC REF	PART NUMBER	QTY	PART NAME 1 2 3 4 5 6 (PRODUCT LEVEL)	SEE PAGE
	1	1	**342-6502**	1	ADAPTER	
M	2	1	**342-6510**	3	BOLT-TORX (M14X1.5X70-MM)	
	3	1	**351-1724**	1	DAMPER	
	4	1	**453-7150**	1	SPACER	
	5	1	**286-7848**	1	PULLEY (8-GROOVE)	

M - METRIC PART

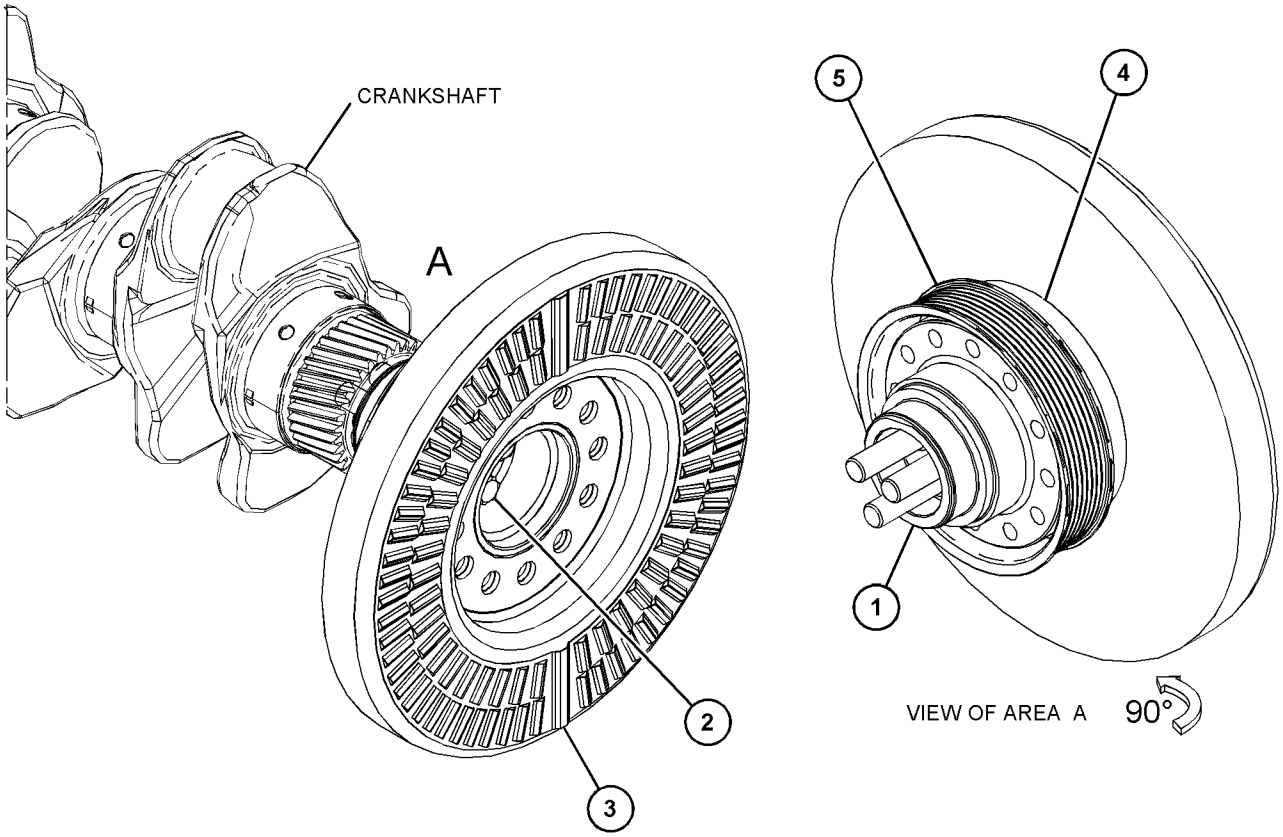

GRAPHIC #1 <END> g06034660

424-4623 PULLEY GP-IDLER

S/N: R5A1-UP
FOR USE WITH CANOPY WITHOUT A/C
AN ATTACHMENT

SMCS-1358 **i06527406**

NOTE	REF NO	GRAPHIC REF	PART NUMBER	QTY	PART NAME 1 2 3 4 5 6 (PRODUCT LEVEL)	SEE PAGE
	1	1	**173-1498**	1	PULLEY AS-IDLER (8-GROOVE)	
	2	1	**185-5872**	1	BELT-SERPENTINE	
	3	1	**192-1563**	1	IDLER GP-BELT (ALTERNATOR, REFRIGERANT COMPR)	
		1	**6V-9027**	1	SEAL-O-RING	
		1	**144-5611**	1	PULLEY AS-IDLER	
		1	**145-2901**	1	COVER-DUST	
		1	**151-2898**	1	SPACER (10.4X38.1X20-MM THK)	
M		1	**151-2900**	1	BOLT (M10X1.5X54.25-MM)	
	4	1	**200-0928**	1	ADAPTER-FAN	
	5	1	**201-8590**	1	PULLEY-FAN	
M	6	1	**099-3649**	6	BOLT (M8X1.25X40-MM)	
M	7	1	**8T-4908**	6	BOLT (M8X1.25X25-MM)	

M - METRIC PART

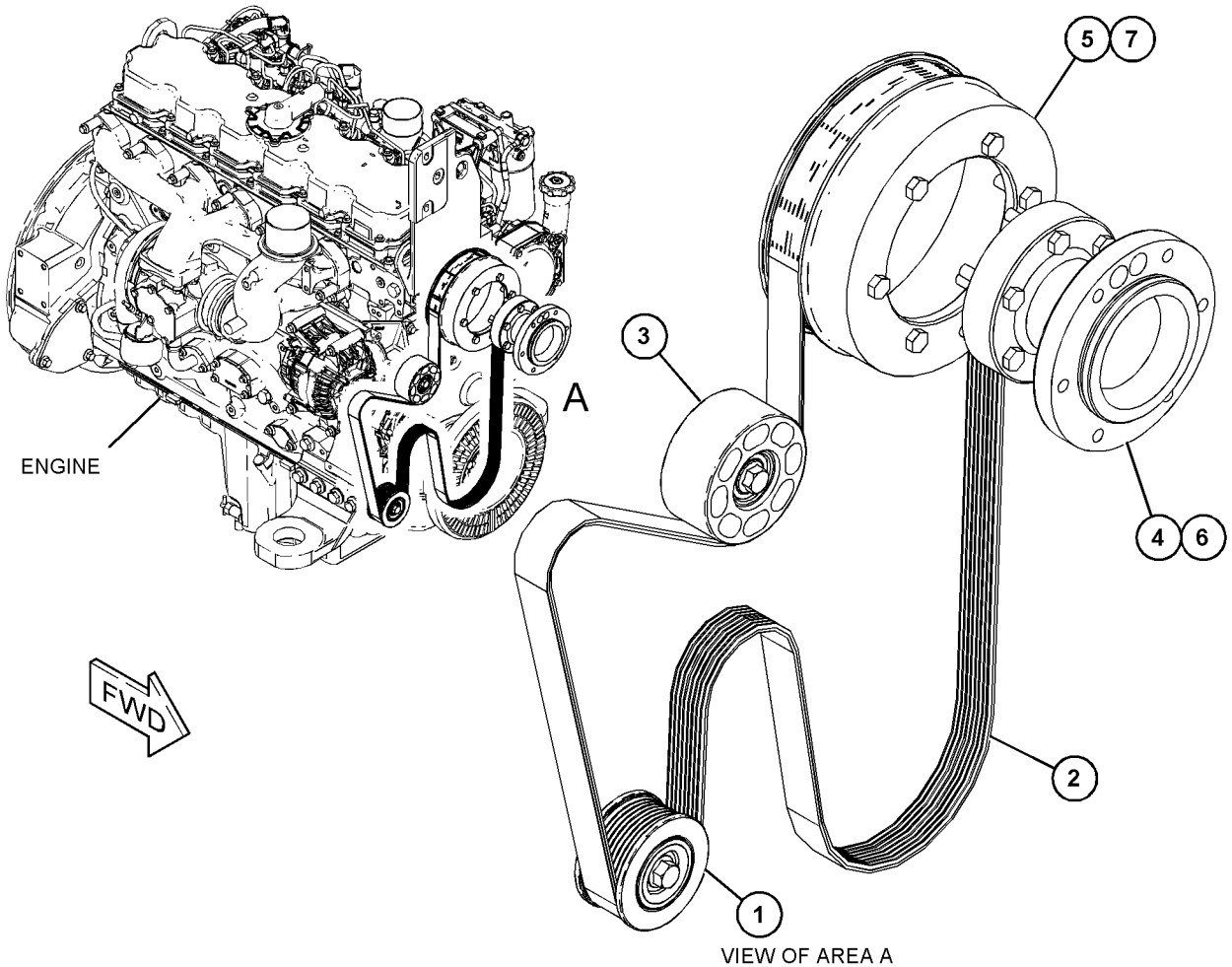

GRAPHIC #1 <END> g06022076

424-4626 PULLEY GP-IDLER

S/N: R5A1-UP
FOR USE WITH CAB WITH A/C
AN ATTACHMENT

SMCS-1358 **i06527408**

NOTE	REF NO	GRAPHIC REF	PART NUMBER	QTY	PART NAME 1 2 3 4 5 6 (PRODUCT LEVEL)	SEE PAGE
	1	1	**185-5872**	1	BELT-SERPENTINE	
	2	1	**192-1563**	1	IDLER GP-BELT (ALTERNATOR, REFRIGERANT COMPR)	
		1	**6V-9027**	1	SEAL-O-RING	
		1	**144-5611**	1	PULLEY AS-IDLER	
		1	**145-2901**	1	COVER-DUST	
		1	**151-2898**	1	SPACER (10.4X38.1X20-MM THK)	
M		1	**151-2900**	1	BOLT (M10X1.5X54.25-MM)	
	3	1	**200-0928**	1	ADAPTER-FAN	
	4	1	**201-8590**	1	PULLEY-FAN	
M	5	1	**099-3649**	6	BOLT (M8X1.25X40-MM)	
M	6	1	**8T-4908**	6	BOLT (M8X1.25X25-MM)	

M - METRIC PART

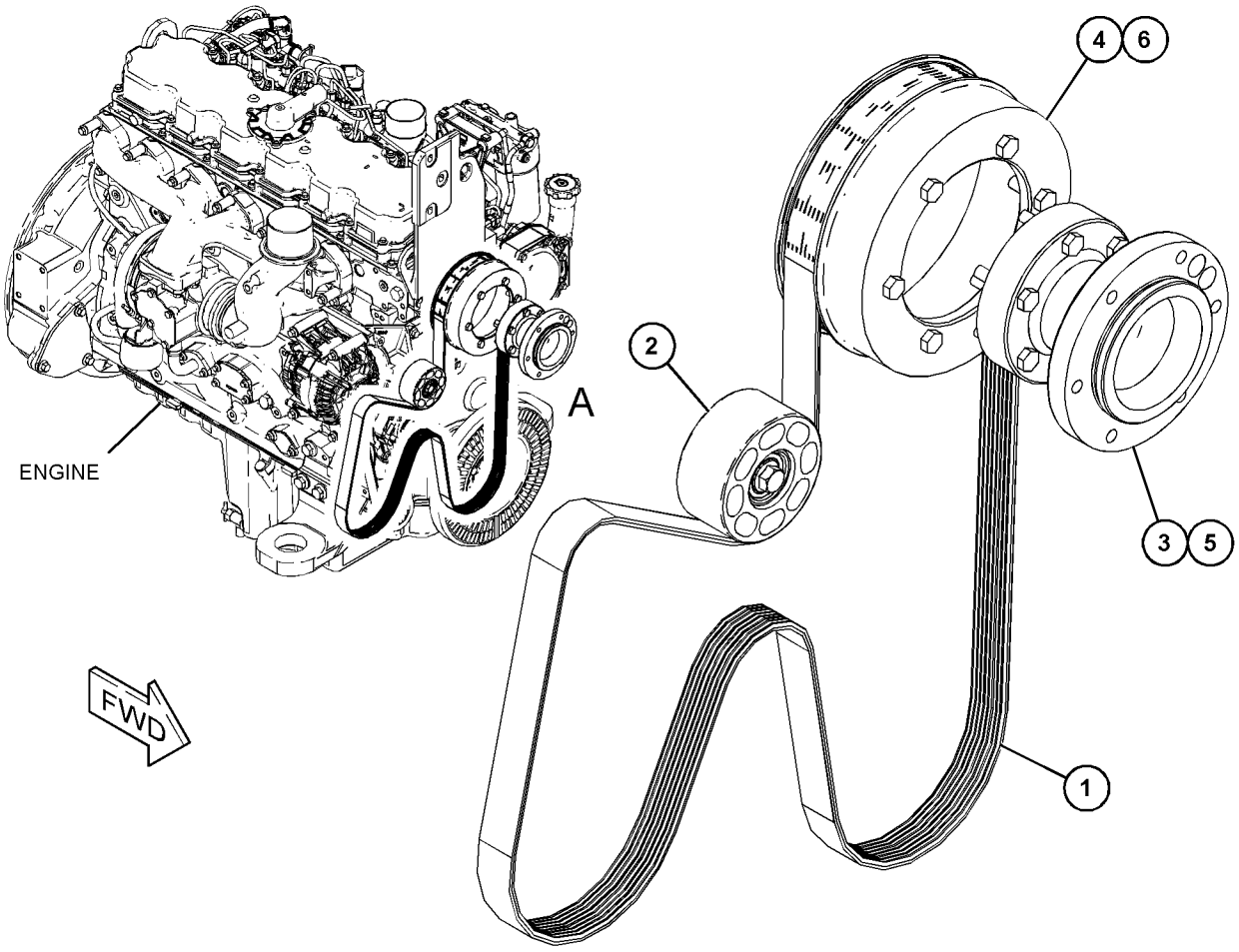

VIEW OF AREA A

GRAPHIC #1 <END> g06022072

280-1911 ROCKER ARM GP

S/N: E7A1-UP

PART OF 371-2480 ROCKER ARM GP

SMCS-1123 **i06567584**

NOTE	REF NO	GRAPHIC REF	PART NUMBER	QTY	PART NAME 1 2 3 4 5 6 (PRODUCT LEVEL)	SEE PAGE
	1	1	**276-9201**	1	CLIP	
	2	1	**276-9206**	5	SPRING-SHAFT	
	3	1	**276-9207**	1	SPRING-SHAFT	
	4	1	**277-5307**	1	SHAFT AS-ROCKER ARM	
	4A	1	**276-9200**	1	PLUG-SHAFT END	
	5	1	**278-5111**	6	ROCKER ARM AS	
					(EACH INCLUDES)	
	5A	1	**276-9230**	1	NUT	
	5B	1	**278-5113**	1	SCREW-ADJUSTING (TORX)	
	6	1	**278-5112**	6	ROCKER ARM AS	
					(EACH INCLUDES)	
	6A	1	**276-9230**	1	NUT	
	6B	1	**278-5113**	1	SCREW-ADJUSTING (TORX)	
	7	1	**280-1912**	6	BRACKET	
	8	1	**280-1913**	6	RETAINER	
	9	1	**280-1914**	12	BOLT (M8X1.25X55-MM)	

280-1911 **ROCKER ARM GP (**contd.**)** **i06567584**

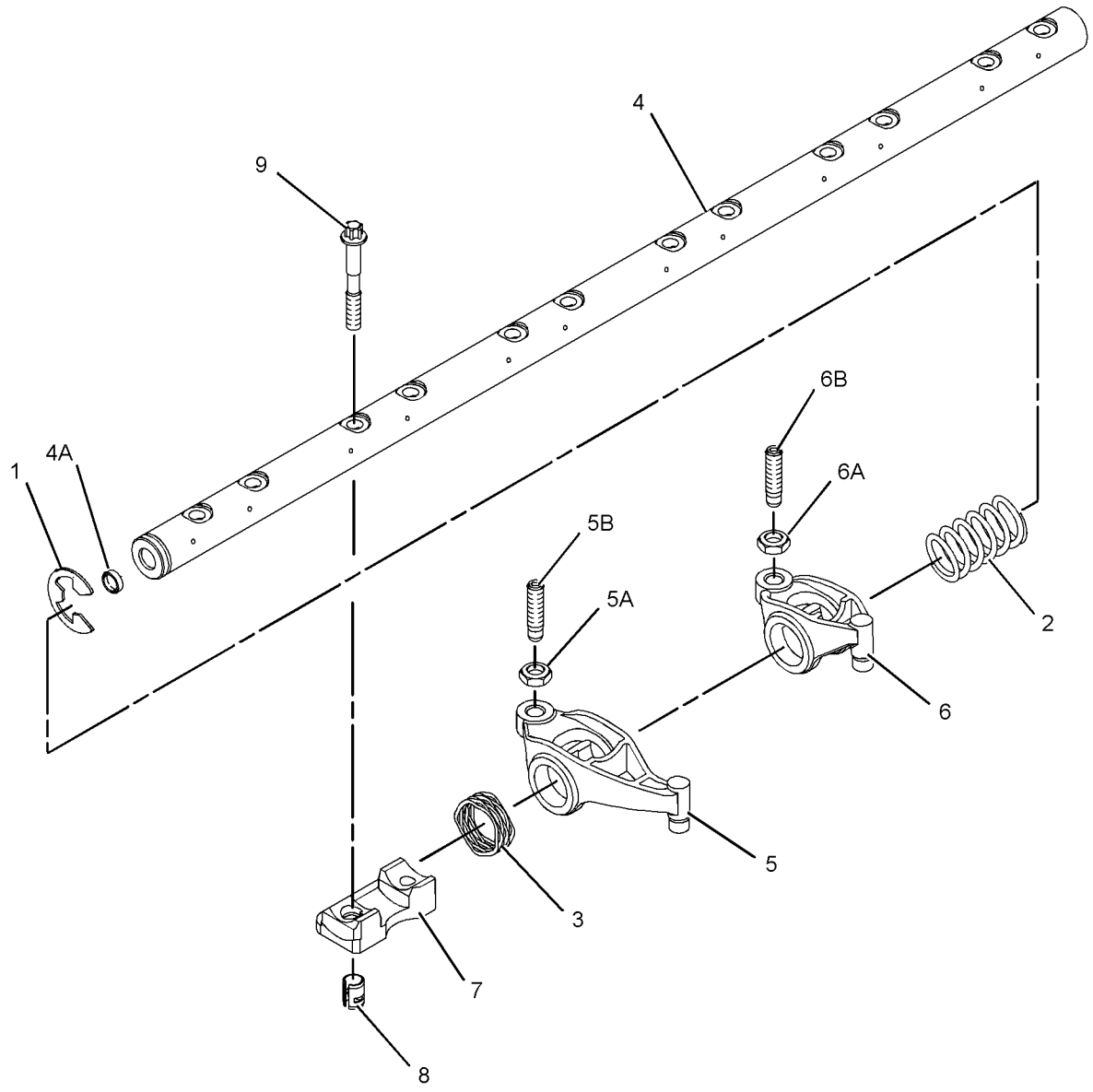

GRAPHIC #1 <END> g01235750

371-2480 ROCKER ARM GP

S/N: E7A1-UP

PART OF 393-4098 ENGINE AR-PRIMARY

SMCS-1123 **i06560451**

NOTE	REF NO	GRAPHIC REF	PART NUMBER	QTY	PART NAME 1 2 3 4 5 6 (PRODUCT LEVEL)	SEE PAGE
	1	1	**436-0521**	24	SPRING-VALVE	
	2	1	**346-4709**	12	BRIDGE GP-VALVE	
	3	1	**276-8123**	48	RETAINER	
	4	1	**276-8133**	24	CAP-VALVE	
Y	5	1	**280-1911**	1	ROCKER ARM GP	35
	6	1	**299-5511**	24	SEAL-VALVE STEM	
	7	1	**309-6678**	12	VALVE-INLET	
	8	1	**339-9637**	12	VALVE-EXHAUST	

Y - SEPARATE ILLUSTRATION

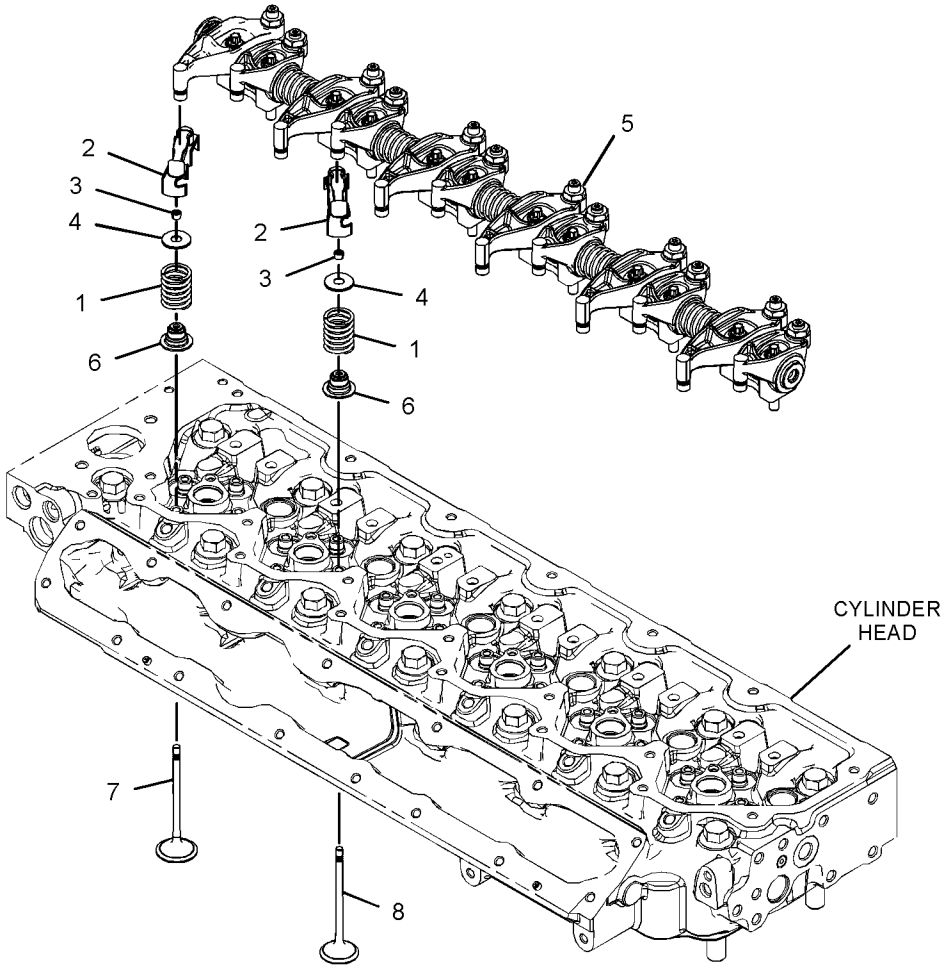

GRAPHIC #1 <END> g03103178

419-6603 FILLER GP-ENGINE OIL

S/N: E7A1-UP

PART OF 393-4098 ENGINE AR-PRIMARY

SMCS-1316 **i06560495**

NOTE	REF NO	GRAPHIC REF	PART NUMBER	QTY	PART NAME 1 2 3 4 5 6 (PRODUCT LEVEL)	SEE PAGE
M	1	1	**6I-4374**	1	BOLT (M8X1.25X60-MM)	
M	2	1	**124-3815**	1	BOLT (M8X1.25X16-MM)	
	3	1	**225-6524**	1	PLUG-CUP	
	4	1	**416-9520**	1	BRACKET AS	
	5	1	*419-0384*	1	FILLER GP-ENGINE OIL	
	5A	1	**306-2337**	1	SEAL-O-RING	
	5B	1	**369-3867**	1	CAP AS-OIL FILLER	
M	6	1	**6I-0217**	2	BOLT (M8X1.25X20-MM)	
M	7	1	**6I-1090**	1	BOLT (M8X1.25X40-MM)	
	8	1	**277-1974**	1	PLATE AS	
	8A	1	**277-1975**	1	SEAL-O-RING	

M - METRIC PART

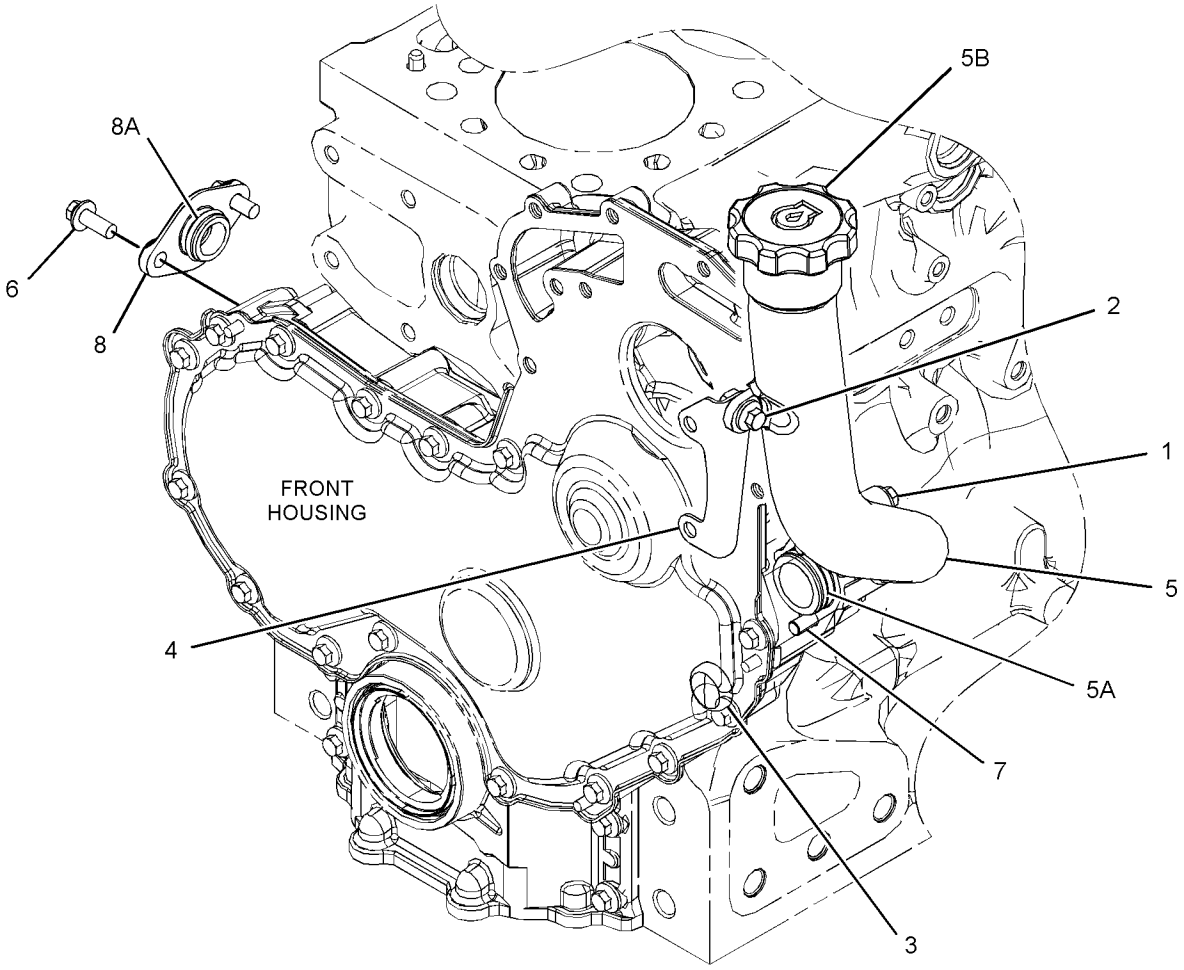

GRAPHIC #1 <END> g03556805

346-0220 FILTER GP-ENGINE OIL

S/N: E7A1-UP

PART OF 393-4098 ENGINE AR-PRIMARY

SMCS-1306, 1308

i06560442

NOTE	REF NO	GRAPHIC REF	PART NUMBER	QTY	PART NAME 1 2 3 4 5 6 (PRODUCT LEVEL)	SEE PAGE
	1	1	**462-1171**	1	FILTER-ENGINE OIL	

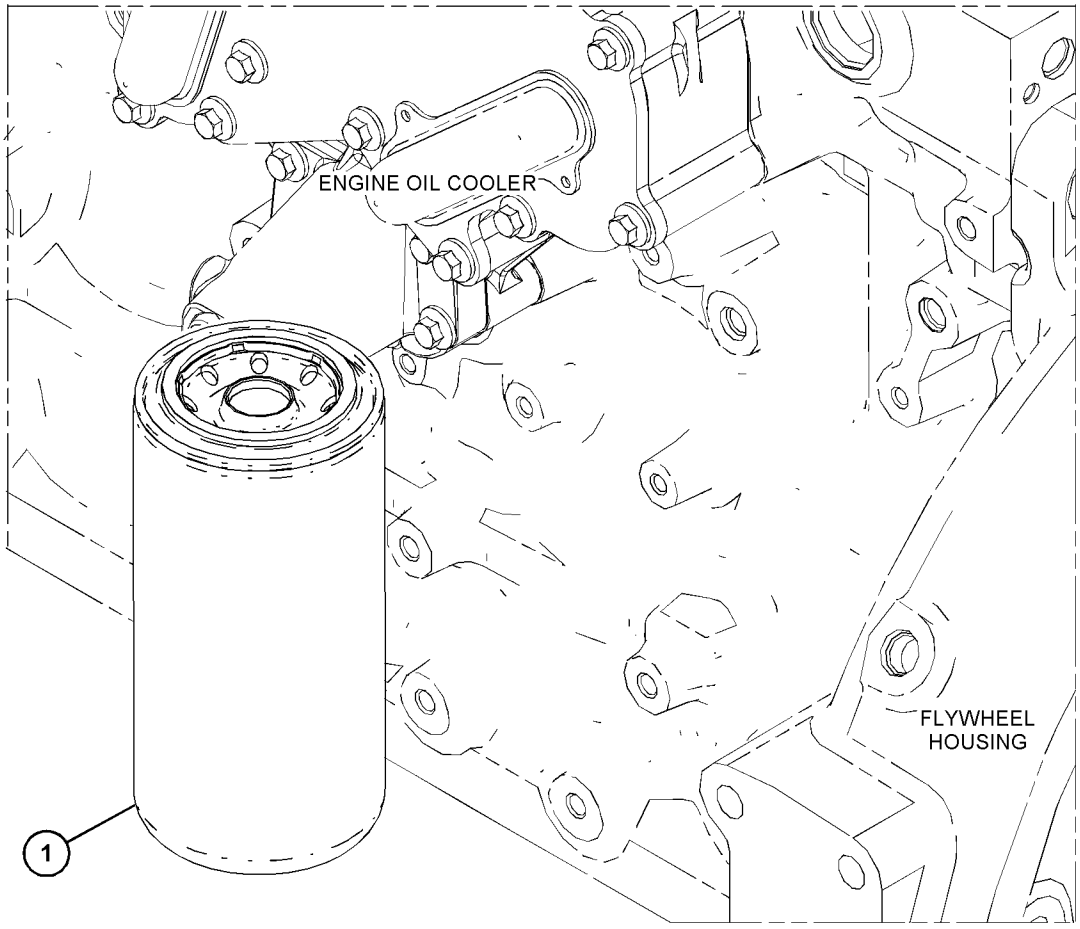

GRAPHIC #1 <END> g03710180

430-5635 FUMES DISPOSAL GP

S/N: R5A1-UP

PART OF 391-9510 INSTALLATION AR-ENGINE

SMCS-1317 **i06521357**

NOTE	REF NO	GRAPHIC REF	PART NUMBER	QTY	PART NAME 1 2 3 4 5 6 (PRODUCT LEVEL)	SEE PAGE
	1	1	**431-0238**	1	HOSE	
	2	1	**462-3018**	1	BRACKET AS	
	3	1	**3T-3622**	1	CLAMP	
	4	1	**7K-1181**	3	STRAP-CABLE	
M	5	1	**8T-4189**	1	BOLT (M8X1.25X20-MM)	
	6	1	**8T-4224**	1	WASHER-HARD (8.8X16X2-MM THK)	

M - METRIC PART

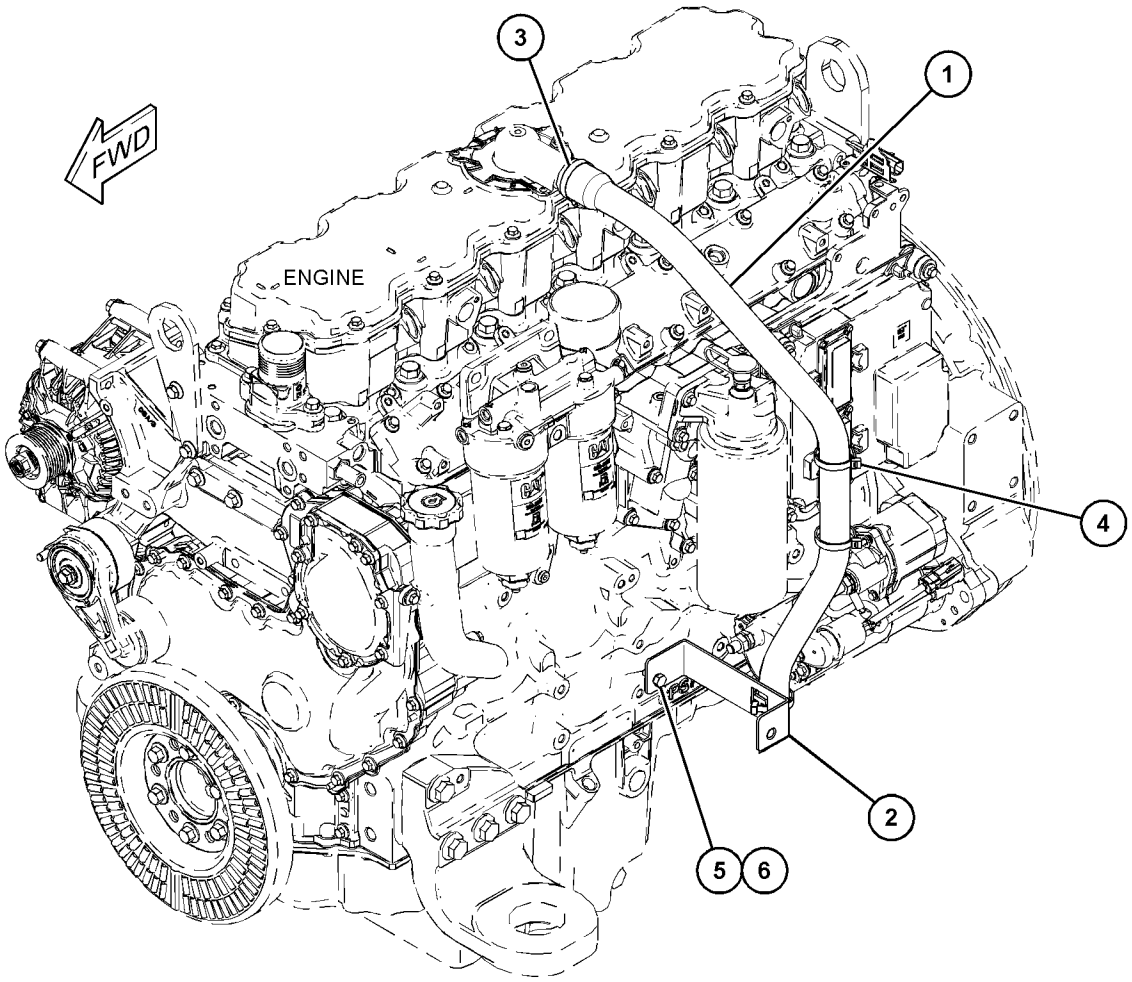

GRAPHIC #1 <END> g06011603

378-0625 GAUGE GP-OIL LEVEL (DIPSTICK)

S/N: E7A1-UP

PART OF 393-4098 ENGINE AR-PRIMARY

SMCS-1326 **i06560469**

NOTE	REF NO	GRAPHIC REF	PART NUMBER	QTY	PART NAME 1 2 3 4 5 6 (PRODUCT LEVEL)	SEE PAGE
	1	1	**6I-1497**	1	SEAL	
	2	1	**354-8322**	1	PLUG	
	3	1	**420-4129**	1	GAUGE GP-OIL LEVEL (DIPSTICK)	
	4	1	**420-4143**	1	SPACER	
M	5	1	**6I-0293**	1	BOLT (M8X1.25X80-MM)	

M - METRIC PART

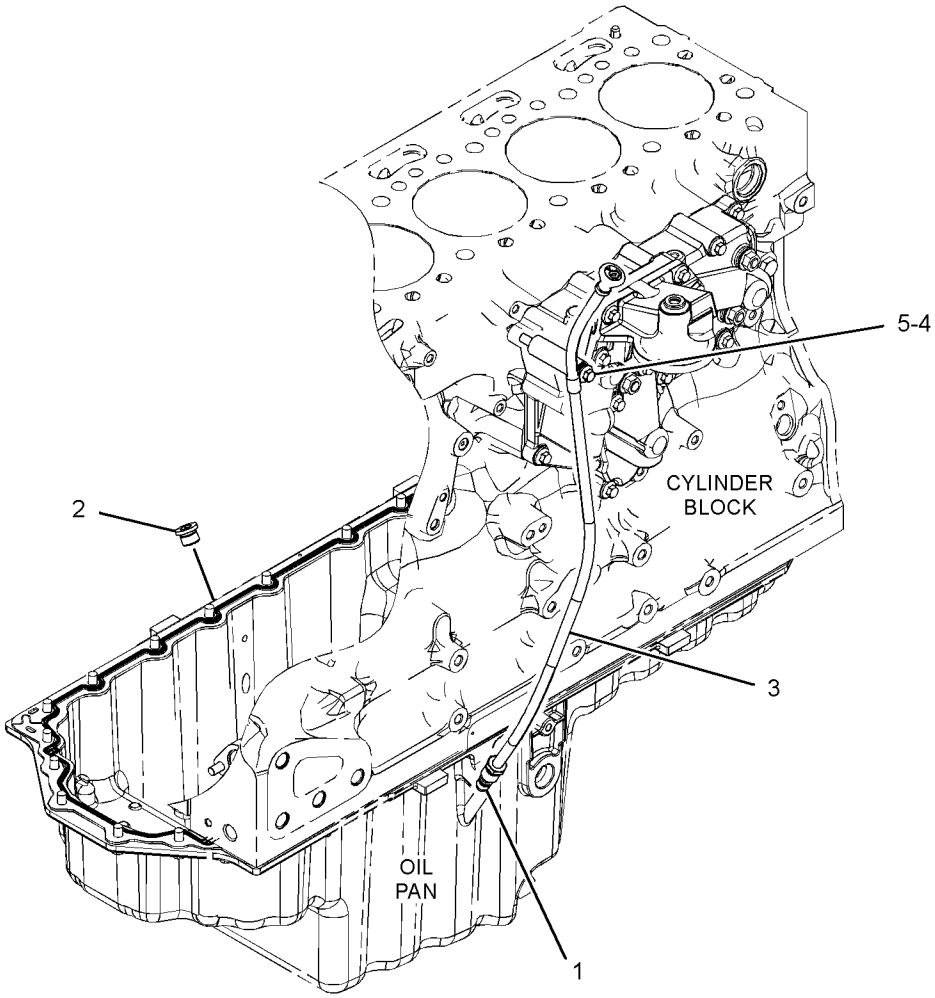

GRAPHIC #1 <END> g03556139

475-3424 OIL CHANGE GP-HIGH SPEED

S/N: R5A1-UP

AN ATTACHMENT

SMCS-1325 **i06530565**

NOTE	REF NO	GRAPHIC REF	PART NUMBER	QTY	PART NAME 1 2 3 4 5 6 (PRODUCT LEVEL)	SEE PAGE
I	1	1	**479-0196**	1	HOSE AS	
I	2	1	**479-0197**	1	HOSE AS	
M	3	1	**8T-4172**	1	BOLT (M10X1.5X80-MM)	
	4	1	**091-9035**	1	SPACER (11X25X20-MM THK)	
	5	1	**099-3001**	3	CLIP	
	6	1	**110-8319**	1	FITTING AS (QUICK DISCONNECT, FEMALE)	
	7	1	**110-8827**	1	FITTING (QUICK DISCONNECT, MALE)	
	8	1	*148-8359*	2	ELBOW AS	
					(EACH INCLUDES)	
		1	**6V-9877**	1	ELBOW	
		1	**3K-0360**	1	SEAL-O-RING	
		1	**6V-9746**	1	SEAL-O-RING	
	9	1	*150-4049*	1	ELBOW AS	
		1	**8T-4149**	1	ELBOW	
		1	**6V-9746**	1	SEAL-O-RING	
		1	**7M-8485**	1	SEAL-O-RING	
	10	1	*153-6237*	1	ELBOW AS	
		1	**6V-9004**	1	ELBOW	
		1	**3D-2824**	1	SEAL-O-RING	
		1	**6V-9746**	1	SEAL-O-RING	
	11	1	*239-5030*	1	ADAPTER AS	
		1	**9X-2493**	1	ADAPTER	
		1	**3K-0360**	1	SEAL-O-RING	
	12	1	**2P-1286**	1	LOCKNUT-BULKHEAD (1-5/16-12-THD)	
	13	1	**2V-2043**	1	NUT-BULKHEAD (1-5/8-12-THD)	
	14	1	**8T-4121**	5	WASHER-HARD (11X21X2.5-MM THK)	
M	15	1	**8T-4137**	4	BOLT (M10X1.5X20-MM)	
	16	1	**479-0198**	1	PLATE	

I - REFER TO HYDRAULIC INFORMATION SYSTEM
M - METRIC PART

475-3424 **OIL CHANGE GP-HIGH SPEED (**contd.**)** **i06530565**

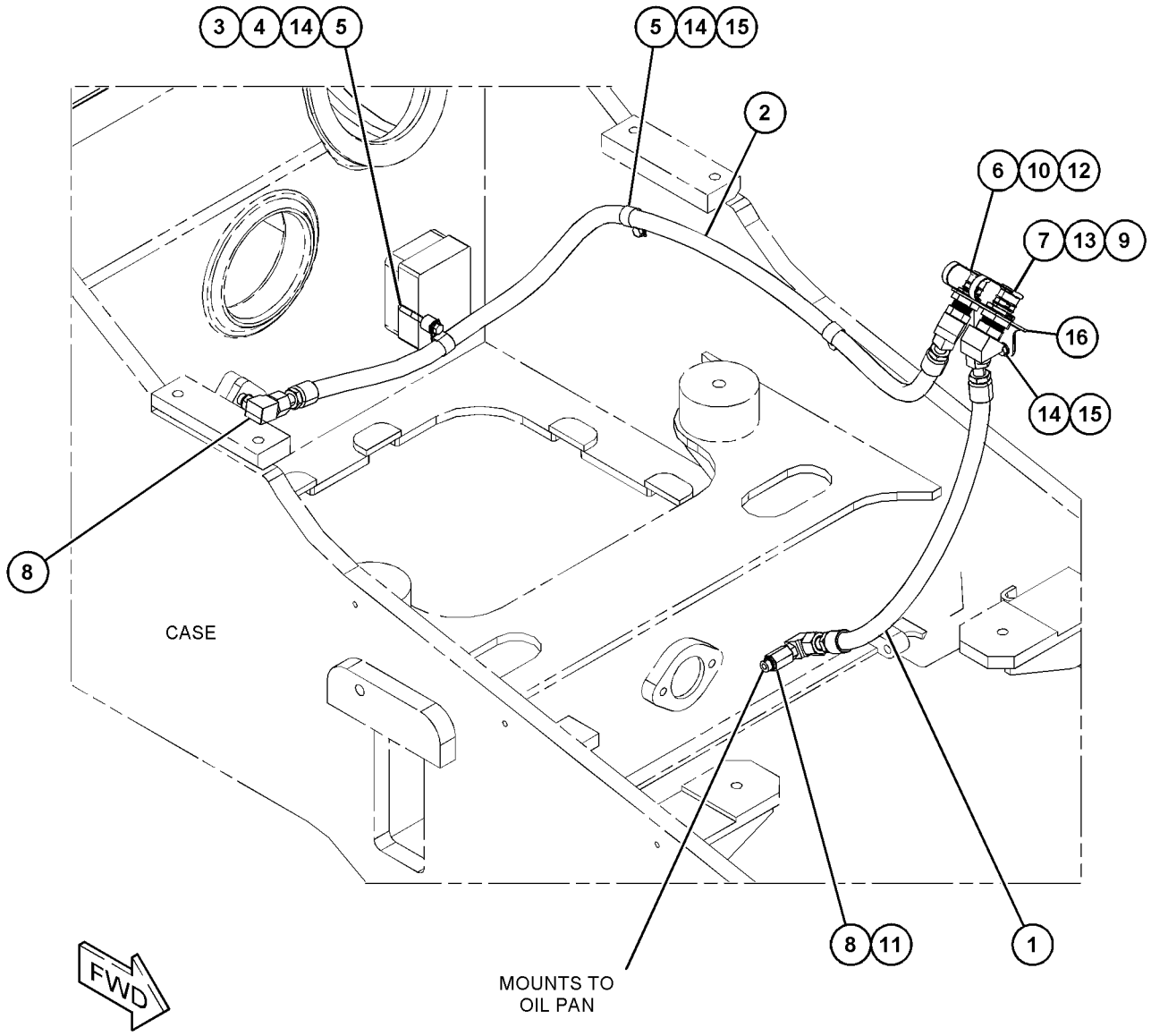

GRAPHIC #1 <END> g06025784

462-6685 PUMP GP-ENGINE OIL

S/N: E7A1-UP

PART OF 393-4098 ENGINE AR-PRIMARY

SMCS-1304, 1315 **i06560507**

NOTE	REF NO	GRAPHIC REF	PART NUMBER	QTY	PART NAME 1 2 3 4 5 6 (PRODUCT LEVEL)	SEE PAGE
	1	1	**469-5033**	1	PUMP AS-ENGINE OIL	
M	2	1	**6I-1090**	4	BOLT (M8X1.25X40-MM)	

M - METRIC PART

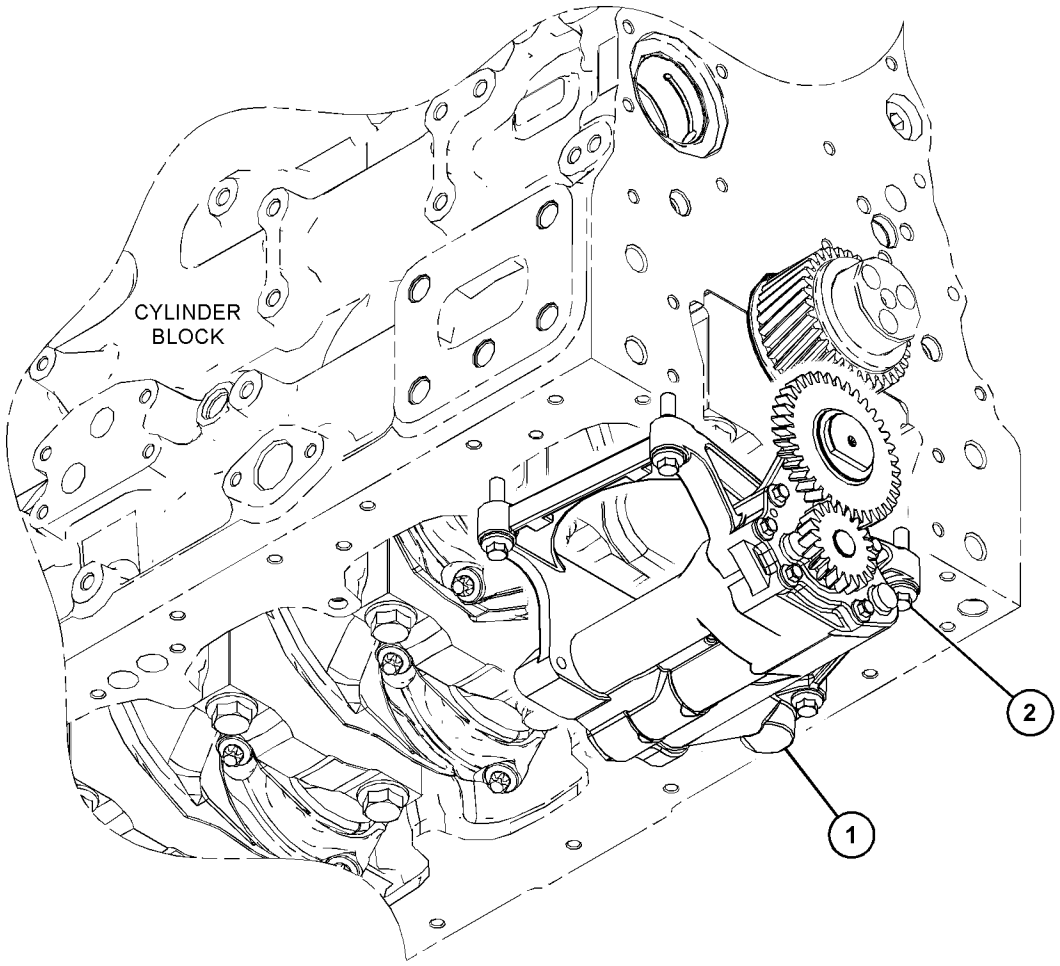

GRAPHIC #1 <END> g03797853

371-2745 VALVE GP-FLUID SAMPLING

S/N: E7A1-UP

PART OF 393-4098 ENGINE AR-PRIMARY

SMCS-7542 **i06560459**

NOTE	REF NO	GRAPHIC REF	PART NUMBER	QTY	PART NAME 1 2 3 4 5 6 (PRODUCT LEVEL)	SEE PAGE
	1	1	**216-9633**	1	VALVE AS-FLUID SAMPLING	
	2	1	**8C-3445**	1	CAP-DUST	

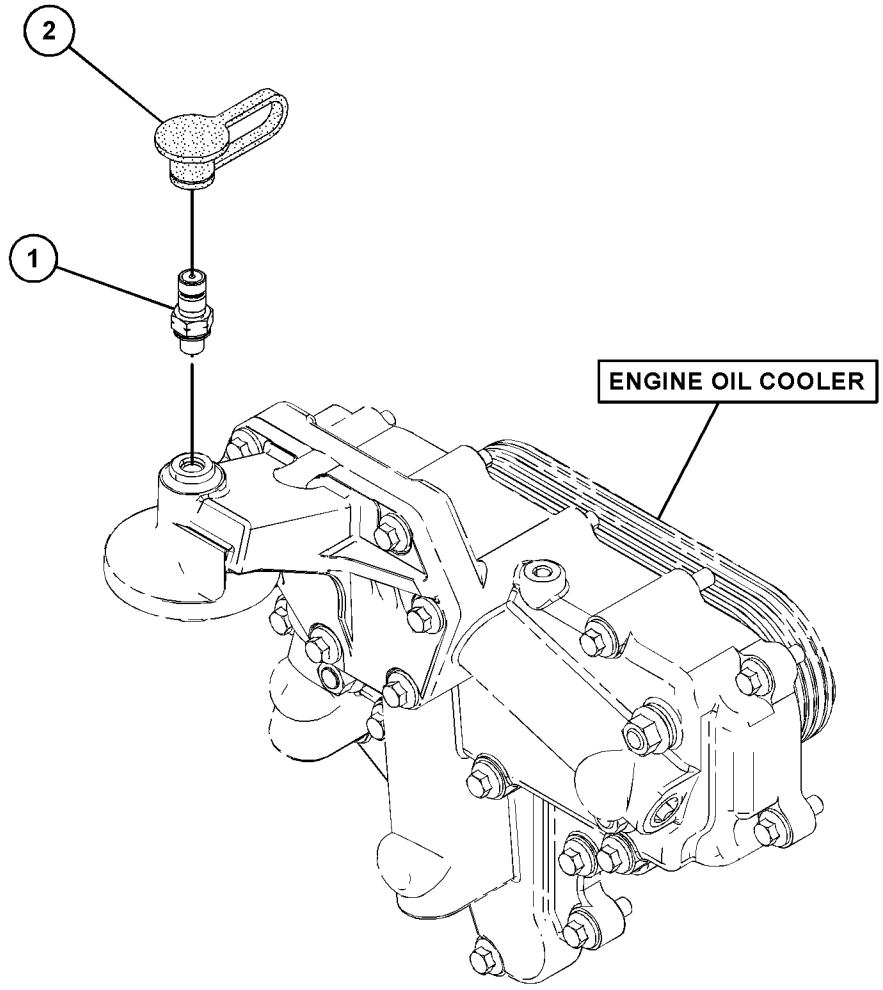

GRAPHIC #1 <END> g03178016

346-0099 BASE GP-OIL COOLER & FILTER

S/N: E7A1-UP

PART OF 393-4098 ENGINE AR-PRIMARY

SMCS-1306, 1378 **i06560441**

NOTE	REF NO	GRAPHIC REF	PART NUMBER	QTY	PART NAME 1 2 3 4 5 6 (PRODUCT LEVEL)	SEE PAGE
M	1	1	**100-3751**	5	BOLT (M8X1.25X65-MM)	
	2	1	**225-7944**	1	GASKET	
	3	1	**232-3751**	1	PLATE	
	4	1	**277-2525**	1	HEAD AS-OIL FILTER	
	5	1	**277-2526**	1	GASKET-FILTER	
	6	1	**277-2537**	1	PLATE	
Y	8	1	**295-8610**	1	COOLER GP-ENGINE OIL	48
M	9	1	**6I-0217**	6	BOLT (M8X1.25X20-MM)	
M	10	1	**6I-0260**	9	BOLT (M8X1.25X25-MM)	
M	11	1	**6I-4709**	3	BOLT (M8X1.25X100-MM)	

M - METRIC PART
Y - SEPARATE ILLUSTRATION

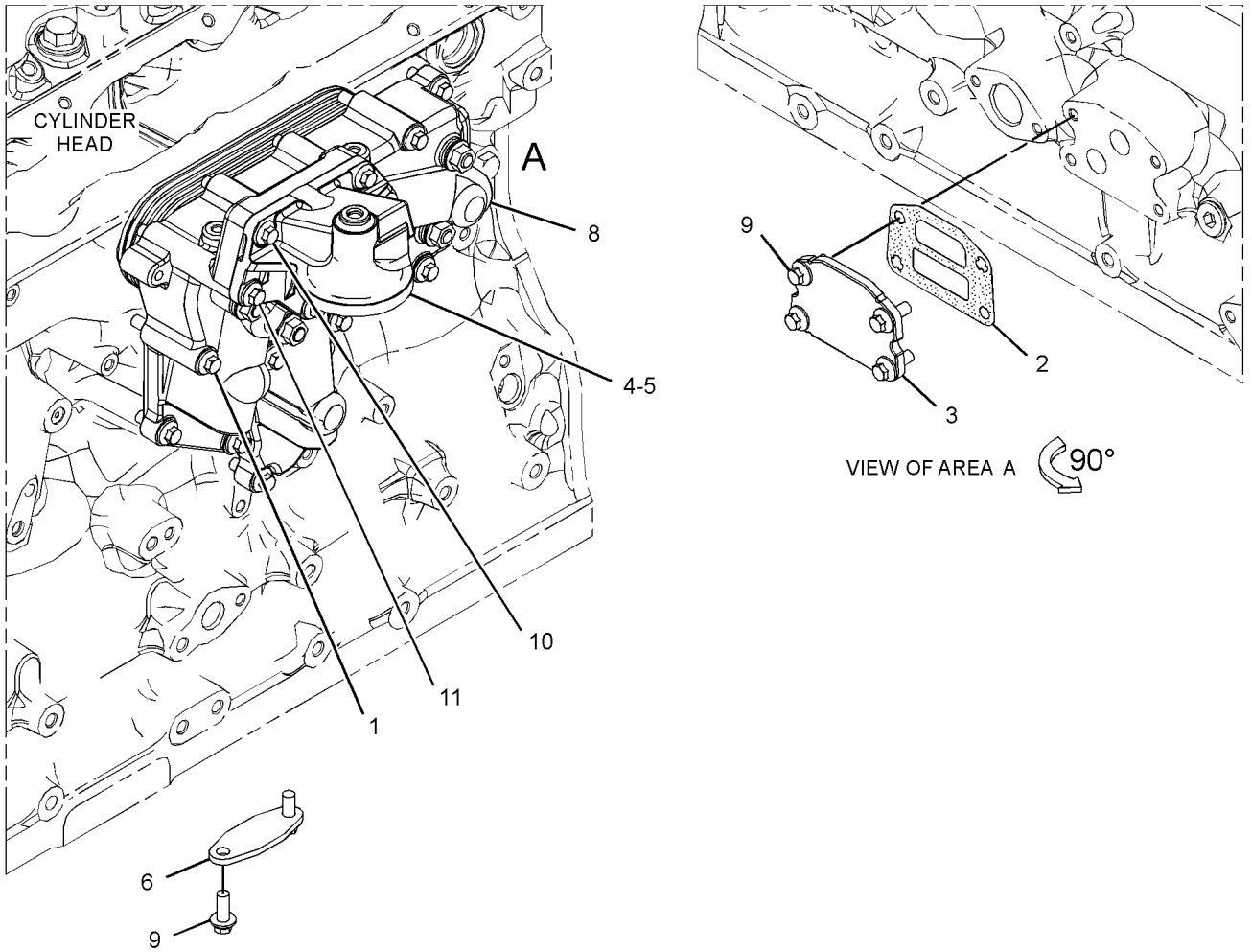

GRAPHIC #1 <END> g03722217

373-3607 CONNECTION GP-WATER

S/N: E7A1-UP

PART OF 393-4098 ENGINE AR-PRIMARY

SMCS-1380 **i06560464**

NOTE	REF NO	GRAPHIC REF	PART NUMBER	QTY	PART NAME 1 2 3 4 5 6 (PRODUCT LEVEL)	SEE PAGE
M	1	1	**123-2899**	2	BOLT (M10X1.5X40-MM)	
	2	1	**417-7782**	1	REGULATOR AS-WATER TEMPERATURE (INCLUDES CONNECTOR)	
	3	1	**281-8744**	1	GASKET-WATER REGULATOR (TEMPERATURE)	

M - METRIC PART

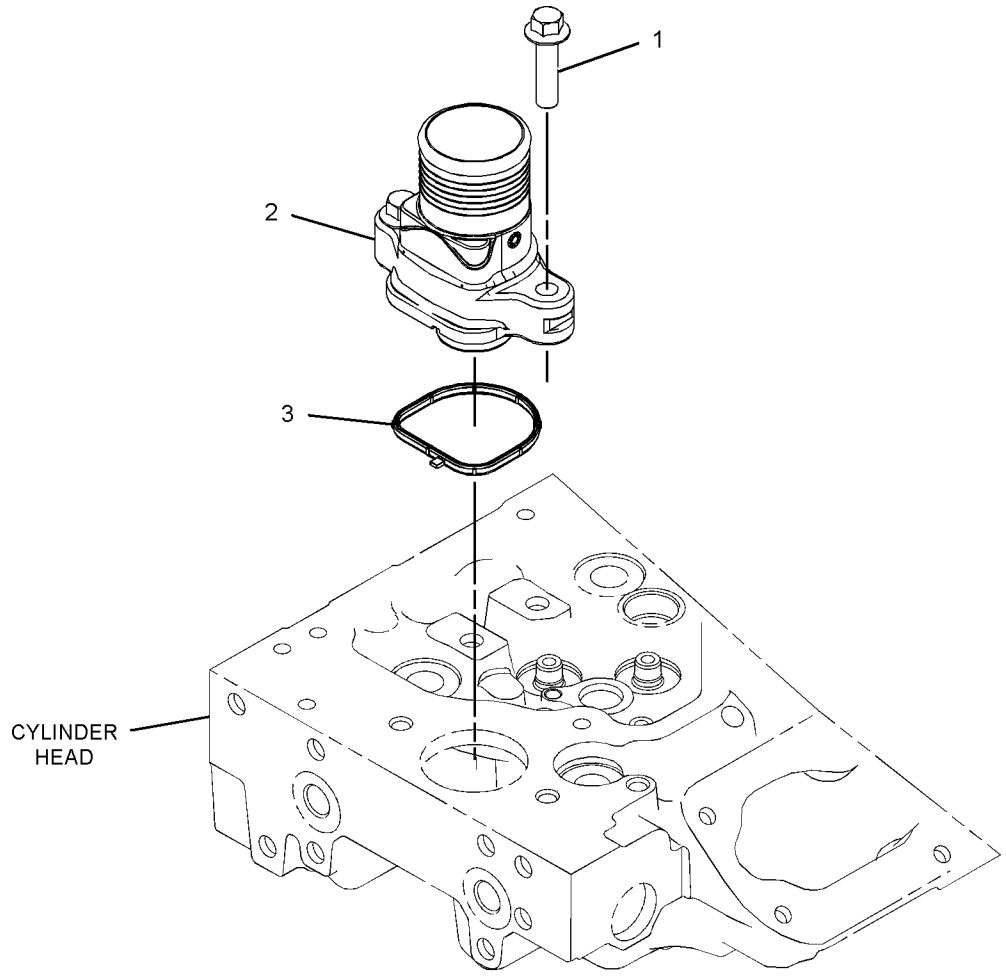

GRAPHIC #1 <END> g03341487

295-8610 COOLER GP-ENGINE OIL

S/N: E7A1-UP

PART OF 346-0099 BASE GP-OIL COOLER & FILTER

SMCS-1378 **i06567563**

NOTE	REF NO	GRAPHIC REF	PART NUMBER	QTY	PART NAME 1 2 3 4 5 6 (PRODUCT LEVEL)	SEE PAGE
M	1	1	**6I-0260**	3	BOLT (M8X1.25X25-MM)	
M	2	1	**6I-0594**	4	NUT (M10X1.5-THD)	
	3	1	**101-3917**	4	WASHER (10.5X21X2-MM THK)	
	4	1	**101-7547**	4	WASHER	
	5	1	**231-1455**	2	STUD	
	6	1	**277-2500**	1	GASKET	
	7	1	**277-2502**	2	STUD	
	8	1	**277-2503**	3	PLUG	
	9	1	**295-8613**	1	COOLER-OIL (ENGINE)	
	10	1	**295-8615**	2	GASKET	

PARTS SHOWN IN GRAPHIC(S) WITHOUT A REFERENCE NUMBER ARE NOT SERVICED SEPARATELY

M - METRIC PART

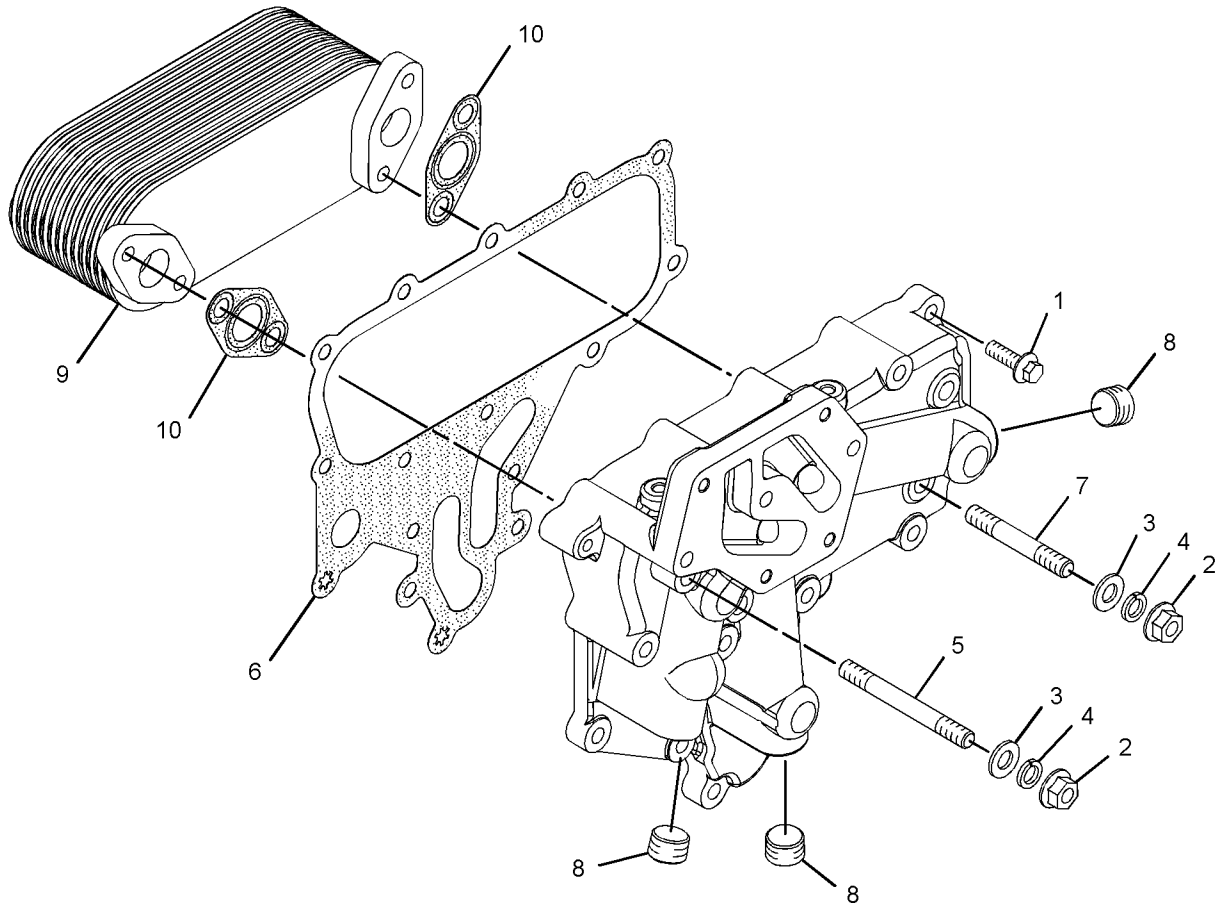

GRAPHIC #1 <END> g03105899

422-7013 COOLING GP

S/N: R5A1-UP

PART OF 391-9510 INSTALLATION AR-ENGINE

SMCS-1350, 1353 **i06554620**

NOTE	REF NO	GRAPHIC REF	PART NUMBER	QTY	PART NAME 1 2 3 4 5 6 (PRODUCT LEVEL)	SEE PAGE
	1	1	**332-4175**	1	CAP AS-RADIATOR	
	2	1	**377-4982**	2	SEAL-AIR	
	3	1	**377-4983**	4	SEAL-AIR	
	4	1	**393-9032**	1	BRACKET	
	5	1	**393-9033**	1	BRACKET	
	6	1	**422-7005**	1	PLATE AS	
	7	1	**422-7006**	1	CORE AS-AFTERCOOLER	
	8	1	**422-7007**	1	CORE AS-OIL COOLER	
		1	**243-2739**	1	REGULATOR-OIL TEMPERATURE (THERMOSTAT, POWER TRAIN)	
		1	**238-5085**	1	SEAL-O-RING	
	9	1	**422-7008**	1	CORE AS-RADIATOR	
	10	1	**7X-0589**	19	WASHER-HARD (12X28.5X5-MM THK)	
M	11	1	**8T-4136**	19	BOLT (M10X1.5X25-MM)	
E	12	1	**233-6832**		SEAL (92-CM EACH)	

E - ORDER BY THE CENTIMETER
M - METRIC PART

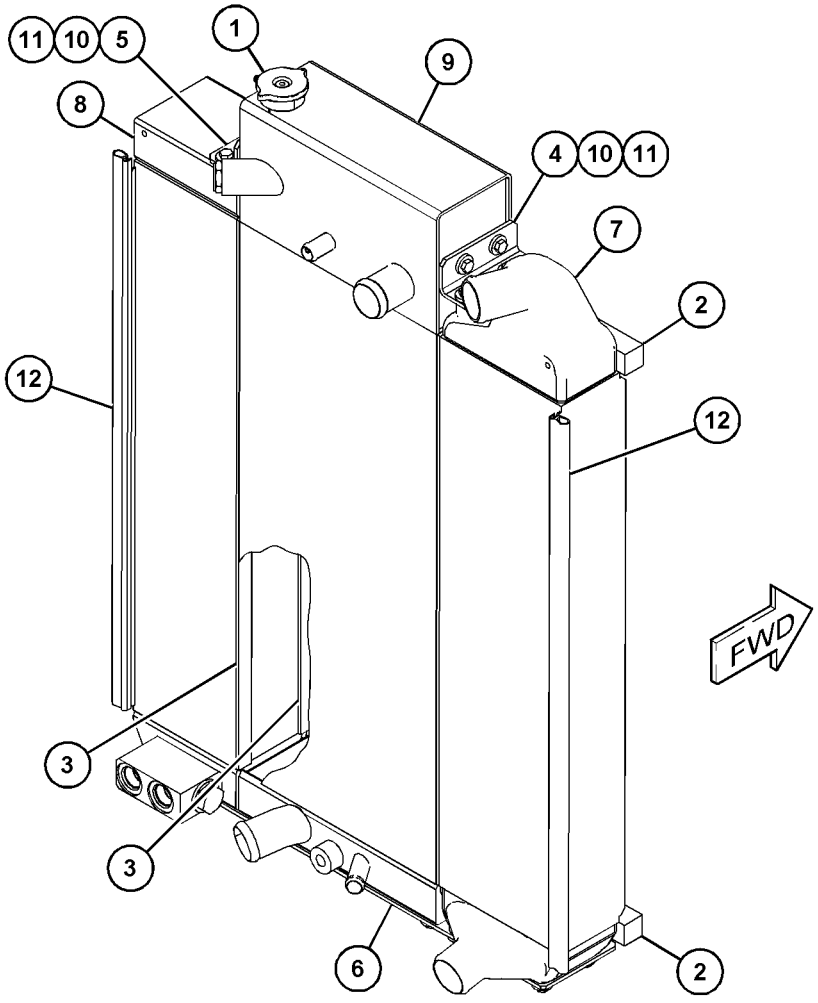

GRAPHIC #1 <END> g06024157

422-7028 FAN GP-BLOWER

S/N: R5A1-UP

AN ATTACHMENT

SMCS-1356, 1360 **i06524055**

NOTE	REF NO	GRAPHIC REF	PART NUMBER	QTY	PART NAME 1 2 3 4 5 6 (PRODUCT LEVEL)	SEE PAGE
	1	1	**226-2261**	1	SPIDER AS-FAN (BLOWER) (6-BLADE)	
	2	1	**319-1605**	1	GUARD AS-FAN (LH)	
	3	1	**319-1606**	1	GUARD AS-FAN (RH)	
	4	1	**5P-4116**	8	WASHER-HARD (8.8X20.5X2-MM THK)	
	5	1	**7D-7233**	2	CLIP	
	6	1	**7X-7958**	2	CLAMP-HOSE	
	7	1	**8T-4121**	10	WASHER-HARD (11X21X2.5-MM THK)	
M	8	1	**8T-4191**	2	BOLT (M10X1.5X16-MM)	
M	9	1	**8T-4195**	8	BOLT (M10X1.5X30-MM)	
M	10	1	**8T-4908**	8	BOLT (M8X1.25X25-MM)	
E	11	1	**371-8094**		HOSE (149-CM)	

E - ORDER BY THE CENTIMETER
M - METRIC PART

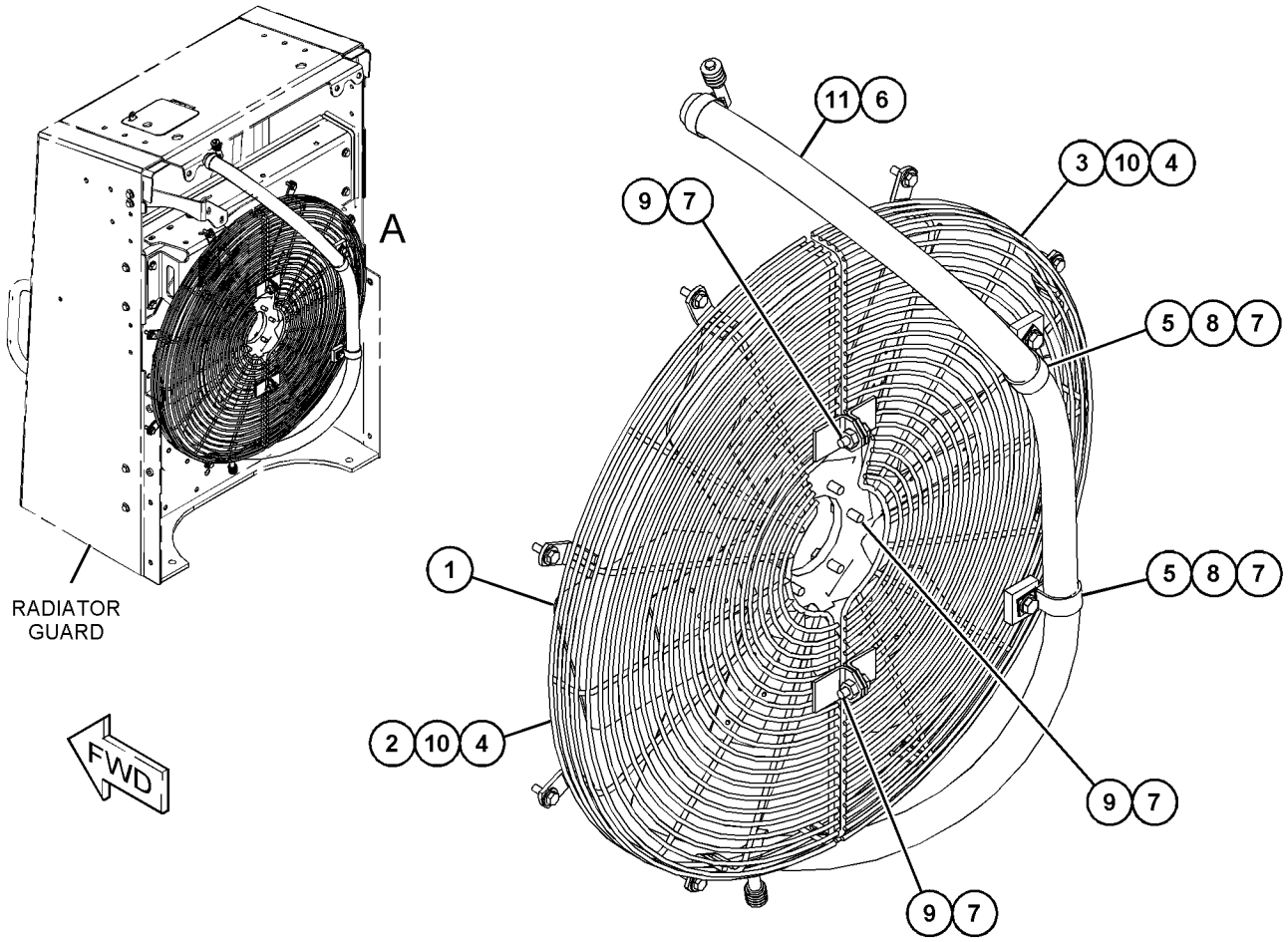

VIEW OF AREA A

GRAPHIC #1 <END> g06009738

422-7030 FAN GP-REVERSIBLE

S/N: R5A1-UP

AN ATTACHMENT

SMCS-1356, 1360 **i06524095**

NOTE	REF NO	GRAPHIC REF	PART NUMBER	QTY	PART NAME 1 2 3 4 5 6 (PRODUCT LEVEL)	SEE PAGE
	1	1	**188-8954**	1	SPIDER AS-FAN (6-BLADE)	
	2	1	**240-8540**	1	GUARD AS-FAN (LH)	
	3	1	**454-5555**	1	GUARD AS-FAN (RH)	
	4	1	**5P-4116**	8	WASHER-HARD (8.8X20.5X2-MM THK)	
	5	1	**7D-7233**	2	CLIP	
	6	1	**7X-7958**	2	CLAMP-HOSE	
	7	1	**8T-4121**	10	WASHER-HARD (11X21X2.5-MM THK)	
M	8	1	**8T-4136**	2	BOLT (M10X1.5X25-MM)	
M	9	1	**8T-4186**	6	BOLT (M10X1.5X40-MM)	
M	10	1	**8T-4195**	2	BOLT (M10X1.5X30-MM)	
M	11	1	**8T-4908**	8	BOLT (M8X1.25X25-MM)	
	12	1	**371-8094**		HOSE (149-CM)	

M - METRIC PART

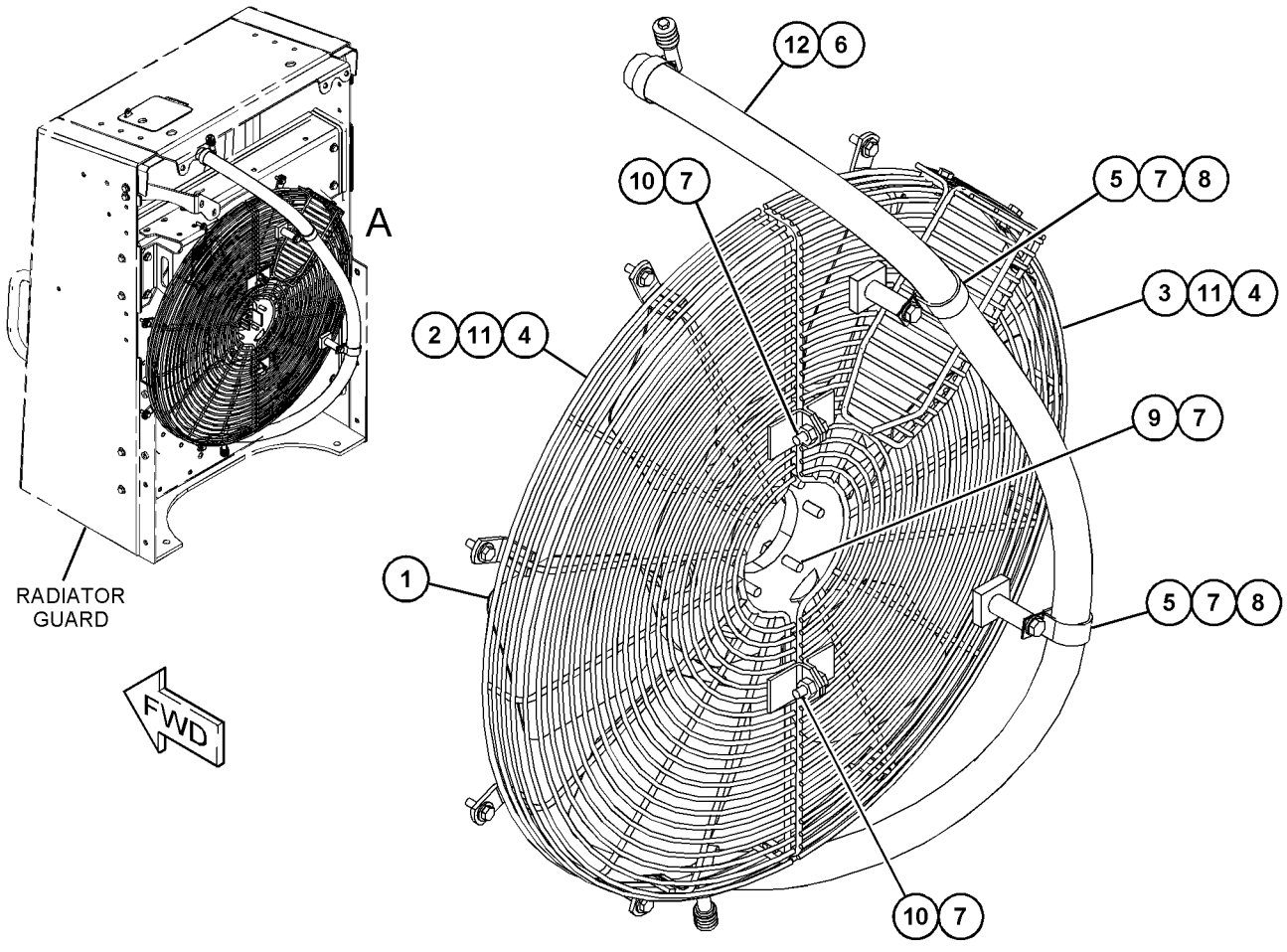

VIEW OF AREA A

GRAPHIC #1 <END> g06009692

422-7020 LINES GP-WATER

S/N: R5A1-UP

PART OF 391-9510 INSTALLATION AR-ENGINE

SMCS-1380 **i06521372**

NOTE	REF NO	GRAPHIC REF	PART NUMBER	QTY	PART NAME 1 2 3 4 5 6 (PRODUCT LEVEL)	SEE PAGE
	1	1	**157-0670**	1	CAP-DUST	
	2	1	**165-2273**	1	VALVE GP-SHUTOFF	
		1	**3K-0360**	1	SEAL-O-RING	
		1	**6V-7238**	1	VALVE-SHUTOFF	
	3	1	**433-4684**	1	HOSE	
	4	1	**434-2640**	1	HOSE	
	5	1	**136-0207**	4	STRAP-CABLE	
	6	1	**154-9024**	1	VALVE GP-FLUID SAMPLING	
	7	1	**159-1503**	1	CLAMP-HOSE	
	8	1	**200-6345**	1	MOUNT (DUAL SWIVEL)	
	9	1	**3B-7255**	1	BUSHING-REDUCER	
	10	1	**8T-4984**	4	CLAMP-HOSE	
E	11	1	**5P-0767**		HOSE (58-CM)	
E	12	1	**8C-3681**		HOSE (136-CM)	

E - ORDER BY THE CENTIMETER

422-7020 **LINES GP-WATER (**contd.**)** **i06521372**

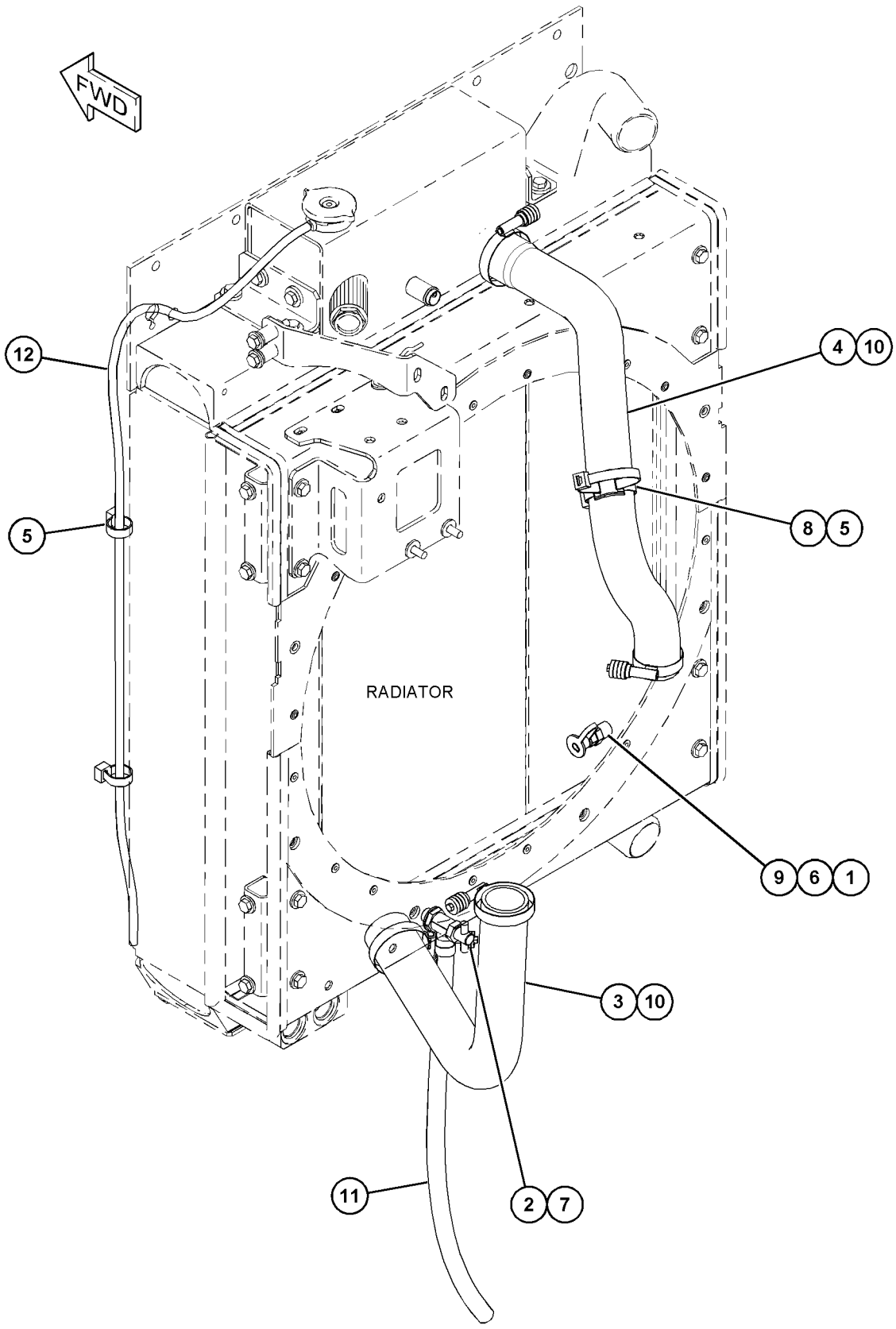

GRAPHIC #1 <END> g06011326

372-2297 PUMP GP-WATER

S/N: E7A1-UP

PART OF 393-4098 ENGINE AR-PRIMARY

SMCS-1361 **i06580488**

NOTE	REF NO	GRAPHIC REF	PART NUMBER	QTY	PART NAME 1 2 3 4 5 6 (PRODUCT LEVEL)	SEE PAGE
M	1	1	**6I-0217**	2	BOLT (M8X1.25X20-MM)	
	2	1	**354-4754**	1	KIT-WATER PUMP	
	3	1	**113-8129**	2	BOLT (M8X1.25X75-MM)	
	4	1	**225-8019**	1	GASKET	
	5	1	**225-7741**	1	CONNECTION AS	
	5A	1	**225-7738**	1	SEAL-O-RING	
	5B	1	**225-7739**	1	SEAL-O-RING	
M	6	1	**6I-0254**	2	BOLT (M8X1.25X30-MM)	
M	7	1	**6I-0839**	5	BOLT (M8X1.25X70-MM)	

M - METRIC PART

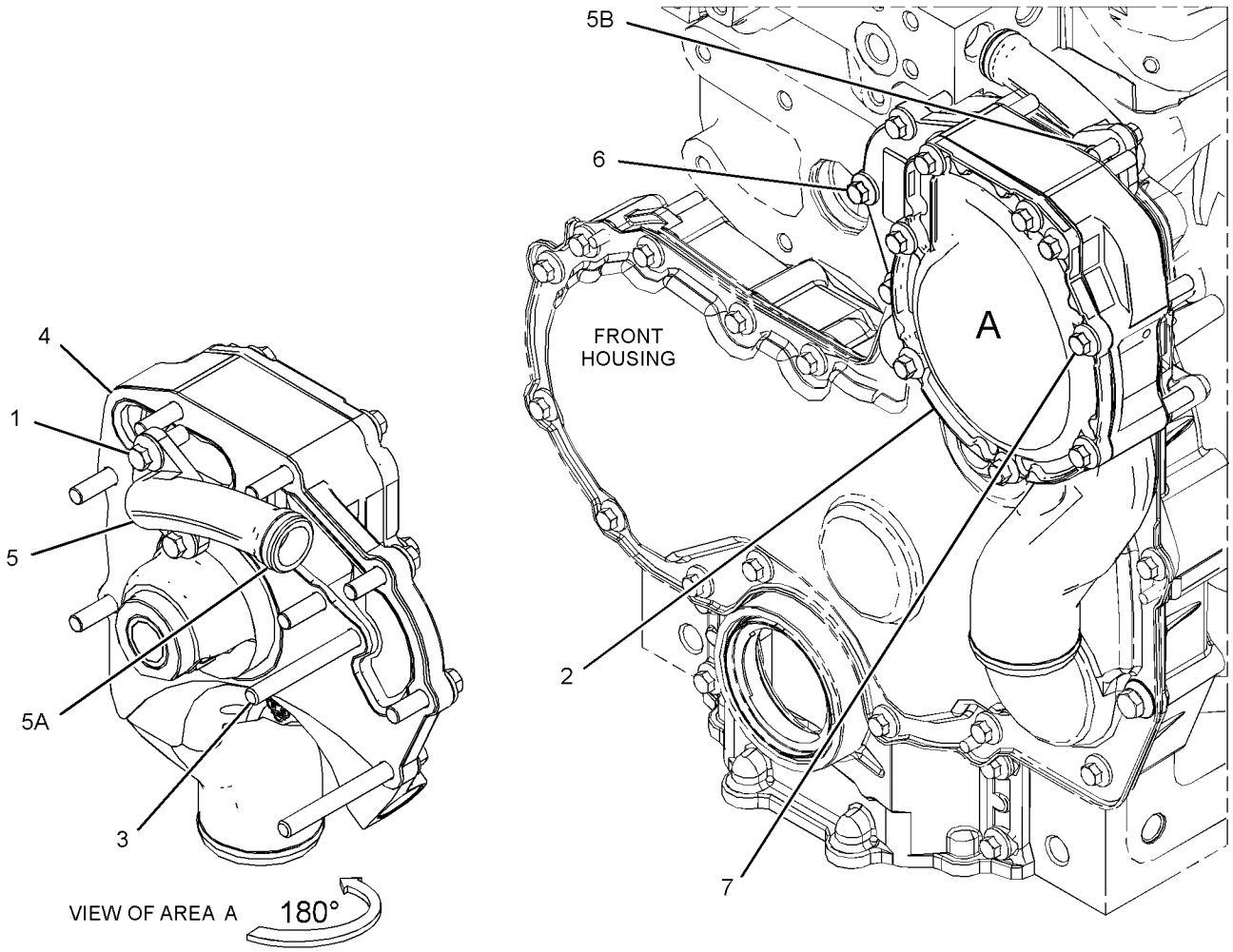

GRAPHIC #1 <END> g06032434

424-4615 AIR CLEANER GP

S/N: R5A1-UP

AN ATTACHMENT

SMCS-1051, 1054 **i06525078**

NOTE	REF NO	GRAPHIC REF	PART NUMBER	QTY	PART NAME 1 2 3 4 5 6 (PRODUCT LEVEL)	SEE PAGE
	1	1	**2S-3440**	3	CLAMP-HOSE	
	2	1	**091-0081**	1	SPACER (10.5X20X10-MM THK)	
	3	1	**224-8946**	1	FILM-WARNING (NO ETHER SPRAY/AIR INTK, INTL)	
	4	1	**247-9730**	1	VALVE AS-CHECK	
	5	1	**290-5626**	1	HOSE	
	6	1	**430-4086**	1	BRACKET AS	
	7	1	**437-3642**	1	AIR CLEANER GP	
		1	**346-6693**	1	FILTER ELEMENT-AIR (PRIMARY)	
		1	**346-6694**	1	FILTER ELEMENT-AIR (SECONDARY)	
		1	**352-9764**	1	COVER AS	
		1	**353-4847**	1	VALVE-DUST	
	8	1	**433-4604**	1	PLATE AS	
	9	1	**472-2219**	1	TUBE	
	10	1	**2J-6540**	1	CLAMP-HOSE	
	11	1	**4D-7388**	1	CLIP	
	12	1	**5P-2230**	1	CLAMP-HOSE	
	13	1	**5P-4116**	6	WASHER-HARD (8.8X20.5X2-MM THK)	
	14	1	**7X-7729**	5	WASHER (11X25X3-MM THK)	
M	15	1	**8T-4137**	4	BOLT (M10X1.5X20-MM)	
M	16	1	**8T-4189**	6	BOLT (M8X1.25X20-MM)	
M	17	1	**8T-4196**	1	BOLT (M10X1.5X35-MM)	
M	18	1	**8T-4200**	4	BOLT (M8X1.25X16-MM)	
	19	1	**8T-4224**	4	WASHER-HARD (8.8X16X2-MM THK)	
E	20	1	**6V-5632**		HOSE (70-CM)	

E - ORDER BY THE CENTIMETER
M - METRIC PART

424-4615 **AIR CLEANER GP (**contd.**)** **i06525078**

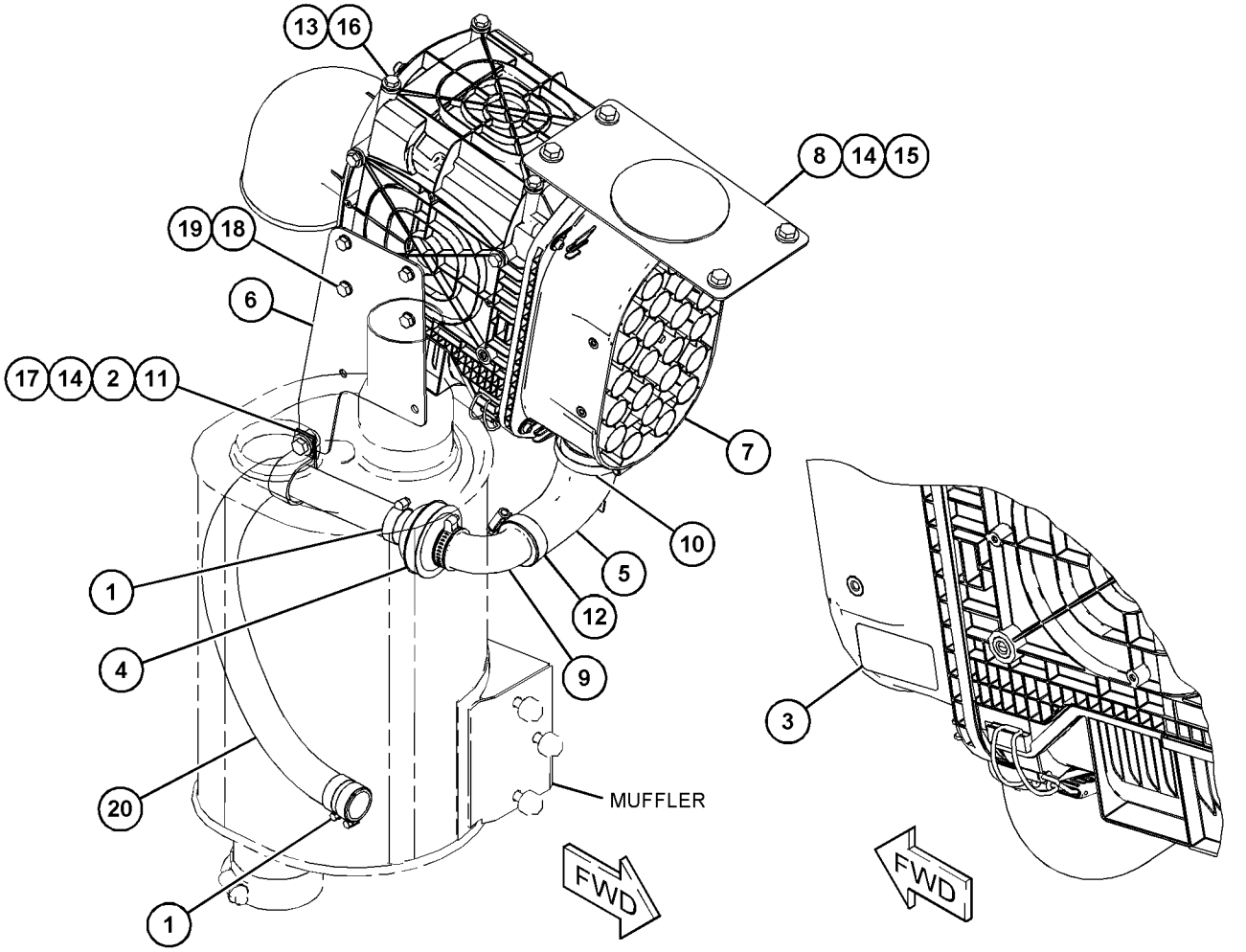

GRAPHIC #1 <END> g06022081

422-7019 LINES GP-AIR

S/N: R5A1-UP

PART OF 391-9510 INSTALLATION AR-ENGINE

SMCS-1071 **i06560101**

NOTE	REF NO	GRAPHIC REF	PART NUMBER	QTY	PART NAME 1 2 3 4 5 6 (PRODUCT LEVEL)	SEE PAGE
	1	1	**216-0067**	1	HOSE	
	2	1	**432-4779**	1	TUBE	
	3	1	**469-1031**	1	BRACKET AS	
	4	1	**469-1032**	1	HOSE	
	5	1	**471-6606**	1	BRACKET AS	
	6	1	**472-2217**	1	HOSE	
	7	1	**472-2218**	1	DUCT	
	8	1	**479-3115**	1	HOSE	
	9	1	**479-3116**	1	TUBE AS	
	10	1	**122-3608**	1	CLIP	
	11	1	**147-1685**	1	CLAMP	
	12	1	**199-7854**	1	SPACER (11.8X20X45-MM THK)	
	13	1	**209-4573**	1	CLAMP-T BOLT	
	14	1	**209-4582**	1	CLAMP	
	15	1	**215-4012**	1	CLAMP-T BOLT	
	16	1	**216-4983**	3	CLAMP-T BOLT	
	17	1	**216-6947**	1	CLAMP	
	18	1	**375-3192**	1	CLIP (TAB)	
	19	1	**375-3193**	1	CLIP (SLOT)	
	20	1	**8T-4121**	6	WASHER-HARD (11X21X2.5-MM THK)	
M	21	1	**8T-4136**	3	BOLT (M10X1.5X25-MM)	
M	22	1	**8T-4195**	2	BOLT (M10X1.5X30-MM)	
M	23	1	**8T-6466**	1	BOLT (M10X1.5X60-MM)	
	24	1	**9X-2201**	2	CLAMP-HOSE	

M - METRIC PART

422-7019 **LINES GP-AIR (**contd.**)** **i06560101**

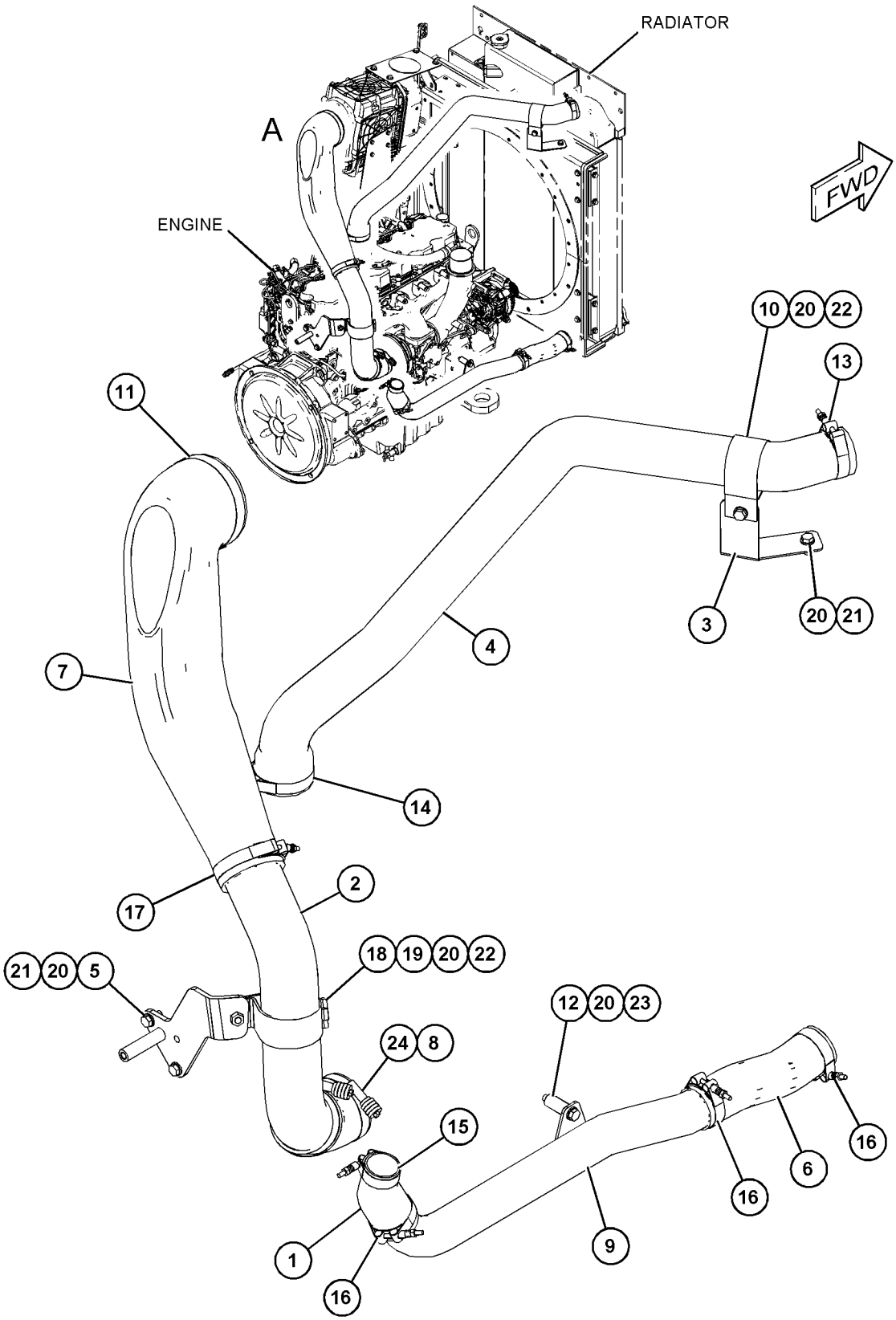

VIEW OF AREA A

GRAPHIC #1 <END> g06024545

396-9532 LINES GP-TURBOCHARGER AIR

S/N: E7A1-UP

PART OF 416-2523 TURBOCHARGER GP

SMCS-1052, 1071 **i06567558**

NOTE	REF NO	GRAPHIC REF	PART NUMBER	QTY	PART NAME 1 2 3 4 5 6 (PRODUCT LEVEL)	SEE PAGE
	1	1	**225-8526**	2	WASHER (10.4X13.75X1.37-MM THK)	
	2	1	**133-9469**	1	CLIP	
	3	1	**225-8524**	1	BOLT-SPECIAL (BANJO)	
	4	1	**335-8611**	1	CLIP	
	5	1	**396-9529**	1	TUBE AS-TURBOCHARGER	
	6	1	**107-2348**	2	CLIP	

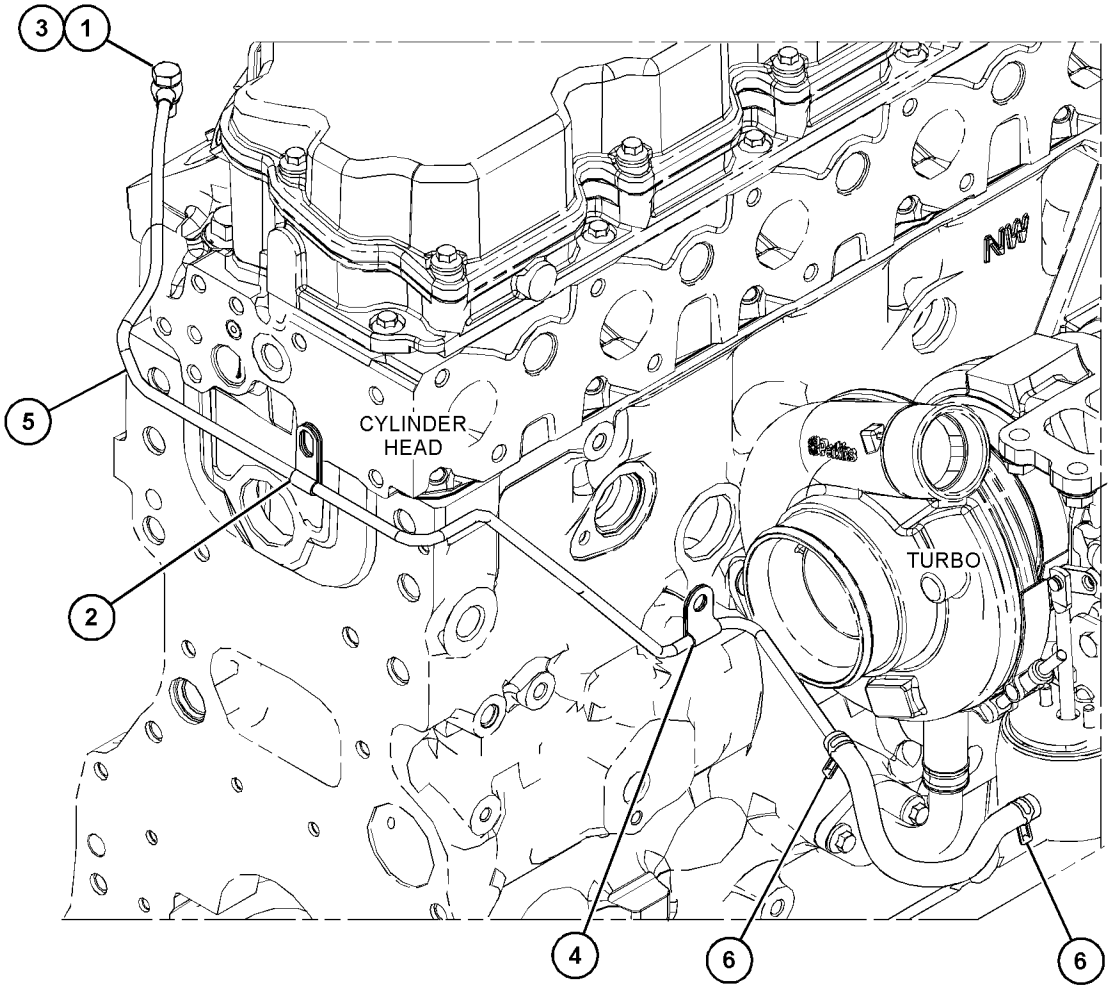

GRAPHIC #1 <END> g03557599

416-7808 MANIFOLD GP-EXHAUST

S/N: E7A1-UP

PART OF 393-4098 ENGINE AR-PRIMARY

SMCS-1059 **i06560494**

NOTE	REF NO	GRAPHIC REF	PART NUMBER	QTY	PART NAME 1 2 3 4 5 6 (PRODUCT LEVEL)	SEE PAGE
	1	1	**238-8292**	12	BOLT-FLANGE HEAD	
	2	1	**286-7851**	12	SPACER	
	3	1	**328-8709**	1	MANIFOLD-EXHAUST	
	4	1	**367-3340**	4	STUD	
	5	1	**416-7727**	2	GASKET	

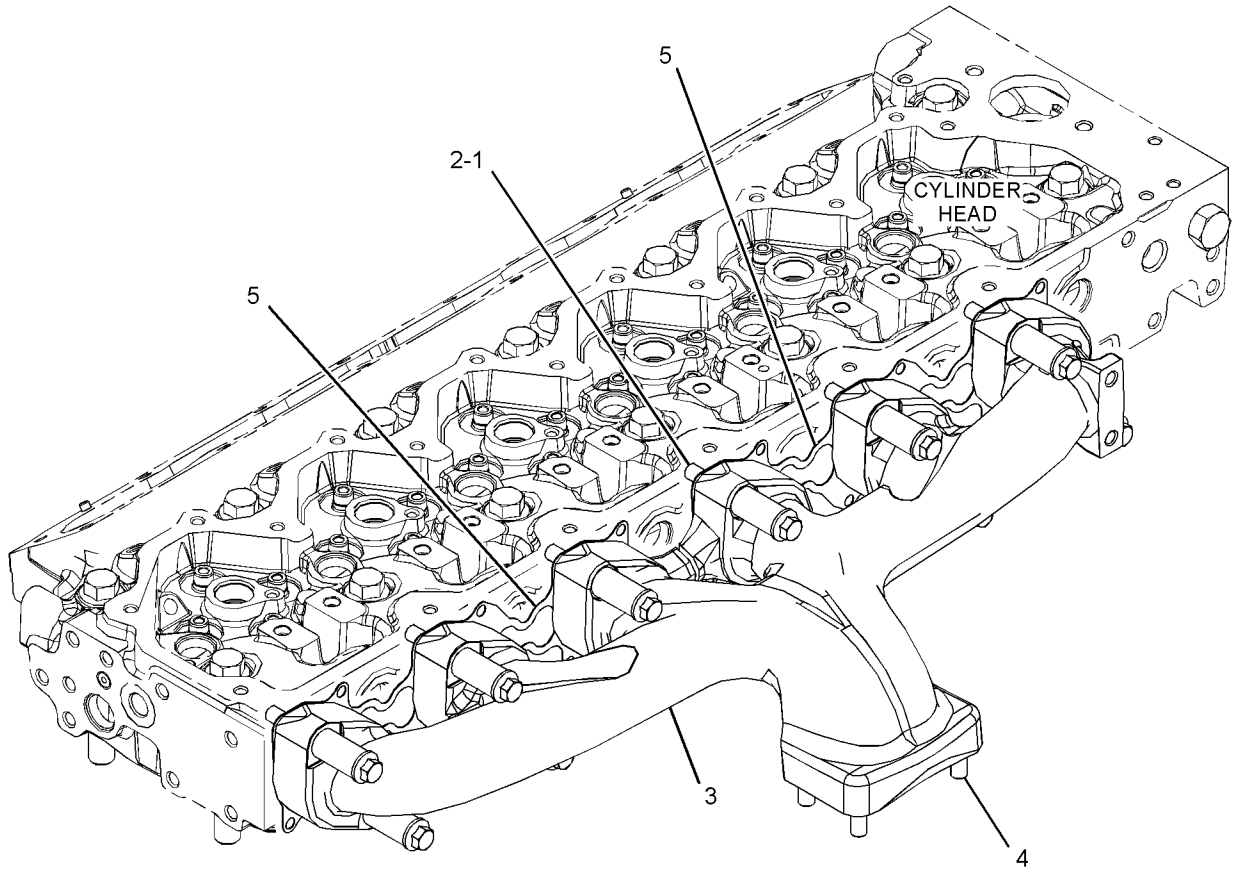

GRAPHIC #1 <END> g03535858

391-5523 MANIFOLD GP-INLET

S/N: E7A1-UP

PART OF 393-4098 ENGINE AR-PRIMARY

SMCS-1058, 1090 **i06560480**

NOTE	REF NO	GRAPHIC REF	PART NUMBER	QTY	PART NAME 1 2 3 4 5 6 (PRODUCT LEVEL)	SEE PAGE
M	1	1	**6I-0917**	2	BOLT (M6X1X25-MM)	
	2	1	**105-2740**	12	BOLT	
	3	1	**369-1658**	1	SOLENOID	
	4	1	**452-9704**	1	COVER (CYLINDER HEAD)	
M	5	1	**6I-0260**	4	BOLT (M8X1.25X25-MM)	
	6	1	**390-7626**	1	CONNECTION GP-AIR	
		1	**238-8288**	1	GASKET-INLET	
		1	**292-3462**	1	PLUG-PIPE	

M - METRIC PART

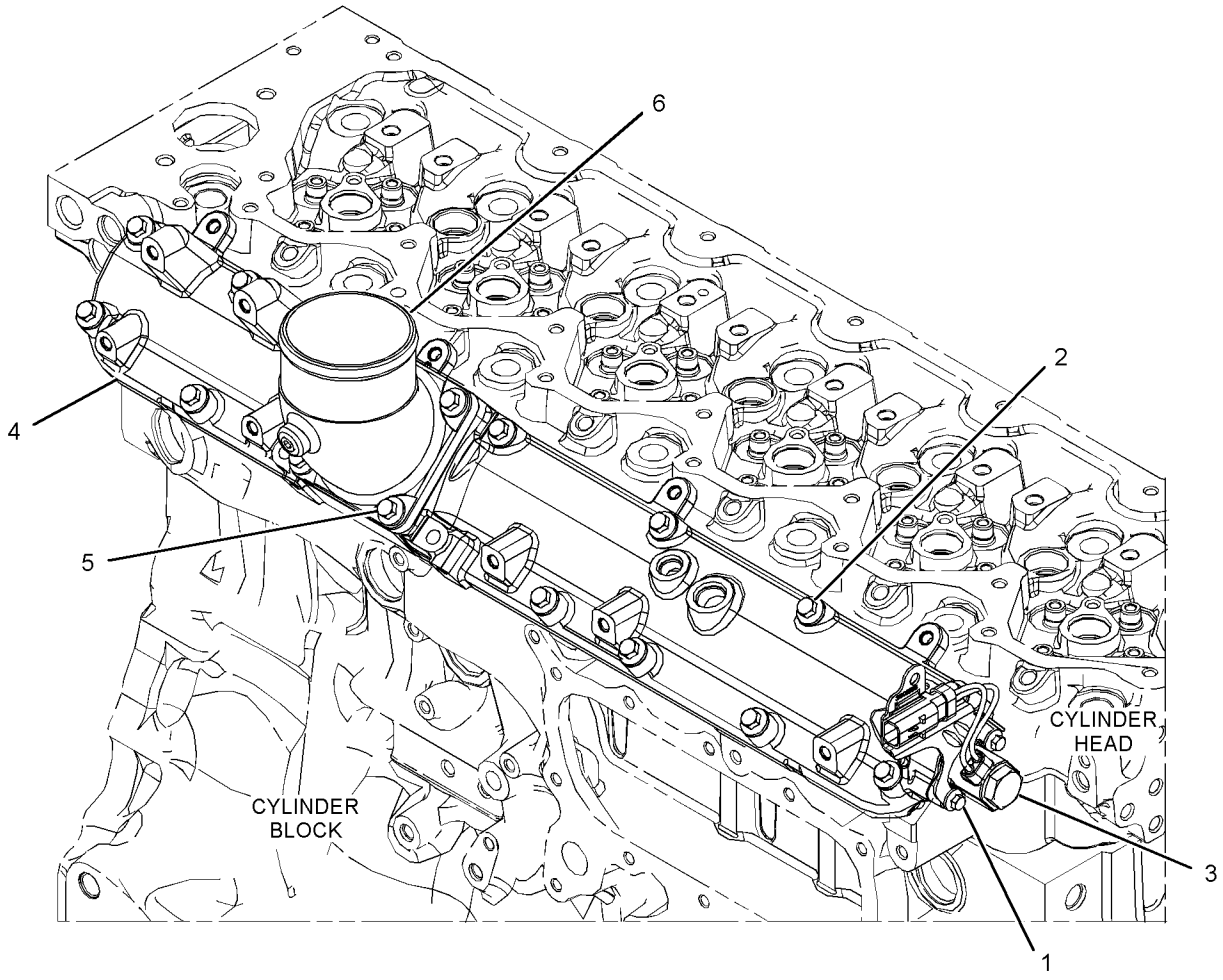

GRAPHIC #1 <END> g03476304

424-4619 MUFFLER GP

S/N: R5A1-UP

PART OF 391-9510 INSTALLATION AR-ENGINE

SMCS-1062 **i06521369**

NOTE	REF NO	GRAPHIC REF	PART NUMBER	QTY	PART NAME 1 2 3 4 5 6 (PRODUCT LEVEL)	SEE PAGE
	1	1	**290-5638**	1	MUFFLER AS	
		1	**388-7010**	1	CLAMP-BENT BOLT	
	2	1	**198-4777**	3	WASHER-HARD (11X25X10-MM THK)	
M	3	1	**8T-4186**	3	BOLT (M10X1.5X40-MM)	

M - METRIC PART

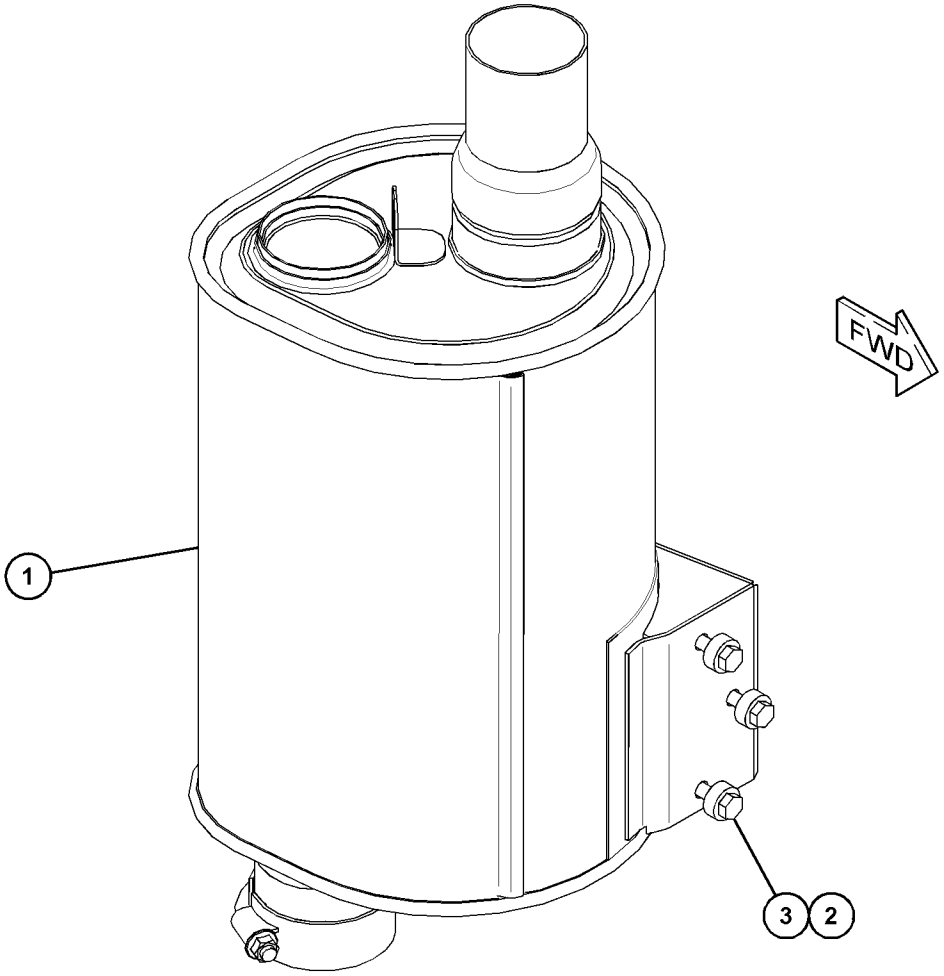

GRAPHIC #1 <END> g06011896

424-4621 PIPE GP-EXHAUST

S/N: R5A1-UP

PART OF 391-9510 INSTALLATION AR-ENGINE

SMCS-1061 **i06521365**

NOTE	REF NO	GRAPHIC REF	PART NUMBER	QTY	PART NAME 1 2 3 4 5 6 (PRODUCT LEVEL)	SEE PAGE
	1	1	**457-4685**	1	PIPE	
	2	1	**388-9525**	1	CLAMP-BENT BOLT	

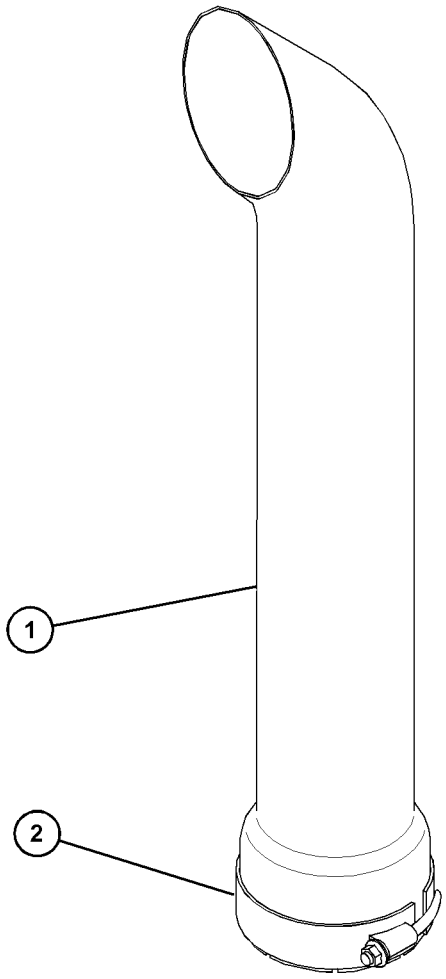

GRAPHIC #1 <END> g06011910

424-4617 PRECLEANER GP

S/N: R5A1-UP

AN ATTACHMENT

SMCS-1055 **i06525101**

NOTE	REF NO	GRAPHIC REF	PART NUMBER	QTY	PART NAME 1 2 3 4 5 6 (PRODUCT LEVEL)	SEE PAGE
	1	1	**0L-1521**	1	PLUG-CORE	
	2	1	**224-8946**	1	FILM-WARNING (NO ETHER SPRAY/AIR INTK, INTL)	
	3	1	**271-0259**	1	KIT-SCREEN (PRECLEANER)	
					(INCLUDES SCREWS, PIPE AS & SCREEN)	
	4	1	**343-5645**	1	PRECLEANER AS	
		1	**222-2277**	1	CLAMP	
	5	1	**348-5021**	1	SEAL	
	6	1	**430-4086**	1	BRACKET AS	
	7	1	**430-8505**	1	PLATE AS	
M		1	**8T-3490**	4	NUT-WELD (M10X1.5-THD)	
	8	1	**474-5400**	1	AIR CLEANER GP	
		1	**346-6693**	1	FILTER ELEMENT-AIR (PRIMARY)	
		1	**346-6694**	1	FILTER ELEMENT-AIR (SECONDARY)	
		1	**352-9764**	1	COVER AS	
	9	1	**216-9197**	1	PLUG	
	10	1	**5P-4116**	6	WASHER-HARD (8.8X20.5X2-MM THK)	
	11	1	**7X-7729**	4	WASHER (11X25X3-MM THK)	
M	12	1	**8T-4137**	4	BOLT (M10X1.5X20-MM)	
M	13	1	**8T-4189**	6	BOLT (M8X1.25X20-MM)	
M	14	1	**8T-4200**	4	BOLT (M8X1.25X16-MM)	
	15	1	**8T-4224**	4	WASHER-HARD (8.8X16X2-MM THK)	
	16	1	**8T-7524**	1	SEAL-O-RING	

M - METRIC PART

424-4617 **PRECLEANER GP (**contd.**)** **i06525101**

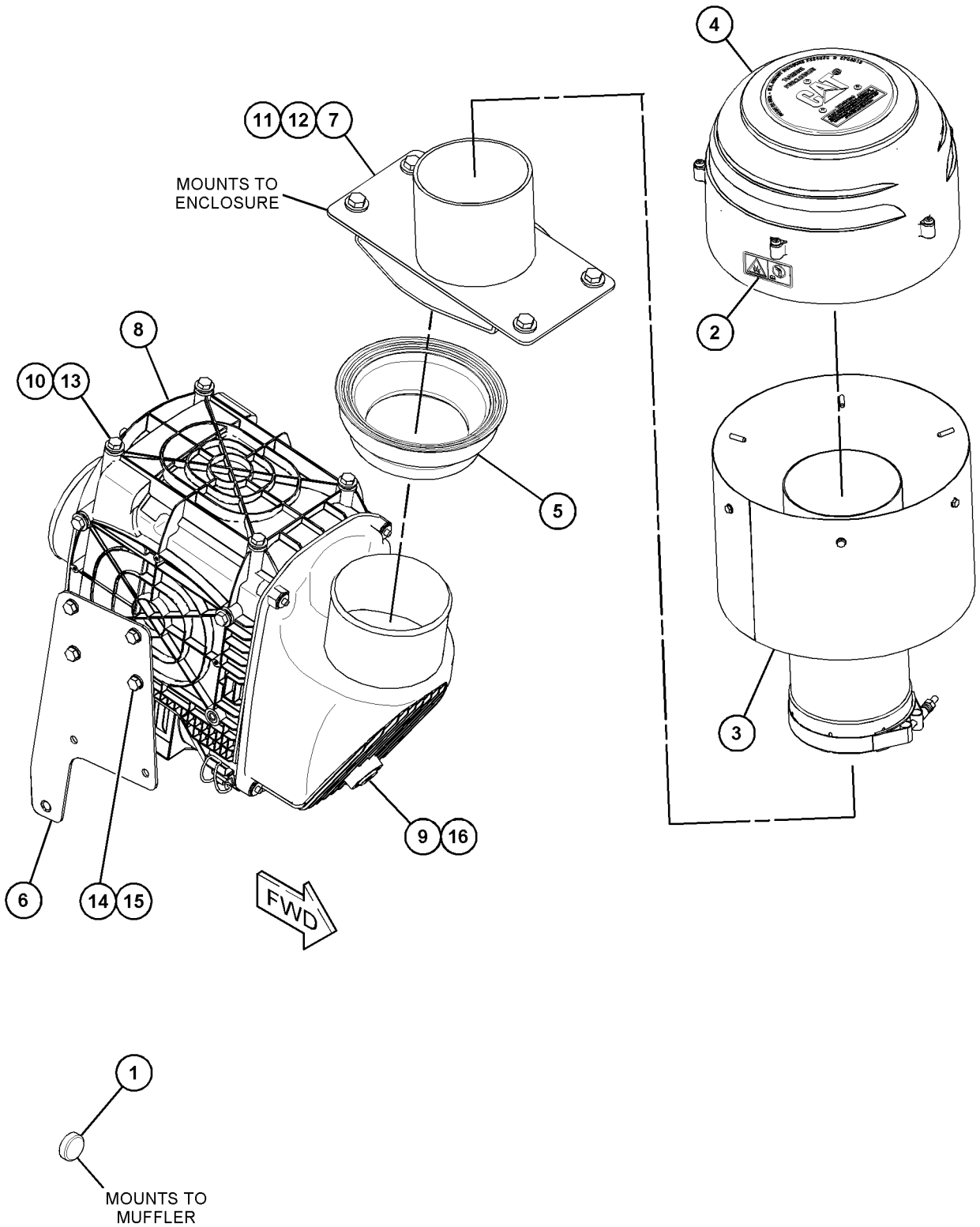

GRAPHIC #1 <END> g06011846

416-2523 TURBOCHARGER GP

S/N: E7A1-UP

PART OF 393-4098 ENGINE AR-PRIMARY

SMCS-1052, 1053 **i06560491**

NOTE	REF NO	GRAPHIC REF	PART NUMBER	QTY	PART NAME 1 2 3 4 5 6 (PRODUCT LEVEL)	SEE PAGE
M	1	1	**6I-0217**	5	BOLT (M8X1.25X20-MM)	
M	2	1	**6I-0563**	4	NUT (M10X1.5-THD)	
M	3	1	**6I-0593**	3	BOLT (M10X1.5X30-MM)	
M	4	1	**100-4830**	1	BOLT (M10X1.5X20-MM)	
M	5	1	**124-3815**	1	BOLT (M8X1.25X16-MM)	
	6	1	**437-4170**	1	GASKET	
	7	1	**278-0017**	1	GASKET	
	8	1	**420-2372**	1	LINE AS	
	9	1	**280-2424**	1	ADAPTER	
	10	1	**282-2830**	1	ELBOW	
R	11	1	**315-9810**	1	TURBOCHARGER GP	
	11A	1	**277-9602**	1	CLAMP	
	11B	1	**277-9603**	1	CLAMP	
	12	1	**368-8557**	1	TUBE AS-TURBOCHARGER	
M	12A	1	**277-9938**	1	BOLT-SPECIAL (BANJO)	
	12B	1	**277-9940**	1	SEAL-O-RING	
	12C	1	**365-5823**	2	WASHER	
Y	13	1	*396-9532*	1	LINES GP-TURBOCHARGER AIR	59

M - METRIC PART
R - REMANUFACTURED PART MAY BE AVAILABLE
Y - SEPARATE ILLUSTRATION

416-2523 **TURBOCHARGER GP (**contd.**)** **i06560491**

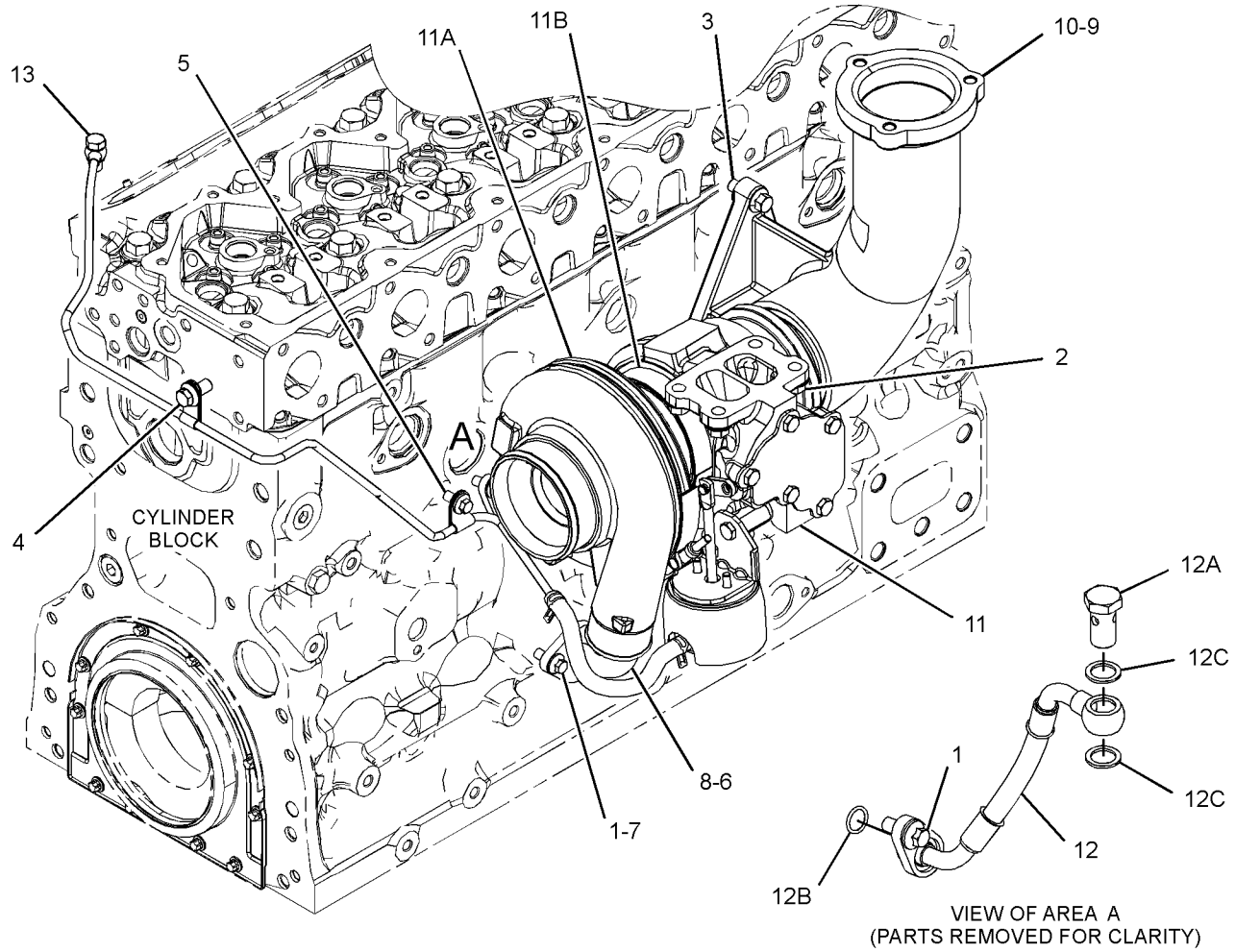

GRAPHIC #1 <END> g03556499

360-8958 FILTER GP-FUEL

S/N: E7A1-UP

PART OF 452-8547 FILTER GP-FUEL

SMCS-1261 **i06567567**

NOTE	REF NO	GRAPHIC REF	PART NUMBER	QTY	PART NAME 1 2 3 4 5 6 (PRODUCT LEVEL)	SEE PAGE
	1	1	**360-8960**	1	FILTER ELEMENT-FUEL	
					AVAILABLE REPAIR KIT(S):	
			362-5412	1	KIT-DRAIN (FUEL FILTER)	
					(INCLUDES DRAIN, KNOB, & SEALS)	

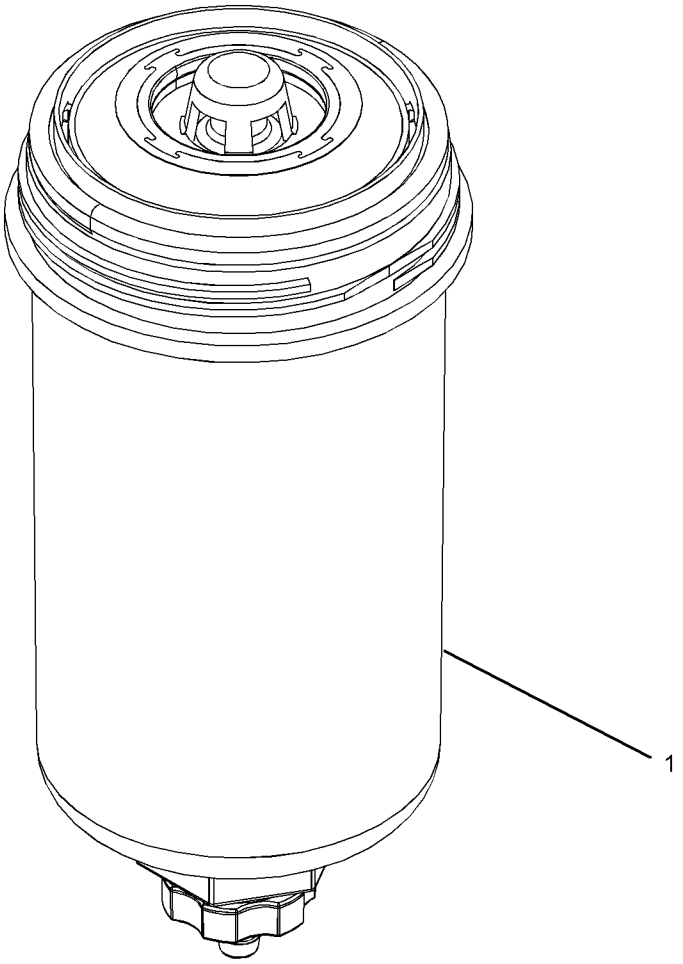

GRAPHIC #1 <END> g03173178

438-7763 FILTER GP-FUEL

S/N: R5A1-UP
PART OF 422-7024 HEATER GP-FUEL
AN ATTACHMENT

SMCS-1261 **i06554449**

NOTE	REF NO	GRAPHIC REF	PART NUMBER	QTY	PART NAME 1 2 3 4 5 6 (PRODUCT LEVEL)	SEE PAGE
	1	1	**192-9207**	1	PLUG AS	
	1A	1	**126-9093**	1	SEAL	
	2	1	**439-5037**	1	FILTER AS-WATER SEP & FUEL	
	3	1	**439-5039**	1	SENSOR GP-LIQUID LEVEL	
	4	1	**439-5040**	1	BOWL AS	

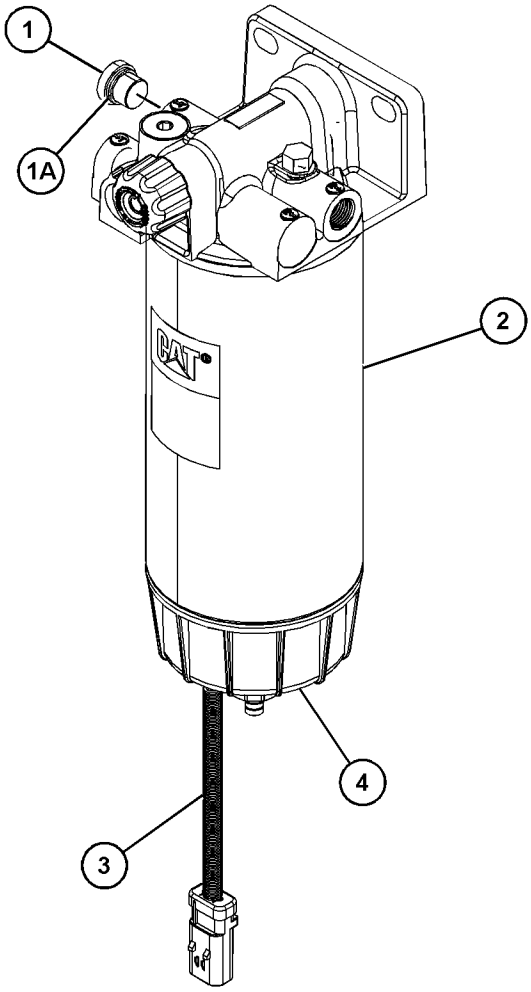

GRAPHIC #1 <END> g03540796

452-8547 FILTER GP-FUEL

S/N: E7A1-UP

PART OF 453-7163 FILTER GP-FUEL

SMCS-1261 **i06567566**

NOTE	REF NO	GRAPHIC REF	PART NUMBER	QTY	PART NAME 1 2 3 4 5 6 (PRODUCT LEVEL)	SEE PAGE
Y	1	1	**360-8958**	2	FILTER GP-FUEL	68
	2	1	**362-9689**	2	SCREW-SPECIAL	
					AVAILABLE REPAIR KIT(S):	
			362-5412	2	KIT-DRAIN	
					(EACH KIT INCLUDES DRAIN, KNOB & SEAL)	

Y - SEPARATE ILLUSTRATION

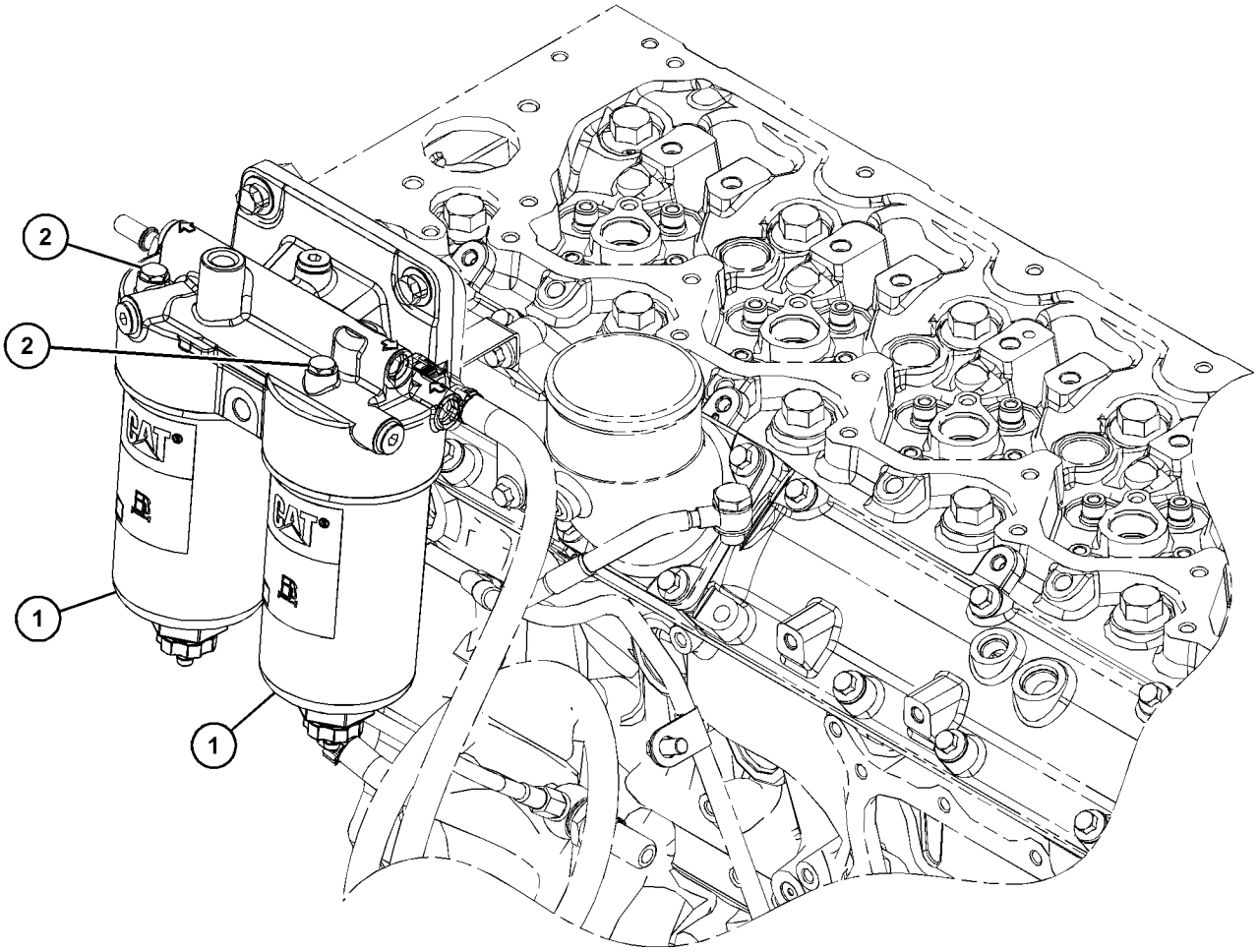

GRAPHIC #1 <END> g03701881

453-7163 FILTER GP-FUEL

S/N: E7A1-UP

PART OF 393-4098 ENGINE AR-PRIMARY

SMCS-1261 **i06560504**

NOTE	REF NO	GRAPHIC REF	PART NUMBER	QTY	PART NAME 1 2 3 4 5 6 (PRODUCT LEVEL)	SEE PAGE
Y	1	1	**452-8547**	1	FILTER GP-FUEL	70

Y - SEPARATE ILLUSTRATION

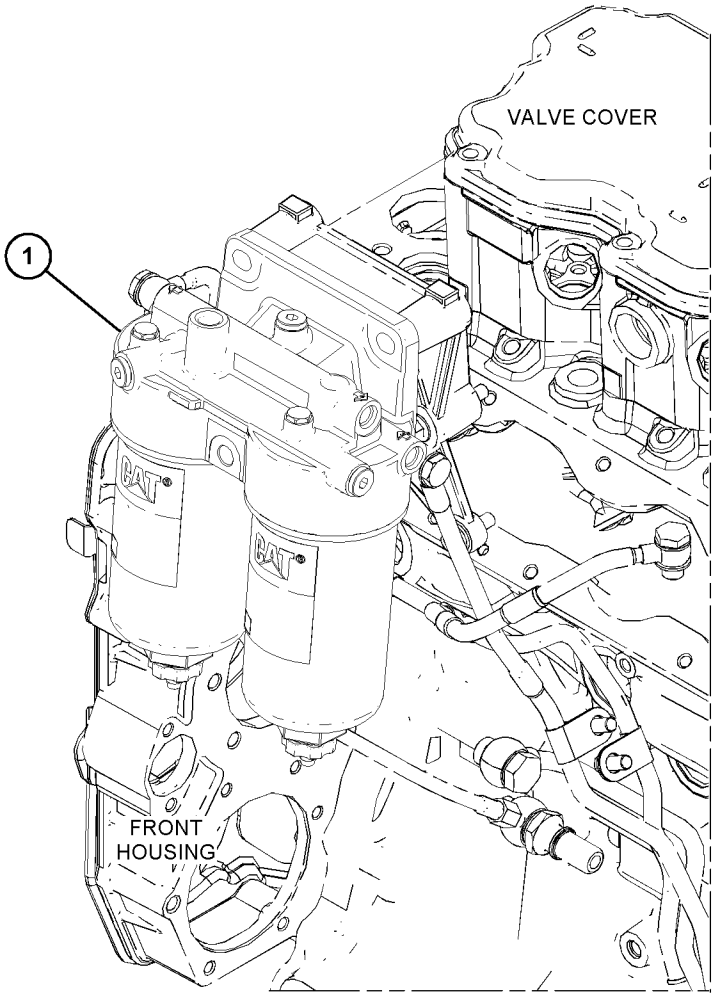

GRAPHIC #1 <END> g03695817

371-2483 INJECTOR GP-FUEL

S/N: E7A1-UP

PART OF 393-4098 ENGINE AR-PRIMARY

SMCS-1251, 1254, 1290 **i06560452**

NOTE	REF NO	GRAPHIC REF	PART NUMBER	QTY	PART NAME 1 2 3 4 5 6 (PRODUCT LEVEL)	SEE PAGE
	1	1	**278-5170**	6	BOLT	
	2	1	**369-7799**	6	CLAMP-INJECTOR	
R	3	1	**371-3974**	6	INJECTOR GP-FUEL	
					(EACH INCLUDES)	
		1	**376-6403**	1	WASHER-SEALING	
		1	**376-6405**	1	SEAL-O-RING	
	4	1	**277-5067**	6	SLEEVE	

R - REMANUFACTURED PART MAY BE AVAILABLE

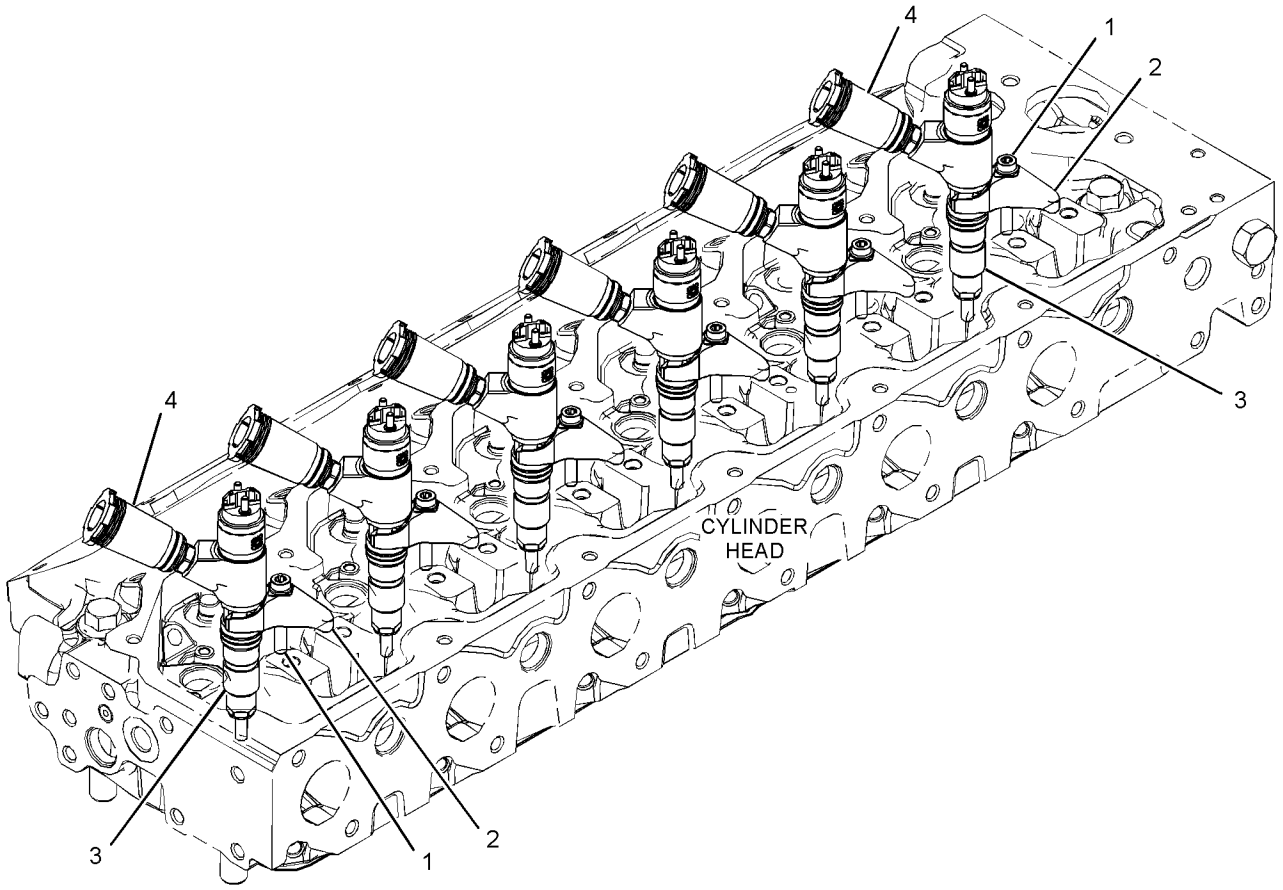

GRAPHIC #1 <END> g03378802

422-7023 LINES GP-FUEL

S/N: R5A1-UP

AN ATTACHMENT

SMCS-1274 **i06563436**

NOTE	REF NO	GRAPHIC REF	PART NUMBER	QTY	PART NAME 1 2 3 4 5 6 (PRODUCT LEVEL)	SEE PAGE
	1	1	**3S-2093**	3	STRAP-CABLE	
M	2	1	**6I-0293**	1	BOLT (M8X1.25X80-MM)	
	3	1	**8T-0119**	2	ELBOW	
	4	1	**8T-6724**	1	VALVE-BALL	
	5	1	**8T-9655**	6	MOUNT-ISOLATION (ISOLATION)	
	6	1	**191-1782**	1	SPACER (8.5X12.7X38.2-MM THK)	
	7	1	**191-1783**	2	SPACER (8.5X12.7X87.3-MM THK)	
	8	1	**264-3518**	1	CONNECTOR-RECEPTACLE	
	9	1	**290-5562**	3	MOUNT (DUAL SWIVEL)	
	10	1	**355-0632**	1	CONNECTOR-SPECIAL	
Y	11	1	*390-6840*	1	PUMP GP-FUEL PRM & PRIM FILTER	91
	12	1	**423-6434**	1	SENSOR GP-LIQUID LEVEL	
		1	**214-7568**	1	SEAL-O-RING	
		1	**281-8805**	1	RECEPTACLE AS-CONNECTOR	
		1	**9X-3401**	3	PIN-CONNECTOR (16-GA TO 18-GA)	
	13	1	*453-2607*	1	ADAPTER AS	
		1	**6V-8721**	1	ELBOW	
		1	**228-7090**	1	SEAL-O-RING	
		1	**238-5081**	1	SEAL-O-RING	
	14	1	*460-2435*	1	DRAIN AS	
		1	**484-5856**	1	CLIP	
		1	**484-5859**	1	CONNECTOR	
	15	1	**460-4945**	1	BRACKET AS	
M		1	**8T-3490**	1	NUT-WELD (M10X1.5-THD)	
M		1	**8T-3612**	3	NUT-WELD (M8X1.25-THD)	
M		1	**171-2419**	2	STUD-WELD (M10X1.5X35-MM)	
	16	1	**460-4947**	1	HOSE AS	
	17	1	**466-9058**	1	BRACKET	
	18	1	**466-9059**	1	HOSE AS	
I	19	1	**466-9060**	1	HOSE AS	
	20	1	**469-2262**	1	BRACKET AS	
M		1	**8T-3490**	2	NUT-WELD (M10X1.5-THD)	
	21	1	**479-0194**	1	BRACKET AS	
M		1	**171-2419**	1	STUD-WELD (M10X1.5X35-MM)	
	22	1	**228-7090**	2	SEAL-O-RING	
	23	1	**228-7091**	1	SEAL-O-RING	
	24	1	**238-5080**	7	SEAL-O-RING	
	25	1	**238-5081**	1	SEAL-O-RING	
	26	1	**281-5882**	1	VALVE-BALL	
	27	1	*309-5131*	2	PLUG AS	
					(EACH INCLUDES)	
		1	**9S-8006**	1	PLUG	
		1	**238-5081**	1	SEAL-O-RING	
	28	1	**326-9712**	2	SPACER (11.4X25.4X35-MM THK)	
M	29	1	**344-5675**	3	NUT (M10X1.5-THD)	
	30	1	**359-7325**	1	CLAMP-HOSE	
	31	1	**5D-1026**	1	CLAMP-BAND	
	32	1	**5K-5338**	6	CLIP	

422-7023 **LINES GP-FUEL (**contd.**)** **i06563436**

NOTE	REF NO	GRAPHIC REF	PART NUMBER	QTY	PART NAME 1 2 3 4 5 6 (PRODUCT LEVEL)	SEE PAGE
	33	1	**5P-4295**	1	CLIP	
	34	1	**5P-4961**	1	CLAMP-HOSE	
	35	1	**6D-4246**	2	CLIP	
	36	1	**6V-4292**	1	ELBOW	
	37	1	**6V-8625**	1	ELBOW	
	38	1	**6V-8626**	1	ELBOW	
	39	1	**6V-8639**	1	CONNECTOR	
	40	1	**7K-1181**	6	STRAP-CABLE	
	41	1	**7X-0579**	4	WASHER-HARD (8.8X25.5X2-MM THK)	
M	42	1	**7X-2542**	2	BOLT (M8X1.25X150-MM)	
M	43	1	**7X-2548**	1	BOLT (M12X1.75X16-MM)	
	44	1	**8M-2769**	2	CLIP	
	45	1	**8M-2773**	1	CLIP	
	46	1	**8T-4121**	15	WASHER-HARD (11X21X2.5-MM THK)	
M	47	1	**8T-4136**	2	BOLT (M10X1.5X25-MM)	
M	48	1	**8T-4137**	4	BOLT (M10X1.5X20-MM)	
M	49	1	**8T-4195**	4	BOLT (M10X1.5X30-MM)	
	50	1	**8T-4223**	1	WASHER-HARD (13.5X25.5X3-MM THK)	
	51	1	**8T-4224**	2	WASHER-HARD (8.8X16X2-MM THK)	
M	52	1	**8T-6870**	1	BOLT (M8X1.25X70-MM)	
G	53	1	**423-1983**		HOSE (18-IN)	
E	54	1	**8C-6959**		HOSE (70-CM)	
E	54A	1	**8C-6959**		HOSE (30-CM EACH)	

E - ORDER BY THE CENTIMETER
G - ORDER BY THE INCH
I - REFER TO HYDRAULIC INFORMATION SYSTEM
M - METRIC PART
Y - SEPARATE ILLUSTRATION

422-7023 **LINES GP-FUEL (**contd.**)** **i06563436**

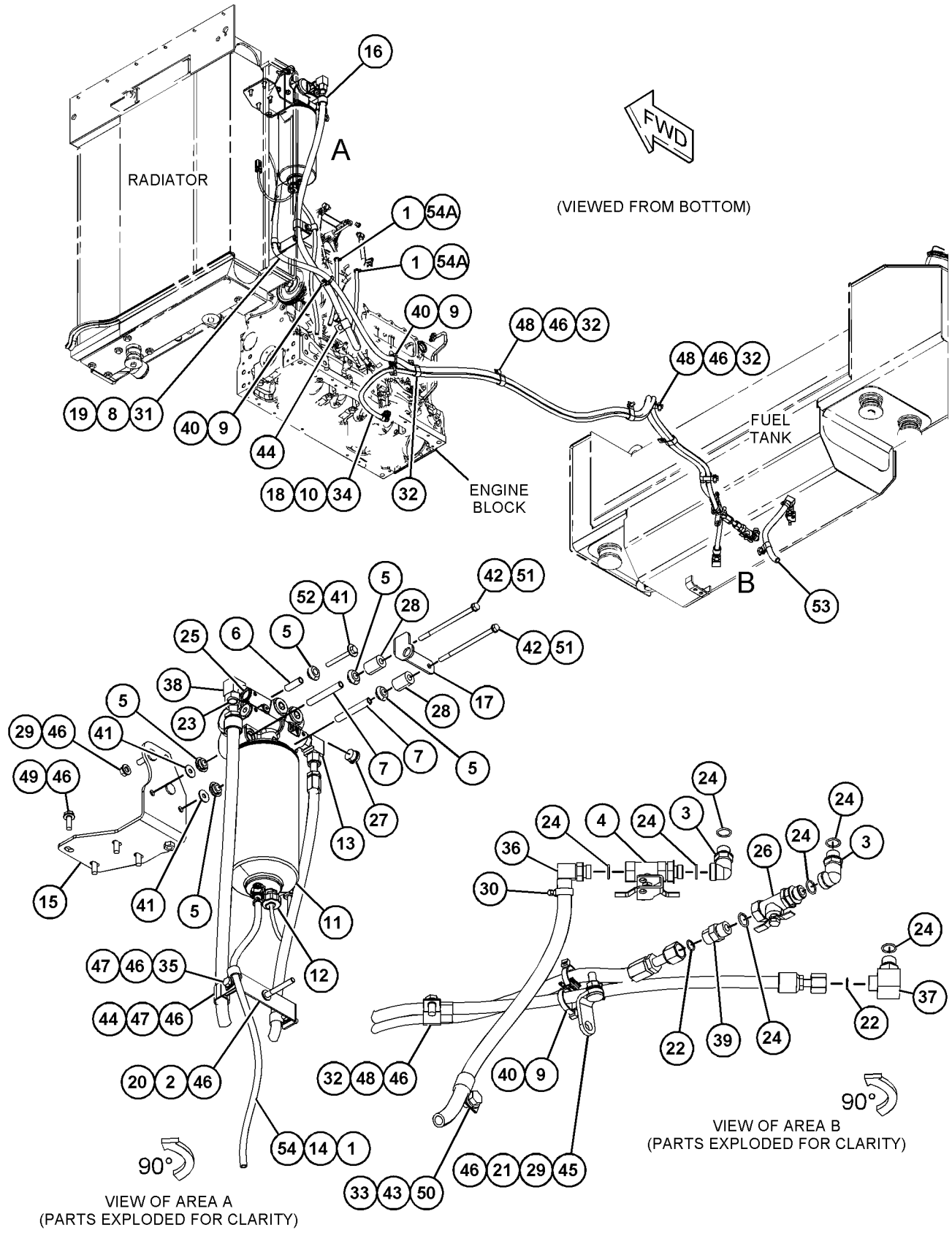

GRAPHIC #1 <END> g06026385

433-1316 LINES GP-FUEL

S/N: E7A1-UP

PART OF 426-3312 LINES GP-FUEL FILTER

SMCS-1274 **i06567570**

NOTE	REF NO	GRAPHIC REF	PART NUMBER	QTY	PART NAME 1 2 3 4 5 6 (PRODUCT LEVEL)	SEE PAGE
	1	1	**246-4361**	2	WASHER (10.5X14X1.5-MM THK)	
	2	1	**385-1398**	1	CONNECTION-FUEL	
	3	1	**386-1864**	1	BOLT-BANJO	
	4	1	**247-4928**	2	WASHER (16.5X20.5X1.6-MM THK)	

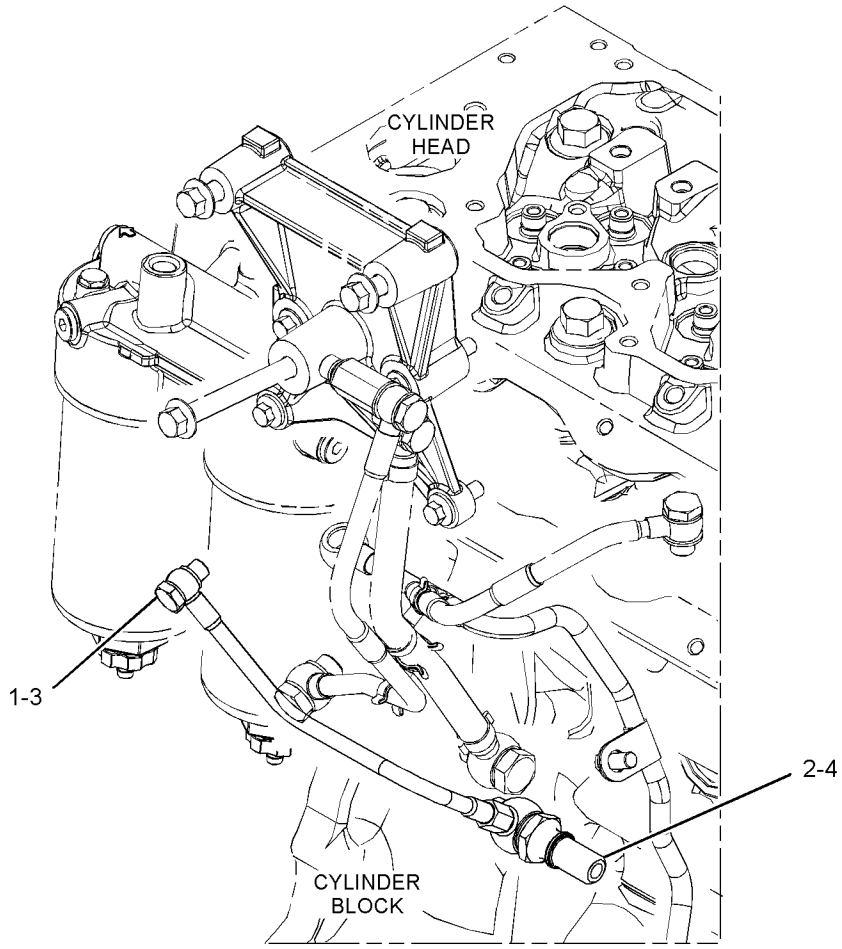

GRAPHIC #1 <END> g03384847

442-8465 LINES GP-FUEL

S/N: E7A1-UP

PART OF 426-3312 LINES GP-FUEL FILTER

SMCS-1274 **i06567572**

NOTE	REF NO	GRAPHIC REF	PART NUMBER	QTY	PART NAME 1 2 3 4 5 6 (PRODUCT LEVEL)	SEE PAGE
M	1	1	**277-9938**	1	BOLT-SPECIAL (BANJO)	
	2	1	**286-2890**	2	WASHER	
	3	1	**295-4670**	1	BOLT-SPECIAL (BANJO)	

M - METRIC PART

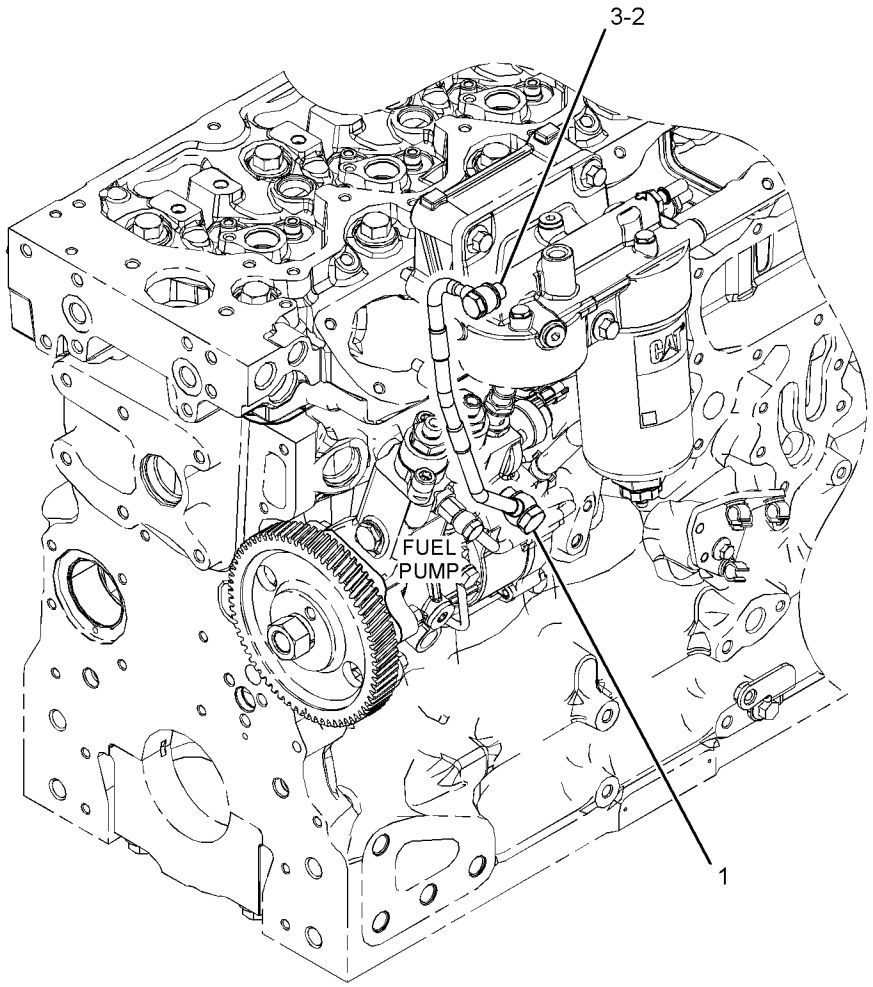

GRAPHIC #1 <END> g03564656

464-7899 LINES GP-FUEL

S/N: E7A1-UP

PART OF 426-3312 LINES GP-FUEL FILTER

SMCS-1274 **i06569532**

NOTE	REF NO	GRAPHIC REF	PART NUMBER	QTY	PART NAME 1 2 3 4 5 6 (PRODUCT LEVEL)	SEE PAGE
	1	1	**349-6847**	2	CLIP	
	2	1	**377-5988**	1	BOLT	
	3	1	**286-2890**	2	WASHER	
M	4	1	**161-7614**	1	NUT (M16X1.5-THD)	
	5	1	**277-4993**	1	SEAL-O-RING	

M - METRIC PART

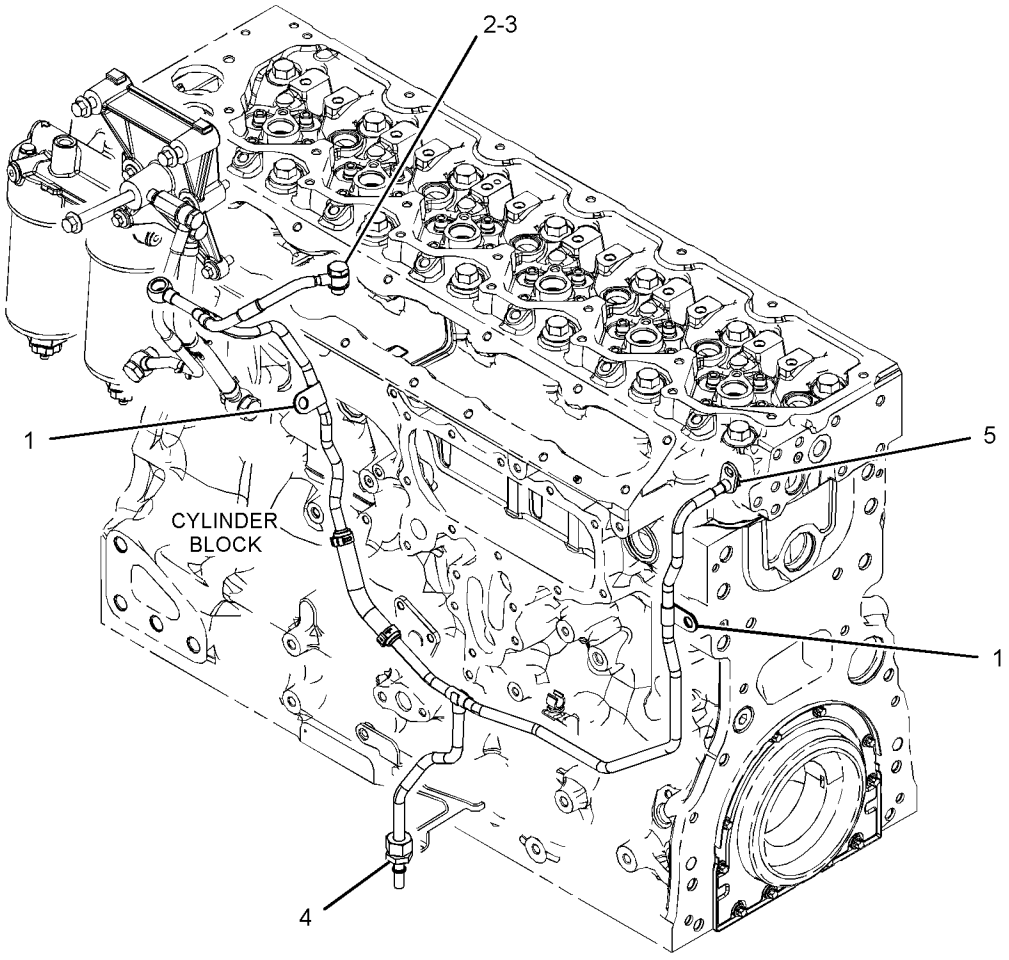

GRAPHIC #1 <END> g03384683

484-7200 LINES GP-FUEL

S/N: E7A1-UP

PART OF 426-3312 LINES GP-FUEL FILTER

SMCS-1274 **i06567577**

NOTE	REF NO	GRAPHIC REF	PART NUMBER	QTY	PART NAME 1 2 3 4 5 6 (PRODUCT LEVEL)	SEE PAGE
	1	1	**247-4928**	2	WASHER (16.5X20.5X1.6-MM THK)	
	2	1	**286-2890**	2	WASHER	
	3	1	**295-4670**	1	BOLT-SPECIAL (BANJO)	
M	4	1	**386-2737**	1	BOLT-BANJO (M16X1.5X27-MM)	
	5	1	*396-2102*	1	LINE AS-FUEL	
E		1	**347-8645**		HOSE (28-CM)	

E - ORDER BY THE CENTIMETER
M - METRIC PART

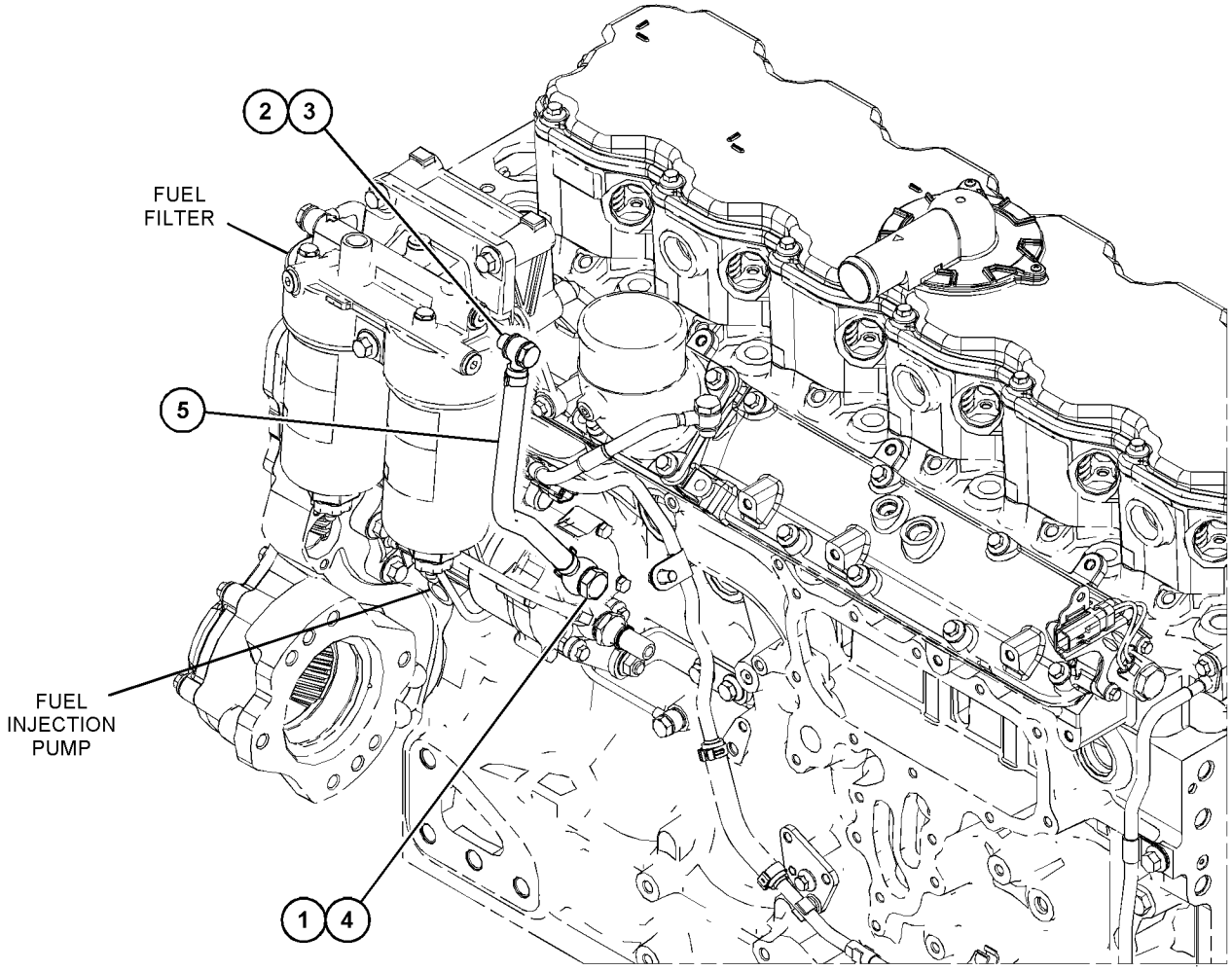

GRAPHIC #1 <END> g03875694

489-2747 LINES GP-FUEL

S/N: R5A1-UP

AN ATTACHMENT

SMCS-1274 **i06563409**

NOTE	REF NO	GRAPHIC REF	PART NUMBER	QTY	PART NAME 1 2 3 4 5 6 (PRODUCT LEVEL)	SEE PAGE
	1	1	**3S-2093**	3	STRAP-CABLE	
M	2	1	**6I-0293**	1	BOLT (M8X1.25X80-MM)	
	3	2	**8T-0119**	2	ELBOW	
	4	1	**8T-9655**	6	MOUNT-ISOLATION (ISOLATION)	
	5	1	**191-1782**	1	SPACER (8.5X12.7X38.2-MM THK)	
	6	1	**191-1783**	2	SPACER (8.5X12.7X87.3-MM THK)	
	7	1	**264-3518**	1	CONNECTOR-RECEPTACLE	
	8	1,2	**290-5562**	3	MOUNT (DUAL SWIVEL)	
	9	2	**351-0264**	1	VALVE-BALL	
	10	2	**351-0265**	1	VALVE-BALL	
	11	1	**355-0632**	1	CONNECTOR-SPECIAL	
Y	12	1	*390-6840*	1	PUMP GP-FUEL PRM & PRIM FILTER	91
	13	1	**423-6434**	1	SENSOR GP-LIQUID LEVEL (FUEL)	
		1	**214-7568**	1	SEAL-O-RING	
		1	**281-8805**	1	RECEPTACLE AS-CONNECTOR	
		1	**9X-3401**	3	PIN-CONNECTOR (16-GA TO 18-GA)	
	14	1	*453-2607*	1	ADAPTER AS	
		1	**6V-8721**	1	ELBOW	
		1	**228-7090**	1	SEAL-O-RING	
		1	**238-5081**	1	SEAL-O-RING	
	15	1	*460-2435*	1	DRAIN AS	
		1	**484-5856**	1	CLIP	
		1	**484-5859**	1	CONNECTOR	
	16	1	**460-4945**	1	BRACKET AS	
	17	1	**460-4947**	1	HOSE AS	
	18	1	**466-9058**	1	BRACKET	
	19	2	**466-9059**	1	HOSE AS	
I	20	1	**466-9060**	1	HOSE AS	
	21	1	**469-2262**	1	BRACKET AS	
	22	2	**479-0194**	1	BRACKET AS	
	23	2	**228-7090**	2	SEAL-O-RING	
	24	1	**228-7091**	1	SEAL-O-RING	
	25	2	**238-5080**	7	SEAL-O-RING	
	26	1	**238-5081**	1	SEAL-O-RING	
	27	1	*309-5131*	2	PLUG AS	
					(EACH INCLUDES)	
		1	**9S-8006**	1	PLUG	
		1	**238-5081**	1	SEAL-O-RING	
	28	1	**326-9712**	2	SPACER (11.4X25.4X35-MM THK)	
M	29	1,2	**344-5675**	3	NUT (M10X1.5-THD)	
	30	2	**359-7325**	1	CLAMP-HOSE	
	31	1	**5D-1026**	1	CLAMP-BAND	
	32	1	**5K-5338**	6	CLIP	
	33	2	**5P-4295**	1	CLIP	
	34	1	**5P-4961**	1	CLAMP-HOSE	
	35	1	**6D-4246**	2	CLIP	
	36	2	**6V-4292**	1	ELBOW	
	37	2	**6V-8625**	1	ELBOW	

489-2747 **LINES GP-FUEL (**contd.**)** **i06563409**

NOTE	REF NO	GRAPHIC REF	PART NUMBER	QTY	PART NAME 1 2 3 4 5 6 (PRODUCT LEVEL)	SEE PAGE
	38	1	**6V-8626**	1	ELBOW	
	39	2	**6V-8639**	1	CONNECTOR	
	40	1,2	**7K-1181**	6	STRAP-CABLE	
	41	1	**7X-0579**	4	WASHER-HARD (8.8X25.5X2-MM THK)	
M	42	1	**7X-2542**	2	BOLT (M8X1.25X150-MM)	
M	43	2	**7X-2548**	1	BOLT (M12X1.75X16-MM)	
	44	1	**8M-2769**	2	CLIP	
	45	2	**8M-2773**	1	CLIP	
	46	1,2	**8T-4121**	15	WASHER-HARD (11X21X2.5-MM THK)	
M	47	1	**8T-4136**	2	BOLT (M10X1.5X25-MM)	
M	48	1	**8T-4137**	4	BOLT (M10X1.5X20-MM)	
M	49	1	**8T-4195**	4	BOLT (M10X1.5X30-MM)	
	50	2	**8T-4223**	1	WASHER-HARD (13.5X25.5X3-MM THK)	
	51	1	**8T-4224**	2	WASHER-HARD (8.8X16X2-MM THK)	
M	52	1	**8T-6870**	1	BOLT (M8X1.25X70-MM)	
G	53	2	**423-1983**		HOSE (18-IN)	
E	54	1	**8C-6959**		HOSE (70-CM)	
E	54A	1	**8C-6959**		HOSE (30-CM EACH)	

E - ORDER BY THE CENTIMETER
G - ORDER BY THE INCH
I - REFER TO HYDRAULIC INFORMATION SYSTEM
M - METRIC PART
Y - SEPARATE ILLUSTRATION

489-2747 **LINES GP-FUEL (**contd.**)** **i06563409**

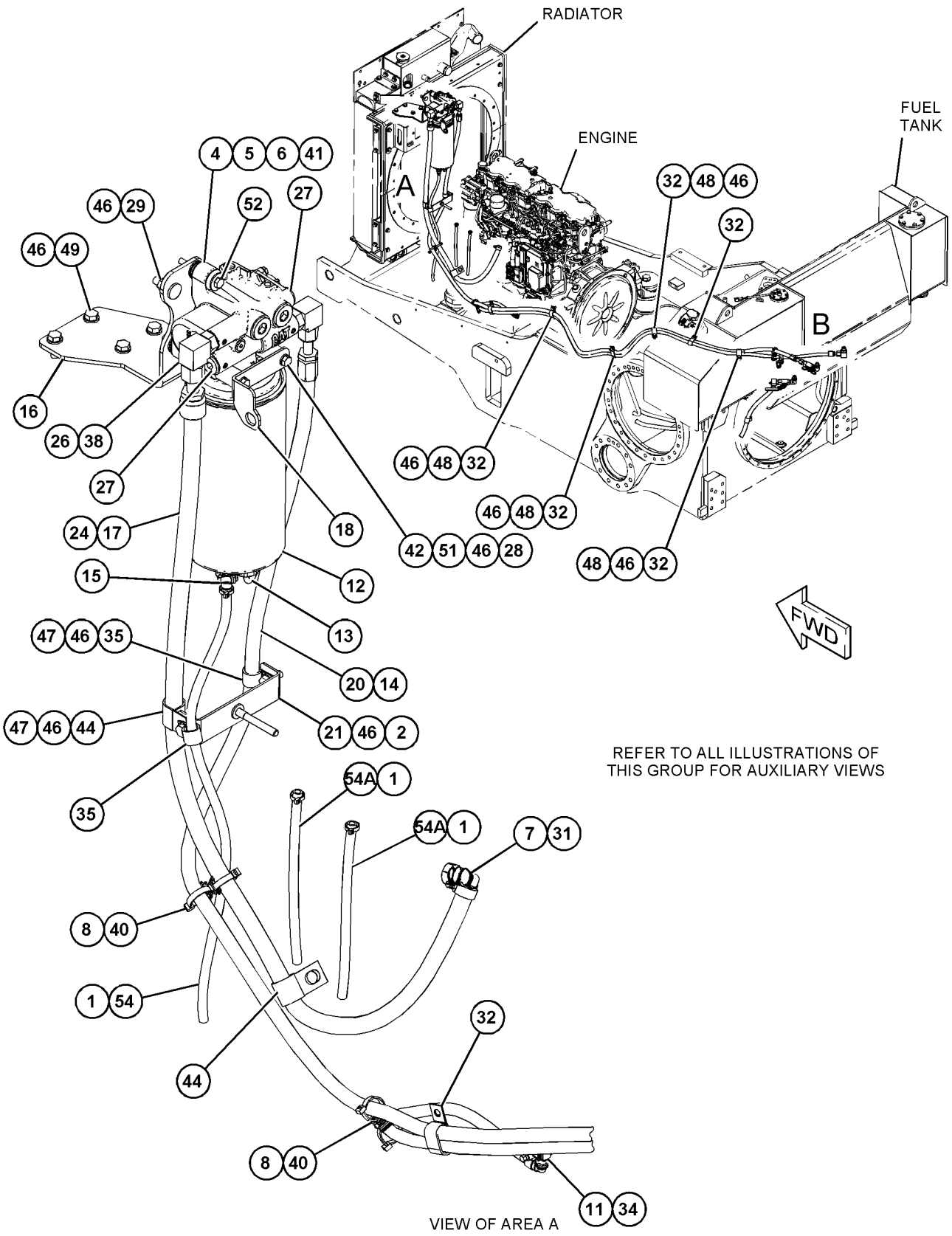

GRAPHIC #1 g06024684

489-2747 **LINES GP-FUEL (**contd.**)** **i06563409**

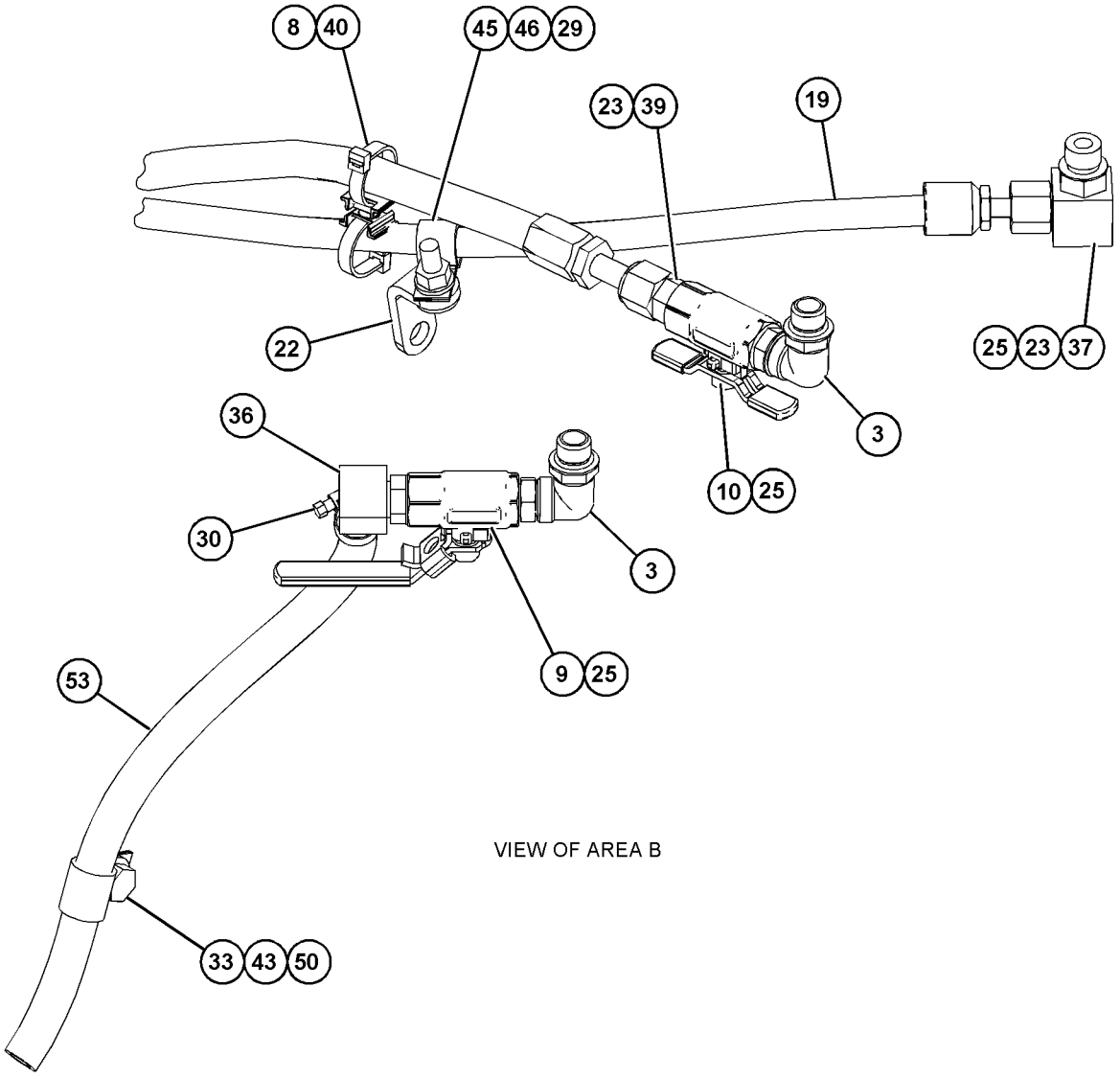

VIEW OF AREA B

GRAPHIC #2 <END> g06024685

426-3312 LINES GP-FUEL FILTER

S/N: E7A1-UP

PART OF 393-4098 ENGINE AR-PRIMARY

SMCS-1261, 1274 **i06560498**

NOTE	REF NO	GRAPHIC REF	PART NUMBER	QTY	PART NAME 1 2 3 4 5 6 (PRODUCT LEVEL)	SEE PAGE
M	1	1	**6I-0593**	2	BOLT (M10X1.5X30-MM)	
M	2	1	**6I-4200**	2	BOLT (M10X1.5X16-MM)	
M	3	1	**100-4458**	2	BOLT (M8X1.25X14-MM)	
M	4	1	**164-7468**	1	BOLT (M10X1.5X95-MM)	
	5	1	**442-8569**	1	CLIP-PIPE	
	6	1	**208-9287**	2	BOLT-FLANGE HEAD (M8X1.25X50-MM)	
Y	7	1	**442-8465**	1	LINES GP-FUEL	77
	8	1	**389-5775**	1	BRACKET	
	9	1	**389-5784**	1	BRACKET-FILTER	
	10	1	**390-0755**	1	BRACKET AS	
	11	1	**390-8738**	1	SUPPORT GP-LINES	
	12	1	**391-1817**	1	SUPPORT GP-LINES	
Y	13	1	**484-7200**	1	LINES GP-FUEL	79
CY	14	1	**464-7899**	1	LINES GP-FUEL	78
Y	15	1	**433-1316**	1	LINES GP-FUEL	76
M	16	1	**6I-0217**	1	BOLT (M8X1.25X20-MM)	
M	17	1	**6I-0260**	3	BOLT (M8X1.25X25-MM)	
	18	1	*330-9723*	2	PLUG AS	
					(EACH INCLUDES)	
		1	**228-7100**	1	SEAL-O-RING	
		1	**241-6157**	1	PLUG	

C - CHANGE FROM PREVIOUS TYPE
M - METRIC PART
Y - SEPARATE ILLUSTRATION

426-3312 **LINES GP-FUEL FILTER (**contd.**)** **i06560498**

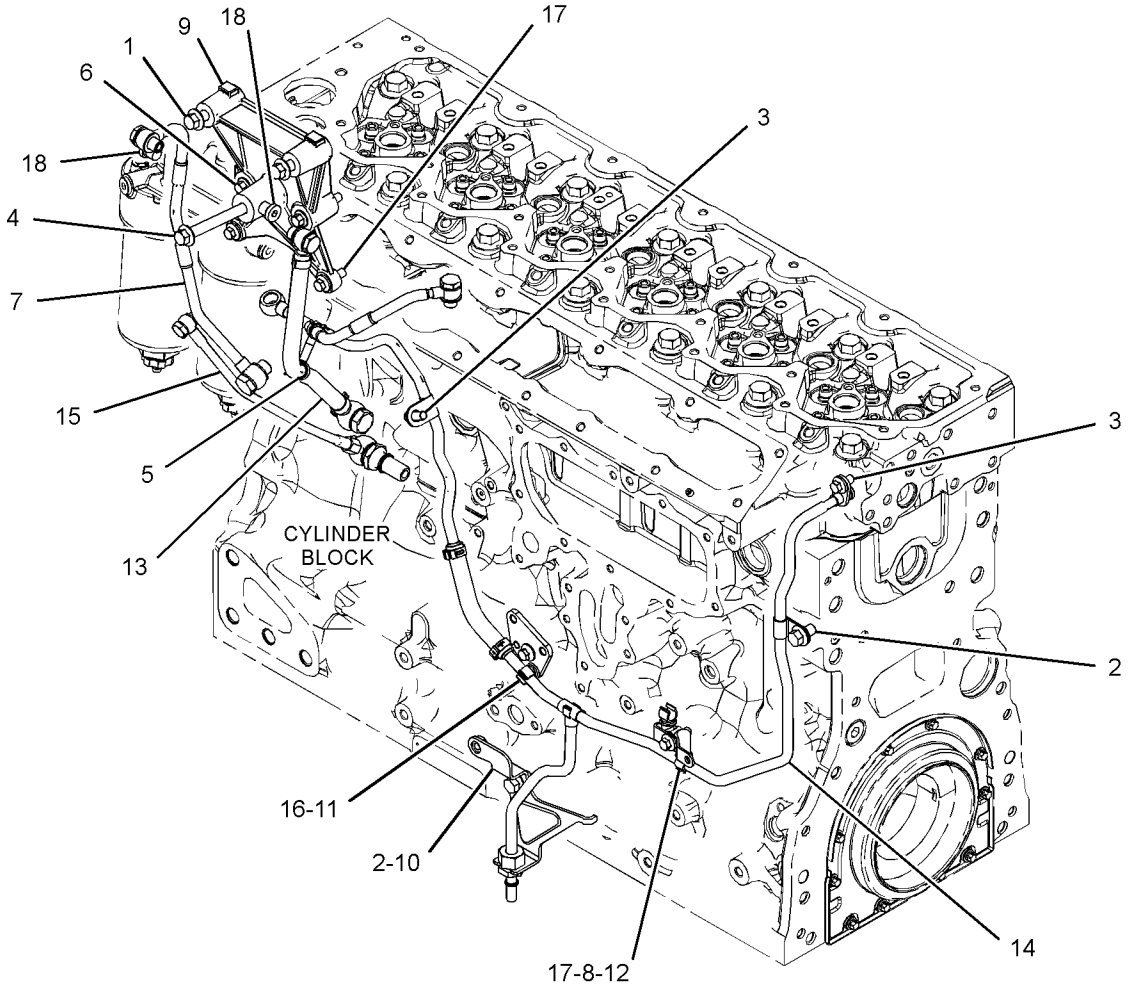

GRAPHIC #1 <END> g03699263

370-5520 LINES GP-FUEL INJECTION

S/N: E7A1-UP

PART OF 394-9639 RAIL GP-FUEL

SMCS-1252, 1254

i06567581

NOTE	REF NO	GRAPHIC REF	PART NUMBER	QTY	PART NAME 1 2 3 4 5 6 (PRODUCT LEVEL)	SEE PAGE
	1	1	**395-1633**	1	BRACKET AS	
M		1	**6I-0631**	1	BOLT (M6X1X12-MM)	
	2	1	**370-5516**	1	LINE AS-FUEL INJECTION	
	3	1	**370-5517**	1	LINE AS-FUEL INJECTION	
	4	1	**370-5518**	1	LINE AS-FUEL INJECTION	

M - METRIC PART

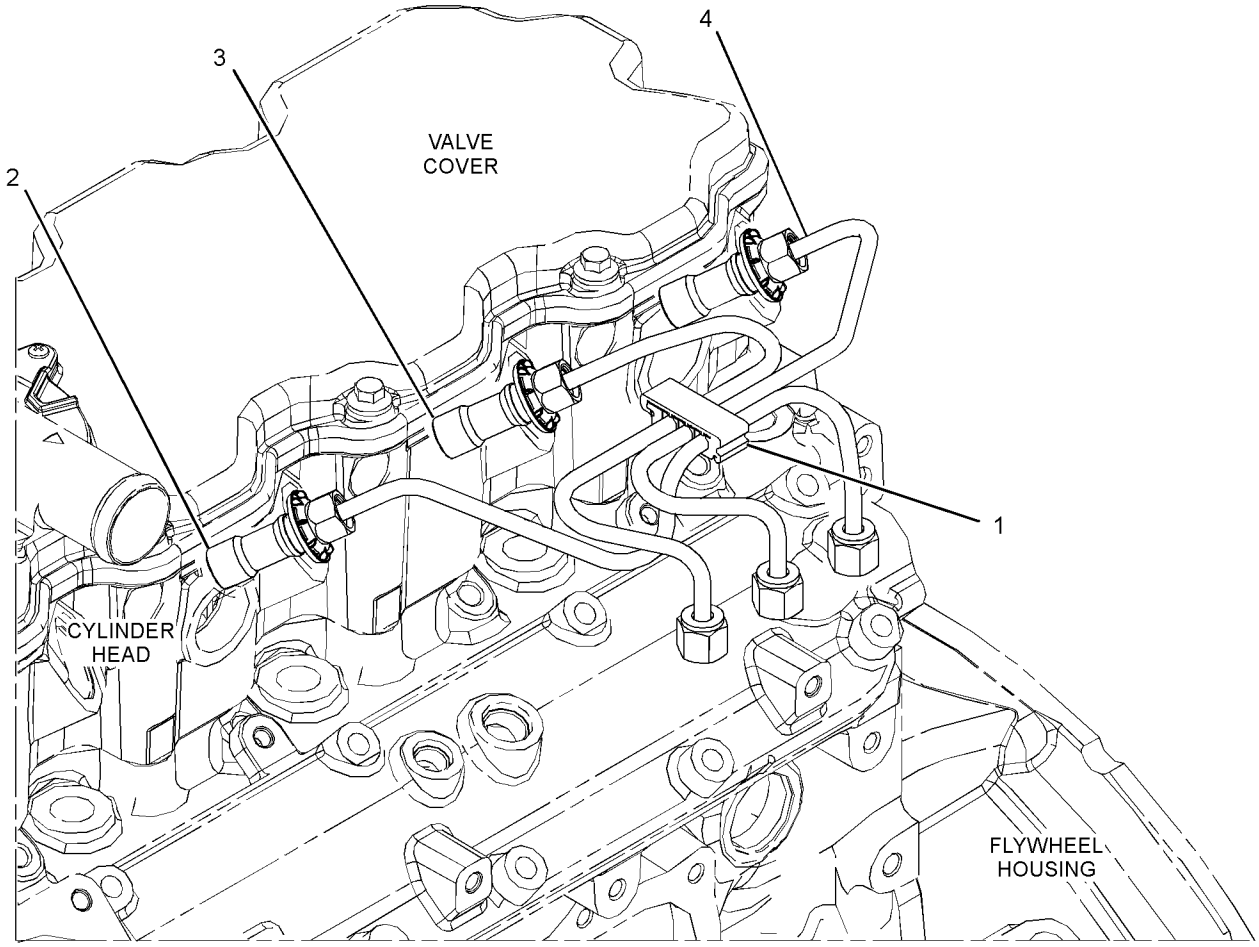

GRAPHIC #1 <END> g03380791

394-0525 LINES GP-FUEL INJECTION

S/N: E7A1-UP

PART OF 394-9639 RAIL GP-FUEL

SMCS-1252, 1254

i06567583

NOTE	REF NO	GRAPHIC REF	PART NUMBER	QTY	PART NAME 1 2 3 4 5 6 (PRODUCT LEVEL)	SEE PAGE
	1	1	**395-1633**	1	BRACKET AS	
M	1A	1	**6I-0631**	1	BOLT (M6X1X12-MM)	
	2	1	**370-5513**	1	LINE AS-FUEL	
	3	1	**393-5467**	1	LINE AS-FUEL	
	4	1	**393-5468**	1	LINE AS-FUEL	

M - METRIC PART

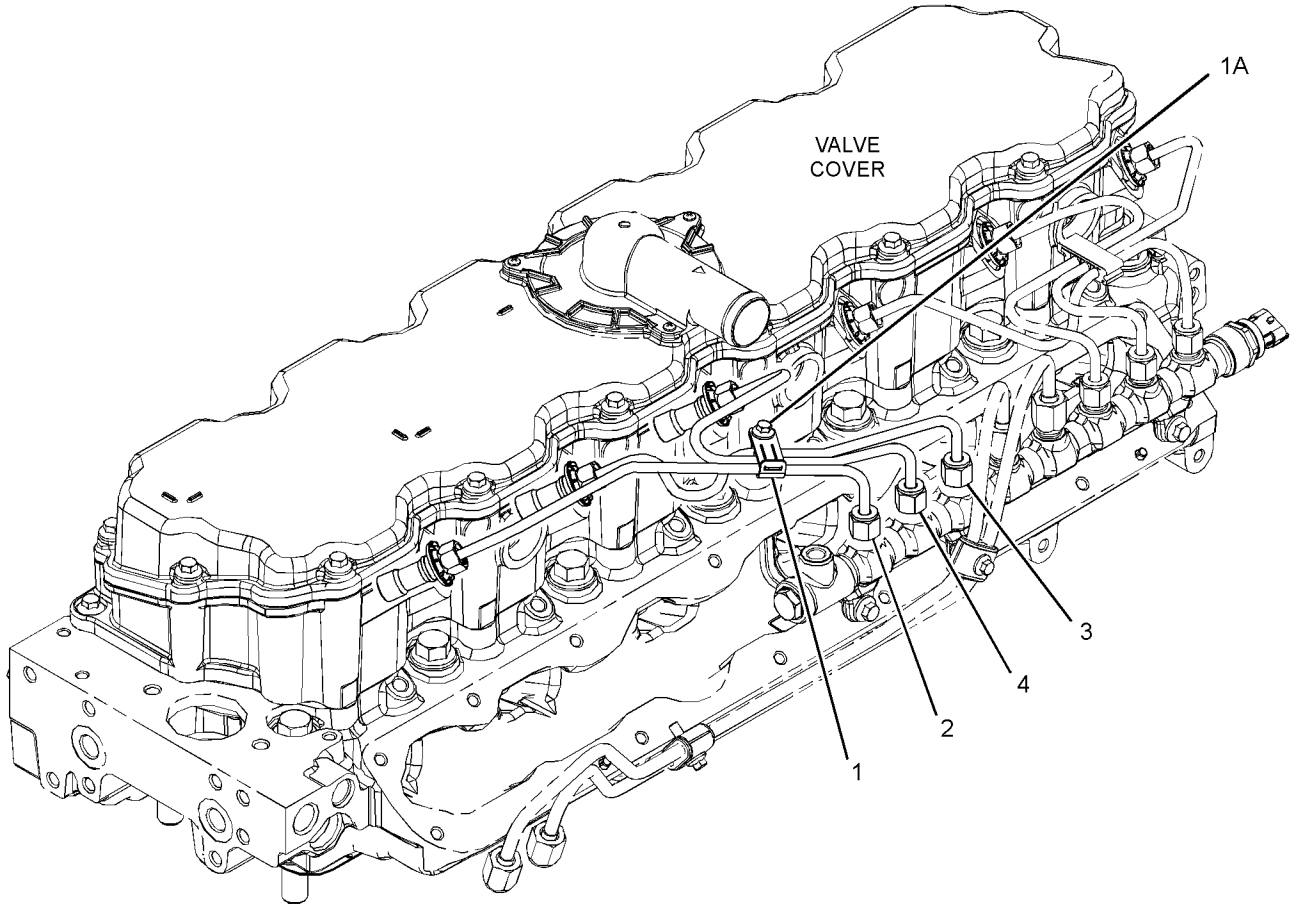

GRAPHIC #1 <END> g03479680

375-2647 PUMP GP-FUEL INJECTION*R

S/N: E7A1-UP

PART OF 391-4811 PUMP GP-FUEL INJECTION

SMCS-1251, 1290 **i06567579**

NOTE	REF NO	GRAPHIC REF	PART NUMBER	QTY	PART NAME 1 2 3 4 5 6 (PRODUCT LEVEL)	SEE PAGE
	1	1	**386-3819**	1	KEY-SHAFT	
	2	1	**375-8254**	1	VALVE	
	3	1	**376-6409**	1	SEAL	
	4	1	**376-6410**	1	RETAINER-WASHER	
	5	1	**376-6411**	1	NUT-SHAFT	
	6	1	**386-2971**	2	WASHER	
	7	1	**386-2976**	2	WASHER	

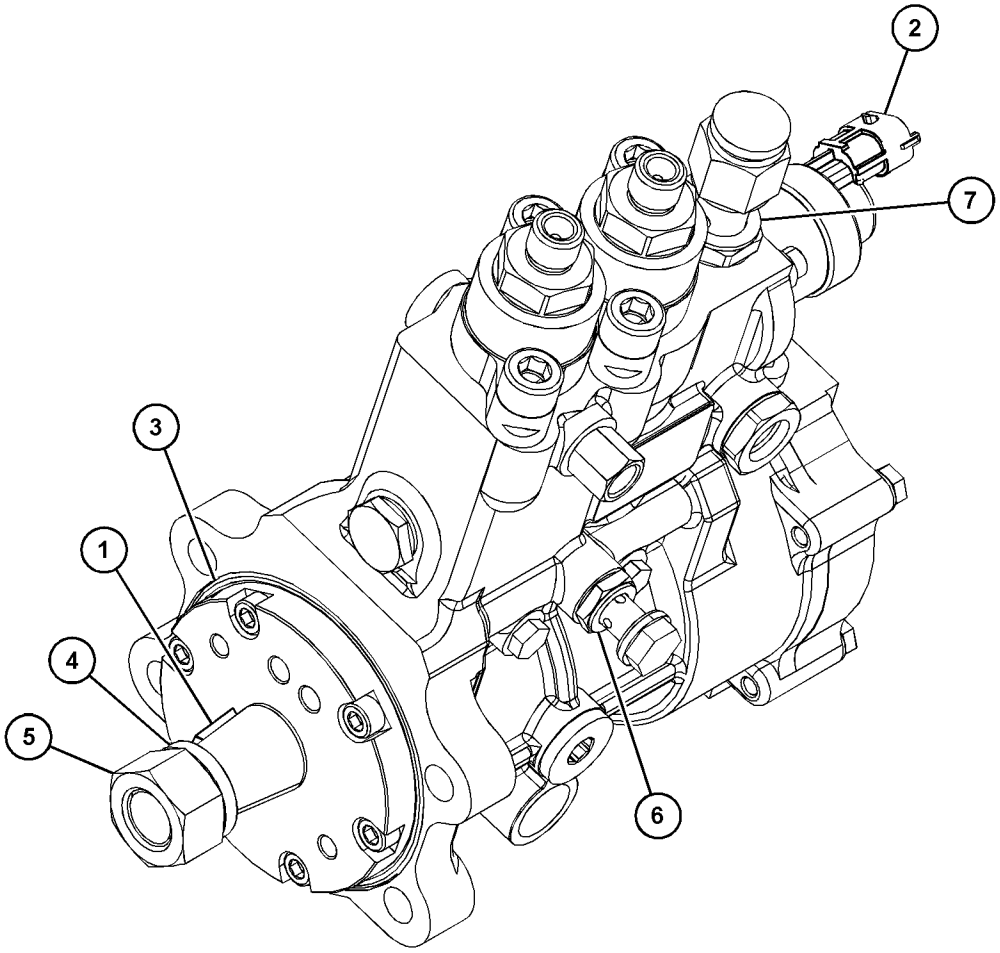

GRAPHIC #1 <END> g03657844

391-4811 PUMP GP-FUEL INJECTION

S/N: E7A1-UP

PART OF 393-4098 ENGINE AR-PRIMARY

SMCS-1251, 1290 **i06560478**

NOTE	REF NO	GRAPHIC REF	PART NUMBER	QTY	PART NAME 1 2 3 4 5 6 (PRODUCT LEVEL)	SEE PAGE
M	1	1	**286-0123**	4	BOLT (M10X1.5X35-MM THK)	
M	2	1	**6I-0654**	3	BOLT (M10X1.5X25-MM)	
	3	1	**371-2684**	1	BRACKET	
	4	1	**371-2691**	1	BRACKET	
	5	1	**371-7263**	1	LINE AS-FUEL	
YR	6	1	**375-2647**	1	PUMP GP-FUEL INJECTION	88
	7	1	**476-2947**	1	GEAR-FUEL PUMP	
M	8	1	**6I-0217**	2	BOLT (M8X1.25X20-MM)	
	9	1	**346-0006**	1	BOLT-SPECIAL	
	10	1	**346-0007**	2	WASHER	
M	11	1	**6I-0594**	1	NUT (M10X1.5-THD)	

M - METRIC PART
R - REMANUFACTURED PART MAY BE AVAILABLE
Y - SEPARATE ILLUSTRATION

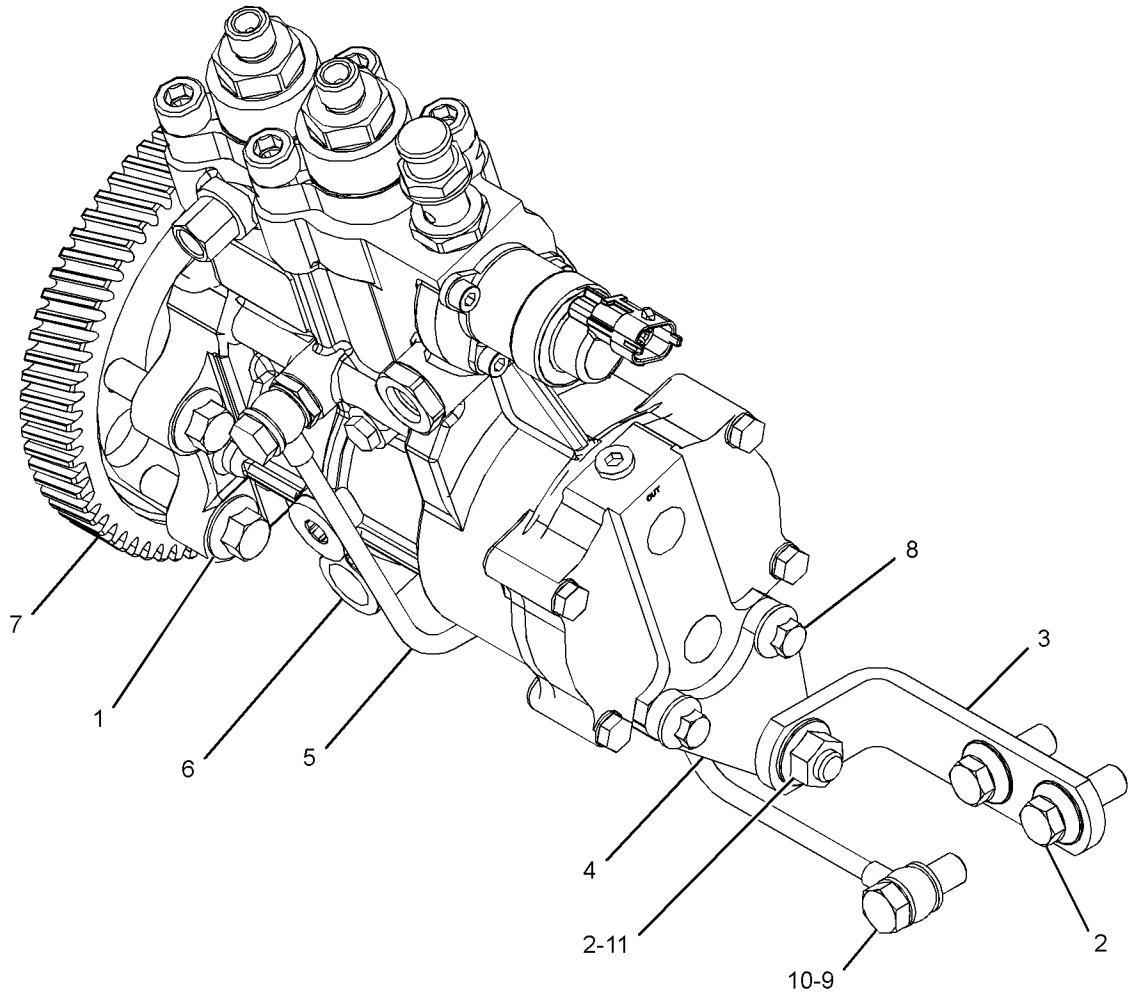

GRAPHIC #1 <END> g03378913

390-4679 PUMP GP-FUEL PRIMING

S/N: R5A1-UP

PART OF 390-6840 PUMP GP-FUEL PRM & PRIM FILTER

AN ATTACHMENT

SMCS-1258 **i06268470**

NOTE	REF NO	GRAPHIC REF	PART NUMBER	QTY	PART NAME 1 2 3 4 5 6 (PRODUCT LEVEL)	SEE PAGE
	1	1	**436-8983**	2	VALVE-CHECK	
	2	1	**162-2222**	2	SPRING	
	3	1	**9X-8267**	3	WASHER (6.6X12X2-MM THK)	
	4	1	**9S-8002**	1	PLUG (7/16-20-THD)	
M	5	1	**8T-4138**	3	BOLT (M6X1X20-MM)	
	6	1	**447-7206**	1	SEAL-O-RING	
	7	1	**6D-5801**	2	LOCKNUT (8-32-THD)	
	8	1	**236-6717**	2	SEAL-O-RING	
	9	1	**188-7541**	1	SEAL	
	10	1	**188-7536**	1	SEAL	
	11	1	**173-1016**	2	RING-BACKUP	
	12	1	**179-7400**	2	SEAL	
					PARTS SHOWN IN GRAPHIC(S) WITHOUT A REFERENCE NUMBER ARE NOT SERVICED SEPARATELY	

M - METRIC PART

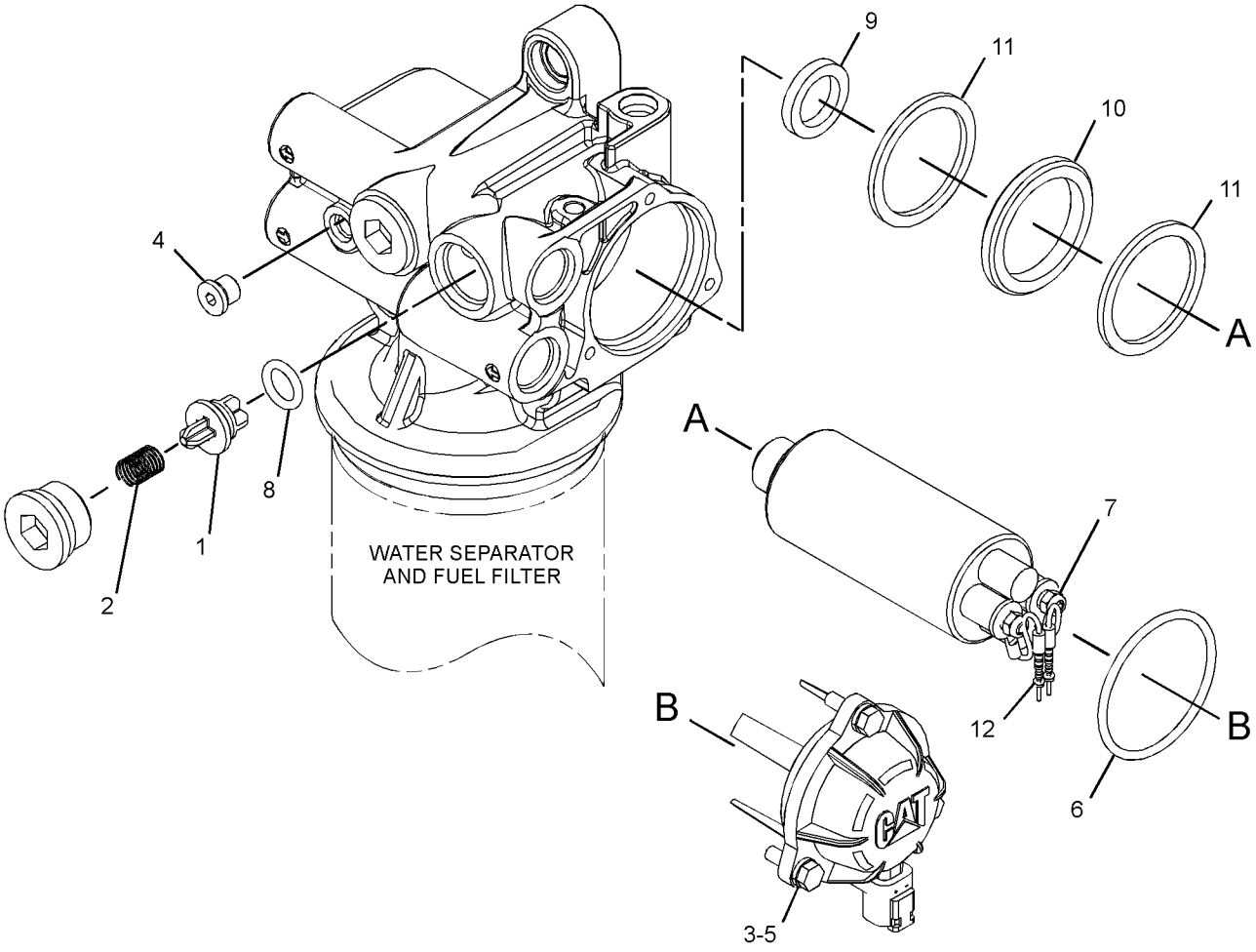

GRAPHIC #1 <END> g03878100

390-6840 PUMP GP-FUEL PRM & PRIM FILTER

S/N: R5A1-UP

PART OF 422-7023, 489-2747 LINES GP-FUEL

AN ATTACHMENT

SMCS-1258, 1260

i06216564

NOTE	REF NO	GRAPHIC REF	PART NUMBER	QTY	PART NAME 1 2 3 4 5 6 (PRODUCT LEVEL)	SEE PAGE
Y	1	1	**390-4679**	1	PUMP GP-FUEL PRIMING	90
	2	1	**438-5386**	1	FILTER AS-WATER SEP & FUEL (ULTRA HIGH EFFICIENCY)	

Y - SEPARATE ILLUSTRATION

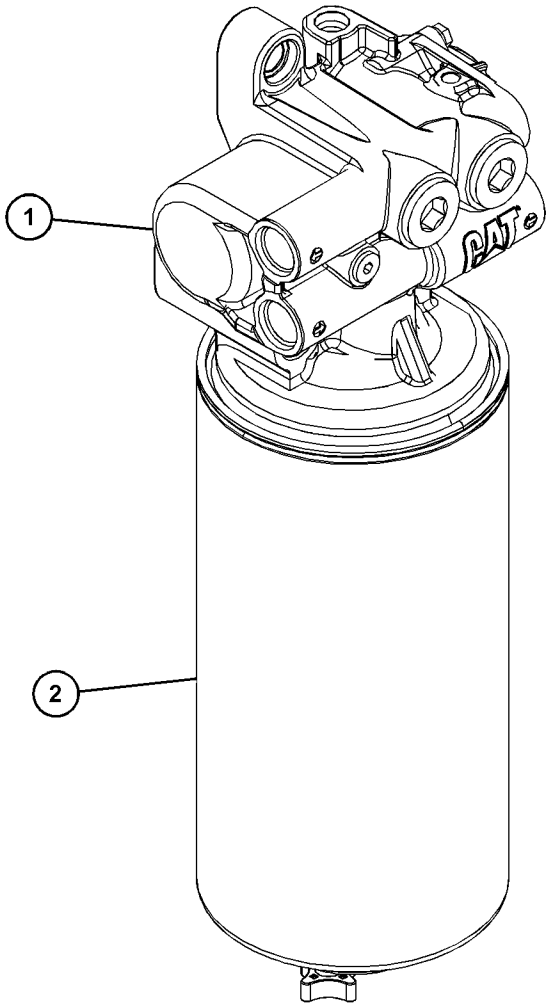

GRAPHIC #1

<END>

g03454786

394-9639 RAIL GP-FUEL

S/N: E7A1-UP

PART OF 393-4098 ENGINE AR-PRIMARY

SMCS-1288 **i06560482**

NOTE	REF NO	GRAPHIC REF	PART NUMBER	QTY	PART NAME 1 2 3 4 5 6 (PRODUCT LEVEL)	SEE PAGE
M	1	1	**6I-0260**	3	BOLT (M8X1.25X25-MM)	
M	2	1	**099-6418**	1	NUT (M6X1-THD)	
	3	1	**206-1826**	2	BOLT	
Y	4	1	*370-5520*	1	LINES GP-FUEL INJECTION	86
	5	1	**375-0482**	4	CLAMP-PIPE	
	6	1	**375-0483**	2	INSERT-CLAMP	
	7	1	**375-2649**	1	RAIL GP-FUEL	
		1	**375-6988**	1	SENSOR (FUEL RAIL PRESSURE)	
		1	**398-6226**	1	VALVE (FUEL RAIL PRESSURE)	
	8	1	**393-2034**	1	LINE AS-FUEL	
	9	1	**393-2035**	1	LINE AS-FUEL	
Y	10	1	**394-0525**	1	LINES GP-FUEL INJECTION	87

M - METRIC PART
Y - SEPARATE ILLUSTRATION

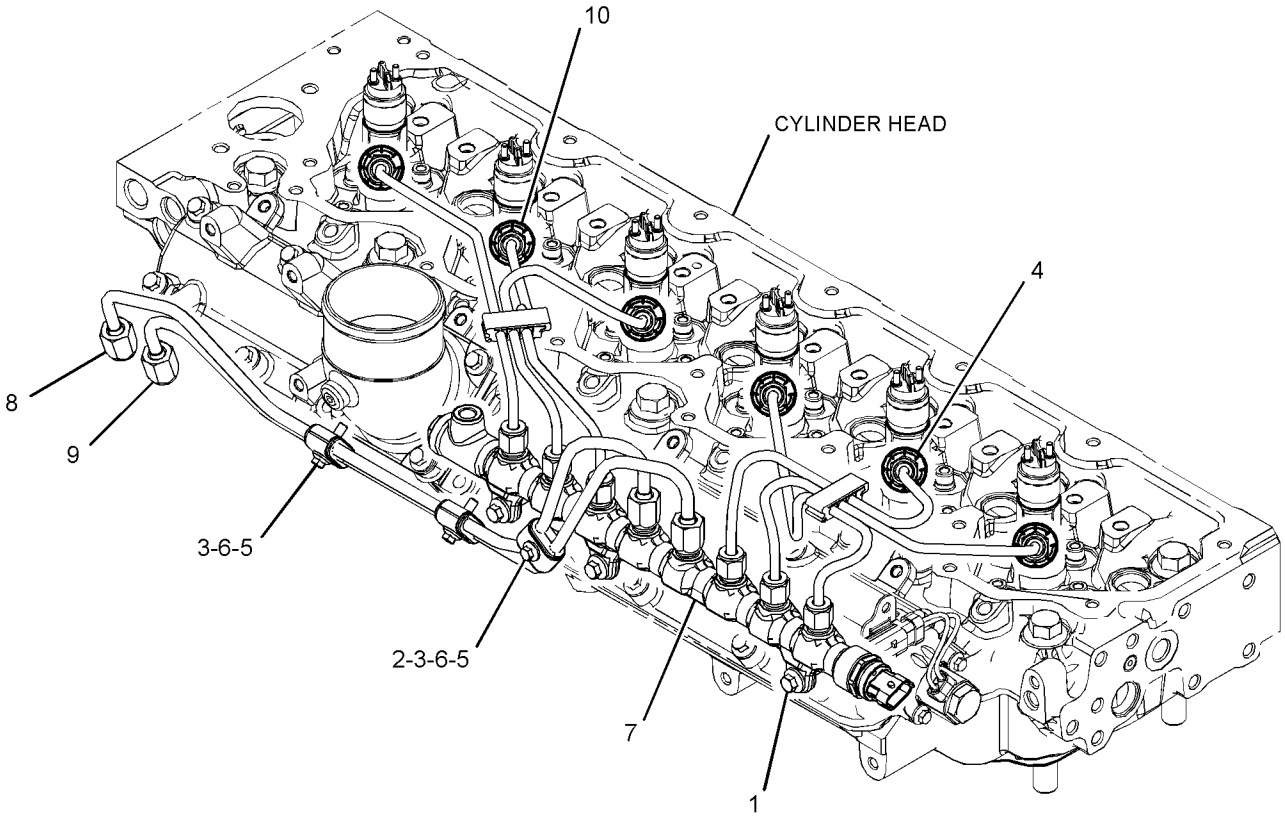

GRAPHIC #1 <END> g03380177

422-8551 TANK GP-FUEL

S/N: R5A1-UP
300-L (79.3- US GAL)
PART OF 391-9522 CHASSIS AR

SMCS-1273 **i06543728**

NOTE	REF NO	GRAPHIC REF	PART NUMBER	QTY	PART NAME 1 2 3 4 5 6 (PRODUCT LEVEL)	SEE PAGE
	1	1	**9P-3066**	8	MOUNTING	
	2	1	**363-4122**	1	GASKET	
	3	1	**423-8860**	1	SENDER AS-FUEL LEVEL	
		1	**9X-3401**	2	PIN-CONNECTOR (16-GA TO 18-GA)	
		1	**102-8802**	1	KIT-RECEPTACLE (2-PIN)	
					(INCLUDES RECEPTACLE AS & WEDGE)	
Y	4	1	**424-1712**	1	TANK GP-FUEL	94
M	5	1	**5C-9553**	6	BOLT (M6X1X16-MM)	
	6	1	**6P-8269**	4	WASHER (20.5X88X6-MM THK)	
M	7	1	**7X-2555**	4	BOLT (M16X2X80-MM)	
	8	1	**9X-8256**	6	WASHER (6.6X12X2-MM THK)	
	9	1	**9X-8257**	4	WASHER (17.5X30X3.5-MM THK)	

M - METRIC PART
Y - SEPARATE ILLUSTRATION

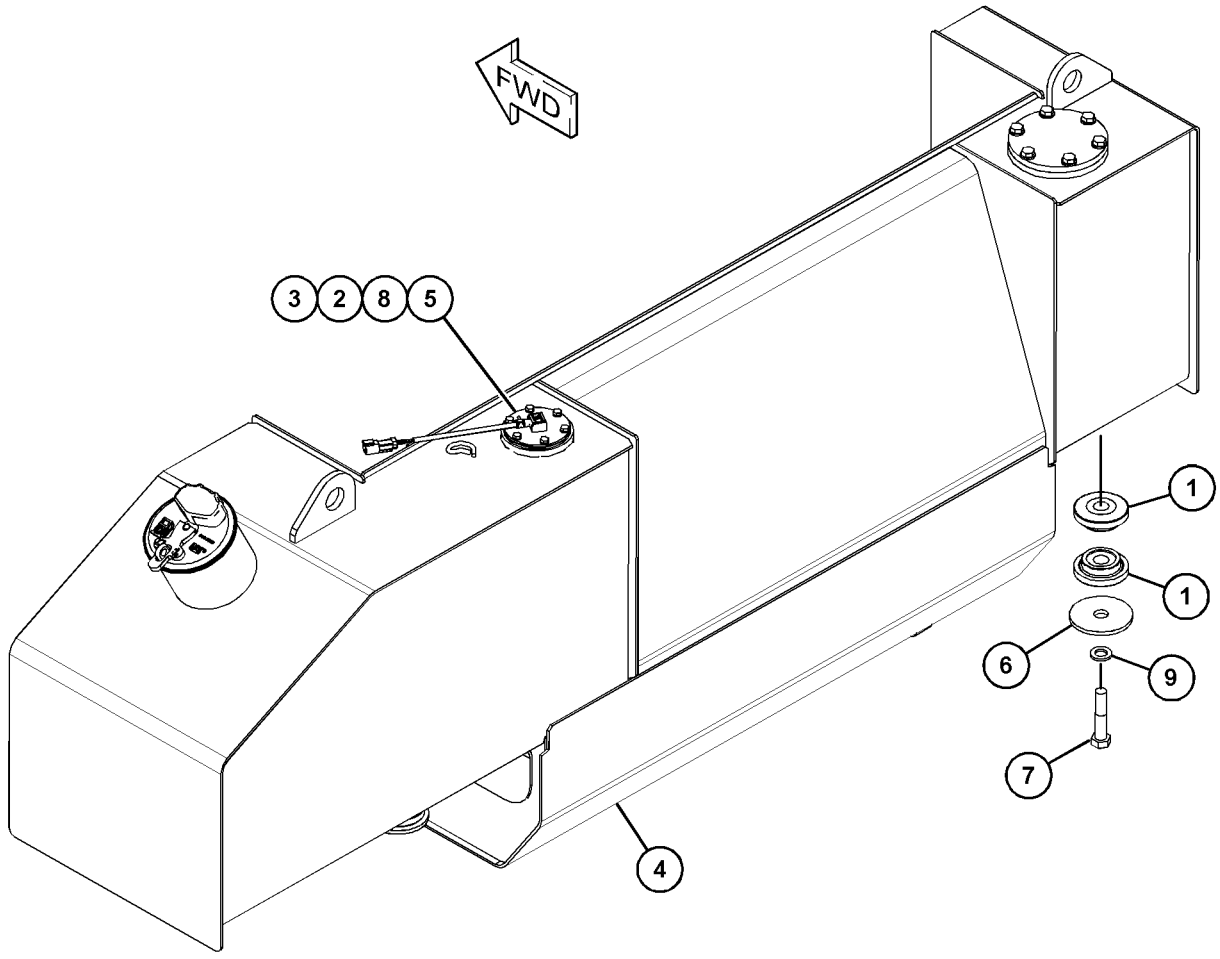

GRAPHIC #1 <END> g06023440

424-1712 TANK GP-FUEL

S/N: R5A1-UP
300-L (79.3-US GAL)
PART OF 422-8551 TANK GP-FUEL

SMCS-1273 **i06561611**

NOTE	REF NO	GRAPHIC REF	PART NUMBER	QTY	PART NAME 1 2 3 4 5 6 (PRODUCT LEVEL)	SEE PAGE
	1	1	**9P-7121**	1	STRAINER-FUEL (FUEL TANK)	
	2	1	**187-1679**	1	COVER	
	3	1	**349-7059**	1	CAP AS-FUEL (LOCKABLE, VENTED)	
		1	**7D-7111**	1	SEAL-O-RING	
		1	**350-7735**	1	KIT-CAP FILTER (FUEL TANK)	
					(INCLUDES BODY-BREATHER, GASKET, SCREWS & WASHERS)	
M	4	1	**8T-4136**	6	BOLT (M10X1.5X25-MM)	
	5	1	**3E-6773**	1	SEAL-O-RING	
	6	1	**8T-4121**	6	WASHER-HARD (11X21X2.5-MM THK)	

M - METRIC PART

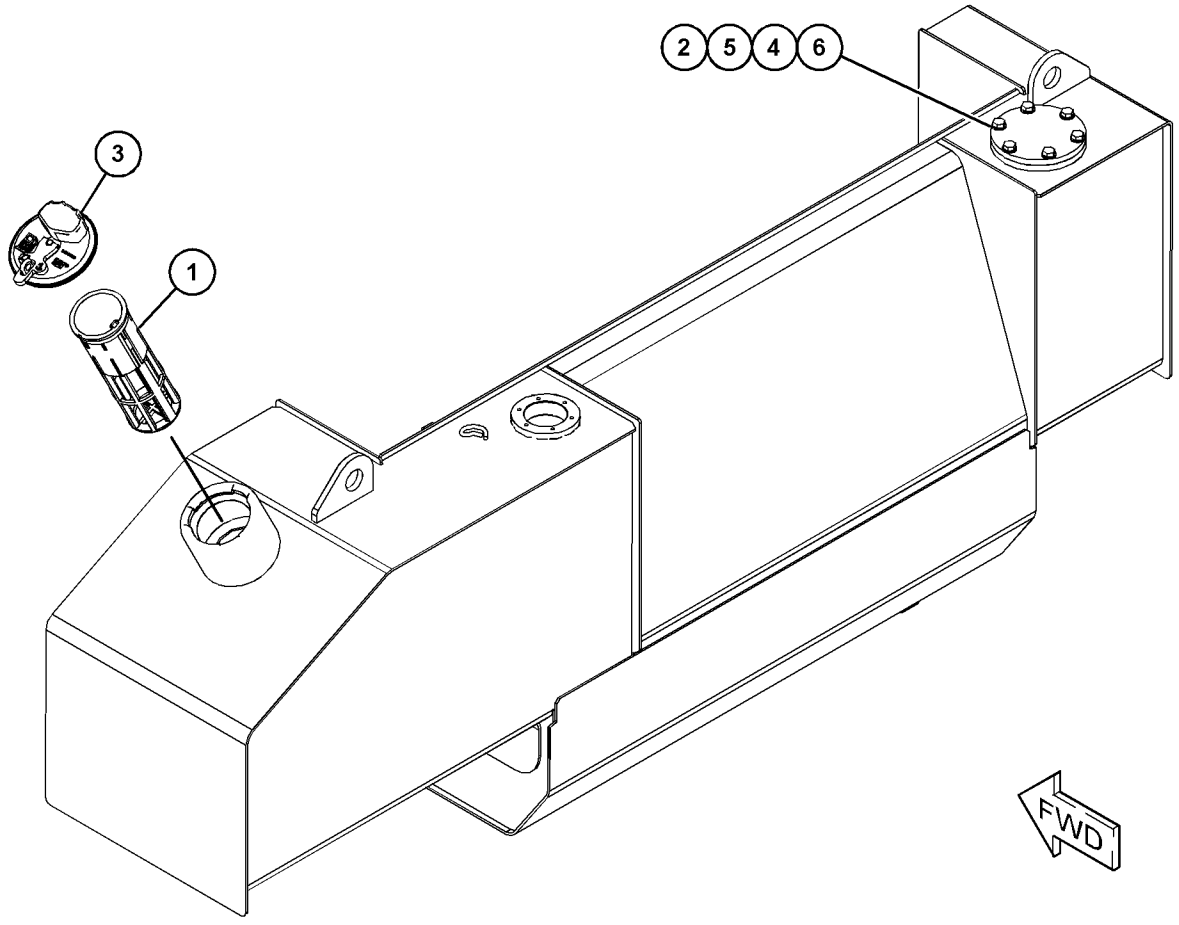

GRAPHIC #1 <END> g06023032

3E-6328 ALARM GP

S/N: R5A1-UP
24-VOLT
PART OF 415-4252, 420-1160 WIRING GP-CAB
AN ATTACHMENT

SMCS-7400, 7402, 7407 **i06056667**

NOTE	REF NO	GRAPHIC REF	PART NUMBER	QTY	PART NAME 1 2 3 4 5 6 (PRODUCT LEVEL)	SEE PAGE
	1	1	**102-8802**	1	KIT-RECEPTACLE (2-PIN)	
					(INCLUDES RECEPTACLE AS & WEDGE)	
	2	1	**8T-8729**	2	PIN-CONNECTOR (16-GA TO 18-GA)	

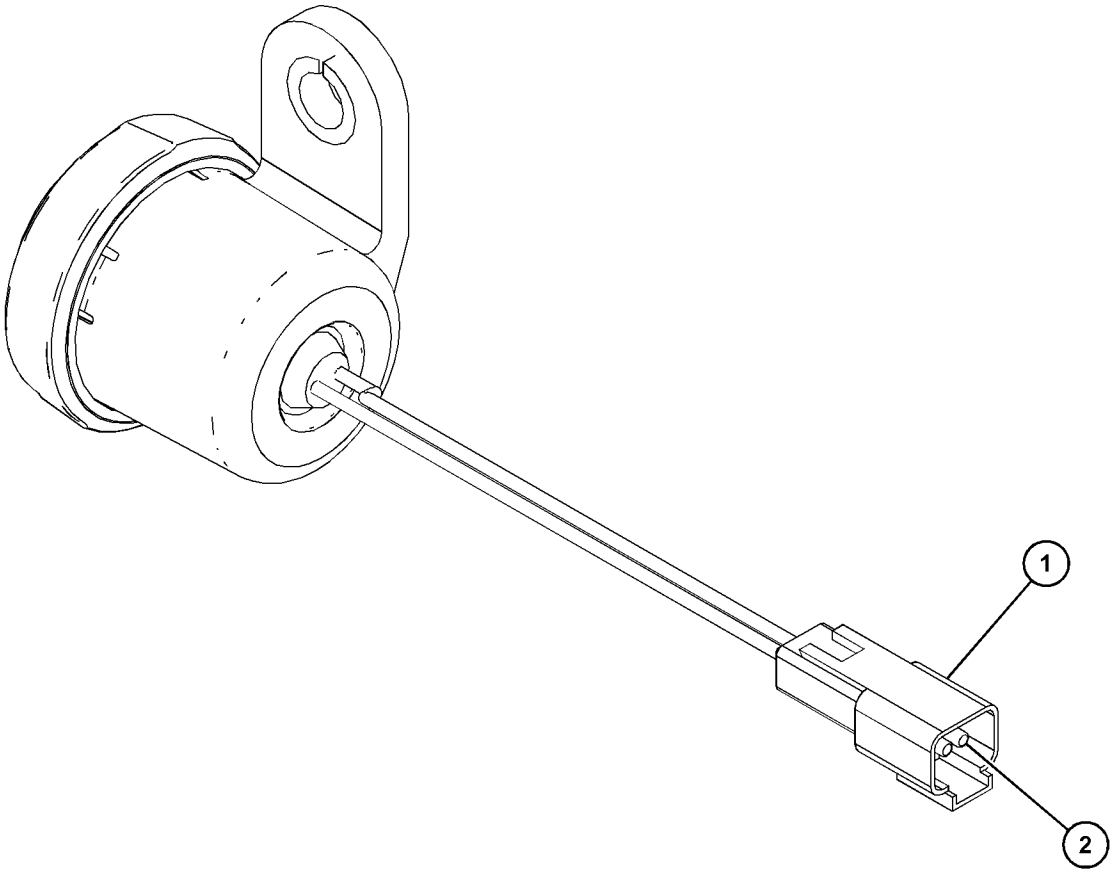

GRAPHIC #1 <END> g03798741

437-9860 ALTERNATOR GP-CHARGING

S/N: E7A1-UP

PART OF 393-4098 ENGINE AR-PRIMARY

SMCS-1405 **i06563758**

NOTE	REF NO	GRAPHIC REF	PART NUMBER	QTY	PART NAME 1 2 3 4 5 6 (PRODUCT LEVEL)	SEE PAGE
M	1	1	**6I-0654**	3	BOLT (M10X1.5X25-MM)	
M	2	1	**111-0859**	3	BOLT (M10X1.5X35-MM)	
M	3	1	**164-7468**	4	BOLT (M10X1.5X95-MM)	
	4	1	**273-9291**	2	BOLT	
	5	1	**277-6078**	1	BRACKET	
R	6	1	**344-5081**	1	ALTERNATOR GP-CHARGING (24-VOLT, 115-AMPERE)	
	7	1	**438-5107**	1	BRACKET	

M - METRIC PART
R - REMANUFACTURED PART MAY BE AVAILABLE

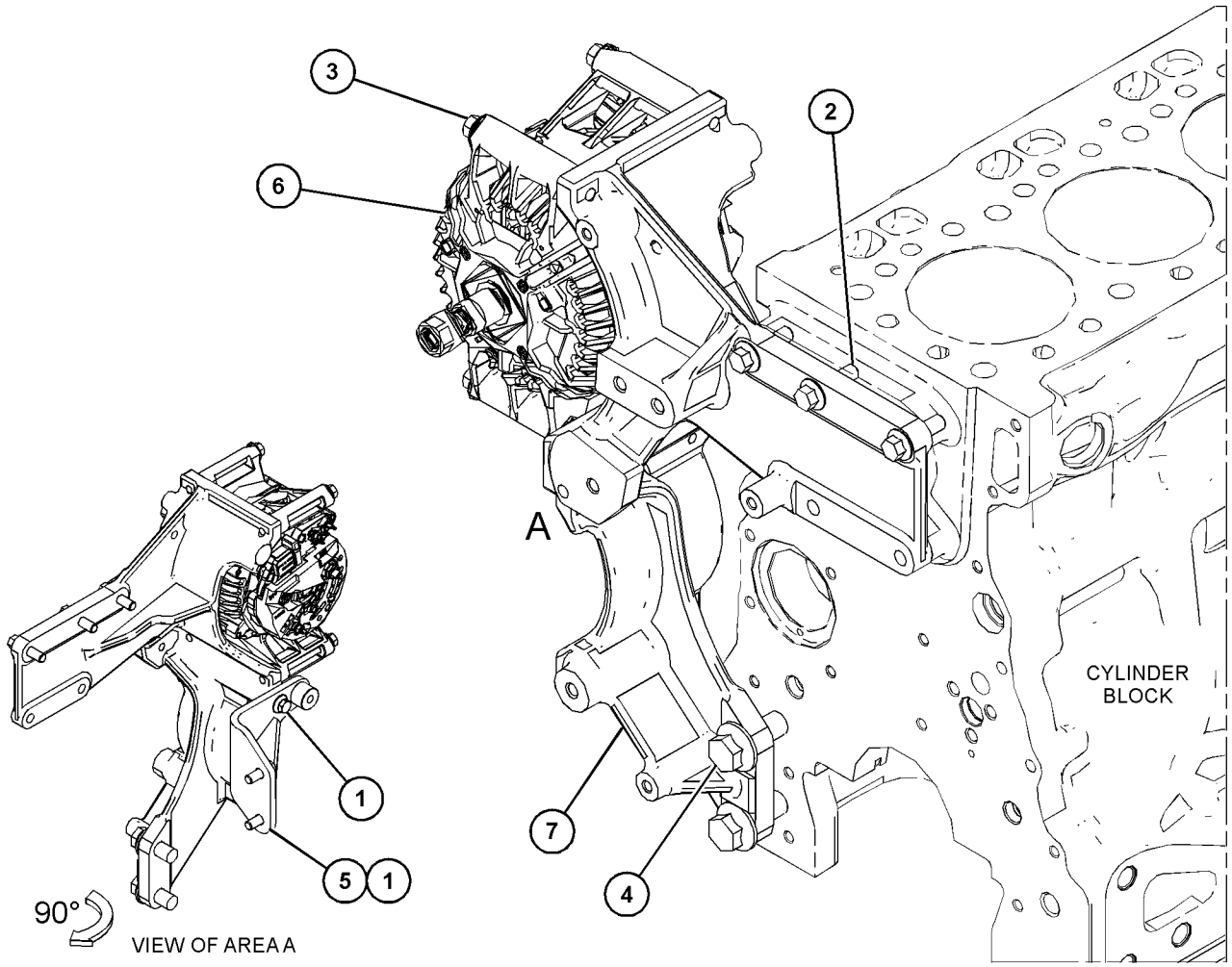

GRAPHIC #1 <END> g06034814

423-5417 BATTERY GP—HEAVY-DUTY

S/N: R5A1-UP

AN ATTACHMENT

SMCS-1401 **i06525059**

NOTE	REF NO	GRAPHIC REF	PART NUMBER	QTY	PART NAME 1 2 3 4 5 6 (PRODUCT LEVEL)	SEE PAGE
	1	1	**5I-8304**	2	ROD	
	2	1	**8V-0622**	1	CABLE AS-BATTERY	
		1	**8C-5917**	1	TERMINAL AS-BATTERY (POSITIVE)	
		1	**1M-6119**	1	BOLT (5/16-18X1.375-IN)	
		1	**1M-6120**	1	NUT (5/16-18-THD)	
E		1	**159-8049**		CABLE (00-GA, RED) (16-CM)	
		1	**8T-9757**	1	TERMINAL AS-BATTERY (NEGATIVE)	
		1	**1M-6119**	1	BOLT (5/16-18X1.375-IN)	
		1	**1M-6120**	1	NUT (5/16-18-THD)	
		1	**9G-0003**	1	COVER AS-TERMINAL (BLACK)	
		1	**8L-8413**	1	STRAP-CABLE (WHITE)	
		1	**9G-0004**	1	COVER AS-TERMINAL (RED)	
		1	**8L-8413**	1	STRAP-CABLE (WHITE)	
	3	1	**153-5710**	2	BATTERY GP (12-VOLT, MAINTENANCE FREE, WET)	
					(EACH INCLUDES)	
		1	**123-1373**	6	CAP AS-FILLER (7/8-9-THD)	
		1	**461-5232**	6	CAP AS-FILLER (M18X2-MM)	
	4	1	**195-1117**	1	BRACKET	
	5	1	**321-1291**	1	HOLD-DOWN AS	
		1	**7T-1099**	1	LINK	
M		1	**8T-3490**	1	NUT-WELD (M10X1.5-THD)	
M	6	1	**5C-7261**	2	NUT (M8X1.25-THD)	
	7	1	**5P-4116**	1	WASHER-HARD (8.8X20.5X2-MM THK)	
M	8	1	**8T-0389**	2	LOCKNUT (M10X1.5-THD)	
	9	1	**8T-4121**	2	WASHER-HARD (11X21X2.5-MM THK)	
M	10	1	**8T-4189**	1	BOLT (M8X1.25X20-MM)	

E - ORDER BY THE CENTIMETER
M - METRIC PART

423-5417 **BATTERY GP (**contd.**)** **i06525059**

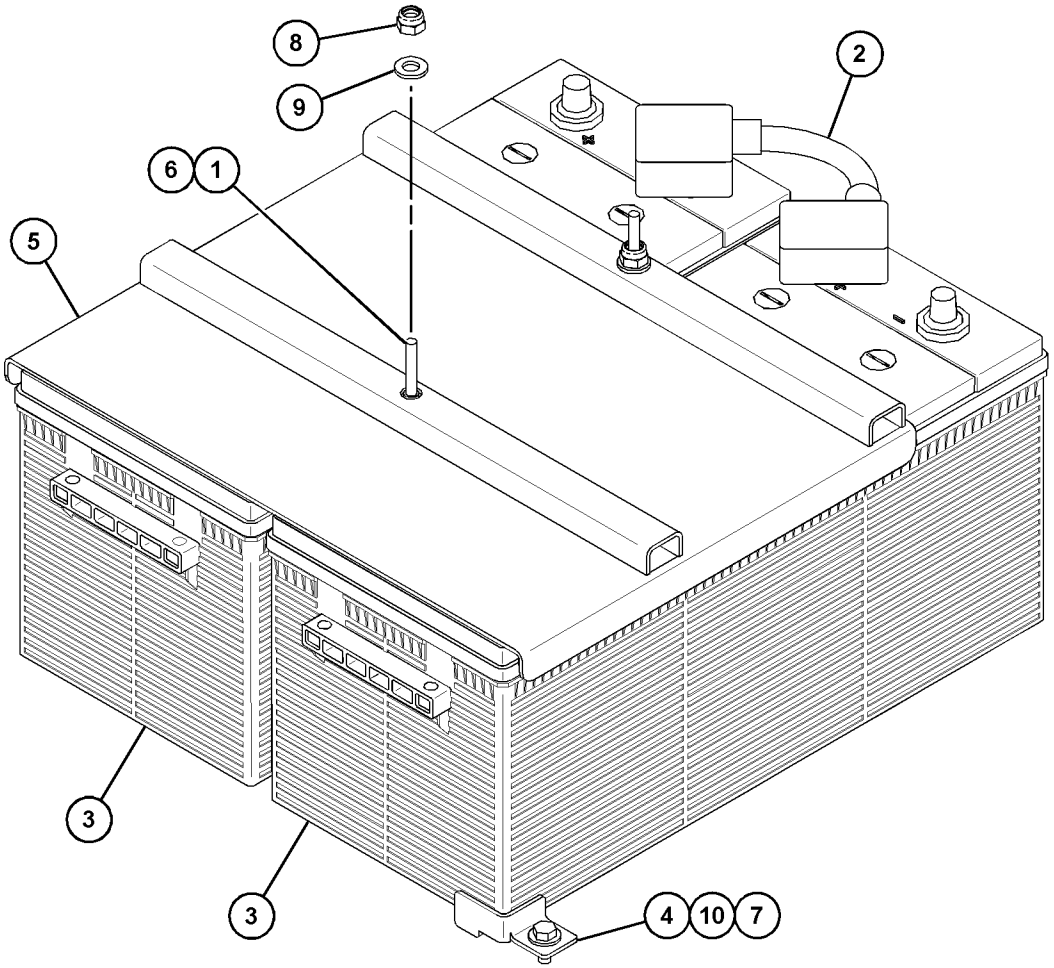

GRAPHIC #1 <END> g06013021

423-5418 BATTERY GP

S/N: R5A1-UP

AN ATTACHMENT

SMCS-1401 **i06563425**

NOTE	REF NO	GRAPHIC REF	PART NUMBER	QTY	PART NAME 1 2 3 4 5 6 (PRODUCT LEVEL)	SEE PAGE
	1	1	**5I-8304**	1	ROD	
	2	1	**6W-6005**	1	HOLD-DOWN-BATTERY	
	3	1	**160-2182**	1	CABLE AS	
E		1	**159-8049**		CABLE (00-GA, RED) (33-CM)	
		1	**9G-0002**	1	COVER AS-TERMINAL (RED)	
		1	**9G-0005**	1	COVER AS-TERMINAL (BLACK)	
					(EACH COVER AS INCLUDES)	
		1	**8L-8413**	1	STRAP-CABLE (WHITE)	
		1	**8C-5918**	1	TERMINAL AS (NEGATIVE)	
		1	**8T-9756**	1	TERMINAL AS (POSITIVE)	
					(EACH TERMINAL AS INCLUDES)	
		1	**1M-6119**	1	BOLT (5/16-18X1.375-IN)	
		1	**1M-6120**	1	NUT (5/16-18-THD)	
	4	1	**195-1117**	1	BRACKET	
	5	1	**252-6922**	1	COVER	
	6	1	**115-2422**	2	BATTERY GP (12-VOLT, MAINTENANCE FREE, WET)	
					(EACH INCLUDES)	
		1	**123-1373**	6	CAP AS-FILLER (7/8-9-THD)	
M	7	1	**344-5674**	1	NUT (M8X1.25-THD)	
	8	1	**5P-4116**	1	WASHER-HARD (8.8X20.5X2-MM THK)	
M	9	1	**8T-0389**	1	LOCKNUT (M10X1.5-THD)	
M	10	1	**8T-4189**	1	BOLT (M8X1.25X20-MM)	
	11	1	**8T-4226**	2	WASHER-PLATED (10.5X45X3-MM THK)	

E - ORDER BY THE CENTIMETER
M - METRIC PART

423-5418 **BATTERY GP (**contd.**)** **i06563425**

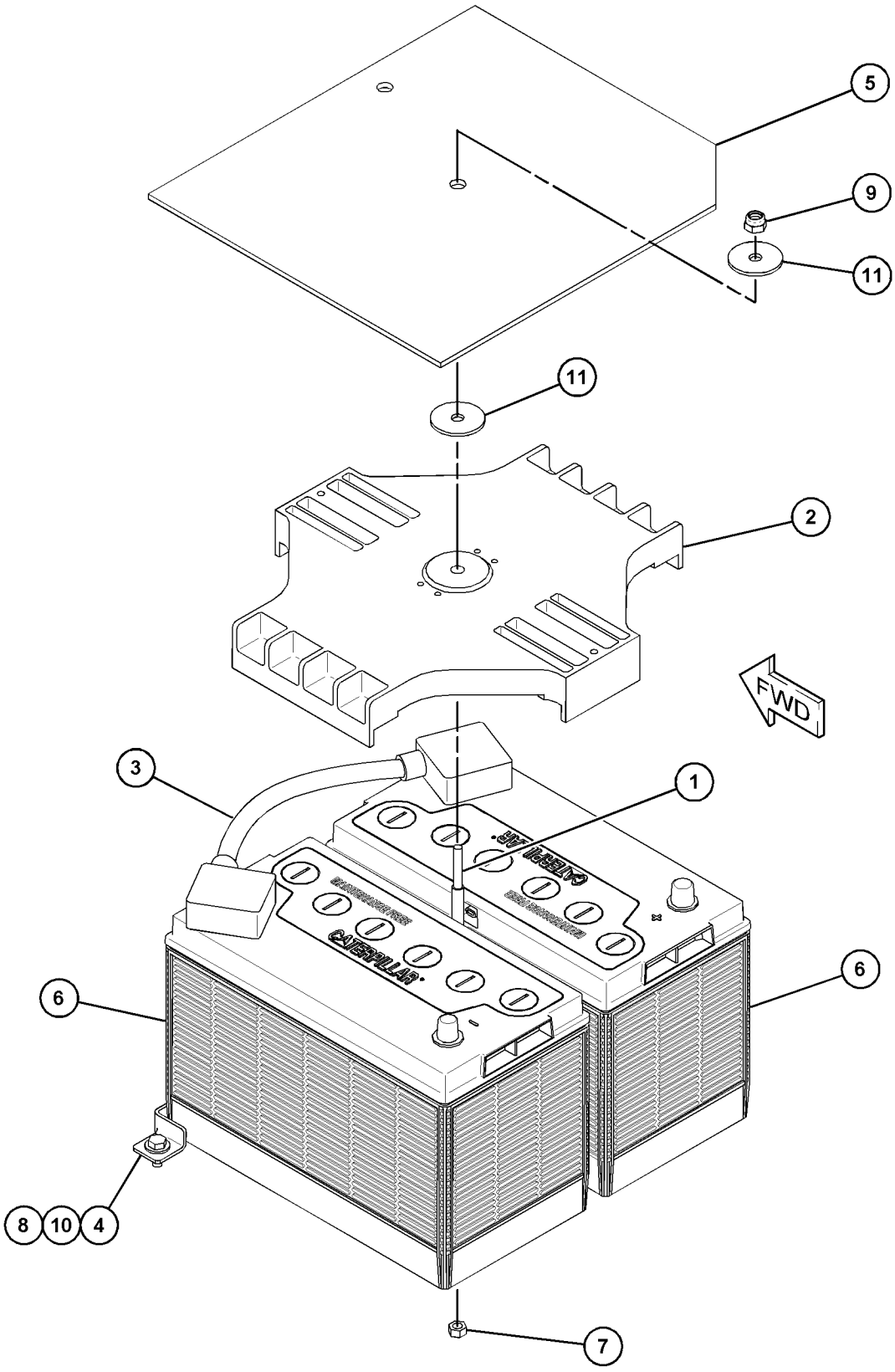

GRAPHIC #1 <END> g06024588

322-3305 BLOCK GP-JUNCTION

S/N: R5A1-UP

PART OF 394-4834 WIRING GP-CHASSIS

SMCS-1408, 7426

i06517720

NOTE	REF NO	GRAPHIC REF	PART NUMBER	QTY	PART NAME 1 2 3 4 5 6 (PRODUCT LEVEL)	SEE PAGE
	1	1	**5G-6505**	3	WASHER (25X38X14-MM THK)	
	2	1	**8C-6358**	1	BLOCK AS-JUNCTION (BATTERY)	
	2A	1	**7F-0560**	6	WASHER (0.516X0.938X0.101-IN THK)	
	2B	1	**8T-3518**	6	NUT-FULL (1/2-13-THD)	

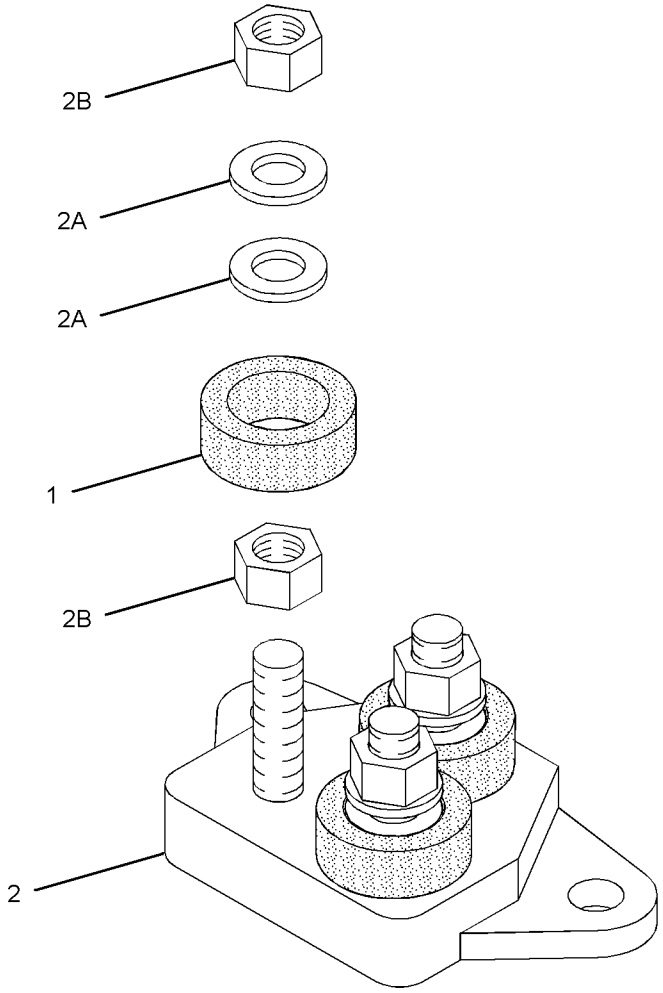

GRAPHIC #1

<END>

g03664766

480-3535 CONTROL GP-ELECTRONIC

S/N: R5A1-UP

PART OF 465-2815 INSTALLATION GP-COMMUNICATION

AN ATTACHMENT

SMCS-7418, 7490

i06580901

NOTE	REF NO	GRAPHIC REF	PART NUMBER	QTY	PART NAME 1 2 3 4 5 6 (PRODUCT LEVEL)	SEE PAGE
Y	1	1	**440-2105**	1	RADIO GP-COMMUNICATION (PL641E CELLULAR)	163
	2	1	**483-3530**	1	FILM-IDENTIFICATION (LABEL)	

Y - SEPARATE ILLUSTRATION

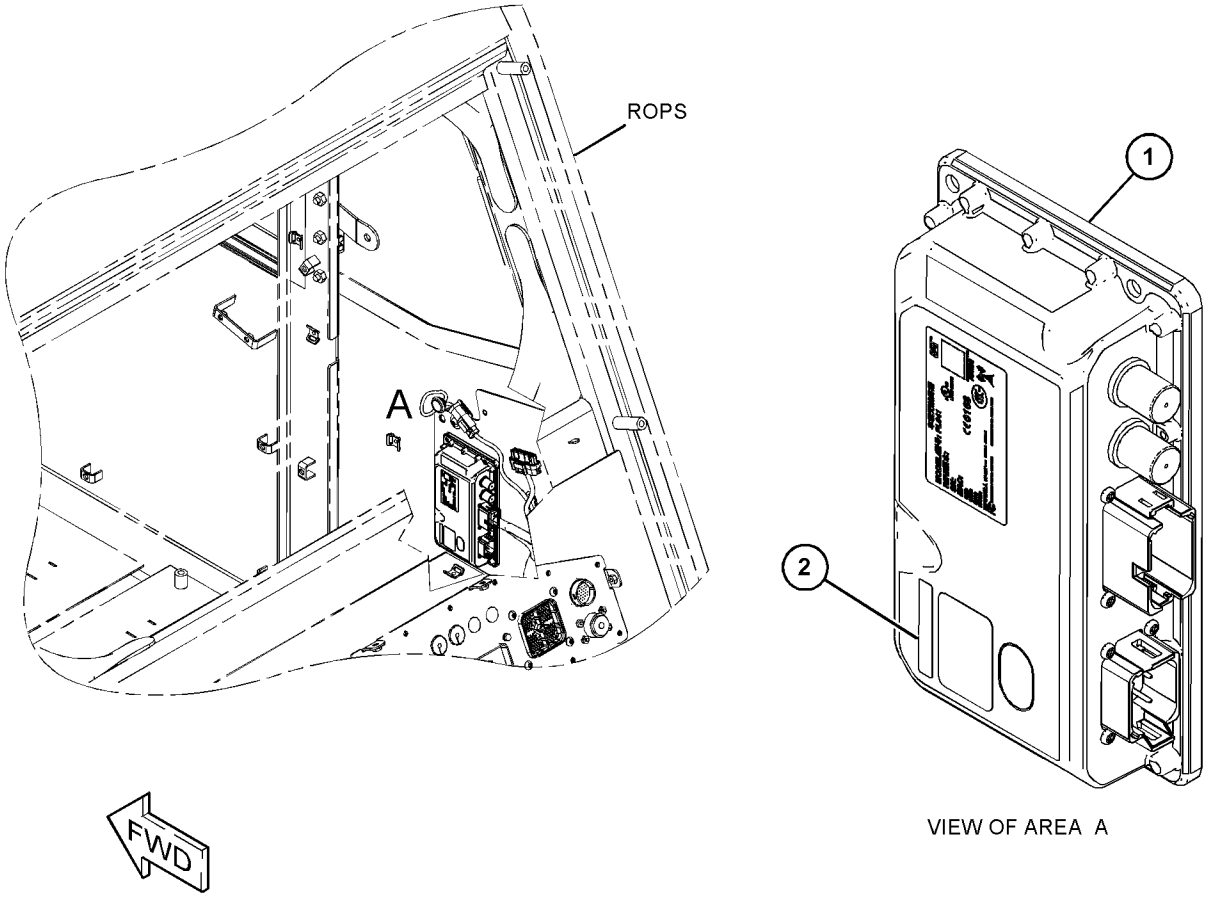

GRAPHIC #1

<END>

g06032419

371-2537 CONTROL GP-ENGINE ELECTRONIC

S/N: E7A1-UP

PART OF 393-4098 ENGINE AR-PRIMARY

SMCS-1901 **i06560453**

NOTE	REF NO	GRAPHIC REF	PART NUMBER	QTY	PART NAME 1 2 3 4 5 6 (PRODUCT LEVEL)	SEE PAGE
	1	1	**7W-2632**	1	WASHER (8.5X16.8X1.6-MM THK)	
	2	1	**217-0099**	4	SPACER (8.2X25X2-MM THK)	
	3	1	**278-5203**	4	SPACER	
	4	1	**155-0576**	8	MOUNT-ISOLATION	
M	5	1	**6I-0456**	4	BOLT (M8X1.25X45-MM)	
	6	1	**374-2640**	1	CONTROL GP-UNPROGRAMMED	

M - METRIC PART

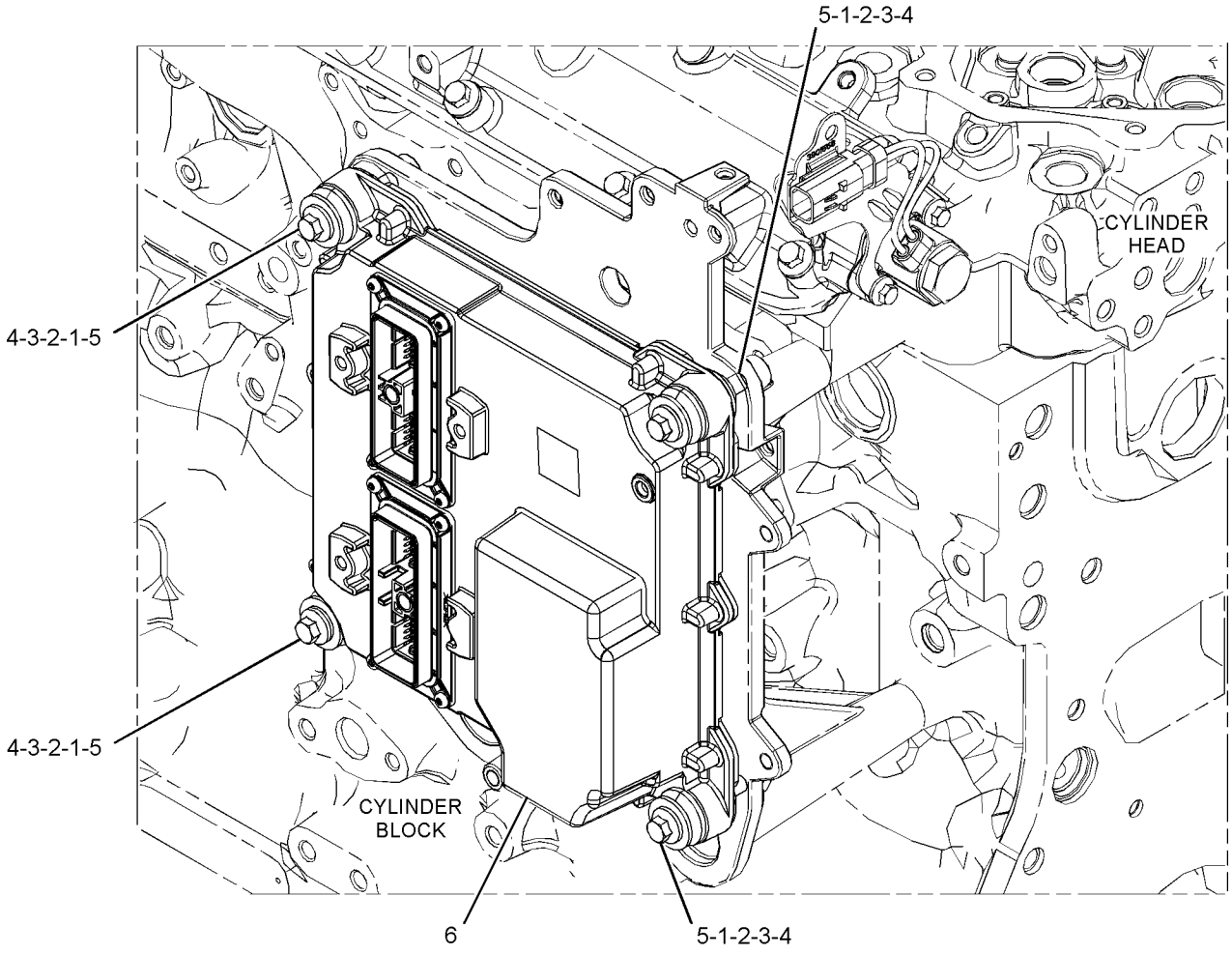

GRAPHIC #1 <END> g03644945

449-9303 CONTROL GP-POWER TRAIN–AUTOSHIFT

S/N: R5A1-UP

AN ATTACHMENT

SMCS-4808, 7610 **i06165537**

NOTE	REF NO	GRAPHIC REF	PART NUMBER	QTY	PART NAME 1 2 3 4 5 6 (PRODUCT LEVEL)	SEE PAGE
	1	1	**428-9166**	1	SWITCH AS (POWER TRAIN)	
M	2	1	**9X-2045**	2	SCREW-TRUSS HEAD (M6X1X20-MM)	

M - METRIC PART

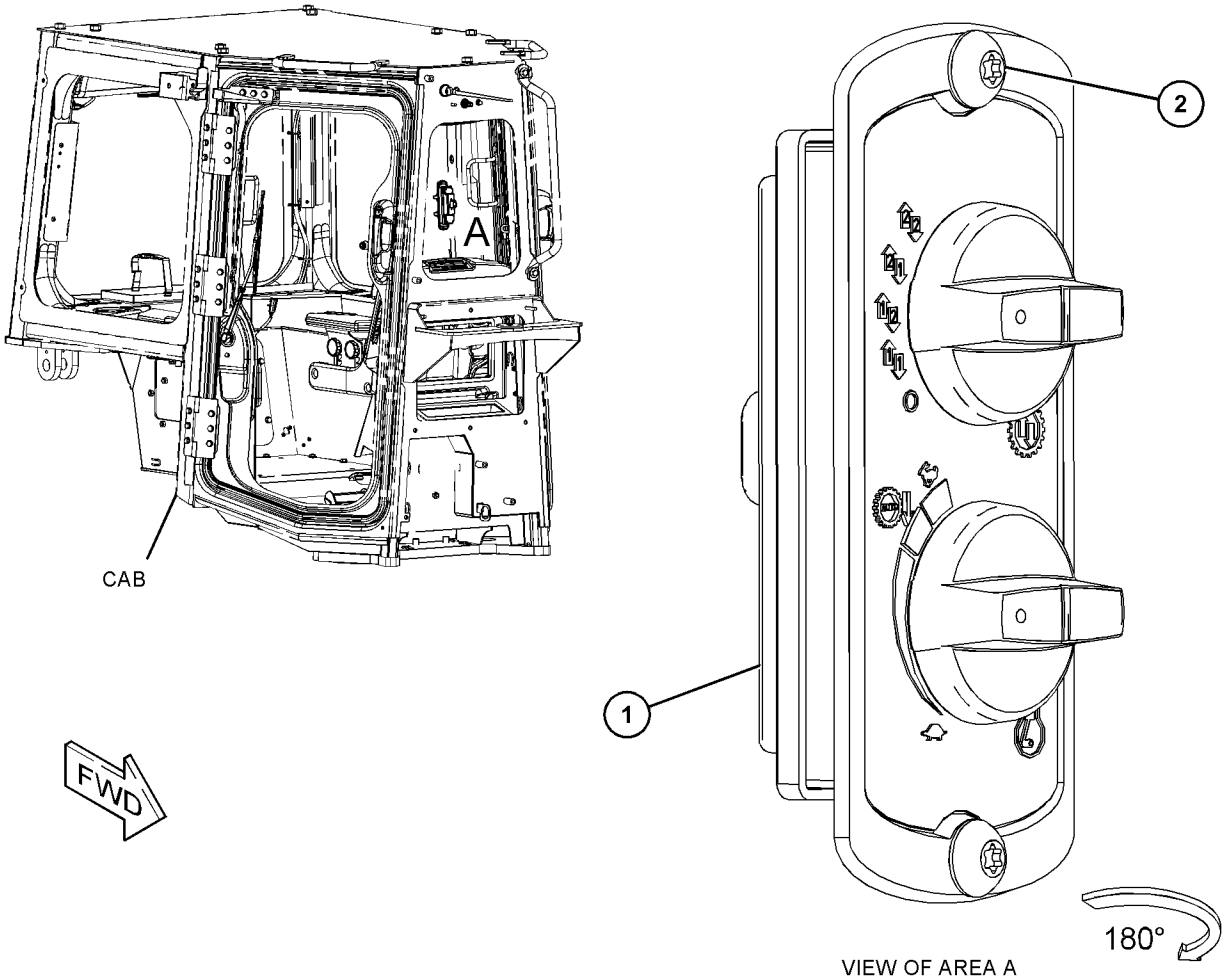

VIEW OF AREA A

GRAPHIC #1 <END> g03849723

453-9497 ELECTRONICS AR-MACHINE

S/N: R5A1-UP

PART OF 391-9502 COMMON AR

SMCS-7610, 7620

i06521440

NOTE	PART NUMBER	QTY	PART NAME 1 2 3 4 5 6 (PRODUCT LEVEL)	SEE PAGE
Y	*483-0217*	1	ELECTRONICS GP-IMPLEMENT	107
Y	*483-0214*	1	ELECTRONICS GP-MACHINE	107
Y	*483-0215*	1	ELECTRONICS GP-MONITOR (MACHINE CONTROL)	107
Y	*483-0216*	1	ELECTRONICS GP-MONITOR (DISPLAY)	107

Y - SEPARATE ILLUSTRATION

<END>

417-4722 ELECTRONICS GP-COMMUNICATION–PLE601 NETWORK MANAGER

S/N: R5A1-UP

PART OF 450-3389 INSTALLATION GP-COMMUNICATION

AN ATTACHMENT

SMCS-7606, 7610, 7620 **i06210311**

NOTE	REF NO	GRAPHIC REF	PART NUMBER	QTY	PART NAME 1 2 3 4 5 6 (PRODUCT LEVEL)	SEE PAGE
R	1	1	**459-0786**	1	ELECTRONICS GP-COMMUNICATION (NETWORK MANAGER)	
		1	**7X-6315**	1	STRAP AS-GROUND	
		1	**5P-6006**	1	TUBE-HEAT SHRINK (9.52-MM DIA)	
		1	**2L-8078**	1	TERMINAL-RING (14-GA TO 16-GA, 5/16-IN SCREW)	
		1	**2L-8075**	1	TERMINAL-RING (14-GA TO 16-GA, NO. 8 SCREW)	
		1	**8C-8514**	1	SCREW-MACHINE (8-32X0.375-IN)	
		1	**134-4126**	1	WASHER (4.52X8.28X0.76-MM THK)	
		1	**175-4168**	12	SCREW-PAN HEAD (6-32X0.37-IN)	
		1	**272-2379**	1	FILM-WARNING (EXPLOSION HAZARD, READ OMM)	

R - REMANUFACTURED PART MAY BE AVAILABLE

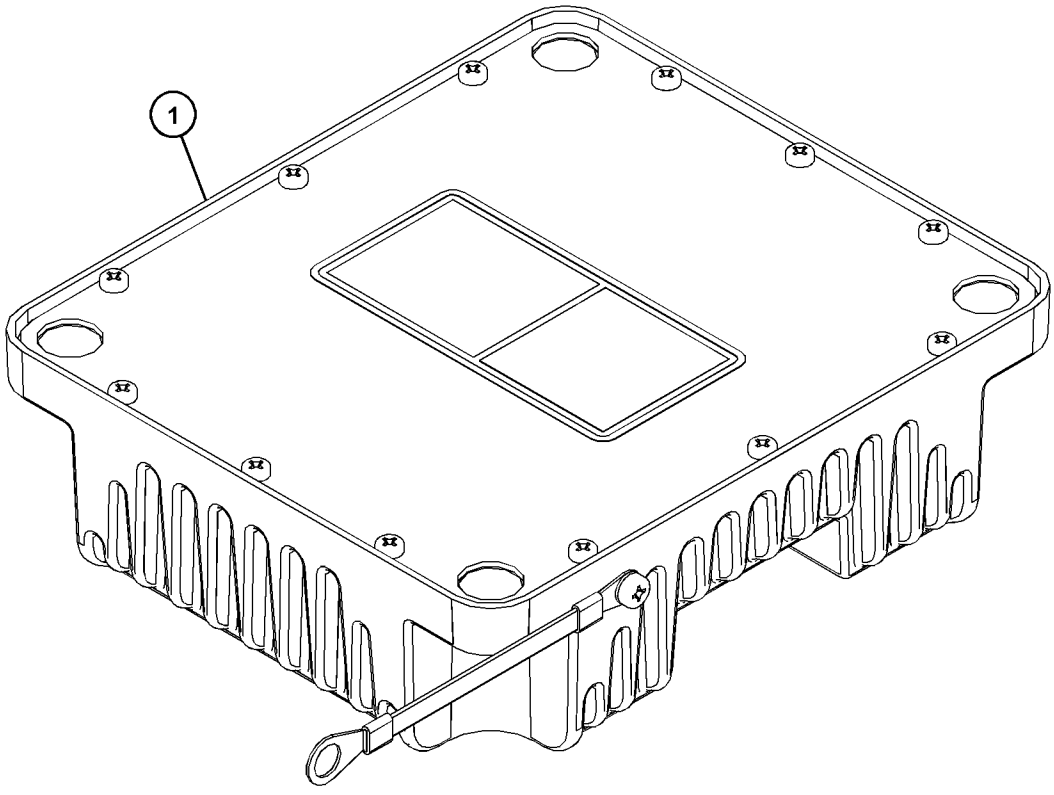

GRAPHIC #1 <END> g03786631

483-0217 ELECTRONICS GP-IMPLEMENT

S/N: R5A1-UP

PART OF 453-9497 ELECTRONICS AR-MACHINE

SMCS-5701, 7610, 7620 **i06521443**

NOTE	PART NUMBER	QTY	PART NAME 1 2 3 4 5 6 (PRODUCT LEVEL)	SEE PAGE
	479-6876	1	SOFTWARE GP-IMPLEMENT	

<END>

483-0214 ELECTRONICS GP-MACHINE

S/N: R5A1-UP

PART OF 453-9497 ELECTRONICS AR-MACHINE

SMCS-7610, 7620 **i06521446**

NOTE	PART NUMBER	QTY	PART NAME 1 2 3 4 5 6 (PRODUCT LEVEL)	SEE PAGE
	479-6845	1	SOFTWARE GP-MACHINE	

<END>

483-0215 ELECTRONICS GP-MONITOR—MACHINE CONTROL

S/N: R5A1-UP

PART OF 453-9497 ELECTRONICS AR-MACHINE

SMCS-7490, 7601, 7603, 7610, 7620 **i06521445**

NOTE	PART NUMBER	QTY	PART NAME 1 2 3 4 5 6 (PRODUCT LEVEL)	SEE PAGE
	482-3498	1	SOFTWARE GP-MONITOR (MACHINE CONTROL)	

<END>

483-0216 ELECTRONICS GP-MONITOR—DISPLAY

S/N: R5A1-UP

PART OF 453-9497 ELECTRONICS AR-MACHINE

SMCS-7490, 7601, 7603, 7610, 7620 **i06521444**

NOTE	PART NUMBER	QTY	PART NAME 1 2 3 4 5 6 (PRODUCT LEVEL)	SEE PAGE
	484-4470	1	SOFTWARE GP-MONITOR (DISPLAY)	

<END>

384-1825 HARNESS AS-CAB

S/N: R5A1-UP

PART OF 398-0416, 398-0423 DOOR GP-CAB

AN ATTACHMENT

SMCS-1408 **i05899880**

NOTE	PART NUMBER	QTY	PART NAME 1 2 3 4 5 6 (PRODUCT LEVEL)	SEE PAGE
	155-2274	2	KIT-CONNECTING PLUG (6-PIN)	
			(EACH PLUG KIT INCLUDES PLUG AS, WEDGE & INTERACE SEAL)	
	8T-8737	2	PLUG-SEAL	
	9X-3402	10	SOCKET-CONNECTOR (16-GA TO 18-GA)	

<END>

415-2089 HARNESS AS-CAB

S/N: R5A1-UP
PART OF 415-4252 WIRING GP-CAB
AN ATTACHMENT

SMCS-1408 **i06213241**

NOTE	PART NUMBER	QTY	PART NAME 1 2 3 4 5 6 (PRODUCT LEVEL)	SEE PAGE
	102-8805	2	KIT-RECEPTACLE (6-PIN)	
	166-5229	1	KIT-RECEPTACLE (12-PIN)	
			(EACH RECEPTACLE KIT INCLUDES RECEPTACLE AS & WEDGE)	
	8T-8737	39	PLUG-SEAL	
	9X-1054	2	PLUG AS-CONNECTOR (4-PIN)	
	9X-1056	8	TERMINAL-RECEPTACLE (14-GA TO 16-GA)	
E	**125-7874**		TUBE-HEAT SHRINK (5.72-MM DIA) (50-CM)	
E	**125-7875**		TUBE-HEAT SHRINK (7.44-MM DIA) (25-CM)	
	9X-3402	55	SOCKET-CONNECTOR (16-GA TO 18-GA)	
			—OR—	
	126-1768	55	SOCKET-CONNECTOR (14-GA TO 16-GA)	
	5P-4571	2	TERMINAL-BLADE (14-GA TO 16-GA)	
	097-7234	2	TERMINAL-BLADE (18-GA TO 22-GA)	
	2L-8069	3	TERMINAL-RING (2-GA TO 10-GA, 3/8-IN SCREW)	
	9X-3401	44	PIN-CONNECTOR (16-GA TO 18-GA)	
			—OR—	
	126-1767	44	PIN-CONNECTOR (14-GA TO 16-GA)	
	155-2255	2	KIT-CONNECTING PLUG (12-PIN)	
	155-2265	5	KIT-CONNECTING PLUG (8-PIN)	
	155-2260	1	KIT-CONNECTING PLUG (3-PIN)	
	155-2270	2	KIT-CONNECTING PLUG (2-PIN)	
	155-2274	2	KIT-CONNECTING PLUG (6-PIN)	
			(EACH PLUG KIT INCLUDES PLUG AS WEDGE(S) & INTERFACE SEAL)	
B	**1P-0810**		TAPE-ELECTRICAL	
	167-3692	1	RECEPTACLE AS-CONNECTOR (31-PIN)	
	185-1860	12	SEAL-WIRE	
	185-1861	8	SEAL-WIRE	
	202-5397	10	PLUG	
	204-1297	14	TERMINAL AS-BLADE (18-GA TO 20-GA)	
			(EACH INCLUDES)	
	235-4123	1	TERMINAL (18-GA TO 20-GA)	
	245-7434	3	KIT-CONNECTING PLUG (10-PIN)	
			(EACH INCLUDES CONNECTOR PLUG, WIRE ASSEMBLIES & PLUGS)	
	274-3774	1	CAP-CONNECTOR	
	274-3778	1	CAP-SEAL	

B - USE AS REQUIRED
E - ORDER BY THE CENTIMETER

<END>

415-2090 HARNESS AS-CAB–FUSE BLOCK

S/N: R5A1-UP

PART OF 415-2092 HARNESS AS-CAB

AN ATTACHMENT

SMCS-1408 **i06581620**

NOTE	PART NUMBER	QTY	PART NAME 1 2 3 4 5 6 (PRODUCT LEVEL)	SEE PAGE
	102-8802	1	KIT-RECEPTACLE (2-PIN)	
	102-8803	1	KIT-RECEPTACLE (3-PIN)	
	102-8804	2	KIT-RECEPTACLE (4-PIN)	
	102-8801	1	KIT-RECEPTACLE (12-PIN)	
	190-7614	1	KIT-RECEPTACLE (12-PIN)	
	197-7565	1	KIT-RECEPTACLE (4-PIN)	
			(EACH RECEPTACLE KIT INCLUDES RECEPTACLE AS & WEDGE)	
	3S-2093	2	STRAP-CABLE	
	9X-0196	1	TERMINAL AS	
	8T-8737	131	PLUG-SEAL	
	9X-6772	4	STRAP-CABLE	
E	**114-8843**		SLEEVE-PLASTIC (100-CM)	
E	**125-7874**		TUBE-HEAT SHRINK (5.72-MM DIA) (160-CM)	
E	**125-7875**		TUBE-HEAT SHRINK (7.44-MM DIA) (50-CM)	
	9X-3402	204	SOCKET-CONNECTOR (16-GA TO 18-GA)	
			–OR–	
	126-1768	204	SOCKET-CONNECTOR (14-GA TO 16-GA)	
	126-1774	2	COVER-CONNECTOR	
	128-4123	20	SEAL	
	2L-8069	3	TERMINAL-RING (2-GA TO 10-GA, 3/8-IN SCREW)	
	2L-8075	1	TERMINAL-RING (14-GA TO 16-GA, NO. 8 SCREW)	
	2L-8079	2	TERMINAL-RING (14-GA TO 16-GA, 3/8-IN SCREW)	
	134-2540	1	RESISTOR AS-CONNECTION (3-PIN)	
	9X-3401	75	PIN-CONNECTOR (16-GA TO 18-GA)	
			–OR–	
	126-1767	75	PIN-CONNECTOR (14-GA TO 16-GA)	
	147-1445	1	PLUG AS-CONNECTOR (70-PIN)	
	147-1446	1	PLUG AS-CONNECTOR (70-PIN)	
			(EACH PLUG AS INCLUDES)	
	159-9322	1	SEAL-O-RING	
	155-2255	1	KIT-CONNECTING PLUG (12-PIN)	
	155-2256	1	KIT-CONNECTING PLUG (12-PIN)	
	155-2265	1	KIT-CONNECTING PLUG (8-PIN)	
	155-2260	2	KIT-CONNECTING PLUG (3-PIN)	
	155-2270	4	KIT-CONNECTING PLUG (2-PIN)	
	155-2271	4	KIT-CONNECTING PLUG (4-PIN)	
	155-2274	5	KIT-CONNECTING PLUG (6-PIN)	
	174-0503	1	KIT-CONNECTING PLUG (3-PIN)	
			(EACH PLUG KIT INCLUDES PLUG AS, WEDGE(S) & INTERFACE SEAL)	
B	**1P-0810**		TAPE-ELECTRICAL	
	167-3692	2	RECEPTACLE AS-CONNECTOR (31-PIN)	
	167-3693	2	PLUG AS-CONNECTOR (31-PIN)	
	185-1860	5	SEAL-WIRE	
	189-3158	1	SUPPRESSOR-ARC	
	202-0314	20	TERMINAL AS (14-GA)	
			(EACH INCLUDES)	
	128-4123	1	SEAL	

415-2090 **HARNESS AS-CAB (**contd.**)** **i06581620**

NOTE	PART NUMBER	QTY	PART NAME 1 2 3 4 5 6 (PRODUCT LEVEL)	SEE PAGE
	202-5397	5	PLUG	
	204-1297	5	TERMINAL AS-BLADE (18-GA TO 20-GA)	
			(EACH INCLUDES)	
	235-4123	1	TERMINAL (18-GA TO 20-GA)	
	245-7434	1	KIT-CONNECTING PLUG (10-PIN)	
			(INCLUDES CONNECTOR PLUG, WIRE ASSEMBLIES & PLUGS)	
	274-3774	1	CAP-CONNECTOR	
	274-3775	1	CAP-CONNECTOR	
	274-3776	2	CAP-SEAL	
	274-3777	2	CAP-CONNECTOR	

B - USE AS REQUIRED
E - ORDER BY THE CENTIMETER

<END>

415-2091 HARNESS AS-CAB—FRONT

S/N: R5A1-UP

PART OF 415-4252, 420-1160 WIRING GP-CAB

AN ATTACHMENT

SMCS-1408 **i06213243**

NOTE	PART NUMBER	QTY	PART NAME 1 2 3 4 5 6 (PRODUCT LEVEL)	SEE PAGE
	8T-8737	10	PLUG-SEAL	
E	**125-7874**		TUBE-HEAT SHRINK (5.72-MM DIA) (10-CM)	
	9X-3402	44	SOCKET-CONNECTOR (16-GA TO 18-GA)	
			—OR—	
	126-1768	44	SOCKET-CONNECTOR (14-GA TO 16-GA)	
	2L-8079	2	TERMINAL-RING (14-GA TO 16-GA, 3/8-IN SCREW)	
	155-2260	2	KIT-CONNECTING PLUG (3-PIN)	
	155-2271	2	KIT-CONNECTING PLUG (4-PIN)	
	155-2274	1	KIT-CONNECTING PLUG (6-PIN)	
			(EACH PLUG KIT INCLUDES PLUG AS, WEDGE(S) & INTERFACE SEAL)	
B	**1P-0810**		TAPE-ELECTRICAL	
	167-3693	1	PLUG AS-CONNECTOR (31-PIN)	
	230-4013	1	PLUG AS-CONNECTOR (3-PIN)	
	455-0705	1	SEAL-CONNECTOR	
	274-3777	1	CAP-CONNECTOR	
	340-2567	10	WIRE AS (18-GA)	
	340-2566	42	PLUG-SEAL	

B - USE AS REQUIRED
E - ORDER BY THE CENTIMETER

<END>

415-2092 HARNESS AS-CAB–LH

S/N: R5A1-UP
PART OF 415-4252, 420-1160 WIRING GP-CAB
AN ATTACHMENT

SMCS-1408 **i06215433**

NOTE	PART NUMBER	QTY	PART NAME 1 2 3 4 5 6 (PRODUCT LEVEL)	SEE PAGE
Y	**415-2090**	1	HARNESS AS-CAB (FUSE BLOCK)	109
	275-7877	1	BLOCK AS-FUSE	
	1H-3244	2	LOCKWASHER	
M	**5C-2890**	2	NUT (M6X1-THD)	
	8T-4205	2	WASHER-HARD (7.2X14.5X2-MM THK)	
	306-0348	1	COVER-FUSE	
	306-0351	1	SEAL-COVER	

M - METRIC PART
Y - SEPARATE ILLUSTRATION

<END>

420-1159 HARNESS AS-CAB—REAR

S/N: R5A1-UP

PART OF 420-1160 WIRING GP-CAB

AN ATTACHMENT

SMCS-1408 **i06213244**

NOTE	PART NUMBER	QTY	PART NAME 1 2 3 4 5 6 (PRODUCT LEVEL)	SEE PAGE
	102-8801	1	KIT-RECEPTACLE (12-PIN)	
			(INCLUDES RECEPTACLE AS & WEDGE)	
	8T-8737	37	PLUG-SEAL	
	9X-1054	2	PLUG AS-CONNECTOR (4-PIN)	
	9X-1056	8	TERMINAL-RECEPTACLE (14-GA TO 16-GA)	
E	**125-7874**		TUBE-HEAT SHRINK (5.72-MM DIA) (25-CM)	
E	**125-7875**		TUBE-HEAT SHRINK (7.44-MM DIA) (10-CM)	
	9X-3402	17	SOCKET-CONNECTOR (16-GA TO 18-GA)	
			—OR—	
	126-1768	17	SOCKET-CONNECTOR (14-GA TO 16-GA)	
	2L-8069	2	TERMINAL-RING (2-GA TO 10-GA, 3/8-IN SCREW)	
	9X-3401	20	PIN-CONNECTOR (16-GA TO 18-GA)	
			—OR—	
	126-1767	20	PIN-CONNECTOR (14-GA TO 16-GA)	
	155-2255	2	KIT-CONNECTING PLUG (12-PIN)	
	155-2260	1	KIT-CONNECTING PLUG (3-PIN)	
	155-2270	2	KIT-CONNECTING PLUG (2-PIN)	
			(EACH PLUG KIT INCLUDES PLUG AS, WEDGE(S) & INTERFACE SEAL)	
B	**1P-0810**		TAPE-ELECTRICAL	
	167-3692	1	RECEPTACLE AS-CONNECTOR (31-PIN)	
	185-1860	8	SEAL-WIRE	
	185-1861	6	SEAL-WIRE	
	202-5397	6	PLUG	
	204-1297	8	TERMINAL AS-BLADE (18-GA TO 20-GA)	
			(EACH INCLUDES)	
	235-4123	1	TERMINAL (18-GA TO 20-GA)	
	245-7434	2	KIT-CONNECTING PLUG (10-PIN)	
			(EACH INCLUDES CONNECTOR PLUG, WIRE ASSEMBLIES & PLUGS)	
	274-3774	1	CAP-CONNECTOR	
	274-3779	1	CAP-SEAL	

B - USE AS REQUIRED
E - ORDER BY THE CENTIMETER

<END>

465-2811 HARNESS AS-CHASSIS

S/N: R5A1-UP

PART OF 394-4834 WIRING GP-CHASSIS

SMCS-1408 **i06532152**

NOTE	PART NUMBER	QTY	PART NAME 1 2 3 4 5 6 (PRODUCT LEVEL)	SEE PAGE
	102-8801	1	KIT-RECEPTACLE (12-PIN)	
			(INCLUDES RECEPTACLE AS & WEDGE)	
	8T-8737	2	PLUG-SEAL	
E	**125-7874**		TUBE-HEAT SHRINK (5.72-MM DIA) (5-CM)	
E	**125-7875**		TUBE-HEAT SHRINK (7.44-MM DIA) (5-CM)	
	9X-3402	16	SOCKET-CONNECTOR (16-GA TO 18-GA)	
			—OR—	
	126-1768	16	SOCKET-CONNECTOR (14-GA TO 16-GA)	
	9X-3401	10	PIN-CONNECTOR (16-GA TO 18-GA)	
			—OR—	
	126-1767	10	PIN-CONNECTOR (14-GA TO 16-GA)	
	155-2260	1	KIT-CONNECTING PLUG (3-PIN)	
	155-2270	5	KIT-CONNECTING PLUG (2-PIN)	
			(EACH PLUG KIT INCLUDES PLUG AS, WEDGE, & INTERFACE SEAL)	
	281-8803	1	PLUG AS-CONNECTOR (3-PIN)	
	455-0705	1	SEAL-CONNECTOR	

E - ORDER BY THE CENTIMETER

<END>

465-2789 HARNESS AS-CONTROL—PRODUCT LINK

S/N: R5A1-UP

PART OF 450-2736, 450-2737, 465-2815 INSTALLATION GP-COMMUNICATION

AN ATTACHMENT

SMCS-1408 **i06581630**

NOTE	PART NUMBER	QTY	PART NAME 1 2 3 4 5 6 (PRODUCT LEVEL)	SEE PAGE
	190-7614	1	KIT-RECEPTACLE (12-PIN)	
			(INCLUDES RECEPTACLE AS & WEDGE)	
	8T-8737	6	PLUG-SEAL	
	9X-3402	9	SOCKET-CONNECTOR (16-GA TO 18-GA)	
			—OR—	
	126-1768	9	SOCKET-CONNECTOR (14-GA TO 16-GA)	
	9X-3401	9	PIN-CONNECTOR (16-GA TO 18-GA)	
			—OR—	
	126-1767	9	PIN-CONNECTOR (14-GA TO 16-GA)	
	155-2256	1	KIT-CONNECTING PLUG (12-PIN)	
			(INCLUDES PLUG AS, WEDGE & INTERFACE SEAL)	

<END>

465-2806 HARNESS AS-CONTROL–PRODUCT LINK

S/N: R5A1-UP

PART OF 450-3389 INSTALLATION GP-COMMUNICATION

AN ATTACHMENT

SMCS-1408 **i06581638**

NOTE	PART NUMBER	QTY	PART NAME 1 2 3 4 5 6 (PRODUCT LEVEL)	SEE PAGE
	102-8804	1	KIT-RECEPTACLE (4-PIN)	
	190-7614	1	KIT-RECEPTACLE (12-PIN)	
			(EACH RECEPTACLE KIT INCLUDES RECEPTACLE AS & WEDGE)	
	3E-3377	1	WEDGE-RECEPTACLE LOCK (4-PIN)	
D	**5P-6001**		TUBE-HEAT SHRINK (4.75-MM DIA) (0.2-M)	
	8T-8737	63	PLUG-SEAL	
	9X-6772	2	STRAP-CABLE	
E	**125-7874**		TUBE-HEAT SHRINK (5.72-MM DIA) (20-CM)	
E	**125-7876**		TUBE-HEAT SHRINK (17.78-MM DIA) (20-CM)	
	9X-3402	47	SOCKET-CONNECTOR (16-GA TO 18-GA)	
			–OR–	
	126-1768	47	SOCKET-CONNECTOR (14-GA TO 16-GA)	
	126-1774	1	COVER-CONNECTOR	
	9X-3401	12	PIN-CONNECTOR (16-GA TO 18-GA)	
			–OR–	
	126-1767	12	PIN-CONNECTOR (14-GA TO 16-GA)	
	147-1445	1	PLUG AS-CONNECTOR (70-PIN)	
	159-9322	1	SEAL-O-RING	
	155-2255	1	KIT-CONNECTING PLUG (12-PIN)	
	155-2256	2	KIT-CONNECTING PLUG (12-PIN)	
			(EACH PLUG KIT INCLUDES PLUG AS, WEDGE & INTERFACE SEAL)	
	155-2258	3	WEDGE-PLUG LOCK (12-PIN)	

D - ORDER BY THE METER
E - ORDER BY THE CENTIMETER

<END>

387-1410 HARNESS AS-DASH

S/N: R5A1-UP

PART OF 387-5701 AIR CONDITIONER & MOUNTING GP, 375-7911 HEATER & MTG GP-CAB AN ATTACHMENT

SMCS-1408 **i05898398**

NOTE	PART NUMBER	QTY	PART NAME 1 2 3 4 5 6 (PRODUCT LEVEL)	SEE PAGE
	6T-6505	2	HOUSING-RECEPTACLE (BLADE, POSITIVE LOCK)	
	155-2270	1	KIT-CONNECTING PLUG (2-PIN)	
			(INCLUDES PLUG AS, WEDGE & INTERFACE SEAL)	
	102-8805	1	KIT-RECEPTACLE (6-PIN)	
			(INCLUDES RECEPTACLE AS & WEDGE)	
	9W-0852	6	PIN-CONNECTOR (14-GA TO 16-GA)	
	9W-0844	2	SOCKET-CONNECTOR (14-GA TO 16-GA)	
	6T-6506	2	TERMINAL-BLADE (14-GA TO 18-GA)	
	065-5071	3	TERMINAL-BLADE (14-GA TO 16-GA)	
	5P-4571	1	TERMINAL-BLADE (14-GA TO 16-GA)	
E	**125-7874**		TUBE-HEAT SHRINK (5.72-MM DIA) (10-CM)	
	3E-3383	1	WEDGE-RECEPTACLE LOCK (6-PIN)	

E - ORDER BY THE CENTIMETER

<END>

385-5997 HARNESS AS-ENGINE

S/N: E7A1-UP

PART OF 395-0113 WIRING GP-ENGINE

SMCS-1408 **i06567561**

NOTE	PART NUMBER	QTY	PART NAME 1 2 3 4 5 6 (PRODUCT LEVEL)	SEE PAGE
	377-6932	1	COVER	
E	**292-2896**		CONDUIT (45-CM)	
	155-2271	3	KIT-CONNECTING PLUG (4-PIN)	
			(INCLUDES PLUG AS, WEDGE & INTERFACE SEAL)	
	245-1044	2	LOCK-CONNECTOR	
	316-9351	7	MOUNTING-CABLE TIE	
	230-4011	2	PLUG AS-CONNECTOR (2-PIN)	
			(EACH INCLUDES)	
	264-7029	1	SEAL-CONNECTOR	
	238-8245	1	PLUG AS-CONNECTOR (2-PIN)	
	264-7029	1	SEAL-CONNECTOR	
	238-8247	2	PLUG AS-CONNECTOR (2-PIN)	
			(EACH INCLUDES)	
	264-7029	1	SEAL-CONNECTOR	
	245-1043	1	PLUG AS-CONNECTOR (64-PIN)	
M	**267-7207**	1	BOLT-SPECIAL (M6X1-THD)	
	281-8804	2	PLUG AS-CONNECTOR (3-PIN)	
			(EACH INCLUDES)	
	264-7030	1	SEAL-CONNECTOR	
	245-1048	33	PLUG-CONNECTOR (1-PIN)	
	185-1860	5	SEAL-WIRE	
	267-9572	31	SOCKET-CONNECTION (18-GA)	
	9X-3402	16	SOCKET-CONNECTOR (16-GA TO 18-GA)	
			—OR—	
	126-1768	16	SOCKET-CONNECTOR (14-GA TO 16-GA)	
	217-9039	6	STRAP-CABLE	
	356-1219	1	STRAP-CABLE	
	206-1345	14	RETAINER AS	
E	**125-7874**		TUBE-HEAT SHRINK (5.72-MM DIA) (10-CM)	
	194-5226	12	WIRE AS (16-GA)	
			—OR—	
	194-5227	12	WIRE AS (14-GA)	

E - ORDER BY THE CENTIMETER
M - METRIC PART

<END>

465-2808 HARNESS AS-ENGINE

S/N: R5A1-UP

PART OF 394-4835 WIRING GP-ENGINE

SMCS-1408 **i06556295**

NOTE	PART NUMBER	QTY	PART NAME 1 2 3 4 5 6 (PRODUCT LEVEL)	SEE PAGE
	245-1045	1	COVER	
	155-2255	1	KIT-CONNECTING PLUG (12-PIN)	
	155-2270	6	KIT-CONNECTING PLUG (2-PIN)	
	155-2271	1	KIT-CONNECTING PLUG (4-PIN)	
	174-0503	1	KIT-CONNECTING PLUG (3-PIN)	
			(EACH INCLUDES PLUG AS, WEDGE, & INTERFACE SEAL)	
	102-8802	1	KIT-RECEPTACLE (2-PIN)	
			(INCLUDES RECEPTACLE AS & WEDGE)	
	245-1044	2	LOCK-CONNECTOR	
	9X-3401	2	PIN-CONNECTOR (16-GA TO 18-GA)	
			—OR—	
	126-1767	2	PIN-CONNECTOR (14-GA TO 16-GA)	
	167-3693	1	PLUG AS-CONNECTOR (31-PIN)	
	230-4011	2	PLUG AS-CONNECTOR (2-PIN)	
			(EACH INCLUDES)	
	455-0704	1	SEAL-CONNECTOR	
	245-1042	1	PLUG AS-CONNECTOR (64-PIN)	
M	**267-7207**	1	BOLT-SPECIAL (M6X1-THD)	
	267-7208	1	RING-RETAINING	
	274-4990	1	SEAL	
	245-1048	42	PLUG-CONNECTOR (1-PIN)	
	8T-8737	11	PLUG-SEAL	
	134-2540	1	RESISTOR AS-CONNECTION (3-PIN)	
	267-9572	22	SOCKET-CONNECTION (18-GA)	
	9X-3402	55	SOCKET-CONNECTOR (16-GA TO 18-GA)	
			—OR—	
	126-1768	55	SOCKET-CONNECTOR (14-GA TO 16-GA)	
	7K-1181	1	STRAP-CABLE	
	189-3158	1	SUPPRESSOR-ARC	
	2L-8079	1	TERMINAL-RING (14-GA TO 16-GA, 3/8-IN SCREW)	
	7N-9017	1	TERMINAL-RING (18-GA TO 22-GA, NO. 10 SCREW)	
	125-7874	40	TUBE-HEAT SHRINK (5.72-MM DIA)	
	155-2258	1	WEDGE-PLUG LOCK (12-PIN)	

M - METRIC PART

<END>

465-2812 HARNESS AS-FRONT

S/N: R5A1-UP
PART OF 465-2809 WIRING GP-CHASSIS
AN ATTACHMENT

SMCS-1408 **i06534182**

NOTE	PART NUMBER	QTY	PART NAME 1 2 3 4 5 6 (PRODUCT LEVEL)	SEE PAGE
	102-8802	1	KIT-RECEPTACLE (2-PIN)	
	102-8805	1	KIT-RECEPTACLE (6-PIN)	
	102-8806	1	KIT-RECEPTACLE (8-PIN)	
			(EACH RECEPTACLE KIT INCLUDES RECEPTACLE AS & WEDGE)	
	7K-1181	1	STRAP-CABLE	
	8T-8737	2	PLUG-SEAL	
E	**125-7874**		TUBE-HEAT SHRINK (5.72-MM DIA) (10-CM)	
	9X-3402	12	SOCKET-CONNECTOR (16-GA TO 18-GA)	
			—OR—	
	126-1768	12	SOCKET-CONNECTOR (14-GA TO 16-GA)	
	9X-3401	18	PIN-CONNECTOR (16-GA TO 18-GA)	
			—OR—	
	126-1767	18	PIN-CONNECTOR (14-GA TO 16-GA)	
	155-2270	5	KIT-CONNECTING PLUG (2-PIN)	
			(EACH INCLUDES PLUG AS, WEDGE, & INTERFACE SEAL)	
	230-4012	1	RECEPTACLE AS-CONNECTOR (2-PIN)	
	230-5008	1	PLUG AS-CONNECTOR (4-PIN)	
	455-0706	1	SEAL-CONNECTOR	
	361-6052	1	RESISTOR AS	
	102-8802	1	KIT-RECEPTACLE (2-PIN)	
			(INCLUDES RECEPTACLE AS & WEDGE)	
	8T-8729	2	PIN-CONNECTOR (16-GA TO 18-GA)	

E - ORDER BY THE CENTIMETER

<END>

245-5891 HARNESS AS-HEATER & AIR COND

S/N: R5A1-UP
PART OF 394-6377 CONDENSER GP-REFRIGERANT
AN ATTACHMENT

SMCS-1408 **i05903365**

NOTE	PART NUMBER	QTY	PART NAME 1 2 3 4 5 6 (PRODUCT LEVEL)	SEE PAGE
	155-2270	2	KIT-CONNECTING PLUG (2-PIN)	
			(EACH INCLUDES PLUG AS, WEDGE & INTERFACE SEAL)	
	102-8805	1	KIT-RECEPTACLE (6-PIN)	
			(INCLUDES RECEPTACLE AS & WEDGE)	
	9W-0852	5	PIN-CONNECTOR (14-GA TO 16-GA)	
	9X-1054	2	PLUG AS-CONNECTOR (4-PIN)	
	9G-3695	1	PLUG-SEAL	
	9W-0844	4	SOCKET-CONNECTOR (14-GA TO 16-GA)	
	9X-1056	8	TERMINAL-RECEPTACLE (14-GA TO 16-GA)	
E	**119-3662**		TUBE-HEAT SHRINK (10.85-MM DIA) (20-CM)	

E - ORDER BY THE CENTIMETER

<END>

385-7302 HARNESS AS-LIGHTING—CYLINDER

S/N: R5A1-UP

PART OF 423-1040, 423-1041, 423-1042, 423-1043, 430-4098 LIGHTING GP-FLOOD AN ATTACHMENT

SMCS-1408 **i06581641**

NOTE	PART NUMBER	QTY	PART NAME 1 2 3 4 5 6 (PRODUCT LEVEL)	SEE PAGE
	155-2270	1	KIT-CONNECTING PLUG (2-PIN)	
			(INCLUDES PLUG AS, WEDGE, & INTERFACE SEAL)	
	102-8802	1	KIT-RECEPTACLE (2-PIN)	
			(INCLUDES RECEPTACLE AS & WEDGE)	
	126-1767	2	PIN-CONNECTOR (14-GA TO 16-GA)	
E	**114-8843**		SLEEVE-PLASTIC (40-CM)	
	126-1768	2	SOCKET-CONNECTOR (14-GA TO 16-GA)	

E - ORDER BY THE CENTIMETER

<END>

420-1156 HARNESS AS-LIGHTING—CANOPY

S/N: R5A1-UP

PART OF 423-1040 LIGHTING GP-FLOOD AN ATTACHMENT

SMCS-1408 **i06581648**

NOTE	PART NUMBER	QTY	PART NAME 1 2 3 4 5 6 (PRODUCT LEVEL)	SEE PAGE
	274-3774	3	CAP-CONNECTOR	
	155-2255	1	KIT-CONNECTING PLUG (12-PIN)	
	155-2270	7	KIT-CONNECTING PLUG (2-PIN)	
			(EACH PLUG KIT INCLUDES PLUG AS, WEDGE & INTERFACE SEAL)	
	8T-8737	7	PLUG-SEAL	
	8T-8730	15	SOCKET-CONNECTOR (16-GA TO 18-GA)	
	9W-0844	4	SOCKET-CONNECTOR (14-GA TO 16-GA)	
E	**125-7874**		TUBE-HEAT SHRINK (5.72-MM DIA) (5-CM)	
E	**125-7875**		TUBE-HEAT SHRINK (7.44-MM DIA) (15-CM)	
	155-2258	1	WEDGE-PLUG LOCK (12-PIN)	

E - ORDER BY THE CENTIMETER

<END>

430-4096 HARNESS AS-LIGHTING—CYLINDER

S/N: R5A1-UP
PART OF 430-4099 LIGHTING GP-FLOOD
AN ATTACHMENT

SMCS-1408 **i06581662**

NOTE	PART NUMBER	QTY	PART NAME 1 2 3 4 5 6 (PRODUCT LEVEL)	SEE PAGE
	155-2270	2	KIT-CONNECTING PLUG (2-PIN)	
			(EACH INCLUDES PLUG AS, WEDGE, & INTERFACE SEAL)	
	102-8802	1	KIT-RECEPTACLE (2-PIN)	
			(INCLUDES RECEPTACLE AS & WEDGE)	
	126-1767	2	PIN-CONNECTOR (14-GA TO 16-GA)	
	126-1768	4	SOCKET-CONNECTOR (14-GA TO 16-GA)	
E	**125-7874**		TUBE-HEAT SHRINK (5.72-MM DIA) (10-CM)	

E - ORDER BY THE CENTIMETER

<END>

430-4097 HARNESS AS-LIGHTING

S/N: R5A1-UP
CAB FLOODLIGHT
PART OF 423-1041, 430-4098 LIGHTING GP-FLOOD
AN ATTACHMENT

SMCS-1408 **i06220778**

NOTE	PART NUMBER	QTY	PART NAME 1 2 3 4 5 6 (PRODUCT LEVEL)	SEE PAGE
	8T-8737	3	PLUG-SEAL	
E	**125-7874**		TUBE-HEAT SHRINK (5.72-MM DIA) (15-CM)	
E	**125-7875**		TUBE-HEAT SHRINK (7.44-MM DIA) (5-CM)	
	9X-3402	25	SOCKET-CONNECTOR (16-GA TO 18-GA)	
			—OR—	
	126-1768	25	SOCKET-CONNECTOR (14-GA TO 16-GA)	
	155-2255	1	KIT-CONNECTING PLUG (12-PIN)	
	155-2270	5	KIT-CONNECTING PLUG (2-PIN)	
	155-2274	1	KIT-CONNECTING PLUG (6-PIN)	
			(EACH KIT INCLUDES PLUG AS, WEDGE & INTERFACE SEAL)	
	374-7463	1	CAP-SEAL	
	374-7466	1	CAP-SEAL	

E - ORDER BY THE CENTIMETER

<END>

448-2114 HARNESS AS-LIGHTING—CAB, REAR

S/N: R5A1-UP
PART OF 423-1042 LIGHTING GP-FLOOD
AN ATTACHMENT

SMCS-1408 **i06581666**

NOTE	PART NUMBER	QTY	PART NAME 1 2 3 4 5 6 (PRODUCT LEVEL)	SEE PAGE
	8T-8737	4	PLUG-SEAL	
E	**125-7874**		TUBE-HEAT SHRINK (5.72-MM DIA) (10-CM)	
	9X-3402	20	SOCKET-CONNECTOR (16-GA TO 18-GA)	
			—OR—	
	126-1768	20	SOCKET-CONNECTOR (14-GA TO 16-GA)	
	155-2258	1	WEDGE-PLUG LOCK (12-PIN)	
	155-2270	3	KIT-CONNECTING PLUG (2-PIN)	
	155-2274	1	KIT-CONNECTING PLUG (6-PIN)	
	155-2255	1	KIT-CONNECTING PLUG (12-PIN)	
			(EACH PLUG KIT INCLUDES PLUG AS, WEDGE & INTERFACE SEAL)	
	274-3774	1	CAP-CONNECTOR	
	274-3777	1	CAP-CONNECTOR	

E - ORDER BY THE CENTIMETER

<END>

399-7895 HARNESS AS-PLATFORM

S/N: R5A1-UP
PART OF 375-0350 AIR CONDITIONER GP
AN ATTACHMENT

SMCS-1408 **i05901424**

NOTE	PART NUMBER	QTY	PART NAME 1 2 3 4 5 6 (PRODUCT LEVEL)	SEE PAGE
	2V-8260	1	GROMMET	
	155-2270	1	KIT-CONNECTING PLUG (2-PIN)	
			(INCLUDES PLUG AS, WEDGE & INTERFACE SEAL)	
	102-8802	1	KIT-RECEPTACLE (2-PIN)	
			(INCLUDES RECEPTACLE AS & WEDGE)	
	9W-0852	2	PIN-CONNECTOR (14-GA TO 16-GA)	
	9W-0844	2	SOCKET-CONNECTOR (14-GA TO 16-GA)	

<END>

398-4445 HARNESS AS-REAR LIGHTING

S/N: R5A1-UP
PART OF 430-4099, 488-2521 LIGHTING GP-FLOOD
AN ATTACHMENT

SMCS-1408 **i06193835**

NOTE	PART NUMBER	QTY	PART NAME 1 2 3 4 5 6 (PRODUCT LEVEL)	SEE PAGE
	274-3774	1	CAP-CONNECTOR	
	274-3777	1	CAP-CONNECTOR	
	155-2270	3	KIT-CONNECTING PLUG (2-PIN)	
	155-2274	1	KIT-CONNECTING PLUG (6-PIN)	
	155-2255	1	KIT-CONNECTING PLUG (12-PIN)	
			(EACH PLUG KIT INCLUDES PLUG AS, WEDGE & INTERFACE SEAL)	
	102-8804	1	KIT-RECEPTACLE (4-PIN)	
			(INCLUDES RECEPTACLE AS & WEDGE)	
	8T-8729	4	PIN-CONNECTOR (16-GA TO 18-GA)	
	8T-8737	3	PLUG-SEAL	
	8T-8730	9	SOCKET-CONNECTOR (16-GA TO 18-GA)	
	9W-0844	12	SOCKET-CONNECTOR (14-GA TO 16-GA)	
E	**125-7874**		TUBE-HEAT SHRINK (5.72-MM DIA) (15-CM)	
E	**125-7875**		TUBE-HEAT SHRINK (7.44-MM DIA) (5-CM)	
	155-2258	1	WEDGE-PLUG LOCK (12-PIN)	
	3E-3377	1	WEDGE-RECEPTACLE LOCK (4-PIN)	

E - ORDER BY THE CENTIMETER

<END>

420-1157 HARNESS AS-REAR LIGHTING

S/N: R5A1-UP
PART OF 423-1043 LIGHTING GP-FLOOD
AN ATTACHMENT

SMCS-1408 **i06193772**

NOTE	PART NUMBER	QTY	PART NAME 1 2 3 4 5 6 (PRODUCT LEVEL)	SEE PAGE
	274-3774	1	CAP-CONNECTOR	
	155-2255	1	KIT-CONNECTING PLUG (12-PIN)	
	155-2270	3	KIT-CONNECTING PLUG (2-PIN)	
			(EACH PLUG KIT INCLUDES PLUG AS, WEDGE & INTERFACE SEAL)	
	8T-8737	8	PLUG-SEAL	
	8T-8730	6	SOCKET-CONNECTOR (16-GA TO 18-GA)	
	9W-0844	4	SOCKET-CONNECTOR (14-GA TO 16-GA)	
B	**125-7874**		TUBE-HEAT SHRINK (5.72-MM DIA) (10-CM)	
	155-2258	1	WEDGE-PLUG LOCK (12-PIN)	

B - USE AS REQUIRED

<END>

391-6256 HARNESS AS-SENSOR

S/N: R5A1-UP
PART OF 415-4252, 420-1160 WIRING GP-CAB
AN ATTACHMENT

SMCS-1408 **i06210630**

NOTE	PART NUMBER	QTY	PART NAME 1 2 3 4 5 6 (PRODUCT LEVEL)	SEE PAGE
	8T-8737	13	PLUG-SEAL	
E	**125-7874**		TUBE-HEAT SHRINK (5.72-MM DIA) (10-CM)	
	9X-3402	26	SOCKET-CONNECTOR (16-GA TO 18-GA)	
			—OR—	
	126-1768	26	SOCKET-CONNECTOR (14-GA TO 16-GA)	
	9X-3401	22	PIN-CONNECTOR (16-GA TO 18-GA)	
			—OR—	
	126-1767	22	PIN-CONNECTOR (14-GA TO 16-GA)	
	155-2259	1	WEDGE-PLUG LOCK (8-PIN)	
	155-2265	1	KIT-CONNECTING PLUG (8-PIN)	
	155-2271	1	KIT-CONNECTING PLUG (4-PIN)	
	155-2274	3	KIT-CONNECTING PLUG (6-PIN)	
			(EACH PLUG KIT INCLUDES PLUG AS, WEDGE & INTERFACE SEAL)	
	167-3692	1	RECEPTACLE AS-CONNECTOR (31-PIN)	

E - ORDER BY THE CENTIMETER

<END>

398-4481 HARNESS AS-TRANSMISSION

S/N: R5A1-UP
PART OF 394-4834 WIRING GP-CHASSIS

SMCS-1408, 3030 **i06518737**

NOTE	PART NUMBER	QTY	PART NAME 1 2 3 4 5 6 (PRODUCT LEVEL)	SEE PAGE
	8T-8737	1	PLUG-SEAL	
	9X-3402	11	SOCKET-CONNECTOR (16-GA TO 18-GA)	
			—OR—	
	126-1768	11	SOCKET-CONNECTOR (14-GA TO 16-GA)	
	154-3172	1	PLUG AS (14-PIN)	
	155-2255	1	KIT-CONNECTING PLUG (12-PIN)	
			(INCLUDES PLUG AS, WEDGE, & INTERFACE SEAL)	

<END>

465-2810 HARNESS AS-VALVE

S/N: R5A1-UP
PART OF 465-2809 WIRING GP-CHASSIS
AN ATTACHMENT

SMCS-1408 **i06534188**

NOTE	PART NUMBER	QTY	PART NAME 1 2 3 4 5 6 (PRODUCT LEVEL)	SEE PAGE
	102-8801	1	KIT-RECEPTACLE (12-PIN)	
			(INCLUDES RECEPTACLE AS & WEDGE)	
	8T-8737	2	PLUG-SEAL	
	9X-3402	10	SOCKET-CONNECTOR (16-GA TO 18-GA)	
			—OR—	
	126-1768	10	SOCKET-CONNECTOR (14-GA TO 16-GA)	
	9X-3401	10	PIN-CONNECTOR (16-GA TO 18-GA)	
			—OR—	
	126-1767	10	PIN-CONNECTOR (14-GA TO 16-GA)	
	155-2270	3	KIT-CONNECTING PLUG (2-PIN)	
			(EACH INCLUDES PLUG AS, WEDGE, & INTERFACE SEAL)	
	230-4011	2	PLUG AS-CONNECTOR (2-PIN)	
			(EACH INCLUDES)	
	455-0704	1	SEAL-CONNECTOR	

<END>

389-3056 HARNESS AS-WIRING—WINDOW WASHER

S/N: R5A1-UP
PART OF 375-7927 TANK GP-WINDOW WASHER
AN ATTACHMENT

SMCS-1408 **i06581759**

NOTE	PART NUMBER	QTY	PART NAME 1 2 3 4 5 6 (PRODUCT LEVEL)	SEE PAGE
	102-8805	1	KIT-RECEPTACLE (6-PIN)	
			(INCLUDES RECEPTACLE AS & WEDGE)	
	8T-8729	5	PIN-CONNECTOR (16-GA TO 18-GA)	
	8T-8737	1	PLUG-SEAL	
	9X-0194	4	TERMINAL AS	
	5P-4571	8	TERMINAL-BLADE (14-GA TO 16-GA)	
E	**125-7875**		TUBE-HEAT SHRINK (7.44-MM DIA) (5-CM)	
	3E-3383	1	WEDGE-RECEPTACLE LOCK (6-PIN)	

E - ORDER BY THE CENTIMETER

<END>

390-6814 HARNESS AS-WIRING—SEAT

S/N: R5A1-UP

PART OF 391-4061 SEAT & MOUNTING GP

AN ATTACHMENT

SMCS-1408 **i05906458**

NOTE	PART NUMBER	QTY	PART NAME 1 2 3 4 5 6 (PRODUCT LEVEL)	SEE PAGE
	155-2270	1	KIT-CONNECTING PLUG (2-PIN)	
	155-2271	1	KIT-CONNECTING PLUG (4-PIN)	
			(EACH PLUG KIT INCLUDES PLUG AS, WEDGE & INTERFACE SEAL)	
	8T-8737	2	PLUG-SEAL	
	9W-0844	4	SOCKET-CONNECTOR (14-GA TO 16-GA)	

<END>

422-7024 HEATER GP-FUEL

S/N: R5A1-UP

AN ATTACHMENT

SMCS-1296 **i06580425**

NOTE	REF NO	GRAPHIC REF	PART NUMBER	QTY	PART NAME 1 2 3 4 5 6 (PRODUCT LEVEL)	SEE PAGE
	1	1	**246-2641**	1	PADLOCK GP	
		1	**5P-8500**	1	KEY	
M	2	2	**6I-0293**	1	BOLT (M8X1.25X80-MM)	
	3	1	**8T-0119**	2	ELBOW	
	4	1	**8T-6724**	1	VALVE-BALL	
	5	2	**126-9093**	1	SEAL	
	6	1	**156-2525**	1	VALVE-SHUTOFF	
	7	1	**184-9114**	2	ELBOW	
	8	1	**203-3847**	1	BRACKET AS	
M		1	**171-2419**	1	STUD-WELD (M10X1.5X35-MM)	
	9	1	**224-9772**	1	HEATER AS-FUEL	
	10	1,2	**290-5562**	3	MOUNT (DUAL SWIVEL)	
	11	1	*332-8591*	1	ELBOW AS	
		1	**9X-3982**	1	ELBOW	
		1	**238-5080**	1	SEAL-O-RING	
	12	2	**376-9967**	1	CONNECTION-FUEL	
	13	2	**422-7025**	1	BRACKET AS	
M		2	**8T-3490**	2	NUT-WELD (M10X1.5-THD)	
	14	1	**426-2470**	1	BRACKET AS	
M		1	**6V-9632**	4	NUT-WELD (M6X1-THD)	
M		1	**8T-3490**	1	NUT-WELD (M10X1.5-THD)	
	15	1	**430-8498**	1	HOSE AS	
	16	1	**430-8502**	1	HOSE AS	
	17	1	**430-8503**	1	HOSE AS	
Y	18	2	**438-7763**	1	FILTER GP-FUEL	69
	19	2	*442-1579*	1	FITTING AS	
		2	**126-9093**	1	SEAL	
		2	**439-1840**	1	FITTING	
	20	2	**455-1270**	1	HOSE AS	
	21	1	*459-0572*	1	CONNECTOR AS	
		1	**238-5080**	1	SEAL-O-RING	
		1	**422-7026**	1	CONNECTOR	
M	22	1	**136-4192**	2	BOLT (M6X1X35-MM)	
	23	2	**197-4566**	1	BRACKET AS	
	24	2	**1P-4278**	2	CLAMP-HOSE	
	25	1	**238-5080**	5	SEAL-O-RING	
	26	1	**238-5081**	2	SEAL-O-RING	
	27	1	**262-0494**	1	CLAMP	
	28	1	**302-3908**	3	SPACER (11X20X30-MM THK)	
M	29	1	**344-5675**	1	NUT (M10X1.5-THD)	
	30	1	**4D-7733**	2	CLIP	
	31	2	**4S-1962**	2	CLIP	
	32	1	**5P-4295**	1	CLIP	
	33	1	**5P-4961**	3	CLAMP-HOSE	
	34	1	**6V-4292**	1	ELBOW	
	35	1,2	**7K-1181**	7	STRAP-CABLE	
M	36	1	**7X-2545**	3	BOLT (M10X1.5X150-MM)	
M	37	1	**7X-2548**	1	BOLT (M12X1.75X16-MM)	

422-7024 **HEATER GP-FUEL (**contd.**)** **i06580425**

NOTE	REF NO	GRAPHIC REF	PART NUMBER	QTY	PART NAME 1 2 3 4 5 6 (PRODUCT LEVEL)	SEE PAGE
	38	1,2	**8M-2773**	8	CLIP	
M	39	1	**8T-0269**	2	BOLT-SOCKET HEAD (M6X1X20-MM)	
	40	1,2	**8T-4121**	16	WASHER-HARD (11X21X2.5-MM THK)	
M	41	2	**8T-4136**	1	BOLT (M10X1.5X25-MM)	
M	42	1	**8T-4137**	4	BOLT (M10X1.5X20-MM)	
M	43	2	**8T-4186**	2	BOLT (M10X1.5X40-MM)	
M	44	2	**8T-4195**	4	BOLT (M10X1.5X30-MM)	
	45	1	**8T-4205**	4	WASHER-HARD (7.2X14.5X2-MM THK)	
	46	1	**8T-4223**	1	WASHER-HARD (13.5X25.5X3-MM THK)	
D	47	2	**5P-5991**		HOSE (0.7-M)	
D	47A	2	**5P-5991**		HOSE (0.3-M)	
D	47B	2	**5P-5991**		HOSE (0.4-M)	
G	48	1	**423-1983**		HOSE (18-IN)	

D - ORDER BY THE METER
G - ORDER BY THE INCH
M - METRIC PART
Y - SEPARATE ILLUSTRATION

422-7024 **HEATER GP-FUEL (**contd.**)** **i06580425**

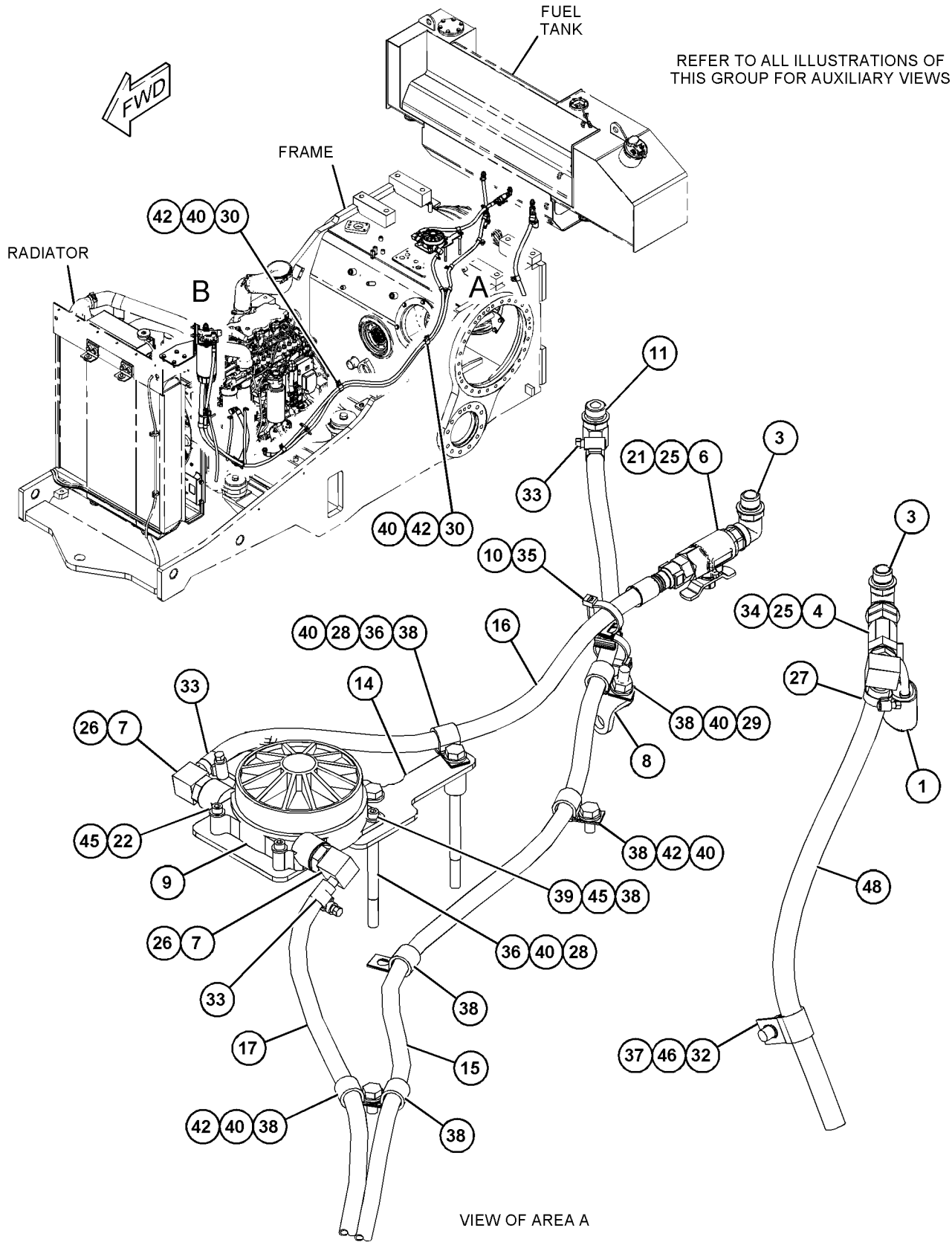

GRAPHIC #1 g06024140

422-7024 **HEATER GP-FUEL (**contd.**)** **i06580425**

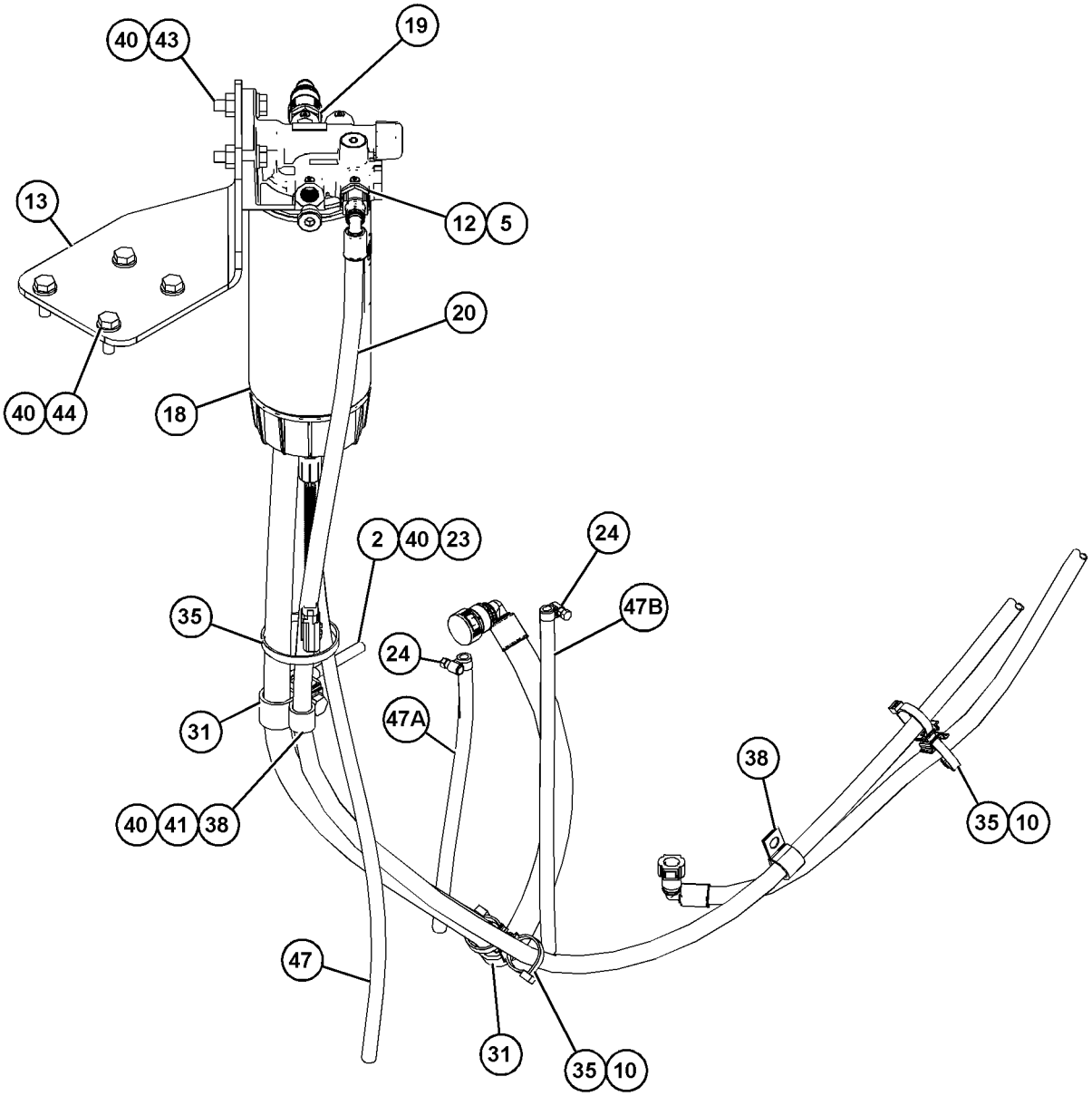

VIEW OF AREA B

GRAPHIC #2 <END> g06024142

423-1039 HEATER GP-JACKET WATER

S/N: R5A1-UP
240-VOLT, 1000-WATT
AN ATTACHMENT

SMCS-1383 **i06524141**

NOTE	REF NO	GRAPHIC REF	PART NUMBER	QTY	PART NAME 1 2 3 4 5 6 (PRODUCT LEVEL)	SEE PAGE
	1	1	**7K-1181**	8	STRAP-CABLE	
	2	1	**214-9389**	1	FILM-IDENTIFICATION (WATER HEATER)	
	3	1	**260-1556**	1	ELEMENT AS-JACKET WATER HEATER (240-VOLT, 1000-WATT)	
		1	**3D-2824**	1	SEAL-O-RING	
	4	1	**8T-4224**	1	WASHER-HARD (8.8X16X2-MM THK)	
	5	1	**424-6097**	1	FILM-WARNING (SHOCK, ELECTROCUTION HAZARD)	
	6	1	**430-4103**	1	BRACKET AS	
	7	1	**454-7920**	1	CORD AS	
	8	1	**8T-4121**	1	WASHER-HARD (11X21X2.5-MM THK)	
M	9	1	**8T-4137**	1	BOLT (M10X1.5X20-MM)	
M	10	1	**8T-4200**	1	BOLT (M8X1.25X16-MM)	
	11	1	**331-3966**	1	BRACKET	

M - METRIC PART

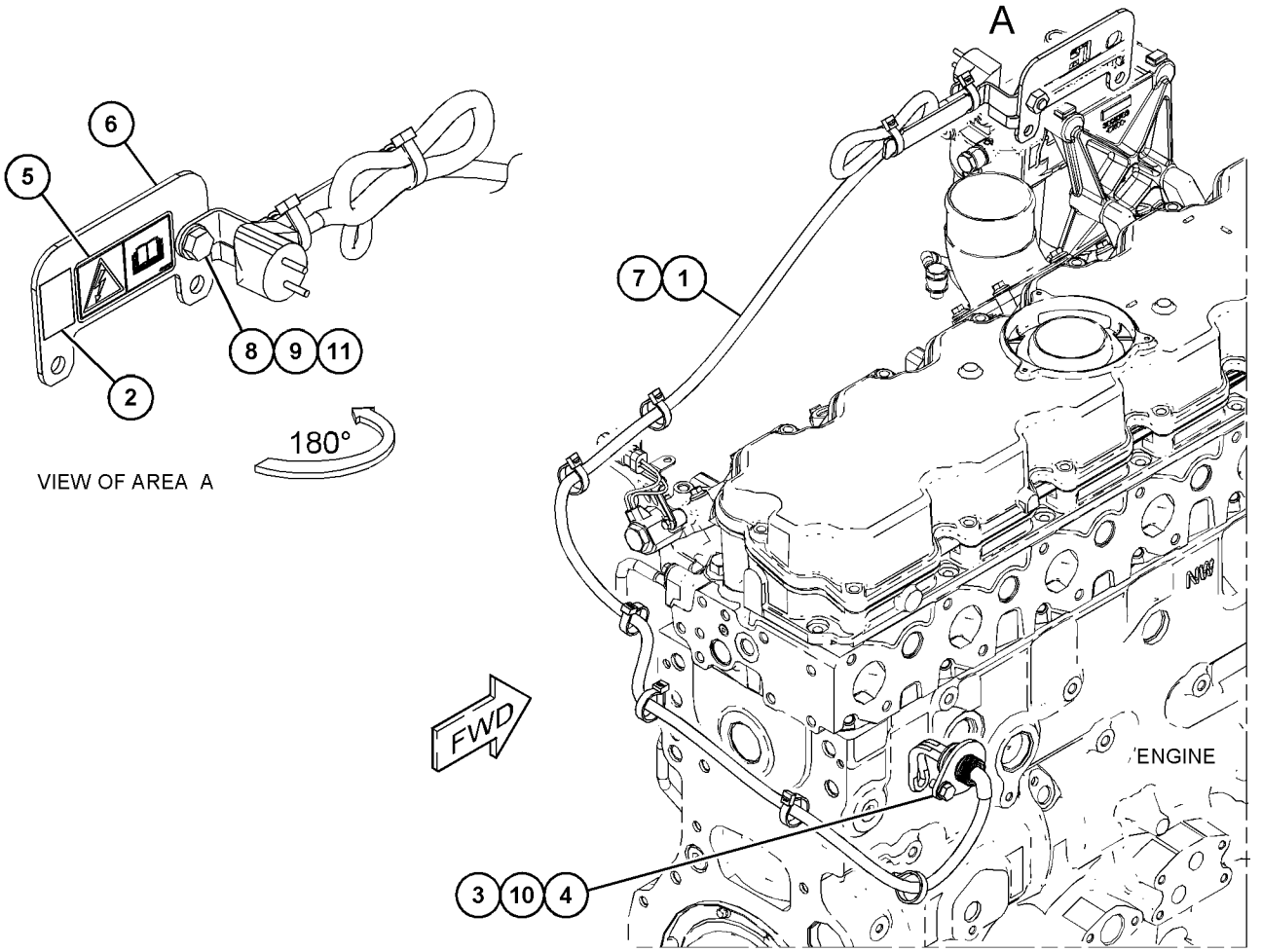

GRAPHIC #1 <END> g06022960

450-2736 INSTALLATION GP-COMMUNICATION–PL631 SATELLITE

S/N: R5A1-UP

AN ATTACHMENT

SMCS-7606 **i06219397**

NOTE	REF NO	GRAPHIC REF	PART NUMBER	QTY	PART NAME 1 2 3 4 5 6 (PRODUCT LEVEL)	SEE PAGE
	1	1	**7K-1181**	9	STRAP-CABLE	
	2	1	**8T-8737**	8	PLUG-SEAL	
	3	1	**230-1341**	1	FILM-WARNING (PRODUCT LINK RADIO, INTL)	
	4	1	**307-0047**	1	FILM-INFORMATION (PRODUCT LINK, READ OMM)	
B	5	2	**8K-1433**	1	GROMMET	
Y	6	1	**442-7199**	1	RADIO GP-COMMUNICATION (PL631 SATELLITE)	164
	7	1	**443-8462**	1	ANTENNA AS (CELLULAR) (CELLULAR)	
	7A	1	**385-8201**	1	CAP AS-CONNECTOR	
	7B	1	**361-1045**	1	NUT-SPECIAL (5/8-18-THD)	
	8	1	**450-2733**	1	CABLE AS	
E		1	**135-5009**		TUBE-HEAT SHRINK (32-MM DIA) (24-CM)	
E		1	**232-0897**		CONDUIT-FLEXIBLE (16.2-MM ID) (90-CM)	
Y	9	1	**465-2789**	1	HARNESS AS-CONTROL	113
	10	1	**155-2265**	1	KIT-CONNECTING PLUG (8-PIN)	
					(INCLUDES PLUG AS, WEDGE & INTERFACE SEAL)	
M	11	1	**8T-4138**	4	BOLT (M6X1X20-MM)	
	12	1	**9X-8256**	4	WASHER (6.6X12X2-MM THK)	

B - USE AS REQUIRED
E - ORDER BY THE CENTIMETER
M - METRIC PART
Y - SEPARATE ILLUSTRATION

450-2736 **INSTALLATION GP-COMMUNICATION (**contd.**)** **i06219397**

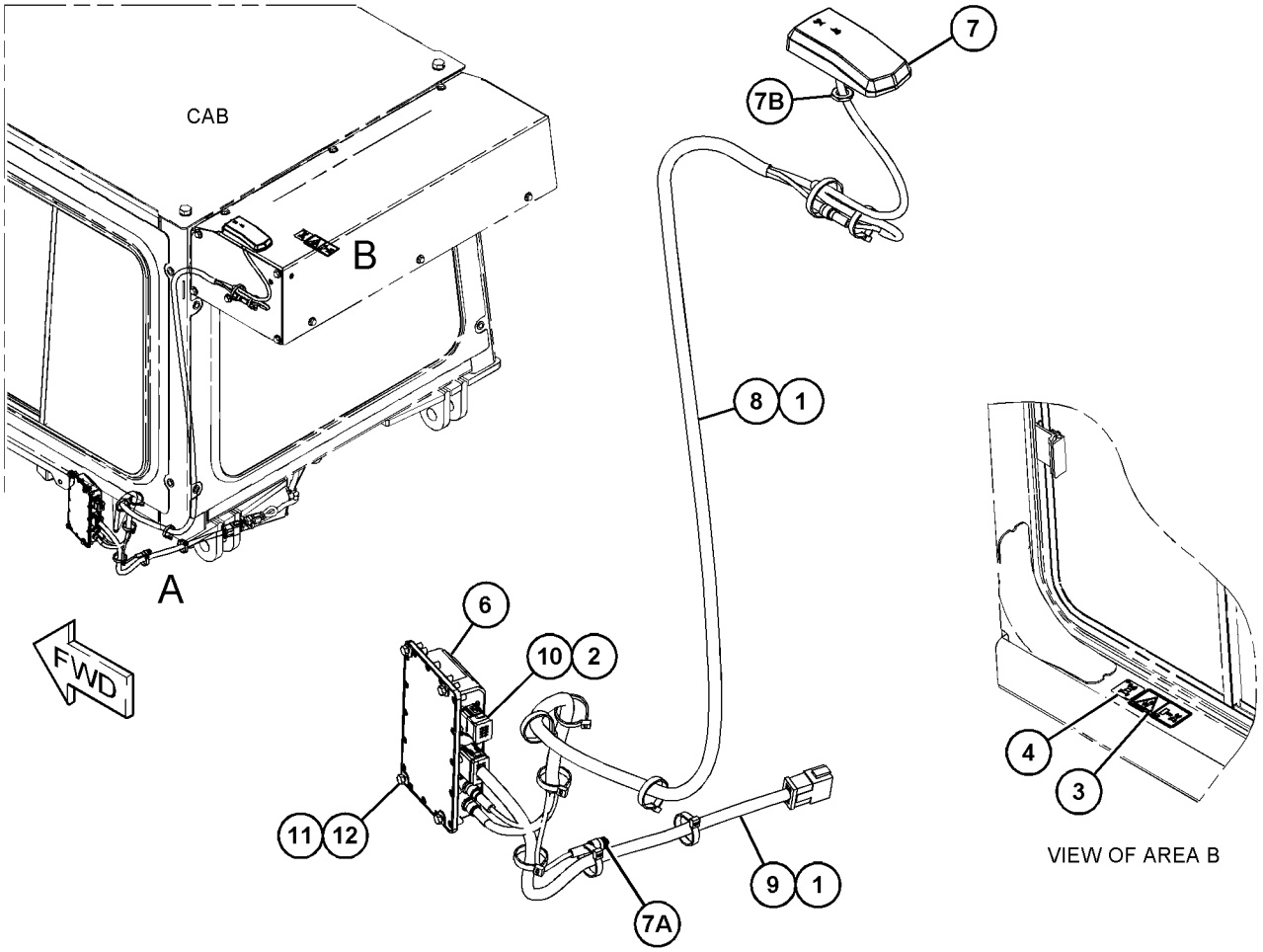

GRAPHIC #1 g03862670

450-2736 **INSTALLATION GP-COMMUNICATION (**contd.**)** **i06219397**

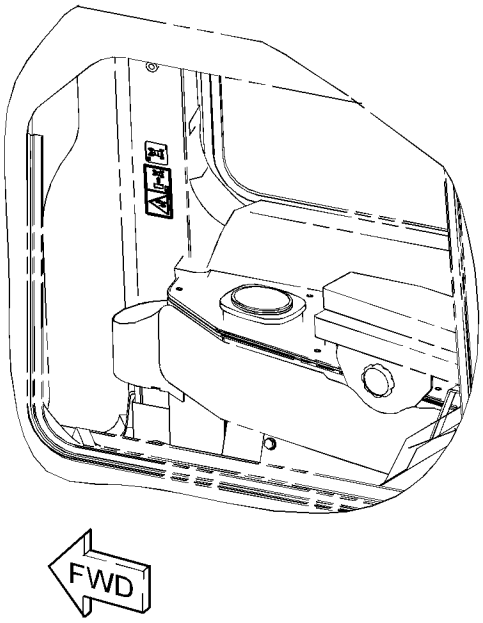

(FILM LOCATION WHEN RIGHT HAND COVER IS ASSEMBLED)

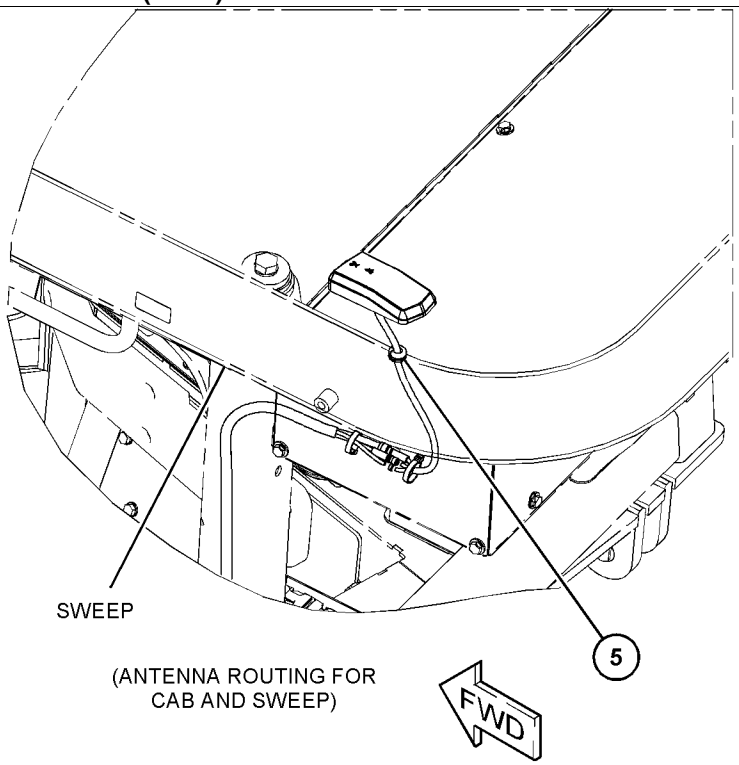

(ANTENNA ROUTING FOR CAB AND SWEEP)

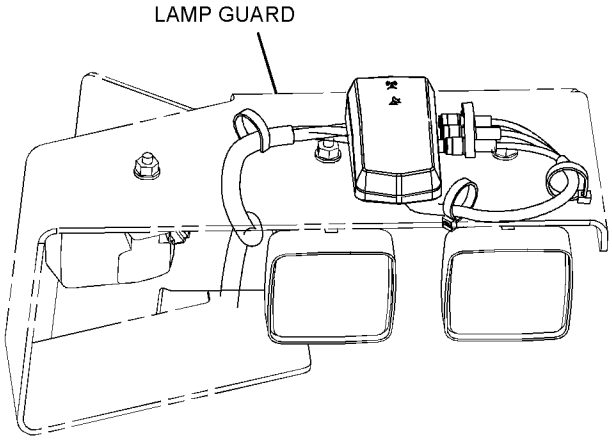

REAR VIEW
(ANTENNA ROUTING FOR LIGHTING GROUP 06)

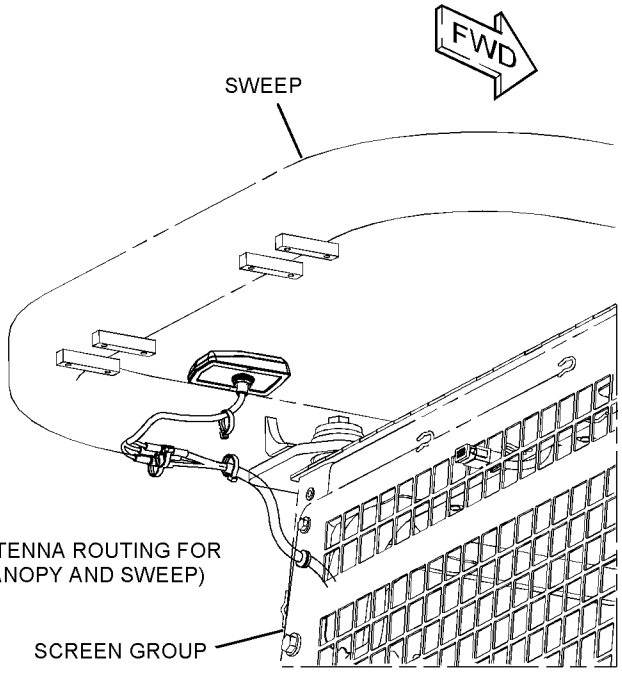

(ANTENNA ROUTING FOR CANOPY AND SWEEP)

GRAPHIC #2 <END> g03862672

450-2737 INSTALLATION GP-COMMUNICATION–PLE641 CELLULAR

S/N: R5A1-UP

AN ATTACHMENT

SMCS-7606 **i06219394**

NOTE	REF NO	GRAPHIC REF	PART NUMBER	QTY	PART NAME 1 2 3 4 5 6 (PRODUCT LEVEL)	SEE PAGE
	1	1	**7K-1181**	9	STRAP-CABLE	
	2	1	**8T-8737**	8	PLUG-SEAL	
	3	1	**230-1341**	1	FILM-WARNING (PRODUCT LINK RADIO, INTL)	
	4	1	**307-0047**	1	FILM-INFORMATION (PRODUCT LINK, READ OMM)	
B	5	2	**8K-1433**	1	GROMMET	
Y	6	1	**440-2105**	1	RADIO GP-COMMUNICATION (PL641E CELLULAR)	163
	7	1	**443-8462**	1	ANTENNA AS (CELLULAR)	
	7A	1	**385-8201**	1	CAP AS-CONNECTOR	
	7B	1	**361-1045**	1	NUT-SPECIAL (5/8-18-THD)	
	8	1	**450-2733**	1	CABLE AS	
E		1	**135-5009**		TUBE-HEAT SHRINK (32-MM DIA) (24-CM)	
E		1	**232-0897**		CONDUIT-FLEXIBLE (16.2-MM ID) (90-CM)	
Y	9	1	**465-2789**	1	HARNESS AS-CONTROL	113
	10	1	**155-2265**	1	KIT-CONNECTING PLUG (8-PIN)	
					(INCLUDES PLUG AS, WEDGE & INTERFACE SEAL)	
M	11	1	**8T-4138**	4	BOLT (M6X1X20-MM)	
	12	1	**9X-8256**	4	WASHER (6.6X12X2-MM THK)	

B - USE AS REQUIRED
E - ORDER BY THE CENTIMETER
M - METRIC PART
Y - SEPARATE ILLUSTRATION

450-2737 **INSTALLATION GP-COMMUNICATION (**contd.**)** **i06219394**

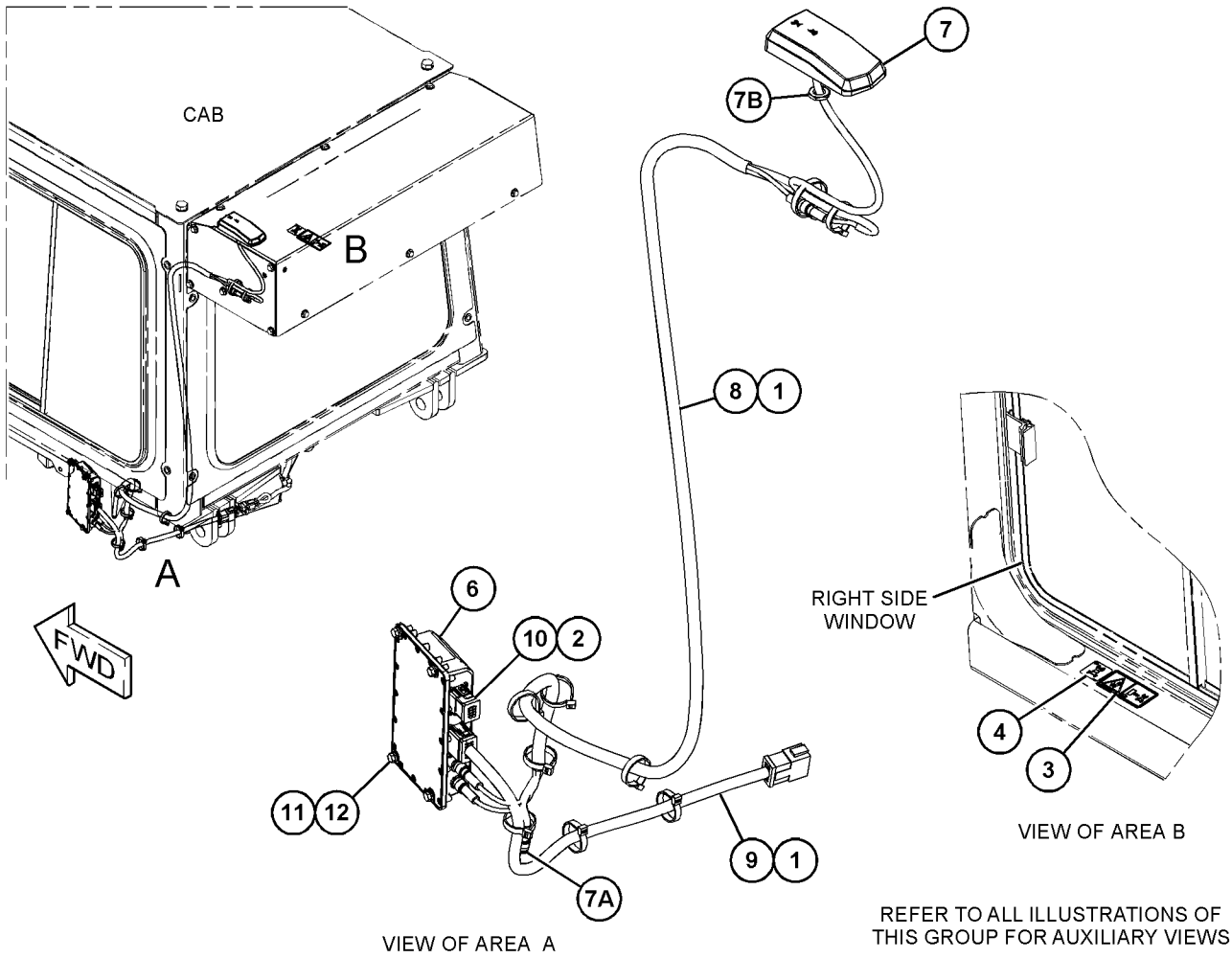

GRAPHIC #1

g03862580

450-2737 **INSTALLATION GP-COMMUNICATION (**contd.**)** **i06219394**

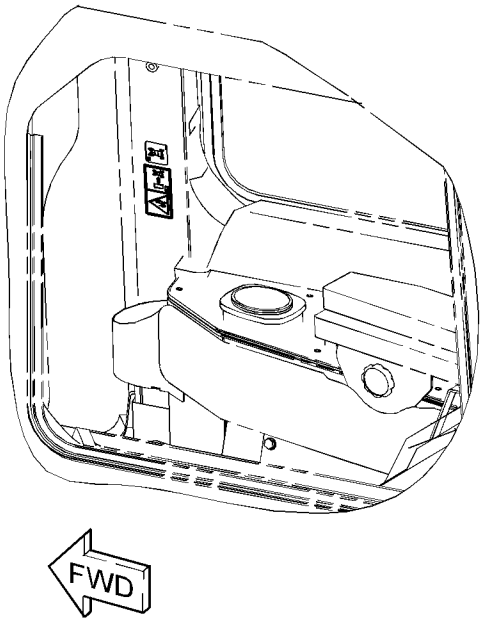

(FILM LOCATION WHEN RIGHT HAND COVER IS ASSEMBLED)

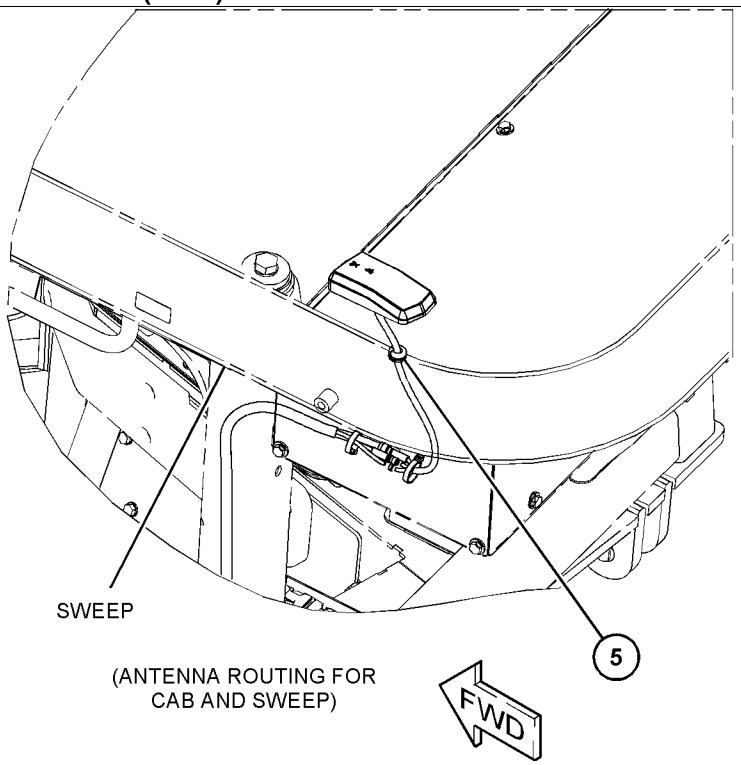

(ANTENNA ROUTING FOR CAB AND SWEEP)

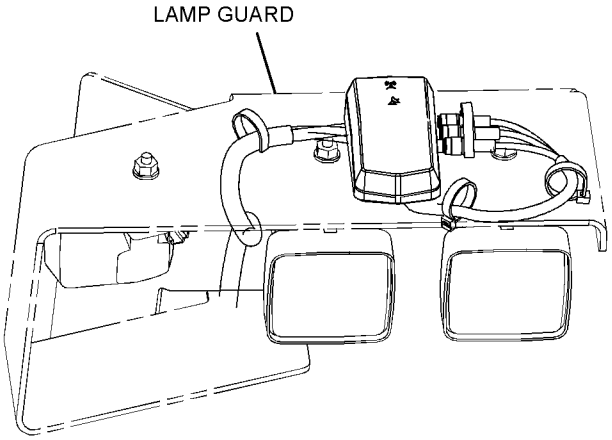

REAR VIEW
(ANTENNA ROUTING FOR LIGHTING GROUP 06)

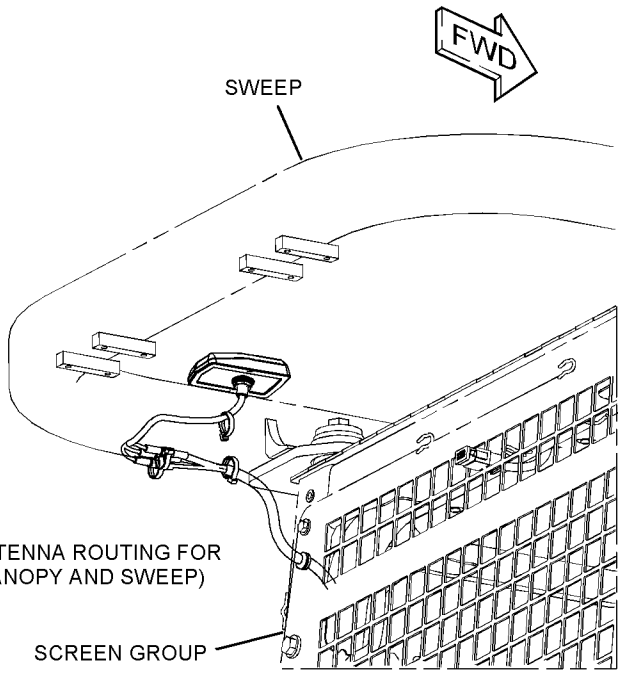

(ANTENNA ROUTING FOR CANOPY AND SWEEP)

GRAPHIC #2 <END> g03862588

450-3389 INSTALLATION GP-COMMUNICATION–PLE641+PL631

S/N: R5A1-UP

AN ATTACHMENT

SMCS-7606 **i06532704**

NOTE	REF NO	GRAPHIC REF	PART NUMBER	QTY	PART NAME 1 2 3 4 5 6 (PRODUCT LEVEL)	SEE PAGE
	1	1	**7K-1181**	11	STRAP-CABLE	
	2	1	**8C-5607**	8	MOUNT-ISOLATION	
	3	1	**8T-8737**	16	PLUG-SEAL	
	4	1	**230-1341**	1	FILM-WARNING (PRODUCT LINK RADIO, INTL)	
	5	1	**307-0047**	1	FILM-INFORMATION (PRODUCT LINK, READ OMM)	
Y	6	1	**417-4722**	1	ELECTRONICS GP-COMMUNICATION (PLE601 NETWORK MANAGER)	106
Y	7	1	**440-2105**	1	RADIO GP-COMMUNICATION (PL641E CELLULAR)	163
Y	8	1	**442-7199**	1	RADIO GP-COMMUNICATION (PL631 SATELLITE)	164
	9	1	**443-8462**	1	ANTENNA AS (CELLULAR)	
		1	**361-1045**	1	NUT-SPECIAL (5/8-18-THD)	
		1	**385-8201**	1	CAP AS-CONNECTOR	
	10	1	**450-2733**	1	CABLE AS	
E			**135-5009**		TUBE-HEAT SHRINK (32-MM DIA) (24-CM)	
E			**232-0897**		CONDUIT-FLEXIBLE (16.2-MM ID) (90-CM)	
Y	11	1	**465-2806**	1	HARNESS AS-CONTROL	114
	12	1	**155-2265**	2	KIT-CONNECTING PLUG (8-PIN)	
					(EACH INCLUDES PLUG AS, WEDGE & INTERFACE SEAL)	
	13	1	**352-3968**	1	CLIP	
M	14	1	**6V-7357**	4	BOLT (M6X1X25-MM)	
	15	1	**8C-5608**	4	SPACER (6.5X9.5X25.4-MM THK)	
M	16	1	**8C-8451**	4	BOLT (M6X1X40-MM)	
	17	1	**8T-4121**	1	WASHER-HARD (11X21X2.5-MM THK)	
M	18	1	**8T-4137**	1	BOLT (M10X1.5X20-MM)	
	19	1	**9X-6165**	4	WASHER (6.5X22X2.5-MM THK)	
	20	1	**9X-8256**	4	WASHER (6.6X12X2-MM THK)	
J	21	1	**8K-1433**	1	GROMMET	

E - ORDER BY THE CENTIMETER
J - FOR USE WITH CAB & SWEEP CONFIGURATION
M - METRIC PART
Y - SEPARATE ILLUSTRATION

450-3389 **INSTALLATION GP-COMMUNICATION (**contd.**)** **i06532704**

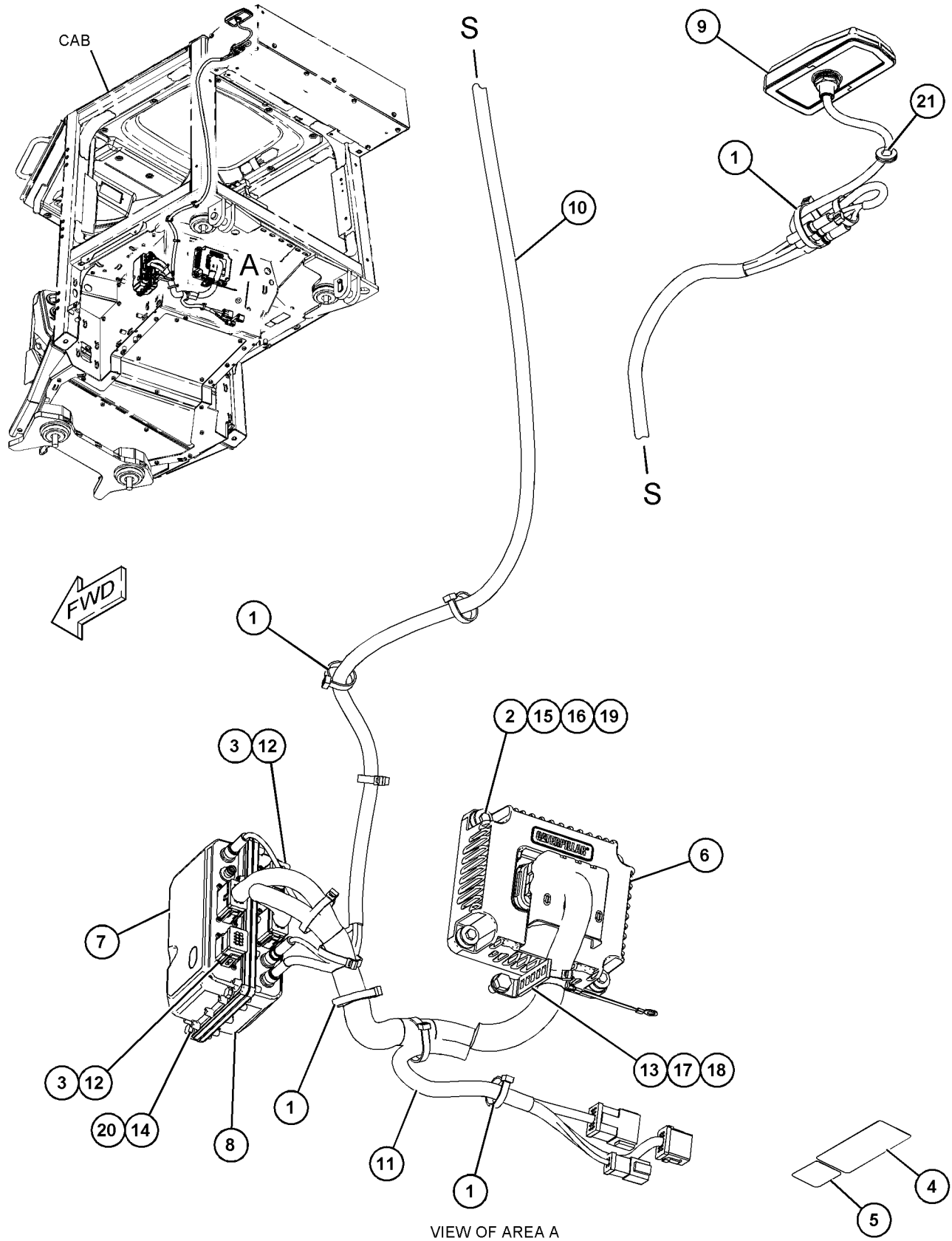

VIEW OF AREA A

GRAPHIC #1 <END> g03858352

465-2815 INSTALLATION GP-COMMUNICATION–PL641 CELLULAR

S/N: R5A1-UP

AN ATTACHMENT

SMCS-7606 **i06582282**

NOTE	REF NO	GRAPHIC REF	PART NUMBER	QTY	PART NAME 1 2 3 4 5 6 (PRODUCT LEVEL)	SEE PAGE
	1	1	**7K-1181**	9	STRAP-CABLE	
	2	1	**8T-8737**	8	PLUG-SEAL	
	3	1	**230-1341**	1	FILM-WARNING (PRODUCT LINK RADIO, INTL)	
	4	1	**307-0047**	1	FILM-INFORMATION (PRODUCT LINK, READ OMM)	
	5	1	**385-8201**	1	CAP AS-CONNECTOR	
	6	1	**443-8462**	1	ANTENNA AS (CELLULAR)	
		1	**361-1045**	1	NUT-SPECIAL (5/8-18-THD)	
		1	**385-8201**	1	CAP AS-CONNECTOR	
	7	1	**450-2733**	1	CABLE AS	
E		1	**135-5009**		TUBE-HEAT SHRINK (32-MM DIA) (24-CM)	
E		1	**232-0897**		CONDUIT-FLEXIBLE (16.2-MM ID) (90-CM)	
Y	8	1	**465-2789**	1	HARNESS AS-CONTROL	113
Y	9	1	**480-3535**	1	CONTROL GP-ELECTRONIC	102
	10	1	**155-2265**	1	KIT-CONNECTING PLUG (8-PIN)	
					(INCLUDES PLUG AS, WEDGE, & INTERFACE SEAL)	
M	11	1	**8T-4138**	4	BOLT (M6X1X20-MM)	
	12	1	**9X-8256**	4	WASHER (6.6X12X2-MM THK)	
	13	1	**8K-1433**	1	GROMMET	

E - ORDER BY THE CENTIMETER
M - METRIC PART
Y - SEPARATE ILLUSTRATION

465-2815 **INSTALLATION GP-COMMUNICATION (**contd.**)** **i06582282**

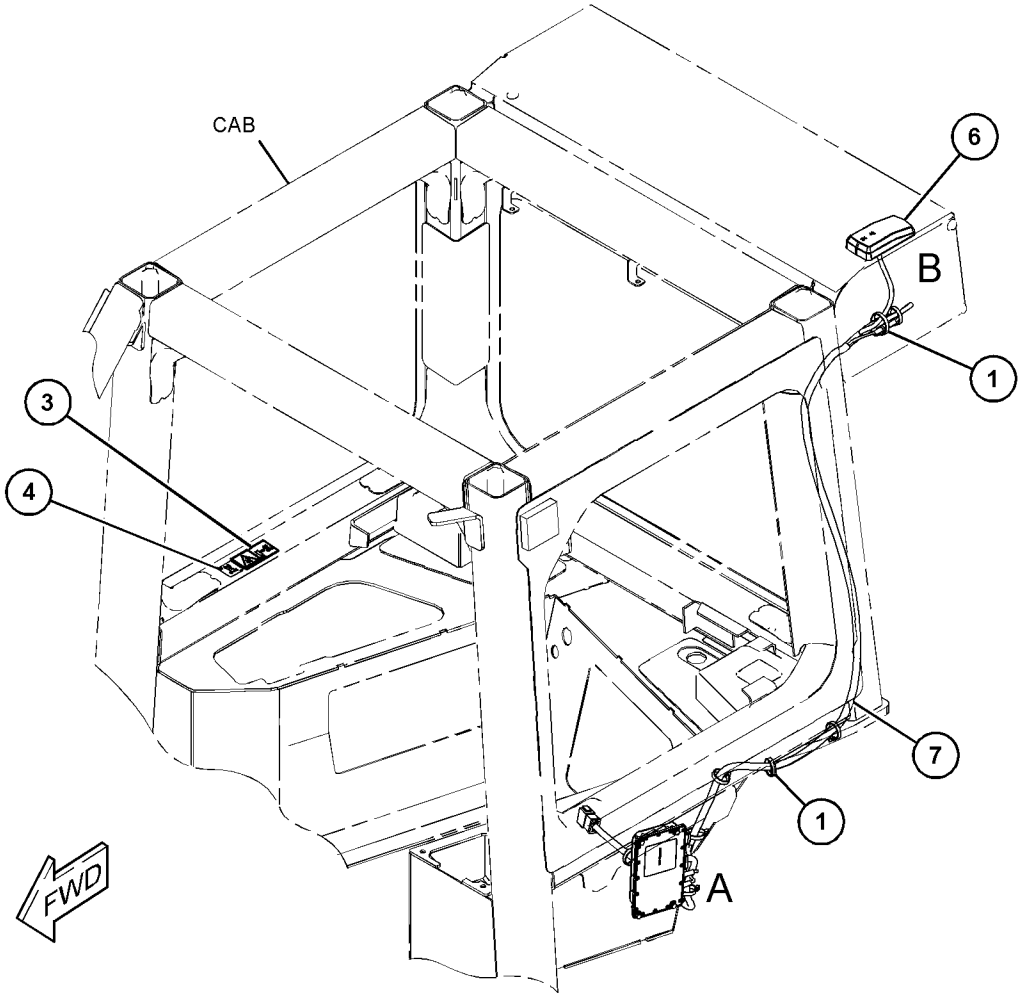

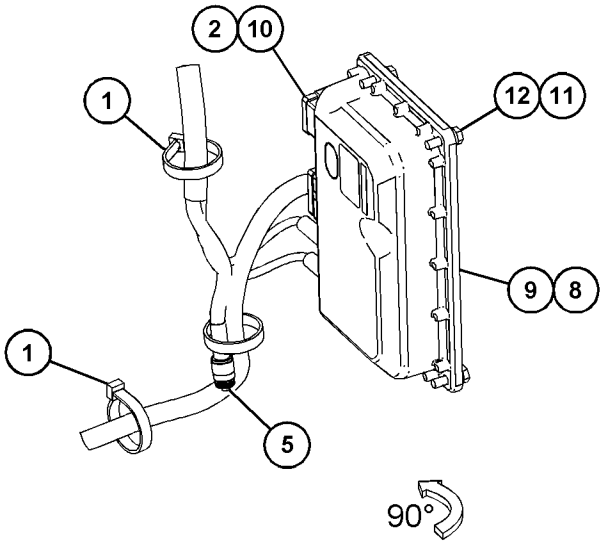

VIEW OF AREA A

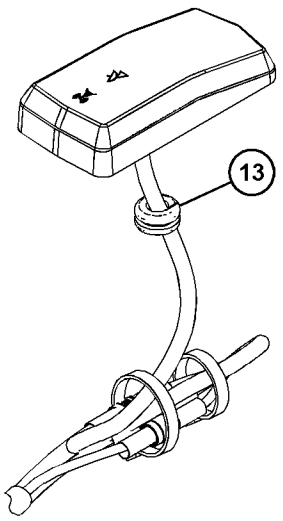

VIEW OF AREA B
(ANTENNA ROUTING FOR CAB AND SWEEP)

GRAPHIC #1 <END> g06031515

3E-6389 LAMP GP-DOME–WITH SWITCH

S/N: R5A1-UP
24-VOLT
PART OF 415-4252, 420-1160 WIRING GP-CAB
AN ATTACHMENT

SMCS-1433 **i04953728**

NOTE	REF NO	GRAPHIC REF	PART NUMBER	QTY	PART NAME 1 2 3 4 5 6 (PRODUCT LEVEL)	SEE PAGE
	1	1	**7N-9943**	1	LAMP (24-VOLT) (DOME LIGHT)	
	2	1	**102-8803**	1	KIT-RECEPTACLE (3-PIN)	
					(INCLUDES RECEPTACLE AS & WEDGE)	
	3	1	**8T-8729**	3	PIN-CONNECTOR (16-GA TO 18-GA)	
	4	1	**7T-0020**	1	LENS-DOME LAMP	

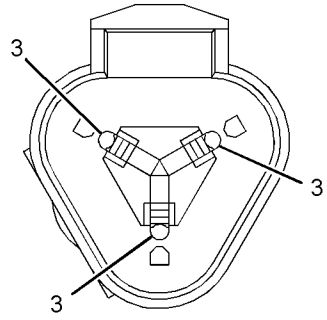

VIEW A-A

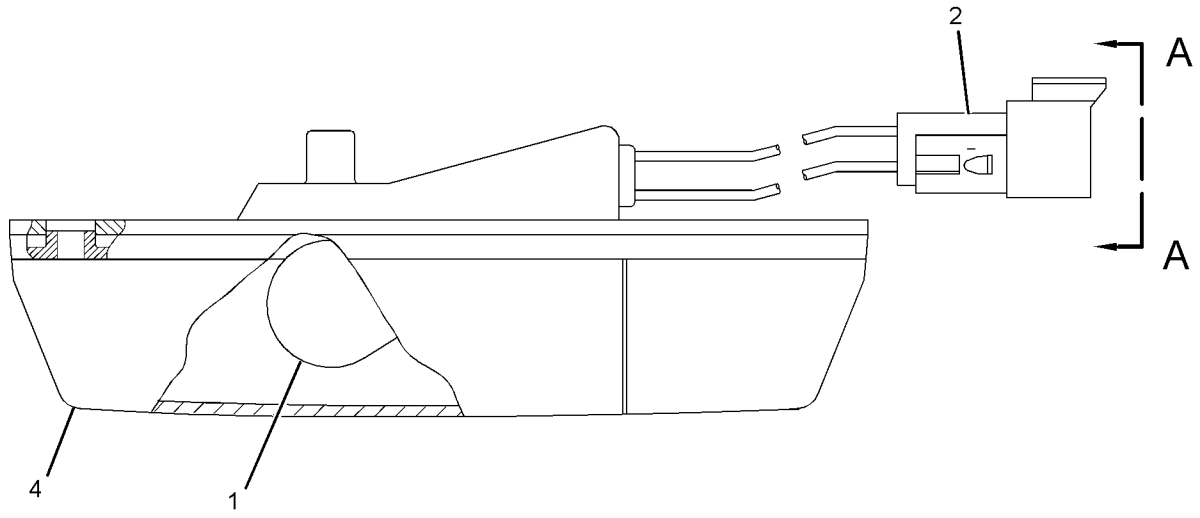

GRAPHIC #1 <END> g02646562

219-6485 LAMP GP-FLOOD

S/N: R5A1-UP
24-VOLT, 70-WATT
FIELD REPLACEMENT FOR 272-6641—PAGE: 145

SMCS-1434 **i05640718**

NOTE	REF NO	GRAPHIC REF	PART NUMBER	QTY	PART NAME 1 2 3 4 5 6 (PRODUCT LEVEL)	SEE PAGE
	1	1	**351-9918**	1	LAMP-HALOGEN (24-VOLT, 70-WATT)	
M	2	1	**9X-4244**	2	SCREW-SPECIAL (M4X1.79X25-MM)	
	3	1	**175-4291**	1	BRACKET AS	
	4	1	**202-6614**	1	LENS AS (FLOODLIGHT)	
	5	1	**175-4292**	1	BODY AS	
	6	1	**164-7556**	1	BRACKET (LAMP RETAINING)	
	7	1	**247-4285**	1	BOLT (M8X1.25X50-MM)	
M	8	1	**6V-9189**	1	LOCKNUT (M8X1.25-THD)	
	9	1	**8T-4224**	2	WASHER-HARD (8.8X16X2-MM THK)	

M - METRIC PART

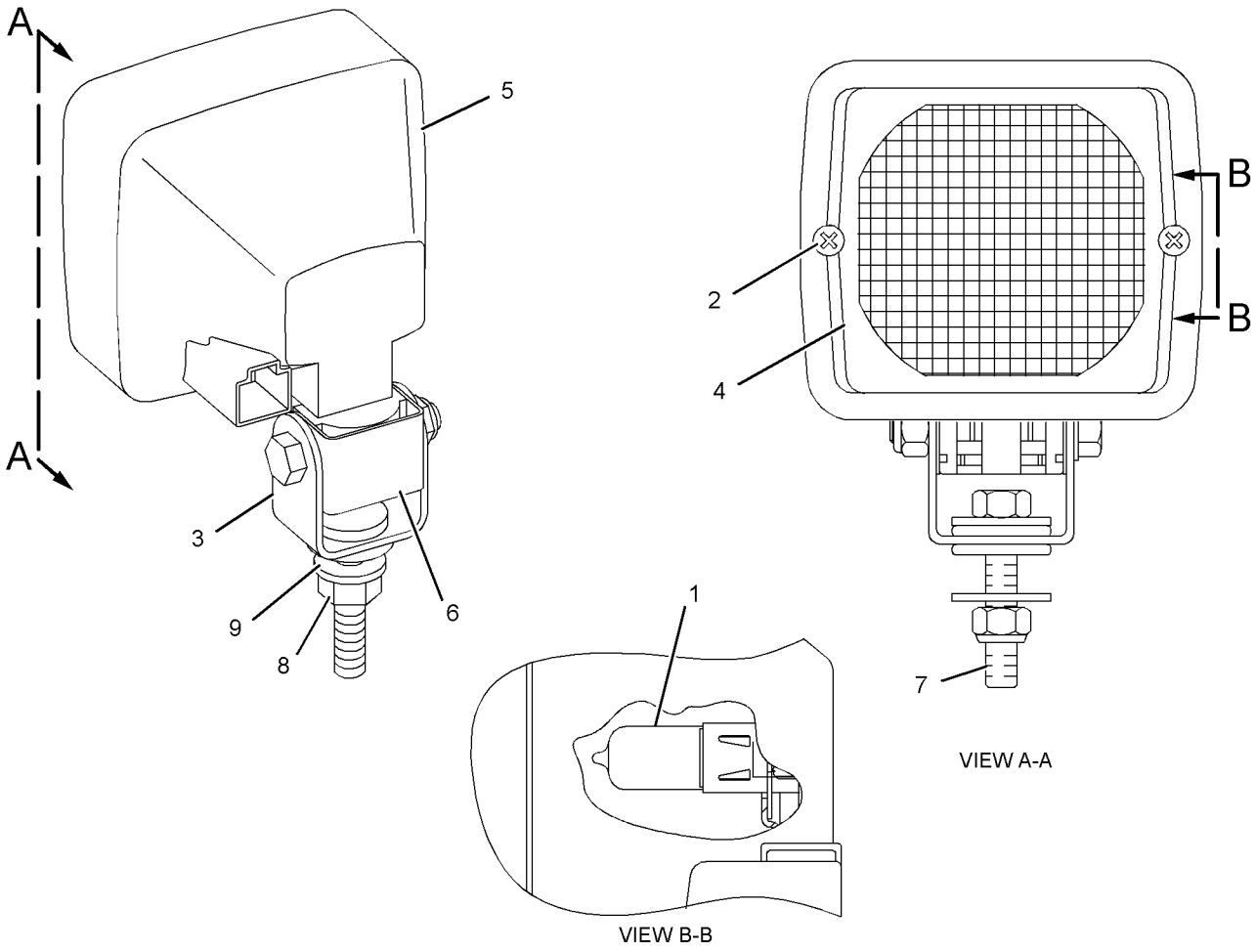

VIEW A-A

VIEW B-B

GRAPHIC #1 <END> g02075738

219-6487 LAMP GP-FLOOD

S/N: R5A1-UP
24-VOLT, 70-WATT
FIELD REPLACEMENT FOR 254-8155—PAGE: 144

SMCS-1434 **i05517862**

NOTE	REF NO	GRAPHIC REF	PART NUMBER	QTY	PART NAME 1 2 3 4 5 6 (PRODUCT LEVEL)	SEE PAGE
	1	1	**351-9918**	1	LAMP-HALOGEN (24-VOLT, 70-WATT)	
M	2	1	**8T-6912**	1	BOLT (M8X1.25X50-MM)	
M	3	1	**6V-9189**	1	LOCKNUT (M8X1.25-THD)	
	4	1	**8T-4224**	2	WASHER-HARD (8.8X16X2-MM THK)	
M	5	1	**9X-4244**	2	SCREW-SPECIAL (M4X1.79X25-MM)	
	6	1	**175-4291**	1	BRACKET AS	
	7	1	**202-6614**	1	LENS AS (FLOODLIGHT)	
	8	1	**175-4292**	1	BODY AS	
	9	1	**164-7556**	1	BRACKET (LAMP RETAINING)	

M - METRIC PART

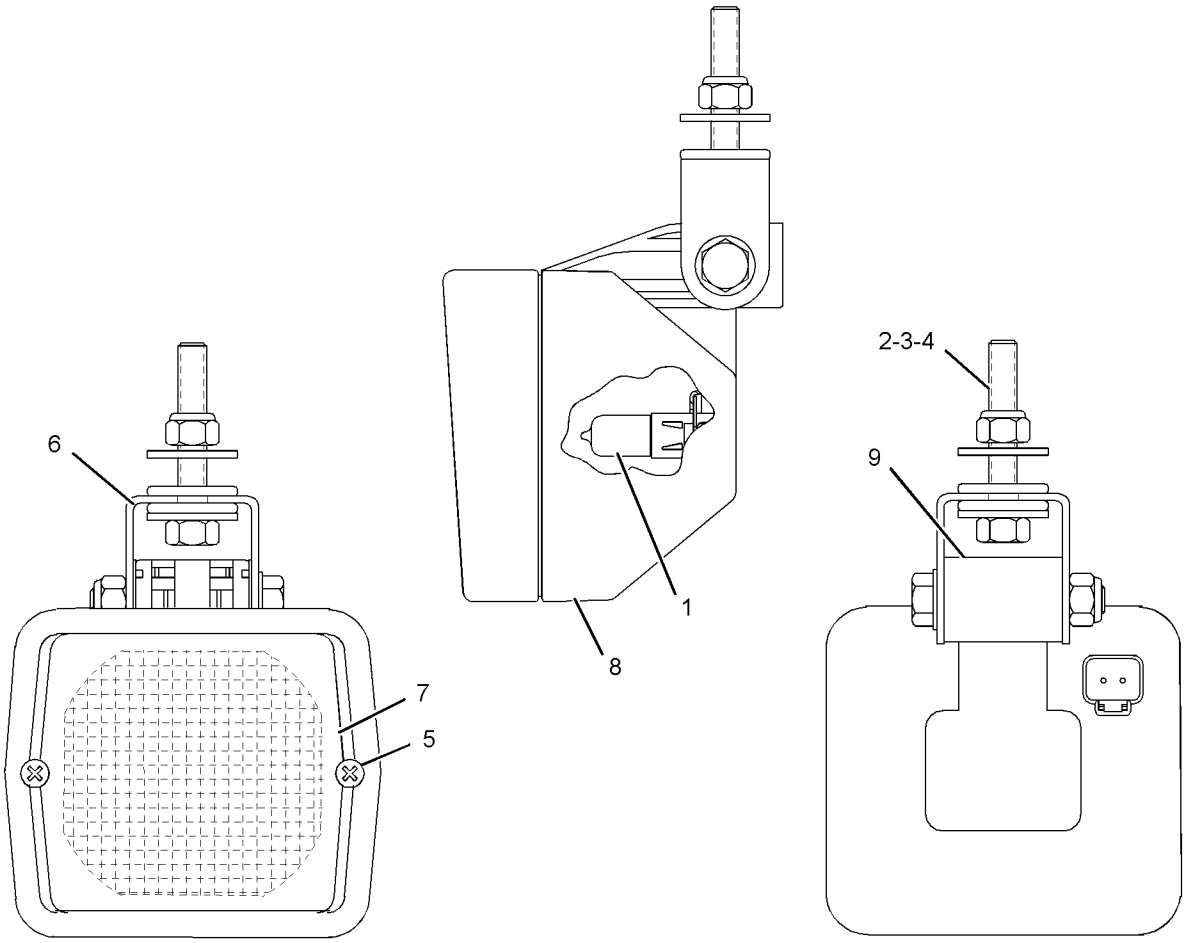

GRAPHIC #1 <END> g02167882

254-8155 LAMP GP-FLOOD

S/N: R5A1-UP
24-VOLT, 70-WATT
FIELD REPLACEMENT ORDER 219-6487—PAGE: 143
PART OF 423-1040, 423-1041, 423-1042, 423-1043, 430-4099, 488-2521 LIGHTING GP-FLOOD AN ATTACHMENT

SMCS-1434 **i05501419**

NOTE	REF NO	GRAPHIC REF	PART NUMBER	QTY	PART NAME 1 2 3 4 5 6 (PRODUCT LEVEL)	SEE PAGE
	1	1	**351-9918**	1	LAMP-HALOGEN (24-VOLT, 70-WATT)	
M	2	1	**8T-4154**	1	BOLT (M8X1.25X35-MM)	
M	3	1	**5C-7261**	1	NUT (M8X1.25-THD)	
	4	1	**8T-4224**	2	WASHER-HARD (8.8X16X2-MM THK)	
M	5	1	**9X-4244**	2	SCREW-SPECIAL (M4X1.79X25-MM)	
	6	1	**202-6614**	1	LENS AS	
	7	1	**175-4292**	1	BODY AS	
	8	1	**164-7556**	1	BRACKET (LAMP RETAINING)	
	9	1	**175-4291**	1	BRACKET AS	

M - METRIC PART

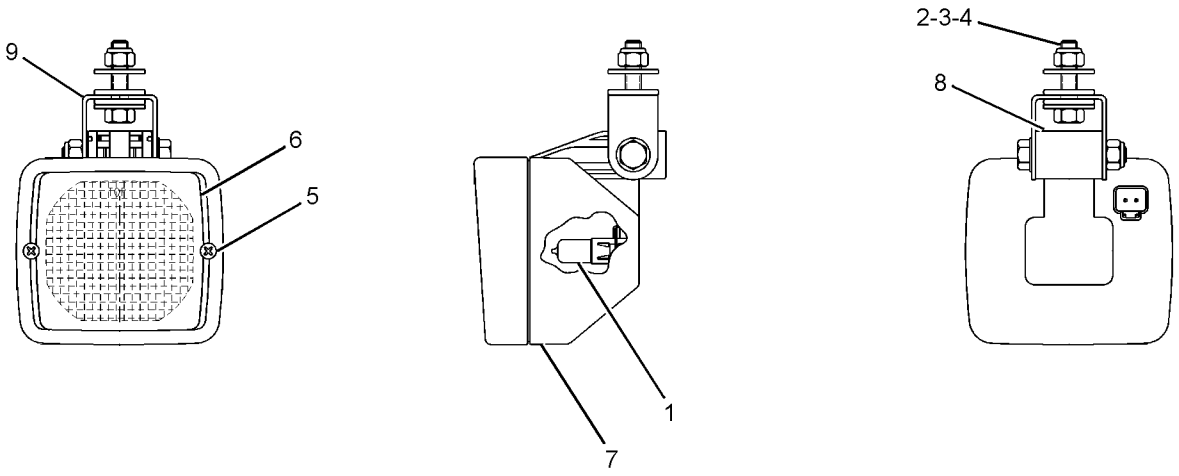

GRAPHIC #1 <END> g01205426

272-6641 LAMP GP-FLOOD

S/N: R5A1-UP
24-VOLT, 70-WATT
FIELD REPLACEMENT ORDER 219-6485—PAGE: 142
PART OF 423-1041, 430-4099, 488-2521 LIGHTING GP-FLOOD
AN ATTACHMENT

SMCS-1434 **i05626809**

NOTE	REF NO	GRAPHIC REF	PART NUMBER	QTY	PART NAME 1 2 3 4 5 6 (PRODUCT LEVEL)	SEE PAGE
	1	1	**351-9918**	1	LAMP-HALOGEN (24-VOLT, 70-WATT)	
M	2	1	**9X-4244**	2	SCREW-SPECIAL (M4X1.79X25-MM)	
	3	1	**202-6614**	1	LENS AS	
	4	1	**175-4292**	1	BODY AS	
	5	1	**164-7556**	1	BRACKET (LAMP RETAINING)	
M	6	1	**8T-7547**	1	BOLT (M8X1.25X30-MM)	
M	7	1	**5C-7261**	1	NUT (M8X1.25-THD)	
	8	1	**8T-4224**	2	WASHER-HARD (8.8X16X2-MM THK)	
	9	1	**175-4291**	1	BRACKET AS	

M - METRIC PART

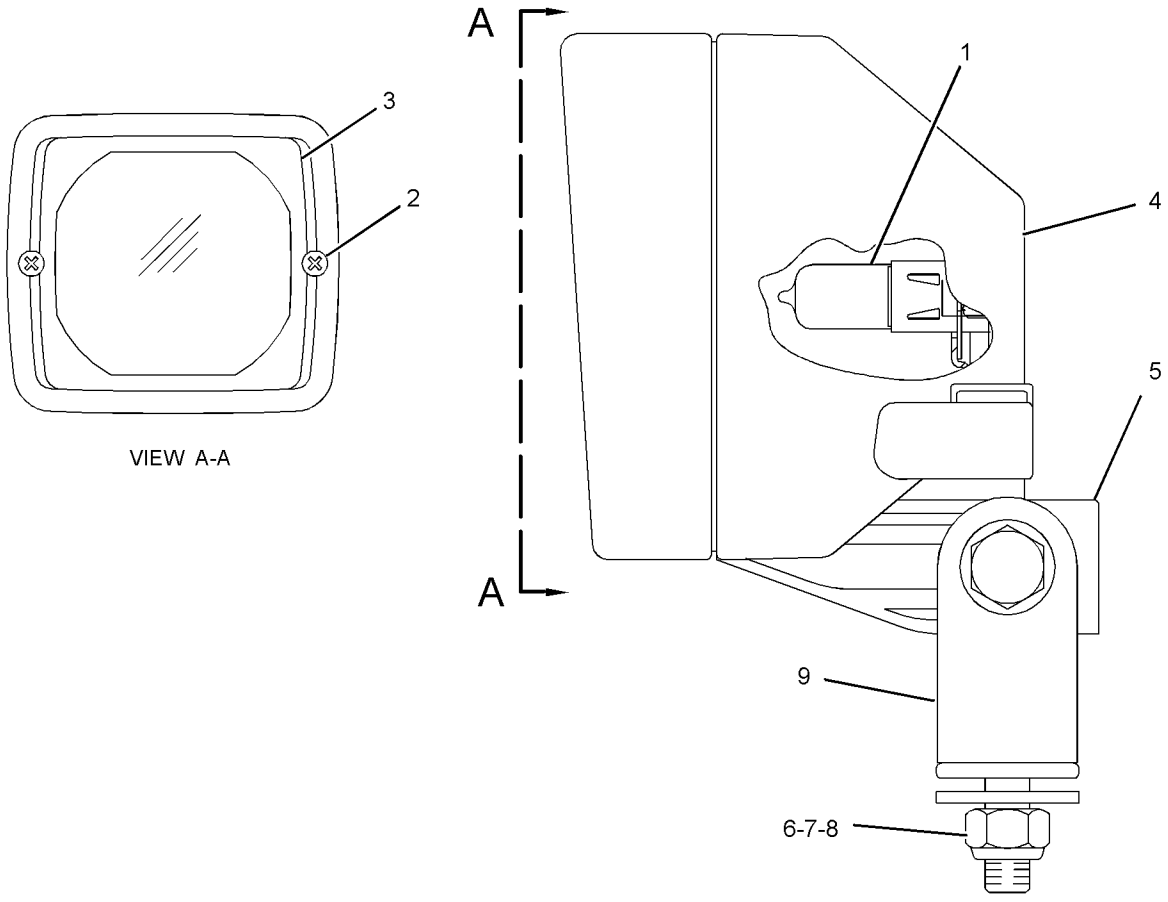

GRAPHIC #1 <END> g01305640

383-8634 LAMP GP-FLOOD–LED

S/N: R5A1-UP
24-VOLT, 35 WATT
PART OF 430-4098 LIGHTING GP-FLOOD
AN ATTACHMENT

SMCS-1434 **i06556318**

NOTE	REF NO	GRAPHIC REF	PART NUMBER	QTY	PART NAME 1 2 3 4 5 6 (PRODUCT LEVEL)	SEE PAGE
					(NO BREAKDOWN OF SERVICEABLE PARTS AVAILABLE AT TIME OF PUBLICATION)	

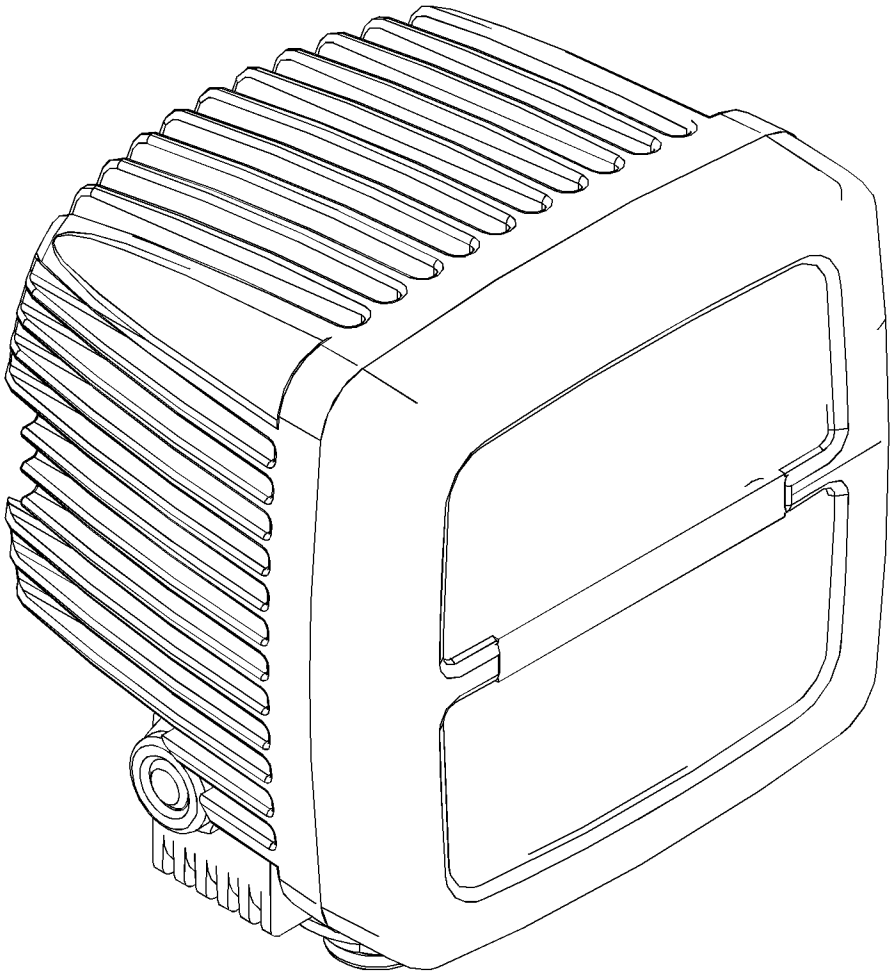

GRAPHIC #1 <END> g03355664

423-1040 LIGHTING GP-FLOOD—CANOPY, CYLINDER

S/N: R5A1-UP

CANNOT BE USED WITH SWEEP, 426-3911—PAGE: 312, 433-2758—PAGE: 540, 438-9381—PAGE: 542

AN ATTACHMENT

SMCS-1434 **i06524154**

NOTE	REF NO	GRAPHIC REF	PART NUMBER	QTY	PART NAME 1 2 3 4 5 6 (PRODUCT LEVEL)	SEE PAGE
	1	1	**457-1045**	8	NUT (3/8-16-THD)	
	2	1	**7K-1181**	17	STRAP-CABLE	
	3	1	**9W-4361**	4	MOUNT-FLEXIBLE	
Y	4	1	*254-8155*	6	LAMP GP-FLOOD (24-VOLT)	144
Y	5	1	**385-7302**	2	HARNESS AS-LIGHTING (CYLINDER)	119
	6	1	**386-9710**	2	HANDHOLD	
	7	1	**395-4186**	1	BRACKET (LH)	
	8	1	**395-4187**	1	BRACKET (RH)	
Y	9	1	**420-1156**	1	HARNESS AS-LIGHTING (REAR)	119
	10	1	**450-2739**	2	PLATE	
	11	1	**455-1256**	2	PLATE AS	
M	12	1	**344-5675**	2	NUT (M10X1.5-THD)	
	13	1	**5P-9085**	2	CLIP	
	14	1	**6H-4005**	2	GROMMET	
	15	1	**8T-1889**	2	CLIP (SLOT)	
	16	1	**8T-1890**	2	CLIP (TAB)	
	17	1	**8T-4121**	24	WASHER-HARD (11X21X2.5-MM THK)	
M	18	1	**8T-4136**	2	BOLT (M10X1.5X25-MM)	
M	19	1	**8T-4137**	8	BOLT (M10X1.5X20-MM)	
M	20	1	**8T-4196**	4	BOLT (M10X1.5X35-MM)	

M - METRIC PART
Y - SEPARATE ILLUSTRATION

423-1040 **LIGHTING GP-FLOOD (**contd.**)** **i06524154**

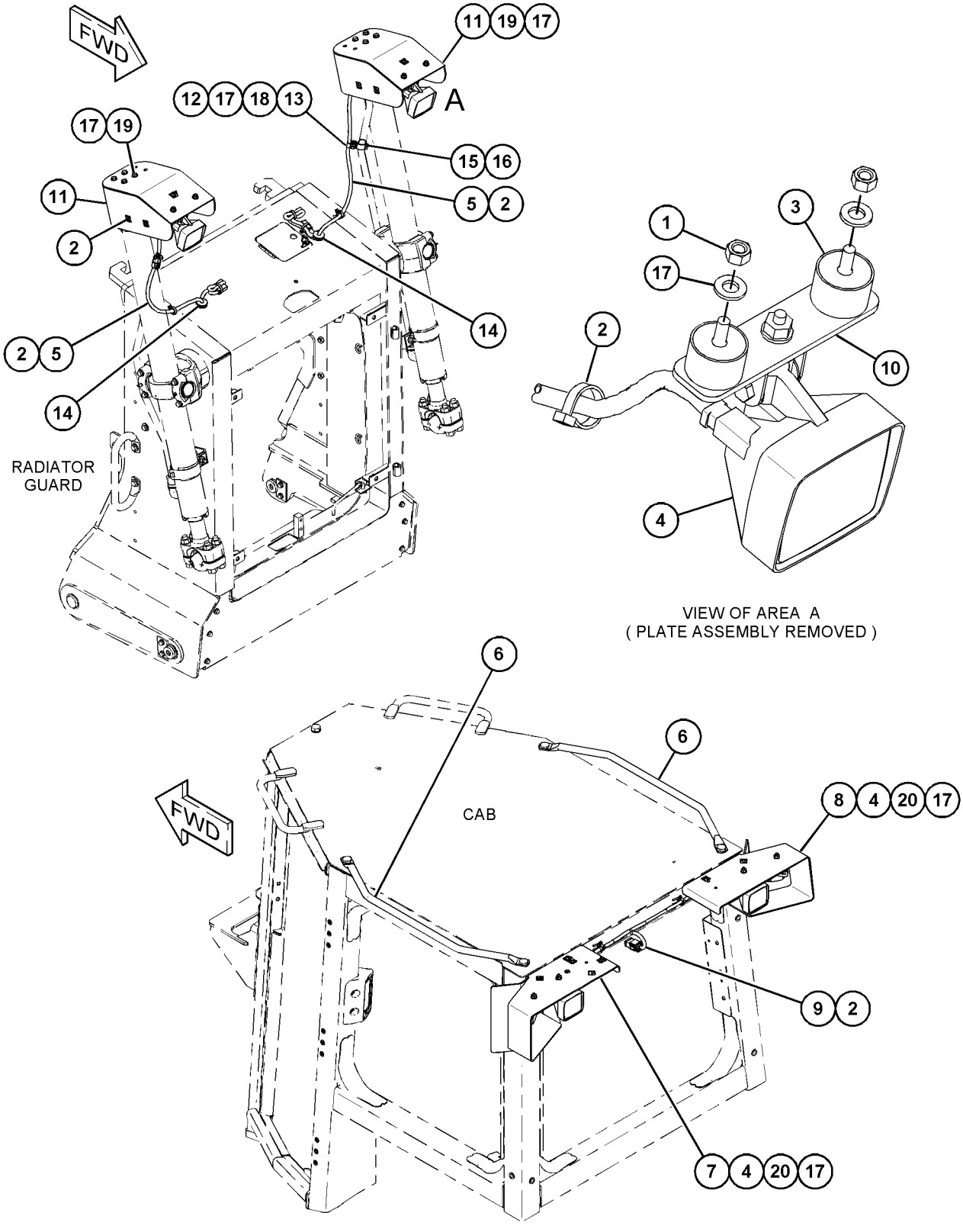

GRAPHIC #1 <END> g06010216

423-1041 LIGHTING GP-FLOOD—CAB, CYLINDER

S/N: R5A1-UP

CANNOT BE USED WITH CANOPY, SWEEP, CAB SIDE SCREEN, 426-3911—PAGE: 312, 433-2758—PAGE: 540, 438-9381—PAGE: 542

AN ATTACHMENT

SMCS-1434 **i06524158**

NOTE	REF NO	GRAPHIC REF	PART NUMBER	QTY	PART NAME 1 2 3 4 5 6 (PRODUCT LEVEL)	SEE PAGE
	1	1	**457-1045**	8	NUT (3/8-16-THD)	
	2	1	**7K-1181**	28	STRAP-CABLE	
	3	1	**9W-4361**	4	MOUNT-FLEXIBLE	
Y	4	1	*254-8155*	4	LAMP GP-FLOOD (24-VOLT)	144
Y	5	1	*272-6641*	2	LAMP GP-FLOOD (24-VOLT)	145
Y	6	1	**385-7302**	2	HARNESS AS-LIGHTING (CYLINDER)	119
	7	1	**386-9710**	2	HANDHOLD	
Y	8	1	**430-4097**	1	HARNESS AS-LIGHTING (CAB FLOODLIGHT)	120
	9	1	**450-2739**	2	PLATE	
	10	1	**455-1256**	2	PLATE AS	
	11	1	**481-8427**	1	GUARD AS	
	12	1	**481-8428**	1	GUARD AS	
	13	1	**132-5789**	2	CLIP	
M	14	1	**344-5675**	2	NUT (M10X1.5-THD)	
	15	1	**5P-4116**	2	WASHER-HARD (8.8X20.5X2-MM THK)	
	16	1	**5P-9085**	2	CLIP	
	17	1	**6H-4005**	2	GROMMET	
	18	1	**8T-1889**	2	CLIP (SLOT)	
	19	1	**8T-1890**	2	CLIP (TAB)	
	20	1	**8T-4121**	20	WASHER-HARD (11X21X2.5-MM THK)	
M	21	1	**8T-4136**	2	BOLT (M10X1.5X25-MM)	
M	22	1	**8T-4137**	8	BOLT (M10X1.5X20-MM)	
M	23	1	**8T-4189**	2	BOLT (M8X1.25X20-MM)	
	24	1	**8T-4223**	2	WASHER-HARD (13.5X25.5X3-MM THK)	
M	25	1	**8T-4910**	2	BOLT (M12X1.75X60-MM)	
	26	1	**8V-9708**	2	SPACER (14.3X25.4X35-MM THK)	

M - METRIC PART
Y - SEPARATE ILLUSTRATION

423-1041 **LIGHTING GP-FLOOD (**contd.**)** **i06524158**

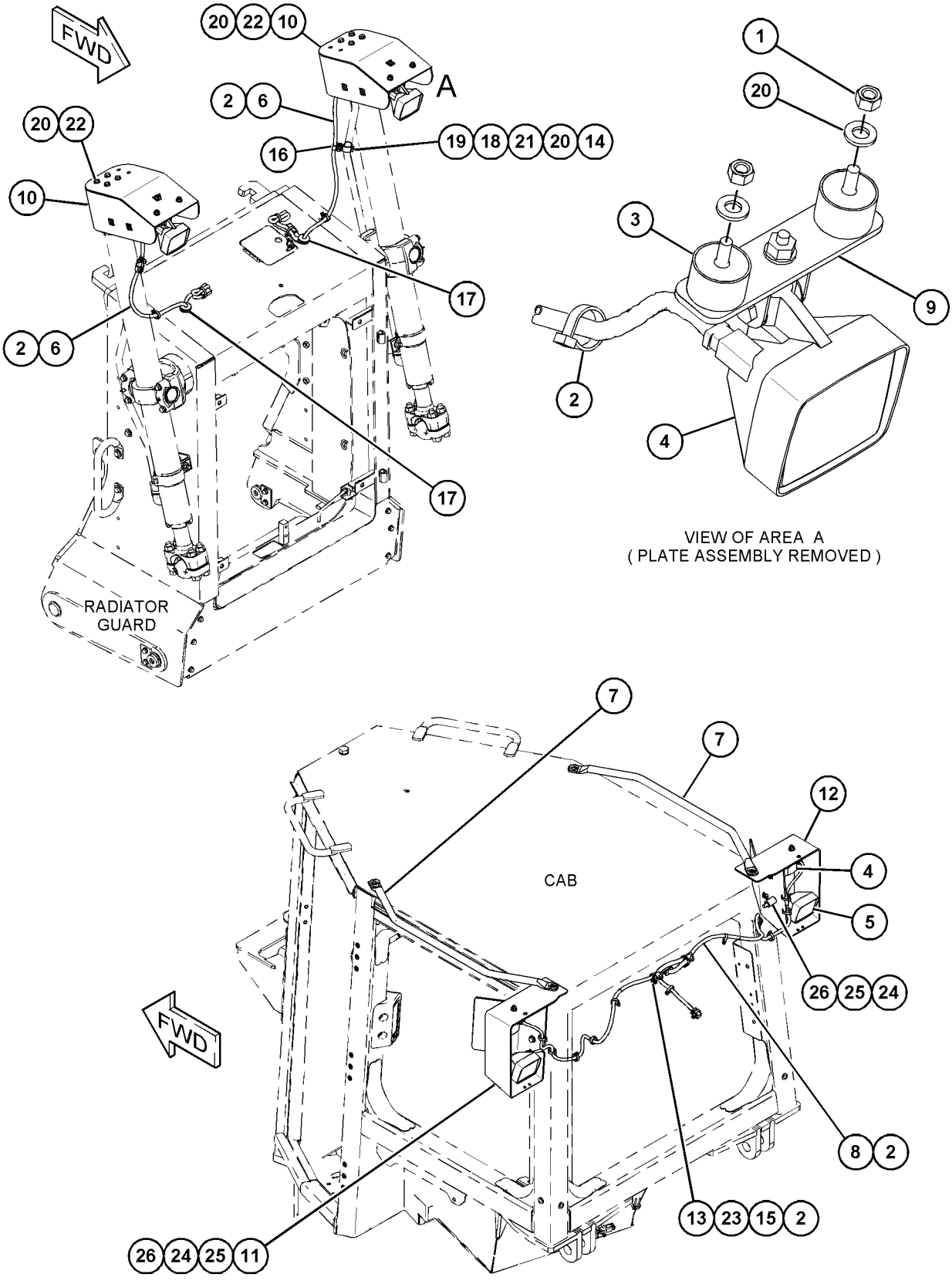

GRAPHIC #1 <END> g06011097

423-1042 LIGHTING GP-FLOOD—CAB, CYLINDER

S/N: R5A1-UP

CANNOT BE USED WITH CANOPY, SWEEP, 426-3911—PAGE: 312, 433-2758—PAGE: 540, 438-9381—PAGE: 542

AN ATTACHMENT

SMCS-1434 **i06524188**

NOTE	REF NO	GRAPHIC REF	PART NUMBER	QTY	PART NAME 1 2 3 4 5 6 (PRODUCT LEVEL)	SEE PAGE
	1	1	**457-1045**	8	NUT (3/8-16-THD)	
	2	1	**7K-1181**	22	STRAP-CABLE	
	3	1	**8T-1889**	2	CLIP (SLOT)	
	4	1	**9W-4361**	4	MOUNT-FLEXIBLE	
Y	5	1	*254-8155*	4	LAMP GP-FLOOD (24-VOLT)	144
Y	6	1	**385-7302**	2	HARNESS AS-LIGHTING (CYLINDER)	119
	7	1	**386-9710**	2	HANDHOLD	
Y	8	1	**448-2114**	1	HARNESS AS-LIGHTING (CAB)	121
	9	1	**450-2739**	2	PLATE	
	10	1	**455-1256**	2	PLATE AS	
	11	1	**132-5789**	5	CLIP	
M	12	1	**344-5675**	2	NUT (M10X1.5-THD)	
	13	1	**4P-7581**	2	CLIP	
	14	1	**5P-4116**	2	WASHER-HARD (8.8X20.5X2-MM THK)	
	15	1	**5P-9085**	2	CLIP	
	16	1	**6H-4005**	2	GROMMET	
	17	1	**8T-1890**	2	CLIP (TAB)	
	18	1	**8T-4121**	20	WASHER-HARD (11X21X2.5-MM THK)	
M	19	1	**8T-4136**	2	BOLT (M10X1.5X25-MM)	
M	20	1	**8T-4137**	8	BOLT (M10X1.5X20-MM)	
M	21	1	**8T-4189**	2	BOLT (M8X1.25X20-MM)	

M - METRIC PART
Y - SEPARATE ILLUSTRATION

423-1042 **LIGHTING GP-FLOOD (**contd.**)** **i06524188**

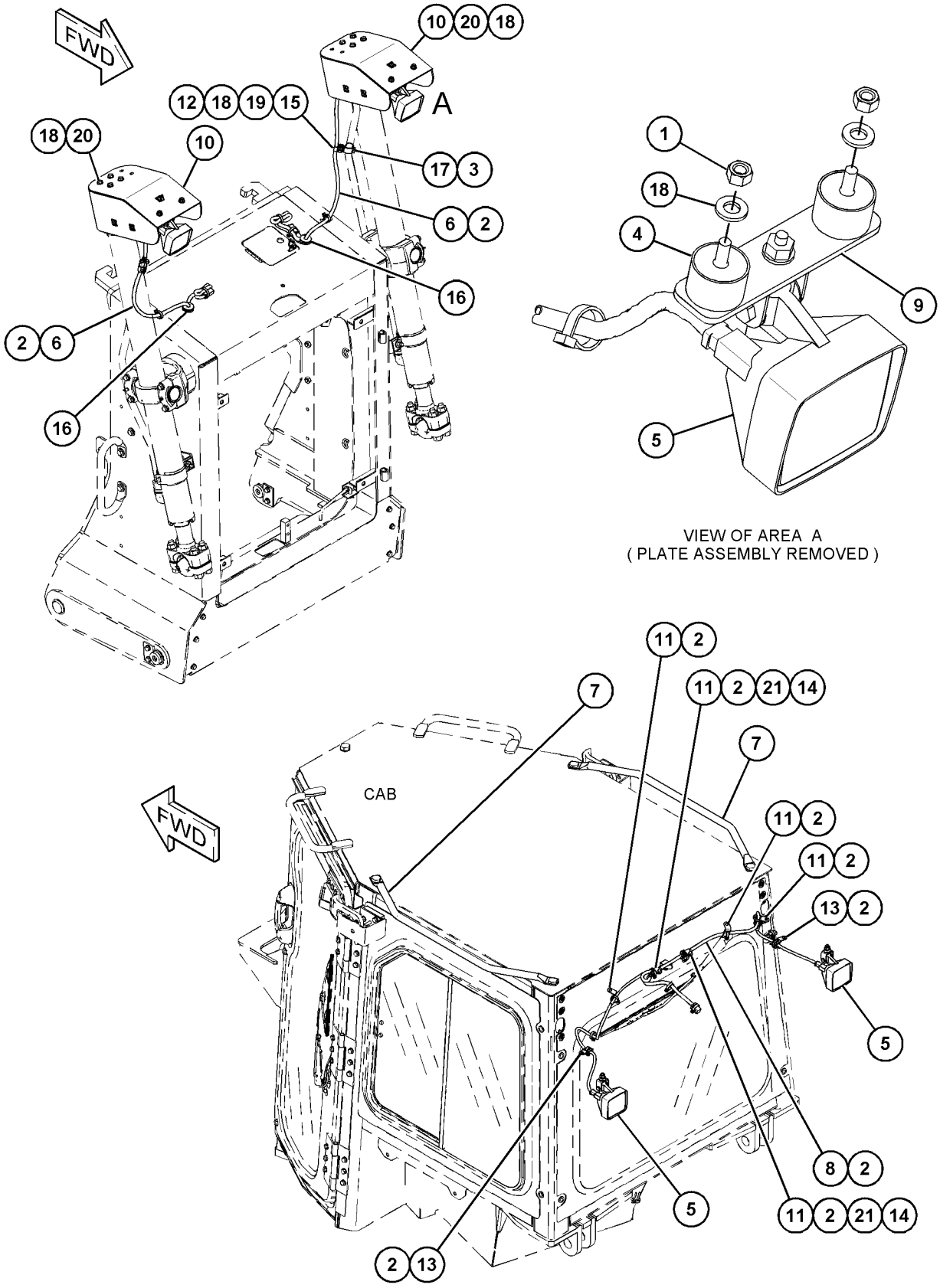

GRAPHIC #1 <END> g06010292

423-1043 LIGHTING GP-FLOOD—CANOPY, CYLINDER

S/N: R5A1-UP

CANNOT BE USED WITH CAB, SWEEP, 426-3911—PAGE: 312, 433-2758—PAGE: 540, 438-9381—PAGE: 542

AN ATTACHMENT

SMCS-1434 **i06524208**

NOTE	REF NO	GRAPHIC REF	PART NUMBER	QTY	PART NAME 1 2 3 4 5 6 (PRODUCT LEVEL)	SEE PAGE
	1	1	**457-1045**	8	NUT (3/8-16-THD)	
	2	1	**7K-1181**	14	STRAP-CABLE	
	3	1	**9W-4361**	4	MOUNT-FLEXIBLE	
Y	4	1	*254-8155*	4	LAMP GP-FLOOD (24-VOLT)	144
Y	5	1	**385-7302**	2	HARNESS AS-LIGHTING (CYLINDER)	119
	6	1	**386-9710**	2	HANDHOLD	
	7	1	**395-4184**	1	BRACKET (LH)	
	8	1	**395-4185**	1	BRACKET (RH)	
Y	9	1	**420-1157**	1	HARNESS AS-REAR LIGHTING	122
	10	1	**450-2739**	2	PLATE	
	11	1	**455-1256**	2	PLATE AS	
M	12	1	**344-5675**	2	NUT (M10X1.5-THD)	
	13	1	**4H-2558**	2	GROMMET	
	14	1	**5P-9085**	2	CLIP	
	15	1	**6H-4005**	2	GROMMET	
	16	1	**7X-7729**	4	WASHER (11X25X3-MM THK)	
	17	1	**8T-1889**	2	CLIP (SLOT)	
	18	1	**8T-1890**	2	CLIP (TAB)	
	19	1	**8T-4121**	20	WASHER-HARD (11X21X2.5-MM THK)	
M	20	1	**8T-4136**	2	BOLT (M10X1.5X25-MM)	
M	21	1	**8T-4137**	8	BOLT (M10X1.5X20-MM)	
M	22	1	**8T-4196**	4	BOLT (M10X1.5X35-MM)	

M - METRIC PART
Y - SEPARATE ILLUSTRATION

423-1043 **LIGHTING GP-FLOOD (**contd.**)** **i06524208**

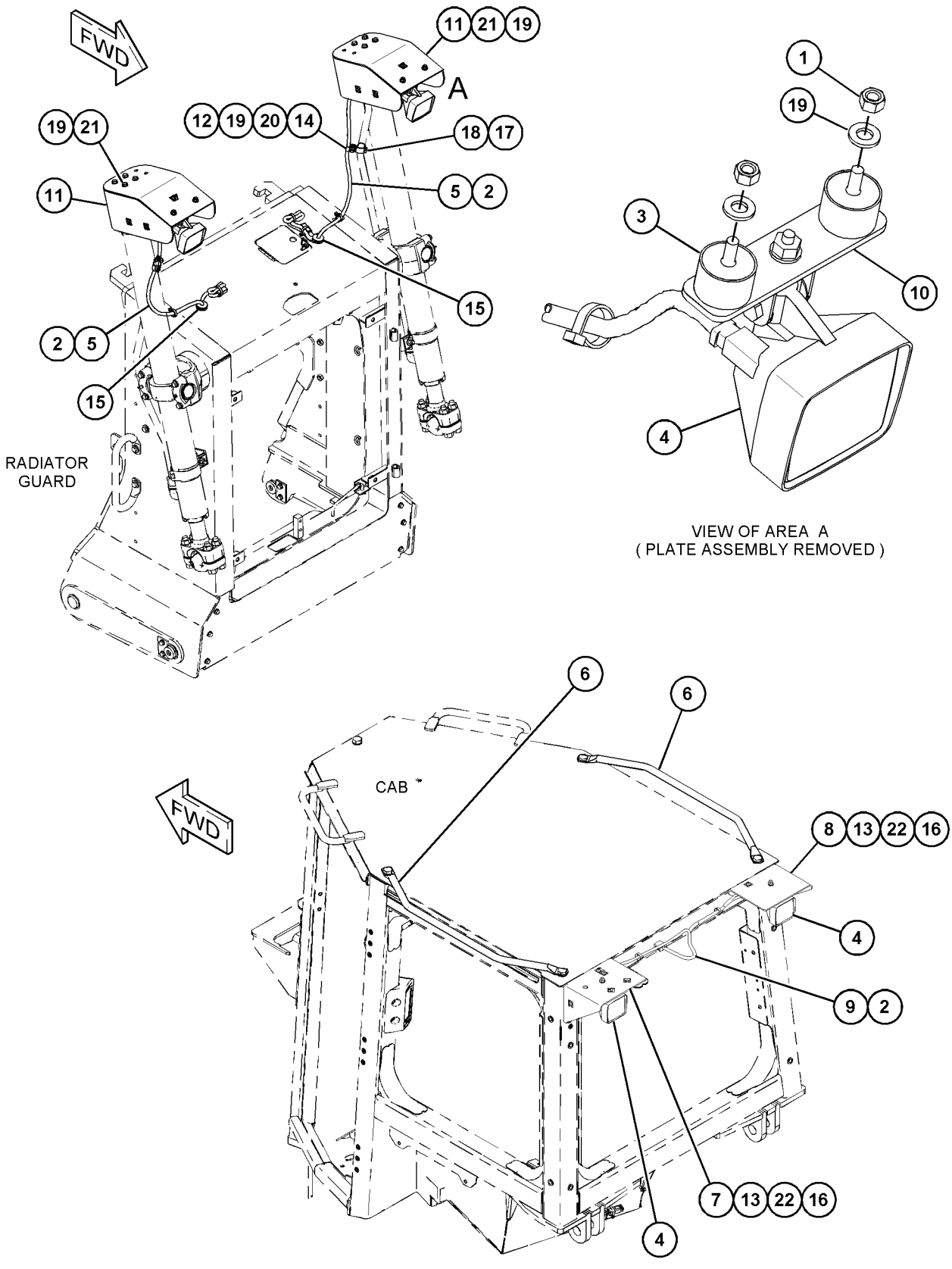

GRAPHIC #1 <END> g06010332

430-4098 LIGHTING GP-FLOOD—CAB, CYLINDER

S/N: R5A1-UP

LED

CANNOT BE USED WITH 426-3911—PAGE: 312, 433-2758—PAGE: 540, 438-9381—PAGE: 542 AN ATTACHMENT

SMCS-1434 **i06527784**

NOTE	REF NO	GRAPHIC REF	PART NUMBER	QTY	PART NAME 1 2 3 4 5 6 (PRODUCT LEVEL)	SEE PAGE
	1	1	**457-1045**	8	NUT (3/8-16-THD)	
	2	1	**7K-1181**	28	STRAP-CABLE	
	3	1	**9W-4361**	4	MOUNT-FLEXIBLE	
Y	4	1	**383-8634**	6	LAMP GP-FLOOD (24-VOLT)	146
Y	5	1	**385-7302**	2	HARNESS AS-LIGHTING (CYLINDER)	119
	6	1	**386-9710**	2	HANDHOLD	
Y	7	1	**430-4097**	1	HARNESS AS-LIGHTING (CAB FLOODLIGHT)	120
	8	1	**450-2739**	2	PLATE	
	9	1	**455-1256**	2	PLATE AS	
	10	1	**481-8427**	1	GUARD AS	
	11	1	**481-8428**	1	GUARD AS	
	12	1	**132-5789**	2	CLIP	
M	13	1	**344-5675**	2	NUT (M10X1.5-THD)	
	14	1	**5P-4116**	2	WASHER-HARD (8.8X20.5X2-MM THK)	
	15	1	**5P-9085**	2	CLIP	
	16	1	**6H-4005**	2	GROMMET	
	17	1	**8T-1889**	2	CLIP (SLOT)	
	18	1	**8T-1890**	2	CLIP (TAB)	
	19	1	**8T-4121**	20	WASHER-HARD (11X21X2.5-MM THK)	
M	20	1	**8T-4136**	2	BOLT (M10X1.5X25-MM)	
M	21	1	**8T-4137**	8	BOLT (M10X1.5X20-MM)	
M	22	1	**8T-4189**	2	BOLT (M8X1.25X20-MM)	
	23	1	**8T-4223**	2	WASHER-HARD (13.5X25.5X3-MM THK)	
M	24	1	**8T-4910**	2	BOLT (M12X1.75X60-MM)	
	25	1	**8V-9708**	2	SPACER (14.3X25.4X35-MM THK)	

M - METRIC PART
Y - SEPARATE ILLUSTRATION

430-4098 **LIGHTING GP-FLOOD (**contd.**)** **i06527784**

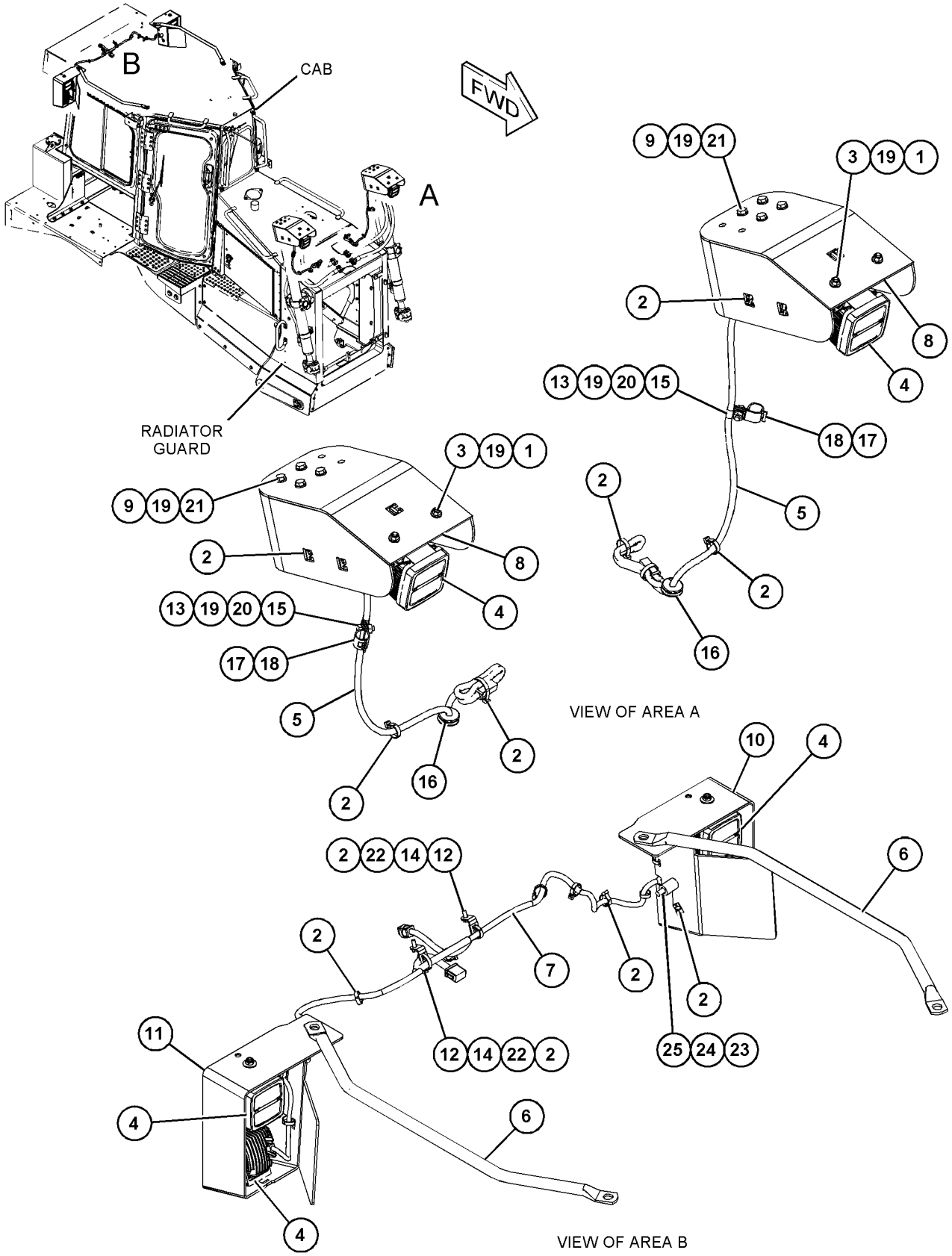

GRAPHIC #1 <END> g06022640

430-4099 LIGHTING GP-FLOOD—SWEEP

S/N: R5A1-UP

CANNOT BE USED WITH 426-3911—PAGE: 312, 433-2758—PAGE: 540, 438-9381—PAGE: 542 AN ATTACHMENT

SMCS-1434 **i06527816**

NOTE	REF NO	GRAPHIC REF	PART NUMBER	QTY	PART NAME 1 2 3 4 5 6 (PRODUCT LEVEL)	SEE PAGE
	1	1	**457-1045**	16	NUT (3/8-16-THD)	
	2	1,2	**7K-1181**	52	STRAP-CABLE	
	3	1	**9W-4361**	8	MOUNT-FLEXIBLE	
Y	4	1,2	*254-8155*	4	LAMP GP-FLOOD (24-VOLT)	144
Y	5	1,2	*272-6641*	4	LAMP GP-FLOOD (24-VOLT)	145
	6	1	**356-4254**	2	GUARD AS	
					(EACH INCLUDES)	
M		1	**8T-3490**	2	NUT-WELD (M10X1.5-THD)	
	7	1	**356-4259**	2	GUARD AS-LAMP	
	8	2	**383-1731**	2	GUARD AS-LAMP	
	9	2	**384-0071**	2	GUARD AS-LAMP	
					(EACH INCLUDES)	
		2	**383-1730**		GUARD	
Y	10	2	**398-4445**	1	HARNESS AS-REAR LIGHTING	122
	11	2	**398-4446**	1	HARNESS AS-FRONT LIGHTING	
		2	**8T-8730**	8	SOCKET-CONNECTOR (16-GA TO 18-GA)	
		2	**155-2270**	2	KIT-CONNECTING PLUG (2-PIN)	
		2	**155-2271**	1	KIT-CONNECTING PLUG (4-PIN)	
					(EACH PLUG KIT INCLUDES PLUG AS, WEDGE, & INTERFACE SEAL)	
Y	12	1	**430-4096**	2	HARNESS AS-LIGHTING (FRONT, RH, LH)	120
	13	1	**465-2807**	2	PLATE AS	
	14	1,2	**132-5789**	4	CLIP	
M	15	2	**344-5675**	2	NUT (M10X1.5-THD)	
	16	2	**5F-9757**	1	GROMMET	
	17	2	**5P-4116**	2	WASHER-HARD (8.8X20.5X2-MM THK)	
	18	1	**6H-4005**	2	GROMMET	
	19	1,2	**8T-4121**	38	WASHER-HARD (11X21X2.5-MM THK)	
M	20	1,2	**8T-4136**	14	BOLT (M10X1.5X25-MM)	
M	21	1	**8T-4137**	8	BOLT (M10X1.5X20-MM)	
M	22	2	**8T-4189**	2	BOLT (M8X1.25X20-MM)	

M - METRIC PART
Y - SEPARATE ILLUSTRATION

430-4099 **LIGHTING GP-FLOOD (**contd.**)** **i06527816**

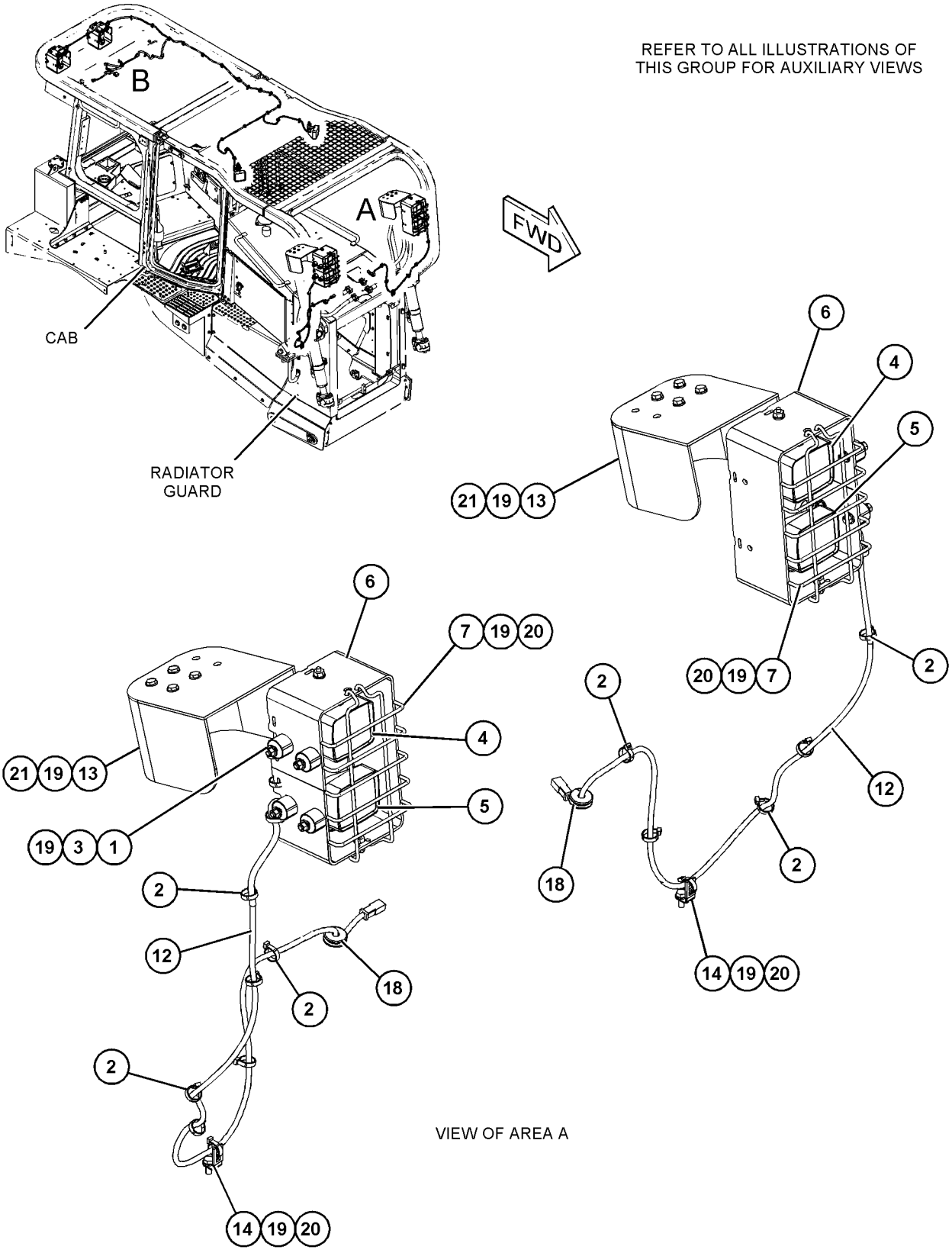

GRAPHIC #1 g06022664

430-4099 **LIGHTING GP-FLOOD (**contd.**)** **i06527816**

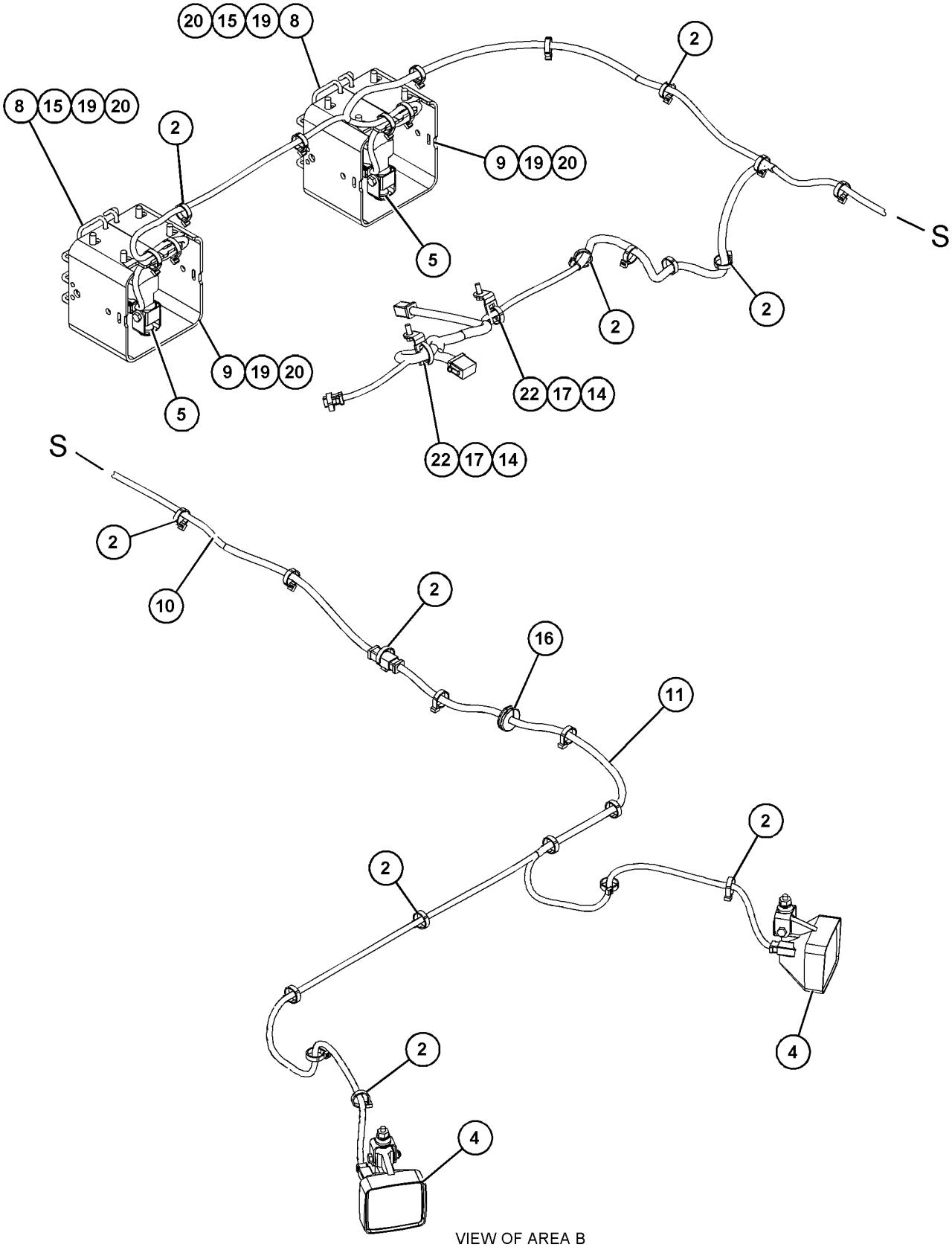

VIEW OF AREA B

GRAPHIC #2 <END> g06022665

488-2521 LIGHTING GP-FLOOD—SWEEP

S/N: R5A1-UP

AN ATTACHMENT

SMCS-1434 **i06530588**

NOTE	REF NO	GRAPHIC REF	PART NUMBER	QTY	PART NAME 1 2 3 4 5 6 (PRODUCT LEVEL)	SEE PAGE
	1	1	**7K-1181**	31	STRAP-CABLE	
Y	2	1	*254-8155*	2	LAMP GP-FLOOD (24-VOLT) (FRONT)	144
Y	3	1	*272-6641*	2	LAMP GP-FLOOD (24-VOLT) (REAR)	145
	4	1	**383-1731**	2	GUARD AS-LAMP	
	5	1	**384-0071**	2	GUARD AS-LAMP	
Y	6	1	**398-4445**	1	HARNESS AS-REAR LIGHTING	122
	7	1	**398-4446**	1	HARNESS AS-FRONT LIGHTING	
		1	**8T-8730**	8	SOCKET-CONNECTOR (16-GA TO 18-GA)	
		1	**155-2270**	2	KIT-CONNECTING PLUG (2-PIN)	
		1	**155-2271**	1	KIT-CONNECTING PLUG (4-PIN)	
					(EACH PLUG KIT INCLUDES PLUG AS, WEDGE, & INTERFACE SEAL)	
	8	1	**465-2807**	2	PLATE AS	
	9	1	**132-5789**	2	CLIP	
M	10	1	**344-5675**	2	NUT (M10X1.5-THD)	
	11	1	**374-7463**	2	CAP-SEAL	
	12	1	**5F-9757**	1	GROMMET	
	13	1	**5P-4116**	2	WASHER-HARD (8.8X20.5X2-MM THK)	
	14	1	**8T-4121**	18	WASHER-HARD (11X21X2.5-MM THK)	
M	15	1	**8T-4136**	10	BOLT (M10X1.5X25-MM)	
M	16	1	**8T-4137**	8	BOLT (M10X1.5X20-MM)	
M	17	1	**8T-4189**	2	BOLT (M8X1.25X20-MM)	

M - METRIC PART
Y - SEPARATE ILLUSTRATION

488-2521 **LIGHTING GP-FLOOD (**contd.**)** **i06530588**

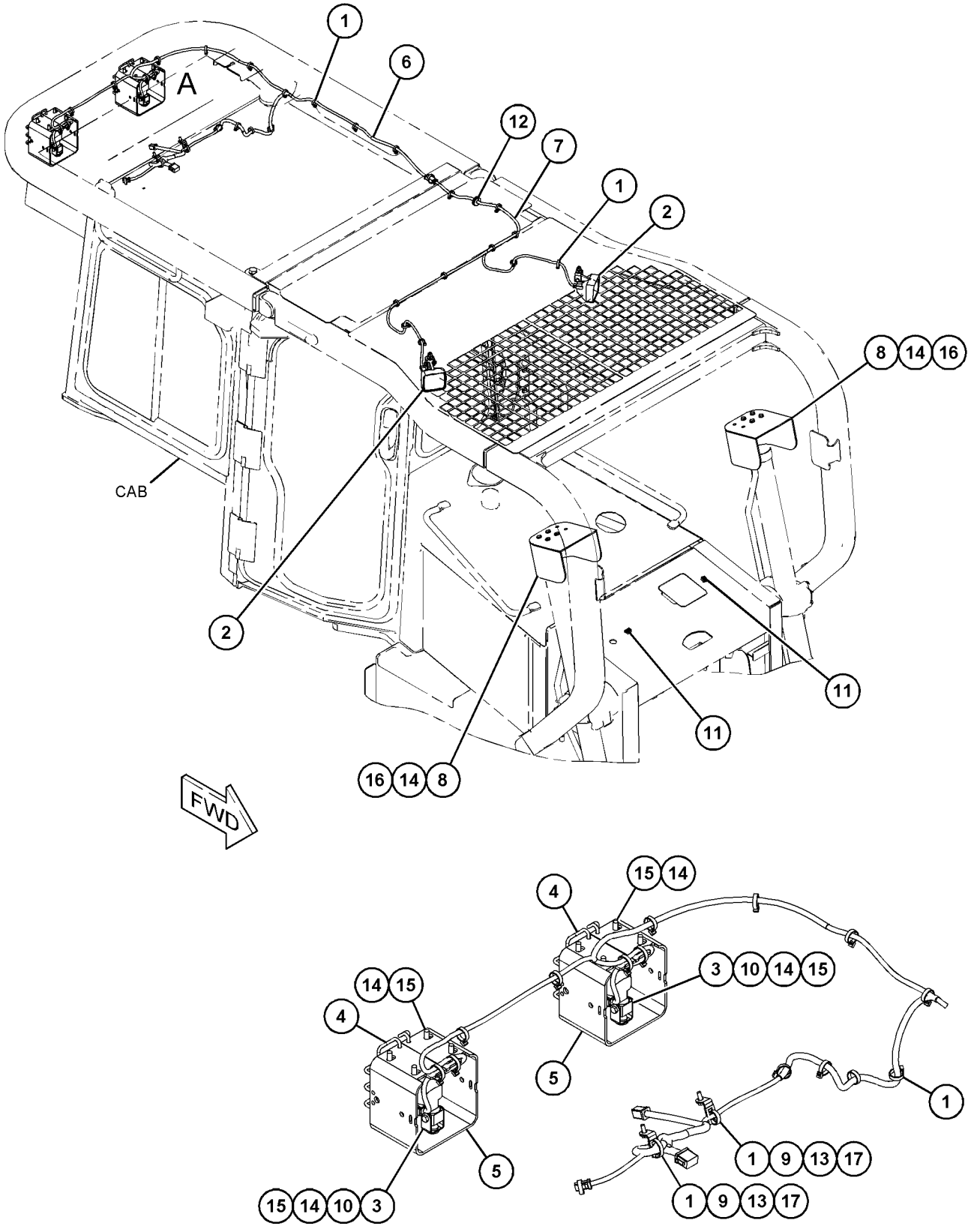

VIEW OF AREA A

GRAPHIC #1 <END> g06024162

395-0112 MOUNTING GP-ELECTRONIC CONTROL

S/N: E7A1-UP

PART OF 393-4098 ENGINE AR-PRIMARY

SMCS-1901, 7610 **i06583007**

NOTE	REF NO	GRAPHIC REF	PART NUMBER	QTY	PART NAME 1 2 3 4 5 6 (PRODUCT LEVEL)	SEE PAGE
	1	1	**446-1268**	1	BRACKET AS	
M	2	1	**6I-0292**	2	BOLT (M8X1.25X140-MM)	
M	3	1	**6I-0293**	2	BOLT (M8X1.25X80-MM)	

M - METRIC PART

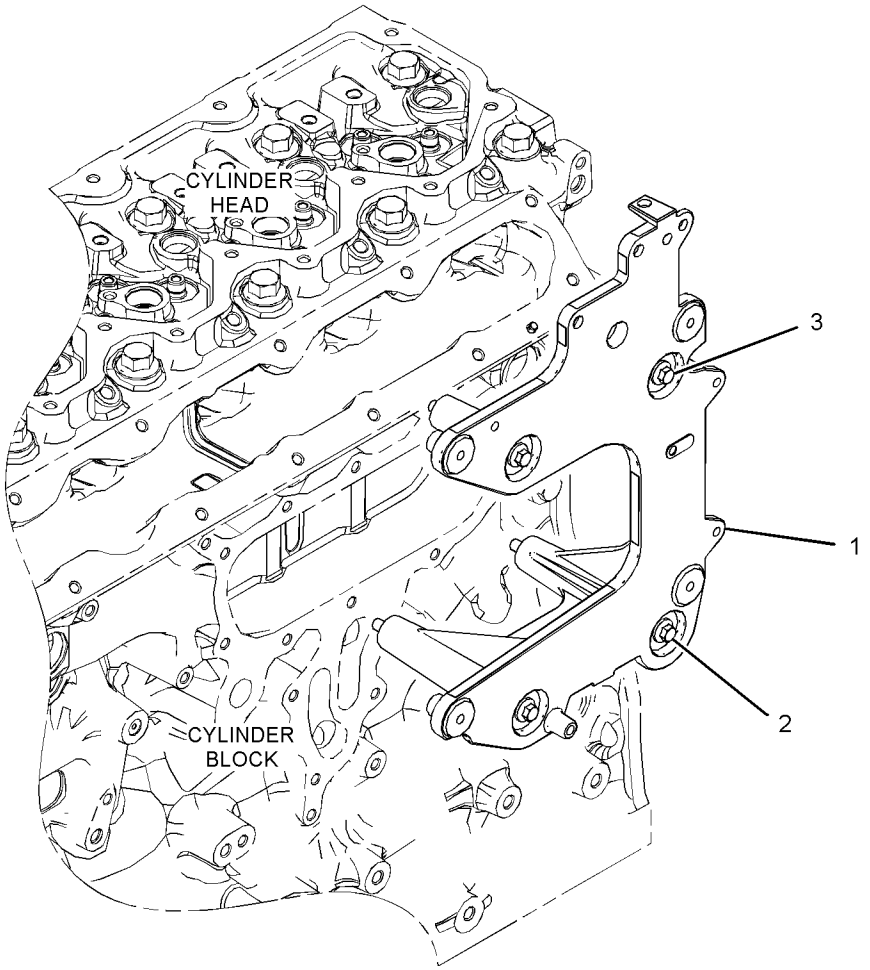

GRAPHIC #1 <END> g06032947

440-2105 RADIO GP-COMMUNICATION–PL641E CELLULAR

S/N: R5A1-UP

PART OF 480-3535 CONTROL GP-ELECTRONIC, 450-2737, 450-3389 INSTALLATION GP-COMMUNICATION

AN ATTACHMENT

SMCS-733T **i06587389**

NOTE	REF NO	GRAPHIC REF	PART NUMBER	QTY	PART NAME 1 2 3 4 5 6 (PRODUCT LEVEL)	SEE PAGE
	1	1	**449-7301**	1	FILM-INFORMATION (PL641 CELLULAR)	
F			**482-8138**	1	SOFTWARE GP-MONITOR (CELLULAR)	

F - NOT SHOWN

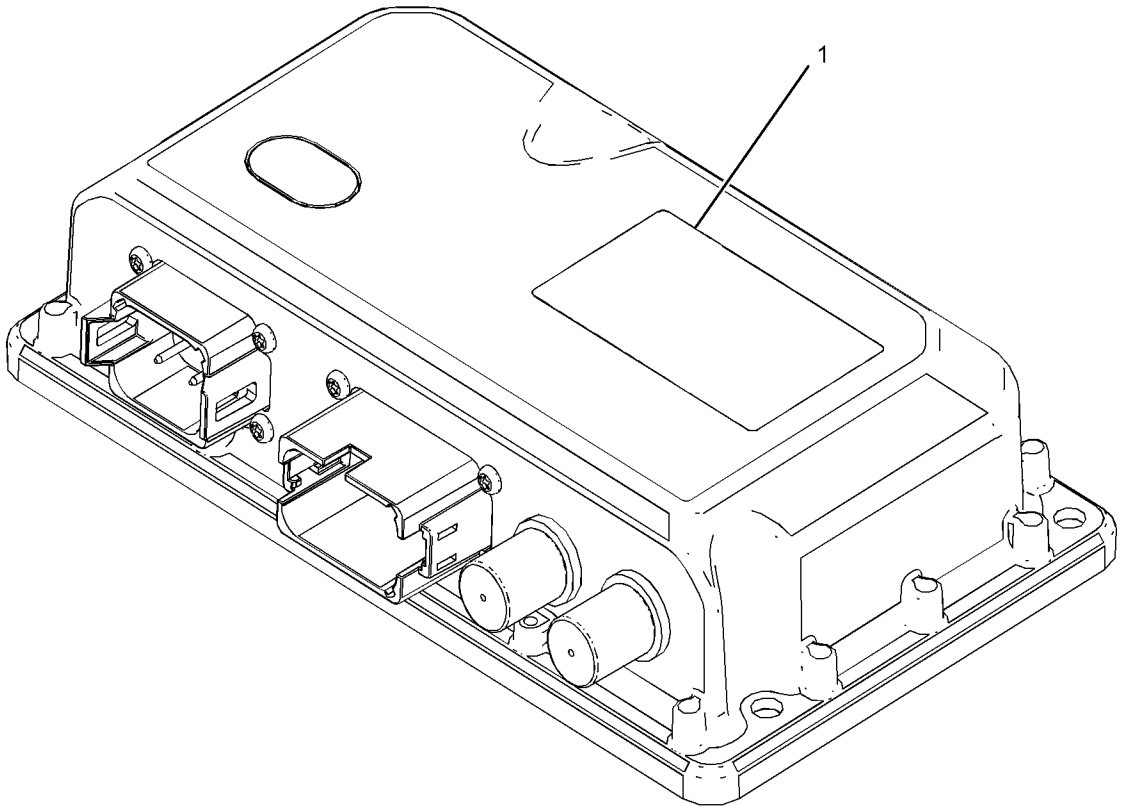

GRAPHIC #1 <END> g03853143

442-7199 RADIO GP-COMMUNICATION–PL631 SATELLITE

S/N: R5A1-UP

PART OF 450-2736, 450-3389 INSTALLATION GP-COMMUNICATION

AN ATTACHMENT

SMCS-733T **i06555752**

NOTE	REF NO	GRAPHIC REF	PART NUMBER	QTY	PART NAME 1 2 3 4 5 6 (PRODUCT LEVEL)	SEE PAGE
	1	1	**467-2513**	1	FILM-CERTIFICATION (PL631)	
	2	1	**449-7303**	1	FILM-INFORMATION (SERIAL NUMBER)	
F			**482-8159**	1	SOFTWARE GP-MONITOR (SATELLITE RADIO)	

F - NOT SHOWN

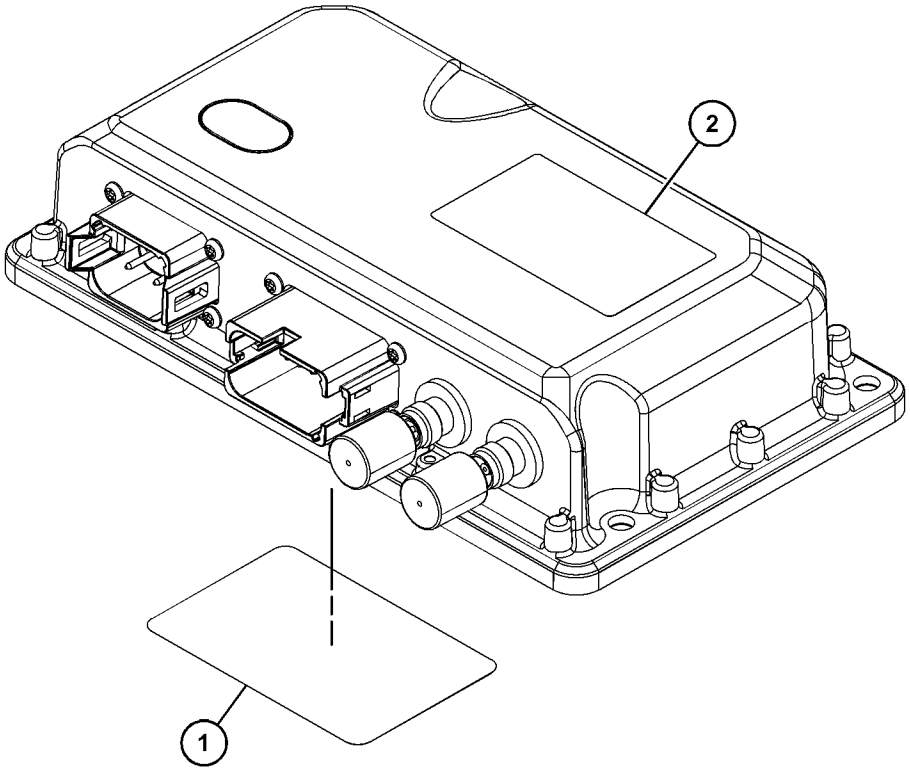

GRAPHIC #1 <END> g03836726

395-0110 SENSOR GP-ENGINE

S/N: E7A1-UP

PART OF 393-4098 ENGINE AR-PRIMARY

SMCS-1000, 1718, 1906, 1907, 1912, 1917, 1923, 1924, 1925, 1928, 1929, 7400, 7422

i06560483

NOTE	REF NO	GRAPHIC REF	PART NUMBER	QTY	PART NAME 1 2 3 4 5 6 (PRODUCT LEVEL)	SEE PAGE
M	1	1	**124-3815**	2	BOLT (M8X1.25X16-MM)	
	2	1	**199-9252**	1	SEAL-O-RING	
	3	1	**199-9267**	1	SEAL-O-RING	
	4	1	**199-9751**	1	SEAL-O-RING	
	5	1	**384-3888**	2	SENSOR GP-SPEED (ENGINE)	
	6	1	**256-6454**	1	SENSOR-TEMPERATURE (AIR INLET MANIFOLD)	
	6A	1	**256-6454**	1	SENSOR-TEMPERATURE (COOLANT)	
	7	1	**276-5603**	1	SEAL-O-RING	
	8	1	**320-3060**	1	SENSOR GP-PRESSURE (ENGINE OIL)	
	9	1	**320-3062**	1	SENSOR GP-PRESSURE (INLET MANIFOLD AIR)	
	10	1	**228-4947**	2	SEAL-O-RING	

M - METRIC PART

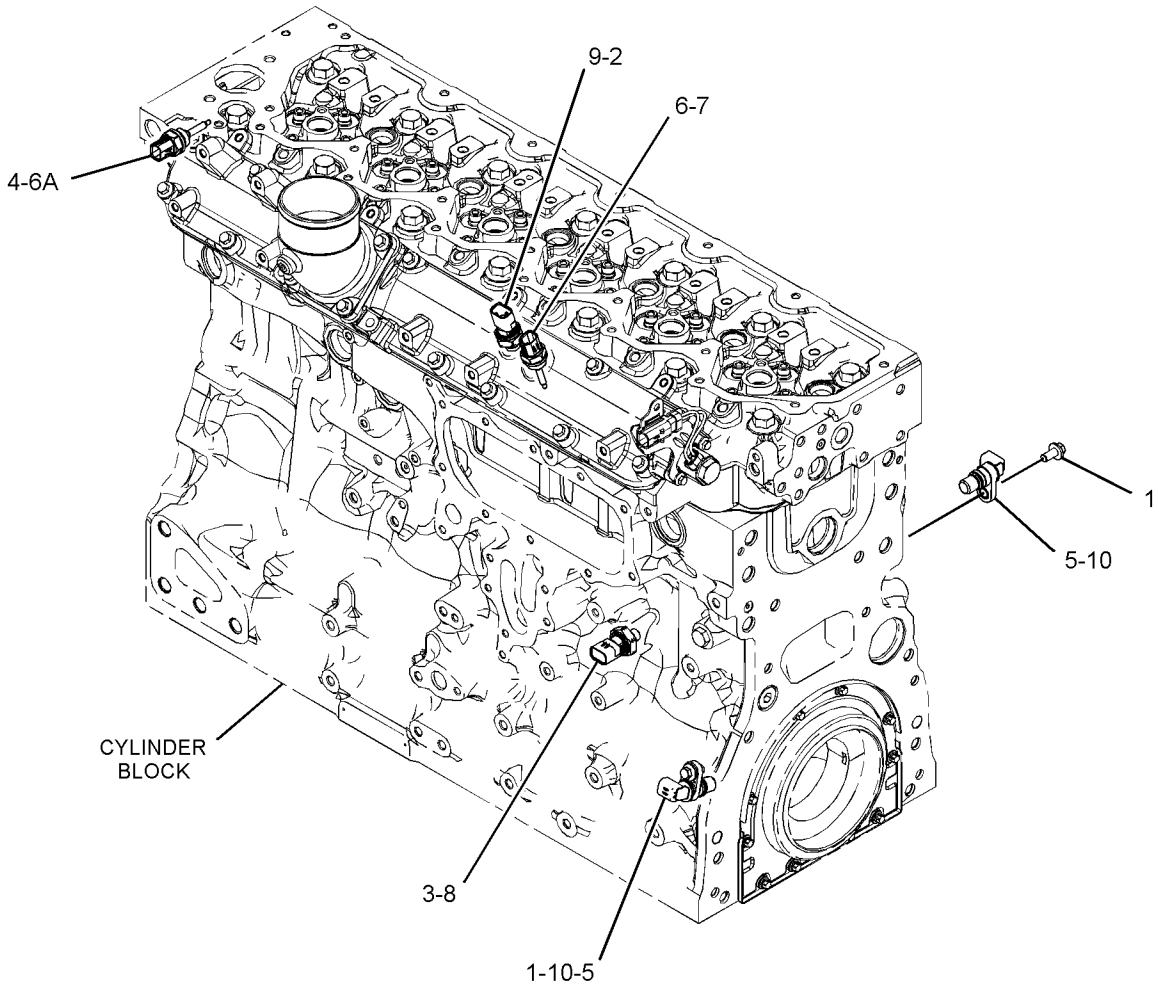

GRAPHIC #1

<END>

g03380662

266-1467 SENSOR GP-POSITION

S/N: R5A1-UP

PART OF 329-5766 PEDAL GP-GOVERNOR & BRAKE

AN ATTACHMENT

SMCS-1408, 1439, 1905, 1911 **i05575170**

NOTE	REF NO	GRAPHIC REF	PART NUMBER	QTY	PART NAME 1 2 3 4 5 6 (PRODUCT LEVEL)	SEE PAGE
	1	1	**9X-3401**	3	PIN-CONNECTOR (16-GA TO 18-GA)	
					—OR—	
		1	**126-1767**	3	PIN-CONNECTOR (14-GA TO 16-GA)	
	2	1	**102-8803**	1	KIT-RECEPTACLE (3-PIN)	
					(INCLUDES RECEPTACLE AS & WEDGE)	
E	3	1	**3E-9375**		CONDUIT (13-CM)	

E - ORDER BY THE CENTIMETER

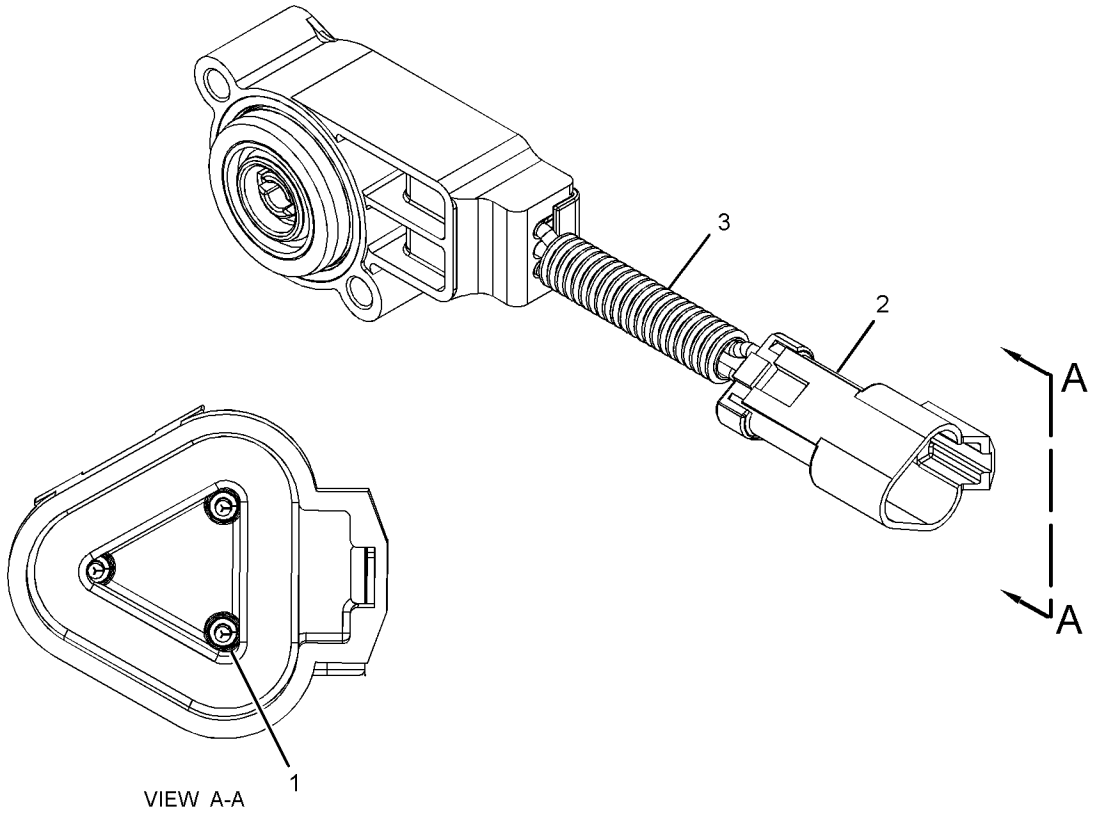

VIEW A-A

GRAPHIC #1 <END> g03547699

269-1981 SENSOR GP-POSITION

S/N: R5A1-UP

PART OF 329-5766 PEDAL GP-GOVERNOR & BRAKE

AN ATTACHMENT

SMCS-1408, 1439, 1905, 1911

i06171946

NOTE	REF NO	GRAPHIC REF	PART NUMBER	QTY	PART NAME 1 2 3 4 5 6 (PRODUCT LEVEL)	SEE PAGE
	1	1	**230-4014**	2	RECEPTACLE AS-CONNECTOR (3-PIN)	
	2	1	**9X-3401**	6	PIN-CONNECTOR (16-GA TO 18-GA)	
					–OR–	
			126-1767	6	PIN-CONNECTOR (14-GA TO 16-GA)	

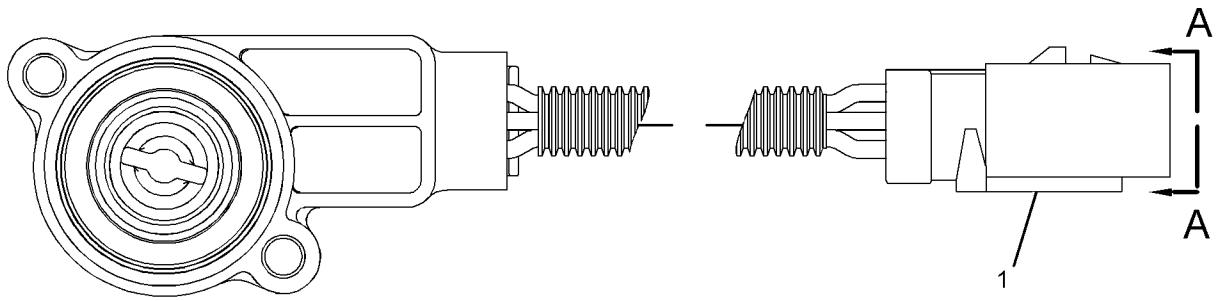

GRAPHIC #1 <END> g01391032

356-5425 SENSOR GP-POSITION

S/N: R5A1-UP

PART OF 424-8511 CONTROL GP-JOYSTICK

AN ATTACHMENT

SMCS-1408, 1439, 1905, 1911 **i06207092**

NOTE	REF NO	GRAPHIC REF	PART NUMBER	QTY	PART NAME 1 2 3 4 5 6 (PRODUCT LEVEL)	SEE PAGE
	1	1	**7P-4190**	2	BEARING-ROLLER	
	2	1	**237-0145**	1	SPACER (19.5X58X3.5-MM THK)	
	3	1	**269-7050**	1	SPRING	
	4	1	**356-5426**	1	CAM AS	
		1	**3H-0702**	1	DOWEL	
	5	1	**356-5428**	1	HOUSING	
	6	1	**356-5429**	1	HOUSING	
	7	1	**1B-8706**	1	KEY-WOODRUFF	
	8	1	**1W-6448**	3	DOWEL	
	9	1	**2H-9445**	1	PIN-SPRING	
	10	1	**2J-6356**	2	RING-RETAINING	
	11	1	**5M-1179**	1	PIN-SPRING	
	12	1	**8F-7702**	2	SEAL-LIP TYPE	
M	13	1	**8T-0640**	4	BOLT (M6X1X30-MM)	
	14	1	**8T-4994**	1	WASHER-HARD (20X36.5X3.5-MM THK)	
	15	1	**9X-8256**	4	WASHER (6.6X12X2-MM THK)	

M - METRIC PART

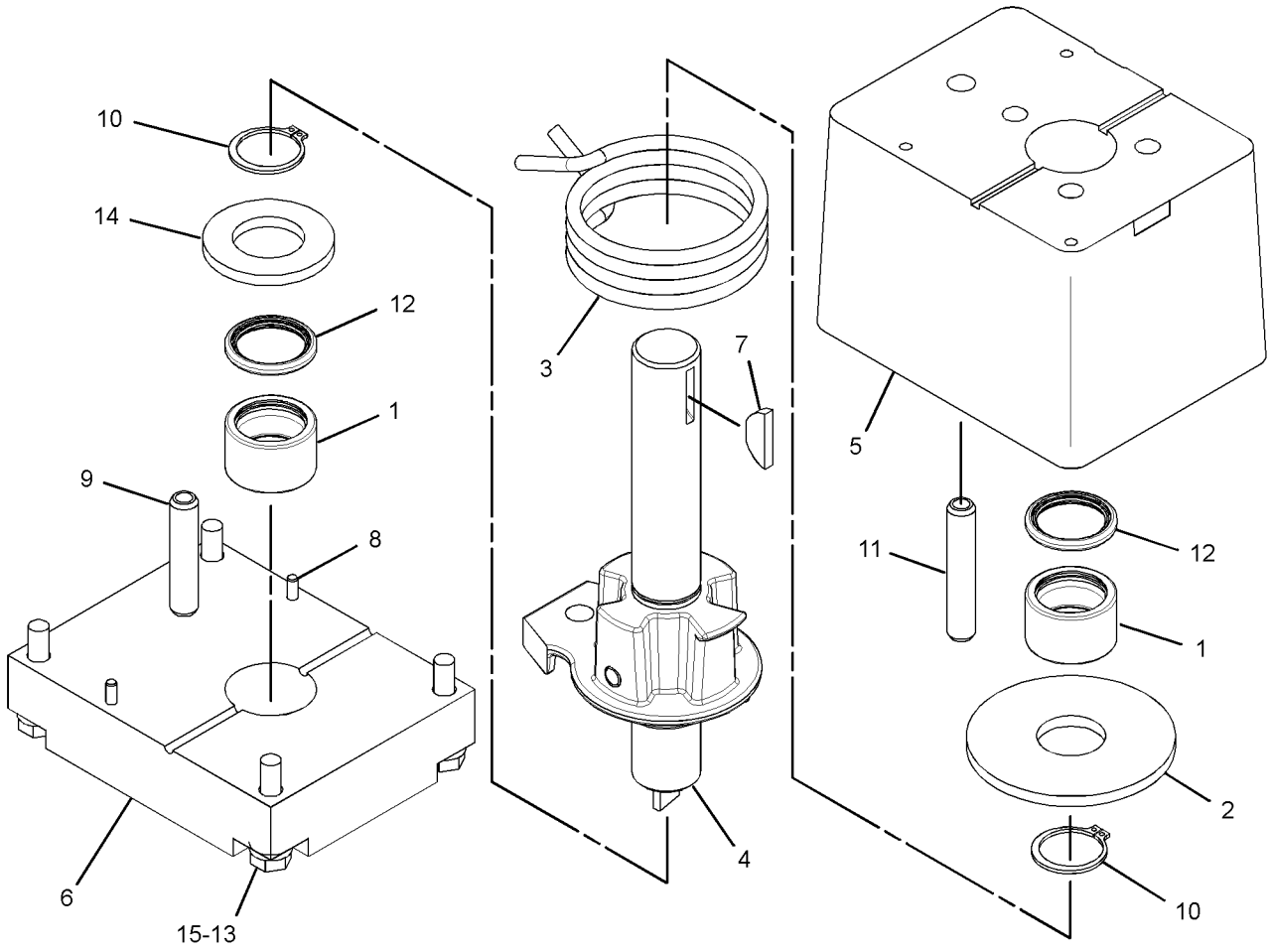

GRAPHIC #1 <END> g02872602

318-1178 SENSOR GP-SPEED—MAGNETIC, HIGH OUTPUT

S/N: R5A1-UP

PART OF 394-4835 WIRING GP-ENGINE

SMCS-1907 **i05349230**

NOTE	REF NO	GRAPHIC REF	PART NUMBER	QTY	PART NAME 1 2 3 4 5 6 (PRODUCT LEVEL)	SEE PAGE
	1	1	**171-5349**	1	STRAP-MARKER	
	2	1	**102-8802**	1	KIT-RECEPTACLE (2-PIN)	
					(INCLUDES RECEPTACLE AS & WEDGE)	
	3	1	**9X-3401**	2	PIN-CONNECTOR (16-GA TO 18-GA)	
E	4	1	**329-0418**		SLEEVE (14-CM)	

E - ORDER BY THE CENTIMETER

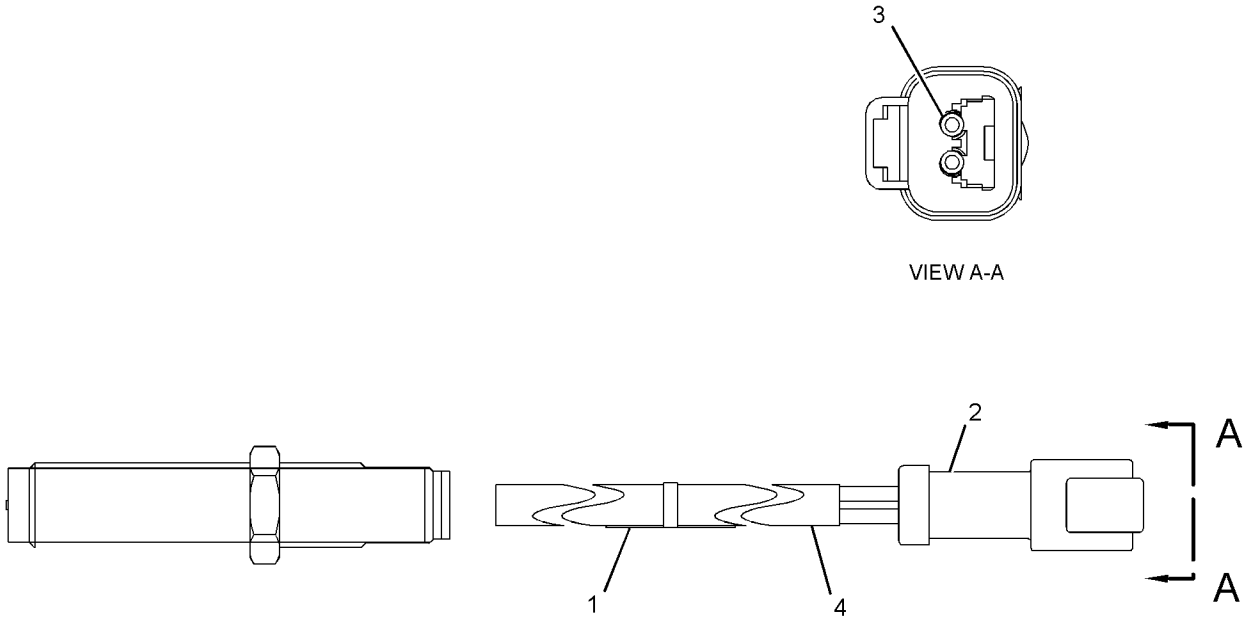

GRAPHIC #1 <END> g02699918

358-2399 SENSOR GP-SPEED

S/N: R5A1-UP

PART OF 394-4834 WIRING GP-CHASSIS

SMCS-1907 **i06517724**

NOTE	REF NO	GRAPHIC REF	PART NUMBER	QTY	PART NAME 1 2 3 4 5 6 (PRODUCT LEVEL)	SEE PAGE
					(NO SERVICED PARTS)	

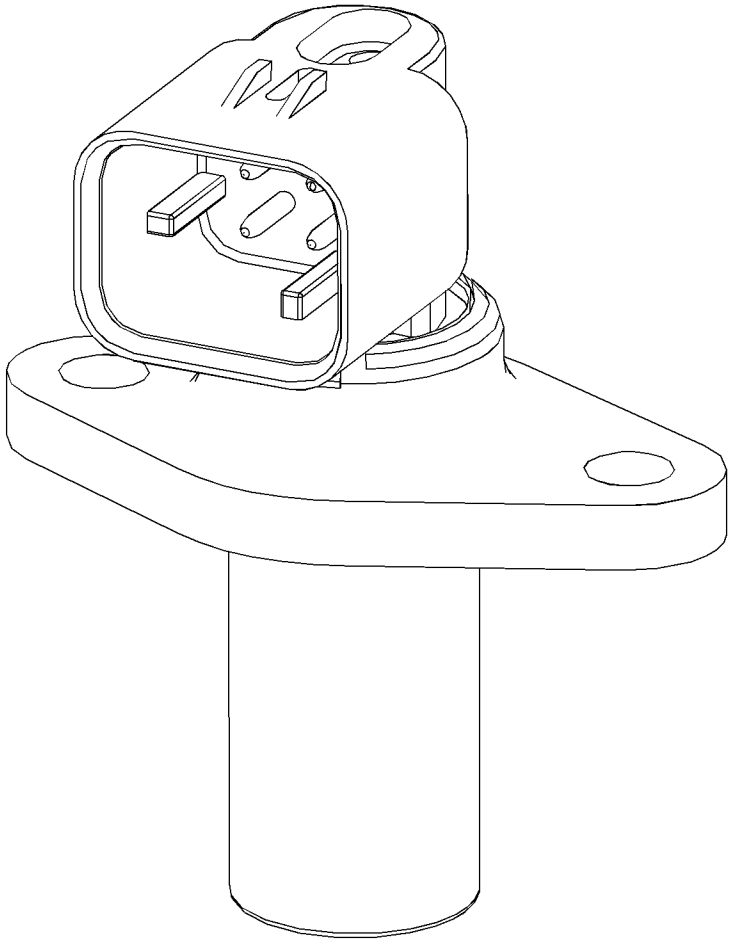

GRAPHIC #1 <END> g03348192

234-5013 SENSOR GP-TEMPERATURE

S/N: R5A1-UP

PART OF 394-4835 WIRING GP-ENGINE

SMCS-1906, 1919, 1921, 1922, 1928, 1929

i05355870

NOTE	REF NO	GRAPHIC REF	PART NUMBER	QTY	PART NAME 1 2 3 4 5 6 (PRODUCT LEVEL)	SEE PAGE
	1	1	**256-6453**	1	SENSOR-TEMPERATURE	
	2	1	**238-5080**	1	SEAL-O-RING	

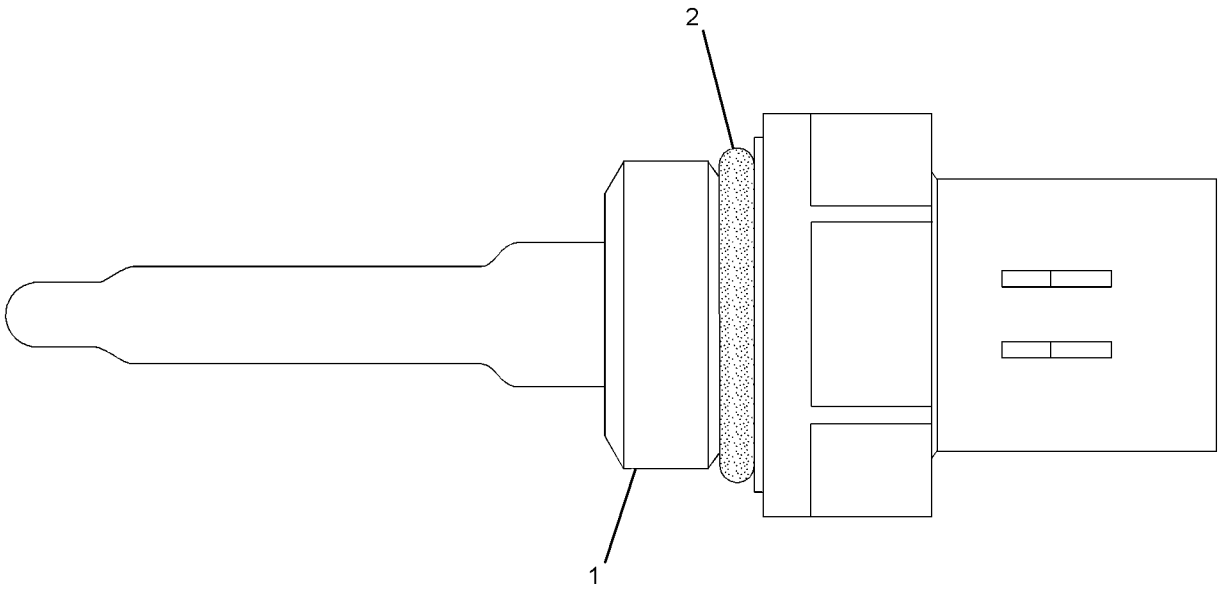

GRAPHIC #1 <END> g01164268

395-0114 STARTING AID GP

S/N: E7A1-UP

PART OF 393-4098 ENGINE AR-PRIMARY

SMCS-1090 **i06585521**

NOTE	REF NO	GRAPHIC REF	PART NUMBER	QTY	PART NAME 1 2 3 4 5 6 (PRODUCT LEVEL)	SEE PAGE
M	1	1	**112-7704**	1	BOLT (M6X1X30-MM)	
M	2	1	**5C-2890**	2	NUT (M6X1-THD)	
	3	1	**217-9039**	1	STRAP-CABLE	
	4	1	**462-2235**	6	GLOW PLUG (24-VOLT)	
	5	1	**368-3145**	1	BUS BAR AS	
	6	1	**384-7567**	1	HARNESS AS-STARTING AID	
		1	**2L-8050**	2	TERMINAL-RING (6-GA, 1/4-IN SCREW)	
					—OR—	
		1	**2L-8058**	2	TERMINAL-RING (8-GA, 1/4-IN SCREW)	
		1	**427-9771**	1	CLIP	
M	7	1	**208-8469**	1	LOCKNUT (M6X1-THD)	
	8	1	**275-2428**	1	INSULATOR	
	9	1	**277-4409**	1	CAP	
	10	1	**067-6070**	1	WASHER	
	11	1	**275-2431**	1	WASHER	

M - METRIC PART

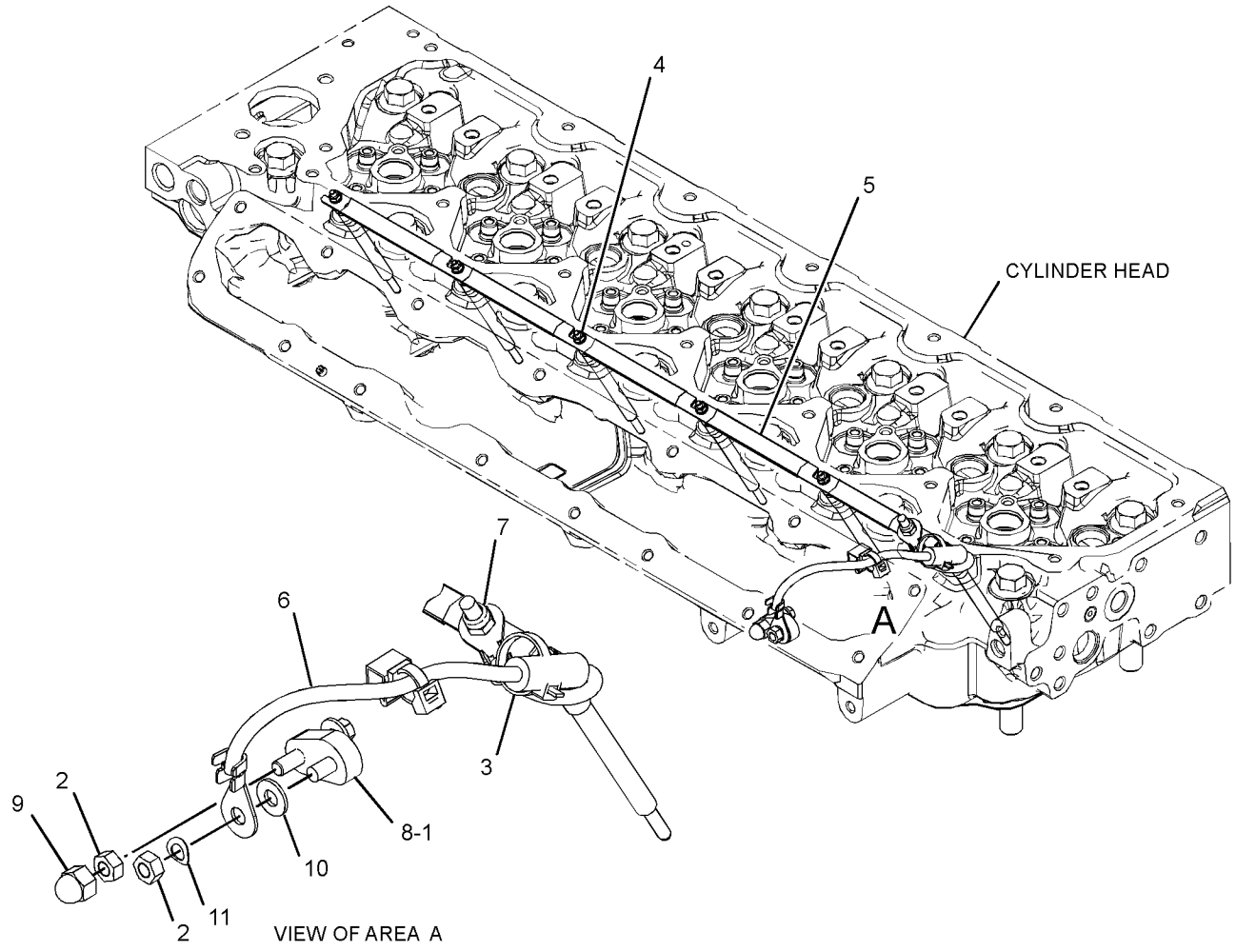

GRAPHIC #1 <END> g06032380

424-4632 STARTING AID GP-ETHER

S/N: R5A1-UP
FOR USE WITH CAB WITH A/C
AN ATTACHMENT

SMCS-1456 **i06527411**

NOTE	REF NO	GRAPHIC REF	PART NUMBER	QTY	PART NAME 1 2 3 4 5 6 (PRODUCT LEVEL)	SEE PAGE
	1	1	**3S-2093**	1	STRAP-CABLE	
	2	1	**7N-2059**	1	CLAMP AS	
	3	1	**127-7443**	1	ATOMIZER AS (ETHER)	
		1	**236-4545**	1	NUT-SLEEVE (5/16-24-THD)	
Y	4	1	**239-1134**	1	VALVE GP-ETHER STARTING (24-VOLT)	182
	5	1	**241-4194**	1	FITTING AS (CONTROL)	
		1	**236-4545**	1	NUT-SLEEVE (5/16-24-THD)	
	6	1	**206-2423**	3	SADDLE	
M	7	1	**344-5674**	2	NUT (M8X1.25-THD)	
	8	1	**4P-8134**	1	CLIP	
	9	1	**7K-1181**	6	STRAP-CABLE	
M	10	1	**8T-4189**	2	BOLT (M8X1.25X20-MM)	
	11	1	**8T-4224**	4	WASHER-HARD (8.8X16X2-MM THK)	
E	12	1	**174-9169**		TUBE (80-CM)	
AF			**7N-0296**	1	CYLINDER AS-ETHER	
					(MUST BE PROCURED LOCALLY FROM YOUR CAT DEALER)	

A - NOT PART OF THIS GROUP
E - ORDER BY THE CENTIMETER
F - NOT SHOWN
M - METRIC PART
Y - SEPARATE ILLUSTRATION

424-4632 **STARTING AID GP-ETHER (**contd.**)** **i06527411**

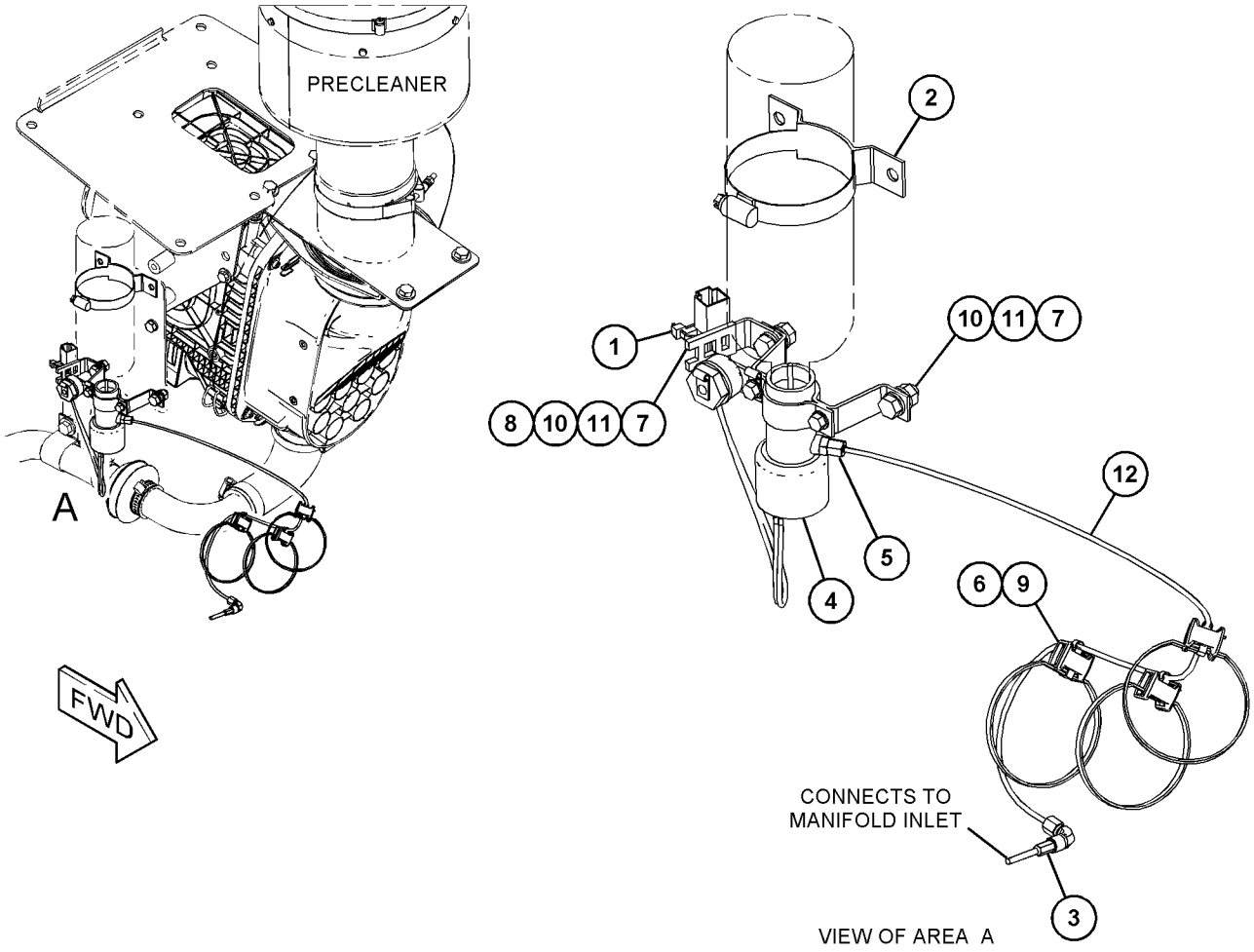

GRAPHIC #1 <END> g06022628

392-2022 STARTING MOTOR GP-ELECTRIC

S/N: E7A1-UP
24-VOLT
PART OF 393-4098 ENGINE AR-PRIMARY

SMCS-1453 **i06563747**

NOTE	REF NO	GRAPHIC REF	PART NUMBER	QTY	PART NAME 1 2 3 4 5 6 (PRODUCT LEVEL)	SEE PAGE
	1	1	**183-1343**	3	STUD	
R	2	1	**387-9639**	1	STARTING MOTOR GP-ELECTRIC (24-VOLT)	
		1	**230-4012**	1	RECEPTACLE AS-CONNECTOR (2-PIN)	
	3	1	**399-5260**	1	GASKET	
M	4	1	**184-0983**	3	NUT-HEX FLANGE (M12X1.75-THD)	

M - METRIC PART
R - REMANUFACTURED PART MAY BE AVAILABLE

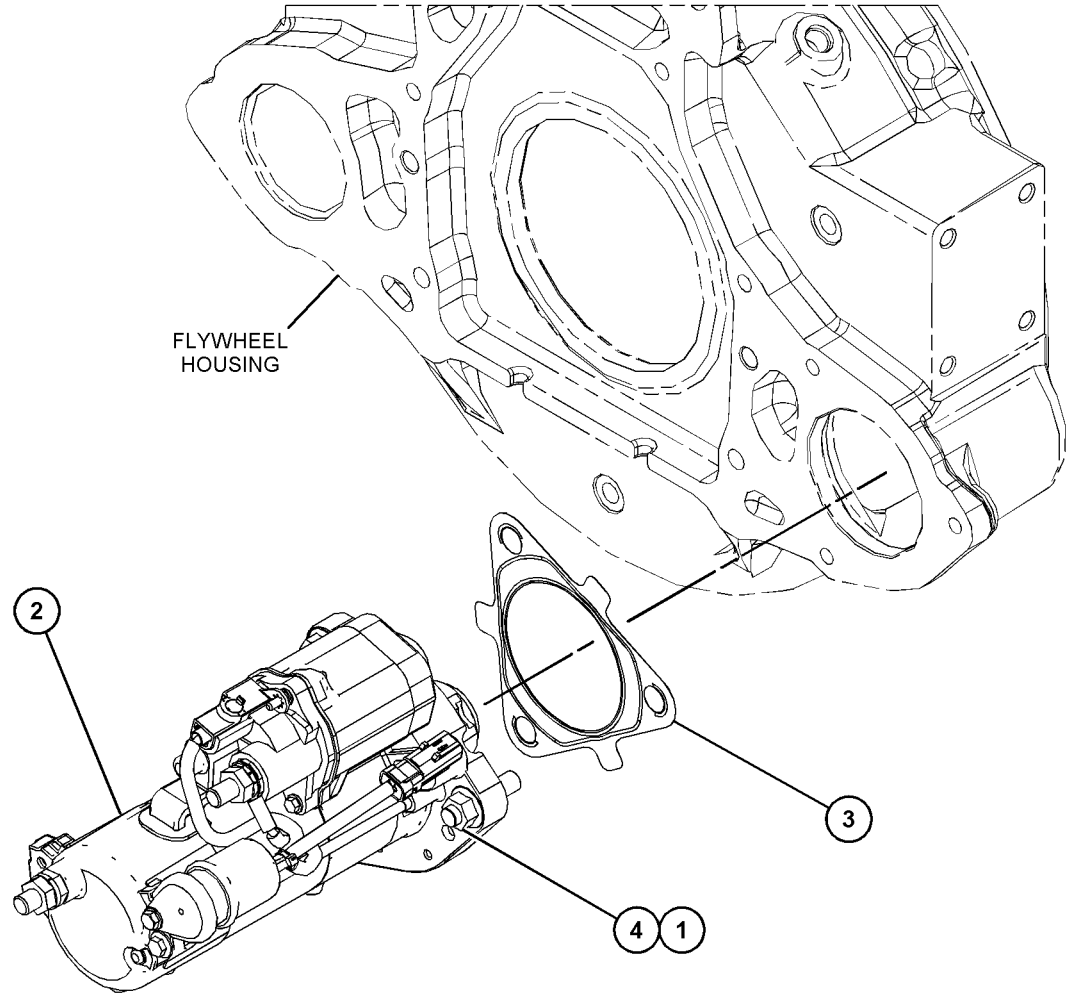

GRAPHIC #1 <END> g06034760

7N-0718 SWITCH GP-DISCONNECT–BATTERY

S/N: R5A1-UP

PART OF 394-4834 WIRING GP-CHASSIS

SMCS-1411 **i04921892**

NOTE	REF NO	GRAPHIC REF	PART NUMBER	QTY	PART NAME 1 2 3 4 5 6 (PRODUCT LEVEL)	SEE PAGE
	1	1	**2H-3922**	2	LOCKWASHER	
	2	1	**8H-5303**	1	NUT (3/4-16-THD)	
	3	1	**9F-5644**	2	LOCKWASHER	
	4	1	**6F-7045**	2	NUT-FULL (3/8-24-THD)	
	5	1	**8H-5306**	1	KEY (BATTERY DISCONNECT)	

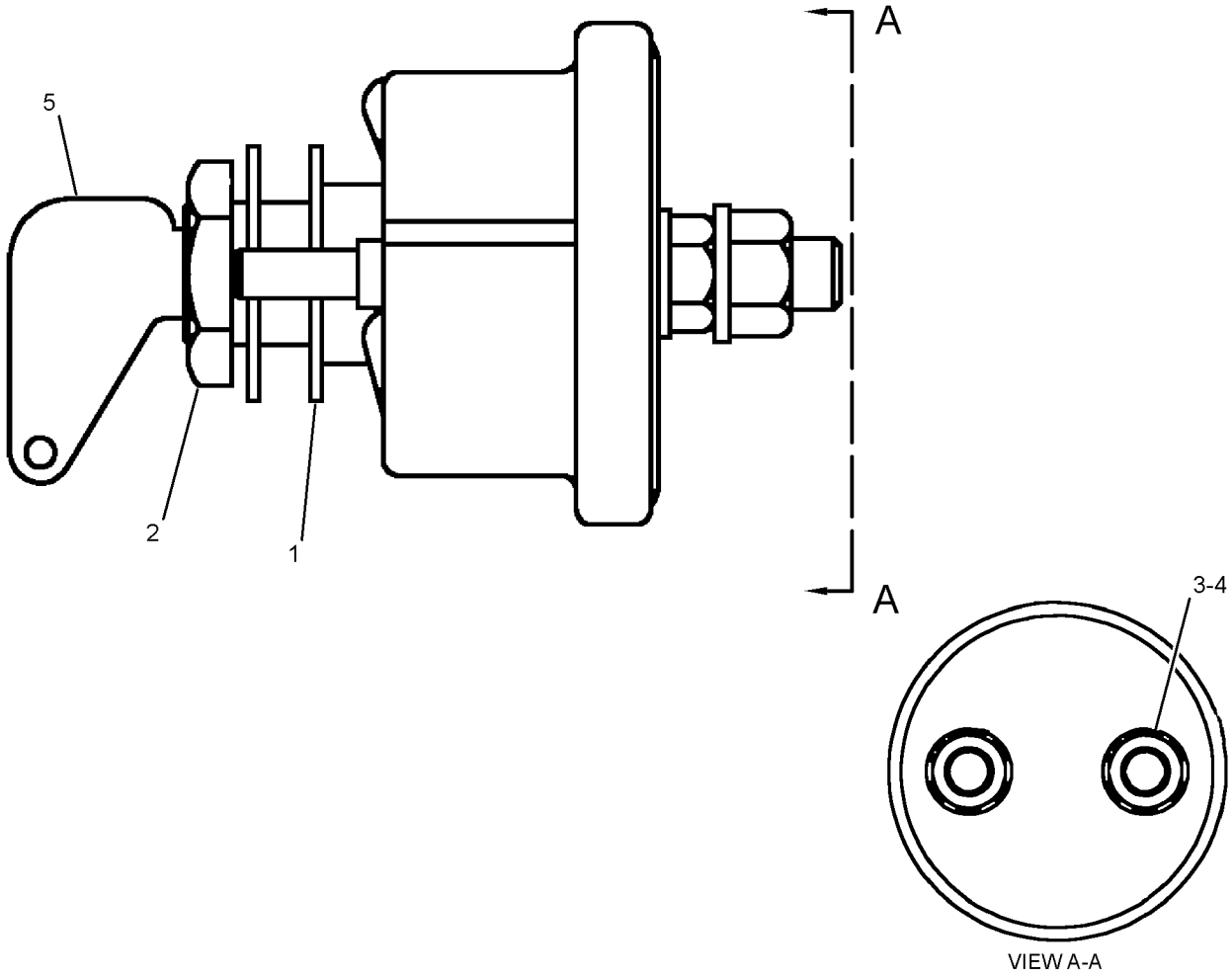

VIEW A-A

GRAPHIC #1 <END> g02663120

241-8368 SWITCH GP-MAGNETIC

S/N: R5A1-UP
24-VOLT
PART OF 415-4252, 420-1160 WIRING GP-CAB
AN ATTACHMENT

SMCS-7499 **i06576212**

NOTE	REF NO	GRAPHIC REF	PART NUMBER	QTY	PART NAME 1 2 3 4 5 6 (PRODUCT LEVEL)	SEE PAGE
	1	1	**155-2270**	1	KIT-CONNECTING PLUG (2-PIN)	
					(INCLUDES PLUG AS, WEDGE & INTERFACE SEAL)	
	2	1	**4F-2294**	2	NUT-JAM (5/16-24-THD)	
	3	1	**8T-8730**	2	SOCKET-CONNECTOR (16-GA TO 18-GA)	

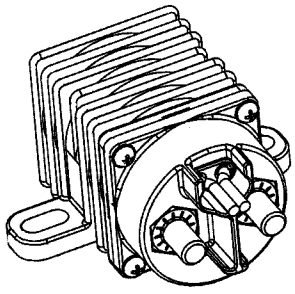

ISOMETRIC VIEW

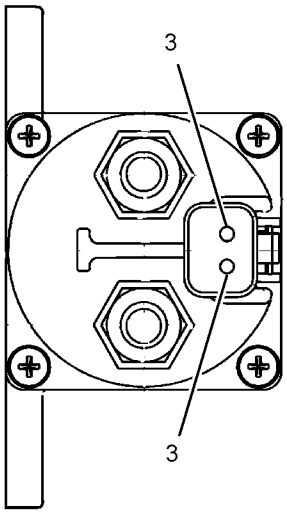

VIEW A-A

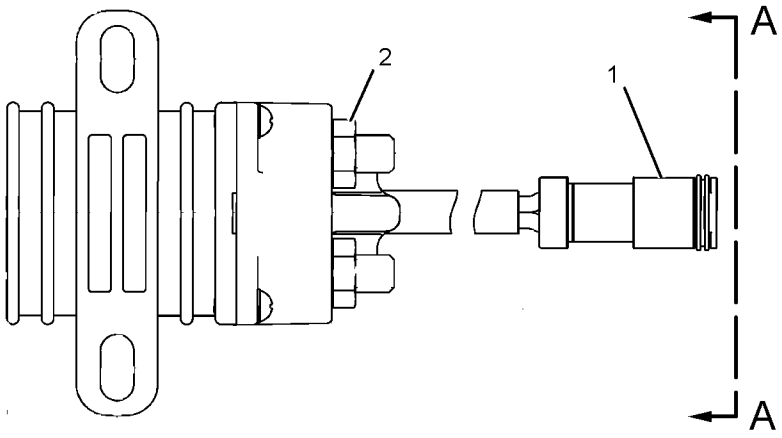

GRAPHIC #1 <END> g01077362

398-0940 SWITCH GP-MAGNETIC

S/N: R5A1-UP
24-VOLT
PART OF 394-4834 WIRING GP-CHASSIS

SMCS-7499 **i06517756**

NOTE	REF NO	GRAPHIC REF	PART NUMBER	QTY	PART NAME 1 2 3 4 5 6 (PRODUCT LEVEL)	SEE PAGE
	1	1	**102-8802**	1	KIT-RECEPTACLE (2-PIN)	
					(INCLUDES RECEPTACLE AS & WEDGE)	
	2	1	**8T-8729**	2	PIN-CONNECTOR (16-GA TO 18-GA)	
	3	1	**3F-9556**	2	LOCKWASHER	
	4	1	**6V-8186**	2	NUT-FULL (5/16-24-THD)	
	5	1	**6V-8378**	2	NUT (10-32-THD)	
	6	1	**8F-1434**	2	LOCKWASHER	

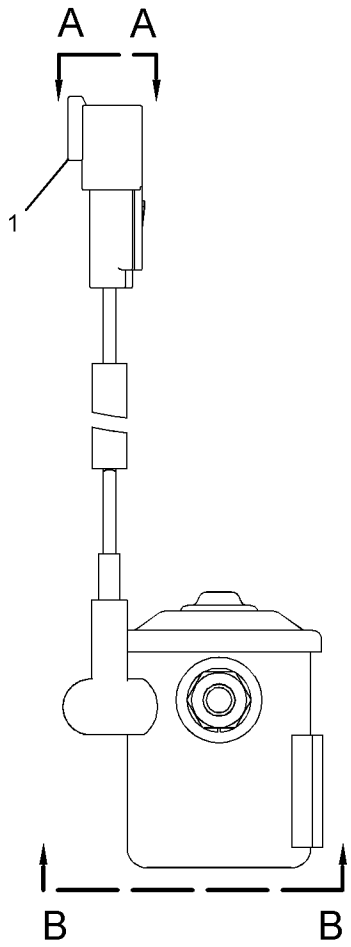

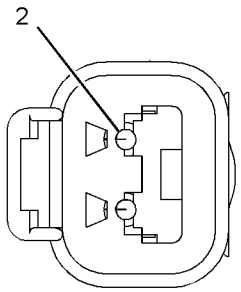

VIEW A-A

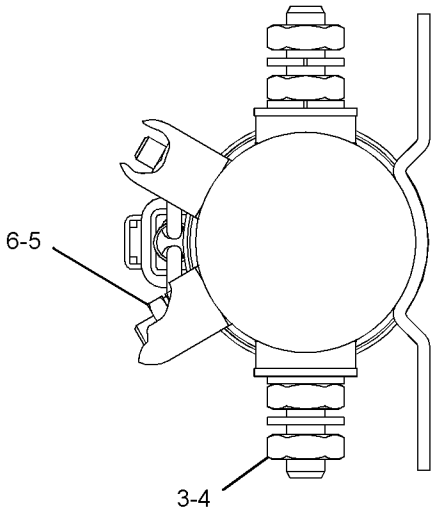

VIEW B-B

GRAPHIC #1 <END> g03351877

440-0257 SWITCH GP-PRESSURE

S/N: R5A1-UP
DIFFERENTIAL
PART OF 332-8833 FILTER GP-OIL

SMCS-7400, 7421

i06124009

NOTE	REF NO	GRAPHIC REF	PART NUMBER	QTY	PART NAME 1 2 3 4 5 6 (PRODUCT LEVEL)	SEE PAGE
	1	1	**102-8802**	1	KIT-RECEPTACLE (2-PIN)	
					(INCLUDES RECEPTACLE AS & WEDGE)	
	2	1	**033-6033**	1	SEAL-O-RING	
	3	1	**8T-8729**	2	PIN-CONNECTOR (16-GA TO 18-GA)	
E	4	1	**9X-1813**		SLEEVE (28-CM)	
	5	1	**206-9295**	1	SEAL-O-RING	

E - ORDER BY THE CENTIMETER

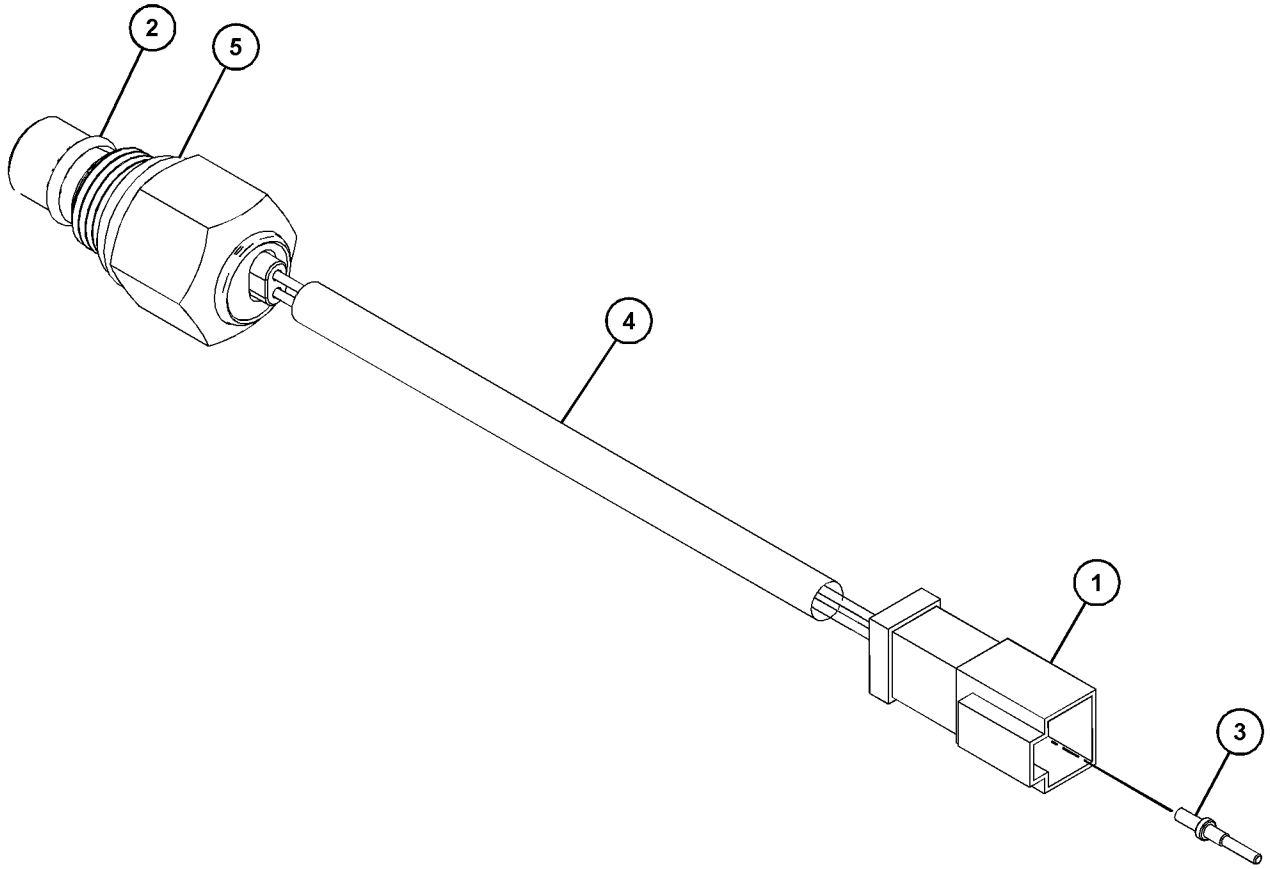

GRAPHIC #1 <END> g03688962

158-6632 SWITCH GP-PUSH BUTTON

S/N: R5A1-UP
24-VOLT
PART OF 415-4252, 420-1160 WIRING GP-CAB
AN ATTACHMENT

SMCS-1435, 7332 **i05330661**

NOTE	REF NO	GRAPHIC REF	PART NUMBER	QTY	PART NAME 1 2 3 4 5 6 (PRODUCT LEVEL)	SEE PAGE
	1	1	**9X-0199**	1	BOOT-SWITCH	
	2	1	**7T-9515**	1	KNOB-HORN	
	3	1	**5L-7200**	1	SCREW (8-32X0.375-IN)	
	4	1	**3B-4501**	1	LOCKWASHER	
	5	1	**6V-8370**	1	NUT-HEX (3/4-32-THD)	
	6	1	**2H-3922**	1	LOCKWASHER	
	7	1	**102-8802**	1	KIT-RECEPTACLE (2-PIN)	
					(INCLUDES RECEPTACLE AS & WEDGE)	
	8	1	**9X-3401**	2	PIN-CONNECTOR (16-GA TO 18-GA)	
	9	1	**3E-3365**	1	WEDGE-RECEPTACLE LOCK (2-PIN)	

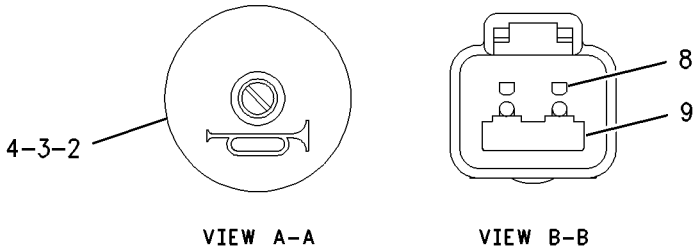

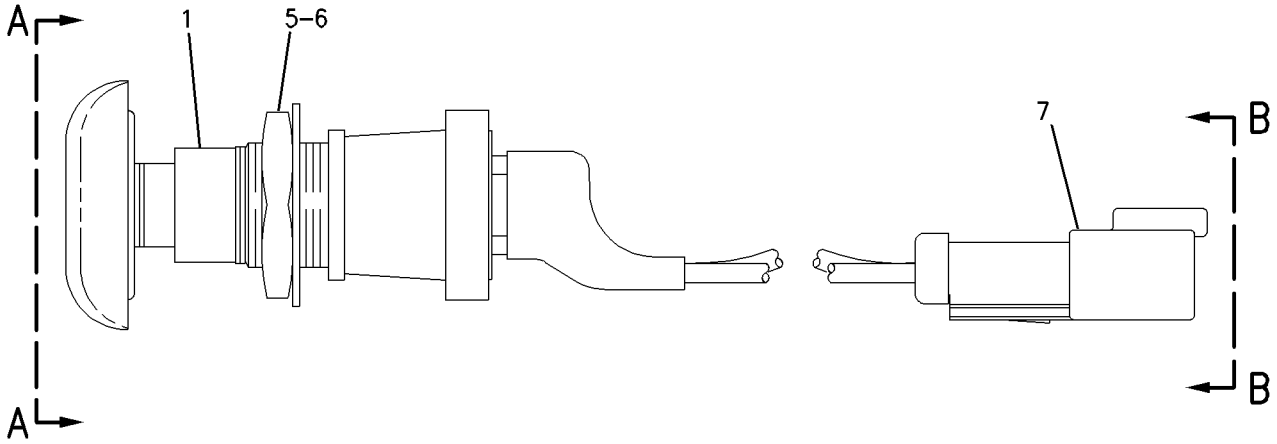

GRAPHIC #1 <END> g00942674

112-6174 SWITCH GP-ROTARY

S/N: R5A1-UP
PART OF 415-4252 WIRING GP-CAB
AN ATTACHMENT

SMCS-7332 **i05269471**

NOTE	REF NO	GRAPHIC REF	PART NUMBER	QTY	PART NAME 1 2 3 4 5 6 (PRODUCT LEVEL)	SEE PAGE
	1	1	**6V-8369**	1	NUT (7/16-28-THD)	
	2	1	**2H-3920**	1	LOCKWASHER	
	3	1	**102-8806**	1	KIT-RECEPTACLE (8-PIN)	
					(INCLUDES RECEPTACLE AS & WEDGE)	
	4	1	**8T-8737**	2	PLUG-SEAL	
	5	1	**8T-8729**	6	PIN-CONNECTOR (16-GA TO 18-GA)	

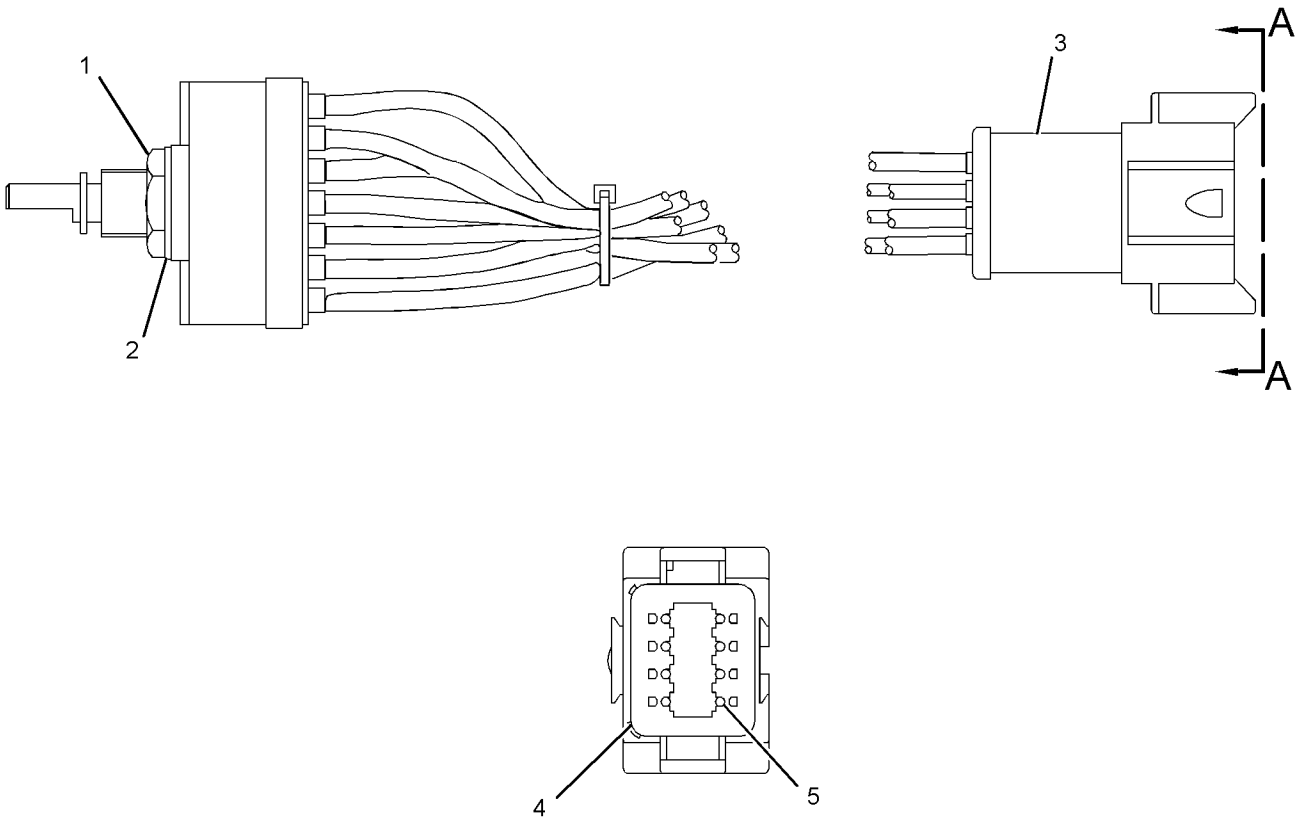

VIEW A-A

GRAPHIC #1 <END> g03197518

239-1134 VALVE GP-ETHER STARTING

S/N: R5A1-UP
24-VOLT, CONTINUOUS
PART OF 424-4632 STARTING AID GP-ETHER
AN ATTACHMENT

SMCS-1456 **i05505369**

NOTE	REF NO	GRAPHIC REF	PART NUMBER	QTY	PART NAME 1 2 3 4 5 6 (PRODUCT LEVEL)	SEE PAGE
	1	1	**7N-9801**	1	GASKET	
	2	1	**102-8802**	1	KIT-RECEPTACLE (2-PIN)	
					(INCLUDES RECEPTACLE AS & WEDGE)	
	3	1	**8T-8729**	2	PIN-CONNECTOR (16-GA TO 18-GA)	
	4	1	**358-4889**	1	FILTER (ETHER START)	

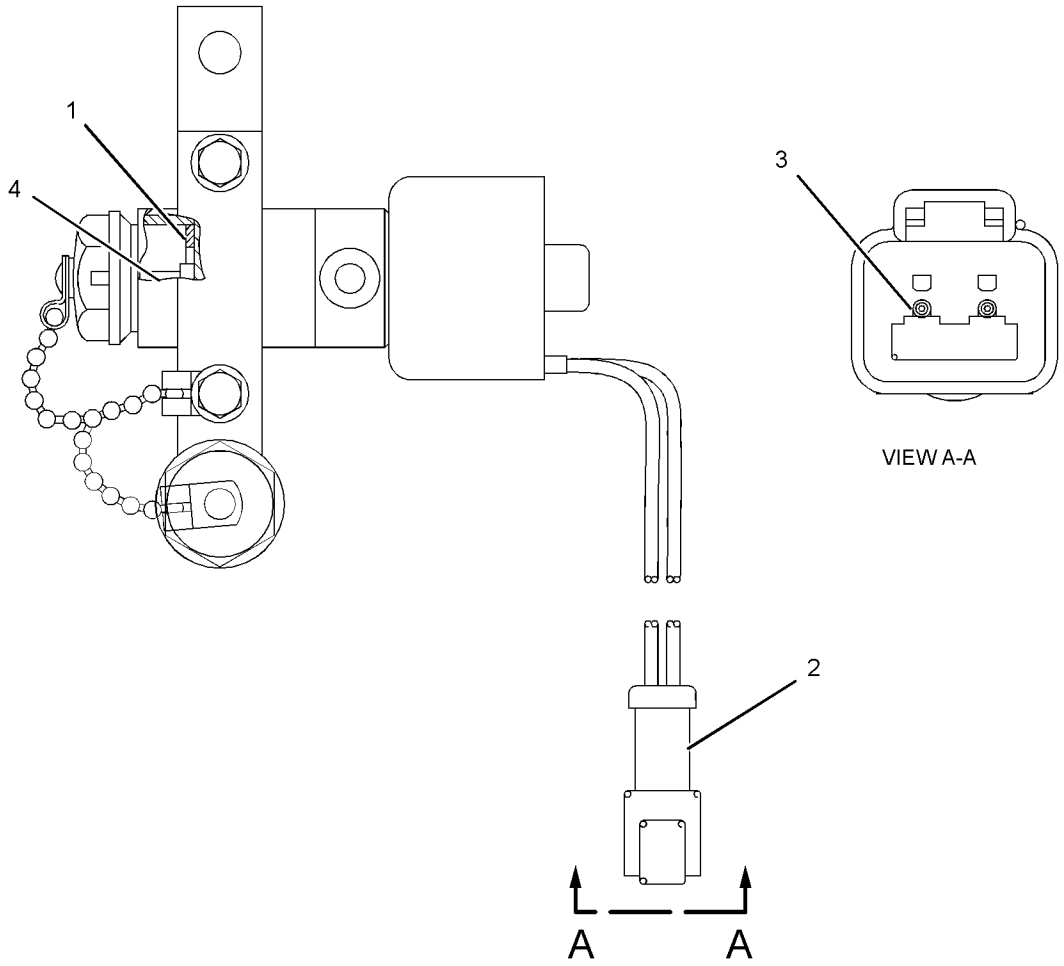

GRAPHIC #1 <END> g02138138

415-4252 WIRING GP-CAB

S/N: R5A1-UP

PART OF 393-6480 CAB AR, 393-6485 CAB AR-ENCLOSED ROPS AN ATTACHMENT

SMCS-1408, 7301 **i06532556**

NOTE	REF NO	GRAPHIC REF	PART NUMBER	QTY	PART NAME 1 2 3 4 5 6 (PRODUCT LEVEL)	SEE PAGE
	1	1	**3E-5239**	2	RELAY AS (24-VOLT) (WINDOW WIPERS)	
Y	2	1	**3E-6328**	1	ALARM GP (24-VOLT) (ACTION)	95
Y	3	1	**3E-6389**	1	LAMP GP-DOME (24-VOLT) (WITH SWITCH)	141
	4	2	**6I-1418**	4	SPACER (8.2X12.7X28.7-MM THK)	
	5	2	**8T-9655**	8	MOUNT-ISOLATION (ISOLATION)	
	6	2	**9N-0869**	4	WASHER-HARD (8.8X25.5X2-MM THK)	
	7	3	**467-8535**	1	SWITCH AS-START (KEY)	
		3	**7T-6799**	1	NUT-MOUNTING (1-32-THD)	
		3	**8T-8729**	4	PIN-CONNECTOR (16-GA TO 18-GA)	
		3	**102-8804**	1	KIT-RECEPTACLE (4-PIN)	
					(INCLUDES RECEPTACLE AS & WEDGE)	
Y	8	1	**112-6174**	4	SWITCH GP-ROTARY (WIPER, WASHER)	181
	9	2	**113-8490**	4	FUSE (10-AMPERE)	
	10	2	**113-8491**	16	FUSE (15-AMPERE)	
	11	3	**133-9405**	1	SWITCH AS-PUSH BUTTON (DISPLAY MODES)	
		3	**3E-3371**	1	WEDGE-RECEPTACLE LOCK (3-PIN)	
		3	**3K-0835**	1	NUT (5/8-24-THD)	
		3	**6F-0253**	1	LOCKWASHER	
		3	**8T-8729**	3	PIN-CONNECTOR (16-GA TO 18-GA)	
		3	**102-8803**	1	KIT-RECEPTACLE (3-PIN)	
					(INCLUDES RECEPTACLE AS & WEDGE)	
Y	12	2	**158-6632**	1	SWITCH GP-PUSH BUTTON (HORN)	180
	13	1	**161-1099**	1	PLATE	
	14	3	**218-0651**	1	FILM-INSTRUCTION (KEY START SWITCH)	
Y	15	2	**241-8368**	1	SWITCH GP-MAGNETIC (24-VOLT) (MAIN POWER RELAY)	177
	16	3	**261-7990**	1	GROMMET	
M	17	2	**263-6556**	1	STUD (M10X1.5-THD)	
	18	1	**270-2679**	1	LOCKWASHER	
	19	1	**274-3774**	1	CAP-CONNECTOR	
	20	2	**274-3777**	1	CAP-CONNECTOR	
	21	2	**274-3778**	1	CAP-SEAL	
	22	1	**274-3779**	1	CAP-SEAL	
	23	1	**284-3623**	1	SWITCH AS-ROCKER (24-VOLT) (IMPLEMENT LOCKOUT)	
	24	1	**284-3664**	1	SWITCH AS-ROCKER (24-VOLT) (FLOODLIGHT, FRONT)	
	25	2	**286-0322**	1	GASKET	
	26	1	**286-0323**	1	GASKET	
	27	1	**293-9123**	1	SWITCH AS-ROCKER (24-VOLT) (FLOODLIGHTS, REAR)	
	28	2	**296-2649**	1	BRACKET AS	
	29	1	**307-0649**	4	KNOB (WINDOW WIPER CONTROLS)	
	30	1	**335-5365**	1	SOCKET-AUXILIARY POWER (12-VOLT)	
	31	2	**340-7161**	1	CONVERTER-POWER (24-VOLT TO 12-VOLT) (COMMAND COMMUNICATION)	
R	32	2	**365-6773**	1	CONTROL GP-UNPROGRAMMED (ELECTRONIC) (IMPLEMENT)	
	33	1	**375-7929**	1	FILM-IDENTIFICATION (WINDOW WIPER CONTROLS)	
	34	3	**375-9257**	1	BRACKET	
Y	35	2	**391-6256**	1	HARNESS AS-SENSOR (STEERING)	123

415-4252 **WIRING GP-CAB (**contd.**)** **i06532556**

NOTE	REF NO	GRAPHIC REF	PART NUMBER	QTY	PART NAME 1 2 3 4 5 6 (PRODUCT LEVEL)	SEE PAGE
	36	2	**392-4771**	1	CABLE AS	
D		2	**6V-2369**		CABLE (4-GA, BLACK) (0.4-M)	
		2	**8T-8799**	1	BOOT (RED)	
		2	**5P-3454**	1	TERMINAL-RING (4-GA, 5/16-IN SCREW)	
		2	*317-3240*	1	TERMINAL AS	
E		2	**125-7876**		TUBE-HEAT SHRINK (17.78-MM DIA) (4-CM)	
		2	**317-3239**	1	TERMINAL-RING	
	37	1	**392-9884**	1	PLATE	
	38	3	**393-3962**	1	FILM-IDENTIFICATION (OPERATOR)	
	39	2	**395-7861**	1	CABLE AS	
D		2	**6V-2369**		CABLE (4-GA, BLACK) (0.4-M)	
		2	**9G-4336**	1	TERMINAL-RING (4-GA, 3/8-IN SCREW)	
		2	*317-3240*	1	TERMINAL AS	
E		2	**125-7876**		TUBE-HEAT SHRINK (17.78-MM DIA) (4-CM)	
		2	**317-3239**	1	TERMINAL-RING	
Y	40	1	**415-2089**	1	HARNESS AS-CAB (MAIN)	108
Y	41	3	**415-2091**	1	HARNESS AS-CAB (FRONT)	110
Y	42	1	*415-2092*	1	HARNESS AS-CAB (LH)	111
	43	2	**420-1153**	1	HARNESS AS-CONSOLE (SWITCH PANEL)	
	44	3	**423-7330**	1	MODULE GP-DISPLAY (DASH)	
		3	**364-8277**	1	FILM-IDENTIFICATION (CAT)	
	45	2	**450-2194**	1	FILM-IDENTIFICATION (FUSE PANEL)	
	46	1	**455-9568**	1	CAP AS	
	47	2	**465-3467**	1	CABLE AS	
D		2	**6V-2369**		CABLE (4-GA, BLACK) (0.2-M)	
		2	**8T-8827**	1	BOOT (RED)	
		2	**5P-3454**	1	TERMINAL-RING (4-GA, 5/16-IN SCREW)	
		2	**9G-4336**	1	TERMINAL-RING (4-GA, 3/8-IN SCREW)	
M	48	1	**107-3786**	2	BOLT (M4X0.7X12-MM)	
	49	3	**132-5789**	1	CLIP	
	50	2	**156-6175**	1	CLIP	
M	51	2	**174-8131**	2	SCREW-TRUSS HEAD (M4X0.7X12-MM)	
M	52	3	**191-8921**	4	BOLT-SOCKET HEAD (M6X1X25-MM)	
	53	2	**1H-3244**	2	LOCKWASHER	
	54	1	**203-9007**	1	NUT (1-1/2-18-THD)	
	55	1,2,3	**204-2281**	8	STRAP-CABLE	
	56	2,3	**211-0052**	4	NUT (1-11/16-18-THD)	
	57	2,3	**310-0674**	3	LOCKWASHER	
	58	1	**3S-2093**	2	STRAP-CABLE	
	59	1,3	**4P-7581**	2	CLIP	
	60	1,3	**4P-8134**	2	CLIP	
M	61	1,2	**5C-2890**	4	NUT (M6X1-THD)	
	62	2	**5F-9757**	1	GROMMET	
	63	3	**5P-4116**	1	WASHER-HARD (8.8X20.5X2-MM THK)	
	64	2	**5P-7162**	4	SCREW-MACHINE (10-32X0.5-IN)	
	65	2	**5P-8939**	2	GROMMET	
	66	1,2,3	**7K-1181**	121	STRAP-CABLE	
M	67	2	**7X-0818**	4	BOLT (M8X1.25X45-MM)	
M	68	2	**7Y-7388**	2	SCREW-BUTTON HEAD (M5X0.8X12-MM)	
	69	1,2,3	**8T-4121**	8	WASHER-HARD (11X21X2.5-MM THK)	
M	70	2	**8T-4133**	1	NUT (M10X1.5-THD)	

415-4252 **WIRING GP-CAB (**contd.**)** **i06532556**

NOTE	REF NO	GRAPHIC REF	PART NUMBER	QTY	PART NAME 1 2 3 4 5 6 (PRODUCT LEVEL)	SEE PAGE
M	71	1	**8T-4136**	2	BOLT (M10X1.5X25-MM)	
M	72	1,3	**8T-4137**	5	BOLT (M10X1.5X20-MM)	
M	73	3	**8T-4171**	2	BOLT (M6X1X12-MM)	
M	74	3	**8T-4200**	1	BOLT (M8X1.25X16-MM)	
	75	2	**8T-4205**	2	WASHER-HARD (7.2X14.5X2-MM THK)	
M	76	1,2	**9X-1046**	13	SCREW (M4X0.7X18-MM)	
M	77	2	**9X-2044**	2	SCREW-TRUSS HEAD (M6X1X16-MM)	
	78	1,3	**9X-8256**	4	WASHER (6.6X12X2-MM THK)	
E	79	3	**7X-7877**		STRIP-EDGE (16-CM EACH)	
	80	2	**8T-3426**		CHANNEL-TRIM (0.2-M)	
	81	2	**4B-4277**	2	WASHER (8.8X17.5X1.6-MM THK)	

D - ORDER BY THE METER
E - ORDER BY THE CENTIMETER
M - METRIC PART
R - REMANUFACTURED PART MAY BE AVAILABLE
Y - SEPARATE ILLUSTRATION

415-4252 **WIRING GP-CAB (**contd.**)** **i06532556**

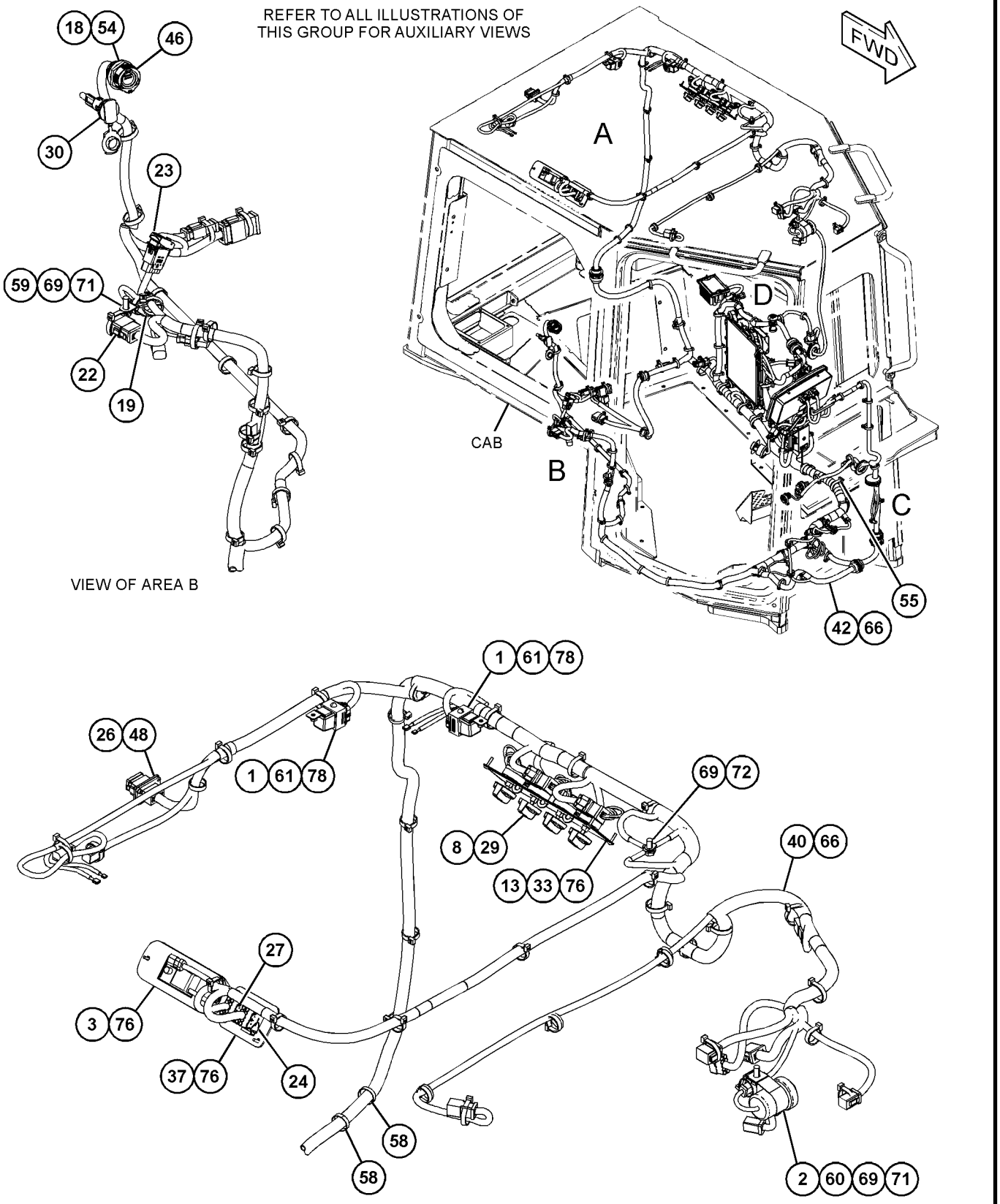

VIEW OF AREA B

VIEW OF AREA A

GRAPHIC #1 g06031636

415-4252 **WIRING GP-CAB (**contd.**)** **i06532556**

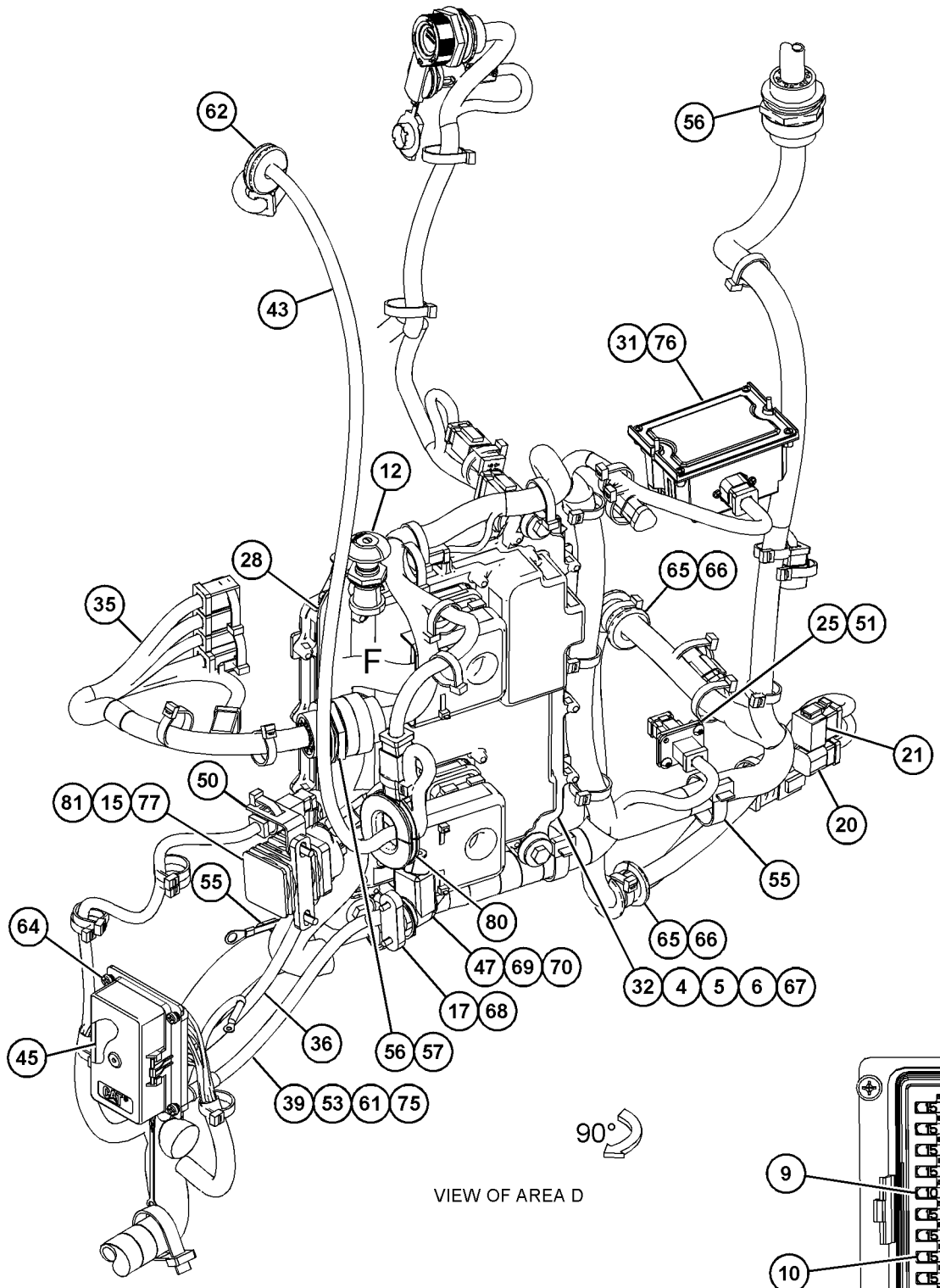

REFER TO ALL ILLUSTRATIONS OF
THIS GROUP FOR AUXILIARY VIEWS

GRAPHIC #2

g06031638

415-4252 **WIRING GP-CAB (**contd.**)** **i06532556**

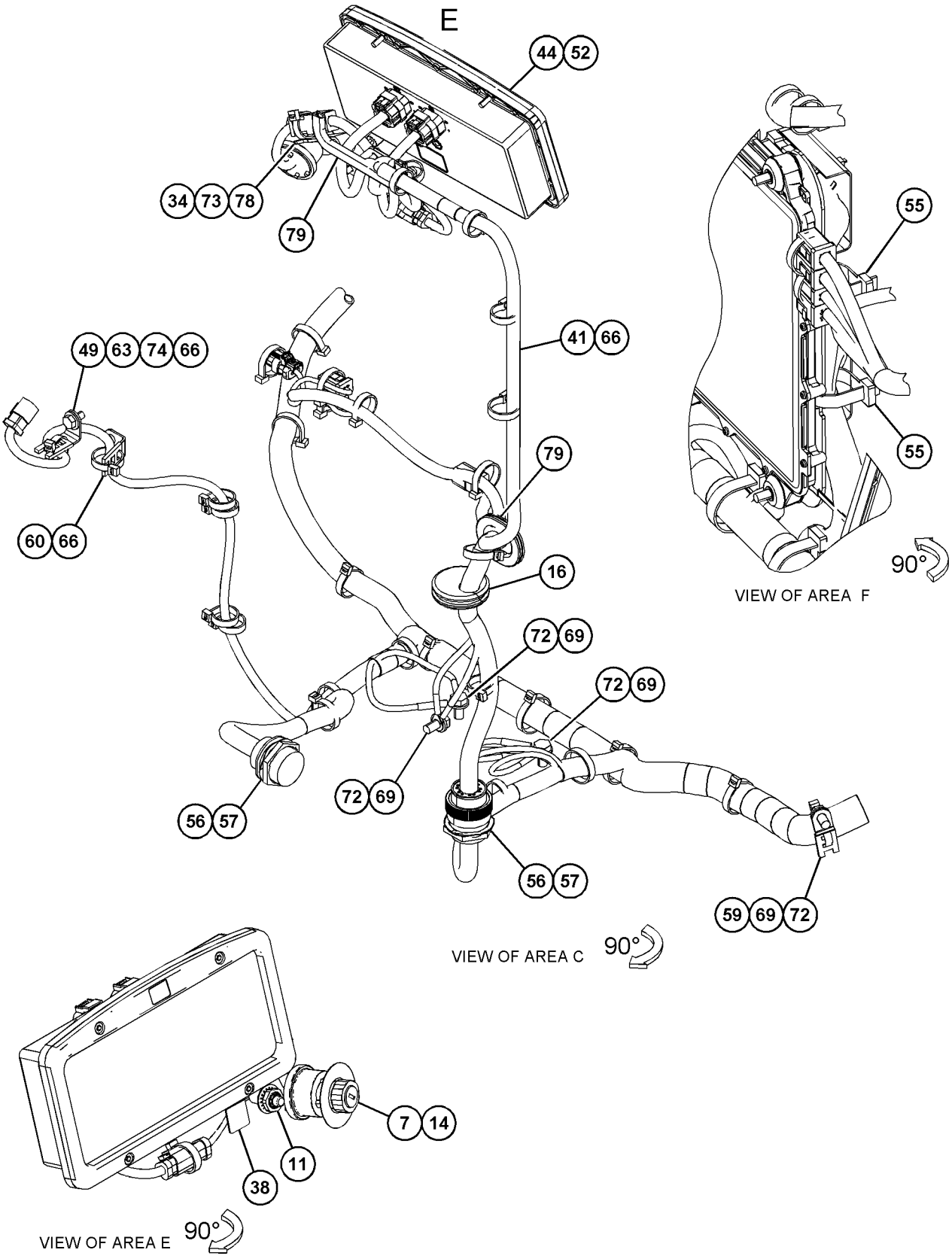

GRAPHIC #3 <END> g06031639

420-1160 WIRING GP-CAB

S/N: R5A1-UP
PART OF 393-6475 CANOPY AR
AN ATTACHMENT

SMCS-1408, 7301 **i06555812**

NOTE	REF NO	GRAPHIC REF	PART NUMBER	QTY	PART NAME 1 2 3 4 5 6 (PRODUCT LEVEL)	SEE PAGE
	1	5	**113-8490**	4	FUSE (10-AMPERE)	
	2	5	**113-8491**	16	FUSE (15-AMPERE)	
	3	3	**132-5789**	1	CLIP	
	4	4	**156-6175**	1	CLIP	
Y	5	4	**158-6632**	1	SWITCH GP-PUSH BUTTON (HORN)	180
M	6	3	**191-8921**	4	BOLT-SOCKET HEAD (M6X1X25-MM)	
	7	3	**218-0651**	1	FILM-INSTRUCTION (KEY START SWITCH)	
	8	3	**261-7990**	1	GROMMET	
M	9	4	**263-6556**	1	STUD (M10X1.5-THD)	
	10	2	**270-2679**	1	LOCKWASHER	
	11	2	**274-3777**	1	CAP-CONNECTOR	
	12	2	**274-3778**	1	CAP-SEAL	
	13	2	**274-3779**	1	CAP-SEAL	
	14	2	**284-3623**	1	SWITCH AS-ROCKER (24-VOLT) (IMPLEMENT LOCKOUT)	
	15	4	**286-0322**	1	GASKET	
	16	4	**296-2649**	1	BRACKET AS	
	17	2	**335-5365**	1	SOCKET-AUXILIARY POWER (12-VOLT)	
	18	4	**340-7161**	1	CONVERTER-POWER (24-VOLT TO 12-VOLT)	
R	19	4	**365-6773**	1	CONTROL GP- UNPROGRAMMED (ELECTRONIC) (MACHINE)	
	20	3	**375-9257**	1	BRACKET	
Y	21	4	**391-6256**	1	HARNESS AS-SENSOR	123
	22	1	**392-9884**	1	PLATE	
Y	23	3	**415-2091**	1	HARNESS AS-CAB (FRONT)	110
Y	24	2	*415-2092*	1	HARNESS AS-CAB (LH)	111
	25	4	**420-1153**	1	HARNESS AS-CONSOLE	
Y	26	1	**420-1159**	1	HARNESS AS-CAB (REAR)	112
	27	3	**423-7330**	1	MODULE GP-DISPLAY	
	28	5	**450-2194**	1	FILM-IDENTIFICATION (FUSE PANEL)	
	29	2	**455-9568**	1	CAP AS	
	30	4	**465-3467**	1	CABLE AS	
D		4	**6V-2369**		CABLE (4-GA, BLACK) (0.2-M)	
		4	**8T-8827**	1	BOOT (RED)	
		4	**5P-3454**	1	TERMINAL-RING (4-GA, 5/16-IN SCREW)	
		4	**9G-4336**	1	TERMINAL-RING (4-GA, 3/8-IN SCREW)	
	31	3	**467-8535**	1	SWITCH AS-START (KEY)	
		3	**7T-6799**	1	NUT-MOUNTING (1-32-THD)	
		3	**8T-8729**	4	PIN-CONNECTOR (16-GA TO 18-GA)	
		3	**102-8804**	1	KIT-RECEPTACLE (4-PIN)	
					(INCLUDES RECEPTACLE AS & WEDGE)	
	32	3	**133-9405**	1	SWITCH AS-PUSH BUTTON (DISPLAY MODES)	
		3	**3E-3371**	1	WEDGE-RECEPTACLE LOCK (3-PIN)	
		3	**3K-0835**	1	NUT (5/8-24-THD)	
		3	**6F-0253**	1	LOCKWASHER	
		3	**8T-8729**	3	PIN-CONNECTOR (16-GA TO 18-GA)	
		3	**102-8803**	1	KIT-RECEPTACLE (3-PIN)	
					(INCLUDES RECEPTACLE AS & WEDGE)	
M	33	4	**174-8131**	2	SCREW-TRUSS HEAD (M4X0.7X12-MM)	

420-1160 **WIRING GP-CAB (**contd.**)** **i06555812**

NOTE	REF NO	GRAPHIC REF	PART NUMBER	QTY	PART NAME 1 2 3 4 5 6 (PRODUCT LEVEL)	SEE PAGE
	34	5	**1H-3244**	2	LOCKWASHER	
	35	2	**203-9007**	1	NUT (1-1/2-18-THD)	
	36	3,4	**204-2281**	8	STRAP-CABLE	
	37	3,4	**211-0052**	4	NUT (1-11/16-18-THD)	
Y	38	4	**241-8368**	1	SWITCH GP-MAGNETIC (24-VOLT) (MAIN RELAY)	177
	39	2	**274-3774**	1	CAP-CONNECTOR	
	40	1	**284-3664**	1	SWITCH AS-ROCKER (24-VOLT) (FRONT WORK LIGHT)	
	41	1	**293-9123**	1	SWITCH AS-ROCKER (24-VOLT) (REAR WORK LIGHTS)	
	42	3,4	**310-0674**	3	LOCKWASHER	
	43	5	**392-4771**	1	CABLE AS	
D		5	**6V-2369**		CABLE (4-GA, BLACK) (0.4-M)	
		5	**8T-8799**	1	BOOT (RED)	
		5	**5P-3454**	1	TERMINAL-RING (4-GA, 5/16-IN SCREW)	
		5	*317-3240*	1	TERMINAL AS	
E		5	**125-7876**		TUBE-HEAT SHRINK (17.78-MM DIA) (4-CM)	
		5	**317-3239**	1	TERMINAL-RING	
	44	3	**393-3962**	1	FILM-IDENTIFICATION (OPERATOR)	
	45	5	**395-7861**	1	CABLE AS	
D		5	**6V-2369**		CABLE (4-GA, BLACK) (0.4-M)	
		5	**9G-4336**	1	TERMINAL-RING (4-GA, 3/8-IN SCREW)	
		5	*317-3240*	1	TERMINAL AS	
E		5	**125-7876**		TUBE-HEAT SHRINK (17.78-MM DIA) (4-CM)	
		5	**317-3239**	1	TERMINAL-RING	
	46	1	**3E-5239**	2	RELAY AS (24-VOLT) (WINDOW WIPERS)	
Y	47	1	*3E-6389*	1	LAMP GP-DOME (24-VOLT)	141
Y	48	1	**3E-6328**	1	ALARM GP (24-VOLT)	95
	49	2,3	**4P-7581**	2	CLIP	
	50	1,3	**4P-8134**	2	CLIP	
M	51	1,5	**5C-2890**	4	NUT (M6X1-THD)	
	52	1	**5F-9757**	1	GROMMET	
	53	3	**5P-4116**	1	WASHER-HARD (8.8X20.5X2-MM THK)	
	54	5	**5P-7162**	4	SCREW-MACHINE (10-32X0.5-IN)	
	55	2	**5P-8939**	2	GROMMET	
	56	4	**6I-1418**	4	SPACER (8.2X12.7X28.7-MM THK)	
	57	1,2,3,4	**7K-1181**	113	STRAP-CABLE	
M	58	4	**7X-0818**	4	BOLT (M8X1.25X45-MM)	
M	59	4	**7Y-7388**	2	SCREW-BUTTON HEAD (M5X0.8X12-MM)	
	60	1,2,3,4	**8T-4121**	8	WASHER-HARD (11X21X2.5-MM THK)	
M	61	4	**8T-4133**	1	NUT (M10X1.5-THD)	
M	62	1,2	**8T-4136**	2	BOLT (M10X1.5X25-MM)	
M	63	1,3	**8T-4137**	5	BOLT (M10X1.5X20-MM)	
M	64	3	**8T-4171**	2	BOLT (M6X1X12-MM)	
M	65	3	**8T-4200**	1	BOLT (M8X1.25X16-MM)	
	66	5	**8T-4205**	2	WASHER-HARD (7.2X14.5X2-MM THK)	
	67	4	**8T-9655**	8	MOUNT-ISOLATION (ISOLATION)	
	68	4	**9N-0869**	4	WASHER-HARD (8.8X25.5X2-MM THK)	
M	69	1,4	**9X-1046**	9	SCREW (M4X0.7X18-MM)	
M	70	4	**9X-2044**	2	SCREW-TRUSS HEAD (M6X1X16-MM)	
	71	1,3	**9X-8256**	4	WASHER (6.6X12X2-MM THK)	
E	72	3	**7X-7877**		STRIP-EDGE (16-CM EACH)	

420-1160 **WIRING GP-CAB (**contd.**)** **i06555812**

NOTE	REF NO	GRAPHIC REF	PART NUMBER	QTY	PART NAME 1 2 3 4 5 6 (PRODUCT LEVEL)	SEE PAGE
	73	4	**4B-4277**	2	WASHER (8.8X17.5X1.6-MM THK)	
D	74	4	**8T-3426**		CHANNEL-TRIM (0.2-M)	

D - ORDER BY THE METER
E - ORDER BY THE CENTIMETER
M - METRIC PART
R - REMANUFACTURED PART MAY BE AVAILABLE
Y - SEPARATE ILLUSTRATION

420-1160 **WIRING GP-CAB (**contd.**)** **i06555812**

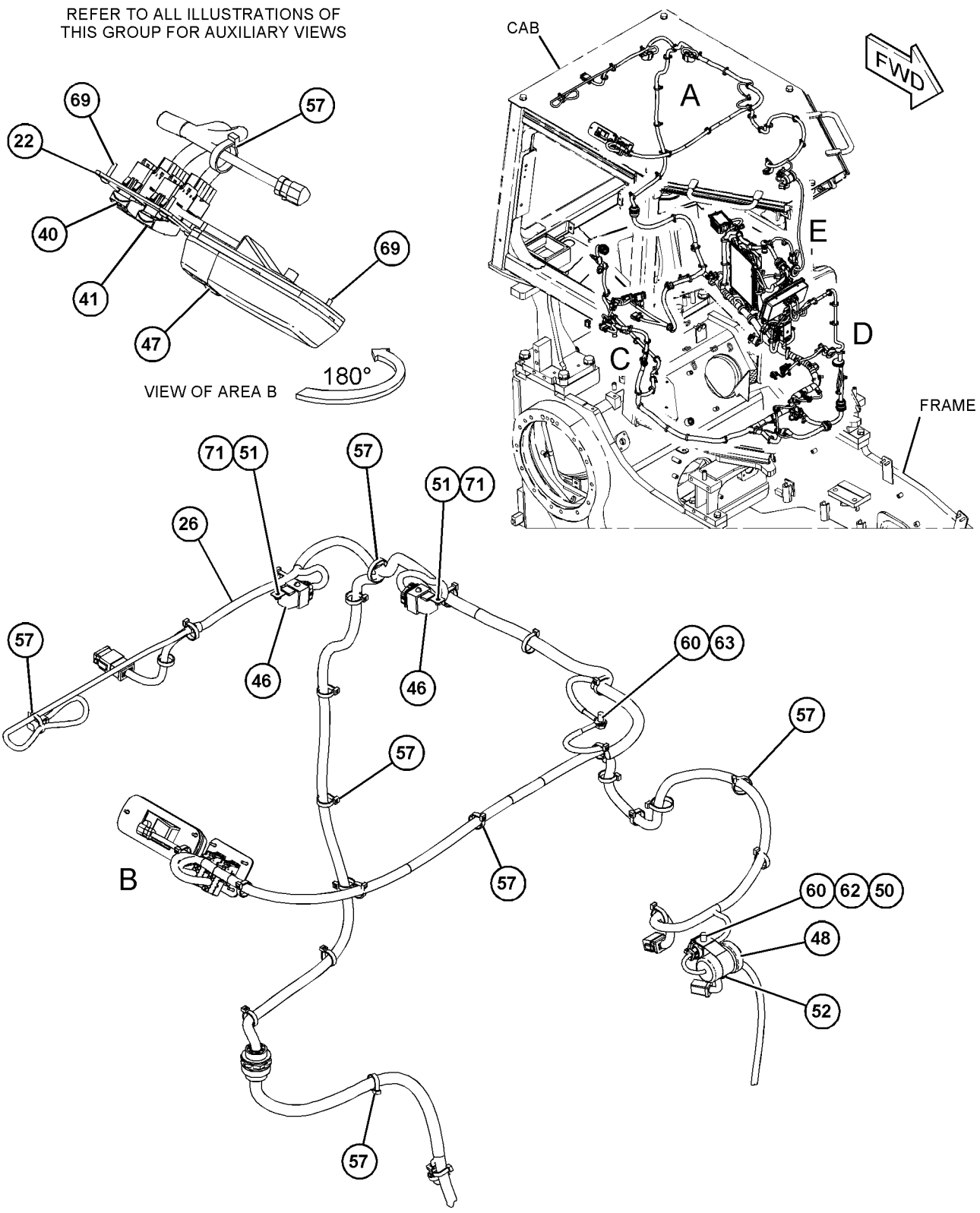

GRAPHIC #1 g06024174

420-1160 **WIRING GP-CAB (**contd.**)** **i06555812**

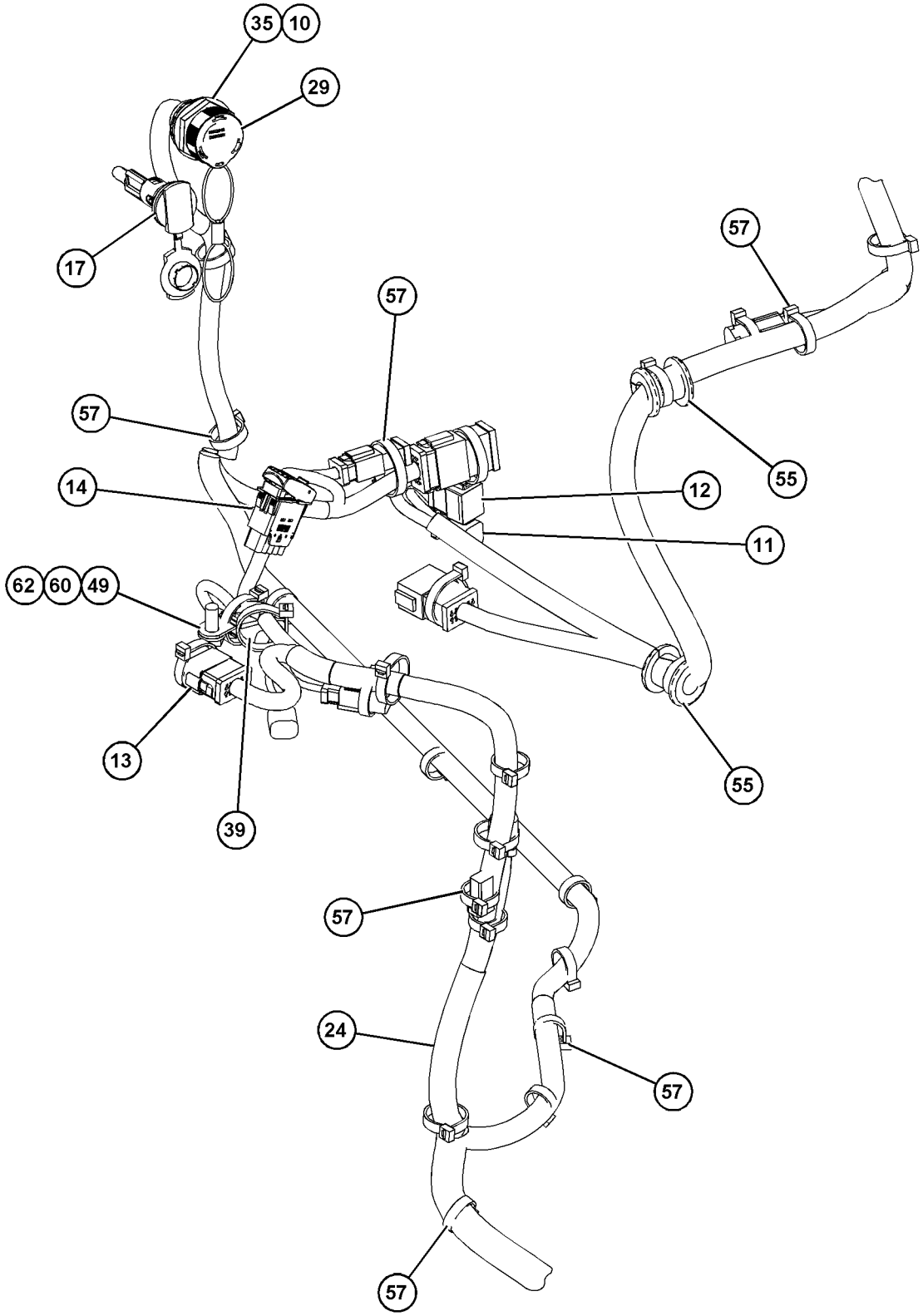

VIEW OF AREA C

GRAPHIC #2 g06024175

420-1160 **WIRING GP-CAB (**contd.**)** **i06555812**

REFER TO ALL ILLUSTRATIONS OF
THIS GROUP FOR AUXILIARY VIEWS

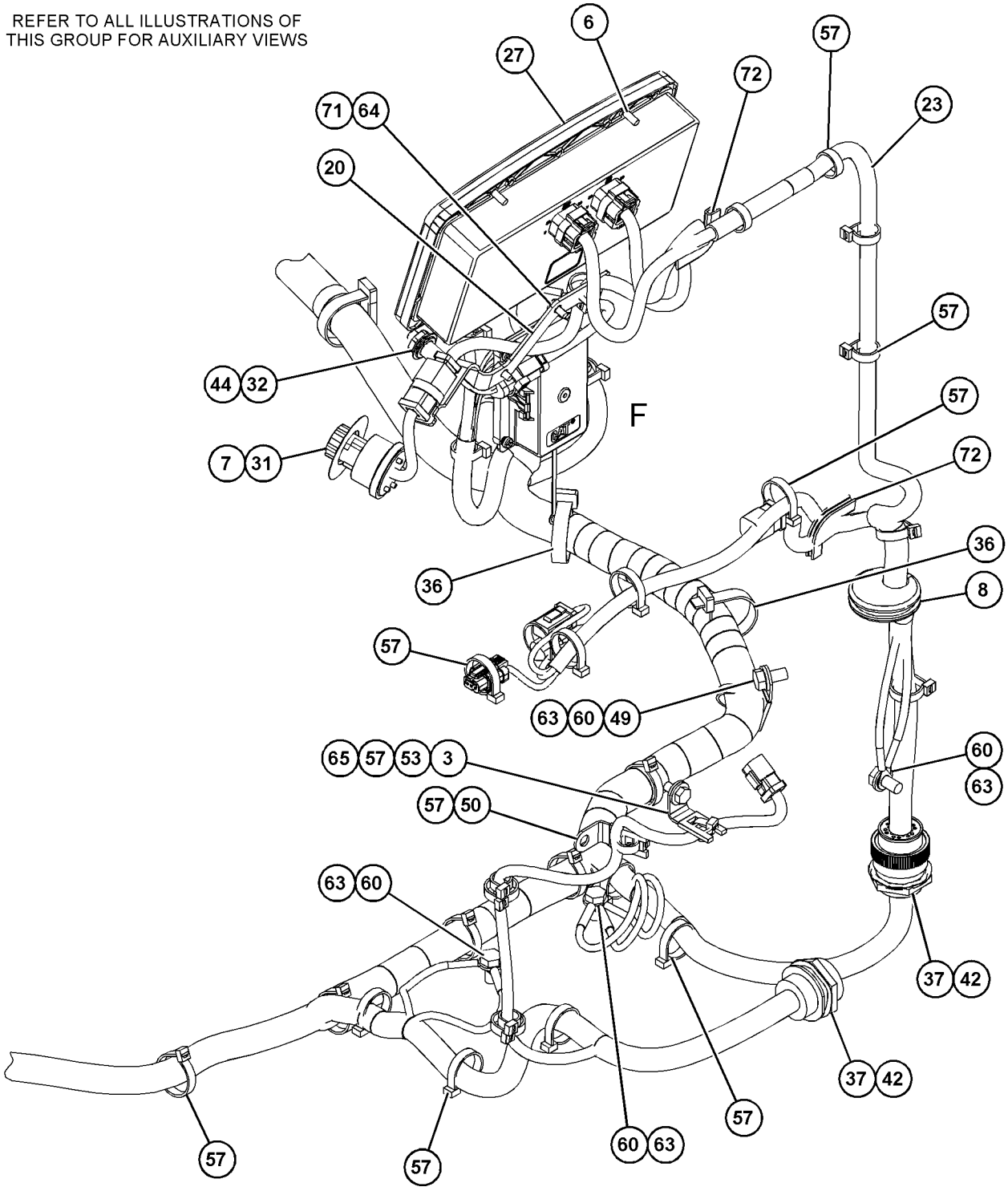

VIEW OF AREA D

GRAPHIC #3 g06024176

420-1160 **WIRING GP-CAB (**contd.**)** **i06555812**

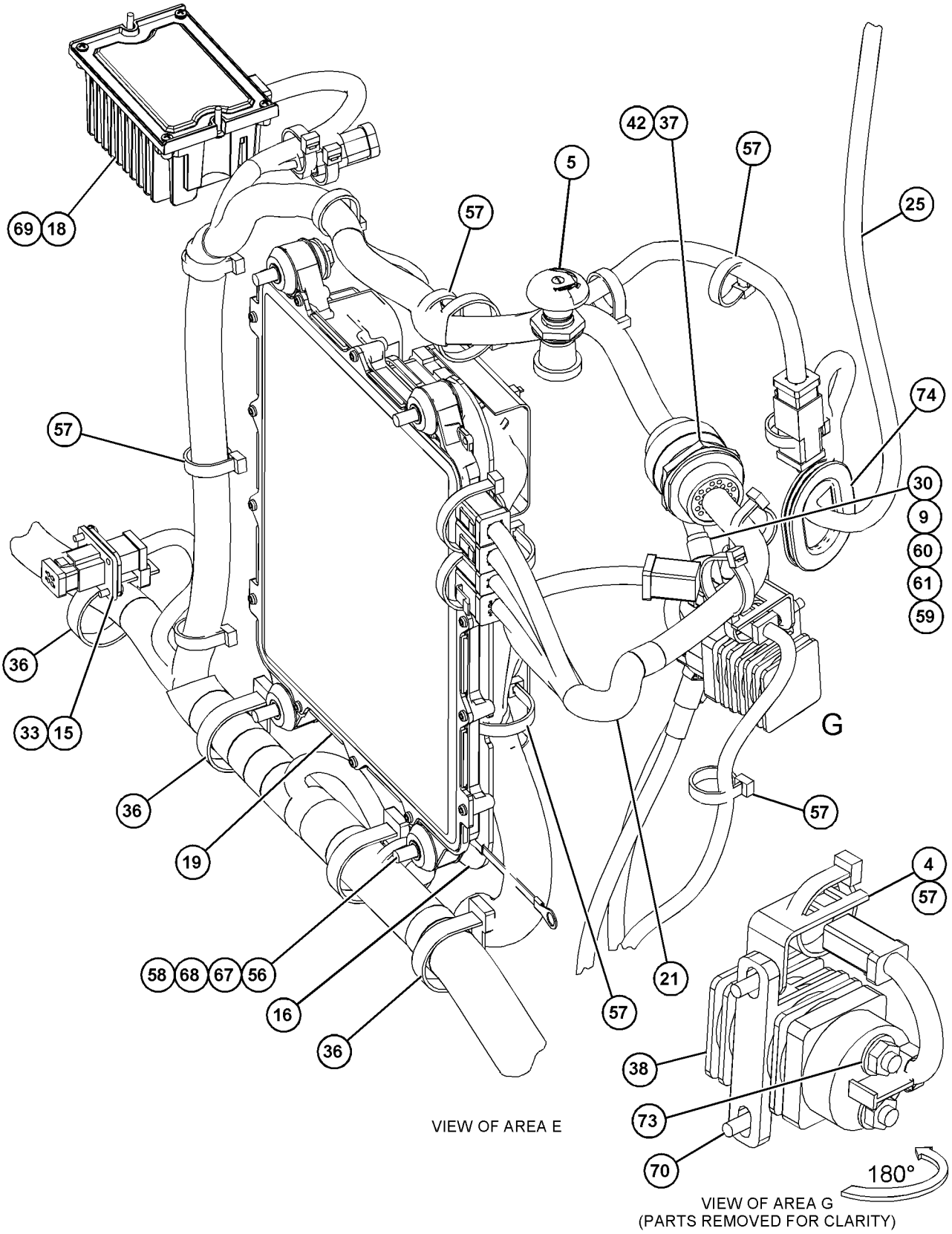

GRAPHIC #4

g06024178

420-1160 **WIRING GP-CAB (**contd.**)** **i06555812**

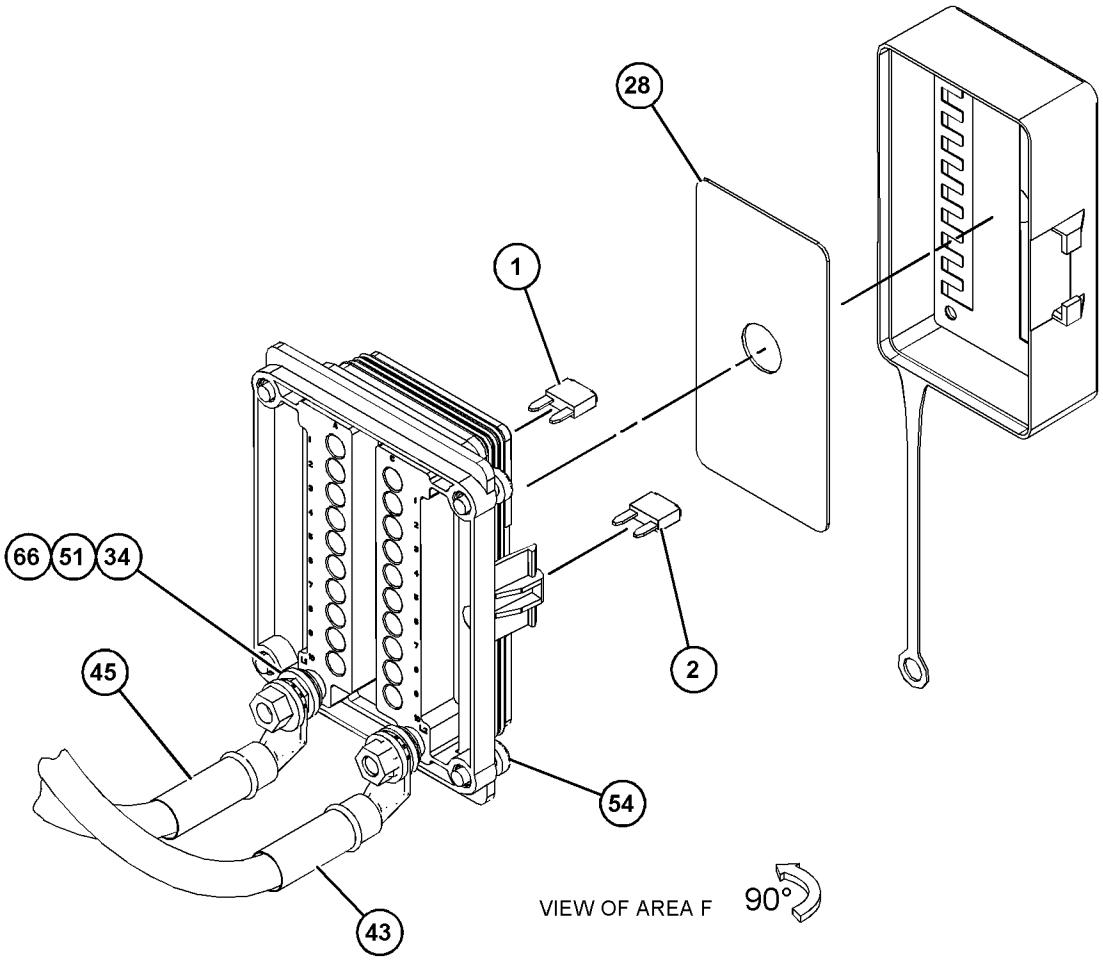

GRAPHIC #5 <END> g06024179

394-4834 WIRING GP-CHASSIS

S/N: R5A1-UP

PART OF 391-9522 CHASSIS AR

SMCS-1408 **i06518722**

NOTE	REF NO	GRAPHIC REF	PART NUMBER	QTY	PART NAME 1 2 3 4 5 6 (PRODUCT LEVEL)	SEE PAGE
	1	1	**193-9131**	1	BRACKET AS	
	2	1,2	**7K-1181**	40	STRAP-CABLE	
	3	1	**8X-7517**	1	BRACKET AS	
		1	**2W-7940**	1	BRACKET	
M		1	**8T-3490**	1	NUT-WELD (M10X1.5-THD)	
	4	1	**121-2844**	1	HARNESS AS-WIRING (CRANK WITHOUT INJECT)	
		1	**102-8803**	2	KIT-RECEPTACLE (3-PIN)	
					(EACH INCLUDES RECEPTACLE AS & WEDGE)	
		1	**8T-8729**	4	PIN-CONNECTOR (16-GA TO 18-GA)	
		1	**8T-8737**	5	PLUG-SEAL	
		1	**155-2260**	1	KIT-CONNECTING PLUG (3-PIN)	
					(INCLUDES PLUG AS, WEDGE(S) & INTERFACE SEAL)	
	5	1	**137-2104**	1	ANGLE AS	
	6	1	**171-2208**	1	CIRCUIT BREAKER AS (60-AMPERE) (GLOW PLUG)	
		1	**1H-3244**	2	LOCKWASHER	
		1	**4E-5724**	2	WASHER (7X12X1-MM THK)	
		1	**8T-0122**	2	NUT-FULL (1/4-28-THD)	
	7	1	**174-7876**	1	HORN AS (24-VOLT, LOW TONE)	
	8	2	**213-9100**	1	ALARM AS (BACKUP)	
		2	**102-8802**	1	KIT-RECEPTACLE (2-PIN)	
					(INCLUDES RECEPTACLE AS & WEDGE)	
		2	**8T-8729**	2	PIN-CONNECTOR (16-GA TO 18-GA)	
E		2	**9X-1813**		SLEEVE (29-CM)	
	9	1	**282-2586**	1	SWITCH GP-PUSH BUTTON (FUEL PRIMING PUMP)	
		1	**238-0303**	1	KNOB	
		1	**2H-3922**	1	LOCKWASHER	
		1	**3B-4501**	1	LOCKWASHER	
		1	**5L-7200**	1	SCREW (8-32X0.375-IN)	
		1	**198-2914**	1	NUT (3/4-32-THD)	
		1	**9X-3401**	2	PIN-CONNECTOR (16-GA TO 18-GA)	
		1	**102-8802**	1	KIT-RECEPTACLE (2-PIN)	
					(INCLUDES RECEPTACLE AS & WEDGE)	
	10	1	**328-0919**	1	FILM-IDENTIFICATION (CONTROL PANEL)	
	11	2	**321-4070**	1	STRAP AS-GROUND	
Y	12	1	**322-3305**	1	BLOCK GP-JUNCTION (BATTERY)	101
Y	13	2	**358-2399**	1	SENSOR GP-SPEED (STEERING MOTOR)	170
	14	1	**391-6261**	1	WIRE AS	
Y	15	1	**398-0940**	1	SWITCH GP-MAGNETIC (24-VOLT) (START RELAY)	178
Y	16	2	**398-4481**	1	HARNESS AS-TRANSMISSION	123
	17	2	**423-1030**	1	HARNESS AS-FUEL TANK	
		2	**9X-3402**	4	SOCKET-CONNECTOR (16-GA TO 18-GA)	
					—OR—	
		2	**126-1768**	4	SOCKET-CONNECTOR (14-GA TO 16-GA)	
		2	**155-2270**	1	KIT-CONNECTING PLUG (2-PIN)	
					(INCLUDES PLUG AS, WEDGE, & INTERFACE SEAL)	
		2	**230-4011**	1	PLUG AS-CONNECTOR (2-PIN)	
		2	**455-0704**	1	SEAL-CONNECTOR	

394-4834 **WIRING GP-CHASSIS (**contd.**)** **i06518722**

NOTE	REF NO	GRAPHIC REF	PART NUMBER	QTY	PART NAME 1 2 3 4 5 6 (PRODUCT LEVEL)	SEE PAGE
	18	1	**423-5419**	1	CABLE AS	
		1	**1S-7251**	1	TERMINAL-CABLE (00-GA, 1/2-IN SCREW)	
		1	**1S-7252**	1	TERMINAL-CABLE (00-GA, 3/8-IN SCREW)	
E		1	**159-8049**		CABLE (00-GA, RED) (149-CM)	
		1	**8N-0869**	1	COVER-TERMINAL (RED)	
		1	**8N-1725**	1	COVER AS-TERMINAL (RED)	
		1	**8L-8413**	1	STRAP-CABLE (WHITE)	
		1	**3S-6049**	1	TERMINAL AS-BATTERY (POSITIVE)	
		1	**1M-6119**	1	BOLT (5/16-18X1.375-IN)	
		1	**1M-6120**	1	NUT (5/16-18-THD)	
E		1	**351-9309**		TUBE-HEAT SHRINK (32-MM DIA) (14-CM)	
	19	1	**423-5420**	1	CABLE AS	
		1	**1S-4915**	2	LINER (CONDUIT)	
		1	**1S-7251**	2	TERMINAL-CABLE (00-GA, 1/2-IN SCREW)	
E		1	**5P-0695**		CONDUIT (67-CM)	
		1	**8N-0869**	1	COVER-TERMINAL (RED)	
E		1	**8T-2225**		TUBE-HEAT SHRINK (25.4-MM DIA) (16-CM)	
E		1	**159-8049**		CABLE (00-GA, RED) (101-CM)	
		1	**301-0091**	1	COVER-TERMINAL (RED)	
E		1	**311-4859**		TUBE-HEAT SHRINK (48-MM DIA) (14-CM)	
	20	1	**430-4095**	1	PLATE AS	
	21	1	**430-4104**	1	WIRE AS	
	22	1	**433-2475**	1	CABLE AS	
		1	**1S-7252**	1	TERMINAL-CABLE (00-GA, 3/8-IN SCREW)	
E		1	**159-8050**		CABLE (00-GA, BLACK) (110-CM)	
		1	**9G-8909**	1	COVER-TERMINAL (BLACK)	
		1	**9G-0003**	1	COVER AS-TERMINAL (BLACK)	
		1	**8L-8413**	1	STRAP-CABLE (WHITE)	
		1	**8T-9757**	1	TERMINAL AS-BATTERY (NEGATIVE)	
		1	**1M-6119**	1	BOLT (5/16-18X1.375-IN)	
		1	**1M-6120**	1	NUT (5/16-18-THD)	
	23	1	**435-6590**	1	BRACKET	
Y	24	1	**465-2811**	1	HARNESS AS-CHASSIS	113
	25	1	*465-2813*	1	CABLE AS	
		1	**1S-7252**	1	TERMINAL-CABLE (00-GA, 3/8-IN SCREW)	
E		1	**159-8050**		CABLE (00-GA, BLACK) (85-CM)	
B		1	**1P-0810**		TAPE-ELECTRICAL	
		1	**276-7278**	1	TERMINAL-RING	
	26	1	**465-2814**	1	WIRE AS	
	27	2	**466-6951**	1	GUARD AS	
	28	1	**033-8248**	5	CLIP	
	29	1	**130-5300**	1	CLIP	
	30	1	**132-5789**	5	CLIP	
	31	1	**147-0385**	2	CLIP	
	32	1	**1S-0994**	5	CLIP	
	33	2	**297-3218**	1	CLIP	
	34	1	**2V-1771**	7	GROMMET	
	35	2	**351-1904**	1	SEAL-O-RING	
	36	1	**352-3964**	1	CLIP	
	37	1	**4K-8864**	2	CLIP	
	38	1,2	**4P-7581**	9	CLIP	

394-4834 **WIRING GP-CHASSIS (**contd.**)** **i06518722**

NOTE	REF NO	GRAPHIC REF	PART NUMBER	QTY	PART NAME 1 2 3 4 5 6 (PRODUCT LEVEL)	SEE PAGE
	39	1	**4P-8134**	1	CLIP	
	40	1	**6V-7978**	2	SCREW-MACHINE (10-32X0.375-IN)	
	41	1	**6W-6672**	1	SPACER (10.5X20X38-MM THK)	
Y	42	1	**7N-0718**	1	SWITCH GP-DISCONNECT (BATTERY)	176
	43	1	**7V-6571**	1	GROMMET	
M	44	2	**8T-0267**	2	BOLT-SOCKET HEAD (M6X1X12-MM)	
	45	1	**8T-1889**	1	CLIP (SLOT)	
	46	1	**8T-1890**	1	CLIP (TAB)	
	47	1,2	**8T-4121**	29	WASHER-HARD (11X21X2.5-MM THK)	
M	48	1	**8T-4133**	2	NUT (M10X1.5-THD)	
M	49	1	**8T-4136**	9	BOLT (M10X1.5X25-MM)	
M	50	1,2	**8T-4137**	15	BOLT (M10X1.5X20-MM)	
M	51	1	**8T-4138**	2	BOLT (M6X1X20-MM)	
M	52	2	**8T-4182**	2	BOLT (M10X1.5X45-MM)	
M	53	1	**8T-5005**	1	BOLT (M10X1.5X70-MM)	
M	54	1	**8T-6466**	1	BOLT (M10X1.5X60-MM)	
	55	1	**8T-7934**	1	WASHER-HARD (11X21X5-MM THK)	
	56	1	**9W-1991**	1	SPACER (10.7X17.1X40-MM THK)	
	57	1	**9X-8256**	2	WASHER (6.6X12X2-MM THK)	

B - USE AS REQUIRED
E - ORDER BY THE CENTIMETER
M - METRIC PART
Y - SEPARATE ILLUSTRATION

394-4834 **WIRING GP-CHASSIS (**contd.**)** **i06518722**

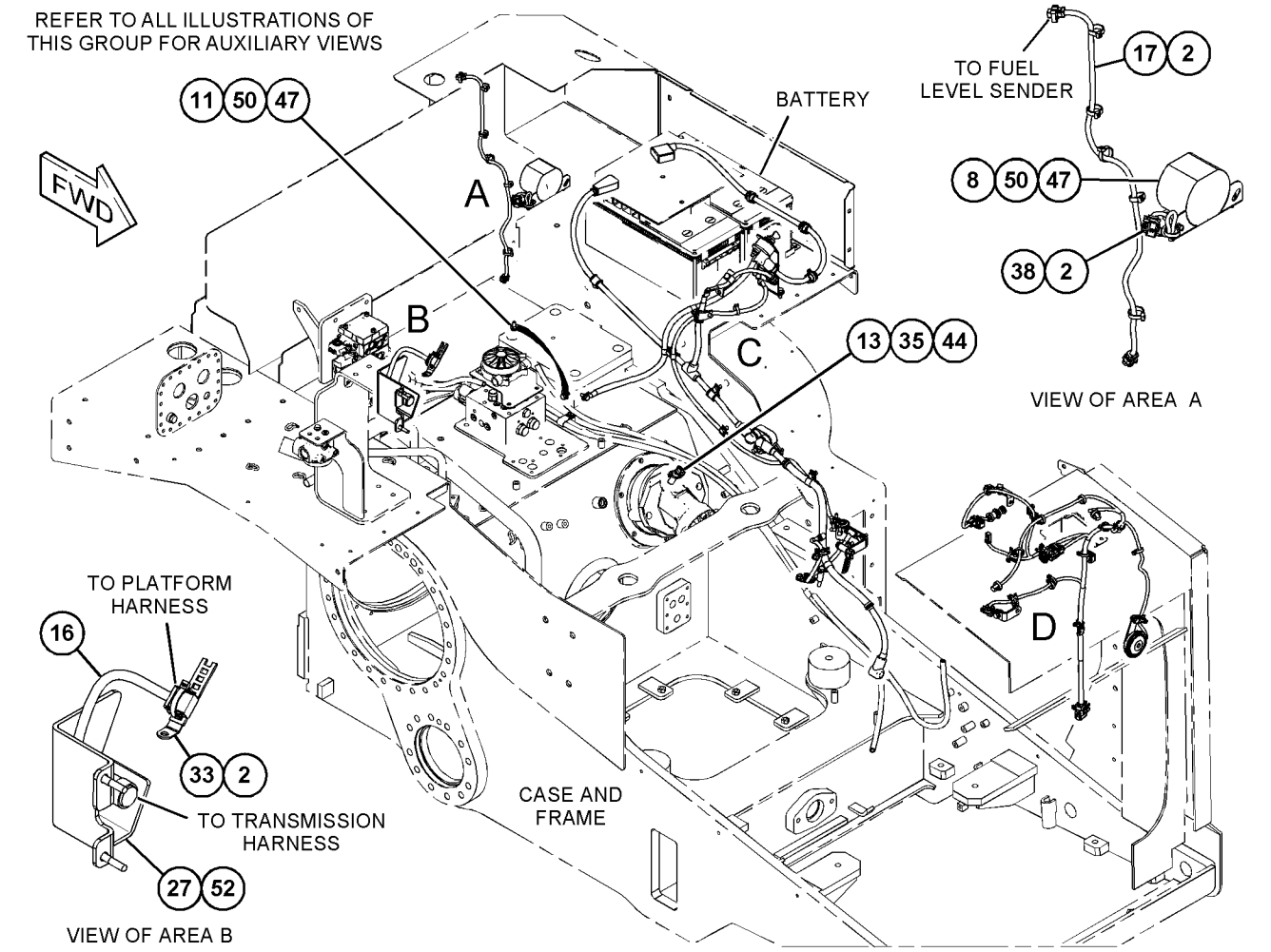

GRAPHIC #1 g06025289

394-4834 **WIRING GP-CHASSIS (**contd.**)** **i06518722**

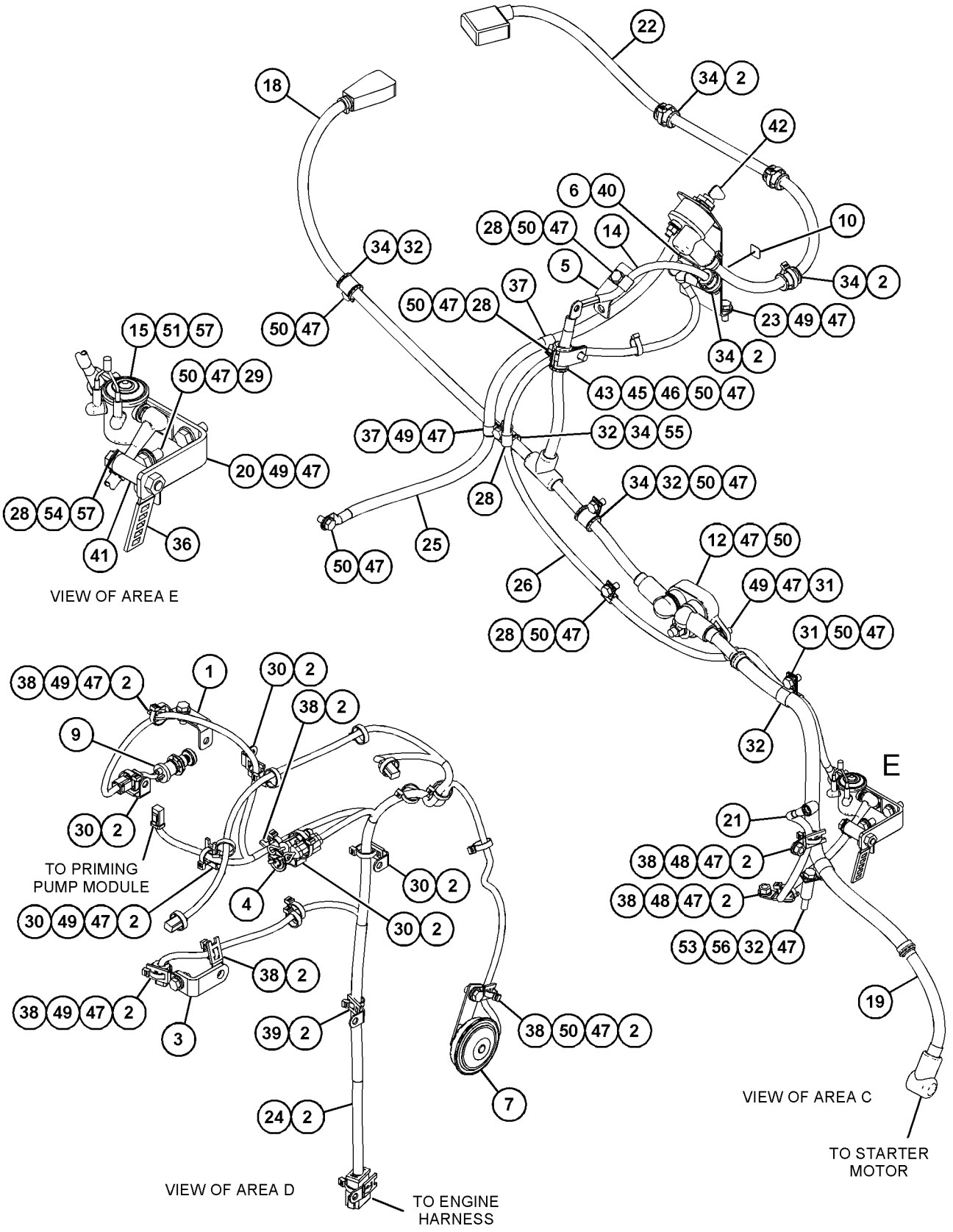

GRAPHIC #2 <END> g06025294

465-2809 WIRING GP-CHASSIS

S/N: R5A1-UP

PART OF 391-9512 HYDRAULIC AR-2 VALVE, 391-9515 HYDRAULIC AR-3 VALVE AN ATTACHMENT

SMCS-1408 **i06534057**

NOTE	REF NO	GRAPHIC REF	PART NUMBER	QTY	PART NAME 1 2 3 4 5 6 (PRODUCT LEVEL)	SEE PAGE
	1	1	**7K-1181**	28	STRAP-CABLE	
	2	1	**256-6453**	1	SENSOR-TEMPERATURE (HYDRAULIC OIL)	
	2A	1	**256-6453**	1	SENSOR-TEMPERATURE (TRANSMISSION)	
Y	3	1	**465-2810**	1	HARNESS AS-VALVE	124
Y	4	1	**465-2812**	1	HARNESS AS-FRONT	118
	5	1	**238-5080**	2	SEAL-O-RING	
	6	1	**353-7957**	2	GROMMET	
	7	1	**4P-7581**	5	CLIP	
	8	1	**4P-8134**	6	CLIP	
	9	1	**5P-5777**	1	ADAPTER-O-RING	
	10	1	**5P-8522**	1	GROMMET	
	11	1	**7M-8485**	1	SEAL-O-RING	
	12	1	**8T-4121**	6	WASHER-HARD (11X21X2.5-MM THK)	
M	13	1	**8T-4137**	5	BOLT (M10X1.5X20-MM)	
M	14	1	**8T-4195**	1	BOLT (M10X1.5X30-MM)	

M - METRIC PART
Y - SEPARATE ILLUSTRATION

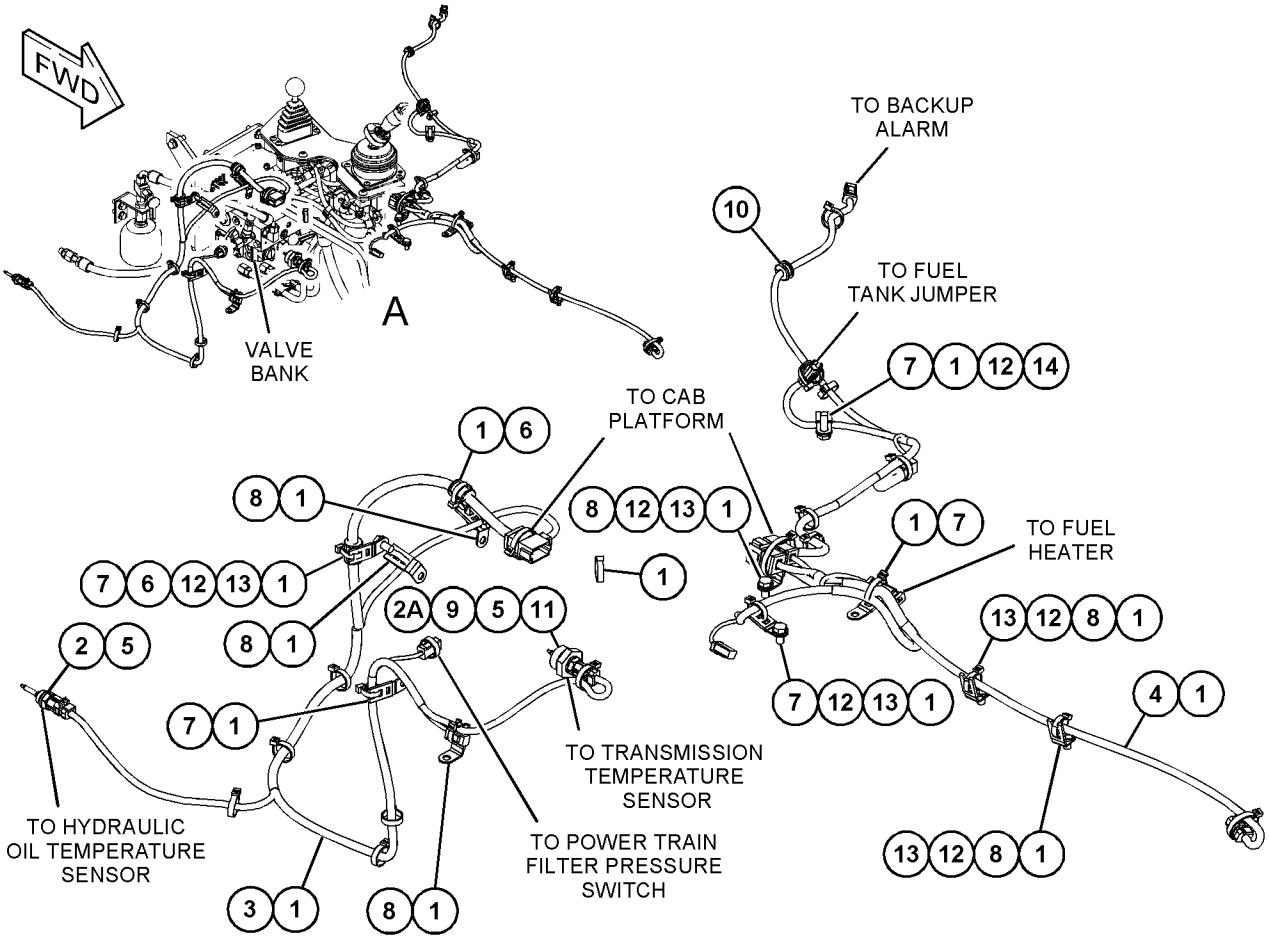

VIEW OF AREA A

GRAPHIC #1 <END> g06023207

394-4835 WIRING GP-ENGINE

S/N: R5A1-UP

PART OF 391-9510 INSTALLATION AR-ENGINE

SMCS-1000, 1408 **i06521409**

NOTE	REF NO	GRAPHIC REF	PART NUMBER	QTY	PART NAME 1 2 3 4 5 6 (PRODUCT LEVEL)	SEE PAGE
	1	1	**7K-1181**	26	STRAP-CABLE	
	2	1	**142-3331**	1	BRACKET AS	
		1	**2W-7940**	1	BRACKET	
M		1	**8T-3490**	1	NUT-WELD (M10X1.5-THD)	
Y	3	1	*234-5013*	1	SENSOR GP-TEMPERATURE (TORQUE CONVERTER OIL)	171
	4	1	**290-5562**	1	MOUNT (DUAL SWIVEL)	
	5	1	**295-2610**	1	INDICATOR AS (AIR FILTER)	
	6	1	**306-6687**	2	STRAP AS	
Y	7	1	**318-1178**	1	SENSOR GP-SPEED (MAGNETIC, HIGH OUTPUT) (TORQUE CONVERTER OUTPUT)	169
	8	1	**326-4515**	2	TIE-CABLE	
	9	1	**348-2522**	1	BRACKET AS	
	10	1	**423-1035**	1	CABLE AS	
		1	**1S-4915**	2	LINER (CONDUIT)	
E		1	**5P-0695**		CONDUIT (155-CM)	
E		1	**5P-0760**		CABLE (00-GA, RED) (272-CM)	
E		1	**8T-2225**		TUBE-HEAT SHRINK (25.4-MM DIA) (16-CM)	
E		1	**125-7876**		TUBE-HEAT SHRINK (17.78-MM DIA) (14-CM)	
E		1	**174-1712**		INSULATION (27-CM)	
		1	**189-1899**	1	TERMINAL-RING (0-GA, 1/2-IN SCREW)	
		1	**276-1786**	1	COVER-TERMINAL (RED)	
		1	**299-6082**	1	COVER-TERMINAL (RED)	
		1	**326-4516**	2	TIE-CABLE	
	11	1	**435-6607**	1	BRACKET AS	
	12	1	**449-9287**	1	HARNESS AS-STARTING AID	
		1	**102-8804**	1	KIT-RECEPTACLE (4-PIN)	
					(INCLUDES RECEPTACLE AS & WEDGE)	
		1	**9X-3402**	4	SOCKET-CONNECTOR (16-GA TO 18-GA)	
					—OR—	
		1	**126-1768**	4	SOCKET-CONNECTOR (14-GA TO 16-GA)	
		1	**9X-3401**	4	PIN-CONNECTOR (16-GA TO 18-GA)	
					—OR—	
		1	**126-1767**	4	PIN-CONNECTOR (14-GA TO 16-GA)	
		1	**155-2270**	1	KIT-CONNECTING PLUG (2-PIN)	
					(INCLUDES PLUG AS, WEDGE, & INTERFACE SEAL)	
		1	**160-8124**	1	PLUG AS (2-PIN)	
		1	**102-8802**	1	KIT-RECEPTACLE (2-PIN)	
					(INCLUDES RECEPTACLE AS & WEDGE)	
		1	**8T-8737**	2	PLUG-SEAL	
		1	**230-4011**	1	PLUG AS-CONNECTOR (2-PIN)	
		1	**455-0704**	1	SEAL-CONNECTOR	
Y	13	1	**465-2808**	1	HARNESS AS-ENGINE	117
M	14	1	**085-8091**	2	BOLT (M10X1.5X55-MM)	
	15	1	**132-5789**	1	CLIP	
	16	1	**133-6934**	2	SPACER (11X20X25-MM THK)	
	17	1	*148-8307*	1	ADAPTER AS	
		1	**3J-1907**	1	SEAL-O-RING	
		1	**5P-8874**	1	ADAPTER	
	18	1	**174-5907**	1	CLIP	

394-4835 **WIRING GP-ENGINE (**contd.**)** **i06521409**

NOTE	REF NO	GRAPHIC REF	PART NUMBER	QTY	PART NAME 1 2 3 4 5 6 (PRODUCT LEVEL)	SEE PAGE
	19	1	**1S-0994**	5	CLIP	
	20	1	**203-2789**	1	BRACKET AS	
	21	1	**208-4622**	1	STRAP AS	
	22	1	**4P-7428**	2	CLIP	
	23	1	**4P-7581**	10	CLIP	
	24	1	**4P-8134**	7	CLIP	
	25	1	**5G-3676**	2	GROMMET	
	26	1	**5P-4116**	2	WASHER-HARD (8.8X20.5X2-MM THK)	
	27	1	**5P-9297**	2	CLIP	
M	28	1	**6V-7357**	1	BOLT (M6X1X25-MM)	
	29	1	**8T-1889**	2	CLIP (SLOT)	
	30	1	**8T-1890**	2	CLIP (TAB)	
	31	1	**8T-4121**	27	WASHER-HARD (11X21X2.5-MM THK)	
M	32	1	**8T-4136**	4	BOLT (M10X1.5X25-MM)	
M	33	1	**8T-4137**	9	BOLT (M10X1.5X20-MM)	
M	34	1	**8T-4185**	2	BOLT (M10X1.5X50-MM)	
M	35	1	**8T-4189**	2	BOLT (M8X1.25X20-MM)	
M	36	1	**8T-4191**	8	BOLT (M10X1.5X16-MM)	
M	37	1	**8T-4192**	1	BOLT (M12X1.75X25-MM)	
M	38	1	**8T-4195**	2	BOLT (M10X1.5X30-MM)	
	39	1	**8T-4223**	1	WASHER-HARD (13.5X25.5X3-MM THK)	
	40	1	**8X-5489**	2	SLEEVE	
	41	1	**9X-2038**	1	WASHER (7X19X2-MM THK)	

E - ORDER BY THE CENTIMETER
M - METRIC PART
Y - SEPARATE ILLUSTRATION

394-4835 **WIRING GP-ENGINE (**contd.**)** **i06521409**

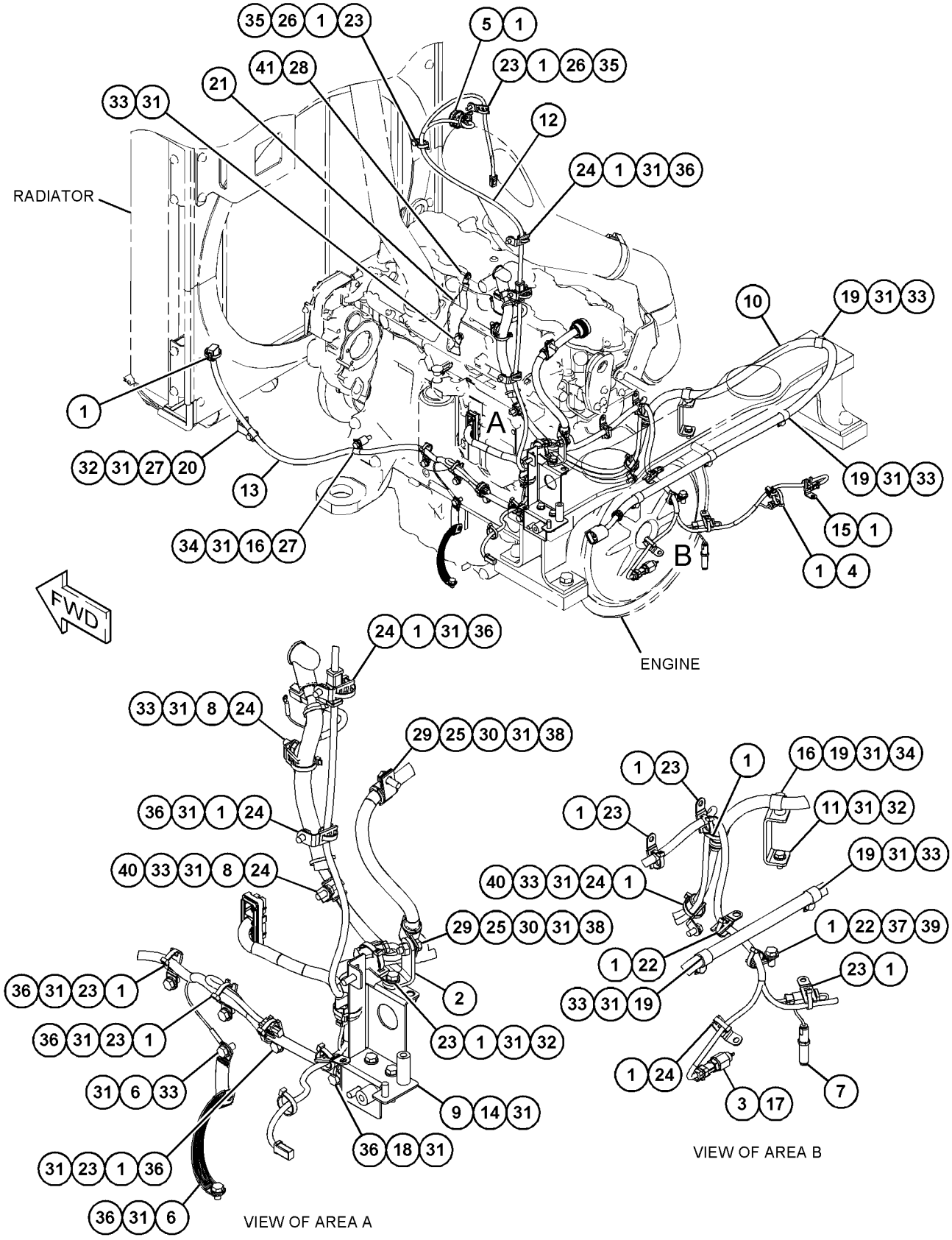

GRAPHIC #1 <END> g06023590

395-0113 WIRING GP-ENGINE

S/N: E7A1-UP

PART OF 393-4098 ENGINE AR-PRIMARY

SMCS-1000, 1408 **i06560487**

NOTE	REF NO	GRAPHIC REF	PART NUMBER	QTY	PART NAME 1 2 3 4 5 6 (PRODUCT LEVEL)	SEE PAGE
C	1	1	**323-7347**	3	SEAL-O-RING	
CM	2	1	**254-3633**	3	BOLT-FLANGE HEAD (M6X1X16-MM, SELF LOCKING)	
M	3	1	**124-3815**	4	BOLT (M8X1.25X16-MM)	
	4	1	**217-9039**	1	STRAP-CABLE	
	5	1	**348-4637**	1	BOLT	
C	6	1	**458-3745**	3	HARNESS AS-PLATFORM	
					(EACH INCLUDES)	
		1	**332-7865**	1	TIE-CABLE	
	7	1	**377-1293**	1	BRACKET	
Y	8	1	**385-5997**	1	HARNESS AS-ENGINE	116
	9	1	**389-3863**	1	BRACKET	
	10	1	**392-2780**	1	BRACKET	
	11	1	**132-5789**	1	CLIP	
M	12	1	**232-1693**	1	BOLT-FLANGE HEAD (M6X1X35-MM)	

C - CHANGE FROM PREVIOUS TYPE
M - METRIC PART
Y - SEPARATE ILLUSTRATION

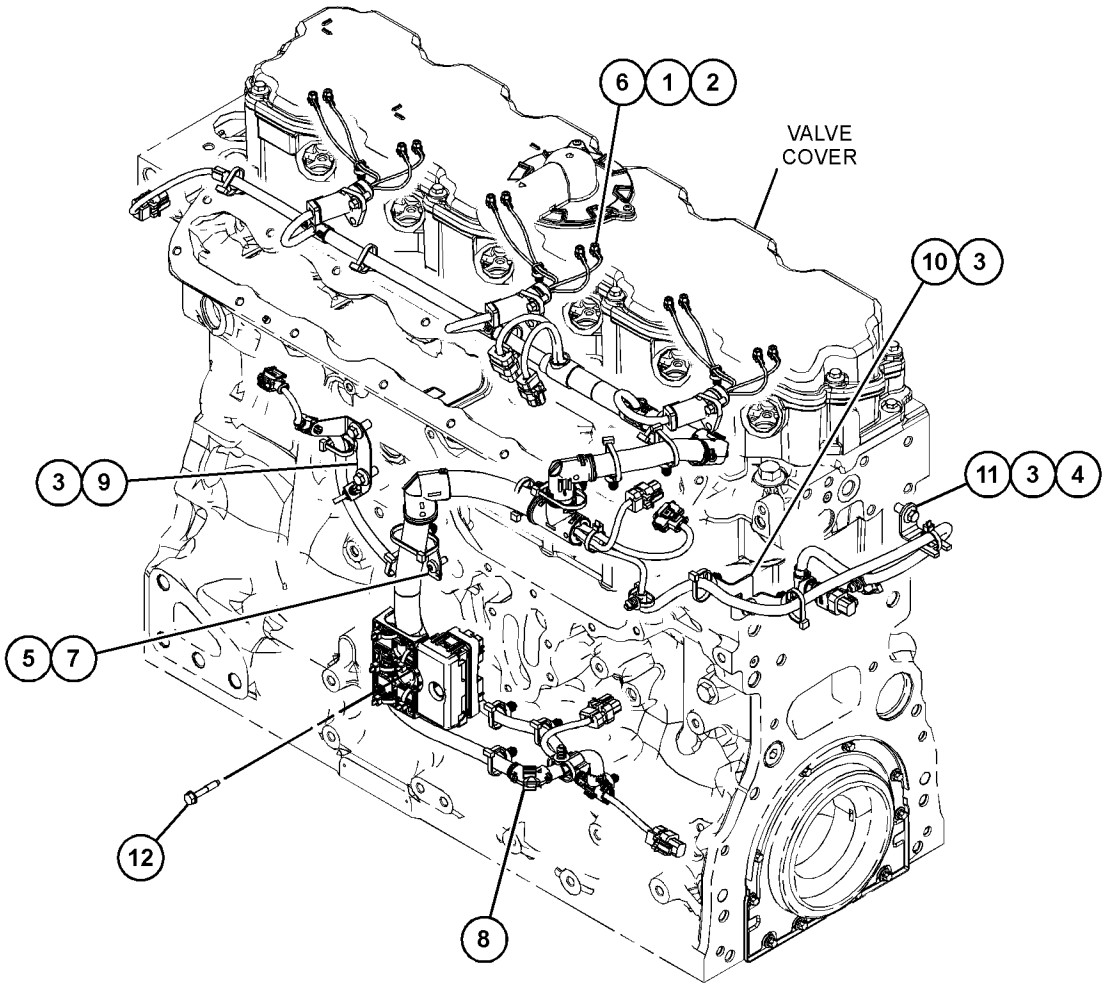

GRAPHIC #1 <END> g03739892

243-4398 ACCUMULATOR GP–CHARGED

S/N: R5A1-UP

FIELD REPLACEMENT ORDER 250-0393–PAGE: 208

PART OF 434-9672 LINES GP-POWER TRAIN OIL

SMCS-5077 **i06539958**

NOTE	REF NO	GRAPHIC REF	PART NUMBER	QTY	PART NAME 1 2 3 4 5 6 (PRODUCT LEVEL)	SEE PAGE
	1	1	**224-5152**	1	VALVE-GAS (STEERING ACCUMULATOR)	
	2	1	**224-5132**	1	CAP (GAS VALVE)	
	3	1	**3J-7354**	1	SEAL-O-RING	
	4	1	**1J-9671**	1	SEAL-O-RING	
	5	1	**241-0037**	1	FILM-WARNING (HIGH PRESSURE, READ OMM)	

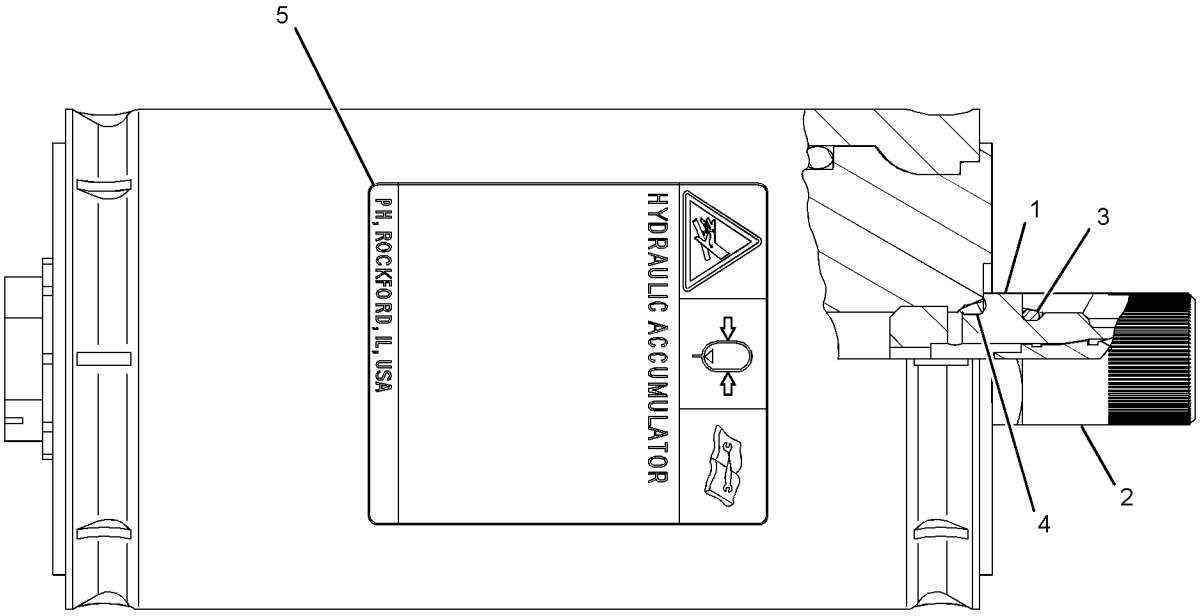

GRAPHIC #1 <END> g02178050

250-0393 ACCUMULATOR GP—UNCHARGED

S/N: R5A1-UP

FIELD REPLACEMENT FOR 243-4398—PAGE: 207

SMCS-5077 **i06147160**

NOTE	REF NO	GRAPHIC REF	PART NUMBER	QTY	PART NAME 1 2 3 4 5 6 (PRODUCT LEVEL)	SEE PAGE
	1	1	**224-5152**	1	VALVE-GAS (HYDRAULIC ACCUMULATOR)	
	2	1	**224-5132**	1	CAP (GAS VALVE)	
	3	1	**3J-7354**	1	SEAL-O-RING	
	4	1	**1J-9671**	1	SEAL-O-RING	
	5	1	**241-0037**	1	FILM-WARNING (HIGH PRESSURE, READ OMM)	

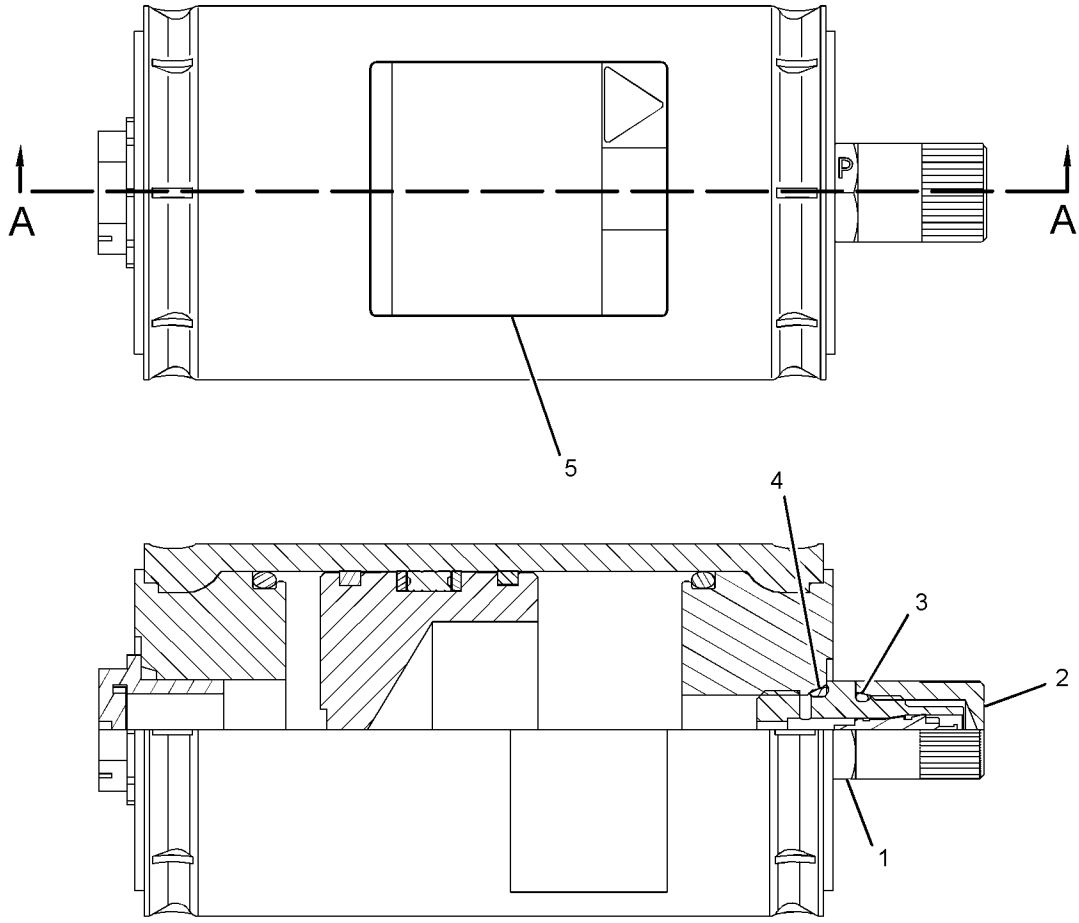

SECTION A-A

GRAPHIC #1 <END> g02271014

193-7361 AXLE GP

S/N: R5A1-UP

PART OF 458-3587, 458-3589, 478-7557 DRIVE AR-FINAL

AN ATTACHMENT

SMCS-3282 **i06156421**

NOTE	REF NO	GRAPHIC REF	PART NUMBER	QTY	PART NAME 1 2 3 4 5 6 (PRODUCT LEVEL)	SEE PAGE
	1	1	**191-4916**	1	SHAFT-SUN GEAR	
	2	1	**193-7365**	1	SHAFT	
	3	1	**193-7366**	1	SHAFT-SUN GEAR	

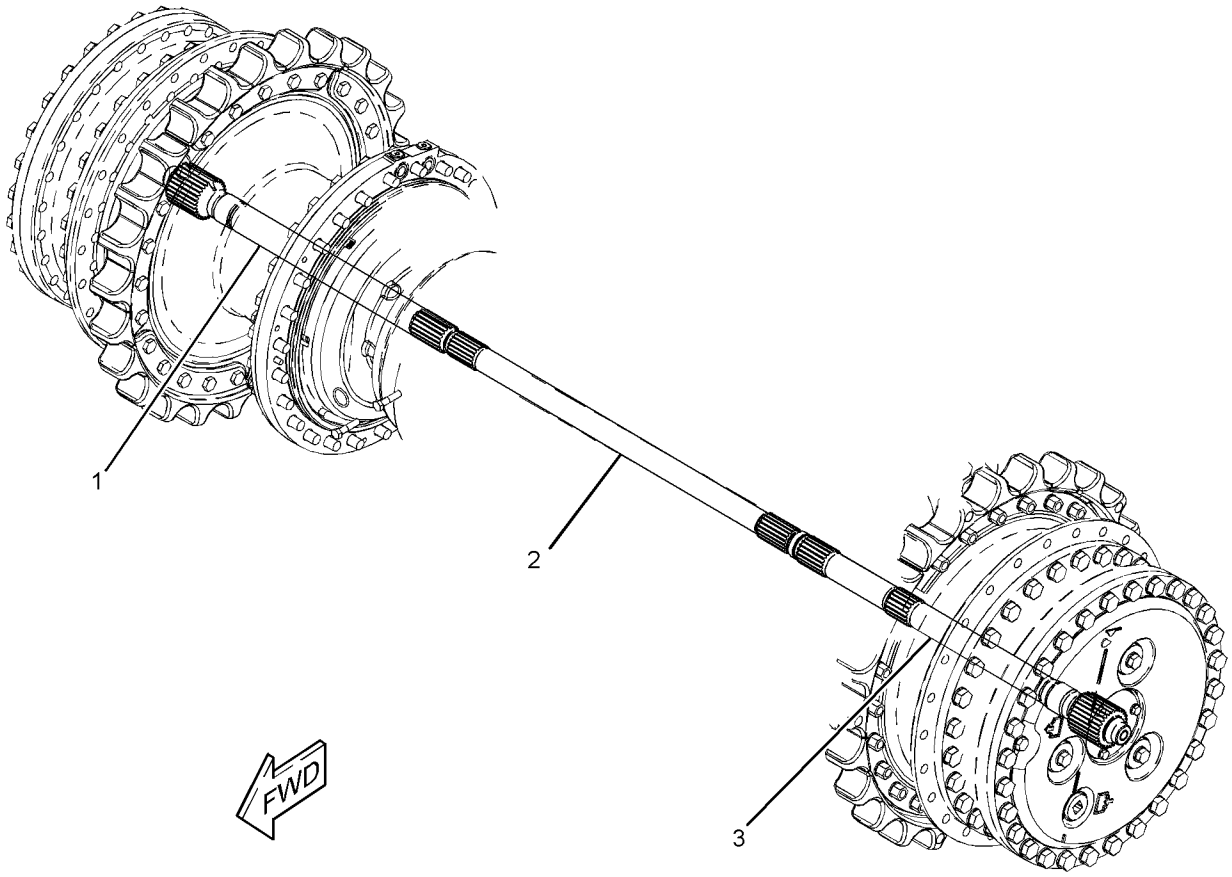

GRAPHIC #1 <END> g02410477

448-4208 BRAKE & DIFFERENTIAL DRIVE GP

S/N: R5A1-UP

PART OF 391-9508 POWER TRAIN AR

SMCS-4131 **i06517228**

NOTE	REF NO	GRAPHIC REF	PART NUMBER	QTY	PART NAME 1 2 3 4 5 6 (PRODUCT LEVEL)	SEE PAGE
	1	2	**6Y-2704**	1	SPRING-DISC	
	2	1	**3T-4568**	3	SHAFT-PLANETARY	
	3	1	**3T-4824**	4	GEAR-PLANETARY (30-TEETH)	
	4	1	**3T-6963**	1	SEAL-RING	
B	5	2	**3T-9272**	1	SHIM PACK (INCLUDES 8-SHIMS)	
	6	1	**6I-8724**	1	RING-LOCK	
	7	1	**6T-0062**	1	PLATE	
	8	1	**6T-0064**	4	SHAFT-PLANETARY	
	9	2	**6T-0850**	2	WASHER-THRUST (255X287.25X2.75-MM THK)	
	10	1	**6Y-0926**	3	GEAR-PLANETARY (23-TEETH)	
	11	1	**6Y-0984**	1	GEAR-RING (75-TEETH)	
	12	2	**6Y-9373**	4	DISC-FRICTION	
	13	1	**7G-1596**	1	RING-RETAINING	
	14	2	**7T-1885**	1	RING	
	15	2	**7T-6994**	3	PLATE-CLUTCH & BRAKE	
	16	1	**7T-8130**	1	RING-RETAINING	
	17	2	**7T-9832**	1	RETAINER	
	18	2	**7T-9837**	1	PLATE	
	19	1	**8E-8307**	6	DISC-THRUST	
	20	1	**8E-8310**	8	DISC-THRUST	
	21	1	**9W-1571**	1	SLINGER	
B	22	1	**9W-2853**	1	SHIM PACK (INCLUDES 21-SHIMS)	
	23	1	**9W-6102**	1	GEAR-RING (84-TEETH)	
	24	1	**9W-6103**	1	RING-THRUST	
	25	1	**136-1595**	1	HOUSING-ROTATING	
	26	1	**191-0938**	1	CARRIER-PLANETARY (34-TEETH)	
	27	1	**191-0940**	1	CARRIER-PLANETARY (50-TEETH)	
	28	2	**193-7405**	1	HUB	
	29	2	**214-3573**	1	PISTON	
	30	2	**216-6371**	1	CARRIER	
	31	2	**217-2293**	1	RETAINER	
	32	1	**226-4462**	1	GEAR-BEVEL (74-TEETH)	
	33	2	**226-4464**	1	PINION-BEVEL (15-TEETH)	
	34	2	**227-2451**	1	HOUSING AS (BRAKE)	
	35	1	**292-2017**	1	GEAR AS-SUN (30, 24-TEETH)	
	36	2	**005-4834**	2	BEARING AS-TAPERED ROLLER	
	37	1	**030-2135**	4	BOLT-LOCKING (5/16-18X0.625-IN)	
	38	1	**0L-1143**	21	BOLT (3/8-16X2.5-IN)	
	39	2	**0S-1614**	3	BOLT (1/4-20X0.5-IN)	
	40	2	**1A-1460**	6	BOLT (1/2-13X2-IN)	
	41	2	**1A-2029**	6	BOLT (3/8-16X1.125-IN)	
	42	2	**2A-4639**	1	BOLT (3/8-16X1.625-IN)	
	43	1	**2K-5069**	1	CUP-BEARING (TAPERED ROLLER)	
	44	2	**2K-9295**	1	BEARING AS-TAPERED ROLLER	
	45	2	**3B-4124**	1	CUP-BEARING (TAPERED ROLLER)	
	46	2	**3K-0360**	2	SEAL-O-RING	
	47	1	**3S-2708**	7	PIN-SPRING	

448-4208 **BRAKE & DIFFERENTIAL DRIVE GP (**contd.**)** **i06517228**

NOTE	REF NO	GRAPHIC REF	PART NUMBER	QTY	PART NAME 1 2 3 4 5 6 (PRODUCT LEVEL)	SEE PAGE
	48	1	**5K-9107**	3	BOLT-LOCKING (3/8-16X0.75-IN)	
	49	1	**5M-0578**	3	BEARING AS-ROLLER	
	50	2	**5M-2894**	7	WASHER-HARD (10.2X18.5X2.5-MM THK)	
	51	1	**5M-7925**	4	BEARING AS-ROLLER	
	52	2	**5P-8245**	6	WASHER-HARD (13.5X25.5X3-MM THK)	
	53	2	**6P-1735**	1	LOCKWASHER	
	54	2	**6P-1736**	1	WASHER (55.17X76.2X2.67-MM THK)	
	55	2	**6P-5317**	1	RING-SEAL (EXTERNAL)	
	56	2	**6V-7646**	3	WASHER-HARD (7.2X25X2-MM THK)	
	57	2	**7H-4566**	2	CUP-BEARING (TAPERED ROLLER)	
	58	2	**7W-6534**	4	PLUG-PIPE	
	59	2	**8M-4438**	1	SEAL-O-RING	
	60	2	**8P-8357**	1	RING-SEAL (INTERNAL)	
	61	1	**8T-0072**	1	CONE-BEARING	
	62	2	**9B-0576**	1	LOCKNUT-BEARING	
	63	1	**9L-9132**	3	WASHER (10.2X25.5X2.5-MM THK)	
	64	2	**9S-8005**	2	PLUG	

B - USE AS REQUIRED

448-4208 **BRAKE & DIFFERENTIAL DRIVE GP** (contd.) **i06517228**

REFER TO ALL ILLUSTRATIONS OF
THIS GROUP FOR AUXILIARY VIEWS

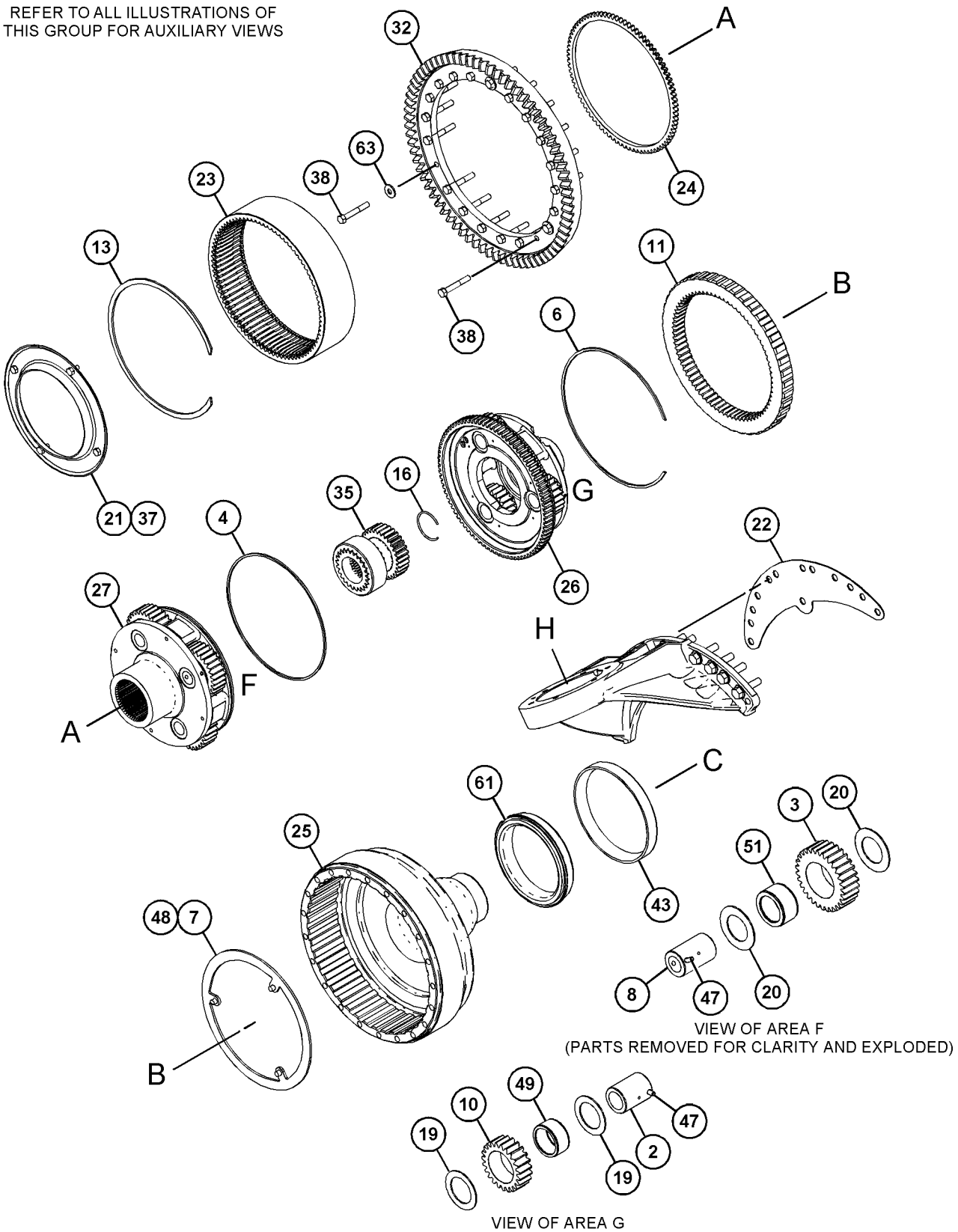

VIEW OF AREA F
(PARTS REMOVED FOR CLARITY AND EXPLODED)

VIEW OF AREA G
(PARTS REMOVED FOR CLARITY AND EXPLODED)

GRAPHIC #1 g06011564

448-4208 **BRAKE & DIFFERENTIAL DRIVE GP (**contd.**)** **i06517228**

REFER TO ALL ILLUSTRATIONS OF
THIS GROUP FOR AUXILIARY VIEWS

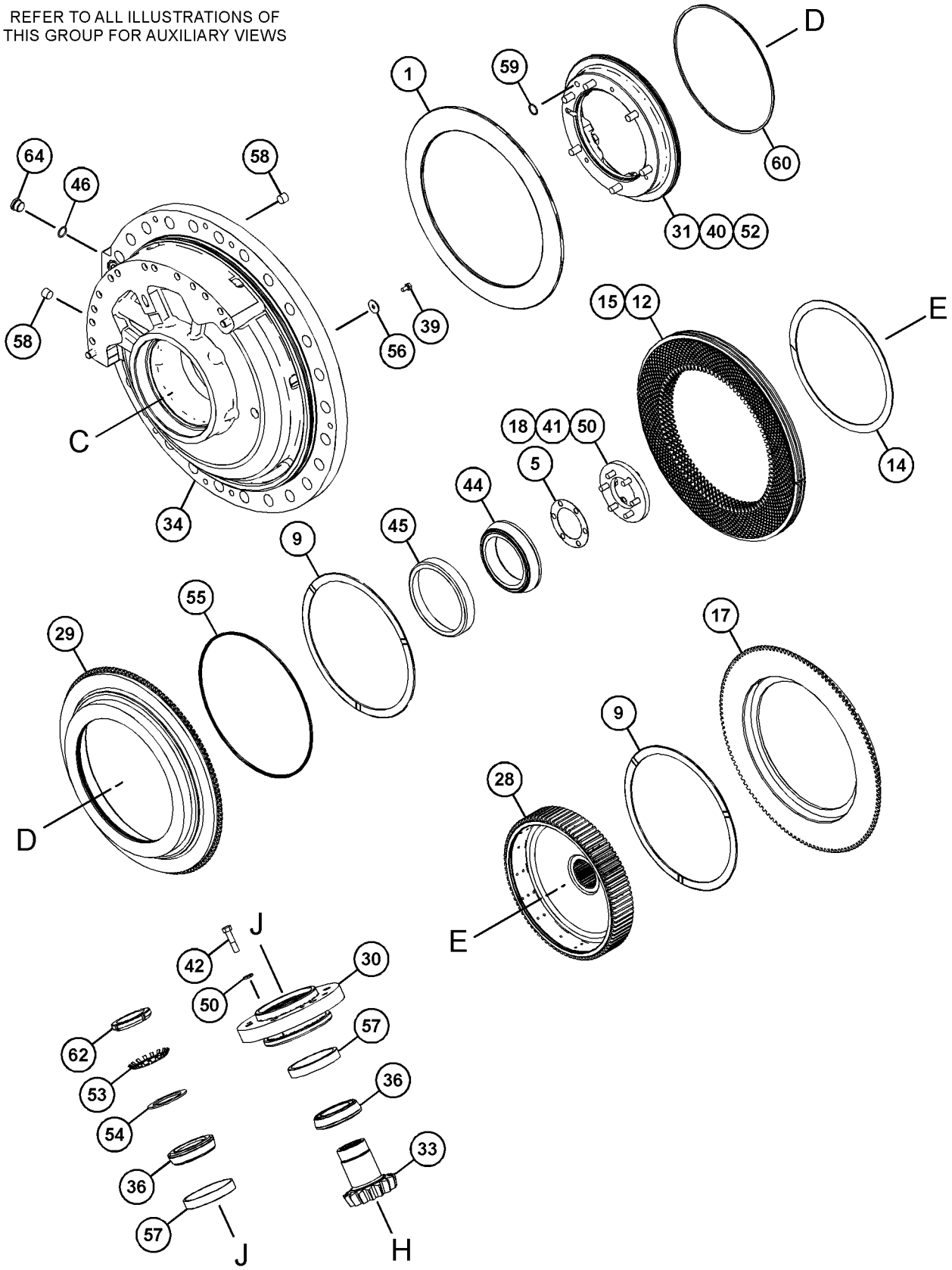

GRAPHIC #2 <END> g06011605

448-5374 BRAKE & PLANETARY GP

S/N: R5A1-UP

PART OF 391-9508 POWER TRAIN AR

SMCS-4011, 4132, 4255 **i06517230**

NOTE	REF NO	GRAPHIC REF	PART NUMBER	QTY	PART NAME 1 2 3 4 5 6 (PRODUCT LEVEL)	SEE PAGE
	1	1	**6Y-2704**	1	SPRING-DISC	
	2	1	**3T-5807**	1	SLINGER	
	3	1	**6Y-9373**	4	DISC-FRICTION	
	4	1	**7T-1885**	1	RING	
	5	1	**7T-6994**	3	PLATE-CLUTCH & BRAKE	
	6	1	**7T-8136**	3	SHAFT-PLANETARY	
	7	1	**7T-9031**	1	GEAR-RING (75-TEETH)	
	8	1	**7T-9837**	1	PLATE	
	9	1	**8E-8307**	6	DISC-THRUST	
	10	1	**205-5314**	1	HOUSING	
	11	1	**214-3573**	1	PISTON	
	12	1	**216-4591**	1	RETAINER AS	
		1	**8S-0527**	1	PLUG-CUP	
	13	1	**244-2310**	3	GEAR-PLANETARY (23-TEETH)	
	14	1	**305-2418**	1	GEAR AS-SUN (30-TEETH)	
		1	**3E-4354**	2	BALL	
	15	1	**305-2419**	1	CARRIER-PLANETARY	
	16	1	**0S-1585**	12	BOLT (1/2-13X1.5-IN)	
	17	1	**1A-1460**	6	BOLT (1/2-13X2-IN)	
	18	1	**1A-2029**	6	BOLT (3/8-16X1.125-IN)	
	19	1	**1C-0569**	6	BOLT (5/16-18X0.5-IN)	
	20	1	**3K-0360**	2	SEAL-O-RING	
	21	1	**3S-2708**	3	PIN-SPRING	
	22	1	**5M-0578**	6	BEARING AS-ROLLER	
	23	1	**5M-2894**	6	WASHER-HARD (10.2X18.5X2.5-MM THK)	
	24	1	**5P-8245**	18	WASHER-HARD (13.5X25.5X3-MM THK)	
	25	1	**6P-5317**	1	RING-SEAL (EXTERNAL)	
	26	1	**8M-4438**	1	SEAL-O-RING	
	27	1	**8P-8357**	1	RING-SEAL (INTERNAL)	
	28	1	**9S-8005**	2	PLUG	
	29	1	**9W-7925**	2	BEARING AS-TAPERED ROLLER	
	30	1	**9W-7926**	2	CUP-BEARING	

448-5374 **BRAKE & PLANETARY GP (**contd.**)** **i06517230**

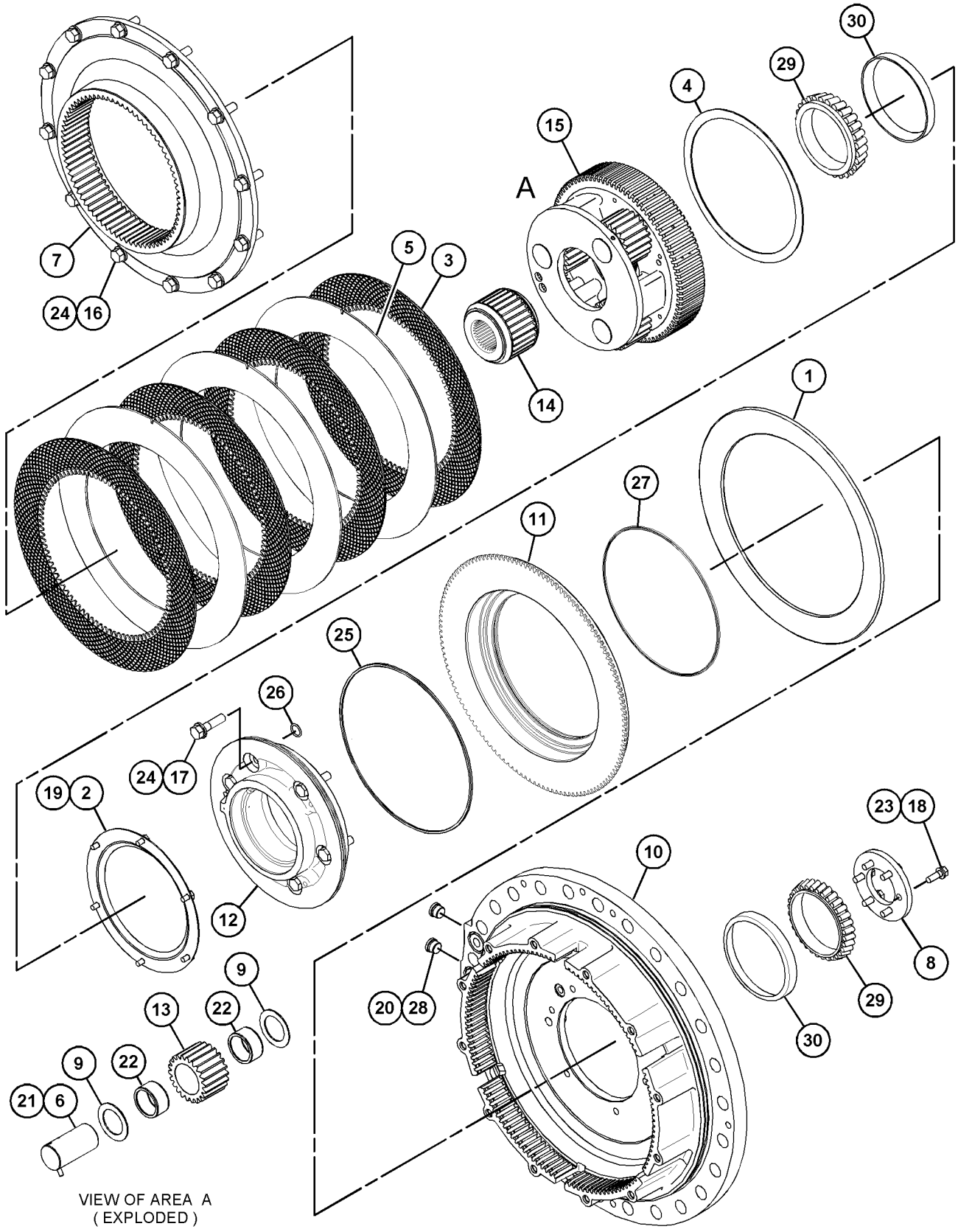

GRAPHIC #1 <END> g06012711

320-6128 CASE AS-TRANSMISSION

S/N: RC51-UP

PART OF 352-9851 GEAR GP-BEVEL & TRANSFER

SMCS-3064 **i06567211**

NOTE	REF NO	GRAPHIC REF	PART NUMBER	QTY	PART NAME 1 2 3 4 5 6 (PRODUCT LEVEL)	SEE PAGE
	1	1	**7T-9356**	1	PLUG-CUP	
	2	1	**424-8431**	1	CASE AS-TRANSMISSION	
		1	**0S-1585**	18	BOLT (1/2-13X1.5-IN)	
		1	**5H-6202**	2	PIN	
	3	1	**2A-3576**	1	PIN	

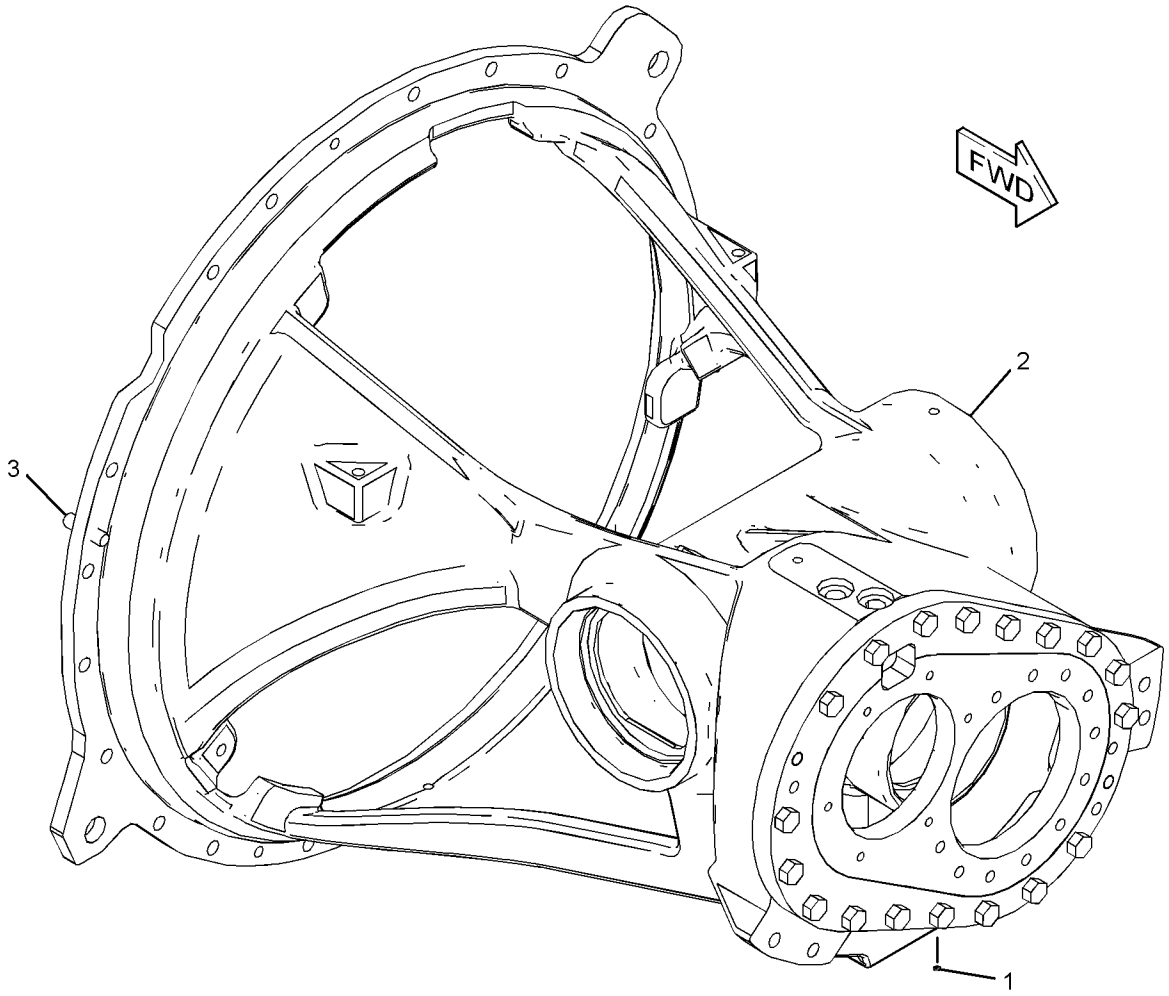

GRAPHIC #1 <END> g03588058

421-5950 CONTROL GP-STEERING & XMSN

S/N: R5A1-UP

PART OF 393-6480 CAB AR, 393-6485 CAB AR-ENCLOSED ROPS, 393-6475 CANOPY AR AN ATTACHMENT

SMCS-4122 **i06554434**

NOTE	REF NO	GRAPHIC REF	PART NUMBER	QTY	PART NAME 1 2 3 4 5 6 (PRODUCT LEVEL)	SEE PAGE
	1	1	**478-2128**	1	GASKET	
Y	2	1	**424-8511**	1	CONTROL GP-JOYSTICK (STEERING, TRANSMISSION)	489
	3	1	**430-9355**	1	GUARD	
M	4	1	**127-2170**	4	SCREW-TRUSS HEAD (M8X1.25X20-MM)	
	5	1	**8T-4121**	2	WASHER-HARD (11X21X2.5-MM THK)	
M	6	1	**9X-2041**	2	SCREW-TRUSS HEAD (M10X1.5X20-MM)	

M - METRIC PART
Y - SEPARATE ILLUSTRATION

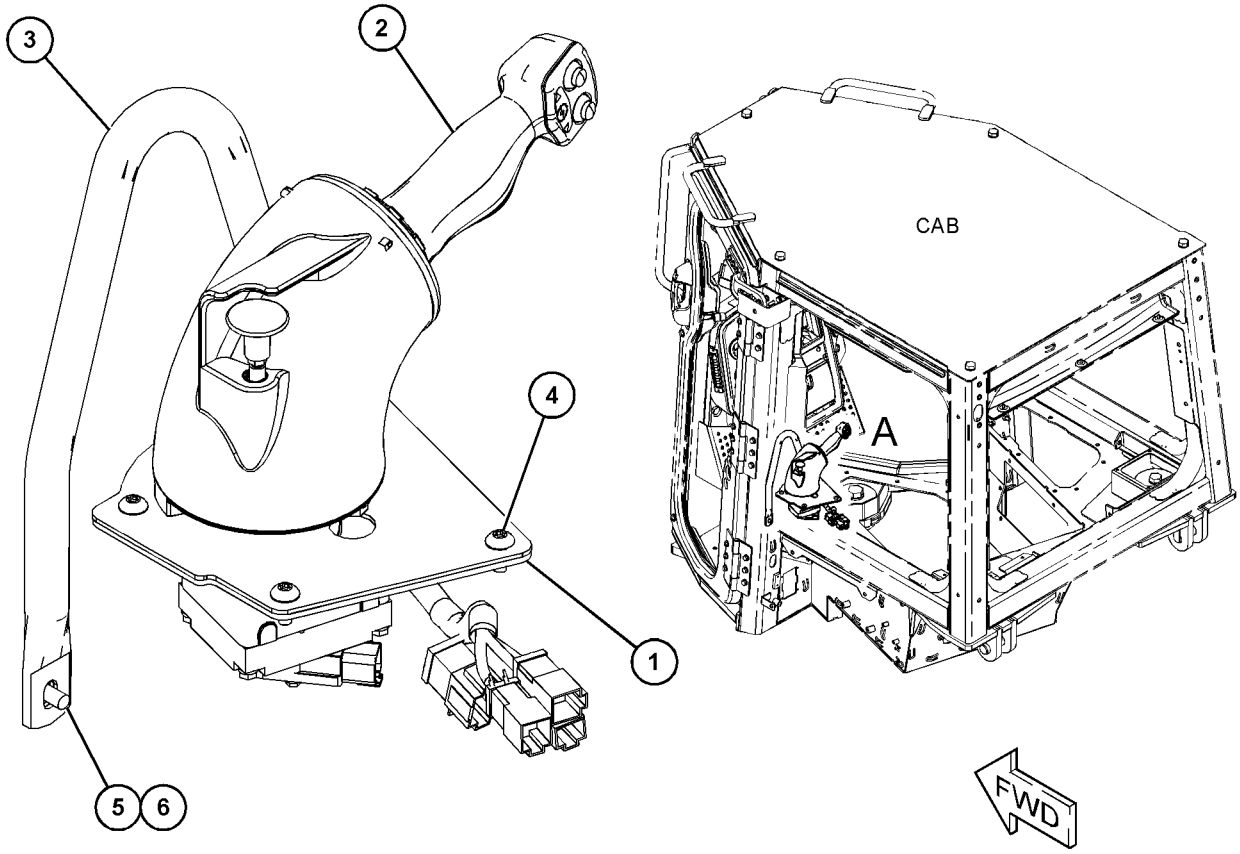

VIEW OF AREA A

GRAPHIC #1 <END> g06024630

365-6797 CONTROL GP-TRANSMISSION HYD

S/N: RC51-UP

PART OF 365-6795 TRANSMISSION AR

SMCS-3073, 3167 **i06517237**

NOTE	REF NO	GRAPHIC REF	PART NUMBER	QTY	PART NAME 1 2 3 4 5 6 (PRODUCT LEVEL)	SEE PAGE
	1	1	**104-6729**	1	RETAINER	
	2	1	**169-5414**	1	CLIP	
Y	3	1	**244-3114**	5	VALVE GP-MODULATING (24-VOLT) (TRANSMISSION HYDRAULIC CONTROL)	265
Y	4	1	**365-6807**	1	VALVE GP-RELIEF	270
	5	1	**448-2859**	2	DRAIN	
	6	1	**365-6809**	1	HARNESS AS-TRANSMISSION	
		1	**3S-2093**	5	STRAP-CABLE	
		1	**4P-8134**	1	CLIP	
		1	**132-5789**	3	CLIP	
		1	**352-3964**	1	CLIP	
E		1	**8T-6342**		TUBE-HEAT SHRINK (3.2-MM DIA) (46-CM)	
E		1	**9X-2109**		TUBE-HEAT SHRINK (6.4-MM DIA) (10-CM)	
		1	**9X-3402**	14	SOCKET-CONNECTOR (16-GA TO 18-GA)	
					—OR—	
		1	**126-1768**	14	SOCKET-CONNECTOR (14-GA TO 16-GA)	
		1	**125-5341**	1	NUT (1-1/4-18-THD)	
		1	**331-4226**	7	KIT-CONNECTING PLUG (2-PIN)	
					(EACH INCLUDES PLUG AS, WEDGE, & INTERFACE SEAL)	
	7	1	**0S-0509**	1	BOLT (3/8-16X0.75-IN)	
	8	1	**104-6730**	1	GASKET	
	9	1	**1D-4540**	14	BOLT (5/16-18X2.75-IN)	
	10	1	**5M-2894**	1	WASHER-HARD (10.2X18.5X2.5-MM THK)	
M	11	1	**8T-4136**	2	BOLT (M10X1.5X25-MM)	
	12	1	**9M-1974**	14	WASHER-HARD (8.8X16X2-MM THK)	
	13	1	**5P-8065**	1	SEAL-O-RING	
	14	1	**125-5341**	1	NUT (1-1/4-18-THD)	

E - ORDER BY THE CENTIMETER
M - METRIC PART
Y - SEPARATE ILLUSTRATION

365-6797 **CONTROL GP-TRANSMISSION HYD (**contd.**)** **i06517237**

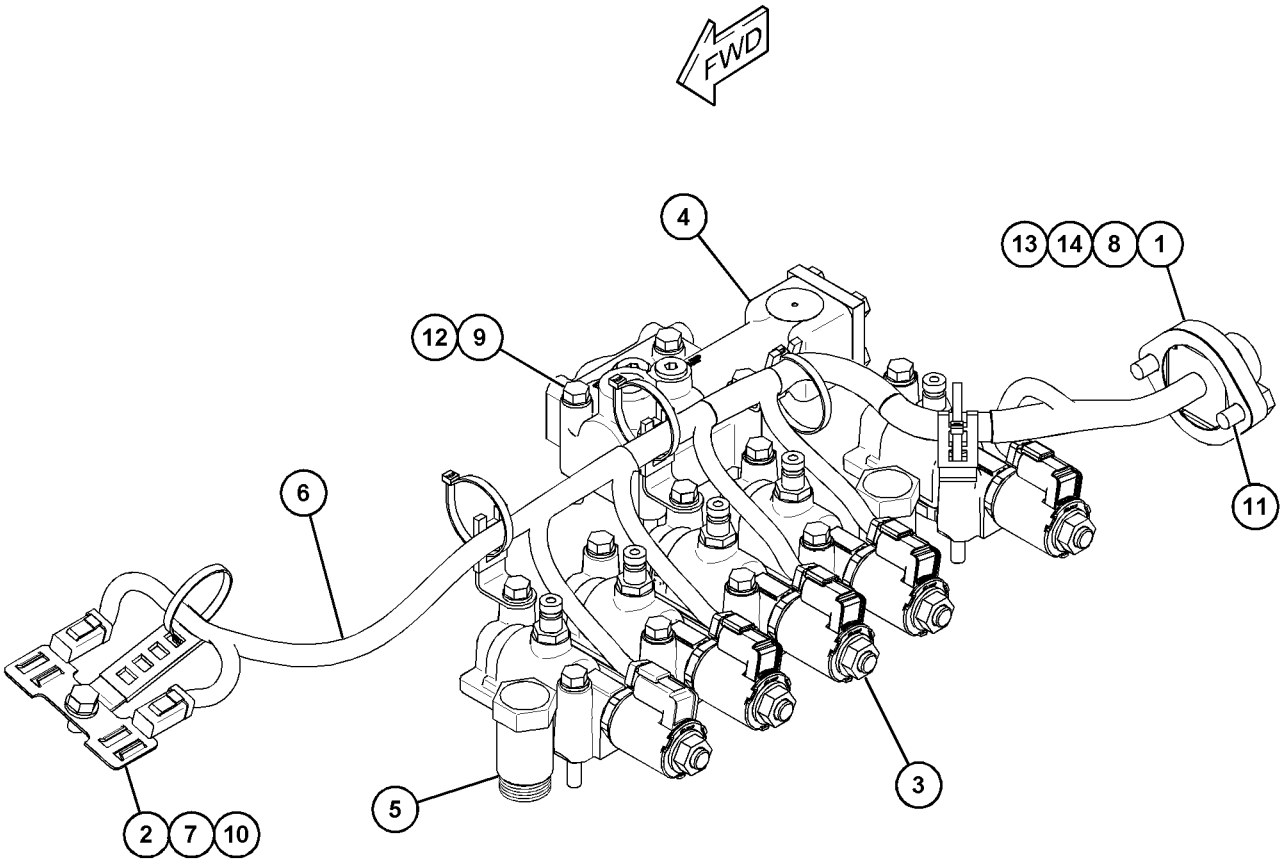

MOUNTS TO
TOP OF TRANSMISSION

GRAPHIC #1 <END> g06009789

453-9491 DRAIN GP-ECOLOGY

S/N: R5A1-UP

AN ATTACHMENT

SMCS-3100 **i06530524**

NOTE	REF NO	GRAPHIC REF	PART NUMBER	QTY	PART NAME 1 2 3 4 5 6 (PRODUCT LEVEL)	SEE PAGE
	1	1	**2B-0858**	1	PLUG-PIPE	
	2	1	*321-8667*	1	ADAPTER GP-PLUG	
		1	**6V-1322**	1	BOLT (1/4-20X0.375-IN)	
		1	**109-9549**	1	SPACER (0.13-MM THK)	
		1	**321-8665**	1	PLUG-DRAIN	
		1	**321-8666**	1	ADAPTER	
	3	1	**8H-9818**	1	GASKET	
M	4	1	**8T-4136**	2	BOLT (M10X1.5X25-MM)	

M - METRIC PART

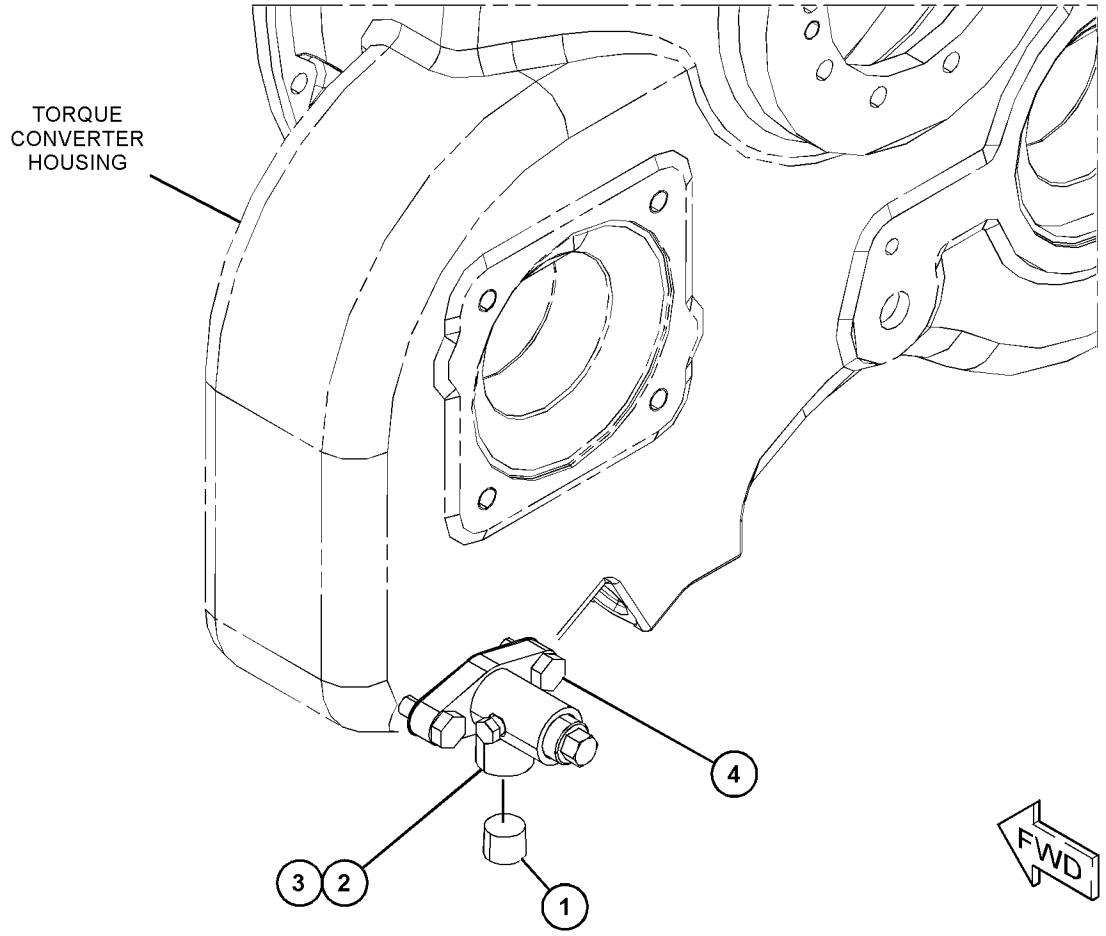

GRAPHIC #1 <END> g06022369

458-3587 DRIVE AR-FINAL

S/N: R5A1-UP

AN ATTACHMENT

SMCS-4050 **i06581799**

NOTE	REF NO	GRAPHIC REF	PART NUMBER	QTY	PART NAME 1 2 3 4 5 6 (PRODUCT LEVEL)	SEE PAGE
Y	1	1	*193-7361*	1	AXLE GP	209
Y	2	1	**448-1167**	2	DRIVE GP-FINAL	226
Y	3	1	*449-0302*	1	MOUNTING GP-FINAL DRIVE	244

Y - SEPARATE ILLUSTRATION

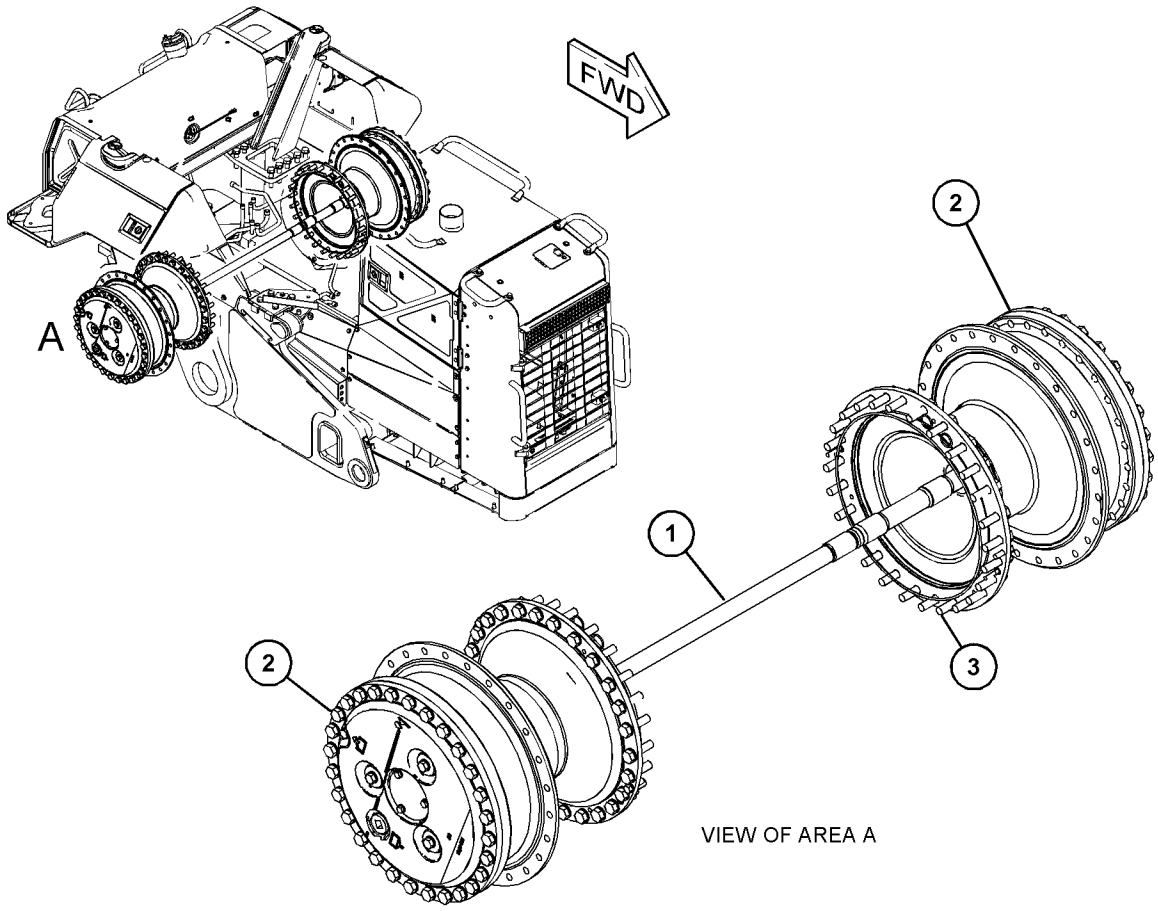

VIEW OF AREA A

GRAPHIC #1 <END> g03785786

458-3589 DRIVE AR-FINAL—COLD WEATHER

S/N: R5A1-UP

AN ATTACHMENT

SMCS-4050 **i06563386**

NOTE	REF NO	GRAPHIC REF	PART NUMBER	QTY	PART NAME 1 2 3 4 5 6 (PRODUCT LEVEL)	SEE PAGE
Y	1	1	*193-7361*	1	AXLE GP	209
Y	2	1	**443-6917**	2	DRIVE GP-FINAL	224
Y	3	1	*449-0302*	1	MOUNTING GP-FINAL DRIVE	244

Y - SEPARATE ILLUSTRATION

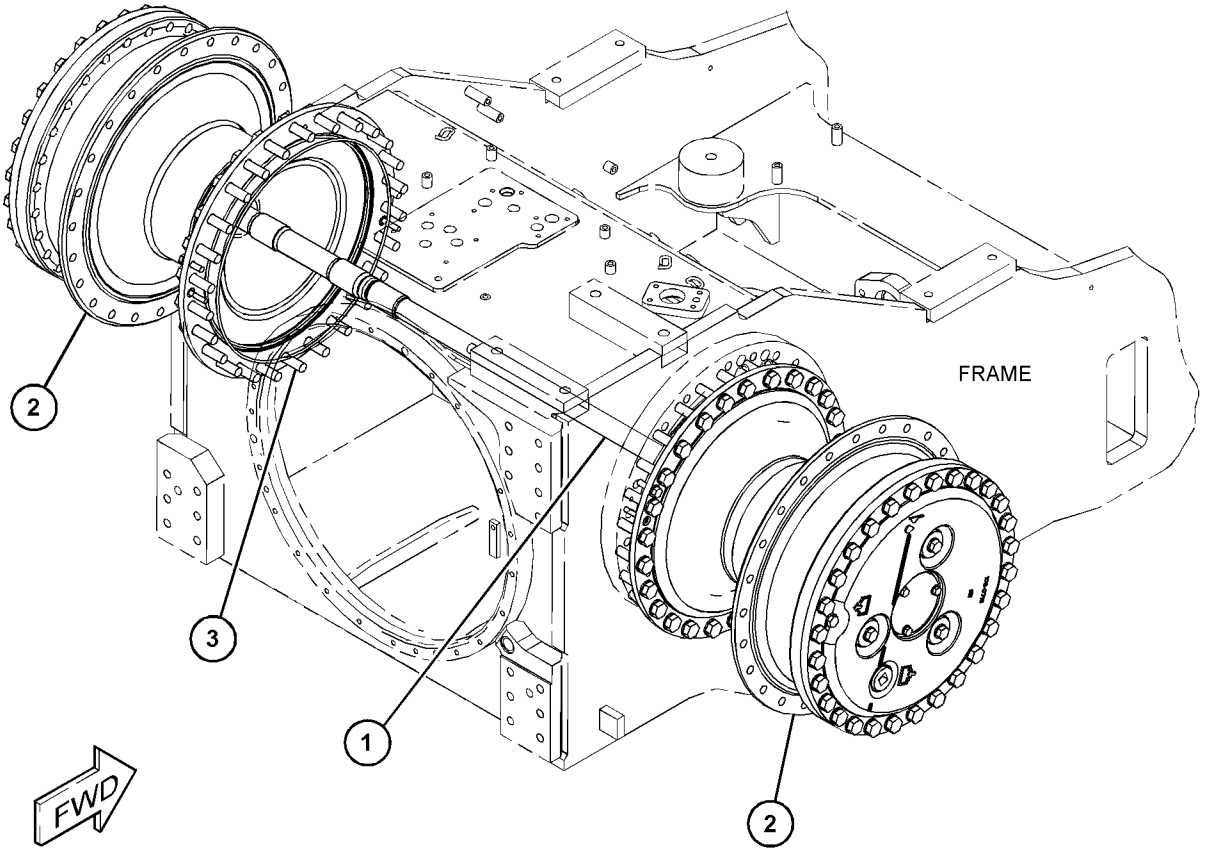

GRAPHIC #1 <END> g06024820

478-7557 DRIVE AR-FINAL

S/N: R5A1-UP
AN ATTACHMENT

SMCS-4050 **i06567344**

NOTE	REF NO	GRAPHIC REF	PART NUMBER	QTY	PART NAME 1 2 3 4 5 6 (PRODUCT LEVEL)	SEE PAGE
Y	1	1	**478-7555**	2	DRIVE GP-FINAL	228
Y	2	1	*193-7361*	1	AXLE GP	209
Y	3	1	*449-0302*	1	MOUNTING GP-FINAL DRIVE	244

Y - SEPARATE ILLUSTRATION

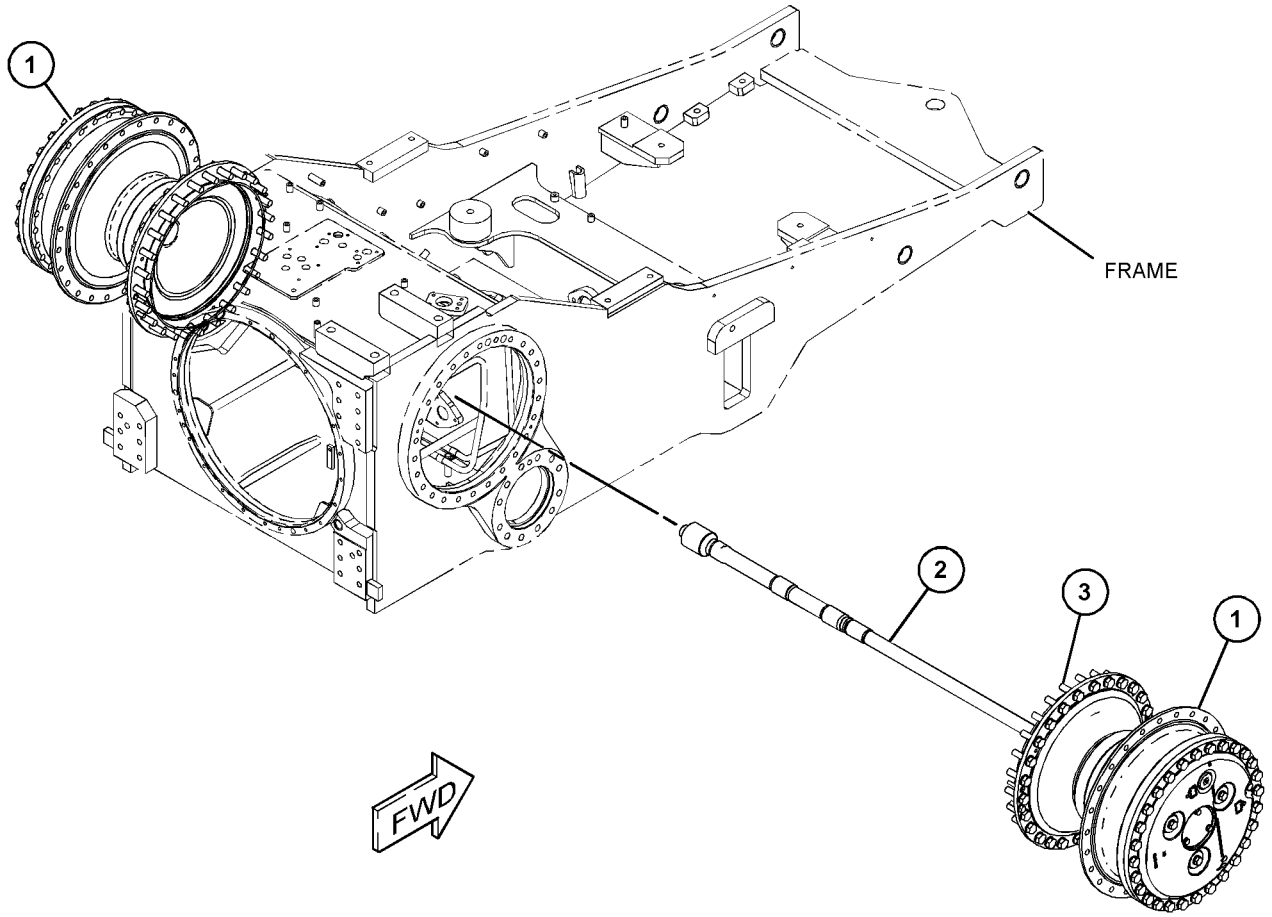

GRAPHIC #1 <END> g06027964

443-6917 DRIVE GP-FINAL—COLD WEATHER

S/N: R5A1-UP

PART OF 458-3589 DRIVE AR-FINAL

AN ATTACHMENT

SMCS-4050 **i06563397**

NOTE	REF NO	GRAPHIC REF	PART NUMBER	QTY	PART NAME 1 2 3 4 5 6 (PRODUCT LEVEL)	SEE PAGE
	1	1	**6Y-6277**	1	SEAL GP-DUO-CONE	
	2	1	**8E-3075**	3	RETAINER	
	3	1	**8G-4565**	3	GEAR-PLANETARY (30-TEETH)	
	4	1	**8G-4566**	1	PLATE	
	5	1	**8G-4568**	1	GEAR-RING (74-TEETH)	
	6	1	**9G-4876**	1	RETAINER	
	7	1	**106-0713**	1	CARRIER	
	8	1	**107-1763**	1	HUB-SPROCKET	
	9	1	**178-6854**	1	HUB-RING GEAR	
	10	1	**179-6707**	3	SHAFT	
	11	1	**9X-8257**	3	WASHER (17.5X30X3.5-MM THK)	
	12	1	**191-4923**	1	SPINDLE	
	13	1	**480-6340**	1	SEAL-LIP TYPE	
	14	1	**1B-3978**	6	CUP-BEARING (TAPERED ROLLER)	
	15	1	**1B-3980**	6	CONE-BEARING (TAPERED ROLLER)	
	16	1	**1H-8128**	1	SEAL-O-RING	
	17	1	**1H-9696**	3	SEAL-O-RING	
	18	1	**2S-4078**	1	SEAL-O-RING	
	19	1	**3K-0360**	1	SEAL-O-RING	
	20	1	**8H-0901**	1	CUP-BEARING (TAPERED ROLLER)	
	21	1	**8H-0902**	1	CONE-BEARING (TAPERED ROLLER)	
	22	1	**2K-5066**	1	CONE-BEARING (TAPERED ROLLER)	
	23	1	**6V-0330**	1	CUP-BEARING (TAPERED ROLLER)	
	24	1	**6V-0439**	1	PLUG-MAGNETIC (FINAL DRIVE, OIL CHECK, FILL)	
M	25	1	**7X-2563**	28	BOLT (M20X2.5X60-MM)	
M	26	1	**8C-8729**	9	BOLT-SOCKET HEAD (M12X1.75X80-MM)	
	27	1	**8D-4771**	1	SEAL-O-RING	
	28	1	**8G-4569**	1	RING	
	29	1	**8T-4121**	3	WASHER-HARD (11X21X2.5-MM THK)	
	30	1	**8T-4123**	28	WASHER (3.62X5.75X0.375-MM THK)	
M	31	1	**8T-4136**	3	BOLT (M10X1.5X25-MM)	
M	32	1	**8T-4193**	3	BOLT (M16X2X50-MM)	
	33	1	**8T-4223**	9	WASHER-HARD (13.5X25.5X3-MM THK)	
	34	1	**9S-4185**	1	PLUG (FINAL DRIVE OIL DRAIN)	

M - METRIC PART

443-6917 **DRIVE GP-FINAL (**contd.**)** **i06563397**

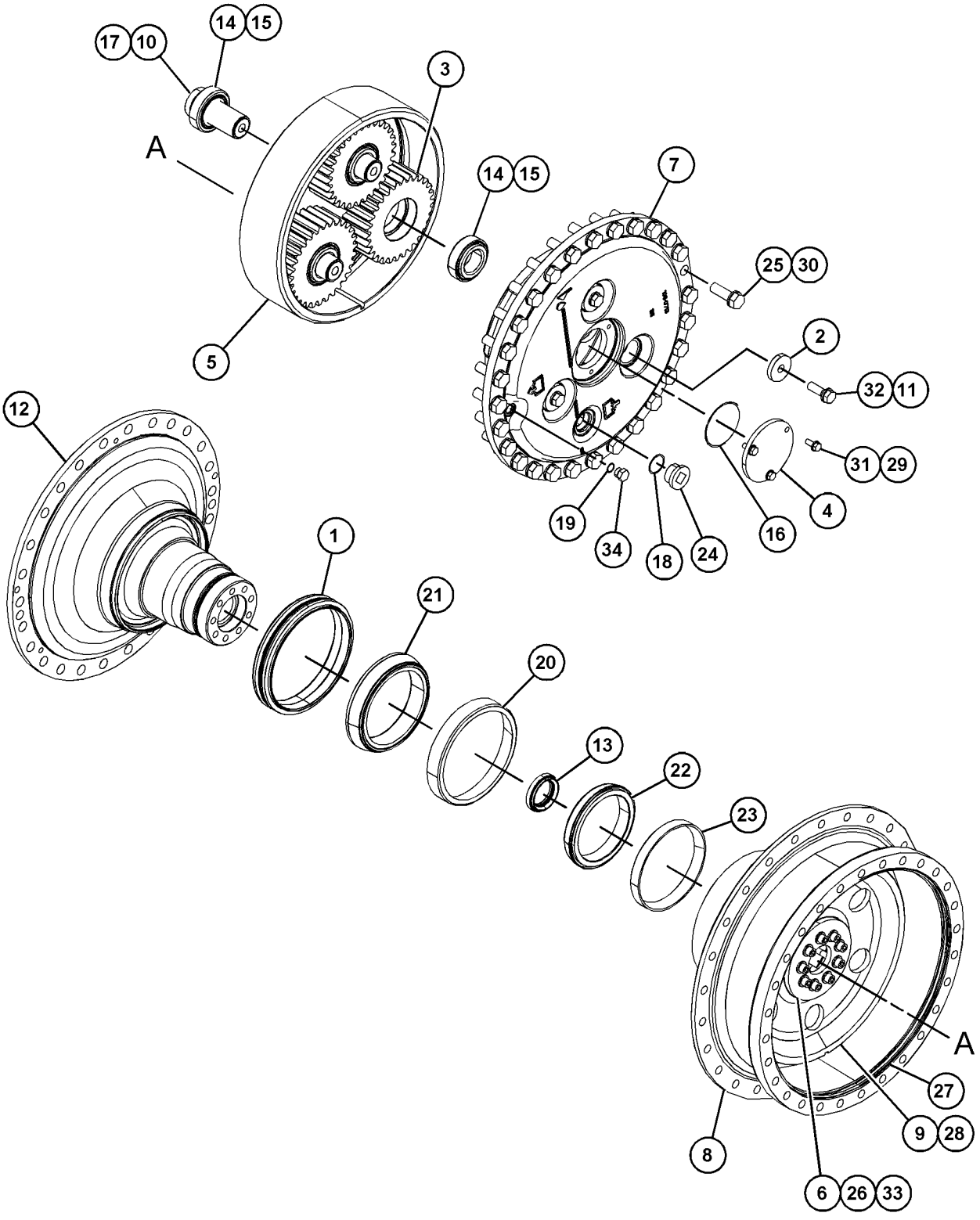

GRAPHIC #1 <END> g06025836

448-1167 DRIVE GP-FINAL

S/N: R5A1-UP
PART OF 458-3587 DRIVE AR-FINAL
AN ATTACHMENT

SMCS-4050 **i06530453**

NOTE	REF NO	GRAPHIC REF	PART NUMBER	QTY	PART NAME 1 2 3 4 5 6 (PRODUCT LEVEL)	SEE PAGE
	1	1	**6Y-0859**	1	SEAL GP-DUO-CONE	
	2	1	**8E-3075**	3	RETAINER	
	3	1	**8G-4565**	3	GEAR-PLANETARY (30-TEETH)	
	4	1	**8G-4566**	1	PLATE	
	5	1	**8G-4568**	1	GEAR-RING (74-TEETH)	
	6	1	**9G-4876**	1	RETAINER	
	7	1	**106-0713**	1	CARRIER	
	8	1	**107-1763**	1	HUB-SPROCKET	
	9	1	**178-6854**	1	HUB-RING GEAR	
	10	1	**179-6707**	3	SHAFT	
	12	1	**191-4923**	1	SPINDLE	
	13	1	**460-4832**	1	SEAL-LIP TYPE	
	14	1	**1B-3978**	6	CUP-BEARING (TAPERED ROLLER)	
	15	1	**1B-3980**	6	CONE-BEARING (TAPERED ROLLER)	
	16	1	**1H-8128**	1	SEAL-O-RING	
	17	1	**1H-9696**	3	SEAL-O-RING	
	18	1	**2S-4078**	1	SEAL-O-RING	
	19	1	**3K-0360**	1	SEAL-O-RING	
	20	1	**8H-0901**	1	CUP-BEARING (TAPERED ROLLER)	
	21	1	**8H-0902**	1	CONE-BEARING (TAPERED ROLLER)	
	22	1	**2K-5066**	1	CONE-BEARING (TAPERED ROLLER)	
	23	1	**6V-0330**	1	CUP-BEARING (TAPERED ROLLER)	
	24	1	**6V-0439**	1	PLUG-MAGNETIC (FINAL DRIVE)	
M	25	1	**7X-2563**	28	BOLT (M20X2.5X60-MM)	
M	26	1	**8C-8729**	9	BOLT-SOCKET HEAD (M12X1.75X80-MM)	
	27	1	**8D-4771**	1	SEAL-O-RING	
	28	1	**8G-4569**	1	RING	
	29	1	**8T-4121**	3	WASHER-HARD (11X21X2.5-MM THK)	
	30	1	**8T-4123**	28	WASHER (3.62X5.75X0.375-MM THK)	
M	31	1	**8T-4136**	3	BOLT (M10X1.5X25-MM)	
M	32	1	**8T-4193**	3	BOLT (M16X2X50-MM)	
	33	1	**8T-4223**	9	WASHER-HARD (13.5X25.5X3-MM THK)	
	34	1	**9S-4185**	1	PLUG	
	35	1	**9X-8257**	3	WASHER (17.5X30X3.5-MM THK)	

M - METRIC PART

448-1167 **DRIVE GP-FINAL (**contd.**)** **i06530453**

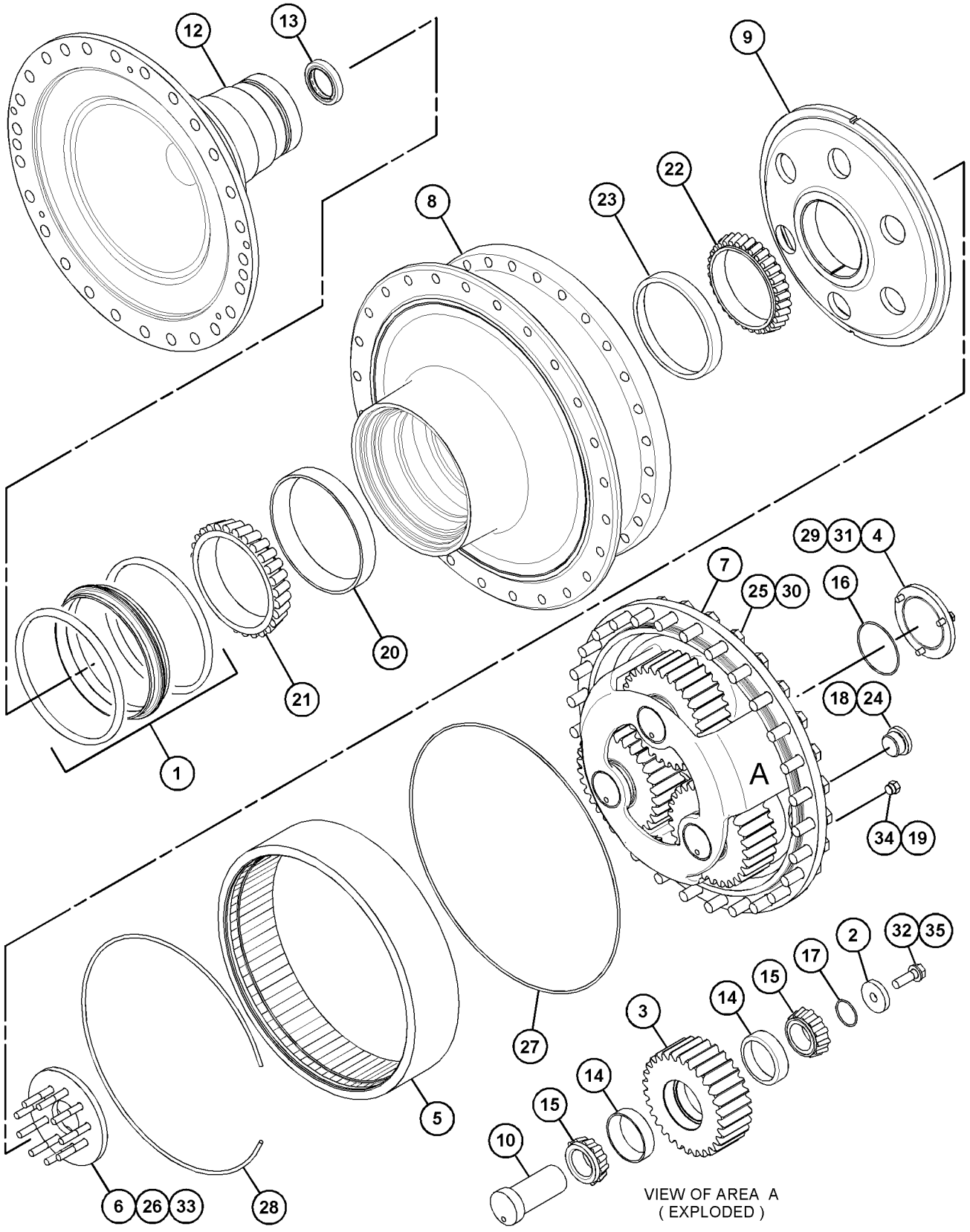

GRAPHIC #1 <END> g06014102

478-7555 DRIVE GP-FINAL

S/N: R5A1-UP
WITH GUARD
PART OF 478-7557 DRIVE AR-FINAL
AN ATTACHMENT

SMCS-4050 **i06567348**

NOTE	REF NO	GRAPHIC REF	PART NUMBER	QTY	PART NAME 1 2 3 4 5 6 (PRODUCT LEVEL)	SEE PAGE
	1	1	**1B-3978**	6	CUP-BEARING (TAPERED ROLLER)	
	2	1	**1B-3980**	6	CONE-BEARING (TAPERED ROLLER)	
	3	1	**460-4832**	1	SEAL-LIP TYPE	
	4	1	**8H-0901**	1	CUP-BEARING (TAPERED ROLLER)	
	5	1	**8H-0902**	1	CONE-BEARING (TAPERED ROLLER)	
	6	1	**2K-5066**	1	CONE-BEARING (TAPERED ROLLER)	
	7	1	**6V-0330**	1	CUP-BEARING (TAPERED ROLLER)	
	8	1	**5Q-7578**	1	HUB AS	
		1	**1Q-4230**	1	GUARD	
	9	1	**6V-0439**	1	PLUG-MAGNETIC (FINAL DRIVE, OIL CHECK, FILL)	
	10	1	**8E-3075**	3	RETAINER	
	11	1	**8G-4565**	3	GEAR-PLANETARY (30-TEETH)	
	12	1	**8G-4566**	1	PLATE	
	13	1	**8G-4568**	1	GEAR-RING (74-TEETH)	
	14	1	**9G-4876**	1	RETAINER	
	15	1	**106-0713**	1	CARRIER	
	16	1	**178-6854**	1	HUB-RING GEAR	
	17	1	**179-6707**	3	SHAFT	
	18	1	**226-1416**	1	SPINDLE AS	
	19	1	**1H-8128**	1	SEAL-O-RING	
	20	1	**1H-9696**	3	SEAL-O-RING	
	21	1	**2S-4078**	1	SEAL-O-RING	
	22	1	**3K-0360**	1	SEAL-O-RING	
	23	1	**6Y-0859**	1	SEAL GP-DUO-CONE	
M	24	1	**7X-2563**	28	BOLT (M20X2.5X60-MM)	
M	25	1	**8C-8729**	9	BOLT-SOCKET HEAD (M12X1.75X80-MM)	
	26	1	**8D-4771**	1	SEAL-O-RING	
	27	1	**8G-4569**	1	RING	
	28	1	**8T-4121**	3	WASHER-HARD (11X21X2.5-MM THK)	
	29	1	**8T-4123**	28	WASHER (3.62X5.75X0.375-MM THK)	
M	30	1	**8T-4136**	3	BOLT (M10X1.5X25-MM)	
M	31	1	**8T-4193**	3	BOLT (M16X2X50-MM)	
	32	1	**8T-4223**	9	WASHER-HARD (13.5X25.5X3-MM THK)	
	33	1	**9S-4185**	1	PLUG (FINAL DRIVE OIL DRAIN)	
	34	1	**9X-8257**	3	WASHER (17.5X30X3.5-MM THK)	

M - METRIC PART

478-7555 **DRIVE GP-FINAL (**contd.**)** **i06567348**

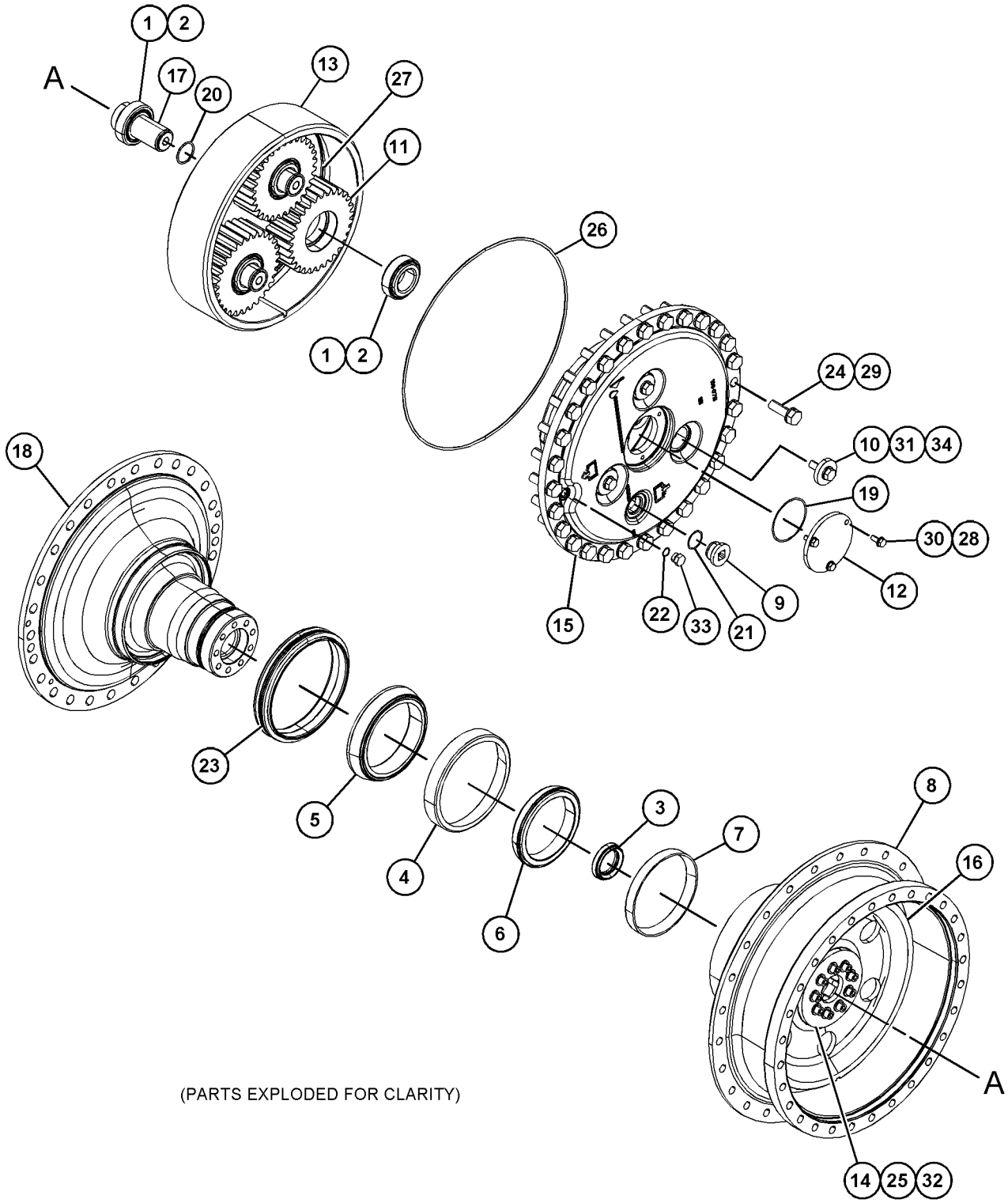

(PARTS EXPLODED FOR CLARITY)

GRAPHIC #1 <END> g06029210

332-8833 FILTER GP-OIL—MEDIUM PRESSURE

S/N: R5A1-UP
HYDRAULIC, TRANSMISSION
PART OF 434-9672 LINES GP-POWER TRAIN OIL

SMCS-3004, 3067

i06123999

NOTE	REF NO	GRAPHIC REF	PART NUMBER	QTY	PART NAME 1 2 3 4 5 6 (PRODUCT LEVEL)	SEE PAGE
	1	1	**332-8832**	1	BASE AS-OIL FILTER	
		1	**5P-7701**	1	SEAL-O-RING	
		1	**9S-4181**	1	PLUG (5/16-12-THD)	
		1	**114-0561**	1	PLUG	
		1	**206-9292**	1	SEAL-O-RING	
Y	2	1	**440-0257**	1	SWITCH GP-PRESSURE (POWER TRAIN OIL)	179
Y	3	1	**353-4688**	1	FILTER GP-OIL (POWER TRAIN)	231

Y - SEPARATE ILLUSTRATION

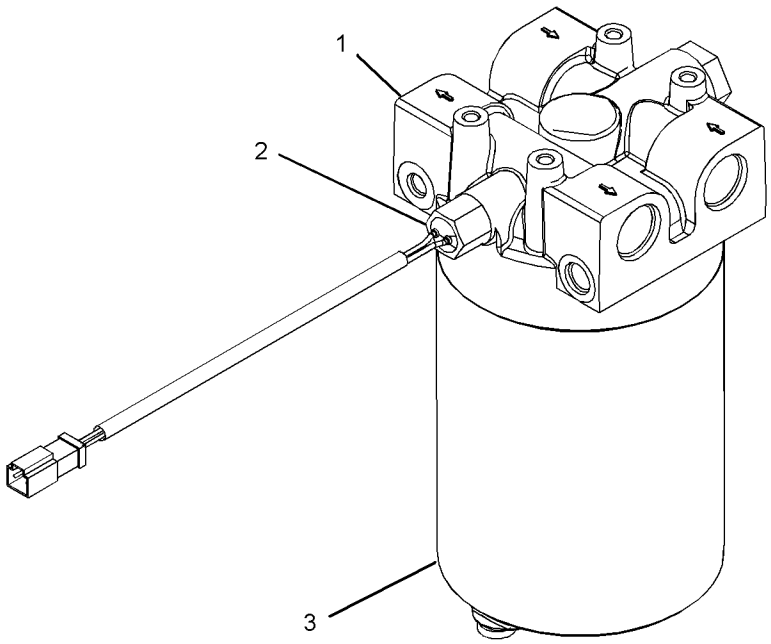

GRAPHIC #1 <END> g03842928

353-4688 FILTER GP-OIL

S/N: R5A1-UP
TRANSMISSION
PART OF 332-8833 FILTER GP-OIL

SMCS-3004, 3067

i05895964

NOTE	REF NO	GRAPHIC REF	PART NUMBER	QTY	PART NAME 1 2 3 4 5 6 (PRODUCT LEVEL)	SEE PAGE
	1	1	**9S-8005**	1	PLUG	
	2	1	**337-5270**	1	FILTER ELEMENT AS-OIL (POWER TRAIN)	
	2A	1	**095-1678**	1	SEAL-O-RING	
	3	1	**347-7407**	1	TUBE-CENTER	
	4	1	**8L-2786**	1	SEAL-O-RING	
					PARTS SHOWN IN GRAPHIC(S) WITHOUT A REFERENCE NUMBER ARE NOT SERVICED SEPARATELY	

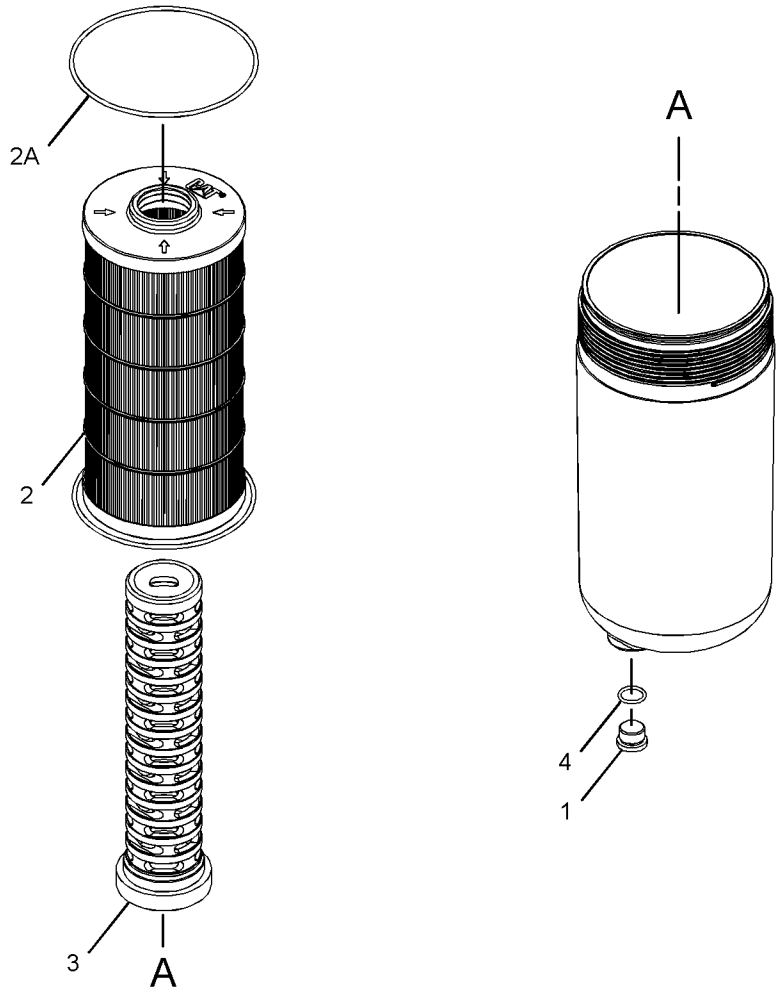

GRAPHIC #1

<END>

g02308153

352-9851 GEAR GP-BEVEL & TRANSFER

S/N: RC51-UP

PART OF 365-6795 TRANSMISSION AR

SMCS-3011 **i06516981**

NOTE	REF NO	GRAPHIC REF	PART NUMBER	QTY	PART NAME 1 2 3 4 5 6 (PRODUCT LEVEL)	SEE PAGE
	1	1	**205-7397**	1	CONE-BEARING (TAPERED ROLLER)	
	2	1	**205-7398**	1	CUP-BEARING (TAPERED ROLLER)	
	3	1	**205-7396**	1	CONE-BEARING (TAPERED ROLLER)	
	4	1	**2J-6362**	1	BEARING	
	5	1	**5P-4920**	1	RACE & ROLLER AS	
	6	1	**5P-4921**	1	RACE-BEARING OUTER	
	7	1	**6K-8329**	3	CONE-BEARING	
	8	1	**6V-1864**	1	CUP-BEARING	
	9	1	**7T-8859**	1	CUP-BEARING	
	10	1	**1L-6957**	1	LOCKNUT-BEARING	
	11	2	**2D-8009**	1	SEAL-O-RING	
	12	1	**2S-8983**	2	RING-SEAL	
	13	1	**3L-9410**	1	CONE-BEARING	
B	14	1	**3T-9819**	1	SHIM PACK (INCLUDES 19-SHIMS)	
	15	1	**6K-8328**	3	CUP-BEARING	
	16	2	**6T-7995**	1	TUBE AS	
	17	2	**6T-7996**	1	TUBE AS	
	18	1	**6V-2404**	1	LOCKWASHER-BEARING	
	19	2	**8D-0071**	1	TEE-FLARED	
	20	1	**9P-7072**	1	WASHER (90.6X115X2.5-MM THK)	
	21	1	**108-8250**	1	CARRIER-SEAL	
	22	2	**198-9162**	1	TUBE AS	
	23	1	**198-9163**	1	TUBE AS	
B	24	1	**200-8644**	2	SHIM PACK (INCLUDES 24-SHIMS)	
	25	1	**201-1281**	1	COVER	
	26	1	**203-4786**	1	CARRIER	
	27	1	**204-5341**	1	TEE	
	28	1	**204-9092**	1	SHAFT	
	29	1	*204-9096*	1	CAGE AS	
		1	**124-6657**	1	ORIFICE	
		1	**204-8981**	1	CAGE-BEARING	
	30	2	**206-2080**	1	TUBE AS	
	31	1	**206-2963**	1	TUBE AS	
	32	1	**225-4315**	1	GEAR (TRANSFER, 28-TEETH)	
	33	1	**225-4316**	1	GEAR (TRANSFER, 31-TEETH)	
	34	1	**265-2109**	1	SET-BEVEL GEAR (31, 14-TEETH)	
	35	1	**317-8261**	1	CAGE-BEARING	
	36	2	**318-0106**	1	SEAL-LIP TYPE	
	37	2	**318-1179**	2	SENSOR GP-SPEED (MAGNETIC, HIGH OUTPUT) (TRANSMISSION OUTPUT)	
					(EACH INCLUDES)	
		2	**102-8802**	1	KIT-RECEPTACLE (2-PIN)	
					(INCLUDES RECEPTACLE AS & WEDGE)	
		2	**9X-3401**	2	PIN-CONNECTOR (16-GA TO 18-GA)	
					—OR—	
		2	**126-1767**	2	PIN-CONNECTOR (14-GA TO 16-GA)	
		2	**171-5349**	1	STRAP-MARKER	
Y	38	1	*320-6128*	1	CASE AS-TRANSMISSION	216

352-9851 **GEAR GP-BEVEL & TRANSFER (**contd.**)** **i06516981**

NOTE	REF NO	GRAPHIC REF	PART NUMBER	QTY	PART NAME 1 2 3 4 5 6 (PRODUCT LEVEL)	SEE PAGE
	39	1	**032-1267**	1	CONNECTOR (STRAIGHT)	
	40	2	**032-1268**	1	CONNECTOR (90-DEG)	
	41	1	**052-0572**	1	TEE-SWIVEL	
	42	2	**0S-0509**	1	BOLT (3/8-16X0.75-IN)	
	43	1	**0S-1595**	19	BOLT (1/2-13X1.25-IN)	
	44	1	**0S-1599**	1	BOLT (1/2-20X2.75-IN)	
	45	2	**0S-1614**	2	BOLT (1/4-20X0.5-IN)	
	46	2	**1A-5350**	2	CLIP	
	47	2	**1T-0720**	3	BOLT-12 POINT HEAD (3/8-16X1.25-IN)	
B	48	1	**201-1282**	1	SHIM PACK (INCLUDES 25-SHIMS)	
	49	2	**2B-2404**	1	CLIP	
	50	1	**2N-1287**	1	ELBOW-FLARED	
	51	1	**3B-1915**	6	BOLT (3/8-16X1.375-IN)	
	52	1	**3T-9674**	1	RETAINER	
	53	2	**5B-0841**	20	BOLT (5/8-18X1.75-IN)	
	54	2	**5M-2894**	1	WASHER-HARD (10.2X18.5X2.5-MM THK)	
	55	2	**5P-0537**	2	WASHER-HARD (7.2X14.5X2-MM THK)	
	56	1	**8L-6557**	1	CONNECTOR	
M	57	1	**8T-4136**	4	BOLT (M10X1.5X25-MM)	

B - USE AS REQUIRED
M - METRIC PART
Y - SEPARATE ILLUSTRATION

352-9851 **GEAR GP-BEVEL & TRANSFER (**contd.**)** **i06516981**

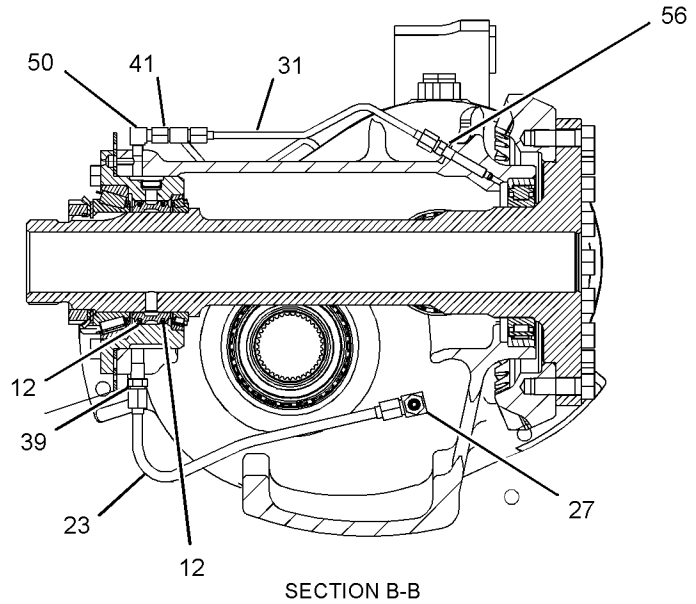

SECTION B-B

REFER TO ALL ILLUSTRATIONS OF THIS GROUP FOR AUXILIARY VIEWS

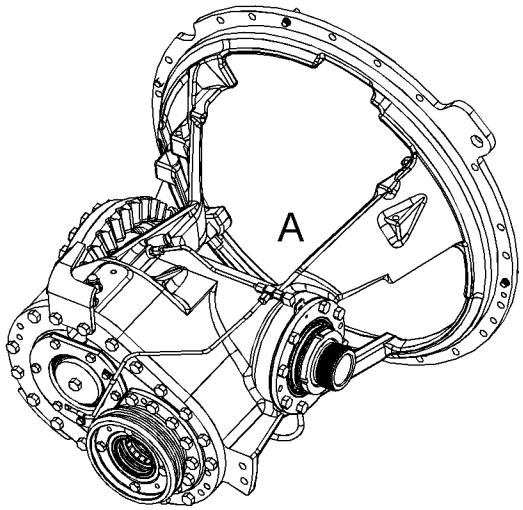

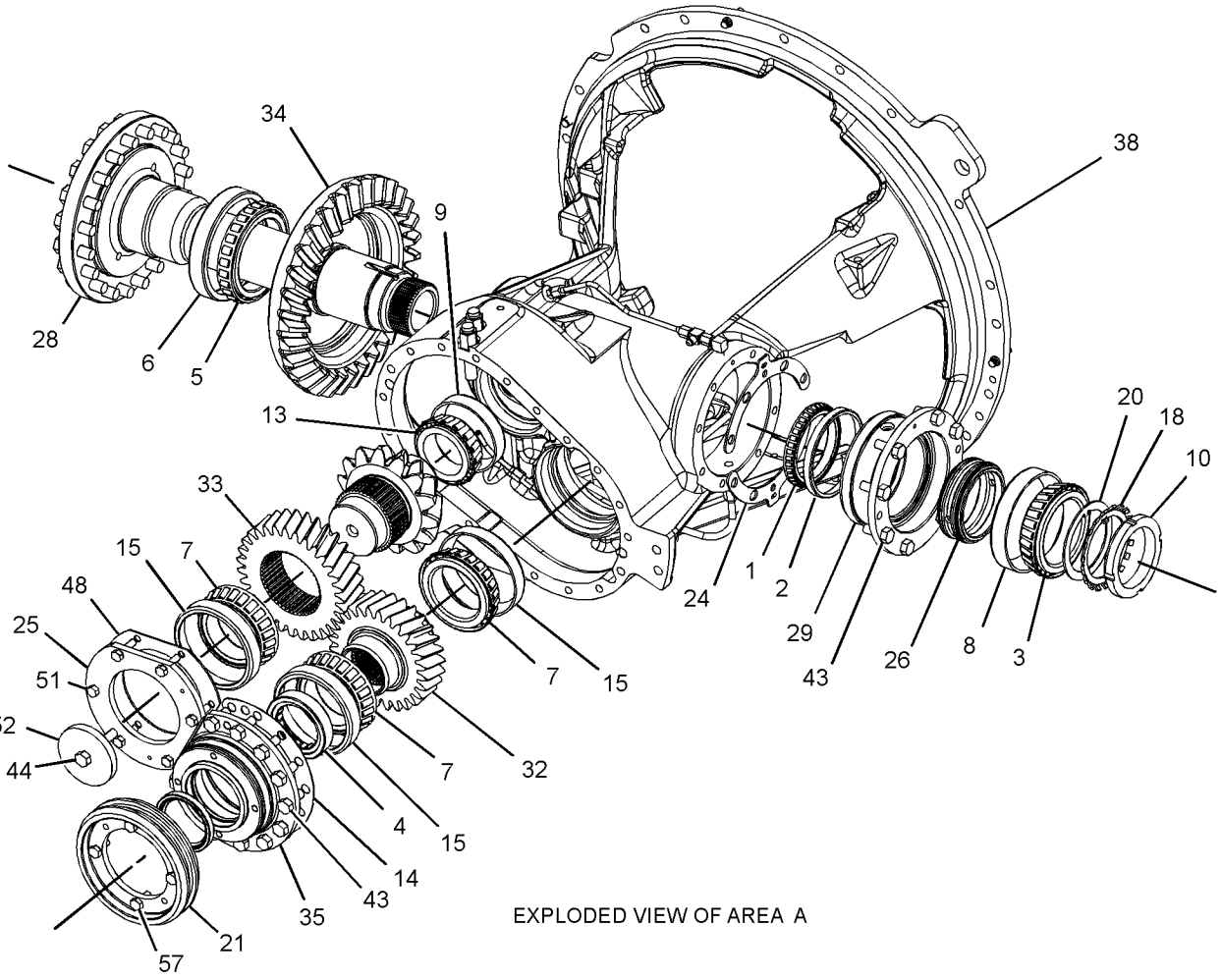

EXPLODED VIEW OF AREA A

GRAPHIC #1 g02823156

352-9851 **GEAR GP-BEVEL & TRANSFER** (contd.) **i06516981**

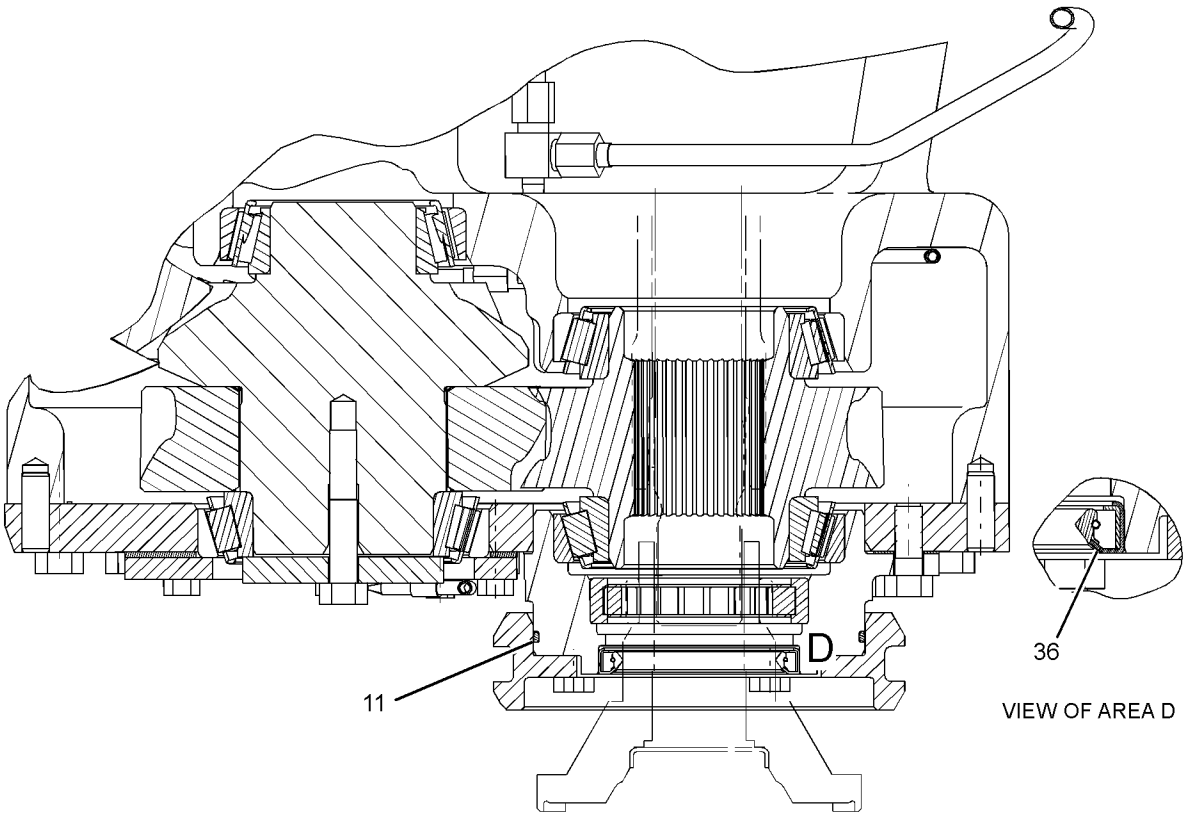

VIEW OF AREA D

SECTION C-C

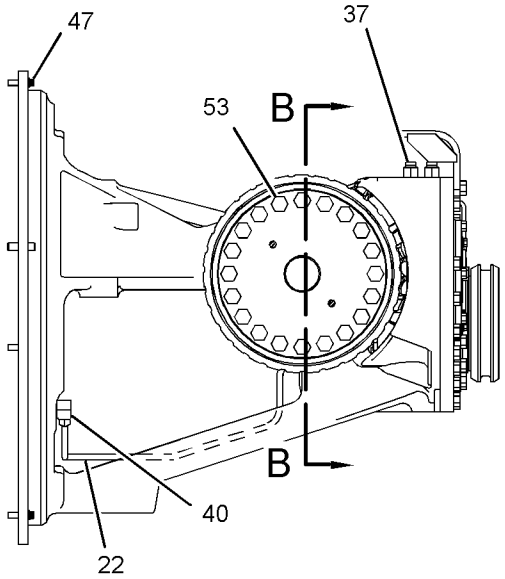

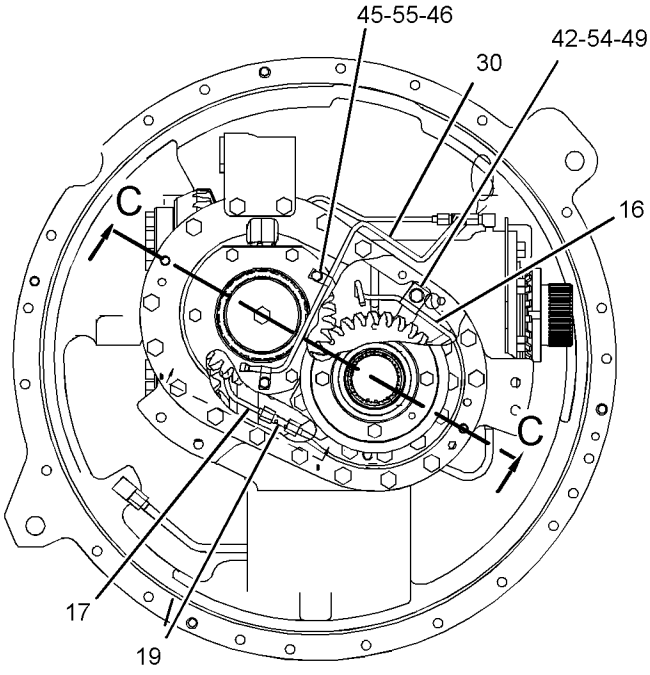

VIEW A-A

GRAPHIC #2 <END> g02823157

434-9672 LINES GP-POWER TRAIN OIL

S/N: R5A1-UP

PART OF 391-9508 POWER TRAIN AR

SMCS-3016 **i06554621**

NOTE	REF NO	GRAPHIC REF	PART NUMBER	QTY	PART NAME 1 2 3 4 5 6 (PRODUCT LEVEL)	SEE PAGE
	1	1	**2W-6225**	1	CAP AS-OIL FILLER (POWER TRAIN)	
	2	3	**3K-0360**	2	SEAL-O-RING	
Y	3	3	**6Y-8473**	1	VALVE GP-RELIEF (POWER TRAIN OIL)	271
	4	3	*7M-8489*	1	ADAPTER AS	
		3	**3J-1907**	1	SEAL-O-RING	
		3	**426-4086**	1	ADAPTER-ELBOW	
	5	3	**8G-5551**	1	FLANGE	
	6	3	**8G-5654**	1	GASKET	
	7	1	**8G-9560**	1	TUBE AS	
	8	3	**8S-9129**	1	FILTER-MAGNETIC (POWER TRAIN OIL)	
	9	3	**8S-9130**	1	SCREEN-SUCTION (POWER TRAIN OIL)	
	10	3	**9G-5127**	1	BREATHER AS (POWER TRAIN)	
	11	3	**9S-4185**	1	PLUG	
	12	3	**114-2312**	1	COVER AS	
	13	3	**148-1928**	1	VALVE-RELIEF	
	14	2	**162-6966**	1	TUBE AS	
	15	3	**177-3382**	1	MANIFOLD	
	16	3	*195-2037*	1	FITTING AS	
		3	**3K-0360**	1	SEAL-O-RING	
		3	**034-3679**	1	ADAPTER	
Y	17	3	*202-4365*	1	PUMP GP-GEAR (POWER TRAIN OIL)	256
	18	3	**220-0907**	1	HOSE	
	19	3	**222-1206**	1	SPACER (11X25X83-MM THK)	
	20	2	*241-6215*	1	ELBOW AS	
		2	**3J-1907**	1	SEAL-O-RING	
		2	**6V-8076**	1	ELBOW	
Y	21	2	*243-4398*	1	ACCUMULATOR GP (CHARGED)	207
Y	22	2	**258-7335**	1	MANIFOLD GP-TRANSMISSION	243
	23	2	**290-5562**	2	MOUNT (DUAL SWIVEL)	
	24	2,3	*296-7059*	1	FITTING AS	
		2,3	**3K-0360**	1	SEAL-O-RING	
		2,3	**178-5883**	1	FITTING	
	25	1	**329-9730**	1	TUBE AS	
Y	26	2	*332-8833*	1	FILTER GP-OIL (MEDIUM PRESSURE) (POWER TRAIN)	230
	27	1	**344-1950**	1	CLIP (SLOT)	
I	28	1	**417-2403**	1	HOSE AS	
I	29	2	**431-0284**	1	HOSE AS	
	30	1	**438-1370**	1	GAUGE-OIL LEVEL (DIPSTICK) (POWER TRAIN)	
I	31	2	**446-0689**	1	HOSE AS	
	32	1	**446-0691**		TUBE AS	
	33	2	**446-0692**	1	TUBE AS	
	34	1	**450-6468**	1	HOUSING	
	35	1	**455-1255**	1	HOSE AS	
	36	3	**456-2182**	1	BRACKET	
I	37	3	**466-9047**	1	HOSE AS	
	38	1	**466-9063**	1	TUBE	
	39	2	**469-2267**	1	BRACKET	

434-9672 **LINES GP-POWER TRAIN OIL** (contd.) **i06554621**

NOTE	REF NO	GRAPHIC REF	PART NUMBER	QTY	PART NAME 1 2 3 4 5 6 (PRODUCT LEVEL)	SEE PAGE
	40	1	**475-3341**	1	PLATE AS	
	41	1	**475-3342**	1	PLATE AS	
	42	1	**475-3343**	1	PLATE AS	
I	43	1	**479-0211**	1	HOSE AS	
I	44	1	**479-0213**	1	HOSE AS	
	45	3	**485-7336**	1	TUBE AS	
M	46	3	**101-3129**	1	STUD (M10X1.5-THD)	
	47	2	**104-3173**	1	CLIP	
	48	2	**139-1398**	1	CLIP	
	49	2	*148-8327*	1	CONNECTOR AS	
		2	**3D-2824**	1	SEAL-O-RING	
		2	**6V-8637**	1	CONNECTOR	
		2	**6V-9746**	1	SEAL-O-RING	
	50	3	*148-8339*	2	CONNECTOR AS	
					(EACH INCLUDES)	
		3	**6V-8716**	1	CONNECTOR (STRAIGHT)	
		3	**6V-9746**	1	SEAL-O-RING	
		3	**7M-8485**	1	SEAL-O-RING	
	51	3	*148-8340*	2	CONNECTOR AS	
					(EACH INCLUDES)	
		3	**3K-0360**	1	SEAL-O-RING	
		3	**6V-8398**	1	SEAL-O-RING	
		3	**6V-8639**	1	CONNECTOR	
	52	2,3	*148-8357*	2	ELBOW AS	
					(EACH INCLUDES)	
		2,3	**5K-9090**	1	SEAL-O-RING	
		2,3	**6V-9008**	1	ELBOW	
		2,3	**7M-8485**	1	SEAL-O-RING	
	53	1	*148-8395*	1	PLUG AS	
		1	**3K-0360**	1	SEAL-O-RING	
		1	**9S-8005**	1	PLUG	
	54	1	*148-8406*	2	PLUG AS	
					(EACH INCLUDES)	
		1	**7M-8485**	1	SEAL-O-RING	
		1	**9S-9334**	1	PLUG-O-RING	
	55	1	*148-8408*	1	PLUG AS	
		1	**3D-2824**	1	SEAL-O-RING	
		1	**9S-4183**	1	PLUG (1-1/16-12-THD)	
	56	3	*150-3026*	1	ELBOW AS	
		3	**3K-0360**	1	SEAL-O-RING	
		3	**6V-4292**	1	ELBOW	
	57	3	*162-0177*	1	PLUG AS	
		3	**3J-1907**	1	SEAL-O-RING	
		3	**9S-8004**	1	PLUG	
	58	1	*164-5567*	3	COUPLER AS-QUICK DISCONNECT (MALE)	
		1	**6V-3965**	1	FITTING (QUICK DISCONNECT)	
		1	**214-7568**	1	SEAL-O-RING	
	59	1,2,3	*164-5590*	1	VALVE GP-FLUID SAMPLING	
		1,2,3	**3J-7354**	1	SEAL-O-RING	
		1,2,3	**8C-3446**	1	VALVE-SAMPLING	
	60	1	*169-7397*	1	ADAPTER AS	

434-9672 **LINES GP-POWER TRAIN OIL (**contd.**)** **i06554621**

NOTE	REF NO	GRAPHIC REF	PART NUMBER	QTY	PART NAME 1 2 3 4 5 6 (PRODUCT LEVEL)	SEE PAGE
		1	**3K-0360**	1	SEAL-O-RING	
		1	**3P-1932**	1	ADAPTER	
	61	1	*171-6728*	1	ELBOW AS	
		1	**3K-0360**	1	SEAL-O-RING	
		1	**8T-0249**	1	ELBOW (SWIVEL)	
	62	2	**173-1437**	4	FLANGE-HALF	
	63	2	**177-2215**	1	STRAP-DUAL CLAMP	
	64	3	**1P-3708**	1	SEAL-RECTANGULAR	
	65	3	**1P-4576**	2	FLANGE-HALF	
	66	3	**1P-4577**	6	FLANGE-HALF	
M	67	2	**329-3356**	1	NUT (M12X1.75-THD)	
	68	1	**344-1951**	1	CLIP (TAB)	
M	69	1	**344-5675**	1	NUT (M10X1.5-THD)	
	70	2	**4J-0520**	4	SEAL-O-RING	
	71	2	**4J-0522**	3	SEAL-O-RING	
	72	2,3	**5D-0718**	3	CLIP	
	73	3	**5K-1770**	1	SEAL-O-RING	
	74	3	**5K-9090**	3	SEAL-O-RING	
	75	1,2	**5P-4961**	3	CLAMP-HOSE	
	76	3	**5P-7470**	1	CLIP (SLOT)	
	77	1	**5P-7471**	1	CLIP (TAB)	
	78	1	**5P-8066**	1	SEAL-O-RING	
	79	3	**5P-8182**	1	GROMMET (46-MM ID)	
	80	1	**6B-2882**	3	SPACER (0.406X0.75X0.312-IN THK)	
	81	3	**6H-3977**	1	SEAL-O-RING	
	82	3	**6L-1651**	1	SEAL-O-RING	
	83	3	**6L-5359**	1	SEAL-O-RING	
	84	3	**6V-0852**	3	CAP-DUST	
	85	1,2,3	**6V-1230**	1	ELBOW	
	86	3	**6V-8398**	1	SEAL-O-RING	
	87	3	**7K-1181**	4	STRAP-CABLE	
	88	2,3	**7X-0871**	1	TEE	
	89	1,2	**7X-7729**	6	WASHER (11X25X3-MM THK)	
	90	1	**8C-3447**	1	CAP-DUST	
	91	3	**8M-4988**	1	SEAL-O-RING	
	92	2	**8M-5249**	1	SEAL-O-RING	
	93	2	**8M-5254**	4	SEAL-O-RING	
	94	1,2	**8T-1889**	4	CLIP (SLOT)	
	95	1,2	**8T-1890**	4	CLIP (TAB)	
	96	1,2,3	**8T-4121**	63	WASHER-HARD (11X21X2.5-MM THK)	
M	97	1	**8T-4136**	4	BOLT (M10X1.5X25-MM)	
M	98	1,3	**8T-4137**	4	BOLT (M10X1.5X20-MM)	
M	99	3	**8T-4172**	3	BOLT (M10X1.5X80-MM)	
M	100	2	**8T-4178**	6	BOLT (M10X1.5X90-MM)	
M	101	1	**8T-4182**	2	BOLT (M10X1.5X45-MM)	
M	102	1,2	**8T-4183**	9	BOLT (M12X1.75X40-MM)	
M	103	3	**8T-4184**	8	BOLT (M12X1.75X45-MM)	
M	104	1	**8T-4185**	2	BOLT (M10X1.5X50-MM)	
M	105	3	**8T-4191**	1	BOLT (M10X1.5X16-MM)	
M	106	1,3	**8T-4195**	8	BOLT (M10X1.5X30-MM)	
M	107	1,2,3	**8T-4196**	33	BOLT (M10X1.5X35-MM)	

434-9672 **LINES GP-POWER TRAIN OIL** (contd.) **i06554621**

NOTE	REF NO	GRAPHIC REF	PART NUMBER	QTY	PART NAME 1 2 3 4 5 6 (PRODUCT LEVEL)	SEE PAGE
M	108	2	**8T-4198**	1	BOLT (M10X1.5X100-MM)	
	109	1,2,3	**8T-4223**	19	WASHER-HARD (13.5X25.5X3-MM THK)	
M	110	1	**8T-4956**	1	BOLT (M12X1.75X35-MM)	
M	111	3	**8T-6466**	6	BOLT (M10X1.5X60-MM)	
	112	3	**8T-6703**	2	CLAMP-HOSE	
	113	3	**9M-4218**	1	SEAL-O-RING	
	114	2	**9X-4609**	1	SEAL-O-RING	
G	115	3	**423-1983**		HOSE (25-IN)	

G - ORDER BY THE INCH
I - REFER TO HYDRAULIC INFORMATION SYSTEM
M - METRIC PART
Y - SEPARATE ILLUSTRATION

434-9672 **LINES GP-POWER TRAIN OIL** (contd.) **i06554621**

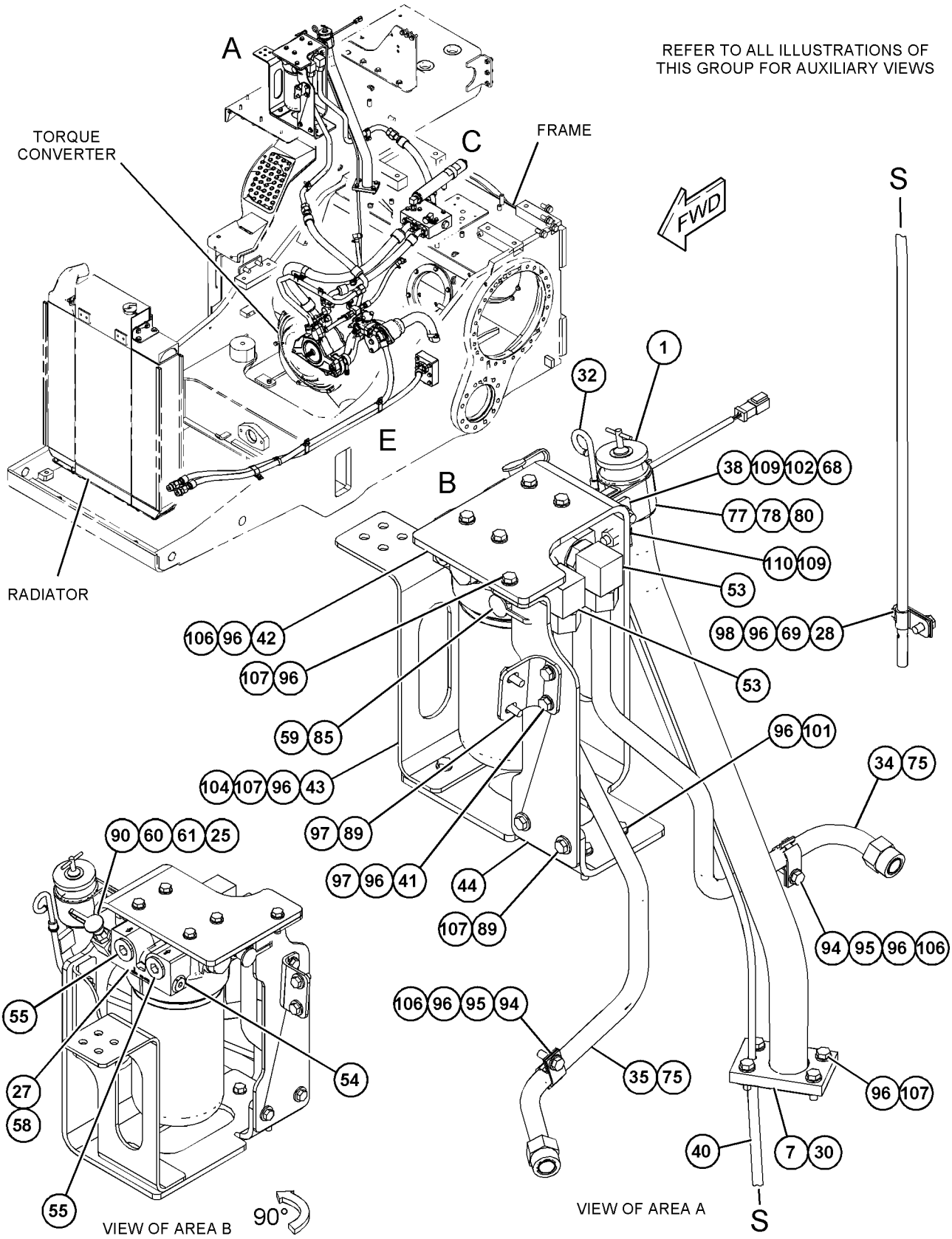

GRAPHIC #1 g06024014

434-9672 **LINES GP-POWER TRAIN OIL (**contd.**)** **i06554621**

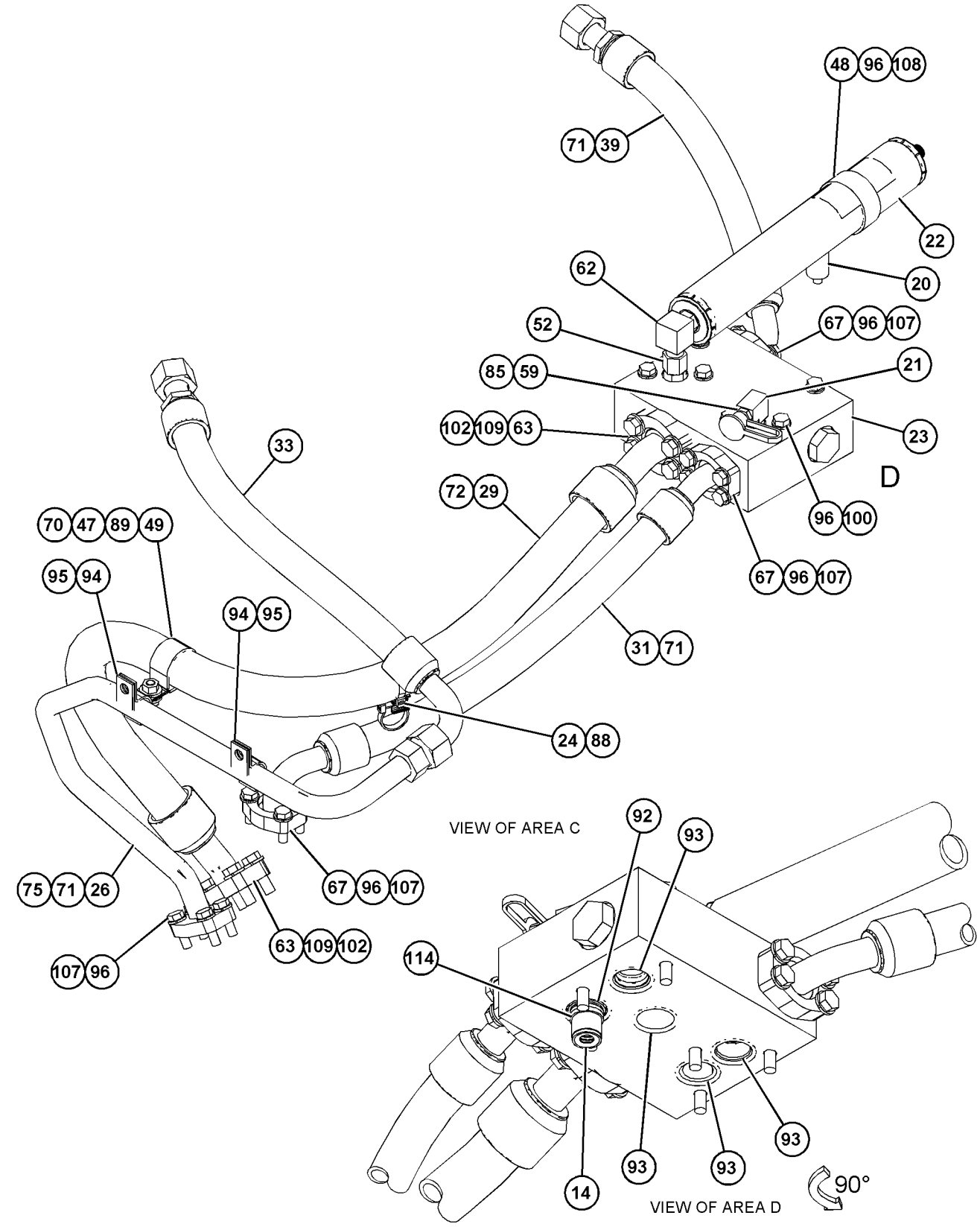

GRAPHIC #2

g06024015

434-9672 **LINES GP-POWER TRAIN OIL** (contd.) **i06554621**

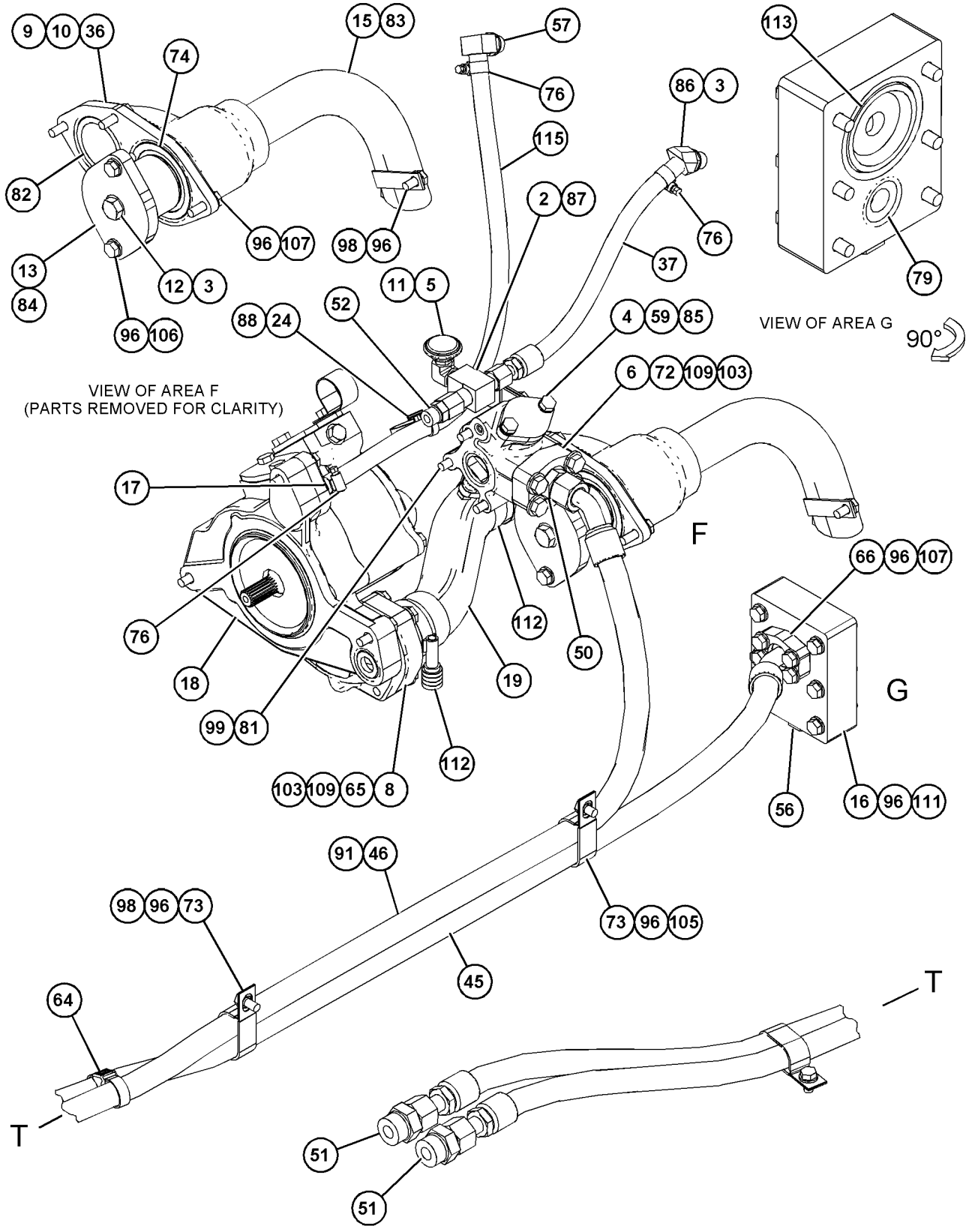

GRAPHIC #3 <END> g06024016

258-7335 MANIFOLD GP-TRANSMISSION

S/N: R5A1-UP

PART OF 434-9672 LINES GP-POWER TRAIN OIL

SMCS-5264 **i06156435**

NOTE	REF NO	GRAPHIC REF	PART NUMBER	QTY	PART NAME 1 2 3 4 5 6 (PRODUCT LEVEL)	SEE PAGE
	1	1	**217-2730**	1	ORIFICE	
Z	2	1			MANIFOLD	
	3	1	**4K-1388**	1	SEAL-O-RING	
	4	1	**9S-4188**	1	PLUG	

Z - NOT SERVICED SEPARATELY

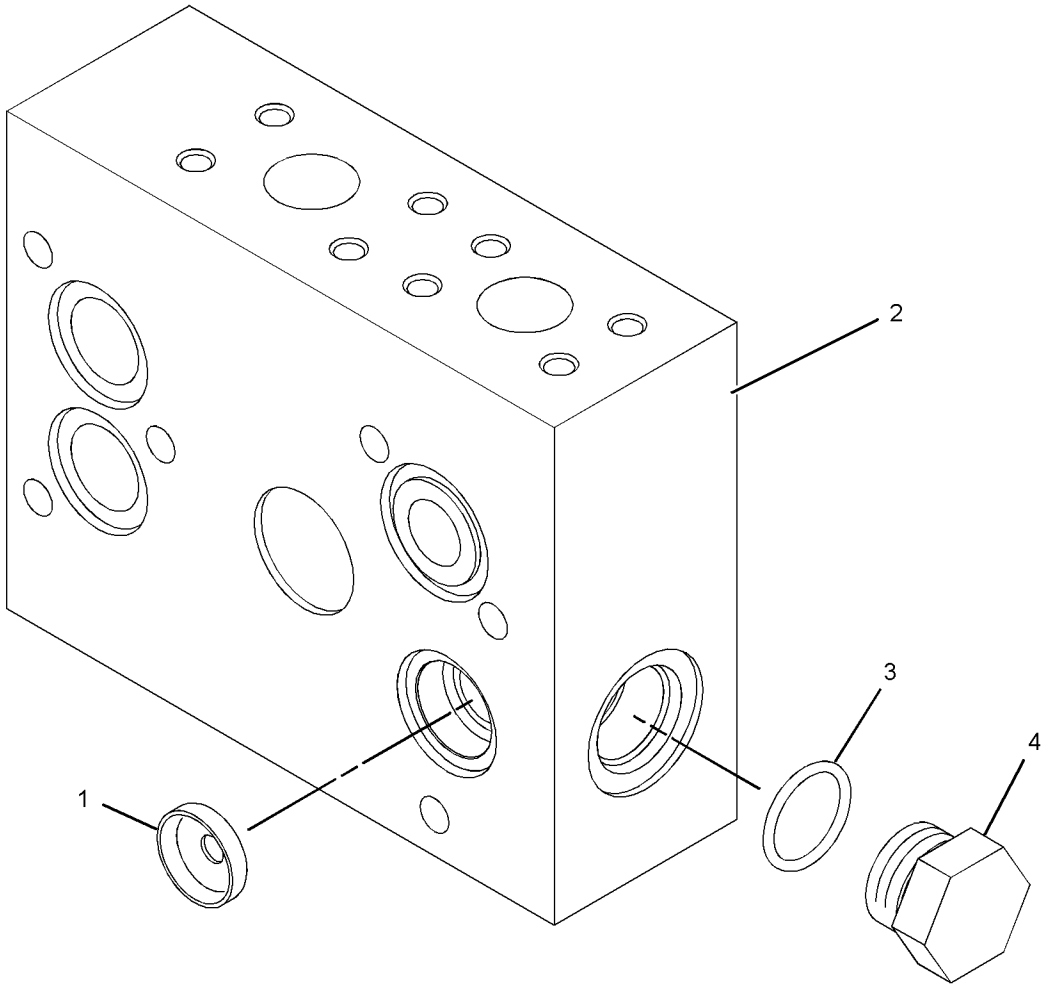

GRAPHIC #1 <END> g01254039

449-0302 MOUNTING GP-FINAL DRIVE

S/N: R5A1-UP

PART OF 458-3587, 458-3589, 478-7557 DRIVE AR-FINAL

AN ATTACHMENT

SMCS-4050 **i06532698**

NOTE	REF NO	GRAPHIC REF	PART NUMBER	QTY	PART NAME 1 2 3 4 5 6 (PRODUCT LEVEL)	SEE PAGE
	1	1	**8D-4771**	2	SEAL-O-RING	
M	2	1	**8T-4141**	52	BOLT (M20X2.5X70-MM)	
	3	1	**2R-0098**	2	SEAL-O-RING	
B	4	1	**6F-6673**	4	SEAL-O-RING	
	5	1	**8T-4123**	52	WASHER (3.62X5.75X0.375-MM THK)	
M	6	1	**8T-2223**	4	BOLT-SOCKET HEAD (M10X1.5X45-MM)	
	7	1	**8T-4223**	4	WASHER-HARD (13.5X25.5X3-MM THK)	
	8	1	**8T-8919**	4	BOLT (1/2-13X1.75-IN)	
	9	1	**9X-2027**	4	WASHER (11X18X2-MM THK)	

B - USE AS REQUIRED
M - METRIC PART

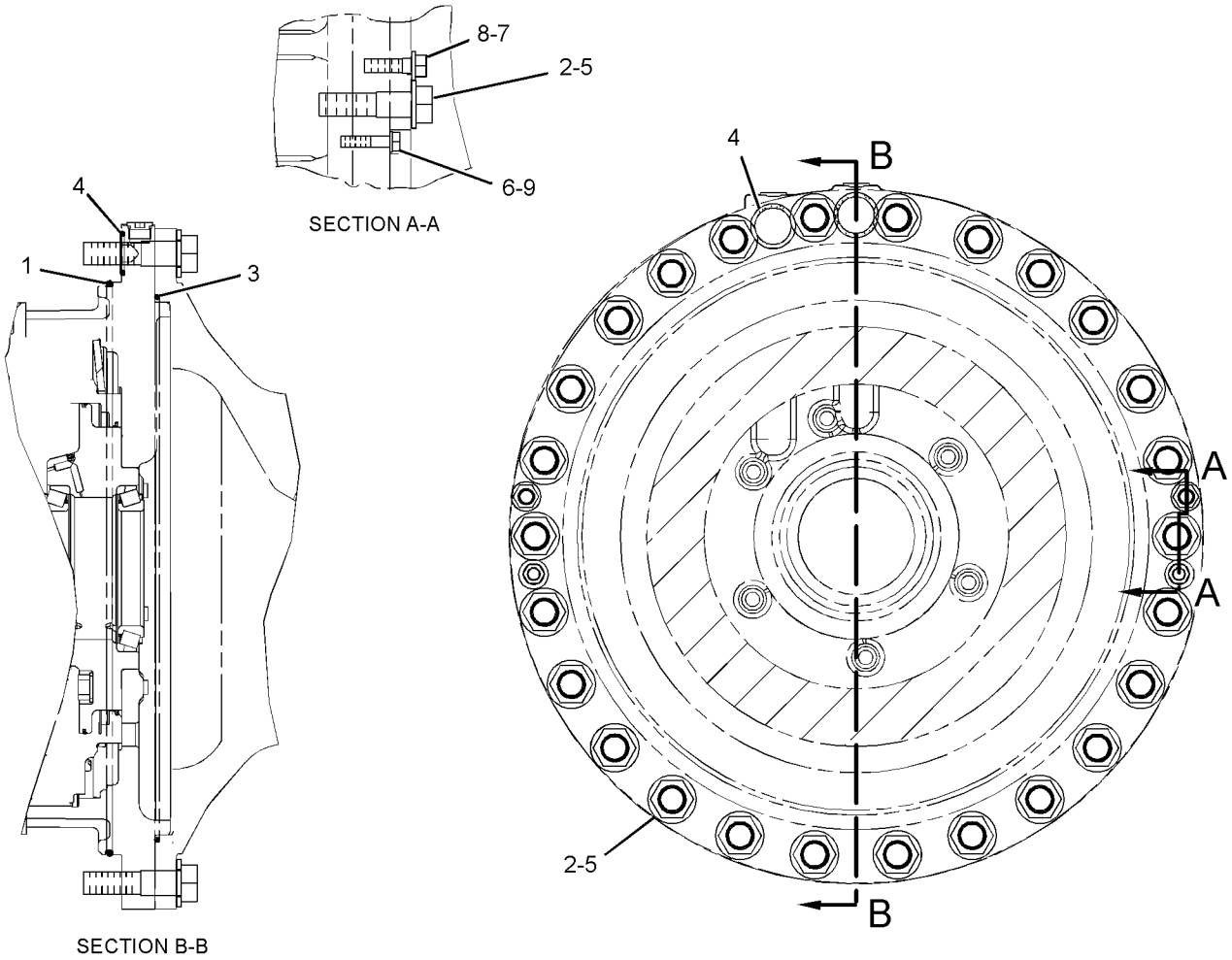

GRAPHIC #1 <END> g06011612

453-9493 MOUNTING GP-TORQUE CONVERTER

S/N: R5A1-UP

PART OF 391-9508 POWER TRAIN AR

SMCS-3101 **i06517234**

NOTE	REF NO	GRAPHIC REF	PART NUMBER	QTY	PART NAME 1 2 3 4 5 6 (PRODUCT LEVEL)	SEE PAGE
	1	1	**266-9180**	1	ADAPTER	
	2	1	**242-1583**	8	STUD (M10X1.5X75-MM)	
M	3	1	**344-5675**	8	NUT (M10X1.5-THD)	
	4	1	**5P-9806**	1	SEAL-O-RING	
M	5	1	**8T-6466**	4	BOLT (M10X1.5X60-MM)	

M - METRIC PART

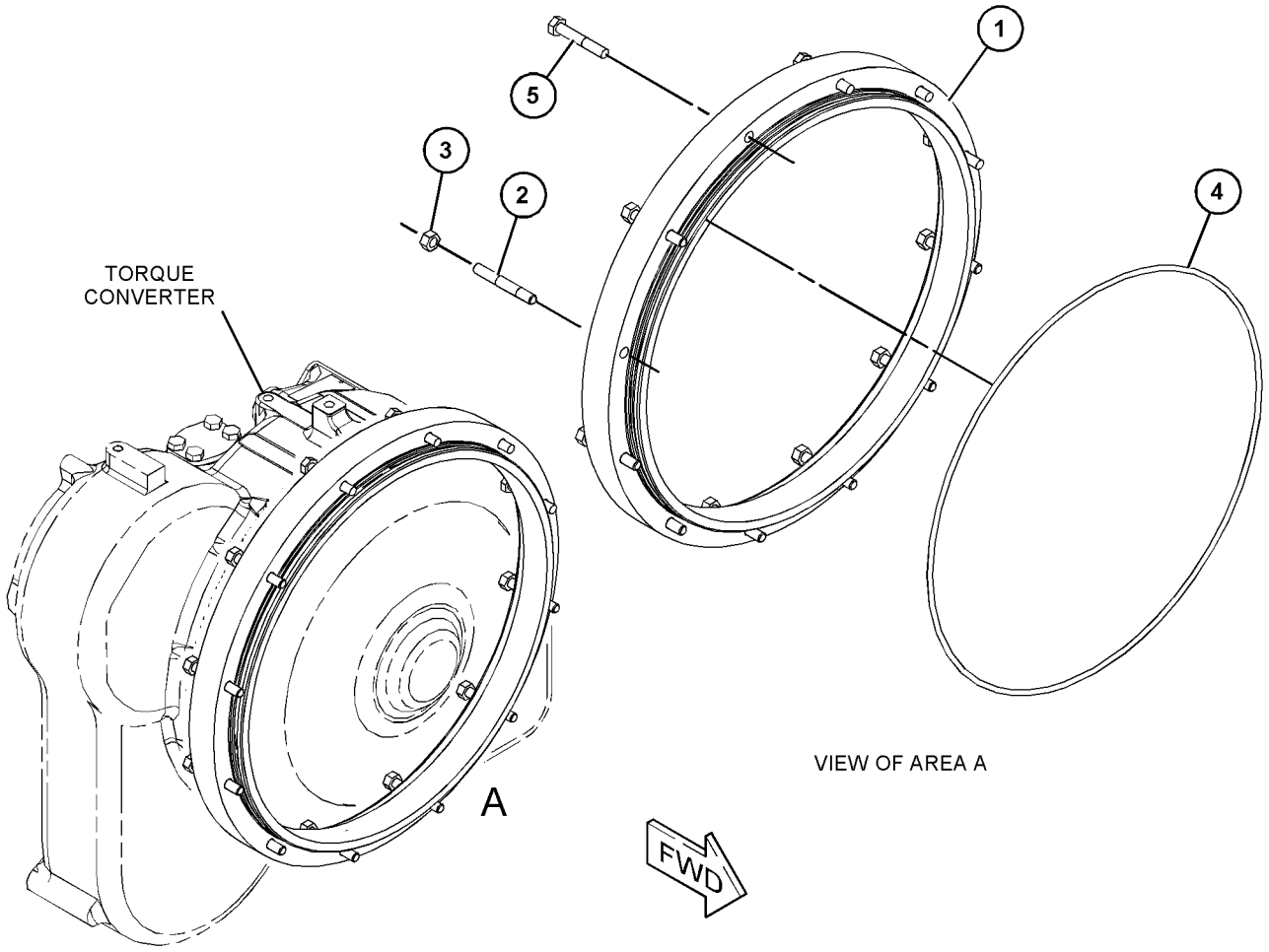

GRAPHIC #1 <END> g06007410

453-9492 MOUNTING GP-TRANSMISSION

S/N: R5A1-UP

PART OF 391-9508 POWER TRAIN AR

SMCS-3082 **i06517231**

NOTE	REF NO	GRAPHIC REF	PART NUMBER	QTY	PART NAME 1 2 3 4 5 6 (PRODUCT LEVEL)	SEE PAGE
	1	1	**3T-9315**	2	SPACER (13.5X19.05X29-MM THK)	
	2	1	**5V-0564**	2	SPACER (20X28.5X28-MM THK)	
	3	1	**112-5056**	1	BRACKET	
	4	1	**112-5057**	1	BRACKET AS	
	5	1	**5D-7523**	1	SEAL-O-RING	
	6	1	**7M-0475**	1	RING-SEALING	
	7	1	**8M-5254**	2	SEAL-O-RING	
M	8	1	**8T-4184**	4	BOLT (M12X1.75X45-MM)	
M	9	1	**8T-4194**	22	BOLT (M12X1.75X50-MM)	
	10	1	**8T-4223**	27	WASHER-HARD (13.5X25.5X3-MM THK)	
M	11	1	**8T-4244**	2	NUT (M12X1.75-THD)	
M	12	1	**8T-4910**	1	BOLT (M12X1.75X60-MM)	

M - METRIC PART

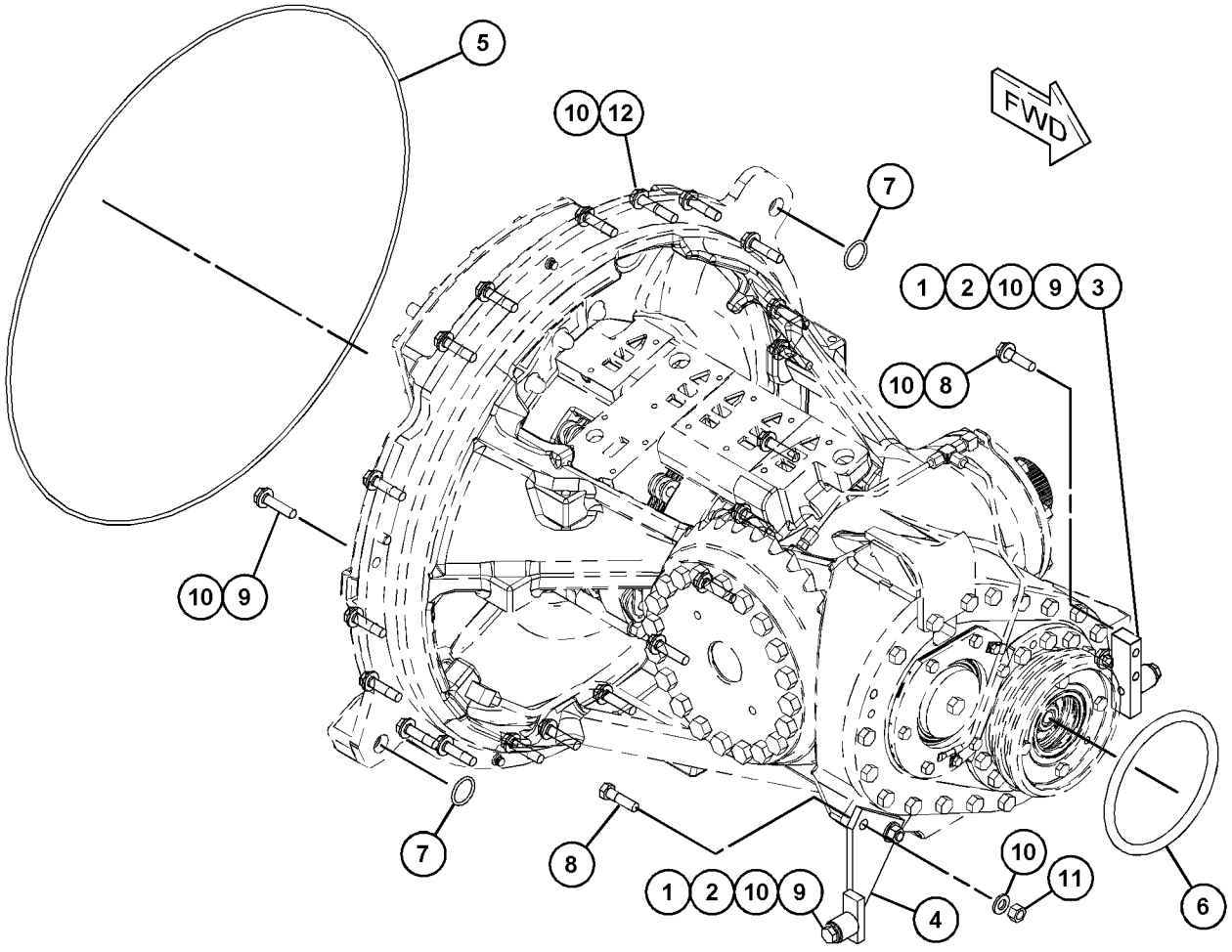

GRAPHIC #1 <END> g06009000

365-6796 PLANETARY GP-TRANSMISSION

S/N: RC51-UP

PART OF 365-6795 TRANSMISSION AR

SMCS-3160 **i06546674**

NOTE	REF NO	GRAPHIC REF	PART NUMBER	QTY	PART NAME 1 2 3 4 5 6 (PRODUCT LEVEL)	SEE PAGE
	1	3	**3K-1432**	2	RING-METAL SEAL	
	2	3	**3P-7019**	2	SEAL-METAL	
	3	2,3	**3S-8109**	11	PIN-SPRING	
	4	1	**3T-0810**	1	SLEEVE	
	5	3	**3T-3447**	1	GEAR AS-SUN (44-TEETH)	
		3	**8S-0527**	2	PLUG-CUP	
	6	2	**3T-4629**	1	GEAR-RING (80-TEETH)	
	7	2	**3T-6769**	4	GEAR-PLANETARY (24-TEETH)	
	8	1	**3T-7584**	4	SPRING	
	9	3	**5P-3131**	3	BEARING AS-ROLLER	
	10	2	**5P-3930**	8	BEARING AS-ROLLER	
	11	2,3	**5P-8245**	9	WASHER-HARD (13.5X25.5X3-MM THK)	
	12	3	**186-2517**	1	GEAR-RING (82-TEETH)	
	13	3	**6P-2233**	3	GEAR-PLANETARY (20-TEETH)	
	14	2	**6P-4977**	1	SLEEVE	
	15	2	**6P-7742**	4	SHAFT-PLANETARY	
					(EACH INCLUDES)	
		2	**281-1695**	1	SHAFT-PLANETARY	
	16	2	**6P-7743**	4	SHAFT-PLANETARY	
					(EACH INCLUDES)	
		2	**281-1696**	1	SHAFT-PLANETARY	
	17	3	**6P-7968**	3	PLATE-CLUTCH	
	18	3	**6P-7983**	1	RING-RETAINING	
	19	3	**6P-7985**	2	RING-SEAL	
	20	3	**6V-0835**	1	RING-RETAINING	
	21	1	**6V-0852**	1	CAP-DUST	
	22	3	**6V-1586**	1	RING-RETAINING	
	23	1	**6V-1720**	1	PLATE-SERIAL NUMBER (TRANSMISSION)	
	24	3	**6Y-3484**	1	BALL BEARING	
	25	1	**7B-7515**	1	BALL BEARING	
R	26	1,2,3	**7G-0437**	15	PLATE-CLUTCH	
	27	3	**7G-5614**	3	SHAFT-PLANETARY	
					(EACH INCLUDES)	
		3	**281-1697**	1	SHAFT-PLANETARY	
	28	1,2,3	**7G-5675**	4	RING-SEAL	
	29	2	**7G-6061**	1	COUPLING	
	30	2,3	**7G-8121**	2	RING-LOCK	
	31	3	**7X-7608**	1	RING-RETAINING	
	32	3	**8E-1484**	1	HOUSING AS-CLUTCH	
		3	**3S-8109**	1	PIN-SPRING	
		3	**4S-8537**	1	DOWEL	
	33	3	**8E-1666**	1	PLATE-RETAINER	
	34	3	**8E-8115**	1	SHAFT AS-OUTPUT	
	34A	3	**6Y-0306**	2	BUSHING	
		3	**8S-3426**	1	DOWEL	
	35	3	**8E-8117**	1	GEAR-SUN (32-TEETH)	
	36	3	**8E-8118**	1	CARRIER-RING	
	37	3	**8E-8297**	6	DISC-THRUST	

365-6796 **PLANETARY GP-TRANSMISSION (**contd.**)** **i06546674**

NOTE	REF NO	GRAPHIC REF	PART NUMBER	QTY	PART NAME 1 2 3 4 5 6 (PRODUCT LEVEL)	SEE PAGE
	38	2	**8E-8299**	24	DISC-THRUST	
	39	2	**8P-1916**	8	GEAR-PLANETARY (20-TEETH)	
	40	2	**8P-8950**	2	RING-METAL SEAL	
	41	3	**9G-1233**	1	COUPLING	
	42	1	**9G-8615**	1	COVER	
	43	3	**9M-1503**	1	RING-METAL SEAL	
	44	3	**9P-5558**	1	RING-RETAINING	
	45	3	**108-5618**	1	GEAR-SUN (33-TEETH)	
	46	3	**108-5619**	1	GEAR-SUN (33-TEETH)	
	47	2	**108-5620**	1	CARRIER-PLANETARY	
	48	3	**108-5621**	1	CARRIER-PLANETARY	
	49	2	**108-5623**	1	GEAR-RING (71-TEETH)	
	50	2	**113-9212**	1	DISC-THRUST	
	51	2	**144-0761**	1	CARRIER-PLANETARY	
	52	1	*164-5567*	1	COUPLER AS-QUICK DISCONNECT (MALE)	
		1	**6V-3965**	1	FITTING (QUICK DISCONNECT)	
		1	**214-7568**	1	SEAL-O-RING	
	53	2	**177-4487**	1	GEAR-RING (71-TEETH)	
	54	3	**202-2380**	1	SHAFT AS-INPUT	
		3	**156-4406**	1	PLUG-PIPE	
	55	3	**213-3719**	1	PLATE-REACTION	
	56	2,3	**458-3635**	2	PISTON	
	57	3	**321-5715**	1	PISTON	
	58	1,2,3	**355-2617**	15	DISC-FRICTION	
	59	3	**355-2618**	4	DISC-FRICTION	
	60	1	**365-6798**	1	COVER	
	61	2	**365-6801**	1	PLATE	
	62	2	**365-6802**	1	HOUSING-CLUTCH	
	63	3	**365-6803**	1	HOUSING-CLUTCH	
	64	3	**365-6804**	1	HOUSING-SUPPORT	
	65	1	**365-6805**	1	HOUSING AS	
		1	**204-7876**	1	ORIFICE	
		1	**365-6800**	1	HOUSING-CLUTCH	
	67	1,2	**366-8298**	2	PISTON	
C	68	1	*448-1354*	1	COVER GP-ACCESS	
		1	**239-1139**	1	SEAL	
		1	**448-1367**	1	COVER AS	
	69	3	**035-3360**	1	RING-RETAINING	
	70	1	*148-8309*	1	ADAPTER AS	
		1	**2P-8421**	1	ADAPTER-O-RING	
		1	**3D-2824**	1	SEAL-O-RING	
	71	1	**1M-8649**	1	RING-RETAINING	
	72	2	**2D-0516**	3	BOLT (1/2-13X8.75-IN)	
	73	1	*319-6231*	1	PLUG AS	
		1	**9S-4183**	1	PLUG (1-1/16-12-THD)	
		1	**238-5082**	1	SEAL-O-RING	
	74	1	*326-0319*	1	PLUG AS	
		1	**9S-4188**	1	PLUG	
		1	**238-5083**	1	SEAL-O-RING	
	75	2,3	**363-4541**	8	SPRING	
	76	3	**3P-3441**	1	RING-RETAINING	

365-6796 **PLANETARY GP-TRANSMISSION (**contd.**)** **i06546674**

NOTE	REF NO	GRAPHIC REF	PART NUMBER	QTY	PART NAME 1 2 3 4 5 6 (PRODUCT LEVEL)	SEE PAGE
	77	1	**5J-3864**	1	RING-LOCK	
	78	3	**5K-9106**	1	RING-RETAINING	
	79	1,2,3	**5P-7530**	7	SEAL-O-RING	
	80	2	**5P-8118**	2	SEAL-O-RING	
	81	1	**5P-8210**	2	SEAL-O-RING	
	82	1	**5P-9186**	2	SEAL-O-RING	
	83	3	**6P-7772**	1	RING-SEAL	
	84	1,2,3	**6P-7773**	4	RING-SEAL	
	85	3	**6V-0834**	1	RING-RETAINING	
	86	3	**6V-1649**	2	BALL BEARING	
	87	3	**6V-7568**	6	BOLT (1/2-13X14.86-IN)	
	88	1	**7G-3710**	4	ROD	
	89	3	**7G-5730**	1	RING-SEAL	
	90	2	**7S-4534**	4	BEARING-CAGED	
	91	1	**8D-5096**	1	SEAL-O-RING	
	92	1	**8P-0058**	1	GASKET-COVER	
CM	93	1	**8T-4186**	6	BOLT (M10X1.5X40-MM)	
	94	3	**9G-1234**	5	SPRING-DISC	
	95	3	**9H-5604**	1	RING-RETAINING	
M	96	1	**9X-2125**	6	BOLT-LOCKING (M10X1.5X25-MM)	

C - CHANGE FROM PREVIOUS TYPE
M - METRIC PART
R - REMANUFACTURED PART MAY BE AVAILABLE

365-6796 **PLANETARY GP-TRANSMISSION (**contd.**)** **i06546674**

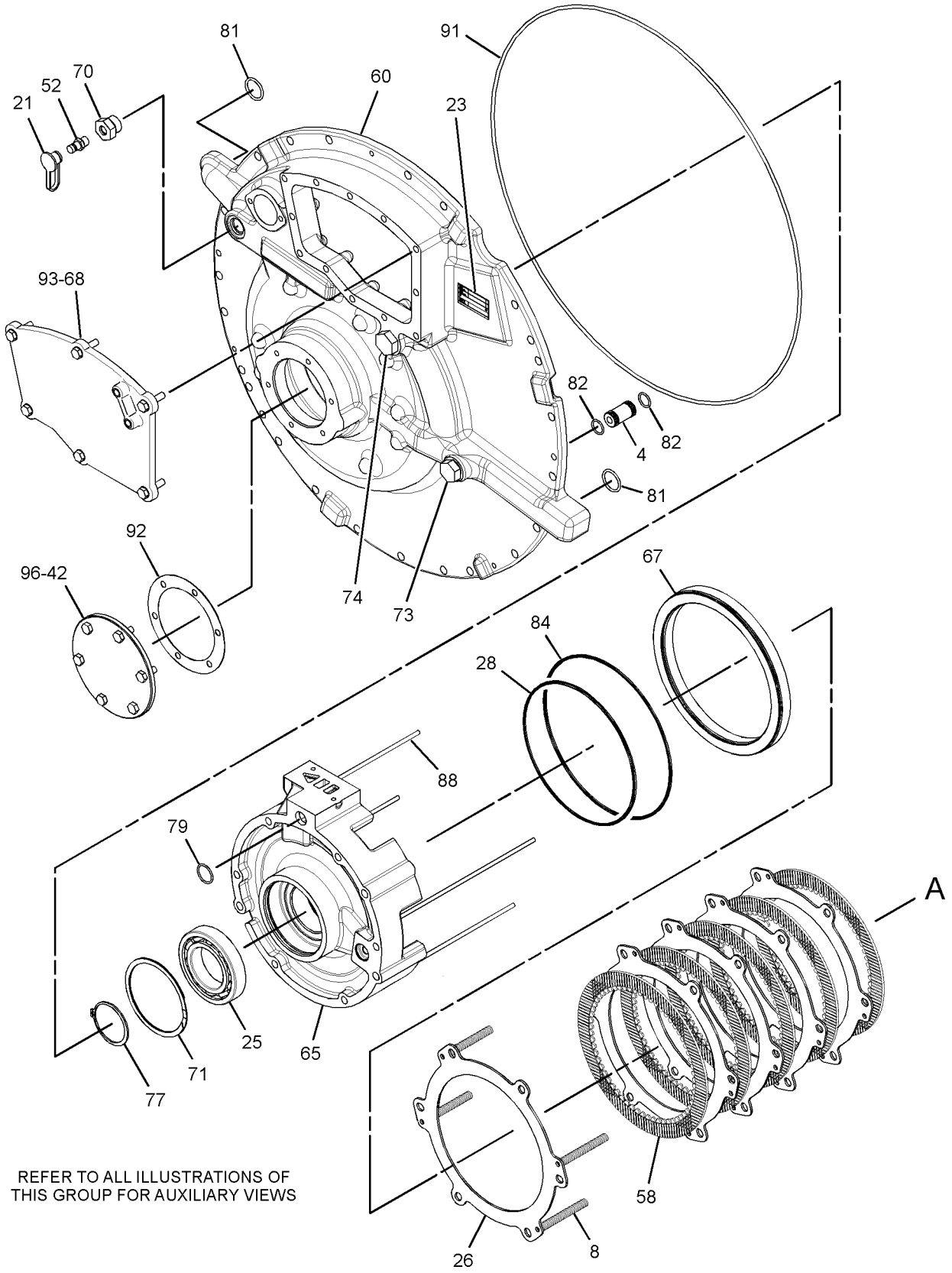

REFER TO ALL ILLUSTRATIONS OF
THIS GROUP FOR AUXILIARY VIEWS

GRAPHIC #1 g06031518

365-6796 **PLANETARY GP-TRANSMISSION (**contd.**)** **i06546674**

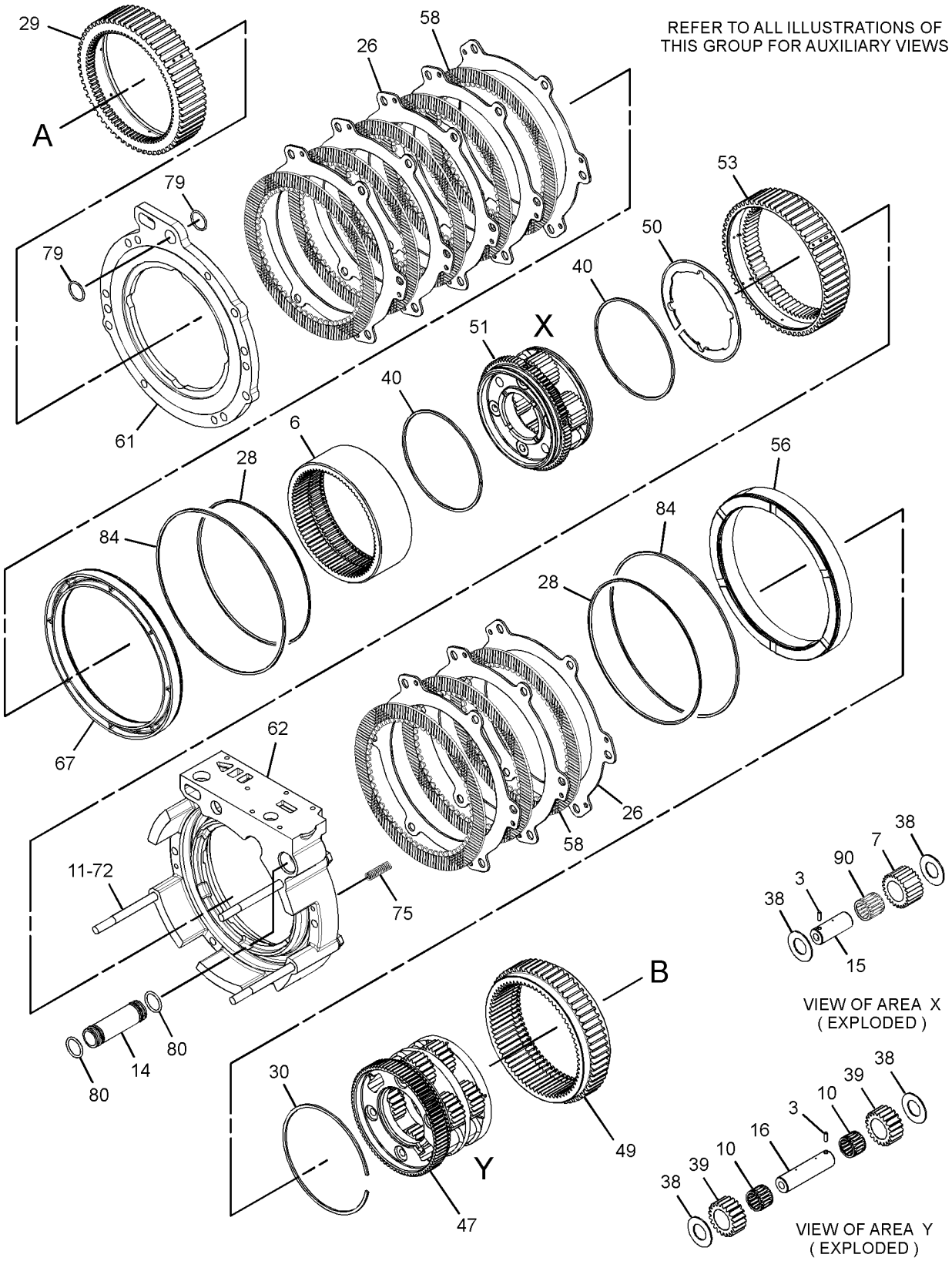

GRAPHIC #2 g06031519

365-6796 **PLANETARY GP-TRANSMISSION (**contd.**)** **i06546674**

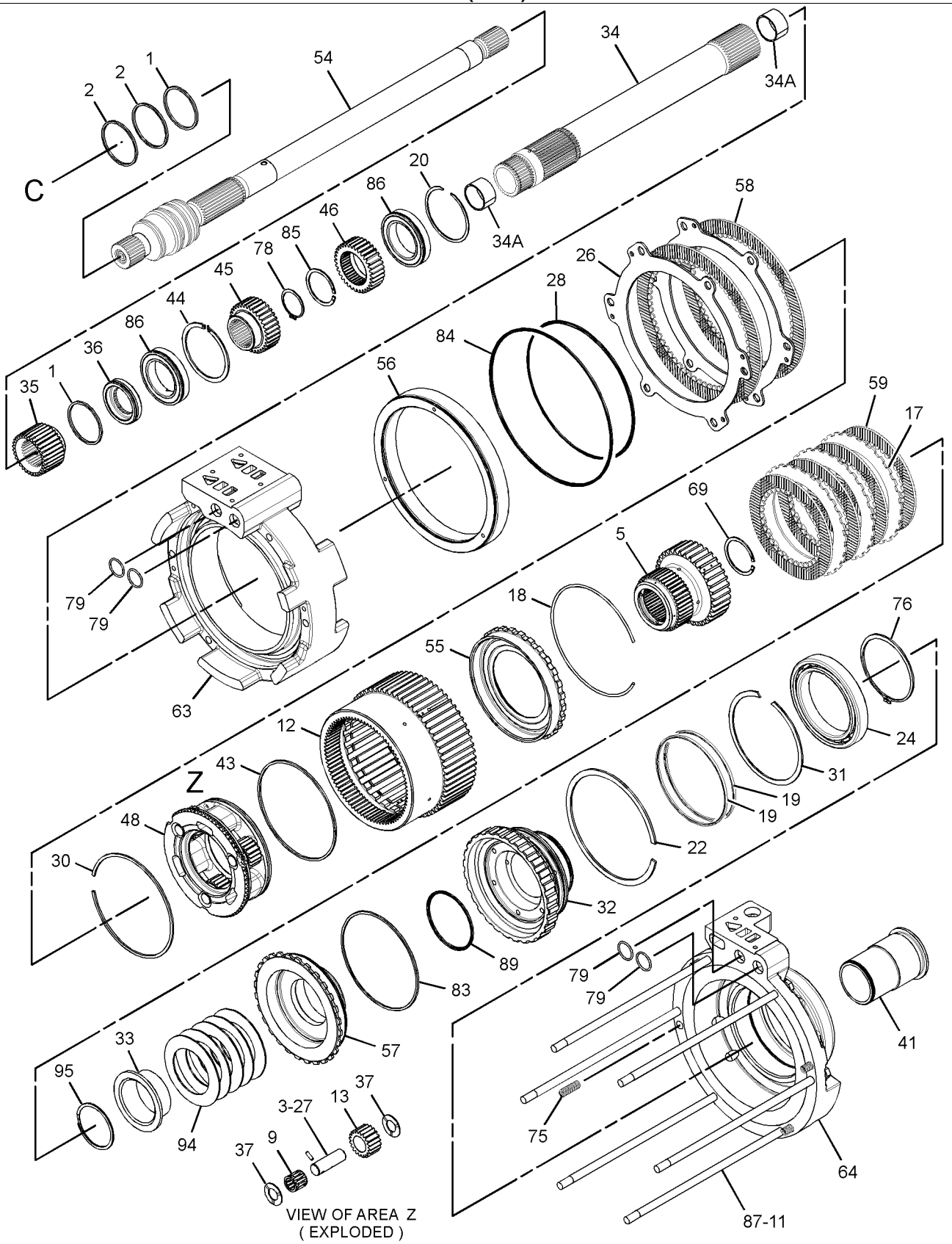

GRAPHIC #3 <END> g06031520

391-9508 POWER TRAIN AR

S/N: R5A1-UP

PART OF 391-9502 COMMON AR

SMCS-3000, 4000 **i06516934**

NOTE	REF NO	GRAPHIC REF	PART NUMBER	QTY	PART NAME 1 2 3 4 5 6 (PRODUCT LEVEL)	SEE PAGE
Y	1	1	*178-6690*	1	SHAFT GP-DRIVE	258
Y	2	1	*336-2446*	1	TORQUE CONVERTER & HOUSING GP	259
Y	3	1	**365-6795**	1	TRANSMISSION AR	263
Y	4	1	*391-9545*	1	VALVE & MTG GP-CONTROL (BRAKE)	368
Y	5	1	*434-9672*	1	LINES GP-POWER TRAIN OIL	236
Y	6	1	*448-4208*	1	BRAKE & DIFFERENTIAL DRIVE GP	210
Y	7	1	*448-5374*	1	BRAKE & PLANETARY GP	214
Y	8	1	*453-9492*	1	MOUNTING GP-TRANSMISSION	246
Y	9	1	*453-9493*	1	MOUNTING GP-TORQUE CONVERTER	245

Y - SEPARATE ILLUSTRATION

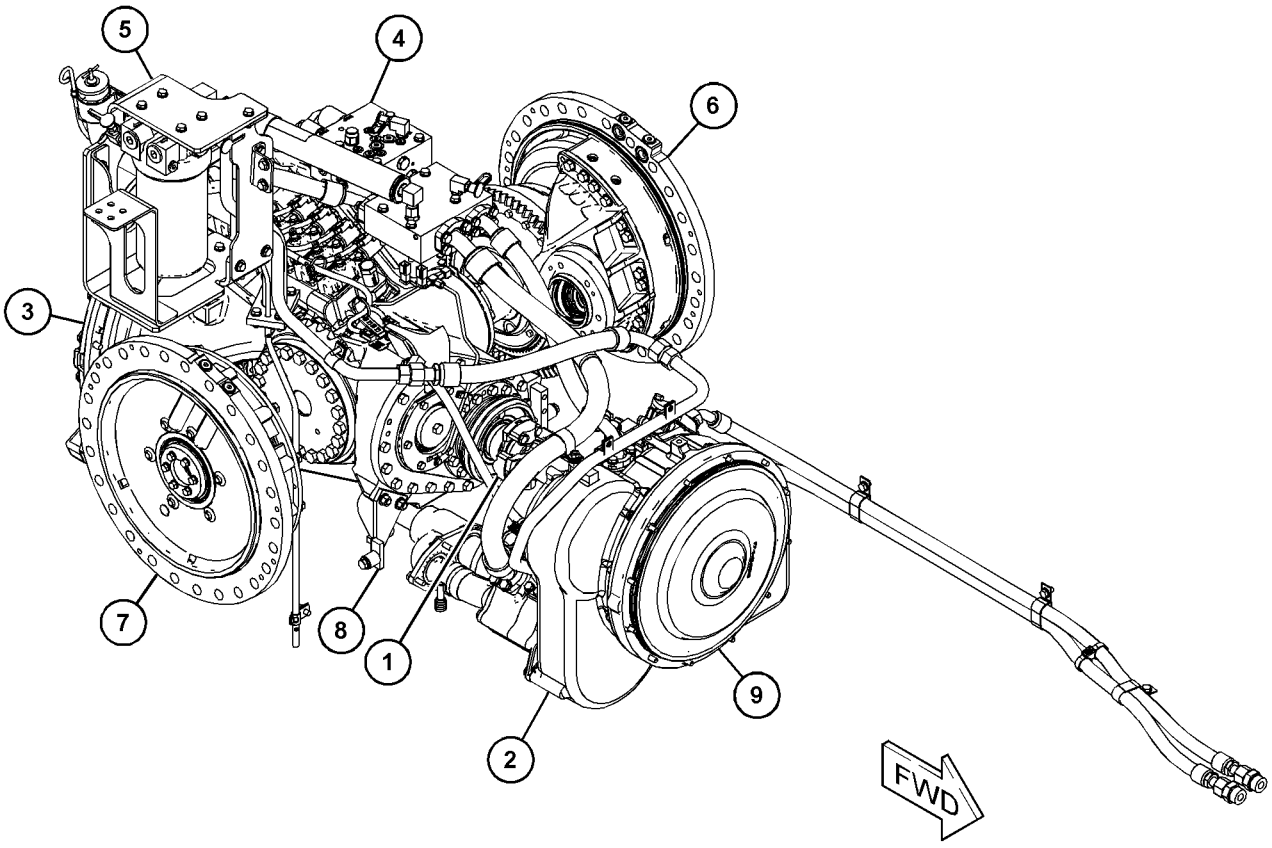

GRAPHIC #1 <END> g06024205

202-4364 PUMP GP-GEAR—3-SECTION

S/N: R5A1-UP

PART OF 202-4365 PUMP GP-GEAR

SMCS-3066, 3115, 5073 **i06563601**

NOTE	REF NO	GRAPHIC REF	PART NUMBER	QTY	PART NAME 1 2 3 4 5 6 (PRODUCT LEVEL)	SEE PAGE
	1	1	**202-6488**	1	BODY-OIL PUMP (CONVERTER SCAVENGE)	
	2	1	**178-9041**	1	BODY AS-OIL PUMP (TRANSMISSION CHARGING)	
	2A	1	**5M-3320**	2	BUSHING	
	2B	1	**8M-8489**	4	DOWEL	
	3	1	**202-0552**	1	BODY AS-OIL PUMP (CONVERTER/COOLER LUBRICATION)	
	3A	1	**131-0167**	2	BUSHING	
	3B	1	**8M-8489**	2	DOWEL	
M	4	1	**8T-5030**	2	BOLT (M10X1.5X120-MM)	
	5	1	**3S-0004**	6	WASHER (0.406X0.728X0.09-IN THK)	
	6	1	**1B-8736**	1	KEY-WOODRUFF	
	7	1	**133-1222**	1	COVER AS-OIL PUMP	
	7A	1	**131-0167**	2	BUSHING	
	8	1	**2D-8009**	3	SEAL-O-RING	
	9	1	**202-0551**	2	GEAR (12-TEETH)	
	10	1	**202-0549**	1	GEAR (12-TEETH)	
	11	1	**3T-8757**	2	GEAR (12-TEETH)	
	12	1	**202-0550**	1	GEAR (12-TEETH)	
	13	1	**1B-8705**	1	KEY-WOODRUFF	
	14	1	**3H-1461**	1	SEAL-O-RING	
	15	1	**9S-4191**	2	PLUG (9/16-18-THD)	
	16	1	**3J-1907**	2	SEAL-O-RING	
M	17	1	**8T-0356**	4	BOLT (M10X1.5X160-MM)	
	18	1	**6Y-5010**	8	WASHER (10.16X19X0.84-MM THK)	

M - METRIC PART

202-4364 **PUMP GP-GEAR (**contd.**)** **i06563601**

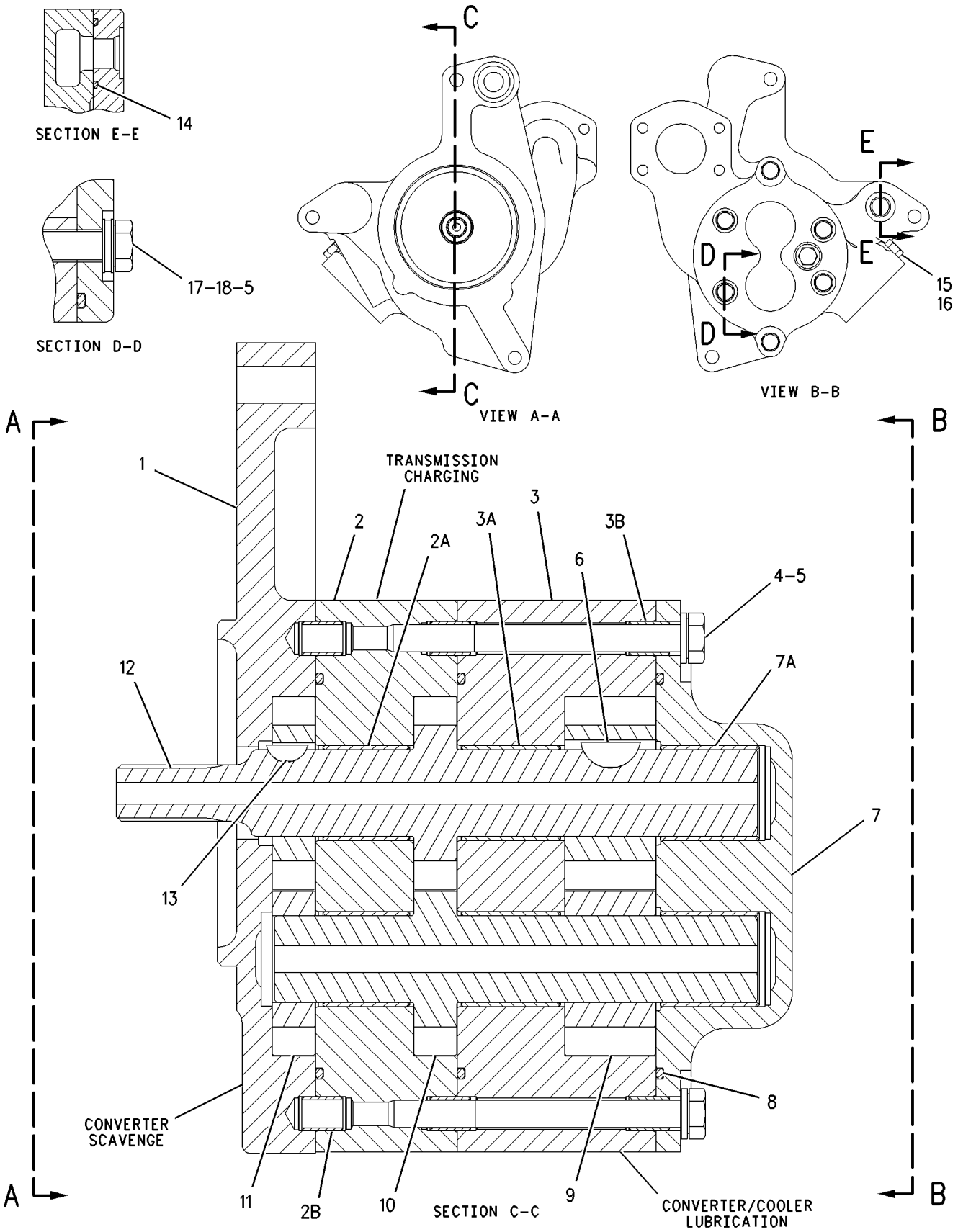

GRAPHIC #1 <END> g00778277

202-4365 PUMP GP-GEAR

S/N: R5A1-UP
3 SECTION
PART OF 434-9672 LINES GP-POWER TRAIN OIL

SMCS-3066, 3115, 5073 **i06539955**

NOTE	REF NO	GRAPHIC REF	PART NUMBER	QTY	PART NAME 1 2 3 4 5 6 (PRODUCT LEVEL)	SEE PAGE
Y	1	1	**202-4364**	1	PUMP GP-GEAR (POWER TRAIN OIL)	254
	2	1	**5F-3106**	1	SEAL-O-RING	
M	3	1	**8T-4182**	1	BOLT (M10X1.5X45-MM)	
	4	1	**8T-4121**	3	WASHER-HARD (11X21X2.5-MM THK)	
M	5	1	**8T-6466**	1	BOLT (M10X1.5X60-MM)	
M	6	1	**8T-4195**	1	BOLT (M10X1.5X30-MM)	
	7	1	**3H-1461**	1	SEAL-O-RING	

M - METRIC PART
Y - SEPARATE ILLUSTRATION

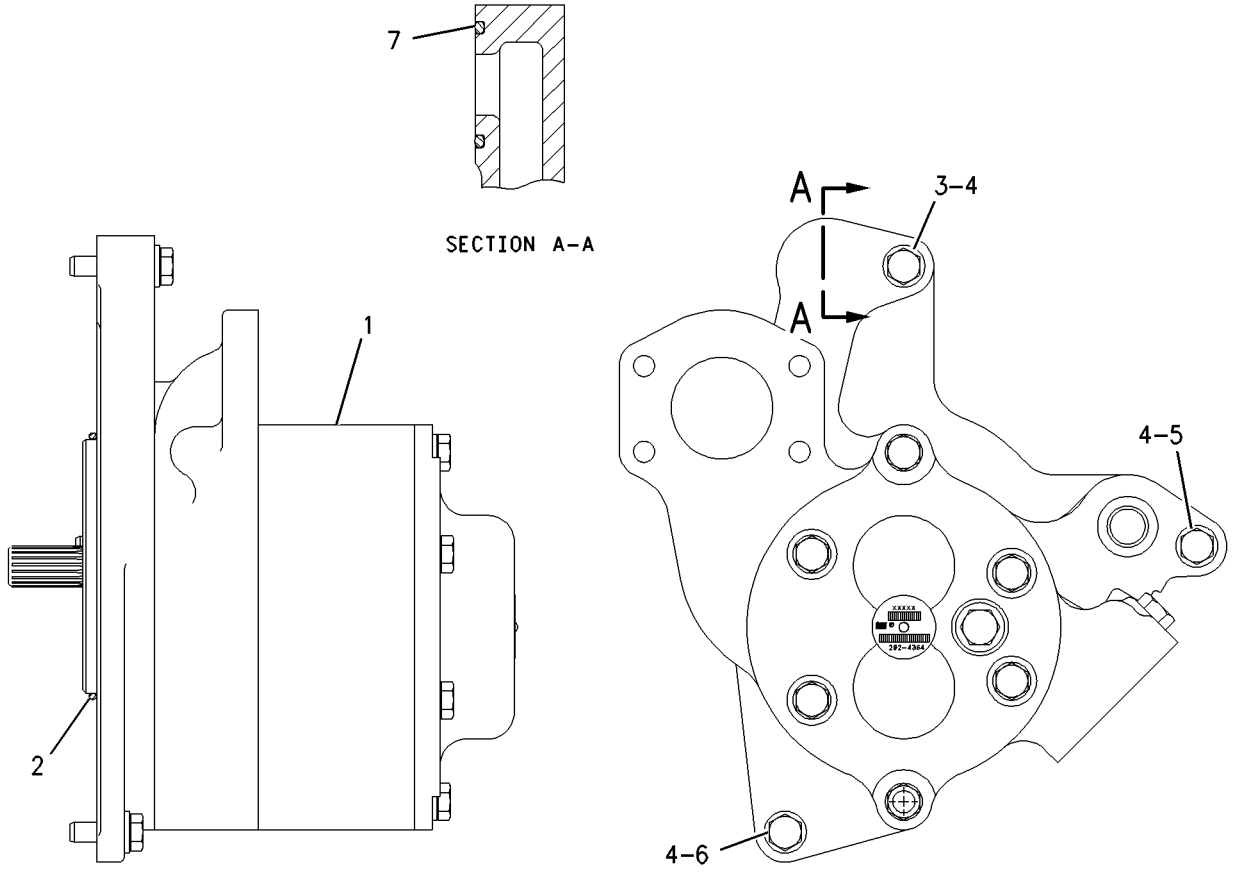

GRAPHIC #1 <END> g00942888

6I-8078 SEGMENT GP-SPROCKET

S/N: R5A1-UP

PART OF 489-4642, 489-4643, 491-4974, 492-0417, 492-0421 UNDERCARRIAGE AR AN ATTACHMENT

SMCS-4155 **i06558950**

NOTE	REF NO	GRAPHIC REF	PART NUMBER	QTY	PART NAME 1 2 3 4 5 6 (PRODUCT LEVEL)	SEE PAGE
	1	1	**6I-8077**	5	SEGMENT-SPROCKET	
	2	1	**2S-5658**	25	WASHER-HARD (17X29X3-MM THK)	
	3	1	**6V-0937**	25	BOLT (5/8-18X2.1-IN)	
	4	1	**7H-3607**	25	NUT (5/8-18-THD)	

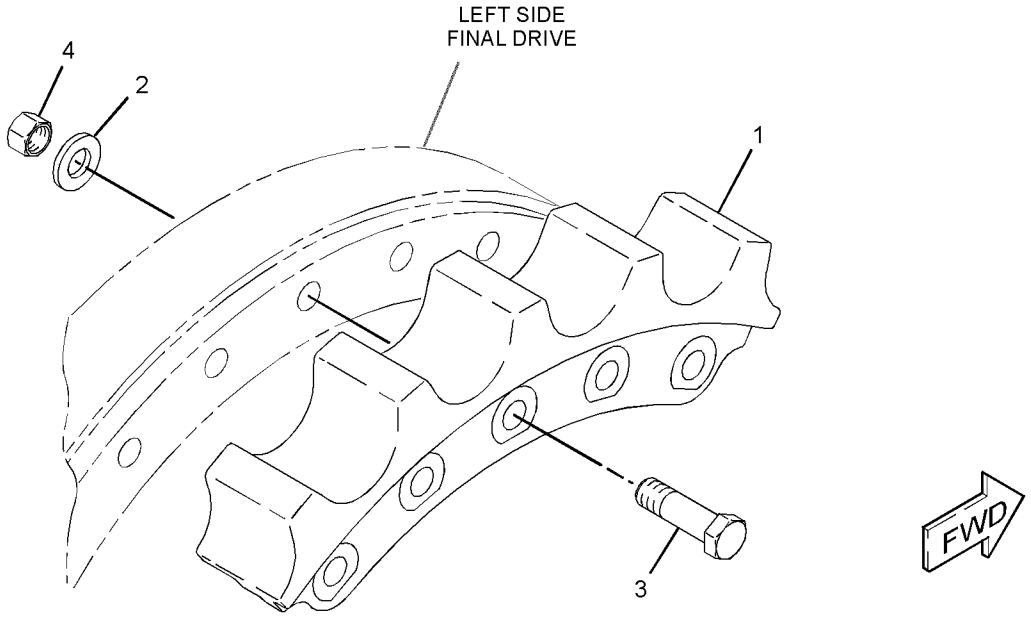

GRAPHIC #1 <END> g01432220

178-6690 SHAFT GP-DRIVE

S/N: R5A1-UP

PART OF 391-9508 POWER TRAIN AR

SMCS-3253 **i06581832**

NOTE	REF NO	GRAPHIC REF	PART NUMBER	QTY	PART NAME 1 2 3 4 5 6 (PRODUCT LEVEL)	SEE PAGE
	1	1	**108-8296**	1	YOKE AS	
		1	**4B-4098**	1	PLUG-CUP	
		1	**7F-6935**	1	RACE-BEARING INNER	
Y	2	1	**222-3351**	1	UNIVERSAL JOINT GP	264
M	3	1	**8T-4182**	8	BOLT (M10X1.5X45-MM)	

M - METRIC PART
Y - SEPARATE ILLUSTRATION

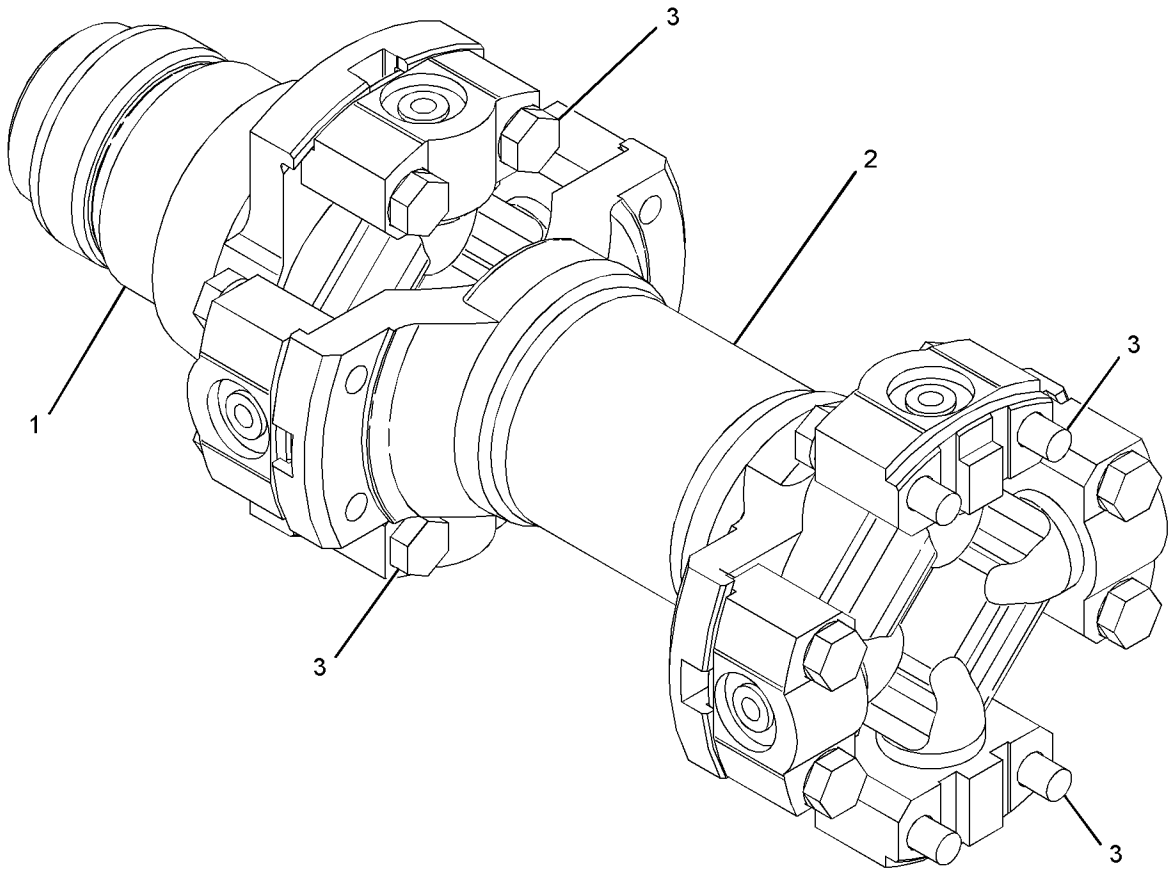

GRAPHIC #1 <END> g06032457

336-2446 TORQUE CONVERTER & HOUSING GP—WITH HOUSING

S/N: R5A1-UP

PART OF 391-9508 POWER TRAIN AR

SMCS-3101, 3105

i06517251

NOTE	REF NO	GRAPHIC REF	PART NUMBER	QTY	PART NAME 1 2 3 4 5 6 (PRODUCT LEVEL)	SEE PAGE
	1	1	**1T-0034**	2	RING-LOCK	
	2	1	**1T-0205**	1	RING-SNAP	
	3	1	**1T-0933**	2	RING-RETAINING	
	4	1	**3T-6471**	1	SCREEN AS	
		1	**3T-6469**	1	WASHER (19X26X1.6-MM THK)	
	5	1	**6Y-3164**	1	GEAR-PUMP DRIVE (77-TEETH)	
	6	1	**7G-3496**	1	RETAINER	
	7	1	**7X-7816**	1	PLATE-SERIAL NUMBER	
	8	1	**9J-0461**	1	SPRING	
	9	1	**106-0721**	1	YOKE	
	10	1	**110-1211**	1	GEAR-PUMP DRIVE (77-TEETH)	
Y	11	1	**336-2441**	1	TORQUE CONVERTER GP	261
	12	1	**225-4286**	1	GEAR-PUMP DRIVE (68-TEETH)	
	13	1	**265-7356**	1	HOUSING-TORQUE CONVERTER	
	14	1	*307-2670*	2	PLUG AS	
					(EACH INCLUDES)	
		1	**9S-4185**	1	PLUG	
		1	**238-5080**	1	SEAL-O-RING	
	15	1	*326-0319*	1	PLUG AS	
		1	**9S-4188**	1	PLUG	
		1	**238-5083**	1	SEAL-O-RING	
	16	1	**1T-0043**	1	BALL BEARING	
	17	1	**1T-1639**	1	RING	
	18	1	**4B-3665**	2	BALL BEARING	
	19	1	**5P-5846**	1	SEAL-O-RING	
	20	1	**5P-8428**	1	SEAL-O-RING	
	21	1	**5P-9806**	1	SEAL-O-RING	
	22	1	**8C-3229**	1	RING-RETAINING	
	23	1	**8T-4121**	8	WASHER-HARD (11X21X2.5-MM THK)	
M	24	1	**8T-4195**	8	BOLT (M10X1.5X30-MM)	
M	25	1	**8T-4910**	1	BOLT (M12X1.75X60-MM)	
	26	1	**9X-7719**	1	SEAL-LIP TYPE	
	27	1	**8H-9818**	1	GASKET	
	28	1	**110-0510**	1	COVER	
M	29	1	**8T-4137**	2	BOLT (M10X1.5X20-MM)	

M - METRIC PART
Y - SEPARATE ILLUSTRATION

336-2446 **TORQUE CONVERTER & HOUSING GP** (contd.) **i06517251**

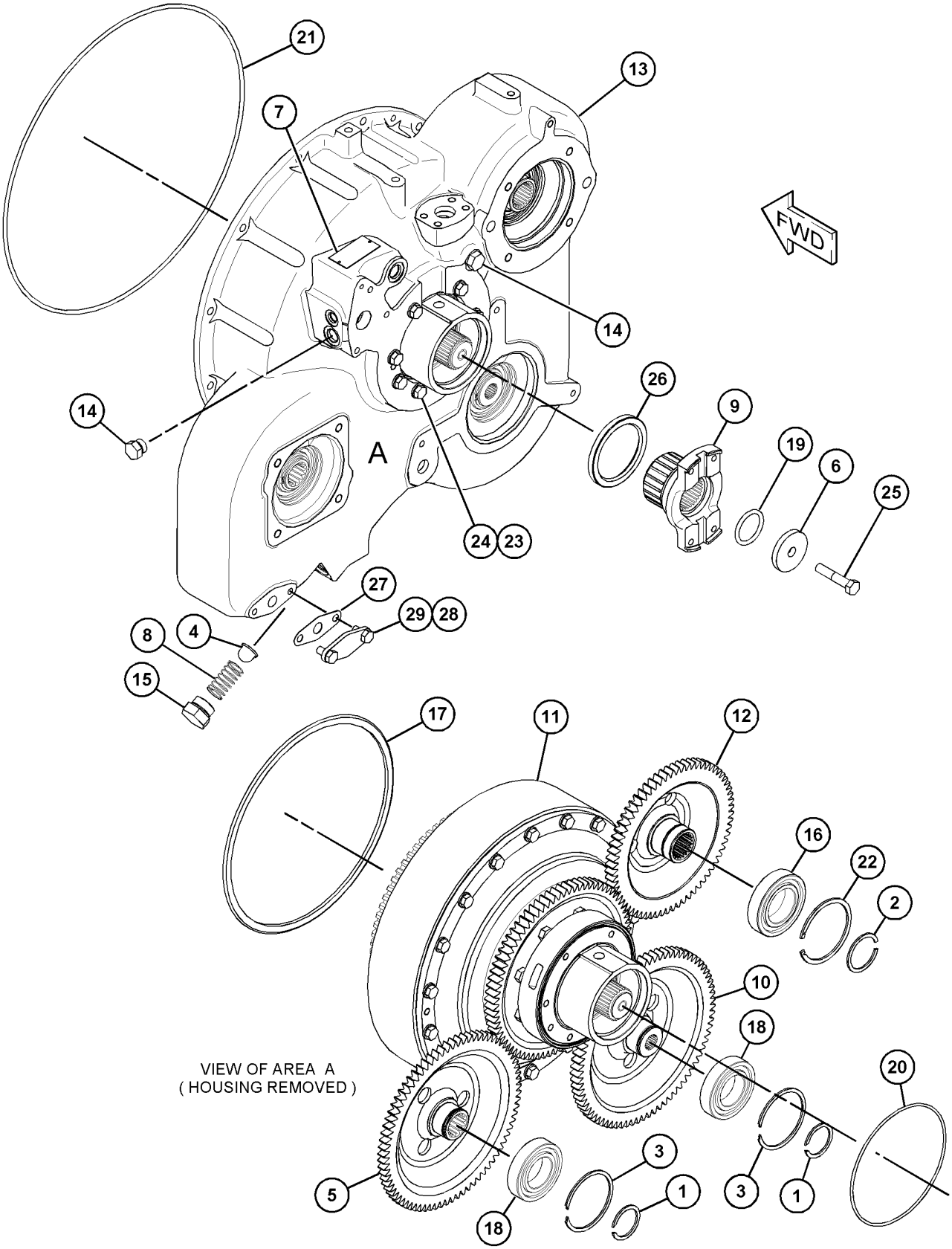

GRAPHIC #1 <END> g06009781

336-2441 TORQUE CONVERTER GP

S/N: T6P1-UP

PART OF 336-2446 TORQUE CONVERTER & HOUSING GP

SMCS-3101 **i06517248**

NOTE	REF NO	GRAPHIC REF	PART NUMBER	QTY	PART NAME 1 2 3 4 5 6 (PRODUCT LEVEL)	SEE PAGE
	1	1	**1T-0234**	1	RING-METAL SEAL	
	2	1	**1T-1621**	1	RING-SEAL	
	3	1	**5K-9065**	1	RING-RETAINING	
	4	1	**6Y-1084**	1	IMPELLER-CONVERTER	
	5	1	**6Y-1087**	1	COVER-END	
	6	1	**6Y-3149**	1	TURBINE-CONVERTER	
	7	1	**6Y-3159**	1	SHAFT-OUTPUT	
	8	1	**6Y-3167**	1	GEAR-PUMP DRIVE (77-TEETH)	
	9	1	**8E-6539**	1	HUB AS	
		1	**4S-8541**	1	DOWEL	
	10	1	**8E-6648**	1	SPACER (60.2X80X3-MM THK)	
	11	1	**064-3843**	1	RING-SNAP	
	12	1	**129-1262**	1	CARRIER AS	
		1	**4S-8541**	1	DOWEL	
	13	1	**218-3598**	1	HOUSING	
	14	1	**351-8434**	1	STATOR	
	15	1	**129-2380**	1	BALL BEARING	
	16	1	**1J-6472**	1	RING-RETAINING	
	17	1	**1T-0043**	1	BALL BEARING	
	18	1	**3E-6799**	1	SEAL-O-RING	
M	19	1	**6V-1820**	34	BOLT (M10X1.5X30-MM)	
	20	1	**6V-5839**	34	WASHER (11X21X2.5-MM THK)	
M	21	1	**6V-7673**	8	BOLT (M12X1.75X50-MM)	
	22	1	**8E-5247**	1	BALL BEARING	
	23	1	**6V-8128**	1	RING-RETAINING	

M - METRIC PART

336-2441 **TORQUE CONVERTER GP** (contd.) **i06517248**

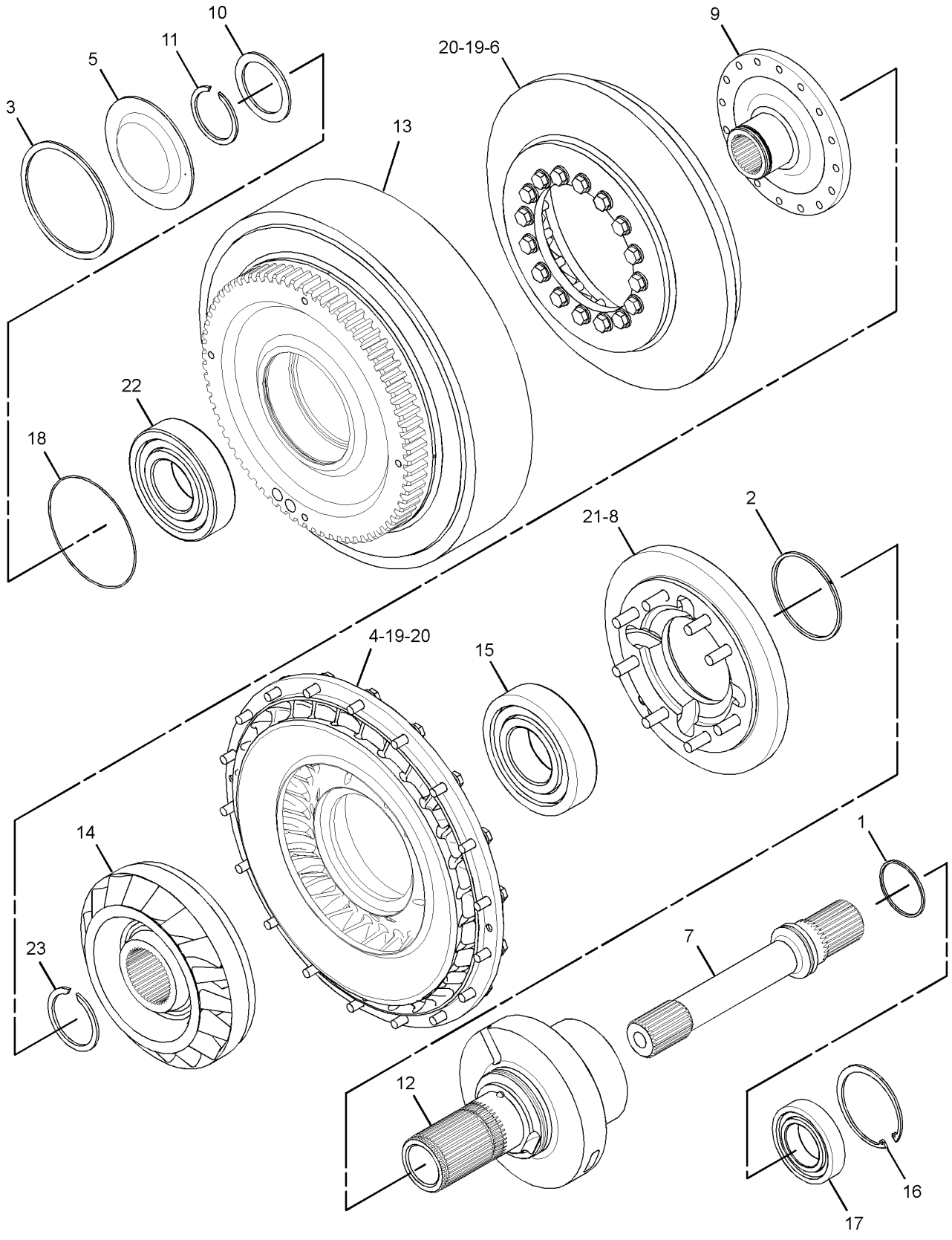

GRAPHIC #1 <END> g02798784

365-6795 TRANSMISSION AR

S/N: RC51-UP

PART OF 391-9508 POWER TRAIN AR

SMCS-3030 **i06517236**

NOTE	REF NO	GRAPHIC REF	PART NUMBER	QTY	PART NAME 1 2 3 4 5 6 (PRODUCT LEVEL)	SEE PAGE
Y	1	1	*352-9851*	1	GEAR GP-BEVEL & TRANSFER	232
Y	2	1	*365-6796*	1	PLANETARY GP-TRANSMISSION	247
Y	3	1	*365-6797*	1	CONTROL GP-TRANSMISSION HYD	218

Y - SEPARATE ILLUSTRATION

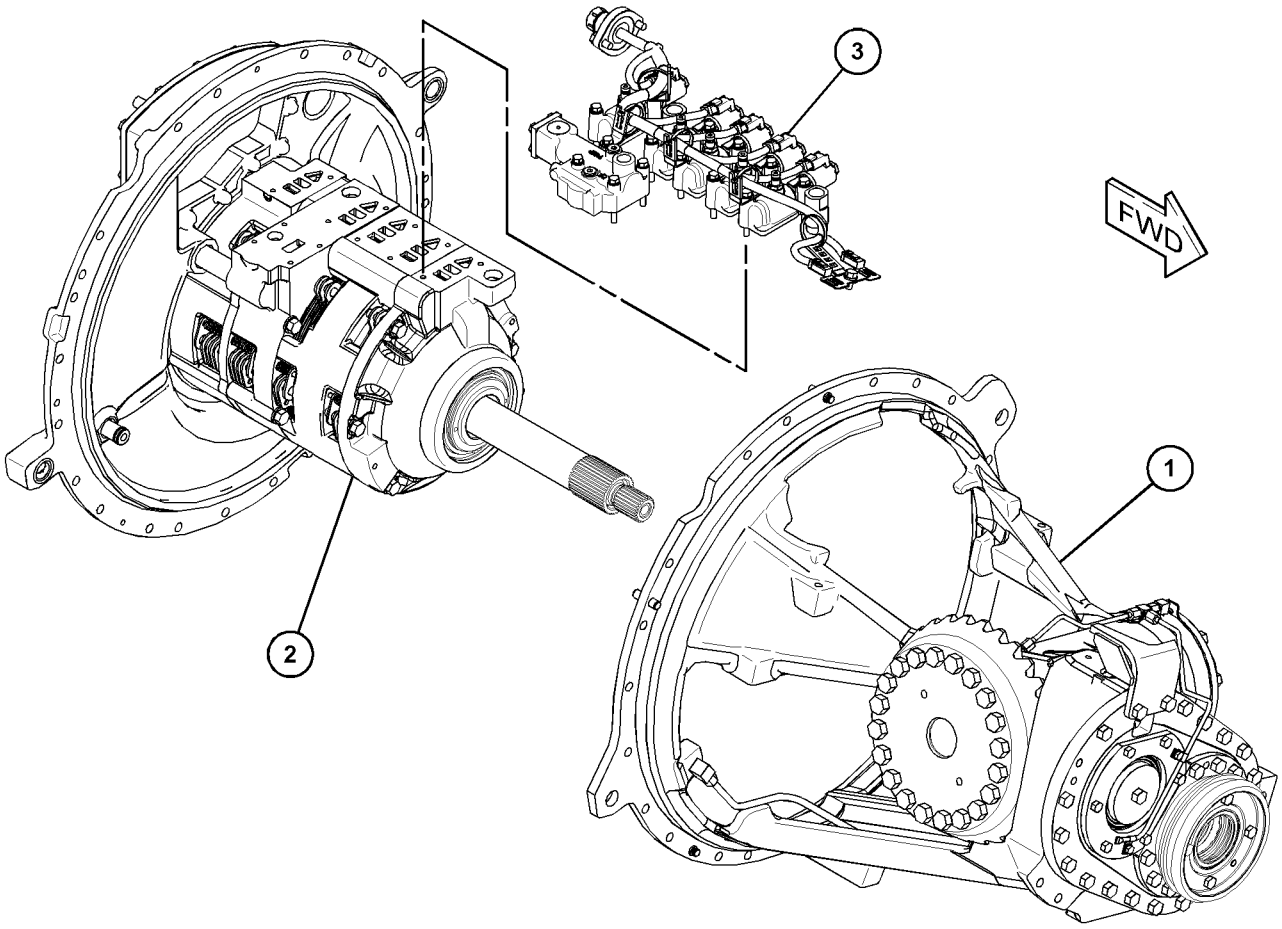

GRAPHIC #1 <END> g06009294

222-3351 UNIVERSAL JOINT GP

S/N: R5A1-UP

PART OF 178-6690 SHAFT GP-DRIVE

SMCS-3251, 3253 **i06559677**

NOTE	REF NO	GRAPHIC REF	PART NUMBER	QTY	PART NAME 1 2 3 4 5 6 (PRODUCT LEVEL)	SEE PAGE
	1	1	**108-6587**	2	BEARING	
	2	1	**222-3352**	1	TUBE	
M	3	1	**6V-5843**	8	BOLT (M10X1.5X45-MM)	

M - METRIC PART

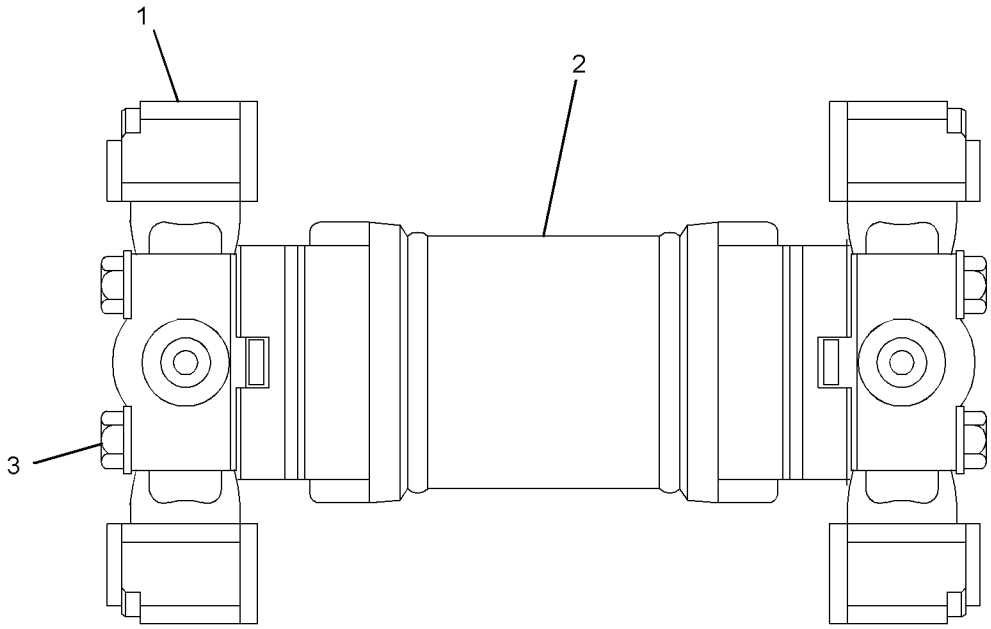

GRAPHIC #1 <END> g03812954

244-3114 VALVE GP-MODULATING

S/N: RC51-UP
24-VOLT
PART OF 365-6797 CONTROL GP-TRANSMISSION HYD

SMCS-3139 **i06262895**

NOTE	PART NUMBER	QTY	PART NAME 1 2 3 4 5 6 (PRODUCT LEVEL)	SEE PAGE
Y	*385-4432*	1	VALVE GP-MODULATING (24-VOLT)	267
			—OR—	
Y	*425-6734*	1	VALVE GP-MODULATING (24-VOLT)	269
			—OR—	
Y	*350-3913*	1	VALVE GP-MODULATING (24-VOLT)	266
			—OR—	
Y	*425-4565*	1	VALVE GP-MODULATING (24-VOLT)	268

Y - SEPARATE ILLUSTRATION

<END>

350-3913 VALVE GP-MODULATING

S/N: RC51-UP
24-VOLT
FIELD REPLACEMENT FOR 244-3114—PAGE: 265
PART OF 244-3114 VALVE GP-MODULATING

SMCS-3139 **i06262900**

NOTE	REF NO	GRAPHIC REF	PART NUMBER	QTY	PART NAME 1 2 3 4 5 6 (PRODUCT LEVEL)	SEE PAGE
	1	1	**6V-3965**	1	FITTING (QUICK DISCONNECT)	
	2	1	**218-2373**	1	NUT (1/2-28-THD)	
	3	1	**323-9531**	1	COIL AS (24-VOLT)	
	4	1	**214-7568**	1	SEAL-O-RING	
	5	1	**164-2108**	1	WASHER (13.03X25.4X2.38-MM THK)	

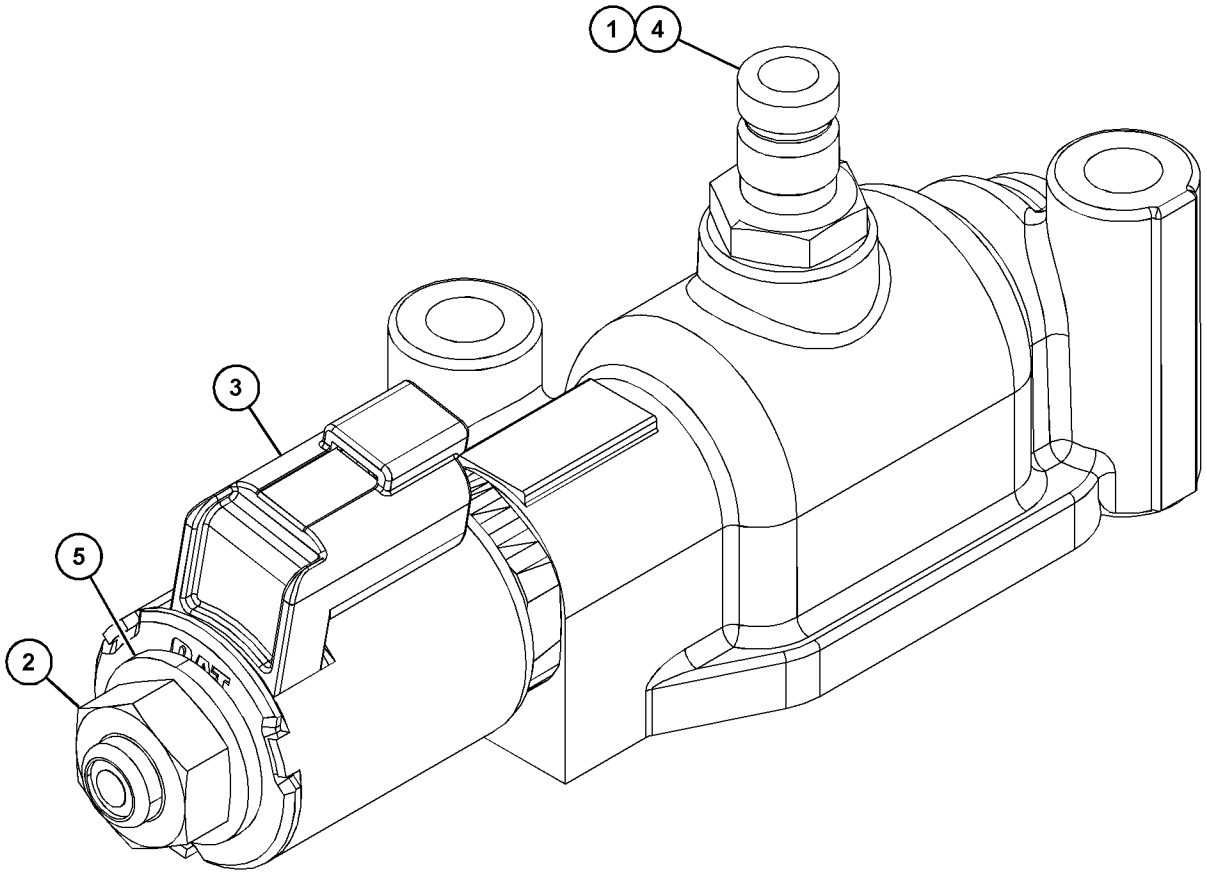

GRAPHIC #1 <END> g03736461

385-4432 VALVE GP-MODULATING

S/N: RC51-UP
24-VOLT
PART OF 244-3114 VALVE GP-MODULATING

SMCS-3139 **i06262901**

NOTE	REF NO	GRAPHIC REF	PART NUMBER	QTY	PART NAME 1 2 3 4 5 6 (PRODUCT LEVEL)	SEE PAGE
	1	1	**6V-3965**	1	FITTING (QUICK DISCONNECT)	
	2	1	**323-9531**	1	COIL AS (24-VOLT)	
	3	1	**214-7568**	1	SEAL-O-RING	
	4	1	**164-2108**	1	WASHER (13.03X25.4X2.38-MM THK)	
	5	1	**218-2373**	1	NUT (1/2-28-THD)	
					PARTS SHOWN IN GRAPHIC(S) WITHOUT A REFERENCE NUMBER ARE NOT SERVICED SEPARATELY	

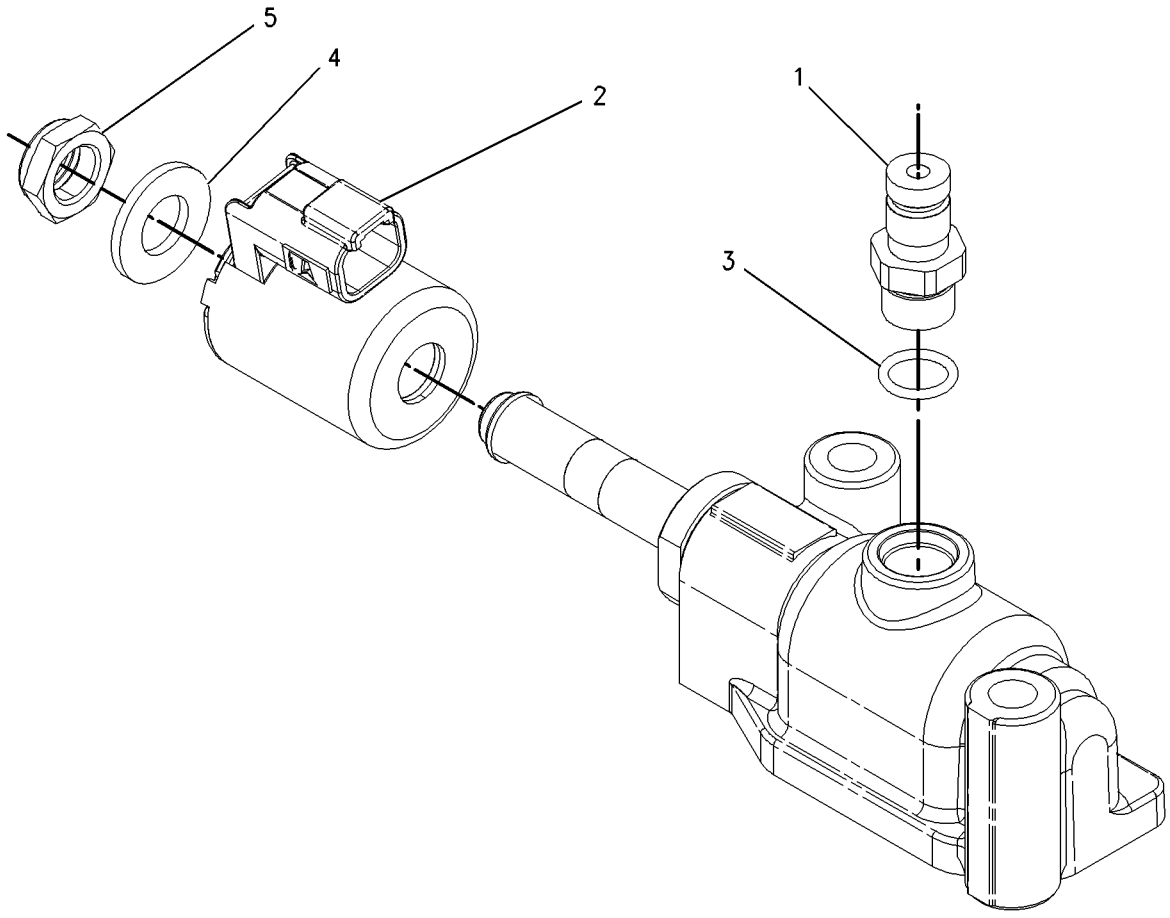

GRAPHIC #1 <END> g00919065

425-4565 VALVE GP-MODULATING

S/N: RC51-UP
24-VOLT
FIELD REPLACEMENT FOR 244-3114—PAGE: 265
PART OF 244-3114 VALVE GP-MODULATING

SMCS-3139 **i06262902**

NOTE	REF NO	GRAPHIC REF	PART NUMBER	QTY	PART NAME 1 2 3 4 5 6 (PRODUCT LEVEL)	SEE PAGE
	1	1	**6V-3965**	1	FITTING (QUICK DISCONNECT)	
	2	1	**164-2108**	1	WASHER (13.03X25.4X2.38-MM THK)	
	3	1	**218-2373**	1	NUT (1/2-28-THD)	
	4	1	**214-7568**	1	SEAL-O-RING	
	5	1	**323-9531**	1	COIL AS (24-VOLT)	

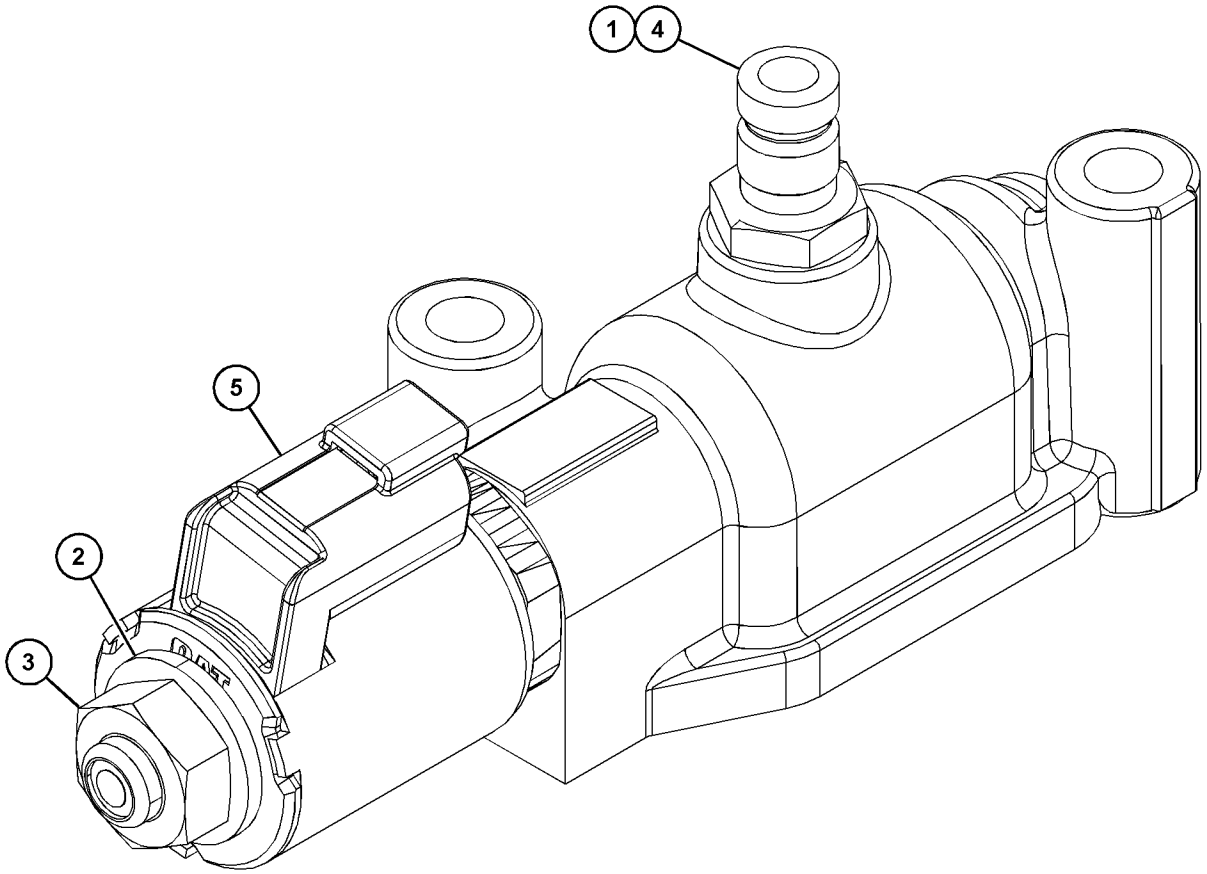

GRAPHIC #1 <END> g03736453

425-6734 VALVE GP-MODULATING

S/N: RC51-UP
24-VOLT
PART OF 244-3114 VALVE GP-MODULATING

SMCS-3139 **i06262903**

NOTE	REF NO	GRAPHIC REF	PART NUMBER	QTY	PART NAME 1 2 3 4 5 6 (PRODUCT LEVEL)	SEE PAGE
	1	1	**6V-3965**	1	FITTING (QUICK DISCONNECT)	
	2	1	**323-9531**	1	COIL AS (24-VOLT)	
	3	1	**214-7568**	1	SEAL-O-RING	
	4	1	**164-2108**	1	WASHER (13.03X25.4X2.38-MM THK)	
	5	1	**218-2373**	1	NUT (1/2-28-THD)	
					PARTS SHOWN IN GRAPHIC(S) WITHOUT A REFERENCE NUMBER ARE NOT SERVICED SEPARATELY	

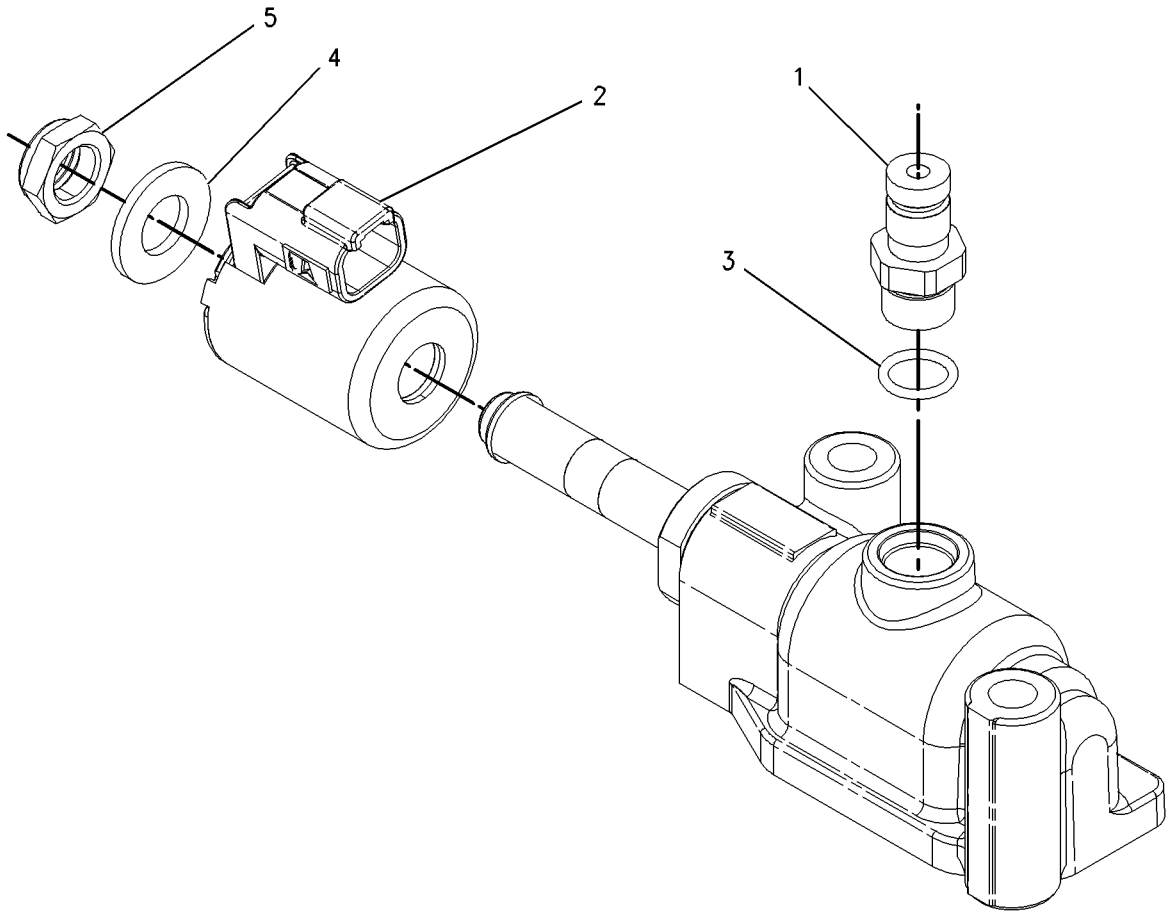

GRAPHIC #1 <END> g00919065

365-6807 VALVE GP-RELIEF

S/N: RC51-UP

PART OF 365-6797 CONTROL GP-TRANSMISSION HYD

SMCS-3133, 3182 **i06517241**

NOTE	REF NO	GRAPHIC REF	PART NUMBER	QTY	PART NAME 1 2 3 4 5 6 (PRODUCT LEVEL)	SEE PAGE
	1	1	**1M-9351**	1	SPRING	
	2	1	**2S-5835**	1	PISTON-LOAD	
	3	1	**8E-1143**	1	SLUG	
	4	1	**9U-8668**	1	SPOOL AS	
		1	**3D-8317**	1	RING-RETAINING	
		1	**4B-9880**	1	BALL	
		1	**4M-2381**	1	SPRING	
		1	**9U-8669**	1	RETAINER	
	5	1	**202-2005**	1	COVER	
	6	1	**355-2381**	1	SCREW-ADJUSTING (5/16-24X1.5-IN)	
	7	1	*162-0177*	2	PLUG AS	
					(EACH INCLUDES)	
		1	**3J-1907**	1	SEAL-O-RING	
		1	**9S-8004**	1	PLUG	
	8	1	**4F-2294**	1	NUT-JAM (5/16-24-THD)	
M	9	1	**6V-3940**	4	BOLT (M8X1.25X25-MM)	
	10	1	**9M-1974**	1	WASHER-HARD (8.8X16X2-MM THK)	

M - METRIC PART

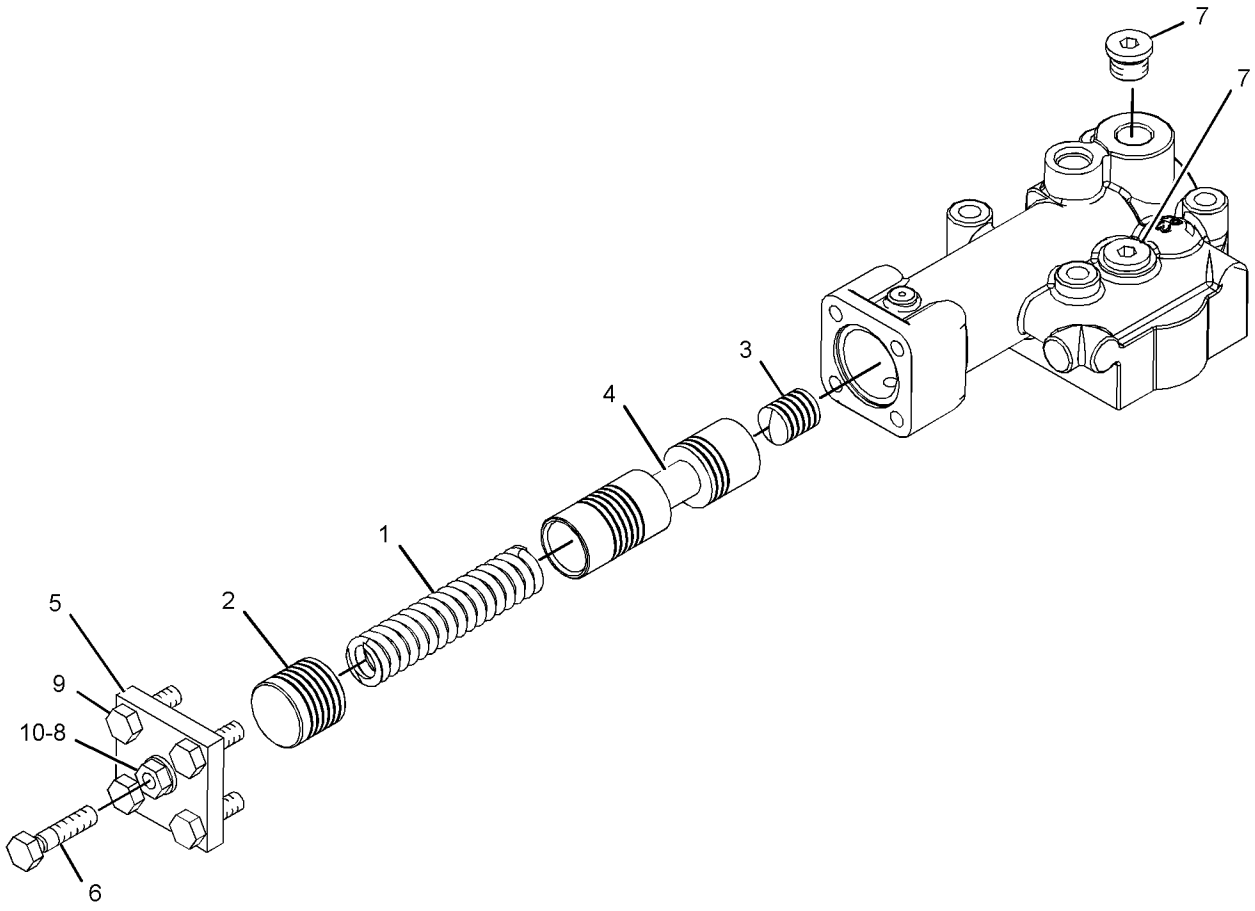

GRAPHIC #1 <END> g02416237

6Y-8473 VALVE GP-RELIEF

S/N: R5A1-UP

PART OF 434-9672 LINES GP-POWER TRAIN OIL

SMCS-3133, 3182

i06542767

NOTE	REF NO	GRAPHIC REF	PART NUMBER	QTY	PART NAME 1 2 3 4 5 6 (PRODUCT LEVEL)	SEE PAGE
	1	1	**2S-1382**	1	SPRING	
	2	1	**2S-1384**	1	SPOOL AS-RELIEF	
	2A	1	**2S-1385**	1	SPOOL-RELIEF VALVE	
	2B	1	**8M-2538**	1	POPPET	
	2C	1	**5M-9548**	1	SPRING	
	2D	1	**8M-4409**	1	RETAINER	
	2E	1	**7M-8592**	1	RING-RETAINING	
M	3	1	**8T-4136**	4	BOLT (M10X1.5X25-MM)	
	4	1	**9S-4191**	1	PLUG (9/16-18-THD)	
	5	1	**9X-2027**	4	WASHER (11X18X2-MM THK)	
	6	1	**061-7540**	1	SEAL-O-RING	
	7	1	**3J-1907**	1	SEAL-O-RING	
B	8	1	**4M-1751**	3	SPACER (15.09X0.4-MM THK)	
	9	1	**4M-8239**	2	COVER	
B	10	1	**5S-7001**	5	SPACER (7.54X14.15X0.9-MM THK)	
	11	1	**6V-4365**	1	SEAL-O-RING	
	12	1	**8M-4986**	2	SEAL-O-RING	

B - USE AS REQUIRED
M - METRIC PART

6Y-8473 **VALVE GP-RELIEF (**contd.**)** **i06542767**

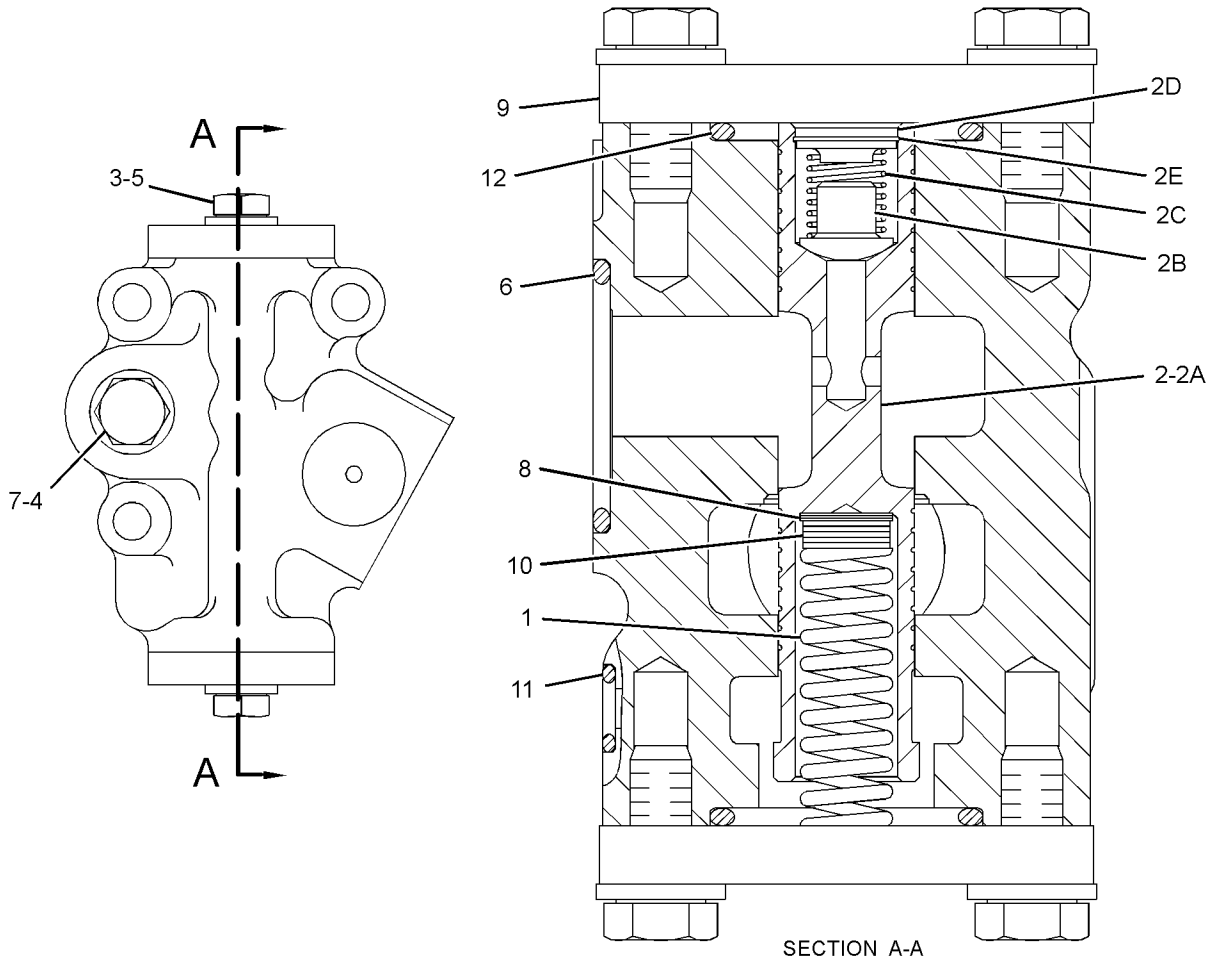

GRAPHIC #1 <END> g02853276

422-7012 BAFFLE GP-RADIATOR

S/N: R5A1-UP

PART OF 391-9510 INSTALLATION AR-ENGINE

SMCS-1353, 1806 **i06560091**

NOTE	REF NO	GRAPHIC REF	PART NUMBER	QTY	PART NAME 1 2 3 4 5 6 (PRODUCT LEVEL)	SEE PAGE
	1	1	**3E-4903**	2	MOUNT AS	
	2	1	**6N-6984**	2	MOUNT-RUBBER	
	3	1	**393-9030**	2	BRACKET AS	
					(EACH INCLUDES)	
M		1	**8T-3490**	4	NUT-WELD (M10X1.5-THD)	
	4	1	**393-9031**	2	BRACKET	
	5	1	**393-9034**	1	BAFFLE AS-RADIATOR	
		1	**4B-4274**	8	WASHER (5.5X13X1.2-MM THK)	
		1	**9M-5732**	8	RIVET-POP	
	6	1	**422-6998**	2	BRACKET AS	
	7	1	**422-6999**	1	BAFFLE AS-RADIATOR	
		1	**4B-4274**	8	WASHER (5.5X13X1.2-MM THK)	
		1	**9M-5732**	8	RIVET-POP	
	8	1	**422-7002**	1	BAFFLE	
	9	1	**423-4027**	1	BRACKET AS	
	10	1	**469-1029**	1	BRACKET AS	
	11	1	**198-4778**	4	WASHER-HARD (13.5X30X12-MM THK)	
M	12	1	**344-5675**	2	NUT (M10X1.5-THD)	
	13	1	**5R-5927**	2	WASHER (14X65X6-MM THK)	
	14	1	**6V-4604**	6	RIVET-POP	
	15	1	**7X-7729**	19	WASHER (11X25X3-MM THK)	
	16	1	**8T-2561**	2	WASHER-HARD (10.5X28.5X5-MM THK)	
M	17	1	**8T-4136**	13	BOLT (M10X1.5X25-MM)	
M	18	1	**8T-4183**	4	BOLT (M12X1.75X40-MM)	
M	19	1	**8T-4195**	6	BOLT (M10X1.5X30-MM)	
M	20	1	**8T-4196**	2	BOLT (M10X1.5X35-MM)	
	21	1	**8T-4226**	2	WASHER-PLATED (10.5X45X3-MM THK)	
M	22	1	**8T-4648**	2	BOLT (M12X1.75X70-MM)	
E	23	1	**221-8310**		SEAL (88-CM)	
E	23A	1	**221-8310**		SEAL (91-CM)	
E	23B	1	**221-8310**		SEAL (58-CM EACH)	
E	23C	1	**221-8310**		SEAL (37-CM EACH)	
E	23D	1	**221-8310**		SEAL (20-CM EACH)	
E	23E	1	**221-8310**		SEAL (89-CM)	

E - ORDER BY THE CENTIMETER
M - METRIC PART

422-7012 **BAFFLE GP-RADIATOR (**contd.**)** **i06560091**

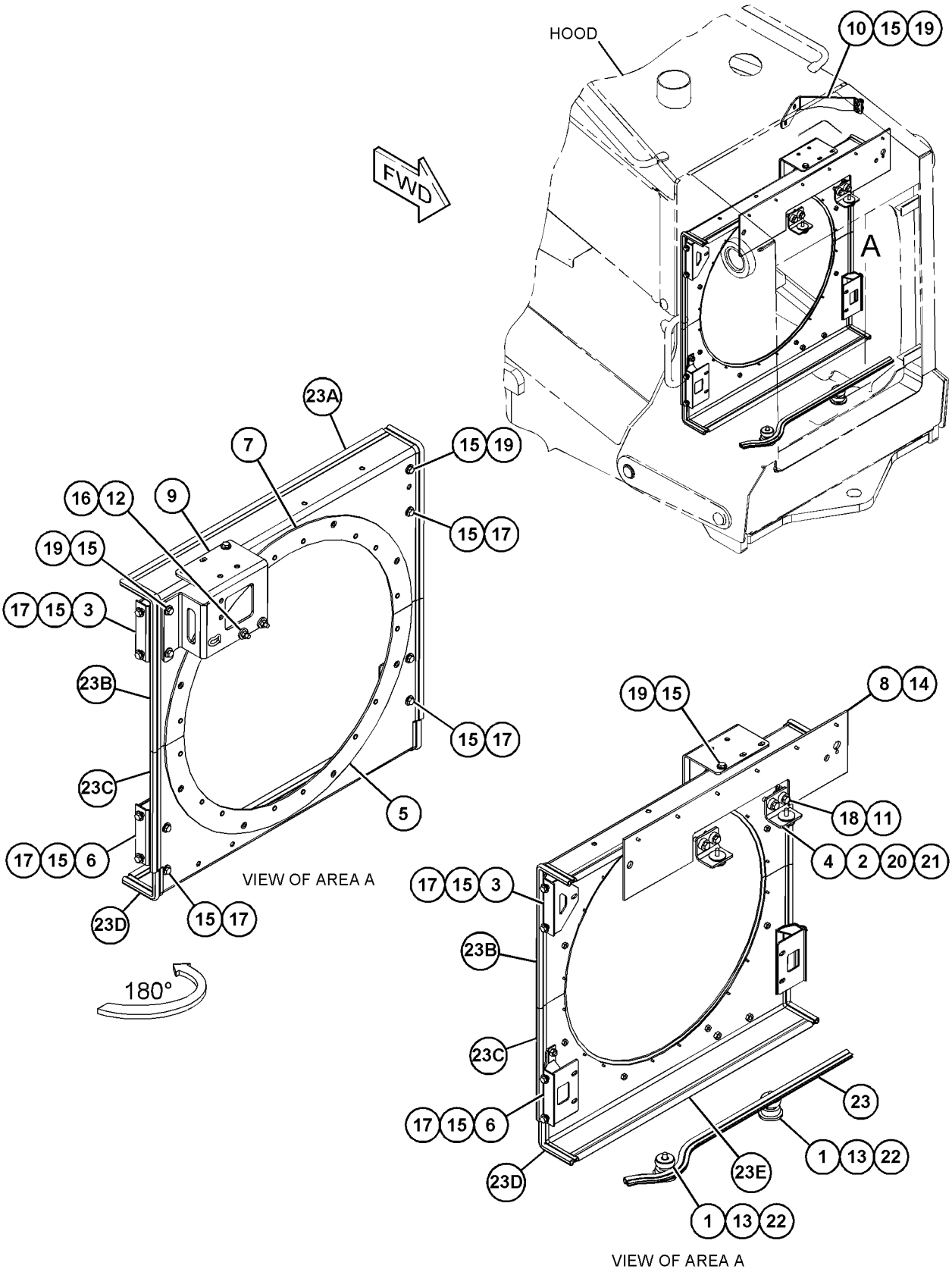

GRAPHIC #1 <END> g06024599

249-7010 BAR GP-STRIKER

S/N: R5A1-UP
PART OF 386-7265 BAR GP-STRIKER
AN ATTACHMENT

SMCS-7180 **i06532271**

NOTE	REF NO	GRAPHIC REF	PART NUMBER	QTY	PART NAME 1 2 3 4 5 6 (PRODUCT LEVEL)	SEE PAGE
	1	1	**1L-4418**	2	SPRING-SHUTOFF	
	2	1	**1P-2841**	2	SPACER (0.531X1X0.69-IN THK)	
	3	1	**1Z-9932**	2	HINGE AS	
	4	1	**8T-1579**	1	PLATE	
	5	1	**8T-9496**	2	LOCKNUT (9/16-18-THD)	
Y	6	1	**8Y-6400**	1	LATCH GP (T-BAR, COMPARTMENT)	308
	7	1	**9Z-9214**	2	ROD AS	
	8	1	**201-2557**	2	HINGE AS	
	9	1	**263-8661**	1	STEP AS	
	10	1	**245-6260**	1	BAR AS-STRIKER	
	11	1	**246-8411**	1	DOOR AS (RH)	
	12	1	**246-8412**	1	DOOR AS (LH)	
	13	1	**2K-8467**	4	PIN-SPRING	
M	14	1	**5C-7261**	2	NUT (M8X1.25-THD)	
	15	1	**5P-1076**	4	WASHER-HARD (13.5X30X4-MM THK)	
M	16	1	**7X-2575**	2	BOLT (M24X3X60-MM)	
	17	1	**8T-4167**	2	WASHER-HARD (26X44X4-MM THK)	
M	18	1	**8T-4183**	8	BOLT (M12X1.75X40-MM)	
	19	1	**8T-4223**	8	WASHER-HARD (13.5X25.5X3-MM THK)	
	20	1	**8T-4224**	2	WASHER-HARD (8.8X16X2-MM THK)	
M	21	1	**8T-7547**	2	BOLT (M8X1.25X30-MM)	

M - METRIC PART
Y - SEPARATE ILLUSTRATION

249-7010 **BAR GP-STRIKER (**contd.**)** **i06532271**

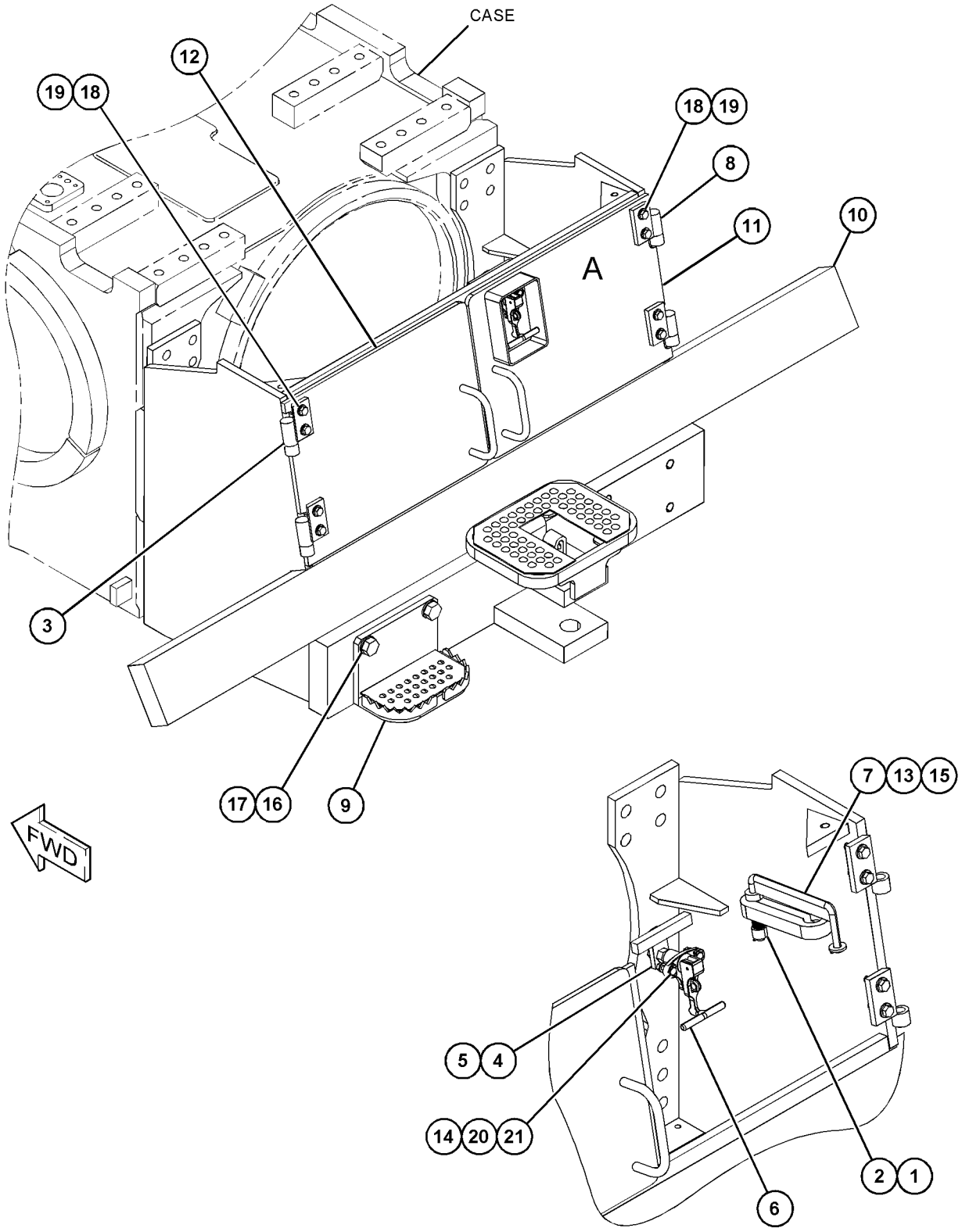

VIEW OF AREA A
(PARTS REMOVED FOR CLARITY)

GRAPHIC #1 <END> g06023939

386-7265 BAR GP-STRIKER—HEAVY-DUTY

S/N: R5A1-UP
REAR
AN ATTACHMENT

SMCS-7180 **i06580426**

NOTE	REF NO	GRAPHIC REF	PART NUMBER	QTY	PART NAME 1 2 3 4 5 6 (PRODUCT LEVEL)	SEE PAGE
	1	1	**246-2641**	1	PADLOCK GP	
		1	**5P-8500**	1	KEY	
	2	1	**6V-9313**	4	PLUG	
	3	1	**7B-0863**	1	LATCH-PIN	
	4	1	**8G-7085**	1	PIN AS	
		1	**7F-9543**	1	COLLAR	
Y	5	1	*249-7010*	1	BAR GP-STRIKER	275
	6	1	**8T-4123**	20	WASHER (3.62X5.75X0.375-MM THK)	
M	7	1	**8T-4140**	1	BOLT (M16X2X60-MM)	
M	8	1	**8T-4778**	1	LOCKNUT (M16X2-THD)	
M	9	1	**8T-6430**	20	BOLT (M20X2.5X50-MM)	

M - METRIC PART
Y - SEPARATE ILLUSTRATION

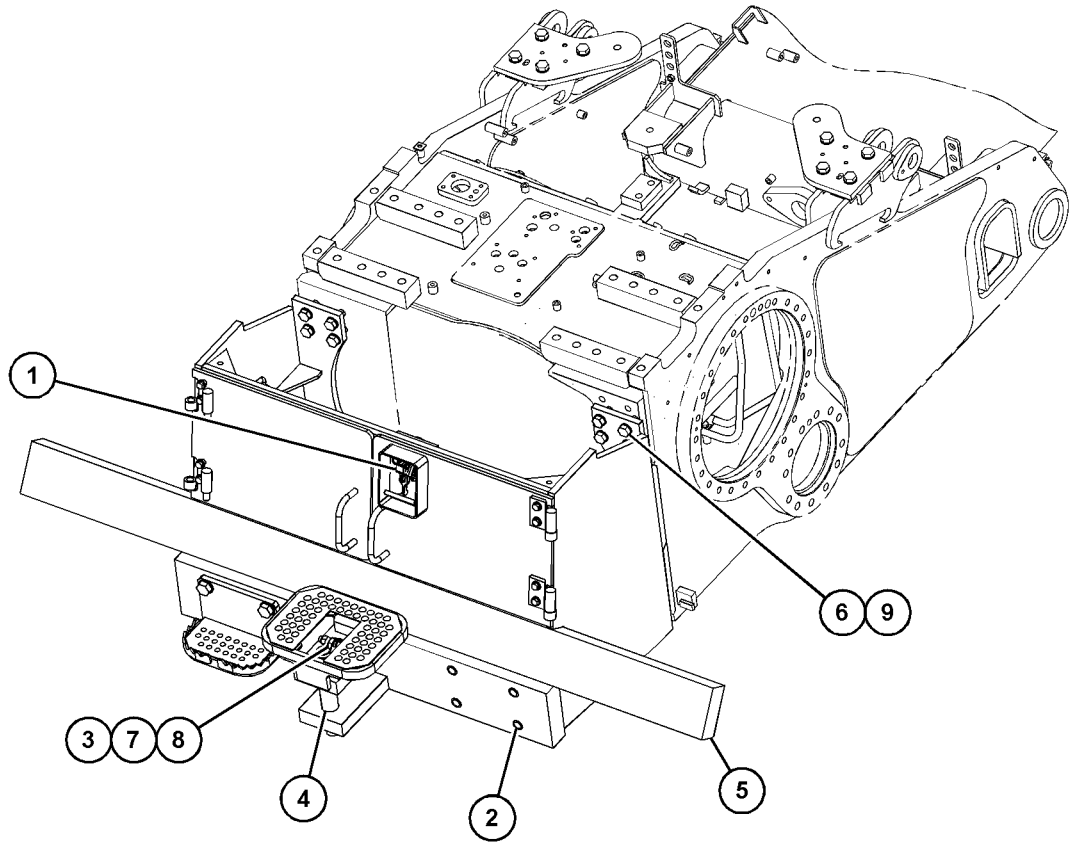

GRAPHIC #1 <END> g06030908

483-7817 BAR GP-STRIKER

S/N: R5A1-UP
PART OF 453-9495 STRIKER GP-REAR
AN ATTACHMENT

SMCS-7180 **i06563381**

NOTE	REF NO	GRAPHIC REF	PART NUMBER	QTY	PART NAME 1 2 3 4 5 6 (PRODUCT LEVEL)	SEE PAGE
	1	1	**1Z-9932**	2	HINGE AS	
	2	1	**8T-1579**	1	PLATE	
Y	3	1	**8Y-6400**	1	LATCH GP (T-BAR, COMPARTMENT)	308
	4	1	**9Z-9214**	2	ROD AS	
	5	1	**201-2557**	2	HINGE AS	
	6	1	**246-8411**	1	DOOR AS (RH)	
	7	1	**246-8412**	1	DOOR AS (LH)	
	8	1	**483-7818**	1	BAR AS-STRIKER	
	9	1	**1L-4418**	2	SPRING-SHUTOFF	
	10	1	**1P-2841**	2	SPACER (0.531X1X0.69-IN THK)	
	11	1	**2K-8467**	4	PIN-SPRING	
M	12	1	**5C-7261**	2	NUT (M8X1.25-THD)	
	13	1	**5P-1076**	4	WASHER-HARD (13.5X30X4-MM THK)	
M	14	1	**8T-4183**	8	BOLT (M12X1.75X40-MM)	
	15	1	**8T-4223**	8	WASHER-HARD (13.5X25.5X3-MM THK)	
	16	1	**8T-4224**	2	WASHER-HARD (8.8X16X2-MM THK)	
M	17	1	**8T-7547**	2	BOLT (M8X1.25X30-MM)	
	18	1	**8T-9496**	2	LOCKNUT (9/16-18-THD)	

M - METRIC PART
Y - SEPARATE ILLUSTRATION

483-7817 **BAR GP-STRIKER (**contd.**)** **i06563381**

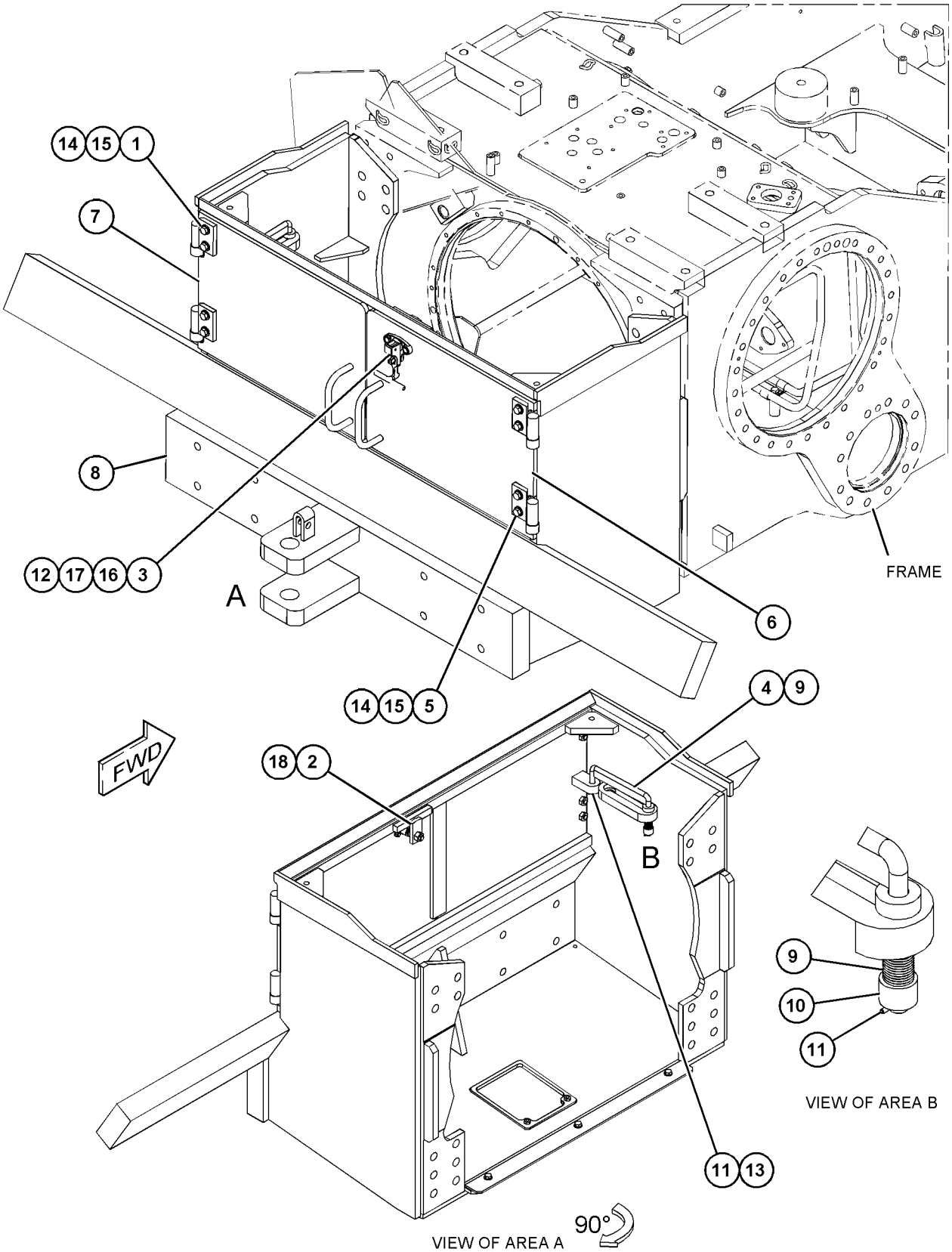

GRAPHIC #1

<END>

g06024715

422-8595 BOX GP-BATTERY

S/N: R5A1-UP

PART OF 391-9522 CHASSIS AR

SMCS-7257 **i06518833**

NOTE	REF NO	GRAPHIC REF	PART NUMBER	QTY	PART NAME 1 2 3 4 5 6 (PRODUCT LEVEL)	SEE PAGE
	1	1	**2M-5795**	1	PIN-CLEVIS	
	2	1	**5V-1496**	1	RETAINER	
	3	1	**6Y-3973**	1	LINK	
	4	1	**8E-7561**	1	KNOB AS	
		1	**7S-2042**	1	STUD (3/8-16X1.5-IN)	
		1	**8E-1205**	1	KNOB	
		1	**8T-7566**	1	PIN-SPRING	
	5	1	**9M-3835**	1	LATCH-RUBBER	
	6	1	**9S-8230**	1	PLATE AS	
		1	**1F-0750**	1	NUT-WELD (3/8-16-THD)	
	7	1	**422-8596**	1	SUPPORT AS	
		1	**1S-6385**	1	LUG	
		1	**7T-1099**	4	LINK	
		1	**8P-0612**	1	BRACKET	
M		1	**8T-3490**	5	NUT-WELD (M10X1.5-THD)	
	8	1	**472-0615**	1	COVER GP-BATTERY	
		1	**6C-3681**	8	RIVET-POP	
	9	1	**472-0619**	1	HINGE AS	
	10	1	**479-4382**	1	DOOR	
	11	1	**4H-1641**	1	PIN-SPRING	
	12	1	**6V-9197**	2	LOCK PIN	
	13	1	**7X-7729**	18	WASHER (11X25X3-MM THK)	
M	14	1	**8T-4136**	17	BOLT (M10X1.5X25-MM)	
M	15	1	**8T-4195**	1	BOLT (M10X1.5X30-MM)	
	16	1	**8T-4222**	3	WASHER-PLATED (11X32X2.5-MM THK)	

M - METRIC PART

422-8595 **BOX GP-BATTERY (**contd.**)** **i06518833**

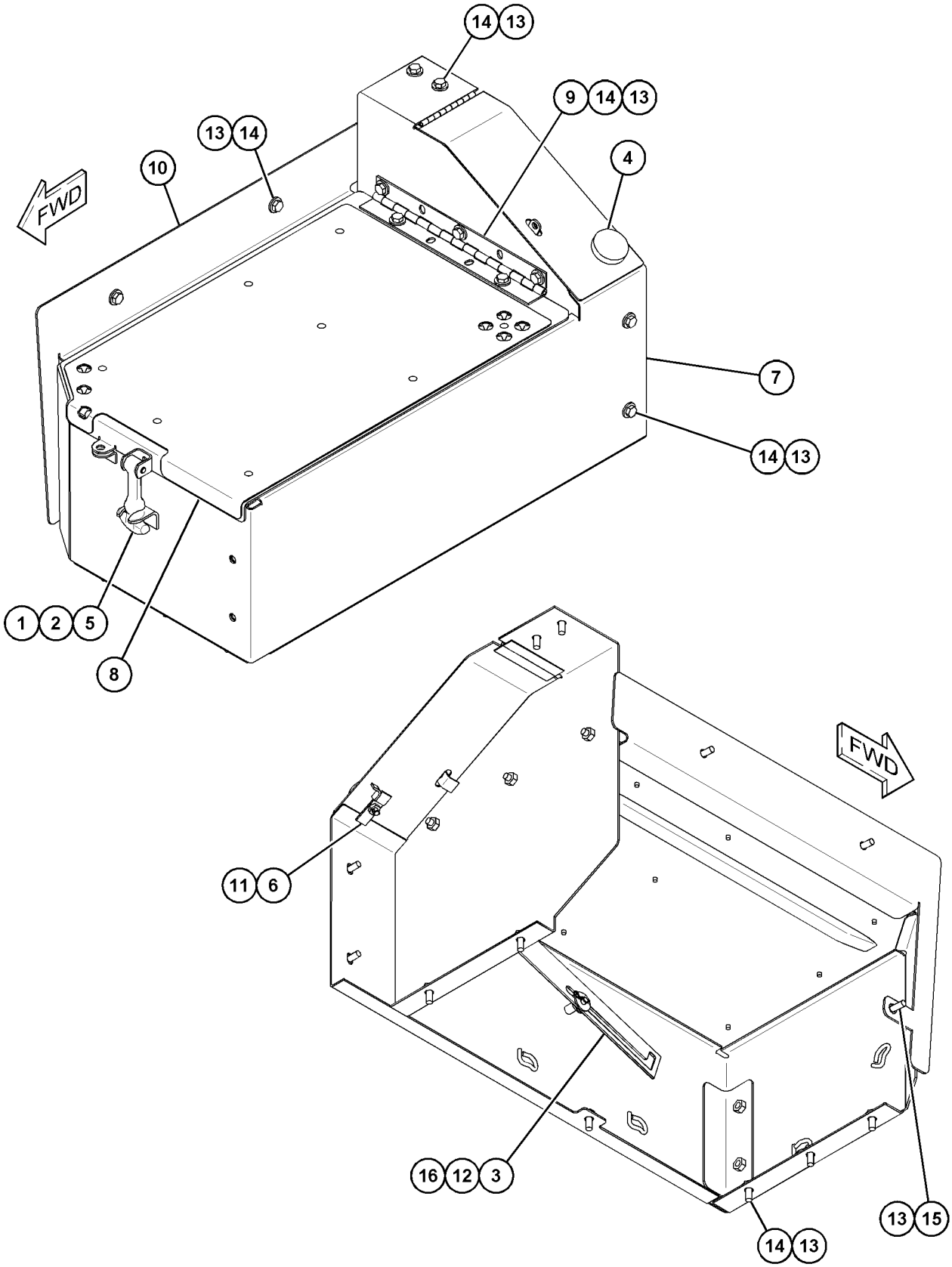

GRAPHIC #1 <END> g06009626

453-1588 BOX GP-STORAGE–SHOVEL

S/N: R5A1-UP

PART OF 459-9163 KIT-MOUNTING

SMCS-7268 **i06278543**

NOTE	REF NO	GRAPHIC REF	PART NUMBER	QTY	PART NAME 1 2 3 4 5 6 (PRODUCT LEVEL)	SEE PAGE
	1	1	**9M-3835**	2	LATCH-RUBBER	
	2	1	**453-1587**	1	PLATE AS	
		1	**8P-0612**	2	BRACKET	
		1	**9M-3838**	2	BRACKET	
	3	1	**2M-5795**	2	PIN-CLEVIS	
	4	1	**3B-4607**	2	PIN-COTTER	

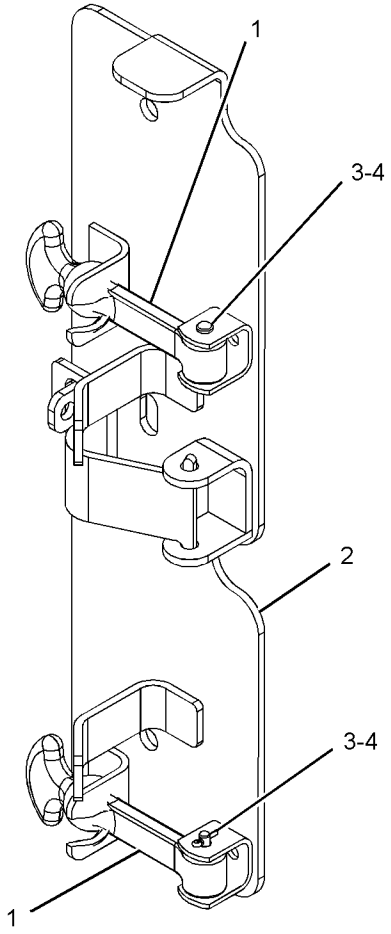

GRAPHIC #1 <END> g03661576

482-8608 CASE & FRAME GP

S/N: R5A1-UP

PART OF 391-9522 CHASSIS AR

SMCS-7051 **i06559705**

NOTE	REF NO	GRAPHIC REF	PART NUMBER	QTY	PART NAME 1 2 3 4 5 6 (PRODUCT LEVEL)	SEE PAGE
	1	1	**8G-6683**	1	RAIL AS	
	2	1	**8G-6684**	1	RAIL AS	
	3	1	**106-8186**	1	VALVE AS-DRAIN (ECOLOGY)	
		1	**077-3241**	1	SEAL-O-RING	
	4	1	**106-8187**	1	PLUG-DRAIN (DRAIN)	
	5	1	**191-1734**	1	RING	
Y	6	1	*482-8609*	1	CASE & FRAME GP	284
	7	1	**2D-9572**	1	SEAL-O-RING	
	8	1	**6F-0711**	1	SEAL-O-RING	
	9	1	**7X-7729**	6	WASHER (11X25X3-MM THK)	
M	10	1	**8C-8992**	4	BOLT-LOCKING (M12X1.75X30-MM)	
M	11	1	**8T-4136**	6	BOLT (M10X1.5X25-MM)	
	12	1	**8T-4223**	4	WASHER-HARD (13.5X25.5X3-MM THK)	

M - METRIC PART
Y - SEPARATE ILLUSTRATION

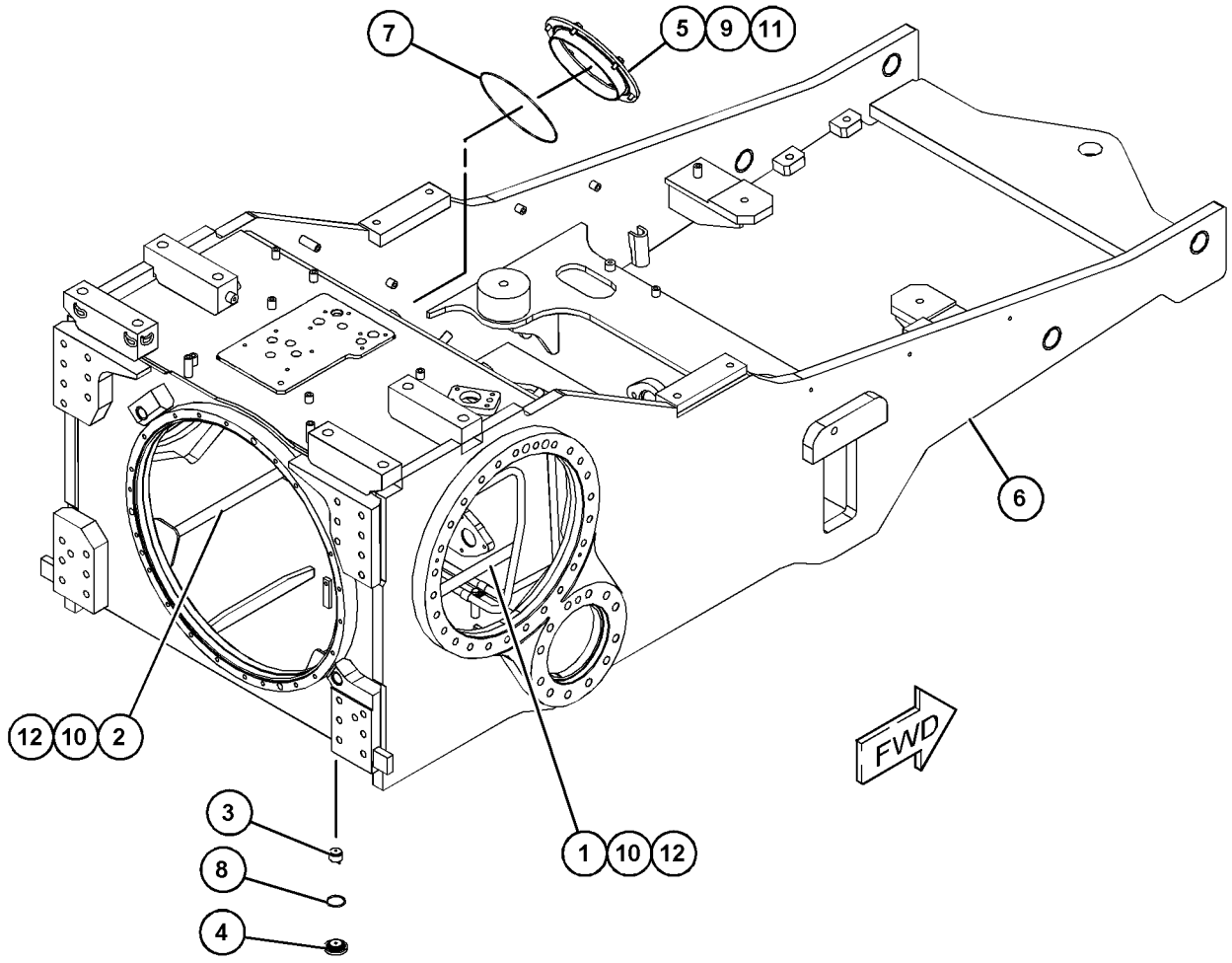

GRAPHIC #1 <END> g06023584

482-8609 CASE & FRAME GP

S/N: R5A1-UP

PART OF 482-8608 CASE & FRAME GP

SMCS-7051 **i06554662**

NOTE	REF NO	GRAPHIC REF	PART NUMBER	QTY	PART NAME 1 2 3 4 5 6 (PRODUCT LEVEL)	SEE PAGE
	1	1	**111-5009**	1	TUBE	
	2	1	**192-4100**	1	TUBE	
	3	1	**192-4101**	1	TUBE	
	4	1	**192-4102**	1	TUBE	
	5	1	**192-4103**	1	TUBE	
	6	1	**192-4106**	1	TUBE	
	7	1	**192-4107**	1	TUBE	
	8	1	**196-2632**	1	TUBE	
	9	1	**201-4634**	1	TUBE	
	10	1	**482-8610**	1	CASE & FRAME AS	
	10A	1	**7P-6596**	2	BUSHING	
	11	1	**5K-9660**	4	CLIP	
M	12	1	**6V-1820**	3	BOLT (M10X1.5X30-MM)	
	13	1	**8G-4386**	11	SLEEVE	
	14	1	**8G-5247**	4	SLEEVE	
	15	1	**8T-4121**	3	WASHER-HARD (11X21X2.5-MM THK)	
	16	1	**258-2305**	4	BUSHING	

M - METRIC PART

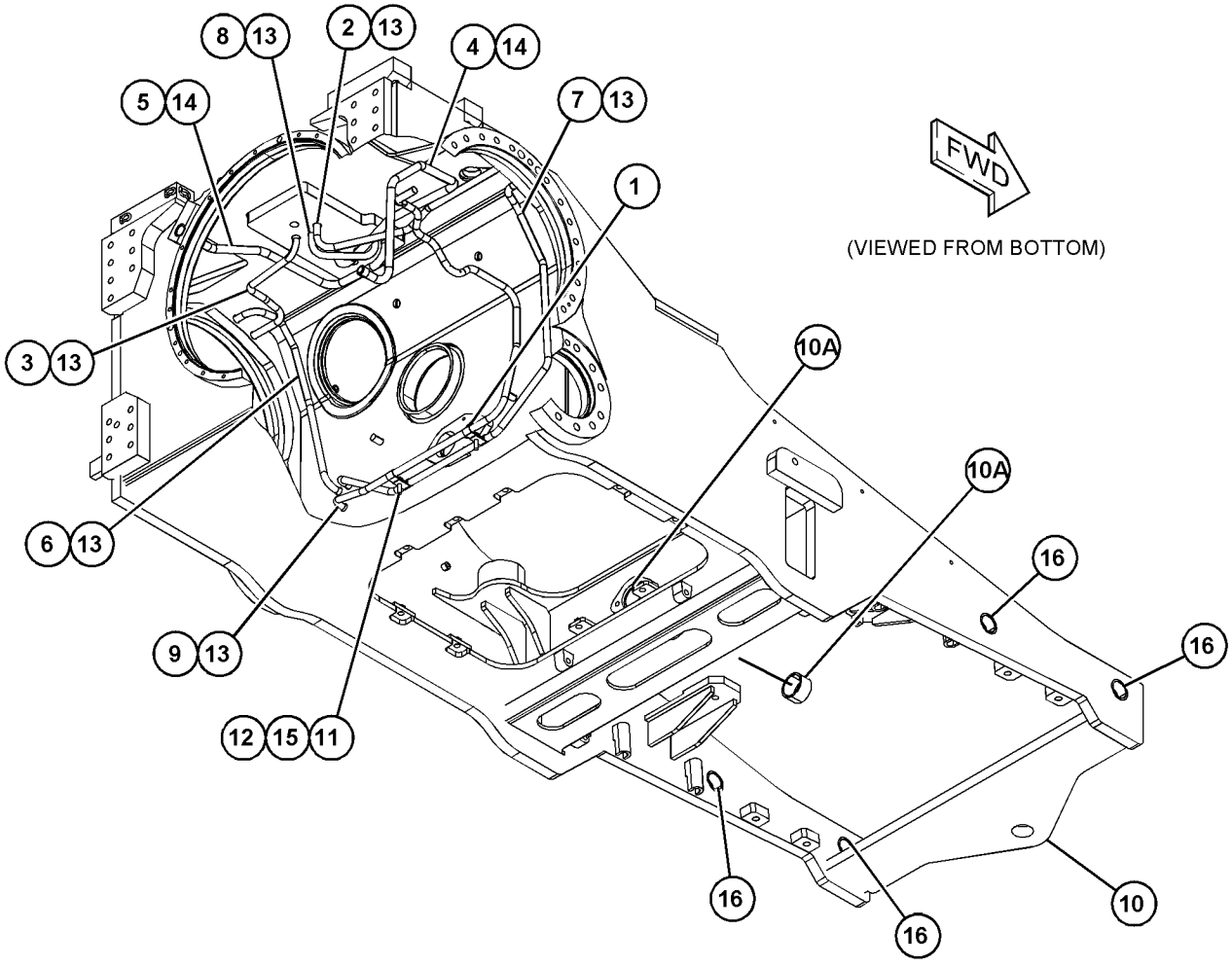

GRAPHIC #1 <END> g06024320

426-3930 DRAWBAR GP

S/N: R5A1-UP

AN ATTACHMENT

SMCS-7105, 7119 **i06527470**

NOTE	REF NO	GRAPHIC REF	PART NUMBER	QTY	PART NAME 1 2 3 4 5 6 (PRODUCT LEVEL)	SEE PAGE
	1	1	**7B-0863**	1	LATCH-PIN	
	2	1	**8G-7085**	1	PIN AS	
		1	**7F-9543**	1	COLLAR	
	3	1	**193-5917**	14	PLUG	
	4	1	**426-3929**	1	DRAWBAR AS	
	5	1	*481-7829*	1	GUARD GP-FUEL TANK	
		1	**7X-7729**	6	WASHER (11X25X3-MM THK)	
M		1	**8T-4195**	6	BOLT (M10X1.5X30-MM)	
		1	**481-7830**	1	PLATE	
M	6	1	**7X-2565**	12	BOLT (M20X2.5X100-MM)	
	7	1	**8T-4123**	12	WASHER (3.62X5.75X0.375-MM THK)	
M	8	1	**8T-4140**	1	BOLT (M16X2X60-MM)	
M	9	1	**8T-4778**	1	LOCKNUT (M16X2-THD)	

M - METRIC PART

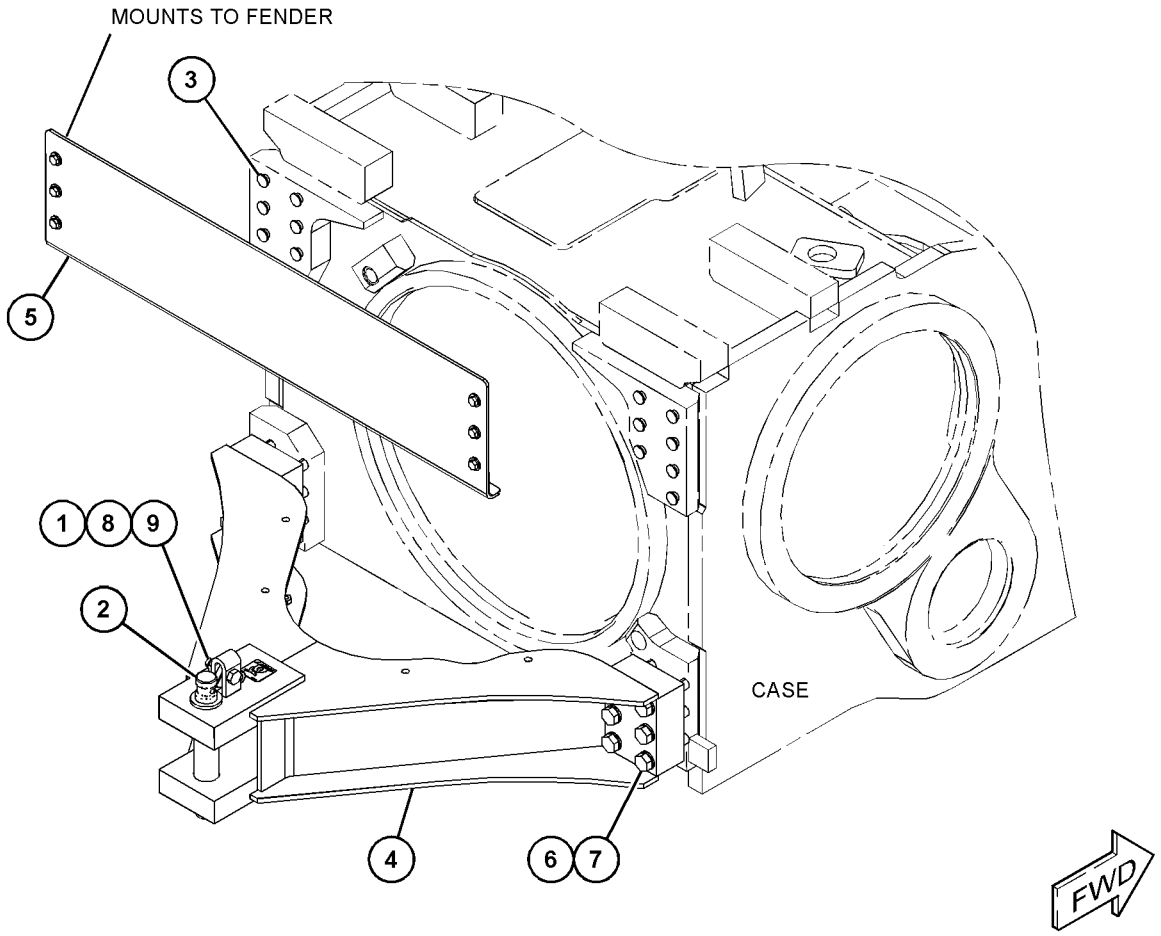

GRAPHIC #1 <END> g06022268

422-8608 ENCLOSURE GP

S/N: R5A1-UP

PART OF 391-9522 CHASSIS AR

SMCS-7267, 7276 **i06518831**

NOTE	REF NO	GRAPHIC REF	PART NUMBER	QTY	PART NAME 1 2 3 4 5 6 (PRODUCT LEVEL)	SEE PAGE
Y	1	1	*487-7108*	1	ENCLOSURE GP	287
	2	1	**7X-7729**	7	WASHER (11X25X3-MM THK)	
M	3	1	**8T-4136**	6	BOLT (M10X1.5X25-MM)	
M	4	1	**8T-4195**	1	BOLT (M10X1.5X30-MM)	

M - METRIC PART
Y - SEPARATE ILLUSTRATION

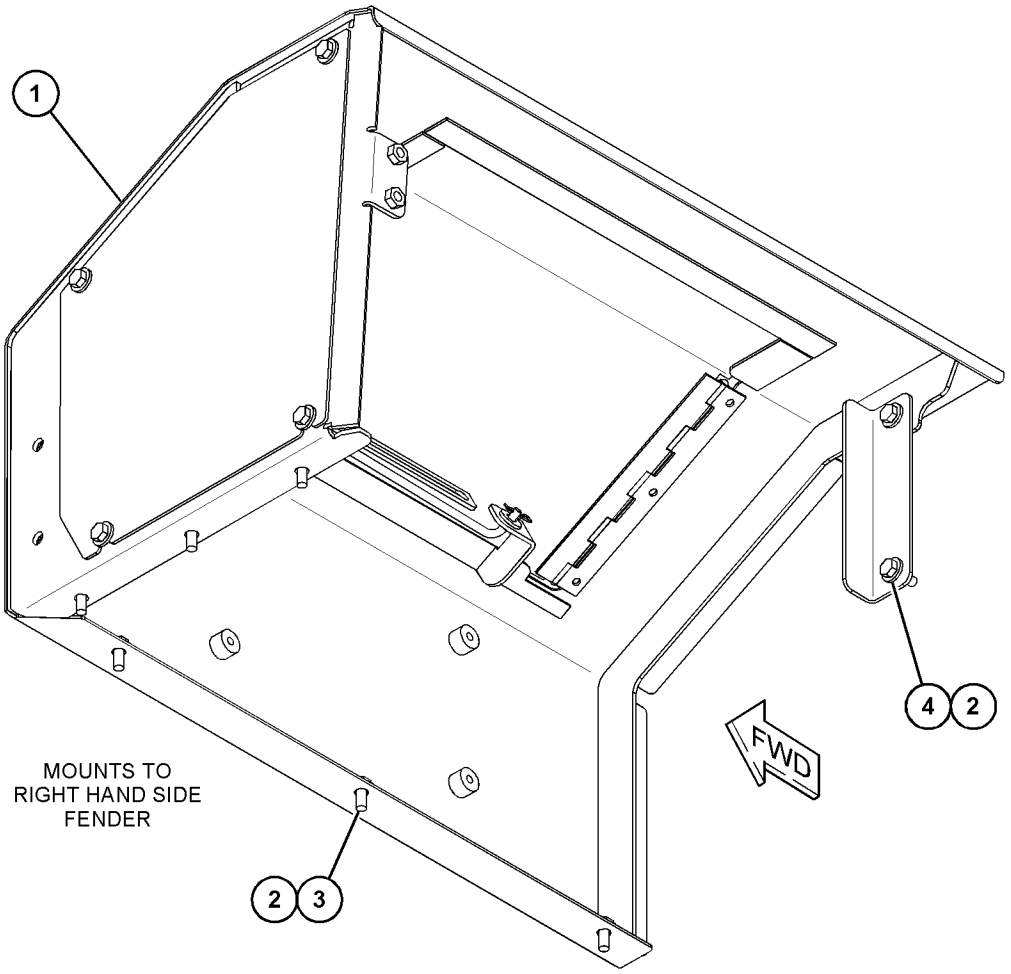

GRAPHIC #1 <END> g06009333

487-7108 ENCLOSURE GP

S/N: R5A1-UP

PART OF 422-8608 ENCLOSURE GP

SMCS-7267, 7276 **i06518828**

NOTE	REF NO	GRAPHIC REF	PART NUMBER	QTY	PART NAME 1 2 3 4 5 6 (PRODUCT LEVEL)	SEE PAGE
	1	1	**8E-7561**	1	KNOB AS	
	2	1	**9S-8230**	1	PLATE AS	
		1	**1F-0750**	1	NUT-WELD (3/8-16-THD)	
	3	1	**240-6124**	1	ROD AS	
	4	1	**427-0075**	1	PLATE	
	5	1	**479-4373**	1	DOOR	
	6	1	**479-4375**	1	COVER AS	
	7	1	**4H-1641**	1	PIN-SPRING	
	8	1	**6V-9197**	1	LOCK PIN	
	9	1	**7X-7729**	6	WASHER (11X25X3-MM THK)	
M	10	1	**8T-4136**	5	BOLT (M10X1.5X25-MM)	

M - METRIC PART

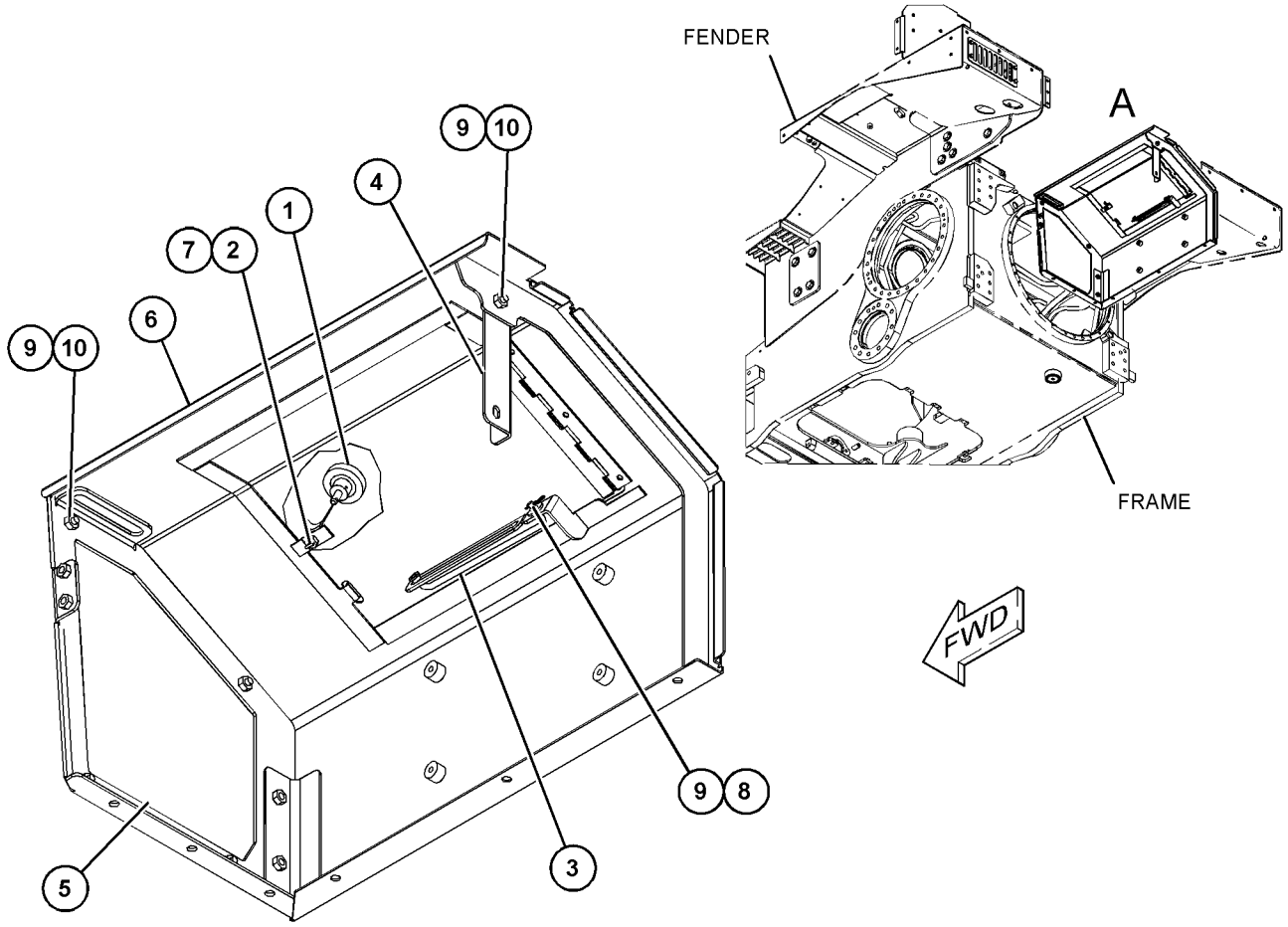

VIEW OF AREA A

GRAPHIC #1 <END> g06009267

422-8498 ENCLOSURE GP-ENGINE

S/N: R5A1-UP

PART OF 391-9522 CHASSIS AR

SMCS-7263 **i06559718**

NOTE	REF NO	GRAPHIC REF	PART NUMBER	QTY	PART NAME 1 2 3 4 5 6 (PRODUCT LEVEL)	SEE PAGE
	1	1,2	**3B-4605**	2	PIN-COTTER	
	2	1,2	**3V-9399**	2	ROD AS	
					(EACH INCLUDES)	
		1,2	**4B-4278**	2	WASHER (10.2X20.5X1.6-MM THK)	
	3	1,2	**6T-9927**	2	SLIDE	
	4	1,2	**8C-8584**	2	PAWL-T-BAR LATCH	
	5	1,2	**8G-4014**	2	RETAINER	
	6	1,2	**8T-9496**	4	LOCKNUT (9/16-18-THD)	
	7	2	**8Y-4000**	2	LATCH AS (T-BAR, COMPARTMENT)	
	8	2	**9P-3066**	2	MOUNTING	
	9	1,2	**317-7071**	6	SPACER	
	10	1,2	**329-1798**	2	GUIDE	
	11	1,2	**356-1032**	2	HINGE AS	
	12	1,2	**356-1033**	2	HINGE AS	
	13	2	**426-1362**	1	PLATE AS (LH)	
	14	1	**426-1366**	1	PLATE AS (RH)	
	15	1	**426-1372**	1	BRACKET AS	
	16	1	**431-0367**	1	COVER	
	17	1,2	**434-9727**	2	PLATE AS	
	18	1,2	**455-8306**	2	BRACKET AS	
	19	1,2	**455-8309**	2	BRACKET AS	
Y	20	2	**476-7590**	1	GUARD GP-ENGINE (LH)	299
	21	1	**476-7595**	1	HOOD AS	
	22	1	**476-7599**	1	DOOR AS-ACCESS (RH)	
M		1	**8T-3490**	2	NUT-WELD (M10X1.5-THD)	
	23	2	**476-7602**	1	DOOR AS-ACCESS (LH)	
M		2	**8T-3490**	2	NUT-WELD (M10X1.5-THD)	
	24	1	**476-7604**	1	PLATE AS (RH)	
	25	2	**476-7607**	1	PLATE AS (LH)	
	26	1	**476-7620**	1	GUARD GP-ENGINE (RH)	
		1	**162-2480**	4	RIVET	
M		1	**8T-3490**	5	NUT-WELD (M10X1.5-THD)	
	27	1,2	**190-7971**	2	WASHER-HARD (11X64X6-MM THK)	
	28	1,2	**3W-3819**	2	PLATE	
	29	1,2	**4H-2558**	2	GROMMET	
	30	1,2	**4M-7470**	2	GROMMET	
	31	1,2	**5P-1076**	6	WASHER-HARD (13.5X30X4-MM THK)	
	32	2	**6P-8269**	1	WASHER (20.5X88X6-MM THK)	
M	33	1,2	**6V-7744**	4	LOCKNUT (M10X1.5-THD)	
	34	1,2	**7X-7729**	54	WASHER (11X25X3-MM THK)	
	35	1,2	**8E-4832**	2	STRIKER	
	36	1,2	**8T-4121**	6	WASHER-HARD (11X21X2.5-MM THK)	
	37	1,2	**8T-4123**	2	WASHER (3.62X5.75X0.375-MM THK)	
M	38	1,2	**8T-4136**	56	BOLT (M10X1.5X25-MM)	
M	39	1,2	**8T-4137**	4	BOLT (M10X1.5X20-MM)	
M	40	1,2	**8T-4139**	6	BOLT (M12X1.75X30-MM)	
M	41	2	**8T-4175**	1	BOLT (M16X2X90-MM)	
M	42	1,2	**8T-4195**	4	BOLT (M10X1.5X30-MM)	

422-8498 **ENCLOSURE GP-ENGINE (**contd.**)** **i06559718**

NOTE	REF NO	GRAPHIC REF	PART NUMBER	QTY	PART NAME 1 2 3 4 5 6 (PRODUCT LEVEL)	SEE PAGE
	43	1,2	**9X-2027**	2	WASHER (11X18X2-MM THK)	
M	44	1,2	**9X-2041**	4	SCREW-TRUSS HEAD (M10X1.5X20-MM)	
	45	2	**9X-8257**	1	WASHER (17.5X30X3.5-MM THK)	
D	46	1,2	**5P-7211**		SEAL (0.6-M EACH)	
D	46A	1,2	**5P-7211**		SEAL (0.8-M EACH)	

D - ORDER BY THE METER
M - METRIC PART
Y - SEPARATE ILLUSTRATION

422-8498 **ENCLOSURE GP-ENGINE (**contd.**)** **i06559718**

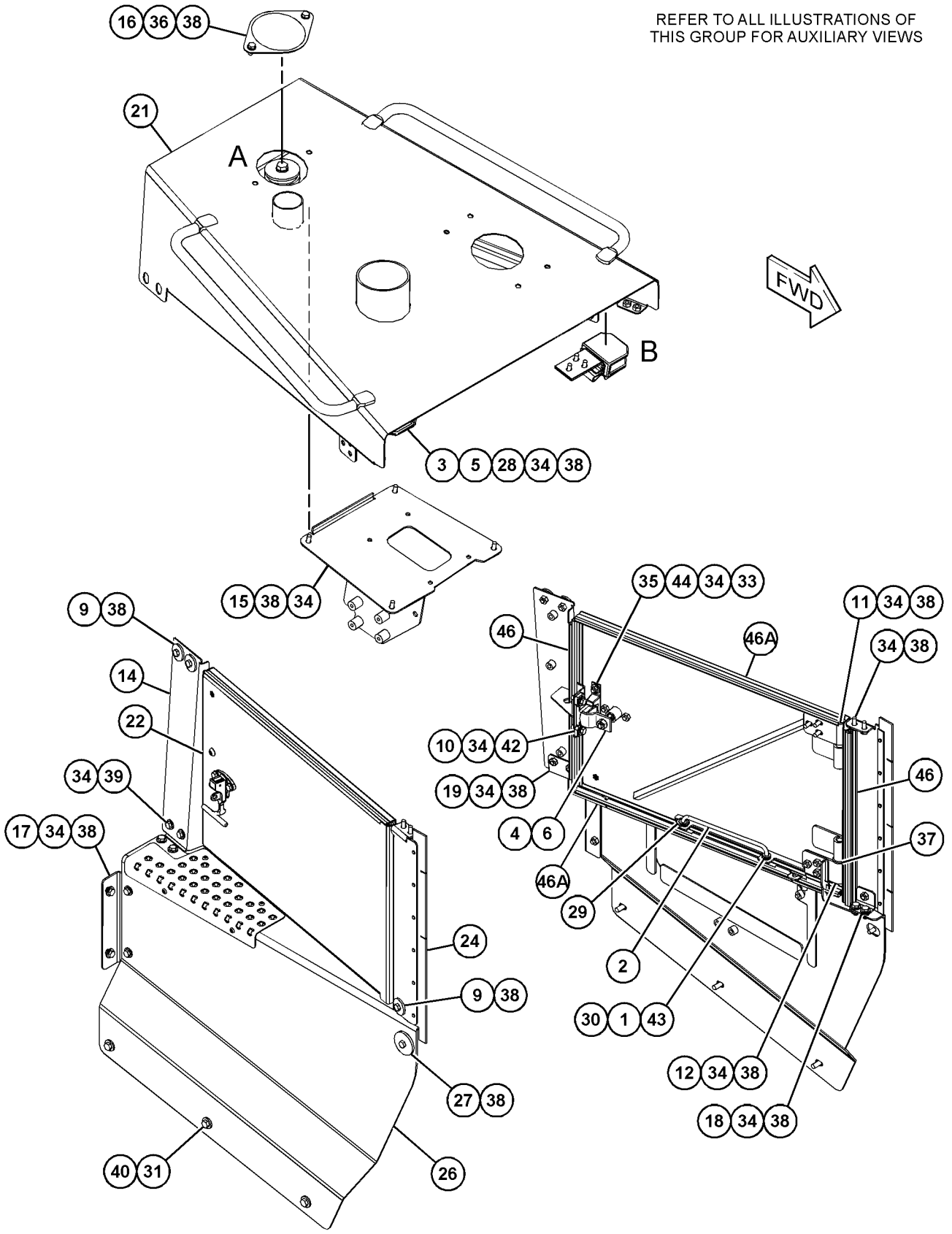

GRAPHIC #1 g06024392

422-8498 **ENCLOSURE GP-ENGINE (**contd.**)** **i06559718**

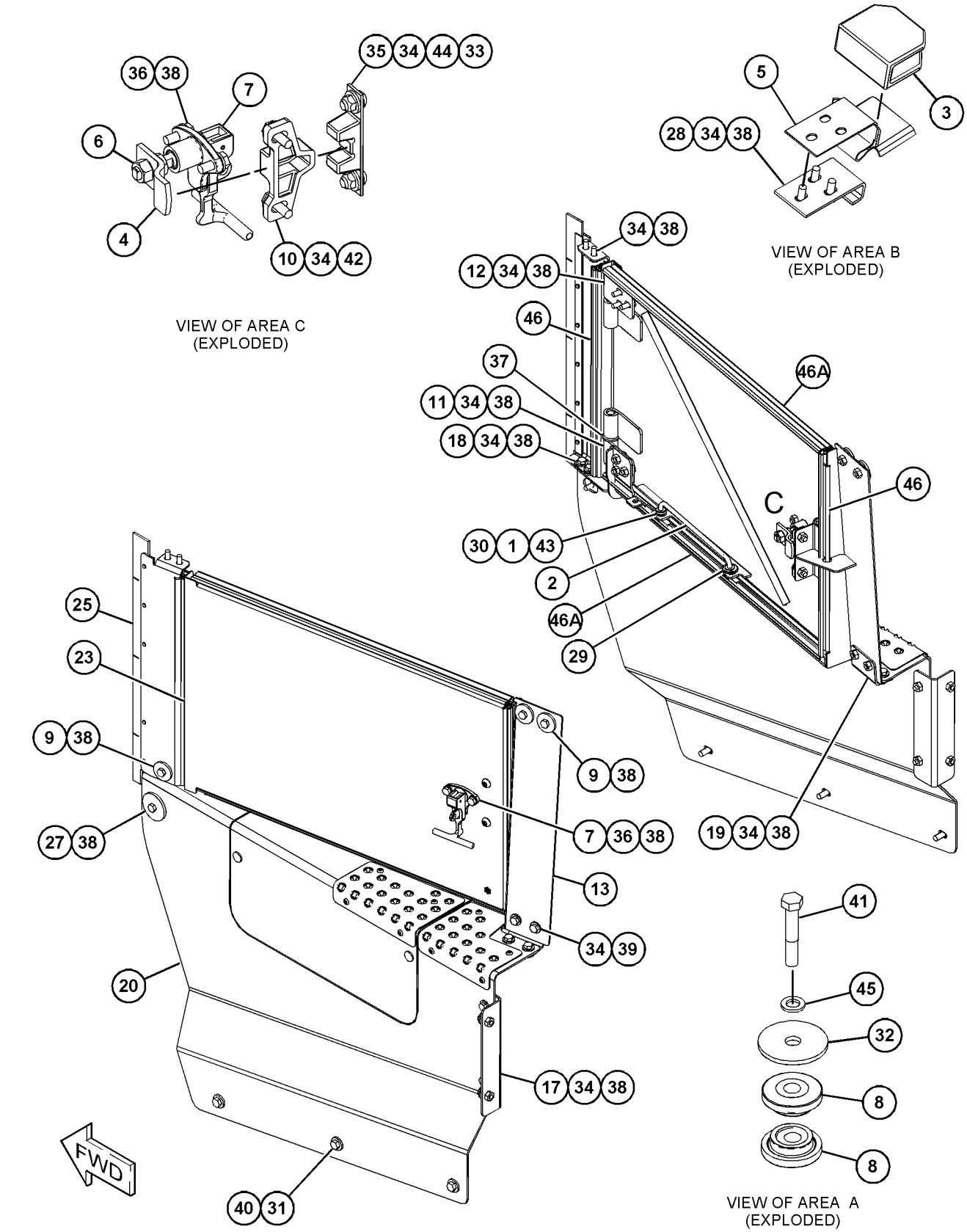

GRAPHIC #2 <END> g06024393

422-8497 FENDER GP

S/N: R5A1-UP

PART OF 391-9522 CHASSIS AR

SMCS-7252 **i06518835**

NOTE	REF NO	GRAPHIC REF	PART NUMBER	QTY	PART NAME 1 2 3 4 5 6 (PRODUCT LEVEL)	SEE PAGE
	1	1	**415-1377**	1	COVER	
	2	1	**422-8550**	1	PLATE AS	
M		1	**8T-3490**	3	NUT-WELD (M10X1.5-THD)	
	3	1	**476-7593**	1	PLATE AS	
M		1	**6V-9632**	4	NUT-WELD (M6X1-THD)	
M		1	**8T-3490**	5	NUT-WELD (M10X1.5-THD)	
	4	1	**479-4352**	1	FENDER AS (RH)	
	5	1	**479-4367**	1	FENDER AS (LH)	
	6	1	**198-4778**	14	WASHER-HARD (13.5X30X12-MM THK)	
	7	1	**198-4781**	18	WASHER-HARD (22X40X10-MM THK)	
	8	1	**8T-4121**	4	WASHER-HARD (11X21X2.5-MM THK)	
M	9	1	**8T-4136**	4	BOLT (M10X1.5X25-MM)	
M	10	1	**8T-4183**	14	BOLT (M12X1.75X40-MM)	
M	11	1	**8T-6430**	18	BOLT (M20X2.5X50-MM)	

M - METRIC PART

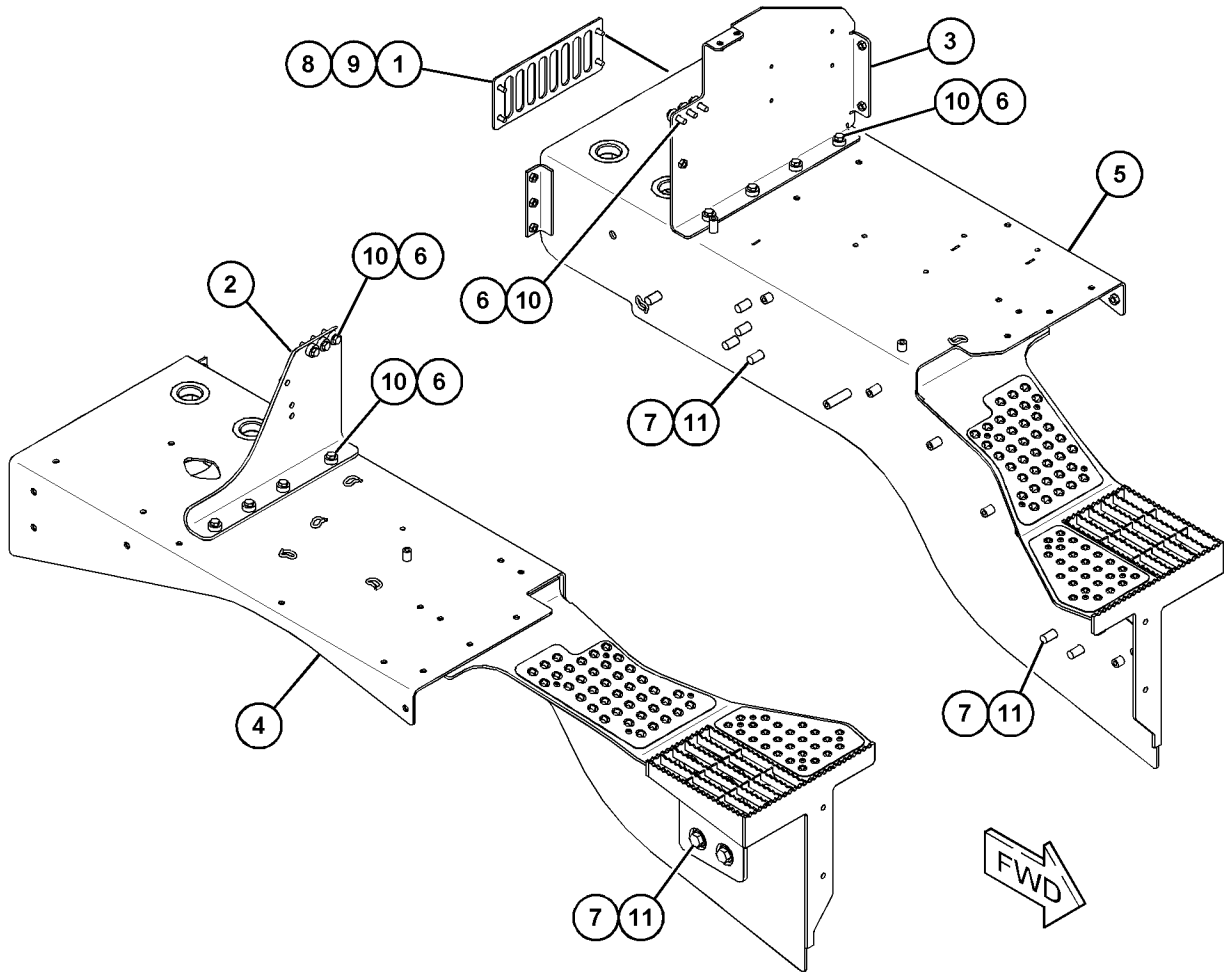

GRAPHIC #1 <END> g06009182

369-7781 GRID GP-SAND BLAST ERODING

S/N: R5A1-UP
CANNOT BE USED WITH REVERSIBLE FAN
AN ATTACHMENT

SMCS-7179 **i06277087**

NOTE	REF NO	GRAPHIC REF	PART NUMBER	QTY	PART NAME 1 2 3 4 5 6 (PRODUCT LEVEL)	SEE PAGE
	1	1	**355-1011**	1	GRID AS	
	2	1	**8T-4121**	4	WASHER-HARD (11X21X2.5-MM THK)	
M	3	1	**8T-4195**	4	BOLT (M10X1.5X30-MM)	

M - METRIC PART

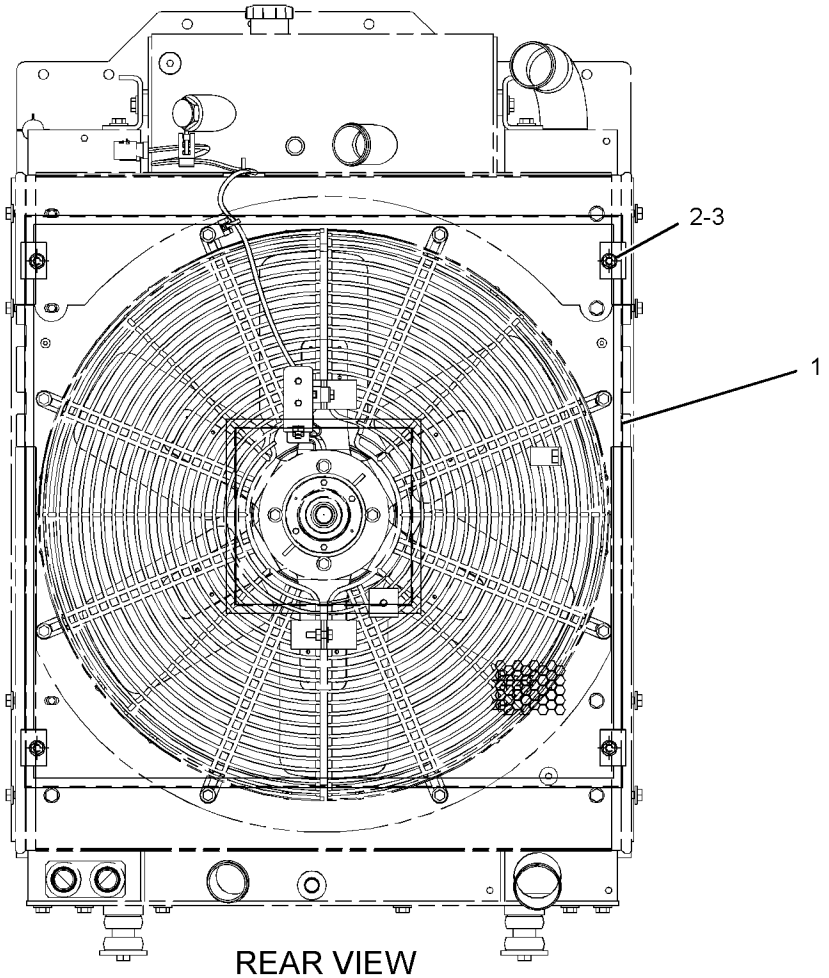

REAR VIEW

GRAPHIC #1 <END> g02799757

426-0207 GRILL GP-RADIATOR

S/N: R5A1-UP

AN ATTACHMENT

SMCS-7170 **i06527437**

NOTE	REF NO	GRAPHIC REF	PART NUMBER	QTY	PART NAME 1 2 3 4 5 6 (PRODUCT LEVEL)	SEE PAGE
	1	1	**479-4410**	1	GRILL AS	
	2	1	**5P-1076**	4	WASHER-HARD (13.5X30X4-MM THK)	
M	3	1	**8T-4956**	4	BOLT (M12X1.75X35-MM)	

M - METRIC PART

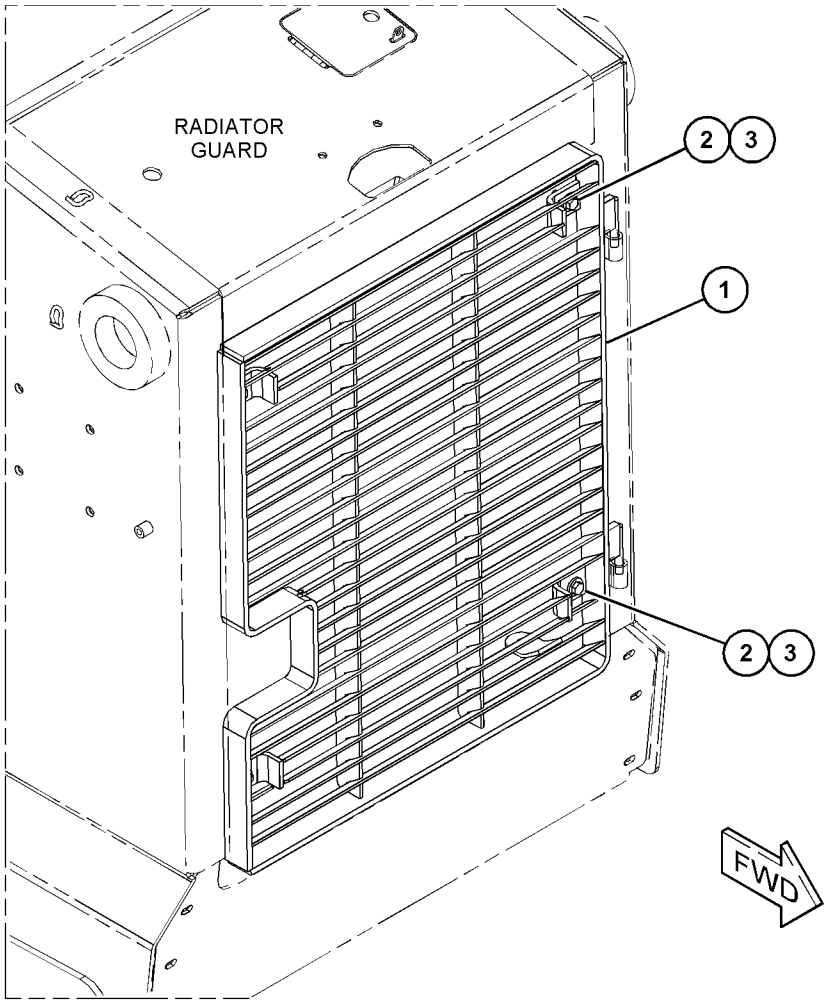

GRAPHIC #1 <END> g06022284

426-0209 GRILL GP-RADIATOR–HEAVY DUTY

S/N: R5A1-UP

AN ATTACHMENT

SMCS-7170 **i06527440**

NOTE	REF NO	GRAPHIC REF	PART NUMBER	QTY	PART NAME 1 2 3 4 5 6 (PRODUCT LEVEL)	SEE PAGE
	1	1	**479-4408**	1	GRILL AS	
	2	1	**5P-1076**	4	WASHER-HARD (13.5X30X4-MM THK)	
M	3	1	**8T-4956**	4	BOLT (M12X1.75X35-MM)	

M - METRIC PART

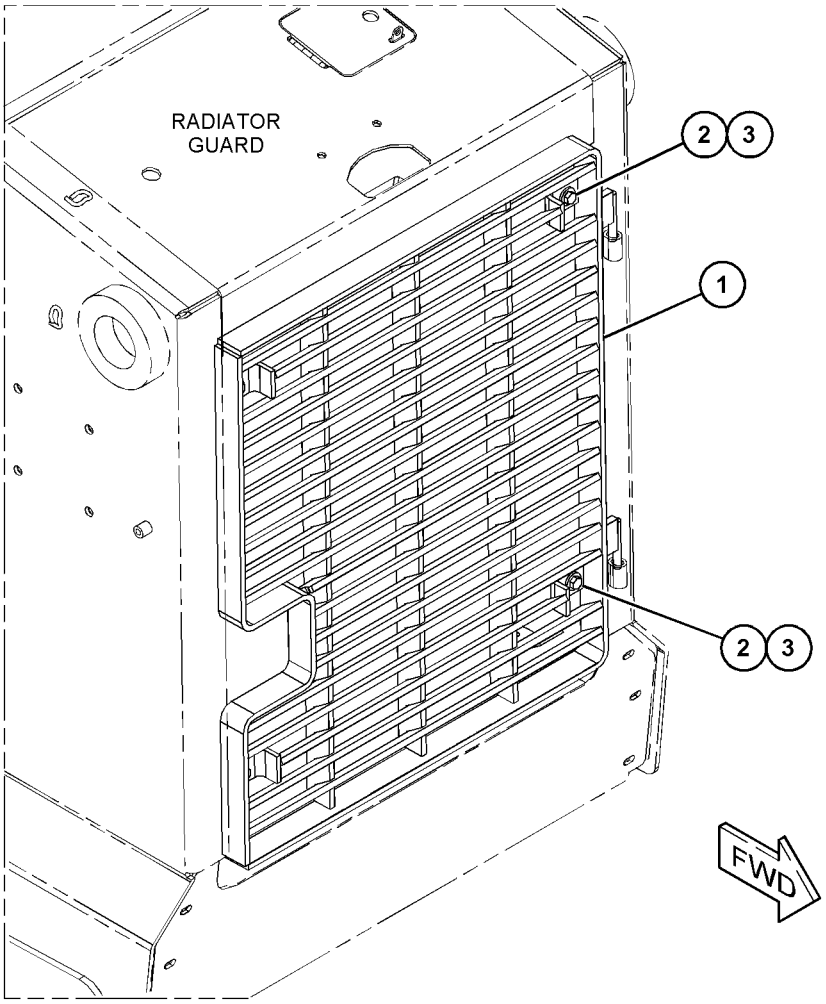

GRAPHIC #1 <END> g06022273

398-2224 GUARD GP-BOTTOM

S/N: R5A1-UP

AN ATTACHMENT

SMCS-7153 **i06523973**

NOTE	REF NO	GRAPHIC REF	PART NUMBER	QTY	PART NAME 1 2 3 4 5 6 (PRODUCT LEVEL)	SEE PAGE
	1	1	**217-3655**	4	RETAINER	
	2	1	**278-7048**	2	PLATE	
	3	1	**398-2227**	1	GUARD AS	
	4	1	**479-7698**	1	GUARD AS	
	5	1	**480-7727**	1	GUARD AS	
	6	1	**345-7738**	4	PIN-CLEVIS	
	7	1	**3B-4617**	4	PIN-COTTER	
	8	1	**5P-1076**	8	WASHER-HARD (13.5X30X4-MM THK)	
	9	1	**7X-0618**	9	WASHER-HARD (13.5X40X5-MM THK)	
M	10	1	**8C-8478**	4	BOLT (M20X2.5X140-MM)	
	11	1	**8T-4121**	4	WASHER-HARD (11X21X2.5-MM THK)	
M	12	1	**8T-4131**	4	NUT (M20X2.5-THD)	
M	13	1	**8T-4195**	2	BOLT (M10X1.5X30-MM)	
M	14	1	**8T-4196**	2	BOLT (M10X1.5X35-MM)	
M	15	1	**8T-4910**	9	BOLT (M12X1.75X60-MM)	
	16	1	**8T-5439**	8	WASHER-HARD (21.5X45X6-MM THK)	
M	17	1	**8T-6430**	4	BOLT (M20X2.5X50-MM)	

M - METRIC PART

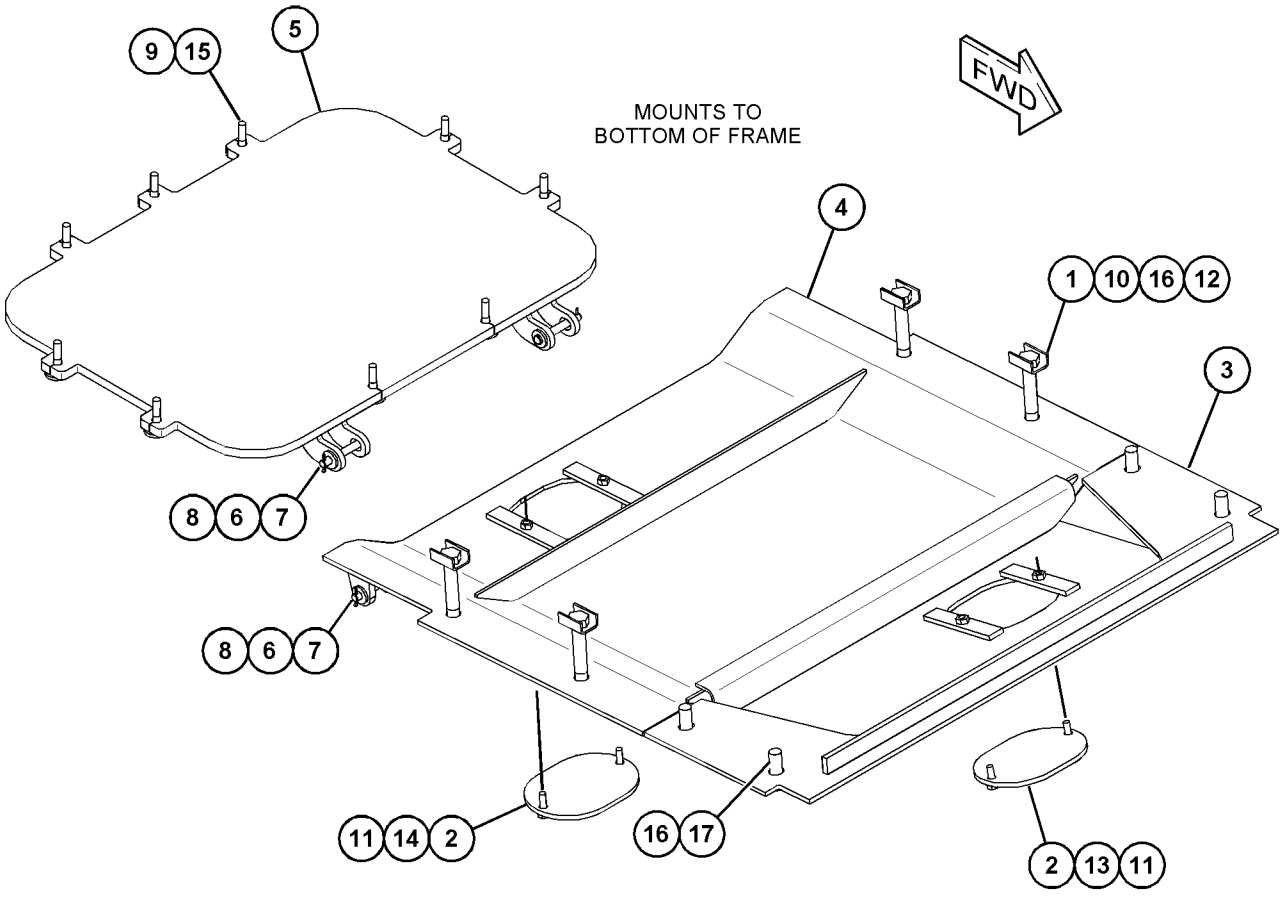

GRAPHIC #1 <END> g06011077

398-2225 GUARD GP-BOTTOM

S/N: R5A1-UP

AN ATTACHMENT

SMCS-7153 **i06523982**

NOTE	REF NO	GRAPHIC REF	PART NUMBER	QTY	PART NAME 1 2 3 4 5 6 (PRODUCT LEVEL)	SEE PAGE
	1	1	**217-3655**	4	RETAINER	
	2	1	**278-7048**	1	PLATE	
	3	1	**428-5969**	1	PLATE	
	4	1	**450-7197**	1	GUARD AS	
	5	1	**450-7198**	1	GUARD AS	
	6	1	**480-7727**	1	GUARD AS	
	7	1	**345-7738**	4	PIN-CLEVIS	
	8	1	**3B-4617**	4	PIN-COTTER	
	9	1	**5P-1076**	8	WASHER-HARD (13.5X30X4-MM THK)	
	10	1	**7X-0618**	9	WASHER-HARD (13.5X40X5-MM THK)	
	11	1	**8T-4121**	4	WASHER-HARD (11X21X2.5-MM THK)	
M	12	1	**8T-4131**	4	NUT (M20X2.5-THD)	
M	13	1	**8T-4170**	4	BOLT (M20X2.5X150-MM)	
M	14	1	**8T-4186**	2	BOLT (M10X1.5X40-MM)	
M	15	1	**8T-4195**	2	BOLT (M10X1.5X30-MM)	
M	16	1	**8T-4910**	9	BOLT (M12X1.75X60-MM)	
	17	1	**8T-5439**	8	WASHER-HARD (21.5X45X6-MM THK)	
M	18	1	**8T-6430**	4	BOLT (M20X2.5X50-MM)	
D	19	1	**5P-7483**		SEAL (1.1-M)	
D	20	1	**5P-5649**		SEAL-BULK (0.7-M)	
D	20A	1	**5P-5649**		SEAL-BULK (1.1-M)	

D - ORDER BY THE METER
M - METRIC PART

398-2225 **GUARD GP-BOTTOM (**contd.**)** **i06523982**

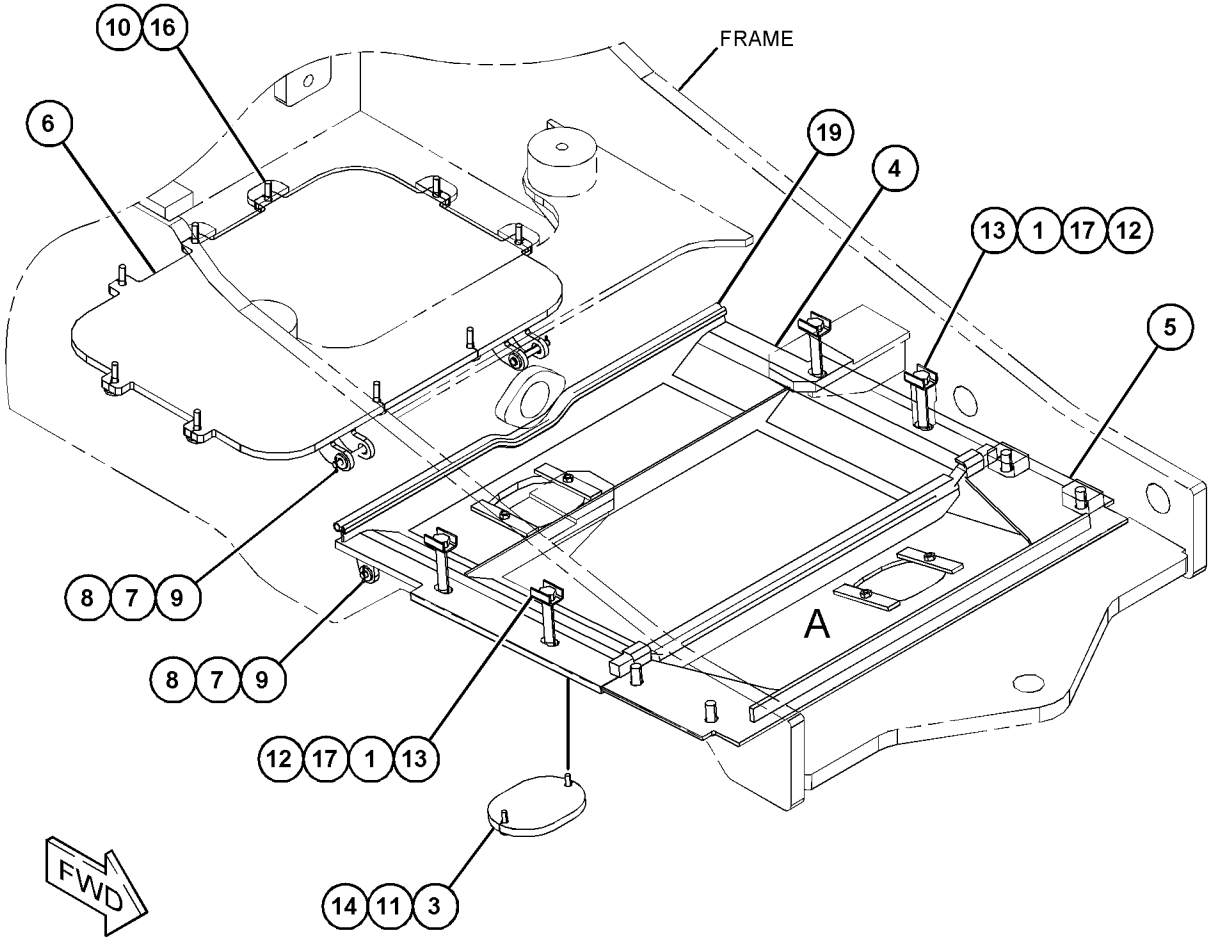

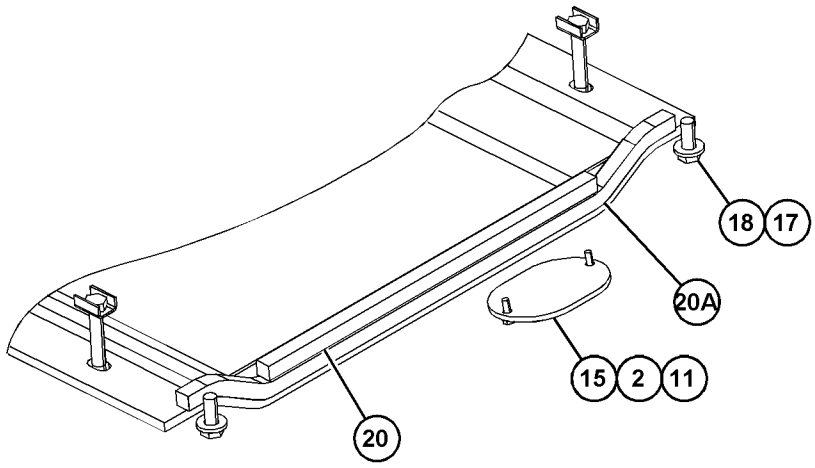

VIEW OF AREA A
(PARTS REMOVED FOR CLARITY)

GRAPHIC #1 <END> g06031619

476-7590 GUARD GP-ENGINE

S/N: R5A1-UP

PART OF 422-8498 ENCLOSURE GP-ENGINE

SMCS-7154 **i06575709**

NOTE	REF NO	GRAPHIC REF	PART NUMBER	QTY	PART NAME 1 2 3 4 5 6 (PRODUCT LEVEL)	SEE PAGE
	1	1	**476-7611**	1	GUARD GP-ENGINE (LH)	
		1	**162-2480**	4	RIVET	
		1	**431-0388**	1	PLATE-TREAD	
		1	*476-7612*	1	GUARD AS-ENGINE (LOWER, LH)	
M		1	**8T-3490**	5	NUT-WELD (M10X1.5-THD)	
M		1	**9R-2821**	2	BOSS (M10X1.5X15-MM)	
	2	1	**476-7616**	1	DOOR GP-ACCESS (LH)	
		1	**162-2480**	4	RIVET	
		1	**426-1371**	1	PLATE-TREAD	
		1	*476-7617*	1	DOOR AS-ACCESS (LH)	
		1	**8Y-3465**	2	BOSS (M10X1.5X12-MM)	

M - METRIC PART

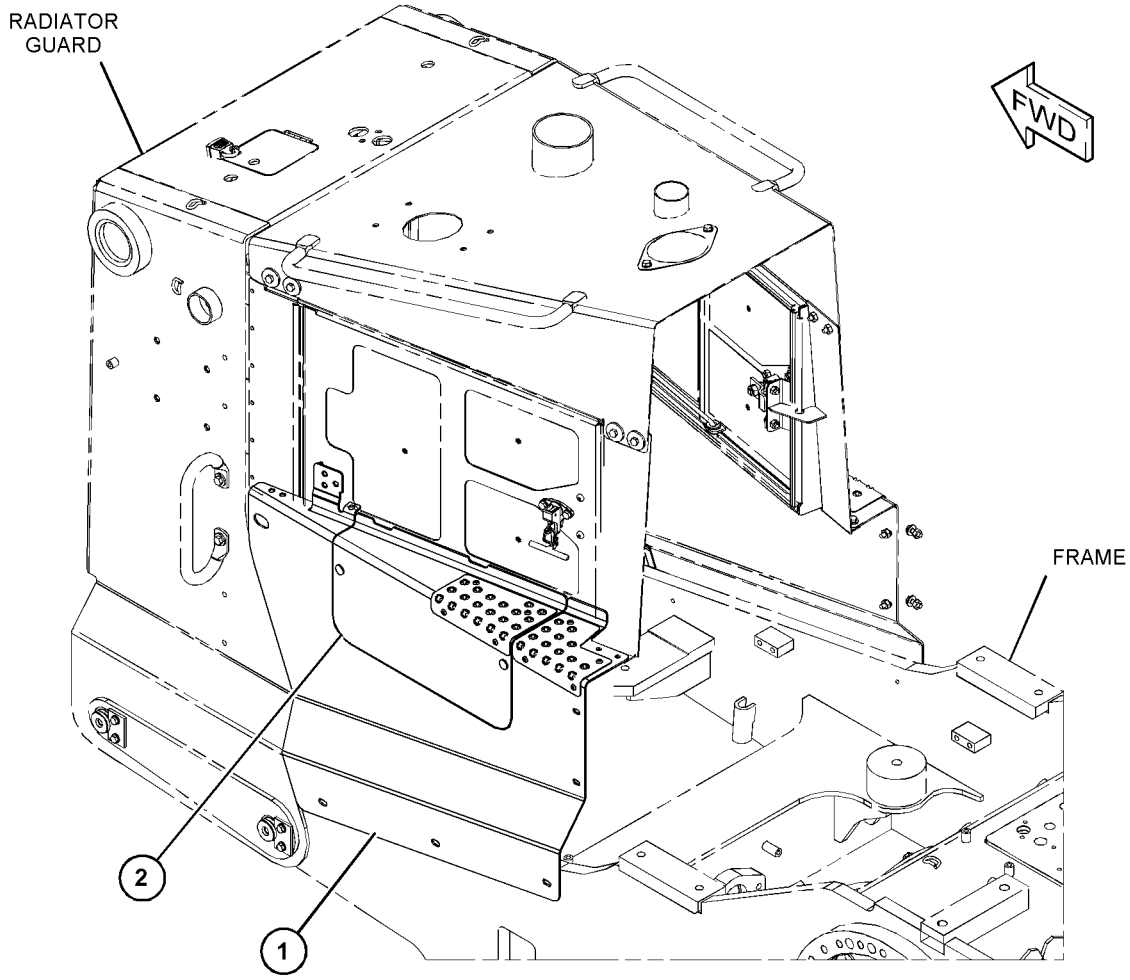

GRAPHIC #1 <END> g06023552

431-0369 GUARD GP-FUEL TANK

S/N: R5A1-UP

CANNOT BE USED WITH 455-8286—PAGE: 306

AN ATTACHMENT

SMCS-1273, 7150

i06527975

NOTE	REF NO	GRAPHIC REF	PART NUMBER	QTY	PART NAME 1 2 3 4 5 6 (PRODUCT LEVEL)	SEE PAGE
	1	1	**431-0372**	1	PLATE	
	2	1	**473-6068**	1	PLATE	
	3	1	**473-6069**	1	PLATE	
	4	1	**476-7625**	1	GUARD AS (RH)	
	5	1	**476-7626**	1	GUARD AS (LH)	
	6	1	**479-4384**	1	PLATE AS (LH)	
	7	1	**479-4385**	1	PLATE AS (RH)	
	8	1	**5P-1076**	30	WASHER-HARD (13.5X30X4-MM THK)	
	9	1	**5V-9221**	14	SPACER (13.8X25X25-MM THK)	
	10	1	**7X-7729**	4	WASHER (11X25X3-MM THK)	
M	11	1	**8T-4910**	14	BOLT (M12X1.75X60-MM)	
M	12	1	**8T-4956**	16	BOLT (M12X1.75X35-MM)	
M	13	1	**8T-6466**	4	BOLT (M10X1.5X60-MM)	

M - METRIC PART

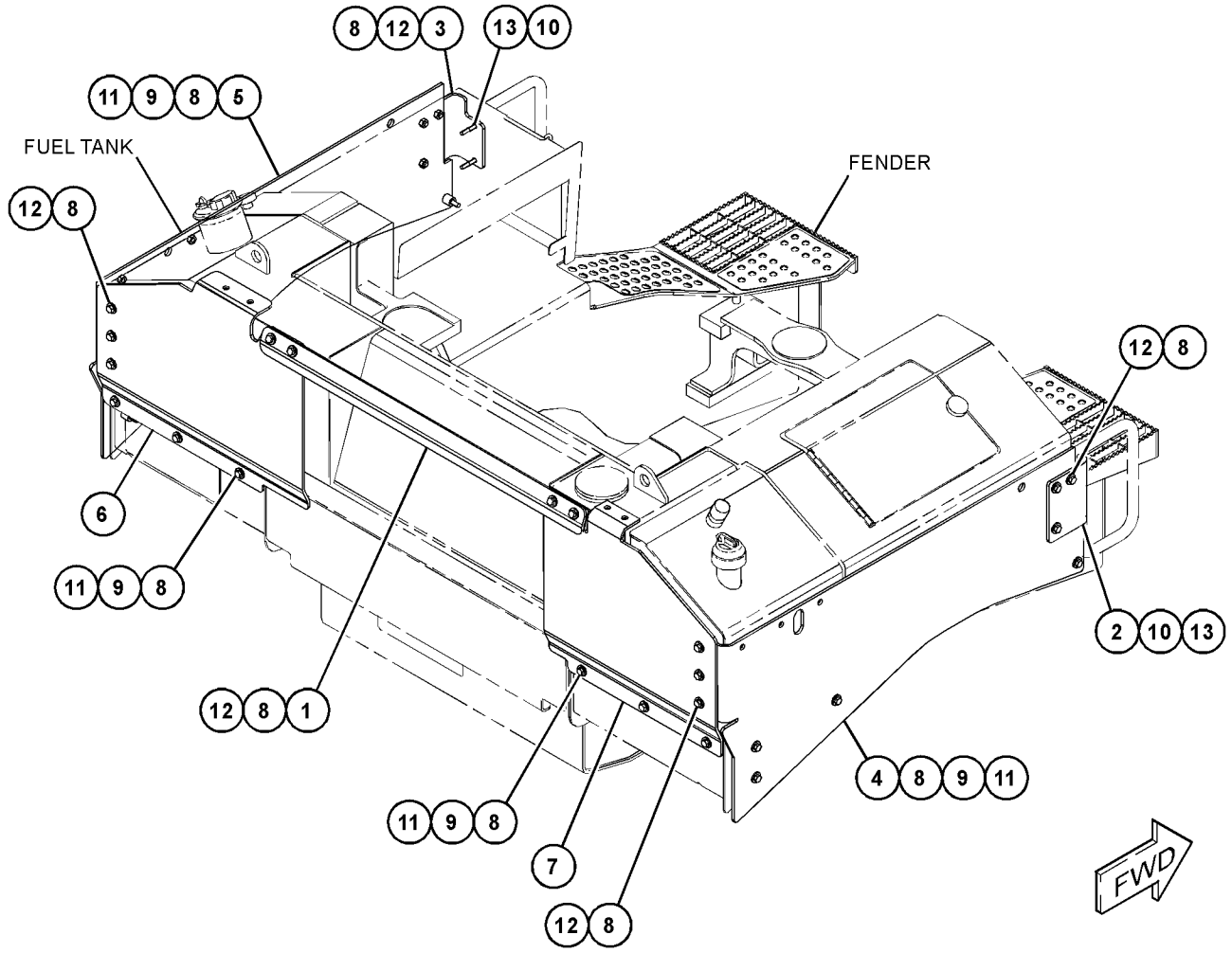

GRAPHIC #1

<END>

g06022154

431-0370 GUARD GP-FUEL TANK

S/N: R5A1-UP
CANNOT BE USED WITH 455-8286—PAGE: 306
AN ATTACHMENT

SMCS-1273, 7150 **i06528034**

NOTE	REF NO	GRAPHIC REF	PART NUMBER	QTY	PART NAME 1 2 3 4 5 6 (PRODUCT LEVEL)	SEE PAGE
	1	1	**8E-1356**	1	KNOB AS	
		1	**8E-1205**	1	KNOB	
		1	**8T-7566**	1	PIN-SPRING	
	2	1	**9S-8230**	1	PLATE AS	
	3	1	**366-1065**	1	SPACER (14X25X60-MM THK)	
	4	1	**431-0372**	1	PLATE	
	5	1	**473-6068**	1	PLATE	
	6	1	**473-6069**	1	PLATE	
	7	1	**476-7625**	1	GUARD AS (RH)	
	8	1	**476-7626**	1	GUARD AS (LH)	
	9	1	**476-7627**	1	GUARD AS	
	10	1	**479-4384**	1	PLATE AS (LH)	
	11	1	**479-4385**	1	PLATE AS (RH)	
	12	1	**479-4392**	1	GUARD AS	
	13	1	**265-9596**	1	WASHER-HARD (13.5X30X9-MM THK)	
	14	1	**4H-1641**	1	PIN-SPRING	
	15	1	**5P-1076**	39	WASHER-HARD (13.5X30X4-MM THK)	
	16	1	**5V-9221**	14	SPACER (13.8X25X25-MM THK)	
M	17	1	**7X-2549**	1	BOLT (M12X1.75X100-MM)	
	18	1	**7X-7729**	4	WASHER (11X25X3-MM THK)	
M	19	1	**8T-4910**	14	BOLT (M12X1.75X60-MM)	
M	20	1	**8T-4956**	25	BOLT (M12X1.75X35-MM)	
M	21	1	**8T-6466**	4	BOLT (M10X1.5X60-MM)	

M - METRIC PART

431-0370 **GUARD GP-FUEL TANK (**contd.**)** **i06528034**

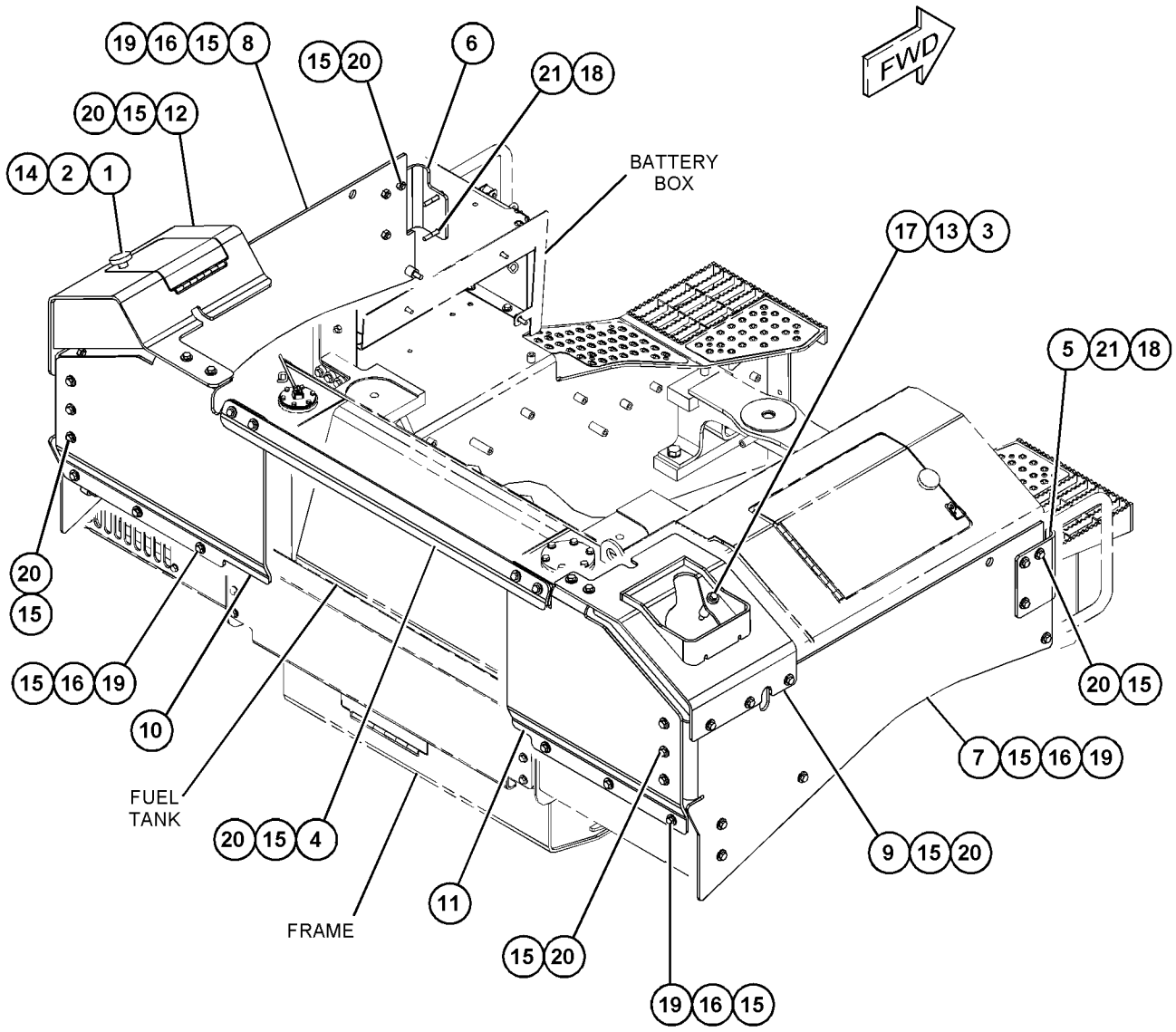

GRAPHIC #1 <END> g06021732

481-7828 GUARD GP-FUEL TANK

S/N: RT51-UP
PART OF 432-5811 RIPPER AR
AN ATTACHMENT

SMCS-1273, 7150

i06528208

NOTE	REF NO	GRAPHIC REF	PART NUMBER	QTY	PART NAME 1 2 3 4 5 6 (PRODUCT LEVEL)	SEE PAGE
M	1	1	**8T-4195**	6	BOLT (M10X1.5X30-MM)	
	2	1	**7X-7729**	6	WASHER (11X25X3-MM THK)	

M - METRIC PART

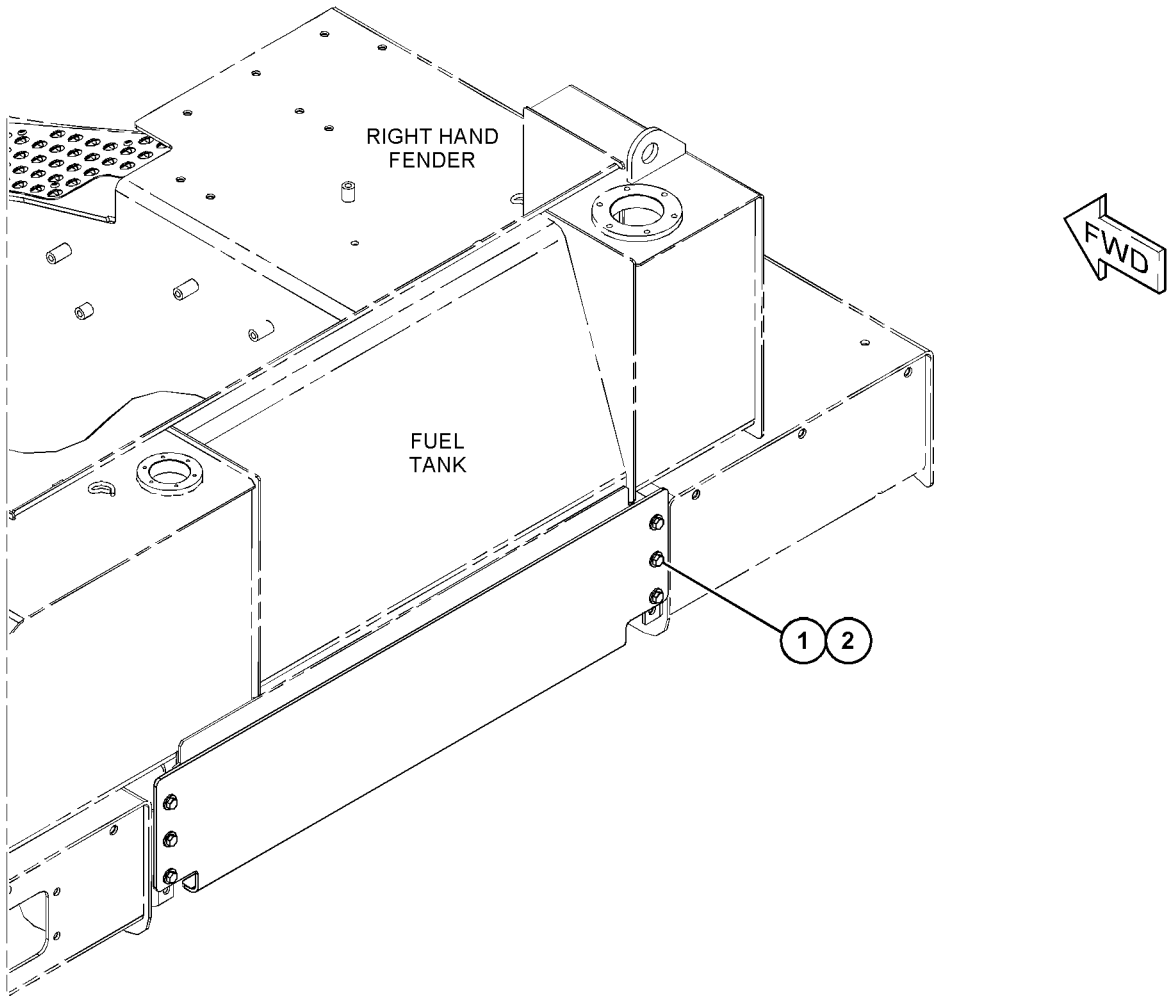

GRAPHIC #1 <END> g06022250

423-8834 GUARD GP-RADIATOR

S/N: R5A1-UP

PART OF 391-9522 CHASSIS AR

SMCS-7155 **i06532622**

NOTE	REF NO	GRAPHIC REF	PART NUMBER	QTY	PART NAME 1 2 3 4 5 6 (PRODUCT LEVEL)	SEE PAGE
	1	1	**2J-6305**	2	SEAL-OIL	
	2	1	**3W-3896**	2	HANDHOLD (GRAB)	
	3	1	**7K-1181**	1	STRAP-CABLE	
	4	1	**9W-2822**	1	ROD	
	5	1	**456-3103**	1	GUARD AS-RADIATOR	
	6	1	**456-6630**	4	PLATE	
	7	1	**475-3354**	4	PIN	
	8	1	**482-8605**	1	PLATE AS	
	9	1	**3B-4615**	2	PIN-COTTER	
	10	1	**5P-1076**	12	WASHER-HARD (13.5X30X4-MM THK)	
	11	1	**8T-4121**	16	WASHER-HARD (11X21X2.5-MM THK)	
M	12	1	**8T-4136**	14	BOLT (M10X1.5X25-MM)	
M	13	1	**8T-4139**	4	BOLT (M12X1.75X30-MM)	
M	14	1	**8T-4194**	8	BOLT (M12X1.75X50-MM)	

M - METRIC PART

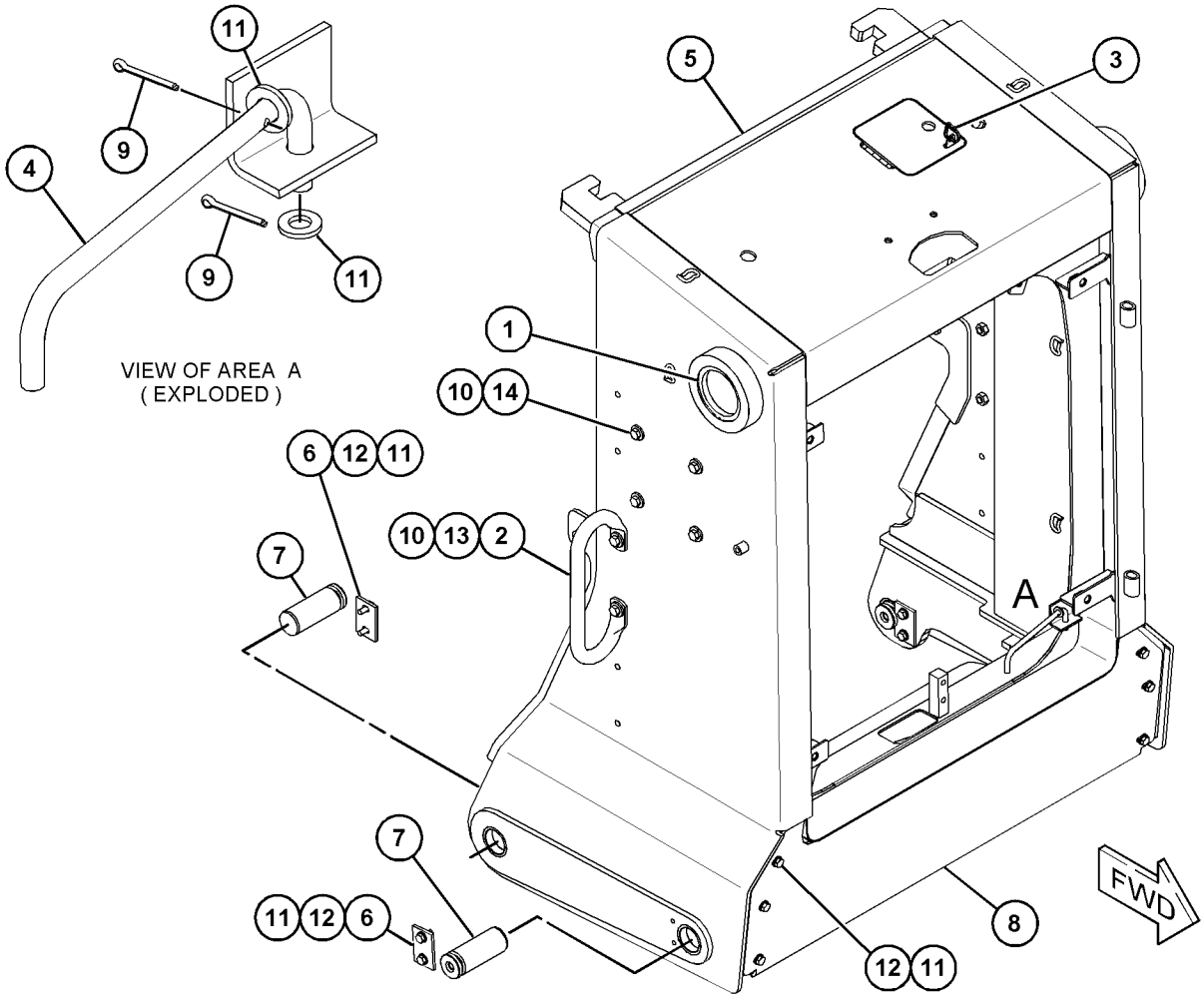

GRAPHIC #1 <END> g06023171

454-7330 GUARD GP-TRANSMISSION–REAR

S/N: R5A1-UP

AN ATTACHMENT

SMCS-7153 **i06530534**

NOTE	REF NO	GRAPHIC REF	PART NUMBER	QTY	PART NAME 1 2 3 4 5 6 (PRODUCT LEVEL)	SEE PAGE
	1	1	**1K-8850**	1	SPRING	
	2	1	**479-4368**	1	GUARD AS	
M	3	1	**8T-4195**	6	BOLT (M10X1.5X30-MM)	
	4	1	**198-4781**	4	WASHER-HARD (22X40X10-MM THK)	
M	5	1	**7X-2562**	4	BOLT (M20X2.5X45-MM)	
	6	1	**8T-4121**	6	WASHER-HARD (11X21X2.5-MM THK)	

M - METRIC PART

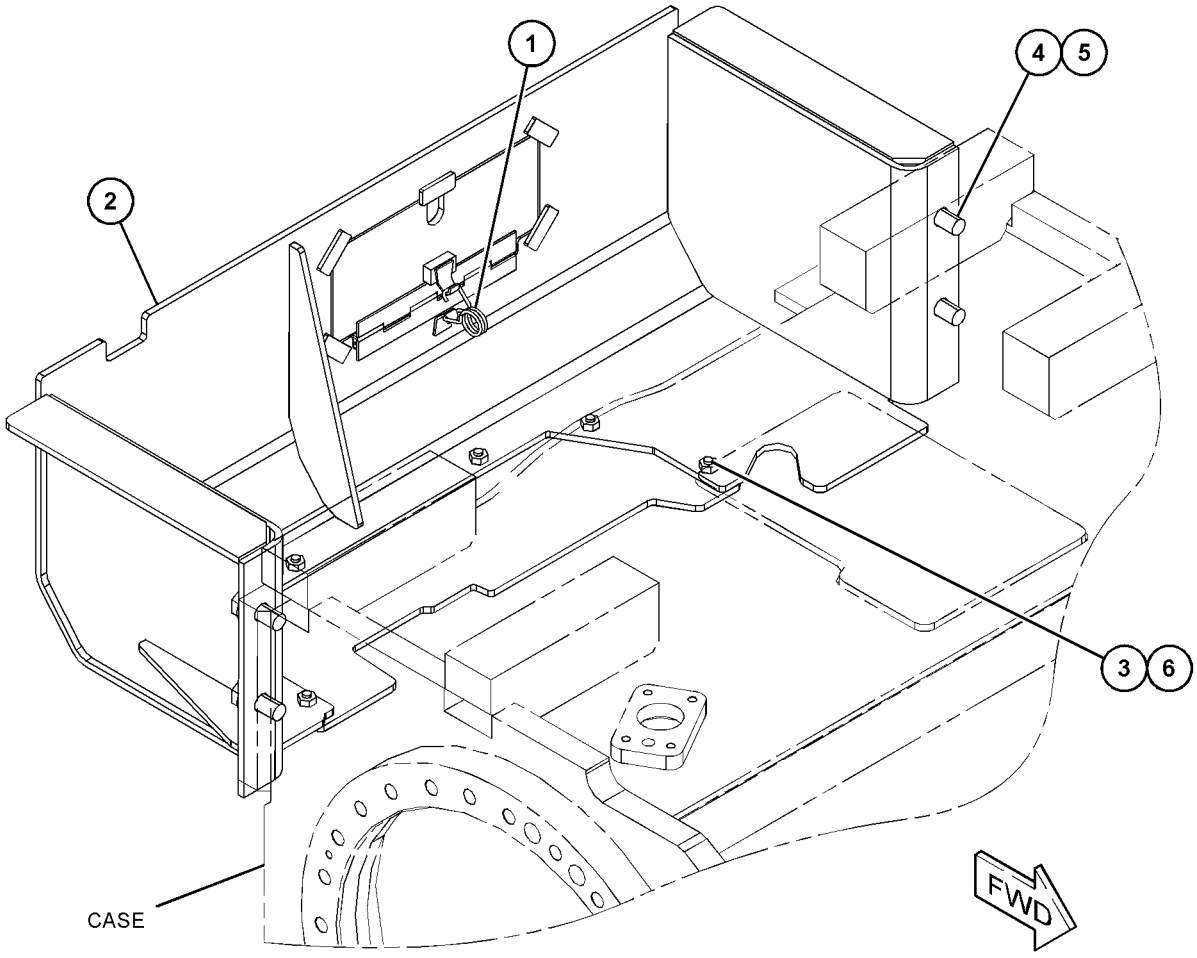

GRAPHIC #1 <END> g06022328

455-8286 HANDHOLD GP

S/N: R5A1-UP

CANNOT BE USED WITH 431-0369—PAGE: 300, 431-0370—PAGE: 301

PART OF 391-9522 CHASSIS AR

SMCS-7256 **i06559839**

NOTE	REF NO	GRAPHIC REF	PART NUMBER	QTY	PART NAME 1 2 3 4 5 6 (PRODUCT LEVEL)	SEE PAGE
	1	1	**455-8283**	1	HANDLE AS	
	2	1	**455-8285**	1	HANDLE AS	
	3	1	**091-9035**	4	SPACER (11X25X20-MM THK)	
	4	1	**5P-1076**	4	WASHER-HARD (13.5X30X4-MM THK)	
	5	1	**7X-7729**	4	WASHER (11X25X3-MM THK)	
M	6	1	**8T-4185**	4	BOLT (M10X1.5X50-MM)	
M	7	1	**8T-4192**	4	BOLT (M12X1.75X25-MM)	

M - METRIC PART

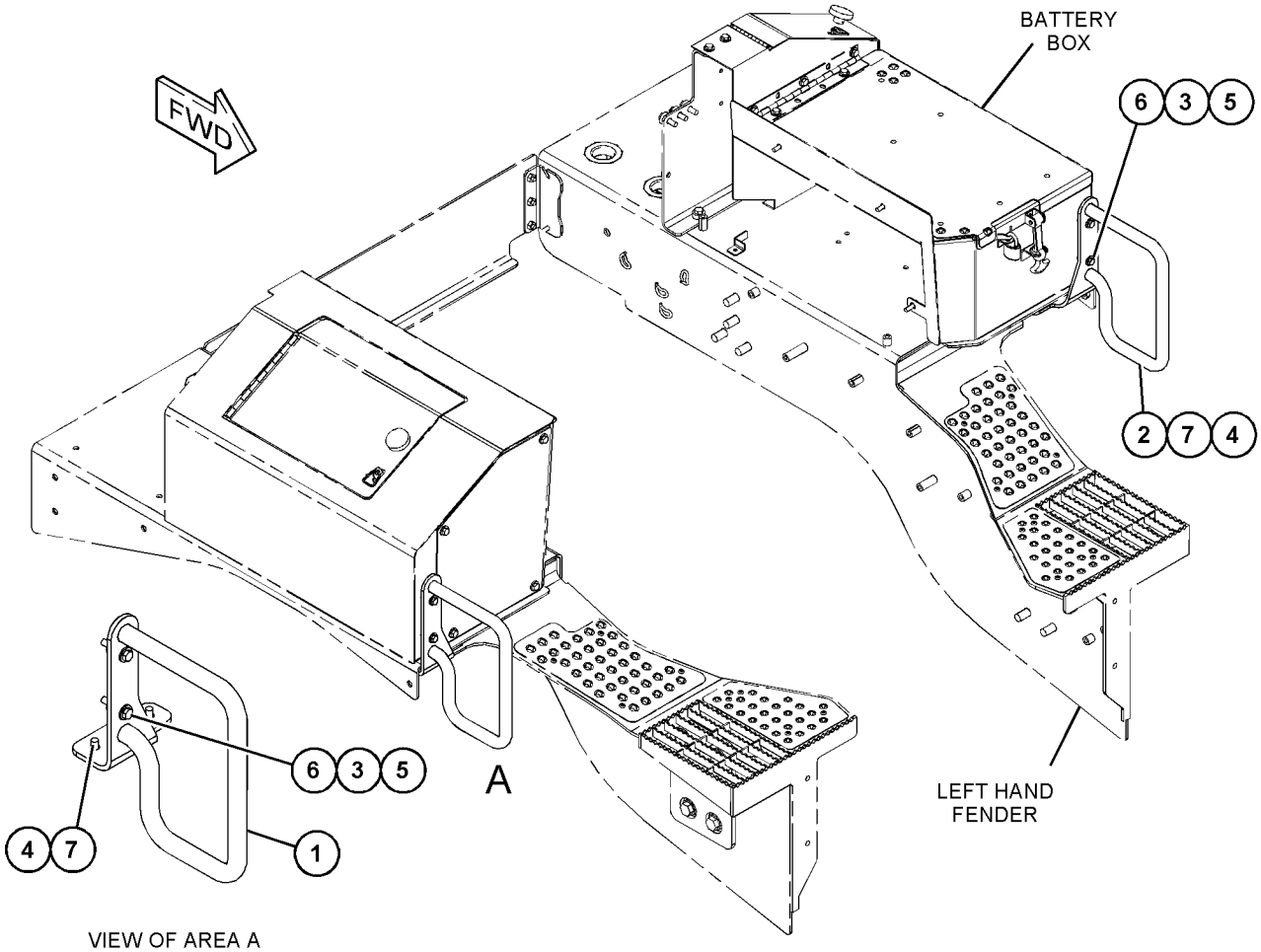

VIEW OF AREA A

GRAPHIC #1 <END> g06024330

459-9163 KIT-MOUNTING—SHOVEL

S/N: R5A1-UP

FOR USE WITH REHS8579

CANNOT BE USED WITH MACHINES THAT HAVE FAST FUEL ATTACHMENTS OR FUEL TANK GUARDS

FIELD INSTALLATION

SMCS-7050, 7259, 7268

i06517245

NOTE	PART NUMBER	QTY	PART NAME 1 2 3 4 5 6 (PRODUCT LEVEL)	SEE PAGE
Y	**453-1588**	1	BOX GP-STORAGE (SHOVEL)	282
M	**8T-4176**	3	BOLT (M12X1.75X90-MM)	
M	**8T-4139**	2	BOLT (M12X1.75X30-MM)	
M	**8T-6868**	3	BOLT (M12X1.75X80-MM)	
	157-2278	1	DRAIN	
	347-2280	1	FILM-IDENTIFICATION (SHOVEL MOUNTING, READ OMM)	
	5V-9221	3	SPACER (13.8X25X25-MM THK)	
	9V-0999	3	SPACER (13.8X30X50-MM THK)	
	5P-1076	3	WASHER-HARD (13.5X30X4-MM THK)	

M - METRIC PART
Y - SEPARATE ILLUSTRATION

<END>

8Y-6400 LATCH GP

S/N: R5A1-UP

PART OF 249-7010, 483-7817 BAR GP-STRIKER

AN ATTACHMENT

SMCS-7251 **i05321301**

NOTE	REF NO	GRAPHIC REF	PART NUMBER	QTY	PART NAME 1 2 3 4 5 6 (PRODUCT LEVEL)	SEE PAGE
	1	1	**7X-0766**	1	SPRING-LATCH	
	2	1	**8Y-5747**	1	BRACKET-MOUNTING	
	3	1	**8Y-3998**	1	HANDLE-LATCH	
	4	1	**8Y-3966**	1	WASHER (14.7X35X1.57-MM THK)	
	5	1	**8Y-8306**	1	SHAFT-LATCH	
	6	1	**6H-3956**	1	PIN	

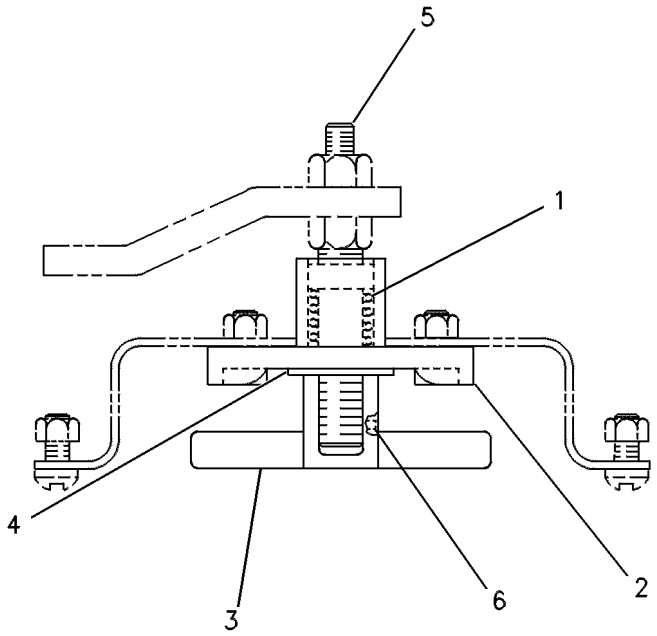

GRAPHIC #1 <END> g00236353

391-9499 PLUG GP

S/N: R5A1-UP

CANNOT BE USED WITH 386-7265—PAGE: 277, 426-3930—PAGE: 285, 432-5811—PAGE: 602 AN ATTACHMENT

SMCS-7051 **i06522670**

NOTE	REF NO	GRAPHIC REF	PART NUMBER	QTY	PART NAME 1 2 3 4 5 6 (PRODUCT LEVEL)	SEE PAGE
	1	1	**193-5917**	26	PLUG	
	2	1	*481-7829*	1	GUARD GP-FUEL TANK	
	2A	1	**7X-7729**	6	WASHER (11X25X3-MM THK)	
M	2B	1	**8T-4195**	6	BOLT (M10X1.5X30-MM)	
	2C	1	**481-7830**	1	PLATE	

M - METRIC PART

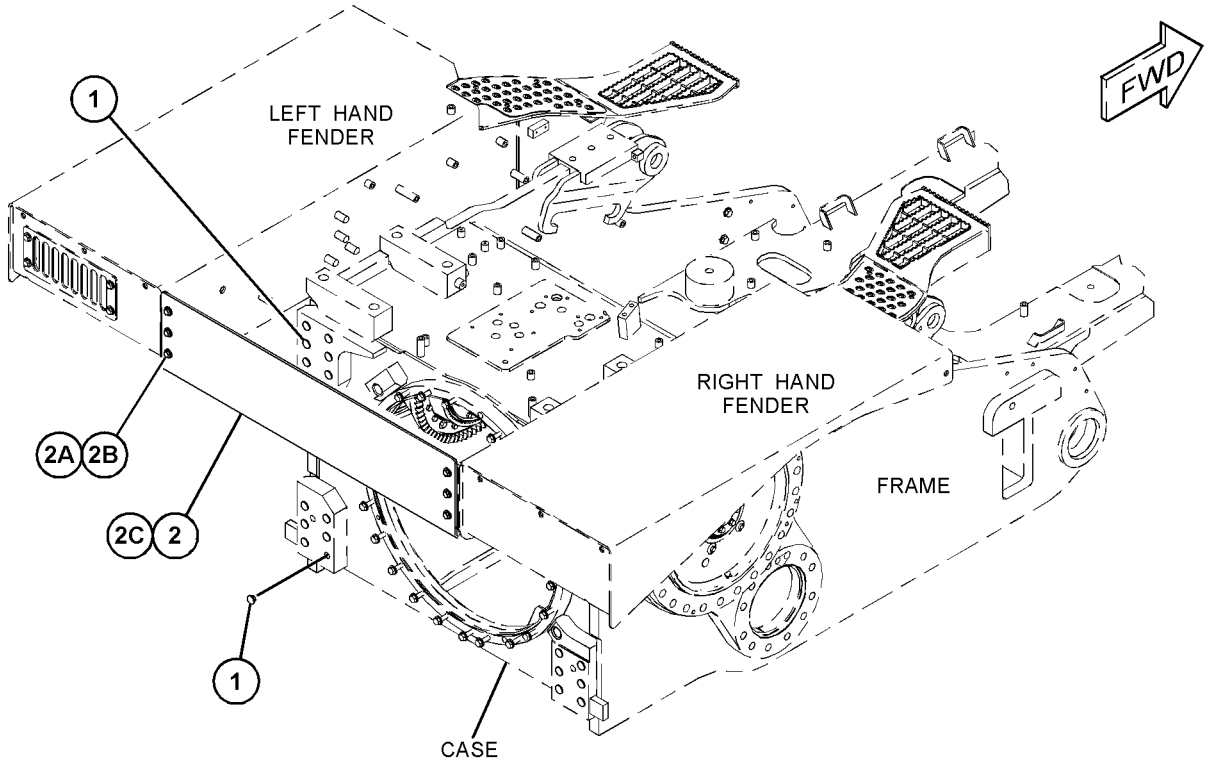

GRAPHIC #1 <END> g06011362

474-4764 SEAL GP-WASTE HANDLING

S/N: R5A1-UP

PART OF 478-6541 WASTE HANDLING AR

AN ATTACHMENT

SMCS-7555 **i06561244**

NOTE	REF NO	GRAPHIC REF	PART NUMBER	QTY	PART NAME 1 2 3 4 5 6 (PRODUCT LEVEL)	SEE PAGE
	1	1	**269-0210**	2	BAFFLE	
D	2	1	**5P-5649**		SEAL-BULK (0.2-M EACH)	
D	2A	1	**5P-5649**		SEAL-BULK (0.5-M)	
D	2B	1	**5P-5649**		SEAL-BULK (0.3-M EACH)	
D	2C	1	**5P-5649**		SEAL-BULK (0.1-M EACH)	
D	3	1	**5P-7483**		SEAL (0.7-M)	
D	3A	1	**5P-7483**		SEAL (1.1-M)	
D	4	1	**8T-6936**		SEAL (1.1-M)	
D	4A	1	**8T-6936**		SEAL (1-M)	
D	5	1	**5P-7211**		SEAL (0.2-M EACH)	
D	5A	1	**5P-7211**		SEAL (0.3-M EACH)	
D	5B	1	**5P-7211**		SEAL (0.5-M)	
D	5C	1	**5P-7211**		SEAL (0.6-M EACH)	
D	6	1	**6V-1359**		SEAL (0.1-M EACH)	
D	6A	1	**6V-1359**		SEAL (1.1-M)	
D	6B	1	**6V-1359**		SEAL (0.5-M EACH)	
D	6C	1	**6V-1359**		SEAL (0.4-M)	
D	6D	1	**6V-1359**		SEAL (0.2-M EACH)	
E	7	1	**149-5933**		SEAL (167-CM)	
E	7A	1	**149-5933**		SEAL (45-CM)	
E	7B	1	**149-5933**		SEAL (162-CM)	
E	8	1	**103-2543**		SEAL (8-CM EACH)	
E	8A	1	**103-2543**		SEAL (149-CM EACH)	
E	8B	1	**103-2543**		SEAL (99-CM)	
E	9	1	**238-9166**		SEAL (52-CM)	
E	9A	1	**238-9166**		SEAL (33-CM)	
E	9B	1	**238-9166**		SEAL (80-CM)	
E	9C	1	**238-9166**		SEAL (134-CM)	
E	9D	1	**238-9166**		SEAL (42-CM EACH)	
E	9E	1	**238-9166**		SEAL (68-CM)	
E	9F	1	**238-9166**		SEAL (100-CM)	
E	9G	1	**238-9166**		SEAL (72-CM EACH)	
B	10	1	**9X-6382**		SEAL (14-CM EACH)	
B	10A	1	**9X-6382**		SEAL (18-CM EACH)	
B	10B	1	**9X-6382**		SEAL (19-CM EACH)	

B - USE AS REQUIRED
D - ORDER BY THE METER
E - ORDER BY THE CENTIMETER

474-4764 **SEAL GP-WASTE HANDLING (**contd.**)** **i06561244**

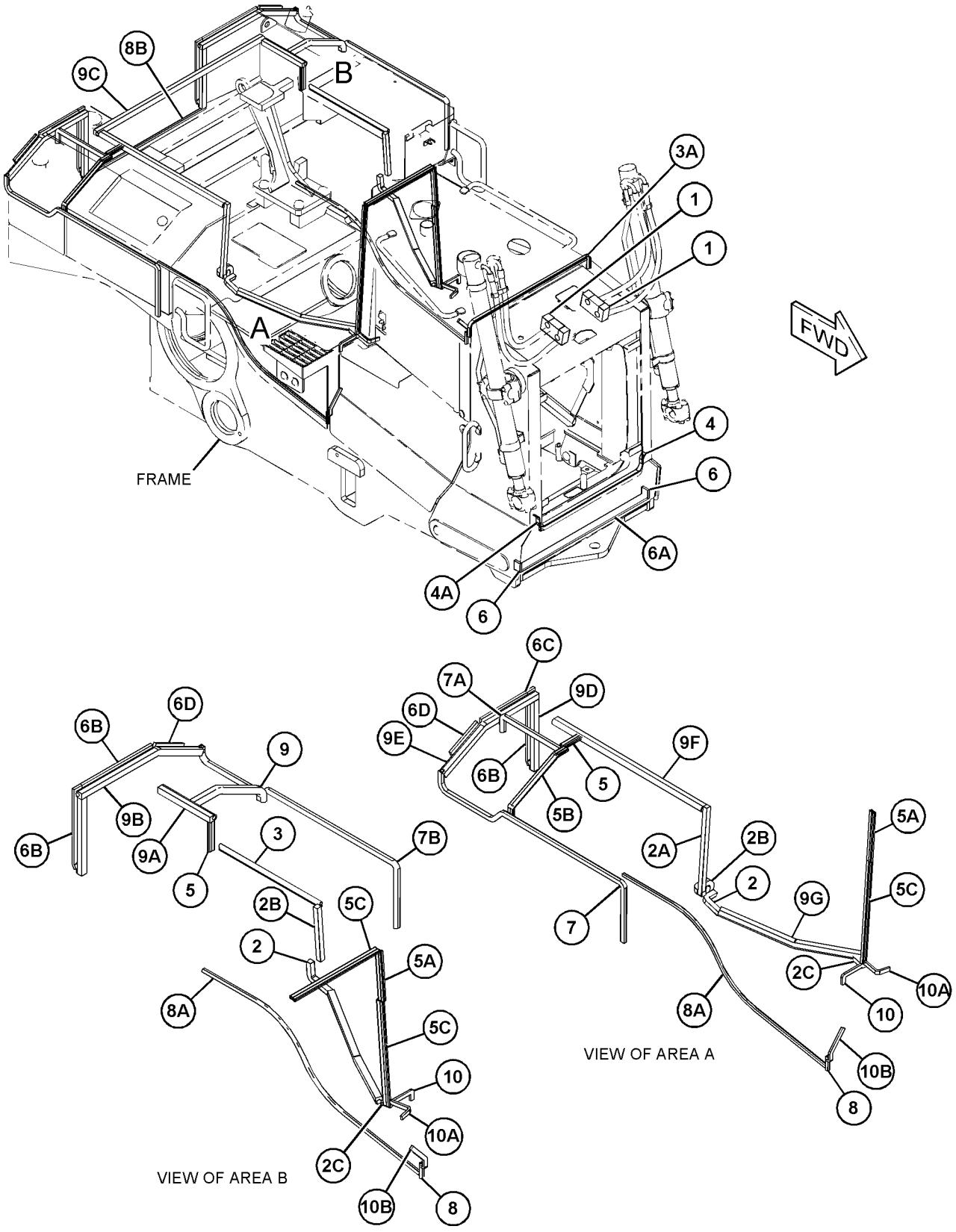

GRAPHIC #1 <END> g06025904

426-3911 SWEEP GP

S/N: R5A1-UP

AN ATTACHMENT

SMCS-7162 **i06559787**

NOTE	REF NO	GRAPHIC REF	PART NUMBER	QTY	PART NAME 1 2 3 4 5 6 (PRODUCT LEVEL)	SEE PAGE
	1	1	**6T-1698**	8	MOUNT	
	2	1	**235-0544**	8	PLATE	
	3	1	**337-7619**	2	MOUNT AS	
	4	1	**424-8002**	1	GUARD AS-REAR	
	5	1	**426-3918**	2	BRACKET AS	
					(EACH INCLUDES)	
M		1	**9R-2613**	1	BOSS-WELD (M10X1.5X25-MM)	
	6	1	**438-2277**	4	PLATE	
	7	1	**459-4094**	2	BRACKET AS	
					(EACH INCLUDES)	
		1	**459-1795**	1	MOUNTING	
	8	1	**475-9623**	2	BOLT (M24X3X120-MM)	
	9	1	**479-7700**	1	GUARD AS-FRONT	
	10	1	**198-4778**	8	WASHER-HARD (13.5X30X12-MM THK)	
	11	1	**317-1117**	4	LOCKNUT (M24X3-THD)	
	12	1	**5P-1076**	8	WASHER-HARD (13.5X30X4-MM THK)	
M	13	1	**7X-2565**	4	BOLT (M20X2.5X100-MM)	
M	14	1	**7X-2567**	2	BOLT (M24X3X160-MM)	
	15	1	**8P-5244**	4	WASHER (33.3X69.8X6.35-MM THK)	
	16	1	**8T-4123**	12	WASHER (3.62X5.75X0.375-MM THK)	
M	17	1	**8T-4131**	4	NUT (M20X2.5-THD)	
	18	1	**8T-4167**	6	WASHER-HARD (26X44X4-MM THK)	
M	19	1	**8T-4170**	4	BOLT (M20X2.5X150-MM)	
M	20	1	**8T-4194**	16	BOLT (M12X1.75X50-MM)	

M - METRIC PART

426-3911 **SWEEP GP (**contd.**)** **i06559787**

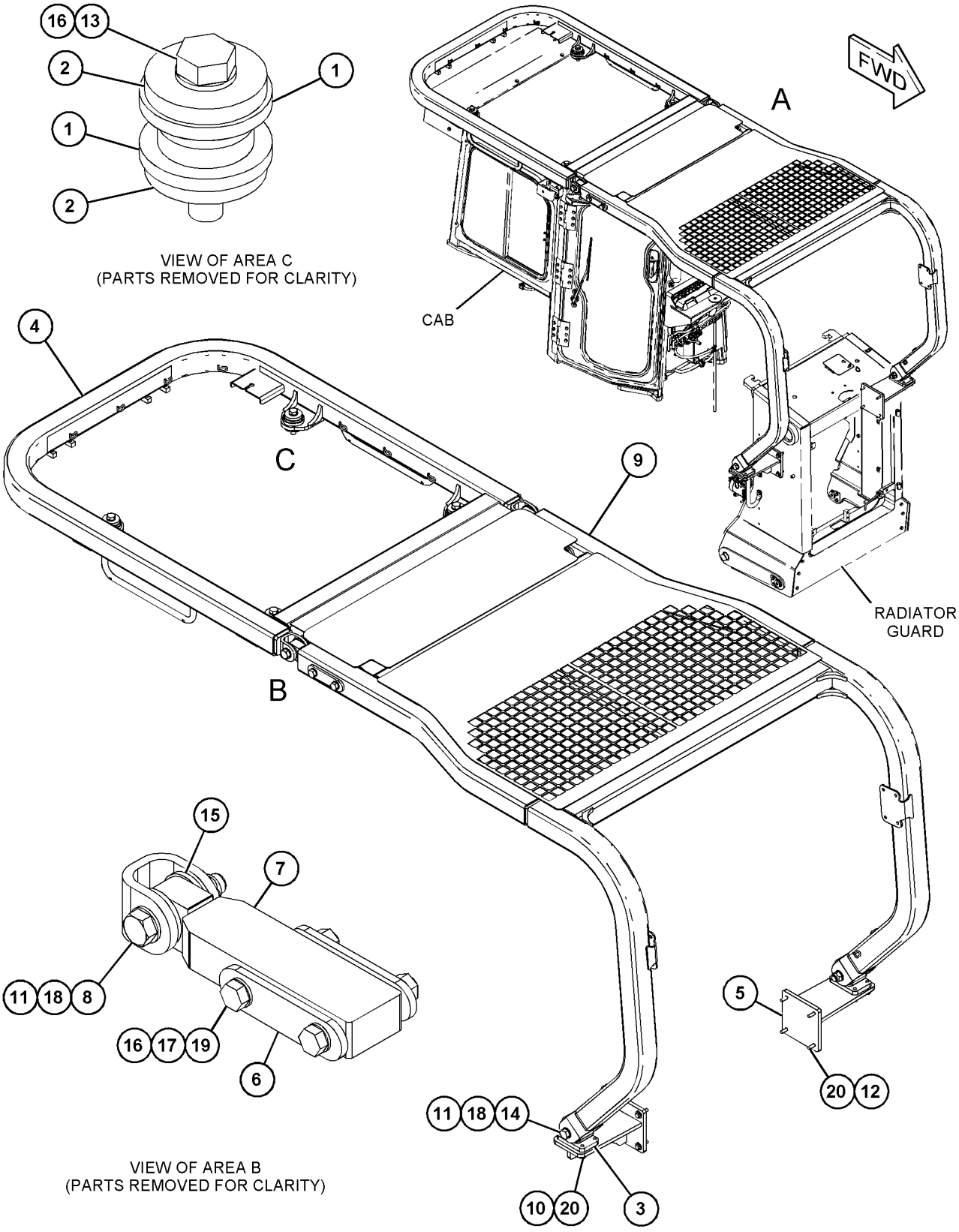

GRAPHIC #1

<END>

g06024318

448-0181 BAR GP-EQUALIZER

S/N: R5A1-UP

PART OF 489-4642, 489-4643, 491-4974, 492-0417, 492-0421 UNDERCARRIAGE AR AN ATTACHMENT

SMCS-7206 **i06560303**

NOTE	REF NO	GRAPHIC REF	PART NUMBER	QTY	PART NAME 1 2 3 4 5 6 (PRODUCT LEVEL)	SEE PAGE
	1	1	**340-7503**	2	PIN AS	
	2	1	**346-2900**	2	COVER	
	3	1	**435-5614**	1	PIN	
Y	4	1	*448-0182*	1	BAR GP-EQUALIZER	315
	5	1	**3B-8489**	2	FITTING-GREASE (1/8-27 PTF)	
	6	1	**7X-0587**	2	WASHER-HARD (17X54X3-MM THK)	
	7	1	**8G-8316**	2	SPACER (64.7X85X7-MM THK)	
M	8	1	**8T-4190**	2	BOLT (M16X2X25-MM)	
M	9	1	**8T-7338**	4	BOLT (M16X2X45-MM)	
	10	1	**9X-8257**	4	WASHER (17.5X30X3.5-MM THK)	

M - METRIC PART
Y - SEPARATE ILLUSTRATION

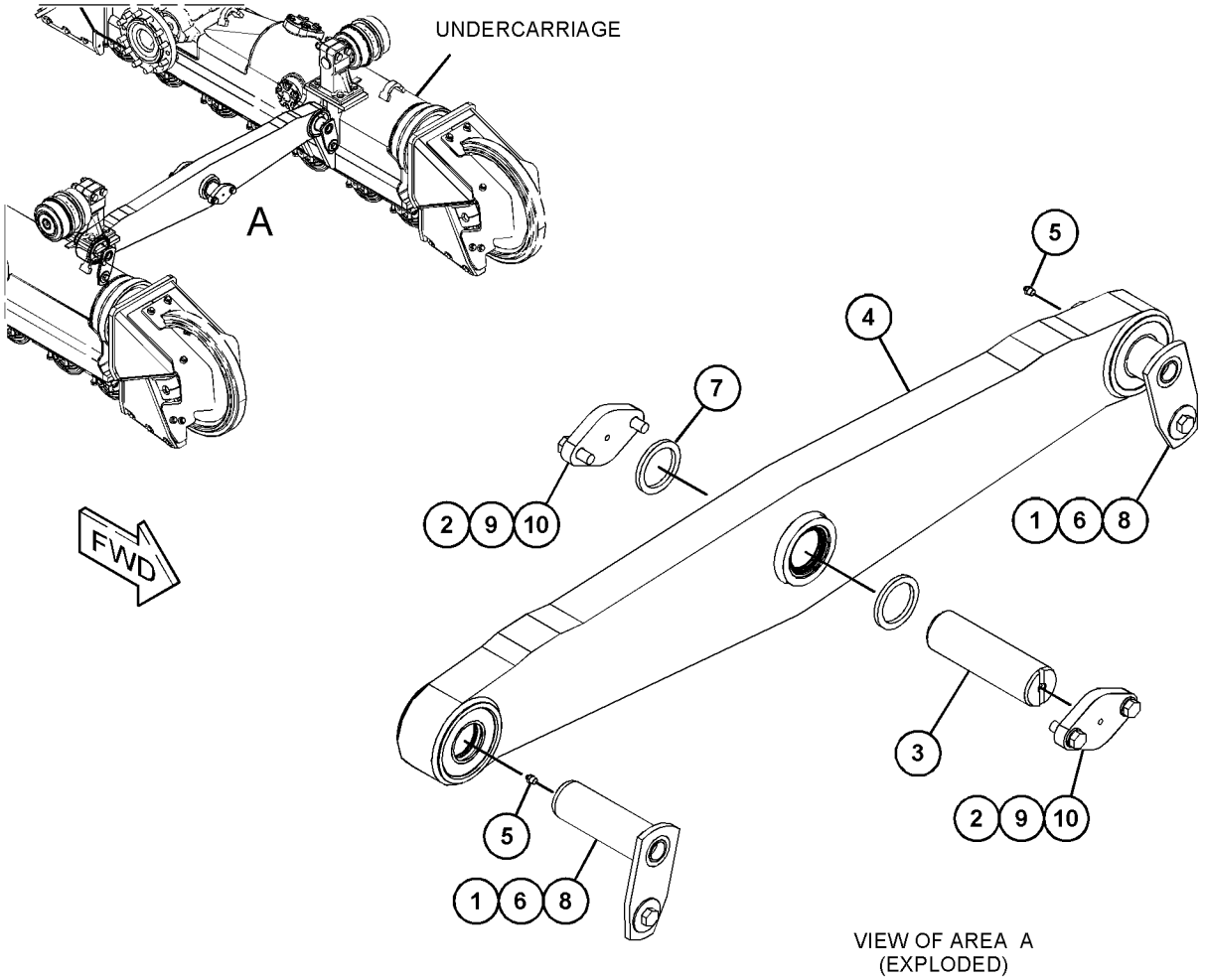

VIEW OF AREA A
(EXPLODED)

GRAPHIC #1 <END> g03890545

448-0182 BAR GP-EQUALIZER

S/N: R5A1-UP
PART OF 448-0181 BAR GP-EQUALIZER
AN ATTACHMENT

SMCS-7206 **i06532694**

NOTE	REF NO	GRAPHIC REF	PART NUMBER	QTY	PART NAME 1 2 3 4 5 6 (PRODUCT LEVEL)	SEE PAGE
	1	1	**448-0183**	1	BAR AS	
	2	1	**1J-6472**	4	RING-RETAINING	
	3	1	**7K-9205**	2	SEAL-LIP TYPE	
	4	1	**7P-6596**	1	BUSHING	
	5	1	**8G-4189**	2	BEARING-SELF-ALIGNING	
	6	1	**8G-4190**	4	SEAL	
	7	1	**8G-8311**	1	BUSHING	

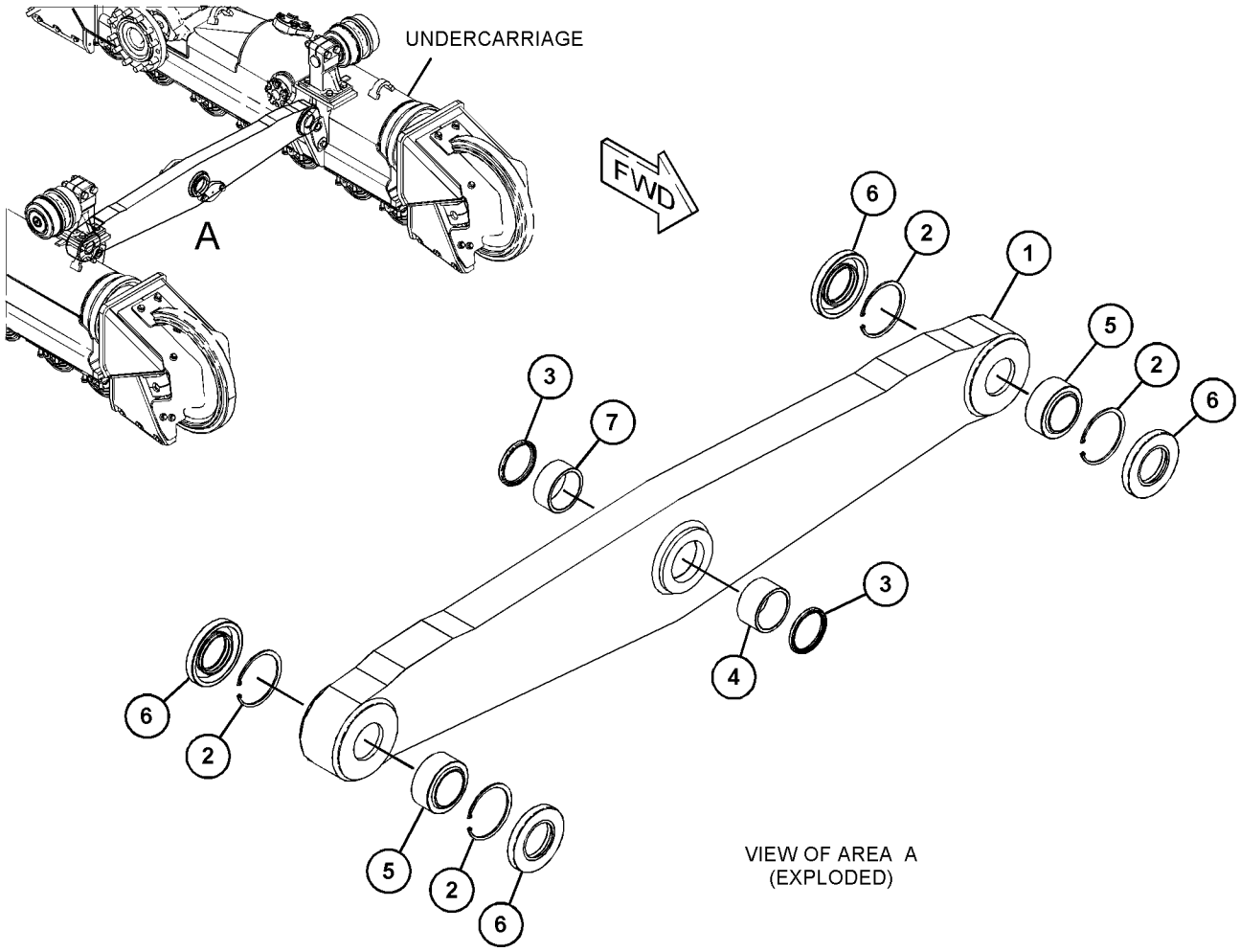

GRAPHIC #1 <END> g03890509

233-0367 CAP GP-TRACK IDLER–FRONT, LH

S/N: R5A1-UP

PART OF 489-4642, 489-4643, 491-4974, 492-0417, 492-0421 UNDERCARRIAGE AR AN ATTACHMENT

SMCS-4159 **i06558993**

NOTE	REF NO	GRAPHIC REF	PART NUMBER	QTY	PART NAME 1 2 3 4 5 6 (PRODUCT LEVEL)	SEE PAGE
	1	1	**233-0368**	1	CAP AS	
	2	1	**254-3927**	1	BLOCK-TRACK IDLER	
B	3	1	**254-3929**	1	SHIM (10-MM THK)	
	4	1	**5P-8247**	2	WASHER-HARD (17X32X3.5-MM THK)	
M	5	1	**8T-0359**	2	BOLT (M16X2X130-MM)	

B - USE AS REQUIRED
M - METRIC PART

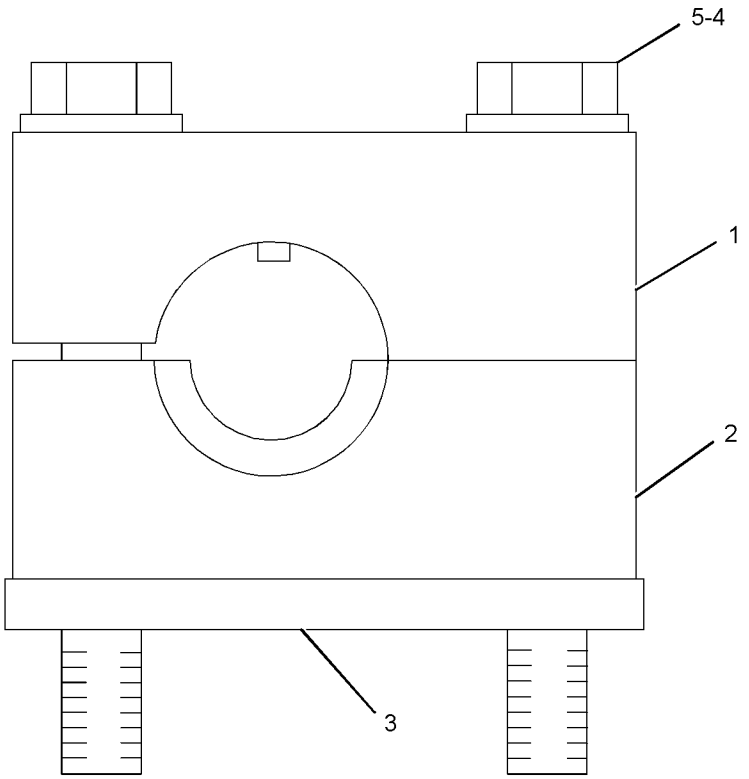

GRAPHIC #1 <END> g01240617

233-0854 CAP GP-TRACK IDLER–FRONT, RH

S/N: R5A1-UP

PART OF 489-4642, 489-4643, 491-4974, 492-0417, 492-0421 UNDERCARRIAGE AR AN ATTACHMENT

SMCS-4159 **i06559003**

NOTE	REF NO	GRAPHIC REF	PART NUMBER	QTY	PART NAME 1 2 3 4 5 6 (PRODUCT LEVEL)	SEE PAGE
	1	1	**233-0372**	1	CAP AS-TRACK IDLER	
		1	**6B-6863**	1	PIN-SPRING	
	2	1	**254-3928**	1	BLOCK-TRACK IDLER	
B	3	1	**254-3929**	1	SHIM (10-MM THK)	
	4	1	**5P-8247**	2	WASHER-HARD (17X32X3.5-MM THK)	
M	5	1	**8T-0359**	2	BOLT (M16X2X130-MM)	

B - USE AS REQUIRED
M - METRIC PART

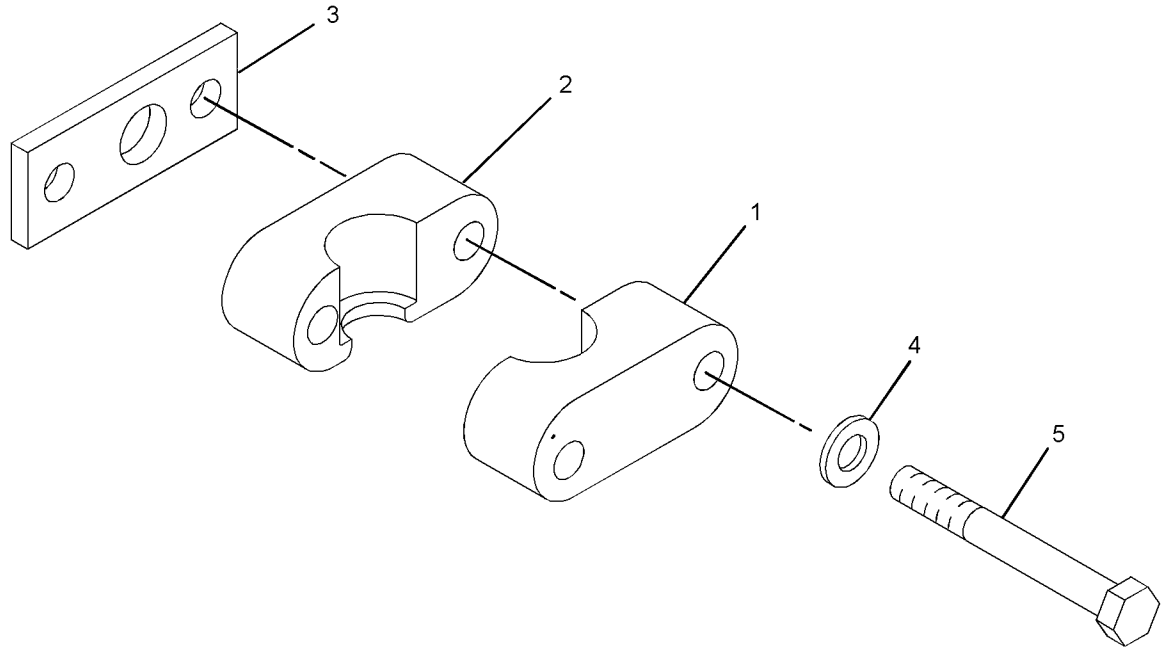

GRAPHIC #1 <END> g01239189

255-0045 CAP GP-TRACK IDLER—REAR, RH

S/N: R5A1-UP

PART OF 489-4642, 489-4643, 491-4974, 492-0417, 492-0421 UNDERCARRIAGE AR AN ATTACHMENT

SMCS-4159 **i06559039**

NOTE	REF NO	GRAPHIC REF	PART NUMBER	QTY	PART NAME 1 2 3 4 5 6 (PRODUCT LEVEL)	SEE PAGE
	1	1	**233-0372**	1	CAP AS-TRACK IDLER	
		1	**6B-6863**	1	PIN-SPRING	
	2	1	**239-8090**	1	BLOCK-TRACK IDLER	
	3	1	**5P-8247**	2	WASHER-HARD (17X32X3.5-MM THK)	
M	4	1	**8T-0282**	2	BOLT (M16X2X120-MM)	

M - METRIC PART

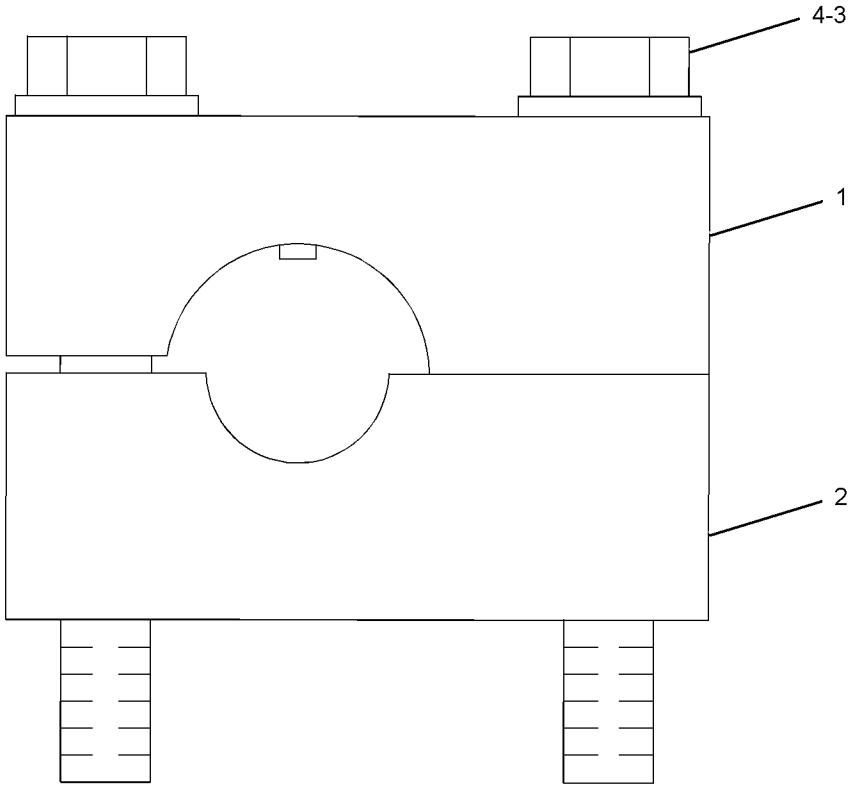

GRAPHIC #1 <END> g01294307

255-0046 CAP GP-TRACK IDLER–REAR, LH

S/N: R5A1-UP

PART OF 489-4642, 489-4643, 491-4974, 492-0417, 492-0421 UNDERCARRIAGE AR AN ATTACHMENT

SMCS-4159 **i06559046**

NOTE	REF NO	GRAPHIC REF	PART NUMBER	QTY	PART NAME 1 2 3 4 5 6 (PRODUCT LEVEL)	SEE PAGE
	1	1	**233-0368**	1	CAP AS	
		1	**6B-6863**	1	PIN-SPRING	
	2	1	**239-8091**	1	BLOCK-TRACK IDLER	
	3	1	**5P-8247**	2	WASHER-HARD (17X32X3.5-MM THK)	
M	4	1	**8T-0282**	2	BOLT (M16X2X120-MM)	

M - METRIC PART

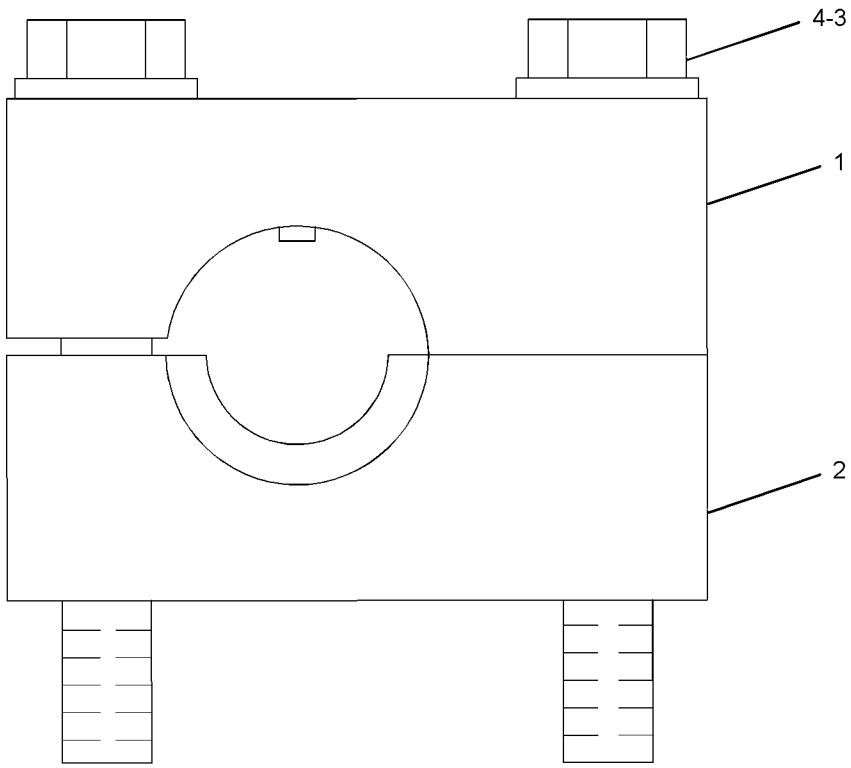

GRAPHIC #1 <END> g01294304

489-5748 FRAME GP-TELESCOPING RECOIL—RH

S/N: R5A1-UP

PART OF 489-4642, 489-4643, 491-4974, 492-0417, 492-0421 UNDERCARRIAGE AR AN ATTACHMENT

SMCS-4151 **i06533186**

NOTE	REF NO	GRAPHIC REF	PART NUMBER	QTY	PART NAME 1 2 3 4 5 6 (PRODUCT LEVEL)	SEE PAGE
	1	1	**9X-4580**	1	SEAL AS	
	2	1	**110-5692**	2	RETAINER AS	
					(EACH INCLUDES)	
		1	**241-3720**	1	FILM-WARNING (RECOIL SPRING)	
	3	1	**268-9710**	1	COVER AS	
		1	**7B-3028**	4	SCREW-DRIVE (NO 4X 3/16-IN)	
		1	**8E-1211**	1	COVER	
		1	**253-1346**	1	PLATE-WARNING (HIGH PRESSURE CYLINDER)	
	4	1	**351-5115**	1	FRAME AS (RH)	
		1	**8K-0589**	2	DOWEL	
		1	**221-3197**	1	BUSHING	
		1	**221-3202**	1	BUSHING	
Y	5	1	*492-1345*	1	FRAME GP-TELESCOPING RECOIL	325
	6	1	**1B-5174**	2	PLUG-PIPE	
	7	1	**3W-2025**	1	RING-RETAINING	
	8	1	**5H-6734**	1	SEAL-O-RING	
	9	1	**8T-4121**	4	WASHER-HARD (11X21X2.5-MM THK)	
M	10	1	**8T-4136**	4	BOLT (M10X1.5X25-MM)	
M	11	1	**8T-4139**	12	BOLT (M12X1.75X30-MM)	
	12	1	**8T-4223**	12	WASHER-HARD (13.5X25.5X3-MM THK)	
	13	1	**9P-8899**	1	BEARING	

M - METRIC PART
Y - SEPARATE ILLUSTRATION

489-5748 **FRAME GP-TELESCOPING RECOIL (**contd.**)** **i06533186**

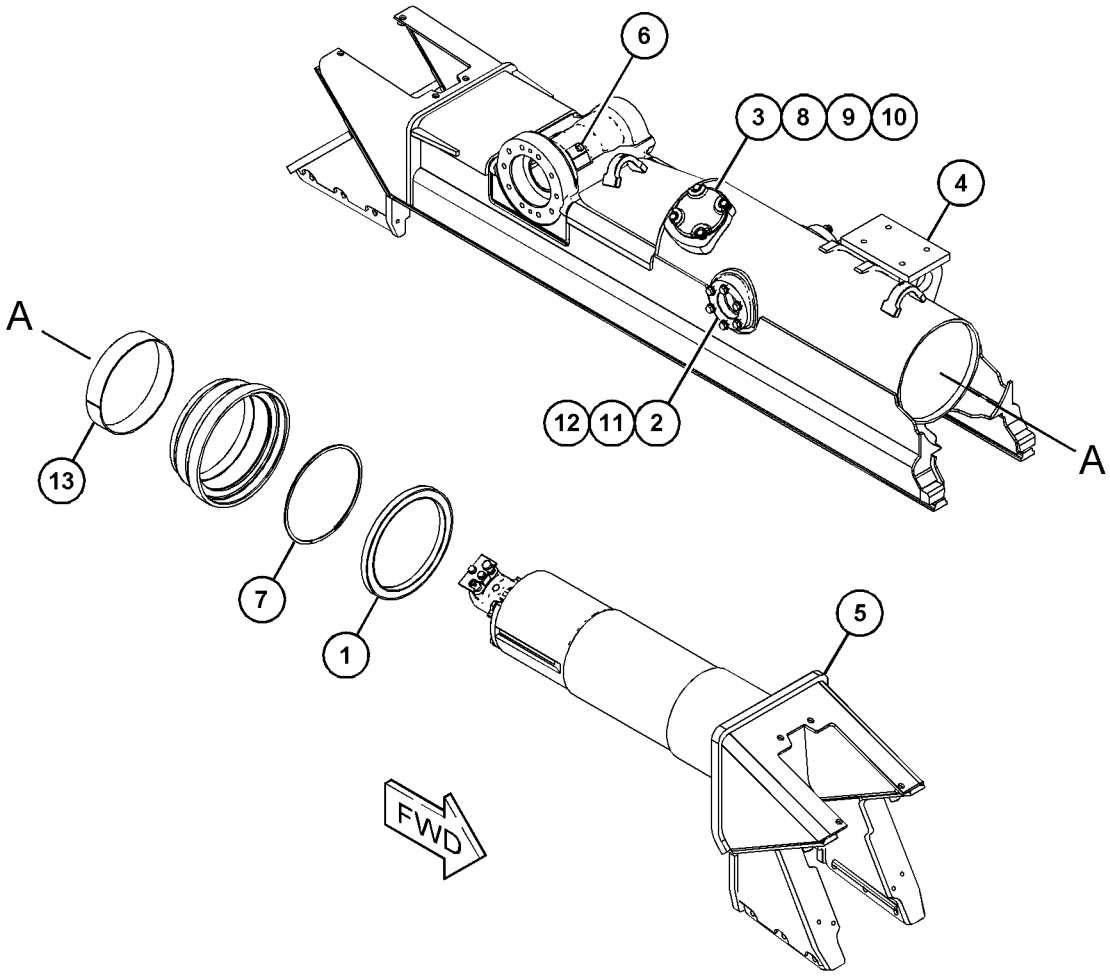

GRAPHIC #1 <END> g06022134

489-5749 FRAME GP-TELESCOPING RECOIL—LH

S/N: R5A1-UP

PART OF 489-4642, 489-4643, 491-4974, 492-0417, 492-0421 UNDERCARRIAGE AR AN ATTACHMENT

SMCS-4151 **i06533826**

NOTE	REF NO	GRAPHIC REF	PART NUMBER	QTY	PART NAME 1 2 3 4 5 6 (PRODUCT LEVEL)	SEE PAGE
	1	1	**9X-4580**	1	SEAL AS	
	2	1	**110-5692**	2	RETAINER AS	
					(EACH INCLUDES)	
		1	**241-3720**	1	FILM-WARNING (RECOIL SPRING)	
	3	1	**268-9710**	1	COVER AS	
		1	**7B-3028**	4	SCREW-DRIVE (NO 4X 3/16-IN)	
		1	**8E-1211**	1	COVER	
		1	**253-1346**	1	PLATE-WARNING (HIGH PRESSURE CYLINDER)	
	4	1	**351-5116**	1	FRAME AS (LH)	
		1	**8K-0589**	2	DOWEL	
		1	**221-3197**	1	BUSHING	
		1	**221-3202**	1	BUSHING	
Y	5	1	**492-1344**	1	FRAME GP-TELESCOPING RECOIL	324
	6	1	**1B-5174**	2	PLUG-PIPE	
	7	1	**3W-2025**	1	RING-RETAINING	
	8	1	**5H-6734**	1	SEAL-O-RING	
	9	1	**8T-4121**	4	WASHER-HARD (11X21X2.5-MM THK)	
M	10	1	**8T-4136**	4	BOLT (M10X1.5X25-MM)	
M	11	1	**8T-4139**	12	BOLT (M12X1.75X30-MM)	
	12	1	**8T-4223**	12	WASHER-HARD (13.5X25.5X3-MM THK)	
	13	1	**9P-8899**	1	BEARING	

M - METRIC PART
Y - SEPARATE ILLUSTRATION

489-5749 **FRAME GP-TELESCOPING RECOIL (**contd.**)** **i06533826**

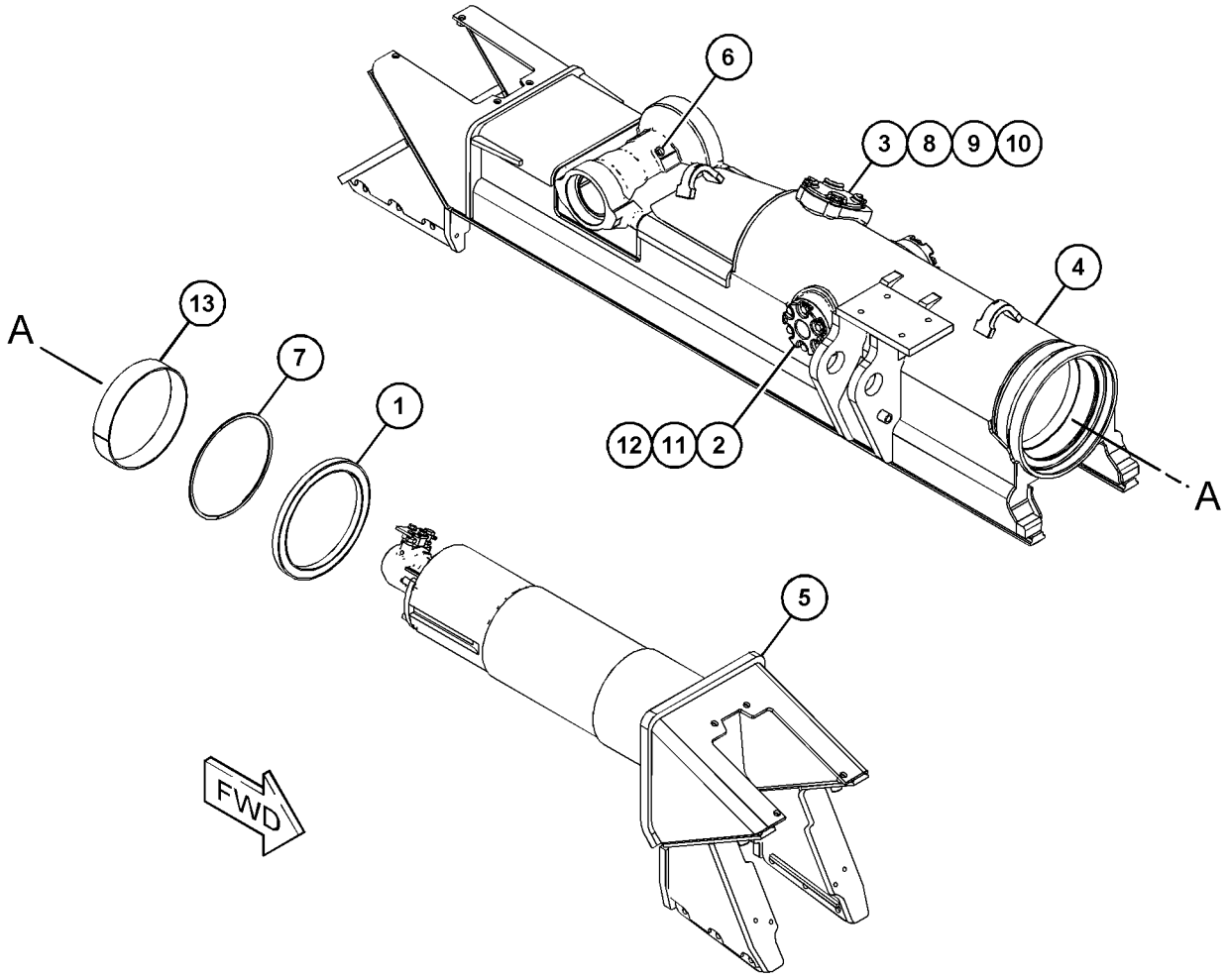

GRAPHIC #1 <END> g06023401

492-1344 FRAME GP-TELESCOPING RECOIL—LH

S/N: R5A1-UP

PART OF 489-5749 FRAME GP-TELESCOPING RECOIL

AN ATTACHMENT

SMCS-4151 **i06533833**

NOTE	REF NO	GRAPHIC REF	PART NUMBER	QTY	PART NAME 1 2 3 4 5 6 (PRODUCT LEVEL)	SEE PAGE
Y	1	1	*271-6184*	1	TRACK ADJUSTER & RECOIL GP	346
	2	1	**353-2166**	1	FRAME AS-FRONT	
		1	**8G-3202**	1	BUSHING	
		1	**8K-0589**	2	DOWEL	
		1	**8T-9530**	2	TACK	
		1	**239-4989**	1	PLATE-WARNING (RECOIL SPRING)	

Y - SEPARATE ILLUSTRATION

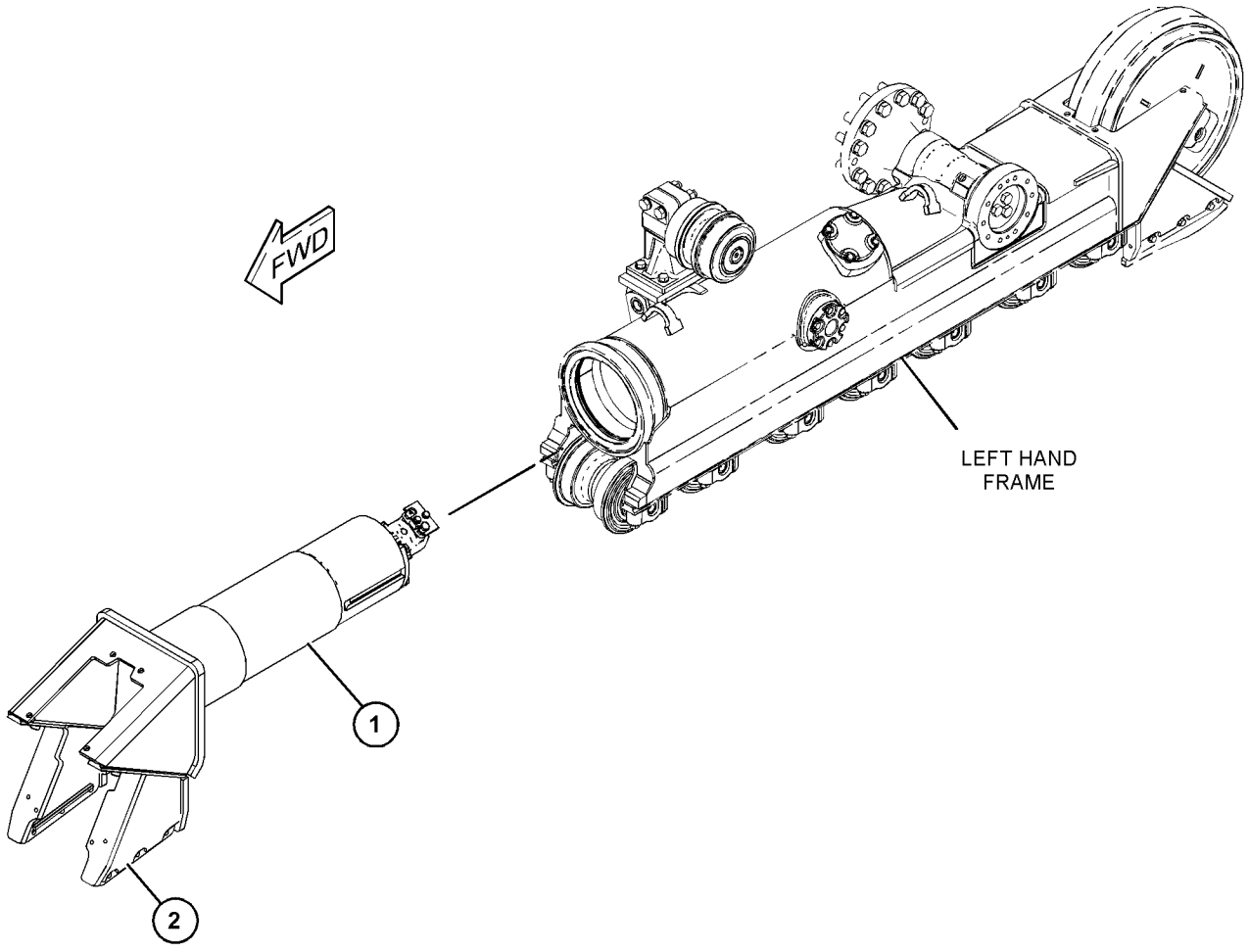

GRAPHIC #1 <END> g06022239

492-1345 FRAME GP-TELESCOPING RECOIL—RH

S/N: R5A1-UP

PART OF 489-5748 FRAME GP-TELESCOPING RECOIL

AN ATTACHMENT

SMCS-4151 **i06533821**

NOTE	REF NO	GRAPHIC REF	PART NUMBER	QTY	PART NAME 1 2 3 4 5 6 (PRODUCT LEVEL)	SEE PAGE
Y	1	1	*271-6184*	1	TRACK ADJUSTER & RECOIL GP	346
	2	1	**353-2166**	1	FRAME AS-FRONT	
		1	**8G-3202**	1	BUSHING	
		1	**8K-0589**	2	DOWEL	
		1	**8T-9530**	2	TACK	
		1	**239-4989**	1	PLATE-WARNING (RECOIL SPRING)	

Y - SEPARATE ILLUSTRATION

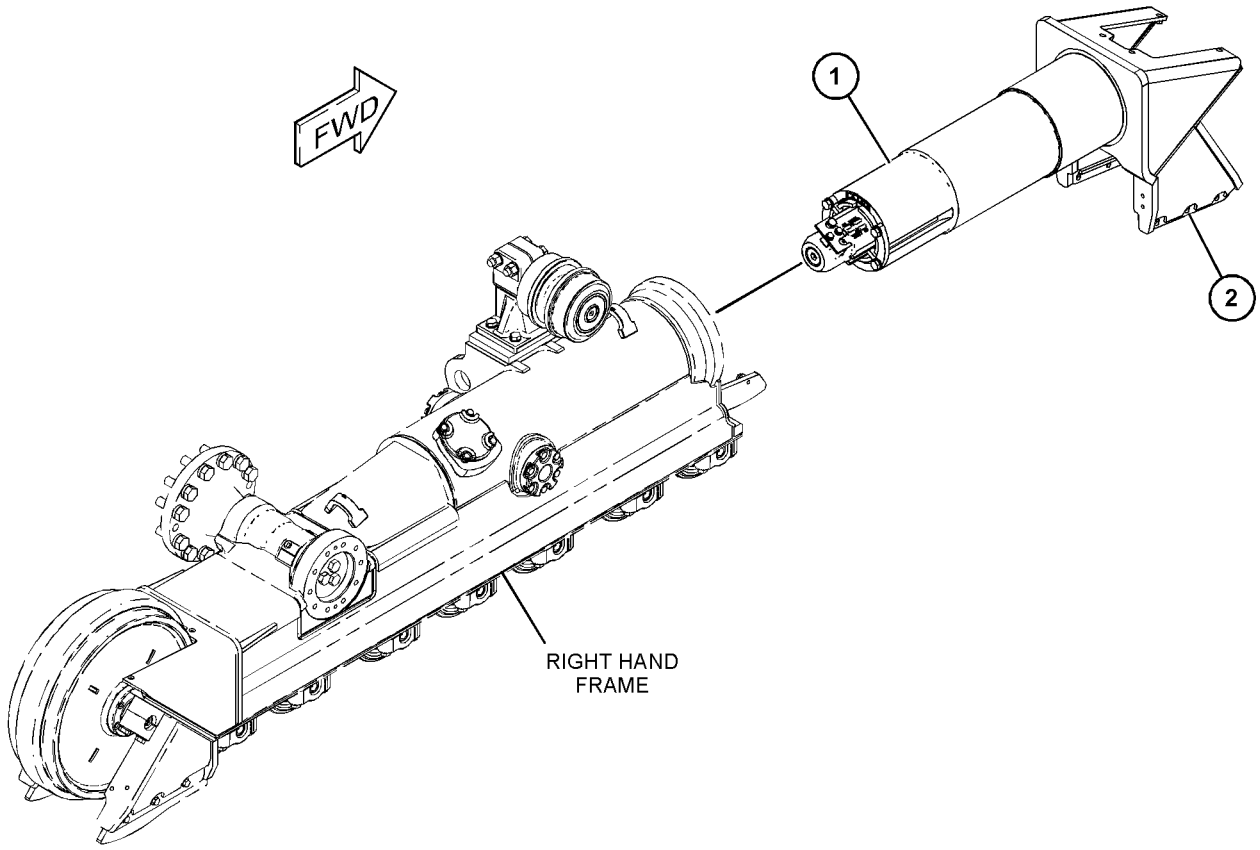

GRAPHIC #1 <END> g06022446

205-6127 GUARD GP-TRACK GUIDE

S/N: R5A1-UP
DOUBLE SHORT GUARDS
PART OF 491-4974 UNDERCARRIAGE AR
AN ATTACHMENT

SMCS-4177 **i06521747**

NOTE	REF NO	GRAPHIC REF	PART NUMBER	QTY	PART NAME 1 2 3 4 5 6 (PRODUCT LEVEL)	SEE PAGE
	1	1	**204-6365**	16	SPACER (15-MM THK)	
	2	1	**205-6160**	4	GUIDE AS	
M	3	1	**8T-4140**	16	BOLT (M16X2X60-MM)	

M - METRIC PART

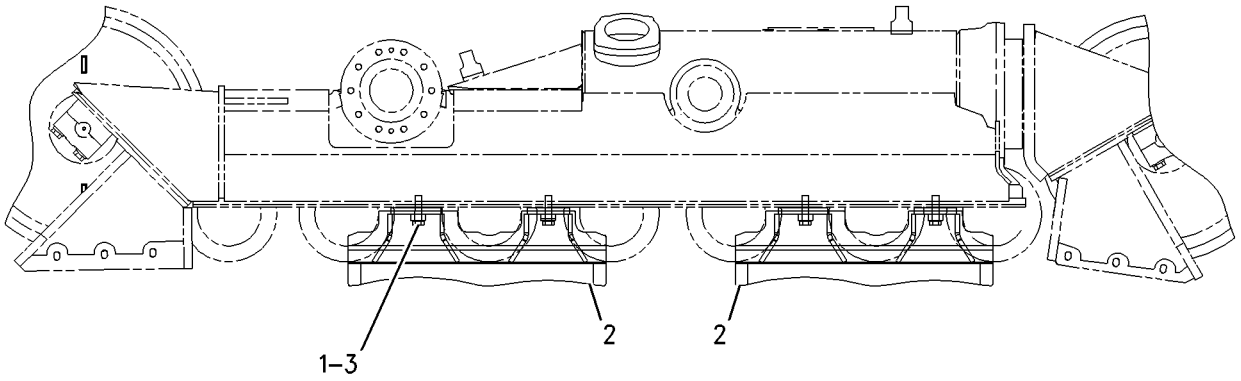

RIGHT SIDE VIEW

GRAPHIC #1 <END> g00899177

384-7413 GUARD GP-TRACK GUIDE—HEAVY-DUTY

S/N: R5A1-UP
CENTER GUARDS
CANNOT BE USED WITH UNDERCARRIAGE AR (SYSTEMONE), UNCERCARRIAGE AR (FINE GRADING), UNDERCARRIAGE AR(HEAVY-DUTY, TALL, DOUBLE FLANGE ROLLERS)
PART OF 492-0421 UNDERCARRIAGE AR
AN ATTACHMENT

SMCS-4177 **i06532422**

NOTE	REF NO	GRAPHIC REF	PART NUMBER	QTY	PART NAME 1 2 3 4 5 6 (PRODUCT LEVEL)	SEE PAGE
	1	1	**204-6365**	8	SPACER (15-MM THK)	
	2	1	**205-6160**	2	GUIDE AS	
M	3	1	**8T-4140**	8	BOLT (M16X2X60-MM)	

M - METRIC PART

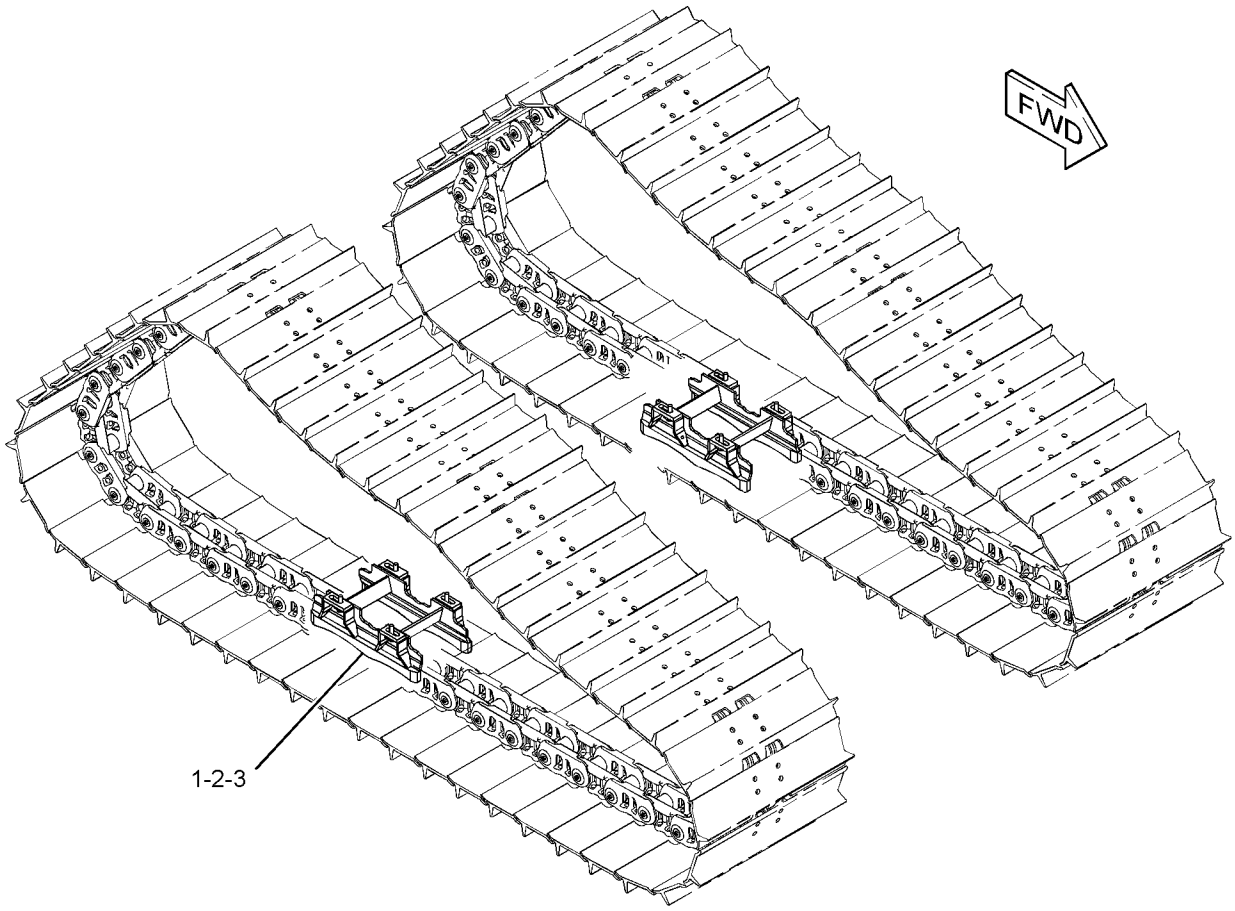

GRAPHIC #1 <END> g02795738

205-6128 GUARD GP-TRACK ROLLER

S/N: R5A1-UP
FULL GUARDS
PART OF 492-0417 UNDERCARRIAGE AR
AN ATTACHMENT

SMCS-7152 **i06582013**

NOTE	REF NO	GRAPHIC REF	PART NUMBER	QTY	PART NAME 1 2 3 4 5 6 (PRODUCT LEVEL)	SEE PAGE
	1	1	**204-6365**	24	SPACER (15-MM THK)	
	2	1	**205-6141**	8	TUBE	
	3	1	**205-6162**	2	GUARD AS (RH)	
	4	1	**205-6163**	2	GUARD AS (LH)	
M	5	1	**110-6969**	8	BOLT (M16X2X300-MM)	
	6	1	**7X-0550**	4	WASHER-HARD (13.5X32X5-MM THK)	
B	7	1	**7X-0605**	4	WASHER-HARD (13X28X1.6-MM THK)	
M	8	1	**8T-4140**	24	BOLT (M16X2X60-MM)	
M	9	1	**8T-4194**	4	BOLT (M12X1.75X50-MM)	
M	10	1	**8T-4778**	8	LOCKNUT (M16X2-THD)	
	11	1	**9X-8257**	16	WASHER (17.5X30X3.5-MM THK)	

B - USE AS REQUIRED
M - METRIC PART

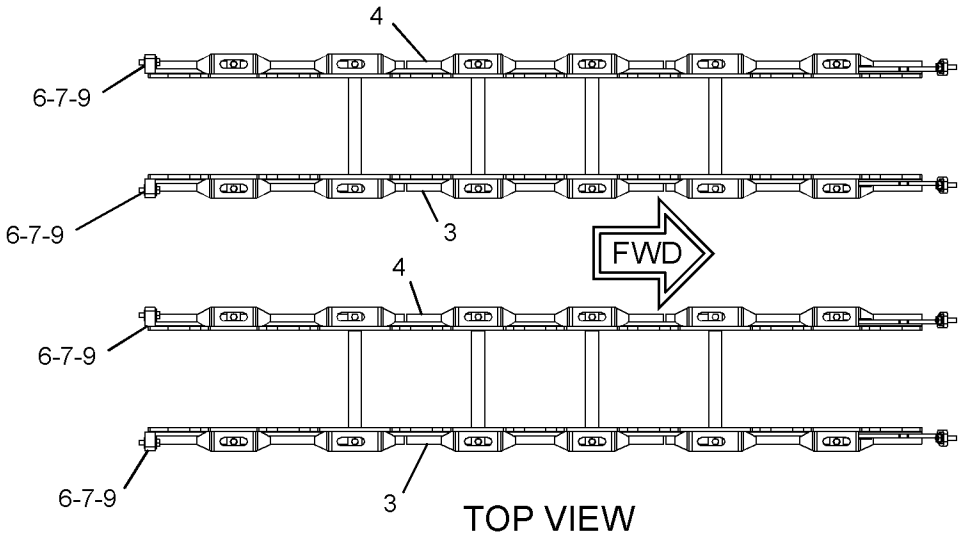

TOP VIEW

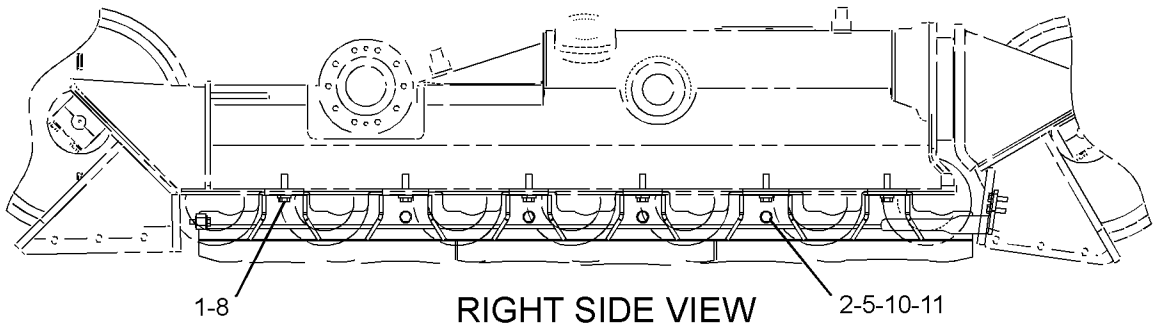

RIGHT SIDE VIEW

GRAPHIC #1 <END> g03729909

204-7266 IDLER GP-FRONT

S/N: R5A1-UP
PART OF 489-4643 UNDERCARRIAGE AR
AN ATTACHMENT

SMCS-4159 **i06277068**

NOTE	REF NO	GRAPHIC REF	PART NUMBER	QTY	PART NAME 1 2 3 4 5 6 (PRODUCT LEVEL)	SEE PAGE
	1	1	**3T-9536**	1	STOPPER-RUBBER	
	2	1	**6Y-0473**	1	PLUG-CLEAR	
	3	1	**110-3362**	2	WASHER-THRUST (74X101.65X4.52-MM THK)	
	4	1	**161-7247**	2	SEAL GP-DUO-CONE	
					(EACH INCLUDES)	
		1	**161-7249**	2	RING-TORIC	
	5	1	**161-7350**	1	SHAFT-TRACK IDLER	
	6	1	**189-2164**	2	RETAINER	
	7	1	**189-2165**	2	RING	
	8	1	**189-2170**	2	COLLAR	
	9	1	**189-2171**	2	SEAL	
	10	1	**190-1547**	1	IDLER & BEARING AS	
	10A	1	**9P-1360**	2	BUSHING	
	11	1	**1H-8128**	2	SEAL-O-RING	
	12	1	**3S-1307**	12	BOLT-12 POINT HEAD (3/8-16X2-IN)	
	13	1	**5K-0216**	2	SEAL-O-RING	
	14	1	**8T-4896**	12	WASHER-HARD (10.2X18.5X2.5-MM THK)	

204-7266 **IDLER GP-FRONT (**contd.**)** **i06277068**

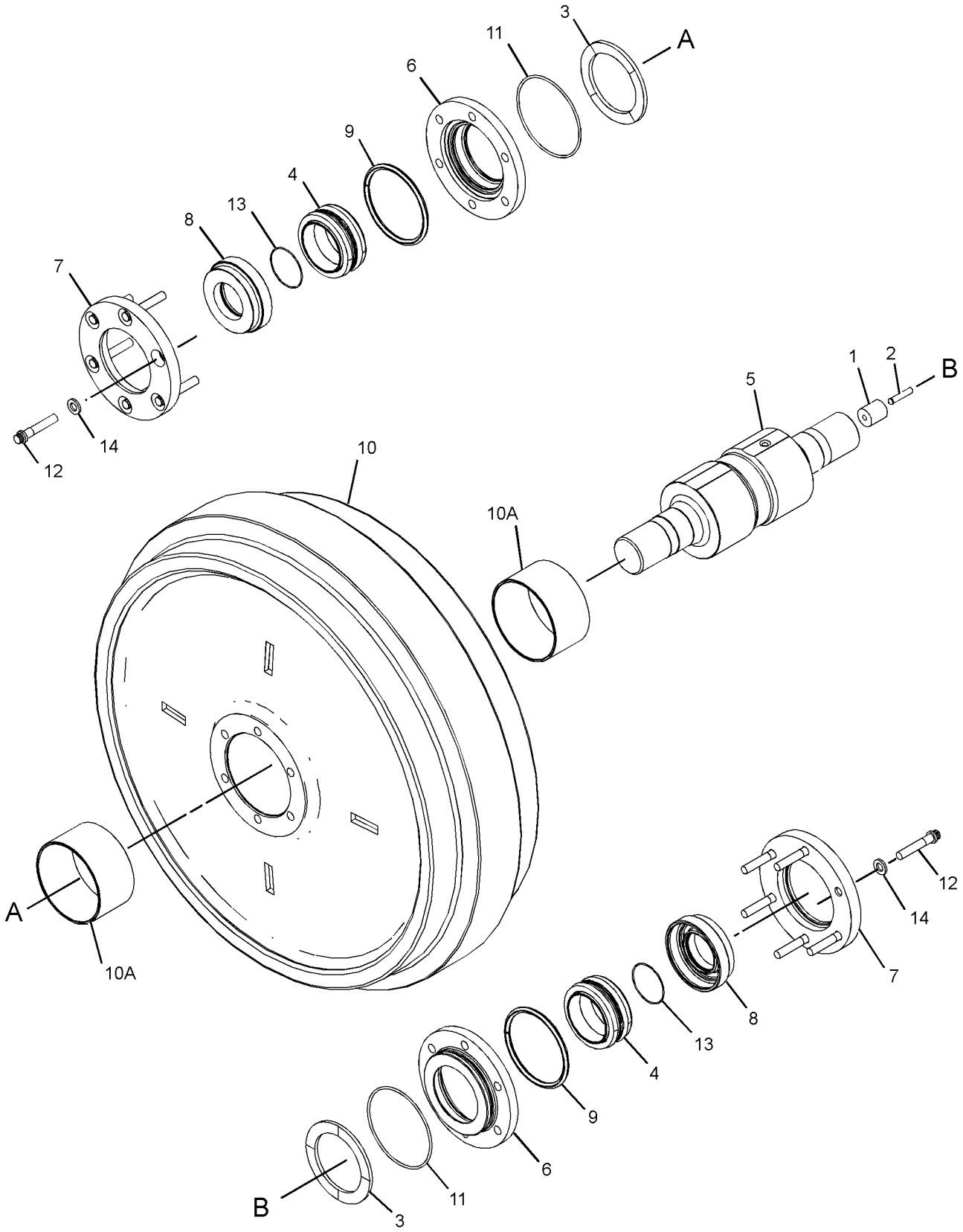

GRAPHIC #1 <END> g03353392

190-1546 IDLER GP-TRACK

S/N: R5A1-UP

PART OF 489-4642, 491-4974, 492-0417, 492-0421 UNDERCARRIAGE AR

AN ATTACHMENT

SMCS-4159 **i06558958**

NOTE	REF NO	GRAPHIC REF	PART NUMBER	QTY	PART NAME 1 2 3 4 5 6 (PRODUCT LEVEL)	SEE PAGE
	1	1	**8H-7521**	2	SEAL-O-RING	
	2	1	**3T-9536**	1	STOPPER-RUBBER	
	3	1	**5K-0216**	2	SEAL-O-RING	
	4	1	**6Y-0473**	1	PLUG-CLEAR	
	5	1	**110-3362**	2	WASHER-THRUST (74X101.65X4.52-MM THK)	
	6	1	**160-9756**	2	COLLAR	
	7	1	**473-1457**	2	SEAL GP-DUO-CONE	
					(EACH INCLUDES)	
		1	**161-7249**	2	RING-TORIC	
	8	1	**161-7350**	1	SHAFT-TRACK IDLER	
	9	1	**161-7550**	2	RETAINER	
	10	1	**190-1547**	1	IDLER & BEARING AS	
		1	**9P-1360**	2	BUSHING	
	11	1	**053-2294**	12	BOLT-12 POINT HEAD (3/8-16X1.75-IN)	
	12	1	**5M-2894**	12	WASHER-HARD (10.2X18.5X2.5-MM THK)	

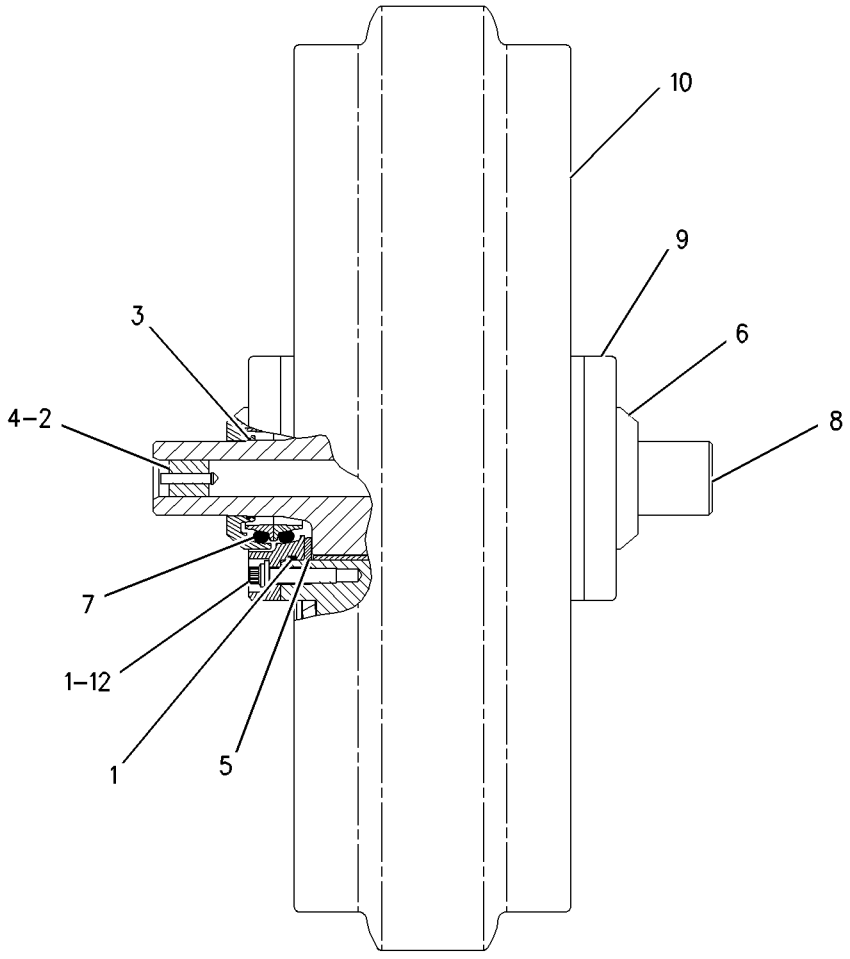

GRAPHIC #1 <END> g00807250

110-2976 LINK AS-TRACK—HEAVY-DUTY

S/N: R5A1-UP
40-JOINTS. SEALED, LUBRICATED
PART OF 110-2977, 110-2978, 110-2980, 356-3434, 356-3435 TRACK GP
AN ATTACHMENT

SMCS-4169, 4171

i06163916

NOTE	REF NO	GRAPHIC REF	PART NUMBER	QTY	PART NAME 1 2 3 4 5 6 (PRODUCT LEVEL)	SEE PAGE
	1	1	**6Y-0473**	40	PLUG-CLEAR	
			5G-2247	40	STOPPER-RUBBER	
	2	1	**152-8070**	80	RING-THRUST	
	3	1	**250-3988**	80	SEAL AS	
	4	1	**106-1626**	39	LINK-TRACK (LH)	
	5	1	**106-1625**	39	LINK-TRACK (RH)	
	6	1	**106-1628**	1	LINK-MASTER (PIN END, LH)	
	7	1	**106-1627**	1	LINK-MASTER (PIN END, RH)	
	8	1	**106-1630**	1	LINK-TRACK MASTER (BUSHING END, LH)	
	9	1	**106-1629**	1	LINK-TRACK MASTER (BUSHING END, RH)	
	10	1	**106-1618**	40	BUSHING-TRACK	
	11	1	**179-0126**	40	PIN-TRACK	

110-2976 **LINK AS-TRACK (**contd.**)** **i06163916**

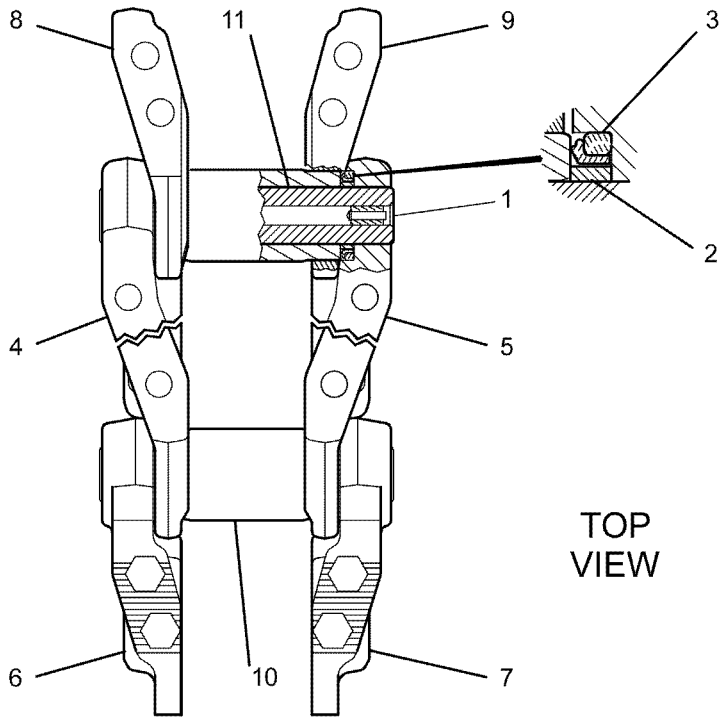

GRAPHIC #1 <END> g01088373

118-6345 MOUNTING GP-CARRIER ROLLER

S/N: R5A1-UP

PART OF 489-4642, 489-4643, 491-4974, 492-0417, 492-0421 UNDERCARRIAGE AR AN ATTACHMENT

SMCS-4154 **i06558954**

NOTE	REF NO	GRAPHIC REF	PART NUMBER	QTY	PART NAME 1 2 3 4 5 6 (PRODUCT LEVEL)	SEE PAGE
	1	1	**6Y-3125**	2	BRACKET AS	
M	2	1	**7X-2532**	4	BOLT (M20X2.5X130-MM)	
	3	1	**8T-4123**	8	WASHER (3.62X5.75X0.375-MM THK)	
M	4	1	**8T-4131**	4	NUT (M20X2.5-THD)	
M	5	1	**8T-7338**	8	BOLT (M16X2X45-MM)	
	6	1	**9X-8257**	8	WASHER (17.5X30X3.5-MM THK)	
					QUANTITIES SHOWN ARE THOSE REQUIRED FOR BOTH LH & RH SIDES	

M - METRIC PART

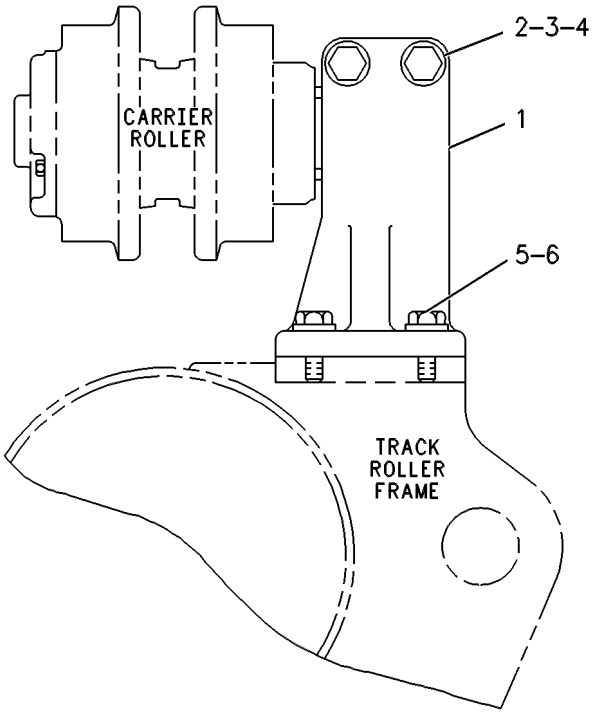

GRAPHIC #1 <END> g00252461

384-7365 PIVOT BAR GP

S/N: R5A1-UP

PART OF 489-4642, 489-4643, 491-4974, 492-0417, 492-0421 UNDERCARRIAGE AR AN ATTACHMENT

SMCS-4153 **i06559068**

NOTE	REF NO	GRAPHIC REF	PART NUMBER	QTY	PART NAME 1 2 3 4 5 6 (PRODUCT LEVEL)	SEE PAGE
	1	1	**8G-2943**	2	SEAL	
	2	1	**8G-4107**	2	PLATE	
	3	1	**108-0803**	2	SHAFT AS	
					(EACH INCLUDES)	
		1	**8G-5799**	1	RING	
	4	1	**126-8928**	24	WASHER-HARD (26X40X8-MM THK)	
M	5	1	**160-8510**	6	BOLT-SELF-LOCKING (M20X2.5X60-MM)	
M	6	1	**8T-5878**	24	BOLT (M24X3X80-MM)	

M - METRIC PART

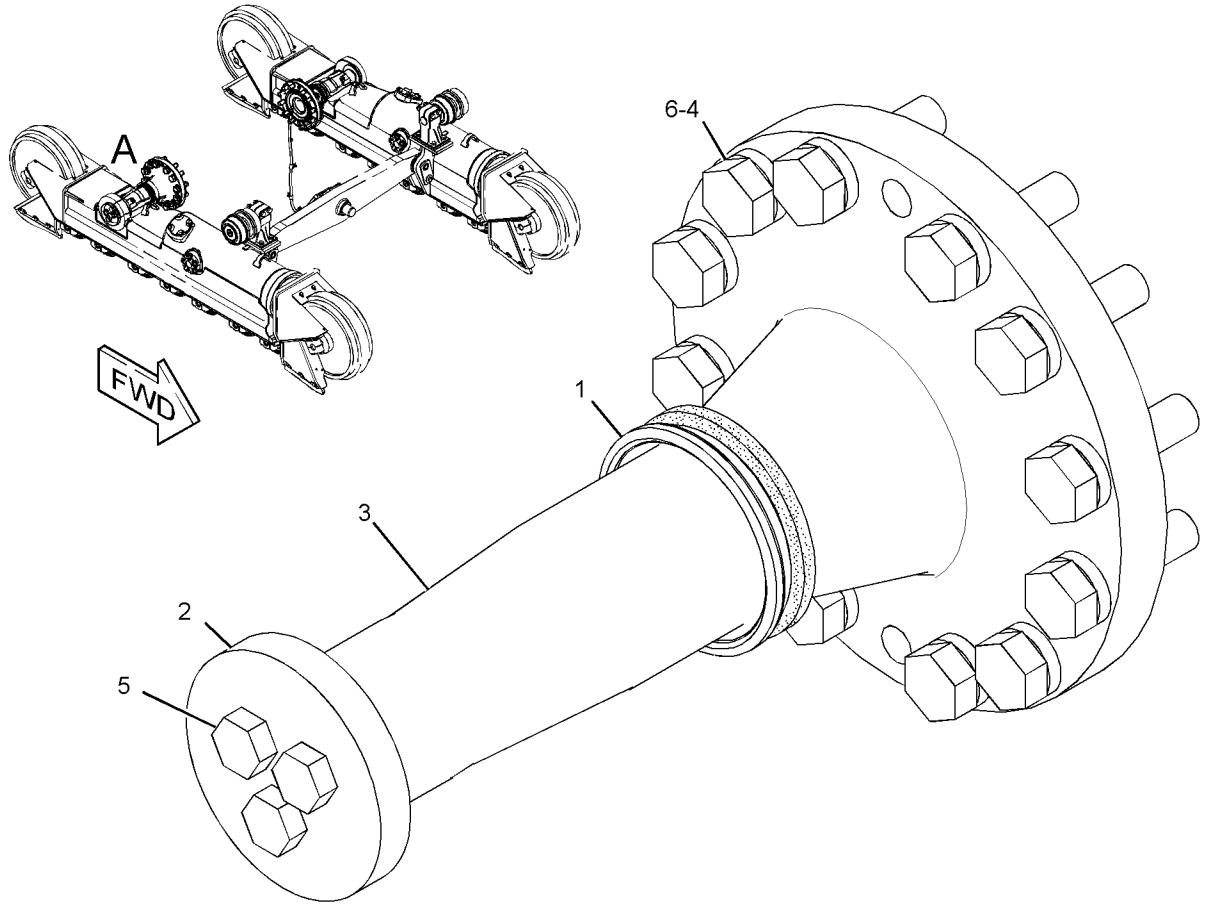

VIEW OF AREA A

GRAPHIC #1 <END> g02958420

229-5446 ROLLER GP-TRACK CARRIER

S/N: R5A1-UP

PART OF 489-4642, 489-4643, 491-4974, 492-0417, 492-0421 UNDERCARRIAGE AR

AN ATTACHMENT

SMCS-4154 **i06558981**

NOTE	REF NO	GRAPHIC REF	PART NUMBER	QTY	PART NAME 1 2 3 4 5 6 (PRODUCT LEVEL)	SEE PAGE
					(INDIVIDUAL PARTS ARE NOT SERVICED SEPARATELY)	

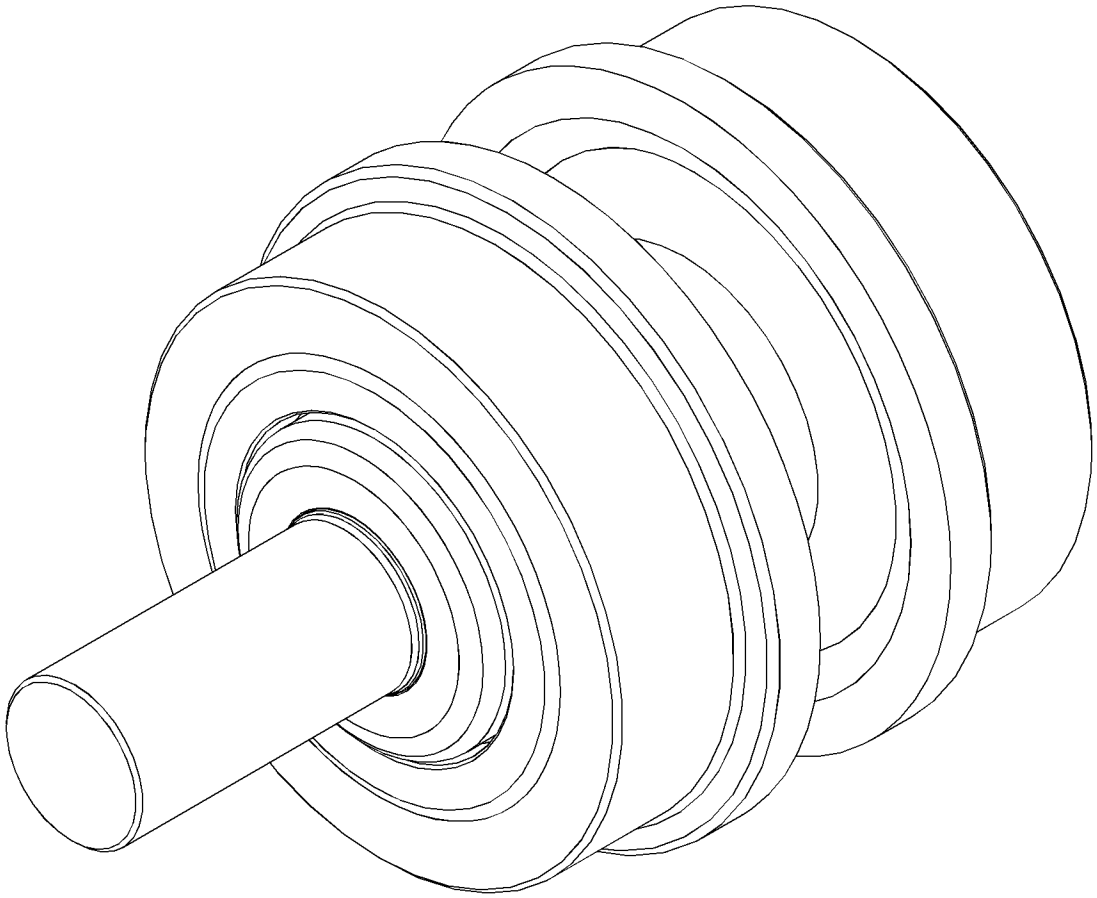

GRAPHIC #1 <END> g01395978

310-4915 ROLLER GP-TRACK-DOUBLE FLANGE—HEAVY-DUTY

S/N: R5A1-UP

PART OF 358-8583 ROLLER GP-TRACK-DOUBLE FLANGE AN ATTACHMENT

SMCS-4180 **i06590200**

NOTE	REF NO	GRAPHIC REF	PART NUMBER	QTY	PART NAME 1 2 3 4 5 6 (PRODUCT LEVEL)	SEE PAGE
	1	1	**121-0834**	2	BUSHING AS	
	2	1	**121-1257**	2	RING-RETAINING	
R	3	1	**2M-2858**	2	SEAL GP-DUO-CONE	
					(EACH INCLUDES)	
	3A	1	**1M-3097**	2	RING-SEALING	
	4	1	**1H-6227**	2	SEAL-O-RING	
	5	1	*6Y-0454*	1	STOPPER AS	
	5A	1	**6Y-0473**	1	PLUG-CLEAR	
	5B	1	**7G-4332**	1	STOPPER	

R - REMANUFACTURED PART MAY BE AVAILABLE

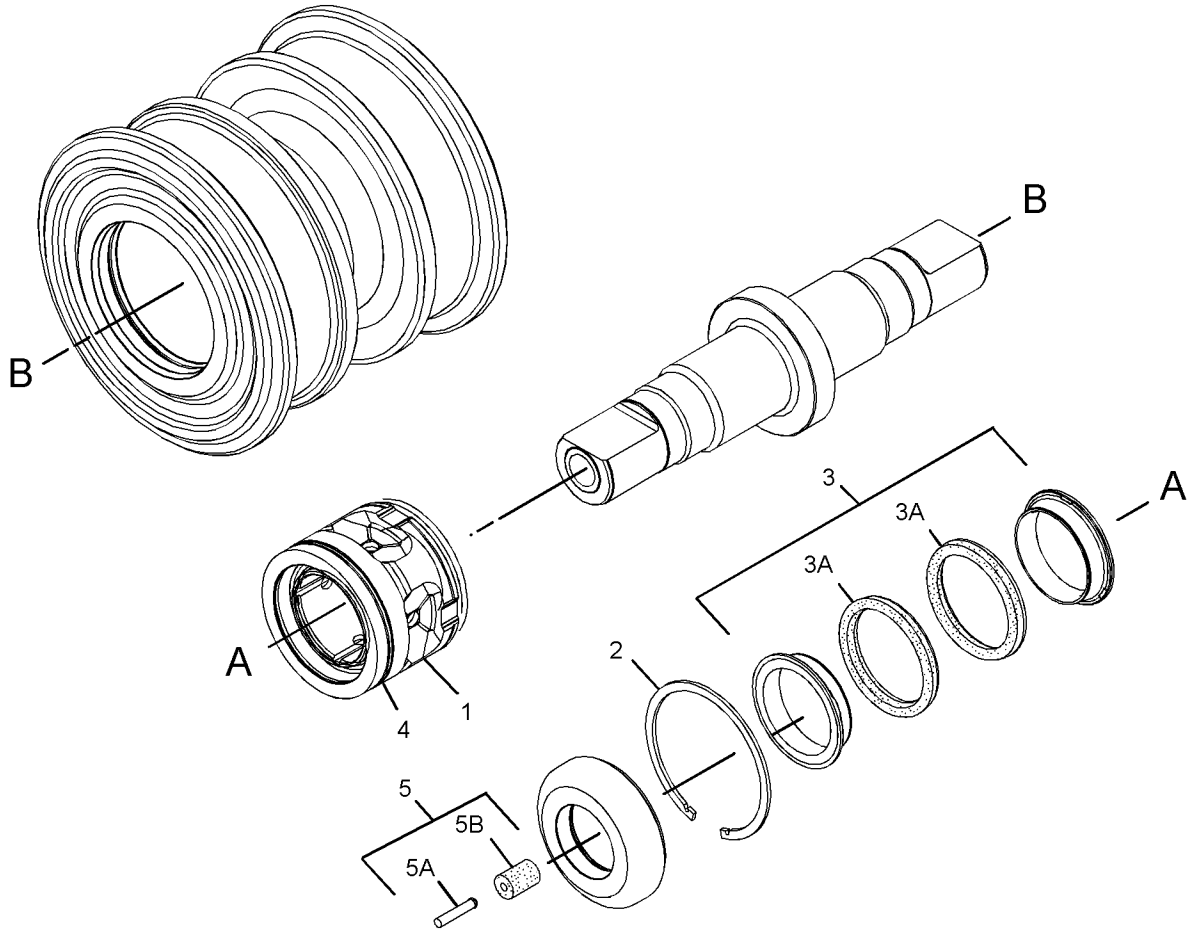

GRAPHIC #1 <END> g02393501

310-4918 ROLLER GP-TRACK-DOUBLE FLANGE

S/N: R5A1-UP

PART OF 384-3275 ROLLER GP-TRACK-DOUBLE FLANGE

AN ATTACHMENT

SMCS-4180 **i06567353**

NOTE	REF NO	GRAPHIC REF	PART NUMBER	QTY	PART NAME 1 2 3 4 5 6 (PRODUCT LEVEL)	SEE PAGE
	1	1	**121-0834**	2	BUSHING AS	
					(EACH INCLUDES)	
	1A	1	**2P-8044**	1	BEARING AS	
	1B	1	**121-0835**	1	BUSHING-TRACK ROLLER	
	2	1	**6Y-0454**	1	STOPPER AS	
	2A	1	**6Y-0473**	1	PLUG-CLEAR	
	2B	1	**7G-4332**	1	STOPPER	
	3	1	**1H-6227**	2	SEAL-O-RING	
	4	1	**121-1257**	2	RING-RETAINING	
	5	1	**9W-5224**	2	SEAL GP-DUO-CONE	

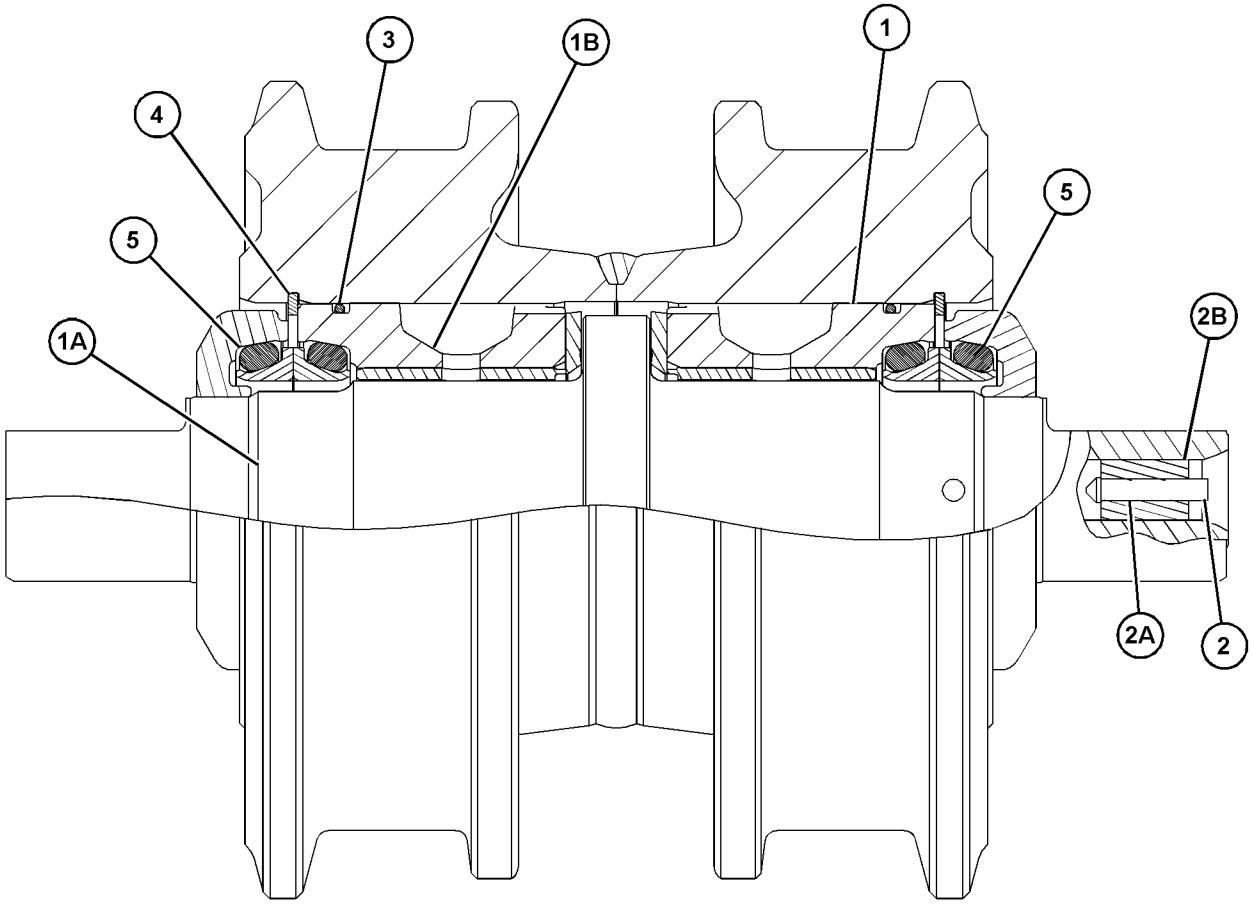

GRAPHIC #1 <END> g06027974

358-8583 ROLLER GP-TRACK-DOUBLE FLANGE

S/N: R5A1-UP

PART OF 489-4642, 489-4643, 492-0421 UNDERCARRIAGE AR

AN ATTACHMENT

SMCS-4180 **i06559542**

NOTE	REF NO	GRAPHIC REF	PART NUMBER	QTY	PART NAME 1 2 3 4 5 6 (PRODUCT LEVEL)	SEE PAGE
	1	1	**223-9110**	2	CAP-TRACK ROLLER	
Y	2	1	**310-4915**	1	ROLLER GP-TRACK-DOUBLE FLANGE	337
M	3	1	**8T-0281**	4	BOLT (M16X2X80-MM)	
	4	1	**9X-8268**	4	WASHER (17.5X30X3.5-MM THK)	

M - METRIC PART
Y - SEPARATE ILLUSTRATION

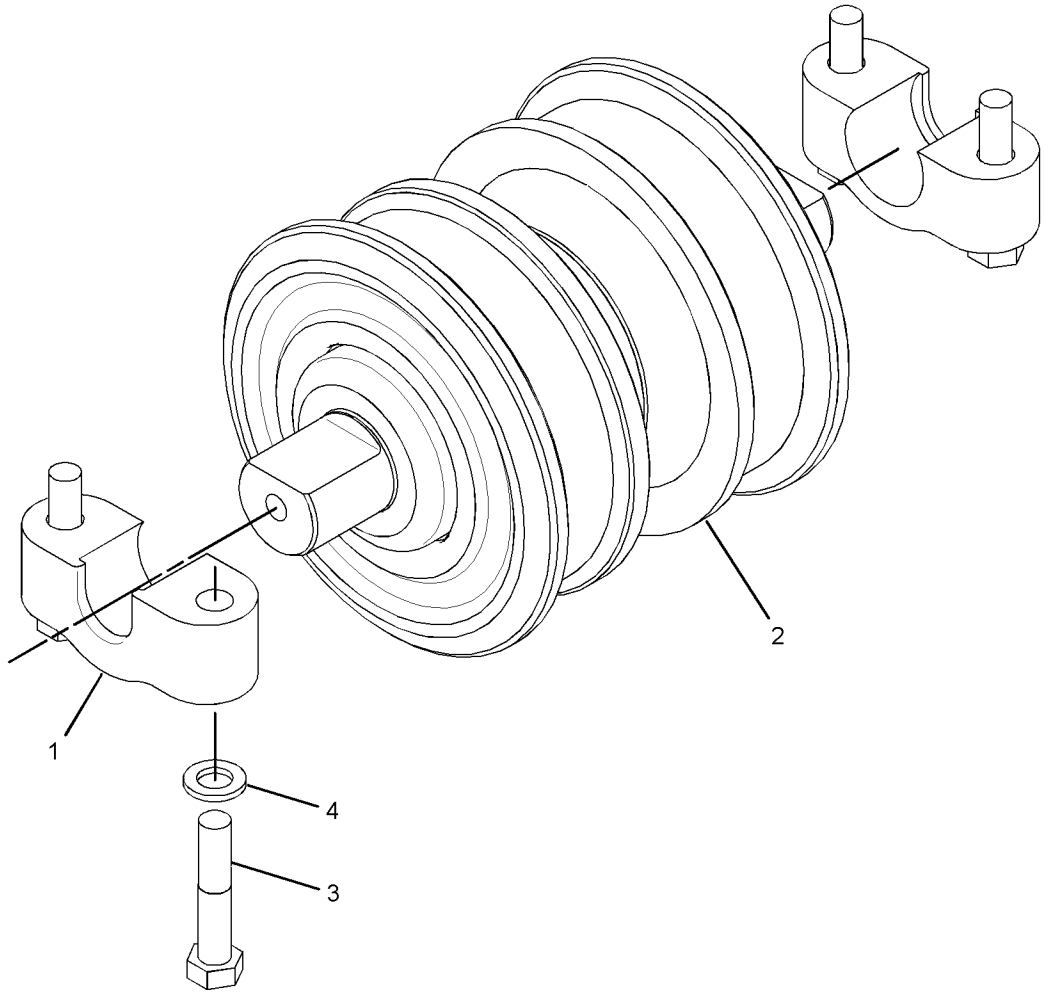

GRAPHIC #1 <END> g02323534

384-3275 ROLLER GP-TRACK-DOUBLE FLANGE—HEAVY-DUTY

S/N: R5A1-UP
TALL
PART OF 491-4974, 492-0417 UNDERCARRIAGE AR
AN ATTACHMENT

SMCS-4180 **i06532356**

NOTE	REF NO	GRAPHIC REF	PART NUMBER	QTY	PART NAME 1 2 3 4 5 6 (PRODUCT LEVEL)	SEE PAGE
	1	1	**223-9110**	2	CAP-TRACK ROLLER	
Y	2	1	**310-4918**	1	ROLLER GP-TRACK-DOUBLE FLANGE	338
M	3	1	**8T-0281**	4	BOLT (M16X2X80-MM)	
	4	1	**9X-8268**	4	WASHER (17.5X30X3.5-MM THK)	

M - METRIC PART
Y - SEPARATE ILLUSTRATION

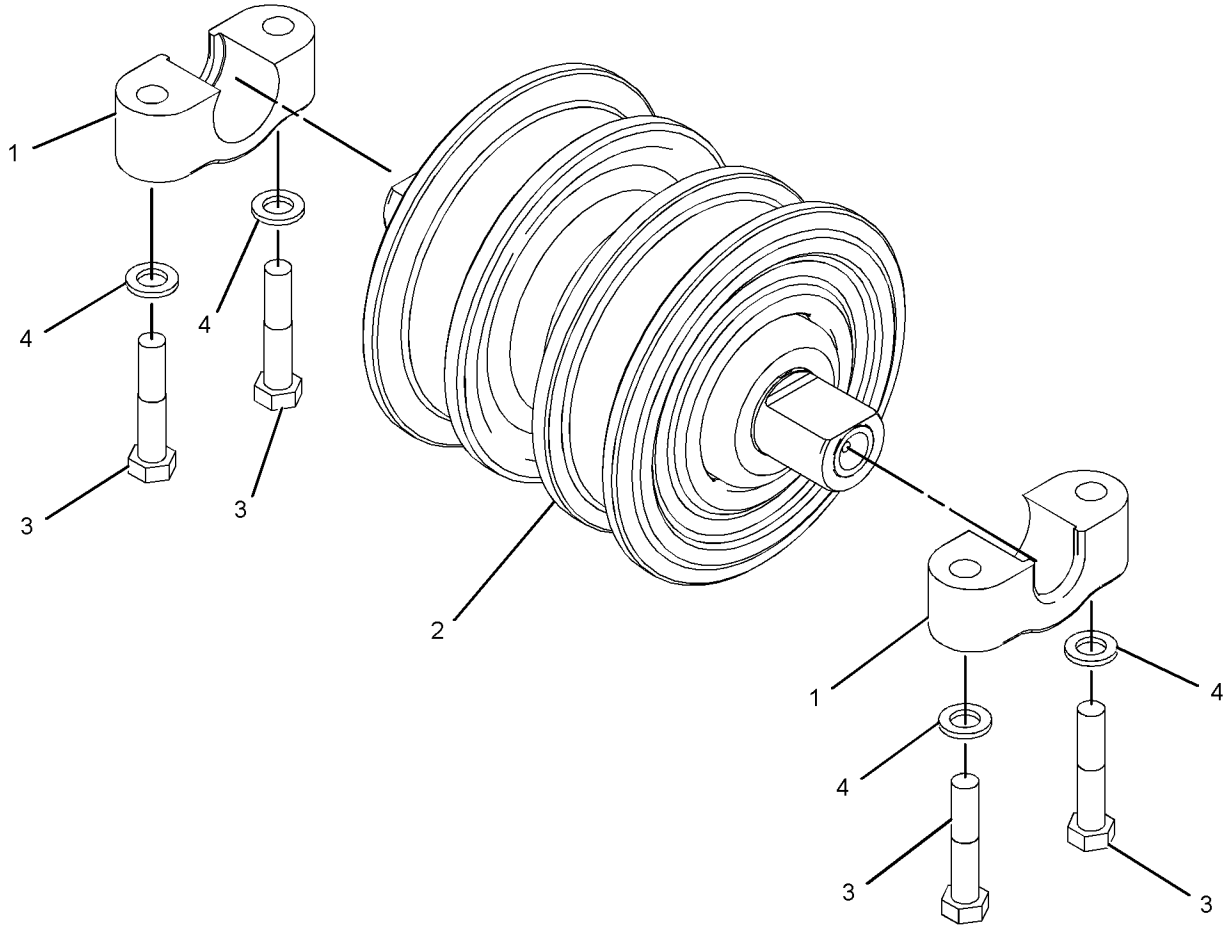

GRAPHIC #1 <END> g02806037

310-4912 ROLLER GP-TRACK-SINGLE FLANGE

S/N: R5A1-UP

PART OF 358-7239 ROLLER GP-TRACK-SINGLE FLANGE

AN ATTACHMENT

SMCS-4180 **i06559062**

NOTE	REF NO	GRAPHIC REF	PART NUMBER	QTY	PART NAME 1 2 3 4 5 6 (PRODUCT LEVEL)	SEE PAGE
	1	1	**121-0834**	2	BUSHING AS	
	2	1	**121-1257**	2	RING-RETAINING	
R	3	1	**2M-2858**	2	SEAL GP-DUO-CONE	
					(EACH INCLUDES)	
	3A	1	**1M-3097**	2	RING-SEALING	
	4	1	**1H-6227**	2	SEAL-O-RING	
	5	1	*6Y-0454*	1	STOPPER AS	
	5A	1	**6Y-0473**	1	PLUG-CLEAR	
	5B	1	**7G-4332**	1	STOPPER	

R - REMANUFACTURED PART MAY BE AVAILABLE

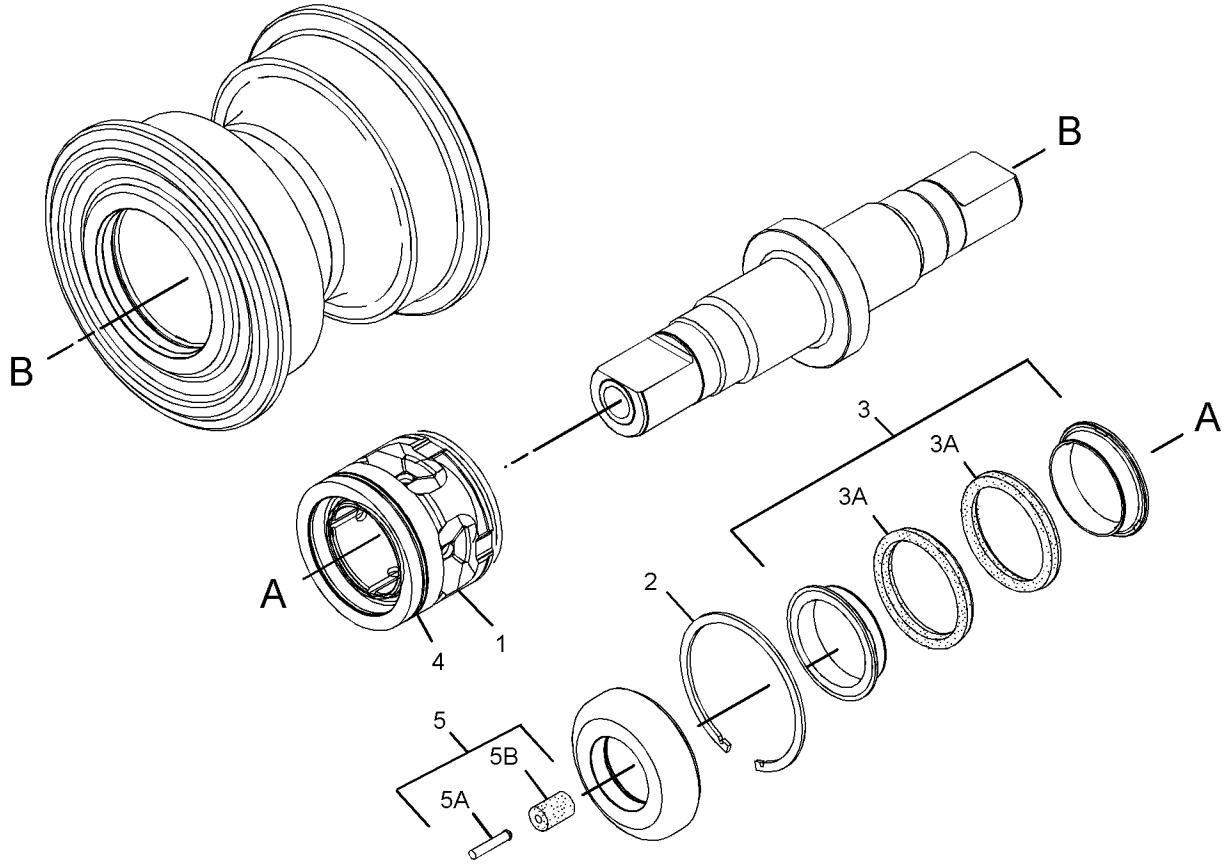

GRAPHIC #1 <END> g02394297

358-7239 ROLLER GP-TRACK-SINGLE FLANGE

S/N: R5A1-UP

PART OF 489-4642, 489-4643, 491-4974, 492-0417, 492-0421 UNDERCARRIAGE AR AN ATTACHMENT

SMCS-4180 **i06559052**

NOTE	REF NO	GRAPHIC REF	PART NUMBER	QTY	PART NAME 1 2 3 4 5 6 (PRODUCT LEVEL)	SEE PAGE
	1	1	**223-9110**	2	CAP-TRACK ROLLER	
Y	2	1	**310-4912**	1	ROLLER GP-TRACK-SINGLE FLANGE	341
M	3	1	**8T-0281**	4	BOLT (M16X2X80-MM)	
	4	1	**9X-8268**	4	WASHER (17.5X30X3.5-MM THK)	

M - METRIC PART
Y - SEPARATE ILLUSTRATION

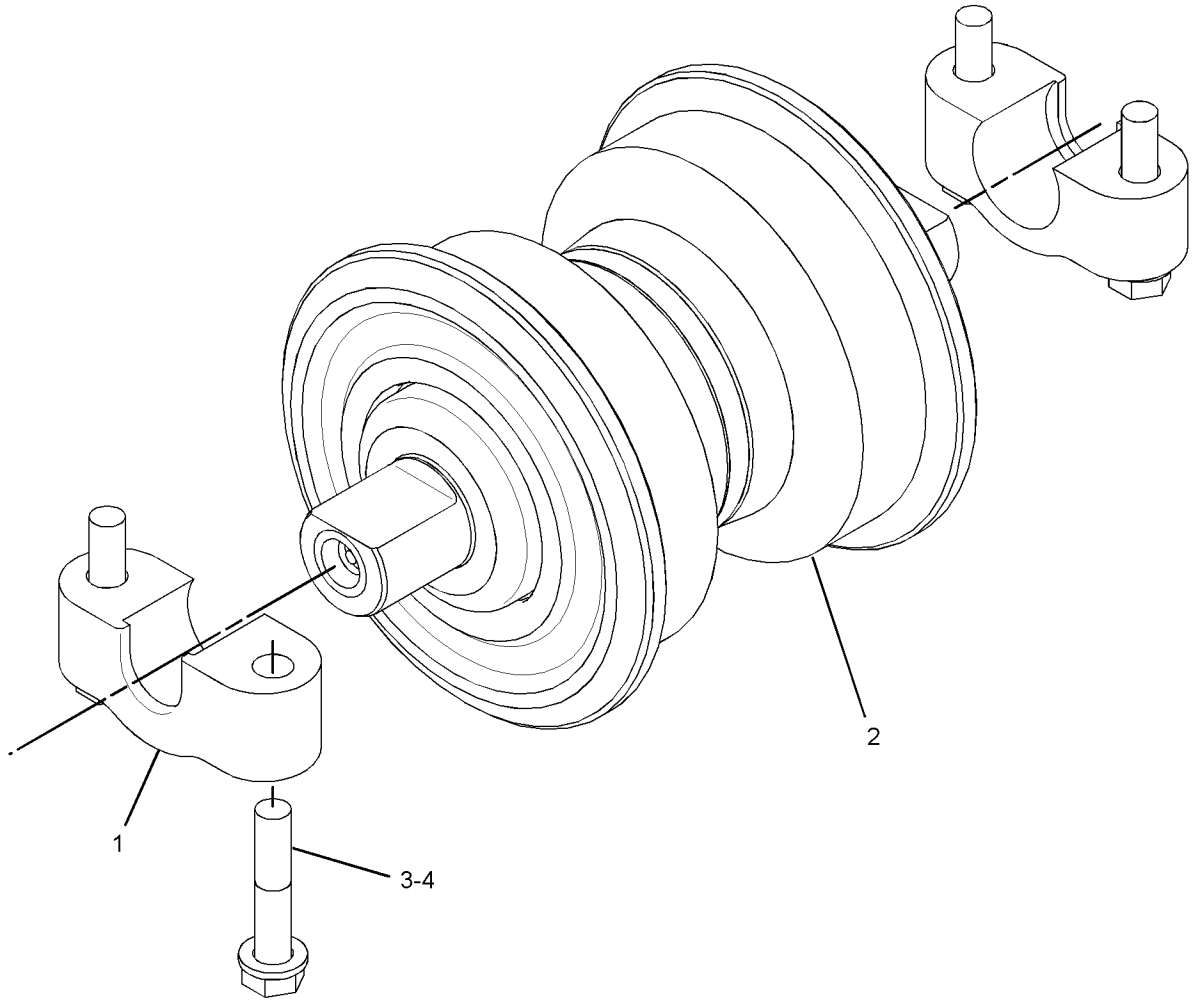

GRAPHIC #1 <END> g02323593

489-5751 SCRAPER GP-IDLER

S/N: R5A1-UP

PART OF 489-4642, 489-4643, 491-4974, 492-0417, 492-0421 UNDERCARRIAGE AR AN ATTACHMENT

SMCS-4152 **i06534197**

NOTE	REF NO	GRAPHIC REF	PART NUMBER	QTY	PART NAME 1 2 3 4 5 6 (PRODUCT LEVEL)	SEE PAGE
	1	1	**196-7074**	4	STRIP-WEAR (REAR)	
	2	1	**196-7078**	4	STRIP-WEAR (FRONT)	
	3	1	**251-8601**	2	SCRAPER	
M	4	1	**8T-4183**	4	BOLT (M12X1.75X40-MM)	
M	5	1	**8T-4192**	24	BOLT (M12X1.75X25-MM)	
	6	1	**8T-4223**	28	WASHER-HARD (13.5X25.5X3-MM THK)	

M - METRIC PART

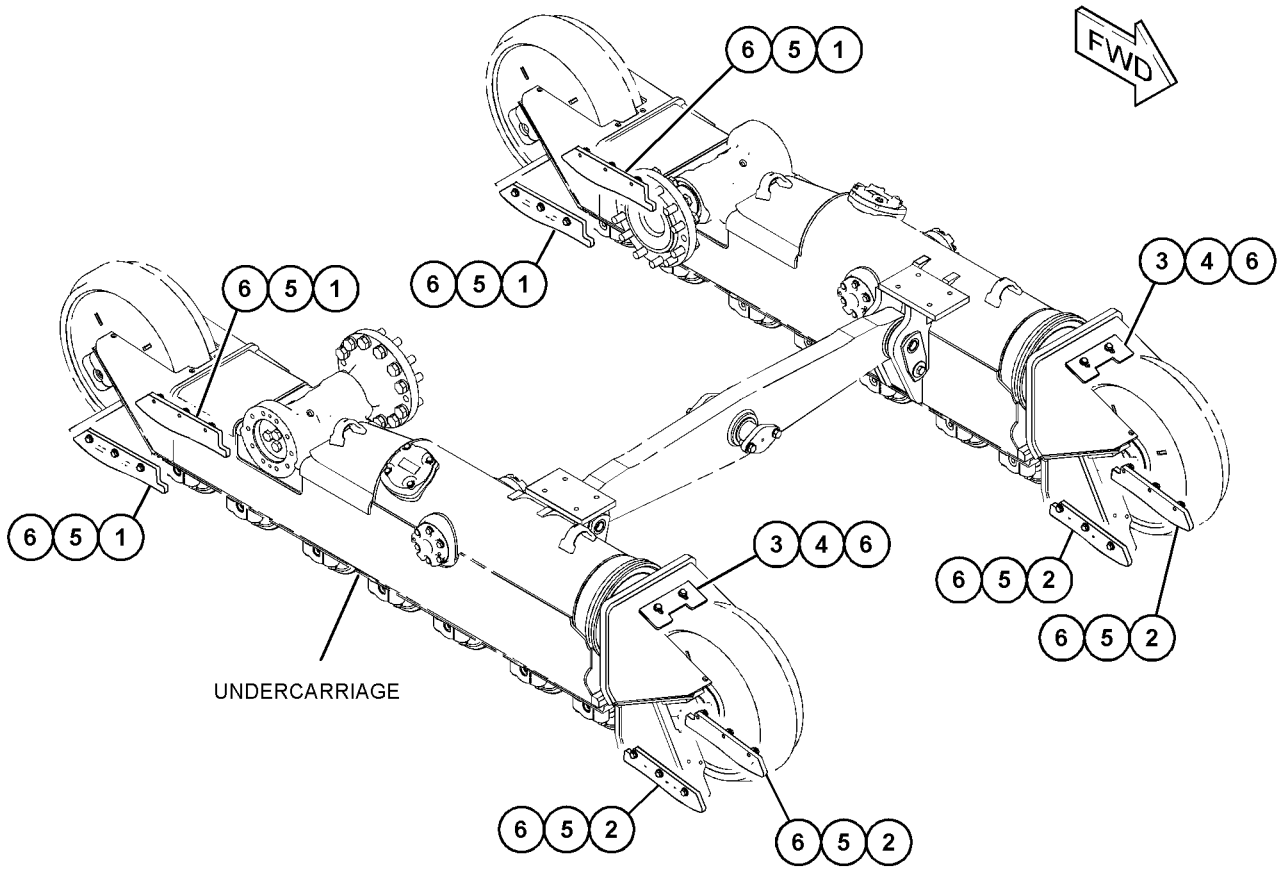

GRAPHIC #1 <END> g06023392

453-9495 STRIKER GP-REAR—WASTE HANDLING

S/N: R5A1-UP

AN ATTACHMENT

SMCS-4150 **i06582025**

NOTE	REF NO	GRAPHIC REF	PART NUMBER	QTY	PART NAME 1 2 3 4 5 6 (PRODUCT LEVEL)	SEE PAGE
	1	1	**246-2641**	1	PADLOCK GP	
		1	**5P-8500**	1	KEY	
	2	1	**6V-9313**	8	PLUG	
	3	1	**7B-0863**	1	LATCH-PIN	
	4	1	**8G-7085**	1	PIN AS	
	5	1	*481-7829*	1	GUARD GP-FUEL TANK	
		1	**7X-7729**	6	WASHER (11X25X3-MM THK)	
M		1	**8T-4195**	6	BOLT (M10X1.5X30-MM)	
		1	**481-7830**	1	PLATE	
Y	6	1	*483-7817*	1	BAR GP-STRIKER	278
	7	1	**483-7834**	2	PLATE	
	8	1	**8T-4123**	20	WASHER (3.62X5.75X0.375-MM THK)	
M	9	1	**8T-4140**	1	BOLT (M16X2X60-MM)	
M	10	1	**8T-4778**	1	LOCKNUT (M16X2-THD)	
M	11	1	**8T-6430**	20	BOLT (M20X2.5X50-MM)	
E	12	1	**103-2543**		SEAL (52-CM EACH)	
E	12A	1	**103-2543**		SEAL (117-CM)	
E	12B	1	**103-2543**		SEAL (31-CM EACH)	

E - ORDER BY THE CENTIMETER
M - METRIC PART
Y - SEPARATE ILLUSTRATION

453-9495 **STRIKER GP-REAR (**contd.**)** **i06582025**

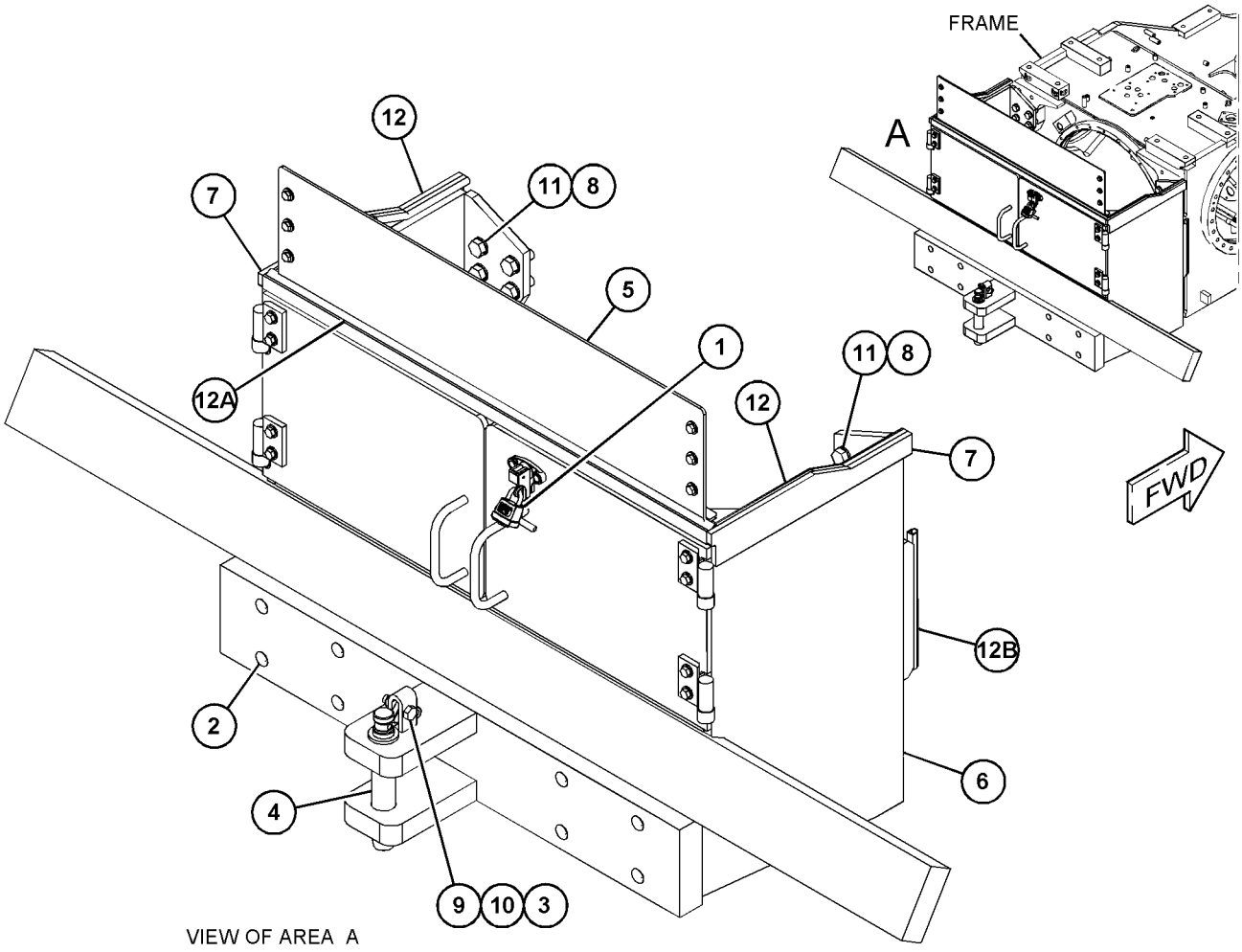

VIEW OF AREA A

GRAPHIC #1 <END> g06025065

271-6184 TRACK ADJUSTER & RECOIL GP

S/N: R5A1-UP

PART OF 492-1344, 492-1345 FRAME GP-TELESCOPING RECOIL

AN ATTACHMENT

SMCS-4157, 4158

i06532294

NOTE	REF NO	GRAPHIC REF	PART NUMBER	QTY	PART NAME 1 2 3 4 5 6 (PRODUCT LEVEL)	SEE PAGE
	1	1	**2S-5926**	1	VALVE-RELIEF (RECOIL SPRING OIL)	
	2	1	**3W-2369**	1	PLATE AS	
	3	1	**8E-4092**	2	RETAINER	
	4	1	**8G-3102**	1	PISTON	
	5	1	**8G-4945**	1	SEAL AS	
	6	1	**108-0801**	1	CYLINDER	
	7	1	**190-8609**	1	VALVE-FILL (RECOIL SPRING OIL)	
	8	1	**271-6185**	1	SPRING	
	9	1	**331-2427**	1	TUBE AS	
	10	1	**331-2430**	1	RETAINER	
	11	1	**2J-6274**	1	SEAL-O-RING	
	12	1	**2S-4078**	1	SEAL-O-RING	
M	13	1	**8T-0375**	4	BOLT (M16X2X45-MM)	
	14	1	**8T-4121**	2	WASHER-HARD (11X21X2.5-MM THK)	
M	15	1	**8T-4182**	2	BOLT (M10X1.5X45-MM)	
	16	1	**9S-8010**	1	PLUG	
	17	1	**9X-8268**	4	WASHER (17.5X30X3.5-MM THK)	

M - METRIC PART

271-6184 **TRACK ADJUSTER & RECOIL GP (**contd.**)** **i06532294**

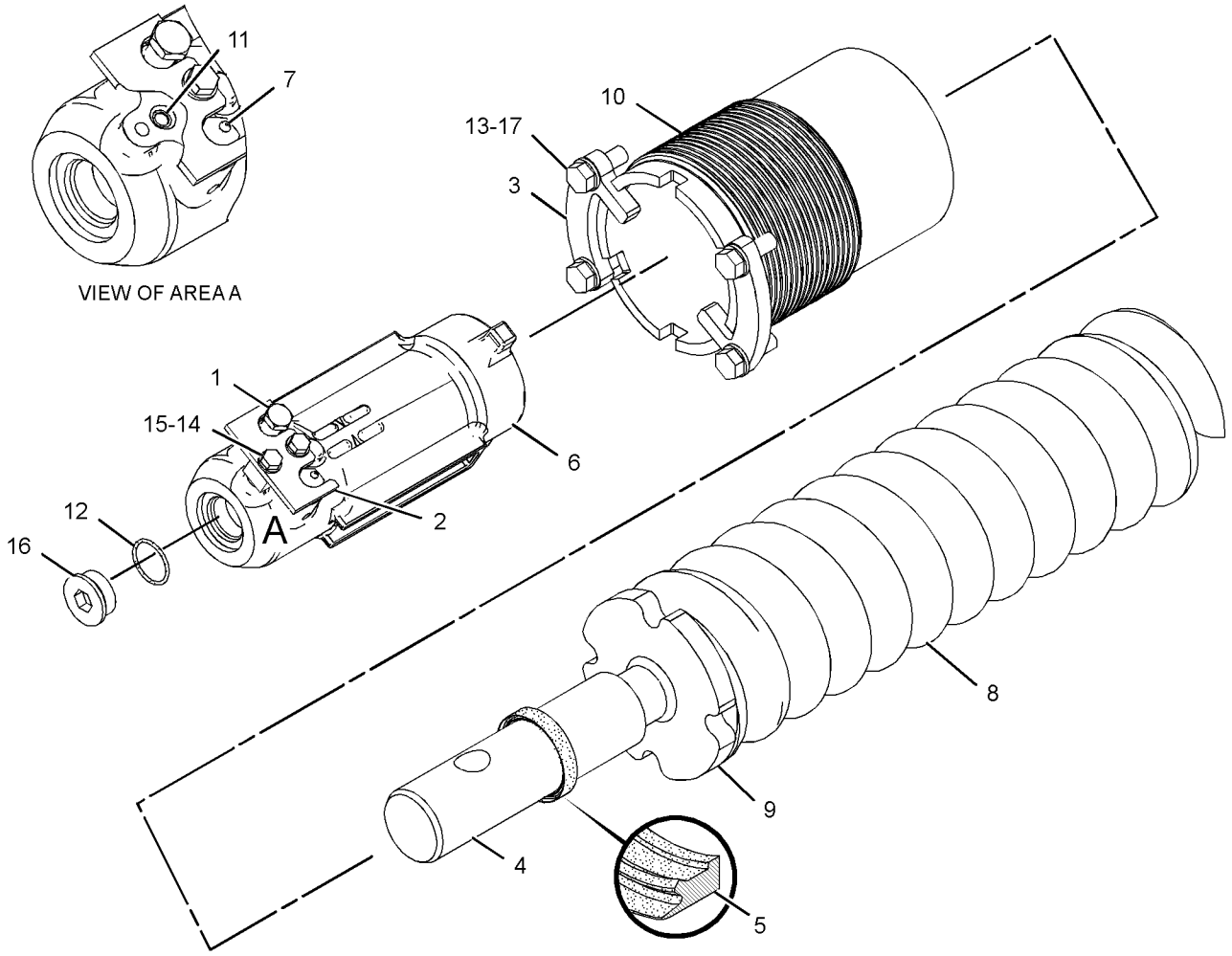

GRAPHIC #1 <END> g01903581

379-3982 TRACK AR–HEAVY-DUTY

S/N: R5A1-UP

560-MM (22-IN) GROUSER SHOE. SEALED, LUBRICATED

FOR USE WITH HEAVY-DUTY ROLLER, GUARDS, GUIDESTRIPS & CONVENTIONAL IDLERS

AN ATTACHMENT

SMCS-4170 **i06582962**

NOTE	REF NO	GRAPHIC REF	PART NUMBER	QTY	PART NAME 1 2 3 4 5 6 (PRODUCT LEVEL)	SEE PAGE
Y	1	1	*110-2977*	2	TRACK GP	353

Y - SEPARATE ILLUSTRATION

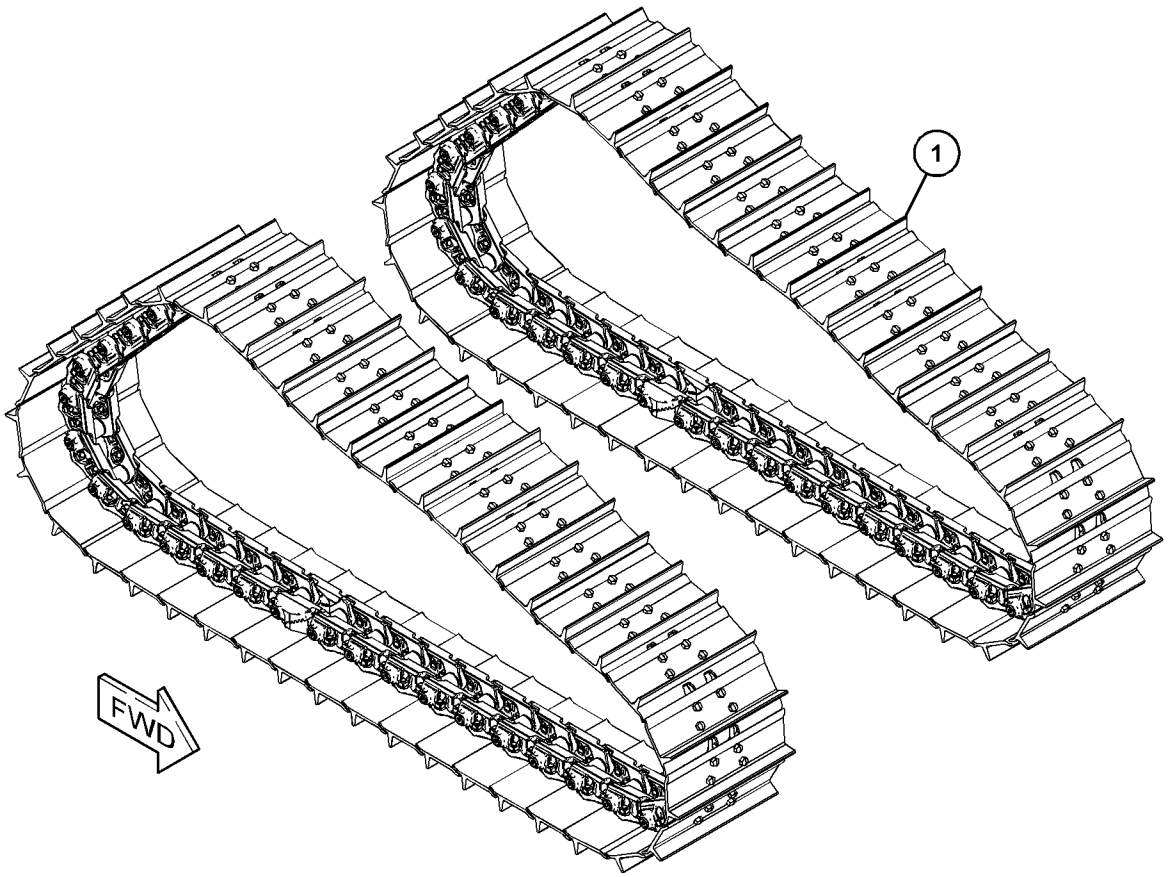

GRAPHIC #1 <END> g06033384

384-1711 TRACK AR—HEAVY-DUTY

S/N: R5A1-UP

600-MM (23.6-IN) GROUSER SHOE. SEALED, LUBRICATED. EXTREME SERVICE
FOR USE WITH HEAVY-DUTY ROLLERS, GUARDS, GUIDESTRIPS, CONVENTIONAL IDLERS
AN ATTACHMENT

SMCS-4170 **i06585571**

NOTE	REF NO	GRAPHIC REF	PART NUMBER	QTY	PART NAME 1 2 3 4 5 6 (PRODUCT LEVEL)	SEE PAGE
Y	1	1	*356-3434*	2	TRACK GP (2-REQUIRED, HEAVY-DUTY)	356

Y - SEPARATE ILLUSTRATION

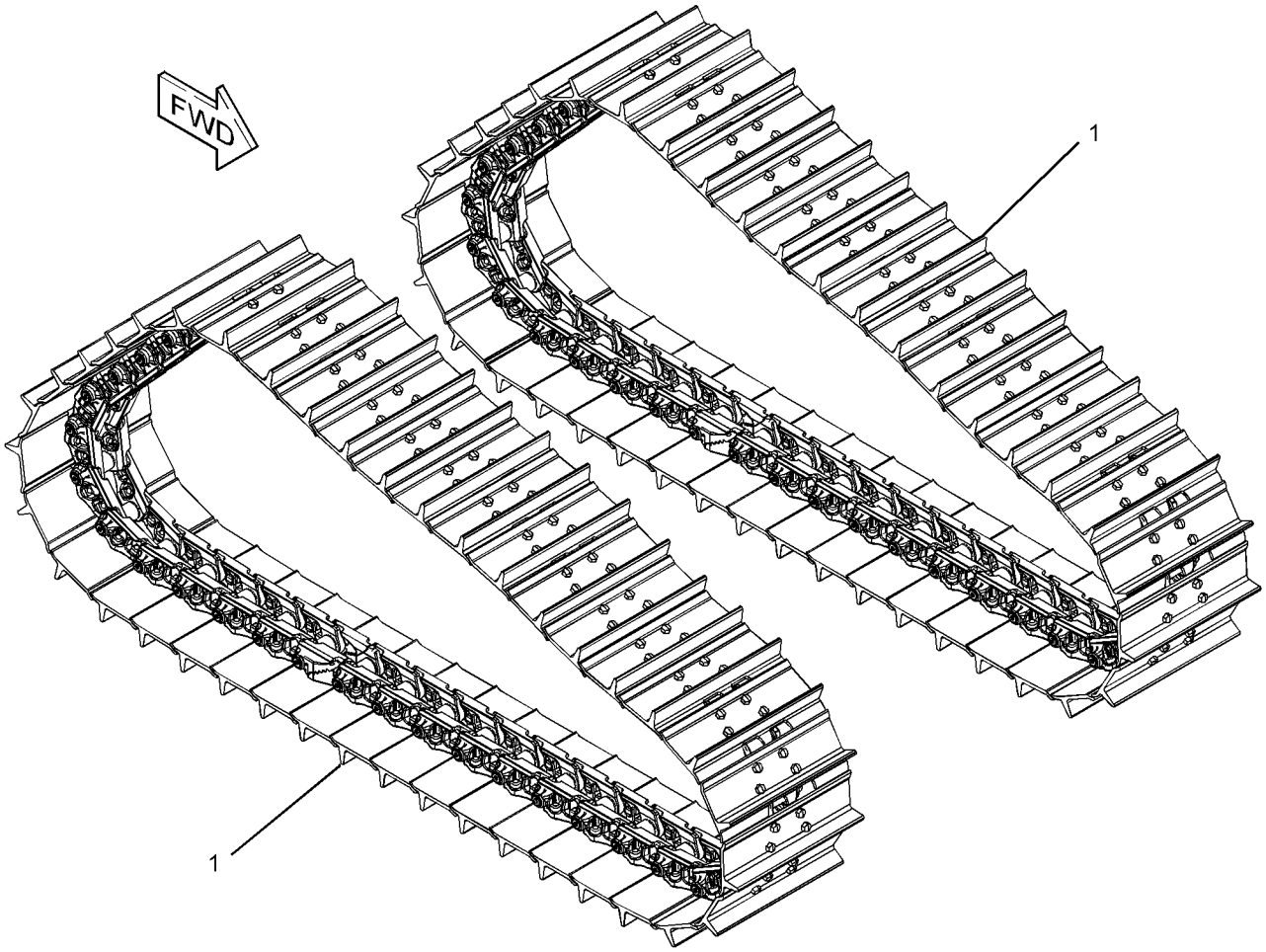

GRAPHIC #1 <END> g02814836

384-1712 TRACK AR–HEAVY-DUTY

S/N: R5A1-UP

600-MM (23.6-IN) GROUSER SHOE, TRAPEZOIDAL. SEALED, LUBRICATED. EXTREME SERVICE. TRAPEZOIDAL

FOR USE WITH HEAVY-DUTY ROLLERS, GUARDS, GUIDESTRIPS & CONVENTIONAL IDLERS

AN ATTACHMENT

SMCS-4170 **i06534628**

NOTE	REF NO	GRAPHIC REF	PART NUMBER	QTY	PART NAME 1 2 3 4 5 6 (PRODUCT LEVEL)	SEE PAGE
Y	1	1	*356-3435*	2	TRACK GP	357

Y - SEPARATE ILLUSTRATION

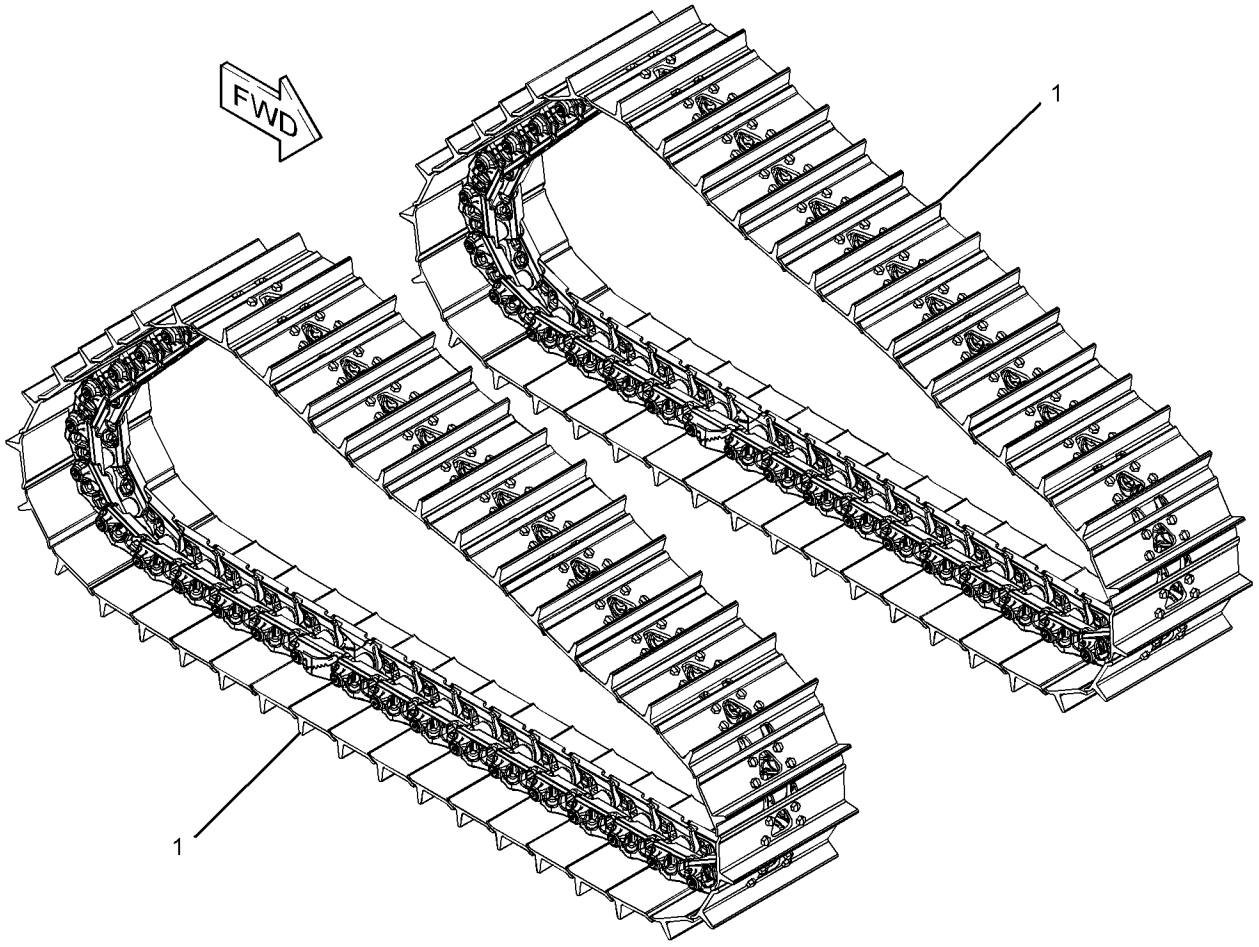

GRAPHIC #1 <END> g02814837

451-5834 TRACK AR—HEAVY-DUTY

S/N: R5A1-UP

600-MM (23.6-IN) GROUSER SHOE. SEALED, LUBRICATED

FOR USE WITH HEAVY-DUTY ROLLERS, GUARDS, GUIDESTRIPS & CONVENTIONAL IDLERS

AN ATTACHMENT

SMCS-4170 **i06582964**

NOTE	REF NO	GRAPHIC REF	PART NUMBER	QTY	PART NAME 1 2 3 4 5 6 (PRODUCT LEVEL)	SEE PAGE
Y	1	1	**110-2978**	2	TRACK GP	354

Y - SEPARATE ILLUSTRATION

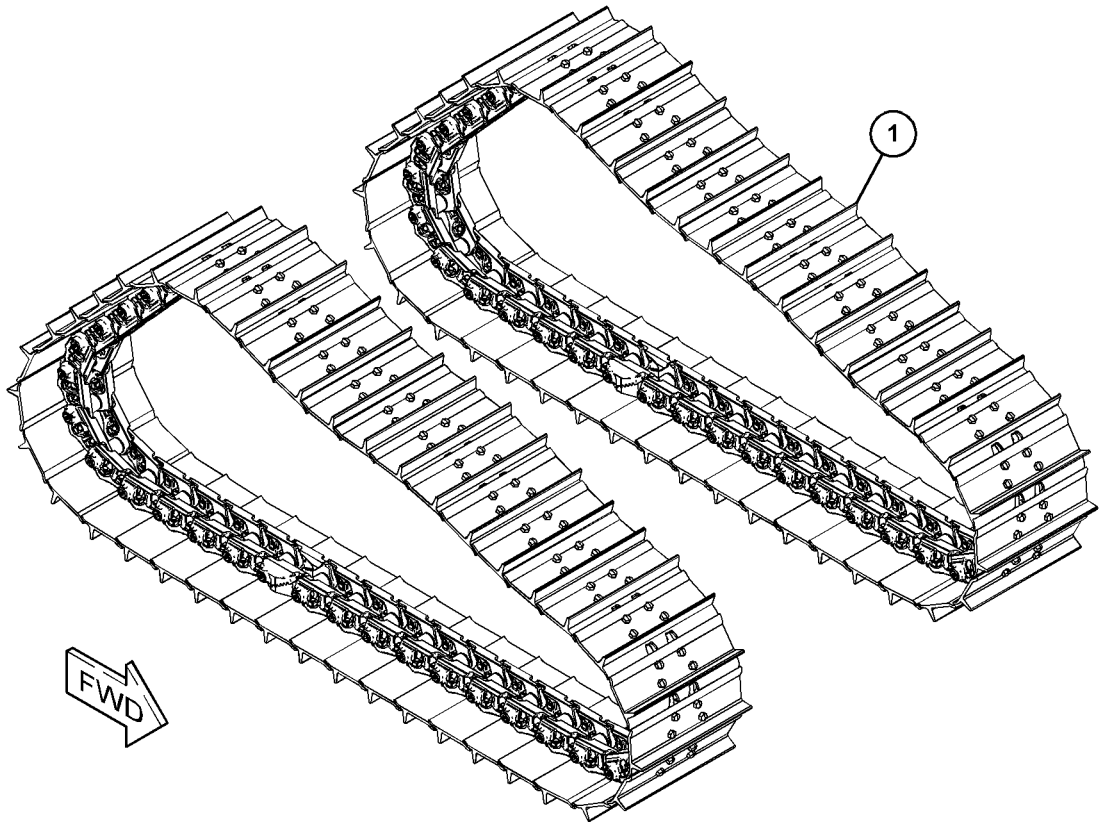

GRAPHIC #1 <END> g06033356

451-5835 TRACK AR–HEAVY-DUTY

S/N: R5A1-UP

560-MM (22-IN) GROUSER SHOE. SEALED, LUBRICATED. EXTREME SERVICE

FOR USE WITH HEAVY-DUTY ROLLERS, GUARDS, GUIDESTRIPS & CONVENTIONAL IDLERS

AN ATTACHMENT

SMCS-4170 **i06582963**

NOTE	REF NO	GRAPHIC REF	PART NUMBER	QTY	PART NAME 1 2 3 4 5 6 (PRODUCT LEVEL)	SEE PAGE
Y	1	1	*110-2980*	2	TRACK GP	355

Y - SEPARATE ILLUSTRATION

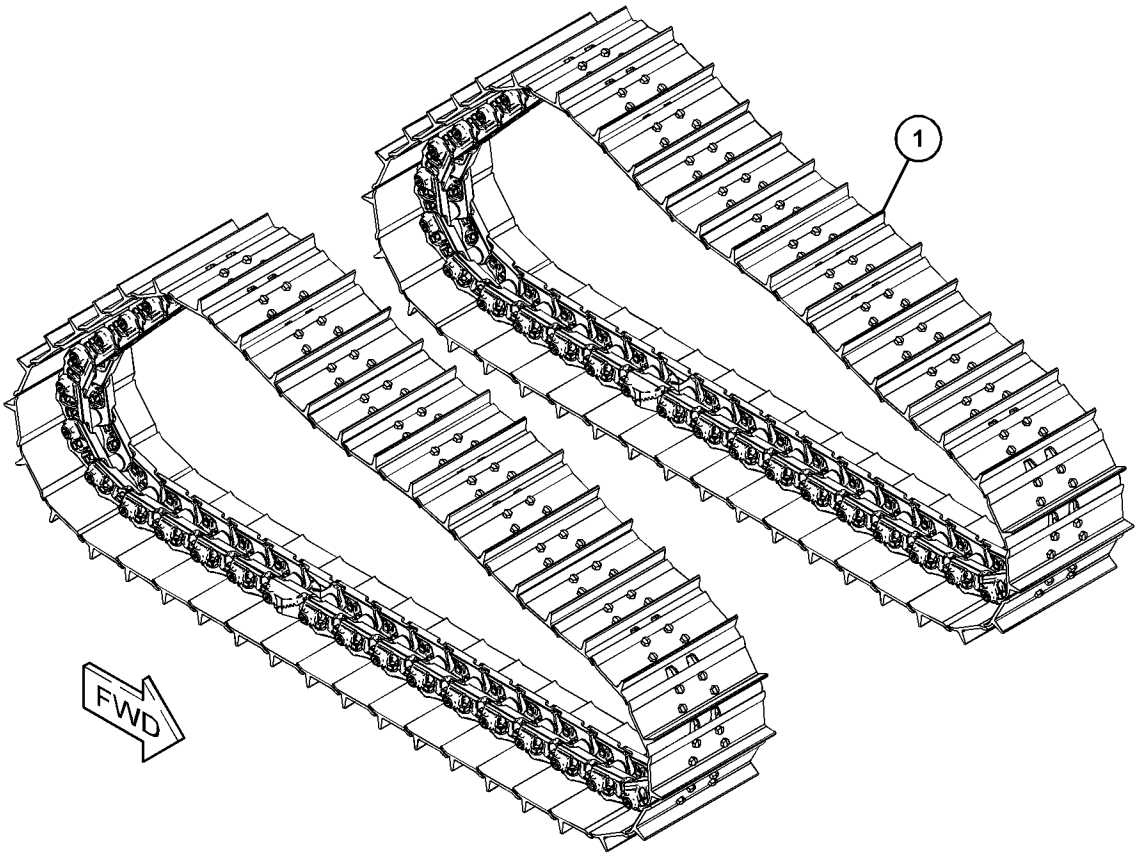

GRAPHIC #1 <END> g06033389

110-2977 TRACK GP–2-REQUIRED, HEAVY-DUTY

S/N: R5A1-UP
560-MM (22-IN) GROUSER SHOE. SEALED, LUBRICATED, EXTREME SERVICE
PART OF 379-3982 TRACK AR
AN ATTACHMENT

SMCS-4170 **i06586073**

NOTE	REF NO	GRAPHIC REF	PART NUMBER	QTY	PART NAME 1 2 3 4 5 6 (PRODUCT LEVEL)	SEE PAGE
	1	1	**106-1607**	39	SHOE-TRACK	
	2	1	**106-1613**	1	SHOE-TRACK	
Y	3	1	**110-2976**	1	LINK AS-TRACK	332
	4	1	**106-1642**	2	BOLT-TRACK MASTER (3/4-16X2.9-IN)	
	5	1	**107-0719**	2	BOLT-TRACK MASTER (3/4-16X3.9-IN)	
	6	1	**1S-1860**	156	NUT-TRACK (3/4-16-THD)	
	7	1	**6V-1792**	156	BOLT-TRACK (3/4-16X2.4-IN)	

Y - SEPARATE ILLUSTRATION

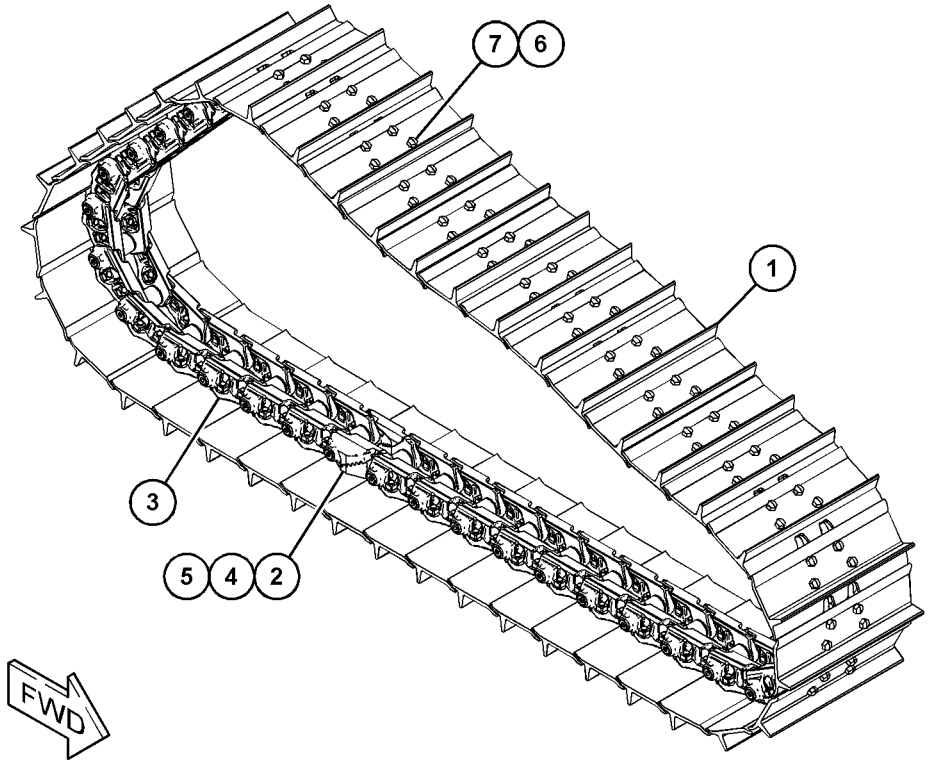

GRAPHIC #1 <END> g06034710

110-2978 TRACK GP–2-REQUIRED, HEAVY-DUTY

S/N: R5A1-UP

600-MM (23.6-IN) GROUSER SHOE. SEALED, LUBRICATED, MODERATE SERVICE
FOR USE WITH HEAVY-DUTYROLLERS, GUARD, GUIDESTRIPS & CONVENTIONAL IDLERS
PART OF 451-5834 TRACK AR
AN ATTACHMENT

SMCS-4170 **i06582370**

NOTE	REF NO	GRAPHIC REF	PART NUMBER	QTY	PART NAME 1 2 3 4 5 6 (PRODUCT LEVEL)	SEE PAGE
	1	1	**117-0615**	39	SHOE-TRACK	
	2	1	**117-0616**	1	SHOE-TRACK MASTER	
Y	3	1	**110-2976**	1	LINK AS-TRACK	332
	4	1	**106-1642**	2	BOLT-TRACK MASTER (3/4-16X2.9-IN)	
	5	1	**107-0719**	2	BOLT-TRACK MASTER (3/4-16X3.9-IN)	
	6	1	**1S-1860**	156	NUT-TRACK (3/4-16-THD)	
	7	1	**6V-1792**	156	BOLT-TRACK (3/4-16X2.4-IN)	

Y - SEPARATE ILLUSTRATION

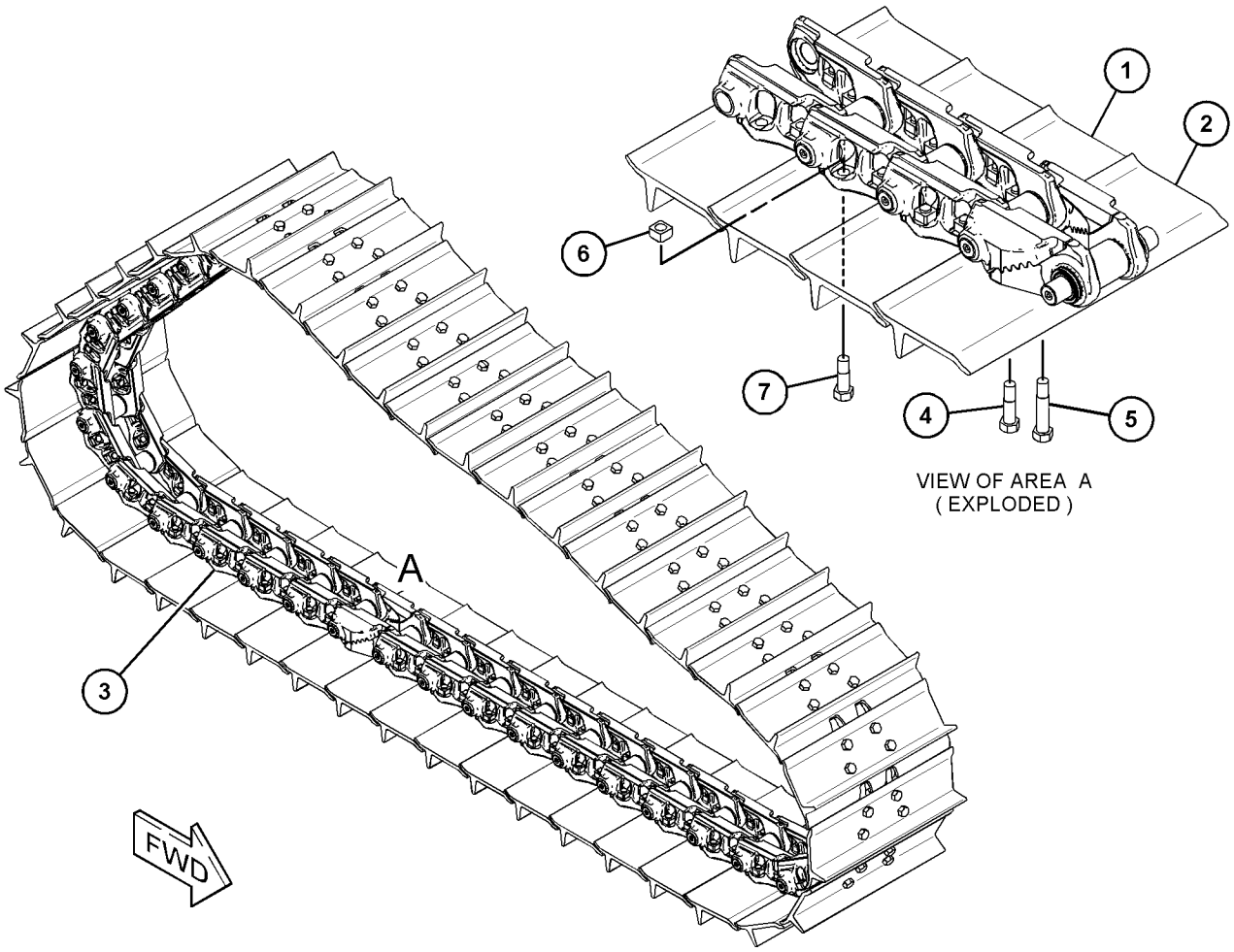

GRAPHIC #1 <END> g06033005

110-2980 TRACK GP–2-REQUIRED, HEAVY-DUTY

S/N: R5A1-UP
560-MM (22-IN) GROUSER SHOE. SEALED, LUBRICATED. EXTREME SERVICE
FOR USE WITH HEAVY-DUTY ROLLERS, GUARD, GUIDESTRIPS, & CONVENTIONAL IDLERS
PART OF 451-5835 TRACK AR
AN ATTACHMENT

SMCS-4170 **i06530486**

NOTE	REF NO	GRAPHIC REF	PART NUMBER	QTY	PART NAME 1 2 3 4 5 6 (PRODUCT LEVEL)	SEE PAGE
	1	1	**107-0713**	39	SHOE-TRACK	
	2	1	**107-0714**	1	SHOE-TRACK MASTER	
Y	3	1	**110-2976**	1	LINK AS-TRACK	332
	4	1	**106-1642**	2	BOLT-TRACK MASTER (3/4-16X2.9-IN)	
	5	1	**107-0719**	2	BOLT-TRACK MASTER (3/4-16X3.9-IN)	
	6	1	**1S-1860**	156	NUT-TRACK (3/4-16-THD)	
	7	1	**6V-1792**	156	BOLT-TRACK (3/4-16X2.4-IN)	

Y - SEPARATE ILLUSTRATION

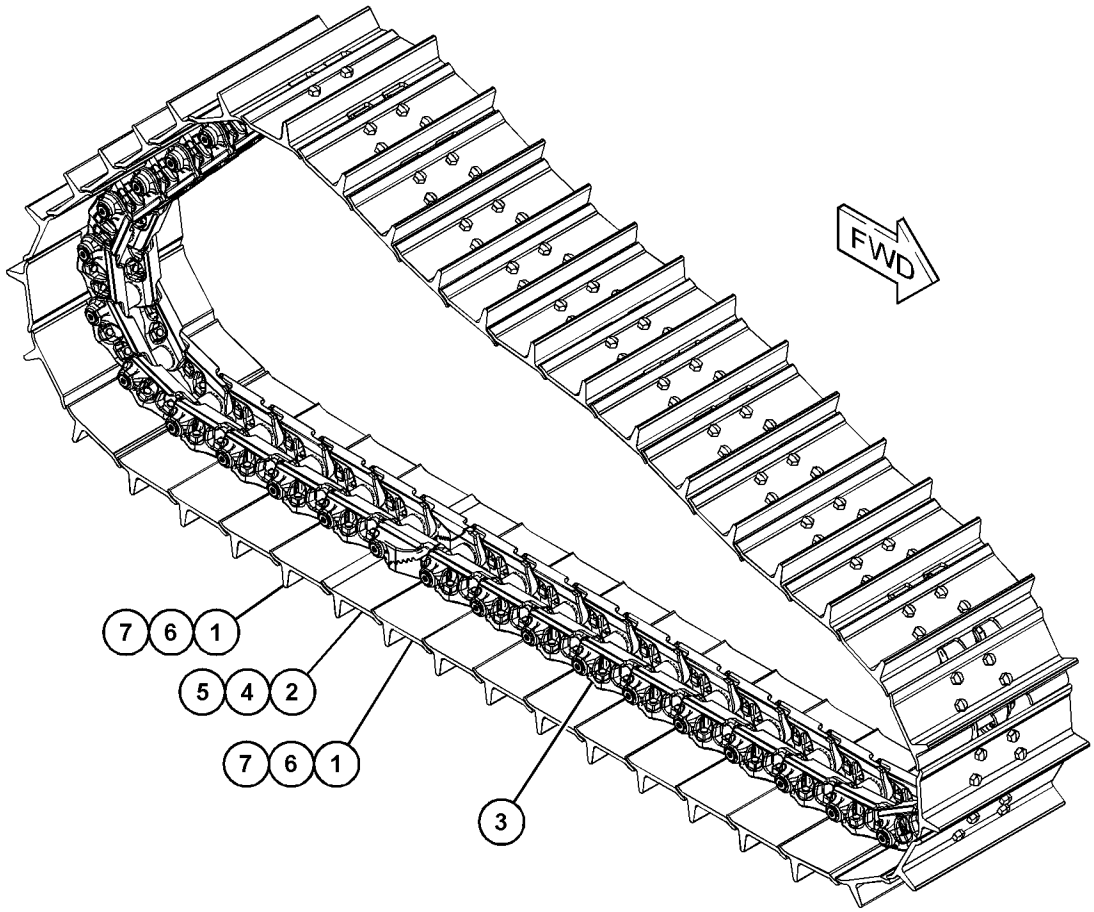

GRAPHIC #1 <END> g03709838

356-3434 TRACK GP–2-REQUIRED, HEAVY-DUTY

S/N: R5A1-UP
600-MM (23.6-IN) GROUSER SHOE. SEALED, LUBRICATED, EXTREME SERVICE
FOR USE WITH HEAVY-DUTY ROLLERS, GUARDS, GUIDESTRIPS & CONVENTIONAL IDLERS
PART OF 384-1711 TRACK AR
AN ATTACHMENT

SMCS-4170 **i06582385**

NOTE	REF NO	GRAPHIC REF	PART NUMBER	QTY	PART NAME 1 2 3 4 5 6 (PRODUCT LEVEL)	SEE PAGE
	1	1	**132-1334**	39	SHOE-TRACK	
	2	1	**132-1336**	1	SHOE-TRACK MASTER	
Y	3	1	**110-2976**	1	LINK AS-TRACK	332
	4	1	**106-1642**	2	BOLT-TRACK MASTER (3/4-16X2.9-IN)	
	5	1	**107-0719**	2	BOLT-TRACK MASTER (3/4-16X3.9-IN)	
	6	1	**1S-1860**	156	NUT-TRACK (3/4-16-THD)	
	7	1	**6V-1792**	156	BOLT-TRACK (3/4-16X2.4-IN)	

Y - SEPARATE ILLUSTRATION

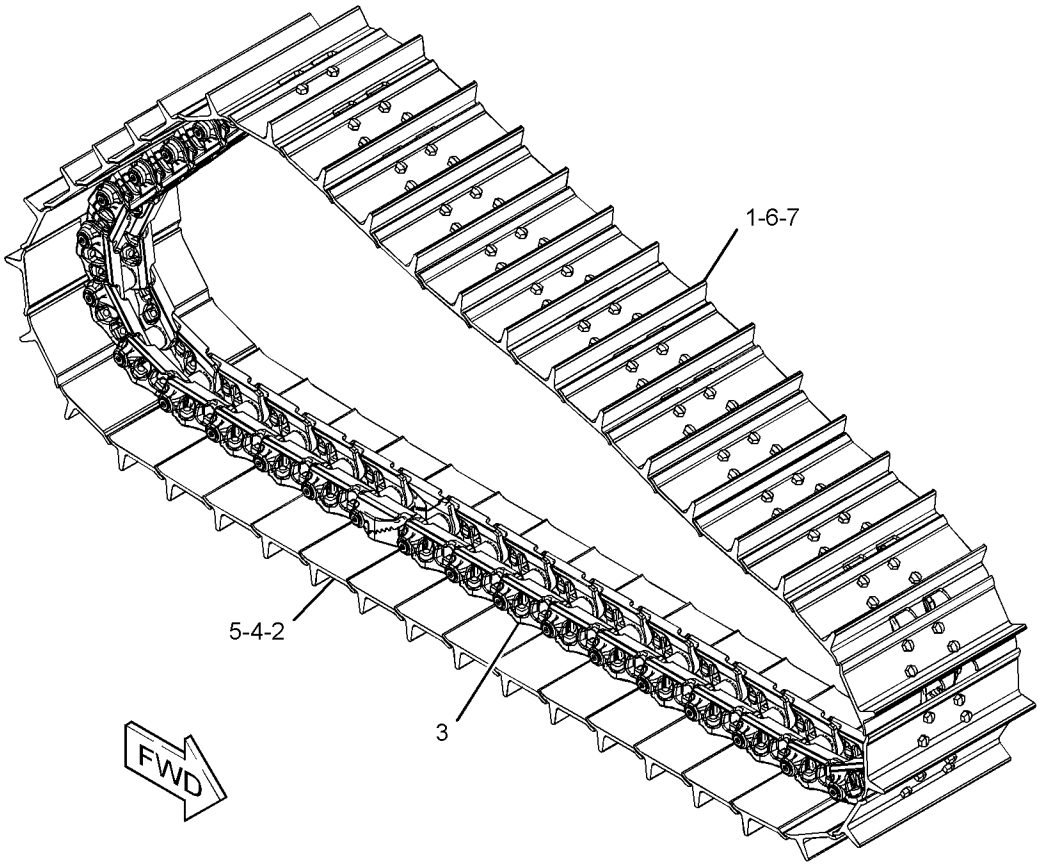

GRAPHIC #1 <END> g03324085

356-3435 TRACK GP–2-REQUIRED, HEAVY-DUTY

S/N: R5A1-UP

600-MM (23.6-INCH) GROUSER SHOE. SEALED, LUBRICATED. EXTREME SERVICE. TRAPEZOIDAL FOR USE WITH HEAVY DUTY UNDERCARRIAGE AR, HEAVY DUTY ROLLERS, GUARDS GUIDESTRIPS & CONVENTIONAL IDLERS

PART OF 384-1712 TRACK AR

AN ATTACHMENT

SMCS-4170 **i06582415**

NOTE	REF NO	GRAPHIC REF	PART NUMBER	QTY	PART NAME 1 2 3 4 5 6 (PRODUCT LEVEL)	SEE PAGE
Y	1	1	**110-2976**	1	LINK AS-TRACK	332
	2	1	**356-3427**	39	SHOE-TRACK	
	3	1	**356-3428**	1	SHOE-TRACK MASTER	
	4	1	**106-1642**	2	BOLT-TRACK MASTER (3/4-16X2.9-IN)	
	5	1	**107-0719**	2	BOLT-TRACK MASTER (3/4-16X3.9-IN)	
	6	1	**1S-1860**	156	NUT-TRACK (3/4-16-THD)	
	7	1	**6V-1792**	156	BOLT-TRACK (3/4-16X2.4-IN)	

Y - SEPARATE ILLUSTRATION

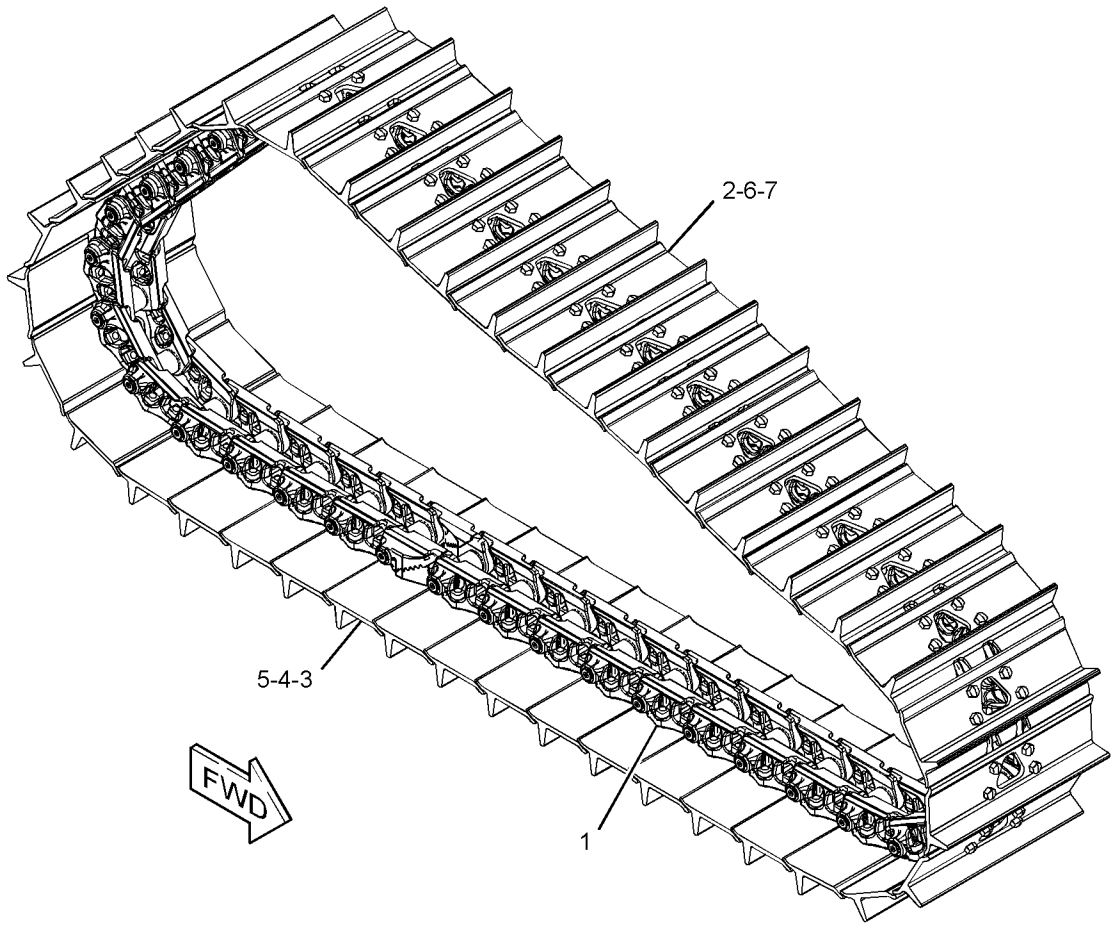

GRAPHIC #1 <END> g03324095

489-4642 UNDERCARRIAGE AR—HEAVY DUTY

S/N: R5A1-UP

AN ATTACHMENT

SMCS-4150 **i06559602**

NOTE	REF NO	GRAPHIC REF	PART NUMBER	QTY	PART NAME 1 2 3 4 5 6 (PRODUCT LEVEL)	SEE PAGE
Y	1	1	*6I-8078*	2	SEGMENT GP-SPROCKET	257
Y	2	1	*118-6345*	1	MOUNTING GP-CARRIER ROLLER	334
Y	3	1	**190-1546**	4	IDLER GP-TRACK	331
Y	4	1	**229-5446**	2	ROLLER GP-TRACK CARRIER	336
Y	5	1	*233-0367*	2	CAP GP-TRACK IDLER	316
Y	6	1	*233-0854*	2	CAP GP-TRACK IDLER	317
Y	7	1	*255-0045*	2	CAP GP-TRACK IDLER	318
Y	8	1	*255-0046*	2	CAP GP-TRACK IDLER	319
Y	9	1	*358-7239*	8	ROLLER GP-TRACK-SINGLE FLANGE	342
Y	10	1	*358-8583*	6	ROLLER GP-TRACK-DOUBLE FLANGE (HEAVY-DUTY)	339
Y	11	1	*384-7365*	1	PIVOT BAR GP	335
Y	12	1	*448-0181*	1	BAR GP-EQUALIZER	314
Y	13	1	*489-5748*	1	FRAME GP-TELESCOPING RECOIL (RH)	320
Y	14	1	*489-5749*	1	FRAME GP-TELESCOPING RECOIL (LH)	322
Y	15	1	*489-5751*	1	SCRAPER GP-IDLER	343

Y - SEPARATE ILLUSTRATION

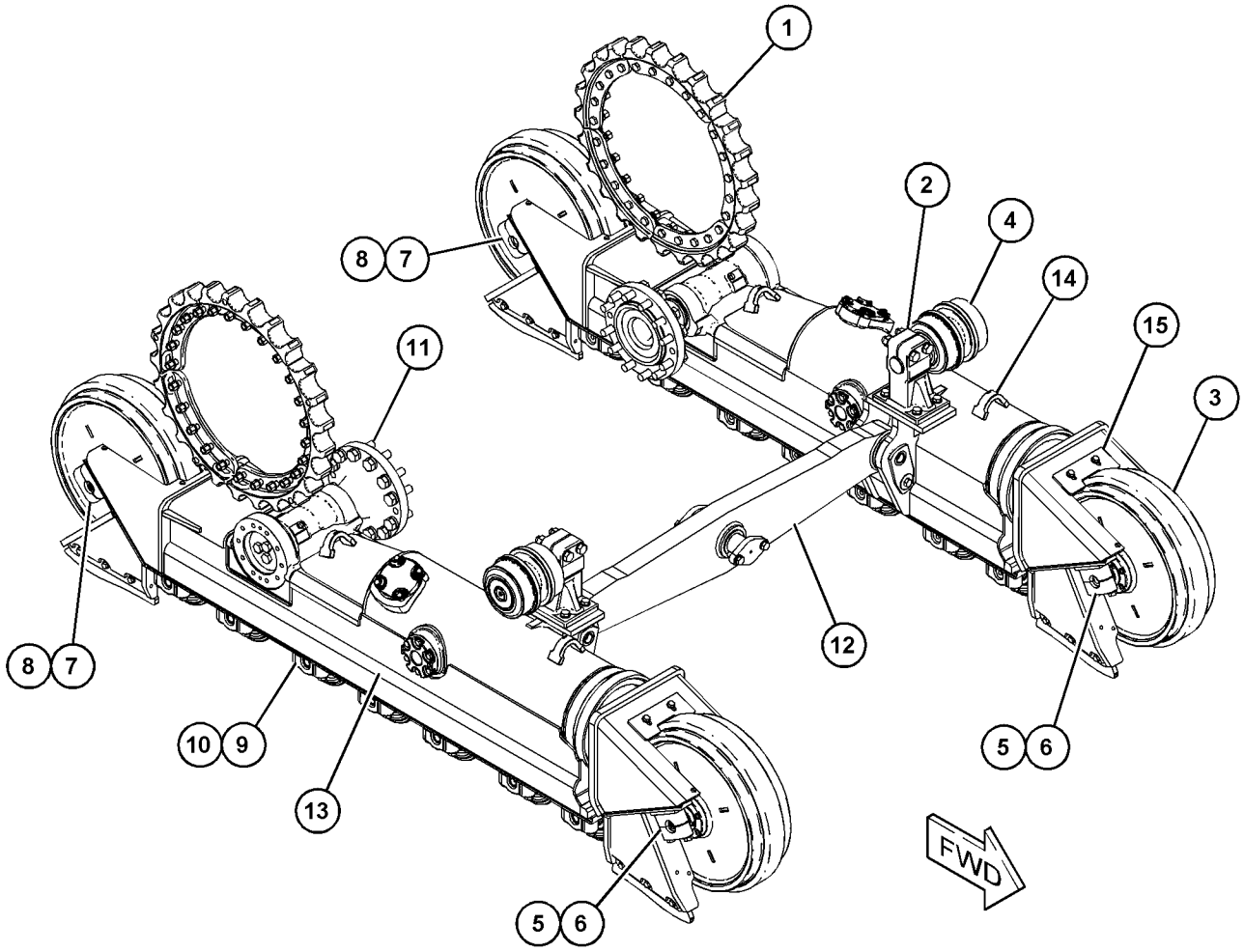

GRAPHIC #1 <END> g06024271

489-4643 UNDERCARRIAGE AR—HEAVY-DUTY, WASTE HANDLING

S/N: R5A1-UP

AN ATTACHMENT

SMCS-4150 **i06561585**

NOTE	REF NO	GRAPHIC REF	PART NUMBER	QTY	PART NAME 1 2 3 4 5 6 (PRODUCT LEVEL)	SEE PAGE
Y	1	1	*6I-8078*	2	SEGMENT GP-SPROCKET	257
Y	2	1	*118-6345*	1	MOUNTING GP-CARRIER ROLLER	334
Y	3	1	**204-7266**	4	IDLER GP-FRONT	329
Y	4	1	**229-5446**	2	ROLLER GP-TRACK CARRIER	336
Y	5	1	*233-0367*	2	CAP GP-TRACK IDLER	316
Y	6	1	*233-0854*	2	CAP GP-TRACK IDLER	317
Y	7	1	*255-0045*	2	CAP GP-TRACK IDLER	318
Y	8	1	*255-0046*	2	CAP GP-TRACK IDLER	319
Y	9	1	*358-7239*	8	ROLLER GP-TRACK-SINGLE FLANGE	342
Y	10	1	*358-8583*	6	ROLLER GP-TRACK-DOUBLE FLANGE (HEAVY-DUTY)	339
Y	11	1	*384-7365*	1	PIVOT BAR GP	335
Y	12	1	*448-0181*	1	BAR GP-EQUALIZER	314
Y	13	1	*489-5748*	1	FRAME GP-TELESCOPING RECOIL (RH)	320
Y	14	1	*489-5749*	1	FRAME GP-TELESCOPING RECOIL (LH)	322
Y	15	1	*489-5751*	1	SCRAPER GP-IDLER	343

Y - SEPARATE ILLUSTRATION

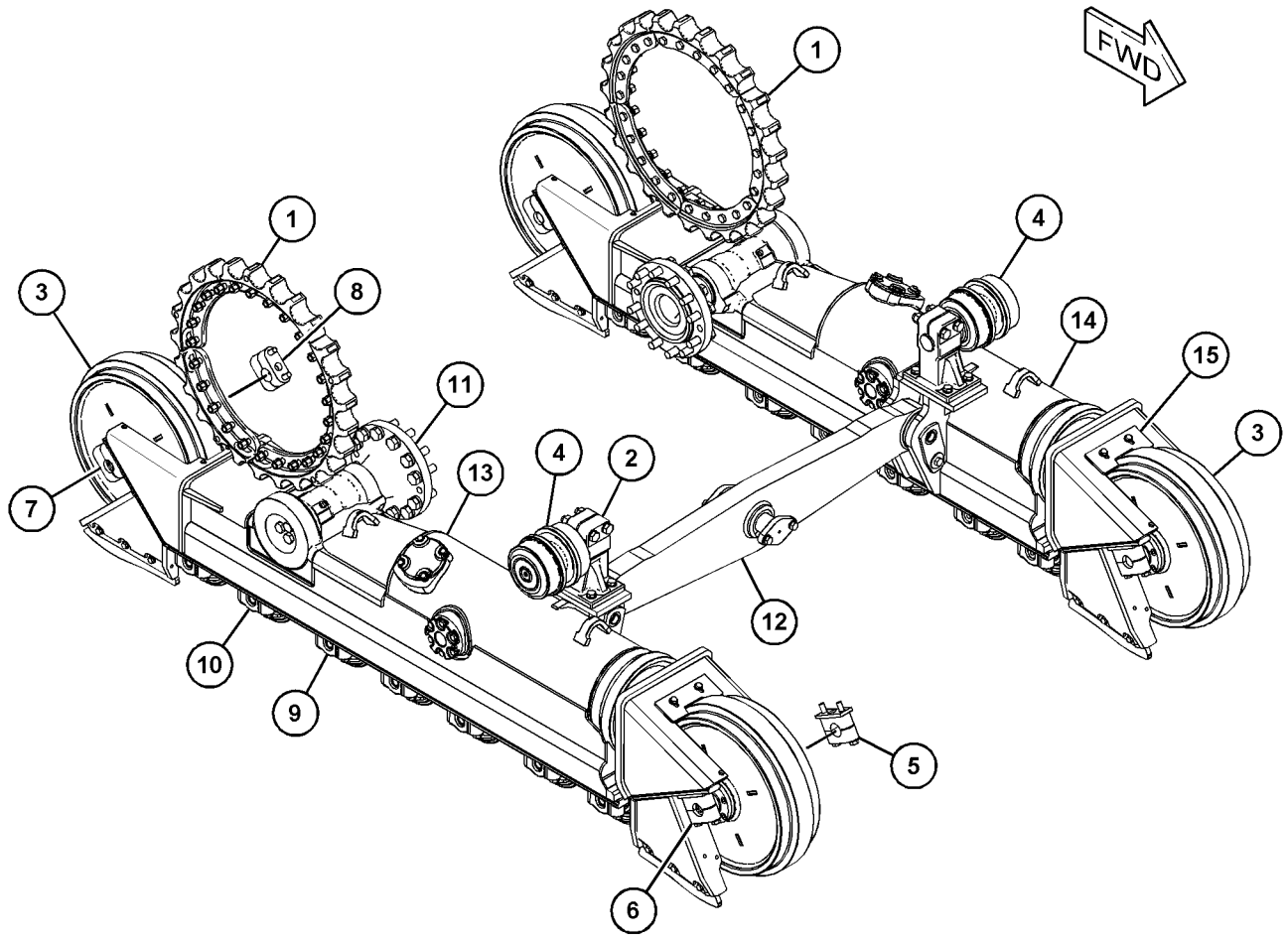

GRAPHIC #1 <END> g06024452

491-4974 UNDERCARRIAGE AR

S/N: R5A1-UP
DOUBLE SHORT GUARDS
AN ATTACHMENT

SMCS-4150 **i06559121**

NOTE	REF NO	GRAPHIC REF	PART NUMBER	QTY	PART NAME 1 2 3 4 5 6 (PRODUCT LEVEL)	SEE PAGE
Y	1	1	*384-3275*	10	ROLLER GP-TRACK-DOUBLE FLANGE	340
Y	2	1	*6I-8078*	2	SEGMENT GP-SPROCKET	257
Y	3	1	*118-6345*	1	MOUNTING GP-CARRIER ROLLER	334
Y	4	1	**190-1546**	4	IDLER GP-TRACK	331
Y	5	1	*205-6127*	1	GUARD GP-TRACK GUIDE	326
Y	6	1	**229-5446**	2	ROLLER GP-TRACK CARRIER	336
Y	7	1	*233-0367*	2	CAP GP-TRACK IDLER	316
Y	8	1	*233-0854*	2	CAP GP-TRACK IDLER	317
Y	9	1	*255-0045*	2	CAP GP-TRACK IDLER	318
Y	10	1	*255-0046*	2	CAP GP-TRACK IDLER	319
Y	11	1	*358-7239*	4	ROLLER GP-TRACK-SINGLE FLANGE	342
Y	12	1	*384-7365*	1	PIVOT BAR GP	335
Y	13	1	*448-0181*	1	BAR GP-EQUALIZER	314
Y	14	1	*489-5748*	1	FRAME GP-TELESCOPING RECOIL (RH)	320
Y	15	1	*489-5749*	1	FRAME GP-TELESCOPING RECOIL (LH)	322
Y	16	1	*489-5751*	1	SCRAPER GP-IDLER	343

Y - SEPARATE ILLUSTRATION

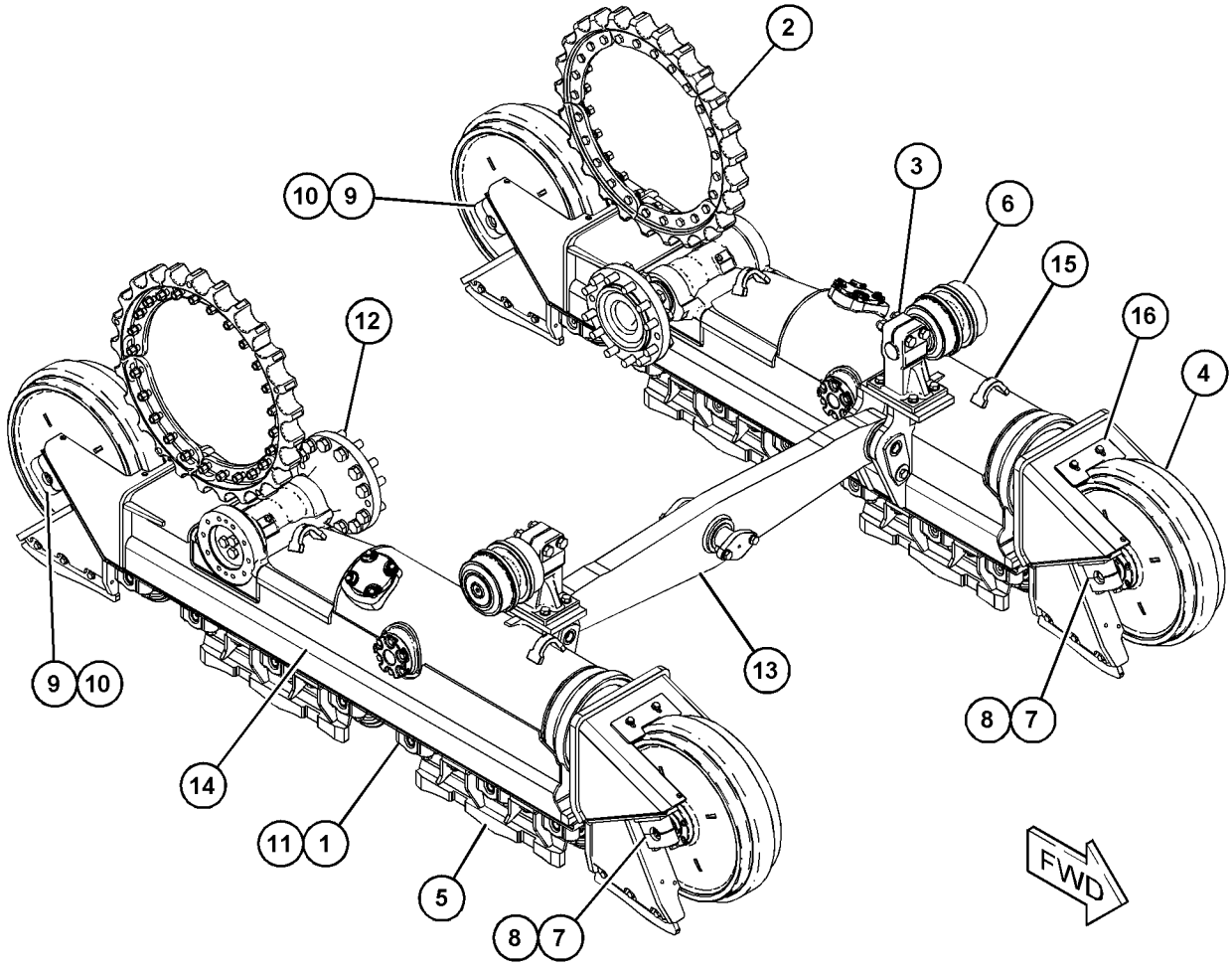

GRAPHIC #1 <END> g06023534

492-0417 UNDERCARRIAGE AR

S/N: R5A1-UP
FULL GUARDS
AN ATTACHMENT

SMCS-4150 **i06558938**

NOTE	REF NO	GRAPHIC REF	PART NUMBER	QTY	PART NAME 1 2 3 4 5 6 (PRODUCT LEVEL)	SEE PAGE
Y	1	1	*384-3275*	10	ROLLER GP-TRACK-DOUBLE FLANGE	340
Y	2	1	*6I-8078*	2	SEGMENT GP-SPROCKET	257
Y	3	1	*118-6345*	1	MOUNTING GP-CARRIER ROLLER	334
Y	4	1	**190-1546**	4	IDLER GP-TRACK	331
Y	5	1	*205-6128*	1	GUARD GP-TRACK ROLLER	328
Y	6	1	**229-5446**	2	ROLLER GP-TRACK CARRIER	336
Y	7	1	*233-0367*	2	CAP GP-TRACK IDLER	316
Y	8	1	*233-0854*	2	CAP GP-TRACK IDLER	317
Y	9	1	*255-0045*	2	CAP GP-TRACK IDLER	318
Y	10	1	*255-0046*	2	CAP GP-TRACK IDLER	319
Y	11	1	*358-7239*	4	ROLLER GP-TRACK-SINGLE FLANGE	342
Y	12	1	*384-7365*	1	PIVOT BAR GP	335
Y	13	1	*448-0181*	1	BAR GP-EQUALIZER	314
Y	14	1	*489-5748*	1	FRAME GP-TELESCOPING RECOIL (RH)	320
Y	15	1	*489-5749*	1	FRAME GP-TELESCOPING RECOIL (LH)	322
Y	16	1	*489-5751*	1	SCRAPER GP-IDLER	343

Y - SEPARATE ILLUSTRATION

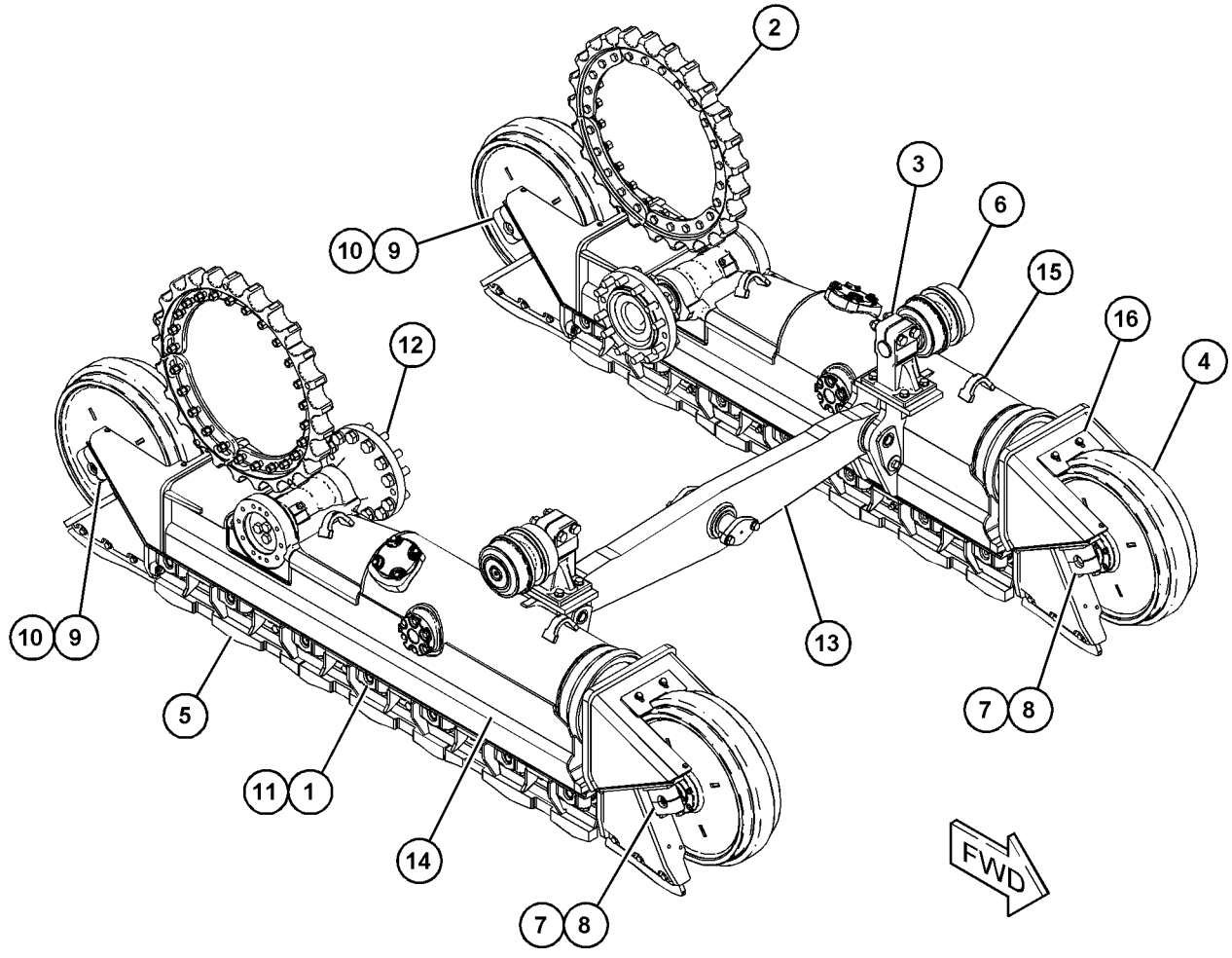

GRAPHIC #1 <END> g06024276

492-0421 UNDERCARRIAGE AR–HEAVY-DUTY

S/N: R5A1-UP
WITH CENTER GUIDES
AN ATTACHMENT

SMCS-4150 **i06559540**

NOTE	REF NO	GRAPHIC REF	PART NUMBER	QTY	PART NAME 1 2 3 4 5 6 (PRODUCT LEVEL)	SEE PAGE
Y	1	1	*6I-8078*	2	SEGMENT GP-SPROCKET	257
Y	2	1	*118-6345*	1	MOUNTING GP-CARRIER ROLLER	334
Y	3	1	**190-1546**	4	IDLER GP-TRACK	331
Y	4	1	**229-5446**	2	ROLLER GP-TRACK CARRIER	336
Y	5	1	*233-0367*	2	CAP GP-TRACK IDLER	316
Y	6	1	*233-0854*	2	CAP GP-TRACK IDLER	317
Y	7	1	*255-0045*	2	CAP GP-TRACK IDLER	318
Y	8	1	*255-0046*	2	CAP GP-TRACK IDLER	319
Y	9	1	*358-7239*	8	ROLLER GP-TRACK-SINGLE FLANGE	342
Y	10	1	*358-8583*	6	ROLLER GP-TRACK-DOUBLE FLANGE (HEAVY-DUTY)	339
Y	11	1	*384-7365*	1	PIVOT BAR GP	335
Y	12	1	*384-7413*	1	GUARD GP-TRACK GUIDE	327
Y	13	1	*448-0181*	1	BAR GP-EQUALIZER	314
Y	14	1	*489-5748*	1	FRAME GP-TELESCOPING RECOIL (RH)	320
Y	15	1	*489-5749*	1	FRAME GP-TELESCOPING RECOIL (LH)	322
Y	16	1	*489-5751*	1	SCRAPER GP-IDLER	343

Y - SEPARATE ILLUSTRATION

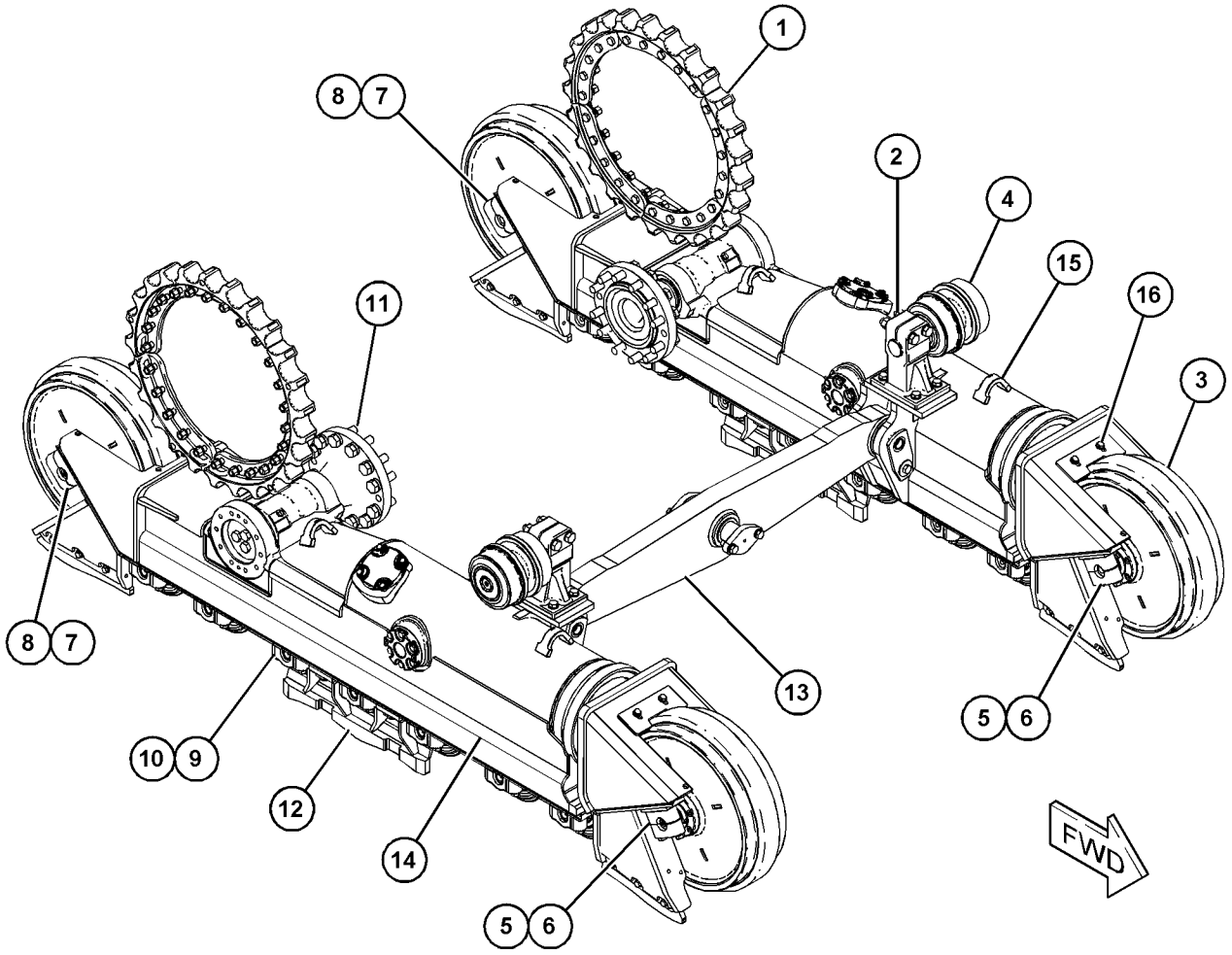

GRAPHIC #1 <END> g06023522

223-2115 CONTROL GP-PARKING BRAKE

S/N: R5A1-UP
PART OF 337-6853 CONTROL GP-HANDLE
AN ATTACHMENT

SMCS-4267, 4284 **i06207087**

NOTE	REF NO	GRAPHIC REF	PART NUMBER	QTY	PART NAME 1 2 3 4 5 6 (PRODUCT LEVEL)	SEE PAGE
	1	1	**2R-5001**	1	DOWEL	
	2	1	**3B-4605**	2	PIN-COTTER	
	3	1	**7H-9737**	1	PIN-COTTER	
	4	1	**9S-1305**	2	PIN-CLEVIS	
	5	1	**242-5206**	1	SPACER (6.4X12.5X0.76-MM THK)	
	6	1	**1W-6448**	1	DOWEL	
	7	1	**4V-6981**	2	SCREW-BUTTON HEAD (1/4-20X0.75-IN)	
	8	1	**6V-8185**	2	NUT (1/4-20-THD)	
	9	1	**8T-0328**	2	WASHER-HARD (5.5X10X1-MM THK)	
	10	1	**8T-4205**	1	WASHER-HARD (7.2X14.5X2-MM THK)	
					PARTS SHOWN IN GRAPHIC(S) WITHOUT A REFERENCE NUMBER ARE NOT SERVICED SEPARATELY	

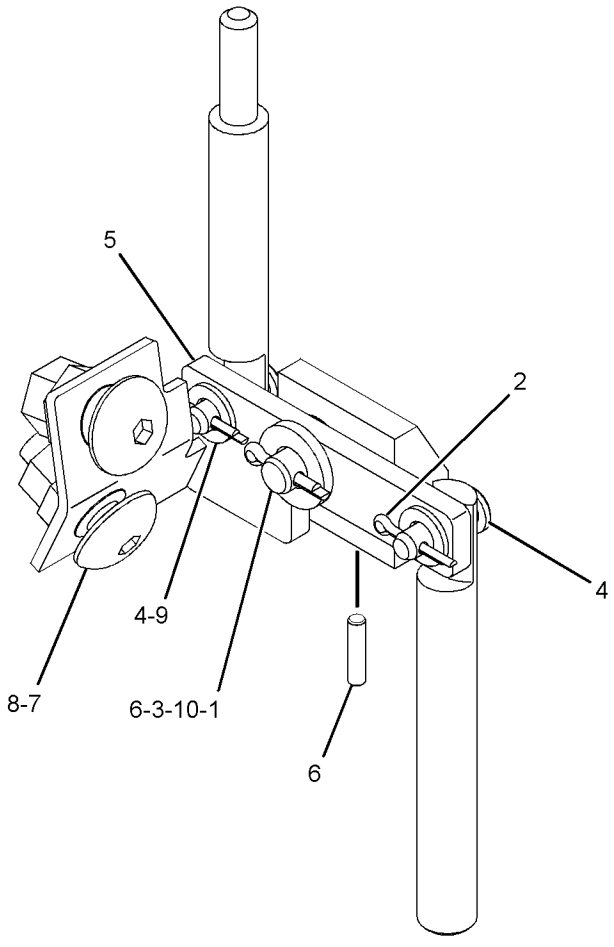

GRAPHIC #1 <END> g01150038

416-8305 FILTER GP-OIL

S/N: R5A1-UP

PART OF 430-4151 LINES GP-STEERING

SMCS-5068 **i06278459**

NOTE	REF NO	GRAPHIC REF	PART NUMBER	QTY	PART NAME 1 2 3 4 5 6 (PRODUCT LEVEL)	SEE PAGE
	1	1	**349-6097**	1	SWITCH AS-PRESSURE (OIL)	
		1	**033-6033**	1	SEAL-O-RING	
		1	**206-9295**	1	SEAL-O-RING	
	2	1	**359-3609**	1	BASE AS-FILTER	
		1	**5P-7701**	1	SEAL-O-RING	
		1	**6V-5048**	1	SEAL-O-RING	
		1	**9S-4181**	1	PLUG (5/16-12-THD)	
		1	**9S-4182**	1	PLUG (7/16-20-THD)	
		1	**9S-4191**	1	PLUG (9/16-18-THD)	
		1	**214-7568**	1	SEAL-O-RING	
	3	1	**428-8644**	1	HOUSING AS-FILTER	
		1	**6V-5048**	1	SEAL-O-RING	
		1	**9S-8002**	1	PLUG (7/16-20-THD)	
		1	**095-1671**	1	SEAL-O-RING	
		1	**389-1076**	1	FILTER ELEMENT AS-OIL	
		1	**095-1671**	1	SEAL-O-RING	

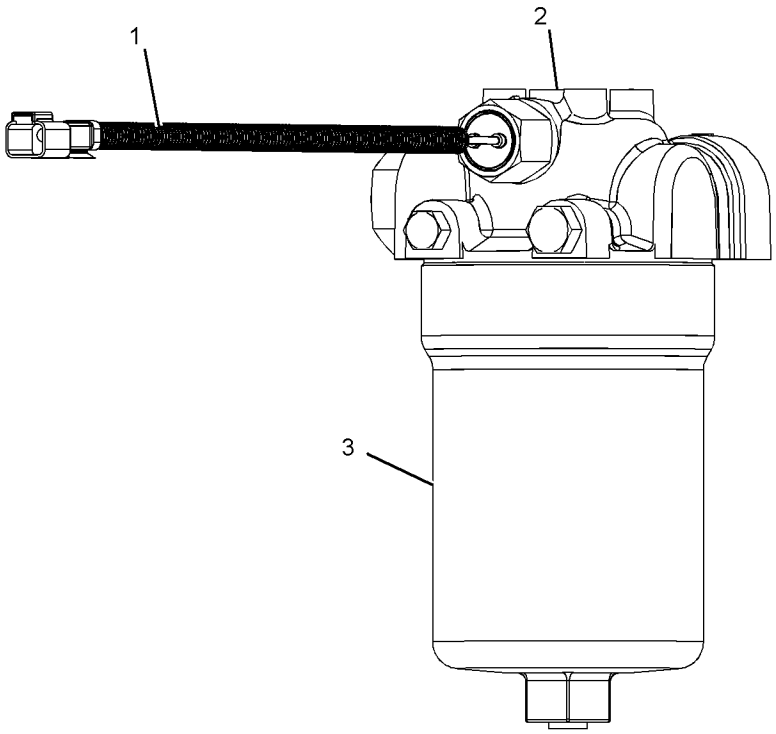

GRAPHIC #1 <END> g03783366

430-4151 LINES GP-STEERING

S/N: R5A1-UP

PART OF 391-9505 HYDRAULIC AR

SMCS-4104, 4133, 4304 **i06516891**

NOTE	REF NO	GRAPHIC REF	PART NUMBER	QTY	PART NAME 1 2 3 4 5 6 (PRODUCT LEVEL)	SEE PAGE
	1	1	**197-6453**	1	BRACKET AS	
I	2	1	**262-0349**	1	HOSE AS	
I	3	1	**323-4260**	1	HOSE AS	
	4	1	**335-5408**	2	BRACKET AS	
Y	5	1	*416-8305*	1	FILTER GP-OIL (HYDRAULIC, STEERING)	364
I	6	1	**446-0674**	1	HOSE AS	
I	7	1	**446-0675**	1	HOSE AS	
	8	1	**446-0702**	1	TUBE AS	
	9	1	**446-0703**	1	TUBE AS	
I	10	1	**479-0212**	1	HOSE AS	
	11	1	*148-8342*	1	CONNECTOR AS	
		1	**3K-0360**	1	SEAL-O-RING	
		1	**6V-8632**	1	CONNECTOR	
		1	**7J-9108**	1	SEAL-O-RING	
	12	1	*148-8347*	1	ELBOW AS	
		1	**3D-2824**	1	SEAL-O-RING	
		1	**6V-9007**	1	ELBOW	
		1	**6V-9746**	1	SEAL-O-RING	
	13	1	*148-8390*	1	ELBOW AS	
		1	**2M-9780**	1	SEAL-O-RING	
		1	**6V-8626**	1	ELBOW	
		1	**7J-9108**	1	SEAL-O-RING	
	14	1	*155-3504*	1	ELBOW AS	
		1	**2M-9780**	1	SEAL-O-RING	
		1	**6V-9003**	1	ELBOW	
		1	**7J-9108**	1	SEAL-O-RING	
	15	1	*164-5567*	2	COUPLER AS-QUICK DISCONNECT (MALE)	
					(EACH INCLUDES)	
		1	**6V-3965**	1	FITTING (QUICK DISCONNECT)	
		1	**214-7568**	1	SEAL-O-RING	
	16	1	*164-5590*	1	VALVE GP-FLUID SAMPLING	
		1	**3J-7354**	1	SEAL-O-RING	
		1	**8C-3446**	1	VALVE-SAMPLING	
	17	1	**177-2215**	1	STRAP-DUAL CLAMP	
	18	1	*180-9286*	1	TEE AS	
		1	**3D-2824**	1	SEAL-O-RING	
		1	**3E-2345**	1	TEE-O-RING	
		1	**6V-9746**	1	SEAL-O-RING	
	19	1	**1L-2731**	4	CLAMP-TUBE	
	20	1	**1P-3702**	2	SEAL-RECTANGULAR	
	21	1	**1P-3703**	2	SEAL-RECTANGULAR	
	22	1	**241-6217**	1	ELBOW	
	23	1	*321-8634*	1	TEE AS	
		1	**3K-0360**	1	SEAL-O-RING	
		1	**6V-9746**	1	SEAL-O-RING	
		1	**321-8633**	1	TEE	
	24	1	**3J-1907**	1	SEAL-O-RING	

430-4151 **LINES GP-STEERING (**contd.**)** **i06516891**

NOTE	REF NO	GRAPHIC REF	PART NUMBER	QTY	PART NAME 1 2 3 4 5 6 (PRODUCT LEVEL)	SEE PAGE
	25	1	**5P-7466**	1	CLIP (SLOT)	
	26	1	**5P-7467**	1	CLIP (TAB)	
	27	1	**5P-8112**	1	GROMMET (50-MM ID)	
	28	1	**6D-1641**	2	CLIP	
	29	1	**6D-4636**	3	CLIP	
	30	1	**6V-0400**	4	FLANGE-HALF	
	31	1	**6V-0852**	2	CAP-DUST	
	32	1	**7J-9108**	2	SEAL-O-RING	
	33	1	**8C-3451**	1	CAP-DUST	
	34	1	**8T-4121**	23	WASHER-HARD (11X21X2.5-MM THK)	
M	35	1	**8T-4136**	6	BOLT (M10X1.5X25-MM)	
M	36	1	**8T-4137**	4	BOLT (M10X1.5X20-MM)	
M	37	1	**8T-4182**	8	BOLT (M10X1.5X45-MM)	
M	38	1	**8T-4184**	8	BOLT (M12X1.75X45-MM)	
M	39	1	**8T-4195**	4	BOLT (M10X1.5X30-MM)	
	40	1	**8T-4223**	8	WASHER-HARD (13.5X25.5X3-MM THK)	
M	41	1	**8T-6466**	1	BOLT (M10X1.5X60-MM)	
	42	1	**8T-7934**	2	WASHER-HARD (11X21X5-MM THK)	
	43	1	**8T-9403**	4	FLANGE-HALF	
	44	1	**9W-1991**	1	SPACER (10.7X17.1X40-MM THK)	

I - REFER TO HYDRAULIC INFORMATION SYSTEM
M - METRIC PART
Y - SEPARATE ILLUSTRATION

430-4151 **LINES GP-STEERING (**contd.**)** **i06516891**

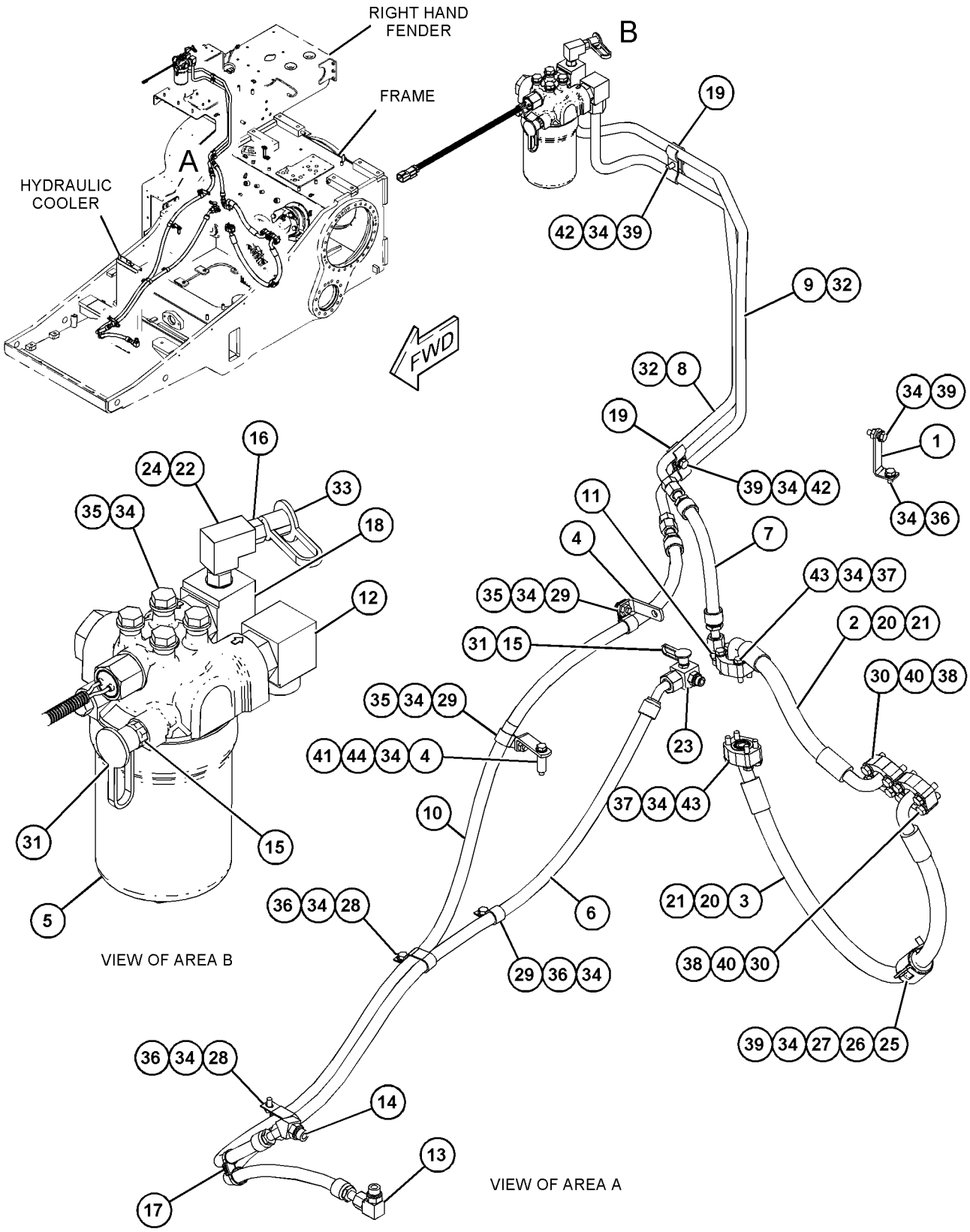

GRAPHIC #1 <END> g06025780

391-9545 VALVE & MTG GP-CONTROL–BRAKE

S/N: R5A1-UP

PART OF 391-9508 POWER TRAIN AR

SMCS-5051 **i06517226**

NOTE	REF NO	GRAPHIC REF	PART NUMBER	QTY	PART NAME 1 2 3 4 5 6 (PRODUCT LEVEL)	SEE PAGE
	1	1	*241-6215*	1	ELBOW AS	
		1	**3J-1907**	1	SEAL-O-RING	
		1	**6V-8076**	1	ELBOW	
Y	2	1	**389-1531**	1	VALVE GP-CONTROL (BRAKE)	371
	3	1	*164-5567*	1	COUPLER AS-QUICK DISCONNECT (MALE)	
		1	**6V-3965**	1	FITTING (QUICK DISCONNECT)	
		1	**214-7568**	1	SEAL-O-RING	
	4	1	**6V-0852**	1	CAP-DUST	
M	5	1	**7X-2543**	4	BOLT (M10X1.5X120-MM)	
	6	1	**8M-5254**	4	SEAL-O-RING	
	7	1	**8T-4121**	4	WASHER-HARD (11X21X2.5-MM THK)	

M - METRIC PART
Y - SEPARATE ILLUSTRATION

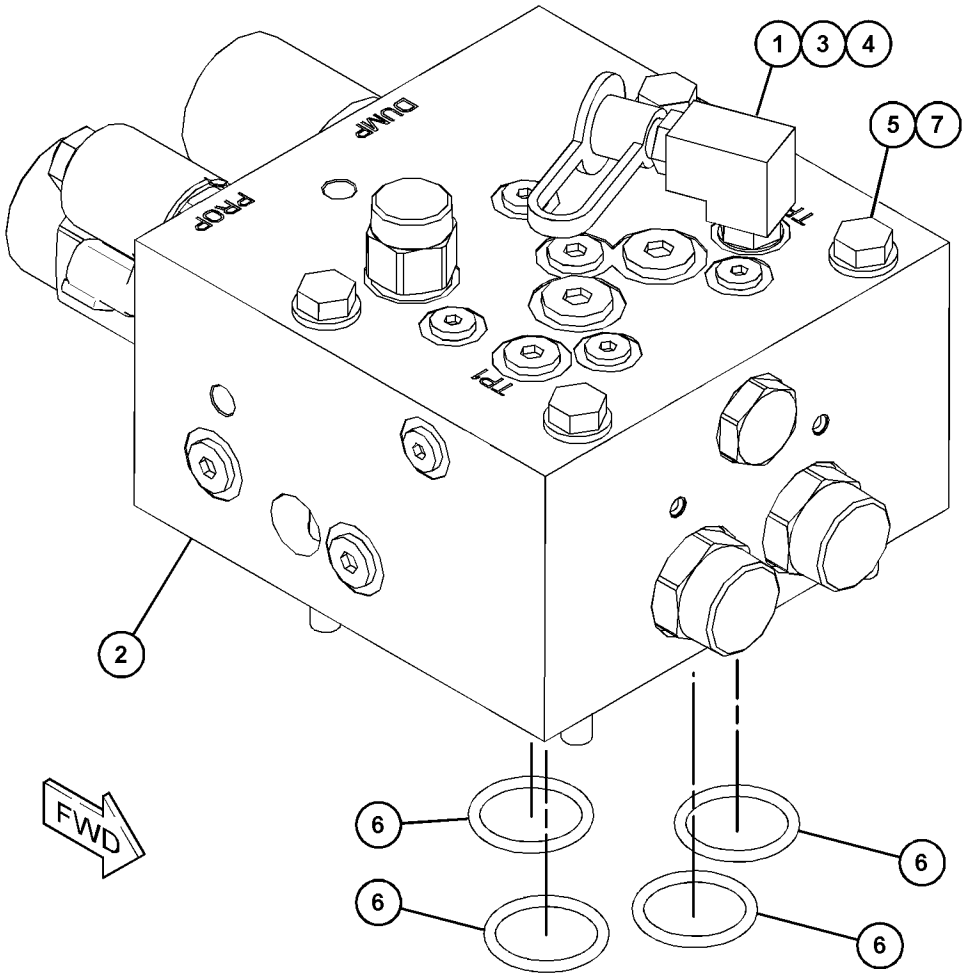

GRAPHIC #1 <END> g06009129

485-5146 VALVE GP-BRAKE CONTROL

S/N: R5A1-UP

FIELD REPLACEMENT FOR 389-1531—PAGE: 371

SMCS-4265, 4282 **i06517200**

NOTE	REF NO	GRAPHIC REF	PART NUMBER	QTY	PART NAME 1 2 3 4 5 6 (PRODUCT LEVEL)	SEE PAGE
Y	1	1	**174-4909**	1	VALVE GP-SOLENOID (BRAKE)	373
	2	1	**251-3269**	1	CARTRIDGE AS-VALVE (SCREEN)	
J	3	1	**382-0936**	2	VALVE GP-PRESSURE REDUCING (BRAKE)	
H	4	1	**382-0937**	1	ACCUMULATOR GP (BRAKE)	
	5	1	**382-0938**	1	VALVE GP-CONTROL (IMPLEMENT, STEERING, BRAKE)	
		1	**033-6027**	1	SEAL-O-RING	
		1	**033-6043**	1	SEAL-O-RING	
		1	**169-1616**	2	RING-BACKUP	
Y	6	1	**478-8207**	1	VALVE GP-SOLENOID (24-VOLT) (HYDRAULIC LOCKOUT)	374
	7	1	**3J-1907**	7	SEAL-O-RING	
	8	1	**3J-7354**	7	SEAL-O-RING	
	9	1	**3K-0360**	2	SEAL-O-RING	
	10	1	**9S-8002**	7	PLUG (7/16-20-THD)	
	11	1	**9S-8004**	7	PLUG	
	12	1	**9S-8005**	2	PLUG	
					AVAILABLE REPAIR KIT(S):	
J			**166-0321**	1	KIT-SEAL	
					(INCLUDES SEALS)	
H			**172-7753**	1	KIT-SEAL	
					(INCLUDES SEALS & BACK UP RING)	

H - KIT MARKED H SERVICES PART(S) MARKED H
J - KIT MARKED J SERVICES PART(S) MARKED J
Y - SEPARATE ILLUSTRATION

485-5146 **VALVE GP-BRAKE CONTROL (**contd.**)** **i06517200**

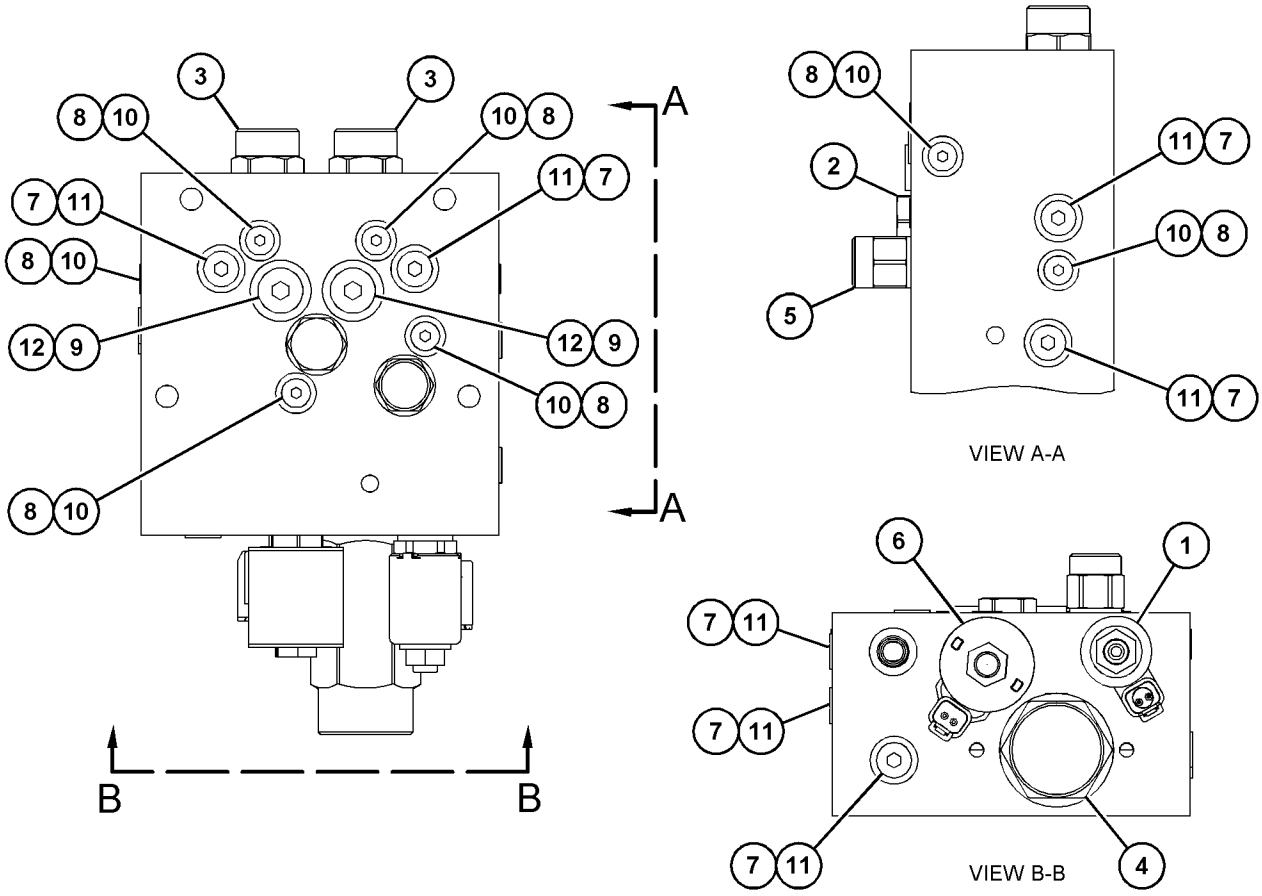

GRAPHIC #1 <END> g06023780

389-1531 VALVE GP-CONTROL—BRAKE

S/N: R5A1-UP

FIELD REPLACEMENT ORDER 485-5146—PAGE: 369, 1-3J-1907 SEAL-O-RING, 1-3K-0360 SEAL-O-RING, 1-9S-8004 PLUG, 1-9S-8005 PLUG

PART OF 391-9545 VALVE & MTG GP-CONTROL

SMCS-4307 **i06543246**

NOTE	REF NO	GRAPHIC REF	PART NUMBER	QTY	PART NAME 1 2 3 4 5 6 (PRODUCT LEVEL)	SEE PAGE
Y	1	1	**174-4909**	1	VALVE GP-SOLENOID (BRAKE)	373
	2	1	**251-3269**	1	CARTRIDGE AS-VALVE (SCREEN)	
J	3	1	**382-0936**	2	VALVE GP-PRESSURE REDUCING (BRAKE)	
L	4	1	**382-0937**	1	ACCUMULATOR GP (BRAKE)	
	5	1	**382-0938**	1	VALVE GP-CONTROL (IMPLEMENT, STEERING, BRAKE)	
		1	**033-6027**	1	SEAL-O-RING	
		1	**033-6043**	1	SEAL-O-RING	
		1	**169-1616**	2	RING-BACKUP	
Y	6	1	**478-8207**	1	VALVE GP-SOLENOID (24-VOLT) (HYDRAULIC LOCKOUT)	374
					AVAILABLE REPAIR KIT(S):	
J			**166-0321**	1	KIT-SEAL (PARKING BRAKE)	
					(INCLUDES SEALS)	
L			**172-7753**	1	KIT-SEAL (BRAKE ACCUMULATOR)	
					(INCLUDES BUNA O-RINGS & BACKUP RING)	

J - KIT MARKED J SERVICES PART(S) MARKED J
L - KIT MARKED L SERVICES PART(S) MARKED L
Y - SEPARATE ILLUSTRATION

389-1531 **VALVE GP-CONTROL (**contd.**)** **i06543246**

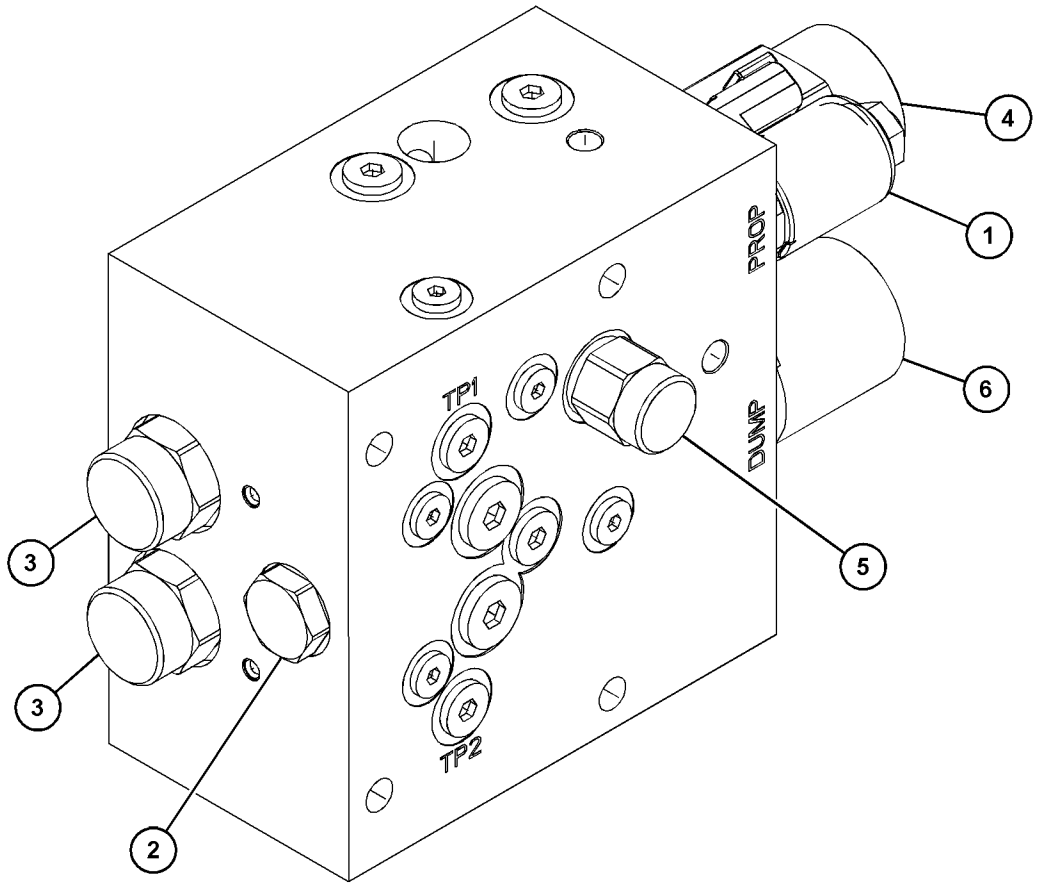

GRAPHIC #1 <END> g03548136

174-4909 VALVE GP-SOLENOID

S/N: R5A1-UP

PART OF 485-5146 VALVE GP-BRAKE CONTROL, 389-1531 VALVE GP-CONTROL

SMCS-4804 **i06216515**

NOTE	REF NO	GRAPHIC REF	PART NUMBER	QTY	PART NAME 1 2 3 4 5 6 (PRODUCT LEVEL)	SEE PAGE
	1	1	**226-9622**	1	COIL AS-SOLENOID (24-VOLT)	
	2	1	**164-2108**	1	WASHER (13.03X25.4X2.38-MM THK)	
	3	1	**218-2373**	1	NUT (1/2-28-THD)	
F			**6V-4589**	1	SEAL-O-RING	
F			**8L-2746**	1	SEAL-O-RING	

F - NOT SHOWN

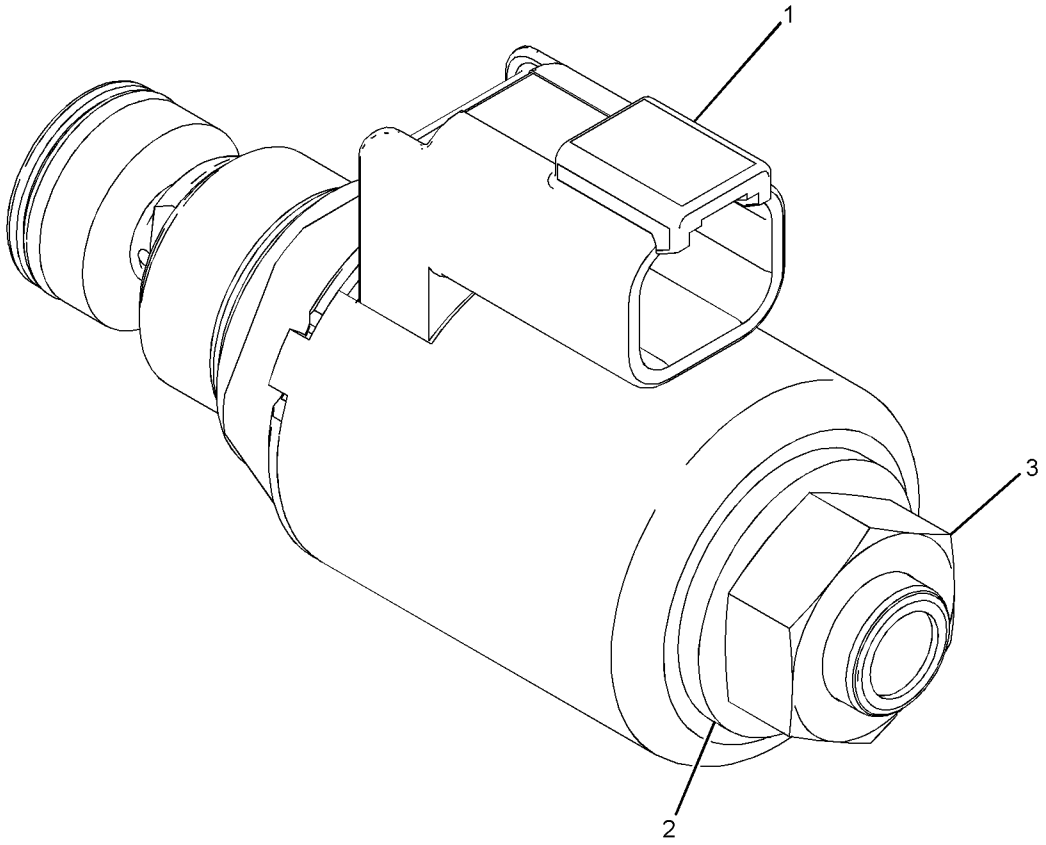

GRAPHIC #1 <END> g01139934

478-8207 VALVE GP-SOLENOID

S/N: R5A1-UP

24-VDC

PART OF 485-5146 VALVE GP-BRAKE CONTROL, 389-1531 VALVE GP-CONTROL

SMCS-4804 **i06543240**

NOTE	REF NO	GRAPHIC REF	PART NUMBER	QTY	PART NAME 1 2 3 4 5 6 (PRODUCT LEVEL)	SEE PAGE
	1	1	**254-0072**	1	COIL AS (24-VOLT)	
	2	1	**114-2772**	1	NUT (1/2-20-THD)	
					AVAILABLE REPAIR KIT(S):	
			277-8873	1	KIT-SEAL (SOLENOID VALVE)	
					(INCLUDES SEALS & BACKUP RINGS)	

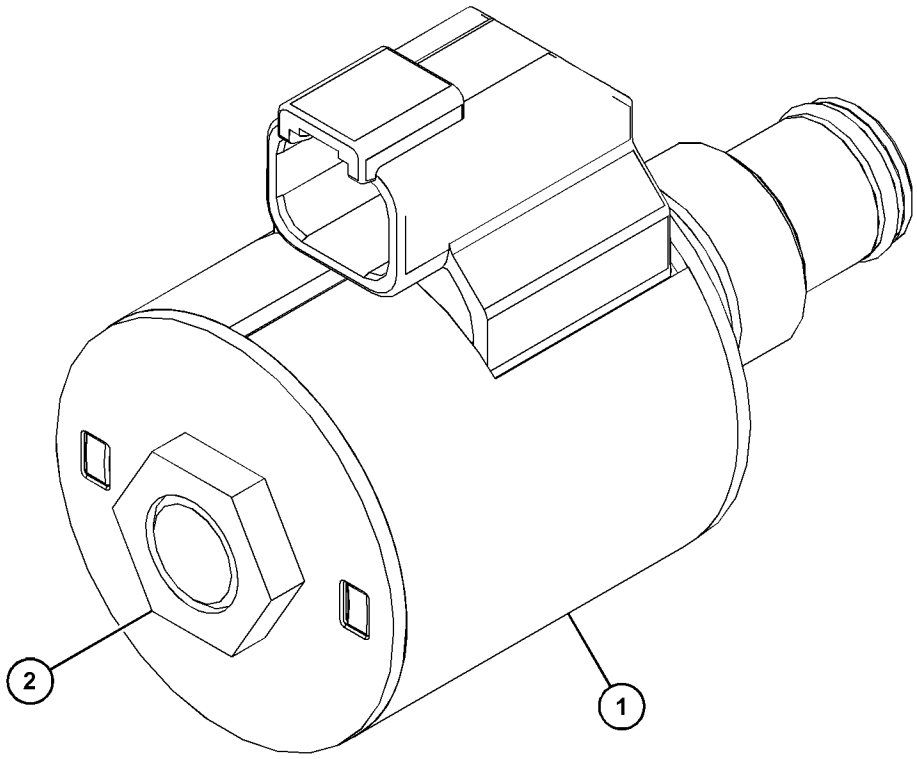

GRAPHIC #1 <END> g06015915

226-0420 ACCUMULATOR GP-HYDRAULIC—CHARGED

S/N: R5A1-UP
FIELD REPLACEMENT ORDER 230-3489—PAGE: 376
PART OF 418-9921 LINES GP-PILOT
AN ATTACHMENT

SMCS-5077 **i06523563**

NOTE	REF NO	GRAPHIC REF	PART NUMBER	QTY	PART NAME 1 2 3 4 5 6 (PRODUCT LEVEL)	SEE PAGE
	1	1	**232-3317**	1	FILM-IDENTIFICATION (HYDRAULIC ACCUMULATOR)	

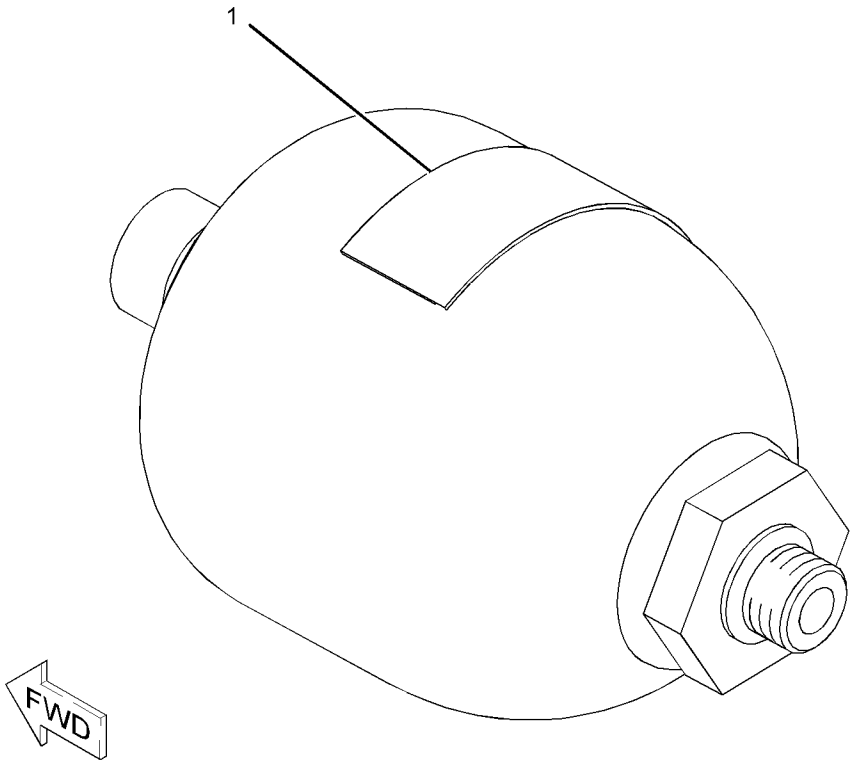

GRAPHIC #1 <END> g02722396

230-3489 ACCUMULATOR GP-PILOT OIL—UNCHARGED

S/N: R5A1-UP

FIELD REPLACEMENT FOR 226-0420—PAGE: 375

SMCS-5077 **i06582456**

NOTE	REF NO	GRAPHIC REF	PART NUMBER	QTY	PART NAME 1 2 3 4 5 6 (PRODUCT LEVEL)	SEE PAGE
	1	1	**232-3317**	1	FILM-IDENTIFICATION (HYDRAULIC ACCUMULATOR)	
	2	1	**312-1139**	1	CAP	
M	3	1	**222-3785**	1	SCREW-VENT (M8X1.5-THD)	
	4	1	**222-5765**	1	SEAL-RING	

M - METRIC PART

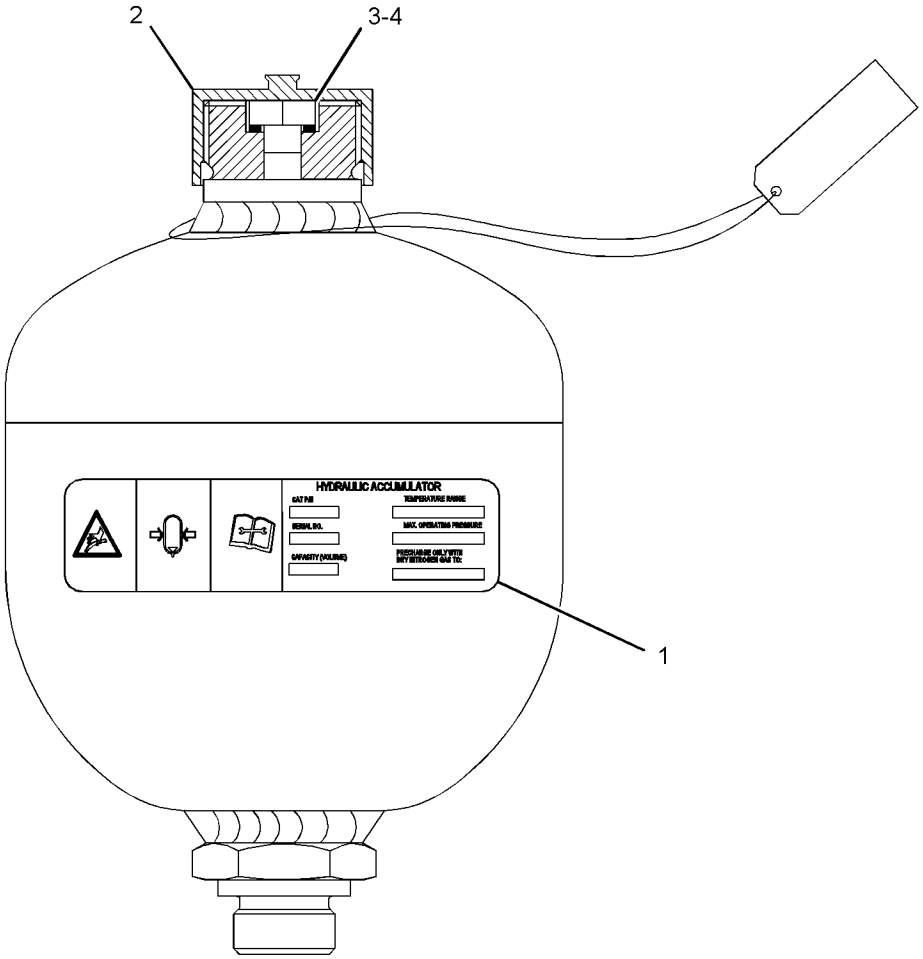

GRAPHIC #1 <END> g03883345

177-6949 ACTUATOR GP-PUMP

S/N: R5A1-UP

PART OF 320-8637 PUMP GP-PISTON

SMCS-5070, 5078 **i06567525**

NOTE	REF NO	GRAPHIC REF	PART NUMBER	QTY	PART NAME 1 2 3 4 5 6 (PRODUCT LEVEL)	SEE PAGE
	1	1	**145-3811**	1	COVER	
	2	1	**117-7273**	2	SEAL-O-RING	
	3	1	**145-3812**	2	RING (9.5-MM)	
	4	1	**145-3813**	2	RING-SEAL (2.93-MM)	
	5	1	**177-7783**	1	PISTON	
	6	1	**145-3810**	1	COVER	
M	7	1	**160-8499**	1	NUT (M12X1.5-THD)	
	8	1	**5W-1437**	8	LOCKWASHER	
M	9	1	**8T-1158**	8	BOLT-SOCKET HEAD (M8X1.25X20-MM)	

M - METRIC PART

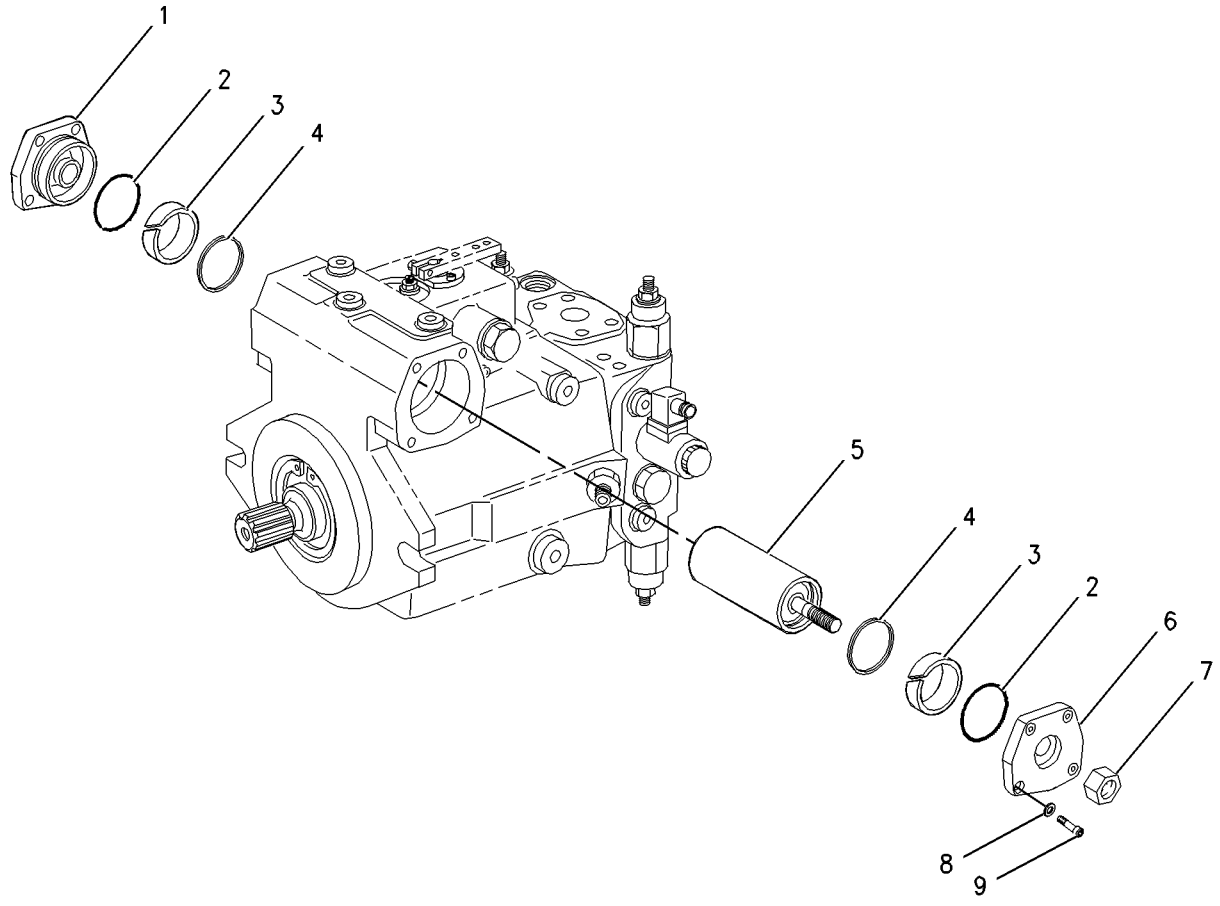

GRAPHIC #1 <END> g00648257

310-7794 BARREL GP-MOTOR—STEERING

S/N: R5A1-UP

PART OF 340-7751 ROTATING GP-MOTOR

SMCS-5058 **i06582474**

NOTE	REF NO	GRAPHIC REF	PART NUMBER	QTY	PART NAME 1 2 3 4 5 6 (PRODUCT LEVEL)	SEE PAGE
	1	1	**111-8287**	1	BARREL	
	2	1	**123-3299**	1	PLATE-RETAINING	
B	3	1	**141-0247**	1	SHIM (3.5-MM THK)	
B	4	1	**141-0248**	1	SHIM (3.6-MM THK)	
B	5	1	**141-0249**	1	SHIM (3.7-MM THK)	
B	6	1	**141-0250**	1	SHIM (3.8-MM THK)	
B	7	1	**141-0251**	1	SHIM (3.9-MM THK)	
B	8	1	**141-0252**	1	SHIM (4-MM THK)	
	9	1	**165-6968**	7	PISTON AS	
	10	1	**166-7409**	1	PIN-CENTER	
	11	1	**166-7410**	1	SPRING	
Y	12	1	**111-7346**	1	VALVE GP-FLUSHING (STEERING MOTOR)	440
	13	1	**9T-2559**	1	DISC-RETAINING	
M	14	1	**113-4417**	7	SCREW (M6X1X16-MM)	
	15	1	**202-0972**	1	PLATE	

B - USE AS REQUIRED
M - METRIC PART
Y - SEPARATE ILLUSTRATION

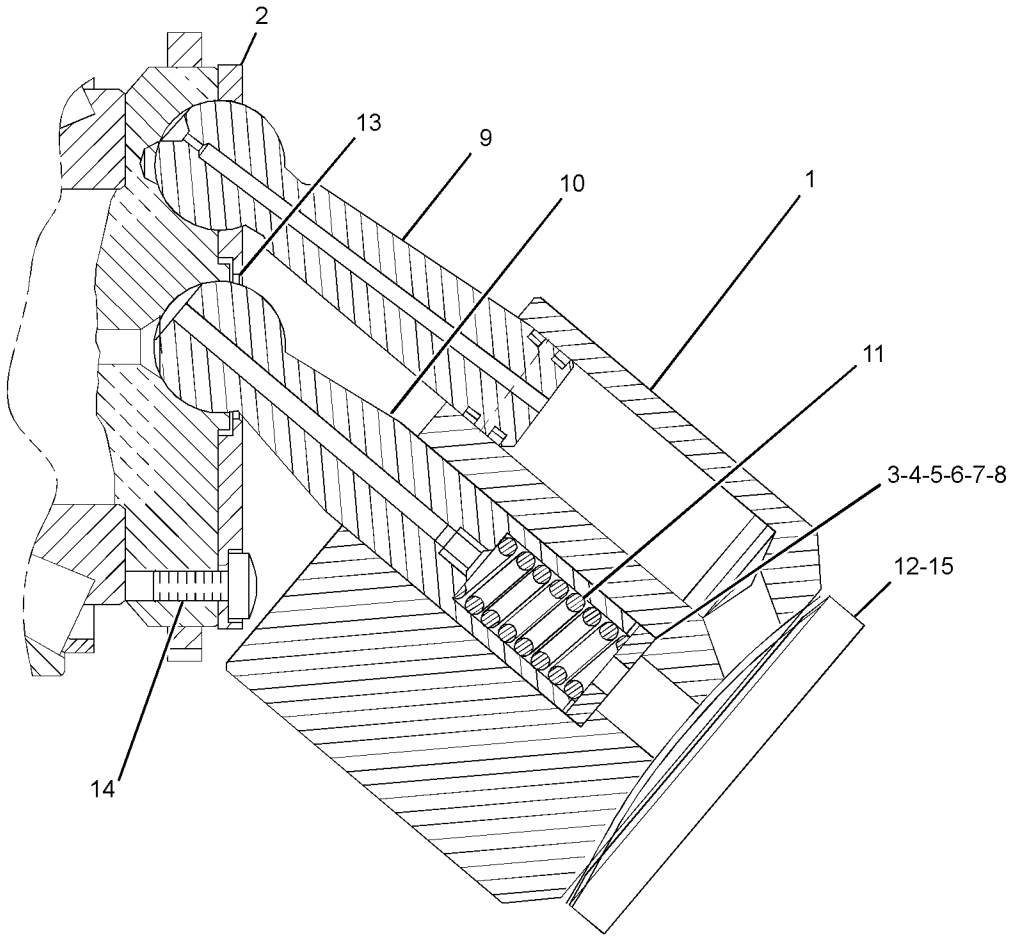

GRAPHIC #1 <END> g01885795

422-7003 COOLER GP-HYDRAULIC OIL

S/N: R5A1-UP

PART OF 391-9510 INSTALLATION AR-ENGINE

SMCS-1374 **i06521388**

NOTE	REF NO	GRAPHIC REF	PART NUMBER	QTY	PART NAME 1 2 3 4 5 6 (PRODUCT LEVEL)	SEE PAGE
	1	1	**377-4975**	1	BRACKET AS	
	2	1	**393-9054**	1	CORE AS-OIL COOLER (HYDRAULIC)	
		1	**360-5604**	1	VALVE AS-CONTROL	
		1	**238-5085**	1	SEAL-O-RING	
M	3	1	**344-5675**	2	NUT (M10X1.5-THD)	
	4	1	**8T-2561**	2	WASHER-HARD (10.5X28.5X5-MM THK)	
	5	1	**8T-4121**	2	WASHER-HARD (11X21X2.5-MM THK)	
M	6	1	**8T-4136**	2	BOLT (M10X1.5X25-MM)	

M - METRIC PART

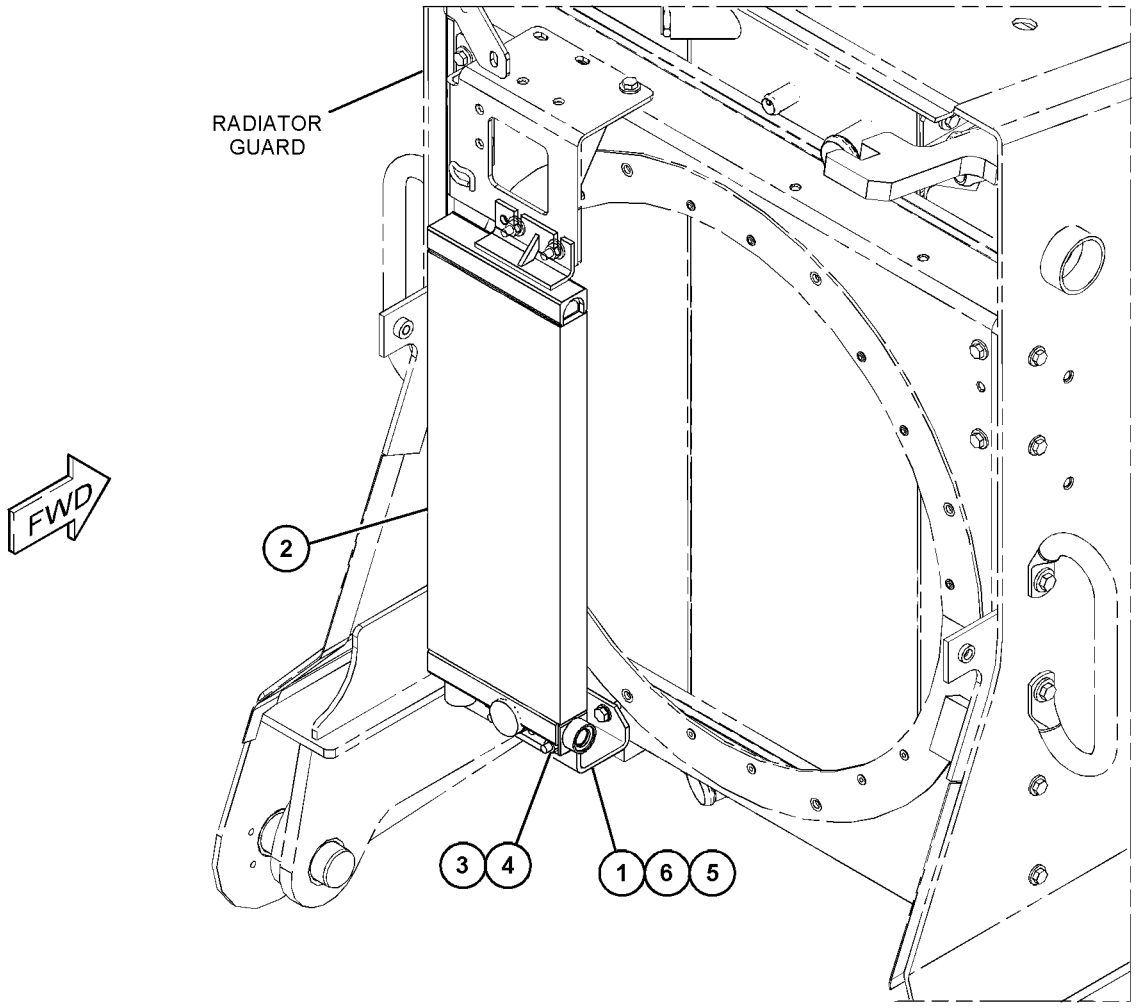

GRAPHIC #1 <END> g06023518

431-0261 CYLINDER & LINES GP–BULLDOZER, RH

S/N: R5A1-UP

PART OF 430-4143 MOUNTING GP-CYLINDER

SMCS-5110 **i06582505**

NOTE	REF NO	GRAPHIC REF	PART NUMBER	QTY	PART NAME 1 2 3 4 5 6 (PRODUCT LEVEL)	SEE PAGE
	1	1	**8T-1889**	1	CLIP (SLOT)	
Y	2	1	*422-5821*	1	CYLINDER GP-BULLDOZER LIFT	384
	3	1	**431-0282**	1	CLIP-2 PIECE	
	4	1	**431-0283**	1	CLIP	
I	5	1	**446-0713**	1	HOSE AS	
I	6	1	**446-0714**	1	HOSE AS	
	7	1	**455-1262**	1	TUBE AS	
	8	1	*148-8317*	1	CONNECTOR AS	
		1	**3D-2824**	1	SEAL-O-RING	
		1	**5K-9090**	1	SEAL-O-RING	
		1	**6V-8714**	1	CONNECTOR	
	9	1	*148-8327*	1	CONNECTOR AS	
		1	**3D-2824**	1	SEAL-O-RING	
		1	**6V-8637**	1	CONNECTOR	
		1	**6V-9746**	1	SEAL-O-RING	
M	10	1	**344-5675**	2	NUT (M10X1.5-THD)	
	11	1	**4J-5267**	3	SEAL-O-RING	
	12	1	**6V-5185**	2	CLIP (SLOT)	
	13	1	**6V-5186**	2	CLIP (TAB)	
	14	1	**8C-3205**	6	FLANGE-HALF	
	15	1	**8T-1890**	1	CLIP (TAB)	
	16	1	**8T-4121**	13	WASHER-HARD (11X21X2.5-MM THK)	
M	17	1	**8T-4136**	1	BOLT (M10X1.5X25-MM)	
M	18	1	**8T-4186**	1	BOLT (M10X1.5X40-MM)	
M	19	1	**8T-4196**	12	BOLT (M10X1.5X35-MM)	

I - REFER TO HYDRAULIC INFORMATION SYSTEM
M - METRIC PART
Y - SEPARATE ILLUSTRATION

431-0261 **CYLINDER & LINES GP** (contd.) **i06582505**

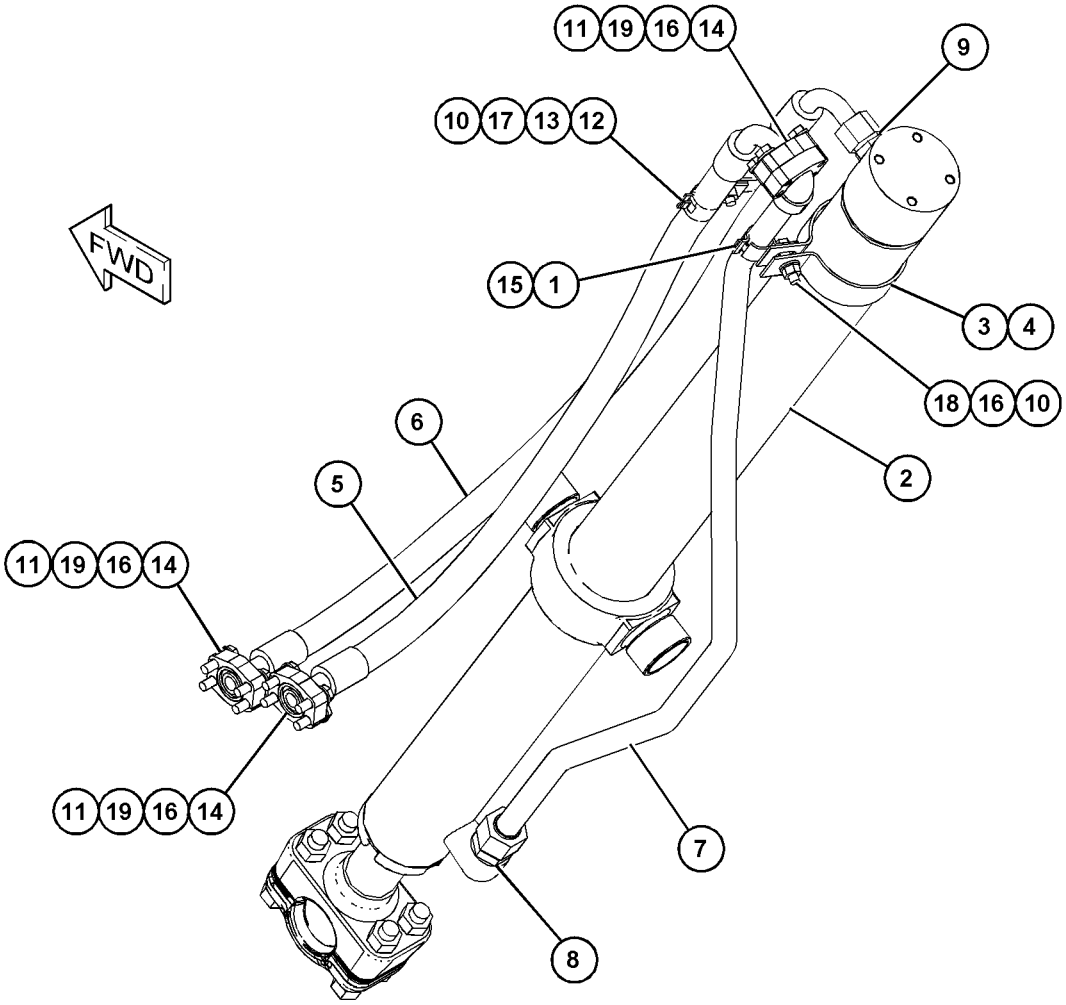

GRAPHIC #1 <END> g06007430

431-0262 CYLINDER & LINES GP–BULLDOZER, LH

S/N: R5A1-UP

PART OF 430-4143 MOUNTING GP-CYLINDER

SMCS-5110 **i06582517**

NOTE	REF NO	GRAPHIC REF	PART NUMBER	QTY	PART NAME 1 2 3 4 5 6 (PRODUCT LEVEL)	SEE PAGE
	1	1	**8T-1889**	1	CLIP (SLOT)	
Y	2	1	*422-5821*	1	CYLINDER GP-BULLDOZER LIFT	384
	3	1	**431-0282**	1	CLIP-2 PIECE	
	4	1	**431-0283**	1	CLIP	
I	5	1	**446-0713**	1	HOSE AS	
I	6	1	**446-0714**	1	HOSE AS	
	7	1	**455-1263**	1	TUBE AS	
	8	1	*148-8317*	1	CONNECTOR AS	
		1	**3D-2824**	1	SEAL-O-RING	
		1	**5K-9090**	1	SEAL-O-RING	
		1	**6V-8714**	1	CONNECTOR	
	9	1	*148-8327*	1	CONNECTOR AS	
		1	**3D-2824**	1	SEAL-O-RING	
		1	**6V-8637**	1	CONNECTOR	
		1	**6V-9746**	1	SEAL-O-RING	
M	10	1	**344-5675**	2	NUT (M10X1.5-THD)	
	11	1	**4J-5267**	3	SEAL-O-RING	
	12	1	**6V-5185**	2	CLIP (SLOT)	
	13	1	**6V-5186**	2	CLIP (TAB)	
	14	1	**8C-3205**	6	FLANGE-HALF	
	15	1	**8T-1890**	1	CLIP (TAB)	
	16	1	**8T-4121**	13	WASHER-HARD (11X21X2.5-MM THK)	
M	17	1	**8T-4136**	1	BOLT (M10X1.5X25-MM)	
M	18	1	**8T-4186**	1	BOLT (M10X1.5X40-MM)	
M	19	1	**8T-4196**	12	BOLT (M10X1.5X35-MM)	

I - REFER TO HYDRAULIC INFORMATION SYSTEM
M - METRIC PART
Y - SEPARATE ILLUSTRATION

431-0262 **CYLINDER & LINES GP** (contd.) **i06582517**

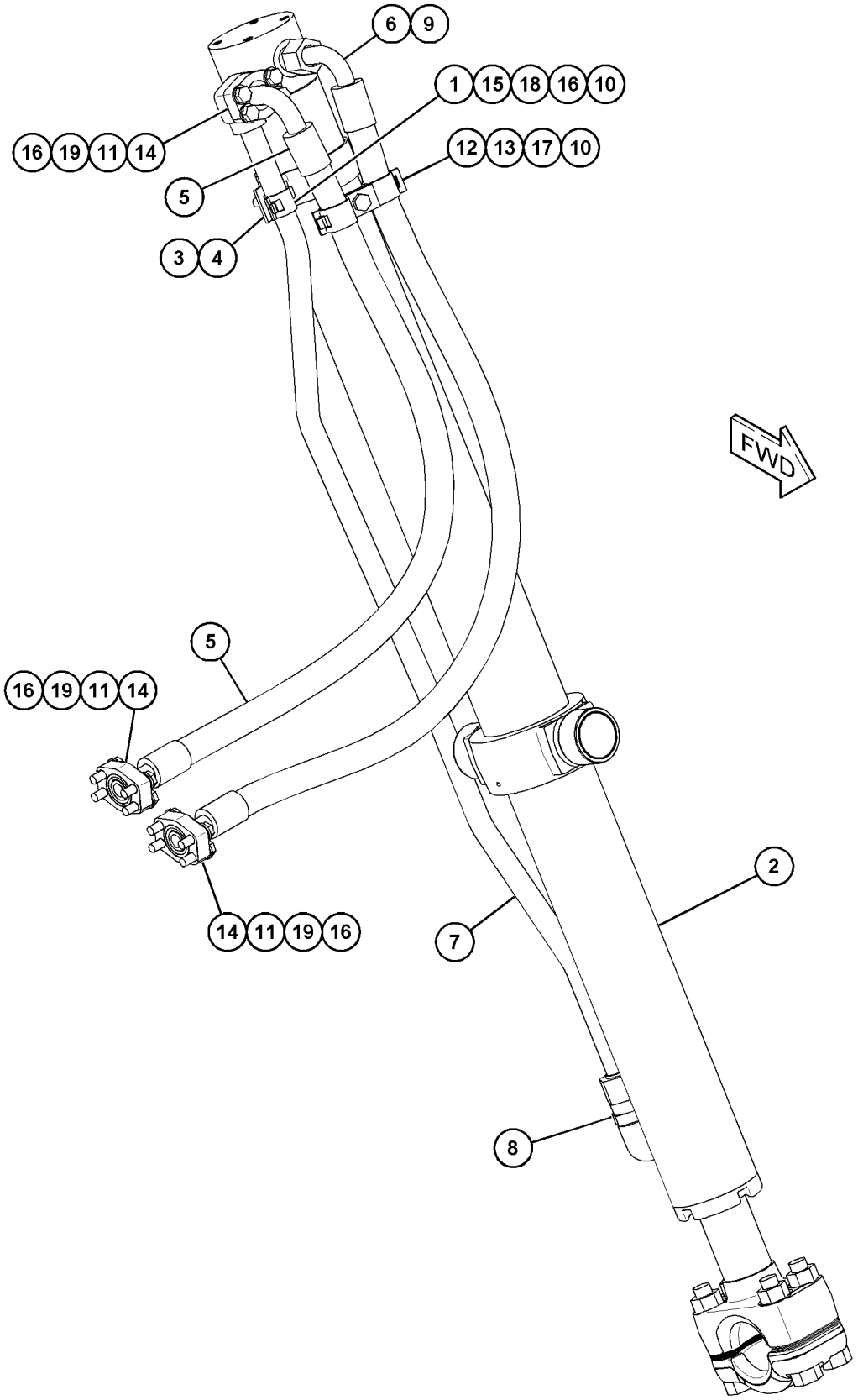

GRAPHIC #1 <END> g06009373

422-5821 CYLINDER GP-BULLDOZER LIFT

S/N: R5A1-UP
85-MM (3.4-IN) BORE X 1144-MM (45-IN) STROKE
PART OF 431-0261, 431-0262 CYLINDER & LINES GP

SMCS-5102 **i06516864**

NOTE	REF NO	GRAPHIC REF	PART NUMBER	QTY	PART NAME 1 2 3 4 5 6 (PRODUCT LEVEL)	SEE PAGE
	1	1	**1H-7339**	1	SEAL-O-RING	
	2	1	**2H-6338**	1	SEAL-O-RING	
	3	1	**4J-0121**	1	CAP AS-BEARING	
B	4	1	**8E-9212**	16	SHIM (0.8-MM THK)	
	5	1	**8J-2574**	1	RING-BACKUP	
	6	1	**140-0249**	1	RING-WEAR	
	7	1	**141-0711**	1	RING-WEAR	
	8	1	**167-2199**	1	SEAL AS-BUFFER	
	9	1	**167-2306**	1	SEAL-U-CUP	
	10	1	**233-0625**	1	SEAL-WIPER	
	11	1	**423-5884**	1	CYLINDER AS	
	11A	1	**4J-6374**	2	BUSHING	
	11B	1	**423-5894**	1	TRUNNION	
	12	1	**423-5885**	1	PISTON AS	
	13	1	**423-5887**	1	ROD AS	
	14	1	**423-5890**	1	HEAD	
	15	1	**424-3621**	1	PLATE-BEARING	
	16	1	**0S-1756**	4	BOLT (3/4-10X4.25-IN)	
	17	1	**2J-3506**	4	NUT-FULL (3/4-10-THD)	
M	18	1	**8T-0283**	1	BOLT (M30X3.5X110-MM)	

B - USE AS REQUIRED
M - METRIC PART

422-5821 **CYLINDER GP-BULLDOZER LIFT (**contd.**)** **i06516864**

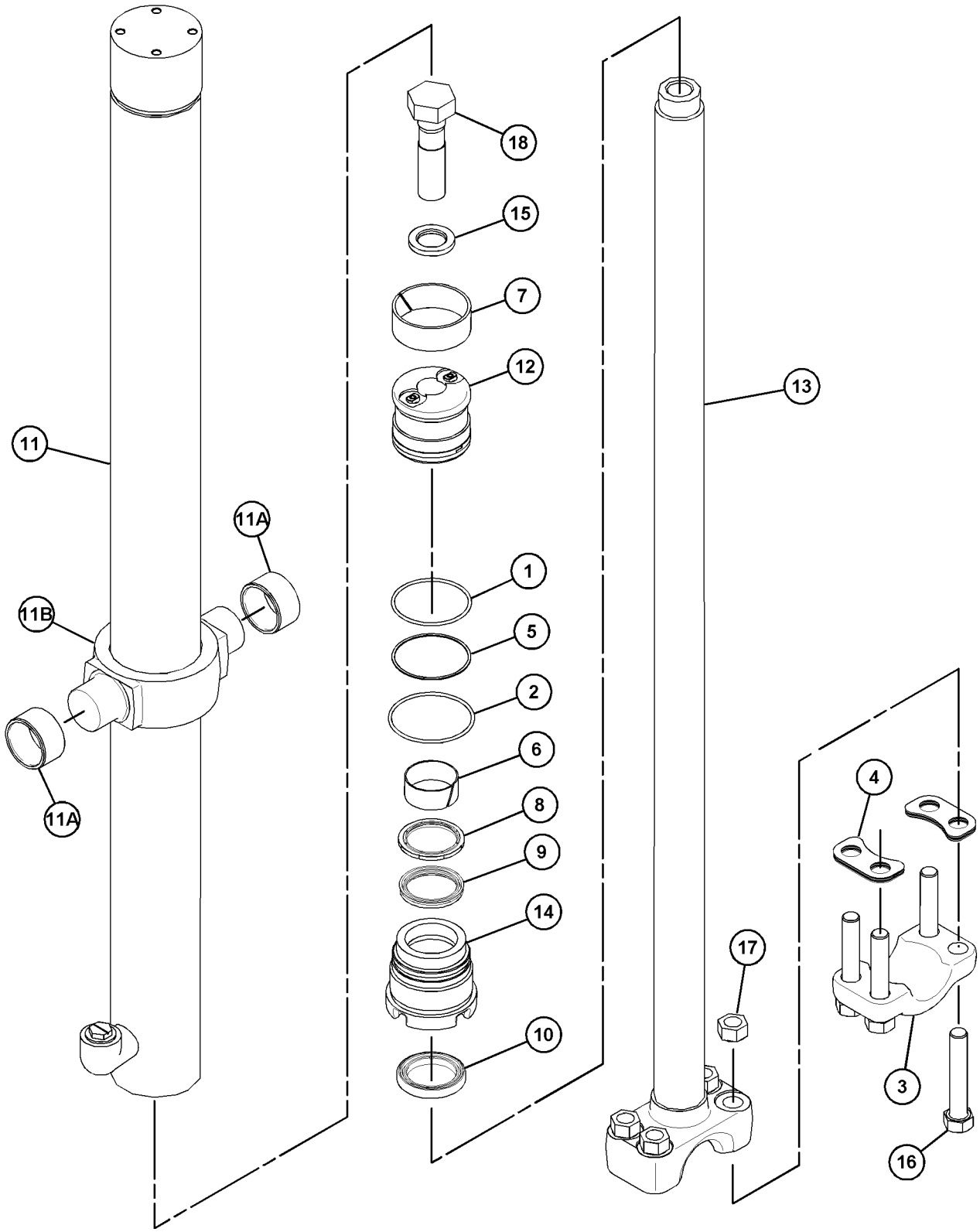

GRAPHIC #1 <END> g06009706

448-4913 CYLINDER GP-RIPPER

S/N: RT51-UP
127-MM(5-IN) BORE X 362-MM(14.3-IN) STROKE
PART OF 432-5811 RIPPER AR
AN ATTACHMENT

SMCS-5352, 5356 **i06528206**

NOTE	REF NO	GRAPHIC REF	PART NUMBER	QTY	PART NAME 1 2 3 4 5 6 (PRODUCT LEVEL)	SEE PAGE
	1	1	**1P-4576**	4	FLANGE-HALF	
	2	1	**2K-4096**	1	RING-BACKUP	
	3	1	**3G-1753**	1	PISTON	
	4	1	**4J-3420**	1	RING-WEAR	
	5	1	**8T-5668**	1	RING-WEAR	
	6	1	**9T-2714**	1	ROD AS	
	6A	1	**2K-4507**	1	BUSHING	
	7	1	**9X-7264**	1	SEAL AS	
	8	1	**225-3281**	1	SEAL-WIPER	
	9	1	**230-4872**	1	HEAD	
	10	1	**289-2937**	1	SEAL AS-BUFFER	
	11	1	**289-2948**	1	SEAL-U-CUP	
	12	1	**310-2189**	1	SEAL-O-RING	
	13	1	**448-6997**	1	CYLINDER AS	
	13A	1	**4K-3128**	2	BUSHING	
M	14	1	**173-9779**	4	BOLT (M24X3X80-MM)	
	15	1	**2J-0564**	1	LOCKNUT (2-12-THD)	
	16	1	**3G-1757**	1	WASHER (50.95X82X12-MM THK)	
	17	1	**6V-8237**	4	WASHER (26X44X4-MM THK)	
	18	1	**8T-4121**	8	WASHER-HARD (11X21X2.5-MM THK)	
M	19	1	**8T-4186**	8	BOLT (M10X1.5X40-MM)	

M - METRIC PART

448-4913 **CYLINDER GP-RIPPER (**contd.**)** **i06528206**

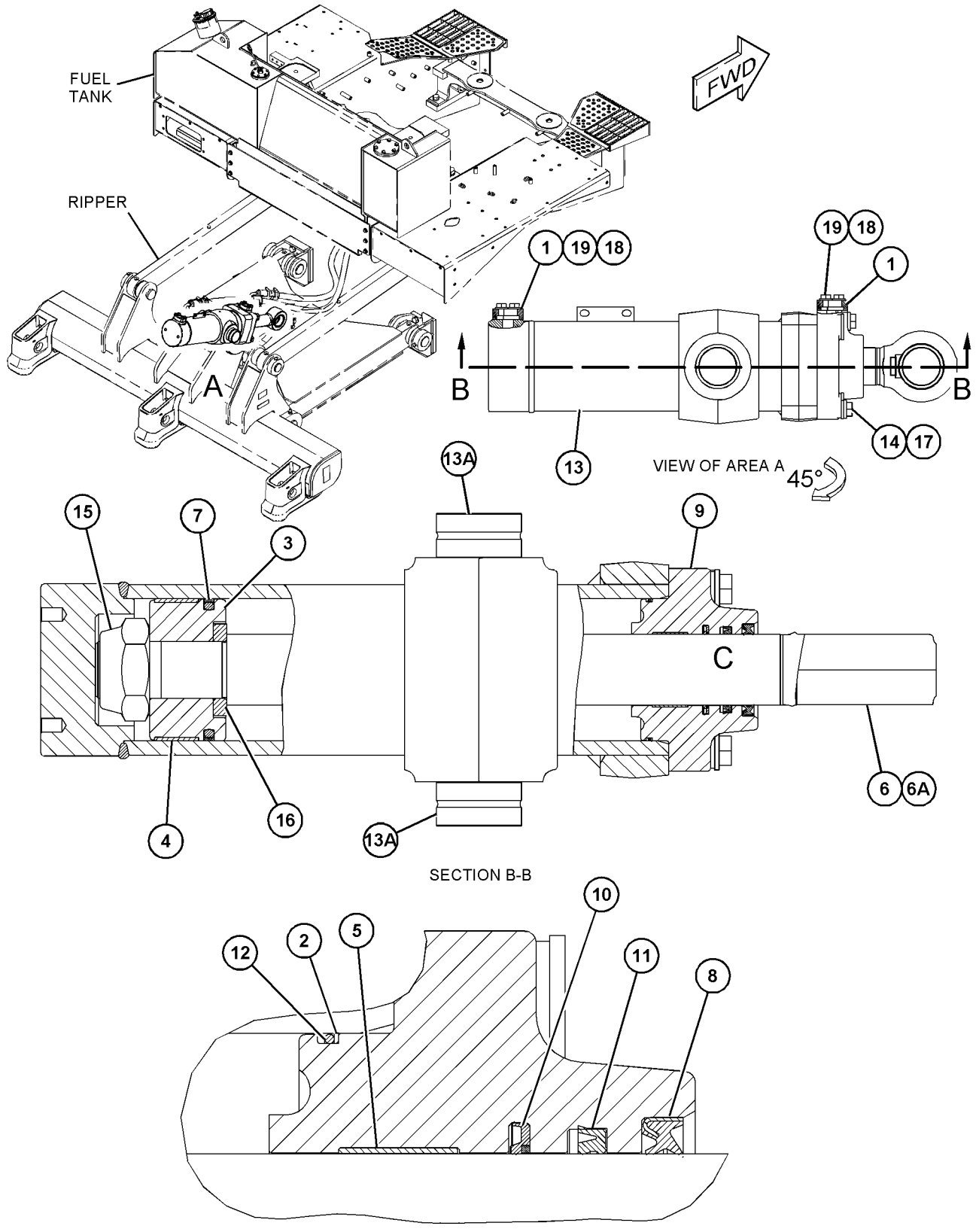

GRAPHIC #1

<END>

g06021929

367-9478 CYLINDER GP-TILT–BULLDOZER

S/N: R5A1-UP
165.1-MM (6.5-IN) BORE X 128-MM (5-IN) STROKE. BULLDOZER
PART OF 444-2870 PUSH ARM GP
AN ATTACHMENT

SMCS-5104 **i05627992**

NOTE	REF NO	GRAPHIC REF	PART NUMBER	QTY	PART NAME 1 2 3 4 5 6 (PRODUCT LEVEL)	SEE PAGE
	1	1	**2J-0564**	1	LOCKNUT (2-12-THD)	
	2	1	**5J-4991**	1	SEAL AS	
B	3	1	**8E-5703**	24	SHIM (0.8-MM THK)	
	4	1	**8J-2880**	1	CAP-BEARING	
	5	1	**233-9135**	1	CYLINDER AS	
	5A	1	**2J-8489**	1	BEARING	
	6	1	**233-9138**	1	HEAD-CYLINDER	
	7	1	**312-4247**	1	SEAL-WIPER	
	8	1	**312-4248**	1	SEAL AS-BUFFER	
R	9	1	**364-4416**	1	ROD AS	
B		1	**3J-6572**	14	SHIM (0.5-MM THK)	
	10	1	**367-9479**	1	PISTON	
	11	1	**312-4245**	1	SEAL-U-CUP	
	12	1	**3J-9703**	1	RING-WEAR	
M	13	1	**6V-7742**	4	NUT-FULL (M20X2.5-THD)	
M	14	1	**6V-8133**	4	BOLT (M24X3X80-MM)	
	15	1	**6V-8237**	4	WASHER (26X44X4-MM THK)	
M	16	1	**6V-9167**	4	BOLT (M20X2.5X140-MM)	
	17	1	**7J-8955**	1	RING-BACKUP	
	18	1	**7J-8956**	1	SEAL-O-RING	
	19	1	**8T-8379**	1	SEAL-HEAD	
	20	1	**9T-0094**	1	RING-WEAR	

B - USE AS REQUIRED
M - METRIC PART
R - REMANUFACTURED PART MAY BE AVAILABLE

367-9478 **CYLINDER GP-TILT (**contd.**)** **i05627992**

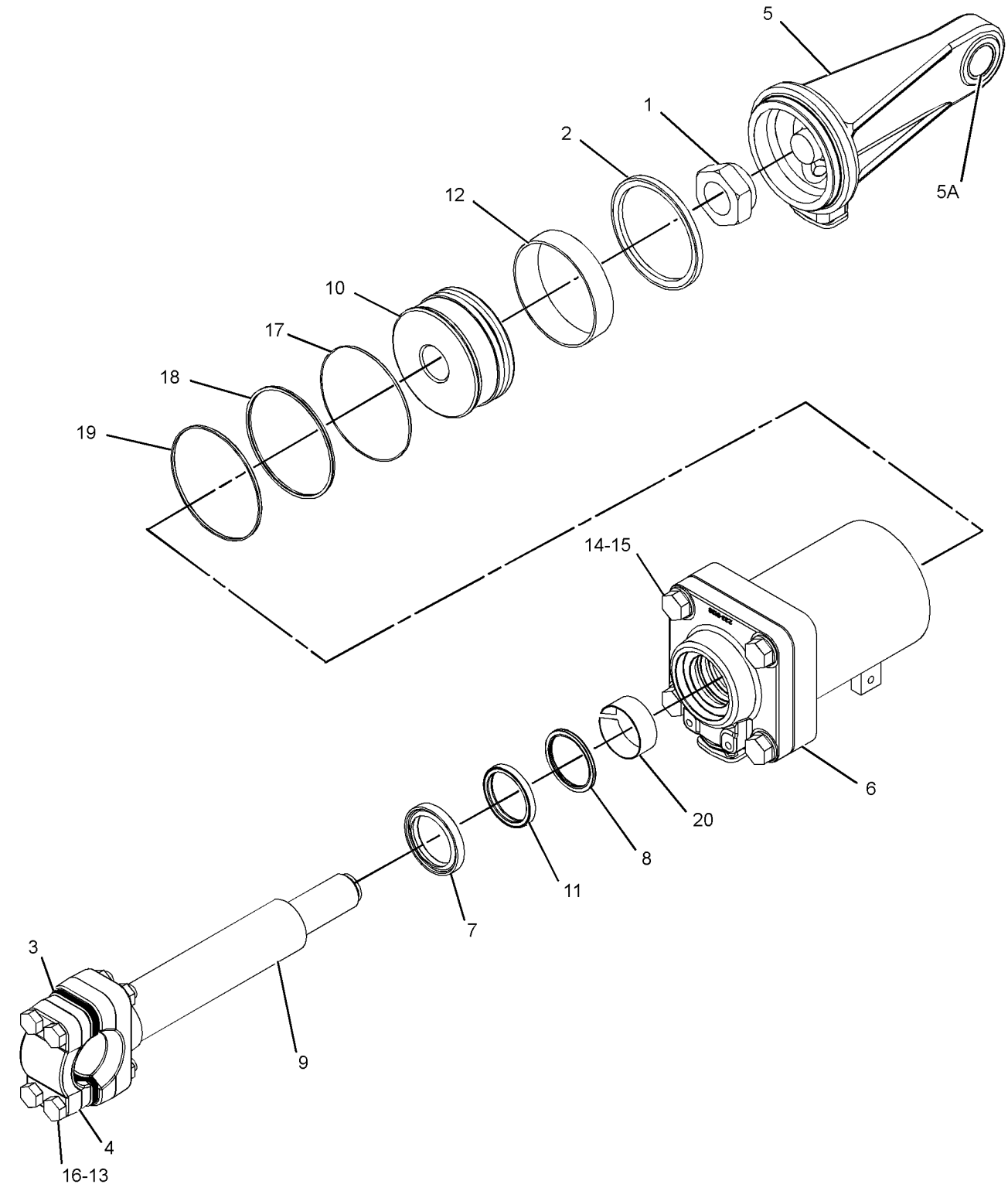

GRAPHIC #1 <END> g03243797

341-1510 HEAD GP-PUMP—STEERING

S/N: R5A1-UP

PART OF 320-8637 PUMP GP-PISTON

SMCS-5070 **i06582538**

NOTE	REF NO	GRAPHIC REF	PART NUMBER	QTY	PART NAME 1 2 3 4 5 6 (PRODUCT LEVEL)	SEE PAGE
	1	1	**117-7280**	1	BUSHING (INTERNAL)	
	2	1	**117-7282**	1	SEAL-O-RING	
	3	1	**117-7279**	1	BUSHING (EXTERNAL)	
	4	1	**6V-8397**	1	SEAL-O-RING	
	5	1	**5W-1250**	2	PIN	
	6	1	**087-4772**	2	PLUG-O-RING	
Y	7	1	**152-1811**	1	VALVE GP-RELIEF	450
M	8	1	**8C-4365**	4	BOLT (M14X2X80-MM)	
	9	1	**117-7278**	1	BUSHING	
	10	1	**120-4394**	3	PLUG-BREAK OFF	
	11	1	**9S-4182**	2	PLUG (7/16-20-THD)	
	12	1	**6V-8978**	1	SEAL-O-RING	
	13	1	**123-7575**	1	SCREW-LOCK	
Y	14	1	**212-6679**	1	VALVE GP-RELIEF (CHARGE PRESSURE)	451
	15	1	**9S-8002**	1	PLUG (7/16-20-THD)	
	16	1	**123-7583**	1	ORIFICE	
	17	1	**177-6854**	1	PLUG-PIN	
Y	18	1	**277-6679**	2	VALVE GP-RELIEF (CROSSOVER)	452
	19	1	**3J-7354**	2	SEAL-O-RING	
					PARTS SHOWN IN GRAPHIC(S) WITHOUT A REFERENCE NUMBER ARE NOT SERVICED SEPARATELY	

M - METRIC PART
Y - SEPARATE ILLUSTRATION

341-1510 **HEAD GP-PUMP (**contd.**)** **i06582538**

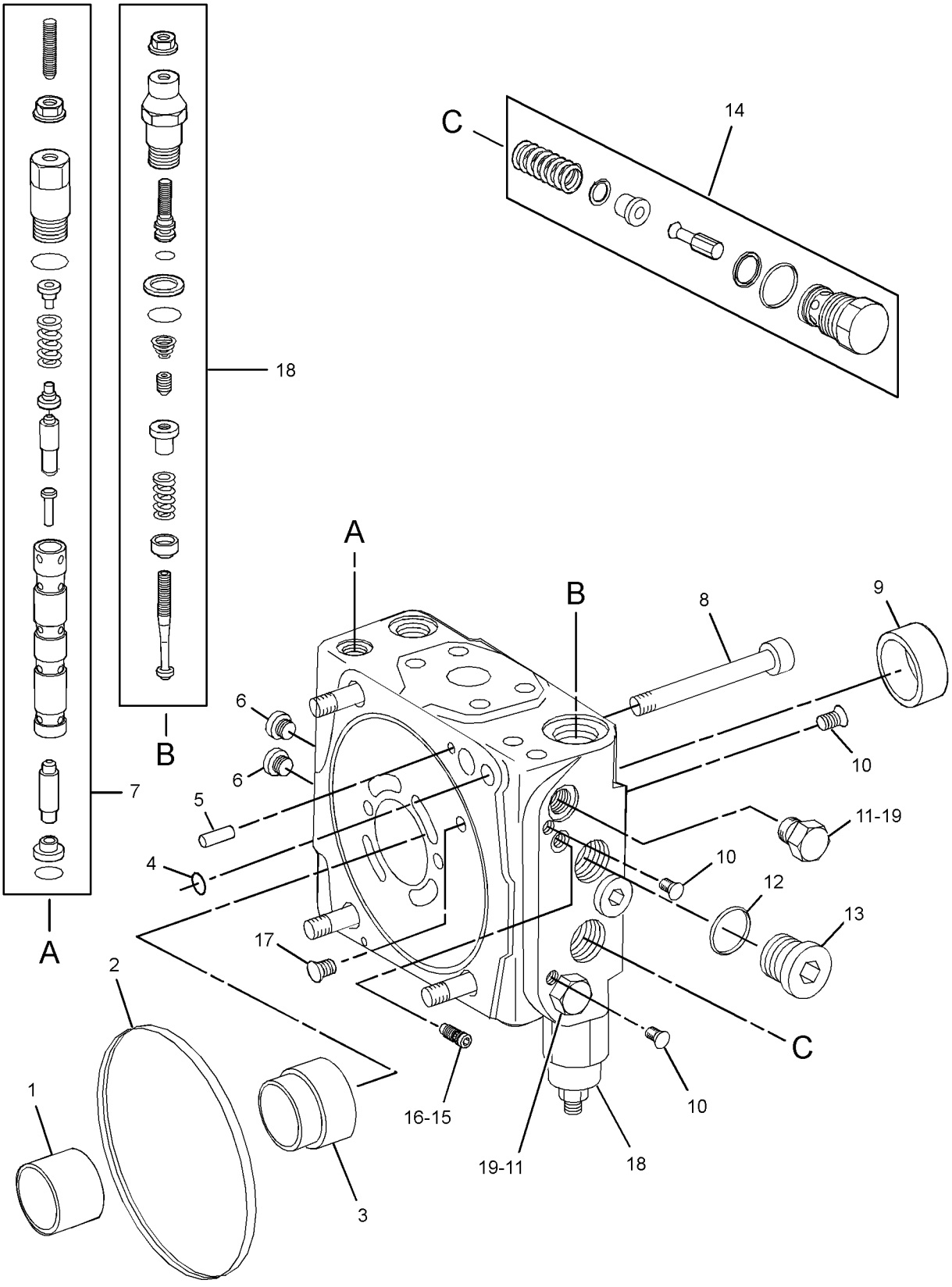

GRAPHIC #1 <END> g01886360

391-9505 HYDRAULIC AR

S/N: R5A1-UP

PART OF 391-9502 COMMON AR

SMCS-5050 **i06516735**

NOTE	PART NUMBER	QTY	PART NAME 1 2 3 4 5 6 (PRODUCT LEVEL)	SEE PAGE
Y	*453-0567*	1	LINES GP-GREASE	460
Y	*418-9919*	1	LINES GP-LIFT CYLINDER	393
Y	*418-9918*	1	LINES GP-PUMP	400
Y	*430-4151*	1	LINES GP-STEERING	365
Y	*418-9914*	1	MOTOR & MOUNTING GP (STEERING)	411
Y	*430-4143*	1	MOUNTING GP-CYLINDER (BLADE)	413
Y	*418-9917*	1	PUMP & MOUNTING GP (IMPLEMENT)	415
Y	*430-4142*	1	PUMP & MOUNTING GP (STEERING)	416
Y	*418-9912*	1	TANK & MTG GP-HYDRAULIC	428

Y - SEPARATE ILLUSTRATION

<END>

391-9512 HYDRAULIC AR-2 VALVE—BULLDOZER

S/N: R5A1-UP

AN ATTACHMENT

SMCS-5051 **i06582555**

NOTE	PART NUMBER	QTY	PART NAME 1 2 3 4 5 6 (PRODUCT LEVEL)	SEE PAGE
Y	*453-9494*	1	CONTROL GP-PILOT OPERATED HYD	491
Y	*418-9921*	1	LINES GP-PILOT	395
Y	*418-9927*	1	LINES GP-TILT CYLINDER	407
Y	*418-9929*	1	VALVE & MTG GP-CONTROL	432
Y	*465-2809*	1	WIRING GP-CHASSIS	202

Y - SEPARATE ILLUSTRATION

<END>

391-9515 HYDRAULIC AR-3 VALVE—BULLDOZER, RIPPER

S/N: R5A1-UP

AN ATTACHMENT

SMCS-5051 **i06582561**

NOTE	PART NUMBER	QTY	PART NAME 1 2 3 4 5 6 (PRODUCT LEVEL)	SEE PAGE
Y	*418-9920*	1	CONTROL GP-PILOT OPERATED HYD (BLADE, RIPPER LIFT, TILT)	490
Y	*418-9921*	1	LINES GP-PILOT (WITH ACCUMULATOR)	395
Y	*430-4137*	1	LINES GP-PILOT	398
Y	*418-9928*	1	LINES GP-RIPPER	403
Y	*418-9927*	1	LINES GP-TILT CYLINDER	407
Y	*418-9926*	1	VALVE & MTG GP-CONTROL	431
Y	*465-2809*	1	WIRING GP-CHASSIS	202

Y - SEPARATE ILLUSTRATION

<END>

418-9919 LINES GP-LIFT CYLINDER

S/N: R5A1-UP

PART OF 391-9505 HYDRAULIC AR

SMCS-5057, 5102 **i06516886**

NOTE	REF NO	GRAPHIC REF	PART NUMBER	QTY	PART NAME 1 2 3 4 5 6 (PRODUCT LEVEL)	SEE PAGE
	1	1	**2W-7940**	1	BRACKET	
	2	1	**7J-6142**	2	CLAMP	
	3	1	**453-0576**	1	MANIFOLD	
	4	1	**456-2184**	2	TUBE AS	
	5	1	**456-2186**	1	BRACKET	
I	6	1	**479-0204**	1	HOSE AS	
I	7	1	**479-0205**	1	HOSE AS	
	8	1	*480-3004*	2	ADAPTER AS	
					(EACH INCLUDES)	
		1	**3D-2824**	1	SEAL-O-RING	
		1	**6V-8400**	1	SEAL-O-RING	
		1	**480-3003**	1	ADAPTER-STRAIGHT	
	9	1	**482-5036**	1	TUBE AS	
	10	1	**482-5037**	1	TUBE AS	
	11	1	**133-6934**	1	SPACER (11X20X25-MM THK)	
	12	1	*148-8317*	2	CONNECTOR AS	
					(EACH INCLUDES)	
		1	**3D-2824**	1	SEAL-O-RING	
		1	**5K-9090**	1	SEAL-O-RING	
		1	**6V-8714**	1	CONNECTOR	
	13	1	*148-8409*	2	PLUG AS	
					(EACH INCLUDES)	
		1	**3D-2824**	1	SEAL-O-RING	
		1	**9S-8008**	1	PLUG (1-1/16-12-THD)	
	14	1	**178-3620**	1	STRAP-DUAL CLAMP	
	15	1	**272-1882**	4	STUD-TAPERLOCK (M12X1.75X80-MM)	
M	16	1	**329-3356**	4	NUT (M12X1.75-THD)	
M	17	1	**344-5675**	2	NUT (M10X1.5-THD)	
	18	1	**5K-9090**	4	SEAL-O-RING	
	19	1	**7G-5984**	3	CLIP (TAB)	
	20	1	**7G-5985**	3	CLIP (SLOT)	
	21	1	**7G-5986**	3	GROMMET	
M	22	1	**7X-2543**	2	BOLT (M10X1.5X120-MM)	
	23	1	**8S-0023**	2	CLIP (SLOT)	
	24	1	**8S-0024**	2	CLIP (TAB)	
	25	1	**8T-4121**	10	WASHER-HARD (11X21X2.5-MM THK)	
M	26	1	**8T-4137**	3	BOLT (M10X1.5X20-MM)	
M	27	1	**8T-4183**	2	BOLT (M12X1.75X40-MM)	
M	28	1	**8T-4186**	1	BOLT (M10X1.5X40-MM)	
	29	1	**8T-4223**	6	WASHER-HARD (13.5X25.5X3-MM THK)	
M	30	1	**8T-5005**	1	BOLT (M10X1.5X70-MM)	

I - REFER TO HYDRAULIC INFORMATION SYSTEM
M - METRIC PART

418-9919 **LINES GP-LIFT CYLINDER (**contd.**)** **i06516886**

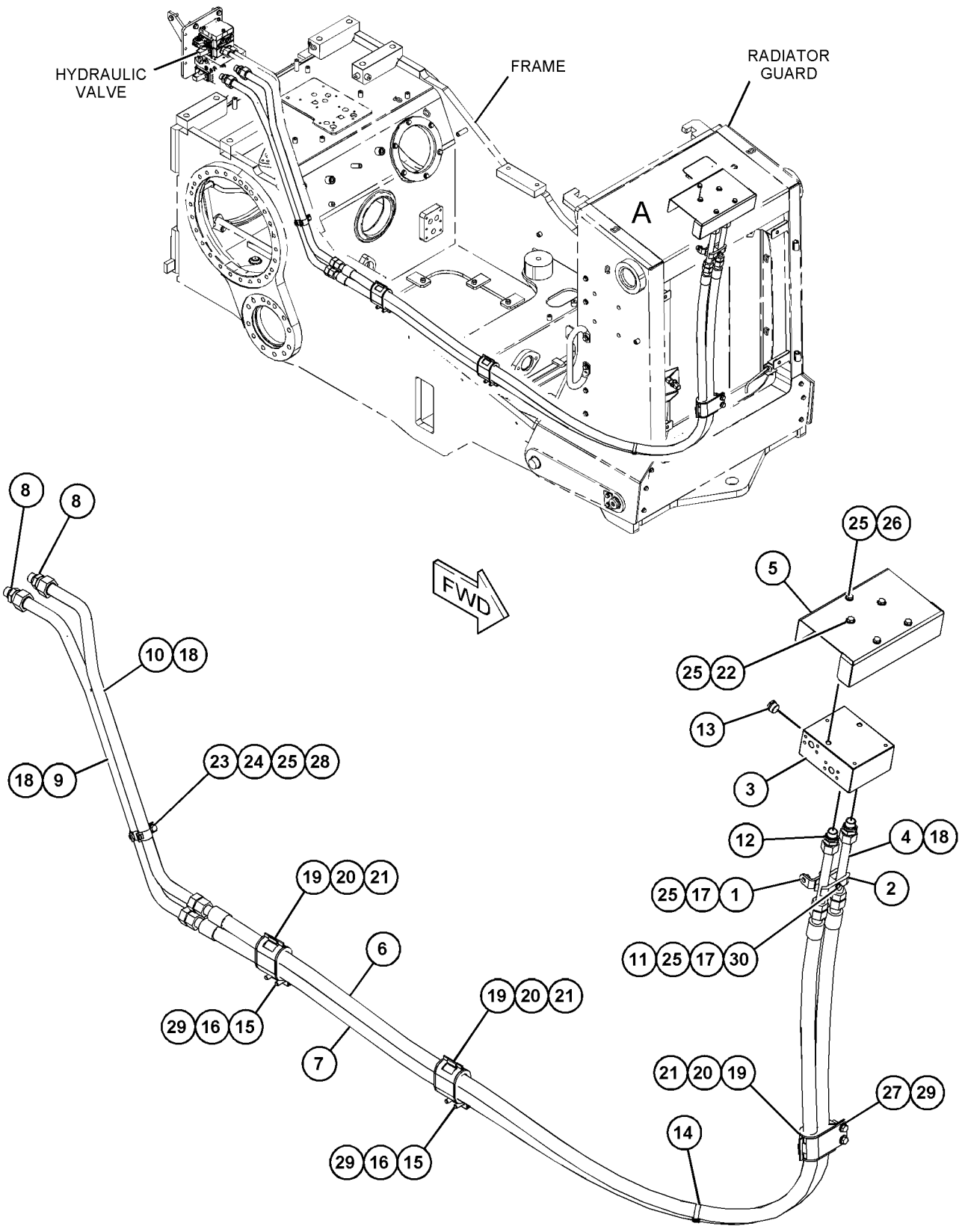

VIEW OF AREA A

GRAPHIC #1 <END> g06013609

418-9921 LINES GP-PILOT

S/N: R5A1-UP

PART OF 391-9512 HYDRAULIC AR-2 VALVE, 391-9515 HYDRAULIC AR-3 VALVE AN ATTACHMENT

SMCS-5057 **i06523566**

NOTE	REF NO	GRAPHIC REF	PART NUMBER	QTY	PART NAME 1 2 3 4 5 6 (PRODUCT LEVEL)	SEE PAGE
	1	1	*150-5968*	1	TEE AS	
		1	**6V-9835**	1	TEE	
		1	**4J-5477**	2	SEAL-O-RING	
	2	1	*168-1968*	1	TEE AS	
		1	**126-6872**	1	TEE	
		1	**3J-1907**	1	SEAL-O-RING	
		1	**6V-8397**	1	SEAL-O-RING	
	3	1	**213-3745**	1	ELBOW	
	4	1	*281-5898*	1	TEE AS	
		1	**153-6270**	1	TEE	
		1	**3J-1907**	1	SEAL-O-RING	
		1	**6V-8398**	2	SEAL-O-RING	
I	5	1	**348-5349**	1	HOSE AS	
I	6	1	**430-4177**	1	HOSE AS	
I	7	1	**430-4178**	1	HOSE AS	
I	8	1	**430-4179**	1	HOSE AS	
I	9	1	**430-4180**	1	HOSE AS	
I	10	1	**430-4181**	1	HOSE AS	
I	11	1	**430-4183**	1	HOSE AS	
I	12	1	**479-0208**	1	HOSE AS	
I	13	1	**482-5040**	1	HOSE AS	
	14	1	**482-5041**	1	BRACKET	
	15	1	**110-6349**	2	FITTING AS (QUICK DISCONNECT)	
	16	1	*148-8325*	8	CONNECTOR AS	
					(EACH INCLUDES)	
		1	**6V-8641**	1	CONNECTOR	
		1	**3J-1907**	1	SEAL-O-RING	
		1	**4J-5477**	1	SEAL-O-RING	
	17	1	*148-8365*	1	ELBOW AS	
		1	**8T-6876**	1	ELBOW	
		1	**3J-1907**	1	SEAL-O-RING	
		1	**6V-8398**	1	SEAL-O-RING	
	18	1	*148-8369*	2	ELBOW AS	
					(EACH INCLUDES)	
		1	**6V-8628**	1	ELBOW	
		1	**3J-7354**	1	SEAL-O-RING	
		1	**4J-5477**	1	SEAL-O-RING	
	19	1	*148-8374*	1	ELBOW AS	
		1	**6V-8723**	1	ELBOW	
		1	**3K-0360**	1	SEAL-O-RING	
		1	**6V-8397**	1	SEAL-O-RING	
	20	1	*150-3033*	1	ELBOW AS	
		1	**3J-1907**	1	SEAL-O-RING	
		1	**4J-5477**	1	SEAL-O-RING	
		1	**8T-0164**	1	ELBOW	
	21	1	*150-4043*	1	CONNECTOR AS	
		1	**6V-9873**	1	CONNECTOR	

418-9921 **LINES GP-PILOT (**contd.**)** **i06523566**

NOTE	REF NO	GRAPHIC REF	PART NUMBER	QTY	PART NAME 1 2 3 4 5 6 (PRODUCT LEVEL)	SEE PAGE
		1	**3J-1907**	1	SEAL-O-RING	
		1	**6V-8398**	1	SEAL-O-RING	
	22	1	*164-5567*	2	COUPLER AS-QUICK DISCONNECT (MALE)	
					(EACH INCLUDES)	
		1	**6V-3965**	1	FITTING (QUICK DISCONNECT)	
		1	**214-7568**	1	SEAL-O-RING	
	23	1	*174-3181*	1	ELBOW AS	
		1	**8T-7521**	1	ELBOW	
		1	**3J-1907**	1	SEAL-O-RING	
		1	**6V-8398**	1	SEAL-O-RING	
	24	1	**204-2281**	2	STRAP-CABLE	
Y	25	1	*226-0420*	1	ACCUMULATOR GP-HYDRAULIC (CHARGED)	375
	26	1	*304-7984*	1	TEE AS	
		1	**304-7983**	1	TEE	
		1	**6V-8397**	1	SEAL-O-RING	
	27	1	**3K-0360**	1	SEAL-O-RING	
	28	1	**6D-4244**	1	CLIP	
	29	1	**6D-7128**	1	SEAL-O-RING	
	30	1	**6V-0852**	4	CAP-DUST	
	31	1	**6V-8936**	1	REDUCER	
	32	1	**6V-9168**	1	NUT (11/16-16-THD)	
	33	1	**6V-9829**	1	CAP AS	
	34	1	**8T-4121**	2	WASHER-HARD (11X21X2.5-MM THK)	
M	35	1	**8T-4195**	2	BOLT (M10X1.5X30-MM)	
	36	1	**8T-7087**	1	GROMMET (34-MM ID)	

I - REFER TO HYDRAULIC INFORMATION SYSTEM
M - METRIC PART
Y - SEPARATE ILLUSTRATION

418-9921 **LINES GP-PILOT (**contd.**)** **i06523566**

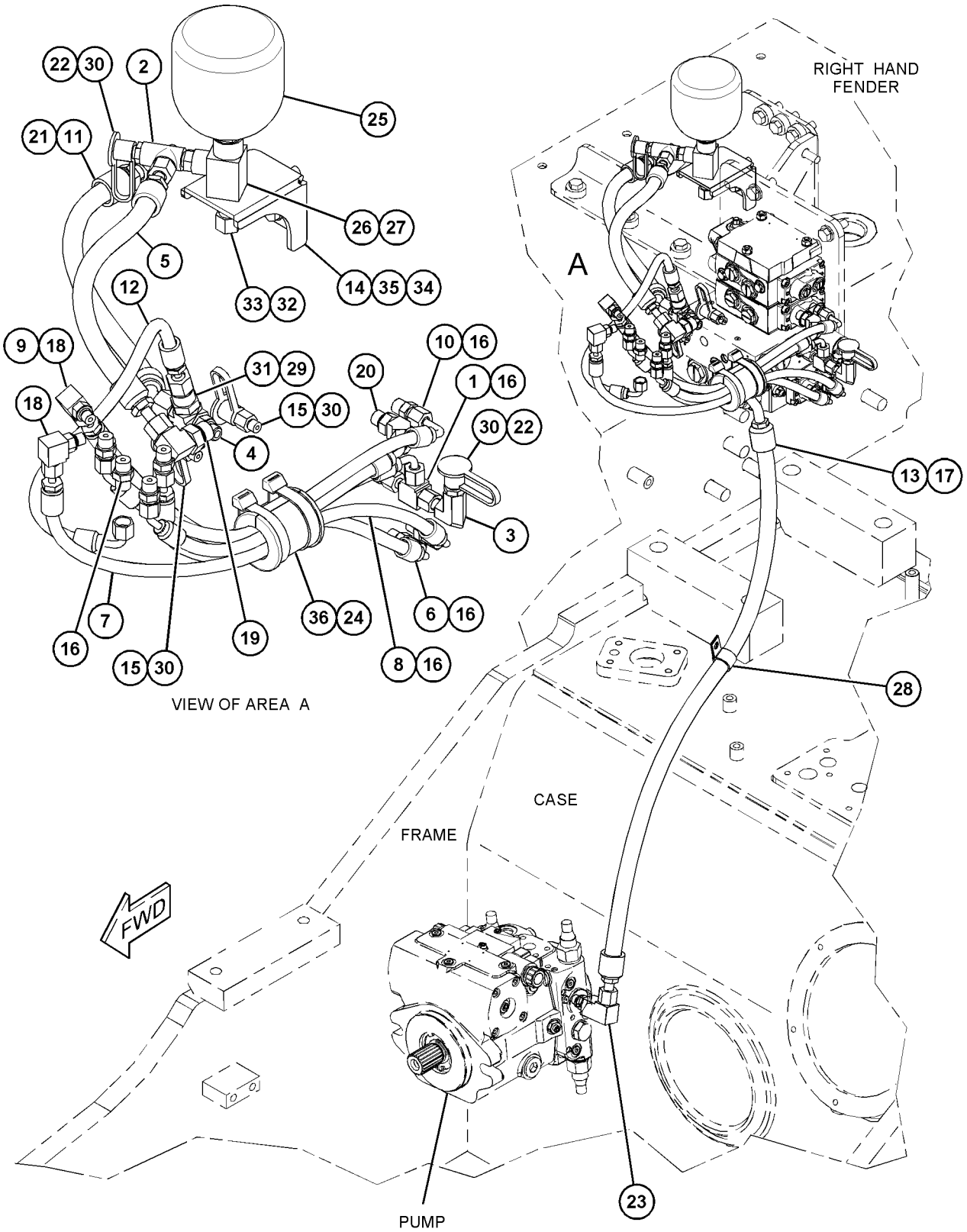

GRAPHIC #1 <END> g06011212

430-4137 LINES GP-PILOT

S/N: R5A1-UP

PART OF 391-9515 HYDRAULIC AR-3 VALVE

AN ATTACHMENT

SMCS-5057 **i06523109**

NOTE	REF NO	GRAPHIC REF	PART NUMBER	QTY	PART NAME 1 2 3 4 5 6 (PRODUCT LEVEL)	SEE PAGE
	1	1	*150-5968*	2	TEE AS	
					(EACH INCLUDES)	
		1	**4J-5477**	2	SEAL-O-RING	
		1	**6V-9835**	1	TEE	
	2	1	**7K-1181**	2	STRAP-CABLE	
	3	1	**290-5562**	1	MOUNT (DUAL SWIVEL)	
I	4	1	**381-0230**	2	HOSE AS	
I	5	1	**479-0202**	1	HOSE AS	
I	6	1	**479-0203**	1	HOSE AS	
	7	1	*148-8325*	3	CONNECTOR AS	
					(EACH INCLUDES)	
		1	**3J-1907**	1	SEAL-O-RING	
		1	**4J-5477**	1	SEAL-O-RING	
		1	**6V-8641**	1	CONNECTOR	
	8	1	*148-8368*	3	ELBOW AS	
					(EACH INCLUDES)	
		1	**3J-1907**	1	SEAL-O-RING	
		1	**4J-5477**	1	SEAL-O-RING	
		1	**6V-8627**	1	ELBOW	
	9	1	**177-2215**	2	STRAP-DUAL CLAMP	

I - REFER TO HYDRAULIC INFORMATION SYSTEM

430-4137 **LINES GP-PILOT (**contd.**)** **i06523109**

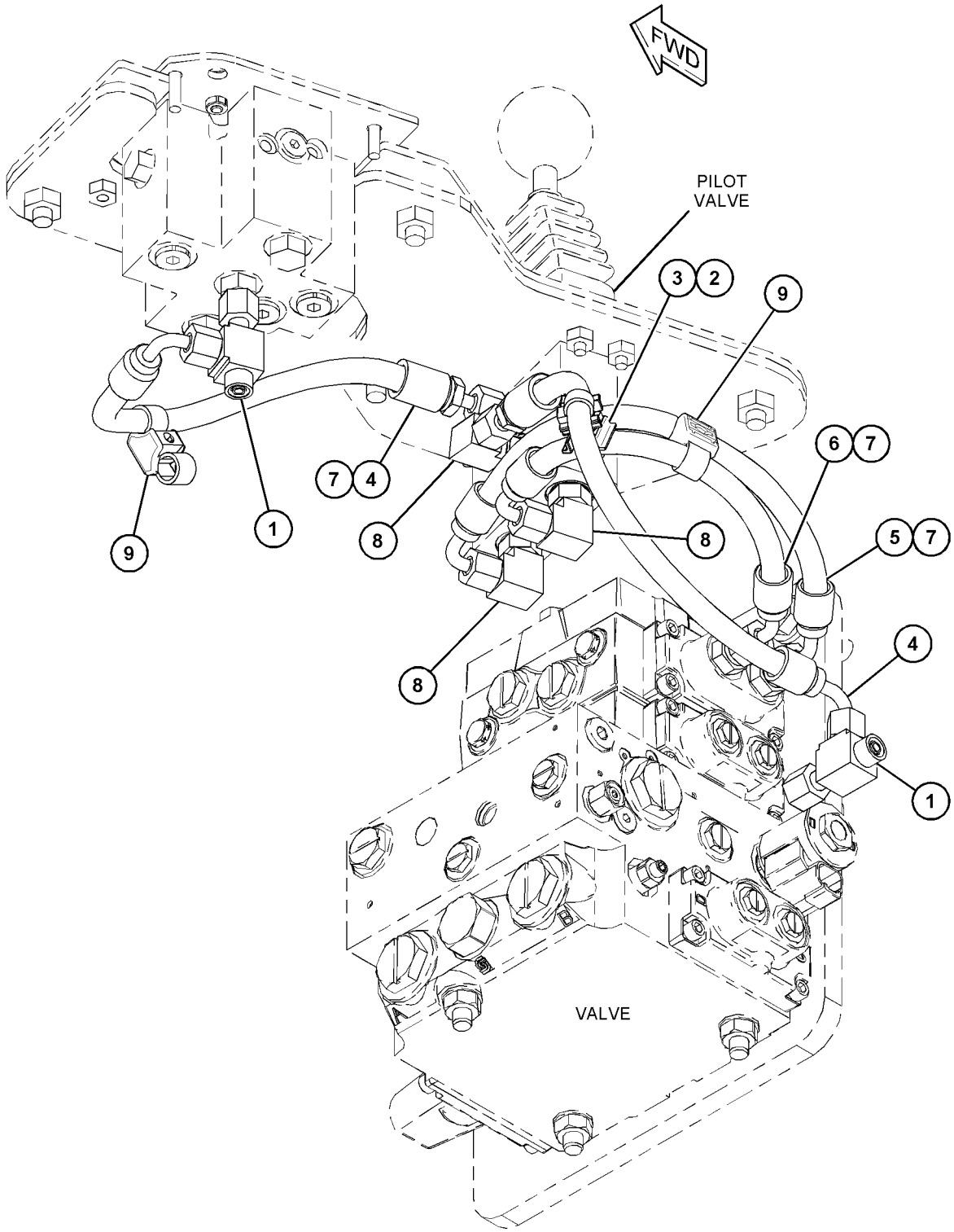

GRAPHIC #1 <END> g06011662

418-9918 LINES GP-PUMP

S/N: R5A1-UP

PART OF 391-9505 HYDRAULIC AR

SMCS-5057 **i06516888**

NOTE	REF NO	GRAPHIC REF	PART NUMBER	QTY	PART NAME 1 2 3 4 5 6 (PRODUCT LEVEL)	SEE PAGE
	1	1	**4W-3277**	1	BRACKET	
	2	1	**7K-1181**	2	STRAP-CABLE	
	3	1	**8T-4984**	8	CLAMP-HOSE	
	4	1	**180-4850**	1	VALVE GP-CHECK	
		1	**5K-9090**	1	SEAL-O-RING	
		1	**7M-8485**	1	SEAL-O-RING	
	5	1	**191-1422**	1	BRACKET AS	
	6	1	**194-6478**	1	HOSE	
	7	1	**196-1747**	1	BRACKET AS	
I	8	1	**268-1151**	1	HOSE AS	
	9	1	**290-5562**	1	MOUNT (DUAL SWIVEL)	
I	10	1	**322-1562**	1	HOSE AS	
I	11	1	**430-4168**	1	HOSE AS	
I	12	1	**430-4169**	1	HOSE AS	
	13	1	**431-0250**	1	TUBE	
	14	1	**431-0298**	1	SPRING	
	15	1	**440-6911**	1	TUBE AS	
I	16	1	**446-0679**	1	HOSE AS	
I	17	1	**446-0704**	1	HOSE AS	
	18	1	**466-9048**	1	TUBE AS	
I	19	1	**479-0207**	1	HOSE AS	
I	20	1	**479-0214**	1	HOSE AS	
	21	1	*148-8327*	2	CONNECTOR AS	
					(EACH INCLUDES)	
		1	**3D-2824**	1	SEAL-O-RING	
		1	**6V-8637**	1	CONNECTOR	
		1	**6V-9746**	1	SEAL-O-RING	
	22	1	*148-8333*	1	CONNECTOR AS	
		1	**6V-8400**	1	SEAL-O-RING	
		1	**7M-8485**	1	SEAL-O-RING	
		1	**8T-7927**	1	CONNECTOR	
	23	1	*148-8335*	3	CONNECTOR AS	
					(EACH INCLUDES)	
		1	**5K-9090**	1	SEAL-O-RING	
		1	**6V-8635**	1	CONNECTOR	
		1	**7M-8485**	1	SEAL-O-RING	
	24	1	*148-8347*	1	ELBOW AS	
		1	**3D-2824**	1	SEAL-O-RING	
		1	**6V-9007**	1	ELBOW	
		1	**6V-9746**	1	SEAL-O-RING	
	25	1	*148-8368*	1	ELBOW AS	
		1	**3J-1907**	1	SEAL-O-RING	
		1	**4J-5477**	1	SEAL-O-RING	
		1	**6V-8627**	1	ELBOW	
	26	1	*148-8369*	1	ELBOW AS	
		1	**3J-7354**	1	SEAL-O-RING	
		1	**4J-5477**	1	SEAL-O-RING	
		1	**6V-8628**	1	ELBOW	

418-9918 **LINES GP-PUMP (**contd.**)** **i06516888**

NOTE	REF NO	GRAPHIC REF	PART NUMBER	QTY	PART NAME 1 2 3 4 5 6 (PRODUCT LEVEL)	SEE PAGE
	27	1	*148-8390*	1	ELBOW AS	
		1	**2M-9780**	1	SEAL-O-RING	
		1	**6V-8626**	1	ELBOW	
		1	**7J-9108**	1	SEAL-O-RING	
	28	1	*148-8392*	1	ELBOW AS	
		1	**6V-9746**	1	SEAL-O-RING	
		1	**6V-9853**	1	ELBOW	
	29	1	*153-6244*	1	ELBOW AS	
		1	**2M-9780**	1	SEAL-O-RING	
		1	**6V-9746**	1	SEAL-O-RING	
		1	**8T-5389**	1	ELBOW	
	30	1	**198-4777**	1	WASHER-HARD (11X25X10-MM THK)	
	31	1	**1P-4577**	2	FLANGE-HALF	
	32	1	*329-5530*	1	TEE AS	
		1	**9X-2235**	1	TEE-SWIVEL	
		1	**228-7092**	1	SEAL-O-RING	
		1	**228-7093**	1	SEAL-O-RING	
	33	1	**4I-8933**	1	PIPE	
	34	1	**4J-0520**	1	SEAL-O-RING	
	35	1	**4J-0527**	1	SEAL-O-RING	
	36	1	**5K-9090**	2	SEAL-O-RING	
	37	1	**5P-7466**	1	CLIP (SLOT)	
	38	1	**5P-7467**	1	CLIP (TAB)	
	39	1	**5P-7468**	2	CLIP (SLOT)	
	40	1	**5P-7469**	2	CLIP (TAB)	
	41	1	**5P-8112**	1	GROMMET (50-MM ID)	
	42	1	**6V-1889**	2	CLIP	
	43	1	**8M-2770**	2	CLIP	
	44	1	**8T-1889**	2	CLIP (SLOT)	
	45	1	**8T-1890**	2	CLIP (TAB)	
	46	1	**8T-4121**	13	WASHER-HARD (11X21X2.5-MM THK)	
M	47	1	**8T-4133**	2	NUT (M10X1.5-THD)	
M	48	1	**8T-4137**	1	BOLT (M10X1.5X20-MM)	
M	49	1	**8T-4139**	1	BOLT (M12X1.75X30-MM)	
M	50	1	**8T-4178**	1	BOLT (M10X1.5X90-MM)	
M	51	1	**8T-4185**	1	BOLT (M10X1.5X50-MM)	
M	52	1	**8T-4195**	5	BOLT (M10X1.5X30-MM)	
M	53	1	**8T-4196**	4	BOLT (M10X1.5X35-MM)	
	54	1	**8T-4223**	5	WASHER-HARD (13.5X25.5X3-MM THK)	
M	55	1	**8T-6868**	4	BOLT (M12X1.75X80-MM)	
	56	1	**5P-1293**		HOSE (39-CM)	

I - REFER TO HYDRAULIC INFORMATION SYSTEM
M - METRIC PART

418-9918 **LINES GP-PUMP (**contd.**)** **i06516888**

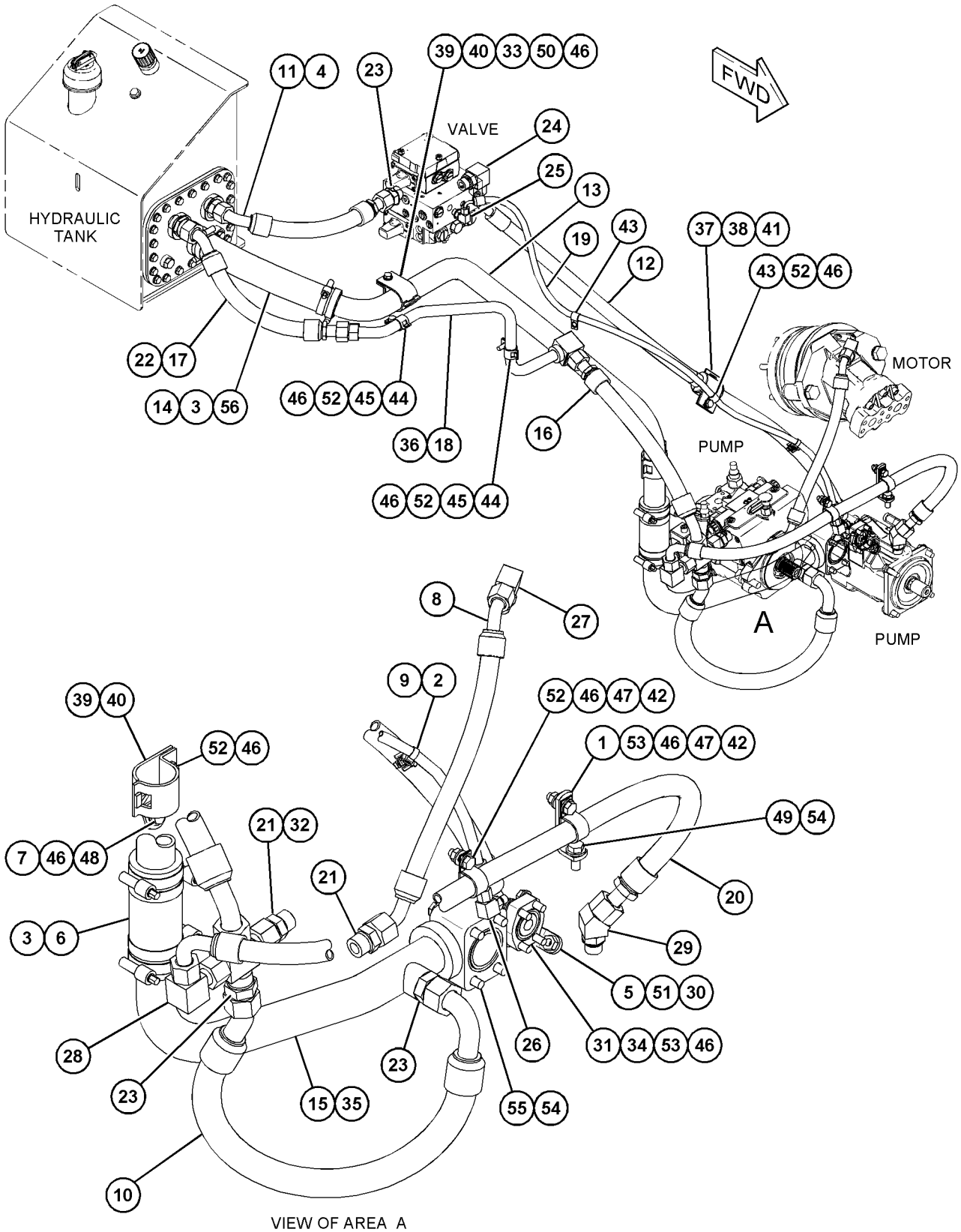

VIEW OF AREA A
(PUMPS AND MOTOR REMOVED)

GRAPHIC #1 <END> g06025877

418-9928 LINES GP-RIPPER

S/N: R5A1-UP
PART OF 391-9515 HYDRAULIC AR-3 VALVE
AN ATTACHMENT

SMCS-5057, 5352, 5356 **i06523111**

NOTE	REF NO	GRAPHIC REF	PART NUMBER	QTY	PART NAME 1 2 3 4 5 6 (PRODUCT LEVEL)	SEE PAGE
	1	1	**485-7331**	1	TUBE AS	
	2	1	**479-0210**	1	TUBE AS	
	3	1	*148-8315*	1	CONNECTOR AS	
		1	**2M-9780**	1	SEAL-O-RING	
		1	**6V-8642**	1	CONNECTOR	
		1	**7J-9108**	1	SEAL-O-RING	
	4	1	*148-8390*	1	ELBOW AS	
		1	**2M-9780**	1	SEAL-O-RING	
		1	**6V-8626**	1	ELBOW	
		1	**7J-9108**	1	SEAL-O-RING	
	5	1	*148-8393*	1	ELBOW AS	
		1	**6V-9852**	1	ELBOW (SWIVEL)	
		1	**7J-9108**	1	SEAL-O-RING	
	6	1	**6V-8398**	2	SEAL-O-RING	
	7	1	**8T-4121**	1	WASHER-HARD (11X21X2.5-MM THK)	
M	8	1	**344-5675**	1	NUT (M10X1.5-THD)	
	9	1	**9R-1004**	2	CLIP (TAB)	
	10	1	**9R-1005**	2	CLIP (SLOT)	
M	11	1	**309-1906**	1	STUD-TAPERLOCK (M10X1.5X55-MM)	

M - METRIC PART

418-9928 **LINES GP-RIPPER (**contd.**)** **i06523111**

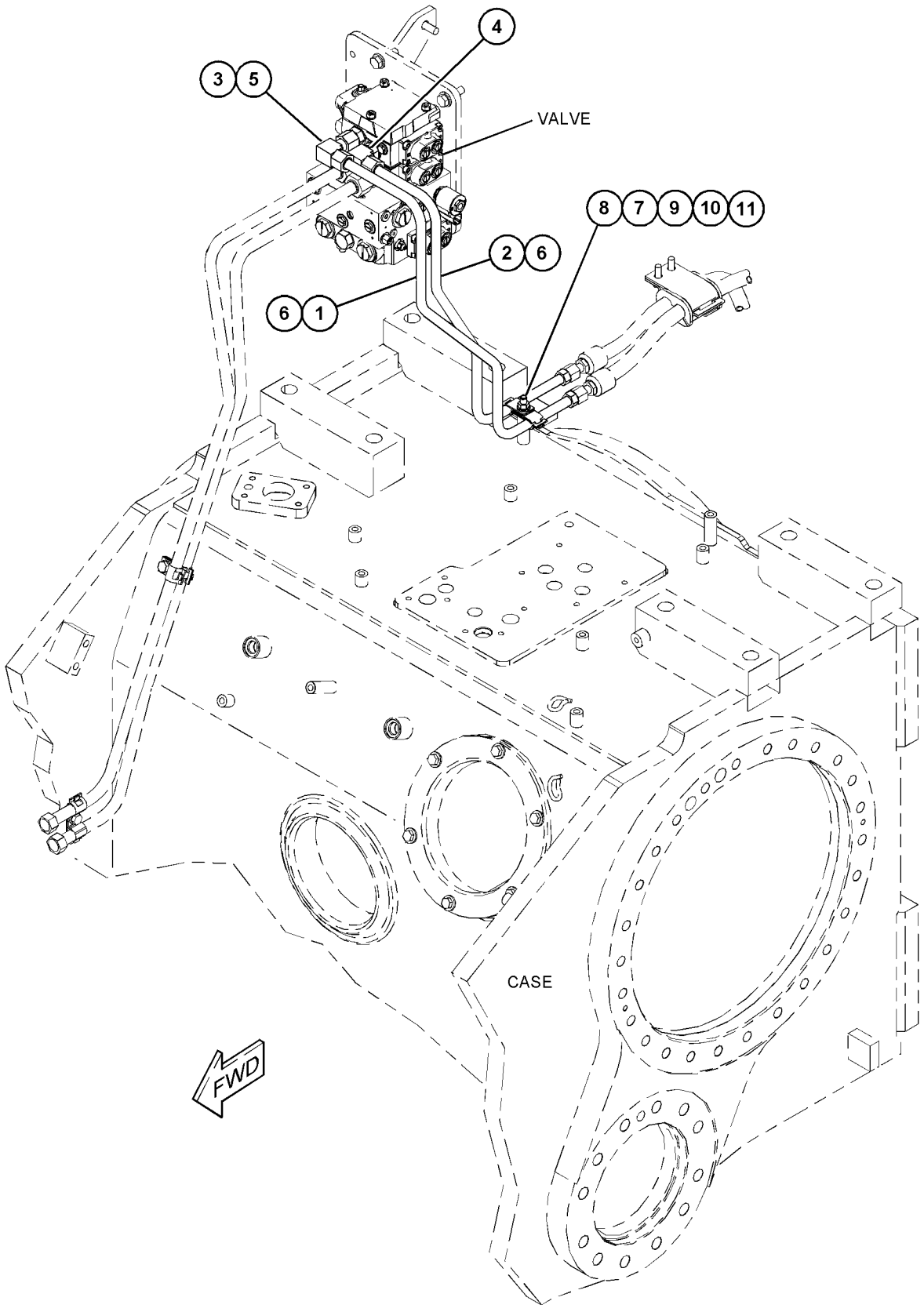

GRAPHIC #1 <END> g06010673

446-0722 LINES GP-RIPPER

S/N: RT51-UP
PART OF 432-5811 RIPPER AR
AN ATTACHMENT

SMCS-5057, 5352, 5356 **i06528205**

NOTE	REF NO	GRAPHIC REF	PART NUMBER	QTY	PART NAME 1 2 3 4 5 6 (PRODUCT LEVEL)	SEE PAGE
	1	1	**9M-2904**	4	CLAMP-HOSE	
	2	1	**130-1977**	4	SHIELD	
	3	1	**130-9192**	4	GROMMET	
	4	1	**208-6727**	2	SHIELD	
I	5	1	**446-0720**	1	HOSE AS	
I	6	1	**485-7333**	1	HOSE AS	
	7	1	**272-1777**	1	WASHER-HARD (11X18.5X15-MM THK)	
	8	1	**3G-8047**	1	GROMMET	
	9	1	**3G-8054**	1	CLIP (TAB)	
	10	1	**3G-8057**	1	CLIP (SLOT)	
	11	1	**4J-5267**	2	SEAL-O-RING	
	12	1	**5P-7466**	1	CLIP (SLOT)	
	13	1	**5P-7467**	1	CLIP (TAB)	
	14	1	**5P-8112**	1	GROMMET (50-MM ID)	
	15	1	**8T-4121**	10	WASHER-HARD (11X21X2.5-MM THK)	
M	16	1	**8T-4186**	7	BOLT (M10X1.5X40-MM)	
M	17	1	**8T-4195**	2	BOLT (M10X1.5X30-MM)	
M	18	1	**8T-6466**	1	BOLT (M10X1.5X60-MM)	

I - REFER TO HYDRAULIC INFORMATION SYSTEM
M - METRIC PART

446-0722 **LINES GP-RIPPER (**contd.**)** **i06528205**

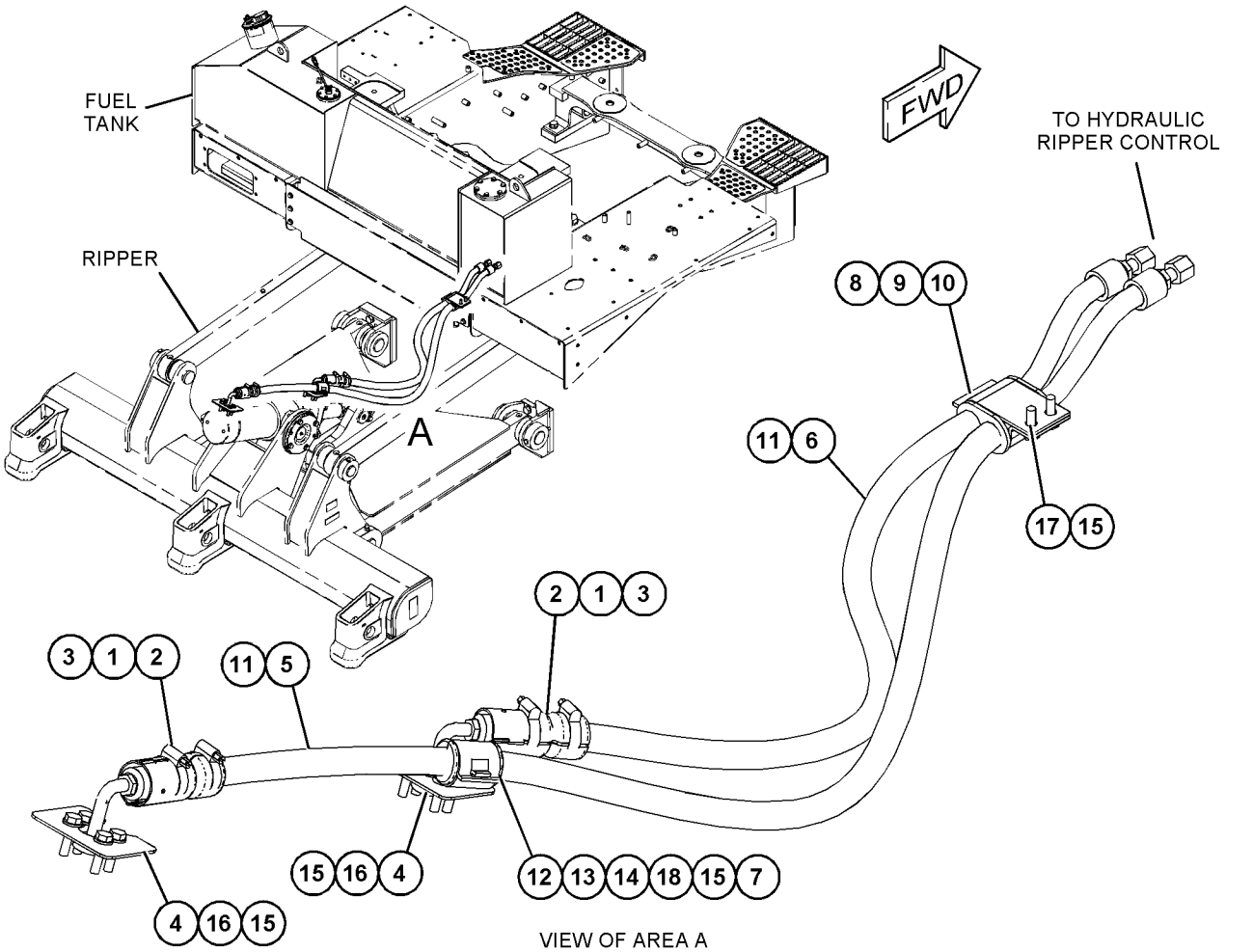

VIEW OF AREA A

GRAPHIC #1 <END> g06021735

418-9927 LINES GP-TILT CYLINDER–BULLDOZER

S/N: R5A1-UP

PART OF 391-9512 HYDRAULIC AR-2 VALVE, 391-9515 HYDRAULIC AR-3 VALVE AN ATTACHMENT

SMCS-5057, 5104 **i06582596**

NOTE	REF NO	GRAPHIC REF	PART NUMBER	QTY	PART NAME 1 2 3 4 5 6 (PRODUCT LEVEL)	SEE PAGE
	1	1	**7K-1181**	2	STRAP-CABLE	
	2	1	**158-3412**	2	CLIP (SLOT)	
	3	1	**290-5562**	1	MOUNT (DUAL SWIVEL)	
	4	1	**346-1726**	1	BRACKET	
I	5	1	**479-0201**	2	HOSE AS	
	6	1	**482-5038**	1	TUBE AS	
	7	1	**482-5039**	1	TUBE AS	
	8	1	*148-8315*	2	CONNECTOR AS	
					(EACH INCLUDES)	
		1	**2M-9780**	1	SEAL-O-RING	
		1	**6V-8642**	1	CONNECTOR	
		1	**7J-9108**	1	SEAL-O-RING	
	9	1	*164-6859*	2	UNION AS	
					(EACH INCLUDES)	
		1	**6V-8398**	1	SEAL-O-RING	
		1	**6V-9353**	1	UNION	
		1	**7J-9108**	1	SEAL-O-RING	
	10	1	**265-9590**	2	WASHER-HARD (21X37X2-MM THK)	
	11	1	**272-1882**	2	STUD-TAPERLOCK (M12X1.75X80-MM)	
	12	1	**6V-9169**	2	NUT (13/16-16-THD)	
	13	1	**7G-3833**	3	CLIP (TAB)	
	14	1	**7G-3834**	3	CLIP (SLOT)	
	15	1	**7J-9108**	2	SEAL-O-RING	
	16	1	**7X-7729**	2	WASHER (11X25X3-MM THK)	
	17	1	**8C-3174**	3	GROMMET	
	18	1	**8T-4121**	2	WASHER-HARD (11X21X2.5-MM THK)	
M	19	1	**8T-4136**	1	BOLT (M10X1.5X25-MM)	
M	20	1	**8T-4137**	2	BOLT (M10X1.5X20-MM)	
M	21	1	**8T-4186**	1	BOLT (M10X1.5X40-MM)	
	22	1	**8T-4223**	2	WASHER-HARD (13.5X25.5X3-MM THK)	
M	23	1	**8T-4244**	2	NUT (M12X1.75-THD)	
	24	1	**9R-1004**	2	CLIP (TAB)	
	25	1	**9R-1005**	2	CLIP (SLOT)	
	26	1	**9R-7803**	1	CLIP (TAB)	

I - REFER TO HYDRAULIC INFORMATION SYSTEM
M - METRIC PART

418-9927 **LINES GP-TILT CYLINDER (**contd.**)** **i06582596**

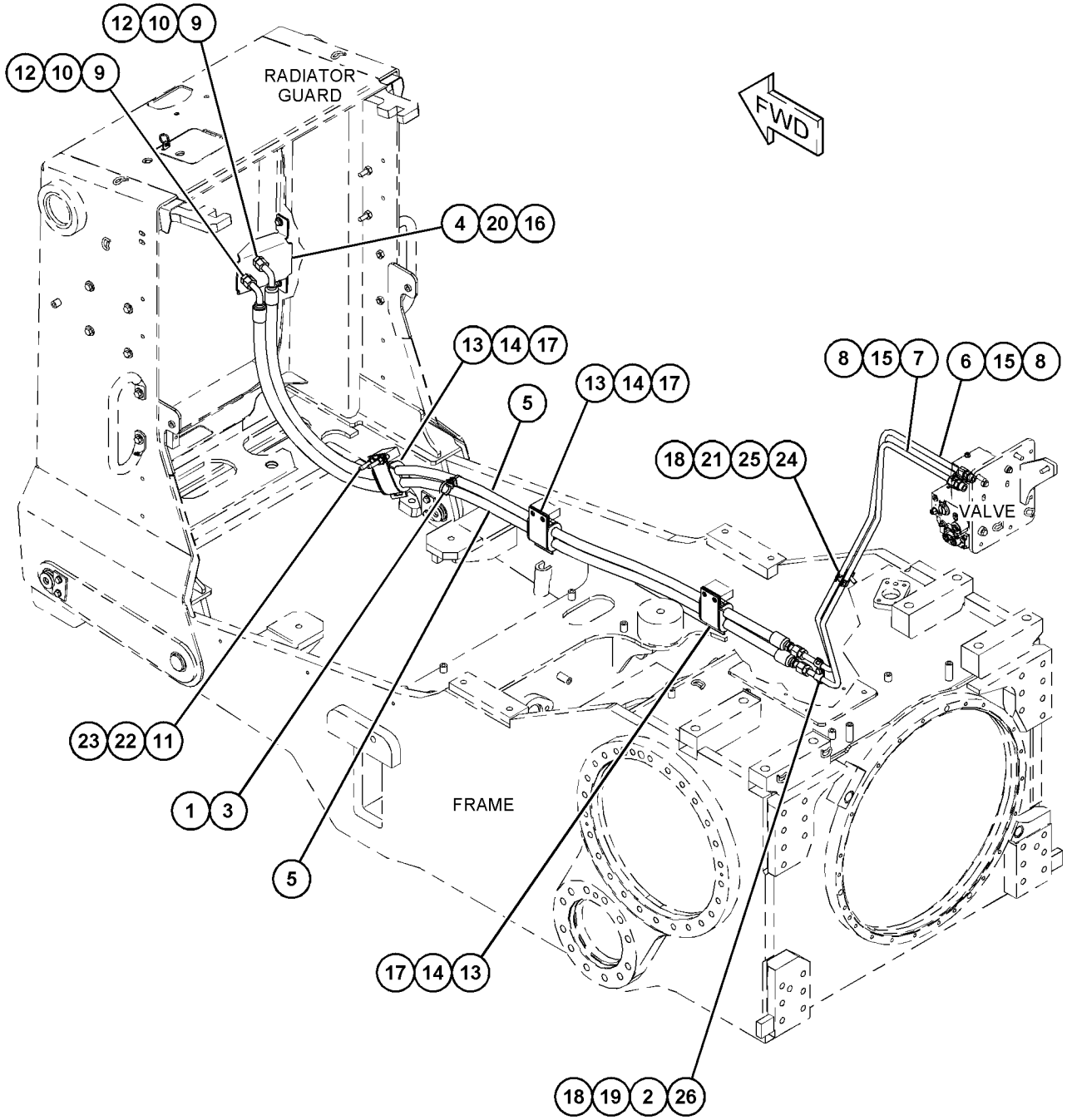

GRAPHIC #1 <END> g06010105

453-0586 LINES GP-TILT CYLINDER–BULLDOZER

S/N: R5A1-UP

PART OF 491-4975 INSTALLATION AR-BULLDOZER

AN ATTACHMENT

SMCS-5057, 5104 **i06582812**

NOTE	REF NO	GRAPHIC REF	PART NUMBER	QTY	PART NAME 1 2 3 4 5 6 (PRODUCT LEVEL)	SEE PAGE
	1	1	**3Y-5405**	2	RUBBER	
	2	1	**4T-3521**	1	GUARD	
I	3	1	**7T-6934**	1	HOSE AS	
	4	1	**289-4638**	1	GUARD AS	
I	5	1	**455-1253**	2	HOSE AS	
I	6	1	**455-1254**	1	HOSE AS	
	7	1	*148-8375*	2	ELBOW AS	
					(EACH INCLUDES)	
		1	**6V-8981**	1	ELBOW	
		1	**6V-8398**	2	SEAL-O-RING	
	8	1	**198-4778**	2	WASHER-HARD (13.5X30X12-MM THK)	
M	9	1	**344-5675**	1	NUT (M10X1.5-THD)	
	10	1	**4J-5267**	2	SEAL-O-RING	
	11	1	**6V-9169**	2	NUT (13/16-16-THD)	
	12	1	**8C-3205**	4	FLANGE-HALF	
	13	1	**8T-1889**	2	CLIP (SLOT)	
	14	1	**8T-1890**	2	CLIP (TAB)	
	15	1	**8T-4121**	10	WASHER-HARD (11X21X2.5-MM THK)	
M	16	1	**8T-4139**	2	BOLT (M12X1.75X30-MM)	
M	17	1	**8T-4183**	2	BOLT (M12X1.75X40-MM)	
M	18	1	**8T-4192**	3	BOLT (M12X1.75X25-MM)	
M	19	1	**8T-4196**	9	BOLT (M10X1.5X35-MM)	
	20	1	**8T-4223**	5	WASHER-HARD (13.5X25.5X3-MM THK)	

I - REFER TO HYDRAULIC INFORMATION SYSTEM
M - METRIC PART

453-0586 **LINES GP-TILT CYLINDER (**contd.**)** **i06582812**

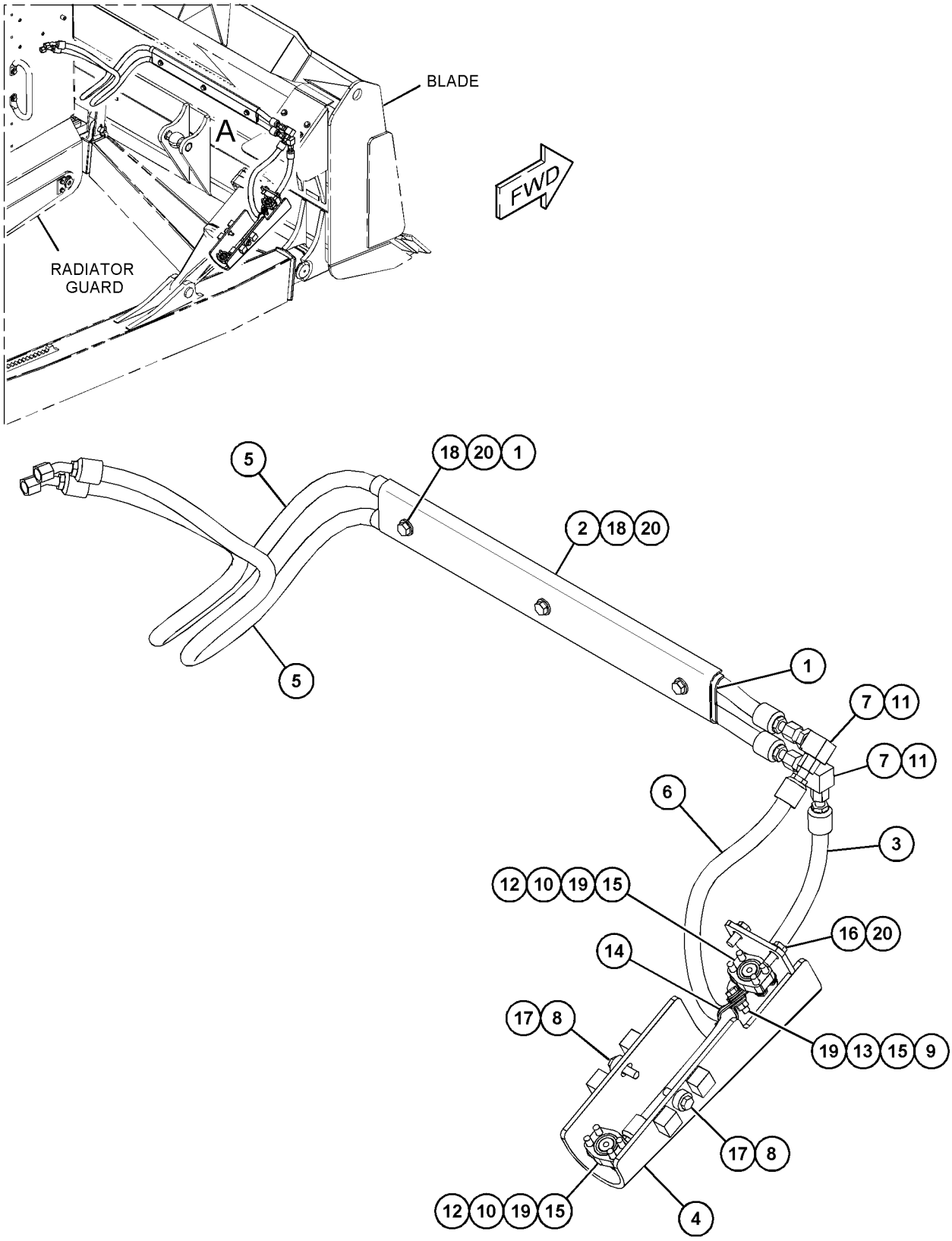

VIEW OF AREA A

GRAPHIC #1 <END> g06023856

418-9914 MOTOR & MOUNTING GP–STEERING

S/N: R5A1-UP

PART OF 391-9505 HYDRAULIC AR

SMCS-5082 **i06582815**

NOTE	REF NO	GRAPHIC REF	PART NUMBER	QTY	PART NAME 1 2 3 4 5 6 (PRODUCT LEVEL)	SEE PAGE
	1	1	**232-2303**	1	ADAPTER	
YR	2	1	**309-1916**	1	MOTOR GP-PISTON (STEERING)	412
	3	1	**2K-2939**	1	SEAL-O-RING	
	4	1	**3N-0759**	1	RING-SEALING	
	5	1	**7K-6058**	6	BOLT-12 POINT HEAD (1/2-13X2.5-IN)	
M	6	1	**7X-2563**	2	BOLT (M20X2.5X60-MM)	
	7	1	**8T-4123**	2	WASHER (3.62X5.75X0.375-MM THK)	

M - METRIC PART
R - REMANUFACTURED PART MAY BE AVAILABLE
Y - SEPARATE ILLUSTRATION

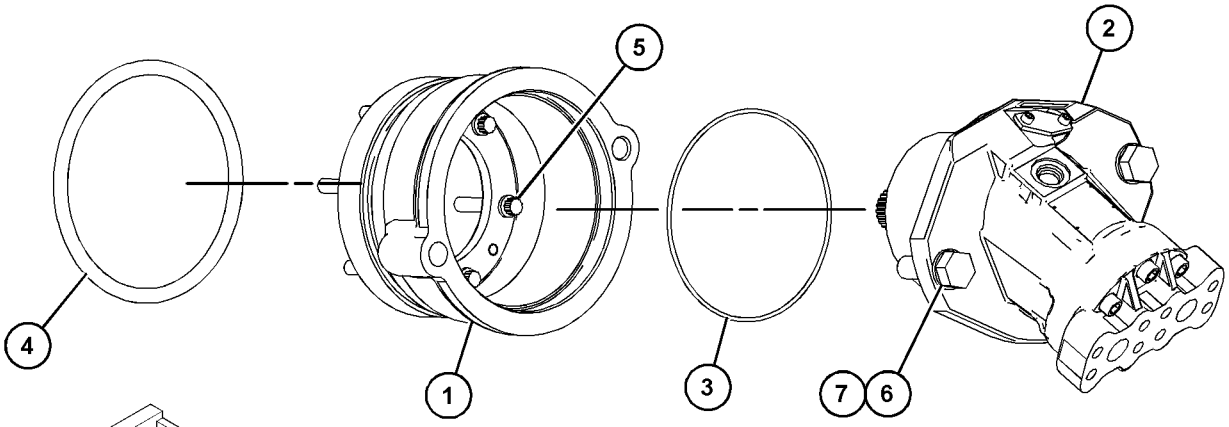

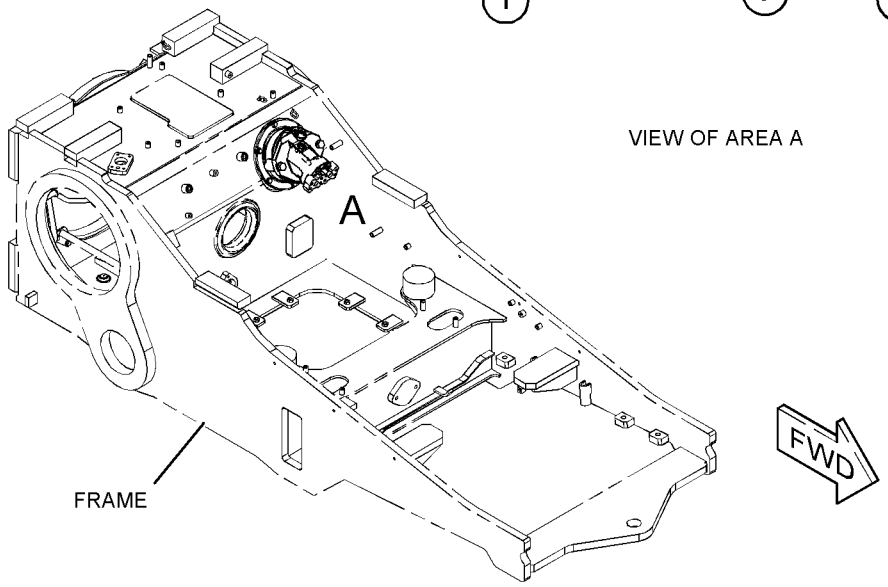

VIEW OF AREA A

GRAPHIC #1 <END> g06007352

309-1916 MOTOR GP-PISTON–STEERING*R

S/N: R5A1-UP

PART OF 418-9914 MOTOR & MOUNTING GP

SMCS-5058 **i06516847**

NOTE	REF NO	GRAPHIC REF	PART NUMBER	QTY	PART NAME 1 2 3 4 5 6 (PRODUCT LEVEL)	SEE PAGE
Y	1	1	**340-7751**	1	ROTATING GP-MOTOR	423
	2	1	**9S-8006**	1	PLUG	
	3	1	**137-5524**	1	HEAD	
	4	1	**8T-4231**	1	DOWEL	
	5	1	**2M-9780**	1	SEAL-O-RING	
	6	1	**6R-0365**	1	SEAL-O-RING	
M	7	1	**8T-3957**	6	BOLT-SOCKET HEAD (M12X1.75X30-MM)	

M - METRIC PART
Y - SEPARATE ILLUSTRATION

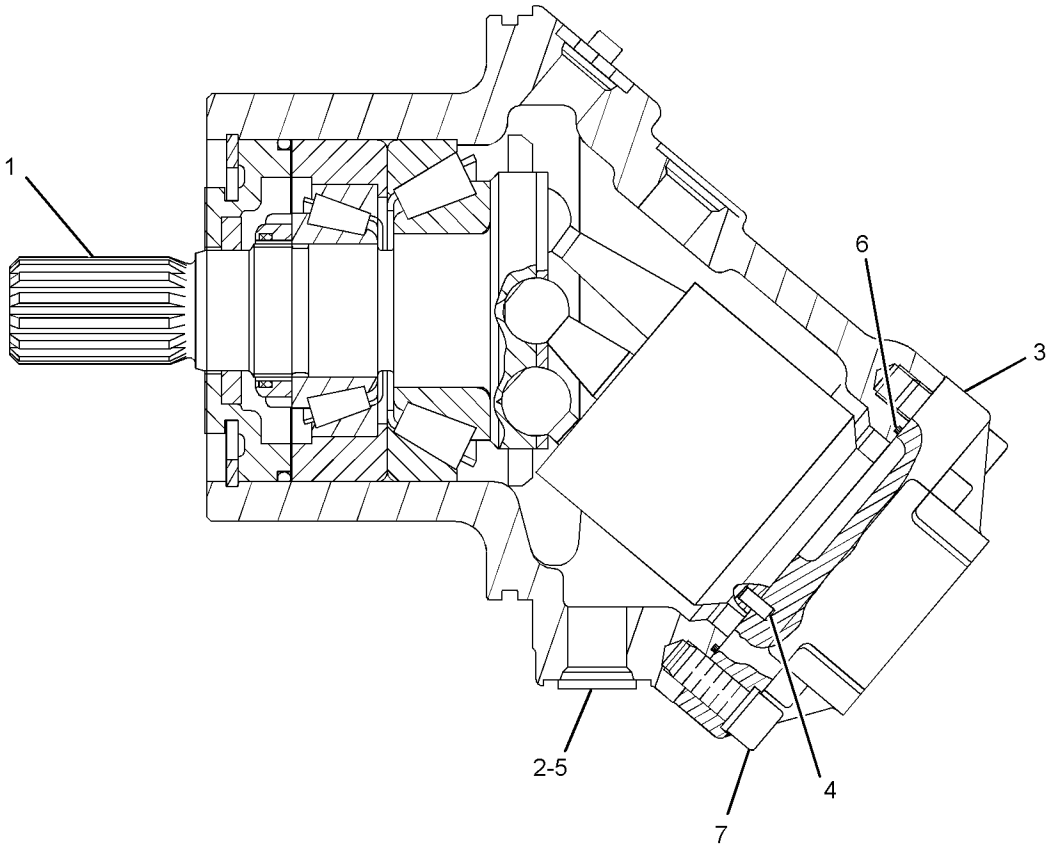

GRAPHIC #1 <END> g01884574

430-4143 MOUNTING GP-CYLINDER

S/N: R5A1-UP

PART OF 391-9505 HYDRAULIC AR

SMCS-7562 **i06516904**

NOTE	REF NO	GRAPHIC REF	PART NUMBER	QTY	PART NAME 1 2 3 4 5 6 (PRODUCT LEVEL)	SEE PAGE
	1	1	**458-6845**	2	YOKE	
	2	1	**3B-8485**	4	ELBOW	
	3	1	**4J-6326**	8	BEARING-HALF	
	4	1	**4J-6327**	4	CAP	
	5	1	**5Y-2206**	2	PIN	
Y	6	1	*431-0261*	1	CYLINDER & LINES GP (RH)	380
Y	7	1	*431-0262*	1	CYLINDER & LINES GP (LH)	382
	8	1	**431-0282**	2	CLIP-2 PIECE	
	9	1	**431-0283**	2	CLIP	
	10	1	**476-9919**	2	STRAP	
	11	1	**2J-3505**	2	NUT-FULL (7/8-9-THD)	
M	12	1	**329-3356**	2	NUT (M12X1.75-THD)	
	13	1	**5P-1076**	4	WASHER-HARD (13.5X30X4-MM THK)	
	14	1	**5P-8249**	2	WASHER-HARD (24X41.5X4-MM THK)	
	15	1	**7X-7729**	2	WASHER (11X25X3-MM THK)	
M	16	1	**8T-4136**	2	BOLT (M10X1.5X25-MM)	
M	17	1	**8T-4183**	2	BOLT (M12X1.75X40-MM)	
M	18	1	**8T-4910**	8	BOLT (M12X1.75X60-MM)	
	19	1	**8T-7971**	8	WASHER-HARD (13.5X25.5X5-MM THK)	
D	20	1	**5P-5908**		SEAL (0.3-M EACH)	

D - ORDER BY THE METER
M - METRIC PART
Y - SEPARATE ILLUSTRATION

430-4143 **MOUNTING GP-CYLINDER (**contd.**)** **i06516904**

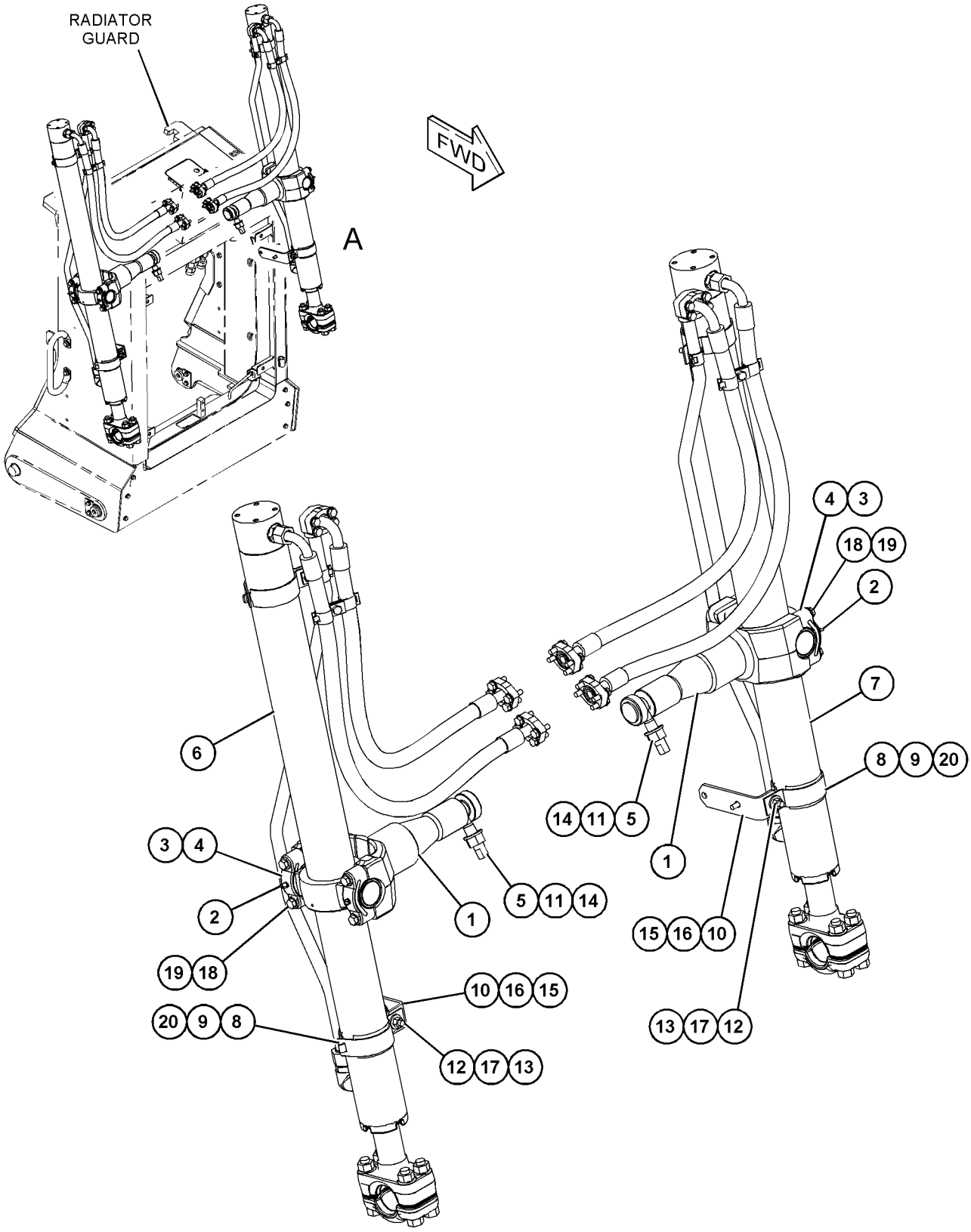

VIEW OF AREA A

GRAPHIC #1 <END> g06012685

418-9917 PUMP & MOUNTING GP–IMPLEMENT

S/N: R5A1-UP

PART OF 391-9505 HYDRAULIC AR

SMCS-5084 **i06582825**

NOTE	REF NO	GRAPHIC REF	PART NUMBER	QTY	PART NAME 1 2 3 4 5 6 (PRODUCT LEVEL)	SEE PAGE
YR	1	1	**318-8481**	1	PUMP GP-PISTON (IMPLEMENT)	419
	2	1	*150-4046*	1	ADAPTER AS	
		1	**2M-9780**	1	SEAL-O-RING	
		1	**5P-1404**	1	ADAPTER	
	3	1	*164-5567*	1	COUPLER AS-QUICK DISCONNECT (MALE)	
		1	**6V-3965**	1	FITTING (QUICK DISCONNECT)	
		1	**214-7568**	1	SEAL-O-RING	
	4	1	**5F-3106**	1	SEAL-O-RING	
	5	1	**6V-0852**	1	CAP-DUST	
	6	1	**8T-4223**	4	WASHER-HARD (13.5X25.5X3-MM THK)	
M	7	1	**8T-4956**	4	BOLT (M12X1.75X35-MM)	

M - METRIC PART
R - REMANUFACTURED PART MAY BE AVAILABLE
Y - SEPARATE ILLUSTRATION

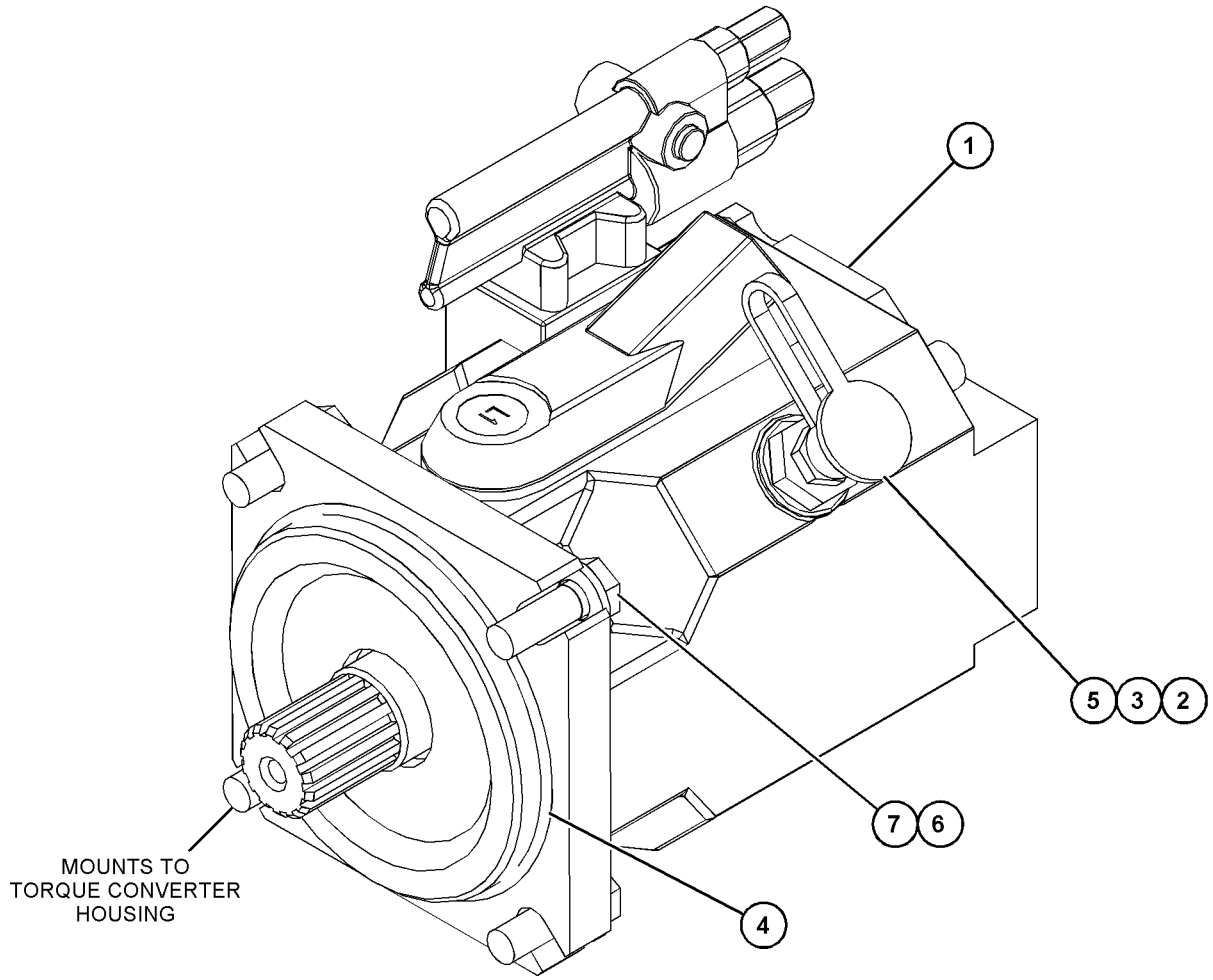

GRAPHIC #1 <END> g06012610

430-4142 PUMP & MOUNTING GP—STEERING

S/N: R5A1-UP

PART OF 391-9505 HYDRAULIC AR

SMCS-5084 **i06584037**

NOTE	REF NO	GRAPHIC REF	PART NUMBER	QTY	PART NAME 1 2 3 4 5 6 (PRODUCT LEVEL)	SEE PAGE
YR	1	1	**320-8637**	1	PUMP GP-PISTON (STEERING)	421
	2	1	*150-4047*	3	ADAPTER AS	
					(EACH INCLUDES)	
		1	**3J-7354**	1	SEAL-O-RING	
		1	**8T-2353**	1	ADAPTER	
	3	1	*164-5567*	3	COUPLER AS-QUICK DISCONNECT (MALE)	
					(EACH INCLUDES)	
		1	**6V-3965**	1	FITTING (QUICK DISCONNECT)	
		1	**214-7568**	1	SEAL-O-RING	
	4	1	**198-4780**	2	WASHER-HARD (17.5X32X8-MM THK)	
	5	1	**5F-3106**	1	SEAL-O-RING	
	6	1	**6V-0852**	3	CAP-DUST	
M	7	1	**8T-0348**	2	BOLT-SOCKET HEAD (M16X2X50-MM)	

M - METRIC PART
R - REMANUFACTURED PART MAY BE AVAILABLE
Y - SEPARATE ILLUSTRATION

430-4142 **PUMP & MOUNTING GP (**contd.**)** **i06584037**

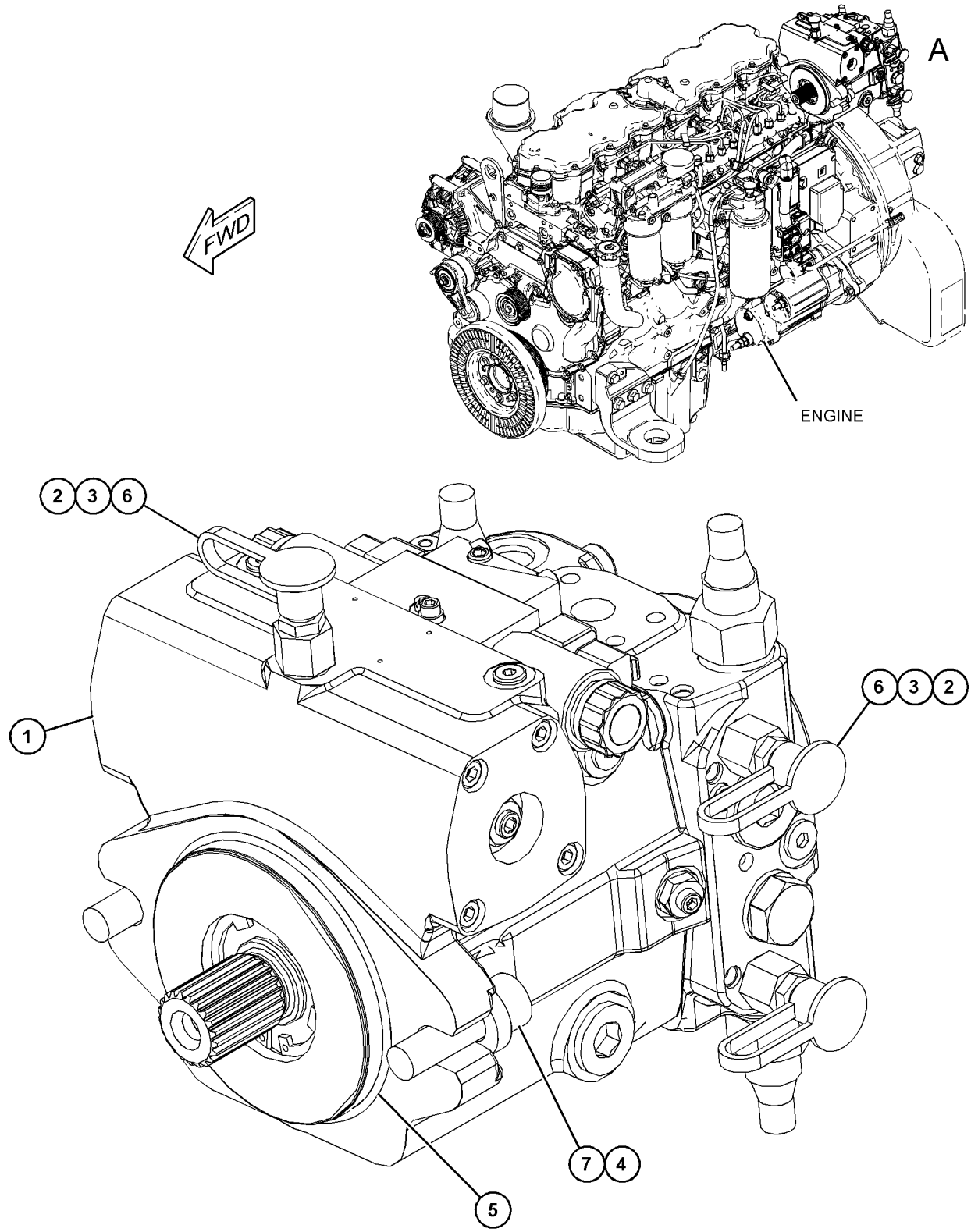

VIEW OF AREA A

GRAPHIC #1 <END> g06012634

293-5440 PUMP GP-CHARGE–STEERING

S/N: R5A1-UP

PART OF 320-8637 PUMP GP-PISTON

SMCS-3204 **i06584043**

NOTE	REF NO	GRAPHIC REF	PART NUMBER	QTY	PART NAME 1 2 3 4 5 6 (PRODUCT LEVEL)	SEE PAGE
M	1	1	**096-0001**	4	BOLT-SOCKET HEAD (M8X1.25X40-MM)	
	2	1	**123-7598**	4	SEAL-BONDED	
	3	1	**117-7278**	1	BUSHING (BEARING)	
	4	1	**117-7322**	2	SEAL-RING	
	5	1	**277-6624**	1	PLATE-WEAR	
	6	1	**246-5804**	2	PLUG	

M - METRIC PART

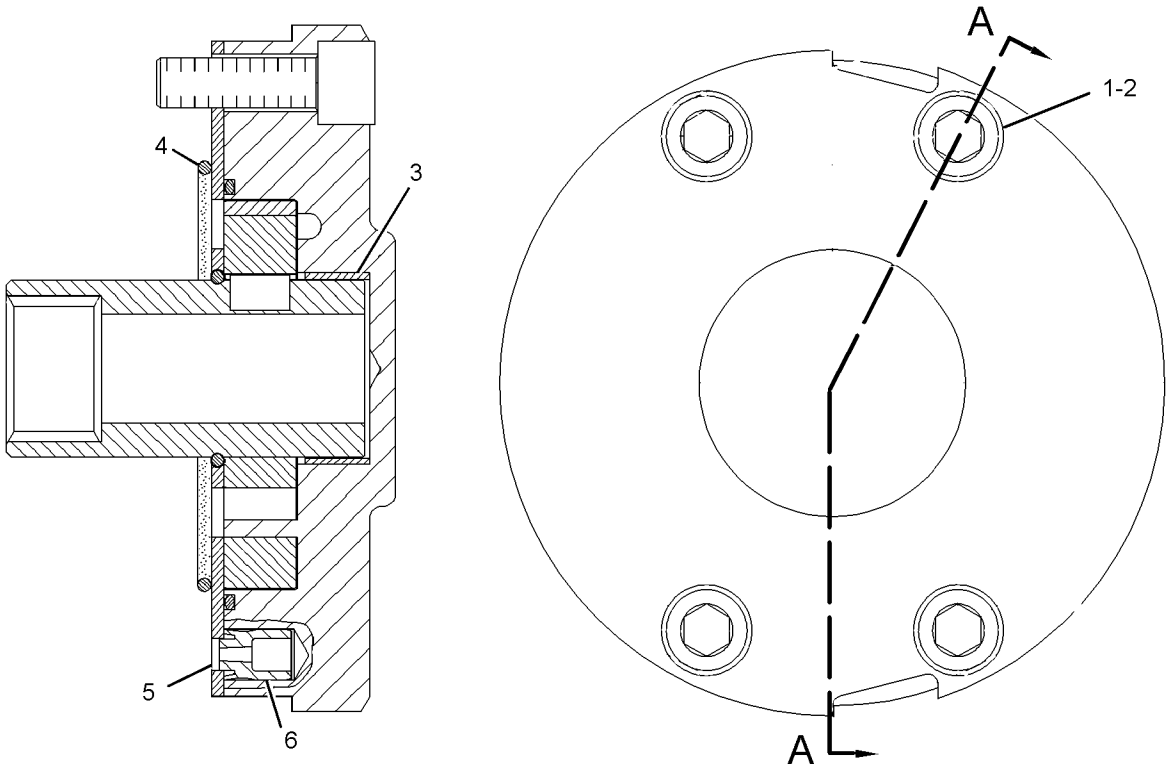

SECTION A-A

GRAPHIC #1 <END> g01377495

318-8481 PUMP GP-PISTON—IMPLEMENT*R

S/N: R5A1-UP

PART OF 418-9917 PUMP & MOUNTING GP

SMCS-5070 **i06516833**

NOTE	REF NO	GRAPHIC REF	PART NUMBER	QTY	PART NAME 1 2 3 4 5 6 (PRODUCT LEVEL)	SEE PAGE
	1	1	**180-6213**	1	RING-RETAINING	
	2	1	**168-7319**	1	SEAL-SHAFT	
M	3	1	**6R-7943**	2	SCREW (M5X0.8X15-MM)	
	4	1	**168-2197**	1	SPRING	
	5	1	**168-2198**	1	LINK-CONTROL	
	6	1	**174-9994**	1	PISTON-CONTROL	
	7	1	**8T-7525**	1	SEAL-O-RING	
	8	1	**198-5351**	1	PLUG	
	9	1	**9W-2109**	1	CONE-BEARING	
	10	1	**3J-7354**	2	SEAL-O-RING	
M	11	1	**095-0687**	4	BOLT-SOCKET HEAD (M14X2X45-MM)	
	12	1	**9X-8979**	1	DOWEL	
	13	1	**192-7470**	1	SEAL-O-RING	
	14	1	**168-2203**	1	SHIM-SHAFT (3-MM THK)	
Y	15	1	**197-2849**	1	ROTATING GP-PUMP	425
	16	1	**168-7317**	1	SWASHPLATE	
	17	1	**168-2206**	2	BEARING-CRADLE	
	18	1	**3P-1210**	1	CONE-BEARING	
M	19	1	**8T-8442**	4	BOLT-SOCKET HEAD (M6X1X30-MM)	
	20	1	**190-6507**	1	RING-STOP	
	21	1	**197-2850**	1	SHAFT	
	22	1	**120-4394**	2	PLUG-BREAK OFF	
	23	1	**168-3504**	2	SEAL	
C	24	1	**280-7870**	1	GASKET	
	25	1	**9S-8002**	2	PLUG (7/16-20-THD)	
CJY	26	1	**285-5240**	1	VALVE GP-PUMP CONTROL (PRESSURE, FLOW COMPENSATOR)	447
	27	1	**9W-2110**	1	CUP-TAPERED ROLLER	
	28	1	**8J-0412**	1	CUP-BEARING	
					AVAILABLE REPAIR KIT(S):	
J			**293-8350**	1	KIT-SEAL	
					(INCLUDES RINGS)	

C - CHANGE FROM PREVIOUS TYPE
J - KIT MARKED J SERVICES PART(S) MARKED J
M - METRIC PART
Y - SEPARATE ILLUSTRATION

318-8481 **PUMP GP-PISTON (**contd.**)** **i06516833**

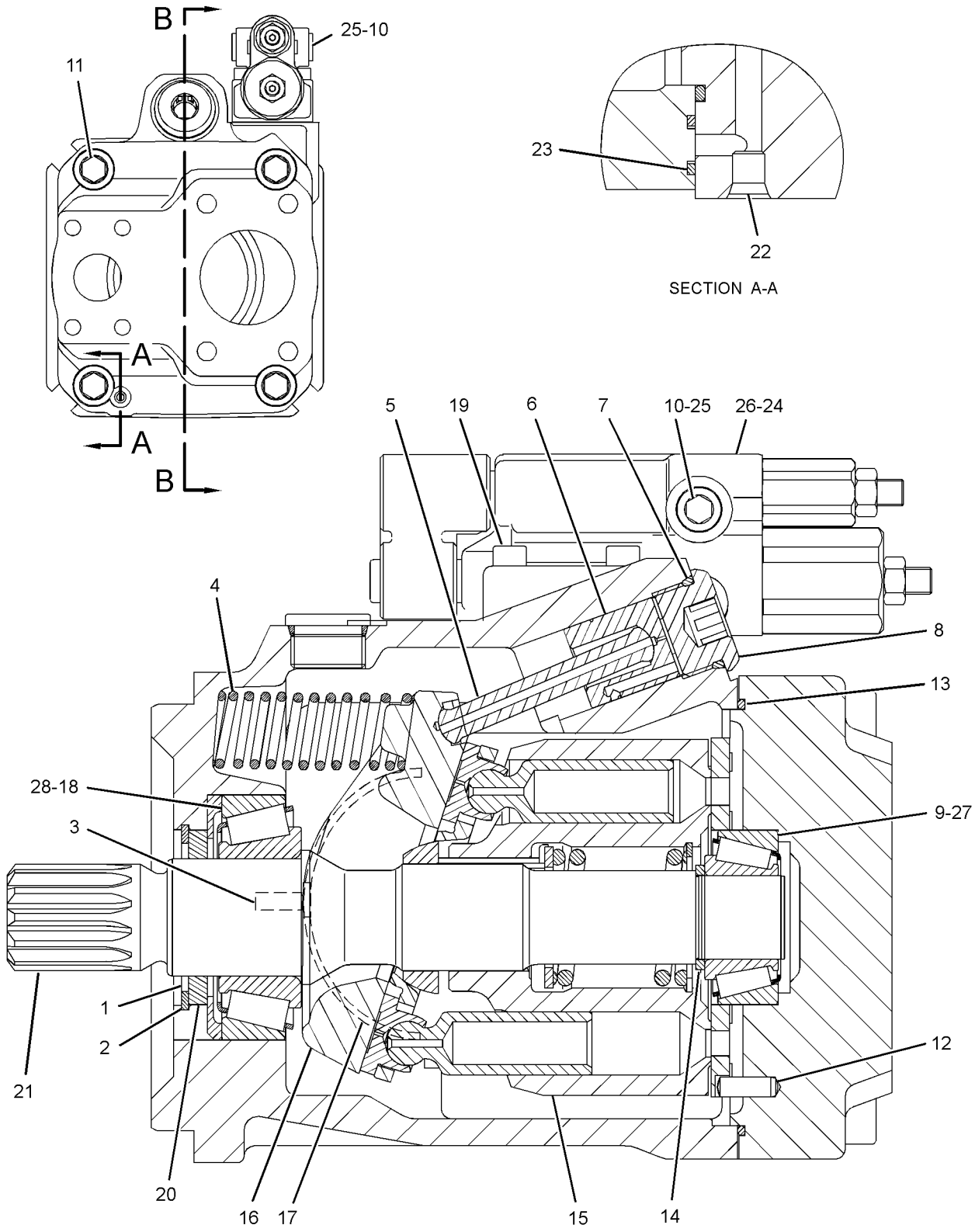

GRAPHIC #1 <END> g03697526

320-8637 PUMP GP-PISTON–STEERING*R

S/N: R5A1-UP

PART OF 430-4142 PUMP & MOUNTING GP

SMCS-5070 **i06516826**

NOTE	REF NO	GRAPHIC REF	PART NUMBER	QTY	PART NAME 1 2 3 4 5 6 (PRODUCT LEVEL)	SEE PAGE
	1	1	**9T-3928**	1	PLUG AS	
	1A	1	**187-8001**	1	SEAL	
	3	1	**122-9718**	1	PIN	
	4	1	**1G-3180**	1	SCREW-ECCENTRIC	
M	5	1	**6E-4240**	1	NUT-SEALING (M10X1-THD)	
	6	1	**9S-8002**	5	PLUG (7/16-20-THD)	
	7	1	**3J-7354**	5	SEAL-O-RING	
Y	8	1	**341-1511**	1	VALVE GP-PUMP CONTROL	448
	9	1	**167-6805**	2	PIN	
Y	10	1	**279-4414**	1	ROTATING GP-PUMP	426
	11	1	**281-5598**	1	PIN-ECCENTRIC	
	12	1	**9T-3726**	1	PLUG	
	13	1	**112-4629**	1	SCREW (3/4-16X0.6-IN)	
	14	1	**202-7704**	1	PLUG	
Y	15	1	**341-1510**	1	HEAD GP-PUMP	390
	16	1	**9S-8008**	1	PLUG (1-1/16-12-THD)	
	17	1	**6V-8978**	1	SEAL-O-RING	
	18	1	**123-7575**	1	SCREW-LOCK	
	20	1	**123-7583**	1	ORIFICE	
	21	1	**087-4772**	1	PLUG-O-RING	
M	22	1	**1G-3176**	1	SCREW-LOCK (M8-THD)	
	23	1	**9S-8004**	2	PLUG	
	24	1	**3J-1907**	3	SEAL-O-RING	
Y	25	1	**177-6949**	1	ACTUATOR GP-PUMP	377
Y	26	1	**293-5440**	1	PUMP GP-CHARGE	418
	27	1	**3D-2824**	1	SEAL-O-RING	
	28	1	**6V-8636**	1	CONNECTOR	
	29	1	**6V-8397**	1	SEAL-O-RING	
Y	30	1	**341-3186**	1	VALVE GP-RELIEF (COLD START)	453

M - METRIC PART
Y - SEPARATE ILLUSTRATION

320-8637 **PUMP GP-PISTON (**contd.**)** **i06516826**

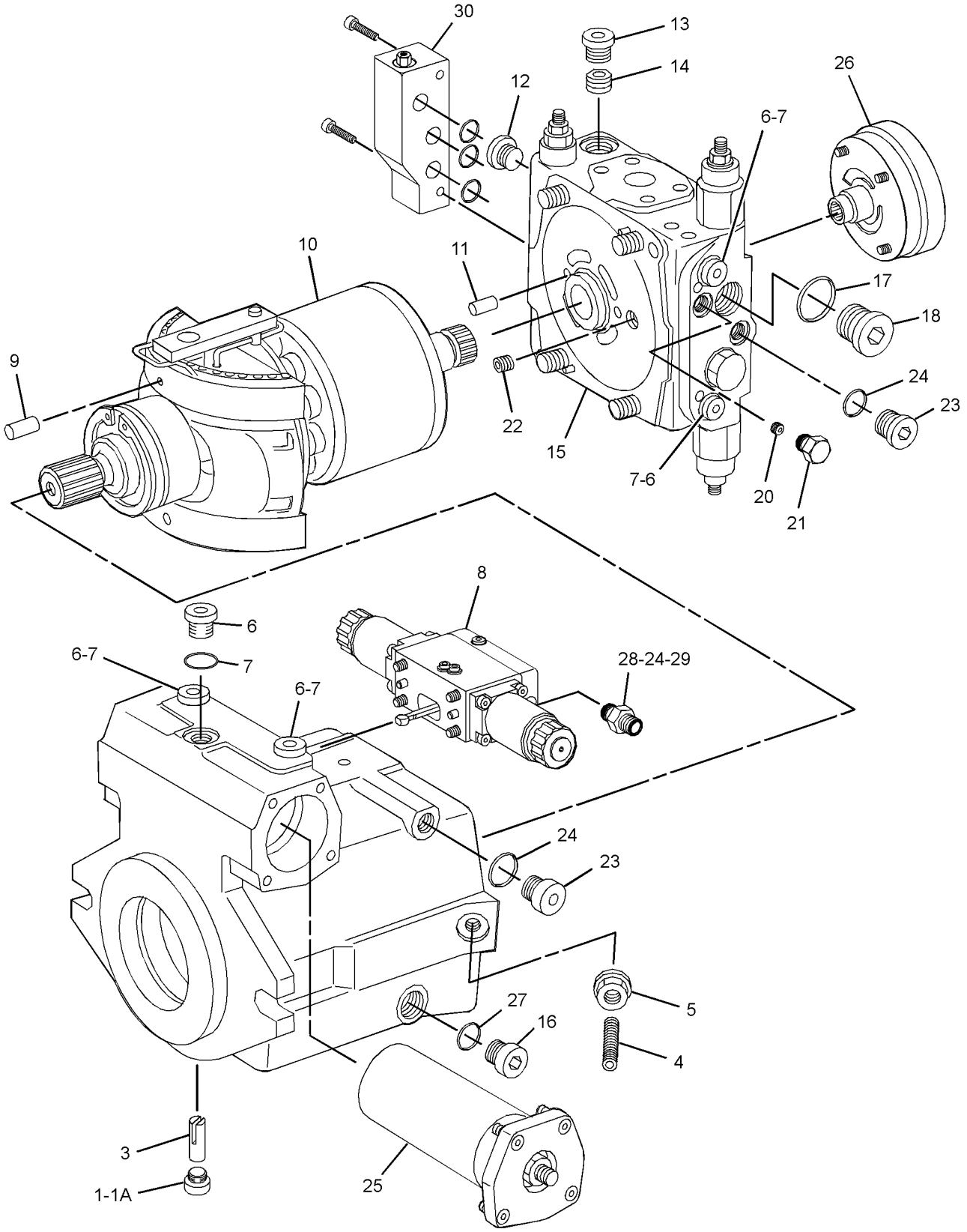

GRAPHIC #1 <END> g02117813

340-7751 ROTATING GP-MOTOR—STEERING

S/N: R5A1-UP

PART OF 309-1916 MOTOR GP-PISTON

SMCS-5058 **i06584048**

NOTE	REF NO	GRAPHIC REF	PART NUMBER	QTY	PART NAME 1 2 3 4 5 6 (PRODUCT LEVEL)	SEE PAGE
J	1	1	**340-7766**	1	SHAFT & BEARING AS	
	2	1	**9T-2560**	1	COVER	
		1	**7X-1553**	1	SEAL-LIP TYPE	
	3	1	**9T-2584**	1	RING-RETAINING (INTERNAL)	
	4	1	**133-8739**	1	SEAL-LIP TYPE	
	5	1	**2H-3928**	1	SEAL-O-RING	
B	6	1	**9T-2581**	2	SHIM (0.1-MM THK)	
B	7	1	**9T-2582**	1	SHIM (0.3-MM THK)	
Y	8	1	**310-7794**	1	BARREL GP-MOTOR	378
B	9	1	**141-0250**	1	SHIM (3.8-MM THK)	
B	10	1	**141-0252**	1	SHIM (4-MM THK)	
B	11	1	**141-0249**	1	SHIM (3.7-MM THK)	
B	12	1	**141-0248**	1	SHIM (3.6-MM THK)	
B	13	1	**141-0247**	1	SHIM (3.5-MM THK)	
B	14	1	**141-0251**	1	SHIM (3.9-MM THK)	
	15	1	**123-3299**	1	PLATE-RETAINING	
M	16	1	**113-4417**	7	SCREW (M6X1X16-MM)	
					PARTS SHOWN IN GRAPHIC(S) WITHOUT A REFERENCE NUMBER ARE NOT SERVICED SEPARATELY	
					AVAILABLE REPAIR KIT(S):	
J			**171-5990**	1	KIT-BEARING (SHAFT)	
					(INCLUDES BEARINGS)	

B - USE AS REQUIRED
J - KIT MARKED J SERVICES PART(S) MARKED J
M - METRIC PART
Y - SEPARATE ILLUSTRATION

340-7751 **ROTATING GP-MOTOR (**contd.**)** **i06584048**

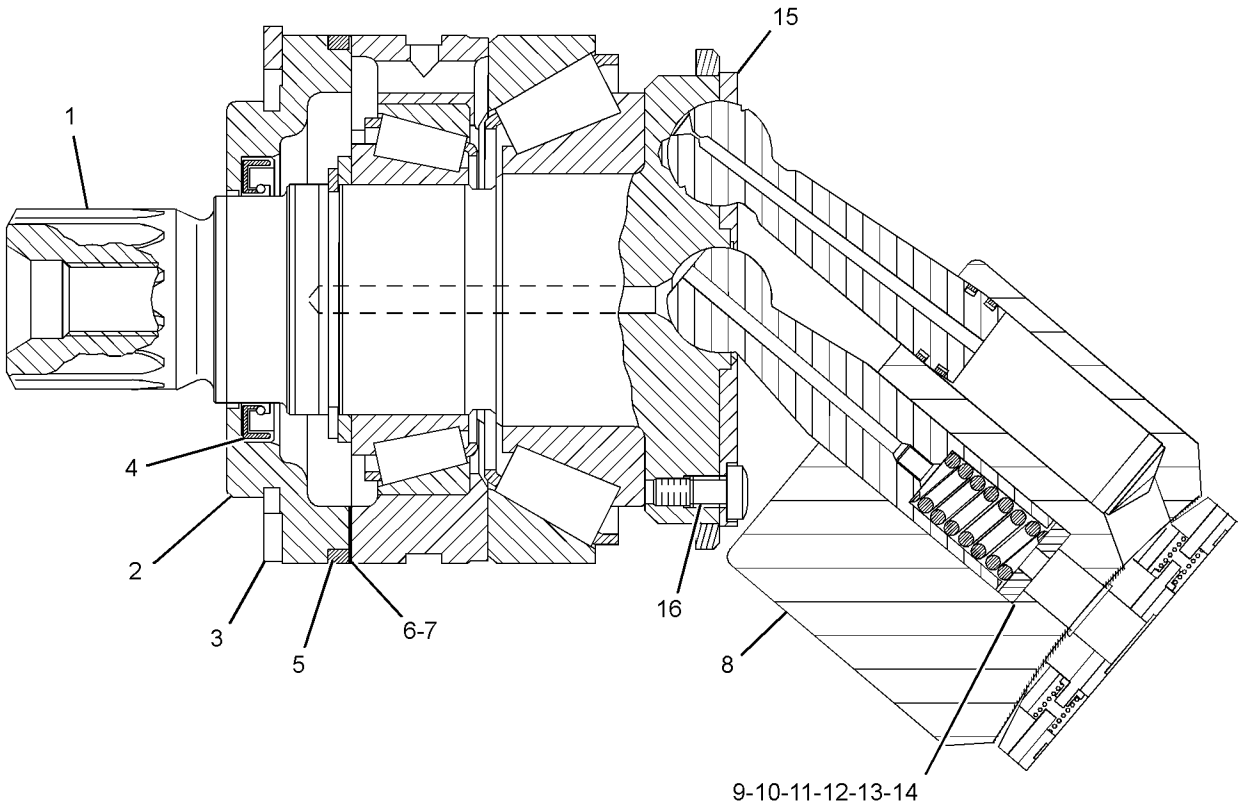

GRAPHIC #1 <END> g01891733

197-2849 ROTATING GP-PUMP—IMPLEMENT CONTROL

S/N: R5A1-UP

PART OF 318-8481 PUMP GP-PISTON

SMCS-5070 **i06567501**

NOTE	REF NO	GRAPHIC REF	PART NUMBER	QTY	PART NAME 1 2 3 4 5 6 (PRODUCT LEVEL)	SEE PAGE
	1	1	**168-3384**	9	PISTON AS-PUMP	
	2	1	**197-2851**	1	BARREL	
	3	1	**168-3385**	1	PLATE-RETRACTION	
	4	1	**313-2060**	1	PLATE-PORT	
	5	1	**168-3378**	1	BEARING-SPHERICAL	
	6	1	**168-3381**	1	SPRING	
	7	1	**168-3379**	3	PIN	
	8	1	**6V-7723**	1	RING-RETAINING	
	9	1	**168-3382**	1	WASHER (30X42X2.7-MM THK)	

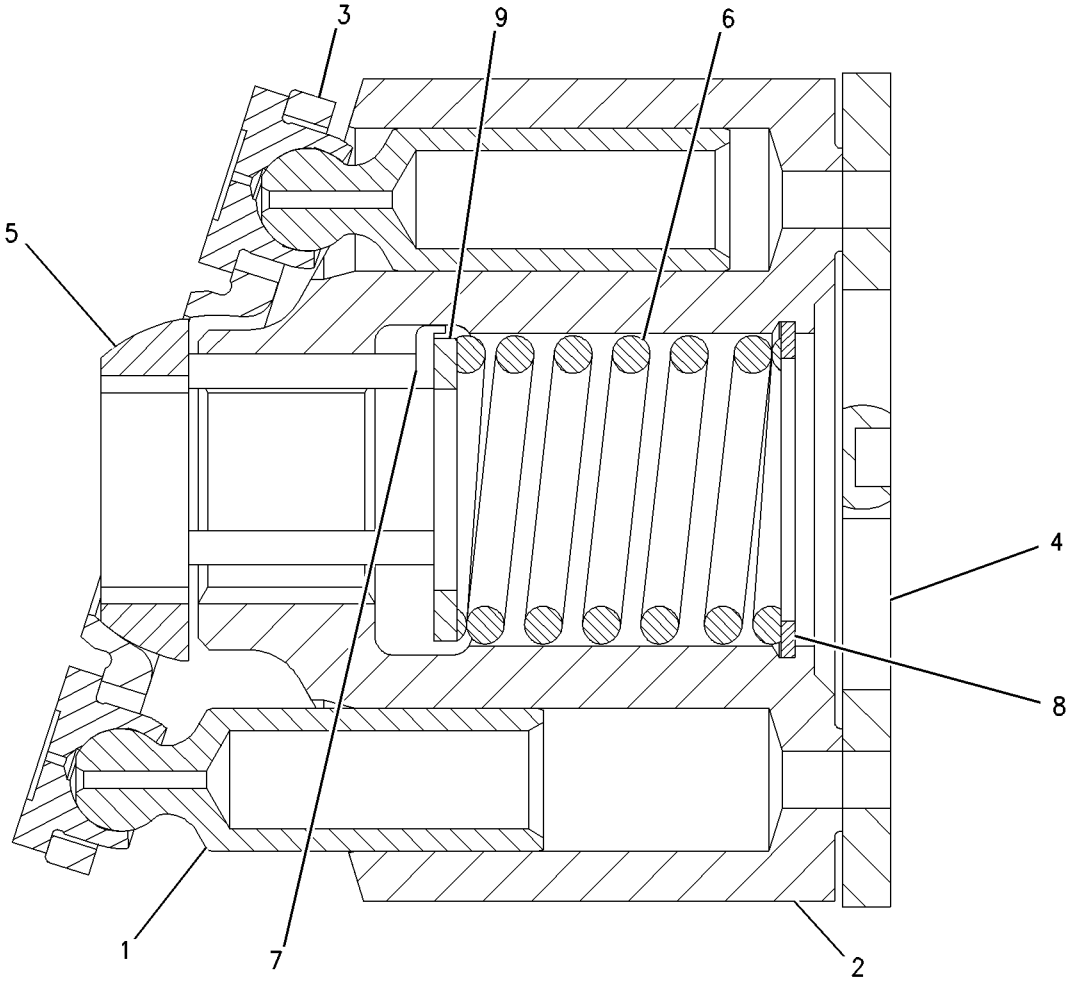

GRAPHIC #1 <END> g00719942

279-4414 ROTATING GP-PUMP–STEERING

S/N: R5A1-UP

PART OF 320-8637 PUMP GP-PISTON

SMCS-5070 **i06584052**

NOTE	REF NO	GRAPHIC REF	PART NUMBER	QTY	PART NAME 1 2 3 4 5 6 (PRODUCT LEVEL)	SEE PAGE
	1	1	**212-4483**	1	RING-RETAINING	
	2	1	**194-1983**	1	SEAL-SHAFT	
	3	1	**126-9587**	1	RING-RETAINING	
	4	1	**126-8901**	1	SHAFT	
	5	1	**117-7251**	1	BEARING	
	6	1	**108-3565**	1	CLIP	
	7	1	**125-9134**	1	BEARING AS	
	8	1	**122-9068**	1	WIRE	
	9	1	**340-5800**	1	BEARING AS-ROLLER	
	10	1	**112-4657**	1	PIN	
	11	1	**117-7241**	1	PLATE	
	12	1	**117-7240**	1	CRADLE	
	13	1	**1G-3410**	1	WIRE	
J	14	1	**126-8842**	1	RING-SNAP	
J	15	1	**122-9070**	2	SHIM (3-MM THK)	
J	16	1	**122-9071**	1	SPRING	
J	17	1	**117-7239**	1	SPRING SET	
BJ	18	1	**117-7245**	1	SHIM (1.2-MM THK)	
BJ	19	1	**117-7246**	1	SHIM (1-MM THK)	
BJ	20	1	**117-7247**	1	SHIM (0.8-MM THK)	
BJ	21	1	**117-7248**	1	SHIM (0.6-MM THK)	
J	22	1	**117-7250**	1	RETAINER	
J	23	1	**117-7249**	1	PLATE-RETAINER	
J	24	1	**117-7238**	9	PISTON	
J	25	1	**177-6915**	1	CYLINDER	
	26	1	**6E-0725**	2	ROLLER	
	27	1	**279-4418**	1	PLATE	
J	28	1	**251-1752**	1	KIT-PUMP ROTATING GROUP	

B - USE AS REQUIRED
J - KIT MARKED J SERVICES PART(S) MARKED J

279-4414 **ROTATING GP-PUMP (**contd.**)** **i06584052**

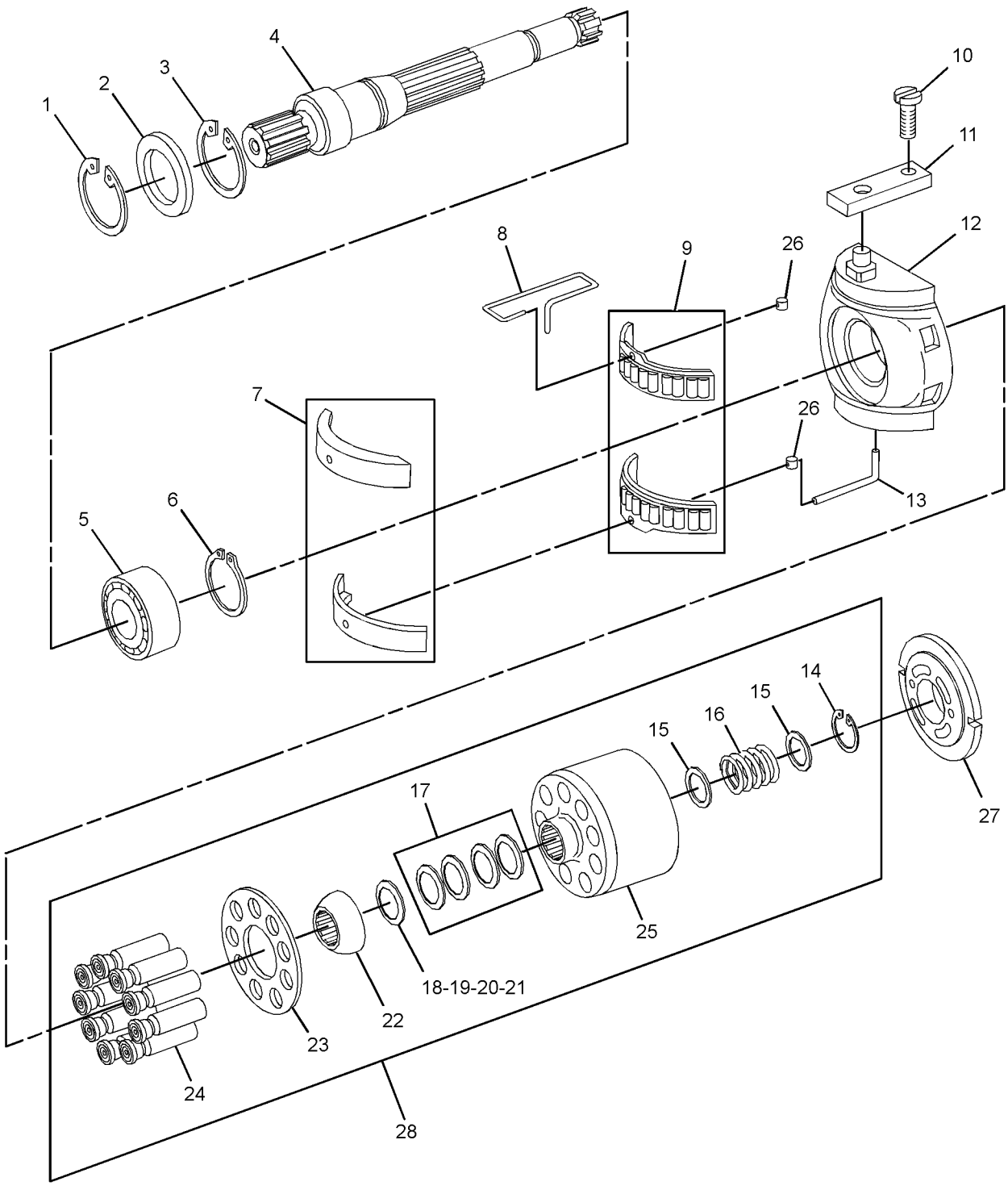

GRAPHIC #1 <END> g01298172

418-9912 TANK & MTG GP-HYDRAULIC

S/N: R5A1-UP

PART OF 391-9505 HYDRAULIC AR

SMCS-5056 **i06523043**

NOTE	REF NO	GRAPHIC REF	PART NUMBER	QTY	PART NAME 1 2 3 4 5 6 (PRODUCT LEVEL)	SEE PAGE
	1	1	**116-2810**	1	VALVE (BREAKER RELIEF VALVE)	
Y	2	1	**416-8562**	1	TANK GP-HYDRAULIC	429
	3	1	**169-0314**	3	RING	
	4	1	**3D-2824**	1	SEAL-O-RING	
M	5	1	**8T-4139**	1	BOLT (M12X1.75X30-MM)	
M	6	1	**8T-4183**	3	BOLT (M12X1.75X40-MM)	
	7	1	**8T-4223**	1	WASHER-HARD (13.5X25.5X3-MM THK)	

M - METRIC PART
Y - SEPARATE ILLUSTRATION

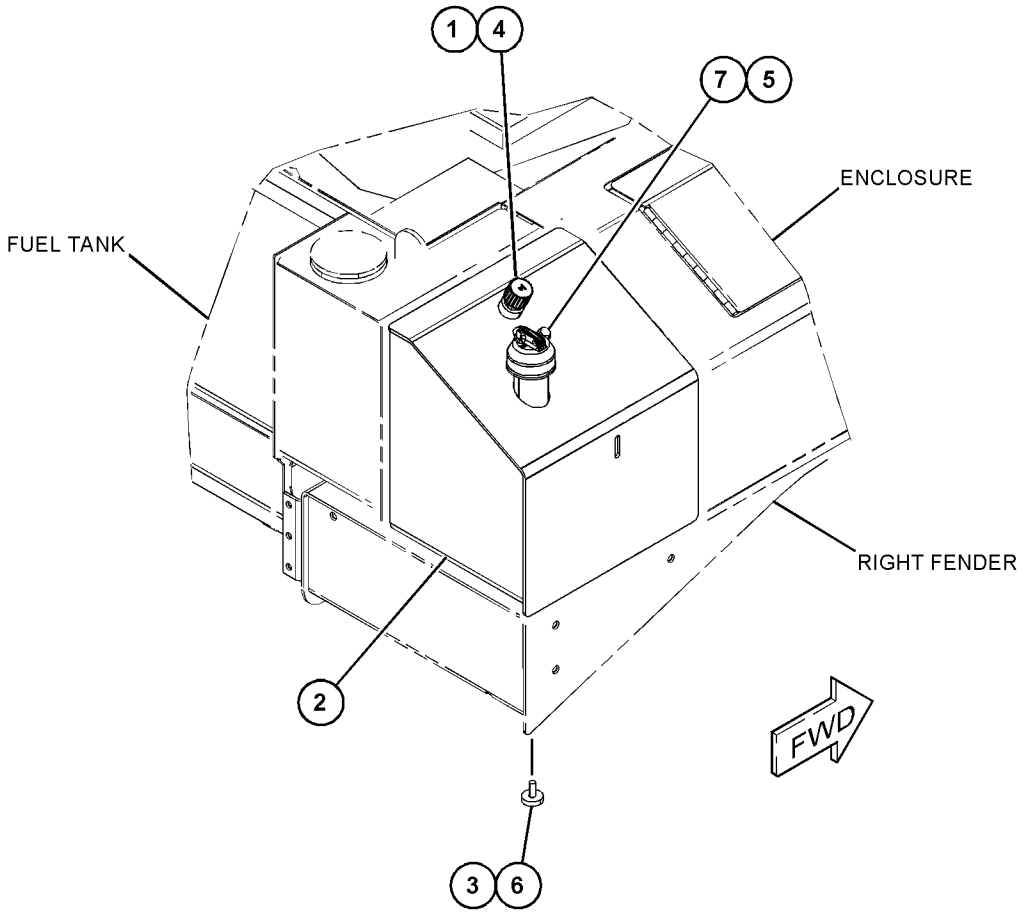

GRAPHIC #1 <END> g06024010

416-8562 TANK GP-HYDRAULIC

S/N: R5A1-UP
53-L (14-US GAL)
PART OF 418-9912 TANK & MTG GP-HYDRAULIC

SMCS-5056 **i06523046**

NOTE	REF NO	GRAPHIC REF	PART NUMBER	QTY	PART NAME 1 2 3 4 5 6 (PRODUCT LEVEL)	SEE PAGE
M	1	1	**8T-4136**	22	BOLT (M10X1.5X25-MM)	
	2	1	**1L-5072**	1	DOWEL	
	3	1	**1U-2827**	1	GUIDE-VALVE	
	4	1	**2D-4202**	1	PLATE	
	5	1	**2J-7761**	1	RING-RETAINING	
	6	1	**4J-8251**	1	GROMMET	
	7	1	**4J-8252**	1	GAUGE-SIGHT (HYDRAULIC OIL)	
	8	1	**5D-1911**	1	COVER-HYDRAULIC CAP	
	9	1	**5D-7927**	1	STRAINER AS-OIL (HYDRAULIC)	
	10	1	**5M-2057**	1	SEAL-O-RING	
	11	1	**6E-1752**	2	SCREEN (HYDRAULIC TANK)	
	12	1	**6H-9361**	1	RING-RETAINING	
M	13	1	**6V-7732**	6	BOLT (M10X1.5X25-MM)	
M	14	1	**6V-7744**	6	LOCKNUT (M10X1.5-THD)	
	15	1	**7B-3039**	1	SPRING	
	16	1	**7H-1447**	1	CAP-FILLER (HYDRAULIC OIL)	
	17	1	**8J-6913**	1	RETAINER	
	18	1	**8J-8782**	1	BODY-DRAIN VALVE	
	19	1	**8J-8783**	1	VALVE-DRAIN	
	20	1	**8T-2275**	1	BALL	
	21	1	**8T-3298**	1	SEAL-RECTANGULAR	
	22	1	**8T-4121**	28	WASHER-HARD (11X21X2.5-MM THK)	
	23	1	**9H-6454**	1	GASKET	
	24	1	**9J-7031**	1	PLUG-DRAIN (HYDRAULIC OIL)	
	25	1	**9M-7394**	1	LEVER	
	26	1	**187-9194**	1	PLATE (SIGHT GLASS)	
	28	1	**422-7059**	1	COVER AS	
		1	**5J-3306**	1	FITTING (9/16-18-THD)	
		1	**7J-5544**	1	FITTING (3/4X16-THD)	
		1	**283-0024**	2	BOSS	
	29	1	**430-5330**	1	GASKET	

M - METRIC PART

416-8562 **TANK GP-HYDRAULIC (**contd.**)** **i06523046**

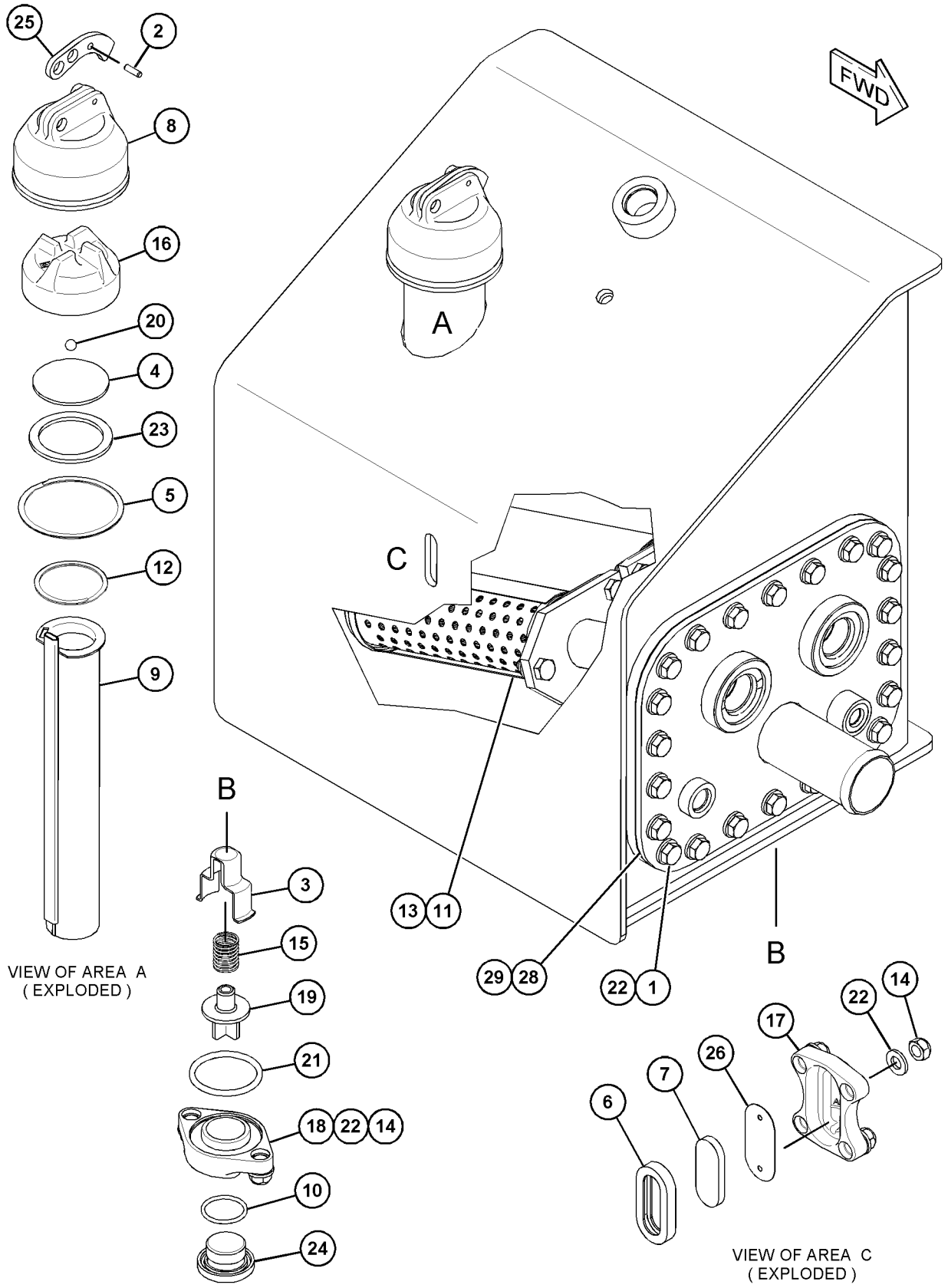

GRAPHIC #1 <END> g06024294

418-9926 VALVE & MTG GP-CONTROL

S/N: R5A1-UP

PART OF 391-9515 HYDRAULIC AR-3 VALVE

AN ATTACHMENT

SMCS-5051 **i06523291**

NOTE	REF NO	GRAPHIC REF	PART NUMBER	QTY	PART NAME 1 2 3 4 5 6 (PRODUCT LEVEL)	SEE PAGE
Y	1	1	**394-6360**	1	VALVE GP-BANK 3 (LIFT, TILT, RIPPER)	435
	2	1	**466-9045**	1	BRACKET AS	
	3	1	**198-4776**	2	WASHER-HARD (8.8X20X8-MM THK)	
	4	1	**198-4777**	2	WASHER-HARD (11X25X10-MM THK)	
M	5	1	**8T-4183**	3	BOLT (M12X1.75X40-MM)	
M	6	1	**8T-4186**	2	BOLT (M10X1.5X40-MM)	
	7	1	**8T-4223**	3	WASHER-HARD (13.5X25.5X3-MM THK)	
M	8	1	**8T-7547**	2	BOLT (M8X1.25X30-MM)	

M - METRIC PART
Y - SEPARATE ILLUSTRATION

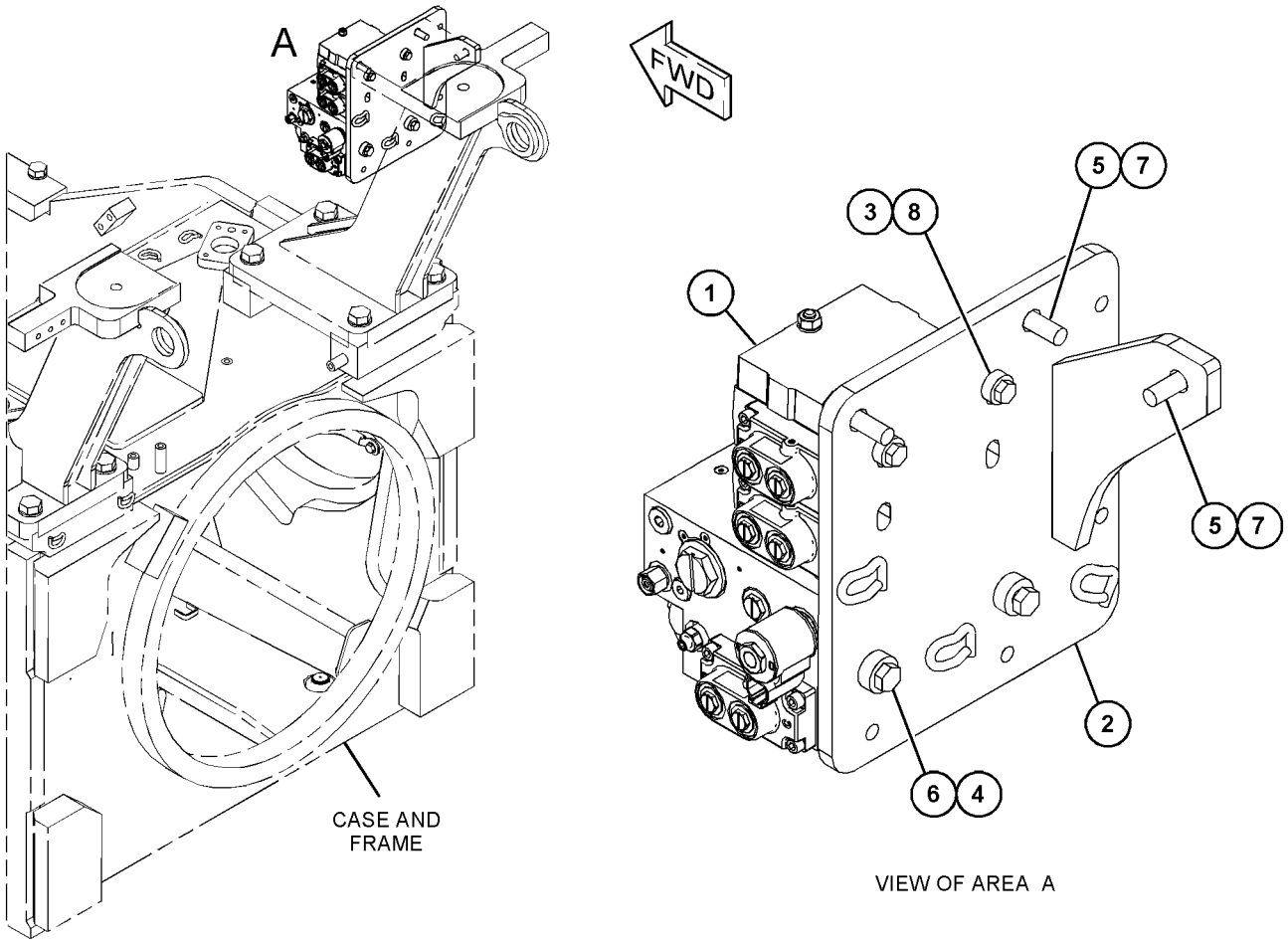

VIEW OF AREA A

GRAPHIC #1 <END> g06009854

418-9929 VALVE & MTG GP-CONTROL

S/N: R5A1-UP

PART OF 391-9512 HYDRAULIC AR-2 VALVE

AN ATTACHMENT

SMCS-5051 **i06523551**

NOTE	REF NO	GRAPHIC REF	PART NUMBER	QTY	PART NAME 1 2 3 4 5 6 (PRODUCT LEVEL)	SEE PAGE
Y	1	1	*394-6361*	1	VALVE GP-BANK 2 (BULLDOZER)	433
	2	1	**466-9045**	1	BRACKET AS	
	3	1	**198-4776**	2	WASHER-HARD (8.8X20X8-MM THK)	
	4	1	**198-4777**	2	WASHER-HARD (11X25X10-MM THK)	
M	5	1	**8T-4183**	3	BOLT (M12X1.75X40-MM)	
M	6	1	**8T-4186**	2	BOLT (M10X1.5X40-MM)	
	7	1	**8T-4223**	3	WASHER-HARD (13.5X25.5X3-MM THK)	
M	8	1	**8T-7547**	2	BOLT (M8X1.25X30-MM)	

M - METRIC PART
Y - SEPARATE ILLUSTRATION

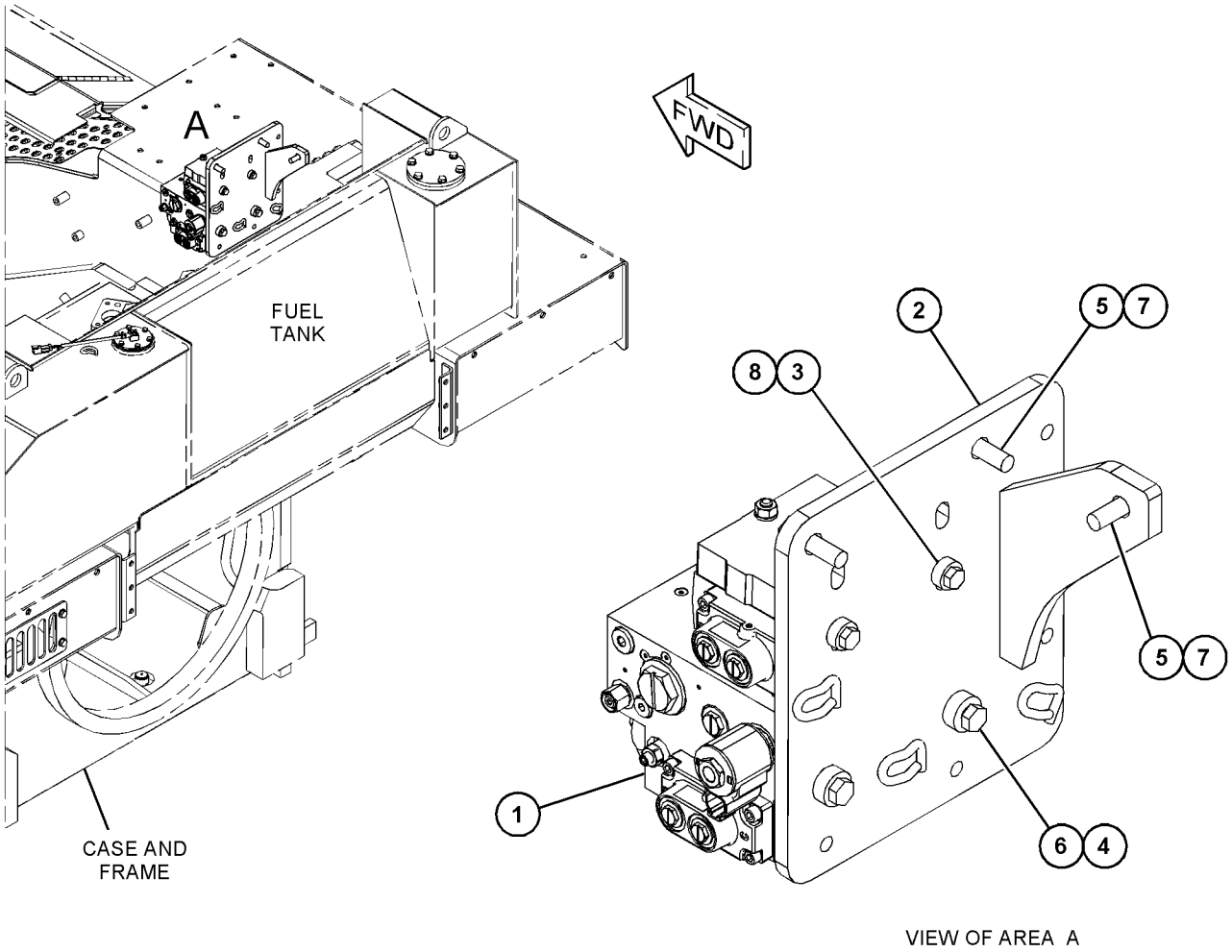

VIEW OF AREA A

GRAPHIC #1 <END> g06009772

394-6361 VALVE GP-BANK 2—BULLDOZER

S/N: R5A1-UP

PART OF 418-9929 VALVE & MTG GP-CONTROL

AN ATTACHMENT

SMCS-5051 **i06584057**

NOTE	REF NO	GRAPHIC REF	PART NUMBER	QTY	PART NAME 1 2 3 4 5 6 (PRODUCT LEVEL)	SEE PAGE
Y	1	1	**394-6364**	1	VALVE GP-MANIFOLD & RELIEF (INLET)	441
Y	2	1	**394-6365**	1	VALVE GP-CONTROL (LIFT)	437
	3	1	**394-6371**	1	VALVE GP-CONTROL (TILT)	
		1	**192-2061**	1	COVER AS	
M		1	**149-4311**	4	BOLT-SOCKET HEAD (M6X1X16-MM)	
		1	**192-7505**	1	SEAL-O-RING	
		1	**192-7506**	4	SEAL-O-RING	
J		1	**373-6993**	1	KIT-COVER	
					(INCLUDES O-RINGS, HOUSING, SEAL KIT & BOLTS)	
	4	1	**373-7005**	1	KIT-FASTENER	
					(INCLUDES NUTS, RODS & WASHERS)	
	5	1	**349-6064**	1	KIT-SEAL	
					(INCLUDES SEALS)	
	6	1	**424-4858**	1	COVER-END	
	7	1	**383-2217**	1	KIT-SEAL	
					(INCLUDES NUTS, WASHERS, BOLTS & O-RINGS)	
	8	1	**373-7004**	2	KIT-SEAL	
					(INCLUDES O-RINGS)	
					AVAILABLE REPAIR KIT(S):	
J			**373-7041**	1	KIT-SEAL	
					(INCLUDES O-RING SEALS)	

J - KIT MARKED J SERVICES PART(S) MARKED J
M - METRIC PART
Y - SEPARATE ILLUSTRATION

394-6361 **VALVE GP-BANK 2 (**contd.**)** **i06584057**

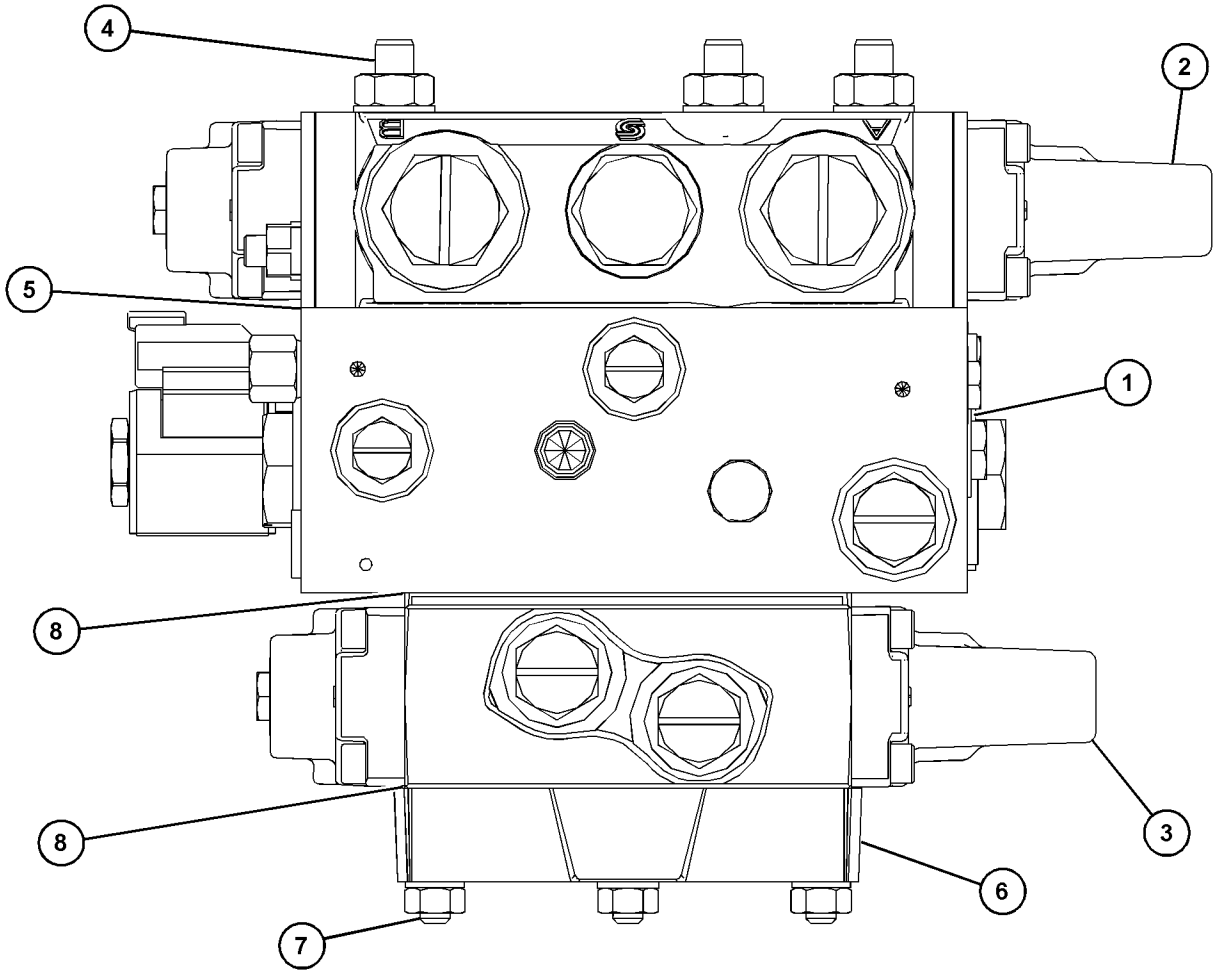

GRAPHIC #1 <END> g06011705

394-6360 VALVE GP-BANK 3—BULLDOZER, RIPPER

S/N: R5A1-UP

PART OF 418-9926 VALVE & MTG GP-CONTROL

AN ATTACHMENT

SMCS-5051 **i06523299**

NOTE	REF NO	GRAPHIC REF	PART NUMBER	QTY	PART NAME 1 2 3 4 5 6 (PRODUCT LEVEL)	SEE PAGE
Y	1	1	**394-6364**	1	VALVE GP-MANIFOLD & RELIEF (INLET)	441
Y	2	1	**394-6365**	1	VALVE GP-CONTROL (LIFT)	437
	3	1	**394-6371**	1	VALVE GP-CONTROL (TILT)	
		1	**373-6993**	1	KIT-COVER	
					(INCLUDES O-RINGS, BOLTS & HOUSING)	
		1	**192-2061**	1	COVER AS	
M		1	**149-4311**	4	BOLT-SOCKET HEAD (M6X1X16-MM)	
		1	**192-7505**	1	SEAL-O-RING	
		1	**192-7506**	4	SEAL-O-RING	
Y	4	1	**394-6368**	1	VALVE GP-CONTROL (RIPPER)	439
	5	1	**373-7005**	1	KIT-FASTENER	
					(INCLUDES RODS, WASHERS & NUTS)	
	6	1	**349-6064**	1	KIT-SEAL	
					(INCLUDES SEALS)	
	7	1	**424-4858**	1	COVER-END	
	8	1	**259-6756**	1	KIT-FASTENER (2-BANK)	
					(INCLUDES TIE RODS, WASHERS, NUTS & O-RINGS)	
	9	1	**373-7004**	3	KIT-SEAL	
					(EACH INCLUDES O-RINGS)	

M - METRIC PART
Y - SEPARATE ILLUSTRATION

394-6360 **VALVE GP-BANK 3 (**contd.**)** **i06523299**

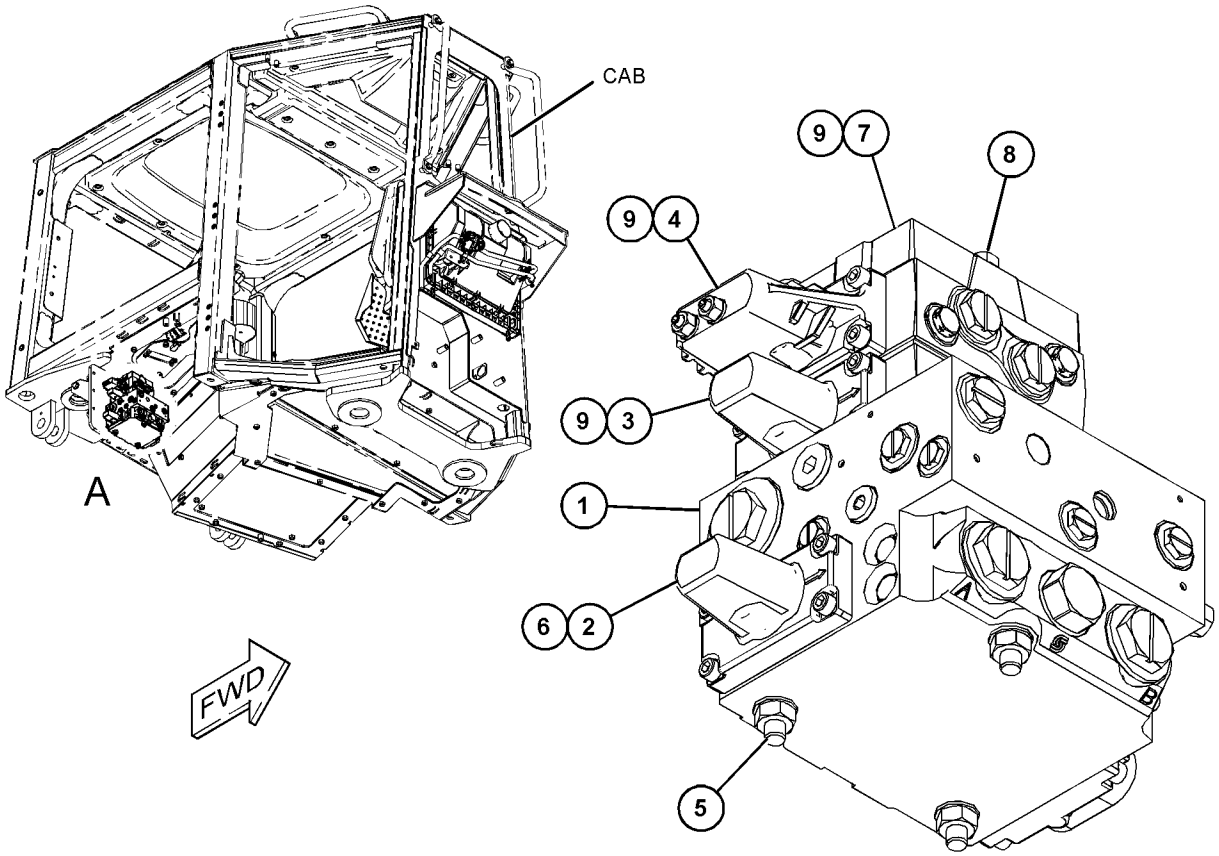

VIEW OF AREA A

GRAPHIC #1 <END> g06022458

394-6365 VALVE GP-CONTROL—BULLDOZER LIFT

S/N: R5A1-UP

PART OF 394-6361 VALVE GP-BANK 2, 394-6360 VALVE GP-BANK 3

AN ATTACHMENT

SMCS-5051 **i06584068**

NOTE	REF NO	GRAPHIC REF	PART NUMBER	QTY	PART NAME 1 2 3 4 5 6 (PRODUCT LEVEL)	SEE PAGE
	1	1	**348-4593**	2	VALVE GP-CHECK	
					(EACH INCLUDES)	
		1	**6V-5138**	1	SEAL-O-RING	
	2	1	**192-2061**	1	COVER AS	
M		1	**149-4311**	4	BOLT-SOCKET HEAD (M6X1X16-MM)	
		1	**192-7505**	1	SEAL-O-RING	
		1	**192-7506**	4	SEAL-O-RING	
J	3	1	**373-6993**	1	KIT-COVER	
					(INCLUDES O-RINGS, HOUSING, SEAL KIT & BOLTS)	
	4	1	**6V-7970**	1	SEAL-O-RING	
	5	1	**260-3004**	1	VALVE GP-RELIEF (LIFT)	
	6	1	**348-4592**	1	VALVE GP-MANUAL (OVERRIDE CONTROL)	
		1	**6V-5138**	1	SEAL-O-RING	
					AVAILABLE REPAIR KIT(S):	
J			**373-7041**	1	KIT-SEAL (COVER)	
					(INCLUDES O-RINGS)	

J - KIT MARKED J SERVICES PART(S) MARKED J
M - METRIC PART

394-6365 **VALVE GP-CONTROL (**contd.**)** **i06584068**

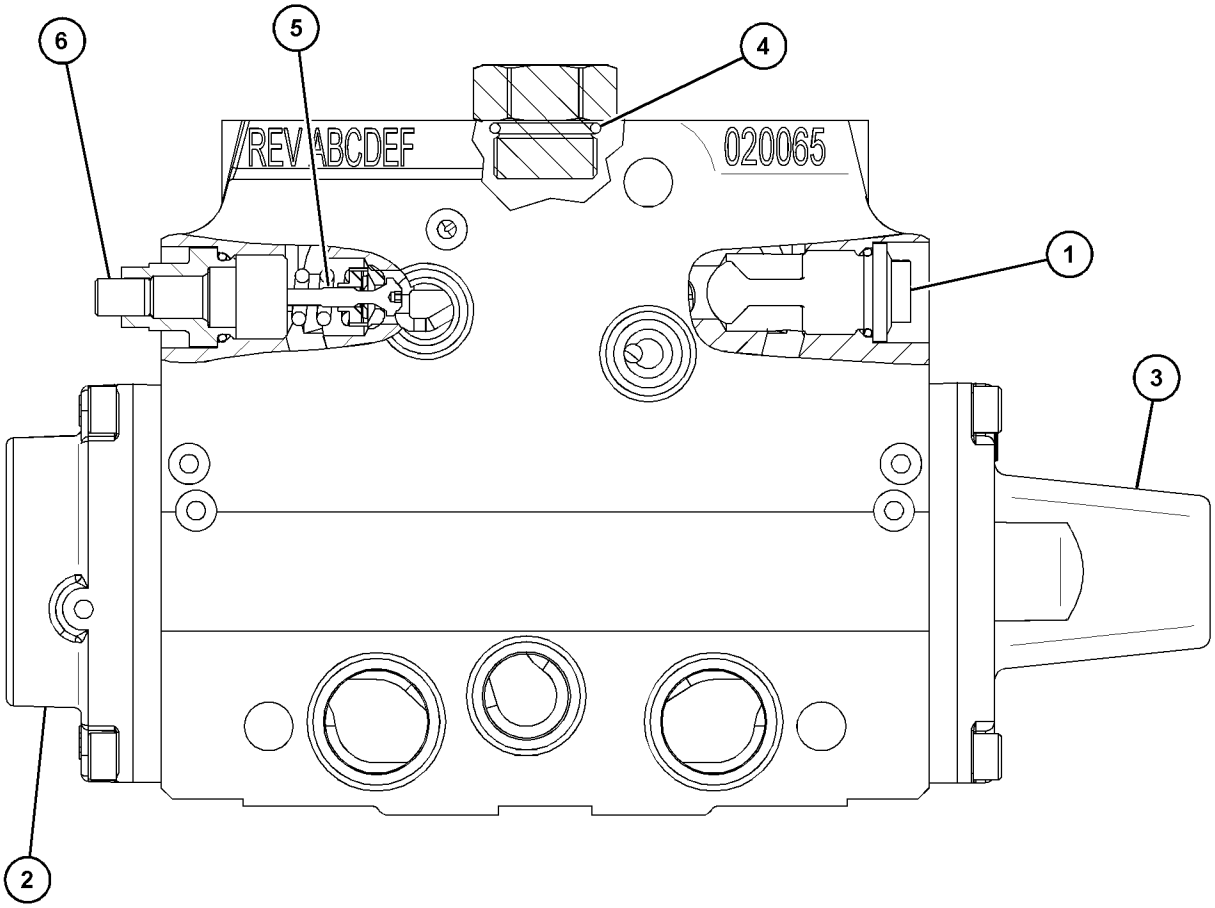

GRAPHIC #1 <END> g06010730

394-6368 VALVE GP-CONTROL–RIPPER

S/N: R5A1-UP
PART OF 394-6360 VALVE GP-BANK 3
AN ATTACHMENT

SMCS-5051 **i06539726**

NOTE	REF NO	GRAPHIC REF	PART NUMBER	QTY	PART NAME 1 2 3 4 5 6 (PRODUCT LEVEL)	SEE PAGE
	1	1	**348-4593**	1	VALVE GP-CHECK	
		1	**6V-5138**	1	SEAL-O-RING	
	2	1	**192-2061**	1	COVER AS	
M		1	**149-4311**	4	BOLT-SOCKET HEAD (M6X1X16-MM)	
		1	**192-7505**	1	SEAL-O-RING	
		1	**192-7506**	4	SEAL-O-RING	
	3	1	**297-8500**	1	CAP-END	
	4	1	**284-9134**	1	VALVE AS-RELIEF	

M - METRIC PART

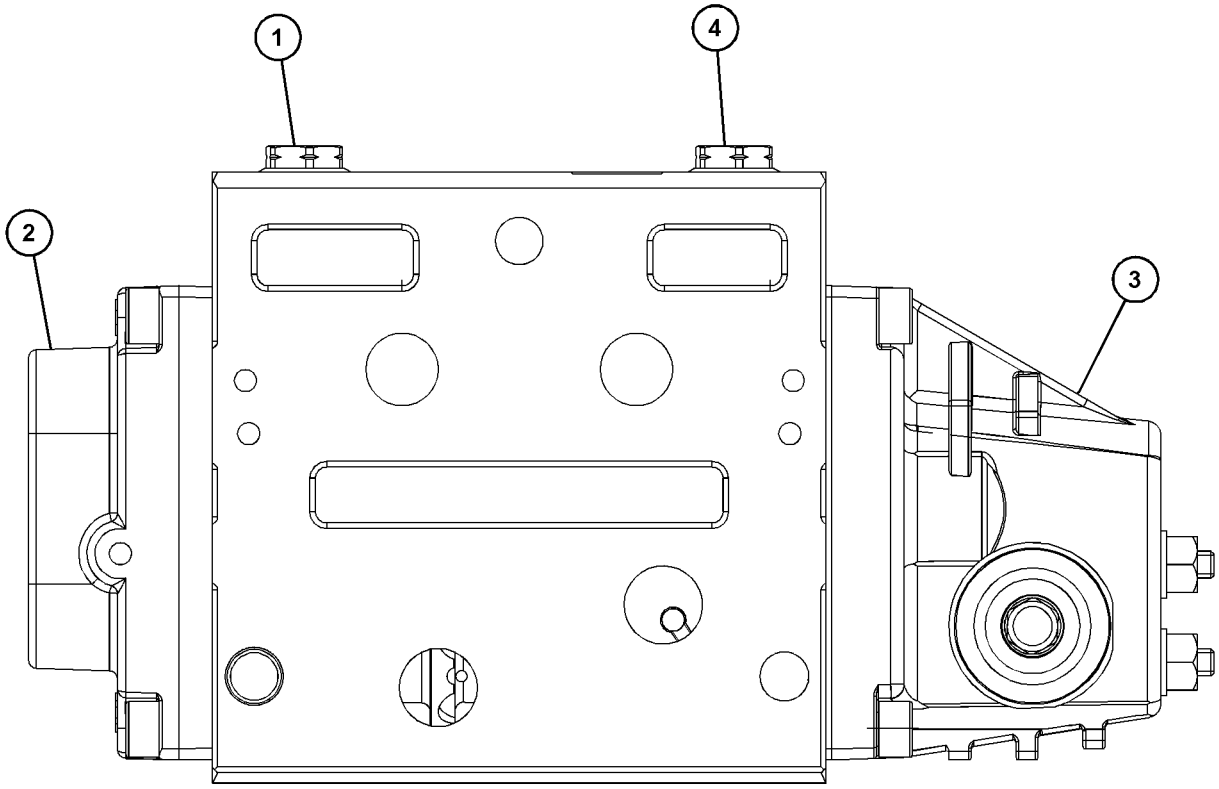

GRAPHIC #1 <END> g06022463

111-7346 VALVE GP-FLUSHING–STEERING

S/N: R5A1-UP

PART OF 310-7794 BARREL GP-MOTOR

SMCS-5051, 5066

i06567495

NOTE	REF NO	GRAPHIC REF	PART NUMBER	QTY	PART NAME 1 2 3 4 5 6 (PRODUCT LEVEL)	SEE PAGE
	1	1	**111-8288**	1	PLATE	
	2	1	**111-8289**	1	ROD	
	3	1	**119-6110**	2	RETAINER	
	4	1	**6E-4102**	2	SPRING	
	5	1	**112-9327**	2	DOWEL	

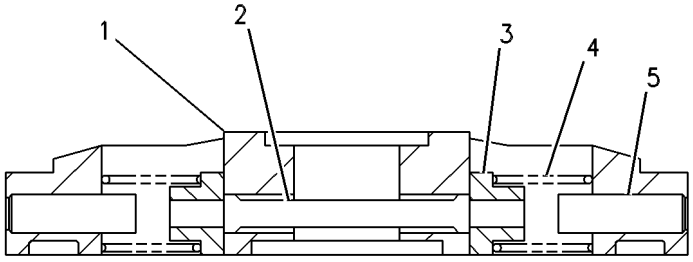

GRAPHIC #1 <END> g00115015

394-6364 VALVE GP-MANIFOLD & RELIEF

S/N: R5A1-UP
IMPLEMENT CONTROL
PART OF 394-6361 VALVE GP-BANK 2, 394-6360 VALVE GP-BANK 3
AN ATTACHMENT

SMCS-5069, 5264 **i06523509**

NOTE	REF NO	GRAPHIC REF	PART NUMBER	QTY	PART NAME 1 2 3 4 5 6 (PRODUCT LEVEL)	SEE PAGE
	1	1	**373-6989**	1	VALVE GP-RELIEF (DIRECT OPERATED)	
	2	1	**373-6990**	1	PLUG-ORIFICE	
	3	1	**333-8242**	1	VALVE GP-SOLENOID (24-VOLT) (PILOT SHUTOFF)	
		1	**384-8750**	1	COIL AS (24-VOLT)	
	4	1	**9S-8004**	1	PLUG	
	5	1	**3J-1907**	1	SEAL-O-RING	

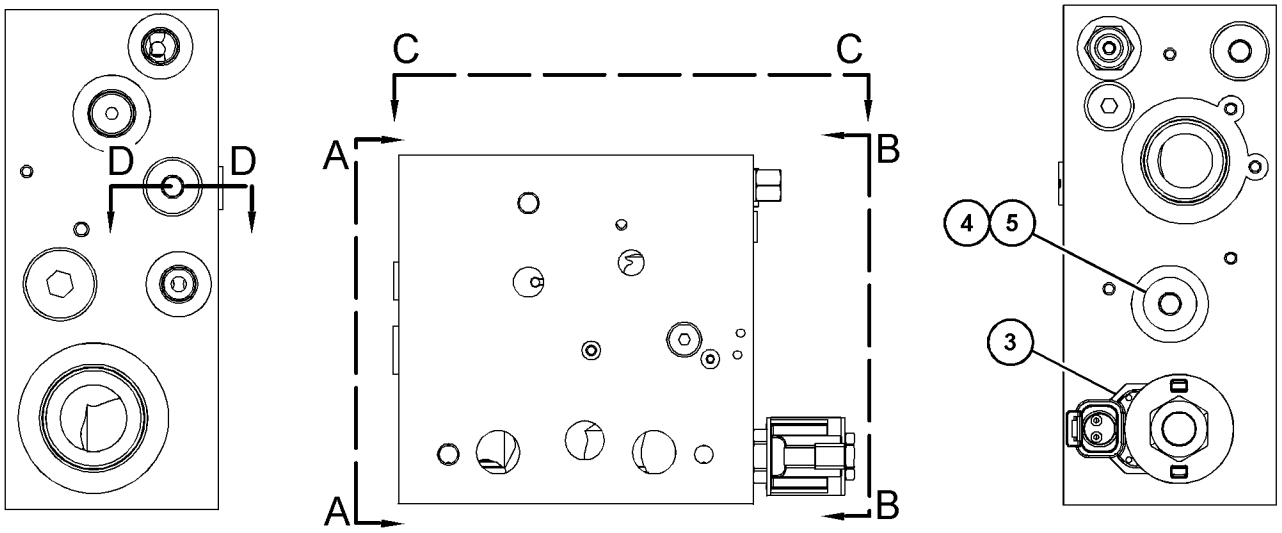

VIEW A-A

VIEW B-B

VIEW C-C

SECTION D-D

GRAPHIC #1 <END> g03867286

394-3611 VALVE GP-PILOT—BLADE CONTROL

S/N: R5A1-UP

PART OF 418-9920, 453-9494 CONTROL GP-PILOT OPERATED HYD AN ATTACHMENT

SMCS-5059 **i06530891**

NOTE	REF NO	GRAPHIC REF	PART NUMBER	QTY	PART NAME 1 2 3 4 5 6 (PRODUCT LEVEL)	SEE PAGE
	1	1	**102-8802**	1	KIT-RECEPTACLE (2-PIN)	
					(INCLUDES RECEPTACLE AS & WEDGE)	
	3	1	**8L-2786**	1	SEAL-O-RING	
	4	1	**136-9297**	1	PLATE	
	5	1	**136-9298**	1	RETAINER	
	6	1	**137-9755**	1	COIL AS-DETENT (24-VOLT)	
		1	**8T-8729**	2	PIN-CONNECTOR (16-GA TO 18-GA)	
D		1	**6V-2689**		TUBE-HEAT SHRINK (6.35-MM DIA) (0.2-M)	
	7	1	**141-4852**	1	BOOT	
	8	1	**145-2334**	1	ADAPTER	
	9	1	**149-5470**	1	PLATE	
	10	1	*162-0177*	3	PLUG AS	
					(EACH INCLUDES)	
		1	**3J-1907**	1	SEAL-O-RING	
		1	**9S-8004**	1	PLUG	
	11	1	**163-5512**	2	GROMMET	
	12	1	**180-6152**	1	RETAINER	
	13	1	*183-7263*	5	PLUG AS	
					(EACH INCLUDES)	
		1	**3J-7354**	1	SEAL-O-RING	
		1	**9S-8002**	1	PLUG (7/16-20-THD)	
	14	1	**196-5515**	1	LEVER AS	
B	15	1	**200-5003**	8	SHIM (0.25-MM THK)	
	16	1	**206-2800**	1	PLATE-DETENT	
	17	1	**213-6657**	1	PLATE AS	
Y	19	1	*394-3631*	1	VALVE GP-PILOT CARTRIDGE (LOWER)	445
Y	20	1	*394-3634*	2	VALVE GP-PILOT CARTRIDGE (BLADE TILT RIGHT, LEFT)	446
Y	20A	1	*394-3634*	1	VALVE GP-PILOT CARTRIDGE (RAISE)	446
M	22	1	**191-8921**	4	BOLT-SOCKET HEAD (M6X1X25-MM)	
					PARTS SHOWN IN GRAPHIC(S) WITHOUT A REFERENCE NUMBER ARE NOT SERVICED SEPARATELY	

B - USE AS REQUIRED
D - ORDER BY THE METER
M - METRIC PART
Y - SEPARATE ILLUSTRATION

394-3611 **VALVE GP-PILOT (**contd.**)** **i06530891**

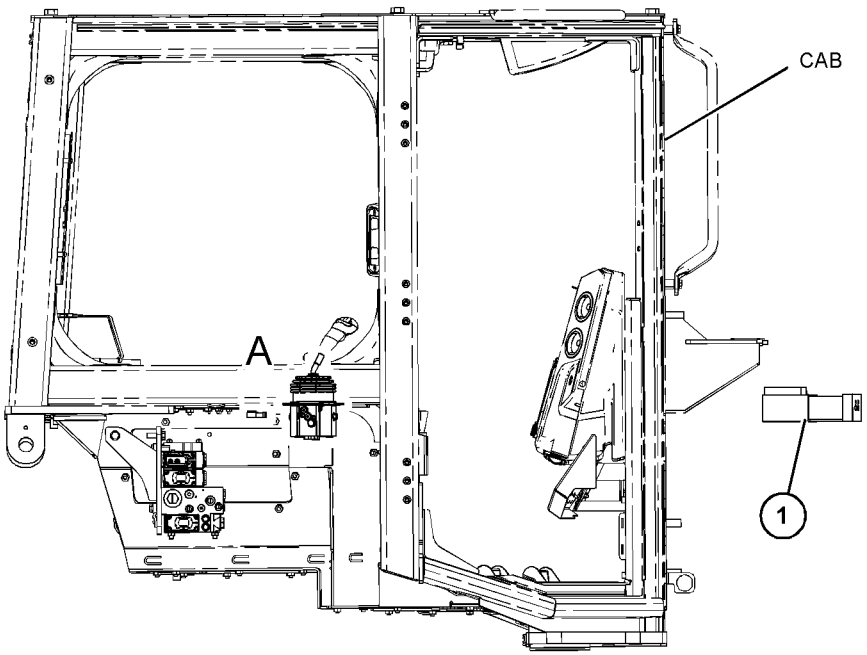

RIGHT SIDE VIEW

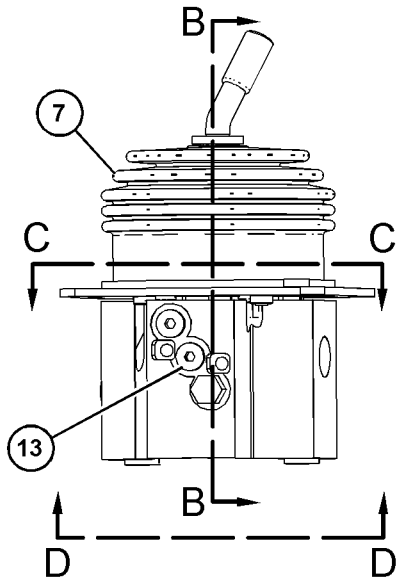

VIEW OF AREA A

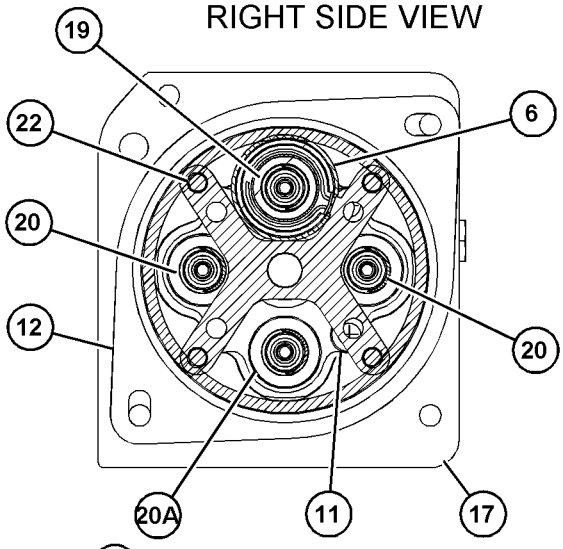

SECTION C-C

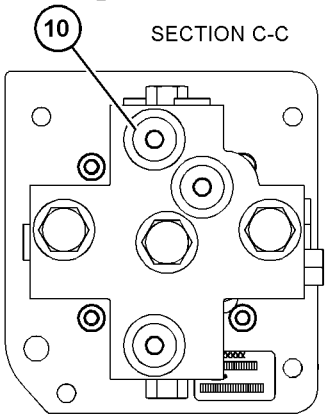

VIEW D-D

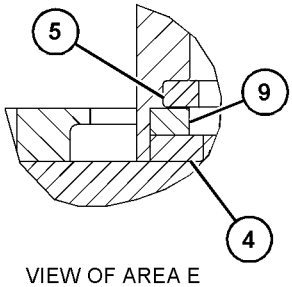

VIEW OF AREA E

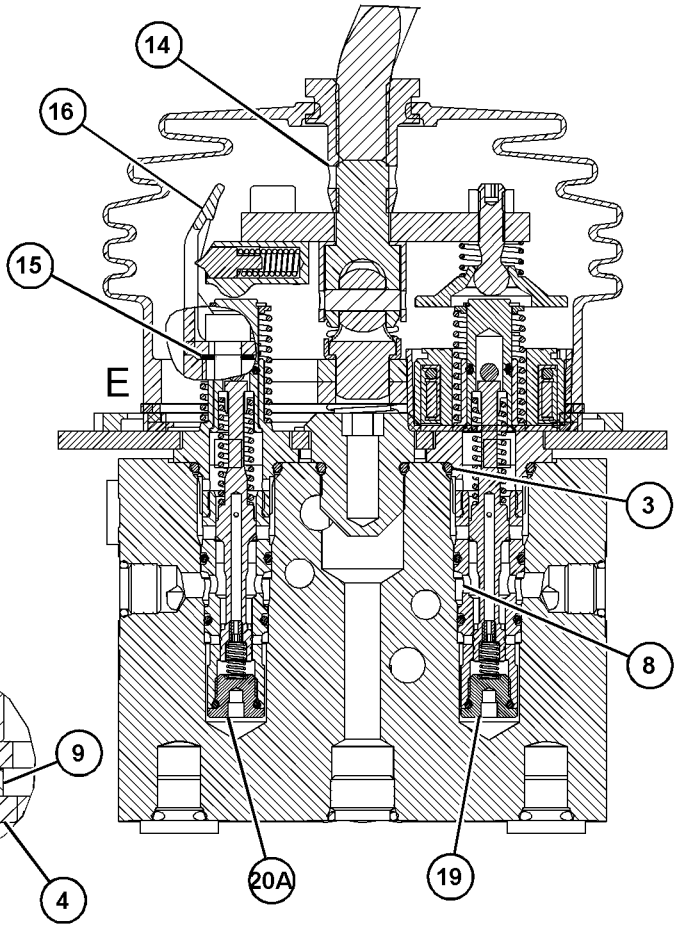

SECTION B-B

GRAPHIC #1 <END> g06023416

398-3263 VALVE GP-PILOT–RIPPER

S/N: R5A1-UP

PART OF 418-9920 CONTROL GP-PILOT OPERATED HYD

AN ATTACHMENT

SMCS-5059 **i06530914**

NOTE	REF NO	GRAPHIC REF	PART NUMBER	QTY	PART NAME 1 2 3 4 5 6 (PRODUCT LEVEL)	SEE PAGE
			(NO SERVICED PARTS)			

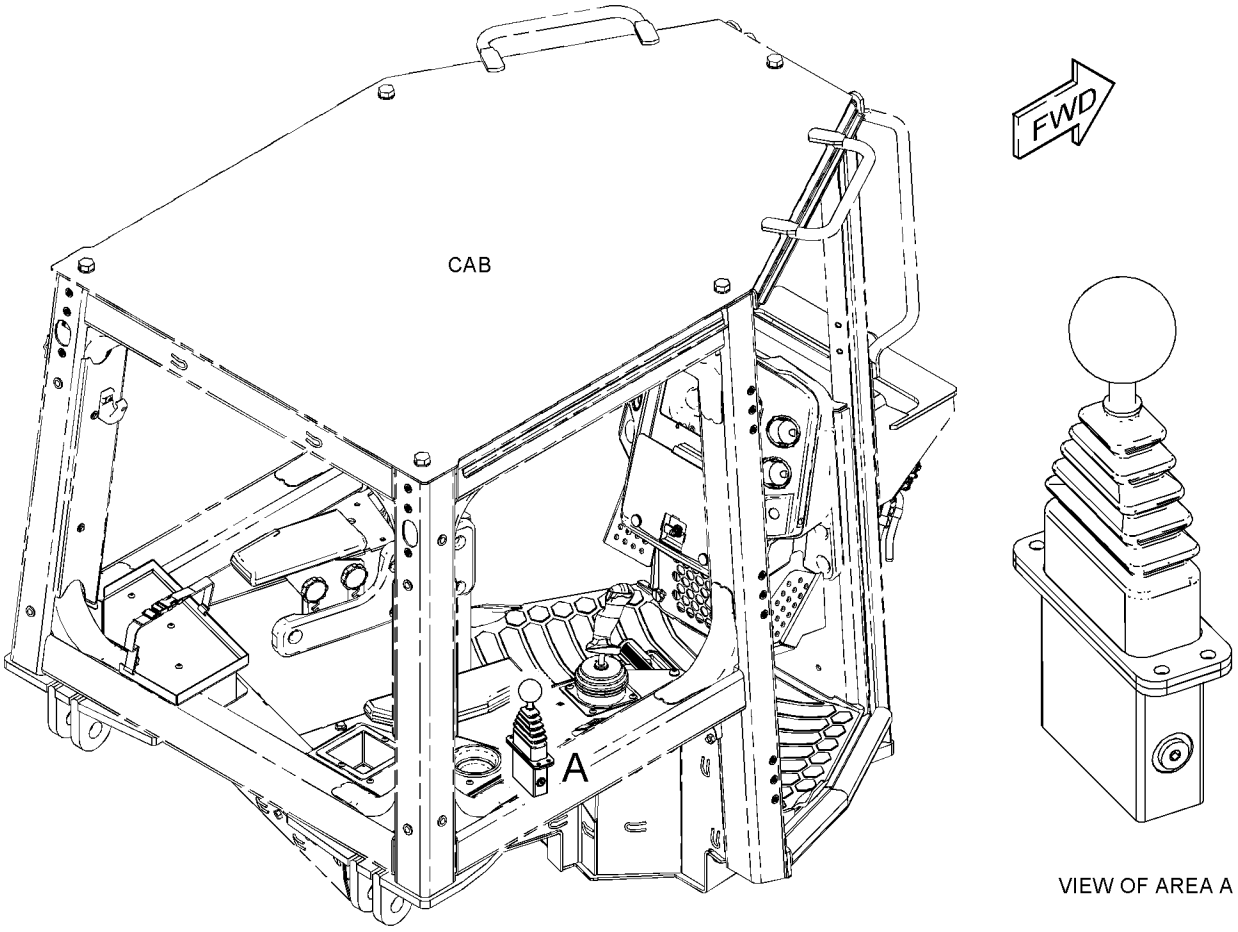

GRAPHIC #1 <END> g06022204

394-3631 VALVE GP-PILOT CARTRIDGE

S/N: R5A1-UP
PART OF 394-3611 VALVE GP-PILOT
AN ATTACHMENT

SMCS-5059 **i06532519**

NOTE	REF NO	GRAPHIC REF	PART NUMBER	QTY	PART NAME 1 2 3 4 5 6 (PRODUCT LEVEL)	SEE PAGE
	1	1	**1M-6718**	1	BALL	
	2	1	**3K-0360**	1	SEAL-O-RING	
	3	1	**4K-2039**	1	SEAL-O-RING	
	4	1	**6M-5062**	1	SEAL-O-RING	
	5	1	**7J-0204**	1	SEAL-O-RING	
	6	1	**146-6319**	1	RETAINER	
	7	1	**153-8925**	1	STOP	
	8	1	**153-8926**	1	SPRING	
	9	1	**157-2153**	1	SPRING	
	10	1	**2H-3429**	1	RING-RETAINING	

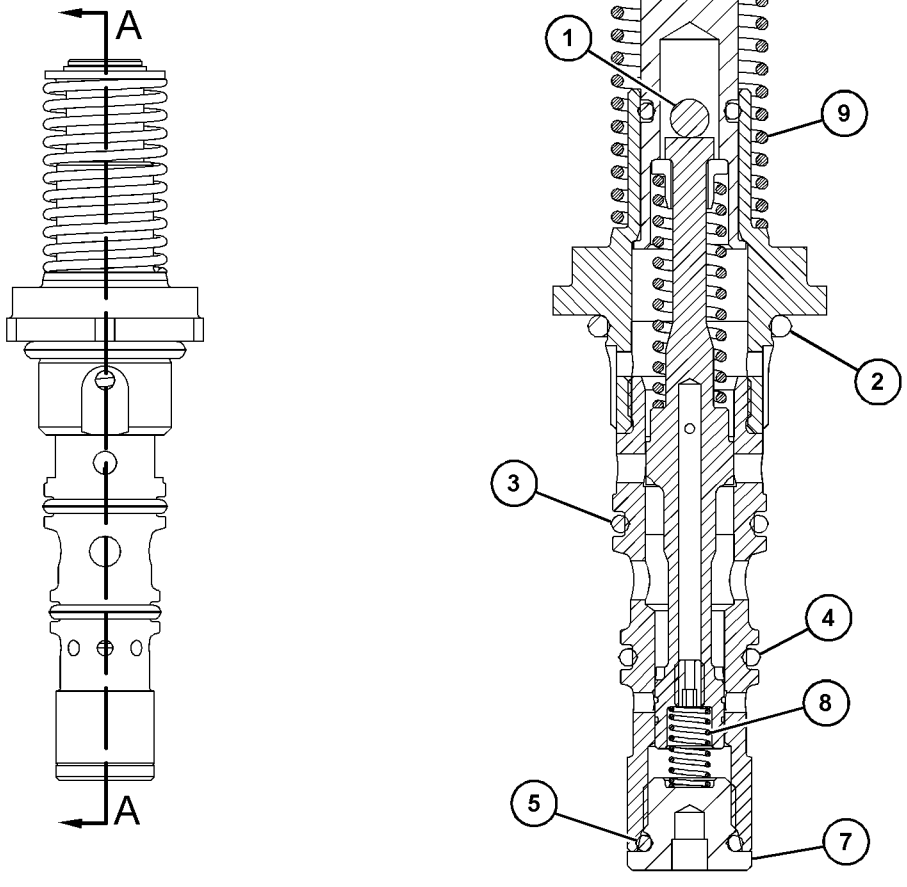

SECTION A-A

GRAPHIC #1 <END> g06021800

394-3634 VALVE GP-PILOT CARTRIDGE

S/N: R5A1-UP
PART OF 394-3611 VALVE GP-PILOT
AN ATTACHMENT

SMCS-5059 **i06532518**

NOTE	REF NO	GRAPHIC REF	PART NUMBER	QTY	PART NAME 1 2 3 4 5 6 (PRODUCT LEVEL)	SEE PAGE
	1	1	**1M-6718**	1	BALL	
	2	1	**3K-0360**	1	SEAL-O-RING	
	3	1	**4K-2039**	1	SEAL-O-RING	
	4	1	**6M-5062**	1	SEAL-O-RING	
	5	1	**7J-0204**	1	SEAL-O-RING	
	6	1	**146-6319**	1	RETAINER	
	7	1	**153-8925**	1	STOP	
	8	1	**153-8926**	1	SPRING	
	9	1	**157-2153**	1	SPRING	
	10	1	**2H-3429**	1	RING-RETAINING	

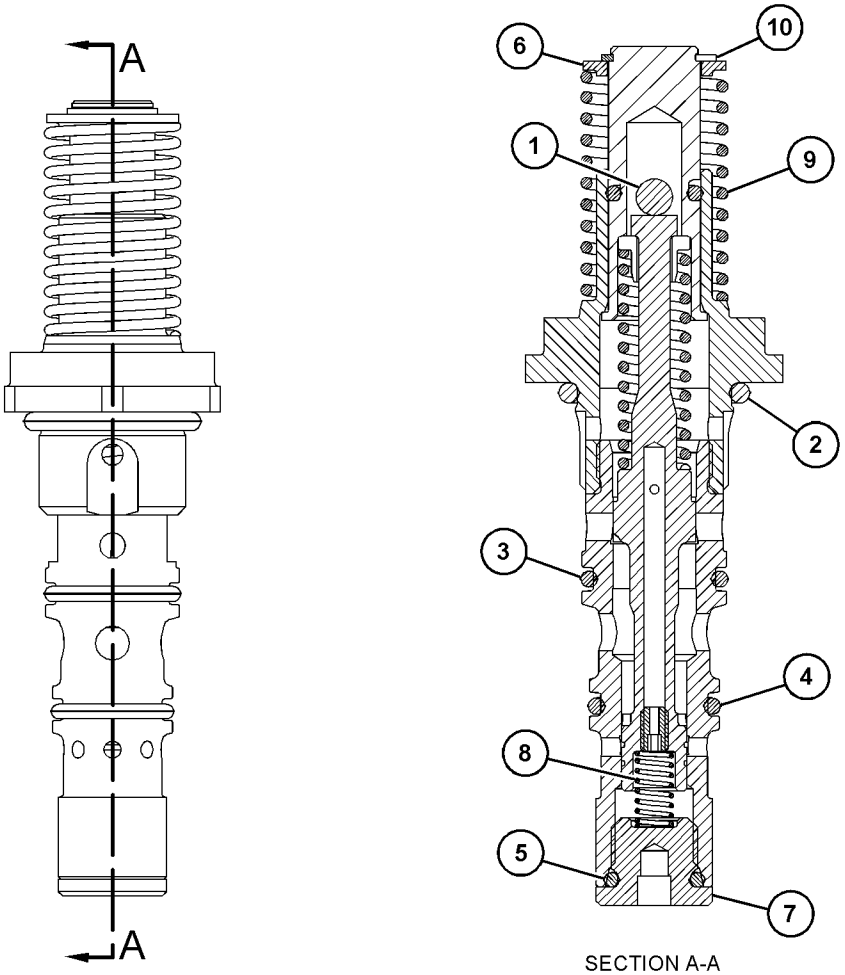

SECTION A-A

GRAPHIC #1 <END> g06021852

285-5240 VALVE GP-PUMP CONTROL–PRESSURE, FLOW COMPENSATOR

S/N: R5A1-UP

PART OF 318-8481 PUMP GP-PISTON

SMCS-5455 **i06567502**

NOTE	REF NO	GRAPHIC REF	PART NUMBER	QTY	PART NAME 1 2 3 4 5 6 (PRODUCT LEVEL)	SEE PAGE
M	1	1	**8T-8442**	4	BOLT-SOCKET HEAD (M6X1X30-MM)	
	2	1	**280-7870**	1	GASKET	
J	3	1	**6E-6528**	2	SEAL	
	4	1	**9S-8002**	1	PLUG (7/16-20-THD)	
	5	1	**3J-7354**	1	SEAL-O-RING	
J	6	1	**033-6043**	1	SEAL-O-RING	
J	7	1	**6V-6339**	1	SEAL-O-RING	
					AVAILABLE REPAIR KIT(S):	
J			**293-8350**	1	KIT-SEAL (FLOW COMPENSATOR)	
					(INCLUDES SEAL-O-RINGS & BACK-UP RINGS)	

J - KIT MARKED J SERVICES PART(S) MARKED J
M - METRIC PART

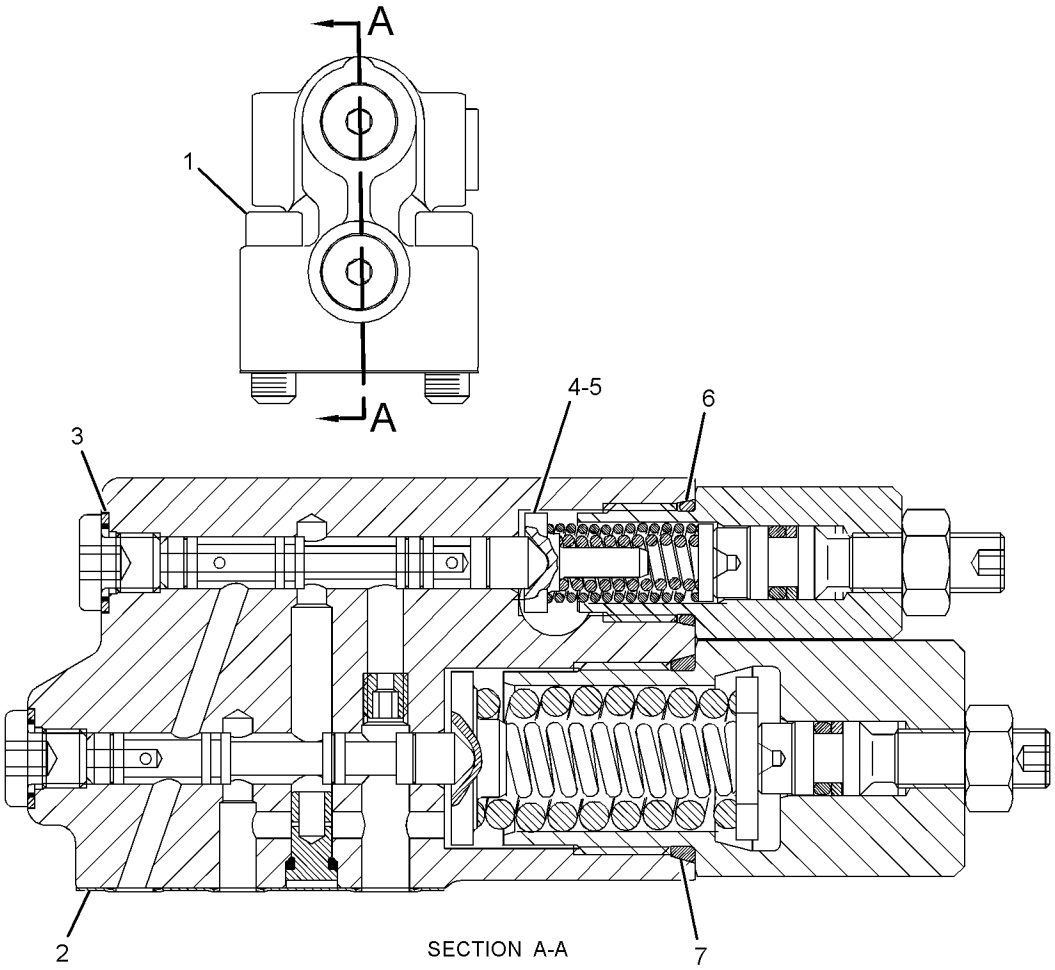

GRAPHIC #1 <END> g01297140

341-1511 VALVE GP-PUMP CONTROL–STEERING

S/N: R5A1-UP

PART OF 320-8637 PUMP GP-PISTON

SMCS-5455 **i06567522**

NOTE	REF NO	GRAPHIC REF	PART NUMBER	QTY	PART NAME 1 2 3 4 5 6 (PRODUCT LEVEL)	SEE PAGE
	1	1	**316-5999**	2	SOLENOID AS (PUMP CONTROL VALVE)	
	2	1	**202-6535**	2	PIN	
M	3	1	**8T-2922**	4	BOLT-SOCKET HEAD (M6X1X65-MM)	
	4	1	**301-3424**	1	KIT-COVER	
					(INCLUDES SEALS, FILTER, COVER, & RING)	
	5	1	**196-4253**	1	GASKET	
	6	1	**215-8014**	1	KIT-LEVER	
	7	1	**277-6631**	1	SPRING	
B	8	1	**216-4551**	1	SHIM (0.8-MM THK)	
B		1	**216-4552**	1	SHIM (1-MM THK)	
B		1	**216-4553**	1	SHIM (1.2-MM THK)	
B		1	**216-4554**	1	SHIM (1.4-MM THK)	
B		1	**216-4555**	1	SHIM (1.6-MM THK)	
B		1	**233-9808**	1	SHIM (0.6-MM THK)	
	14	1	**209-3565**	1	SEAL	
M	15	1	**196-9445**	1	BOLT-SOCKET HEAD (M6X1X45-MM)	
	16	1	**215-8008**	1	LEVER	
	17	1	**215-8012**	1	PIN	
	18	1	**6H-9691**	1	SEAL-O-RING	
	19	1	**215-8011**	1	BOLT-SPECIAL	
	20	1	**215-8010**	1	SHIM (3-MM THK)	
	21	1	**215-8015**	2	PIN	

B - USE AS REQUIRED
M - METRIC PART

341-1511 **VALVE GP-PUMP CONTROL (**contd.**)** **i06567522**

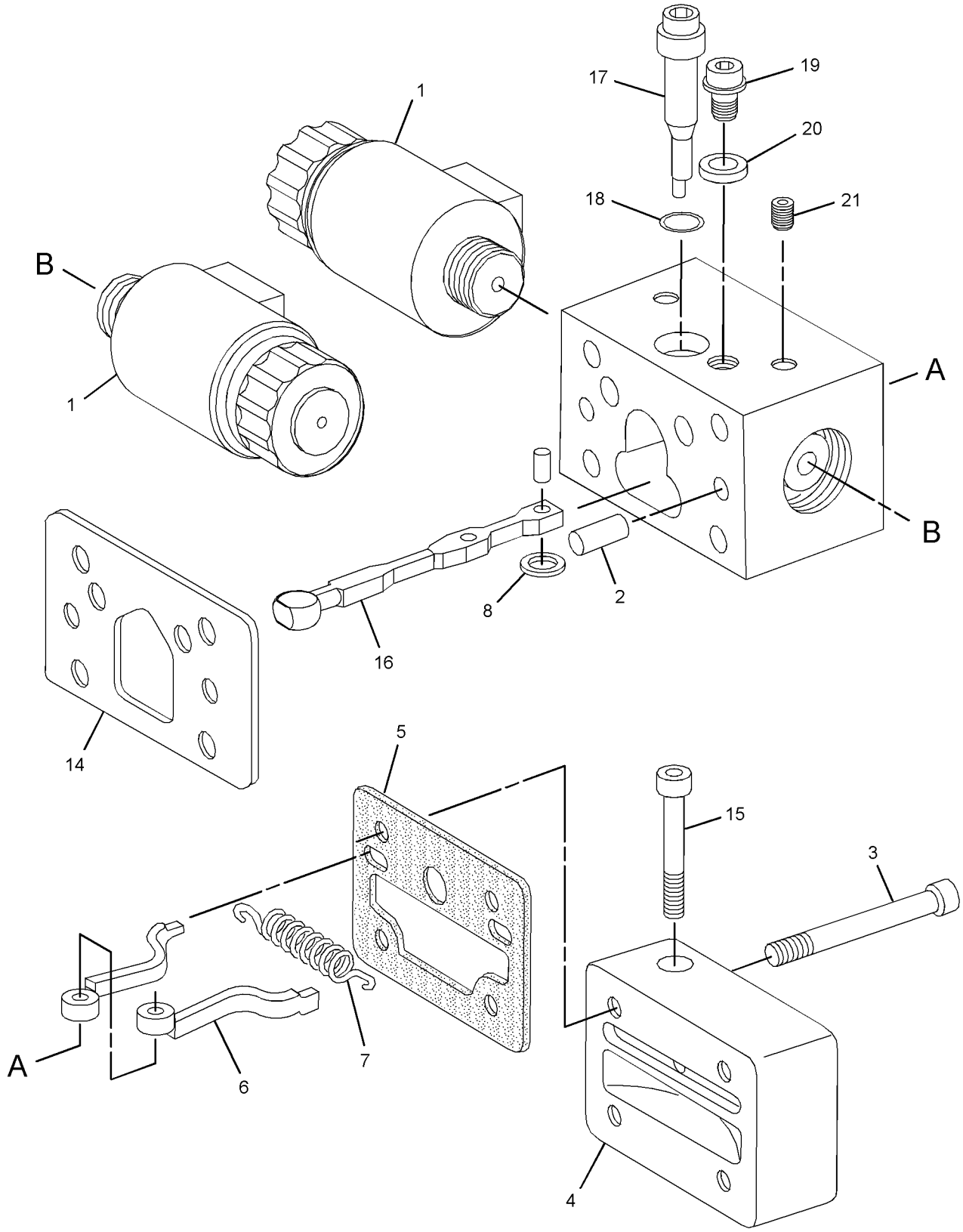

GRAPHIC #1 <END> g01884516

152-1811 VALVE GP-RELIEF–PRESSURE OVERRIDE

S/N: R5A1-UP

PART OF 341-1510 HEAD GP-PUMP

SMCS-5069, 5117 **i06567511**

NOTE	REF NO	GRAPHIC REF	PART NUMBER	QTY	PART NAME 1 2 3 4 5 6 (PRODUCT LEVEL)	SEE PAGE
J	1	1	**7Y-5219**	1	SEAL-O-RING	
J	2	1	**6V-5586**	1	SEAL-O-RING	
JM	3	1	**6E-1607**	1	LOCKNUT-SEALING	
					AVAILABLE REPAIR KIT(S):	
J			**122-9363**	1	KIT-SEAL (RELIEF VALVE)	
					(INCLUDES O-RING SEALS & LOCKNUT)	

J - KIT MARKED J SERVICES PART(S) MARKED J
M - METRIC PART

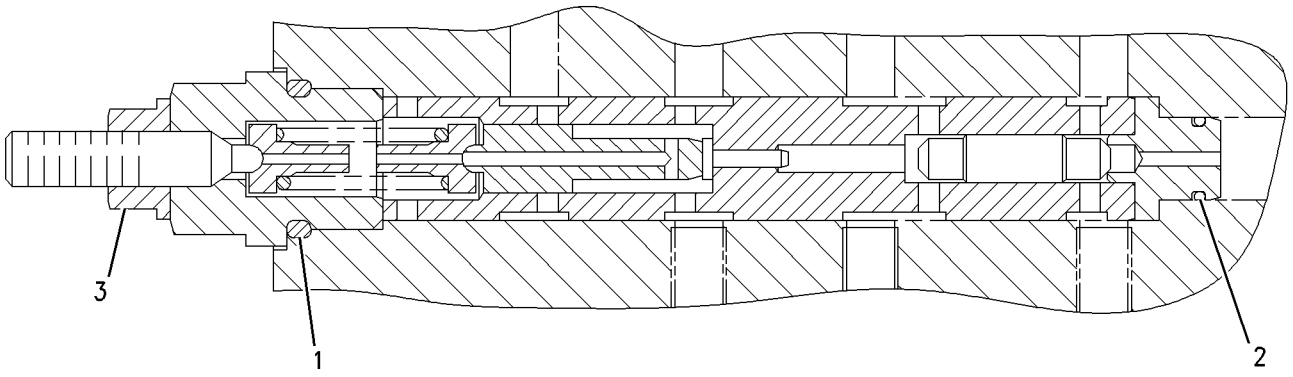

GRAPHIC #1 <END> g00813622

212-6679 VALVE GP-RELIEF

S/N: R5A1-UP

PART OF 341-1510 HEAD GP-PUMP

SMCS-5069, 5117

i06567515

NOTE	REF NO	GRAPHIC REF	PART NUMBER	QTY	PART NAME 1 2 3 4 5 6 (PRODUCT LEVEL)	SEE PAGE
	1	1	**6V-8352**	1	SEAL-O-RING	

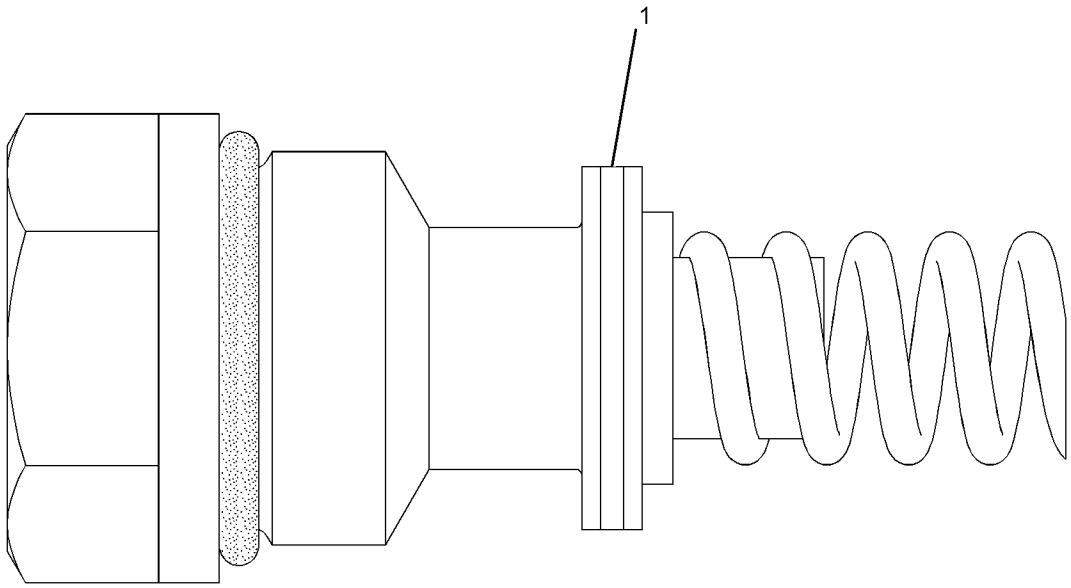

GRAPHIC #1

<END>

g03035896

277-6679 VALVE GP-RELIEF

S/N: R5A1-UP

PART OF 341-1510 HEAD GP-PUMP

SMCS-5069, 5117

i06567520

NOTE	REF NO	GRAPHIC REF	PART NUMBER	QTY	PART NAME 1 2 3 4 5 6 (PRODUCT LEVEL)	SEE PAGE
	1	1	**6V-5326**	1	SEAL-O-RING	
	2	1	**167-7713**	1	RING-BACKUP	

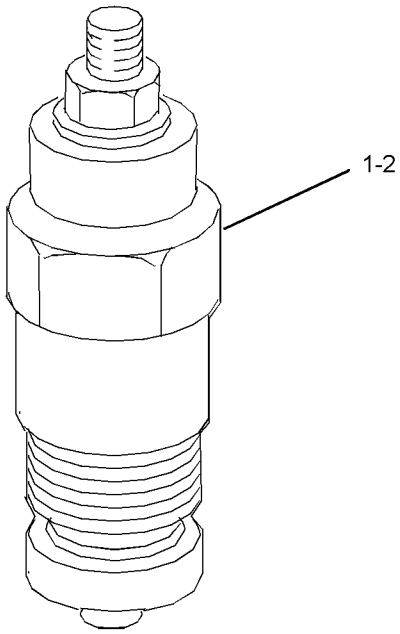

GRAPHIC #1

<END>

g01203296

341-3186 VALVE GP-RELIEF

S/N: R5A1-UP

PART OF 320-8637 PUMP GP-PISTON

SMCS-5069, 5117

i06567528

NOTE	REF NO	GRAPHIC REF	PART NUMBER	QTY	PART NAME 1 2 3 4 5 6 (PRODUCT LEVEL)	SEE PAGE
	1	1	**109-3203**	4	SEAL-O-RING	
M	2	1	**136-4184**	2	BOLT-SOCKET HEAD (M8X1.25X40-MM)	
	3	1	**095-0934**	1	RING-RETAINING (INTERNAL)	
	4	1	**033-6041**	1	SEAL-O-RING	
	5	1	**9T-3929**	1	PLUG AS	
		1	**6E-5479**	1	SEAL	

M - METRIC PART

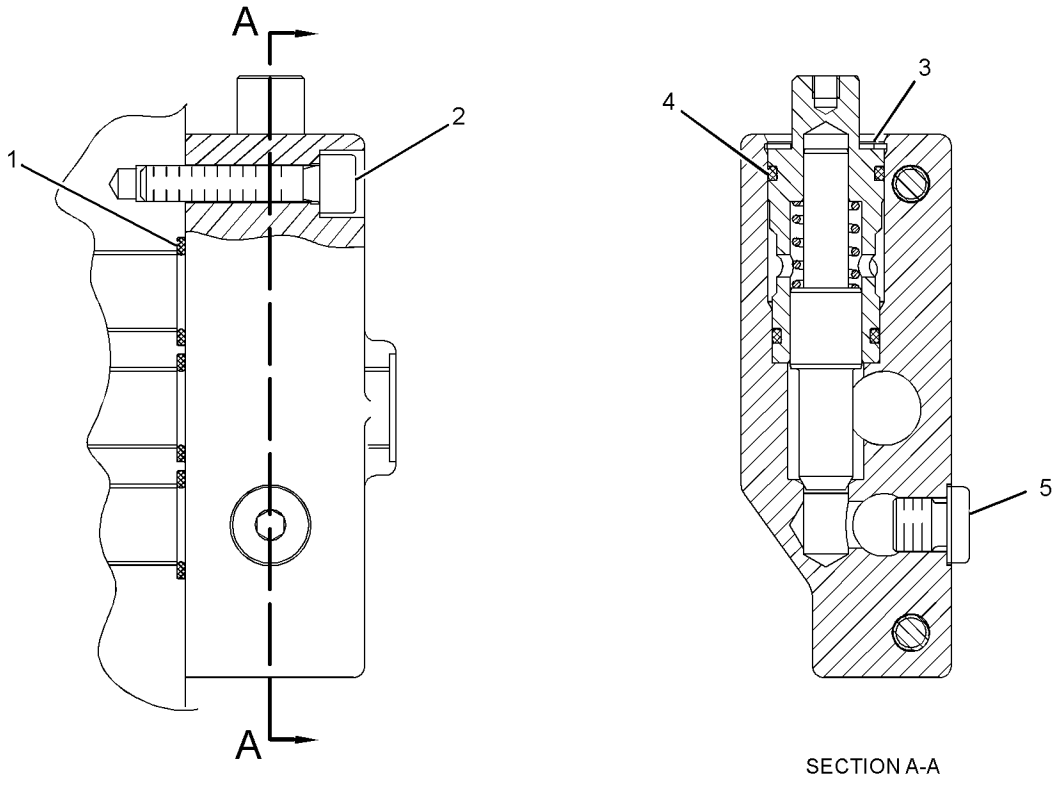

SECTION A-A

GRAPHIC #1

<END>

g01946488

431-9791 BRACE GP-BULLDOZER—HYDRAULIC TILT

S/N: R5A1-UP

PART OF 491-4977 INSTALLATION AR-BULLDOZER

AN ATTACHMENT

SMCS-6074 **i06195643**

NOTE	REF NO	GRAPHIC REF	PART NUMBER	QTY	PART NAME 1 2 3 4 5 6 (PRODUCT LEVEL)	SEE PAGE
	1	1	**1U-0928**	2	SCREW-ADJUSTMENT	
	2	1	**1U-0929**	2	SCREW-ADJUSTMENT	
	3	1	**1U-1176**	2	PIN	
	4	1	**1U-1267**	2	BRACE AS	
					(EACH INCLUDES)	
		1	**3F-4854**	1	KNOB	
		1	**6F-3908**	1	HANDLE	
		1	**8J-4866**	1	LUG	
	5	1	**3B-4626**	2	PIN-COTTER	
	6	1	**3B-8489**	4	FITTING-GREASE (1/8-27 PTF)	
	7	1	**3J-1770**	2	LOCK PIN	
	8	1	**3J-6573**	2	SCREW-ADJUSTMENT	
	9	1	**4F-0255**	2	PIN	
	10	1	**4F-1252**	2	PIN	
	11	1	**4T-5495**	2	STUD-BALL	
B	12	1	**8E-5701**	52	SHIM (0.8-MM THK)	
	13	1	**160-6306**	2	CAP-BEARING	
	14	1	**251-9815**	1	ARM AS (LH)	
	15	1	**251-9816**	1	ARM AS (RH)	
					(EACH ARM ASSEMBLY INCLUDES)	
		1	**1U-1173**	1	BRACKET (RH)	
		1	**1U-1174**	1	BRACKET (LH)	
		1	**1U-1175**	2	PLATE	
		1	**3Y-3866**	1	NUT (2-3/4-8-THD)	
		1	**4B-4098**	1	PLUG-CUP	
	16	1	**251-9828**	4	CAP-BEARING	
B	17	1	**251-9834**	104	SHIM (0.8-MM THK)	
M	18	1	**7X-2564**	16	BOLT (M20X2.5X90-MM)	
M	19	1	**8T-4187**	4	BOLT (M20X2.5X80-MM)	

B - USE AS REQUIRED
M - METRIC PART

431-9791 **BRACE GP-BULLDOZER (**contd.**)** **i06195643**

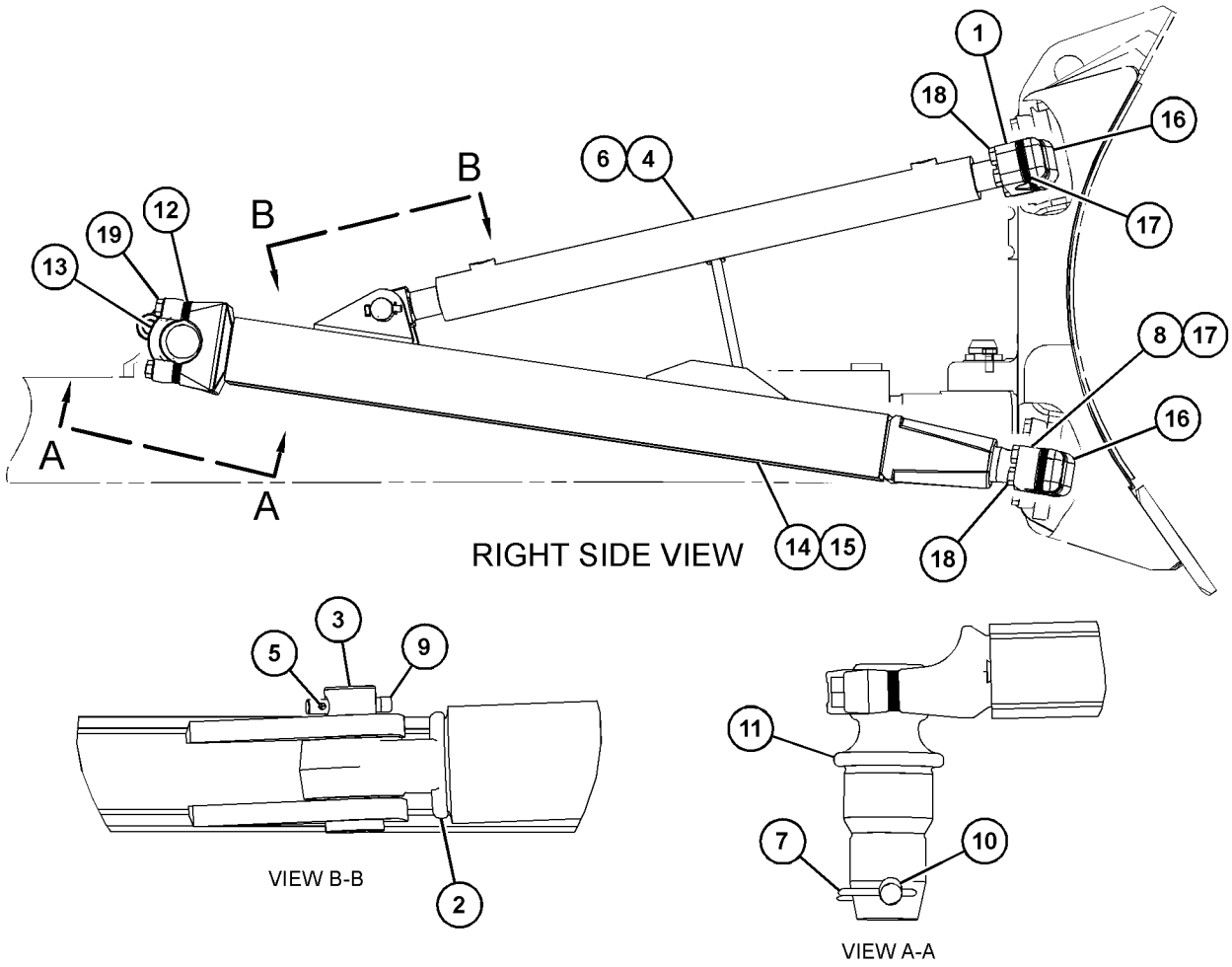

GRAPHIC #1 <END> g03434496

398-1479 C-FRAME AS

S/N: R5A1-UP

PART OF 396-4383 C-FRAME GP-POWER ANGLING

AN ATTACHMENT

SMCS-6063 **i06530710**

NOTE	REF NO	GRAPHIC REF	PART NUMBER	QTY	PART NAME 1 2 3 4 5 6 (PRODUCT LEVEL)	SEE PAGE
	1	1	**6J-9187**	1	BRACKET AS (RH)	
	1A	1	**4J-2414**	1	TRUNNION	
		1	**7J-2595**	2	BRACKET	
	2	1	**6J-9188**	1	BRACKET AS (LH)	
	2A	1	**4J-2414**	1	TRUNNION	
		1	**7J-2595**	2	BRACKET	
	3	1	**251-9835**	2	BEARING	
	4	1	**9W-9000**	1	ADAPTER AS	
	4A	1	**8E-5486**	2	BUSHING	
		1	**5M-6214**	1	PLUG-PIPE	
	5	1	**9W-5375**	4	BAR	
	6	1	**8P-9770**	1	PLATE	
	7	1	**9V-0321**	1	BLOCK	
	8	1	**9W-4897**	6	BRACKET AS	

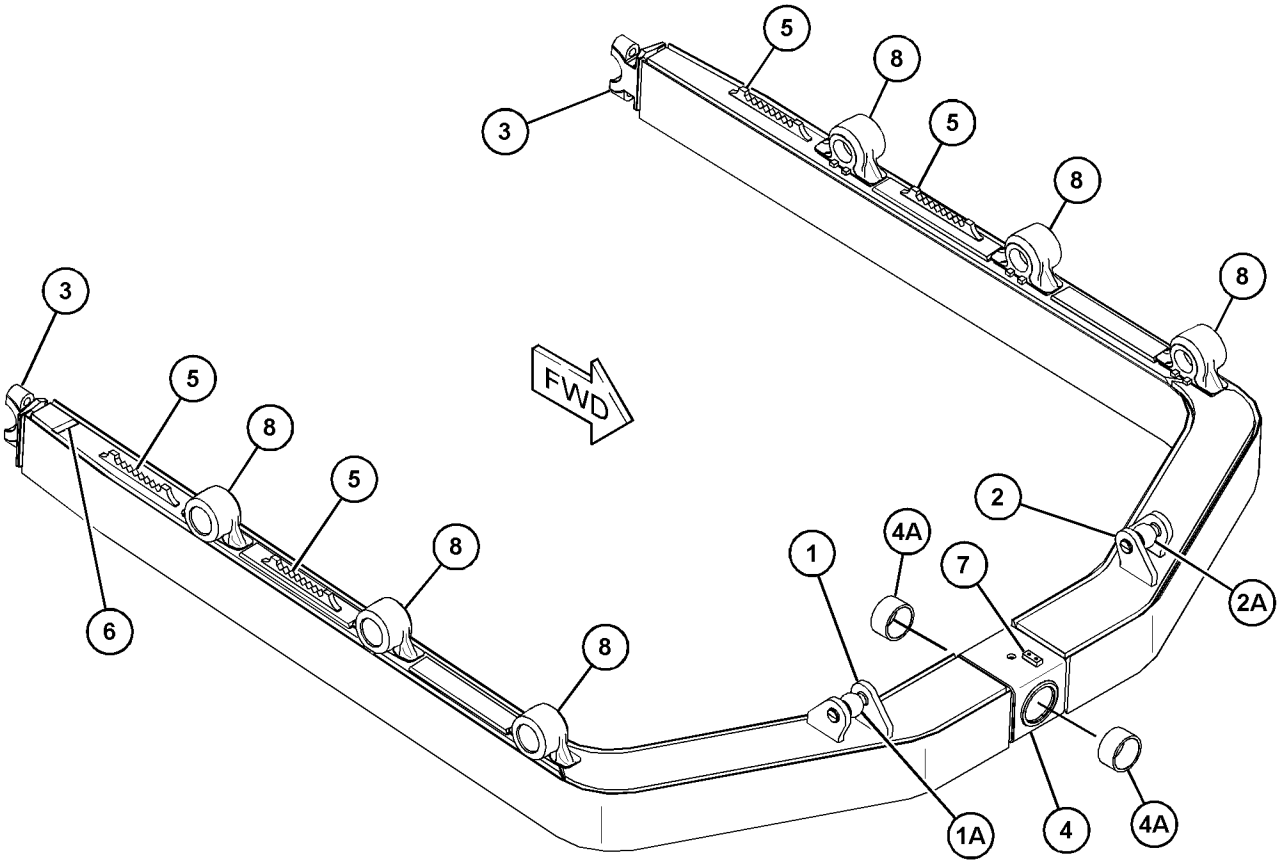

GRAPHIC #1 <END> g06022978

396-4383 C-FRAME GP-POWER ANGLING

S/N: R5A1-UP
PART OF 491-4977 INSTALLATION AR-BULLDOZER
AN ATTACHMENT

SMCS-6063 **i06530715**

NOTE	REF NO	GRAPHIC REF	PART NUMBER	QTY	PART NAME 1 2 3 4 5 6 (PRODUCT LEVEL)	SEE PAGE
	1	1	**1U-0725**	1	RETAINER	
	2	1	**4J-9118**	1	RETAINER	
B	3	1	**4T-4866**	52	SHIM (0.8-MM THK)	
	4	1	**6Y-6751**	1	PIN	
M	5	1	**251-8203**	4	NUT-SQUARE (M24X3-THD)	
	6	1	**251-9832**	1	PIN-PIVOT	
	7	1	**251-9836**	2	CAP-BEARING	
Y	8	1	*398-1479*	1	C-FRAME AS	456
M	9	1	**7X-2553**	1	BOLT (M16X2X40-MM)	
M	10	1	**7X-2562**	2	BOLT (M20X2.5X45-MM)	
M	11	1	**7X-2567**	4	BOLT (M24X3X160-MM)	
	12	1	**8T-4167**	4	WASHER-HARD (26X44X4-MM THK)	

B - USE AS REQUIRED
M - METRIC PART
Y - SEPARATE ILLUSTRATION

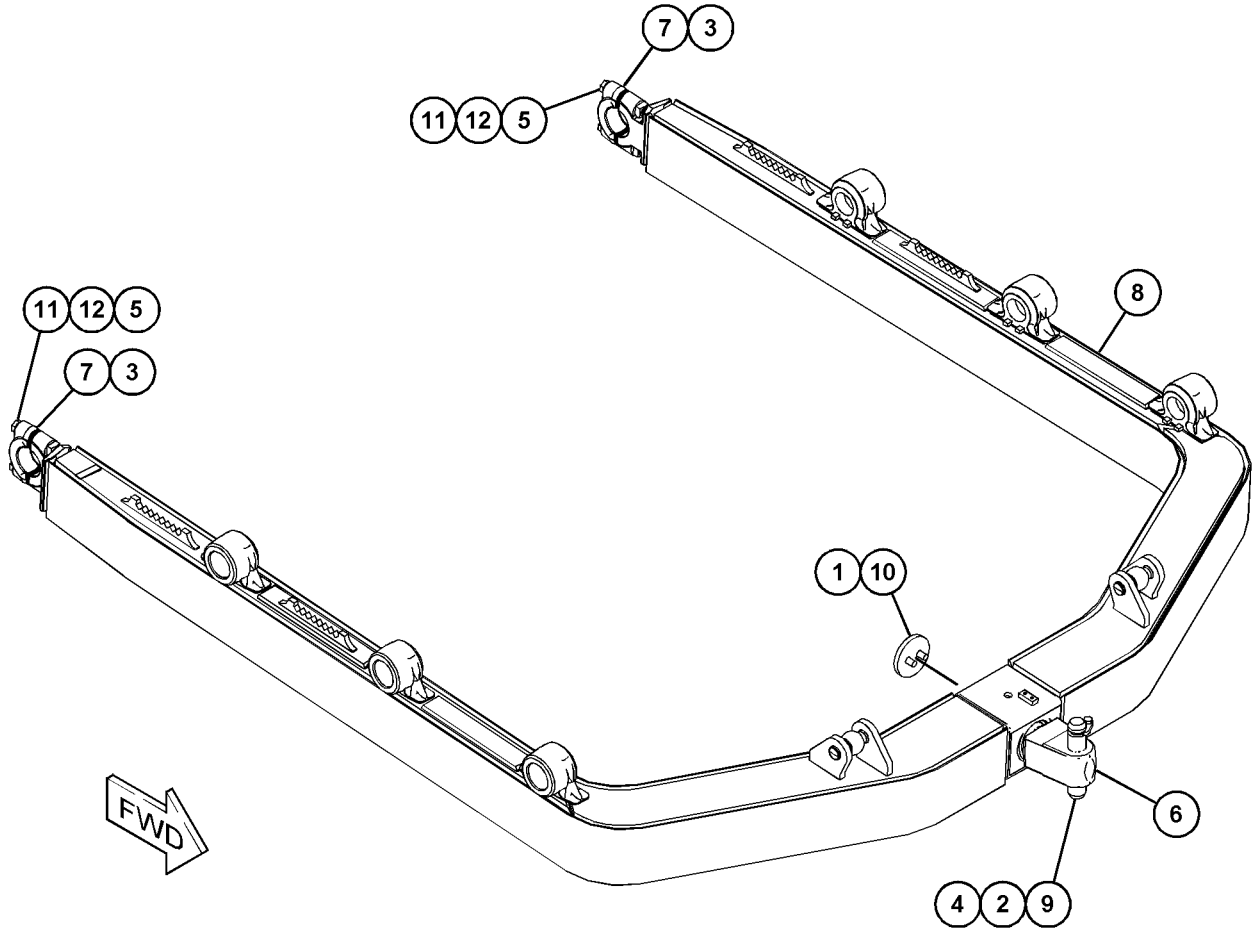

GRAPHIC #1 <END> g06022699

491-4975 INSTALLATION AR-BULLDOZER—SEMI-UNIVERSAL

S/N: R5A1-UP

AN ATTACHMENT

SMCS-6050 **i06530636**

NOTE	REF NO	GRAPHIC REF	PART NUMBER	QTY	PART NAME 1 2 3 4 5 6 (PRODUCT LEVEL)	SEE PAGE
	1	1	**4T-1481**	1	LINK AS	
	2	1	*288-3925*	1	GUARD GP-TILT CYLINDER	
		1	**4Y-9398**	1	GUARD AS	
		1	**5P-1076**	4	WASHER-HARD (13.5X30X4-MM THK)	
M		1	**8T-4192**	4	BOLT (M12X1.75X25-MM)	
Y	3	1	*444-2870*	1	PUSH ARM GP	462
Y	4	1	*453-0586*	1	LINES GP-TILT CYLINDER	409
Y	5	1	*491-5104*	1	TRUNNION GP-BULLDOZER	464
	6	1	**3B-4632**	2	PIN-COTTER	
	7	1	**8H-8898**	2	PIN	

M - METRIC PART
Y - SEPARATE ILLUSTRATION

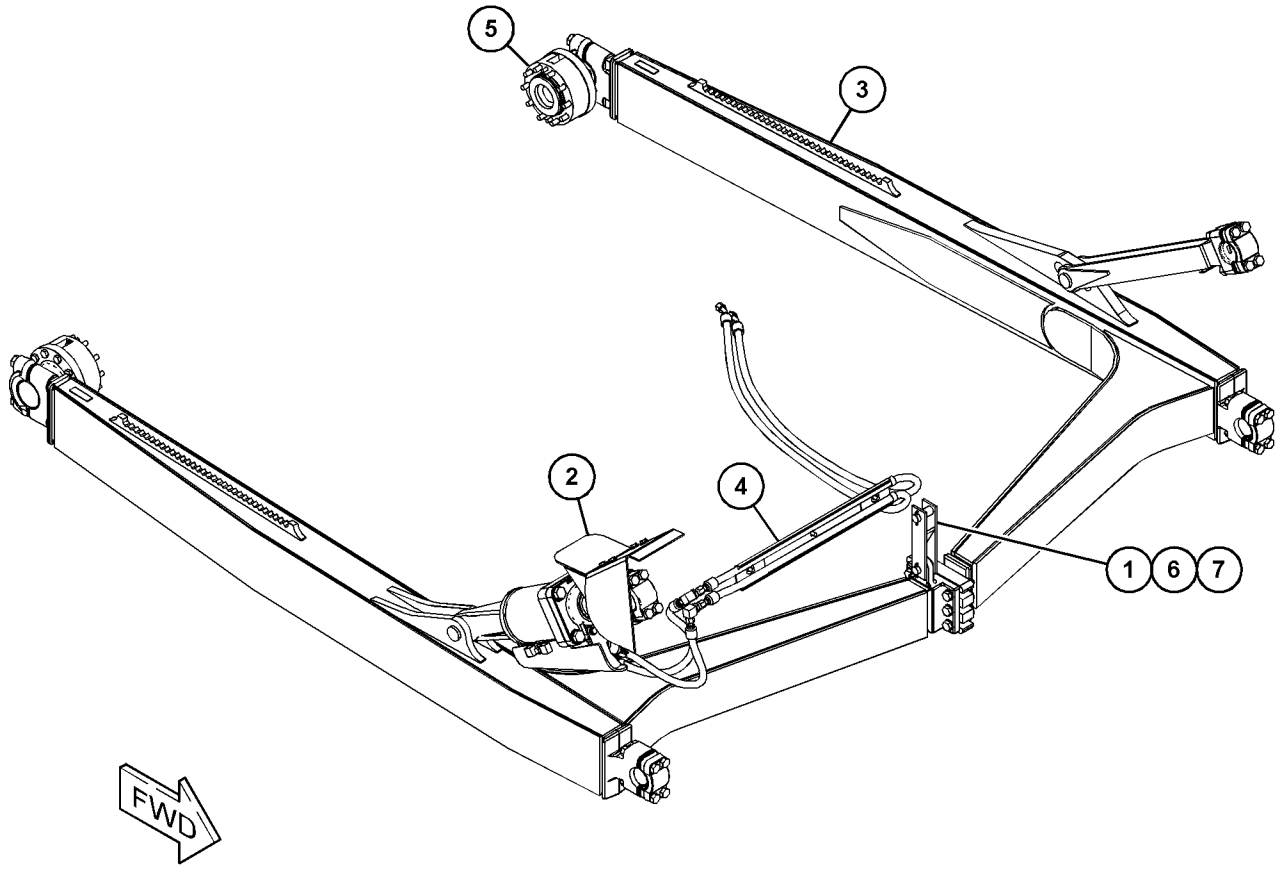

GRAPHIC #1 <END> g06022992

491-4977 INSTALLATION AR-BULLDOZER—ANGLING

S/N: R5A1-UP

AN ATTACHMENT

SMCS-6050 **i06530714**

NOTE	REF NO	GRAPHIC REF	PART NUMBER	QTY	PART NAME 1 2 3 4 5 6 (PRODUCT LEVEL)	SEE PAGE
M	1	1	**7X-2563**	16	BOLT (M20X2.5X60-MM)	
	2	1	**251-9827**	4	TRUNNION	
Y	3	1	*396-4383*	1	C-FRAME GP-POWER ANGLING	457
Y	4	1	*431-9791*	1	BRACE GP-BULLDOZER	454
Y	5	1	*491-5104*	1	TRUNNION GP-BULLDOZER	464

M - METRIC PART
Y - SEPARATE ILLUSTRATION

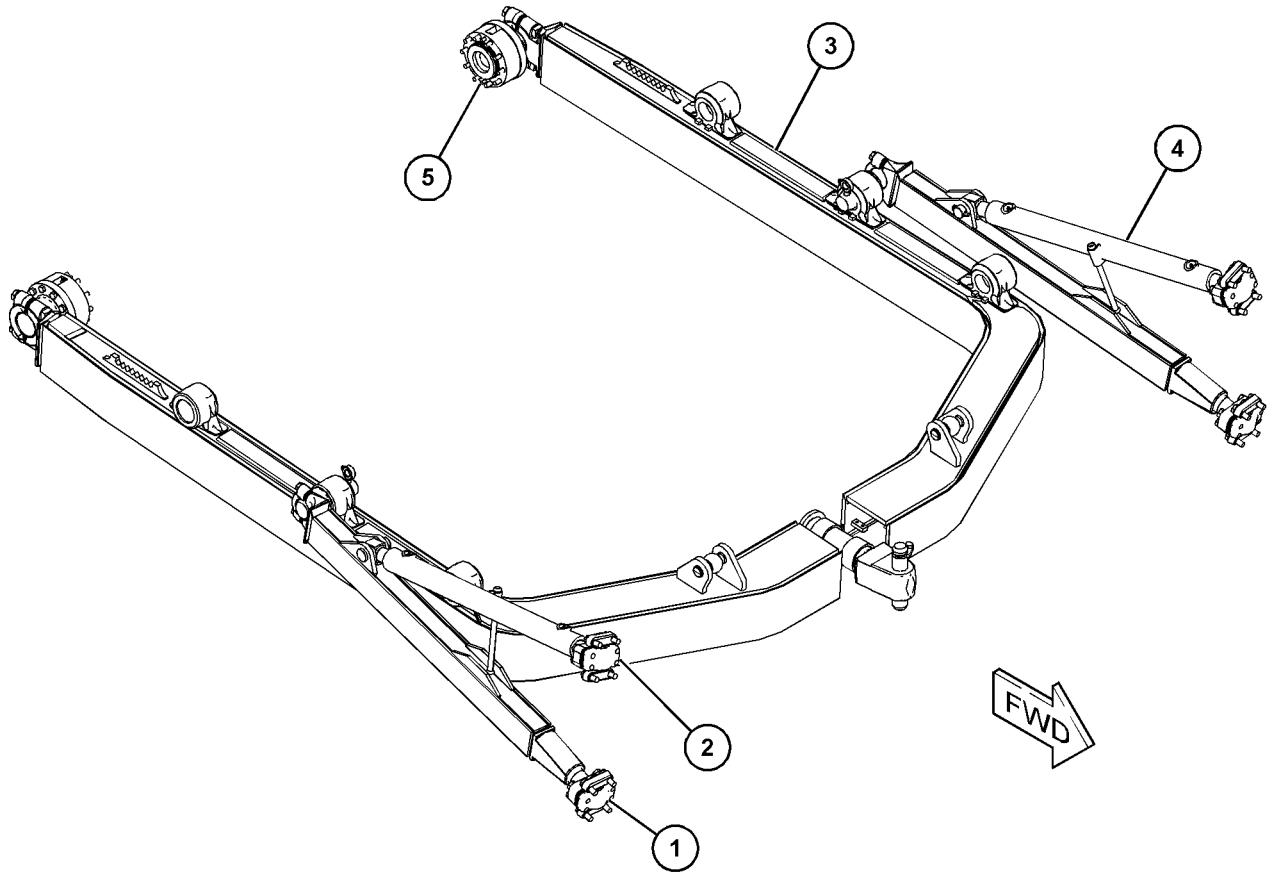

GRAPHIC #1 <END> g06021759

453-0567 LINES GP-GREASE

S/N: R5A1-UP

PART OF 391-9505 HYDRAULIC AR

SMCS-7510 **i06532718**

NOTE	REF NO	GRAPHIC REF	PART NUMBER	QTY	PART NAME 1 2 3 4 5 6 (PRODUCT LEVEL)	SEE PAGE
	1	1	**3B-8488**	3	FITTING-GREASE (1/8-27 PTF)	
	2	1	**5P-6941**	3	CONNECTOR	
	3	1	**7K-1181**	3	STRAP-CABLE	
	4	1	**290-5562**	1	MOUNT (DUAL SWIVEL)	
	5	1	**476-9904**	1	HOSE AS	
	6	1	**476-9905**	1	HOSE AS	
	7	1	**476-9907**	1	HOSE AS	
	8	1	**479-0219**	1	BRACKET	
	9	1	**3B-6552**	1	ELBOW-PIPE	
	10	1	**5B-3254**	3	NUT-JAM (7/16-20-THD)	
	11	1	**5M-6214**	1	PLUG-PIPE	
	12	1	**5P-9085**	8	CLIP	
	13	1	**8T-4121**	3	WASHER-HARD (11X21X2.5-MM THK)	
M	14	1	**8T-4136**	2	BOLT (M10X1.5X25-MM)	
M	15	1	**8T-4137**	1	BOLT (M10X1.5X20-MM)	
	16	1	**9X-8582**	1	CLIP	

M - METRIC PART

453-0567 **LINES GP-GREASE (**contd.**)** **i06532718**

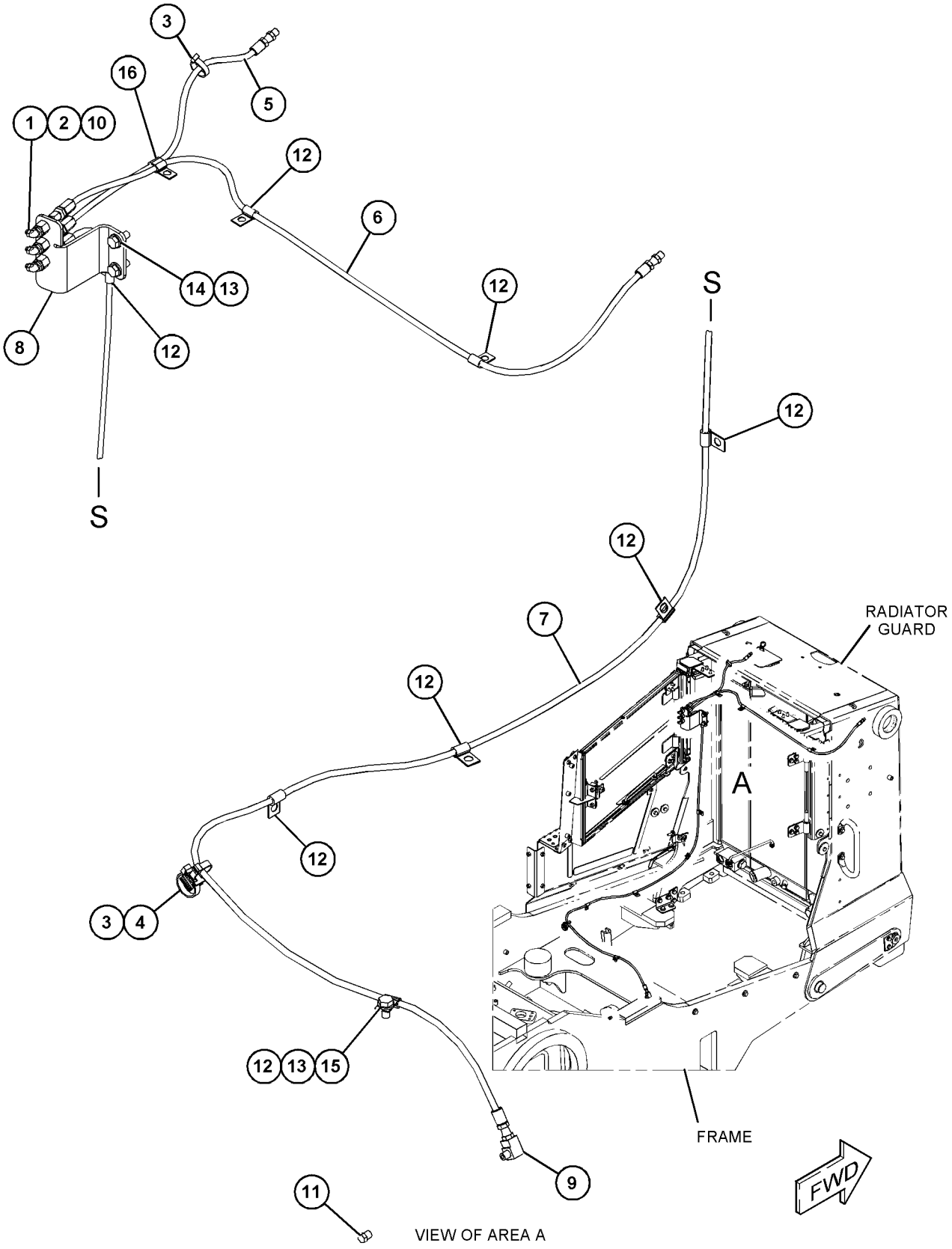

GRAPHIC #1

<END>

g06024721

444-2870 PUSH ARM GP

S/N: R5A1-UP

PART OF 491-4975 INSTALLATION AR-BULLDOZER

AN ATTACHMENT

SMCS-6061 **i06530631**

NOTE	REF NO	GRAPHIC REF	PART NUMBER	QTY	PART NAME 1 2 3 4 5 6 (PRODUCT LEVEL)	SEE PAGE
	1	1	**4T-1520**	1	CAGE AS	
	1A	1	**6J-5383**	1	BEARING	
B	2	1	**4T-4866**	52	SHIM (0.8-MM THK)	
B	3	1	**8E-5703**	78	SHIM (0.8-MM THK)	
	4	1	**8J-2880**	3	CAP-BEARING	
	5	1	**124-9672**	1	BRACE AS-TILT	
	6	1	**160-6305**	2	CAP-BEARING	
Y	7	1	**367-9478**	1	CYLINDER GP-TILT	388
	8	1	**482-3710**	1	ARM AS (RH)	
	8A	1	**179-6152**	1	BEARING	
	8B	1	**179-6153**	1	BEARING	
	9	1	**482-3717**	1	ARM AS (LH)	
	9A	1	**179-6152**	1	BEARING	
	9B	1	**179-6153**	1	BEARING	
	9C	1	**4T-0780**	1	TRUNNION	
M	10	1	**251-8203**	4	NUT-SQUARE (M24X3-THD)	
	11	1	**3B-4626**	2	PIN-COTTER	
	12	1	**3F-6185**	2	PIN	
	13	1	**4F-0255**	2	PIN	
M	14	1	**6V-9167**	8	BOLT (M20X2.5X140-MM)	
M	15	1	**7X-2566**	6	BOLT (M20X2.5X110-MM)	
M	16	1	**7Y-5235**	4	BOLT (M24X3X190-MM)	
M	17	1	**8C-8478**	4	BOLT (M20X2.5X140-MM)	
	18	1	**8T-4123**	6	WASHER (3.62X5.75X0.375-MM THK)	
M	19	1	**8T-4131**	18	NUT (M20X2.5-THD)	
	20	1	**8T-4167**	4	WASHER-HARD (26X44X4-MM THK)	
	21	1	**8T-5439**	6	WASHER-HARD (21.5X45X6-MM THK)	

B - USE AS REQUIRED
M - METRIC PART
Y - SEPARATE ILLUSTRATION

444-2870 **PUSH ARM GP (**contd.**)** **i06530631**

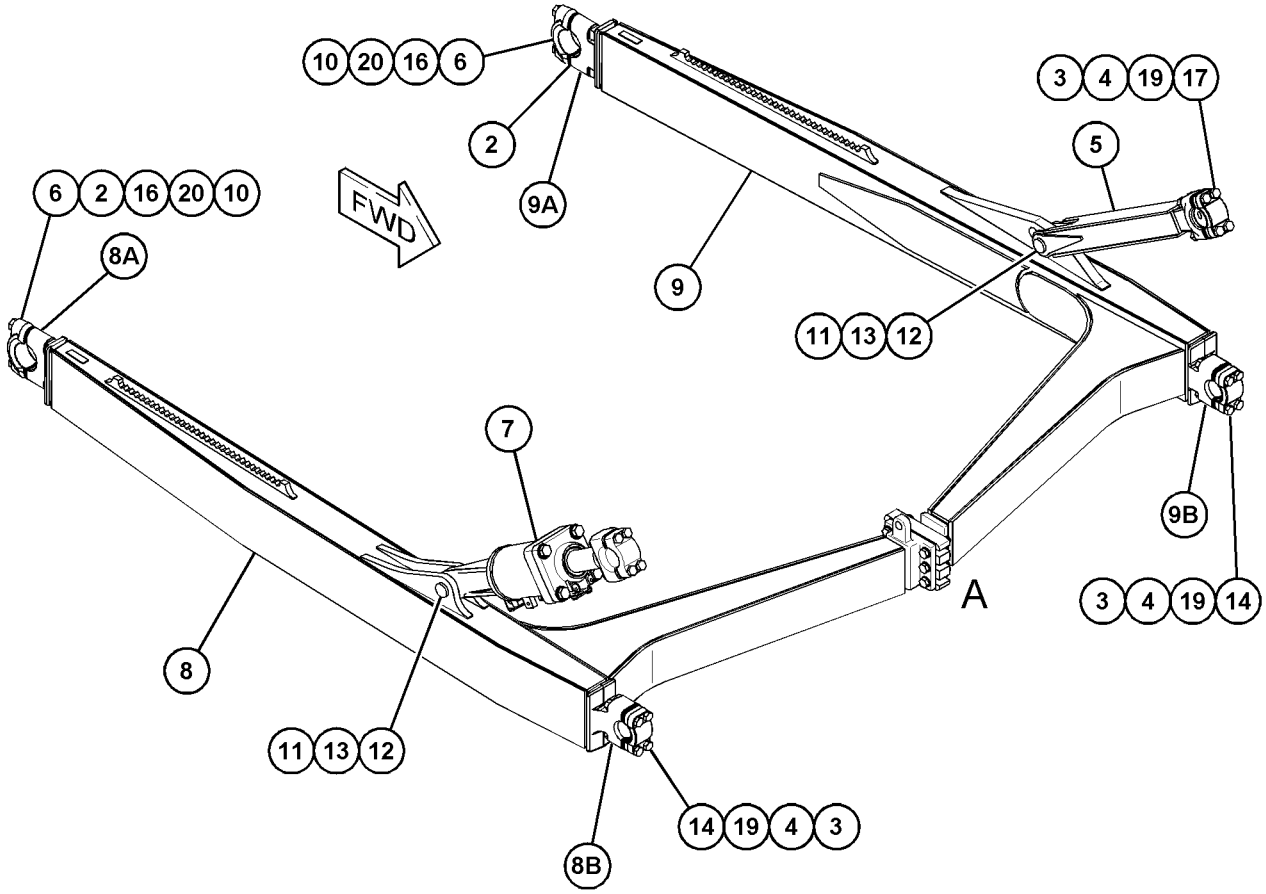

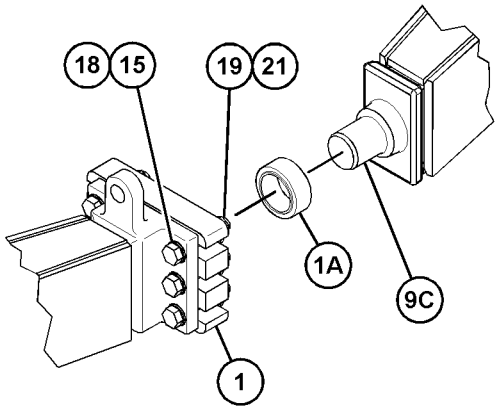

VIEW OF AREA A
(EXPLODED)

GRAPHIC #1 <END> g06023477

491-5104 TRUNNION GP-BULLDOZER

S/N: R5A1-UP

PART OF 491-4975, 491-4977 INSTALLATION AR-BULLDOZER

AN ATTACHMENT

SMCS-6069 **i06530622**

NOTE	REF NO	GRAPHIC REF	PART NUMBER	QTY	PART NAME 1 2 3 4 5 6 (PRODUCT LEVEL)	SEE PAGE
	1	1	**386-9118**	2	COVER	
	2	1	**448-8350**	2	TRUNNION	
	3	1	**5P-1979**	2	SEAL-O-RING	
M	4	1	**7X-2475**	20	BOLT (M16X2X130-MM)	
M	5	1	**8T-4183**	4	BOLT (M12X1.75X40-MM)	
	6	1	**8T-4223**	4	WASHER-HARD (13.5X25.5X3-MM THK)	
					QUANTITIES SHOWN ARE THOSE REQUIRED FOR BOTH LH & RH SIDES	

M - METRIC PART

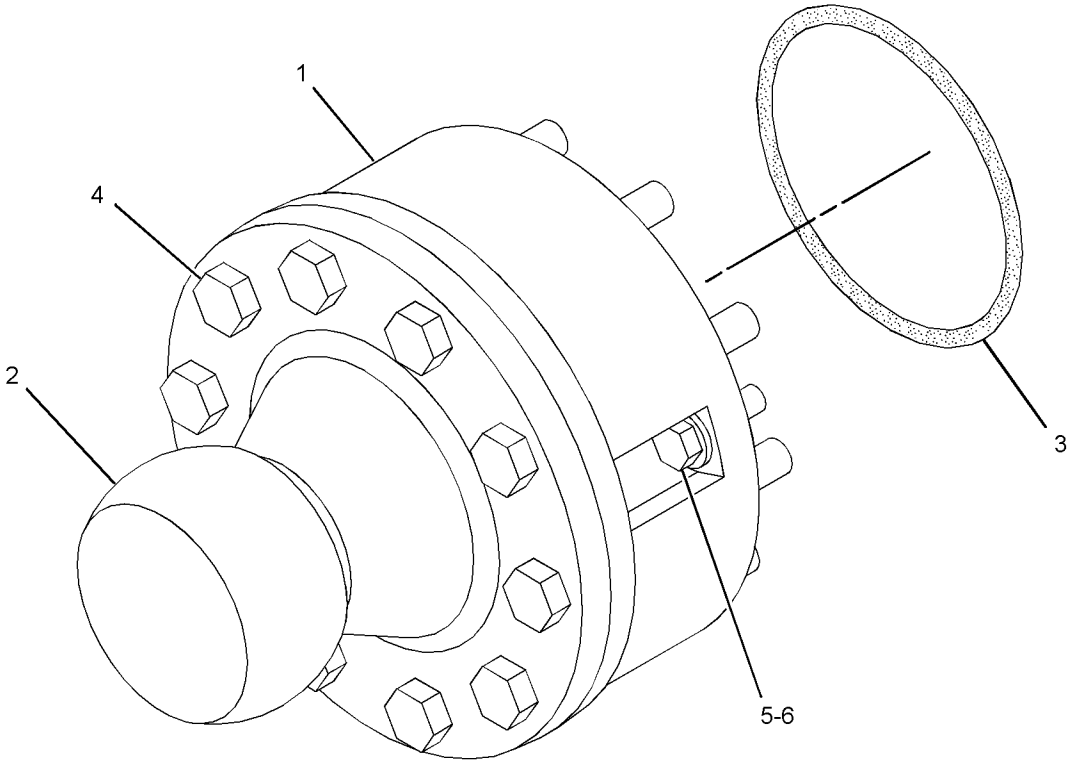

GRAPHIC #1 <END> g02969016

173-1028 ADJUSTER GP-SEAT

S/N: R5A1-UP
PART OF 178-0603, 180-7304 SEAT GP
AN ATTACHMENT

SMCS-7321 **i05332866**

NOTE	REF NO	GRAPHIC REF	PART NUMBER	QTY	PART NAME 1 2 3 4 5 6 (PRODUCT LEVEL)	SEE PAGE
	1	1	**4V-8256**	4	SPRING	
	2	1	**117-4492**	1	ROD	
	3	1	**136-1544**	1	LATCH AS (LH)	
	4	1	**156-5545**	1	LATCH AS (RH)	
	5	1	**164-4531**	1	ROD	
	6	1	**170-1112**	1	PLATE AS	
	7	1	**170-1114**	1	HANDLE (SLIDE ADJUSTMENT)	
	8	1	**170-1115**	1	HANDLE (TILT ADJUSTMENT)	
	9	1	**132-0338**	2	WASHER-PLASTIC (13X31.7X0.8-MM THK)	
	10	1	**2K-4973**	2	LOCKNUT (3/8-16-THD)	
	11	1	**7X-0608**	2	WASHER-HARD (10.2X16X2-MM THK)	

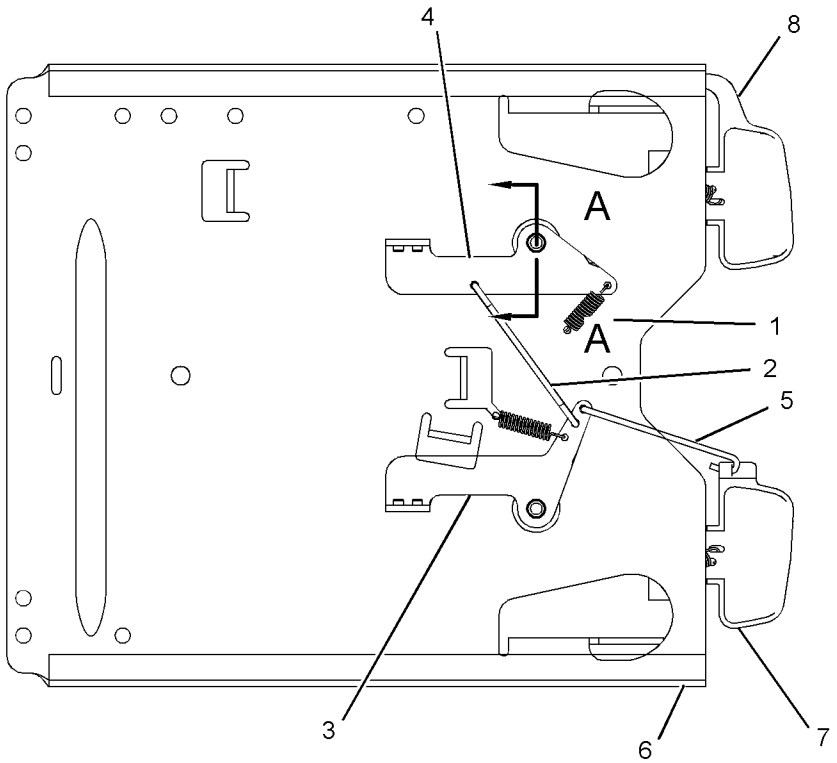

BOTTOM VIEW

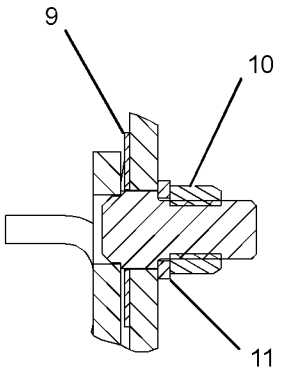

SECTION A-A

GRAPHIC #1 <END> g01191495

387-5701 AIR CONDITIONER & MOUNTING GP

S/N: R5A1-UP
PART OF 393-6475 CANOPY AR
AN ATTACHMENT

SMCS-7320 **i06299657**

NOTE	REF NO	GRAPHIC REF	PART NUMBER	QTY	PART NAME 1 2 3 4 5 6 (PRODUCT LEVEL)	SEE PAGE
	1	1	**8C-5682**	1	TEE	
	2	1	**112-7448**	1	FILTER ELEMENT-CAB AIR (STANDARD EFFICIENCY)	
	3	1	**228-6089**	1	PLUG (ROCKER SWITCH)	
	4	1	**240-8917**	1	FILM-IDENTIFICATION (CIRCUIT BREAKER)	
	5	1	**267-5243**	1	PANEL AS (AIR CONDITIONER, HEATER CONT)	
		1	**271-7312**	1	KNOB (TEMPERATURE CONTROL)	
		1	**285-7415**	1	KNOB (BLOWER FAN SPEED)	
	6	1	**273-5924**	2	KNOB (ADJUSTMENT CONTROL)	
	7	1	**323-5864**	1	VALVE (CONDENSATION DRAIN)	
	8	1	**335-6983**	5	CLAMP-BAND	
Y	9	1	*375-0350*	1	AIR CONDITIONER GP	468
Y	10	1	**387-1410**	1	HARNESS AS-DASH (RH)	115
	11	1	**388-5571**	1	WIRE AS	
	12	1	**392-7232**	1	PLATE	
	13	1	**068-4209**	2	SCREW (8-32X0.75-IN)	
	14	1	**276-1326**	3	BOLT (M10X1.5X55-MM)	
M	15	1	**344-5675**	3	NUT (M10X1.5-THD)	
	16	1	**6T-3643**	1	CIRCUIT BREAKER AS (15-AMPERE)	
		1	**6V-8376**	2	SCREW-MACHINE (8-32X0.25-IN)	
		1	**9B-7233**	2	LOCKWASHER	
	17	1	**8T-4121**	6	WASHER-HARD (11X21X2.5-MM THK)	
M	18	1	**9X-2045**	2	SCREW-TRUSS HEAD (M6X1X20-MM)	
M	19	1	**9X-6485**	1	STUD	
D	20	1	**5P-6129**		TUBE (0.25-M)	
D	20A	1	**5P-6129**		TUBE (0.55-M)	
D	20B	1	**5P-6129**		TUBE (0.5-M)	

D - ORDER BY THE METER
M - METRIC PART
Y - SEPARATE ILLUSTRATION

387-5701 **AIR CONDITIONER & MOUNTING GP (**contd.**)** **i06299657**

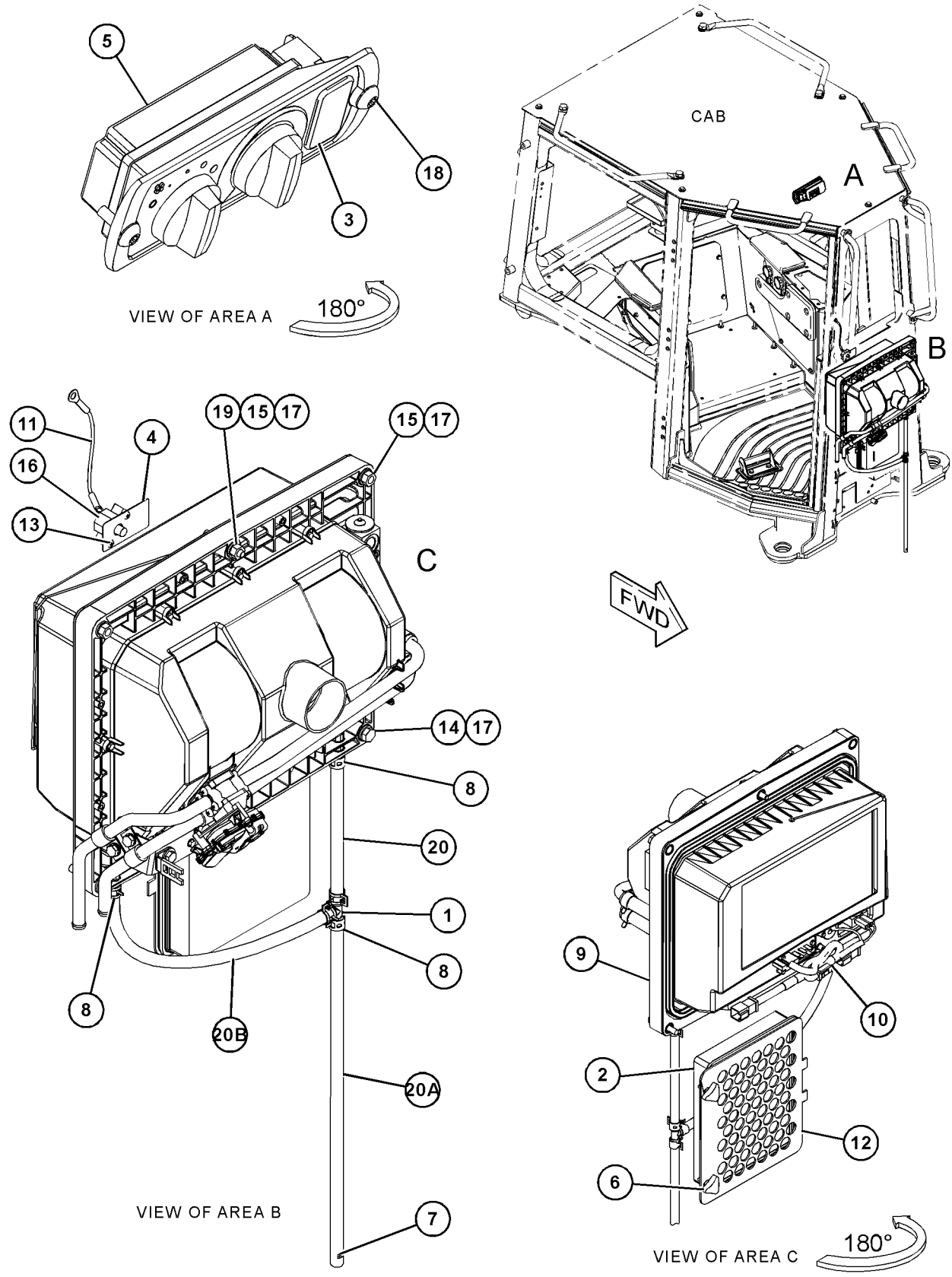

GRAPHIC #1 <END> g03722632

375-0350 AIR CONDITIONER GP

S/N: R5A1-UP

PART OF 387-5701 AIR CONDITIONER & MOUNTING GP, 375-7911 HEATER & MTG GP-CAB

AN ATTACHMENT

SMCS-7320 **i06231268**

NOTE	REF NO	GRAPHIC REF	PART NUMBER	QTY	PART NAME 1 2 3 4 5 6 (PRODUCT LEVEL)	SEE PAGE
	1	1	**119-9631**	1	SWITCH-TEMPERATURE (HVAC) (AIR CONDITIONER)	
	2	1	**131-3093**	1	BUSHING	
	3	1	**212-3416**	3	SCREW-PAN HEAD (8-16X0.5-IN)	
	4	1	**257-5030**	1	GUARD	
	5	1	**268-8769**	1	VALVE & MOUNTING AS-WATER	
	6	1	**275-6706**	1	MOTOR AS-BLOWER (24-VOLT) (HEATER, A/C)	
		1	**102-8802**	1	KIT-RECEPTACLE (2-PIN)	
					(INCLUDES RECEPTACLE AS & WEDGE)	
		1	**9W-0852**	2	PIN-CONNECTOR (14-GA TO 16-GA)	
	7	1	**279-0850**	1	ACTUATOR (ELECTRONIC) (WATER VALVE)	
	8	1	**327-0282**	1	SEAL-INTEGRAL (1/2-IN) (REFRIGERANT, HIGH SIDE)	
	9	1	**327-0283**	1	SEAL-INTEGRAL (3/4-IN) (REFRIGERANT, LOW SIDE)	
	10	1	**349-5830**	2	GASKET	
	11	1	**349-5835**	1	RESISTOR AS	
	12	1	**371-1679**	2	SCREW-FORMING	
	13	1	**375-0341**	1	COIL AS-EVAPORATOR	
	14	1	**375-0342**	1	CASE	
	15	1	**375-0343**	1	CASE	
	16	1	**375-0345**	1	CASE	
	17	1	**375-0346**	1	SEAL	
	18	1	**387-5659**	1	PLATE	
	19	1	**387-5661**	1	PAN-DRAIN	
	20	1	**387-5665**	1	BRACKET AS	
	21	1	**387-5671**	1	TUBE	
	22	1	**387-5672**	1	TUBE	
	23	1	**387-5674**	1	TUBE	
	24	1	**387-5681**	1	VALVE-EXPANSION	
	25	1	**396-3856**	1	GROMMET	
Y	26	1	**399-7895**	1	HARNESS AS-PLATFORM	121
M	27	1	**151-6282**	2	BOLT-SOCKET HEAD (M6X1X40-MM)	
	28	1	**172-4702**	4	CLAMP	
M	29	1	**174-9194**	3	BOLT (M8X1.25X16-MM)	
	30	1	**1P-6524**	2	SCREW-FORMING (10-16X0.625-IN)	
	31	1	**206-1345**	1	RETAINER AS	
	32	1	**248-6772**	8	SCREW-MACHINE (8-16X7.75-IN)	
	33	1	**2M-1444**	4	SCREW-TAPPING (8-18X0.3-IN)	
	34	1	**311-3520**	21	SCREW-HEX HEAD (8-16X0.5-IN)	
	35	1	**4D-2297**	2	SEAL-O-RING	
	36	1	**9M-8406**	3	CLIP	
E	37	1	**136-1953**		HOSE (10.5-CM EACH)	
E	38	1	**126-8472**		SEAL (156-CM)	

E - ORDER BY THE CENTIMETER
M - METRIC PART
Y - SEPARATE ILLUSTRATION

375-0350 **AIR CONDITIONER GP (**contd.**)** **i06231268**

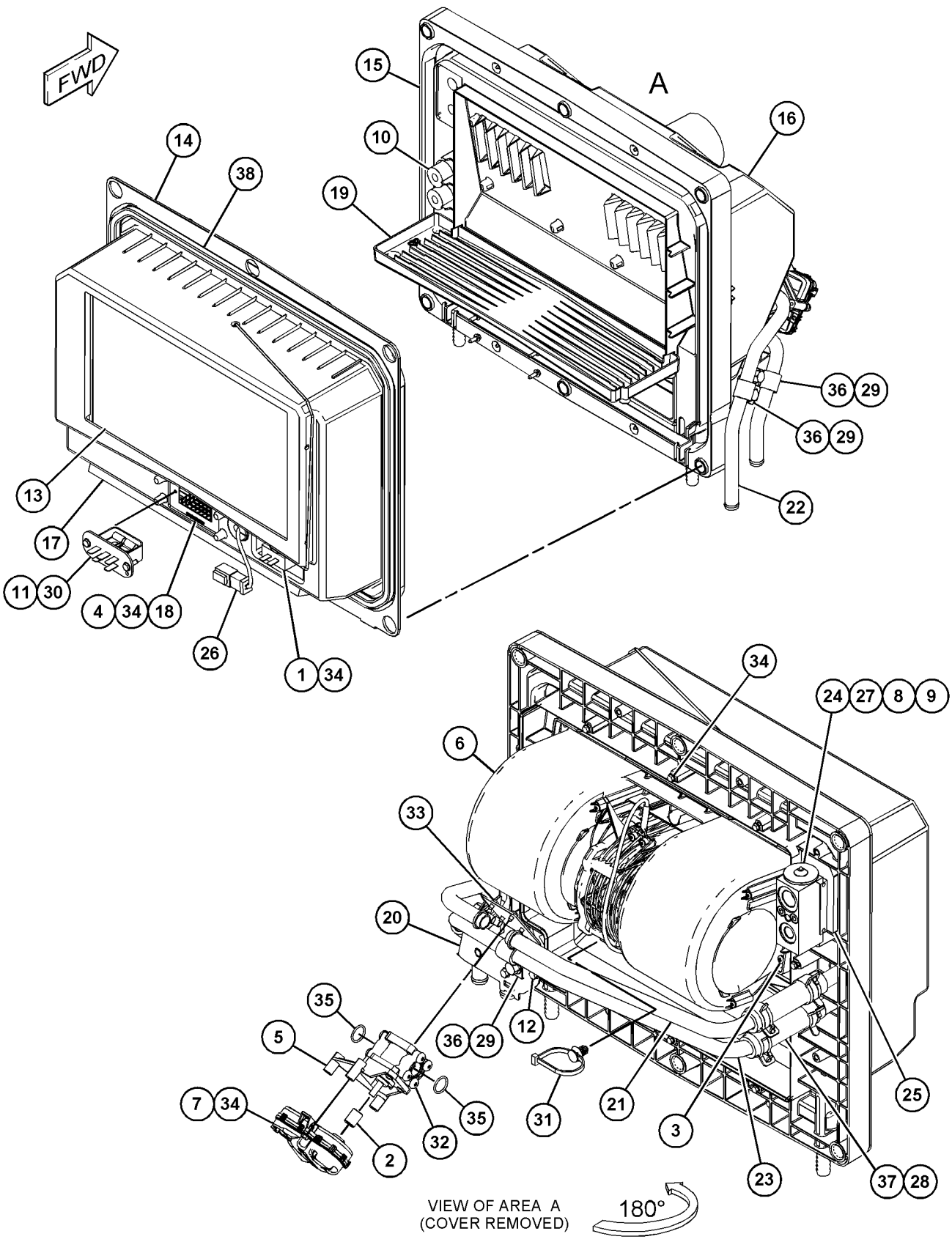

GRAPHIC #1 <END> g03719736

222-5374 ARM GP-WINDOW WIPER—DOOR, RH

S/N: R5A1-UP

PART OF 374-4733 WIPER GP-WINDOW

AN ATTACHMENT

SMCS-7305 **i05901623**

NOTE	REF NO	GRAPHIC REF	PART NUMBER	QTY	PART NAME 1 2 3 4 5 6 (PRODUCT LEVEL)	SEE PAGE
	1	1	**305-9194**	1	NOZZLE AS-WASHER	
E	2	1	**194-5171**		HOSE (33-CM)	

E - ORDER BY THE CENTIMETER

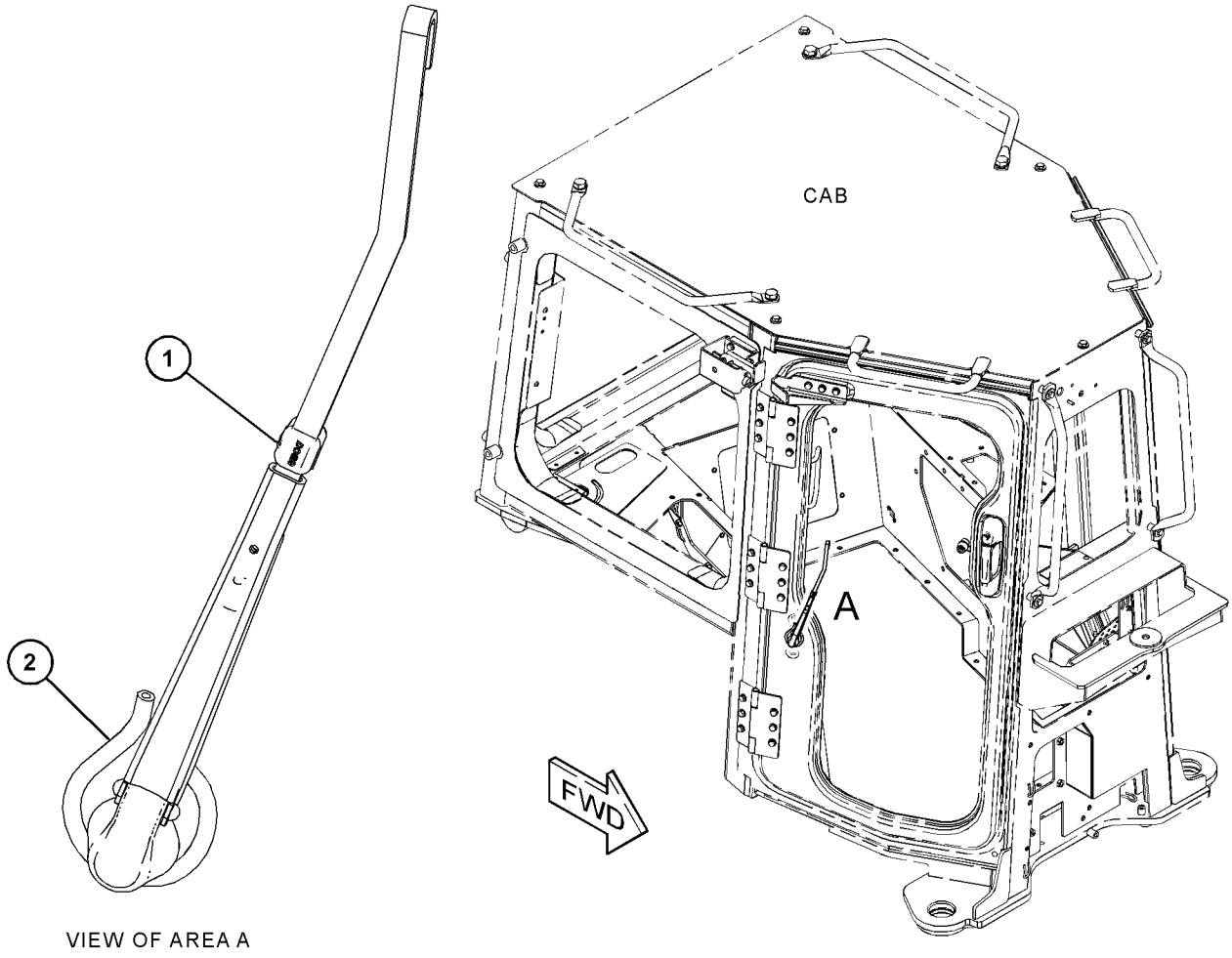

VIEW OF AREA A

GRAPHIC #1 <END> g03719954

222-5378 ARM GP-WINDOW WIPER–DOOR, LH

S/N: R5A1-UP

PART OF 374-4733 WIPER GP-WINDOW

AN ATTACHMENT

SMCS-7305 **i05900254**

NOTE	REF NO	GRAPHIC REF	PART NUMBER	QTY	PART NAME 1 2 3 4 5 6 (PRODUCT LEVEL)	SEE PAGE
	1	1	**305-9195**	1	NOZZLE AS-WASHER	
E	2	1	**194-5171**		HOSE (33-CM)	

E - ORDER BY THE CENTIMETER

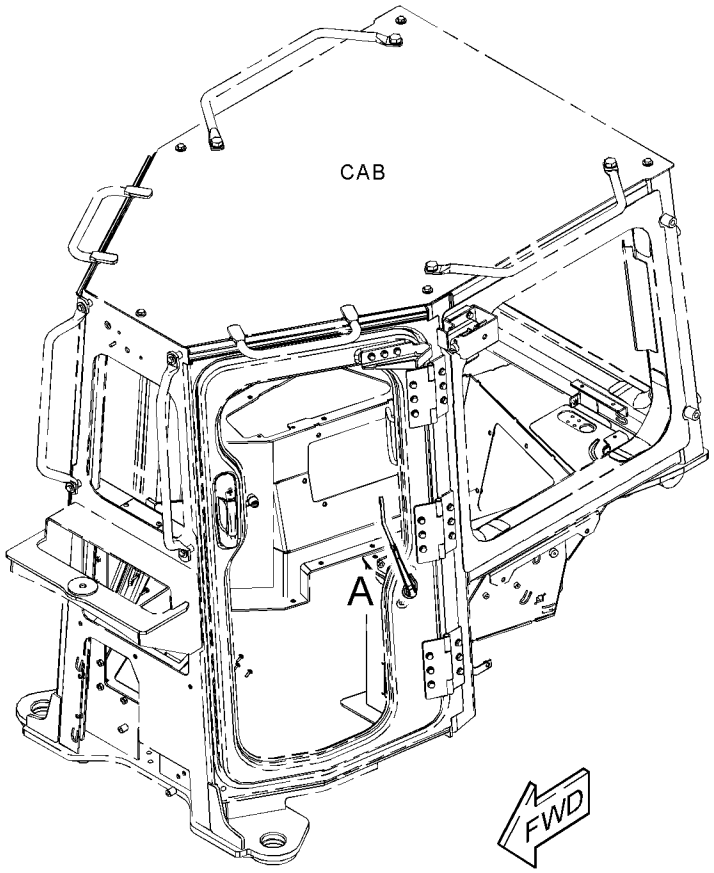

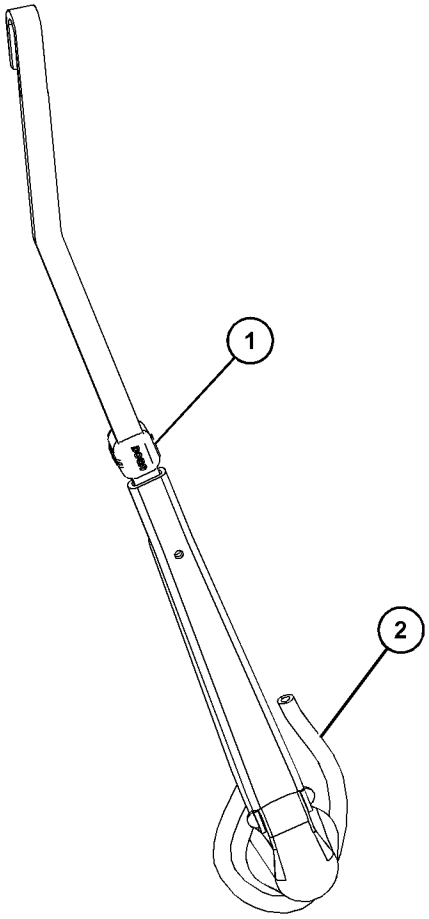

VIEW OF AREA A

GRAPHIC #1 <END> g03719977

293-0754 ARM GP-WINDOW WIPER

S/N: R5A1-UP

PART OF 374-4733 WIPER GP-WINDOW

AN ATTACHMENT

SMCS-7305 **i05331115**

NOTE	REF NO	GRAPHIC REF	PART NUMBER	QTY	PART NAME 1 2 3 4 5 6 (PRODUCT LEVEL)	SEE PAGE
	1	1	**305-9192**	1	NOZZLE AS-WASHER	
E	2	1	**194-5171**		HOSE (35-CM)	

PARTS SHOWN IN GRAPHIC(S) WITHOUT A REFERENCE NUMBER ARE NOT SERVICED SEPARATELY

E - ORDER BY THE CENTIMETER

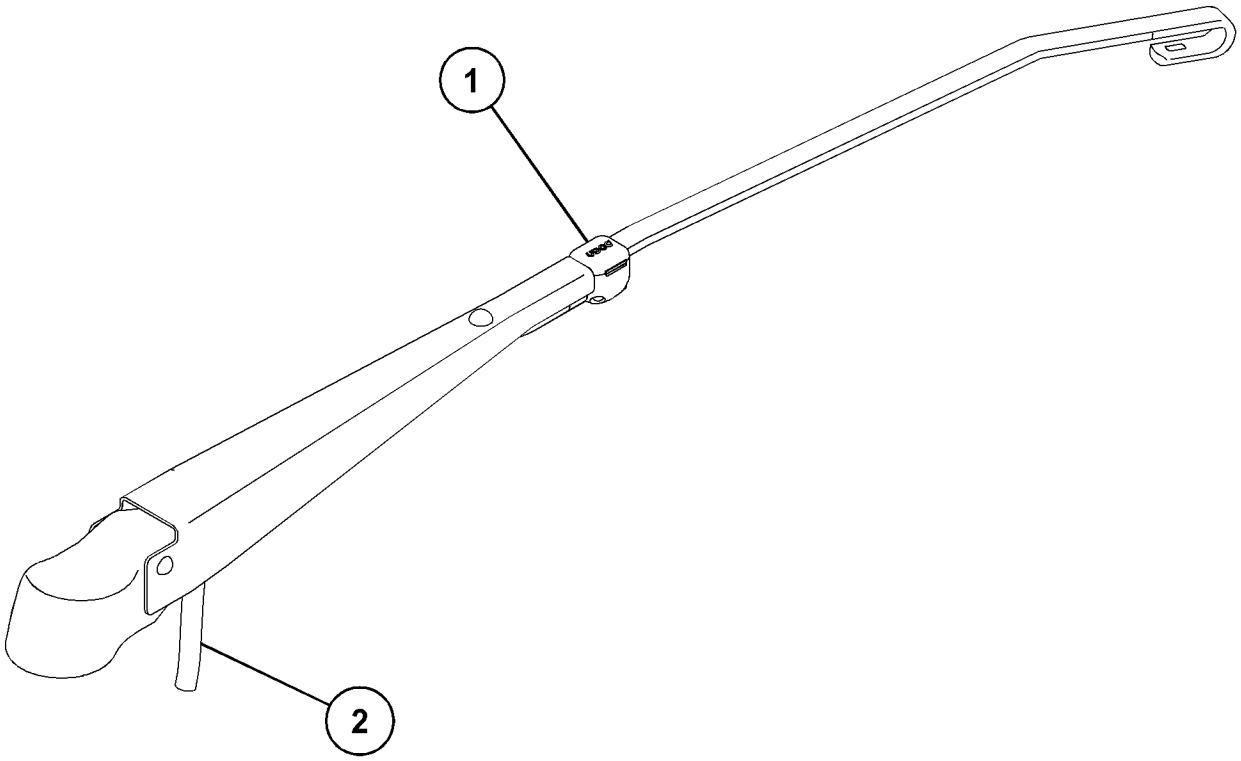

GRAPHIC #1 <END> g03312598

393-8112 ARM GP-WINDOW WIPER–FRONT

S/N: R5A1-UP

PART OF 374-4733 WIPER GP-WINDOW

AN ATTACHMENT

SMCS-7305 **i05900248**

NOTE	REF NO	GRAPHIC REF	PART NUMBER	QTY	PART NAME 1 2 3 4 5 6 (PRODUCT LEVEL)	SEE PAGE
	1	1	**136-3189**	3	CLIP	
	2	1	**136-3191**	1	NOZZLE AS-WASHER	
E	3	1	**194-5171**		HOSE (50-CM)	

E - ORDER BY THE CENTIMETER

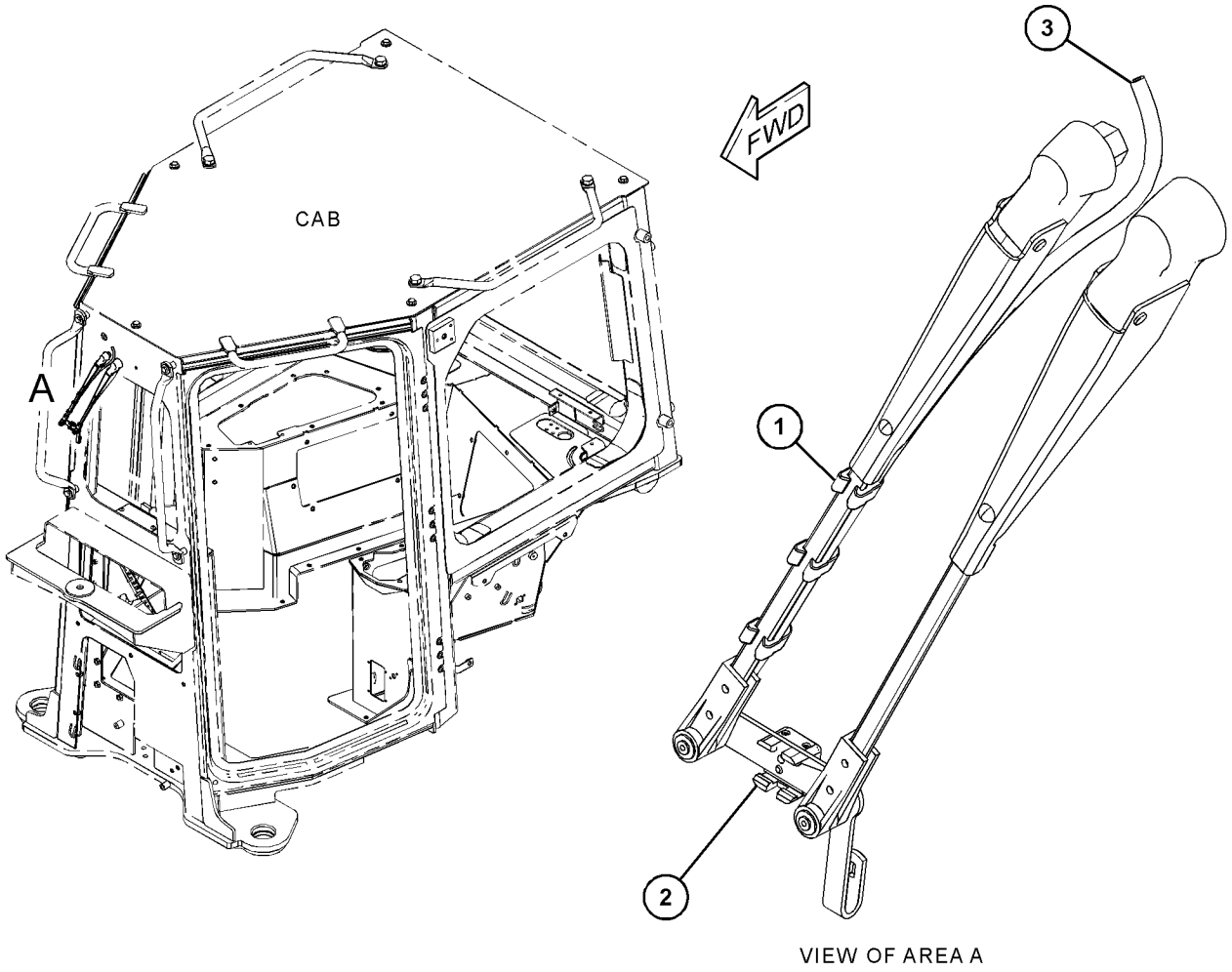

VIEW OF AREA A

GRAPHIC #1 <END> g03720015

393-6480 CAB AR

S/N: R5A1-UP
SINGLE PANE
PART OF 393-6488 CAB AR
AN ATTACHMENT

SMCS-7301 **i06214142**

NOTE	PART NUMBER	QTY	PART NAME 1 2 3 4 5 6 (PRODUCT LEVEL)	SEE PAGE
Y	*326-4855*	1	CONTROL & MTG GP-PEDAL (GOVERNOR, BRAKE)	482
Y	*421-5950*	1	CONTROL GP-STEERING & XMSN	217
Y	*398-0423*	1	DOOR GP-CAB (RH)	497
Y	*398-0416*	1	DOOR GP-CAB (LH)	495
Y	*398-4296*	1	FILM GP	609
Y	*375-7911*	1	HEATER & MTG GP-CAB	503
Y	*375-7906*	1	INSTALLATION GP-RADIO	508
Y	*424-8524*	1	LINER GP-CAB	513
Y	*105-9659*	1	MIRROR GP-REAR VIEW (INTERIOR)	523
Y	*393-6481*	1	ROPS GP	538
Y	*383-6866*	1	WINDOW GP-CAB	578
Y	*374-4733*	1	WIPER GP-WINDOW	588
Y	*415-4252*	1	WIRING GP-CAB	183

Y - SEPARATE ILLUSTRATION

<END>

393-6488 CAB AR

S/N: R5A1-UP
AN ATTACHMENT

SMCS-7301 **i06560328**

NOTE	PART NUMBER	QTY	PART NAME 1 2 3 4 5 6 (PRODUCT LEVEL)	SEE PAGE
Y	**393-6480**	1	CAB AR	474
Y	*243-2156*	1	COMPRESSOR GP-REFRIGERANT	478
Y	*386-3966*	1	CONDENSER & MTG GP-REFRIGERANT	479
Y	*393-6494*	1	COVER GP-CAB	493
Y	*393-6493*	1	FILTER GP-CAB AIR	502
Y	*424-4629*	1	LINES GP-AIR CONDITIONER	518
Y	*393-6479*	1	MOUNTING GP-ROPS	529
Y	*375-7921*	1	TANK GP-WINDOW WASHER	575
	6V-1970	1	LITERATURE GP (STANDARD CAB)	
	5P-7958	1	SLEEVE-CABLE SPLICE	
	5P-8500	2	KEY	

Y - SEPARATE ILLUSTRATION

<END>

393-6489 CAB AR

S/N: R5A1-UP
AN ATTACHMENT

SMCS-7301 **i06560338**

NOTE	PART NUMBER	QTY	PART NAME 1 2 3 4 5 6 (PRODUCT LEVEL)	SEE PAGE
Y	**393-6485**	1	CAB AR-ENCLOSED ROPS	475
Y	*243-2156*	1	COMPRESSOR GP-REFRIGERANT	478
Y	*386-3966*	1	CONDENSER & MTG GP-REFRIGERANT	479
Y	*393-6494*	1	COVER GP-CAB	493
Y	*391-4062*	1	FAN GP-CIRCULATING	500
Y	*393-6493*	1	FILTER GP-CAB AIR	502
Y	*424-4629*	1	LINES GP-AIR CONDITIONER	518
Y	*393-6479*	1	MOUNTING GP-ROPS	529
Y	*375-7921*	1	TANK GP-WINDOW WASHER	575
	6V-1970	1	LITERATURE GP (STANDARD CAB)	
	5P-7958	1	SLEEVE-CABLE SPLICE	
	5P-8500	2	KEY	

Y - SEPARATE ILLUSTRATION

<END>

393-6485 CAB AR-ENCLOSED ROPS

S/N: R5A1-UP
DUAL PANE
PART OF 393-6489 CAB AR
AN ATTACHMENT

SMCS-7301 **i06207001**

NOTE	PART NUMBER	QTY	PART NAME 1 2 3 4 5 6 (PRODUCT LEVEL)	SEE PAGE
Y	*326-4855*	1	CONTROL & MTG GP-PEDAL (GOVERNOR, BRAKE)	482
Y	*421-5950*	1	CONTROL GP-STEERING & XMSN	217
Y	*398-0416*	1	DOOR GP-CAB	495
Y	*398-0423*	1	DOOR GP-CAB	497
Y	*398-4296*	1	FILM GP	609
Y	*375-7911*	1	HEATER & MTG GP-CAB	503
Y	*375-7906*	1	INSTALLATION GP-RADIO	508
Y	*424-8524*	1	LINER GP-CAB	513
Y	*105-9659*	1	MIRROR GP-REAR VIEW (INTERIOR)	523
Y	*393-6481*	1	ROPS GP	538
Y	*389-1414*	1	WINDOW GP-CAB (DUAL PANE)	582
Y	*374-4733*	1	WIPER GP-WINDOW	588
Y	*415-4252*	1	WIRING GP-CAB	183

Y - SEPARATE ILLUSTRATION

<END>

393-6475 CANOPY AR–HEATED

S/N: R5A1-UP
PART OF 393-6487 CANOPY AR
AN ATTACHMENT

SMCS-7302 **i06214164**

NOTE	PART NUMBER	QTY	PART NAME 1 2 3 4 5 6 (PRODUCT LEVEL)	SEE PAGE
Y	*387-5701*	1	AIR CONDITIONER & MOUNTING GP	466
Y	*326-4855*	1	CONTROL & MTG GP-PEDAL (GOVERNOR, BRAKE)	482
Y	*421-5950*	1	CONTROL GP-STEERING & XMSN	217
Y	*398-4296*	1	FILM GP	609
Y	*425-6167*	1	LINER GP-CAB	516
Y	*105-9659*	1	MIRROR GP-REAR VIEW (INTERIOR)	523
Y	*393-6476*	1	ROPS GP	536
Y	*420-1160*	1	WIRING GP-CAB	189
Y - SEPARATE ILLUSTRATION				

<END>

393-6487 CANOPY AR–HEATED

S/N: R5A1-UP
AN ATTACHMENT

SMCS-7302 **i06523660**

NOTE	PART NUMBER	QTY	PART NAME 1 2 3 4 5 6 (PRODUCT LEVEL)	SEE PAGE
Y	**393-6475**	1	CANOPY AR (HEATED)	476
Y	*393-6494*	1	COVER GP-CAB	493
Y	*393-6493*	1	FILTER GP-CAB AIR	502
Y	*393-6479*	1	MOUNTING GP-ROPS	529
	6V-1970	1	LITERATURE GP (STANDARD CAB)	
	5P-7958	1	SLEEVE-CABLE SPLICE	
	5P-8500	2	KEY	
Y - SEPARATE ILLUSTRATION				

<END>

183-5106 COMPRESSOR GP-REFRIGERANT

S/N: R5A1-UP

PART OF 243-2156 COMPRESSOR GP-REFRIGERANT

AN ATTACHMENT

SMCS-1802 **i06568294**

NOTE	REF NO	GRAPHIC REF	PART NUMBER	QTY	PART NAME 1 2 3 4 5 6 (PRODUCT LEVEL)	SEE PAGE
	1	1	**180-9339**	2	PIN-CONNECTOR (14-GA TO 18-GA)	
	2	1	**102-8802**	1	KIT-RECEPTACLE (2-PIN)	
					(INCLUDES RECEPTACLE AS & WEDGE)	
	3	1	**314-4018**	1	VALVE AS-PRESSURE RELIEF (REFRIGERANT COMPRESSOR)	
		1	**9X-7378**	1	SEAL-O-RING	
	4	1	**7T-4532**	1	PLUG AS	
	5	1	**9X-7385**	2	SEAL-O-RING	

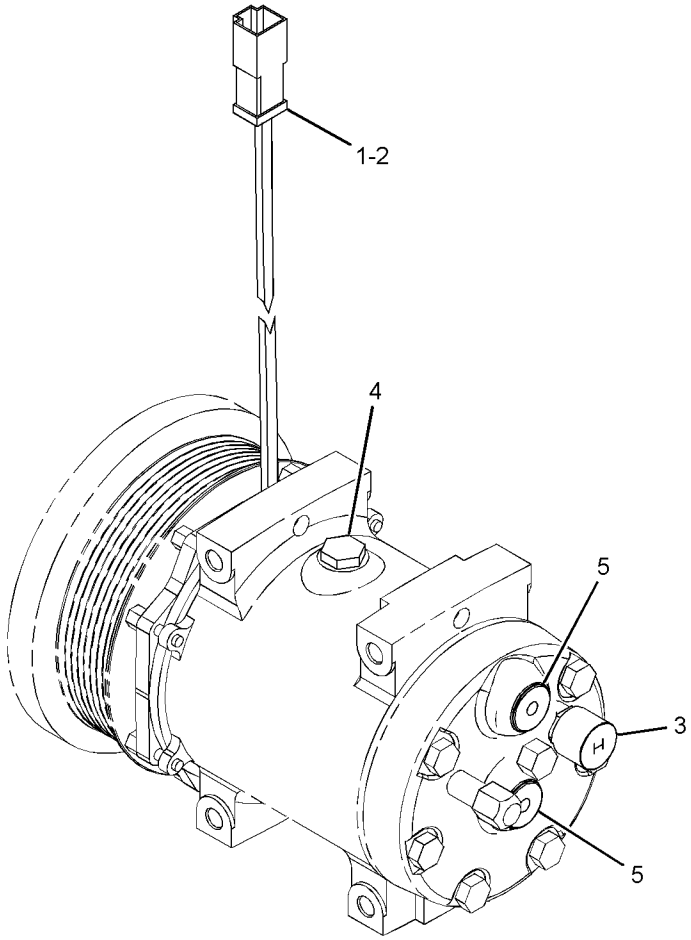

GRAPHIC #1 <END> g01419732

243-2156 COMPRESSOR GP-REFRIGERANT

S/N: R5A1-UP
PART OF 393-6488, 393-6489 CAB AR
AN ATTACHMENT

SMCS-1802 **i06523674**

NOTE	REF NO	GRAPHIC REF	PART NUMBER	QTY	PART NAME 1 2 3 4 5 6 (PRODUCT LEVEL)	SEE PAGE
	1	1	**3S-2093**	2	STRAP-CABLE	
M	2	1	**315-5492**	2	STUD (M8X1.25X130-MM)	
Y	3	1	**183-5106**	1	COMPRESSOR GP-REFRIGERANT	477
M	4	1	**255-1281**	2	BOLT-FLANGE HEAD (M8X1.25X100-MM)	
	5	1	**4P-7581**	1	CLIP	
	6	1	**4P-8134**	1	CLIP	
	7	1	**8T-4224**	2	WASHER-HARD (8.8X16X2-MM THK)	
H	8	1	**310-8320**		CONDUIT (1-DM)	

H - ORDER BY THE DECIMETER
M - METRIC PART
Y - SEPARATE ILLUSTRATION

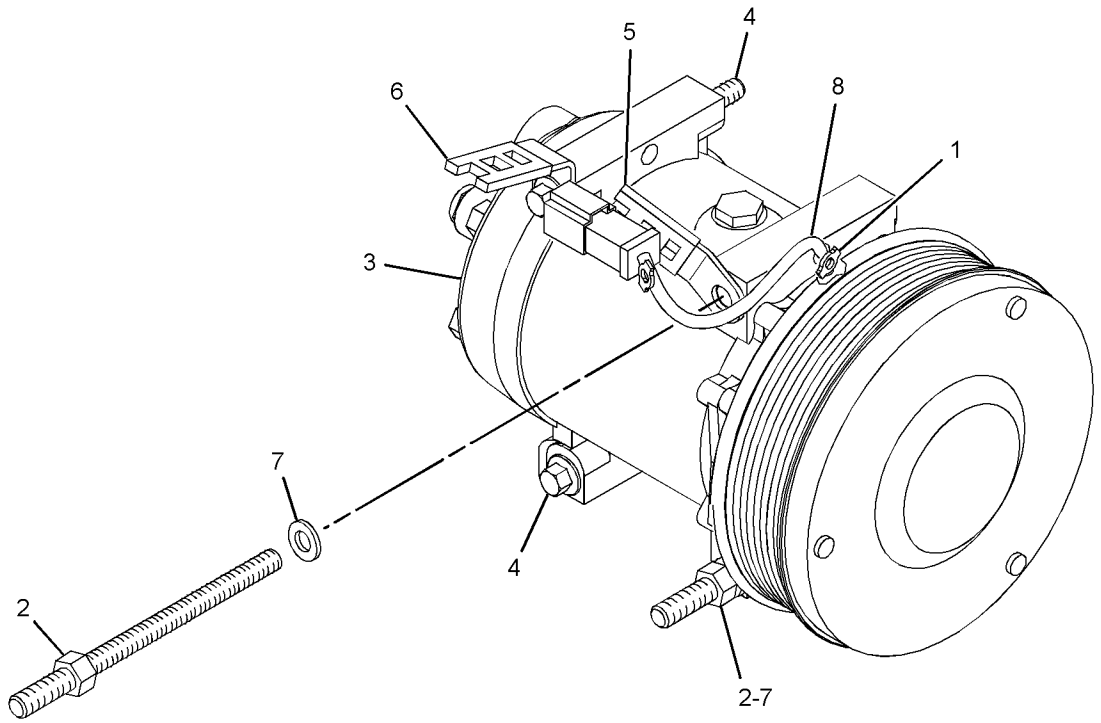

GRAPHIC #1 <END> g01346819

386-3966 CONDENSER & MTG GP-REFRIGERANT

S/N: R5A1-UP
PART OF 393-6488, 393-6489 CAB AR
AN ATTACHMENT

SMCS-1805 **i05903113**

NOTE	REF NO	GRAPHIC REF	PART NUMBER	QTY	PART NAME 1 2 3 4 5 6 (PRODUCT LEVEL)	SEE PAGE
	1	1	**7K-1181**	2	STRAP-CABLE	
	2	1	**386-3830**	1	PLATE AS	
	3	1	**391-4066**	1	PLATE	
	4	1	**391-4068**	1	PLATE AS	
Y	5	1	**394-6377**	1	CONDENSER GP-REFRIGERANT	480
	6	1	**425-9033**	1	PLATE	
	7	1	**7X-7729**	30	WASHER (11X25X3-MM THK)	
M	8	1	**8T-4136**	24	BOLT (M10X1.5X25-MM)	
M	9	1	**8T-4196**	6	BOLT (M10X1.5X35-MM)	

M - METRIC PART
Y - SEPARATE ILLUSTRATION

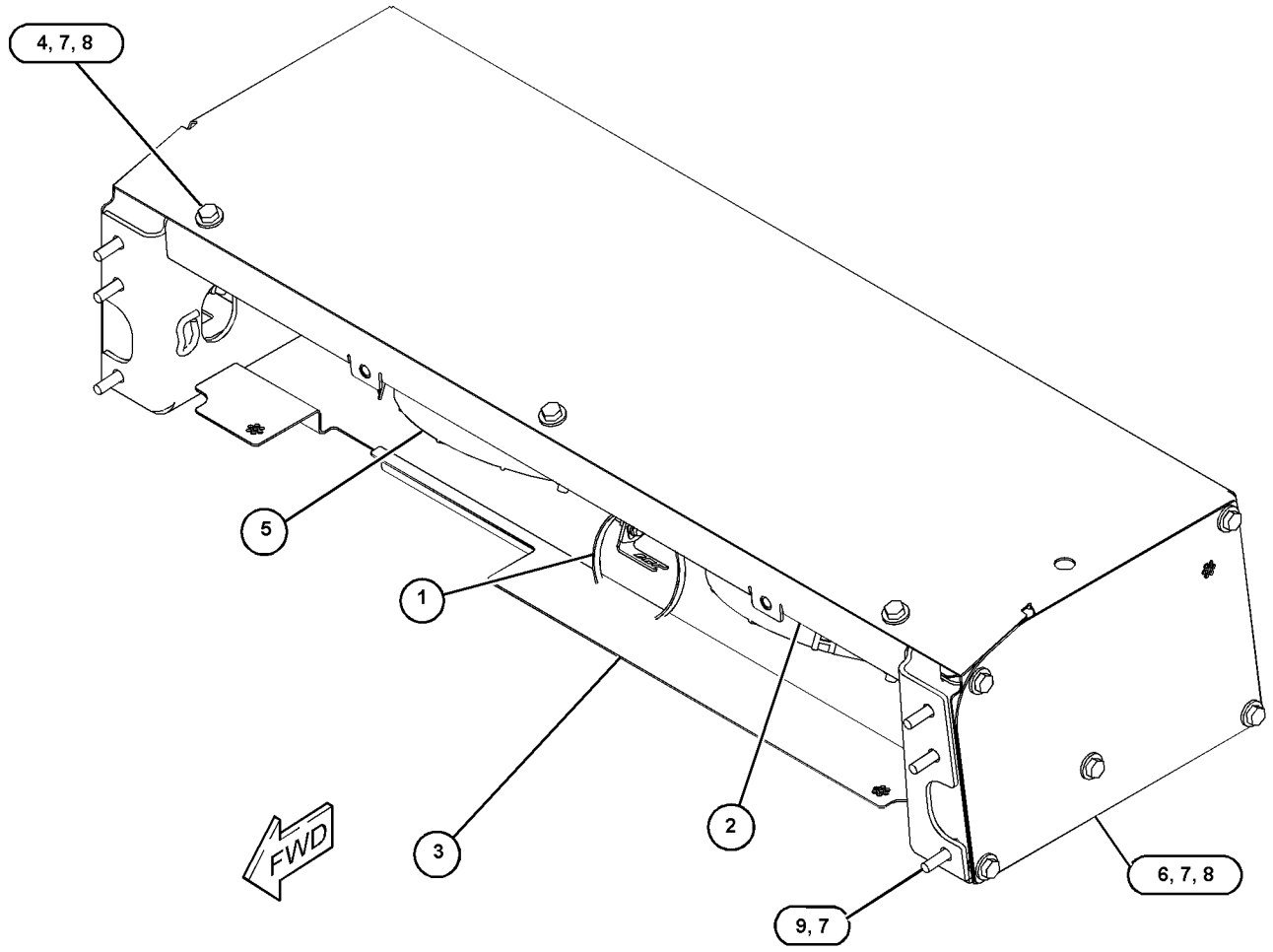

GRAPHIC #1 <END> g03720864

394-6377 CONDENSER GP-REFRIGERANT

S/N: R5A1-UP

PART OF 386-3966 CONDENSER & MTG GP-REFRIGERANT

AN ATTACHMENT

SMCS-1805 **i06277635**

NOTE	REF NO	GRAPHIC REF	PART NUMBER	QTY	PART NAME 1 2 3 4 5 6 (PRODUCT LEVEL)	SEE PAGE
	1	1	**3E-5239**	2	RELAY AS (24-VOLT) (CONDENSER)	
	2	1	**8C-3756**	1	FILM-IDENTIFICATION (GROUP NO., SEQUENCE NO.)	
Y	3	1	**245-5891**	1	HARNESS AS-HEATER & AIR COND	118
	4	1	**320-2151**	1	COIL AS	
		1	**2D-6403**	1	PIN-SPRING	
		1	**325-4416**	2	STUD	
	5	1	**394-6378**	1	CASE AS	
		1	**7T-1099**	2	LINK	
M		1	**8T-3612**	10	NUT-WELD (M8X1.25-THD)	
	6	1	**132-5789**	1	CLIP	
	7	1	**156-6175**	4	CLIP	
M	8	1	**342-9920**	8	BOLT-FLANGE HEAD (M8X1.25X20-MM)	
	9	1	**3S-2093**	2	STRAP-CABLE	
M	10	1	**5C-2890**	1	NUT (M6X1-THD)	
M	11	1	**5C-9553**	7	BOLT (M6X1X16-MM)	
M	12	1	**6V-7357**	4	BOLT (M6X1X25-MM)	
	13	1	**8T-4205**	12	WASHER-HARD (7.2X14.5X2-MM THK)	
	14	1	**454-2948**	2	FAN AS-CONDENSER (24-VOLT)	

M - METRIC PART
Y - SEPARATE ILLUSTRATION

394-6377 **CONDENSER GP-REFRIGERANT (**contd.**)** **i06277635**

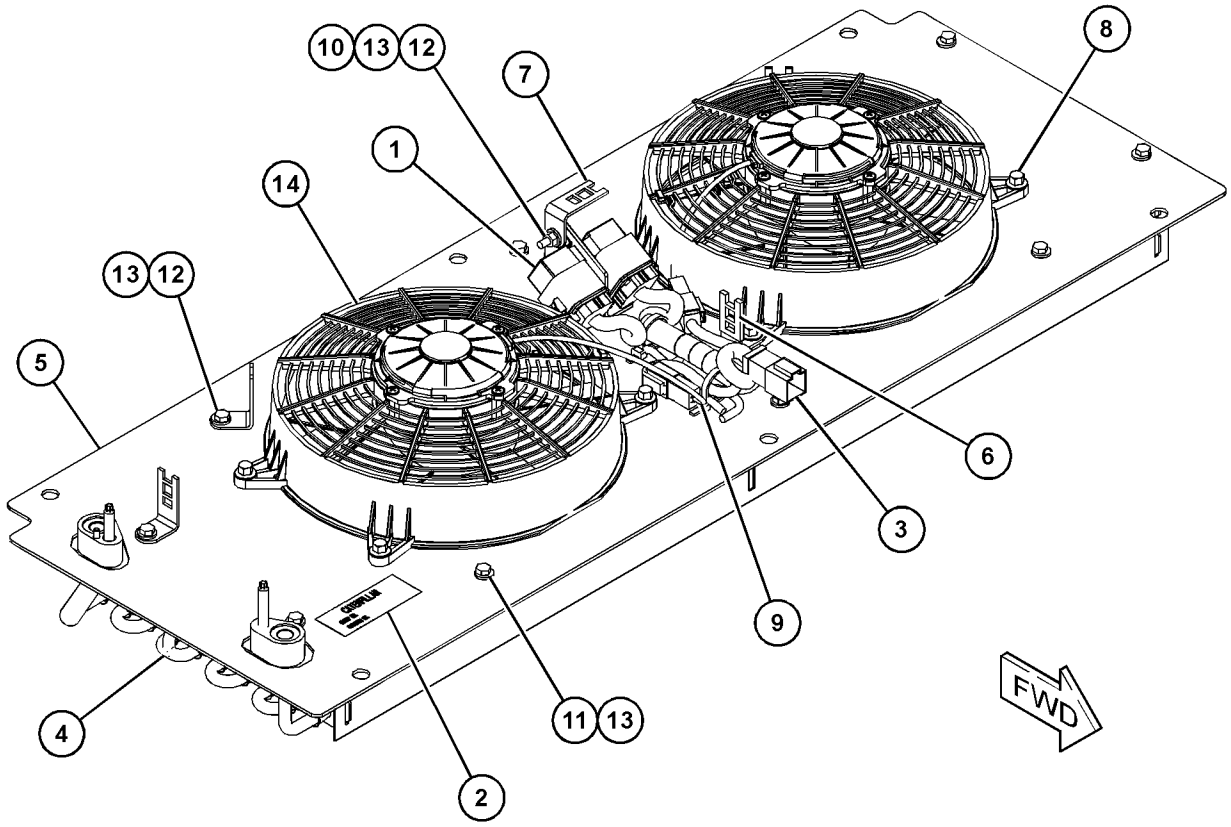

GRAPHIC #1 <END> g03721479

326-4855 CONTROL & MTG GP-PEDAL–GOVERNOR, BRAKE

S/N: R5A1-UP

PART OF 393-6480 CAB AR, 393-6485 CAB AR-ENCLOSED ROPS, 393-6475 CANOPY AR AN ATTACHMENT

SMCS-5462 **i06171956**

NOTE	REF NO	GRAPHIC REF	PART NUMBER	QTY	PART NAME 1 2 3 4 5 6 (PRODUCT LEVEL)	SEE PAGE
	1	1	**171-7077**	2	ROD-THREADED	
Y	2	1	**329-5766**	1	PEDAL GP-GOVERNOR & BRAKE	534
	3	1	**8T-4121**	4	WASHER-HARD (11X21X2.5-MM THK)	
M	4	1	**8T-4133**	2	NUT (M10X1.5-THD)	
M	5	1	**8T-4136**	2	BOLT (M10X1.5X25-MM)	

M - METRIC PART
Y - SEPARATE ILLUSTRATION

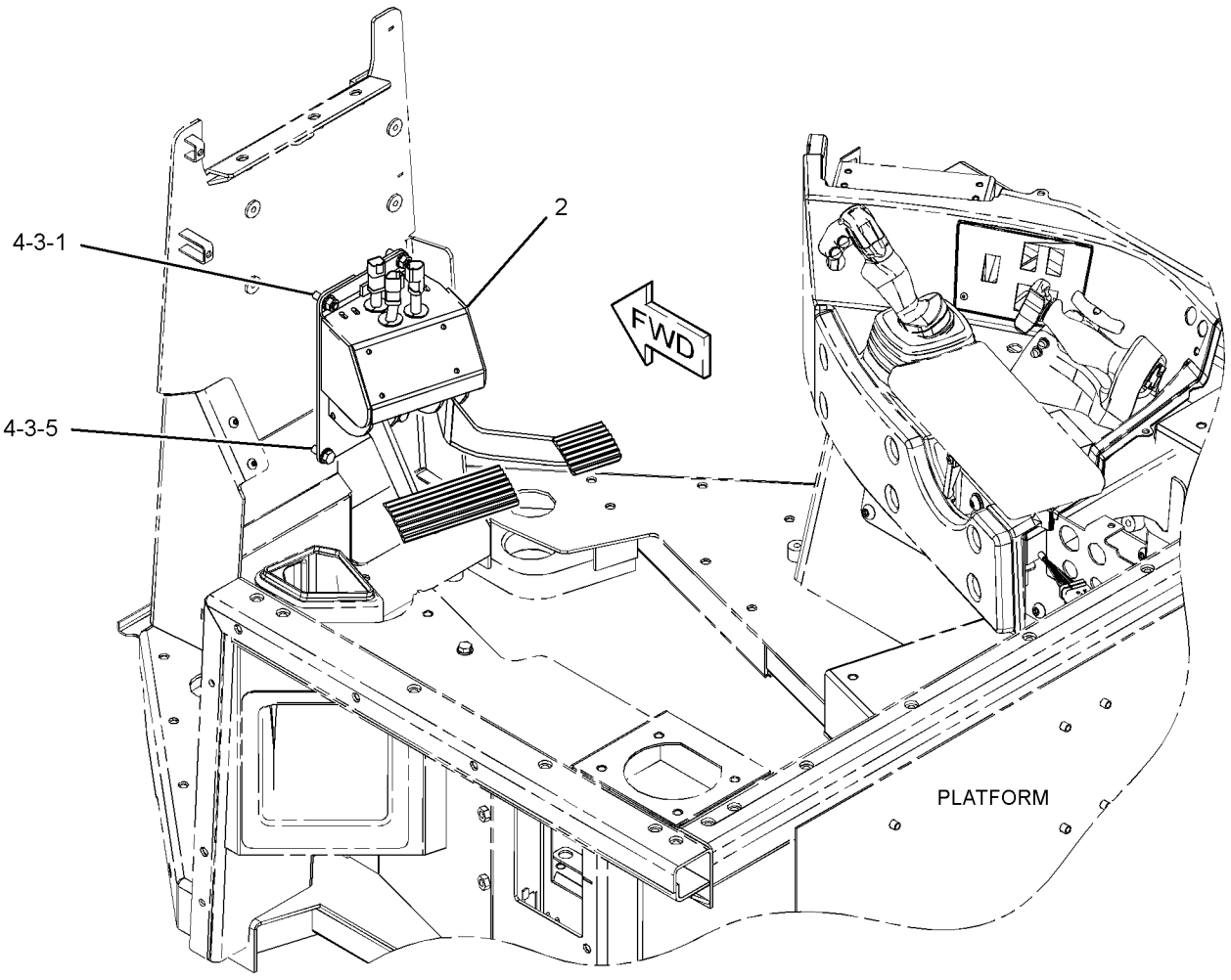

GRAPHIC #1 <END> g02427997

350-3036 CONTROL GP-AIR & TEMPERATURE

S/N: R5A1-UP
PART OF 375-7911 HEATER & MTG GP-CAB
AN ATTACHMENT

SMCS-7451 **i05898342**

NOTE	REF NO	GRAPHIC REF	PART NUMBER	QTY	PART NAME 1 2 3 4 5 6 (PRODUCT LEVEL)	SEE PAGE
	1	1	**267-5243**	1	PANEL AS	
		1	**271-7312**	1	KNOB (TEMPERATURE CONTROL)	
		1	**285-7415**	1	KNOB (BLOWER FAN SPEED)	
	2	1	**284-3662**	1	SWITCH AS-ROCKER (24-VOLT) (AIR CONDITIONER ON, OFF)	
M	3	1	**9X-2045**	2	SCREW-TRUSS HEAD (M6X1X20-MM)	

M - METRIC PART

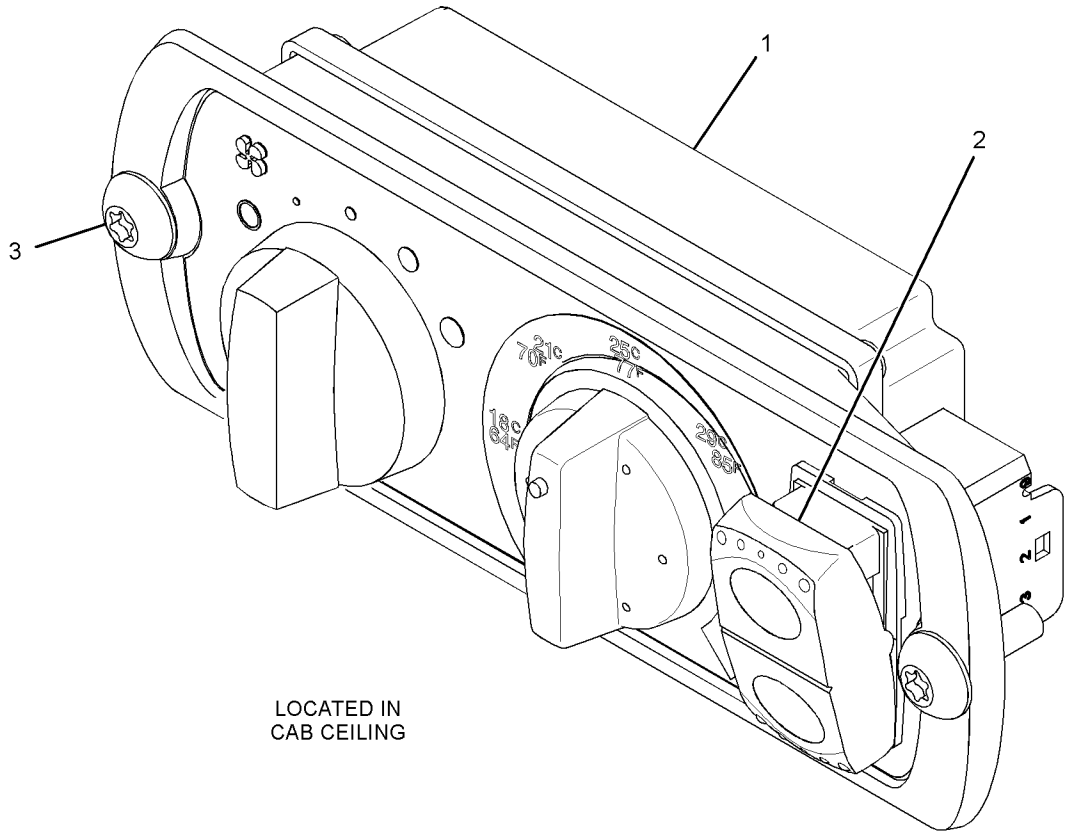

GRAPHIC #1 <END> g02373898

161-3615 CONTROL GP-HANDLE

S/N: R5A1-UP

PART OF 418-9920, 453-9494 CONTROL GP-PILOT OPERATED HYD

AN ATTACHMENT

SMCS-5063, 5705

i05558635

NOTE	REF NO	GRAPHIC REF	PART NUMBER	QTY	PART NAME 1 2 3 4 5 6 (PRODUCT LEVEL)	SEE PAGE
	1	1	**188-1079**	1	CONTROL GP-HANDLE (BULLDOZER)	
	2	1	**4B-9808**	2	SETSCREW (1/4-20X0.5-IN)	

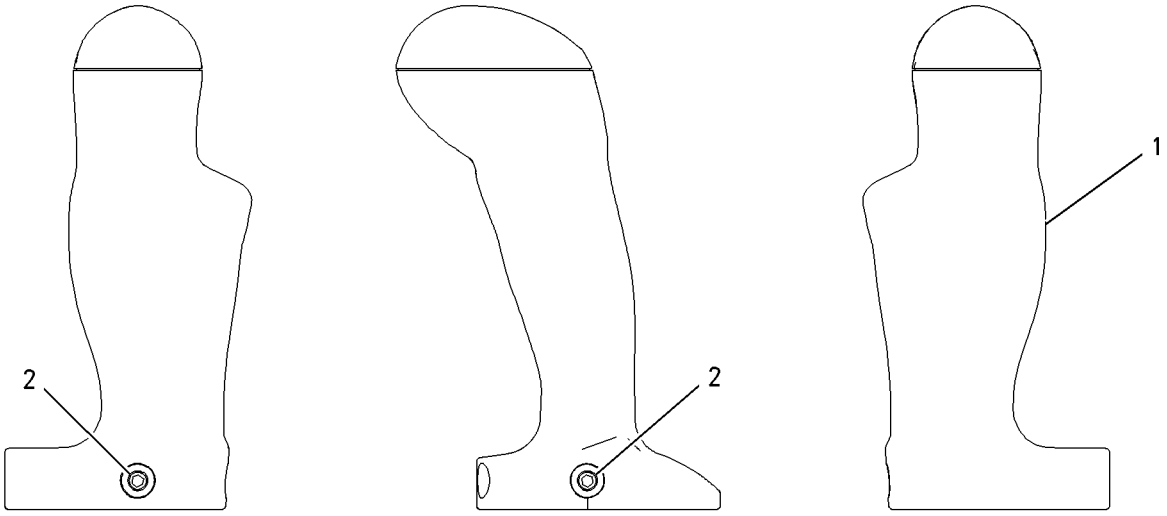

GRAPHIC #1 <END> g00763645

337-6853 CONTROL GP-HANDLE

S/N: R5A1-UP
PART OF 424-8511 CONTROL GP-JOYSTICK
AN ATTACHMENT

SMCS-5063, 5705 **i06304475**

NOTE	REF NO	GRAPHIC REF	PART NUMBER	QTY	PART NAME 1 2 3 4 5 6 (PRODUCT LEVEL)	SEE PAGE
	1	1	**1N-5724**	2	BOLT (6-32X0.5-IN)	
	2	1	**112-0858**	2	BEARING	
	3	1	**208-9647**	1	KNOB (PARKING BRAKE)	
	4	1	**214-1962**	1	HOUSING	
	5	1	**216-0380**	1	PLATE	
Y	6	1	**223-2115**	1	CONTROL GP-PARKING BRAKE	363
	7	1	**225-3195**	1	GASKET	
	8	1	**257-7285**	1	SWITCH AS-ROCKER (PARKING BRAKE ON, OFF)	
		1	**102-8806**	1	KIT-RECEPTACLE (8-PIN)	
					(INCLUDES RECEPTACLE AS & WEDGE)	
		1	**8T-8737**	2	PLUG-SEAL	
		1	**9X-3401**	6	PIN-CONNECTOR (16-GA TO 18-GA)	
Y	9	1	**337-6855**	1	CONTROL GP-HANDLE (STEERING, TRANSMISSION)	487
M	10	1	**166-3777**	3	SCREW-BUTTON HEAD (M6X1X28-MM)	
M	11	1	**5C-2890**	1	NUT (M6X1-THD)	
M	12	1	**8T-4138**	2	BOLT (M6X1X20-MM)	
	13	1	**8T-5410**	1	SEAL-LIP TYPE	
E	14	1	**307-2338**		SLEEVE (47-CM)	
B	15	1	**372-2547**		TAPE-ELECTRICAL	

B - USE AS REQUIRED
E - ORDER BY THE CENTIMETER
M - METRIC PART
Y - SEPARATE ILLUSTRATION

337-6853 **CONTROL GP-HANDLE (**contd.**)** **i06304475**

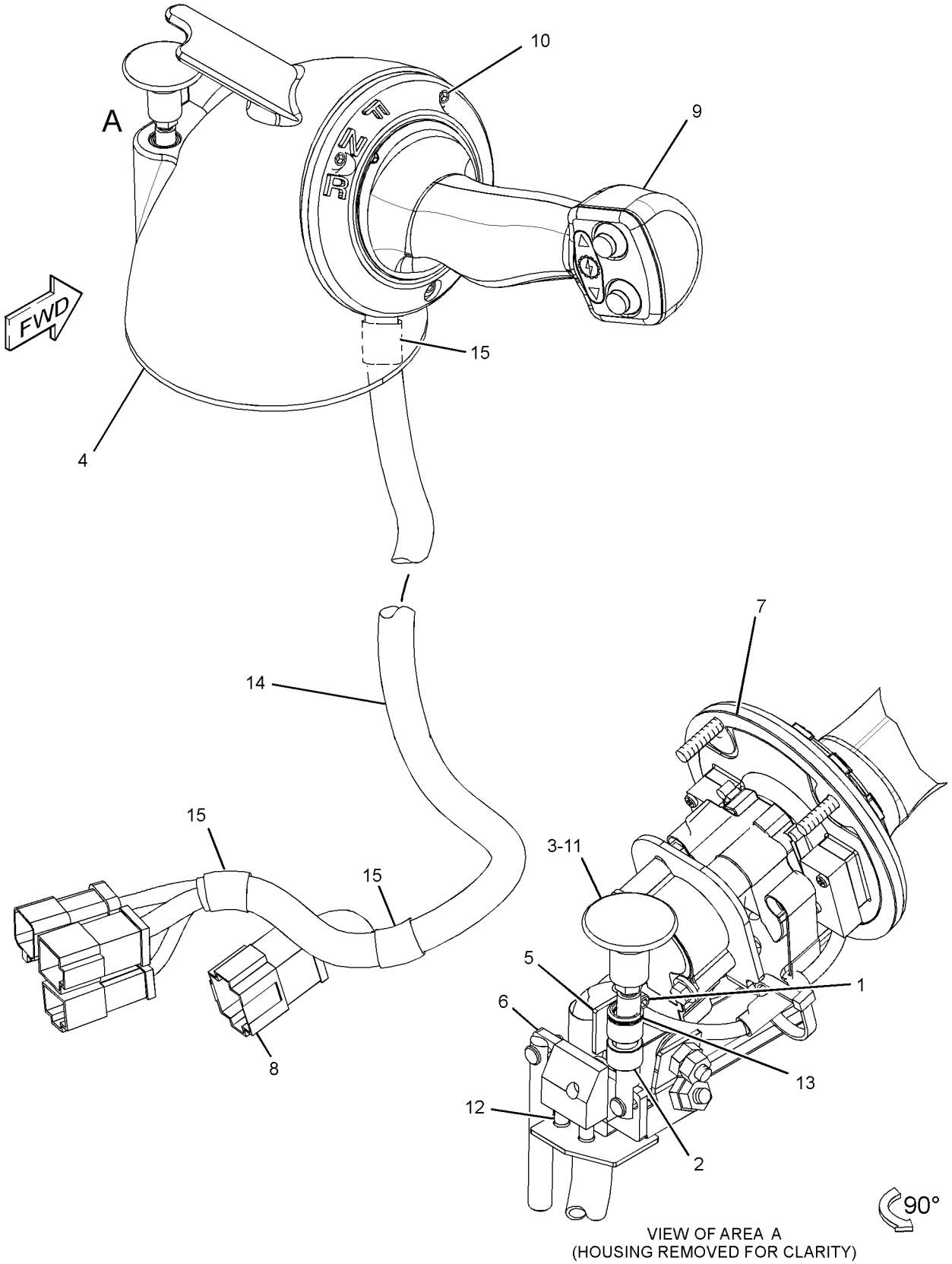

VIEW OF AREA A
(HOUSING REMOVED FOR CLARITY)

GRAPHIC #1 <END> g03896411

337-6855 CONTROL GP-HANDLE

S/N: R5A1-UP
PART OF 337-6853 CONTROL GP-HANDLE
AN ATTACHMENT

SMCS-5063, 5705 **i06207088**

NOTE	REF NO	GRAPHIC REF	PART NUMBER	QTY	PART NAME 1 2 3 4 5 6 (PRODUCT LEVEL)	SEE PAGE
	1	1	**151-9275**	1	KIT-RECEPTACLE (6-PIN)	
					(INCLUDES RECEPTACLE AS & WEDGE)	
	2	1	**3S-2093**	2	STRAP-CABLE	
	3	1	**6V-3545**	1	BEARING-ROLLER	
	4	1	**186-3735**	6	PIN-CONNECTOR (16-GA TO 18-GA)	
	5	1	**9W-1464**	2	SCREW (1/4-20X1-IN)	
	6	1	**9X-4610**	1	SEAL-V-RING	
M	7	1	**130-3265**	1	SCREW (M6X1X20-MM)	
	8	1	**131-0447**	2	NUT-SPECIAL (15/32-32-THD)	
	9	1	**132-7419**	1	SWITCH AS-PUSH BUTTON (DOWNSHIFT)	
		1	**144-0331**	1	CAP-PUSH BUTTON (YELLOW)	
	10	1	**132-7450**	1	SWITCH AS-PUSH BUTTON (UPSHIFT)	
		1	**144-0331**	1	CAP-PUSH BUTTON (YELLOW)	
	12	1	**158-2734**	2	SPRING	
	13	1	**158-2735**	1	BASE	
	17	1	**242-5202**	1	FILM-IDENTIFICATION (JOYSTICK CONTROL) (TRANSMISSION CONTROL)	
	18	1	**226-9423**	2	SPRING	
	19	1	**266-1476**	1	SENSOR GP-POSITION (FORWARD, NEUTRAL, REVERSE)	
		1	**102-8804**	1	KIT-RECEPTACLE (4-PIN)	
					(INCLUDES RECEPTACLE AS & WEDGE)	
		1	**8T-8737**	1	PLUG-SEAL	
		1	**180-9339**	3	PIN-CONNECTOR (14-GA TO 18-GA)	
	20	1	**334-1953**	1	ANGLE	
	21	1	**337-9001**	1	SWITCH GP-LIMIT (STEERING)	
		1	**102-8805**	1	KIT-RECEPTACLE (6-PIN)	
					(INCLUDES RECEPTACLE AS & WEDGE)	
D		1	**6V-2689**		TUBE-HEAT SHRINK (6.35-MM DIA) (0.1-M)	
		1	**186-3735**	6	PIN-CONNECTOR (16-GA TO 18-GA)	
	22	1	**103-6262**	4	SCREW-MACHINE (4-40X0.63-IN)	
	23	1	**5H-9899**	1	RING-RETAINING (EXTERNAL)	
	24	1	**6V-1051**	1	SCREW-BUTTON HEAD (10-24X19.05-MM)	
	25	1	**6V-1232**	2	SCREW-BUTTON HEAD (8-32X9.52-MM)	
M	26	1	**6V-2314**	2	BOLT (M5X0.8X35-MM)	
	27	1	**7X-0584**	1	WASHER-HARD (13.5X20.5X2-MM THK)	
M	28	1	**7Y-5226**	2	NUT (M5X0.8-THD)	
	29	1	**8T-4205**	2	WASHER-HARD (7.2X14.5X2-MM THK)	
	30	1	**9X-8256**	5	WASHER (6.6X12X2-MM THK)	
D	31	1	**6V-2689**		TUBE-HEAT SHRINK (6.35-MM DIA) (0.2-M)	

D - ORDER BY THE METER
M - METRIC PART

337-6855 **CONTROL GP-HANDLE (**contd.**)** **i06207088**

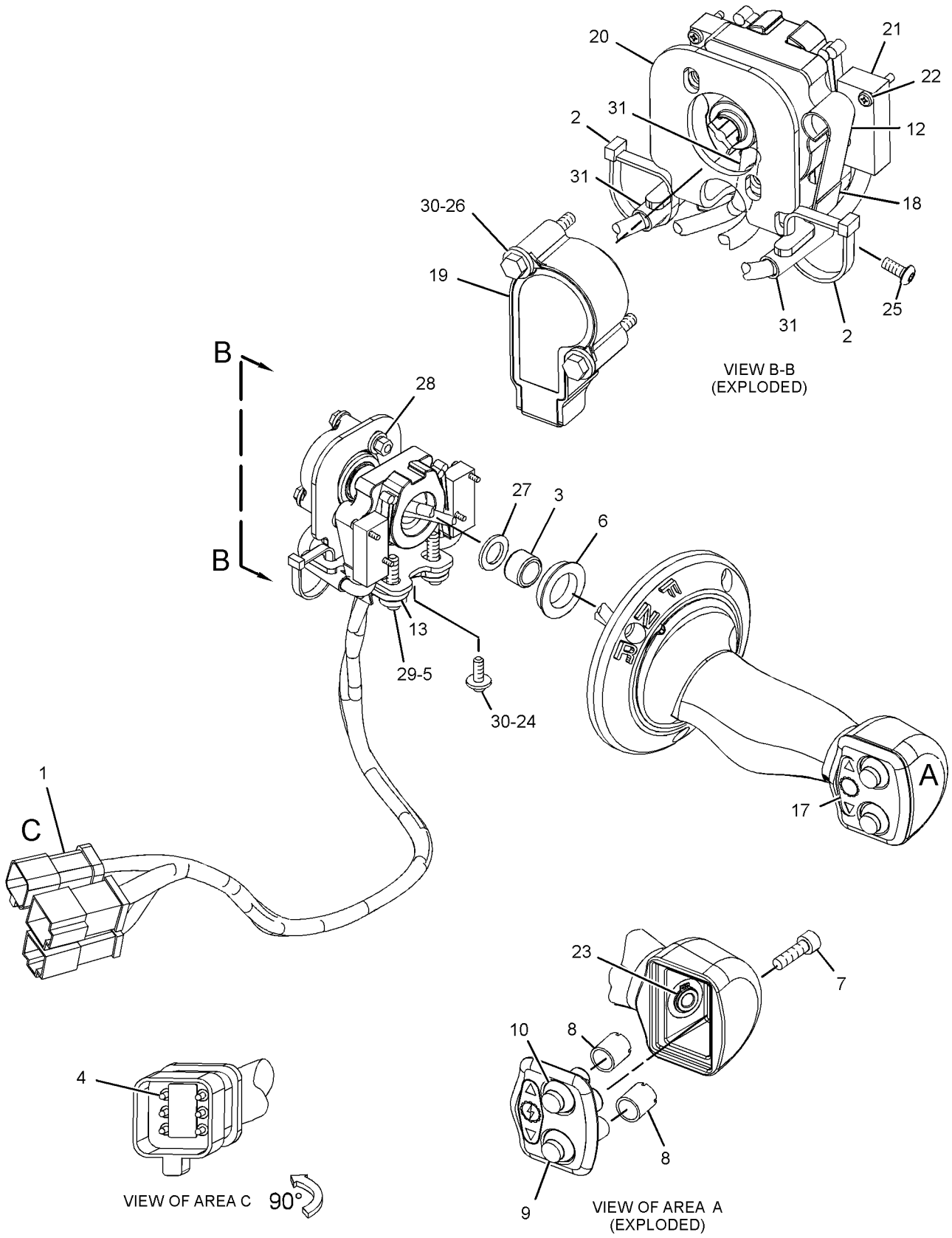

GRAPHIC #1 <END> g01959977

424-8511 CONTROL GP-JOYSTICK–STEERING, TRANSMISSION

S/N: R5A1-UP

PART OF 421-5950 CONTROL GP-STEERING & XMSN

AN ATTACHMENT

SMCS-5705 **i06507977**

NOTE	REF NO	GRAPHIC REF	PART NUMBER	QTY	PART NAME 1 2 3 4 5 6 (PRODUCT LEVEL)	SEE PAGE
	1	1	**268-4737**	1	COVER AS	
M		1	**9X-2546**	2	BOLT (M6X1X20-MM)	
Y	2	1	**337-6853**	1	CONTROL GP-HANDLE (STEERING, TRANSMISSION)	485
Y	3	1	**356-5425**	1	SENSOR GP-POSITION (STEERING)	168
	4	1	**358-6190**	1	SENSOR GP-POSITION (STEERING)	
B	5	1	**1P-0810**		TAPE-ELECTRICAL	
	6	1	**338-2845**	1	GROMMET	
M	7	1	**6V-2314**	2	BOLT (M5X0.8X35-MM)	
	8	1	**8T-4121**	2	WASHER-HARD (11X21X2.5-MM THK)	
M	9	1	**8T-4186**	1	BOLT (M10X1.5X40-MM)	
M	10	1	**8T-4189**	3	BOLT (M8X1.25X20-MM)	
M	11	1	**8T-4195**	2	BOLT (M10X1.5X30-MM)	
	12	1	**8T-4224**	3	WASHER-HARD (8.8X16X2-MM THK)	
	13	1	**9X-8256**	2	WASHER (6.6X12X2-MM THK)	

B - USE AS REQUIRED
M - METRIC PART
Y - SEPARATE ILLUSTRATION

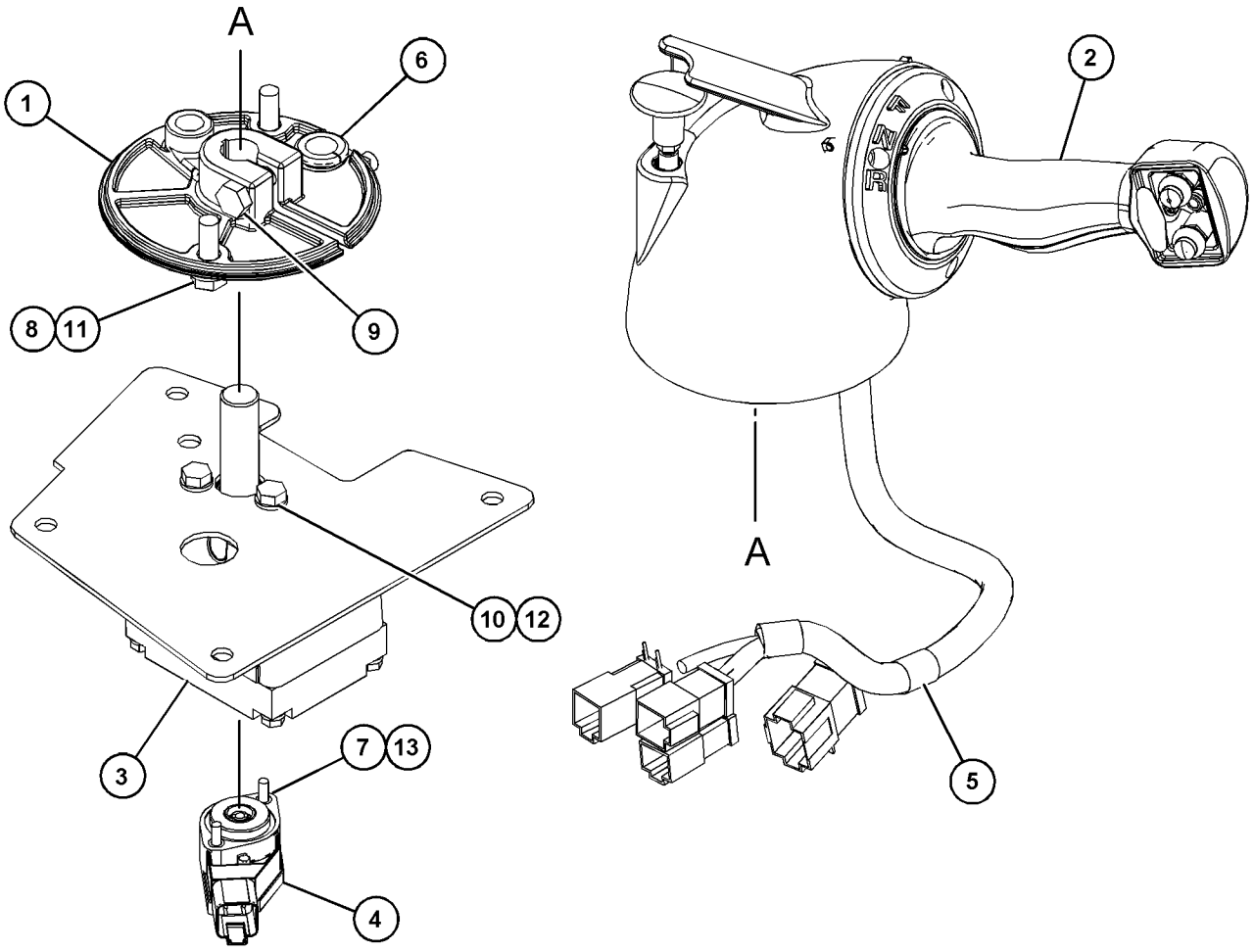

GRAPHIC #1 <END> g03857700

418-9920 CONTROL GP-PILOT OPERATED HYD

S/N: R5A1-UP
PART OF 391-9515 HYDRAULIC AR-3 VALVE
AN ATTACHMENT

SMCS-5059, 5063, 5705 **i06534217**

NOTE	REF NO	GRAPHIC REF	PART NUMBER	QTY	PART NAME 1 2 3 4 5 6 (PRODUCT LEVEL)	SEE PAGE
Y	1	1	**398-3263**	1	VALVE GP-PILOT (RIPPER)	444
	2	1	**102-9478**	1	FILM-INSTRUCTION (RIPPER CONTROL)	
Y	3	1	*161-3615*	1	CONTROL GP-HANDLE (BULLDOZER)	484
Y	4	1	*394-3611*	1	VALVE GP-PILOT (BLADE CONTROL)	442
	5	1	**466-7564**	1	PLATE AS	
	6	1	**466-7565**	1	GASKET	
M	7	1	**3E-8020**	8	SCREW-TRUSS HEAD (M6X1X25-MM)	
M	8	1	**9X-2040**	4	SCREW-TRUSS HEAD (M10X1.5X25-MM)	

M - METRIC PART
Y - SEPARATE ILLUSTRATION

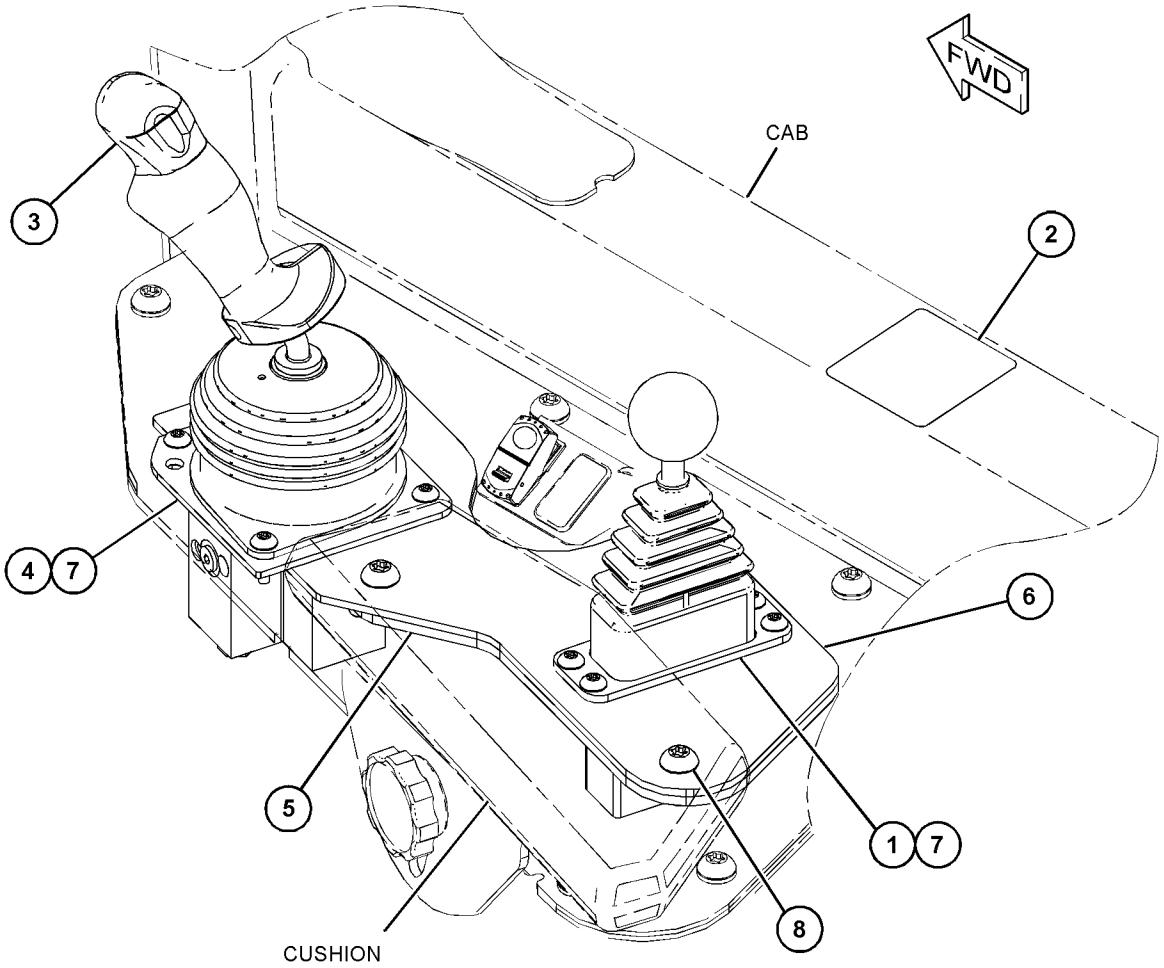

GRAPHIC #1 <END> g06023776

453-9494 CONTROL GP-PILOT OPERATED HYD

S/N: R5A1-UP
PART OF 391-9512 HYDRAULIC AR-2 VALVE
AN ATTACHMENT

SMCS-5059, 5063, 5705 **i06540579**

NOTE	REF NO	GRAPHIC REF	PART NUMBER	QTY	PART NAME 1 2 3 4 5 6 (PRODUCT LEVEL)	SEE PAGE
Y	1	1	*161-3615*	1	CONTROL GP-HANDLE (BLADE)	484
Y	2	1	*394-3611*	1	VALVE GP-PILOT (BLADE CONTROL)	442
	3	1	**436-3470**	1	PLATE AS	
	4	1	**436-3472**	1	GASKET	
	5	1	**450-4134**	1	PLATE	
M	6	1	**3E-8020**	8	SCREW-TRUSS HEAD (M6X1X25-MM)	
M	7	1	**9X-2040**	4	SCREW-TRUSS HEAD (M10X1.5X25-MM)	

M - METRIC PART
Y - SEPARATE ILLUSTRATION

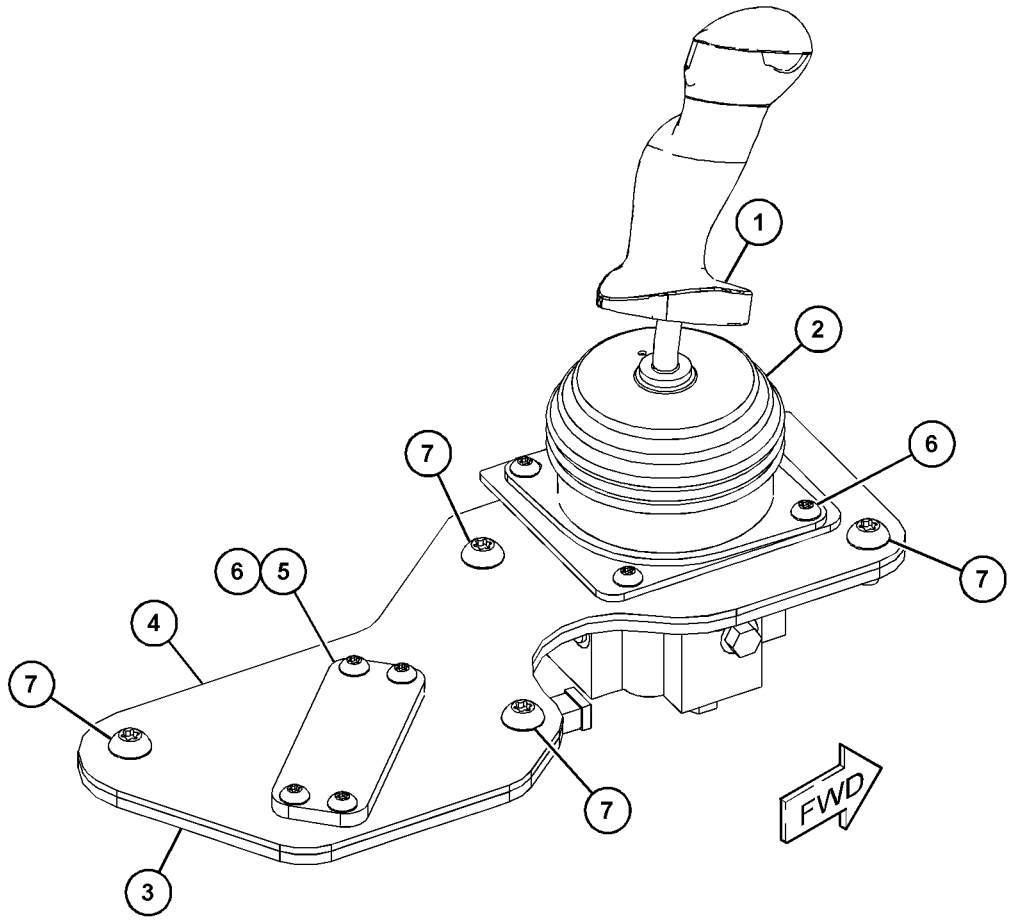

GRAPHIC #1 <END> g06021799

449-9291 CONTROL GP-THROTTLE

S/N: R5A1-UP

AN ATTACHMENT

SMCS-1265 **i06532702**

NOTE	REF NO	GRAPHIC REF	PART NUMBER	QTY	PART NAME 1 2 3 4 5 6 (PRODUCT LEVEL)	SEE PAGE
	1	1	**428-9165**	1	SWITCH AS (SPEED CONTROL)	
M	2	1	**9X-2045**	2	SCREW-TRUSS HEAD (M6X1X20-MM)	

M - METRIC PART

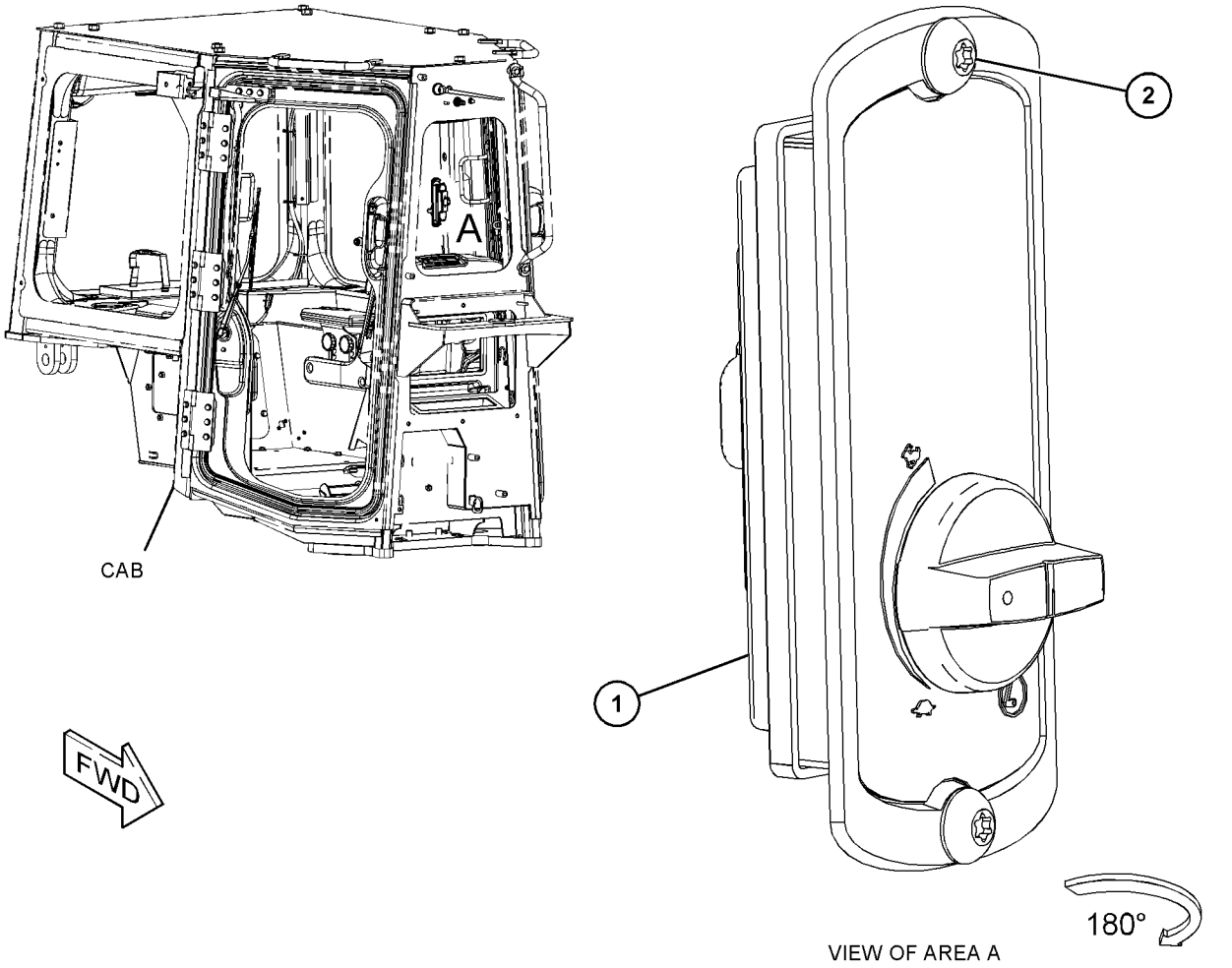

GRAPHIC #1 <END> g03854067

393-6494 COVER GP-CAB

S/N: R5A1-UP

PART OF 393-6488, 393-6489 CAB AR, 393-6487 CANOPY AR

AN ATTACHMENT

SMCS-7301 **i06203876**

NOTE	REF NO	GRAPHIC REF	PART NUMBER	QTY	PART NAME 1 2 3 4 5 6 (PRODUCT LEVEL)	SEE PAGE
	1	1	**7G-4824**	1	STRAP	
	2	1	**8E-7791**	1	STRAP	
	3	1	**108-3588**	1	HOLDER-CUP	
	4	1	**228-6089**	1	PLUG (ROCKER SWITCH)	
	5	1	**339-3566**	2	SUPPORT AS	
	6	1	**384-8283**	1	GASKET	
	7	1	**384-8284**	1	PLATE AS	
	8	1	**384-8285**	1	GASKET	
	9	1	**384-8286**	1	PLATE AS	
	10	1	**384-8287**	1	GASKET	
	11	1	**384-8289**	1	GASKET	
	12	1	**384-8293**	1	PLATE	
	13	1	**387-5639**	1	CUSHION AS	
	14	1	**387-5640**	1	BRACKET	
	15	1	**387-6883**	1	BRACKET	
	16	1	**387-7116**	1	GASKET	
	17	1	**388-3944**	1	CUSHION AS	
	18	1	**388-6319**	1	PLATE AS	
	19	1	**388-7142**	1	CUSHION AS	
	20	1	**391-4060**	1	PLATE AS	
	21	1	**391-4071**	1	PLATE AS	
	22	1	**391-4072**	1	PLATE	
	23	1	**393-1075**	3	KNOB	
	24	1	**393-1188**	1	CUSHION AS	
	25	1	**393-4752**	1	FLOOR MAT AS	
	26	1	**425-9030**	1	BOX-STORAGE	
	27	1	**425-9035**	2	HANDHOLD	
	28	1	**425-9049**	1	GASKET	
	29	1	**425-9052**	1	HOLDER AS	
	30	1	**425-9054**	1	PLATE AS	
	31	1	**466-6957**	1	GASKET	
	32	1	**475-5698**	1	PLATE AS	
	33	1	**7X-7729**	12	WASHER (11X25X3-MM THK)	
	34	1	**8T-4121**	50	WASHER-HARD (11X21X2.5-MM THK)	
M	35	1	**8T-4136**	21	BOLT (M10X1.5X25-MM)	
M	36	1	**8T-4137**	2	BOLT (M10X1.5X20-MM)	
M	37	1	**8T-4195**	20	BOLT (M10X1.5X30-MM)	
M	38	1	**8T-4196**	8	BOLT (M10X1.5X35-MM)	
M	39	1	**9X-2040**	8	SCREW-TRUSS HEAD (M10X1.5X25-MM)	
M	40	1	**9X-2041**	2	SCREW-TRUSS HEAD (M10X1.5X20-MM)	
M	41	1	**9X-2043**	8	SCREW-TRUSS HEAD (M6X1X14-MM)	
M	42	1	**9X-2045**	13	SCREW-TRUSS HEAD (M6X1X20-MM)	
E	43	1	**7X-7877**		STRIP-EDGE (7-CM)	

E - ORDER BY THE CENTIMETER
M - METRIC PART

393-6494 **COVER GP-CAB** (contd.) **i06203876**

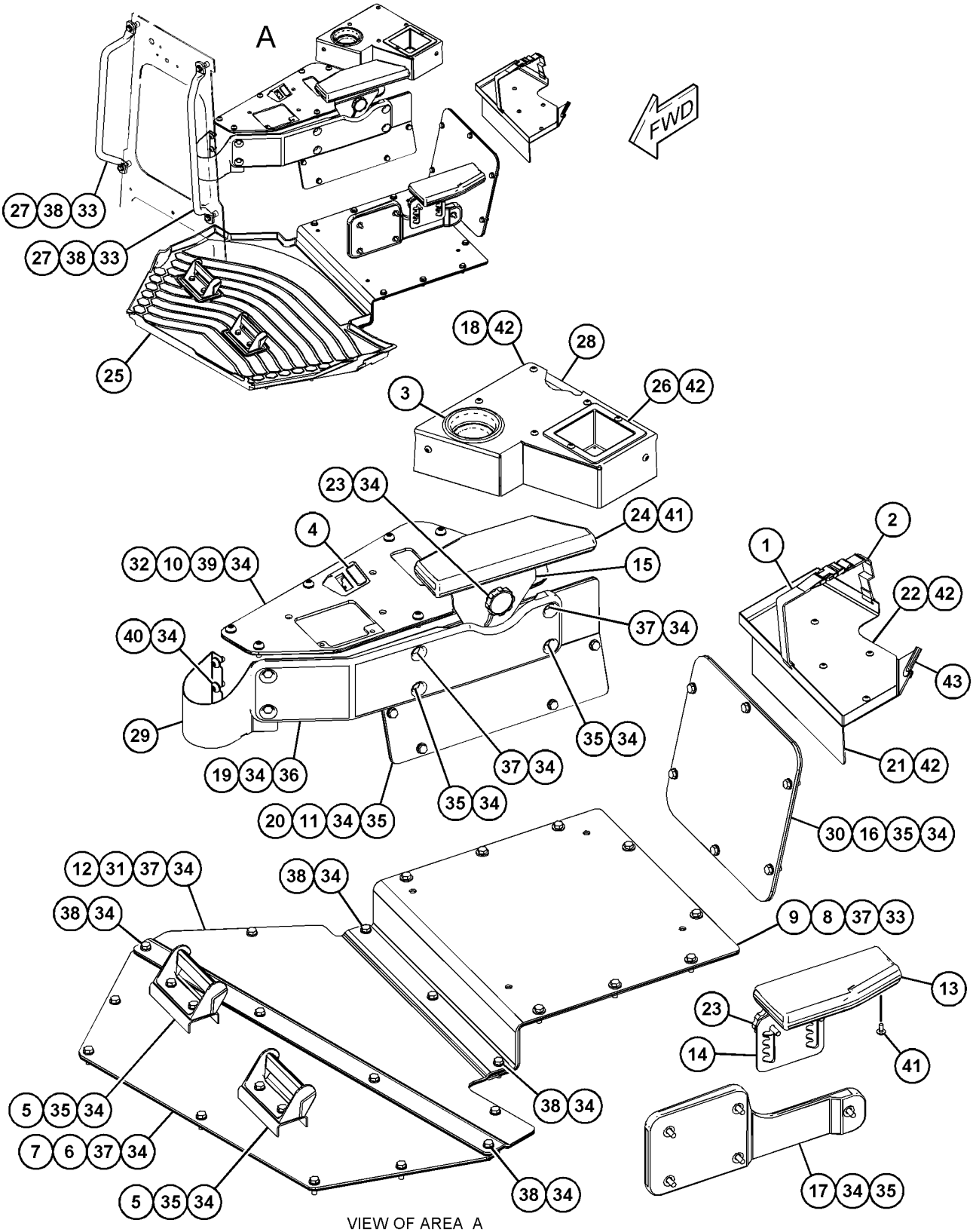

VIEW OF AREA A
(EXPLODED)
(FLOORMAT REMOVED)

GRAPHIC #1 <END> g03854940

398-0416 DOOR GP-CAB—LH

S/N: R5A1-UP

PART OF 393-6480 CAB AR, 393-6485 CAB AR-ENCLOSED ROPS AN ATTACHMENT

SMCS-7308 **i06214160**

NOTE	REF NO	GRAPHIC REF	PART NUMBER	QTY	PART NAME 1 2 3 4 5 6 (PRODUCT LEVEL)	SEE PAGE
	1	1	**3S-2093**	2	STRAP-CABLE	
	2	1	**5G-8655**	1	LEVER	
	3	1	**6I-9386**	1	BRACKET AS	
	4	1	**7K-1181**	1	STRAP-CABLE	
	5	1	**8C-3442**	1	SPRING-COIL	
	6	1	**218-7119**	1	GASKET	
	7	1	**336-6672**	1	HANDLE AS (PULL)	
	8	1	**368-6992**	3	HINGE AS	
					(EACH INCLUDES)	
	8A	1	**372-5042**	2	BUSHING	
	9	1	**379-6658**	1	LATCH AS (LH)	
Y	10	1	**384-1825**	1	HARNESS AS-CAB	107
	11	1	**386-7346**	1	BRACKET (LH)	
	12	1	**387-4502**	1	HANDLE AS	
	13	1	**390-0448**	1	ROD	
	14	1	**390-9086**	2	PLATE	
	15	1	**391-3950**	1	STRIKER AS	
	16	1	**434-1899**	1	DOOR GP-CAB (LH)	
	17	1	**457-4683**	1	BUMPER	
	18	1	**130-8360**	2	GROMMET	
	19	1	**1B-8735**	1	KEY-WOODRUFF	
	20	1	**313-5638**	2	BOLT (5/16-18X1-IN)	
	21	1	**4K-3533**	1	WASHER (9.7X17.5X1.6-MM THK)	
M	22	1	**5C-7261**	2	NUT (M8X1.25-THD)	
	23	1	**5M-8500**	1	KNOB	
	24	1	**6V-8189**	1	NUT (5/16-18-THD)	
	25	1	**7X-7729**	2	WASHER (11X25X3-MM THK)	
M	26	1	**7Y-9099**	2	SCREW-TRUSS HEAD (M8X1.25X25-MM)	
M	27	1	**8C-8992**	3	BOLT-LOCKING (M12X1.75X30-MM)	
M	28	1	**8T-0722**	9	BOLT-LOCKING (M10X1.5X30-MM)	
	29	1	**8T-4121**	24	WASHER-HARD (11X21X2.5-MM THK)	
M	30	1	**8T-4136**	6	BOLT (M10X1.5X25-MM)	
M	31	1	**8T-4181**	3	BOLT (M6X1X20-MM)	
M	32	1	**8T-4196**	9	BOLT (M10X1.5X35-MM)	
	33	1	**8T-4205**	3	WASHER-HARD (7.2X14.5X2-MM THK)	
	34	1	**8T-4223**	3	WASHER-HARD (13.5X25.5X3-MM THK)	
	35	1	**8T-4224**	1	WASHER-HARD (8.8X16X2-MM THK)	
M	36	1	**9X-2040**	2	SCREW-TRUSS HEAD (M10X1.5X25-MM)	
M	37	1	**9X-2043**	4	SCREW-TRUSS HEAD (M6X1X14-MM)	
M	38	1	**9X-2045**	4	SCREW-TRUSS HEAD (M6X1X20-MM)	
E	39	1	**292-2896**		CONDUIT (108-CM)	
E	40	1	**144-0195**		HOSE (117-CM)	
E	41	1	**341-9763**		SEAL (410-CM)	

E - ORDER BY THE CENTIMETER
M - METRIC PART
Y - SEPARATE ILLUSTRATION

398-0416 **DOOR GP-CAB** (contd.) **i06214160**

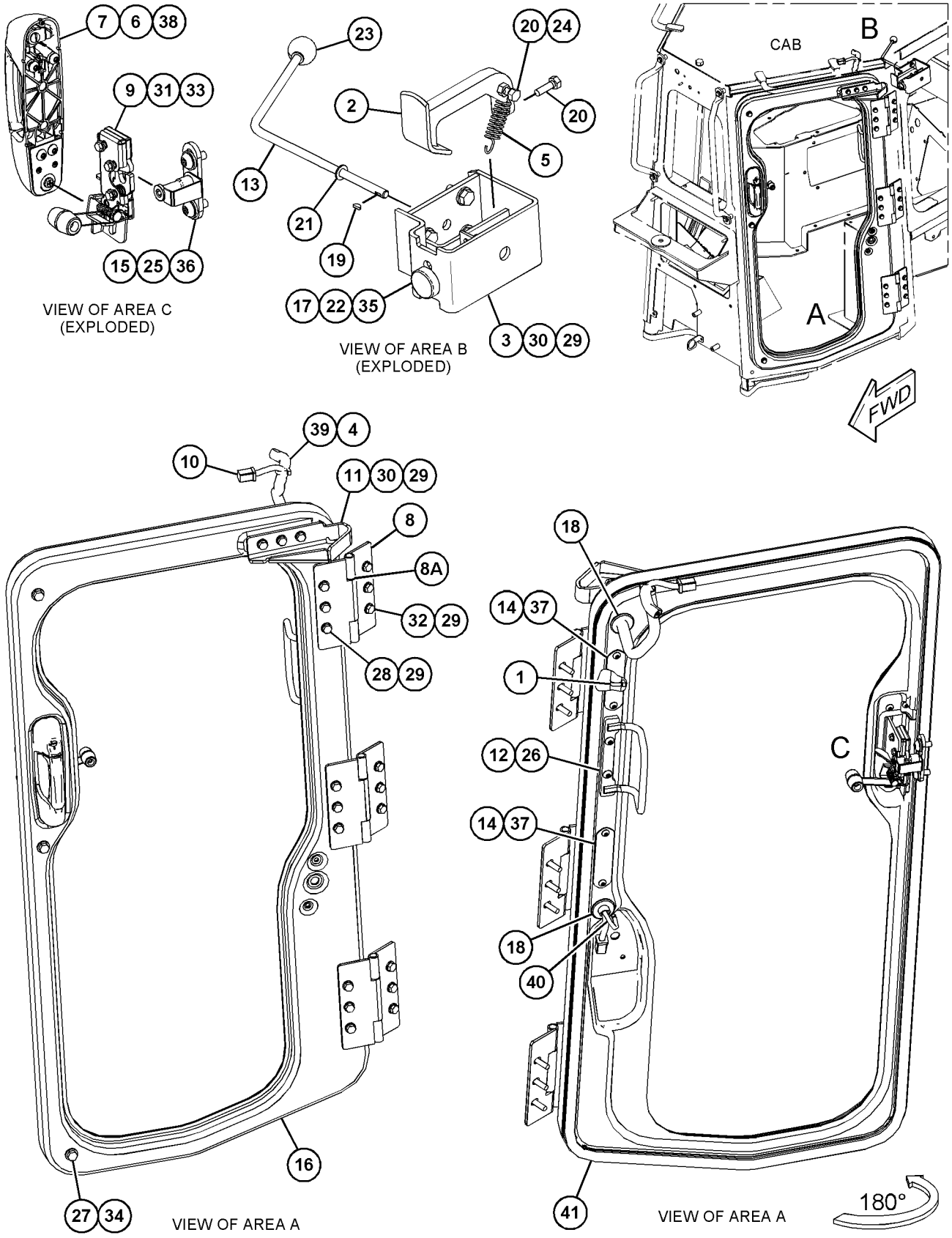

GRAPHIC #1 <END> g03861153

398-0423 DOOR GP-CAB—RH

S/N: R5A1-UP
PART OF 393-6480 CAB AR, 393-6485 CAB AR-ENCLOSED ROPS
AN ATTACHMENT

SMCS-7308 **i06218736**

NOTE	REF NO	GRAPHIC REF	PART NUMBER	QTY	PART NAME 1 2 3 4 5 6 (PRODUCT LEVEL)	SEE PAGE
	1	2	**3S-2093**	2	STRAP-CABLE	
	2	1	**5G-8655**	1	LEVER	
	3	1	**6I-9386**	1	BRACKET AS	
	4	1	**7K-1181**	1	STRAP-CABLE	
	5	1	**8C-3442**	1	SPRING-COIL	
	6	1	**218-7119**	1	GASKET	
	7	1	**336-6672**	1	HANDLE AS (PULL)	
	8	1	**368-6992**	3	HINGE AS	
					(EACH INCLUDES)	
	8A	1	**372-5042**	2	BUSHING	
	9	2	**383-1431**	1	LATCH AS	
Y	10	1	**384-1825**	1	HARNESS AS-CAB	107
	11	1	**386-7345**	1	BRACKET (RH)	
	12	2	**387-4502**	1	HANDLE AS	
	13	1	**390-0448**	1	ROD	
	14	2	**390-9086**	2	PLATE	
	15	2	**391-3950**	1	STRIKER AS	
	16	2	**434-1901**	1	DOOR AS-CAB	
	17	1	**457-4683**	1	BUMPER	
	18	2	**130-8360**	2	GROMMET	
	19	1	**1B-8735**	1	KEY-WOODRUFF	
	20	1	**313-5638**	2	BOLT (5/16-18X1-IN)	
	21	1	**4K-3533**	1	WASHER (9.7X17.5X1.6-MM THK)	
M	22	1	**5C-7261**	2	NUT (M8X1.25-THD)	
	23	1	**5M-8500**	1	KNOB	
	24	1	**6V-8189**	1	NUT (5/16-18-THD)	
	25	2	**7X-7729**	2	WASHER (11X25X3-MM THK)	
M	26	2	**7Y-9099**	2	SCREW-TRUSS HEAD (M8X1.25X25-MM)	
M	27	1	**8C-8992**	3	BOLT-LOCKING (M12X1.75X30-MM)	
M	28	1	**8T-0722**	9	BOLT-LOCKING (M10X1.5X30-MM)	
	29	1	**8T-4121**	24	WASHER-HARD (11X21X2.5-MM THK)	
M	30	1	**8T-4136**	6	BOLT (M10X1.5X25-MM)	
M	31	2	**8T-4181**	3	BOLT (M6X1X20-MM)	
M	32	1	**8T-4196**	9	BOLT (M10X1.5X35-MM)	
	33	2	**8T-4205**	3	WASHER-HARD (7.2X14.5X2-MM THK)	
	34	1	**8T-4223**	3	WASHER-HARD (13.5X25.5X3-MM THK)	
	35	1	**8T-4224**	1	WASHER-HARD (8.8X16X2-MM THK)	
M	36	2	**9X-2040**	2	SCREW-TRUSS HEAD (M10X1.5X25-MM)	
M	37	2	**9X-2043**	4	SCREW-TRUSS HEAD (M6X1X14-MM)	
M	38	2	**9X-2045**	4	SCREW-TRUSS HEAD (M6X1X20-MM)	
E	39	2	**292-2896**		CONDUIT (108-CM)	
E	40	2	**144-0195**		HOSE (117-CM)	
BE	41	2	**341-9763**		SEAL (407-CM)	

B - USE AS REQUIRED
E - ORDER BY THE CENTIMETER
M - METRIC PART
Y - SEPARATE ILLUSTRATION

398-0423 **DOOR GP-CAB** (contd.) **i06218736**

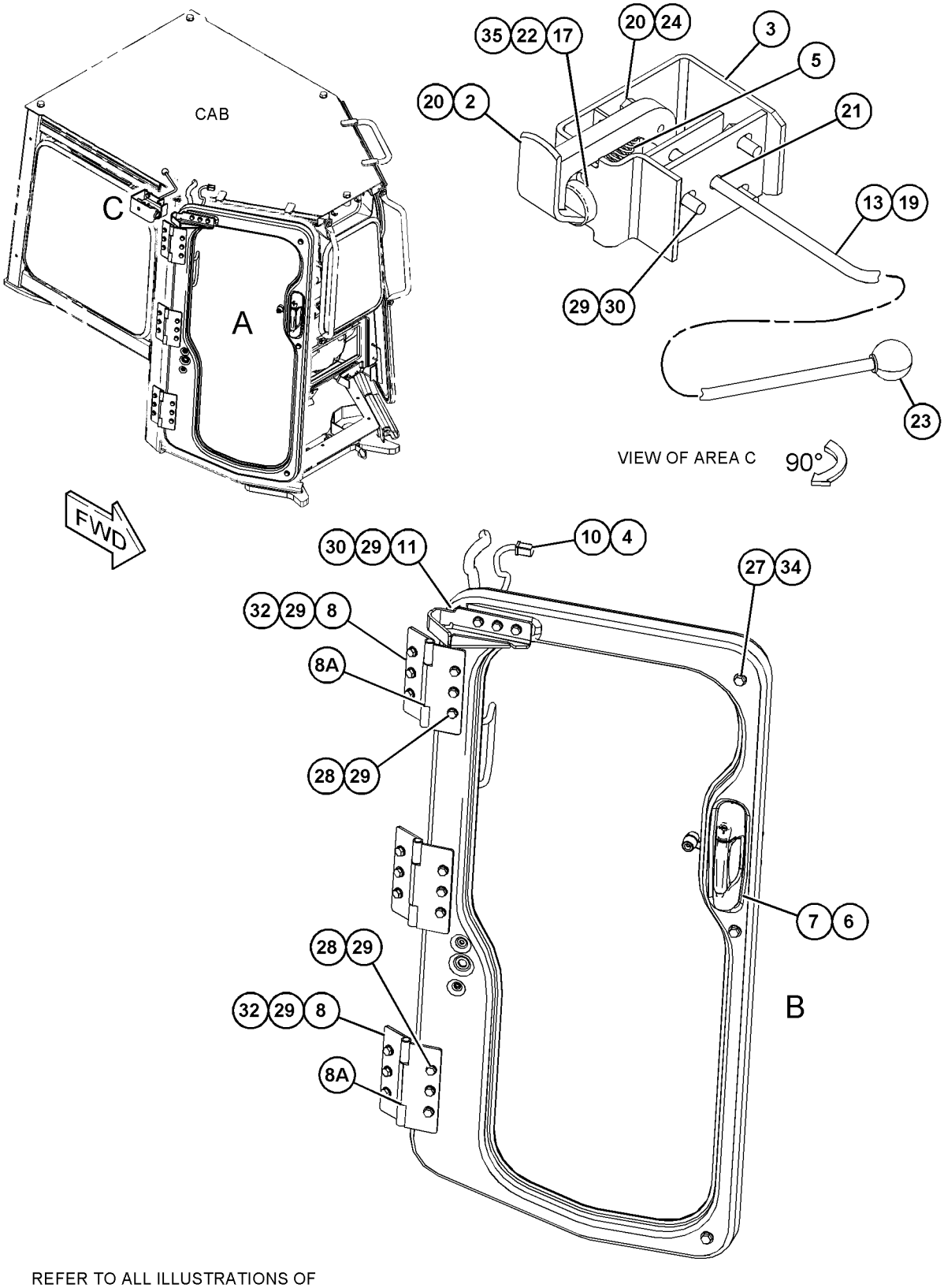

REFER TO ALL ILLUSTRATIONS OF THIS GROUP FOR AUXILIARY VIEWS

GRAPHIC #1 g03862174

398-0423 **DOOR GP-CAB (**contd.**)** **i06218736**

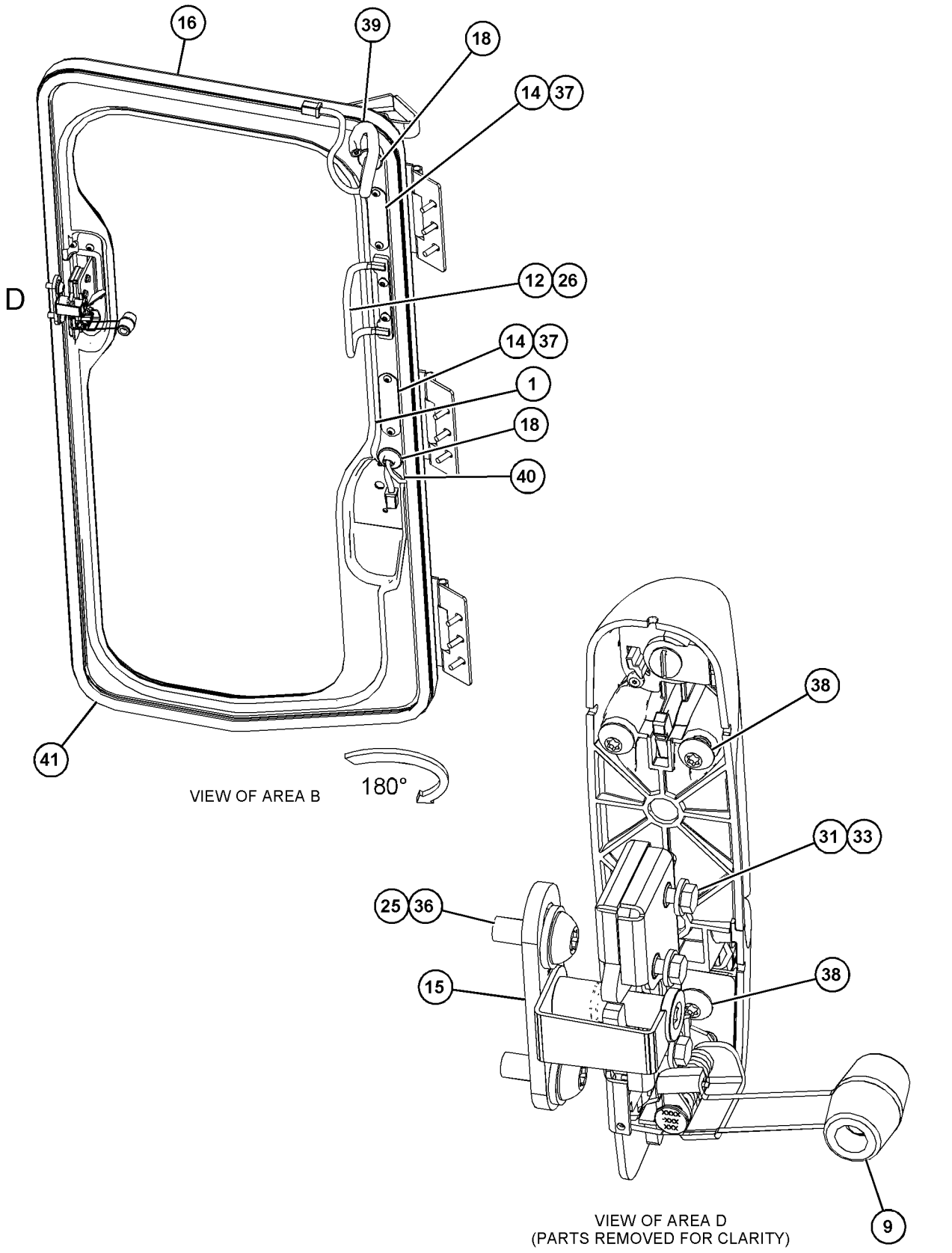

GRAPHIC #2 <END> g03862175

391-4062 FAN GP-CIRCULATING

S/N: R5A1-UP
PART OF 393-6489 CAB AR
AN ATTACHMENT

SMCS-7316 **i05899842**

NOTE	REF NO	GRAPHIC REF	PART NUMBER	QTY	PART NAME 1 2 3 4 5 6 (PRODUCT LEVEL)	SEE PAGE
	1	1	**180-5316**	1	FAN GP-CIRCULATING (24-VOLT)	
		1	**3S-2093**	1	STRAP-CABLE	
		1	**9X-3401**	2	PIN-CONNECTOR (16-GA TO 18-GA)	
		1	**102-8802**	1	KIT-RECEPTACLE (2-PIN)	
					(INCLUDES RECEPTACLE AS & WEDGE)	
	2	1	**391-4065**	1	PLATE AS	
M	3	1	**198-9706**	4	SCREW-TRUSS HEAD (M5X0.8X16-MM)	
M	4	1	**9X-2043**	4	SCREW-TRUSS HEAD (M6X1X14-MM)	

M - METRIC PART

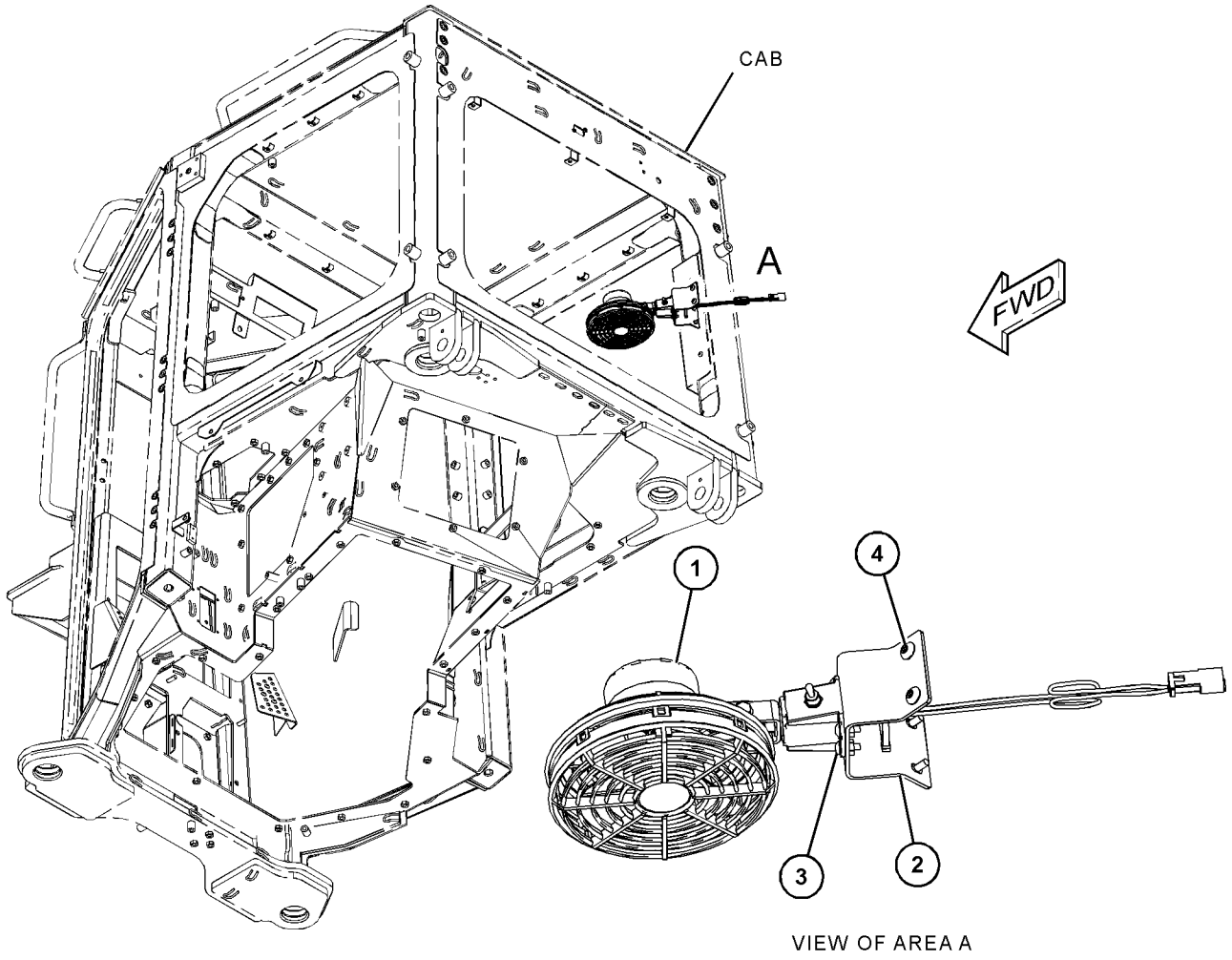

VIEW OF AREA A

GRAPHIC #1 <END> g03719884

389-3067 FILTER GP-CAB AIR

S/N: R5A1-UP
PART OF 393-6493 FILTER GP-CAB AIR
AN ATTACHMENT

SMCS-7342 **i05899826**

NOTE	REF NO	GRAPHIC REF	PART NUMBER	QTY	PART NAME 1 2 3 4 5 6 (PRODUCT LEVEL)	SEE PAGE
	1	1	**396-7087**	1	FILTER GP-CAB AIR	
	2	1	**451-1872**	1	CLAMP AS	
					PARTS SHOWN IN GRAPHIC(S) WITHOUT A REFERENCE NUMBER ARE NOT SERVICED SEPARATELY	

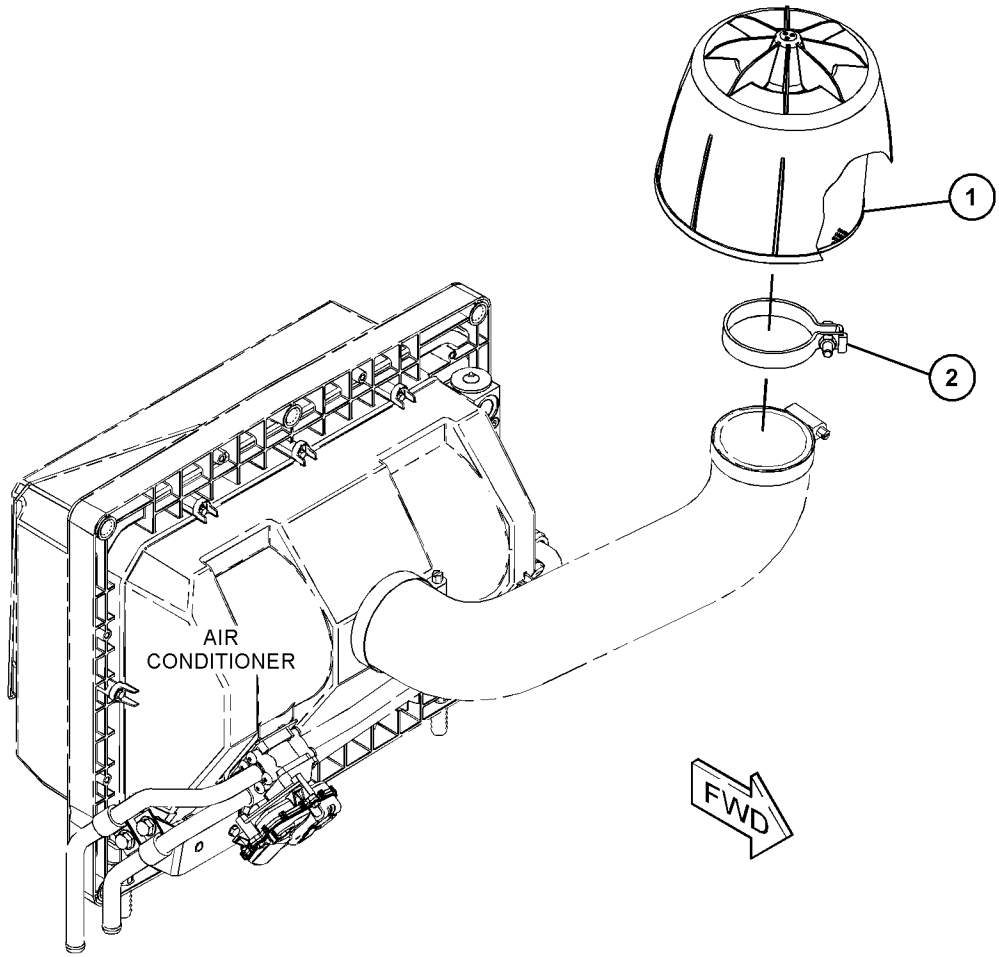

GRAPHIC #1 <END> g03719953

393-6493 FILTER GP-CAB AIR

S/N: R5A1-UP

PART OF 393-6488, 393-6489 CAB AR, 393-6487 CANOPY AR

AN ATTACHMENT

SMCS-7342 **i06523658**

NOTE	REF NO	GRAPHIC REF	PART NUMBER	QTY	PART NAME 1 2 3 4 5 6 (PRODUCT LEVEL)	SEE PAGE
	1	1	**3E-7404**	2	CLAMP-HOSE	
Y	2	1	**389-3067**	1	FILTER GP-CAB AIR	501
	3	1	**425-9037**	1	HOSE	

Y - SEPARATE ILLUSTRATION

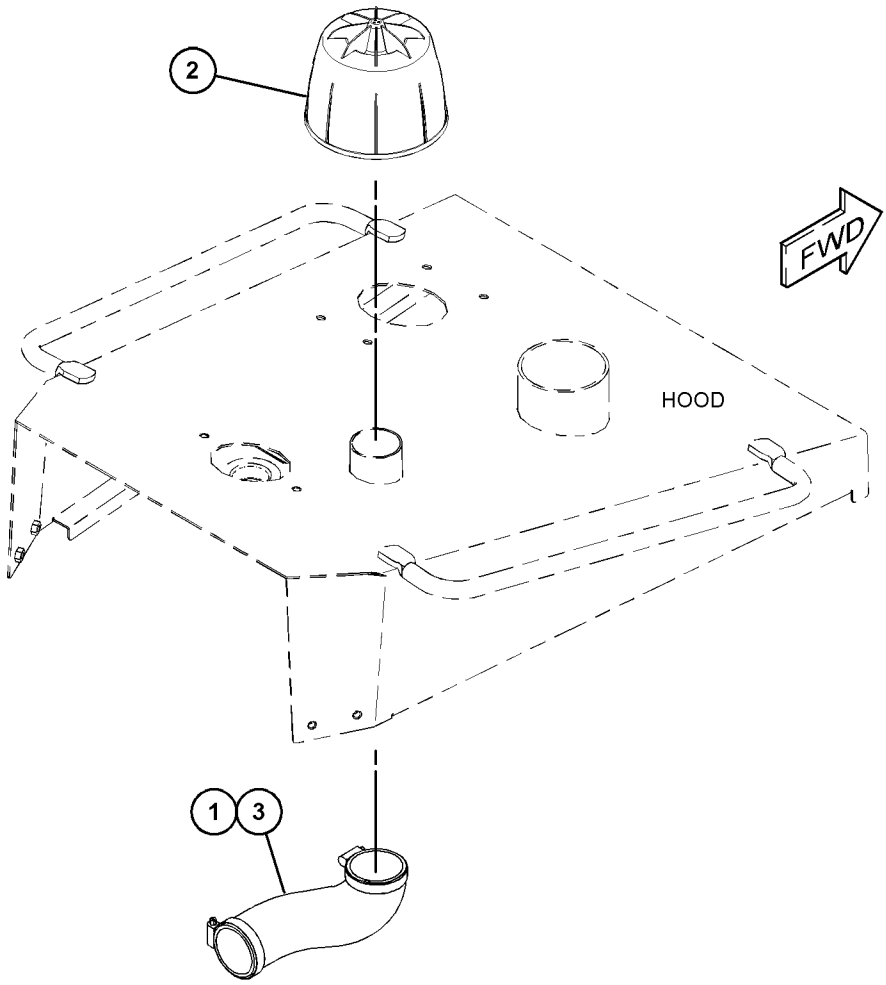

GRAPHIC #1 <END> g06010748

375-7911 HEATER & MTG GP-CAB

S/N: R5A1-UP

PART OF 393-6480 CAB AR, 393-6485 CAB AR-ENCLOSED ROPS AN ATTACHMENT

SMCS-7304 **i06299659**

NOTE	REF NO	GRAPHIC REF	PART NUMBER	QTY	PART NAME 1 2 3 4 5 6 (PRODUCT LEVEL)	SEE PAGE
	1	1	**8C-5682**	1	TEE	
	2	1	**112-7448**	1	FILTER ELEMENT-CAB AIR (STANDARD EFFICIENCY)	
	3	1	**240-8917**	1	FILM-IDENTIFICATION (CIRCUIT BREAKER)	
	4	1	**273-5924**	2	KNOB (ADJUSTMENT CONTROL)	
	5	1	**323-5864**	1	VALVE	
	6	1	**335-6983**	5	CLAMP-BAND	
Y	7	1	*350-3036*	1	CONTROL GP-AIR & TEMPERATURE	483
Y	8	1	**375-0350**	1	AIR CONDITIONER GP	468
Y	9	1	**387-1410**	1	HARNESS AS-DASH	115
	10	1	**388-5571**	1	WIRE AS	
	11	1	**392-7232**	1	PLATE	
	12	1	**068-4209**	2	SCREW (8-32X0.75-IN)	
	13	1	**276-1326**	3	BOLT (M10X1.5X55-MM)	
M	14	1	**344-5675**	3	NUT (M10X1.5-THD)	
	15	1	**6T-3643**	1	CIRCUIT BREAKER AS (15-AMPERE) (AIR CONDITIONER)	
		1	**6V-8376**	2	SCREW-MACHINE (8-32X0.25-IN)	
		1	**9B-7233**	2	LOCKWASHER	
	16	1	**8T-4121**	6	WASHER-HARD (11X21X2.5-MM THK)	
M	17	1	**9X-6485**	1	STUD	
D	18	1	**5P-6129**		TUBE (0.6-M)	
D	18A	1	**5P-6129**		TUBE (0.3-M)	
D	18B	1	**5P-6129**		TUBE (1.1-M)	

D - ORDER BY THE METER
M - METRIC PART
Y - SEPARATE ILLUSTRATION

375-7911 **HEATER & MTG GP-CAB** (contd.) **i06299659**

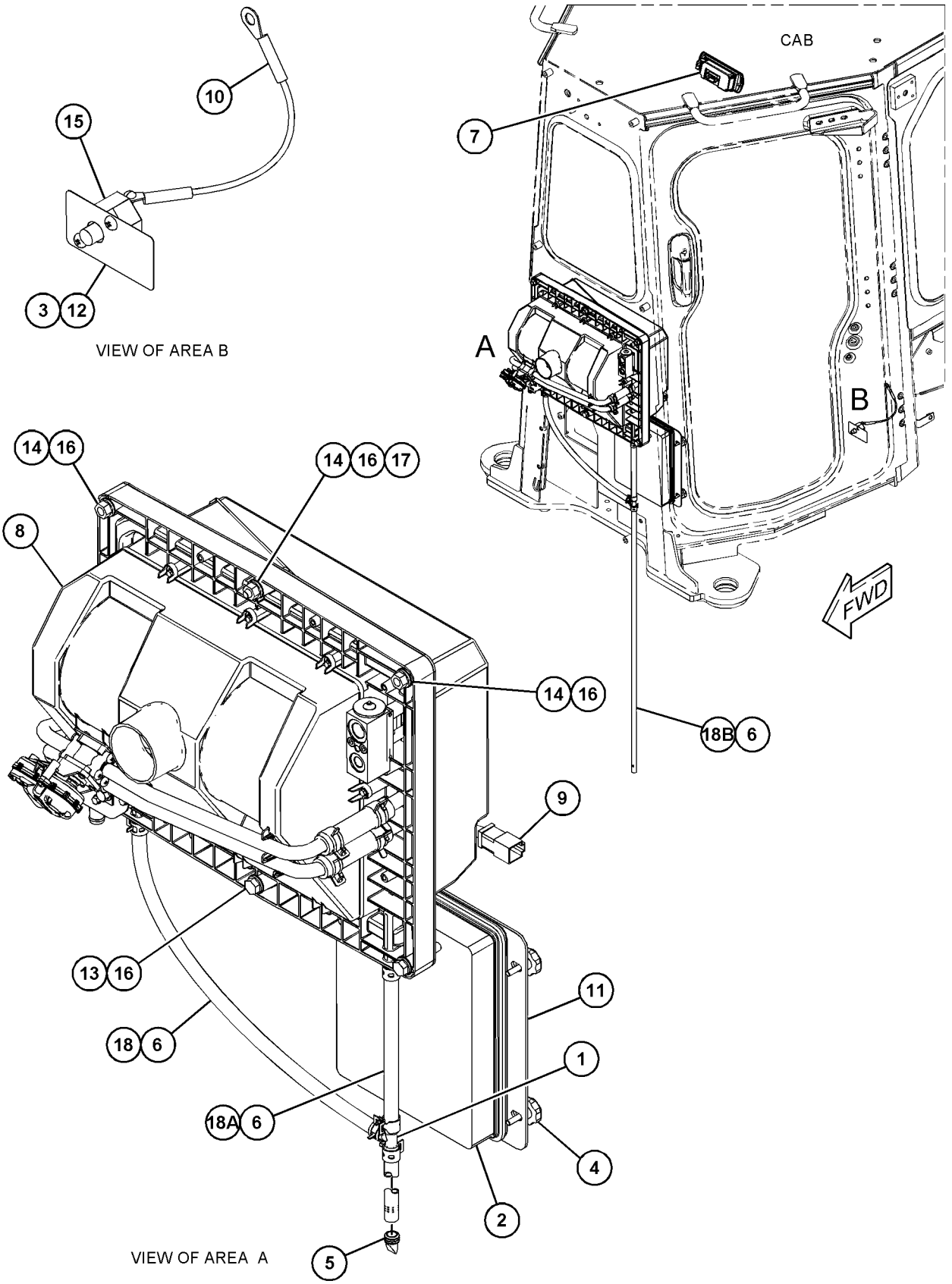

GRAPHIC #1 <END> g03860587

174-2231 HOUSING GP-SEAT SUSPENSION

S/N: R5A1-UP

PART OF 160-7165 SUSPENSION GP-SEAT

AN ATTACHMENT

SMCS-7321 **i05333520**

NOTE	REF NO	GRAPHIC REF	PART NUMBER	QTY	PART NAME 1 2 3 4 5 6 (PRODUCT LEVEL)	SEE PAGE
	1	1	**1Y-7927**	1	PIN	
	2	1	**2D-6235**	2	LOCKNUT (1/4-20-THD)	
	3	1	**2M-7819**	4	RING-RETAINING	
	4	1	**3D-2975**	2	RING-RETAINING	
	5	1	**4B-5059**	6	WASHER (15X29.5X2.5-MM THK)	
	6	1	**4N-2927**	2	RACE-THRUST BEARING	
	7	1	**5D-4822**	2	RING-RETAINING	
	8	1	**5P-8445**	4	RING-RETAINING	
	9	1	**5V-0770**	2	BOLT-CARRIAGE (1/4-20X0.74-IN)	
	10	1	**7M-7219**	1	BEARING-THRUST	
	11	1	**7V-5191**	2	SPACER (28X10X7.1-MM THK)	
	12	1	**8L-8413**	2	STRAP-CABLE (WHITE)	
	13	1	**8S-7803**	4	RING-RETAINING	
	14	1	**8Y-6041**	1	ARM AS	
	15	1	**8Y-6045**	1	CAM	
	16	1	**8Y-6046**	1	PIN	
	17	1	**8Y-6047**	2	PIN	
	18	1	**8Y-6060**	2	ROLLER	
	19	1	**8Y-6062**	1	LINK-ACTUATOR (RH)	
	20	1	**8Y-6063**	1	LINK-ACTUATOR (LH)	
	21	1	**8Y-6064**	2	ROLLER-SLIDER	
	22	1	**8Y-6066**	1	SPRING	
	23	1	**8Y-6067**	1	SPACER (10.54-MM THK)	
	24	1	**8Y-6068**	1	NUT (3/8X16-THD)	
	25	1	**8Y-6069**	1	ADJUSTER AS	
	26	1	**9X-8918**	3	SCREW-FLAT HEAD (8-32X0.5-IN)	
	27	1	**095-0878**	1	PIN-SPRING	
	28	1	**131-4242**	1	BOLT (3/8-16X5.18-IN)	
	29	1	**131-5167**	1	KNOB AS-ADJUSTMENT (WEIGHT)	
	30	1	**161-5967**	1	SHAFT	
	31	1	**174-2237**	1	FRAME AS-SUSPENSION	
					AVAILABLE REPAIR KIT(S):	
			8Y-5945	1	KIT-SUSPENSION KNOB (HEIGHT ADJUSTMENT)	
					(INCLUDES KNOBS)	
			8Y-6859	1	KIT-SPRING (SUSPENSION SEAT)	
					(INCLUDES SPRINGS, BUSHINGS & RINGS)	
			8Y-6860	1	KIT-SPRING (HEIGHT ADJUSTMENT) (SUSPENSION SEAT)	
					(INCLUDES SPRINGS, BUSHINGS, RODS & SPACERS)	
			100-3224	1	KIT-INDICATOR (WEIGHT ADJUSTMENT) (SUSPENSION SEAT)	
					(INCLUDES TAPE, GUIDE & STRAPS)	
			100-5179	1	KIT-BUMPER (WEIGHT ADJUSTMENT) (SUSPENSION SEAT)	
					(INCLUDES BUMPERS)	
			108-4086	1	KIT-FOLLOWER (SUSPENSION SEAT)	
					(INCLUDES FOLLOWER & PIN)	
			108-4087	1	KIT-FOLLOWER (SUSPENSION SEAT)	

174-2231 **HOUSING GP-SEAT SUSPENSION (**contd.**)** **i05333520**

NOTE	REF NO	GRAPHIC REF	PART NUMBER	QTY	PART NAME 1 2 3 4 5 6 (PRODUCT LEVEL)	SEE PAGE
					(INCLUDES FOLLOWER & PIN)	
			108-4103	1	KIT-BEARING (SUSPENSION SEAT)	
					(INCLUDES ROLLER ASSEMBLIES)	

174-2231 **HOUSING GP-SEAT SUSPENSION (**contd.**)** **i05333520**

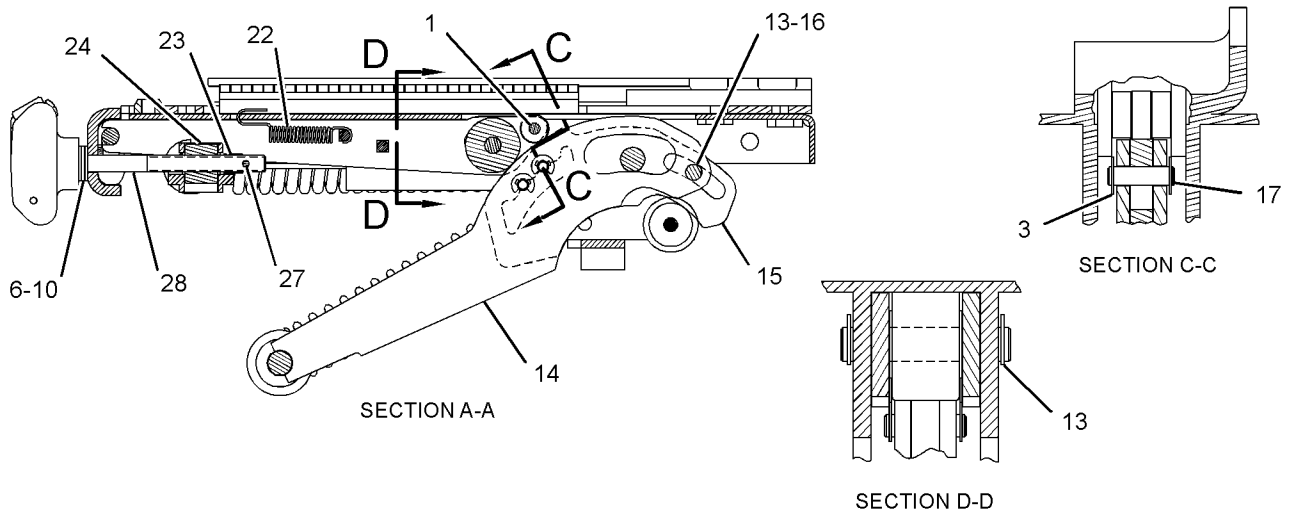

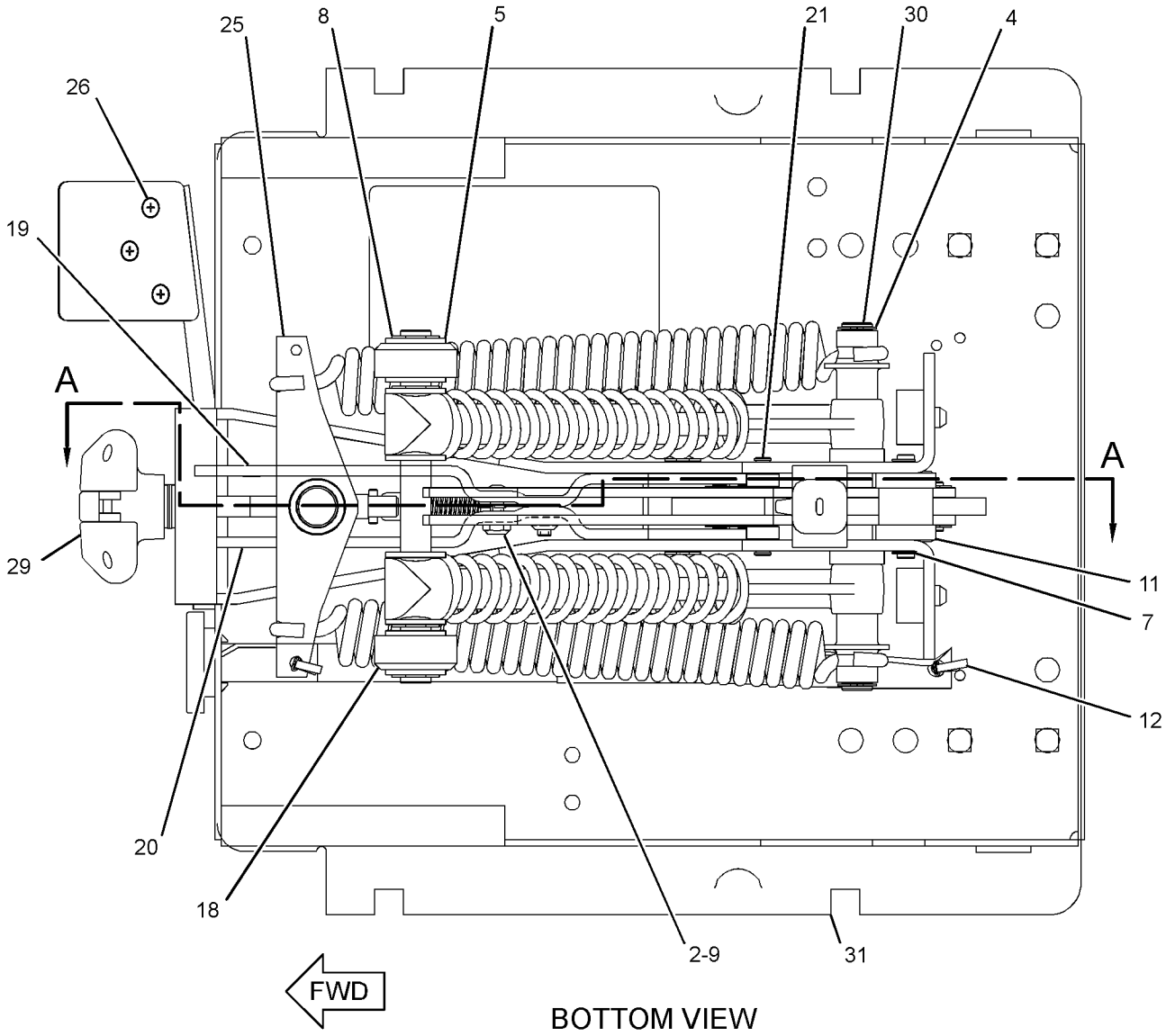

GRAPHIC #1 <END> g01923320

375-7906 INSTALLATION GP-RADIO

S/N: R5A1-UP

PART OF 393-6480 CAB AR, 393-6485 CAB AR-ENCLOSED ROPS

AN ATTACHMENT

SMCS-7338 **i05898333**

NOTE	REF NO	GRAPHIC REF	PART NUMBER	QTY	PART NAME 1 2 3 4 5 6 (PRODUCT LEVEL)	SEE PAGE
	1	1	**8E-1118**	1	ANTENNA AS (RADIO)	
	2	1	**9U-8263**	1	COVER	
	3	1	**9U-8746**	1	CABLE AS-COAXIAL	
	4	1	**101-3055**	2	COVER-SPEAKER	
	5	1	**168-8772**	2	SPEAKER AS-RADIO	
M	6	1	**123-0708**	8	SCREW-HEX SOCKET (M4X0.7X30-MM)	

M - METRIC PART

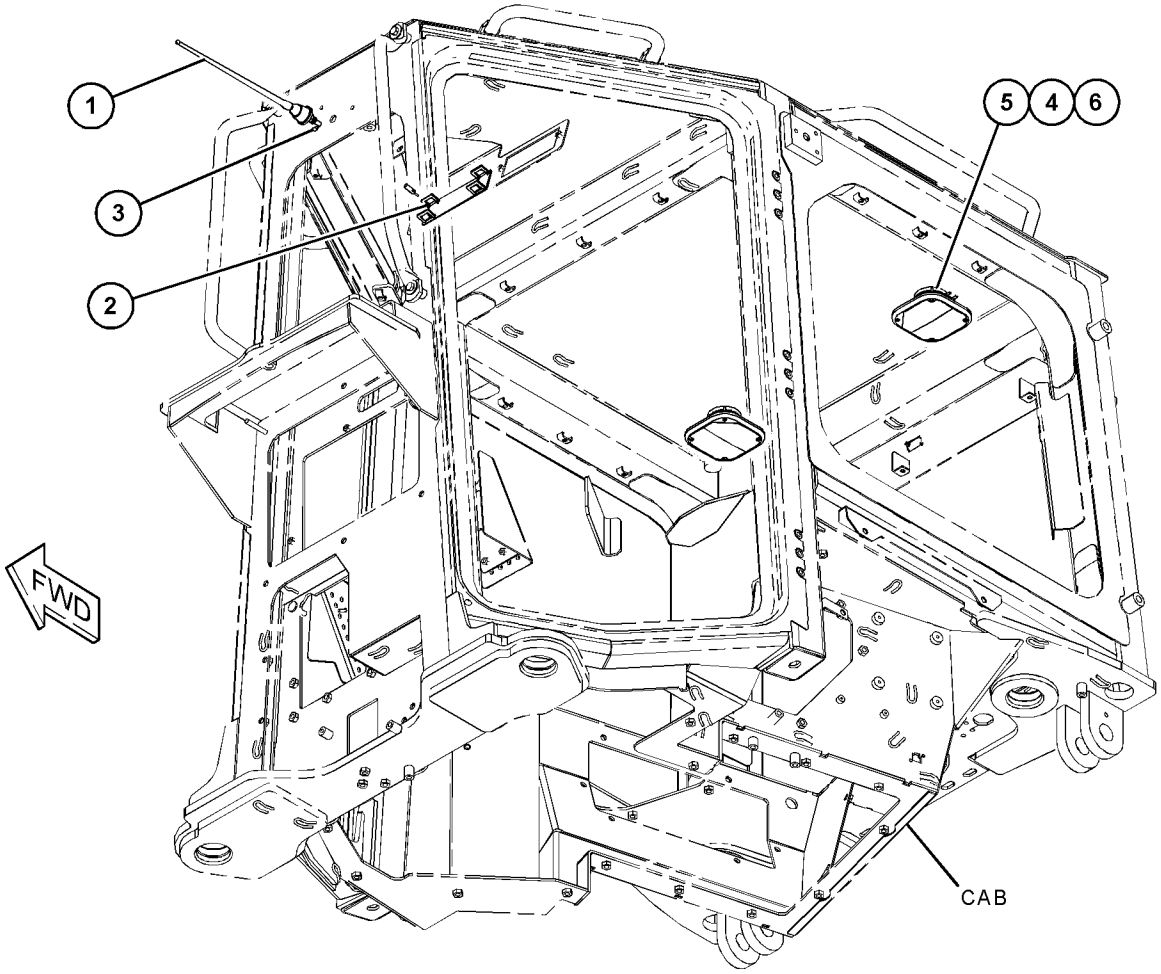

GRAPHIC #1 <END> g03719837

443-8573 KIT-HANDLE

S/N: R5A1-UP
PART OF 443-8222 SEAT GP
AN ATTACHMENT

SMCS-7312 **i06213914**

NOTE	REF NO	GRAPHIC REF	PART NUMBER	QTY	PART NAME 1 2 3 4 5 6 (PRODUCT LEVEL)	SEE PAGE
	1	1	**5T-7486**	2	RETAINER-SPRING	
	2	1	**7Y-0468**	2	PIN-SPRING	
	3	1	**9T-5241**	4	WASHER (9.53X18X1-MM THK)	

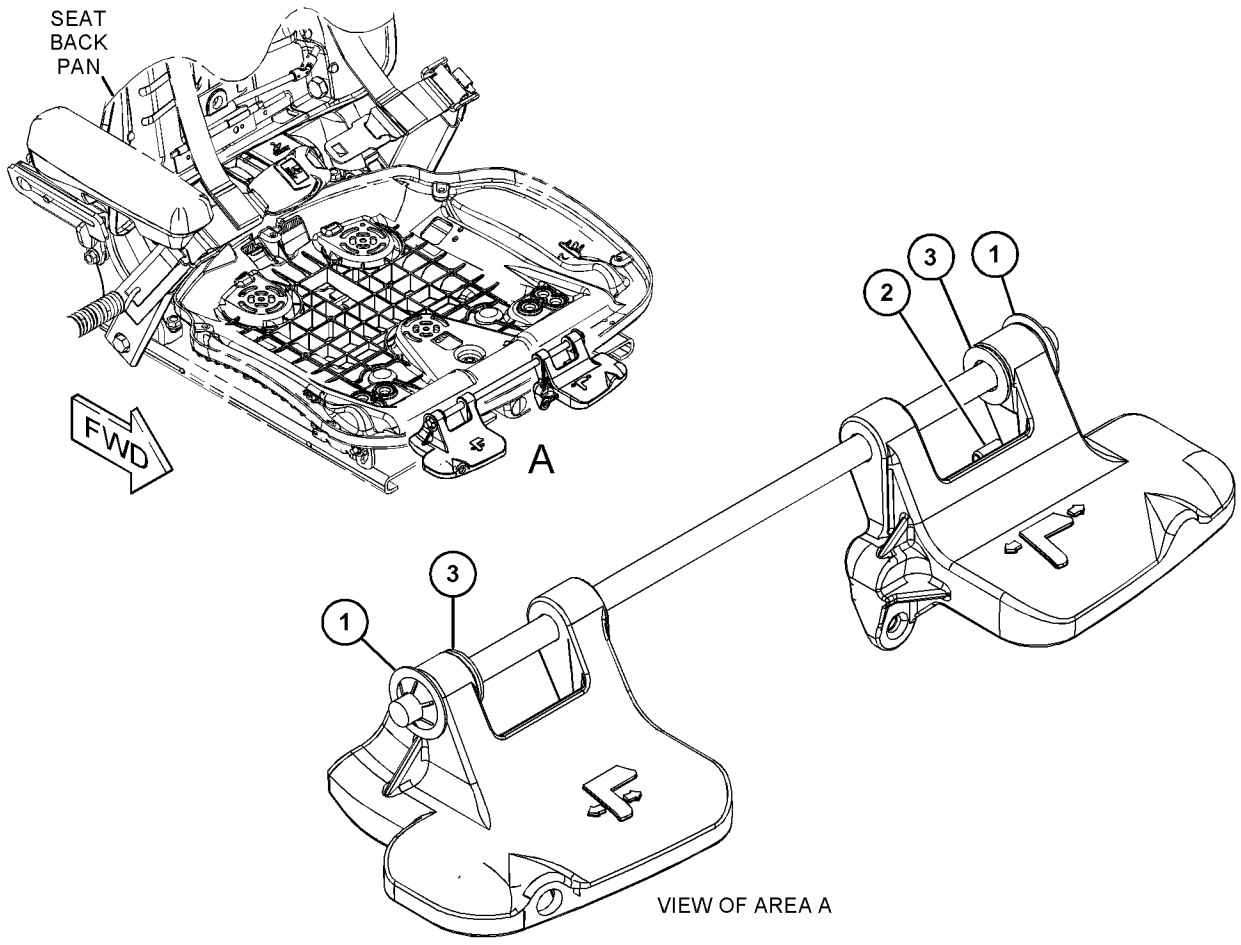

GRAPHIC #1 <END> g03850471

446-0649 KIT-SEAT CUSHION

S/N: R5A1-UP
PART OF 443-8222 SEAT GP
AN ATTACHMENT

SMCS-7312 **i06210441**

NOTE	REF NO	GRAPHIC REF	PART NUMBER	QTY	PART NAME 1 2 3 4 5 6 (PRODUCT LEVEL)	SEE PAGE
	1	1	**357-5170**	1	CUSHION AS-BACK	
	2	1	**443-8576**	1	CUSHION AS	
	3	1	**385-0229**	7	SCREW-FORMING (12-16X0.75-IN)	
	4	1	**385-0230**	2	SCREW-FORMING (1/4-15-1-IN)	
					(KIT ALSO INCLUDES SEAT PAN, HEATER PAD & VENT FAN HARNESS AND OPERATOR STATION HARNESS)	

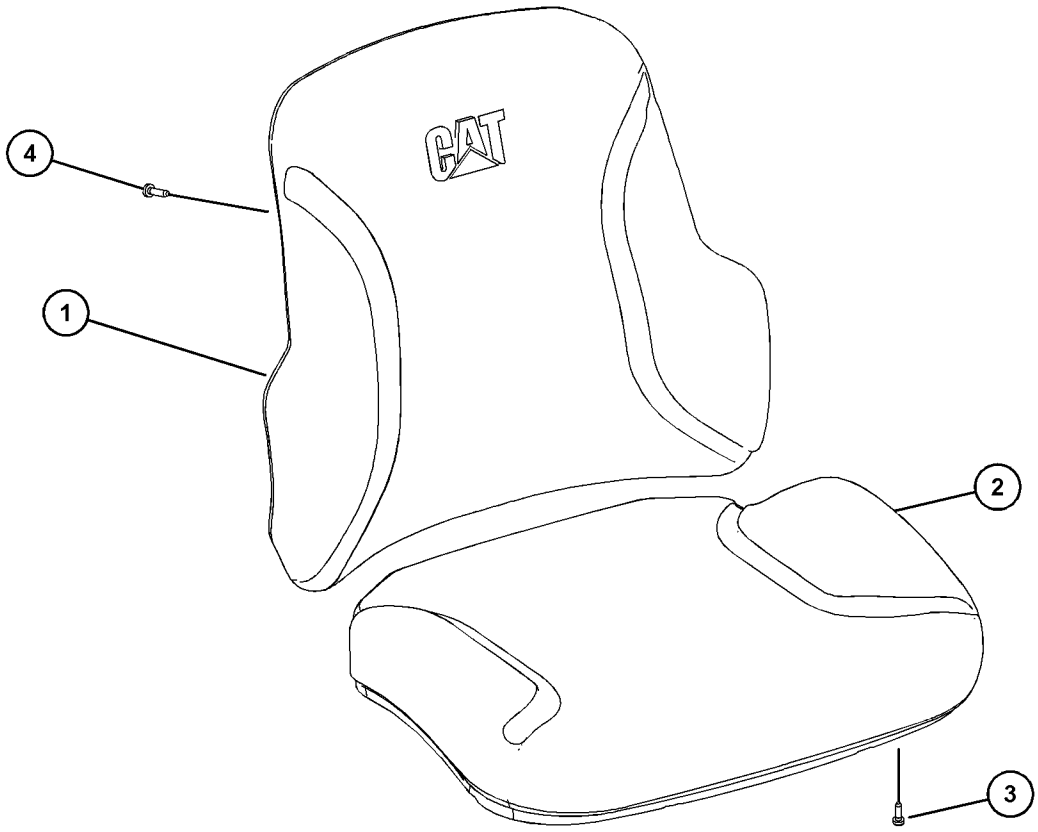

GRAPHIC #1 <END> g03855002

212-7779 KIT-SHOCK ABSORBER

S/N: R5A1-UP

PART OF 191-2933 SUSPENSION GP-SEAT

AN ATTACHMENT

SMCS-7324 **i06250884**

NOTE	REF NO	GRAPHIC REF	PART NUMBER	QTY	PART NAME 1 2 3 4 5 6 (PRODUCT LEVEL)	SEE PAGE
	1	1	**3S-2093**	1	STRAP-CABLE	
	2	1	**7D-6922**	1	LOCKNUT (6-32-THD)	
	3	1	**114-5157**	2	ADJUSTER	
	4	1	**138-8885**	1	BOLT-SOCKET HEAD (6-32X0.5-IN)	
	5	1	**163-1137**	2	BEARING	
	6	1	**192-7811**	2	WASHER (13X22X2-MM THK)	
	7	1	**192-7812**	1	BOLT-SPECIAL	
	8	1	**192-7813**	1	BOLT-SPECIAL	
	9	1	**212-7780**	1	ABSORBER AS-SHOCK	
	10	1	**212-7783**	1	KIT-PULLEY	
					(INCLUDES PARTS MARKED "H" IN GRAPHIC)	
	11	1	**213-4754**	1	KNOB	
	12	1	**9M-2904**	1	CLAMP-HOSE	
	13	1	**377-3141**	1	CABLE AS	
	14	1	**138-8886**	1	BOLT-SOCKET HEAD (1/4-20X1.5-IN)	
	15	1	**2D-6235**	3	LOCKNUT (1/4-20-THD)	
	16	1	**2D-6642**	1	BALL	
	17	1	**2K-4973**	1	LOCKNUT (3/8-16-THD)	
	18	1	**3J-4818**	1	LOCKWASHER	
					PARTS SHOWN IN GRAPHIC(S) WITHOUT A REFERENCE NUMBER ARE NOT SERVICED SEPARATELY	

212-7779 **KIT-SHOCK ABSORBER (**contd.**)** **i06250884**

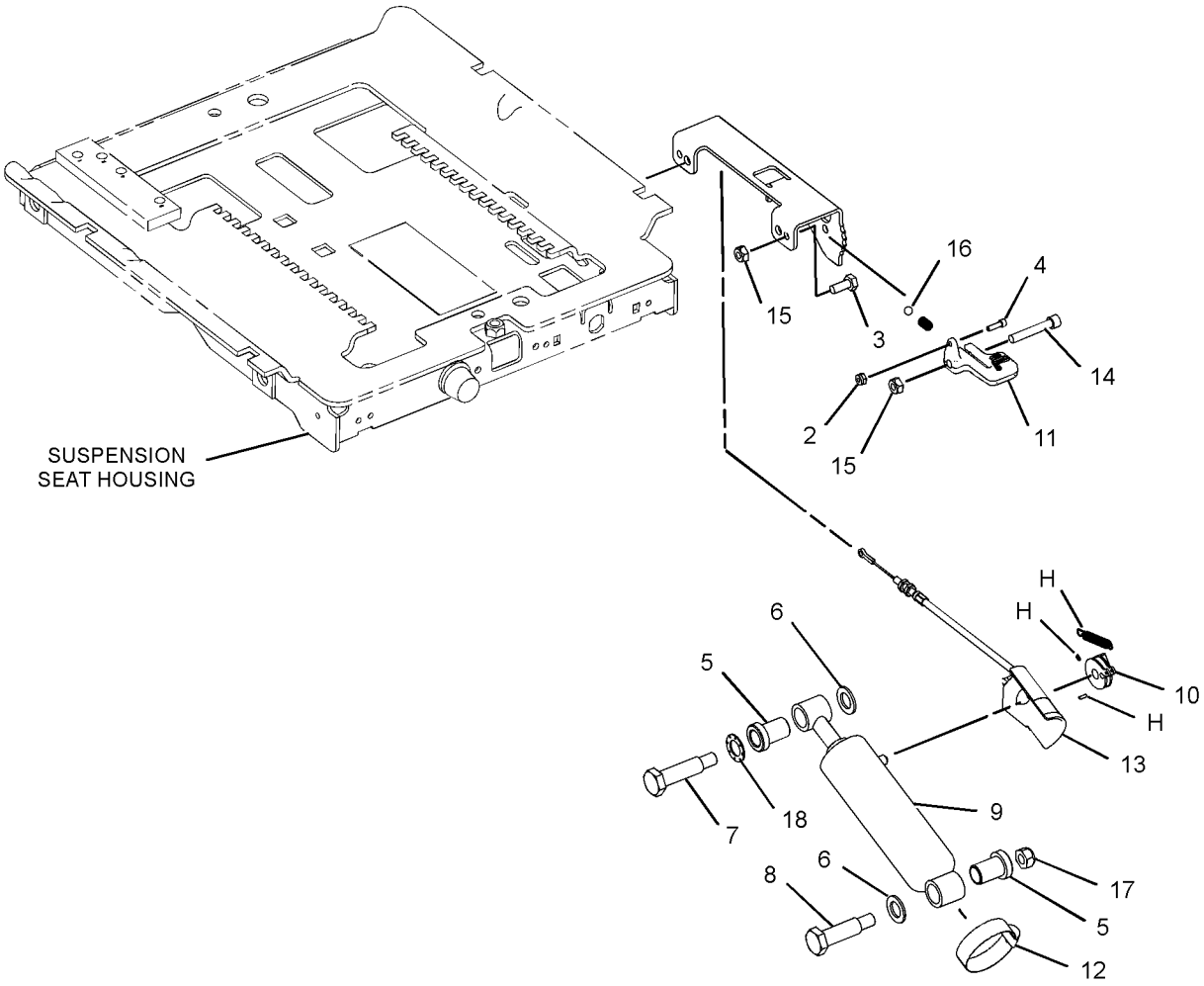

GRAPHIC #1 <END> g03662307

424-8524 LINER GP-CAB

S/N: R5A1-UP

PART OF 393-6480 CAB AR, 393-6485 CAB AR-ENCLOSED ROPS

AN ATTACHMENT

SMCS-7329 **i06218740**

NOTE	REF NO	GRAPHIC REF	PART NUMBER	QTY	PART NAME 1 2 3 4 5 6 (PRODUCT LEVEL)	SEE PAGE
	1	1	**6V-8928**	1	HOOK-COAT	
	2	1	**154-8079**	19	NUT-RETAINER (U-TYPE)	
	3	2	**385-7840**	1	PLATE AS	
M		2	**6V-9632**	4	NUT-WELD (M6X1-THD)	
	4	2	**385-7845**	1	COVER-LATCH (LH)	
	5	2	**385-7851**	1	COVER (LH)	
	6	2	**386-0513**	1	COVER-LATCH (RH)	
	7	1	**386-0516**	1	LINER AS-CAB (FRONT)	
	8	1	**386-0517**	1	LINER AS-CAB (REAR)	
	9	2	**390-3829**	1	DUCT AS	
	10	2	**390-3831**	1	COVER-DASH	
	11	2	**392-7769**	1	PLATE	
	12	2	**392-9663**	1	DOOR AS	
	13	2	**392-9829**	1	SEAL	
	14	2	**393-2286**	1	LATCH AS	
	15	2	**396-2352**	4	LOUVER AS	
	16	2	**422-2152**	2	LOUVER AS-VENT	
	17	2	**422-6177**	2	SEAL	
	18	2	**422-6201**	1	COVER (RH)	
	19	2	**424-4574**	3	LOUVER AS	
	20	2	**426-0972**	2	BUMPER	
	21	2	**427-5774**	2	HINGE AS	
	22	2	**431-7856**	1	SEAL	
	23	2	**450-1843**	1	COVER AS (LH)	
M		2	**3E-4304**	2	INSERT-THREADED (M6X1-THD)	
	24	2	**104-2091**	10	SCREW-FLAT HEAD (6-20X0.5-IN)	
	25	2	**234-0091**	4	RIVET	
M	26	1	**3E-8020**	1	SCREW-TRUSS HEAD (M6X1X25-MM)	
M	27	1,2	**172-8591**	26	NUT-SPRING (M6X1-THD)	
M	28	2	**7Y-7388**	12	SCREW-BUTTON HEAD (M5X0.8X12-MM)	
	29	1,2	**9X-2038**	32	WASHER (7X19X2-MM THK)	
M	30	2	**9X-2042**	6	SCREW-TRUSS HEAD (M6X1X12-MM)	
M	31	1,2	**9X-2044**	30	SCREW-TRUSS HEAD (M6X1X16-MM)	
M	32	2	**9X-2046**	6	SCREW-TRUSS HEAD (M6X1X35-MM)	

M - METRIC PART

424-8524 **LINER GP-CAB (**contd.**)** **i06218740**

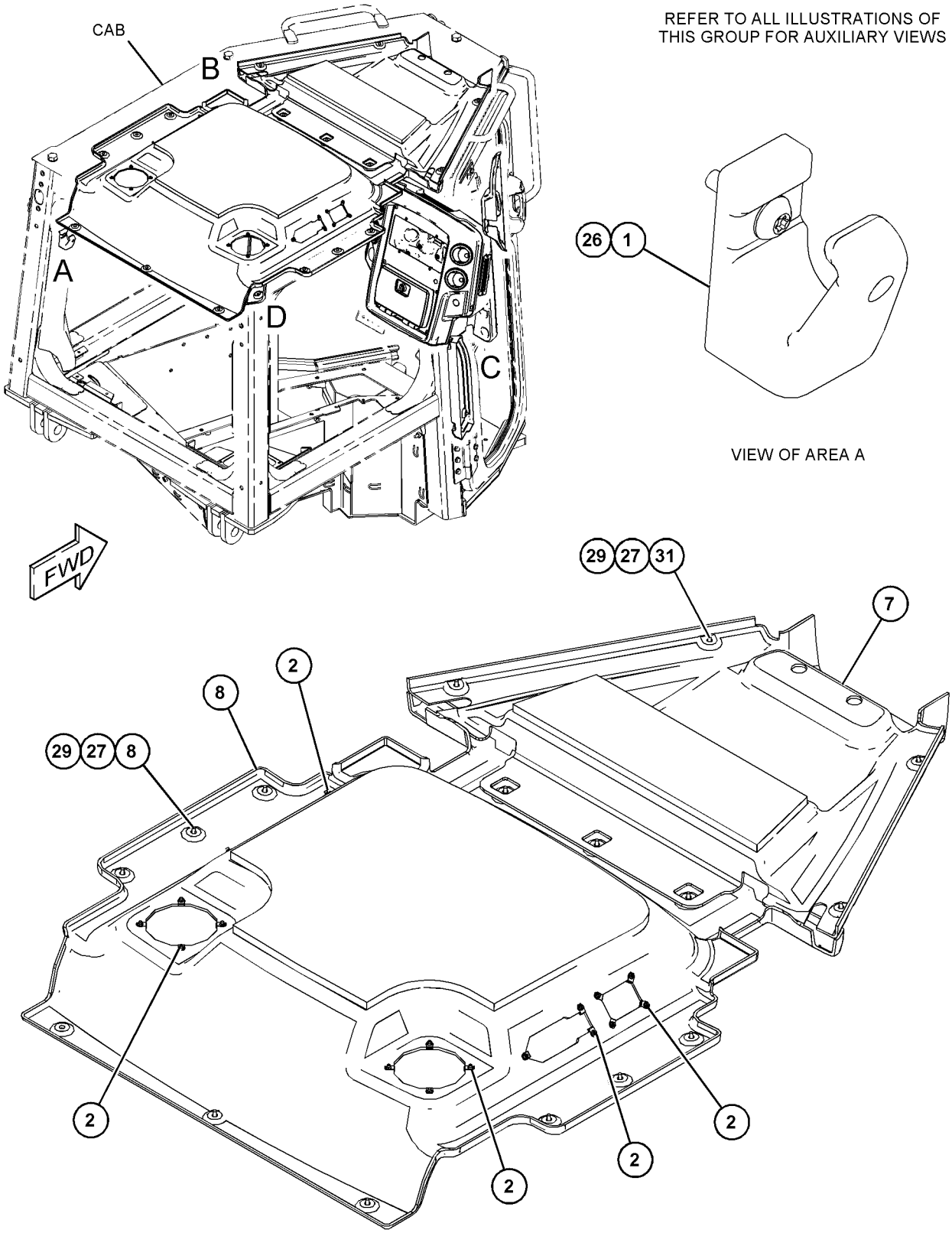

GRAPHIC #1 g03861985

424-8524 **LINER GP-CAB (**contd.**)** **i06218740**

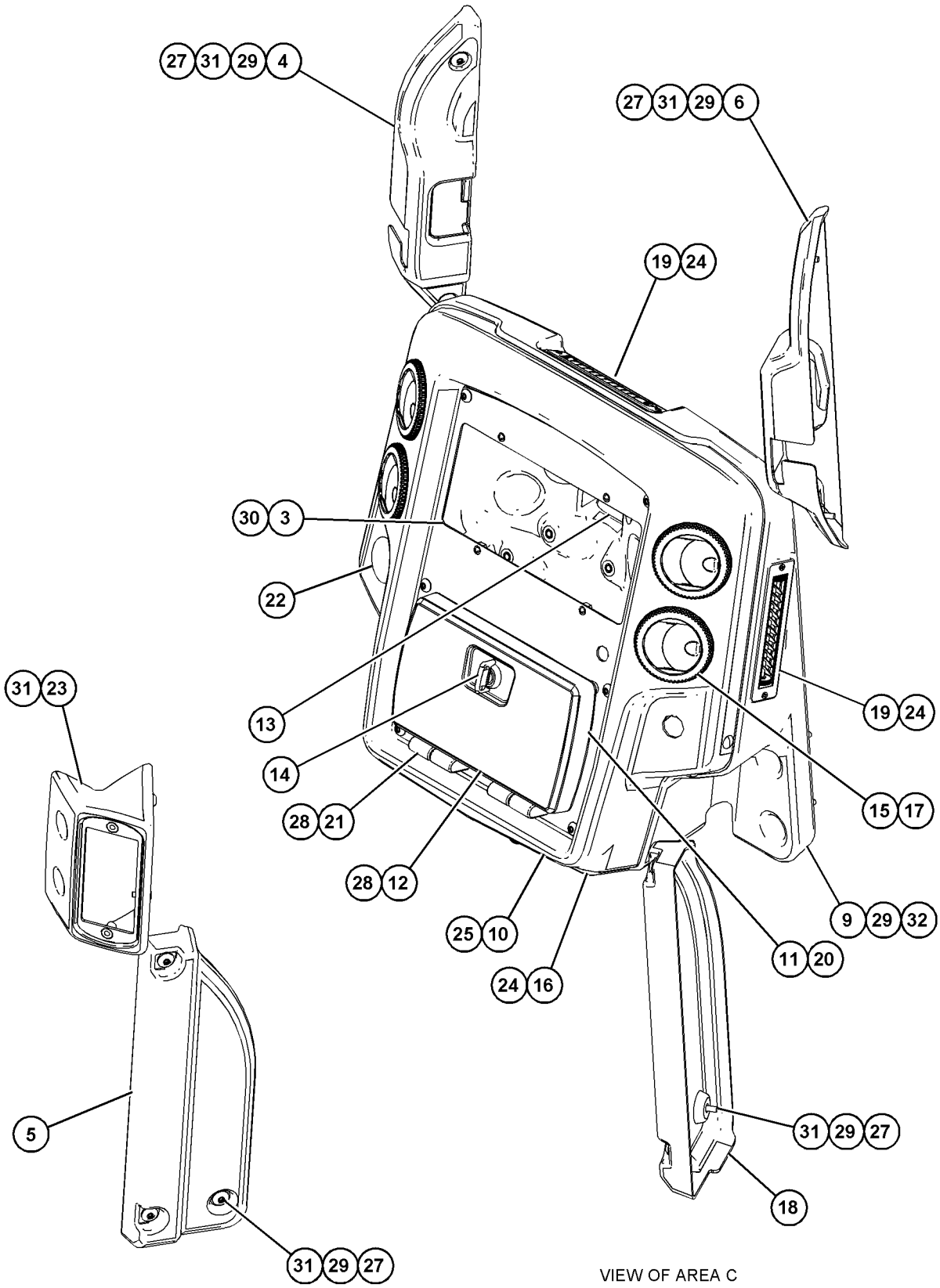

GRAPHIC #2 <END> g03861986

425-6167 LINER GP-CAB

S/N: R5A1-UP
PART OF 393-6475 CANOPY AR
AN ATTACHMENT

SMCS-7329 **i06212831**

NOTE	REF NO	GRAPHIC REF	PART NUMBER	QTY	PART NAME 1 2 3 4 5 6 (PRODUCT LEVEL)	SEE PAGE
M	1	1	**314-3025**	2	SCREW-THUMB (M6X1X16-MM)	
	2	1	**6V-8928**	1	HOOK-COAT	
	3	1	**154-8079**	7	NUT-RETAINER (U-TYPE)	
J	4	1	**226-0295**	1	LOCK AS	
	5	1	**226-0340**	1	CAM	
	6	1	**389-2146**	1	LINER AS-CAB (FRONT)	
	7	1	**389-2148**	1	LINER AS-CAB (MAIN)	
	8	1	**390-3831**	1	COVER-DASH	
	9	1	**391-4073**	1	PLATE AS	
	10	1	**391-4074**	1	PLATE AS	
	11	1	**392-9829**	1	SEAL	
	12	1	**393-4749**	1	DUCT AS	
	13	1	**396-2352**	4	LOUVER AS	
	14	1	**422-2152**	2	LOUVER AS-VENT	
	15	1	**422-6177**	2	SEAL	
	16	1	**431-7856**	1	SEAL	
	17	1	**450-1843**	1	COVER AS	
M		1	**3E-4304**	2	INSERT-THREADED (M6X1-THD)	
	18	1	**104-2091**	4	SCREW-FLAT HEAD (6-20X0.5-IN)	
	19	1	**234-0091**	4	RIVET	
	20	1	**275-6710**	2	RETAINER	
M	21	1	**172-8591**	5	NUT-SPRING (M6X1-THD)	
	22	1	**9X-2038**	22	WASHER (7X19X2-MM THK)	
M	23	1	**9X-2043**	2	SCREW-TRUSS HEAD (M6X1X14-MM)	
M	24	1	**9X-2044**	18	SCREW-TRUSS HEAD (M6X1X16-MM)	
M	25	1	**9X-2045**	7	SCREW-TRUSS HEAD (M6X1X20-MM)	
M	26	1	**9X-2046**	6	SCREW-TRUSS HEAD (M6X1X35-MM)	

J - REQUIRES CORPORATE KEY
M - METRIC PART

425-6167 **LINER GP-CAB (**contd.**)** **i06212831**

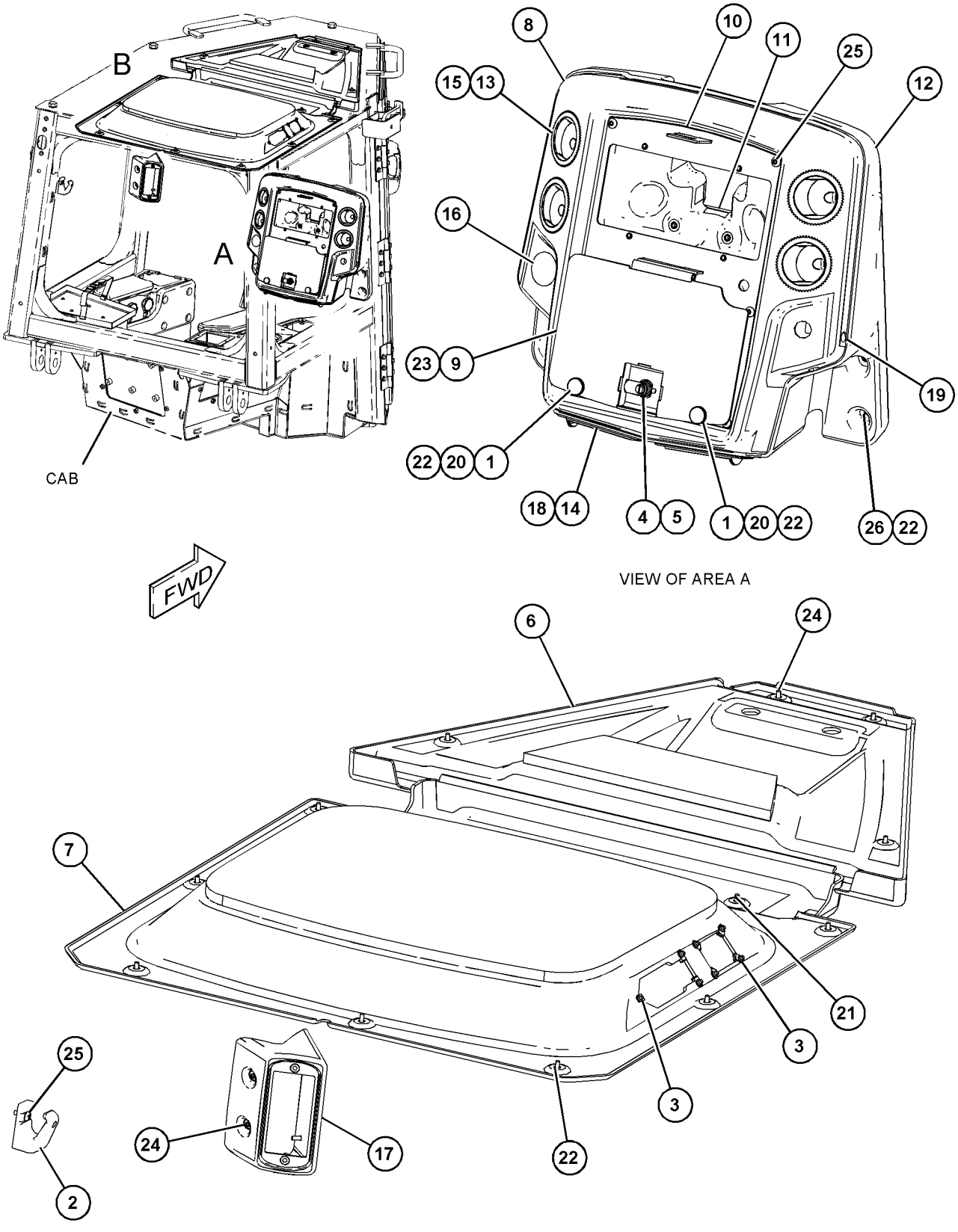

GRAPHIC #1 <END> g03859806

424-4629 LINES GP-AIR CONDITIONER—ROPS MOUNTED

S/N: R5A1-UP
PART OF 393-6488, 393-6489 CAB AR
AN ATTACHMENT

SMCS-1808 **i06563772**

NOTE	REF NO	GRAPHIC REF	PART NUMBER	QTY	PART NAME 1 2 3 4 5 6 (PRODUCT LEVEL)	SEE PAGE
	1	1	**6L-4724**	1	CLIP-TUBE	
	2	1	**7K-1181**	7	STRAP-CABLE	
	3	1	**106-5534**	1	DRYER-REFRIGERANT (RECEIVER)	
	4	1	**125-8534**	1	PLATE AS	
	5	1	**146-0797**	1	FITTING AS-AIR CONDITIONER	
		1	**3E-4051**	1	CAP-SEAL (LOW SIDE CHARGE PORT)	
		1	**3E-4057**	1	VALVE AS (REFRIGERANT, LOW SIDE)	
	6	1	**189-3158**	1	SUPPRESSOR-ARC	
	7	1	**195-0882**	1	BRACKET AS	
M		1	**8T-3490**	1	NUT-WELD (M10X1.5-THD)	
		1	**195-2640**	1	BRACKET	
	8	1	**315-7790**	1	PLATE	
	9	1	**327-0282**	3	SEAL-INTEGRAL (1/2-IN)	
	10	1	**327-0283**	1	SEAL-INTEGRAL (3/4-IN)	
	11	1	**355-1790**	1	CLAMP	
	12	1	**355-3148**	1	SWITCH AS-PRESSURE (HIGH, LOW)	
		1	**8T-8729**	2	PIN-CONNECTOR (16-GA TO 18-GA)	
		1	**102-8802**	1	KIT-RECEPTACLE (2-PIN)	
					(INCLUDES RECEPTACLE AS & WEDGE)	
I	13	1	**431-0405**	1	HOSE AS	
I	15	1	**460-4943**	1	HOSE AS	
	16	1	**472-0602**	1	HOSE AS	
	17	1	**472-0603**	1	HOSE AS	
	18	1	**482-6370**	1	BRACKET AS	
I	19	1	**482-6371**	1	HOSE AS	
I	20	1	**482-6372**	1	HOSE AS	
	21	1	**485-8950**	1	HARNESS AS-SWITCH	
E		1	**125-7874**		TUBE-HEAT SHRINK (5.72-MM DIA) (10-CM)	
		1	**9X-3402**	8	SOCKET-CONNECTOR (16-GA TO 18-GA)	
					—OR—	
		1	**126-1768**	8	SOCKET-CONNECTOR (14-GA TO 16-GA)	
		1	**155-2270**	4	KIT-CONNECTING PLUG (2-PIN)	
					(EACH INCLUDES PLUG AS, WEDGE, & INTERFACE SEAL)	
	22	1	**486-8250**	1	BRACKET	
	23	1	**127-9323**	1	BRACKET AS	
M		1	**8T-3490**	1	NUT-WELD (M10X1.5-THD)	
	24	1	**132-5789**	1	CLIP	
	25	1	**136-0207**	6	STRAP-CABLE	
	26	1	**173-2090**	1	SPACER (11X20X15-MM THK)	
M	27	1	**178-3336**	2	NUT-HEX FLANGE (M8X1.25-THD)	
	28	1	**200-6345**	3	MOUNT (DUAL SWIVEL)	
	29	1	**219-0943**	1	FITTING AS-AIR CONDITIONER	
		1	**3E-4052**	1	CAP-SEAL (HIGH SIDE CHARGE PORT)	
		1	**3E-4058**	1	VALVE AS (REFRIGERANT, HIGH SIDE)	
	30	1	**4S-1962**	3	CLIP	
	31	1	**6D-1641**	8	CLIP	

424-4629 **LINES GP-AIR CONDITIONER (**contd.**)** **i06563772**

NOTE	REF NO	GRAPHIC REF	PART NUMBER	QTY	PART NAME 1 2 3 4 5 6 (PRODUCT LEVEL)	SEE PAGE
	32	1	**6D-4636**	3	CLIP	
	33	1	**7X-7729**	1	WASHER (11X25X3-MM THK)	
	34	1	**8M-2773**	2	CLIP	
	35	1	**8T-4121**	15	WASHER-HARD (11X21X2.5-MM THK)	
M	36	1	**8T-4136**	4	BOLT (M10X1.5X25-MM)	
M	37	1	**8T-4137**	8	BOLT (M10X1.5X20-MM)	
M	38	1	**8T-4182**	1	BOLT (M10X1.5X45-MM)	
M	39	1	**8T-4191**	2	BOLT (M10X1.5X16-MM)	
	40	1	**8T-4224**	1	WASHER-HARD (8.8X16X2-MM THK)	
M	41	1	**8T-4908**	1	BOLT (M8X1.25X25-MM)	
M	42	1	**8T-6466**	1	BOLT (M10X1.5X60-MM)	
	43	1	**8T-7934**	1	WASHER-HARD (11X21X5-MM THK)	
	44	1	**9X-7378**	1	SEAL-O-RING	
	45	1	**9X-7380**	2	SEAL-O-RING	
	46	1	**9X-7381**	3	SEAL-O-RING	
	47	1	**9X-7382**	1	SEAL-O-RING	
	48	1	**9X-7385**	2	SEAL-O-RING	
F		1	**110-6393**	1	PLATE-INSTRUCTION (AIR CONDITIONER)	
					(ON LH SIDE OF DASH)	

E - ORDER BY THE CENTIMETER
F - NOT SHOWN
I - REFER TO HYDRAULIC INFORMATION SYSTEM
M - METRIC PART

424-4629 **LINES GP-AIR CONDITIONER (**contd.**)** **i06563772**

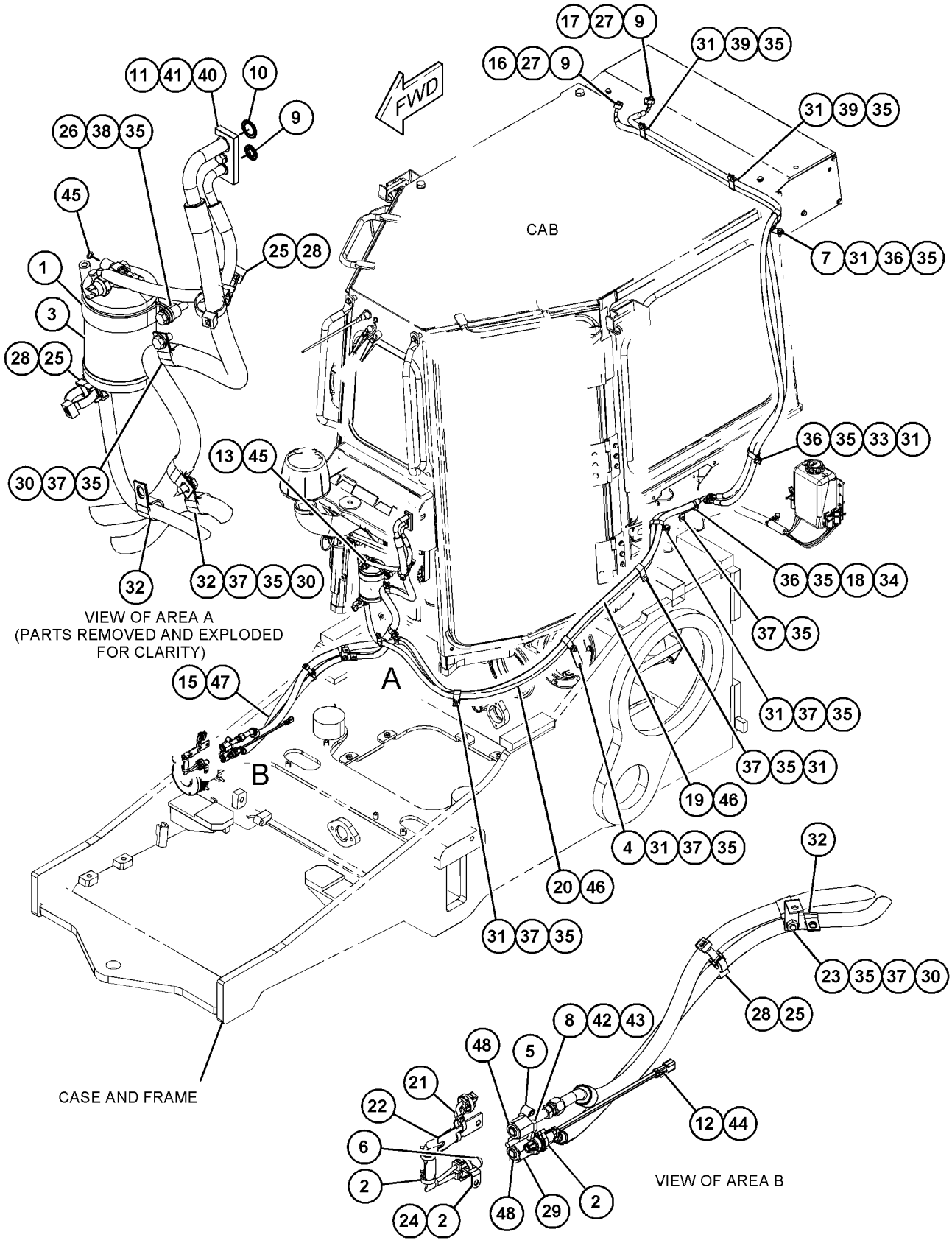

GRAPHIC #1 <END> g06026214

424-4628 LINES GP-HEATER

S/N: R5A1-UP

PART OF 391-9510 INSTALLATION AR-ENGINE

SMCS-1380, 1812, 7304 **i06556288**

NOTE	REF NO	GRAPHIC REF	PART NUMBER	QTY	PART NAME 1 2 3 4 5 6 (PRODUCT LEVEL)	SEE PAGE
	1	1	**129-3108**	1	BRACKET AS	
		1	**8R-0040**	1	ANGLE	
M		1	**8T-3490**	1	NUT-WELD (M10X1.5-THD)	
	2	1	**133-6934**	1	SPACER (11X20X25-MM THK)	
	3	1	**203-2789**	1	BRACKET AS	
	4	1	**343-2389**	5	CLIP	
M	5	1	**344-5675**	1	NUT (M10X1.5-THD)	
	6	1	**6D-1641**	1	CLIP	
	7	1	**8T-0154**	4	CLAMP-HOSE	
	8	1	**8T-4121**	7	WASHER-HARD (11X21X2.5-MM THK)	
M	9	1	**8T-4136**	3	BOLT (M10X1.5X25-MM)	
M	10	1	**8T-4185**	1	BOLT (M10X1.5X50-MM)	
	11	1	**9X-3959**	2	ELBOW	
E	12	1	**5P-0767**		HOSE (231-CM)	
E	12A	1	**5P-0767**		HOSE (67-CM)	
	13	1	**139-1398**	1	CLIP	
M	14	1	**8T-4195**	1	BOLT (M10X1.5X30-MM)	
M	15	1	**8T-4133**	1	NUT (M10X1.5-THD)	

E - ORDER BY THE CENTIMETER
M - METRIC PART

424-4628 **LINES GP-HEATER (**contd.**)** **i06556288**

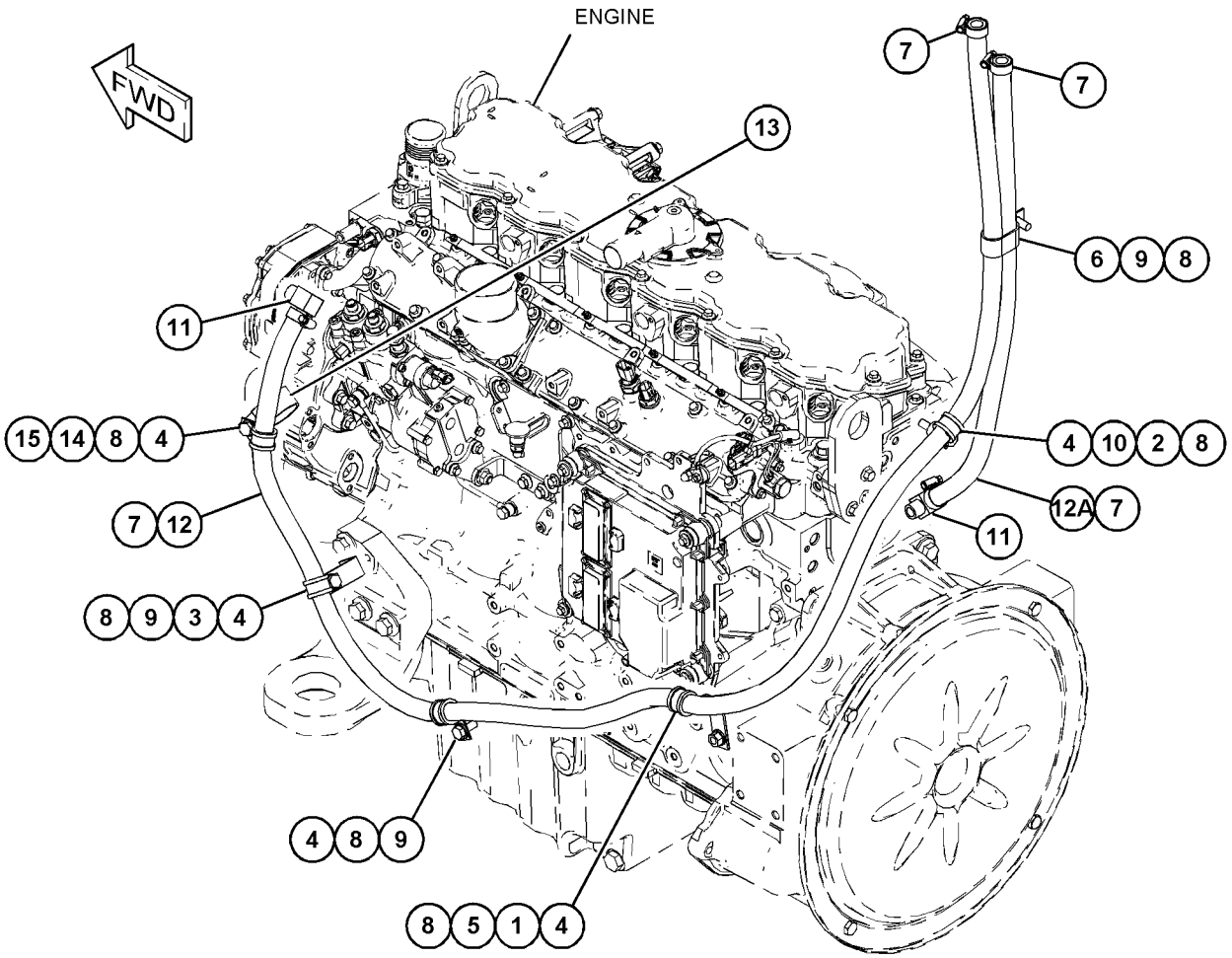

GRAPHIC #1 <END> g06024216

105-9659 MIRROR GP-REAR VIEW

S/N: R5A1-UP

PART OF 393-6480 CAB AR, 393-6485 CAB AR-ENCLOSED ROPS, 393-6475 CANOPY AR

AN ATTACHMENT

SMCS-7319 **i05331109**

NOTE	REF NO	GRAPHIC REF	PART NUMBER	QTY	PART NAME 1 2 3 4 5 6 (PRODUCT LEVEL)	SEE PAGE
	1	1	**9P-9388**	1	KNOB (MIRROR ADJUSTMENT)	
	2	1	**5P-6874**	1	MIRROR (REAR VIEW)	
	3	1	**5K-9179**	1	BOLT-CARRIAGE (3/8-16X11-IN)	
	4	1	**6Y-5113**	1	BRACKET	
	5	1	**8T-4121**	2	WASHER-HARD (11X21X2.5-MM THK)	
M	6	1	**8T-4195**	2	BOLT (M10X1.5X30-MM)	

M - METRIC PART

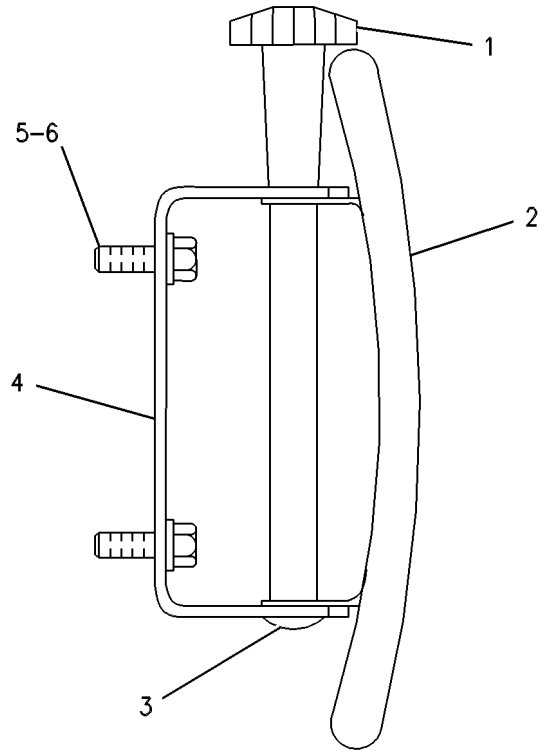

GRAPHIC #1 <END> g00254288

281-3997 MIRROR GP-REAR VIEW—LH

S/N: R5A1-UP

AN ATTACHMENT

SMCS-7319 **i06556503**

NOTE	REF NO	GRAPHIC REF	PART NUMBER	QTY	PART NAME 1 2 3 4 5 6 (PRODUCT LEVEL)	SEE PAGE
	1	1	**281-3998**	1	MIRROR AS	
M	2	1	**9X-2046**	1	SCREW-TRUSS HEAD (M6X1X35-MM)	

M - METRIC PART

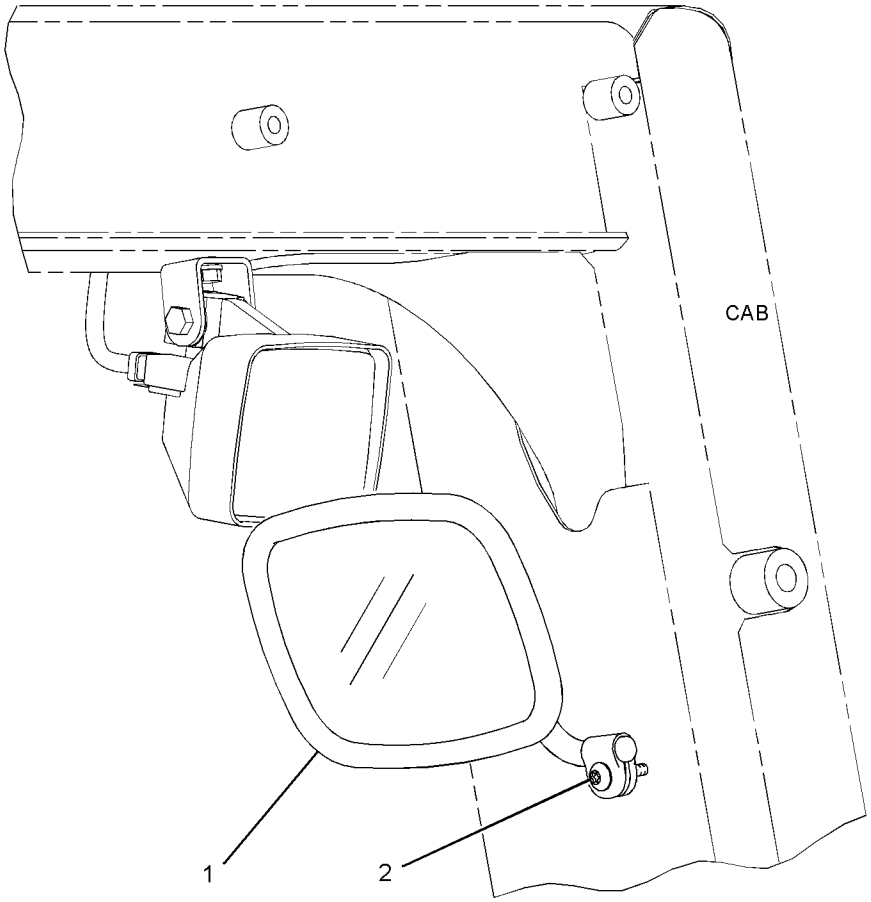

REAR VIEW
(LOWER LEFT)

GRAPHIC #1 <END> g01373435

330-5013 MOTOR GP-WINDOW WIPER

S/N: R5A1-UP
24-VOLT
PART OF 374-4733 WIPER GP-WINDOW
AN ATTACHMENT

SMCS-7305 **i05331117**

NOTE	REF NO	GRAPHIC REF	PART NUMBER	QTY	PART NAME 1 2 3 4 5 6 (PRODUCT LEVEL)	SEE PAGE
	1	1	**102-8805**	1	KIT-RECEPTACLE (6-PIN)	
					(INCLUDES RECEPTACLE AS & WEDGE)	
	2	1	**8T-8729**	5	PIN-CONNECTOR (16-GA TO 18-GA)	
	3	1	**8T-8737**	1	PLUG-SEAL	
M	4	1	**5C-7261**	1	NUT (M8X1.25-THD)	
	5	1	**3F-9556**	1	LOCKWASHER	
	6	1	**263-3823**	1	CAP-WIPER	

M - METRIC PART

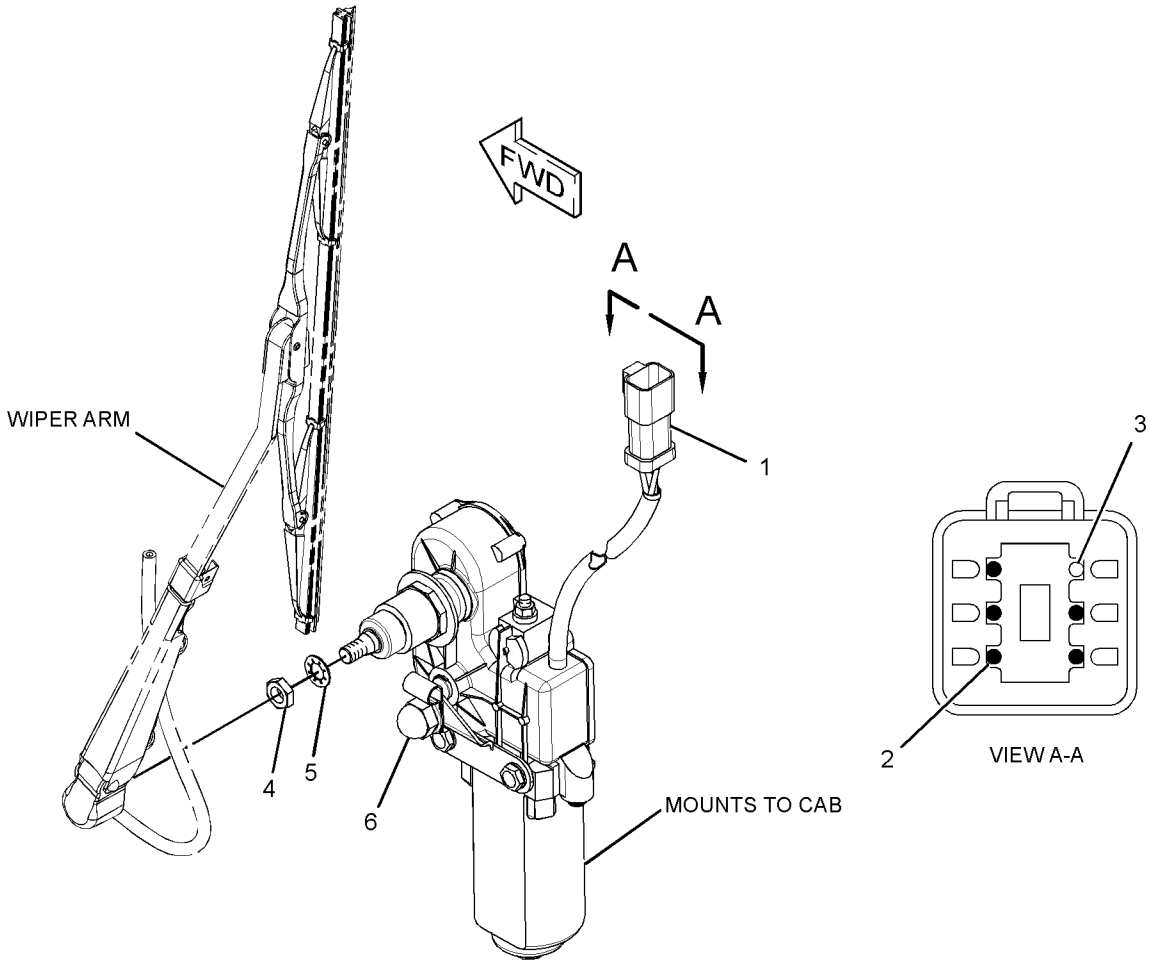

GRAPHIC #1 <END> g02052753

330-5014 MOTOR GP-WINDOW WIPER

S/N: R5A1-UP
24-VOLT
PART OF 374-4733 WIPER GP-WINDOW
AN ATTACHMENT

SMCS-7305 **i06231675**

NOTE	REF NO	GRAPHIC REF	PART NUMBER	QTY	PART NAME 1 2 3 4 5 6 (PRODUCT LEVEL)	SEE PAGE
	1	1	**8T-8737**	1	PLUG-SEAL	
	2	1	**102-8805**	1	KIT-RECEPTACLE (6-PIN)	
					(INCLUDES RECEPTACLE AS & WEDGE)	
	3	1	**186-3735**	5	PIN-CONNECTOR (16-GA TO 18-GA)	
	4	1	**263-3823**	1	CAP-WIPER	
	5	1	**3F-9556**	1	LOCKWASHER	
M	6	1	**5C-7261**	1	NUT (M8X1.25-THD)	

M - METRIC PART

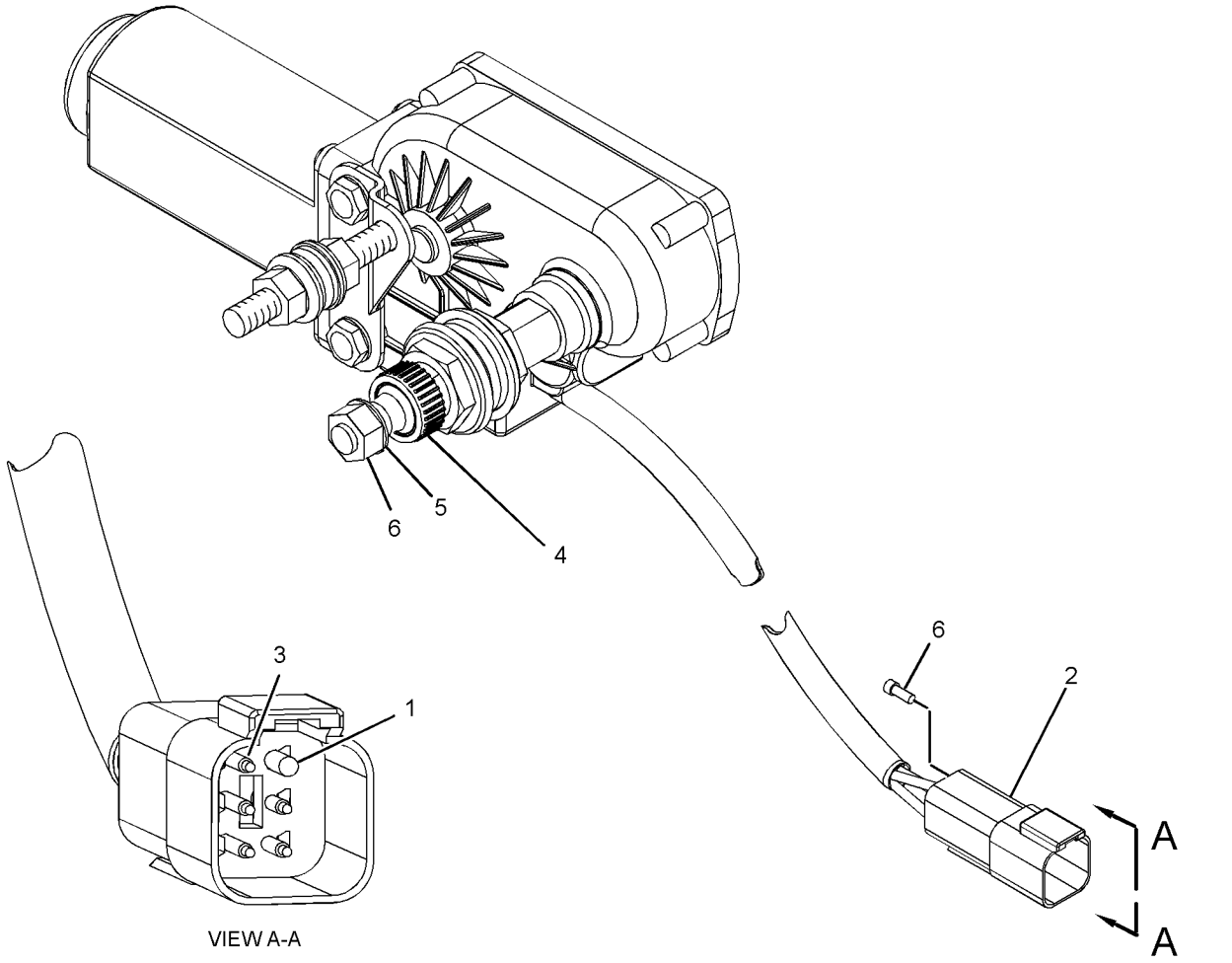

GRAPHIC #1 <END> g02029793

330-5017 MOTOR GP-WINDOW WIPER–REAR

S/N: R5A1-UP
24-VOLT
PART OF 374-4733 WIPER GP-WINDOW
AN ATTACHMENT

SMCS-7305 **i05331119**

NOTE	REF NO	GRAPHIC REF	PART NUMBER	QTY	PART NAME 1 2 3 4 5 6 (PRODUCT LEVEL)	SEE PAGE
	1	1	**8T-8737**	1	PLUG-SEAL	
	2	1	**102-8805**	1	KIT-RECEPTACLE (6-PIN)	
					(INCLUDES RECEPTACLE AS & WEDGE)	
	3	1	**8T-8729**	5	PIN-CONNECTOR (16-GA TO 18-GA)	
	4	1	**263-3823**	1	CAP-WIPER	
	5	1	**3F-9556**	1	LOCKWASHER	
M	6	1	**5C-7261**	1	NUT (M8X1.25-THD)	

M - METRIC PART

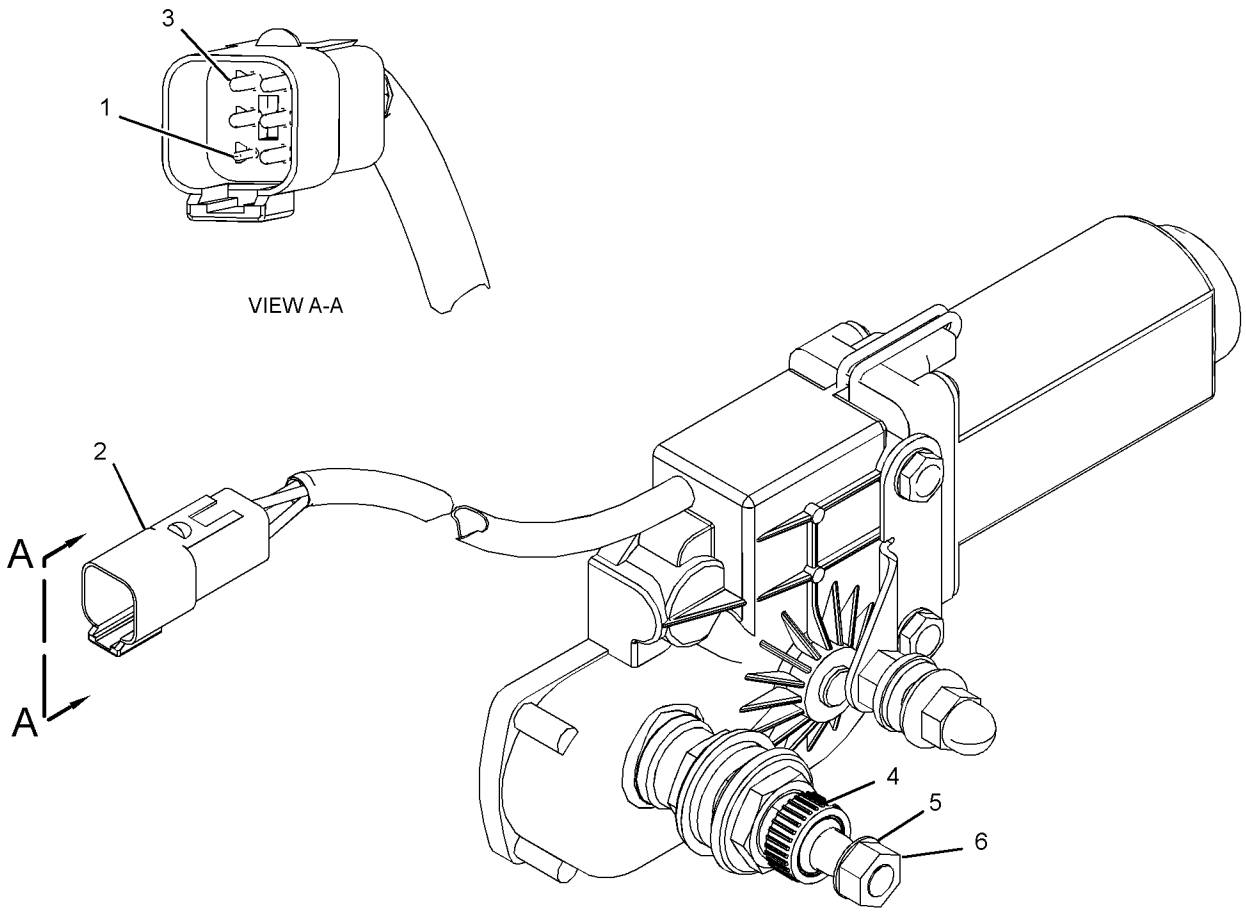

GRAPHIC #1 <END> g02153801

393-8111 MOTOR GP-WINDOW WIPER

S/N: R5A1-UP
24-VOLT
PART OF 374-4733 WIPER GP-WINDOW
AN ATTACHMENT

SMCS-7305 **i06231673**

NOTE	REF NO	GRAPHIC REF	PART NUMBER	QTY	PART NAME 1 2 3 4 5 6 (PRODUCT LEVEL)	SEE PAGE
	1	1	**102-8805**	1	KIT-RECEPTACLE (6-PIN)	
					(INCLUDES RECEPTACLE AS & WEDGE)	
	2	1	**8T-8729**	5	PIN-CONNECTOR (16-GA TO 18-GA)	
	3	1	**8T-8737**	1	PLUG-SEAL	
M	4	1	**5C-7261**	1	NUT (M8X1.25-THD)	
	5	1	**3F-9556**	1	LOCKWASHER	
	6	1	**263-3823**	1	CAP-WIPER	

M - METRIC PART

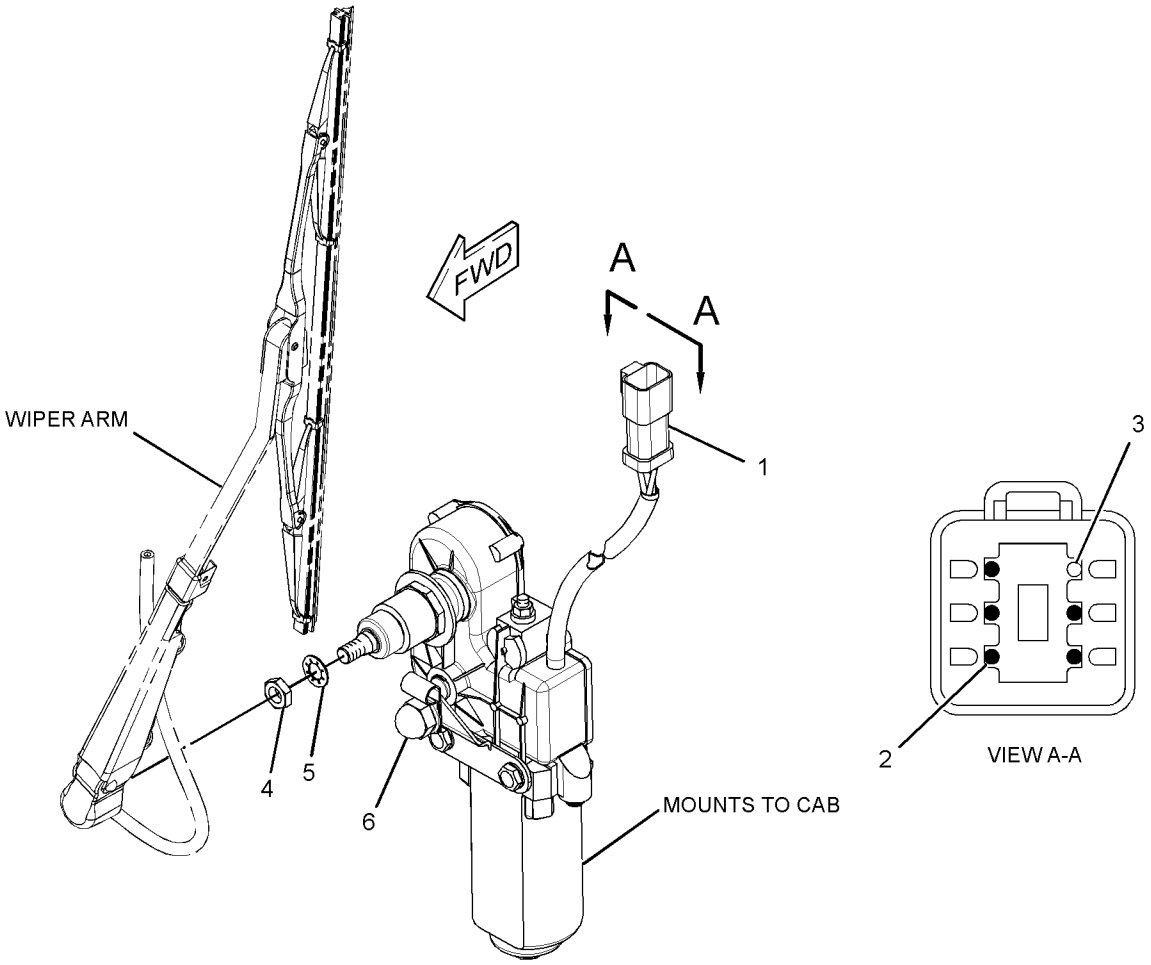

GRAPHIC #1 <END> g03864904

393-6479 MOUNTING GP-ROPS

S/N: R5A1-UP

PART OF 393-6488, 393-6489 CAB AR, 393-6487 CANOPY AR

AN ATTACHMENT

SMCS-7266 **i06147599**

NOTE	REF NO	GRAPHIC REF	PART NUMBER	QTY	PART NAME 1 2 3 4 5 6 (PRODUCT LEVEL)	SEE PAGE
	1	1	**117-8131**	8	MOUNT AS	
	2	1	**387-2002**	2	PIN AS	
	3	1	**144-2179**	2	SLEEVE	
	4	1	**252-0080**	2	WASHER (25X144X12-MM THK)	
	5	1	**297-0846**	2	BOLT (M30X3.5X180-MM)	
	6	1	**3E-4888**	2	WASHER (32X144X12-MM THK)	
	7	1	**3E-4898**	2	SLEEVE	
	8	1	**7X-0593**	2	WASHER-HARD (34X57X6-MM THK)	
	9	1	**7X-7729**	2	WASHER (11X25X3-MM THK)	
M	10	1	**8C-3290**	2	BOLT (M24X3X150-MM)	
M	11	1	**8T-4136**	2	BOLT (M10X1.5X25-MM)	
	12	1	**8T-4167**	2	WASHER-HARD (26X44X4-MM THK)	

M - METRIC PART

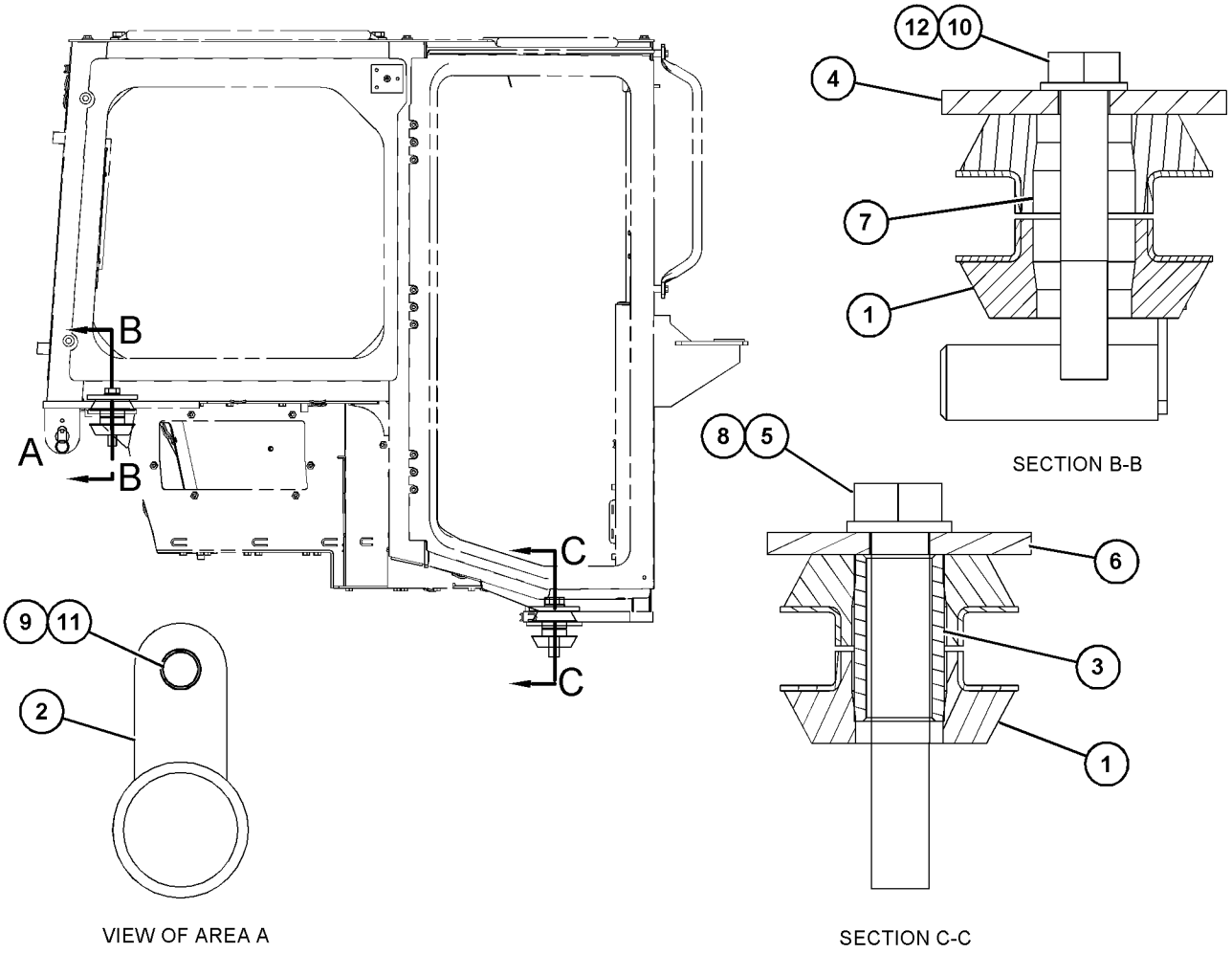

GRAPHIC #1 <END> g03842293

423-3663 MOUNTING GP-ROPS

S/N: R5A1-UP

PART OF 391-9522 CHASSIS AR

SMCS-7266 **i06518826**

NOTE	REF NO	GRAPHIC REF	PART NUMBER	QTY	PART NAME 1 2 3 4 5 6 (PRODUCT LEVEL)	SEE PAGE
	1	1	**423-7295**	1	SUPPORT AS (RH)	
	2	1	**423-7296**	1	SUPPORT AS (LH)	
	3	1	**434-8111**	1	SUPPORT AS	
	4	1	**226-4192**	4	WASHER-HARD (21.5X35X8-MM THK)	
M	5	1	**7X-2580**	8	BOLT (M30X3.5X90-MM)	
M	6	1	**213-5007**	4	BOLT (M20X2.5X80-MM)	
	7	1	**9X-8258**	8	WASHER (33X56X6-MM THK)	

M - METRIC PART

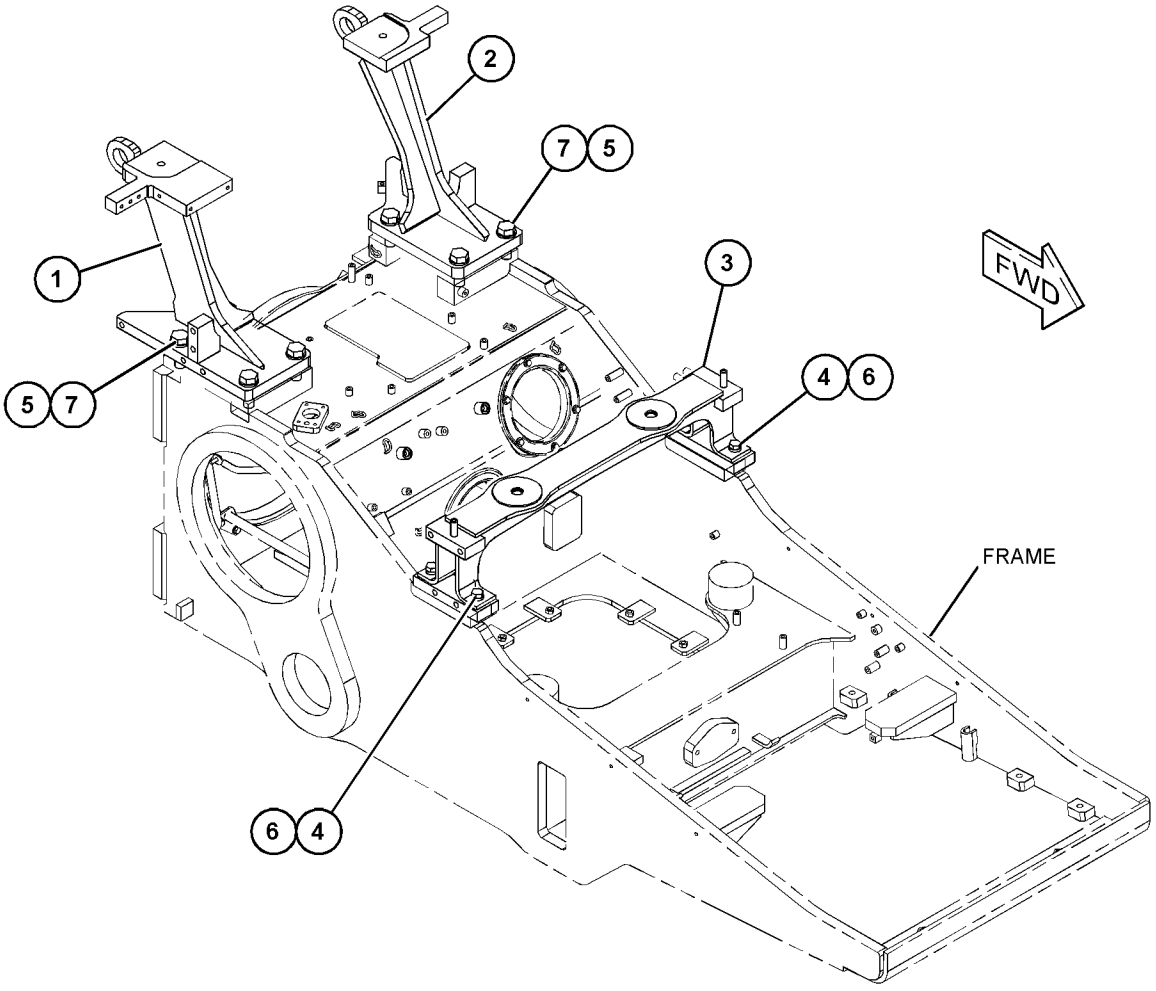

GRAPHIC #1 <END> g06009210

292-6402 PAN GP-BACKREST

S/N: R5A1-UP

PART OF 292-9237, 292-9238 PAN GP-BACKREST

AN ATTACHMENT

SMCS-7312 **i05333518**

NOTE	REF NO	GRAPHIC REF	PART NUMBER	QTY	PART NAME 1 2 3 4 5 6 (PRODUCT LEVEL)	SEE PAGE
	1	1	**5P-7957**	1	LANYARD	
	2	1	**136-1543**	1	PLATE AS-LUMBAR	
	3	1	**173-2052**	1	RETAINER	
	4	1	**178-7907**	1	HOLDER (LITERATURE)	
	5	1	**261-5694**	1	PAN AS-BACKREST	
	6	1	**322-3161**	1	SPRING	
	7	1	**4K-9429**	8	RIVET-POP	

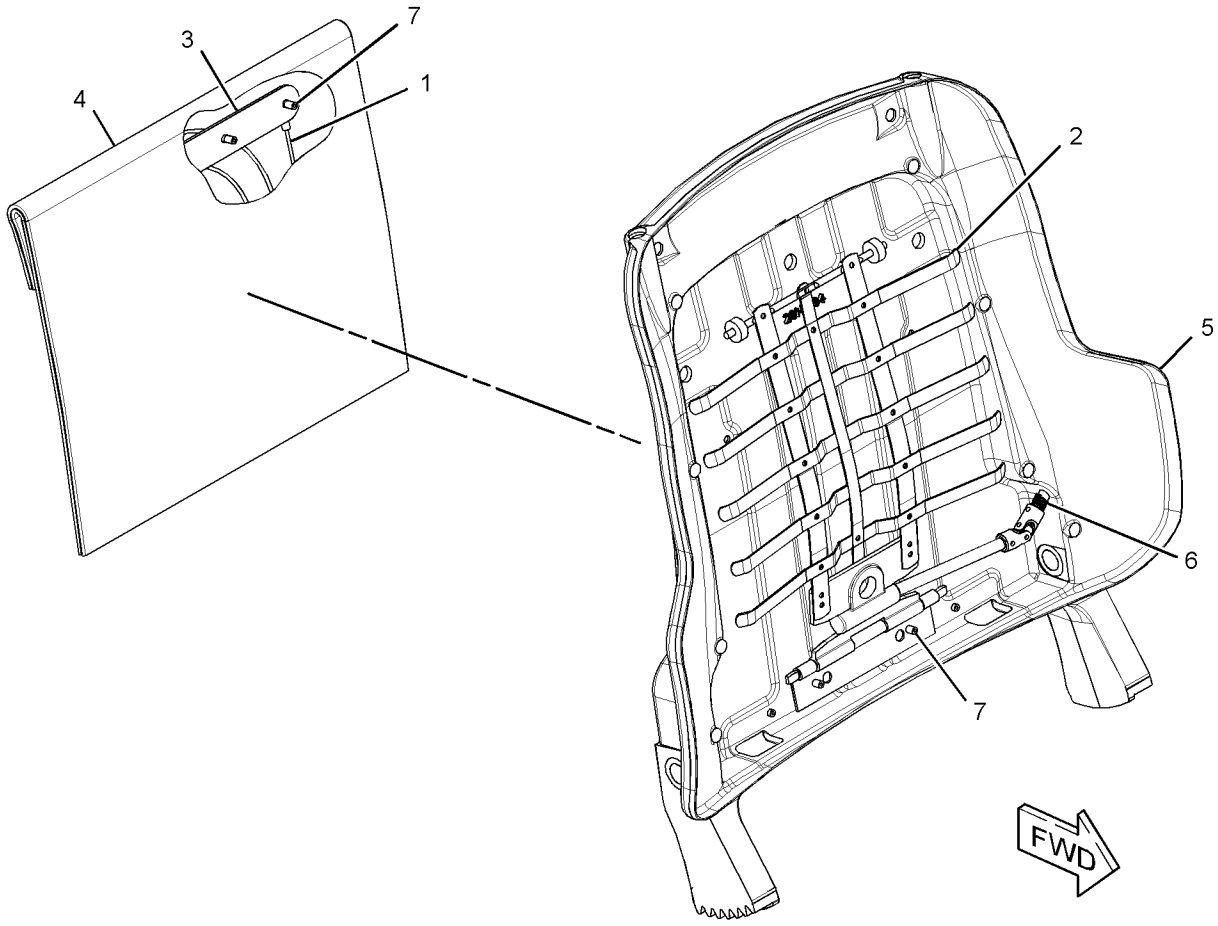

GRAPHIC #1 <END> g01577333

292-9237 PAN GP-BACKREST

S/N: R5A1-UP
PART OF 178-0603 SEAT GP
AN ATTACHMENT

SMCS-7312 **i05332841**

NOTE	REF NO	GRAPHIC REF	PART NUMBER	QTY	PART NAME 1 2 3 4 5 6 (PRODUCT LEVEL)	SEE PAGE
	1	1	**164-4883**	1	KNOB-LUMBAR	
	2	1	**250-4628**	3	PLUG	
	3	1	**292-6097**	1	CUSHION AS-BACK	
Y	4	1	**292-6402**	1	PAN GP-BACKREST (LUMBAR)	531
	5	1	**5P-0537**	2	WASHER-HARD (7.2X14.5X2-MM THK)	
	6	1	**6V-8969**	2	SCREW-BUTTON HEAD (1/4-20X0.5-IN)	
	7	1	**8T-7566**	1	PIN-SPRING	

Y - SEPARATE ILLUSTRATION

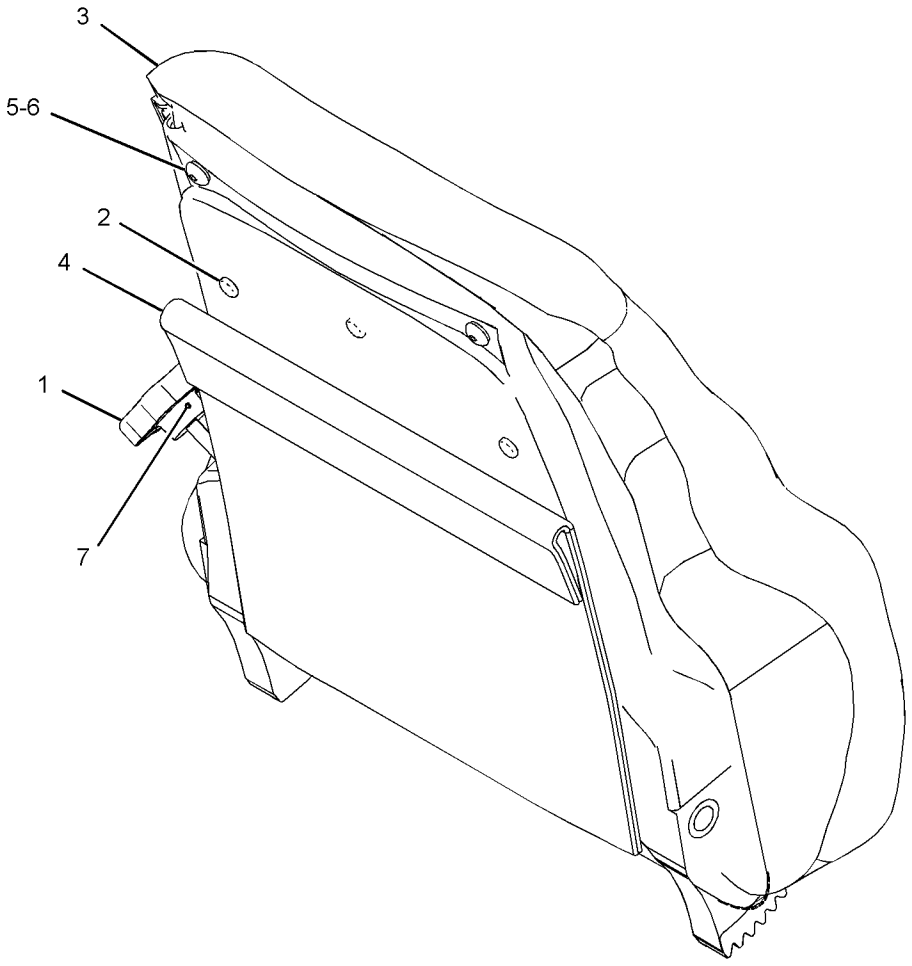

GRAPHIC #1 <END> g01336870

292-9238 PAN GP-BACKREST

S/N: R5A1-UP
PART OF 180-7304 SEAT GP
AN ATTACHMENT

SMCS-7312 **i05333544**

NOTE	REF NO	GRAPHIC REF	PART NUMBER	QTY	PART NAME 1 2 3 4 5 6 (PRODUCT LEVEL)	SEE PAGE
	1	1	**164-4883**	1	KNOB-LUMBAR	
	2	1	**250-4628**	3	PLUG	
	3	1	**292-6098**	1	CUSHION AS (VINYL)	
Y	4	1	*292-6402*	1	PAN GP-BACKREST (LUMBAR)	531
	5	1	**5P-0537**	2	WASHER-HARD (7.2X14.5X2-MM THK)	
	6	1	**6V-8969**	2	SCREW-BUTTON HEAD (1/4-20X0.5-IN)	
	7	1	**8T-7566**	1	PIN-SPRING	

Y - SEPARATE ILLUSTRATION

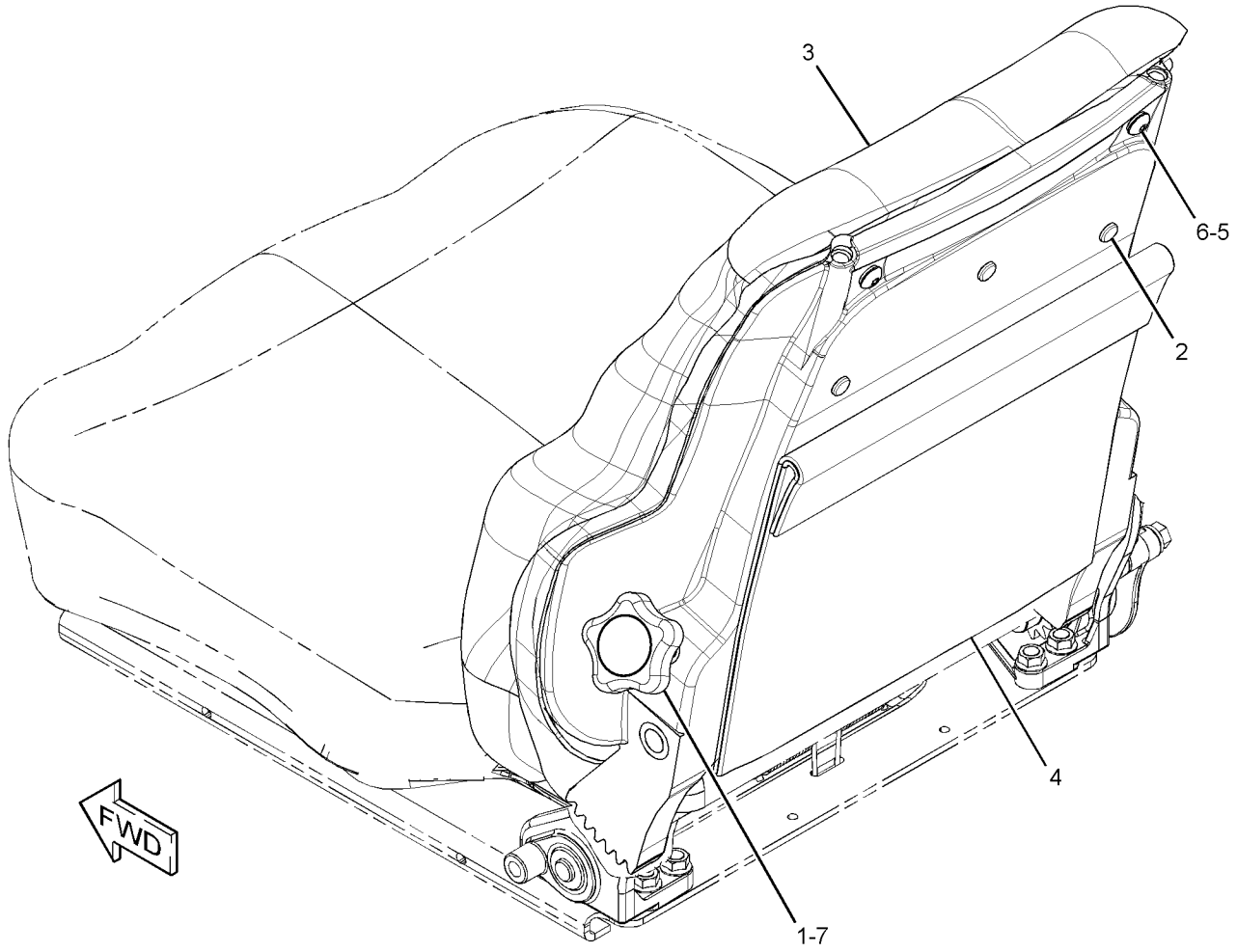

GRAPHIC #1 <END> g01341782

329-5766 PEDAL GP-GOVERNOR & BRAKE

S/N: R5A1-UP

PART OF 326-4855 CONTROL & MTG GP-PEDAL

AN ATTACHMENT

SMCS-4122 **i06171942**

NOTE	REF NO	GRAPHIC REF	PART NUMBER	QTY	PART NAME 1 2 3 4 5 6 (PRODUCT LEVEL)	SEE PAGE
	1	1	**132-7077**	1	SWITCH AS-LIMIT (SERVICE BRAKE PEDAL)	
		1	**6V-8376**	3	SCREW-MACHINE (8-32X0.25-IN)	
		1	**9B-7233**	3	LOCKWASHER	
Y	2	1	**266-1467**	1	SENSOR GP-POSITION (ROTARY) (SERVICE BRAKE)	166
	3	1	**102-8804**	1	KIT-RECEPTACLE (4-PIN)	
					(INCLUDES RECEPTACLE AS & WEDGE)	
	4	1	**103-1107**	2	SCREW-MACHINE (6-32X0.87-IN)	
	5	1	**168-4511**	4	SCREW-PAN HEAD (10-32X1-IN)	
Y	6	1	**269-1981**	1	SENSOR GP-POSITION (DECELERATOR)	167
	7	1	**364-8725**	1	PEDAL AS (DECELERATOR)	
	8	1	**364-8726**	1	PEDAL AS (BRAKE)	

Y - SEPARATE ILLUSTRATION

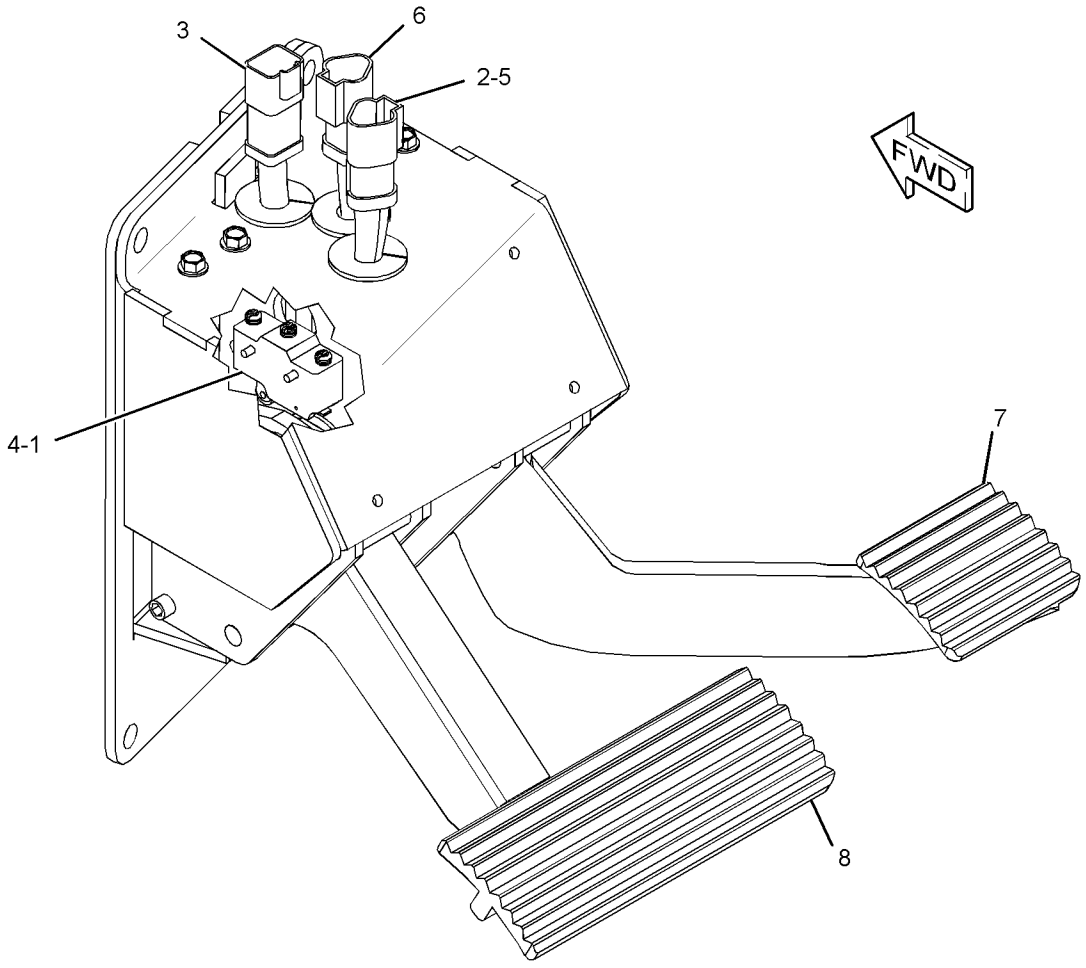

GRAPHIC #1 <END> g02428681

210-2270 RECLINER GP-SEAT

S/N: R5A1-UP
PART OF 178-0603, 180-7304 SEAT GP
AN ATTACHMENT

SMCS-7312 **i06231556**

NOTE	REF NO	GRAPHIC REF	PART NUMBER	QTY	PART NAME 1 2 3 4 5 6 (PRODUCT LEVEL)	SEE PAGE
	1	1	**177-1862**	1	BRACKET (SEAT BELT)	
	2	1	**210-2262**	1	BRACKET AS	
	3	1	**210-2263**	1	BRACKET AS	
	4	1	**210-2266**	1	GEAR-LOCK (14-TEETH)	
	5	1	**293-2911**	1	SHAFT AS	
		1	**2L-5893**	2	PIN-SPRING	
		1	**170-8590**	1	SPRING	
	6	1	**217-7933**	1	LATCH	
	7	1	**236-5197**	1	SPRING	
	8	1	**031-0214**	1	BOLT-LOCKING (1/4-20X0.5-IN)	
	9	1	**101-2867**	1	WASHER-HARD (7.2X25X2-MM THK)	
	10	1	**4M-6425**	1	BOLT (5/16-18X1-IN)	
	11	1	**5M-2894**	1	WASHER-HARD (10.2X18.5X2.5-MM THK)	
	12	1	**5S-7383**	1	BOLT (3/8-16X1.75-IN)	
	13	1	**8T-4224**	1	WASHER-HARD (8.8X16X2-MM THK)	

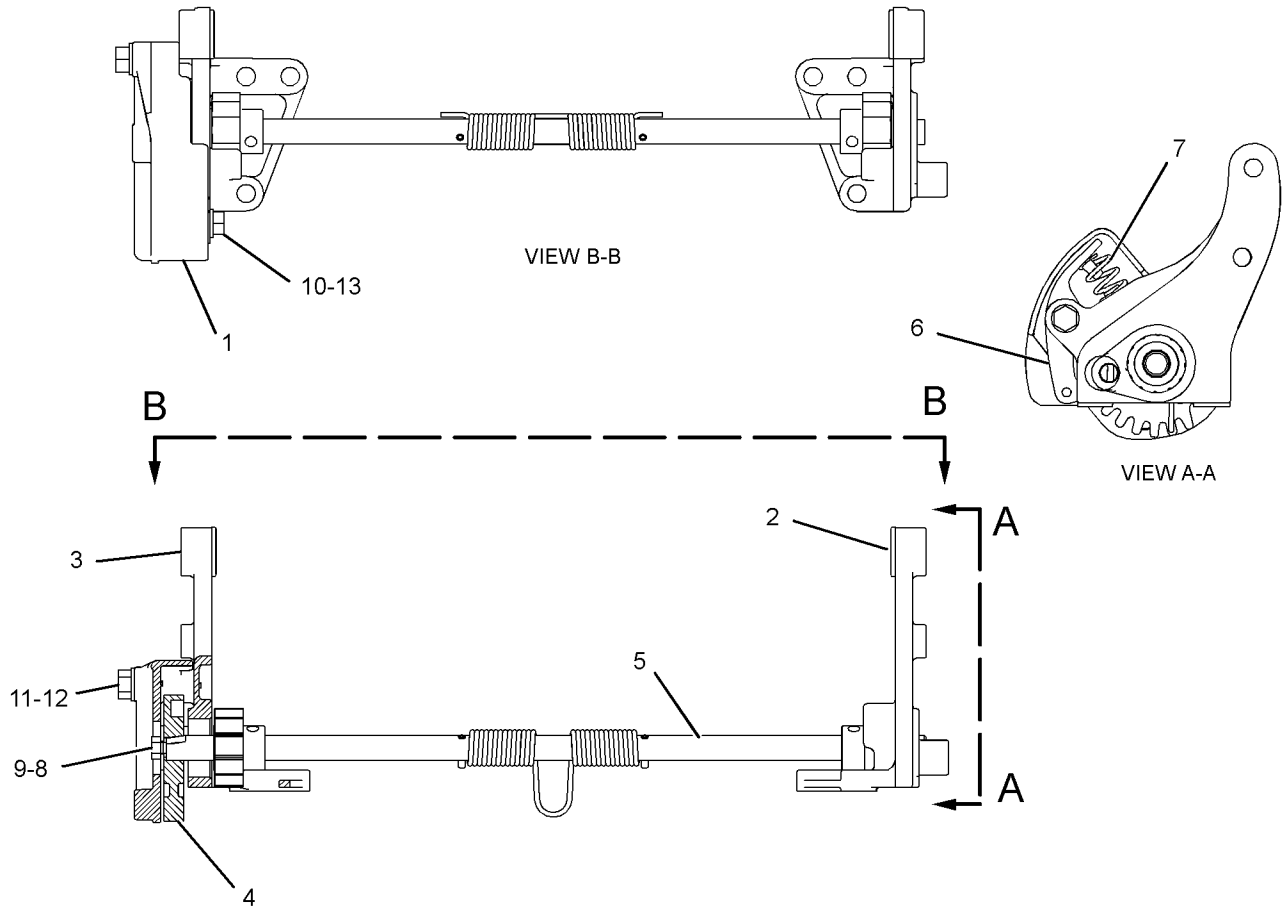

GRAPHIC #1 <END> g01296294

393-6476 ROPS GP

S/N: R5A1-UP
PART OF 393-6475 CANOPY AR
AN ATTACHMENT

SMCS-7177, 7301

i06163814

NOTE	REF NO	GRAPHIC REF	PART NUMBER	QTY	PART NAME 1 2 3 4 5 6 (PRODUCT LEVEL)	SEE PAGE
	1	1	**6V-3928**	1	PLUG-BUTTON	
	2	1	**391-4067**	1	PLATE AS	
	3	1	**391-4069**	1	PLATE	
	4	1	**393-6486**	1	PLATE	
	5	1	**420-8672**	1	ROPS AS	
	6	1	**425-9050**	1	COVER AS	
M		1	**6V-9632**	1	NUT-WELD (M6X1-THD)	
M	7	1	**455-1179**	8	INSERT-THREADED (M12X1.75-THD)	
	8	1	**459-7533**	24	INSERT-THREADED (M10X1.5-THD)	
M	9	1	**3E-4304**	2	INSERT-THREADED (M6X1-THD)	
	10	1	**8T-4123**	5	WASHER (3.62X5.75X0.375-MM THK)	
M	11	1	**8T-4970**	4	BOLT (M6X1X14-MM)	
M	12	1	**8T-5460**	5	BOLT (M20X2.5X40-MM)	
	13	1	**9X-2038**	4	WASHER (7X19X2-MM THK)	
M	14	1	**9X-2042**	4	SCREW-TRUSS HEAD (M6X1X12-MM)	
M	15	1	**9X-2044**	4	SCREW-TRUSS HEAD (M6X1X16-MM)	
M	16	1	**9X-2045**	3	SCREW-TRUSS HEAD (M6X1X20-MM)	
E	17	1	**7X-7877**		STRIP-EDGE (6-CM)	

E - ORDER BY THE CENTIMETER
M - METRIC PART

393-6476 **ROPS GP** (contd.) **i06163814**

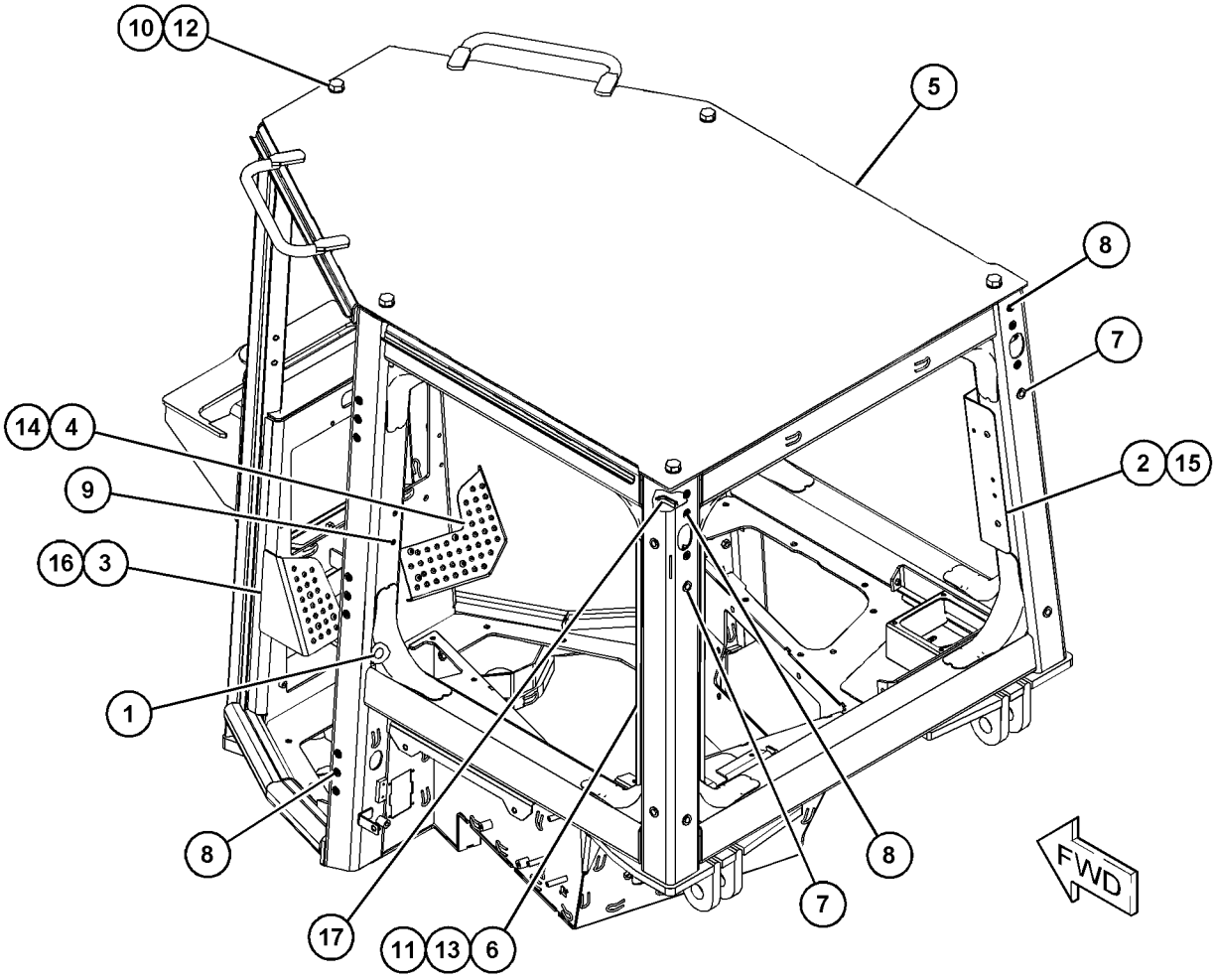

GRAPHIC #1 <END> g03840533

393-6481 ROPS GP

S/N: R5A1-UP

PART OF 393-6480 CAB AR, 393-6485 CAB AR-ENCLOSED ROPS

AN ATTACHMENT

SMCS-7177, 7301

i06163685

NOTE	REF NO	GRAPHIC REF	PART NUMBER	QTY	PART NAME 1 2 3 4 5 6 (PRODUCT LEVEL)	SEE PAGE
	1	1	**425-9047**	1	PLATE AS	
	2	1	**6V-3928**	1	PLUG-BUTTON	
	3	1	**241-6070**	2	GROMMET	
	4	1	**391-4064**	1	PLATE	
	5	1	**391-4067**	1	PLATE AS	
	6	1	**391-4069**	1	PLATE	
	7	1	**393-6486**	1	PLATE	
	8	1	**418-2469**	1	ROPS AS	
	9	1	**425-9048**	1	GASKET	
	10	1	**425-9050**	1	COVER AS	
M		1	**6V-9632**	1	NUT-WELD (M6X1-THD)	
M	11	1	**455-1179**	8	INSERT-THREADED (M12X1.75-THD)	
	12	1	**459-7533**	24	INSERT-THREADED (M10X1.5-THD)	
M	13	1	**3E-4304**	2	INSERT-THREADED (M6X1-THD)	
	14	1	**8T-4123**	5	WASHER (3.62X5.75X0.375-MM THK)	
M	15	1	**8T-4970**	4	BOLT (M6X1X14-MM)	
M	16	1	**8T-5460**	5	BOLT (M20X2.5X40-MM)	
	17	1	**9X-2038**	4	WASHER (7X19X2-MM THK)	
M	18	1	**9X-2042**	4	SCREW-TRUSS HEAD (M6X1X12-MM)	
M	19	1	**9X-2044**	6	SCREW-TRUSS HEAD (M6X1X16-MM)	
M	20	1	**9X-2045**	7	SCREW-TRUSS HEAD (M6X1X20-MM)	
E	21	1	**7X-7877**		STRIP-EDGE (6-CM)	

E - ORDER BY THE CENTIMETER
M - METRIC PART

393-6481 **ROPS GP** (contd.) **i06163685**

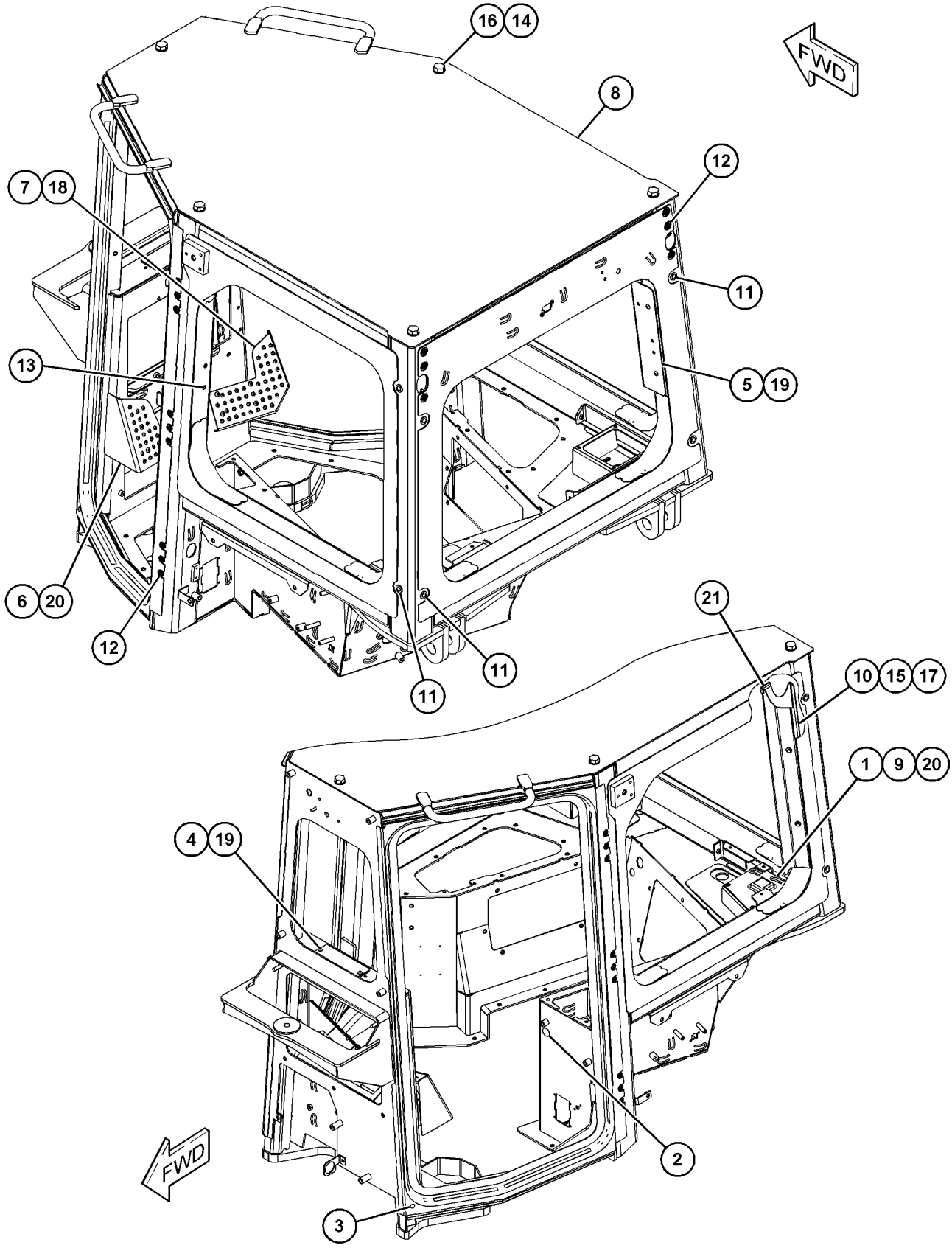

GRAPHIC #1 <END> g03841806

433-2758 SCREEN GP-PROTECTION

S/N: R5A1-UP

CANNOT BE USED WITH 426-3911—PAGE: 312, 438-9381—PAGE: 542, 423-1040—PAGE: 147, 423-1041—PAGE: 149, 423-1042—PAGE: 151, 423-1043—PAGE: 153, 430-4098—PAGE: 155, 430-4099—PAGE: 157

AN ATTACHMENT

SMCS-7165 **i06532658**

NOTE	REF NO	GRAPHIC REF	PART NUMBER	QTY	PART NAME 1 2 3 4 5 6 (PRODUCT LEVEL)	SEE PAGE
	1	1	**114-9284**	4	BUMPER	
	2	1	**129-3737**	2	STRIKER BOLT-CAB (M12X1.75X17.8-MM)	
	3	1	**172-2384**	2	LATCH AS-ROTARY (ROTARY)	
	4	1	**434-4405**	1	SCREEN AS (LH)	
	5	1	**434-4406**	1	PLATE AS	
	6	1	**434-4407**	1	PLATE AS	
	7	1	**434-4409**	1	PLATE AS	
	8	1	**434-4414**	1	SCREEN AS (RH)	
	9	1	**434-4483**	1	PLATE AS	
M	10	1	**184-0983**	2	NUT-HEX FLANGE (M12X1.75-THD)	
	11	1	**1H-3244**	8	LOCKWASHER	
M	12	1	**5C-7261**	4	NUT (M8X1.25-THD)	
	13	1	**5P-0372**	4	LOCK PIN	
	14	1	**6S-9277**	4	PIN	
M	15	1	**6V-7357**	8	BOLT (M6X1X25-MM)	
	16	1	**8T-4121**	4	WASHER-HARD (11X21X2.5-MM THK)	
M	17	1	**8T-4183**	4	BOLT (M12X1.75X40-MM)	
M	18	1	**8T-4186**	4	BOLT (M10X1.5X40-MM)	
	19	1	**8T-4223**	4	WASHER-HARD (13.5X25.5X3-MM THK)	
	20	1	**8T-4224**	4	WASHER-HARD (8.8X16X2-MM THK)	

M - METRIC PART

433-2758 **SCREEN GP-PROTECTION (**contd.**)** **i06532658**

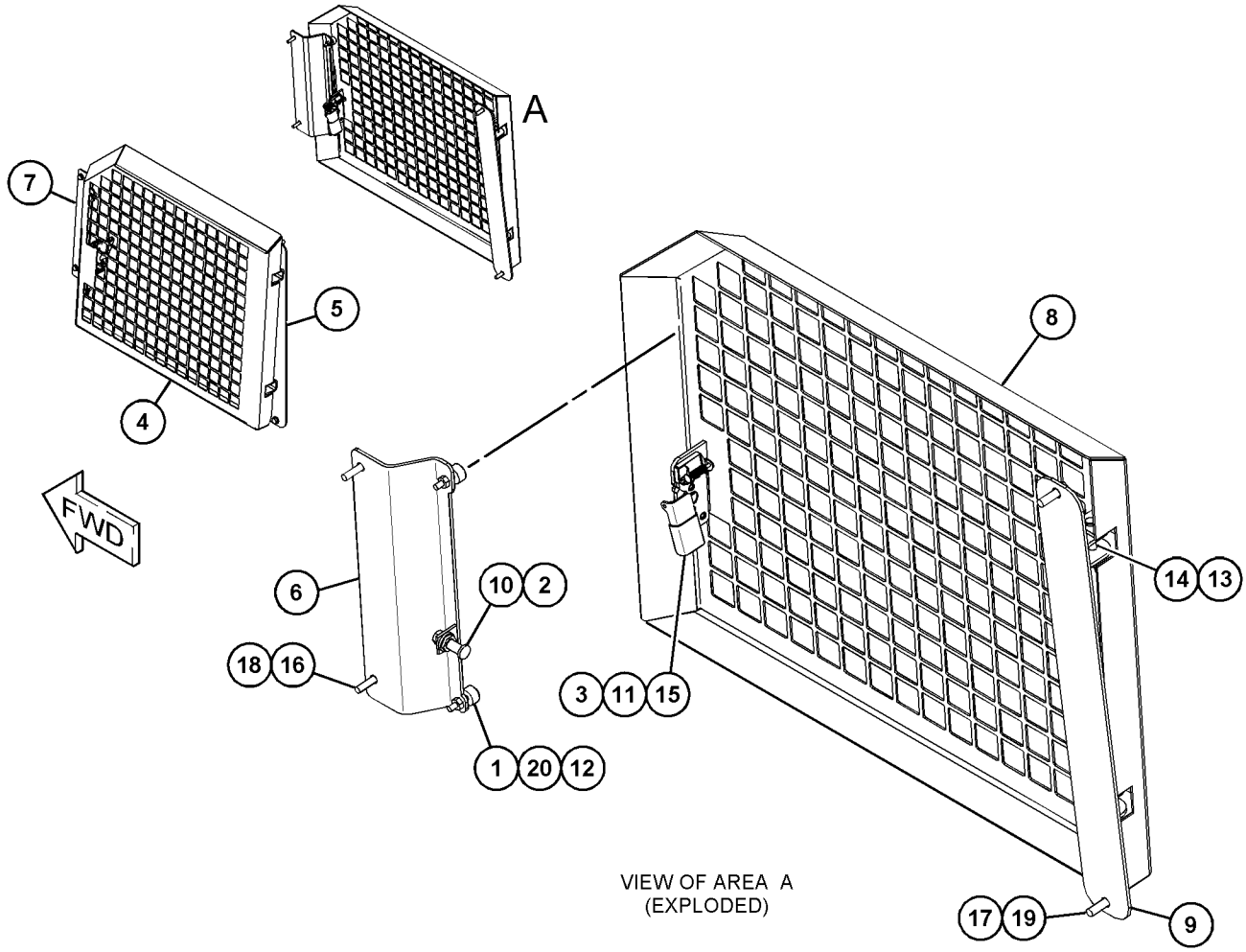

VIEW OF AREA A
(EXPLODED)

GRAPHIC #1 <END> g03861538

438-9381 SCREEN GP-PROTECTION

S/N: R5A1-UP
REAR
FOR USE WITH CAB
CANNOT BE USED WITH 426-3911—PAGE: 312, 433-2758—PAGE: 540, 423-1040—PAGE: 147, 423-1042—PAGE: 151, 423-1043—PAGE: 153, 430-4098—PAGE: 155, 430-4099—PAGE: 157
AN ATTACHMENT

SMCS-7165 **i06532669**

NOTE	REF NO	GRAPHIC REF	PART NUMBER	QTY	PART NAME 1 2 3 4 5 6 (PRODUCT LEVEL)	SEE PAGE
	1	1	**433-3028**	1	BRACKET AS	
	2	1	**433-3029**	1	BRACKET AS	
	3	1	**479-4400**	1	SCREEN AS-PROTECTION (REAR)	
	4	1	**5P-0372**	2	LOCK PIN	
	5	1	**6S-9277**	2	PIN	
	6	1	**8T-4223**	4	WASHER-HARD (13.5X25.5X3-MM THK)	
M	7	1	**8T-4183**	4	BOLT (M12X1.75X40-MM)	
M	8	1	**8T-4190**	2	BOLT (M16X2X25-MM)	
	9	1	**9X-8257**	2	WASHER (17.5X30X3.5-MM THK)	
	10	1	**479-4362**	2	PLATE	
	11	1	**8T-4224**	2	WASHER-HARD (8.8X16X2-MM THK)	
M	12	1	**6V-2317**	2	BOLT (M8X1.25X30-MM)	

M - METRIC PART

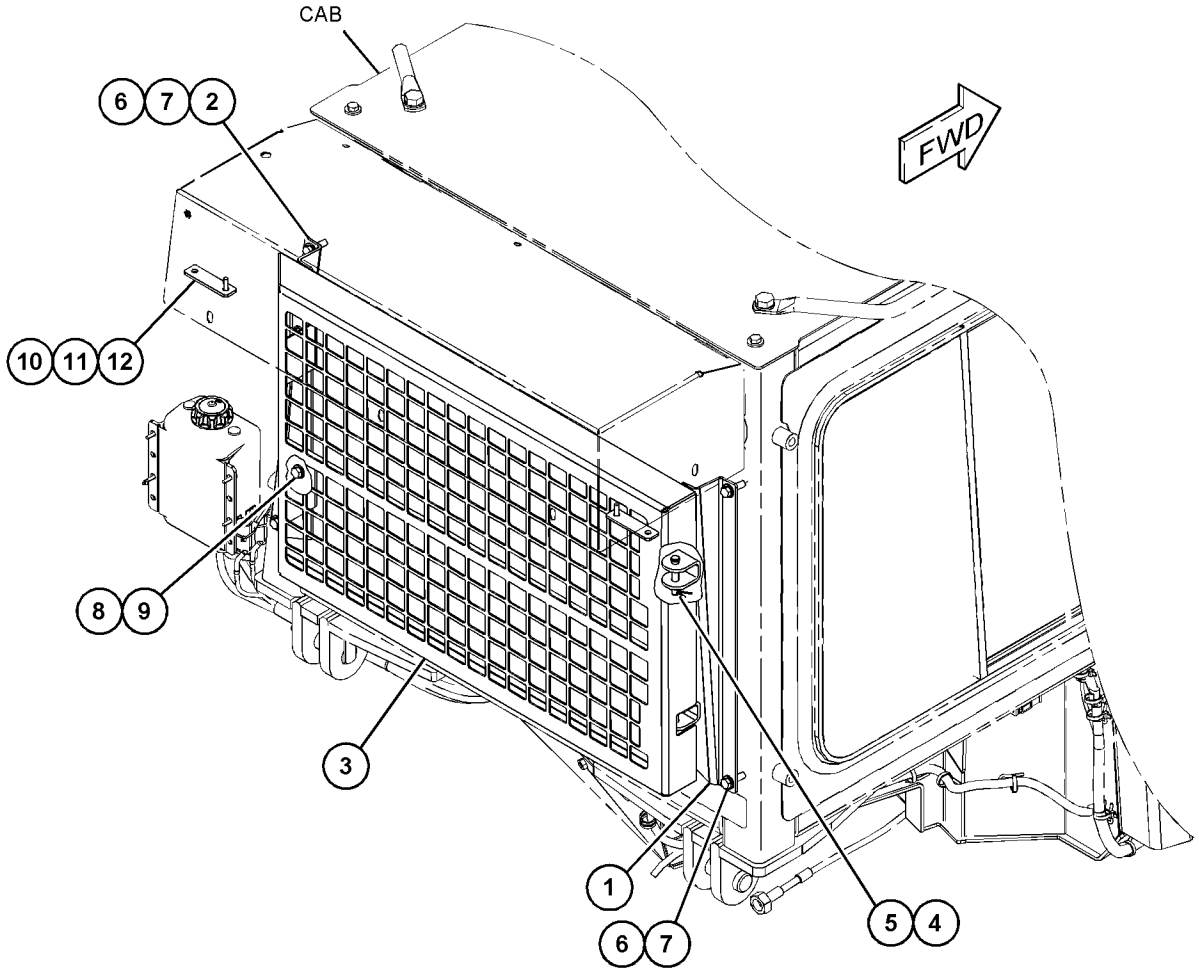

GRAPHIC #1 <END> g03860689

453-8044 SCREEN GP-PROTECTION

S/N: R5A1-UP
FOR USE WITH CANOPY ONLY
AN ATTACHMENT

SMCS-7165 **i06554433**

NOTE	REF NO	GRAPHIC REF	PART NUMBER	QTY	PART NAME 1 2 3 4 5 6 (PRODUCT LEVEL)	SEE PAGE
	1	1	**495-7660**	1	SCREEN (FRONT)	
Y	2	1	*479-4357*	1	SCREEN GP-PROTECTION (RH)	548
Y	3	1	*479-4360*	1	SCREEN GP-PROTECTION (LH)	550

Y - SEPARATE ILLUSTRATION

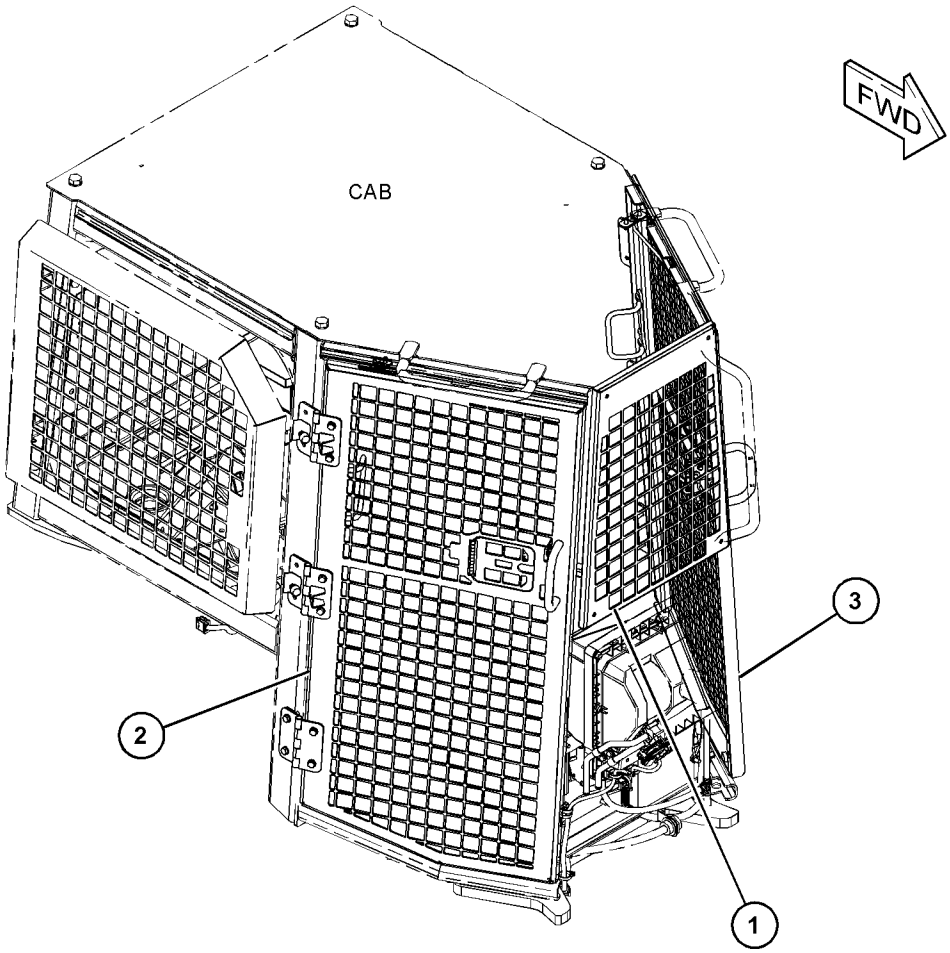

GRAPHIC #1 <END> g03861046

453-8045 SCREEN GP-PROTECTION

S/N: R5A1-UP
FOR USE WITH CANOPY ONLY
AN ATTACHMENT

SMCS-7165 **i06532731**

NOTE	REF NO	GRAPHIC REF	PART NUMBER	QTY	PART NAME 1 2 3 4 5 6 (PRODUCT LEVEL)	SEE PAGE
	1	1	**143-4792**	12	BUMPER	
	2	1	**479-4363**	1	SCREEN AS-PROTECTION (LH)	
	3	1	**479-4364**	1	SCREEN AS-PROTECTION (RH)	
	4	1	**8T-4121**	8	WASHER-HARD (11X21X2.5-MM THK)	
M	5	1	**8T-4184**	4	BOLT (M12X1.75X45-MM)	
M	6	1	**8T-4186**	8	BOLT (M10X1.5X40-MM)	
	7	1	**8T-4223**	4	WASHER-HARD (13.5X25.5X3-MM THK)	

M - METRIC PART

453-8045 **SCREEN GP-PROTECTION (**contd.**)** **i06532731**

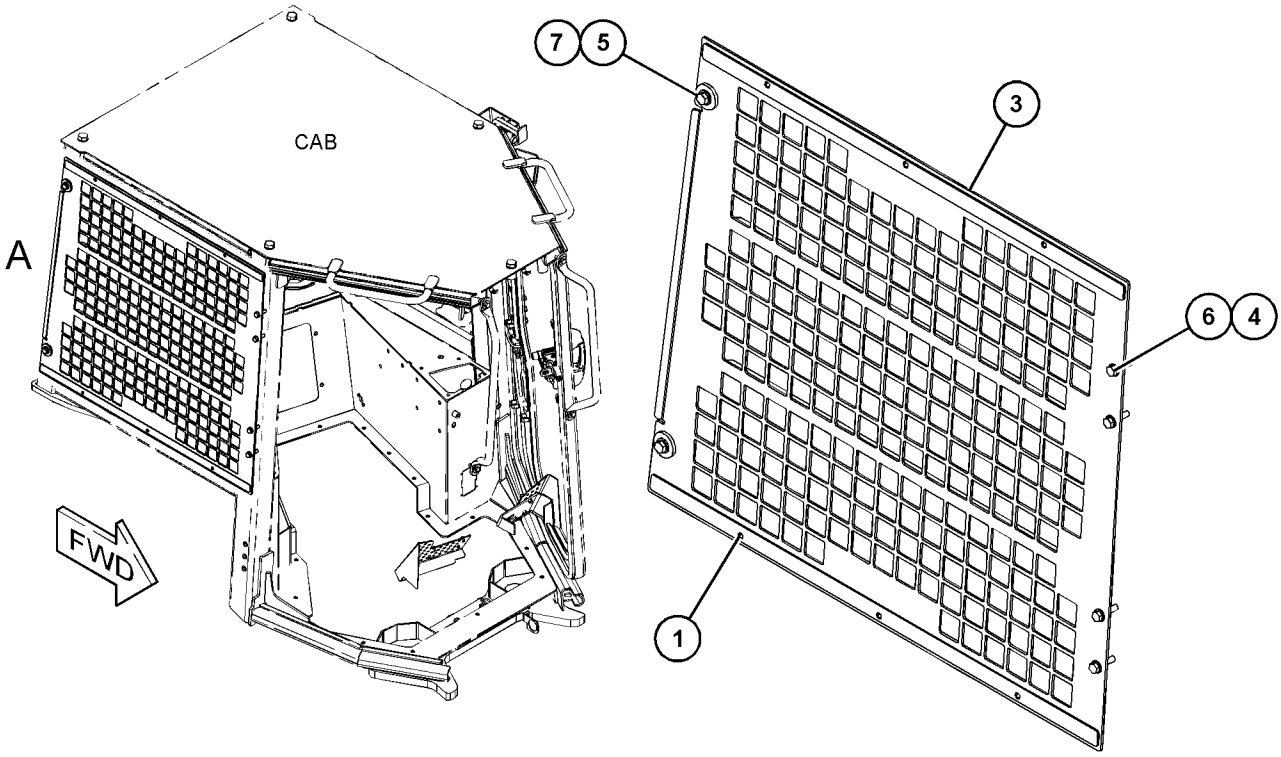

VIEW OF AREA A

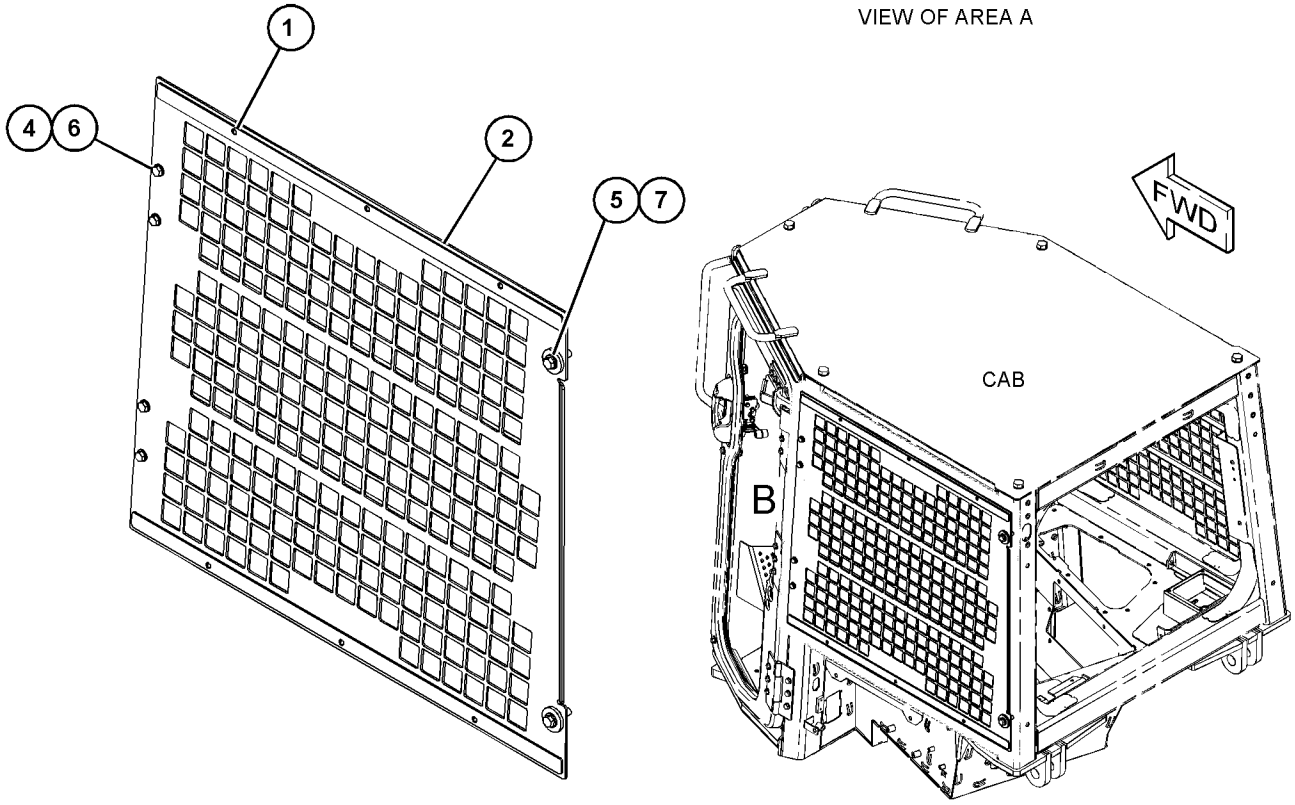

VIEW OF AREA B

GRAPHIC #1 <END> g03857068

453-8046 SCREEN GP-PROTECTION–REAR

S/N: R5A1-UP
FOR USE WITH CANOPY ONLY
AN ATTACHMENT

SMCS-7165 **i06532732**

NOTE	REF NO	GRAPHIC REF	PART NUMBER	QTY	PART NAME 1 2 3 4 5 6 (PRODUCT LEVEL)	SEE PAGE
	1	1	**143-4792**	1	BUMPER	
	2	1	**479-4361**	1	SCREEN AS-PROTECTION (REAR)	
	3	1	**479-4435**	1	BRACKET AS	
	4	1	**8T-4121**	6	WASHER-HARD (11X21X2.5-MM THK)	
M	5	1	**8T-4183**	2	BOLT (M12X1.75X40-MM)	
M	6	1	**8T-4184**	2	BOLT (M12X1.75X45-MM)	
M	7	1	**8T-4186**	6	BOLT (M10X1.5X40-MM)	
	8	1	**8T-4223**	4	WASHER-HARD (13.5X25.5X3-MM THK)	
	9	1	**8T-9471**	2	GROMMET	

M - METRIC PART

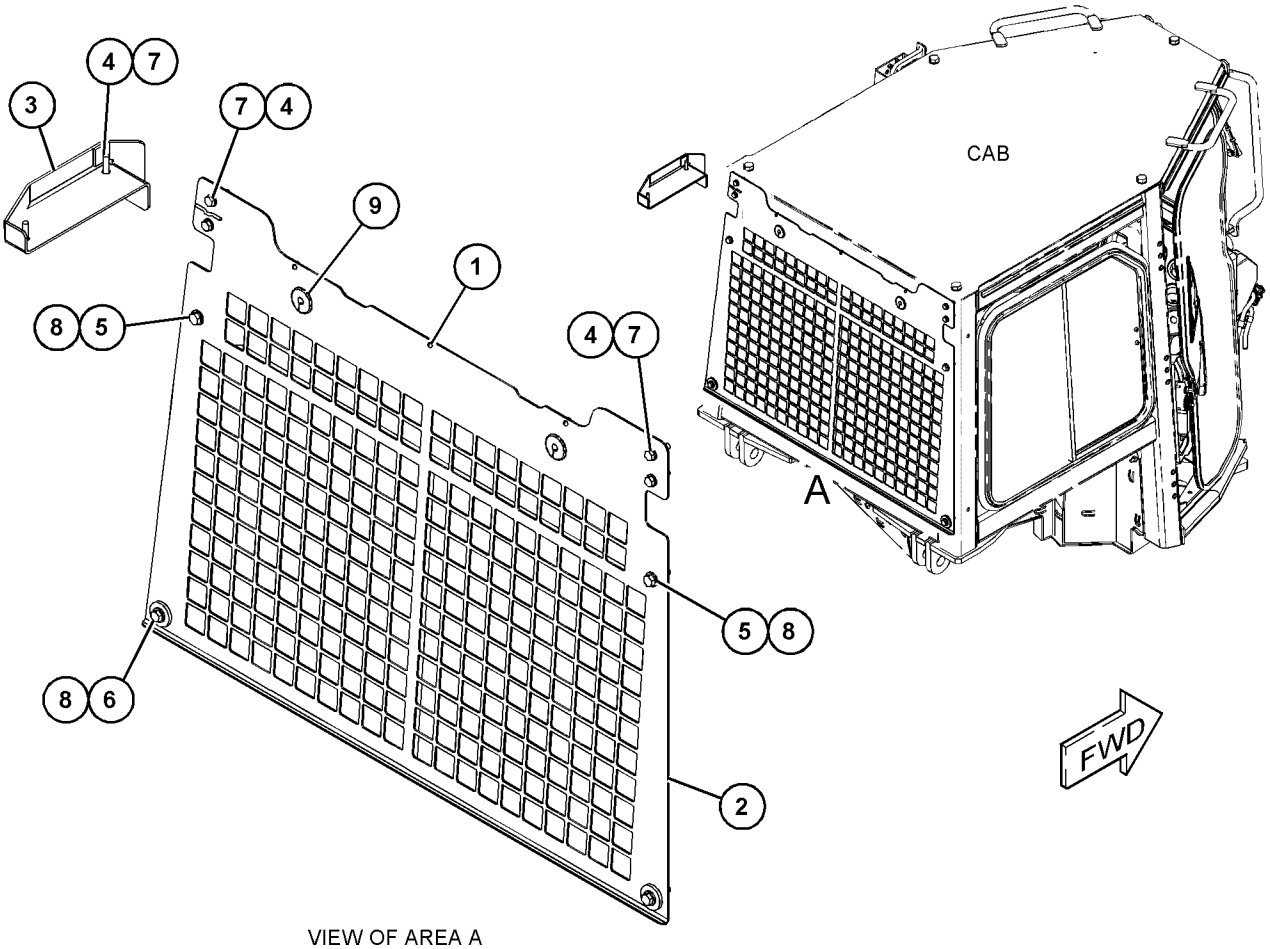

VIEW OF AREA A

GRAPHIC #1 <END> g03863026

453-8047 SCREEN GP-PROTECTION

S/N: R5A1-UP
FOR USE WITH CAB
AN ATTACHMENT

SMCS-7165 **i06530504**

NOTE	REF NO	GRAPHIC REF	PART NUMBER	QTY	PART NAME 1 2 3 4 5 6 (PRODUCT LEVEL)	SEE PAGE
CY	1	1	*493-3940*	1	SCREEN GP-PROTECTION (RH)	552
CY	2	1	*493-3941*	1	SCREEN GP-PROTECTION (LH)	553
	3	1	**8T-4121**	18	WASHER-HARD (11X21X2.5-MM THK)	
M	4	1	**8T-4195**	18	BOLT (M10X1.5X30-MM)	

C - CHANGE FROM PREVIOUS TYPE
M - METRIC PART
Y - SEPARATE ILLUSTRATION

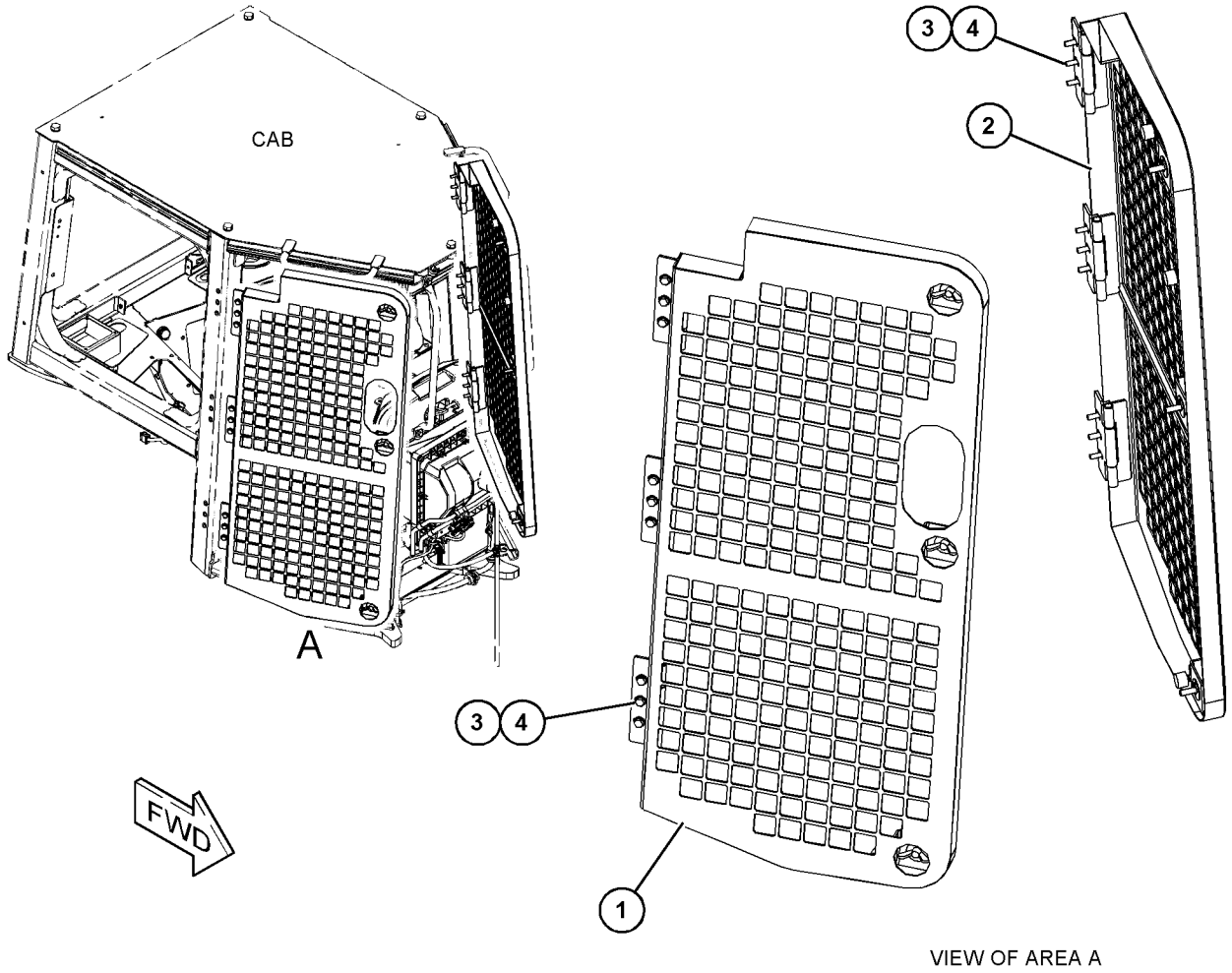

VIEW OF AREA A

GRAPHIC #1 <END> g03862753

479-4357 SCREEN GP-PROTECTION—RH

S/N: R5A1-UP

PART OF 453-8044 SCREEN GP-PROTECTION

AN ATTACHMENT

SMCS-7165 **i06219362**

NOTE	REF NO	GRAPHIC REF	PART NUMBER	QTY	PART NAME 1 2 3 4 5 6 (PRODUCT LEVEL)	SEE PAGE
	1	1	**1K-8850**	1	SPRING	
	2	1	**114-9284**	2	BUMPER	
	3	1	**240-6124**	1	ROD AS	
	4	1	**281-3974**	2	BUMPER	
	5	1	**387-4502**	1	HANDLE AS	
	6	1	**391-3950**	1	STRIKER AS	
	7	1	**455-8239**	1	HINGE AS	
	8	1	**461-3903**	1	LATCH AS	
	9	1	**473-6081**	1	PLATE	
	10	1	**473-6084**	2	HINGE AS	
	11	1	**476-7585**	1	PLATE	
	12	1	**479-4356**	1	SCREEN AS-PROTECTION (RH)	
M	13	1	**344-5673**	2	NUT (M6X1-THD)	
M	14	1	**344-5674**	2	NUT (M8X1.25-THD)	
M	15	1	**6V-7357**	4	BOLT (M6X1X25-MM)	
	16	1	**6V-9197**	1	LOCK PIN	
	17	1	**7X-7729**	3	WASHER (11X25X3-MM THK)	
M	18	1	**7Y-9099**	2	SCREW-TRUSS HEAD (M8X1.25X25-MM)	
	19	1	**8T-4121**	8	WASHER-HARD (11X21X2.5-MM THK)	
M	20	1	**8T-4136**	6	BOLT (M10X1.5X25-MM)	
M	21	1	**8T-4186**	2	BOLT (M10X1.5X40-MM)	
M	22	1	**8T-4189**	2	BOLT (M8X1.25X20-MM)	
M	23	1	**8T-4195**	2	BOLT (M10X1.5X30-MM)	
	24	1	**8T-4205**	4	WASHER-HARD (7.2X14.5X2-MM THK)	
	25	1	**8T-4224**	2	WASHER-HARD (8.8X16X2-MM THK)	

M - METRIC PART

479-4357 **SCREEN GP-PROTECTION (**contd.**)** **i06219362**

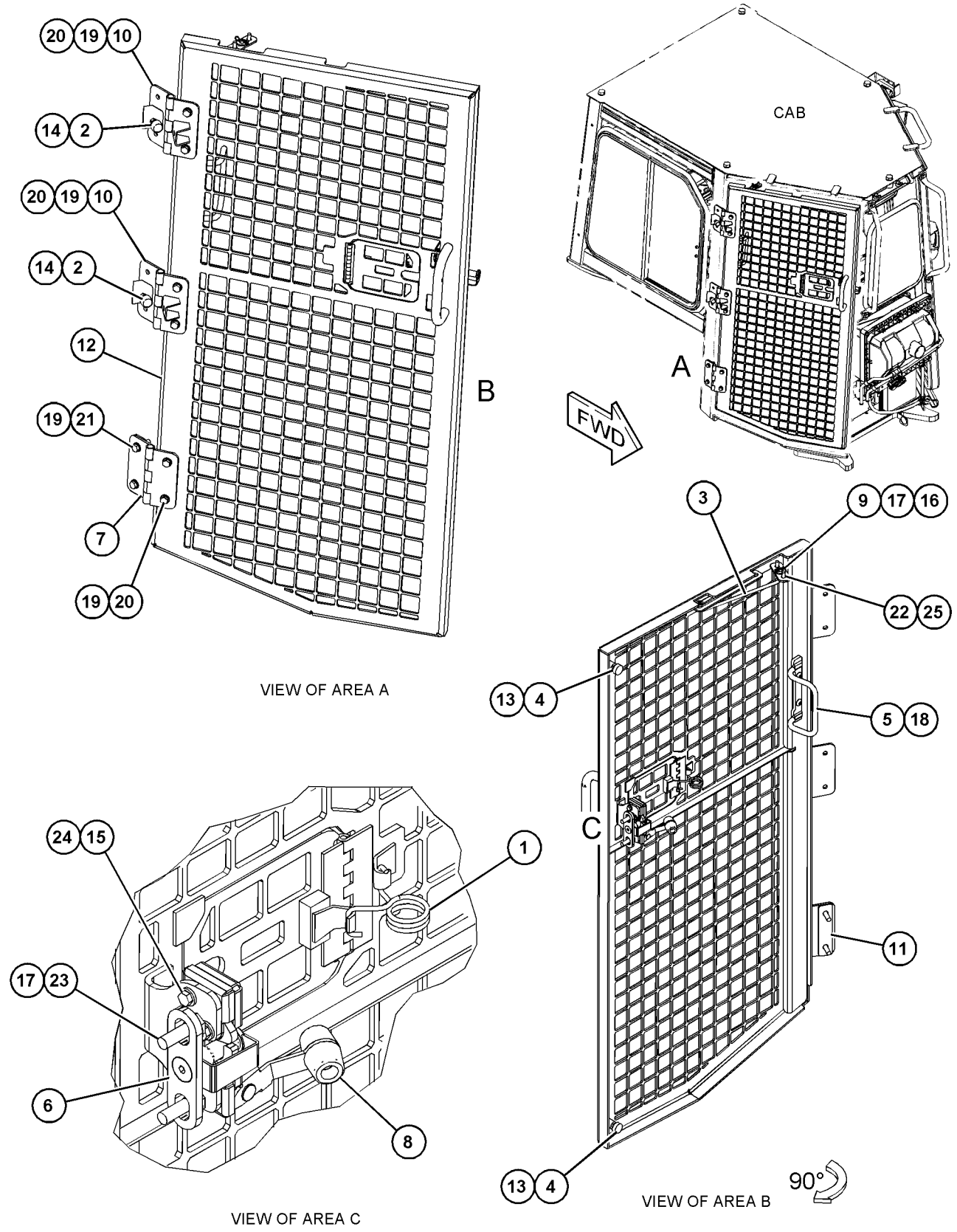

GRAPHIC #1 <END> g03863031

479-4360 SCREEN GP-PROTECTION—LH

S/N: R5A1-UP

PART OF 453-8044 SCREEN GP-PROTECTION

AN ATTACHMENT

SMCS-7165 **i06219358**

NOTE	REF NO	GRAPHIC REF	PART NUMBER	QTY	PART NAME 1 2 3 4 5 6 (PRODUCT LEVEL)	SEE PAGE
	1	1	**1K-8850**	1	SPRING	
	2	1	**114-9284**	2	BUMPER	
	3	1	**240-6124**	1	ROD AS	
	4	1	**281-3974**	2	BUMPER	
	5	1	**387-4502**	1	HANDLE AS	
	6	1	**391-3950**	1	STRIKER AS	
	7	1	**455-8239**	1	HINGE AS	
	8	1	**461-3904**	1	LATCH AS	
	9	1	**473-6081**	1	PLATE	
	10	1	**473-6084**	2	HINGE AS	
	11	1	**476-7585**	1	PLATE	
	12	1	**479-4359**	1	SCREEN AS-PROTECTION (LH)	
M	13	1	**344-5673**	2	NUT (M6X1-THD)	
M	14	1	**344-5674**	2	NUT (M8X1.25-THD)	
M	15	1	**6V-7357**	4	BOLT (M6X1X25-MM)	
	16	1	**6V-9197**	1	LOCK PIN	
	17	1	**7X-7729**	3	WASHER (11X25X3-MM THK)	
M	18	1	**7Y-9099**	2	SCREW-TRUSS HEAD (M8X1.25X25-MM)	
	19	1	**8T-4121**	8	WASHER-HARD (11X21X2.5-MM THK)	
M	20	1	**8T-4136**	6	BOLT (M10X1.5X25-MM)	
M	21	1	**8T-4186**	2	BOLT (M10X1.5X40-MM)	
M	22	1	**8T-4189**	2	BOLT (M8X1.25X20-MM)	
M	23	1	**8T-4195**	2	BOLT (M10X1.5X30-MM)	
	24	1	**8T-4205**	4	WASHER-HARD (7.2X14.5X2-MM THK)	
	25	1	**8T-4224**	2	WASHER-HARD (8.8X16X2-MM THK)	

M - METRIC PART

479-4360 **SCREEN GP-PROTECTION (**contd.**)** **i06219358**

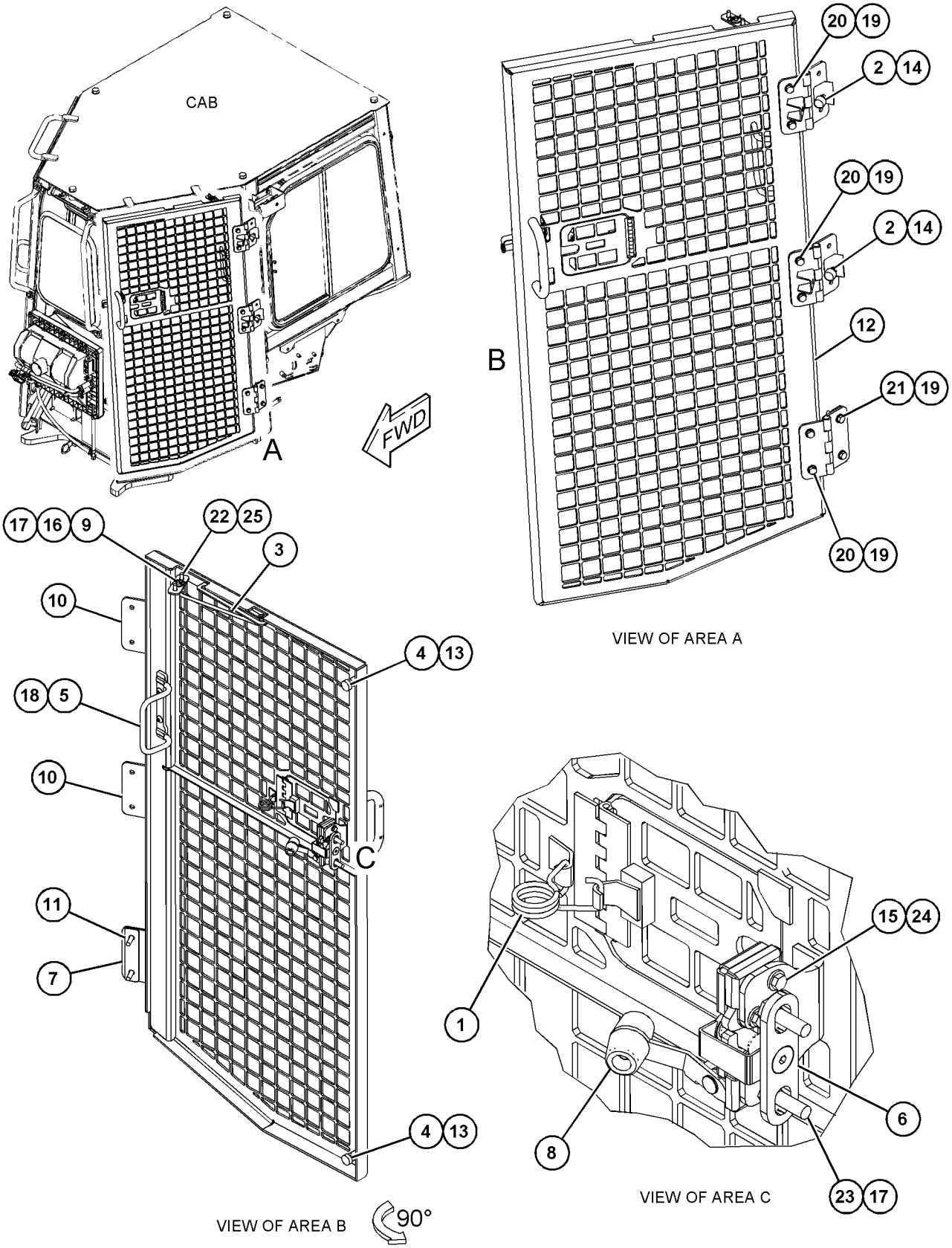

GRAPHIC #1 <END> g03863050

493-3940 SCREEN GP-PROTECTION–RH

S/N: R5A1-UP
PART OF 453-8047 SCREEN GP-PROTECTION
AN ATTACHMENT

SMCS-7165 **i06563422**

NOTE	REF NO	GRAPHIC REF	PART NUMBER	QTY	PART NAME 1 2 3 4 5 6 (PRODUCT LEVEL)	SEE PAGE
	1	1	**178-2593**	3	BUMPER	
	2	1	**493-3939**	1	SCREEN AS-PROTECTION	
	2A	1	**372-5042**	6	BUSHING	
	3	1	**275-4236**	3	SCREW-WING (M12X1.75X40-MM)	
	4	1	**3B-4611**	3	PIN-COTTER	
M	5	1	**5C-7261**	3	NUT (M8X1.25-THD)	
	6	1	**6S-3859**	6	WASHER (0.562X1.75X0.063-IN THK)	

M - METRIC PART

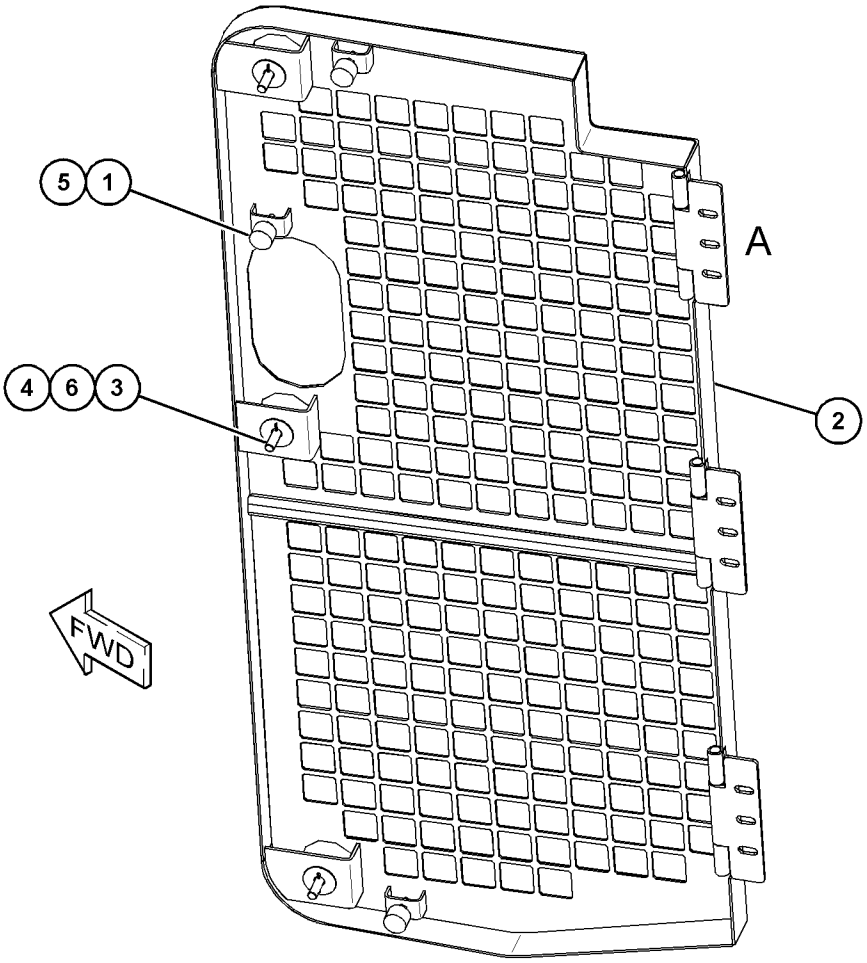

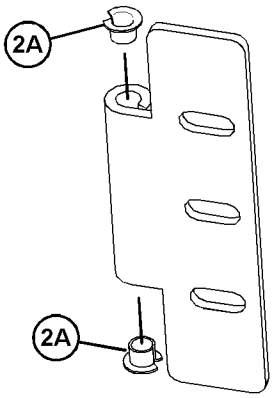

VIEW OF AREA A
(EXPLODED)

GRAPHIC #1 <END> g06024428

493-3941 SCREEN GP-PROTECTION–LH

S/N: R5A1-UP
PART OF 453-8047 SCREEN GP-PROTECTION
AN ATTACHMENT

SMCS-7165 **i06563417**

NOTE	REF NO	GRAPHIC REF	PART NUMBER	QTY	PART NAME 1 2 3 4 5 6 (PRODUCT LEVEL)	SEE PAGE
	1	1	**178-2593**	3	BUMPER	
	2	1	**493-3942**	1	SCREEN AS-PROTECTION	
	2A	1	**372-5042**	6	BUSHING	
	3	1	**275-4236**	3	SCREW-WING (M12X1.75X40-MM)	
	4	1	**3B-4611**	3	PIN-COTTER	
M	5	1	**5C-7261**	3	NUT (M8X1.25-THD)	
	6	1	**6S-3859**	6	WASHER (0.562X1.75X0.063-IN THK)	

M - METRIC PART

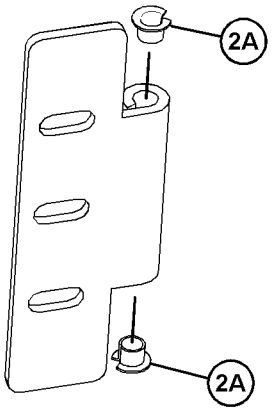

VIEW OF AREA A
(EXPLODED)

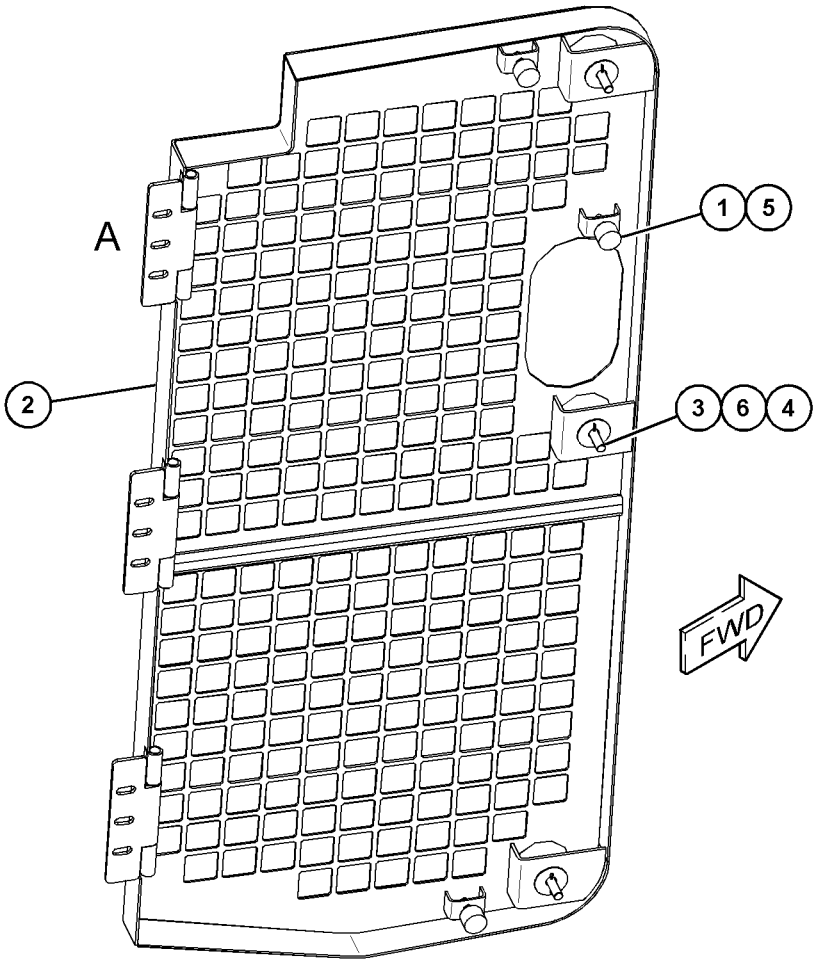

GRAPHIC #1

<END>

g06024434

375-7899 SEAT & MOUNTING GP—VINYL

S/N: R5A1-UP
FOR USE WITH CANOPY
AN ATTACHMENT

SMCS-7312 **i06530766**

NOTE	REF NO	GRAPHIC REF	PART NUMBER	QTY	PART NAME 1 2 3 4 5 6 (PRODUCT LEVEL)	SEE PAGE
Y	1	1	**222-0345**	1	SEAT BELT GP (RETRACTABLE, 3-IN)	556
Y	2	1	**385-7835**	1	SEAT GP-SUSPENSION (VINYL)	568
	3	1	**7X-7729**	4	WASHER (11X25X3-MM THK)	
M	4	1	**9X-2125**	4	BOLT-LOCKING (M10X1.5X25-MM)	
	5	1	**205-6388**	1	BOLT (7/16-20X1.75-IN)	
	6	1	**177-4937**	1	SPACER (11.7X19.8X20.3-MM THK)	
	7	1	**0T-0244**	1	BOLT (7/16-20X1.25-IN)	

M - METRIC PART
Y - SEPARATE ILLUSTRATION

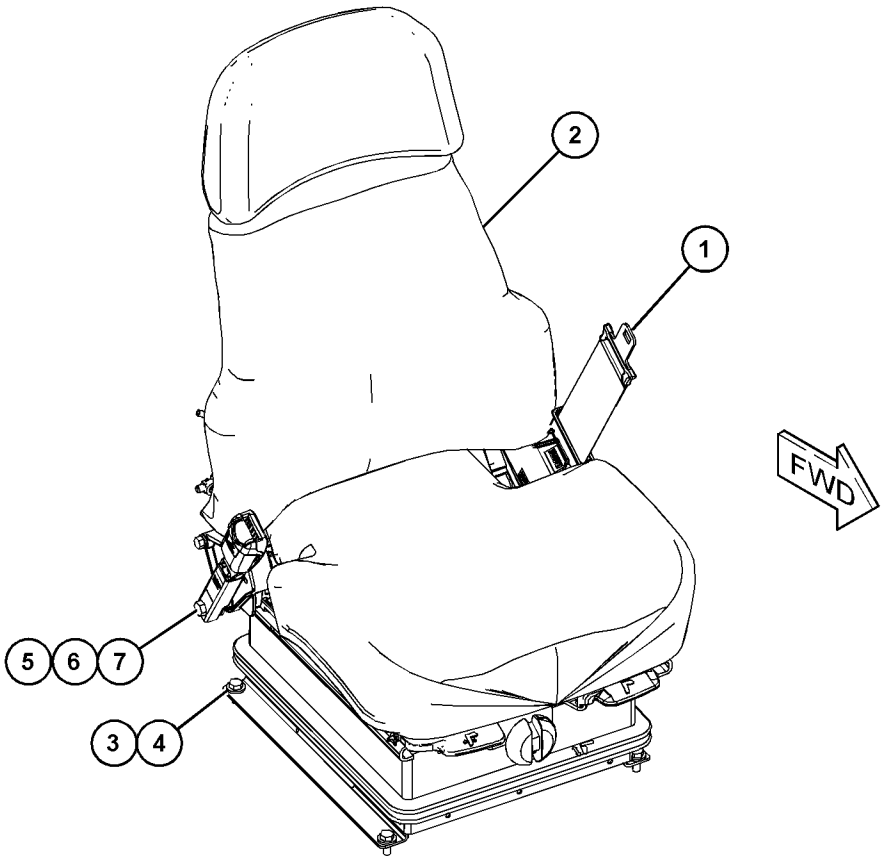

GRAPHIC #1 <END> g03860558

391-4061 SEAT & MOUNTING GP—CLOTH, HEATED

S/N: R5A1-UP
CANNOT BE USED WITH CANOPY
AN ATTACHMENT

SMCS-7312 **i06521905**

NOTE	REF NO	GRAPHIC REF	PART NUMBER	QTY	PART NAME 1 2 3 4 5 6 (PRODUCT LEVEL)	SEE PAGE
	1	1	**7K-1181**	1	STRAP-CABLE	
Y	2	1	**222-0345**	1	SEAT BELT GP (RETRACTABLE, 3-IN)	556
	3	1	**275-7803**	1	SPACER (11.7X19.8X25.4-MM THK)	
Y	4	1	**443-8263**	1	SEAT GP-SUSPENSION (CLOTH, HEATED, AIR)	569
Y	5	1	**390-6814**	1	HARNESS AS-WIRING (SEAT)	125
	6	1	**0T-0489**	1	BOLT (7/16-20X2-IN)	
	7	1	**205-6388**	1	BOLT (7/16-20X1.75-IN)	
	8	1	**4P-8134**	1	CLIP	
	9	1	**7X-7729**	4	WASHER (11X25X3-MM THK)	
	10	1	**8T-5360**	1	WASHER (12X22.5X2.5-MM THK)	
M	11	1	**9X-2125**	4	BOLT-LOCKING (M10X1.5X25-MM)	

M - METRIC PART
Y - SEPARATE ILLUSTRATION

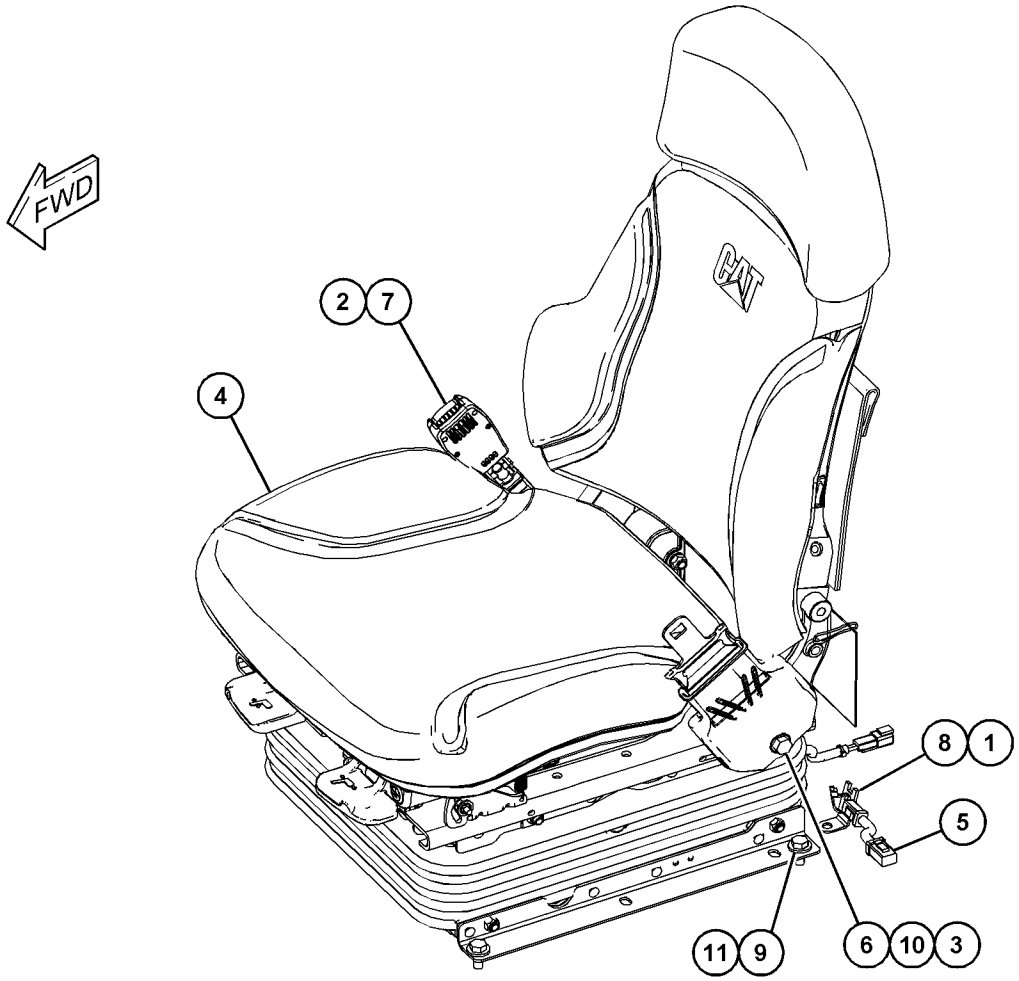

GRAPHIC #1 <END> g03722788

222-0345 SEAT BELT GP

S/N: R5A1-UP

PART OF 375-7899, 391-4061 SEAT & MOUNTING GP, 178-0606 SEAT GP

AN ATTACHMENT

SMCS-7327 **i05332838**

NOTE	REF NO	GRAPHIC REF	PART NUMBER	QTY	PART NAME 1 2 3 4 5 6 (PRODUCT LEVEL)	SEE PAGE
F			**0T-0244**	1	BOLT (7/16-20X1.25-IN)	
F			**205-6388**	1	BOLT (7/16-20X1.75-IN)	

F - NOT SHOWN

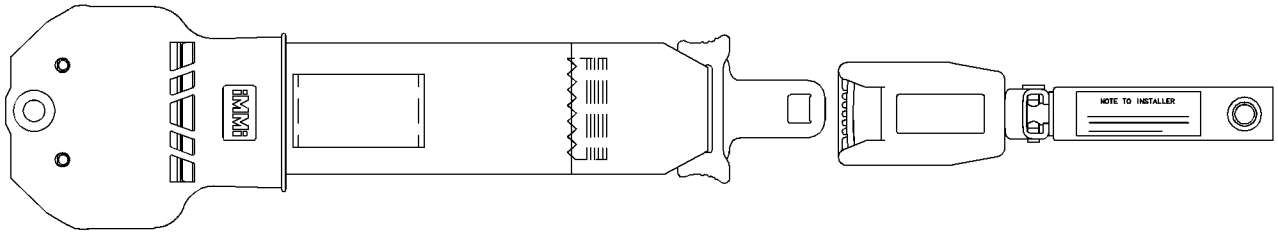

GRAPHIC #1 <END> g01196135

178-0603 SEAT GP–CLOTH

S/N: R5A1-UP
PART OF 178-0606 SEAT GP
AN ATTACHMENT

SMCS-7312 **i06231563**

NOTE	REF NO	GRAPHIC REF	PART NUMBER	QTY	PART NAME 1 2 3 4 5 6 (PRODUCT LEVEL)	SEE PAGE
	1	1	**218-0861**	1	PAN AS	
		1	**8T-9082**	5	RIVET-POP	
	2	1	**143-1288**	8	LOCKNUT-FLANGE (3/8-16-THD)	
	3	1	**171-1230**	6	SCREW-BUTTON HEAD (3/8-16X1-IN)	
	4	1	**171-6682**	1	BAR	
	5	1	**172-2416**	2	PIN	
Y	6	1	*173-1028*	1	ADJUSTER GP-SEAT	465
	7	1	**177-1863**	2	BOLT-PIVOT (3/8-16X2.89-IN)	
Y	8	1	*210-2270*	1	RECLINER GP-SEAT	535
Y	9	1	*292-9237*	1	PAN GP-BACKREST (CLOTH, LUMBAR)	532
	10	1	**184-2298**	1	ROD	
	11	1	**184-2299**	4	WASHER (7X25.4X2.54-MM THK)	
	12	1	**095-0843**	2	PIN-COTTER	
	13	1	**5V-1496**	2	RETAINER	
	14	1	**6V-7646**	2	WASHER-HARD (7.2X25X2-MM THK)	
	15	1	**8T-0328**	1	WASHER-HARD (5.5X10X1-MM THK)	
	16	1	**8T-4205**	1	WASHER-HARD (7.2X14.5X2-MM THK)	
	17	1	**294-5042**	2	SPACER (11.1X19.5X9.67-MM THK)	

Y - SEPARATE ILLUSTRATION

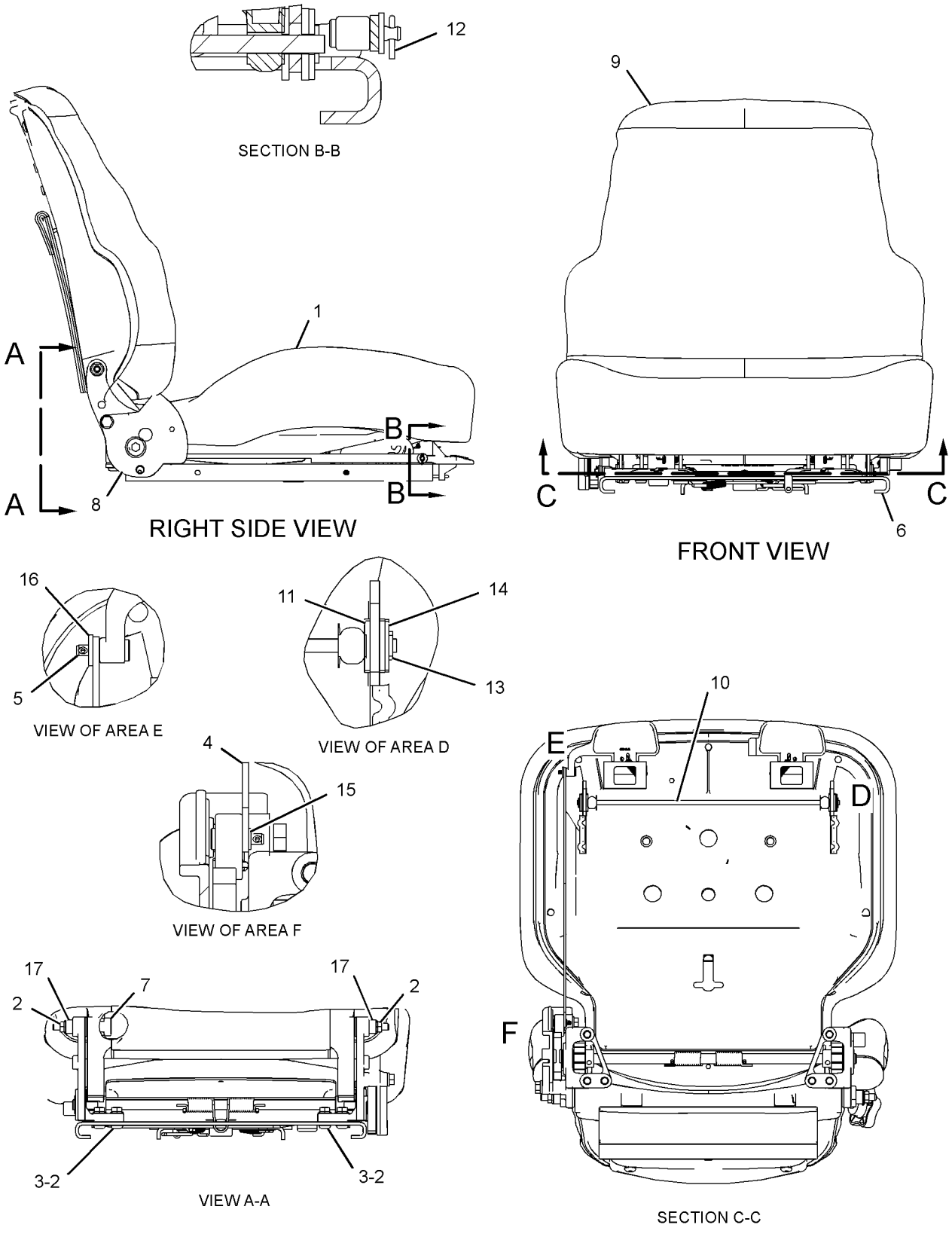

GRAPHIC #1 <END> g01336990

178-0606 SEAT GP–CLOTH

S/N: R5A1-UP
PART OF 160-7186 SEAT GP-SUSPENSION
AN ATTACHMENT

SMCS-7312 **i06231564**

NOTE	REF NO	GRAPHIC REF	PART NUMBER	QTY	PART NAME 1 2 3 4 5 6 (PRODUCT LEVEL)	SEE PAGE
	1	1	**177-4937**	1	SPACER (11.7X19.8X20.3-MM THK)	
Y	2	1	**178-0603**	1	SEAT GP (CLOTH)	557
Y	3	1	**222-0345**	1	SEAT BELT GP (RETRACTABLE, 3-IN)	556
	4	1	**229-1494**	1	EXTENSION GP-BACKREST (CLOTH)	
		1	**117-4491**	1	ROD	
	5	1	**0T-0244**	1	BOLT (7/16-20X1.25-IN)	
	6	1	**205-6388**	1	BOLT (7/16-20X1.75-IN)	

Y - SEPARATE ILLUSTRATION

178-0606 **SEAT GP (**contd.**)** **i06231564**

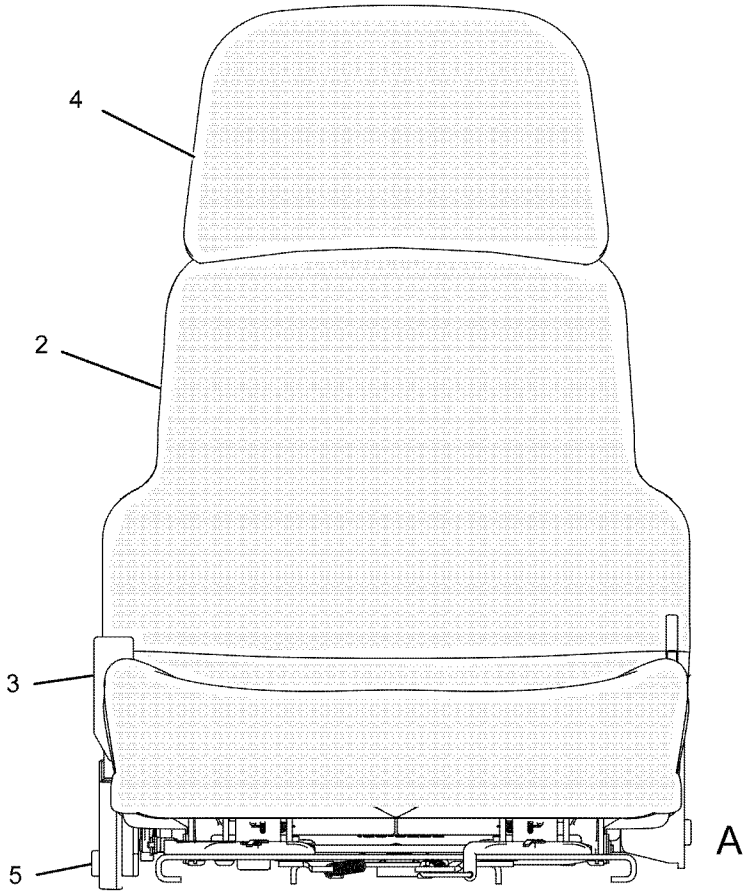

FRONT VIEW

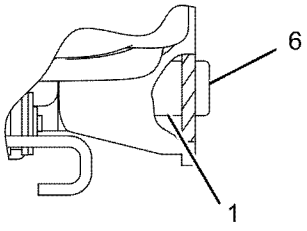

VIEW A

GRAPHIC #1 <END> g01084230

180-7304 SEAT GP–VINYL

S/N: R5A1-UP
PART OF 385-7834 SEAT GP
AN ATTACHMENT

SMCS-7312 **i06231565**

NOTE	REF NO	GRAPHIC REF	PART NUMBER	QTY	PART NAME 1 2 3 4 5 6 (PRODUCT LEVEL)	SEE PAGE
	1	1	**143-1288**	8	LOCKNUT-FLANGE (3/8-16-THD)	
	2	1	**171-1230**	6	SCREW-BUTTON HEAD (3/8-16X1-IN)	
	3	1	**171-6682**	1	BAR	
	4	1	**172-2416**	2	PIN	
Y	5	1	*173-1028*	1	ADJUSTER GP-SEAT	465
	6	1	**173-3283**	1	PAN AS (VINYL)	
		1	**169-1026**	1	CUSHION AS	
		1	**6K-3273**	5	RIVET-POP	
	7	1	**177-1863**	2	BOLT-PIVOT (3/8-16X2.89-IN)	
Y	8	1	*292-9238*	1	PAN GP-BACKREST (VINYL)	533
	9	1	**184-2298**	1	ROD	
	10	1	**184-2299**	4	WASHER (7X25.4X2.54-MM THK)	
Y	11	1	*210-2270*	1	RECLINER GP-SEAT	535
	12	1	**095-0843**	2	PIN-COTTER	
	13	1	**5V-1496**	2	RETAINER	
	14	1	**6V-7646**	2	WASHER-HARD (7.2X25X2-MM THK)	
	15	1	**8T-0328**	1	WASHER-HARD (5.5X10X1-MM THK)	
	16	1	**8T-4205**	1	WASHER-HARD (7.2X14.5X2-MM THK)	
	17	1	**294-5042**	2	SPACER (11.1X19.5X9.67-MM THK)	

Y - SEPARATE ILLUSTRATION

180-7304 **SEAT GP (**contd.**)** **i06231565**

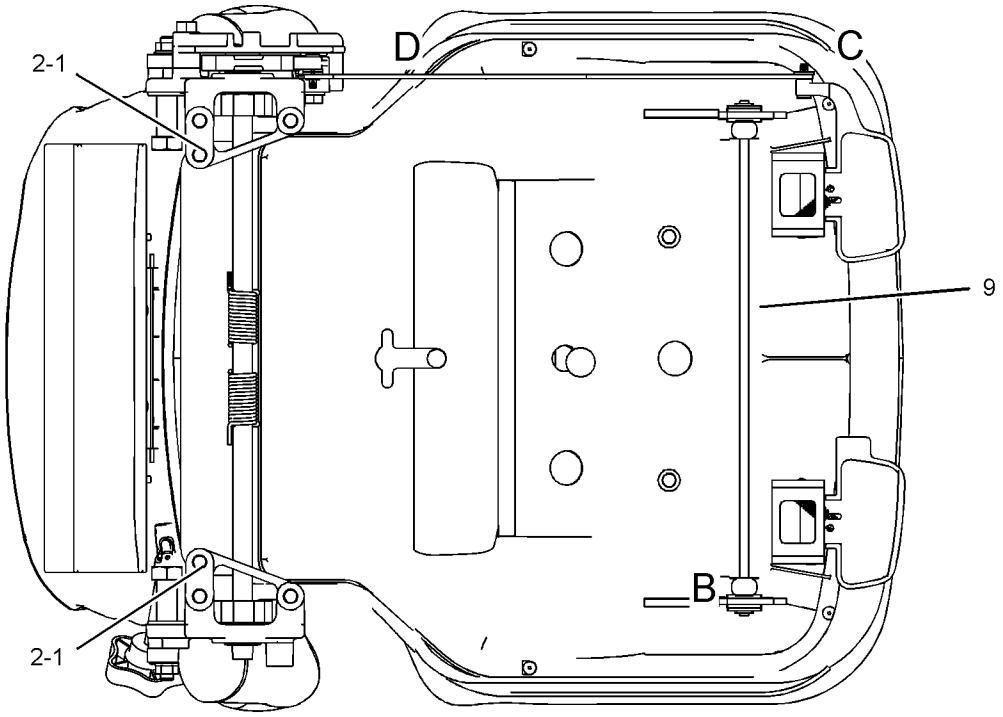

SECTION A-A

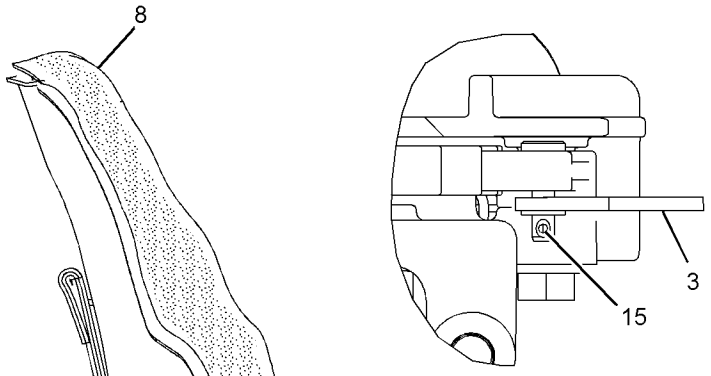

VIEW OF AREA D

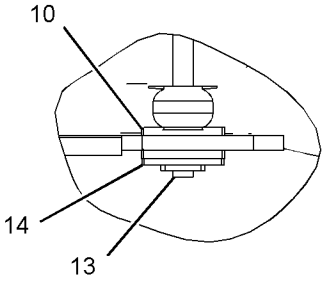

VIEW OF AREA B

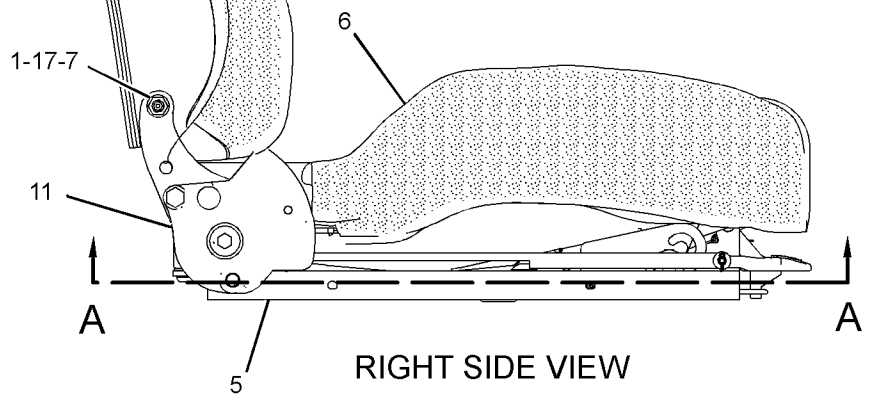

RIGHT SIDE VIEW

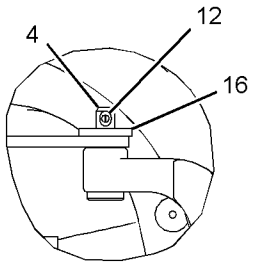

VIEW OF AREA C

GRAPHIC #1 <END> g01451635

374-5771 SEAT GP–CLOTH

S/N: R5A1-UP
FOR USE WITH CAB
AN ATTACHMENT

SMCS-7312 **i06521804**

NOTE	REF NO	GRAPHIC REF	PART NUMBER	QTY	PART NAME 1 2 3 4 5 6 (PRODUCT LEVEL)	SEE PAGE
Y	1	1	**160-7186**	1	SEAT GP-SUSPENSION (CLOTH)	567
	2	1	**7X-7729**	4	WASHER (11X25X3-MM THK)	
M	3	1	**9X-2125**	4	BOLT-LOCKING (M10X1.5X25-MM)	

M - METRIC PART
Y - SEPARATE ILLUSTRATION

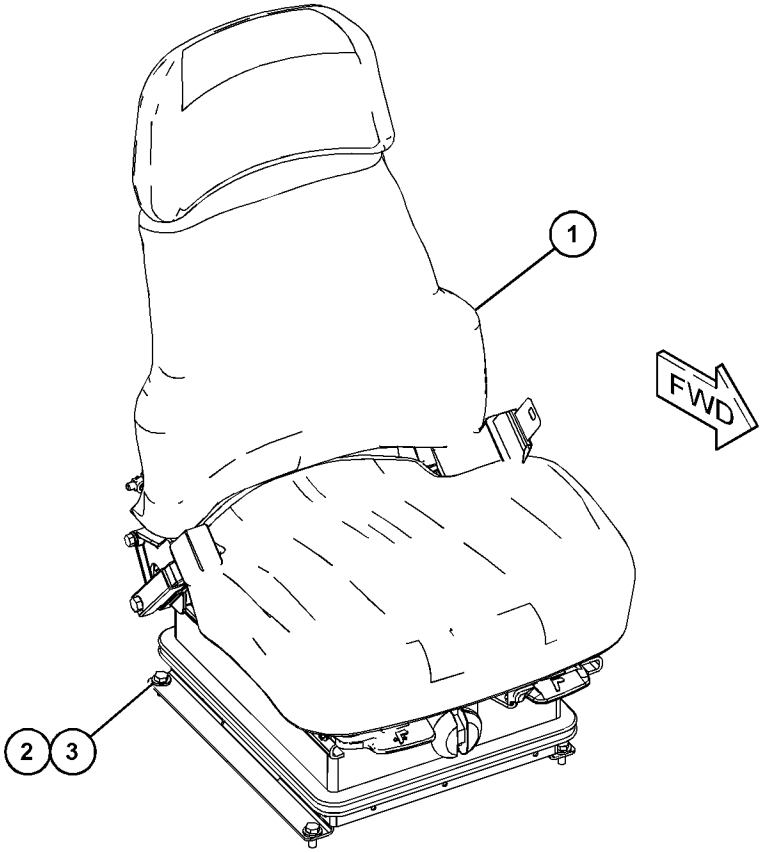

GRAPHIC #1 <END> g03719321

385-7834 SEAT GP–VINYL

S/N: R5A1-UP

PART OF 385-7835 SEAT GP-SUSPENSION

AN ATTACHMENT

SMCS-7312 **i05897971**

NOTE	REF NO	GRAPHIC REF	PART NUMBER	QTY	PART NAME 1 2 3 4 5 6 (PRODUCT LEVEL)	SEE PAGE
	1	1	**173-3083**	1	EXTENSION GP-BACKREST (VINYL)	
		1	**117-4491**	1	ROD	
Y	2	1	**180-7304**	1	SEAT GP (VINYL)	561

Y - SEPARATE ILLUSTRATION

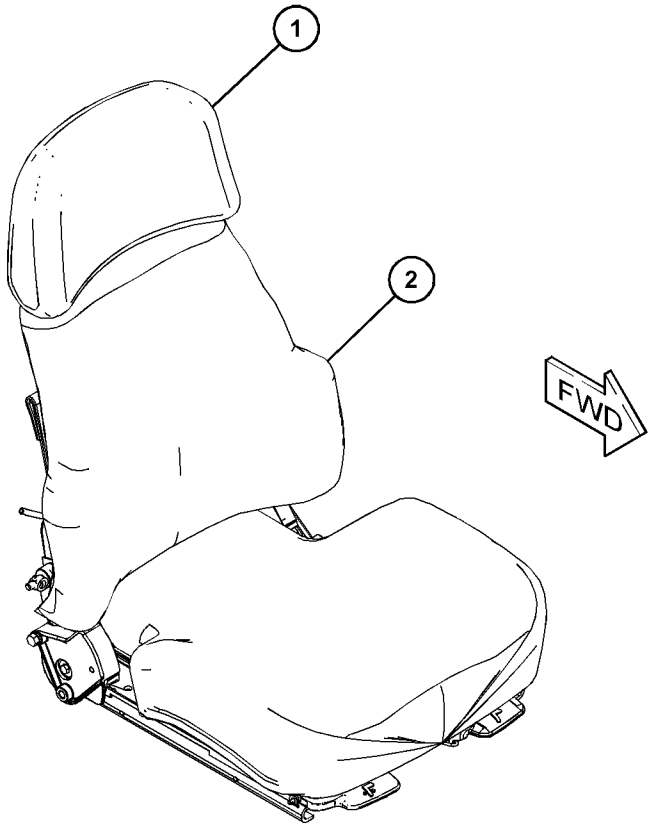

GRAPHIC #1 <END> g03719265

443-8222 SEAT GP—CLOTH, HEATED

S/N: R5A1-UP
24-VOLT
PART OF 443-8263 SEAT GP-SUSPENSION
AN ATTACHMENT

SMCS-7312 **i06208827**

NOTE	REF NO	GRAPHIC REF	PART NUMBER	QTY	PART NAME 1 2 3 4 5 6 (PRODUCT LEVEL)	SEE PAGE
	1	1	**143-1288**	8	LOCKNUT-FLANGE (3/8-16-THD)	
	2	1	**177-1863**	2	BOLT-PIVOT (3/8-16X2.89-IN)	
	3	1	**218-2529**	3	PLUG	
	4	1	**229-1494**	1	EXTENSION GP-BACKREST (CLOTH)	
		1	**117-4491**	1	ROD	
	5	1	**262-0767**	1	BRACKET AS (LH)	
	6	1	**277-8103**	1	PLUG	
	7	1	**314-5162**	1	BRACKET AS (RH)	
Y	8	1	**446-0649**	1	KIT-SEAT CUSHION	510
					(INCLUDES CUSHIONS, HEATER PAD, SEAT PAN, SCREWS, VENT FAN HARNESS & OPERATOR STATION HARNESS)	
	9	1	**355-3016**	1	PLATE AS	
	10	1	**365-3532**	1	PAN AS-BACK (24-VOLT)	
	11	1	**369-9004**	1	CABLE AS	
	12	1	**389-0879**	1	PAN-SEAT BACK	
	13	1	**451-5453**	1	HARNESS AS-SWITCH (WITH SWITCH) (SEAT HEATER)	
	14	1	**171-1230**	6	SCREW-BUTTON HEAD (3/8-16X1-IN)	
	15	1	**294-5042**	2	SPACER (11.1X19.5X9.67-MM THK)	
	16	1	**9F-5975**	1	BOLT (5/16-18X0.75-IN)	
	17	1	**436-1687**	1	KIT-LATCH	
					(INCLUDES BOLTS, LATCHES, RODS, SPRINGS & WASHERS)	
	18	1	**436-1688**	1	KIT-SEAT	
					(INCLUDES RETAINERS, SPRINGS, WASHERS & ROD)	
	19	1	**442-5287**	1	KIT-SHAFT	
Y	20	1	**443-8573**	1	KIT-HANDLE (SEAT ADJUSTMENT)	509
					(INCLUDES LEVERS, RETAINER-SPRINGS, PIN-SPRINGS, WASHERS & ROD)	

Y - SEPARATE ILLUSTRATION

443-8222 **SEAT GP** (contd.) **i06208827**

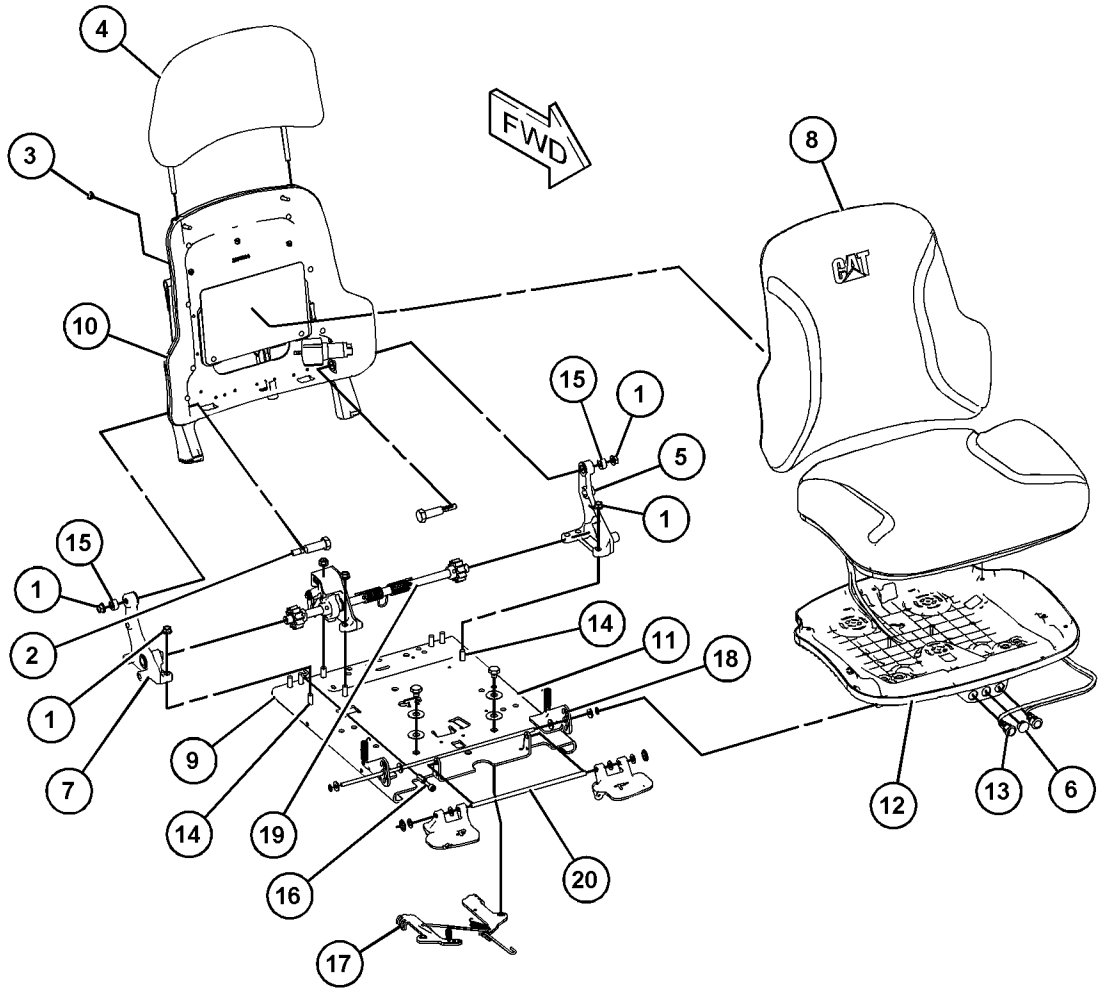

GRAPHIC #1 <END> g03820438

160-7186 SEAT GP-SUSPENSION–CLOTH

S/N: R5A1-UP
PART OF 374-5771 SEAT GP
AN ATTACHMENT

SMCS-7321, 7324, 7336

i05332309

NOTE	REF NO	GRAPHIC REF	PART NUMBER	QTY	PART NAME 1 2 3 4 5 6 (PRODUCT LEVEL)	SEE PAGE
Y	1	1	**160-7165**	1	SUSPENSION GP-SEAT (AIR)	570
Y	2	1	**178-0606**	1	SEAT GP (CLOTH)	559
J	3	1	**173-5787**	4	SETSCREW (1/4-20-THD)	
J	4	1	**4F-4879**	1	BOLT (3/8-16X0.5-IN)	
J	5	1	**203-7703**	2	WASHER-HARD (10.2X22.22X2.38-MM THK)	
					AVAILABLE REPAIR KIT(S):	
J			**173-7035**	1	KIT-SLIDER BLOCK (SUSPENSION SEAT)	
					(INCLUDES SLIDER BLOCKS)	

J - (KIT MARKED J SERVICES PARTS MARKED J)
Y - SEPARATE ILLUSTRATION

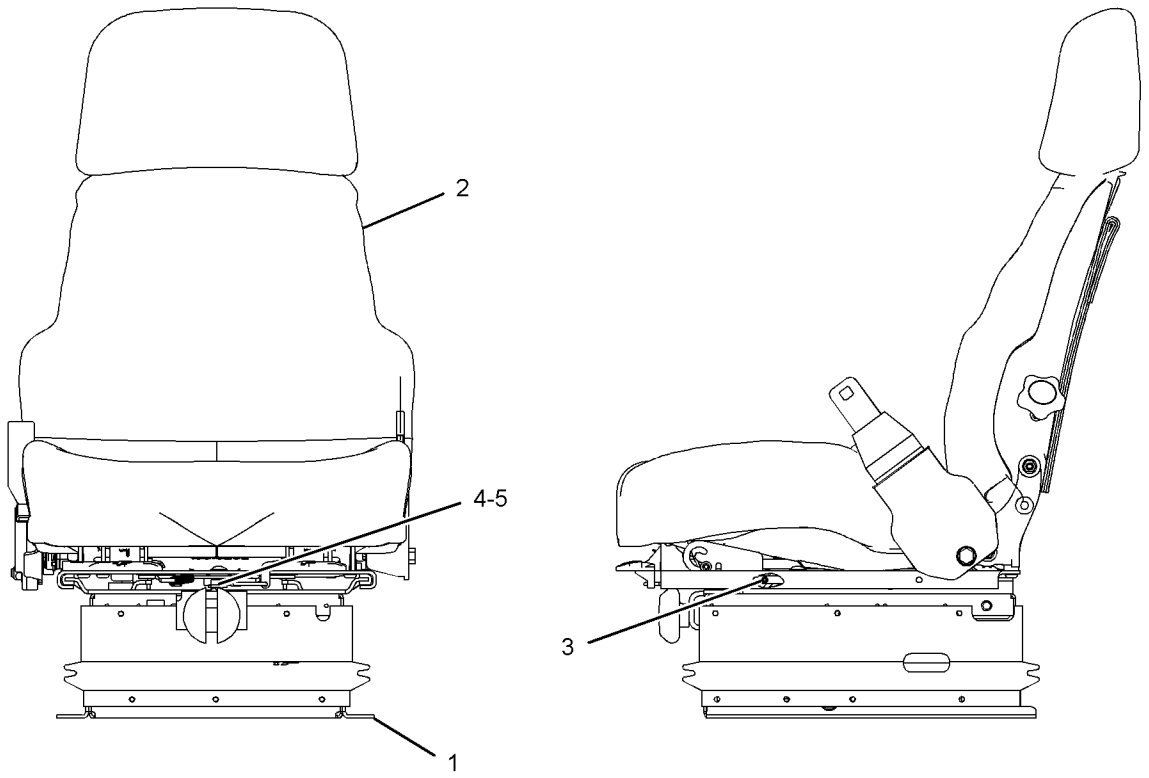

FRONT VIEW LEFT SIDE VIEW

GRAPHIC #1 <END> g01909213

385-7835 SEAT GP-SUSPENSION—VINYL

S/N: R5A1-UP

PART OF 375-7899 SEAT & MOUNTING GP

AN ATTACHMENT

SMCS-7321, 7324, 7336 **i05897944**

NOTE	REF NO	GRAPHIC REF	PART NUMBER	QTY	PART NAME 1 2 3 4 5 6 (PRODUCT LEVEL)	SEE PAGE
Y	1	1	**160-7165**	1	SUSPENSION GP-SEAT (AIR)	570
Y	2	1	**385-7834**	1	SEAT GP (VINYL)	564
					AVAILABLE REPAIR KIT(S):	
			173-7035	1	KIT-SLIDER BLOCK (SUSPENSION SEAT)	
					(INCLUDES WASHERS, BOLTS, SLIDER BLOCKS & SETSCREWS)	

Y - SEPARATE ILLUSTRATION

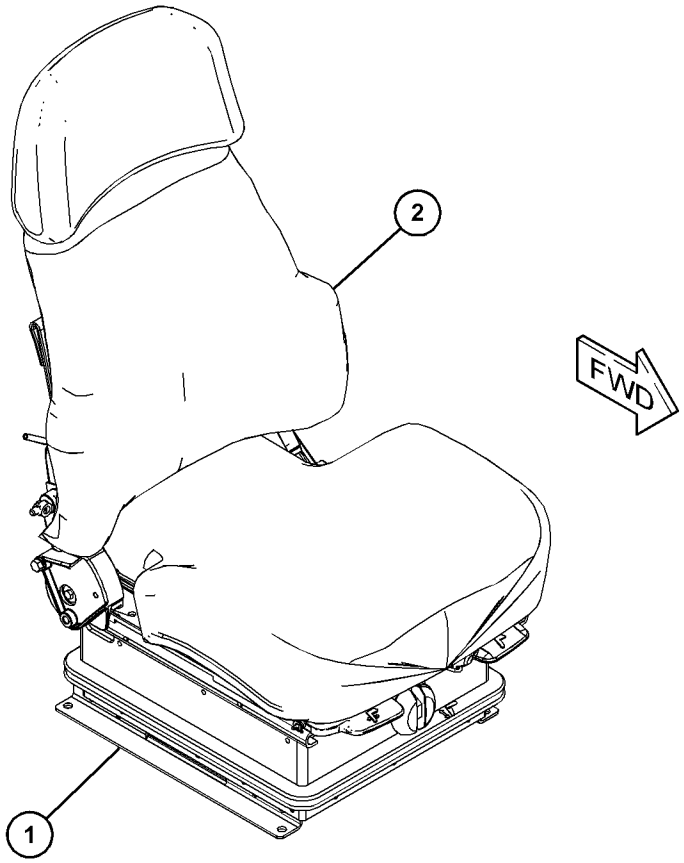

GRAPHIC #1 <END> g03719303

443-8263 SEAT GP-SUSPENSION—CLOTH, HEATED, AIR

S/N: R5A1-UP
24-VOLT
PART OF 391-4061 SEAT & MOUNTING GP
AN ATTACHMENT

SMCS-7321, 7324, 7336 **i06141380**

NOTE	REF NO	GRAPHIC REF	PART NUMBER	QTY	PART NAME 1 2 3 4 5 6 (PRODUCT LEVEL)	SEE PAGE
Y	1	1	**191-2933**	1	SUSPENSION GP-SEAT (AIR)	572
	2	1	**365-3536**	1	HARNESS AS-HEATER	
Y	3	1	**443-8222**	1	SEAT GP (CLOTH, HEATED)	565
	4	1	**173-7035**	1	KIT-SLIDER BLOCK (SUSPENSION SEAT)	
					(INCLUDES WASHERS, BLOCK-SLIDERS, SETSCREWS & BOLT)	

Y - SEPARATE ILLUSTRATION

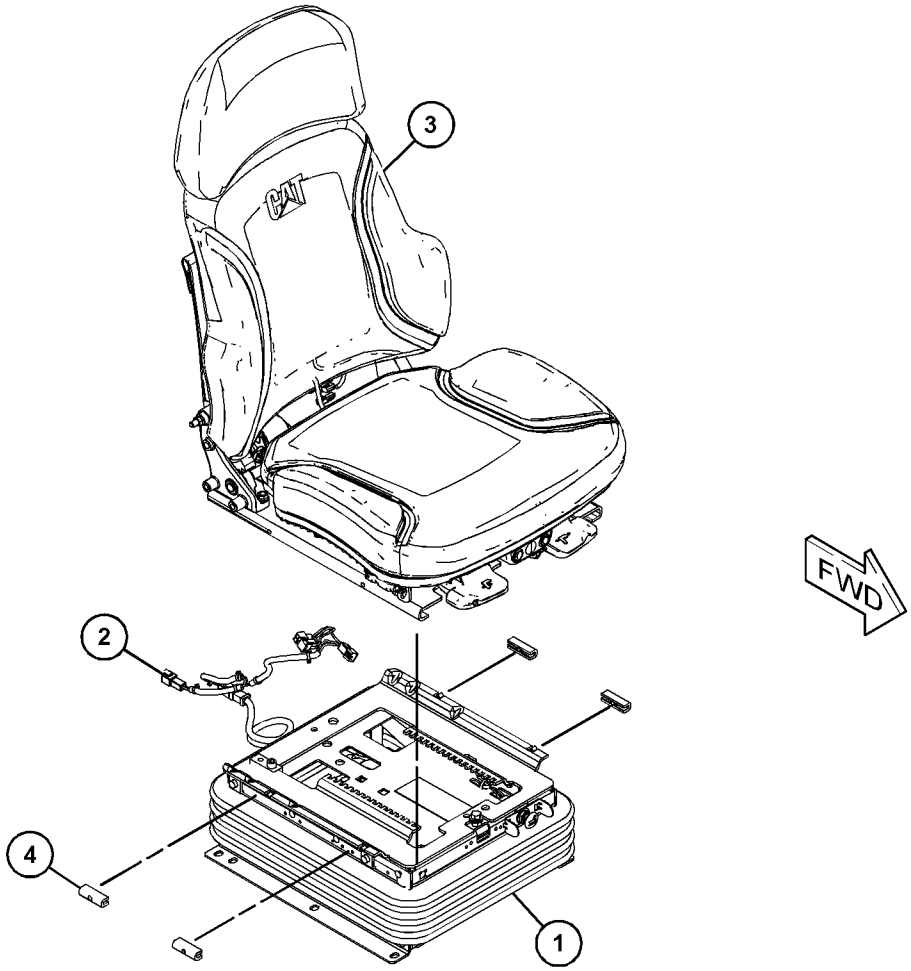

GRAPHIC #1 <END> g03813916

160-7165 SUSPENSION GP-SEAT

S/N: R5A1-UP

PART OF 160-7186, 385-7835 SEAT GP-SUSPENSION

AN ATTACHMENT

SMCS-7324 **i06507819**

NOTE	REF NO	GRAPHIC REF	PART NUMBER	QTY	PART NAME 1 2 3 4 5 6 (PRODUCT LEVEL)	SEE PAGE
	1	1	**2K-4973**	2	LOCKNUT (3/8-16-THD)	
	2	1	**4V-7884**	2	BEARING	
	3	1	**4V-8577**	4	BEARING	
	4	1	**5V-1497**	1	RETAINER	
	5	1	**8Y-5965**	1	ABSORBER AS-SHOCK	
	6	1	**8Y-6012**	1	ARM AS-SUSPENSION	
	7	1	**8Y-6014**	1	HOUSING AS (LOWER)	
	8	1	**8Y-6024**	2	SHAFT AS	
	9	1	**8Y-5944**	1	KIT-SUSPENSION BOOT (SEAT)	
					(INCLUDES BOOT, RETAINERS & FASTENERS)	
	10	1	**101-4194**	1	KIT-TETHER BELT (SUSPENSION SEAT)	
					(INCLUDES BELTS)	
	11	1	**101-4195**	1	KIT-SUSPENSION ROLLER (SUSPENSION SEAT)	
					(INCLUDES ROLLERS)	
	12	1	**145-0326**	1	FILM-INSTRUCTION (SEAT ADJUSTMENT)	
	13	1	**169-7380**	1	BOLT-SOCKET HEAD (3/8-16X0.375-IN)	
Y	14	1	**174-2231**	1	HOUSING GP-SEAT SUSPENSION	505

Y - SEPARATE ILLUSTRATION

160-7165 **SUSPENSION GP-SEAT (**contd.**)** **i06507819**

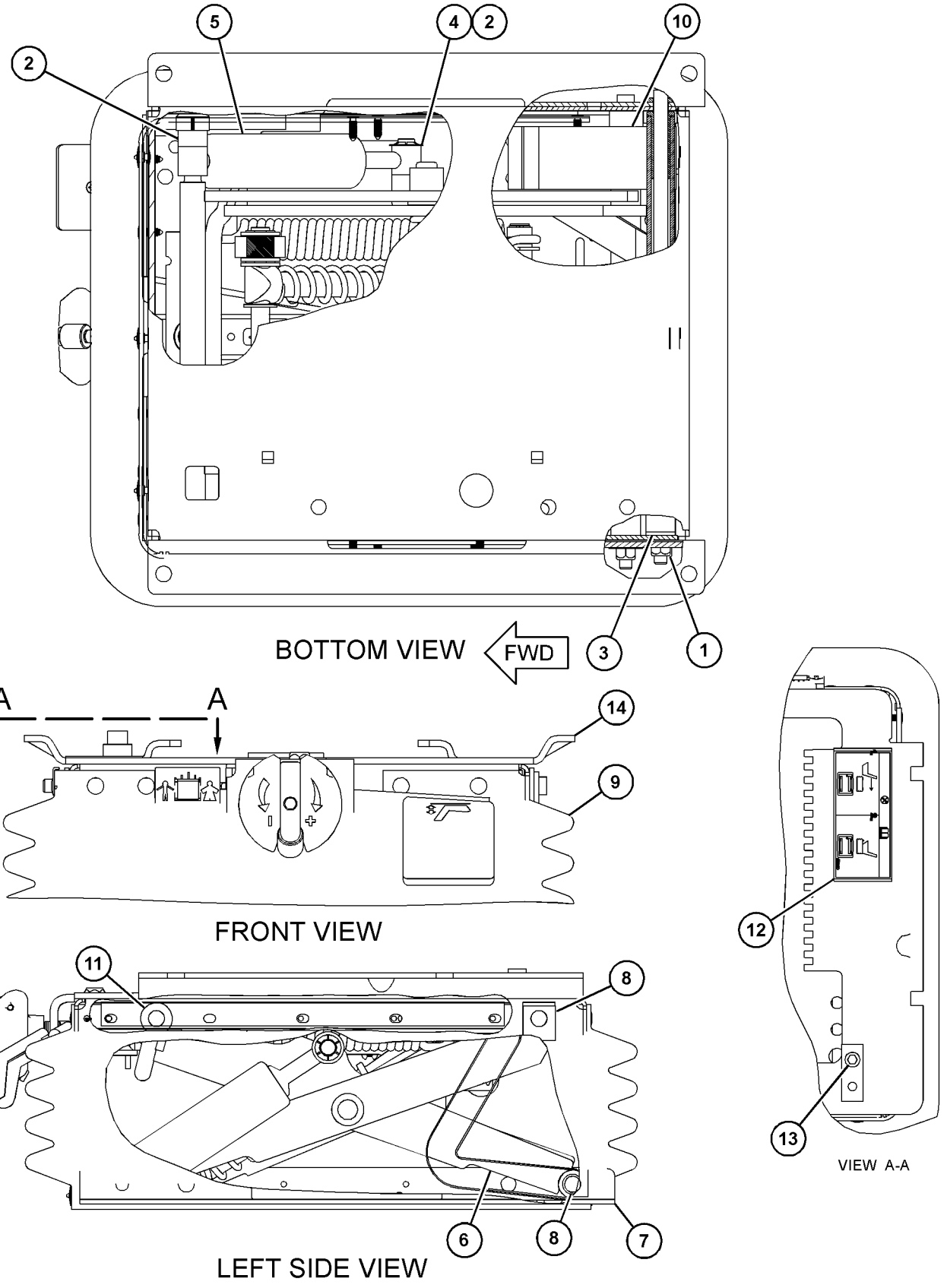

GRAPHIC #1 <END> g06008788

191-2933 SUSPENSION GP-SEAT—AIR

S/N: R5A1-UP

PART OF 443-8263 SEAT GP-SUSPENSION

AN ATTACHMENT

SMCS-7324 **i05775532**

NOTE	REF NO	GRAPHIC REF	PART NUMBER	QTY	PART NAME 1 2 3 4 5 6 (PRODUCT LEVEL)	SEE PAGE
	1	1	**3P-9900**	5	WASHER (10.5X30X3-MM THK)	
	2	1	**4B-4278**	2	WASHER (10.2X20.5X1.6-MM THK)	
	3	1	**4V-8577**	12	BEARING	
	4	1	**8L-8413**	1	STRAP-CABLE (WHITE)	
	5	1	**145-0326**	1	FILM-INSTRUCTION (SEAT ADJUSTMENT)	
	6	1	**164-1234**	1	PLATE	
	7	1	**101-0003**	33	FASTENER	
	8	1	**169-7380**	1	BOLT-SOCKET HEAD (3/8-16X0.375-IN)	
	9	1	**186-5107**	2	SCREW-DRIVE (NO 8-16X1.25-IN)	
	10	1	**192-7752**	4	SHAFT AS	
	11	1	**192-7755**	1	HOUSING AS (LOWER)	
	12	1	**192-7760**	1	SHAFT	
	13	1	**192-7767**	1	SCISSORS AS	
	14	1	**192-7783**	1	TOGGLE AS (WIDE)	
	15	1	**192-7787**	1	TOGGLE AS (NARROW)	
	16	1	**192-7790**	1	HOUSING AS (UPPER)	
	17	1	**192-7795**	1	BOOT	
	18	1	**192-7805**	1	HARNESS AS-VALVE (SEAT AIR COMPRESSOR)	
		1	**186-3735**	2	PIN-CONNECTOR (16-GA TO 18-GA)	
		1	**102-8802**	1	KIT-RECEPTACLE (2-PIN)	
					(INCLUDES RECEPTACLE AS & WEDGE)	
E		1	**211-5358**		CONDUIT-FLEXIBLE (64-CM)	
	19	1	**192-7810**	1	SPRING AS-AIR	
		1	**5P-4423**	1	ELBOW	
		1	**163-1135**	1	SPRING	
	20	1	**192-7812**	1	BOLT-SPECIAL	
	21	1	**192-7820**	3	BUMPER	
	22	1	**192-7822**	1	SHAFT	
	23	1	**237-3943**	1	BRACKET	
	24	1	**237-3970**	1	AIR COMPRESSOR GP-SEAT	
	25	1	**108-4311**	1	SCREW-MACHINE (3/8-16X0.75-IN)	
	26	1	**2K-4973**	8	LOCKNUT (3/8-16-THD)	
	27	1	**3J-4818**	1	LOCKWASHER	
M	28	1	**5C-2890**	3	NUT (M6X1-THD)	
	29	1	**8T-9371**	1	BOLT (3/8-16X0.5-IN)	
E	30	1	**211-5358**		CONDUIT-FLEXIBLE (26.7-CM)	
E	30A	1	**211-5358**		CONDUIT-FLEXIBLE (35.6-CM)	
D	31	1	**5P-6010**		TUBE (0.267-M)	
D	31A	1	**5P-6010**		TUBE (0.356-M)	
					AVAILABLE REPAIR KIT(S):	
			192-7799	1	KIT-AIR VALVE (SUSPENSION SEAT)	
					(INCLUDES KNOB AS, NUT, VALVE, LOCKWASHER & FITTING)	
B			**192-7848**	1	KIT-SHOCK ABSORBER (SUSPENSION SEAT)	
					(INCLUDES LOCKNUT, LOCKWASHER, SHOCK ABSORBER, BEARINGS, WASHER & BOLTS)	
			211-9294	1	KIT-TETHER (SUSPENSION SEAT)	

191-2933 **SUSPENSION GP-SEAT (**contd.**)** **i05775532**

NOTE	REF NO	GRAPHIC REF	PART NUMBER	QTY	PART NAME 1 2 3 4 5 6 (PRODUCT LEVEL)	SEE PAGE
					(INCLUDES TETHERS)	
AB			**213-5170**	1	KIT-SEAT ADJUSTER (SEAT ADJUSTMENT)	
					(INCLUDES BOLTS, NUTS, ROD, ARM & HOUSING)	
ABY			**212-7779**	1	KIT-SHOCK ABSORBER (SUSPENSION SEAT) (ADJUSTABLE SEAT)	511
AB			**346-4360**	1	KIT-SHOCK ABSORBER (SUSPENSION SEAT) (HEAVY-DUTY)	
					(INCLUDES SHOCK ABSORBER, BEARINGS, WASHERS, BOLTS, LOCKNUT, & LOCKWASHER)	

A - NOT PART OF THIS GROUP
B - USE AS REQUIRED
D - ORDER BY THE METER
E - ORDER BY THE CENTIMETER
M - METRIC PART
Y - SEPARATE ILLUSTRATION

191-2933 **SUSPENSION GP-SEAT (**contd.**)** **i05775532**

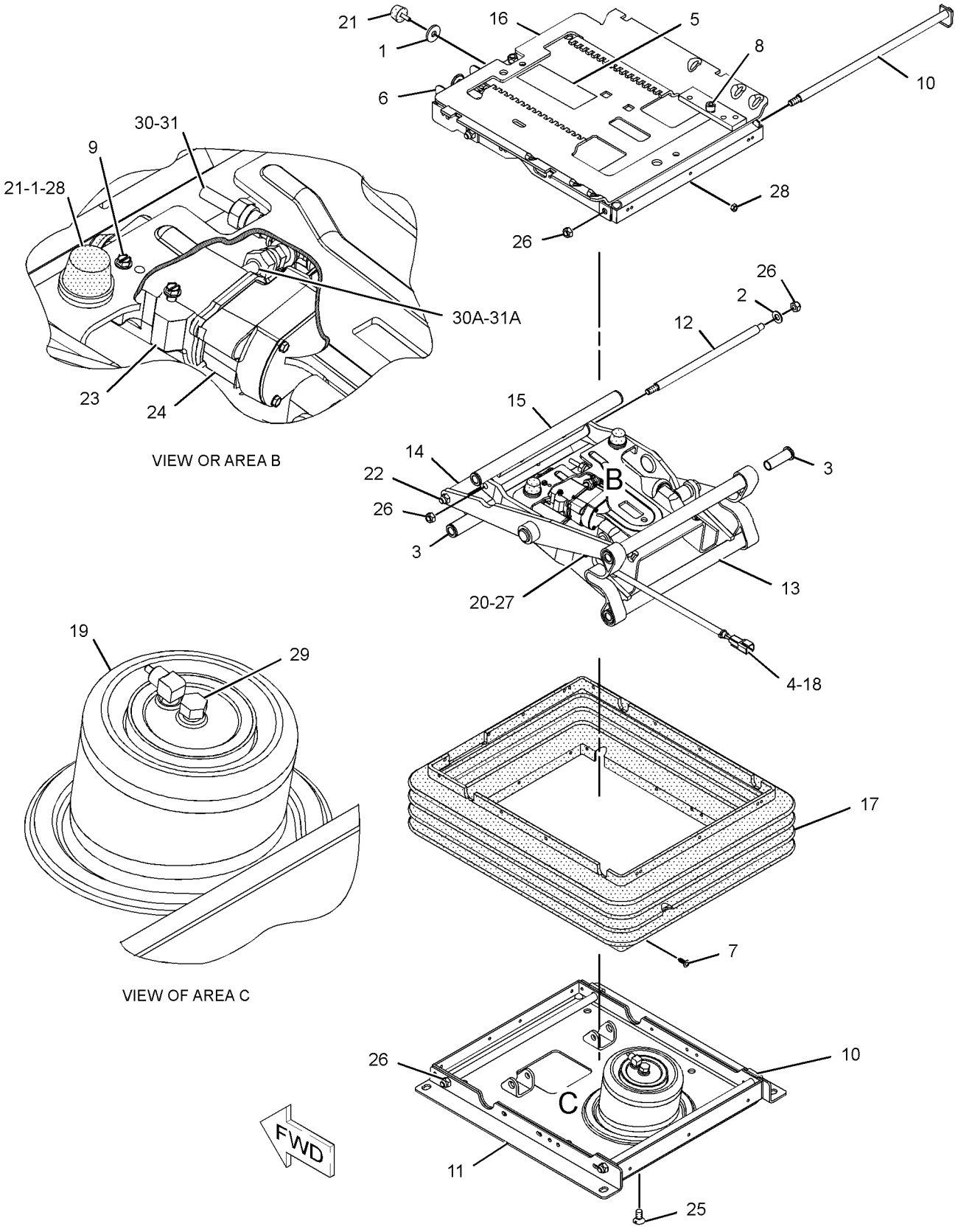

GRAPHIC #1 <END> g01197079

375-7921 TANK GP-WINDOW WASHER

S/N: R5A1-UP
PART OF 393-6488, 393-6489 CAB AR
AN ATTACHMENT

SMCS-7306 **i06581454**

NOTE	REF NO	GRAPHIC REF	PART NUMBER	QTY	PART NAME 1 2 3 4 5 6 (PRODUCT LEVEL)	SEE PAGE
	1	1	**3S-2093**	1	STRAP-CABLE	
	2	1	**7Y-3474**	4	VALVE AS-CHECK (WINDOW WASHER)	
Y	3	1	**375-7927**	1	TANK GP-WINDOW WASHER	576
	4	1	**4P-7581**	1	CLIP	
M	5	1	**6V-7357**	4	BOLT (M6X1X25-MM)	
	6	1	**8T-4121**	1	WASHER-HARD (11X21X2.5-MM THK)	
M	7	1	**8T-4137**	1	BOLT (M10X1.5X20-MM)	
	8	1	**8T-4205**	4	WASHER-HARD (7.2X14.5X2-MM THK)	

M - METRIC PART
Y - SEPARATE ILLUSTRATION

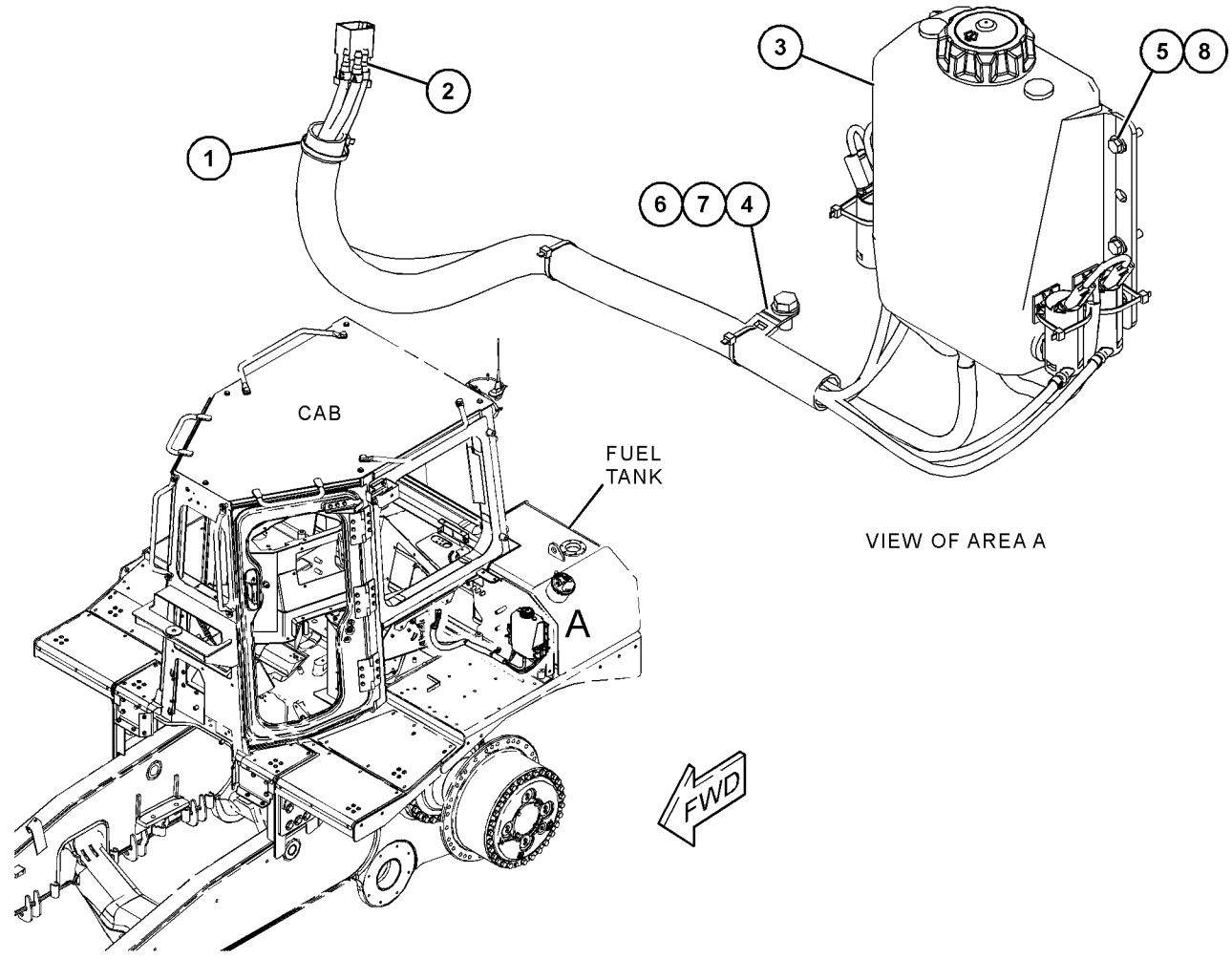

GRAPHIC #1 <END> g03722515

375-7927 TANK GP-WINDOW WASHER

S/N: R5A1-UP

PART OF 375-7921 TANK GP-WINDOW WASHER

AN ATTACHMENT

SMCS-7306 **i06231622**

NOTE	REF NO	GRAPHIC REF	PART NUMBER	QTY	PART NAME 1 2 3 4 5 6 (PRODUCT LEVEL)	SEE PAGE
	1	1	**3S-2093**	7	STRAP-CABLE	
	2	1	**3V-3263**	2	CONNECTOR (HOSE)	
	3	1	**267-8715**	4	GROMMET	
	4	1	**322-4964**	1	CAP-VENTED (WINDOW WASHER TANK)	
	5	1	**322-4965**	4	ANCHOR-TIE	
	6	1	**339-9915**	4	PUMP-WASHER	
	7	1	**340-5693**	2	HOSE-ELBOW	
Y	8	1	**389-3056**	1	HARNESS AS-WIRING (WINDOW WASHER) (WINDOW WASHER)	124
D	9	1	**6V-5817**		CONDUIT-FLEXIBLE (26.1-MM ID, SPLIT) (1-M)	
E	10	1	**144-0195**		HOSE (80-CM)	
E	10A	1	**144-0195**		HOSE (78-CM)	
E	10B	1	**144-0195**		HOSE (95-CM)	
E	10C	1	**144-0195**		HOSE (101-CM)	
E	11	1	**7X-7927**		TAPE-IDENTIFICATION (LETTER A) (6-CM EACH)	
E	12	1	**7X-7928**		TAPE-IDENTIFICATION (LETTER B) (6-CM EACH)	
E	13	1	**7X-7929**		TAPE-IDENTIFICATION (LETTER C) (6-CM EACH)	
E	14	1	**7X-7930**		TAPE-IDENTIFICATION (LETTER D) (6-CM EACH)	

D - ORDER BY THE METER
E - ORDER BY THE CENTIMETER
Y - SEPARATE ILLUSTRATION

375-7927 **TANK GP-WINDOW WASHER (**contd.**)** **i06231622**

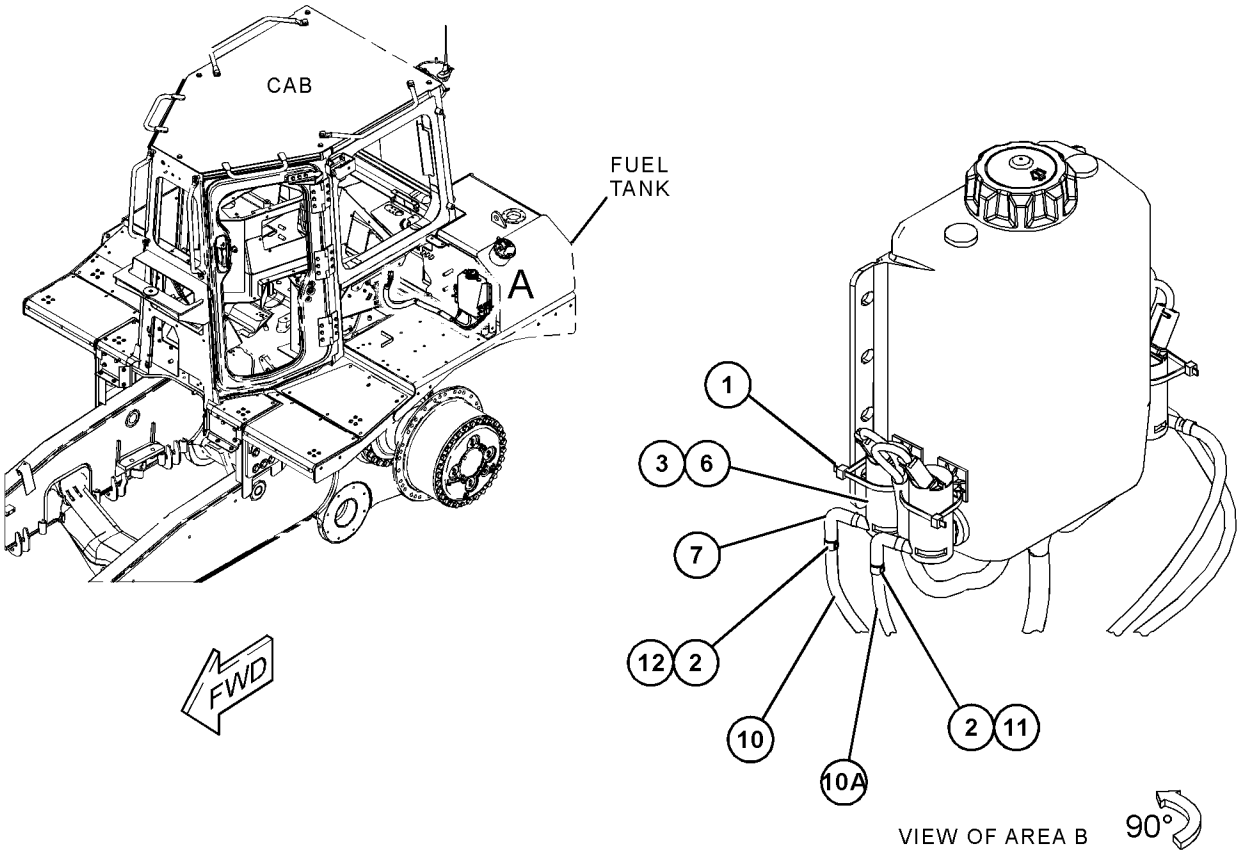

GRAPHIC #1 <END> g03722583

383-6866 WINDOW GP-CAB

S/N: R5A1-UP
PART OF 393-6480 CAB AR
AN ATTACHMENT

SMCS-7310 **i05900856**

NOTE	REF NO	GRAPHIC REF	PART NUMBER	QTY	PART NAME 1 2 3 4 5 6 (PRODUCT LEVEL)	SEE PAGE
	1	1	**379-6657**	2	GLASS (DOOR)	
	2	1	**383-6864**	1	GLASS-FRONT	
	3	1	**383-6865**	1	GLASS-REAR	
Y	4	1	*384-0859*	1	WINDOW GP-CAB (LH)	580
Y	5	1	*384-0860*	1	WINDOW GP-CAB (RH)	581
D	6	1	**5P-5768**		SEAL (1.8-M)	
D	7	1	**5P-6605**		SEAL (3.1-M EACH)	
D	7A	1	**5P-6605**		SEAL (3.3-M)	
E	8	1	**353-7114**		SEAL (358-CM EACH)	

D - ORDER BY THE METER
E - ORDER BY THE CENTIMETER
Y - SEPARATE ILLUSTRATION

383-6866 **WINDOW GP-CAB (**contd.**)** **i05900856**

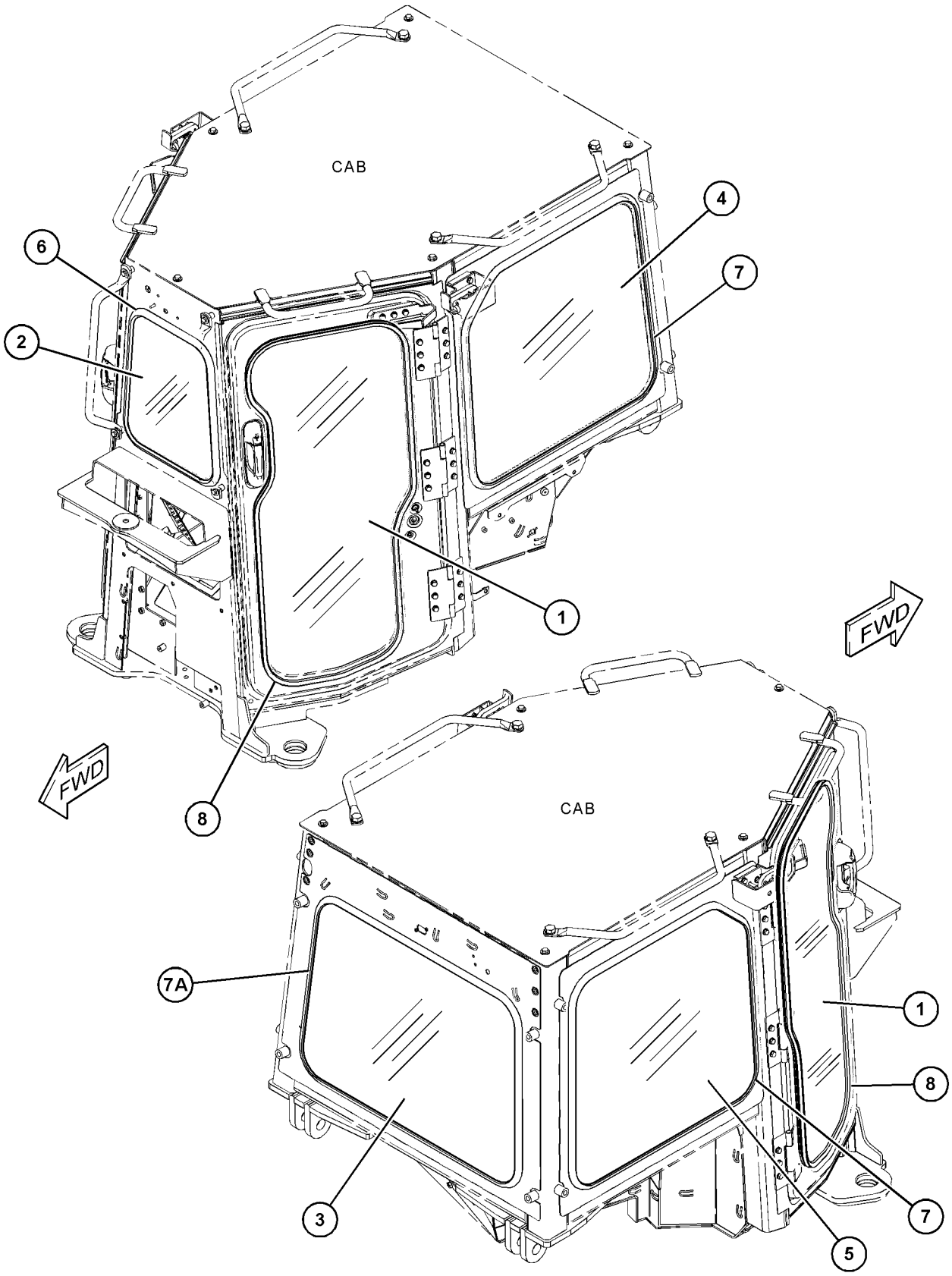

GRAPHIC #1 <END> g03721604

384-0859 WINDOW GP-CAB–LH

S/N: R5A1-UP
PART OF 383-6866 WINDOW GP-CAB
AN ATTACHMENT

SMCS-7310 **i05900980**

NOTE	REF NO	GRAPHIC REF	PART NUMBER	QTY	PART NAME 1 2 3 4 5 6 (PRODUCT LEVEL)	SEE PAGE
	1	1	**352-4897**	1	LOCK AS	
	2	1	**447-0302**	1	PILLAR	
	3	1	**447-0304**	1	SEAL	
	4	1	**447-0305**	1	SEAL	
	5	1	**447-0307**	1	SEAL	
	6	1	**447-0314**	1	GLASS-FIXED	
Y	7	1	*447-0315*	1	WINDOW GP-CAB	586
E	8	1	**447-0306**		SEAL (139-CM)	
E	9	1	**425-0242**		SEAL (75-CM)	
E	9A	1	**425-0242**		SEAL (73-CM)	

E - ORDER BY THE CENTIMETER
Y - SEPARATE ILLUSTRATION

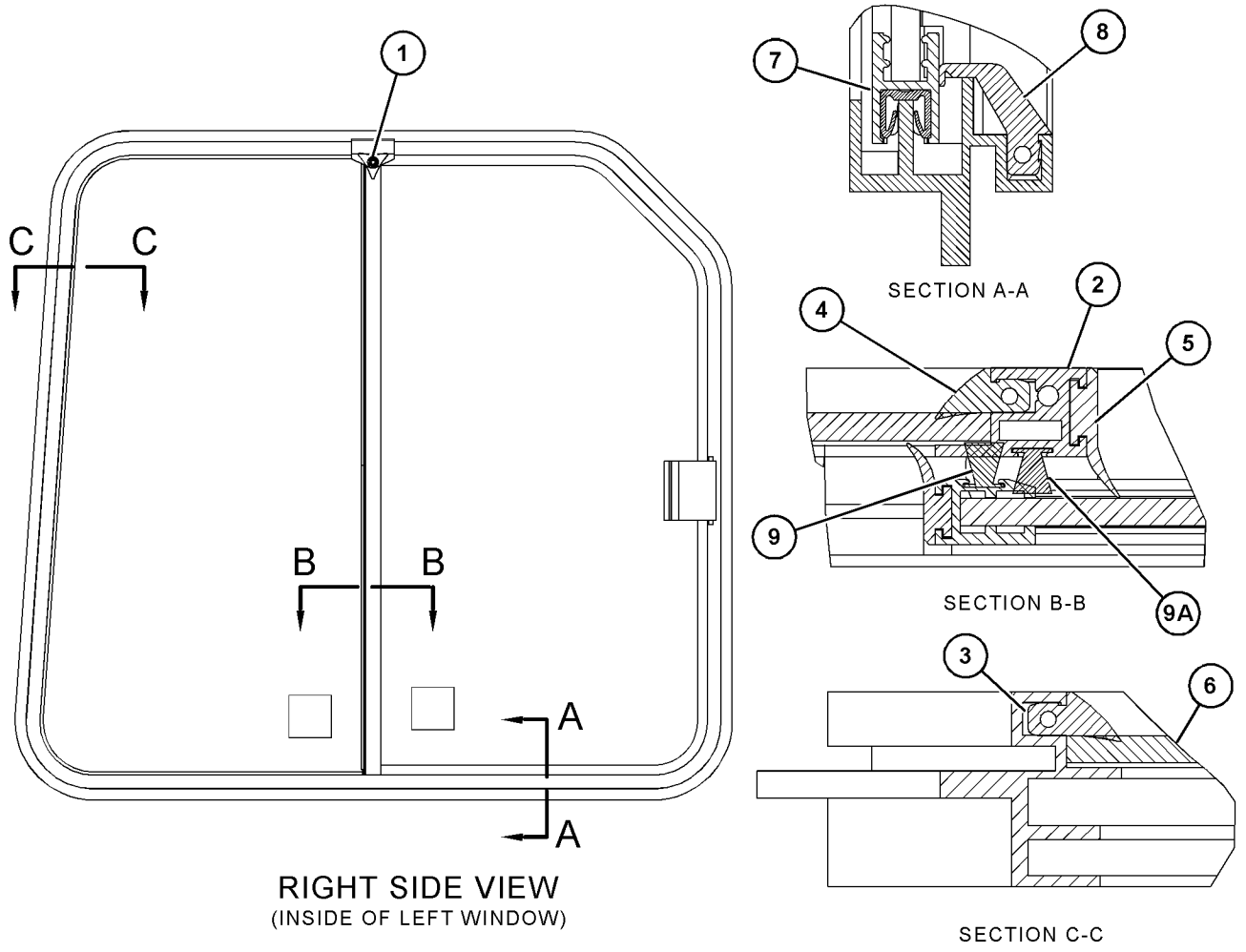

GRAPHIC #1 <END> g03721582

384-0860 WINDOW GP-CAB—RH

S/N: R5A1-UP
PART OF 383-6866 WINDOW GP-CAB
AN ATTACHMENT

SMCS-7310 **i05901187**

NOTE	REF NO	GRAPHIC REF	PART NUMBER	QTY	PART NAME 1 2 3 4 5 6 (PRODUCT LEVEL)	SEE PAGE
	1	1	**352-4897**	1	LOCK AS	
Y	2	1	*447-0299*	1	WINDOW GP-CAB	584
	3	1	**447-0301**	1	GLASS-FIXED	
	4	1	**447-0302**	1	PILLAR	
	5	1	**447-0304**	1	SEAL	
	6	1	**447-0305**	1	SEAL	
	7	1	**447-0307**	1	SEAL	
E	8	1	**447-0306**		SEAL (139-CM)	
E	9	1	**425-0242**		SEAL (75-CM)	
E	9A	1	**425-0242**		SEAL (73-CM)	

E - ORDER BY THE CENTIMETER
Y - SEPARATE ILLUSTRATION

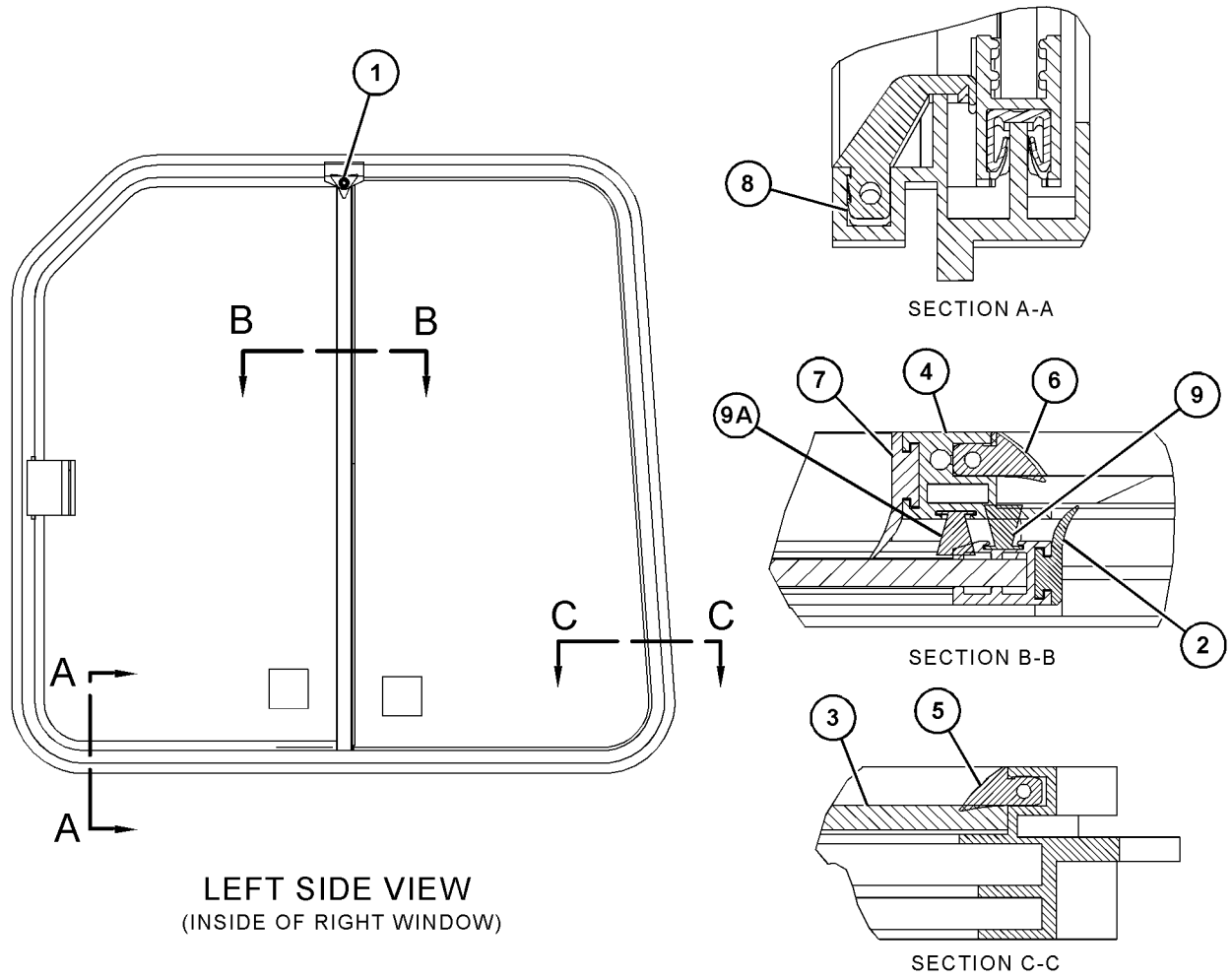

GRAPHIC #1 <END> g03721581

389-1414 WINDOW GP-CAB

S/N: R5A1-UP
DUAL PANE
PART OF 393-6485 CAB AR-ENCLOSED ROPS
AN ATTACHMENT

SMCS-7310 **i05899841**

NOTE	REF NO	GRAPHIC REF	PART NUMBER	QTY	PART NAME 1 2 3 4 5 6 (PRODUCT LEVEL)	SEE PAGE
	1	1	**389-0855**	1	GLASS AS-DOOR (LH)	
	2	1	**389-0856**	1	GLASS AS-DOOR (RH)	
	3	1	**390-3151**	1	GLASS AS-FRONT	
	4	1	**390-3152**	1	GLASS AS (LH) (SIDE)	
	5	1	**390-3153**	1	GLASS AS (RH) (SIDE)	
	6	1	**390-3154**	1	GLASS AS-REAR	
D	7	1	**5P-5768**		SEAL (1.78-M)	
D	8	1	**5P-6605**		SEAL (3.27-M)	
D	8A	1	**5P-6605**		SEAL (3.1-M EACH)	
E	9	1	**353-7114**		SEAL (357.5-CM EACH)	

D - ORDER BY THE METER
E - ORDER BY THE CENTIMETER

389-1414 **WINDOW GP-CAB (**contd.**)** **i05899841**

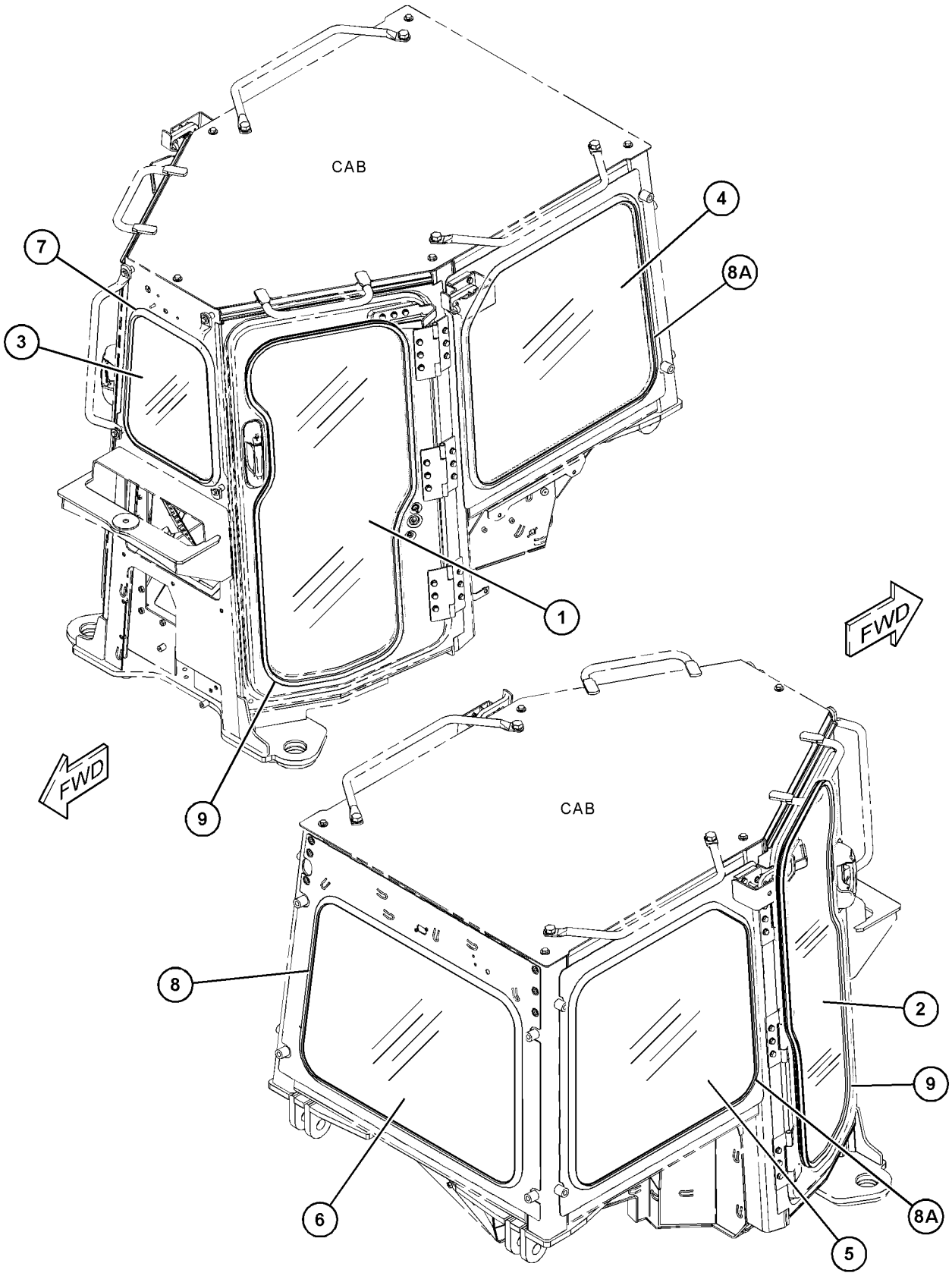

GRAPHIC #1 <END> g03720684

447-0299 WINDOW GP-CAB–RH

S/N: R5A1-UP

PART OF 384-0860 WINDOW GP-CAB

AN ATTACHMENT

SMCS-7310 **i05901249**

NOTE	REF NO	GRAPHIC REF	PART NUMBER	QTY	PART NAME 1 2 3 4 5 6 (PRODUCT LEVEL)	SEE PAGE
	1	1	**302-2136**	1	CATCH AS	
	2	1	**447-0300**	4	SLIPPER	
	3	1	**447-0308**	1	SEAL	
	4	1	**447-0310**	1	GLASS-SLIDING	
	5	1	**447-0311**	1	FRAME	
	6	1	**447-0312**	1	PILLAR	
E	7	1	**447-0313**		SEAL (91-CM)	
E	7A	1	**447-0313**		SEAL (24-CM)	
E	7B	1	**447-0313**		SEAL (14-CM)	

E - ORDER BY THE CENTIMETER

447-0299 **WINDOW GP-CAB (**contd.**)** **i05901249**

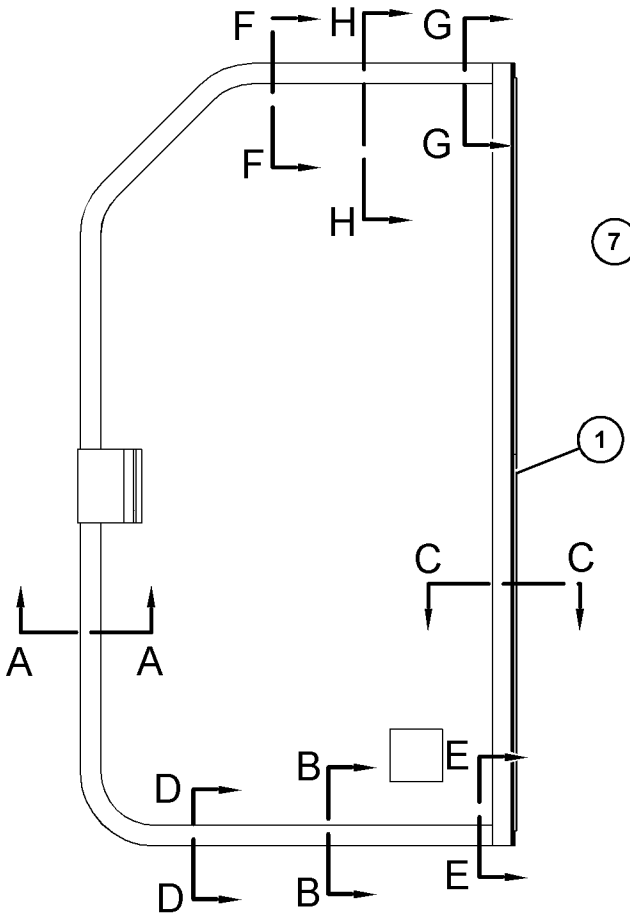

LEFT SIDE VIEW
(INSIDE OF RIGHT WINDOW)

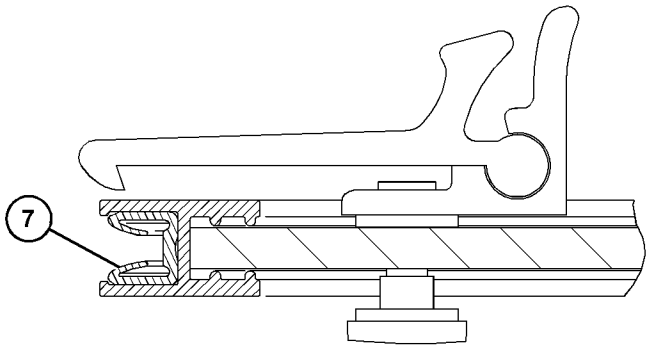

SECTION A-A

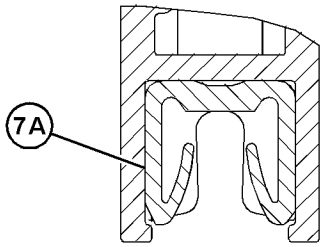

SECTION B-B

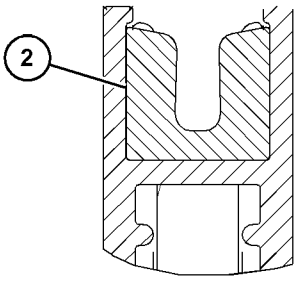

SECTION G-G

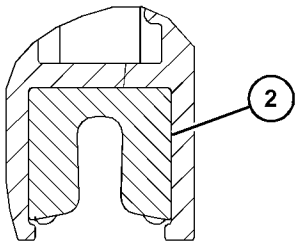

SECTION E-E

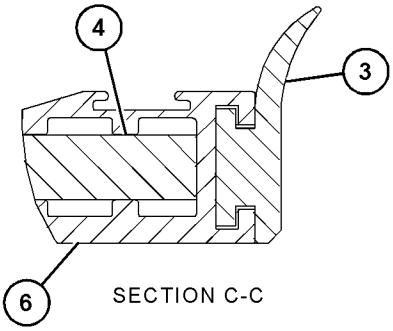

SECTION C-C

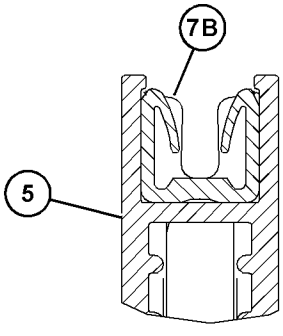

SECTION H-H

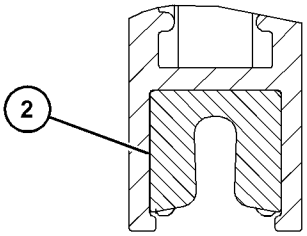

SECTION D-D

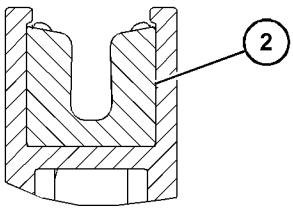

SECTION F-F

GRAPHIC #1 <END> g03721601

447-0315 WINDOW GP-CAB—LH

S/N: R5A1-UP

PART OF 384-0859 WINDOW GP-CAB

AN ATTACHMENT

SMCS-7310 **i05901106**

NOTE	REF NO	GRAPHIC REF	PART NUMBER	QTY	PART NAME 1 2 3 4 5 6 (PRODUCT LEVEL)	SEE PAGE
	1	1	**302-2136**	1	CATCH AS	
	2	1	**447-0300**	4	SLIPPER	
	3	1	**447-0308**	1	SEAL	
	4	1	**447-0311**	1	FRAME	
	5	1	**447-0312**	1	PILLAR	
	6	1	**447-0316**	1	GLASS-SLIDING	
E	7	1	**447-0313**		SEAL (91-CM)	
E	7A	1	**447-0313**		SEAL (24-CM)	
E	7B	1	**447-0313**		SEAL (14-CM)	

E - ORDER BY THE CENTIMETER

447-0315 **WINDOW GP-CAB (**contd.**)** **i05901106**

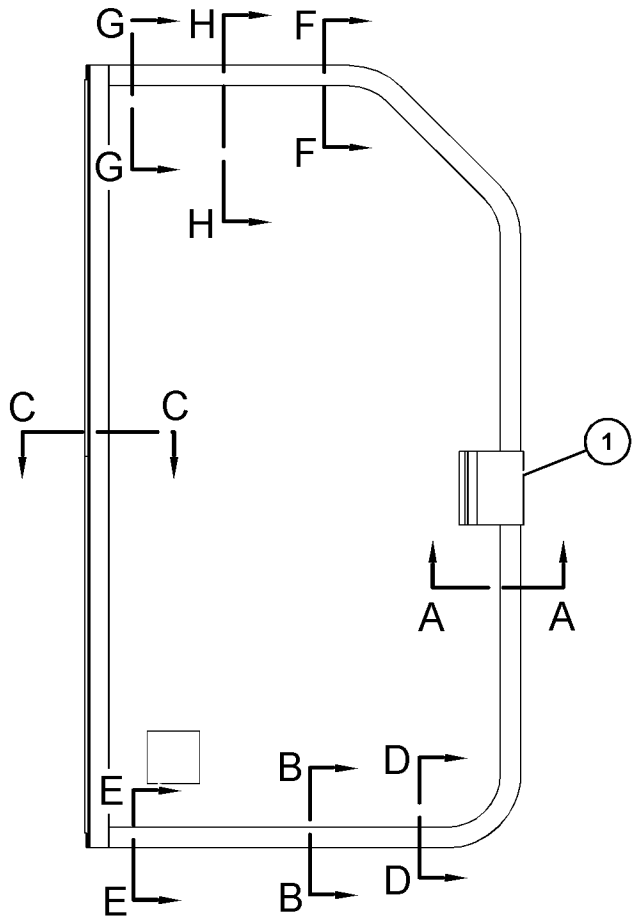

RIGHT SIDE VIEW
(INSIDE OF LEFT WINDOW)

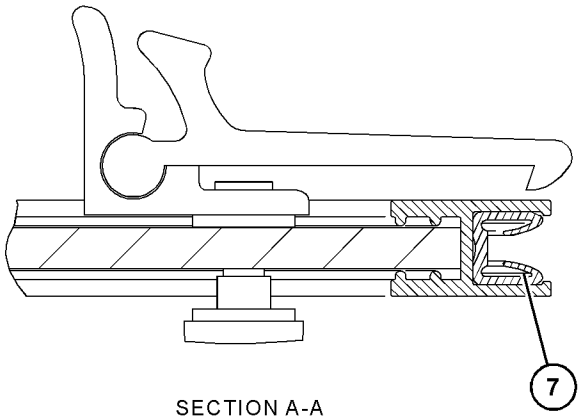

SECTION A-A

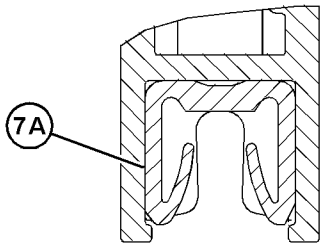

SECTION B-B

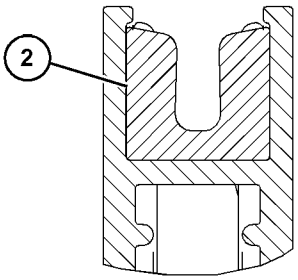

SECTION G-G

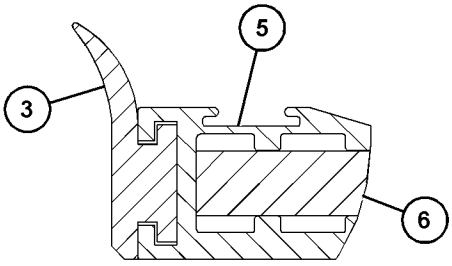

SECTION C-C

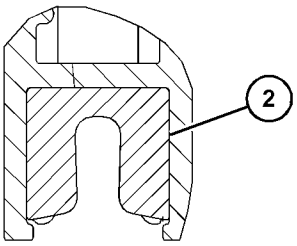

SECTION E-E

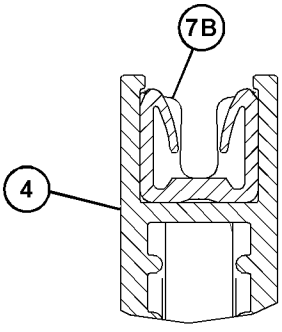

SECTION H-H

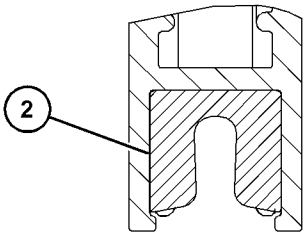

SECTION D-D

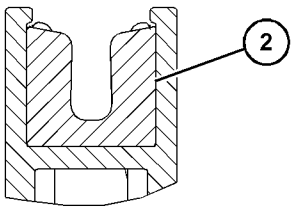

SECTION F-F

GRAPHIC #1 <END> g03721583

374-4733 WIPER GP-WINDOW

S/N: R5A1-UP

PART OF 393-6480 CAB AR, 393-6485 CAB AR-ENCLOSED ROPS

AN ATTACHMENT

SMCS-7305 **i05898297**

NOTE	REF NO	GRAPHIC REF	PART NUMBER	QTY	PART NAME 1 2 3 4 5 6 (PRODUCT LEVEL)	SEE PAGE
	1	1	**3S-2093**	24	STRAP-CABLE	
	2	1	**3V-3263**	2	CONNECTOR (HOSE)	
	3	2	**6V-5849**	3	BLADE AS-WIPER (350-MM)	
					(EACH INCLUDES)	
		2	**8C-5060**	1	KIT-WIPER BLADE (INCLUDES 2-BLADES)	
	4	1,2	**8T-5400**	8	CONNECTOR AS	
	5	2	**146-6433**	1	BLADE AS-WIPER (500-MM)	
Y	6	2	**222-5374**	1	ARM GP-WINDOW WIPER (DOOR, RH)	470
Y	7	2	**222-5378**	1	ARM GP-WINDOW WIPER (DOOR, LH)	471
Y	8	2	**293-0754**	1	ARM GP-WINDOW WIPER (REAR)	472
Y	9	2	**330-5013**	1	MOTOR GP-WINDOW WIPER (DOOR, LH)	525
Y	10	2	**330-5014**	1	MOTOR GP-WINDOW WIPER (DOOR, RH)	526
Y	11	2	**330-5017**	1	MOTOR GP-WINDOW WIPER (REAR)	527
Y	12	2	**393-8111**	1	MOTOR GP-WINDOW WIPER (FRONT SIDE)	528
Y	13	2	**393-8112**	1	ARM GP-WINDOW WIPER (FRONT SIDE)	473
M	14	2	**344-5674**	1	NUT (M8X1.25-THD)	
E	15	1	**144-0195**		HOSE (197-CM)	
E	15A	1	**144-0195**		HOSE (292-CM)	
E	15B	1	**144-0195**		HOSE (319-CM)	
E	15C	1	**144-0195**		HOSE (227-CM)	
E	15D	1	**144-0195**		HOSE (46-CM)	
E	15E	1	**144-0195**		HOSE (47-CM EACH)	
E	15F	1	**144-0195**		HOSE (49-CM)	
E	16	1	**7X-7927**		TAPE-IDENTIFICATION (LETTER A) (6-CM)	
E	17	1	**7X-7928**		TAPE-IDENTIFICATION (LETTER B) (6-CM)	
E	18	1	**7X-7929**		TAPE-IDENTIFICATION (LETTER C) (6-CM)	
E	19	1	**7X-7930**		TAPE-IDENTIFICATION (LETTER D) (6-CM)	

E - ORDER BY THE CENTIMETER
M - METRIC PART
Y - SEPARATE ILLUSTRATION

374-4733 **WIPER GP-WINDOW (**contd.**)** **i05898297**

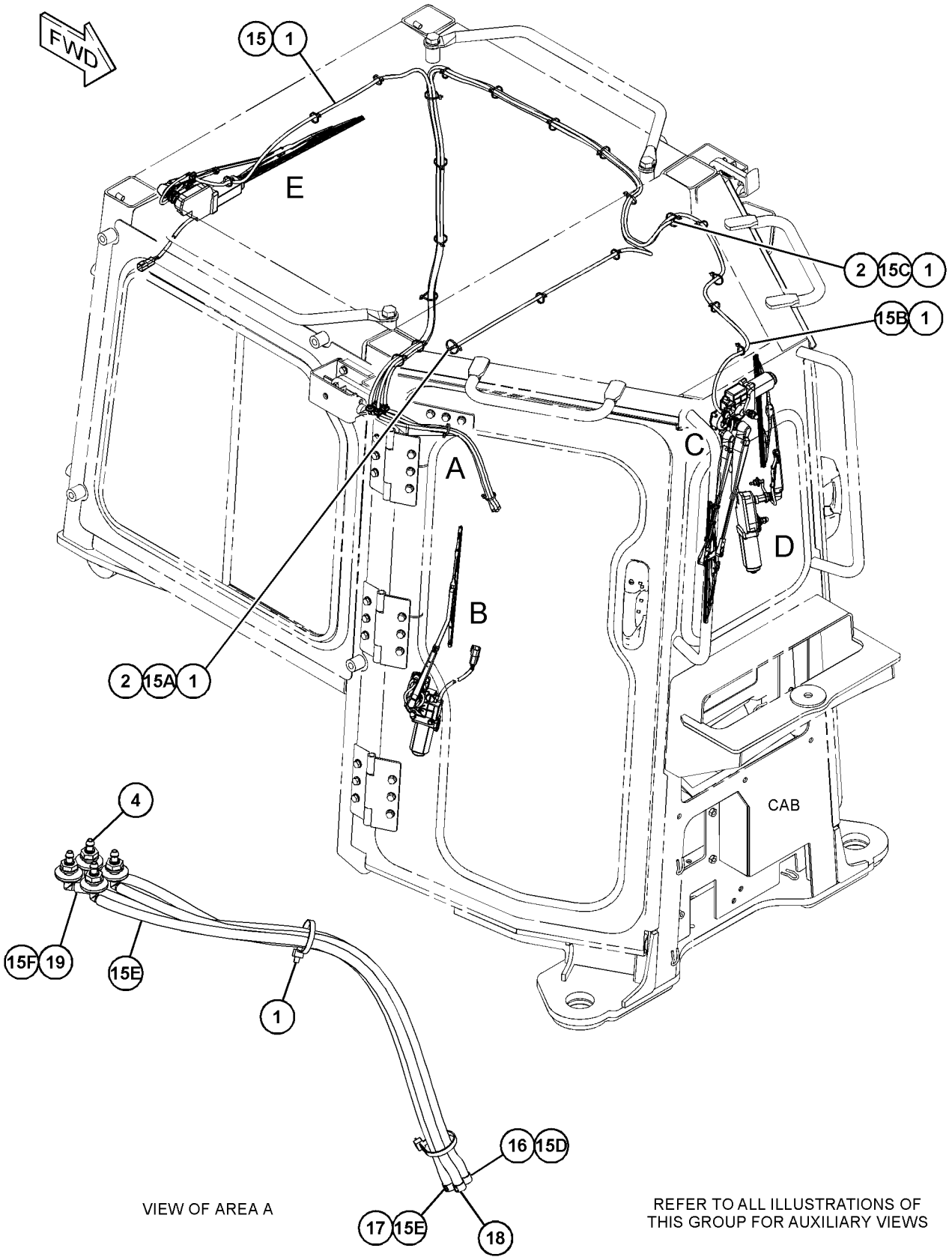

GRAPHIC #1 g03722552

374-4733 **WIPER GP-WINDOW (**contd.**)** **i05898297**

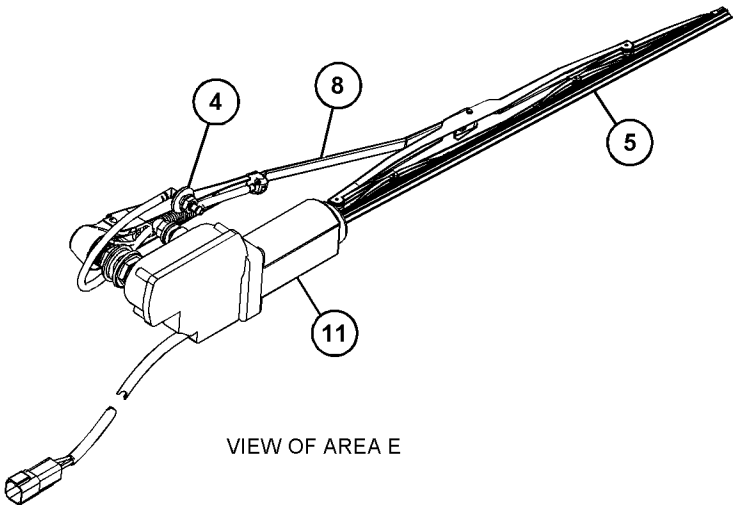

VIEW OF AREA E

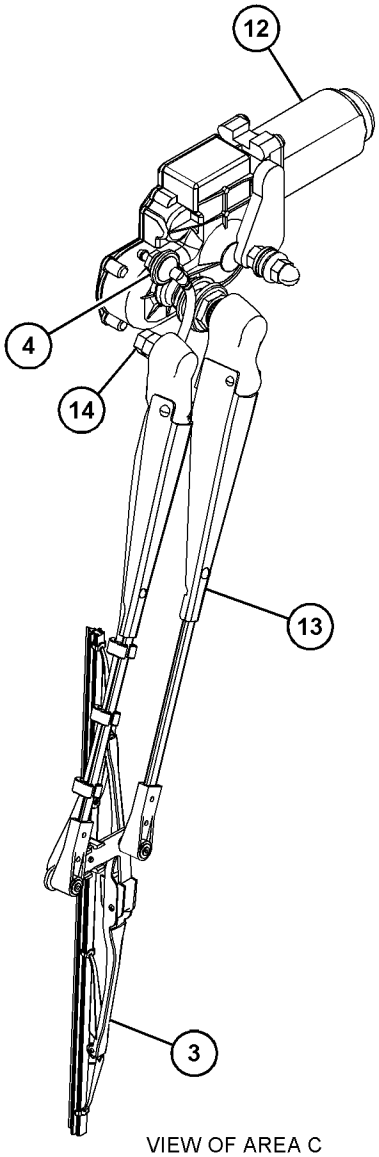

VIEW OF AREA C

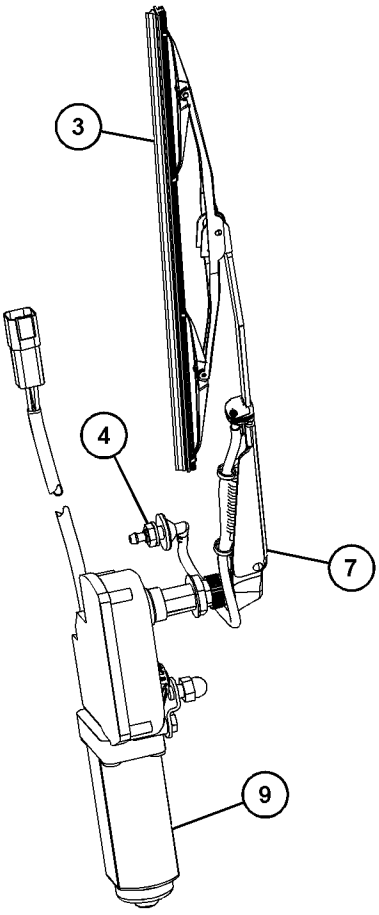

VIEW OF AREA D

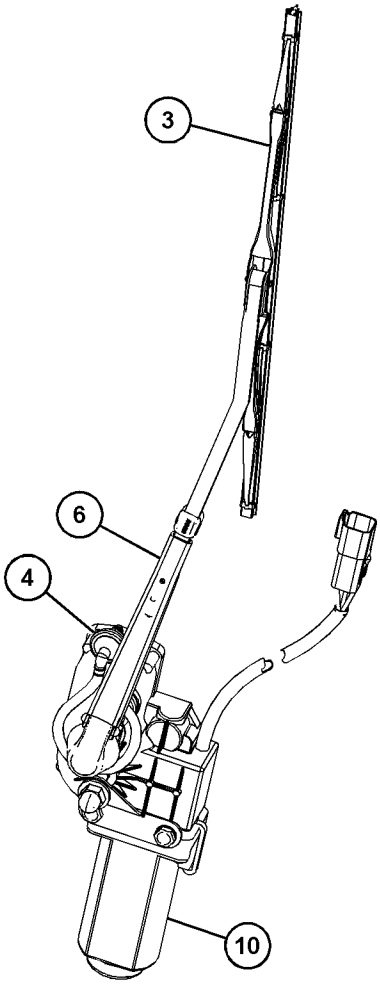

VIEW OF AREA B

GRAPHIC #2 <END> g03722555

433-9637 BIT-END—RH

S/N: R5A1-UP

FIELD INSTALLATION

SMCS-6804 **i06563477**

NOTE	REF NO	GRAPHIC REF	PART NUMBER	QTY	PART NAME 1 2 3 4 5 6 (PRODUCT LEVEL)	SEE PAGE

(NO SERVICED PARTS)

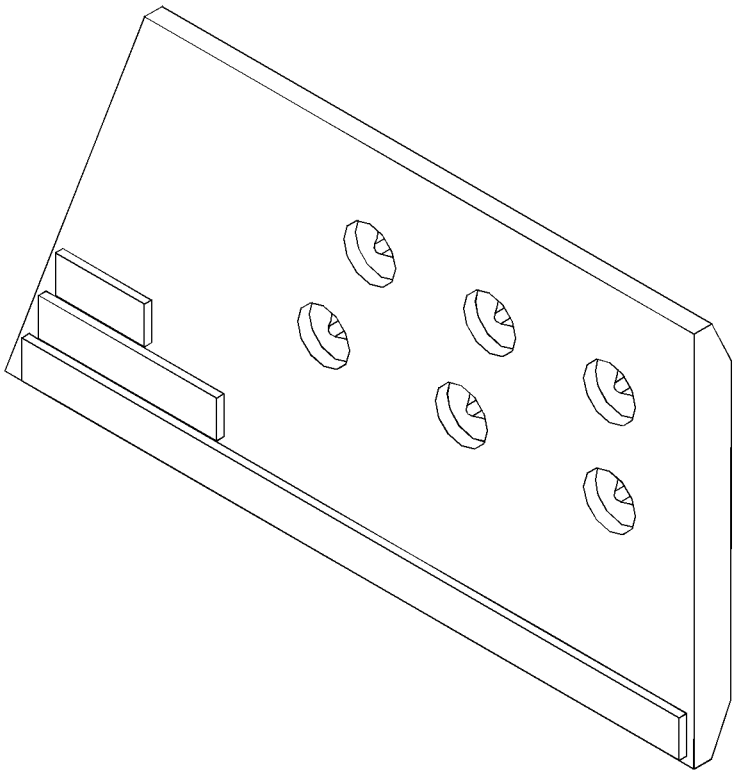

GRAPHIC #1

<END>

g06024436

433-9639 BIT-END—LH

S/N: R5A1-UP

FIELD INSTALLATION

SMCS-6804 **i06563492**

NOTE	REF NO	GRAPHIC REF	PART NUMBER	QTY	PART NAME 1 2 3 4 5 6 (PRODUCT LEVEL)	SEE PAGE
					(NO SERVICED PARTS)	

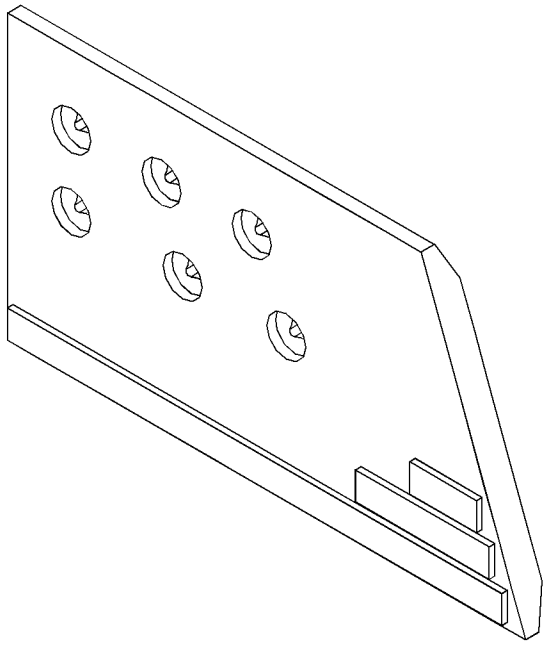

GRAPHIC #1 <END> g06024426

462-4828 BIT-END—RH

S/N: R5A1-UP

FIELD INSTALLATION

SMCS-6804 **i06581558**

NOTE	REF NO	GRAPHIC REF	PART NUMBER	QTY	PART NAME 1 2 3 4 5 6 (PRODUCT LEVEL)	SEE PAGE
					(NO SERVICED PARTS)	

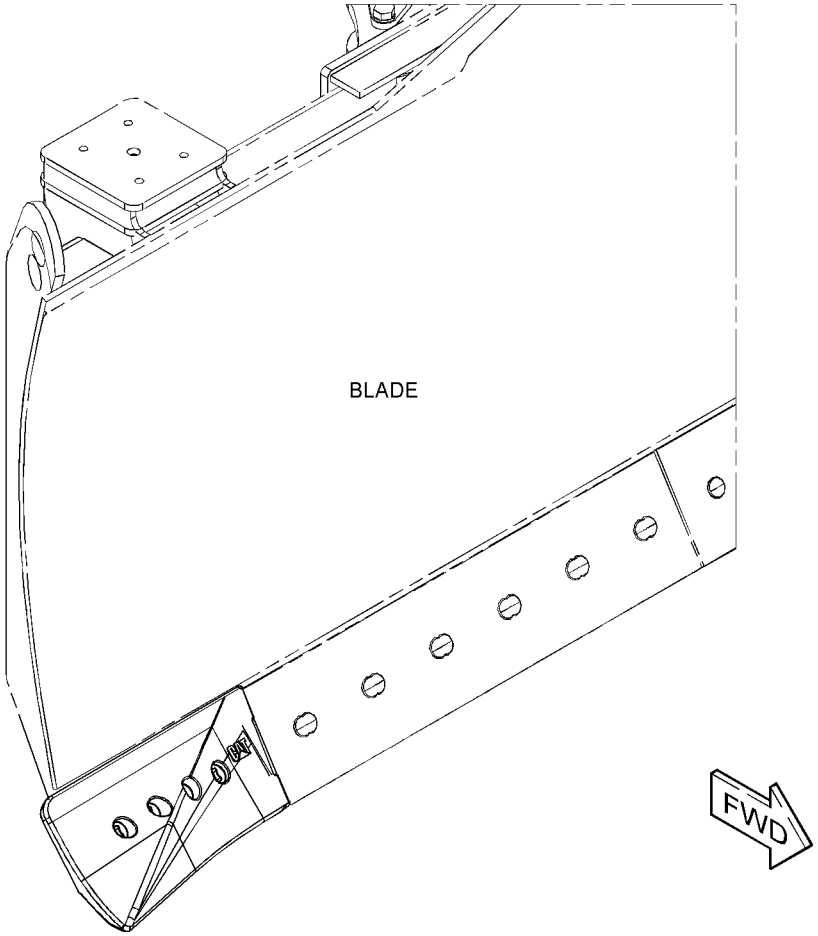

GRAPHIC #1 <END> g06032970

462-4829 BIT-END—LH

S/N: R5A1-UP

FIELD INSTALLATION

SMCS-6804 **i06581567**

NOTE	REF NO	GRAPHIC REF	PART NUMBER	QTY	PART NAME 1 2 3 4 5 6 (PRODUCT LEVEL)	SEE PAGE
					(NO SERVICED PARTS)	

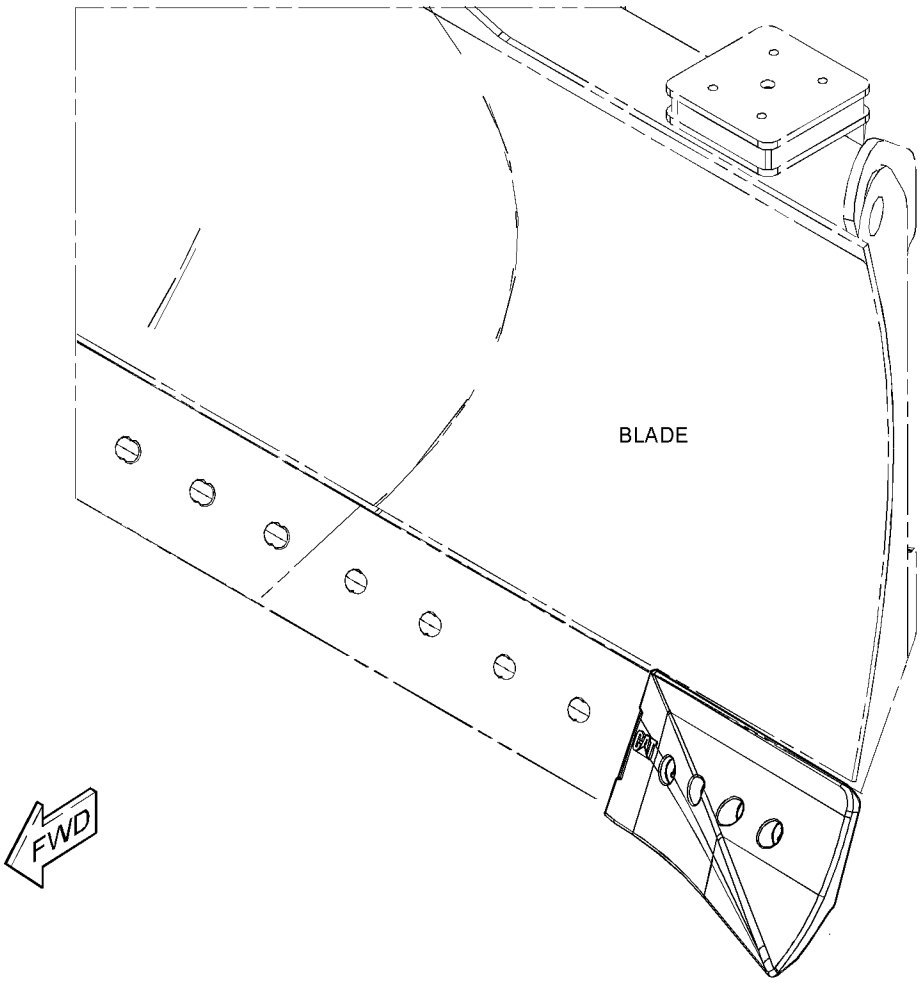

GRAPHIC #1 <END> g06032960

398-1480 BLADE & EDGE GP-ANGLING—WASTE HANDLING

S/N: RA51-UP

AN ATTACHMENT

SMCS-6060 **i06525055**

NOTE	REF NO	GRAPHIC REF	PART NUMBER	QTY	PART NAME 1 2 3 4 5 6 (PRODUCT LEVEL)	SEE PAGE
	1	1	**4B-4158**	2	SCREW-DRIVE (NO 4X0.25-IN)	
Y	2	1	*6Y-2039*	1	EDGE GP-BIT & CUTTING	599
	3	1	**8T-7371**	1	PLATE-SERIAL NUMBER (BLADE)	

Y - SEPARATE ILLUSTRATION

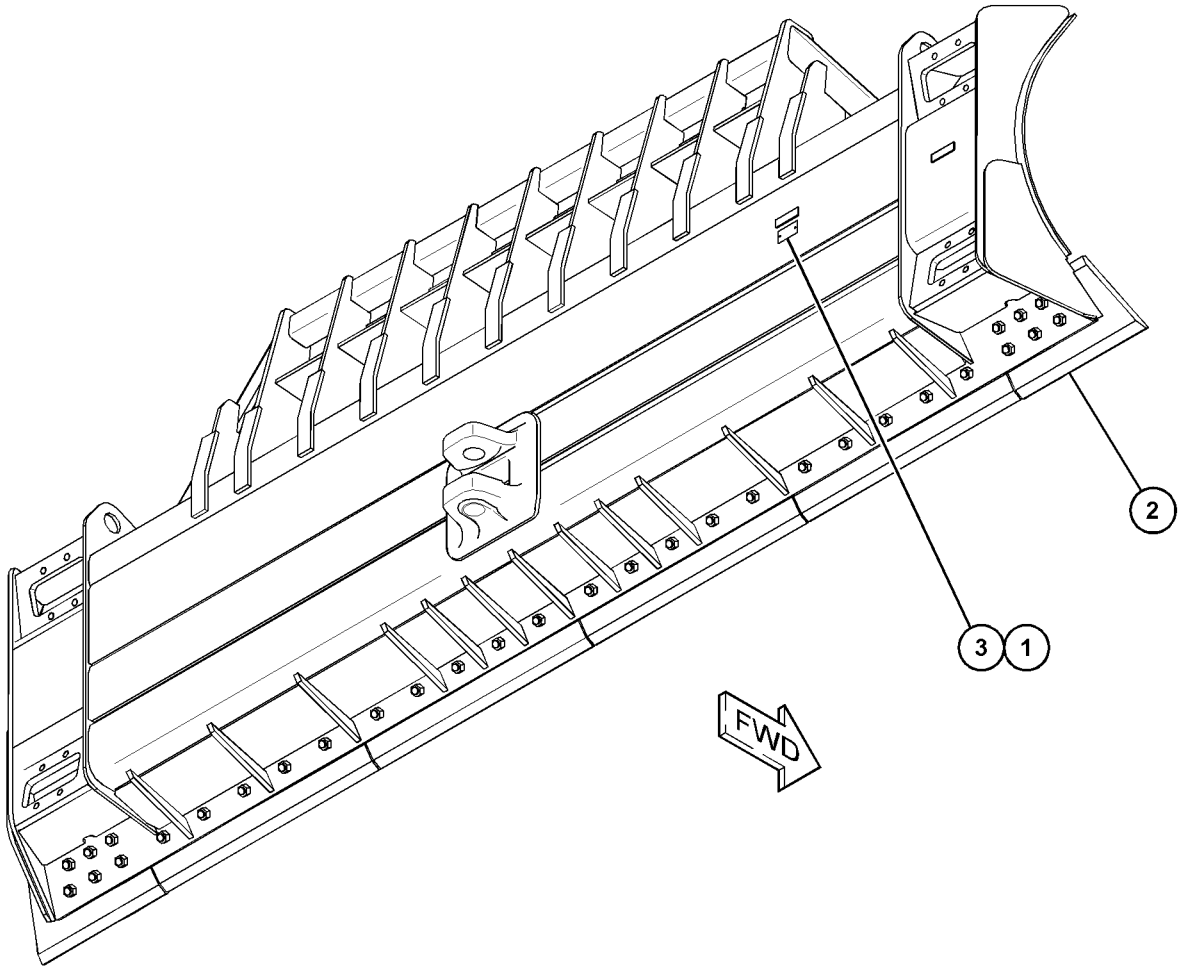

GRAPHIC #1 <END> g06011926

398-1484 BLADE & EDGE GP-SEMI-UNIVERSAL

S/N: TR51-UP

AN ATTACHMENT

SMCS-6060 **i06555719**

NOTE	REF NO	GRAPHIC REF	PART NUMBER	QTY	PART NAME 1 2 3 4 5 6 (PRODUCT LEVEL)	SEE PAGE
	1	1	**4B-4158**	2	SCREW-DRIVE (NO 4X0.25-IN)	
Y	2	1	*9U-8079*	1	EDGE GP-BIT & CUTTING	600
Y	3	1	*398-1485*	1	BLADE AS-SEMI-UNIVERSAL	597
	4	1	**8T-7371**	1	PLATE-SERIAL NUMBER	

Y - SEPARATE ILLUSTRATION

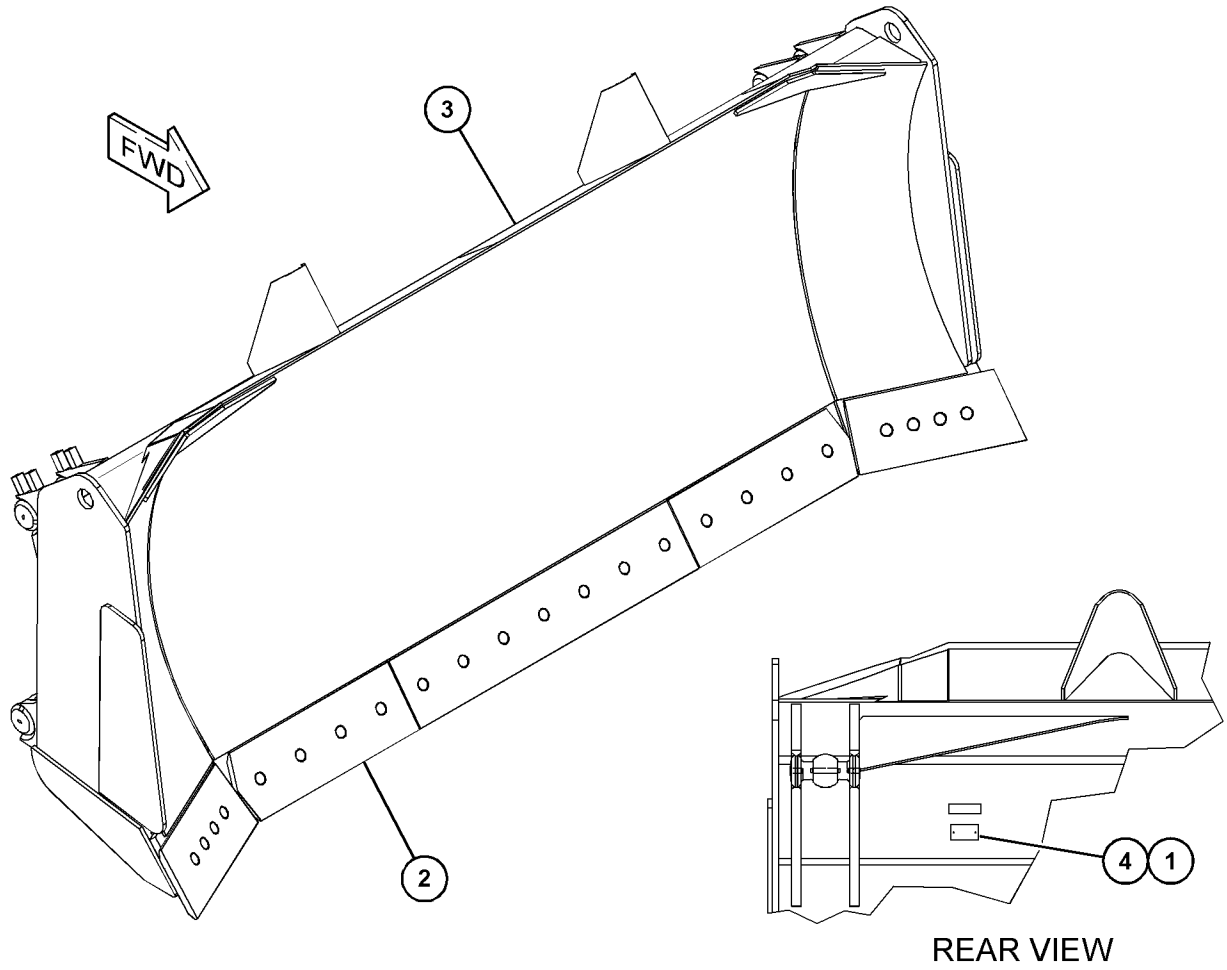

GRAPHIC #1 <END> g06023434

398-1485 BLADE AS-SEMI-UNIVERSAL

S/N: TR51-UP

PART OF 398-1484 BLADE & EDGE GP-SEMI-UNIVERSAL

AN ATTACHMENT

SMCS-6060 **i06575754**

NOTE	REF NO	GRAPHIC REF	PART NUMBER	QTY	PART NAME 1 2 3 4 5 6 (PRODUCT LEVEL)	SEE PAGE
	1	1	**1U-0183**	2	DEFLECTOR	
	2	1	**6I-9420**	2	BRACKET AS	
					(EACH INCLUDES)	
	2A	1	**7J-5131**	1	TRUNNION	
	3	1	**6I-9461**	1	PLATE (LH)	
	4	1	**6I-9462**	1	PLATE (RH)	
	5	1	**8E-5192**	2	BRACKET AS	
					(EACH INCLUDES)	
	5A	1	**4J-1641**	1	TRUNNION	
	6	1	**8E-5194**	1	BRACKET	
	7	1	**8P-9770**	2	PLATE	
	8	1	**9W-6381**	1	PLATE	
	9	1	*398-1486*	2	BRACKET AS	
					(EACH INCLUDES)	
	9A	1	**4T-1504**	1	TRUNNION	

398-1485 **BLADE AS-SEMI-UNIVERSAL (**contd.**)** **i06575754**

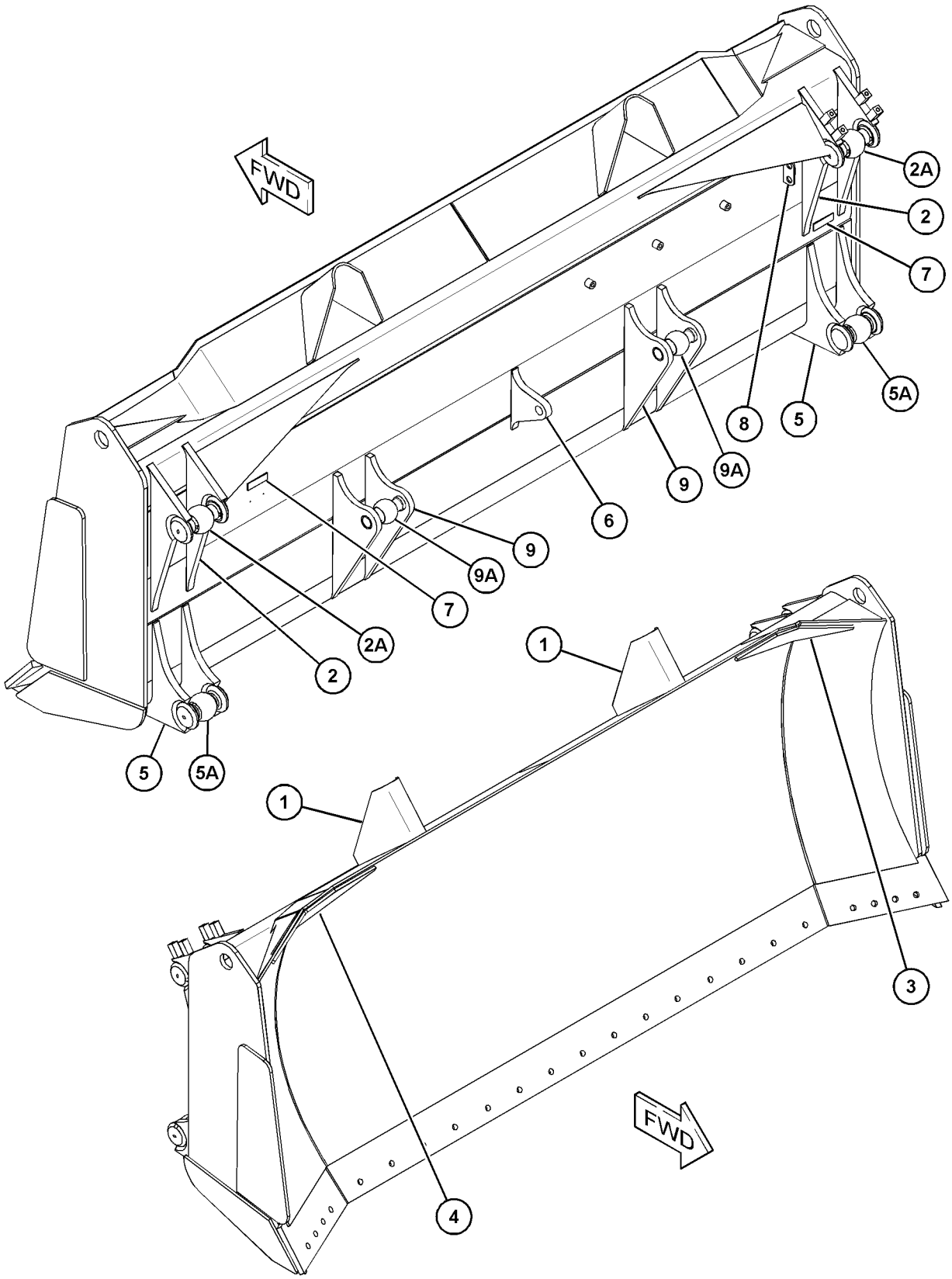

GRAPHIC #1 <END> g06023466

6Y-2039 EDGE GP-BIT & CUTTING

S/N: RA51-UP

PART OF 398-1480 BLADE & EDGE GP-ANGLING

AN ATTACHMENT

SMCS-6801, 6804

i05633596

NOTE	REF NO	GRAPHIC REF	PART NUMBER	QTY	PART NAME 1 2 3 4 5 6 (PRODUCT LEVEL)	SEE PAGE
	1	1	**9W-8874**	1	BIT-END (RH)	
		1	**9W-8875**	1	BIT-END (LH)	
	2	1	**5J-4773**	32	BOLT-PLOW (3/4-10X2.5-IN)	
		1	**5P-8248**	32	WASHER-HARD (20X36.5X3.5-MM THK)	
		1	**2J-3506**	32	NUT-FULL (3/4-10-THD)	
	3	1	**4T-2952**	4	EDGE-CUTTING	

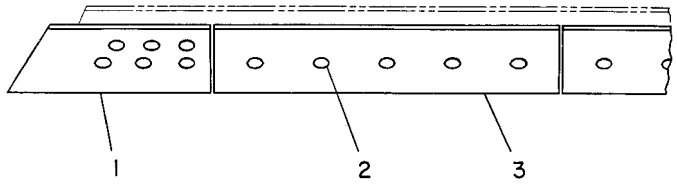

GRAPHIC #1 <END> g00195495

9U-8079 EDGE GP-BIT & CUTTING

S/N: TR51-UP

PART OF 398-1484 BLADE & EDGE GP-SEMI-UNIVERSAL

AN ATTACHMENT

SMCS-6801, 6804

i06533992

NOTE	REF NO	GRAPHIC REF	PART NUMBER	QTY	PART NAME 1 2 3 4 5 6 (PRODUCT LEVEL)	SEE PAGE
	1	1	**8E-9378**	1	BIT-END	
		1	**8E-9379**	1	BIT-END	
	2	1	**4T-6659**	1	EDGE-CUTTING	
	3	1	**9U-8057**	2	EDGE-CUTTING	
	4	1	**5J-4773**	23	BOLT-PLOW (3/4-10X2.5-IN)	
	5	1	**5P-8248**	23	WASHER-HARD (20X36.5X3.5-MM THK)	
	6	1	**2J-3506**	23	NUT-FULL (3/4-10-THD)	

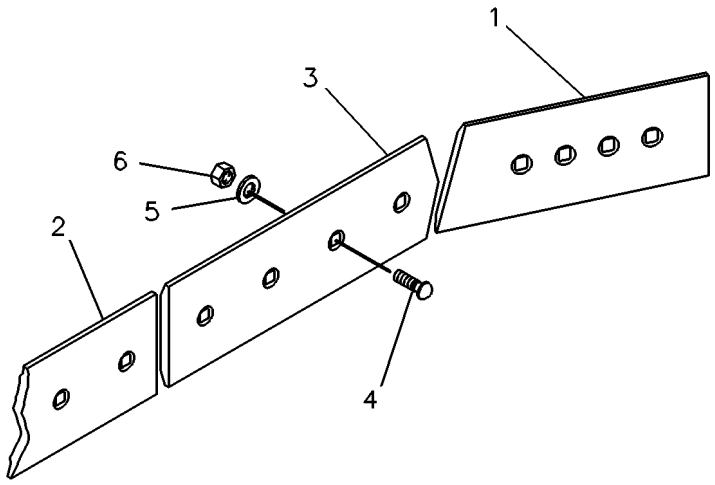

GRAPHIC #1 <END> g00223834

359-3346 MOUNTING GP-RIPPER

S/N: RT51-UP
PART OF 432-5811 RIPPER AR
AN ATTACHMENT

SMCS-6165, 6310, 6324 **i06528187**

NOTE	REF NO	GRAPHIC REF	PART NUMBER	QTY	PART NAME 1 2 3 4 5 6 (PRODUCT LEVEL)	SEE PAGE
	1	1	**1U-0063**	2	PIN	
	2	1	**3A-8613**	1	BRACKET AS (LH)	
	3	1	**3A-8614**	1	BRACKET AS (RH)	
	4	1	**9N-4450**	12	SPACER (68X120X5-MM THK)	
	5	1	**114-5671**	1	PLATE AS (RH)	
	6	1	**114-5672**	1	PLATE AS (LH)	
	7	1	**193-3074**	2	SPACER (52X120X5-MM THK)	
	8	1	**1U-0159**	2	PIN	
	9	1	**6K-8987**	2	DOWEL	
M	10	1	**6V-7687**	2	LOCKNUT (M12X1.75-THD)	
M	11	1	**6V-7744**	2	LOCKNUT (M10X1.5-THD)	
	12	1	**8T-4123**	26	WASHER (3.62X5.75X0.375-MM THK)	
M	13	1	**8T-4198**	2	BOLT (M10X1.5X100-MM)	
M	14	1	**8T-5412**	2	BOLT (M12X1.75X140-MM)	
M	15	1	**8T-6430**	26	BOLT (M20X2.5X50-MM)	

M - METRIC PART

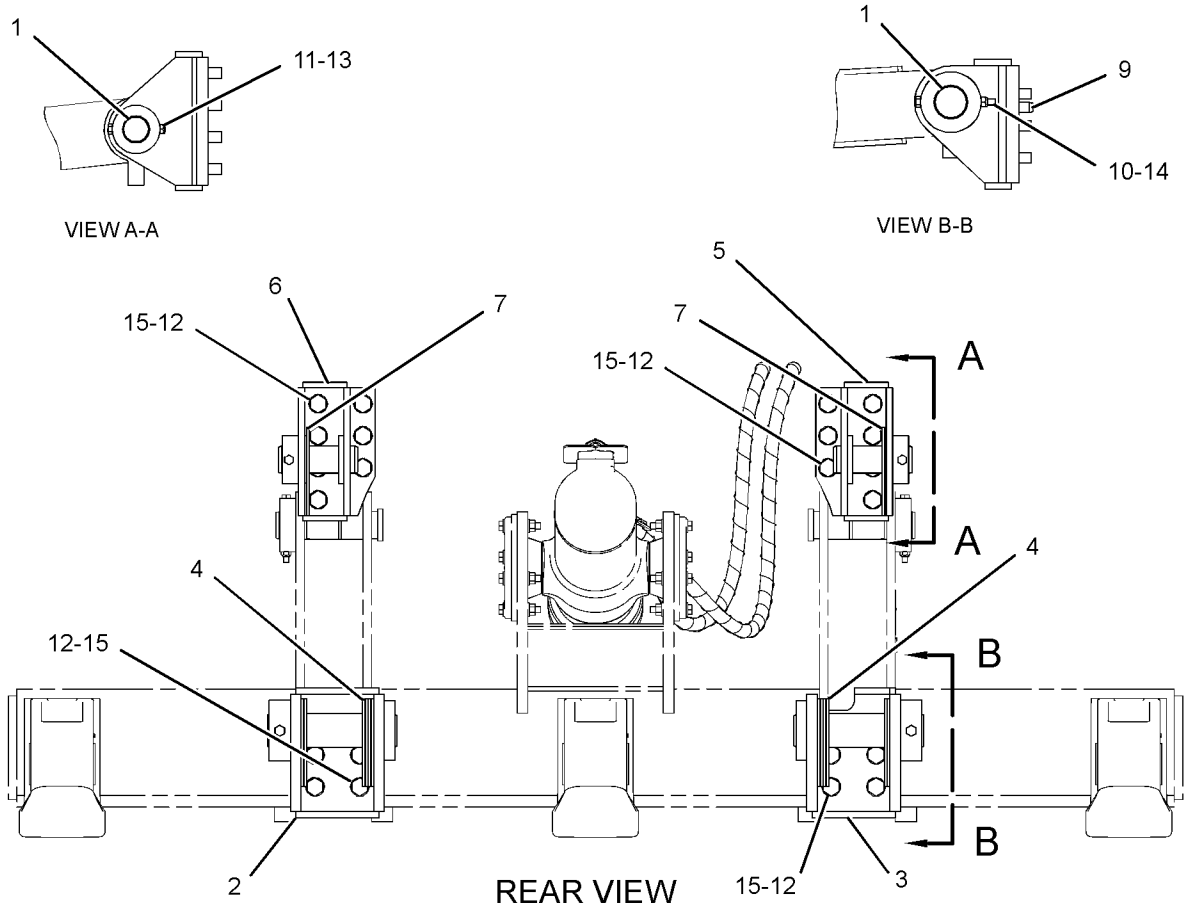

GRAPHIC #1 <END> g02796418

432-5811 RIPPER AR

S/N: RT51-UP

FOR USE WITH 394-6360—PAGE: 435

AN ATTACHMENT

SMCS-6310 **i06532158**

NOTE	REF NO	GRAPHIC REF	PART NUMBER	QTY	PART NAME 1 2 3 4 5 6 (PRODUCT LEVEL)	SEE PAGE
	1	1	*240-1469*	1	PLATE & FILM GP	
		1	**8M-3494**	1	PLATE-SERIAL NUMBER (RIPPER)	
		1	**4B-4158**	2	SCREW-DRIVE (NO 4X0.25-IN)	
		1	**7X-7644**	2	FILM-IDENTIFICATION (TIE-DOWN)	
Y	2	1	*359-3346*	1	MOUNTING GP-RIPPER	601
Y	3	1	*432-5812*	1	RIPPER GP	603
Y	4	1	*446-0722*	1	LINES GP-RIPPER	405
Y	5	1	**448-4913**	1	CYLINDER GP-RIPPER	386
Y	6	1	*481-7828*	1	GUARD GP-FUEL TANK	303

Y - SEPARATE ILLUSTRATION

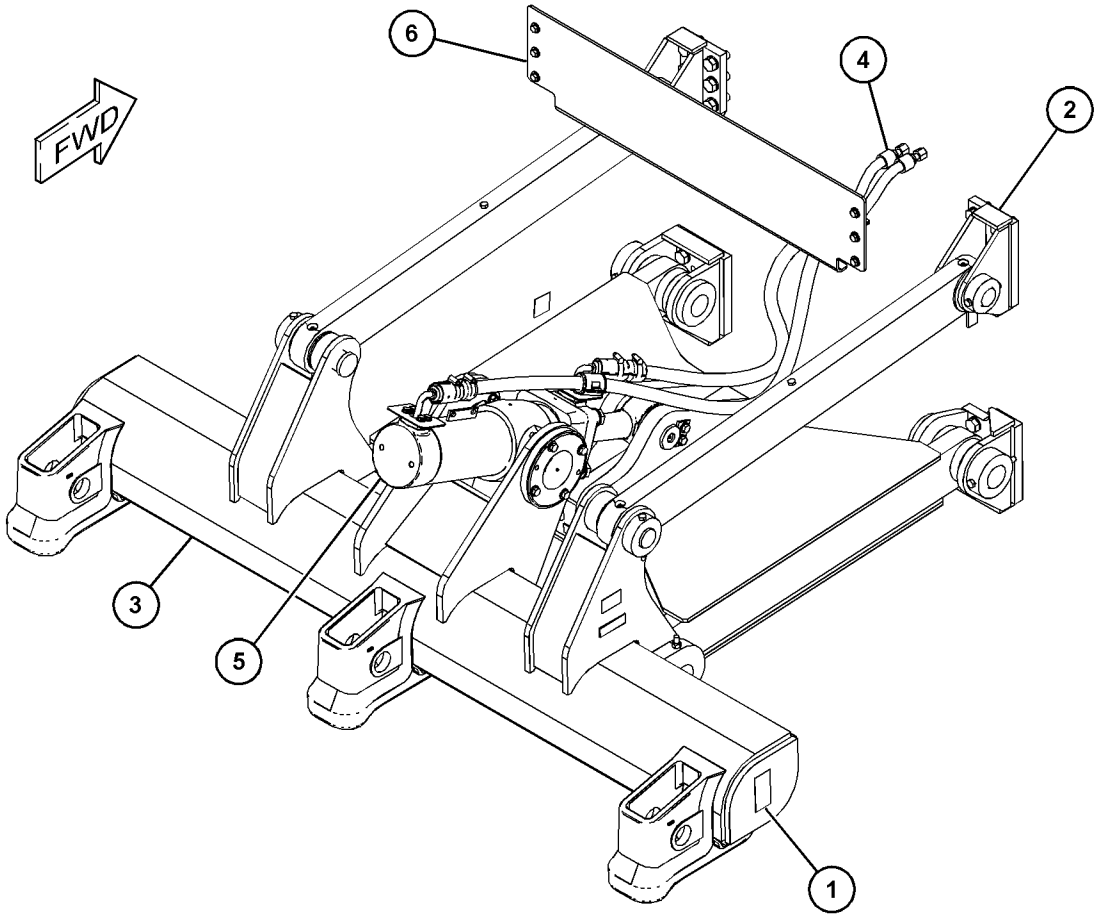

GRAPHIC #1 <END> g06023468

432-5812 RIPPER GP

S/N: RT51-UP
PART OF 432-5811 RIPPER AR
AN ATTACHMENT

SMCS-6310, 6325

i06528204

NOTE	REF NO	GRAPHIC REF	PART NUMBER	QTY	PART NAME 1 2 3 4 5 6 (PRODUCT LEVEL)	SEE PAGE
	1	1	**2K-0703**	1	BAR	
	2	1	**3A-8612**	2	LINK AS	
					(EACH INCLUDES)	
	2A	1	**7J-9682**	2	BUSHING	
	3	1	**3B-8489**	11	FITTING-GREASE (1/8-27 PTF)	
	4	1	**3K-8510**	1	PIN	
	5	1	**4K-3004**	2	BEARING-TRUNNION SUPPLEMENTARY	
	6	1	**6H-3616**	4	PLUG-PROTECTION	
B	7	1	**9T-5900**	6	WASHER (51.2X98X4.76-MM THK)	
	8	1	**322-3353**	1	CARRIAGE AS	
		1	**8P-9770**	1	PLATE	
M	9	1	**329-3356**	8	NUT (M12X1.75-THD)	
	10	1	**432-5813**	1	LINK AS	
	10A	1	**9W-0099**	4	BUSHING	
	11	1	**1U-0159**	2	PIN	
M	12	1	**6V-7687**	2	LOCKNUT (M12X1.75-THD)	
M	13	1	**6V-7744**	2	LOCKNUT (M10X1.5-THD)	
M	14	1	**7X-2543**	2	BOLT (M10X1.5X120-MM)	
M	15	1	**7X-2621**	2	BOLT (M10X1.5X12-MM)	
M	16	1	**8T-4139**	2	BOLT (M12X1.75X30-MM)	
	17	1	**8T-4223**	18	WASHER-HARD (13.5X25.5X3-MM THK)	
M	18	1	**8T-4648**	8	BOLT (M12X1.75X70-MM)	
M	19	1	**8T-7929**	2	BOLT (M12X1.75X180-MM)	
	20	1	**9J-9598**	2	PIN	

B - USE AS REQUIRED
M - METRIC PART

432-5812 **RIPPER GP (**contd.**)** **i06528204**

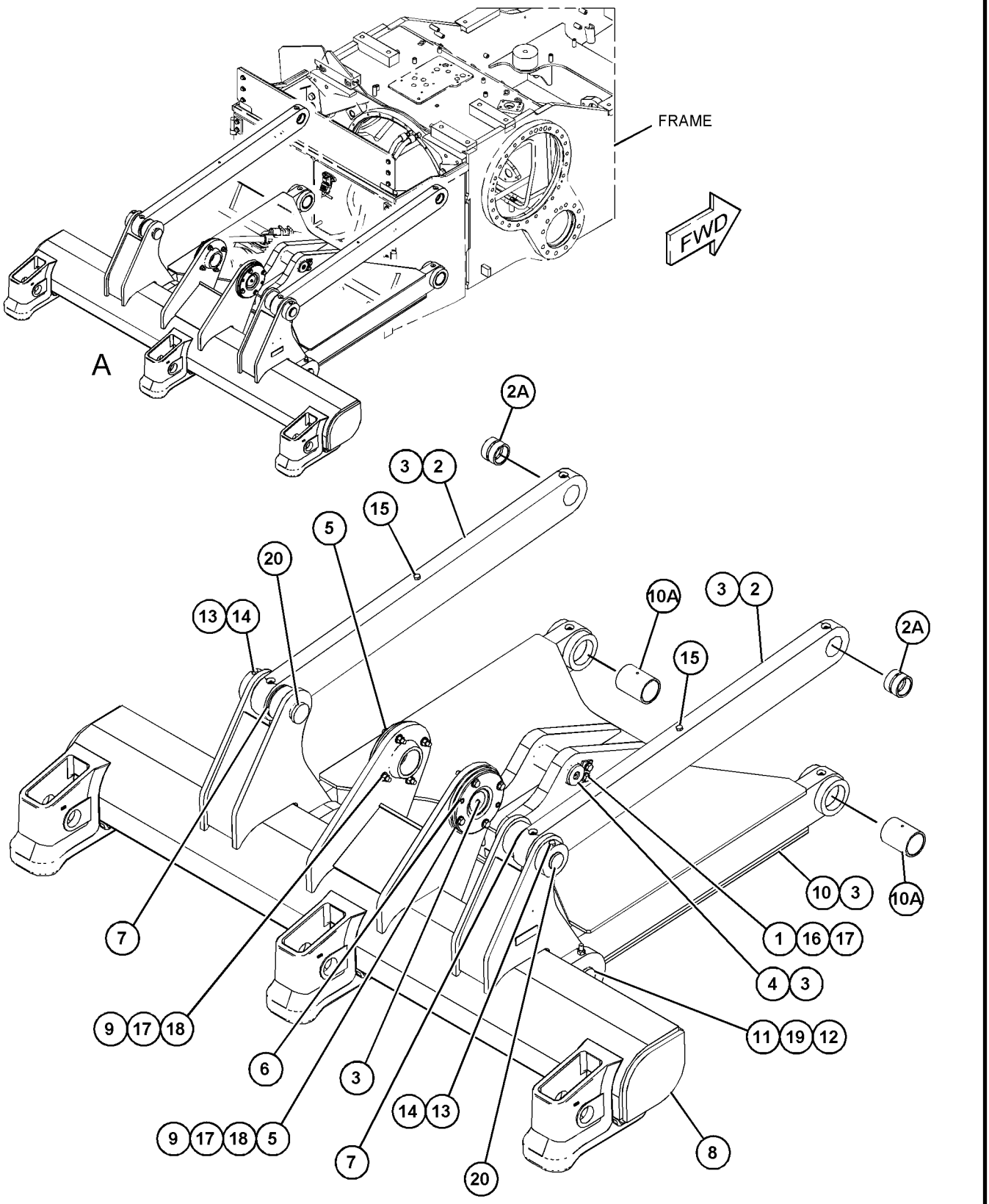

VIEW OF AREA A`

GRAPHIC #1 <END> g06022092

416-0249 TIP GP-RIPPER

S/N: R5A1-UP
R350
FIELD INSTALLATION

SMCS-6808 **i06524000**

NOTE	REF NO	GRAPHIC REF	PART NUMBER	QTY	PART NAME 1 2 3 4 5 6 (PRODUCT LEVEL)	SEE PAGE
	1	1	**6Y-0359**	1	TIP-RIPPER	

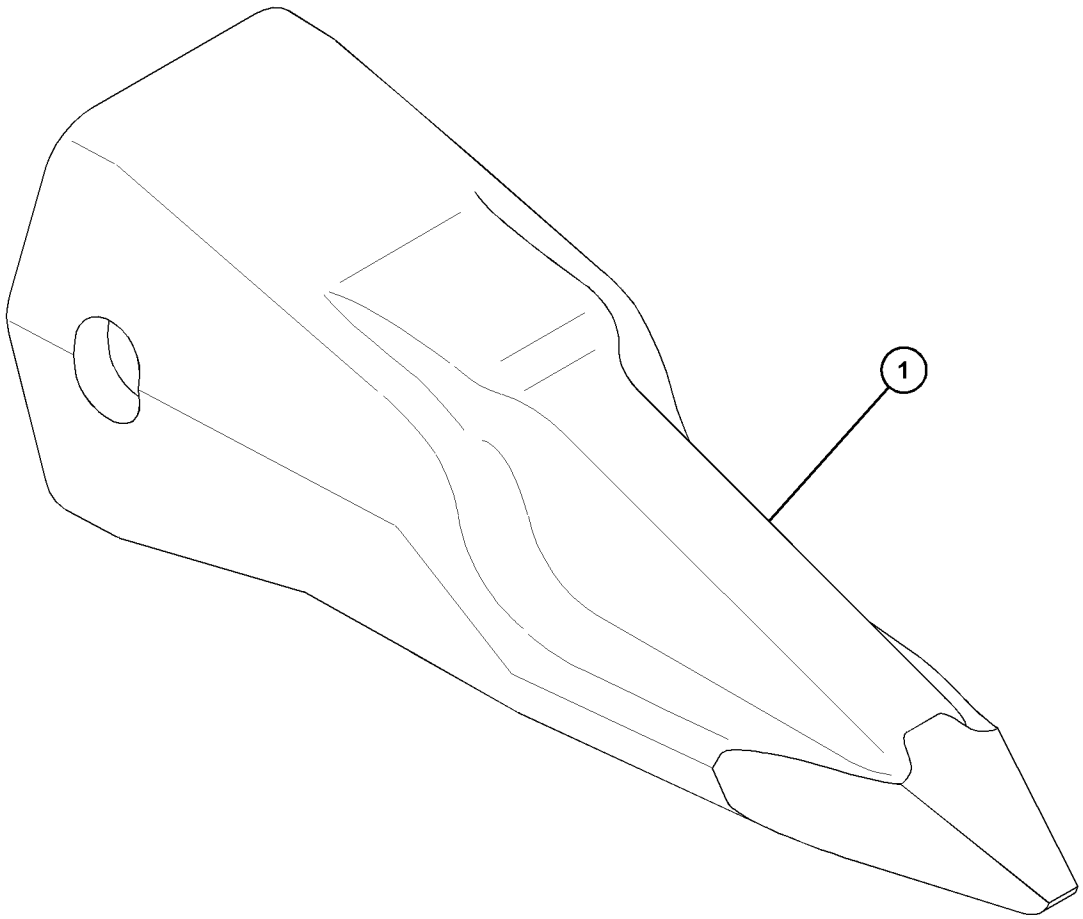

GRAPHIC #1 <END> g03746183

8J-2189 TOOTH GP-RIPPER

S/N: R5A1-UP

AN ATTACHMENT

SMCS-6808, 6810 **i06518870**

NOTE	REF NO	GRAPHIC REF	PART NUMBER	QTY	PART NAME 1 2 3 4 5 6 (PRODUCT LEVEL)	SEE PAGE
	1	1	**3B-5325**	2	PIN-COTTER	
	2	1	**8J-2190**	1	PIN	
	3	1	**9J-3139**	1	SHANK-RIPPER	
	4	1	**114-0358**	1	PIN	
		1	**114-0359**	1	RETAINER AS	
	5	1	**6Y-0359**	1	TIP-RIPPER	

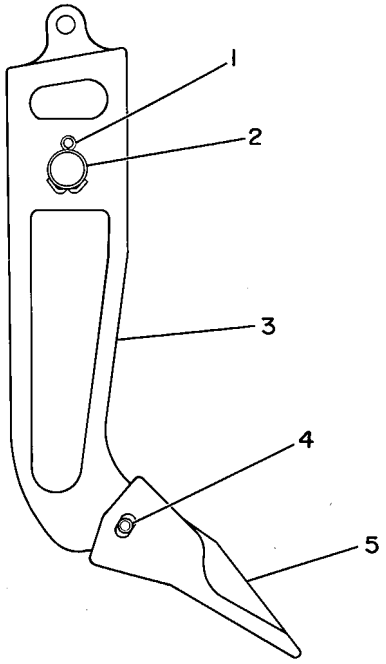

GRAPHIC #1 <END> g00081660

9J-8926 TOOTH GP-RIPPER—CURVED

S/N: R5A1-UP

AN ATTACHMENT

SMCS-6808, 6810

i06518876

NOTE	REF NO	GRAPHIC REF	PART NUMBER	QTY	PART NAME 1 2 3 4 5 6 (PRODUCT LEVEL)	SEE PAGE
	1	1	**3B-5325**	2	PIN-COTTER	
	2	1	**8J-2190**	1	PIN	
	3	1	**9J-8923**	1	SHANK-RIPPER	
	4	1	**114-0358**	1	PIN	
	5	1	**6Y-0352**	1	TIP-RIPPER	
	6	1	**114-0359**	1	RETAINER AS	

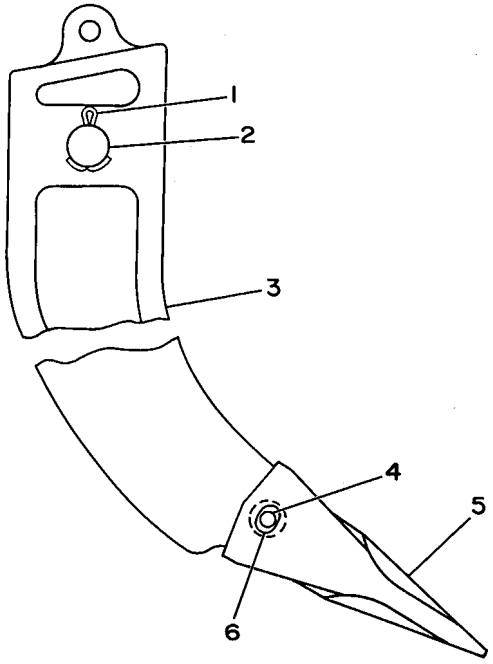

GRAPHIC #1 <END> g00174183

391-9519 FILM GP

S/N: R5A1-UP

PART OF 391-9502 COMMON AR

SMCS-7000 **i06521426**

NOTE	REF NO	GRAPHIC REF	PART NUMBER	QTY	PART NAME 1 2 3 4 5 6 (PRODUCT LEVEL)	SEE PAGE
	1	1	**292-4396**	1	FILM-IDENTIFICATION (CAT, REAR)	
	2	1	**294-4614**	1	FILM-STRIPE (CAT, RH)	
	3	1	**294-4615**	1	FILM-STRIPE (CAT, LH)	
	4	1	**392-7132**	1	FILM-IDENTIFICATION (CAT)	
	5	1	**482-1874**	1	FILM-IDENTIFICATION (D5R2 XL LH)	
	6	1	**482-1875**	1	FILM-IDENTIFICATION (D5R2 XL RH)	

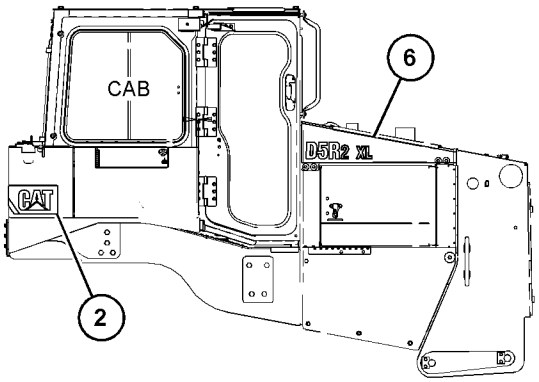

RIGHT SIDE VIEW

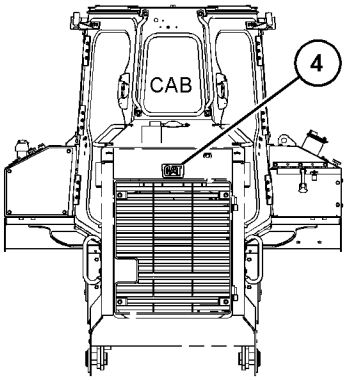

FRONT VIEW

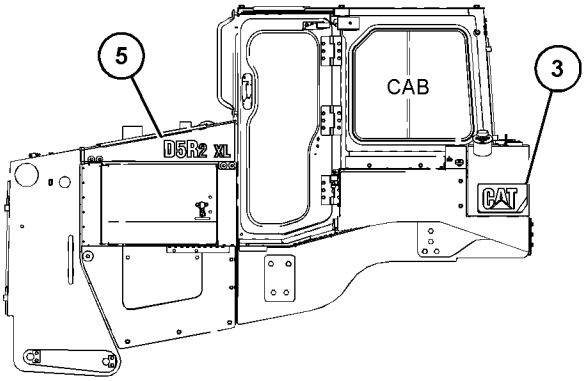

LEFT SIDE VIEW

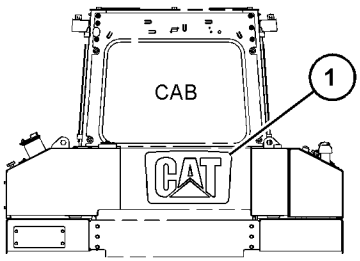

REAR VIEW

GRAPHIC #1 <END> g06021900

398-4296 FILM GP

S/N: R5A1-UP

PART OF 393-6480 CAB AR, 393-6485 CAB AR-ENCLOSED ROPS, 393-6475 CANOPY AR AN ATTACHMENT

SMCS-7000 **i06156471**

NOTE	REF NO	GRAPHIC REF	PART NUMBER	QTY	PART NAME 1 2 3 4 5 6 (PRODUCT LEVEL)	SEE PAGE
	1	1	**169-2876**	1	FILM-IDENTIFICATION (POWER RECEPTACLE, 12-VOLT)	
	2	1	**219-0302**	1	FILM-WARNING (NO WELD, NO DRILL, READ OMM)	
	3	1	**224-0672**	1	FILM-WARNING (HIGH PRESSURE, READ OMM, INTL)	
	4	1	**241-4167**	1	FILM-INSTRUCTION (READ OMM, STEERING)	
	5	1	**247-6876**	1	FILM-WARNING (DO NOT OPERATE, READ OMM)	
	6	1	**247-6878**	1	FILM-WARNING (SEAT BELT)	
	7	1	**309-9690**	1	FILM-INFORMATION (READ OMM)	

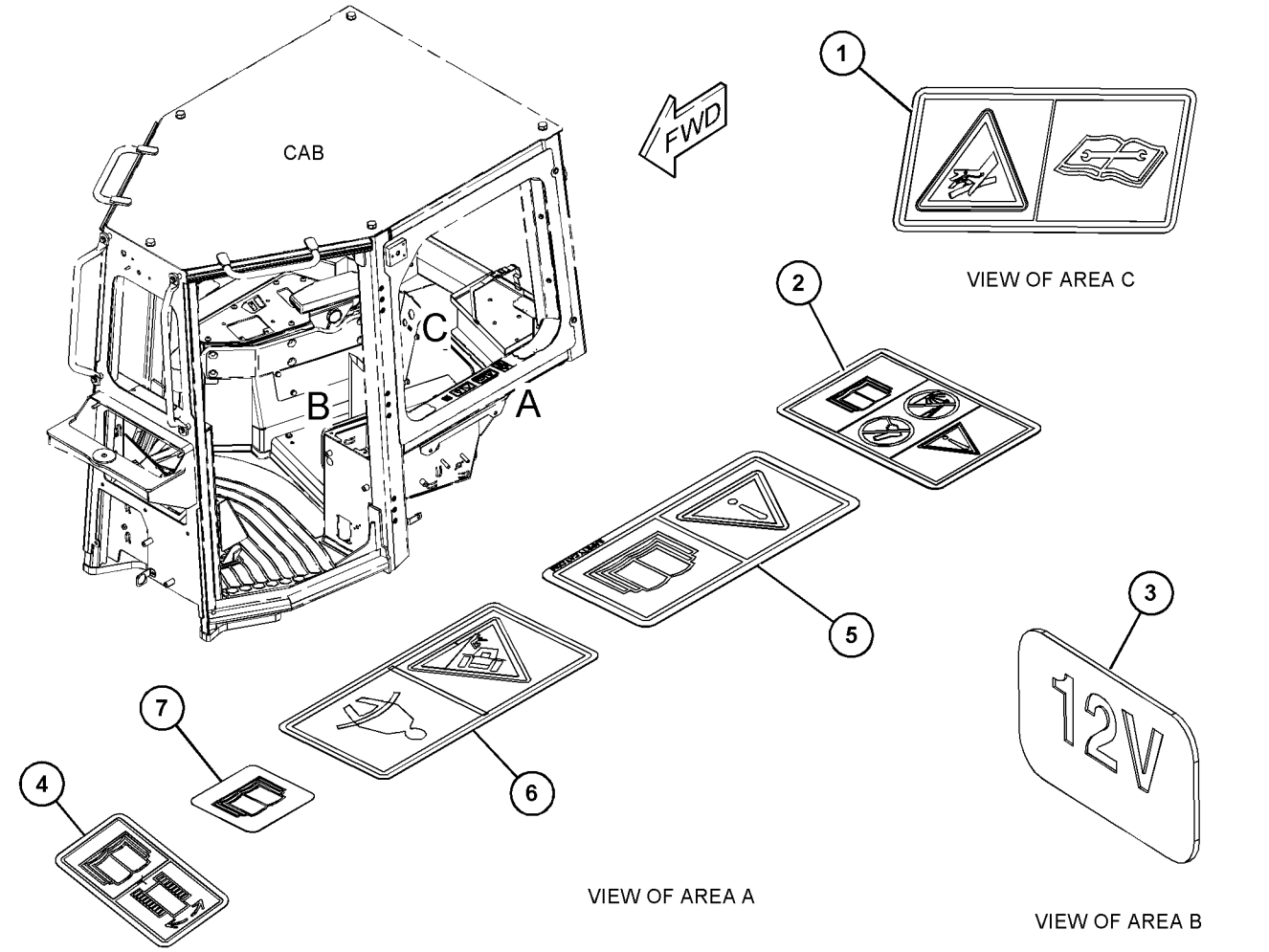

GRAPHIC #1

<END>

g03840561

415-5625 FILM GP

S/N: E7A1-UP

PART OF 393-4098 ENGINE AR-PRIMARY

SMCS-7000 **i06560490**

NOTE	REF NO	GRAPHIC REF	PART NUMBER	QTY	PART NAME 1 2 3 4 5 6 (PRODUCT LEVEL)	SEE PAGE
	1	1	**451-7225**	1	FILM-IDENTIFICATION (CAT)	

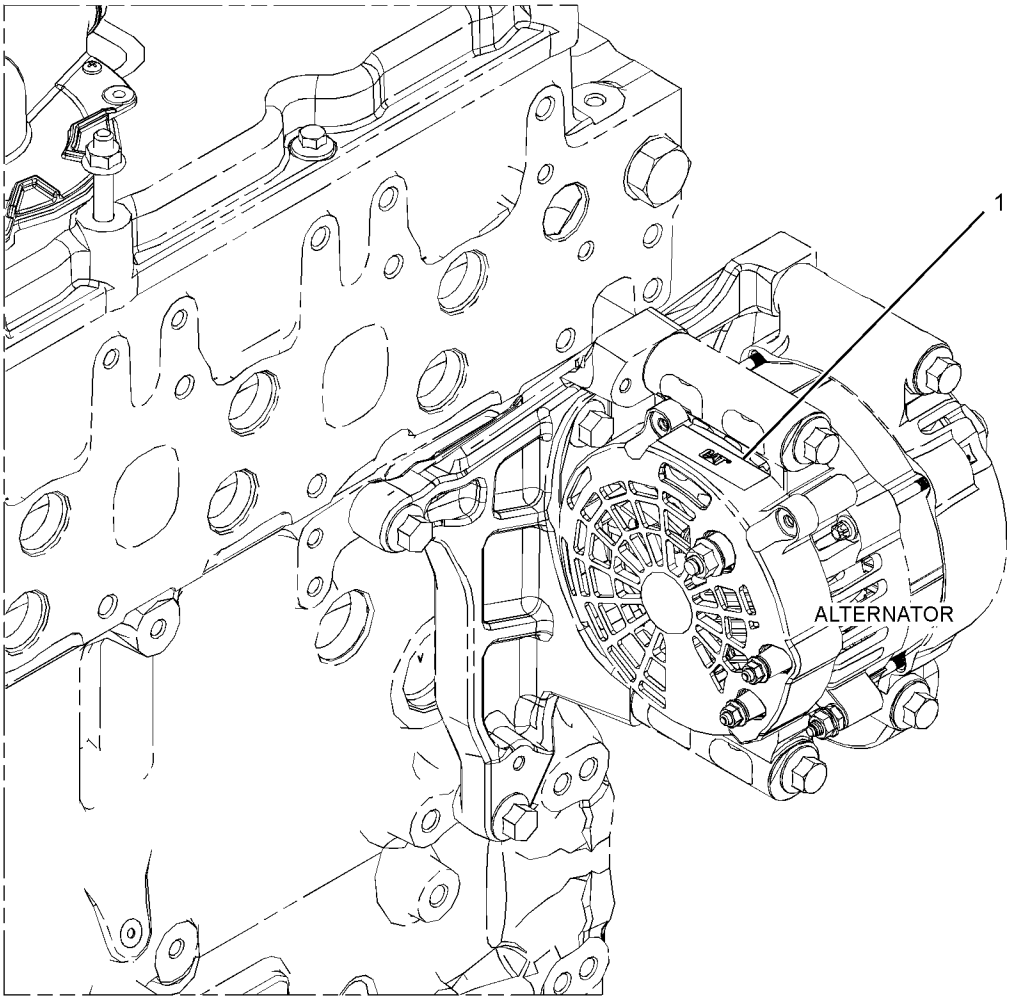

GRAPHIC #1 <END> g02675436

378-8167 PLATE & FILM GP

S/N: E7A1-UP

PART OF 393-4098 ENGINE AR-PRIMARY

SMCS-7557, 7563 **i06560471**

NOTE	REF NO	GRAPHIC REF	PART NUMBER	QTY	PART NAME 1 2 3 4 5 6 (PRODUCT LEVEL)	SEE PAGE
	1	1	**392-8477**	1	PLATE-IDENTIFICATION (CAT)	
	2	1	**326-9053**	1	FILM-WARNING (DO NOT SPRAY, READ OMM)	
	3	1	**346-8219**	2	FILM-WARNING (UNIVERSAL WARNING)	
	4	1	**355-3486**	1	STRIP-ADHESIVE	

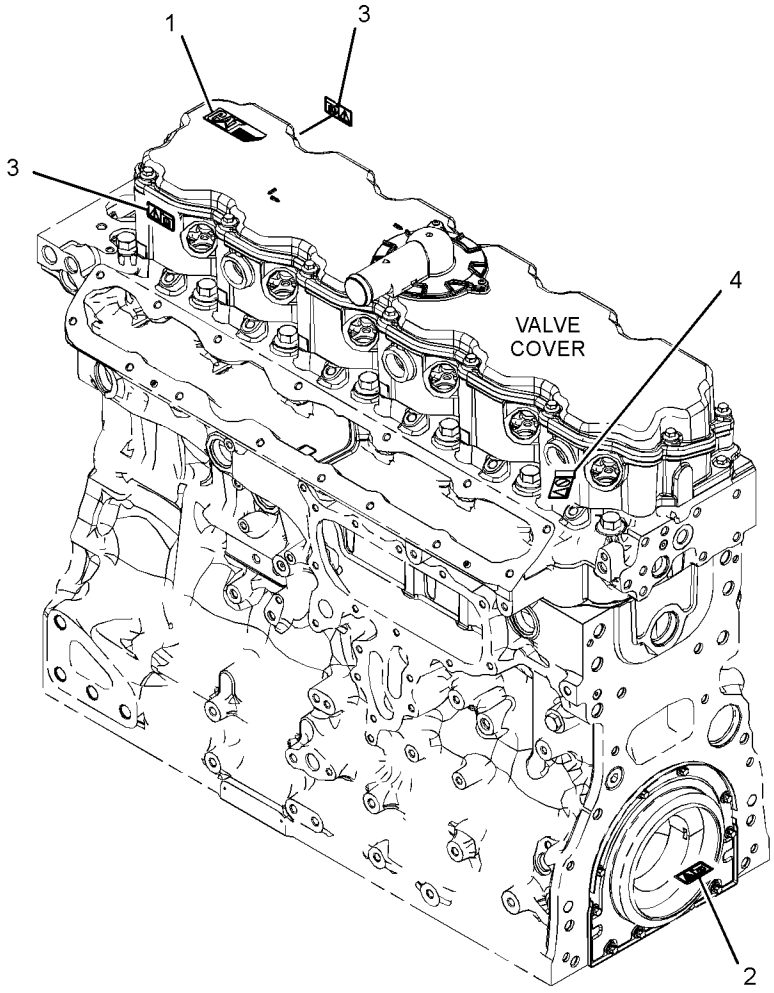

GRAPHIC #1 <END> g03378858

391-9540 PLATE & FILM GP

S/N: R5A1-UP

AN ATTACHMENT

SMCS-7557, 7563 **i06523103**

NOTE	REF NO	GRAPHIC REF	PART NUMBER	QTY	PART NAME 1 2 3 4 5 6 (PRODUCT LEVEL)	SEE PAGE
	1	1	**482-1882**	1	FILM-WARNING (ROPS, FOPS, READ OMM, NO WELD)	
	3	1	**246-2641**	2	PADLOCK GP	
					(EACH INCLUDES)	
		1	**5P-8500**	1	KEY	
	4	1	**7X-3229**	4	FILM-IDENTIFICATION (LIFT EYE, TIE-DOWN LOCATION)	
	5	1	**7X-7644**	3	FILM-IDENTIFICATION (TIE-DOWN)	
	6	1	**8T-4999**	1	FILM-INSTRUCTION (BATTERY DISCONNECT)	
	7	1	**8T-9905**	1	PLATE-IDENTIFICATION (TRANSMISSION OIL FILL TUBE)	
	8	1	**9X-6340**	1	FILM-INSTRUCTION (ENGINE OIL)	
	9	1	**102-2913**	1	FILM-INSTRUCTION (BULLDOZER CONTROL)	
	10	1	**134-7258**	1	FILM-INFORMATION (EXTENDED LIFE COOLANT)	
	11	1	**146-6747**	1	FILM-INFORMATION (24-VOLT)	
	12	1	**157-3579**	1	FILM-INSTRUCTION (GREASE)	
	13	1	**190-5386**	2	FILM-IDENTIFICATION (ROUND RED REFLECTIVE)	
	14	1	**225-0312**	1	FILM-WARNING (JUMP START, READ OMM, INTL)	
	15	1	**225-4257**	1	FILM-WARNING (HOT FLUID UNDER PRESS)	
	18	1	**239-6986**	1	PLATE-SERIAL NUMBER (MACHINE)	
	19	1	**245-8456**	1	FILM-IDENTIFICATION (FUEL PUMP)	
	20	1	**307-6202**	1	FILM-INSTRUCTION (AIR FILTER SERVICE, READ OMM)	
	21	1	**323-3309**	12	CAP	
	22	1	**334-4603**	1	FILM-INFORMATION (HYDO ADVANCED 10)	
	23	1	**344-7132**	1	FILM-INFORMATION (TRANSMISSION FILTER)	
	25	1	**430-7600**	1	PLATE-IDENTIFICATION (SERVICE INFORMATION NUMBERS)	
	26	1	**455-1084**	1	FILM-IDENTIFICATION (CAT)	
	28	1	**211-8073**	6	CAP-PROTECTION	
	29	1	**9F-6656**	1	RING-RETAINING	
	30	1	**9N-1995**	4	RIVET-POP	
AF		1	**4P-6236**	1	PLATE-SERIAL NUMBER (ENGINE)	
					(ON ENGINE BLOCK)	

A - NOT PART OF THIS GROUP
F - NOT SHOWN

391-9540 **PLATE & FILM GP (**contd.**)** **i06523103**

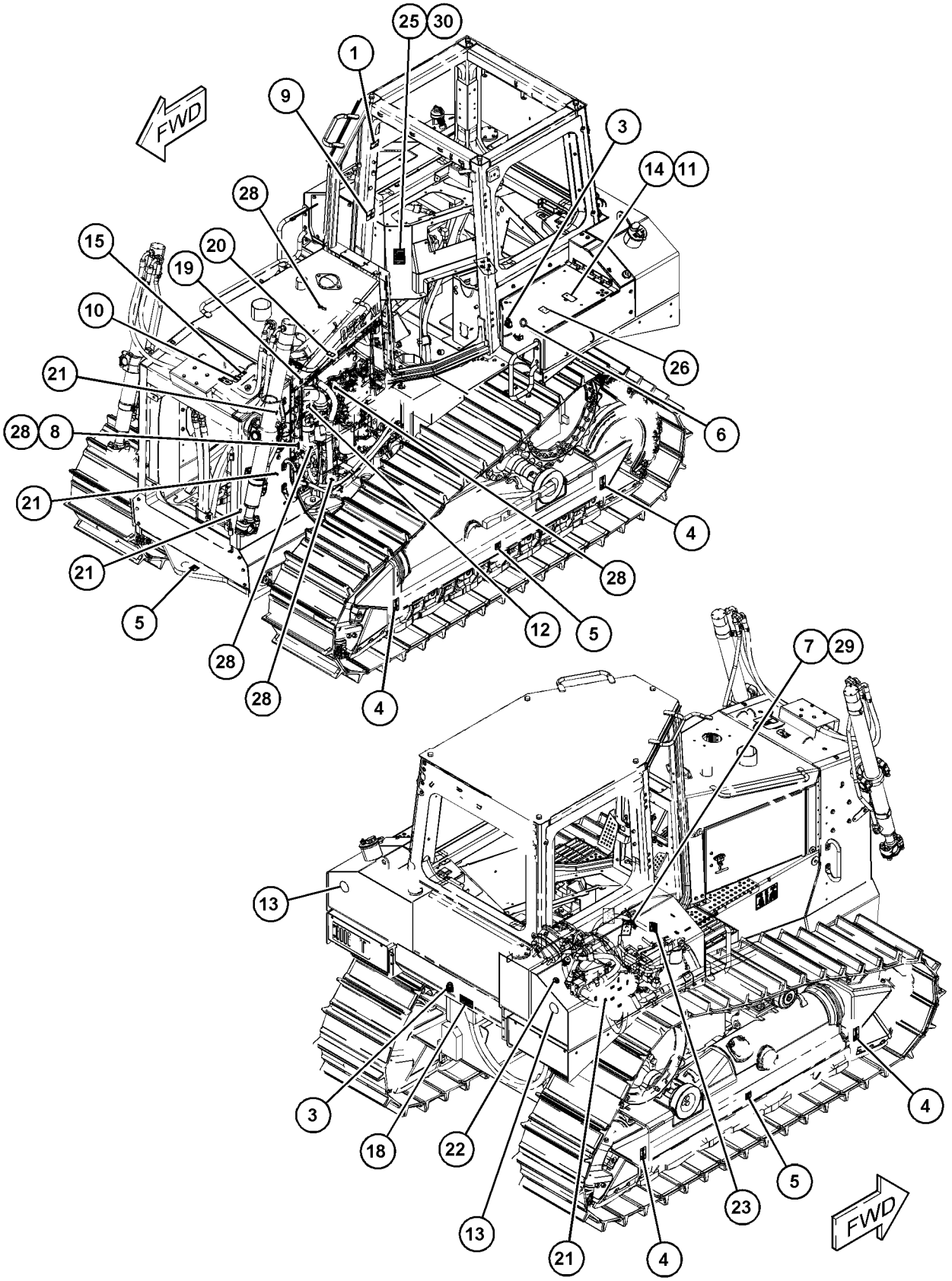

GRAPHIC #1 <END> g06023512

391-9541 PLATE & FILM GP—COLD WEATHER

S/N: R5A1-UP

AN ATTACHMENT

SMCS-7557, 7563 **i06523610**

NOTE	REF NO	GRAPHIC REF	PART NUMBER	QTY	PART NAME 1 2 3 4 5 6 (PRODUCT LEVEL)	SEE PAGE
	1	1	**482-1882**	1	FILM-WARNING (ROPS, FOPS, READ OMM, NO WELD)	
	3	1	**246-2641**	2	PADLOCK GP	
					(EACH INCLUDES)	
		1	**5P-8500**	1	KEY	
	4	1	**7X-3229**	4	FILM-IDENTIFICATION (LIFT EYE, TIE-DOWN LOCATION)	
	5	1	**7X-7644**	3	FILM-IDENTIFICATION (TIE-DOWN)	
	6	1	**8T-4999**	1	FILM-INSTRUCTION (BATTERY DISCONNECT)	
	7	1	**8T-9905**	1	PLATE-IDENTIFICATION (TRANSMISSION OIL FILL TUBE)	
	8	1	**9X-6340**	1	FILM-INSTRUCTION (ENGINE OIL)	
	9	1	**102-2913**	1	FILM-INSTRUCTION (BULLDOZER CONTROL)	
	11	1	**134-7258**	1	FILM-INFORMATION (EXTENDED LIFE COOLANT)	
	12	1	**146-6747**	1	FILM-INFORMATION (24-VOLT)	
	13	1	**157-3579**	1	FILM-INSTRUCTION (GREASE)	
	14	1	**158-7864**	1	FILM-IDENTIFICATION (HYDRAULIC OIL)	
	15	1	**190-5386**	2	FILM-IDENTIFICATION (ROUND RED REFLECTIVE)	
	16	1	**225-0312**	1	FILM-WARNING (JUMP START, READ OMM, INTL)	
	17	1	**225-4257**	1	FILM-WARNING (HOT FLUID UNDER PRESS)	
	20	1	**239-6986**	1	PLATE-SERIAL NUMBER (MACHINE)	
	21	1	**245-8456**	1	FILM-IDENTIFICATION (FUEL PUMP)	
	22	1	**307-6202**	1	FILM-INSTRUCTION (AIR FILTER SERVICE, READ OMM)	
	23	1	**323-3309**	12	CAP	
	24	1	**344-7132**	1	FILM-INFORMATION (TRANSMISSION FILTER)	
	25	1	**354-8706**	1	PLATE-IDENTIFICATION (YEAR OF MANUFACTURE)	
	26	1	**430-7600**	1	PLATE-IDENTIFICATION (SERVICE INFORMATION NUMBERS)	
	27	1	**455-1084**	1	FILM-IDENTIFICATION (CAT)	
	29	1	**211-8073**	6	CAP-PROTECTION	
	30	1	**9F-6656**	1	RING-RETAINING	
	31	1	**9N-1995**	4	RIVET-POP	
AF		1	**4P-6236**	1	PLATE-SERIAL NUMBER (ENGINE)	
					(ON ENGINE BLOCK)	

A - NOT PART OF THIS GROUP
F - NOT SHOWN

391-9541 **PLATE & FILM GP (**contd.**)** **i06523610**

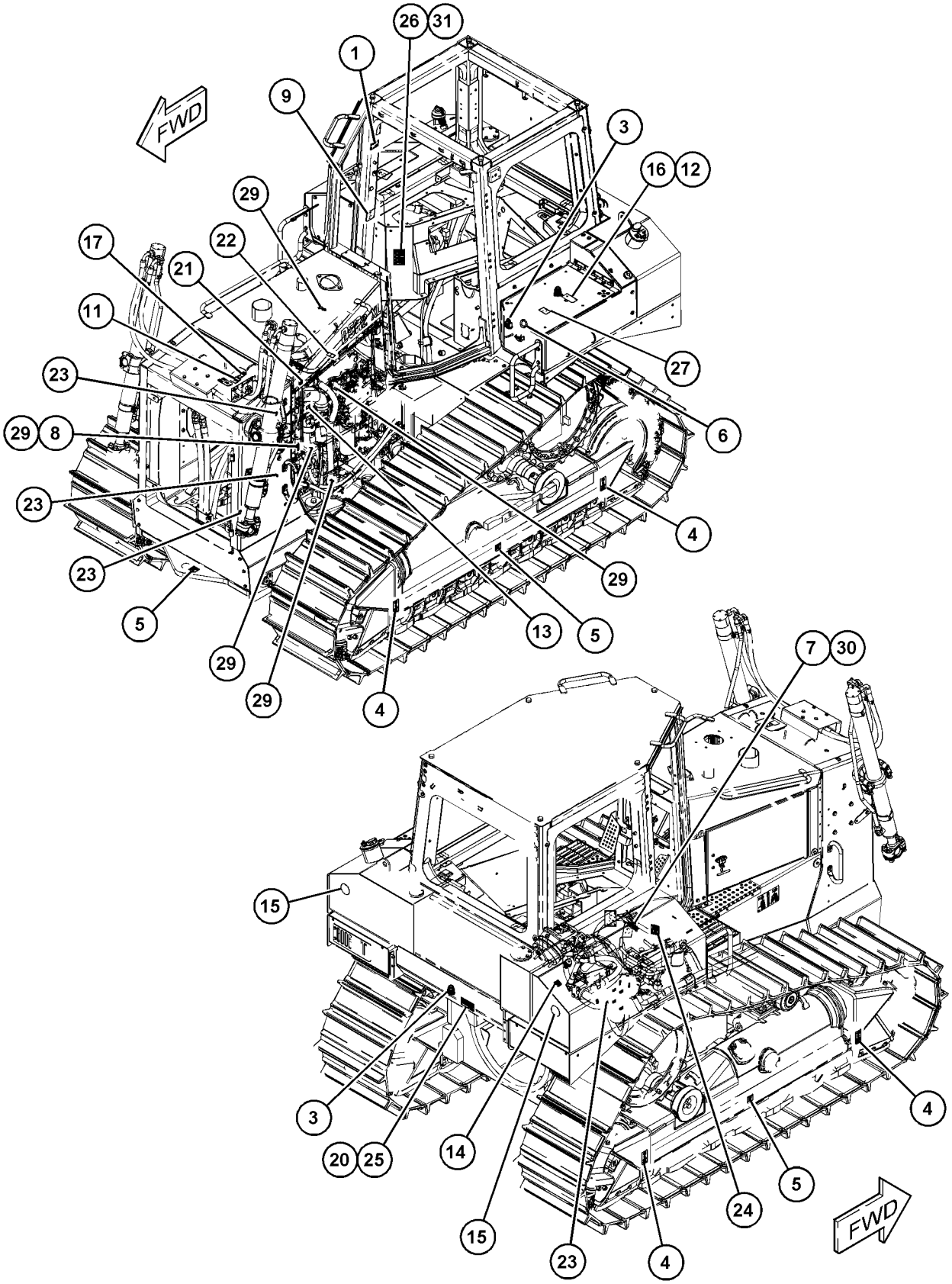

GRAPHIC #1 <END> g06023887

391-9542 PLATE & FILM GP–HIGH AMBIENT

S/N: R5A1-UP

AN ATTACHMENT

SMCS-7557, 7563 **i06523627**

NOTE	REF NO	GRAPHIC REF	PART NUMBER	QTY	PART NAME 1 2 3 4 5 6 (PRODUCT LEVEL)	SEE PAGE
	1	1	**482-1882**	1	FILM-WARNING (ROPS, FOPS, READ OMM, NO WELD)	
	3	1	**246-2641**	2	PADLOCK GP	
					(EACH INCLUDES)	
		1	**5P-8500**	1	KEY	
	4	1	**7X-3229**	4	FILM-IDENTIFICATION (LIFT EYE, TIE-DOWN LOCATION)	
	5	1	**7X-7644**	3	FILM-IDENTIFICATION (TIE-DOWN)	
	6	1	**8T-4999**	1	FILM-INSTRUCTION (BATTERY DISCONNECT)	
	7	1	**8T-9905**	1	PLATE-IDENTIFICATION (TRANSMISSION OIL FILL TUBE)	
	8	1	**9X-6340**	1	FILM-INSTRUCTION (ENGINE OIL)	
	9	1	**102-2913**	1	FILM-INSTRUCTION (BULLDOZER CONTROL)	
	10	1	**134-7258**	1	FILM-INFORMATION (EXTENDED LIFE COOLANT)	
	11	1	**146-6747**	1	FILM-INFORMATION (24-VOLT)	
	12	1	**157-3579**	1	FILM-INSTRUCTION (GREASE)	
	13	1	**158-7864**	1	FILM-IDENTIFICATION (HYDRAULIC OIL)	
	14	1	**190-5386**	2	FILM-IDENTIFICATION (ROUND RED REFLECTIVE)	
	15	1	**225-0312**	1	FILM-WARNING (JUMP START, READ OMM, INTL)	
	16	1	**225-4257**	1	FILM-WARNING (HOT FLUID UNDER PRESS)	
	19	1	**239-6986**	1	PLATE-SERIAL NUMBER (MACHINE)	
	20	1	**245-8456**	1	FILM-IDENTIFICATION (FUEL PUMP)	
	21	1	**307-6202**	1	FILM-INSTRUCTION (AIR FILTER SERVICE, READ OMM)	
	22	1	**323-3309**	12	CAP	
	23	1	**344-7132**	1	FILM-INFORMATION (TRANSMISSION FILTER)	
	24	1	**354-8706**	1	PLATE-IDENTIFICATION (YEAR OF MANUFACTURE)	
	25	1	**430-7600**	1	PLATE-IDENTIFICATION (SERVICE INFORMATION NUMBERS)	
	26	1	**455-1084**	1	FILM-IDENTIFICATION (CAT)	
	28	1	**211-8073**	6	CAP-PROTECTION	
	29	1	**9F-6656**	1	RING-RETAINING	
	30	1	**9N-1995**	4	RIVET-POP	
AF		1	**4P-6236**	1	PLATE-SERIAL NUMBER (ENGINE)	
					(ON ENGINE BLOCK)	

A - NOT PART OF THIS GROUP
F - NOT SHOWN

391-9542 **PLATE & FILM GP (**contd.**)** **i06523627**

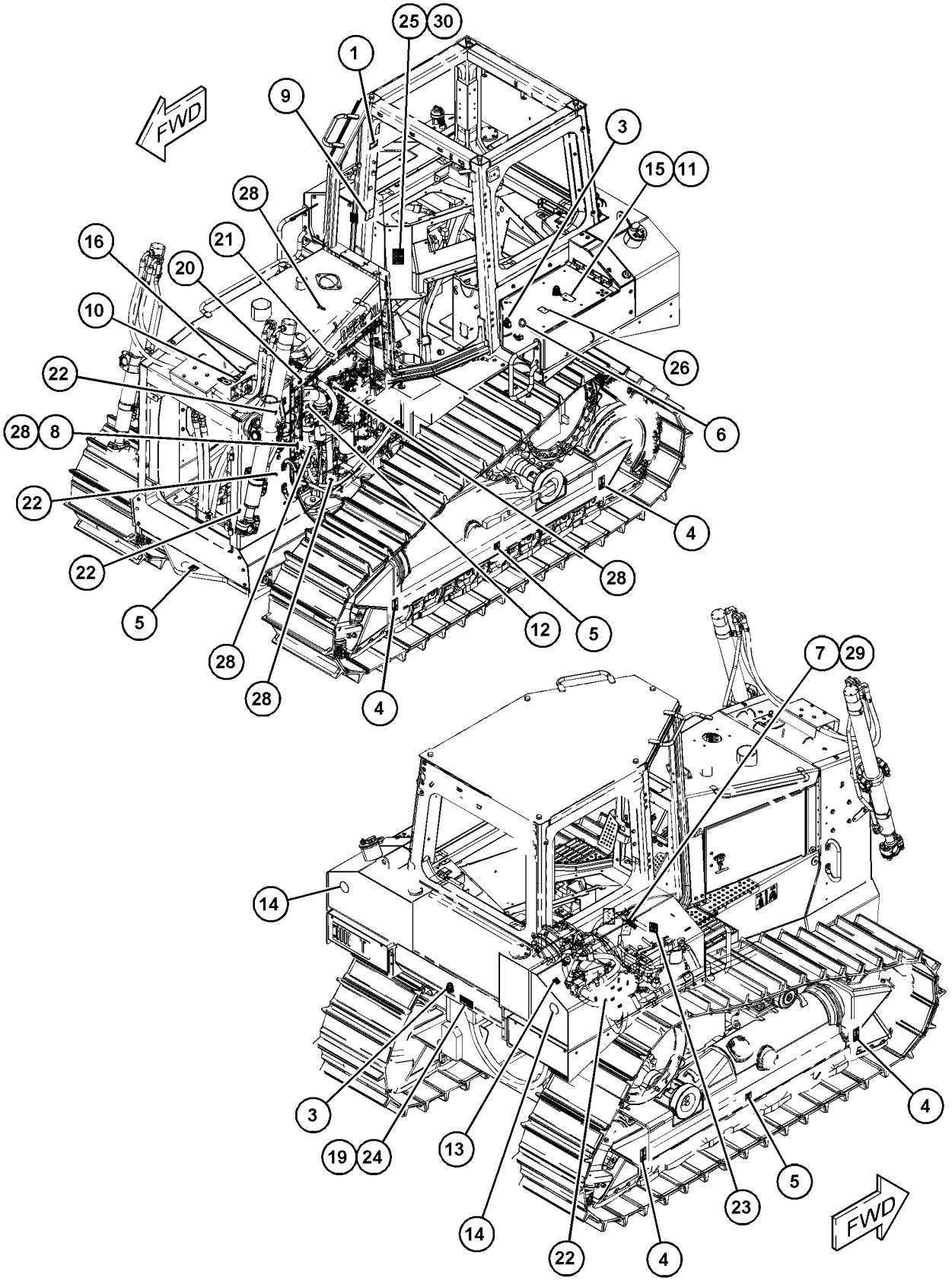

GRAPHIC #1 <END> g06024147

465-2737 PLATE GP-CERTIFICATION

S/N: R5A1-UP

AN ATTACHMENT

SMCS-7405, 7557

i06250058

NOTE	PART NUMBER	QTY	PART NAME 1 2 3 4 5 6 (PRODUCT LEVEL)	SEE PAGE
	479-3043	1	PLATE-CERTIFICATION (MACHINE)	

<END>

PART NUMBER INDEX

Part Page

0

0L-1143 210
0L-1521 64
0S-0509 218
233
0S-1585 214
216
0S-1595 233
0S-1599 233
0S-1614 210
233
0S-1756 384
0T-0244 554
556
559
0T-0489 555

1

1A-1460 210
214
1A-2029 210
214
1A-5350 233
1B-3978 224
226
228
1B-3980 224
226
228
1B-5174 320
322
1B-8705 254
1B-8706 168
1B-8735 495
497
1B-8736 254
1C-0569 214
1D-4540 218
1F-0750 280
287
1G-3176 421
1G-3180 421
1G-3410 426
1H-3244 111
184
190
197
540
1H-6227 337
338
341
1H-7339 384
1H-8128 224
226
228
329
1H-9696 224
226
228
1J-6472 261
315
1J-9671 207
208
1K-8850 305
548
550
1L-2731 365
1L-4418 275
278
1L-5072 429
1L-6957 232
1M-3097 337
341
1M-6119 97
99
198
1M-6120 97
99
198
1M-6718 445
446
1M-8649 248
1M-9351 270
1N-5724 485
1P-0810 108
109
110
112
198
489
1P-2841 275
278
1P-3702 365
1P-3703 365
1P-3708 238
1P-4278 126
1P-4576 238
386
1P-4577 238
401
1P-6524 468
1Q-4230 228
1S-0994 198
204
1S-1860 353
354
355
356
357
1S-4915 198
203
1S-6385 280
1S-7251 198
1S-7252 198
1T-0034 259
1T-0043 259
261
1T-0205 259
1T-0234 261
1T-0720 233
1T-0933 259
1T-1621 261
1T-1639 259
1U-0063 601
1U-0159 601
603
1U-0183 597
1U-0725 457
1U-0928 454
1U-0929 454
1U-1173 454
1U-1174 454
1U-1175 454
1U-1176 454
1U-1267 454
1U-2827 429
1W-6448 168
363
1W-6735 18
1Y-7927 505
1Z-9932 275
278

2

2A-3576 216
2A-4639 210
2B-0858 220
2B-2404 233
2D-0516 248
2D-4202 429
2D-6235 505
511
2D-6403 480
2D-6642 511
2D-8009 232
254
2D-9572 283
2H-3429 445
446
2H-3920 181
2H-3922 176
180
197
2H-3928 423
2H-6338 384
2H-9445 168
2J-0564 386
388
2J-3505 413
2J-3506 384
599
600
2J-6274 346
2J-6305 304
2J-6356 168
2J-6362 232
2J-6540 55
2J-7761 429
2J-8489 388
2K-0703 603
2K-2939 411
2K-4096 386
2K-4507 386
2K-4973 465
511
570
572
2K-5066 224
226
228
2K-5069 210
2K-8467 275
278
2K-9295 210
2L-5893 535
2L-8050 172
2L-8058 172
2L-8069 108
109
112
2L-8075 106
109
2L-8078 106
2L-8079 109
110
117
2M-1444 468
2M-2858 337
341
2M-5795 280
282
2M-7819 505
2M-9780 365
401
403
407
412
415
2N-1287 233
2P-1286 42
2P-8044 338
2P-8421 248
2R-0098 244
2R-5001 363
2S-1382 271
2S-1384 271
2S-1385 271
2S-3440 55
2S-4078 224
226
228
346
2S-5658 257
2S-5835 270
2S-5926 346
2S-8983 232
2V-1771 198
2V-2043 42
2V-8260 121
2W-6225 236
2W-7940 197
203
393

3

3A-8612 603
3A-8613 601
3A-8614 601
3B-1915 233
3B-4124 210
3B-4501 180
197
3B-4605 288
363
3B-4607 282
3B-4611 552
553
3B-4615 304
3B-4617 296
297
3B-4626 454
462
3B-4632 458
3B-5325 606
607
3B-6552 460
3B-7255 52
3B-8485 413
3B-8488 460
3B-8489 314
454
603
3D-2824 42
130
237
248
365
380
382
393
400
421
428
3D-2975 505
3D-8317 270
3E-2345 365
3E-3365 180

► PRIMARY REFERENCE

PART NUMBER INDEX

Part	Page
3E-3371	183
	189
3E-3377	114
	122
3E-3383	115
	124
3E-4051	518
3E-4052	518
3E-4057	518
3E-4058	518
3E-4304	513
	516
	536
	538
3E-4354	214
3E-4888	529
3E-4898	529
3E-4903	273
3E-5239	183
	190
	480
3E-6328	►95
	183
	190
3E-6389	►141
	183
	190
3E-6773	94
3E-6799	261
3E-7404	502
3E-8020	490
	491
	513
3E-9375	166
3F-4854	454
3F-6185	462
3F-9556	178
	525
	526
	527
	528
3G-1753	386
3G-1757	386
3G-8047	405
3G-8054	405
3G-8057	405
3H-0702	168
3H-1461	254
	256
3J-1770	454
3J-1907	203
	236
	237
	254
	270
	271
	365
	368
	369
	395
	396
	398
	400
	421
	441
	442
3J-4818	511
	572
3J-6572	388
3J-6573	454
3J-7354	207
	208
	237
	365
	369
	390
	395
	400
	416
	419
	421
	442
	447
3J-9703	388
3K-0360	13
	42
	52
	210
	214
	224
	226
	228
	236
	237
	238
	365
	369
	395
	396
	445
	446
3K-0835	183
	189
3K-1432	247
3K-8510	603
3L-9410	232
3N-0759	411
3P-1210	419
3P-1932	238
3P-3441	248
3P-7019	247
3P-9900	572
3S-0004	254
3S-1307	329
3S-2093	73
	80
	109
	173
	184
	218
	478
	480
	487
	495
	497
	500
	511
	575
	576
	588
3S-2708	210
	214
3S-6049	198
3S-8109	247
3T-0810	247
3T-3447	247
3T-3622	40
3T-4568	210
3T-4629	247
3T-4824	210
3T-5807	214
3T-6469	259
3T-6471	259
3T-6769	247
3T-6963	210
3T-7584	247
3T-8757	254
3T-9272	210
3T-9315	246
3T-9536	329
	331
3T-9674	233
3T-9819	232
3V-3263	576
	588
3V-9399	288
3W-2025	320
	322
3W-2369	346
3W-3819	288
3W-3896	304
3Y-3866	454
3Y-5405	409
4	
4B-3665	259
4B-4098	258
	454
4B-4158	595
	596
	602
4B-4274	273
4B-4277	185
	191
4B-4278	288
	572
4B-5059	505
4B-9808	484
4B-9880	270
4D-2297	468
4D-7388	55
4D-7733	126
4E-5724	197
4F-0255	454
	462
4F-1252	454
4F-2294	177
	270
4F-4879	567
4H-1641	280
	287
	301
4H-2558	153
	288
4I-8933	401
4J-0121	384
4J-0520	238
	401
4J-0522	238
4J-0527	401
4J-1641	597
4J-2414	456
4J-3420	386
4J-5267	380
	382
	405
	409
4J-5477	395
	398
	400
4J-6326	413
4J-6327	413
4J-6374	384
4J-8251	429
4J-8252	429
4J-9118	457
4K-1388	243
4K-2039	445
	446
4K-3004	603
4K-3128	386
4K-3533	495
	497
4K-8864	198
4K-9429	531
4M-1751	271
4M-2381	270
4M-6425	535
4M-7470	288
4M-8239	271
4N-2927	505
4P-6236	612
	614
	616
4P-7428	204
4P-7581	151
	184
	190
	198
	202
	204
	478
	575
4P-8134	173
	184
	190
	199
	202
	204
	218
	478
	555
4S-1962	126
	518
4S-8537	247
4S-8541	261
4T-0780	462
4T-1481	458
4T-1504	597
4T-1520	462
4T-2952	599
4T-3521	409
4T-4866	457
	462
4T-5495	454
4T-6659	600
4V-6981	363
4V-7884	570
4V-8256	465
4V-8577	570
	572
4W-1203	15
4W-1204	15
4W-2042	15
4W-3277	400
4Y-9398	458
5	
5B-0841	233
5B-3254	460
5C-2890	111
	172
	184
	190
	480
	485
	572
5C-7261	97
	144
	145

► PRIMARY REFERENCE

PART NUMBER INDEX

Part	Page
	275
	278
	495
	497
	525
	526
	527
	528
	540
	552
	553
5C-9553	93
	480
5D-0718	238
5D-1026	73
	80
5D-1911	429
5D-4822	505
5D-7523	246
5D-7927	429
5F-3106	256
	415
	416
5F-9757	157
	160
	184
	190
5G-2247	332
5G-3676	204
5G-6505	101
5G-8655	495
	497
5H-6202	216
5H-6734	320
	322
5H-9899	487
5I-8304	97
	99
5J-3306	429
5J-3864	249
5J-4773	599
	600
5J-4991	388
5K-0216	329
	331
5K-1770	238
5K-5338	73
	80
5K-9065	261
5K-9090	237
	238
	380
	382
	393
	400
	401
5K-9106	249
5K-9107	211
5K-9179	523
5K-9660	284
5L-7200	180
	197
5M-0578	211
	214
5M-1179	168
5M-2057	429
5M-2894	211
	214
	218
	233
	331
	535
5M-3320	254
5M-6214	456
	460
5M-7925	211
5M-8500	495
	497
5M-9548	271
5P-0372	540
	542
5P-0537	233
	532
	533
5P-0695	198
	203
5P-0760	203
5P-0767	52
	521
5P-1076	275
	278
	288
	294
	295
	296
	297
	300
	301
	304
	306
	307
	312
	413
	458
5P-1293	401
5P-1404	415
5P-1979	464
5P-2230	55
5P-3131	247
5P-3454	184
	189
	190
5P-3930	247
5P-4116	50
	51
	55
	64
	97
	99
	149
	151
	155
	157
	160
	184
	190
	204
5P-4295	74
	80
	126
5P-4423	572
5P-4571	108
	115
	124
5P-4920	232
5P-4921	232
5P-4961	74
	80
	126
	238
5P-5649	297
	310
5P-5768	578
	582
5P-5777	202
5P-5846	259
5P-5908	413
5P-5991	127
5P-6001	114
5P-6006	106
5P-6010	572
5P-6129	466
	503
5P-6605	578
	582
5P-6874	523
5P-6941	460
5P-7162	184
	190
5P-7211	289
	310
5P-7466	366
	401
	405
5P-7467	366
	401
	405
5P-7468	401
5P-7469	401
5P-7470	238
5P-7471	238
5P-7483	297
	310
5P-7530	249
5P-7701	230
	364
5P-7957	531
5P-7958	474
	475
	476
5P-8065	218
5P-8066	238
5P-8112	366
	401
	405
5P-8118	249
5P-8182	238
5P-8210	249
5P-8245	211
	214
	247
5P-8247	316
	317
	318
	319
5P-8248	599
	600
5P-8249	413
5P-8428	259
5P-8445	505
5P-8500	126
	277
	344
	474
	475
	476
	612
	614
	616
5P-8522	202
5P-8874	203
5P-8939	184
	190
5P-9085	147
	149
	151
	153
	155
	460
5P-9186	249
5P-9297	204
5P-9806	245
	259
5Q-7578	228
5R-5927	273
5S-7001	271
5S-7383	535
5S-9062	15
5T-7486	509
5V-0564	246
5V-0770	505
5V-1496	280
	557
	561
5V-1497	570
5V-9221	300
	301
	307
5W-1250	390
5W-1437	377
5Y-2206	413
6	
6B-2882	238
6B-6863	317
	318
	319
6C-3681	280
6D-1641	366
	518
	521
6D-4244	396
6D-4246	74
	80
6D-4636	366
	519
6D-5801	90
6D-7128	396
6E-0725	426
6E-1607	450
6E-1752	429
6E-4102	440
6E-4240	421
6E-5479	453
6E-6528	447
6F-0253	183
	189
6F-0711	283
6F-3908	454
6F-6673	244
6F-7045	176
6H-3616	603
6H-3956	308
6H-3977	238
6H-4005	147
	149
	151
	153
	155
	157
6H-9361	429
6H-9691	448
6I-0217	7
	19
	25
	38
	46
	54
	66
	84
	89
6I-0254	54
6I-0260	25

PART NUMBER INDEX

Part	Page
	46
	48
	61
	84
	92
6I-0292	162
6I-0293	41
	73
	80
	126
	162
6I-0363	25
6I-0456	103
6I-0563	66
6I-0572	25
6I-0593	66
	84
6I-0594	48
	89
6I-0631	86
	87
6I-0645	19
6I-0650	19
6I-0654	22
	25
	89
	96
6I-0839	54
6I-0917	61
6I-1090	38
	44
6I-1418	183
	190
6I-1497	41
6I-4200	84
6I-4374	38
6I-4681	25
6I-4709	46
6I-8077	257
6I-8078	►257
	358
	359
	360
	361
	362
6I-8724	210
6I-9386	495
	497
6I-9420	597
6I-9461	597
6I-9462	597
6J-5383	462
6J-9187	456
6J-9188	456
6K-3273	561
6K-8328	232
6K-8329	232
6K-8987	601
6L-1651	238
6L-4724	518
6L-5359	238
6M-5062	445
	446
6N-6984	273
6P-1735	211
6P-1736	211
6P-2233	247
6P-4977	247
6P-5317	211
	214
6P-7742	247
6P-7743	247
6P-7772	249
6P-7773	249
6P-7968	247
6P-7983	247
6P-7985	247
6P-8269	93
	288
6R-0365	412
6R-7943	419
6S-3859	552
	553
6S-9277	540
	542
6T-0062	210
6T-0064	210
6T-0850	210
6T-1698	312
6T-3643	466
	503
6T-6505	115
6T-6506	115
6T-7995	232
6T-7996	232
6T-9927	288
6V-0330	224
	226
	228
6V-0400	366
6V-0439	224
	226
	228
6V-0834	249
6V-0835	247
6V-0852	238
	247
	366
	368
	396
	415
	416
6V-0937	257
6V-1051	487
6V-1230	238
6V-1232	487
6V-1322	220
6V-1359	310
6V-1586	247
6V-1649	249
6V-1720	247
6V-1792	353
	354
	355
	356
	357
6V-1820	261
	284
6V-1864	232
6V-1889	401
6V-1970	474
	475
	476
6V-2314	487
	489
6V-2317	542
6V-2369	184
	189
	190
6V-2404	232
6V-2689	442
	487
6V-3545	487
6V-3928	536
	538
6V-3940	270
6V-3965	237
	248
	266
	267
	268
	269
	365
	368
	396
	415
	416
6V-4292	74
	80
	126
	237
6V-4365	271
6V-4589	373
6V-4604	273
6V-5048	364
6V-5138	437
	439
6V-5185	380
	382
6V-5186	380
	382
6V-5326	452
6V-5586	450
6V-5632	55
6V-5817	576
6V-5839	261
6V-5843	264
6V-5849	588
6V-6339	447
6V-7238	13
	52
6V-7357	137
	204
	480
	540
	548
	550
	575
6V-7568	249
6V-7646	211
	557
	561
6V-7673	261
6V-7687	601
	603
6V-7723	425
6V-7732	429
6V-7742	388
6V-7744	288
	429
	601
	603
6V-7970	437
6V-7978	199
6V-8076	236
	368
6V-8128	261
6V-8133	388
6V-8185	363
6V-8186	178
6V-8189	495
	497
6V-8237	386
	388
6V-8352	451
6V-8369	181
6V-8370	180
6V-8376	466
	503
	534
6V-8378	178
6V-8397	390
	395
	396
	421
6V-8398	237
	238
	395
	396
	403
	407
	409
6V-8400	393
	400
6V-8625	74
	80
6V-8626	74
	81
	365
	401
	403
6V-8627	398
	400
6V-8628	395
	400
6V-8632	365
6V-8635	400
6V-8636	421
6V-8637	237
	380
	382
	400
6V-8639	74
	81
	237
6V-8641	395
	398
6V-8642	403
	407
6V-8714	380
	382
	393
6V-8716	237
6V-8721	73
	80
6V-8723	395
6V-8928	513
	516
6V-8936	396
6V-8969	532
	533
6V-8978	390
	421
6V-8981	409
6V-9003	365
6V-9004	42
6V-9007	365
	400
6V-9008	237
6V-9027	33
	34
6V-9167	388
	462
6V-9168	396
6V-9169	407
	409
6V-9189	142
	143
6V-9197	280
	287
	548
	550
6V-9313	277
	344
6V-9353	407
6V-9632	126

► PRIMARY REFERENCE

PART NUMBER INDEX

Part	Page
	292
	513
	536
	538
6V-9746	42
	237
	365
	380
	382
	400
	401
6V-9748	15
6V-9829	396
6V-9835	395
	398
6V-9852	403
6V-9853	401
6V-9873	395
6V-9877	42
6W-6005	99
6W-6672	199
6Y-0306	247
6Y-0352	607
6Y-0359	605
	606
6Y-0454	337
	338
	341
6Y-0473	329
	331
	332
	337
	338
	341
6Y-0859	226
	228
6Y-0926	210
6Y-0984	210
6Y-1084	261
6Y-1087	261
6Y-2039	595
	▶599
6Y-2704	210
	214
6Y-3125	334
6Y-3149	261
6Y-3159	261
6Y-3164	259
6Y-3167	261
6Y-3484	247
6Y-3973	280
6Y-5010	254
6Y-5113	523
6Y-6277	224
6Y-6751	457
6Y-8473	236
	▶271
6Y-9373	210
	214

7

Part	Page
7B-0863	277
	285
	344
7B-3028	320
	322
7B-3039	429
7B-7515	247
7C-4616	19
7C-8370	15
7C-8634	15
7D-6922	511
7D-7111	94
7D-7233	50
	51
7E-7606	18
7F-0560	101
7F-6935	258
7F-9543	277
	285
7G-0437	247
7G-1596	210
7G-3496	259
7G-3710	249
7G-3833	407
7G-3834	407
7G-4332	337
	338
	341
7G-4824	493
7G-5614	247
7G-5675	247
7G-5730	249
7G-5984	393
7G-5985	393
7G-5986	393
7G-6061	247
7G-8121	247
7H-1447	429
7H-3607	257
7H-4566	211
7H-9737	363
7J-0204	445
	446
7J-2595	456
7J-5131	597
7J-5544	429
7J-6142	393
7J-8955	388
7J-8956	388
7J-9108	365
	366
	401
	403
	407
7J-9682	603
7K-1181	40
	74
	81
	117
	118
	126
	130
	131
	134
	137
	139
	147
	149
	151
	153
	155
	157
	160
	173
	184
	190
	197
	202
	203
	238
	304
	398
	400
	407
	460
	479
	495
	497
	518
	555
7K-6058	411
7K-9205	315
7M-0475	246
7M-7219	505
7M-8485	42
	202
	237
	400
7M-8489	236
7M-8592	271
7N-0296	173
7N-0718	▶176
	199
7N-2059	173
7N-9017	117
7N-9801	182
7N-9943	141
7P-4190	168
7P-6596	284
	315
7S-2042	280
7S-4534	249
7T-0020	141
7T-1099	97
	280
	480
7T-1885	210
	214
7T-4532	477
7T-6799	183
	189
7T-6934	409
7T-6994	210
	214
7T-8130	210
7T-8136	214
7T-8859	232
7T-9031	214
7T-9356	216
7T-9515	180
7T-9832	210
7T-9837	210
	214
7V-5191	505
7V-6571	199
7W-2632	103
7W-6534	211
7X-0550	328
7X-0579	74
	81
7X-0584	487
7X-0587	314
7X-0589	49
7X-0593	529
7X-0605	328
7X-0608	465
7X-0618	296
	297
7X-0766	308
7X-0818	184
	190
7X-0871	238
7X-1553	423
7X-2475	464
7X-2532	334
7X-2542	74
	81
7X-2543	368
	393
	603
7X-2545	126
7X-2548	74
	81
	126
7X-2549	301
7X-2553	457
7X-2555	93
7X-2562	305
	457
7X-2563	224
	226
	228
	411
	459
7X-2564	454
7X-2565	285
	312
7X-2566	462
7X-2567	312
	457
7X-2575	275
7X-2580	530
7X-2621	603
7X-3229	612
	614
	616
7X-6315	106
7X-7608	247
7X-7644	602
	612
	614
	616
7X-7729	55
	64
	153
	238
	273
	280
	283
	285
	286
	287
	288
	300
	301
	303
	306
	309
	344
	407
	413
	479
	493
	495
	497
	519
	529
	548
	550
	554
	555
	563
7X-7816	259
7X-7877	185
	190
	493
	536
	538
7X-7927	576
	588
7X-7928	576
	588

▶ PRIMARY REFERENCE

PART NUMBER INDEX

Part	Page
7X-7929	576
	588
7X-7930	576
	588
7X-7958	50
	51
7Y-0468	509
7Y-3474	575
7Y-5219	450
7Y-5226	487
7Y-5235	462
7Y-7388	184
	190
	513
7Y-9099	495
	497
	548
	550
8	
8C-3174	407
8C-3205	380
	382
	409
8C-3229	259
8C-3290	24
	529
8C-3442	495
	497
8C-3445	45
8C-3446	237
	365
8C-3447	238
8C-3451	366
8C-3681	52
8C-3756	480
8C-4365	390
8C-5060	588
8C-5607	137
8C-5608	137
8C-5682	466
	503
8C-5917	97
8C-5918	99
8C-6358	101
8C-6959	74
	81
8C-8451	137
8C-8478	296
	462
8C-8514	106
8C-8584	288
8C-8729	224
	226
	228
8C-8992	283
	495
	497
8D-0071	232
8D-4771	224
	226
	228
	244
8D-5096	249
8E-1118	508
8E-1143	270
8E-1205	280
	301
8E-1211	320
	322
8E-1356	301
8E-1484	247
8E-1666	247
8E-3075	224
	226
	228
8E-4092	346
8E-4832	288
8E-5192	597
8E-5194	597
8E-5247	261
8E-5486	456
8E-5701	454
8E-5703	388
	462
8E-6539	261
8E-6648	261
8E-7561	280
	287
8E-7791	493
8E-8115	247
8E-8117	247
8E-8118	247
8E-8297	247
8E-8299	248
8E-8307	210
	214
8E-8310	210
8E-9212	384
8E-9378	600
8E-9379	600
8F-1434	178
8F-7702	168
8G-2943	335
8G-3102	346
8G-3202	324
	325
8G-4014	288
8G-4107	335
8G-4189	315
8G-4190	315
8G-4386	284
8G-4565	224
	226
	228
8G-4566	224
	226
	228
8G-4568	224
	226
	228
8G-4569	224
	226
	228
8G-4945	346
8G-5247	284
8G-5551	236
8G-5654	236
8G-5799	335
8G-6683	283
8G-6684	283
8G-7085	277
	285
	344
8G-8311	315
8G-8316	314
8G-9560	236
8H-0901	224
	226
	228
8H-0902	224
	226
	228
8H-5303	176
8H-5306	176
8H-7521	331
8H-8898	458
8H-9818	220
	259
8J-0412	419
8J-2189	▶606
8J-2190	606
	607
8J-2574	384
8J-2880	388
	462
8J-4866	454
8J-6913	429
8J-8782	429
8J-8783	429
8K-0589	320
	322
	324
	325
8K-1433	131
	134
	137
	139
8L-2746	373
8L-2786	26
	231
	442
8L-6557	233
8L-8413	97
	99
	198
	505
	572
8M-2538	271
8M-2769	74
	81
8M-2770	401
8M-2773	74
	81
	127
	519
8M-3494	602
8M-4409	271
8M-4438	211
	214
8M-4986	271
8M-4988	238
8M-5249	238
8M-5254	238
	246
	368
8M-8489	254
8N-0869	198
8N-1725	198
8P-0058	249
8P-0612	280
	282
8P-1916	248
8P-5244	312
8P-8357	211
	214
8P-8950	248
8P-9770	456
	597
	603
8R-0040	521
8S-0023	393
8S-0024	393
8S-0527	214
	247
8S-3426	247
8S-7803	505
8S-9129	236
8S-9130	236
8T-0072	211
8T-0119	73
	80
	126
8T-0122	197
8T-0154	521
8T-0164	395
8T-0249	238
8T-0267	199
8T-0269	127
8T-0281	339
	340
	342
8T-0282	318
	319
8T-0283	384
8T-0328	363
	557
	561
8T-0348	416
8T-0356	254
8T-0359	316
	317
8T-0375	346
8T-0389	97
	99
8T-0640	168
8T-0722	495
	497
8T-1158	377
8T-1579	275
	278
8T-1889	147
	149
	151
	153
	155
	199
	204
	238
	380
	382
	401
	409
8T-1890	147
	149
	151
	153
	155
	199
	204
	238
	380
	382
	401
	409
8T-2223	244
8T-2225	198
	203
8T-2275	429
8T-2353	416
8T-2561	273
	379
8T-2922	448
8T-3298	429
8T-3426	185
	191
8T-3490	64
	73
	97
	126
	157
	197
	203

▶ PRIMARY REFERENCE

PART NUMBER INDEX

Part	Page
	273
	280
	288
	292
	299
	518
	521
8T-3518	101
8T-3612	73
	480
8T-3957	412
8T-4121	14
	42
	50
	51
	57
	74
	81
	94
	97
	127
	130
	137
	147
	149
	151
	153
	155
	157
	160
	184
	190
	199
	202
	204
	217
	224
	226
	228
	238
	256
	259
	284
	288
	292
	293
	296
	297
	304
	305
	320
	322
	346
	366
	368
	379
	380
	382
	386
	393
	396
	401
	403
	405
	407
	409
	429
	460
	466
	482
	489
	493
	495
	497
	503
	519
	521
	523
	540
	544
	546
	547
	548
	550
	575
8T-4123	24
	224
	226
	228
	244
	277
	285
	288
	312
	334
	344
	411
	462
	536
	538
	601
8T-4131	296
	297
	312
	334
	462
8T-4133	184
	190
	199
	401
	482
	521
8T-4136	49
	51
	57
	74
	81
	94
	127
	147
	149
	151
	153
	155
	157
	160
	185
	190
	199
	204
	218
	220
	224
	226
	228
	233
	238
	271
	273
	280
	283
	286
	287
	288
	292
	304
	320
	322
	366
	379
	380
	382
	407
	413
	429
	460
	479
	482
	493
	495
	497
	519
	521
	529
	548
	550
8T-4137	42
	55
	64
	74
	81
	127
	130
	137
	147
	149
	151
	153
	155
	157
	160
	185
	190
	199
	202
	204
	238
	259
	288
	366
	393
	401
	407
	460
	493
	519
	575
8T-4138	90
	131
	134
	139
	199
	485
8T-4139	288
	304
	307
	320
	322
	401
	409
	428
	603
8T-4140	277
	285
	326
	327
	328
	344
8T-4141	244
8T-4149	42
8T-4154	144
8T-4167	24
	275
	312
	457
	462
	529
8T-4170	297
	312
8T-4171	185
	190
8T-4172	42
	238
8T-4175	288
8T-4176	307
8T-4178	238
	401
8T-4181	495
	497
8T-4182	199
	238
	256
	258
	346
	366
	519
8T-4183	238
	273
	275
	278
	292
	343
	393
	409
	413
	428
	431
	432
	464
	540
	542
	546
8T-4184	238
	246
	366
	544
	546
8T-4185	204
	238
	306
	401
	521
8T-4186	51
	62
	127
	249
	297
	380
	382
	386
	393
	405
	407
	431
	432
	489
	540
	544
	546
	548
	550
8T-4187	454
8T-4189	40
	55
	64
	97

► PRIMARY REFERENCE

PART NUMBER INDEX

Part	Page
	99
	149
	151
	155
	157
	160
	173
	204
	489
	548
	550
8T-4190	314
	542
8T-4191	50
	204
	238
	519
8T-4192	204
	306
	343
	409
	458
8T-4193	224
	226
	228
8T-4194	246
	304
	312
	328
8T-4195	50
	51
	57
	74
	81
	127
	202
	204
	238
	256
	259
	273
	280
	285
	286
	288
	293
	296
	297
	303
	305
	309
	344
	366
	396
	401
	405
	489
	493
	521
	523
	547
	548
	550
8T-4196	14
	55
	147
	153
	238
	273
	296
	380
	382
	401
	409
	479
	493
	495
	497
8T-4198	239
	601
8T-4200	55
	64
	130
	185
	190
8T-4205	111
	127
	185
	190
	363
	480
	487
	495
	497
	548
	550
	557
	561
	575
8T-4222	280
8T-4223	24
	74
	81
	127
	149
	155
	204
	224
	226
	228
	239
	244
	246
	275
	278
	283
	320
	322
	343
	366
	393
	401
	407
	409
	415
	428
	431
	432
	464
	495
	497
	540
	542
	544
	546
	603
8T-4224	40
	55
	64
	74
	81
	130
	142
	143
	144
	145
	173
	275
	278
	478
	489
	495
	497
	519
	535
	540
	542
	548
	550
8T-4226	99
	273
8T-4231	412
8T-4244	246
	407
8T-4648	273
	603
8T-4778	277
	285
	328
	344
8T-4896	329
8T-4908	33
	34
	50
	51
	519
8T-4910	24
	149
	155
	246
	259
	296
	297
	300
	301
	413
8T-4956	239
	294
	295
	300
	301
	415
8T-4970	536
	538
8T-4984	52
	400
8T-4994	168
8T-4999	612
	614
	616
8T-5005	199
	393
8T-5030	254
8T-5041	15
8T-5360	555
8T-5389	401
8T-5400	588
8T-5410	485
8T-5412	601
8T-5439	296
	297
	462
8T-5460	536
	538
8T-5668	386
8T-5878	335
8T-6342	218
8T-6381	24
8T-6430	277
	292
	296
	297
	344
	601
8T-6466	57
	199
	239
	245
	256
	300
	301
	366
	405
	519
8T-6703	239
8T-6724	73
	126
8T-6868	24
	307
	401
8T-6870	74
	81
8T-6876	395
8T-6912	143
8T-6936	310
8T-7087	396
8T-7338	314
	334
8T-7371	595
	596
8T-7521	396
8T-7524	64
8T-7525	419
8T-7547	145
	275
	278
	431
	432
8T-7566	280
	301
	532
	533
8T-7927	400
8T-7929	603
8T-7934	199
	366
	519
8T-7971	413
8T-8379	388
8T-8442	419
	447
8T-8729	95
	118
	122
	124
	141
	178
	179
	181
	182
	183
	189
	197
	442
	518
	525
	527
	528
8T-8730	119
	122
	157
	160
	177
8T-8737	107
	108
	109

PART NUMBER INDEX

Part	Page
	110
	112
	113
	114
	117
	118
	119
	120
	121
	122
	123
	124
	125
	131
	134
	137
	139
	181
	197
	203
	485
	487
	525
	526
	527
	528
8T-8799	184
	190
8T-8827	184
	189
8T-8919	244
8T-9082	557
8T-9371	572
8T-9403	366
8T-9471	546
8T-9496	275
	278
	288
8T-9530	324
	325
8T-9655	73
	80
	183
	190
8T-9756	99
8T-9757	97
	198
8T-9905	612
	614
	616
8V-0622	97
8V-9708	149
	155
8X-5489	204
8X-7517	197
8Y-3465	299
8Y-3966	308
8Y-3998	308
8Y-4000	288
8Y-5747	308
8Y-5944	570
8Y-5945	505
8Y-5965	570
8Y-6012	570
8Y-6014	570
8Y-6024	570
8Y-6041	505
8Y-6045	505
8Y-6046	505
8Y-6047	505
8Y-6060	505
8Y-6062	505
8Y-6063	505
8Y-6064	505
8Y-6066	505
8Y-6067	505
8Y-6068	505
8Y-6069	505
8Y-6400	275
	278
	►308
8Y-6859	505
8Y-6860	505
8Y-8306	308

9

9B-0576	211
9B-7233	466
	503
	534
9F-5644	176
9F-5975	565
9F-6656	612
	614
	616
9G-0002	99
9G-0003	97
	198
9G-0004	97
9G-0005	99
9G-1233	248
9G-1234	249
9G-3695	118
9G-4336	184
	189
	190
9G-4876	224
	226
	228
9G-5127	236
9G-8615	248
9G-8909	198
9H-5604	249
9H-6454	429
9J-0461	259
9J-3139	606
9J-7031	429
9J-8923	607
9J-8926	►607
9J-9598	603
9L-9132	211
9M-1503	248
9M-1974	218
	270
9M-2904	405
	511
9M-3835	280
	282
9M-3838	282
9M-4218	239
9M-5732	273
9M-7394	429
9M-8406	468
9N-0869	183
	190
9N-1995	612
	614
	616
9N-4450	601
9P-1360	329
	331
9P-3066	93
	288
9P-5558	248
9P-7072	232
9P-7121	94
9P-8899	320
	322
9P-9388	523
9R-1004	403
	407
9R-1005	403
	407
9R-2613	312
9R-2821	299
9R-7803	407
9S-1305	363
9S-4181	230
	364
9S-4182	364
	390
9S-4183	237
	248
9S-4185	26
	224
	226
	228
	236
	259
9S-4188	243
	248
	259
9S-4191	254
	271
	364
9S-8002	90
	364
	369
	390
	419
	421
	442
	447
9S-8004	237
	270
	369
	421
	441
	442
9S-8005	211
	214
	231
	237
	369
9S-8006	73
	80
	412
9S-8008	393
	421
9S-8010	346
9S-8230	280
	287
	301
9S-9334	237
9T-0094	388
9T-2559	378
9T-2560	423
9T-2581	423
9T-2582	423
9T-2584	423
9T-2714	386
9T-3726	421
9T-3928	421
9T-3929	453
9T-5241	509
9T-5900	603
9U-8057	600
9U-8079	596
	►600
9U-8263	508
9U-8668	270
9U-8669	270
9U-8746	508
9V-0321	456
9V-0999	307
9W-0099	603
9W-0844	115
	118
	119
	121
	122
	125
9W-0852	115
	118
	121
	468
9W-1464	487
9W-1571	210
9W-1991	199
	366
9W-2109	419
9W-2110	419
9W-2822	304
9W-2853	210
9W-4361	147
	149
	151
	153
	155
	157
9W-4897	456
9W-5224	338
9W-5375	456
9W-6102	210
9W-6103	210
9W-6381	597
9W-6582	24
9W-6584	24
9W-7385	24
9W-7925	214
9W-7926	214
9W-8874	599
9W-8875	599
9W-9000	456
9W-9930	24
9W-9940	24
9X-0194	124
9X-0196	109
9X-0199	180
9X-1046	185
	190
9X-1054	108
	112
	118
9X-1056	108
	112
	118
9X-1813	179
	197
9X-2027	244
	271
	289
9X-2038	204
	513
	516
	536
	538
9X-2040	490
	491
	493
	495
	497
9X-2041	217

► PRIMARY REFERENCE

PART NUMBER INDEX

Part	Page
	289
	493
9X-2042	513
	536
	538
9X-2043	493
	495
	497
	500
	516
9X-2044	185
	190
	513
	516
	536
	538
9X-2045	104
	466
	483
	492
	493
	495
	497
	516
	536
	538
9X-2046	513
	516
	524
9X-2109	218
9X-2125	249
	554
	555
	563
9X-2201	57
9X-2235	401
9X-2493	42
9X-2546	489
9X-3401	73
	80
	93
	108
	109
	112
	113
	114
	117
	118
	123
	124
	166
	167
	169
	180
	197
	203
	232
	485
	500
9X-3402	107
	108
	109
	110
	112
	113
	114
	116
	117
	118
	120
	121
	123
	124
	197
	203
	218
	518
9X-3959	521
9X-3982	126
9X-4244	142
	143
	144
	145
9X-4580	320
	322
9X-4609	239
9X-4610	487
9X-6165	137
9X-6340	612
	614
	616
9X-6382	310
9X-6485	466
	503
9X-6772	109
	114
9X-7264	386
9X-7378	477
	519
9X-7380	519
9X-7381	519
9X-7382	519
9X-7385	477
	519
9X-7719	259
9X-8256	93
	131
	134
	137
	139
	168
	185
	190
	199
	487
	489
9X-8257	93
	224
	226
	228
	289
	314
	328
	334
	542
9X-8258	530
9X-8267	90
9X-8268	339
	340
	342
	346
9X-8582	460
9X-8918	505
9X-8979	419
9Z-9214	275
	278

0

Part	Page
005-4834	210
030-2135	210
031-0214	535
032-1267	233
032-1268	233
033-6027	369
	371
033-6033	179
	364
033-6041	453
033-6043	369
	371
	447
033-8248	198
034-3679	236
035-3360	248
052-0572	233
053-2294	331
061-7540	271
064-3843	261
065-5071	115
067-6043	9
067-6070	172
067-6135	6
	8
067-6179	19
067-6823	9
	30
068-4209	466
	503
077-3241	283
085-8091	203
087-4772	390
	421
091-0081	55
091-9035	42
	306
095-0687	419
095-0843	557
	561
095-0878	505
095-0934	453
095-1671	364
095-1678	231
096-0001	418
097-7234	108
099-3001	42
099-3649	33
	34
099-6418	92

1

Part	Page
100-3224	505
100-3751	19
	46
100-4458	84
100-4830	66
100-4841	21
100-5179	505
101-0003	572
101-2867	535
101-3055	508
101-3129	237
101-3895	7
	19
101-3917	48
101-4194	570
101-4195	570
101-7547	48
102-2913	612
	614
	616
102-8801	109
	112
	113
	124
102-8802	93
	95
	109
	117
	118
	119
	120
	121
	169
	178
	179
	180
	182
	197
	203
	232
	442
	468
	477
	500
	518
	572
102-8803	109
	141
	166
	183
	189
	197
102-8804	109
	114
	122
	183
	189
	203
	487
	534
102-8805	108
	115
	118
	124
	487
	525
	526
	527
	528
102-8806	118
	181
	485
102-9478	490
103-1107	534
103-2543	310
	344
103-5705	7
103-6262	487
104-2091	513
	516
104-3173	237
104-6729	218
104-6730	218
105-2740	5
	61
105-9659	474
	475
	476
	►523
106-0713	224
	226
	228
106-0721	259
106-1607	353
106-1613	353
106-1618	332
106-1625	332
106-1626	332
106-1627	332
106-1628	332

► PRIMARY REFERENCE

PART NUMBER INDEX

Part	Page
106-1629	332
106-1630	332
106-1642	353
	354
	355
	356
	357
106-5534	518
106-8186	283
106-8187	283
107-0713	355
107-0714	355
107-0719	353
	354
	355
	356
	357
107-1763	224
	226
107-2348	59
107-3786	184
108-0801	346
108-0803	335
108-3565	426
108-3588	493
108-4086	505
108-4087	505
108-4103	506
108-4311	572
108-5618	248
108-5619	248
108-5620	248
108-5621	248
108-5623	248
108-6587	264
108-8250	232
108-8296	258
109-3203	453
109-9549	220
110-0510	259
110-1211	259
110-2976	▶332
	353
	354
	355
	356
	357
110-2977	348
	▶353
110-2978	351
	▶354
110-2980	352
	▶355
110-3362	329
	331
110-5692	320
	322
110-6349	395
110-6393	519
110-6969	328
110-8319	42
110-8827	42
111-0859	96
111-5009	284
111-7346	378
	▶440
111-8287	378
111-8288	440
111-8289	440
112-0858	485
112-4629	421
112-4657	426
112-5056	246
112-5057	246
112-6174	▶181
	183
112-7448	466
	503
112-7704	172
112-9327	440
113-4417	378
	423
113-8129	54
113-8490	183
	189
113-8491	183
	189
113-9212	248
114-0358	606
	607
114-0359	606
	607
114-0561	230
114-2312	236
114-2772	374
114-5157	511
114-5671	601
114-5672	601
114-8843	109
	119
114-9284	540
	548
	550
115-2422	99
116-2810	428
117-0615	354
117-0616	354
117-4491	559
	564
	565
117-4492	465
117-7238	426
117-7239	426
117-7240	426
117-7241	426
117-7245	426
117-7246	426
117-7247	426
117-7248	426
117-7249	426
117-7250	426
117-7251	426
117-7273	377
117-7278	390
	418
117-7279	390
117-7280	390
117-7282	390
117-7322	418
117-8131	529
118-6345	▶334
	358
	359
	360
	361
	362
119-3662	118
119-6110	440
119-9631	468
120-4394	390
	419
121-0834	337
	338
	341
121-0835	338
121-1257	337
	338
	341
121-2844	197
122-3608	57
122-9068	426
122-9070	426
122-9071	426
122-9363	450
122-9718	421
123-0708	508
123-1373	97
	99
123-2899	22
	47
123-3299	378
	423
123-7575	390
	421
123-7583	390
	421
123-7598	418
124-3536	27
124-3815	5
	19
	38
	66
	165
	206
124-6657	232
124-9672	462
125-5341	218
125-7874	108
	109
	110
	112
	113
	114
	115
	116
	117
	118
	119
	120
	121
	122
	123
	518
125-7875	108
	109
	112
	113
	119
	120
	122
	124
125-7876	114
	184
	190
	203
125-8534	518
125-9134	426
126-1767	108
	109
	112
	113
	114
	117
	118
	119
	120
	121
	122
	123
	124
	166
	167
	203
	232
126-1768	108
	109
	110
	112
	113
	114
	116
	117
	118
	119
	120
	121
	123
	124
	197
	203
	218
	518
126-1774	109
	114
126-6872	395
126-8472	468
126-8842	426
126-8901	426
126-8928	335
126-9093	69
	126
126-9587	426
127-2170	217
127-7443	173
127-9323	518
128-4123	109
129-1262	261
129-2380	261
129-3108	521
129-3737	540
130-1977	405
130-3265	487
130-5300	198
130-8360	495
	497
130-9192	405
131-0167	254
131-0447	487
131-3093	468
131-4242	505
131-5167	505
132-0338	465
132-1334	356
132-1336	356
132-5789	149
	151
	155
	157
	160
	184
	189
	198
	203
	206
	218
	480
	518
132-7077	534
132-7419	487
132-7450	487
133-1011	19
133-1222	254
133-6934	203
	393
	521
133-8739	423
133-9405	183
	189

▶ PRIMARY REFERENCE

PART NUMBER INDEX

Part	Page
133-9469	59
134-2540	109
	117
134-4126	106
134-7258	612
	614
	616
135-5009	131
	134
	137
	139
136-0207	52
	518
136-1543	531
136-1544	465
136-1595	210
136-1953	468
136-3189	473
136-3191	473
136-4184	453
136-4192	126
136-9297	442
136-9298	442
137-2104	197
137-5524	412
137-9755	442
138-8885	511
138-8886	511
139-1398	237
	521
140-0249	384
141-0247	378
	423
141-0248	378
	423
141-0249	378
	423
141-0250	378
	423
141-0251	378
	423
141-0252	378
	423
141-0711	384
141-4852	442
142-3331	203
143-1288	557
	561
	565
143-4792	544
	546
144-0195	495
	497
	576
	588
144-0331	487
144-0761	248
144-2179	529
144-5611	33
	34
145-0326	570
	572
145-2334	442
145-2901	33
	34
145-3810	377
145-3811	377
145-3812	377
145-3813	377
145-4911	17
146-0797	518
146-6319	445
	446
146-6433	588
146-6747	612
	614
	616
147-0385	198
147-1445	109
	114
147-1446	109
147-1685	57
148-1928	236
148-8307	203
148-8309	248
148-8315	403
	407
148-8317	380
	382
	393
148-8325	395
	398
148-8327	237
	380
	382
	400
148-8333	400
148-8335	400
148-8339	237
148-8340	237
148-8342	365
148-8347	365
	400
148-8357	237
148-8359	42
148-8365	395
148-8368	398
	400
148-8369	395
	400
148-8374	395
148-8375	409
148-8390	365
	401
	403
148-8392	401
148-8393	403
148-8395	237
148-8406	237
148-8408	237
148-8409	393
149-4311	433
	435
	437
	439
149-5470	442
149-5933	310
150-3026	237
150-3033	395
150-4043	395
150-4046	415
150-4047	416
150-4049	42
150-5968	395
	398
151-2898	33
	34
151-2900	33
	34
151-6282	468
151-9275	487
152-1811	390
	▶450
152-8070	332
153-5710	97
153-6237	42
153-6244	401
153-6270	395
153-8925	445
	446
153-8926	445
	446
154-3172	123
154-8079	513
	516
154-9024	52
155-0576	103
155-2255	108
	109
	112
	114
	117
	119
	120
	121
	122
	123
155-2256	109
	113
	114
155-2258	114
	117
	119
	121
	122
155-2259	123
155-2260	108
	109
	110
	112
	113
	197
155-2265	108
	109
	123
	131
	134
	137
	139
155-2270	108
	109
	112
	113
	115
	117
	118
	119
	120
	121
	122
	124
	125
	157
	160
	177
	197
	203
	518
155-2271	109
	110
	116
	117
	123
	125
	157
	160
155-2274	107
	108
	109
	110
	120
	121
	122
155-3504	365
156-2525	126
156-4406	248
156-5545	465
156-6175	184
	189
	480
157-0670	52
157-2153	445
	446
157-2278	307
157-3579	612
	614
	616
158-2734	487
158-2735	487
158-3412	407
158-6632	▶180
	183
	189
158-7864	614
	616
159-1503	52
159-8049	97
	99
	198
159-8050	198
159-9322	109
	114
160-2182	99
160-6305	462
160-6306	454
160-7165	567
	568
	▶570
160-7186	563
	▶567
160-8124	203
160-8499	377
160-8510	335
160-9756	331
161-1099	183
161-3615	▶484
	490
	491
161-5967	505
161-7247	329
161-7249	329
	331
161-7350	329
	331
161-7550	331
161-7614	78
162-0177	237
	270
	442
162-2222	90
162-2480	288
	299
162-6966	236
163-1135	572
163-1137	511
163-5512	442
164-1234	572
164-2108	266
	267
	268
	269
	373
164-4531	465
164-4883	532
	533

▶ PRIMARY REFERENCE

PART NUMBER INDEX

Part	Page
164-5567	237
	248
	365
	368
	396
	415
	416
164-5590	237
	365
164-6859	407
164-7468	84
	96
164-7556	142
	143
	144
	145
165-2273	52
165-6968	378
166-0321	369
	371
166-3777	485
166-5229	108
166-7409	378
166-7410	378
167-2199	384
167-2306	384
167-3692	108
	109
	112
	123
167-3693	109
	110
	117
167-6805	421
167-7713	452
168-1968	395
168-2197	419
168-2198	419
168-2203	419
168-2206	419
168-3378	425
168-3379	425
168-3381	425
168-3382	425
168-3384	425
168-3385	425
168-3504	419
168-4511	534
168-7317	419
168-7319	419
168-8772	508
169-0314	428
169-1026	561
169-1616	369
	371
169-2876	609
169-5414	218
169-7380	570
	572
169-7397	237
170-1112	465
170-1114	465
170-1115	465
170-8590	535
171-1230	557
	561
	565
171-2208	197
171-2419	73
	126
171-5349	169
	232
171-5990	423
171-6682	557
	561
171-6728	238
171-7077	482
172-2384	540
172-2416	557
	561
172-4702	468
172-7753	369
	371
172-8591	513
	516
173-1016	90
173-1028	▶465
	557
	561
173-1437	238
173-1498	33
173-2052	531
173-2090	518
173-3083	564
173-3283	561
173-5787	567
173-7035	567
	568
	569
173-9779	386
174-0503	109
	117
174-1712	203
174-2231	▶505
	570
174-2237	505
174-3181	396
174-4909	369
	371
	▶373
174-5907	203
174-7876	197
174-8131	184
	189
174-9169	173
174-9194	468
174-9994	419
175-4168	106
175-4291	142
	143
	144
	145
175-4292	142
	143
	144
	145
177-1862	535
177-1863	557
	561
	565
177-2215	238
	365
	398
177-3382	236
177-4487	248
177-4937	554
	559
177-6854	390
177-6915	426
177-6949	▶377
	421
177-7783	377
178-0603	▶557
	559
178-0606	▶559
	567
178-2593	552
	553
178-3336	518
178-3620	393
178-5883	236
178-6690	253
	▶258
178-6854	224
	226
	228
178-7907	531
178-9041	254
179-0126	332
179-6152	462
179-6153	462
179-6707	224
	226
	228
179-7400	90
180-4850	400
180-5316	500
180-6152	442
180-6213	419
180-7304	▶561
	564
180-9286	365
180-9339	477
	487
183-1343	175
183-5106	▶477
	478
183-7263	442
184-0983	175
	540
184-2298	557
	561
184-2299	557
	561
184-9114	126
185-0884	9
185-1860	108
	109
	112
	116
185-1861	108
	112
185-5872	33
	34
186-2517	247
186-3735	487
	526
	572
186-5107	572
187-1679	94
187-8001	421
187-9194	429
188-1079	484
188-7536	90
188-7541	90
188-8954	51
189-1899	203
189-2164	329
189-2165	329
189-2170	329
189-2171	329
189-3158	109
	117
	518
190-1546	▶331
	358
	360
	361
	362
190-1547	329
	331
190-5386	612
	614
	616
190-6507	419
190-7614	109
	113
	114
190-7971	288
190-8609	346
191-0938	210
191-0940	210
191-1422	400
191-1734	283
191-1782	73
	80
191-1783	73
	80
191-2933	569
	▶572
191-4916	209
191-4923	224
	226
191-8921	184
	189
	442
192-1563	33
	34
192-2061	433
	435
	437
	439
192-4100	284
192-4101	284
192-4102	284
192-4103	284
192-4106	284
192-4107	284
192-7470	419
192-7505	433
	435
	437
	439
192-7506	433
	435
	437
	439
192-7752	572
192-7755	572
192-7760	572
192-7767	572
192-7783	572
192-7787	572
192-7790	572
192-7795	572
192-7799	572
192-7805	572
192-7810	572
192-7811	511
192-7812	511
	572
192-7813	511
192-7820	572
192-7822	572
192-7848	572
192-9207	69
193-3074	601
193-5917	285
	309
193-7361	▶209
	221
	222
	223
193-7365	209
193-7366	209
193-7405	210

▶ PRIMARY REFERENCE

PART NUMBER INDEX

Part	Page
193-9131	197
194-1983	426
194-5171	470
	471
	472
	473
194-5226	116
194-5227	116
194-6478	400
195-0882	518
195-1117	97
	99
195-2037	236
195-2640	518
195-9245	7
196-1747	400
196-2632	284
196-4253	448
196-5515	442
196-7074	343
196-7078	343
196-9445	448
197-2849	419
	▶425
197-2850	419
197-2851	425
197-4566	126
197-6453	365
197-7565	109
198-2914	197
198-4776	431
	432
198-4777	62
	401
	431
	432
198-4778	273
	292
	312
	409
198-4780	416
198-4781	292
	305
198-5351	419
198-9162	232
198-9163	232
198-9706	500
199-7854	57
199-9252	165
199-9267	165
199-9751	12
	165

2

Part	Page
200-0928	33
	34
200-5003	442
200-6345	52
	518
200-8644	232
201-1281	232
201-1282	233
201-2557	275
	278
201-4634	284
201-8590	33
	34
202-0314	109
202-0549	254
202-0550	254
202-0551	254
202-0552	254
202-0972	378
202-2005	270
202-2380	248
202-4364	▶254
	256
202-4365	236
	▶256
202-5397	108
	110
	112
202-6488	254
202-6535	448
202-6614	142
	143
	144
	145
202-7704	421
203-2789	204
	521
203-3847	126
203-4786	232
203-7703	567
203-9007	184
	190
204-1297	108
	110
	112
204-2281	184
	190
	396
204-5341	232
204-6365	326
	327
	328
204-7266	▶329
	359
204-7876	248
204-8981	232
204-9092	232
204-9096	232
205-5314	214
205-6127	▶326
	360
205-6128	▶328
	361
205-6141	328
205-6160	326
	327
205-6162	328
205-6163	328
205-6388	554
	555
	556
	559
205-7396	232
205-7397	232
205-7398	232
206-1345	116
	468
206-1826	92
206-2080	232
206-2423	173
206-2800	442
206-2963	232
206-9292	230
206-9295	179
	364
208-4622	204
208-6727	405
208-8469	172
208-9287	84
208-9647	485
209-3565	448
209-4573	57
209-4582	57
209-9219	10
210-2262	535
210-2263	535
210-2266	535
210-2270	▶535
	557
	561
211-0052	184
	190
211-5358	572
211-8073	612
	614
	616
211-9294	572
212-3416	468
212-4483	426
212-6679	390
	▶451
212-7779	▶511
	573
212-7780	511
212-7783	511
213-3719	248
213-3745	395
213-4754	511
213-5007	530
213-5170	573
213-6657	442
213-9100	197
214-1962	485
214-3573	210
	214
214-7568	73
	80
	237
	248
	266
	267
	268
	269
	364
	365
	368
	396
	415
	416
214-9389	130
215-4012	57
215-8008	448
215-8010	448
215-8011	448
215-8012	448
215-8014	448
215-8015	448
216-0067	57
216-0380	485
216-4551	448
216-4552	448
216-4553	448
216-4554	448
216-4555	448
216-4591	214
216-4983	57
216-6371	210
216-6947	57
216-8634	19
216-9197	64
216-9633	45
217-0099	103
217-2293	210
217-2730	243
217-3655	296
	297
217-7933	535
217-9039	116
	172
	206
218-0651	183
	189
218-0861	557
218-2373	266
	267
	268
	269
	373
218-2529	565
218-3598	261
218-7119	495
	497
219-0302	609
219-0943	518
219-6485	▶142
219-6487	▶143
220-0907	236
221-3197	320
	322
221-3202	320
	322
221-8310	273
222-0345	554
	555
	▶556
	559
222-1206	236
222-2277	64
222-3351	258
	▶264
222-3352	264
222-3785	376
222-5374	▶470
	588
222-5378	▶471
	588
222-5765	376
223-2115	▶363
	485
223-9110	339
	340
	342
224-0672	609
224-5132	207
	208
224-5152	207
	208
224-8946	55
	64
224-9772	126
225-0312	612
	614
	616
225-3195	485
225-3281	386
225-4257	612
	614
	616
225-4286	259
225-4315	232
225-4316	232
225-6524	38
225-7738	54
225-7739	54
225-7741	54
225-7944	46
225-8019	54
225-8287	19
225-8524	59

▶ PRIMARY REFERENCE

PART NUMBER INDEX

Part	Page
225-8526	59
225-8858	9
226-0295	516
226-0340	516
226-0420	▶375
	396
226-1416	228
226-2261	50
226-4192	530
226-4462	210
226-4464	210
226-9423	487
226-9622	373
227-2451	210
228-4947	165
228-6089	466
	493
228-7090	73
	80
228-7091	73
	80
228-7092	401
228-7093	401
228-7100	84
229-1494	559
	565
229-5446	▶336
	358
	359
	360
	361
	362
230-1341	131
	134
	137
	139
230-3489	▶376
230-4011	116
	117
	124
	197
	203
230-4012	118
	175
230-4013	110
230-4014	167
230-4872	386
230-5008	118
230-8094	25
231-1455	48
232-0897	131
	134
	137
	139
232-1322	10
	12
232-1693	206
232-2303	411
232-3317	375
	376
232-3657	19
232-3666	19
232-3751	46
232-7449	10
232-7596	9
232-7597	9
232-7599	9
233-0367	▶316
	358
	359
	360
	361
	362
233-0368	316
	319
233-0372	317
	318
233-0625	384
233-0854	▶317
	358
	359
	360
	361
	362
233-6832	49
233-9135	388
233-9138	388
233-9808	448
234-0091	513
	516
234-5013	▶171
	203
235-0544	312
235-4123	108
	110
	112
236-4545	173
236-5197	535
236-5511	25
236-6717	90
237-0145	168
237-3943	572
237-3970	572
238-0303	197
238-5080	73
	80
	126
	171
	202
	259
238-5081	73
	80
	126
238-5082	248
238-5083	248
	259
238-5085	49
	379
238-8245	116
238-8247	116
238-8288	61
238-8292	60
238-9166	310
239-1134	173
	▶182
239-1139	248
239-4989	324
	325
239-5030	42
239-6986	612
	614
	616
239-8090	318
239-8091	319
240-1469	602
240-6124	287
	548
	550
240-8540	51
240-8917	466
	503
241-0037	207
	208
241-3720	320
	322
241-4167	609
241-4194	173
241-6070	538
241-6157	84
241-6215	236
	368
241-6217	365
241-8368	▶177
	183
	190
242-1583	245
242-5202	487
242-5206	363
243-2156	474
	475
	▶478
243-2739	49
243-4398	▶207
	236
244-2310	214
244-3114	218
	▶265
245-1042	117
245-1043	116
245-1044	116
	117
245-1045	117
245-1048	116
	117
245-5891	▶118
	480
245-6260	275
245-7434	108
	110
	112
245-8456	612
	614
	616
246-2641	126
	277
	344
	612
	614
	616
246-4361	76
246-5804	418
246-8411	275
	278
246-8412	275
	278
247-4285	142
247-4928	76
	79
247-6876	609
247-6878	609
247-9730	55
248-6772	468
249-7010	▶275
	277
250-0393	▶208
250-3988	332
250-4628	532
	533
251-1752	426
251-3269	369
	371
251-8203	457
	462
251-8601	343
251-9815	454
251-9816	454
251-9827	459
251-9828	454
251-9832	457
251-9834	454
251-9835	456
251-9836	457
252-0080	24
	529
252-6922	99
253-1346	320
	322
254-0072	374
254-3633	206
254-3927	316
254-3928	317
254-3929	316
	317
254-8155	▶144
	147
	149
	151
	153
	157
	160
255-0045	▶318
	358
	359
	360
	361
	362
255-0046	▶319
	358
	359
	360
	361
	362
255-1281	478
256-6453	171
	202
256-6454	165
257-5030	468
257-7285	485
258-2305	284
258-7335	236
	▶243
259-6756	435
260-1556	130
260-3004	437
261-5694	531
261-7990	183
	189
262-0349	365
262-0494	126
262-0767	565
263-3823	525
	526
	527
	528
263-6556	183
	189
263-8661	275
264-3518	73
	80
264-7029	116
264-7030	116
265-2109	232
265-7356	259
265-9590	407
265-9596	301
266-1467	▶166
	534
266-1476	487
266-9180	245
267-5243	466
	483
267-7207	116
	117
267-7208	117
267-8715	576
267-9572	116

PART NUMBER INDEX

Part	Page
	117
268-1151	400
268-4737	489
268-8769	468
268-9710	320
	322
269-0210	310
269-1981	▶167
	534
269-7050	168
270-2679	183
	189
271-0259	64
271-6184	324
	325
	▶346
271-6185	346
271-7312	466
	483
272-1777	405
272-1882	393
	407
272-2379	106
272-6641	▶145
	149
	157
	160
273-5924	466
	503
273-9291	96
274-3774	108
	110
	112
	119
	121
	122
	183
	190
274-3775	110
274-3776	110
274-3777	110
	121
	122
	183
	189
274-3778	108
	183
	189
274-3779	112
	183
	189
274-4990	117
275-2428	172
275-2431	172
275-4236	552
	553
275-6706	468
275-6710	516
275-7803	555
275-7877	111
275-9897	25
276-1326	466
	503
276-1786	203
276-5600	9
276-5602	9
276-5603	10
	165
276-7278	198
276-7391	8
276-7394	8
276-7478	27
276-8116	11
276-8117	11
276-8123	37
276-8133	37
276-8134	12
276-9200	35
276-9201	35
276-9206	35
276-9207	35
276-9230	35
277-0116	18
277-0588	17
277-1974	38
277-1975	38
277-2500	48
277-2502	48
277-2503	48
277-2525	46
277-2526	46
277-2537	46
277-3012	19
277-3013	19
277-4223	29
277-4302	12
277-4409	172
277-4490	23
277-4993	78
277-5067	72
277-5307	35
277-6078	96
277-6624	418
277-6631	448
277-6679	390
	▶452
277-8103	565
277-8873	374
277-9602	66
277-9603	66
277-9938	66
	77
277-9940	66
278-0017	66
278-5111	35
278-5112	35
278-5113	35
278-5125	6
278-5170	72
278-5203	103
278-7048	296
	297
279-0850	468
279-4414	421
	▶426
279-4418	426
279-9254	17
279-9651	22
280-1384	25
280-1911	▶35
	37
280-1912	35
280-1913	35
280-1914	35
280-2424	66
280-7870	419
	447
281-1695	247
281-1696	247
281-1697	247
281-3974	548
	550
281-3997	▶524
281-3998	524
281-5598	421
281-5882	73
281-5898	395
281-8744	47
281-8803	113
281-8804	116
281-8805	73
	80
282-2586	197
282-2830	66
283-0024	429
283-4662	18
	31
283-8301	23
283-8302	23
284-3623	183
	189
284-3662	483
284-3664	183
	190
284-9134	439
285-5240	419
	▶447
285-7415	466
	483
286-0123	89
286-0322	183
	189
286-0323	183
286-2890	77
	78
	79
286-7848	32
286-7851	60
287-8597	18
288-3925	458
288-6974	18
288-6975	18
289-2937	386
289-2948	386
289-4638	409
290-5562	73
	80
	126
	203
	236
	398
	400
	407
	460
290-5626	55
290-5638	62
291-3791	17
292-2017	210
292-2896	116
	495
	497
292-3462	61
292-4396	608
292-6097	532
292-6098	533
292-6402	▶531
	532
	533
292-9237	▶532
	557
292-9238	▶533
	561
293-0754	▶472
	588
293-2911	535
293-5440	▶418
	421
293-8350	419
	447
293-9123	183
	190
294-4614	608
294-4615	608
294-5042	557
	561
	565
295-2610	203
295-4670	77
	79
295-6661	12
295-8610	46
	▶48
295-8613	48
295-8615	48
296-2649	183
	189
296-7059	236
297-0846	529
297-3218	198
297-8500	439
299-5511	37
299-6082	203

3

Part	Page
301-0091	198
301-3424	448
302-2136	584
	586
302-3908	126
302-6112	18
304-5062	22
304-7983	396
304-7984	396
305-2418	214
305-2419	214
305-9192	472
305-9194	470
305-9195	471
306-0348	111
306-0351	111
306-2337	38
306-6687	203
307-0047	131
	134
	137
	139
307-0649	183
307-2338	485
307-2670	259
307-6202	612
	614
	616
309-1906	403
309-1916	411
	▶412
309-5131	73
	80
309-6678	37
309-9690	609
310-0674	184
	190
310-2189	386
310-4912	▶341
	342
310-4915	▶337
	339
310-4918	▶338
	340
310-7794	▶378
	423
310-8320	478
311-3520	468
311-4859	198

PART NUMBER INDEX

Part	Page
312-1139	376
312-4245	388
312-4247	388
312-4248	388
313-2060	425
313-5638	495
	497
314-3025	516
314-4018	477
314-5162	565
315-5492	478
315-7790	518
315-9810	66
316-5999	448
316-9351	116
317-1117	312
317-3239	184
	190
317-3240	184
	190
317-5482	27
317-5483	27
317-5485	8
317-5486	8
317-7071	288
317-8261	232
318-0106	232
318-1178	▶169
	203
318-1179	232
318-8481	415
	▶419
319-1605	50
319-1606	50
319-6231	248
319-8426	6
320-2151	480
320-3060	165
320-3062	165
320-6128	▶216
	232
320-8637	416
	▶421
321-1291	97
321-4070	197
321-5715	248
321-8633	365
321-8634	365
321-8665	220
321-8666	220
321-8667	220
322-1562	400
322-3161	531
322-3305	▶101
	197
322-3353	603
322-4964	576
322-4965	576
323-3309	612
	614
	616
323-4260	365
323-5864	466
	503
323-7347	206
323-9312	27
323-9531	266
	267
	268
	269
324-0444	19
325-4416	480
326-0319	248
	259
326-4515	203
326-4516	203
326-4855	474
	475
	476
	▶482
326-9053	611
326-9712	73
	80
327-0282	468
	518
327-0283	468
	518
328-0919	197
328-8709	60
329-0418	169
329-1798	288
329-3356	238
	393
	413
	603
329-3796	21
329-5530	401
329-5766	482
	▶534
329-9730	236
330-5013	▶525
	588
330-5014	▶526
	588
330-5017	▶527
	588
330-9723	84
331-0290	27
331-2427	346
331-2430	346
331-3966	130
331-4226	218
331-6835	9
332-4175	49
332-7865	206
332-8591	126
332-8832	230
332-8833	▶230
	236
333-8242	441
334-1953	487
334-4603	612
335-5365	183
	189
335-5408	365
335-6983	466
	503
335-8611	59
336-2441	259
	▶261
336-2446	253
	▶259
336-6672	495
	497
337-5270	231
337-6324	16
337-6853	▶485
	489
337-6855	485
	▶487
337-7619	312
337-9001	487
338-2845	489
339-3566	493
339-8780	8
339-9637	37
339-9915	576
340-2566	110
340-2567	110
340-5693	576
340-5800	426
340-7161	183
	189
340-7503	314
340-7751	412
	▶423
340-7766	423
341-1510	▶390
	421
341-1511	421
	▶448
341-3186	421
	▶453
341-9763	495
	497
342-6502	32
342-6510	32
342-9920	480
343-2389	521
343-5645	64
344-1950	236
344-1951	238
344-5081	96
344-5673	548
	550
344-5674	99
	173
	548
	550
	588
344-5675	73
	80
	126
	147
	149
	151
	153
	155
	157
	160
	238
	245
	273
	379
	380
	382
	393
	403
	409
	466
	503
	521
344-7132	612
	614
	616
345-7738	296
	297
345-8846	3
	▶18
345-9030	3
	▶17
346-0006	89
346-0007	89
346-0099	3
	▶46
346-0220	3
	▶39
346-0407	19
346-0408	19
346-1510	3
	▶23
346-1726	407
346-2900	314
346-2908	3
	▶30
346-4360	573
346-4709	37
346-6693	55
	64
346-6694	55
	64
346-8219	611
347-2280	307
347-7407	231
347-8645	79
348-2522	203
348-4592	437
348-4593	437
	439
348-4637	206
348-5021	64
348-5027	15
348-5349	395
349-5830	468
349-5835	468
349-6064	433
	435
349-6097	364
349-6847	78
349-7059	94
350-3036	▶483
	503
350-3913	265
	▶266
350-7735	94
351-0264	80
351-0265	80
351-1724	32
351-1904	198
351-4749	25
351-5115	320
351-5116	322
351-8434	261
351-9309	198
351-9918	142
	143
	144
	145
352-3964	198
	218
352-3968	137
352-4897	580
	581
352-9764	55
	64
352-9851	▶232
	263
353-2166	324
	325
353-4688	230
	▶231
353-4847	55
353-7114	578
	582
353-7957	202
354-4754	54
354-8322	41
354-8706	614
	616
355-0632	73
	80
355-1011	293
355-1790	518
355-2381	270
355-2617	248
355-2618	248

▶ PRIMARY REFERENCE

PART NUMBER INDEX

Part	Page
355-3016	565
355-3148	518
355-3486	611
356-1032	288
356-1033	288
356-1219	116
356-3427	357
356-3428	357
356-3434	349
	▶356
356-3435	350
	▶357
356-4254	157
356-4259	157
356-5425	▶168
	489
356-5426	168
356-5428	168
356-5429	168
357-5170	510
358-2399	▶170
	197
358-4889	182
358-6190	489
358-7239	▶342
	358
	359
	360
	361
	362
358-8583	▶339
	358
	359
	362
359-3346	▶601
	602
359-3609	364
359-7325	73
	80
360-1564	27
360-1978	8
360-5604	379
360-8958	▶68
	70
360-8960	68
361-1045	131
	134
	137
	139
361-6052	118
362-5412	68
	70
362-9689	70
363-0559	8
363-4122	93
363-4541	248
364-4416	388
364-5145	8
364-8277	184
364-8725	534
364-8726	534
365-3532	565
365-3536	569
365-5823	66
365-6773	183
	189
365-6795	253
	▶263
365-6796	▶247
	263
365-6797	▶218
	263
365-6798	248
365-6800	248
365-6801	248
365-6802	248
365-6803	248
365-6804	248
365-6805	248
365-6807	218
	▶270
365-6809	218
366-1065	301
366-6614	18
366-8298	248
367-3340	60
367-9478	▶388
	462
367-9479	388
368-3145	172
368-6992	495
	497
368-8557	66
369-1658	61
369-3867	38
369-7781	▶293
369-7799	72
369-9004	565
370-5513	87
370-5516	86
370-5517	86
370-5518	86
370-5520	▶86
	92
371-1679	468
371-2478	3
	▶21
371-2480	3
	▶37
371-2483	3
	▶72
371-2537	3
	▶103
371-2544	3
	▶25
371-2684	89
371-2691	89
371-2716	3
	▶19
371-2740	3
	▶22
371-2745	3
	▶45
371-3974	72
371-7263	89
371-8094	50
	51
372-2297	3
	▶54
372-2547	485
372-5042	495
	497
	552
	553
373-3607	3
	▶47
373-6989	441
373-6990	441
373-6993	433
	435
	437
373-7004	433
	435
373-7005	433
	435
373-7041	433
	437
374-2640	103
374-4733	474
	475
	▶588
374-5771	▶563
374-6300	3
	▶8
374-6301	3
	▶27
374-7463	120
	160
374-7466	120
374-9295	3
	▶29
375-0341	468
375-0342	468
375-0343	468
375-0345	468
375-0346	468
375-0350	466
	▶468
	503
375-0482	92
375-0483	92
375-2647	▶88
	89
375-2649	92
375-3192	57
375-3193	57
375-6988	92
375-7899	▶554
375-7906	474
	475
	▶508
375-7911	474
	475
	▶503
375-7921	474
	475
	▶575
375-7927	575
	▶576
375-7929	183
375-8254	88
375-9257	183
	189
376-4074	8
376-4078	8
376-4761	7
376-6403	72
376-6405	72
376-6409	88
376-6410	88
376-6411	88
376-9967	126
377-0399	11
377-0400	11
377-1293	206
377-3141	511
377-4718	25
	▶26
377-4975	379
377-4982	49
377-4983	49
377-5988	78
377-6932	116
377-9087	16
378-0625	3
	▶41
378-8166	3
	▶13
378-8167	3
	▶611
379-3982	▶348
379-6657	578
379-6658	495
380-9615	7
381-0230	398
382-0936	369
	371
382-0937	369
	371
382-0938	369
	371
383-1382	7
383-1383	7
383-1431	497
383-1730	157
383-1731	157
	160
383-2217	433
383-3581	▶9
	10
383-6864	578
383-6865	578
383-6866	474
	▶578
383-8634	▶146
	155
384-0071	157
	160
384-0859	578
	▶580
384-0860	578
	▶581
384-1711	▶349
384-1712	▶350
384-1825	▶107
	495
	497
384-3275	▶340
	360
	361
384-3888	165
384-5313	▶11
	12
384-7365	▶335
	358
	359
	360
	361
	362
384-7413	▶327
	362
384-7567	172
384-8283	493
384-8284	493
384-8285	493
384-8286	493
384-8287	493
384-8289	493
384-8293	493
384-8322	18
384-8750	441
385-0229	510
385-0230	510
385-1398	76
385-2572	3
	▶12
385-4432	265
	▶267
385-5997	▶116
	206
385-7302	▶119
	147
	149
	151
	153
	155

▶ PRIMARY REFERENCE

PART NUMBER INDEX

Part	Page
385-7834	▶564
	568
385-7835	554
	▶568
385-7840	513
385-7845	513
385-7851	513
385-8201	131
	134
	137
	139
386-0513	513
386-0516	513
386-0517	513
386-1864	76
386-2112	19
386-2737	79
386-2971	88
386-2976	88
386-3819	88
386-3830	479
386-3966	474
	475
	▶479
386-7265	▶277
386-7345	497
386-7346	495
386-9118	464
386-9710	147
	149
	151
	153
	155
387-1410	▶115
	466
	503
387-2002	529
387-4502	495
	497
	548
	550
387-5639	493
387-5640	493
387-5659	468
387-5661	468
387-5665	468
387-5671	468
387-5672	468
387-5674	468
387-5681	468
387-5701	▶466
	476
387-6883	493
387-7116	493
387-9639	175
388-0536	7
388-3944	493
388-4707	12
388-5571	466
	503
388-6319	493
388-7010	62
388-7142	493
388-9525	63
389-0855	582
389-0856	582
389-0879	565
389-1076	364
389-1414	475
	▶582
389-1531	368
	▶371
389-2146	516
389-2148	516
389-3056	▶124
	576
389-3067	▶501
	502
389-3346	3
	▶7
389-3863	206
389-5775	84
389-5784	84
390-0448	495
	497
390-0755	84
390-0854	3
	▶10
390-3151	582
390-3152	582
390-3153	582
390-3154	582
390-3829	513
390-3831	513
	516
390-4679	▶90
	91
390-6814	▶125
	555
390-6840	73
	80
	▶91
390-7626	61
390-8738	84
390-9086	495
	497
391-1817	84
391-3950	495
	497
	548
	550
391-4060	493
391-4061	▶555
391-4062	475
	▶500
391-4064	538
391-4065	500
391-4066	479
391-4067	536
	538
391-4068	479
391-4069	536
	538
391-4071	493
391-4072	493
391-4073	516
391-4074	516
391-4811	3
	▶89
391-5523	3
	▶61
391-6256	▶123
	183
	189
391-6261	197
391-9499	▶309
391-9502	▶1
391-9505	1
	▶392
391-9508	1
	▶253
391-9510	1
	▶4
391-9512	▶392
391-9515	▶392
391-9519	1
	▶608
391-9522	▶1
391-9540	▶612
391-9541	▶614
391-9542	▶616
391-9545	253
	▶368
392-2022	3
	▶175
392-2780	206
392-4771	184
	190
392-7132	608
392-7232	466
	503
392-7769	513
392-8477	611
392-9663	513
392-9829	513
	516
392-9884	184
	189
393-1075	493
393-1188	493
393-2034	92
393-2035	92
393-2286	513
393-3962	184
	190
393-4006	18
393-4098	1
	▶3
393-4749	516
393-4752	493
393-5467	87
393-5468	87
393-6475	▶476
393-6476	476
	▶536
393-6479	474
	475
	476
	▶529
393-6480	▶474
393-6481	474
	475
	▶538
393-6485	▶475
393-6486	536
	538
393-6487	▶476
393-6488	▶474
393-6489	▶475
393-6493	474
	475
	476
	▶502
393-6494	474
	475
	476
	▶493
393-8111	▶528
	588
393-8112	▶473
	588
393-9030	273
393-9031	273
393-9032	49
393-9033	49
393-9034	273
393-9054	379
394-0525	▶87
	92
394-3611	▶442
	490
	491
394-3631	442
	▶445
394-3634	442
	▶446
394-4834	1
	▶197
394-4835	4
	▶203
394-6360	431
	▶435
394-6361	432
	▶433
394-6364	433
	435
	▶441
394-6365	433
	435
	▶437
394-6368	435
	▶439
394-6371	433
	435
394-6377	479
	▶480
394-6378	480
394-9639	3
	▶92
395-0110	3
	▶165
395-0112	3
	▶162
395-0113	4
	▶206
395-0114	3
	▶172
395-1633	86
	87
395-4184	153
395-4185	153
395-4186	147
395-4187	147
395-7861	184
	190
396-2102	79
396-2352	513
	516
396-2615	3
	▶6
396-3856	468
396-4383	▶457
	459
396-7087	501
396-8795	6
396-9529	59
396-9532	▶59
	66
398-0416	474
	475
	▶495
398-0423	474
	475
	▶497
398-0940	▶178
	197
398-1479	▶456
	457
398-1480	▶595
398-1484	▶596
398-1485	596
	▶597

▶ PRIMARY REFERENCE

PART NUMBER INDEX

Part Page

398-1486 597
398-2224 . . . . . ▶296
398-2225 . . . . . ▶297
398-2227 296
398-3263 . . . . . ▶444
490
398-4296 474
475
476
▶609
398-4445 . . . . . ▶122
157
160
398-4446 157
160
398-4481 . . . . . ▶123
197
398-6226 92
399-5260 175
399-7895 . . . . . ▶121
468

4

415-1377 292
415-1604 22
415-2089 . . . . . ▶108
184
415-2090 . . . . . ▶109
111
415-2091 . . . . . ▶110
184
189
415-2092 . . . . . ▶111
184
189
415-4252 . . . . . ▶183
474
475
415-5625 3
▶610
416-0249 . . . . . ▶605
416-2523 3
▶66
416-7727 60
416-7808 3
▶60
416-8305 . . . . . ▶364
365
416-8562 428
▶429
416-9520 38
417-2403 236
417-4722 . . . . . ▶106
137
417-7782 47
418-2469 538
418-9912 392
▶428
418-9914 392
▶411
418-9917 392
▶415
418-9918 392
▶400
418-9919 392
▶393
418-9920 392
▶490
418-9921 392
▶395
418-9926 392
▶431
418-9927 392
▶407
418-9928 392
▶403
418-9929 392
▶432
419-0384 38
419-6603 3
▶38
420-1153 184
189
420-1156 . . . . . ▶119
147
420-1157 . . . . . ▶122
153
420-1159 . . . . . ▶112
189
420-1160 . . . . . ▶189
476
420-2372 66
420-4129 41
420-4143 41
420-8672 536
421-3789 4
▶24
421-5950 . . . . . ▶217
474
475
476
422-2152 513
516
422-5821 380
382
▶384
422-6177 513
516
422-6201 513
422-6998 273
422-6999 273
422-7002 273
422-7003 4
▶379
422-7005 49
422-7006 49
422-7007 49
422-7008 49
422-7012 4
▶273
422-7013 4
▶49
422-7017 4
▶14
422-7019 4
▶57
422-7020 4
▶52
422-7023 . . . . . ▶73
422-7024 . . . . . ▶126
422-7025 126
422-7026 126
422-7028 . . . . . ▶50
422-7030 . . . . . ▶51
422-7059 429
422-8497 1
▶292
422-8498 1
▶288
422-8550 292
422-8551 1
▶93
422-8595 1
▶280
422-8596 280
422-8608 1
▶286
423-1030 197
423-1035 203
423-1039 . . . . . ▶130
423-1040 . . . . . ▶147
423-1041 . . . . . ▶149
423-1042 . . . . . ▶151
423-1043 . . . . . ▶153
423-1983 74
81
127
239
423-3663 1
▶530
423-4027 273
423-5417 . . . . . ▶97
423-5418 . . . . . ▶99
423-5419 198
423-5420 198
423-5884 384
423-5885 384
423-5887 384
423-5890 384
423-5894 384
423-6434 73
80
423-7295 530
423-7296 530
423-7330 184
189
423-8834 1
▶304
423-8860 93
424-1712 93
▶94
424-3621 384
424-4574 513
424-4615 . . . . . ▶55
424-4617 . . . . . ▶64
424-4619 4
▶62
424-4621 4
▶63
424-4623 . . . . . ▶33
424-4626 . . . . . ▶34
424-4628 4
▶521
424-4629 474
475
▶518
424-4632 . . . . . ▶173
424-4858 433
435
424-6097 130
424-8002 312
424-8431 216
424-8511 217
▶489
424-8524 474
475
▶513
425-0242 580
581
425-4565 265
▶268
425-6167 476
▶516
425-6734 265
▶269
425-9030 493
425-9033 479
425-9035 493
425-9037 502
425-9047 538
425-9048 538
425-9049 493
425-9050 536
538
425-9052 493
425-9054 493
426-0207 . . . . . ▶294
426-0209 . . . . . ▶295
426-0972 513
426-1362 288
426-1366 288
426-1371 299
426-1372 288
426-2470 126
426-3312 3
▶84
426-3911 . . . . . ▶312
426-3918 312
426-3929 285
426-3930 . . . . . ▶285
426-4086 236
427-0075 287
427-5774 513
427-9771 172
428-5969 297
428-7042 5
428-8644 364
428-9165 492
428-9166 104
430-4086 55
64
430-4095 198
430-4096 . . . . . ▶120
157
430-4097 . . . . . ▶120
149
155
430-4098 . . . . . ▶155
430-4099 . . . . . ▶157
430-4103 130
430-4104 198
430-4137 392
▶398
430-4142 392
▶416
430-4143 392
▶413
430-4151 . . . . . ▶365
392
430-4168 400
430-4169 400
430-4177 395
430-4178 395
430-4179 395
430-4180 395
430-4181 395
430-4183 395
430-5330 429
430-5635 4
▶40
430-7600 612
614
616
430-8498 126
430-8502 126
430-8503 126
430-8505 64
430-9306 15
430-9307 14
▶15
430-9355 217
431-0238 40
431-0250 400

▶ PRIMARY REFERENCE

PART NUMBER INDEX

Part	Page
431-0261	▶380
	413
431-0262	▶382
	413
431-0282	380
	382
	413
431-0283	380
	382
	413
431-0284	236
431-0298	400
431-0367	288
431-0369	▶300
431-0370	▶301
431-0372	300
	301
431-0388	299
431-0405	518
431-7856	513
	516
431-9791	▶454
	459
432-4779	57
432-5811	▶602
432-5812	602
	▶603
432-5813	603
433-1316	▶76
	84
433-2475	198
433-2758	▶540
433-3028	542
433-3029	542
433-4604	55
433-4684	52
433-6938	3
	▶5
433-9637	▶591
433-9639	▶592
434-1899	495
434-1901	497
434-2640	52
434-4405	540
434-4406	540
434-4407	540
434-4409	540
434-4414	540
434-4483	540
434-8111	530
434-9672	▶236
	253
434-9727	288
435-5614	314
435-6590	198
435-6607	203
436-0521	37
436-1687	565
436-1688	565
436-3470	491
436-3472	491
436-8983	90
437-3642	55
437-4170	66
437-9860	3
	▶96
438-1370	236
438-2277	312
438-5107	96
438-5386	91
438-7763	▶69
	126
438-9381	▶542
439-1143	3
	▶16
439-1840	126
439-5037	69
439-5039	69
439-5040	69
440-0257	▶179
	230
440-2105	102
	134
	137
	▶163
440-6911	400
442-1579	126
442-5287	565
442-7199	131
	137
	▶164
442-8465	▶77
	84
442-8569	84
443-6917	222
	▶224
443-8222	▶565
	569
443-8263	555
	▶569
443-8462	131
	134
	137
	139
443-8573	▶509
	565
443-8576	510
443-9543	27
444-2190	27
444-2870	458
	▶462
446-0649	▶510
	565
446-0674	365
446-0675	365
446-0679	400
446-0689	236
446-0691	236
446-0692	236
446-0702	365
446-0703	365
446-0704	400
446-0713	380
	382
446-0714	380
	382
446-0720	405
446-0722	▶405
	602
446-1268	162
447-0299	581
	▶584
447-0300	584
	586
447-0301	581
447-0302	580
	581
447-0304	580
	581
447-0305	580
	581
447-0306	580
	581
447-0307	580
	581
447-0308	584
	586
447-0310	584
447-0311	584
	586
447-0312	584
	586
447-0313	584
	586
447-0314	580
447-0315	580
	▶586
447-0316	586
447-7206	90
448-0181	▶314
	358
	359
	360
	361
	362
448-0182	314
	▶315
448-0183	315
448-1167	221
	▶226
448-1354	248
448-1367	248
448-2114	▶121
	151
448-2859	218
448-4208	▶210
	253
448-4762	4
448-4913	▶386
	602
448-5374	▶214
	253
448-6997	386
448-8350	464
449-0302	221
	222
	223
	▶244
449-7301	163
449-7303	164
449-9287	203
449-9291	▶492
449-9303	▶104
450-1843	513
	516
450-2194	184
	189
450-2733	131
	134
	137
	139
450-2736	▶131
450-2737	▶134
450-2739	147
	149
	151
	153
	155
450-3389	▶137
450-4134	491
450-5996	27
450-6468	236
450-7197	297
450-7198	297
450-8020	24
451-1872	501
451-5453	565
451-5834	▶351
451-5835	▶352
451-7225	610
452-8547	▶70
	71
452-9704	61
453-0567	392
	▶460
453-0576	393
453-0586	▶409
	458
453-1587	282
453-1588	▶282
	307
453-2607	73
	80
453-7150	32
453-7163	3
	▶71
453-8044	▶543
453-8045	▶544
453-8046	▶546
453-8047	▶547
453-9491	▶220
453-9492	▶246
	253
453-9493	▶245
	253
453-9494	392
	▶491
453-9495	▶344
453-9497	1
	▶105
454-2948	480
454-5555	51
454-7330	▶305
454-7920	130
455-0704	117
	124
	197
	203
455-0705	110
	113
455-0706	118
455-1084	612
	614
	616
455-1179	536
	538
455-1253	409
455-1254	409
455-1255	236
455-1256	147
	149
	151
	153
	155
455-1262	380
455-1263	382
455-1270	126
455-8239	548
	550
455-8283	306
455-8285	306
455-8286	1
	▶306
455-8306	288
455-8309	288
455-9568	184
	189
456-2182	236
456-2184	393
456-2186	393
456-3103	304
456-6630	304
457-1045	147
	149
	151
	153

▶ PRIMARY REFERENCE

PART NUMBER INDEX

Part	Page
	155
	157
457-4683	495
	497
457-4685	63
458-3587	▶221
458-3589	▶222
458-3635	248
458-3745	206
458-6845	413
458-7918	27
458-7939	27
458-7940	27
459-0572	126
459-0786	106
459-1795	312
459-4094	312
459-4219	3
	▶32
459-7533	536
	538
459-9163	▶307
460-2435	73
	80
460-4832	226
	228
460-4943	518
460-4945	73
	80
460-4947	73
	80
460-7921	3
	▶31
461-3440	7
461-3903	548
461-3904	550
461-5232	97
462-1171	39
462-2235	172
462-3018	40
462-4828	▶593
462-4829	▶594
462-6685	3
	▶44
464-7899	▶78
	84
465-2737	▶618
465-2789	▶113
	131
	134
	139
465-2806	▶114
	137
465-2807	157
	160
465-2808	▶117
	203
465-2809	▶202
	392
465-2810	▶124
	202
465-2811	▶113
	198
465-2812	▶118
	202
465-2813	198
465-2814	198
465-2815	▶139
465-3467	184
	189
466-6951	198
466-6957	493
466-7564	490
466-7565	490
466-9045	431
	432
466-9047	236
466-9048	400
466-9058	73
	80
466-9059	73
	80
466-9060	73
	80
466-9063	236
467-2513	164
467-8535	183
	189
469-1029	273
469-1031	57
469-1032	57
469-2262	73
	80
469-2267	236
469-5033	44
471-6606	57
472-0602	518
472-0603	518
472-0615	280
472-0619	280
472-2217	57
472-2218	57
472-2219	55
473-1457	331
473-6068	300
	301
473-6069	300
	301
473-6081	548
	550
473-6084	548
	550
474-4764	2
	▶310
474-5400	64
475-3341	237
475-3342	237
475-3343	237
475-3354	304
475-3424	▶42
475-5698	493
475-9623	312
476-2947	89
476-7585	548
	550
476-7590	288
	▶299
476-7593	292
476-7595	288
476-7599	288
476-7602	288
476-7604	288
476-7607	288
476-7611	299
476-7612	299
476-7616	299
476-7617	299
476-7620	288
476-7625	300
	301
476-7626	300
	301
476-7627	301
476-9904	460
476-9905	460
476-9907	460
476-9919	413
478-2128	217
478-6541	▶2
478-6546	2
478-6547	2
478-7555	223
	▶228
478-7557	▶223
478-8207	369
	371
	▶374
479-0194	73
	80
479-0196	42
479-0197	42
479-0198	42
479-0201	407
479-0202	398
479-0203	398
479-0204	393
479-0205	393
479-0207	400
479-0208	395
479-0210	403
479-0211	237
479-0212	365
479-0213	237
479-0214	400
479-0219	460
479-3043	618
479-3115	57
479-3116	57
479-4352	292
479-4356	548
479-4357	543
	▶548
479-4359	550
479-4360	543
	▶550
479-4361	546
479-4362	542
479-4363	544
479-4364	544
479-4367	292
479-4368	305
479-4373	287
479-4375	287
479-4382	280
479-4384	300
	301
479-4385	300
	301
479-4392	301
479-4400	542
479-4408	295
479-4410	294
479-4435	546
479-6845	107
479-6876	107
479-7698	296
479-7700	312
480-3003	393
480-3004	393
480-3535	▶102
	139
480-6340	224
480-7727	296
	297
481-7828	▶303
	602
481-7829	285
	309
	344
481-7830	285
	309
	344
481-8427	149
	155
481-8428	149
	155
482-1874	608
482-1875	608
482-1882	612
	614
	616
482-3498	107
482-3710	462
482-3717	462
482-5036	393
482-5037	393
482-5038	407
482-5039	407
482-5040	395
482-5041	395
482-6370	518
482-6371	518
482-6372	518
482-8138	163
482-8159	164
482-8605	304
482-8608	1
	▶283
482-8609	283
	▶284
482-8610	284
483-0214	105
	▶107
483-0215	105
	▶107
483-0216	105
	▶107
483-0217	105
	▶107
483-3530	102
483-7817	▶278
	344
483-7818	278
483-7834	344
484-4470	107
484-5856	73
	80
484-5859	73
	80
484-7200	▶79
	84
485-5146	▶369
485-7331	403
485-7333	405
485-7336	237
485-8950	518
486-8250	518
487-7108	286
	▶287
488-2521	▶160
489-2747	▶80
489-4642	▶358
489-4643	▶359
489-5748	▶320
	358
	359
	360
	361
	362
489-5749	▶322
	358
	359
	360
	361
	362
489-5751	▶343

PART NUMBER INDEX

Part	Page	Part	Page	Part	Page	Part	Page
	358						
	359						
	360						
	361						
	362						
491-4974	►360						
491-4975	►458						
491-4977	►459						
491-5104	458						
	459						
	►464						
492-0417	►361						
492-0421	►362						
492-1344	322						
	►324						
492-1345	320						
	►325						
493-3939	552						
493-3940	547						
	►552						
493-3941	547						
	►553						
493-3942	553						
495-7660	543						

► PRIMARY REFERENCE

MEMORANDA



©2016 Caterpillar
All Rights Reserved

CAT, CATERPILLAR, their respective logos, “Caterpillar Yellow”, and the POWER EDGE trade dress as well as corporate and product identity used herein, are trademarks of Caterpillar and may not be used without permission.