RUTHZIL TRATOR COMERCIAL DE PEÇAS LTDA 11 97083-6812 ROLANDO

INDEX

UE35628F 1

Diesel Engine (Page 14)

Name	Page
Accessory Drive	37
Air Cleaner	18
Belt Tightener	17
Breather	19
Camshaft	32
Connecting Rod	32
Control—Compression Release	33
Control—Fuel Pump	34
Control—Governor	34
Crankshaft	30
Crankshaft Bearings	31
Cylinder Block and Covers	24
Cylinder Head	20
Fan—Suction	16
Filter—Fuel	39
Filter—Oil	47
Flywheel	31
Fuel Pump Housing	34
Fuel Valves and Lines	41
Gauge—Oil	44
Governor	34
Guard—Radiator	16
Heat Indicator	44
Manifold	19
Oil Cooler	42
Piston	32
Pump and Filter—Fuel Transfer	38
Pump—Oil	43
Pump—Water	17
Radiator	14
Service Meter	48
Specifications	184
Tools	181
Transfers	183
Valve Mechanism	20

Starting Engine (Page 49)

Name	Page
Air Cleaner	59
Camshaft and Governor	55
Carburetor	58
Clutch and Brake	66
Connecting Rod	55
Control—Brake	65
Control—Choke	58
Control—Clutch	65
Control—Starter Pinion	65
Control—Throttle	58
Crankshaft	54
Cylinder Block and Covers	52
Cylinder Head	50
Filter—Oil	57
Fuel System	57
Ignition System	61
Magneto	62
Manifold	59
Piston	55
Pump—Oil	56
Starter Pinion	67
Starter—Recoil	64
Support	49
Valve Mechanism	50
Water Lines	49

INDEX
FICHE 1 OF 2
PAGES 1 THRU 101B

FICHE 2 OF 2
PAGES 102 THRU 185

D6 Tractor yellow Engine & Clutch 44A 6859- 10L2
UE35628F Frame & Chassis 44A 13091 10-78

	A-1	A-2	A-3	A-4	A-5	A-6	A-7	A-8	A-9	A-10	A-11	A-12	A-13	A-14	A-15	A-16	A-17	A-18	A-19	A-20	
A											1	14 14A	14B 14C	15	16	16A	16C	16D 16E	17	18	A
	B-1	B-2	B-3	B-4	B-5	B-6	B-7	B-8	B-9	B-10	B-11	B-12	B-13	B-14	B-15	B-16	B-17	B-18	B-19	B-20	
B	19	20 21	22 22A	22B 22C	22D 22E	22F 22G	23	24 25	26 26A	26B 26C	26D	27	28 29	30	31	32	33	34	34A	34B 35	B
	C-1	C-2	C-3	C-4	C-5	C-6	C-7	C-8	C-9	C-10	C-11	C-12	C-13	C-14	C-15	C-16	C-17	C-18	C-19	C-20	
C	36 36A	37	38	38A	39	40 41	42	43	44	44A 45	46 47	48	48A	49	50 51	52 52A	52B 53	54	55	56	C
	D-1	D-2	D-3	D-4	D-5	D-6	D-7	D-8	D-9	D-10	D-11	D-12	D-13	D-14	D-15	D-16	D-17	D-18	D-19	D-20	
D	57	58	59	60	61	62 63	64	65	66	67		69	70 71	72 73	74	75	76 77	78 79	80 81	82 83	D
	E-1	E-2	E-3	E-4	E-5	E-6	E-7	E-8	E-9	E-10	E-11	E-12	E-13	E-14	E-15	E-16	E-17	E-18	E-19	E-20	
E	84 84A	85	86 87	88 89	90 91	92 92A	93	94	94A	95	96	97 97B	98 99	100	101	101B					E
	F-1	F-2	F-3	F-4	F-5	F-6	F-7	F-8	F-9	F-10	F-11	F-12	F-13	F-14	F-15	F-16	F-17	F-18	F-19	F-20	
F																					F
	G-1	G-2	G-3	G-4	G-5	G-6	G-7	G-8	G-9	G-10	G-11	G-12	G-13	G-14	G-15	G-16	G-17	G-18	G-19	G-20	
G																					G
	H-1	H-2	H-3	H-4	H-5	H-6	H-7	H-8	H-9	H-10	H-11	H-12	H-13	H-14	H-15	H-16	H-17	H-18	H-19	H-20	
H																					H
	I-1	I-2	I-3	I-4	I-5	I-6	I-7	I-8	I-9	I-10	I-11	I-12	I-13	I-14	I-15	I-16	I-17	I-18	I-19	I-20	
I																					I
	J-1	J-2	J-3	J-4	J-5	J-6	J-7	J-8	J-9	J-10	J-11	J-12	J-13	J-14	J-15	J-16	J-17	J-18	J-19	J-20	
J																					J

Clutch, Transmission and Chassis
(Page 69)

Name	Page
Battery Box	100
Brakes	86
Clutch—Flywheel	72
Clutch—Steering	85
Control—Flywheel Clutch	70
Control—Gear Shift	70
Control—Steering Clutch	84
Control Mechanism—Steering Clutch Hydraulic	82
Drawbar	101
Fenders	99
Final Drive	88
Frame—Track Roller	97
Fuel System	100
Guard—Track Roller Frame	96
Hood and Dash	98
Idler—Front	92
Power Train	69
Roller—Track	95
Roller—Track Carrier	96
Seat Cushions	101
Spring—Equalizer	93
Track	94
Transmission	76
Transmission Case and Covers	80

Attachments
(Page 102)

Bearing—Pinion Shaft Front	174
Cab	122
Canopy	126
Control—Choke and Throttle	165
Curtain—Canopy	124
Drawbar—Swinging	104
Extension—Air Cleaner Inlet	108
Fan—Blower	102
Fan—Defroster	121
Fan—Reversible Blade	102
Fuel System	168
Guard—Brush	106
Guard—Crankcase	105
Guard—Precleaner	107
Guard—Track Roller Dirt	177
Heater—Cab	126
Hinge—Radiator Guard	103
Hook—Front Pull	104
Idler—Front	176
Lighting System—12 Volt	129
Lighting System—24 Volt	138
Muffler	110
Oil System—Bevel Gear Shaft Bearing	170
Prescreener	107
Protection Cap—Starting Engine Fuel Tank	111
Protection Cover—Fuel Tank	111
Protection Cover—Oil Filler	112
Pump—Fuel Priming	166
Rain Cap	108
Rain Trap—Exhaust	109
Seat Belt	169
Spark Arrester	110
Starting Aid—Ether	168
Starting—Electric	146
Street Plates	176
Tools	181
Track	178
Track Adjusting—Hydraulic	179
Transmission—Conversion	175
Transmission—Optional	172
Turbocharger	113
Windshield Wiper	121

INDEX

FICHE 1 OF 2
PAGES 1 THRU 101B

FICHE 2 OF 2
PAGES 102 THRU 185

D10 Tractor — Yellow — Engine & Clutch — 44A1859- — 10-78
UE35628F — Trans & Chassis — 44A13091

	A-1	A-2	A-3	A-4	A-5	A-6	A-7	A-8	A-9	A-10	A-11	A-12	A-13	A-14	A-15	A-16	A-17	A-18	A-19	A-20	
A	Index									Index	1	14 14A	14B 14C	15	16	16A	16C	16D 16E	17	18	A
	B-1	B-2	B-3	B-4	B-5	B-6	B-7	B-8	B-9	B-10	B-11	B-12	B-13	B-14	B-15	B-16	B-17	B-18	B-19	B-20	
B	19	20 21	22 22A	22B 22C	22D 22E	22F 22G	23	24 25	26 26A	26B 26C	26D	27	28 29	30	31	32	33	34	34A	34B 35	B
	C-1	C-2	C-3	C-4	C-5	C-6	C-7	C-8	C-9	C-10	C-11	C-12	C-13	C-14	C-15	C-16	C-17	C-18	C-19	C-20	
C	36 36A	37	38	38A	39	40 41	42	43	44	44A 45	46 47	48	48A	49	50 51	52 52A	52B 53	54	55	56	C
	C-1	D-2	D-3	D-4	D-5	D-6	D-7	D-8	D-9	D-10	D-11	D-12	D-13	D-14	D-15	D-16	D-17	D-18	D-19	D-20	
D	57	58	59	60	61	62 63	64	65	66	67	blank	69	70 71	72 73	74	75	76 77	78 79	80 81	82 83	D
	E-1	E-2	E-3	E-4	E-5	E-6	E-7	E-8	E-9	E-10	E-11	E-12	E-13	E-14	E-15	E-16	E-17	E-18	E-19	E-20	
E	84 84A	85	86 87	88 89	90 91	92 92A	93	94	94A	95	96	97 97B	98 99	100	101	101B					E
	F-1	F-2	F-3	F-4	F-5	F-6	F-7	F-8	F-9	F-10	F-11	F-12	F-13	F-14	F-15	F-16	F-17	F-18	F-19	F-20	
F																					F
	G-1	G-2	G-3	G-4	G-5	G-6	G-7	G-8	G-9	G-10	G-11	G-12	G-13	G-14	G-15	G-16	G-17	G-18	G-19	G-20	
G																					G
	H-1	H-2	H-3	H-4	H-5	H-6	H-7	H-8	H-9	H-10	H-11	H-12	H-13	H-14	H-15	H-16	H-17	H-18	H-19	H-20	
H																					H
	I-1	I-2	I-3	I-4	I-5	I-6	I-7	I-8	I-9	I-10	I-11	I-12	I-13	I-14	I-15	I-16	I-17	I-18	I-19	I-20	
I																					I
	J-1	J-2	J-3	J-4	J-5	J-6	J-7	J-8	J-9	J-10	J-11	J-12	J-13	J-14	J-15	J-16	J-17	J-18	J-19	J-20	
J																					J

INDEX ALPHABETIQUE

Moteur diesel
(Page 14)

Désignation	Page
Arbre à cames	32
Bielles	32
Bloc-cylindres	24
Caractéristiques	184
Collecteurs	19
Compteur d'entretien	48
Coussinets de vilebrequin	31
Crémaillère	34
Culasse	20
Décompresseur (commande)	33
Entraînements secondaires	37
Filtre à air	18
Filtre à carburant diesel	39
Filtre à huile de graissage	47
Injecteurs et tuyauterie	41
Instructions sur décalcomanies	183
Manomètre de pression d'huile	44
Outillage	181
Pistons	32
Pompe à eau	17
Pompe à huile de graissage	43
Pompe d'alimentation et filtre de carburant	38
Pompe d'injection	34
Protège-radiateur	16
Radiateur	14
Réfrigérant d'huile de graissage	42
Régulateur	34
Reniflard	19
Soupapes et train de commande	20
Tendeur de courroie	17
Thermomètre (eau)	44
Timonerie de régulateur	34
Ventilateur aspirant	16
Vilebrequin	30
Volant	31

Groupe de lancement
(Page 49)

Alimentation d'essence (gazoline)	57
Allumage électrique	61
Arbre à cames et régulateur	55
Bielles	55
Bloc-cylindres	52
Carburateur	58
Collecteurs	59
Commande de lancement	65
Culasse	50
Embrayage et frein	66
Filtre à air	59
Filtre à huile de graissage	57
Freins (commande)	65
Lanceur à câble	64
Magnéto	62
Pignon de lancement	67
Pistons	55
Pompe à huile	56
Soupapes et train de commande	50
Support moteur	49
Tuyauterie d'eau	49
Vilebrequin	54
Volet de départ et accélérateur	58

Bâti et organes de transmission
(Page 69)

Alimentation en carburant diesel	100
Barre d'attelage	101
Bâti arrière	80
Boîte de vitesses	76

INDEX
FICHE 1 OF 2
PAGES 1 THRU 101B

FICHE 2 OF 2
PAGES 102 THRU 185

Dlo Tractor — Yellow — Engine & Clutch — 44A1859- — 1012
UE35628F — Hydr. & Chassis — 44A13091 — 10-68

	A-1	A-2	A-3	A-4	A-5	A-6	A-7	A-8	A-9	A-10	A-11	A-12	A-13	A-14	A-15	A-16	A-17	A-18	A-19	A-20	
A	Index									Index	1	14 14A	14B 14C	15	16	16A	16C	16D 16E	17	18	A
	B-1	B-2	B-3	B-4	B-5	B-6	B-7	B-8	B-9	B-10	B-11	B-12	B-13	B-14	B-15	B-16	B-17	B-18	B-19	B-20	
B	19	20 21	22 22A	22B 22C	22D 22E	22F 22G	23	24 25	26 26A	26B 26C	26D	27	28 29	30	31	32	33	34	34A	34B 35	B
	C-1	C-2	C-3	C-4	C-5	C-6	C-7	C-8	C-9	C-10	C-11	C-12	C-13	C-14	C-15	C-16	C-17	C-18	C-19	C-20	
C	36 36A	37	38	38A	39	40 41	42	43	44	44A 45	46 47	48	48A	49	50 51	52 52A	52B 53	54	55	56	C
	D-1	D-2	D-3	D-4	D-5	D-6	D-7	D-8	D-9	D-10	D-11	D-12	D-13	D-14	D-15	D-16	D-17	D-18	D-19	D-20	
D	57	58	59	60	61	62 63	64	65	66	67	Blank	69	70 71	72 73	74	75	76 77	78 79	80 81	82 83	D
	E-1	E-2	E-3	E-4	E-5	E-6	E-7	E-8	E-9	E-10	E-11	E-12	E-13	E-14	E-15	E-16	E-17	E-18	E-19	E-20	
E	84 84A	85	86 87	88 89	90 91	92 92A	93	94	94A	95	96	97 97B	98 99	100	101	101B					E
	F-1	F-2	F-3	F-4	F-5	F-6	F-7	F-8	F-9	F-10	F-11	F-12	F-13	F-14	F-15	F-16	F-17	F-18	F-19	F-20	
F																					F
	G-1	G-2	G-3	G-4	G-5	G-6	G-7	G-8	G-9	G-10	G-11	G-12	G-13	G-14	G-15	G-16	G-17	G-18	G-19	G-20	
G																					G
	H-1	H-2	H-3	H-4	H-5	H-6	H-7	H-8	H-9	H-10	H-11	H-12	H-13	H-14	H-15	H-16	H-17	H-18	H-19	H-20	
H																					H
	I-1	I-2	I-3	I-4	I-5	I-6	I-7	I-8	I-9	I-10	I-11	I-12	I-13	I-14	I-15	I-16	I-17	I-18	I-19	I-20	
I																					I
	J-1	J-2	J-3	J-4	J-5	J-6	J-7	J-8	J-9	J-10	J-11	J-12	J-13	J-14	J-15	J-16	J-17	J-18	J-19	J-20	
J																					J

Bâti et organes de transmission—Continue

Désignation	Page
Boîte de vitesses (timonerie)	70
Capot et tablier	98
Chaînes de roulement	94
Châssis porteurs	97
Châssis porteurs (tôlerie de protection)	96
Coffre à batterie	100
Embrayage principal	72
Embrayage principal (commande)	70
Embrayages de direction	85
Embrayages de direction (commande)	84
Embrayages de direction (commande du servo)	82
Freins	86
Galets inférieurs	95
Galets supérieurs	96
Garde-boue	99
Mécanisme de transmission	69
Réducteurs latéraux	88
Ressort transversal de suspension	93
Roues avant	92
Siège (coussins)	101
Accessoires (Page 102)	
Alimentation en carburant	168
Barre d'attelage oscillante	104
Boîte de vitesses (groupe de transformation)	175
Boîte de vitesses spéciale	172
Cabine	122
Ceinture de sécurité	169
Chaînes de roulement	178
Chaînes de roulement (tendeur hydraulique)	179
Chapeau de sûreté (réservoir)	111
Chapeau de sûreté (réservoir du moteur de lancement)	111
Chapeau de sûreté (tubulure de remplissage d'huile)	112
Commandes de carburateur	165
Crochet AV	104
Dégivreur	121
Démarrage électrique	146
Dispositif de graissage du couple conique	170
Eclairage électrique (12 volts)	129
Eclairage électrique 24 volts)	138
Essuie-glace	121
Filtre à air (rallonge de prise d'air)	108
Injection d'éther	168
Outillage	181
Pare-étincelles	110
Patins de route	176
Pompe d'amorçage	166
Pot d'échauffement	110
Pot-déflecteur (échappement)	109
Préfiltre (protecteur)	107
Protège-carter moteur	105
Protège-galets	177
Protège-radiateur sur charnière	103
Radiateur de chauffage cabine	126
Rideau de toit	124
Roues AV	176
Roulement AV d'arbre de pignon conique	174
Tamis de préfiltre	107
Toit	126
Tôle pare-broussailles	106
Turbo-compresseur	113
Ventilateur à pales réversibles	102
Ventilateur soufflant	102
Volet du tuyau d'échappement	108

INDEX

FICHE 1 OF 2
PAGES 1 THRU 101B

FICHE 2 OF 2
PAGES 102 THRU 185

Die tractor yellow — Engine & Clutch 44A1859- — 1012
UE35628F — Trans. & Chassis 44A13091 — 10-78

	A-1	A-2	A-3	A-4	A-5	A-6	A-7	A-8	A-9	A-10	A-11	A-12	A-13	A-14	A-15	A-16	A-17	A-18	A-19	A-20	
A	index									index	1	14 14A	14B 14C	15	16	16A	16C	16D 16E	17	18	A
	B-1	B-2	B-3	B-4	B-5	B-6	B-7	B-8	B-9	B-10	B-11	B-12	B-13	B-14	B-15	B-16	B-17	B-18	B-19	B-20	
B	19	20 21	22 22A	22B 22C	22D 22E	22F 22G	23	24 25	26 26A	26B 26C	26D	27	28 29	30	31	32	33	34	34A	34B 35	B
	C-1	C-2	C-3	C-4	C-5	C-6	C-7	C-8	C-9	C-10	C-11	C-12	C-13	C-14	C-15	C-16	C-17	C-18	C-19	C-20	
C	36 36A	37	38	38A	39	40 41	42	43	44	44A 45	46 49	48	48A	49	50 51	52 52A	52B 53	54	55	56	C
	D-1	D-2	D-3	D-4	D-5	D-6	D-7	D-8	D-9	D-10	D-11	D-12	D-13	D-14	D-15	D-16	D-17	D-18	D-19	D-20	
D	57	58	59	60	61	62 63	64	65	66	67	blank	69	70 71	72 73	74	75	76 77	78 79	80 81	82 83	D
	E-1	E-2	E-3	E-4	E-5	E-6	E-7	E-8	E-9	E-10	E-11	E-12	E-13	E-14	E-15	E-16	E-17	E-18	E-19	E-20	
E	84 84A	85	86 87	88 89	90 91	92 92A	93	94	94A	95	96	97 97B	98 99	100	101	101B					E
	F-1	F-2	F-3	F-4	F-5	F-6	F-7	F-8	F-9	F-10	F-11	F-12	F-13	F-14	F-15	F-16	F-17	F-18	F-19	F-20	
F																					F
	G-1	G-2	G-3	G-4	G-5	G-6	G-7	G-8	G-9	G-10	G-11	G-12	G-13	G-14	G-15	G-16	G-17	G-18	G-19	G-20	
G																					G
	H-1	H-2	H-3	H-4	H-5	H-6	H-7	H-8	H-9	H-10	H-11	H-12	H-13	H-14	H-15	H-16	H-17	H-18	H-19	H-20	
H																					H
	I-1	I-2	I-3	I-4	I-5	I-6	I-7	I-8	I-9	I-10	I-11	I-12	I-13	I-14	I-15	I-16	I-17	I-18	I-19	I-20	
I																					I
	J-1	J-2	J-3	J-4	J-5	J-6	J-7	J-8	J-9	J-10	J-11	J-12	J-13	J-14	J-15	J-16	J-17	J-18	J-19	J-20	
J																					J

INDICE

Motor Diesel (Página 14)

Nombre	Página
Bielas	32
Bloque del Motor y Tapas	24
Bomba de Alimentación y Filtro	38
Bomba del Aceite	43
Bomba del Agua	17
Caja de las Bombas del Combustible	34
Calcomanías	183
Cigüeñal	30
Cojinetes de Bancada	31
Control de la Descompresión	33
Control—Bombas del Combustible	34
Control del Regulador	34
Culata	20
Eje de Levas	32
Enfriador del Aceite	42
Especificaciones	184
Filtro de Aire	18
Filtro del Aceite	47
Filtro del Combustible	39
Herramientas	181
Horómetro	48
Indicador de Temperatura	44
Inyectores y Tuberías	41
Mando de Accesorios	37
Manómetro del Aceite	44
Mecanismo de las Válvulas	20
Múltiple	19
Pistón	32
Protección del Radiador	16
Radiador	14
Regulador	34
Respiradero	19
Tensor de la Correa	17
Ventilador d Succión	16
Volante	31

Motor de Arranque (Página 49)

Acelerador	58
Bielas	55
Bloque del Motor y Tapas	52
Bomba del Aceite	56
Carbure[illegible]	58
Cigüeñ[illegible]	54
Control de la Estrangulación	58
Control del Embrague	65
Control del Freno	65
Control del Piñón de Arranque	65
Culata	50
Eje de Levas y Regulador	55
Embrague y Freno	66
Filtro de Aire	59
Filtro del Aceite	57
Magneto	62
Mecanismo de Enrollado Automático para el Arranque	64
Mecanismo de las Válvulas	50
Múltiple	59
Piñón de Arranque	67
Pistón	55
Sistema de Ignición	61
Sistema del Combustible	57
Soporte	49
Tuberías del Agua	49

Embrague, Transmisión y Chasis (Página 69)

Barra de Tiro	101
Bastidor de los Rodillos	97
Caja de la Batería	100
Caja de la Transmisión y Tapas	80

INDEX

FICHE 1 OF 2
PAGES 1 THRU 101B

FICHE 2 OF 2
PAGES 102 THRU 185

Dlo Injector yellow Engine & Clutch 44A6859- 101-2
UE35628F Trans. & Chassis 44A13091 10-78

	1	2	3	4	5	6	7	8	9	10	11	12	13	14	15	16	17	18	19	20	
A	under									Injector	1	14 14A	14B 14C	15	16	16A	16C	16D 16E	17	18	A
B	19	20 21	22 22A	22B 22C	22D 22E	22F 22G	23	24 25	26 26A	26B 26C	26D	27	28 29	30	31	32	33	34	34A	34B 35	B
C	36 36A	37	38	38A	39	40 41	42	43	44	44A 45	46 47	48	48A	49	50 51	52 52A	52B 53	54	55	56	C
D	57	58	59	60	61	62 63	64	65	66	67	blank	69	70 71	72 73	74	75	76 77	78 79	80 81	82 83	D
E	84 84A	85	86 87	88 89	90 91	92 92A	93	94	94A	95	96	97 97B	98 99	100	101	101B					E
F																					F
G																					G
H																					H
I																					I
J																					J

Embrague, Transmisión y Chasis—Continuación

Nombre	Página
Capó y Tablero	98
Carril	94
Cojines del Asiento	101
Control—Cambios	70
Control de Embrague de Dirección	84
Control del Embrague Principal	70
Embrague de Dirección	85
Embrague Principal	72
Frenos	86
Mandos Finales	88
Mecanismo de Control Hidráulico de Embragues de Dirección	82
Protección—Bastidor de los Rodillos	96
Resorte Compensador	93
Rodillos Inferiores	95
Rodillos Superiores	96
Rueda Guía	92
Sistema del Combustible	100
Tapabarros	99
Transmisión	76
Tren de Potencia	69
Accesorios (Página 102)	
Ajuste Hidráulico del Carril	179
Antefiltro Especial	107
Arranque Eléctrico	146
Barra de Tiro Giratoria	104
Bomba de Cebado del Combustible	166
Cabina	122
Calentador para la Cabina	126
Carril	178
Cinturón de Seguridad	169
Cojinete Delantero del Eje del Piñón	174
Control—Estrangulación y Acelerador	165
Cortina—Toldo	124
Extensión de la Admisión del Filtro de Aire	108
Gancho Delantero	104
Guardallamas	110
Herramientas	181
Inyector de Eter	168
Limpia Parabrisas	121
Protección Contra Maleza	106
Protección del Antefiltro	107
Protección del Cárter	105
Protección de los Rodillos Inferiores	177
Protección del Radiador con Charnela	103
Rueda Guía	176
Silenciador	110
Sistema de Alumbrado—12 Voltios	129
Sistema de Alumbrado—24 Voltios	133
Sistema del Aceite—Cojinetes del Eje de la Corona	170
Sistema del Combustible	168
Tapa contra la Lluvia	108
Tapa Protectora—Tanque del Combustible	111
Tapa Protectora—Tanque del Combustible del Motor de Arranque	111
Tapa Protectora—Tubo de Llenado del Aceite	112
Toldo	126
Trampa contra la Lluvia—Escape	109
Transmisión—Conversión	175
Transmisión—Opcional	172
Turboalimentador	113
Ventilador de Paletas Reversibles	102
Ventilador Descongelador	121
Ventilador Insuflador	102
Zapatas para Calle	176

INDEX

FICHE 1 OF 2
PAGES 1 THRU 101B

FICHE 2 OF 2
PAGES 102 THRU 185

D6 Tractor yellow Engine & Clutch 44A6859- 1012
UE35628F Trans & Chassis 44A13091 10-78

	A-1	A-2	A-3	A-4	A-5	A-6	A-7	A-8	A-9	A-10	A-11	A-12	A-13	A-14	A-15	A-16	A-17	A-18	A-19	A-20	
A	Index									Index	1	14 14A	14B 14C	15	16	16A	16C	16D 16E	17	18	A
	B-1	B-2	B-3	B-4	B-5	B-6	B-7	B-8	B-9	B-10	B-11	B-12	B-13	B-14	B-15	B-16	B-17	B-18	B-19	B-20	
B	19	20 21	22 22A	22B 22C	22D 22E	22F 22G	23	24 25	26 26A	26B 26C	26D	27	28 29	30	31	32	33	34	34A	34B 35	B
	C-1	C-2	C-3	C-4	C-5	C-6	C-7	C-8	C-9	C-10	C-11	C-12	C-13	C-14	C-15	C-16	C-17	C-18	C-19	C-20	
C	36 36A	37	38	38A	39	40 41	42	43	44	44A 45	46 49	48	48A	49	50 51	52 52A	52B 53	54	55	56	C
	D-1	D-2	D-3	D-4	D-5	D-6	D-7	D-8	D-9	D-10	D-11	D-12	D-13	D-14	D-15	D-16	D-17	D-18	D-19	D-20	
D	57	58	59	60	61	62 63	64	65	66	67	blank	69	70 71	72 73	74	75	76 77	78 79	80 81	82 83	D
	E-1	E-2	E-3	E-4	E-5	E-6	E-7	E-8	E-9	E-10	E-11	E-12	E-13	E-14	E-15	E-16	E-17	E-18	E-19	E-20	
E	84 84A	85	86 87	88 89	90 91	92 92A	93	94	94A	95	96	97 97A	98 99	100	101	101B					E
	F-1	F-2	F-3	F-4	F-5	F-6	F-7	F-8	F-9	F-10	F-11	F-12	F-13	F-14	F-15	F-16	F-17	F-18	F-19	F-20	
F																					F
	G-1	G-2	G-3	G-4	G-5	G-6	G-7	G-8	G-9	G-10	G-11	G-12	G-13	G-14	G-15	G-16	G-17	G-18	G-19	G-20	
G																					G
	H-1	H-2	H-3	H-4	H-5	H-6	H-7	H-8	H-9	H-10	H-11	H-12	H-13	H-14	H-15	H-16	H-17	H-18	H-19	H-20	
H																					H
	I-1	I-2	I-3	I-4	I-5	I-6	I-7	I-8	I-9	I-10	I-11	I-12	I-13	I-14	I-15	I-16	I-17	I-18	I-19	I-20	
I																					I
	J-1	J-2	J-3	J-4	J-5	J-6	J-7	J-8	J-9	J-10	J-11	J-12	J-13	J-14	J-15	J-16	J-17	J-18	J-19	J-20	
J																					J

INDICE

Motor diesel (Página 14)

Nomenclatura	Página
Arrefecedor do óleo	42
Árvore de comando das válvulas	32
Árvore de manivelas (virabrequim)	30
Biela	32
Bloco do motor e tampas	24
Bomba d'água	17
Bomba de óleo	43
Bomba de transferência do combustível e filtro	38
Cabeçote	20
Caixa das bombas injetoras	34
Coletor	19
Comando de acessórios	37
Contrôle da descompressão	33
Contrôle do regulador de velocidade (acelerador)	34
Cremálheira do combustível	34
Decalcomanias	183
Especificações	184
Ferramentas	181
Filtro de óleo	47
Filtro principal do combustível	39
Horômetro	48
Indicador da temperatura (termômetro)	44
Mancais principais do motor	31
Manômetro do óleo	44
Mecanismo das válvulas	20
Pistão	32
Protetor do radiador	16
Purificador de ar	18
Radiador	14
Regulador de velocidade	34
Respiro	19
Tensor das correias	17
Válvulas injetoras e tubos	41
Ventilador de sucção	16
Volante do motor	31

Sistema de partida (Página 49)

Acelerador	58
Afogador	58
Árvore de comando das válvulas e regulador de velocidade	55
Árvore de manivelas (virabrequim)	54
Biela	55
Bloco do motor e tampas	52
Bomba de óleo	56
Cabeçote	50
Carburador	58
Coletor	59
Contrôle da embreagem	65
Contrôle do freio	65
Contrôle do pinhão de partida	65
Embreagem e freio	66
Filtro de óleo	57
Magneto	62
Mecanismo das válvulas	50
Mecanismo retráctil do cabo de partida	64
Pinhão de partida	67
Pistão	55
Purificador de ar	59
Sistema de alimentação do combustível	57
Sistema de ignição	61
Suporte	49
Tubos d'água	49

INDEX
FICHE 1 OF 2
PAGES 1 THRU 101B

FICHE 2 OF 2
PAGES 102 THRU 185

D6 Tractor Yellow — Engine & Clutch — 44A1857- — 10-12
UE35628F — Trans & Chassis — 44A13091 — 10-98

	A-1	A-2	A-3	A-4	A-5	A-6	A-7	A-8	A-9	A-10	A-11	A-12	A-13	A-14	A-15	A-16	A-17	A-18	A-19	A-20	
A	Index									Index	1	14 14A	14B 14C	15	16	16A	16C	16D 16E	17	18	A
	B-1	B-2	B-3	B-4	B-5	B-6	B-7	B-8	B-9	B-10	B-11	B-12	B-13	B-14	B-15	B-16	B-17	B-18	B-19	B-20	
B	19	20 21	22 22A	22B 22C	22D 22E	22F 22G	23	24 25	26 26A	26B 26C	26D	27	28 29	30	31	32	33	34	34A	34B 35	B
	C-1	C-2	C-3	C-4	C-5	C-6	C-7	C-8	C-9	C-10	C-11	C-12	C-13	C-14	C-15	C-16	C-17	C-18	C-19	C-20	
C	36 36A	37	38	38A	39	40 41	42	43	44	44A 45	46 47	48	48A	49	50 51	52 52A	52B 53	54	55	56	C
	D-1	D-2	D-3	D-4	D-5	D-6	D-7	D-8	D-9	D-10	D-11	D-12	D-13	D-14	D-15	D-16	D-17	D-18	D-19	D-20	
D	57	58	59	60	61	62 63	64	65	66	67	Blank	69	70 71	72 73	74	75	76 77	78 79	80 81	82 83	D
	E-1	E-2	E-3	E-4	E-5	E-6	E-7	E-8	E-9	E-10	E-11	E-12	E-13	E-14	E-15	E-16	E-17	E-18	E-19	E-20	
E	84 84A	85	86 87	88 89	90 91	92 92A	93	94	94A	95	96	97 97B	98 99	100	101	101B					E
	F-1	F-2	F-3	F-4	F-5	F-6	F-7	F-8	F-9	F-10	F-11	F-12	F-13	F-14	F-15	F-16	F-17	F-18	F-19	F-20	
F																					F
	G-1	G-2	G-3	G-4	G-5	G-6	G-7	G-8	G-9	G-10	G-11	G-12	G-13	G-14	G-15	G-16	G-17	G-18	G-19	G-20	
G																					G
	H-1	H-2	H-3	H-4	H-5	H-6	H-7	H-8	H-9	H-10	H-11	H-12	H-13	H-14	H-15	H-16	H-17	H-18	H-19	H-20	
H																					H
	I-1	I-2	I-3	I-4	I-5	I-6	I-7	I-8	I-9	I-10	I-11	I-12	I-13	I-14	I-15	I-16	I-17	I-18	I-19	I-20	
I																					I
	J-1	J-2	J-3	J-4	J-5	J-6	J-7	J-8	J-9	J-10	J-11	J-12	J-13	J-14	J-15	J-16	J-17	J-18	J-19	J-20	
J																					J

Sistema de transmissão e chassi
(Página 69)

Nomenclatura	Página
Almofadas do assento	101
Armação dos rolêtes de esteira	97
Barra de tração	101
Caixa das baterias	100
Caixa de mudanças	76
Capô e painel	98
Carcassa da caixa de mudanças e tampas	80
Comando final	88
Contrôle da embreagem principal	70
Contrôle das embreagens de direção	84
Contrôle das marchas	70
Contrôle hidráulico das embreagens de direção	82
Embreagem de direção	85
Embreagem principal	72
Esteira	94
Freios	86
Mola de suspensão	93
Pára-lamas	99
Protetor da armação dos rolêtes inferiores	96
Roda-guia	92
Rolête inferior	95
Rolête superior	96
Sistema de transmissão	69
Tanque de combustível	100

Acessórios
(Página 102)

Acelerador e afogador	165
Aquecedor da cabine	126
Barra de tração oscilável	104
Bomba manual de purgação do combustível	166
Cabine	122
Caixa de mudanças optativa	172
Calços para as sapatas	176
Calha contra chuva	109
Cinto de segurança	169
Conversão da caixa de mudanças	175
Cortinas do tôldo	124
Descongelador do pára-brisa	121
Esteira	178
Extensão da tomada de ar	108
Ferramentas	181
Gancho dianteiro	104
Grade articulada do radiador	103
Grupo de lubrificação dos rolamentos da coroa	170
Guarda-mato	106
Injetor de éter	168
Limpador do pára-brisa	121
Pára-fagulhas	110
Partida elétrica	146
Pré-purificador de ar	107
Protetor do cárter	105
Protetor do pré-purificador	107
Protetor dos rolêtes inferiores	177
Roda-guia	176
Rolamento dianteiro do pinhão	174
Silenciador	110
Sistema de combustível	168
Sistema de iluminação—12 volts	129
Sistema de iluminação—24 volts	138
Tampa do bocal do cárter com cadeado	112
Tampa do cano de descarga	108
Tampa do tanque de combustível com cadeado	111
Tampa do tanque de gasolina com cadeado	111
Tensor hidráulico das esteiras	179
Tôldo	126
Turbocompressor	113
Ventilador de pás reversíveis	102
Ventilador de sôpro	102

INDEX

FICHE 1 OF 2
PAGES 1 THRU 101B

FICHE 2 OF 2
PAGES 102 THRU 185

Die Tractor yellow — Engine & Clutch 44A 6859- — 1012
UE35628F — Trans. & Chassis 44A 13091 — 10-68

	A-1	A-2	A-3	A-4	A-5	A-6	A-7	A-8	A-9	A-10	A-11	A-12	A-13	A-14	A-15	A-16	A-17	A-18	A-19	A-20	
A	Index									Index	1	14 14A	14B 14C	15	16	16A	16C	16D 16E	17	18	A
	B-1	B-2	B-3	B-4	B-5	B-6	B-7	B-8	B-9	B-10	B-11	B-12	B-13	B-14	B-15	B-16	B-17	B-18	B-19	B-20	
B	19	20 21	22 22A	22B 22C	22D 22E	22F 22G	23	24 25	26 26A	26B 26C	26D	27	28 29	30	31	32	33	34	34A	34B 35	B
	C-1	C-2	C-3	C-4	C-5	C-6	C-7	C-8	C-9	C-10	C-11	C-12	C-13	C-14	C-15	C-16	C-17	C-18	C-19	C-20	
C	36 36A	37	38	38A	39	40 41	42	43	44	44A 45	46 47	48	48A	49	50 51	52 52A	52B 53	54	55	56	C
	D-1	D-2	D-3	D-4	D-5	D-6	D-7	D-8	D-9	D-10	D-11	D-12	D-13	D-14	D-15	D-16	D-17	D-18	D-19	D-20	
D	57	58	59	60	61	62 63	64	65	66	67	Blank	69	70 71	72 73	74	75	76 77	78 79	80 81	82 83	D
	E-1	E-2	E-3	E-4	E-5	E-6	E-7	E-8	E-9	E-10	E-11	E-12	E-13	E-14	E-15	E-16	E-17	E-18	E-19	E-20	
E	84 84A	85	86 87	88 89	90 91	92 92A	93	94	94A	95	96	97 97B	98 99	100	101	101B					E
	F-1	F-2	F-3	F-4	F-5	F-6	F-7	F-8	F-9	F-10	F-11	F-12	F-13	F-14	F-15	F-16	F-17	F-18	F-19	F-20	
F																					F
	G-1	G-2	G-3	G-4	G-5	G-6	G-7	G-8	G-9	G-10	G-11	G-12	G-13	G-14	G-15	G-16	G-17	G-18	G-19	G-20	
G																					G
	H-1	H-2	H-3	H-4	H-5	H-6	H-7	H-8	H-9	H-10	H-11	H-12	H-13	H-14	H-15	H-16	H-17	H-18	H-19	H-20	
H																					H
	I-1	I-2	I-3	I-4	I-5	I-6	I-7	I-8	I-9	I-10	I-11	I-12	I-13	I-14	I-15	I-16	I-17	I-18	I-19	I-20	
I																					I
	J-1	J-2	J-3	J-4	J-5	J-6	J-7	J-8	J-9	J-10	J-11	J-12	J-13	J-14	J-15	J-16	J-17	J-18	J-19	J-20	
J																					J

INHALTSVERZEICHNIS

Dieselmotor (Seite 14)

Bezeichnung	Seite
Abziehbilder	183
Dekompressionshebel	33
Einspritzpumpengehäuse	34
Entlüfter	19
Gasgestänge	34
Kolben	32
Kraftstoffilter	39
Kraftstofförderpumpe und Filter	38
Kraftstoffventile und Leitungen	41
Krümmer	19
Kühlernetz	14
Kühlerschutz	16
Kurbellager	31
Kurbelwelle	30
Luftreiniger	18
Motorblock und Deckel	24
Nockenwelle	32
Öldruckmesser	44
Ölkühler	42
Pleuel	32
Regler	34
Reglerzahnstange	34
Riemenspanner	17
Sauglüfter	16
Schmierfilter	47
Schmierpumpe	43
Schwungscheibe	31
Steuerantrieb	37
Technische Daten	184
Ventilsteuerung	20
Wärmemesser	44
Wartungsmesser	48
Wasserpumpe	17
Werkzeuge	181
Zylinderkopf	20

Startermotor (Seite 49)

Anreisstarter	64
Aufhängung	49
Bremsgestänge	65
Gasgestänge	58
Kolben	55
Kraftstoffanlage	57
Krümmer	59
Kupplung und Bremse	66
Kupplungsgestänge	65
Kurbelwelle	54
Luftklappengestänge	58
Luftreiniger	59
Motorblock und Deckel	52
Nockenwelle und Regler	55
Pleuel	55
Schmierfilter	57
Schmierpumpe	56
Starterritzel	67
Starterritzelgestänge	65
Ventilsteuerung	50
Vergaser	58
Wasserleitungen	49
Zündanlage	61
Zündmagnet	62
Zylinderkopf	50

INDEX

FICHE 1 OF 2
PAGES 1 THRU 101B

FICHE 2 OF 2
PAGES 102 THRU 185

Die Starter yellow — Engines & Clutch 44A6859- 10-12
UE35628F — Parts & Chassis 44A13091 10-78

	A-1	A-2	A-3	A-4	A-5	A-6	A-7	A-8	A-9	A-10	A-11	A-12	A-13	A-14	A-15	A-16	A-17	A-18	A-19	A-20	
A	undil									Index	1	14 14A	14B 14C	15	16	16A	16C	16D 16E	17	18	A
	B-1	B-2	B-3	B-4	B-5	B-6	B-7	B-8	B-9	B-10	B-11	B-12	B-13	B-14	B-15	B-16	B-17	B-18	B-19	B-20	
B	19	20 21	22 22A	22B 22C	22D 22E	22F 22G	23	24 25	26 26A	26B 26C	26D	27	28 29	30	31	32	33	34	34A	34B 35	B
	C-1	C-2	C-3	C-4	C-5	C-6	C-7	C-8	C-9	C-10	C-11	C-12	C-13	C-14	C-15	C-16	C-17	C-18	C-19	C-20	
C	36 36A	37	38	38A	39	40 41	42	43	44	44A 45	46 47	48	48A	49	50 51	52 52A	52B 53	54	55	56	C
	D-1	D-2	D-3	D-4	D-5	D-6	D-7	D-8	D-9	D-10	D-11	D-12	D-13	D-14	D-15	D-16	D-17	D-18	D-19	D-20	
D	57	58	59	60	61	62 63	64	65	66	67	blank	69	70 71	72 73	74	75	76 77	78 79	80 81	82 83	D
	E-1	E-2	E-3	E-4	E-5	E-6	E-7	E-8	E-9	E-10	E-11	E-12	E-13	E-14	E-15	E-16	E-17	E-18	E-19	E-20	
E	84 84A	85	86 87	88 89	90 91	92 92A	93	94	94A	95	96	97 97B	98 99	100	101	101B					E
	F-1	F-2	F-3	F-4	F-5	F-6	F-7	F-8	F-9	F-10	F-11	F-12	F-13	F-14	F-15	F-16	F-17	F-18	F-19	F-20	
F																					F
	G-1	G-2	G-3	G-4	G-5	G-6	G-7	G-8	G-9	G-10	G-11	G-12	G-13	G-14	G-15	G-16	G-17	G-18	G-19	G-20	
G																					G
	H-1	H-2	H-3	H-4	H-5	H-6	H-7	H-8	H-9	H-10	H-11	H-12	H-13	H-14	H-15	H-16	H-17	H-18	H-19	H-20	
H																					H
	I-1	I-2	I-3	I-4	I-5	I-6	I-7	I-8	I-9	I-10	I-11	I-12	I-13	I-14	I-15	I-16	I-17	I-18	I-19	I-20	
I																					I
	J-1	J-2	J-3	J-4	J-5	J-6	J-7	J-8	J-9	J-10	J-11	J-12	J-13	J-14	J-15	J-16	J-17	J-18	J-19	J-20	
J																					J

Kupplung, Getriebe und Laufwerk
(Seite 69)

Bezeichnung	Seite
Ausgleichtraverse	93
Batteriekasten	100
Bremsen	86
Endantrieb	88
Getriebe	76
Getriebegehäuse und Deckel	80
Hauptkupplung	72
Hauptkupplungsgestänge	70
Hydraulikbetätigung der Lenkkupplungen	82
Kraftstoffanlage	100
Kraftübertragung	69
Laufkette	94
Laufrolle	95
Laufwerkrahmen	97
Laufwerkrahmenverkleidung	96
Leitrad	92
Lenkkupplung	85
Lenkkupplungsgestänge	84
Motorhaube und Armaturenbrett	98
Schutzbleche	99
Schaltgestänge	70
Sitzpolster	101
Stützrolle	96
Zughaken	101

Zubehör
(Seite 102)

Abschliessbare Tankkappe (Haupttank)	111
Abschliessbare Kappe (Ölfüllstutzen)	112
Abschliessbare Tankkappe (Startermotor)	111
Ätherstarthilfe	168
Anlasser, elektrisch	146
Antriebsritzellager, vorne	174
Auspuffdämpfer	110
Beleuchtungsanlage, 12 Volt	129
Beleuchtungsanlage, 24 Volt	138
Drucklüfter	102
Entfrostergebläse	121
Fahrerhaus	122
Fahrerhausheizung	126
Frontzughaken	104
Funkenfänger	110
Getriebeumbaugruppe	175
Handkraftstoffpumpe	166
Kettenspanner, hydraulisch	179
Kraftstoffanlage	168
Kühlerschutz mit Scharnieren	103
Kurbelgehäuseschutz	105
Laufkette	178
Laufrollenschutz	177
Leitrad	176
Lüfter, umkehrbar	102
Luftklappen- und Gashebelgestänge	165
Luftsaugrohrverlängerung	108
Motorseitenverkleidung	106
Regenfänger	109
Regenhaube	108
Scheibenwischer	121
Schmiersystem für Tellerradwelle	170
Sitzgurt	169
Sondergetriebe	172
Strassenplatten	176
Turbolader	113
Vorabscheider	107
Vorreinigerschutz	107
Werkzeuge	181
Wetterdach	126
Wetterdachplane	124
Zughaken, unstarr	104

INDEX

FICHE 1 OF 2
PAGES 1 THRU 101B

FICHE 2 OF 2
PAGES 102 THRU 185

Die Tractor yellow Engine & Clutch 44A1859- 1012
UE35628F Trans. & Chassis 44A13091 10-78

	A-1	A-2	A-3	A-4	A-5	A-6	A-7	A-8	A-9	A-10	A-11	A-12	A-13	A-14	A-15	A-16	A-17	A-18	A-19	A-20	
A	Index									Index	1	14 14A	14B 14C	15	16	16A	16C	16D 16E	17	18	A
	B-1	B-2	B-3	B-4	B-5	B-6	B-7	B-8	B-9	B-10	B-11	B-12	B-13	B-14	B-15	B-16	B-17	B-18	B-19	B-20	
B	19	20 21	22 22A	22B 22C	22D 22E	22F 22G	23	24 25	26 26A	26B 26C	26D	27	28 29	30	31	32	33	34	34A	34B 35	B
	C-1	C-2	C-3	C-4	C-5	C-6	C-7	C-8	C-9	C-10	C-11	C-12	C-13	C-14	C-15	C-16	C-17	C-18	C-19	C-20	
C	36 36A	37	38	38A	39	40 41	42	43	44	44A 45	46 47	48	48A	49	50 51	52 52A	52B 53	54	55	56	C
	D-1	D-2	D-3	D-4	D-5	D-6	D-7	D-8	D-9	D-10	D-11	D-12	D-13	D-14	D-15	D-16	D-17	D-18	D-19	D-20	
D	57	58	59	60	61	62 63	64	65	66	67	Blank	69	70 71	72 73	74	75	76 77	78 79	80 81	82 83	D
	E-1	E-2	E-3	E-4	E-5	E-6	E-7	E-8	E-9	E-10	E-11	E-12	E-13	E-14	E-15	E-16	E-17	E-18	E-19	E-20	
E	84 84A	85	86 87	88 89	90 91	92 92A	93	94	94A	95	96	97 97B	98 99	100	101	101B					E
	F-1	F-2	F-3	F-4	F-5	F-6	F-7	F-8	F-9	F-10	F-11	F-12	F-13	F-14	F-15	F-16	F-17	F-18	F-19	F-20	
F																					F
	G-1	G-2	G-3	G-4	G-5	G-6	G-7	G-8	G-9	G-10	G-11	G-12	G-13	G-14	G-15	G-16	G-17	G-18	G-19	G-20	
G																					G
	H-1	H-2	H-3	H-4	H-5	H-6	H-7	H-8	H-9	H-10	H-11	H-12	H-13	H-14	H-15	H-16	H-17	H-18	H-19	H-20	
H																					H
	I-1	I-2	I-3	I-4	I-5	I-6	I-7	I-8	I-9	I-10	I-11	I-12	I-13	I-14	I-15	I-16	I-17	I-18	I-19	I-20	
I																					I
	J-1	J-2	J-3	J-4	J-5	J-6	J-7	J-8	J-9	J-10	J-11	J-12	J-13	J-14	J-15	J-16	J-17	J-18	J-19	J-20	
J																					J

D6 TRACTOR
74 INCH GAUGE

HOW TO ORDER PARTS

Please be sure to furnish the quantity, part number and name of each part wanted. It is also important to give the serial number of the machine for which the parts are intended. Location of serial number plates may be determined by referring to the "Specifications" page of this parts book. It is suggested that you write the serial number of your machine in this space so that it will be readily available when you need it.

THIS PARTS BOOK FOR MACHINE SERIAL NUMBER
44A .....

To insure prompt delivery, please don't overlook furnishing the correct name of the consignee, also the street address, town, county and state to which the parts are to be shipped, and indicate whether shipment is to be made by freight, express, parcel post or by other means.

WHERE TO ORDER PARTS

Caterpillar dealers maintain over 400 stores in the United States, and similar establishments are located strategically in nearly all countries throughout the world. These organizations are backed by the extensive facilities and resources of Caterpillar Tractor Co.

Dealer personnel are factory trained in the stocking and issuing of parts, and large stocks are constantly maintained to insure prompt service. Contact your nearest Caterpillar dealer to make sure that he has your name and address, the correct serial number of your machine, and an accurate list of accessories and attachments. This record will facilitate the issuance of parts when you need them in a hurry.

WHAT THE CATERPILLAR DEALER CAN DO FOR YOU

Caterpillar dealers are in the business of making it economical and profitable for you to own and operate Caterpillar machinery. They are in constant touch with the factory for new developments in repair and maintenance methods, operating procedures, and parts requirements. Their parts stocks are active and up-to-date, including all parts normally required to protect your investment in Caterpillar machinery.

Nearly all Caterpillar dealers offer 24-hour emergency service. For quick reference, write the name and address of the local dealer on your desk pad or the front of your phone book.

ONLY CATERPILLAR PARTS GIVE CATERPILLAR PERFORMANCE

The same quality and craftsmanship that has made Caterpillar products famous throughout the world is built into all Caterpillar replacement parts.

I REVISION PUBLISHED OCTOBER 1978

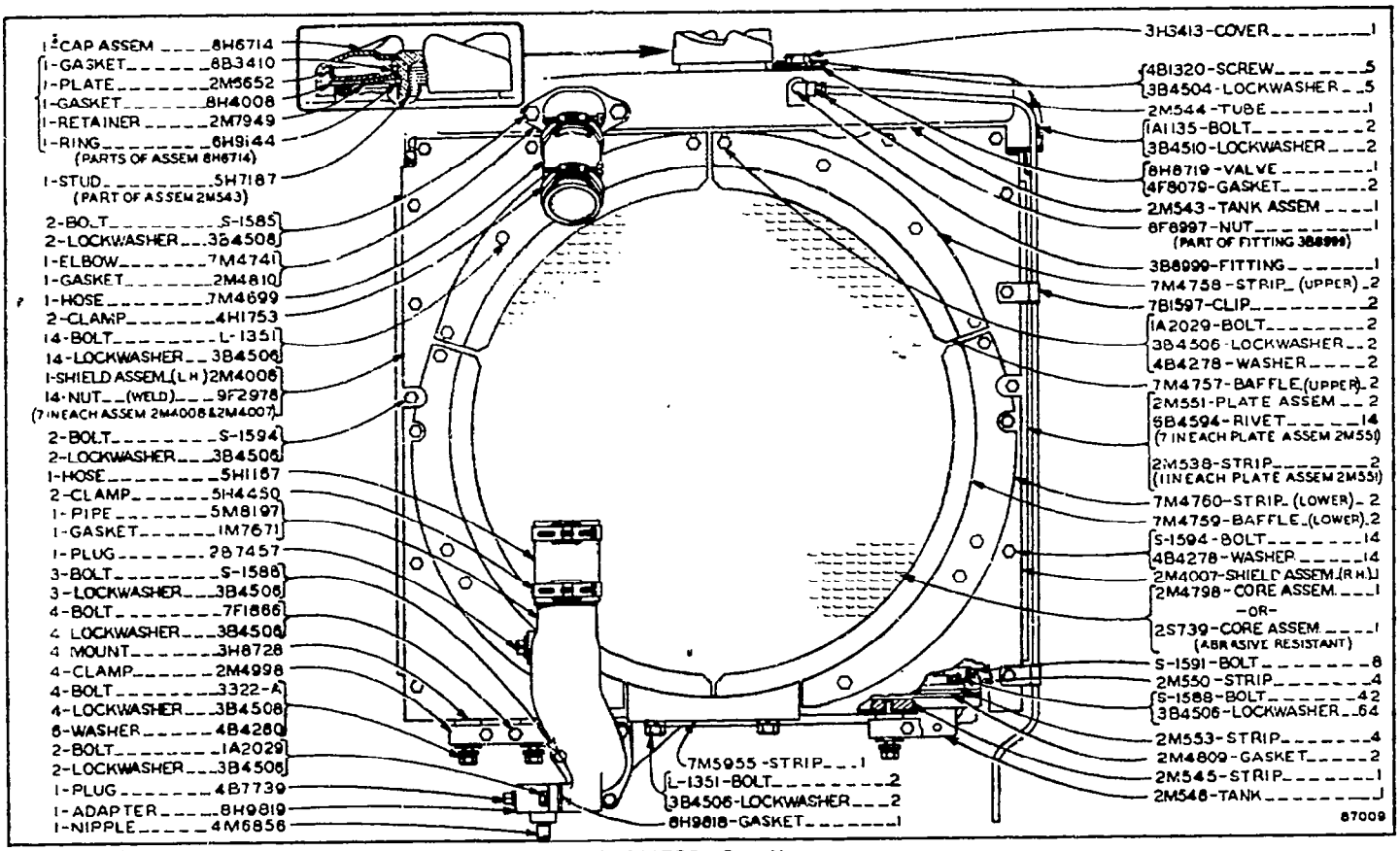

RADIATOR—Rear View
Serial No. 44A6857 to 44A8247 inclusive
Note: 6F6041 Rust Inhibitor is available

RADIATOR—Rear View
Serial No. 44A8248 to 44A10134 inclusive
Note: 6F6041 Rust Inhibitor is available

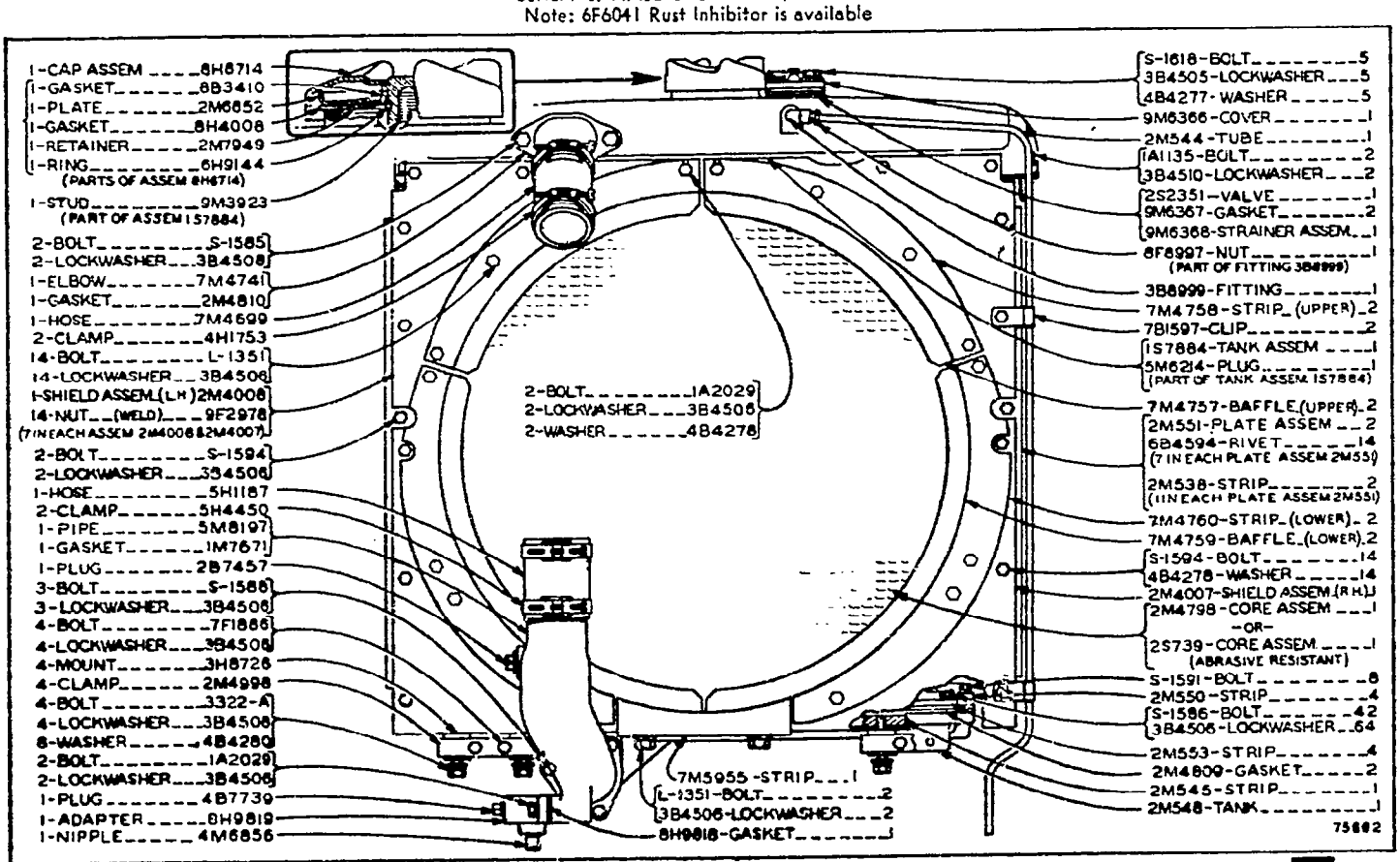

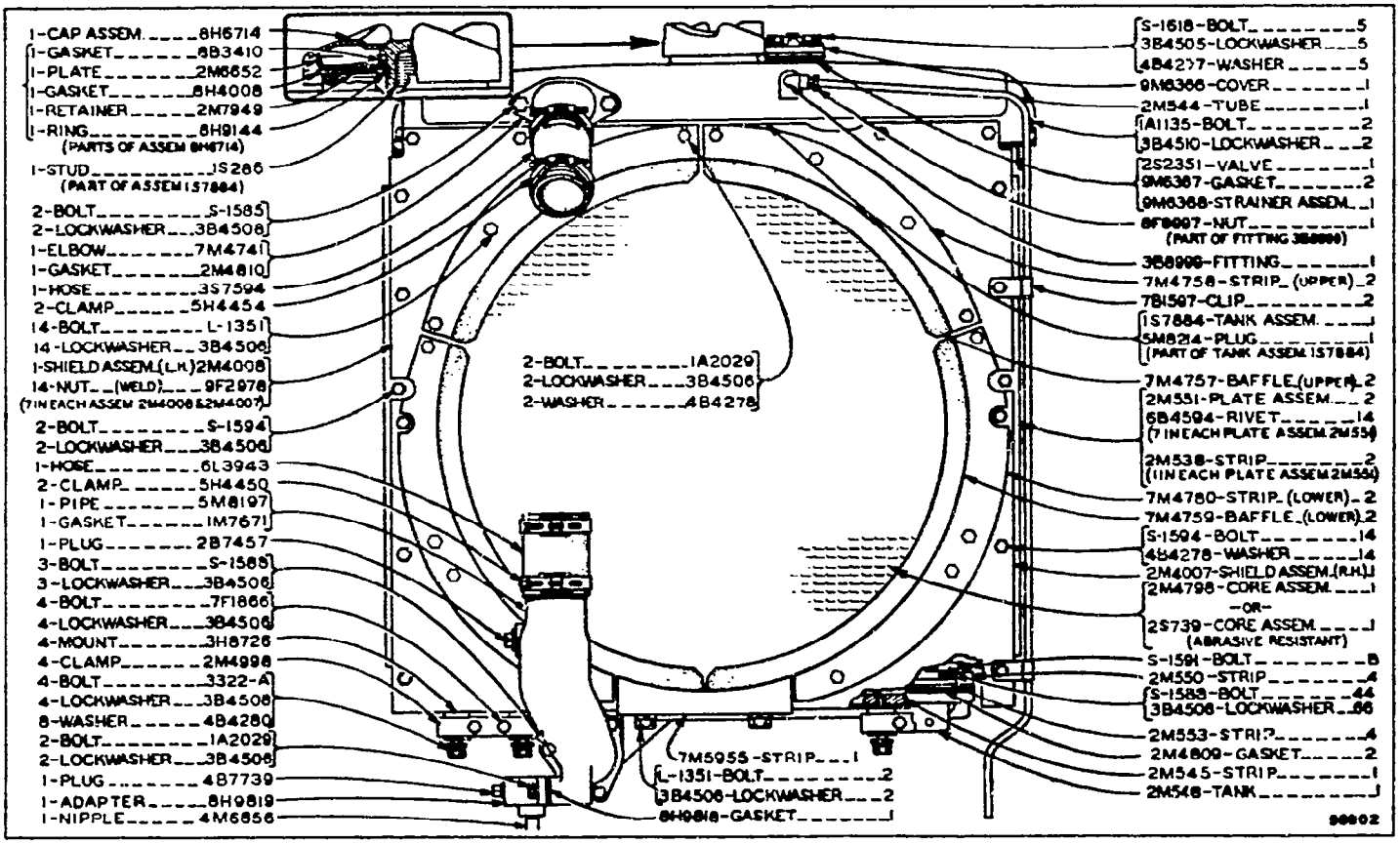

RADIATOR—Rear View
Serial No. 44A10135 to 44A12403 inclusive
Note: 6F6041 Rust Inhibitor is available

RADIATOR—Rear View
Effective with Serial No. 44A12404
Note: 2S9756 Core Assembly, for use where severe plugging occurs, is available. 6F6041 Rust Inhibitor is available.

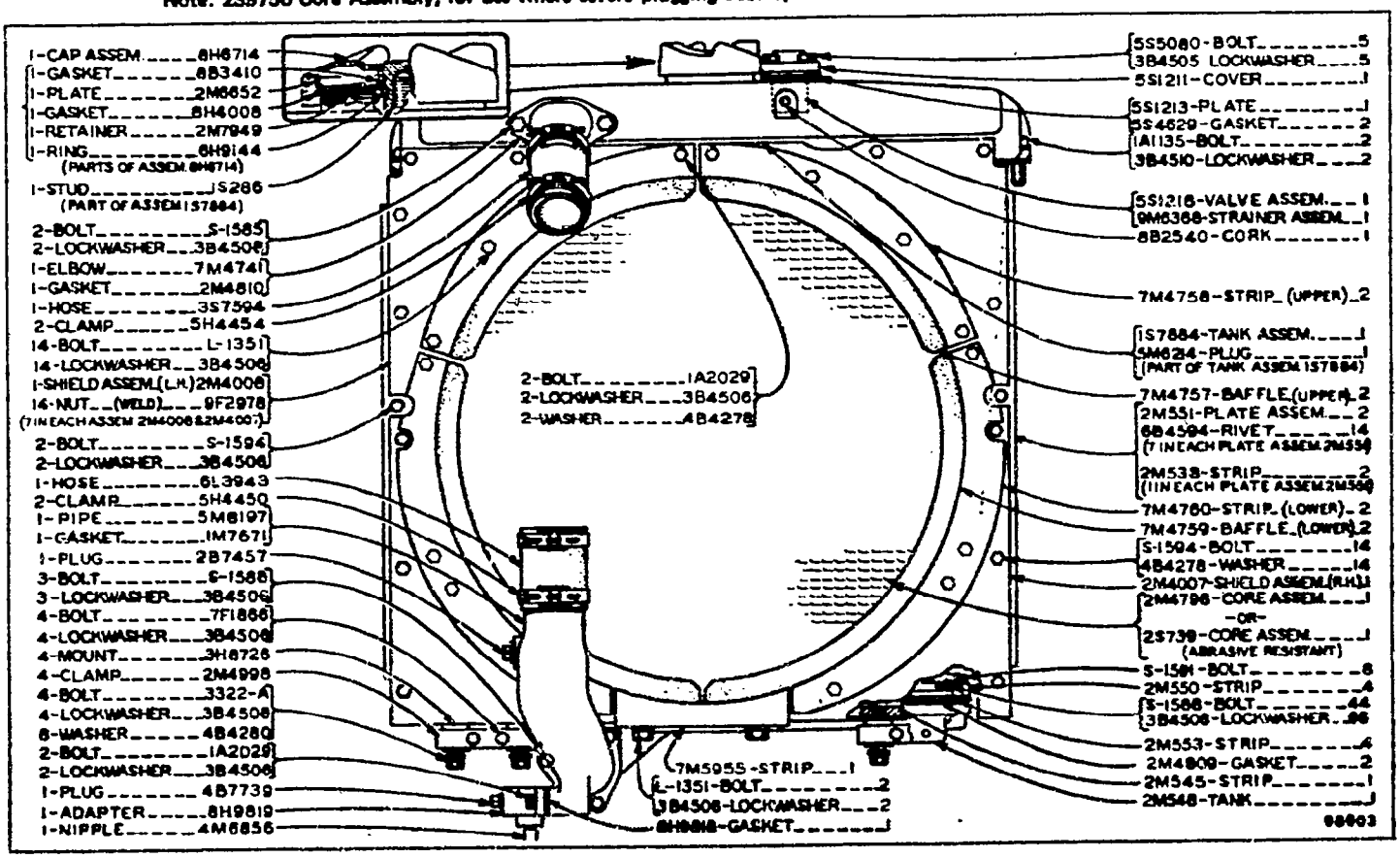

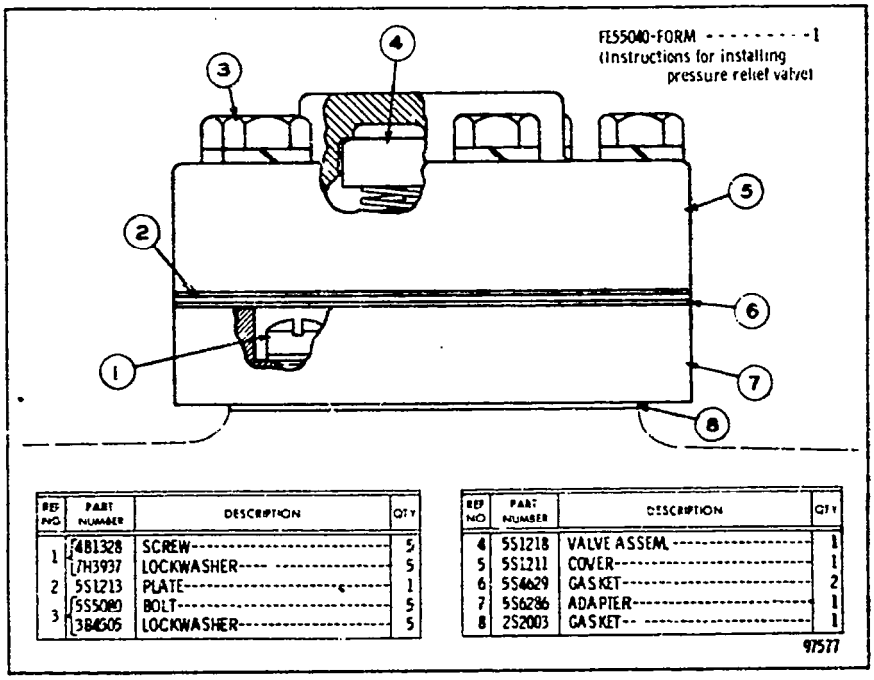

REF NO	PART NUMBER	DESCRIPTION	QTY
1	4B1328	SCREW	5
	7H3937	LOCKWASHER	5
2	5S1213	PLATE	1
3	5S5080	BOLT	5
	3B4505	LOCKWASHER	5

REF NO	PART NUMBER	DESCRIPTION	QTY
4	5S1218	VALVE ASSEM.	1
5	5S1211	COVER	1
6	5S4629	GASKET	2
7	5S6286	ADAPTER	1
8	2S2003	GASKET	1

97577

5S6849 PRESSURE RELIEF VALVE GROUP
Serial No. 44A6857 to 44A8247 inclusive. Provides Field Replacement for 3H3413 Cover
Only Separate parts serviced. When complete group is required order 7S4327

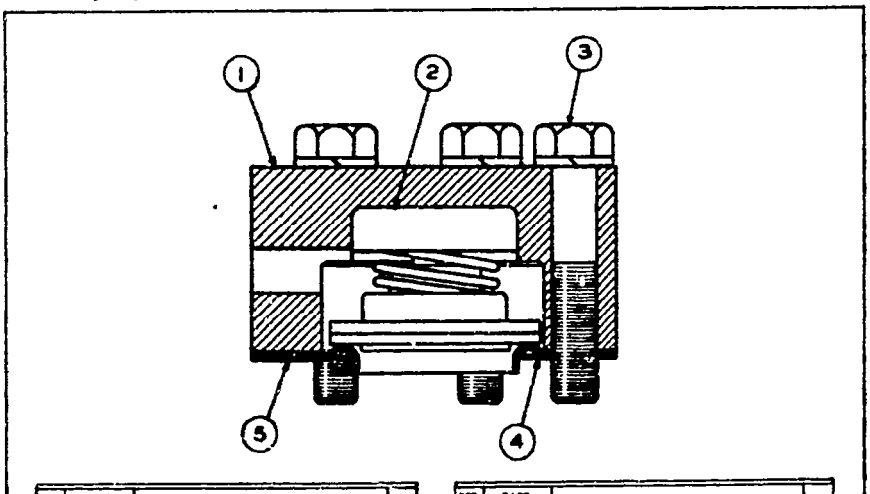

REF NO	PART NUMBER	DESCRIPTION	QTY
1	7S4249	COVER	1
2	5S1219	VALVE ASSEM.	1
3	1B9575	BOLT	5
	3B4505	LOCKWASHER	5
4	7S4252	PLATE	1

REF NO	PART NUMBER	DESCRIPTION	QTY
5	7S7039	GASKET	1
FM055040-01		FORM (Installation instructions for Pressure Relief Valve)	1

104196

7S4327 PRESSURE RELIEF VALVE GROUP
Serial No. 44A6857 to 44A8247 inclusive
Provides Field Replacement for 3H3413 Cover

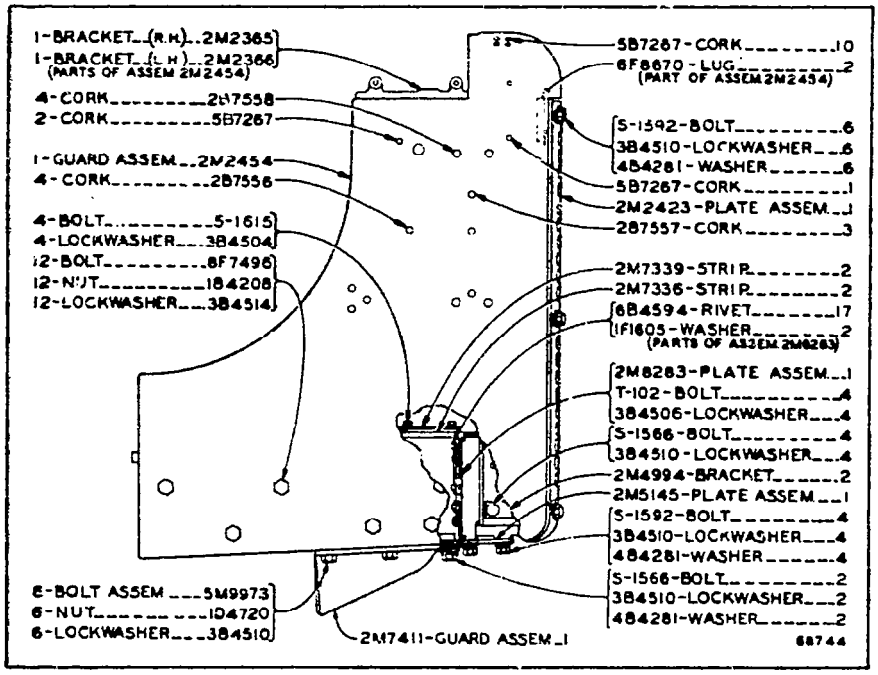

RADIATOR GUARD

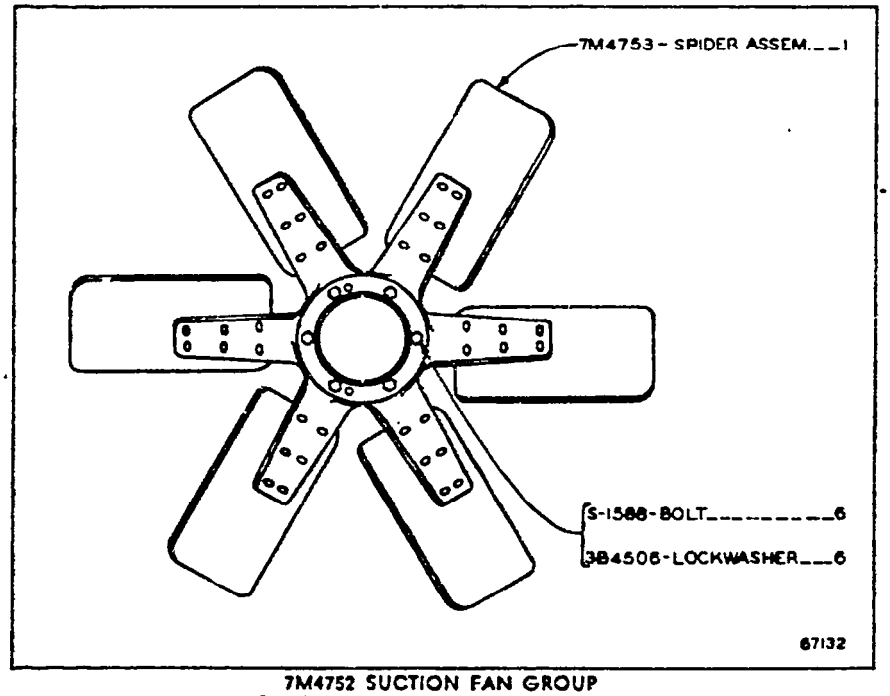

7M4752 SUCTION FAN GROUP
Serial No. 44A6857 to 44A9206 inclusive
Refer also to Pages 102 and 102A for special parts

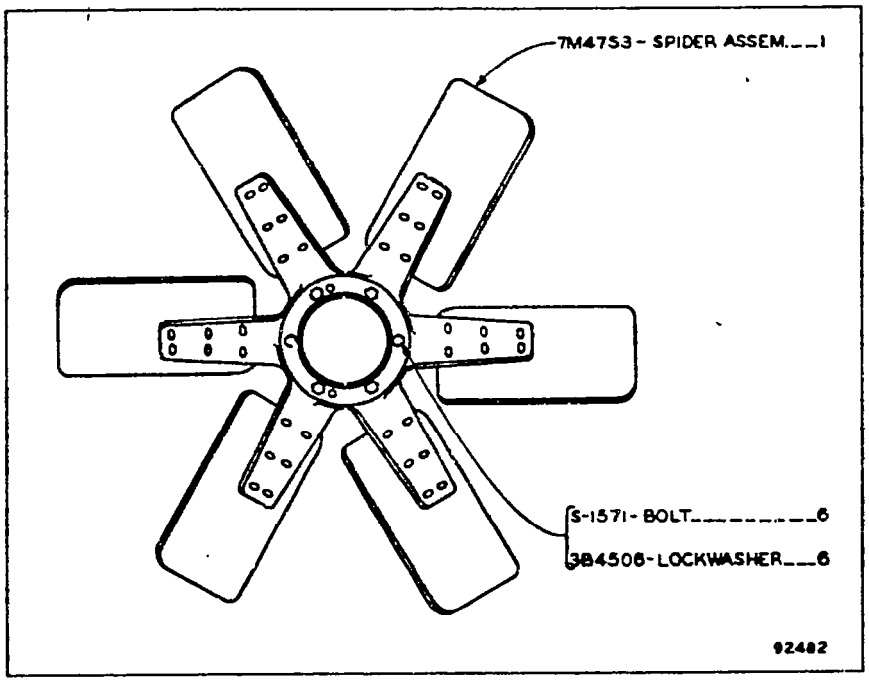

1S5002 SUCTION FAN GROUP—Type 1
Serial No. 44A9207—Up
Refer also to Pages 102 through 102C for special parts

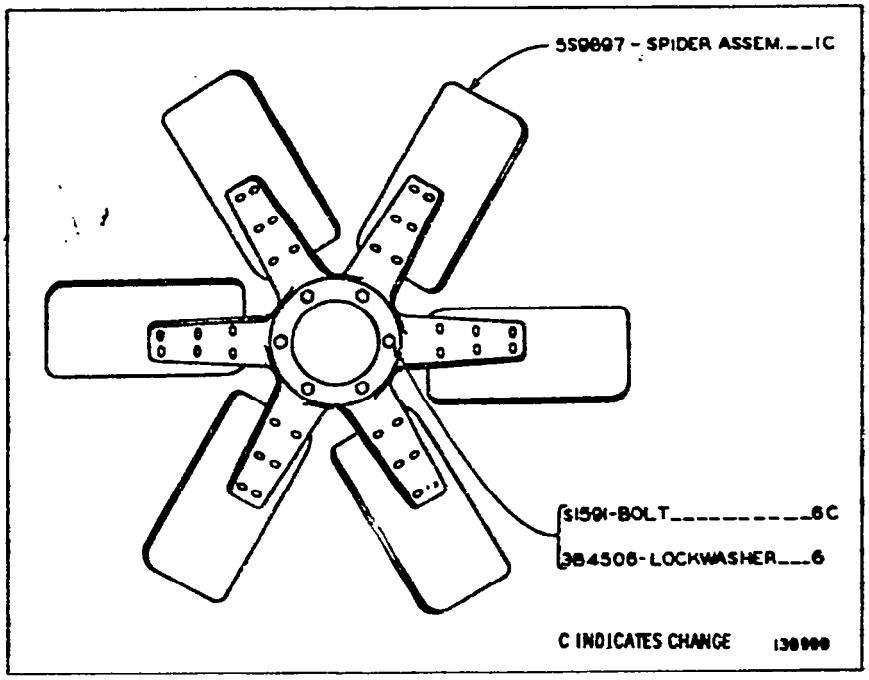

1S5002 SUCTION FAN GROUP—Type 2
Serial No. 44A9207—Up
Refer also to Pages 102 through 102C for special parts

2S6912 WATER PUMP ASSEMBLY

Serial No. 44A9207 to 44A9685 inclusive

See Page 27 for Gasket Kit

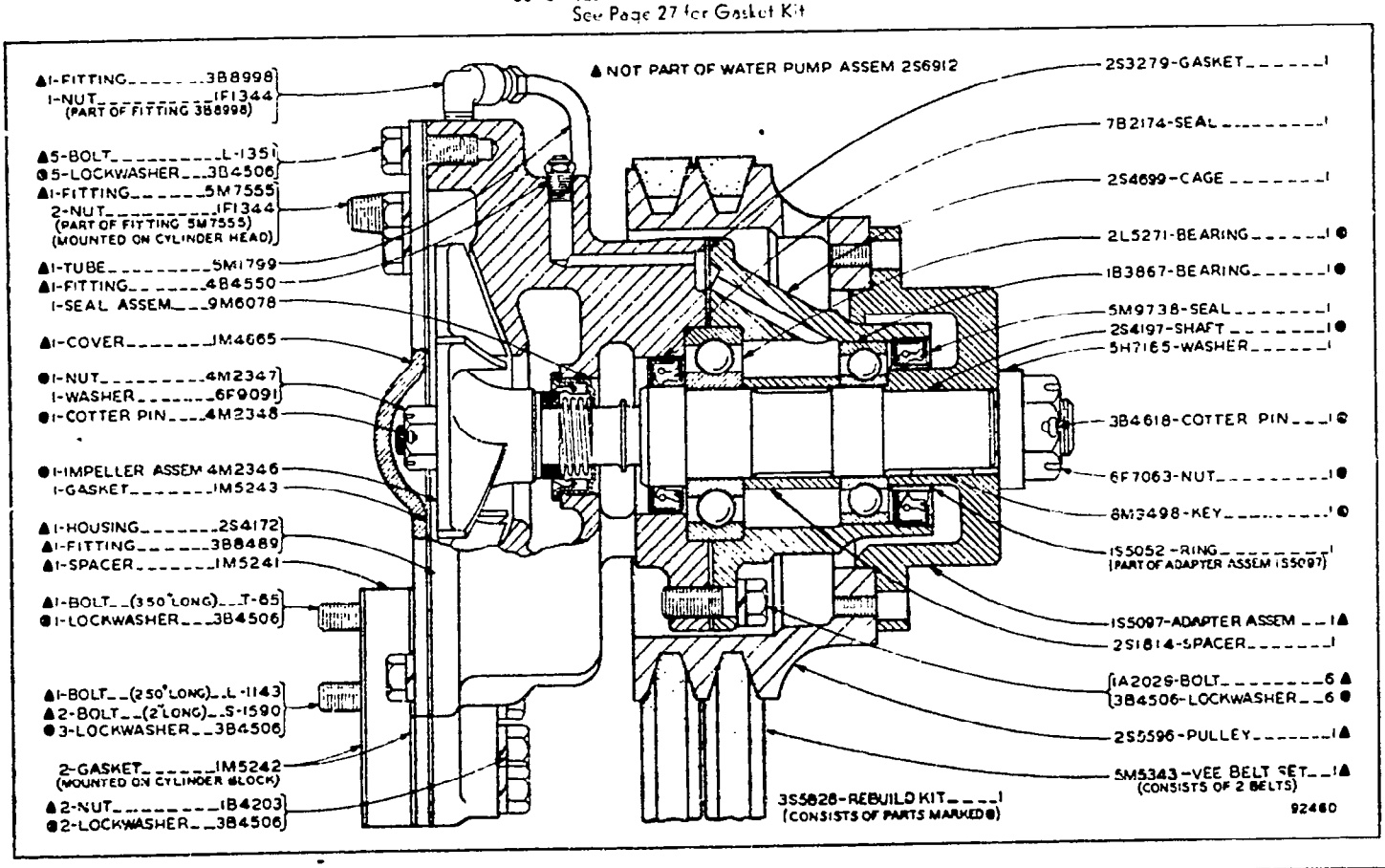

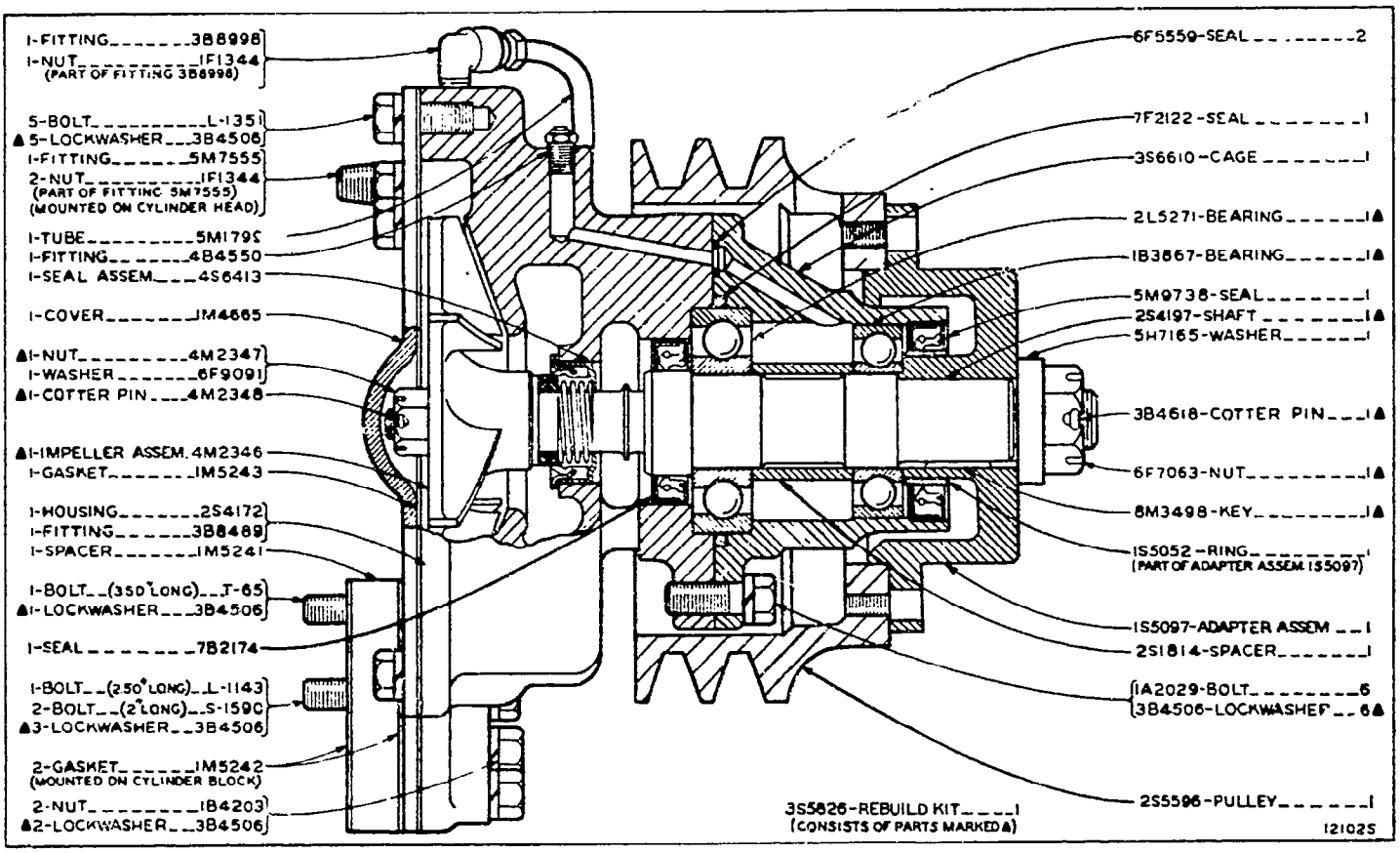

2S5597 WATER PUMP GROUP
Effective with Serial No. 44A9686
See Page 27 for Gasket Kit

2S5597 WATER PUMP GROUP—Type 2
Serial No. 44A9686—Up
See Page 27 for Gasket Kits

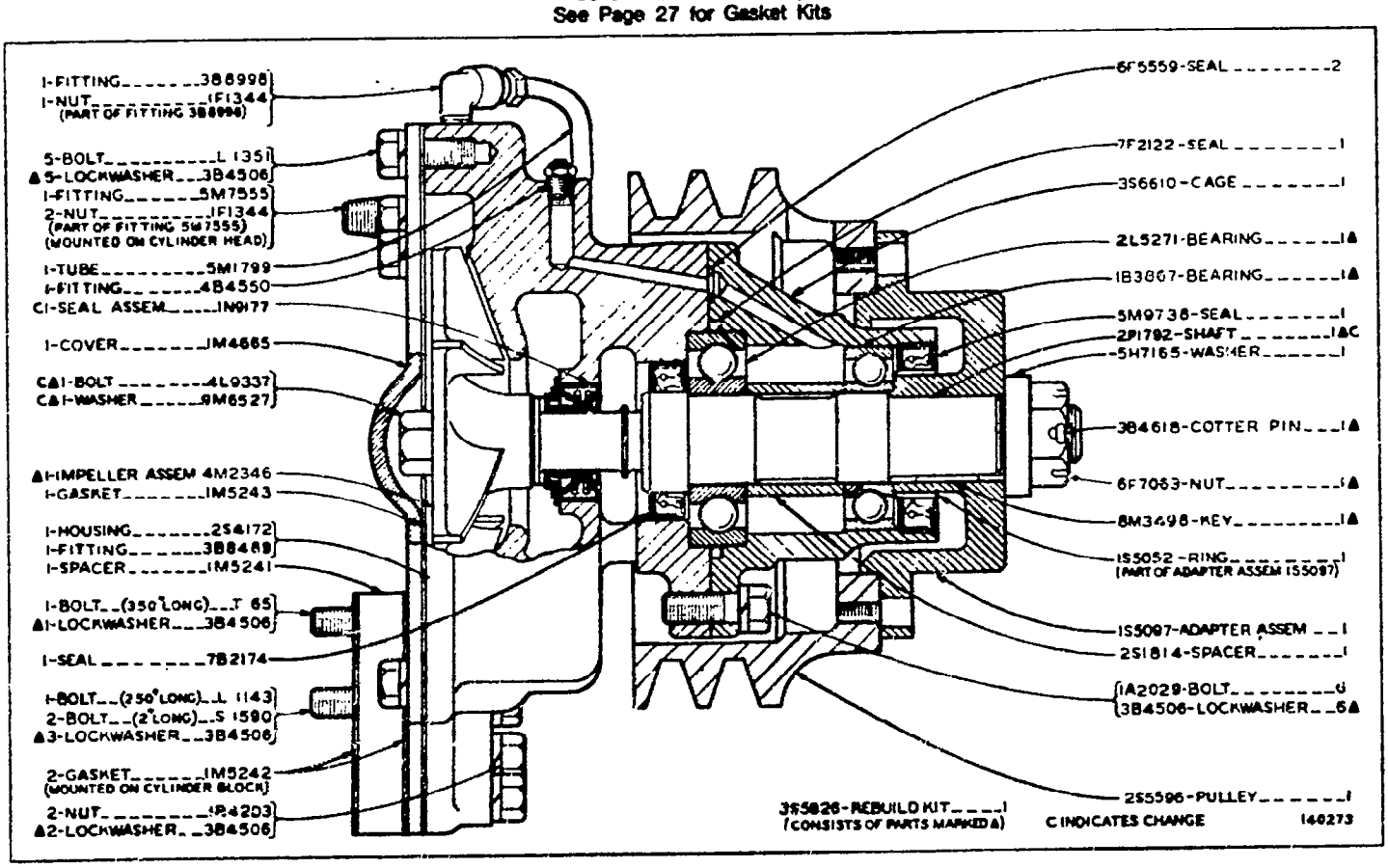

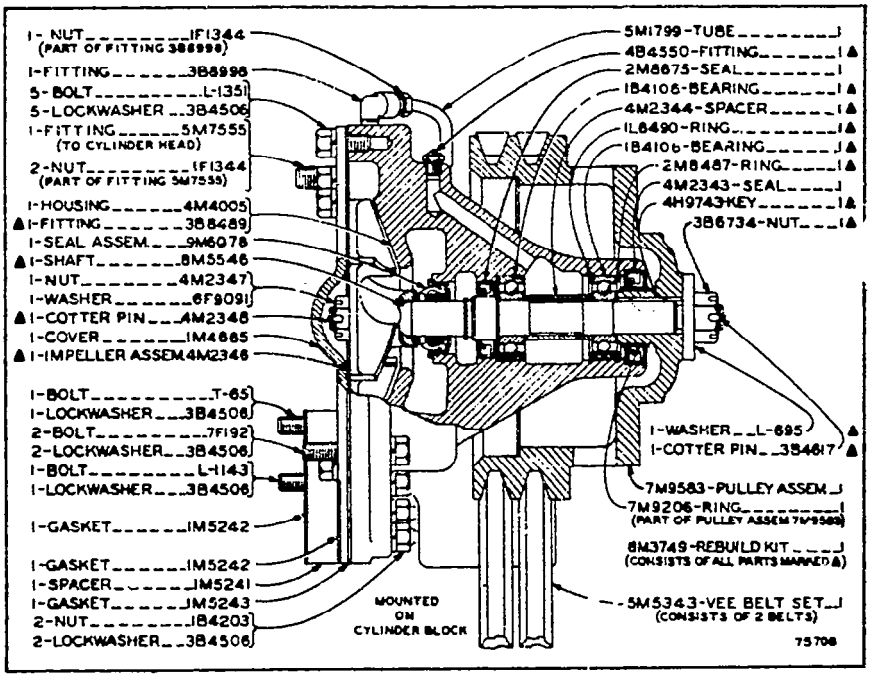

7M4751 WATER PUMP GROUP
Serial No. 44A6857 to 44A9206 inclusive
See Page 27 for Gasket Kits

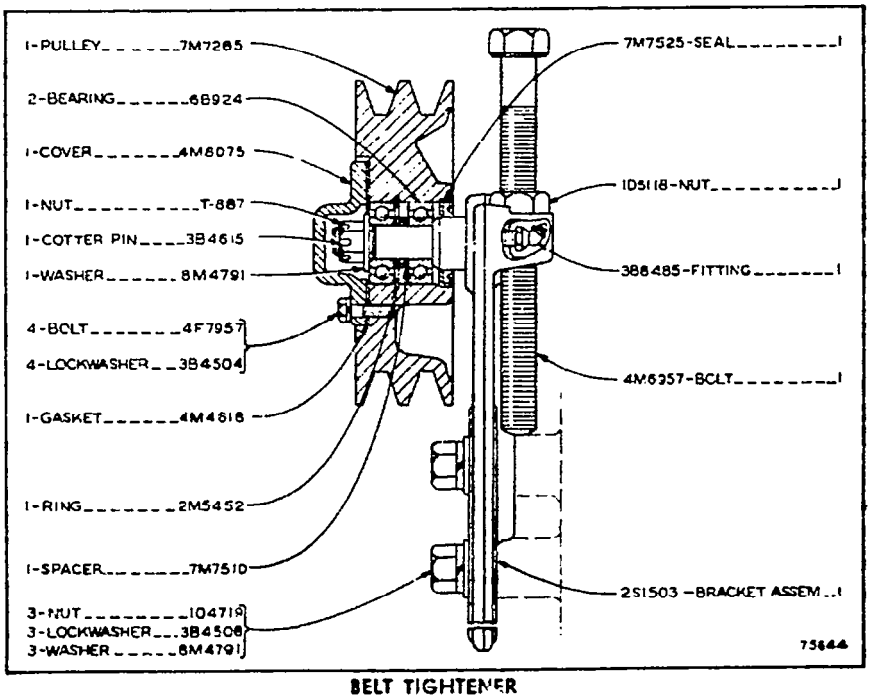

BELT TIGHTENER

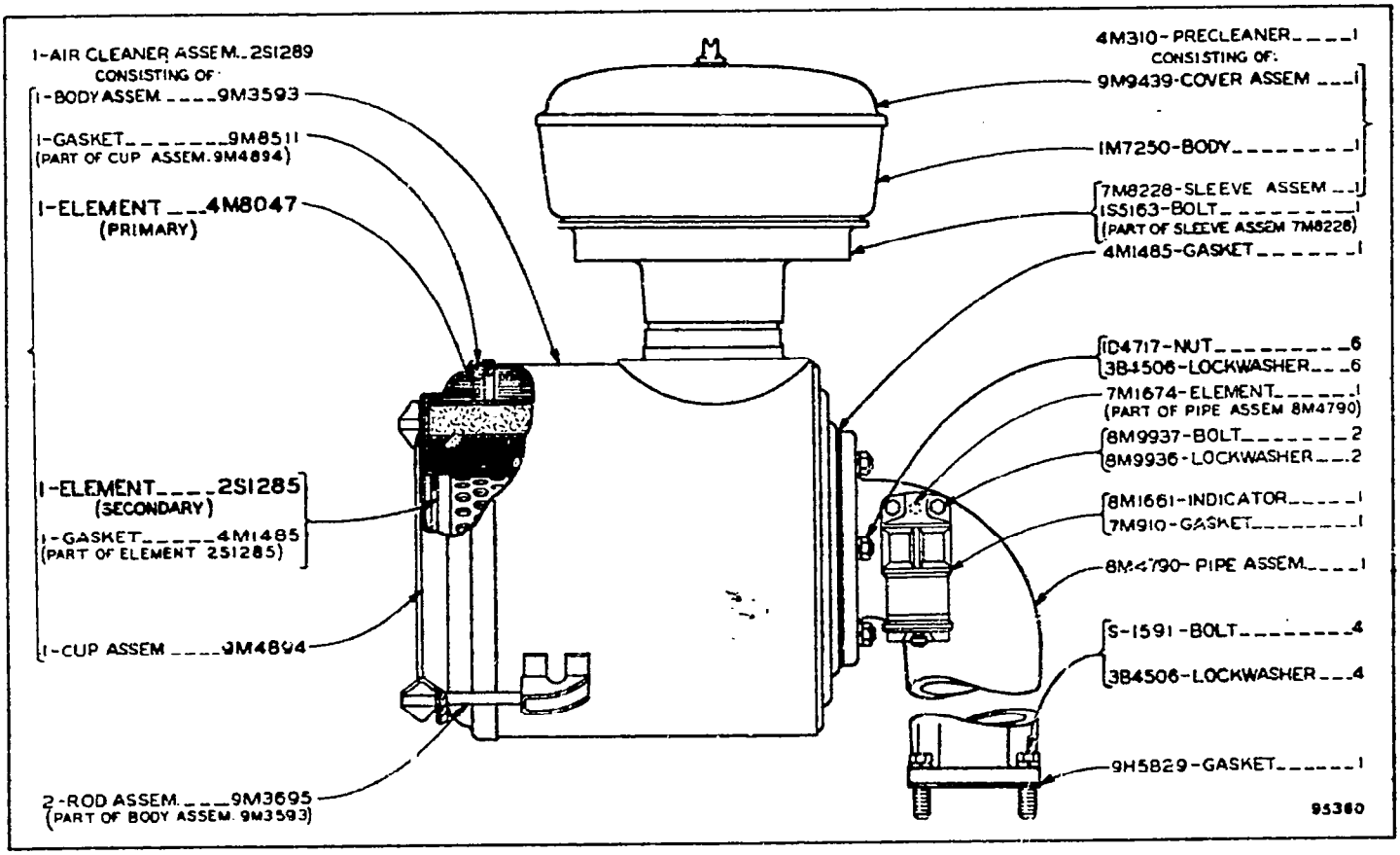

AIR CLEANER

Refer also to Pages 107 and 168 for special parts

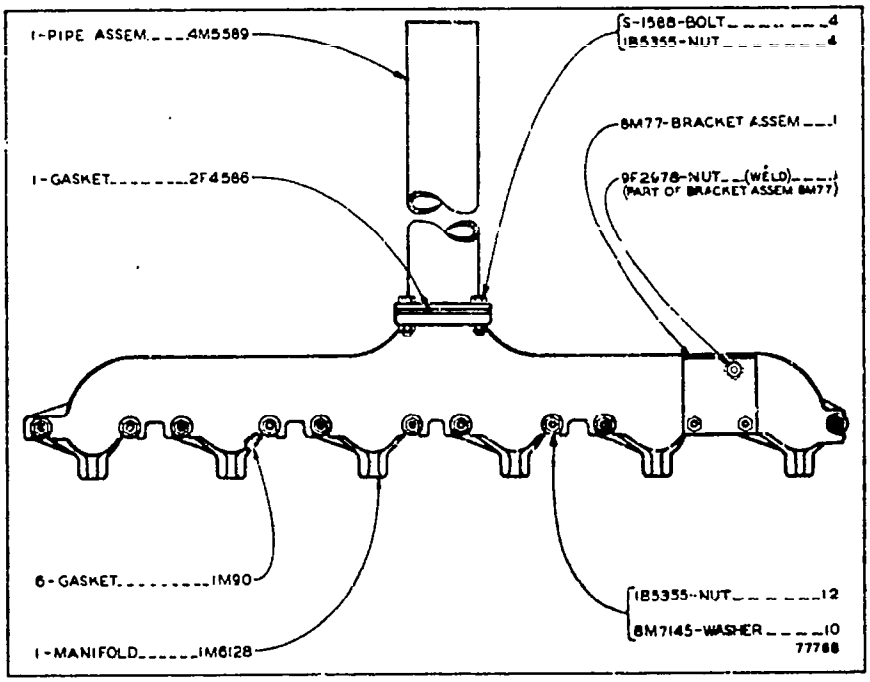

MANIFOLD

Note: 7S4992 Rain Cap Assembly is available
Refer to Pages 109 and 110 for special parts

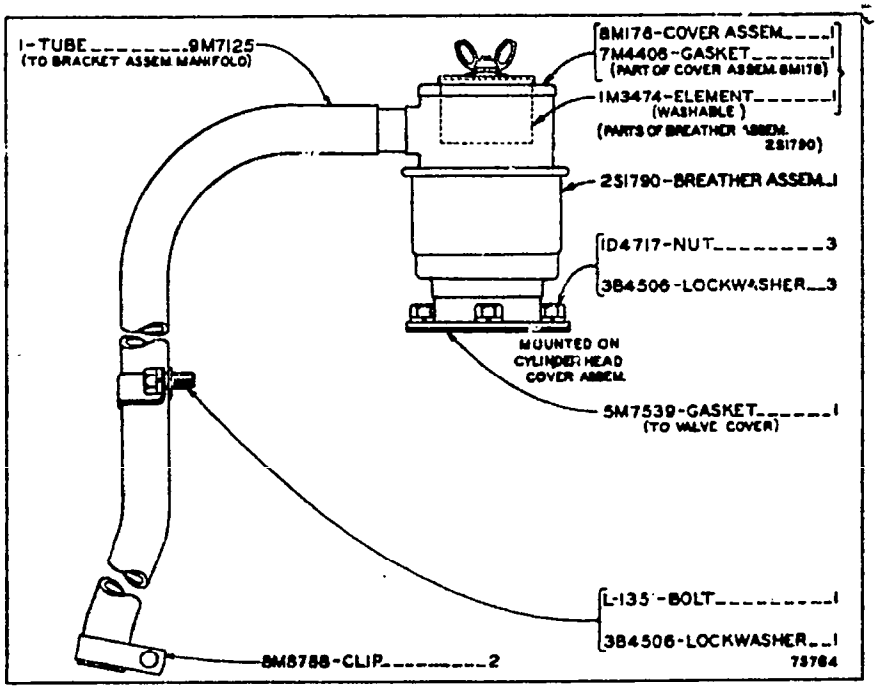

BREATHER

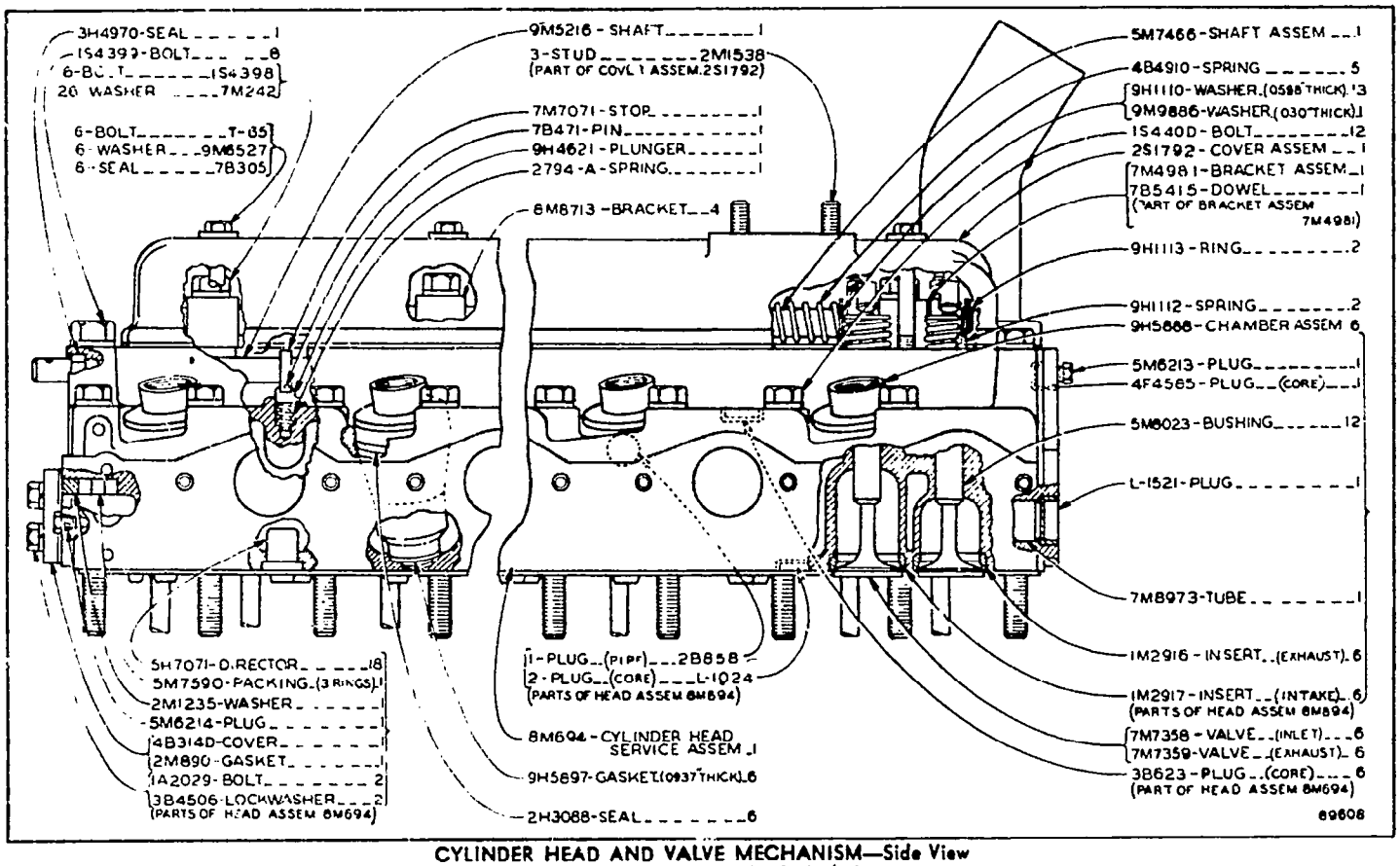

CYLINDER HEAD AND VALVE MECHANISM—Side View
Serial No. 44A6857 to 44A7938 inclusive
See Page 27 for Gasket Kit. Refer also to Page 146 for special parts

CYLINDER HEAD AND VALVE MECHANISM—End View
Serial No. 44A6857 to 44A7938 inclusive

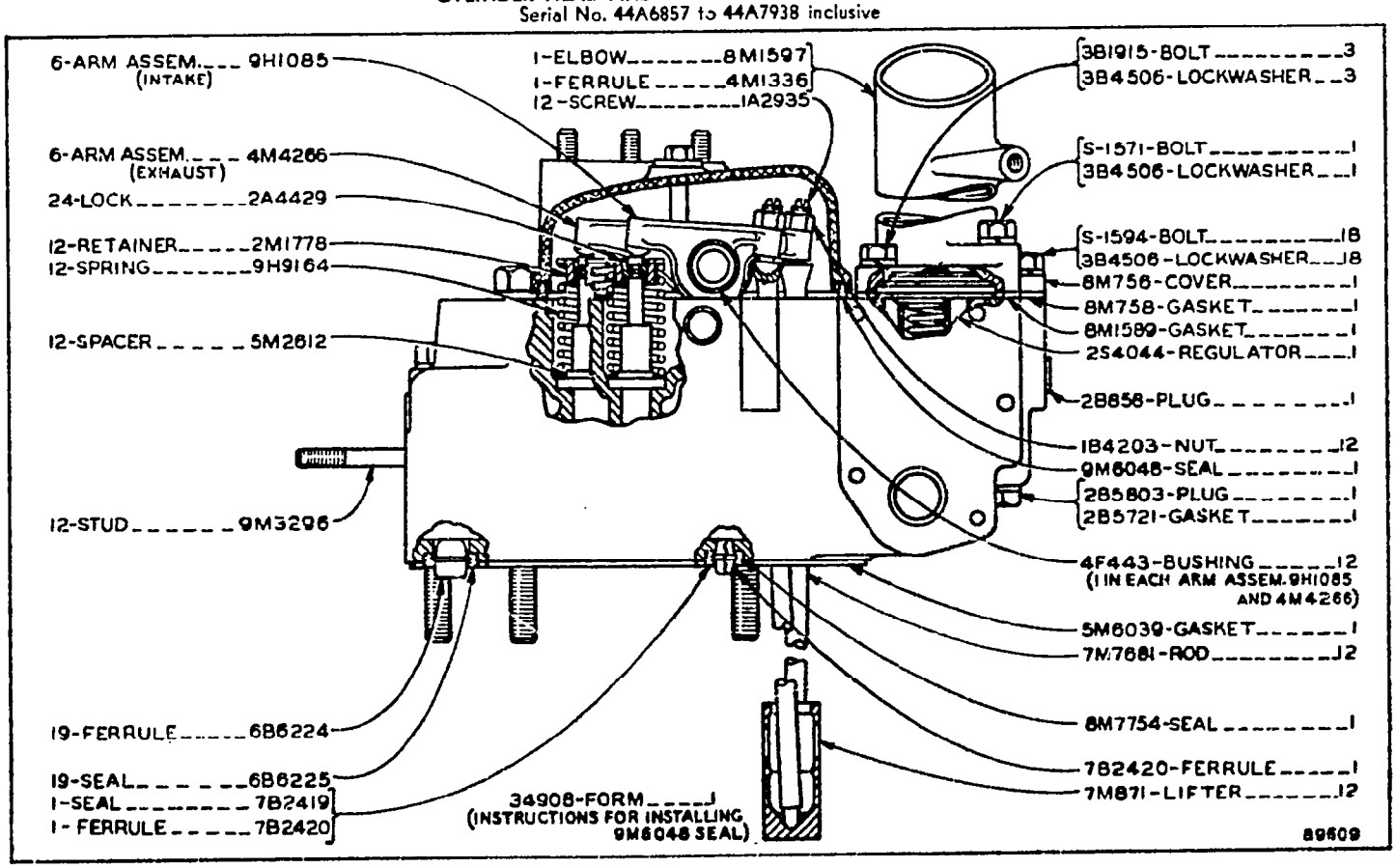

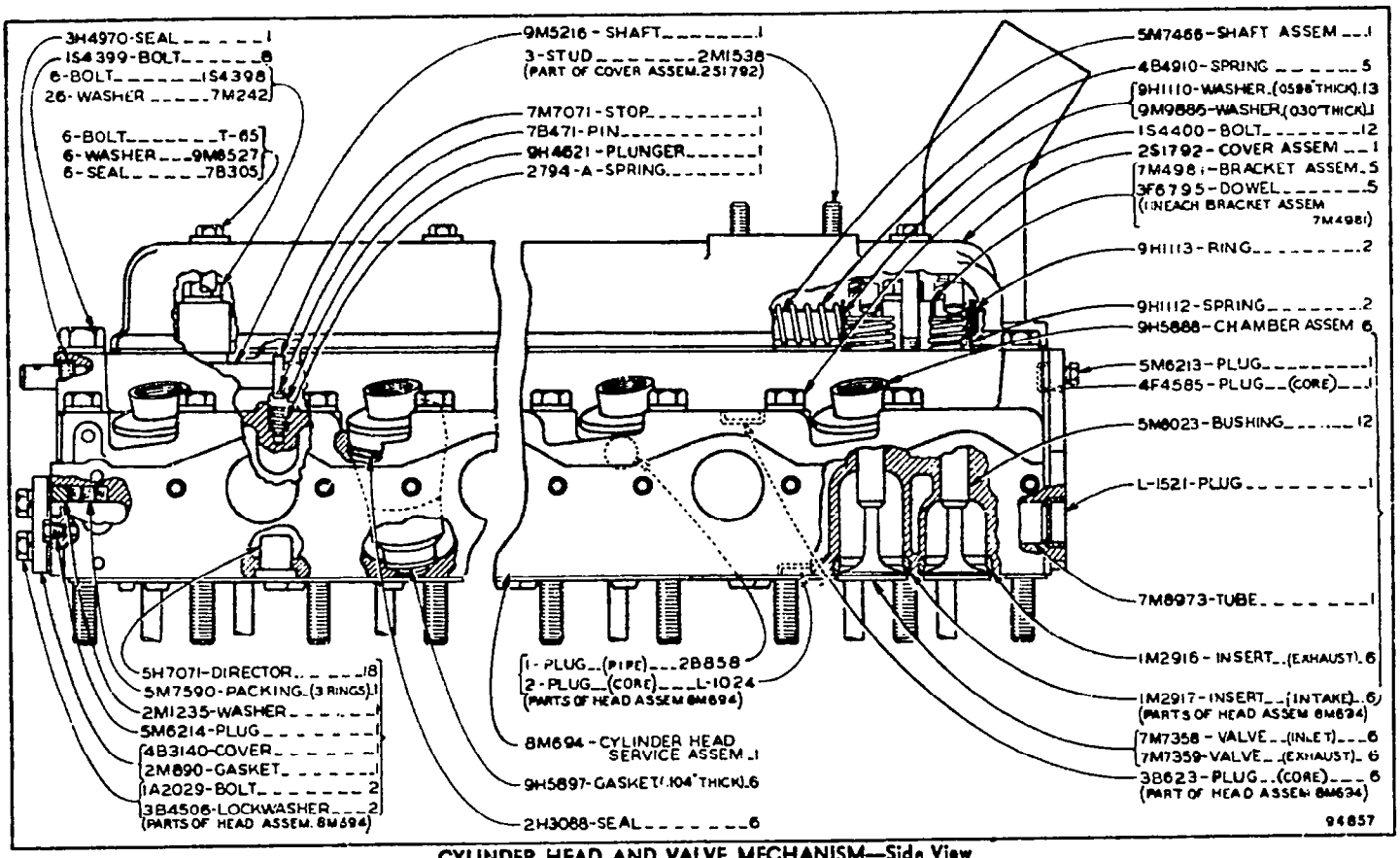

CYLINDER HEAD AND VALVE MECHANISM—Side View
Serial No. 44A7939 to 44A9685 inclusive
See Page 27 for Gasket Kit. Refer also to Page 146 for specia' parts

CYLINDER HEAD AND VALVE MECHANISM—End View
Serial No. 44A7939 to 44A9685 inclusive

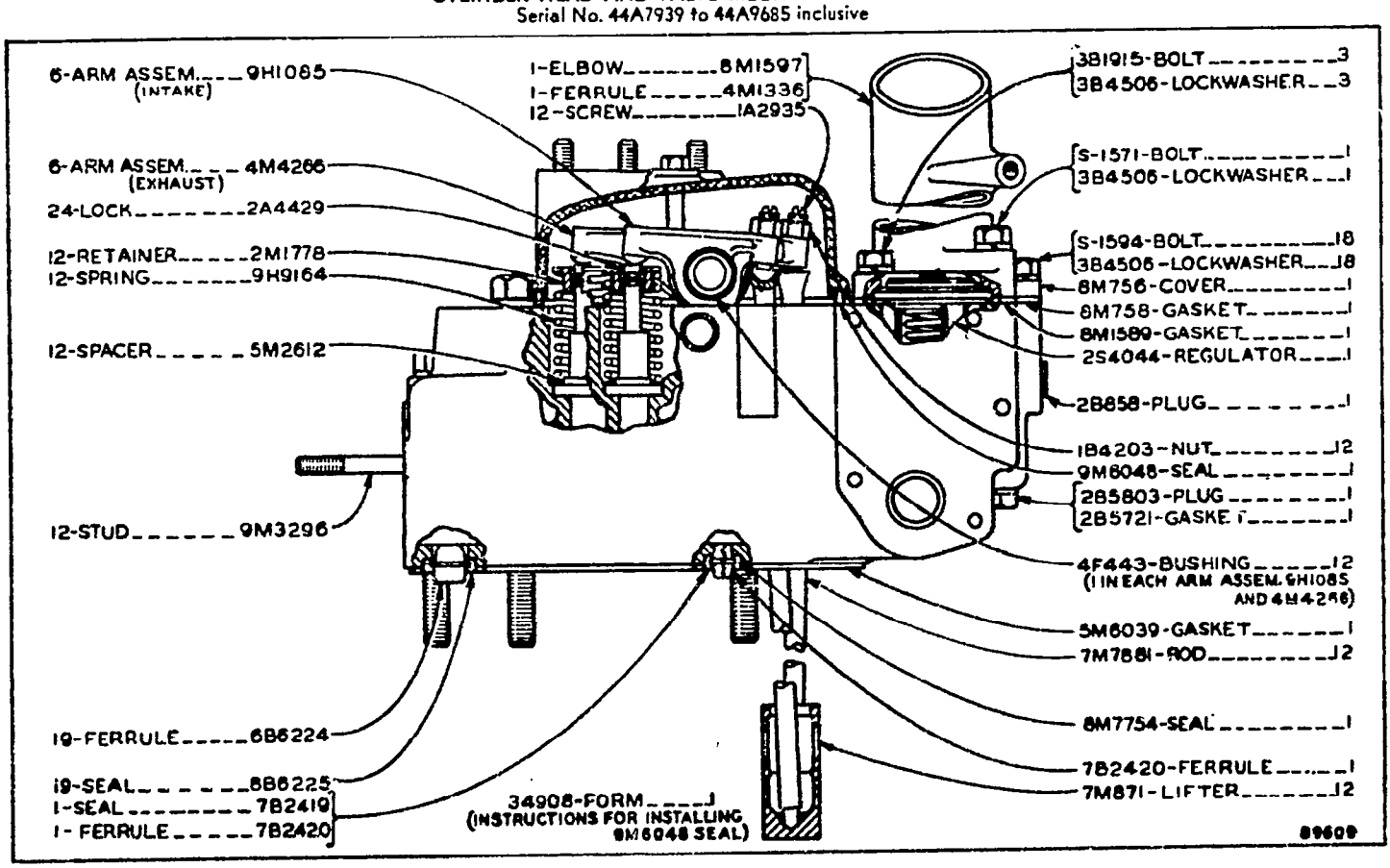

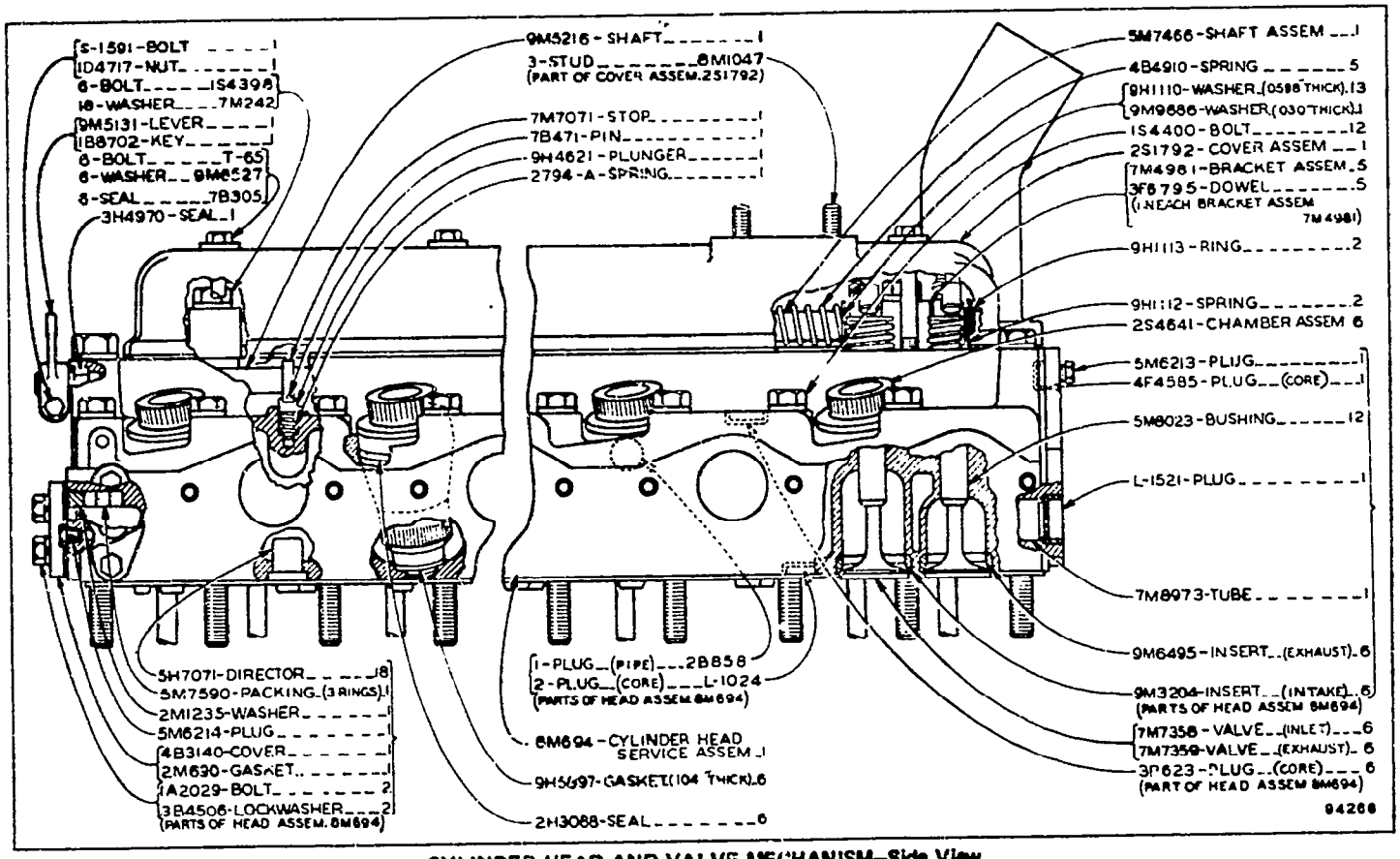

CYLINDER HEAD AND VALVE MECHANISM—Side View
Serial No. 44A9686 to 44A11606 inclusive
See Page 27 for Gasket Kit. Refer also to Page 146 for special parts

CYLINDER HEAD AND VALVE MECHANISM—End View
Serial No. 44A9686 to 44A11606 inclusive

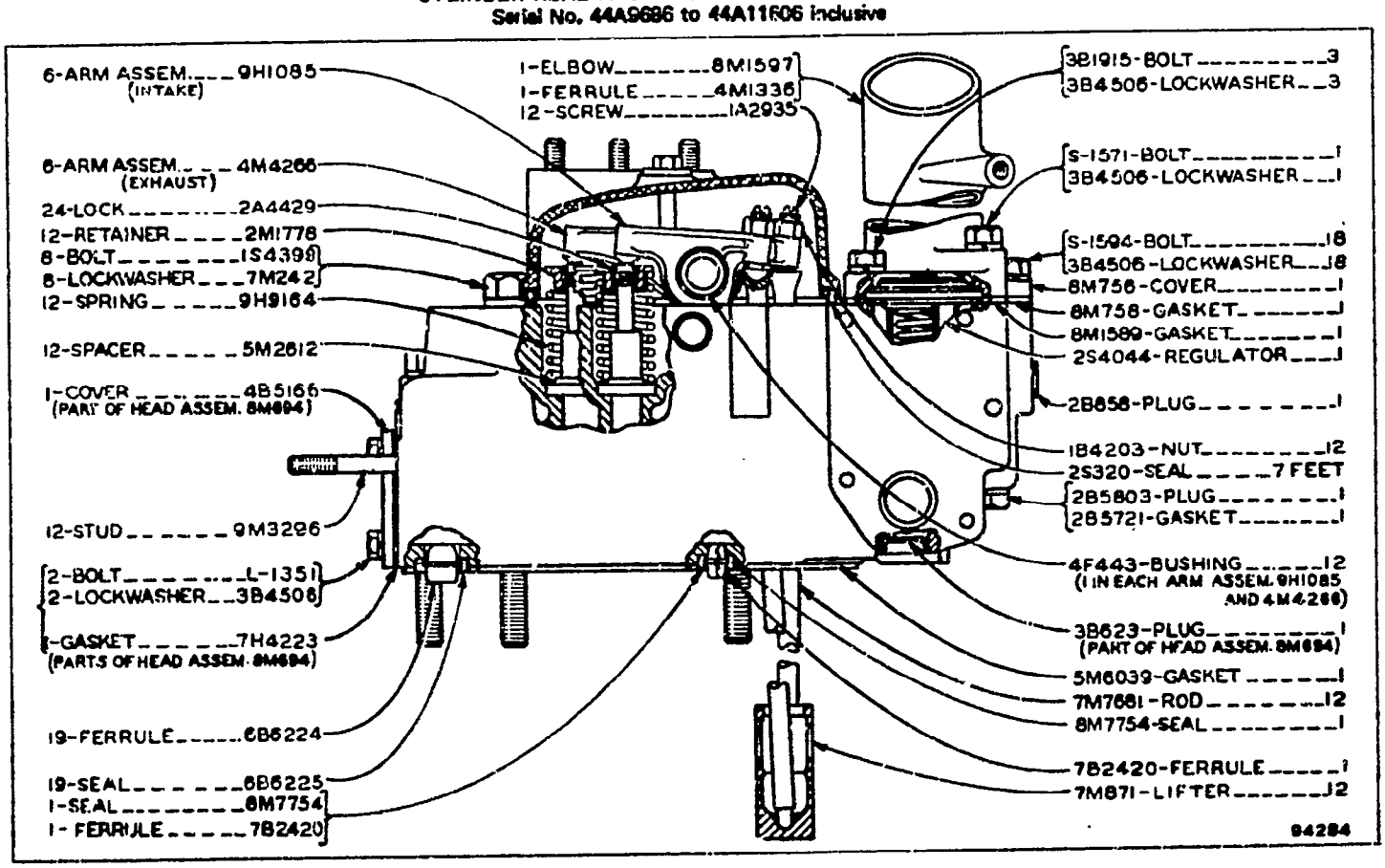

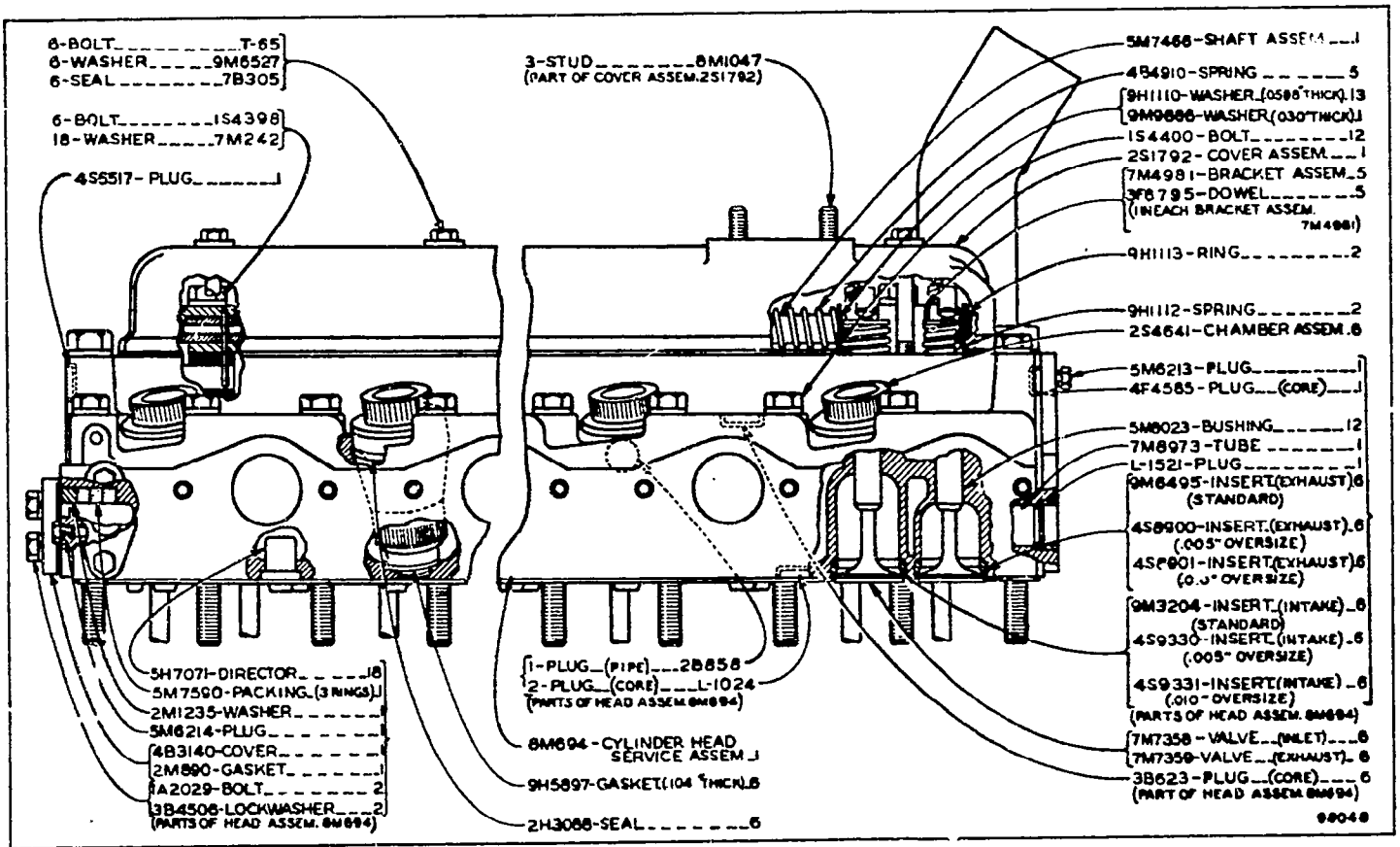

CYLINDER HEAD AND VALVE MECHANISM—Side View
Serial No. 44A11607 to 44A12416 inclusive
See Page 27 for Gasket Kit. Refer also to Page 146 for special parts

CYLINDER HEAD AND VALVE MECHANISM—End View
Serial No. 44A11607 to 44A12416 inclusive

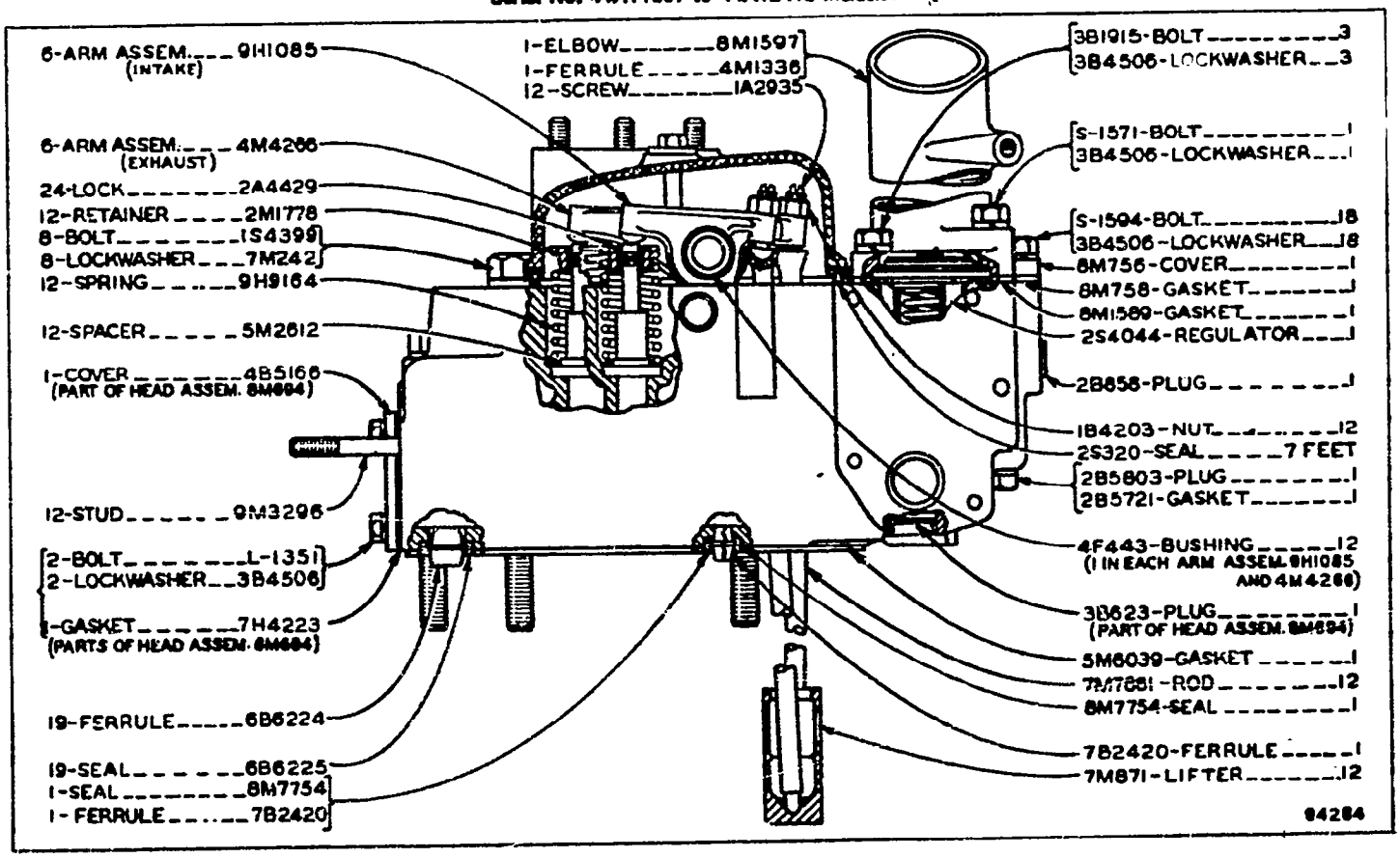

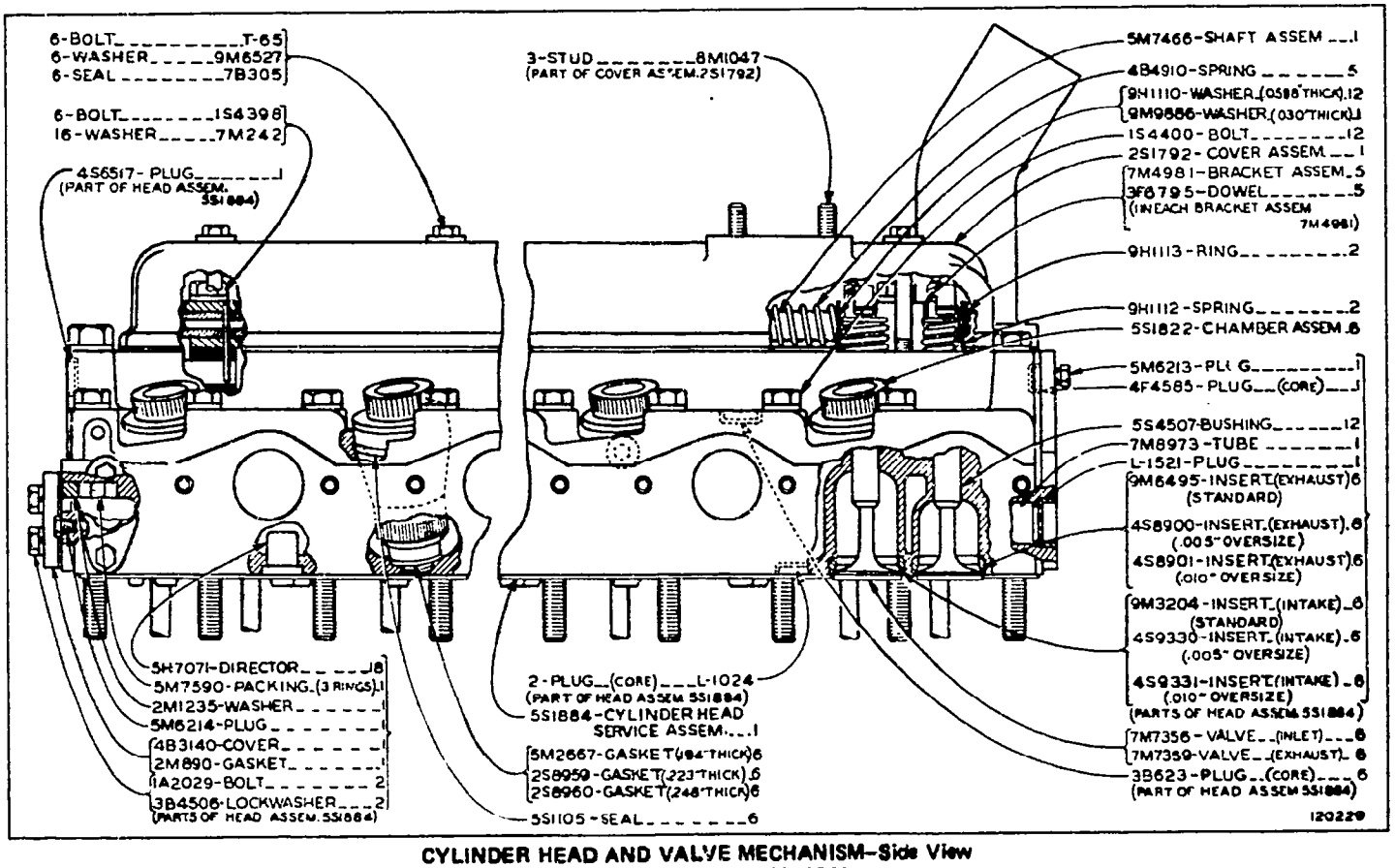

CYLINDER HEAD AND VALVE MECHANISM—Side View
Effective with Serial No. 44A12417
See Page 27 for Gasket Kit. Refer also to Page 146 for special parts

CYLINDER HEAD AND VALVE MECHANISM—End View
Effective with Serial No. 44A12417

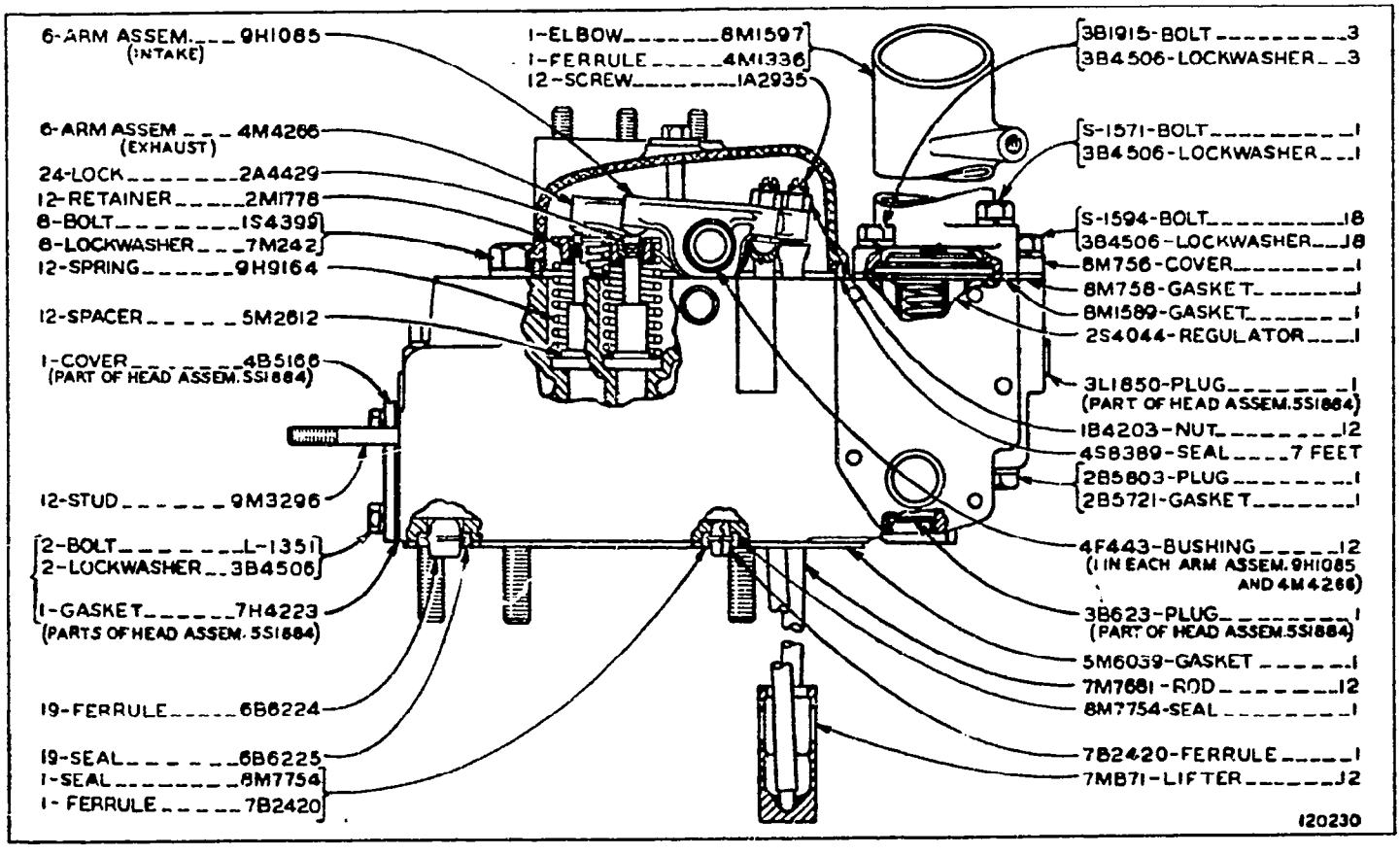

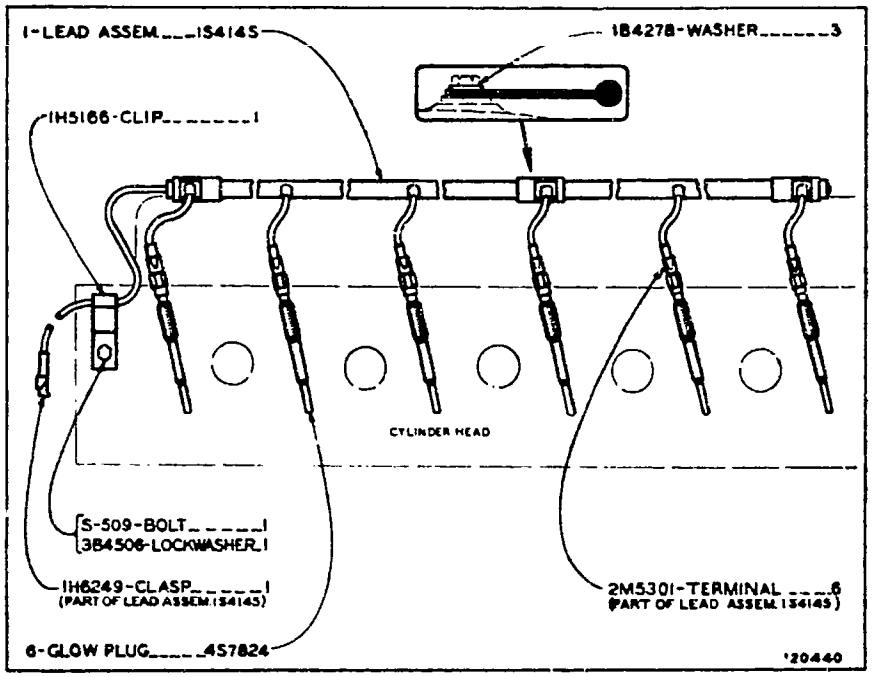

GLOW PLUG AND WIRING
Effective with Serial No. 44A12417

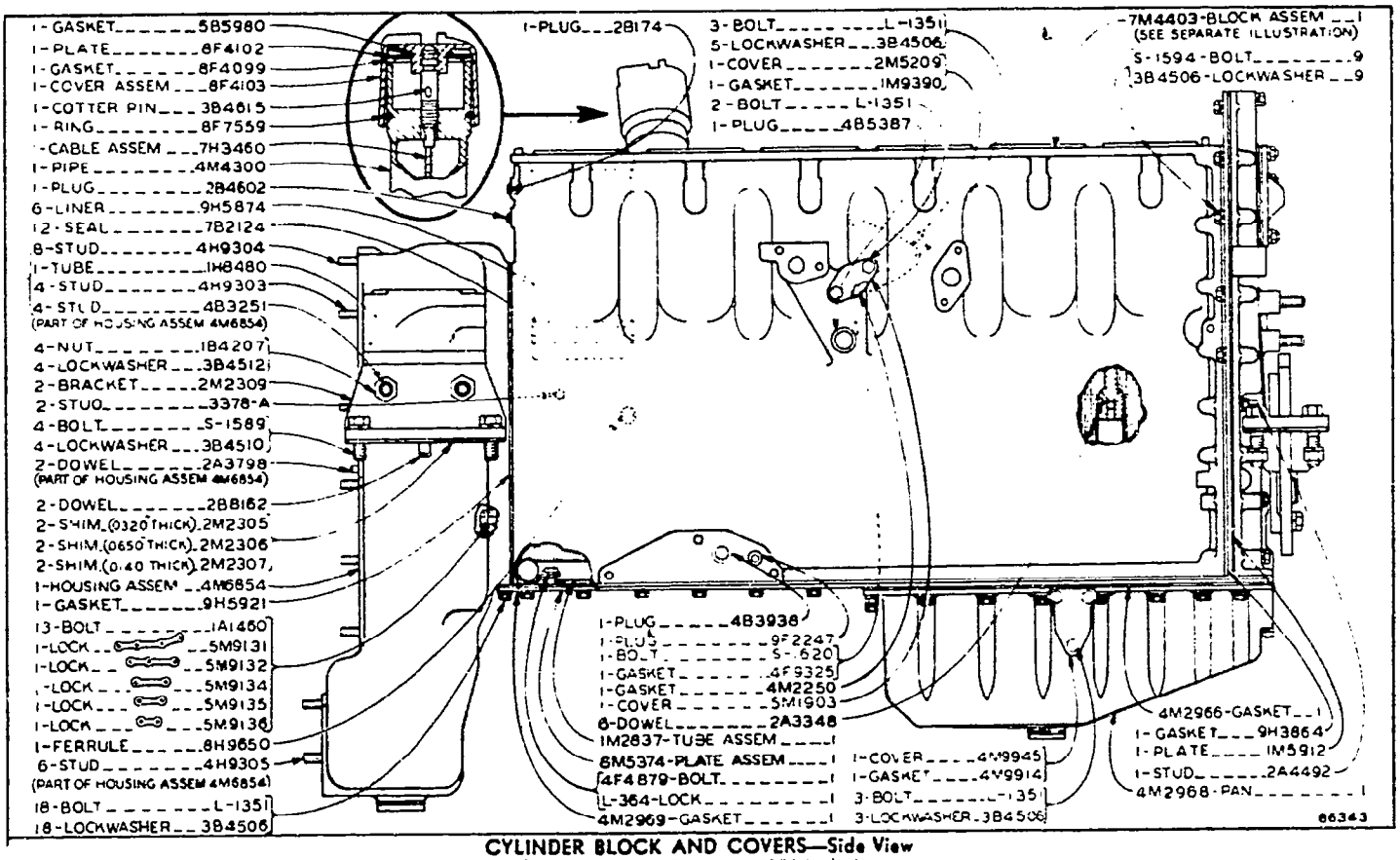

CYLINDER BLOCK AND COVERS—Side View
Serial No. 44A6857 to 44A8358 inclusive
7M4403 Cylinder Block Assembly parts are shown on Page 28
See Page 27 for Gasket Kits

CYLINDER BLOCK AND COVERS—End View
Serial No. 44A6857 to 44A8358 inclusive
Refer also to Page 112 for special parts

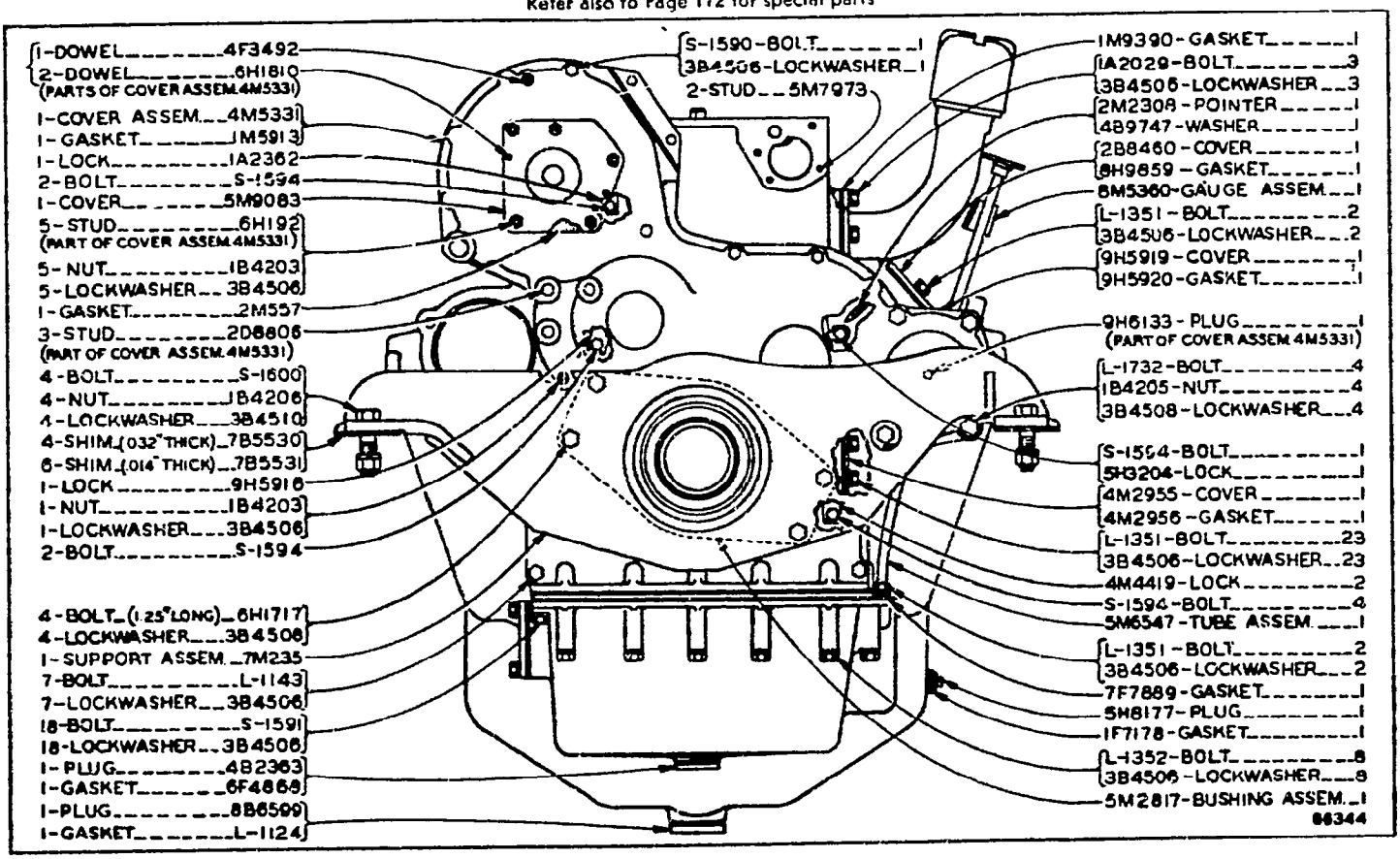

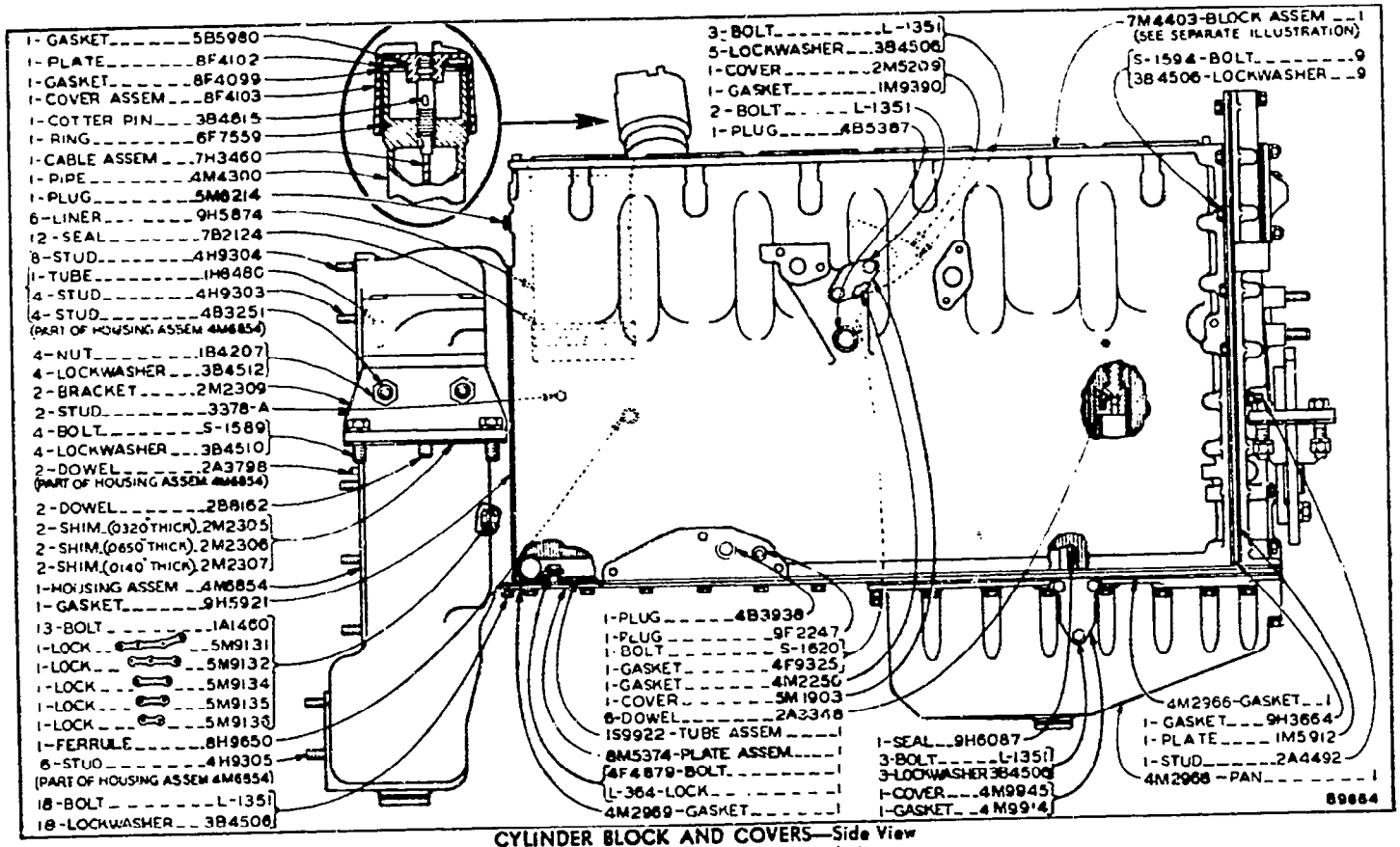

CYLINDER BLOCK AND COVERS—Side View
Serial No. 44A8359 to 44A9685 inclusive
7M4403 Cylinder Block Assembly parts are shown on Page 28
See Page 27 for Gasket Kit

CYLINDER BLOCK AND COVERS—End View
Serial No. 44A8359 to 44A9685 inclusive
Refer also to Page 112 for special parts

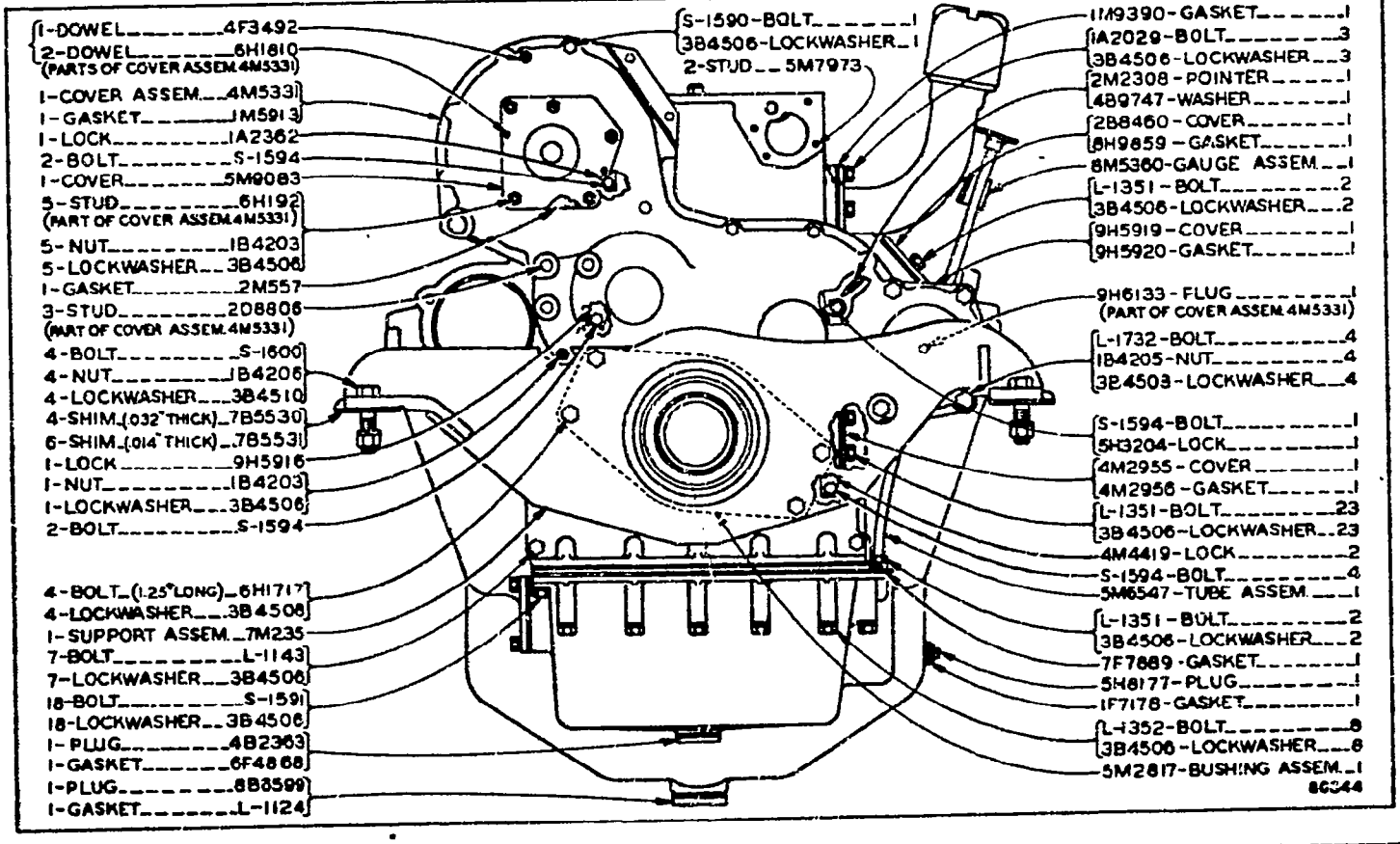

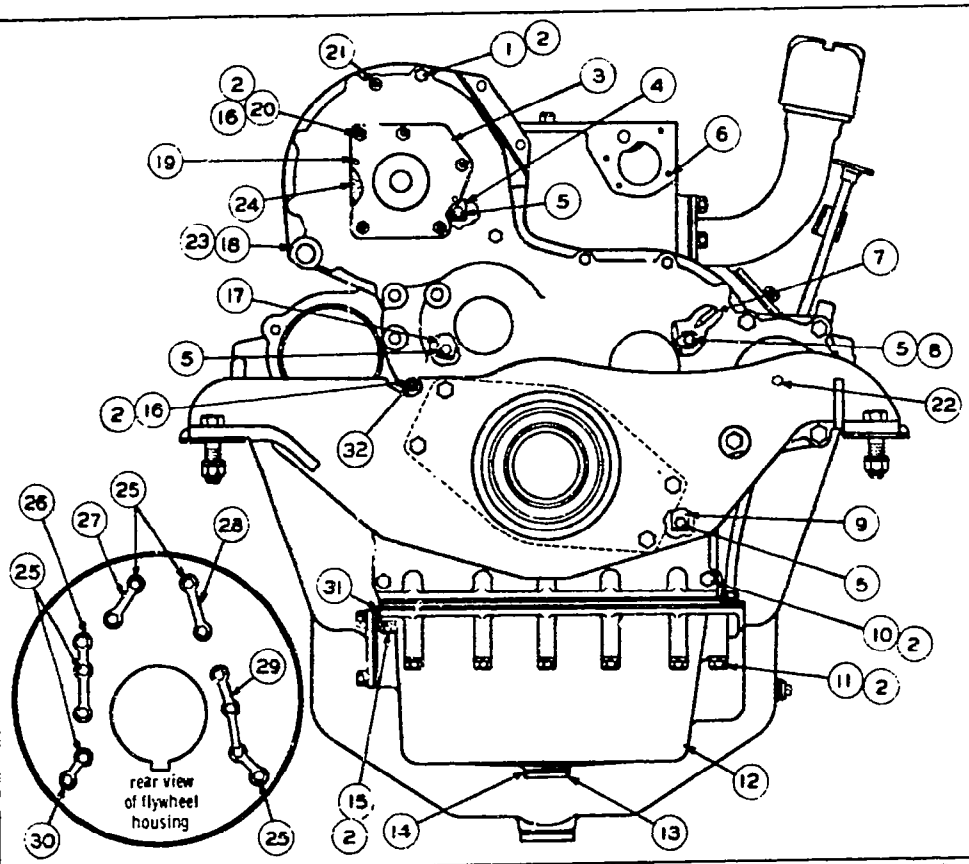

REF NO	PART NUMBER	DESCRIPTION	QTY
1	S-1590	BOLT	1
2	3B4506	LOCKWASHER	40
3	5M9083	COVER	1
4	1A2362	LOCK	1
5	S-1594	BOLT	9
6	5M7973	STUD	2
7	2M2908	POINTER	1
	4B9747	WASHER	1
8	5H3204	LOCK	1
9	4M4419	LOCK	2
10	L-1143	BOLT	7
11	L-1352	BOLT	8
12	4M2968	PAN	1
13	4B2363	PLUG	1
14	6F4868	GASKET	1
15	S-1591	BOLT	18
16	1B4203	NUT	6
17	9H5916	LOCK	1
18	4M5331	COVER ASSEM.	1
19	6H1810	DOWEL	2
20	6H192	STUD	5
21	4F3492	DOWEL	1
22	9H6133	PLUG	1
		(Parts of Cover Assem. 4M5331)	
23	1M5913	GASKET	1
24	2M557	GASKET	1
25	1A1460	BOLT	13
26	5M9132	LOCK	1
27	5M9135	LOCK	1
28	5M9134	LOCK	1
29	5M9131	LOCK	1
30	5M9136	LOCK	1
31	4M2966	GASKET	1
32	2A4492	STUD	1

93959

CYLINDER BLOCK AND COVERS—End View—Part One
Effective with Serial No. 44A9686
Additional parts are shown on Pages 26C and 26D

CYLINDER BLOCK AND COVERS—End View—Part Two
Effective with Serial No. 44A9686
Additional parts are shown on Pages 26B and 26D

REF NO	PART NUMBER	DESCRIPTION	QTY
1	1M9390	GASKET	1
2	1A2029	BOLT	3
3	3B4506	LOCKWASHER	33
4	8F4103	COVER ASSEM.	1
5	8M5360	GAUGE ASSEM.	1
6	8H9859	GASKET	1
7	L-1351	BOLT	30
8	2B8460	COVER	1
9	L-1732	BOLT	4
10	1B4205	NUT	4
11	3B4508	LOCKWASHER	8
12	9H5919	COVER	1
	9H5920	GASKET	1
13	S-1600	BOLT	4
14	7B5530	SHIM (.032" Thick)	4
	7B5531	SHIM (.014" Thick)	6
15	1B4206	NUT	4
	3B4510	LOCKWASHER	4
16	4M2955	COVER	1
	4M2956	GASKET	1
17	5M6547	TUBE ASSEM.	1
18	7F7889	GASKET	1
19	5H8177	PLUG	1
20	1F7178	GASKET	1
21	8B6599	PLUG	1
22	L-1124	GASKET	1
23	4M9945	COVER	1
24	4M9914	GASKET	1
25	5M2817	BUSHING ASSEM.	1
26	7M235	SUPPORT ASSEM.	1
27	6H1717	BOLT	4
28	5B5980	GASKET	1
29	8F4102	PLATE	1
30	8F4099	GASKET	1
31	3B4615	COTTER PIN	1
32	8F7559	RING	1
33	7H3460	CABLE ASSEM.	1
34	4M4300	PIPE	1

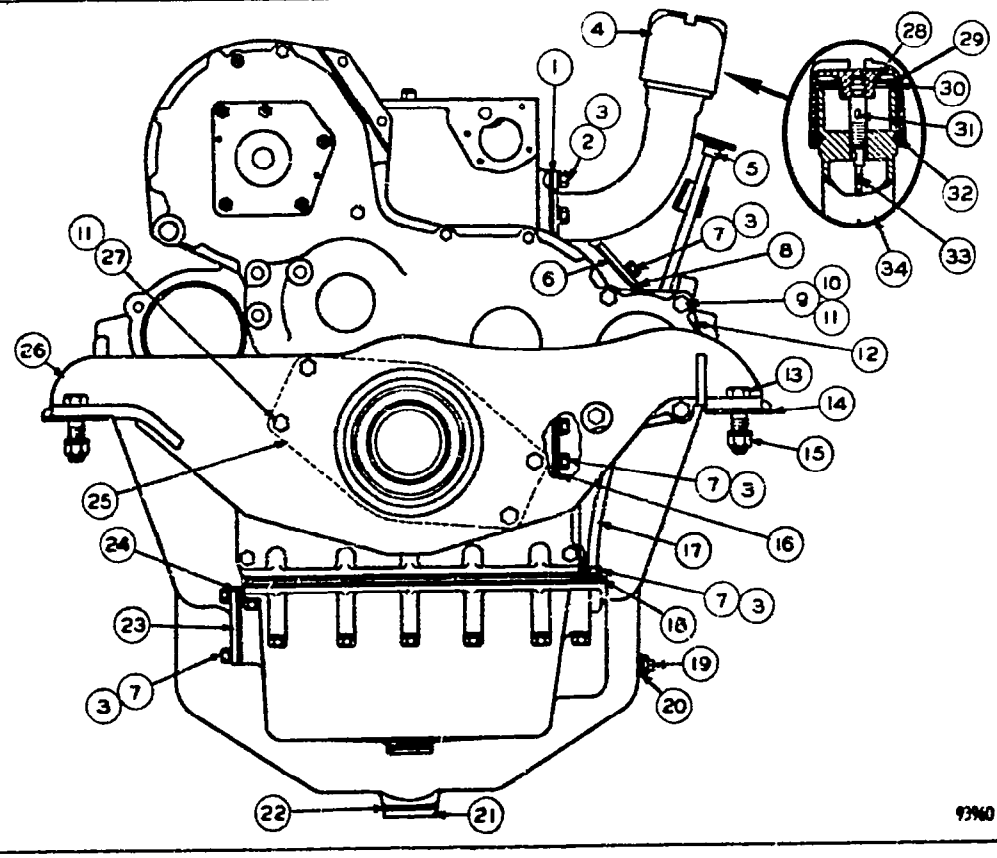

93960

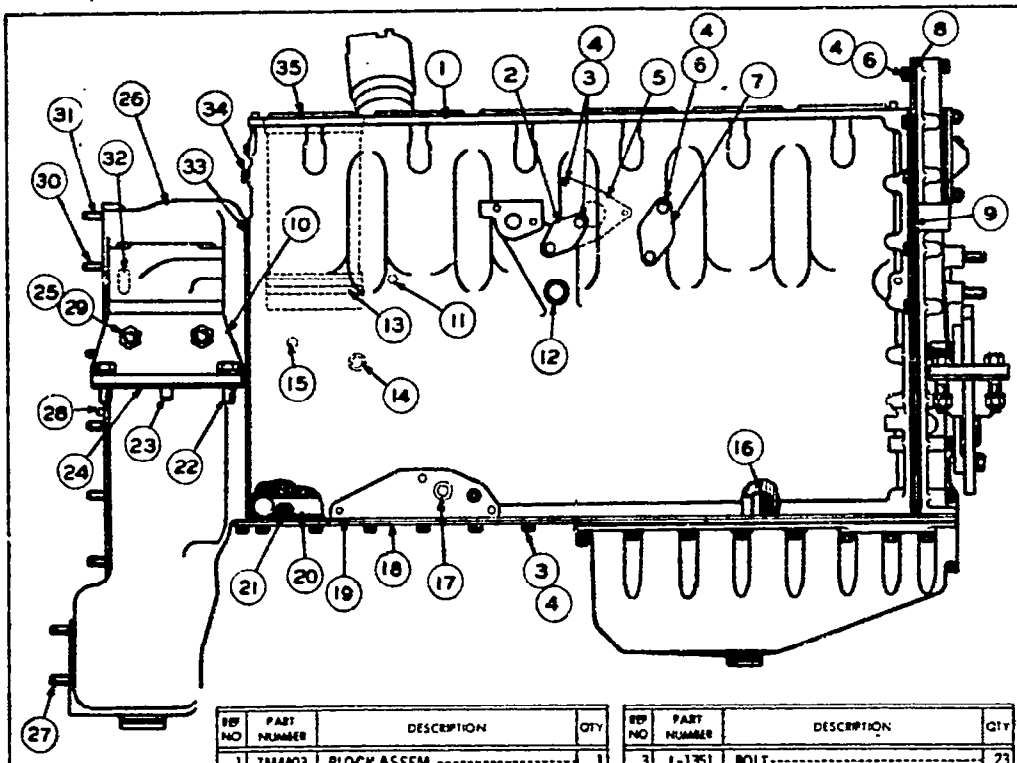

REF NO	PART NUMBER	DESCRIPTION	QTY
1	7M4403	BLOCK ASSEM. (See Separate Illustration)	1
2	5M1903	COVER	1
	4M2250	GASKET	1

REF NO	PART NUMBER	DESCRIPTION	QTY
3	L-1351	BOLT	23
4	3B4506	LOCKWASHER	34
5	2M5209	COVER	1
	1M9380	GASKET	1

REF NO	PART NUMBER	DESCRIPTION	QTY
6	S-1594	BOLT	10
7	1M130	COVER	1
	4M6480	GASKET	1
8	1M5912	PLATE	1
9	9H3864	GASKET	1
10	2M2309	BRACKET	1
11	S-1620	BOLT	1
	4F9325	GASKET	1
12	4B5387	PLUG	1
13	7B2124	SEAL	12
14	8H9650	FERRULE	1
15	3378-A	STUD	2
16	9H6067	SEAL	1
17	4B3938	PLUG	1
18	8M5374	PLATE ASSEM.	1
19	4M2969	GASKET	1
20	1S9922	TUBE ASSEM.	1
21	4F4879	BOLT	1
	L-364	LOCK	1
22	S-1589	BOLT	4
	3B4510	LOCKWASHER	4
23	2B8162	DOWEL	2
24	2M2305	SHIM (.0320" Thick)	2
	2M2306	SHIM (.0650" Thick)	2
	2M2307	SHIM (.0140" Thick)	2
25	1B4207	NUT	4
	3B4512	LOCKWASHER	4
26	4M6854	HOUSING ASSEM.	1
27	4H9305	STUD	6
28	2A3798	DOWEL	2
29	4B3251	STUD	4
30	4H9303	STUD	4
31	4H9304	STUD	8
32	1H8480	TUBE (Parts of Housing Assem. 4M6854)	1
33	9H5921	GASKET	1
34	5M6214	PLUG	1
35	3S1850	LINER	6

93958

CYLINDER BLOCK AND COVERS—Side View—Part Three

Effective with Serial No. 44A9686. 7M4403 Cylinder Block Assembly parts are shown on Page 28

See Page 27 for Gasket Kits. Additional parts are shown on Pages 26B and 26C

9M4739 DIESEL ENGINE BASIC
SERIAL NO. 44A6857 TO 44A12416 INCLUSIVE

7S9063 DIESEL ENGINE BASIC
EFFECTIVE WITH SERIAL NO. 44A12417

9M4760 DIESEL ENGINE SUPPLEMENTARY
SERIAL NO. 44A6857 TO 44A9206 INCLUSIVE

2S3484 DIESEL ENGINE SUPPLEMENTARY
EFFECTIVE WITH SERIAL NO. 44A9207

2S3490 VALVE GRINDING
SERIAL NO. 44A6857 TO 44A9206 INCLUSIVE

2S3486 VALVE GRINDING
EFFECTIVE WITH SERIAL NO. 44A9207

4M6018 CYLINDER LINER AND PISTON REPLACEMENT
NOTE: PISTON AND LINER REPLACEMENT REQUIRE THE USE OF 2S3490 OR 2S3486 AND 4M6018 GASKET KITS

4M6019 WATER PUMP
SERIAL NO. 44A6857 TO 44A9206 INCLUSIVE

4S8053 WATER PUMP
EFFECTIVE WITH SERIAL NO. 44A9207

8M4908 GASOLINE STARTING ENGINE BASIC

1S7223 GASOLINE STARTING ENGINE SUPPLEMENTARY
SERIAL NO. 44A6857 TO 44A9206 INCLUSIVE

2S3485 GASOLINE STARTING ENGINE SUPPLEMENTARY
EFFECTIVE WITH SERIAL NO. 44A9207

9M5678 GASOLINE STARTING ENGINE CLUTCH MECHANISM REPAIR

GASKET KITS

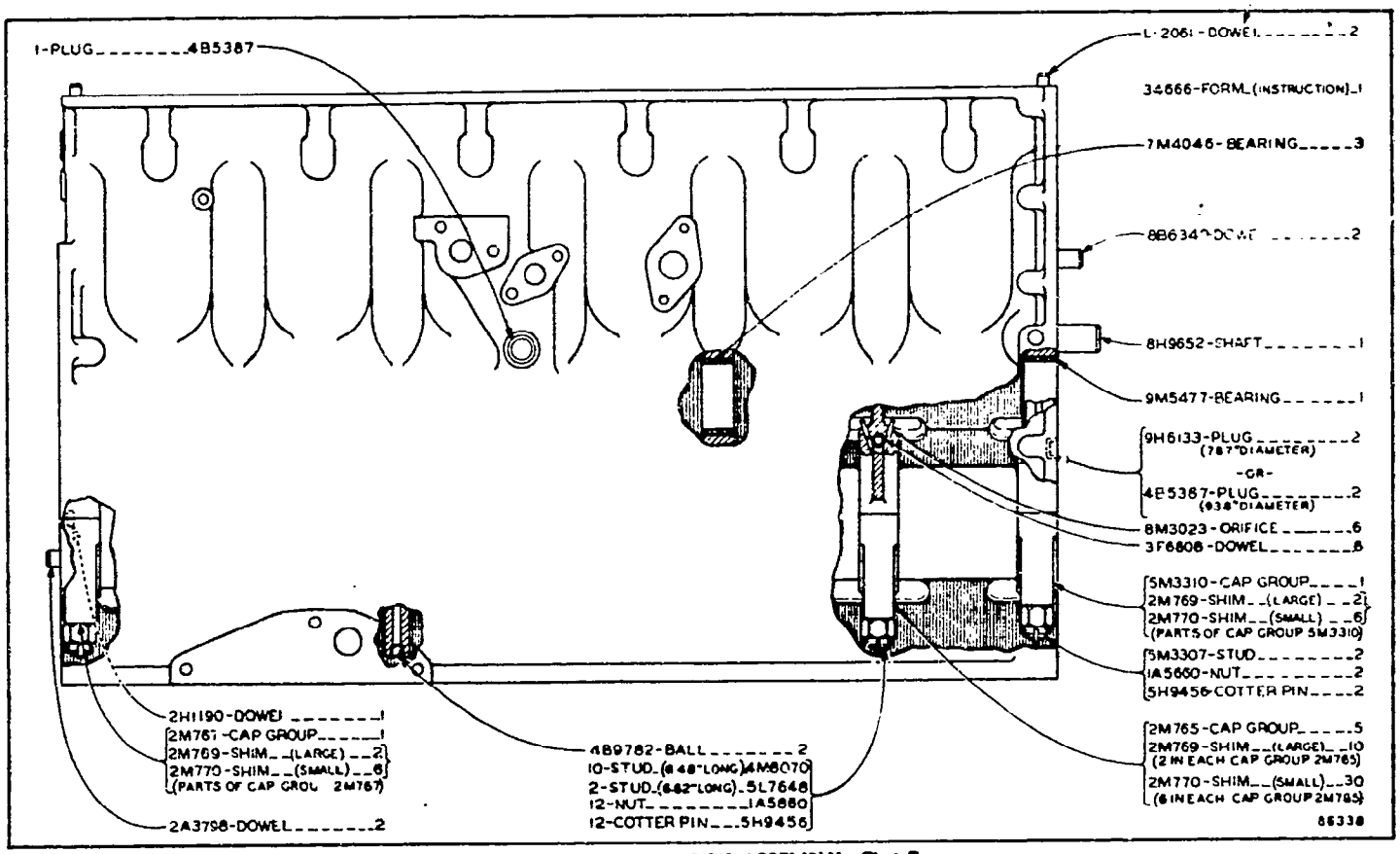

7M4403 CYLINDER BLOCK ASSEMBLY—First Type
Part of Cylinder Block and Covers shown on Pages 24 and 26

7M4403 CYLINDER BLOCK ASSEMBLY—Second Type
Part of Cylinder Block and Covers shown on Pages 24 and 26

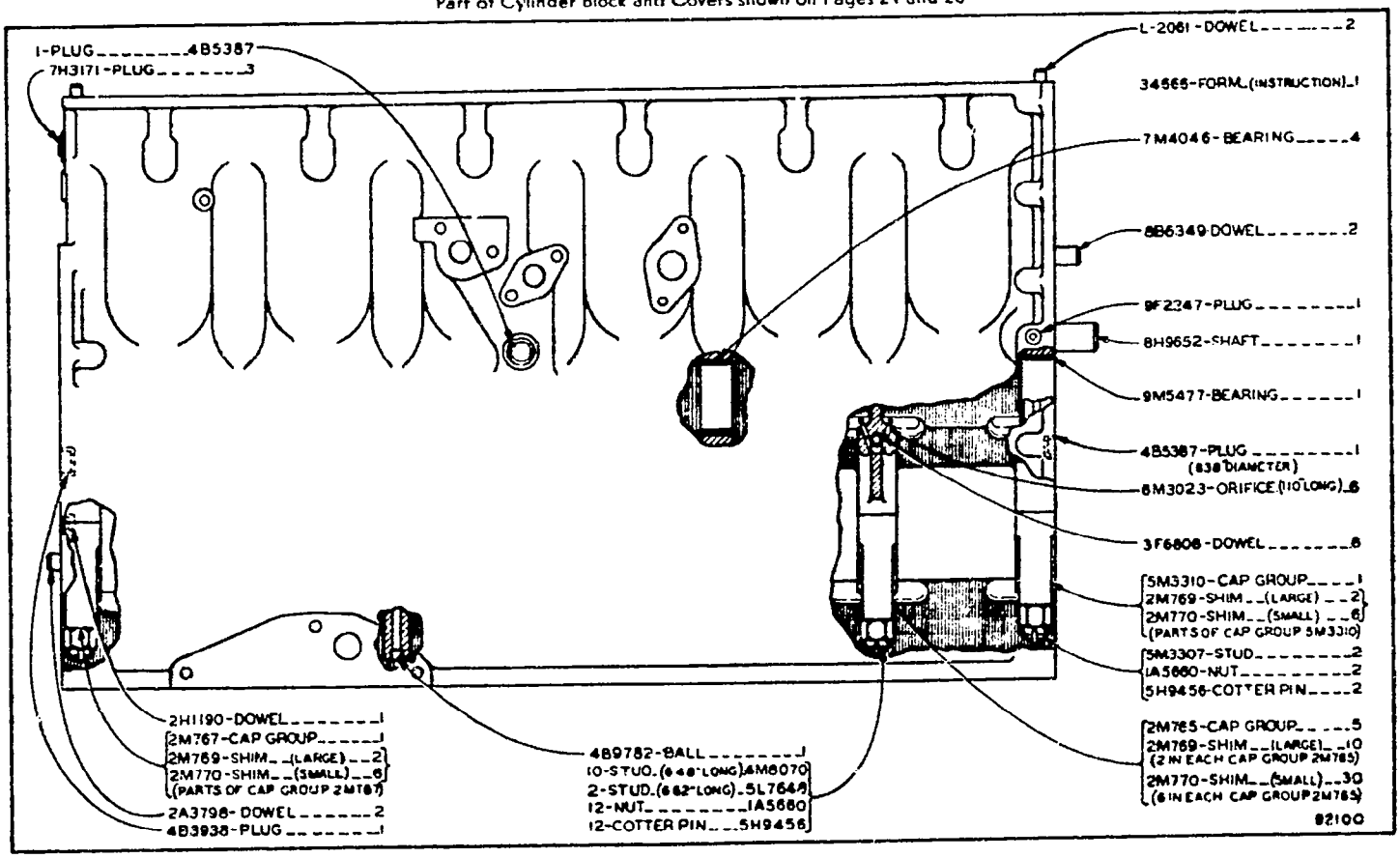

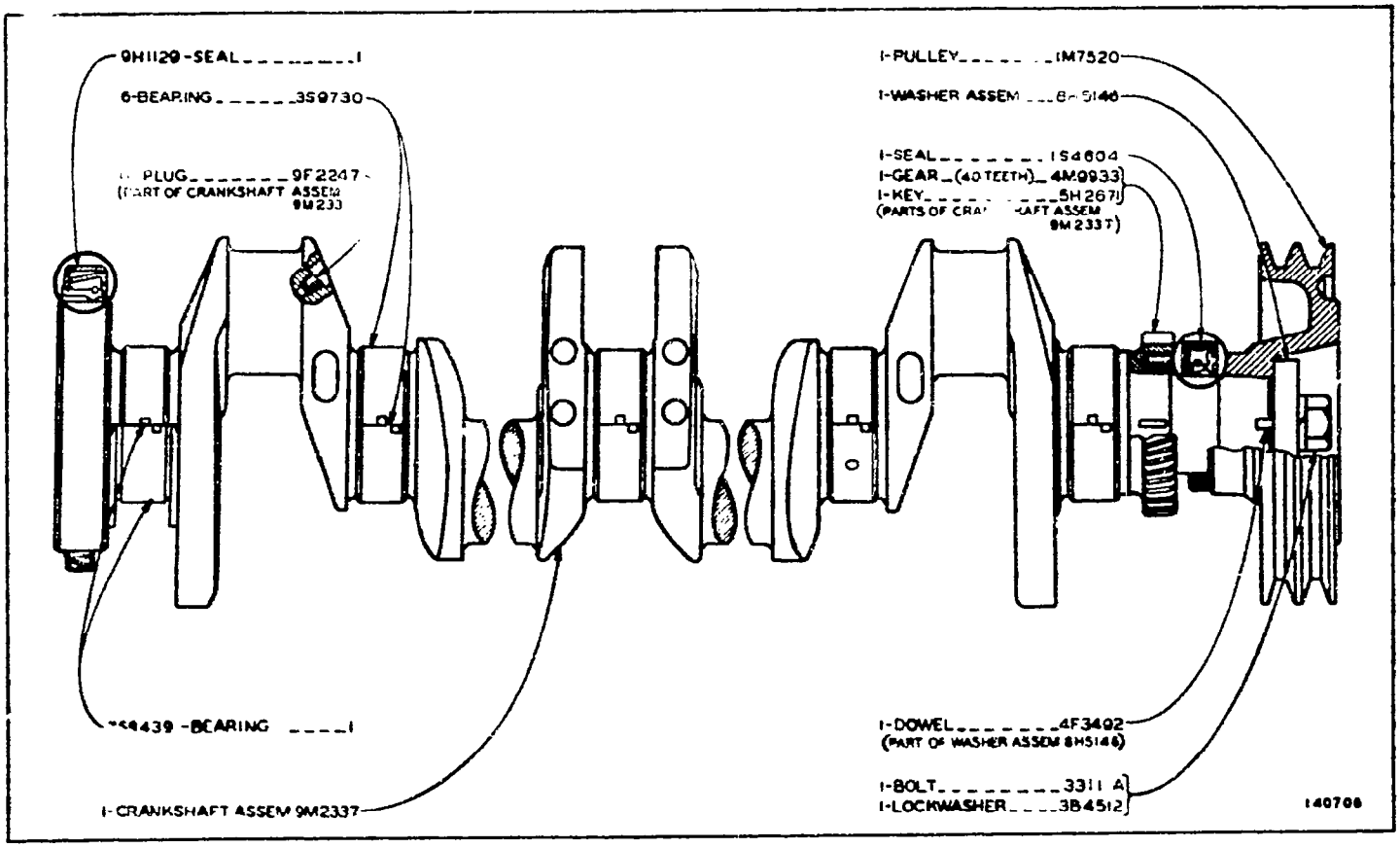
9H1129-SEAL_____1
6-BEARING_____3S9730
1-PLUG_____9F2247
(PART OF CRANKSHAFT ASSEM 9M233)
1-PULLEY_____1M7520
1-WASHER ASSEM_____8H5146
1-SEAL_____1S4604
1-GEAR_(40 TEETH)_4M9933
1-KEY_____5H267
(PARTS OF CRANKSHAFT ASSEM 9M233T)
1-DOWEL_____4F3492
(PART OF WASHER ASSEM 8H5146)
1-BOLT_____3311 A
1-LOCKWASHER_____3B4512
1-CRANKSHAFT ASSEM 9M2337
140708

CRANKSHAFT

FOR USE WITH .010 UNDERSIZE CRANKSHAFT

6	4S8881	BEARING--INTERMEDIATE
1	7S9844	BEARING--REAR

FOR USE WITH .020 UNDERSIZE CRANKSHAFT

6	4S8883	BEARING--INTERMEDIATE
1	7S9845	BEARING--REAR

FOR USE WITH .030 UNDERSIZE CRANKSHAFT

6	4S8885	BEARING--INTERMEDIATE
1	7S9846	BEARING--REAR

CRANKSHAFT BEARING REPLACEMENT GROUPS

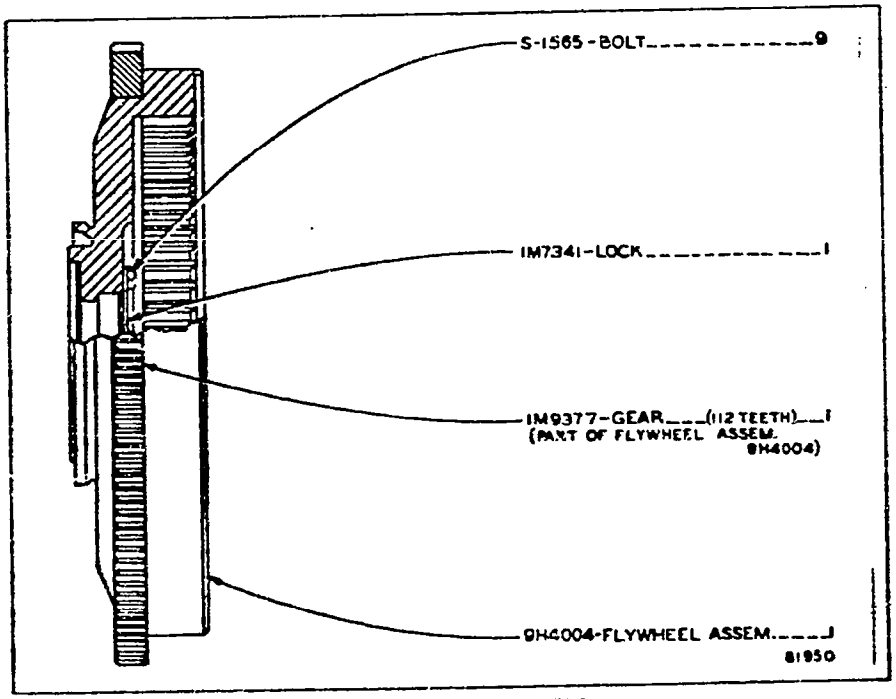

9H4081 FLYWHEEL GROUP
FOR USE WITH GASOLINE STARTING ENGINE
Refer also to Page 146 for special parts

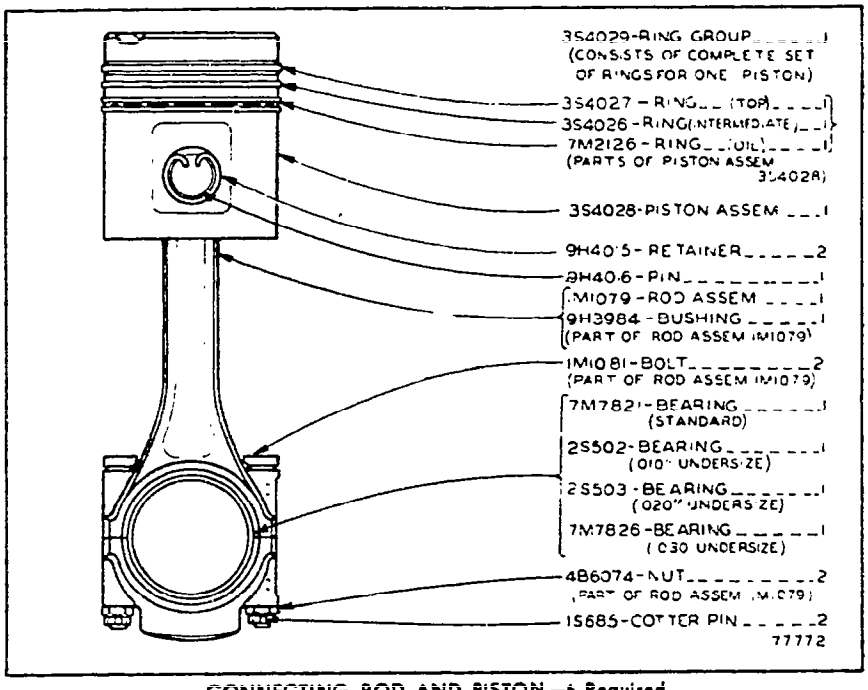

CONNECTING ROD AND PISTON—6 Required

Note: 4M8166 Piston and Liner Group consisting of: 1—Piston Assembly 1—Liner and 2—Seal, is available

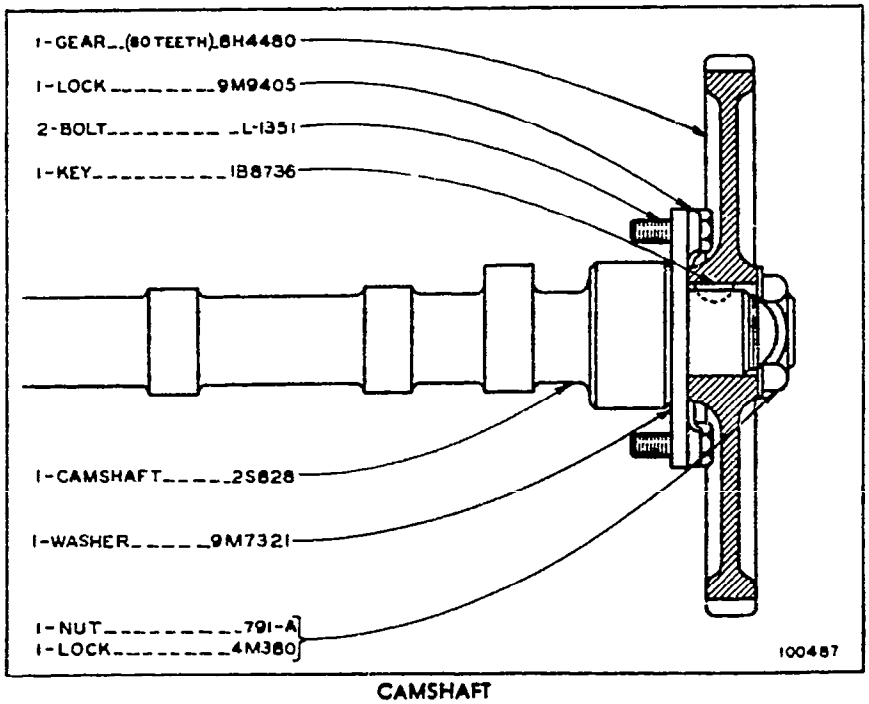

CAMSHAFT

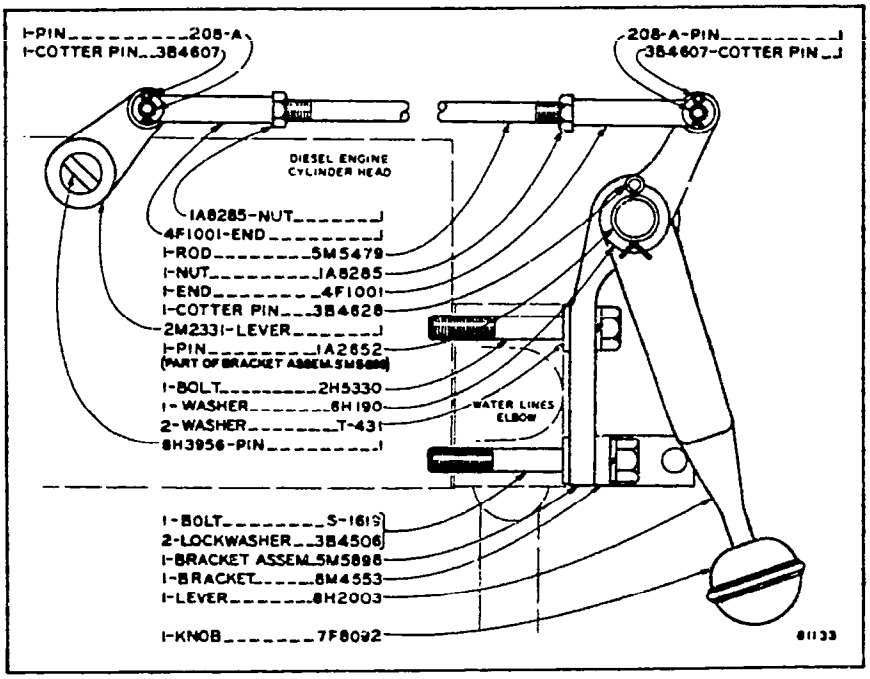

COMPRESSION RELEASE CONTROL
Serial No. 44A6857 to 44A7698 inclusive

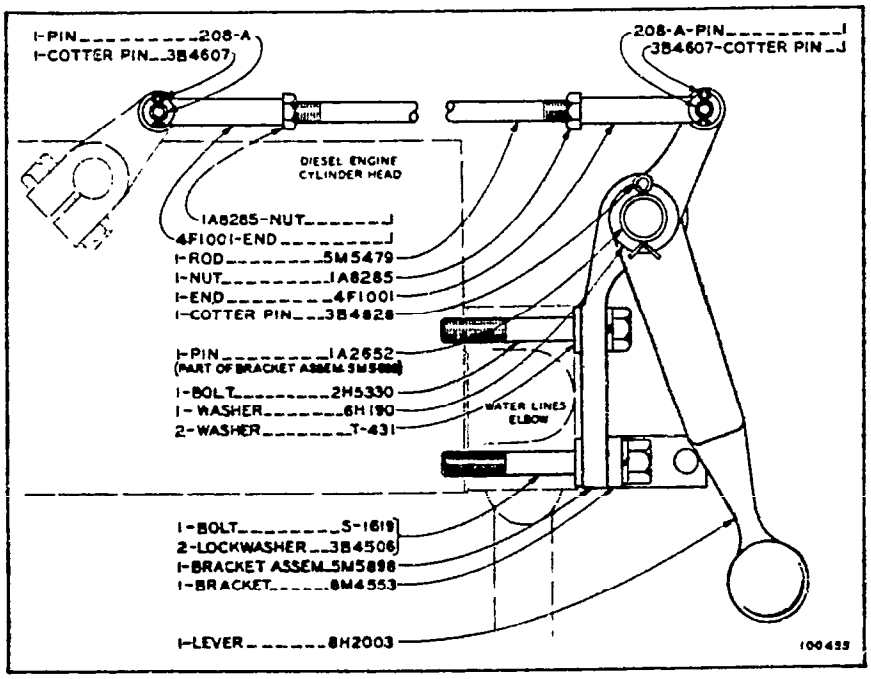

COMPRESSION RELEASE CONTROL
Effective with Serial No. 44A7699

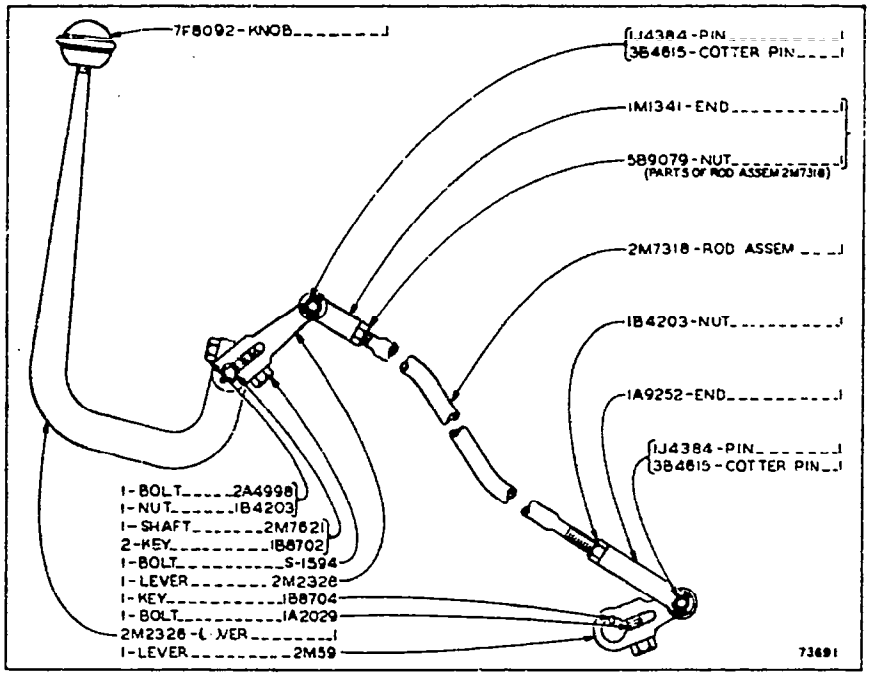

FUEL PUMP AND GOVERNOR CONTROL

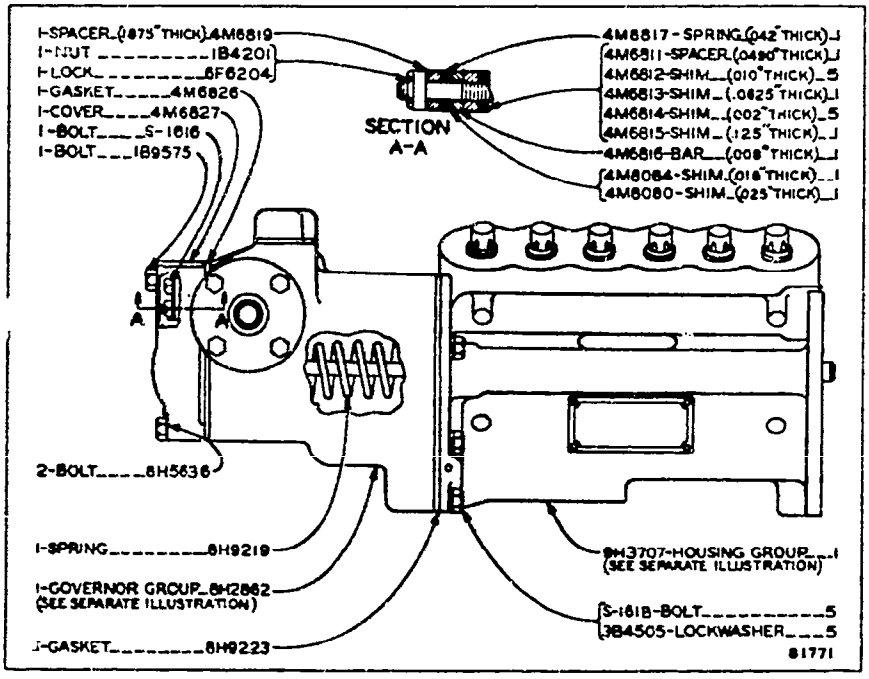

9H3709 FUEL PUMP HOUSING AND GOVERNOR GROUP
Serial No. 44A6857 to 44A9590 inclusive. 8H2862 Governor Group and
9H3707 Fuel Pump Housing Group parts are shown on Pages 34B, 35, 36 and 40

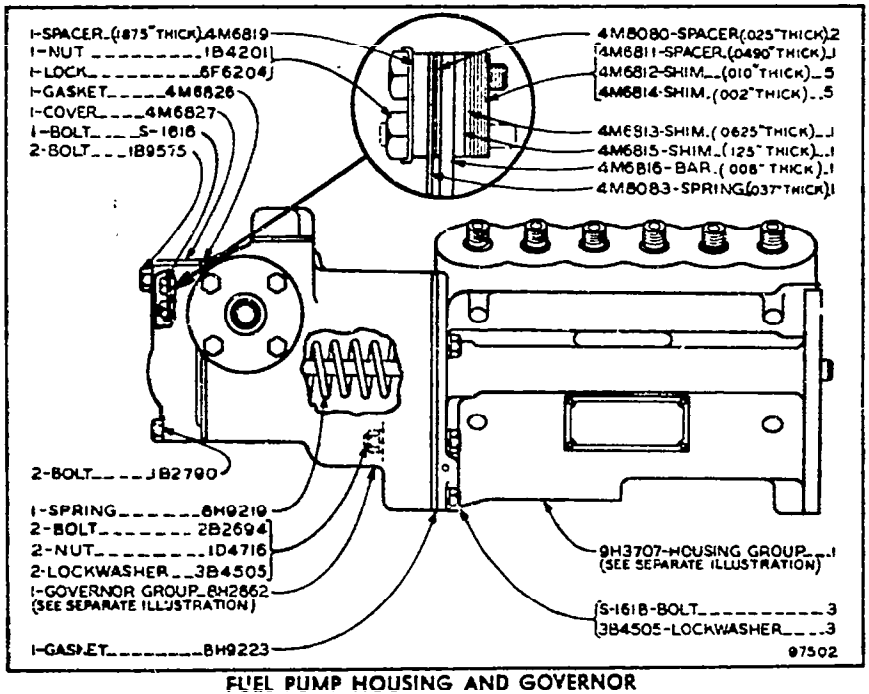

FUEL PUMP HOUSING AND GOVERNOR

Effective with Serial No. 44A9591

8H2862 Governor Group and 9H3707 Fuel Pump Housing Group parts are shown on Pages 36 and 40

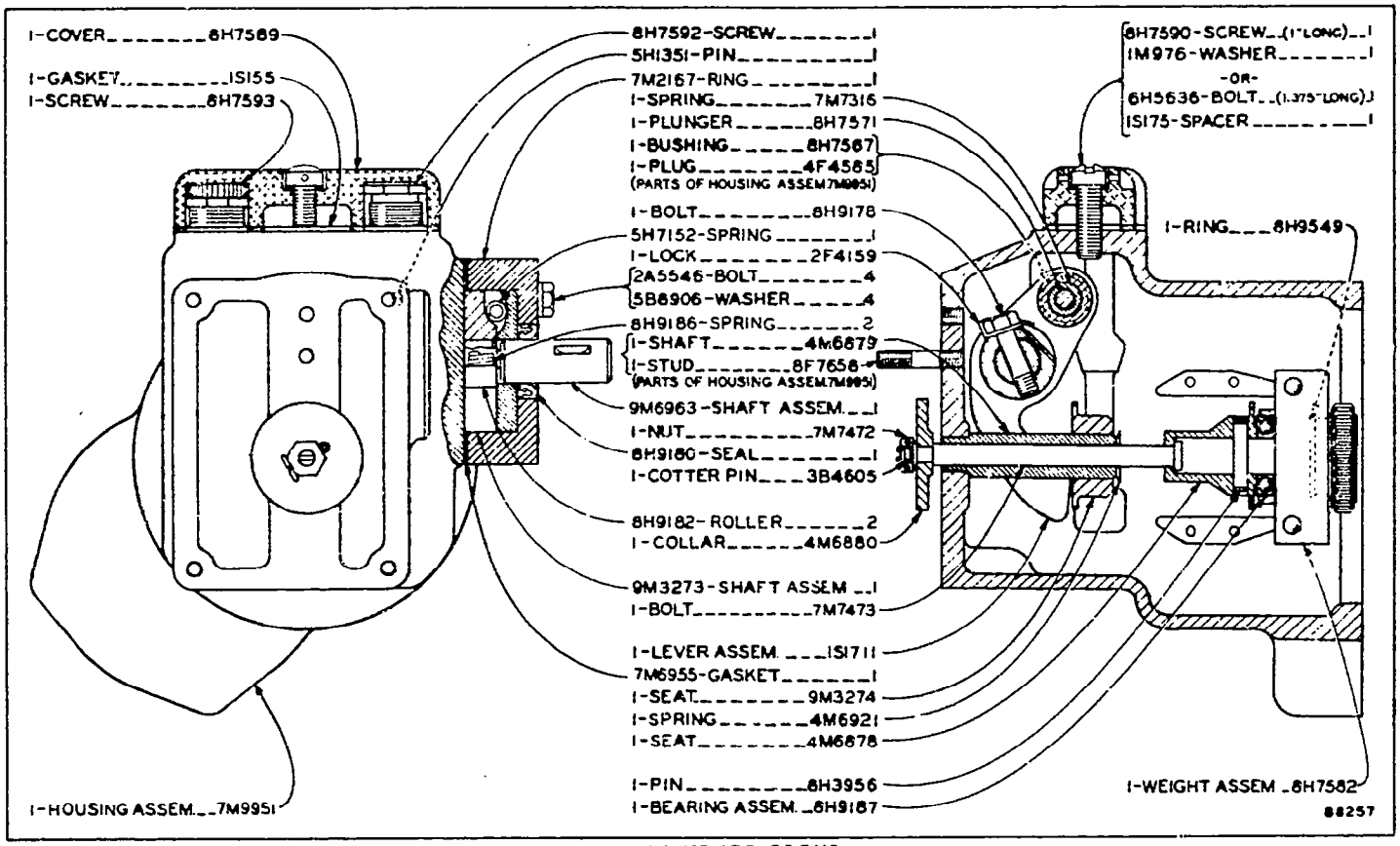

8H2862 GOVERNOR GROUP
Serial No. 44A6857 to 44A7422 inclusive
Part of Fuel Pump Housing and Governor shown on Page 34

8H2862 GOVERNOR GROUP
Serial No. 44A7423 to 44A9105 and 44A9107 to 44A9124 inclusive
Part of Fuel Pump Housing and Governor shown on Page 34

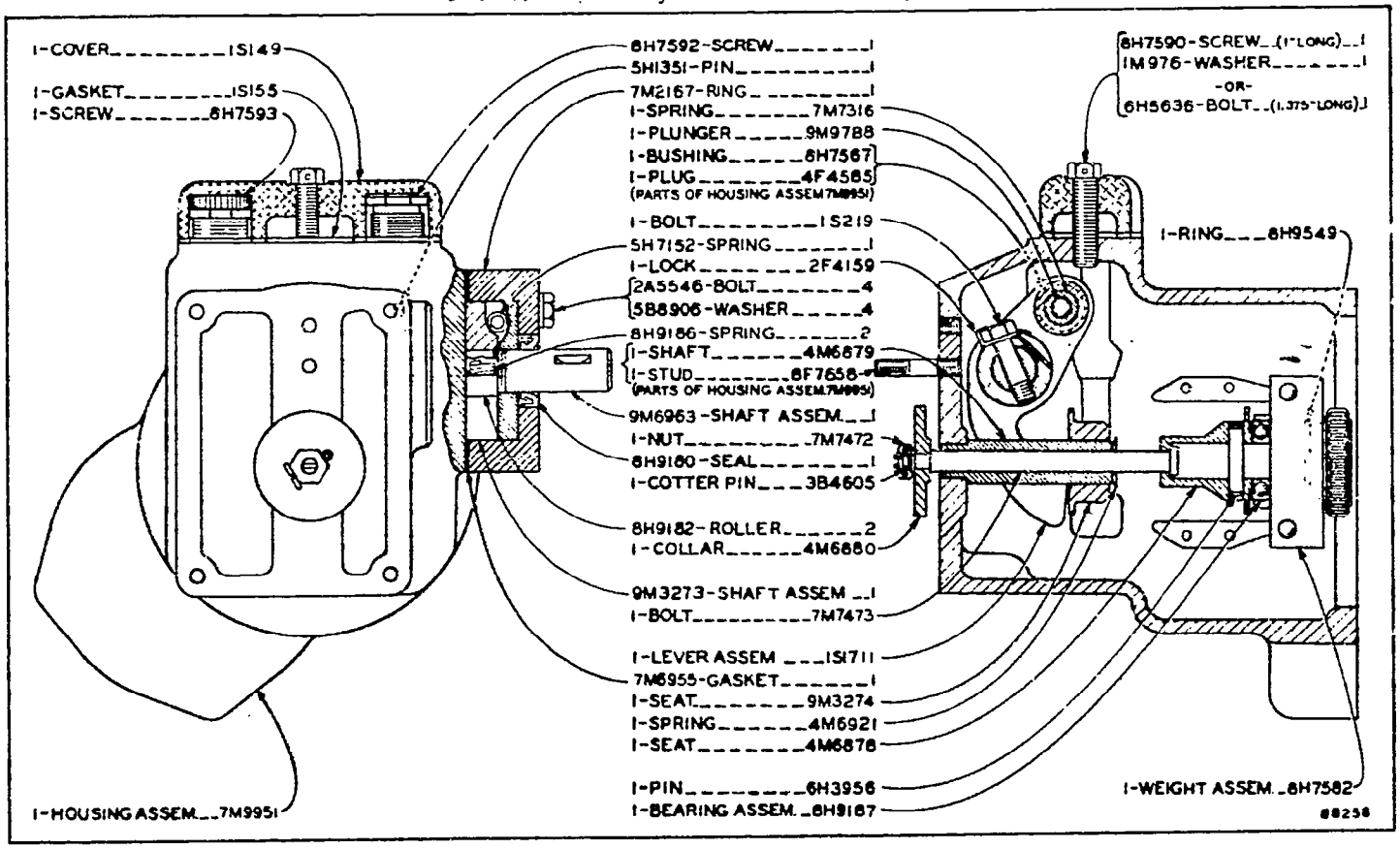

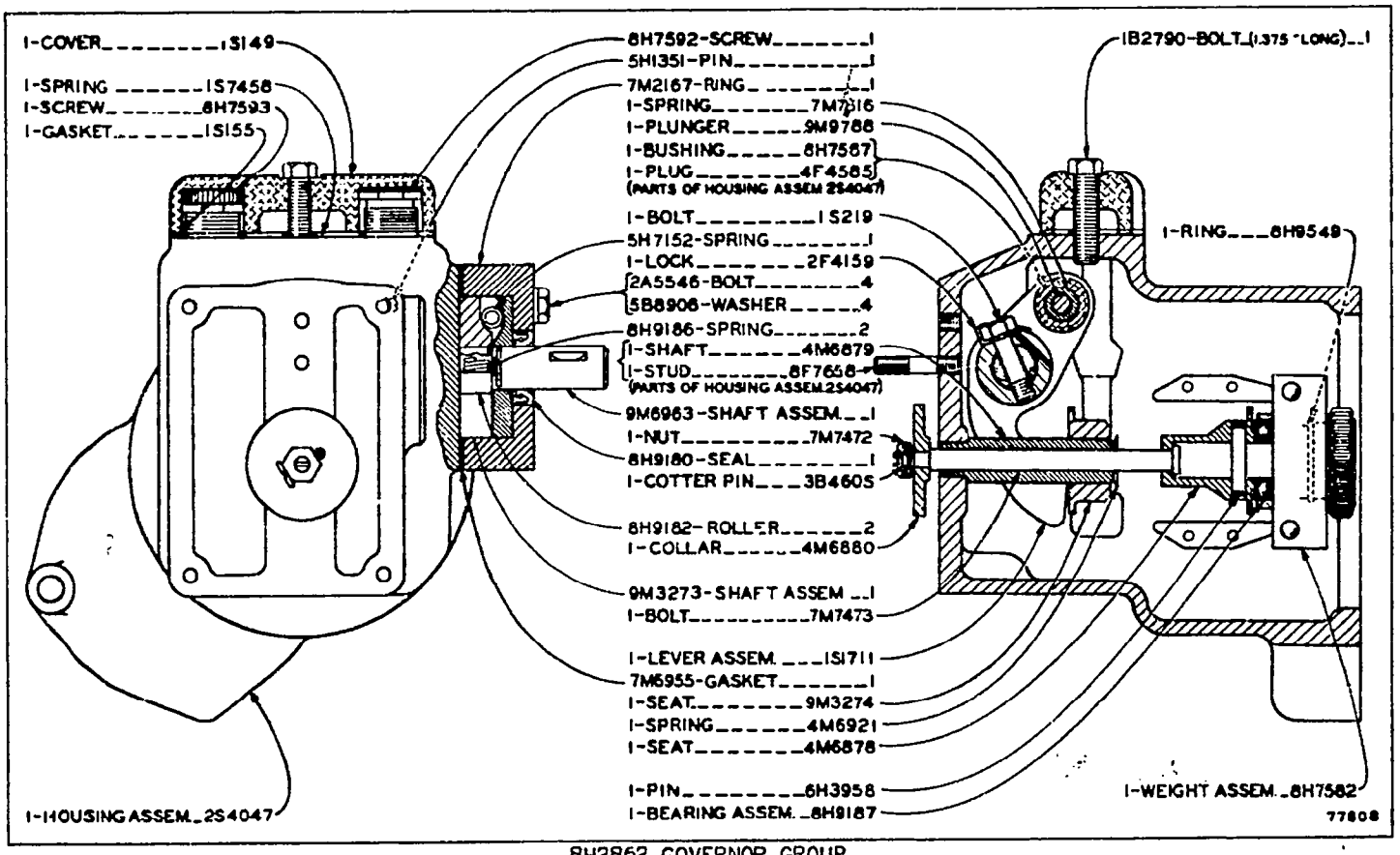

8H2862 GOVERNOR GROUP

SERIAL NO. 44A9106, 44A9125 TO 44A11507, 44A11509, 44A11511 TO 44A11517, 44A11520 AND 44A11521 INCLUSIVE. PART OF FUEL PUMP HOUSING AND GOVERNOR SHOWN ON PAGES 34 AND 34A

8H2862 GOVERNOR GROUP

SERIAL NO. 44A11508, 44A11510, 44A11518, 44A11519 AND 44A11522-UP

PART OF FUEL PUMP HOUSING AND GOVERNOR SHOWN ON PAGE 34A

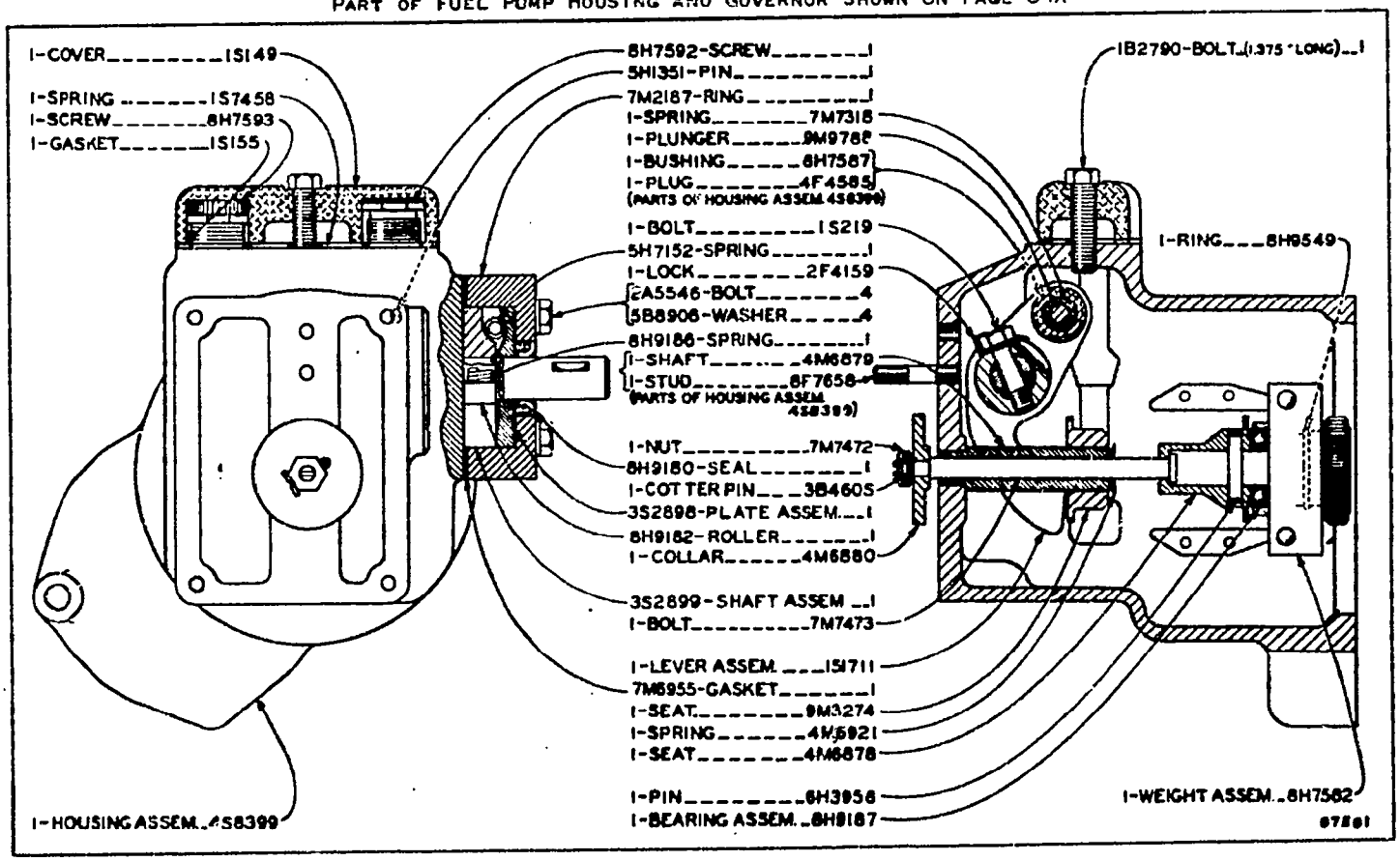

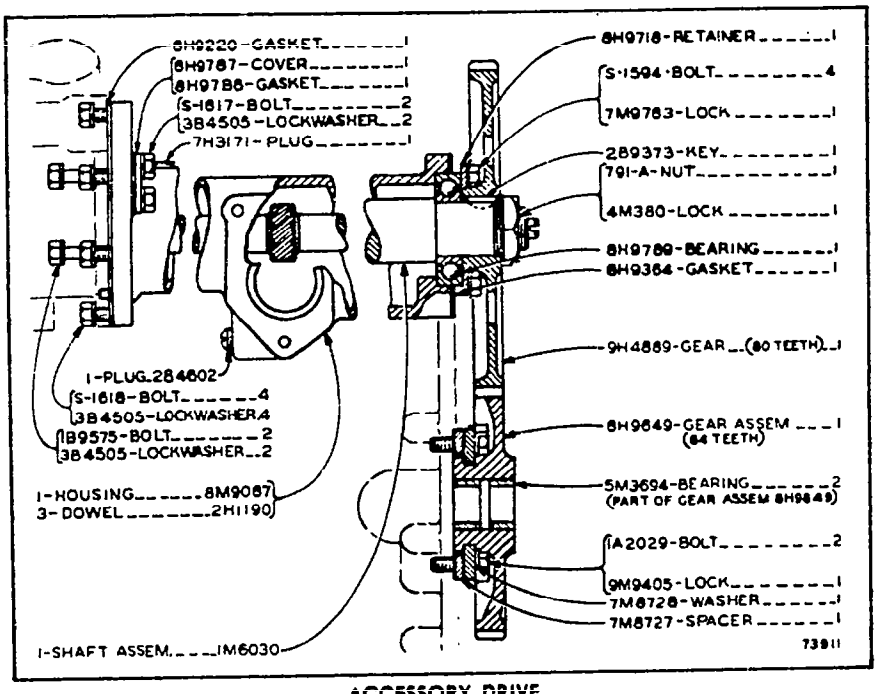

ACCESSORY DRIVE
Serial No. 44A6857 to 44A7972 inclusive

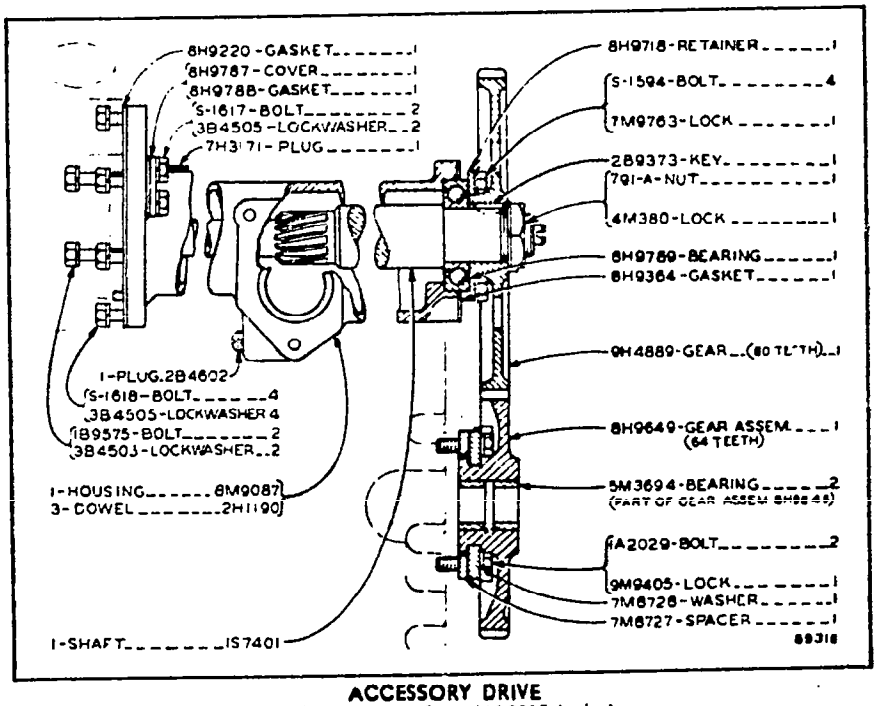

ACCESSORY DRIVE
Serial No. 44A7973 to 44A8082 inclusive

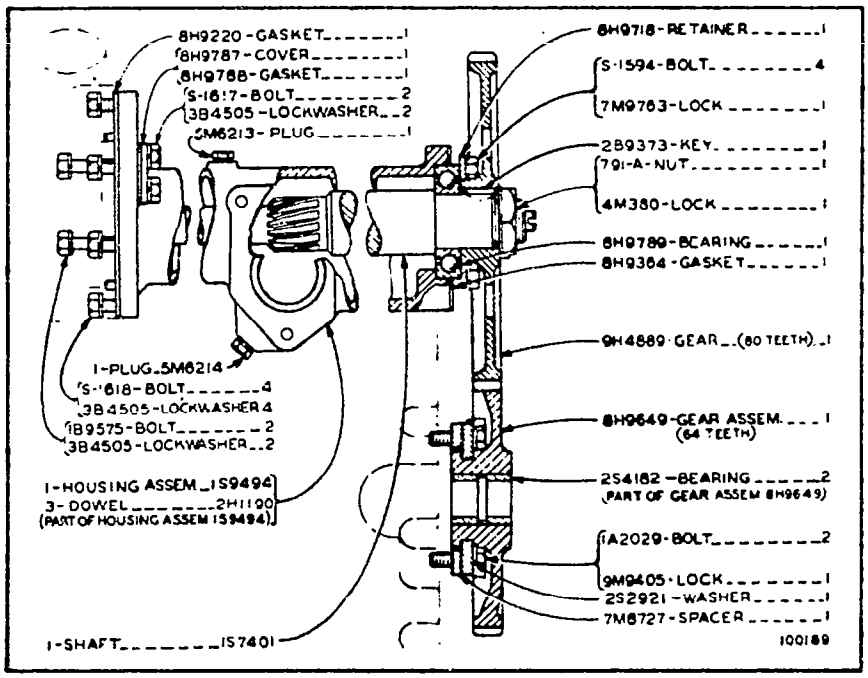

ACCESSORY DRIVE
Effective with Serial No. 44A8093

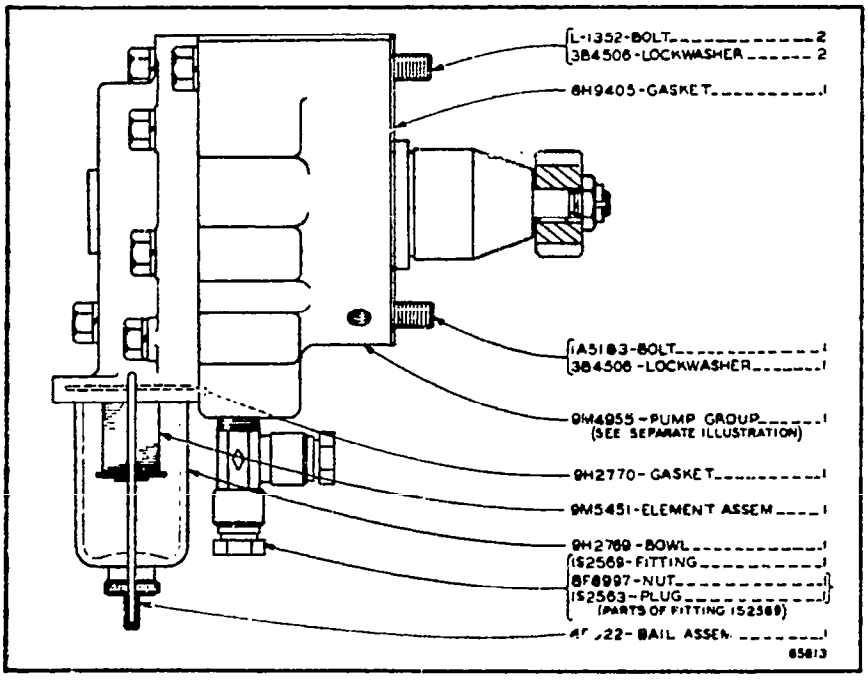

FUEL TRANSFER PUMP AND FILTER

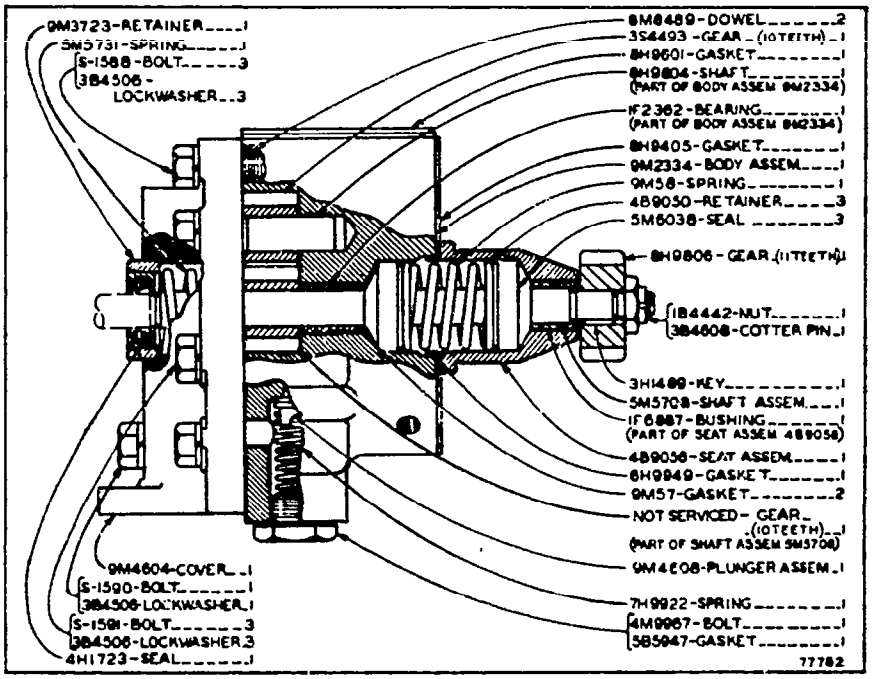

9M4955 FUEL TRANSFER PUMP GROUP
Serial No. 44A6857 to 44A11561, 44A11563 and 44A11569 inclusive
Part of Fuel Transfer Pump and Filter

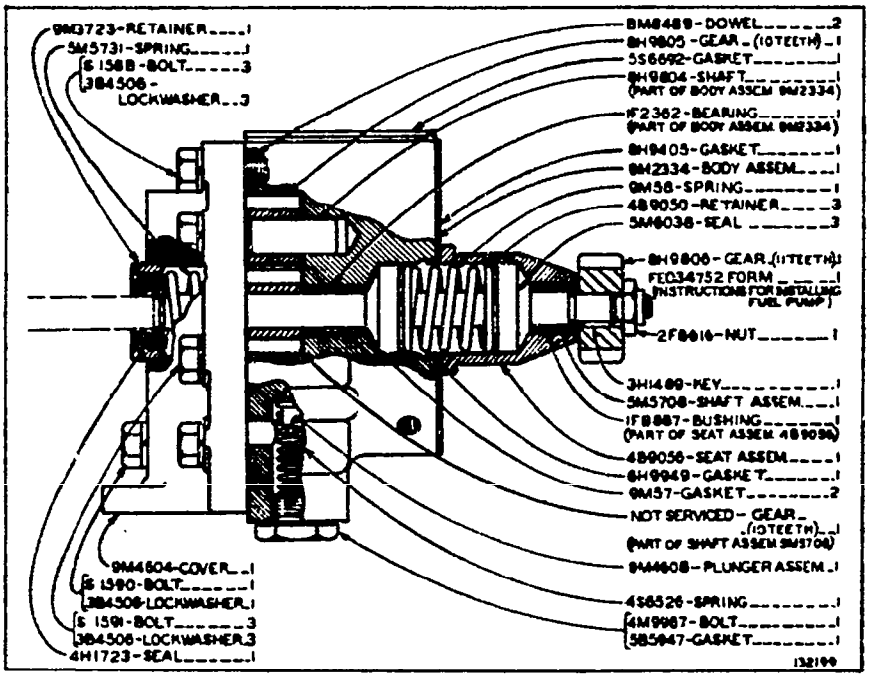

9M4955 FUEL TRANSFER PUMP GROUP
Serial No. 44A11562, 44A11564 to 44A11568 and 44A11570—Up
Part of Fuel Transfer Pump and Filter

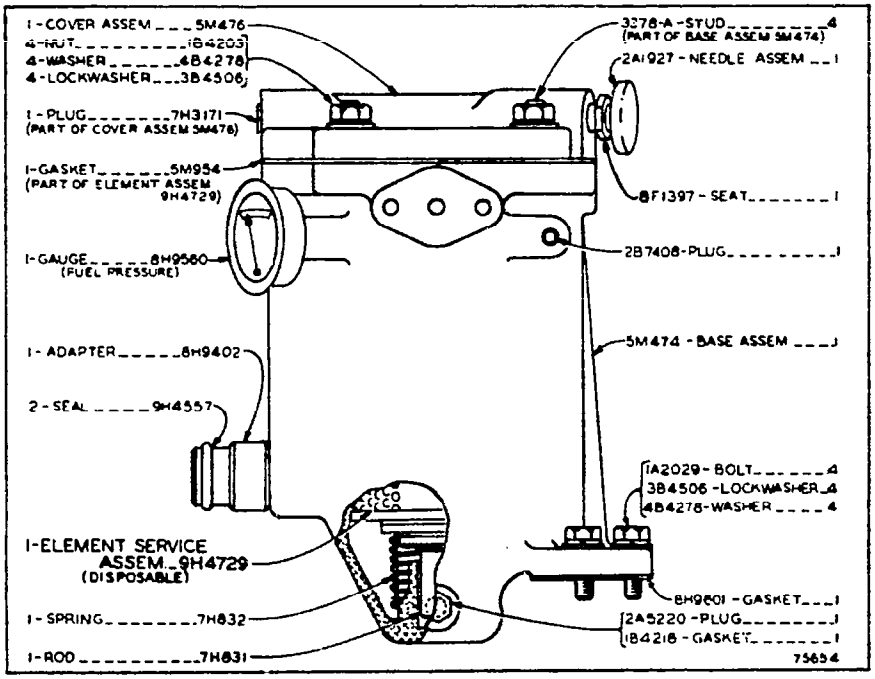

1M6927 FUEL FILTER GROUP
SERIAL NO. 44A6857 TO 44A11561, 44A11563 AND 44A11569 INCLUSIVE

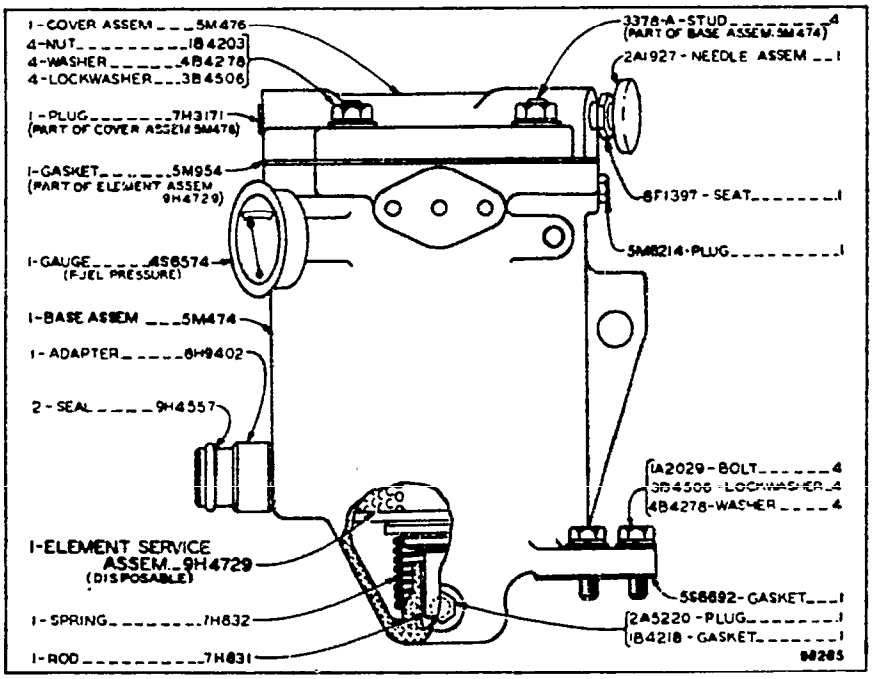

1M6927 FUEL FILTER GROUP
SERIAL NO. 44A11562, 44A11564 TO 44A11568 AND 44A11570-UP

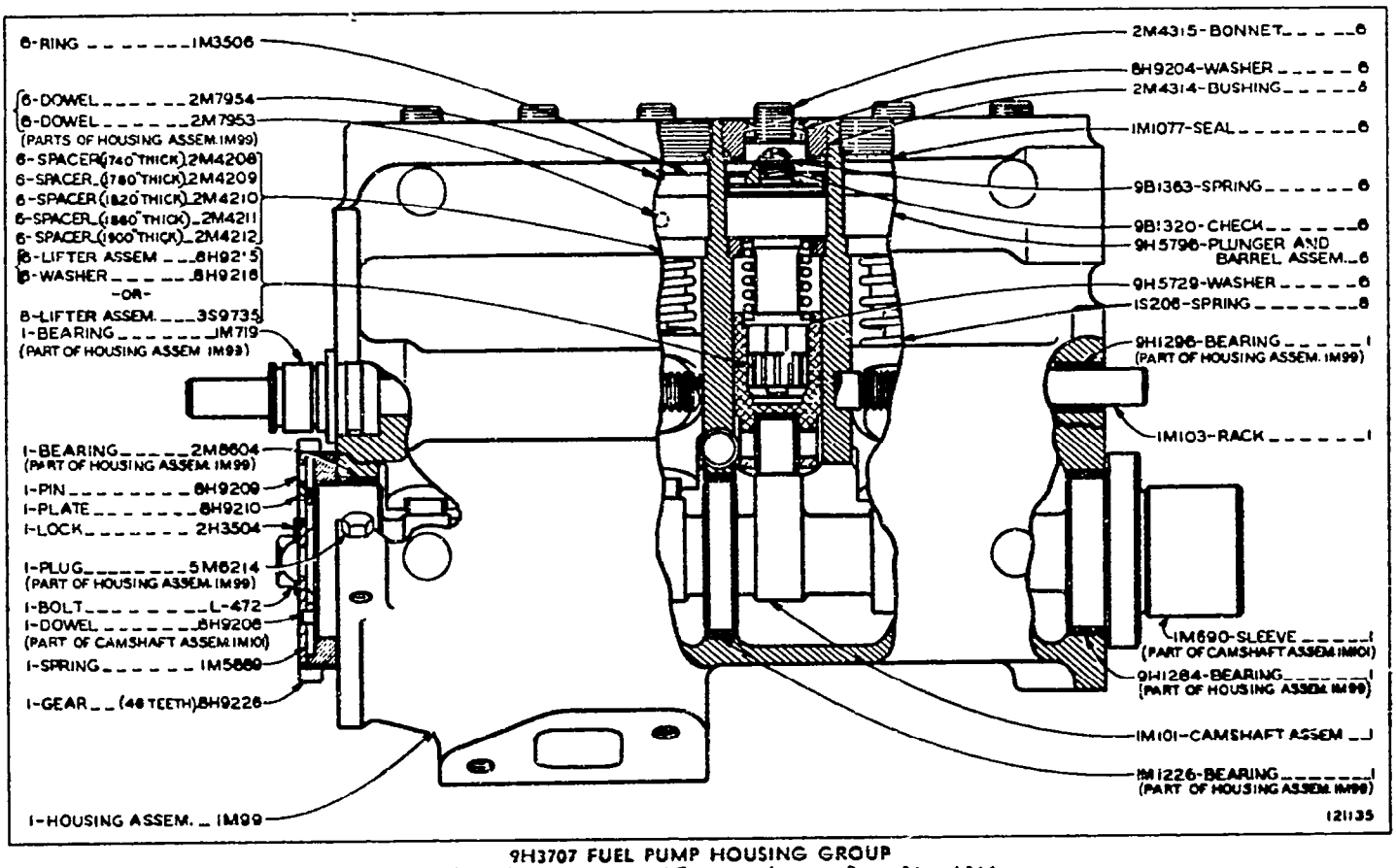

9H3707 FUEL PUMP HOUSING GROUP

Part of Fuel Pump Housing and Governor shown on Pages 34 and 34A

FUEL INJECTION VALVES AND LINES

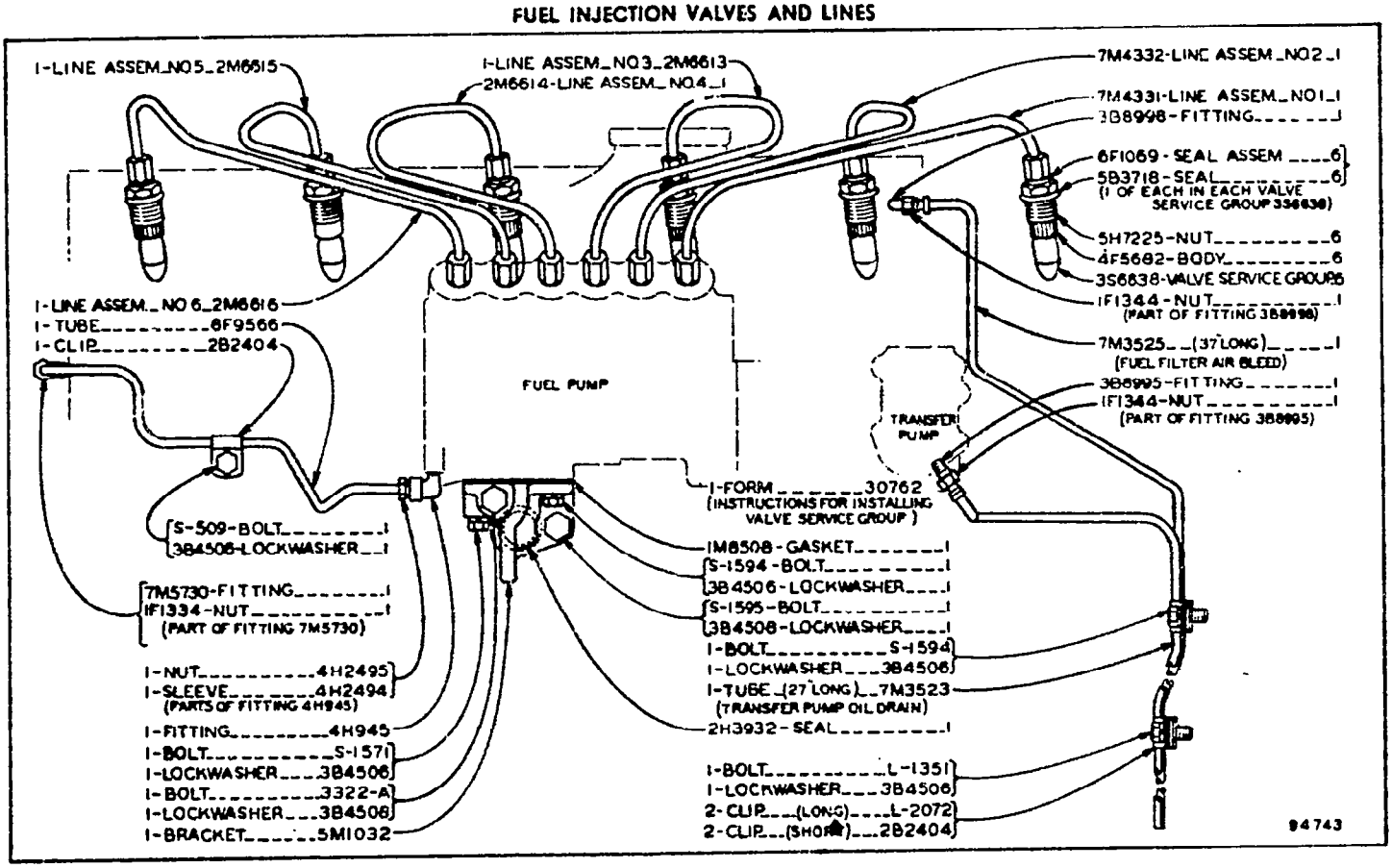

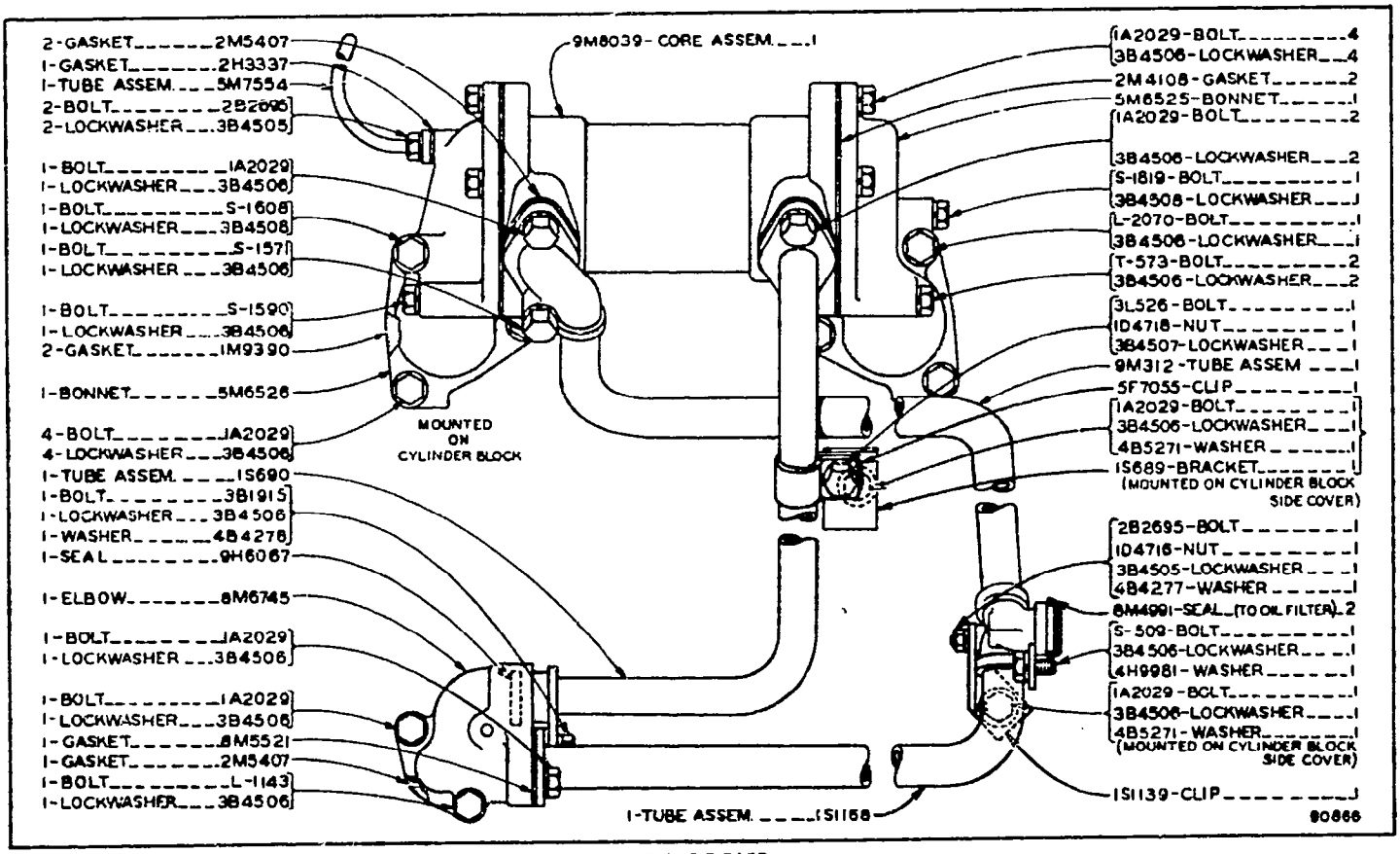
2-GASKET 2M5407
1-GASKET 2H3337
1-TUBE ASSEM. 5M7554
2-BOLT 2B2695
2-LOCKWASHER 3B4505
1-BOLT 1A2029
1-LOCKWASHER 3B4506
1-BOLT S-1608
1-LOCKWASHER 3B4508
1-BOLT S-157
1-LOCKWASHER 3B4506
1-BOLT S-1590
1-LOCKWASHER 3B4506
2-GASKET 1M9390
1-BONNET 5M6526
4-BOLT 1A2029
4-LOCKWASHER 3B4506
MOUNTED ON CYLINDER BLOCK
1-TUBE ASSEM. 1S690
1-BOLT 3B1915
1-LOCKWASHER 3B4506
1-WASHER 4B4278
1-SEAL 9H6067
1-ELBOW 8M6745
1-BOLT 1A2029
1-LOCKWASHER 3B4506
1-BOLT 1A2029
1-LOCKWASHER 3B4506
1-GASKET 8M5521
1-GASKET 2M5407
1-BOLT L-1143
1-LOCKWASHER 3B4506
9M8039-CORE ASSEM.
1-TUBE ASSEM. 1S1158
1A2029-BOLT 4
3B4506-LOCKWASHER 4
2M4108-GASKET 2
5M6525-BONNET 1
1A2029-BOLT 2
3B4506-LOCKWASHER 2
S-1819-BOLT 1
3B4508-LOCKWASHER 1
L-2070-BOLT 1
3B4506-LOCKWASHER 1
T-573-BOLT 2
3B4506-LOCKWASHER 2
3L526-BOLT 1
1D4718-NUT 1
3B4507-LOCKWASHER 1
9M312-TUBE ASSEM 1
5F7055-CLIP 1
1A2029-BOLT 1
3B4506-LOCKWASHER 1
4B5271-WASHER 1
1S689-BRACKET 1
(MOUNTED ON CYLINDER BLOCK SIDE COVER)
2B2695-BOLT 1
1D4718-NUT 1
3B4505-LOCKWASHER 1
4B4277-WASHER 1
8M4991-SEAL (TO OIL FILTER) 2
S-509-BOLT 1
3B4506-LOCKWASHER 1
4H9981-WASHER 1
1A2029-BOLT 1
3B4506-LOCKWASHER 1
4B5271-WASHER 1
(MOUNTED ON CYLINDER BLOCK SIDE COVER)
1S1139-CLIP 1
90866

OIL COOLER

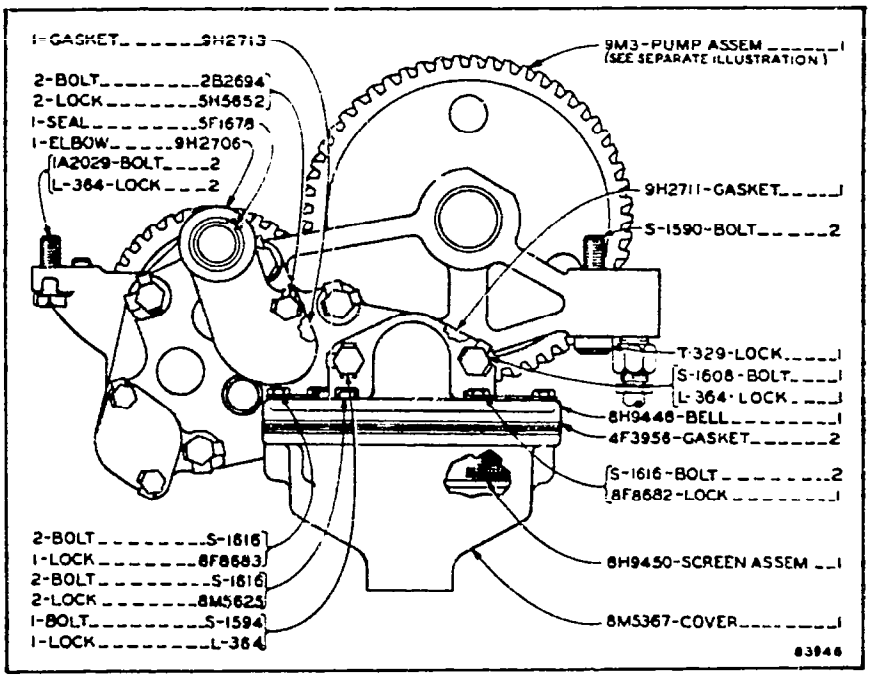

OIL PUMP
Serial No. 44A6857 to 44A6864 inclusive
9M3 Oil Pump Assembly parts are shown on Page 45

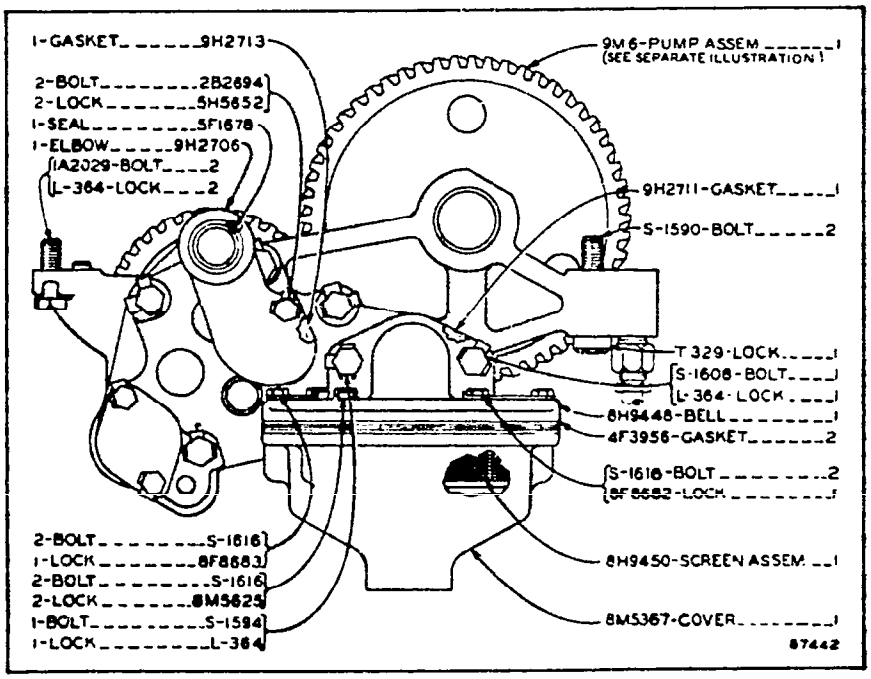

OIL PUMP
Serial No. 44A6865 to 44A8358 inclusive
9M6 Oil Pump Assembly parts are shown on Page 46

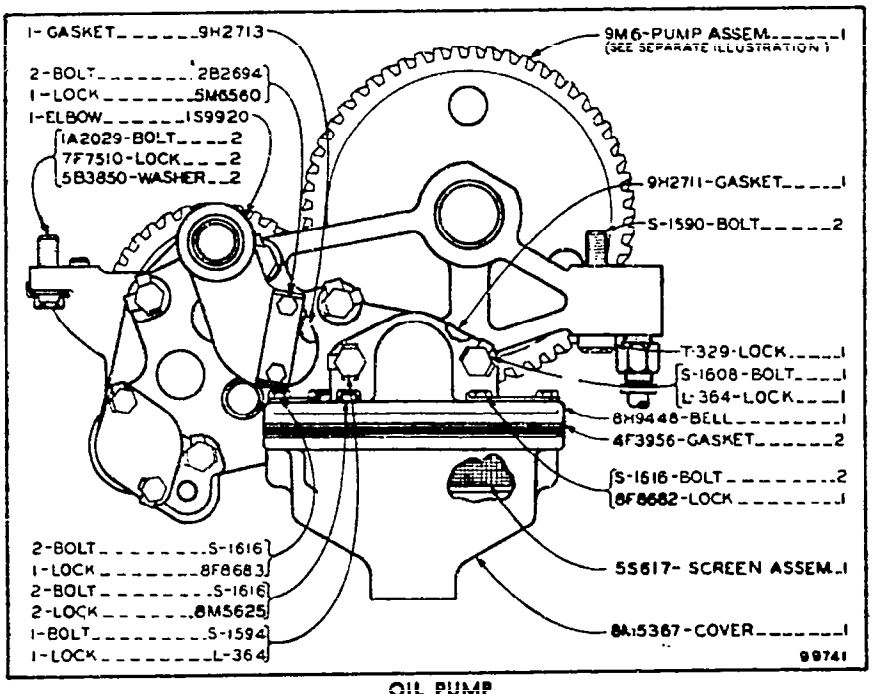

OIL PUMP
Effective with Serial No. 44A8359
9M6 Oil Pump Assembly parts are shown on Page 46

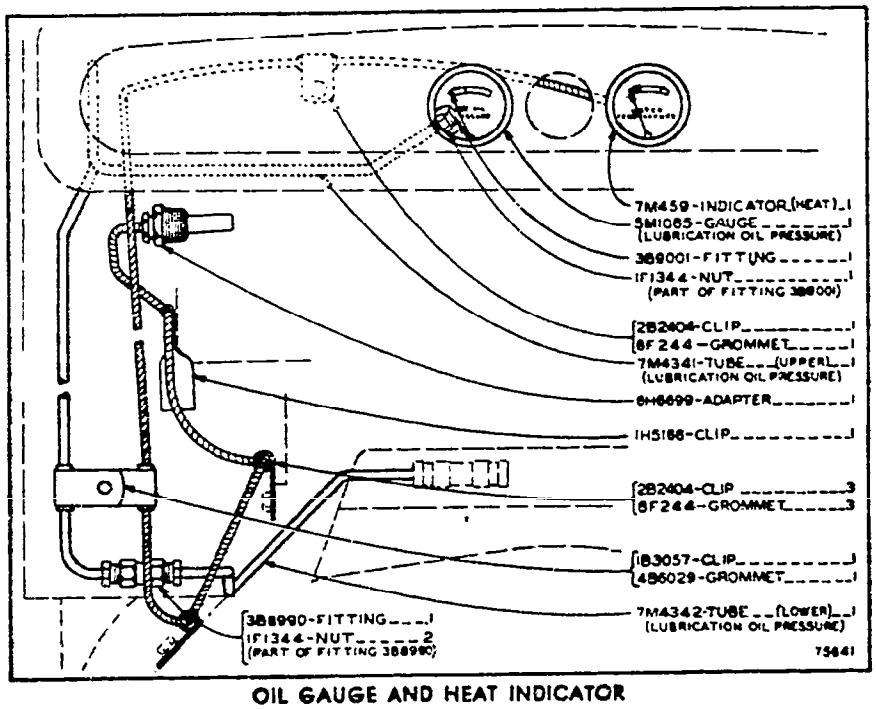

OIL GAUGE AND HEAT INDICATOR

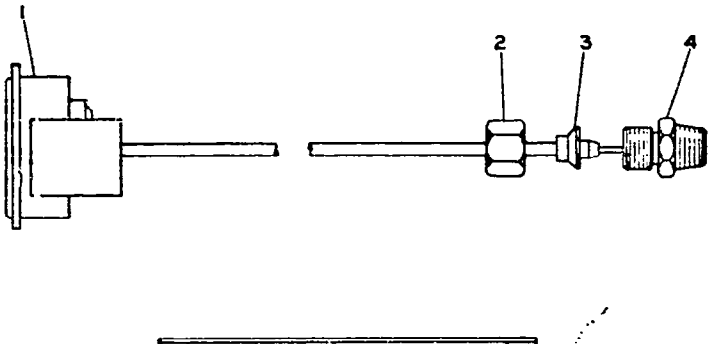

REF. NO.	PART NUMBER	DESCRIPTION	QTY
1	3S4131	GAUGE----(Water Pressure)--------	1
2	1P8563	NUT----------	1
3	1P8561	SLEEVE----------	1
4	1P8560	CONNECTOR----------	1
	1P9132	ELBOW---------(90°)----------	1
		(Not Shown)	

111964

9S2326 WATER PRESSURE GAUGE GROUP–Field Installation

9M3 OIL PUMP ASSEMBLY
Serial No. 44A6857 to 44A6864 inclusive
Part of Oil Pump shown on Page 43

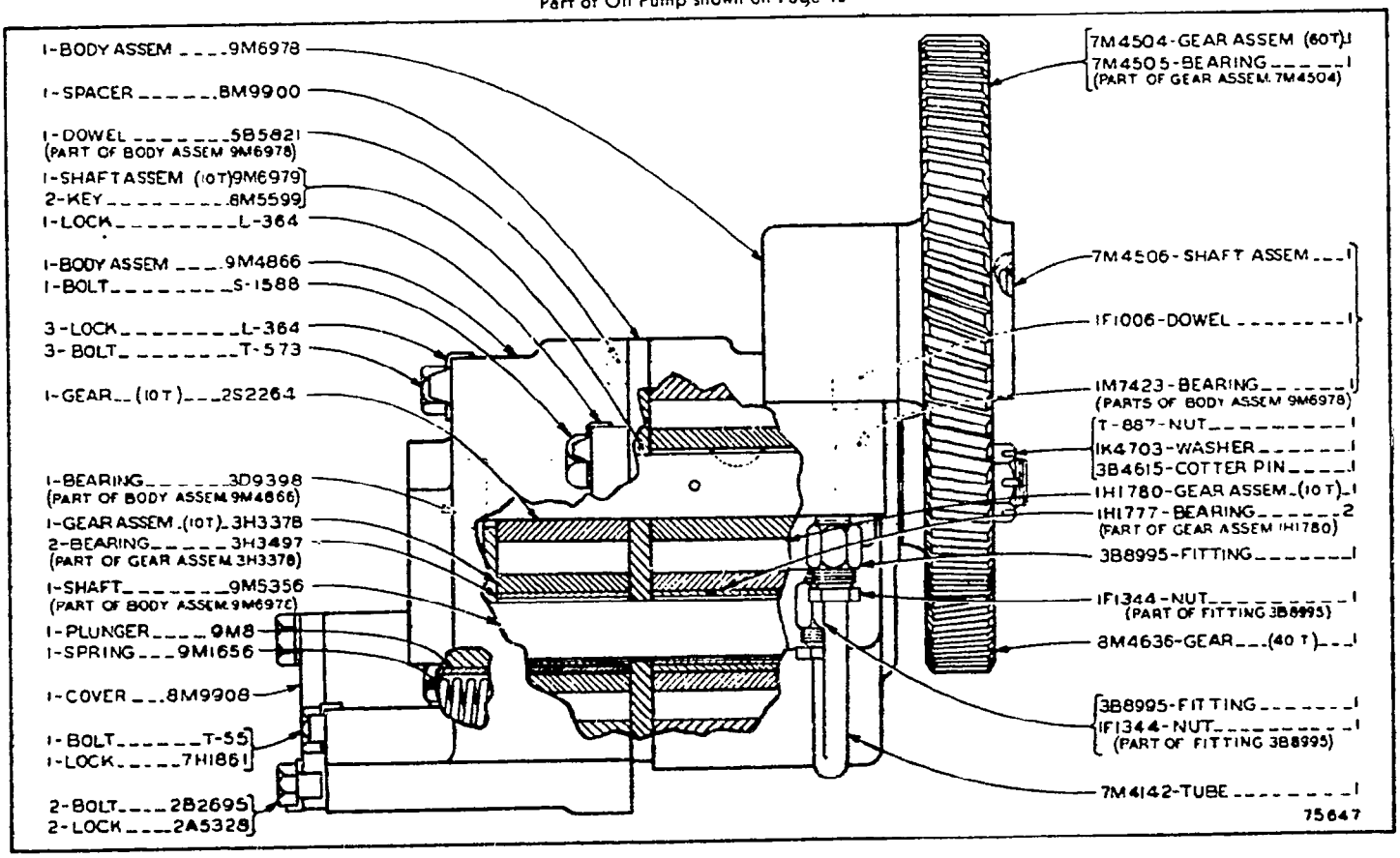

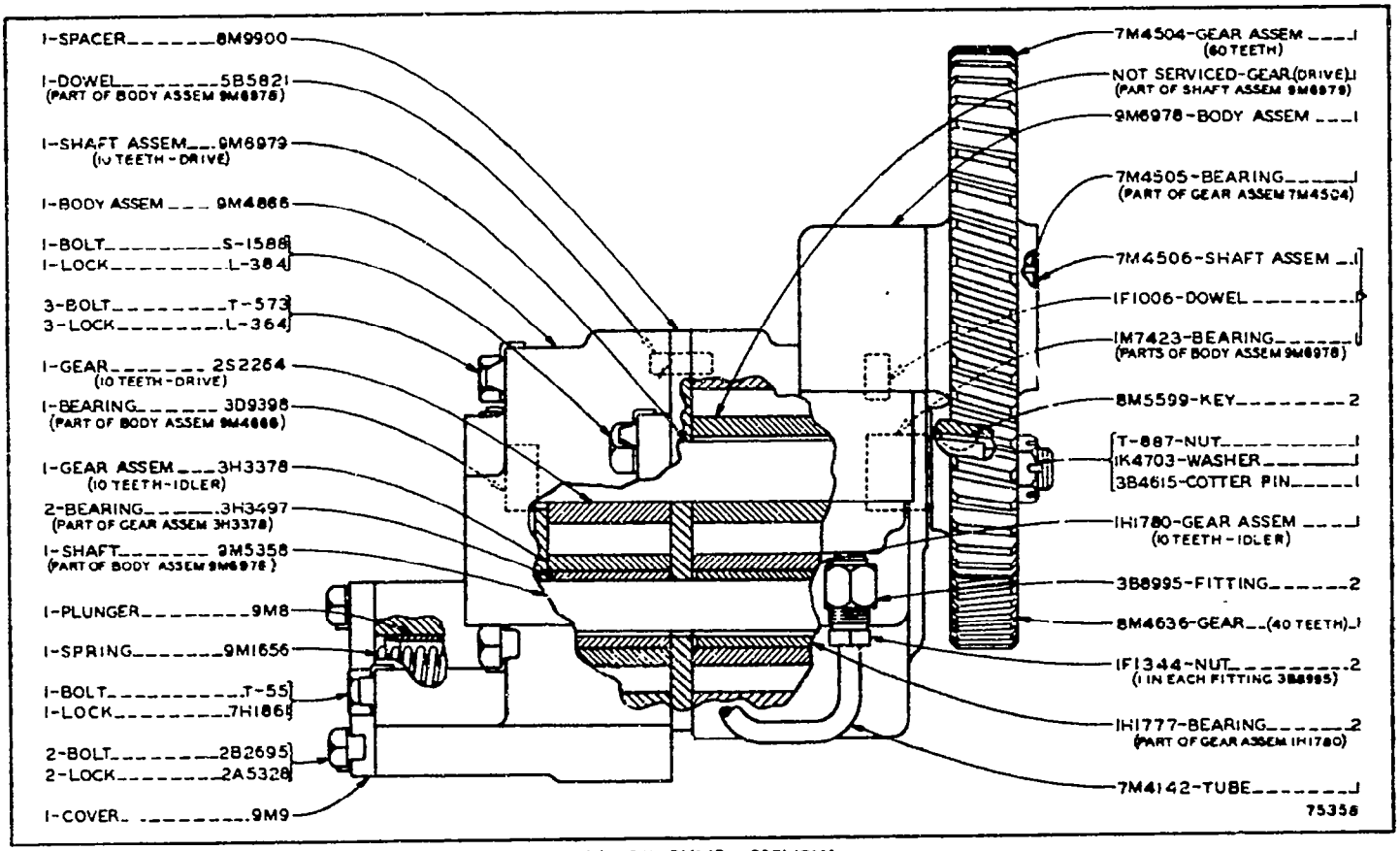

9M6 OIL PUMP ASSEMBLY
Effective with Serial No. 44A6865
Part of Oil Pump shown on Pages 43 and 44

9M576 OIL FILTER ASSEMBLY

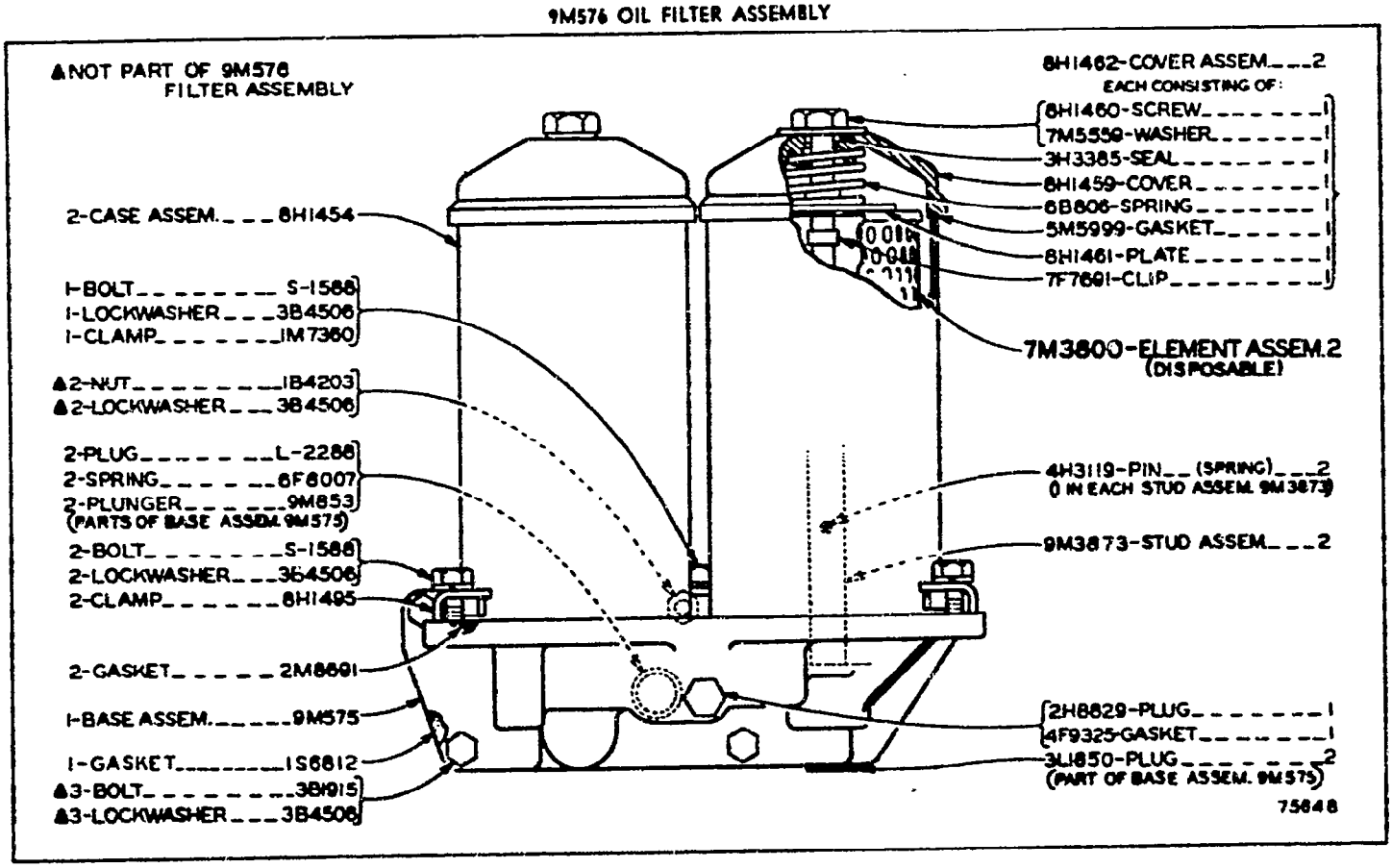

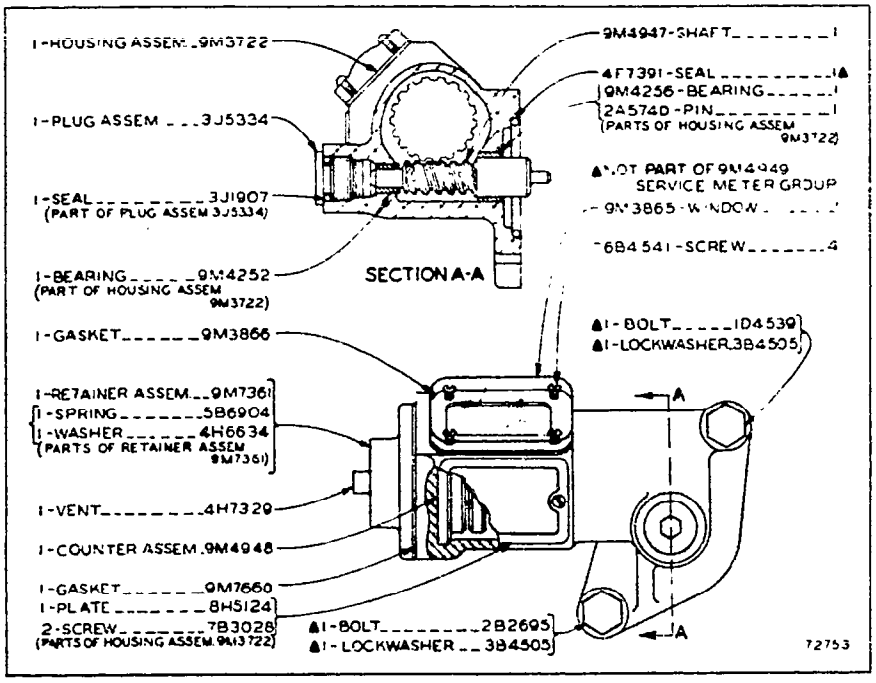

9M4949 SERVICE METER GROUP
SERIAL NO. 44A6857 TO 44A8994, 44A8997 TO 44A8999, 44A9009 AND 44A9019 INCLUSIVE

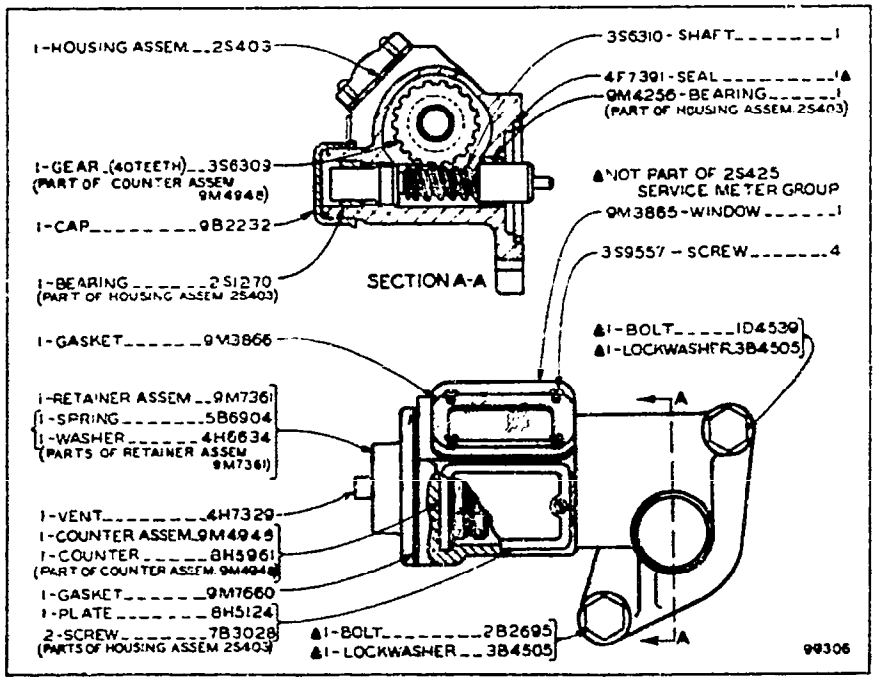

2S425 SERVICE METER GROUP
SERIAL NO. 44A8995, 44A8996, 44A9000 TO 44A9008, 44A9010 TO 44A9018, 44A9020 TO 44A12507 AND 44A12518 INCLUSIVE

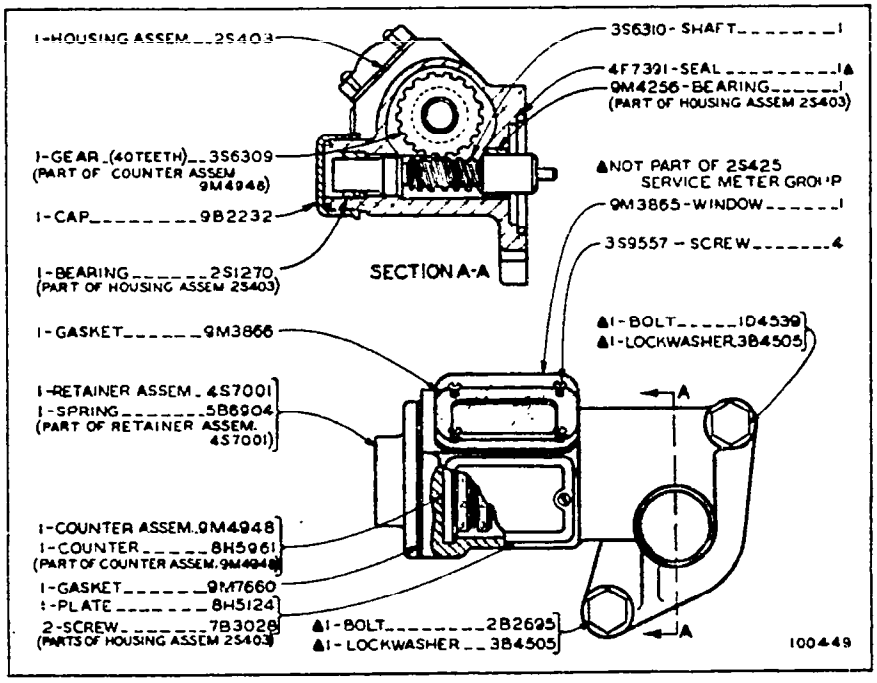

2S425 SERVICE METER GROUP
SERIAL NO. 44A12508 TO 44A12517 AND 44A12519-UP

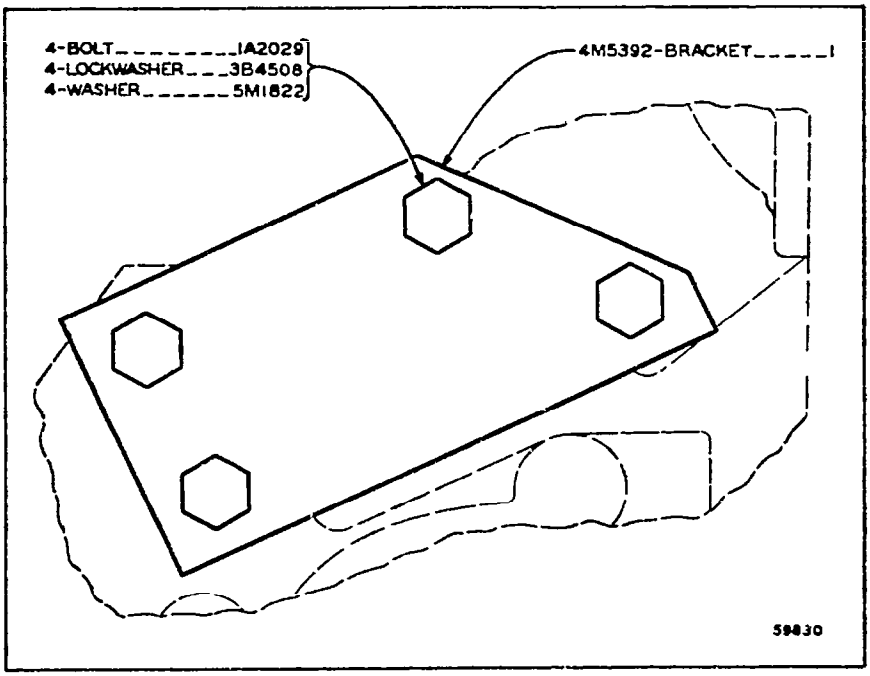

STARTING ENGINE SUPPORT
Effective with Starting Engine Block No. E5803—Up

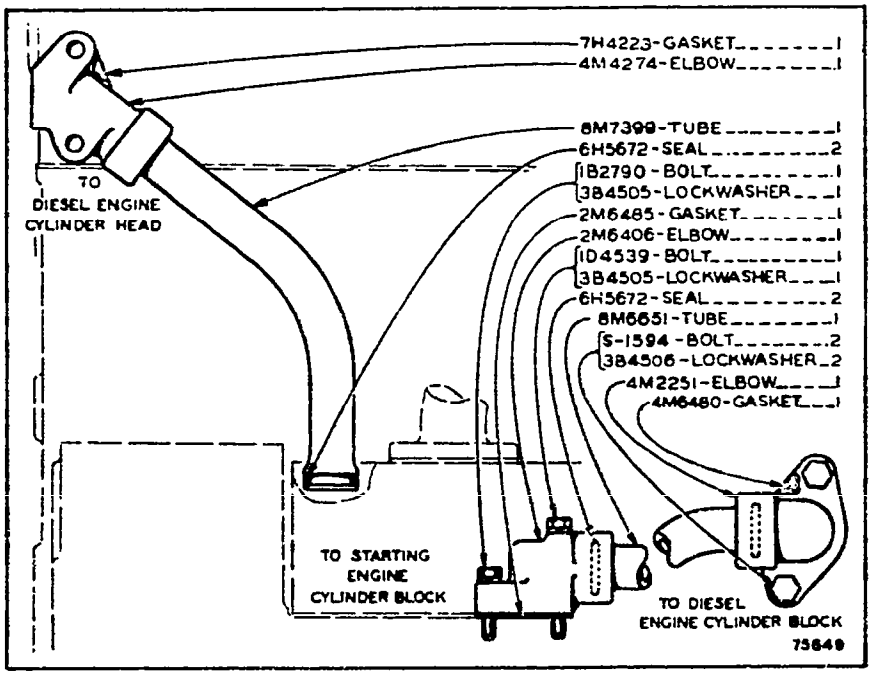

9M1212 WATER LINES GROUP
Effective with Starting Engine Block No. E5803—Up

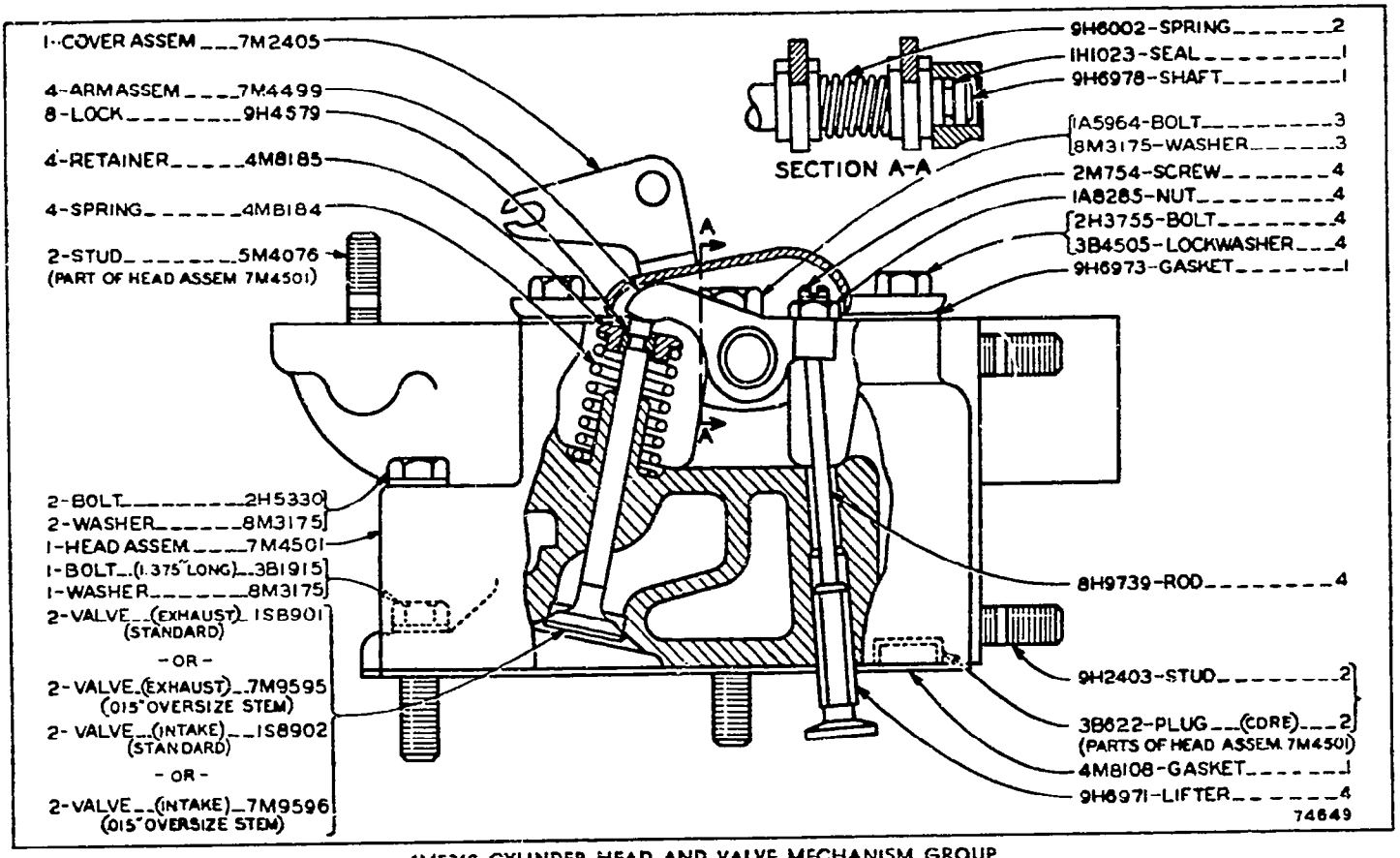

4M5360 CYLINDER HEAD AND VALVE MECHANISM GROUP
Serial No. 44A6857 to 44A8445 inclusive. Starting Engine Block No. E5803 to E8937 inclusive

4M5360 CYLINDER HEAD AND VALVE MECHANISM GROUP
Effective with Serial No. 44A8446—Up and Starting Engine Block No. E8938—Up

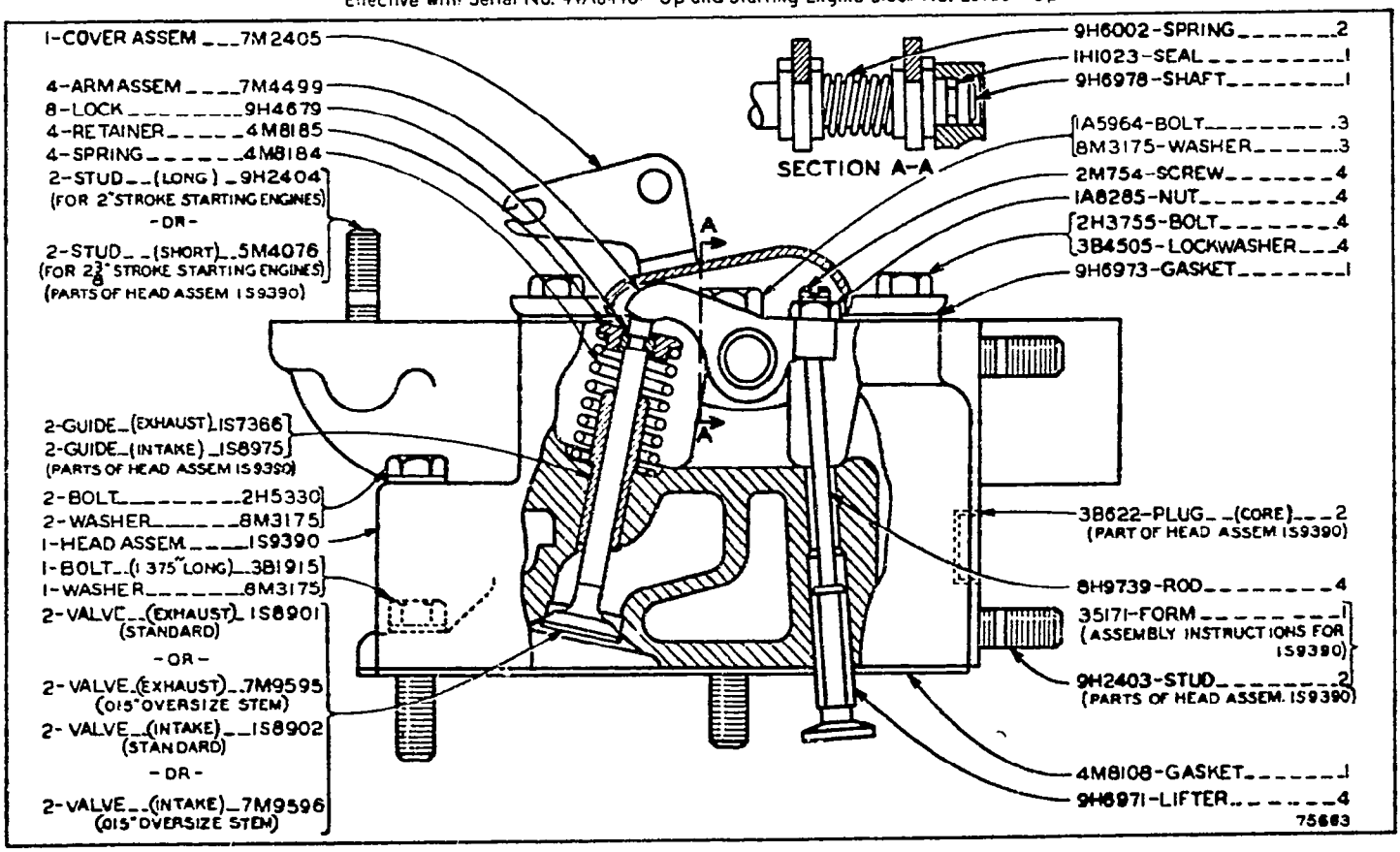

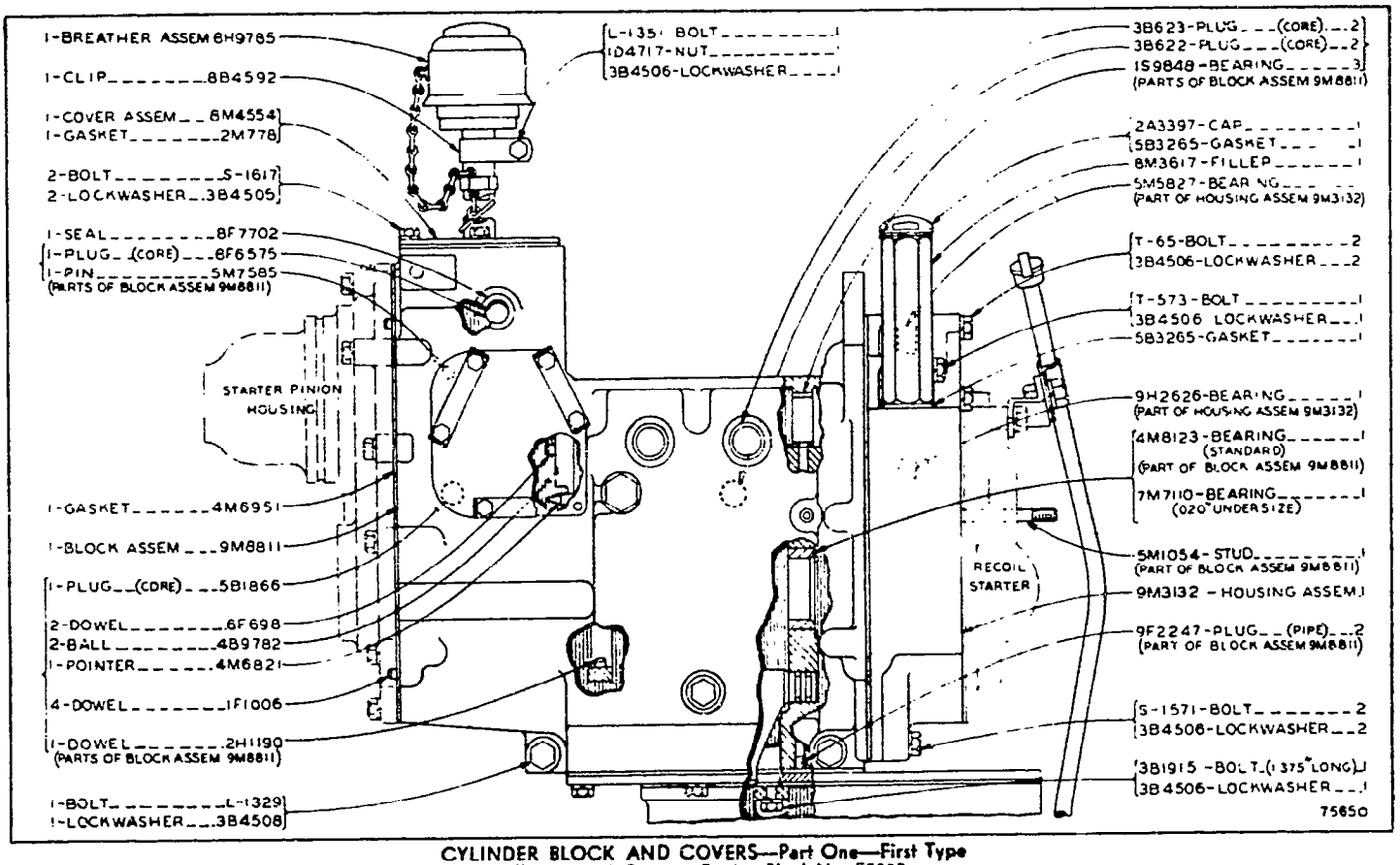

CYLINDER BLOCK AND COVERS—Part One—First Type
Effective with Starting Engine Block No. E5803
See Page 27 for Gasket Kits

CYLINDER BLOCK AND COVERS—Part Two—First Type
Effective with Starting Engine Block No. E5803

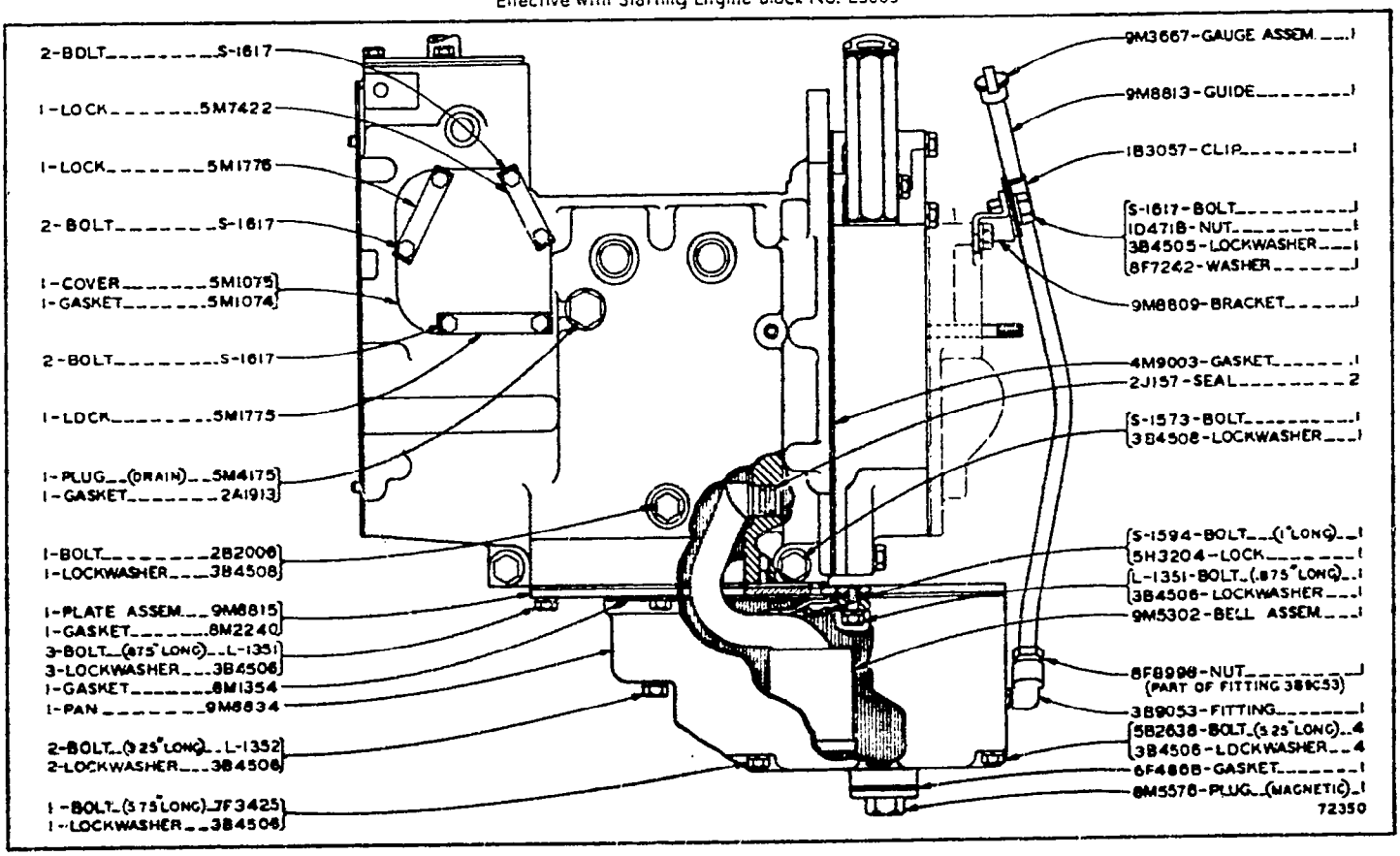

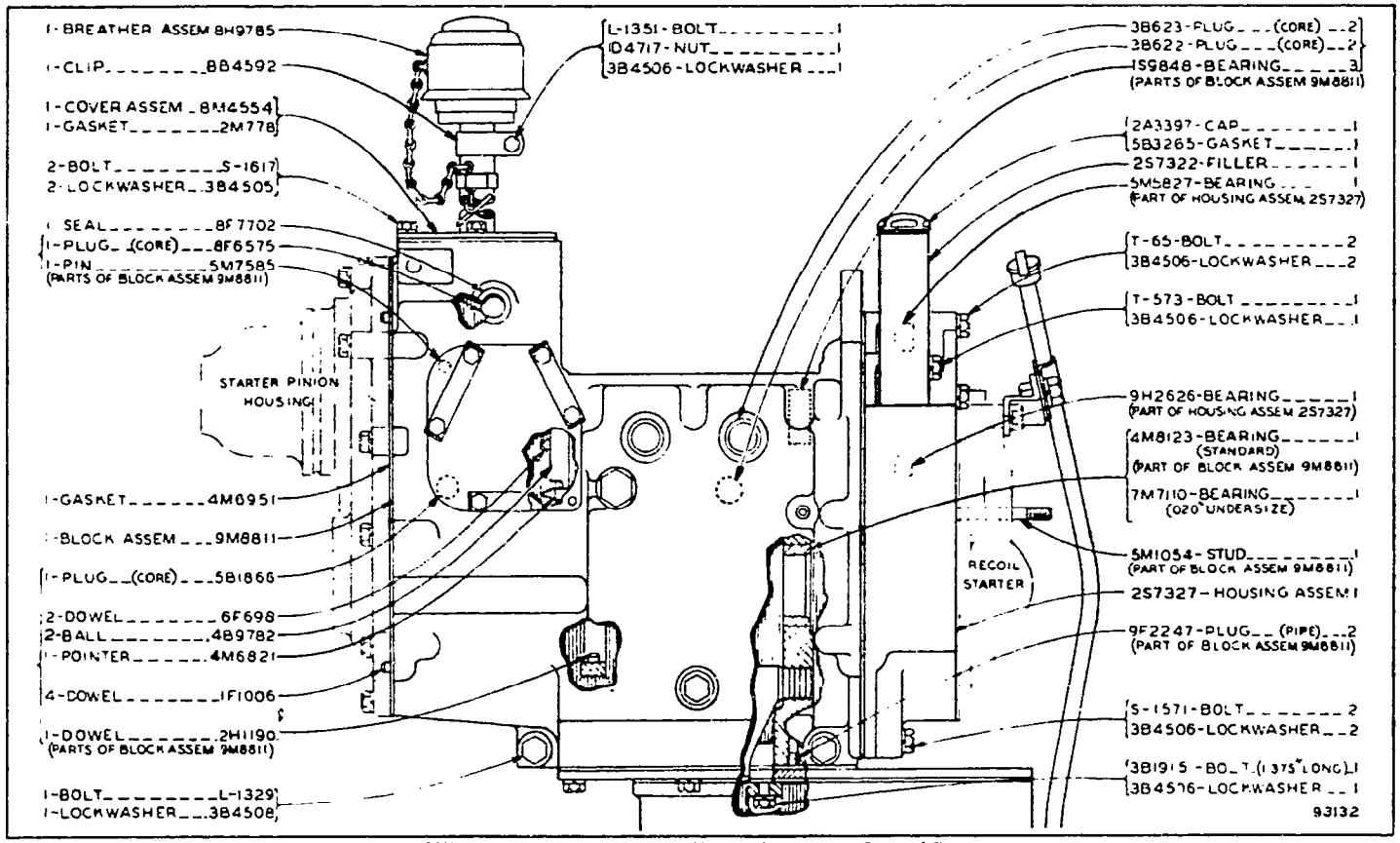

CYLINDER BLOCK AND COVERS—Part One—Second Type
Effective with Starting Engine Block No. E5803
See Page 27 for Gasket Kits

CYLINDER BLOCK AND COVERS—Part Two—Second Type
Effective with Starting Engine Block No. E5803

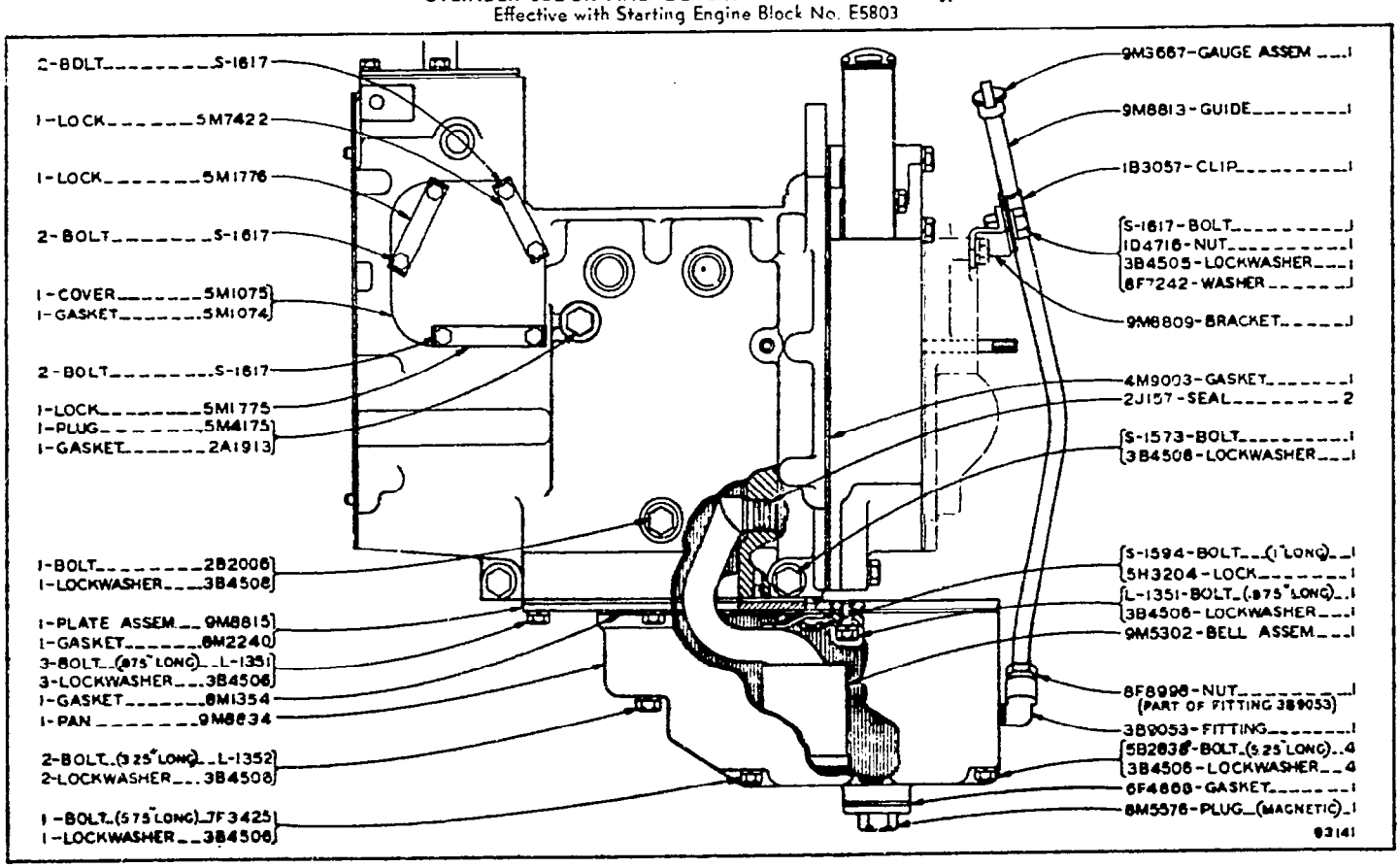

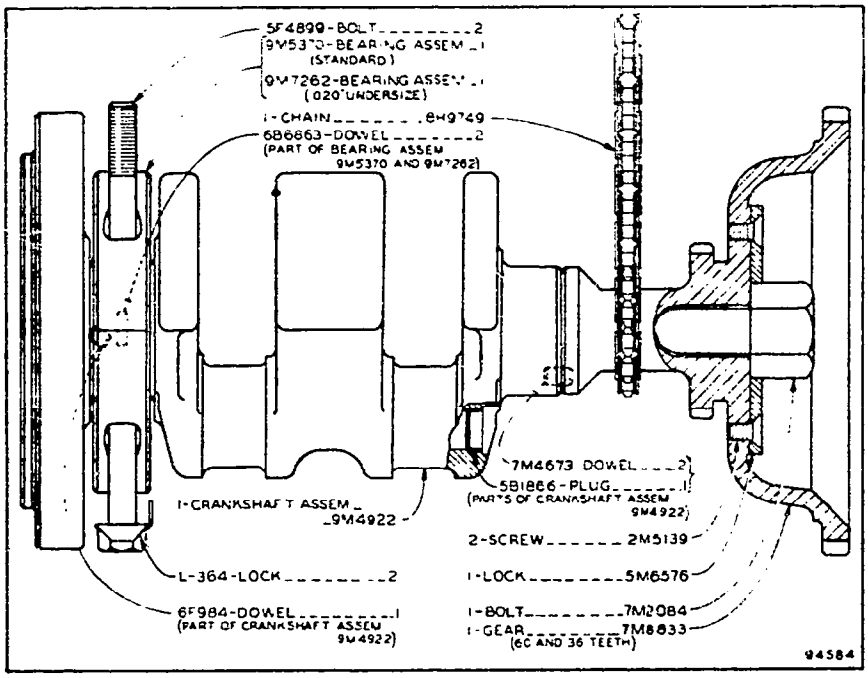

CRANKSHAFT
Serial No. 44A6857 to 44A8079 44A8087 and 44A9088 inclusive
Starting Engine Block No. E5803 to E8350 inclusive

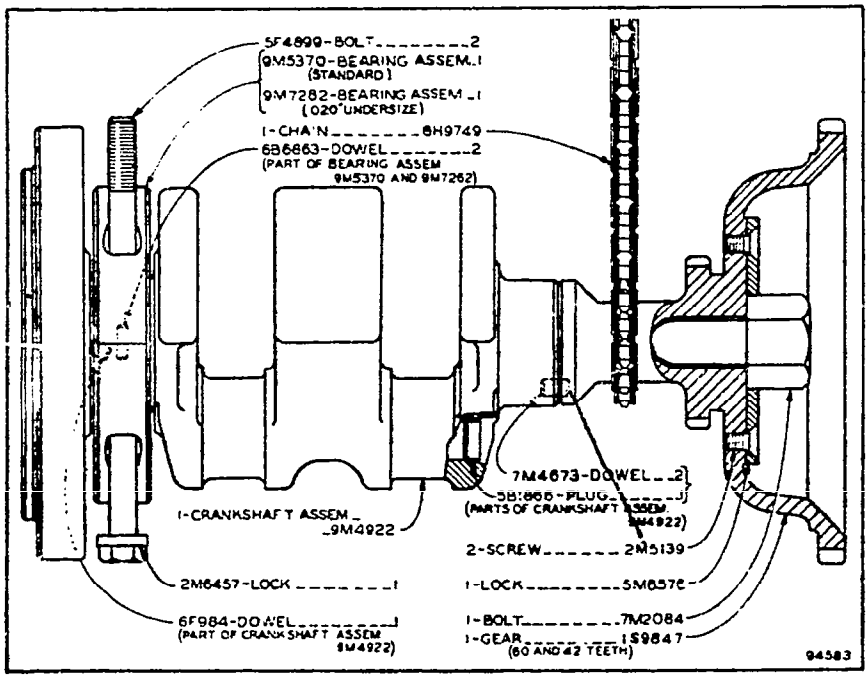

CRANKSHAFT
Serial No. 44A8080 to 44A8086 and 44A8089—Up and Starting Engine Block No. E8351—Up

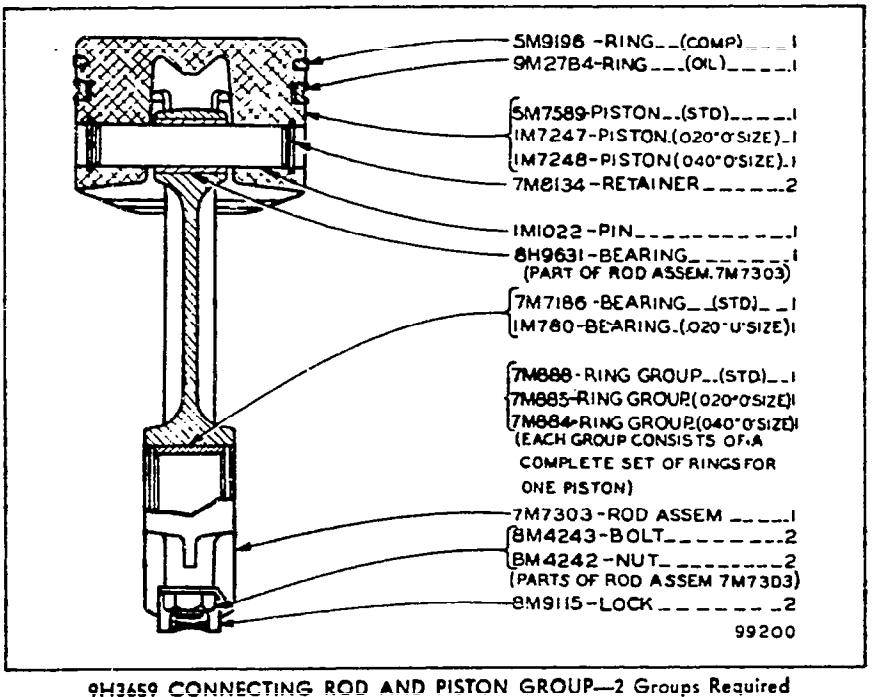

9H3659 CONNECTING ROD AND PISTON GROUP—2 Groups Required
Effective with Starting Engine Block No. E5803—Up

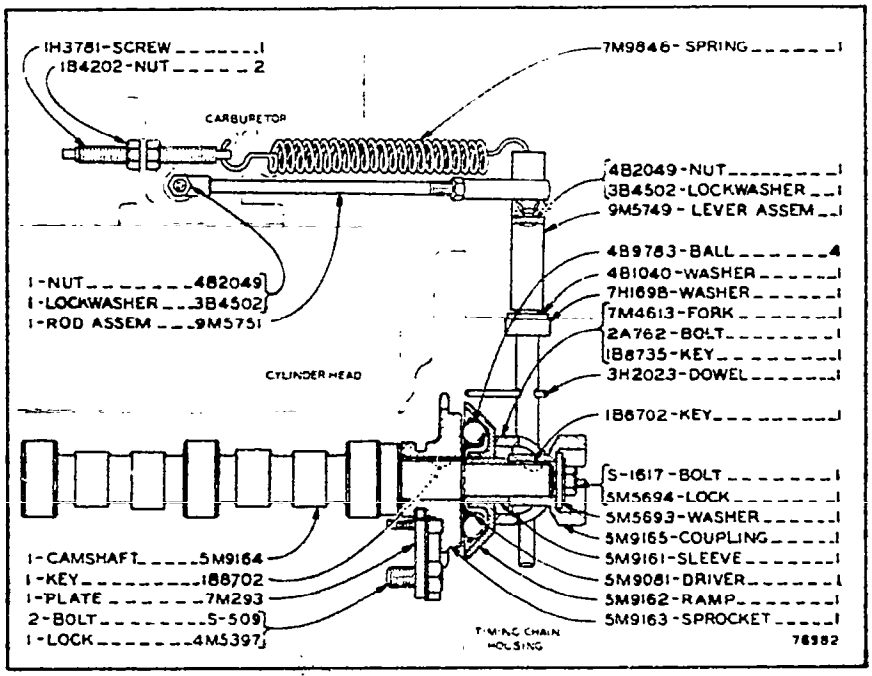

CAMSHAFT AND GOVERNOR
Effective with Starting Engine Block No. E5803—Up

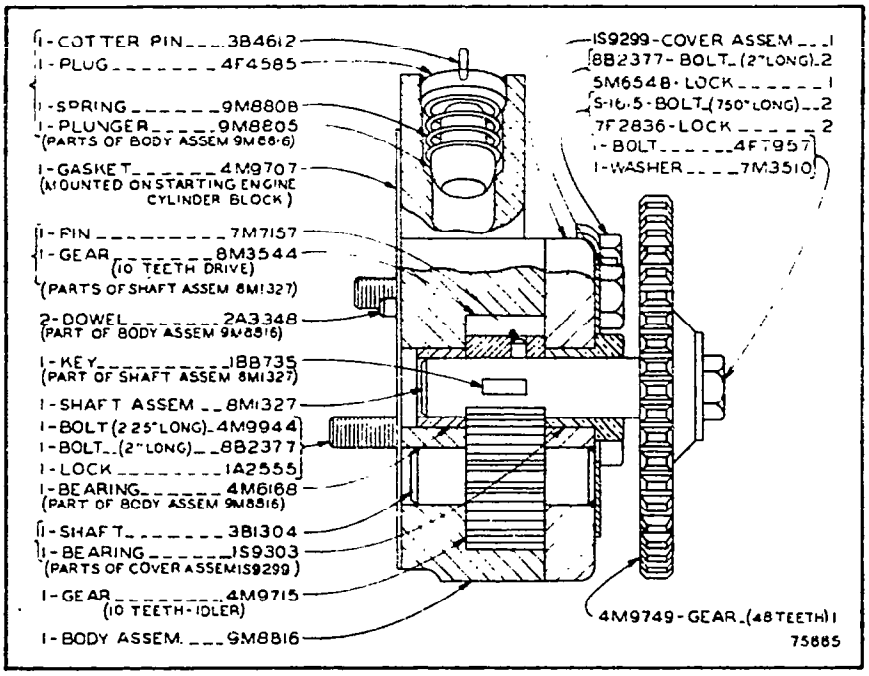

9M8803 OIL PUMP GROUP
Serial No. 44A6857 to 44A8079, 44A8087 and 44A8088 inclusive
Starting Engine Block No. E5803 to E8350 inclusive

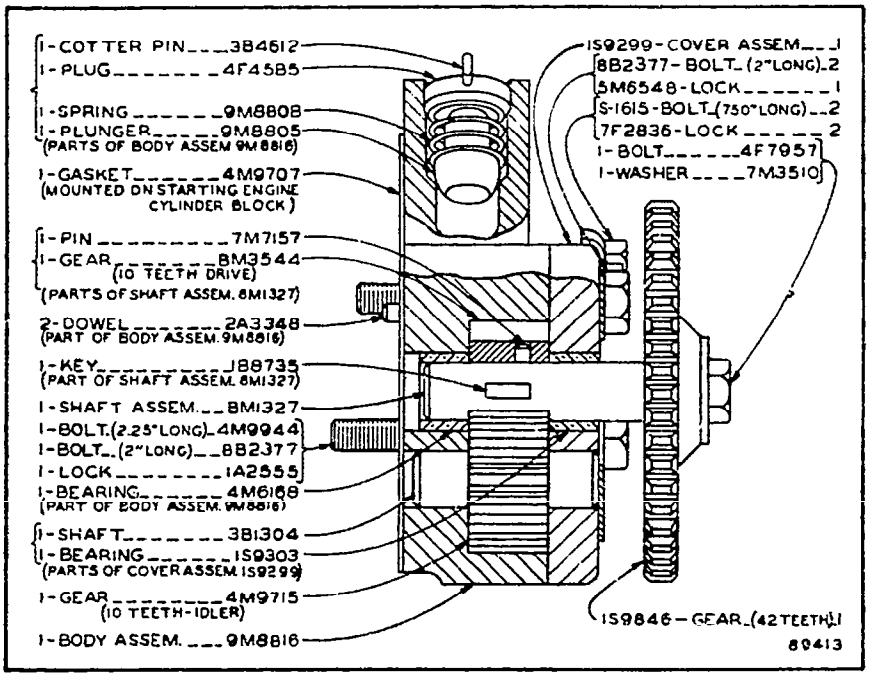

2S132 OIL PUMP GROUP
Serial No. 44A8080 to 44A8086 and 44A8089—Up and Starting Engine Block No. E8351—Up

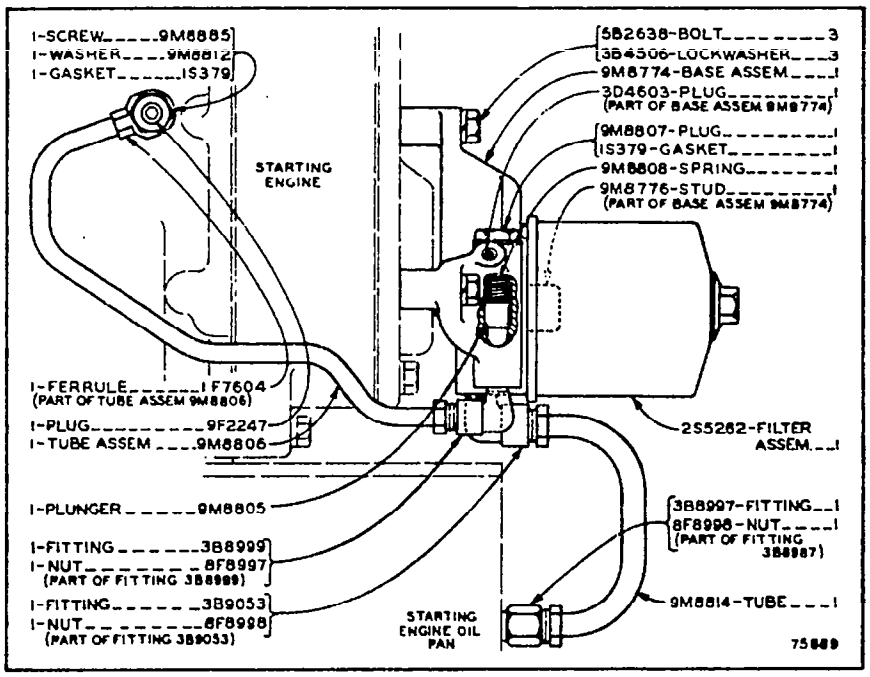

9M8802 OIL FILTER GROUP
Effective with Starting Engine Block No. E5803

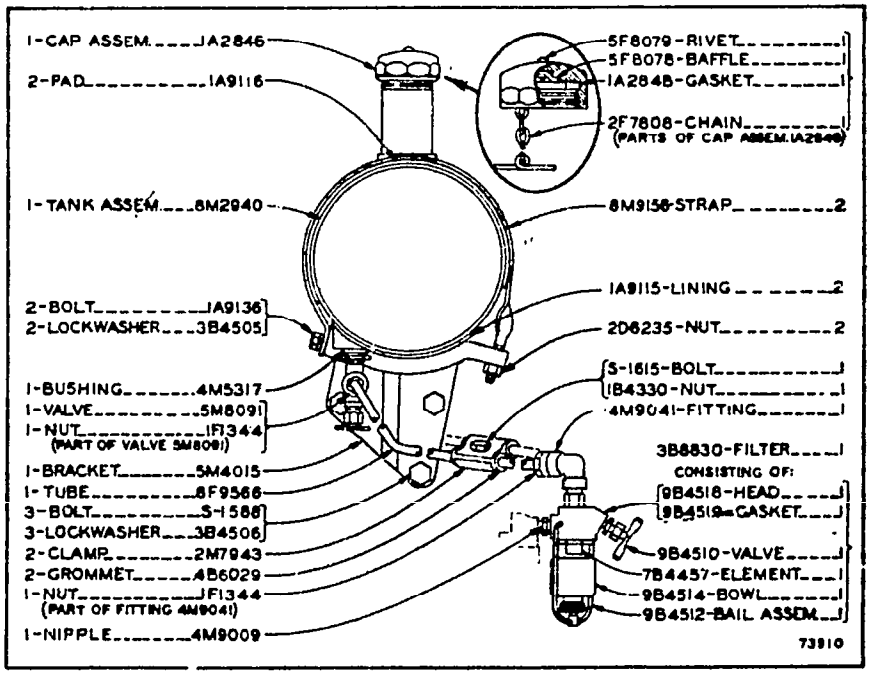

4M9090 FUEL SYSTEM GROUP
Effective with Starting Engine Block No. E5803
Refer also to Pages 111 and 146 for special parts

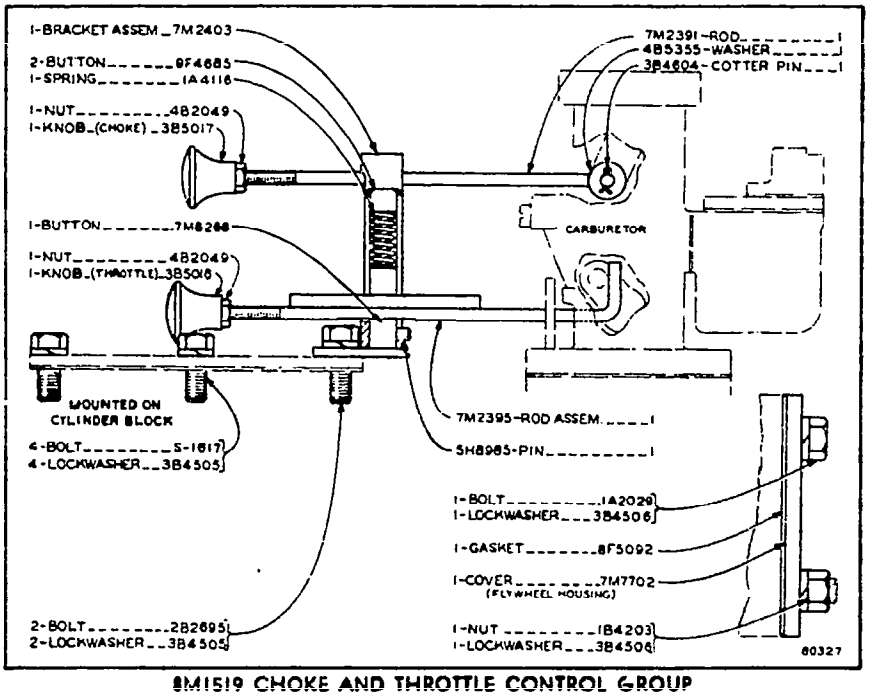

8M1519 CHOKE AND THROTTLE CONTROL GROUP
Effective with Starting Engine Block No. E5803
Refer also to Pages 146 and 165 for special parts

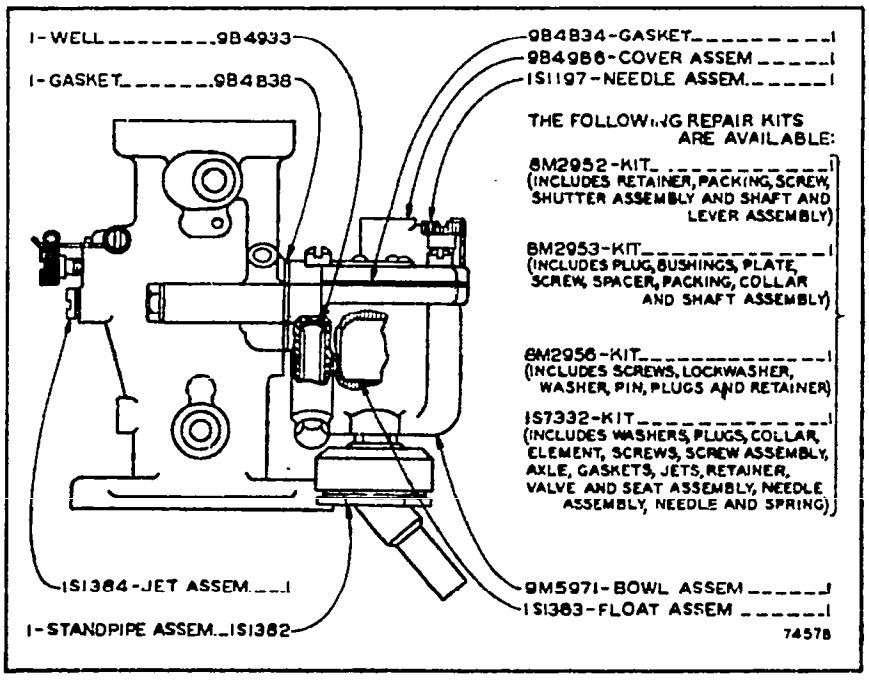

9M3978 CARBURETOR ASSEMBLY
Part of 8M4456 Manifold, Carburetor and Air Cleaner Group shown on Pages 59 and 60

8M4456 MANIFOLD, CARBURETOR AND AIR CLEANER GROUP

Serial No. 44A6857 to 44A7966 inclusive. Starting Engine Block No. E5803 to E8071 inclusive

Refer also to Page 109 for special parts

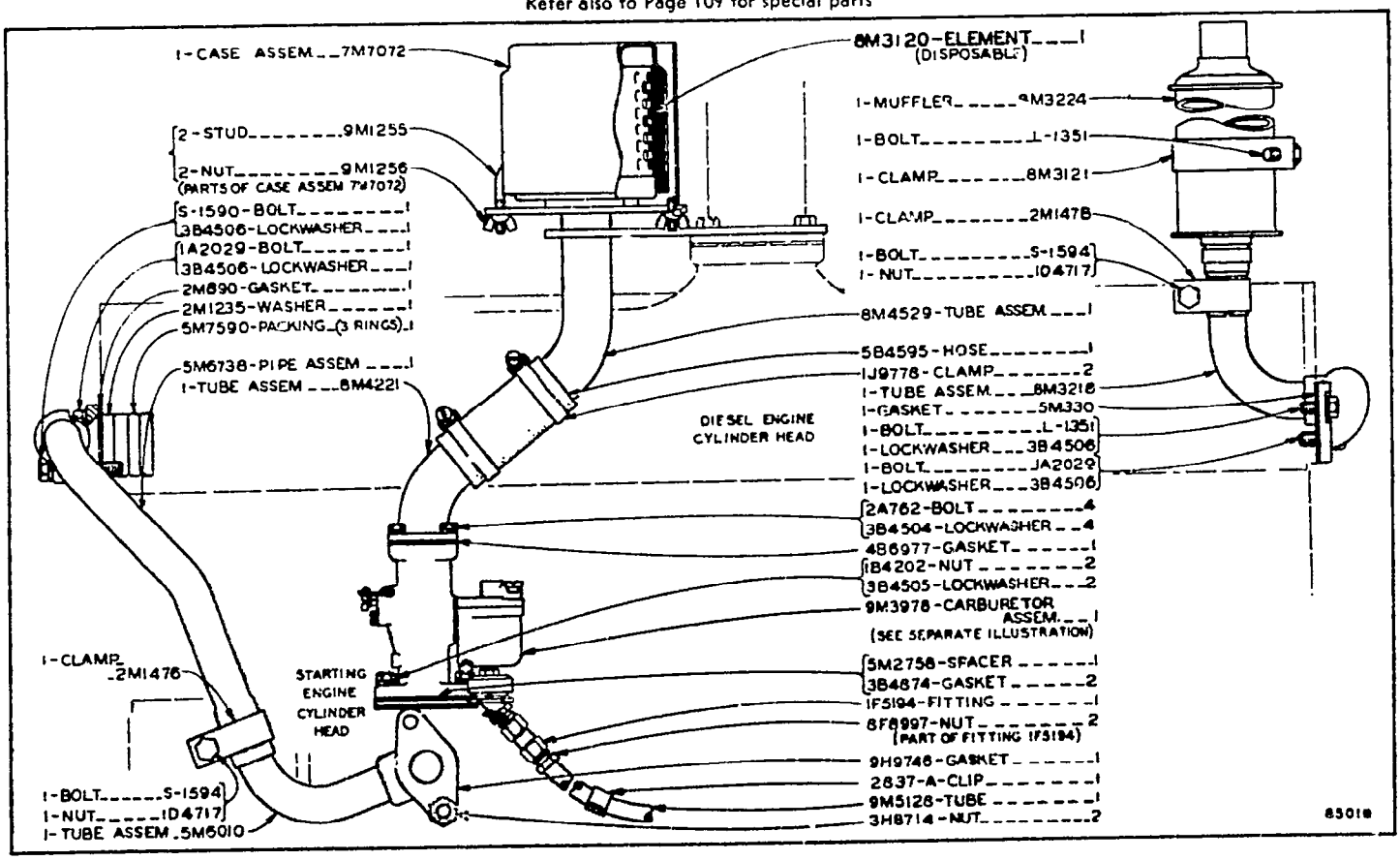

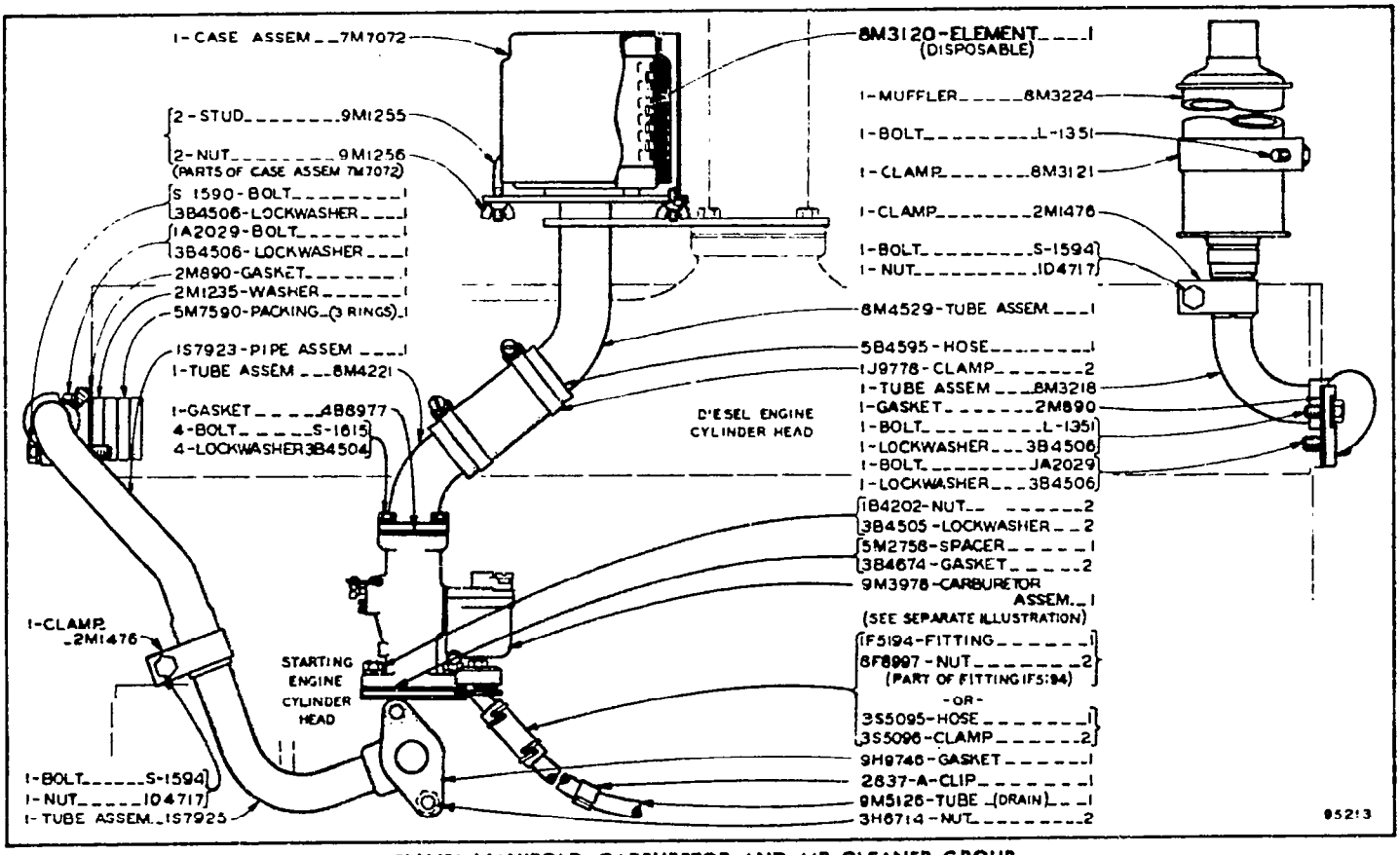

8M4456 MANIFOLD, CARBURETOR AND AIR CLEANER GROUP
Effective with Serial No. 44A7967—Up and Starting Engine Block No. E8072—Up
9M3978 Carburetor Assembly parts are shown on Page 58
Refer also to Page 109 for special parts

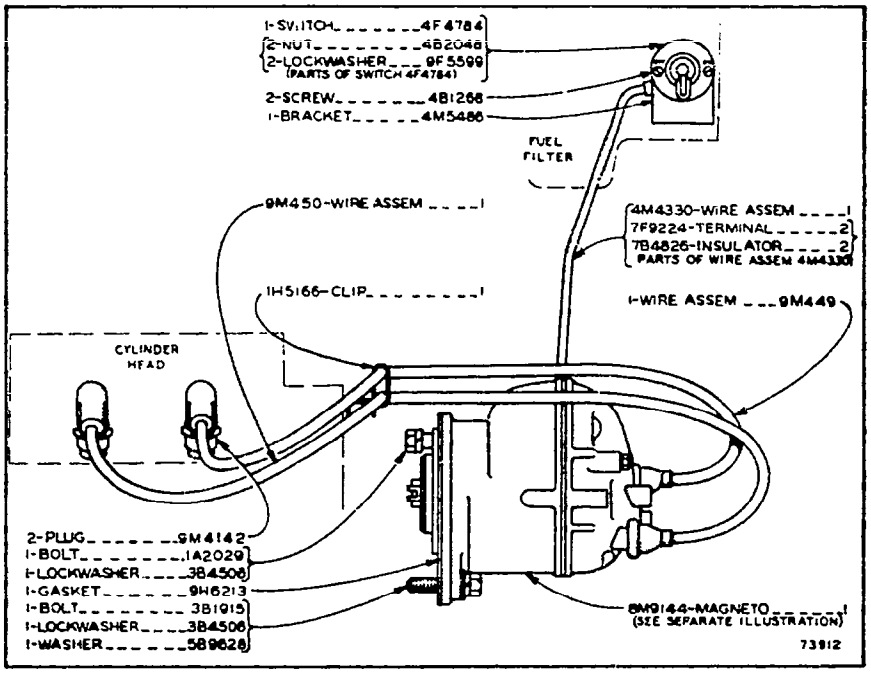

9H3663 IGNITION SYSTEM GROUP

Serial No. 44A6857 to 44A8362 inclusive. Starting Engine Block No. E5803 to E8839 inclusive
8M9144 Magneto Assembly parts are shown on Page 62

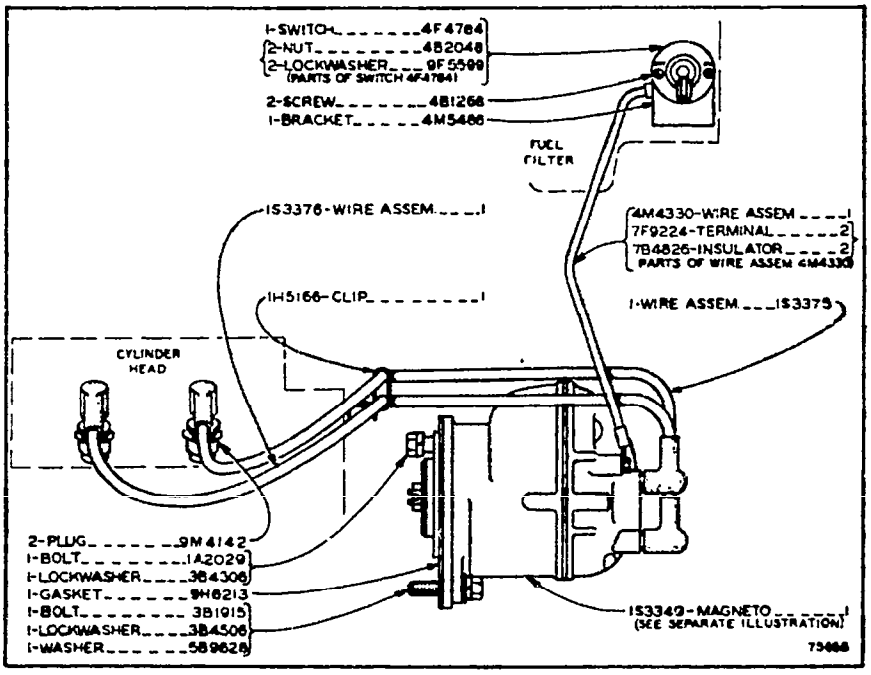

9H3663 IGNITION SYSTEM GROUP

Effective with Serial No. 44A8363—Up and Starting Engine Block No. E8840—Up
1S3349 Magneto Assembly parts are shown on Page 63

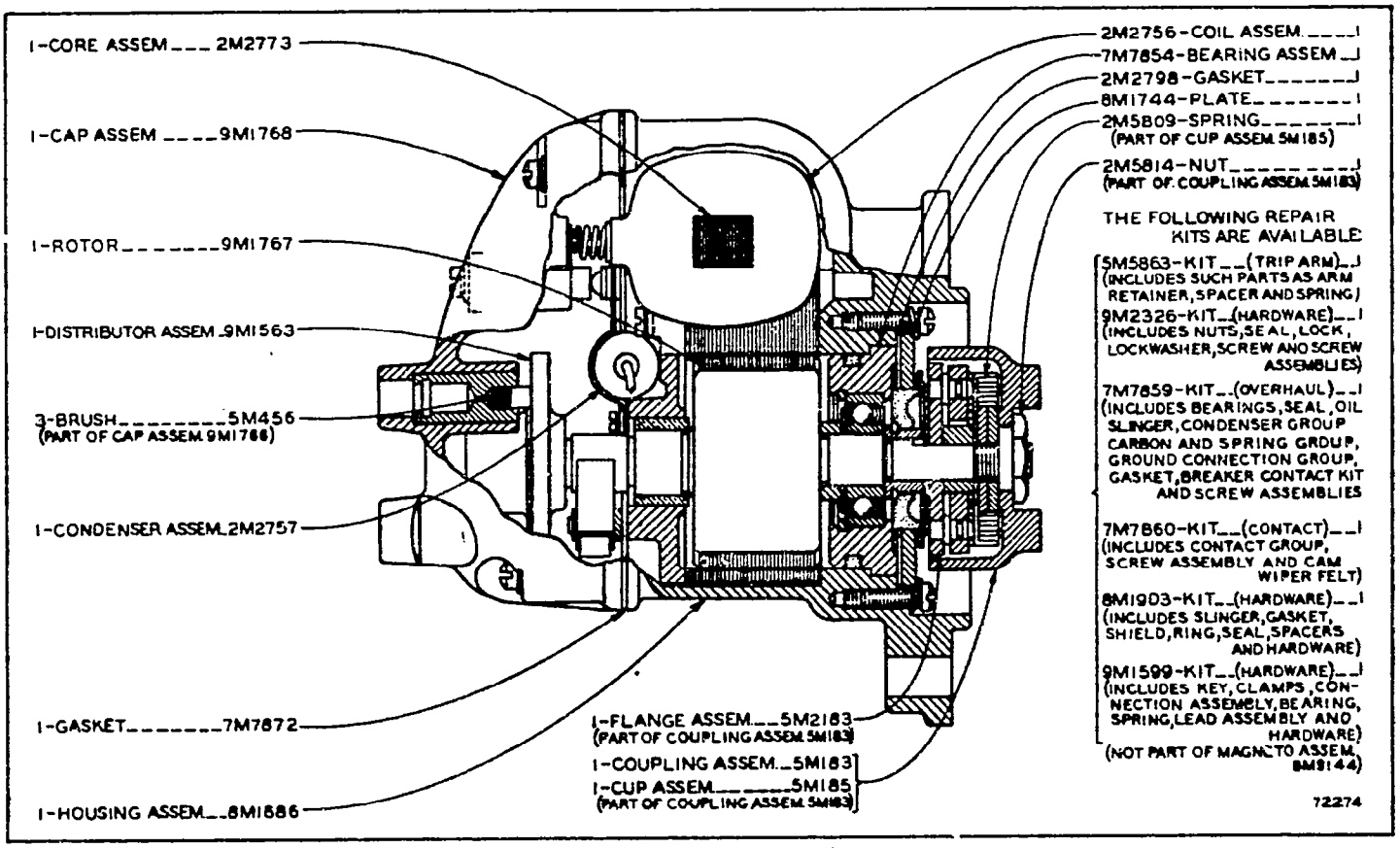

8M9144 MAGNETO ASSEMBLY
Part of 9H3663 Ignition System Group shown on Page 61

IS3349 MAGNETO ASSEMBLY
Part of 9H3663 Ignition System Group shown on Page 61

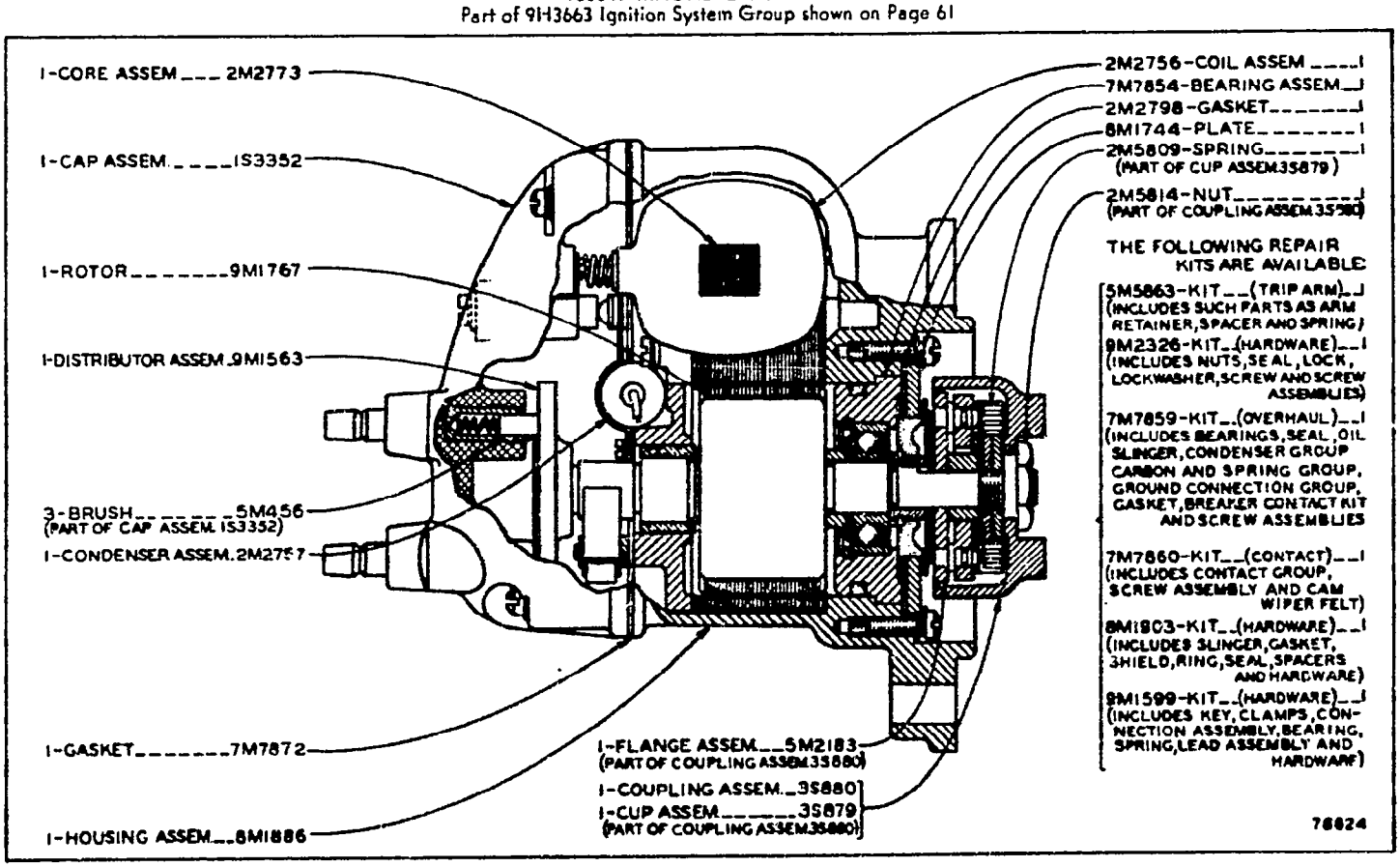

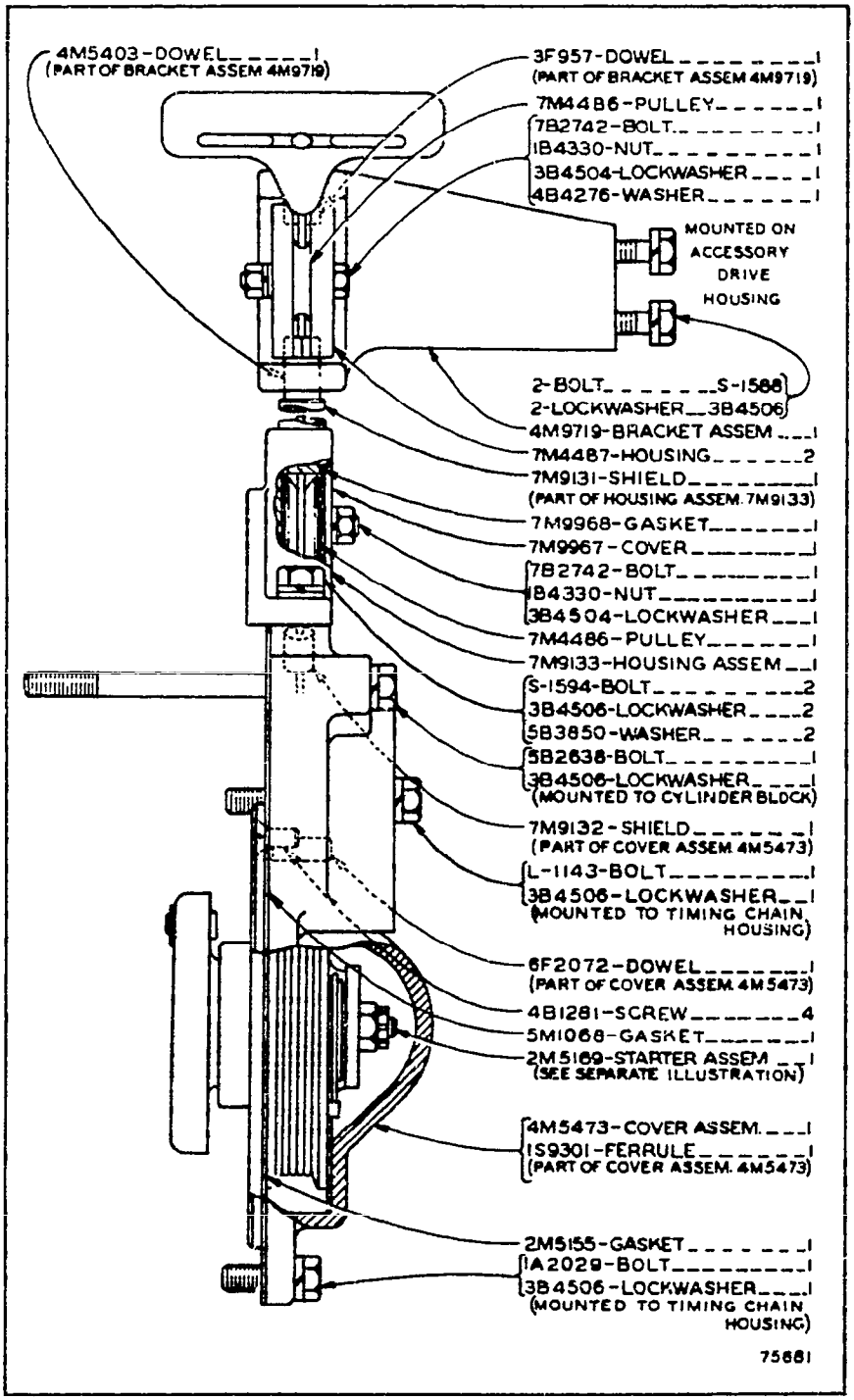

9M9134 RECOIL STARTER GROUP
Effective with Starting Engine Block No. E5803

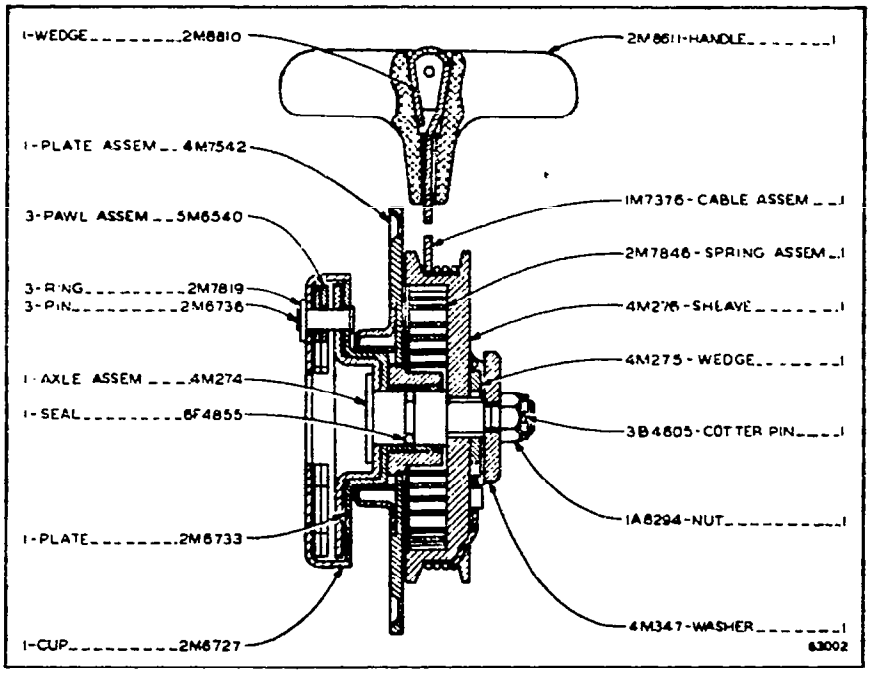

2M5169 RECOIL STARTER ASSEMBLY
Part of 9M9134 Recoil Starter Group

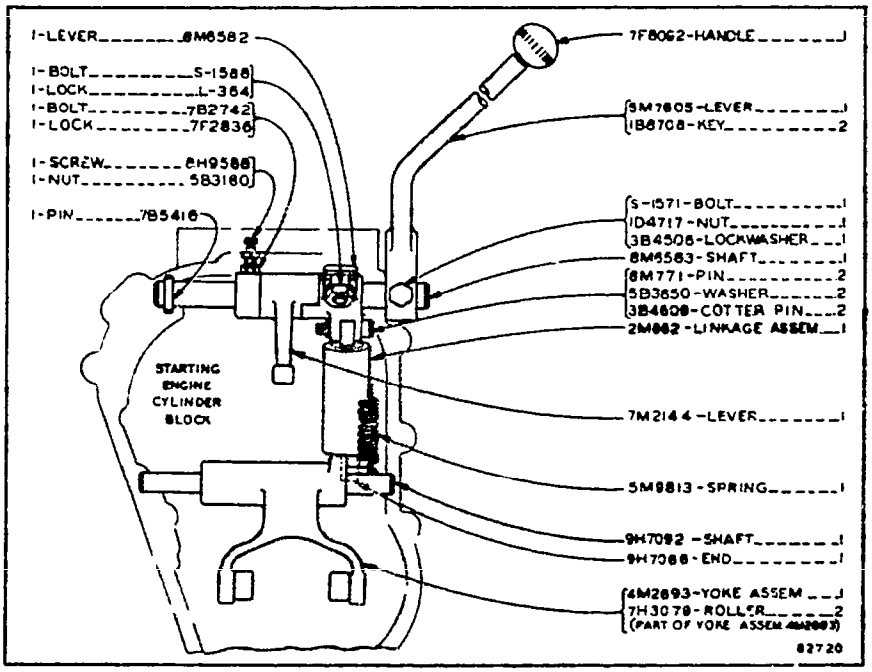

5M2878 CLUTCH, BRAKE AND STARTER PINION CONTROL GROUP
Serial No. 44A6857 to 44A7122 inclusive. Starting Engine Block No. E5803 to E6865 inclusive

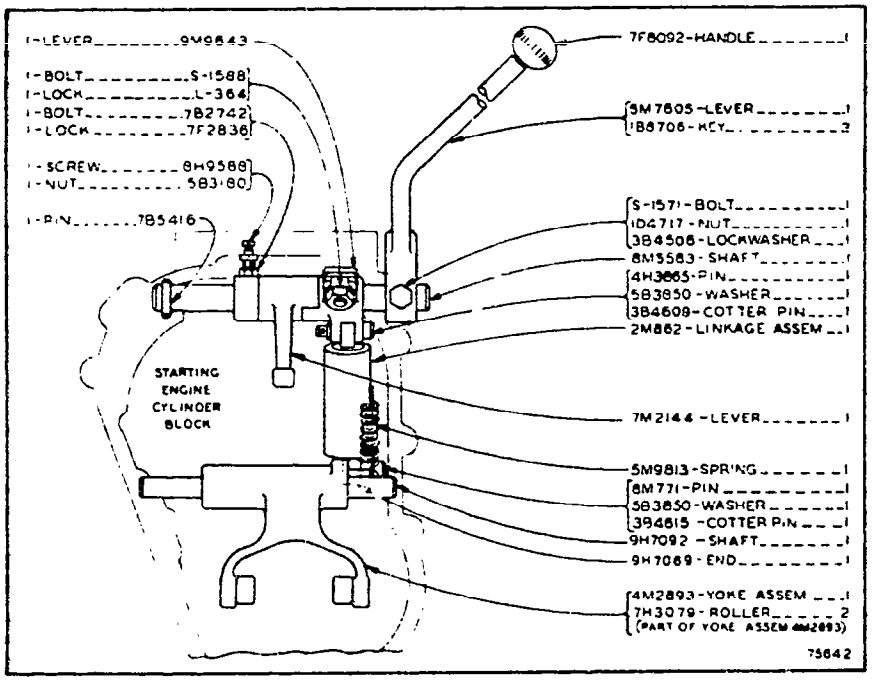

5M2878 CLUTCH, BRAKE AND STARTER PINION CONTROL GROUP
Effective with Serial No 44A7123—Up and Starting Engine Block No. E6866—Up

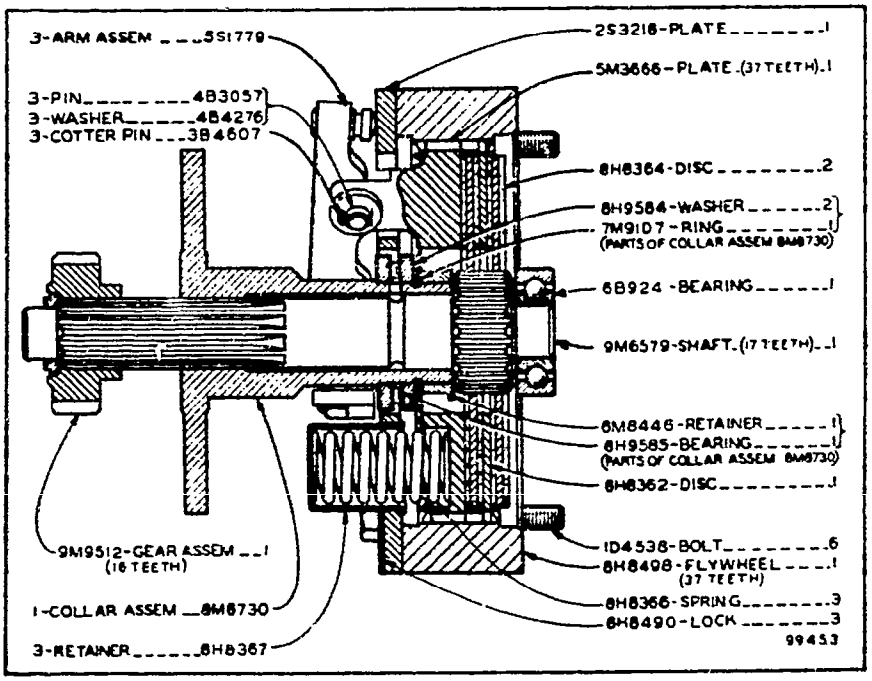

8M9337 CLUTCH AND BRAKE GROUP
Effective with Starting Engine Block No. E5803

8M9351 STARTER PINION GROUP

Effective with Starting Engine Block No. E5803

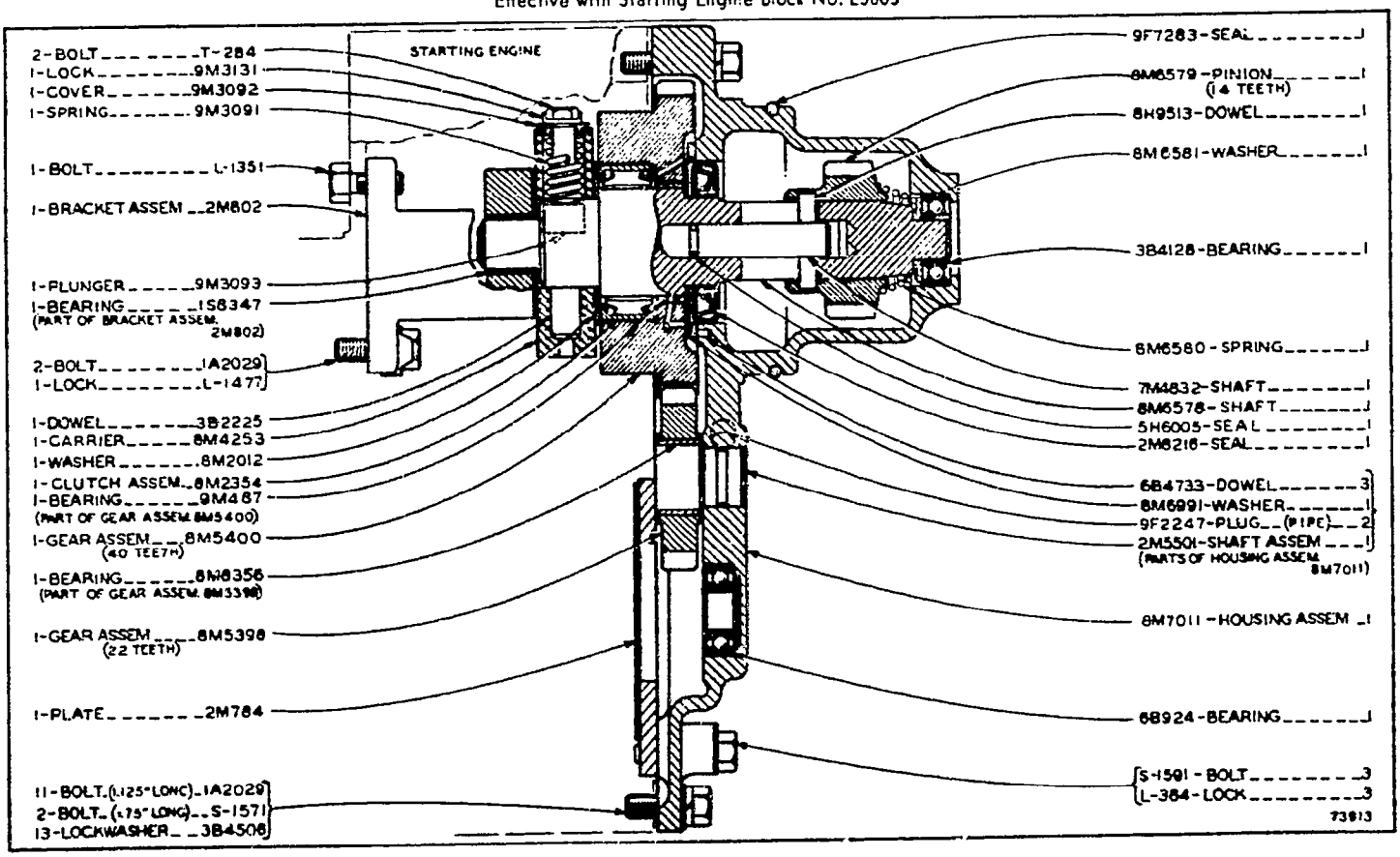

POWER TRAIN ARRANGEMENT

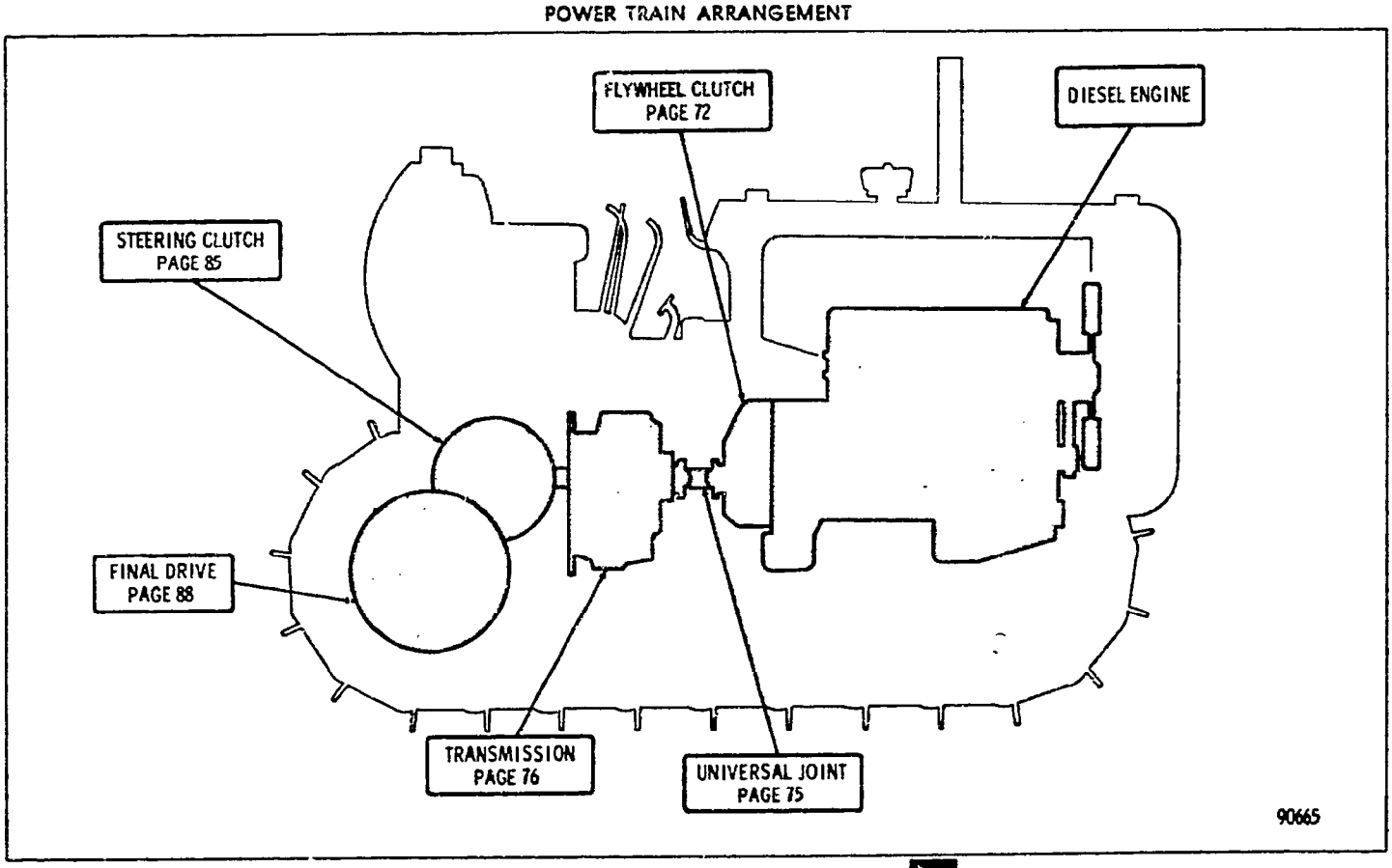

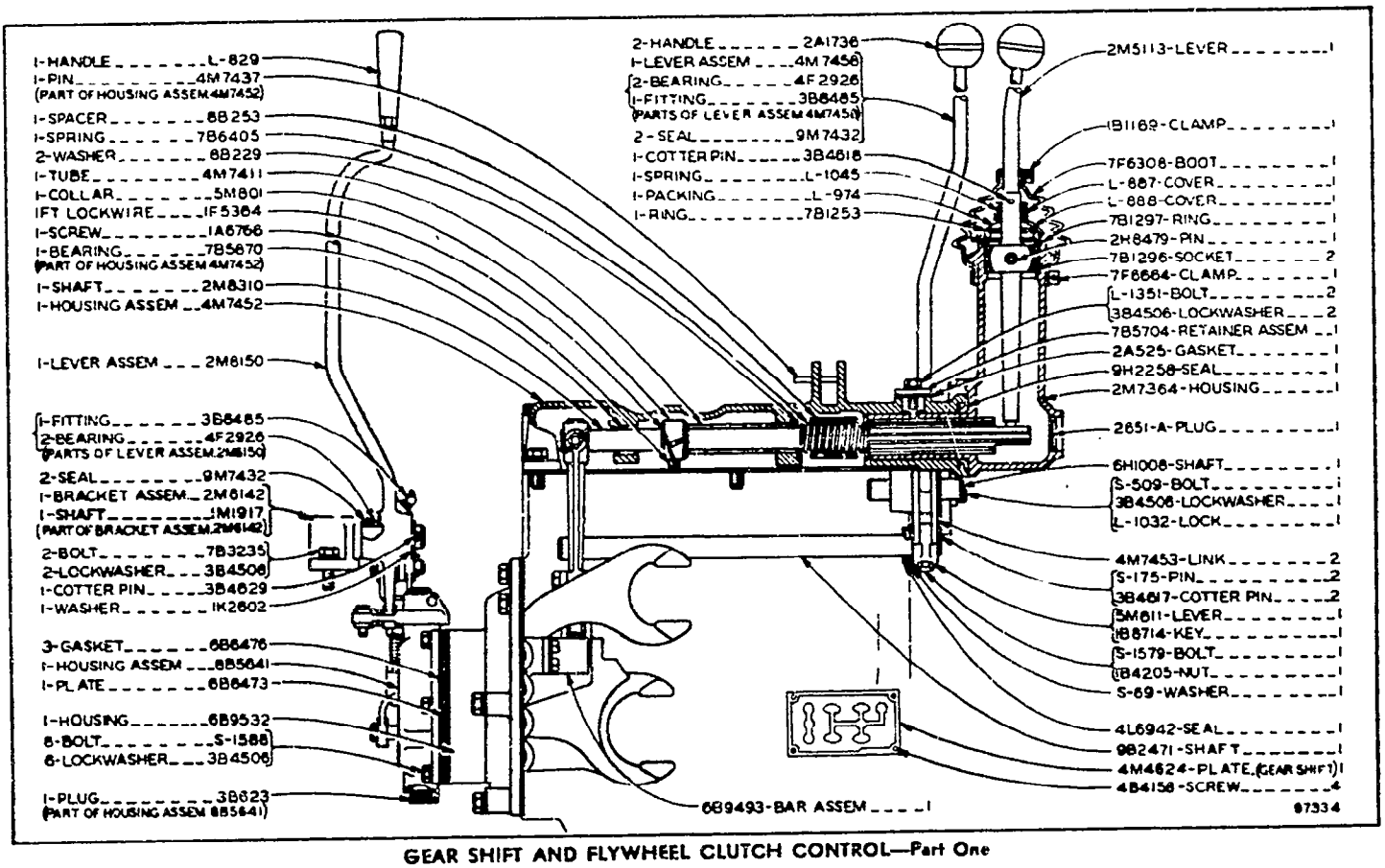

GEAR SHIFT AND FLYWHEEL CLUTCH CONTROL—Part One

GEAR SHIFT AND FLYWHEEL CLUTCH CONTROL—Part Two

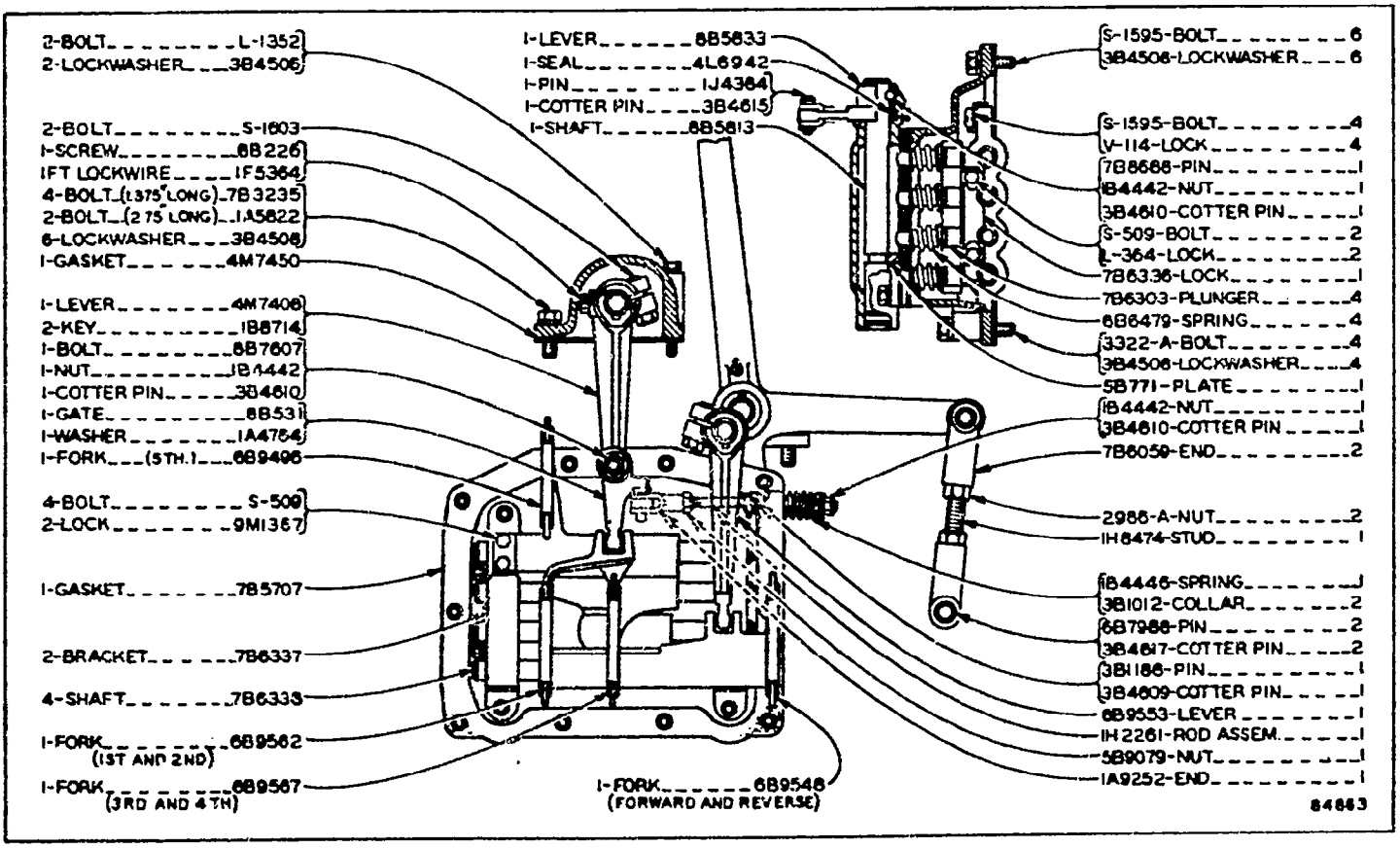

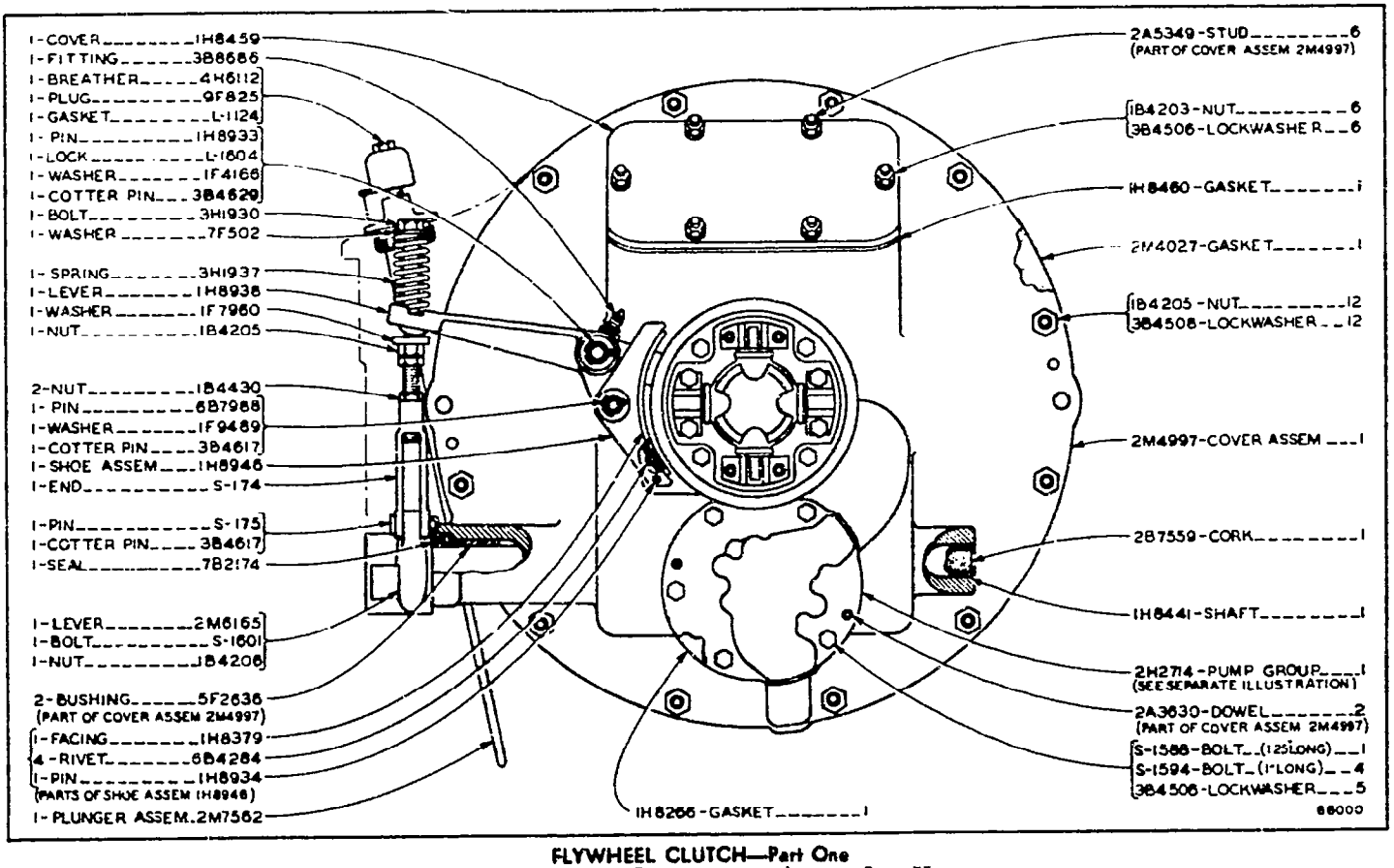

FLYWHEEL CLUTCH—Part One

2H2714 Oil Pump Group parts are shown on Page 75

ADDITIONAL PARTS ARE SHOWN ON PAGES 73 AND 74

FLYWHEEL CLUTCH—Part Two

2M5001 Universal Joint Assembly parts are shown on Page 75

ADDITIONAL PARTS ARE SHOWN ON PAGES 72 AND 74

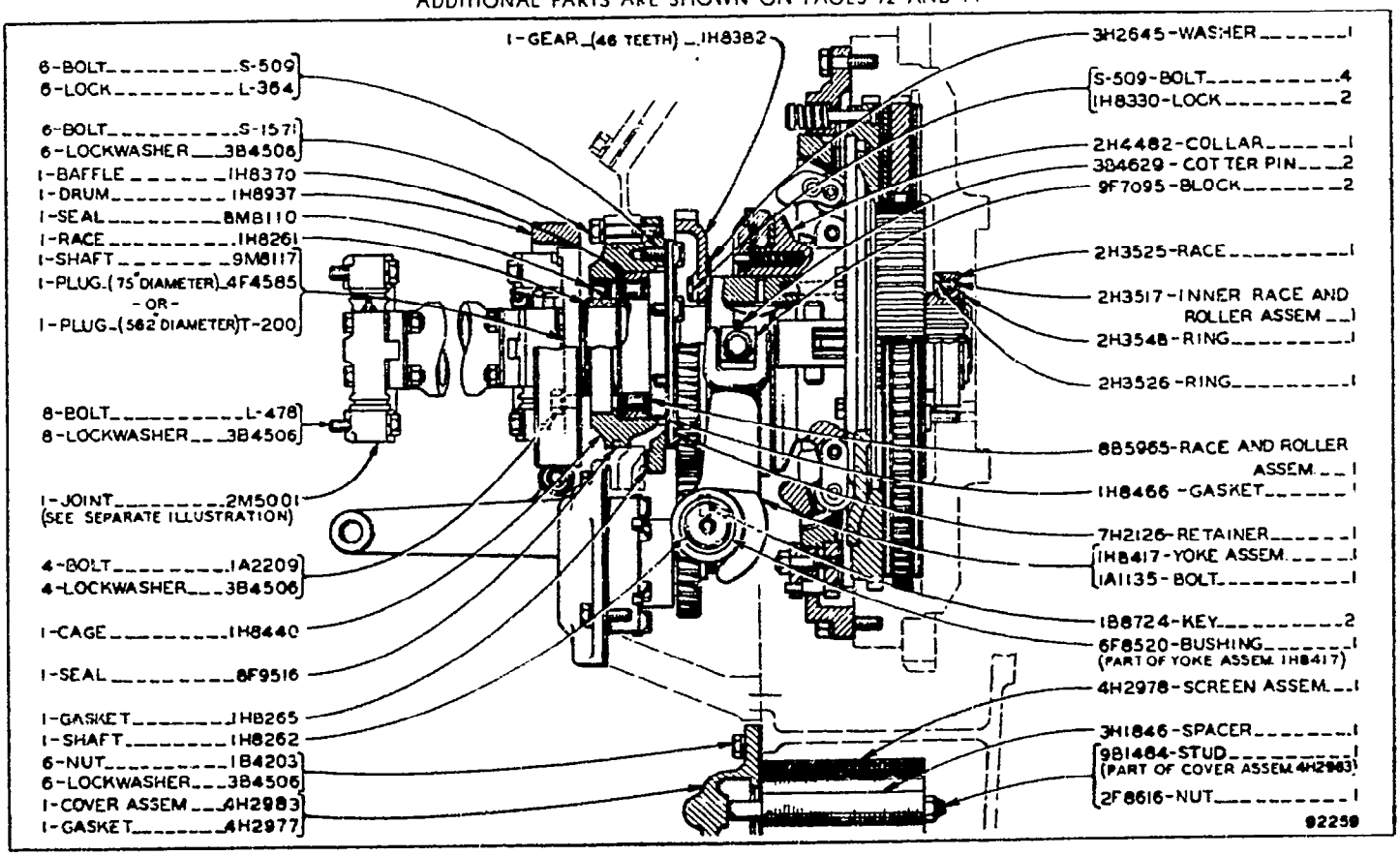

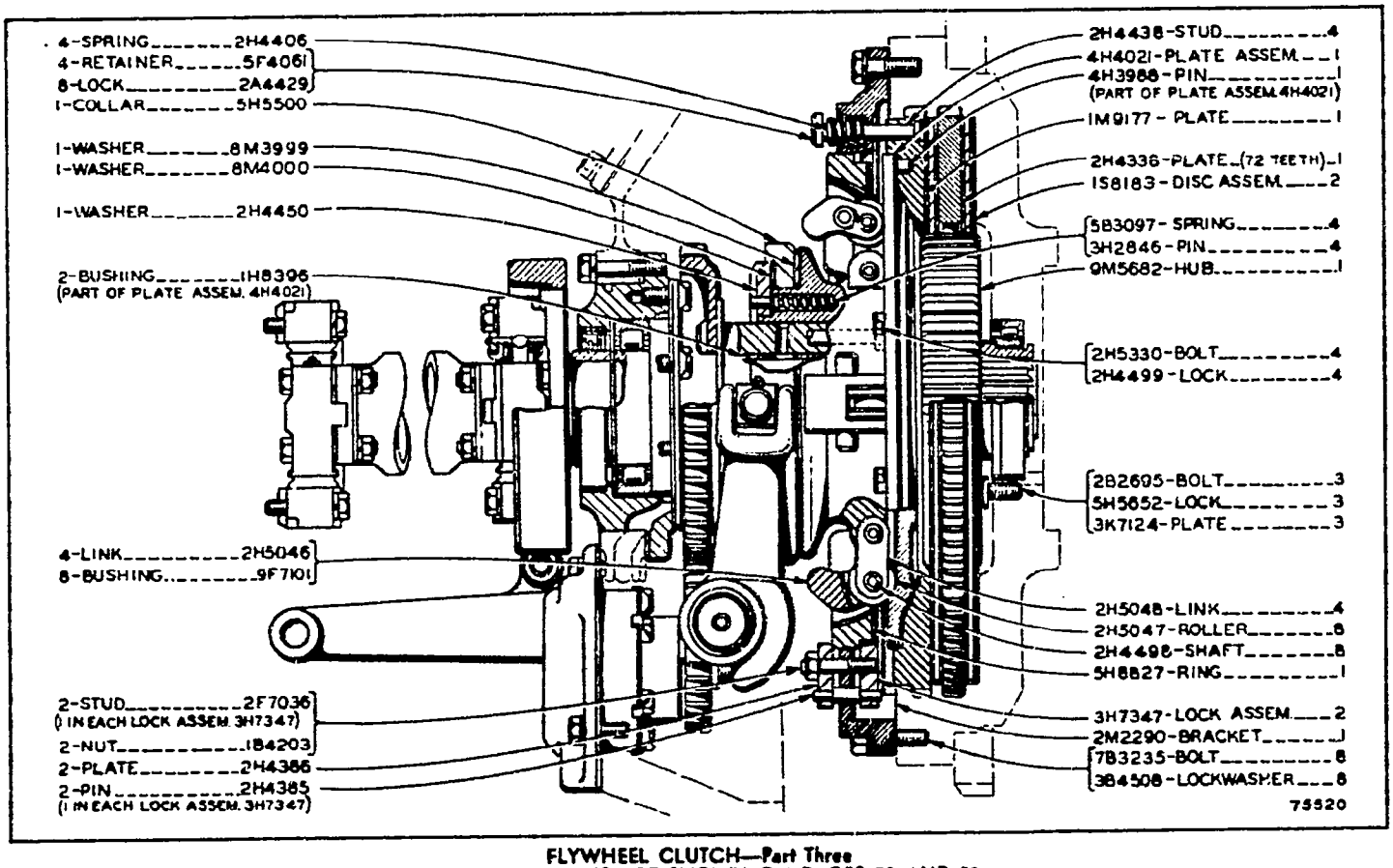

FLYWHEEL CLUTCH—Part Three

ADDITIONAL PARTS ARE SHOWN ON PAGES 72 AND 73

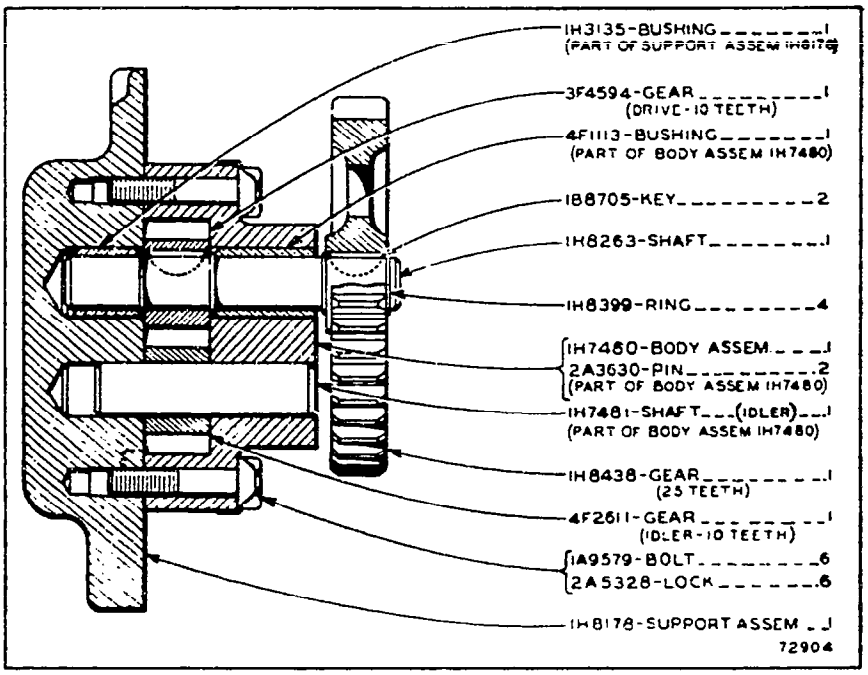

2H2714 OIL PUMP GROUP
Part of Flywheel Clutch shown on Page 72

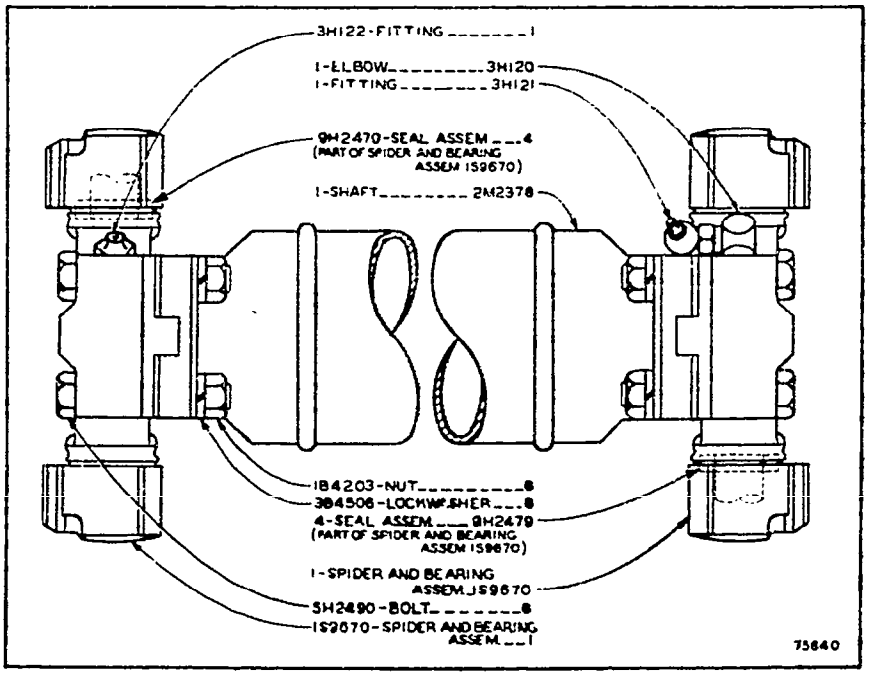

2M5001 UNIVERSAL JOINT ASSEMBLY
Part of Flywheel Clutch shown on Page 73

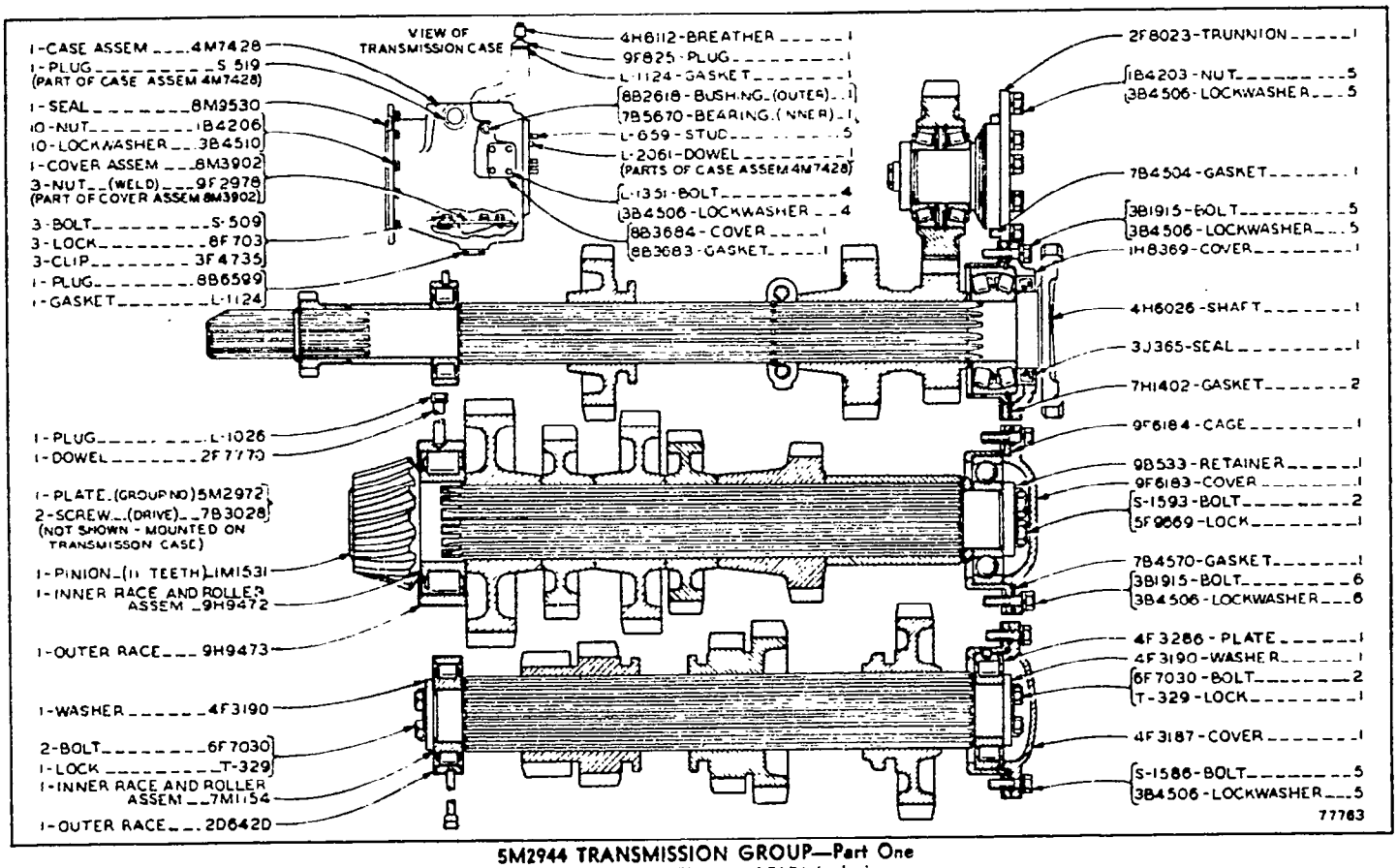

5M2944 TRANSMISSION GROUP—Part One

Serial No. 44A6857 to 44A7674 inclusive

Note: This Transmission provides the following speeds: (Forward) First—1.7 Second—2.7 Third—3.7 Fourth—5.2 and Fifth—6.8 M.P.H. (Reverse) First—2.1 Second—3.3 Third—4.6 and Fourth—6.4 M.P.H. Refer also to Pages 172 and 173 for special parts

5M2944 TRANSMISSION GROUP—Part Two

Serial No. 44A6857 to 44A7674 inclusive

Note: This Transmission provides the following speeds: (Forward) First—1.7 Second—2.7 Third—3.7 Fourth—5.2 and Fifth—6.8 M.P.H. (Reverse) First—2.1 Second—3.3 Third—4.6 and Fourth—6.4 M.P.H. Refer also to Pages 172 173 and 175 for special parts

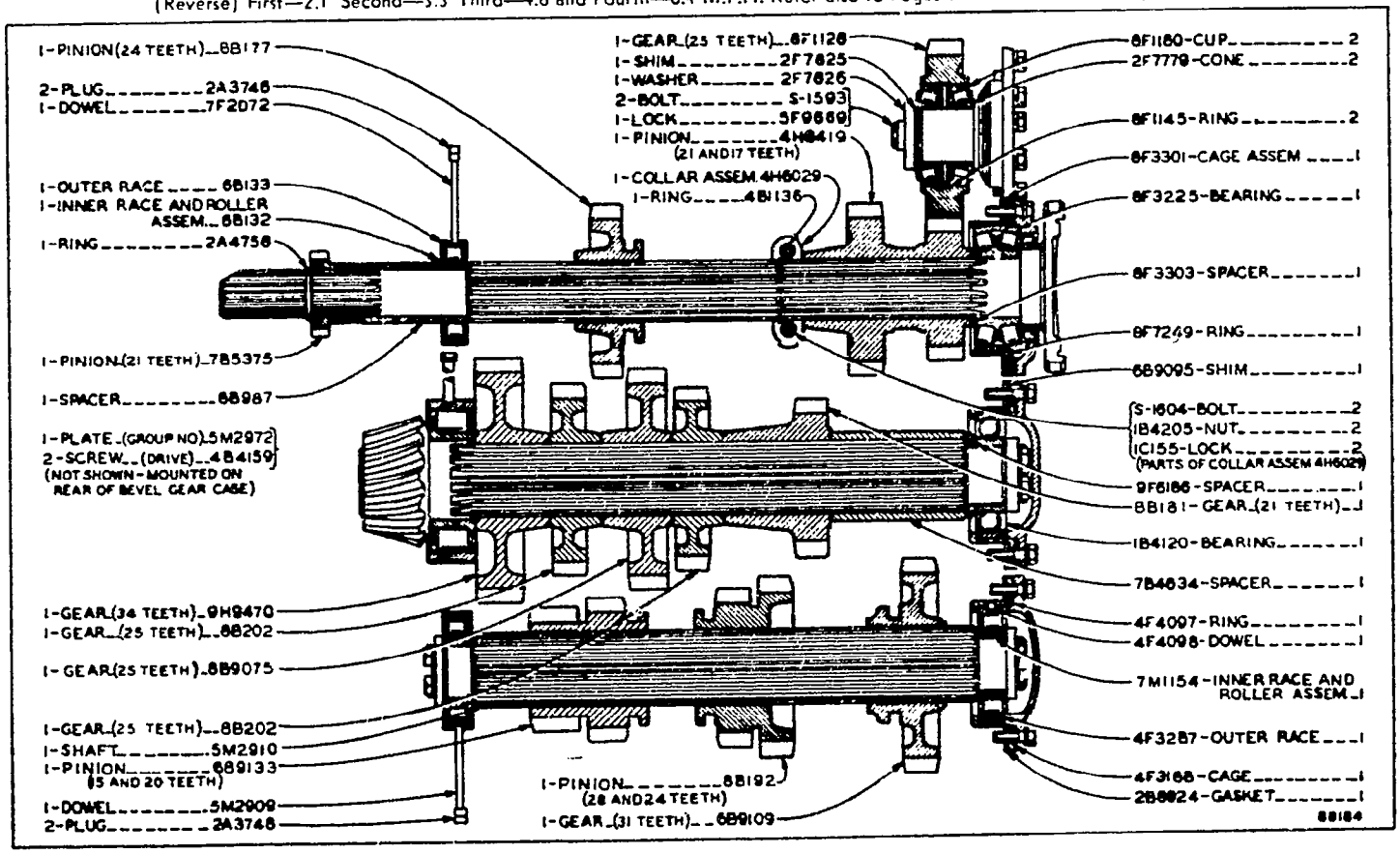

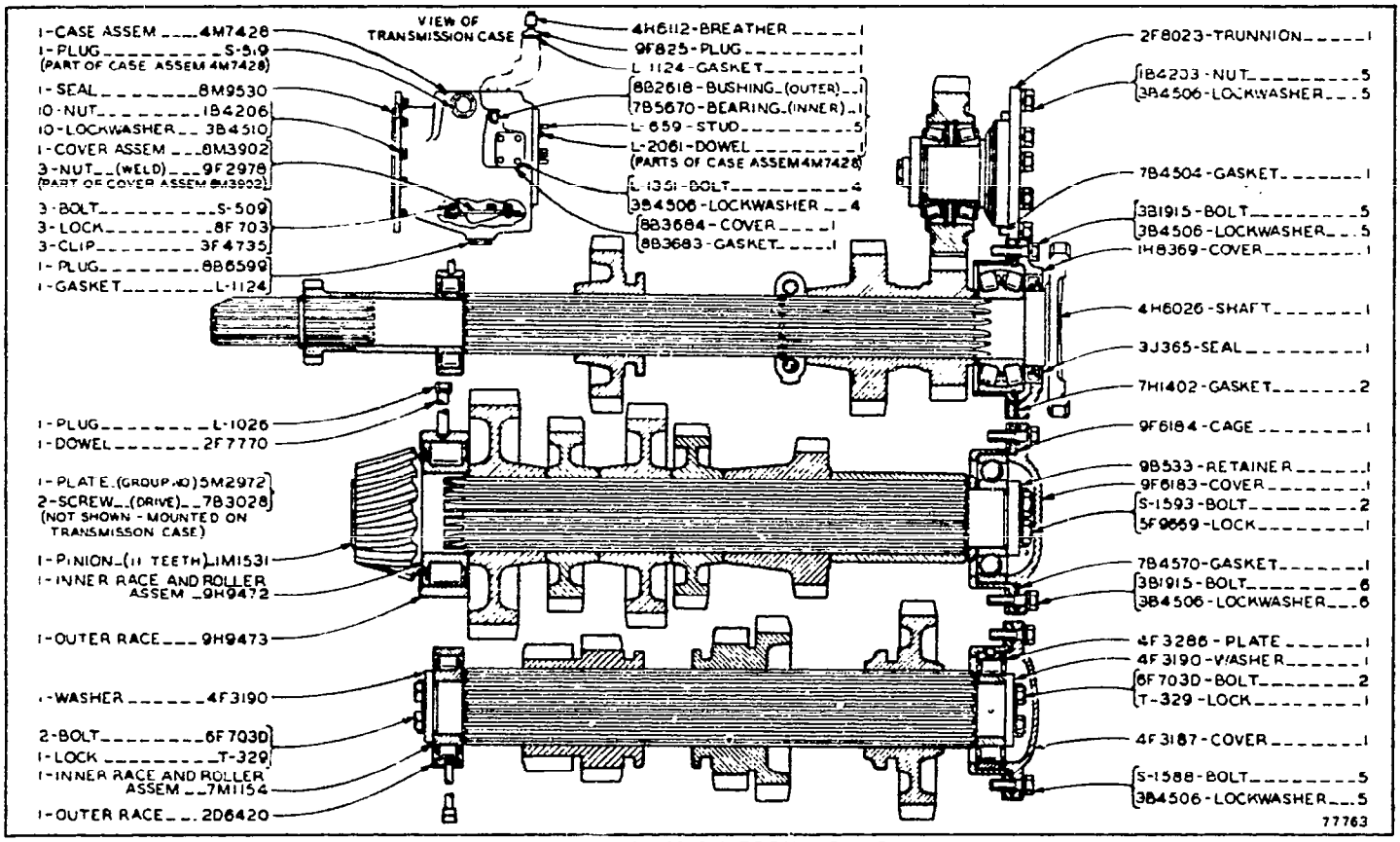

5M2944 TRANSMISSION GROUP—Part One
Effective with Serial No. 44A7675

Note: This Transmission provides the following speeds: (Forward) First—1.7, Second—2.7, Third—3.7, Fourth—5.2 and Fifth—6.8 M.P.H.; (Reverse) First—2.1, Second—3.3, Third—4.6 and Fourth—6.4 M.P.H. Refer also to Pages 172 and 173 for special parts

5M2944 TRANSMISSION GROUP—Part Two
Effective with Serial No. 44A7675

Note: This Transmission provides the following speeds: (Forward) First—1.7, Second—2.7, Third—3.7, Fourth—5.2 and Fifth—6.8 M.P.H.; (Reverse) First—2.1, Second—3.3, Third—4.6 and Fourth—6.4 M.P.H. Refer also to Pages 172 and 173 for special parts

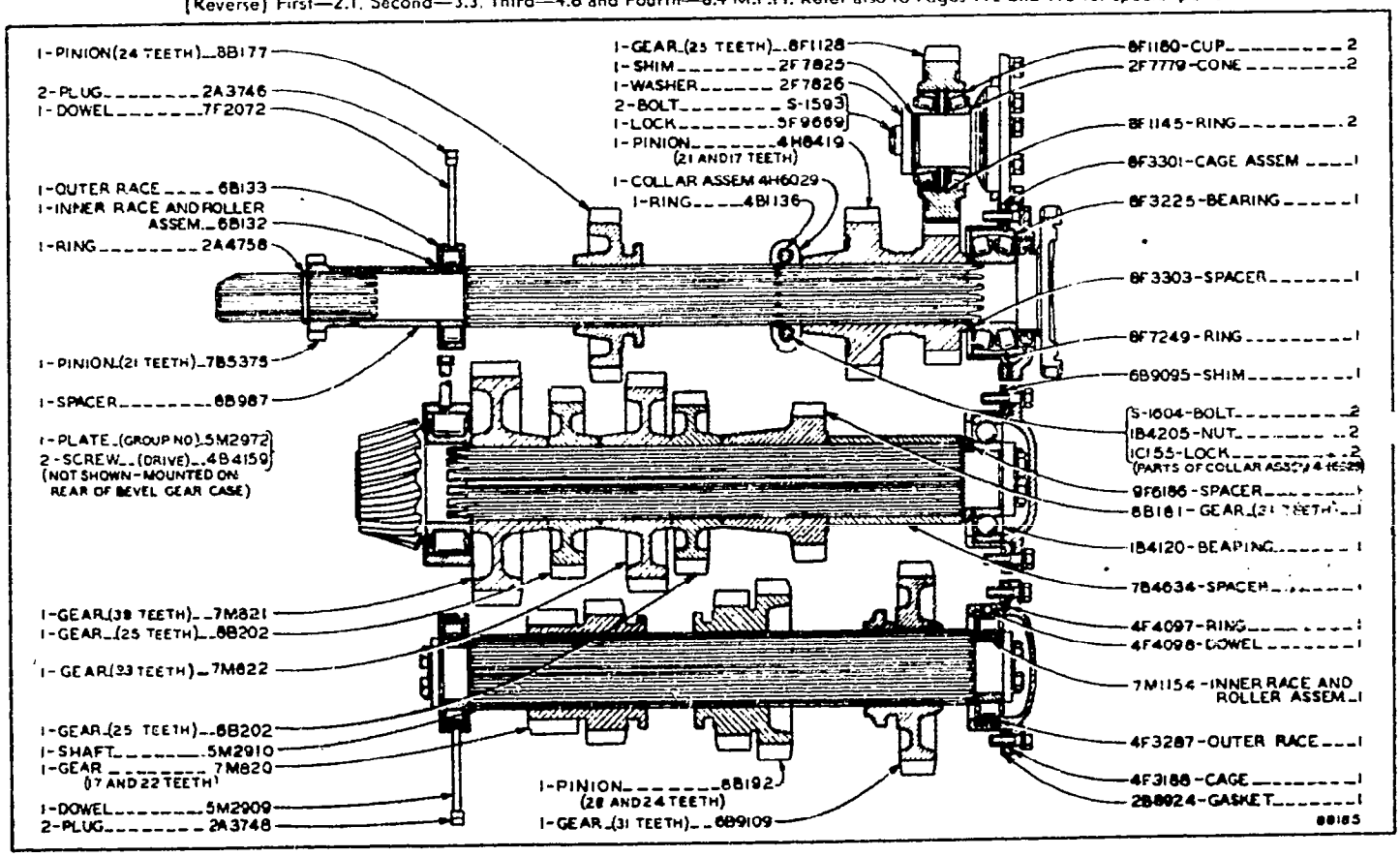

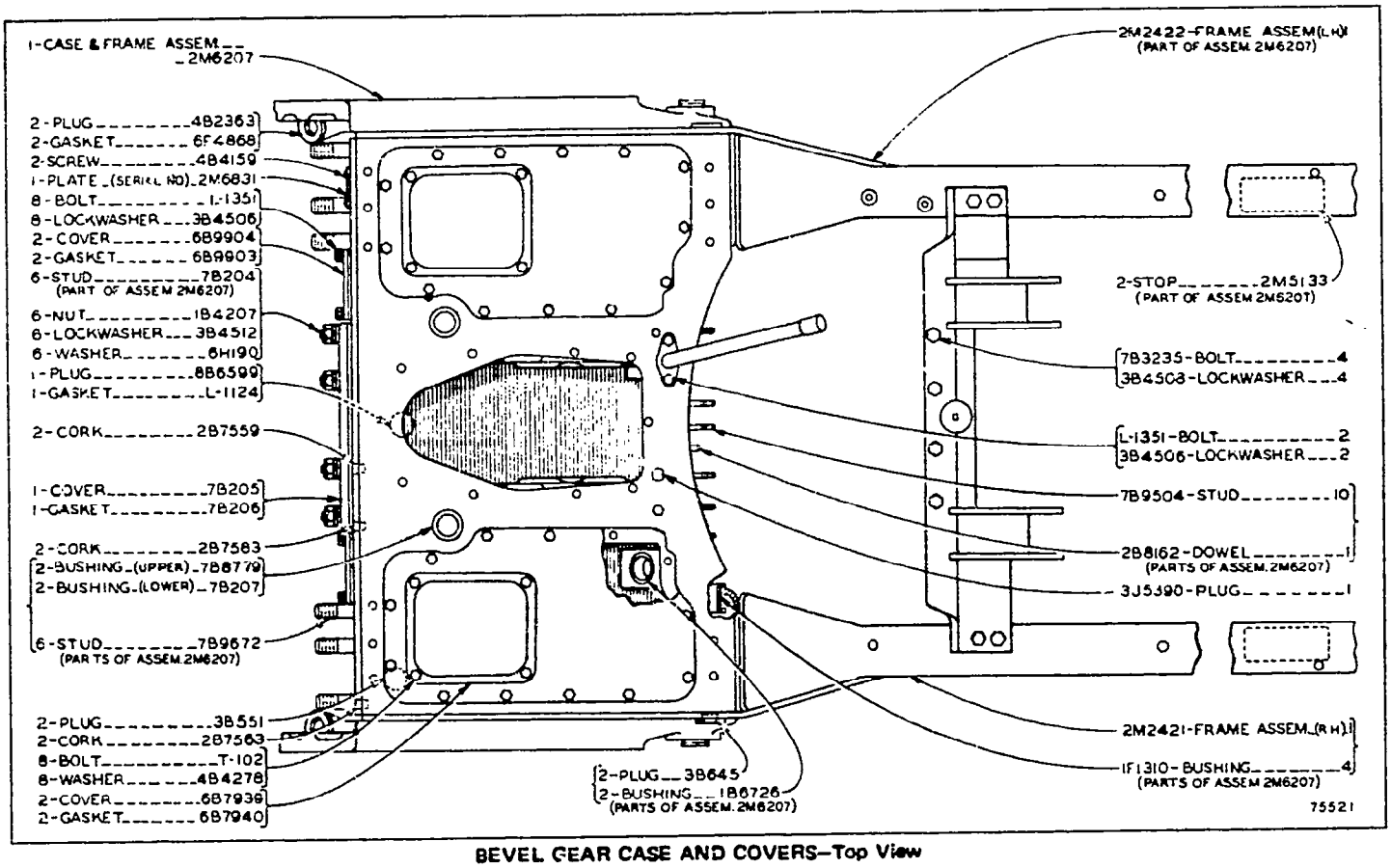

BEVEL GEAR CASE AND COVERS—Top View

BEVEL GEAR CASE AND COVERS—Side View

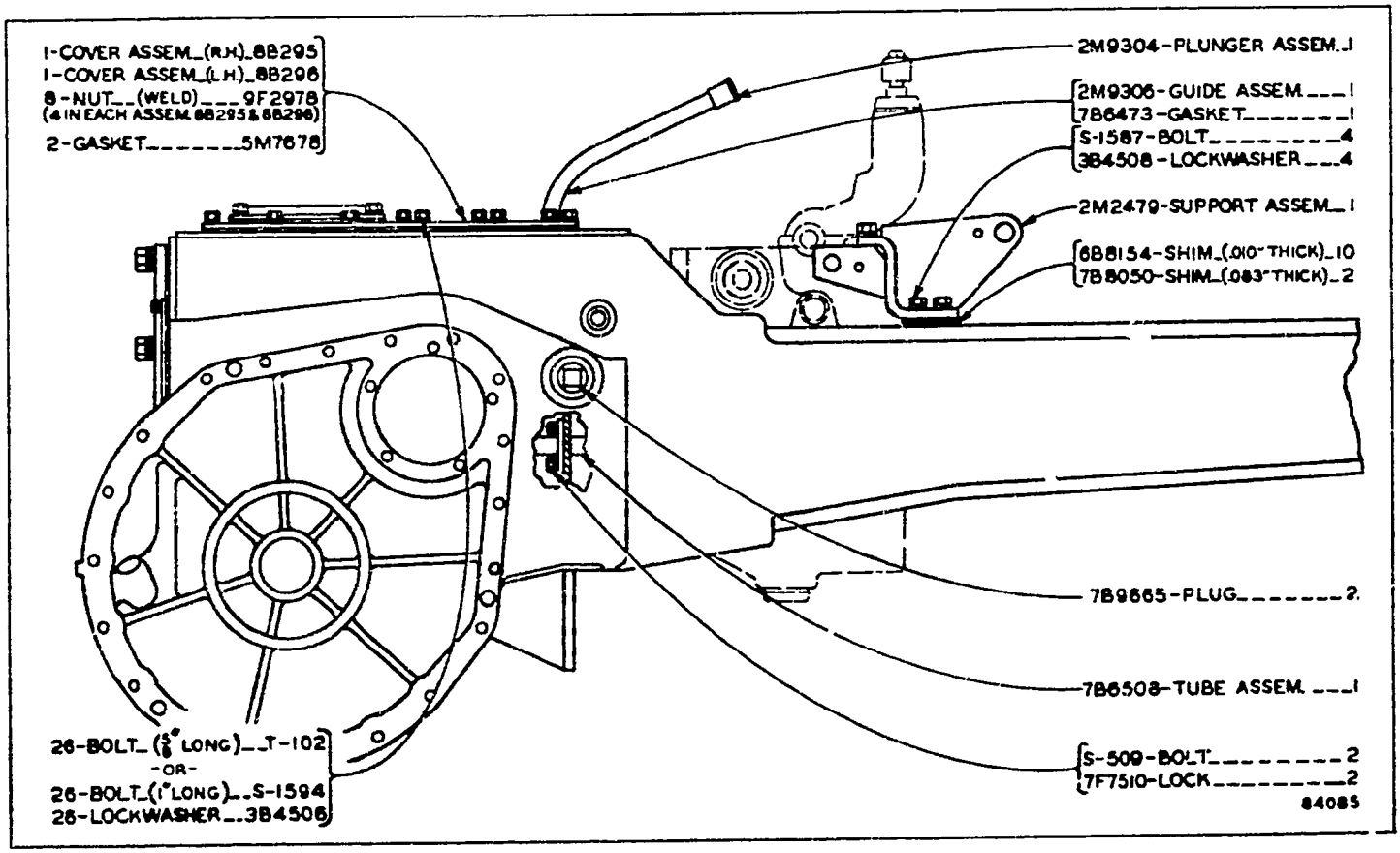

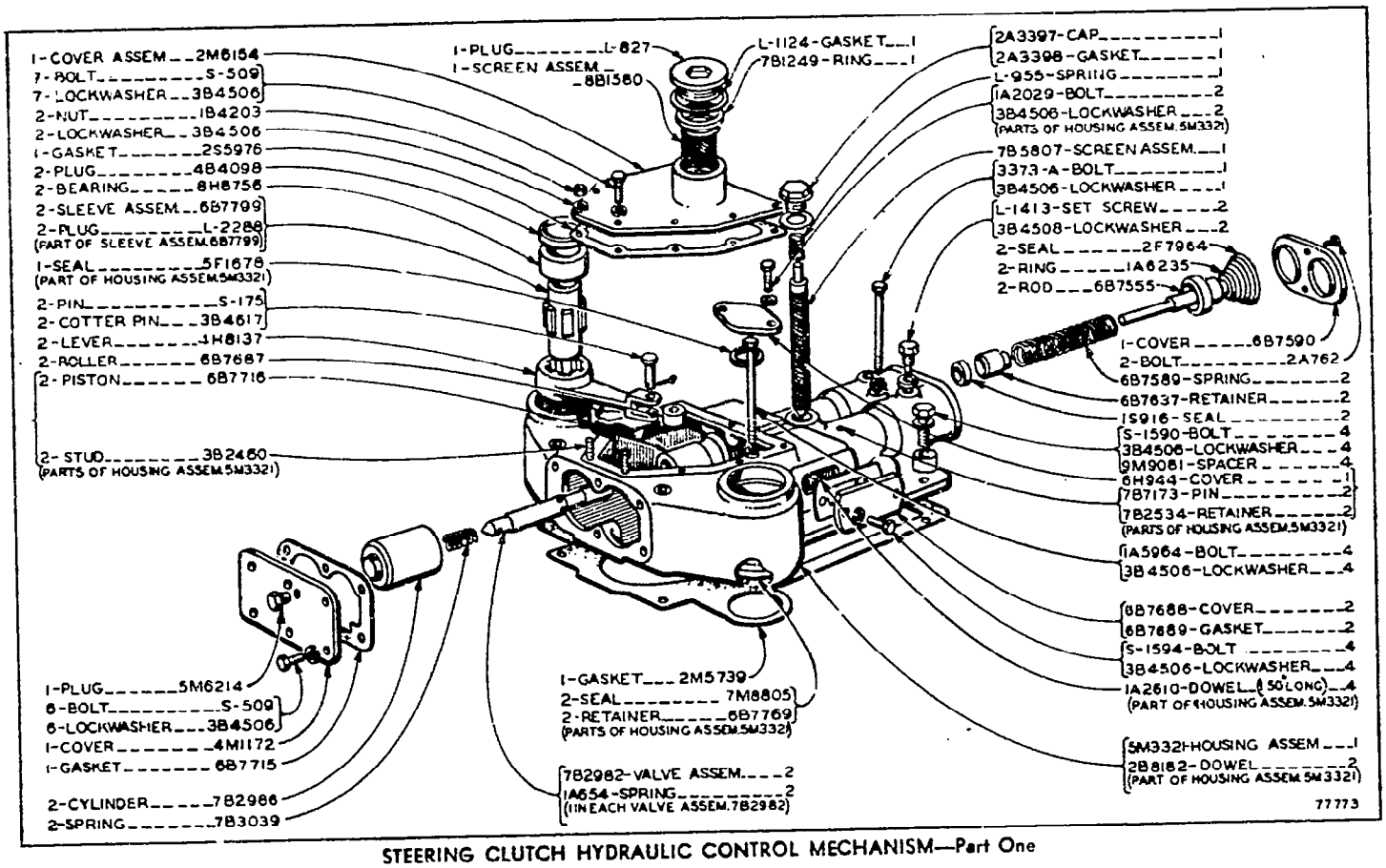

STEERING CLUTCH HYDRAULIC CONTROL MECHANISM—Part One

STEERING CLUTCH HYDRAULIC CONTROL MECHANISM—Part Two

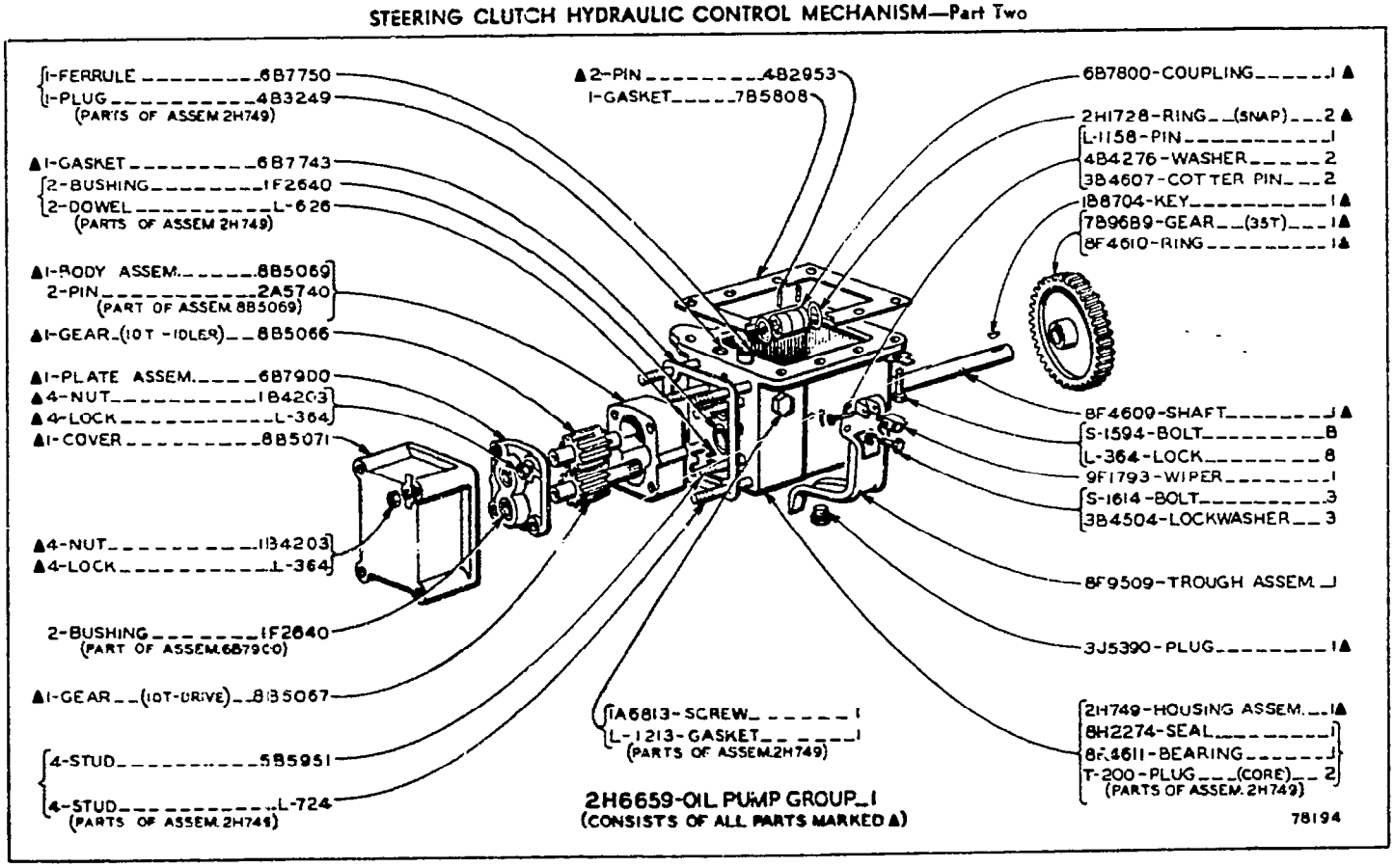

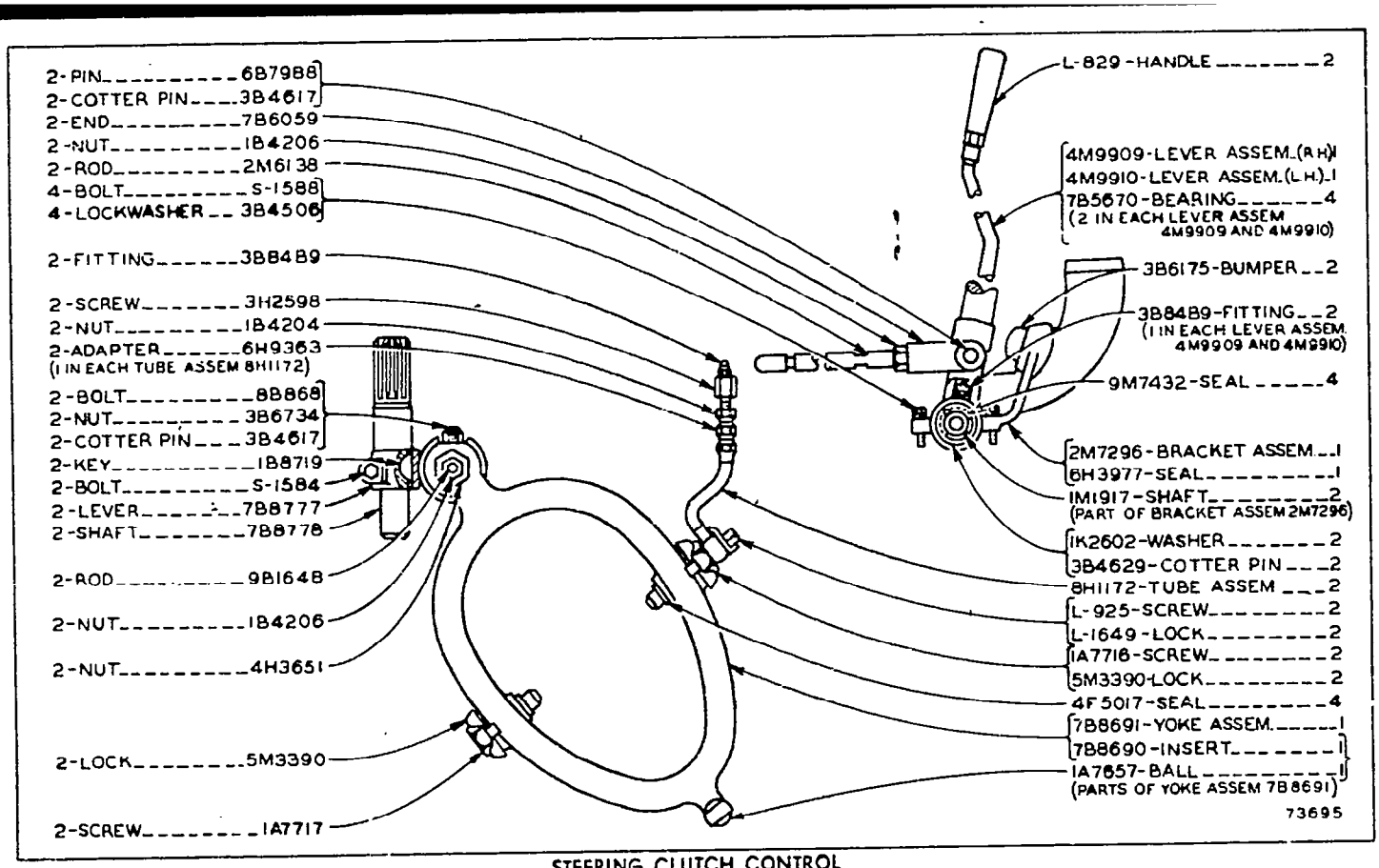

STEERING CLUTCH CONTROL
Serial No. 44A6857 to 44A8840 inclusive

STEERING CLUTCH CONTROL
Effective with Serial No. 44A8841

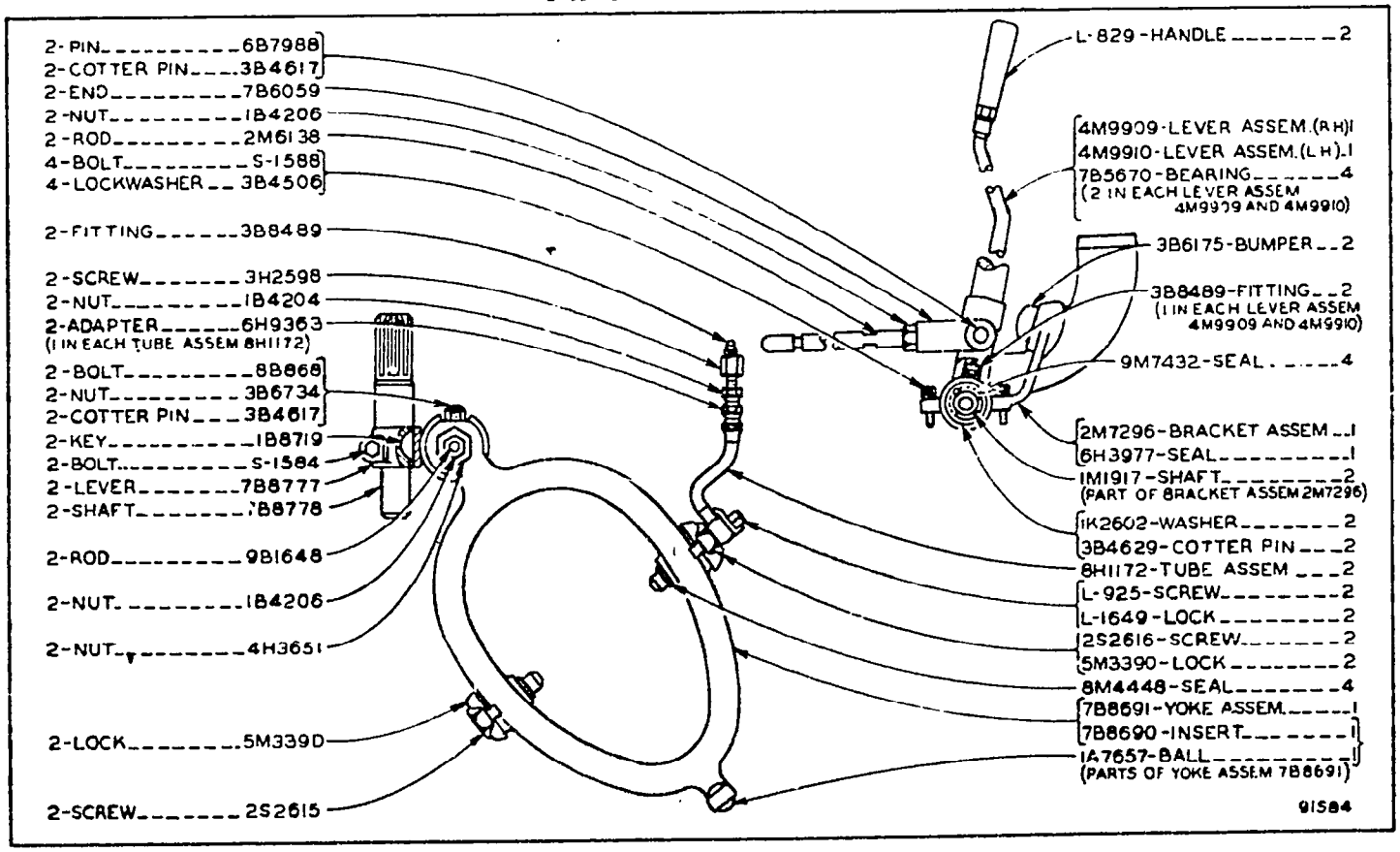

7H2076 STEERING CLUTCH GROUP

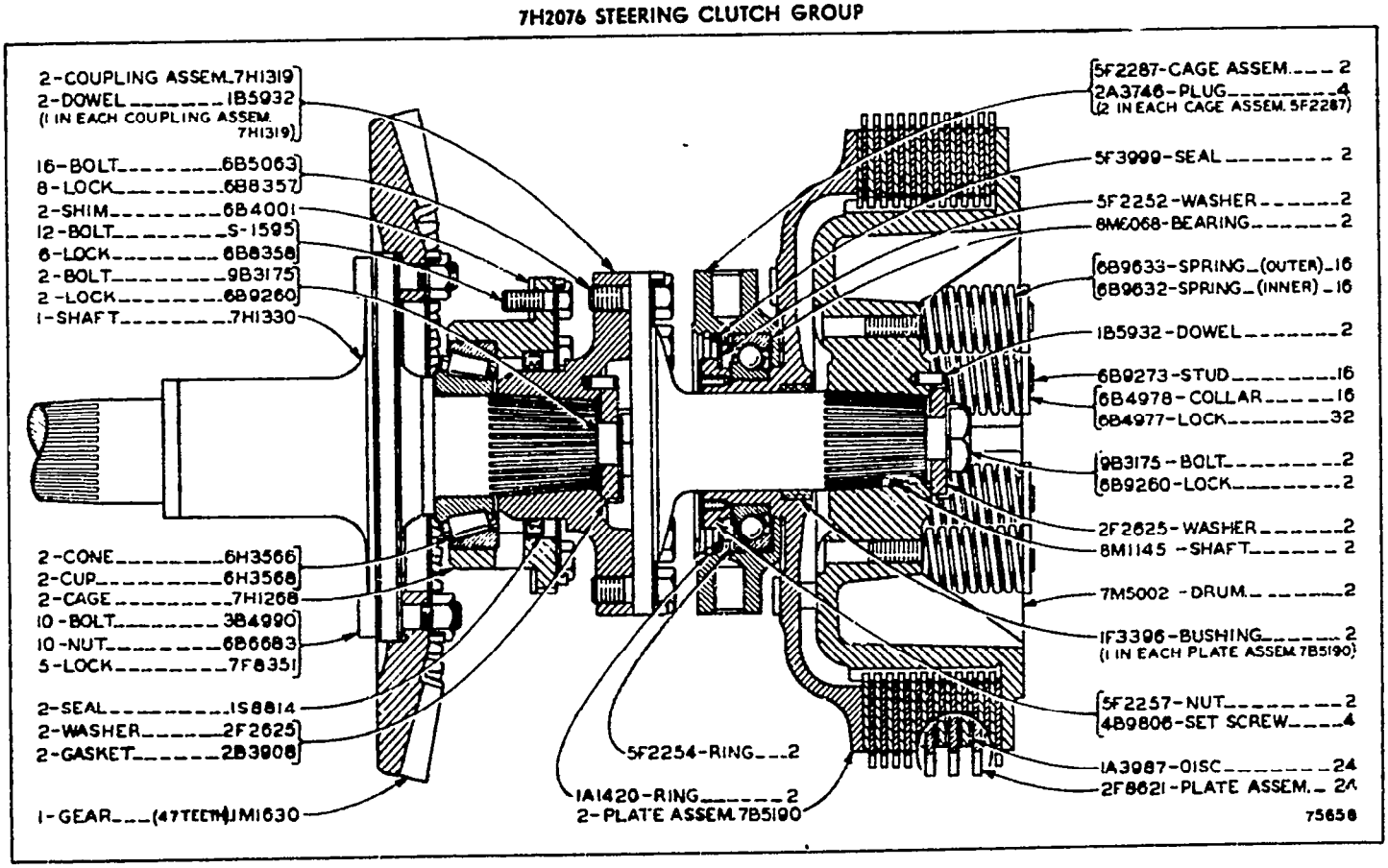

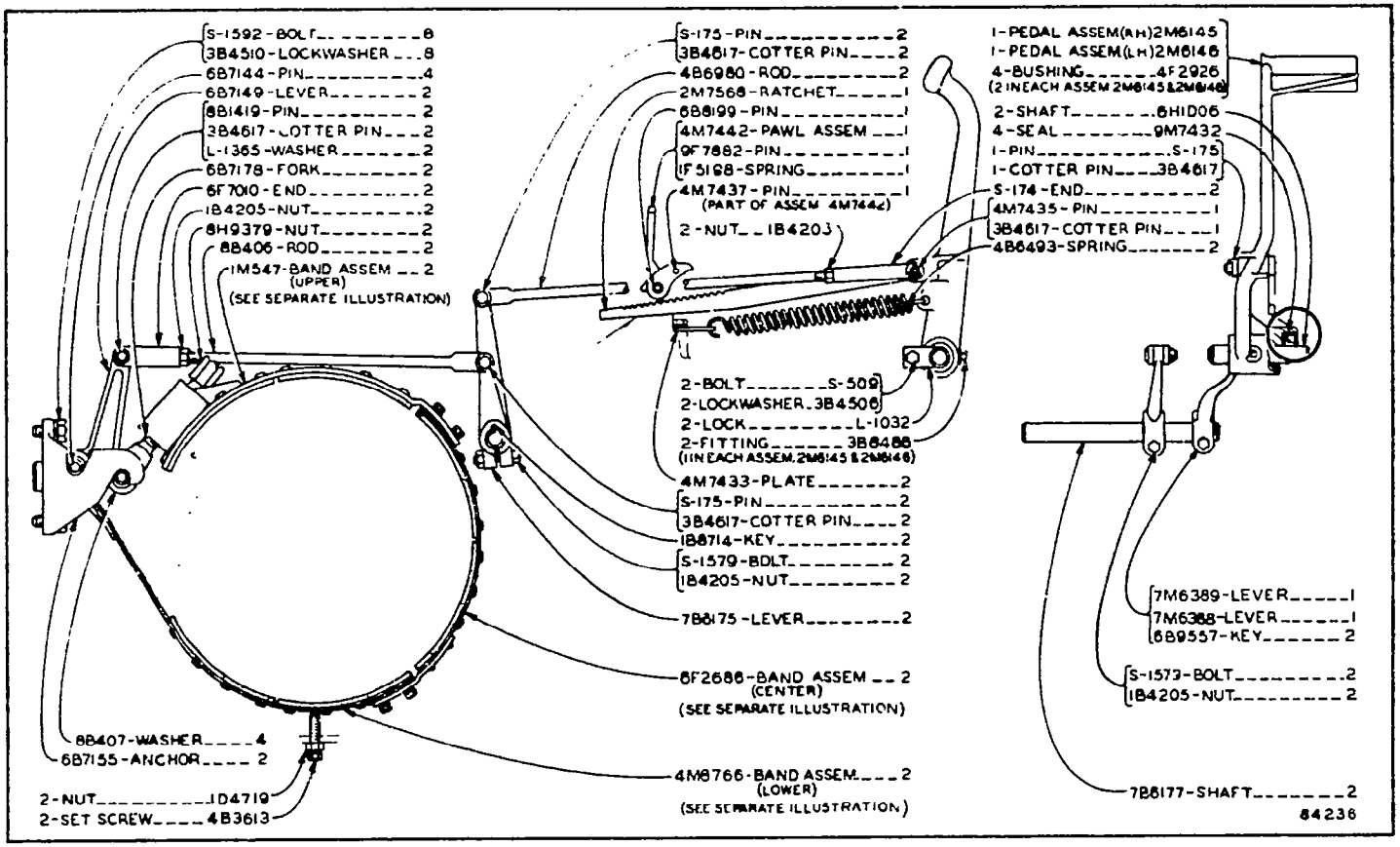

BRAKES

BRAKE BAND ASSEMBLIES
Part of Brakes

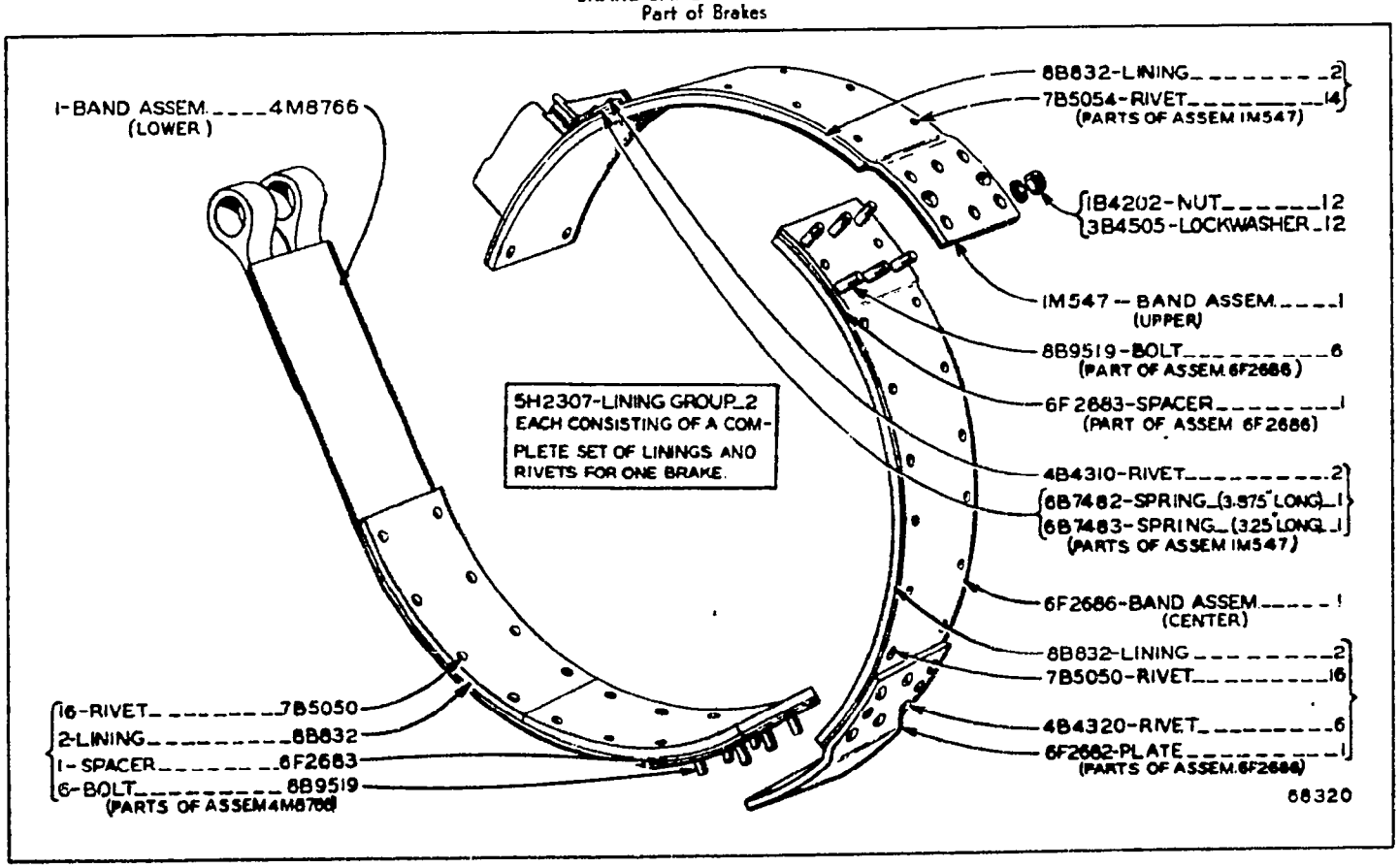

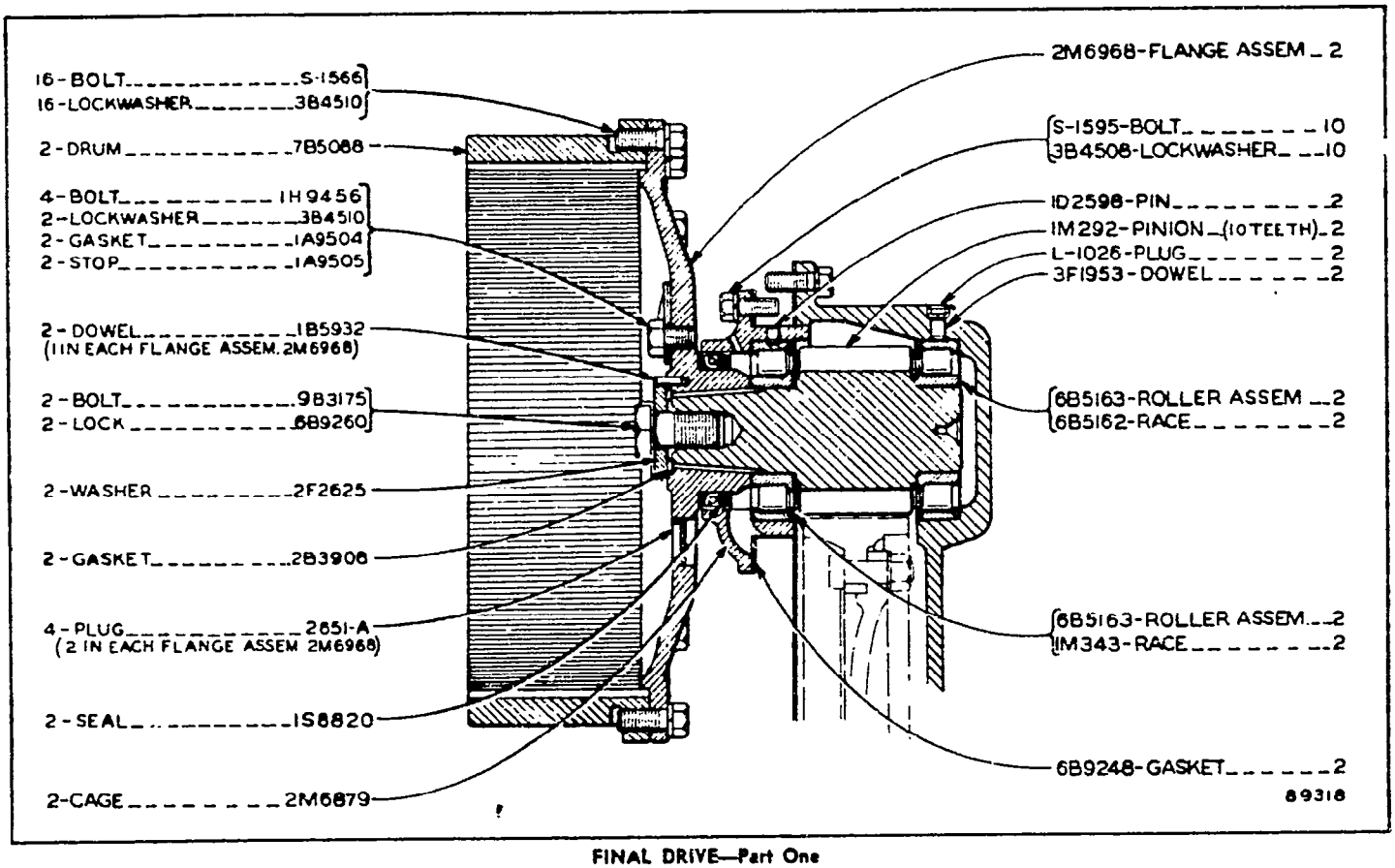

FINAL DRIVE—Part One
Serial No. 44A6857 to 44A8185 inclusive
Note: Quantities shown are those required for both R.H. and L.H. sides

FINAL DRIVE—Part Two
Serial No. 44A6857 to 44A8185 inclusive
Note: Quantities shown are those required for both R.H. and L.H. sides

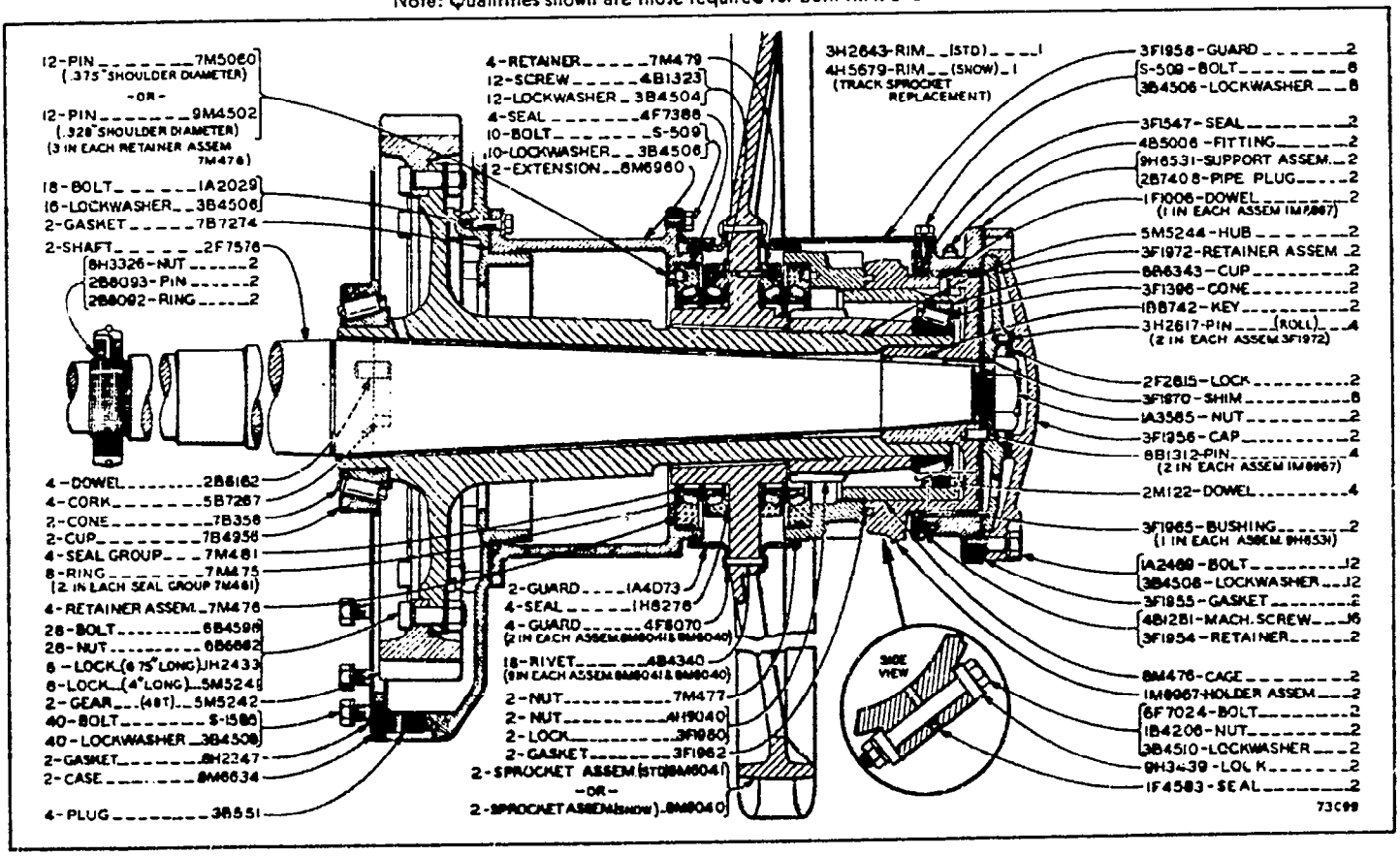

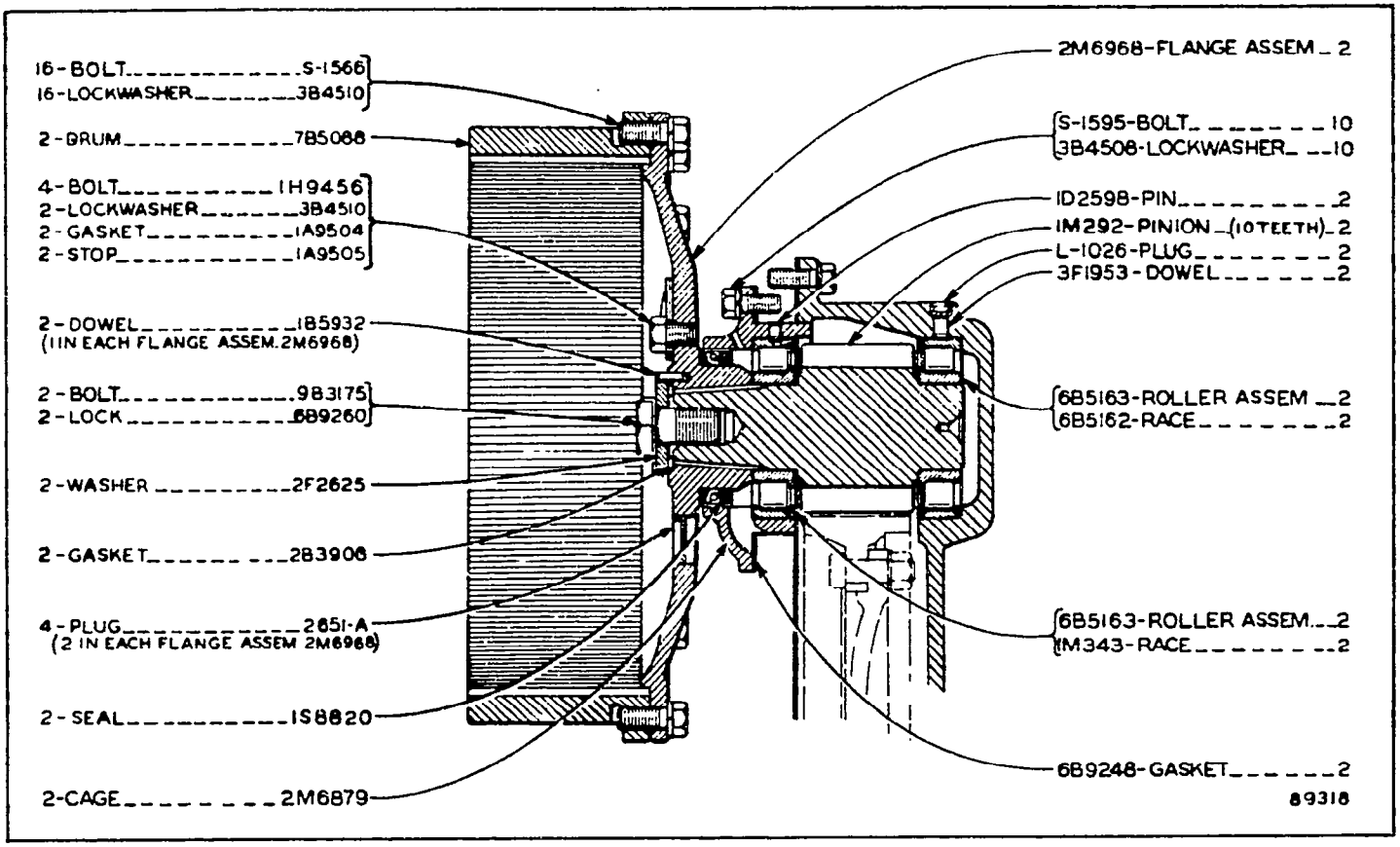

FINAL DRIVE—Part One
Effective with Serial No. 44A8186
Note: Quantities shown are those required for both R.H. and L.H. sides

FINAL DRIVE—Part Two
Effective with Serial No. 44A8186
Note: Quantities shown are those required for both R.H. and L.H. sides

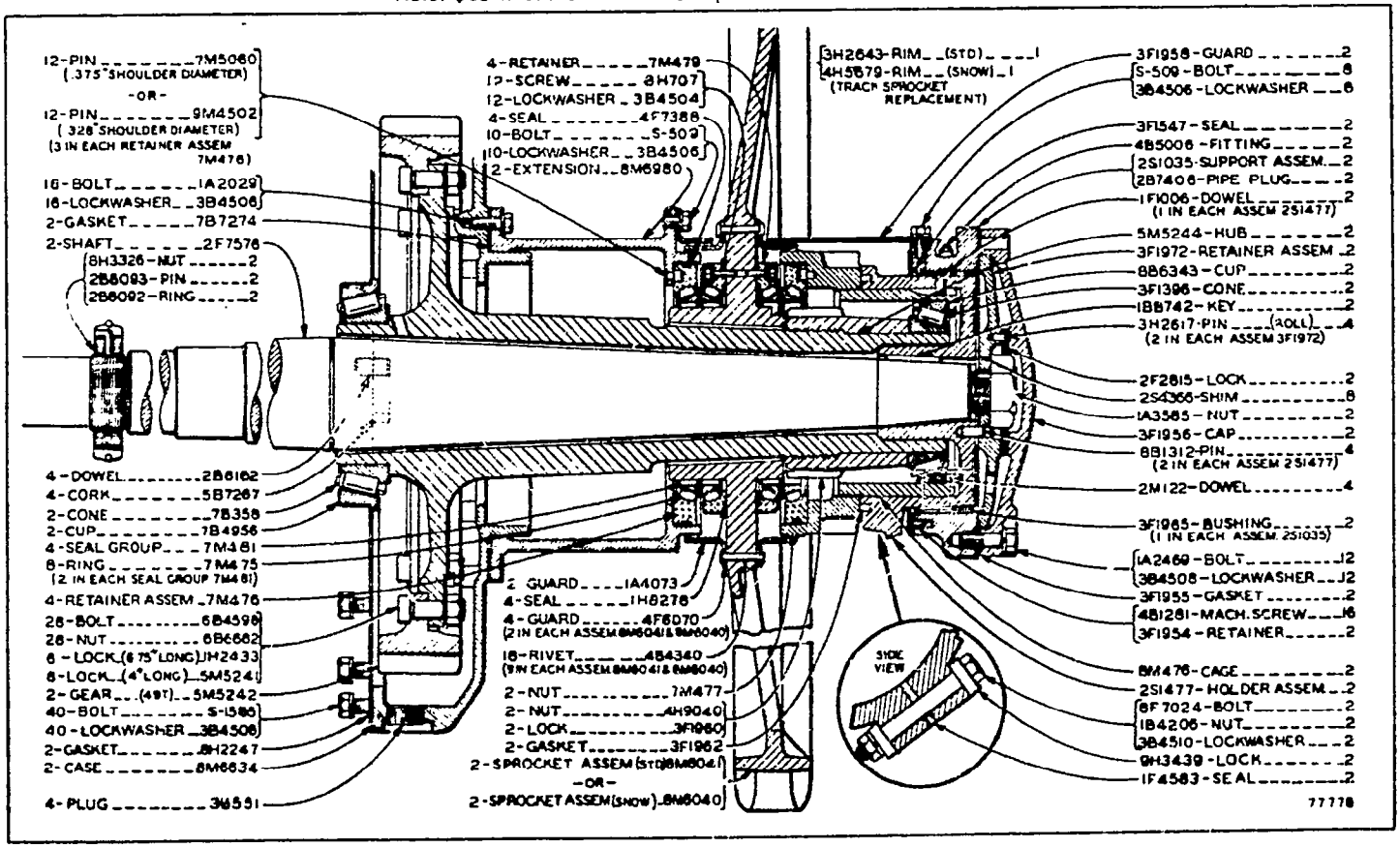

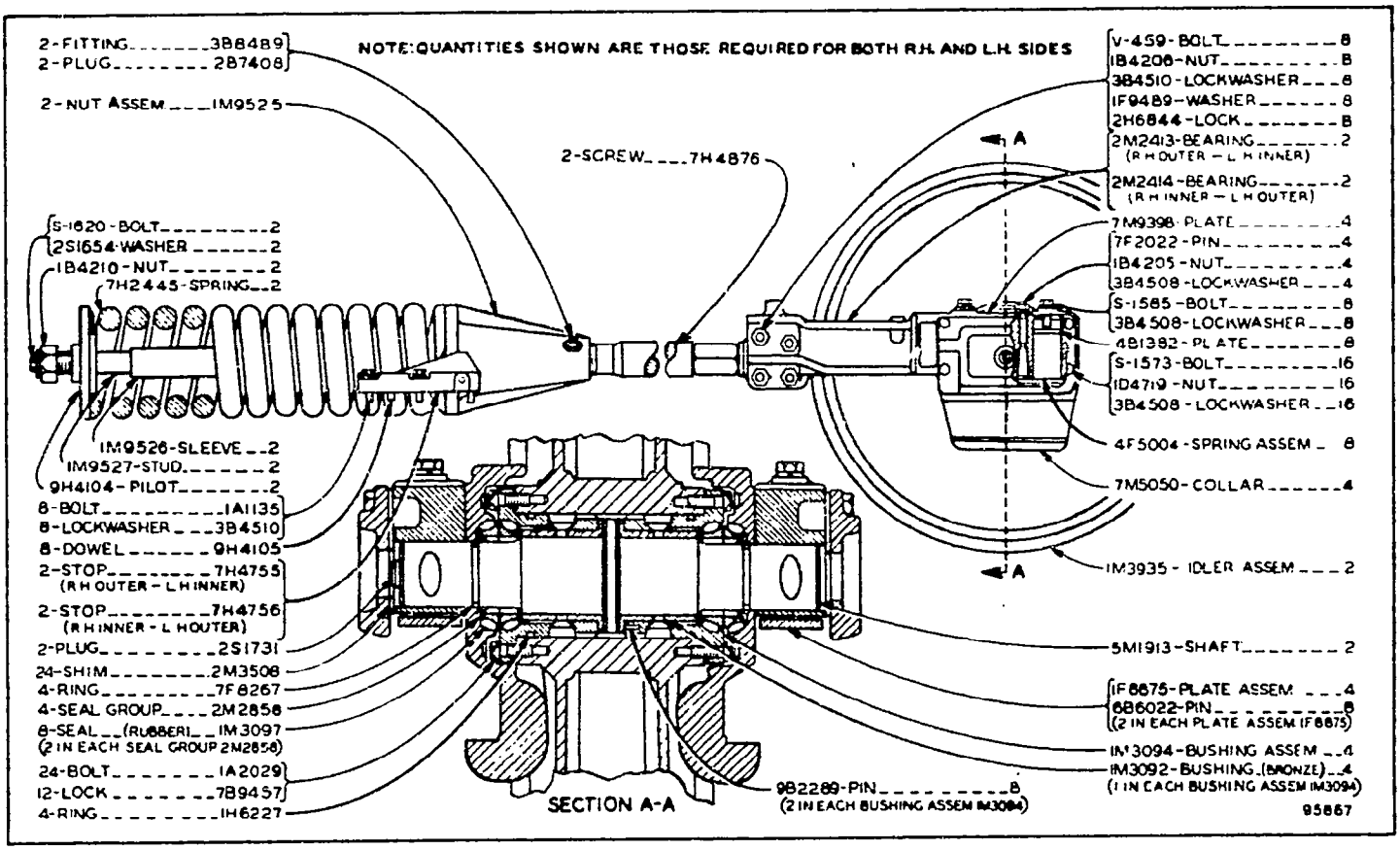

FRONT IDLER

Note: Quantities shown are those required for both R.H. and L.H. sides
Refer also to Pages 176, 179 and 180 for special parts

FRONT IDLER
EFFECTIVE WITH SERIAL No. 44A10483
REFER ALSO TO PAGES 176, 179 AND 180 FOR SPECIAL PARTS

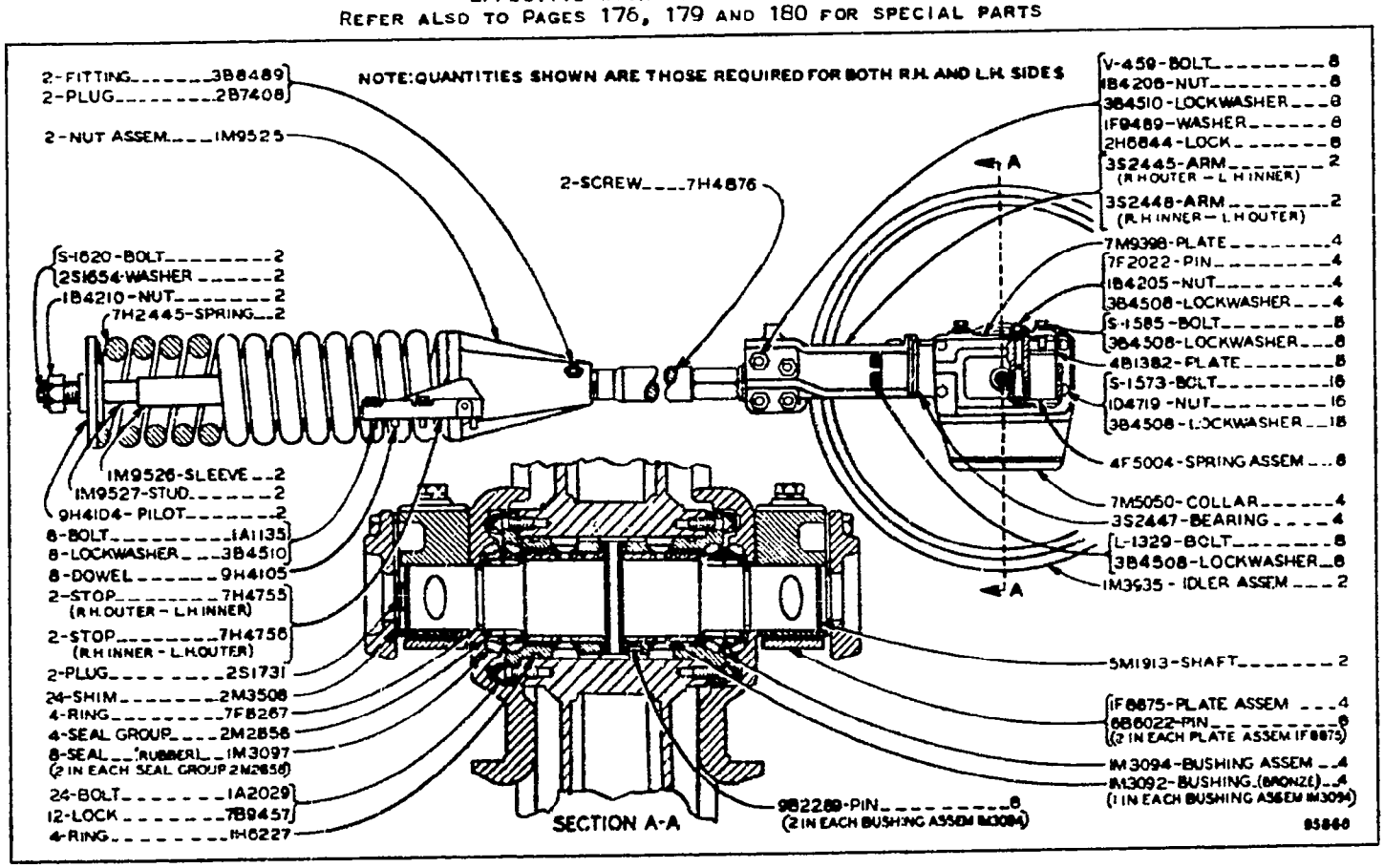

EQUALIZER SPRING (2M2401 N/S)

Refer also to Page 176A for special parts

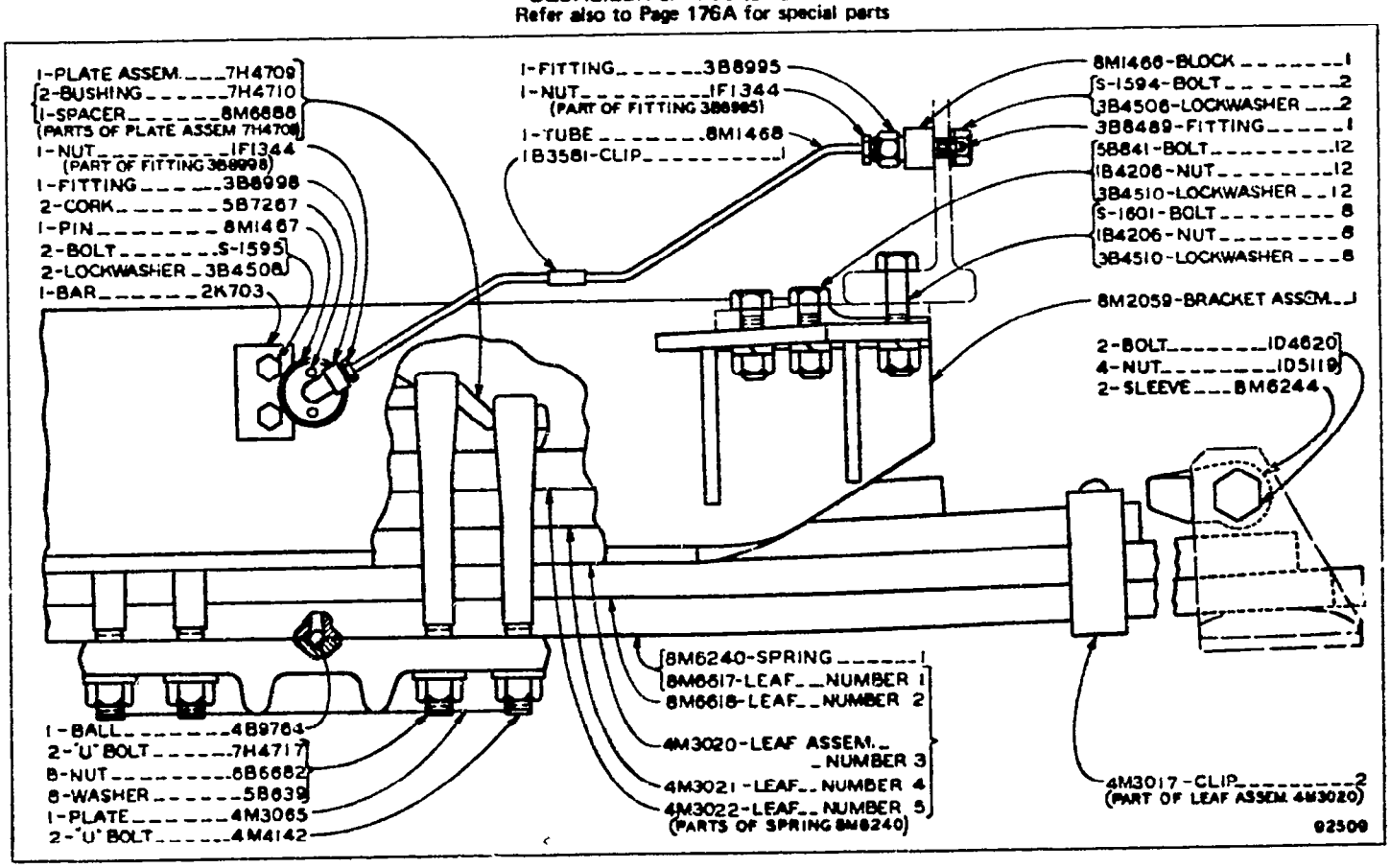

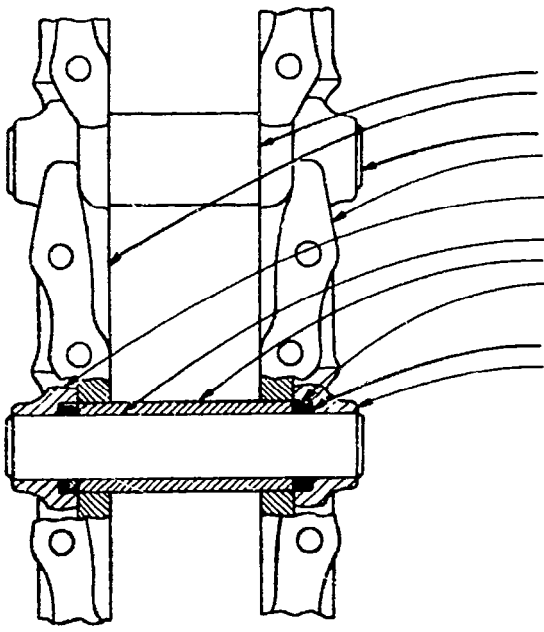

Name	Shoe (40 Req'd. for one Track)	Complete Track Group (Hardware Included) 2 Req'd. per Tractor
16" Grouser Shoe	1M3017	8M7472
16" Semi-Skeleton Shoe	1M8610—D.S.—20 Req'd. 1M8611—S.S.—20 Req'd.	8M7478
18" Grouser Shoe	1M3021	8M7473
18" Grouser Shoe—Center Punched	4M2475	8M7477
18" Semi-Skeleton Shoe	1M3018—D.S.—20 Req'd. 1M3019—S.S.—20 Req'd.	8M7474
20" Grouser Shoe	1M4440	8M7476
24" Grouser Shoe	1M4441	8M7475

NOTE: 7H3597 Track Shoe Bolt—160 Req'd. for one Track
1M1408 Nut—Used with 7H3597
S.S.—Single Spike D.S.—Double Spike

TRACK GROUPS—2 Groups Required
For use with Large Outside Diameter Front Idler
Note: 8M7486 Track Pin and Bushing Group, consisting of a complete set of Pins and Bushings for one Track, is available
Refer also to Pages 176 and 178 for special parts

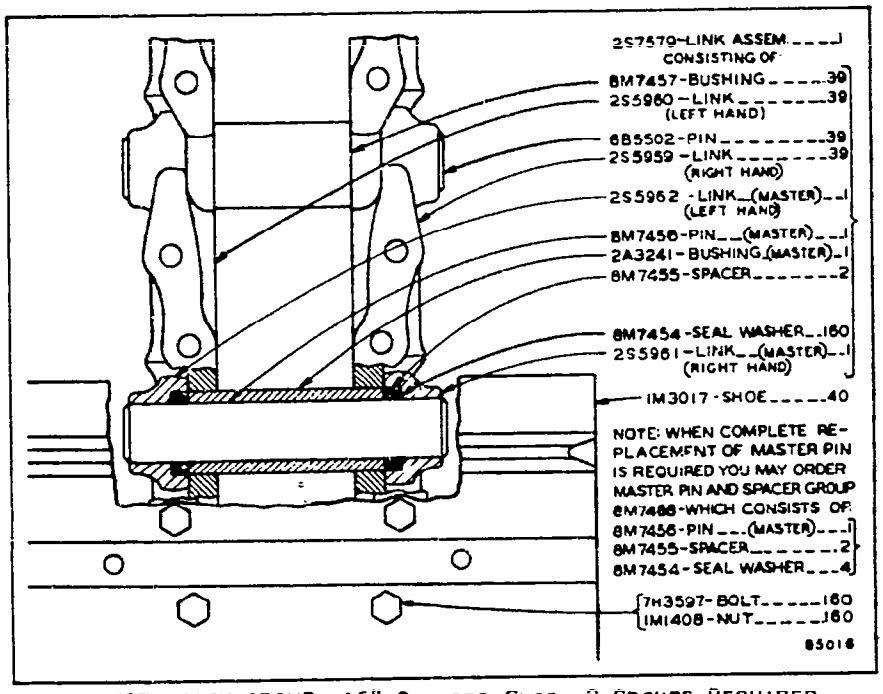

2S7585 TRACK GROUP--16" GROUSER SHOE--2 GROUPS REQUIRED
SERIAL NO. 44A10121 TO 44A12002 INCLUSIVE
NOTE: 8M7486 TRACK PIN AND BUSHING GROUP IS AVAILABLE

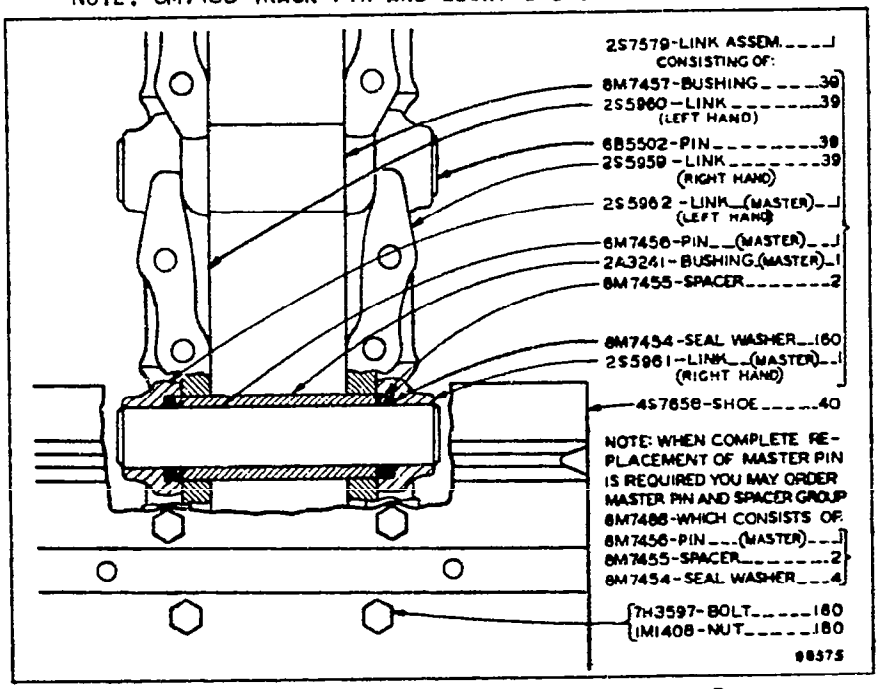

4S7946 TRACK GROUP--16" GROUSER SHOE--2 GROUPS REQUIRED
EFFECTIVE WITH SERIAL NO. 44A12003
NOTE: 8M7486 TRACK PIN AND BUSHING GROUP IS AVAILABLE

1M3826 TRACK ROLLER GROUP—Single Flange—4 Groups Required
1M3827 TRACK ROLLER GROUP—Double Flange—8 Groups Required
Note: 4S8056 Track Roller Seal Kit is available. Refer also to Page 176A for special parts

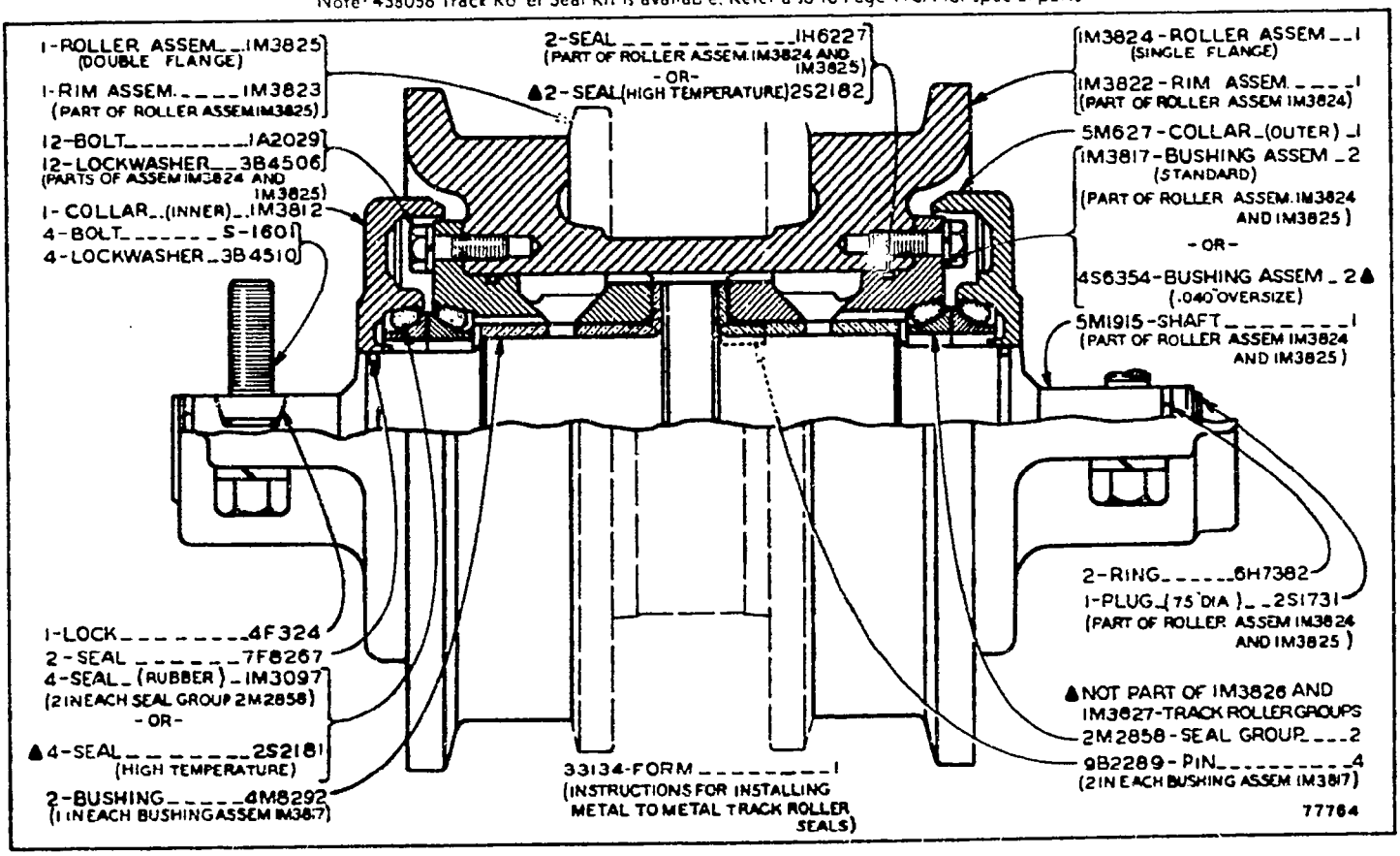

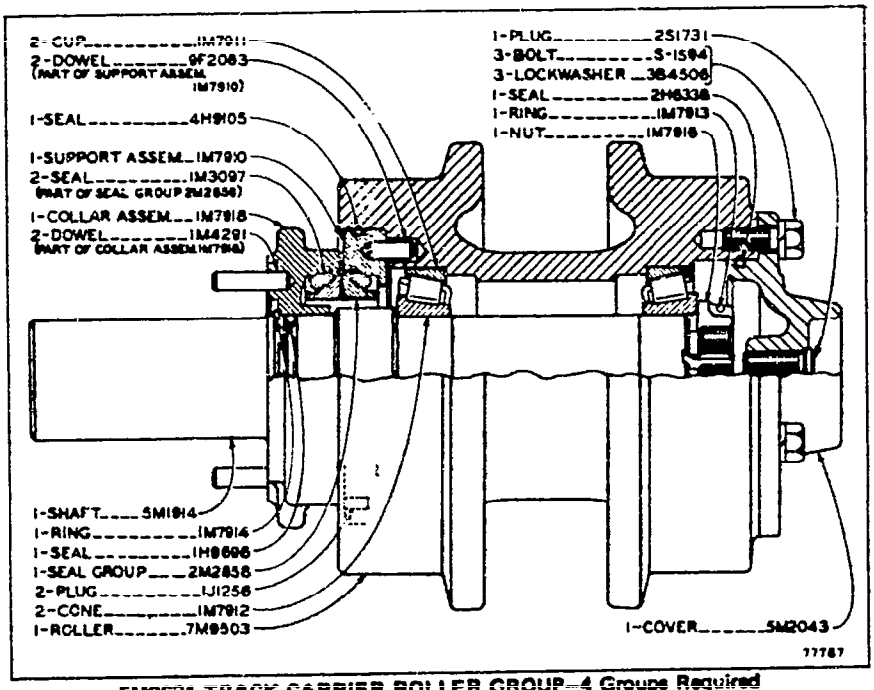

5M8631 TRACK CARRIER ROLLER GROUP—4 Groups Required

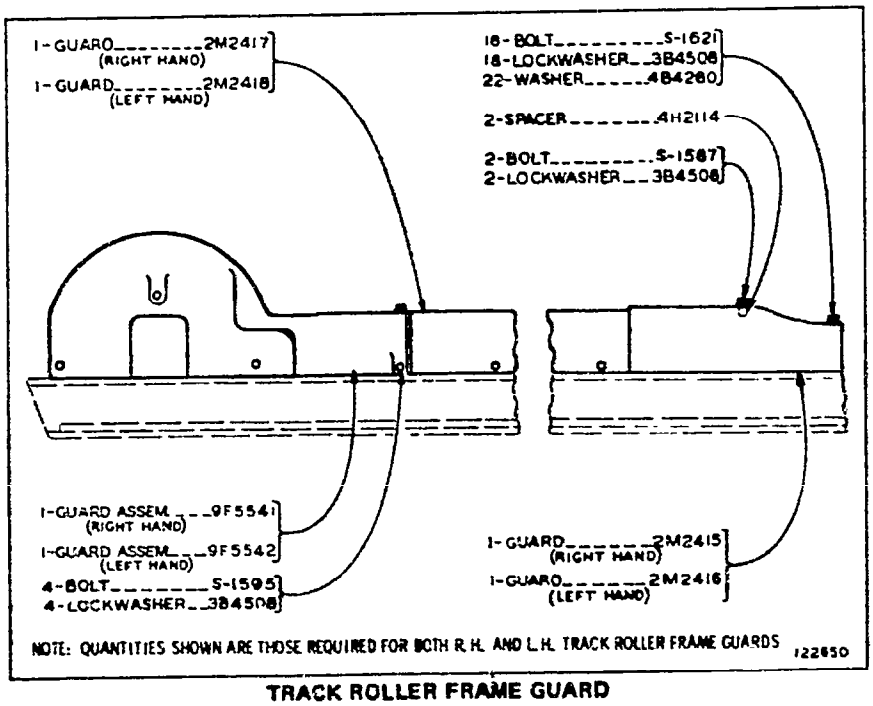

TRACK ROLLER FRAME GUARD

TRACK ROLLER FRAME

Note: Quantities shown are those required for both R.H. and L.H. sides

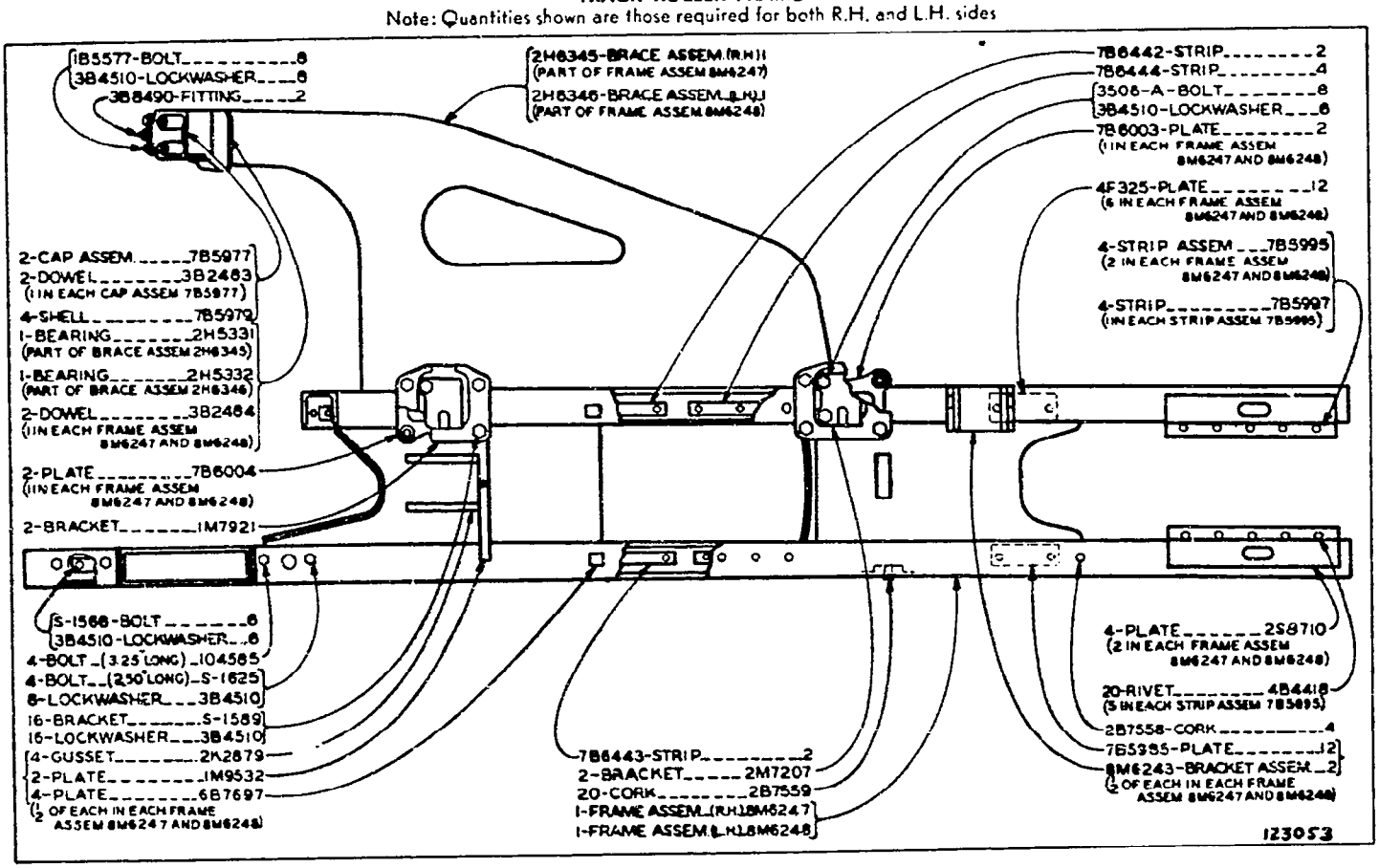

TRACK ROLLER FRAME

EFFECTIVE WITH SERIAL No. 44A10629

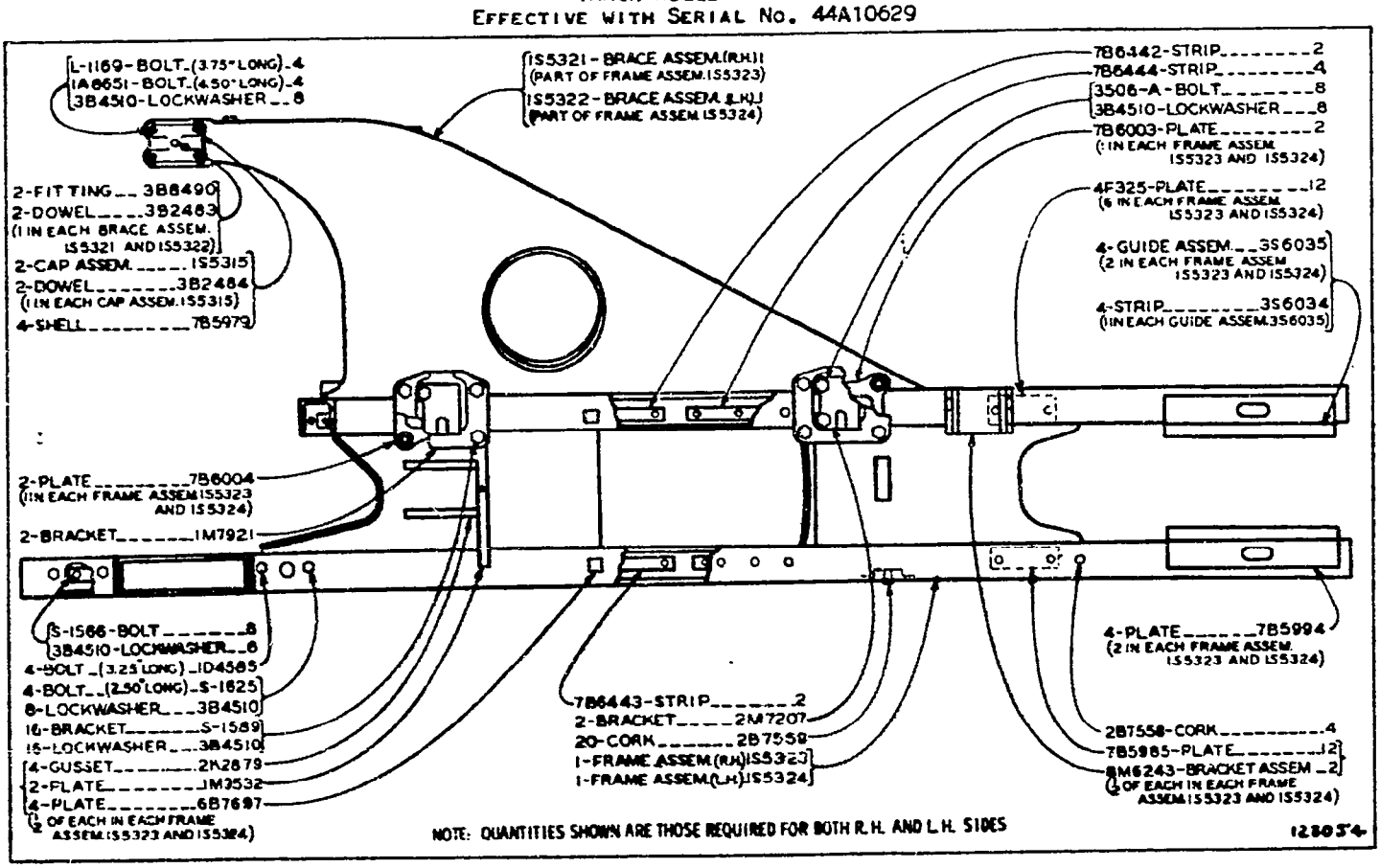

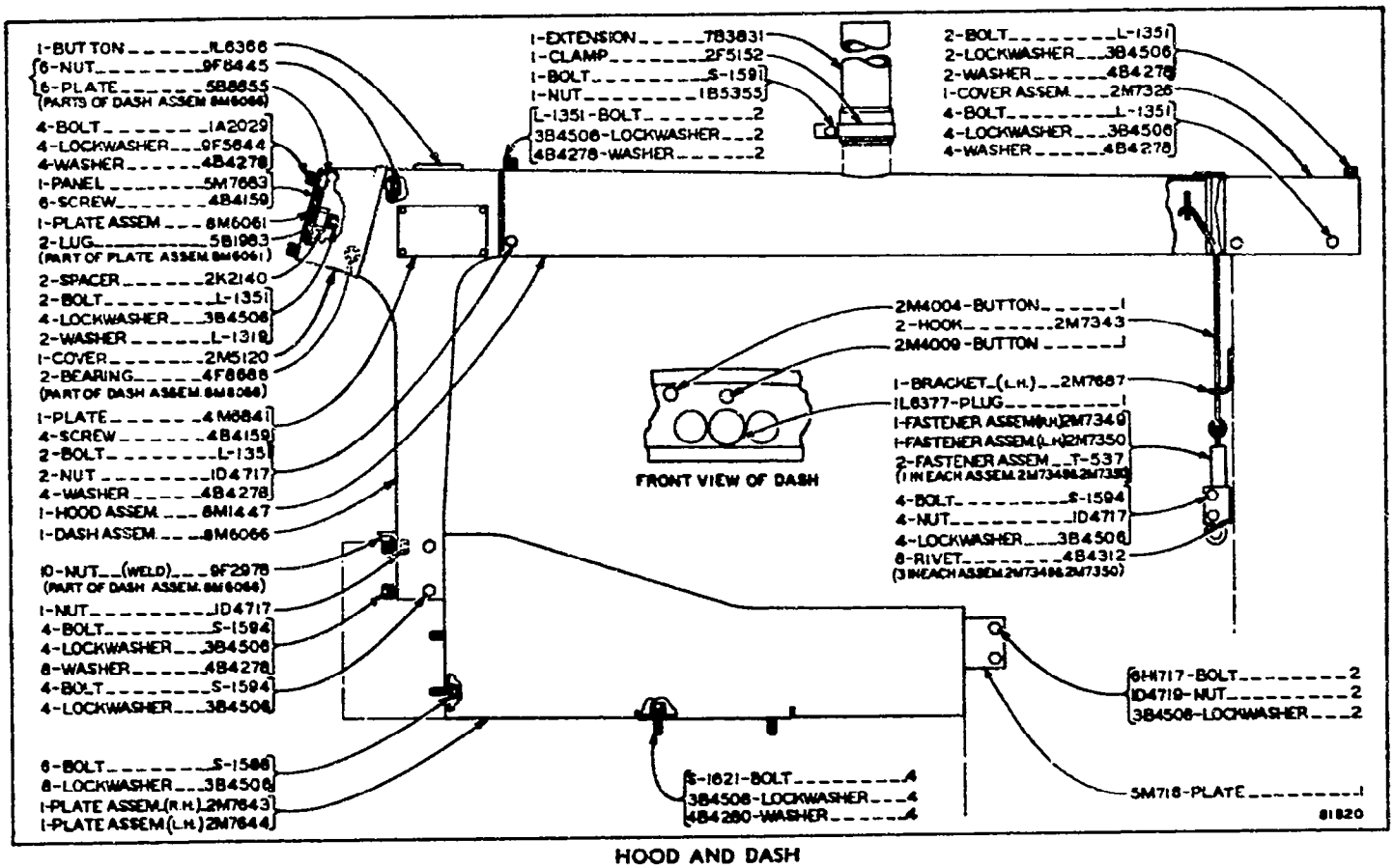

HOOD AND DASH

FENDERS

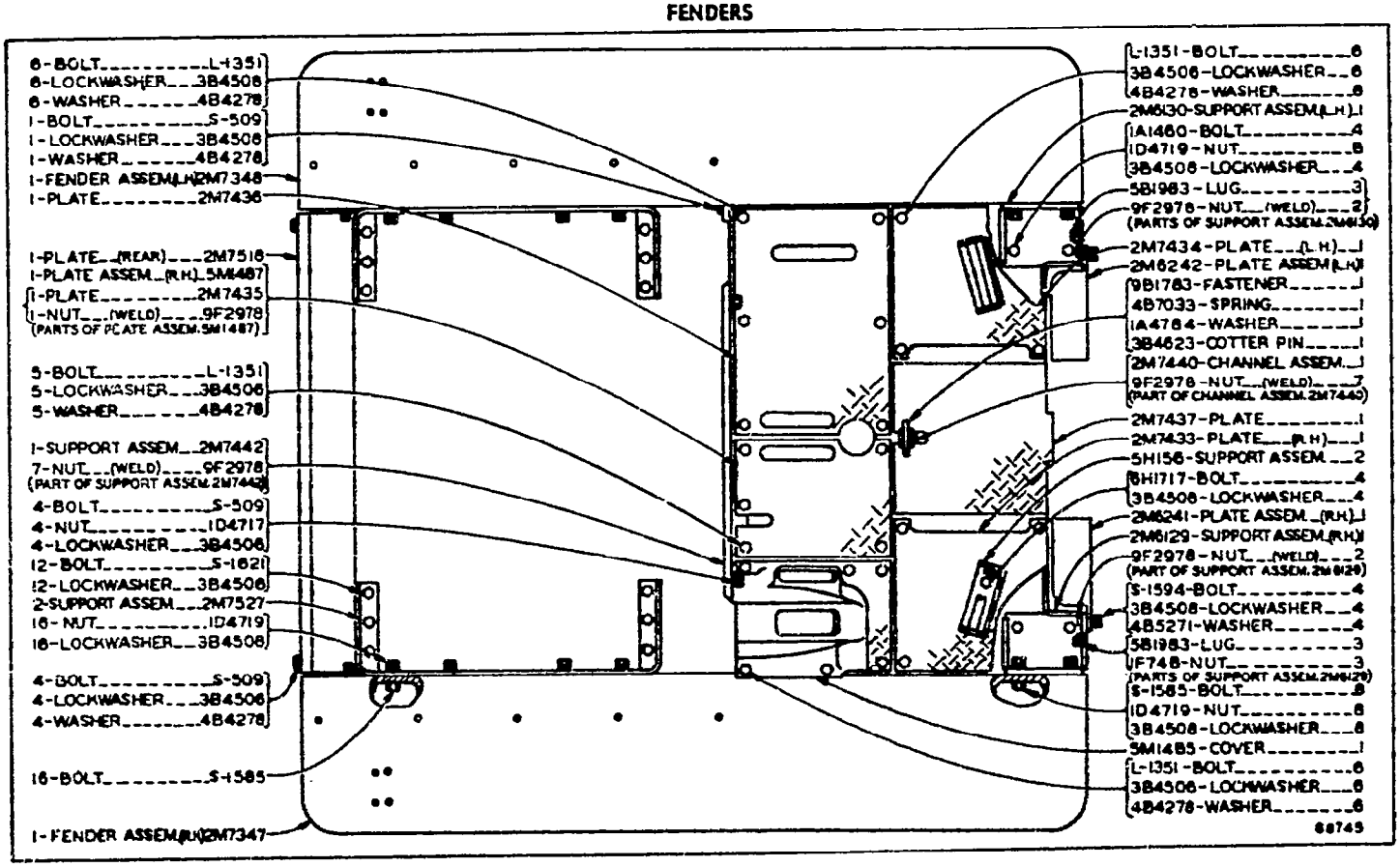

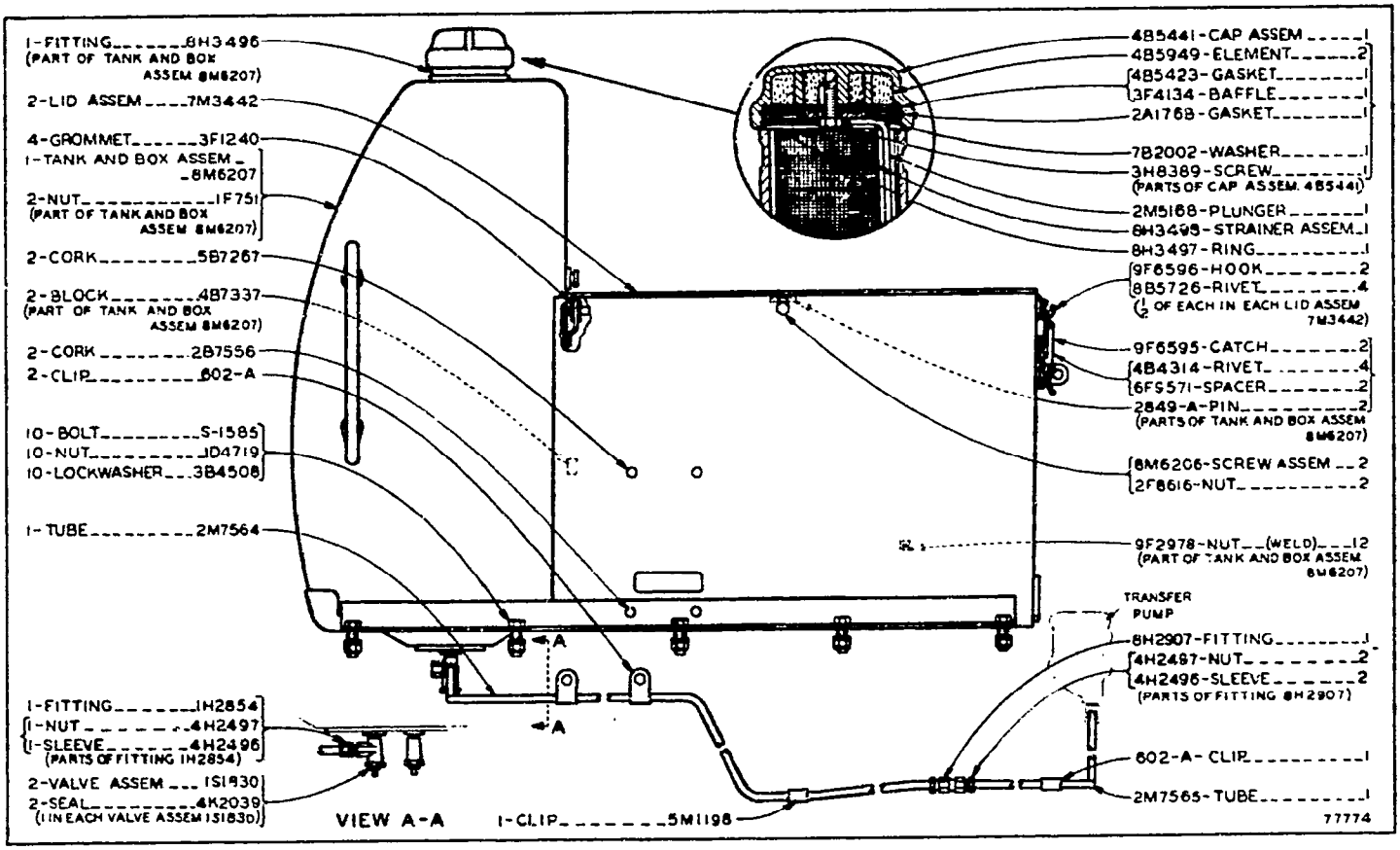

FUEL SYSTEM AND BATTERY BOX

Refer also to Page 111 for special parts

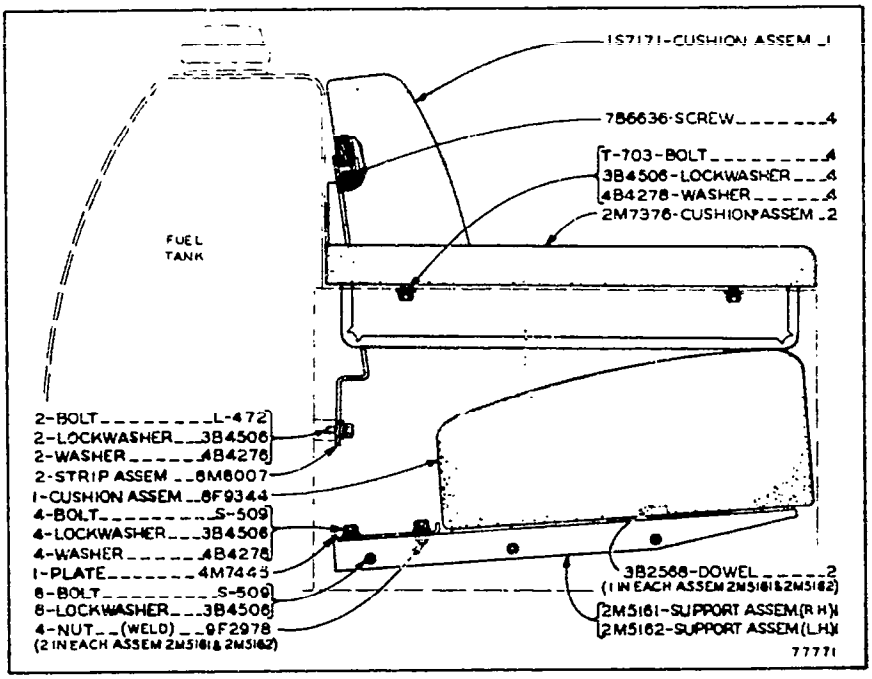

SEAT CUSHIONS

Refer also to Page 169 for special parts

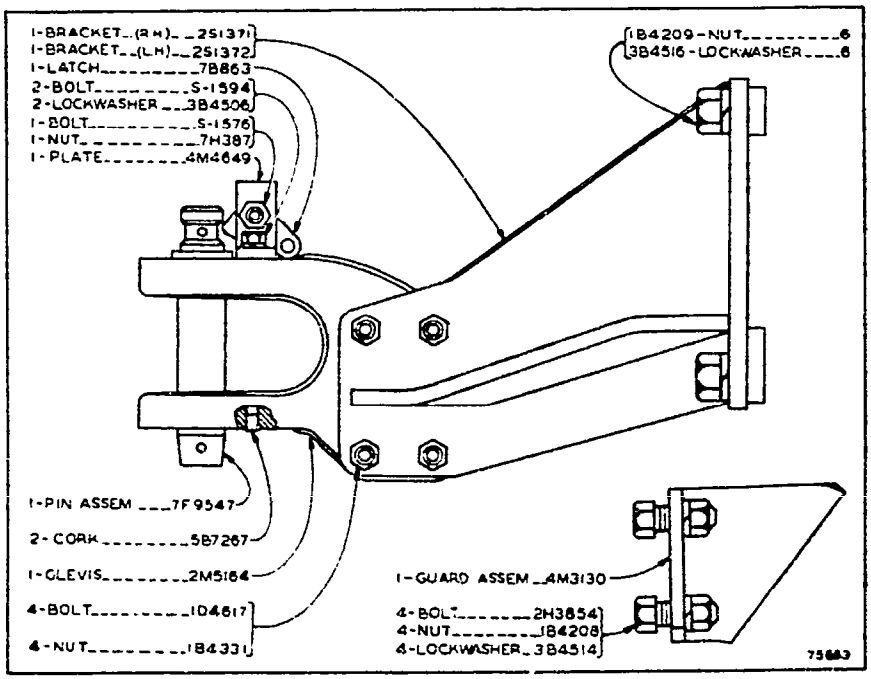

DRAWBAR

Refer also to Pege 104 for special parts

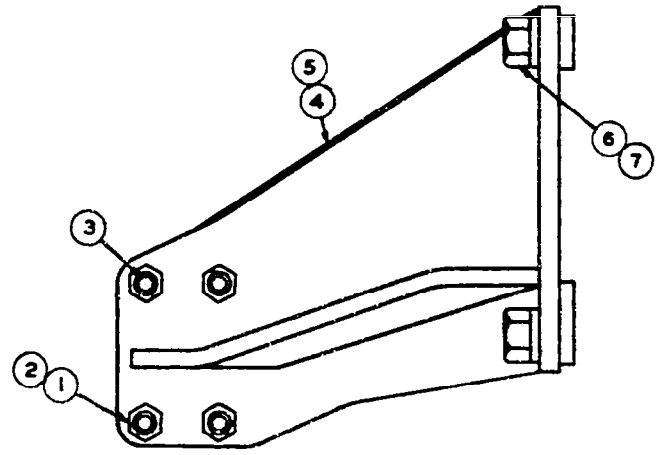

REF NO	PART NUMBER	DESCRIPTION	QTY
1	686682	NUT	4
2	4D6989	WASHER	8
3	2H3750	BOLT	4
4	3S9221	BRACKET ASSEM. ---(Right Hand)--	1

REF NO	PART NUMBER	DESCRIPTION	QTY
5	3S9222	BRACKET ASSEM. ----(Left Hand)---	1
6	2A1935	NUT	6
7	3K5234	WASHER	6

96764

3S9998 DRAWBAR BRACKET GROUP
FOR FIELD REPLACEMENT OF 2S1371 AND 2S1372 BRACKET ASSEMBLIES
SERIAL NO. 44A6857 TO 44A11322 INCLUSIVE

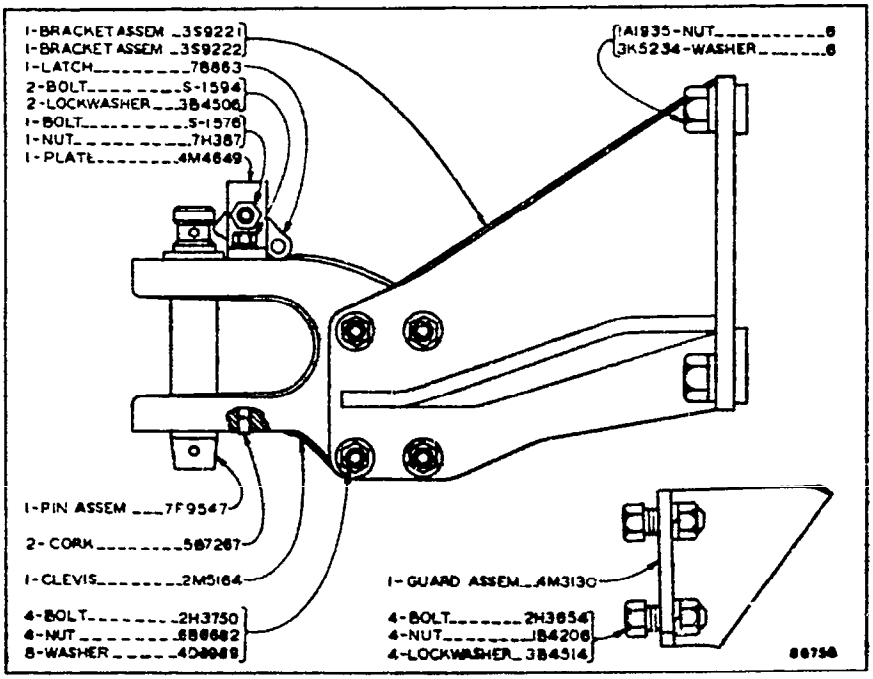

DRAWBAR
EFFECTIVE WITH SERIAL NO. 44A11323
REFER ALSO TO PAGE 104 FOR SPECIAL PARTS

INDEX

Diesel Engine
(Page 14)

Name	Page
Accessory Drive	37
Air Cleaner	18
Belt Tic ener	17
Breather	19
Camshaft	32
Connecting Rod	32
Control—Compression Release	33
Control—Fuel Pump	34
Control—Governor	34
Crankshaft	30
Crankshaft Bearings	31
Cylinder Block and Covers	24
Cylinder Head	20
Fan—Suction	16
Filter—Fuel	39
Filter—Oil	47
Flywheel	31
Fuel Pump Housing	34
Fuel Valves and Lines	41
Gauge—Oil	44
Governor	34
Guard—Radiator	16
Heat Indicator	44
Manifold	19
Oil Cooler	42
Piston	32
Pump and Filter—Fuel Transfer	38
Pump—Oil	43
Pump—Water	17
Radiator	14
Service Meter	48
Specifications	184
Tools	181
Transfers	183
Valve Mechanism	20

Starting Engine
(Page 49)

Air Cleaner	59
Camshaft and Governor	55
Carburetor	58
Clutch and Brake	66
Connecting Rod	55
Control—Brake	65
Control—Choke	58
Control—Clutch	65
Control—Starter Pinion	65
Control—Throttle	58
Crankshaft	54
Cylinder Block and Covers	52
Cylinder Head	50
Filter—Oil	57
Fuel System	57
Ignition System	61
Magneto	62
Manifold	59
Piston	55
Pump—Oil	56
Starter Pinion	67
Starter—Recoil	64
Support	49
Valve Mechanism	50
Water Lines	49

INDEX

FICHE 1 OF 2
PAGES 1 THRU 101B

FICHE 2 OF 2
PAGES 102 THRU 185

D6 Tractor Yellow Attachments 44A6857- 2 of 2
UE 35628F 44A13071 10-78

A	A-1	A-2	A-3	A-4	A-5	A-6	A-7	A-8	A-9	A-10	A-11	A-12	A-13	A-14	A-15	A-16	A-17	A-18	A-19	A-20	A
	index									index	102	102-1	102A	102B	102C	103	104	104A	105	106	
B	B-1	B-2	B-3	B-4	B-5	B-6	B-7	B-8	B-9	B-10	B-11	B-12	B-13	B-14	B-15	B-16	B-17	B-18	B-19	B-20	B
	107	108	108A	109	110	110A	110B	111	112	113	114 115	115B	116	116A	117	118 118A	118B 119	120	121	122 123	
C	C-1	C-2	C-3	C-4	C-5	C-6	C-7	C-8	C-9	C-10	C-11	C-12	C-13	C-14	C-15	C-16	C-17	C-18	C-19	C-20	C
	124 125	126	127	128	129	130 131	132 133	134 135	136 137	138 139	140	141	142	143	144	145	146	146A	146B	146C	
D	D-1	D-2	D-3	D-4	D-5	D-6	D-7	D-8	D-9	D-10	D-11	D-12	D-13	D-14	D-15	D-16	D-17	D-18	D-19	D-20	D
	146D 146E	146F	147	148 148A	148B 148C	148D 149	150 150A	151	152	152A	152B	153	154	154A 155	156 157	157A 157B	158 159	160 160A	161	162 163	
E	E-1	E-2	E-3	E-4	E-5	E-6	E-7	E-8	E-9	E-10	E-11	E-12	E-13	E-14	E-15	E-16	E-17	E-18	E-19	E-20	E
	164	165	165B	166	167	168	169	170 171	172 173	174	175	176	176A	176B 176C	176C-1 176C-2	176D	176E	176F	177	178	
	F-1	F-2	F-3	F-4	F-5	F-6	F-7	F-8	F-9	F-10	F-11	F-12	F-13	F-14	F-15	F-16	F-17	F-18	F-19	F-20	F
	178A	178B	178C	178D	179	180 180A	181	182 182A	183	184	185										
G	G-1	G-2	G-3	G-4	G-5	G-6	G-7	G-8	G-9	G-10	G-11	G-12	G-13	G-14	G-15	G-16	G-17	G-18	G-19	G-20	G
H	H-1	H-2	H-3	H-4	H-5	H-6	H-7	H-8	H-9	H-10	H-11	H-12	H-13	H-14	H-15	H-16	H-17	H-18	H-19	H-20	H
I	I-1	I-2	I-3	I-4	I-5	I-6	I-7	I-8	I-9	I-10	I-11	I-12	I-13	I-14	I-15	I-16	I-17	I-18	I-19	I-20	I
J	J-1	J-2	J-3	J-4	J-5	J-6	J-7	J-8	J-9	J-10	J-11	J-12	J-13	J-14	J-15	J-16	J-17	J-18	J-19	J-20	J

Clutch, Transmission and Chassis
(Page 69)

Name	Page
Battery Box	100
Brakes	86
Clutch—Flywheel	72
Clutch—Steering	85
Control—Flywheel Clutch	70
Control—Gear Shift	70
Control—Steering Clutch	84
Control Mechanism—Steering Clutch Hydraulic	82
Drawbar	101
Fenders	99
Final Drive	88
Frame—Track Roller	97
Fuel System	100
Guard—Track Roller Frame	96
Hood and Dash	98
Idler—Front	92
Power Train	69
Roller—Track	95
Roller—Track Carrier	96
Seat Cushions	101
Spring—Equalizer	93
Track	94
Transmission	76
Transmission Case and Covers	80
Bearing—Pinion Shaft Front	174
Cab	122
Canopy	126
Control—Choke and Throttle	165
Curtain—Canopy	124
Drawbar—Swinging	104
Extension—Air Cleaner Inlet	108
Fan—Blower	102
Fan—Defroster	121
Fan—Reversible Blade	102
Fuel System	168
Guard—Brush	106
Guard—Crankcase	105
Guard—Precleaner	107
Guard—Track Roller Dirt	177
Heater—Cab	126
Hinge—Radiator Guard	103
Hook—Front Pull	104
Idler—Front	176
Lighting System—12 Volt	129
Lighting System—24 Volt	138
Muffler	110
Oil System—Bevel Gear Shaft Bearing	170
Prescreener	107
Protection Cap—Starting Engine Fuel Tank	111
Protection Cover—Fuel Tank	111
Protection Cover—Oil Filler	112
Pump—Fuel Priming	166
Rain Cap	108
Rain Trap—Exhaust	109
Seat Belt	169
Spark Arrester	110
Starting Aid—Ether	168
Starting—Electric	146
Street Plates	176
Tools	181
Track	178
Track Adjusting—Hydraulic	179
Transmission—Conversion	175
Transmission—Optional	172
Turbocharger	113
Windshield Wiper	121

Attachments
(Page 102)

INDEX

FICHE 1 OF 2
PAGES 1 THRU 101B

FICHE 2 OF 2
PAGES 102 THRU 185

Helicopter Yellow Attachments 44A16859- 44A13071 2 of 2 10-78

UE35628F

	1	2	3	4	5	6	7	8	9	10	11	12	13	14	15	16	17	18	19	20	
A	Index									Index	102	102-1	102A	102B	102C	103	104	104A	105	106	A
B	109	108	108A	109	110	110A	110B	111	112	113	114 115	115B	116	116A	117	118 118A	118B 119	120	121	122 123	B
C	124 125	126	127	128	129	130 131	132 133	134 135	136 137	138 139	140	141	142	143	144	145	146	146A	146B	146C	C
D	146D 146E	146F	147	148 148A	148B 148C	148D 149	150 150A	151	152	152A	152B	153	154	154A 155	156 157	159A 159B	158 159	160 160A	161	162 163	D
E	164	165	165B	166	167	168	169	190 191	192 193	194	195	196	196A	196B 196C	196C-1 196C-2	196D	196E	196F	199	198	E
F	198A	198B	198C	198D	199	180 180A	181	182 182A	183	184	185										F
G																					G
H																					H
I																					I
J																					J

INDEX ALPHABETIQUE

Moteur diesel
(Page 14)

Désignation	Page
Arbre à cames	32
Bielles	32
Bloc-cylindres	24
Caractéristiques	184
Collecteurs	19
Compteur d'entretien	48
Coussinets de vilebrequin	31
Crémaillère	34
Culasse	20
Décompresseur (commande)	33
Entraînements secondaires	37
Filtre à air	18
Filtre à carburant diesel	39
Filtre à huile de graissage	47
Injecteurs et tuyauterie	41
Instructions sur décalcomanies	183
Manomètre de pression d'huile	44
Outillage	181
Pistons	32
Pompe à eau	17
Pompe à huile de graissage	43
Pompe d'alimentation et filtre de carburant	38
Pompe d'injection	34
Protège-radiateur	16
Radiateur	14
Réfrigérant d'huile de graissage	42
Régulateur	34
Reniflard	19
Soupapes et train de commande	20
Tendeur de courroie	17
Thermomètre (eau)	44
Timonerie de régulateur	34
Ventilateur aspirant	16
Vilebrequin	30
Volant	31

Groupe de lancement
(Page 49)

Alimentation d'essence (gazoline)	57
Allumage électrique	61
Arbre à cames et régulateur	55
Bielles	55
Bloc-cylindres	52
Carburateur	58
Collecteurs	59
Commande de lancement	65
Culasse	50
Embrayage et frein	66
Filtre à air	59
Filtre à huile de graissage	57
Freins (commande)	65
Lanceur à câble	64
Magnéto	62
Pignon de lancement	67
Pistons	55
Pompe à huile	56
Soupapes et train de commande	50
Support moteur	49
Tuyauterie d'eau	49
Vilebrequin	54
Volet de départ et accélérateur	58

Bâti et organes de transmission
(Page 69)

Alimentation en carburant diesel	100
Barre d'attelage	101
Bâti arrière	80
Boîte de vitesses	76

INDEX

FICHE 1 OF 2
PAGES 1 THRU 101B

FICHE 2 OF 2
PAGES 102 THRU 185

Diétracteur yellow Attachments 44A6857- 2 of 2
UE 35628F 44A13071 10-78

A	A-1	A-2	A-3	A-4	A-5	A-6	A-7	A-8	A-9	A-10	A-11	A-12	A-13	A-14	A-15	A-16	A-17	A-18	A-19	A-20	A
	index									index	102	102-1	102A	102B	102C	103	104	104A	105	[illegible]	
B	B-1	B-2	B-3	B-4	B-5	B-6	B-7	B-8	B-9	B-10	B-11	B-12	B-13	B-14	B-15	B-16	B-17	B-18	B-19	B-20	B
	107	108	108A	109	110	110A	110B	111	112	113	114 115	115B	116	116A	117	118 118A	118B 119	120	121	122 123	
C	C-1	C-2	C-3	C-4	C-5	C-6	C-7	C-8	C-9	C-10	C-11	C-12	C-13	C-14	C-15	C-16	C-17	C-18	C-19	C-20	C
	124 125	126	127	128	129	130 131	132 133	134 135	136 137	138 139	140	141	142	143	144	145	146	146A	146B	146C	
D	D-1	D-2	D-3	D-4	D-5	D-6	D-7	D-8	D-9	D-10	D-11	D-12	D-13	D-14	D-15	D-16	D-17	D-18	D-19	D-20	D
	146D 146E	146F	147	148 148A	148B 148C	148D 149	150 150A	151	152	152A	152B	153	154	154A 155	156 157	157A 157B	158 159	160 160A	161	162 163	
E	E-1	E-2	E-3	E-4	E-5	E-6	E-7	E-8	E-9	E-10	E-11	E-12	E-13	E-14	E-15	E-16	E-17	E-18	E-19	E-20	E
	164	165	165B	166	167	168	169	170 171	172 173	174	175	176	176A	176B 176C	176C-1 176C-2	176D	176E	176F	177	178	
F	F-1	F-2	F-3	F-4	F-5	F-6	F-7	F-8	F-9	F-10	F-11	F-12	F-13	F-14	F-15	F-16	F-17	F-18	F-19	F-20	F
	178A	178B	178C	178D	179	180 180A	181	182 182A	183	184	185										
G	G-1	G-2	G-3	G-4	G-5	G-6	G-7	G-8	G-9	G-10	G-11	G-12	G-13	G-14	G-15	G-16	G-17	G-18	G-19	G-20	G
H	H-1	H-2	H-3	H-4	H-5	H-6	H-7	H-8	H-9	H-10	H-11	H-12	H-13	H-14	H-15	H-16	H-17	H-18	H-19	H-20	H
I	I-1	I-2	I-3	I-4	I-5	I-6	I-7	I-8	I-9	I-10	I-11	I-12	I-13	I-14	I-15	I-16	I-17	I-18	I-19	I-20	I
J	J-1	J-2	J-3	J-4	J-5	J-6	J-7	J-8	J-9	J-10	J-11	J-12	J-13	J-14	J-15	J-16	J-17	J-18	J-19	J-20	J

Bâti et organes de transmission—Continue

Désignation	Page
boîte de vitesses (timonerie)	70
Capot et tablier	98
Chaînes de roulement	94
Châssis porteurs	97
Châssis porteurs (tôlerie de protection)	96
Coffre à batterie	100
Embrayage principal	72
Embrayage principal (commande)	70
Embrayages de direction	85
Embrayages de direction (commande)	84
Embrayages de direction (commande du servo)	82
Freins	86
Galets inférieurs	95
Galets supérieurs	96
Garde-boue	99
Mécanisme de transmission	69
Réducteurs latéraux	88
Ressort transversal de suspension	93
Roues avant	92
Siège (coussins)	101
Accessoires (Page 102)	
Alimentation en carburant	168
Barre d'attelage oscillante	104
Boîte de vitesses (groupe de transformation)	175
Boîte de vitesses spéciale	172
Cabine	122
Ceinture de sécurité	169
Chaînes de roulement	178
Chaînes de roulement (tendeur hydraulique)	179
Chapeau de sûreté (réservoir)	111
Chapeau de sûreté (réservoir du moteur de lancement)	111
Chapeau de sûreté (tubulure de remplissage d'huile)	112
Commandes de carburateur	165
Crochet AV	104
Dégivreur	121
Démarrage électrique	146
Dispositif de graissage du couple conique	170
Eclairage électrique (12 volts)	129
Eclairage électrique 24 volts)	138
Essuie-glace	121
Filtre à air (rallonge de prise d'air)	108
Injection d'éther	168
Outillage	181
Pare-étincelles	110
Patins de route	176
Pompe d'amorçage	166
Pot d'échauffement	110
Pot-déflecteur (échappement)	109
Préfiltre (protecteur)	107
Protège-carter moteur	105
Protège-galets	177
Protège-radiateur sur charnière	103
Radiateur de chauffage cabine	126
Rideau de toit	124
Roues AV	176
Roulement AV d'arbre de pignon conique	174
Tamis de préfiltre	107
Toit	126
Tôle pare-broussailles	106
Turbo-compresseur	113
Ventilateur à pales réversibles	102
Ventilateur soufflant	102
Volet du tuyau d'échappement	108

INDEX

FICHE 1 OF 2
PAGES 1 THRU 101B

FICHE 2 OF 2
PAGES 102 THRU 185

D6 Tractor Yellow Attachments 44A16857- 44A13071 2013 10-78
UE 35628F

	A-1	A-2	A-3	A-4	A-5	A-6	A-7	A-8	A-9	A-10	A-11	A-12	A-13	A-14	A-15	A-16	A-17	A-18	A-19	A-20	
A	Index									Sender	102	102-1	102A	102B	102C	103	104	104A	105	106	A
	B-1	B-2	B-3	B-4	B-5	B-6	B-7	B-8	B-9	B-10	B-11	B-12	B-13	B-14	B-15	B-16	B-17	B-18	B-19	B-20	
B	109	108	108A	109	110	110A	110B	111	112	113	114 115	115B	116	116A	117	118 118A	118A 119	120	121	122 123	B
	C-1	C-2	C-3	C-4	C-5	C-6	C-7	C-8	C-9	C-10	C-11	C-12	C-13	C-14	C-15	C-16	C-17	C-18	C-19	C-20	
C	124 125	126	127	128	129	130 131	132 133	134 135	136 137	138 139	140	141	142	143	144	145	146	146A	146A	146C	C
	D-1	D-2	D-3	D-4	D-5	D-6	D-7	D-8	D-9	D-10	D-11	D-12	D-13	D-14	D-15	D-16	D-17	D-18	D-19	D-20	
D	146D 146E	146F	147	148 148A	148B 148C	148D 149	150 150A	151	152	152A	152B	153	154	154A 155	156 157	157A 157B	158 159	160 160A	161	162 163	D
	E-1	E-2	E-3	E-4	E-5	E-6	E-7	E-8	E-9	E-10	E-11	E-12	E-13	E-14	E-15	E-16	E-17	E-18	E-19	E-20	
E	164	165	165B	166	167	168	169	170 171	172 173	174	175	176	176A	176B 176C	176C-1 176C-2	176D	176E	176F	177	178	E
	F-1	F-2	F-3	F-4	F-5	F-6	F-7	F-8	F-9	F-10	F-11	F-12	F-13	F-14	F-15	F-16	F-17	F-18	F-19	F-20	
F	178A	178B	178C	178D	179	180 180A	181	182 182A	183	184	185										F
	G-1	G-2	G-3	G-4	G-5	G-6	G-7	G-8	G-9	G-10	G-11	G-12	G-13	G-14	G-15	G-16	G-17	G-18	G-19	G-20	
G																					G
	H-1	H-2	H-3	H-4	H-5	H-6	H-7	H-8	H-9	H-10	H-11	H-12	H-13	H-14	H-15	H-16	H-17	H-18	H-19	H-20	
H																					H
	I-1	I-2	I-3	I-4	I-5	I-6	I-7	I-8	I-9	I-10	I-11	I-12	I-13	I-14	I-15	I-16	I-17	I-18	I-19	I-20	
I																					I
	J-1	J-2	J-3	J-4	J-5	J-6	J-7	J-8	J-9	J-10	J-11	J-12	J-13	J-14	J-15	J-16	J-17	J-18	J-19	J-20	
J																					J

INDICE

Motor Diesel (Página 14)

Nombre	Página
Bielas	32
Bloque del Motor y Tapas	24
Bomba de Alimentación y Filtro	38
Bomba del Aceite	43
Bomba del Agua	17
Caja de las Bombas del Combustible	34
Calcomanías	183
Cigüeñal	30
Cojinetes de Bancada	31
Control de la Descompresión	33
Control—Bombas del Combustible	34
Control del Regulador	34
Culata	20
Eje de Levas	32
Enfriador del Aceite	42
Especificaciones	184
Filtro de Aire	18
Filtro del Aceite	47
Filtro del Combustible	39
Herramientas	181
Horómetro	48
Indicador de Temperatura	44
Inyectores y Tuberías	41
Mando de Accesorios	37
Manómetro del Aceite	44
Mecanismo de las Válvulas	20
Múltiple	19
Pistón	32
Protección del Radiador	16
Radiador	14
Regulador	34
Respiradero	19
Tensor de la Correa	17
Ventilador de Succión	16
Volante	31

Motor de Arranque (Página 49)

Acelerador	58
Bielas	55
Bloque del Motor y Tapas	52
Bomba del Aceite	56
Carburador	58
Cigüeñal	54
Control de la Estrangulación	58
Control del Embrague	65
Control del Freno	65
Control del Piñón de Arranque	65
Culata	50
Eje de Levas y Regulador	55
Embrague y Freno	66
Filtro de Aire	59
Filtro del Aceite	57
Magneto	62
Mecanismo de Enrollado Automático para el Arranque	64
Mecanismo de las Válvulas	50
Múltiple	59
Piñón de Arranque	67
Pistón	55
Sistema de Ignición	61
Sistema del Combustible	57
Soporte	49
Tuberías del Agua	49

Embrague, Transmisión y Chasis (Página 69)

Barra de Tiro	101
Bastidor de los Rodillos	97
Caja de la Batería	100
Caja de la Transmisión y Tapas	80

INDEX

FICHE 1 OF 2
PAGES 1 THRU 101B

FICHE 2 OF 2
PAGES 102 THRU 185

Dieselator Yellow Attachments 44A16857-44A13091 2 of 2 10-78

UE 35628F

	A-1	A-2	A-3	A-4	A-5	A-6	A-7	A-8	A-9	A-10	A-11	A-12	A-13	A-14	A-15	A-16	A-17	A-18	A-19	A-20	
A	Index									Index	102	102-1	102A	102B	102C	103	104	104A	105	106	A
	B-1	B-2	B-3	B-4	B-5	B-6	B-7	B-8	B-9	B-10	B-11	B-12	B-13	B-14	B-15	B-16	B-17	B-18	B-19	B-20	
B	107	108	108A	109	110	110A	110B	111	112	113	114 115	115B	116	116A	117	118 118A	118B 119	120	121	122 123	B
	C-1	C-2	C-3	C-4	C-5	C-6	C-7	C-8	C-9	C-10	C-11	C-12	C-13	C-14	C-15	C-16	C-17	C-18	C-19	C-20	
C	124 125	126	127	128	129	130 131	132 133	134 135	136 137	138 139	140	141	142	143	144	145	146	146A	146B	146C	C
	D-1	D-2	D-3	D-4	D-5	D-6	D-7	D-8	D-9	D-10	D-11	D-12	D-13	D-14	D-15	D-16	D-17	D-18	D-19	D-20	
D	146D 146E	146F	147	148 148A	148B 148C	148D 149	150 150A	151	152	152A	152B	153	154	154A 155	156 157	157A 157B	158 159	160 160A	161	162 163	D
	E-1	E-2	E-3	E-4	E-5	E-6	E-7	E-8	E-9	E-10	E-11	E-12	E-13	E-14	E-15	E-16	E-17	E-18	E-19	E-20	
E	164	165	165B	166	167	168	169	170 171	172 173	174	175	176	176A	176B 176C	176C-1 176C-2	176D	176E	176F	197	198	E
	F-1	F-2	F-3	F-4	F-5	F-6	F-7	F-8	F-9	F-10	F-11	F-12	F-13	F-14	F-15	F-16	F-17	F-18	F-19	F-20	
F	178A	178B	178C	178D	179	180 180A	181	182 182A	183	184	185										F
	G-1	G-2	G-3	G-4	G-5	G-6	G-7	G-8	G-9	G-10	G-11	G-12	G-13	G-14	G-15	G-16	G-17	G-18	G-19	G-20	
G																					G
	H-1	H-2	H-3	H-4	H-5	H-6	H-7	H-8	H-9	H-10	H-11	H-12	H-13	H-14	H-15	H-16	H-17	H-18	H-19	H-20	
H																					H
	I-1	I-2	I-3	I-4	I-5	I-6	I-7	I-8	I-9	I-10	I-11	I-12	I-13	I-14	I-15	I-16	I-17	I-18	I-19	I-20	
I																					I
	J-1	J-2	J-3	J-4	J-5	J-6	J-7	J-8	J-9	J-10	J-11	J-12	J-13	J-14	J-15	J-16	J-17	J-18	J-19	J-20	
J																					J

Embrague, Transmisión y Chasis—Continuación

Nombre	Página
Capó y Tablero	98
Carril	94
Cojines del Asiento	101
Control—Cambios	70
Control de Embrague de Dirección	84
Control del Embrague Principal	70
Embrague de Dirección	85
Embrague Principal	72
Frenos	86
Mandos Finales	88
Mecanismo de Control Hidráulico de Embragues de Dirección	82
Protección—Bastidor de los Rodillos	96
Resorte Compensador	93
Rodillos Inferiores	95
Rodillos Superiores	96
Rueda Guía	92
Sistema del Combustible	100
Tapabarros	99
Transmisión	76
Tren de Potencia	69

Accesorios (Página 102)

Ajuste Hidráulico del Carril	179
Antefiltro Especial	107
Arranque Eléctrico	146
Barra de Tiro Giratoria	104
Bomba de Cebado del Combustible	166
Cabina	122
Calentador para la Cabina	126
Carril	178
Cinturón de Seguridad	169
Cojinete Delantero del Eje del Piñón	174
Control—Estrangulación y Acelerador	165
Cortina—Toldo	124
Extensión de la Admisión del Filtro de Aire	108
Gancho Delantero	10
Guardallamas	110
Herramientas	18
Inyector de Eter	168
Limpia Parabrisas	121
Protección Contra Maleza	106
Protección del Antefiltro	107
Protección del Cárter	105
Protección de los Rodillos Inferiores	177
Protección del Radiador con Charnela	103
Rueda Guía	176
Silenciador	110
Sistema de Alumbrado—12 Voltios	129
Sistema de Alumbrado—24 Voltios	133
Sistema del Aceite—Cojinetes del Eje de la Corona	170
Sistema del Combustible	168
Tapa contra la Lluvia	108
Tapa Protectora—Tanque del Combustible	111
Tapa Protectora—Tanque del Combustible del Motor de Arranque	111
Tapa Protectora—Tubo de Llenado del Aceite	112
Toldo	126
Trampa contra la Lluvia—Escape	109
Transmisión—Conversión	175
Transmisión—Opcional	172
Turboalimentador	113
Ventilador de Paletas Reversibles	102
Ventilador Descongelador	121
Ventilador Insuflador	102
Zapatas para Calle	176

INDEX

FICHE 1 OF 2
PAGES 1 THRU 101B

FICHE 2 OF 2
PAGES 102 THRU 185

D6 Tractor Yellow Attachments 44A6857-44A13091 2013 10-78
UE35628F

	A-1	A-2	A-3	A-4	A-5	A-6	A-7	A-8	A-9	A-10	A-11	A-12	A-13	A-14	A-15	A-16	A-17	A-18	A-19	A-20	
A	Index									Index	102	102-1	102A	102B	102C	103	104	104A	105	106	A
	B-1	B-2	B-3	B-4	B-5	B-6	B-7	B-8	B-9	B-10	B-11	B-12	B-13	B-14	B-15	B-16	B-17	B-18	B-19	B-20	
B	109	108	108A	109	110	110A	110B	111	112	113	114 115	115A	116	116A	117	118 118A	118A 119	120	121	122 123	B
	C-1	C-2	C-3	C-4	C-5	C-6	C-7	C-8	C-9	C-10	C-11	C-12	C-13	C-14	C-15	C-16	C-17	C-18	C-19	C-20	
C	124 125	126	127	128	129	130 131	132 133	134 135	136 137	138 139	140	141	142	143	144	145	146	146A	146B	146C	C
	D-1	D-2	D-3	D-4	D-5	D-6	D-7	D-8	D-9	D-10	D-11	D-12	D-13	D-14	D-15	D-16	D-17	D-18	D-19	D-20	
D	146D 146E	146F	147	148 148A	148B 148C	148D 149	150 150A	151	152	152A	152B	153	154	154A 155	156 157	157A 157B	158 159	160 160A	161	162 163	D
	E-1	E-2	E-3	E-4	E-5	E-6	E-7	E-8	E-9	E-10	E-11	E-12	E-13	E-14	E-15	E-16	E-17	E-18	E-19	E-20	
E	164	165	165B	166	167	168	169	170 171	172 173	174	175	176	176A	176B 176C	176C-1 176C-2	176D	176E	176F	197	198	E
	F-1	F-2	F-3	F-4	F-5	F-6	F-7	F-8	F-9	F-10	F-11	F-12	F-13	F-14	F-15	F-16	F-17	F-18	F-19	F-20	
F	178A	178B	178C	178D	179	180 180A	181	182 182A	183	184	185										F
	G-1	G-2	G-3	G-4	G-5	G-6	G-7	G-8	G-9	G-10	G-11	G-12	G-13	G-14	G-15	G-16	G-17	G-18	G-19	G-20	
G																					G
	H-1	H-2	H-3	H-4	H-5	H-6	H-7	H-8	H-9	H-10	H-11	H-12	H-13	H-14	H-15	H-16	H-17	H-18	H-19	H-20	
H																					H
	I-1	I-2	I-3	I-4	I-5	I-6	I-7	I-8	I-9	I-10	I-11	I-12	I-13	I-14	I-15	I-16	I-17	I-18	I-19	I-20	
I																					I
	J-1	J-2	J-3	J-4	J-5	J-6	J-7	J-8	J-9	J-10	J-11	J-12	J-13	J-14	J-15	J-16	J-17	J-18	J-19	J-20	
J																					J

INDICE

Motor diesel (Página 14)

Nomenclatura	Página
Arrefecedor do óleo	42
Árvore de comando das válvulas	32
Árvore de manivelas (virabrequim)	30
Biela	32
Bloco do motor e tampas	24
Bomba d'água	17
Bomba de óleo	43
Bomba de transferência do combustível e filtro	38
Cabeçote	20
Caixa das bombas injetoras	34
Coletor	19
Comando de acessórios	37
Contrôle da descompressão	33
Contrôle do regulador de velocidade (acelerador)	34
Cremalheira do combustível	34
Decalcomanias	183
Especificações	184
Ferramentas	181
Filtro de óleo	47
Filtro principal do combustível	39
Horômetro	48
Indicador da temperatura (termômetro)	44
Mancais principais do motor	31
Manômetro do óleo	44
Mecanismo das válvulas	20
Pistão	32
Protetor do radiador	16
Purificador de ar	18
Radiador	14
Regulador de velocidade	34
Respiro	19
Tensor das correias	17
Válvulas injetoras e tubos	41
Ventilador de sucção	16
Volante do motor	31

Sistema de partida (Página 49)

Acelerador	58
Afogador	58
Árvore de comando das válvulas e regulador de velocidade	55
Árvore de manivelas (virabrequim)	54
Biela	55
Bloco do motor e tampas	52
Bomba de óleo	56
Cabeçote	50
Carburador	58
Coletor	59
Contrôle da embreagem	65
Contrôle do freio	65
Contrôle do pinhão de partida	65
Embreagem e freio	66
Filtro de óleo	57
Magneto	62
Mecanismo das válvulas	50
Mecanismo retráctil do cabo de partida	64
Pinhão de partida	67
Pistão	55
Purificador de ar	59
Sistema de alimentação do combustível	57
Sistema de ignição	61
Suporte	49
Tubos d'água	49

INDEX

FICHE 1 OF 2
PAGES 1 THRU 101B

FICHE 2 OF 2
PAGES 102 THRU 185

D6 Tractor Yellow Attachments 44A16857- 44A13091 2962 10-78
UE35628F

	A-1	A-2	A-3	A-4	A-5	A-6	A-7	A-8	A-9	A-10	A-11	A-12	A-13	A-14	A-15	A-16	A-17	A-18	A-19	A-20	
A	Index									Index	102	102-1	102A	102B	102C	103	104	104A	105	106	A
	B-1	B-2	B-3	B-4	B-5	B-6	B-7	B-8	B-9	B-10	B-11	B-12	B-13	B-14	B-15	B-16	B-17	B-18	B-19	B-20	
B	107	108	108A	109	110	110A	110B	111	112	113	114 115	115B	116	116A	117	118 118A	118B 119	120	121	122 123	B
	C-1	C-2	C-3	C-4	C-5	C-6	C-7	C-8	C-9	C-10	C-11	C-12	C-13	C-14	C-15	C-16	C-17	C-18	C-19	C-20	
C	124 125	126	127	128	129	130 131	132 133	134 135	136 137	138 139	140	141	142	143	144	145	146	146A	146B	146C	C
	D-1	D-2	D-3	D-4	D-5	D-6	D-7	D-8	D-9	D-10	D-11	D-12	D-13	D-14	D-15	D-16	D-17	D-18	D-19	D-20	
D	146D 146E	146F	147	148 148A	148B 148C	148D 149	150 150A	151	152	152A	152B	153	154	154A 155	156 157	157A 157B	158 159	160 160A	161	162 163	D
	E-1	E-2	E-3	E-4	E-5	E-6	E-7	E-8	E-9	E-10	E-11	E-12	E-13	E-14	E-15	E-16	E-17	E-18	E-19	E-20	
E	164	165	165B	166	167	168	169	170 191	172 173	174	175	176	176A	176B 176C	176C-1 176C-2	176D	176E	176F	197	198	E
	F-1	F-2	F-3	F-4	F-5	F-6	F-7	F-8	F-9	F-10	F-11	F-12	F-13	F-14	F-15	F-16	F-17	F-18	F-19	F-20	
F	178A	178B	178C	178D	179	180 180A	181	182 182A	183	184	185										F
	G-1	G-2	G-3	G-4	G-5	G-6	G-7	G-8	G-9	G-10	G-11	G-12	G-13	G-14	G-15	G-16	G-17	G-18	G-19	G-20	
G																					G
	H-1	H-2	H-3	H-4	H-5	H-6	H-7	H-8	H-9	H-10	H-11	H-12	H-13	H-14	H-15	H-16	H-17	H-18	H-19	H-20	
H																					H
	I-1	I-2	I-3	I-4	I-5	I-6	I-7	I-8	I-9	I-10	I-11	I-12	I-13	I-14	I-15	I-16	I-17	I-18	I-19	I-20	
I																					I
	J-1	J-2	J-3	J-4	J-5	J-6	J-7	J-8	J-9	J-10	J-11	J-12	J-13	J-14	J-15	J-16	J-17	J-18	J-19	J-20	
J																					J

Sistema de transmissão e chassi
(Página 69)

Nomenclatura	Página
Almofadas do assento	101
Armação dos rolêtes de esteira	97
Barra de tração	101
Caixa das baterias	100
Caixa de mudanças	76
Capô e painel	98
Carcassa da caixa de mudanças e tampas	80
Comando final	88
Contrôle da embreagem principal	70
Contrôle das embreagens de direção	84
Contrôle das marchas	70
Contrôle hidráulico das embreagens de direção	82
Embreagem de direção	85
Embreagem principal	72
Esteira	94
Freios	86
Mola de suspensão	93
Pára-lamas	99
Protetor da armação dos rolêtes inferiores	96
Roda-guia	92
Rolête inferior	95
Rolête superior	96
Sistema de transmissão	69
Tanque de combustível	100

Acessórios
(Página 102)

Acelerador e afogador	165
Aquecedor da cabine	126
Barra de tração oscilável	104
Bomba manual de purgação do combustível	166
Cabine	122
Caixa de mudanças optativa	172
Calços para as sapatas	176
Calha contra chuva	109
Cinto de segurança	169
Conversão da caixa de mudanças	175
Cortinas do tôldo	124
Descongelador do pára-brisa	121
Esteira	178
Extensão da tomada de ar	108
Ferramentas	181
Gancho dianteiro	104
Grade articulada do radiador	103
Grupo de lubrificação dos rolamentos da coroa	170
Guarda-mato	106
Injetor de éter	168
Limpador do pára-brisa	121
Pára-fagulhas	110
Partida elétrica	146
Pré-purificador de ar	107
Protetor do cárter	105
Protetor do pré-purificador	107
Protetor dos rolêtes inferiores	177
Roda-guia	176
Rolamento dianteiro do pinhão	174
Silenciador	110
Sistema de combustível	168
Sistema de iluminação—12 volts	129
Sistema de iluminação—24 volts	138
Tampa do bocal do cárter com cadeado	112
Tampa do cano de descarga	108
Tampa do tanque de combustível com cadeado	111
Tampa do tanque de gasolina com cadeado	111
Tensor hidráulico das esteiras	179
Tôldo	126
Turbocompressor	113
Ventilador de pás reversíveis	102
Ventilador de sôpro	102

INDEX

FICHE 1 OF 2
PAGES 1 THRU 101B

FICHE 2 OF 2
PAGES 102 THRU 185

Dic Inserter Yellow Attachments 44A16859-44A13091 2013 10-78 UE 35628F

	A-1	A-2	A-3	A-4	A-5	A-6	A-7	A-8	A-9	A-10	A-11	A-12	A-13	A-14	A-15	A-16	A-17	A-18	A-19	A-20
A	Index									Index	102	102-1	102A	102B	102C	103	104	104A	105	106
	B-1	B-2	B-3	B-4	B-5	B-6	B-7	B-8	B-9	B-10	B-11	B-12	B-13	B-14	B-15	B-16	B-17	B-18	B-19	B-20
B	109	108	108A	109	110	110A	110B	111	112	113	114 115	115B	116	116A	117	118 118A	118B 119	120	121	122 123
	C-1	C-2	C-3	C-4	C-5	C-6	C-7	C-8	C-9	C-10	C-11	C-12	C-13	C-14	C-15	C-16	C-17	C-18	C-19	C-20
C	124 125	126	127	128	129	130 131	132 133	134 135	136 137	138 139	140	141	142	143	144	145	146	146A	146B	146C
	D-1	D-2	D-3	D-4	D-5	D-6	D-7	D-8	D-9	D-10	D-11	D-12	D-13	D-14	D-15	D-16	D-17	D-18	D-19	D-20
D	146D 146E	146F	147	148 148A	148B 148C	148D 149	150 150A	151	152	152A	152B	153	154	154A 155	156 157	157A 157B	158 159	160 160A	161	162 163
	E-1	E-2	E-3	E-4	E-5	E-6	E-7	E-8	E-9	E-10	E-11	E-12	E-13	E-14	E-15	E-16	E-17	E-18	E-19	E-20
E	164	165	165B	166	167	168	164	190 191	192 193	194	195	196	196A	196B 196C	196C-1 196C-2	196D	196E	196F	197	198
	F-1	F-2	F-3	F-4	F-5	F-6	F-7	F-8	F-9	F-10	F-11	F-12	F-13	F-14	F-15	F-16	F-17	F-18	F-19	F-20
F	198A	198B	198C	198D	199	180 180A	181	182 182A	183	184	185									
	G-1	G-2	G-3	G-4	G-5	G-6	G-7	G-8	G-9	G-10	G-11	G-12	G-13	G-14	G-15	G-16	G-17	G-18	G-19	G-20
G																				
	H-1	H-2	H-3	H-4	H-5	H-6	H-7	H-8	H-9	H-10	H-11	H-12	H-13	H-14	H-15	H-16	H-17	H-18	H-19	H-20
H																				
	I-1	I-2	I-3	I-4	I-5	I-6	I-7	I-8	I-9	I-10	I-11	I-12	I-13	I-14	I-15	I-16	I-17	I-18	I-19	I-20
I																				
	J-1	J-2	J-3	J-4	J-5	J-6	J-7	J-8	J-9	J-10	J-11	J-12	J-13	J-14	J-15	J-16	J-17	J-18	J-19	J-20
J																				

INHALTSVERZEICHNIS

Dieselmotor (Seite 14)

Bezeichnung	Seite
Abziehbilder	183
Dekompressionshebel	33
Einspritzpumpengehäuse	34
Entlüfter	19
Gasgestänge	34
Kolben	32
Kraftstoffilter	39
Kraftstofförderpumpe und Filter	38
Kraftstoffventile und Leitungen	41
Krümmer	19
Kühlernetz	14
Kühlerschutz	16
Kurbellager	31
Kurbelwelle	30
Luftreiniger	18
Motorblock und Deckel	24
Nockenwelle	32
Öldruckmesser	44
Ölkühler	42
Pleuel	32
Regler	34
Reglerzahnstange	34
Riemenspanner	17
Sauglüfter	16
Schmierfilter	47
Schmierpumpe	43
Schwungscheibe	31
Steuerantrieb	37
Technische Daten	184
Ventilsteuerung	20
Wärmemesser	44
Wartungsmesser	48
Wasserpumpe	17
Werkzeuge	181
Zylinderkopf	20

Startermotor (Seite 49)

Anreisstarter	64
Aufhängung	49
Bremsgestänge	65
Gasgestänge	58
Kolben	55
Kraftstoffanlage	57
Krümmer	59
Kupplung und Bremse	66
Kupplungsgestänge	65
Kurbelwelle	54
Luftklappengestänge	58
Luftreiniger	59
Motorblock und Deckel	52
Nockenwelle und Regler	55
Pleuel	55
Schmierfilter	57
Schmierpumpe	56
Starterritzel	67
Starterritzelgestänge	65
Ventilsteuerung	50
Vergaser	58
Wasserleitungen	49
Zündanlage	61
Zündmagnet	62
Zylinderkopf	50

INDEX

FICHE 1 OF 2
PAGES 1 THRU 101B

FICHE 2 OF 2
PAGES 102 THRU 185

Diesel motor Yellow Attachments 44A1859- 44A13091 2012 10-78

UE 35628F

	A-1	A-2	A-3	A-4	A-5	A-6	A-7	A-8	A-9	A-10	A-11	A-12	A-13	A-14	A-15	A-16	A-17	A-18	A-19	A-20	
A	index									index	102	102-1	102A	102B	102C	103	104	104A	105	106	A
	B-1	B-2	B-3	B-4	B-5	B-6	B-7	B-8	B-9	B-10	B-11	B-12	B-13	B-14	B-15	B-16	B-17	B-18	B-19	B-20	
B	107	108	108A	109	110	110A	110B	111	112	113	114 115	115B	116	116A	117	118 118A	118B 119	120	121	122 123	B
	C-1	C-2	C-3	C-4	C-5	C-6	C-7	C-8	C-9	C-10	C-11	C-12	C-13	C-14	C-15	C-16	C-17	C-18	C-19	C-20	
C	124 125	126	127	128	129	130 131	132 133	134 135	136 137	138 139	140	141	142	143	144	145	146	146A	146B	146C	C
	D-1	D-2	D-3	D-4	D-5	D-6	D-7	D-8	D-9	D-10	D-11	D-12	D-13	D-14	D-15	D-16	D-17	D-18	D-19	D-20	
D	146D 146E	146F	147	148 148A	148B 148C	148D 149	150 150A	151	152	152A	152B	153	154	154A 155	156 157	157A 157B	158 159	160 160A	161	162 163	D
	E-1	E-2	E-3	E-4	E-5	E-6	E-7	E-8	E-9	E-10	E-11	E-12	E-13	E-14	E-15	E-16	E-17	E-18	E-19	E-20	
E	164	165	165B	166	167	168	169	190 191	192 193	194	195	196	196A	196B 196C	196C-1 196C-2	196D	196E	196F	197	198	E
	F-1	F-2	F-3	F-4	F-5	F-6	F-7	F-8	F-9	F-10	F-11	F-12	F-13	F-14	F-15	F-16	F-17	F-18	F-19	F-20	
F	198A	198B	198C	198D	199	180 180A	181	182 182A	183	184	185										F
	G-1	G-2	G-3	G-4	G-5	G-6	G-7	G-8	G-9	G-10	G-11	G-12	G-13	G-14	G-15	G-16	G-17	G-18	G-19	G-20	
G																					G
	H-1	H-2	H-3	H-4	H-5	H-6	H-7	H-8	H-9	H-10	H-11	H-12	H-13	H-14	H-15	H-16	H-17	H-18	H-19	H-20	
H																					H
	I-1	I-2	I-3	I-4	I-5	I-6	I-7	I-8	I-9	I-10	I-11	I-12	I-13	I-14	I-15	I-16	I-17	I-18	I-19	I-20	
I																					I
	J-1	J-2	J-3	J-4	J-5	J-6	J-7	J-8	J-9	J-10	J-11	J-12	J-13	J-14	J-15	J-16	J-17	J-18	J-19	J-20	
J																					J

Kupplung, Getriebe und Laufwerk

(Seite 69)

Bezeichnung	Seite
Ausgleichtraverse	93
Batteriekasten	100
Bremsen	86
Endantrieb	88
Getriebe	76
Getriebegehäuse und Deckel	80
Hauptkupplung	72
Hauptkupplungsgestänge	70
Hydraulikbetätigung der Lenkkupplungen	82
Kraftstoffanlage	100
Kraftübertragung	69
Laufkette	94
Laufrolle	95
Laufwerkrahmen	97
Laufwerkrahmenverkleidung	96
Leitrad	92
Lenkkupplung	85
Lenkkupplungsgestänge	84
Motorhaube und Armaturenbrett	98
Schutzbleche	99
Schaltgestänge	70
Sitzpolster	101
Stützrolle	96
Zughaken	101

Zubehör

(Seite 102)

Abschliessbare Tankkappe (Haupttank)	111
Abschliessbare Kappe (Ölfüllstutzen)	112
Abschliessbare Tankkappe (Startermotor)	111
Ätherstarthilfe	168
Anlasser, elektrisch	146
Antriebsritzellager, vorne	174
Auspuffdämpfer	110
Beleuchtungsanlage, 12 Volt	129
Beleuchtungsanlage, 24 Volt	138
Drucklüfter	102
Entfrostergebläse	121
Fahrerhaus	122
Fahrerhausheizung	126
Frontzughaken	104
Funkenfänger	110
Getriebeumbaugruppe	175
Handkraftstoffpumpe	166
Kettenspanner, hydraulisch	179
Kraftstoffanlage	168
Kühlerschutz mit Scharnieren	103
Kurbelgehäuseschutz	105
Laufkette	178
Laufrollenschutz	177
Leitrad	176
Lüfter, umkehrbar	102
Luftklappen- und Gashebelgestänge	165
Luftsaugrohrverlängerung	108
Motorseitenverkleidung	106
Regenfänger	109

Regenhaube	108
Scheibenwischer	121
Schmiersystem für Tellerradwelle	170
Sitzgurt	169
Sondergetriebe	172
Strassenplatten	176
Turbolader	113
Vorabscheider	107
Vorreinigerschutz	107
Werkzeuge	181
Wetterdach	126
Wetterdachplane	124
Zughaken, unstarr	104

INDEX

FICHE 1 OF 2
PAGES 1 THRU 101B

FICHE 2 OF 2
PAGES 102 THRU 185

Wheel Tractor Yellow Attachments 44A16859- 44A13091 2012 10-98
UE35628F

A-1	A-2	A-3	A-4	A-5	A-6	A-7	A-8	A-9	A-10	A-11	A-12	A-13	A-14	A-15	A-16	A-17	A-18	A-19	A-20	
Index									Index	102	102-1	102A	102B	102C	103	104	104A	105	106	A
B-1	B-2	B-3	B-4	B-5	B-6	B-7	B-8	B-9	B-10	B-11	B-12	B-13	B-14	B-15	B-16	B-17	B-18	B-19	B-20	
109	108	108A	109	110	110A	110B	111	112	113	114 115	115B	116	116A	117	118 118A	118B 119	120	121	122 123	B
C-1	C-2	C-3	C-4	C-5	C-6	C-7	C-8	C-9	C-10	C-11	C-12	C-13	C-14	C-15	C-16	C-17	C-18	C-19	C-20	
124 125	126	127	128	129	130 131	132 133	134 135	136 137	138 139	140	141	142	143	144	145	146	146A	146B	146C	C
D-1	D-2	D-3	D-4	D-5	D-6	D-7	D-8	D-9	D-10	D-11	D-12	D-13	D-14	D-15	D-16	D-17	D-18	D-19	D-20	
146D 146E	146F	147	148 148A	148B 148C	148D 149	150 150A	151	152	152A	152B	153	154	154A 155	156 159	157A 159B	158 159	160 160A	161	162 163	D
E-1	E-2	E-3	E-4	E-5	E-6	E-7	E-8	E-9	E-10	E-11	E-12	E-13	E-14	E-15	E-16	E-17	E-18	E-19	E-20	
164	165	165B	166	167	168	169	190 191	192 193	194	195	196	196A	196B 196C	196C-1 196C-2	196D	196E	196F	197	198	E
F-1	F-2	F-3	F-4	F-5	F-6	F-7	F-8	F-9	F-10	F-11	F-12	F-13	F-14	F-15	F-16	F-17	F-18	F-19	F-20	
198A	198B	198C	198D	199	180 180A	181	182 182A	183	184	185										F
G-1	G-2	G-3	G-4	G-5	G-6	G-7	G-8	G-9	G-10	G-11	G-12	G-13	G-14	G-15	G-16	G-17	G-18	G-19	G-20	
																				G
H-1	H-2	H-3	H-4	H-5	H-6	H-7	H-8	H-9	H-10	H-11	H-12	H-13	H-14	H-15	H-16	H-17	H-18	H-19	H-20	
																				H
I-1	I-2	I-3	I-4	I-5	I-6	I-7	I-8	I-9	I-10	I-11	I-12	I-13	I-14	I-15	I-16	I-17	I-18	I-19	I-20	
																				I
J-1	J-2	J-3	J-4	J-5	J-6	J-7	J-8	J-9	J-10	J-11	J-12	J-13	J-14	J-15	J-16	J-17	J-18	J-19	J-20	
																				J

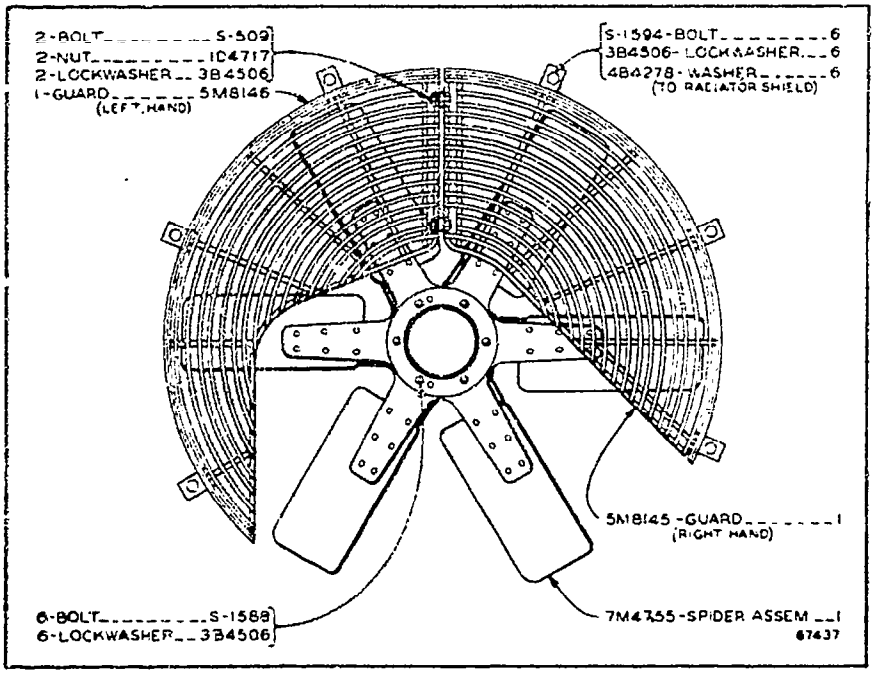

7M4756 BLOWER FAN GROUP
Serial No. 44A6857 to 44A9206 inclusive

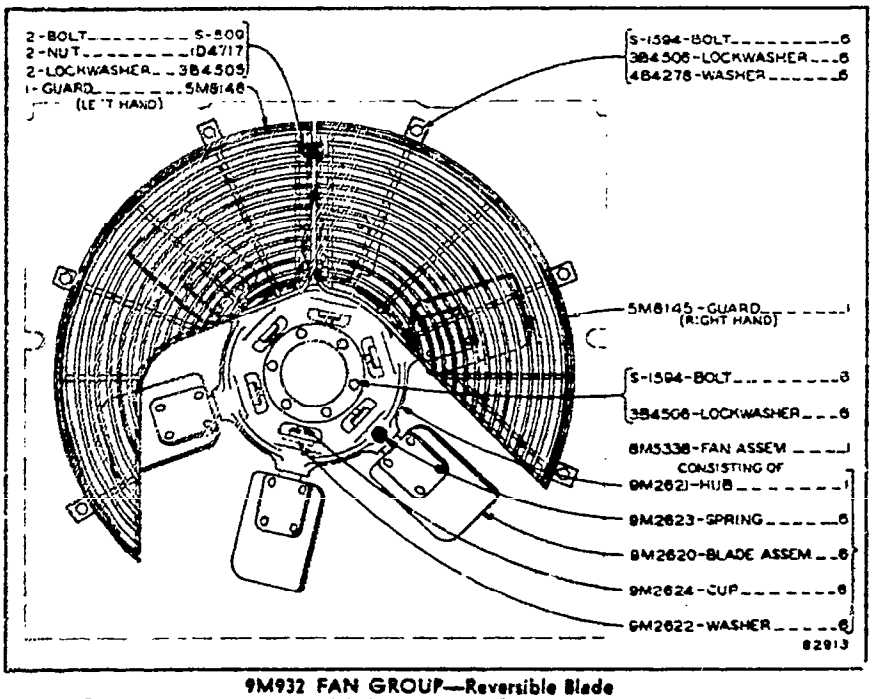

9M932 FAN GROUP—Reversible Blade
Only separate parts serviced. When complete Group is required order 154765

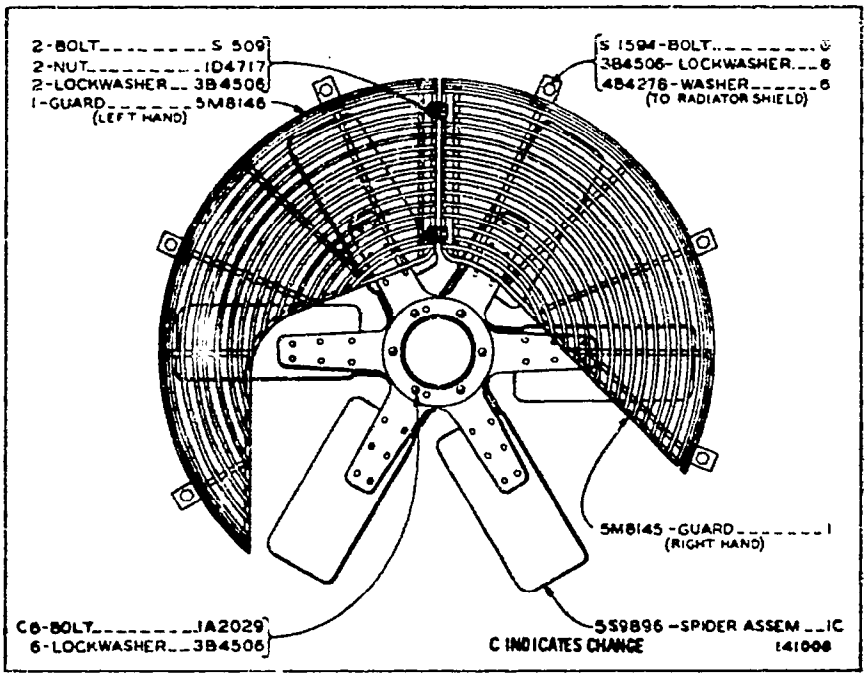

7M4756 BLOWER FAN GROUP—Type 2
Serial No. 44A6857 to 44A9206 inclusive

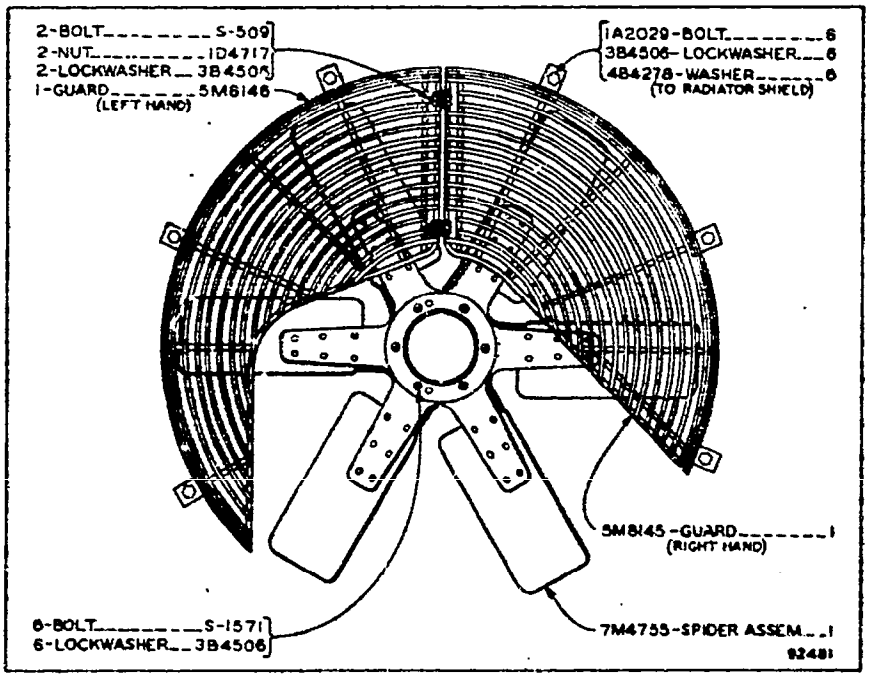

1S5001 BLOWER FAN GROUP—Type 1
Serial No. 44A9207—Up

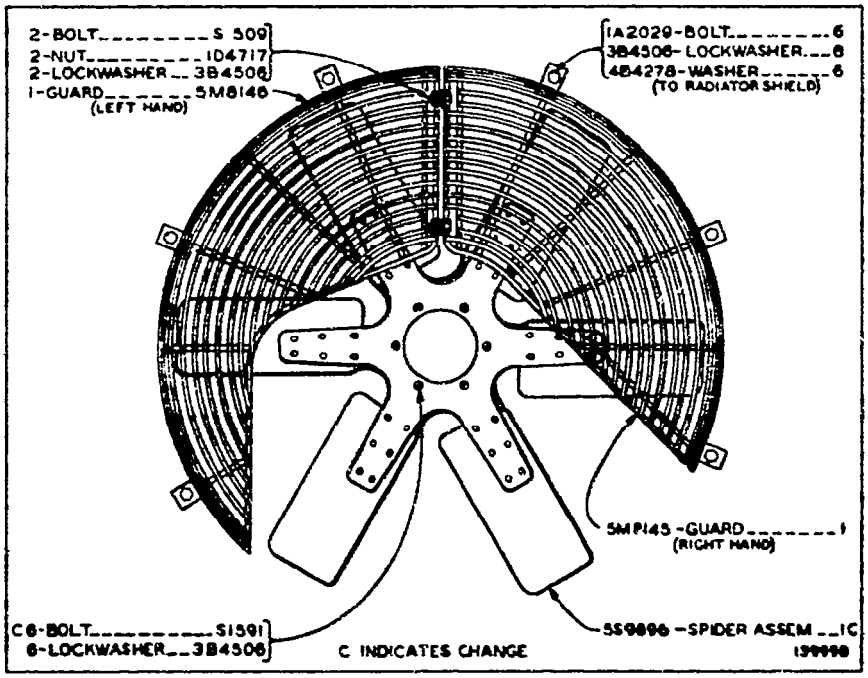

1S5001 BLOWER FAN GROUP—Type 2
Serial No. 44A9207—Up

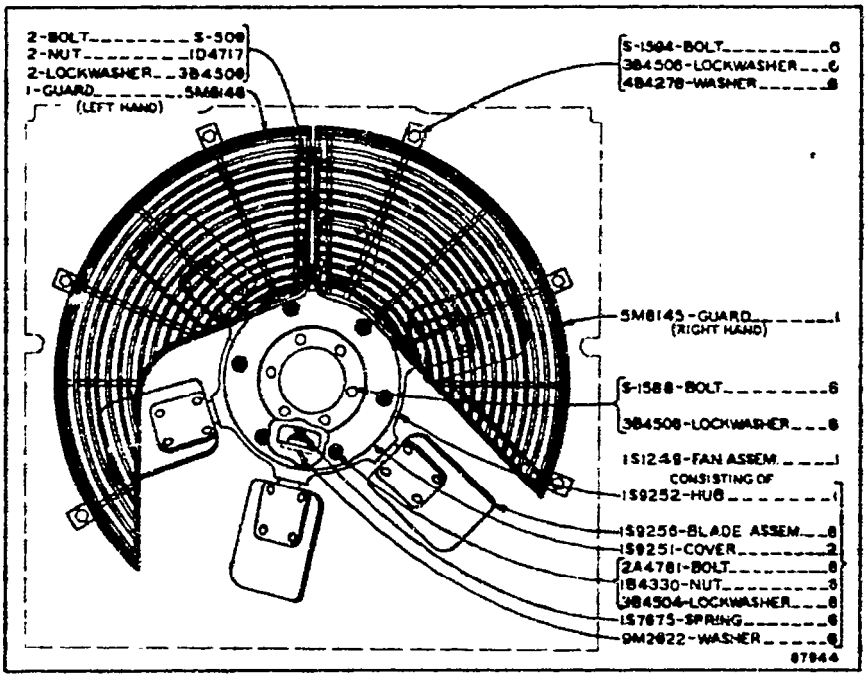

1S4785 FAN GROUP—Reversible Blade
Serial No. 44A6857 to 44A9206 inclusive

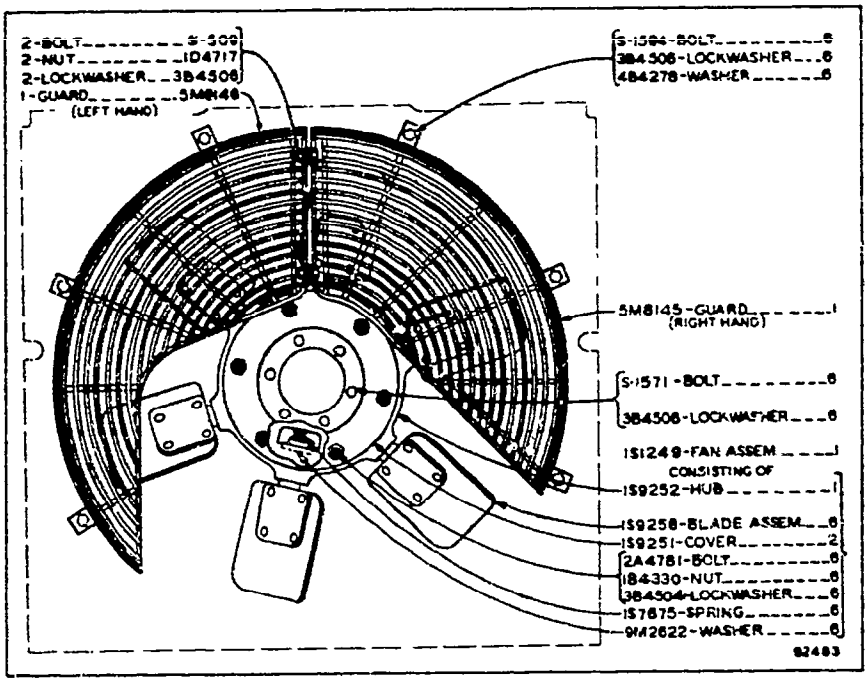

1S5009 FAN GROUP—Reversible Blade—Type 1
Serial No. 44A9207—Up

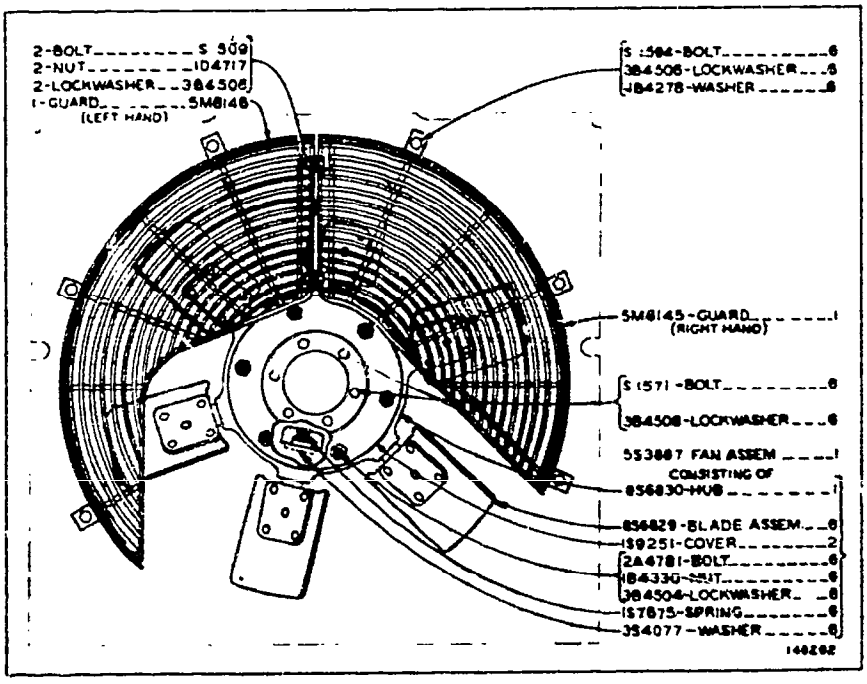

1S5009 FAN GROUP—Reversible Blade—Type 2
Serial No. 44A9207—Up

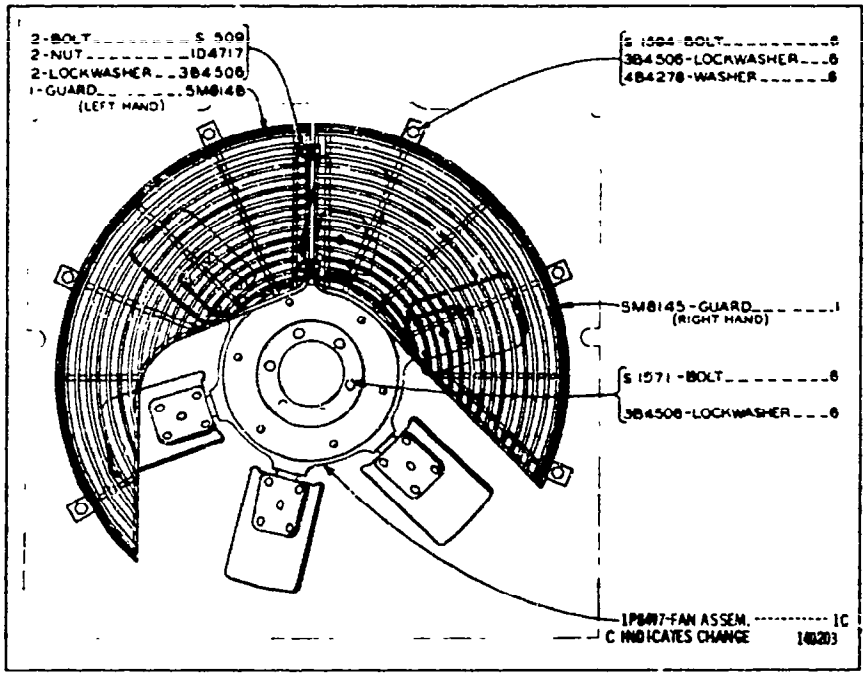

1S5009 FAN GROUP—Reversible Blade—Type 3
Serial No. 44A9207—Up

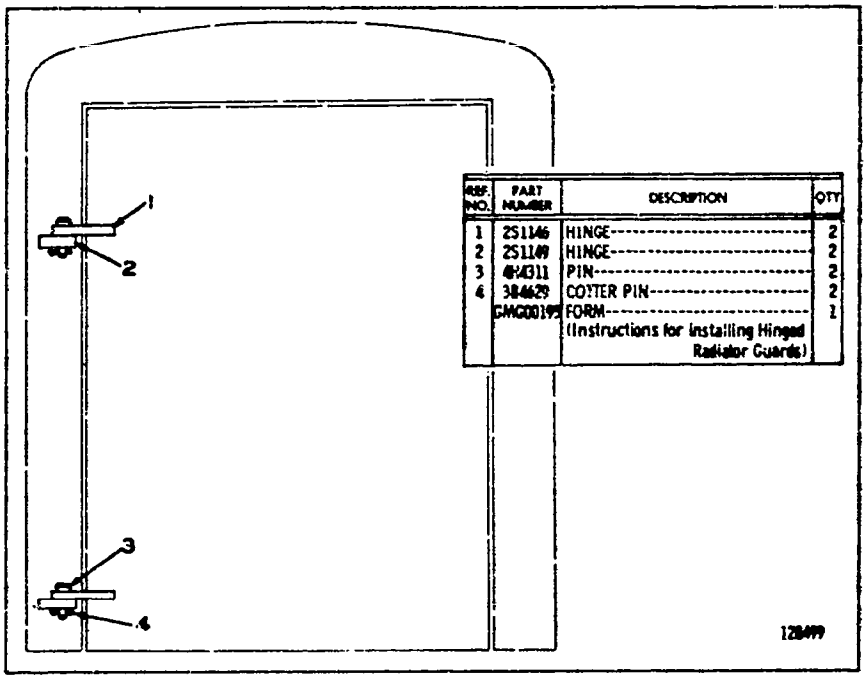

REF. NO.	PART NUMBER	DESCRIPTION	QTY
1	2S1146	HINGE	2
2	2S1149	HINGE	2
3	4H4311	PIN	2
4	384629	COTTER PIN	2
	CMG00195	FORM (Instructions for installing Hinged Radiator Guards)	1

8S7870 RADIATOR GUARD HINGE GROUP—Field installation

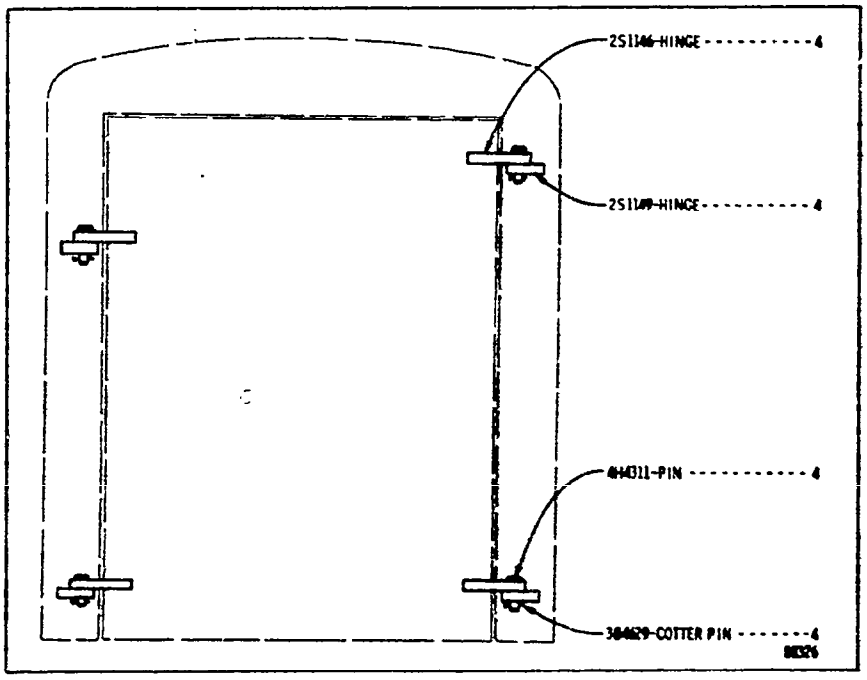

2S1163 RADIATOR GUARD HINGE GROUP

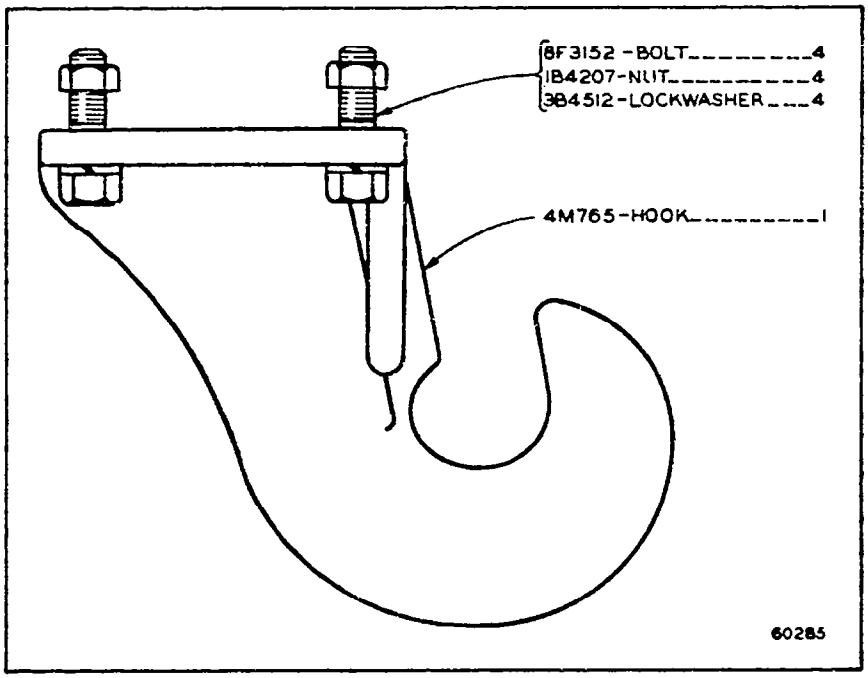

4M3001 FRONT PULL HOOK GROUP

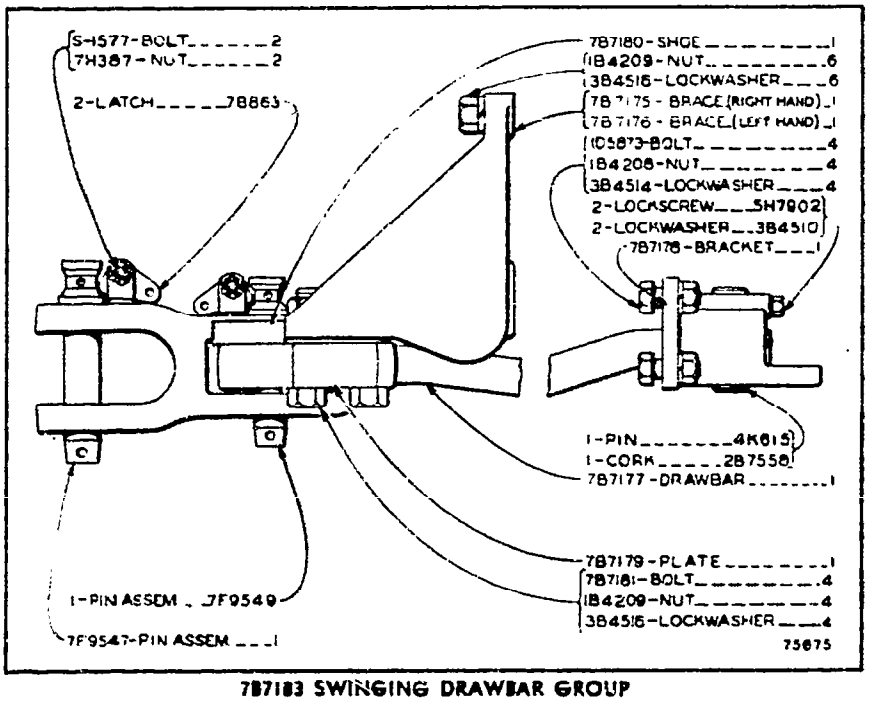

7B7183 SWINGING DRAWBAR GROUP

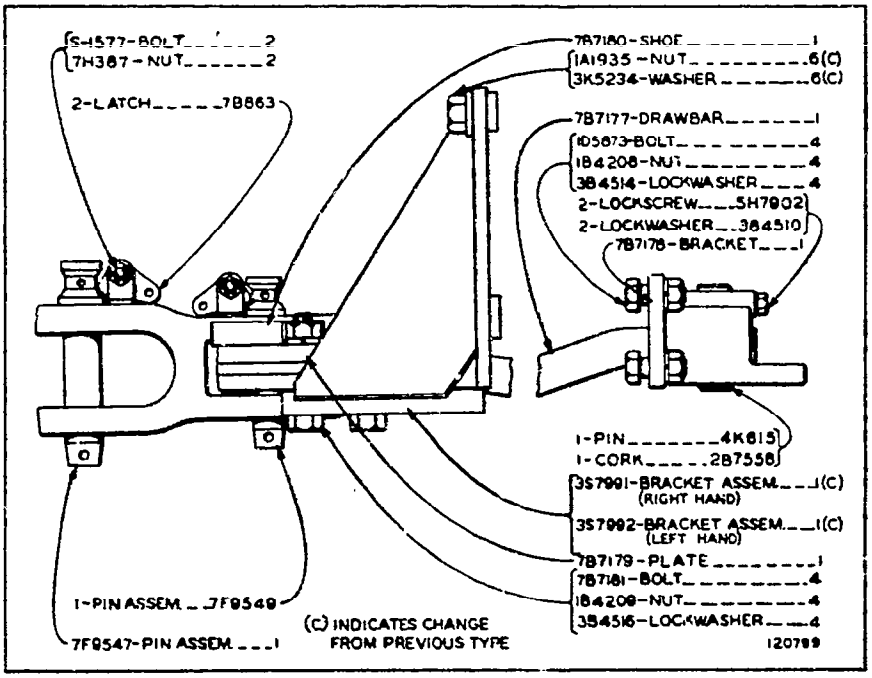

7B7183 SWINGING DRAWBAR GROUP—Type 2

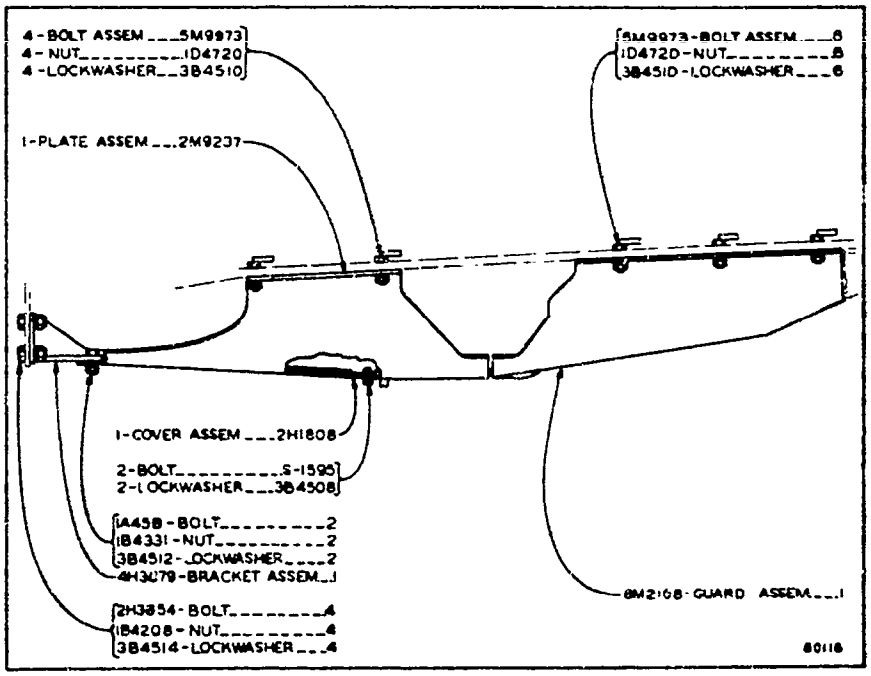

8M2169 CRANKCASE GUARD GROUP
For use without Swinging Drawbar

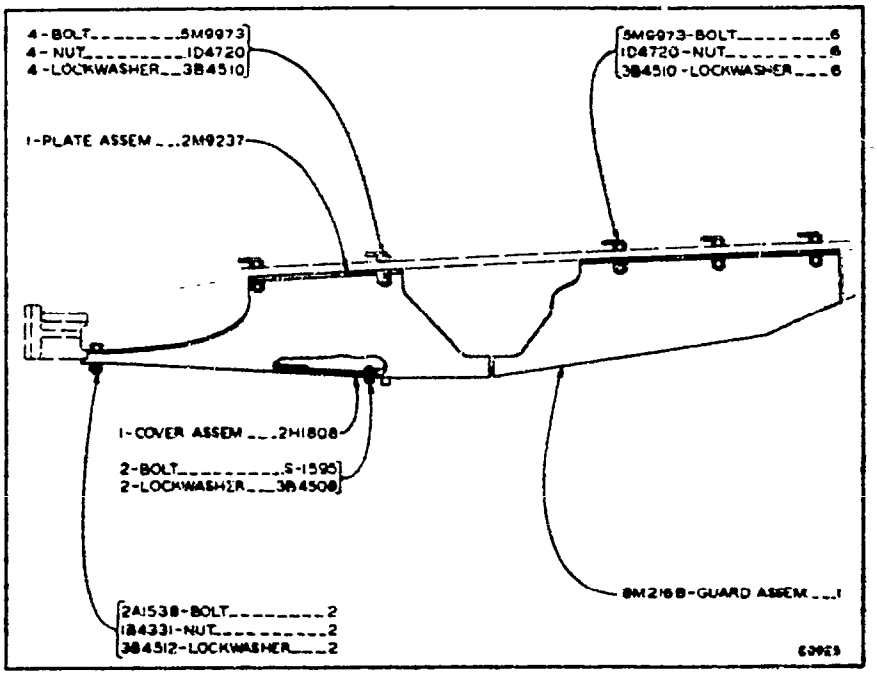

8M2170 CRANKCASE GUARD GROUP
For use with Swinging Drawbar

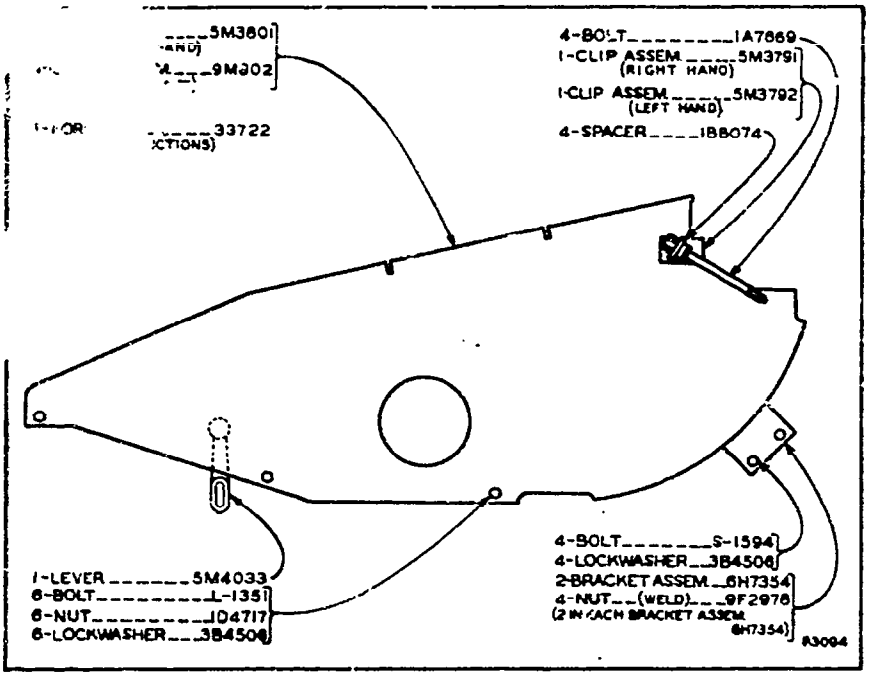

9M804 BRUSH GUARD GROUP
For use with Hydraulic Bulldozer

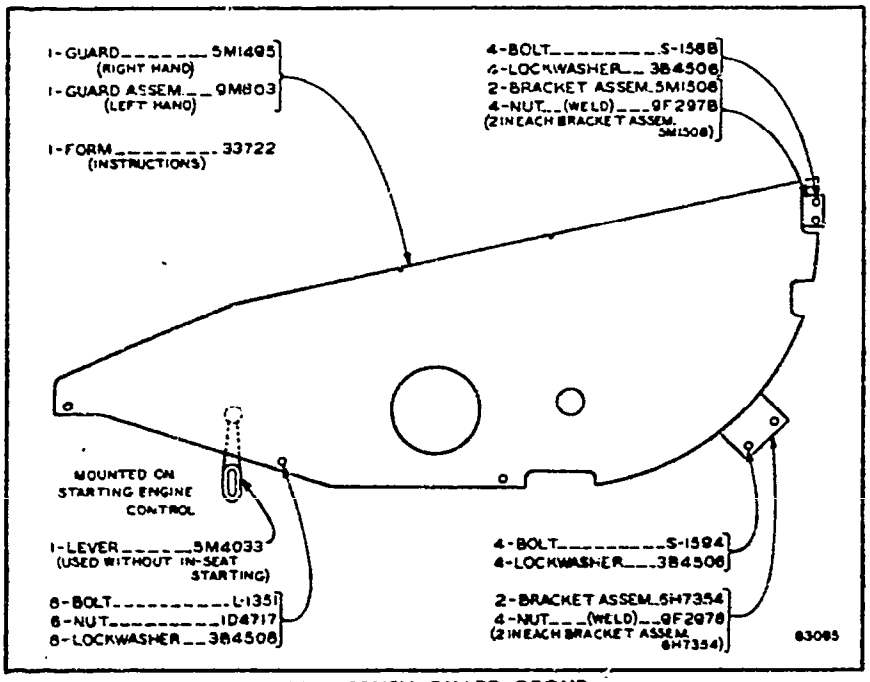

9M805 BRUSH GUARD GROUP
For use without Hydraulic Bulldozer

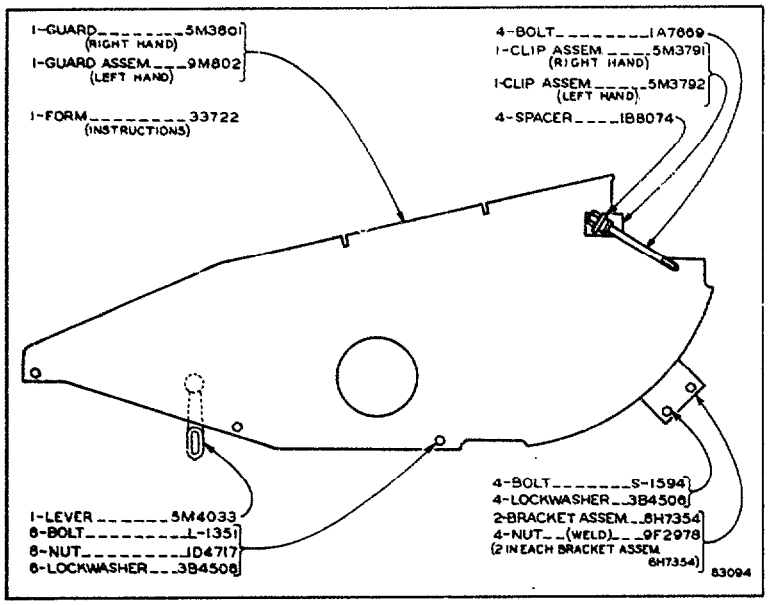

9M804 BRUSH GUARD GROUP
For use with Hydraulic Bulldozer

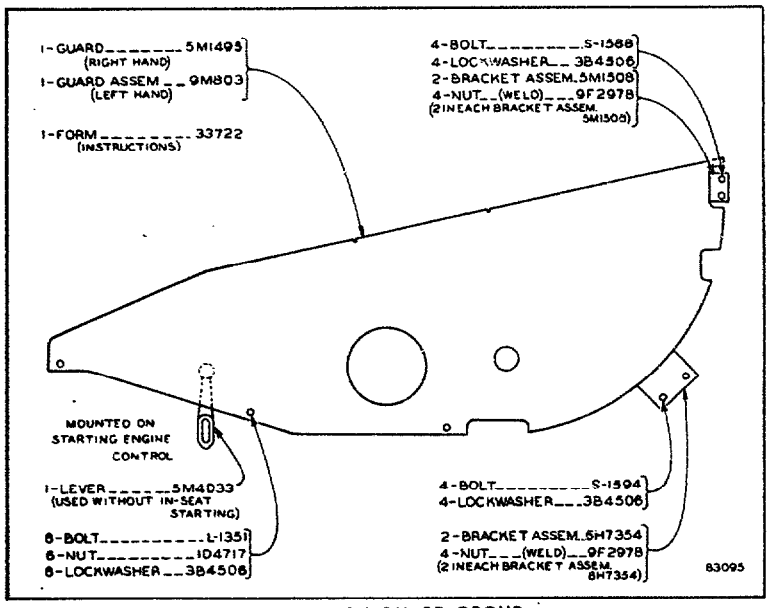

9M805 BRUSH GUARD GROUP
For use without Hydraulic Bulldozer

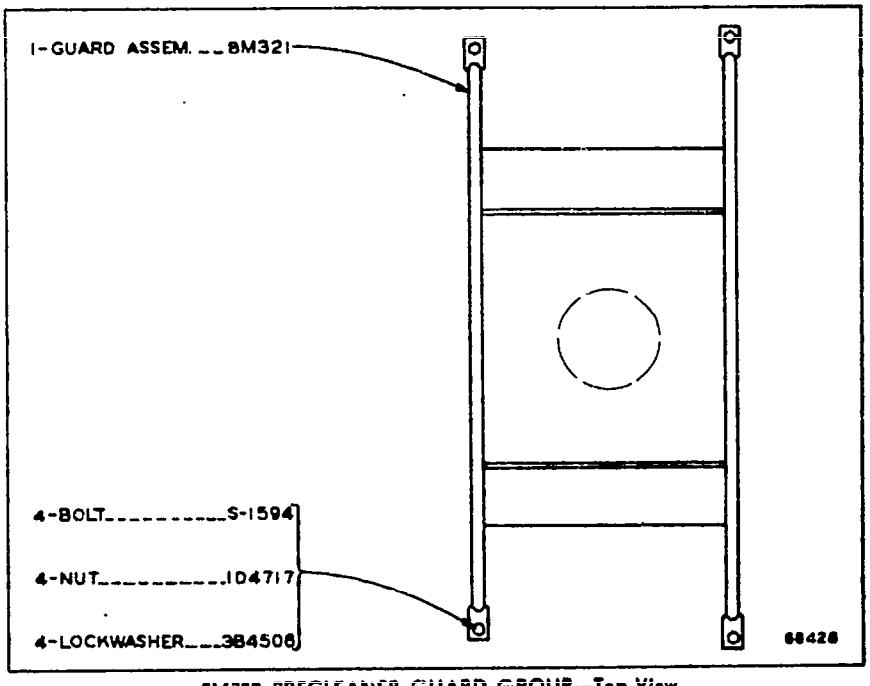

8M322 PRECLEANER GUARD GROUP—Top View

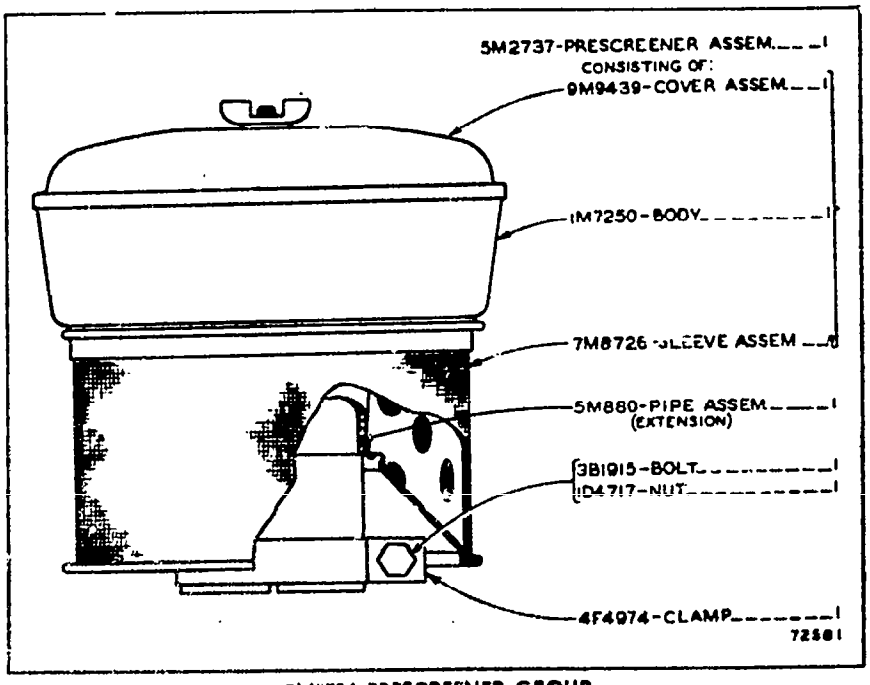

5M2734 PRESCREENER GROUP

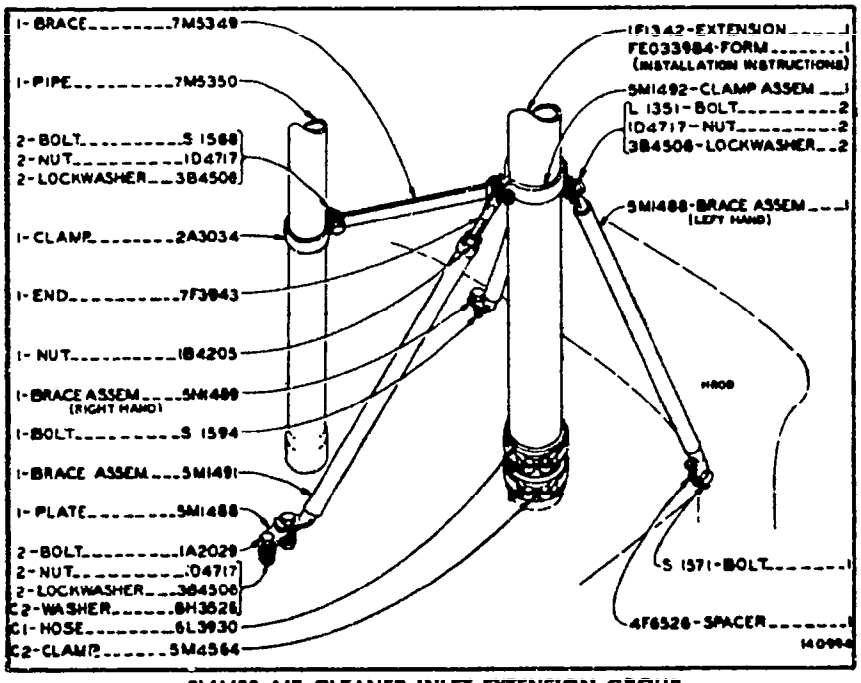

5M1490 AIR CLEANER INLET EXTENSION GROUP

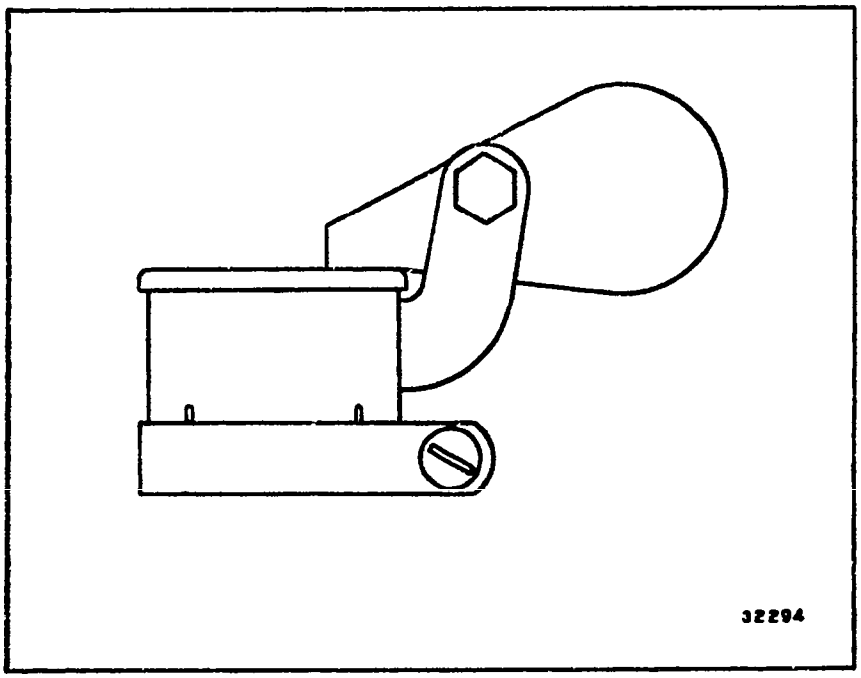

9F9961 EXHAUST RAIN CAP ASSEMBLY

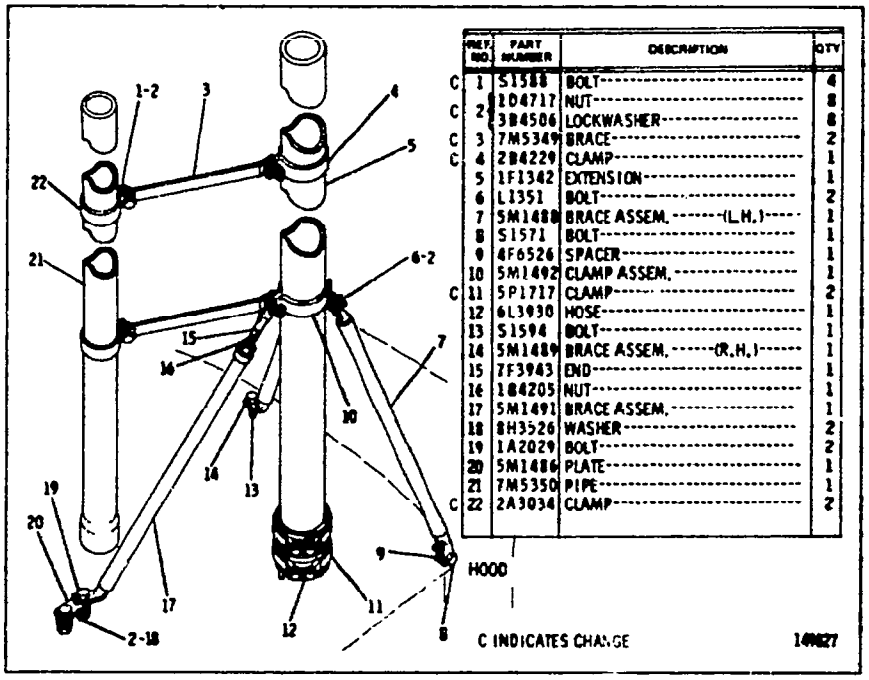

	REF. NO.	PART NUMBER	DESCRIPTION	QTY
C	1	S1588	BOLT	4
C	2	1D4717	NUT	8
		3B4506	LOCKWASHER	8
C	3	7M5349	BRACE	2
C	4	2B4229	CLAMP	1
	5	1F1342	EXTENSION	1
	6	L1351	BOLT	2
	7	5M1488	BRACE ASSEM. -------(L.H.)------	1
	8	S1571	BOLT	1
	9	4F6526	SPACER	1
	10	5M1492	CLAMP ASSEM.	1
C	11	5P1717	CLAMP	2
	12	6L3930	HOSE	1
	13	S1594	BOLT	1
	14	5M1489	BRACE ASSEM. ------(R.H.)------	1
	15	7F3943	END	1
	16	1B4205	NUT	1
	17	5M1491	BRACE ASSEM.	1
	18	8H3526	WASHER	2
	19	1A2029	BOLT	2
	20	5M1486	PLATE	1
	21	7M5350	PIPE	1
C	22	2A3034	CLAMP	2

C INDICATES CHANGE 149827

5M1490 AIR CLEANER INLET EXTENSION GROUP—Type 2

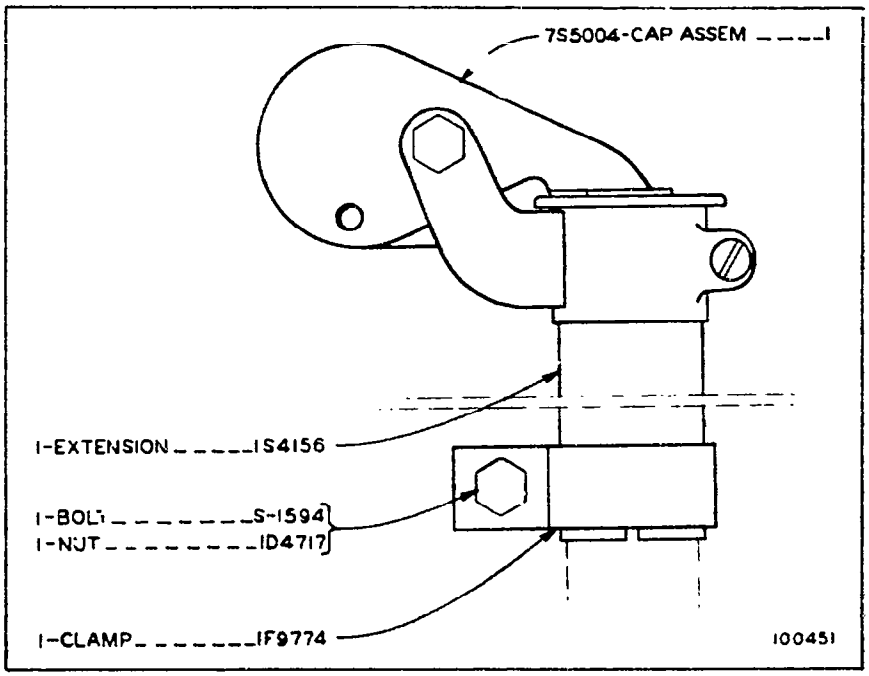

1S4155 RAIN CAP GROUP—Starting Engine

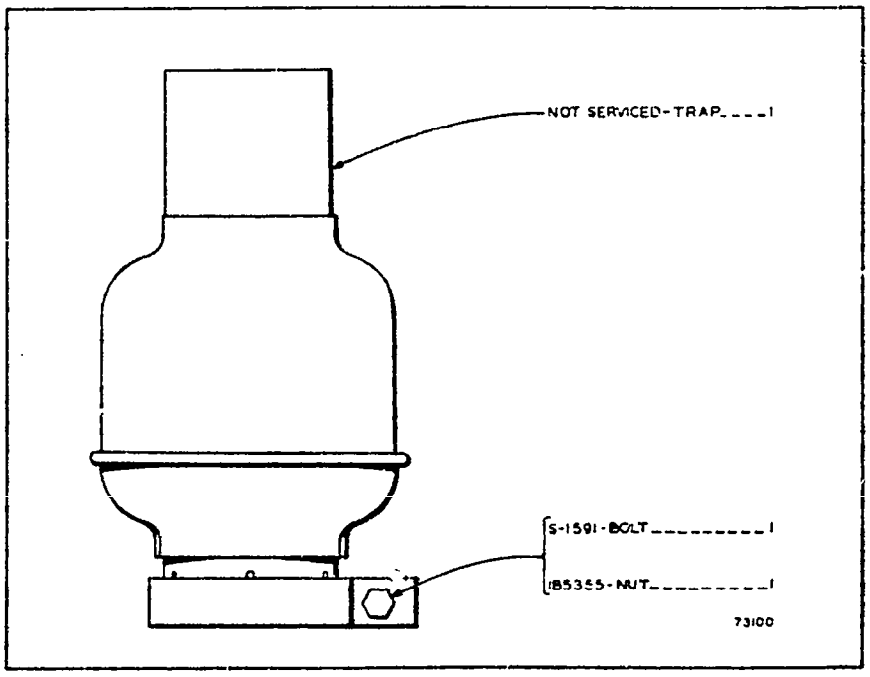

6F6522 EXHAUST RAIN TRAP GROUP

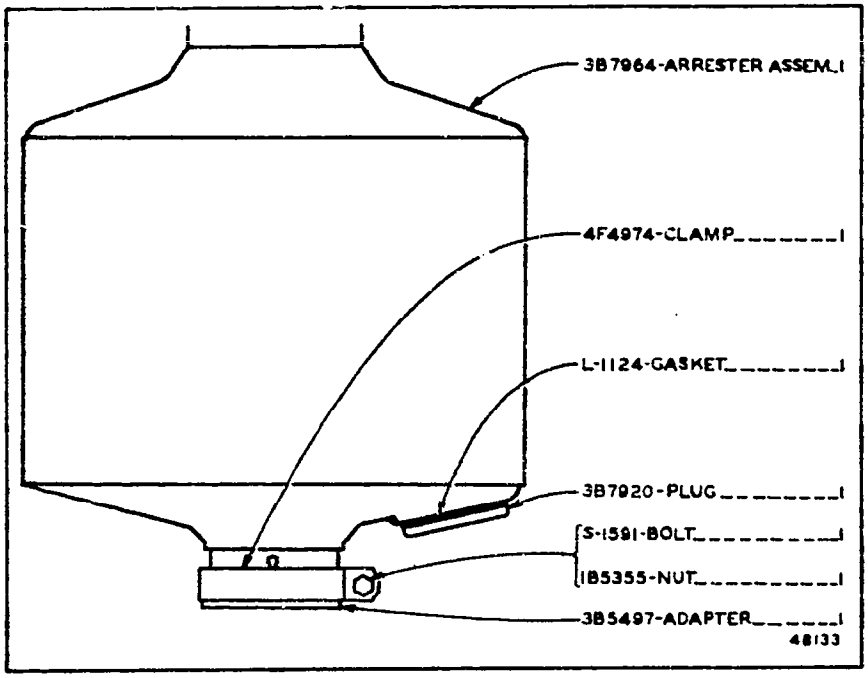

3B5498 SPARK ARRESTER GROUP

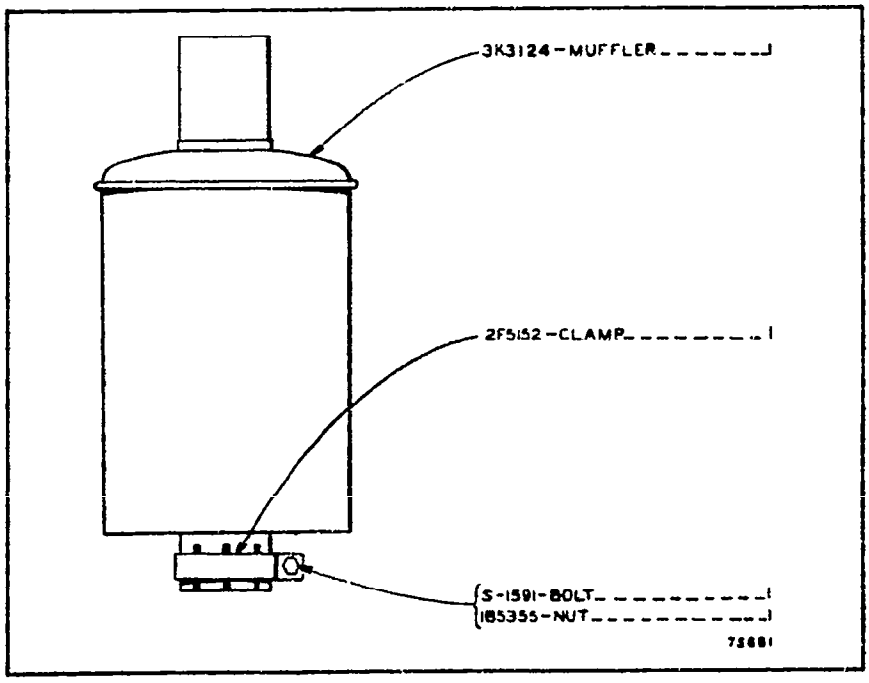

8B8206 MUFFLER GROUP

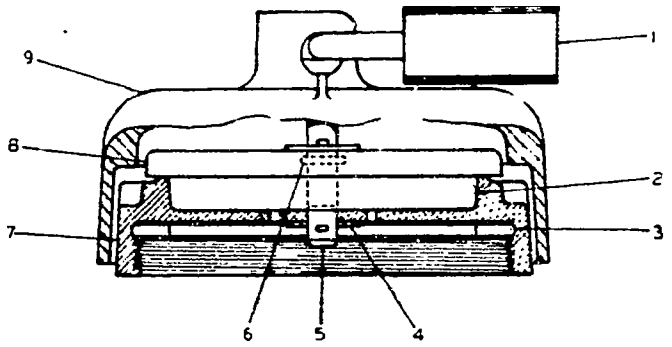

NOTE: FOR SERVICE OF PADLOCK AND KEY ORDER 8S7949 PADLOCK GROUP

▲ NOT PART OF 5S8033 CAP GROUP

REF. NO.	PART NUMBER	DESCRIPTION	QTY
1	Not Serv	PADLOCK	1
▲	8M439	KEY---------(Not Shown)---------	2
2	5S7657	FILTER	1
3	2A1763	GASKET	1
4	4J1185	SHIM	2

REF. NO.	PART NUMBER	DESCRIPTION	QTY
5	5S7651	PIN	1
	3B4505	COTTER PIN	2
6	5F9144	SEAL	1
7	5S8006	CAP	1
8	5S7646	LID	1
9	5S7998	COVER	1

113718

5S8033 PROTECTION COVER GROUP—Fuel Tank Cap—Replaces 1S6307

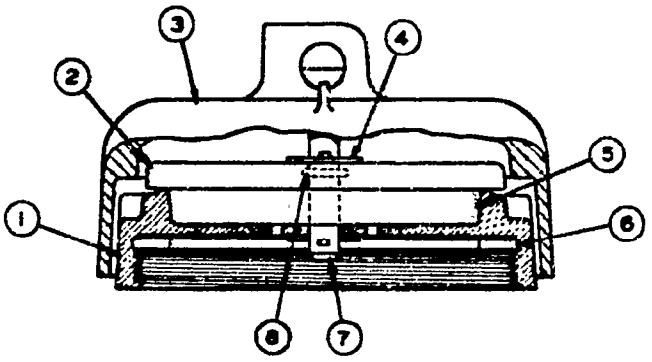

REF. NO.	PART NUMBER	DESCRIPTION	QTY
1	5S8006	CAP	1
2	5S7646	LID	1
3	5S7998	COVER	1
4	4J1185	SHIM	2
5	5S7657	FILTER	1

REF. NO.	PART NUMBER	DESCRIPTION	QTY
6	2A1763	GASKET	1
7	5S7651	PIN	1
	3B4505	COTTER PIN	2
8	5F9144	SEAL	1

124128

9S1932 COVER GROUP—Type 1
Provides Field Replacement for 2S1784 Cover Assembly

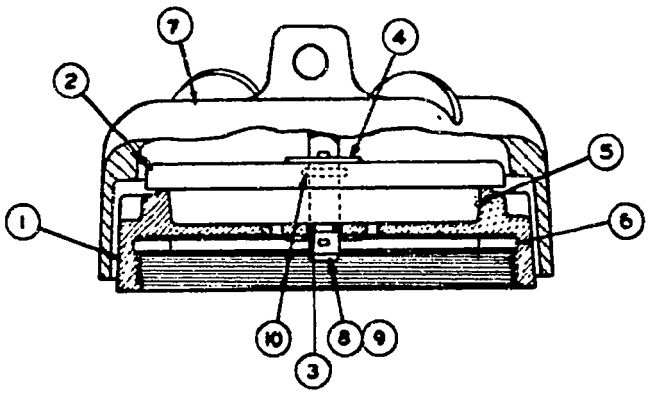

	REF. NO.	PART NUMBER	DESCRIPTION	QTY
C	1	1P8680	CAP	1
	2	5S7646	LID	2
C	3	8F9538	SEAL	1
	4	4J1105	SHIM	2
	5	5S7657	FILTER	1
C	6	2A1763	GASKET	1
	7	1P8050	COVER ASSEM.	1
		1P8052	RETAINER	1
	8	1P8679	PIN	1
	9	3B4605	COTTER PIN	2
	10	5F9144	SEAL	1

C INDICATES CHANGE

138952

9S1932 COVER GROUP—Type 2
Provides Field Replacement for 2S1784 Cover Assembly

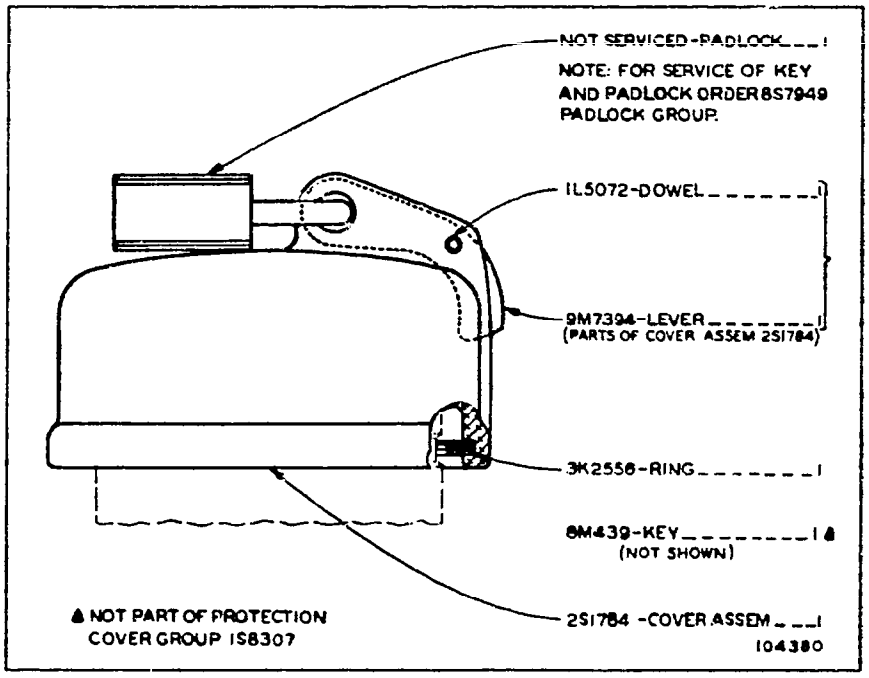

1S8307 PROTECTION COVER GROUP—Fuel Tank Cap
Only separate parts serviced
When complete Group is required order 5S8033

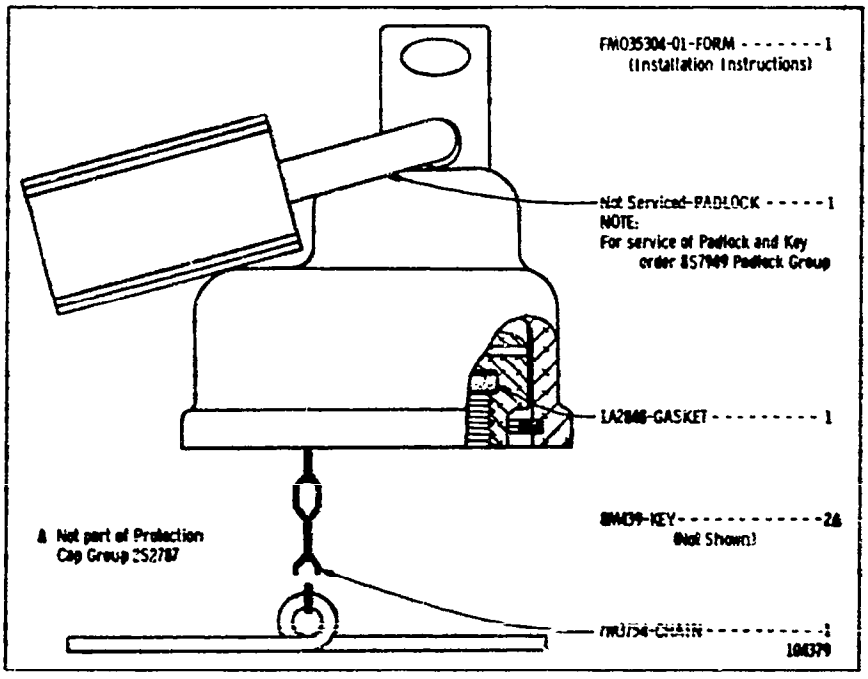

2S2787 PROTECTION CAP GROUP—Starting Engine Fuel Tank

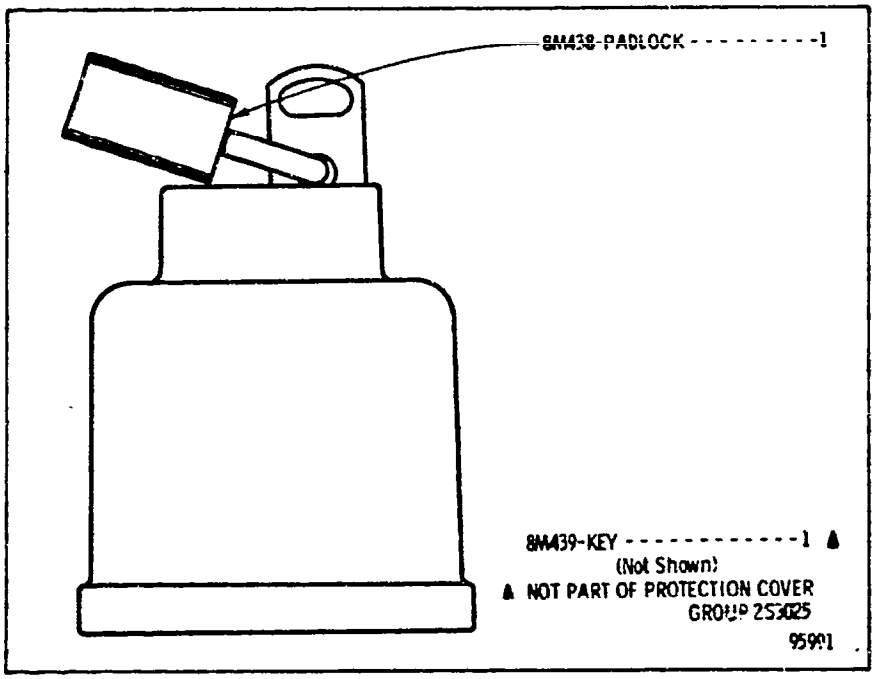

253025 PROTECTION COVER GROUP—Oil Filler Cap

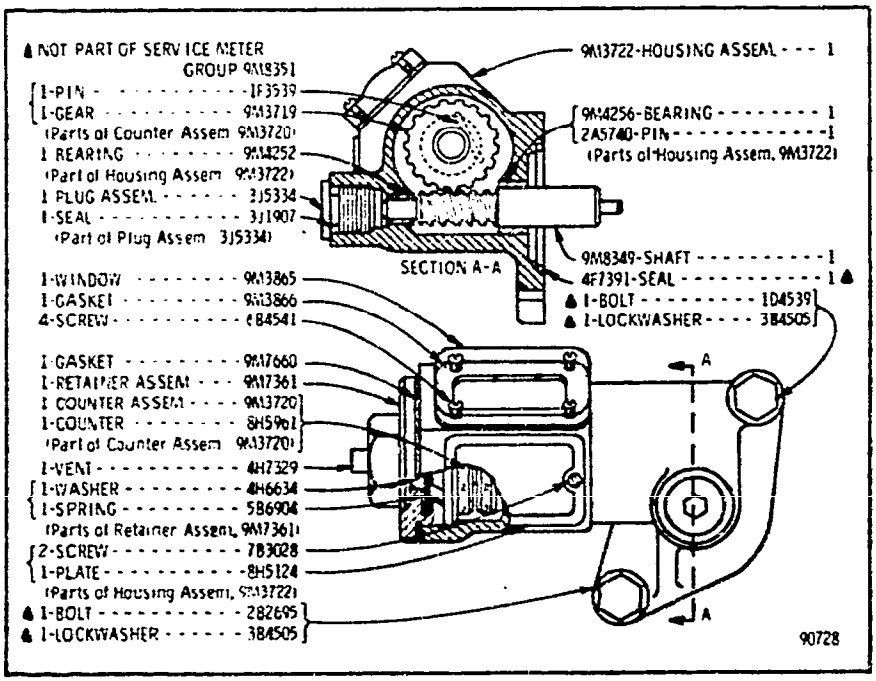

9M8351 SERVICE METER GROUP
Part of 8M6457 Turbocharger Arrangement

8M4455 For use with Electric Starting

		Consists of:	Page
1	....	Exhaust Extension	117
1	8M4262	Manifold Group	117
1	8M4263	Air Cleaner Group	119
1	8M4266	Turbocharger Assembly	114
1	9M1421	Turbocharger Oil Lines Group	116
6	7B3028	Screw—Warning Plate to Fuel Filter Base	
10	2M8411	Stud—Manifold to Head	
2	3M496	Stud—Manifold to Head	
1	4M1477	Seal—Base Assembly to Side Cover	
1	7M4904	Plate—Warning to Fuel Filter Base	
1	7M7220	Elbow—Cooler Tube to Cylinder Block	
1	8M1457	Cover Assembly—Cylinder Block Side	
1	8M3982	Hood Assembly	
1	9M517	Base Assembly—To Cover—Cylinder Block Side	
1	9M955	Cover—Cylinder Block Side	

8M6457 For use with Gasoline Starting

		Consists of:	
1	.....	Exhaust Extension	117
1	8M4262	Manifold Group	117
1	8M4263	Air Cleaner Group	119
1	8M4266	Turbocharger Assembly	114
1	8M5866	Manifold, Carburetor and Air Cleaner Group	118
1	9M1421	Turbocharger Oil Lines Group	116
1	9M8351	Service Meter Group	112
2	3B4505	Lockwasher—5/16"	
2	4B3388	Bolt—Adapter to Pump	
6	7B3028	Screw—Warning Plate to Fuel Filter Base	
1	4F7391	Seal—Adapter to Fuel Transfer Pump	
1	5L1863	Hose—Elbow	
2	5L2547	Clamp—Hose	
10	2M8411	Stud—Manifold to Head	
2	3M496	Stud—Manifold to Head	
1	4M1477	Seal—Base Assembly to Side Cover	
1	7M4904	Plate—Warning to Fuel Filter Base	
1	7M7220	Elbow—Cooler Tube to Cylinder Block	
1	8M1457	Cover Assembly—Cylinder Block Side	
1	8M3982	Hood Assembly	
1	9M517	Base Assembly—To Cover—Cylinder Block Side	
1	9M955	Cover—Cylinder Block Side	
1	9M7226	Tube—Fumes Disposal	
1	9M8353	Adapter Assembly—Service Meter	

TURBOCHARGER ARRANGEMENTS—Normalizing for Altitude Operations

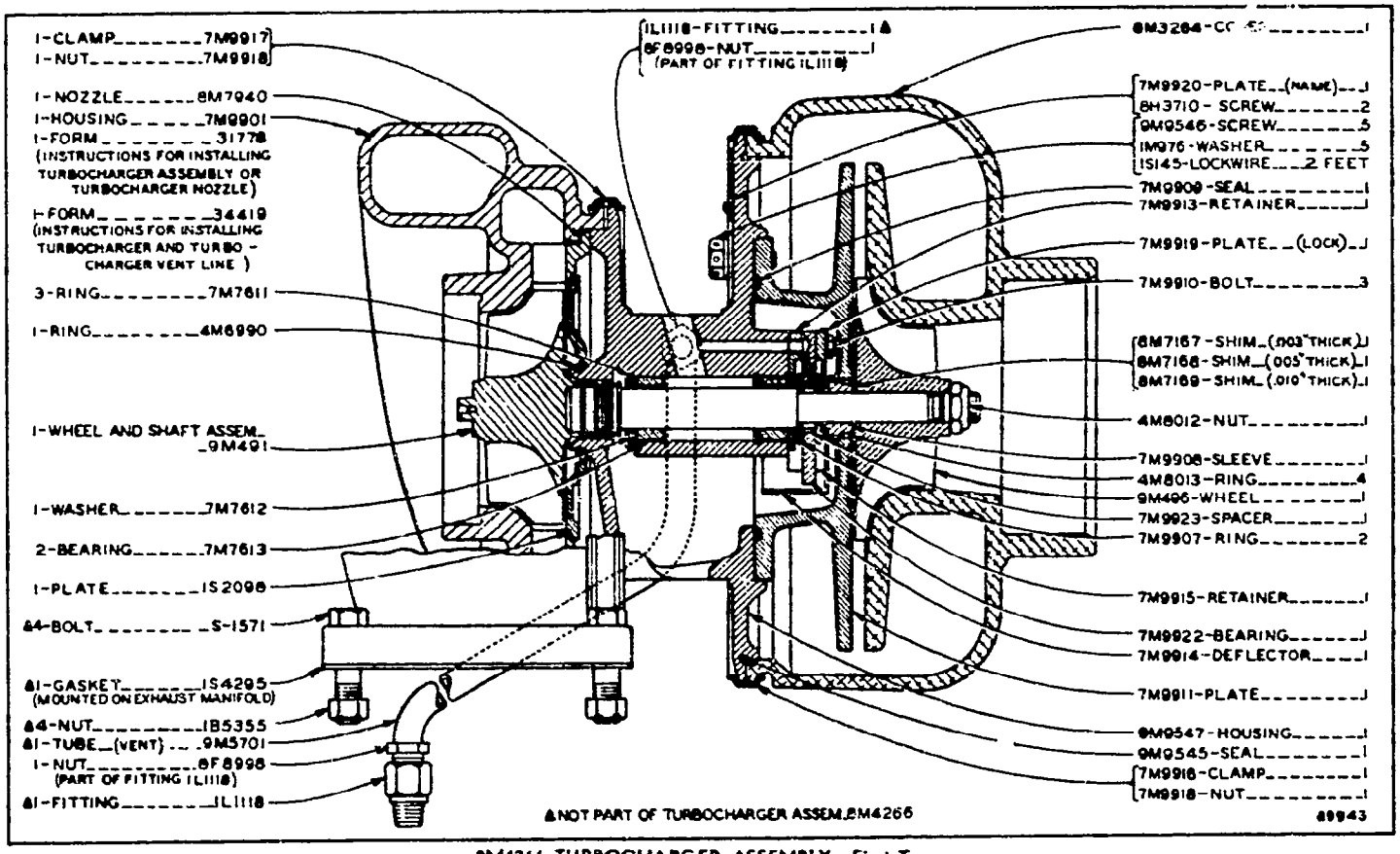

8M4266 TURBOCHARGER ASSEMBLY—First Type
Part of 8M4455 and 8M6457 Turbocharger Arrangements listed on Page 113

8M4266 TURBOCHARGER ASSEMBLY—Second Type
Part of 8M4455 and 8M6457 Turbocharger Arrangements listed on Page 113

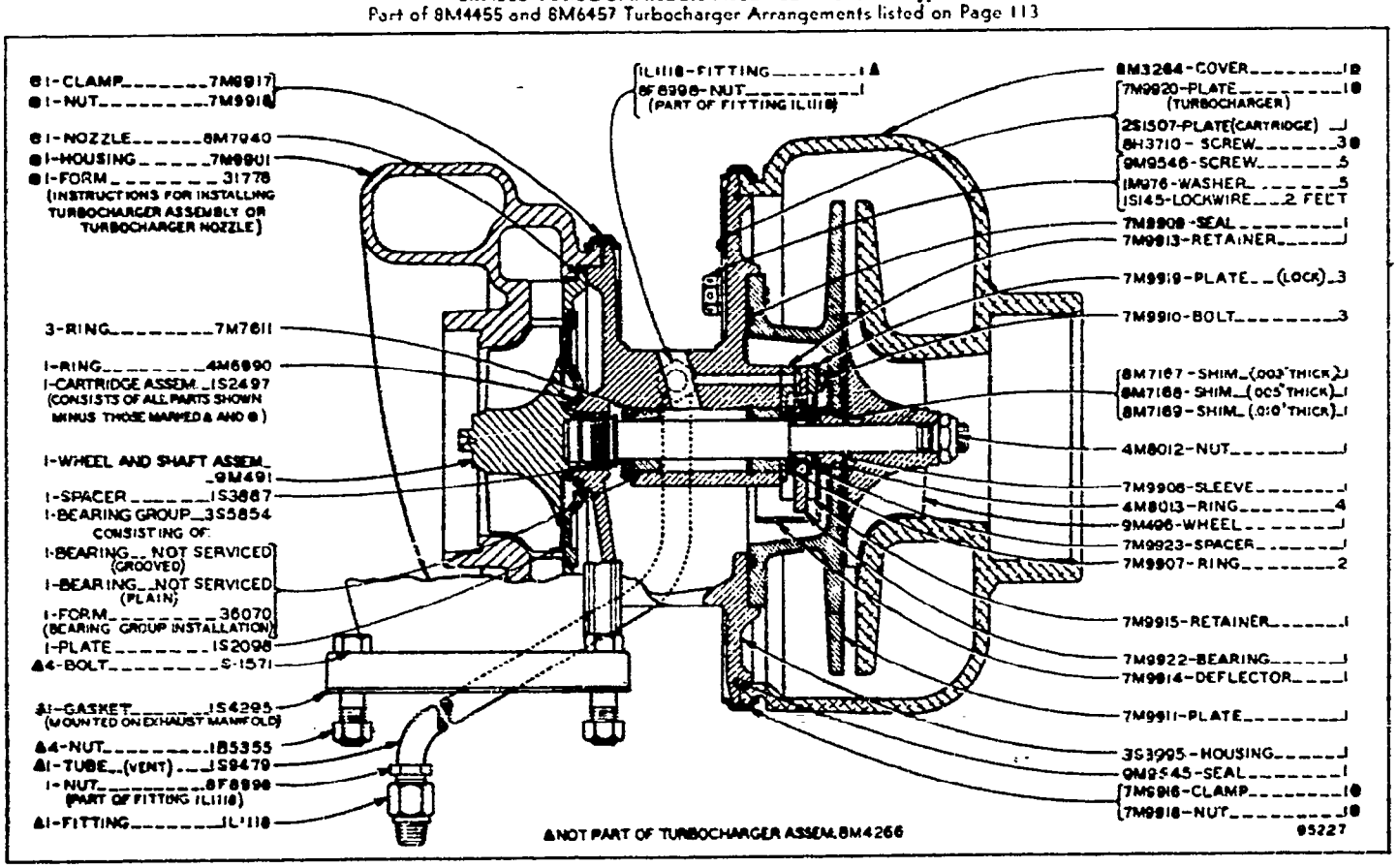

3S4259 TURBOCHARGER ASSEMBLY--REPLACES 8M4266

PART OF 8M4455 AND 8M6457 TURBOCHARGER ARRANGEMENTS LISTED ON PAGE 113

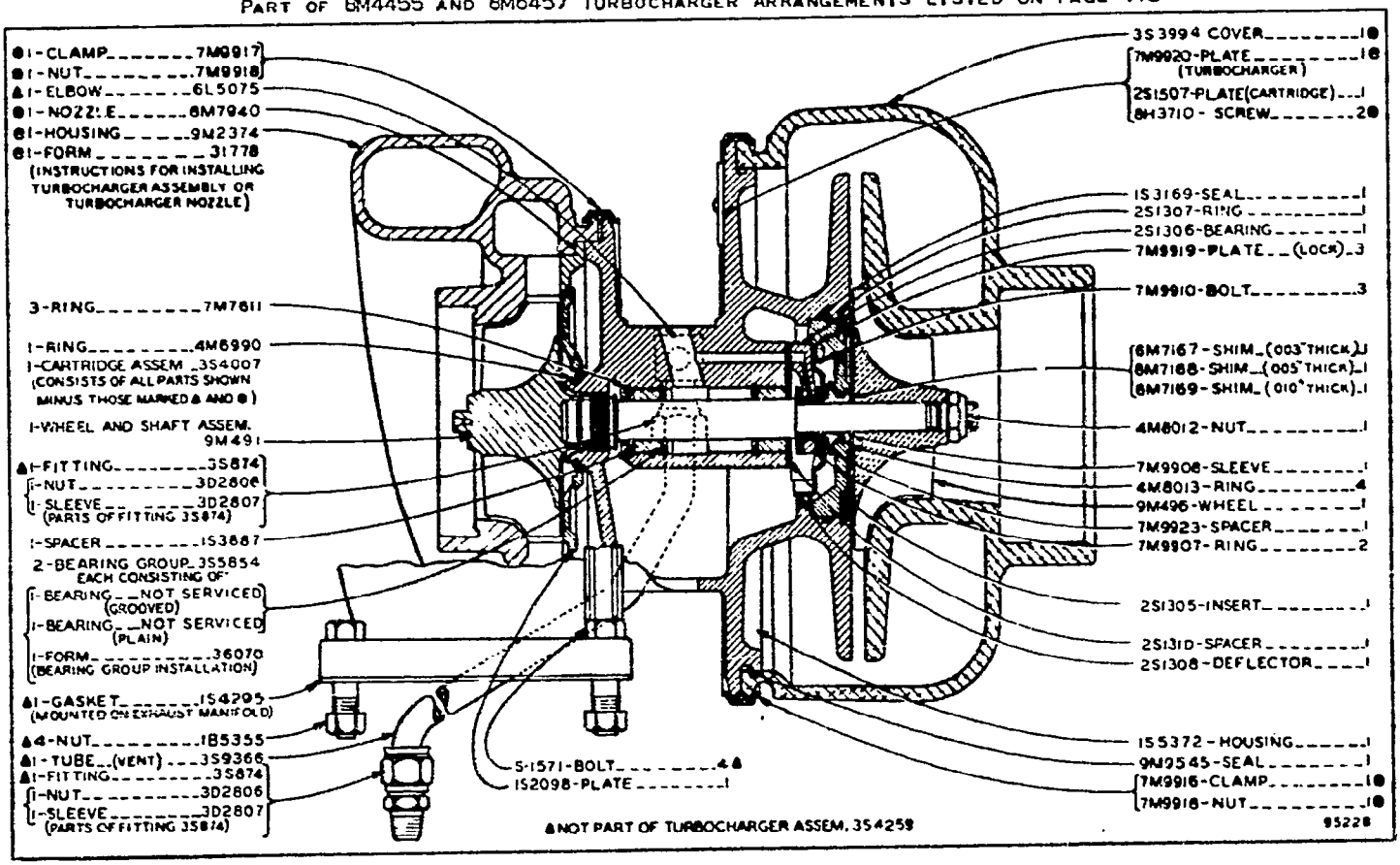

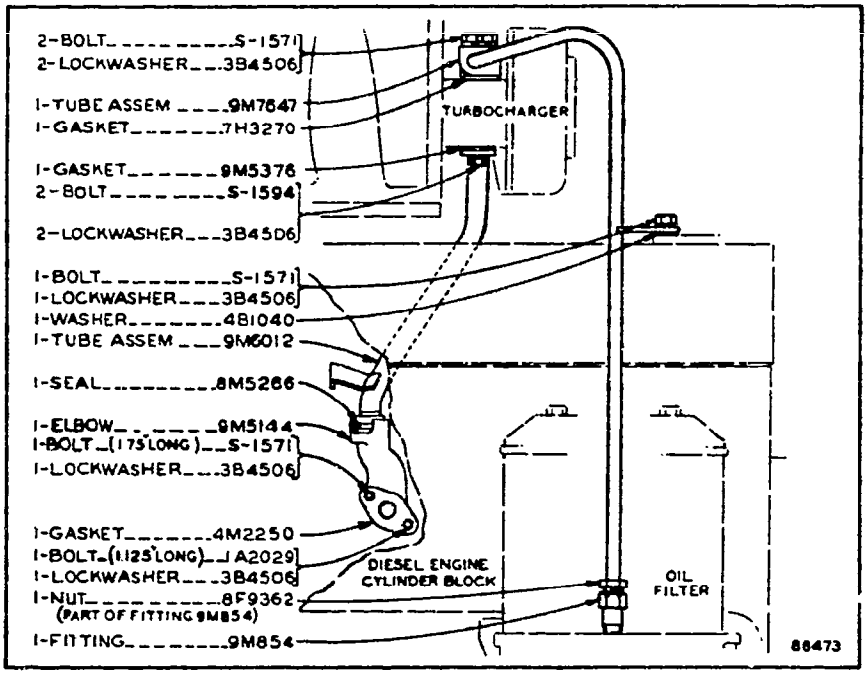

9M1421 TURBOCHARGER OIL LINES GROUP—First Type
Part of 8M4455 and 8M6457 Turbocharger Arrangements listed on Page 113

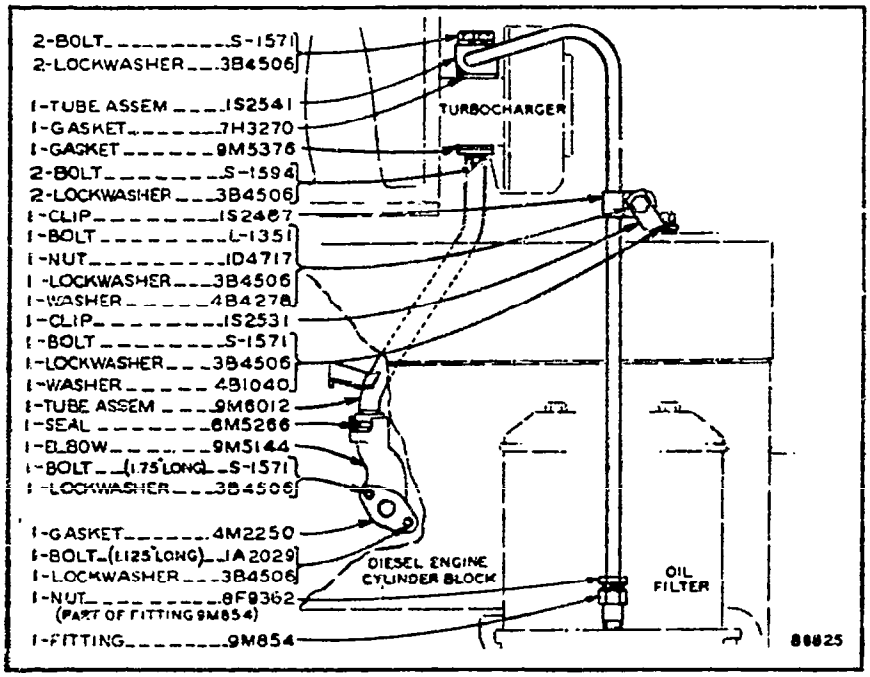

9M1421 TURBOCHARGER OIL LINES GROUP—Second Type
Part of 8M4455 and 8M6457 Turbocharger Arrangements listed on Page 113

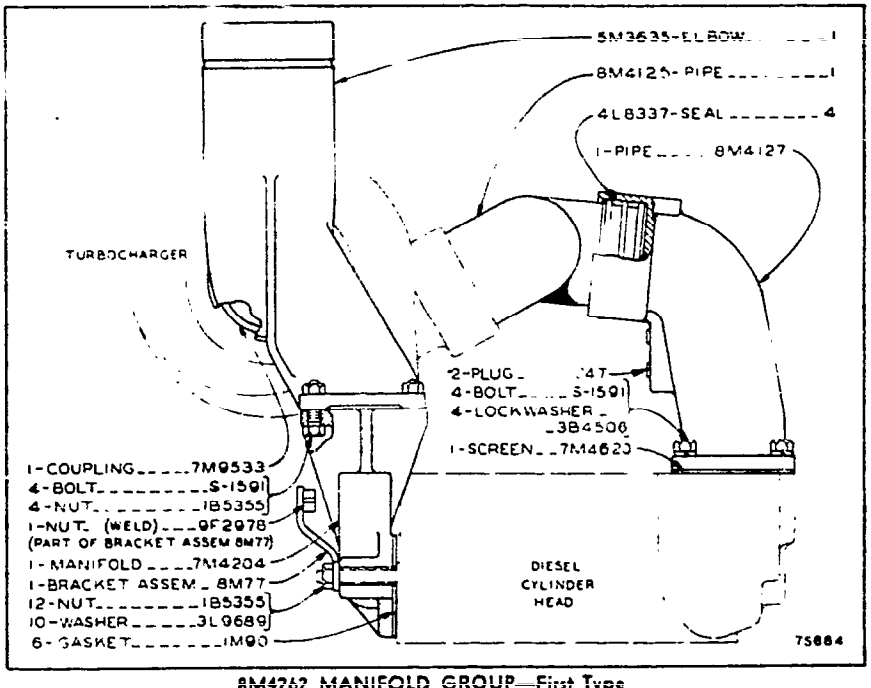

8M4262 MANIFOLD GROUP—First Type

Part of 8M4455 and 8M6457 Turbocharger Arrangements Listed on Page 113

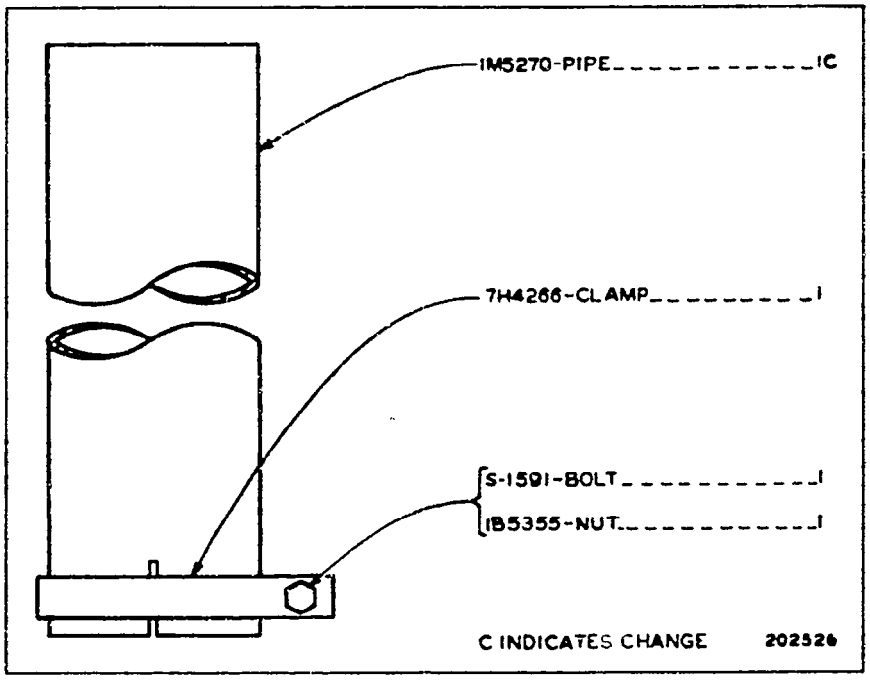

2M5440 EXHAUST EXTENSION GROUP
Part of 8M4465 and 8M6457 Turbocharger Arrangements listed on Page 113

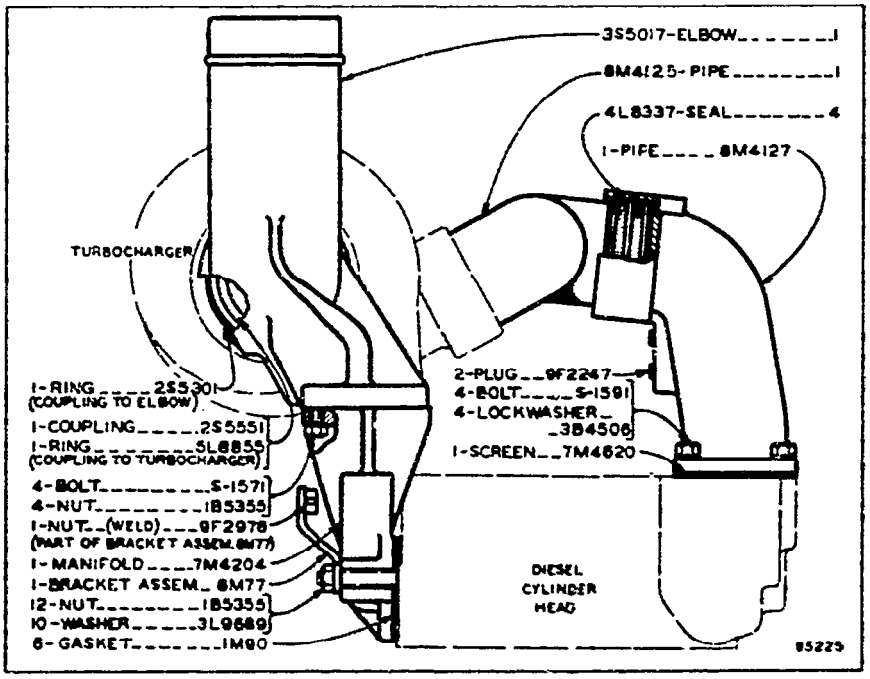

8M4262 MANIFOLD GROUP—Second Type
Part of 8M4465 and 8M6457 Turbocharger Arrangements listed on Page 113

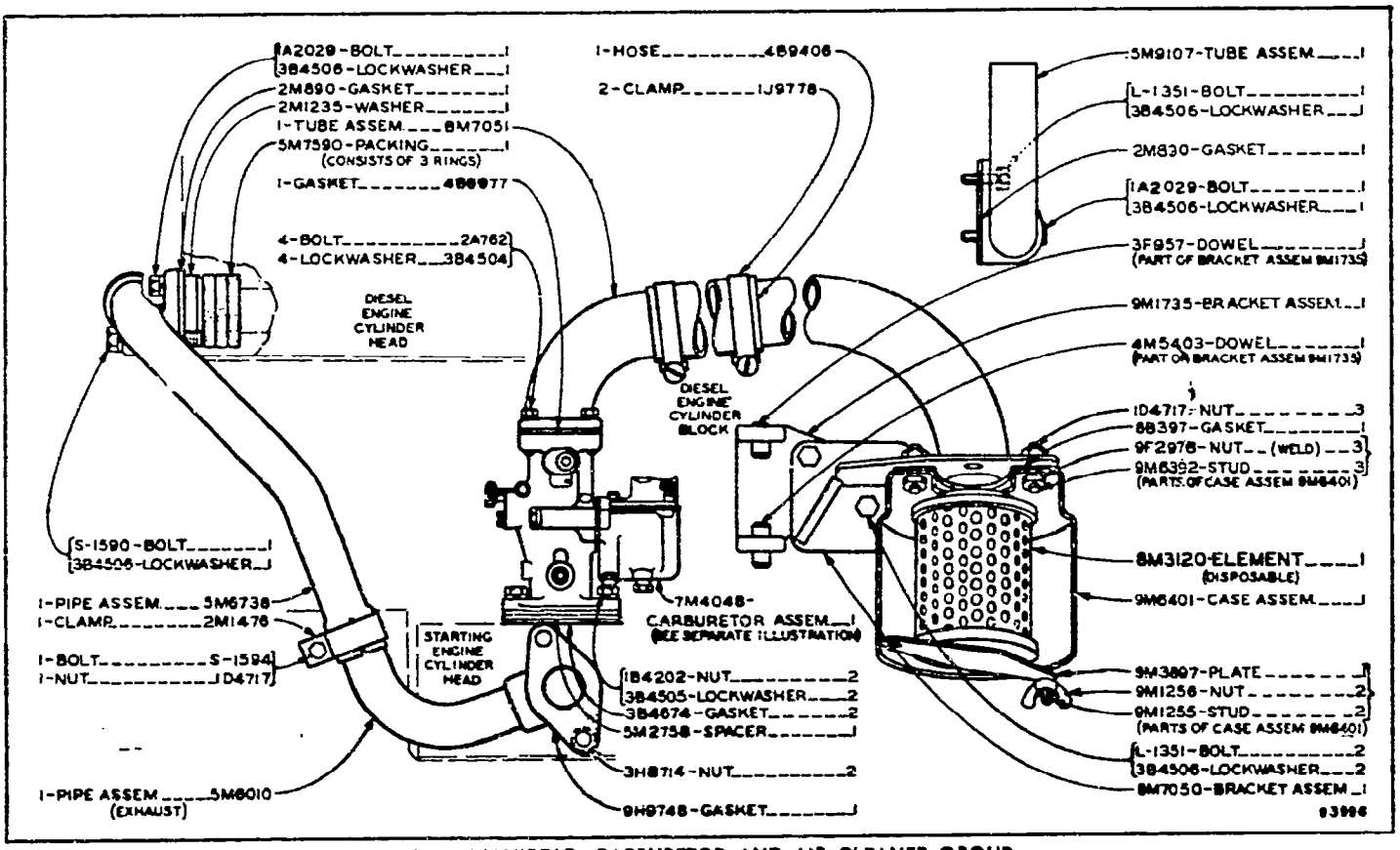

8M5866 MANIFOLD, CARBURETOR AND AIR CLEANER GROUP
Part of 8M6457 Turbocharger Arrangement listed on Page 113
7M4048 Carburetor Assembly parts are shown on Page 120

8M5866 MANIFOLD, CARBURETOR AND AIR CLEANER GROUP—Type 2

Part of 8M6457 Turbocharger Arrangement listed on Page 113
7M4048 Carburetor parts are shown on Page 120

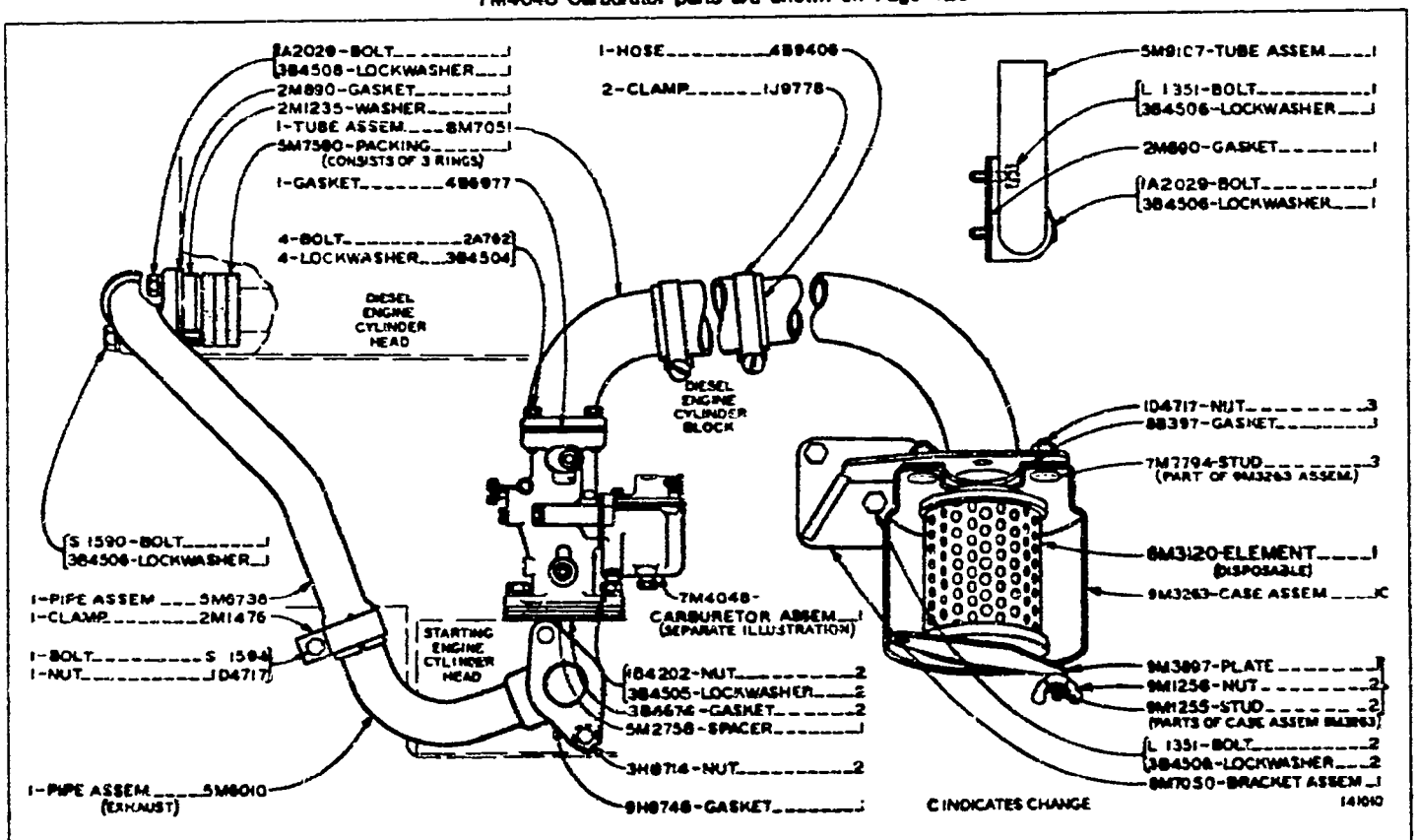

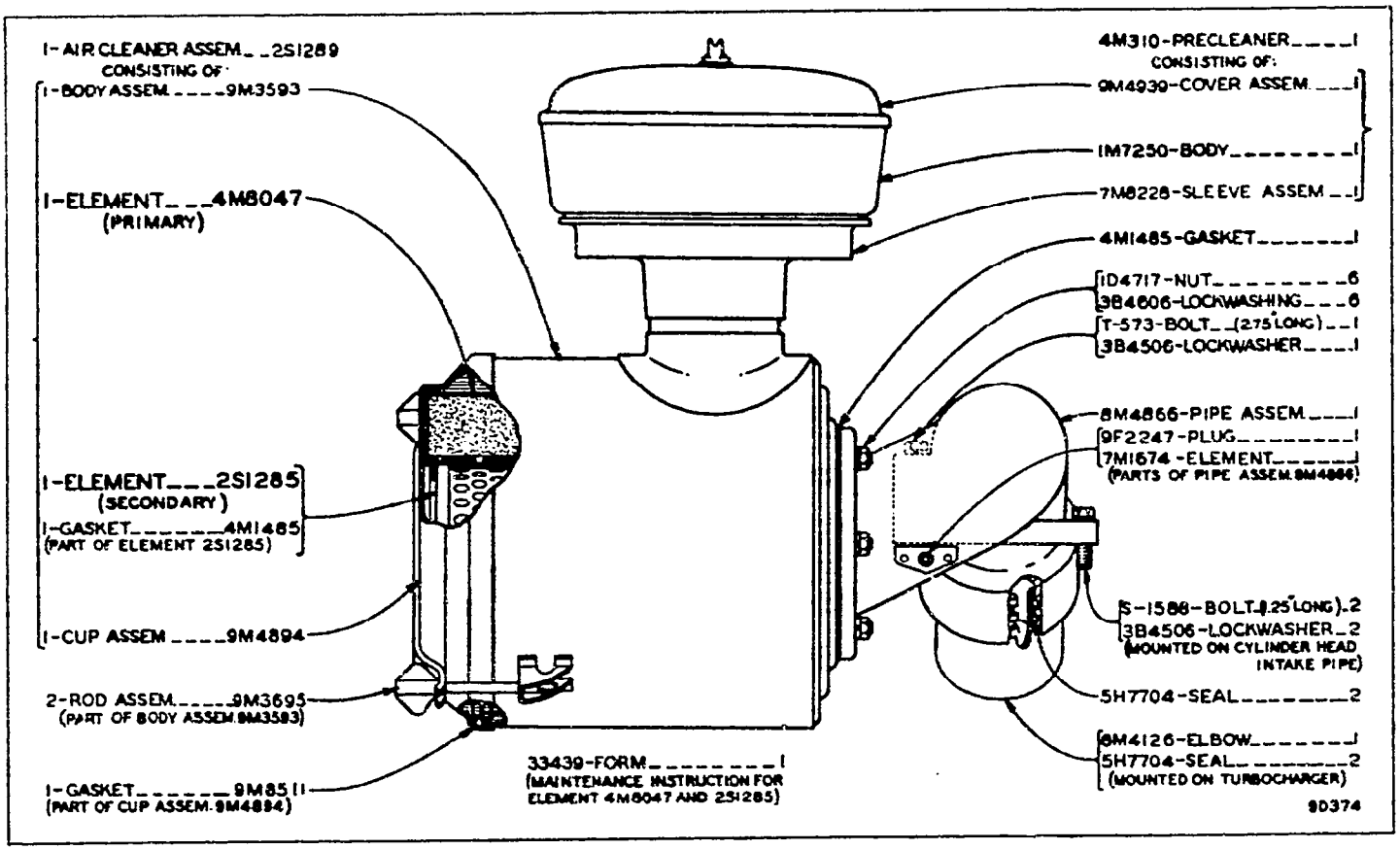

8M4263 AIR CLEANER GROUP—First Type
Part of 8M4455 and 8M6457 Turbocharger Arrangements listed on Page 113

8M4263 AIR CLEANER GROUP—Second Type
Part of 8M4455 and 8M6457 Turbocharger Arrangements listed on Page 113

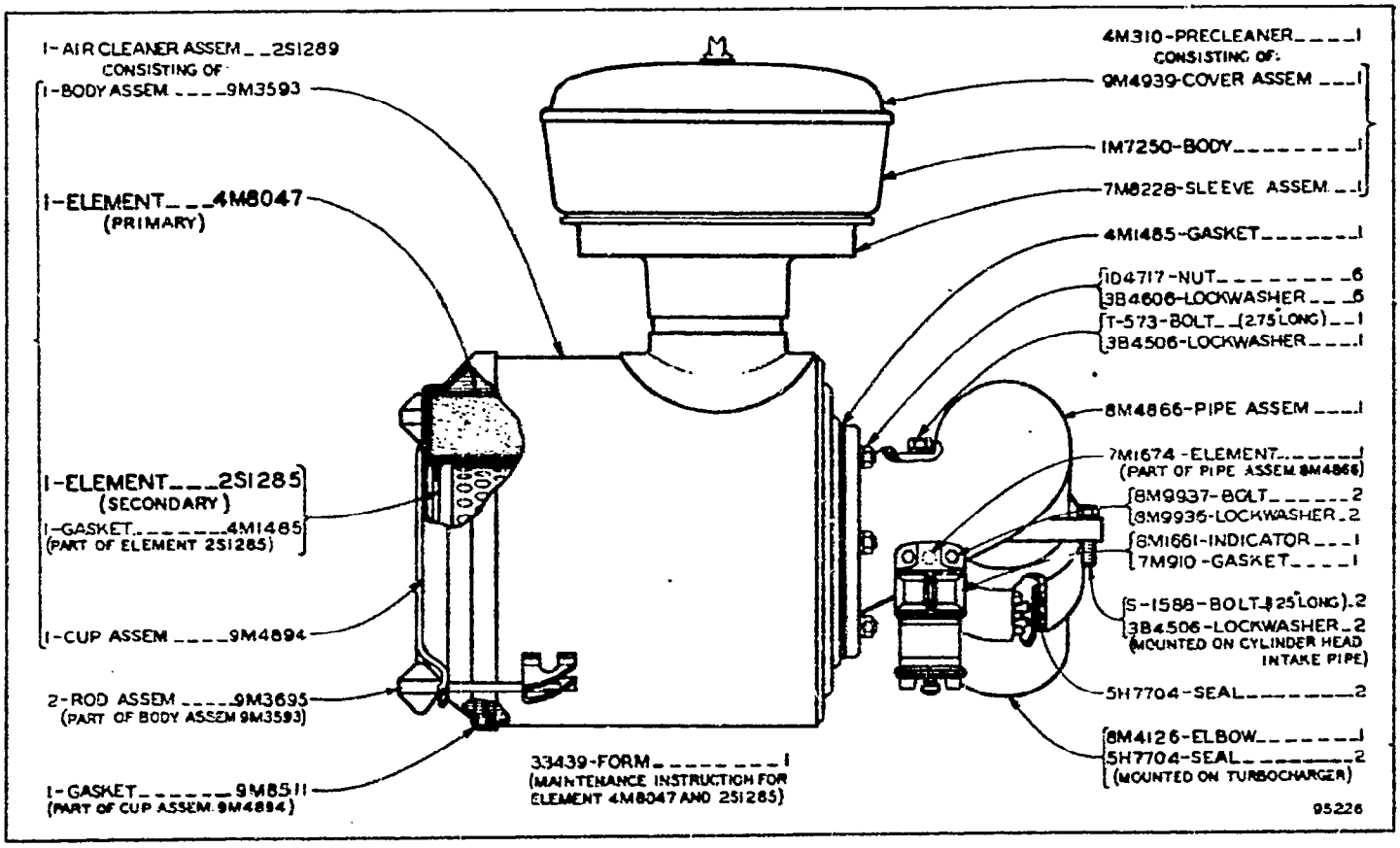

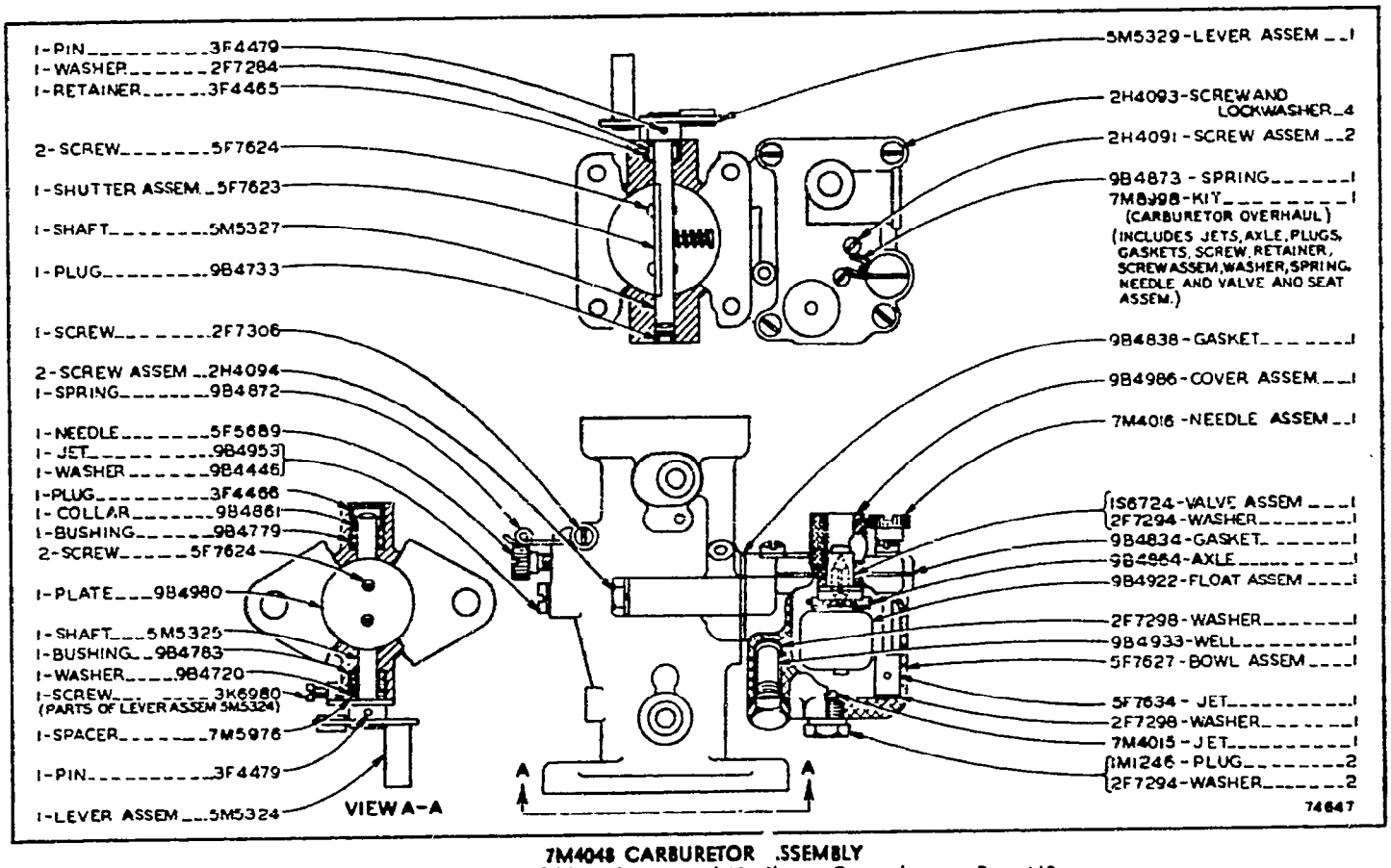

7M4048 CARBURETOR ASSEMBLY

Part of 8M5866 Manifold, Carburator and Air Cleaner Group shown on Page 118

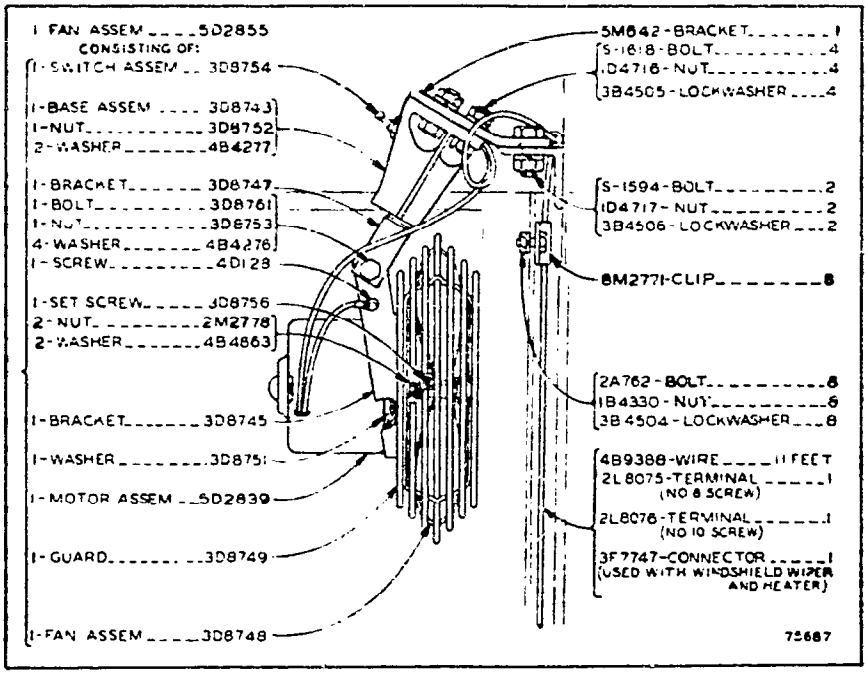

5M2022 DEFROSTER FAN GROUP—12 Volt

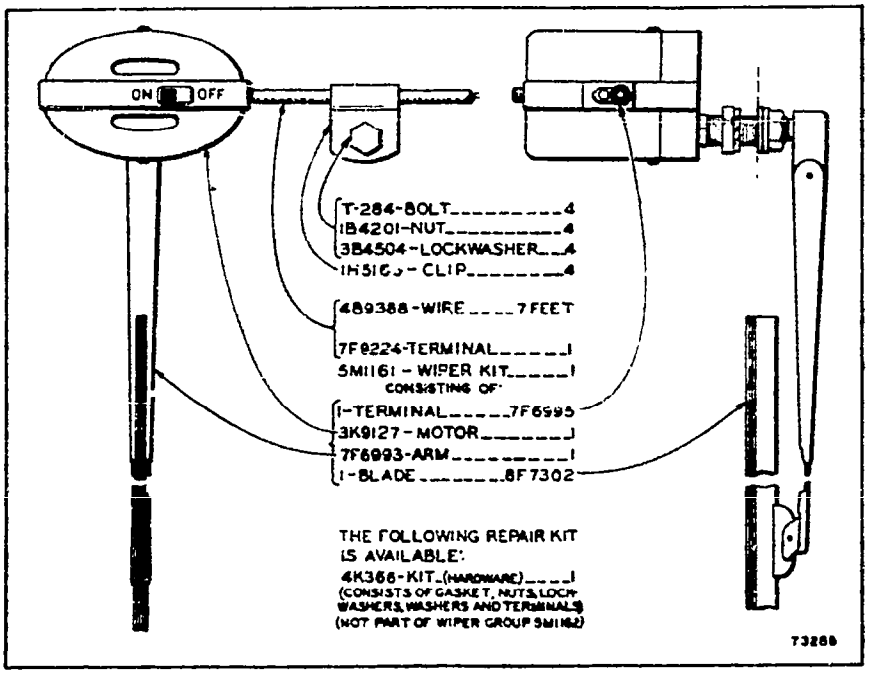

5M1162 WINDSHIELD WIPER GROUP—12 Volt

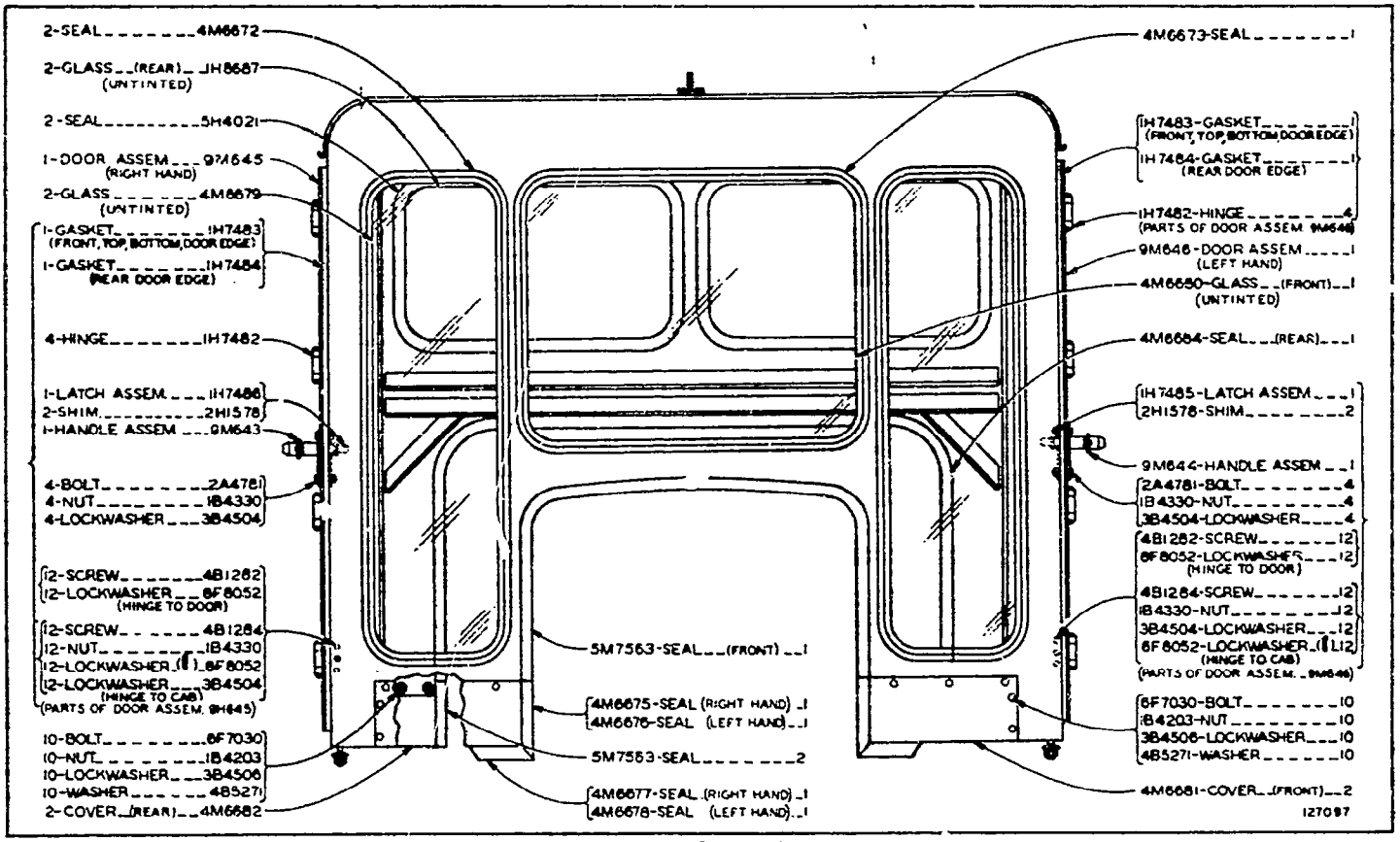

4M6762 CAB GROUP—Front View

4M6762 CAB GROUP—Side View

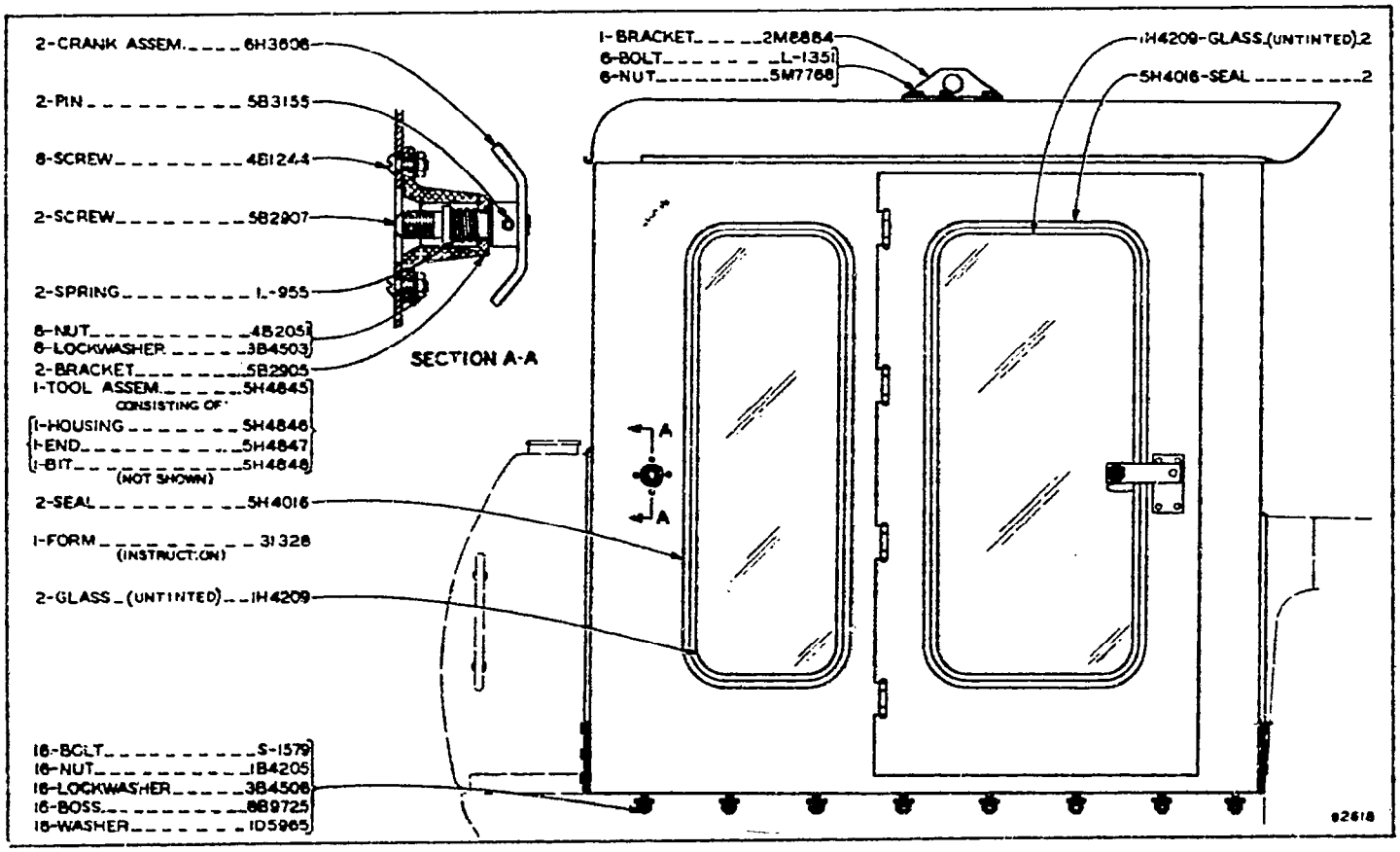

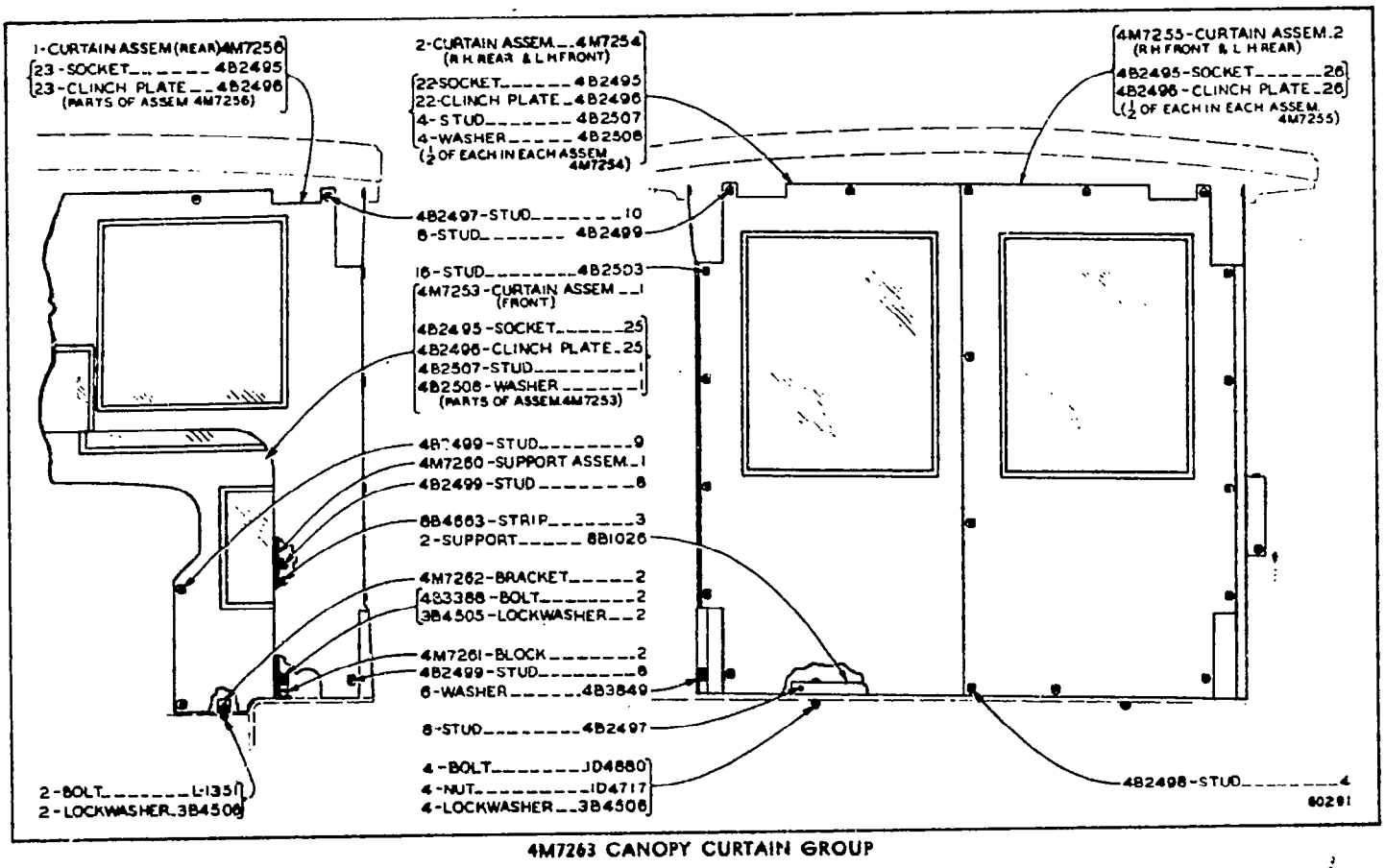

4M7263 CANOPY CURTAIN GROUP

4M7723 CANOPY CURTAIN GROUP

For use with a Rear Cable Control

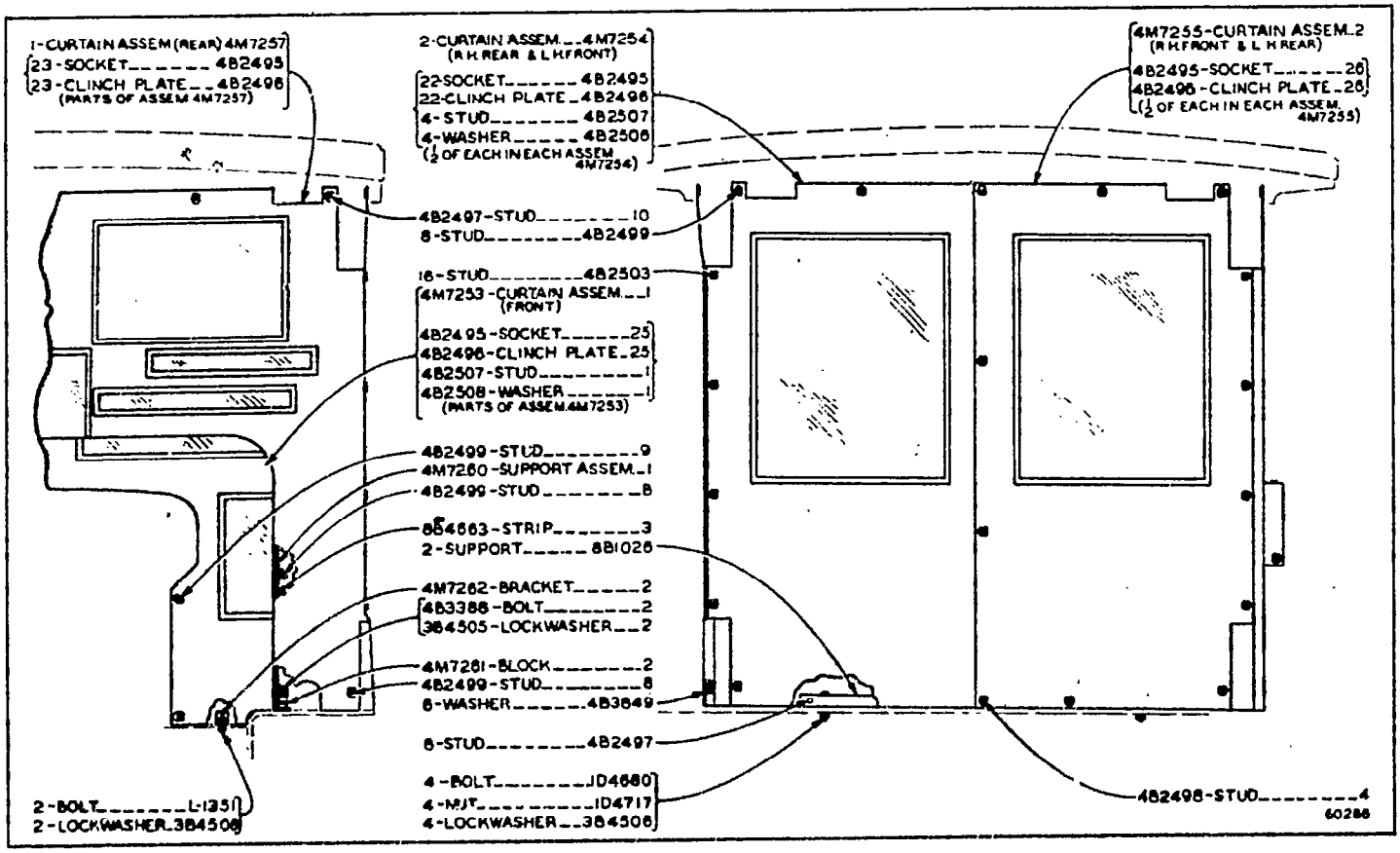

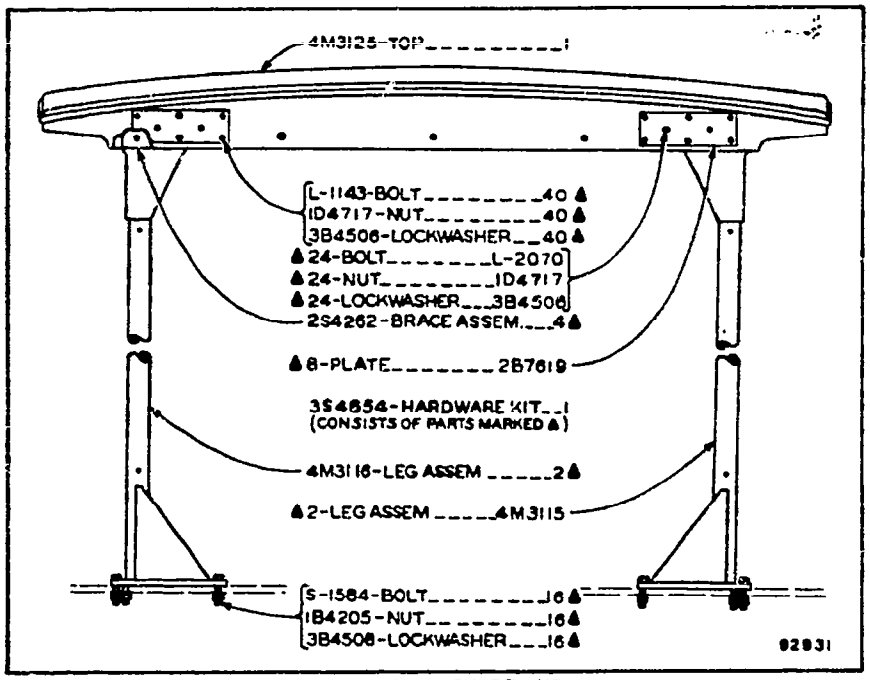

4M3113 CANOPY GROUP

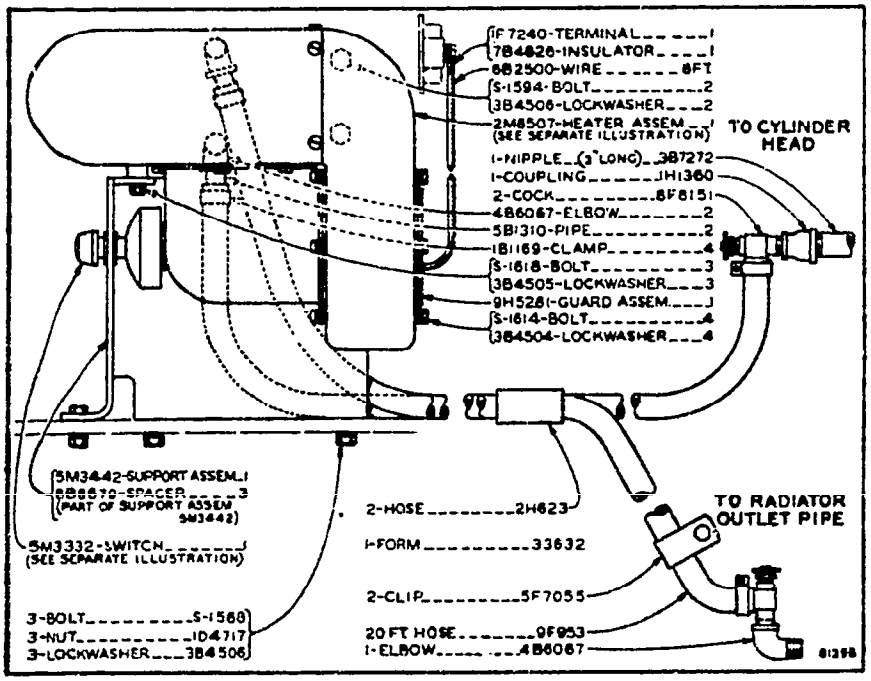

5M3447 CAB HEATER GROUP—Recirculating—12 Volt
Also part of 5M3448 Cab Heater Group
2M8507 Heater Assembly and 5M3332 Switch Assembly parts are shown on Page 128

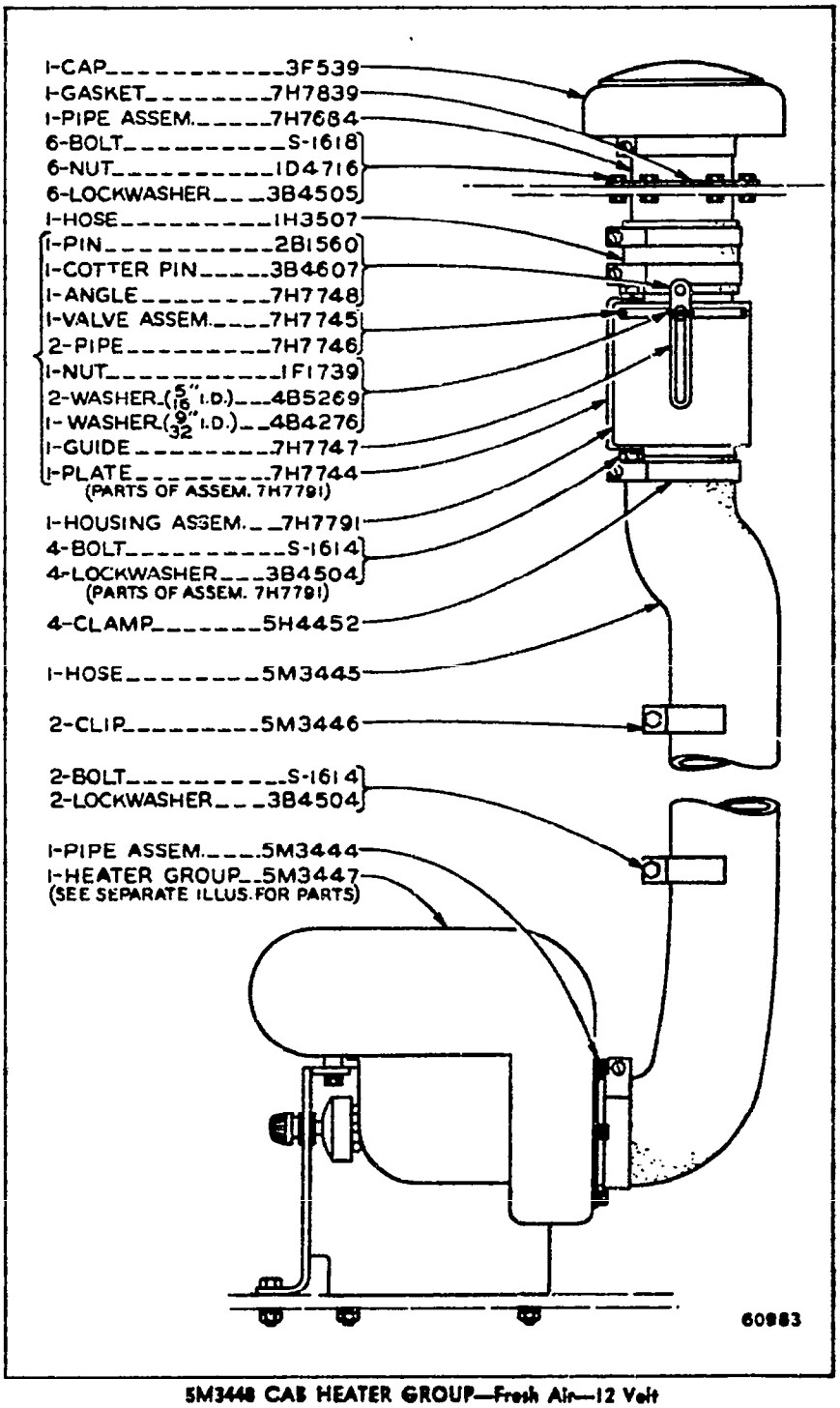

5M3448 CAB HEATER GROUP—Fresh Air—12 Volt

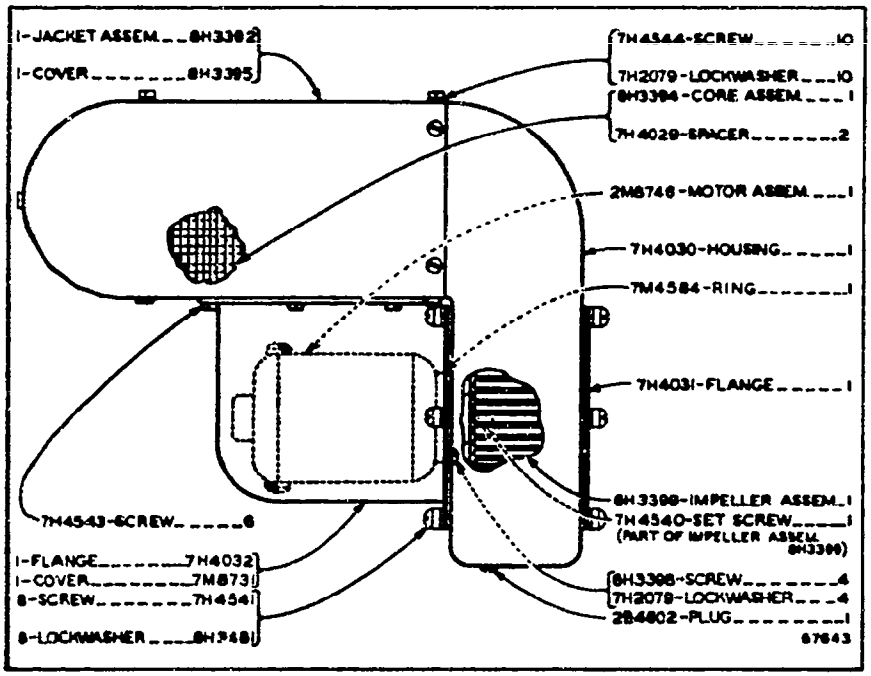

2M8507 HEATER ASSEMBLY—12 Volt
Part of 5M3447 Cab Heater Group shown on Page 126

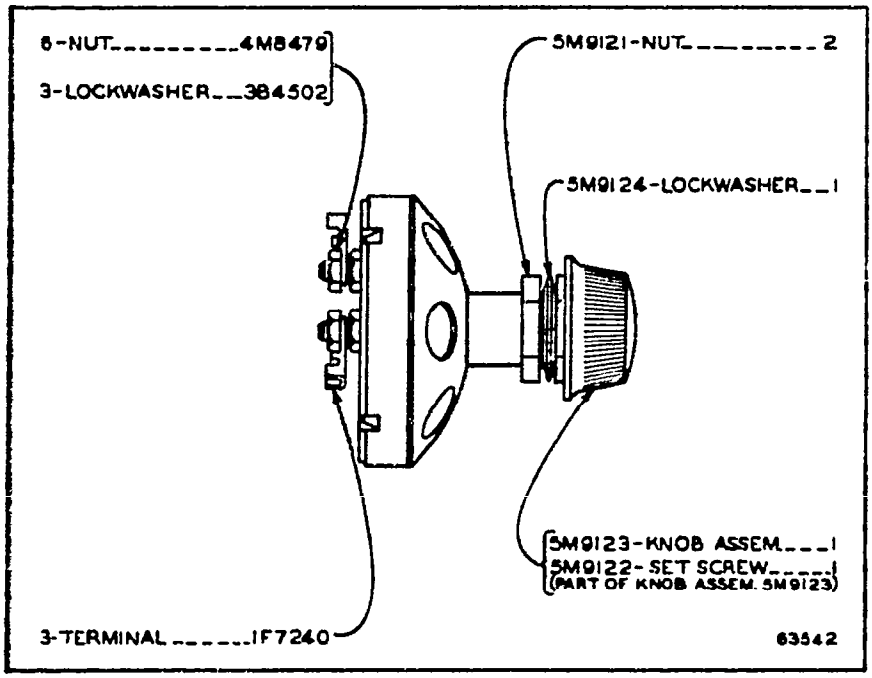

5M3332 SWITCH ASSEMBLY—12 Volt
Part of 5M3447 Cab Heater Group shown on Page 126

4M4576 LIGHTING SYSTEM GROUP—12 Volt, 4 Lamp—Without Battery—Side View

For use without Cab

2M856 Flood Lamp Assembly 2M6647 Dash Lamp Assembly, 4M265 Generator Group and 7F2921 Combination Switch parts are shown on Pages 140, 141, 142 and 145

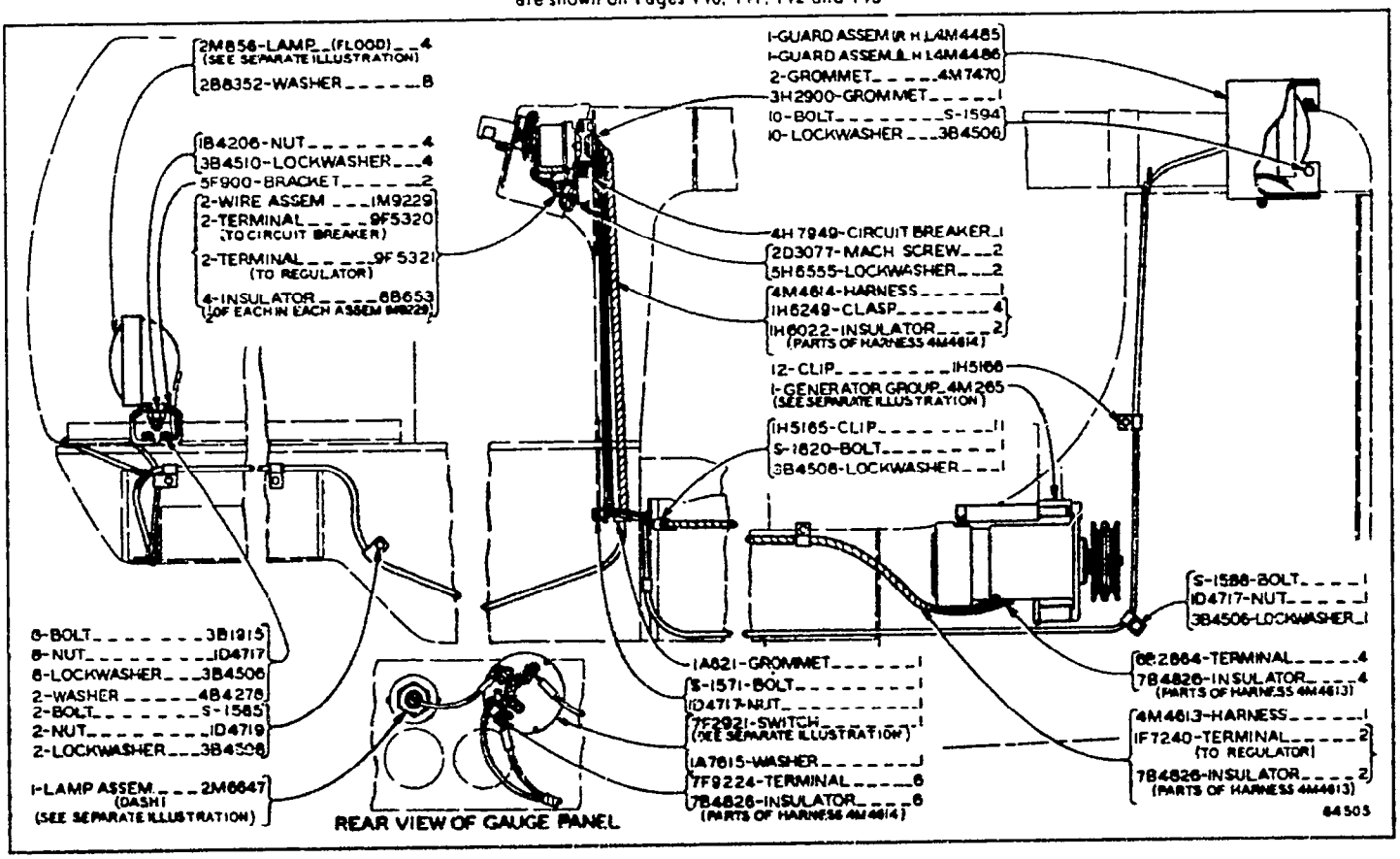

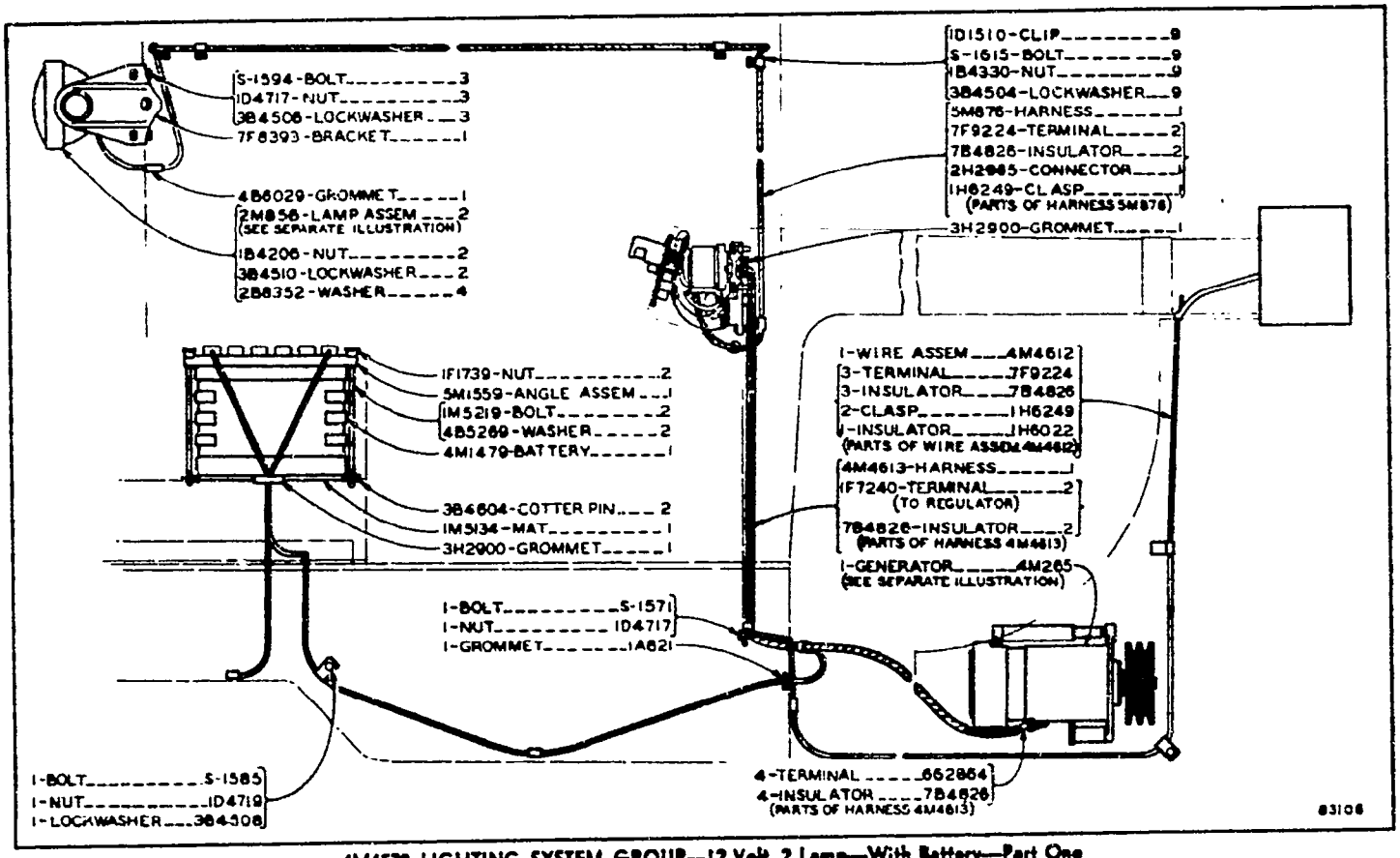

4M4572 LIGHTING SYSTEM GROUP—12 Volt, 2 Lamp—With Battery—Part One

For use with Cab

2M856 Flood Lamp Assembly and 4M265 Generator Group parts are shown on Pages 140 and 142

4M4572 LIGHTING SYSTEM GROUP—12 Volt, 2 Lamp—With Battery—Part Two

For use with Cab

2M6647 Dash Lamp Assembly and 7F2921 Combination Switch parts are shown on Pages 141 and 145

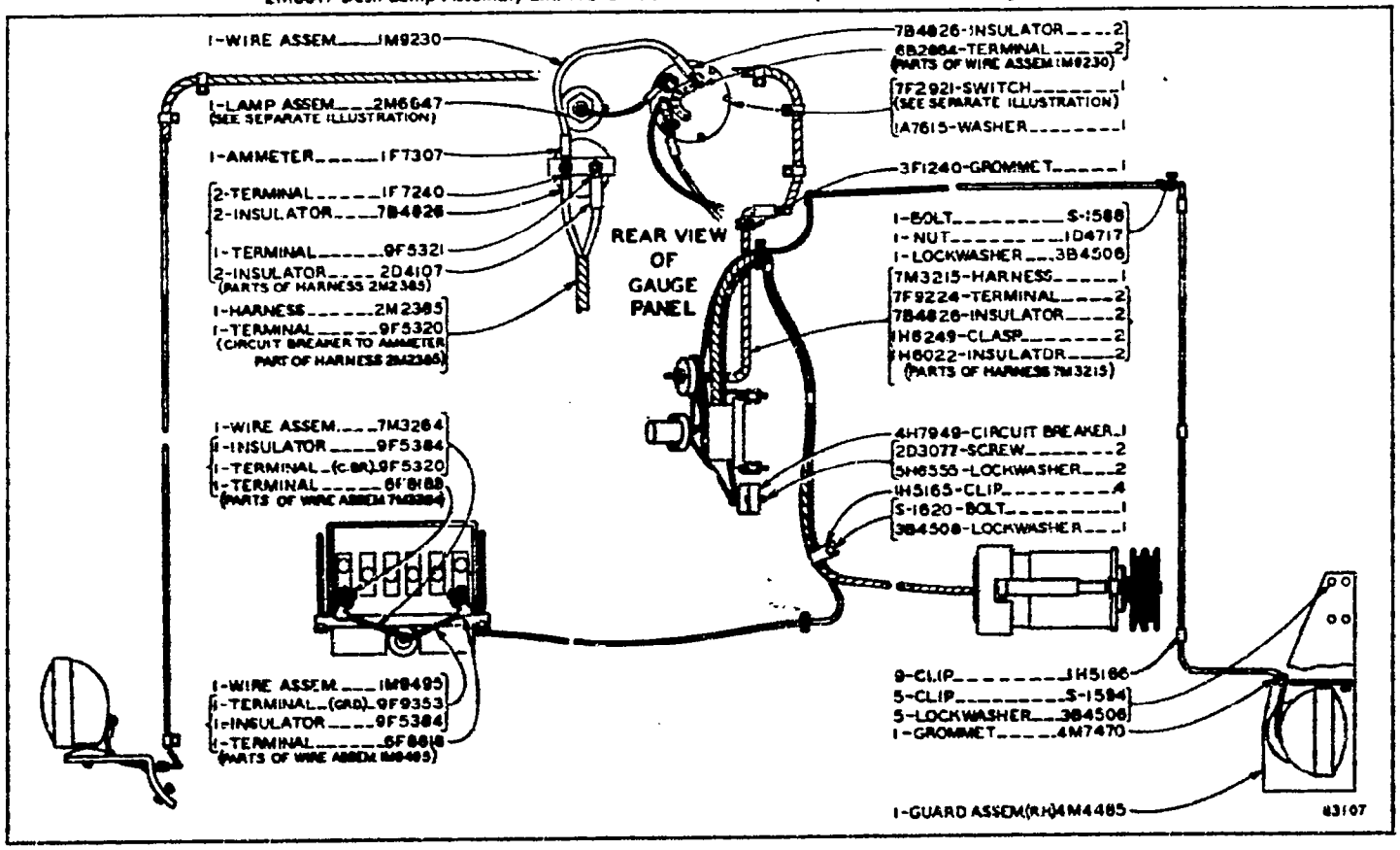

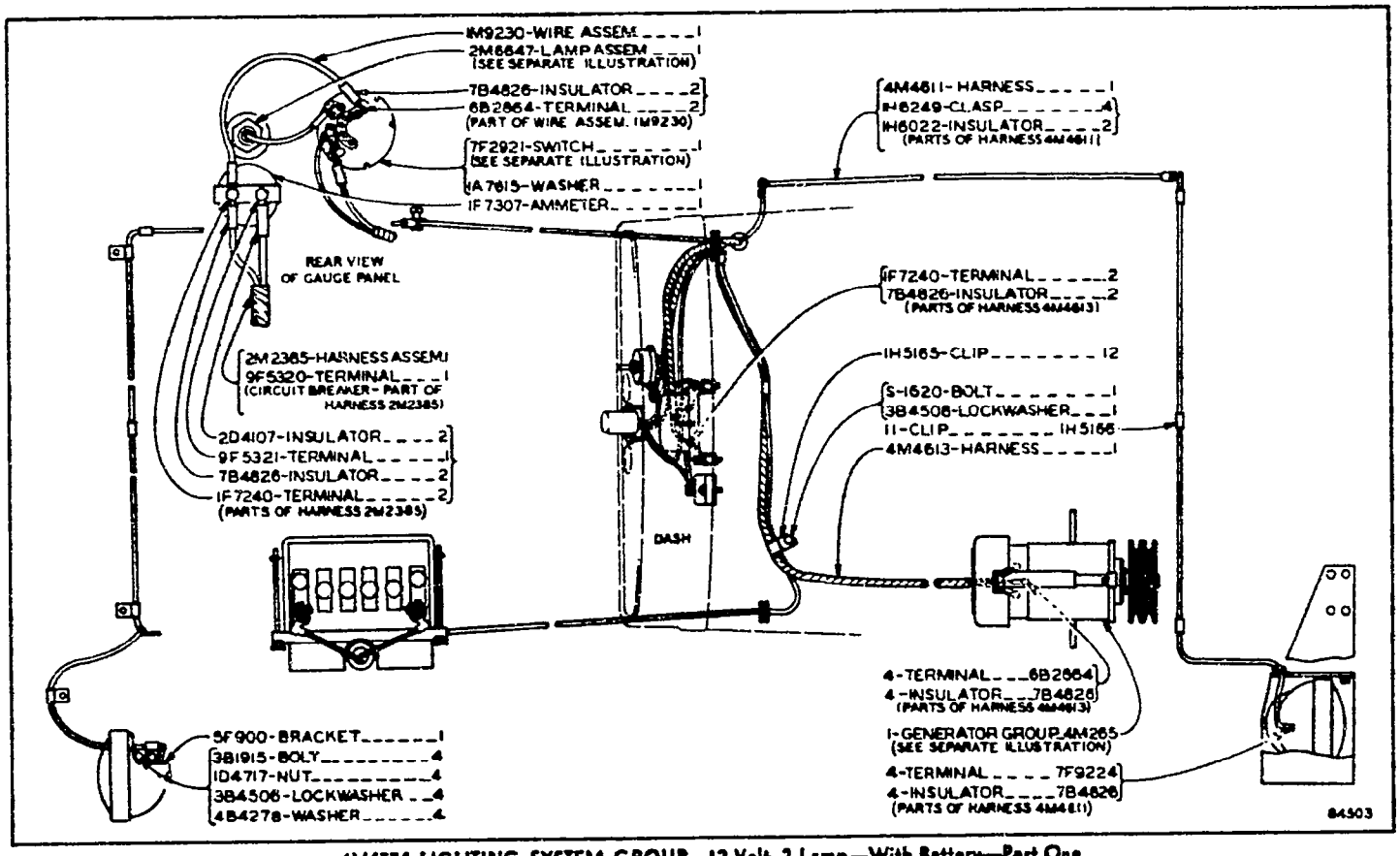

4M4574 LIGHTING SYSTEM GROUP—12 Volt, 2 Lamp—With Battery—Part One

For use without Cab

2M6647 Dash Lamp Assembly, 4M265 Generator Group and 7F2921 Combination Switch parts are shown on Pages 141, 142 and 145

4M4574 LIGHTING SYSTEM GROUP—12 Volt, 2 Lamp—With Battery—Part Two

For use without Cab

2M856 Flood Lamp Assembly parts are shown on Page 140

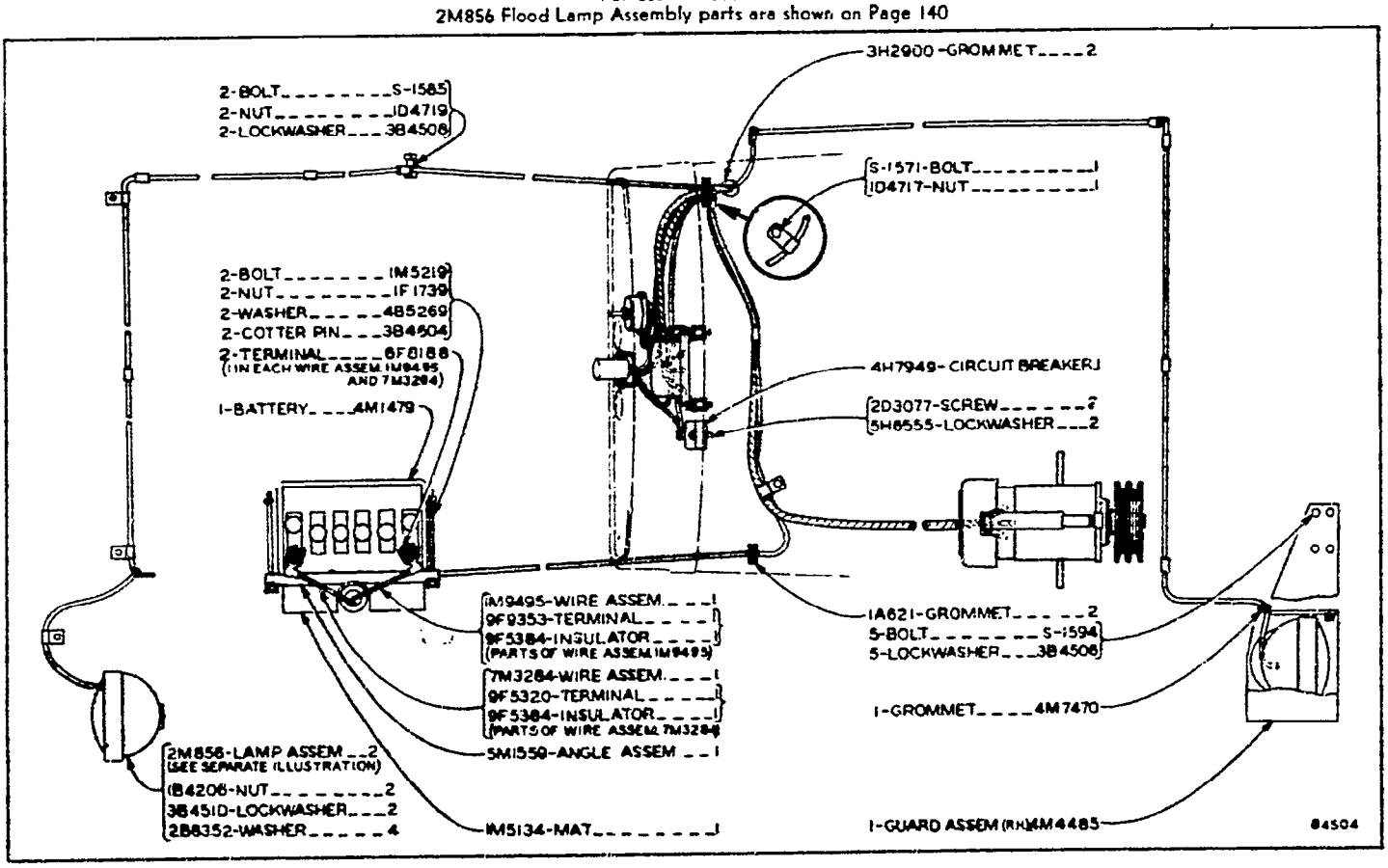

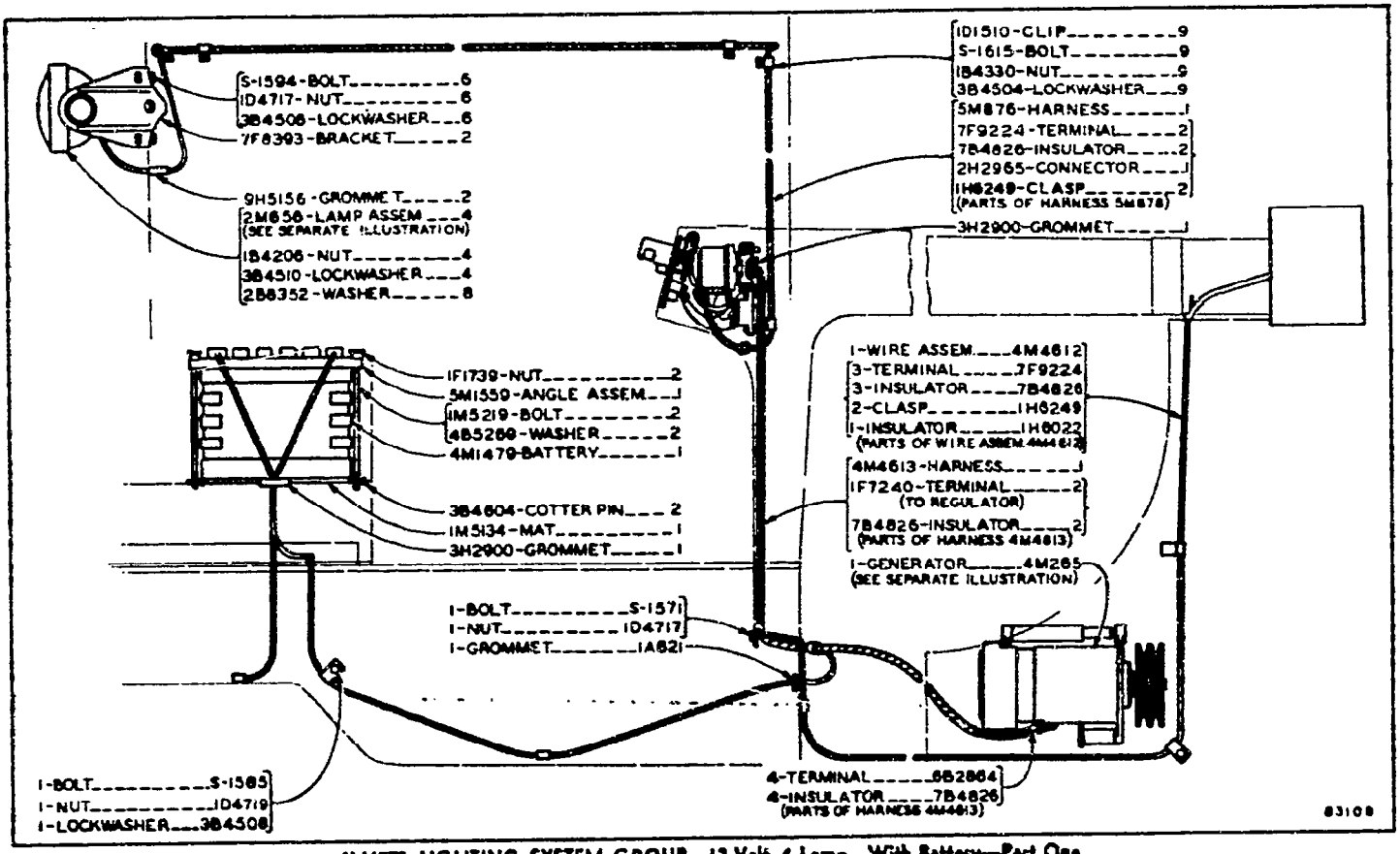

4M4573 LIGHTING SYSTEM GROUP—12 Volt, 4 Lamp—With Battery—Part One

For use with Cab

2M856 Flood Lamp Assembly and 4M265 Generator Group parts are shown on Pages 140 and 142

4M4573 LIGHTING SYSTEM GROUP—12 Volt, 4 Lamp—With Battery—Part Two

For use with Cab

2M6647 Dash Lamp Assembly and 7F2921 Combination Switch parts are shown on Pages 141 and 145

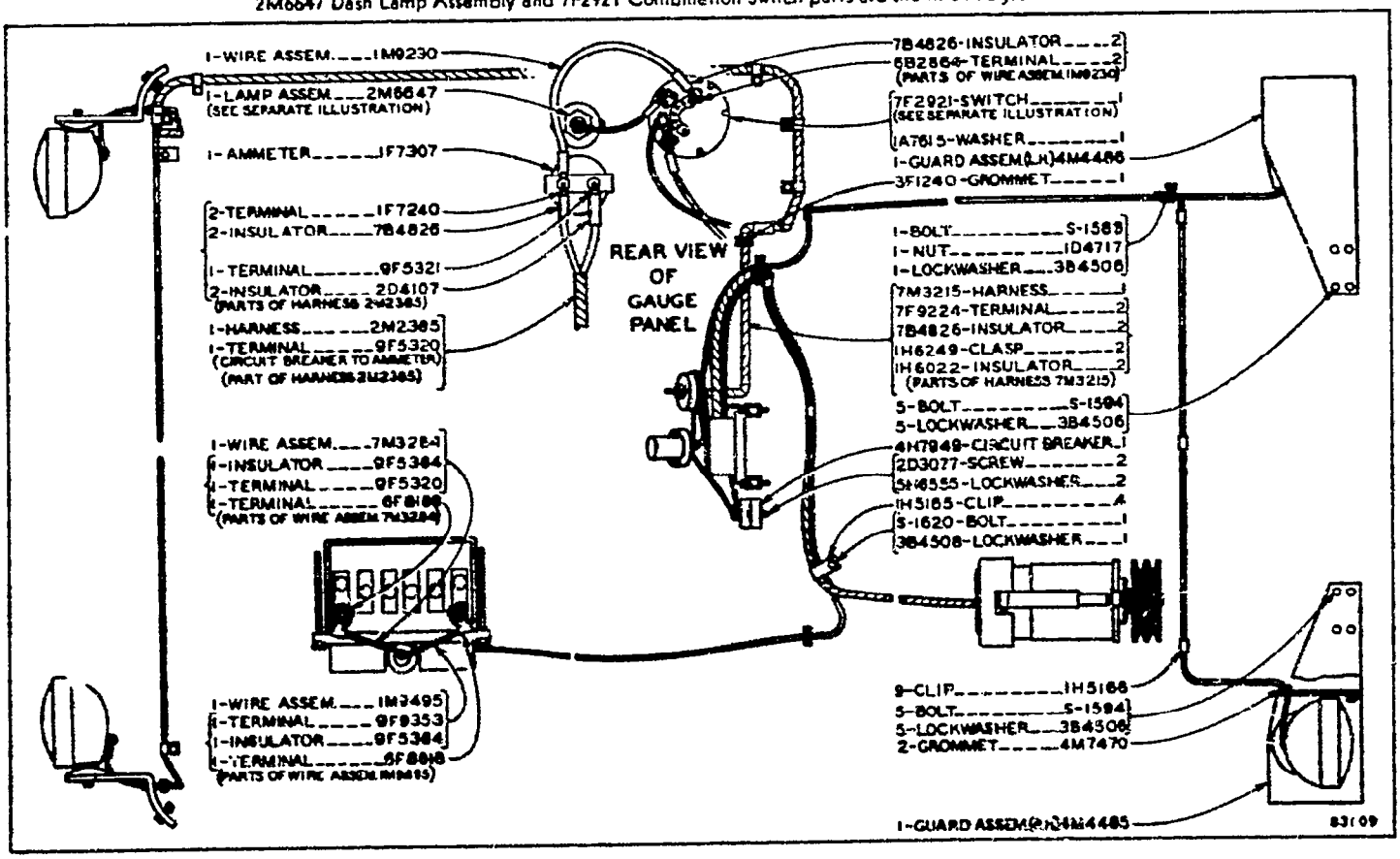

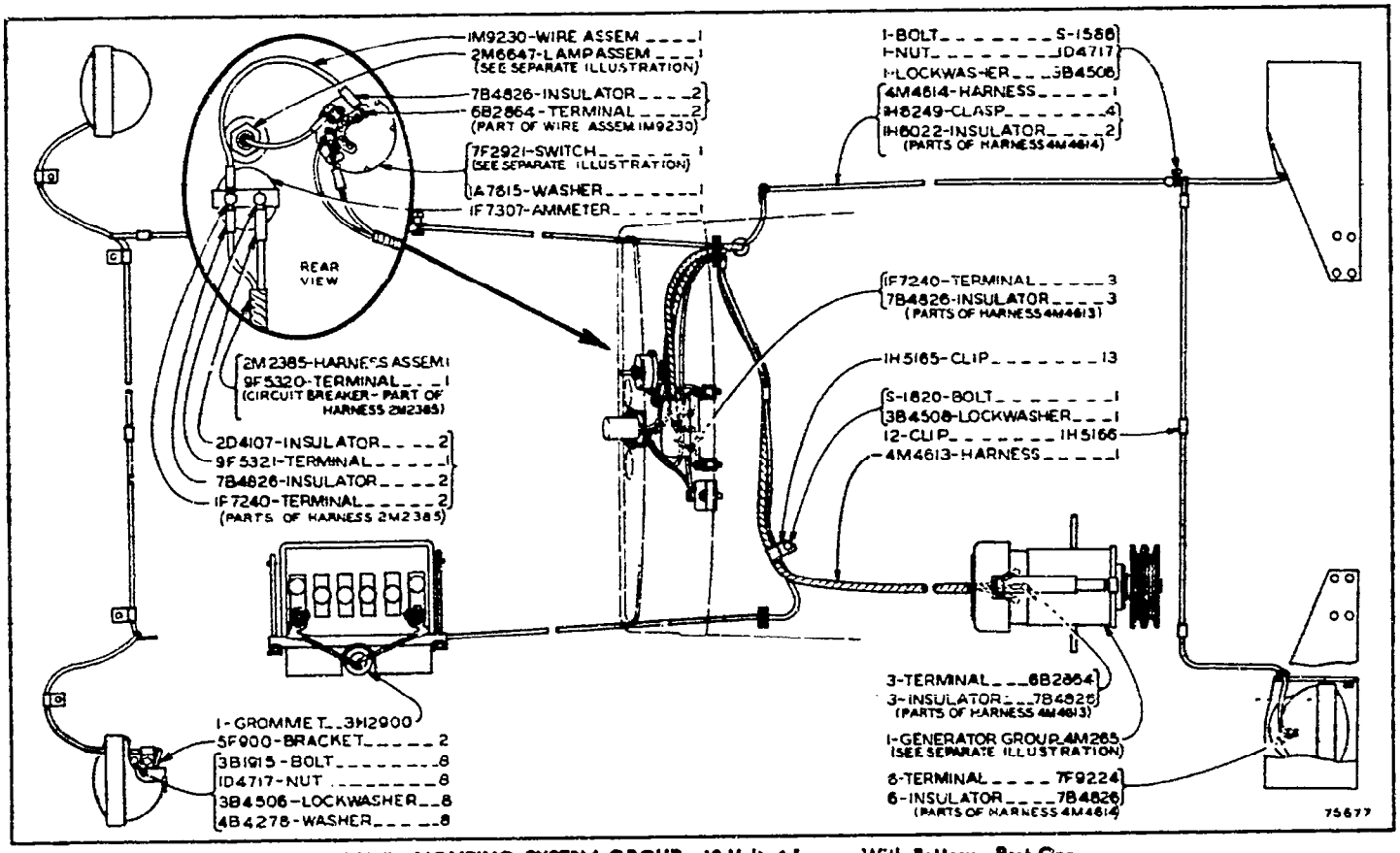

4M4575 LIGHTING SYSTEM GROUP—12 Volt, 4 Lamp—With Battery—Part One

For use without Cab

2M6647 Dash Lamp Assembly, 4M265 Generator Group and 7F2921 Combination Switch parts are shown on Pages 141, 142 and 145

4M4575 LIGHTING SYSTEM GROUP—12 Volt, 4 Lamp—With Battery—Part Two

For use without Cab

2M856 Flood Lamp Assembly parts are shown on Page 140

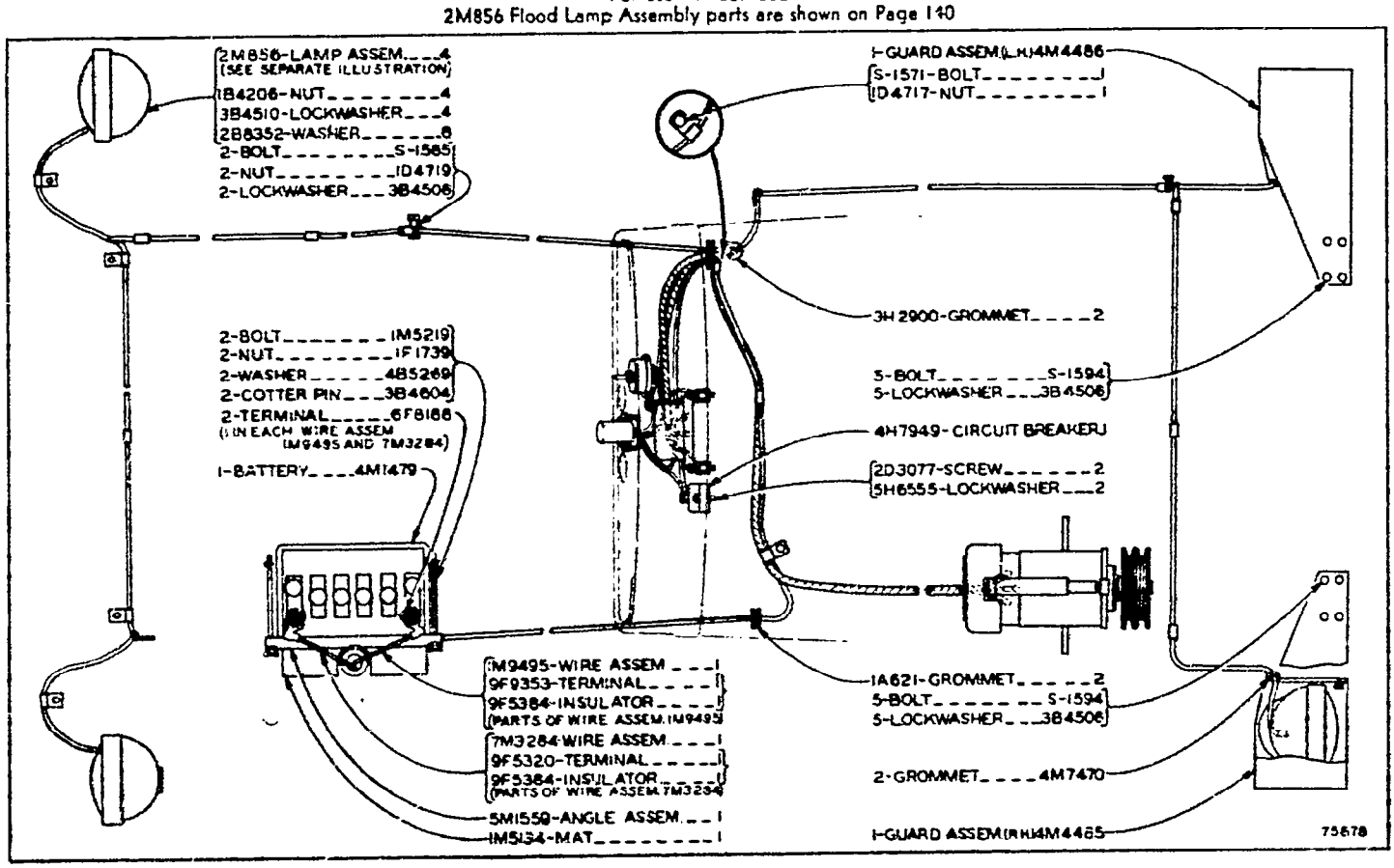

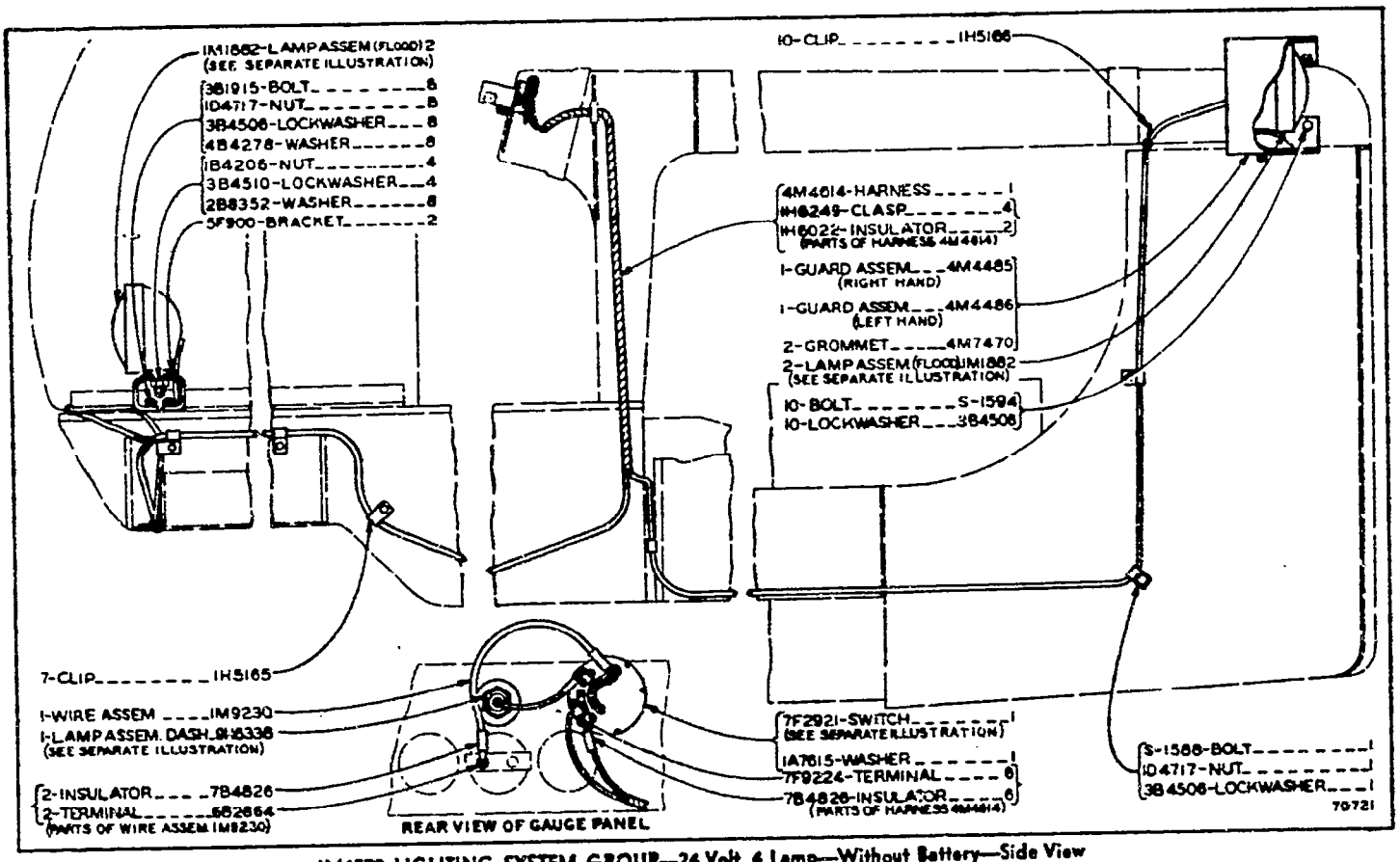

4M4579 LIGHTING SYSTEM GROUP—24 Volt, 4 Lamp—Without Battery—Side View

For use without Cab and with 24 Volt Starting

1M1882 Flood Lamp Assembly, 9H6338 Dash Lamp Assembly and 7F2921 Combination Switch parts are shown on Pages 140, 141 and 145

4M4578 LIGHTING SYSTEM GROUP—24 Volt, 2 Lamp—Without Battery—Side View

For use without Cab and with 24 Volt Starting

1M1882 Flood Lamp Assembly 9H6338 Dash Lamp Assembly and 7F2921 Combination Switch parts are shown on Pages 140, 141 and 145

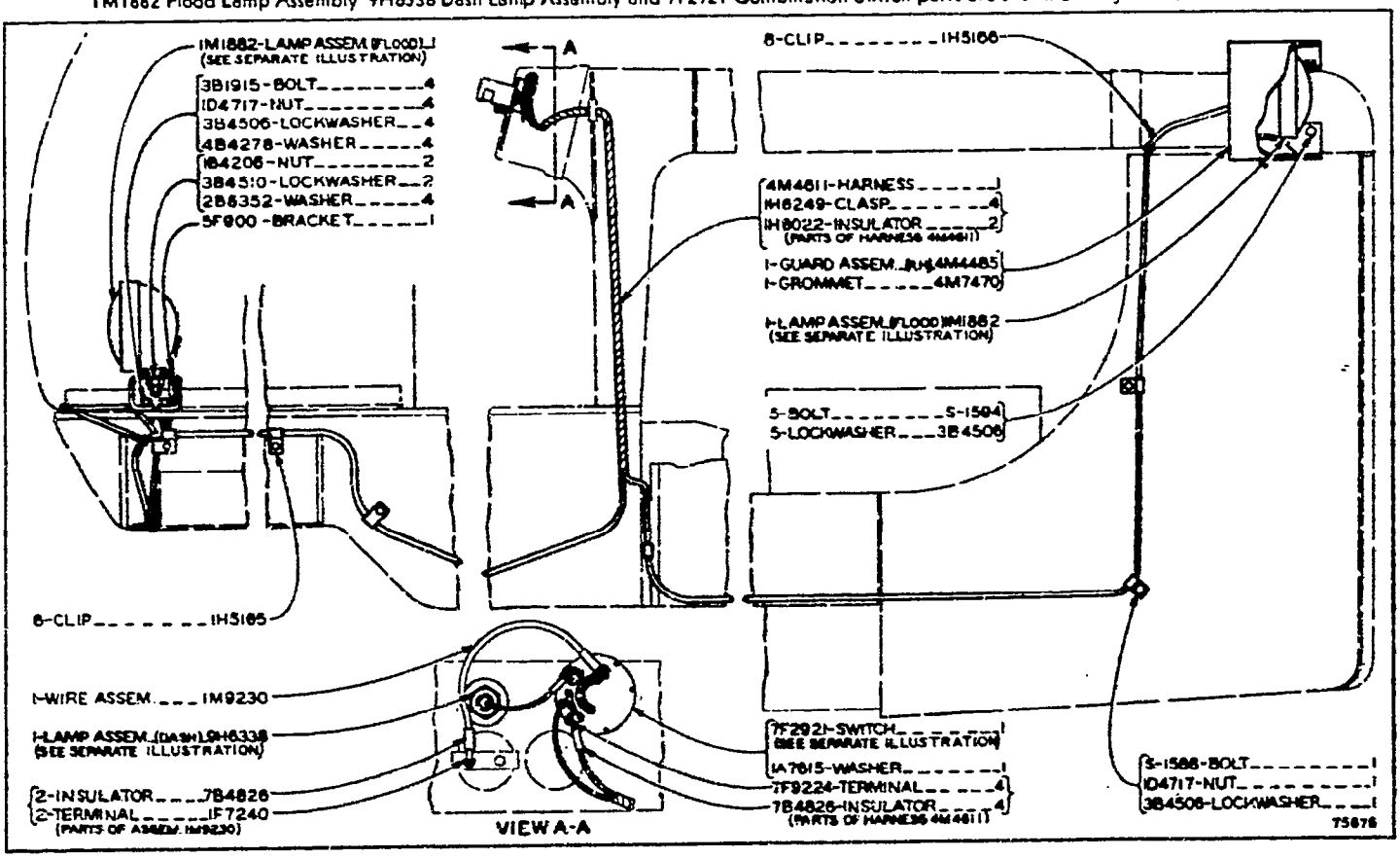

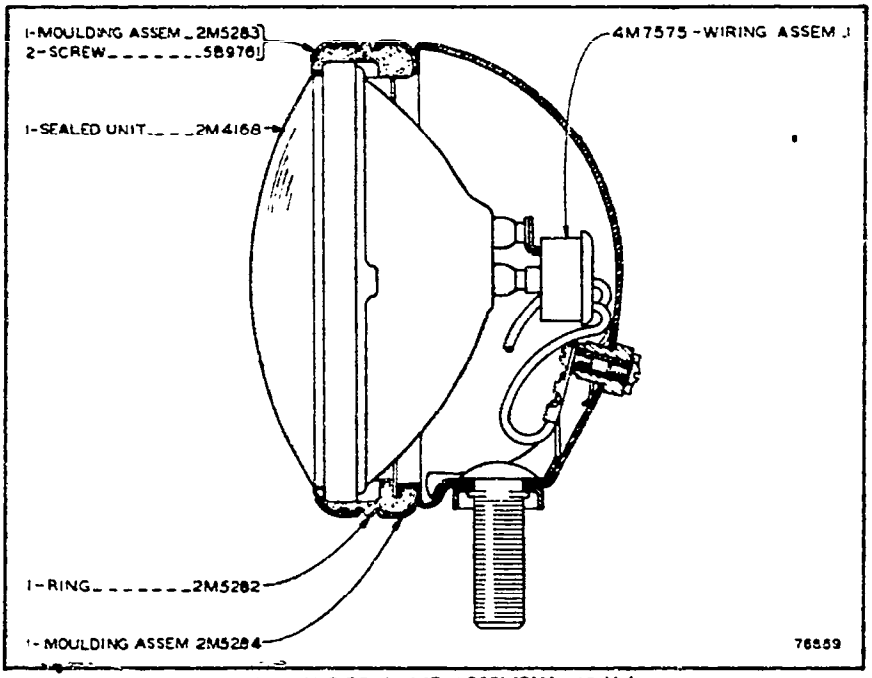

2M6856 FLOOD LAMP ASSEMBLY—12 Volt
Part of Lighting System Groups shown on Pages 129 through 137

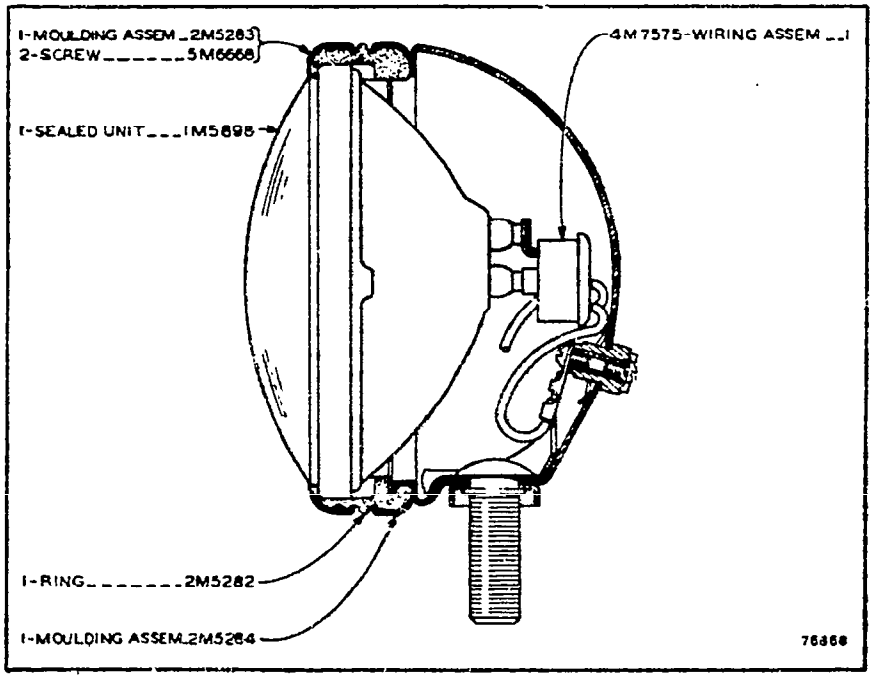

1M1882 FLOOD LAMP ASSEMBLY—24 Volt
Part of 4M4579 and 4M4578 Lighting System Groups shown on Pages 136 and 139

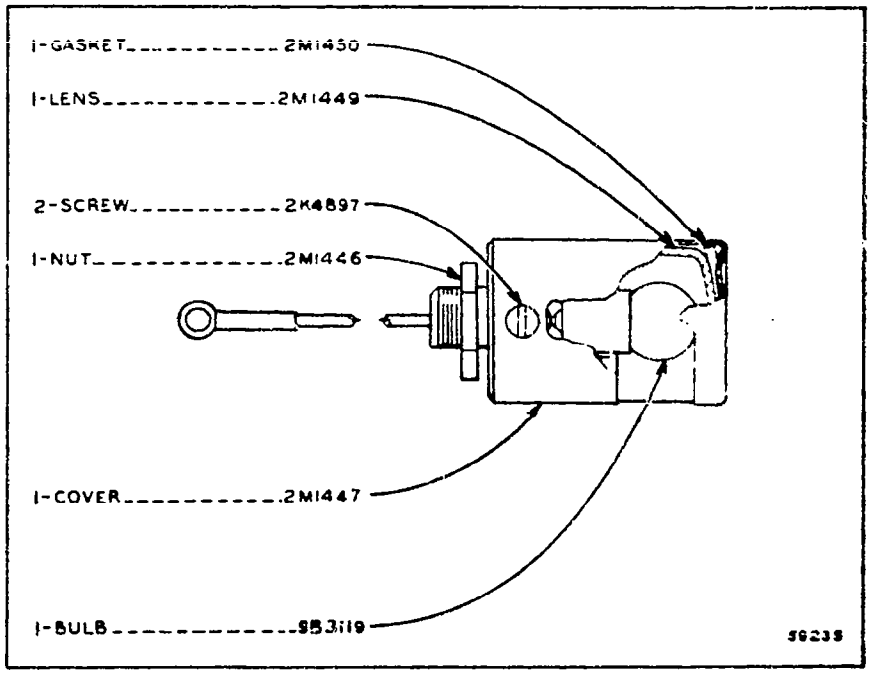

2M6647 DASH LAMP ASSEMBLY—12 Volt
Part of Lighting System Groups shown on Pages 129 through 137

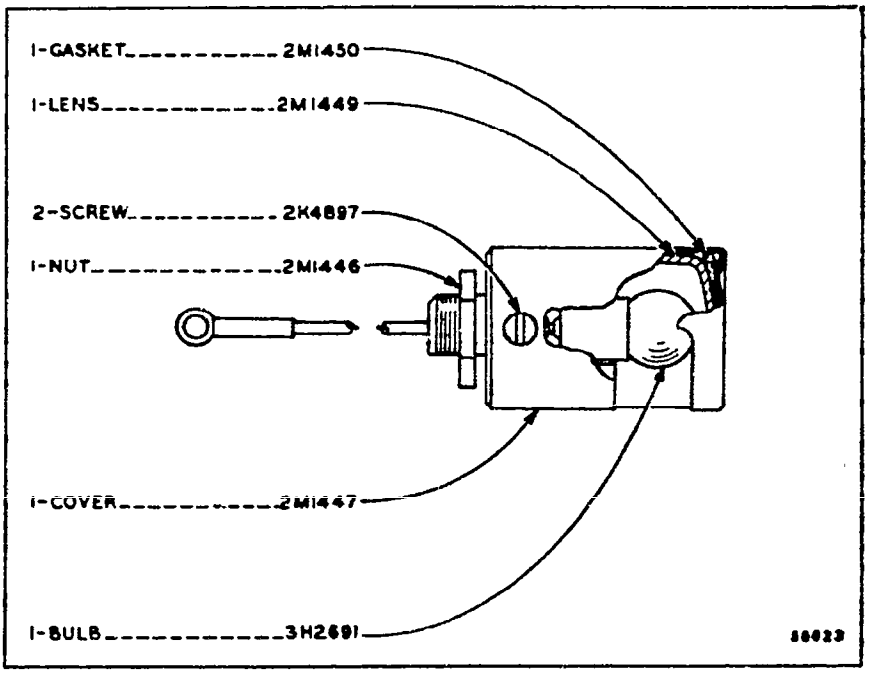

9H6338 DASH LAMP ASSEMBLY—24 Volt
Part of 4M4579 and 4M4578 Lighting System Groups shown on Pages 138 and 139

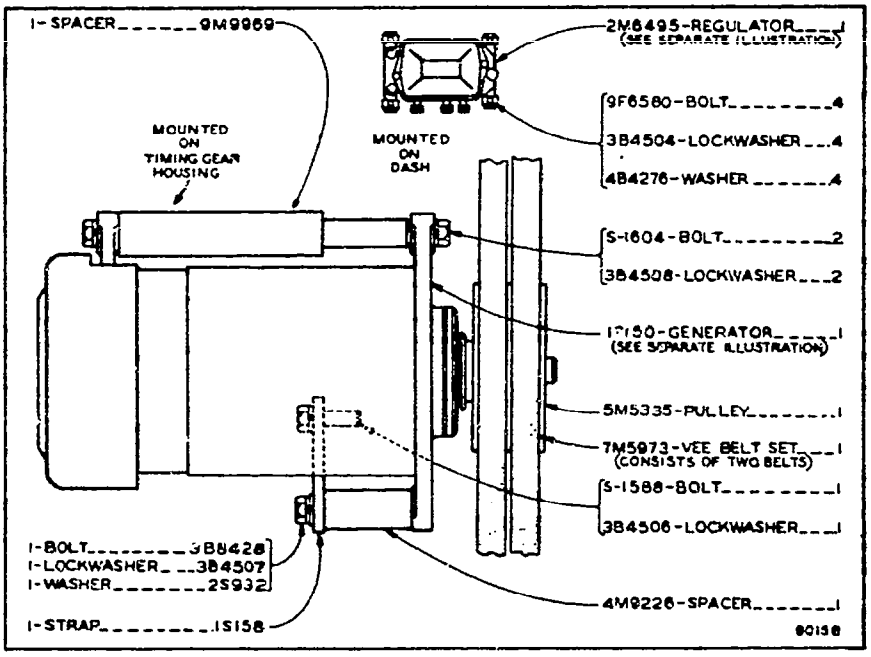

4M265 GENERATOR GROUP—12 Volt, 24 Ampere—First Type
Part of Lighting System Groups and 9M1763 Electric Starting Arrangement
shown on Pages 129 through 137 and 146
2M6495 Regulator Assembly parts are shown on Page 144

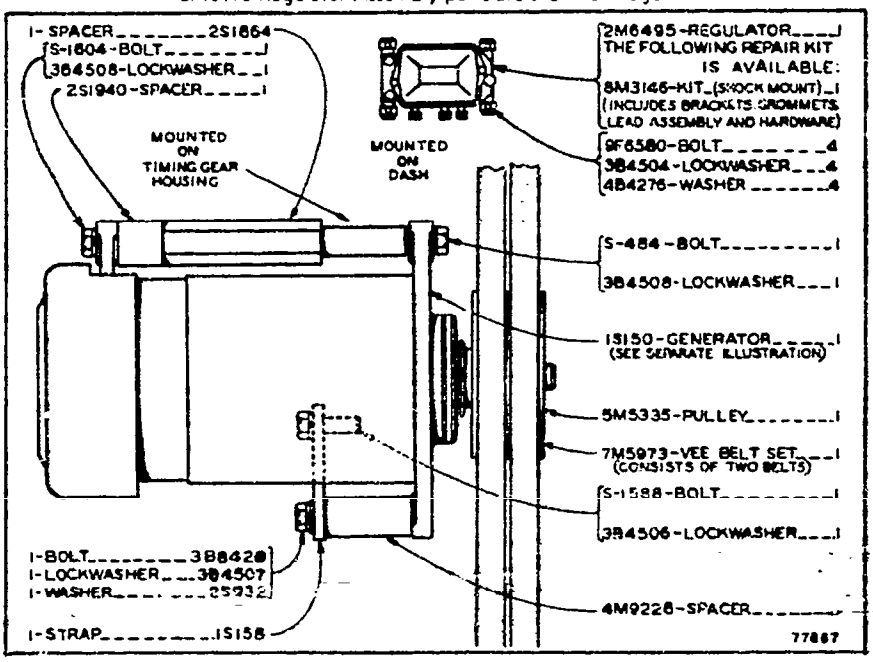

4M265 GENERATOR GROUP—12 Volt, 24 Ampere—Second Type
Part of Lighting System Groups and 9M1763 Electric Starting Arrangement
shown on Pages 129 through 137 and 146

1S150 GENERATOR ASSEMBLY—12 Volt, 24 Ampere

Part of 4M265 Generator Group

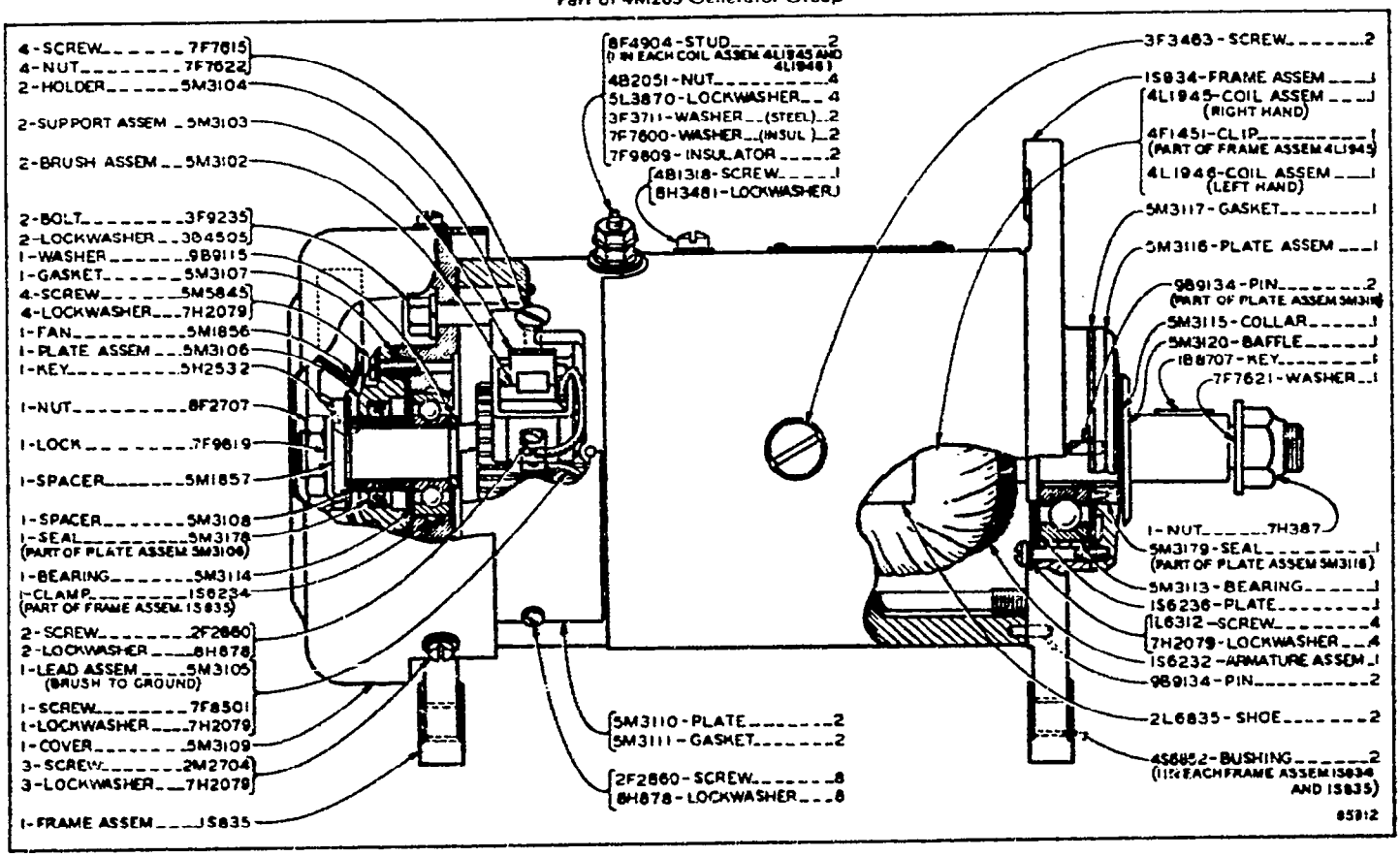

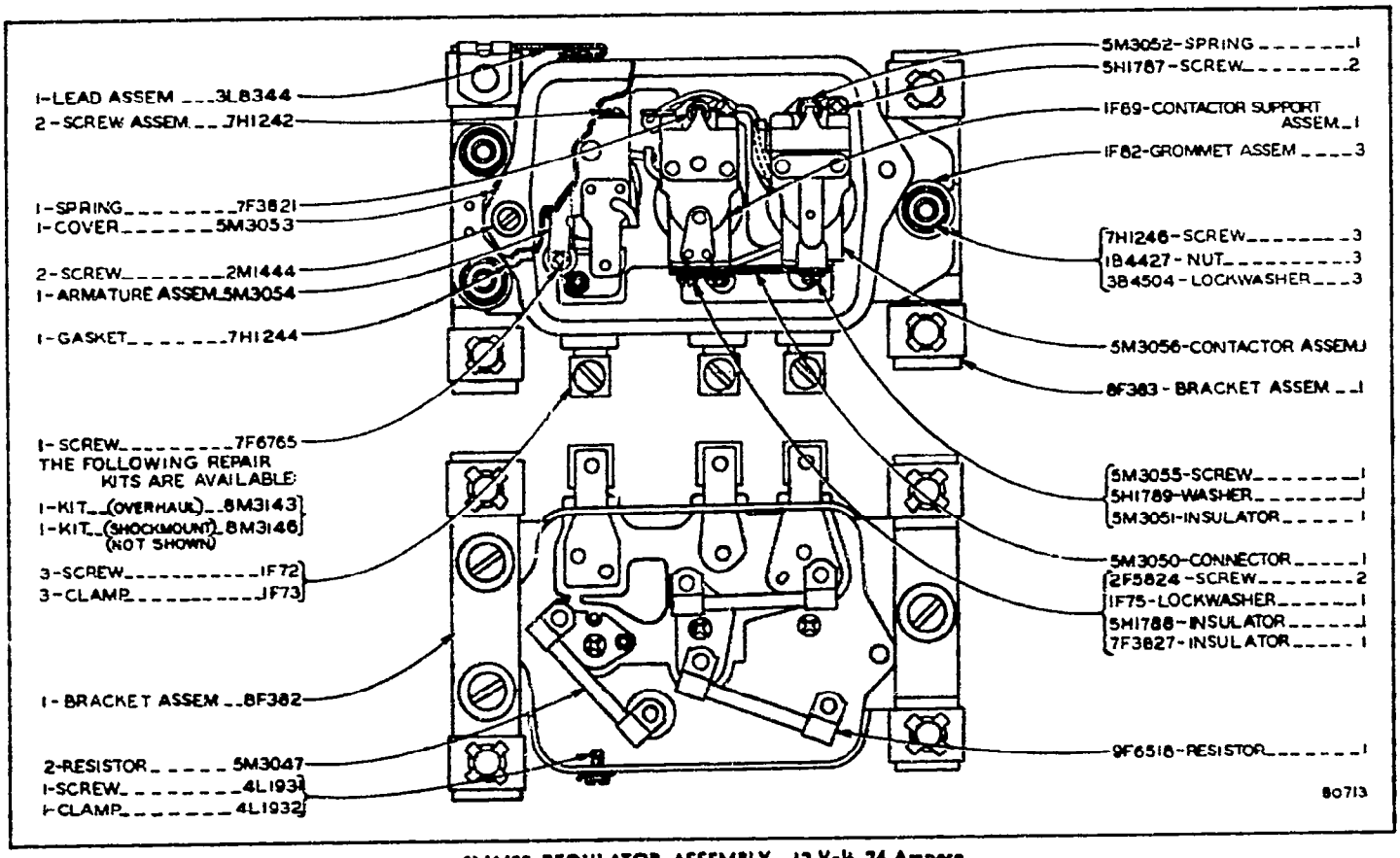

2M6495 REGULATOR ASSEMBLY—12 Volt, 24 Ampere
Part of 4M265 Generator Group shown on Page 142

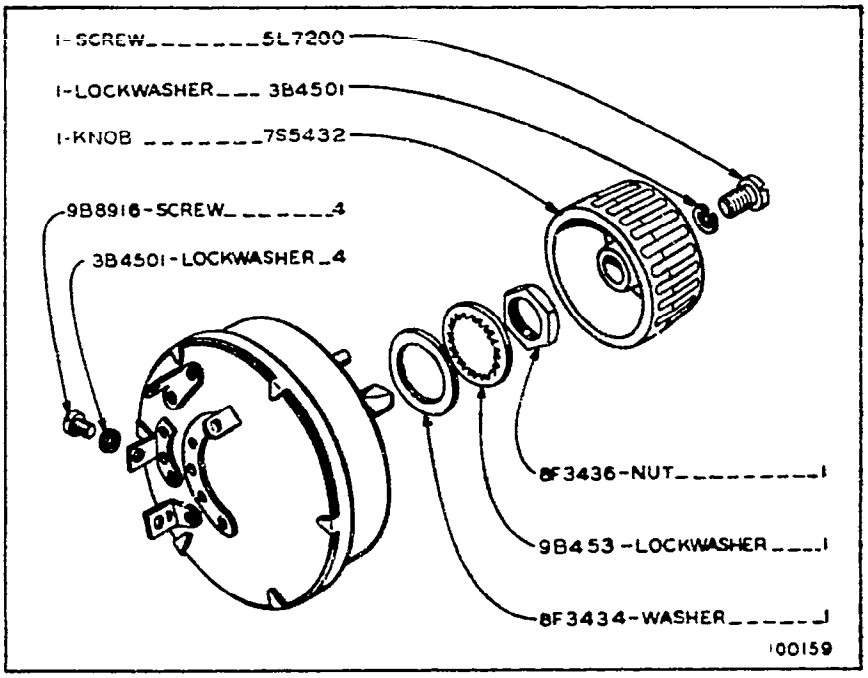

7F2921 COMBINATION SWITCH
Part of Lighting System Groups shown on Pages 129 through 139

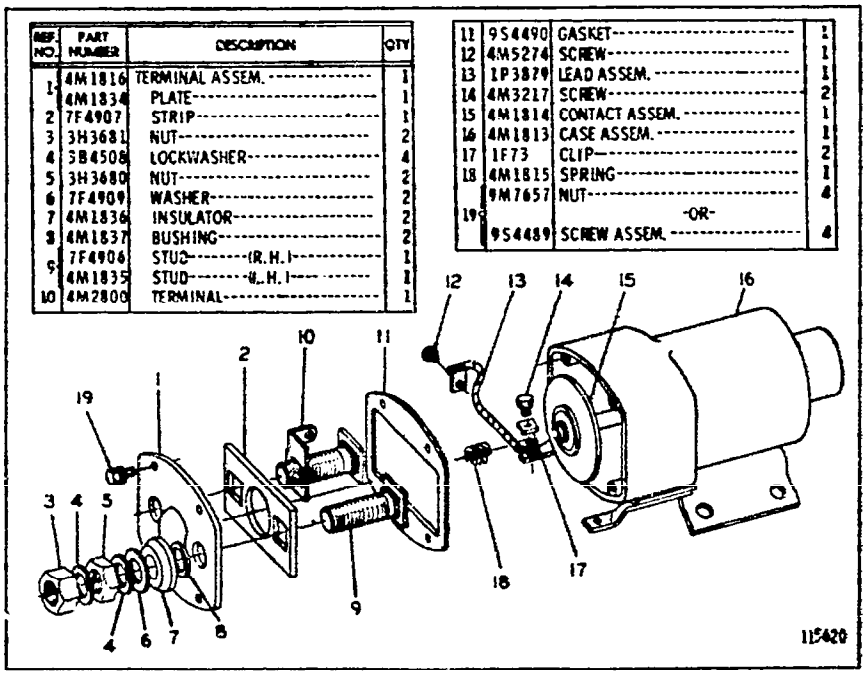

REF. NO.	PART NUMBER	DESCRIPTION	QTY
1	4M1816	TERMINAL ASSEM.	1
	4M1834	PLATE	1
2	7F4907	STRIP	1
3	3H3681	NUT	2
4	3B4508	LOCKWASHER	4
5	3H3680	NUT	2
6	7F4909	WASHER	2
7	4M1836	INSULATOR	2
8	4M1837	BUSHING	2
9	7F4906	STUD (R.H.)	1
	4M1835	STUD (L.H.)	1
10	4M2800	TERMINAL	1
11	9S4490	GASKET	1
12	4M5274	SCREW	1
13	1P3879	LEAD ASSEM.	1
14	4M3217	SCREW	2
15	4M1814	CONTACT ASSEM.	1
16	4M1813	CASE ASSEM.	1
17	1F73	CLIP	2
18	4M1815	SPRING	1
19	9M7657	NUT	4
		-OR-	
	9S4489	SCREW ASSEM.	4

4M1812 SOLENOID SWITCH ASSEMBLY
Part of 8H1913 Motor Assembly shown on Page 148

			Page
9M1762	**For use with Lights**		
	Consists of:		
1	9H3675	Electric Starter Group	147
1	4M3015	Choke and Throttle Control Group	165
1	4M3063	Clutch, Pinion and Brake Control Group	166
1	4M3064	Compression Release Control Group	152
1	4M4571	Wiring Group	155
1	8M1518	Choke and Throttle Control Group	164
1	8M4261	Fuel System Group	153
1	8M3604	Cover Assembly—Breather	
9M1763	**For use without Lights**		
	Consists of:		
1	9H3675	Electric Starter Group	147
1	2M7443	Battery and Wiring Group	156
1	4M265	Generator Group	142
1	4M3015	Choke and Throttle Control Group	165
1	4M3063	Clutch, Pinion and Brake Control Group	166
1	4M3064	Compression Release Control Group	152
1	8M1518	Choke and Throttle Control Group	164
1	8M4261	Fuel System Group	153
1	8M3604	Cover Assembly—Breather	

ELECTRIC STARTING ARRANGEMENTS—12 Volt

		Consists of:	Page
1	.....	Cylinder Head Assembly	151
1	.....	Flywheel	152
1	1M55	Starting Motor Group	147
1	1M7298	Generator Group	161
1	2M4299	Glow Plug and Wiring Group	154
1	8M5265	Battery and Wiring Group	158
1	1B8702	Key—Lever to Compression Release Shaft	
4	3B4506	Lockwasher—3/8"	
1	4B5166	Cover—Cylinder Head Side	
1	1D4717	Nut—Lever Lock	
1	7H4223	Gasket—Cylinder Head Side	
1	1M130	Cover—Starting Engine Water Passage	
1	4M6480	Gasket—Starting Engine Water Passage	
1	9M5131	Lever—Compression Release	
2	L-1351	Bolt—Cover to Head	
3	S-1588	Bolt	
1	S-1591	Bolt—Lever Lock	
2	S-1594	Bolt—Cover to Block	

8M6201 DIRECT ELECTRIC STARTING ARRANGEMENT—24 Volt—Factory Installation

9M1762 FOR USE WITH LIGHTS

		Consists of:	Page
1	.....	Cylinder Head Assembly.	150A
1	9H4081	Flywheel Group.	31
1	4M3015	Choke and Throttle Control Group. . . .	165
1	4M3063	Clutch, Pinion and Brake Control Group	166
1	4M3064	Compression Release Control Group . . .	152
1	4M4571	Wiring Group.	155
1	5S4270	Starting Engine Arrangement . .	Listed below
3	S-1591	Bolt	

9M1763 FOR USE WITHOUT LIGHTS

		Consists of:	
1	.....	Cylinder Head Assembly.	150A
1	9H4081	Flywheel Group.	31
1	2M7443	Battery and Wiring Group.	156
1	4M265	Generator Group	142
1	4M3015	Choke and Throttle Control Group. . . .	165
1	4M3063	Clutch, Pinion and Brake Control Group	166
1	4M3064	Compression Release Control Group . . .	152
1	5S4270	Starting Engine Arrangement . .	Listed below
3	S-1591	Bolt	

5S4270 STARTING ENGINE ARRANGEMENT
Part of 9M1762 and 9M1763 Electric Starting Arrangements

		Consists of:	
1	.....	Camshaft and Governor	55
1	.....	Crankshaft.	54
1	.....	Cylinder Block and Covers	146D
1	.....	Support	49
2	9H3659	Connecting Rod and Piston Group	55
1	9H3675	Electric Starter Group.	147
1	4M5340	Ignition System Group	152A
1	4M5360	Cylinder Head and Valve Mechanism Group	50
1	8M1518	Choke and Throttle Control Group. . . .	164
1	8M4261	Fuel System Group	153
1	8M5866	Manifold, Carburetor and Air Cleaner Group	118
1	8M9337	Clutch and Brake Group.	66
1	8M9351	Starter Pinion Group.	67
1	9M1212	Water Lines Group	49
1	9M1224	Clutch, Brake and Pinion Control Group	165B
1	9M8802	Oil Filter Group.	57
1	9M9135	Recoil Starter Group.	146F
1	2S132	Oil Pump Group.	56

ELECTRIC STARTING ARRANGEMENTS--12 Volt--Type 2
FOR USE WITH NORMALIZED ENGINES

8M6095 FOR USE WITH LIGHTS

		Consists of:	Page
1	9H3675	Electric Starter Group	147
1	4M3063	Clutch, Pinion and Brake Control Group	166
1	4M3064	Compression Release Control Group	152
1	8M6063	Fuel System Group	152B
1	8M6065	Wiring Group	154A
1	8M6076	Choke, Throttle and Fuel Shut-Off Control Group	Between 146 & 147
1	8M6091	Choke and Throttle Control Group	165B
1	8M3604	Cover Assembly	
1	1B3057	Clip--Breather Chain to Cover	

8M6094 FOR USE WITHOUT LIGHTS

		Consists of:	
1	9H3675	Electric Starter Group	147
1	4M265	Generator Group	142
1	4M3063	Clutch, Pinion and Brake Control	166
1	4M3064	Compression Release Control Group	152
1	8M6063	Fuel System Group	152B
1	8M6064	Battery and Wiring Group	157A
1	8M6076	Choke, Throttle and Fuel Shut-Off Control Group	163
1	8M6091	Choke and Throttle Control Group	165B
1	8M3604	Cover Assembly	
1	1B3057	Clip--Breather Chain to Cover	

ELECTRIC STARTING ARRANGEMENTS--12 Volt--Type 1
FOR USE WITH NATURALLY ASPIRATED ENGINE

8M6095 FOR USE WITH LIGHTS

		Consists of:	Page
1	.....	Cylinder Head Assembly.	.150A
1	9H4081	Flywheel Group.	31
1	4M3063	Clutch, Pinion and Brake Control Group	166
1	4M3064	Compression Release Control Group . . .	152
1	8M6065	Wiring Group.	.154A
1	8M6076	Choke, Throttle and Fuel Shut-Off Control Group	163
1	5S4264	Starting Engine Arrangement . .	Listed below
3	S-1591	Bolt	

8M6094 FOR USE WITHOUT LIGHTS

		Consists of:	
1	.....	Cylinder Head Assembly.	.150A
1	9H4081	Flywheel Group.	31
1	4M265	Generator Group	142
1	4M3063	Clutch, Pinion and Brake Control Group	166
1	4M3064	Compression Release Control Group . . .	152
1	8M6064	Battery and Wiring Group.	.157A
1	8M6076	Choke, Throttle and Fuel Shut-Off Control Group	163
1	5S4264	Starting Engine Arrangement . .	Listed below
3	S-1591	Bolt	

5S4264 STARTING ENGINE ARRANGEMENT
Part of 8M6095 and 8M6094 Electric Starting Arrangements

		Consists of:	
1	.....	Camshaft and Governor	55
1	.....	Crankshaft.	54
1	.....	Cylinder Block and Covers	.146D
1	.....	Support	49
2	9H3659	Connecting Rod and Piston Group	55
1	9H3675	Electric Startep Group.	147
1	4M5340	Ignition System Group	.152A
1	4M5360	Cylinder Head and Valve Mechanism Group	50
1	8M4456	Manifold, Carburetor and Air Cleaner Group	60
1	8M6091	Choke and Throttle Control Group. . .	.165B
1	8M6063	Fuel System Group	.152B
1	8M9337	Clutch and Brake Group.	66
1	8M9351	Starter Pinon Group	67
1	9M1212	Water Lines Group	49
1	9M1224	Clutch, Brake and Pinion Control Group	165B
1	9MB802	Oil Filter Group.	57
1	9M9134	Recoil Starter Group.	64
1	2S132	Oil Pump Group.	56

ELECTRIC STARTING ARRANGEMENTS- 12 Volt--Type 2
Factory Installed
FOR USE WITH NATURALLY ASPIRATED ENGINE

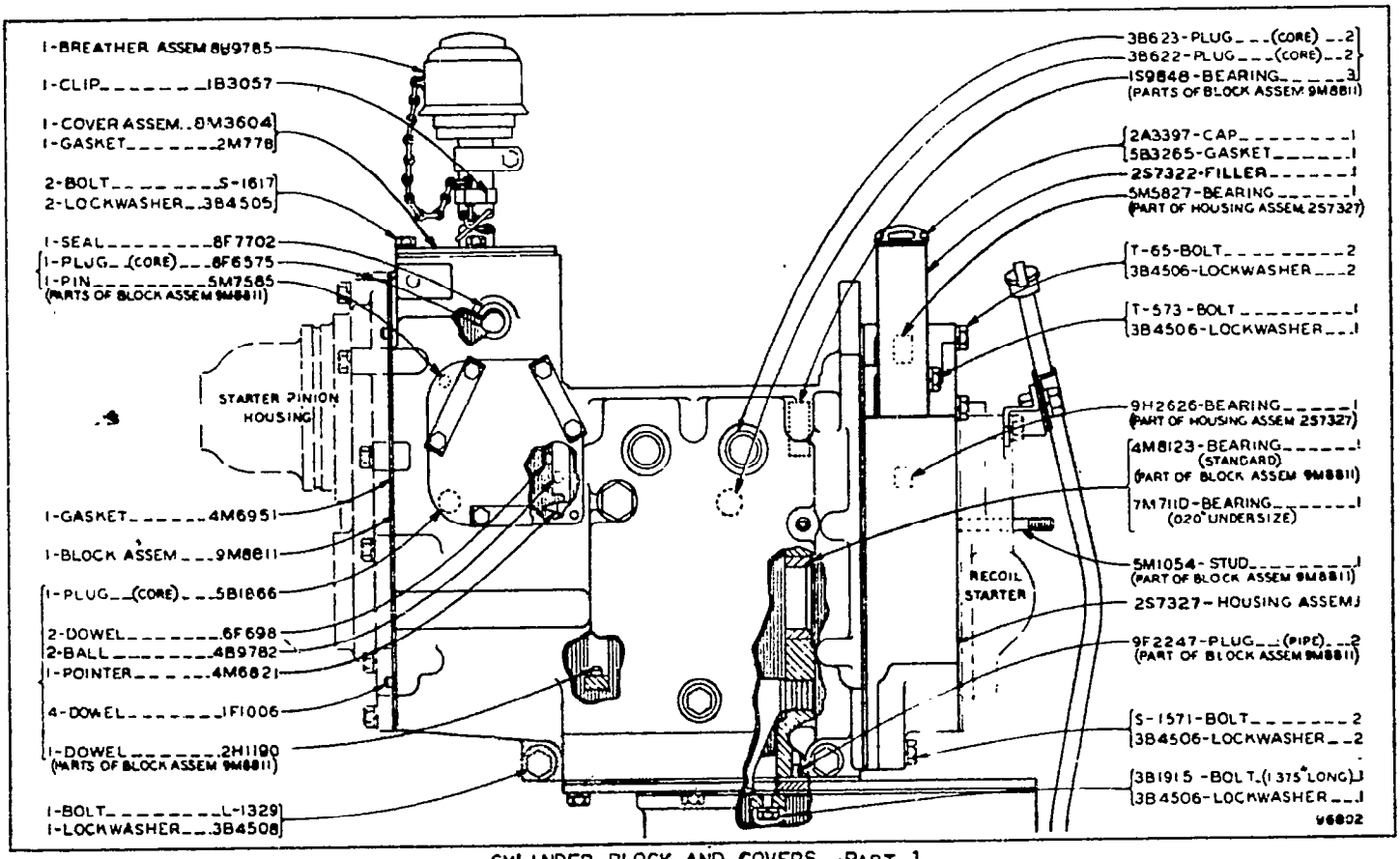

CYLINDER BLOCK AND COVERS--PART 1

PART OF 5S4270 AND 5S4264 STARTING ENGINE ARRANGEMENTS LISTED ON PAGES 146A AND 146C

CYLINDER BLOCK AND COVERS--PART 2

PART OF 5S4270 AND 5S4264 STARTING ENGINE ARRANGEMENTS LISTED ON PAGES 146A AND 146C

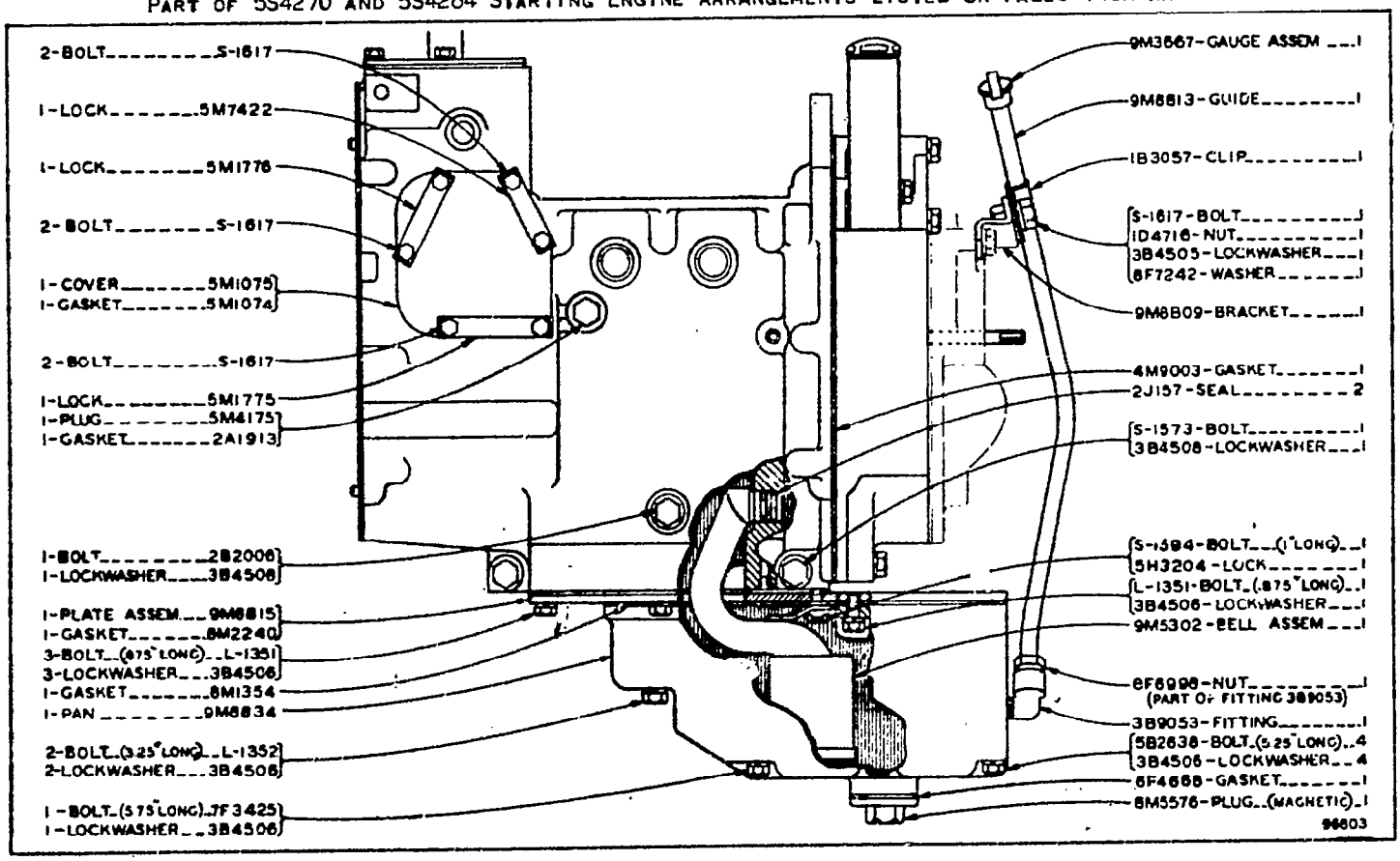

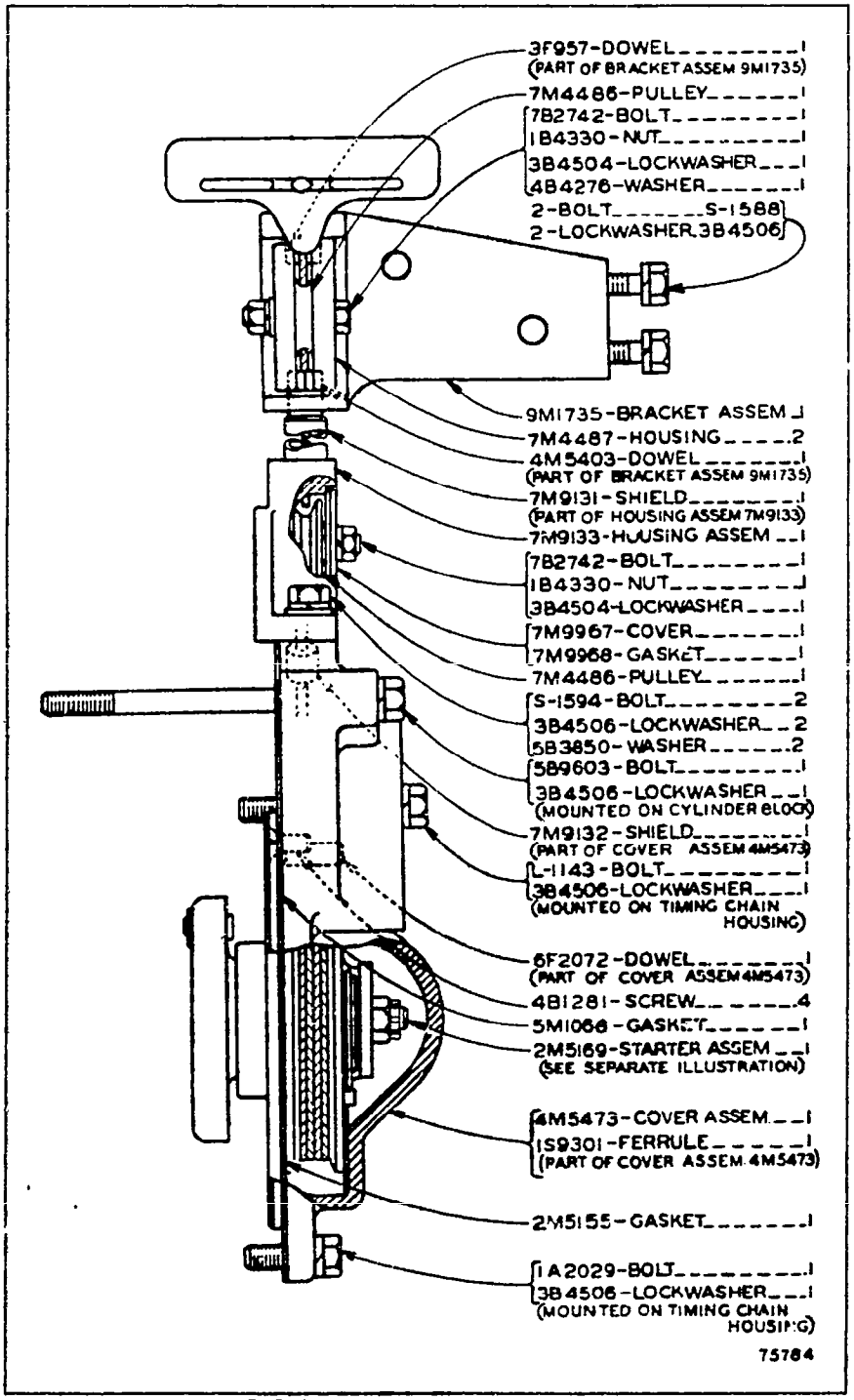

9M9135 RECOIL STARTER GROUP

PART OF 5S4270 STARTING ENGINE ARRANGEMENT LISTED ON PAGE 146A

2M5169 RECOIL STARTER ASSEMBLY PARTS ARE SHOWN ON PAGE 65

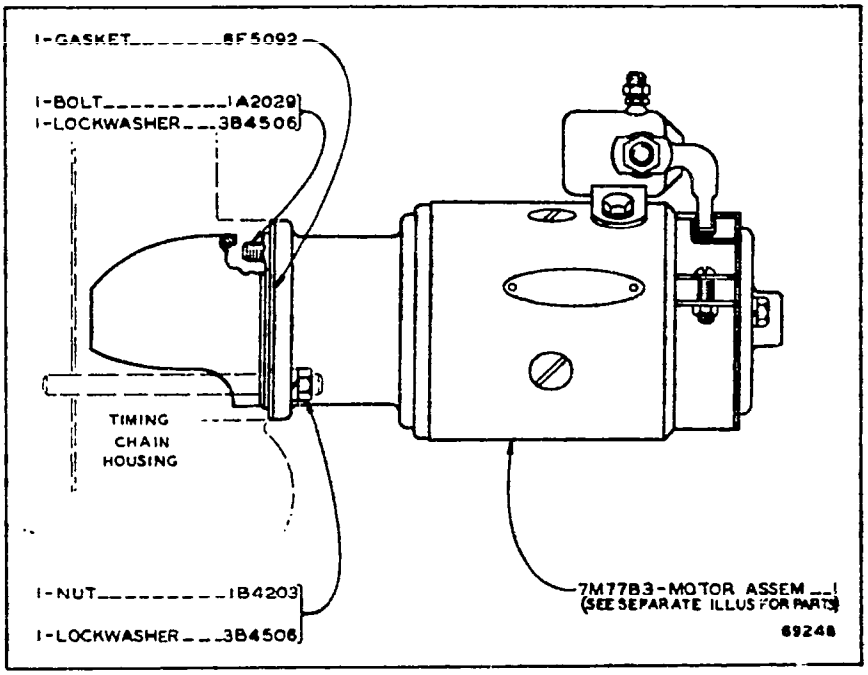

9H3675 ELECTRIC STARTER GROUP—12 Volt
Part of 9M1762 and 9M1763 Electric Starting Arrangements
7M7783 Motor Assembly parts are shown on Page 150

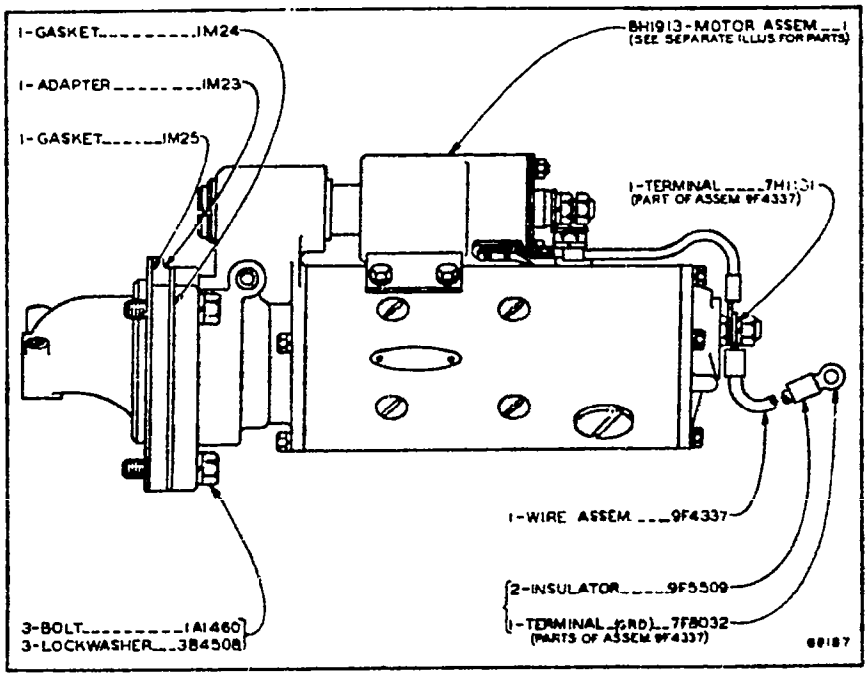

1M55 STARTING MOTOR GROUP—24 Volt
Part of 8M6201 Direct Electric Starting Arrangement
8H1913 Motor Assembly parts are shown on Pages 148 and 149

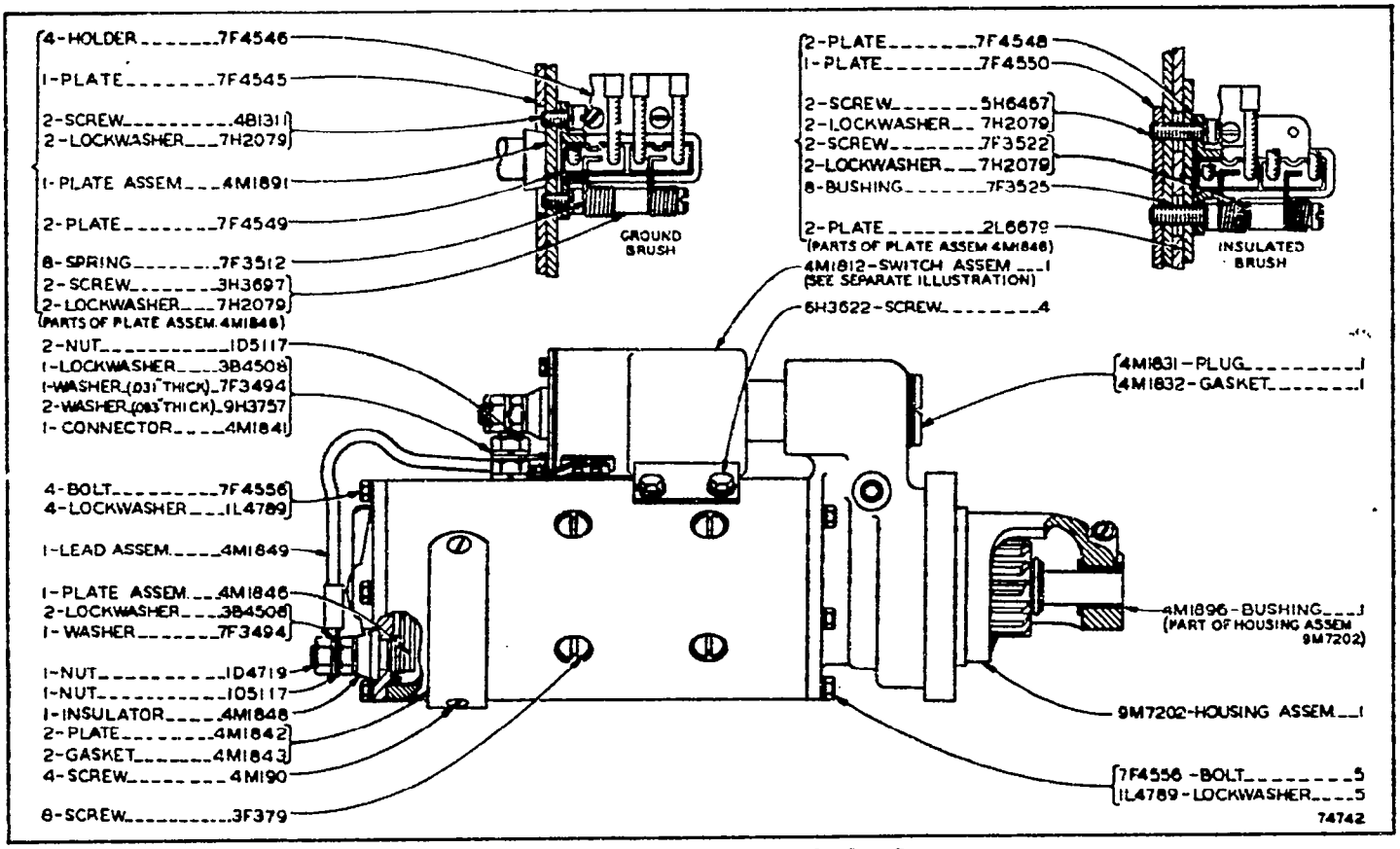

8H1913 MOTOR ASSEMBLY—24 Volt—Part One
Part of 1M55 Starting Motor Group shown on Page 147
4MI812 Solenoid Switch Assembly parts are shown on Page 145

8H1913 MOTOR ASSEMBLY—24 Volt—Part Two
Part of 1M55 Starting Motor Group shown on Page 147

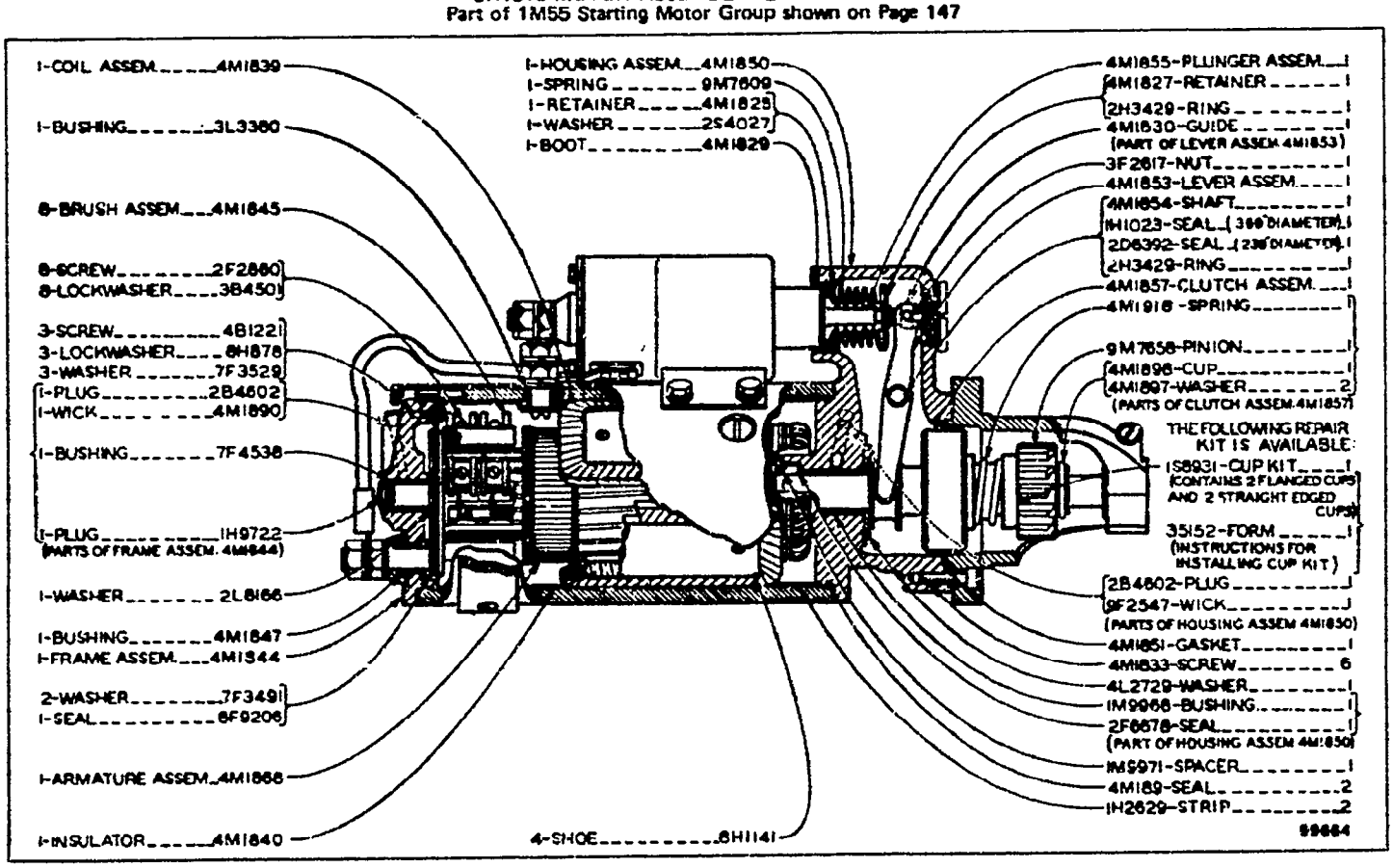

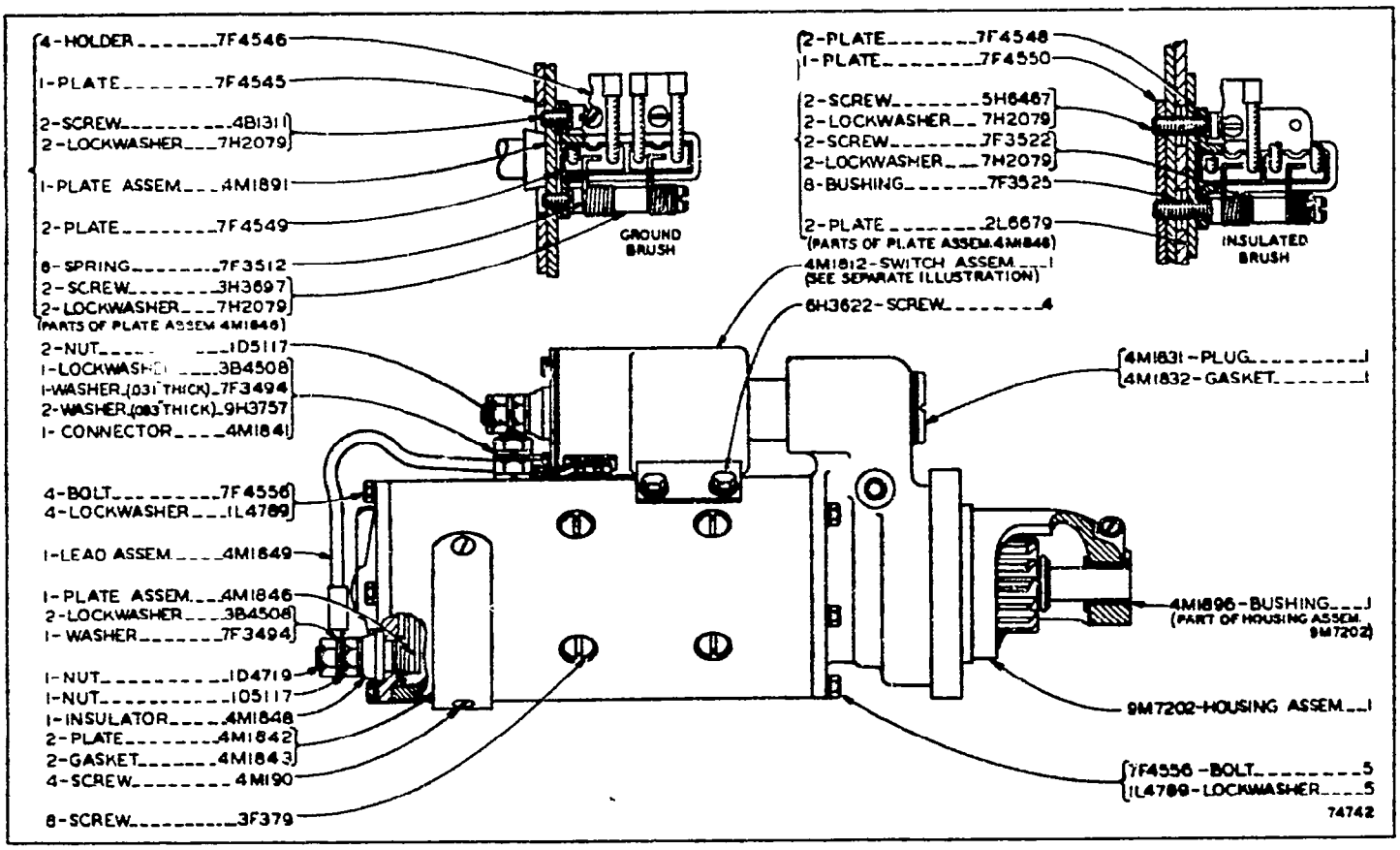

8H1913 MOTOR ASSEMBLY—24 Volt—Part 1—Type 2
Part of 1M55 Starting Motor Group shown on Page 147
4M1812 Switch parts are shown on Page 145

8H1913 MOTOR ASSEMBLY—24 Volt—Part 2—Type 2
Part of 1M55 Starting Motor Group shown on Page 147

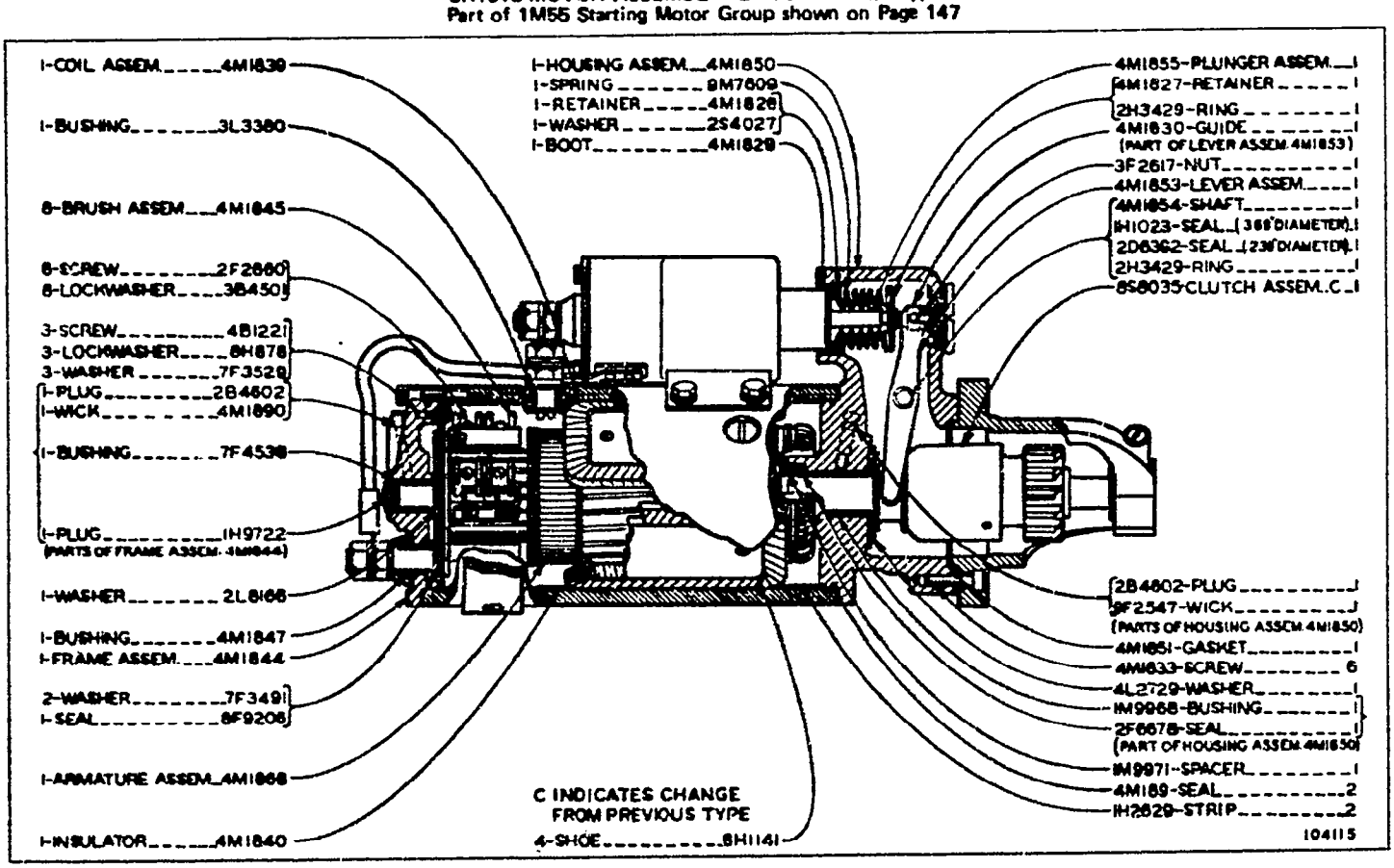

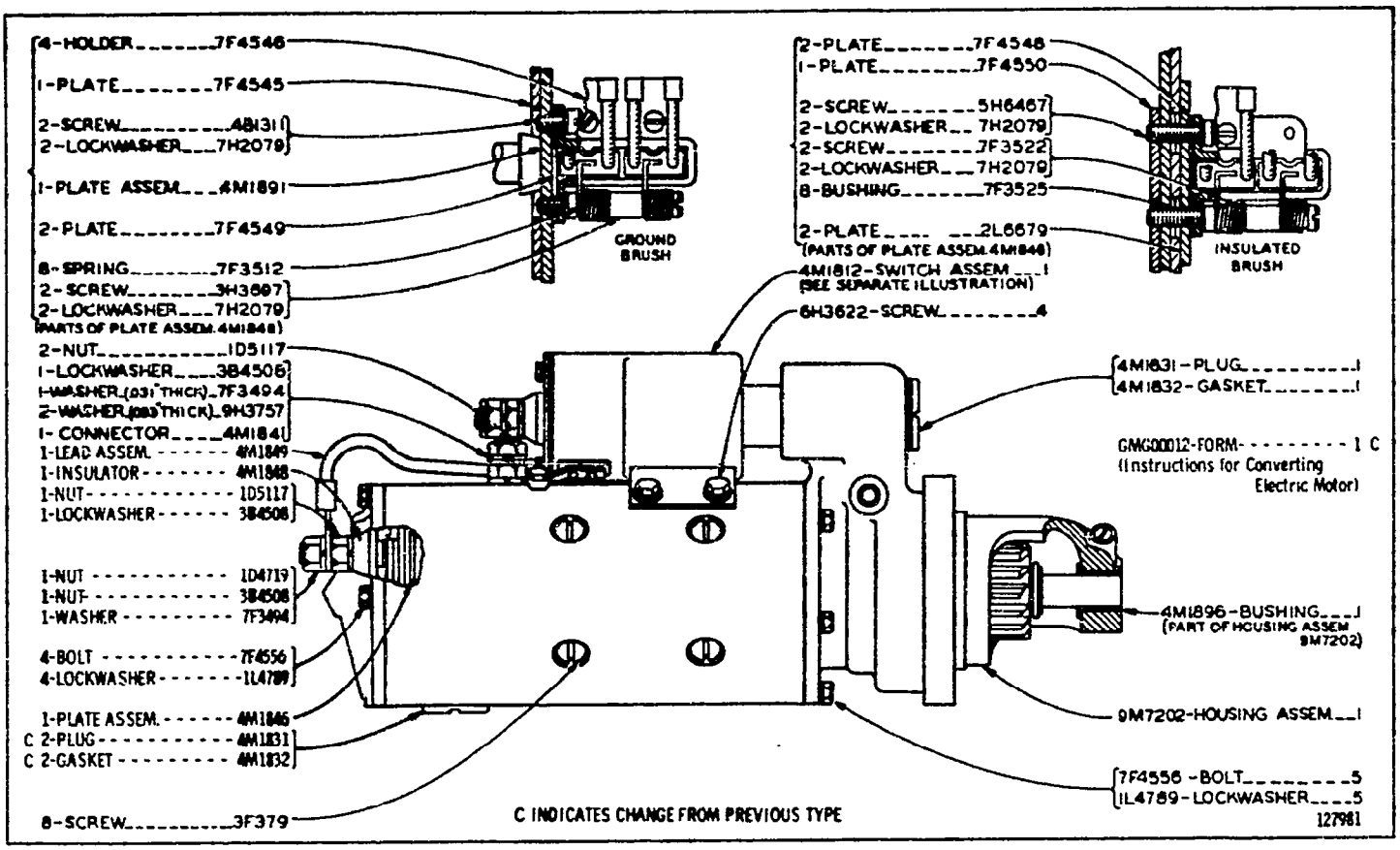

8H1913 MOTOR ASSEMBLY–24 Volt–Part 1–Type 3
Part of 1M55 Starting Motor Group shown on Page 147
4M1812 Switch parts are shown on Page 145

8H1913 MOTOR ASSEMBLY–24 Volt–Part 2–Type 3
Part of 1M55 Starting Motor Group shown on Page 147

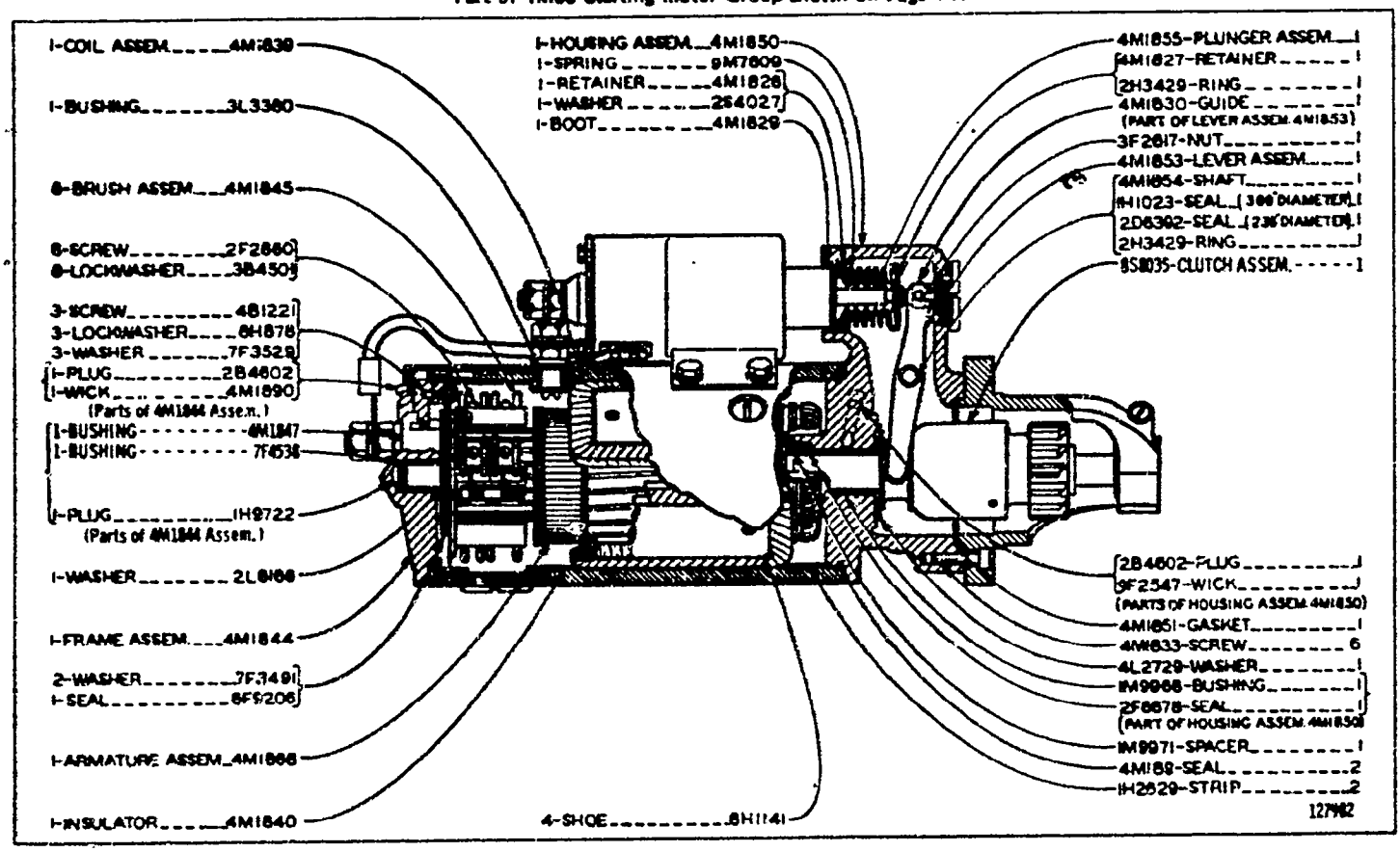

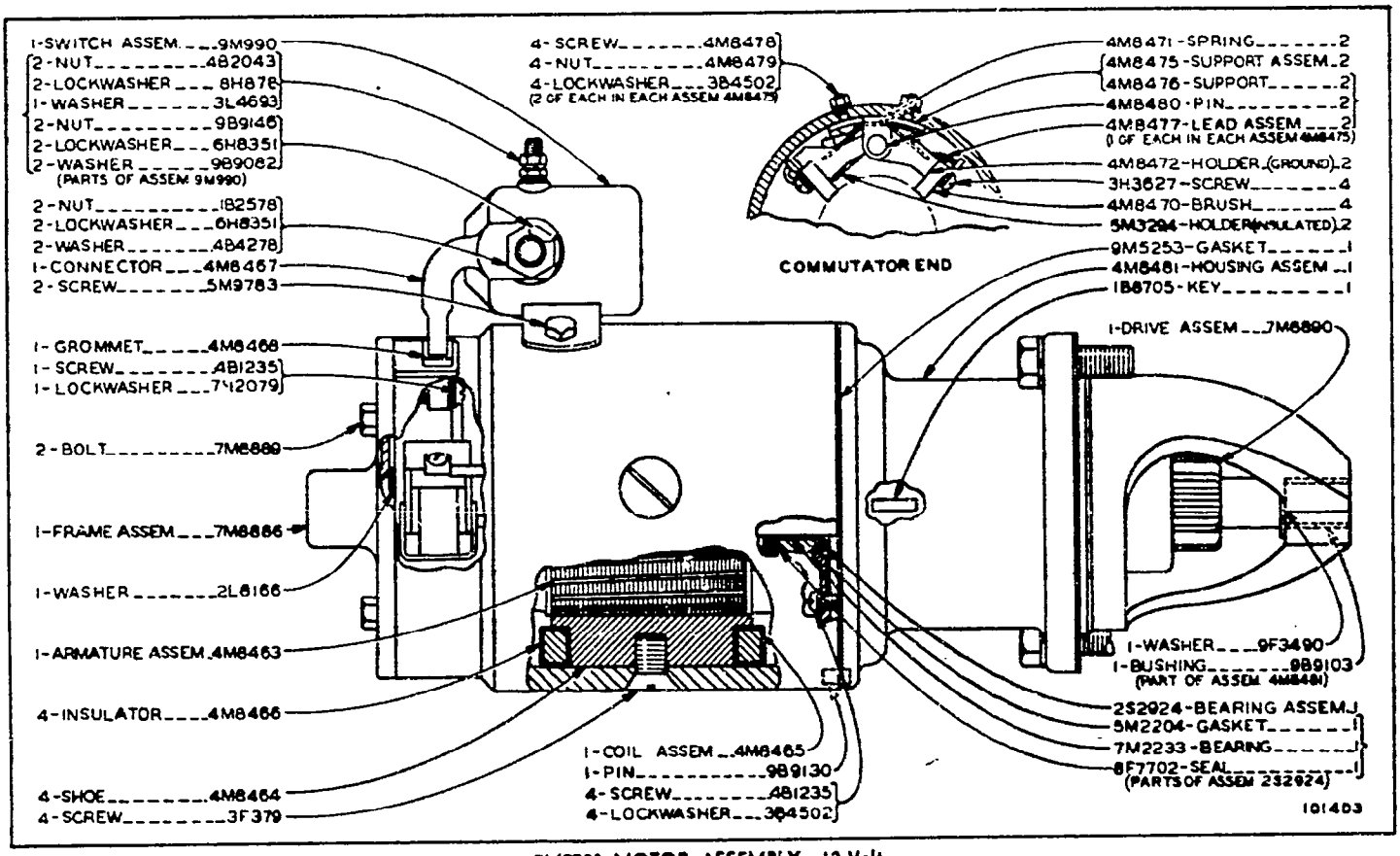

7M7783 MOTOR ASSEMBLY—12 Volt
Part of 9H3675 Electric Starter Group shown on Page 147

CYLINDER HEAD ASSEMBLY
Effective with Serial No. 44A9686
For use with Gasoline Starting

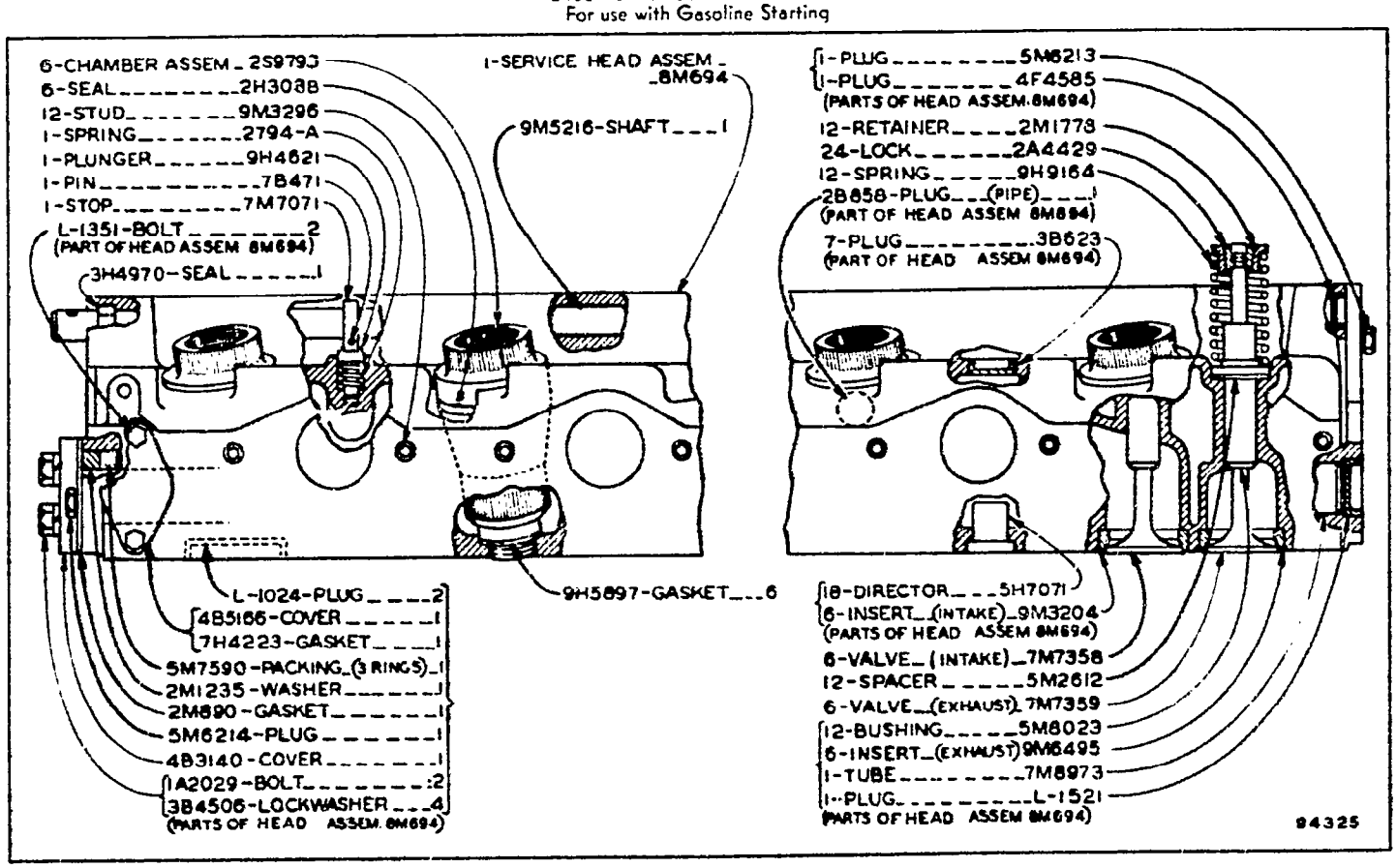

CYLINDER HEAD ASSEMBLY

Part of 8M6201 Direct Electric Starting Arrangement listed on Page 146

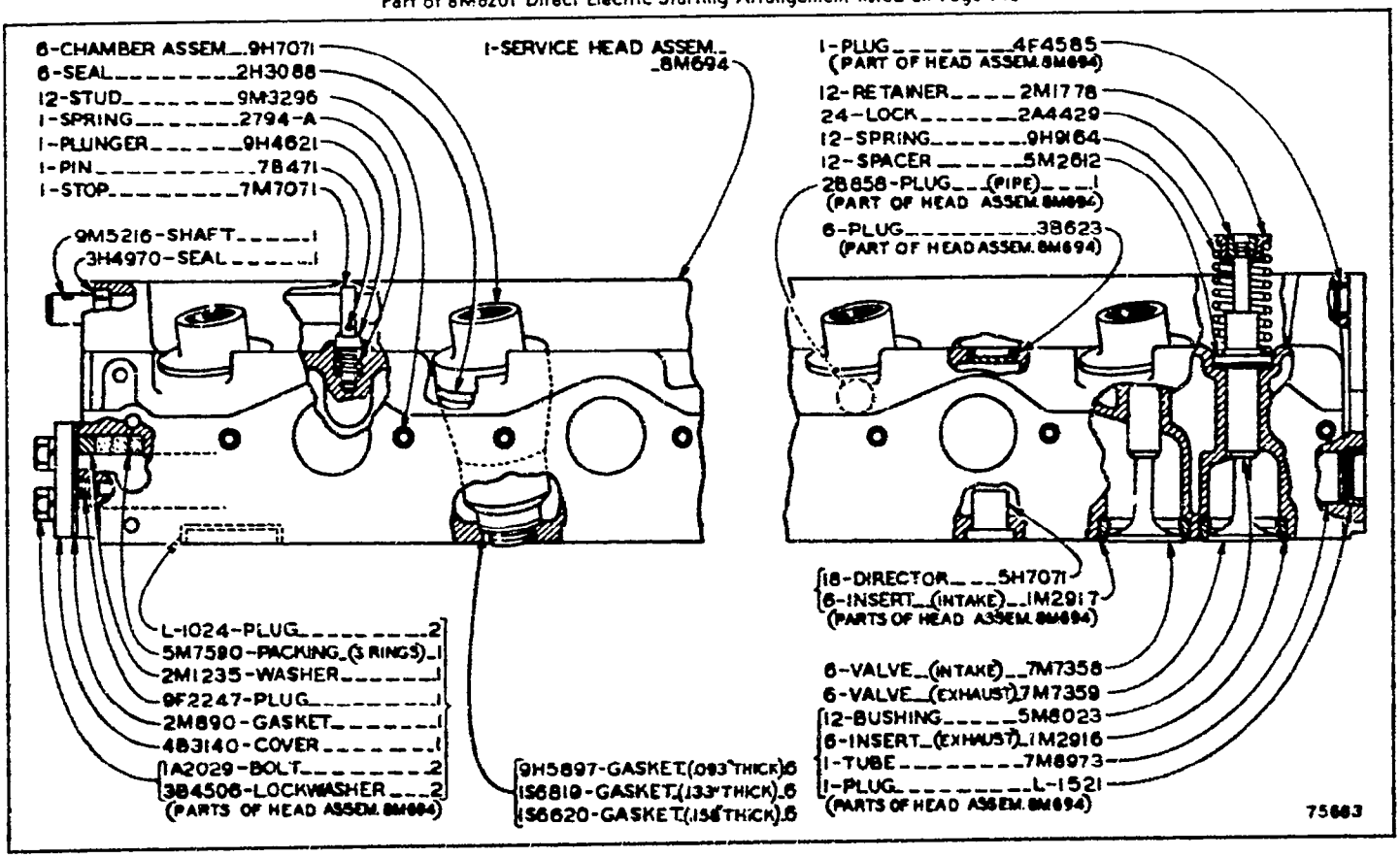

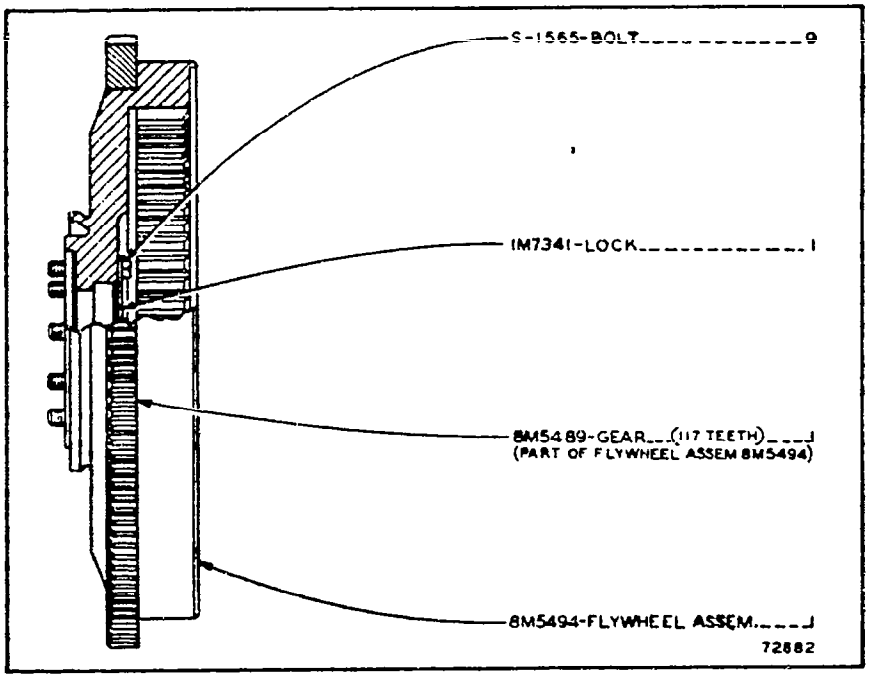

FLYWHEEL
Part of 8M6201 Direct Electric Starting Arrangement listed on Page 146

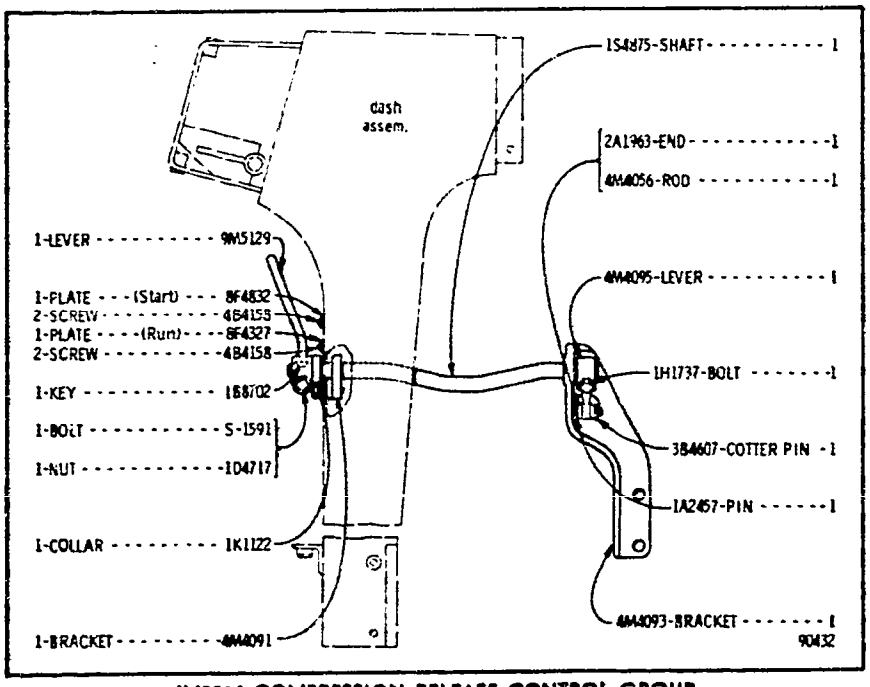

4M3064 COMPRESSION RELEASE CONTROL GROUP
Part of 9M1762 and 9M1763 Electric Starting Arrangements listed on Page 146

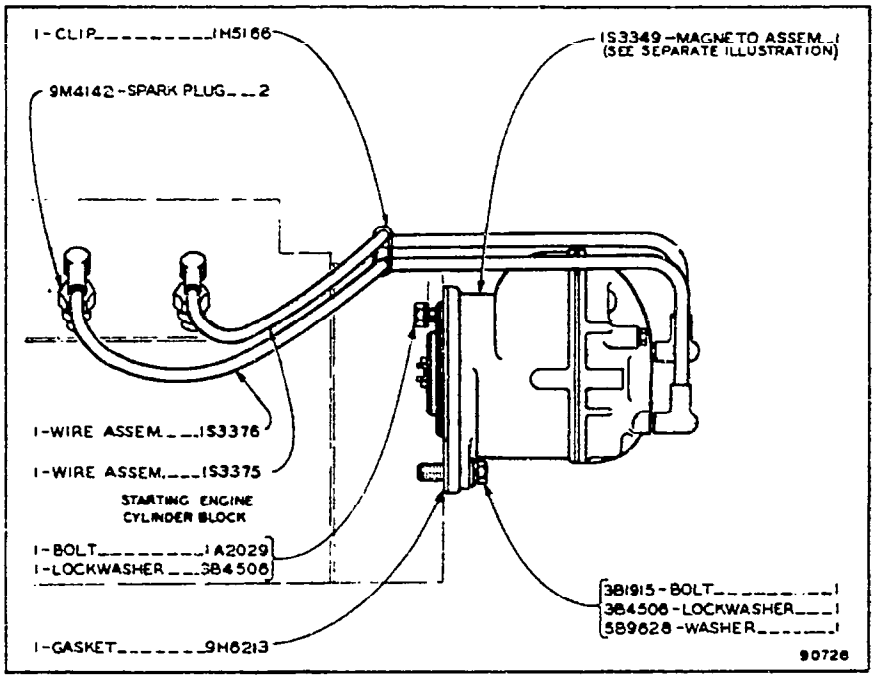

4M5340 IGNITION SYSTEM GROUP
PART OF 5S4270 AND 5S4264 STARTING ENGINE ARRANGEMENTS LISTED ON PAGES 146A AND 146C
1S3349 MAGNETO ASSEMBLY PARTS ARE SHOWN ON PAGE 63

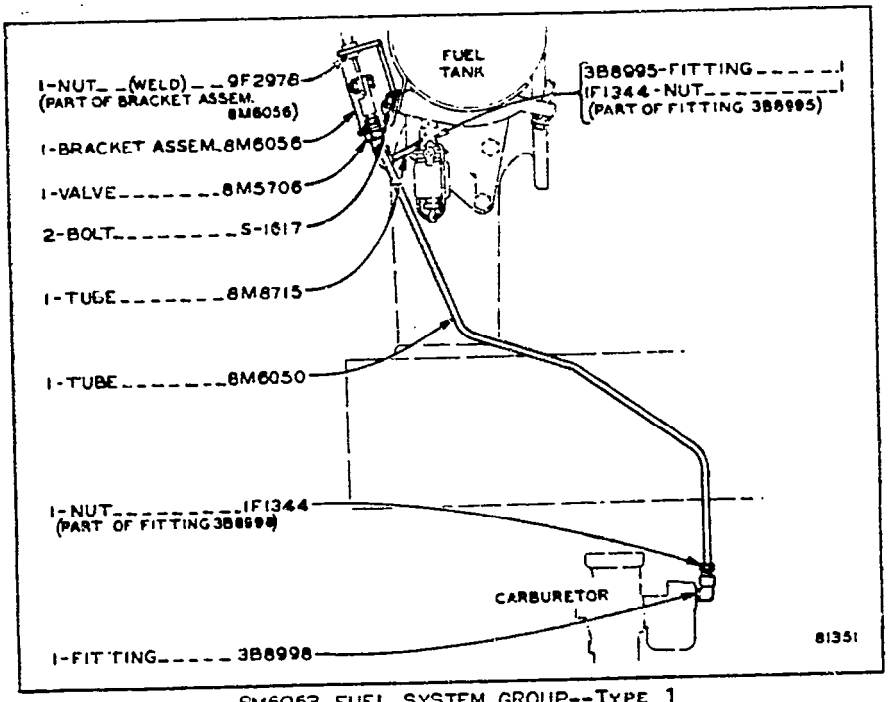

8M6063 FUEL SYSTEM GROUP--TYPE 1
PART OF 8M6095 AND 8M6094 ELECTRIC STARTING ARRANGEMENTS
LISTED ON PAGE 146B

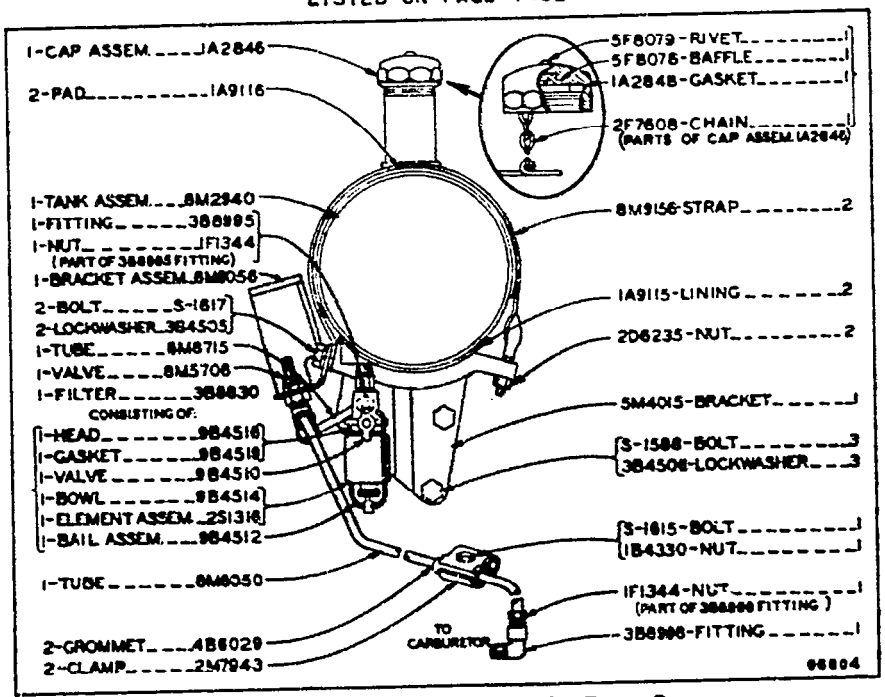

8M6063 FUEL SYSTEM GROUP--TYPE 2
PART OF 5S4264 STARTING ENGINE ARRANGEMENT LISTED ON PAGE 146C

8M4261 FUEL SYSTEM GROUP

Part of 9M1762 and 9M1763 Electric Starting Arrangements listed on Page 146

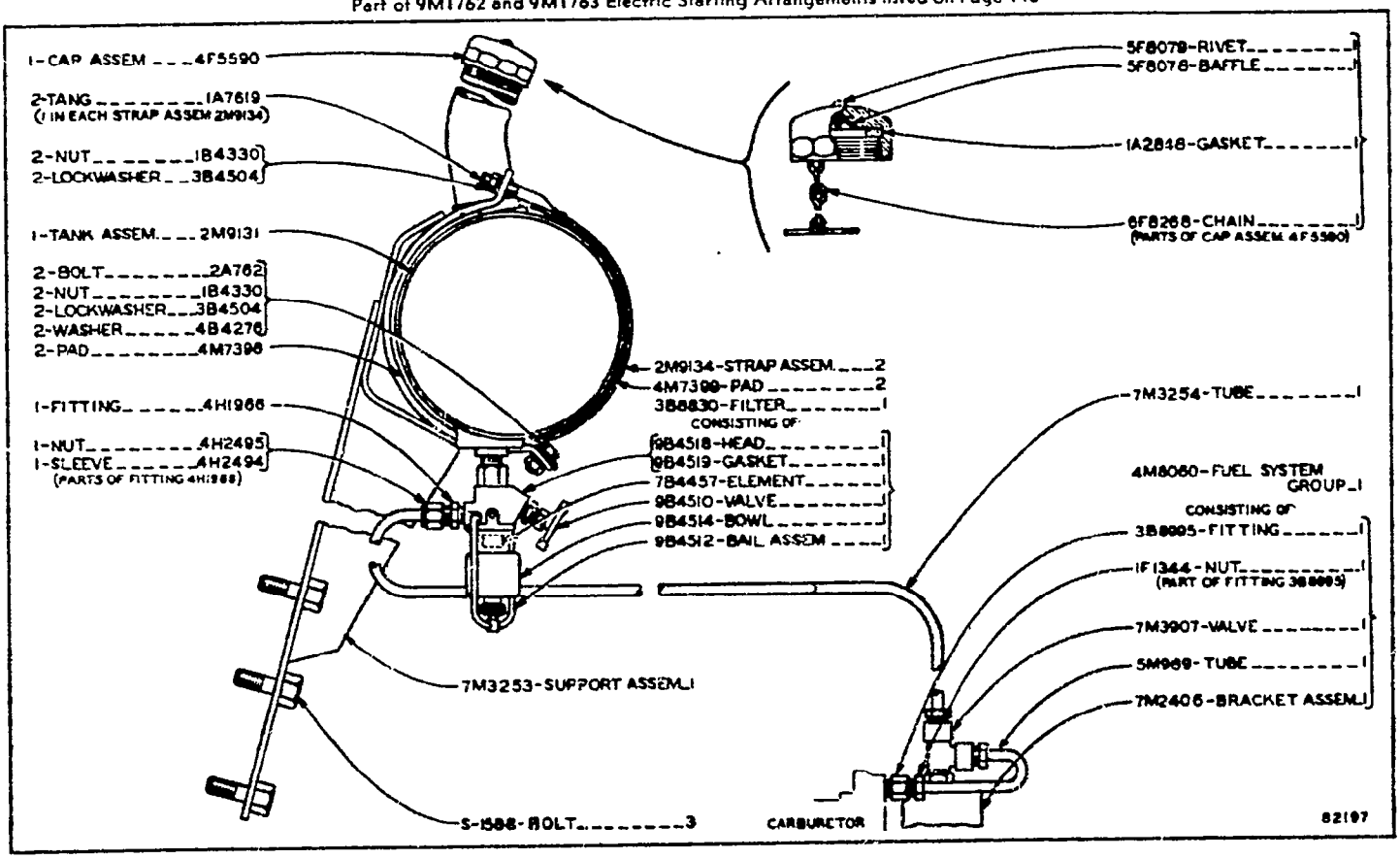

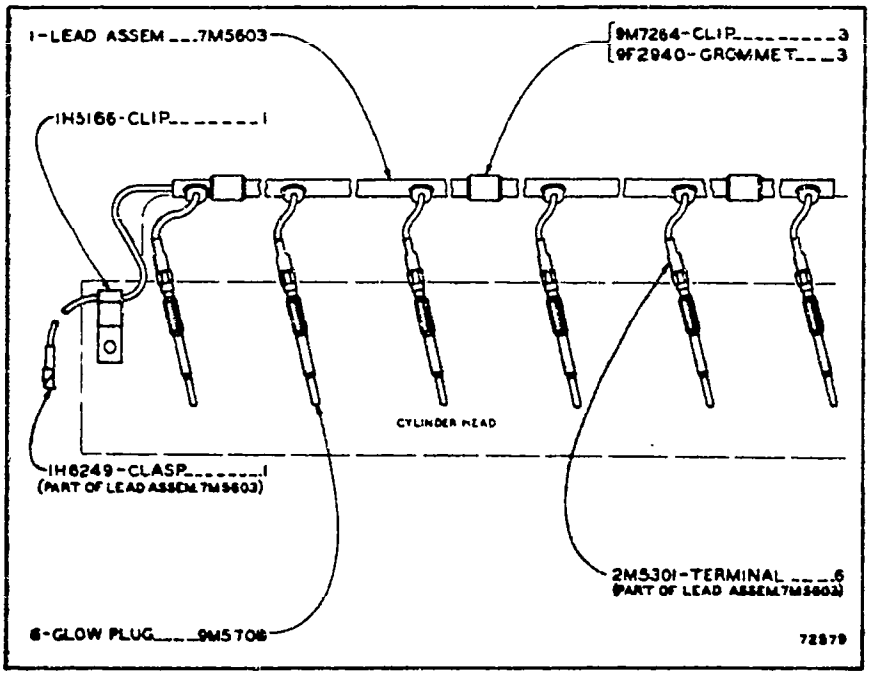

2M4299 GLOW PLUG AND WIRING GROUP—24 Volt—First Type
Part of 8M6201 Direct Electric Starting Arrangement listed on Page 146

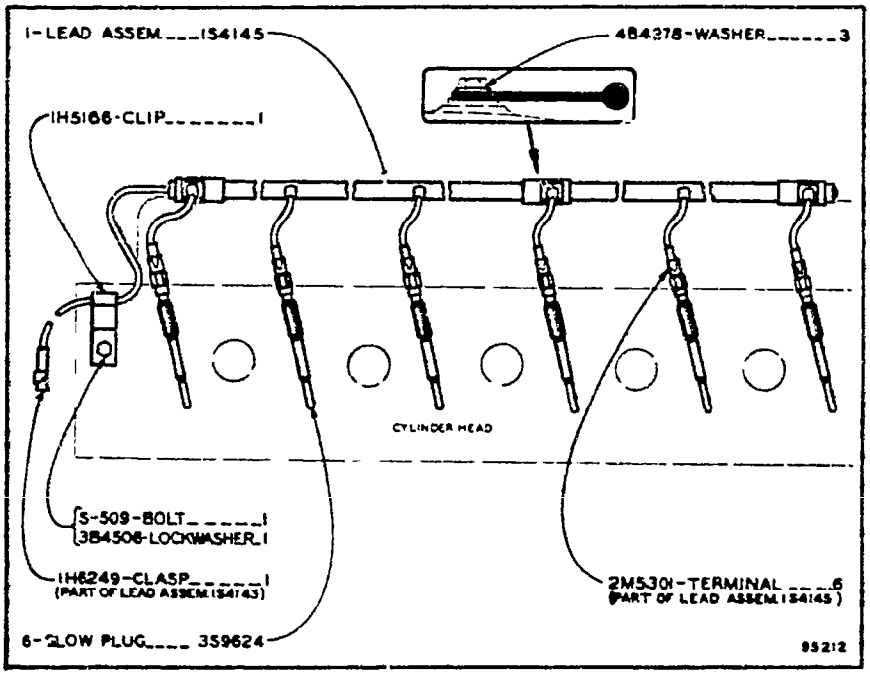

2M4299 GLOW PLUG AND WIRING GROUP—24 Volt—Second Type
Part of 8M6201 Direct Electric Starting Arrangement listed on Page 146

8M6065 WIRING GROUP

PART OF 8M6095 ELECTRIC STARTING ARRANGEMENT LISTED ON PAGE 146B

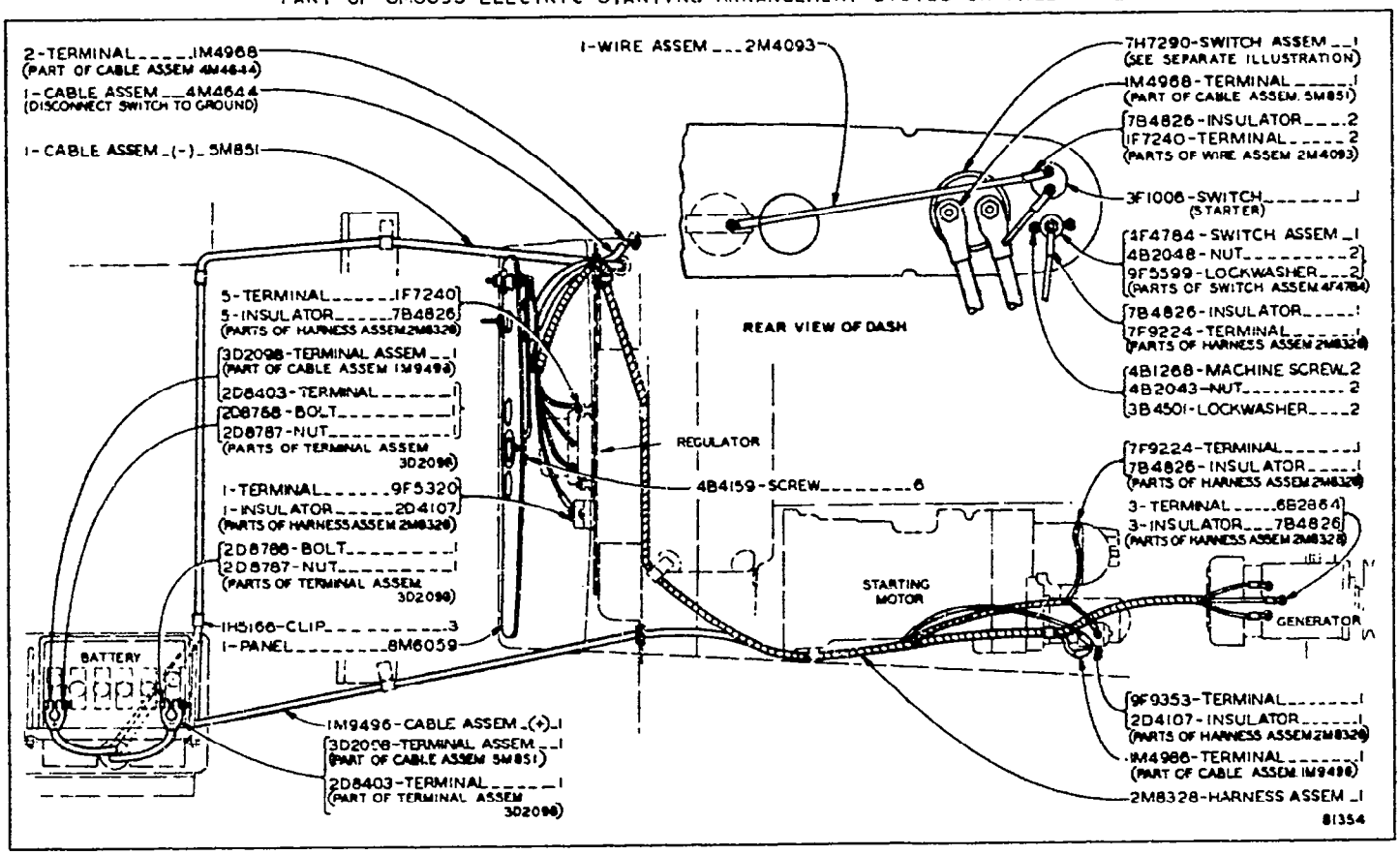

4M4571 WIRING GROUP

Part of 9M1762 Electric Starting Arrangement listed on Page 146
7H7290 Disconnect Switch Assembly parts are shown on Page 164

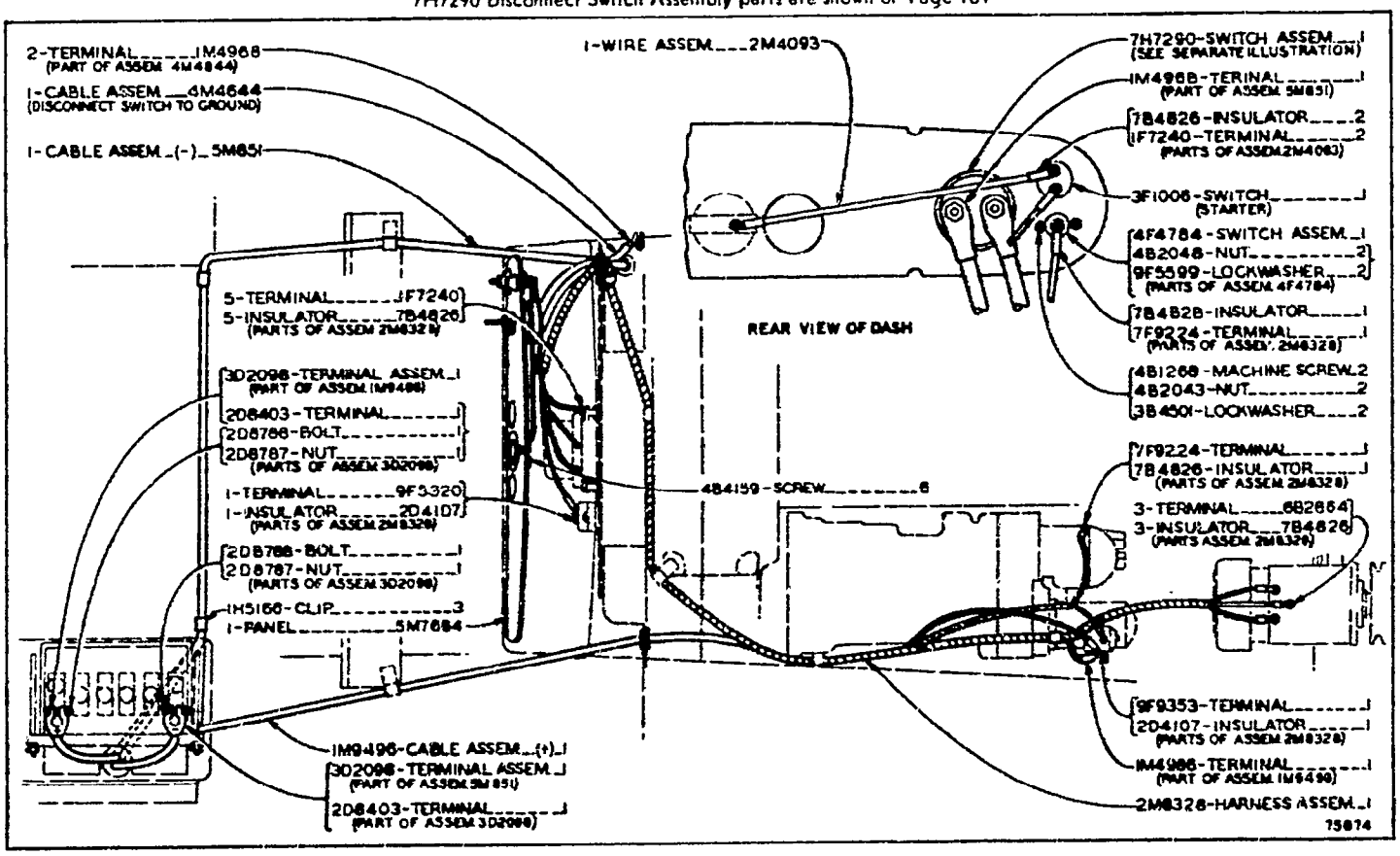

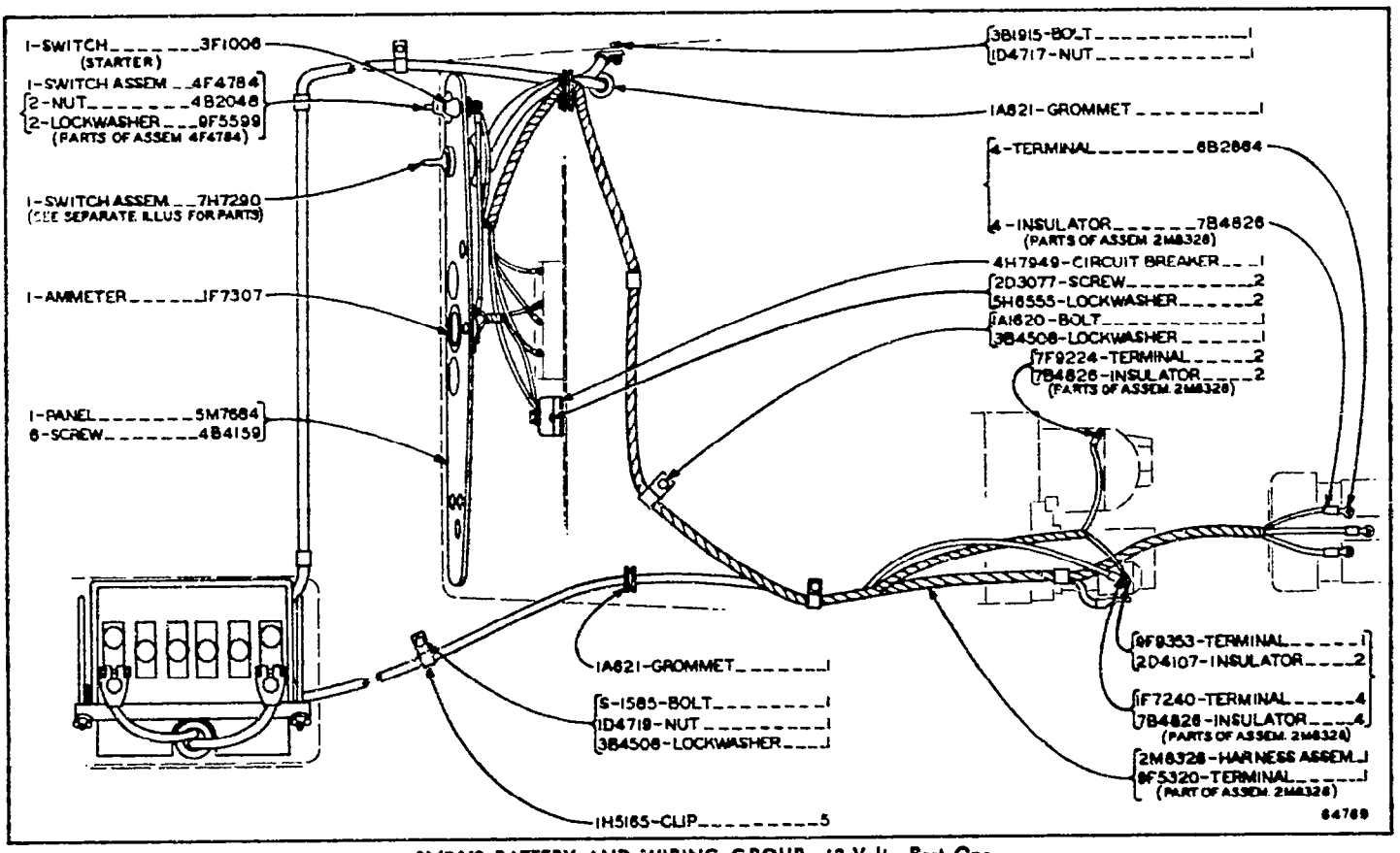

2M7443 BATTERY AND WIRING GROUP—12 Volt—Part One
Part of 9M1763 Electric Starting Arrangement listed on Page 146
7H7290 Disconnect Switch Assembly parts are shown on Page 164

2M7443 BATTERY AND WIRING GROUP—12 Volt—Part Two
Part of 9M1763 Electric Starting Arrangement listed on Page 146

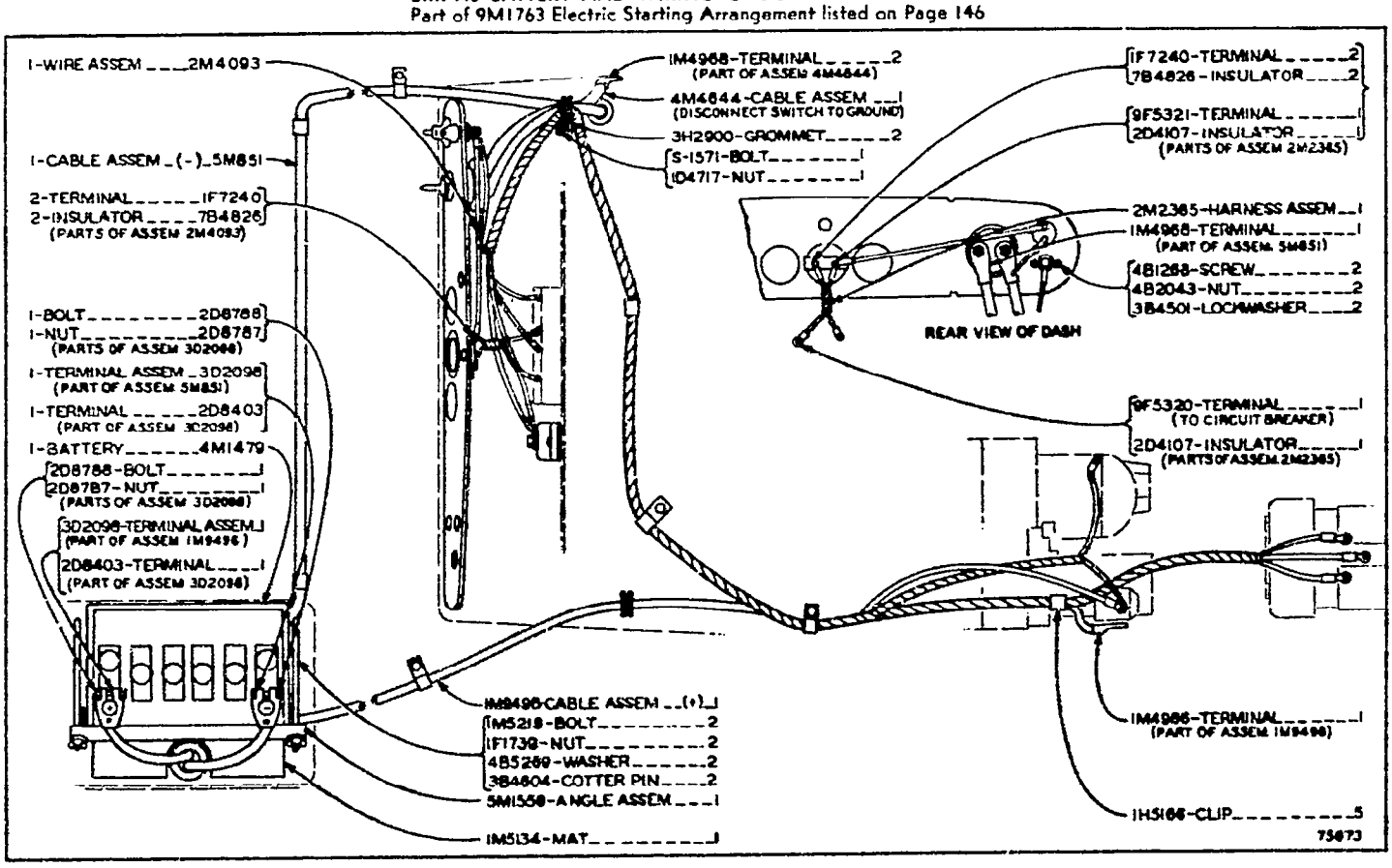

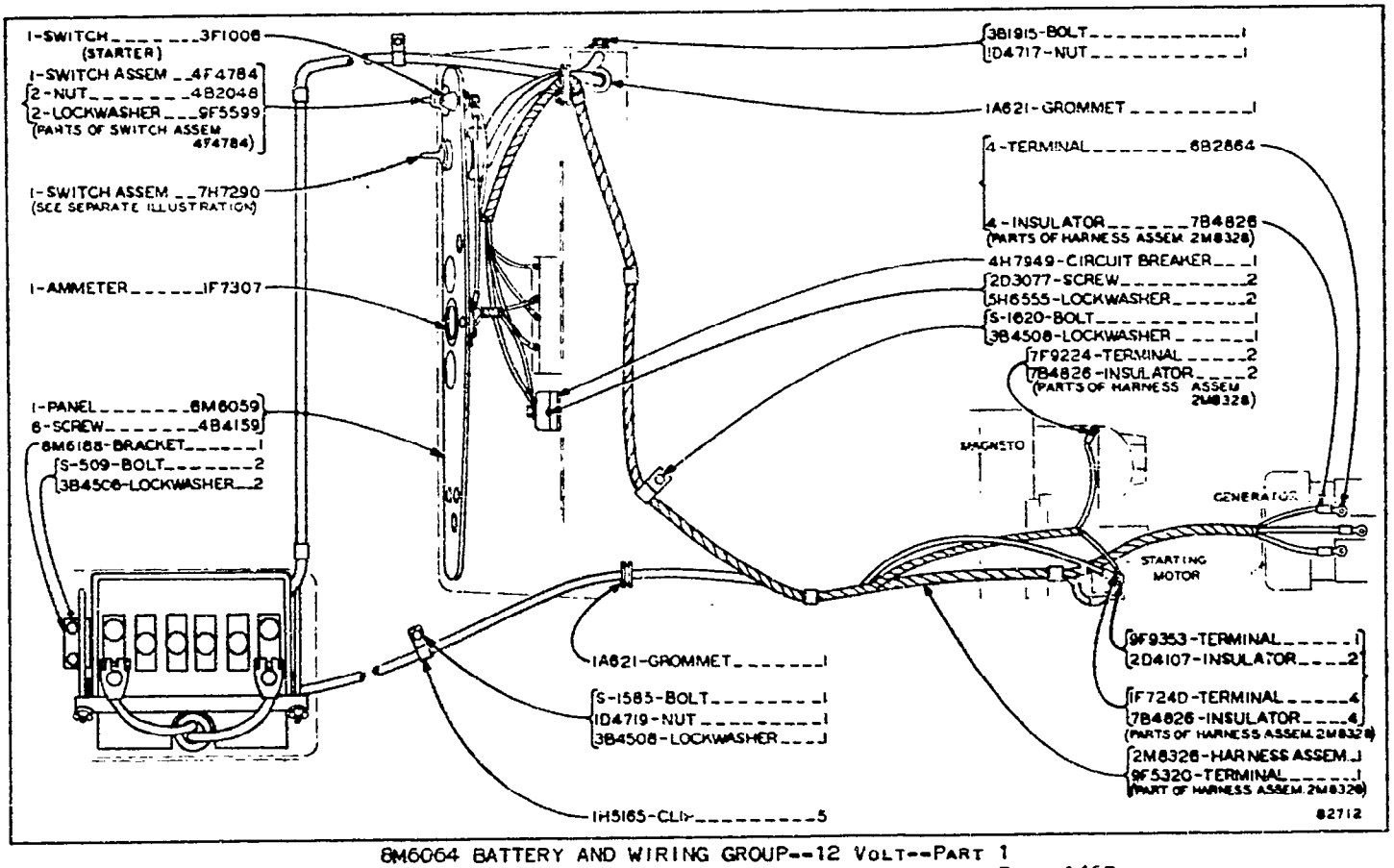

8M6064 BATTERY AND WIRING GROUP--12 VOLT--PART 1
PART OF 8M6094 ELECTRIC STARTING ARRANGEMENT LISTED ON PAGE 146B
7H7290 DISCONNECT SWITCH ASSEMBLY PARTS ARE SHOWN ON PAGE 164. SEE PAGE 160A FOR WIRING DIAGRAM

8M6064 BATTERY AND WIRING GROUP--12 VOLT--PART 2
PART OF 8M6094 ELECTRIC STARTING ARRANGEMENT LISTED ON PAGE 146B. SEE PAGE 160A FOR WIRING DIAGRAM

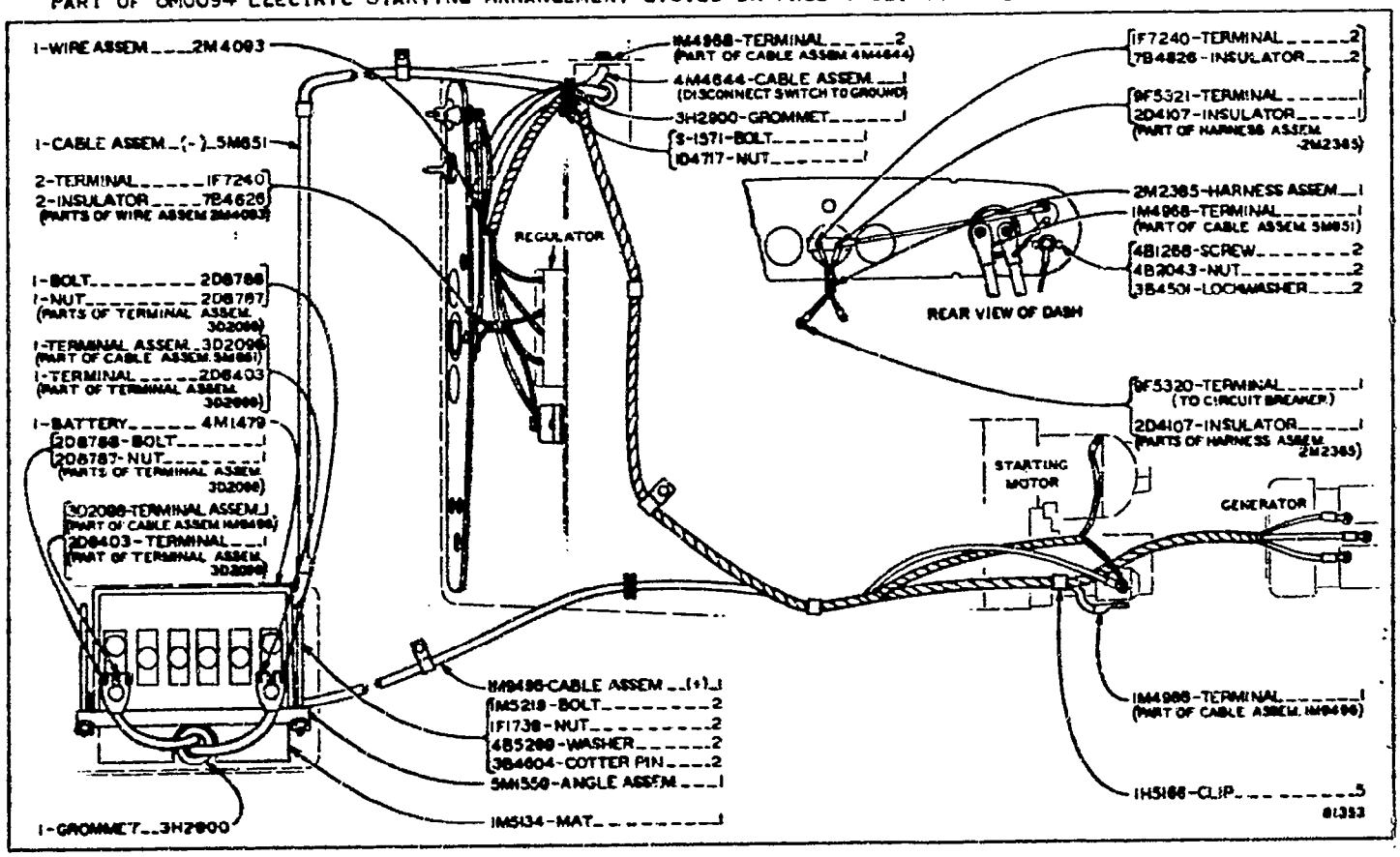

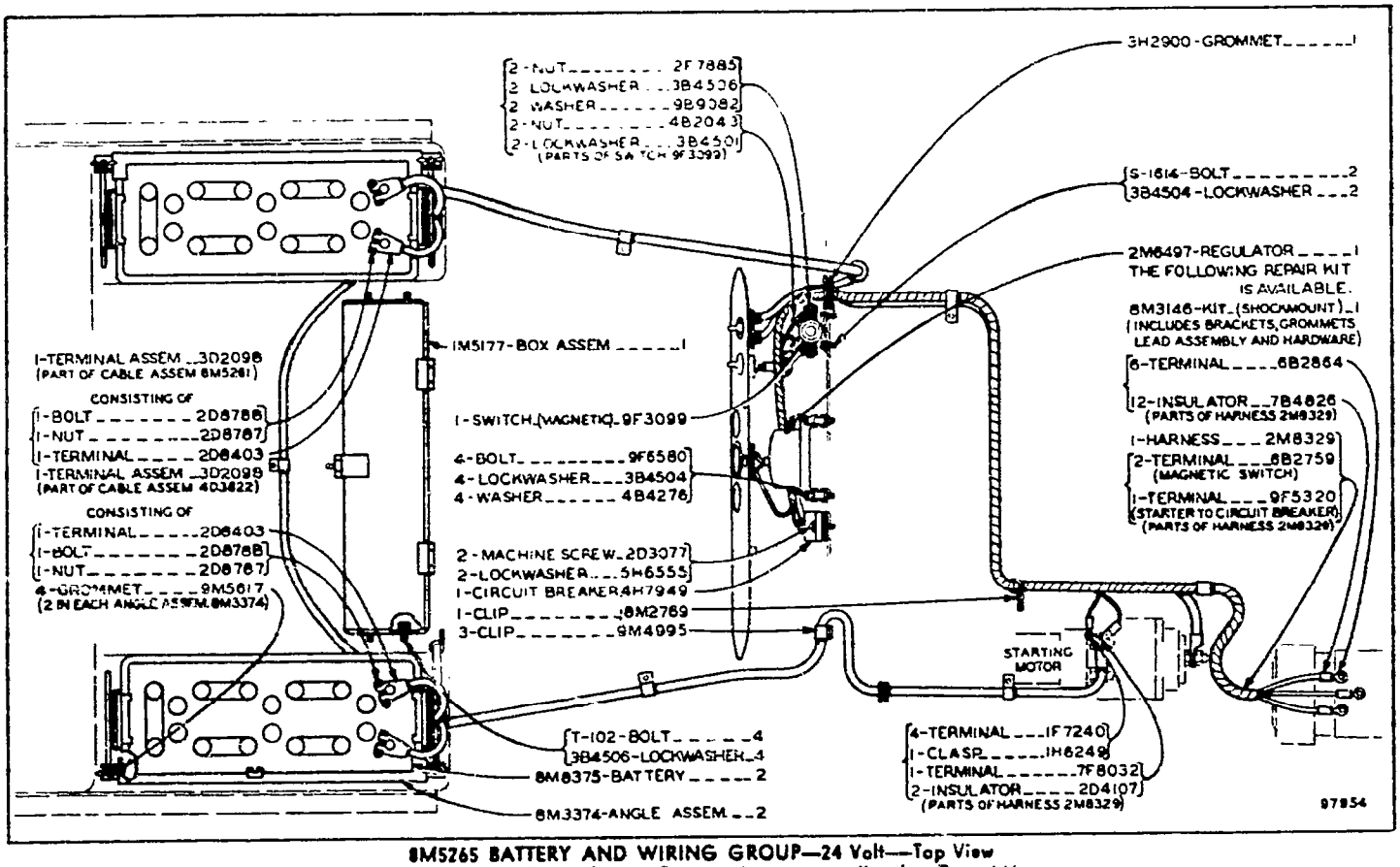

8M5265 BATTERY AND WIRING GROUP—24 Volt—Top View
Part of 8M6201 Direct Electric Starting Arrangement listed on Page 146
See Page 160 for Wiring Diagram

8M5265 BATTERY AND WIRING GROUP—24 Volt—Side View
Part of 8M6201 Direct Electric Starting Arrangement listed on Page 146
7H7290 Disconnect Switch Assembly parts are shown on Page 164
See Page 160 for Wiring Diagram

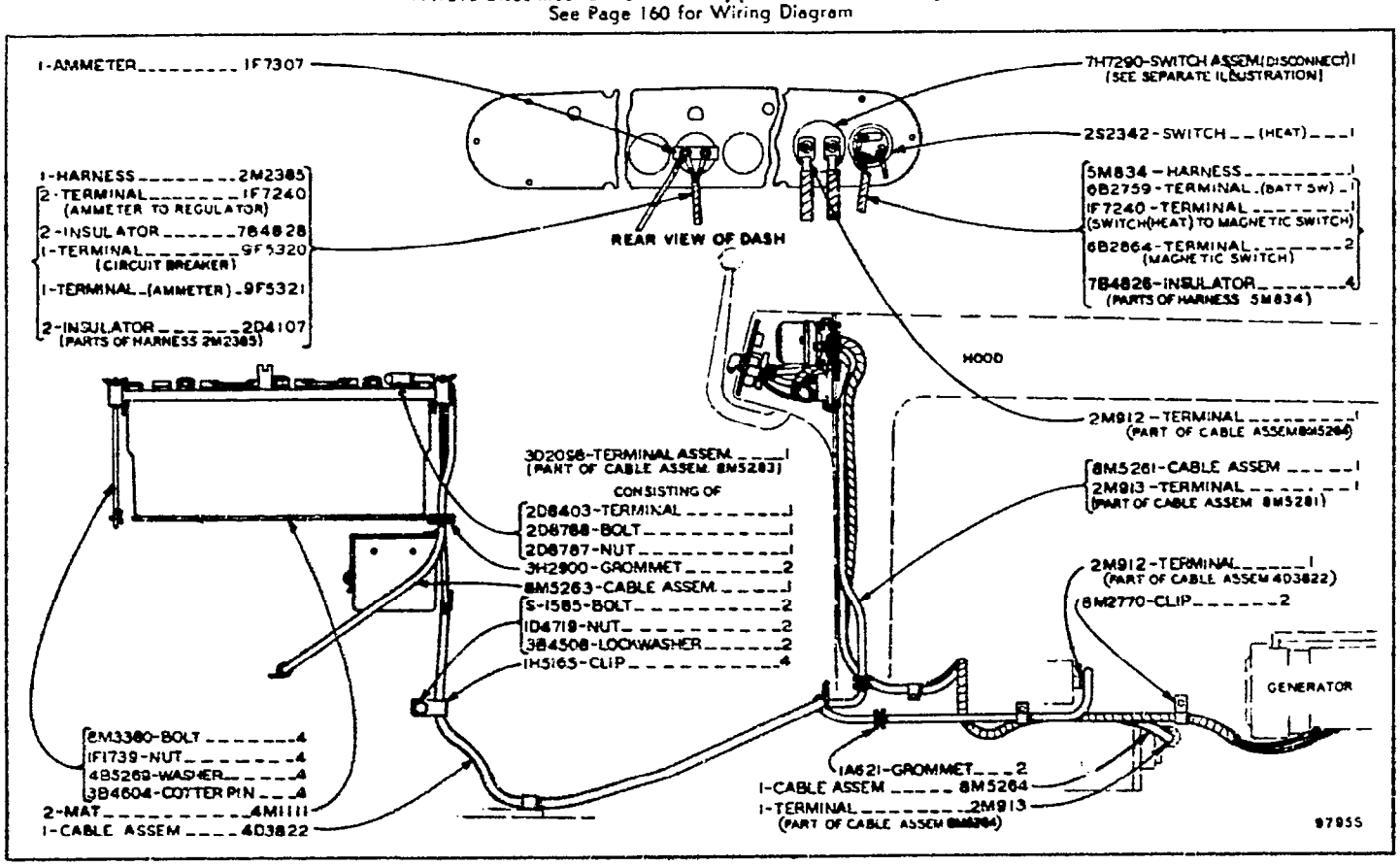

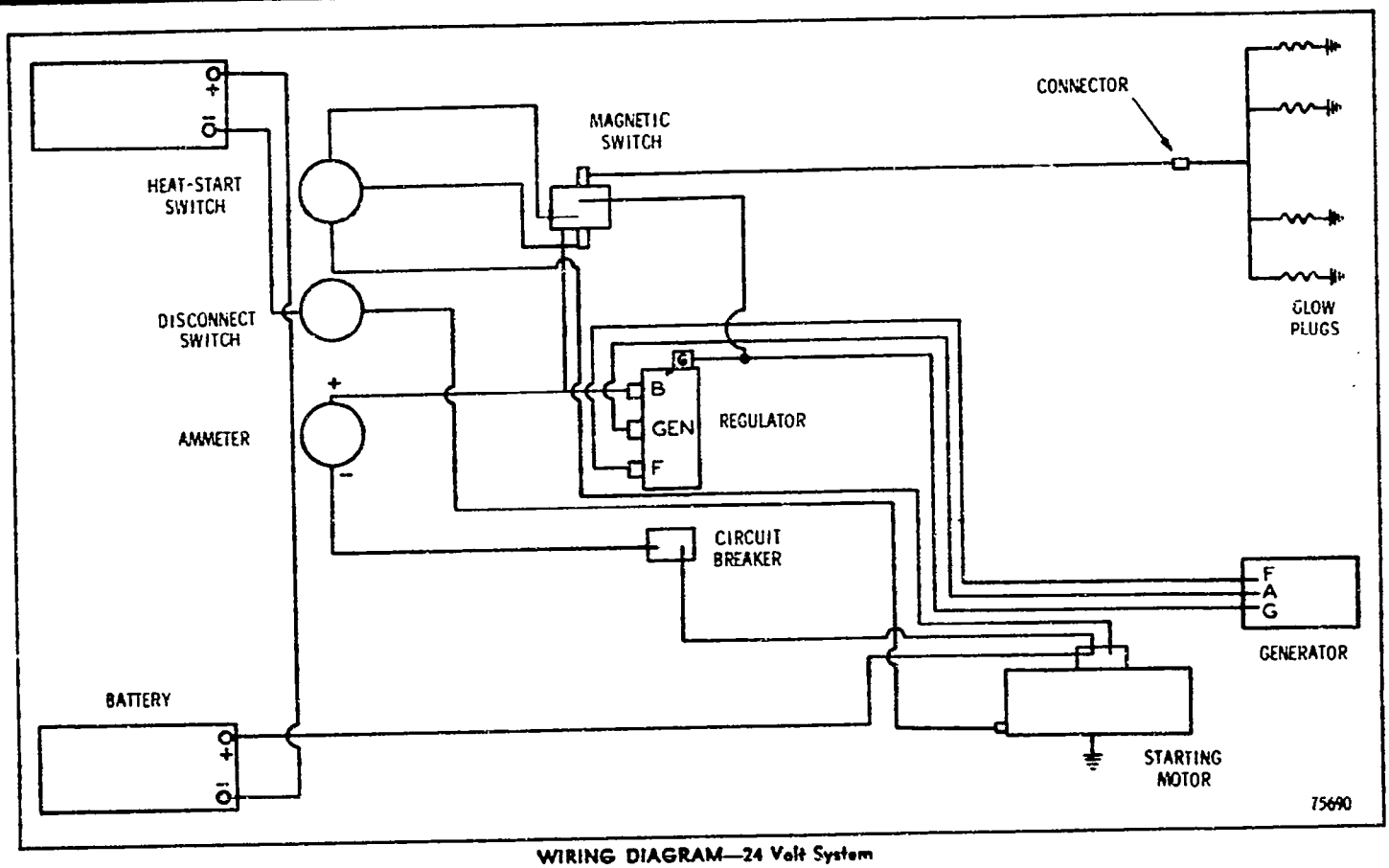

WIRING DIAGRAM—24 Volt System

WIRING DIAGRAM--12 VOLT SYSTEM

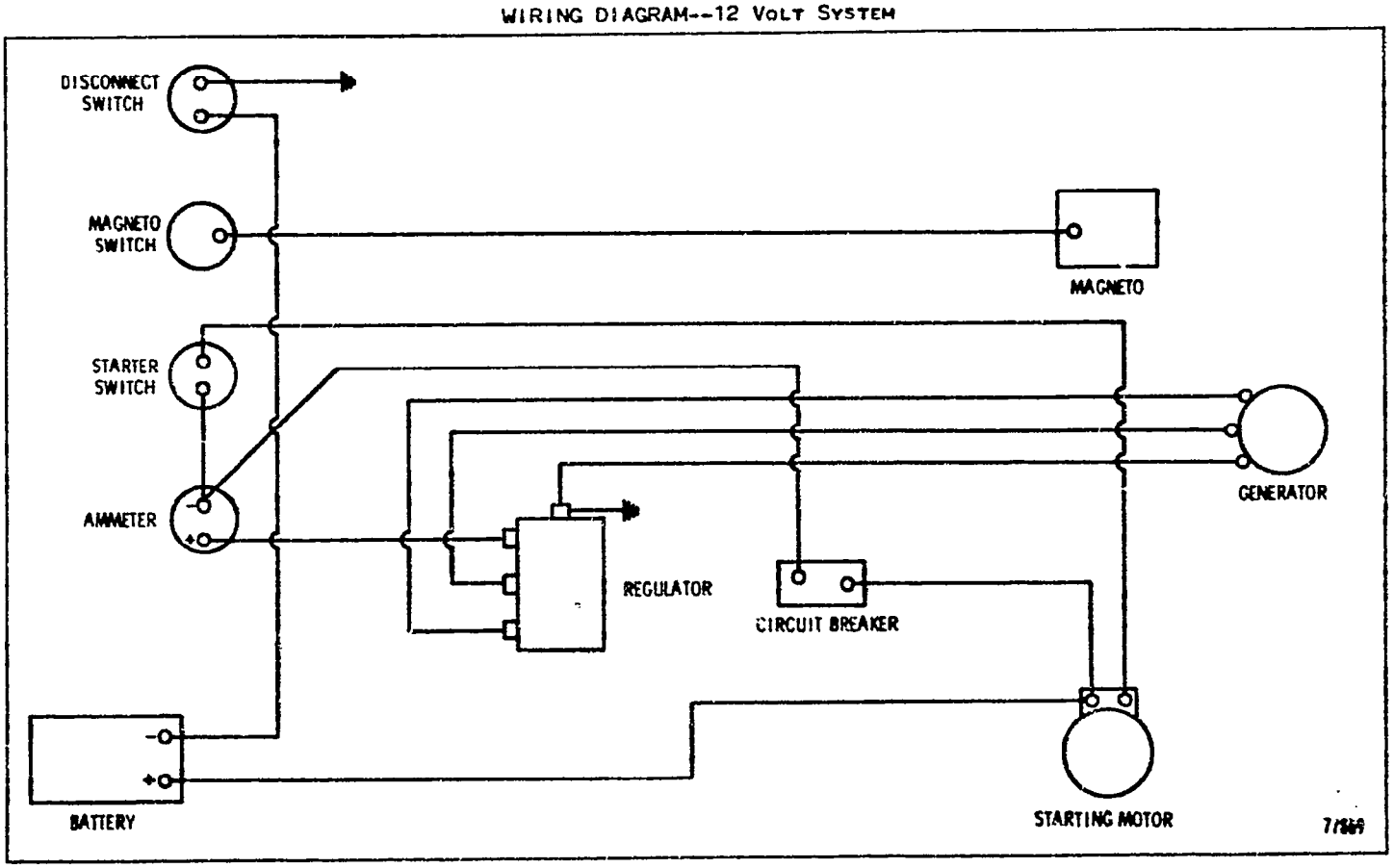

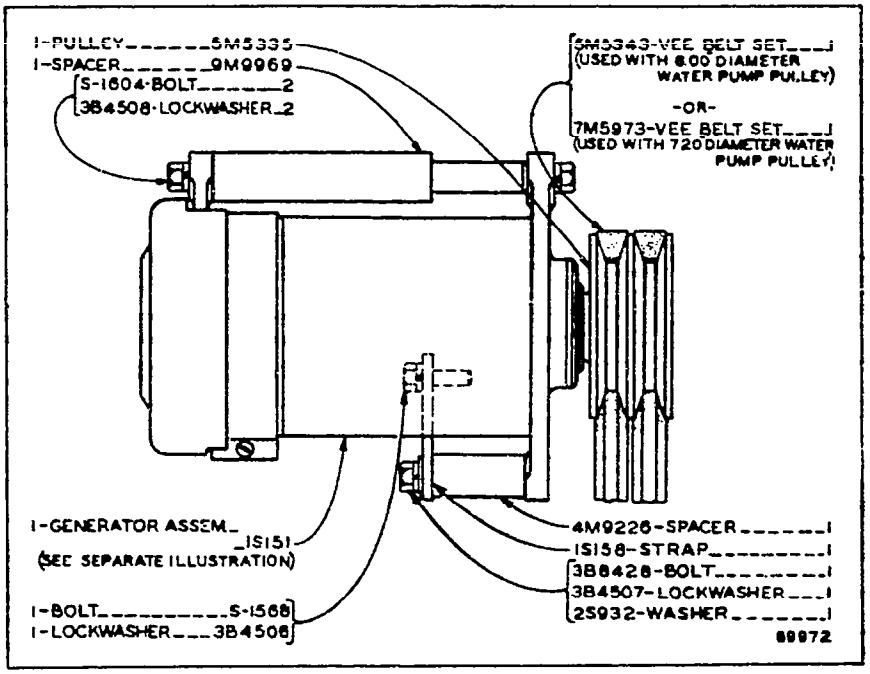

1M7298 GENERATOR GROUP—24 Volt, 15 Ampere—First Type
Part of 8M6201 Direct Electric Starting Arrangement listed on Page 146
1S151 Generator Assembly parts are shown on Page 162

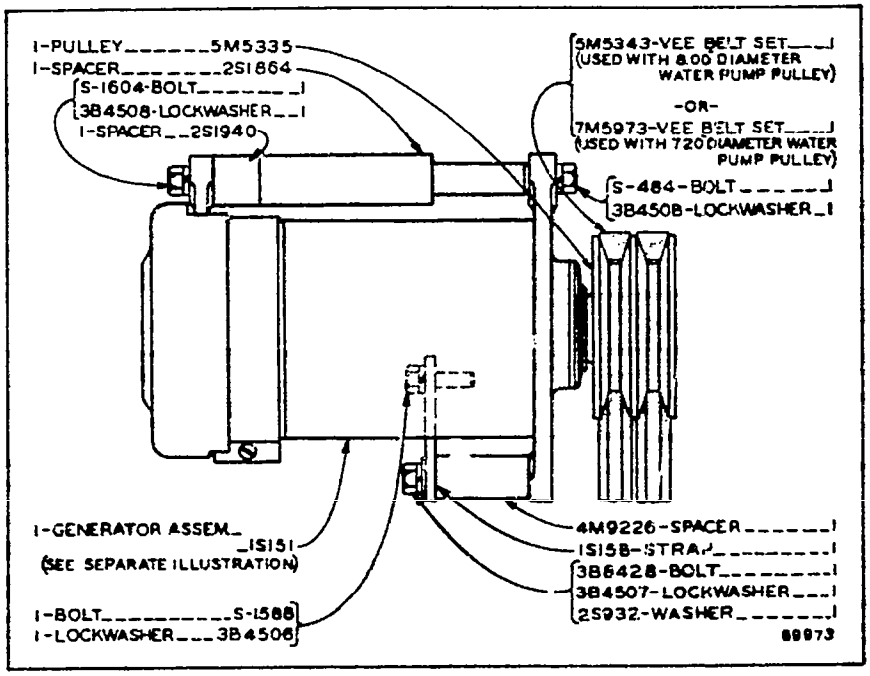

1M7298 GENERATOR GROUP—24 Volt, 15 Ampere—Second Type
Part of 8M6201 Direct Electric Starting Arrangement listed on Page 146
1S151 Generator Assembly parts are shown on Page 162

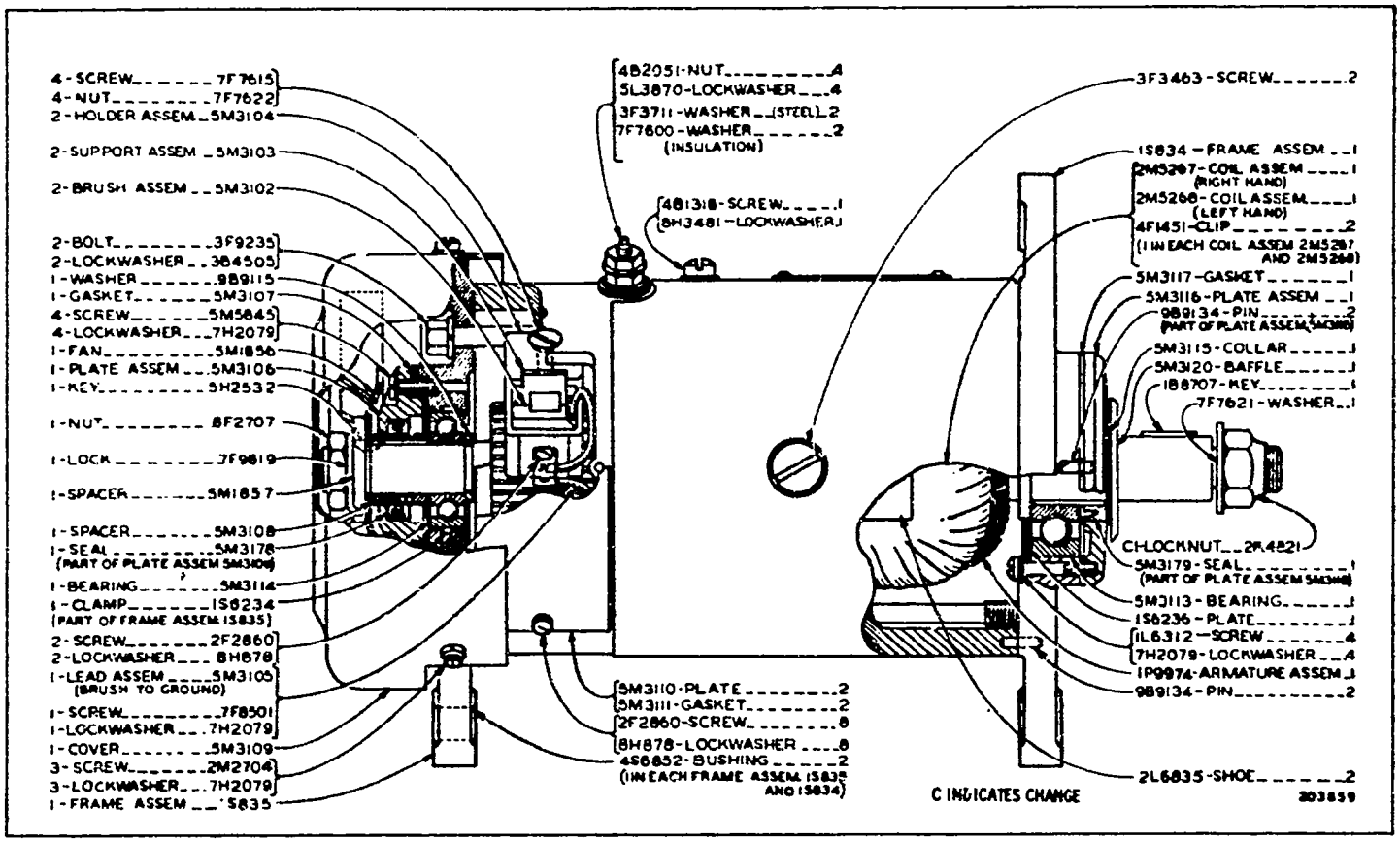

1S151 GENERATOR ASSEMBLY—24 Volt, 15 Ampere
Part of 1M7298 Generator Group shown on Page 161

ATTACHMENTS 163

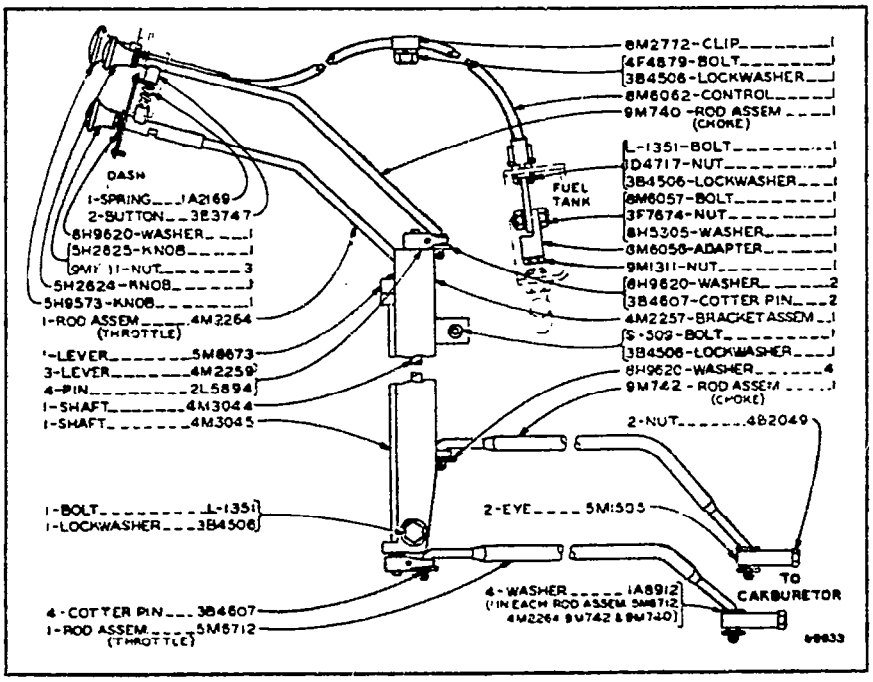

8M6076 CHOKE, THROTTLE AND FUEL SHUT-OFF CONTROL GROUP
PART OF 8M6095 AND 8M6094 ELECTRIC STARTING ARRANGEMENTS
LISTED ON PAGES 146B AND 146C

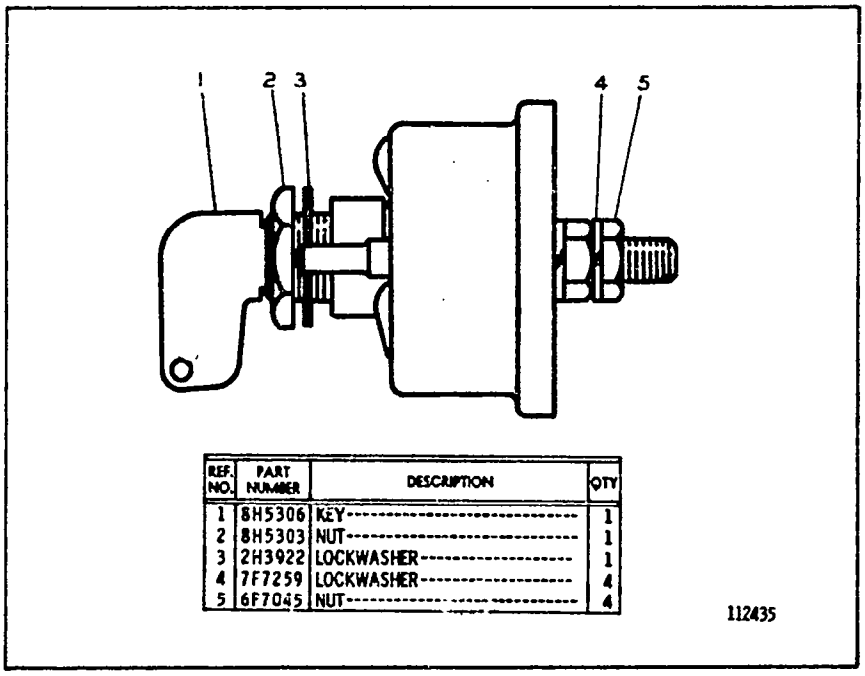

REF. NO.	PART NUMBER	DESCRIPTION	QTY
1	8H5306	KEY	1
2	8H5303	NUT	1
3	2H3922	LOCKWASHER	1
4	7F7259	LOCKWASHER	4
5	6F7045	NUT	4

112435

7H7290 DISCONNECT SWITCH ASSEMBLY
Part of 4M4571 Wiring Group, 2M7443 and 8M5265 Battery and Wiring Groups shown on Pages 155, 156 and 159

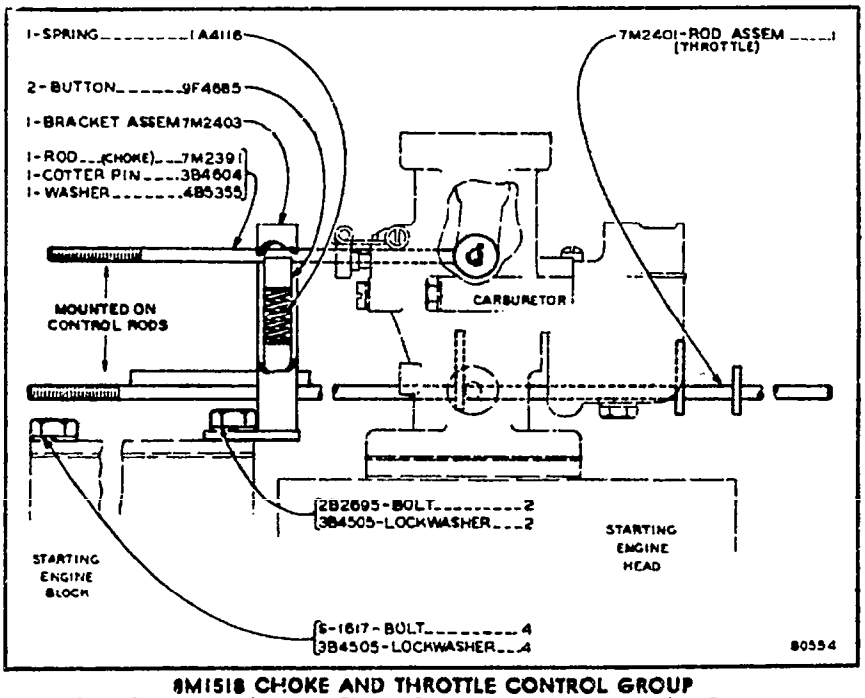

8M1518 CHOKE AND THROTTLE CONTROL GROUP
Part of 9M1762 and 9M1763 Electric Starting Arrangements listed on Page 146

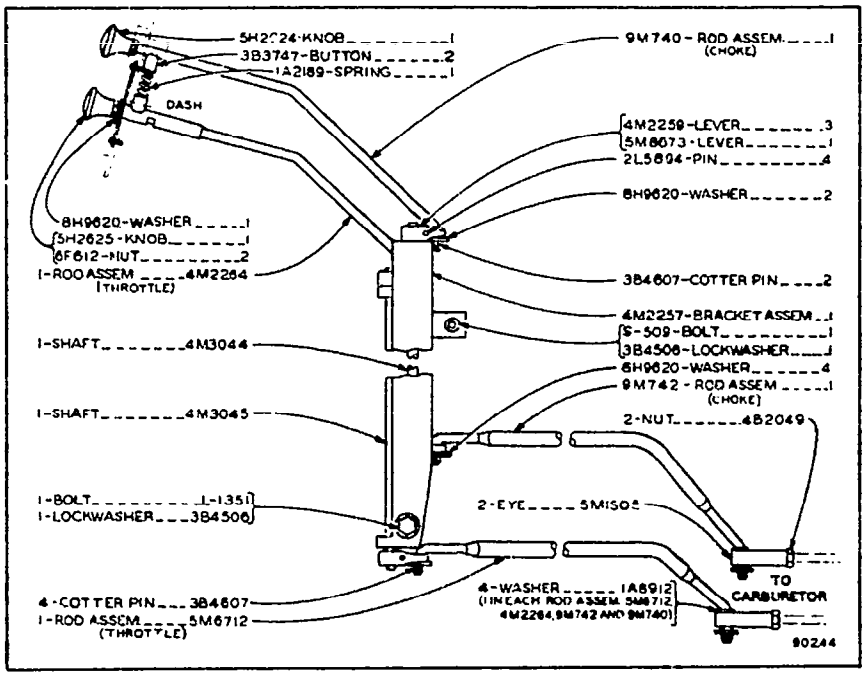

4M3015 CHOKE AND THROTTLE CONTROL GROUP
Part of 9M1762 and 9M1763 Electric Starting Arrangements listed on Page 146

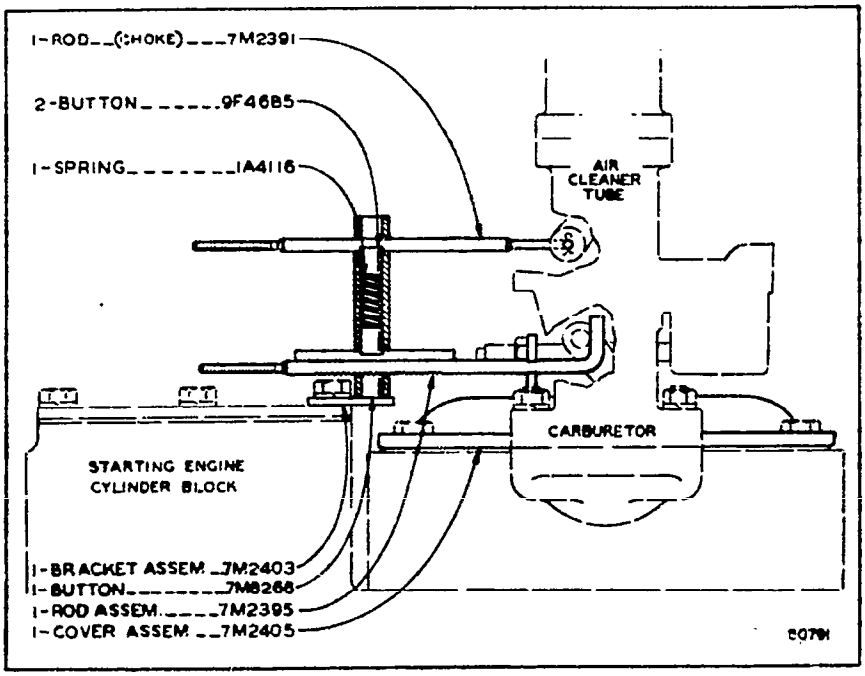

7M2737 CHOKE AND THROTTLE CONTROL SERVICE GROUP
Provides .250 Diameter Control Rods

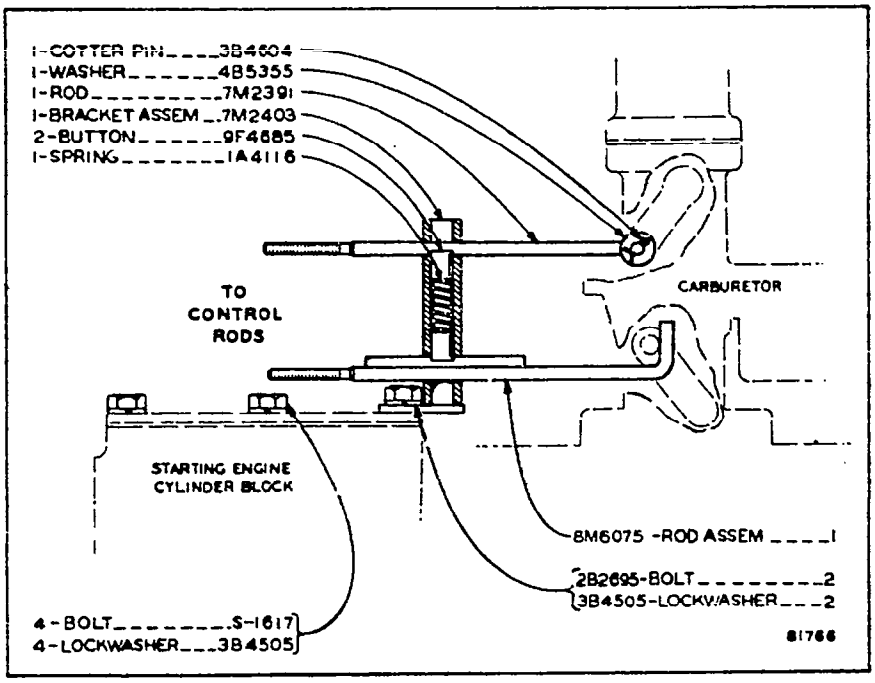

8M6091 CHOKE AND THROTTLE CONTROL GROUP
PART OF 8M6095 AND 8M6094 ELECTRIC STARTING ARRANGEMENTS AND 5S4264 STARTING ENGINE ARRANGEMENT LISTED ON PAGES 146B AND 146C

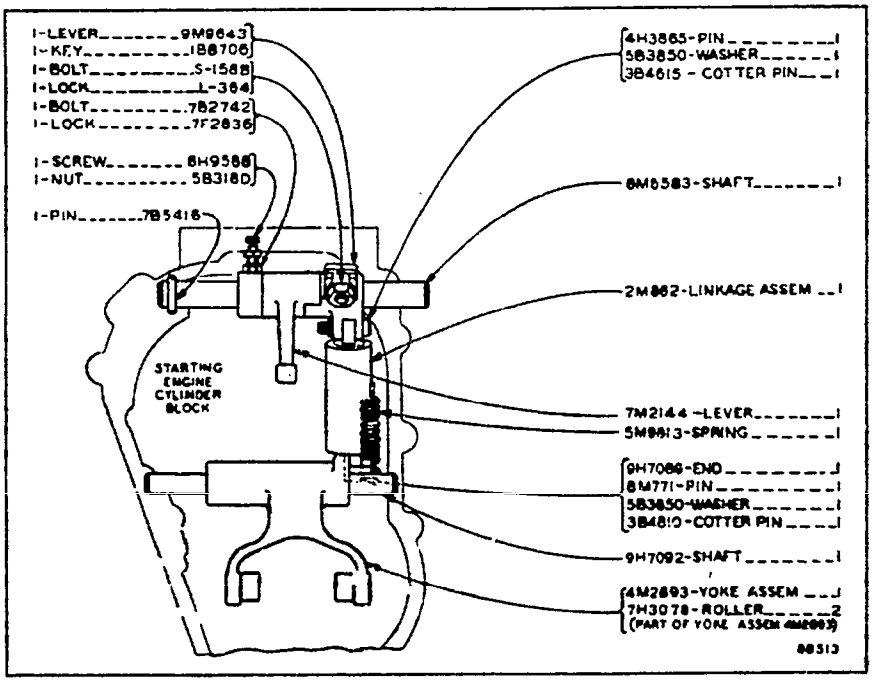

9M1224 CLUTCH, BRAKE AND PINION CONTROL GROUP
PART OF 5S4270 AND 5S4264 STARTING ENGINE ARRANGEMENTS LISTED ON PAGES 146A AND 146C

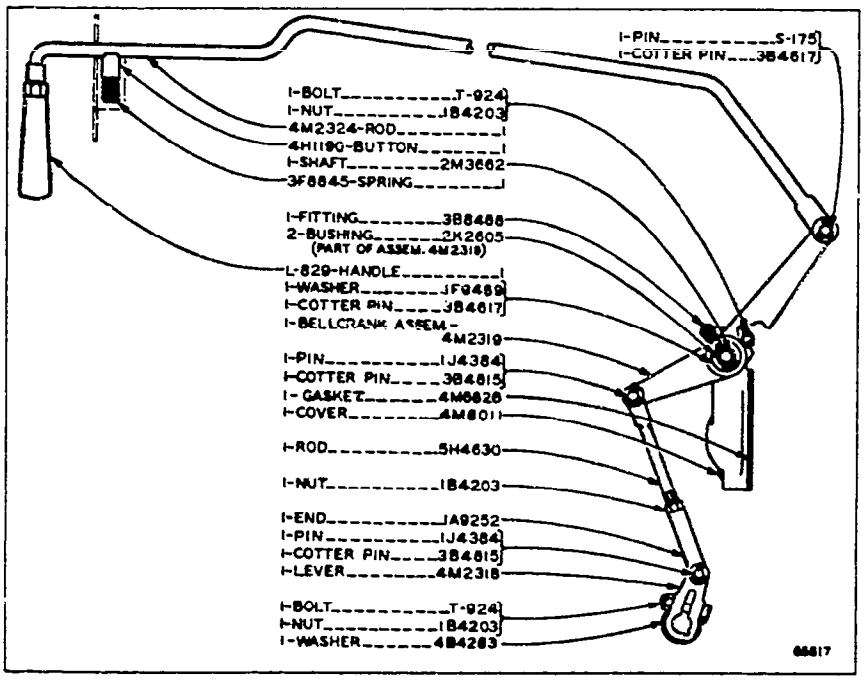

4M3063 CLUTCH, PINION AND BRAKE CONTROL GROUP
Part of 9M1762 and 9M1763 Electric Starting Arrangements listed on Page 146

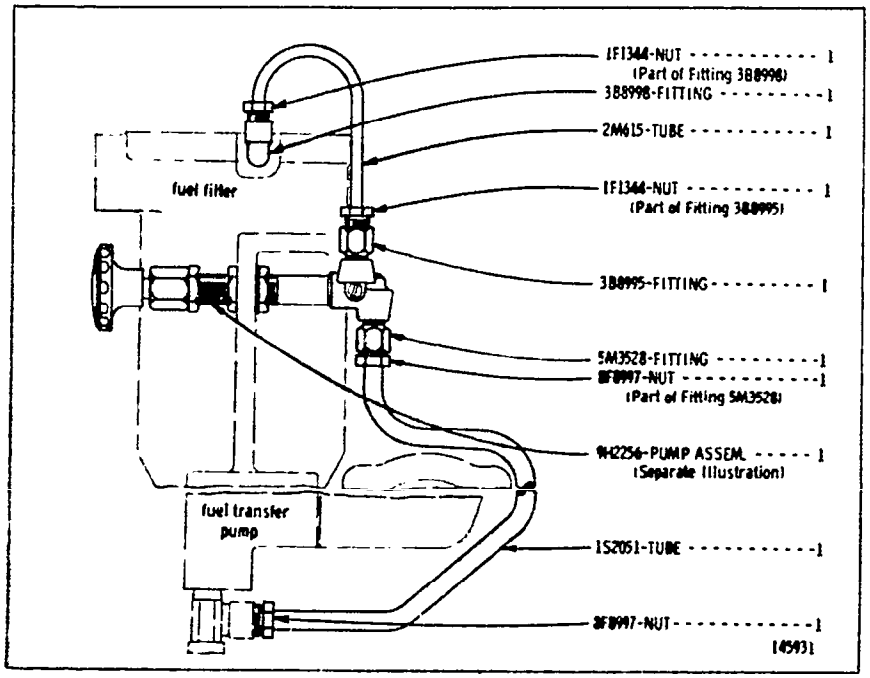

1S4650 FUEL PRIMING PUMP GROUP

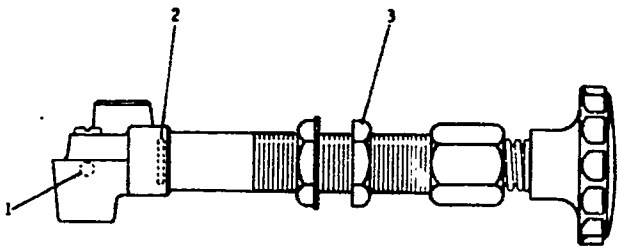

	REF. NO.	PART NUMBER	DESCRIPTION	QTY
	1	1M6718	BALL	2
	2	1H1023	SEAL	2
C	3	1M6781	NUT	2

C INDICATES CHANGE

147588

~~SH2250~~ PUMP ASSEMBLY

Part of 1S4650 Fuel Priming Pump Group shown on Page 166

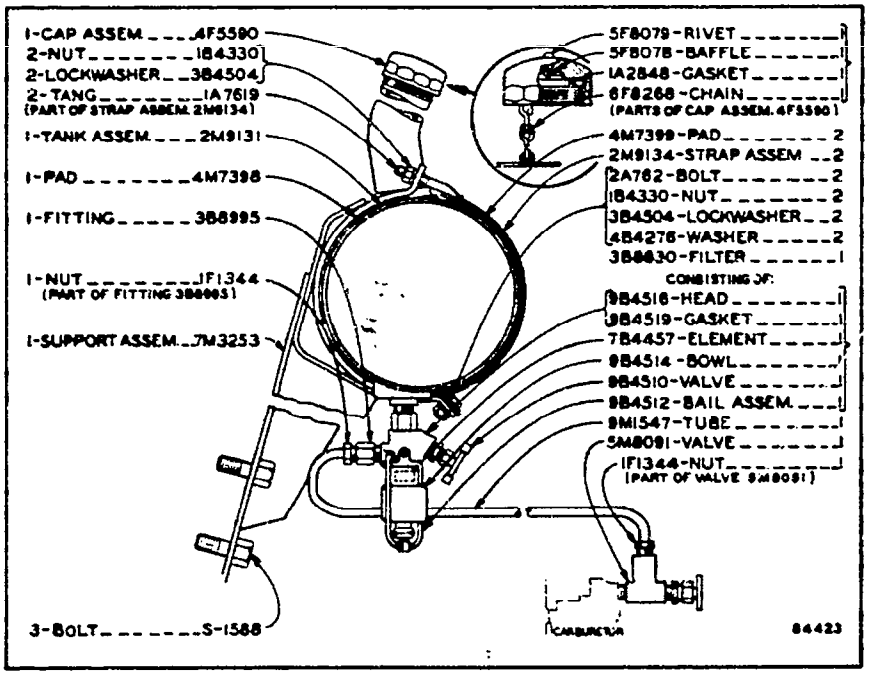

9M1548 FUEL SYSTEM GROUP
For use with 8M6457 Turbocharger Arrangement listed on Page 113

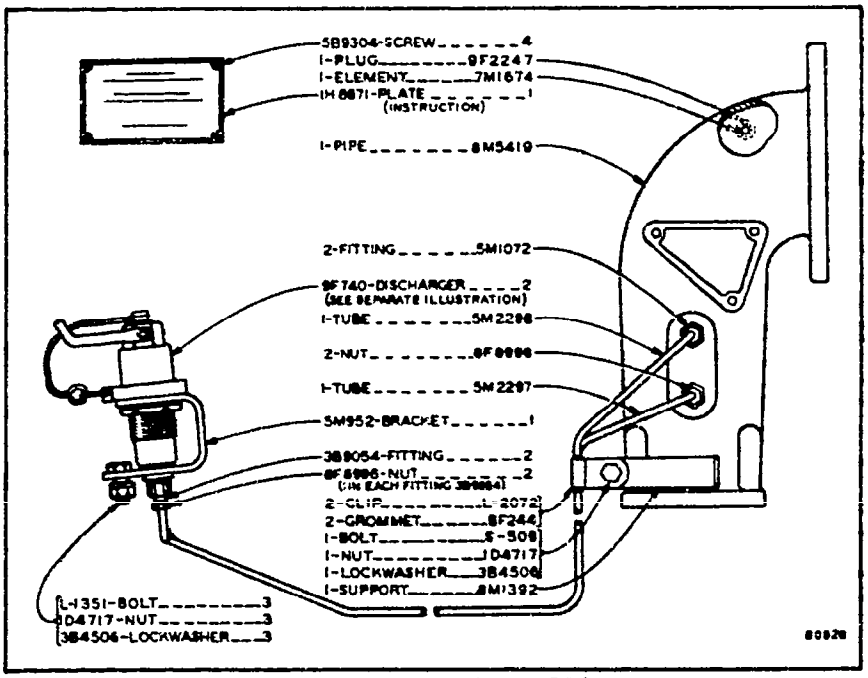

8M2185 ETHER STARTING AID GROUP
For use with 24 Volt Direct Electric Starting

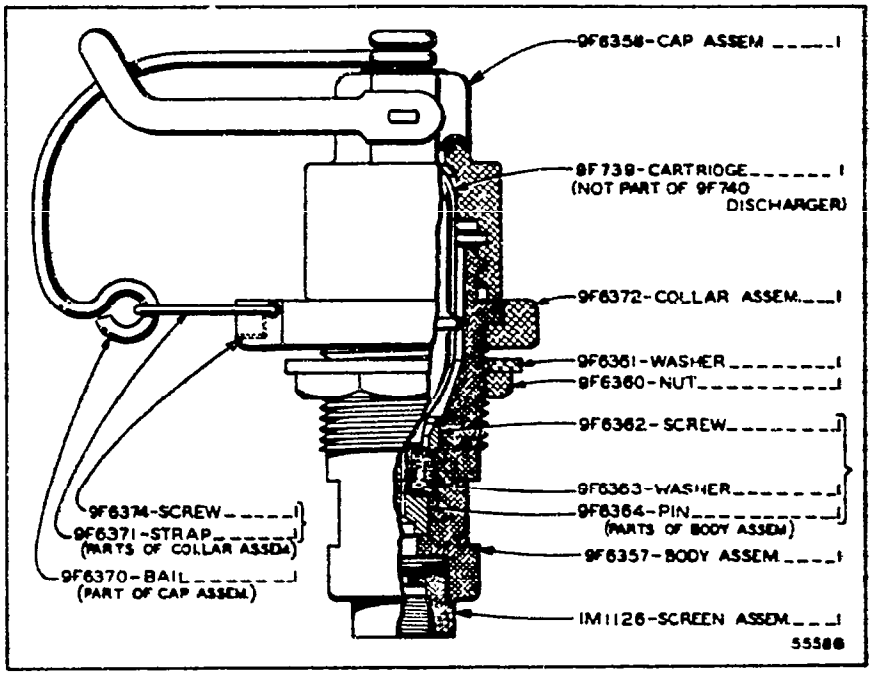

9F740 DISCHARGER
Part of 8M2185 Ether Starting Aid Group

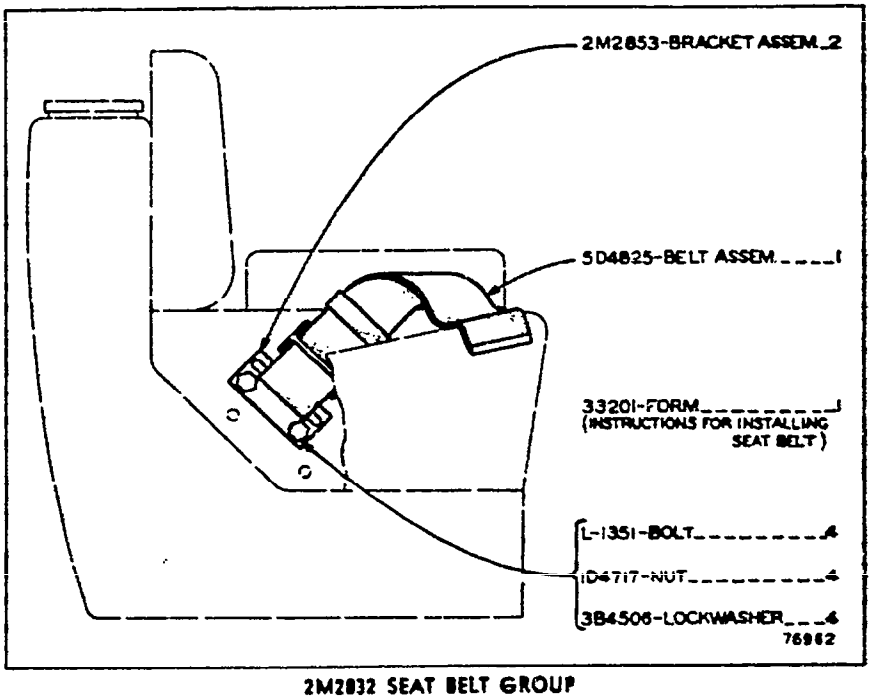

2M2832 SEAT BELT GROUP

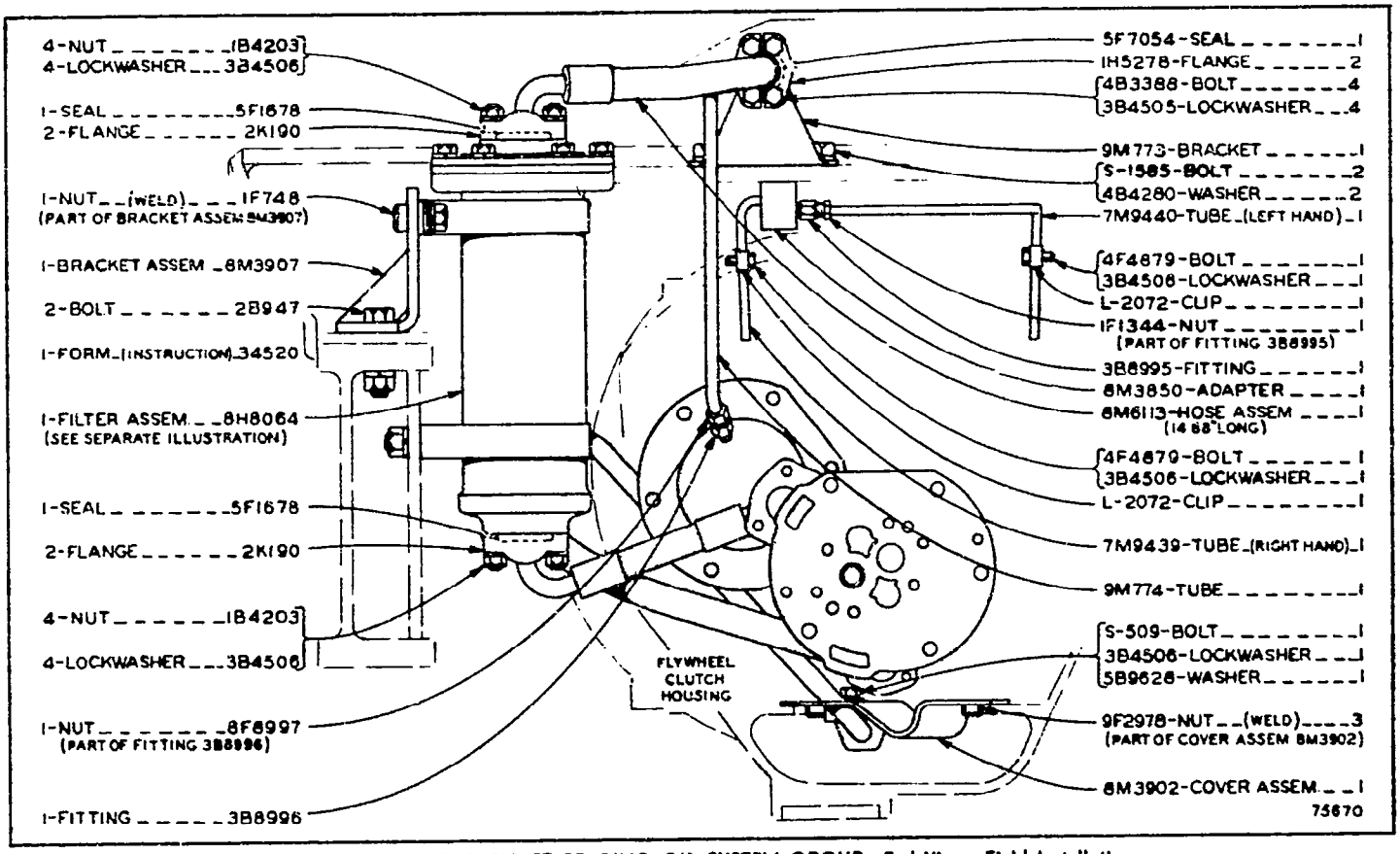

8M6116 BEVEL GEAR SHAFT BEARING OIL SYSTEM GROUP—End View—Field Installation

8H8064 Oil Filter Assembly parts are shown on Page 174

8M6116 BEVEL GEAR SHAFT BEARING OIL SYSTEM GROUP—Top View—Field Installation

2S7565 Oil Pump Group parts are shown on Page 175

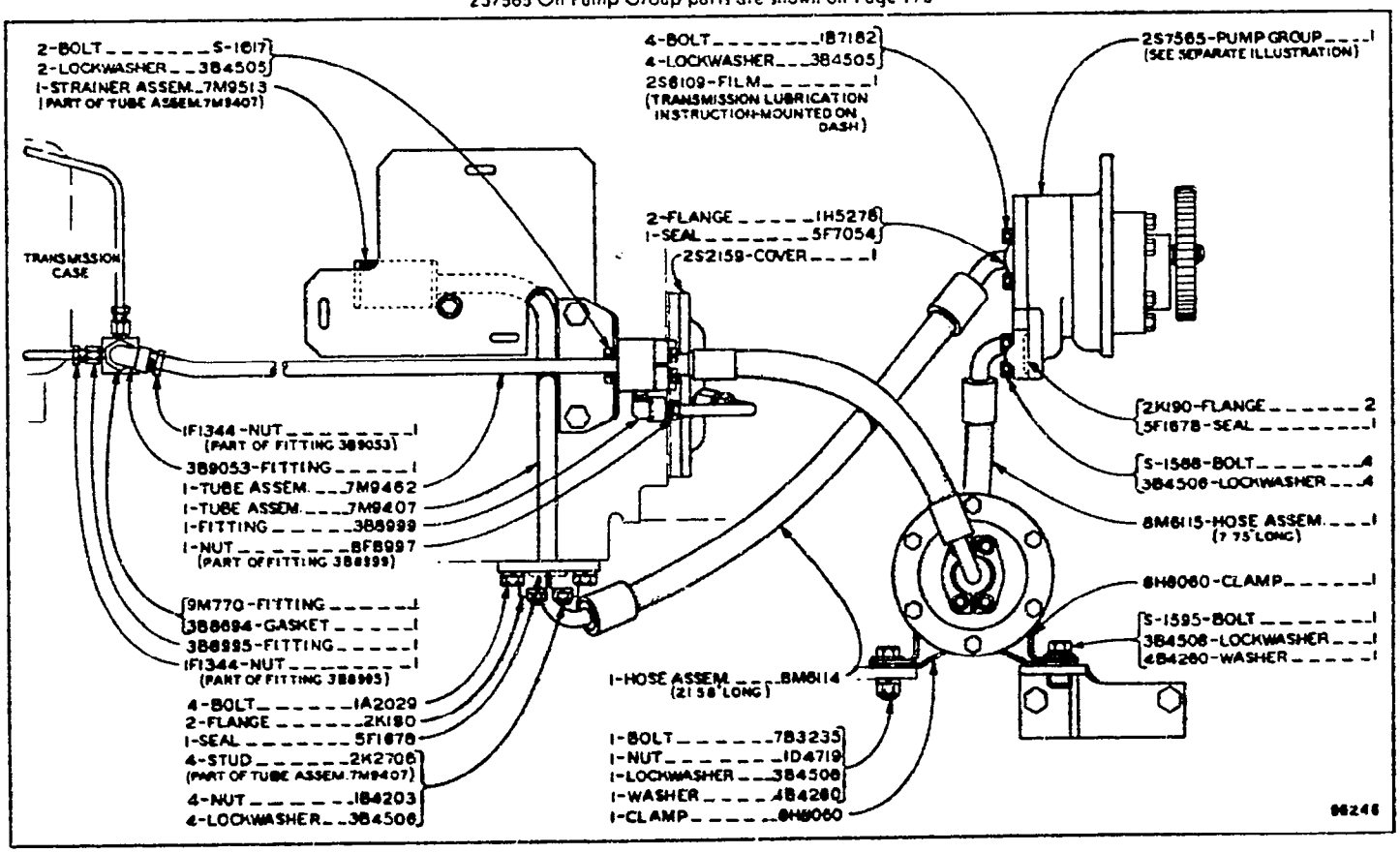

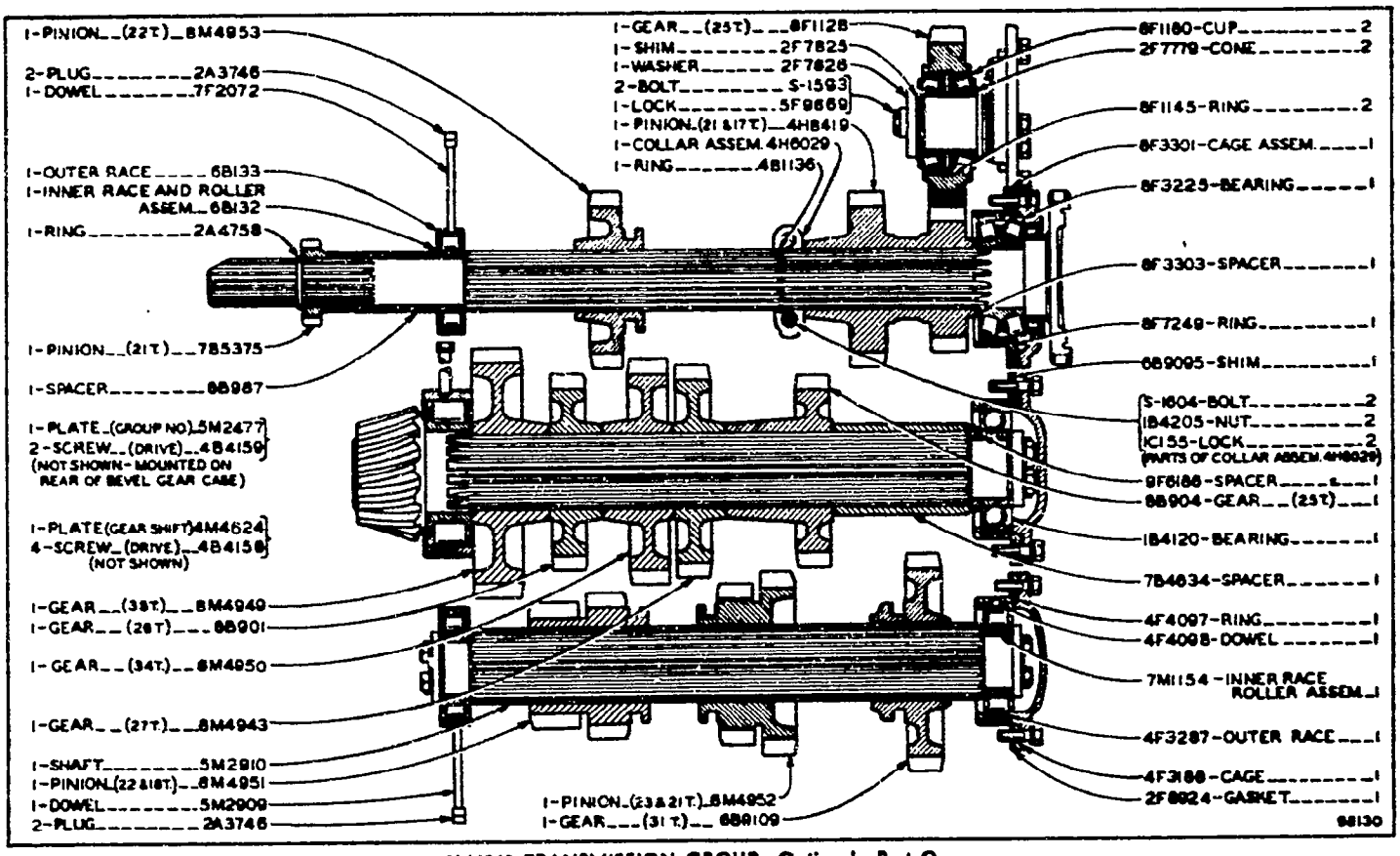

8M4948 TRANSMISSION GROUP—Optional—Part One

Note: This Transmission provides the following speeds: (Forward) First—1.8, Second—2.5, Third—3.0, Fourth—3.6 and Fifth—6.0 M.P.H.; (Reverse) First—2.3, Second—3.1, Third—3.8 and Fourth—4.4 M.P.H.

8M4948 TRANSMISSION GROUP—Optional—Part Two

Note: This Transmission provides the following speeds: (Forward) First—1.8, Second—2.5, Third—3.0, Fourth—3.6 and Fifth—6.0 M.P.H.; (Reverse) First—2.3, Second—3.1, Third—3.8 and Fourth—4.4 M.P.H.

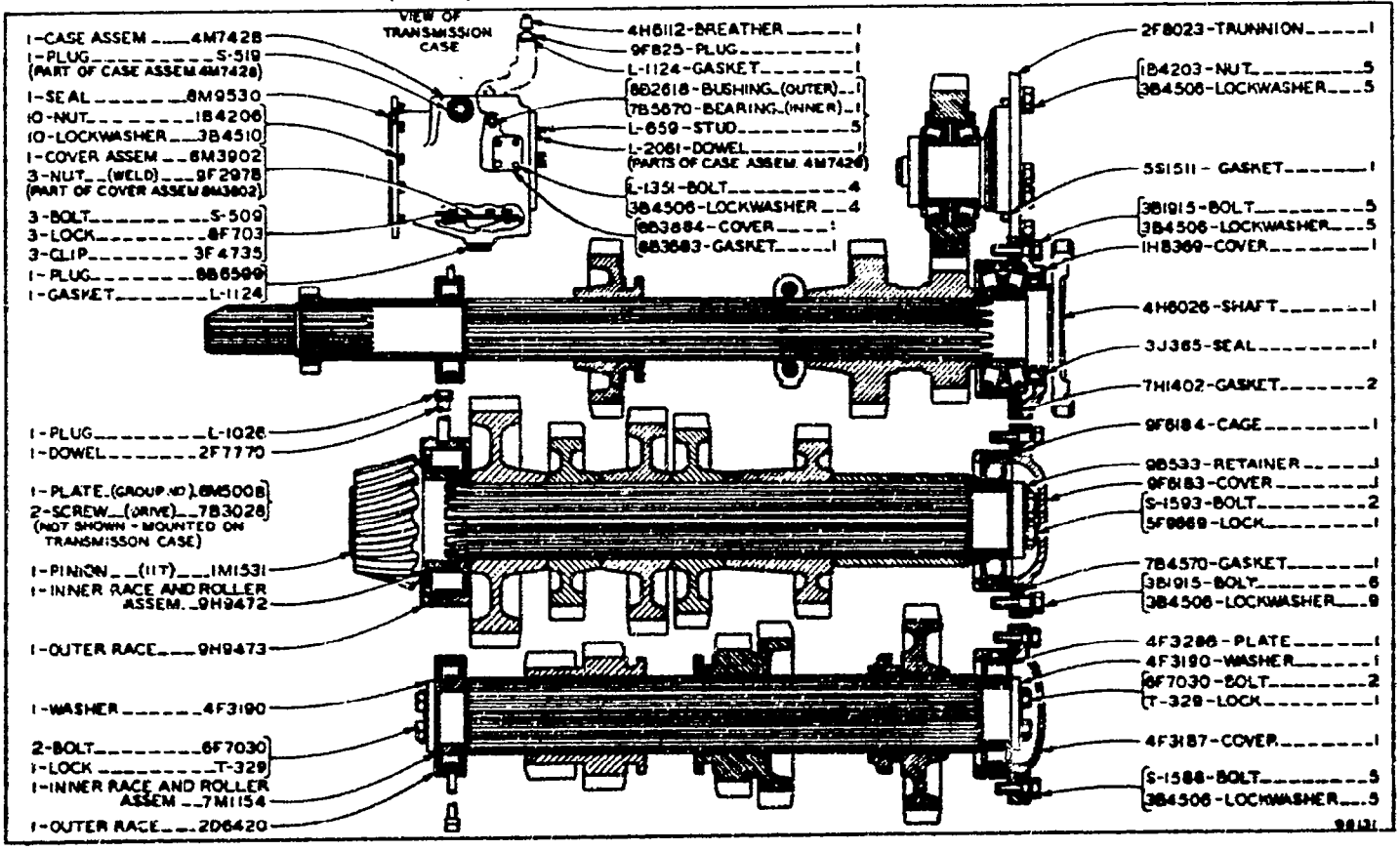

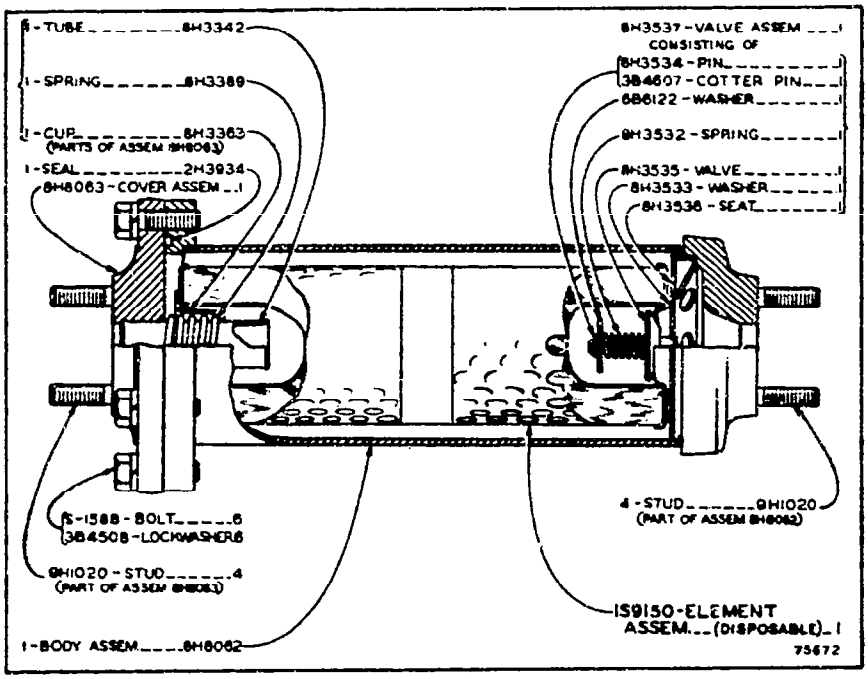

8H8064 OIL FILTER ASSEMBLY
Part of 8M6116 Bevel Gear Shaft Bearing Oil System Group shown on Page 170

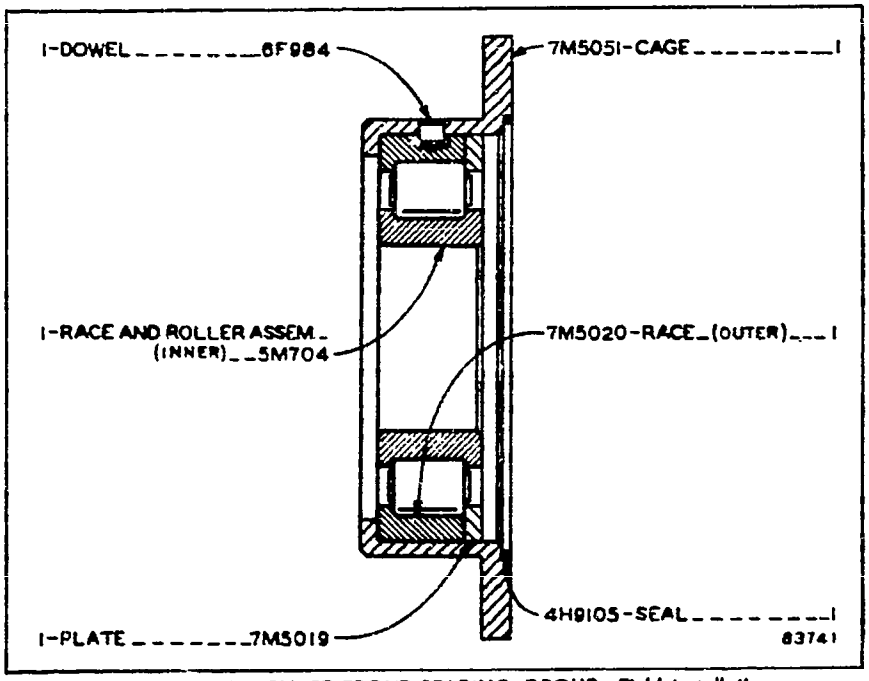

8M9606 PINION SHAFT FRONT BEARING GROUP—Field Installation
For machines operating primarily in forward gear

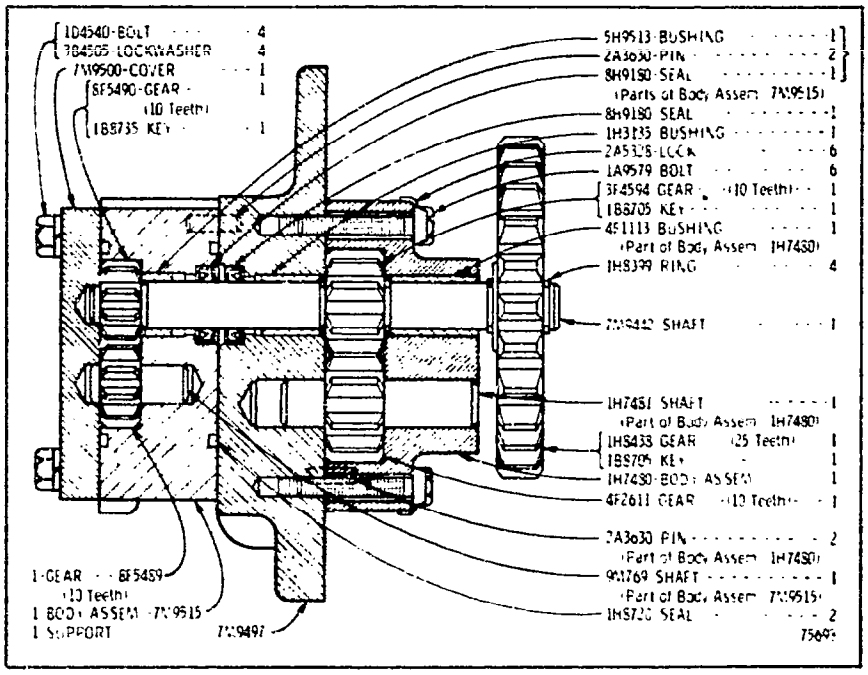

2S7565 OIL PUMP GROUP

Part of 8M6116 Bevel Gear Shaft Bearing Oil System Group shown on Page 171

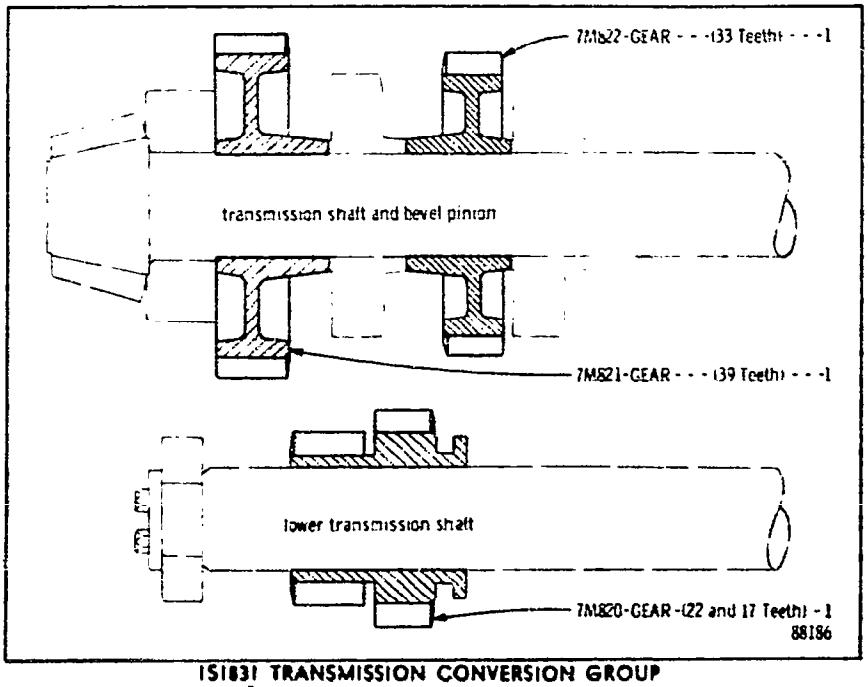

1S1831 TRANSMISSION CONVERSION GROUP

Serial No. 44A6857 to 44A7674 inclusive

For Field Replacement of 6B9133 Pinion 6B9075 and 9H9470 Gears in applications where excessive wear occurs

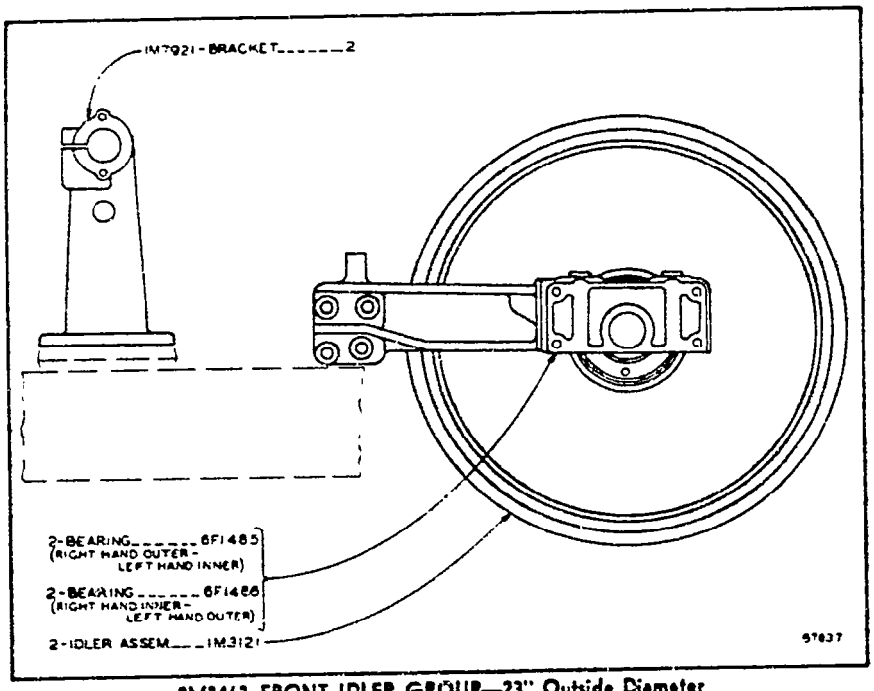

2M2462 FRONT IDLER GROUP—23" Outside Diameter
For use with 39 Section Track Groups

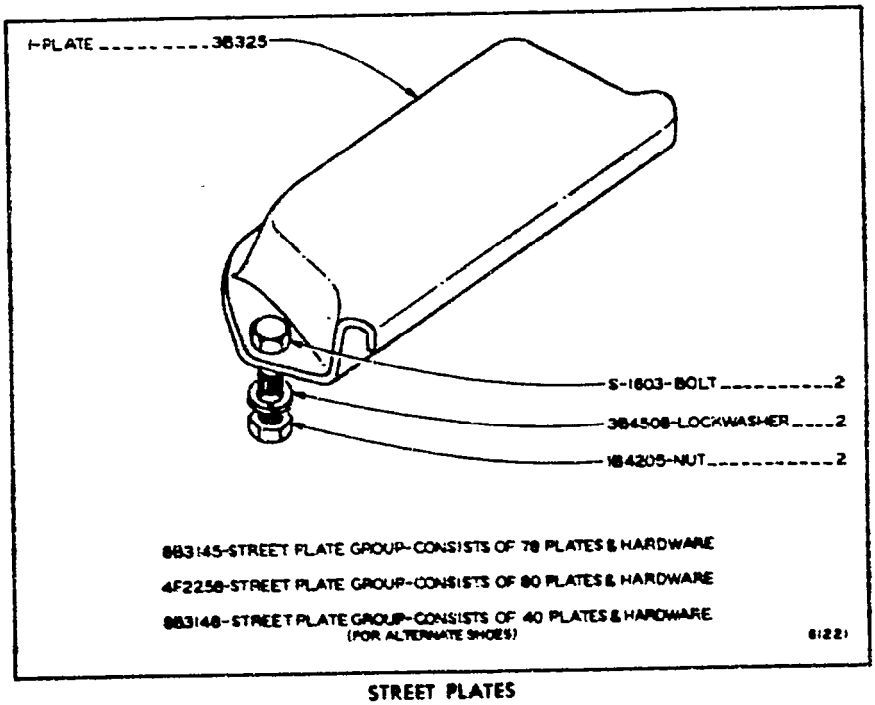

STREET PLATES

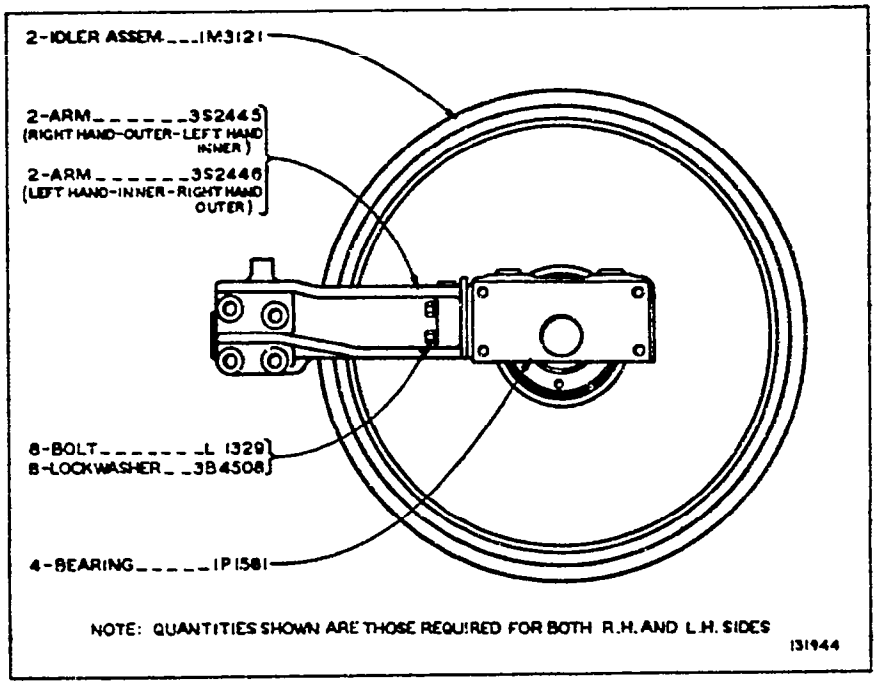

2M2462 FRONT IDLER GROUP–23" OUTSIDE DIAMETER–Type 2
FOR USE WITH 39 SECTION TRACK GROUPS

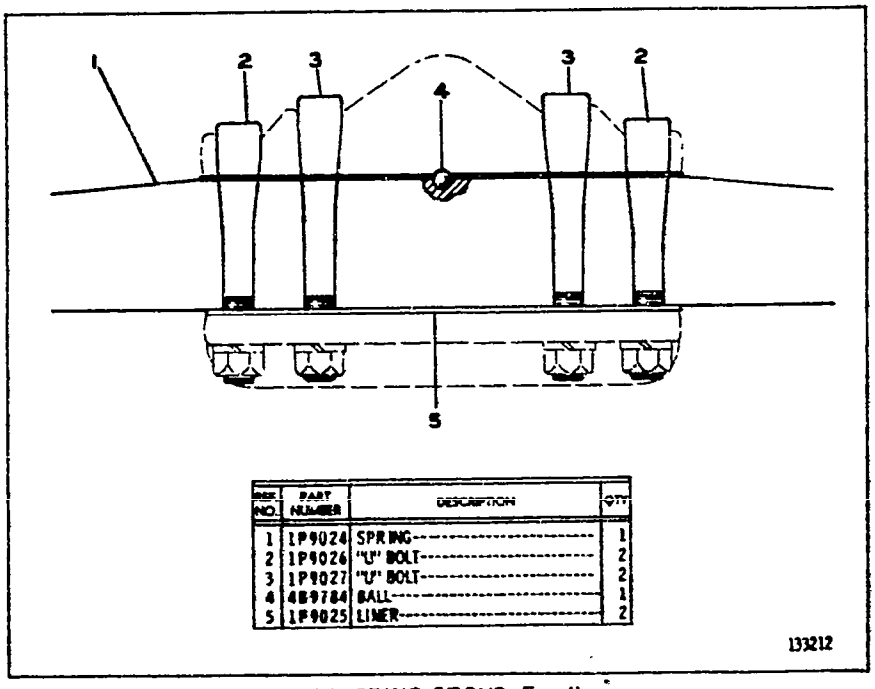

INDEX NO.	PART NUMBER	DESCRIPTION	QTY
1	1P9024	SPRING	1
2	1P9026	"U" BOLT	2
3	1P9027	"U" BOLT	2
4	4B9784	BALL	1
5	1P9025	LINER	2

1P9028 SPRING GROUP–Equalizer

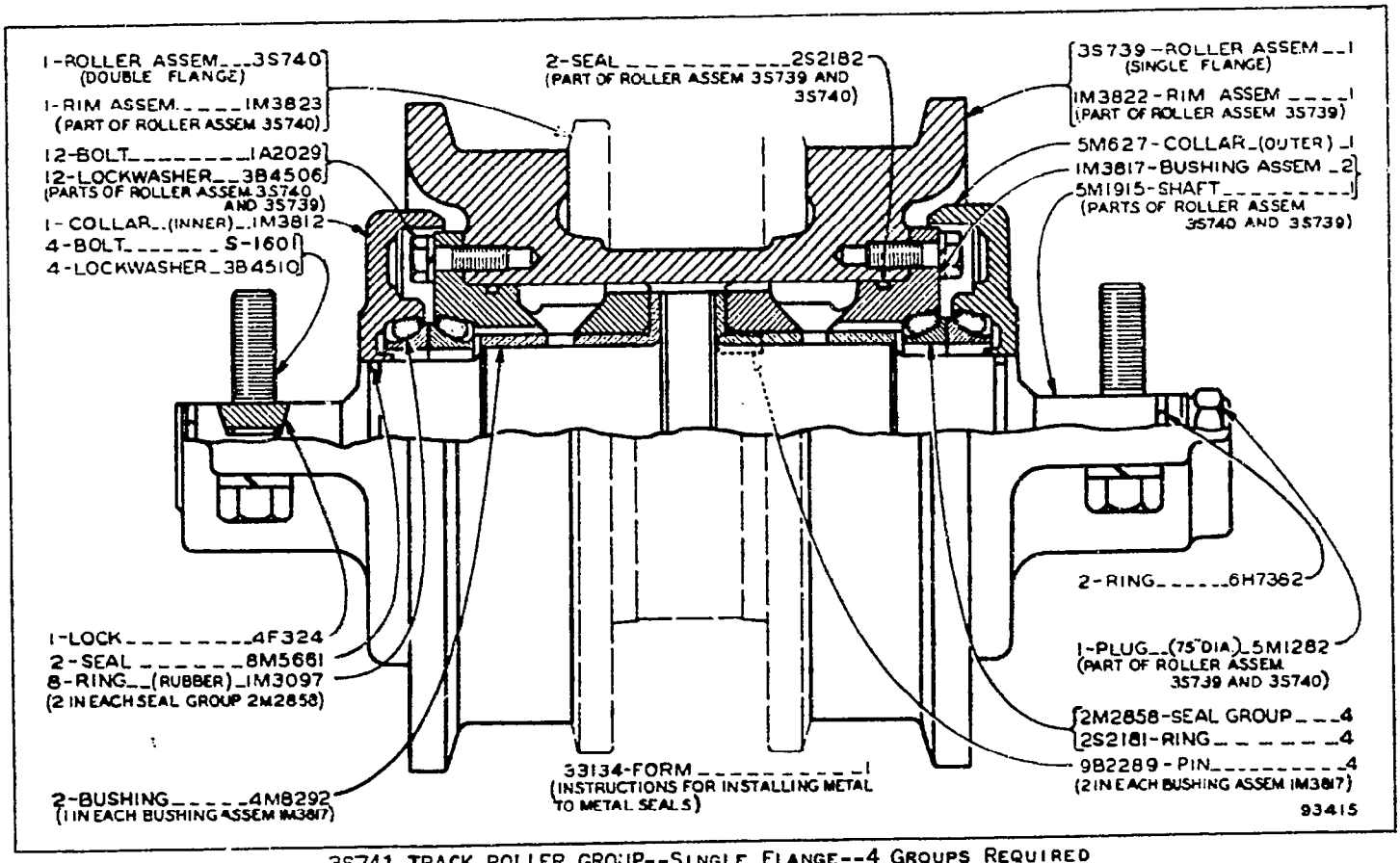

3S741 TRACK ROLLER GROUP--SINGLE FLANGE--4 GROUPS REQUIRED
3S742 TRACK ROLLER GROUP--DOUBLE FLANGE--8 GROUPS REQUIRED
FOR USE IN AREAS WHERE HIGH TEMPERATURES ARE ENCOUNTERED

3S9178 TRACK ROLLER FRAME GROUP—With Guiding Guards
Factory Installation Only

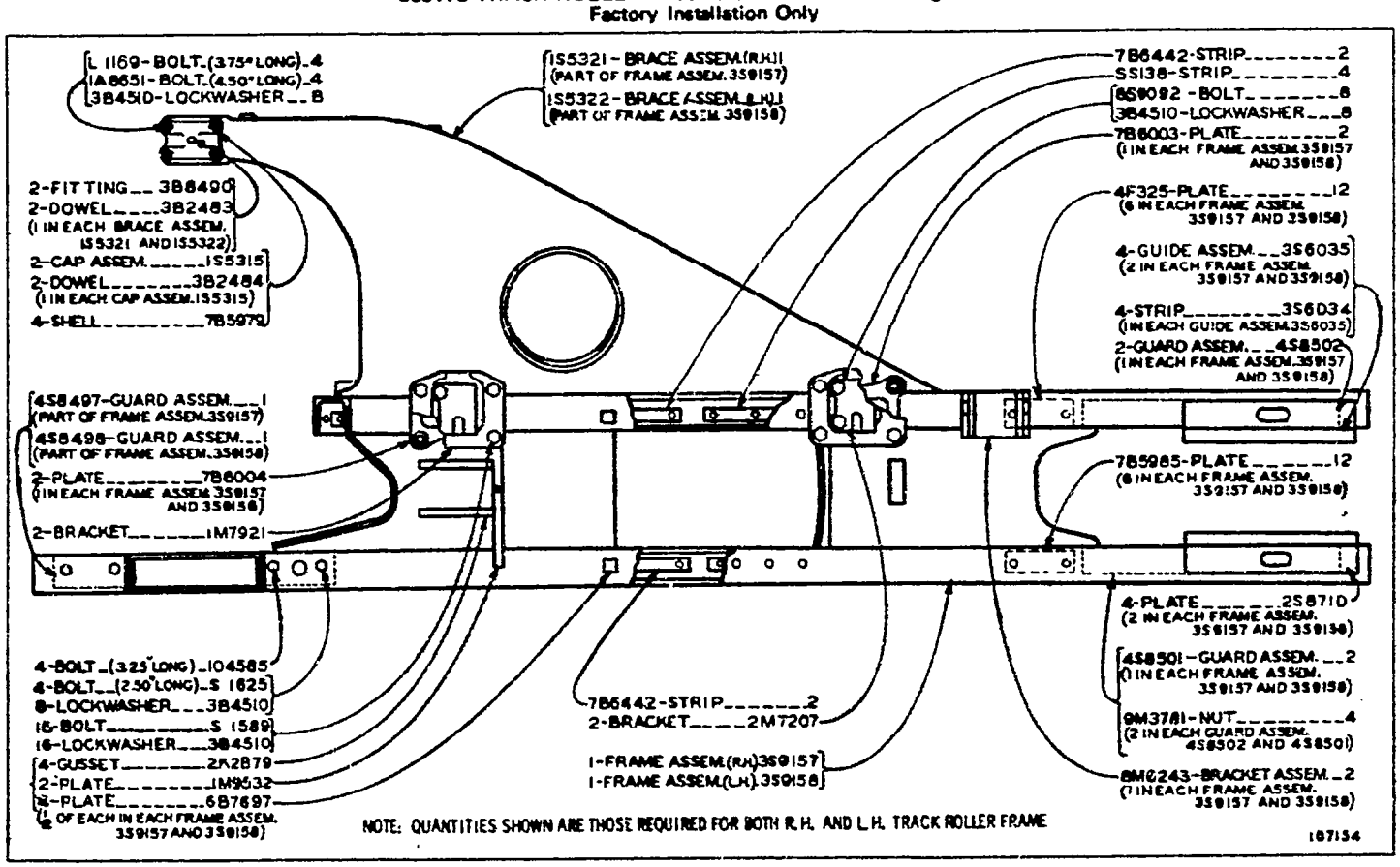

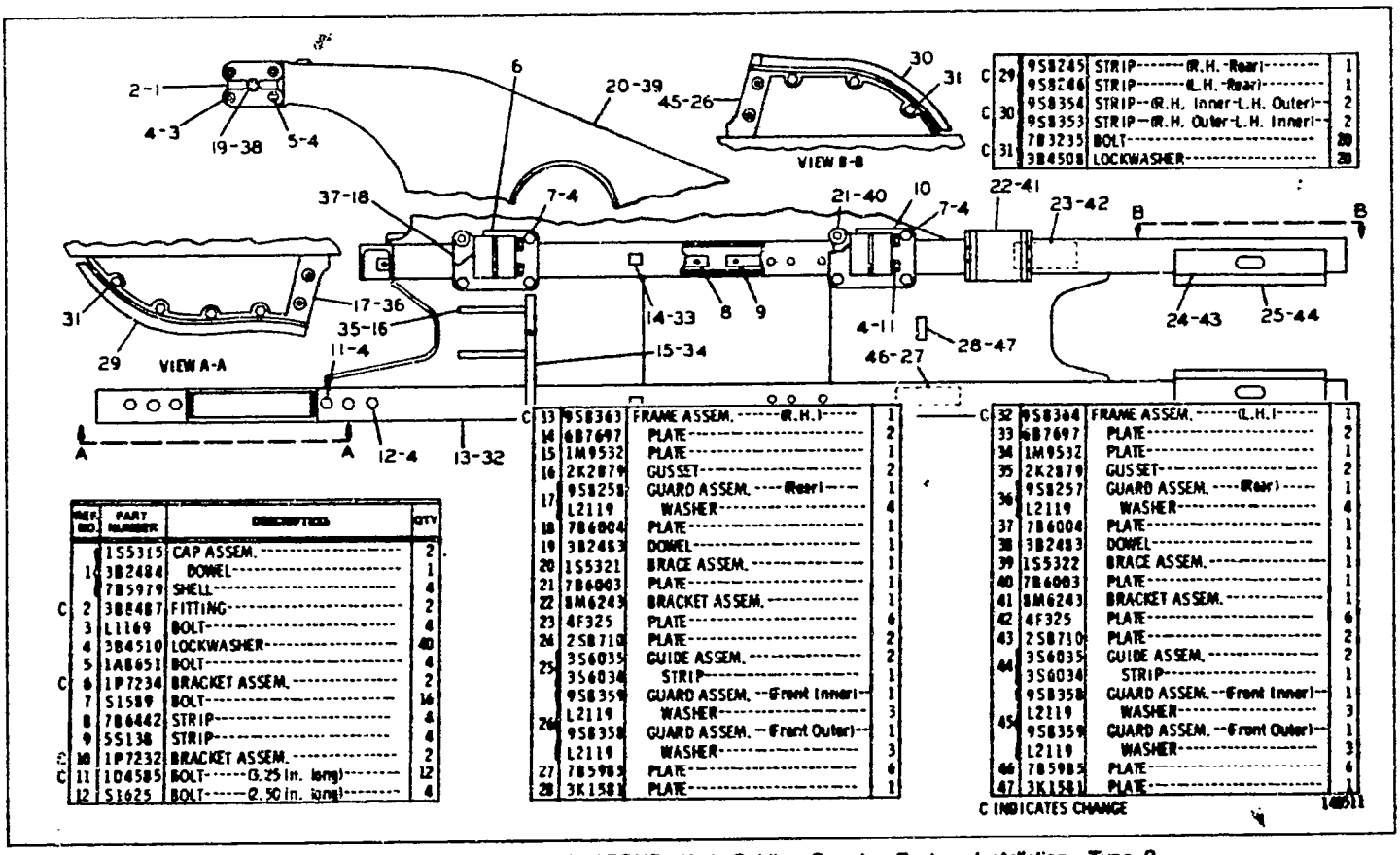

REF. NO.	PART NUMBER	DESCRIPTION	QTY
	1S5315	CAP ASSEM.	2
14	3B2484	DOWEL	1
	7B5979	SHELL	4
C 2	3B8487	FITTING	2
3	L1169	BOLT	4
4	3B4510	LOCKWASHER	40
5	1A8651	BOLT	4
C 6	1P7234	BRACKET ASSEM.	2
7	S1589	BOLT	16
8	7B6442	STRIP	4
9	5S138	STRIP	4
C 10	1P7232	BRACKET ASSEM.	2
C 11	104585	BOLT---(3.25 in. long)	12
12	S1625	BOLT---(2.50 in. long)	4
C 29	9S8245	STRIP---(R.H.-Rear)	1
	9S8246	STRIP---(L.H.-Rear)	1
C 30	9S8354	STRIP--(R.H. Inner-L.H. Outer)	2
	9S8353	STRIP--(R.H. Outer-L.H. Inner)	2
C 31	7B3235	BOLT	20
	3B4508	LOCKWASHER	20
C 33	9S8363	FRAME ASSEM.---(R.H.)	1
14	6B7697	PLATE	2
15	1M9532	PLATE	1
16	2K2879	GUSSET	2
17	9S8258	GUARD ASSEM.---(Rear)	1
	L2119	WASHER	4
18	7B6004	PLATE	1
19	3B2483	DOWEL	1
20	1S5321	BRACE ASSEM.	1
21	7B6003	PLATE	1
22	8M6243	BRACKET ASSEM.	1
23	4F325	PLATE	6
24	2S8710	PLATE	2
25	3S6035	GUIDE ASSEM.	2
	3S6034	STRIP	1
	9S8359	GUARD ASSEM.--(Front Inner)	1
26	L2119	WASHER	3
	9S8358	GUARD ASSEM.--(Front Outer)	1
	L2119	WASHER	3
27	7B5985	PLATE	6
28	3K1581	PLATE	1
C 32	9S8364	FRAME ASSEM.---(L.H.)	1
33	6B7697	PLATE	2
34	1M9532	PLATE	1
35	2K2879	GUSSET	2
36	9S8257	GUARD ASSEM.---(Rear)	1
	L2119	WASHER	4
37	7B6004	PLATE	1
38	3B2483	DOWEL	1
39	1S5322	BRACE ASSEM.	1
40	7B6003	PLATE	1
41	8M6243	BRACKET ASSEM.	1
42	4F325	PLATE	6
43	2S8710	PLATE	2
44	3S6035	GUIDE ASSEM.	2
	3S6034	STRIP	1
	9S8358	GUARD ASSEM.--(Front Inner)	1
45	L2119	WASHER	3
	9S8359	GUARD ASSEM.--(Front Outer)	1
	L2119	WASHER	3
46	7B5985	PLATE	6
47	3K1581	PLATE	1

C INDICATES CHANGE

140511

3S9178 TRACK ROLLER FRAME GROUP—With Guiding Guards—Factory Installation—Type 2

ATTACHMENTS

176C-2

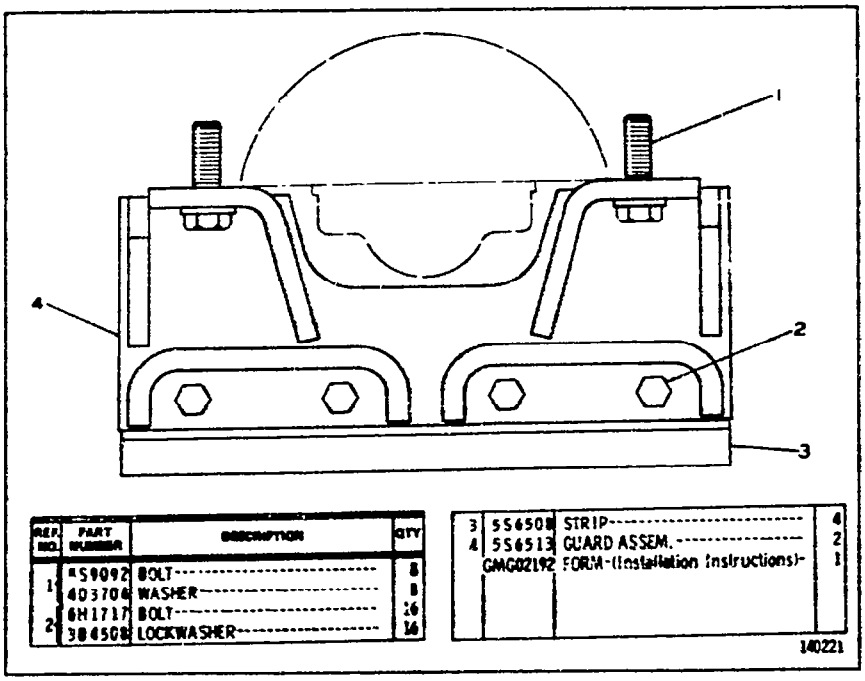

REF. NO.	PART NUMBER	DESCRIPTION	QTY
1	*S9092	BOLT	8
	403706	WASHER	8
2	8H1717	BOLT	16
	3B4508	LOCKWASHER	16
3	5S6508	STRIP	4
4	5S6513	GUARD ASSEM.	2
	GMG02192	FORM-(Installation Instructions)	1

140221

5S6519 TRACK GUIDING GUARD GROUP—Center

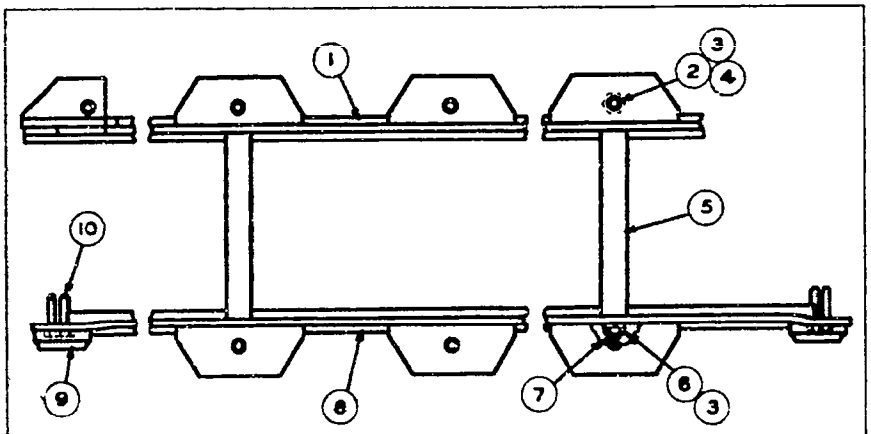

REF NO	PART NUMBER	DESCRIPTION	QTY
1	4S6565	GUARD ASSEM. (Right Hand-Inner)	1
	4S6566	GUARD ASSEM. -(Left Hand-Inner)-	1
2	8S9092	BOLT----------	22
3	3B4510	LOCKWASHER----------	34
4	4B4281	WASHER----------	22
5	4S6559	TUBE----------	6

REF NO	PART NUMBER	DESCRIPTION	QTY
6	1B4206	NUT----------	12
7	8H1381	ROD----------	6
8	4S6485	GUARD ASSEM. ------(Outer)------	2
9	2M4668	RETAINER----------	6
10	5 1595	BOLT----------	12
	3B4508	LOCKWASHER----------	12

NOTE: QUANTITIES SHOWN ARE THOSE REQUIRED FOR BOTH R.H. AND L.H. SIDES

L07152

4S6567 TRACK ROLLER GUARD GROUP
FOR USE WITH 3S9178 TRACK ROLLER FRAME GROUP SHOWN ON PAGE 176C

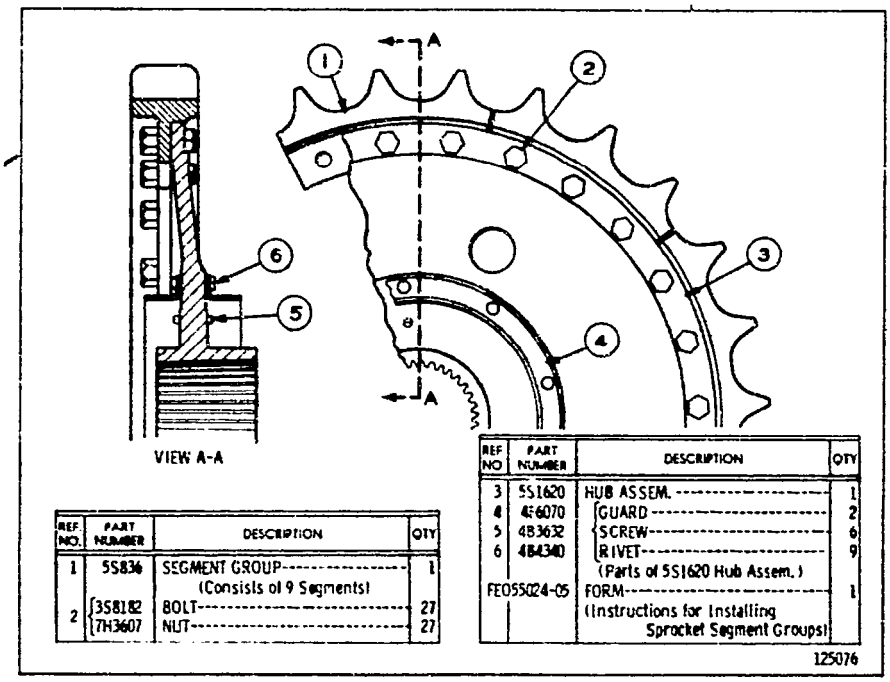

REF NO	PART NUMBER	DESCRIPTION	QTY
1	5S836	SEGMENT GROUP (Consists of 9 Segments)	1
2	3S8182	BOLT	27
	7H3607	NUT	27

REF NO	PART NUMBER	DESCRIPTION	QTY
3	5S1620	HUB ASSEM.	1
4	4F6070	GUARD	2
5	4B3632	SCREW	6
6	4B4340	RIVET (Parts of 5S1620 Hub Assem.)	9
FE055024-05		FORM (Instructions for Installing Sprocket Segment Groups)	1

125076

5S1621 TRACK SPROCKET GROUP—2 Required
NOTE: PROVIDES 6.906 INCH PITCH SPROCKETS FOR USE WITH BELLOWS SEALS TO CONVERT TO BOLT-ON SPROCKETS

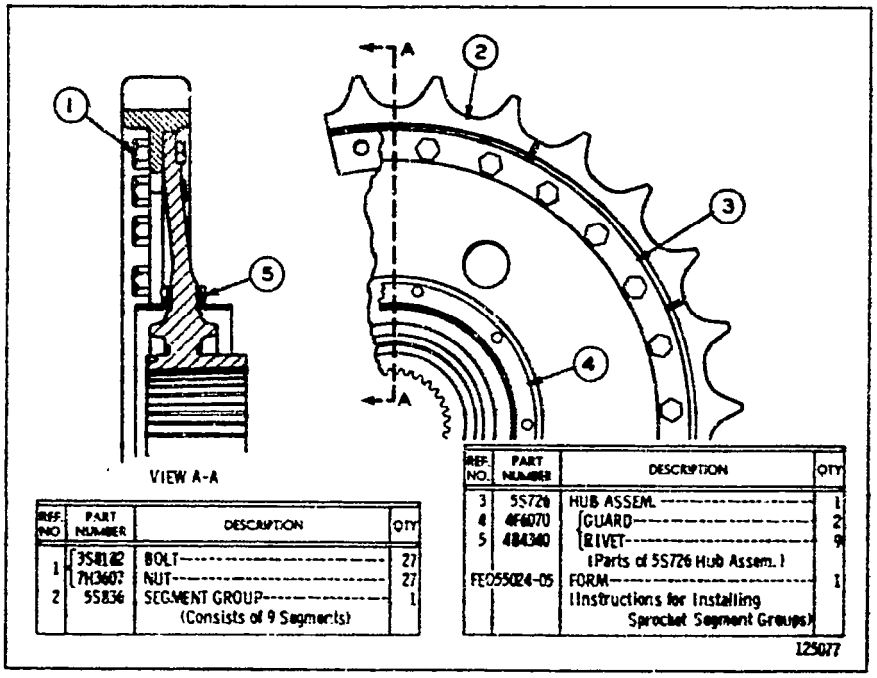

REF NO	PART NUMBER	DESCRIPTION	QTY
1	3S8182	BOLT	27
	7H3607	NUT	27
2	5S836	SEGMENT GROUP (Consists of 9 Segments)	1

REF NO	PART NUMBER	DESCRIPTION	QTY
3	5S726	HUB ASSEM.	1
4	4F6070	GUARD	2
5	4B4340	RIVET (Parts of 5S726 Hub Assem.)	9
FE055024-05		FORM (Instructions for Installing Sprocket Segment Groups)	1

125077

5S727 TRACK SPROCKET GROUP—2 Required
NOTE: PROVIDES 6.906 INCH PITCH SPROCKETS FOR USE WITH METAL FLOATING RING SEALS.

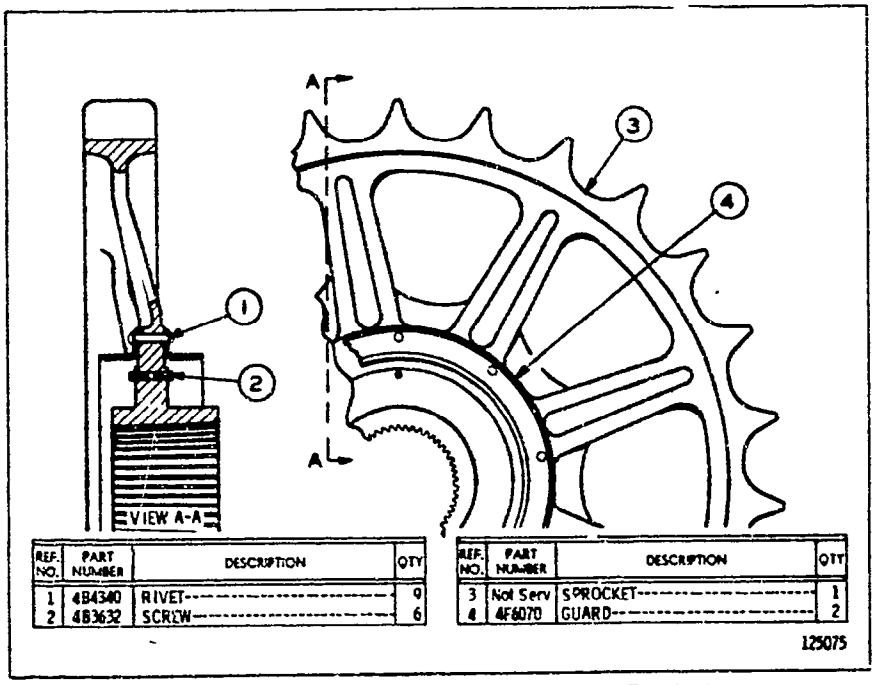

REF. NO.	PART NUMBER	DESCRIPTION	QTY
1	4B4340	RIVET	9
2	4B3632	SCREW	6
3	Not Serv	SPROCKET	1
4	4F6070	GUARD	2

5S6490 TRACK SPROCKET ASSEMBLY—2 Required
NOTE: PROVIDES 6.906 INCH PITCH SPROCKETS FOR USE WITH BELLOWS SEALS. 5S4822 Rim Assembly is available

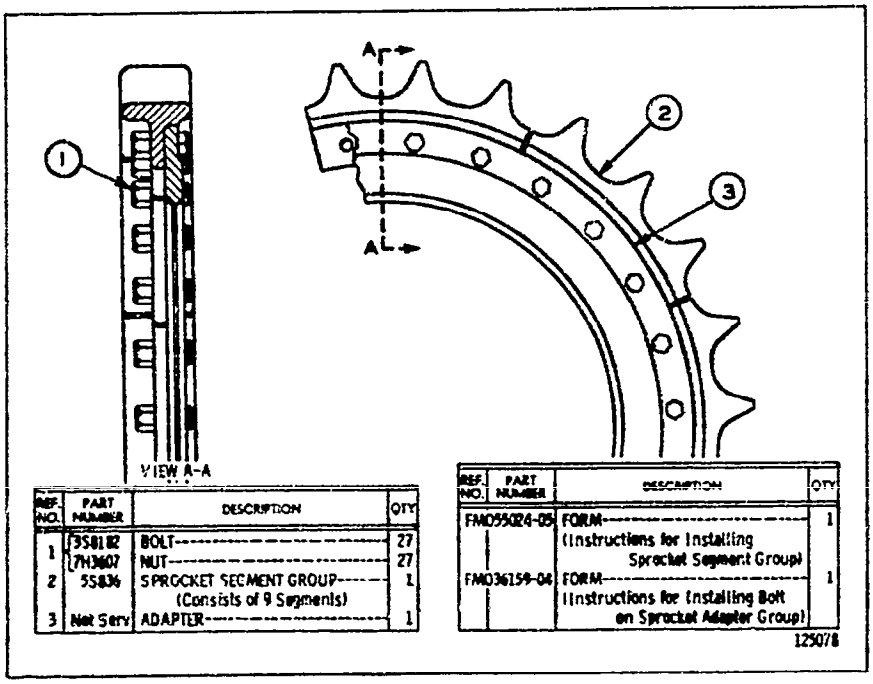

REF. NO.	PART NUMBER	DESCRIPTION	QTY
1	3S8182	BOLT	27
	7H3607	NUT	27
2	5S836	SPROCKET SEGMENT GROUP (Consists of 9 Segments)	1
3	Not Serv	ADAPTER	1

REF. NO.	PART NUMBER	DESCRIPTION	QTY
	FM055024-05	FORM (Instructions for Installing Sprocket Segment Group)	1
	FM036159-04	FORM (Instructions for Installing Bolt on Sprocket Adapter Group)	1

5S836 TRACK SPROCKET ADAPTER GROUP—2 Required
NOTE: PROVIDES 6.906 INCH PITCH SPROCKETS FOR USE WITH BELLOWS SEALS TO CONVERT TO BOLT-ON SPROCKETS

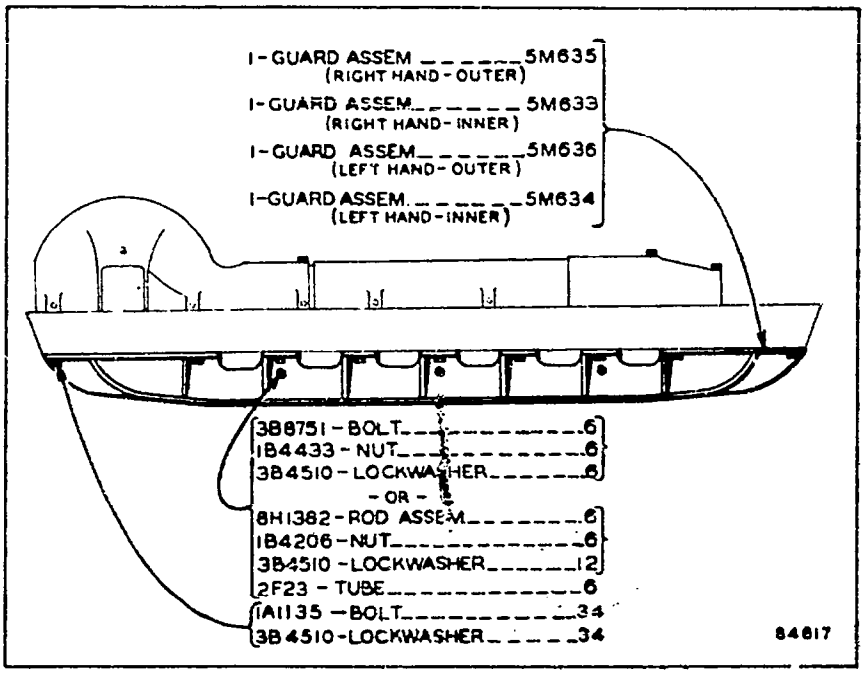

882868 TRACK ROLLER DIRT GUARD GROUP
Reinforced for extremely rough usage

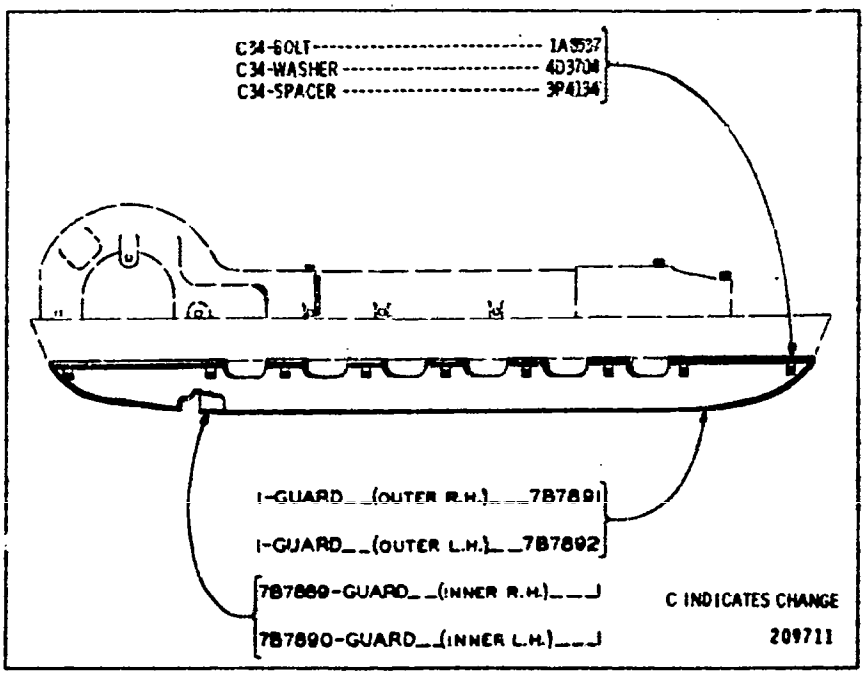

4F7236 TRACK ROLLER DIRT GUARD GROUP

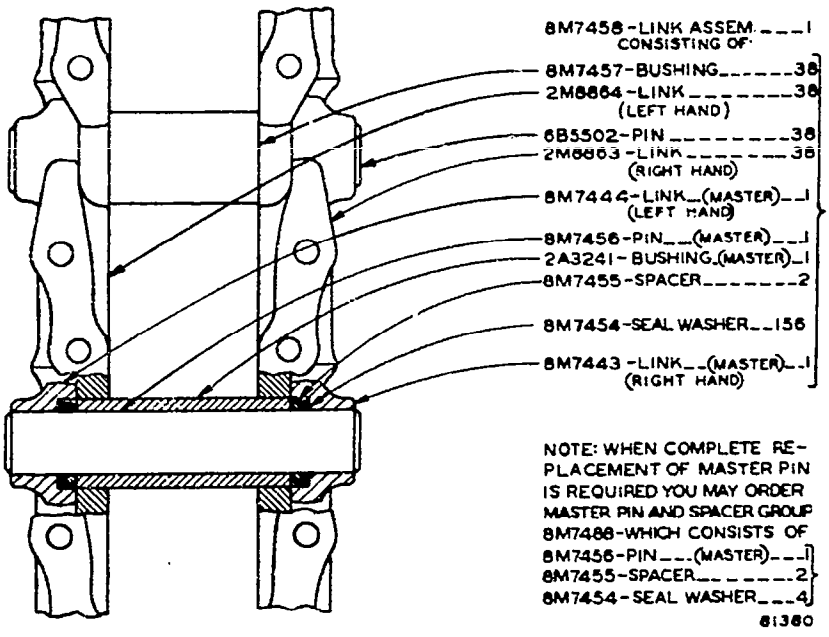

Name	Shoe (39 Req'd. for one Track)	Complete Track Group (Hardware Included) 2 Req'd. per Tractor
16" Grouser Shoe	1M3017	8M7462
16" Skeleton Shoe	1M3022	8M7464
16" Semi-Skeleton Snow Shoe	1M8610—D.S.—20 Req'd. 1M8611—S.S.—19 Req'd.	8M7467
18" Grouser Shoe	1M3021	8M7463
20" Grouser Shoe	1M4440	8M7465
24" Grouser Shoe	1M4441	8M7466

NOTE: 7H3597 Track Shoe Bolt—156 Req'd. for one Track
1M1408 Nut—Used with 7H3597
S.S.—Single Spike D.S.—Double Spike

TRACK GROUPS—2 Groups Required
For use with Small Outside Diameter Front Idler
Note: 8M7485 Track Pin and Bushing Group, consisting of a complete set of Pins and Bushings for one Track, is available

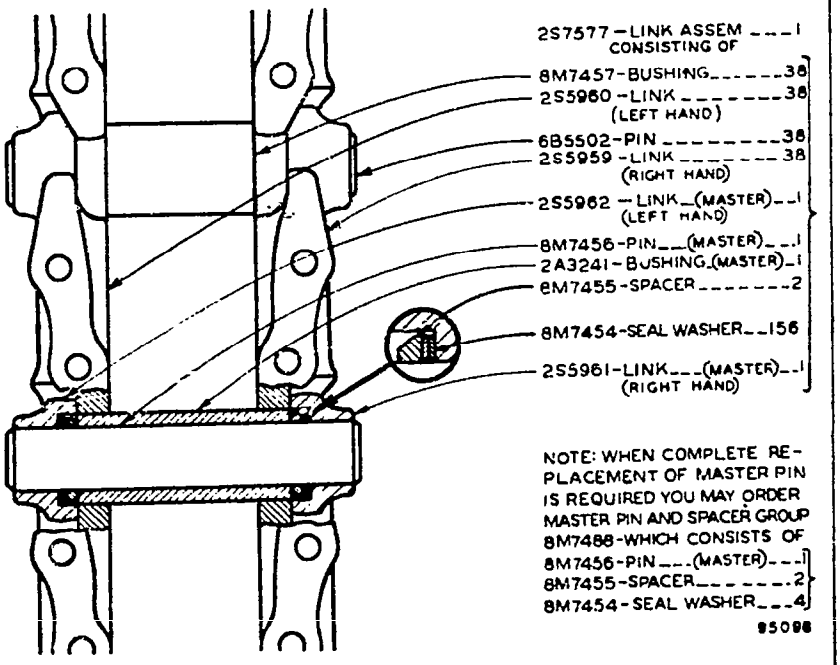

NAME	SHOE (39 Required for one Track)	COMPLETE TRACK GROUP (Hardware included) 2 Required per Tractor
16" Grouser Shoe	1M3017	2S7581
18" Grouser Shoe	1M3021	2S7582
20" Grouser Shoe	1M4440	2S7583
24" Grouser Shoe	1M4441	2S7584

7H3597 Track Shoe Bolt—156 Required for one Track
1M1408 Nut—Used with 7H3597

NOTE: 8M7485 Track Pin and Bushing Group, consisting of a complete set of Pins and Bushings for one Track, is available

TRACK GROUPS—2 Groups Required
For use with Small Outside Diameter Front Idler

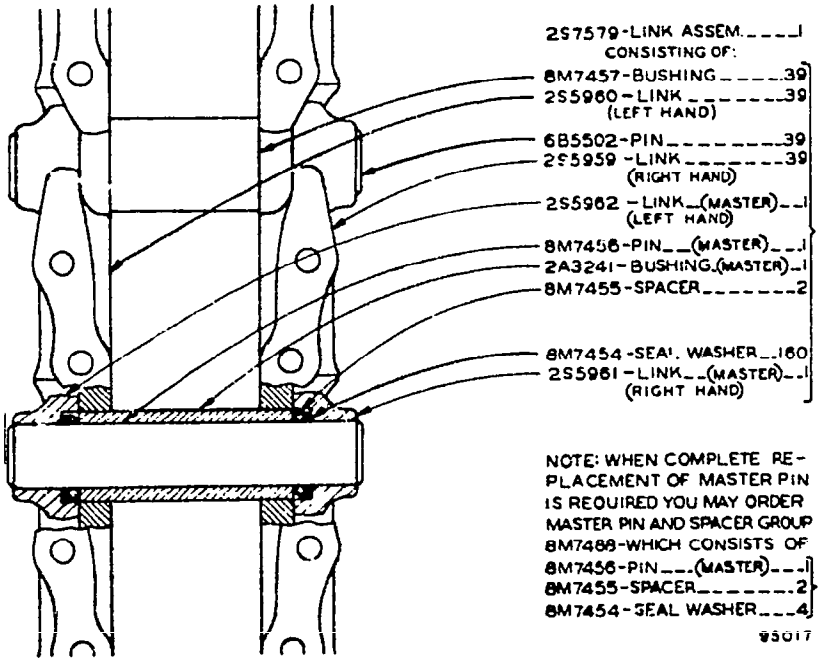

NAME	SHOE (40 Required for one Track)	COMPLETE TRACK GROUP (Hardware Included) 2 Required per Tractor
16" Semi-Skeleton Shoe	1M8610-D.S.-20 Req'd. 1M8611-S.S.-20 Req'd.	2S7591
18" Grouser Shoe	1M3021	2S7586
18" Grouser Shoe—Center Punched	4M2475	2S7590
18" Semi-Skeleton Shoe	1M3018-D.S.-20 Req'd. 1M3019-S.S.-20 Req'd.	2S7587
20" Grouser Shoe	1M4440	2S7589
24" Grouser Shoe	1M4441	2S7588

NOTE: 7H357 Track Shoe Bolt—160 Required for one Track
1M1408 Nut—Used with 7H3597
S.S.—Single Spike D.S.—Double Spike

NOTE: 8M7486 Track Pin and Bushing Group, consisting of a complete set of Pins and Bushings for one Track, is available

TRACK GROUPS—2 Groups Required
For use with Large Outside Diameter Front Idler

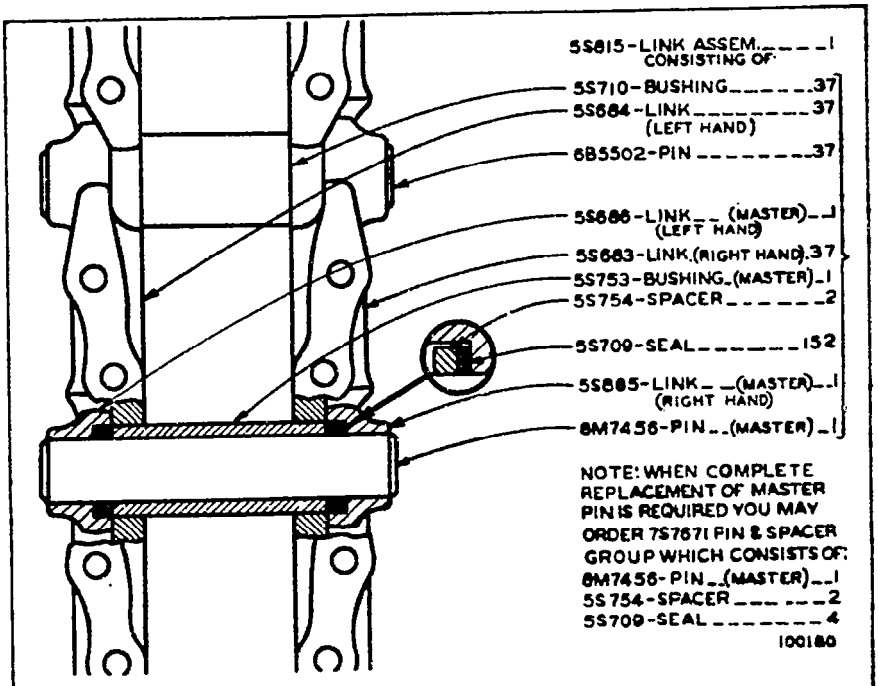

NAME	SHOE (38 REQUIRED FOR ONE TRACK)	COMPLETE TRACK GROUP (HARDWARE INCLUDED) 2 REQUIRED PER TRACTOR
16" GROUSER SHOE	5S820	5S824
18" GROUSER SHOE	5S821	5S825
20" GROUSER SHOE	5S822	5S826

7H3597 TRACK SHOE BOLT--152 REQUIRED FOR ONE TRACK
1M1408 NUT--USED WITH 7H3597

NOTE: 7S6161 TRACK PIN AND BUSHING GROUP, CONSISTING OF A COMPLETE SET OF PINS AND BUSHINGS FOR ONE TRACK, IS AVAILABLE

TRACK GROUPS—2 Groups Required
FOR USE WITH 6.906 INCH PITCH SPROCKET

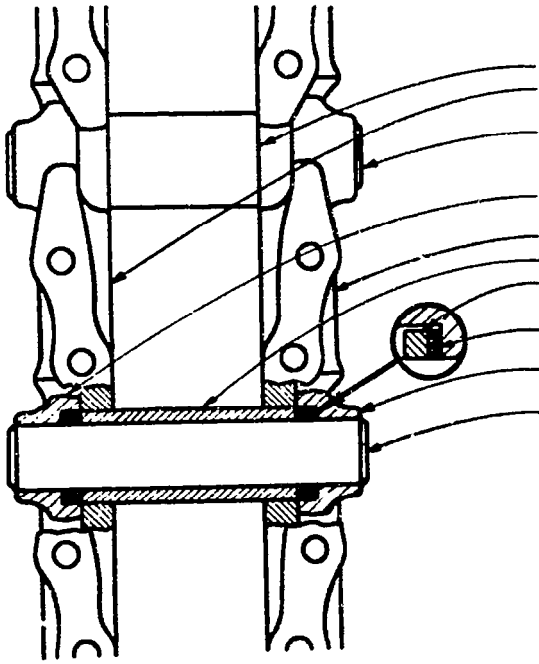

NAME	SHOE (39 REQUIRED FOR ONE TRACK)	COMPLETE TRACK (HARDWARE INCLUDED) 2 REQUIRED PER TRACTOR
16" GROUSER SHOE	5S820	5S827
18" GROUSER SHOE	5S821	5S828
20" GROUSER SHOE	5S822	5S829
22" GROUSER SHOE	5S823	5S830

7H3597 TRACK SHOE BOLT--156 REQUIRED FOR ONE TRACK
1M1408 NUT--USED WITH 7H3597

NOTE: 7S6160 TRACK PIN AND BUSHING GROUP, CONSISTING OF A COMPLETE SET OF PINS AND BUSHINGS FOR ONE TRACK, IS AVAILABLE

TRACK GROUPS–2 Groups Required
FOR USE WITH 6.906 INCH PITCH SPROCKET

2M7539 HYDRAULIC TRACK ADJUSTING GROUP—First Type

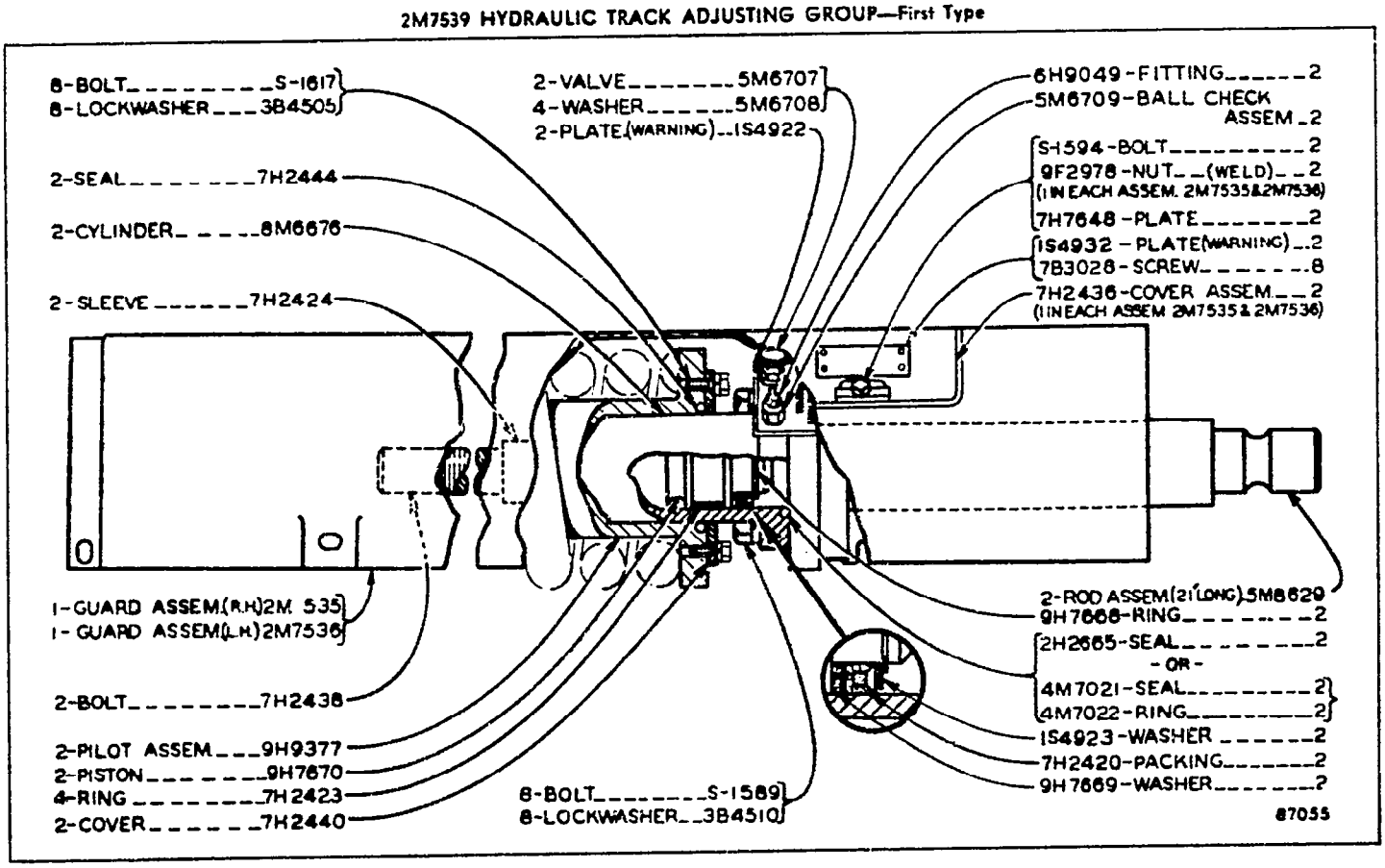

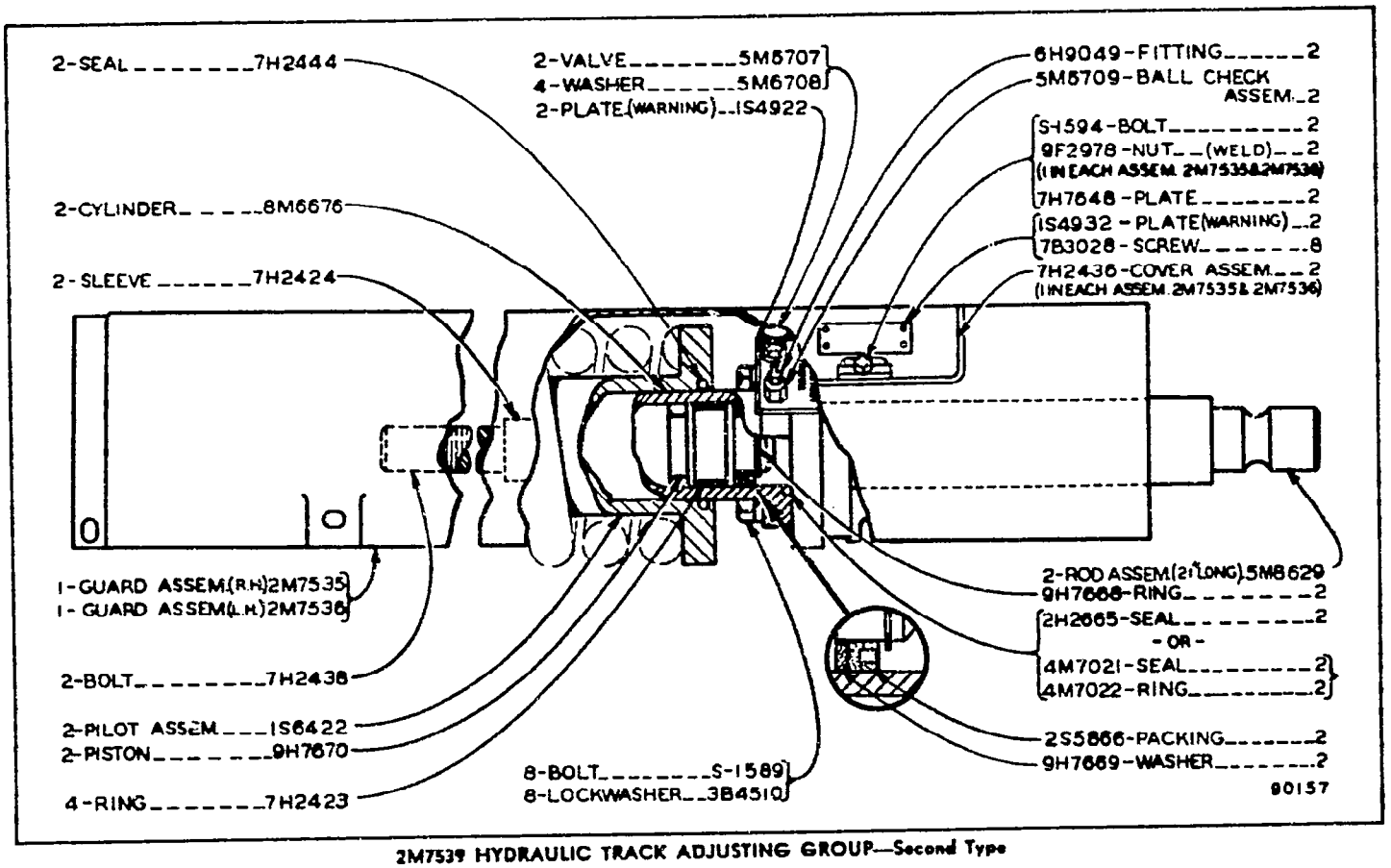

2M7539 HYDRAULIC TRACK ADJUSTING GROUP—Second Type

2M7539 HYDRAULIC TRACK ADJUSTING GROUP--TYPE 3

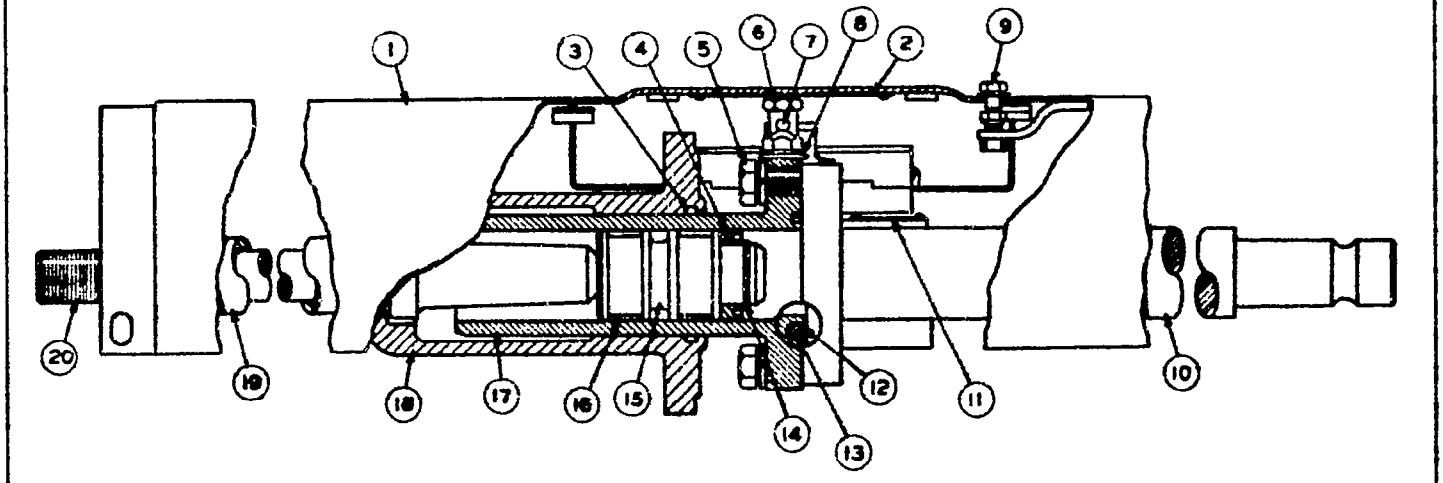

REF NO	PART NUMBER	DESCRIPTION	QTY
1	2S8277	GUARD GROUP----(Right Hand)----	1
	2S8278	GUARD GROUP-----(Left Hand)----	1
2	1S5242	PLATE---------(Warning)------	2
	7B3028	SCREW----------	8
		(1/2 each in 2S8277 and 2S8278 Guard Group)	
3	7H2444	SEAL----------	2
4	2S5867	SEAL----------	2
5	S-1589	BOLT----------	8
	3B4510	LOCKWASHER----------	8

REF NO	PART NUMBER	DESCRIPTION	QTY
6	2S5926	VALVE----------	2
7	2S5925	VALVE----------	2
8	5M6708	WASHER----------	4
	3B1915	BOLT----------	2
9	7D5322	NUT----------	2
	4B4278	WASHER----------	2
10	35311	ROD GROUP----------	2
11	2S5927	PLATE------(Warning)------	2
	7B1928	SCREW----------	8
		(1/2 each in 35311 Rod Group)	

REF NO	PART NUMBER	DESCRIPTION	QTY
12	4M7022	RING----------	2
13	4M7021	SEAL----------	2
14	9H7668	RING----------	2
15	9H7670	PISTON----------	2
16	7H2423	RING----------	4
17	8M6676	CYLINDER----------	2
18	1S6422	PILOT ASSEM.----------	2
19	7H2424	SLEEVE----------	2
20	7H2438	BOLT----------	2

QUANTITIES SHOWN ARE THOSE REQUIRED FOR BOTH R.H. AND L.H. SIDE

108642

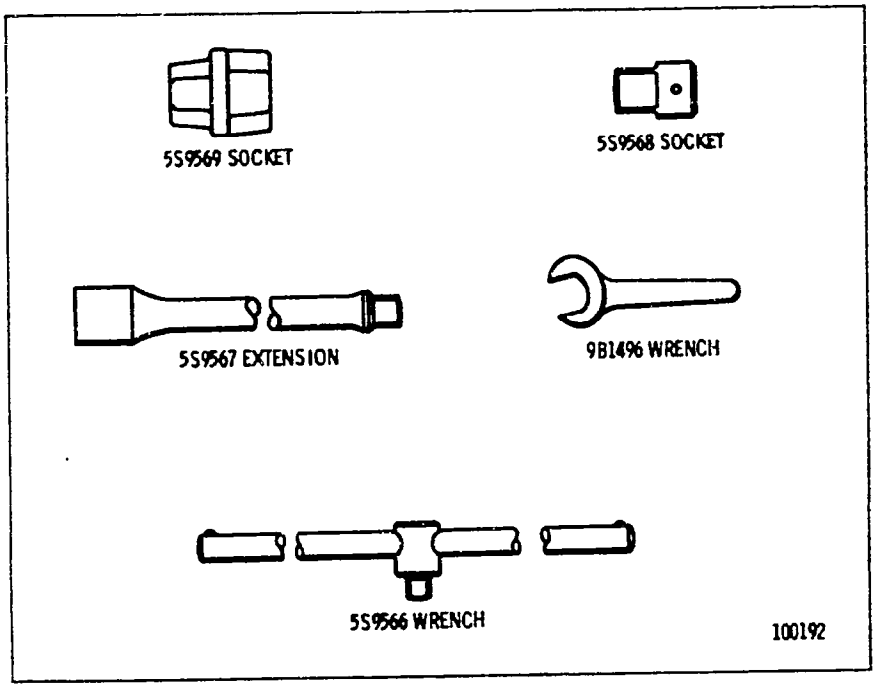

TOOLS (8M8833 N/S)

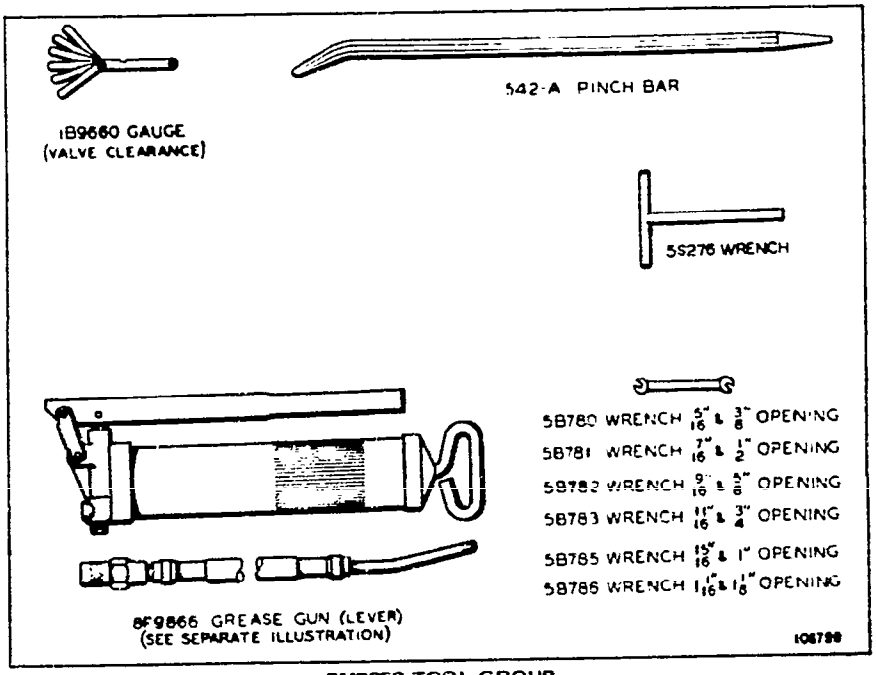

8M9863 TOOL GROUP
8F9866 Grease Gun parts are shown on Page 182A
AN ATTACHMENT. Only separate parts serviced. When complete Group is required order 9S7977 shown on Page 182

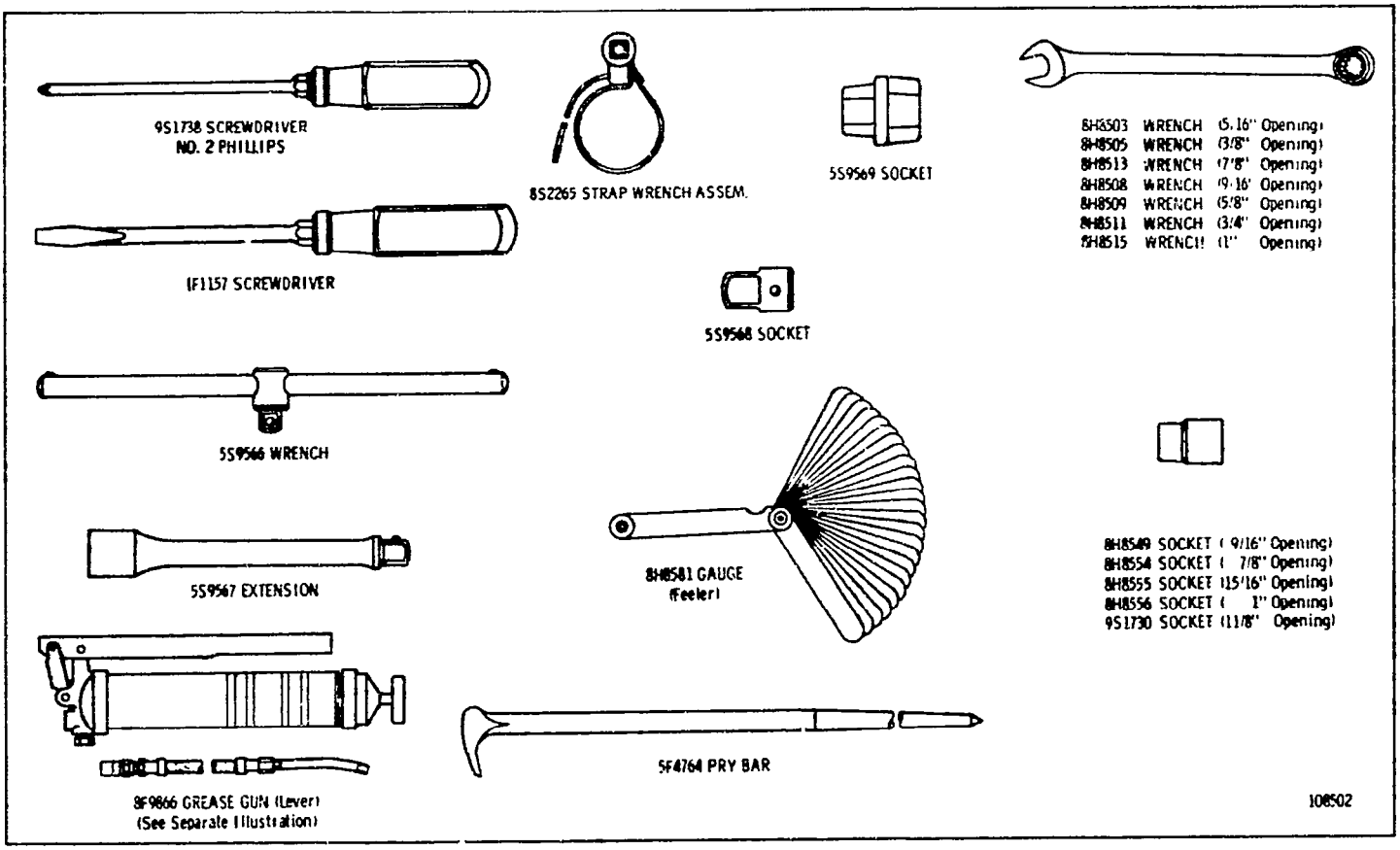

9S7977 TOOL GROUP
AN ATTACHMENT

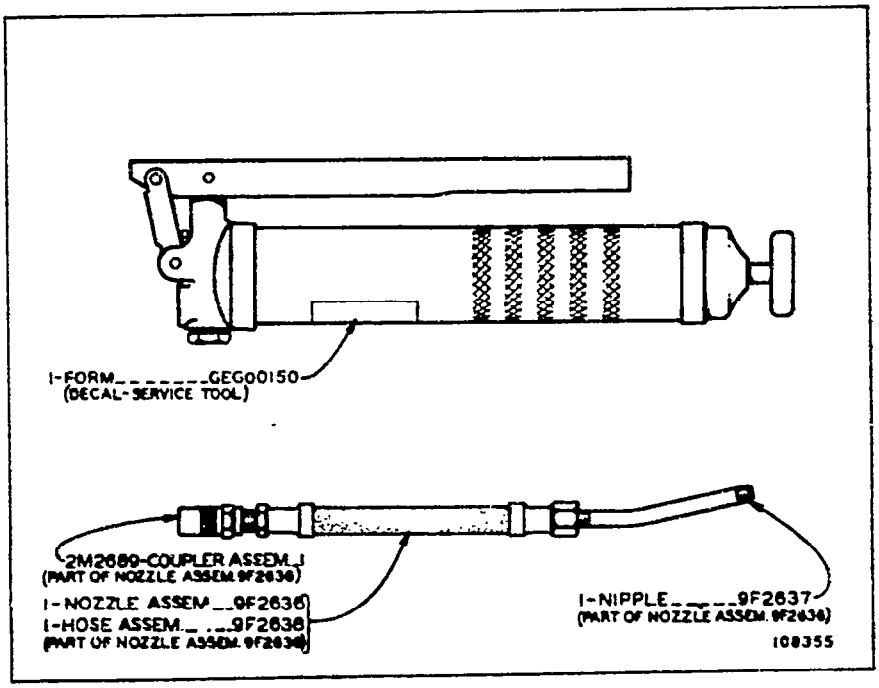

8F9866 GREASE GUN
Part of 8M9853 and 9S7977 Tool Groups shown on Pages 181 & 182

Quantity Used	Part Number	Description
2	2M6831	Plate—Serial Number
1	9M6432	Plate—Lubrication Instructions
10	4B4158	Drive Screw
1	1H6517	Transfer—Filter Instructions On oil filter cover
1	1S8410	Film—Crankcase On front oil filter
1	8M4707	Transfer Group
		Consisting of:
1	.....	Transfer—Safety On dash
1	.....	Transfer—Manufacturer's Address On front panel below seat
1	.....	Transfer—Fuel Oil Capacity To left of fuel tank filler neck
1	.....	Transfer—Air Cleaner Instructions On diesel air cleaner
2	.....	Transfer—Generator Instructions On voltage regulator and Generator
1	.....	Transfer—Air Cleaner Instructions On starting engine air cleaner
2	.....	Transfer—D6B On each side of seat
1	.....	Transfer—Breather Instructions On starting engine breather
1	.....	Transfer—D6 On back of fuel tank
1	.....	Transfer—Series B On back of fuel tank
1	.....	Transfer—Fuel Valve Instructions
1	.....	Transfer—Filter Instructions
2	5H8460	Transfer—CATERPILLAR On front of radiator guard and back of fuel tank
2	7H6814	Transfer—CAT On each side of seat
2	7M8856	Transfer—CATERPILLAR On each side of hood

NAME PLATES AND TRANSFERS

SPECIFICATIONS

(SUBJECT TO CHANGE WITHOUT NOTICE)

Weight, shipping (approximate)	18,125 lbs.

DIMENSIONS

Length	12' 7¾"
Height	6' 3⅛"
Width	7' 9½"
Gauge	74"
Ground Clearance	13½"
Drawbar Height	14"

ATTACHMENTS

Additional equipment such as Hydraulic Track Adjusters, Mufflers, Cable and Hydraulic Controls, Lighting Systems, Cabs, etc., are available at extra cost. Consult your "Caterpillar" Dealer.

MACHINE SERIAL NUMBER PLATE LOCATION

Serial number plates are located on the back of the transmission case and on the left-hand side of the cylinder block.

PRINTED IN U.S.A. FORM UE035628

UE035628

CONVERSION EQUIVALENT TABLES

VOLUME AND CAPACITY EQUIVALENTS

Unit	Cu. In.	Cu. Ft.	Cu. Yd.	Cu. Cm.	Cu. M.	U.S. Liquid Gallons	Imperial Gallons	Liters
1 Cu. In.	1	.000579	.0000214	16.39	.0000164	.004329	.00359	.0164
1 Cu. Ft.	1728	1	.03704	28317	.0283	7.481	6.23	28.32
1 Cu. Yd.	46656	27	1	764600	.765	202	168.9	764.5
1 Cu. Cm.	.061	.0000353	.00000131	1	.000001	.000264	.00022	.001
1 Cu. M.	61020	35.31	1.308	1,000,000	1	264.2	220.2	1000
1 U.S. Liquid Gal.	231	.1337	.00495	3785	.003785	1	.833	3.785
1 Imperial Gallon	277.42	.16	.00594	4545.6	.004546	1.2	1	4.546
1 Liter	61.02	.03531	.001308	1000	.001	.2642	.22	1

LENGTH EQUIVALENTS

Unit	Centimeters	Inches	Feet	Yards	Meters	Kilometers
1 Centimeter	1	0.3937	0.03281	0.01094	0.01	
1 Inch	2.540	1	0.08333	0.02778	0.0254	
1 Foot	30.48	12	1	0.3333	0.3048	
1 Yard	91.44	36	3	1	0.9144	
1 Meter	100	39.37	3.281	1.0936	1	
1 Kilometer	100000	39370	3281	1093.6	1000	1

AREA EQUIVALENTS

Unit	Sq. Cm.	Sq. In.	Sq. M.	Sq. Ft.
1 Sq. Cm.	1	0.155		
1 Sq. In.	6.4516	1	.00064516	.006944
1 Sq. M.	10,000	1550	1	10.764
1 Sq. Ft.	929	144	0.0929	1

WEIGHT EQUIVALENTS

Unit	Kilograms	Ounces Avoirdupois	Pounds Avoirdupois
1 Kilogram	1	35.27	2.205
1 Ounce	0.02835	1	0.0625
1 Pound	0.4536	16	1

Inches to Centimeters and Centimeters to Inches

Inches or Centimeters	Inches	Centimeters	Inches or Centimeters	Inches	Centimeters
1	0.39	2.54	26	10.24	66.04
2	0.79	5.08	27	10.63	68.58
3	1.18	7.62	28	11.02	71.12
4	1.57	10.16	29	11.42	73.66
5	1.97	12.70	30	11.81	76.20
6	2.36	15.24	31	12.20	78.74
7	2.76	17.78	32	12.60	81.28
8	3.15	20.32	33	12.99	83.82
9	3.54	22.86	34	13.39	86.36
10	3.94	25.40	35	13.78	88.90
11	4.33	27.94	36	14.17	91.44
12	4.72	30.48	37	14.57	93.98
13	5.12	33.02	38	14.96	96.52
14	5.51	35.56	39	15.35	99.06
15	5.91	38.10	40	15.75	101.60
16	6.30	40.64	41	16.14	104.14
17	6.69	43.18	42	16.54	106.68
18	7.08	45.72	43	16.93	109.22
19	7.48	48.26	44	17.32	111.76
20	7.87	50.80	45	17.72	114.30
21	8.27	53.34	46	18.11	116.84
22	8.66	55.88	47	18.50	119.38
23	9.06	58.42	48	18.90	121.92
24	9.45	60.96	49	19.29	124.46
25	9.84	63.50	50	19.69	127.00

How to use:
11 inches = 27.94 centimeters
11 centimeters = 4.33 inches