RUTHZIL TRATOR COMERCIAL DE PEÇAS LTDA 11 97083-6812 ROLANDO

DEZEMBRO 1959

Foreword

IT is the purpose of Caterpillar Tractor Co., to build into its products the capability of a long life of useful work. The records of tens of thousands of users testify to success in the achievement of that purpose. It is natural, however, that length of life and cost of operation and maintenance will vary — top records are the reward of the owners and operators who are diligent and conscientious in the care, operation and maintenance of their machines.

The Operator's Instruction Book, a copy of which is supplied with each machine, tells what to do, and how and when to do it, with regard to the day-to-day lubrication, operation and maintenance of the machine. It is urged that these instructions be studied carefully and reread frequently until the operator is thoroughly familiar with them. By following the instructions, the operator is best assured of obtaining maximum life and performance from his machine and of minimizing the frequency, number and cost of repairs.

Even the best of care will not eliminate the necessity, in course of time, of making minor repairs or complete reconditioning.

Your "Caterpillar" dealer has exceptionally complete facilities for such work. He carries a stock of genuine replacement parts and has in his employ competent factory trained servicemen. For work that cannot be done in the field, dealers have well equipped shops. Both the shop and the field servicemen have many special tools, designed and developed by "Caterpillar", that make easier and quicker the disassembly and assembly operations.

Though most "Caterpillar" owners prefer to make use of the excellent service and shop facilities of their dealers, some are themselves skilled mechanics or have such mechanics in their employ for reconditioning their equipment. To those owners this book, issued as a guide for "Caterpillar" dealer servicemen, will be of equal value.

The special tools pictured in various operations throughout are among the many which can be purchased from dealers. These tools are illustrated and listed in the Catalog for Service Tools, a copy of which is available on request.

Table of Contents

	Page
Specifications	3
General Instructions	5
Diesel Engine	
Radiator Removal	13
Oil Cooler Removal	15
Fan Belt Replacement	17
Fan, Water Pump and Regular Housing Removal	18
Oil Pan Removal	20
Governor Control Assembly	22
Hood and Dash	24
Timing Gear Cover Removal	26
Removing and Installing Diesel Engine	31
Engine and Flywheel Clutch Alignment	34
Starting Engine	
Starting Engine Removal	36
Replacing Starting Engine	39
Power Transmission Units	
Flywheel Clutch (Oil Type)	42
Flywheel Clutch (Dry Type)	71
Transmission	81
Bevel Gear	109
Seat and Fuel Tank	119
Brakes	120
Steering Clutches	123
Steering Clutch Hydraulic Control Unit	129
Final Drive Group	137
Track Roller Frame Group	
Tracks	154
Track Carrier Rollers	166
Track Rollers	168
Front Idler	172
Equalizer Spring Group	178
Recoil Springs	183
Track Roller Frame Assembly	185
Drawbar	186
Attachments	
Installing Glass in Steel Cabs	189
Index	195

SPECIFICATIONS

POWER TRANSMISSION UNITS

Flywheel Clutch (Dry Type)	
Clearance between shaft and sliding collar	.005 - .007 -in.
Maximum permissible clearance	.030 -in.
Engine Alignment At Clutch	
Axial—Maximum permissible indicator movement	.010 -in.
Face—Maximum permissible indicator movement	.010 -in.
Transmission	
Reverse idler gear bearing pre-load	.002 -in.
Bevel Gear	
Bevel gear and pinion backlash (as marked on bevel gear) or	.008 - .010 -in.
Bevel gear bearing pre-load:	
Shims to be removed after end clearance taken up	.022 -in.
Or, torque to rotate	85 - 100 lb. in.
Steering Clutch	
Clearance between shaft and pressure plate bushing	.005 - .009 -in.
Maximum permissible clearance	.030 -in.
Clutch Springs	
Outer	
Pounds pressure	193 - 227
When compressed to	4 17/32-in.
Inner	
Pounds pressure	115 - 135
When compressed to	4 7/32-in.
Steering clutch, minimum overall width plates and discs	2 15/16-in.
Steering clutch inner drum-to-shaft press fit, tons	20
Steering clutch coupling-to-bevel gear shaft press fit, tons	20
Steering clutch lever adjustment, free play	3-in.
Brakes	
Adjustment	
Distance pedal depressed	$3\frac{1}{2}$-$4\frac{1}{2}$-in.
Turns to back screw off underneath transmission case	$1\frac{1}{2}$
Final Drive	
Flange-to-final-drive pinion press fit, tons	35-40
Sprocket shaft-to-case press fit, tons	25
Sprocket shaft must be straight within	$\frac{1}{8}$-in.
Sprocket-to-hub press fit, tons	30

TRACK ROLLER FRAME GROUP

Track Roller Frame

Outer bearing clearance	.0065-	.0095-in.
Maximum permissible clearance outer bearing		.025 -in.
Inner bearing clearance	.008 -	.010 -in.
Maximum permissible clearance inner bearing	"	.040 -in.
Minimum thickness of wear strip for front idler		1/4-in.

Track Rollers

Shaft clearance	.005 -	.009 -in.
Maximum permissible shaft clearance		.050 -in.
End clearance	.010 -	.028 -in.
Maximum permissible end clearance	"	.050 -in.

Track Carrier Rollers

Shaft clearance	.003 -	.005 -in.
Maximum permissible shaft clearance		.025 -in.
End clearance	.010 -	.028 -in.
Maximum permissible end clearance		.050 -in.
End of shaft to face of bracket		8 1/4-in.

Front Idlers

Shaft clearance	.005 -	.009 -in.
Maximum permissible shaft clearance		.040 -in.
End clearance	.010 -	.028 -in.
Recoil spring, assembled length		24 3/8-in.
Track adjustment, slack		1 1/2 - 2-in.
Limit of adjusting track, specified distance		8 1/4-in.

Tracks

Bolt torque	145-160 lb. ft.

General Instructions

These general instructions will be extremely helpful in following the detailed instructions in the main sections of the book. They should be read and then kept in mind while assembling or disassembling the machine.

KEEP DIRT OUT

The most important single item in preserving the long life of the machine is to keep dirt out of vital working parts. Caterpillar Tractor Co. has taken precautions to safeguard against dirt entering working parts. Enclosed compartments, seals and filters have been provided to keep the supply of air, fuel, and lubricants clean. It is highly important that the effectiveness of these safeguards be maintained. Filters should be replaced or cleaned regularly. Worn seals or broken gaskets should be replaced immediately.

Anti-friction bearings, properly lubricated with clean lubricant, will last indefinitely. Abrasives in the lubricant will cause rapid wear on the extremely hard races and balls or rollers. Dirt in an anti-friction bearing can cause the bearing to lock, with the result that the shaft will turn in the inner race or the outer race will turn within the cage. Dirt and abrasives in lubricants will embed in bushing-type bearings and act like fine sandpaper against the shaft, causing extremely rapid wear.

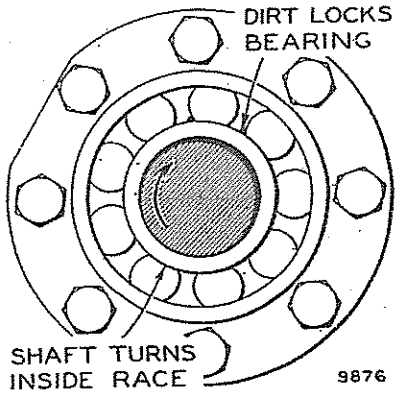

EFFECT OF DIRT IN BEARING

◆

Lubricant must be changed at recommended intervals. Use clean containers. Before removing a filler cap, brush away the dirt with the brush provided in the tool kit.

Utmost care must also be exercised in keeping the hydraulic equipment and lubricant passages clean during reconditioning. Foreign material carelessly introduced into these parts can cause serious trouble.

MAINTAIN ADJUSTMENTS

Operating adjustments have been kept to a minimum on "Caterpillar"-built machines but they are important and should be carefully maintained.

Keep the flywheel clutch and steering clutches in adjustment to avoid slippage and the resulting loss of power and shortened life of the clutch plates. Correctly adjusted steering clutches and brakes are essential to good performance. Keep the fan belts adjusted to the proper tension to obtain maximum belt life and proper cooling.

The tracks must also be kept adjusted to the tension best suited to the particular terrain or type of material on which the machine is operating.

If the tracks are too tight, the front idlers and final drive parts will be overstressed. If the tracks are too loose, more rapid wear will result between the track pins and bushings and the tracks are more likely to be thrown off. However, when operating in loose material which may pick up and clog the tracks, a fairly loose adjustment may be desirable. Experience will show when it is necessary to change the adjustment from normal.

INSPECT FREQUENTLY AND CORRECT MINOR TROUBLES

A bearing changed in time will save a shaft. An oil leak corrected prevents loss of lubricant and an overheated bearing. A nut tightened in time will prevent the loss or breakage of an associated part.

RECONDITIONING PROCEDURE

This book has been arranged for the disassembly and reconditioning of individual parts of the machine. If the machine is to be disassembled for complete inspection and rebuilding, the following procedure is recommended:

1. Remove sheet metal guards, including hood, radiator guard and floor plates, and clean the machine thoroughly.
2. Separate both tracks.
3. Raise the machine and block it securely, front and rear.
4. Remove both track roller frame assemblies.
5. Remove radiator, and fan assembly.
6. Remove starting engine air cleaner, carburetor and manifold assembly.

7. Remove Diesel engine air cleaner, dash and manifolds.

8. Lift out the engine.

9. Remove seat and fuel tank.

10. Remove flywheel clutch and transmission.

11. Remove steering clutches and bevel gear.

12. Disassemble and remove final drive parts.

Instructions for removing and disassembling these parts are contained in this Reference Book, although not necessarily in the above order.

SAFETY AND WORKMANSHIP SUGGESTIONS

There are certain practices which should be followed in the interest of safety and good workmanship when working around machinery.

Always show proper respect for weight. Do not attempt to lift heavy parts where a hoist should be used. Never leave heavy parts in an unstable position. When raising a machine, make sure that it is blocked securely. Then block it up so that the weight will be supported by the blocks rather than the lifting equipment.

Tools

All service tools should be kept in first class condition. Use the proper tool for the job at hand. Special service tools are available for specific jobs and they should be used when recommended. The use of these tools will save time and prevent damage to parts.

In the following pages puller arrangements are illustrated for separating tightly fitted parts. However, if the machine is being reconditioned in a shop, it may in many cases be easier and faster to use a press. When pulling a bearing or gear from a shaft, always use a centering spacer between the forcing screw and the end of the shaft.

Disassembly

If a part offers unexpected resistance to removal, check carefully to see that all nuts and capscrews have been removed before using force. Possibly some other part is interfering and should be removed first. Parts which are fitted together with tapered splines are always very tight. If they are not tight when disassembled, inspect the tapered splines and discard the part if the splines are worn.

Where shims are used, be sure to remove them all. Tie the shims together and identify them as to their location. Then keep them clean and flat until they are reinstalled.

CLEANING AND INSPECTION

Clean all parts thoroughly after they are removed and inspect them. Be sure all lubricant passages and oil holes are open. Badly worn or damaged parts should not be put back in the machine. Cover all parts to keep them clean until they are installed.

Anti-friction bearings should receive special handling. As soon as a bearing is removed, cover it to keep out dirt and abrasives. Wash bearings in non-inflammable cleaning solution and inspect the races and balls or rollers. Discard the bearings if they are pitted, scored, or burned. If the bearing is serviceable, coat it with light oil and wrap it in clean paper. Do not unwrap new bearings until ready to install them.

ASSEMBLY

Clean the rust preventive compound from all machined surfaces of new parts before installing them. Be sure to install parts in the proper location and position.

When one part is pressed into another, use white lead or a suitable prepared compound to lubricate the mating surfaces. Tapered parts, however, should be assembled dry. Before assembling parts with tapered splines, be sure the splines are clean, dry and free from burrs. Then press the parts together tightly.

When possible, soak new rawhide seals in warm oil for a half hour before installing. Install the seal with the wiping edge turned in the direction recommended. Be careful not to cut the leather seal as it is installed or when installing a shaft through the seal. Use shim stock if necessary to protect the seal from shoulders or sharp edges during installation. Packing-type seals should always be renewed if the contacting part is removed.

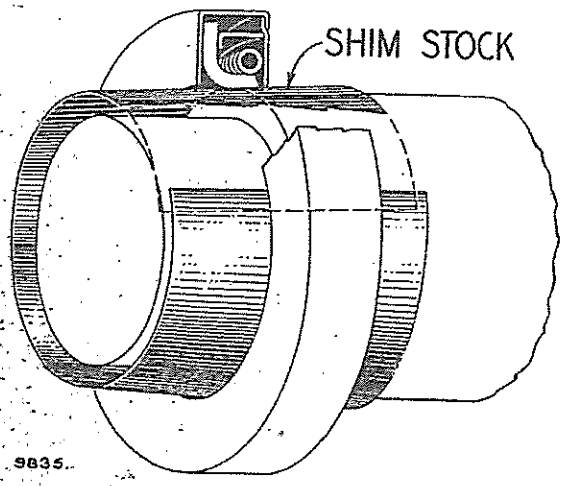

PROTECTING SEAL DURING INSTALLATION

When installing a bearing, spacer, or washer against a shoulder on a shaft, be sure the chamfered side is toward the shoulder. If the washer is turned in the wrong direction, the radius may interfere and prevent the washer from seating against the shoulder.

Do not install bushings by driving them in with a hammer. Use a press if possible and be sure to apply the pressure directly in line with the bore. If a bushing must be driven in, use a bushing driver or a bar with a smooth flat end. If the bushing has an oil hole, be sure it is lined up with the oil hole in the part in which it is assembled.

HOW TO INSTALL SPACER AGAINST SHOULDER ON SHAFT

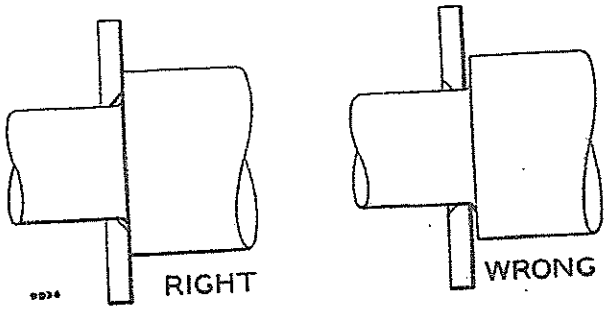

Install gaskets where required and use new ones if necessary. Never use cork or felt gaskets or seals a second time. Be sure the holes in the gaskets correspond with the lubricant passages in the mating parts. If it is necessary to make gaskets, select stock of the proper type and thickness and be sure to cut sufficient holes in the right places. Blank gaskets can cause serious damage.

Use capscrews of the correct length. A capscrew which is too long may "bottom" before the head is tight against the part it is to hold, and in addition the threads may be damaged when the capscrew is removed.

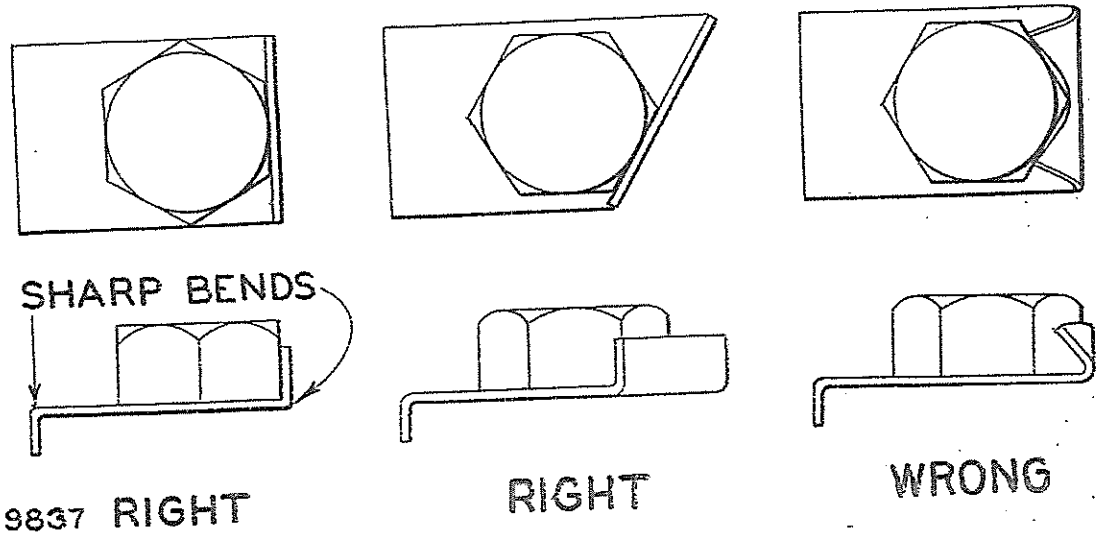

HOW TO INSTALL FLAT METAL LOCKS

If a capscrew is too short, there will not be enough threads to hold the part securely.

Lockwashers, cotter pins, or flat metal locks should be used to lock each nut and capscrew. Flat metal locks must be installed properly to be effective. Bend one end of the lock sharply around the edge of the part. Bend the other end sharply against one flat surface of the nut or capscrew head. Do not bend the lock against more than one side of the nut.

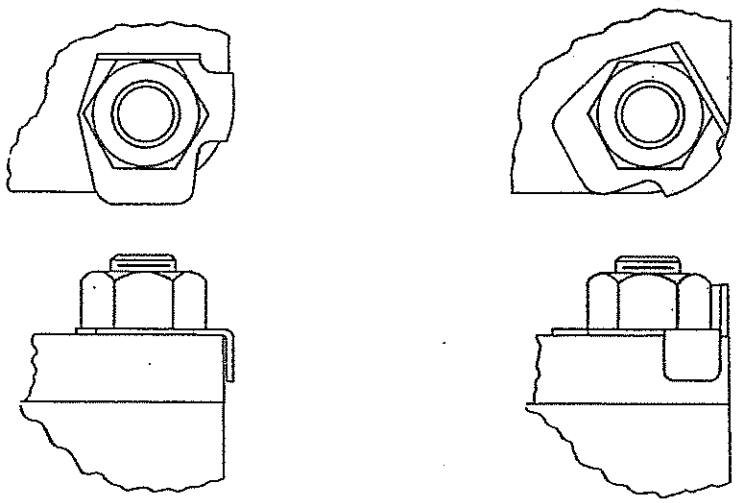

METHOD FOR LOCK POSITIONING AND BENDING

When assembling a machine complete each step in turn. Do not leave one part partially assembled and start assembling some other part. Make all adjustments as recommended. Always check the job after it is completed to see that nothing has been overlooked.

PREPARATION FOR STARTING

After assembling a machine, lubricate it thoroughly. Fill the various gear compartments with the type and grade of lubricant recommended in the Operator's Instruction Book.

Recheck the various adjustments by operating the machine before returning it to the job.

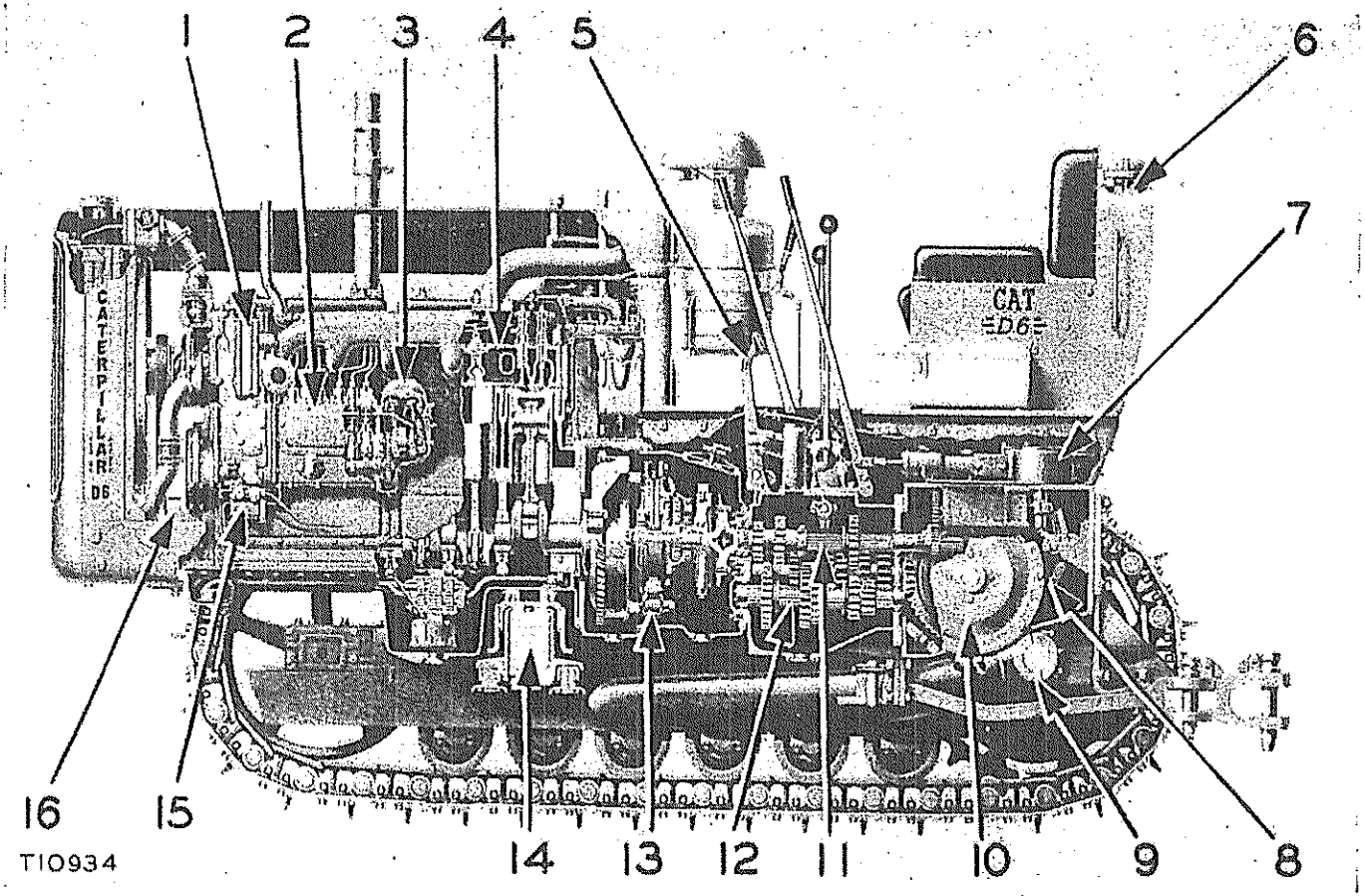

D6 TRACTOR CUTAWAY (LATER MODEL)

1. Fuel Filter Element
2. Fuel Injection Pump Housing
3. Governor
4. Cylinder Head
5. Brake Pedal
6. Fuel Strainer
7. Steering Clutch Hydraulic Control Mechanism
8. Brake Band
9. Track Roller Frame Inner Bearing
10. Final Drive Pinion Flange
11. Transmission Upper Shaft
12. Transmission Lower Shaft
13. Flywheel Clutch Link
14. Equalizer Spring
15. Fuel Transfer Pump
16. Engine Front Support

DIESEL ENGINE

The engine which powers the D6 Tractor is a 6-cylinder, 4-stroke cycle, valve-in-head, "Caterpillar" Diesel engine. It has a 4½" bore in the later or 8U and 9U series tractors and 4¼" bore in the earlier or 4R and 5R series tractors.

Reference material concerning the engines is covered in separate books. However, there are some instructions pertaining to the engine that apply only to the D6 Tractor and these differences are covered in this book.

Radiator Removal

(Later Tractors)

Drain the cooling system, oil cooler and oil filter base.

Remove the hood and take off the guards and braces from each side of the machine.

Remove the plate **(1)** and the guard from the front of the radiator.

Take out the capscrews securing the upper elbow **(3)** to the radiator top tank **(2)**.

Disconnect the lower elbow **(7)** from the radiator lower tank. Disconnect the oil cooler lines **(6)** from the oil cooler **(4)**, which is located in the right side of the radiator assembly.

Support the radiator with a suitable hoist and remove the bolts located at **(5)** from each side of the radiator and then lift the radiator away from the chassis.

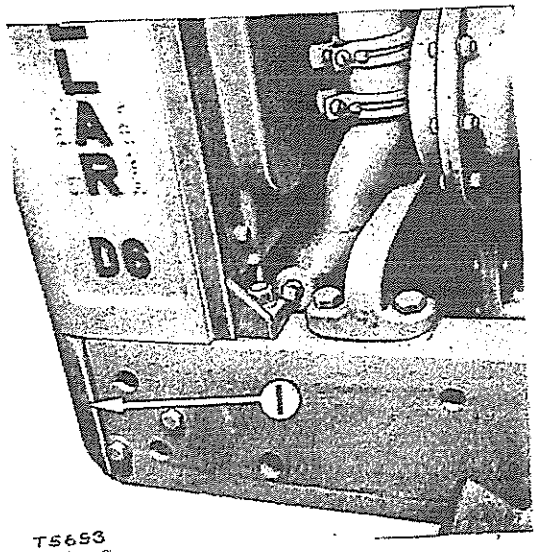

TS693

PREPARING TO REMOVE RADIATOR

1—Plate.

◆

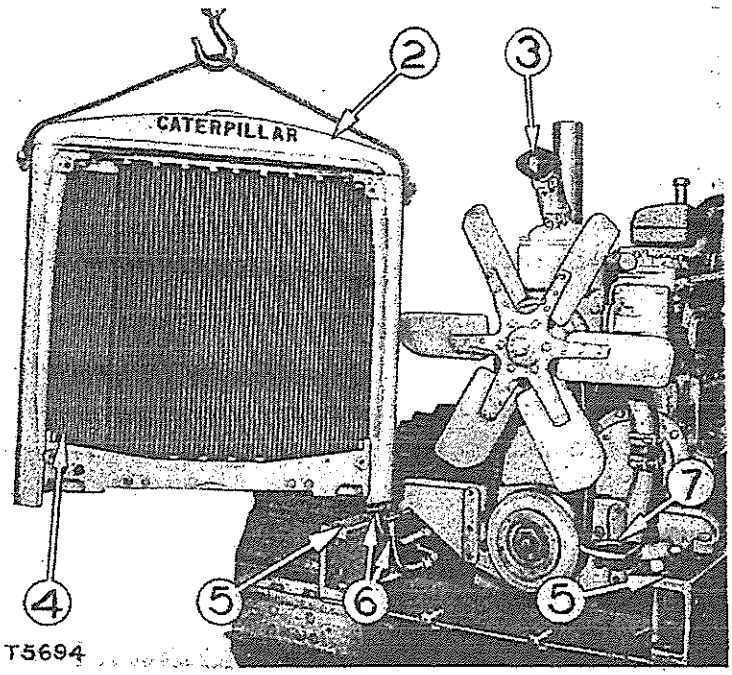

REMOVING RADIATOR

2—Top tank. 3—Upper elbow. 4—Oil cooler. 5—Location of hold-down bolts. 6—Oil cooler tubes. 7—Lower elbow.

Radiator Removal

(Earlier Tractors)

Drain the cooling system at the lower left side of the radiator.

Also drain the oil cooler by removing the plug from the oil cooler tube inside the right frame channel.

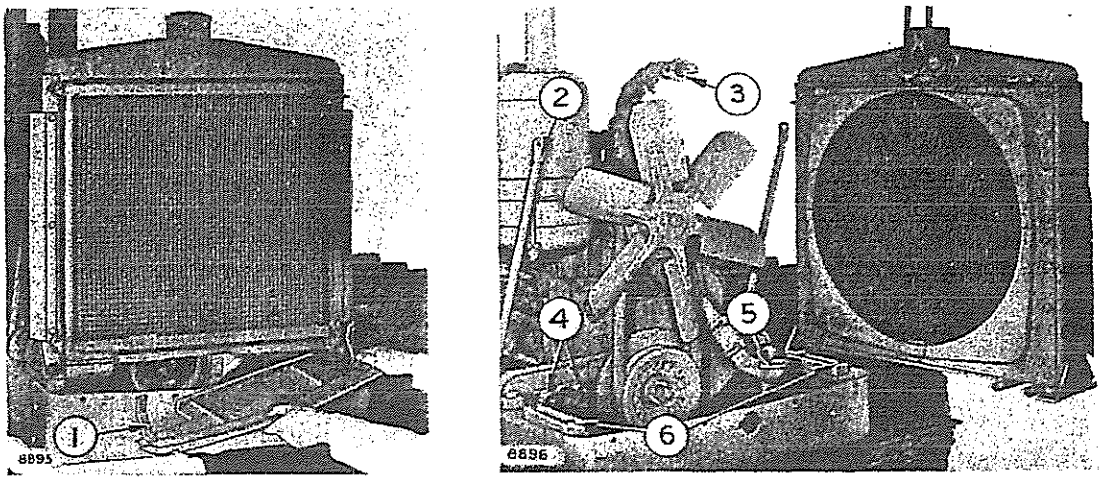

REMOVING RADIATOR

1—Baffle plate assembly. 2—Brace rod. 3—Elbow. 4—Oil cooler tubes. 5—Elbow. 6—Location of hold-down bolts.

Remove the hood as described in the topic, HOOD REMOVAL.

Remove all the capscrews and bolts around the bottom edge of the radiator guard and lift off the guard. Remove the baffle plate assembly **(1)** after taking out the capscrews which secure it to the radiator.

Disconnect the elbow **(3)** and elbow **(5)** at the radiator.

Also disconnect the oil cooler tubes **(4)**.

Remove the capscrews from the radiator brace rods **(2)** and the hold-down bolts at **(6)** on each side of the radiator.

Lift off the radiator as shown.

Oil Cooler Removal

(Later Tractors)

Vent and drain the oil cooler before starting to remove it.

Drain the radiator until the water is below the level where the top tank and radiator core are fastened together.

Disconnect the side braces from the radiator and remove both fan shields.

Disconnect the oil cooler tubes **(2)** from the bottom of the oil cooler core **(1)**.

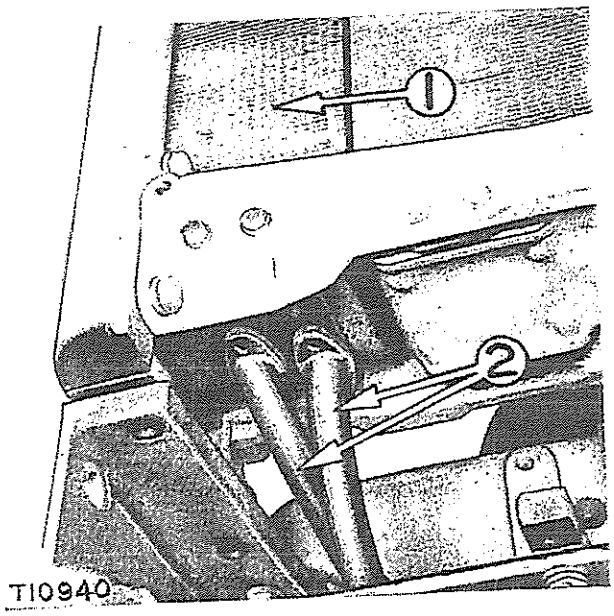

PREPARING TO REMOVE OIL COOLER

1—Oil cooler core.
2—Oil cooler tubes.

Remove the front guard assembly and loosen the capscrews securing the front of the radiator core to the radiator top tank.

Remove the capscrews securing the upper elbow to the radiator.

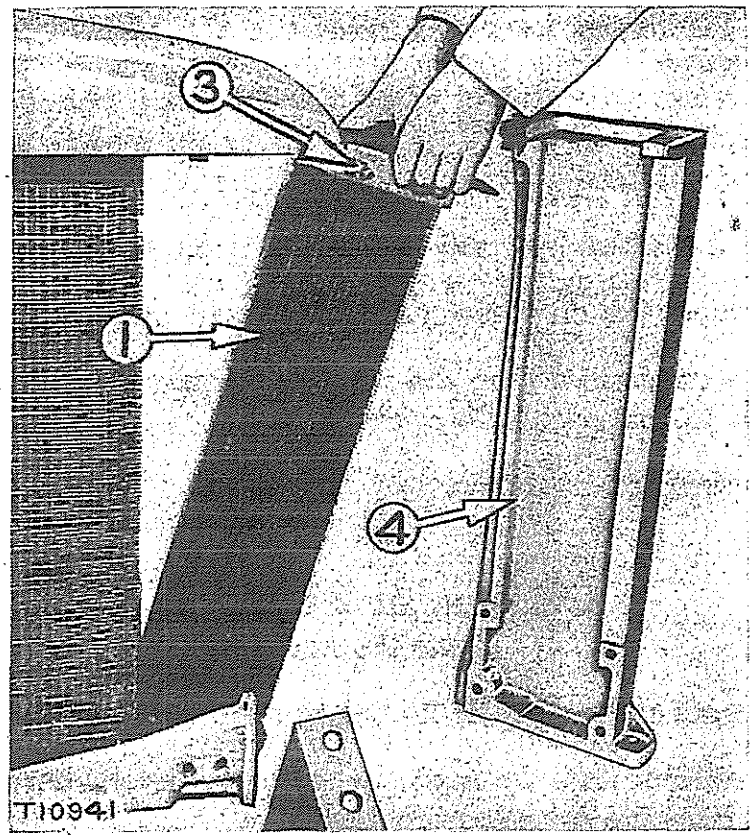

REMOVING OIL COOLER
1—Oil cooler core. 3—Oil cooler vent. 4—Right side plate.

Loosen the capscrews securing the back of the radiator core to the radiator top tank.

Remove the capscrew on the right side of the oil cooler vent **(3)**.

Loosen the capscrews securing the left side plate.

Remove the capscrews securing the oil cooler.

Remove the right side plate **(4)** and remove the oil cooler **(1)**.

Oil Cooler Removal
(Earlier Tractors)

The oil cooler on earlier tractors consists of a separate air-cooled radiator mounted in front of the water radiator.

Loosen the oil cooler vent and drain the oil cooler and the oil filter base.

Remove the radiator grill.

Reach from behind under the water radiator and take out the two capscrews securing the fitting assembly **(3)** to the oil cooler. Separate

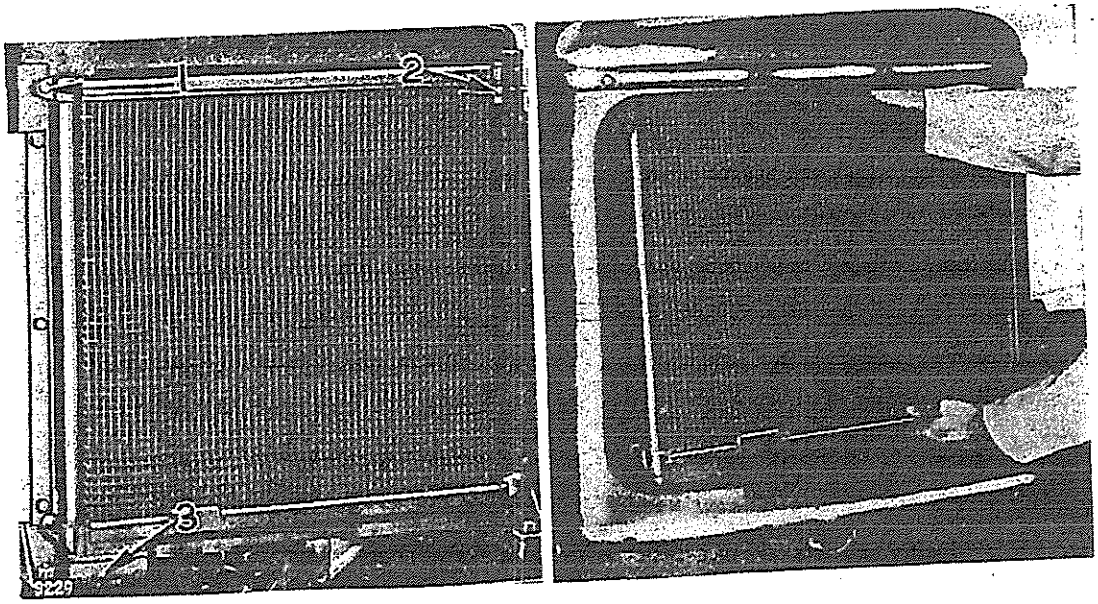

REMOVING OIL COOLER
1—Capscrew. 2—Vent assembly. 3—Fitting assembly.

the vent assembly **(2)** from the oil cooler and take out the capscrew attaching it to the back of the water radiator.

Remove the capscrews **(1)** at the corners of the oil cooler and lift it out as shown.

When installing the cooler, use a new gasket between the fitting assembly and the pad on the bottom of the cooler.

Loosen or remove the oil tubes from the fitting assembly **(3)** if any difficulty is experienced in installing the capscrews through the fitting assembly.

Fan Belt Replacement

Belt replacement can be made after removing the guard **(1)**, brace **(2)** and shield **(3)**.

Completely loosen the belt adjustment and slip the belt **(5)** over the fan blades **(4)**.

Tighten the belt until there is 1" slack.

Install the shield **(3)**, brace **(2)** and guard **(1)**.

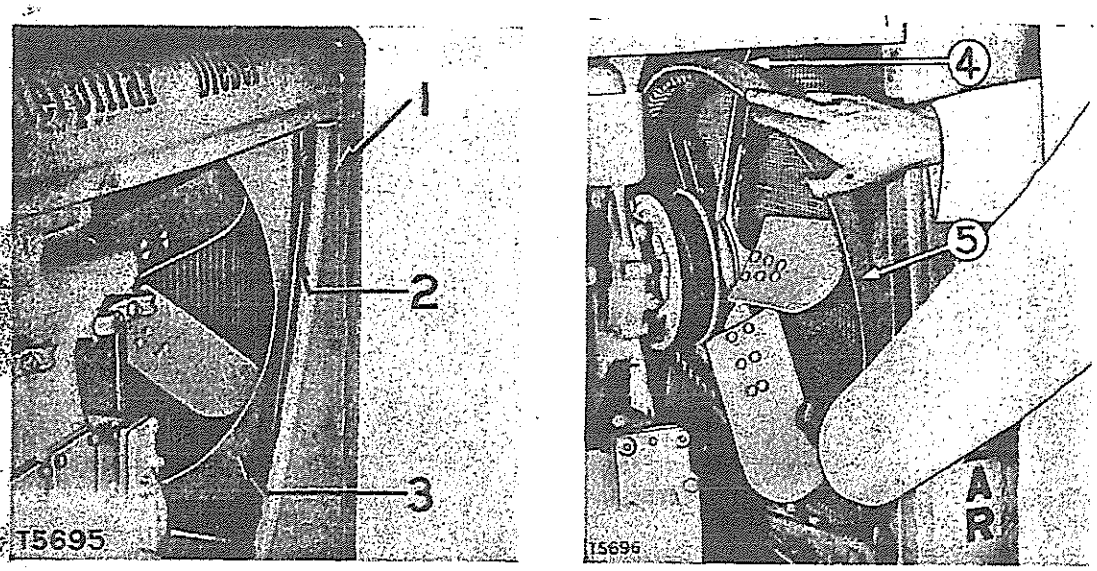

REPLACING FAN BELT (LATER TRACTOR SHOWN)
1—Guard. 2—Brace. 3—Shield. 4—Fan blade. 5—Belt.

Fan, Water Pump and Regulator Housing Removal
(Later Tractors)

If the radiator is removed, all parts of the fan can be replaced without removing the water pump housing from the engine. In most cases, it is more practical to remove the radiator before removing the water pump.

On machines with front-mounted equipment, it may be preferable to remove the water pump and fan as a unit without removing the radiator or radiator guard.

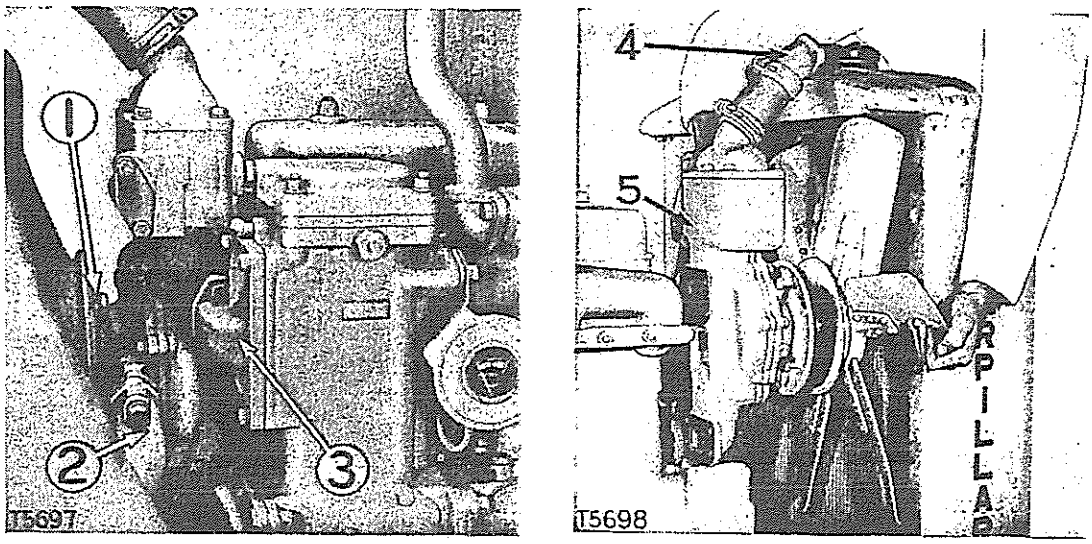

REMOVING FAN, WATER PUMP AND REGULATOR HOUSING
1—Lock. 2—Water pipe. 3—Fuel filter housing water elbow. 4—Water elbow. 5—Fan, water pump and regulator housing assembly.

Drain the cooling system and remove the engine hood.

Disconnect the water pipe **(2)** from the radiator at the pump.

Remove the guards, braces and shields from each side of the tractor.

Remove the capscrews holding the water elbow **(4)** to the radiator.

Remove the capscrews and remove the locks **(1)** from the fan pulley.

Unscrew the rear flange of the pulley so the fan belt can be removed from the pulley on the crankshaft.

Screw the flange back in and remove all the capscrews securing the assembly **(5)** to the engine block.

Remove the capscrews securing the assembly to the fuel filter housing water elbow **(3)**.

Lift the assembly out as shown.

Fan and Water Pump Removal
(Earlier Tractors)

If the radiator is removed, all parts of the fan may be replaced without removing the water pump housing from the engine. In most cases, it is more practical to remove the radiator before removing the water pump.

On machines with front-mounted equipment, however, it may be preferable to remove the water pump and fan as a unit without removing the radiator or radiator guard. This can be accomplished as follows:

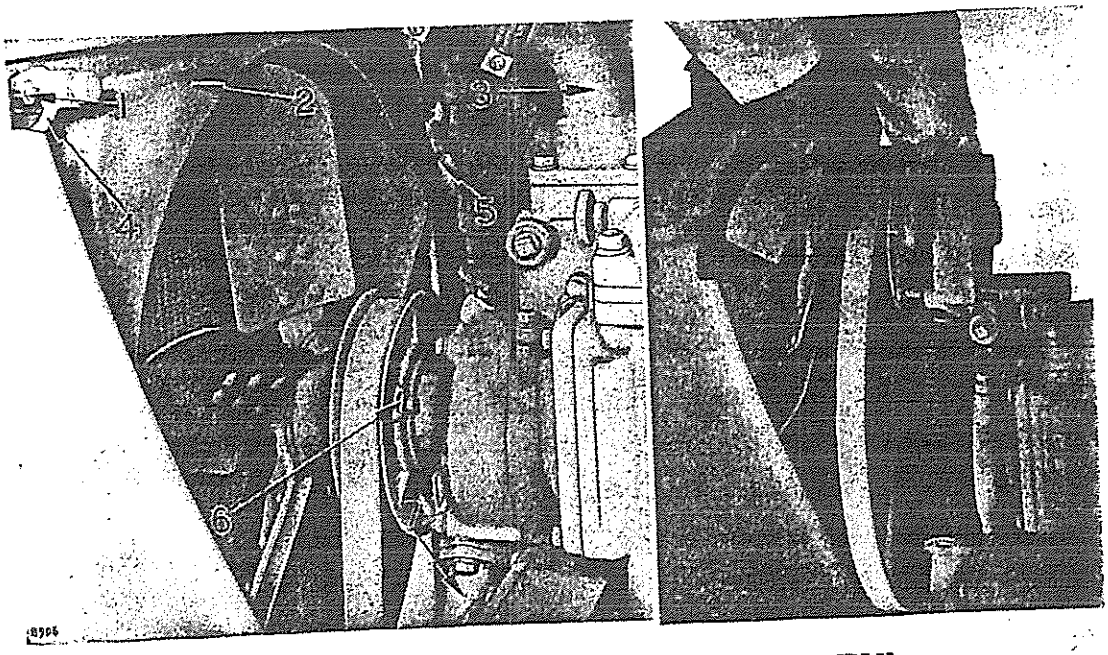

REMOVING FAN AND WATER PUMP ASSEMBLY
1—Capscrew. 2—Shroud. 3—Elbow. 4—Vent line. 5—Brace rod. 6—Lock. 7—Water pipe.

Remove the hood.

Disconnect the water pipe **(7)** from the radiator at the pump.

Remove the capscrews holding the elbow **(3)** to the water regulator housing and to the radiator and remove the elbow.

Disconnect the oil cooler vent line **(4)** at the oil cooler and remove the capscrew **(1)** which holds the line to the back of the radiator.

Remove the capscrews holding the radiator brace rods **(5)** to the radiator and loosen the bolts holding the brace rods to the frame.

Remove the capscrews holding the upper half of the fan shroud **(2)** to the radiator and remove the shroud.

Remove the capscrews and remove the locks **(6)** from the fan pulley.

Unscrew the rear flange of the pulley so the fan belt can be removed from the pulley on the crankshaft. Then turn the rear flange in the other direction.

Unscrew the capscrews holding the water pump in place and back them out as far as possible.

The water pump and fan can then be lifted out the top as shown.

CAUTION

Be very careful when lifting out the pump and fan assembly not to damage the radiator core as there is limited clearance for the fan blades.

Oil Pan Removal

(Later Tractors)

The oil pan **(5)** can be lowered or removed from the Diesel engine cylinder block **(1)** without removing the engine from the frame.

Drain the crankcase.

Remove the plate from the lower front side of the main frames **(2)**.

Remove the bolts securing the equalizer spring bracket **(3)** to both main frames **(2)**.

With a suitable hoist or jack raise the front end of the tractor until there is sufficient clearance for the removal of the oil pan above the bracket **(3)**, and then block the front end of the main frame securely.

Remove the capscrews holding the oil pan **(5)** to the cylinder block **(1)** and also the capscrews that hold the rear end of the oil pan to the flywheel housing.

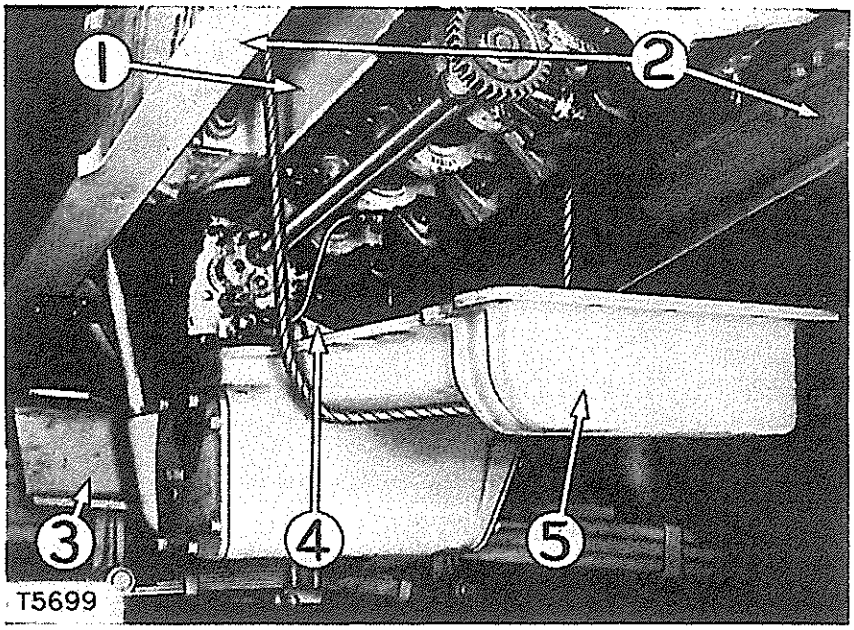

OIL PAN REMOVAL
1—Diesel engine cylinder block. 2—Main frames. 3—Equalizer spring bracket. 4—Oil pump suction bell. 5—Oil pan.

Place a sling under the oil pan and pry the pan from the dowels that position it to the block.

Lower the oil pan and pull it forward over the top of the equalizer spring bracket **(3)** being careful not to damage the oil pump suction bell **(4)** and the front or rear suction bells.

When installing the oil pan, place a new gasket on the pan. A coating of heavy grease or gasket cement on the oil pan will hold the gasket in place while installing it.

Gasket cement should not be used on the upper side of the gasket as this will not permit removal of the timing gear cover without damaging the oil pan gasket.

Oil Pan Removal
(Earlier Tractors)

Drain the crankcase.

Remove the bolts which hold the equalizer spring support bracket **(3)** to the main frame.

Place a jack under the front end of the main frame and raise it until the frame clears the support bracket by about nine inches.

Block up the front end of the tractor securely in this position.

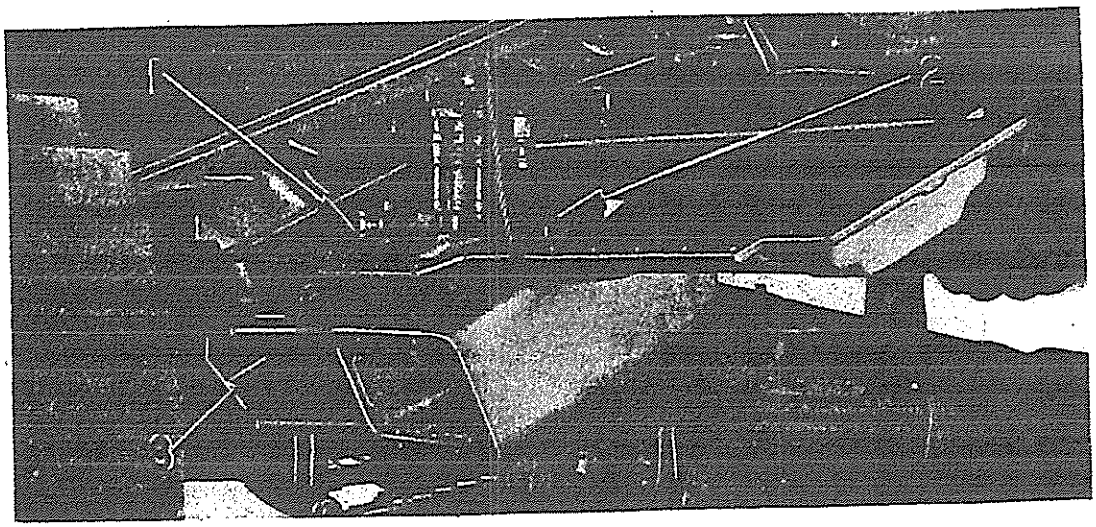

REMOVING OIL PAN
1—Pressure adjusting screw. 2—Main suction bell. 3—Support bracket.

Remove the cover from the right side of the oil pan.

Pass a rope or cable under the pan just ahead of the sump to support its weight.

Remove all the capscrews holding the pan to the cylinder block and to the flywheel housing.

Move the pan toward the right side of the machine so the web in the sump clears the oil pressure adjusting screw **(1)**.

Lower the right side of the pan; then move it to the left so the web clears the main suction bell **(2)**.

The front end of the pan can then be lowered and the pan removed.

Care should be taken not to damage the screens on the suction bells when removing the pan.

Governor Control Assembly
(Earlier Tractors)

The governor control is a combination ratchet and friction disc arrangement mounted near the operator's seat on earlier tractors. The friction resistance can be varied by adjusting the screw **(B)**. This adjustment also compensates for any wear of the friction surfaces.

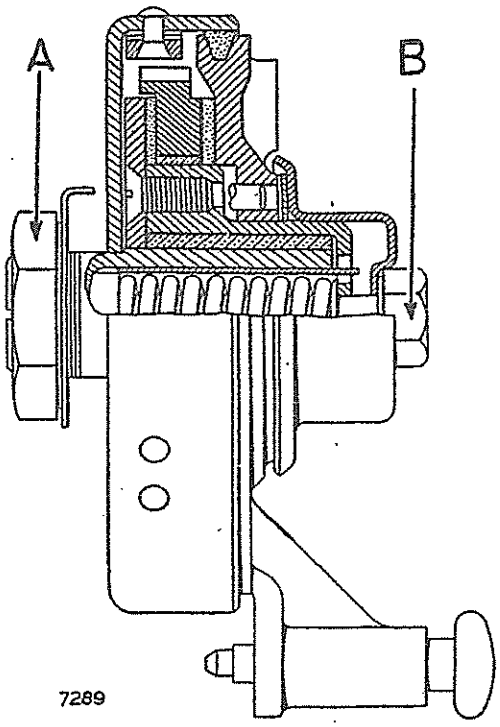

CROSS-SECTION OF GOVERNOR CONTROL ASSEMBLY (EARLIER TRACTORS)

A—Retaining nut. B—Screw.

◆

REMOVAL

Disconnect the governor control rod and then remove the retaining nut **(A)**. This will allow the unit to be removed from the bracket.

DISASSEMBLY

Take out the adjusting screw **(17)**.

Remove the cover **(16)** and the gasket and copper washer **(15)**.

This will permit the lever assembly to slide off.

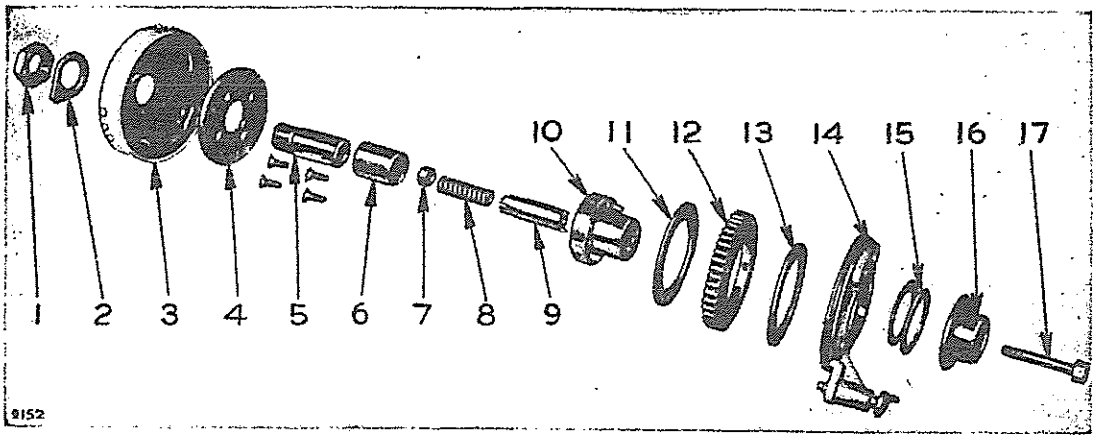

GOVERNOR CONTROL ASSEMBLY (EARLIER TRACTORS)

1—Nut. 2—Washer. 3—Ratchet pawl assembly. 4—Plate. 5—Shaft. 6—Bushing. 7—Nut. 8—Spring. 9—Sleeve. 10—Bearing assembly. 11—Disc. 12—Ratchet assembly. 13—Disc. 14—Lever assembly. 15—Washer. 16—Cover. 17—Adjusting screw.

Following the removal of the lever assembly **(14)**, remove the disc **(13)**, ratchet assembly **(12)** and disc **(11)**.

If the discs **(11)** and **(13)** are worn, they should be replaced.

If the bushing in the ratchet assembly **(12)** is worn, it should be replaced.

Remove the ratchet pawl assembly **(3)**.

Remove the center-punched screws from the plate **(4)** and then slide the governor control bearing **(10)** off the control shaft **(5)**.

If the bushing **(6)** on the control shaft is worn, press it off and replace.

The sleeve **(9)**, spring **(8)** and nut **(7)** will slide out of the control shaft.

ASSEMBLY

When assembling the governor control mechanism, see that the nut **(7)** engages with the sleeve **(9)** and that the tips on the end of the sleeve engage with the holes in the bearing assembly **(10)**.

When the lever assembly **(14)** is installed, check that the dowels in the bearing assembly **(10)** slip into position in the lever assembly.

Insert the shaft **(5)** through the governor control bracket and install washer **(2)** and nut **(1)**. Bend the washer over the bracket and against one side of the nut.

The adjusting screw **(17)** should always be sufficiently tight to cause the ratchet to operate as the governor control lever is pulled back.

Hood and Dash

HOOD AND DASH REMOVAL
(Later Tractors)

Loosen the clamp bolt and remove the exhaust extension **(8)**.

Remove the starting engine fuel tank cap.

Take out the capscrews securing the hood **(9)** to the radiator top tank **(10)**.

Remove the capscrews which hold the hood to the dash **(4)**.

Remove the pre-cleaner jar **(3)** and lift the hood from the tractor.

After removing the hood, disconnect the governor control lever **(1)** and remove the air cleaner **(2)** from the inlet manifold.

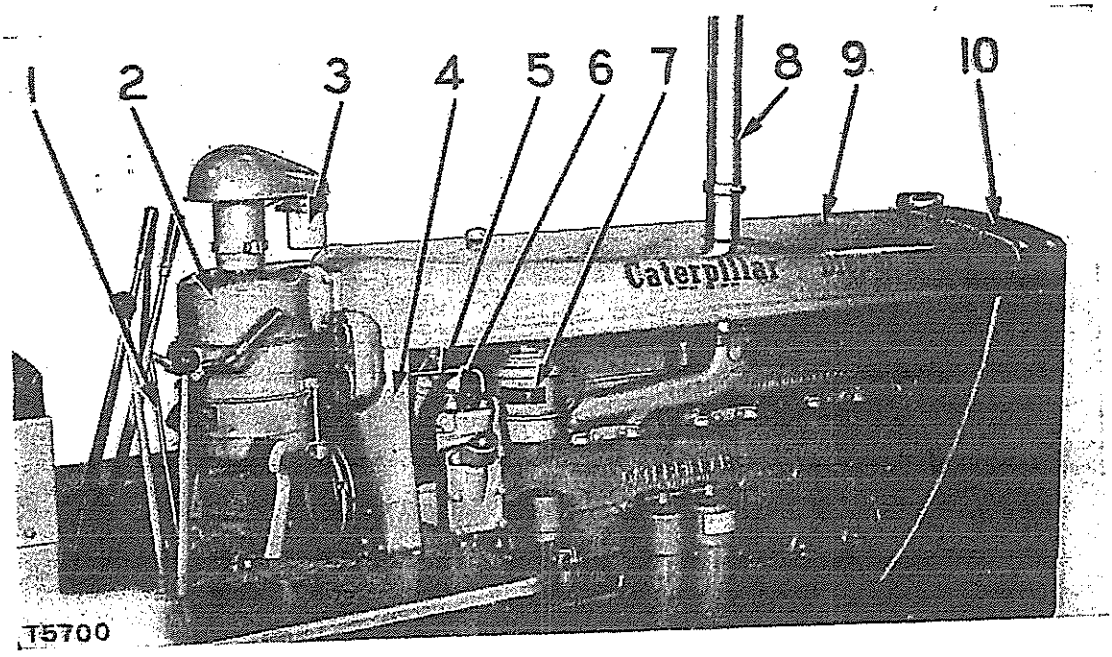

REMOVING HOOD AND DASH

1—Governor control lever. 2—Air cleaner. 3—Pre-cleaner jar. 4—Dash. 5—Oil pressure gauge line. 6—Water temperature gauge line. 7—Starting engine air cleaner. 8—Exhaust extension. 9—Hood. 10—Radiator top tank.

Remove the starting engine air cleaner **(7)** and disconnect the water temperature gauge line **(6)** at the Diesel engine cylinder head.

Disconnect the oil pressure gauge line **(5)** at the oil manifold.

Remove the capscrews at the bottom of the dash and remove the dash.

HOOD AND DASH REMOVAL
(Earlier Tractors)

Loosen the clamp bolt and remove the air pre-cleaner assembly **(3)**.

Also remove the exhaust extension pipe **(2)**.

Remove the capscrews which hold the hood **(5)** to the radiator guard **(6)** and to the dash **(1)**.

The hood can then be lifted off the tractor.

After removing the hood, remove the capscrews **(4)** at the bottom edge of the dash and tilt the dash back away from the starting engine.

Remove the water temperature indicator bulb from the water regulator housing and all the clips which attach the indicator tube to the engine.

Disconnect the lines at the lubricating oil and fuel pressure gauges.

The dash can then be removed.

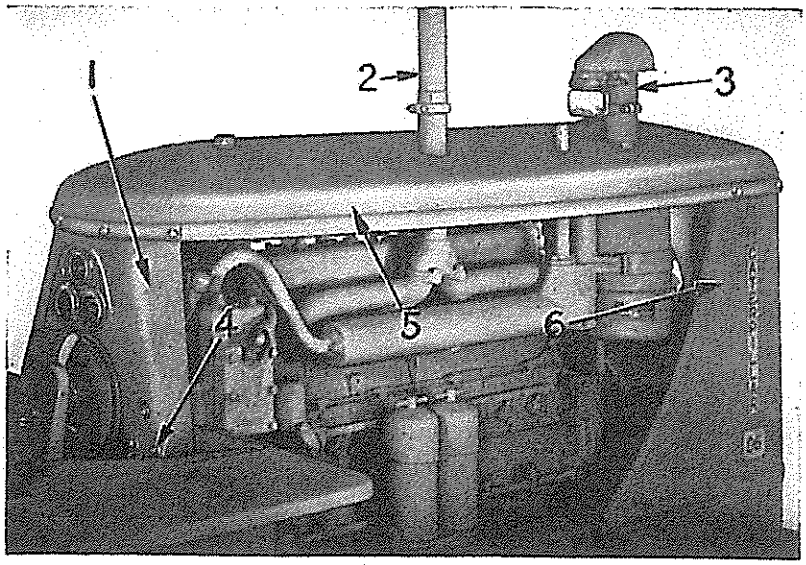

HOOD AND DASH REMOVAL

1—Dash. 2—Exhaust extension pipe. 3—Pre-cleaner. 4—Capscrew. 5—Hood. 6—Radiator guard.

Timing Gear Cover Removal

(Later Tractors)

The timing gears can be reached without removing the engine from the tractor and without removing the oil pan.

Remove the engine hood.

Remove the radiator assembly.

Remove the fan **(1)** and fan belt **(2)**.

Remove the water elbow **(5)**, pipe and hose connection as a unit from the bottom of the radiator to the water pump.

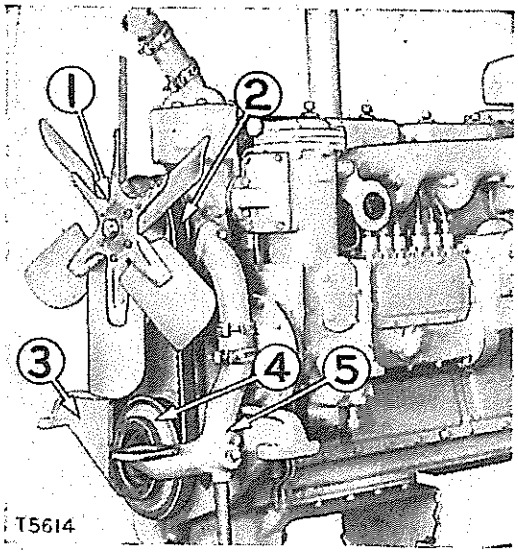

PREPARING TO REMOVE TIMING GEAR COVER

1—Fan. 2—Fan belt. 3—Engine support. 4—Crankshaft pulley. 5—Water elbow.

◆

The hollow screw **(B)** retains the crankshaft pulley **(A)** on the crankshaft. The small capscrew **(C)** having left-hand threads secures this hollow screw **(B)**. Remove the small lock **(D)** and capscrew **(C)**. A 1B4657 Special Socket Wrench can be used for removing the large screw.

Use the puller holes provided and the 8B7548 Puller with two 8B7559 Adapters as shown and remove the pulley from the crankshaft.

Remove the key.

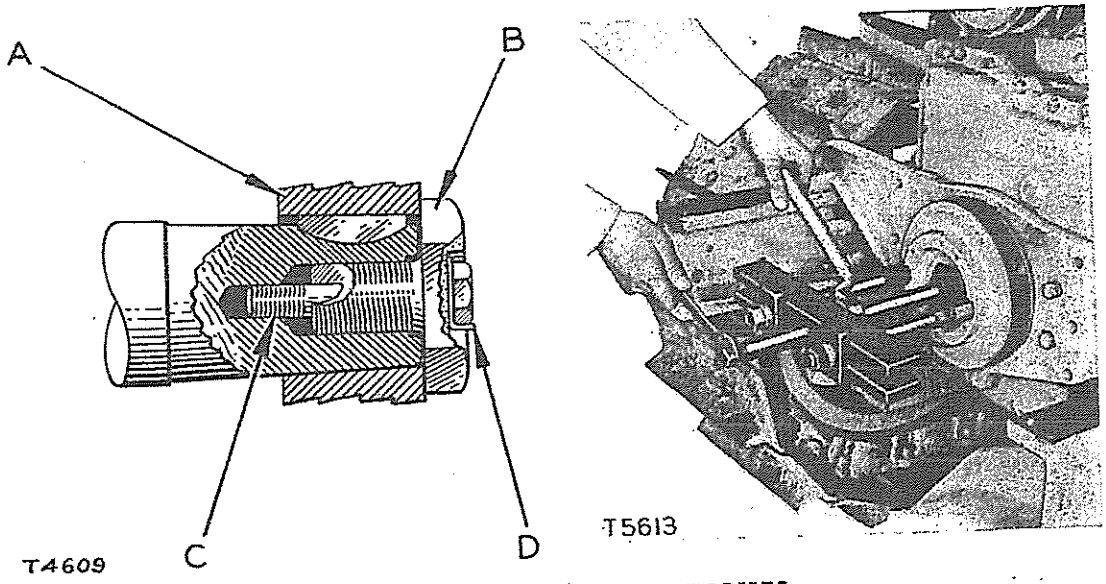

CRANKSHAFT PULLEY REMOVAL
A—Pulley. B—Screw. C—Capscrew. D—Lock.

Support the front of the engine and remove the four bolts which hold the engine front support **(3)** to the main frame.

Remove the four capscrews that secure the front support **(3)** to the bushing assembly **(7)** and remove the support.

Wire the shims **(6)** and **(8)** to the frame.

Loosen all the capscrews holding the oil pan **(11)** to the block and remove those holding the pan to the cover **(10)**.

Support the engine with a hoist and carefully lower the pan about 1/4 inch.

Use a putty knife to free the pan gasket from the timing gear cover.

Install two heavy shim stock spacers between the pan and engine block on both sides of the engine.

This will hold the pan away from the timing cover and avoid damage to the pan gasket when the cover is removed.

The bushing assembly **(7)** remains on the cover **(10)**.

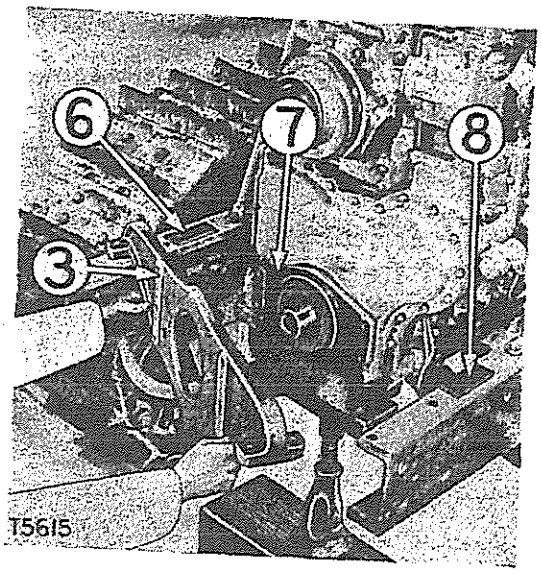

REMOVING ENGINE FRONT SUPPORT

3–Engine support. 6–Shims. 7–Bushing assembly. 8–Shims.

◆

If the annular rubber bushing in this bracket shows excessive wear or deterioration, it should be replaced. The bracket can be removed by damaging the three parts of the assembly. Pull, burn off or cut off the outer sleeve, remove the rubber, and then burn or cut the inner sleeve off the timing gear housing.

As this bushing assembly is pressed on, it should be kept in its proper position relative to the engine front support as closely as possible.

This bushing requires no lubrication.

Remove the timing gear cover **(10)** after having removed cover **(9)**.

If the crankshaft oil seal has been removed, do not replace it until the cover has been installed on the engine. The seal should be installed with the wiping edge out to prevent dirt entering.

A 7B7916 Driver can be used to install the seal.

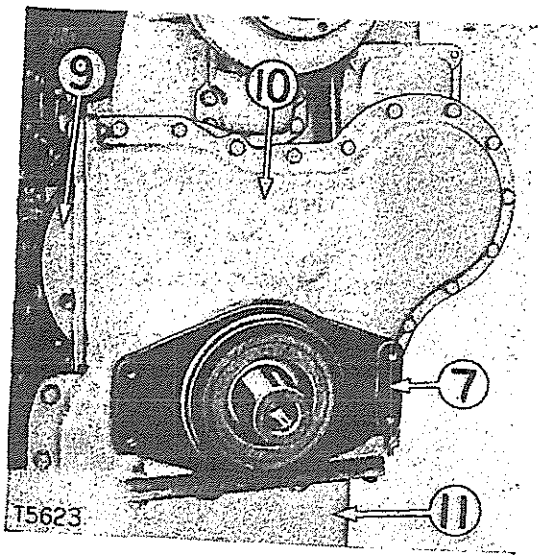

TIMING GEAR COVER REMOVAL

7—Bushing assembly. 9—Cover. 10—Timing gear cover. 11—Oil pan.

◆

The idler gear for the accessory shaft gear can now be removed from the stub shaft.

Because of insufficient clearance the idler gear for the oil pump drive gear can be removed only when the oil pump drive gear is removed.

Timing Gear Cover Removal
(Earlier Tractors)

Remove the radiator as described in the topic, RADIATOR REMOVAL (EARLIER TRACTORS).

For convenience, the lower guard assembly and plate **(3)** across the front end of the main frame can also be removed.

Unlock and remove the crank jaw from the end of the crankshaft.

Pull the pulley **(2)** and vibration damper **(1)**, using the 8B7548 Push Puller and two 8B7559 Adapters.

Remove the key from the crankshaft.

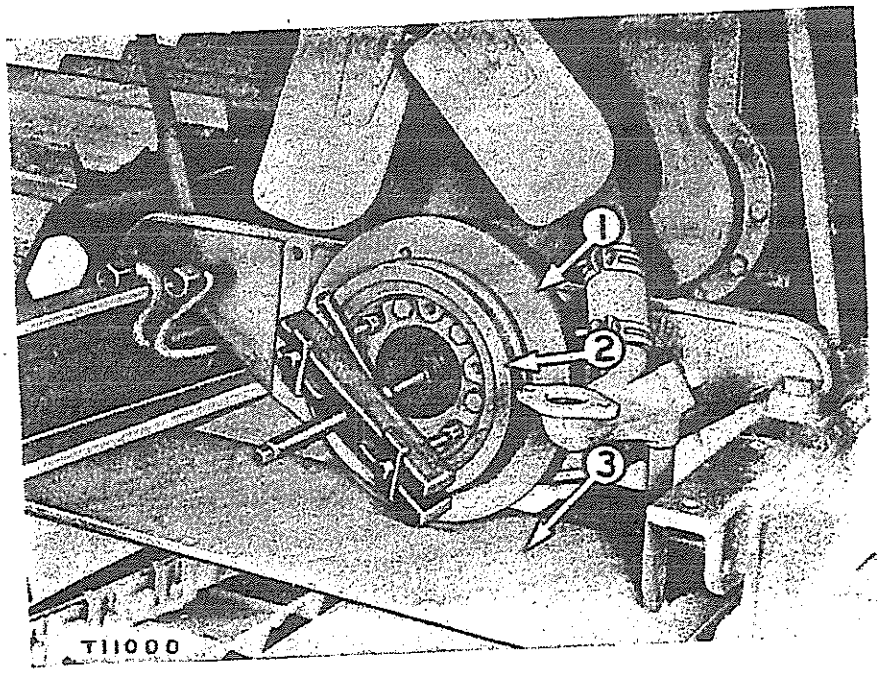

PULLING CRANKSHAFT PULLEY AND VIBRATION DAMPER
1—Vibration damper. 2—Pulley. 3—Plate.

Take out the bolts which hold the engine support **(6)** to the main frame.

Loosen all the capscrews along both sides and remove those across the front end of the oil pan.

This will allow the pan to drop away from the cylinder block.

Place a piece of .020" shim stock approximately two inches square at **(7)** between the oil pan and cylinder block on both sides of the engine.

Place a wooden block under the front end of the oil pan.

With a jack under the wooden block, raise the front end of the engine just enough to take the weight from the front support **(6)**.

Slide the support away from the engine and remove it as shown.

Remove the cover **(4)**, or the generator drive housing if the engine is so equipped.

Take out all the bolts and capscrews which hold the timing gear cover **(5)** to the housing.

Carefully pry the cover away from the housing and slide it off the crankshaft, being careful not to damage the seal.

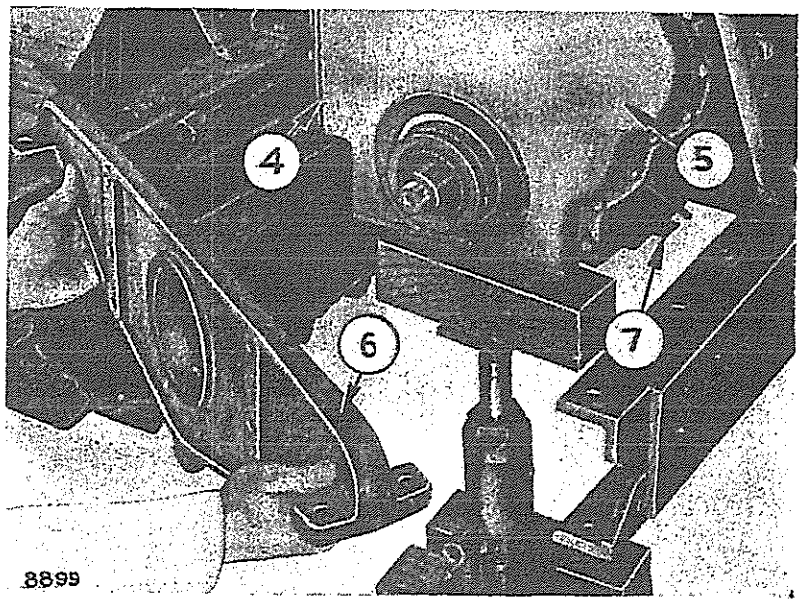

ENGINE FRONT SUPPORT
4—Cover. 5—Timing gear cover. 6—Front support. 7—Shims.

If there is evidence that oil has been leaking past the crankshaft oil seal or if the seal is worn or damaged, it should be replaced. The new seal should be installed with the wiping edge out after the timing gear cover is installed. To avoid damaging the seal during installation, use the 7B7918 Driver.

Removing and Installing Diesel Engine
(Later Tractors)

Drain the cooling system and lubricating oil system.

Close the fuel line valve at the tank, drain the fuel filter housing and disconnect the fuel line from the fuel tank at the transfer pump.

Remove the capscrews securing the fuel line to the cylinder block. Then remove the following:

Hood, dash, flywheel clutch enclosure, all clutch links and two clutch drive pins. For details, see the topic, FLYWHEEL CLUTCH. Turn the flywheel so the three remaining drive pins are up.

Radiator as outlined in the topic, RADIATOR REMOVAL (LATER TRACTORS).

Oil cooler tubes after they have been disconnected from the oil filter base and right frame channel.

Four bolts securing the engine front support **(1)** to the frame channels and the one capscrew **(2)** attaching the support to the plate across the bottom.

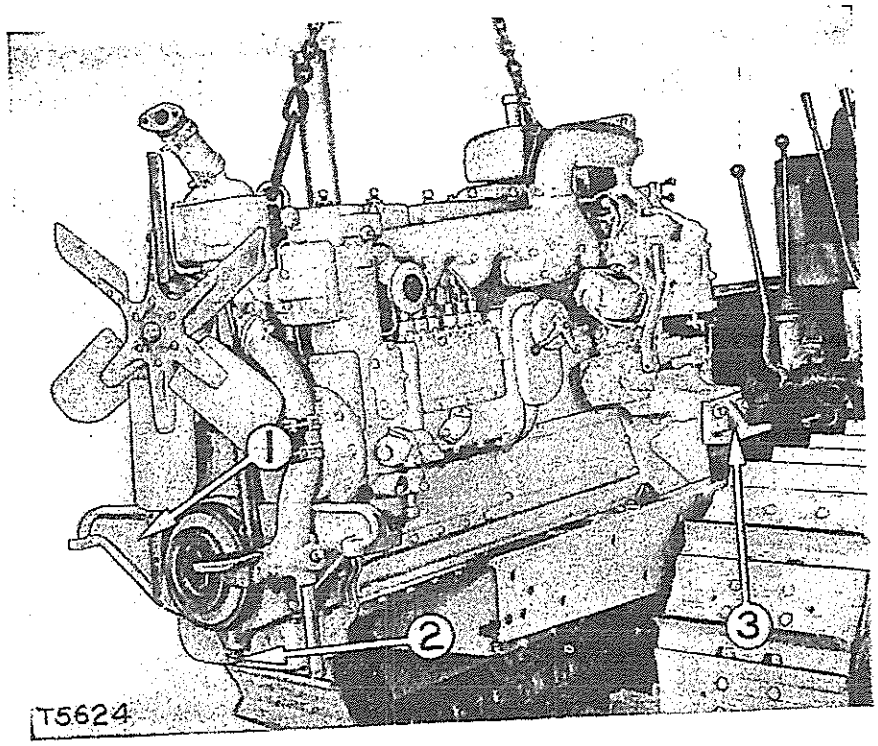

REMOVING ENGINE

1—Engine front support. 2—Capscrew. 3—Engine rear support.

Six bolts (three on each side) securing the engine rear support brackets **(3)** to the frame. The shims under the engine front and rear supports should be tied to the frame channels in their respective positions, or each group removed and tagged as to its proper location.

The engine can be lifted out of the frame by placing cables around it or by installing lifting eyes as described in the topic, LIFTING EYES.

If lifting chains or cables are used directly around the engine, care should be taken to see that they bear against solid parts of the engine, or that wood blocks are used to protect projecting parts.

When installing the engine, check that the original shims are in their respective locations under each of the support pads.

After the engine has been placed in position, its alignment with the flywheel clutch should be checked as suggested in the topic, ENGINE AND FLYWHEEL CLUTCH ALIGNMENT.

LIFTING EYES
(Later Tractors)

Lifting eyes, which attach to two left front and two left rear cylinder head studs, provide a convenient anchor point for cable slings or chains.

The illustration shows the 5F6187 Front Lifting Eye **(1)** and the 5F6122 Rear Lifting Eye **(2)** which can be used with two each 4F9827 and 4F9828 Nuts **(5)** in place of standard nuts and washers on cylinder head studs.

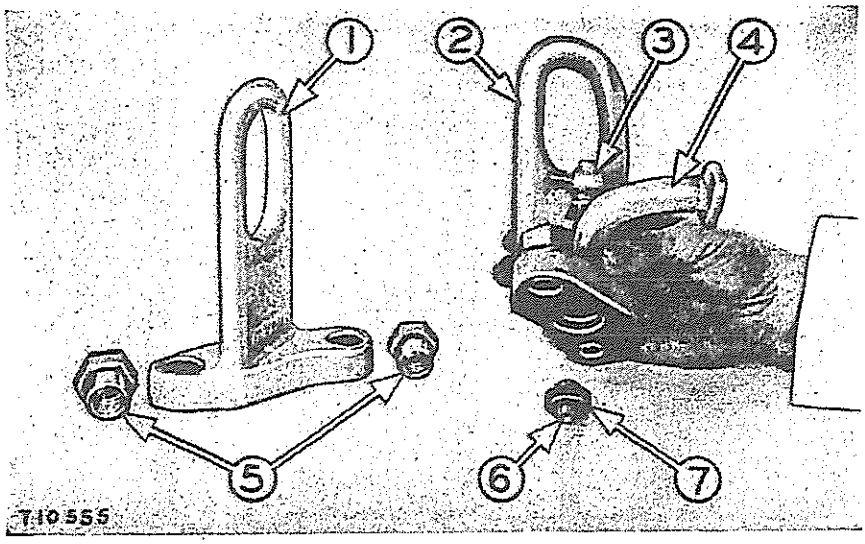

ENGINE LIFTING EYES

1—Front lifting eye. 2—Rear lifting eye. 3—Vent cock. 4—Water elbow on rear lifting eye. 5—Nuts. 6—Ferrule. 7—Seal.

One 6B6224 Ferrule **(6)** and one 6B6225 Seal **(7)** are required for the opening in the cylinder head for the water line **(4)** from the starting engine if the lifting eyes are to remain on the engine permanently.

The vent cock **(3)** which was in the standard water elbow can be used.

Removing and Installing Diesel Engine
(Earlier Tractors)

Drain the cooling system and lubricating oil system.

Close the fuel line valve at the tank, drain the fuel filter housing and disconnect the fuel line from the fuel tank at the transfer pump.

Remove the capscrews securing the fuel line to the cylinder block. Then remove the following:

> Hood, dash, flywheel clutch enclosure, all clutch links and two clutch drive pins. For details, see the topic, FLYWHEEL CLUTCH. Turn the flywheel so the three remaining drive pins are up.

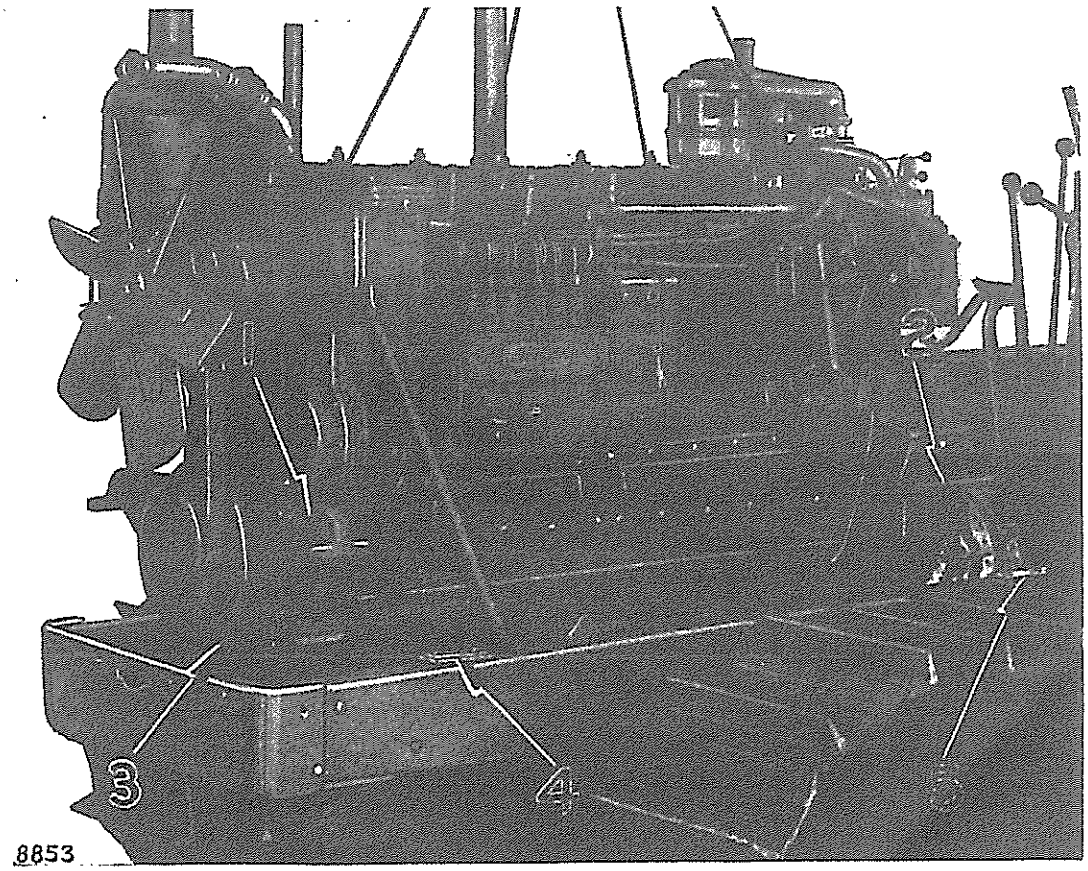

REMOVING ENGINE

1—Engine support. 2—Rear support. 3—Location of capscrew in front support. 4—Shims. 5—Shims.

Radiator as outlined in the topic, RADIATOR REMOVAL.
Oil cooler tubes after they have been disconnected from the oil filter base and right frame channel.

Four bolts securing the engine front support **(1)** to the frame channels and the one capscrew attaching the support at **(3)** to the plate across the bottom.

Six bolts (three on a side) securing the engine rear support brackets **(2)** to the frame.

The engine can now be lifted out of the frame. Care should be taken that the lifting chains or cables are located so that any point of bearing will be against a solid part of the engine.

The shims **(4)** and **(5)** under each support pad should be tied to the frame channels in their respective positions, or each group removed and tagged as to its proper location.

When installing the engine, check that the original shims are in their respective locations under each of the support pads.

After the engine has been placed in position, its alignment with the flywheel clutch should be checked as recommended in the topic, ENGINE AND FLYWHEEL CLUTCH ALIGNMENT.

Engine and Flywheel Clutch Alignment

When reinstalling the drive links, all of the links except one should be placed in position over the drive pins with the wide portion of the metal clip toward the center of the clutch assembly. Then, rotate the clutch links inward so that the center plate can be turned toward the link assemblies and bolts installed. Install all but one of the drive links and engage the clutch. The clutch and flywheel can then be rotated together for checking the alignment.

After the engine and clutch are aligned, install the remaining drive link and make sure all the washers and cotter pins are installed on the pins.

BORE ALIGNMENT

Attach the indicator to a clutch shackle and place the indicator anvil against the top of a flywheel drive pin. Rotate the flywheel and clutch. No indicator movement indicates that the clutch shaft and crankshaft rotate on a common axis. An indicator movement of .010" is permissible.

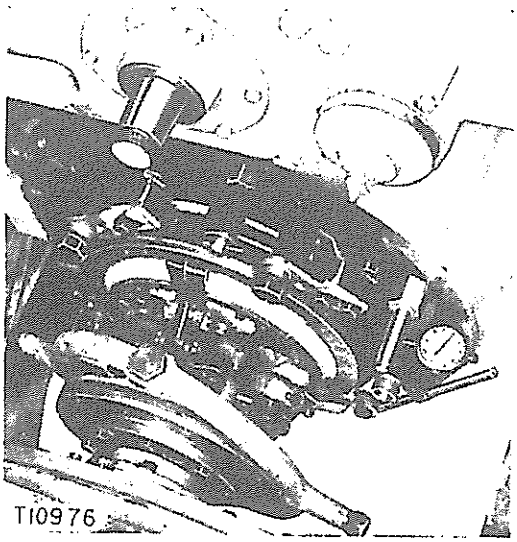

CHECKING BORE ALIGNMENT

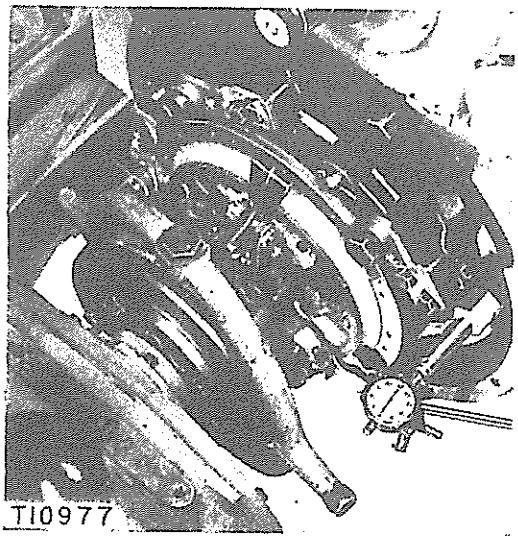

CHECKING FACE ALIGNMENT

After the axial alignment is corrected, the face alignment should be checked.

FACE ALIGNMENT

Remove the end play from the crankshaft and clutch shaft with a bar before taking indicator readings. Place the indicator anvil against the end of the flywheel drive pin and rotate the flywheel and clutch. No indicator movement indicates that the faces of the flywheel and clutch are parallel to each other. A total indicator movement of .010" is permissible.

If changes are made to the face alignment, the axial alignment should again be checked.

MISALIGNMENT

Normally, misalignment can be corrected by adding or removing shims as necessary under the engine supports. If it is necessary to shift the engine from one side to the other in the frame, remove the hold down bolts and shift the engine into alignment, holding it there temporarily with a smaller bolt in each support pad. Then enlarge the bolt holes in the frame or weld up the holes and drill and ream new ones in the correct location. If the holes are enlarged, dowels should be installed to hold the engine in the proper location after it is bolted down.

Extreme misalignment is probably the result of bent main frame channels, in which case they should be straightened or replaced. Extreme wear in the engine front support bearing will also cause misalignment.

STARTING ENGINE

The starting engine, mounted on the Diesel engine flywheel housing, is used to start the Diesel engine. Most reconditioning work can be accomplished more readily by first removing the starting engine from the Diesel engine.

Starting Engine Removal

(Later Tractors)

Drain the Diesel engine cooling system at the radiator and at the plug on the left side of the Diesel engine cylinder block. This will also drain the water from the starting engine.

Drain the oil from the starting engine crankcase.

Remove the hood and dash. See the topic, HOOD AND DASH.

Remove the three front sections of the floor plates and the vertical plates on each side of the Diesel engine flywheel housing.

Remove the air cleaner and fuel injection pump control rod.

Remove the Diesel engine inlet pipe **(3)**.

Disconnect the compression release rod and remove the compression release lever and switch **(2)**.

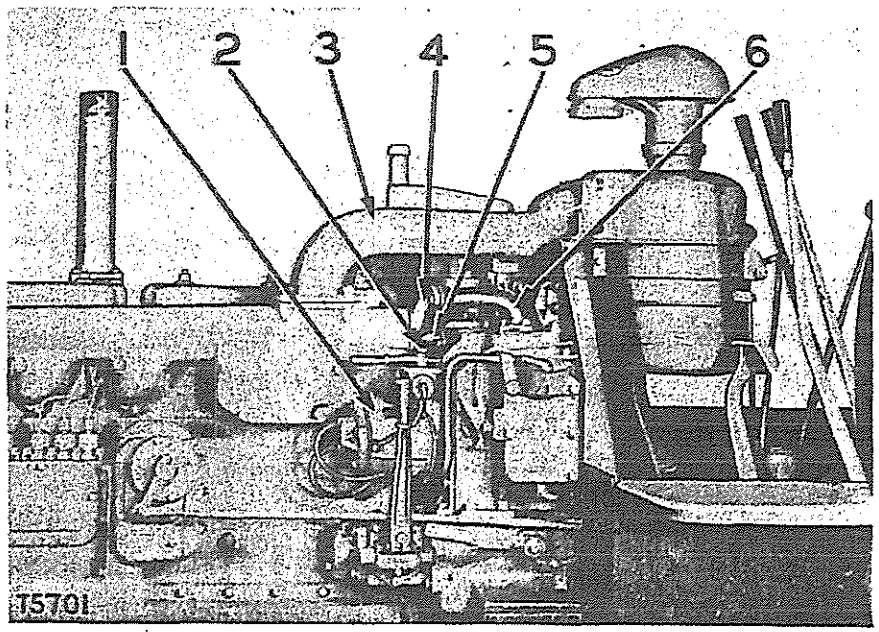

DISCONNECTIONS BEFORE REMOVING STARTING ENGINE
1—Magneto. 2—Compression release lever and switch. 3—Inlet pipe. 4—Elbow. 5—Water outlet elbow. 6—Exhaust pipe.

Remove the magneto **(1)**.

Disconnect the starting engine exhaust pipe **(6)** at the elbow **(4)**.

Disconnect the water outlet elbow **(5)**, and as an added precaution, remove it from the Diesel engine.

Remove the electrical wiring harness from the starter if so equipped and drop the harness down behind the starting engine out of the way.

Take off the starter pinion oiler if the machine is so equipped. Before the engine is replaced, a plug can be installed in place of this oiler. The oiler was deemed unnecessary and left off later engines.

Removing the starting engine cylinder head drain cock on each side and Diesel engine crankcase breather, temporarily, will facilitate reaching the starting engine hold-down stud nuts and capscrews. Remove these nuts and capscrews and lift the starting engine off as shown.

REMOVING STARTING ENGINE

◆

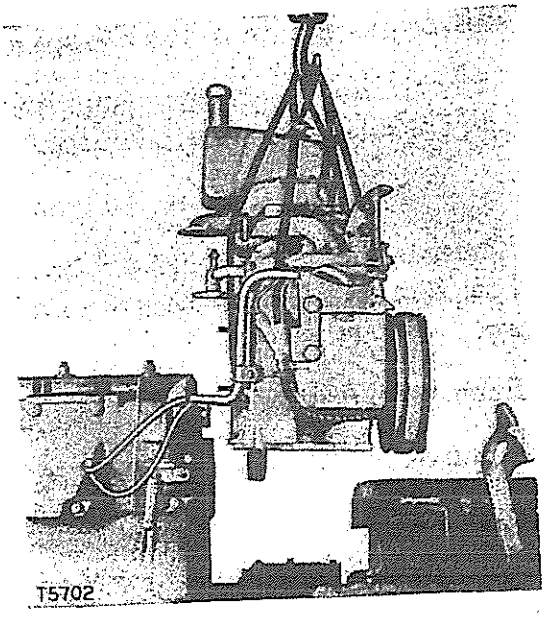

Starting Engine Removal
(Earlier Tractors)

Drain the Diesel engine cooling system at the radiator and at the plug **(10)** on the side of the Diesel engine cylinder block. This will also drain the water from the starting engine.

Drain the oil from the starting engine crankcase.

Remove the hood and dash as described in the topic, HOOD AND DASH.

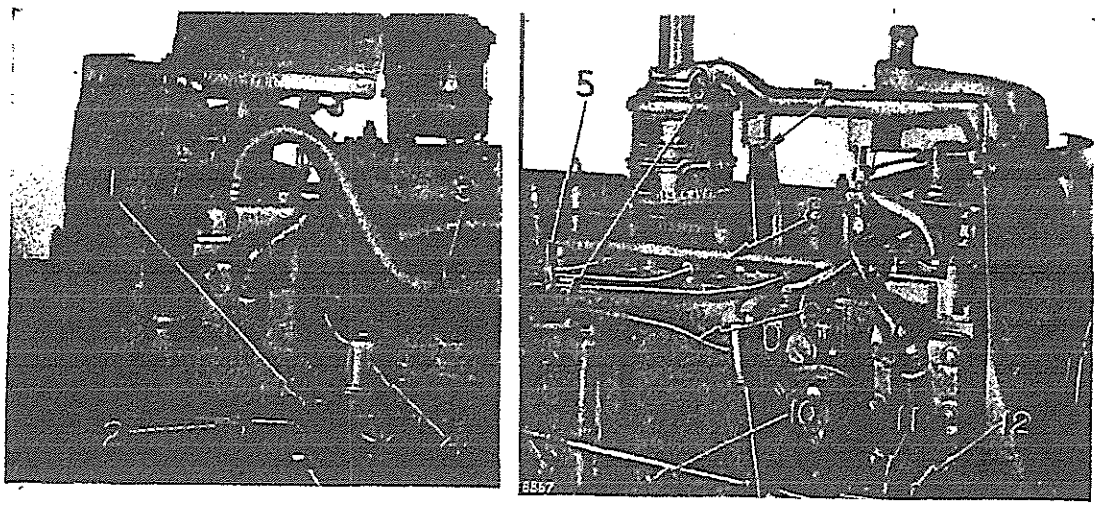

DISCONNECTIONS BEFORE REMOVING STARTING ENGINE

1—Pin. 2—Drain cock. 3—Capscrew on manifold. 4—Breather. 5—Clip. 6—Water connection. 7—Location of capscrew. 8—Water line. 9—Gauge line. 10—Plug. 11—Pinion oiler. 12—Drain cock.

Remove the three front sections of the floor plates and the vertical plates on each side of the Diesel engine flywheel housing.

Remove the capscrews which hold the starting engine exhaust manifold to the Diesel engine inlet manifold at **(3)**.

Remove the pin **(1)** from the compression release lever.

Remove the cylinder head drain cock **(2)** and unscrew the breather **(4)** for access to the hold-down nuts and capscrews in the starting engine base.

Remove the capscrews at **(7)** from the air cleaner support bracket.

Remove the fuel pressure gauge line **(9)**.

Disconnect the fuel injection lines to the last three injection valves of the Diesel engine and cap the openings. Loosen the same lines at the pumps.

Remove the clip **(5)**, and swing the injection lines away from the engine for access to the capscrews which hold the water connection **(6)** to the Diesel engine cylinder heads.

Disconnect the water line **(8)** at the starting engine.

Remove the capscrews and lift off the water connection and the water line.

Remove the starter pinion oiler **(11)** and the drain cock **(12)** from the cylinder head.

Remove the eight nuts and three capscrews from the base of the starting engine and lift off the starting engine as shown.

REMOVING STARTING ENGINE

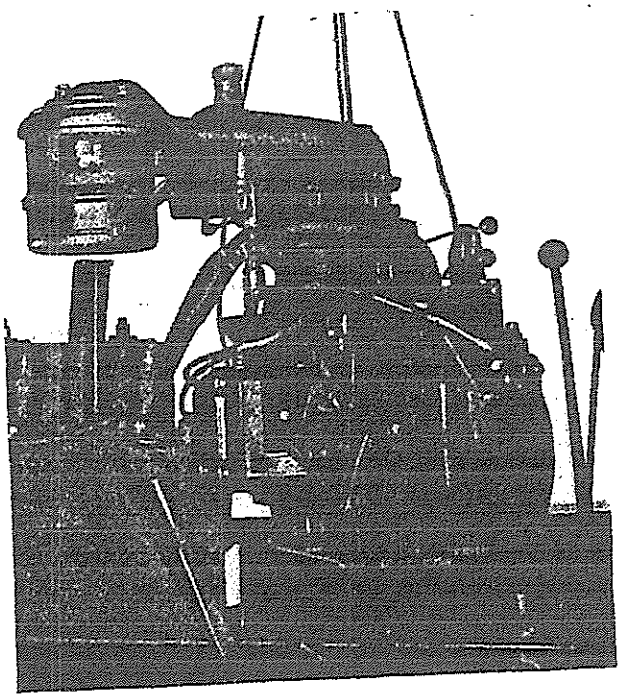

Replacing the Starting Engine
(All Tractors)

Clean the gasket surfaces on the top of the Diesel engine flywheel housing and on the bottom of the starting engine block.

Cement the gasket in place on the flywheel housing and allow it to set.

Coat the top surface of the gasket with a tacky lubricant.

Install the starting engine, exercising care to avoid damage to the gasket.

Tighten the capscrews and nuts at the base of the starting engine evenly and securely.

Complete the installation of items which were removed or disconnected.

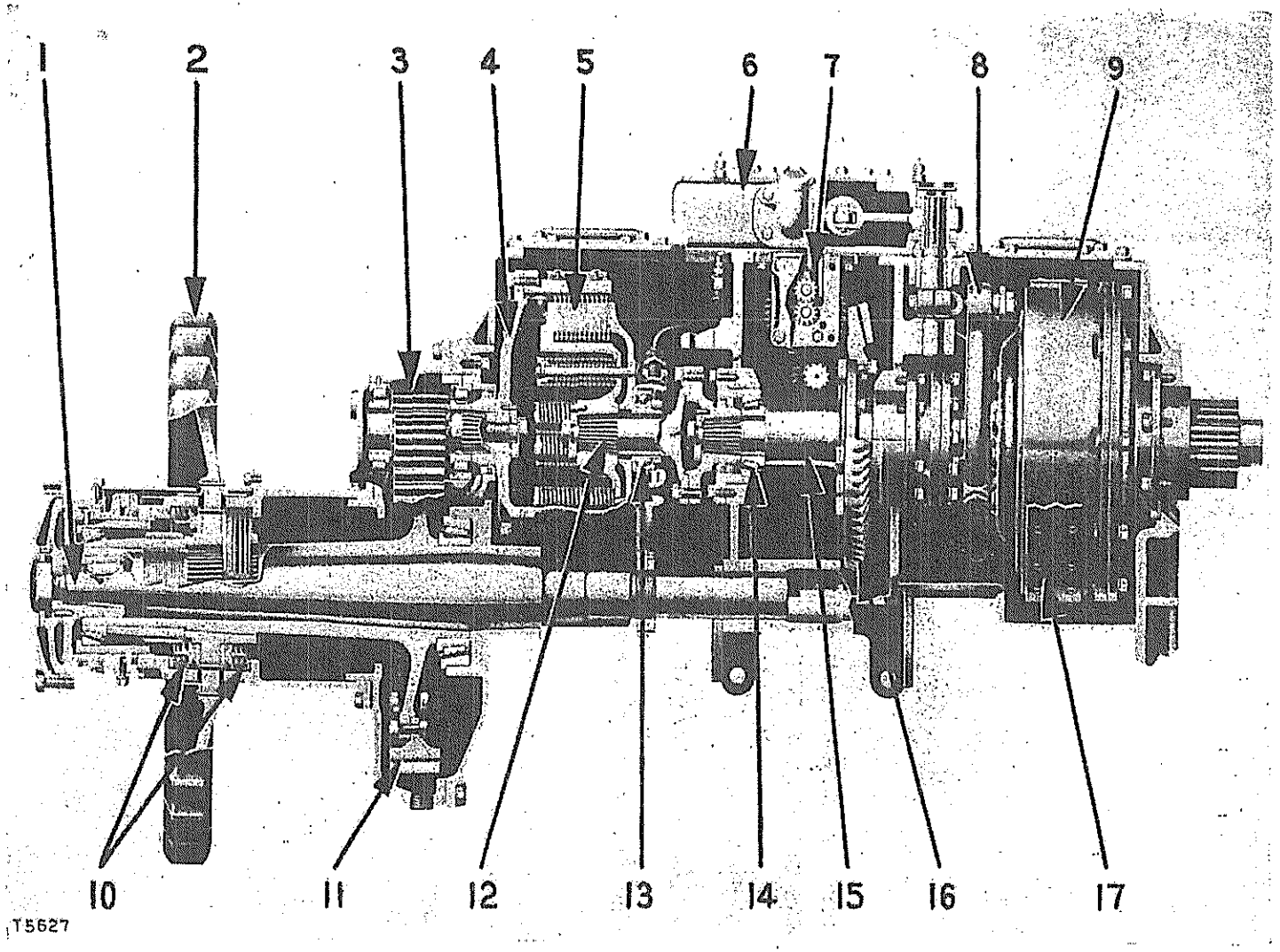

1. Sprocket Shaft
2. Sprocket
3. Final Drive Pinion
4. Pinion Flange
5. Steering Clutch Plates
6. Hydraulic Control Unit
7. Hydraulic Pump
8. Release Yoke
9. Brake Drum
10. Bellows Seals
11. Final Drive Gear
12. Steering Clutch Shaft
13. Steering Clutch Release Bearing
14. Bevel Gear Bearing
15. Bevel Gear Shaft
16. Bevel Gear
17. Brake Band

STEERING CLUTCH AND FINAL DRIVE MECHANISM (LATER TRACTORS)

POWER TRANSMISSION UNITS

The power transmission units consist of the flywheel clutch, transmission, bevel gear, steering clutch assemblies and final drives.

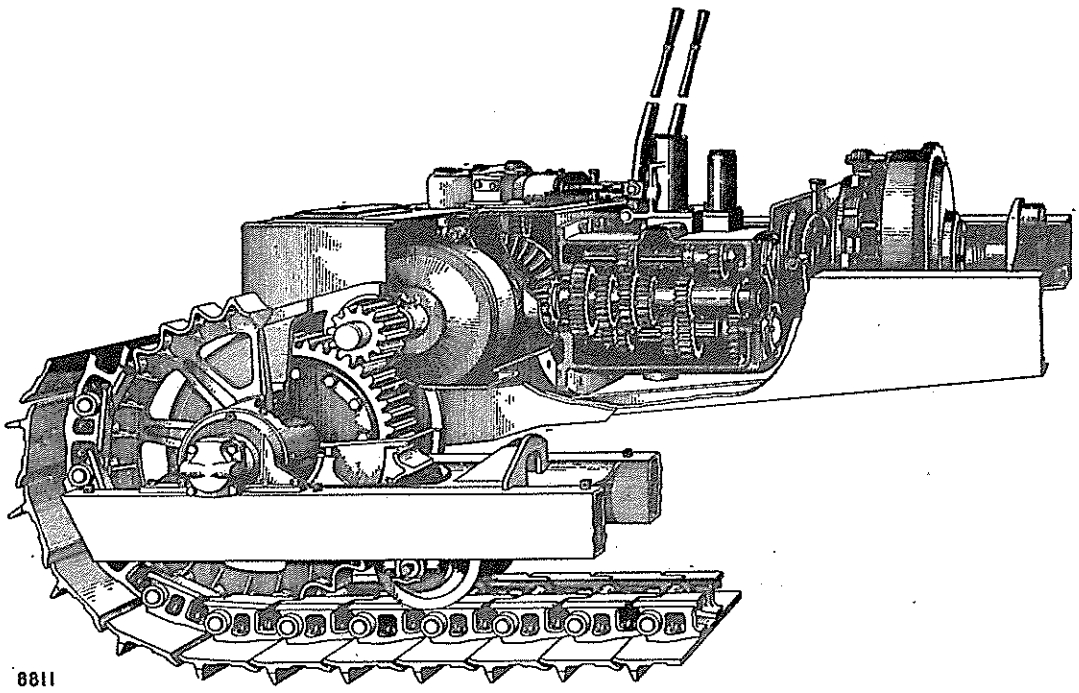

CUTAWAY VIEW OF POWER TRANSMISSION UNITS (EARLIER TRACTORS)

The flywheel clutch is enclosed in a two-piece housing immediately back of the flywheel. The speed change gears are located in the transmission case which is bolted to the steering clutch case. The bevel gear is located in the middle compartment of the steering clutch case. An opening between the transmission and bevel gear compartment allows lubricant to flow from one to the other.

The steering clutches are located in separate compartments in the steering clutch case, one on each side of the bevel gear. The final drive assemblies are enclosed in housings bolted to the sides of the steering clutch case.

Flywheel Clutch—Oil Type

INTRODUCTION

A double plate oil clutch is used effective with 8U6444 and 9U13263.

OPERATION

The oil clutch transmits the engine torque to the transmission from the flywheel **(20)** to the bracket **(11)** which is fastened to the flywheel by capscrews.

The intermediate driving plate **(14)** and the rear driving plate **(12)** have external teeth which mate with internal teeth in the flywheel **(20)**.

The driven plates **(13)** and **(15)** have internal teeth which mate with external teeth on the hub **(16)** which is splined to the clutch shaft **(1)**.

The flanged end of the clutch shaft **(1)** is secured to the universal joint which connects it to the transmission upper shaft. The flanged end of the

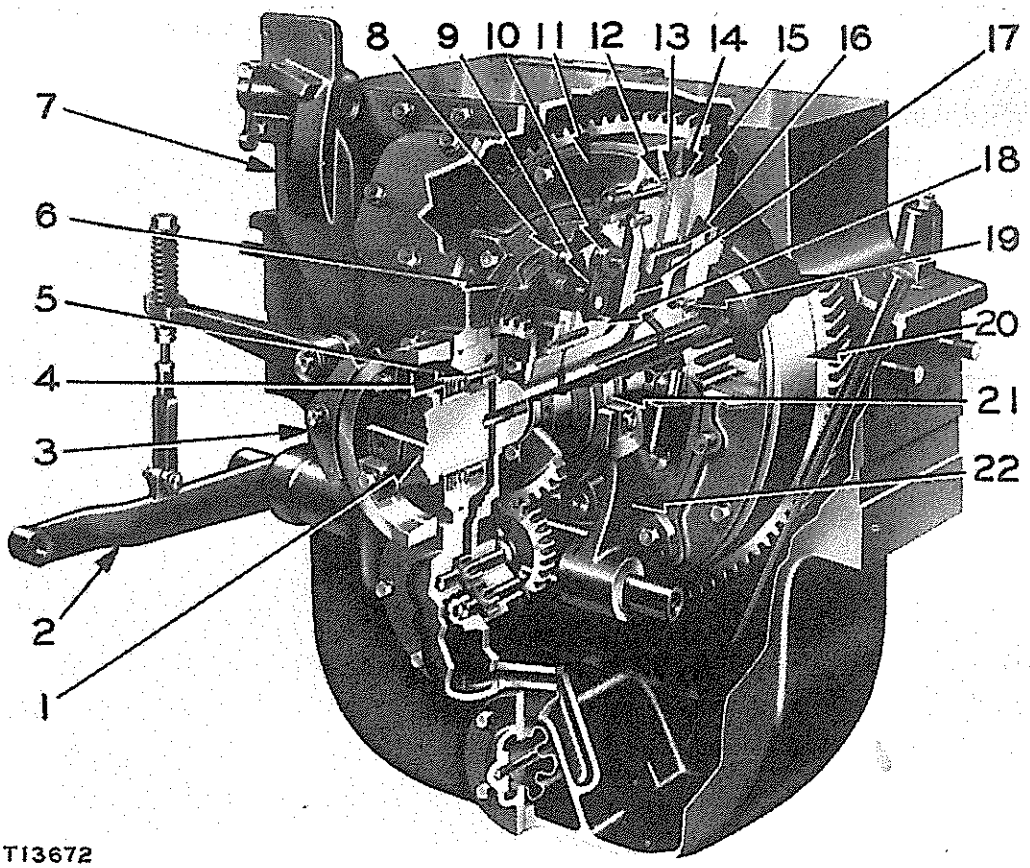

OPERATION OF CLUTCH

1—Clutch shaft. 2—Clutch engaging lever. 3—Clutch brake. 4—Oil seal. 5—Rear bearing. 6—Adjusting ring. 7—Clutch cover. 8—Link. 9—Link. 10—Roller. 11—Bracket. 12—Rear driving plate. 13—Driven plate. 14—Intermediate driving plate. 15—Driven plate. 16—Hub. 17—Plate. 18—Collar. 19—Pilot bearing. 20—Flywheel. 21—Collar. 22—Yoke.

clutch shaft is supported by the bearing **(5)**. An oil seal **(4)** prevents dirt from entering and oil from escaping around the clutch shaft. The forward end of the clutch shaft is piloted in the splined bore of the hub **(16)** which in turn is piloted in the flywheel by the bearing **(19)**.

When engaging the clutch, pressure is applied to the clutch engaging lever **(2)**, moving the yoke **(22)** and collar **(21)** forward against the collar **(18)**.

The collar **(18)** is attached to the adjusting ring **(6)** by the link **(9)** and link **(8)**.

When pressure is applied to the collar **(18)**, the rollers **(10)** are forced down against the plate **(17)**.

The plate **(17)** forces the rear driving pressure plates **(12)** against the driven plate **(13)** which in turn is forced against the intermediate driving plate **(14)**. This plate forces the driven plate **(15)** against the flywheel.

The flywheel and driving plates **(14)** and **(12)** transmit the torque to the driven plates **(15)** and **(13)**.

The driven plates **(15)** and **(13)** rotate the hub **(16)** which turns the clutch shaft **(1)** transmitting the torque to the transmission.

LUBRICATION

The pump **(2)** maintains a supply of oil for lubricating and cooling the clutch.

The pump is always in operation when the Diesel engine is running. The pump is driven by the flywheel **(20)** through the rear pressure plate **(13)** and the plate **(12)**. The pin **(14)** connects the pressure plate **(13)** to the plate **(12)**. The sole purpose of this pin is to couple these two units together so the oil pump will be in operation when the clutch is in the disengaged position.

The plate **(12)** drives the gear **(9)**, which drives the oil pump drive gear **(22)**.

The oil is supplied to the pump from the bottom of the flywheel housing **(23)** through the screen **(24)** and passage **(1)**.

The gear type pump forces the oil through the passage **(3)** to the drilled passage **(6)** in the clutch shaft.

The clutch shaft bearing **(5)** is lubricated by the oil leakage at the gland where oil from passage **(3)** passes into passage **(6)**.

A rubber ring seal **(8)** around the outside of the bearing cage **(7)** and an oil seal **(4)** inside of the bearing cage prevent the oil from leaking out of the clutch housing.

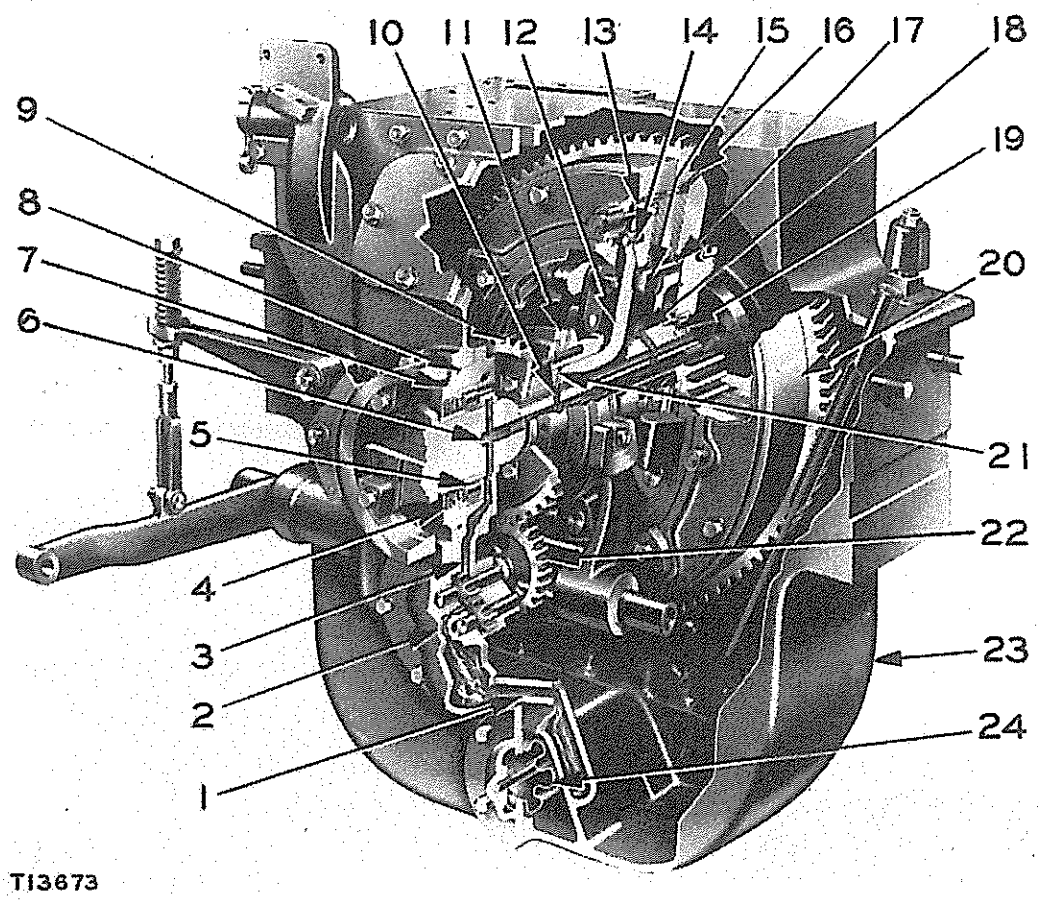

CLUTCH LUBRICATION

1—Oil passage from screen to pump. 2—Oil pump. 3—Oil passage to clutch shaft. 4—Oil seal. 5—Clutch shaft rear bearing. 6—Drilled passage (lengthwise) in clutch shaft. 7—Bearing cage. 8—Rubber ring seal. 9—Gear. 10—Cross passage in clutch shaft. 11—Throwout collar. 12—Plate. 13—Rear pressure plate. 14—Pin. 15—Cut-out section of hub. 16—Drain back hole in flywheel. 17—Hub. 18—Drilled passage in hub. 19—Pilot bearing. 20—Flywheel. 21—Cross passage in plate. 22—Oil pump drive gear. 23—Flywheel housing. 24—Oil screen in bottom of flywheel housing.

A drain hole between the bearing **(5)** and oil seal **(4)** prevents oil pressure from reaching seal **(4)**.

Oil passes along the passage **(6)** to the passage **(10)** where it lubricates the bearing between the plate **(12)** and the clutch shaft.

Oil passes through passage **(21)** up to collar **(11)** and lubricates the thrust washers on each side of the collar.

Oil continues on down the drilled passage **(6)** to the hub **(17)** where it enters the drilled passage **(18)** of the hub **(17)**. There are two of these drilled passages. The drilled passage **(18)** leads to the rear of the hub and another drilled passage (not shown) leads to the front of the hub. Leakage along the spline supplies oil to the pilot bearing **(19)**.

The cut-out sections **(15)** of the hub **(17)** allow the oil to be forced between the driving and driven plates. There are four of these cut-out sections, two on each side of the hub.

When the clutch is in the engaged position, the oil that builds up around the hub **(17)**, escapes through the cut-out sections **(15)**. It then passes through the radial grooves between the lining segments of the driven plates. After it passes through these grooves, it escapes through four drilled holes **(16)** (only one pointed out) in the rear of the flywheel.

The remaining parts of the clutch are splash lubricated.

REMOVAL

Preparing to Remove Clutch

NOTE

The rear end of the tractor should be raised up enough to lower the front of the tractor before installing the driving and driven plates. Then the plates will stay in position and any danger of damaging them when installing the clutch assembly will be eliminated.

1. Drain the oil from the oil clutch.
2. Drain the coolant down far enough to remove the heat indicator connection from the head.
3. Disconnect the governor control rod **(2)** at the air cleaner **(1)** and remove the air cleaner.

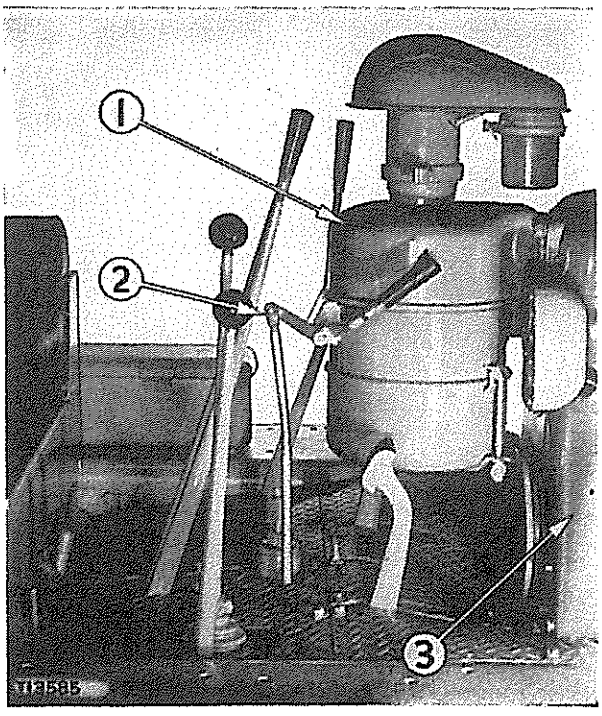

PREPARING TO REMOVE OIL CLUTCH

1—Air cleaner. 2—Governor control rod. 3—Dash.

◆

4. Disconnect the oil gauge line and remove the dash **(3)**.

5. Remove the floor plates.

Removing Universal Joint and Brake Drum

1. Unscrew the capscrews securing the universal joint **(1)** to the transmission shaft.

2. Pry the universal joint and clutch shaft forward as far as possible, approximately 1/4". This will permit the transmission shaft to be rotated 90° thus allowing enough movement in the universal joint to remove the capscrews from it.

3. Unscrew the capscrews securing the universal joint to the clutch shaft. They can be left inserted in the bearing caps of the universal joint.

4. Remove the capscrews holding the brake drum **(2)** to the clutch shaft and slide the drum over to the center of the universal joint.

CAUTION

Do not cut the small metal straps securing the bearing caps to the cross. If they are cut or missing, securely fasten the bearing caps to the universal joint to prevent them from sliding off or dirt entering the bearings.

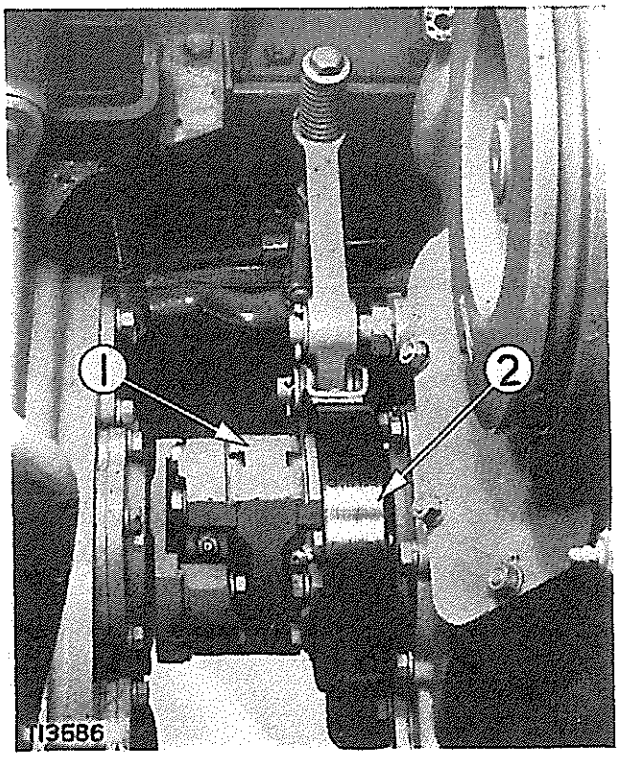

REMOVING UNIVERSAL JOINT AND BRAKE DRUM

1—Universal joint.
2—Brake drum.

◆

5. Pry the universal joint **(1)** away from the clutch shaft and while holding the clutch shaft as far forward as possible remove the universal joint **(1)** and brake drum **(2)** as a unit from between the transmission shaft and clutch shaft.

Removing Starting Engine Flywheel and Disconnecting Brake Pedals

1. Disconnect the rods **(4)** and **(7)** and let the brake pedals fall back toward the seat.
2. Remove the starting engine flywheel **(1)**.
3. Remove the front floor plate support bracket **(5)** and the two vertical plates **(2)** and **(6)**.
4. Engage the starting engine pinion and remove the pin **(3)**.

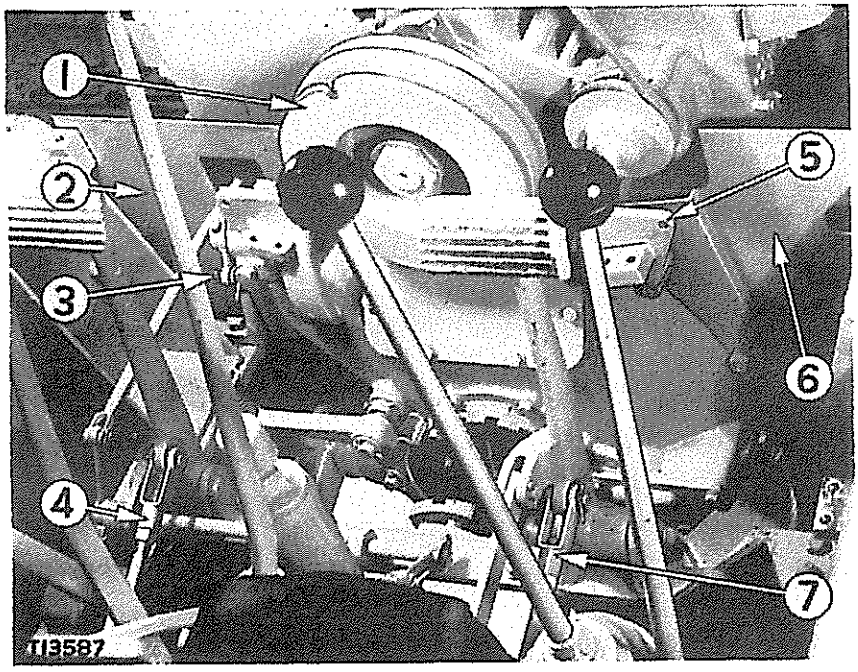

PREPARING TO REMOVE CLUTCH

1—Starting engine flywheel. 2—Vertical plate. 3—Pin. 4—Brake rod. 5—Floor plate support bracket. 6—Vertical plate. 7—Brake rod.

Removing Clutch Brake Mechanism, Clutch Cover and Oil Pump

1. Remove the pin **(3)** holding the brake lever **(4)** to the clutch engaging lever **(2)**.
2. Remove the cotter pin and washer and remove the assembly from the pin **(5)**.
3. Remove the pin **(1)** from the end of the clutch engaging lever.

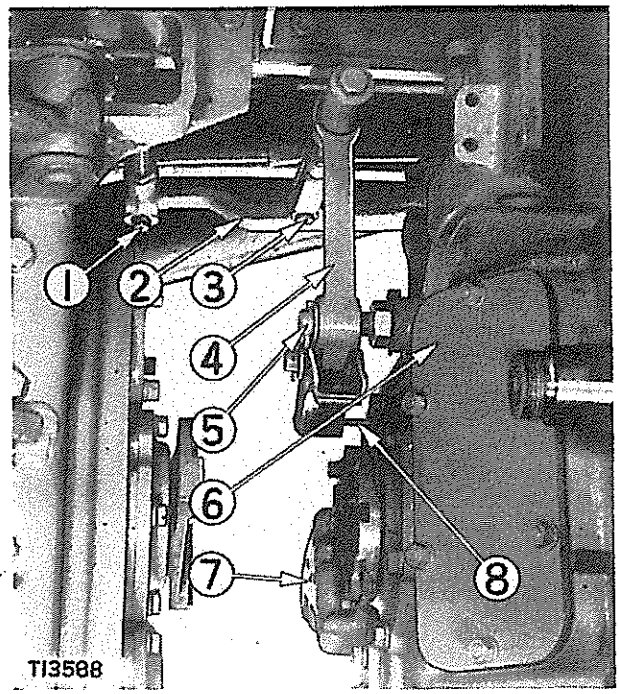

REMOVING CLUTCH BRAKE MECHANISM, CLUTCH COVER AND OIL PUMP

1—Pin. 2—Clutch engaging lever. 3—Pin. 4—Brake lever. 5—Pin. 6—Clutch cover. 7—Oil pump. 8—Pin.

◆

4. Remove the clutch cover **(6)**.

5. Remove the oil pump **(7)**.

NOTE

When replacing the brake assembly, the pin **(8)** on the brake shoe fits into a small hole in the clutch housing.

Disconnecting Clutch from Flywheel

1. Engage the clutch.

2. Rotate the clutch and remove the capscrews **(1)** (only one pointed out), which secure the clutch to the flywheel.

3. Attach a hoist to the clutch housing and remove the capscrew and nuts securing the clutch housing to the flywheel housing.

4. Disengage the clutch.

5. Install two 3/8"-16 (NC) capscrews in the puller holes in the clutch housing flange and force the clutch housing away from the flywheel housing.

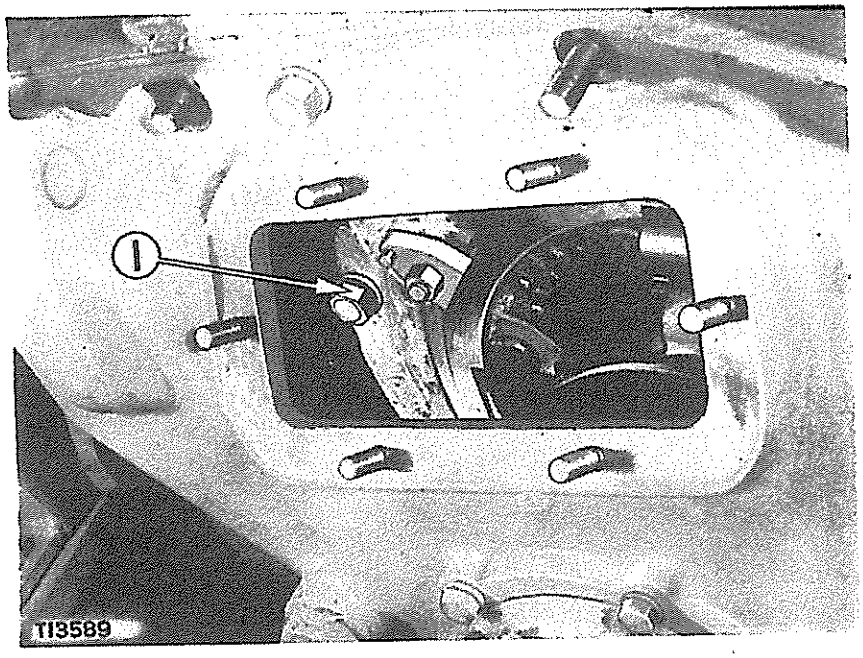

DISCONNECTING CLUTCH FROM FLYWHEEL
1—Capscrew.

6. Install the nut on the starting engine crankshaft to protect the threads.

7. Push the clutch assembly out from the flywheel housing, tilt the unit back toward the seat and lift out.

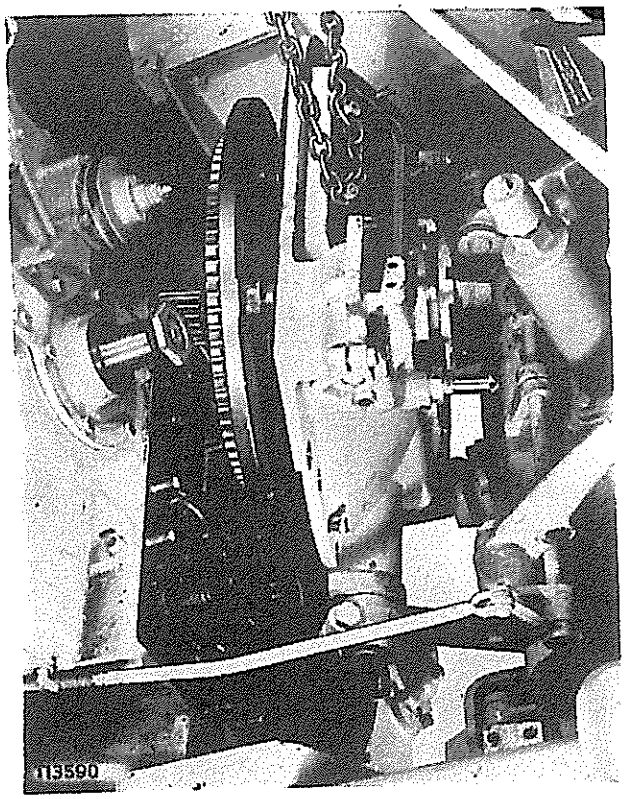

REMOVING FLYWHEEL CLUTCH

◆

Removing Clutch Plates and Hub Assembly

1. Remove the driven plate **(2)**, driving plate **(1)** and the driven plate **(3)** from the flywheel **(5)**.

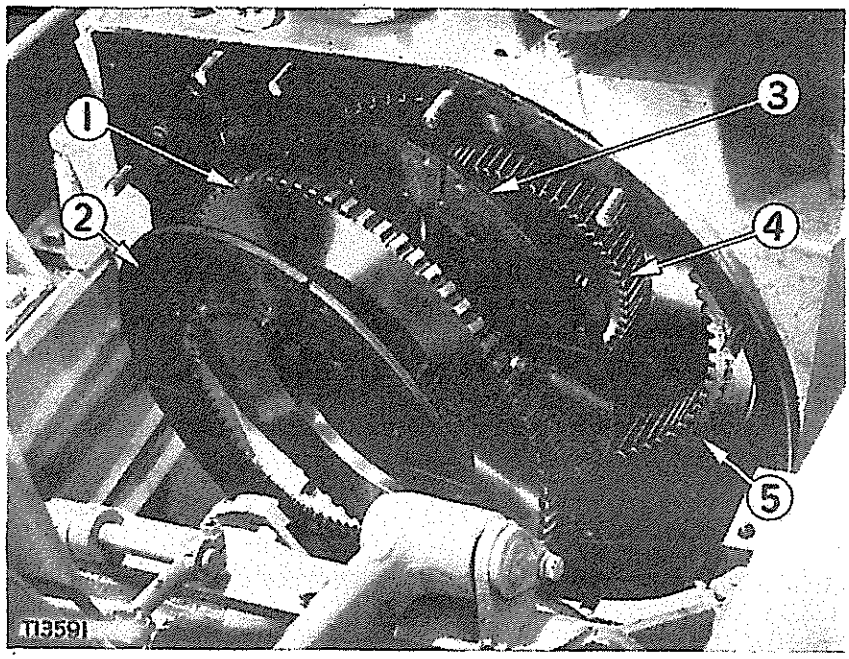

REMOVING PLATES AND HUB ASSEMBLY
1—Driving plate. 2—Driven plate. 3—Driven plate. 4—Hub assembly. 5—Flywheel.

2. Remove the three capscrews, locks and retainers through the holes in the hub assembly **(4)**.

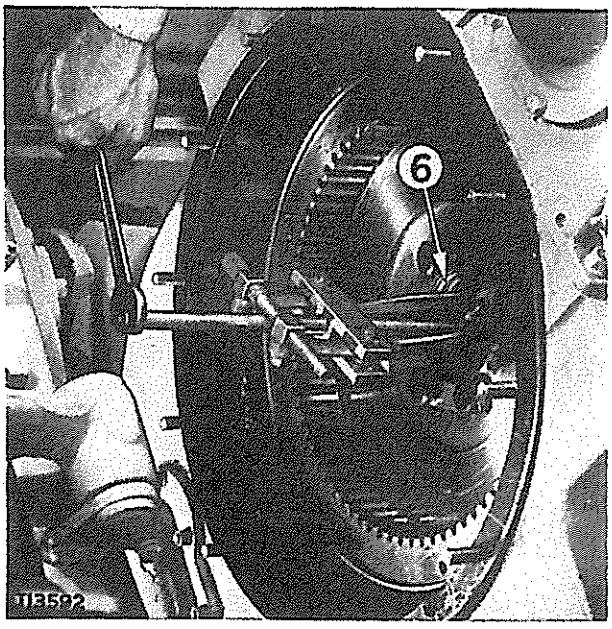

PULLING BEARING OUTER RACE
6—Bearing outer race.

◆

3. Remove the hub assembly **(4)**.

4. The outer bearing race **(6)** can be pulled from the flywheel with the 8B7554 Puller and the 8B7560 Centering Spacer.

Disassembling Hub Assembly

1. Remove the retainer ring **(1)** from the hub assembly **(2)**.

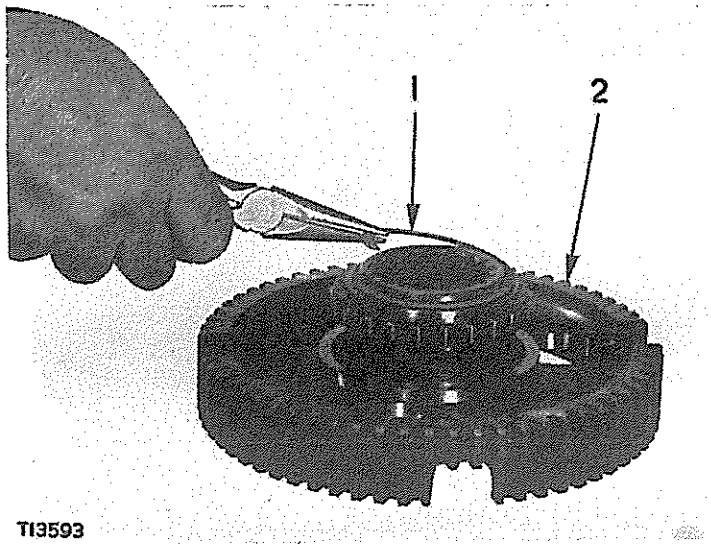

REMOVING HUB BEARING RETAINER RING
1—Retainer ring. 2—Hub assembly.

2. Remove the bearing **(7)** and retainer ring **(6)** from the hub assembly.

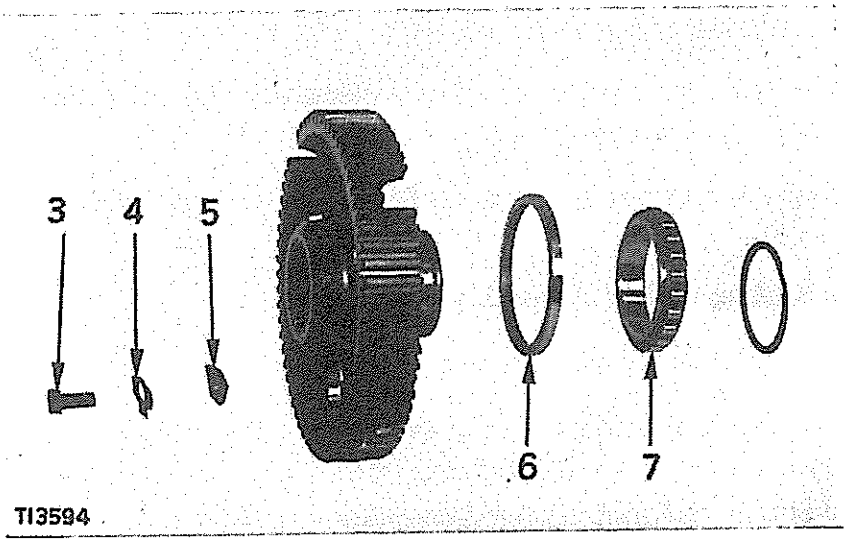

DISASSEMBLING HUB ASSEMBLY
3—Capscrew. 4—Lock. 5—Retainer. 6—Retainer ring. 7—Bearing.

NOTE

The capscrew **(3)**, lock **(4)** and retainer **(5)** were previously removed through the three holes in the hub assembly when it was removed from the flywheel.

Removing Pressure Plate and Oil Pump Drive Gear

1. Remove the retainer **(5)**, locks **(4)** and spring **(6)** from the pin **(7)** securing the pressure plate to the bracket **(3)**.

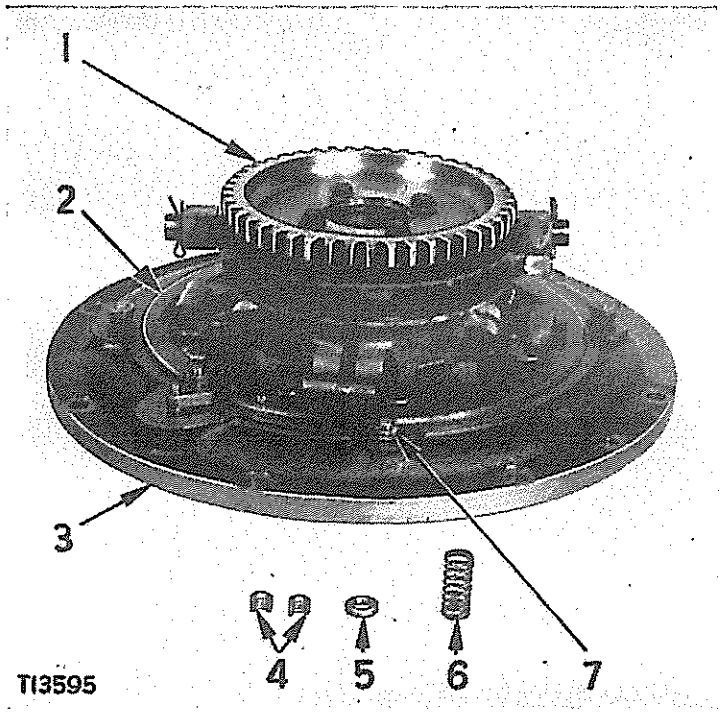

REMOVING PRESSURE PLATE AND OIL PUMP DRIVE GEAR
1—Oil pump drive gear. 2—Plate assembly. 3—Bracket. 4—Locks. 5—Retainer. 6—Spring. 7—Pin.

2. Remove the locks and capscrews securing the oil pump drive gear **(1)** to the plate assembly **(2)**.
3. Remove the washer located under the oil pump drive gear.

Removing Sliding Collar Assembly

1. Place the assembly on two blocks of wood.
2. Remove the bushings **(2)** and **(4)** by tapping them alternately, first one and the other until they drop out. This will free the link **(3)**.
3. Remove the remaining three links.
4. Remove the sliding collar assembly **(1)** from the adjusting ring **(5)**.

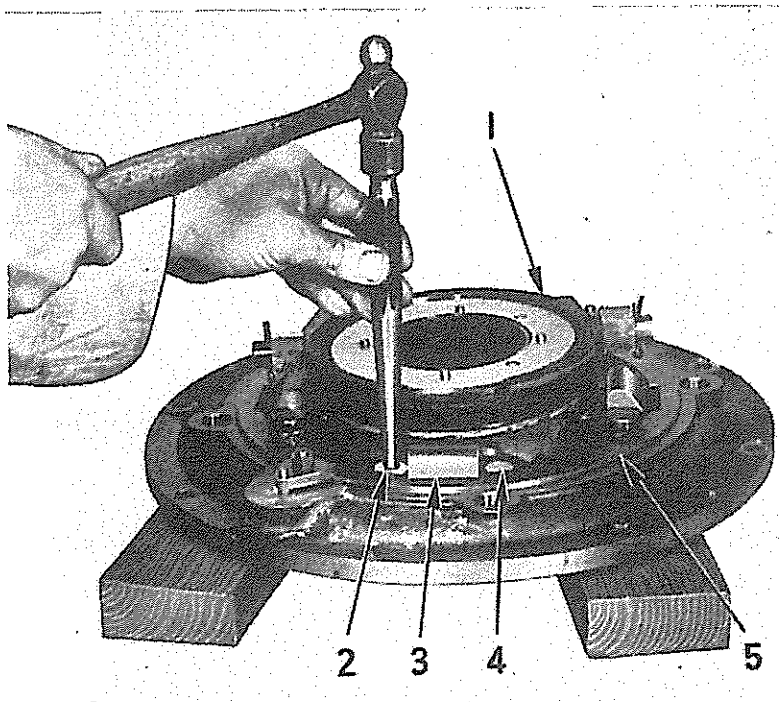

TI3596

REMOVING SLIDING COLLAR ASSEMBLY
1—Sliding collar assembly. 2—Bushing. 3—Link. 4—Bushing. 5—Adjusting ring.

Removing Adjusting Ring

1. Remove the nut **(2)**, nut **(6)**, plate **(3)** and plate **(7)**.
2. Unscrew the adjusting ring **(4)** from the bracket **(5)**.

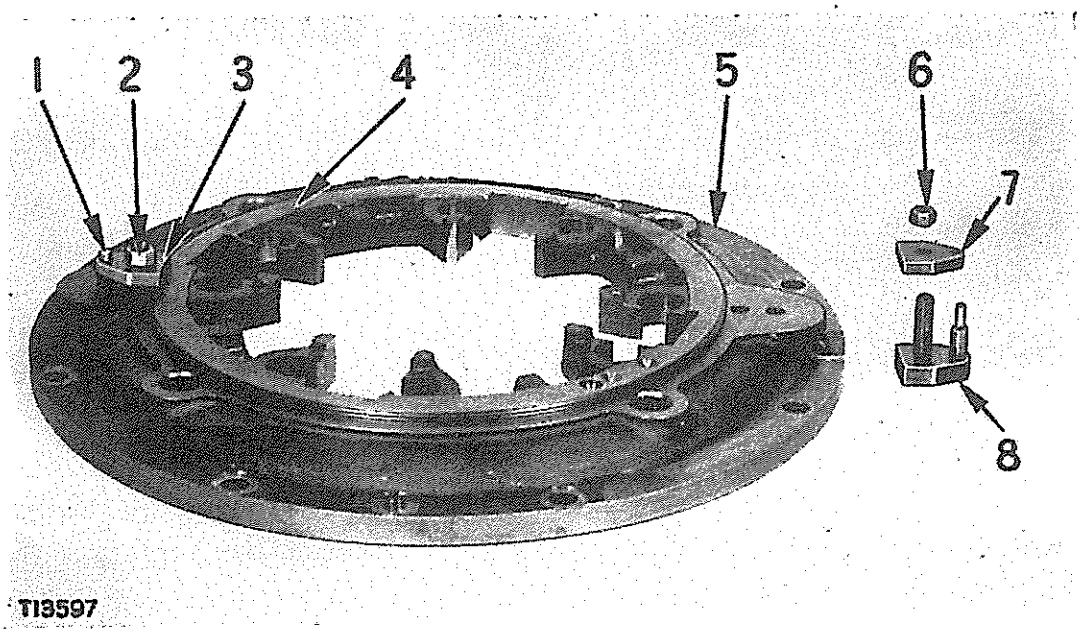

TI3597

REMOVING ADJUSTING RING
1—Lock assembly. 2—Nut. 3—Plate. 4—Adjusting ring. 5—Bracket. 6—Nut. 7—Plate. 8—Lock assembly.

3. The lock assemblies **(1)** and **(8)** will drop out of the bracket after the nuts and plates are removed.

Disassembling Sliding Collar Assembly

1. Remove the four capscrews and locks securing the hub **(9)** to the washer **(1)**.

2. Lift off washer **(1)**, thrust washer **(2)**, collar **(3)** and thrust washer **(4)**.

3. Remove the pin **(7)** and spring **(8)** from the hub **(9)**. There are four of these pins and springs.

4. The cam links **(5)** and rollers **(6)** can be removed from the hub by driving out the pins securing them to the hub. There are four sets of these in the assembly.

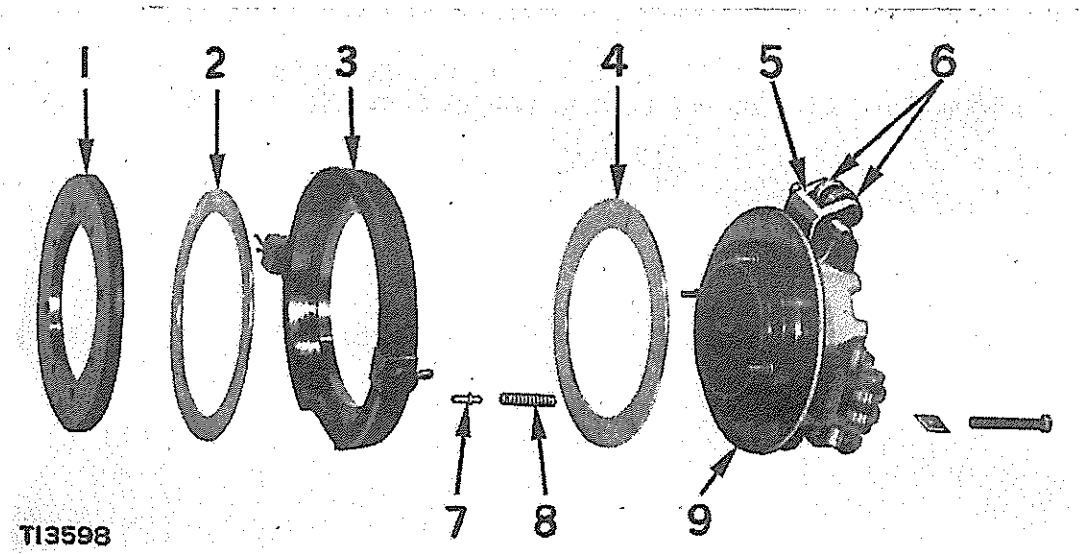

DISASSEMBLING SLIDING COLLAR ASSEMBLY
1—Washer. 2—Thrust washer. 3—Collar. 4—Thrust washer. 5—Cam link. 6—Rollers. 7—Pin. 8—Spring. 9—Hub.

Removing Plate Assembly Bearings

There are two bushing type bearings in the plate assembly **(1)**.

Pull the first bearing using the 8B7548 Push Puller, 8B7549 Legs, 8B7554 Bearing Cup Pulling Attachment, 8B7553 Reducing Adapter and the 8B7562 Box Wrench.

After the first bearing has been pulled, turn the plate assembly **(1)** over and pull the other bearing in the same manner.

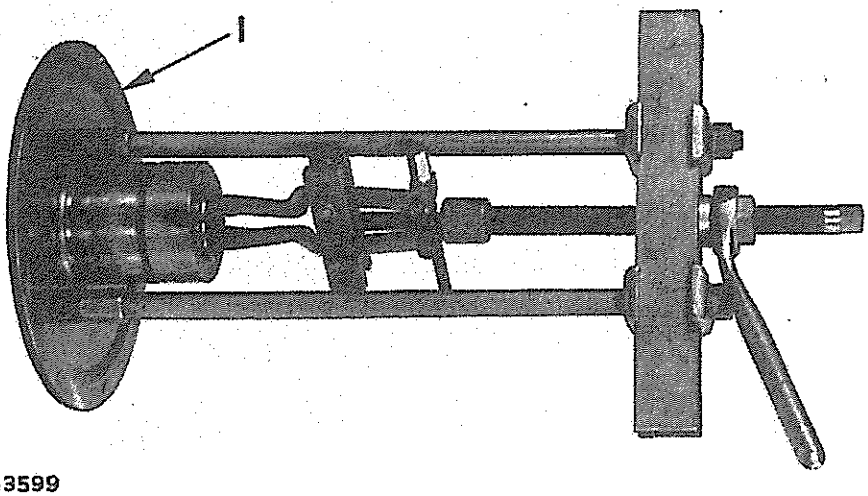

TI3599

REMOVING PLATE ASSEMBLY BEARING
1—Plate assembly.

Removing Bearing Cage and Seal

1. Remove the locks and capscrews securing the retainer **(2)** to the bearing cage **(1)**.

NOTE

When replacing retainer **(2)**, align slot **(3)** with the oil drain hole in the cage **(1)**.

2. Remove the capscrews securing the bearing cage **(1)** to the clutch housing **(4)**.

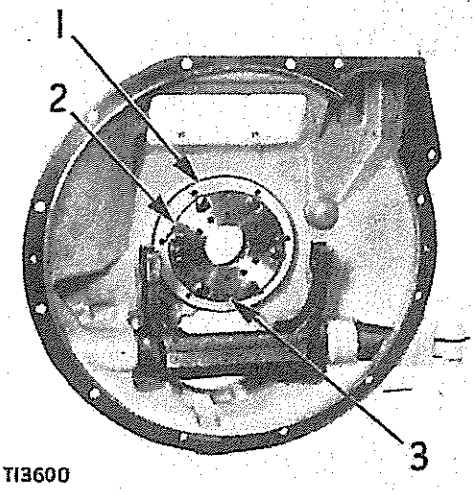

TI3600

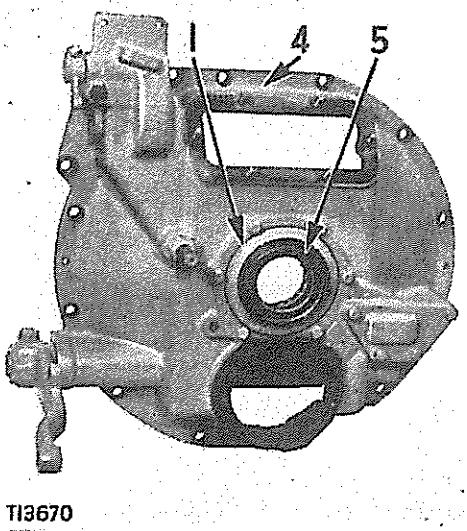

TI3670

REMOVING RETAINER

PREPARING TO REMOVE BEARING CAGE

1—Bearing cage. 2—Retainer. 3—Slot in retainer. 4—Clutch housing. 5—Seal.

3. Remove the bearing cage **(1)** from the back side of the clutch housing.

NOTE

When replacing the bearing cage, oil holes **(6)** and **(7)** must line up.

4. The leather lip type seal **(5)** can be removed from the bearing cage. When replacing the seal, the lip points in toward the clutch.

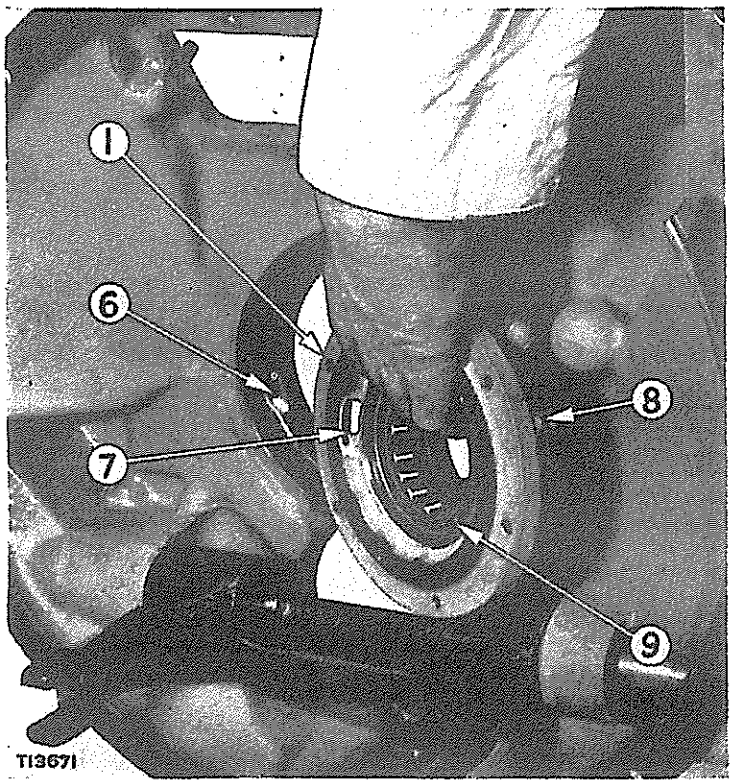

REMOVING BEARING CAGE FROM FLYWHEEL HOUSING
1—Bearing cage. 6—Oil hole in flywheel housing. 7—Oil hole in bearing cage. 8—Rubber ring seal. 9—Bearing.

NOTE

The rubber ring seal **(8)** should be replaced when the bearing cage is assembled to the clutch housing.

5. Press the bearing **(9)** out of the cage if damaged or worn.

Removing Starter Pinion Engaging Levers from Flywheel Clutch Cover

1. To remove the lever **(7)**, remove the plug **(2)** and press the shaft **(3)** and lever **(6)** from the flywheel clutch cover **(1)**.

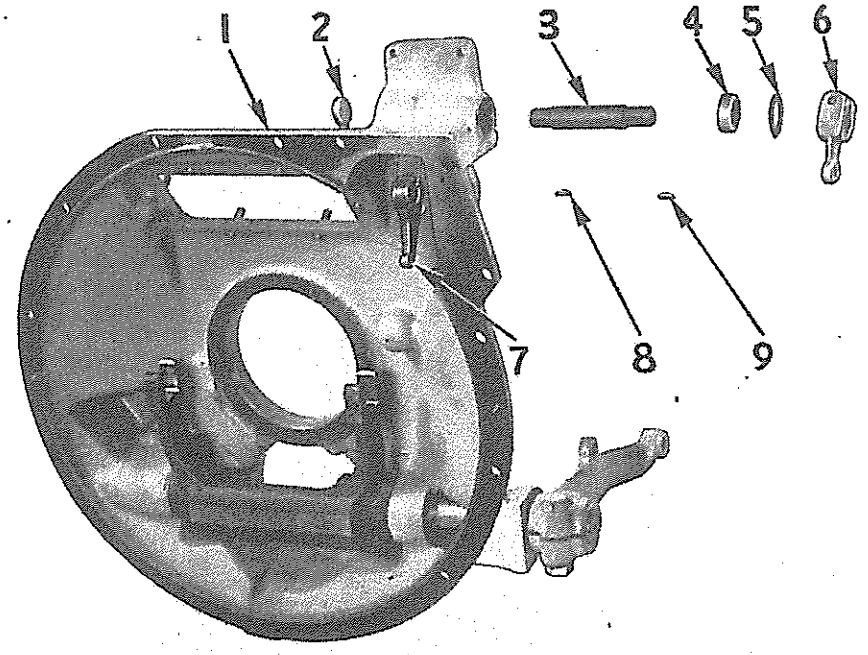

T13674

REMOVING STARTER PINION ENGAGING LEVER
1—Flywheel clutch cover. 2—Plug. 3—Shaft. 4—Seal. 5—Washer. 6—Lever. 7—Lever. 8—Key. 9—Key.

2. Remove the lever **(6)**, keys **(8)** and **(9)** and washer **(5)** from the shaft **(3)**.

3. Pull the seal **(4)** from the clutch cover.

Removing Flywheel Clutch Actuating Yoke

The stub shaft **(1)** that supports one end of the engaging and disengaging yoke can be pulled by threading one of the 5F7341 Adaptors into the end of the shaft. Screw one of the 8B7550 Legs into the adaptor. Place a piece of 1½" pipe, 4" long over the 8B7550 Leg. Install the 7F9540 Hydraulic Puller over the leg and with a nut and flat washer, pull the stub shaft.

1. After the stub shaft **(1)** has been removed, remove the lever **(7)** and key **(6)**.

2. Loosen the capscrew **(4)**.

3. Drive the shaft **(5)** in toward the center of the yoke **(2)** and remove the key **(3)**.

4. Insert a punch through the hole in the cover and drive the shaft **(5)** out of the yoke **(2)**.

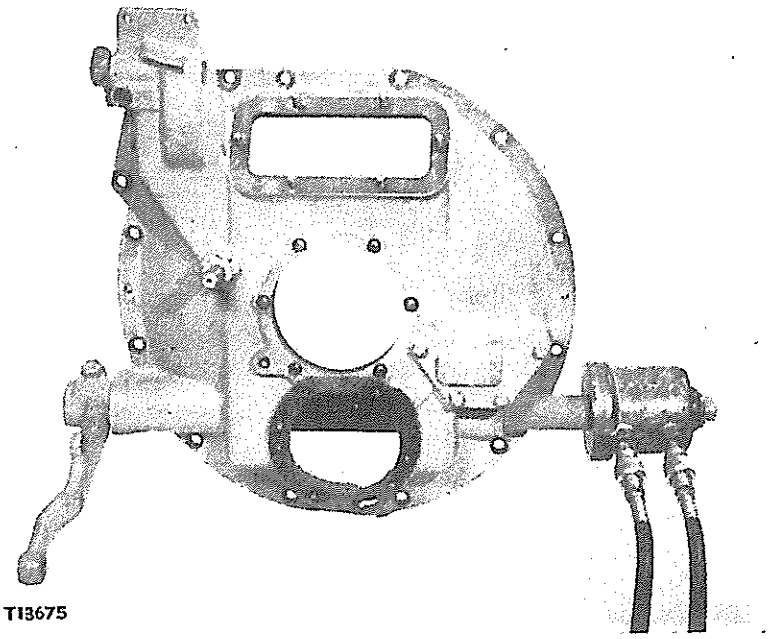

REMOVING STUB SHAFT

5. Remove the yoke from the cover.

6. Remove the seal **(8)** from the flywheel clutch cover.

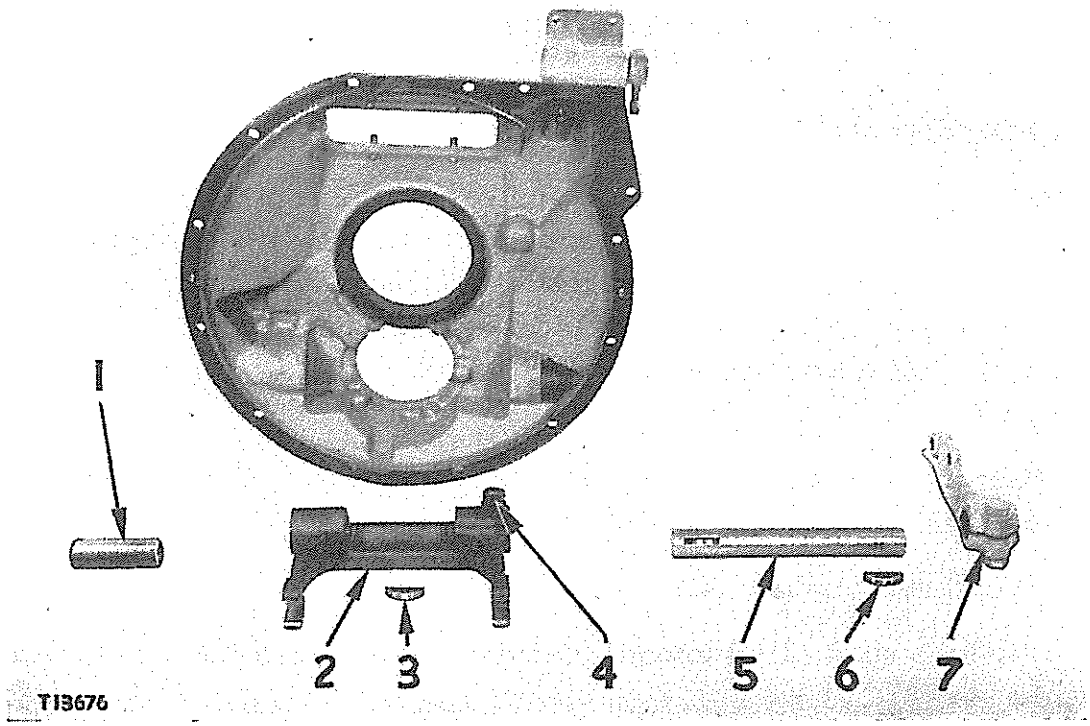

REMOVING CLUTCH ACTUATING YOKE

1—Stub shaft. 2—Yoke. 3—Key. 4—Capscrew. 5—Shaft. 6—Key. 7—Lever.

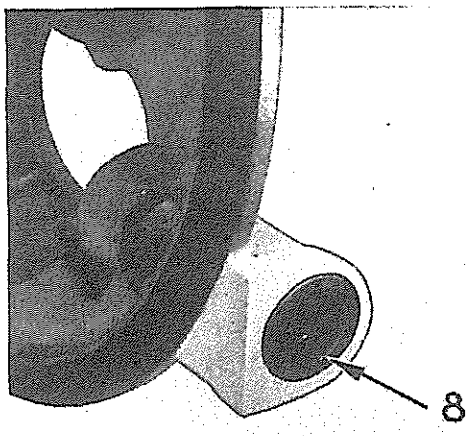

T13677

REMOVING SEAL
8—Seal.

◆

DISASSEMBLING OIL PUMP

Removing Drive Gear

1. Remove the snap ring **(2)** securing the gear **(1)** to the shaft and pull the gear with the 8B7547 Puller.
2. Remove the key **(3)** and the snap ring **(5)** from the shaft **(4)**.
3. Remove the capscrews and locks securing the body **(7)** to the support assembly **(6)**.

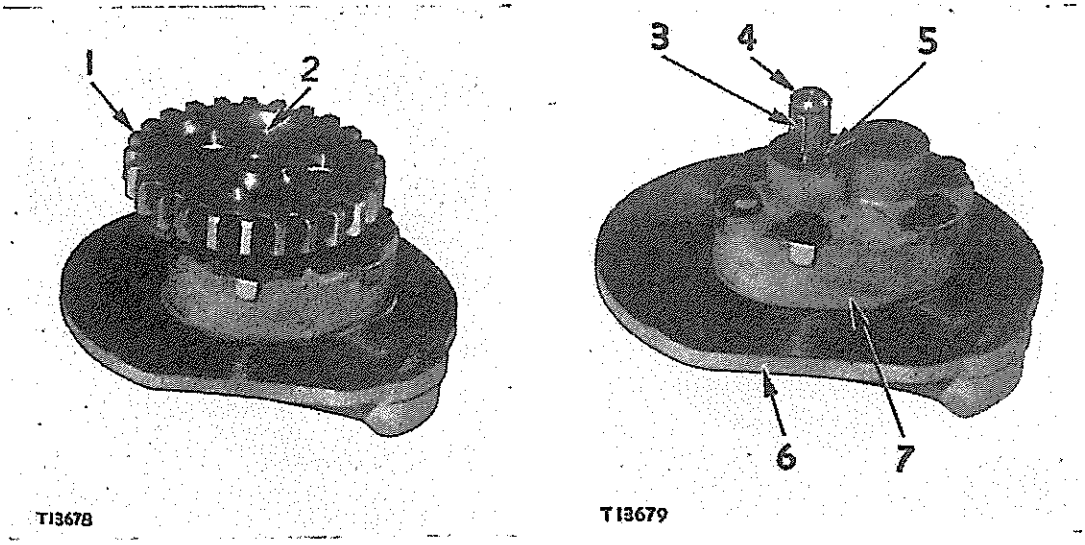

T13678 T13679

REMOVING DRIVE GEAR
1—Gear. 2—Snap ring. 3—Key. 4—Shaft. 5—Snap ring. 6—Support assembly. 7—Body.

Removing Oil Pump Gears

1. Remove the oil pump gears **(2)** and **(4)** from the body assembly **(1)**.
2. The gear **(2)** and shaft **(3)** are removed as a unit.

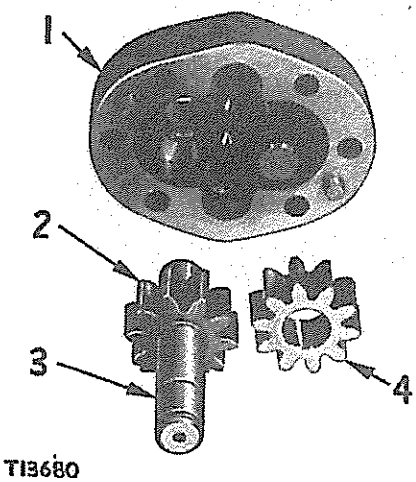

T13680

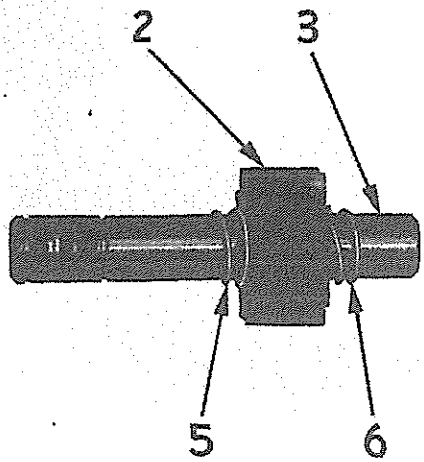

T13681

DISASSEMBLING OIL PUMP
1—Body assembly. 2—Gear. 3—Shaft. 4—Gear. 5—Snap ring. 6—Snap ring.

3. Remove the snap rings **(5)** and **(6)** and remove the gear **(2)** from the shaft **(3)**.
4. Remove the key located under the gear **(2)**.

Oil Pump Bushings

The oil pump bushing **(2)** can be removed from the body **(1)** and replaced if worn or damaged.

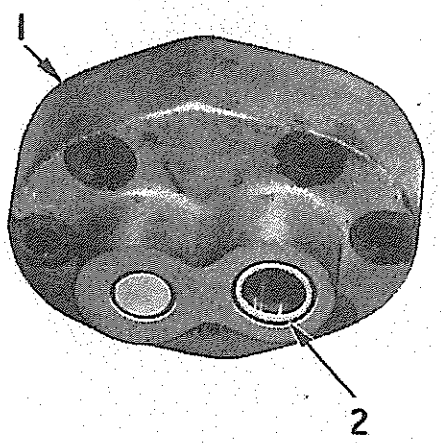

T13682

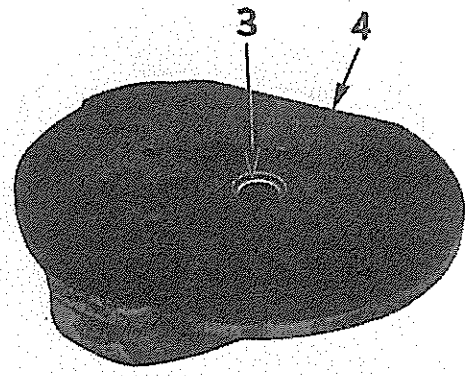

T13683

OIL PUMP BUSHINGS
1—Oil pump body. 2—Bushing. 3—Bushing. 4—Oil pump body support.

The oil pump bushing **(3)** can be removed from the support **(4)** if necessary.

ASSEMBLY

Assembling Flywheel Clutch Cover

1. Install the starter pinion engaging lever **(11)**.
2. Install the actuating yoke **(8)**.
3. Install the bearing **(5)** in the bearing cage **(3)**.
4. Install the baffle plate **(6)** and the seal **(7)**. The lip of the seal faces in toward the clutch plates.
5. Replace the rubber ring seal **(14)** in the groove **(4)** around the outside of the bearing cage.
6. Install the retainer **(1)** aligning the slot **(12)** with the hole **(13)** in the bearing cage. Fasten with capscrews and locks.
7. Install the unit in the flywheel clutch cover **(10)** and secure with lockwashers and capscrews.

NOTE

The oil hole **(2)** must be aligned with the oil hole **(9)** in the clutch cover.

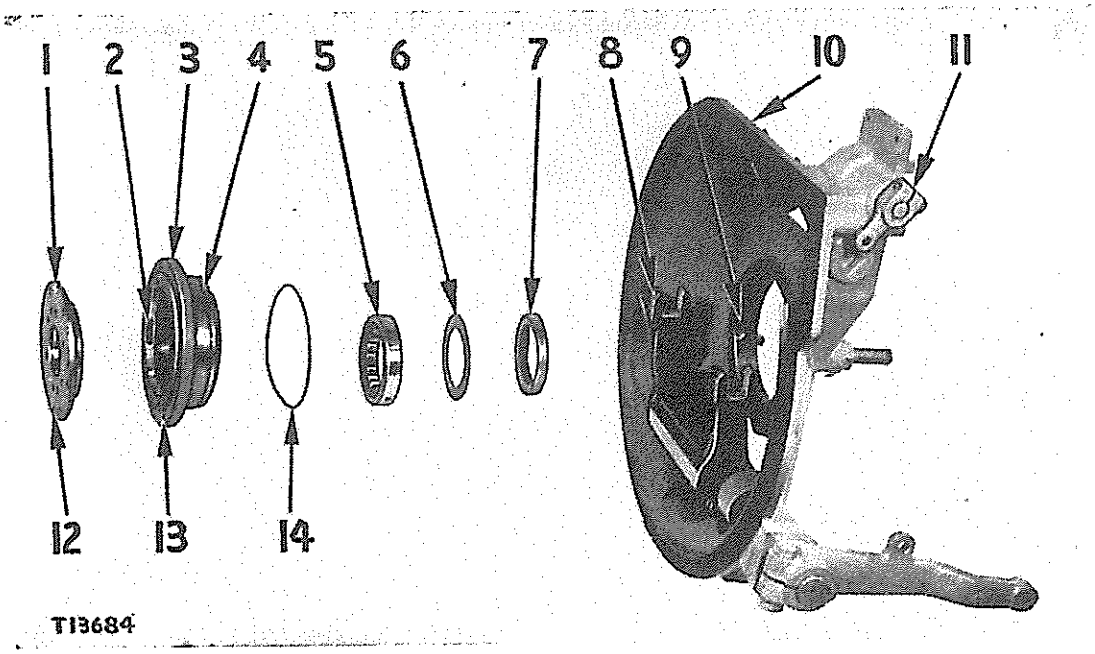

ASSEMBLING FLYWHEEL CLUTCH COVER

1—Retainer. 2—Oil hole in bearing cage. 3—Bearing cage. 4—Groove for rubber ring seal. 5—Bearing. 6—Baffle plate. 7—Seal. 8—Yoke. 9—Oil hole in clutch cover. 10—Clutch cover. 11—Starter pinion engaging lever. 12—Oil drain back slot in retainer. 13—Oil drain back hole in bearing cage. 14—Rubber ring seal.

Assembling Hub

1. Place the retainer ring **(3)** over the end of the hub **(2)** with the grooved portion of the retainer ring toward the bearing **(4)**.
2. Install the bearing **(4)** and ring **(5)** on the end of the hub.
3. Install the outer race of bearing **(4)** in the flywheel.
4. Install the hub **(2)** with the bearing **(4)** into the outer bearing race of the flywheel.
5. Secure the hub to the flywheel with the retainers **(1)**, (only one pointed out), lock and capscrew.

NOTE

The wide portion of the retainer **(1)** should rest against the retainer ring **(3)**. The retainers, locks and capscrews are installed through the holes in the hub **(2)**.

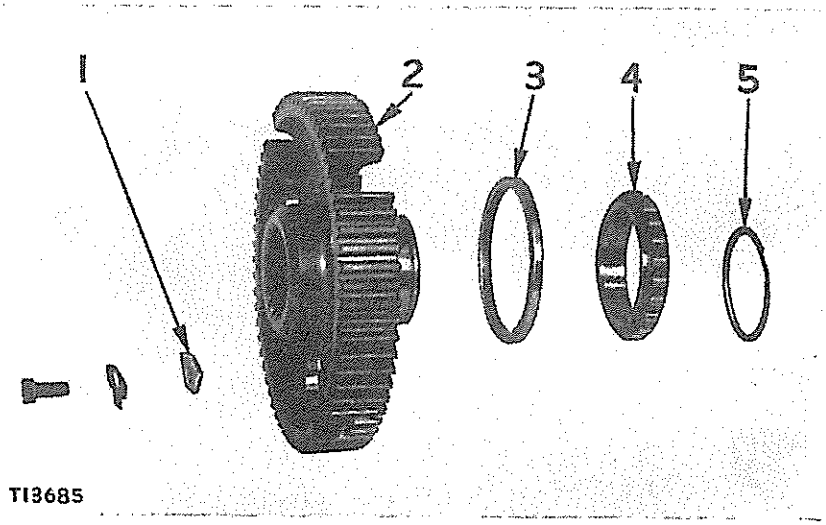

ASSEMBLING HUB TO FLYWHEEL
1—Retainer. 2—Hub. 3—Retainer ring. 4—Bearing. 5—Bearing retaining ring.

Assembling Clutch Plates

1. Install the driven plate **(3)**, pressure plate **(2)** and the driven plate **(1)** on the hub **(4)**.

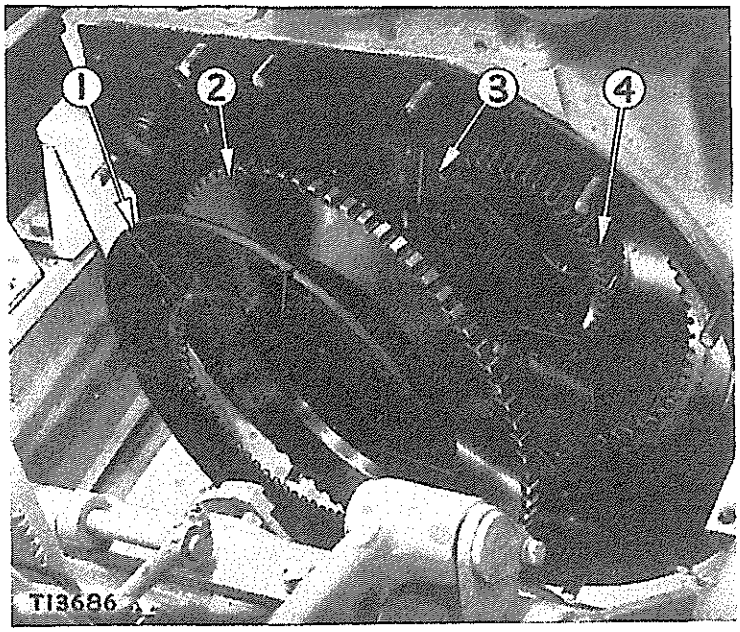

ASSEMBLING CLUTCH PLATES
1—Driven plate. 2—Pressure plate. 3—Driven plate. 4—Hub.

Assembling Sliding Collar Assembly

1. Install the link **(1)** to the collar **(3)** with the pin **(4)**.
2. Place the rollers **(2)**, one on each side of the link **(1)** and install the cam link **(6)** and pin **(5)**.

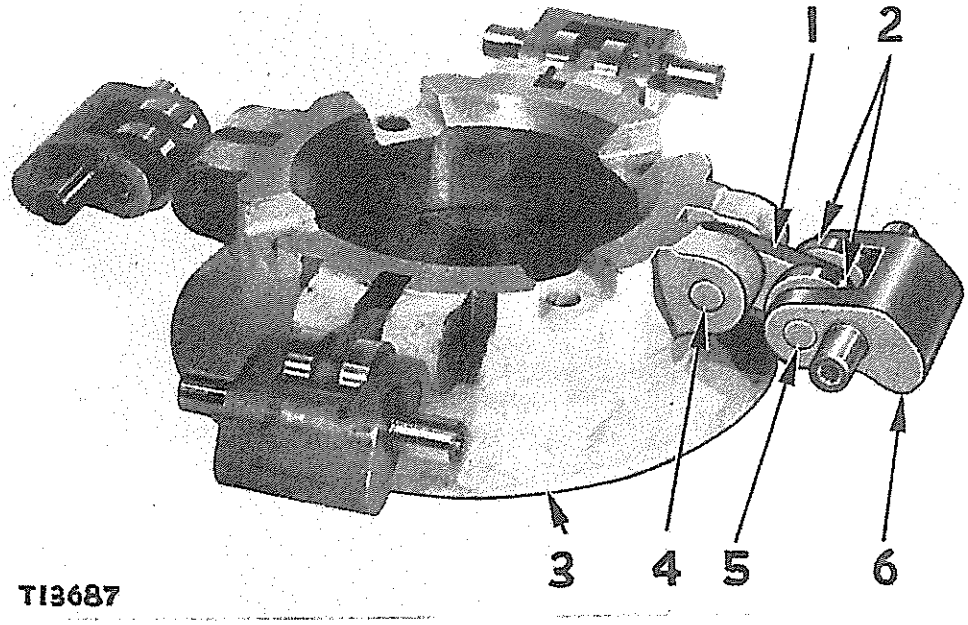

ASSEMBLING SLIDING COLLAR ASSEMBLY
1—Link. 2—Rollers. 3—Collar. 4—Pin. 5—Pin. 6—Cam link.

3. Install the remaining three assemblies.

4. Install the spring **(12)** and pin **(11)** in the collar **(3)**.

NOTE

There are four pins and four springs.

5. Place the thrust washer **(10)** and throwout collar **(9)** over the collar **(3)**.

6. Install the thrust washer **(8)** in the throwout collar **(9)**.

7. Place the plate **(7)** in the throwout collar with the pins **(11)** protruding through the four holes in the plate **(7)**.

8. Secure the assembly together with the four capscrews and locks.

NOTE

The capscrews pass through the rear of the collar and thread into the plate **(7)**.

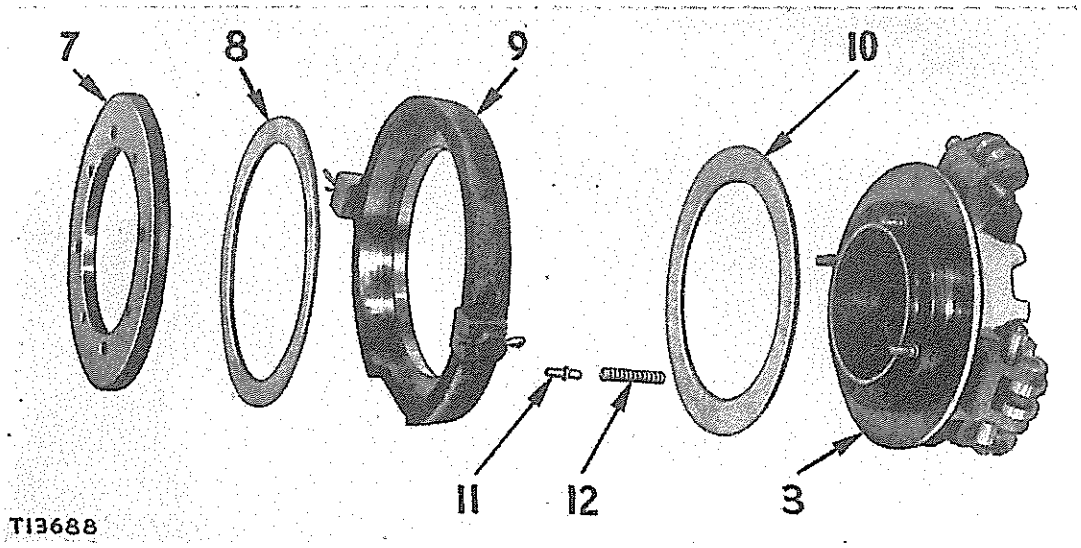

ASSEMBLING THROWOUT COLLAR TO SLIDING COLLAR ASSEMBLY
3—Collar. 7—Plate. 8—Thrust washer. 9—Throwout collar. 10—Thrust washer. 11—Pin. 12—Spring.

Assembling Sliding Collar Assembly to Adjusting Ring and Bracket

1. Place the sliding collar assembly **(2)** in the adjusting ring **(1)**.

CAUTION

The adjusting ring **(1)** must be placed in the position shown with the grooved portion **(6)** on the same side as the rollers **(4)**. This is the side that faces the flywheel.

2. Place the two bushings **(3)** and **(7)** over the cam link pins **(5)**.

3. Tap the two bushings in place in the adjusting ring **(1)** with the shoulder of the bushings in the position shown.

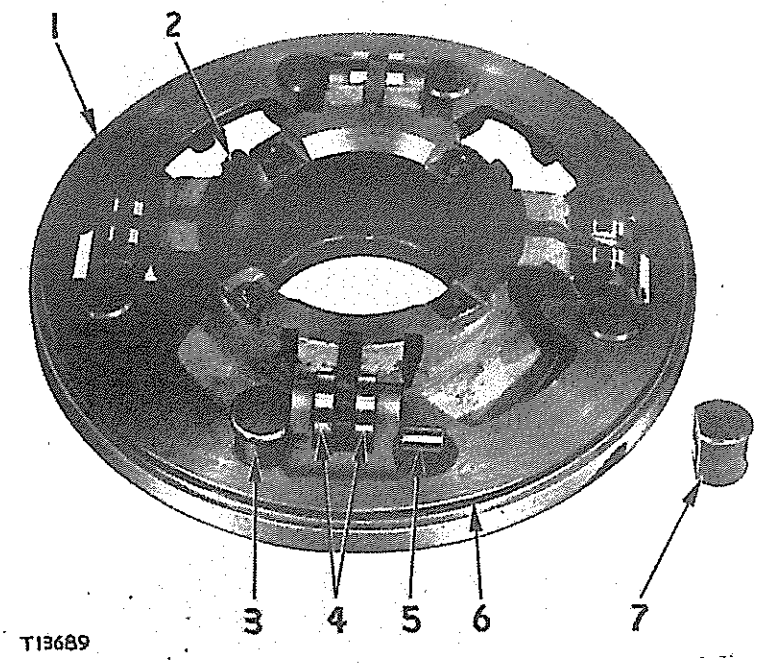

ASSEMBLING SLIDING COLLAR TO ADJUSTING RING
1—Adjusting ring. 2—Sliding collar assembly. 3—Bushing. 4—Rollers. 5—Cam link pin. 6—Groove in adjusting ring. 7—Bushing.

Assembling Adjusting Ring to Bracket

1. Screw the adjusting ring **(1)** into the bracket **(3)**.

2. Insert the two lock assemblies **(2)** and **(6)** through the rear of the bracket **(3)**.

3. Install the plate **(4)** and nut **(5)**.

4. Install the plate and nut on lock assembly **(6)**.

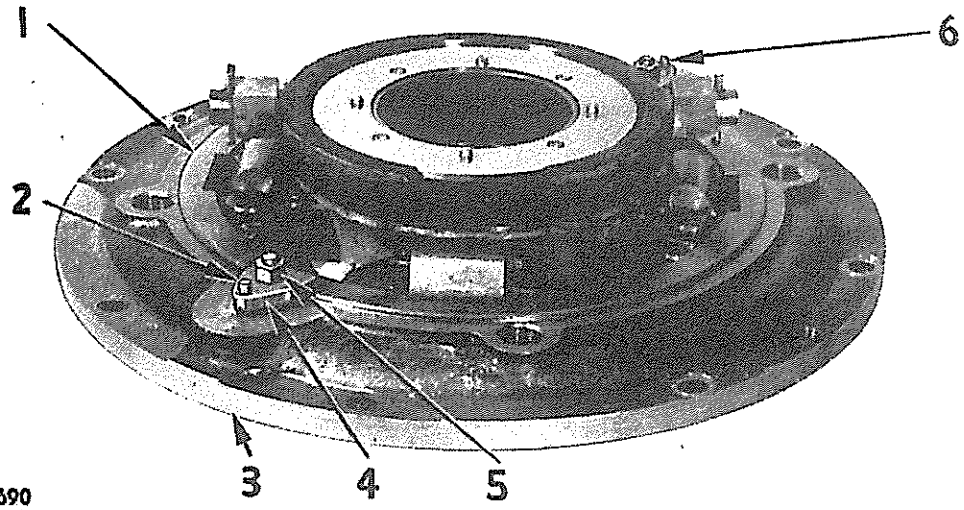

ASSEMBLING ADJUSTING RING TO BRACKET
1—Adjusting ring. 2—Lock assembly. 3—Bracket. 4—Plate. 5—Nut. 6—Lock assembly.

Assembling Rear Pressure Plate and Clutch Loading Plate

Replace the two bushings in the clutch loading plate **(4)** if they are damaged or worn. There should be a running clearance of .003"-.005" between the bushings and clutch shaft.

The bushing in the flanged end of the plate **(4)** is pressed in flush with the hole **(6)**.

The bushing in the hub end of the plate should extend 1/4" above the end of the hub.

1. Lay the rear pressure plate **(1)** down on a flat surface with the pins **(5)** inserted through the holes in the pressure plate.
2. Place the clutch loading plate **(4)** over the rear pressure plate with the dowel **(3)** in the hole **(2)**.
3. Place the bracket **(7)** over the assembly and install the spring **(11)**, locks **(9)** and retainer **(10)**.
4. Install the three remaining springs, locks and retainers.

NOTE

The retainer **(10)** must be turned to accommodate the taper of the locks **(9)**.

5. Place the large washer over the end of the hub of the clutch loading plate **(4)** and install the oil pump drive gear **(8)**.

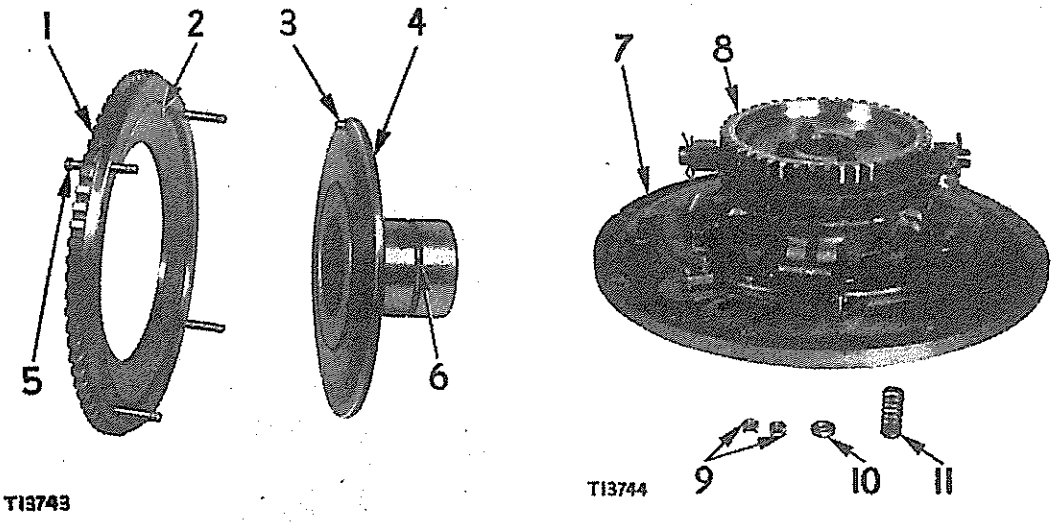

ASSEMBLING REAR PRESSURE PLATE AND CLUTCH LOADING PLATE

1—Rear pressure plate. 2—Dowel hole in rear pressure plate. 3—Dowel in clutch loading plate. 4—Clutch loading plate. 5—Pin. 6—Oil hole. 7—Bracket. 8—Oil pump drive gear. 9—Locks. 10—Retainer. 11—Spring.

Assembling Oil Pump

1. Install the lock ring **(4)** in the second groove of the shaft **(7)**.
2. Install the key **(3)** in the keyway **(13)** of the shaft **(7)**.
3. Install the gear **(2)** with the long hub toward the oil pump body **(5)**.
4. Install the lock ring **(1)** over the end of the shaft to hold the gear **(2)** in place.

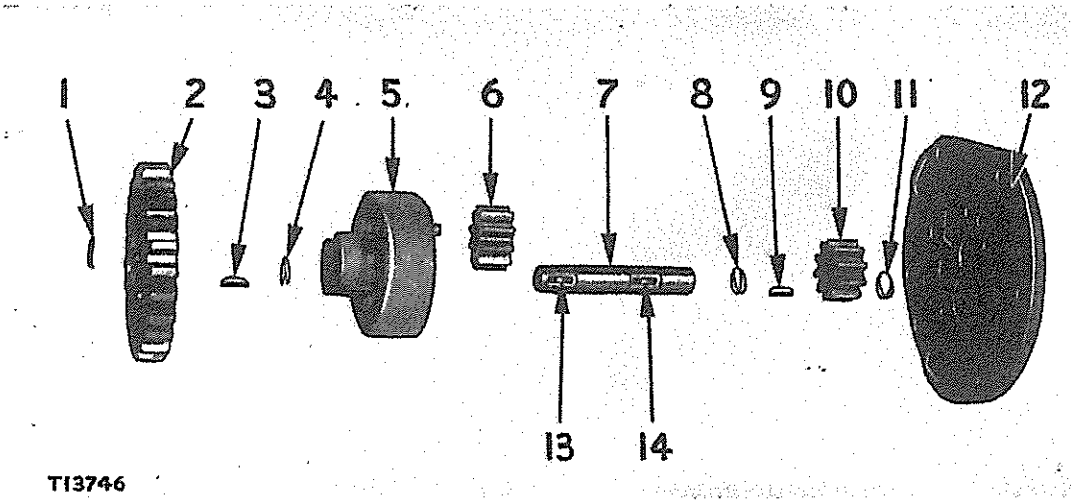

ASSEMBLING OIL PUMP

1—Ring. 2—Gear. 3—Key. 4—Ring. 5—Oil pump body. 6—Gear. 7—Shaft. 8—Ring. 9—Key. 10—Gear. 11—Ring. 12—Oil pump cover and support bracket. 13—Keyway. 14—Keyway.

5. Place all the capscrews and locks in the body **(5)** and insert the gear and shaft through the body.

6. Install the lock ring **(8)** on the shaft **(7)**.

7. Place the key **(9)** in the keyway **(14)** and install the gear **(10)** and lock ring **(11)**.

8. Place the gear **(6)** over the stub shaft in the body **(5)**.

9. Install the oil pump cover and support bracket **(12)** on the body **(5)** and secure with the capscrews and locks previously installed in the body.

INSTALLATION

Installing Clutch Assembly

1. Install the flywheel clutch shaft **(1)** in the flywheel clutch cover **(3)**.

2. Place the clutch assembly on the clutch shaft and install in the machine.

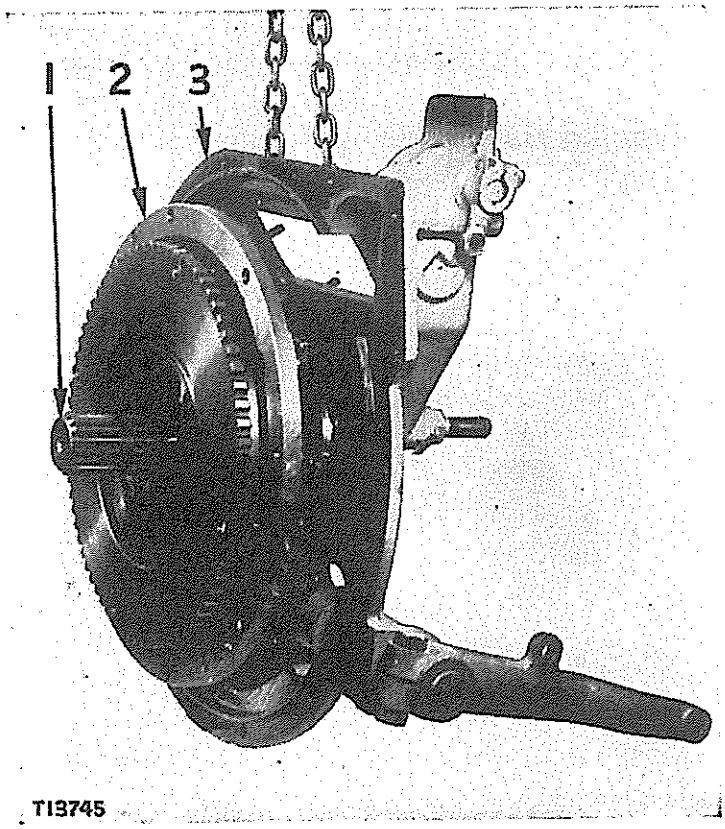

INSTALLING CLUTCH ASSEMBLY
1—Flywheel clutch shaft. 2—Bracket. 3—Flywheel clutch cover.

NOTE

The splined end of the clutch shaft **(1)** must be aligned with the splines in the hub. At the same time, align the holes in the bracket **(2)** with the tapped holes in the flywheel.

3. Fasten the bracket to the flywheel with capscrews.
4. Fasten the flywheel clutch cover to the flywheel housing.

Installing Brake Mechanism and Oil Pump

1. Install the clutch brake assembly **(6)** to the lever **(4)**.
2. Install the lever **(4)** over the pin **(5)**.

NOTE

The pin **(7)** must fit into a hole in the flywheel clutch cover.

3. Install the pin **(3)** which fastens the brake rod to the clutch actuating lever **(2)**.

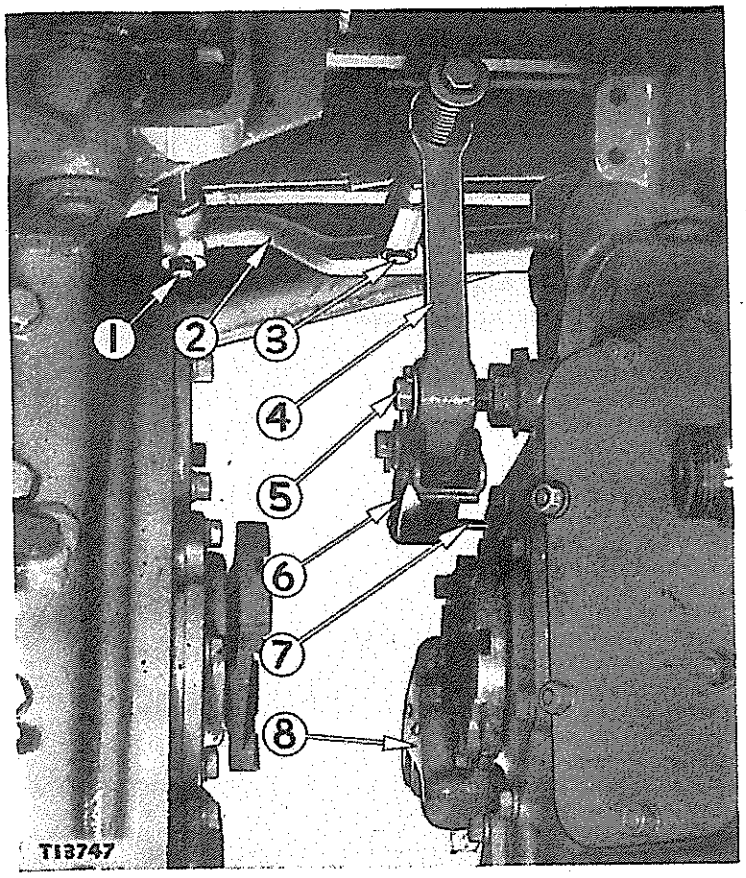

INSTALLING BRAKE MECHANISM AND OIL PUMP
1—Pin. 2—Clutch actuating lever. 3—Pin. 4—Lever. 5—Pin. 6—Clutch brake assembly. 7—Pin. 8—Oil pump.

4. Install the pin **(1)** which fastens the clutch actuating lever to the operating lever.

5. Install the oil pump **(8)**.

Installing Universal Joint and Completing Installation

1. Install the universal joint **(1)** and brake drum **(2)**.

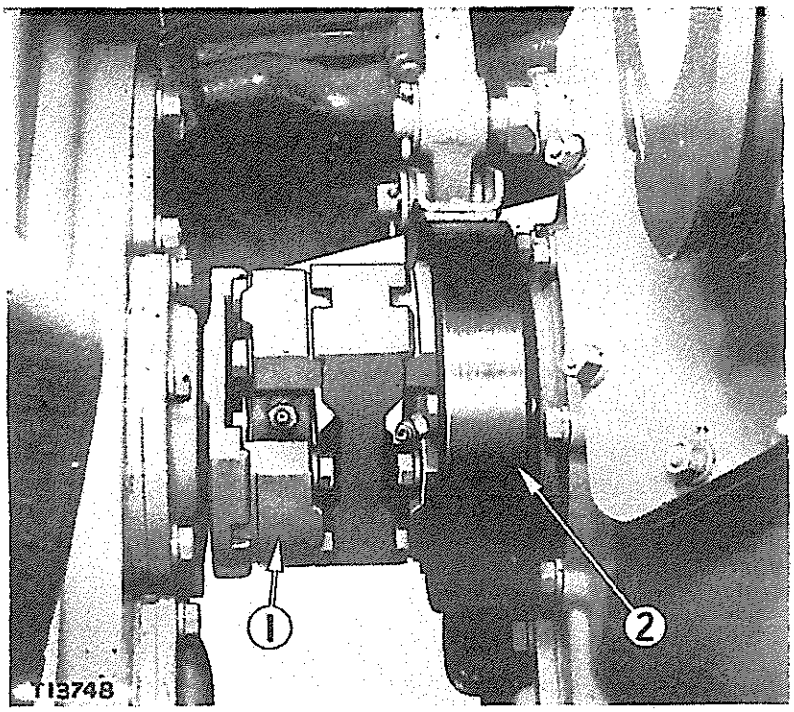

INSTALLING UNIVERSAL JOINT
1—Universal joint. 2—Brake drum.

2. Connect brake pedal rods.

3. Connect the starting engine engaging pinion lever.

4. Install the starting engine flywheel.

5. Install the two vertical side plates.

6. Install the front floor plate support bracket.

7. Install the dash, connect the heat indicator connection and the oil pressure gauge line.

8. Install the air cleaner.

9. Install floor plates and connect the governor control rod.

Flywheel Clutch—Dry Type

The flywheel clutch drive plate is connected to the flywheel by means of flexible links. The two pressure plates, lined with metallic facings, are attached to a stub shaft connected to the transmission.

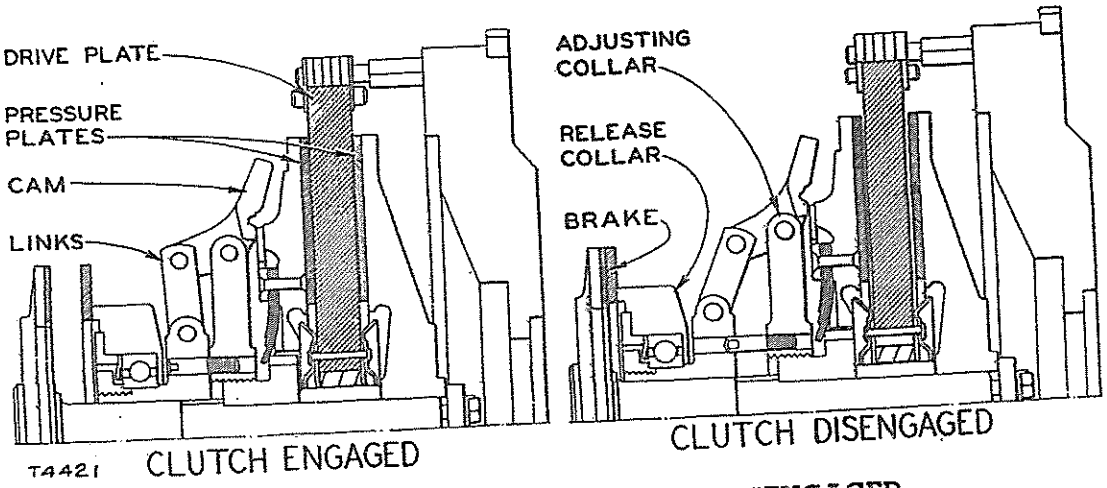

FLYWHEEL CLUTCH ENGAGED AND DISENGAGED
(Earlier Tractors Illustrated)

When the clutch is engaged a toggle mechanism consisting of spring links and cams pushes the rear pressure plate against the drive plate and it in turn presses against the front pressure plate. When the drive plate is gripped by the pressure plates, the turning effort of the engine is transmitted to the transmission. The clutch automatically stays engaged when the spring links snap over center.

A brake is provided to bring the rotating clutch shaft to a stop quickly when the clutch is disengaged and the lever pushed forward. This makes it possible to shift gears without clashing them. The brake pressure plate is attached to the clutch release collar and presses against the revolving brake disc when the clutch control lever is in the extreme released position.

The clutch is adjusted by loosening a clamping bolt and turning the adjusting collar. Turning the collar toward the pressure plate tightens the clutch.

FLYWHEEL CLUTCH ENCLOSURE

Removal

Before removing the flywheel clutch enclosure, it is necessary to remove the hood and dash plate as described in the topic, HOOD AND DASH.

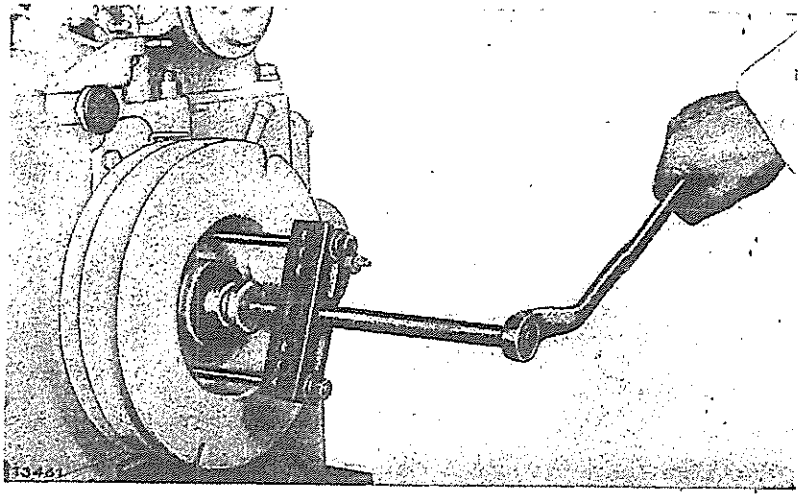

REMOVING STARTING ENGINE FLYWHEEL

Also remove the floor plates and vertical plates at each side of the flywheel housing.

Remove the clutch inspection cover. Disconnect the rod from the right brake pedal and allow the pedal to fall back toward the seat.

Disconnect the rod from the starter pinion engaging lever.

Unlock and remove the nut which holds the starting engine flywheel to the crankshaft. Earlier engines have a retaining plate and capscrew that secures the flywheel to the crankshaft.

Pull the starting engine flywheel using the 5F7465 Puller and two 3/8"-16 (NC) capscrews, 5 1/2" long as shown.

Replace the nut on the crankshaft of later engines to protect the threads.

Remove all the capscrews which hold the upper section of the enclosure to the flywheel housing and the bolts which hold the two sections of the enclosure together.

The upper section of the enclosure can then be lifted off most tractors. On tractors having the longer starting engine crankshaft and insufficient clearance on the enclosure, additional work is required.

If the upper section of the enclosure cannot be removed, it is necessary to remove the transmission support assembly **(2)**.

Remove the pins **(3)** and **(5)** and disconnect the rods from the brake pedals.

Disconnect the parking brake ratchet **(4)** from the clutch pedal.

Remove the pin and disconnect the throttle rod **(1)**.

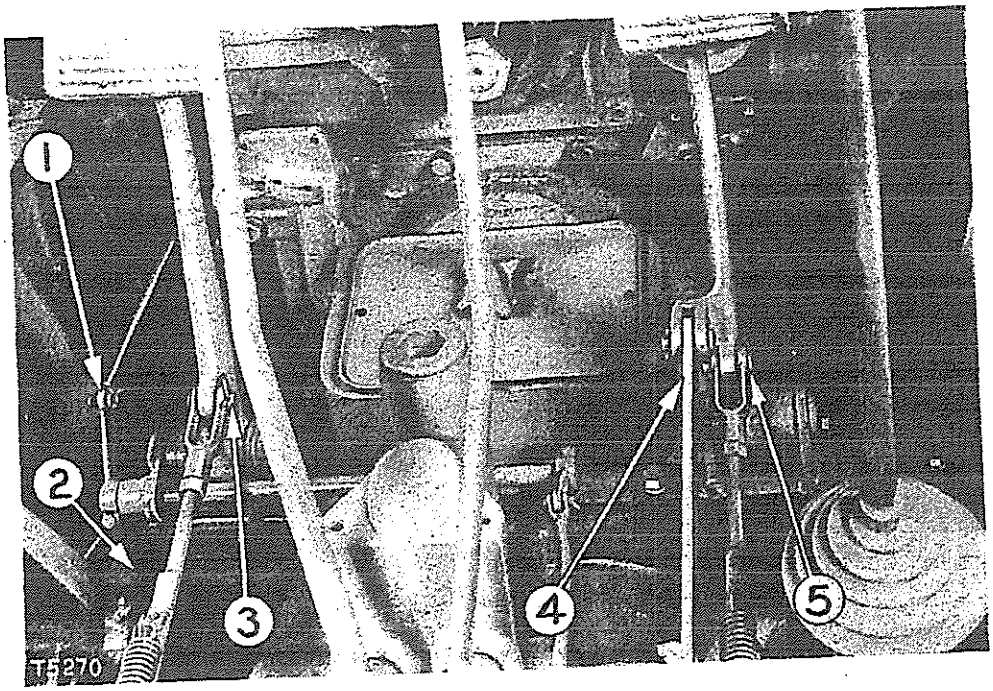

REMOVING SUPPORT ASSEMBLY

1—Throttle rod. 2—Support assembly. 3—Pin. 4—Parking brake ratchet. 5—Pin.

Take out the four capscrews securing the support assembly **(2)** to the transmission case.

Remove the capscrews securing the support assembly to the frame and remove the support assembly.

The shims under each support assembly should be wired in place.

To remove the lower section, disconnect the rod from the clutch lever and remove the capscrews holding the enclosure to the flywheel housing.

Starter Pinion Engaging Levers

To remove the lever **(7)**, remove the plug **(2)** and press the shaft **(4)** and lever **(5)** out of the upper section **(1)**.

The bushings **(3)** can then be pressed out if necessary.

When reassembling, be sure the key in shaft **(4)** lines up with the keyway in lever **(7)**.

Press the shaft into the lever until the lever rests against the shoulder on the shaft.

The gasket **(6)** should be cemented to the upper section of the enclosure **(1)** with 7F2770 Cement if replaced.

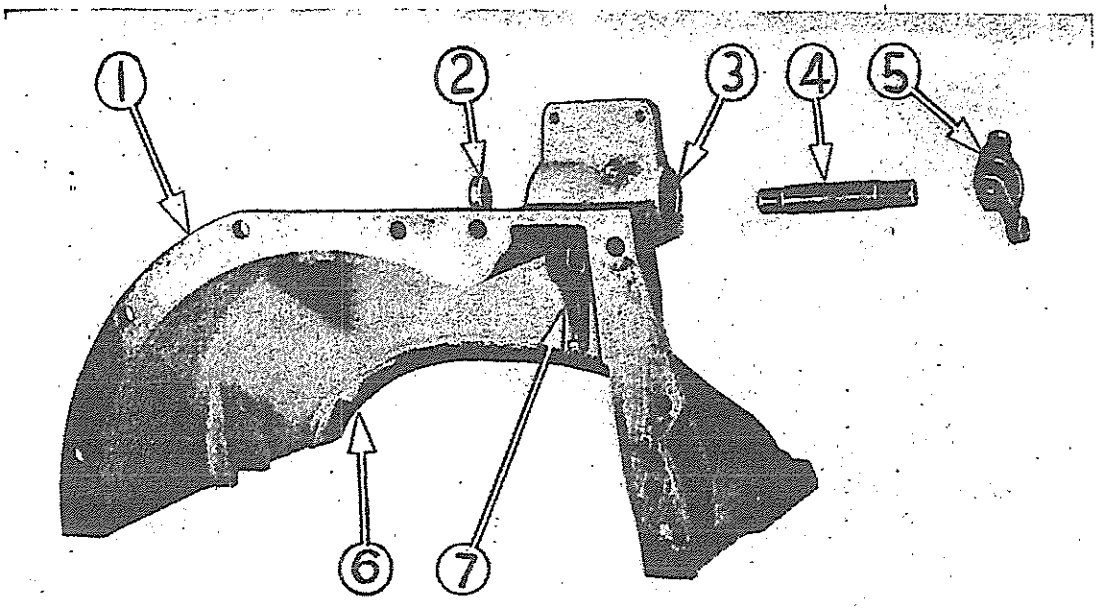

T5271

FLYWHEEL CLUTCH ENCLOSURE (UPPER SECTION)
1—Upper section of enclosure. 2—Plug. 3—Bushing. 4—Shaft. 5—Pinion engaging lever. 6—Gasket. 7—Lever.

Flywheel Clutch Release Levers

To remove the lever **(8)**, loosen the clamping capscrew and pull the lever from the shaft.

The hardened bushing **(9)** should be pressed out if badly worn and a new one installed.

Remove the key **(11)** and pull the lever **(12)**, shaft **(16)** and support **(17)** from the lower section **(13)** as an assembly.

If the bushing **(14)** is badly worn, press it out and install a new one.

The new bushing should be pressed in until the end is flush with the inner end of the bore.

This will allow space for the rubber seal **(15)** at the other end of the bushing.

Loosen the clamping bolt on lever **(12)** and pull the shaft **(16)** from the lever.

The bushing **(18)** should be pressed out of the support **(17)** and replaced if damaged.

The gasket **(10)** should be cemented to the lower section of the enclosure **(13)** with 7F2770 Cement if replaced.

Earlier tractors did not have support **(17)** and bushing **(18)**.

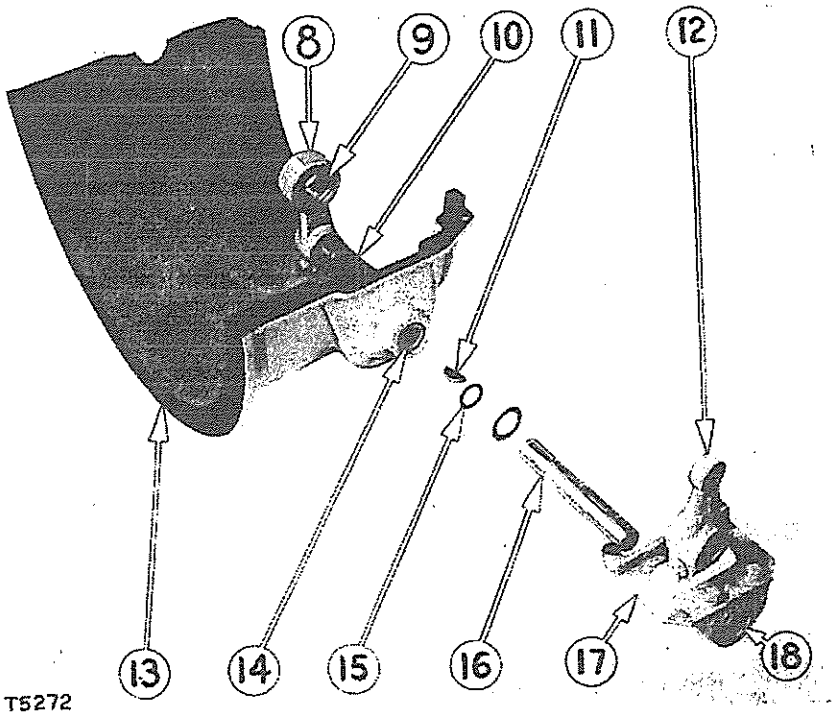

FLYWHEEL CLUTCH ENCLOSURE (LOWER SECTION)
8—Lever. 9—Bushing. 10—Gasket. 11—Key. 12—Lever. 13—Lower section of clutch enclosure. 14—Bushing. 15—Rubber seal. 16—Shaft. 17—Support. 18—Bushing.

REMOVING CLUTCH

Remove the upper section of the flywheel clutch enclosure as previously described.

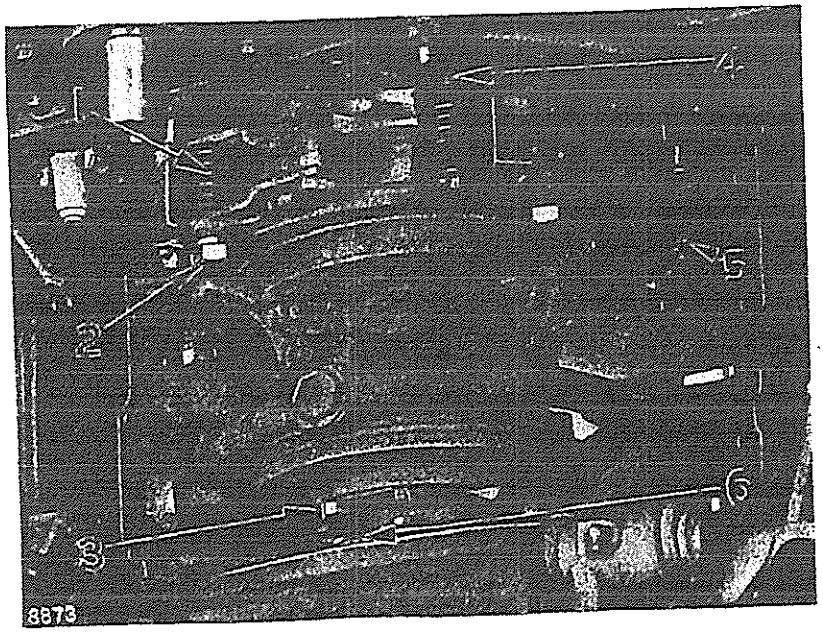

DISCONNECTIONS FOR FLYWHEEL CLUTCH REMOVAL
(Earlier Tractor Illustrated — Later Tractors Same Principle)
1—Link. 2—Bolt. 3—Capscrew. 4—Drive pin. 5—Cotter pin and washer. 6—Notch in cover.

Disengage the clutch.

Remove all the bolts **(2)** which hold the drive links **(1)** to the shackles.

Remove the cotter pins, washers **(5)**, and drive links **(1)** from each of the clutch drive pins **(4)**.

Remove any three successive drive pins **(4)** from the flywheel.

Turn the flywheel so that the remaining two drive pins are below center.

Take out the capscrews **(3)** which hold the clutch shaft flange to the flange on the transmission upper shaft.

The clutch must be turned so that the capscrew being removed is in line with the notch in the cover at **(6)**.

Before removing the last capscrew from the flange, attach a rope or chain or cable around the clutch assembly to support its weight.

Then remove the last capscrew and lift out the clutch as shown.

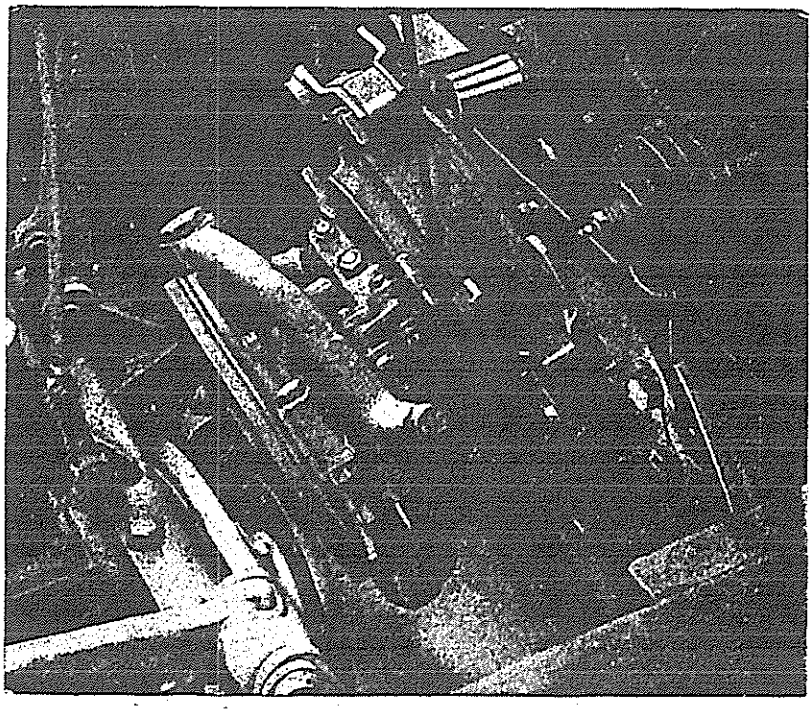

REMOVING FLYWHEEL CLUTCH ASSEMBLY
(Earlier Tractor Illustrated — Later Tractors Same Principle)

CLUTCH DISASSEMBLY

Unlock and remove the two capscrews and retainer washer **(16)**.

The front pressure plate **(11)** can then be taken off the clutch shaft.

PULLING FRONT PRESSURE PLATE

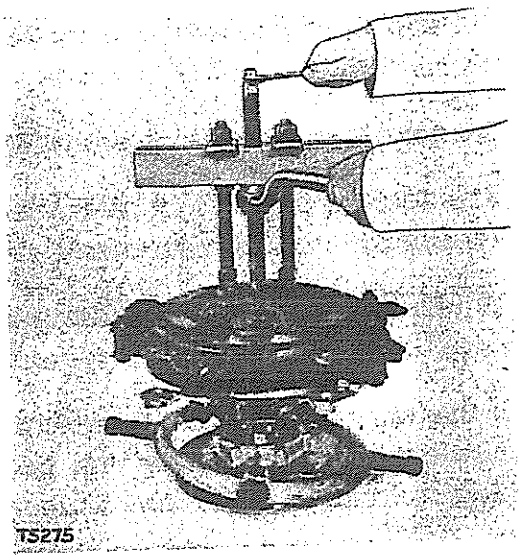

If the plate is tight on the shaft, it can be pulled with the 8B7548 Puller and two 8B7556 Adapters.

Lift off the drive plate **(15)** and remove the sleeve **(9)** which acts as the inner race for the roller bearing **(14)** in the clutch drive plate.

The roller bearing and outer race can be pressed out if necessary after cutting off the rivets and removing the throwers **(10)**.

When reinstalling the throwers, use new felt seals and gaskets.

If the surfaces of the drive plate are scored or heat checked, the plate can be remachined for further service. Remachine the plate to the outer diameter of the throwers, but do not reduce the thickness of the plate more than 1/16".

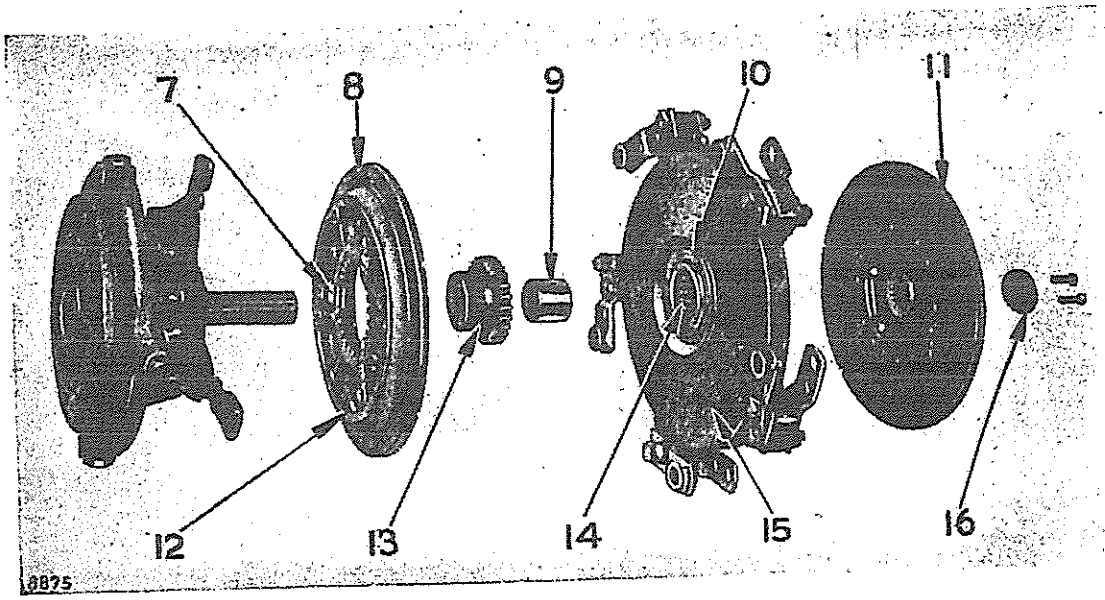

CLUTCH PLATES DISASSEMBLED

7—Leaf spring. 8—Rear pressure plate. 9—Sleeve. 10—Thrower. 11—Front pressure plate. 12—Wear ring. 13—Adjusting hub. 14—Roller bearing. 15—Drive plate. 16—Retainer washer.

Loosen the clamping bolt in the adjusting collar and back off the adjustment until the collar is free of the adjusting hub **(13)**.

Lift off the rear pressure plate **(8)** and the adjusting hub.

The leaf springs **(7)** bear on the adjusting hub at the locations where the teeth are partially cut away.

When installing the adjusting hub and rear pressure plate on the shaft, be sure to line up the cutaway teeth with the leaf springs.

If the springs have lost their tension so that the rear pressure plate does not release properly, they can be replaced after punching out the rivets which hold them to the rear plate.

If the wear ring **(12)** is grooved, cut off the rivets and install a new one.

The adjusting collar **(30)** can be taken off by removing the cotter pins and pins **(28)** which hold the links **(21)** to the sliding collar **(36)**.

If the links **(21)** or cams **(23)** are to be removed from the adjusting collar, remove the pins **(24)** or pins **(22)**.

Take out the two screws **(19)** and remove the release yoke **(26)**. Effective with 8U5116 and 9U9251, the two screws **(19)** were replaced with piloted yoke screws. There are less threads on the later screws and the lower one-third of the screw is piloted in the yoke **(26)**. This makes the assembly rigid and less subject to wear.

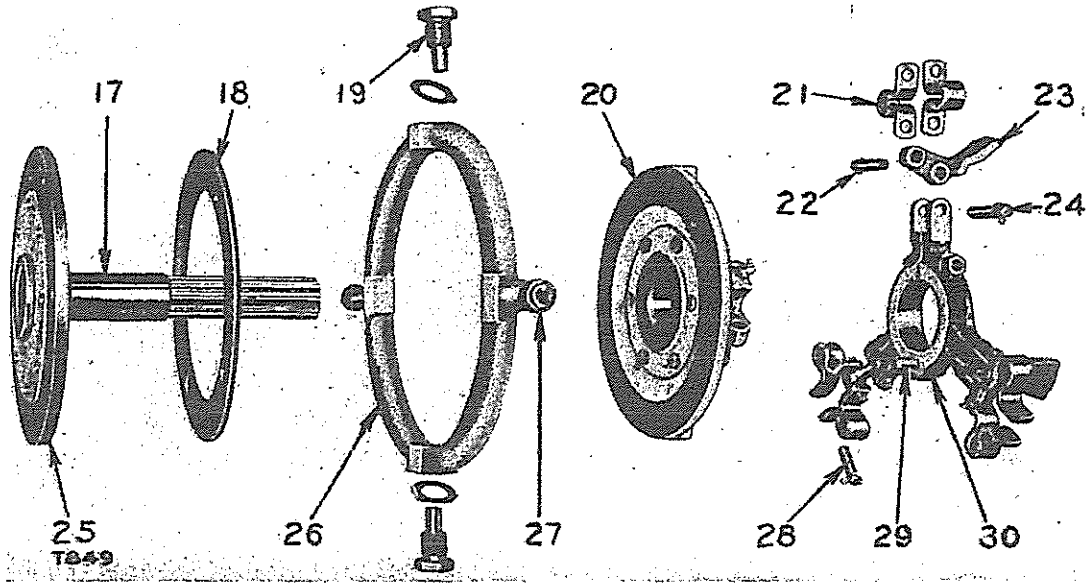

CLUTCH BRAKE, RELEASE BEARING AND ADJUSTING COLLAR

17—Clutch shaft assembly. 18—Clutch brake plate. 19—Screw. 20—Release collar. 21—Link. 22—Pin. 23—Cam. 24—Pin. 25—Clutch brake disc assembly. 26—Release yoke. 27—Ball. 28—Pin. 29—Guide pin. 30—Adjusting collar.

Take out the four bolts which hold the clutch brake plate **(18)** to the release collar **(20)** and remove the plate.

To disassemble the ball bearing release mechanism, remove the six capscrews and take off the retainer **(31)**.

Screw out the hollow head setscrew and remove the nut **(34)** and deflector **(32)**.

Press the sliding collar **(36)** out of the bearing **(35)** and the bearing **(35)** out of the release collar **(33)**.

If the hardened balls **(27)** on the ends of the throw-out yoke are badly worn, they should be replaced. Place them on an anvil and strike them with a hammer to break the old ones off. Place the new ones on and rivet the ends.

If the clutch brake disc assembly **(25)** is badly worn, punch out the rivets which hold it to the flange on the clutch shaft assembly **(17)** and install a new disc.

To disassemble the release collar on earlier tractors, take out the bolts **(38)** which hold the two sections of the release collar **(37)** together, and remove the two sections of the release collar from the sliding collar **(40)**.

CLUTCH FACINGS

The clutch facings on the front and rear pressure plates should be replaced if they have worn until the wearing surfaces are nearly to the rivets. Each facing is made up of segments which can be replaced after punching out the rivets which hold them to the pressure plate.

CLUTCH ASSEMBLY

The flywheel clutch should be assembled in the reverse order of disassembly. The ball bearing **(35)** is designed to take thrust in both directions so either side can be installed against the shoulder in the release collar. The concave side of the deflector should be placed against the bearing. This provides clearance between the deflector and the inner race of the bearing. The nut **(34)** must be securely tightened and if the hole for the hollow head setscrew does not line up, a new hole must be drilled and tapped. Drill a 7/32" hole ½" deep and tap ¼"-28 (NF), ⅜" deep.

Install the clutch drive plate so that the clutch links will pull instead of push the plate when the clutch is installed.

Before attaching the adjusting collar **(30)** to the release collar **(20)**, be sure the guide pin **(29)** lines up with the hole in the sliding collar.

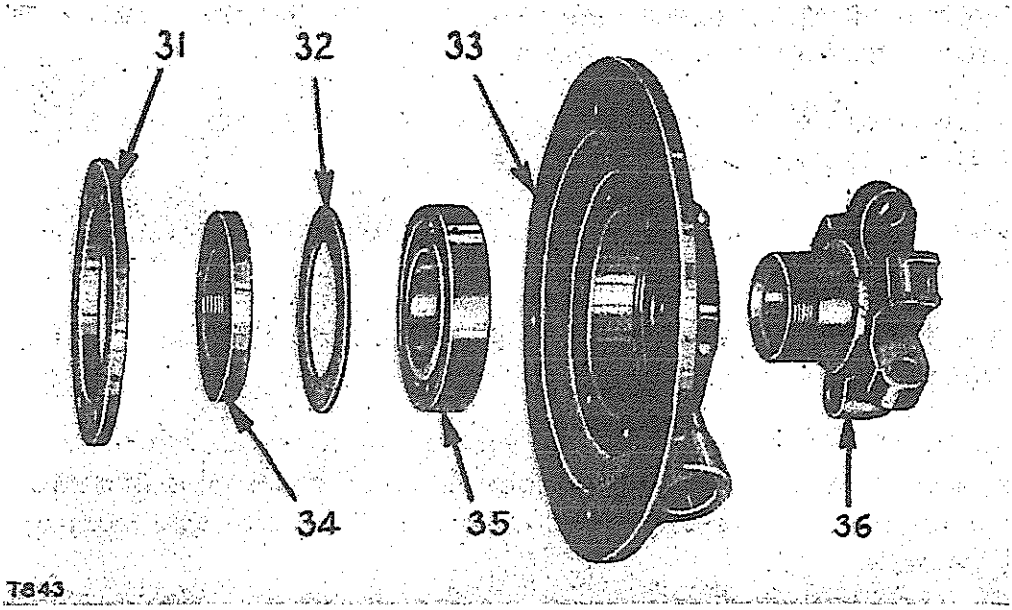

BALL BEARING RELEASE COLLAR (LATER TRACTORS)
31—Retainer. 32—Deflector. 33—Release collar. 34—Nut. 35—Bearing. 36—Sliding collar.

When assembling the adjusting hub and rear pressure plate, line up the two parts so that the leaf springs on the pressure plate will bear against the cutaway teeth on the hub.

When assembling the two-piece release collar **(37)**, used on earlier tractors, the two halves should straddle the center flange **(39)** of the sliding collar **(40)**.

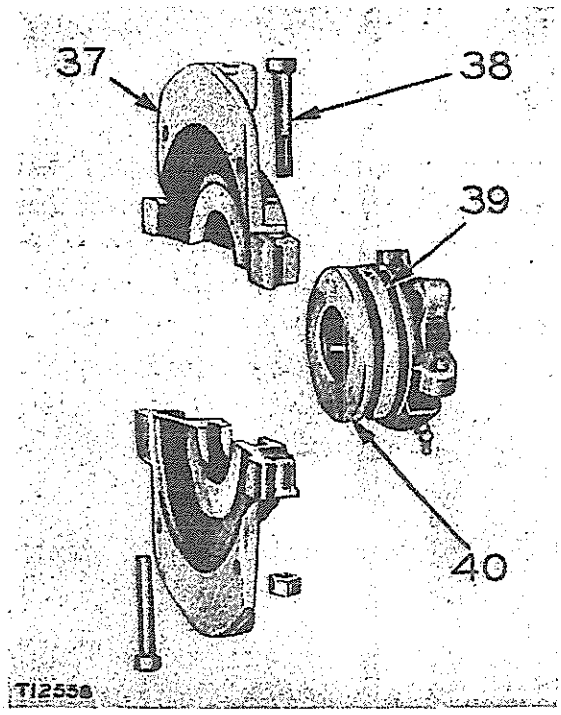

RELEASE COLLAR (EARLIER TRACTORS)

37—Split release collar. 38—Bolt. 39—Center flange of sliding collar. 40—Sliding collar.

◆

Before installing the drive links on the pins, place enough washers on the pins to just keep the drive plate from contacting the front pressure plate when the clutch is released. Add washers on the opposite side of the link to fill the space between the cotter pin and the link.

Lubricate the drive plate bearing and sliding collar.

After the flywheel clutch and flywheel clutch enclosure are installed, the transmission support assembly must be installed as described in the topic, INSTALLING TRANSMISSION.

It is not necessary to remove the transmission front support on earlier tractors.

ADJUSTMENT

After the flywheel clutch is assembled and installed, it should be adjusted so that a reasonably hard pull on the lever will engage the clutch with a distinct snap.

The length of the rod between the flywheel clutch control lever and the crank assembly that actuates the clutch yoke should be adjusted in accordance with information in the topic, GEAR SHIFT INTERLOCK MECHANISM—ADJUSTMENT.

Transmission

To do any service work on the transmission, other than the gear shift mechanism, the transmission must first be removed from the tractor.

REMOVAL

Remove the flywheel clutch as described in the topic, FLYWHEEL CLUTCH.

Disconnect the rod from the flywheel clutch control lever at the lever on the outside of the lower section of the clutch enclosure.

Take out the capscrews holding the lower half of the clutch enclosure to the flywheel housing and remove the enclosure.

Disconnect the brake rods from the pedals by removing the cotter pins and the two pins **(4)** and **(9)**.

Disconnect the rod at the gearshift interlock lever by removing the cotter pin and pin **(3)**.

Disconnect the rod from the throttle control lever by removing the cotter pin and pin **(11)**.

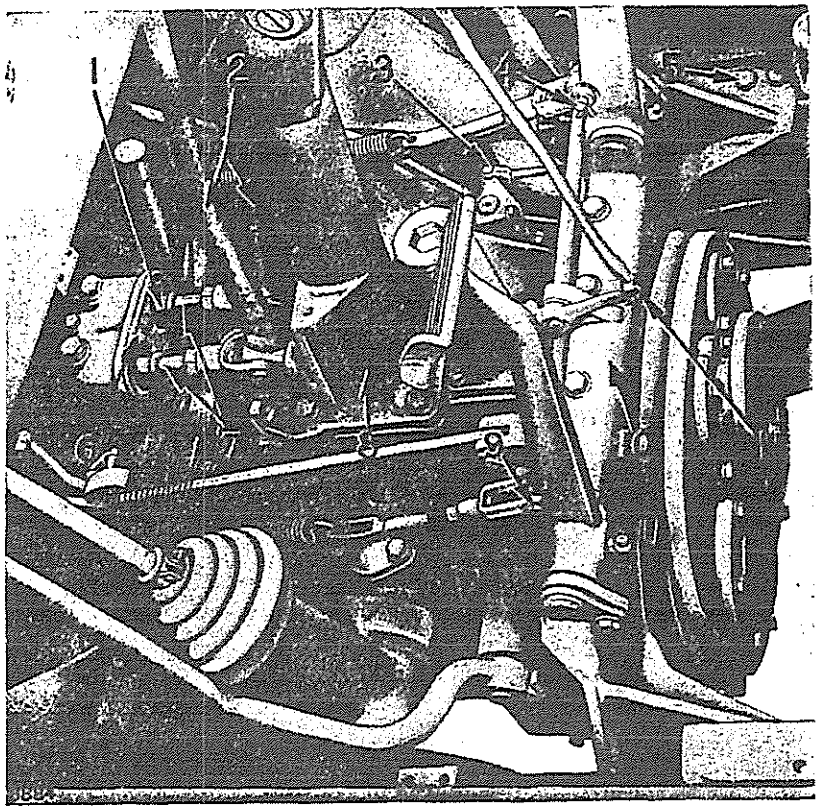

PREPARING TO REMOVE TRANSMISSION
(Earlier Tractor Illustrated — Later Ones Slightly Different In Appearance)
1—Seal. 2—Steering clutch control levers. 3—Pin. 4—Pin. 5—Bolt. 6—Cover. 7—Rods. 8—Bracket. 9—Pin. 10—Support bracket. 11—Pin.

Remove the two capscrews holding the cover **(6)** in place.

Take out the capscrews at the base of the bracket **(8)** and remove the bracket, steering clutch control levers **(2)**, rods **(7)**, seals **(1)** and cover **(6)** as a unit.

Take out the bolts **(5)** at both ends of the support bracket **(10)** and the capscrews which hold the transmission case to the bracket.

Remove the bracket and the brake pedals as a unit.

On some later tractors the transmission front support **(10)** and adjacent parts will have been removed in order to take out the flywheel clutch upper enclosure.

A lifting tool like the one illustrated will simplify the removal and installation of the transmission on both the D6 and D7 Tractors. The tool attaches to the transmission after the top cover is removed.

Attach cables or the lifting tool to the transmission case sufficiently to support its weight.

Remove all of the nuts around the flange at the rear of the case.

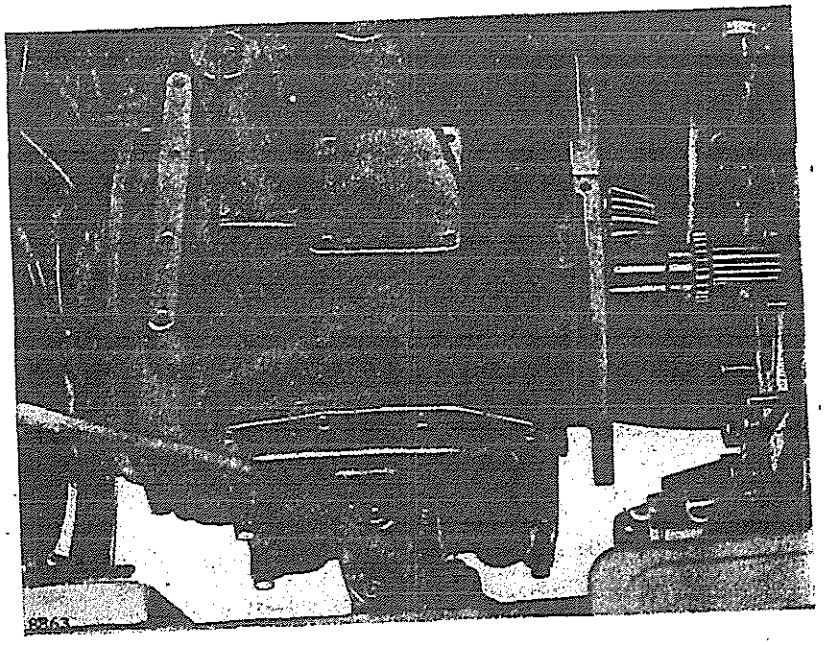

REMOVING TRANSMISSION

Pull the transmission case forward until the end of the upper shaft clears the steering clutch case and lift out the transmission as shown.

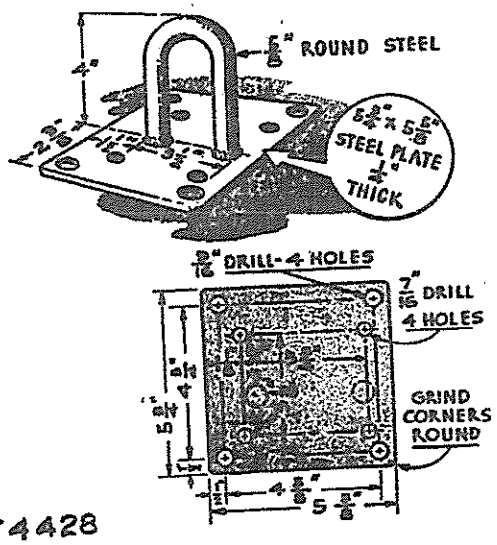

SKETCH OF TRANSMISSION LIFTING TOOL

◆

INSTALLING TRANSMISSION

After checking the pinion setting as described in the topic, BEVEL GEAR AND PINION SETTINGS, cement a new cork seal in the groove on the rear face of the transmission case.

Lower the transmission into place and install and tighten the nuts holding it to the steering clutch case.

Remove the cable by which the transmission was supported.

Install the support assembly **(1)** and tighten the capscrews **(2)** which hold it to the transmission case.

Use a thickness gauge as shown to determine the clearance between the support and the main frame.

Loosen the capscrews **(2)** and under each end of the support, install shims .010" thicker than the clearance determined by the thickness gauge.

Install the bolts holding the support to the frame and again tighten the capscrews **(2)**.

On certain intermediate tractors the support should not be installed until the clutch and clutch enclosure have been installed.

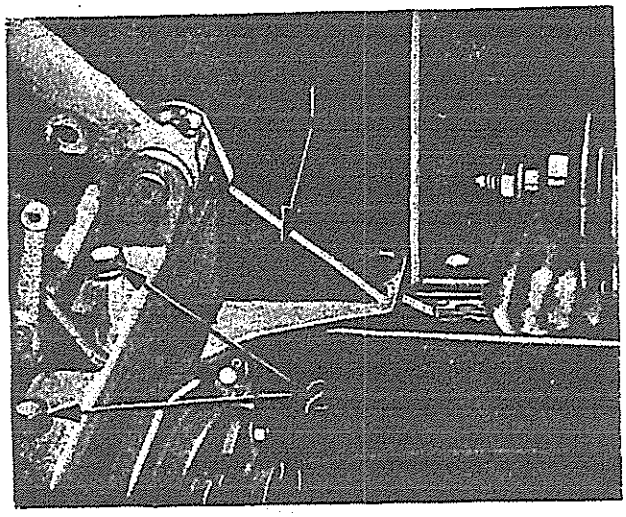

TRANSMISSION SUPPORT ASSEMBLY

1—Support assembly.
2—Capscrews.

◆

GEAR SHIFT INTERLOCK MECHANISM

The gearshift interlock mechanism attached to the left side of the transmission case holds the shifter forks and transmission gears in position when the flywheel clutch is engaged.

The mechanism consists of spring-loaded plungers which fit into notches on the shifter forks and an interlock shaft which is connected by a lever and rod to the flywheel clutch control lever. The interlock shaft acts as a cam to lock the plungers in the notches on the shifter forks when the flywheel clutch is engaged, thereby preventing the transmission gears from sliding out of position. When the clutch is disengaged, the interlock shaft is rotated, allowing the plungers to be forced out of the notches as the gears are shifted.

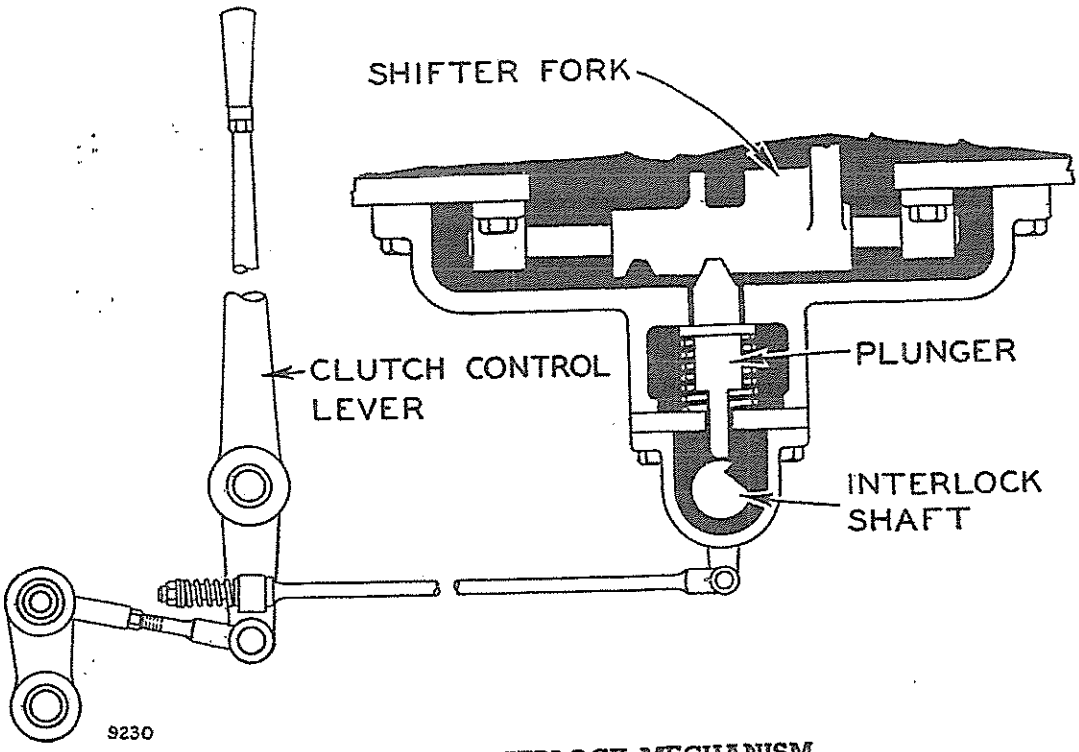

GEAR SHIFT INTERLOCK MECHANISM

Disassembly

Take out the capscrews which hold the housing **(5)** to the cover on the left side of the transmission case and remove the housing.

Remove the plate **(7)** and take out the plungers **(10)** and springs **(8)**.

The lever **(1)** can be removed from the interlock shaft **(3)** after removing the nut **(4)** and driving out the taper pin.

The interlock shaft can be removed from the housing after sliding out the plate **(6)**. However, the shaft should not be removed unless it is necessary to replace it or the seal under the lever at **(2)**.

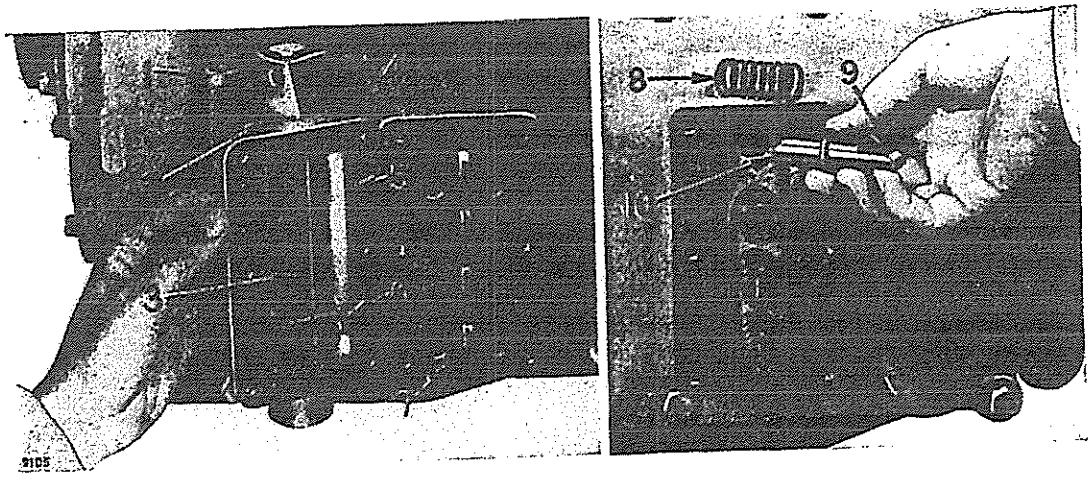

REMOVING INTERLOCK MECHANISM

1—Lever. 2—Location of seal. 3—Interlock shaft. 4—Nut. 5—Housing. 6—Plate. 7—Plate. 8—Spring. 9—Beveled end of plunger. 10—Plunger.

Assembly

Always install a new seal if the interlock shaft is removed.

To avoid damaging the seal, install the shaft in the housing; then place the seal over the end of the shaft with the wiping edge up and press the seal into the counterbore in the housing.

Place the lever on the shaft and install the taper pin.

When replacing the plungers, turn them so the beveled edge **(9)** on the outer end is toward the front of the transmission.

Adjustment

With the adjustable link **(2)** correctly adjusted, the interlock lever **(1)** will move approximately to the position shown in the illustration when the flywheel clutch is engaged.

When the clutch is released the lever will move back until it is approximately perpendicular to the rod.

If the adjustable link is too long, the interlock mechanism will not lock; if the link is too short,the interlock mechanism will not release.

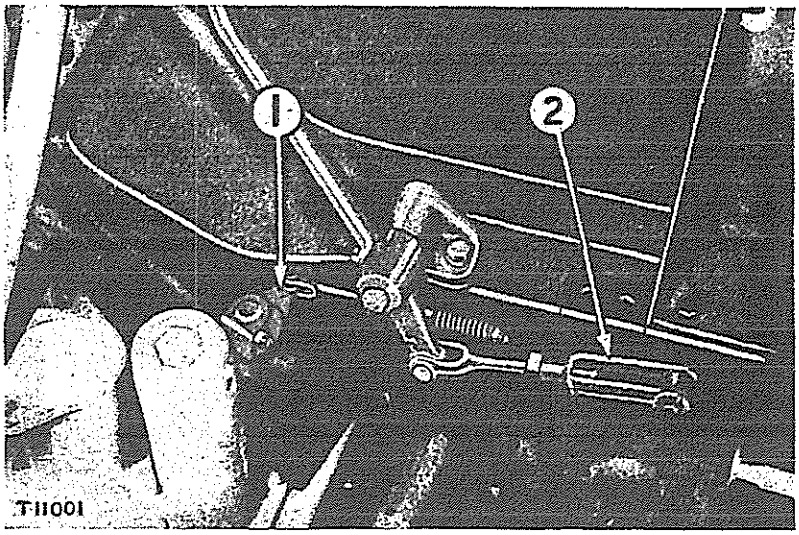

INTERLOCK ADJUSTMENT
1—Interlock lever. 2—Adjustable link.

GEAR SHIFT MECHANISM

By moving two gear shift control levers, various combinations of gears can be selected to give five forward and four reverse speeds. The forward or reverse direction is selected by the lever farthest to the operator's right, while the other gear shift control lever is used to select the desired speed.

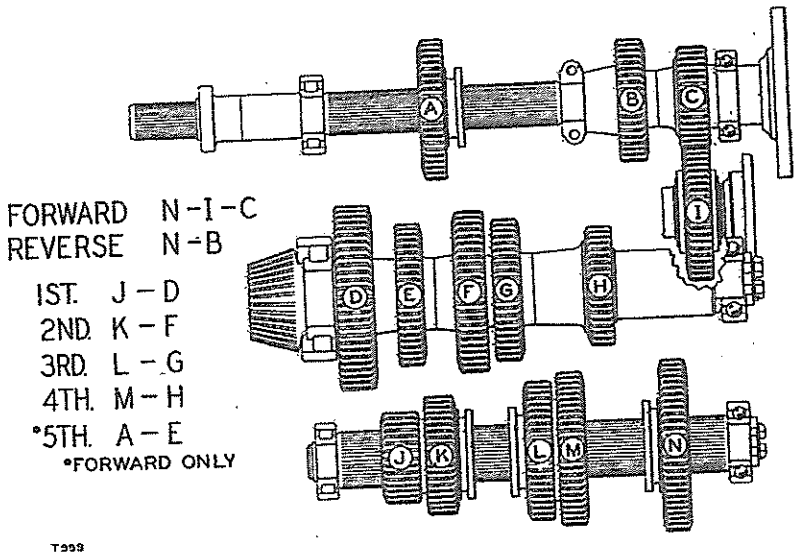

TRANSMISSION GEAR COMBINATIONS

The upper three forks **(5)**, **(2)** and **(6)** are controlled by the speed selector lever through the lever **(4)**. The lower fork **(3)** is controlled by the forward-reverse lever.

The lever **(4)** is moved crosswise to engage any one of the three forks and is then moved to the front or rear to shift the gear controlled by the fork.

The two-pronged lever **(1)** is pivoted on the lever **(4)**. Its purpose is to prevent any but the desired fork from being shifted when shifting gears rapidly.

The fork **(5)** is used for fifth speed, the fork **(2)** for third and fourth speeds and the fork **(6)** for first and second speeds. With the forks in the position shown in the illustration, the machine would be operating in fifth speed forward.

When the tractor is used in fifth gear, or for belt work, or other stationary work or idling with the flywheel clutch engaged, the forward and reverse gear shift lever should be kept in the forward position. This will keep the countershaft rotating and furnish lubricant to the upper transmission shaft bearings.

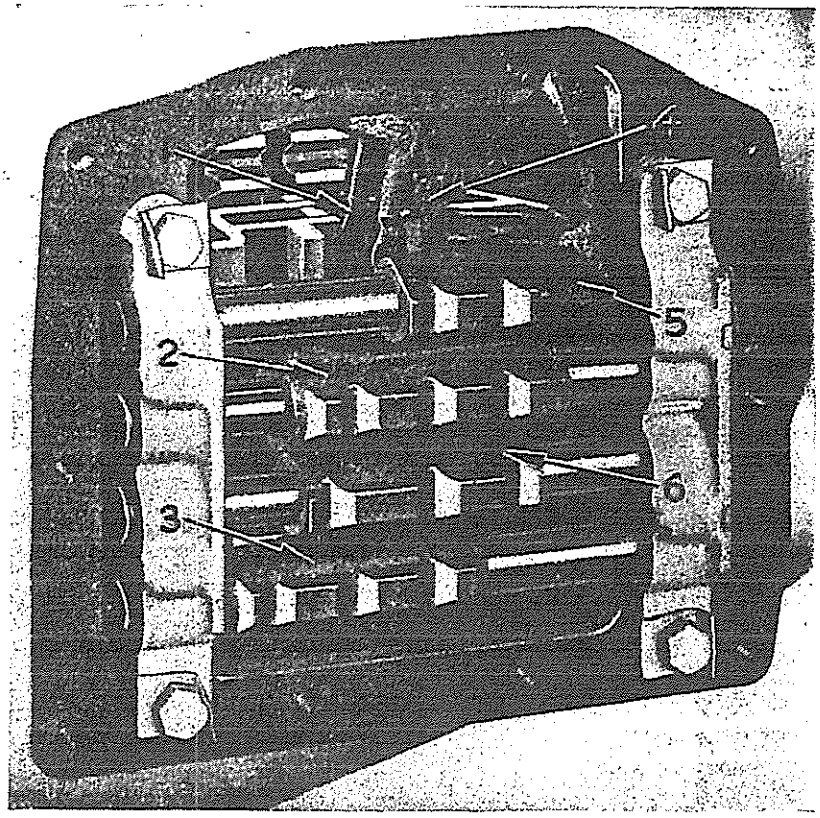

GEAR SHIFT LEVERS AND FORKS

1—Two-pronged lever. 2—3rd and 4th speed fork. 3—Lower or foward-reverse fork. 4—Lever. 5—5th speed fork. 6—1st and 2nd speed fork.

Disassembly of Shifter Forks

Take out the capscrews and remove the large cover from the left side of the transmission case.

Unlock and remove the capscrews which hold the brackets **(11)** in place.

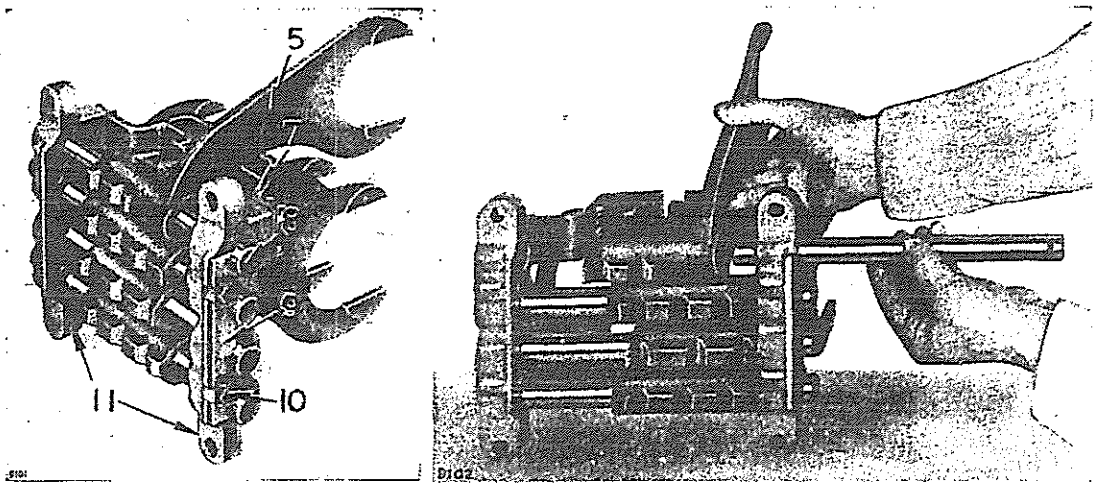

SHIFTER FORKS AND SHAFT

5—Fork. 7—Dividing bar assembly. 8—Shaft. 9—Locking bar. 10—Capscrew. 11—Brackets.

The complete shifter fork group can then be removed from the transmission case.

Take out the capscrews **(10)** and remove the locking bar **(9)**.

Slide out the shaft **(8)** and remove the forks as shown. Each of the forks may be removed in this manner.

The dividing bar assembly **(7)** can be removed after taking out the capscrews holding it to the brackets.

Assembly of Shifter Forks

When assembling the shifter fork group, install the forks, shafts and locking bar **(9)** before tightening the capscrews in the dividing bar **(7)**.

Move the transmission gears into the position shown in the illustration and make sure the forks engage the proper gears when the group is installed.

Also see that the shifter levers enter the slots in the shifter forks.

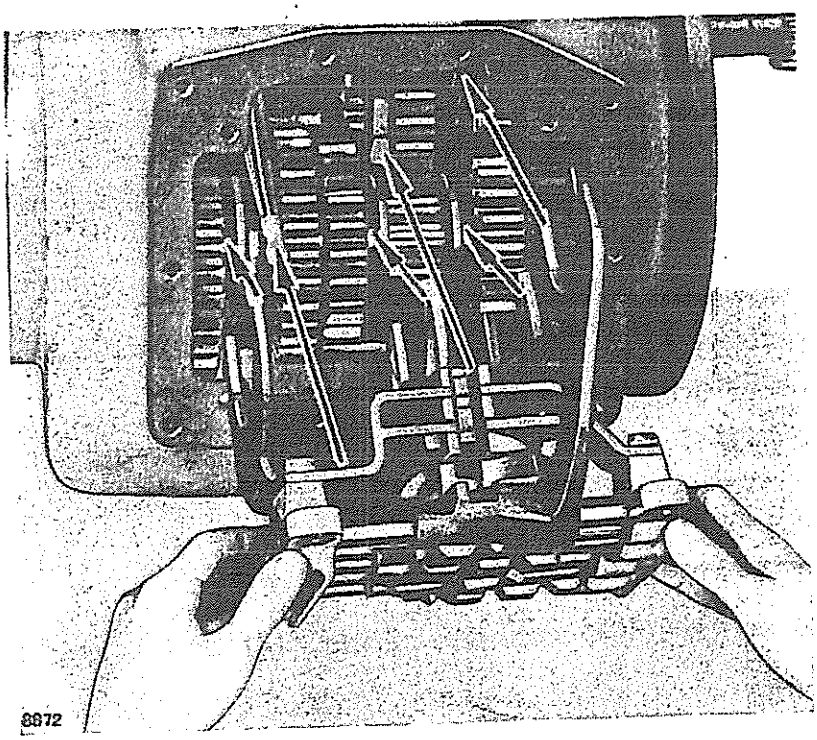

INSTALLING SHIFTER FORKS

Speed Selector Lever Mechanism Removal

The speed selector lever and shaft may be removed from the transmission case without removing the gears. However, for the purpose of illustration, all of the gears have been removed.

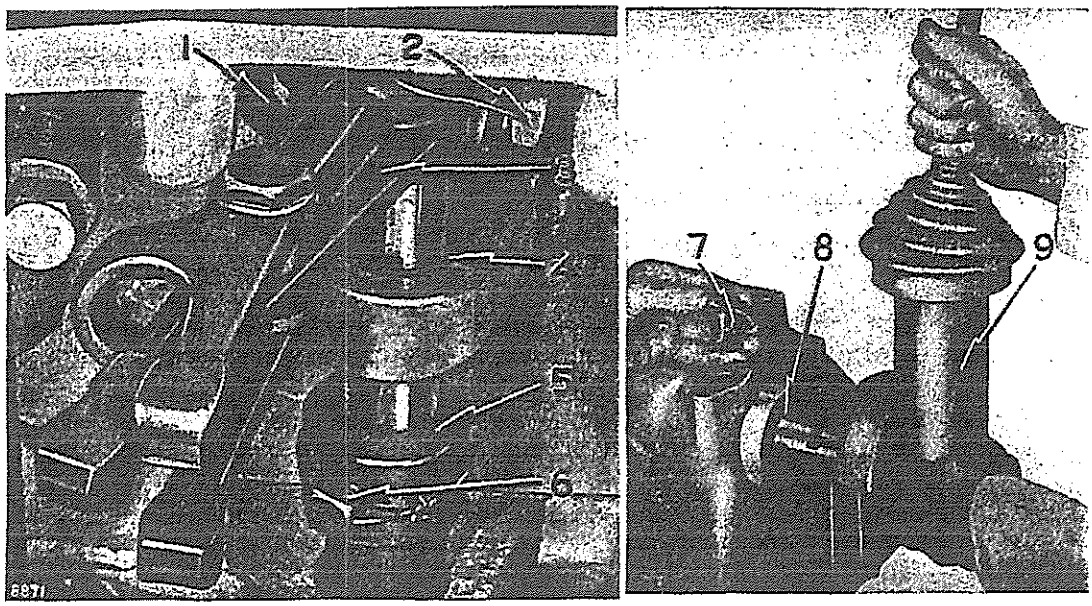

REMOVING SPEED SELECTOR LEVER MECHANISM
1—Clamping capscrew. 2—Setscrew. 3—Lever. 4—Needle bearing. 5—Collar. 6—Setscrew. 7—Retainer. 8—Seal. 9—Housing.

Remove the forks as previously described.

Remove the setscrew **(6)** from the collar **(5)** and loosen the setscrew **(2)**.

Loosen the clamping capscrew **(1)** and remove the lever **(3)** from the shaft.

The needle bearing **(4)** can be pressed out and replaced if necessary after the shaft is withdrawn from the case.

Take out the capscrews and remove the retainer **(7)**.

The speed selector lever, housing **(9)** and shaft can then be removed as a unit from the transmission case.

If the seal **(8)** is worn or damaged, it should be replaced. The wiping edge of the seal should be toward the inside of the case.

Speed Selector Lever Mechanism Disassembly

Slide the spacer **(16)**, washers, spring **(14)** and spacer **(15)** off the shaft.

Unscrew the knob **(10)**, loosen the bolt through the clamp on the boot **(11)**, and remove the boot from the lever.

Remove the cotter pin and take off the cover **(12)**, spring and cover **(13)**.

Remove the packing ring **(18)**, ring **(19)** and snap ring **(20)**.

The upper half of the socket **(21)** and lever **(24)** can then be removed from the housing.

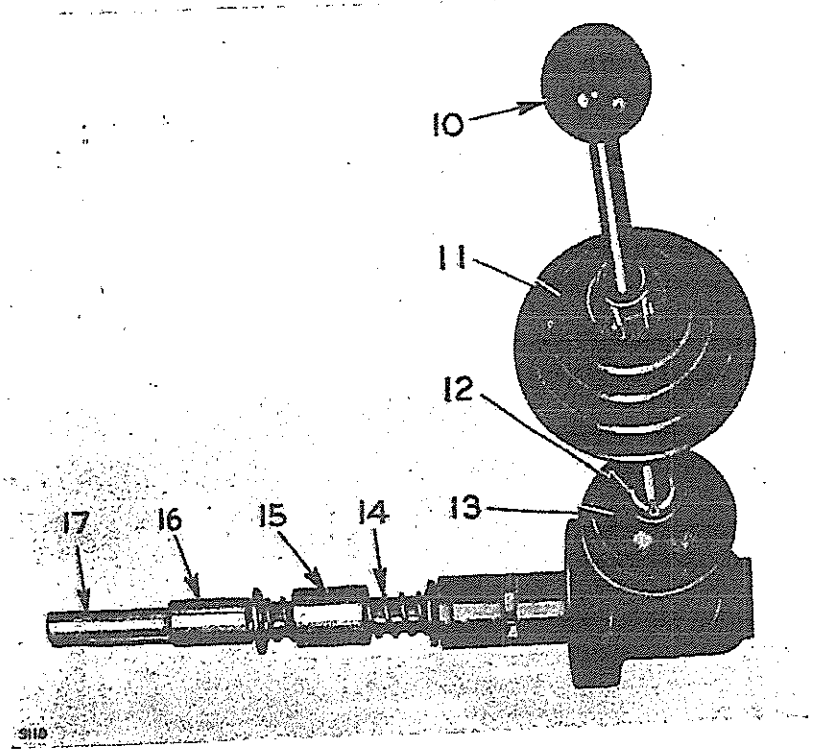

SPEED SELECTOR LEVER AND SHAFT

10—Knob. 11—Boot. 12—Cover. 13—Cover. 14—Spring. 15—Spacer. 16—Spacer. 17—Shaft.

The pin **(22)** can then be removed from the lever.

Remove the key **(25)** if it is desired to remove the lower half of the socket **(23)**.

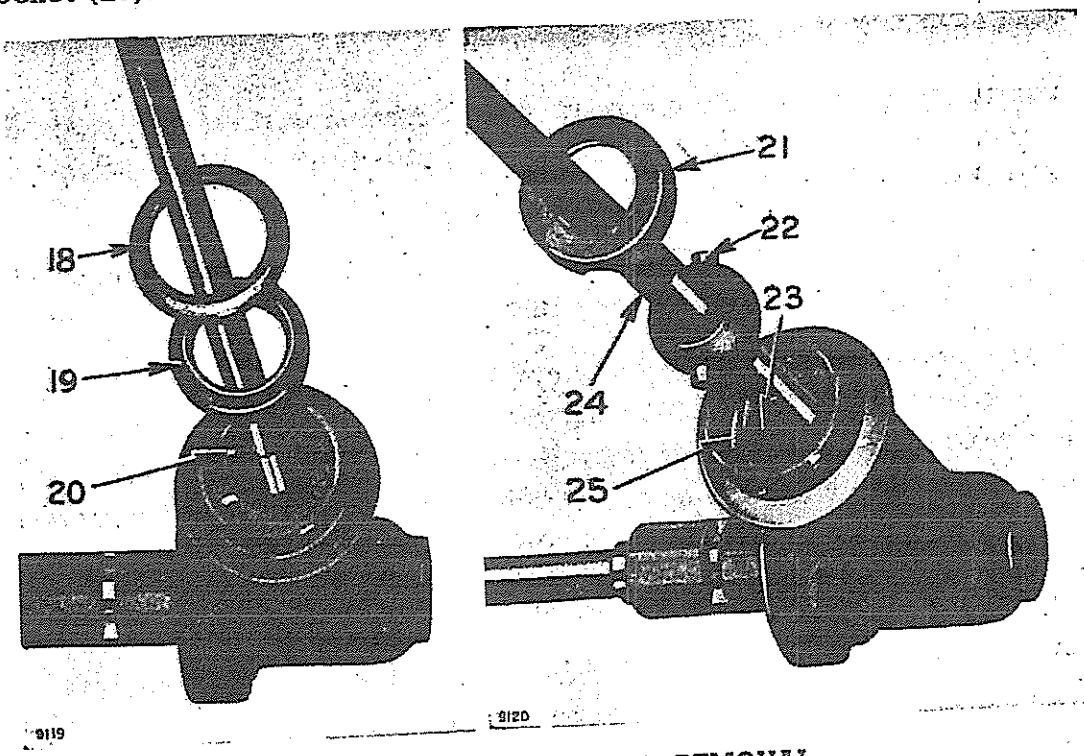

SPEED SELECTOR LEVER REMOVAL

18—Packing ring. 19—Ring. 20—Snap ring. 21—Upper half of socket. 22—Pin. 23—Lower half of socket. 24—Lever. 25—Key.

The shaft (17) can be removed from the housing (9) after the lever (24) is removed.

Speed Selector Lever Mechanism Assembly and Installation

Assemble the shaft in the housing as shown so that the hole (27) is vertical to receive the end of the speed selector lever and the flat (26) at the other end of the shaft is toward the rear of the transmission.

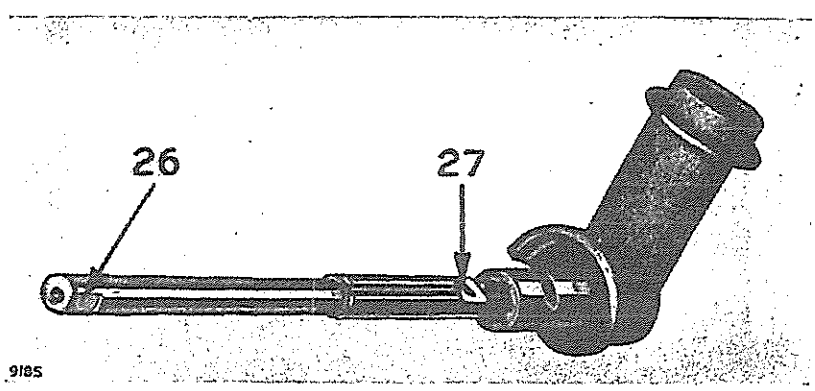

INSTALLING SPEED SELECTOR LEVER SHAFT
26—Flat on end of shaft. 27—Hole.

Reassemble the spring, spacers and washers on the shaft.

Install the selector lever, socket, rings and covers in the housing in the reverse order of disassembly.

Install the complete assembly in the transmission case and place the collar (5) on the shaft before the end of the shaft passes through the needle bearing (4).

Make sure the setscrew (6) enters the hole in the shaft so that the collar will be located correctly. Install the retainer (7).

Place the key in the end of the shaft and install the lever (3). The lever must be located on the shaft so that the face of the lever is 2 7/32" from the machined face of the transmission case. The measurement should be made as shown while the speed selector lever is in the neutral position with no pressure exerted to the right or left.

Tighten the setscrew (2) as soon as the lever is located correctly.

Recheck the measurement and tighten the clamping capscrew (1).

Check that the wires used to lock the setscrews do not get pinched between a moving and stationary part when the speed selector lever is shifted from one extreme to the other.

LOCATING SHIFTER LEVER

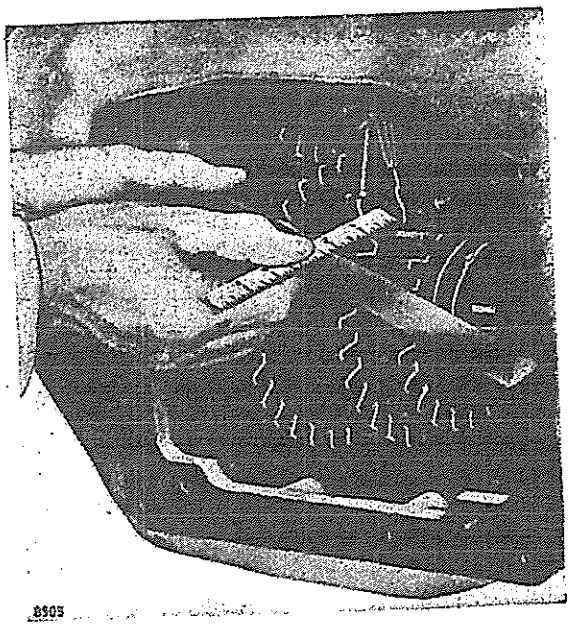

Forward-Reverse Lever

Loosen the clamping capscrew and remove the lever **(28)** from the end of the shaft.

Remove the key and withdraw the shaft **(31)** as shown. The needle bearing in the boss at **(29)** can be pressed out and replaced if necessary after removing the shaft.

The seal **(30)** should be replaced with the wiping edge toward the outside of the case if it is worn or damaged.

The bushing can be pressed out and replaced after removing the seal.

When reinstalling the lever **(28)** locate it so the shaft has .005" to .015" end movement and tighten the clamping capscrew.

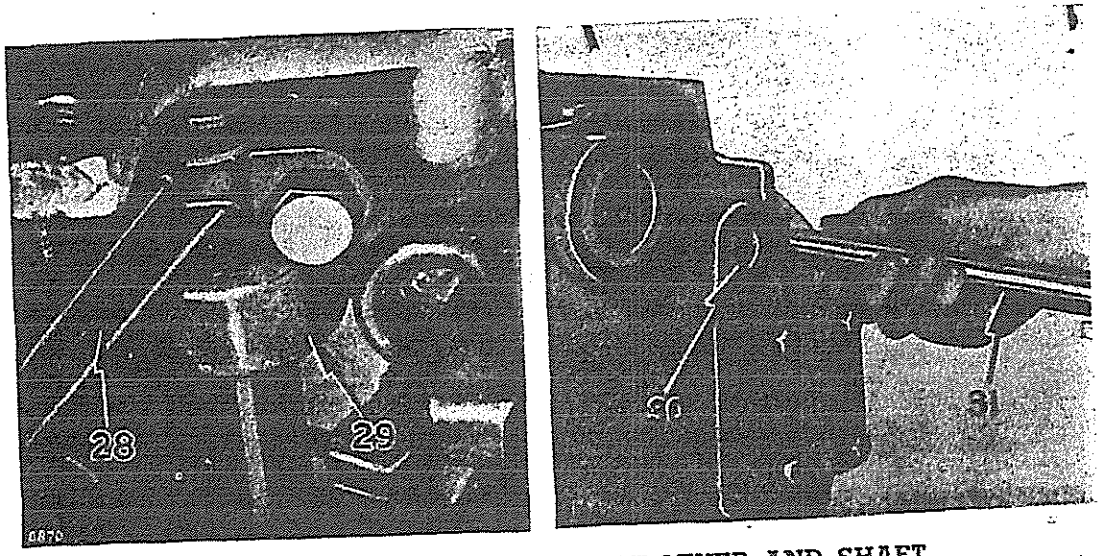

INSTALLING FORWARD-REVERSE LEVER AND SHAFT
28—Lever. 29—Location of needle bearing in boss. 30—Seal. 31—Shaft.

TRANSMISSION GEARS AND SHAFTS

The transmission gears and shafts are all splined to provide a sliding fit. The front bearings are contained in cages and the rear bearing outer races are pressed into the transmission case and secured with dowels.

If the transmission is to be completely disassembled, it is recommended that the gears and shafts be removed in the order described in the following topic.

Remove the transmission case as previously described in the topic, TRANSMISSION REMOVAL.

Remove the cover from the left side of the case and take out the shifter fork group as described in the topic, SHIFTER FORK.

Countershaft Removal and Disassembly

Remove the capscrews securing the cover and cage of the upper shaft through the hole **(2)**.

Pull the upper shaft assembly **(1)** forward so the covers on the pinion shaft and countershaft can be removed.

Take out the capscrews that secure the cover and bearing cage to the case and remove the cover.

Pull the countershaft and bearing cage forward with two 3/8"-16 (NC) capscrews **(3)** using the tapped holes in the flange.

Remove the capscrews and retainer washer from the front of the shaft.

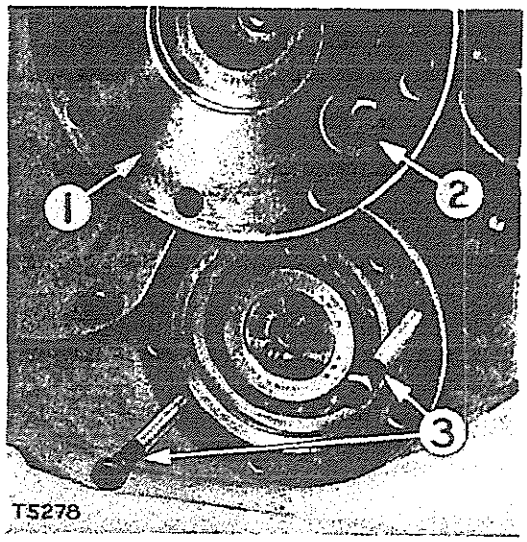

PULLING FRONT BEARING CAGE AND COUNTERSHAFT FORWARD
1—Upper shaft assembly. 2—Hole. 3—Puller screws.

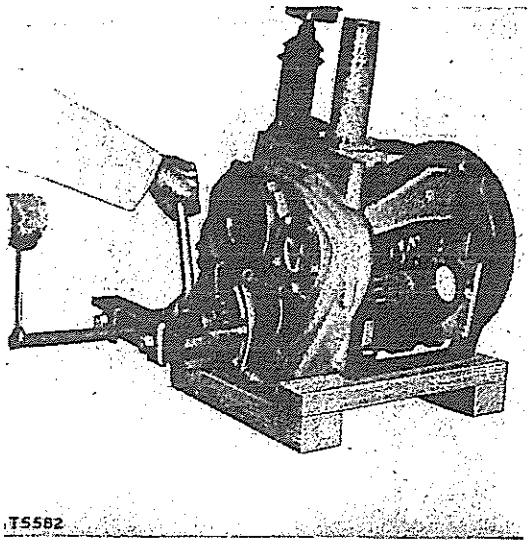

REMOVING COUNTERSHAFT FRONT BEARING

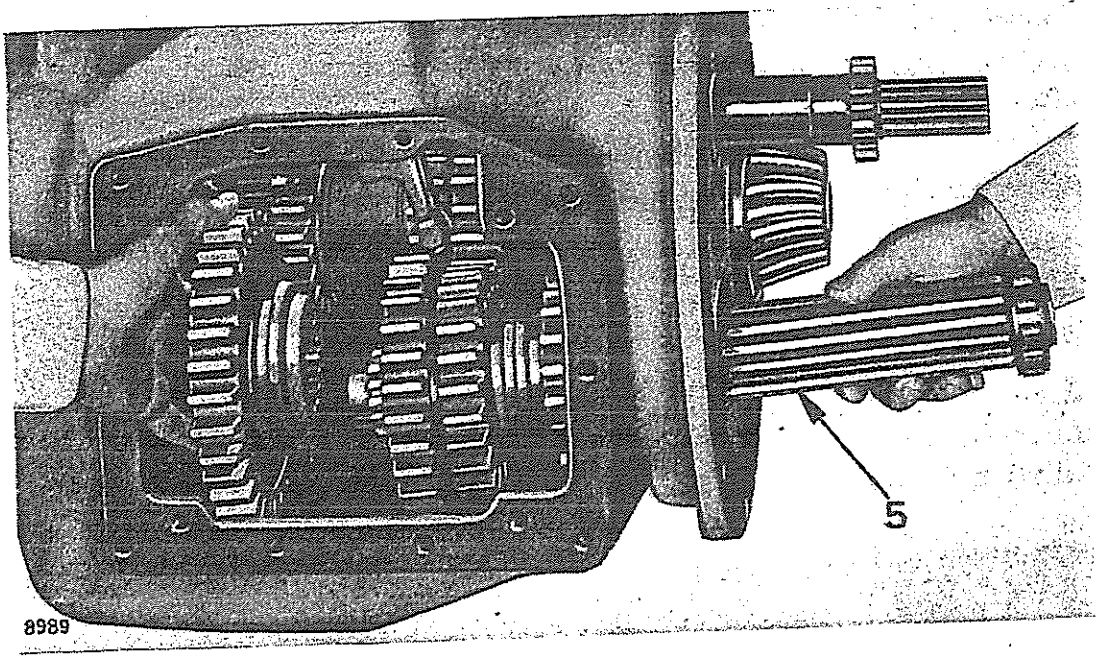

REMOVING COUNTERSHAFT AND GEARS
5—Countershaft.

Place a block of wood under the countershaft to prevent damaging the gears and shaft while pulling the front bearing, slide the bearing cage back on the shaft and pull the bearing using the 8B7548 Puller and the 8B7551 Bearing Pulling Attachment.

After the front bearing has been removed, slide the bearing cage from the shaft and slide the countershaft **(5)** through the rear bearing bore and lift out the gears as shown.

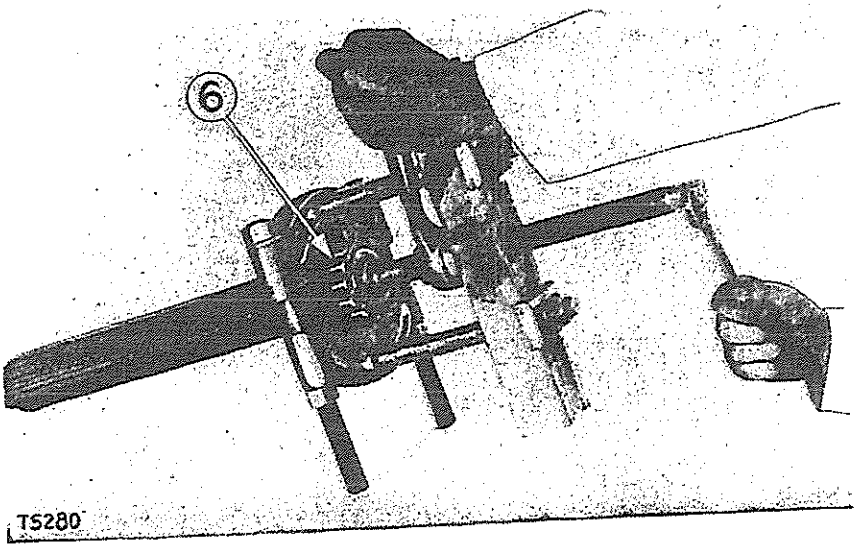

REMOVING COUNTERSHAFT REAR BEARINGS
6—Bearing.

Remove the snap ring and pull the rear bearing **(6)** from the countershaft, using the 8B7551 Bearing Pulling Attachment and the 8B7548 Puller as shown.

Pinion Shaft Removal and Disassembly

Remove the cover over the front end of the pinion shaft and pull the bearing and bearing cage using the 8B7548 Puller and two 8B7557 Adapters.

The shims between the bearing cage and the case should be kept with the cage. These shims are used to adjust the location of the bevel pinion relative to the bevel gear.

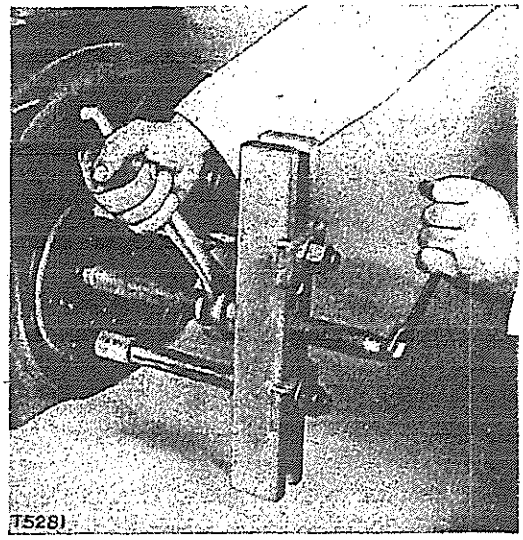

REMOVING BEARING AND CAGE

◆

Slide the pinion shaft out through the rear bearing bore and lift out the gears through the opening in the side of the case.

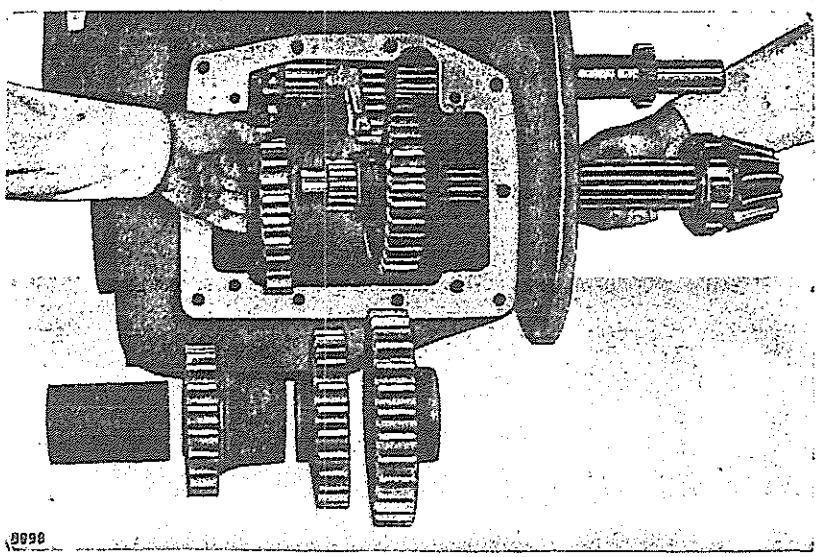

REMOVING PINION SHAFT AND GEARS

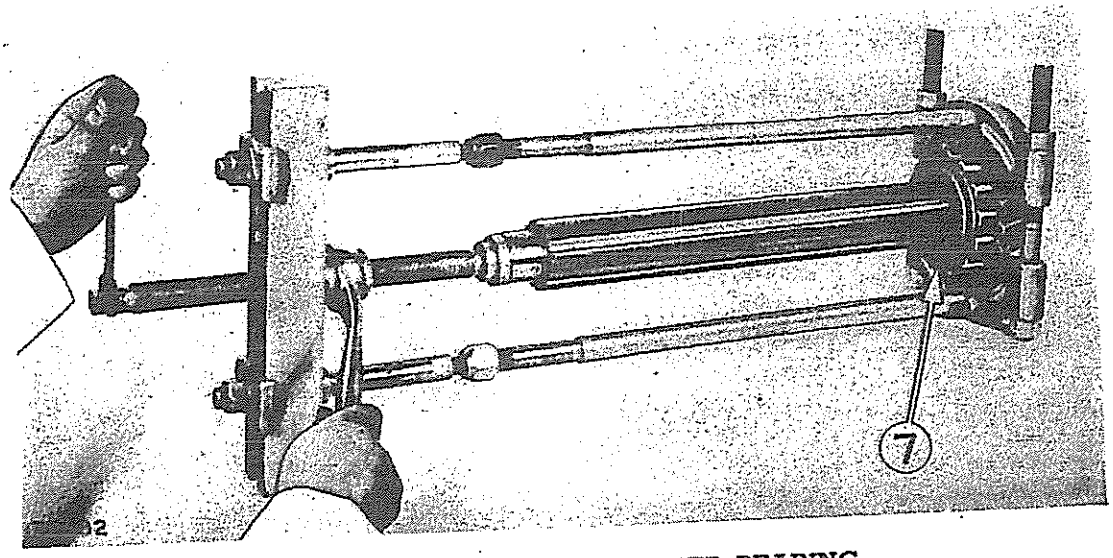

PULLING PINION SHAFT ROLLER BEARING
7—Rear bearing.

Pull the rear bearing **(7)** from the pinion shaft using the following tools: 8B7548 Push Puller, 8B7551 Bearing Pulling Attachment, 8B7549 Legs, 8B7550 Legs and 8B7555 Adapters.

Idler Gear Group Removal and Disassembly

The idler gear is mounted on a stub shaft (trunnion) which is integral with a flange attached to the outside of the transmission case.

Effective with serial numbers 4R1750 and 5R2073, the transmission idler gear bearings were changed to two taper roller bearings rather than the former straight roller bearings.

From the inside of the case, remove the two capscrews and retainer washer from the end of the stub shaft.

Take off the nuts which hold the flange **(8)** to the outside of the case.

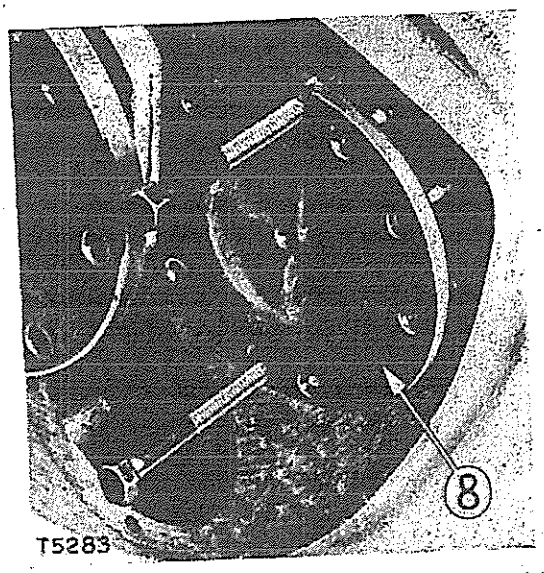

PULLING IDLER GEAR FLANGE
(LATER TRACTORS)

8—Flange.

◆

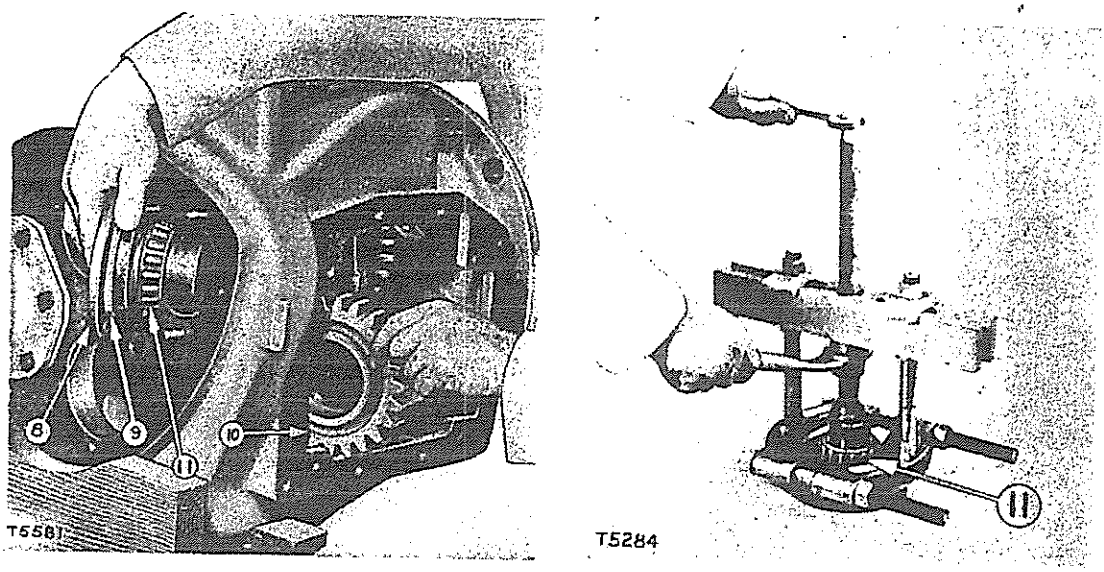

REMOVING IDLER GEAR AND BUSHINGS (LATER TRACTORS)
8—Flange. 9—Cork seal. 10—Gear. 11—Bearing.

Pull the flange **(8)** using two 3/8"-16 (NC) capscrews as shown. As the flange is pulled, support the gear **(10)** and bearing to prevent their dropping down into the transmission case.

Remove the cork seal **(9)**.

Pull the bearing **(11)** using the 8B7548 Push Puller and the 8B7551 Bearing Pulling Attachment.

On earlier tractors, remove the two capscrews, oil catcher, and retainer washer from the inside of the case.

Remove the nuts from the flange **(8)**.

The trunnion and idler gear **(10)** can be removed as shown.

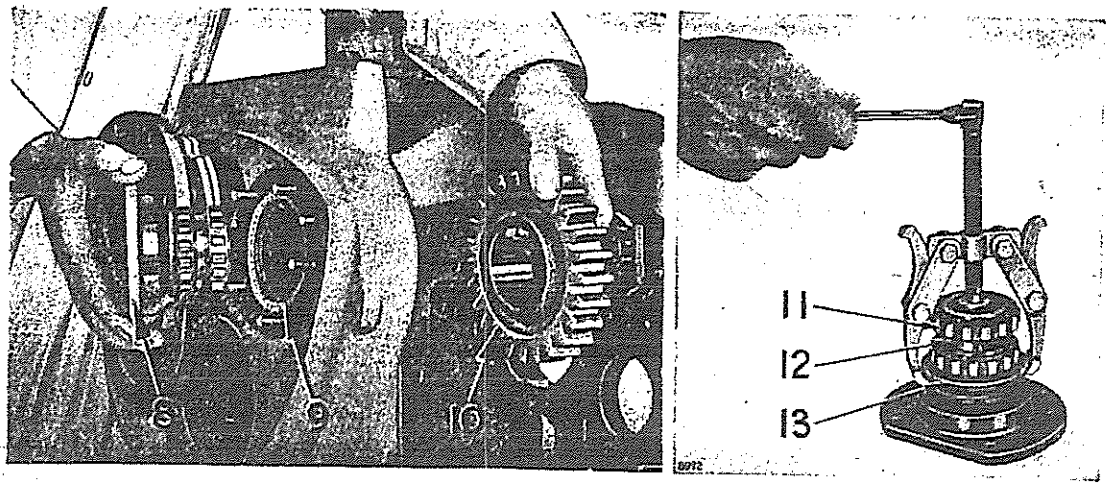

IDLER GEAR AND BEARINGS (EARLIER TRACTORS)
8—Flange. 9—Cork seal. 10—Idler gear. 11—Bearing. 12—Spacer. 13—Washer.

Remove the cork seal **(9)**.

Pull bearings **(11)**, spacer **(12)** and washer **(13)** with the 8B7547 Puller as shown.

Effective with serials 8U3564 and 9U5816, idler gear **(10)** has bearing cups which can be removed.

Upper Shaft Group Removal and Disassembly

Remove the snap ring **(16)** and slide the pinion **(15)** and spacer **(14)** off the upper shaft.

Reach inside the case and remove the collar just back of the gears nearest the front end of the shaft. The collar is in two pieces and can be removed by taking the nuts off the bolts which hold the two halves together.

Pull the shaft forward about six inches and wrap a cloth around the shaft to protect the rear bearing outer race.

Drive the rear bearing **(17)** off the shoulder by sliding the gear against it as shown.

Slide out the shaft through the front bearing cage bore, taking the bearing and gears out the side of the case as the shaft is withdrawn.

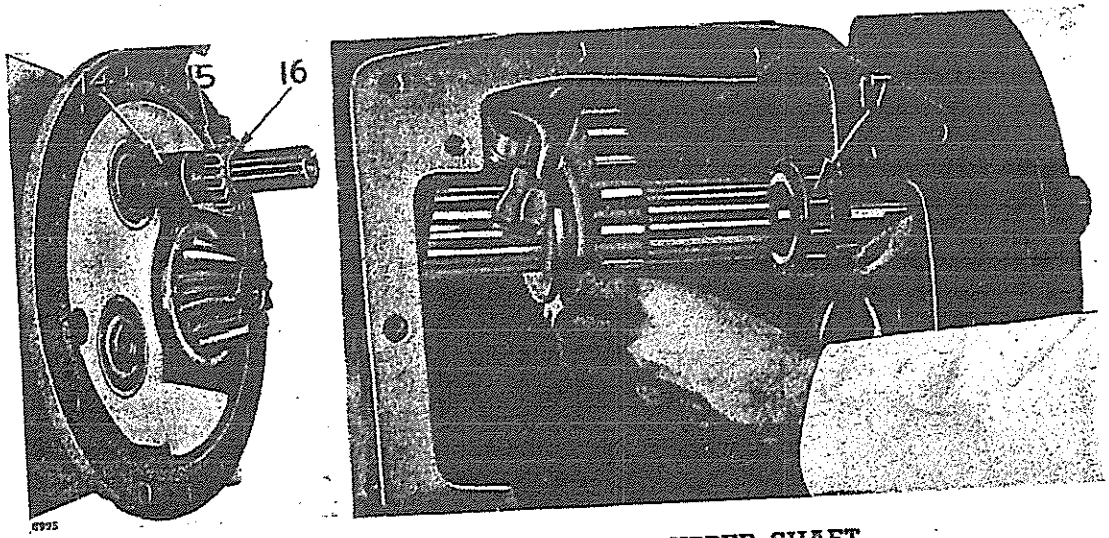

REMOVING TRANSMISSION UPPER SHAFT
14—Spacer. 15—Pinion. 16—Snap ring. 17—Rear bearing.

Pull the bearing **(18)**, cover and cage **(19)** as a unit using the 8B7548 Puller, 8B7549 Legs, 8B7551 Bearing Pulling Attachment and two 8B7555 Adapters.

Install the 8B7551 Bearing Pulling Attachment, behind the cover.

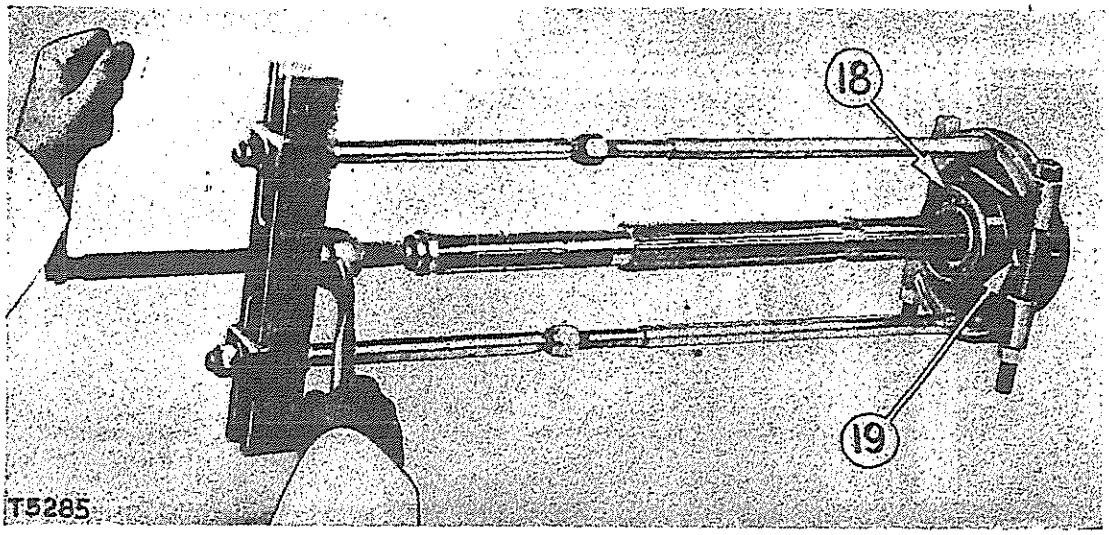

PULLING UPPER SHAFT FRONT BEARING
(LATER TRACTOR ILLUSTRATED)
18—Bearing. 19—Cage.

Press the bearing out of the cage and the seal out of the cover.

Removing Roller Bearing Races

The roller bearing outer races are doweled in position to prevent them from turning in, or slipping out of, the bores.

The dowels must be removed before the races can be pulled out of the transmission case.

The dowels **(20)** are located in the flange at the rear of the case adjacent to each bearing race.

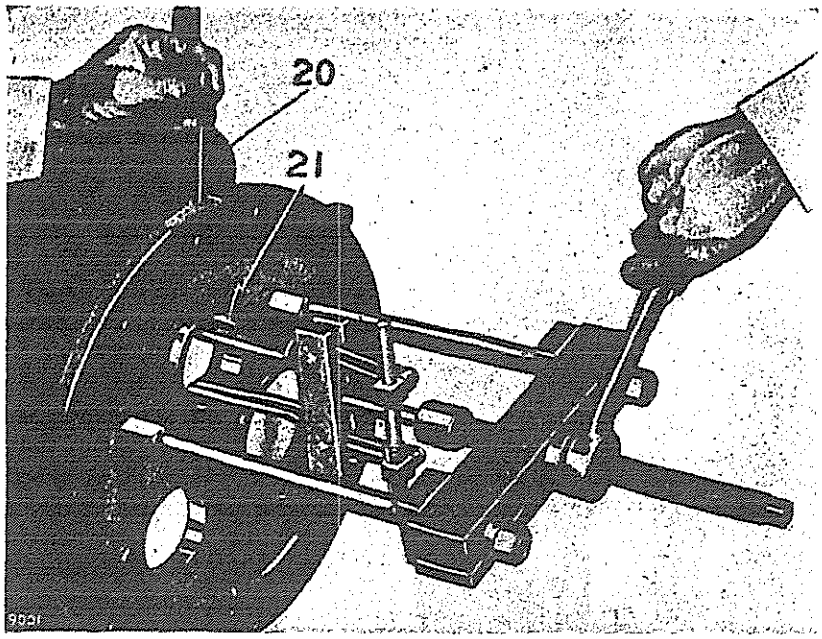

PULLING ROLLER BEARING OUTER RACE
20—Dowel. 21—Bearing race.

To remove a dowel, remove the plug and insert a 1/4"-20 (NC) screw in the tapped hole in the end of the pin. The dowel can then be lifted out.

Pull the bearing race using the 8B7548 Push Puller, 8B7553 Adapter, and 8B7554 Puller. All three bearing races can be pulled in the same manner.

Installation of Roller Bearing Races

Drive each bearing race into its respective bore in the rear of the transmission case, using a soft hammer.

Be sure the dowel holes in the case and the bearing race are lined up when starting the race into the bore.

CAUTION

Later tractors have the dowel hole in the pinion shaft rear bearing outer race drilled off center. The shorter dimension from the dowel hole to the side of the race should be installed to the rear or outside of the case.

Drive the race in until the dowel drops into the dowel hole in the race. Install the plug in the bore at the end of the dowel.

The outer races should be aligned. To check this alignment, lay a two foot straight edge on the race and using thickness gauges, carefully measure the distance between the straight edge and the machined face of the case. Turn the straight edge 90° and again measure the distance between straight edge and the machined face of the case. The four measurements should be within .002". If the measurements are not within these values, realign the race with a soft hammer. Press the bearing races into the cages.

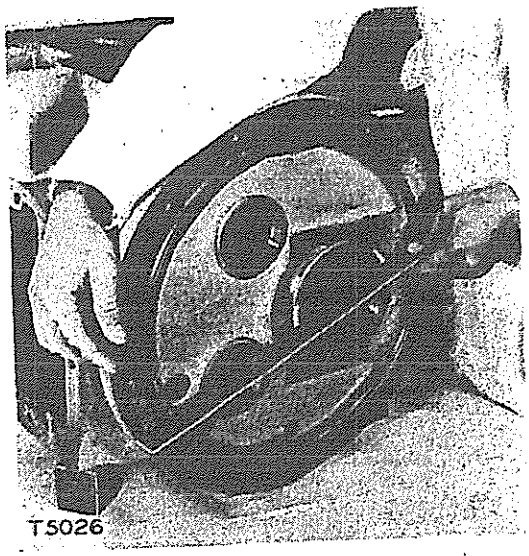

ALIGNING BEARING OUTER RACE

◆

Upper Shaft Group Installation and Assembly (Later Tractors)

Install the seal (6) in the cover **(2)** with the wiping edge away from the flanged end of the shaft. Press the seal in until it is 7/16" from the rear face of the cover.

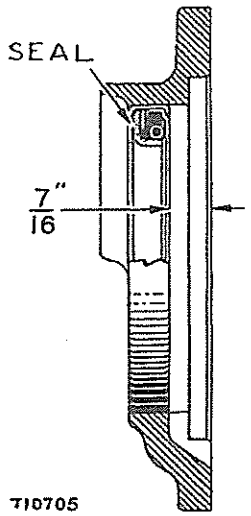

SEAL INSTALLATION (LATER TRACTORS)

Install the capscrews and lockwashers in the flange of the cover **(2)** and place the cover on the shaft.

Press the bearing **(7)** into the cage **(3)**.

Install the bearing and cage on the shaft.

Rotate the cage so that the flat on the flange lines up with the flat on the cover.

Press on the cage to force the bearing onto the shoulder of the shaft, making sure the capscrews through the cover enter the holes in the flange of the bearing cage.

Start the shaft through the bearing cage bore in the front of the transmission case and install gears **(8)**, **(9)** and **(11)** over the end of the shaft. Gear **(11)** which is used in the standard transmission has 24 teeth and a normal backlash of .012". A gear similar to gear **(11)** is used in the optional transmission and has 23 teeth. This gear will have a backlash of .060" if used in error in a standard transmission.

The gears are shown in their proper relative positions in the illustration.

Heat the bearing **(12)** and slide it onto the shoulder of the shaft until it contacts the end of the splines.

Guide the shaft through the rear bearing race and install the spacer **(13)**, pinion **(14)** and snap ring **(15)**.

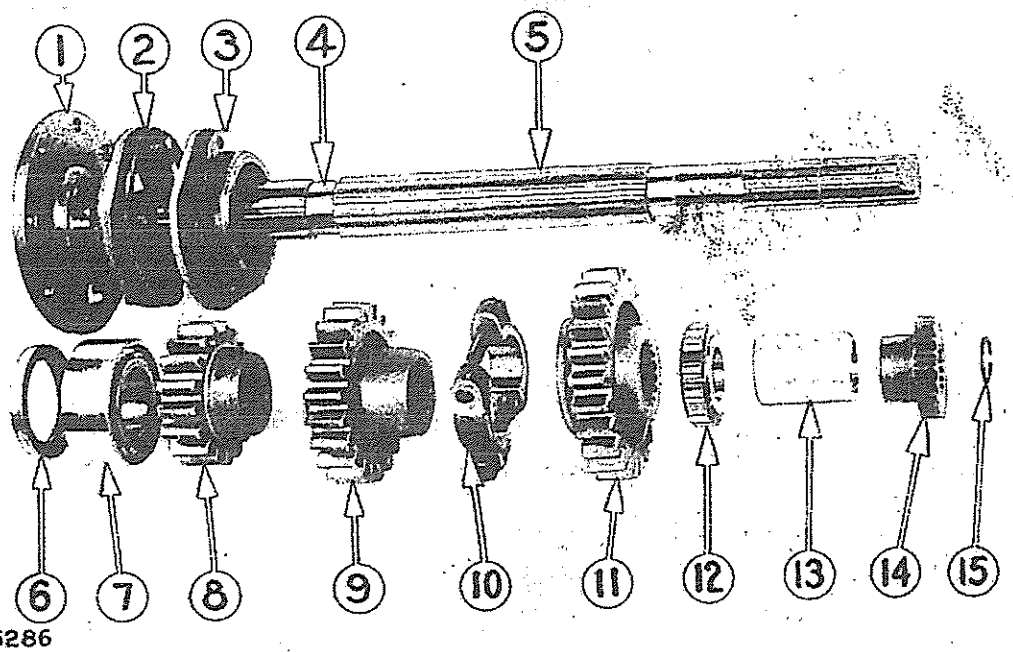

T5286

TRANSMISSION UPPER SHAFT ASSEMBLY (LATER TRACTORS)
1—Flanged end of shaft. 2—Cover. 3—Cage. 4—Location for collar on shaft. 5—Shaft. 6—Seal. 7—Bearing. 8—Gear. 9—Gear. 10—Collar. 11—Gear. 12—Bearing. 13—Spacer. 14—Pinion. 15—Snap ring.

Do not tighten the capscrews through the cover **(2)** until the pinion shaft and countershaft have been installed.

Slide the gears **(8)** and **(9)** forward and install the collar **(10)** on the shaft at **(4)**.

Install the bolts through the two halves of the collar and tighten and lock the nuts.

Upper Shaft Group Installation and Assembly (Earlier Tractors)

Install the ring **(6)** on the shaft **(5)** with the chamfered edge toward the flange and press it tight against the flange. Install the seal **(7)** in the cover **(2)** with the wiping edge away from the flanged end of the shaft. Press the seal in from the rear until it is 1/4" from the end of the bore as shown. This will allow clearance for the ring **(6)** which turns with the shaft. On earlier tractors that have the ring **(6)** and a double row ball bearing in place of the single row ball bearing **(8)**, install the seal **(7)** in the same manner.

Install capscrews and lockwashers in the flange of the cover **(2)** and place the cover on the shaft. Press the bearing **(8)** into the cage **(3)** and install the bearing and cage on the shaft. Rotate the cage so that the flat on the flange lines up with the flat on the cover.

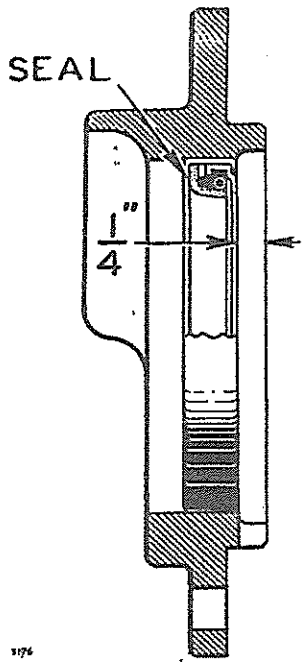

SEAL INSTALLATION
(EARLIER TRACTORS)

Press on the cage to force the bearing onto the shoulder of the shaft, making sure the capscrews through the cover enter the holes in the flange of the bearing cage.

Start the shaft through the bearing cage bore in the front of the transmission case and install the gears **(9)**, **(10)** and **(12)** over the end of the shaft. The gears are shown in their proper relative positions in the illustration. Heat the bearing **(13)** and slide it onto the shoulders of the

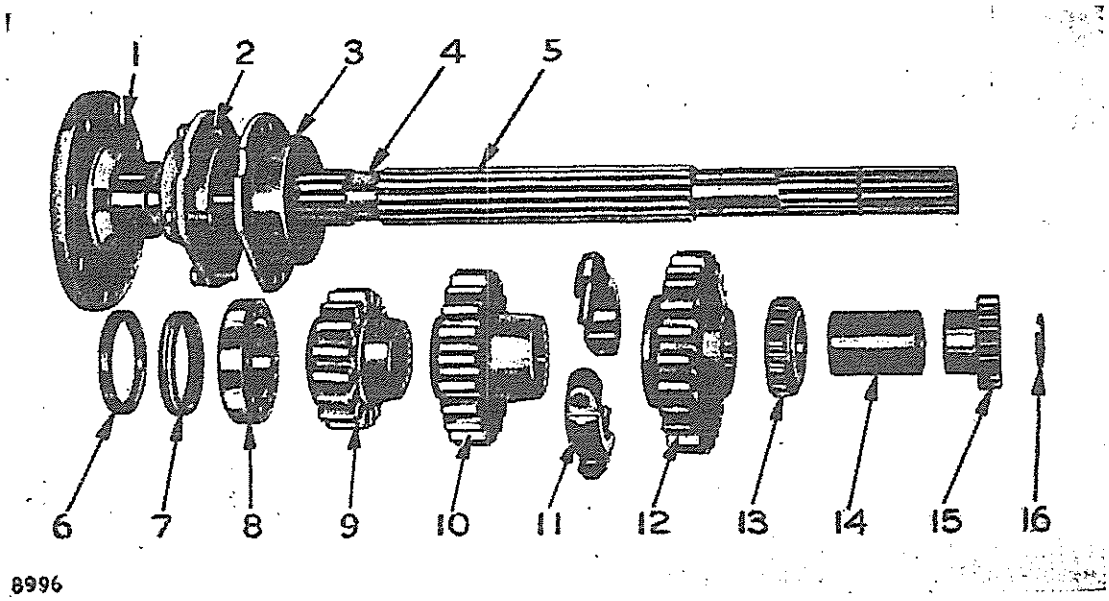

TRANSMISSION UPPER SHAFT ASSEMBLY (EARLIER TRACTORS)

1—Flanged end of shaft. 2—Cover. 3—Cage. 4—Location for collar on shaft. 5—Shaft. 6—Ring. 7—Seal. 8—Bearing. 9—Gear. 10—Gear. 11—Collar. 12—Gear. 13—Bearing. 14—Spacer. 15—Pinion. 16—Snap ring.

shaft until it contacts the ends of the splines. Guide the shaft through the rear bearing race and install the spacer **(14)**, pinion **(15)** and snap ring **(16)**.

Do not tighten the capscrews through the cover **(2)** until the pinion and countershafts have been installed. Slide the gears **(9)** and **(10)** forward and install the collar **(11)** on the shaft at **(4)**. Install the bolts through the two halves of the collar and tighten and lock the nuts.

Idler Gear Group Installation and Assembly (Later Tractors)

Press the bearing **(6)** on the trunnion **(8)** and place a new cork seal **(7)** in the counterbore of the case before installing the trunnion in the transmission case.

Install the gear **(5)** in position (rounded ends of the teeth toward the rear of the case). Heat bearing **(4)** and drive it on. It can also be pulled on using long capscrews and washer **(2)**.

Install enough shims **(3)** between the end of the trunnion shaft and the washer to eliminate all end play when the capscrews **(1)** are installed and tightened.

Remove a .002" shim, which will give a preload of .002" on the bearings when the washer is installed and the capscrews tightened.

This will place the proper preload on the bearings.

Install and tighten the capscrews **(1)** and bend the lock.

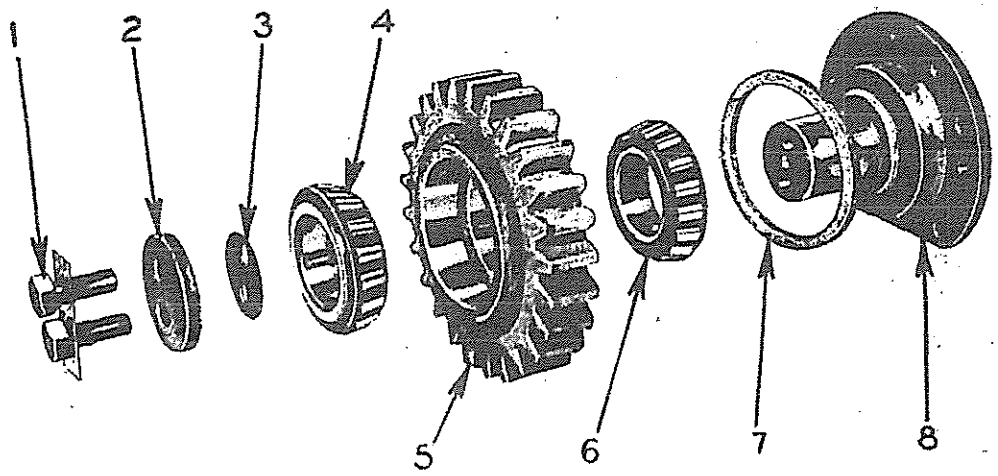

7851

IDLER GEAR GROUP (LATER TRACTORS)
1—Capscrew. 2—Washer. 3—Shims. 4—Bearing. 5—Gear. 6—Bearing. 7—Seal. 8—Trunnion.

Effective with 8U3564 and 9U5816, gear **(5)** has replaceable bearing cups for bearings **(4)** and **(6)**. Press these cups in against retainer rings in gear **(5)** with 5 to 10 tons pressure.

These bearings are splash-lubricated.

Idler Gear Group Installation and Assembly (Earlier Tractors)

Install the washer **(6)** on the trunnion **(1)**.

Heat the bearings **(2)** and **(8)** and press them on the trunnion with the spacer **(7)** between them.

Place a new cork seal in the counterbore in the front of the transmission case.

Hold the idler gear **(3)** in position (with the rounded ends of the teeth toward the rear of the case) inside the transmission case and install the trunnion **(1)**.

Install and tighten the nuts holding the trunnion to the case.

Install the retainer washer **(9)**, oil catcher **(5)**, lock and capscrews **(10)**.

Be sure the retainer washer is installed with the oil hole **(4)** above center so that the oil from the catcher **(5)** can flow into the idler gear bearings.

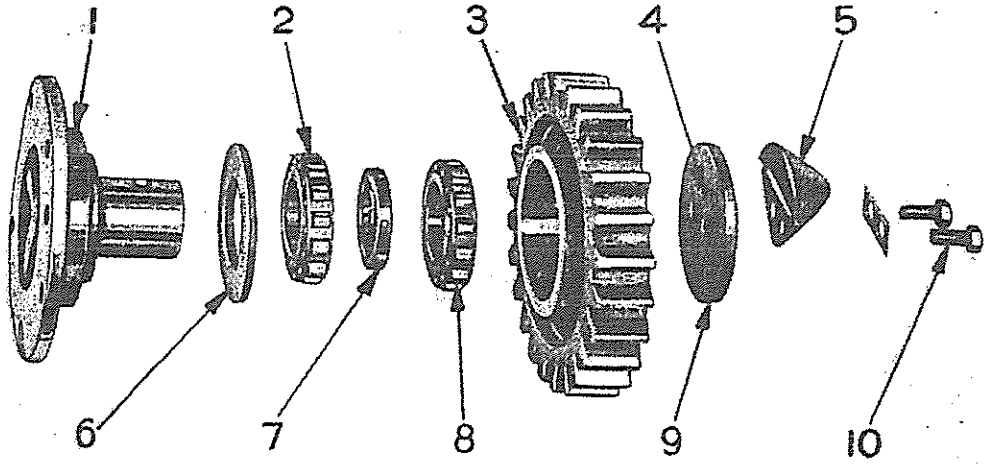

IDLER GEAR ASSEMBLY (EARLIER TRACTORS)
1—Trunnion. 2—Bearing. 3—Idler gear. 4—Oil hole. 5—Oil catcher. 6—Washer. 7—Spacer. 8—Bearing. 9—Retainer washer. 10—Capscrew.

IDLER GEAR LUBRICATION
(EARLIER TRACTORS)

◆

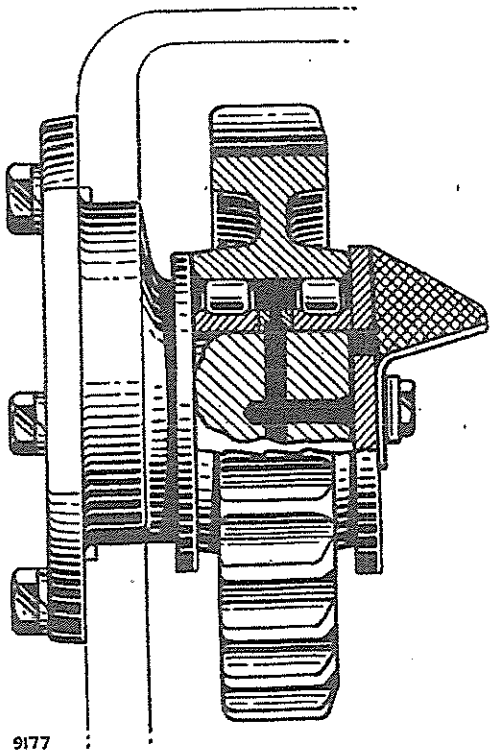

Pinion Shaft Group Installation and Assembly

Heat the bearing **(14)** and press it onto the shaft **(6)** until the bearing is seated against the pinion. Be sure the large chamfer on the inner race of the bearing is seated against the pinion.

Press the bearing **(3)** into the cage **(4)**.

Start the shaft through the rear bearing outer race and install the gears **(13)**, **(12)**, **(11)**, **(10)** and **(9)** also spacers **(8)** and **(7)**.

The illustration shows the gears and spacers in their proper relative positions.

Place the shims **(5)** on the cage **(4)**.

Pull the bearing and cage onto the shaft by inserting the capscrews through the retainer washer **(2)** and screwing them into the shaft.

Install the cover **(1)** and tighten the capscrews.

NOTE

If the same pinion shaft is reinstalled, use the same shims that were removed. If a new pinion shaft is installed, refer to the topic, BEVEL GEAR AND PINION SETTINGS, for information on the number of shims to be used.

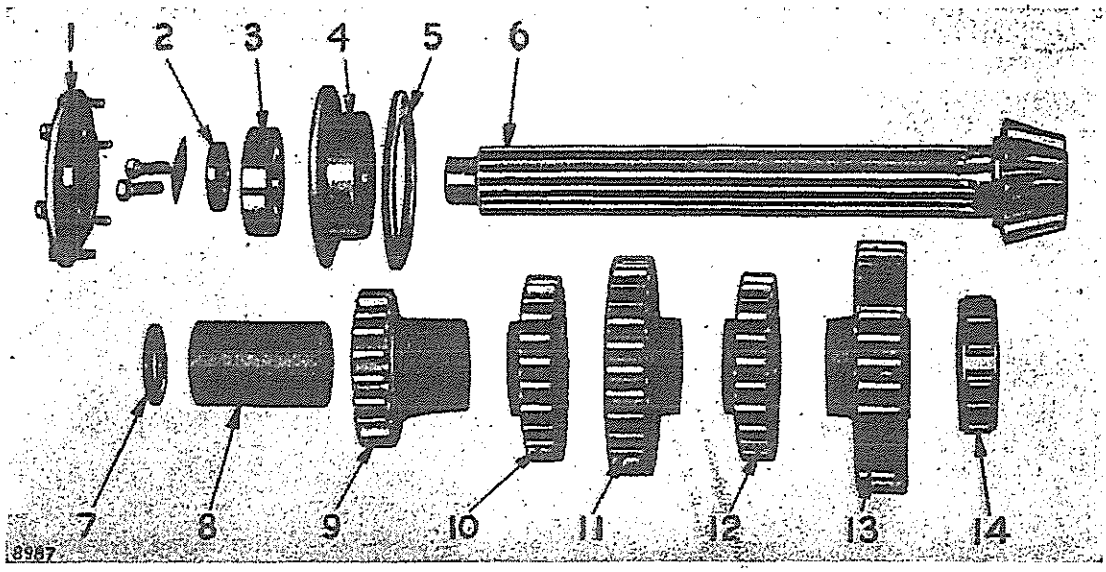

PINION SHAFT GROUP

1—Cover. 2—Retainer washer. 3—Bearing. 4—Cage. 5—Shims. 6—Shaft. 7—Spacer. 8—Spacer. 9—Gear. 10—Gear. 11—Gear. 12—Gear. 13—Gear. 14—Bearing.

Countershaft Group Installation and Assembly

Heat the roller bearing **(2)** and press it on the countershaft **(3)**.

Install the snap ring **(1)** in the groove next to the bearing. Be sure the snap ring is well seated in the groove.

Press the outer bearing race **(5)** into the cage **(4)** aligning the dowel hole in the cage with the dowel hole in the bearing race.

Start the shaft through the bearing race in the rear of the transmission case and install gears **(9)**, **(10)** and **(11)**.

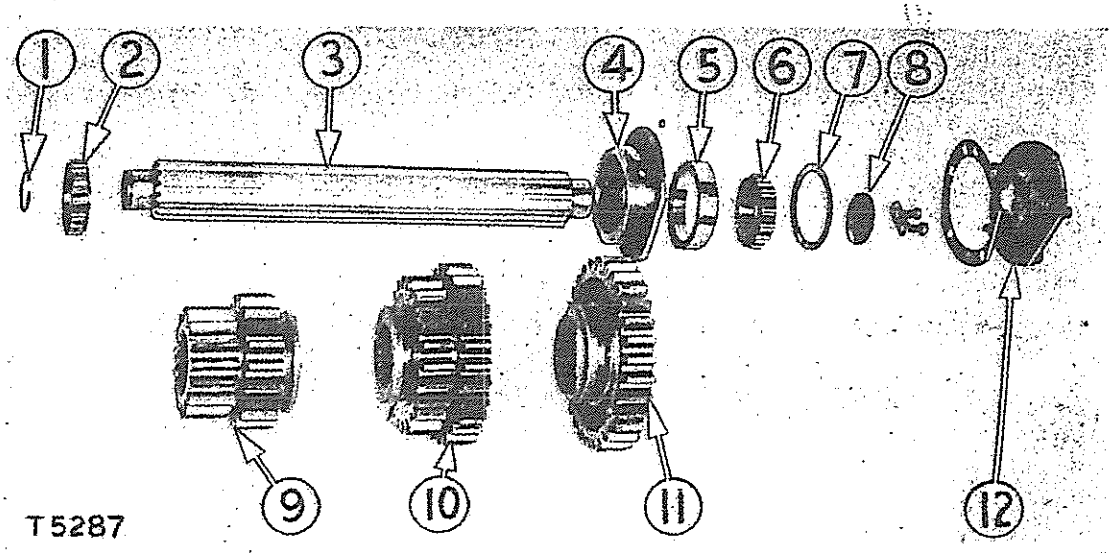

COUNTERSHAFT ASSEMBLY

1—Snap ring. 2—Bearing. 3—Countershaft. 4—Cage. 5—Outer bearing race. 6—Bearing. 7—Ring. 8—Retainer washer. 9—Gear. 10—Gear. 11—Gear. 12—Cover.

The illustration shows the gears in their proper relative positions.

Install the bearing **(6)** in the inner race.

Install the bearing and cage assembly over the end of the shaft and use the retainer **(8)** and capscrews to pull the bearing and cage over the shaft.

Drop the small dowel into the dowel hole in cage **(4)**.

After the bearing and cage have been pulled into position, install the ring **(7)**, lock the capscrews and install the cover **(12)**.

On earlier tractors a smaller bearing cage was used and bearing race **(5)** was part of the bearing. Ring **(7)** was not used, otherwise the parts are identical.

Bevel Gear

The bevel gear is located in the middle compartment of the steering clutch case.

REMOVAL

In preparing to remove the bevel gear, remove the following:

Seat and fuel tank as described in the topic, SEAT AND FUEL TANK.

Transmission case on earlier tractors as described in the topic, TRANSMISSION. The bevel gear shaft on later tractors can be removed without disturbing the upper transmission shaft. This was made possible by adding a 3/8" deep by 3/4" long chamfer to the splined end of the transmission shaft.

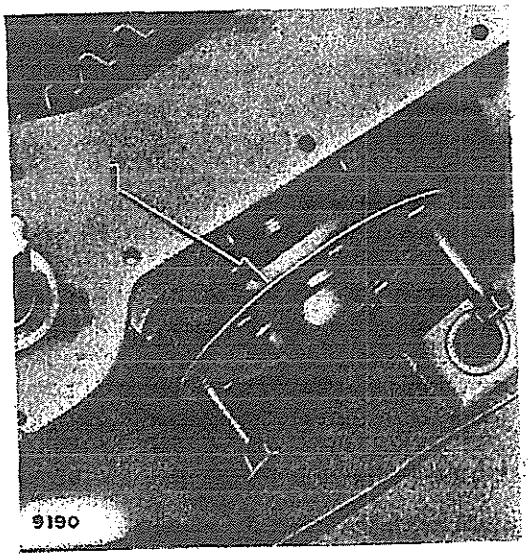

PULLING COUPLING

1—Coupling.

◆

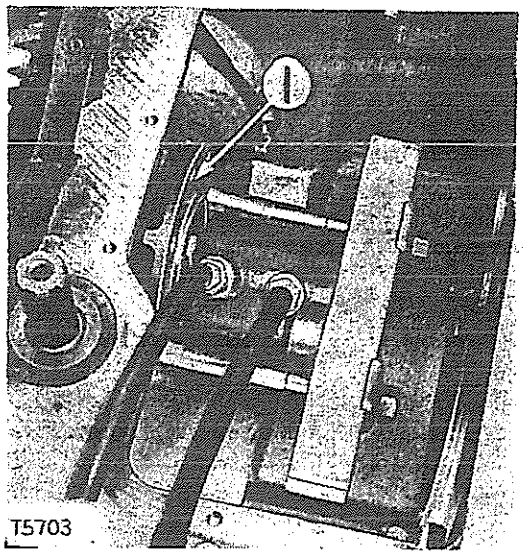

PULLING COUPLING FROM BEVEL GEAR SHAFT

1—Coupling.

◆

Steering clutch control unit as described in the covering topic. Both steering clutch assemblies as described in the topic, STEERING CLUTCHES.

Unlock and remove the capscrew and washer which hold the coupling (1) to the bevel gear shaft.

Pull the coupling, using two 5/8"-18 (NF) capscrews as shown, with the ends of the capscrews bearing on the heads of two of the capscrews in the bearing cage.

The coupling (1) can also be pulled using the 8B7548 Push Puller, two 8B7550 Legs and the 7F9540 Hydraulic Puller.

Unlock and loosen the capscrew which holds the coupling to the bevel gear shaft. Loosen the capscrew approximately three turns and pull the coupling as shown. The washer will prevent the coupling from jumping when it is free of the shaft.

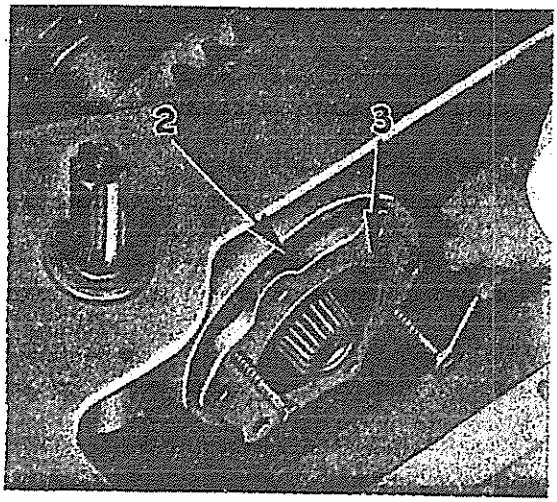

PULLING BEARING CAGE

2—Shims. 3—Bearing cage.

◆

Unlock and remove the capscrews from the bearing cage **(3)** and pull the cage using two 5B4274 Capscrews, 3/8"-16 (NC), 3 1/2" long, as shown.

Keep the shims **(2)** clean and flat until the bearing is reassembled.

The bearing cup can be pulled from the cage using the 8B7548 Push Puller, 8B7553 Adapter and the 8B7554 Bearing Cup Pulling Attachment.

Press the seal out of the cage if it is worn or damaged and install a new one with the wiping edge toward the bevel gear. Press the seal in flush with the face of the cage.

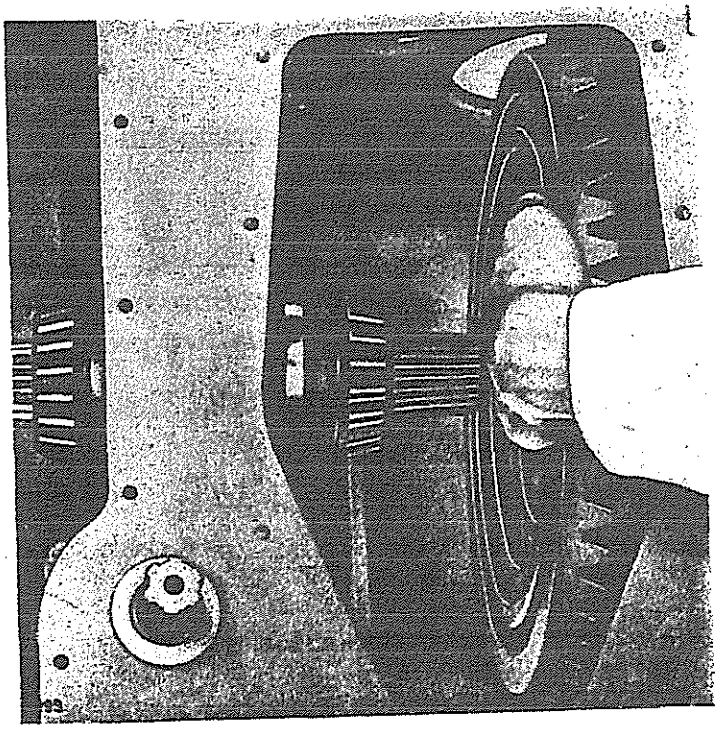

REMOVING BEVEL GEAR

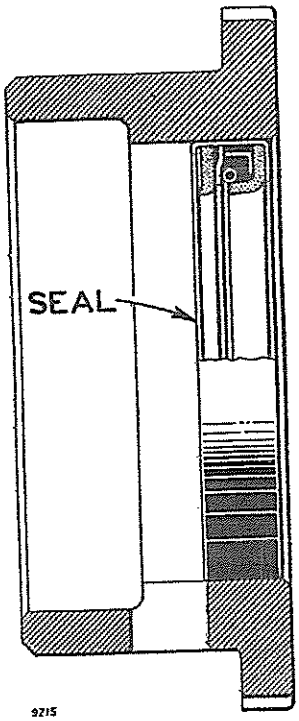

SEAL ASSEMBLY

After removing both bearing cages, wrap clean cloths around the bearings on the bevel gear shaft to protect them while removing the bolts holding the bevel gear to the flange on the shaft.

Move the shaft to the left side of the tractor and lift out the bevel gear.

The bevel gear shaft can then be removed through the same opening.

Pull the bearing cones from the shaft using the 8B7548 Push Puller and the 8B7551 Attachment.

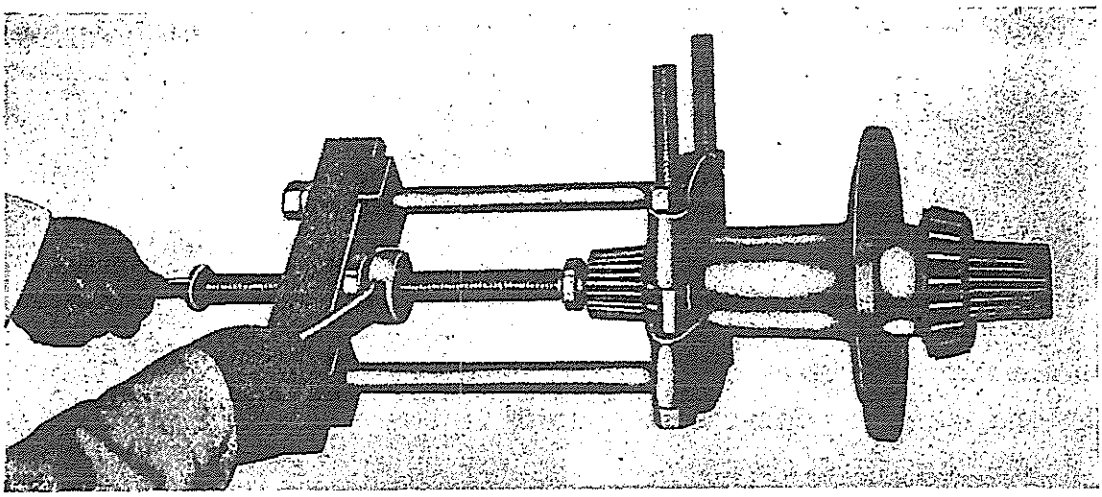

PULLING BEVEL GEAR BEARINGS

INSTALLATION

Install the bearings on the bevel gear shaft before placing the shaft in the case.

The bearings can be heated to facilitate their installation.

Be sure the flange on the bevel gear shaft and the mating surface on the bevel gear are perfectly clean when assembling these two parts.

Then press in the seals flush with the face of the flange. The wiping edges of the seals should be toward the bevel gear.

See the topic, BEVEL GEAR ADJUSTMENTS, BEARING ADJUSTMENT, for determining the proper thickness of shims to be used with each bevel gear bearing cage.

Turn the cage so the oil hole is at the bottom to line up with the oil hole in the bore.

Install the couplings on the bevel gear shaft after the bevel gear is adjusted. Be sure the splines are clean and free of burrs.

Place a new cork seal at the end of the shaft and install the retainer, lock, and capscrew.

The capscrew must be pulled up very tight to assure a tight fit between the shaft and coupling.

Strike the coupling lightly to insure good contact.

The coupling can be installed onto the bevel gear shaft using the 7B2559 Stud, 1"-14 (NF), 10" long, 1B4209 Nut and the 7F9540 Hydraulic Puller. Thread the 7B2559 Stud into the end of the bevel gear shaft through the hydraulic puller and install the nut. Press the coupling on using 20 tons pressure.

PRESSING COUPLING
ON BEVEL GEAR SHAFT

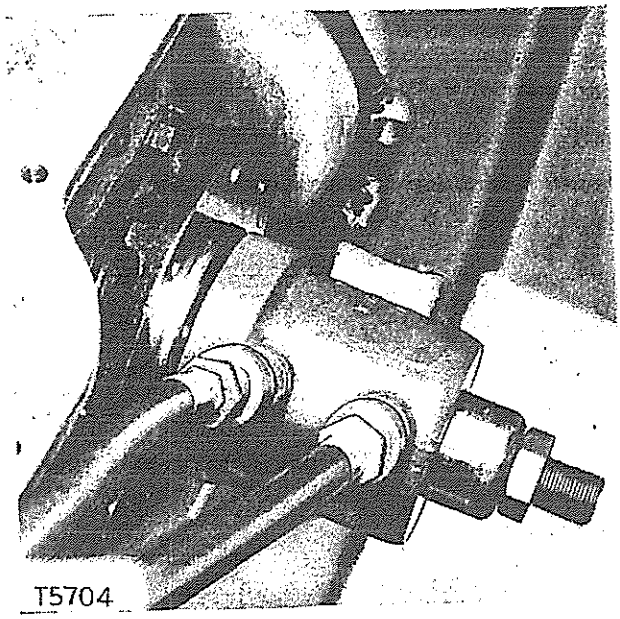

BEVEL GEAR AND PINION SETTINGS

The bevel gear and pinion must be adjusted to the proper location to obtain the correct tooth contact.

Shims are provided between the pinion bearing cage flange **(2)** and the wall in the transmission case so the pinion can be moved toward or away from the centerline of the bevel gear shaft. Other shims are located between the bevel gear bearing cages **(1)** and the walls of the bevel gear compartment to permit moving the bevel gear toward or away from the centerline of the bevel pinion shaft, thereby changing the backlash. Moving either the gear or pinion affects both backlash and tooth contact so the two must be adjusted at the same time.

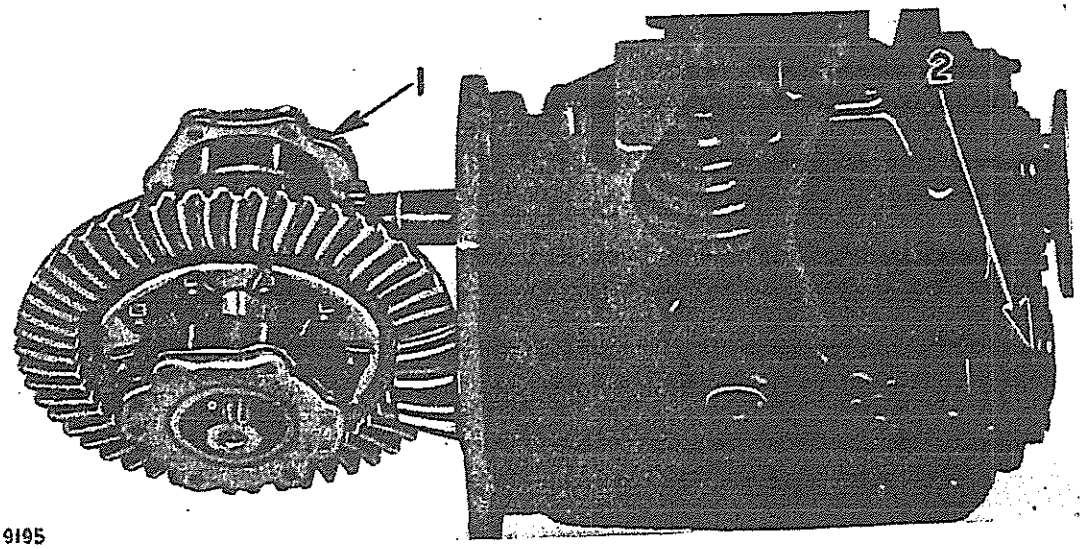

BEVEL GEAR AND PINION ADJUSTMENT
1—Bearing cage. 2—Bearing cage flange.

Because of manufacturing tolerances, the relative positions of gears and pinions will vary with different sets. The correct amount of backlash for each bevel gear is sometimes marked on the outside diameter of that gear. The end of each pinion is usually marked with a dimension to be used with a special gauge for locating the pinion in the transmission case.

If a gauge is not available, the pinion can be located by observing the tooth contact as described later. However, this method requires more time and accurate results are more difficult to obtain.

BEVEL GEAR ADJUSTMENTS

Bearing Adjustment

The transmission should be in place before adjusting the bevel gear bearings so an approximate adjustment for backlash can be made at the same time. Install sufficient shims with the left bearing cage to allow a slight amount of backlash between the bevel gear and pinion and pull the cage tight against the shims. Install the right bearing cage **(1)** without shims and tighten the capscrews evenly, just tight enough to eliminate the end play of the bevel gear shaft **(2)**. Use a thickness gauge as shown to determine the clearance between the bearing cage flange and the wall. Be sure this clearance is the same all around the cage.

Remove the cage and install the shims with a total thickness of .022" less than the clearance determined by the thickness gauge. Again install the cage and securely tighten the capscrews. This will place a preload on the bearings and prevent the bevel gear shaft from shifting when the tractor is operated under load.

Another method of determining the correct bevel gear bearing preload is as follows:

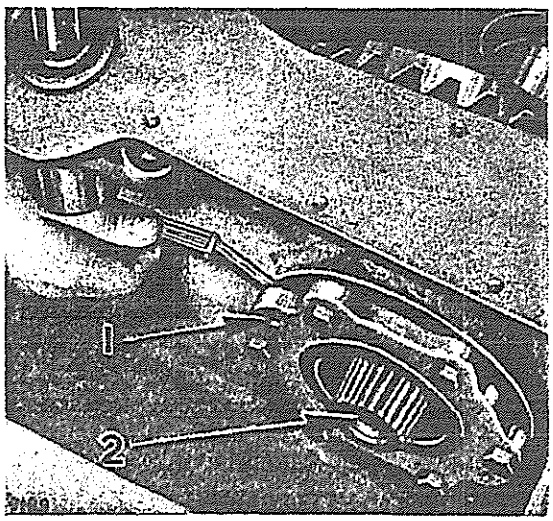

ADJUSTING BEVEL GEAR BEARINGS

1—Right bearing cage.
2—Bevel gear shaft.

◆

Pre-load the bearings so that a torque of 85 to 100 pound inches is required to rotate the bevel gear shaft.

To do this requires the removal of approximately .022" shims after shaft end clearance has been taken up.

Backlash Adjustment

The proper amount of backlash to be allowed between each bevel gear and pinion is sometimes marked on the outside diameter of the gear. When not marked, adjust the backlash to .008"-.010".

If the bevel pinion has been properly located in the transmission case by using the 8B724 Gauge and the 8B722 Dial Indicator, the backlash can be established as soon as the bevel gear bearings are adjusted.

To check the backlash, mount a dial indicator with the finger on one of the bevel gear teeth as shown. Block the pinion so it cannot rotate and rock the bevel gear back and forth. The backlash will be equal to the difference in readings on the dial indicator. Check the backlash at four points around the bevel gear to determine the position of least backlash.

If the backlash is too great at the point of the least backlash, remove shims from the bearing cage on the left side and install them on the right side. To increase the backlash, move shims from the right side to the left side. The preload on the bearings will not be changed by moving shims from one side to the other.

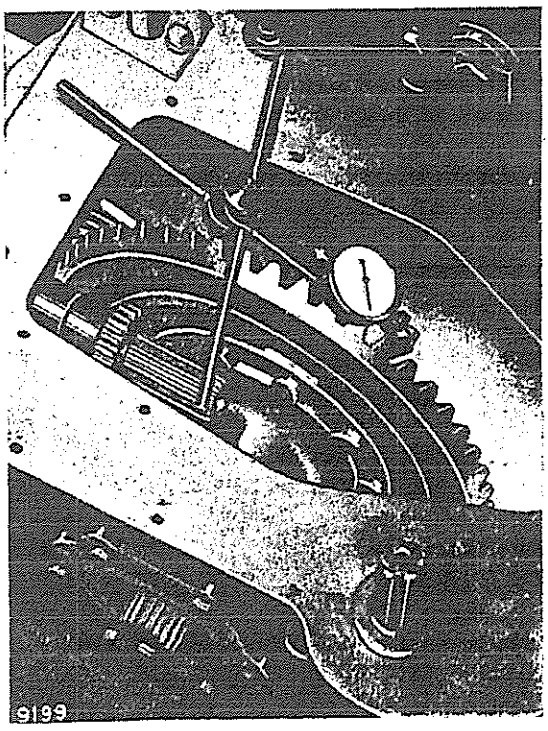

CHECKING BACKLASH

BEVEL PINION LOCATION

If the bevel pinion is re-installed in the same transmission case, use the same shims back of the bearing cage flange at the front end of the pinion shaft that were removed when the transmission was disassembled.

If a new bevel pinion or new transmission case is installed, use the 8B724 Gauge and 8B722 Dial Indicator to determine the proper location of the pinion in the case.

These tools and complete instructions for using them can be obtained from the Parts Department. If the tools are not at hand when needed, the pinion can be located by observing the tooth contact pattern made by the pinion teeth on the gear teeth.

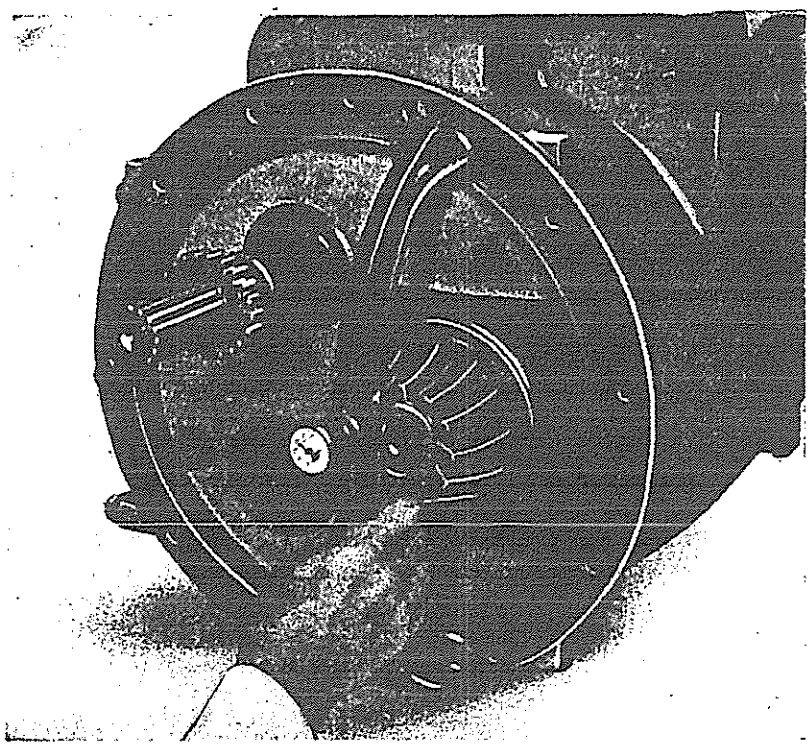

LOCATING BEVEL PINION

Determine the tooth contact pattern in the following manner:

1. Install the transmission and use sufficient shims between the pinion bearing cage and the transmission case to align the heel ends of the bevel gear and pinion. This will place the pinion in nearly the correct relationship with the bevel gear. Adding shims will move the pinion away from the center line of the bevel gear shaft. Removing shims will move the pinion closer to the center line of the bevel gear shaft.

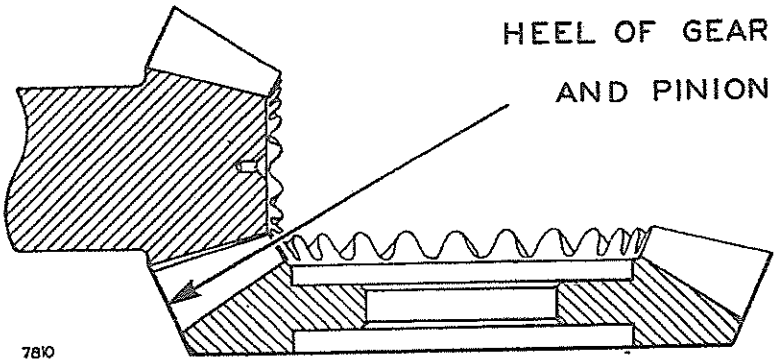

ALIGNING BEVEL GEAR AND PINION

2. Adjust the bevel gear backlash as described in the topic, BACKLASH ADJUSTMENT.

3. Brush Prussian blue or red lead sparingly on the bevel gear teeth. When the pinion is rotated, the red lead is squeezed away by the contact of the teeth, leaving bare areas the exact size, shape and location of the contacts. Sharper impressions can be obtained by applying a small amount of resistance to the bevel gear while rotating the pinion. When making adjustments, check the drive side of the bevel gear teeth. The reverse or coast side contact should automatically be correct when the drive side is correct.

With adjustments properly made, the correct tooth contact shown in Figure A will be secured. The area of contact starts near the toe of the gear and extends about 50 per cent of the tooth length. This adjustment results in a quiet running bevel gear and pinion set which, because the load is distributed over the teeth within the proper area, will give maximum service life. It is permissible for the tooth contact area to be slightly greater on the concave face.

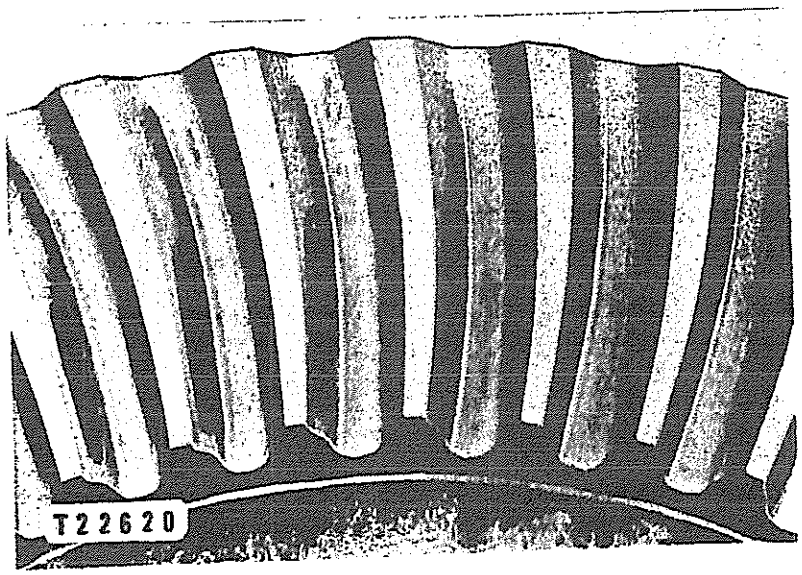

FIG. A
PROPER TOOTH CONTACT PATTERN

In Fig. B, the pinion is too far away from the center line of the bevel gear shaft causing the teeth to bear on the toe ends of the convex faces and toward the heel end of the concave faces. To correct this, move the pinion toward the gear by removing shims from the bevel pinion bearing cage. Recheck the backlash, changing it if necessary, and again check the tooth contact pattern. To correct the backlash, move the bevel gear away from the pinion.

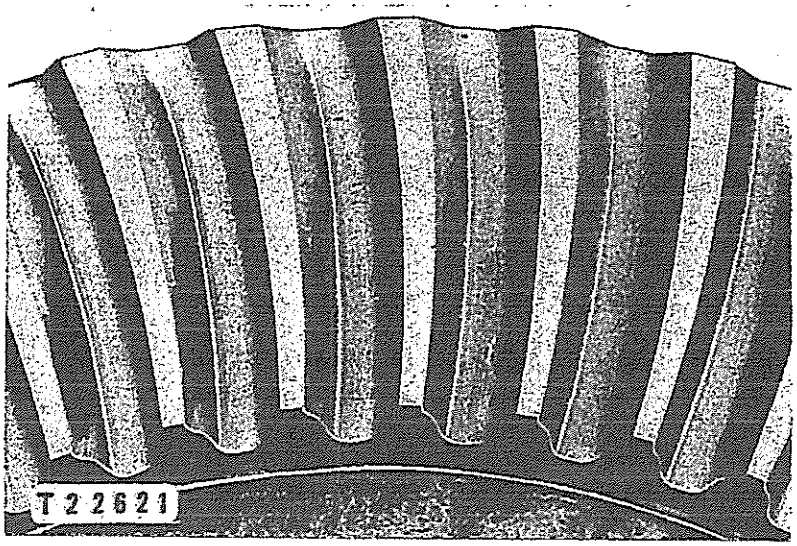

FIG. B
SHORT TOE CONTACT

In Fig. C, the pinion is too close to the center line of the bevel gear shaft causing the teeth to bear on the toe ends of the concave faces and the heel ends of the convex faces. To correct, add shims to the bevel pinion bearing cage. Then, recheck the backlash and tooth contact patterns. To correct the backlash, move the bevel gear toward the pinion.

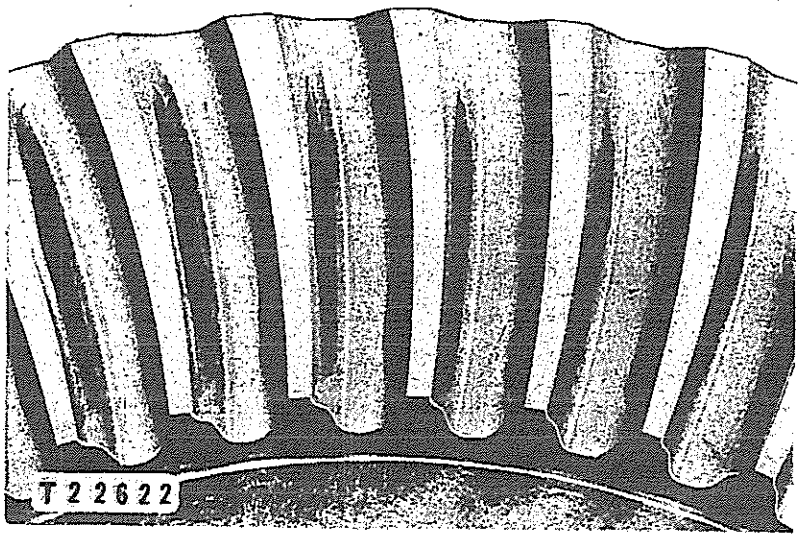

FIG. C
SHORT HEEL CONTACT

Several adjustments of both the pinion and bevel gear may be necessary before correct tooth contact and backlash are secured.

Always remember that the backlash will also affect the tooth contact pattern. Therefore, be sure the backlash is properly adjusted before checking the adjustment of the pinion.

Seat And Fuel Tank

The fuel tank is shaped to support the seat cushions.

REMOVAL

Remove the floor plates just ahead of the seat.

Shut off the fuel at the valve **(2)** and disconnect the fuel line **(3)**.

Take out the two capscrews along each side which hold the seat to the support **(1)**.

Remove the cover from the rear of the seat and remove two capscrews securing the seat to the support.

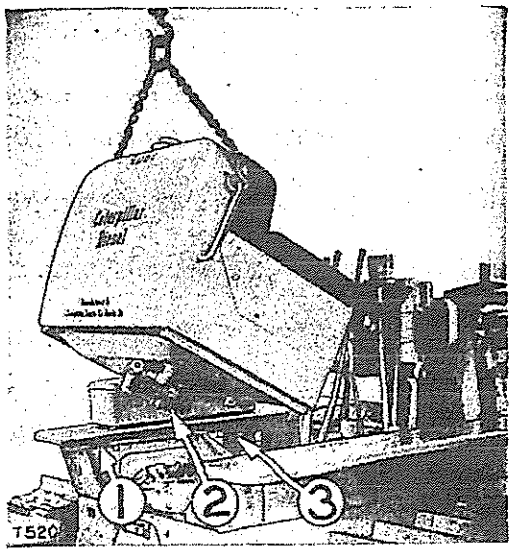

SEAT REMOVAL
1—Support. 2—Valve. 3—Fuel line.

◆

The seat and fuel tank can be lifted off as a unit.

FILLER CAP

The filler cap has two fine metal wool filter elements **(4)** to exclude dust from the fuel tank. To remove the filter elements for cleaning or replacement, take off the nut **(6)**, washer **(7)**, retainer **(8)** and gasket **(5)**.

If the elements have become matted, they should be replaced with new ones. Saturate a new element with oil before installing it.

Replace the gasket **(9)** if it is damaged or hardened.

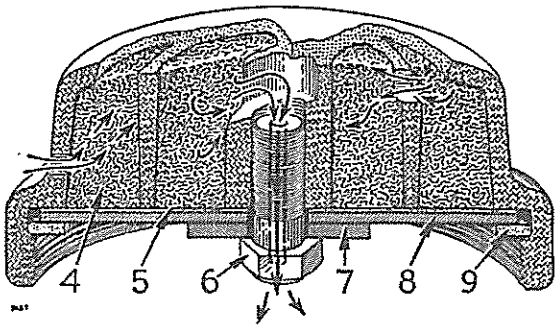

FILLER CAP CROSS-SECTION
4—Filter element. 5—Gasket. 6—Nut. 7—Washer. 8—Retainer. 9—Gasket.

Brakes

Two separate foot brakes are used to supplement the action of the steering clutches or to stop the tractor. Each pedal operates a self-energizing brake band on the steering clutch outer drum. The right brake has a hand-operated lock to set the brake in a locked position.

REMOVING BRAKE BANDS

The brake bands can be removed by working through the openings at the top and rear of the steering clutch case.

Remove the larger cover over the steering clutch compartment.

Take out the pins at both ends of the brake rod **(3)** and remove the rod.

Loosen or remove the support screw **(9)** on the underside of the steering clutch case.

Unscrew the adjusting nut **(2)** from the fork **(4)**.

Rotate the lever **(1)** forward about the anchor pin **(8)** and slide out the other anchor pin **(7)**.

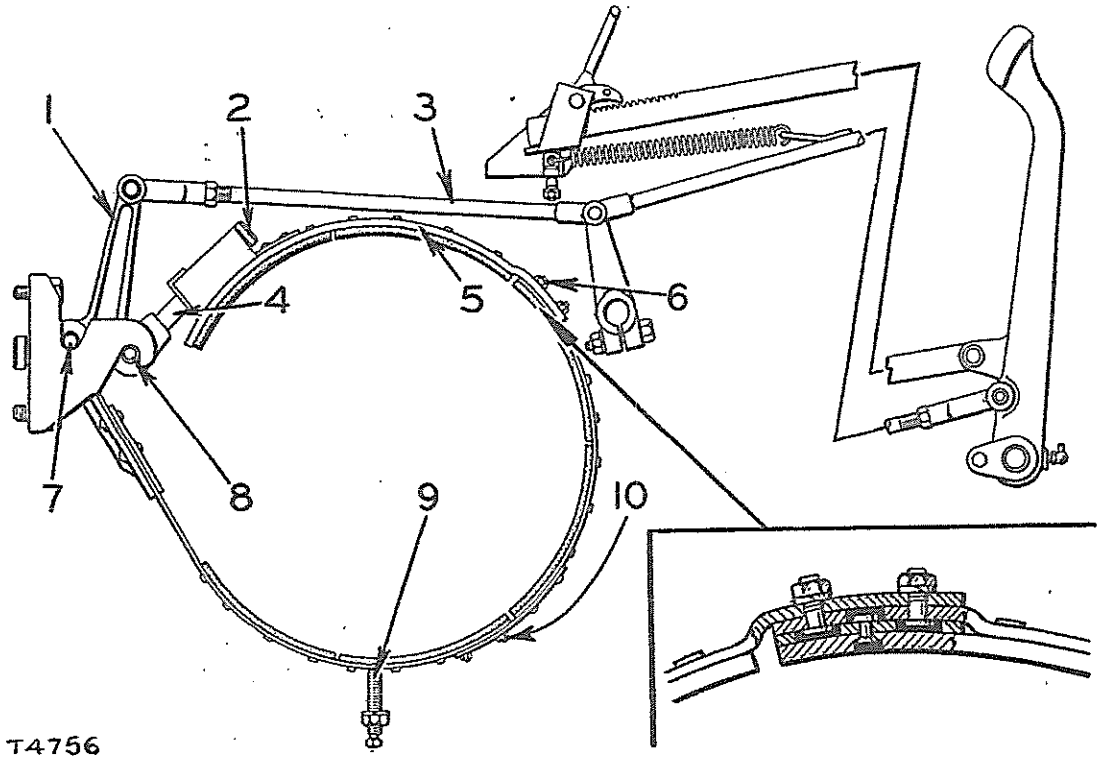

BRAKE MECHANISM
1—Lever. 2—Adjusting nut. 3—Brake rod. 4—Fork. 5—Top section of band. 6—Nut. 7—Anchor pin. 8—Anchor pin. 9—Support screw. 10—Nut.

The anchor pin **(8)**, fork **(4)** and lever **(1)** can then be removed.

Take off the nuts **(6)** which hold the top section of the band to the front section and remove the top section **(5)**.

Rotate the brake band around the drum as shown and remove the nuts **(10)** holding the front section and lower section together.

Both sections of the band can then be removed.

Effective with tractor serial numbers 8U2234 and 9U3532, the brake band connections were changed as shown in the inset. The heads of the bolts are countersunk in a spacer between the lining and band instead of in the lining, thus increasing the useable life of the brake lining.

If the drums are badly worn or scored, they should be replaced to insure proper braking. See the topic, STEERING CLUTCHES, for instructions on removing the drums.

New brake lining should be installed if appreciable wear is present.

When installing new lining make sure the rivets are tight.

When reinstalling the bands, securely tighten the nuts which hold the three sections together.

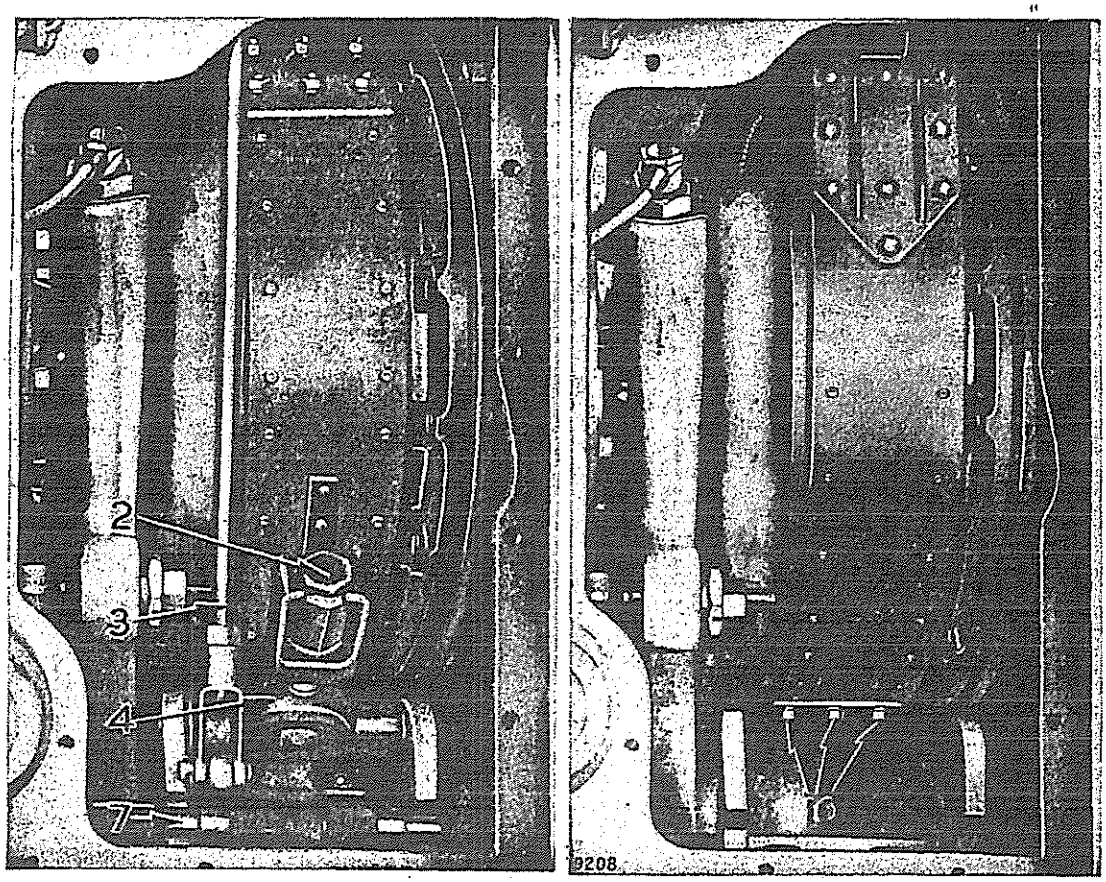

REMOVING BRAKE BAND ASSEMBLY
2—Adjusting nut. 3—Brake rod. 4—Fork. 7—Anchor pin. 10—Nuts.

Assemble the fork **(4)**, lever **(1)** and anchor pins **(8)** and **(7)**.

Be sure the washers are in place on the anchor pin **(8)** between the ends of the fork and the anchor.

ADJUSTMENT

Keep the brakes adjusted just tight enough so the tractor will turn correctly when the steering clutch is released and the brake pedal is depressed about three-fourths of the way to the floor plate or has 3½ to 4½ inches of free travel. The band should be entirely free from the drum when the pedal is in the released position.

Turn the adjusting nut **(2)** to obtain the proper brake adjustment.

With the pedal depressed, turn the support screw **(9)** tight against the band.

Then back it off 1½ turns and tighten the lock nut.

The support screw is located on the underside of the steering clutch case, directly under the steering clutch drum.

This screw supports the band so it will not drag on the top of the drum when the brake is released.

Steering Clutches

The steering clutches are located in separate compartments on each side of the bevel gear. These clutches are of the dry, multiple-disc type, held in engagement by springs. Either clutch can be removed without disturbing the bevel gear or final drive.

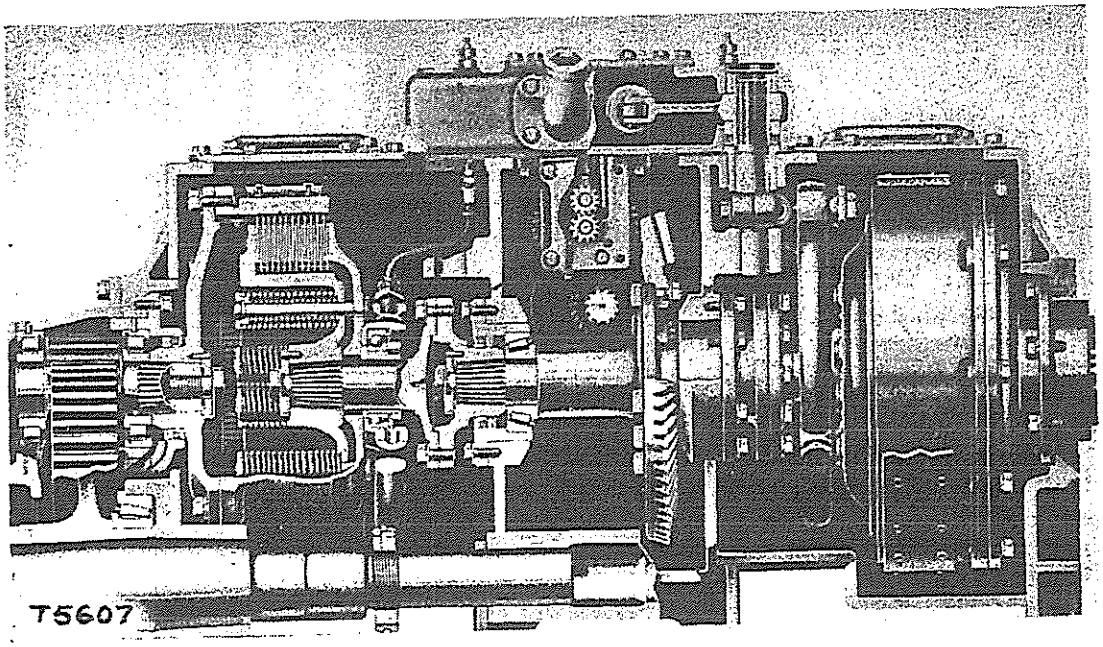

LOCATION OF STEERING CLUTCHES—CUTAWAY, REAR VIEW

REMOVAL

Remove the seat and tank assembly and the large plate over the steering clutch compartment.

Remove the brake rod **(7)** and unscrew the clutch adjusting nuts **(12)**.

Disconnect the rod **(11)** from the clutch control lever and remove it from the yoke **(10)**.

Disconnect the grease tube **(8)** from the clutch yoke.

Remove the brake band support screw from under the steering clutch case and screw the brake adjusting nut **(3)** off the fork.

Remove the rear anchor pin **(6)** and then the anchor pin **(13)**.

Remove the lever **(5)** and fork **(4)**.

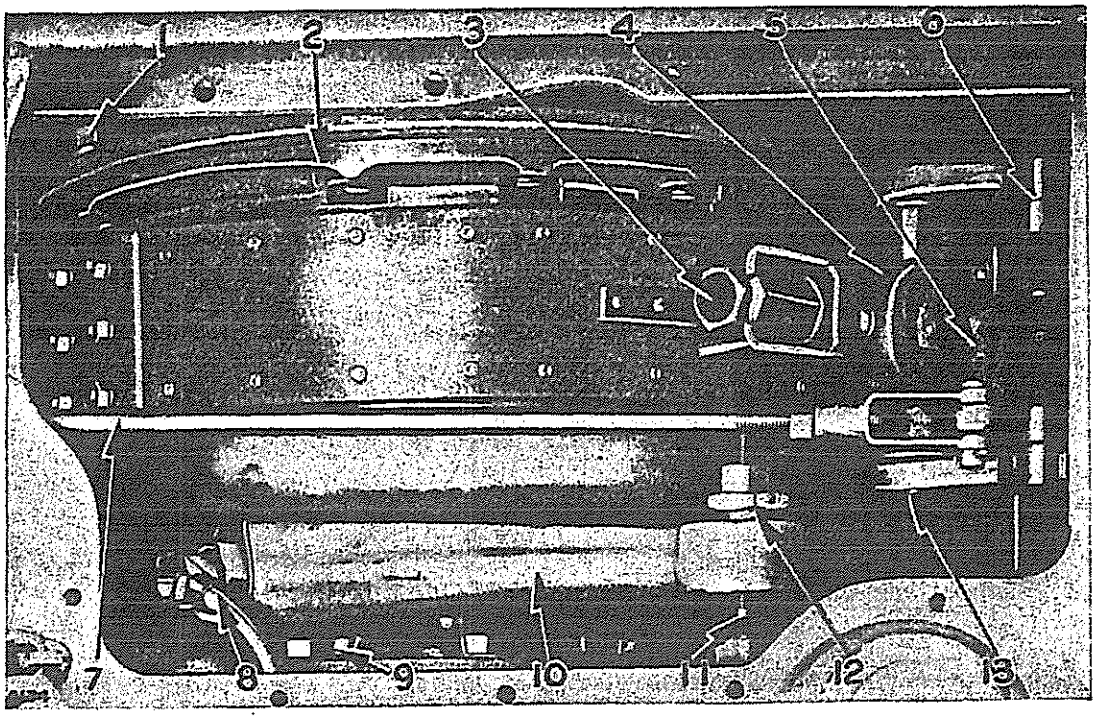

DISCONNECTIONS TO REMOVE STEERING CLUTCH

1—Capscrew. 2—Outer drum. 3—Brake adjusting nut. 4—Fork. 5—Lever. 6—Rear anchor pin. 7—Brake rod. 8—Grease tube. 9—Capscrew. 10—Yoke. 11—Rod. 12—Clutch adjusting nut. 13—Anchor pin.

Remove the capscrews **(1)** which secure the clutch outer drum **(2)** to the final drive pinion flange.

These can be removed through an opening covered with a small plate on the side of the steering clutch case.

Move the tractor to bring each capscrew into alignment with the opening and remove as shown.

Remove the capscrews **(9)** which secure the steering clutch shaft coupling to its mating coupling.

Utilizing the brake band as a sling, support the clutch by attaching a hoist to the ends of the brake band.

Slide the outer drum **(2)** toward the center of the tractor to free it from the shoulder on the final drive pinion flange.

Free the mating flanges.

Lift the steering clutch assembly out of the compartment as shown.

Hold it carefully so the inner drum assembly does not slide out of the outer drum.

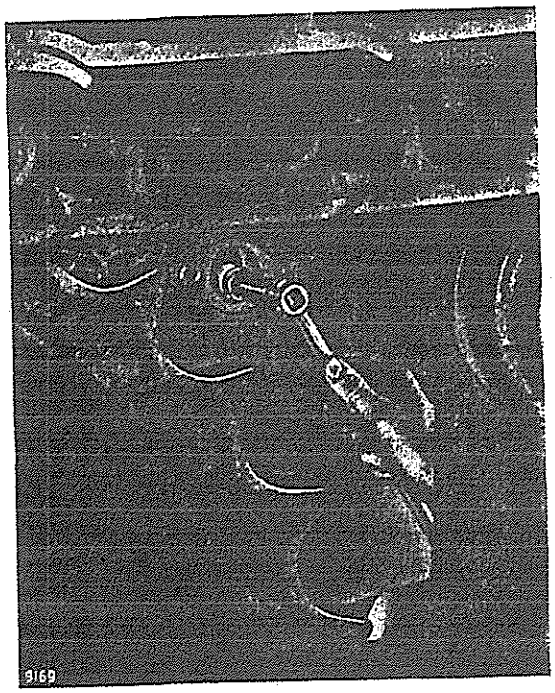

REMOVING FLANGE CAPSCREWS



REMOVING STEERING CLUTCH ASSEMBLY

DISASSEMBLY

Remove the outer drum from the clutch disc assembly.

After the retaining capscrew **(14)** and washer are removed, the steering clutch shaft **(22)** can be pressed out of the inner drum as shown using the 8B7548 Push Puller with 5/8"-11 (NC) capscrews, approximately 14" long, 8B7560 Step Plate and the 7F9540 Hydraulic Puller.

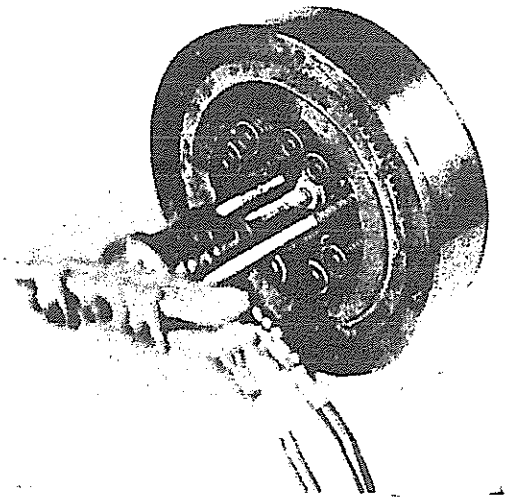

[illegible] SHAFT

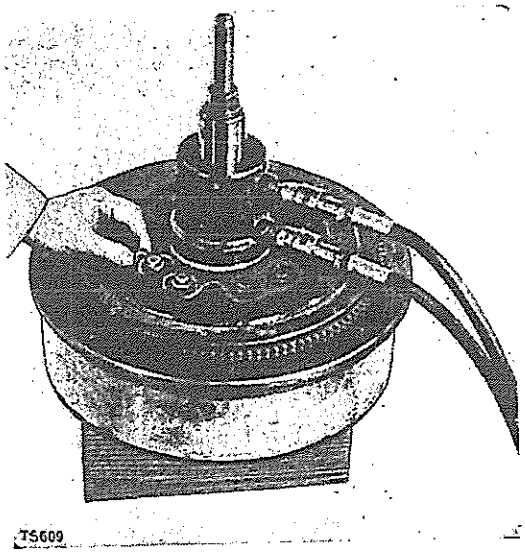

COMPRESSING SPRINGS

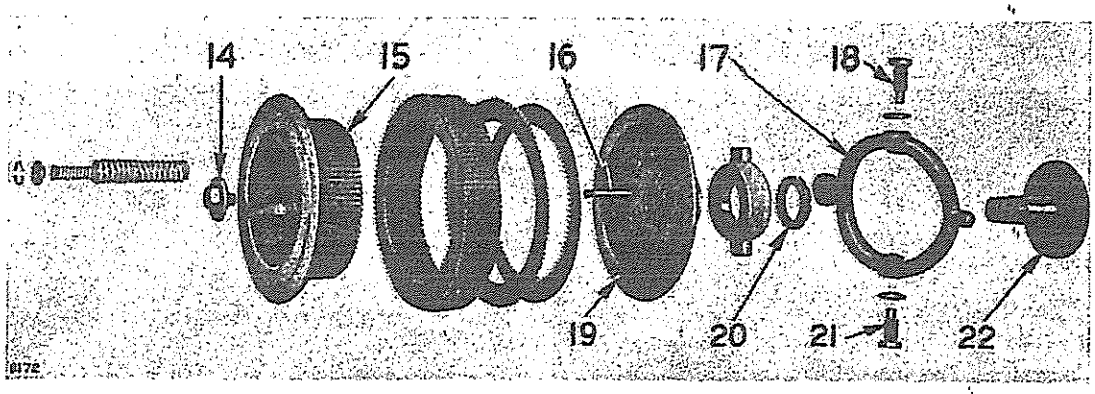

STEERING CLUTCH DISASSEMBLED

14—Retaining capscrew and washer. 15—Inner drum. 16—Spring stud. 17—Yoke. 18—Screw. 19—Pressure plate. 20—Retaining nut. 21—Screw. 22—Shaft assembly.

The steering clutch springs can be compressed and the locks removed using the 1B4332 Nut, 1B4645 Spacer, 5F5034 Plate, 5F5586 Shim, 3456A Plate, 3457A Bolt and the 7F9540 Hydraulic Puller as shown.

After removing the springs from the spring studs **(16)**, turn the clutch assembly over and remove the pressure plate **(19)**.

The clutch discs can be lifted from the inner drum **(15)**.

The steering clutch release yoke **(17)** can be separated from the release bearing by removing screws **(18)** and **(21)**.

Hollow head setscrews lock the release bearing retaining nut **(20)**. These can be removed with the 4B9820 Wrench. After the nut is removed,

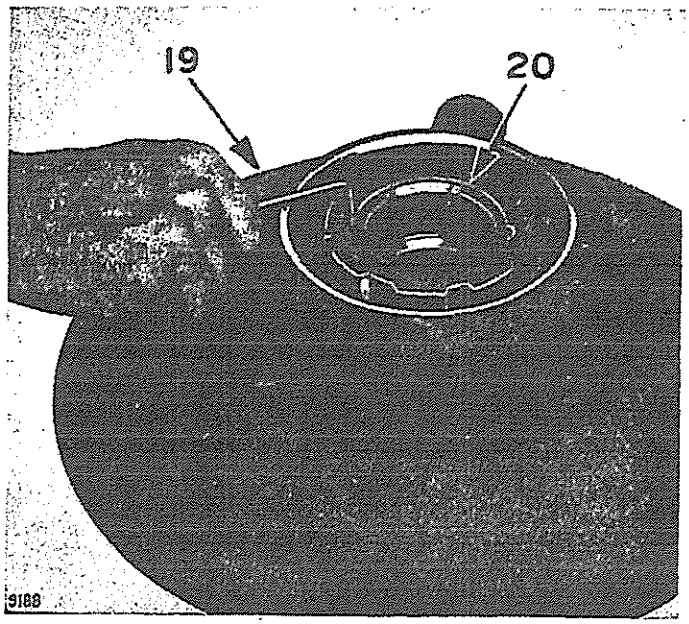

REMOVING LOCK SCREWS

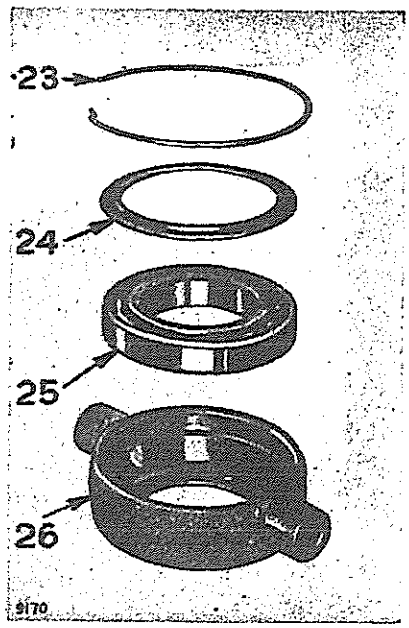

STEERING CLUTCH RELEASE BEARING (EARLIER TRACTORS)

19—Pressure plate. 20—Retaining nut. 23—Snap ring. 24—Washer. 25—Bearing. 26—Cage.

the release bearing and cage can be removed from the pressure plate hub.

After the snap ring **(23)** and washer **(24)** are removed, press or drive the bearing **(25)** out of the cage **(26)** using a punch in the two holes in the back of the bearing cage.

ASSEMBLY

Scored or badly worn plates or discs should be replaced. If the overall thickness of the plates and discs of one steering clutch is less than 2 15/16", the lined discs should be replaced.

Place the inner drum flange downward on a flat surface and place the outer drum over it to assure proper alignment of the teeth of the lined discs.

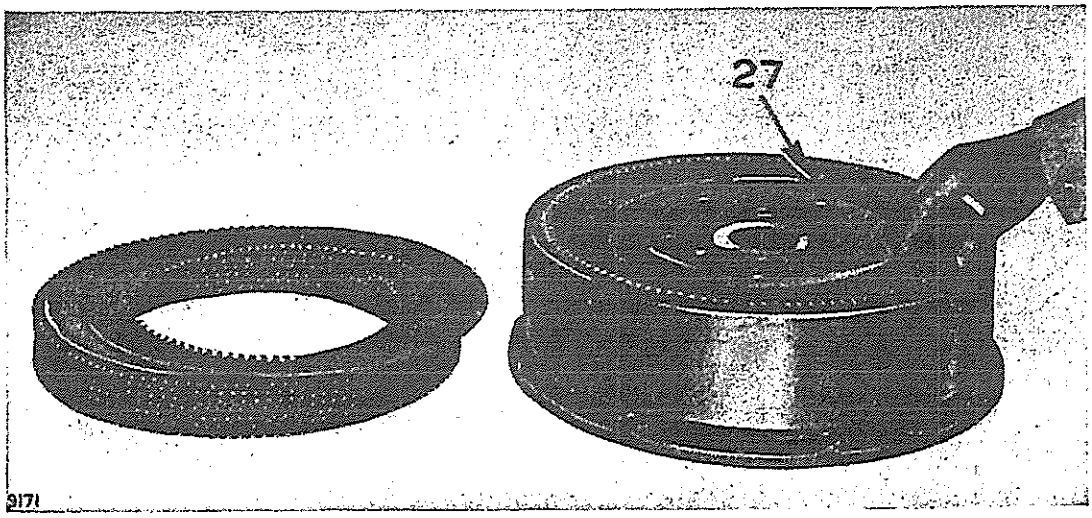

INSTALLING STEERING CLUTCH DISCS
27—Lined disc.

Beginning with a lined disc **(27)** against the flange of the inner drum, alternate the remaining lined and unlined discs as they are dropped in place.

Place the pressure plate on top of the discs and drop the spring studs in place.

Without removing the outer drum, turn the entire clutch assembly upside down and support it so the inner and outer drums are as near concentric as possible.

Install the steering clutch springs with the same tools used for removing them.

Installing Clutch Shaft

Place the clutch assembly over the clutch shaft. Thread a 7B2559 Stud, 1"-14 (NF) 10" long, into the threads in the clutch shaft.

Place retaining washer **(30)** over the dowel to protect it and use additional spacers if required.

Place the 7F9540 Hydraulic Puller over the stud and install the 1B4209 Nut.

Pull the shaft into place using 20 tons force.

Remove the tools and install the retaining capscrew and lock.

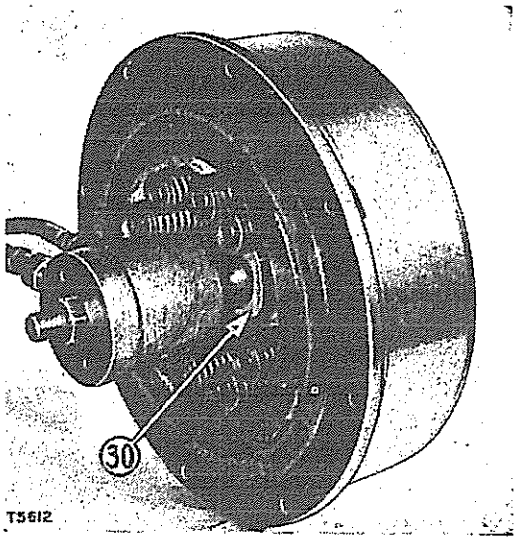

INSTALLING CLUTCH SHAFT
30—Washer.

◆

Steering Clutch Release Bearing and Yoke

Be sure the side of the bearing marked THRUST HERE on the inner race is toward the bevel gear when assembled in the cage. If the words THRUST HERE are marked on the outer race, the marked side should be toward the steering clutch when assembled.

On later tractors the ring **(29)** and seal **(30)** have been added and the bearing cage **(28)** and washer **(32)** have been changed.

Install the bearing **(31)** into the cage **(28)** as previously described.

Place the ring **(29)** and then the seal **(30)** into the cage.

Install the washer **(32)** so that the cupped portion of the washer fits over the seal **(30)** as shown.

Then install the lock ring **(33)**.

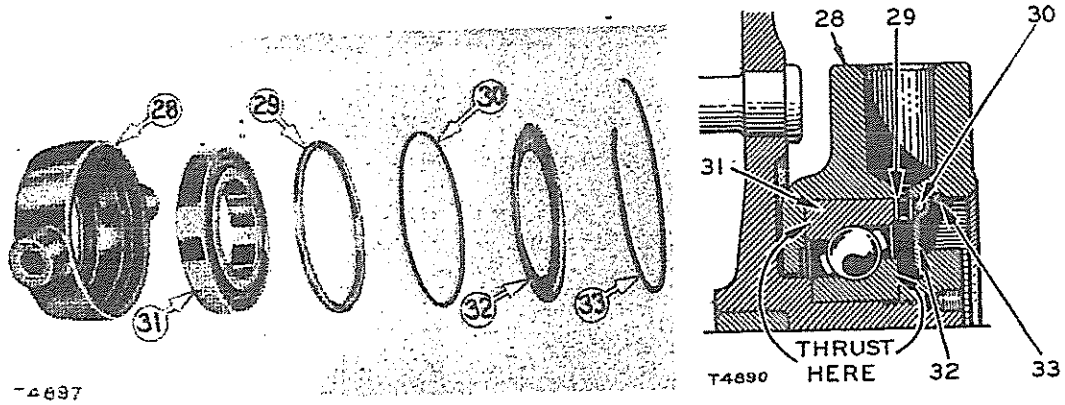

STEERING CLUTCH RELEASE BEARING (LATER TRACTORS)
28—Bearing cage. 29—Ring. 30—Seal. 31—Bearing. 32—Washer. 33—Lock ring.

After the bearing cage **(28)** has been installed on the pressure plate **(19)** and the nut **(20)** tightened, drill two 7/32" holes 3/8" deep, tap 1/4"-20 (NC) 1/4" deep on the parting line of the pressure plate and nut and install the hollow head setscrews. Prick punch the hub and nut to lock the screw in place.

The bushing insert in the clutch release yoke **(17)** should also be toward the pressure plate.

INSTALLING STEERING CLUTCHES

When installing the steering clutches, it is necessary to align the outer drum with the shoulder on the final drive pinion flange. Install one of the capscrews securing the outer drum to the final drive pinion flange. Rotate the steering clutch approximately 180° and install a second capscrew. Hold the steering clutch lever in the disengaged position and tighten this capscrew. Rotate the steering clutch until all the remaining capscrews have been installed and tightened.

Steering Clutch Hydraulic Control Unit

The hydraulic steering clutch control housing is mounted on top of the steering clutch case. The pump for supplying the oil pressure to actuate the mechanism is attached to the bottom of the control housing and is driven by a gear on the rear end of the transmission upper shaft. The oil supply is contained within the housing.

Each steering clutch is released by a cylinder forced out from the end of a stationary piston by oil pressure. Each piston contains oil inlet and outlet ports. A sliding valve assembly controlled by a steering clutch lever fits in the center of the piston.

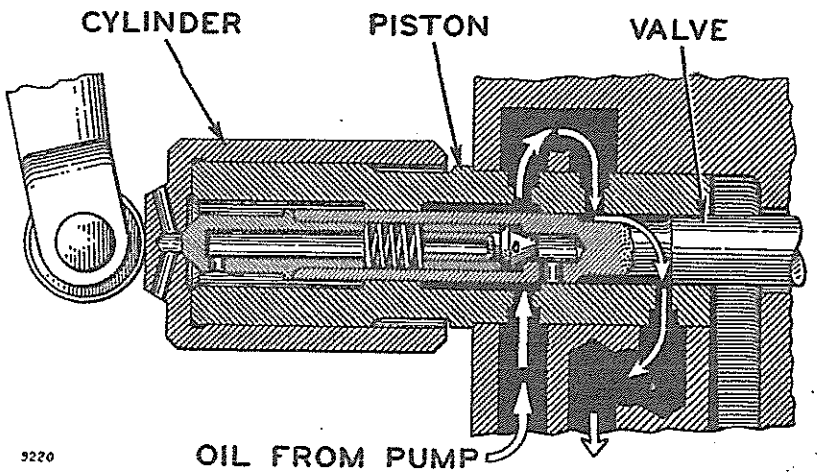

STEERING CLUTCH ENGAGED

As long as the clutch control lever and valve are forward in the clutch engaged position, the inlet and outlet ports in the piston are open and the oil travels to and from the pump.

When the control lever moves the sliding valve back, the outlet port in the piston is closed and the oil is forced through a passage in the sliding valve out into the space between the end of the piston and the end of the cylinder. This forces the cylinder outward and it in turn presses against a lever which releases the steering clutch.

The distance the cylinder moves outward is determined by the stroke of the sliding valve. As soon as the sliding valve ceases to move back, the seat in the end of the cylinder moves away from the tapered end of the sliding valve and the oil is permitted to escape.

If the oil pump fails for any reason, the tractor can be manually controlled by the steering clutch levers.

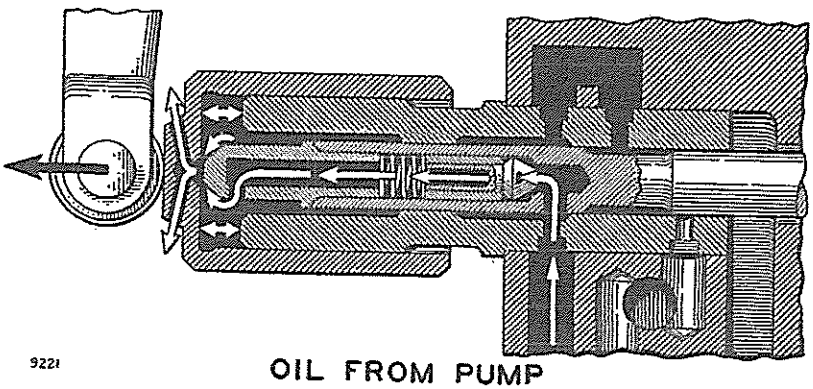

STEERING CLUTCH DISENGAGED

Remove the fuel tank and seat assembly.

Remove the capscrews from the cover which holds the rubber seals in place at the junction of the housing and the control rods.

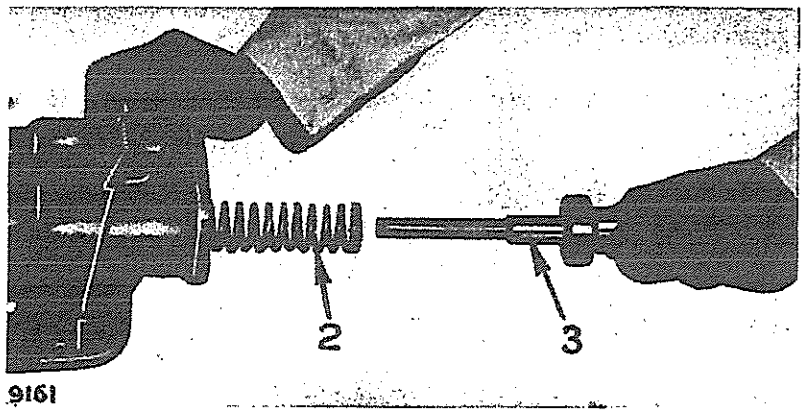

REMOVING PUSH ROD
1—Capscrew. 2—Spring. 3—Push rod.

Remove the capscrews which hold the hydraulic housing to the steering clutch compartments.

Lift the housing straight up off the stub shafts which extend up from the steering clutch compartments.

Remove the capscrew **(1)** which holds the push rod **(3)** in the housing.

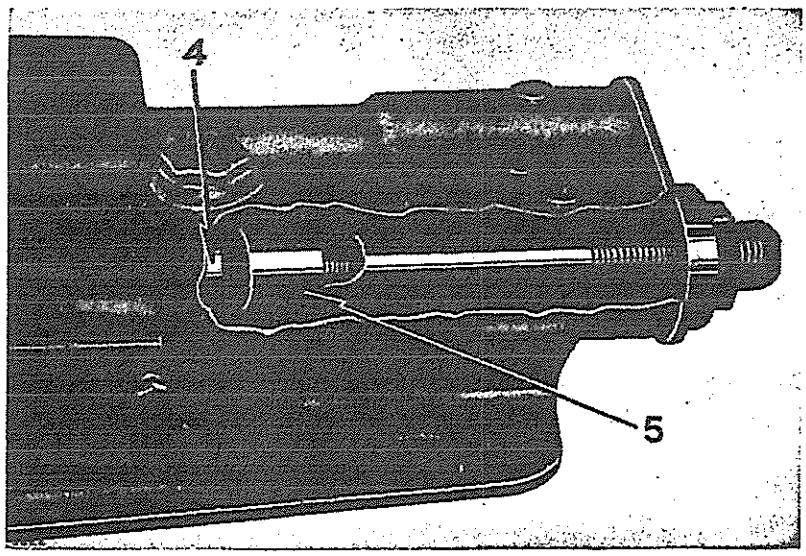

PULLING OIL SEAL RETAINER
4—Retainer. 5—Oil seal retainer.

Care should be taken to prevent the push rod from being snapped out by the spring **(2)**.

The oil seal retainer **(5)** can be removed with the 8B2893 Tool as shown.

The seal inside the retainer should be replaced if oil is leaking past it.

The small retainer **(4)** is a very tight fit and is pinned in position. There should be no occasion to remove this retainer. Remove the rear cover containing the filler elbow.

Drive out the plugs **(6)** with a punch inserted through the center of the sleeve **(8)**.

Press out the sleeve **(8)**.

The seal **(10)** and retainer **(9)** will come out with the sleeve.

Remove the lever **(11)**.

The bushing **(7)** can be pressed out of the housing.

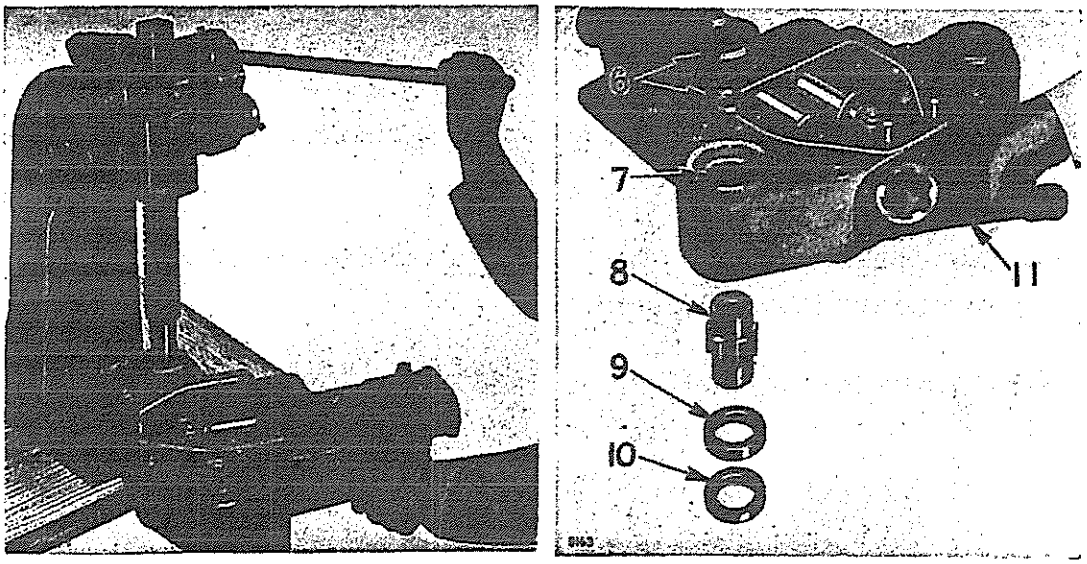

PRESSING OUT SLEEVE **REMOVING LEVER**

6—Plugs. 7—Bushing. 8—Sleeve. 9—Retainer. 10—Seal. 11—Lever.

The cylinder **(13)** can now be removed and the valve assembly **(12)** will slide out with the spring **(14)**.

The piston **(15)** is a tight fit in the housing but can be pulled using the following tools:

A 5/8" steel rod, 14 1/2" long, with 5" of 5/8"-18 (NF) thread on one end and 3/4" of 5/8"-18 (NF) thread on the other end;

One 5/8"-18 (NF) standard hexagon nut and one thin 5/8"-18 (NF) hexagon nut;

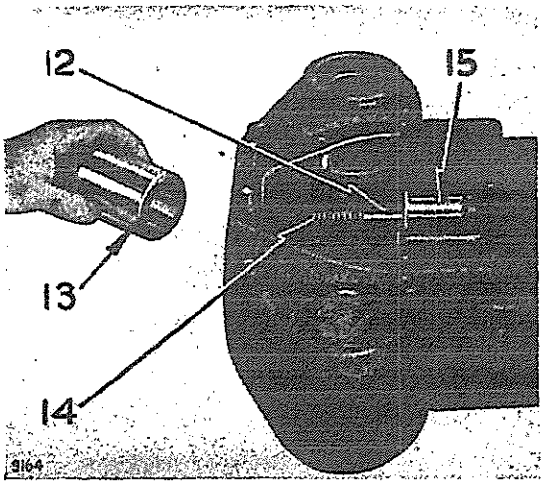

REMOVING CYLINDER

12—Valve assembly. 13—Cylinder. 14—Spring. 15—Piston.

◆

One plate 3½" wide, ¾" thick, 8" long with a ¾" hole drilled 2½" from one end.

Remove the rear cover.

Insert the ¾" threaded end of the rod through the bore in the center of the piston.

Turn the housing upside down. When the oil pump and sump assembly are removed, an opening will be noted which shows the inner end of the piston. It is possible to place the thin nut on the end of the rod through this opening.

Place the plate over the long threaded end of the rod and over the opening at the rear end of the housing.

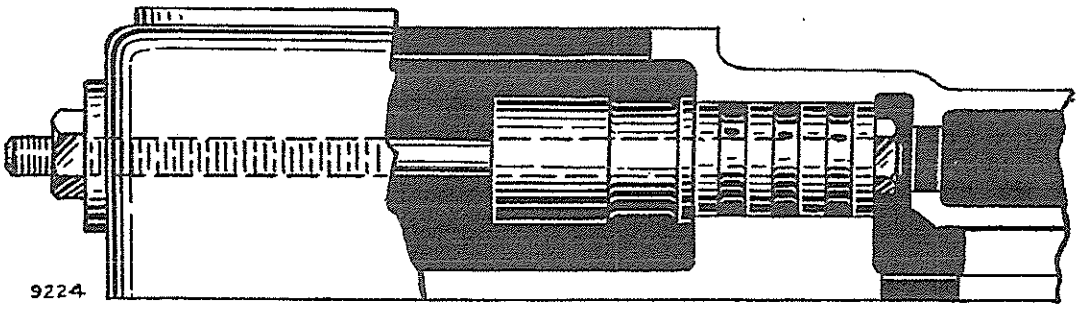

PULLING PISTON

The puller nut can now be screwed on the end of the rod to pull the piston out of the housing.

Oil Pump Disassembly

Separate the oil pump housing **(21)** from the bottom of the main control housing.

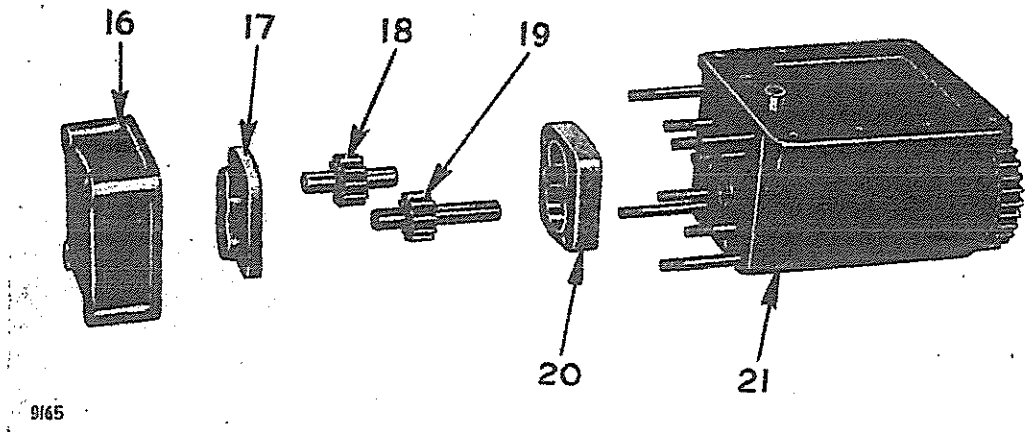

OIL PUMP DISASSEMBLED
16—Cover. 17—Plate. 18—Gear and shaft assembly. 19—Gear and shaft assembly. 20—Body. 21—Oil pump housing.

Remove the snap rings **(22)**, and the pins through the coupling. The shaft **(23)** and drive gear will then slide out.

To remove the drive gear **(25)**, press it back on the shaft far enough to remove the pin **(26)**.

Remove the pin and press off the drive gear.

The two seals **(24)** and the bushing can be pressed out of the housing.

On later tractors the drive gear **(25)** is held in place by a snap ring.

Still later hydraulic control units have the seals **(24)** next to the drive gear and have the gear turned around, with the extended portion of the hub toward the outside of the unit.

Remove the cover **(16)** and the plate **(17)**.

Slide out the gear and shaft assemblies **(18)** and **(19)**.

Remove the body **(20)**.

ASSEMBLY

Clean all parts thoroughly and prevent any dirt from entering the housing during assembly.

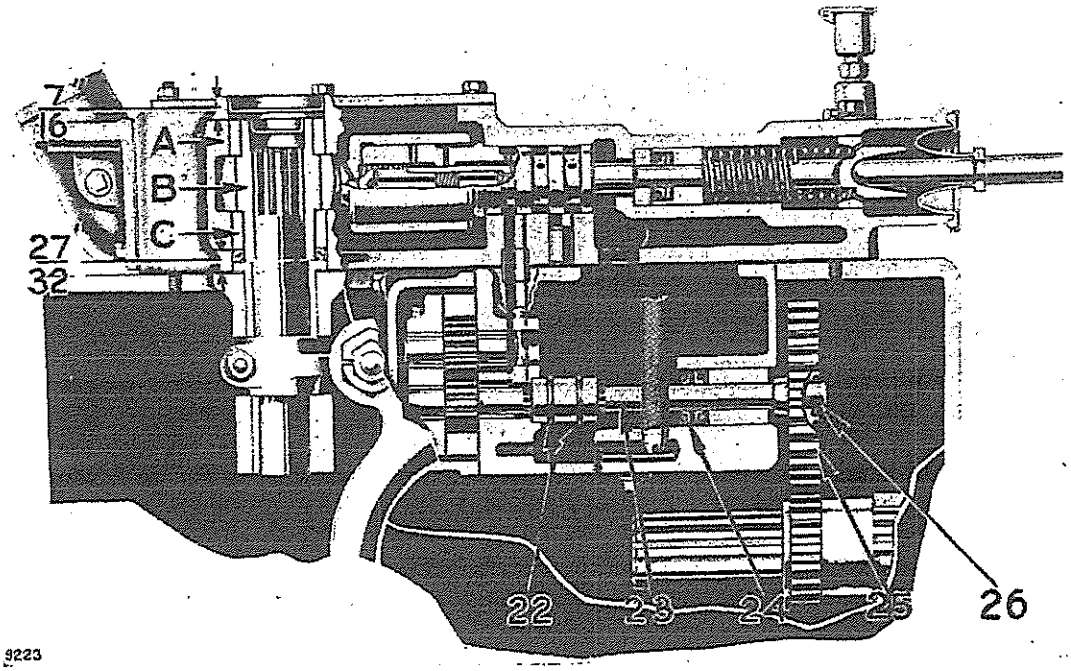

HYDRAULIC STEERING CLUTCH CONTROL MECHANISM
22—Snap rings. 23—Shaft. 24—Two seals. 25—Drive gear. 26—Pin. A—Bushing. B—Sleeve. C—Retainer.

Piston

The piston can be pressed into place much easier if it is first contracted in dry ice.

Bushing

The bushing **(A)** should be pressed into the housing to a depth of 7/16" from the edge of the bore as shown in the cutaway view of the mechanism.

Retainer

After installing the sleeve **(B)**, the retainer **(C)** should be pressed into the housing to a depth of 27/32" from the bottom edge of the bore. Tolerances may vary this measurement so always make sure the lever and sleeve assembly will turn freely after the retainer is installed.

INSTALLATION

When the unit is lowered onto the splined shafts projecting up from the steering clutch case, the levers inside the control housing must be pressed forward against the cylinders. This insures a correct connection between the levers inside the hydraulic housing and the levers in the steering clutch compartments.

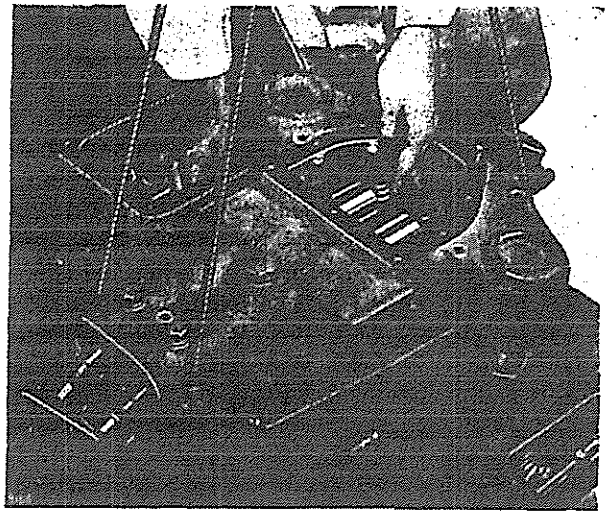

INSTALLING CONTROL UNIT

ADJUSTMENTS

Adjust the steering clutches to obtain three inches of free movement at the top of the steering clutch levers, which will allow a clearance of 3/16" at **(A)**.

To vary the adjustment, remove the cover over the steering clutch and turn the adjusting nut which seats in the steering clutch release yoke.

The adjustment should be checked with the engine stopped or with the flywheel clutch disengaged.

There should be a clearance of 1/64" **(B)** between the rod on the steering clutch control lever and the push rod at the front end of the hydraulic control mechanism. This measurement can be obtained by adjusting the length of the rod from the control lever to the control mechanism.

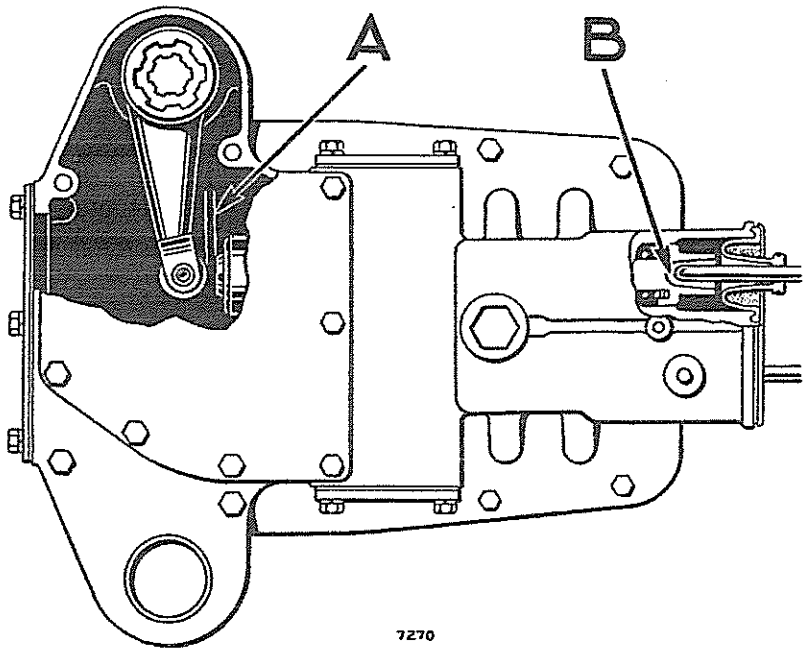

ADJUSTING CONTROL UNIT
A—3/16" distance. B—1/64" distance.

Final Drive Group

The final drive consists principally of a pinion, a gear and a sprocket which transmit the power from the steering clutch to the track.

Except for the final drive gear case and the cap at the end of the sprocket shaft, all the parts on each side are identical and interchangeable.

The steering clutch transmits the power from the transmission to the pinion flange **(9)** turning the pinion **(8)**.

From the pinion the power travels to the gear **(7)** which is bolted to the hub **(16)**.

The sprocket **(5)** is splined to the hub **(16)** by the retaining nut **(13)**.

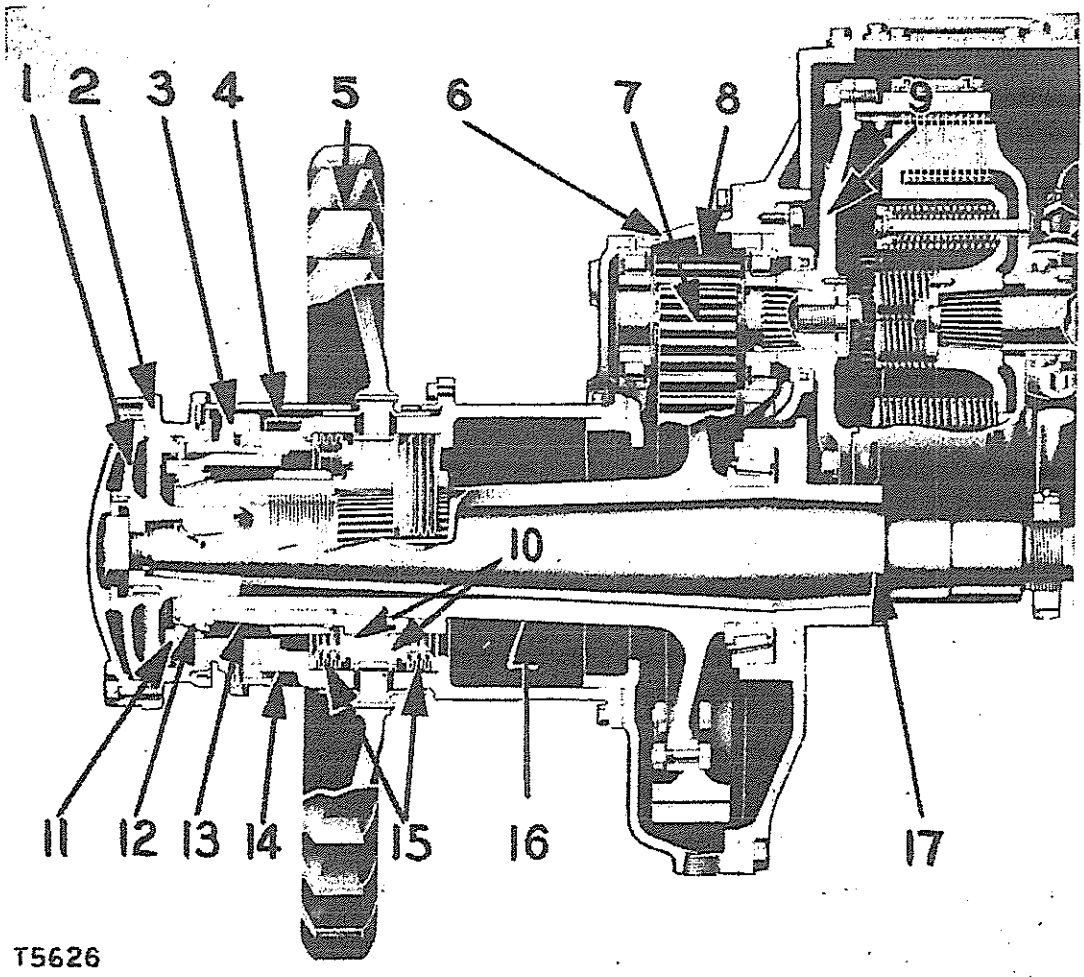

FINAL DRIVE CUTAWAY (74" GAUGE)
(LEFT SIDE — REAR VIEW)

1—Retainer assembly. 2—Bearing assembly. 3—Holder assembly. 4—Dirt guard. 5—Sprocket. 6—Drive case. 7—Gear. 8—Pinion. 9—Pinion flange. 10—Washers. 11—Cage. 12—Roller bearing. 13—Retaining nut. 14—Adjusting nut. 15—Bellows seals. 16—Hub. 17—Sprocket shaft.

The two washers **(10)** are held to and rotate with the sprocket **(5)**.

The bellows seals **(15)**, one of which is mounted in the drive case **(6)** on 60" gauge tractors and in the final drive extensions on 74" gauge tractors and the other in the adjusting nut **(14**, keep the dust and dirt from entering and oil from leaking out of the final drive.

Added protection is also provided by the dirt guards **(4)**.

The bearing cage holder **(3)** is keyed to the sprocket shaft **(17)** and contains the tapered roller bearing **(12)** and cage **(11)**.

This bearing and cage supports the outer end of the hub upon which the drive sprocket **(5)** is mounted.

The adjustment of this bearing is made by rotating the adjusting nut **(14)**.

The bearing assembly **(2)**, which is doweled and bolted to the track roller frame, supports the rear end of the tractor.

The shims between the retainer assembly **(1)** and the holder assembly **(3)** are to be used in aligning the track roller frame with the drive sprocket **(5)**.

Various parts and assemblies must be removed to gain access to the gears and bearings inside the final drive gear case. These parts should be removed in the order described in the following disassembly procedure. It is not necessary, however, to disassemble the various assemblies except to inspect or replace parts thereof.

PREPARATION FOR DISASSEMBLY

Before starting to disassemble the final drive, separate the track and lay it out flat as outlined in the topic, SEPARATING TRACK. Remove the diagonal brace bearing cap and take out the capscrews holding the track roller frame outer bearing assembly to the frame as described in the topic, TRACK ROLLER FRAME ASSEMBLY. One method of obtaining clearance between the final drive and the track roller frame is by raising the rear of the tractor until the sprocket is clear of the track roller frame and blocking the tractor securely.

Another method is as follows: Remove the front track carrier roller and bracket from the mounting pad on the frame. Remove the track adjusting screw and its guide assembly as outlined in the topic, FRONT IDLER. Raise the end of the equalizer spring far enough to clear the recoil spring and block it up securely. Also raise the rear of the tractor to raise the sprocket off the track and place blocks under the drawbar to hold the tractor in position. The track roller frame can then be rolled ahead to clear the sprocket.

Track Roller Frame Outer Bearing

Take out the capscrews and remove the cap **(1)** and the lock **(2)**.

Remove the nut **(4)** and take off the retainer **(5)** and shims **(3)**.

Slide the outer bearing assembly **(7)** off the bearing cage holder assembly **(8)**.

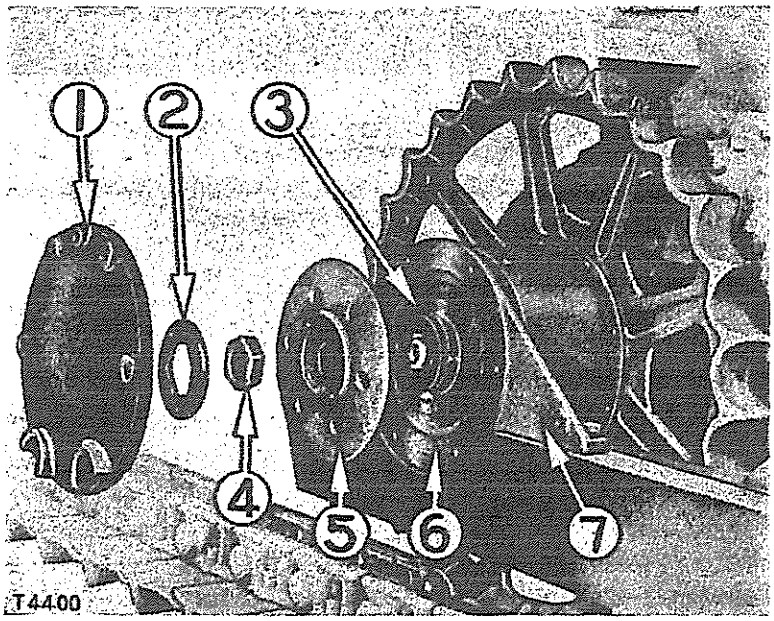

TRACK ROLLER FRAME OUTER BEARING (LATER TRACTORS)
1—Cap. 2—Lock. 3—Shims. 4—Nut. 5—Retainer. 6—Bushing. 7—Outer bearing assembly.

Press the bronze bushing **(6)** out of the bearing assembly if the bushing is worn to such an extent that a .025" thickness gauge can be inserted between the bushing and the bearing cage holder assembly.

The seal at the inner end of the bushing will be pressed out with the bushing.

Press in the new bushing, being careful to line up the oil holes.

Press in a new seal with the wiping edge toward the sprocket.

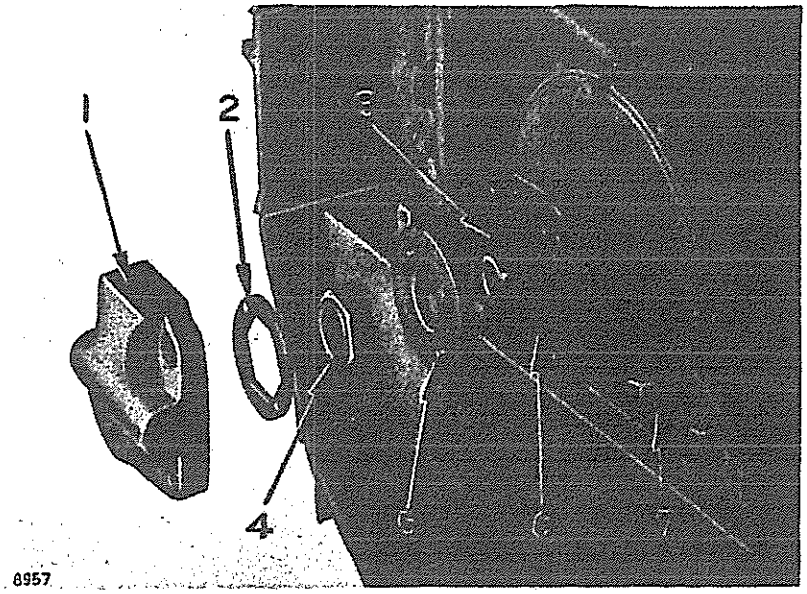

TRACK ROLLER FRAME OUTER BEARING (EARLIER TRACTORS)
1—Cap. 2—Lock. 3—Shims. 4—Nut. 5—Retainer. 6—Bushing. 7—Outer bearing assembly.

Bearing Cage Holder Assembly

Replace the nut on the end of the sprocket shaft, leaving some space between it and the end of the cage holder assembly, so the holder assembly can be pulled loose from the tapered end of the shaft without jumping off the shaft.

Remove the capscrew and lock **(11)** and loosen the clamping bolt **(14)**. Tighten the outer bearing adjusting nut in a counterclockwise direction with a 7F9306 Spanner Wrench thus forcing the bearing cage holder assembly **(8)** from the taper on the sprocket shaft. It may be necessary to strike the holder assembly with a soft hammer in order to free it.

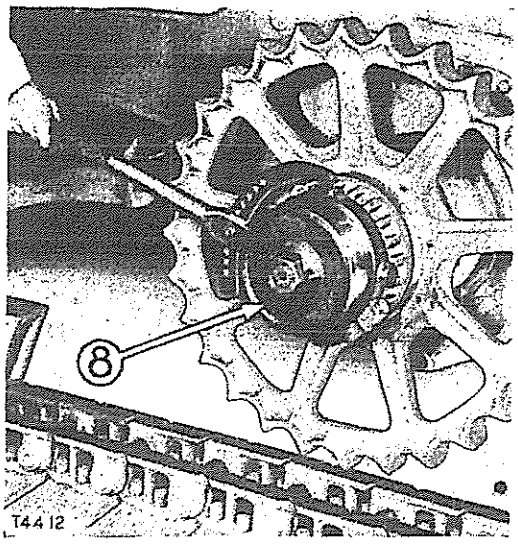

PULLING BEARING CAGE HOLDER
8—Bearing cage holder assembly.

◆

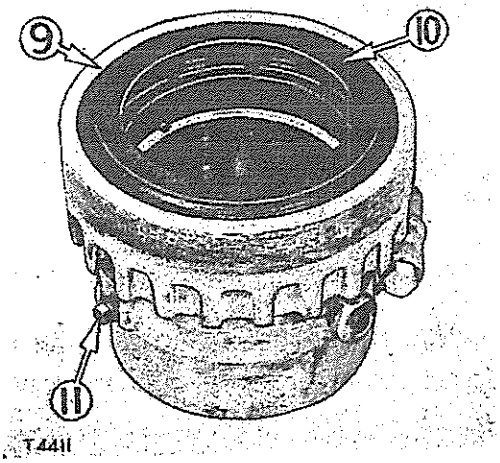

BEARING CAGE HOLDER ASSEMBLY

9—Adjusting nut. 10—Bellows assembly. 11—Capscrew and lock.

◆

The sprocket hub outer bearing race, cage, adjusting nut and outer bellows seal assembly will be pulled with the holder assembly.

When reinstalling the bearing holder assembly, loosen the adjusting nut **(9)** until the cage **(16)** can be driven to the bottom of the bearing cage holder assembly. This procedure will insure that the holder can be drawn up tight on the sprocket shaft before the final drive tapered roller bearings become tight in their races.

Unscrew the adjusting nut **(9)** from the bearing cage **(16)**.

The bellows seal assembly **(10)** is cemented to the adjusting nut.

Pull the bearing race and cage from the holder assembly using the 8B7554 Attachment with the forcing screw from the 5F7465 Puller.

Place a block and centering spacer over the hole in the holder assembly for the forcing screw to push against.

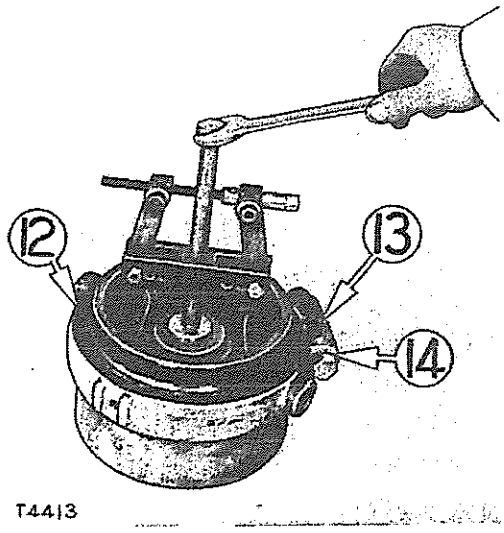

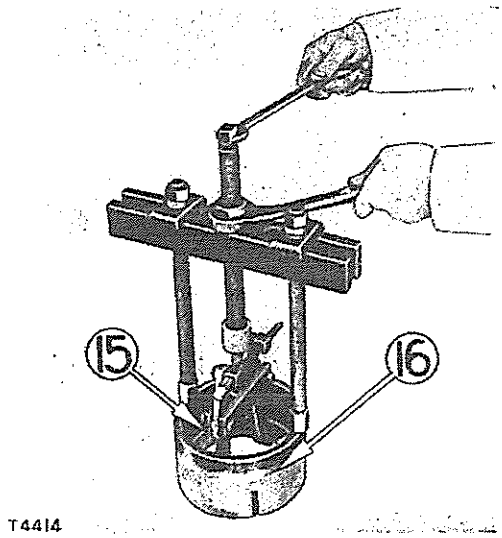

PULLING BEARING CAGE **PULLING BEARING RACE**

12—Cork seal. 13—Rubber seal. 14—Clamping bolt. 15—Bearing race. 16—Cage.

The cork seal **(12)** and rubber seal **(13)** in the holder assembly should be replaced if damaged.

The bearing race **(15)** can be pulled from the cage **(16)** using the 8B7548 Push Puller with the 8B7549 Legs, 8B7553 Adapter and 8B7554 Attachment as shown.

Clean all parts thoroughly.

After pulling the bearing cage holder assembly, the nut should be placed back on the end of the sprocket shaft to protect the threads while removing other parts of the final drive.

Remove the outer bearings from the final drive gear hub by unlocking the sprocket retaining nut **(17)** and backing it off with a 7F9306 Spanner Wrench.

When the bearing is forced off as far as the width of the 4B6091 Yoke, turn the nut back toward the sprocket and insert a 4B6091 Yoke between the nut and the bearing.

The bearing can then be removed by unscrewing the nut with the yoke in place.

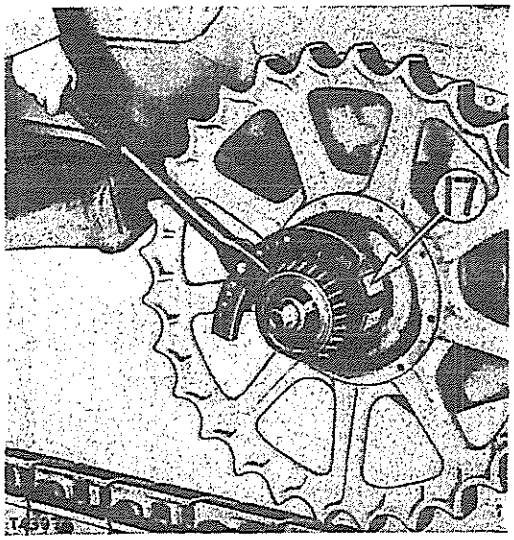

REMOVING OUTER BEARING
17—Retaining nut.

◆

SPROCKET, BELLOWS SEALS, FINAL DRIVE ASSEMBLY

Leave the sprocket retaining nut on the final drive gear hub with some space between it and the end of the sprocket hub. This will keep the sprocket from jumping off when it is being pulled.

Attach the sprocket puller arrangement as shown and pull the sprocket.

PULLING SPROCKET

◆

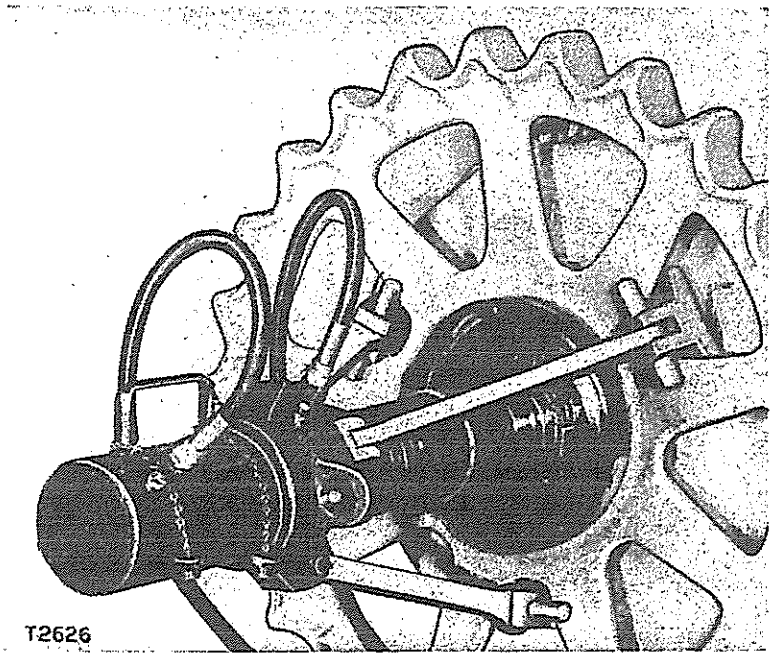

The following tools are used with the 6F25 Service Press.

5F9040 Sprocket Puller Arm Group (3 required).

5F7334 Spacer.

After the sprocket is pulled loose, remove the retainer nut and take off the sprocket. Inspect the splines carefully for wear if the sprocket was loose, or required little or no pulling effort.

The washer **(18)** on either side of the sprocket can be turned over to provide a new wearing surface for the gasket on the bellows seal.

The washers should be replaced if both sides are worn or damaged.

Replace the gaskets between the washers and sprocket, cementing both sides of the gaskets, and stake the washers in place.

Before installing a sprocket, be sure the tapered splines are clean, dry and free from burrs. Press the sprocket on using 30 tons pressure as shown in the illustration.

The outer bellows seal assembly is doweled and cemented to the adjusting nut which was removed from the bearing cage holder assembly.

The inner bellows seal assembly **(21)** is cemented to the spacer **(20)**.

NOTE

On 60" gauge machines, this spacer is not used and the inner bellows seal assembly is attached directly to the final drive gear case **(22)**. Also on 60" gauge machines, the final drive gear hub **(25)** and sprocket shaft **(26)** are shorter by the length of the spacer.

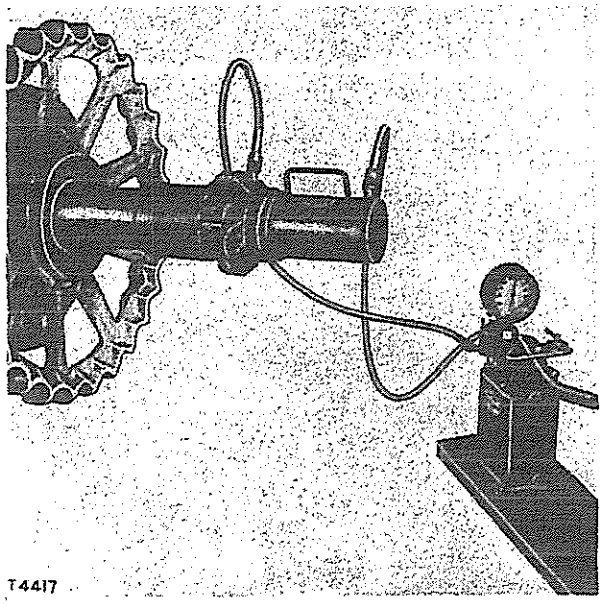

PRESSING SPROCKET IN PLACE

◆

If the seal and gasket are damaged they can be removed and a new seal and gasket cemented to the bellows.

If the bellows are damaged, they can be removed by driving on the dowels with a punch.

Coat the surface of the cork gasket which bears against the washer **(18)** with graphite or lubricant.

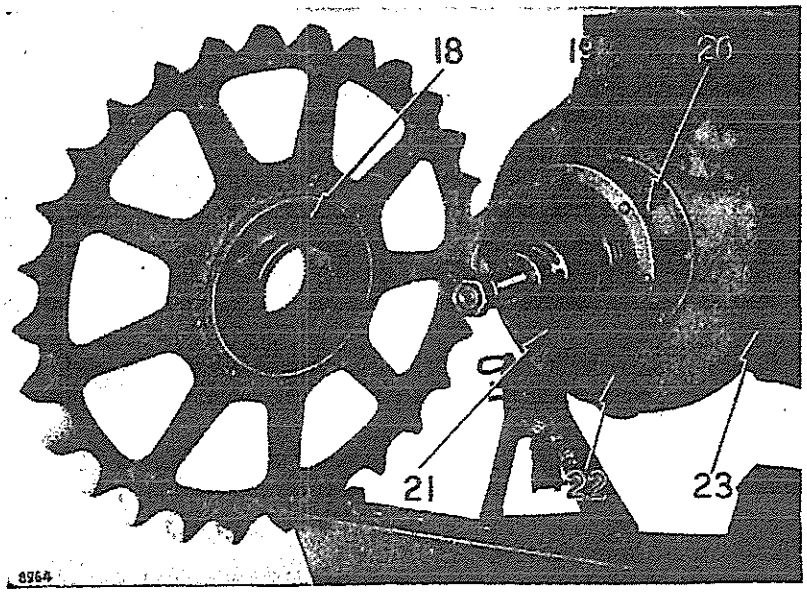

BELLOWS SEAL ASSEMBLIES

18—Washer. 19—Tapped hole. 20—Spacer. 21—Inner bellows seal assembly. 22—Final drive gear case. 23—Tapped hole.

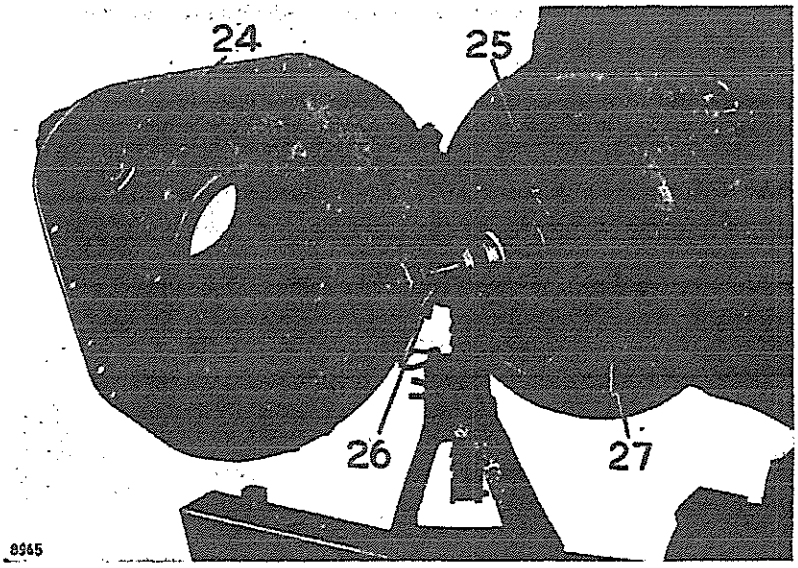

FINAL DRIVE ASSEMBLY
24—Pinion outer bearing. 25—Final drive gear hub. 26—Sprocket shaft. 27—Nut.

Remove all of the capscrews from the final drive gear case **(22)** and insert 3/8" (NC) capscrews in the tapped holes **(19)** and **(23)** to force the case off the dowels and away from the steering clutch case.

Lift off the case, taking care to support it so it does not drop and damage the bellows seal.

If the final drive pinion outer bearing **(24)** is worn or damaged, it should be replaced. It is held in place by a dowel, which can be pulled by using a 1/4"-20 (NC) bolt after removing the plug.

FINAL DRIVE GEAR AND BEARINGS

After removing the final drive gear case, the final drive gear and hub **(25)** can be slid off the sprocket shaft **(26)**.

Remove the nuts **(27)** and remove the gear from the hub.

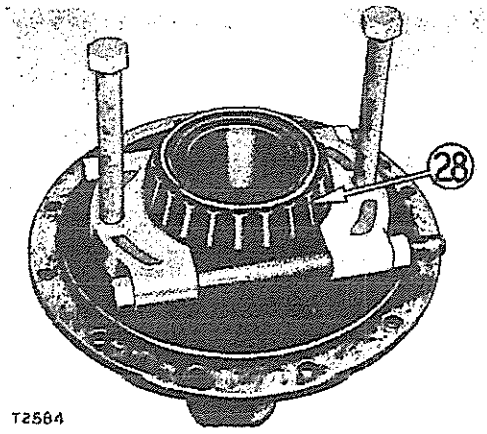

PULLING FINAL DRIVE GEAR BEARING

28—Bearing.

◆

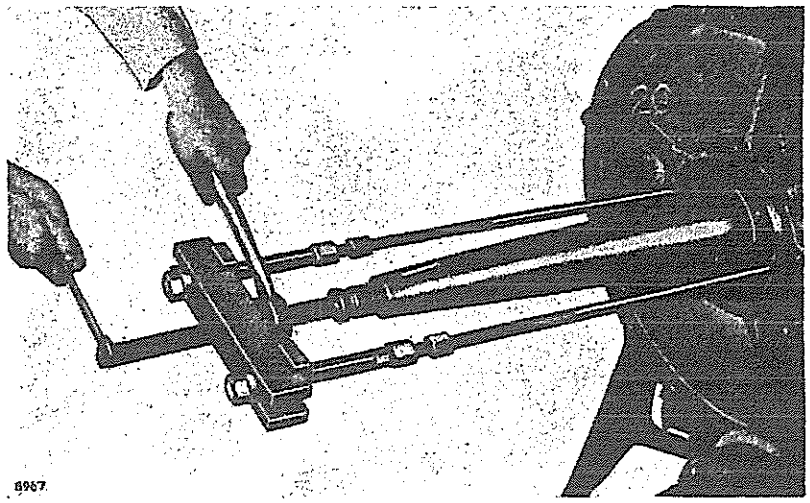

PULLING BEARING RACE
29—Bearing cup.

The bearing **(28)** on the inner end of the hub can be pulled using the 5F7343 Attachment and the two 5F7379 Forcing Bolts as shown.

The bearing cup **(29)** can be pulled using two 1B4658 Arms, one 1F7057 Yoke, 8B7548 Push Puller, 4B6091 Yoke and two 5/8"-11 (NC) thick nuts to connect the adapters and the ends of the puller arms.

SPROCKET SHAFT

Remove the snap ring and pin and unscrew the nut adjacent to the diagonal brace bearing.

Attach the sprocket shaft pulling arrangement as shown and pull the shaft. The following tools are used with the 6F25 Service Press:

5F9890 Puller Group
5F9888 Adapter Coupling
5F9892 Pin
5F9885 Adapter
5F9889 Plug
7F9306 Spanner Wrench

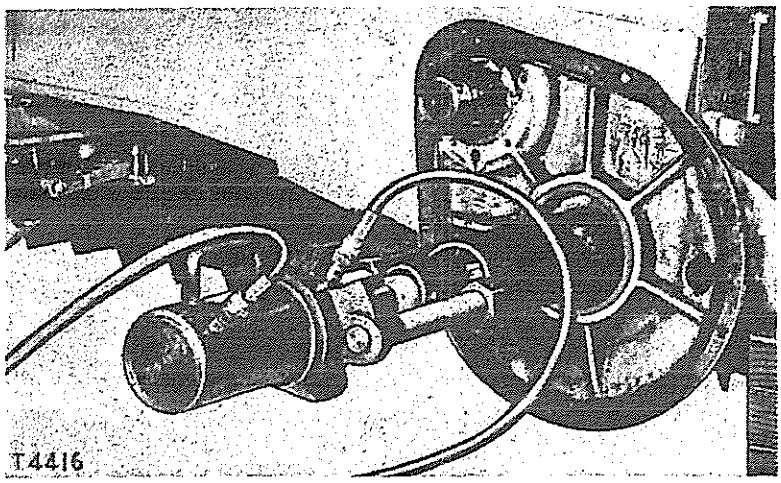

SPROCKET SHAFT PULLING

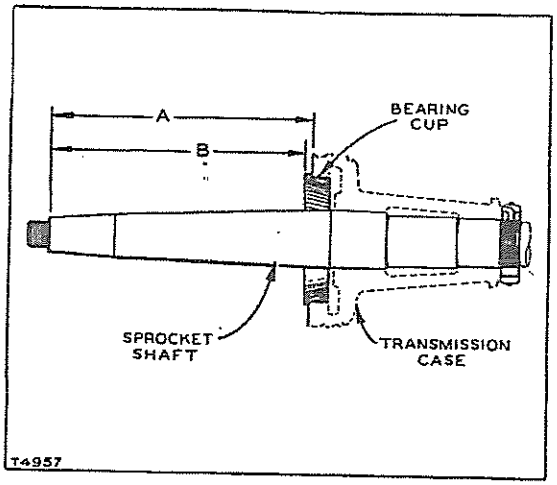

DIMENSIONS WITH SPROCKET SHAFT PROPERLY INSTALLED
60" Gauge A–15 5/32". B–14⅞".
74" Gauge A–22 5/32". B–21⅞".

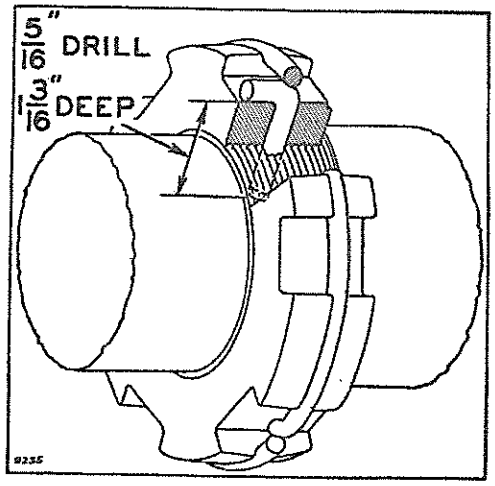

SPROCKET SHAFT RETAINING NUT

To install a new shaft, drive the shaft into position using the 5F9885 Adapter, 5F9889 Plug and the 5F9892 Pin, at the same time tightening the nut adjacent to the diagonal brace bearing.

Securely tighten the nut and lock it in the following manner. In one of the notches on the nut, drill a .3125" diameter hole 1 3/16" deep through the nut and into the shaft. Place the lock pin in the hole and install the snap ring to hold the pin in place.

ADJUSTMENTS

Final Drive Bearings

After the final drive has been assembled, adjust the bearings. With the adjusting nut lock removed and the clamping nut **(1)** loose, tighten the

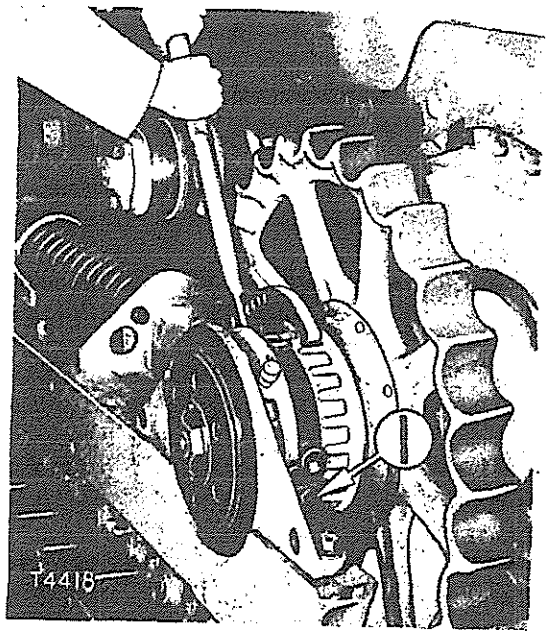

ADJUSTING FINAL DRIVE BEARINGS
1—Clamping nut.

◆

adjusting nut in a counterclockwise direction as tight as possible using a five foot extension on the 7F9306 Spanner Wrench.

Securely tighten the clamping nut **(1)** and install the lock.

SPROCKET

The sprocket can be centered in the track roller frame by moving the roller frame closer to or away from the tractor. This is accomplished by adding or removing shims **(2)** on the outer end of the sprocket shaft. Adding shims moves the roller frame out and removing shims moves the roller frame closer to the tractor.

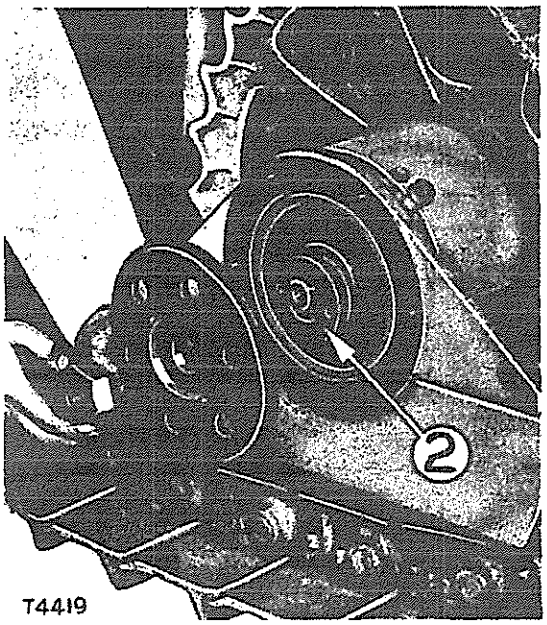

LOCATING TRACK ROLLER FRAME

2—Shims.

◆

ALIGNING TRACK ROLLER FRAME WITH SPROCKET

When installing the track roller frame **(10)**, the center of the track rollers should be centered with the drive sprocket **(9)**, so that the track will lead straight off of the rear roller **(8)** onto the drive sprocket and not rub-against either the sides of the sprocket or the rims of the track roller.

The drive sprocket **(9)** should be centered in the recess of the rear track roller **(8)** so that the spaces **(11)** and **(12)**, between the outer face of the sprocket and the inner edge of the track roller rim, are equal. When this is properly adjusted, the diagonal brace **(13)** should be checked to see that there is some clearance at **(14)** and **(15)** in the recess in the steering clutch case **(16)**.

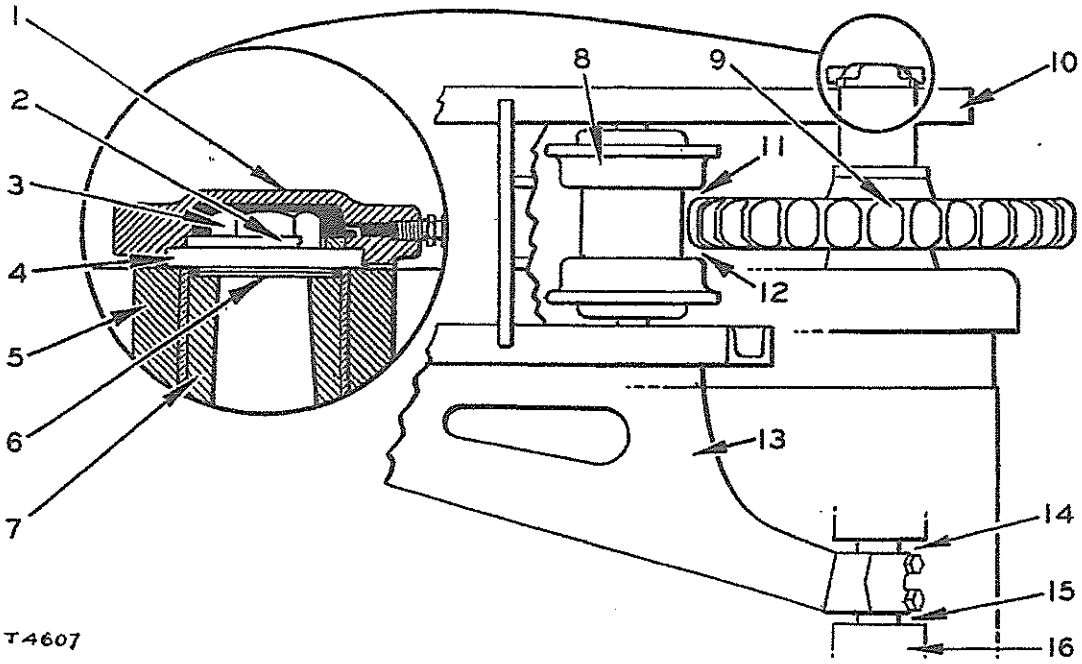

ALIGNING TRACK ROLLER FRAME WITH SPROCKET

1—Cap. 2—Lock ring. 3—Nut. 4—Washer assembly. 5—Outer bearing assembly. 6—Shims. 7—Bearing holder. 8—Rear track roller. 9—Drive sprocket. 10—Track roller frame. 11—Clearance. 12—Clearance. 13—Diagonal brace. 14—Clearance. 15—Clearance. 16—Steering clutch case.

This adjustment can be made by removing the cover **(1)**, from the outer bearing assembly **(5)**, and taking off the lock ring **(2)**, nut **(3)** and washer assembly **(4)**. Add shims **(6)** between the washer assembly **(4)** and the holder assembly **(7)** to move the roller frame out, decreasing the clearance **(12)** at the roller and at the diagonal brace **(14)** and increasing the clearance at **(11)** and **(15)**.

Remove shims **(6)** to allow the roller frame to move closer to the tractor, decreasing the clearance at **(11)** and **(15)** and increasing the clearance at **(12)** and **(14)**.

FINAL DRIVE PINION GROUP

Removal

Remove the steering clutch assembly as described in the topic, STEERING CLUTCHES.

Remove the capscrew and cover from the final drive pinion flange so the capscrews in the bearing cage can be removed by using a wrench as shown.

After all five capscrews have been taken out, pull the flange away from the outer wall. Considerable effort may be required at first while the bearing cage is being pulled out of the bore.

Lift the flange and pinion out of the case.

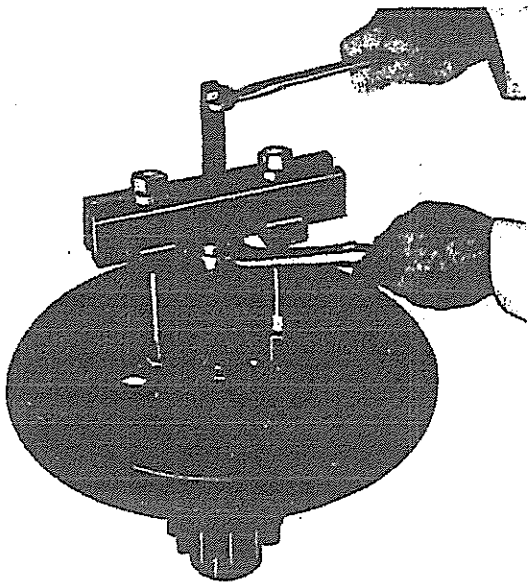

PULLING PINION FLANGE

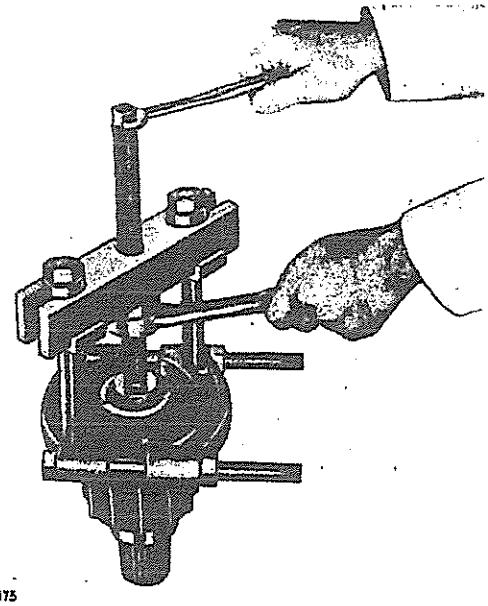

PULLING INNER BEARING RACE

Remove the capscrew and retainer washer and pull the flange from the pinion, using the 8B7548 Push Puller, two 8B7550 Legs and two 8B7556 Adapters.

Remove the bearing cage.

Remove the seal from the cage and press out the bearing.

The inner bearing races can be pulled from either end of the pinion by using the 8B7548 Push Puller and 8B7551 Adapter.

Assembly

Install the oil deflector **(6)** over the splined end of the pinion **(12)** so the outer edge bears against the pinion teeth.

Press the bearing races **(7)** and **(11)** onto the pinion and the bearing **(5)** into the cage **(10)**.

Press the seal **(4)** into the cage until it is flush with the edge of the cage. The wiping edge of the seal should be toward the bearing.

Press the outer bearing **(13)** into the final drive case.

Install the bearing cage over the splined end of the pinion **(12)**.

Apply 20 tons force to press the flange **(9)** onto the pinion after making sure the splines are clean and free from burrs.

Place a new cork seal **(3)** on the end of the pinion and install the retainer washer **(2)**, lock **(8)** and capscrew.

Tighten the capscrew securely and lock it.

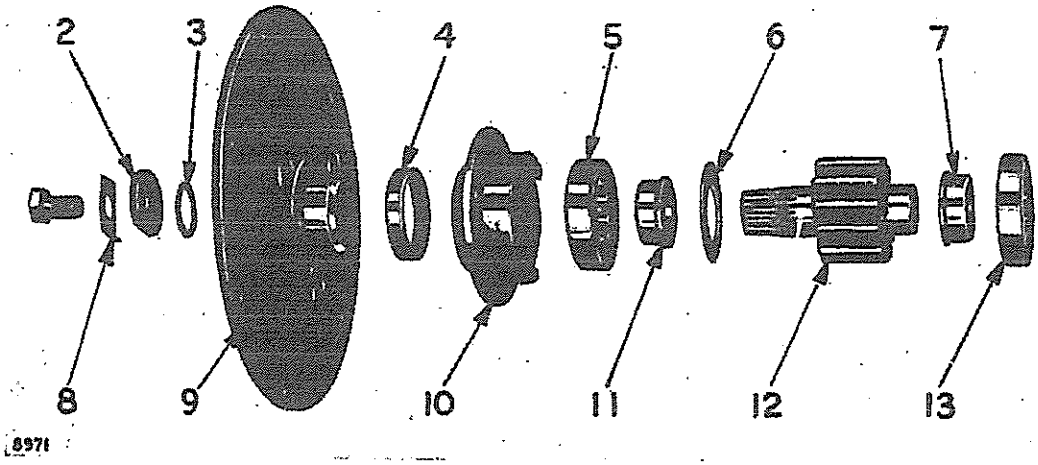

FINAL DRIVE PINION GROUP DISASSEMBLED

2—Retainer washer. 3—Cork seal. 4—Seal. 5—Bearing. 6—Oil deflector. 7—Bearing race. 8—Lock. 9—Flange. 10—Cage. 11—Bearing race. 12—Pinion. 13—Outer bearing.

TRACK ROLLER FRAME GROUP

The track roller frame assembly provides a mounting for the track rollers **(7)**, track carrier rollers **(3)**, front idlers **(10)**, recoil springs **(4)** and equalizer spring **(9)**.

The weight of the tractor is carried through the frame **(8)** to the rollers.

The diagonal brace **(2)**, welded to the inside of the frame, maintains correct track roller frame alignment.

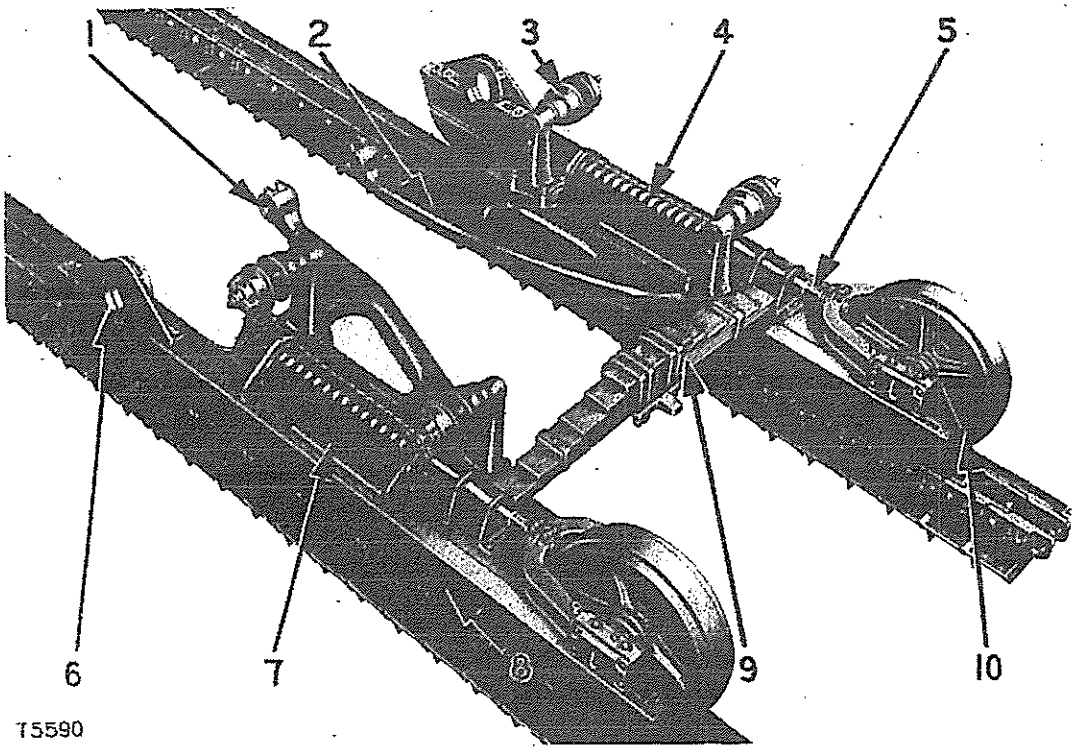

TRACK ROLLER FRAME GROUP

1—Diagonal brace bearing. 2—Diagonal brace. 3—Track carrier roller. 4—Recoil spring. 5—Track adjusting screw. 6—Outer bearing. 7—Track roller. 8—Frame. 9—Equalizer spring. 10—Front idler.

This construction allows each track frame to operate independently and to move up and down relative to one another by pivoting at the sprocket shaft through outer bearings **(6)** and diagonal brace bearings **(1)**.

The track tension is adjusted by the track adjusting screw **(5)**.

Tracks

The track link assembly consists of links, pins and bushings. As shown, each link **(6)** overlaps the preceding link thus forming a continuous chain. Each link is counterbored in the overlapped portion to provide a tight well sealed joint to reduce the entrance of abrasives.

The bushings **(8)** are all alike except the master bushing **(1)** which is shorter for assembly purposes. With the master bushing, collars **(4)** are inserted in the counterbored space. The pins **(7)** are alike except the master pin **(5)** which is taper reamed and split at each end. This construction permits the tapered plug **(2)** to be driven into the master pin to hold the pin in position in the links on earlier tractors.

The cork **(3)** protects the threads in the plug.

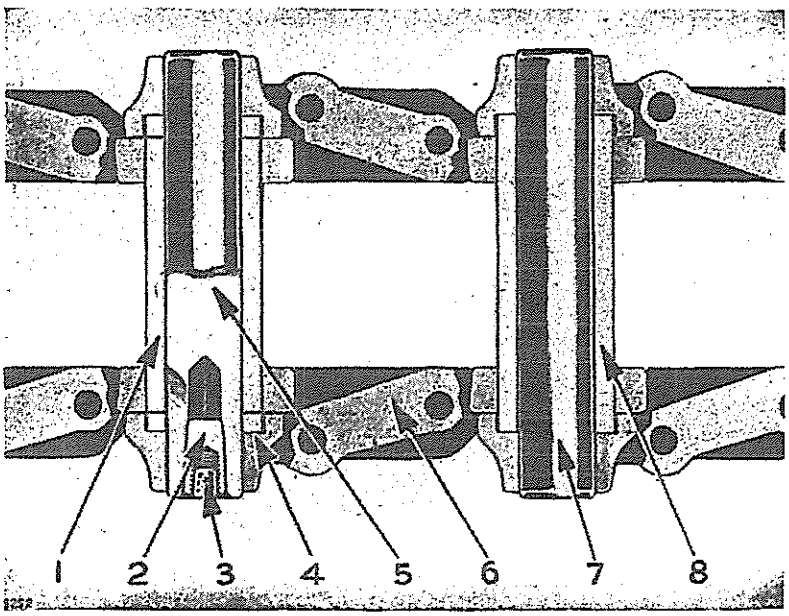

TRACK PIN AND BUSHING CROSS-SECTION
1—Master bushing. 2—Tapered plug. 3—Cork. 4—Collar. 5—Master pin (earlier tractors). 6—Link. 7—Pin. 8—Bushing.

Remove the guard over the track adjusting nut and loosen the track adjustment as much as possible.

Place a block approximately 12" high in front of the track and drive the tractor forward so the track shoe below the master pin rides on the block and the slack is taken out of the bottom part of the track.

The master pin will then be in a position in front of the idler and approximately even with the top of the track roller frame.

Set the brake so the slack will remain in the top part of the track.

Master Pin Removal and Installation (Earlier Tractors)

Remove the corks from the master pin plugs and pull the plugs from both ends of the pin, using a 2B2108 Sleeve **(9)**, 3B1027 Screw **(10)** and a 3B1028 Nut **(11)**.

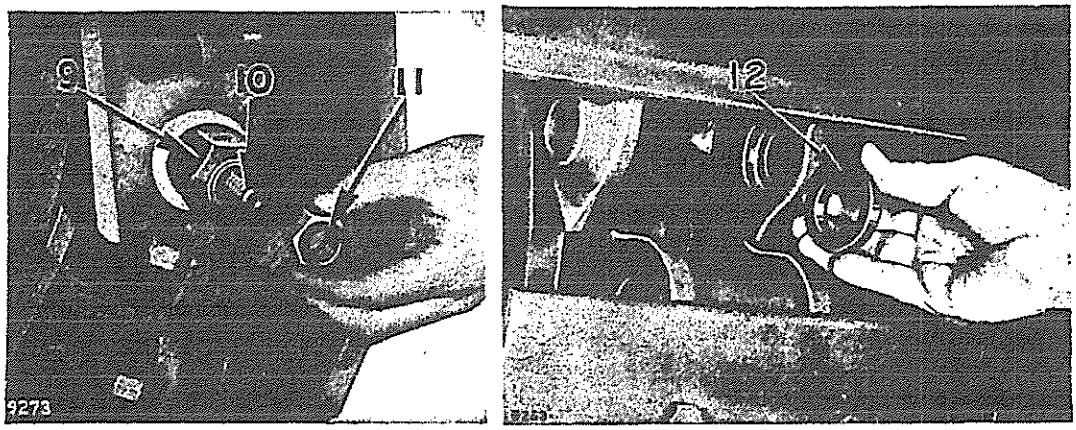

REMOVING MASTER PIN PLUG AND BUSHING COLLAR
(Earlier Tractors)
9—2B2108 Sleeve. 10—3B1027 Screw. 11—3B1028 Nut. 12—Bushing collar.

Drive out the master pin, using a suitable driver inserted in the plug hole of the master pin. Avoid damaging the tapered bore in the master pin.

Remove the bushing collars **(12)**.

Install the master pins in the reverse order cleaning the tapered plugs and the mating surfaces in the master pin thoroughly.

Master Pin Removal and Installation (Later Tractors)

After the preliminary steps described in the topic, SEPARATING TRACK, have been taken, the 1H338 Driver can be used to drive the tapered plugs from the master pin and the master pin from location in

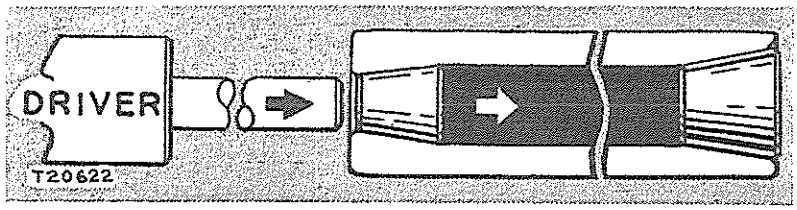

REMOVING TAPERED PLUGS AND MASTER PIN

one operation. The driving is done from the small tapered plug end of the master pin.

Remove the bushing collars.

To install the master pin place the bushing collars in position and drive the master pin in from the outside of the track with the small taper bore facing outward.

NOTE

> The master pin may have had either tapered bore facing outward at the time of removal but this installation procedure is suggested to provide for easier future removal of the master pin.

Insert a small tapered plug from the inside of the track and, using the 1H339 Pilot and the 1H338 Driver, sledge the small plug in place.

Remove the driver and pilot and sledge the large plug into position.

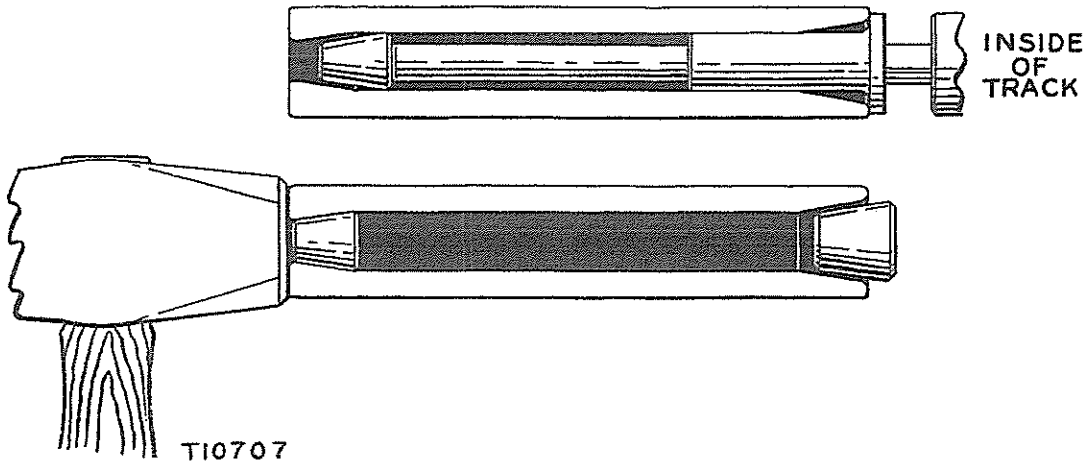

DRIVING IN PLUGS
(Showing method of backing master pin with sledge.)

NOTE

It may be necessary to "back up" or "buck" the master pin with another sledge when driving in either, or both, taper plug. Otherwise the master pin may be driven out of location or the tapered plugs may not be properly seated.

REMOVING AND INSTALLING TRACK

Back the tractor very slowly to lay out the track. To replace the track, back the tractor until the sprocket is just ahead of the rear end of the track. With the bar in the track, aid the track to climb up and over the sprocket, carrier rollers and idler as the tractor is driven slowly forward.

WARNING

In the interest of personal safety, always hold the bar from the side as shown.

With the block under the first track shoe, the track will come together.

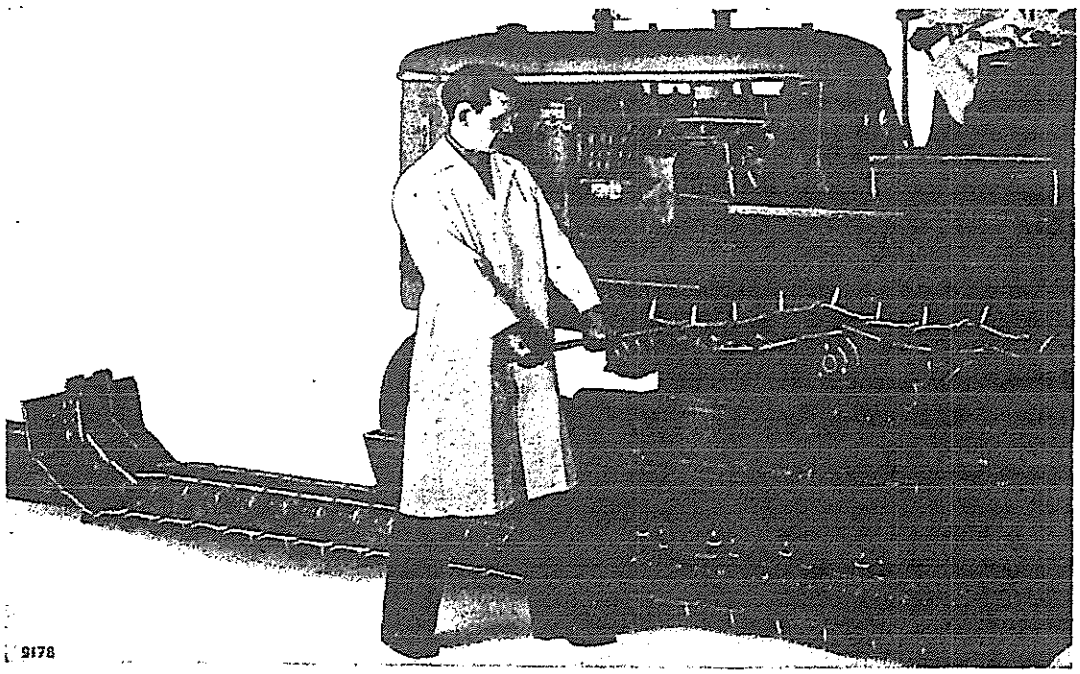

INSTALLING TRACK ASSEMBLY

TRACK LINKS

A damaged track link not adjacent to the master pin can be replaced without disassembling the track.

Remove the shoe from the track links in question.

Press out the track pins at both ends of the track link. It will not be necessary to cut both links as shown in the accompanying illustration.

Cut in two the link to be replaced and a 5/8" section out of the bushing with a torch.

Remove the cut link **(A)** and bushing **(B)**, the other part of the cut link **(C)** and then the other link **(E)** and the remaining part of the bushing **(D)**.

Due to the possibility of uneven wear, install two new links on the track.

Install a standard track pin in the overlapping portions of the new links and a master bushing at the opposite ends.

Insert collars in the counterbore of the mating links and press in either a master pin or a standard track pin as desired.

Install master pin plugs.

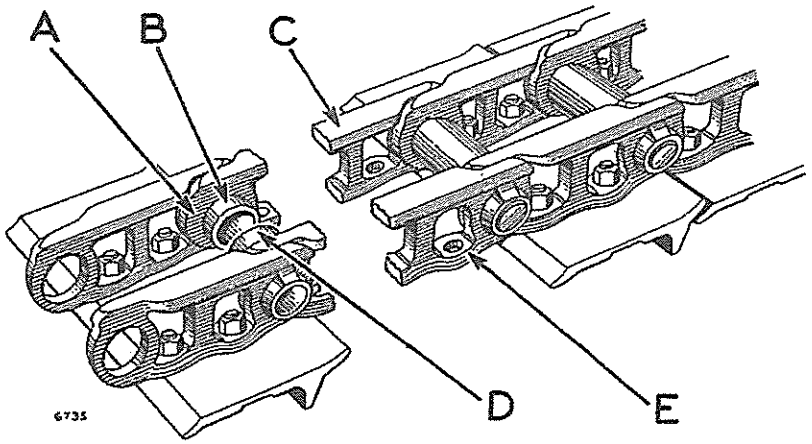

REPLACING DAMAGED TRACK LINK
A—Cut link. B—Bushing. C—Cut link. D—Bushing. E—Link.

TRACK PINS AND BUSHINGS

To obtain maximum life of track pins and bushings, the wear on the outer diameter of the bushing should not exceed 1/8" before turning. To turn pins and bushings, they should be pressed out, rotated 180° and reinstalled to obtain new contact surfaces.

Disassembly

There are two types of presses for track reconditioning:

1. Heavy duty power press.

2. Portable hand press.

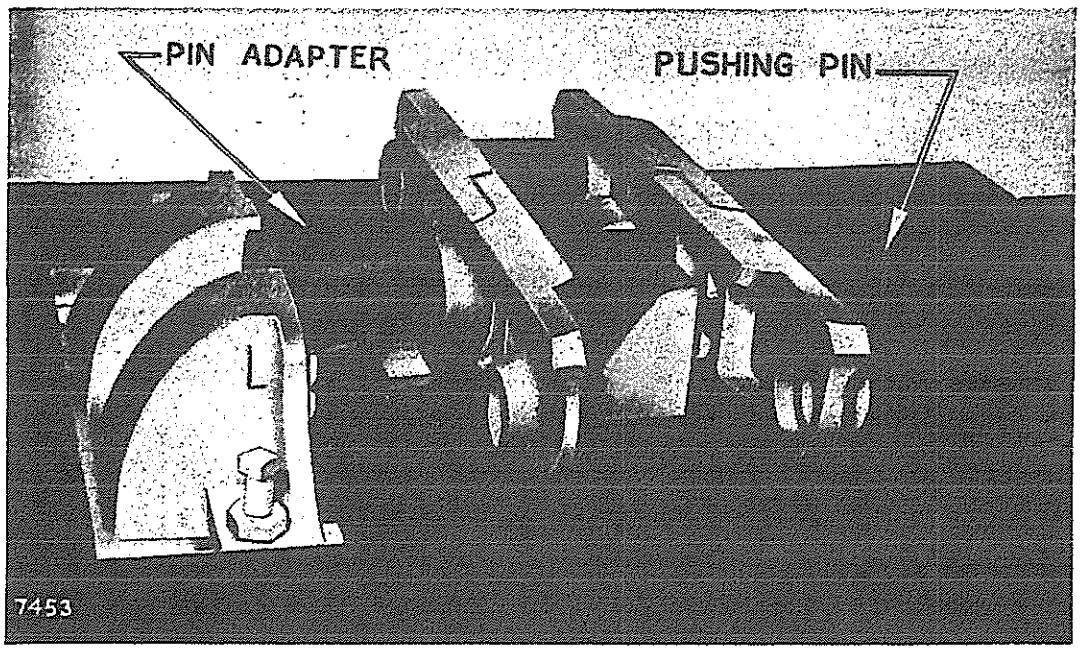

FIG. 1 REMOVING LINK

These illustrations show the use of a heavy duty power press.

Press out the track pins using a pin adapter and bushing pin (Fig. 1).

Press the bushing out of one link using the jaws and bushing pusher (Fig. 2).Turn the link around and then press the bushing out of the other link.

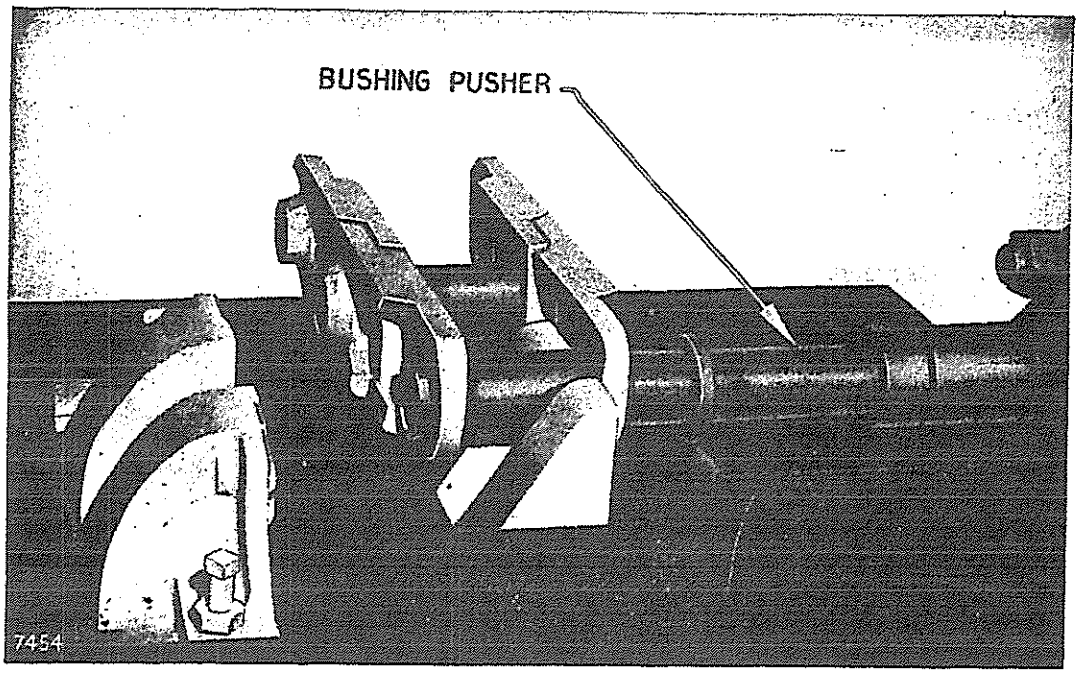

FIG. 2 REMOVING BUSHING

Assembly

Press the bushing in place using a bushing adapter, bushing assembly pin and bushing collar (Fig. 3).

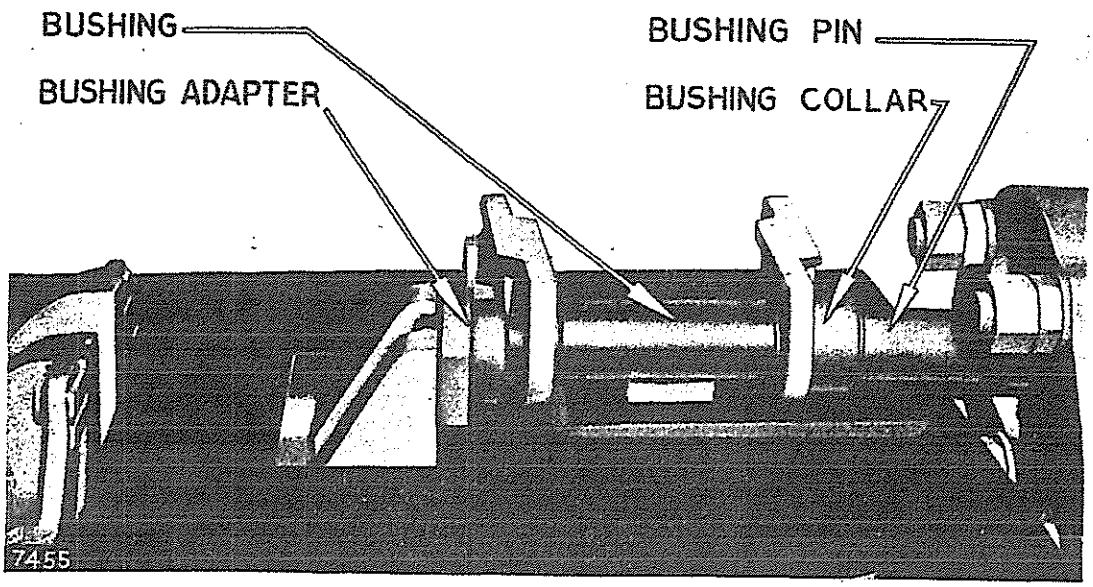

FIG. 3 PRESSING BUSHING IN PLACE

Place one of the next links in position with the counterbore of the links on the bushing previously installed. With the pilot pin in place, press the

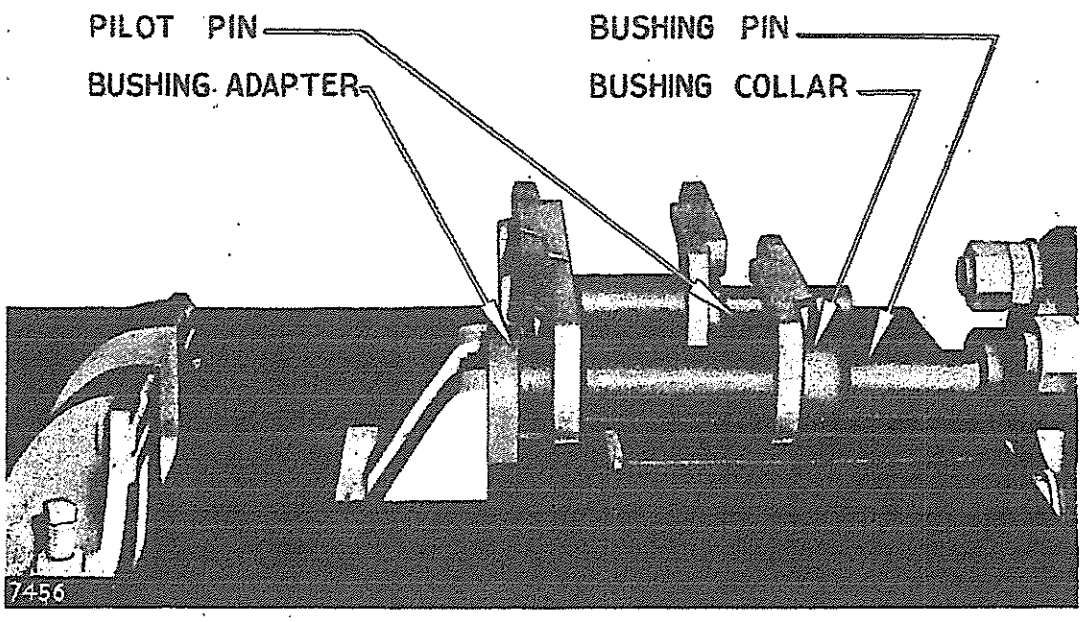

FIG. 4 ASSEMBLING TRACK

bushing into position using the bushing adapter, bushing assembly pin and bushing collar (Fig. 4).

After the bushings are pressed into position, press in the track pins.

TRACK PIN AND BUSHING RECONDITIONING
(One Bolt Method)

This method can be used only when the bushings are of the same outside diameter throughout their entire length.

A method of rotating pins and bushings or the installation of new pins and bushings is commonly called the one-bolt method. The links are not separated from the shoes—only one bolt is removed.

Before starting to disassemble the track, uniformly mark each pin, bushing and track link by some suitable means. This identification will aid in the assembly of the track inasmuch as the location of wear of each part will not have to be determined at the time of assembly.

Remove the peened metal or rough edges from the track links.

Disassembly and Assembly

1. Remove all of the track pins **(1)**.

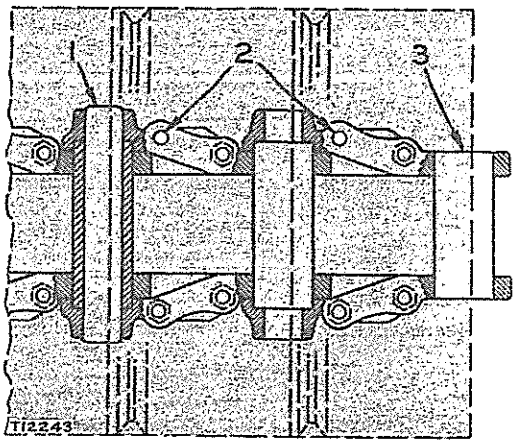

PREPARING TO REMOVE PIN AND MASTER BUSHING
1—Track pin. 2—Bolts. 3—Master bushings.

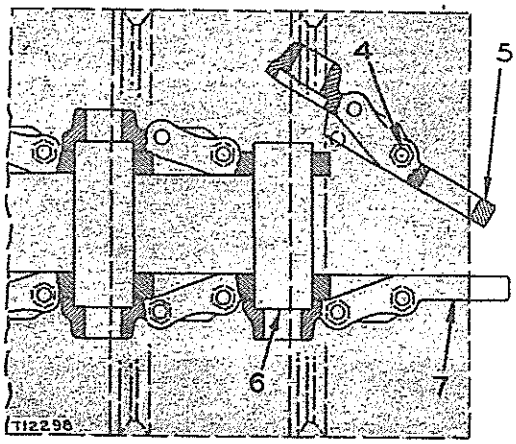

PIVOTING TRACK LINK
4—Bolt. 5—Link. 6—Bushing. 7—Link.

2. Remove the one bolt **(2)** nearest the pin bore end of the link from all of the shoes except the shoe on the master pin end of the track (the open end).

3. Remove the master bushing **(3)**.

4. With a firm blow of a sledge strike the end of the link **(5)** from which the bolt has been removed. The link will pivot around the remaining bolt **(4)** sufficiently to allow uncoupling the two links **(5)** and **(7)** from the extended portion of the next bushing **(6)**.

5. Uncouple the link **(7)** from the bushing **(6)** and move the assembly away from the track as shown.

6. Continue as before, remove the bushing **(6)**, pivot the link **(9)**, uncouple the link **(10)** from the bushing **(8)** and move the assembly away from the remaining links until the last link of the track is reached, then remove the bushings only.

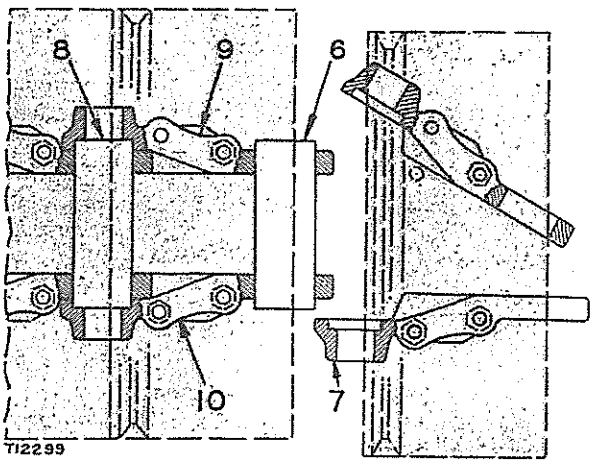

ONE LINK ASSEMBLY REMOVED FROM TRACK

6—Bushing. 7—Link. 8—Bushing. 9—Link. 10—Link.

◆

7. If bushings and pins are being turned, rotate the last bushing that was removed, 180° and press into place.

8. Slide the next link and shoe assembly into position connecting the counterbore with the bushing of the rigid link previously assembled.

9. Pivot the nonrigid link into place positioning the counterbore over the extended portion of the bushing.

10. As the link pivots, the bolt holes in the shoe and the link will line up allowing the installation of the track shoe bolt.

11. Repeat this procedure until all the bushings and bolts have been installed.

12. Install all of the track pins, rotating them 180°.

13. Install the lockwashers and nuts on the track shoe bolt and tighten.

14. Check the remaining bolts for looseness and tighten if necessary.

USING THE 6F25 SERVICE PRESS

The following illustrations show the use of the 6F25 "Caterpillar" Service Press for track work.

Screw the two tension rods **(6)** evenly into the holes provided in the cylinder head **(7)**.

Assemble the yoke **(4)** onto the tension rods with the nuts **(1)** so that the face of the yoke is at right angles to the tension rods.

Pin Removal

Install the ram cap **(3)** on the ram of the service press.

Place the adapter **(5)** in the hole of the yoke **(4)**.

Place the track link against the adapter with the boss of the link inserted in the recess of the adapter.

Place the pin pusher **(2)** against the track pin and with the necessary ram caps (short, long or both) between the pin pusher and ram cap, force the track pin out.

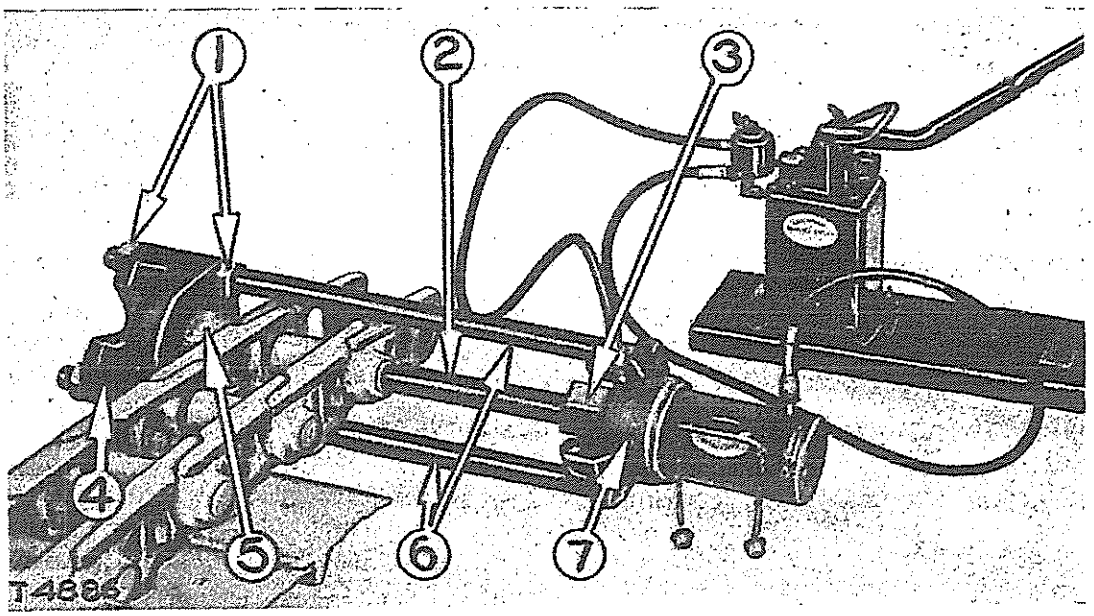

PIN REMOVAL
1–5F9432 Nuts. 2–5F9451 Pin Pusher. 3–5F9438 Ram Cap. 4–5F9427 Yoke.
5–5F9449 Pin and Bushing Adapter. 6–5F9429 Tension Rods.
7–Cylinder head.

Pin Installation

The track pin is installed in the reverse order of removal with one exception, which is that the track pin and necessary ram caps are used in place of the pin pusher **(2)**.

Bushing Removal

The track pins must be removed from both ends of the track link as outlined in the covering topic.

Place the track bushing **(9)** in the slot of the yoke as shown.

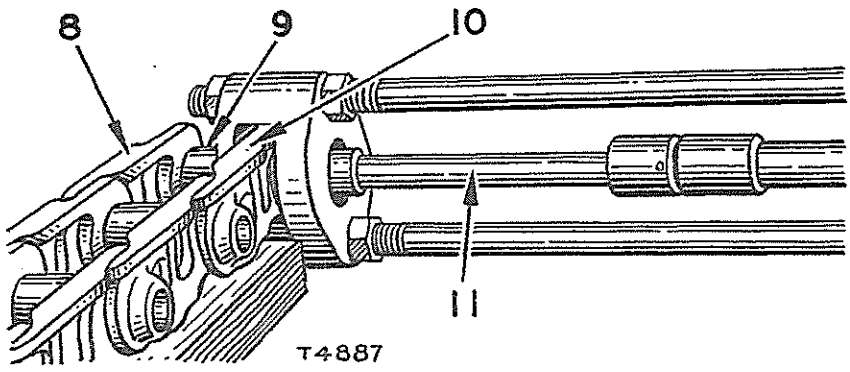

REMOVING LINK FROM BUSHING
8–Link. 9–Bushing. 10–Link. 11–5F9452 Bushing Pusher.

Insert the short end of the bushing pusher **(11)** through the yoke and into the bushing.

Fill in this space between the pusher and the ram cap with the necessary ram caps and force the bushing **(9)** out of the link **(10)**.

Turn the bushing **(9)** end for end and remove the bushing from the other link **(8)** in the same manner.

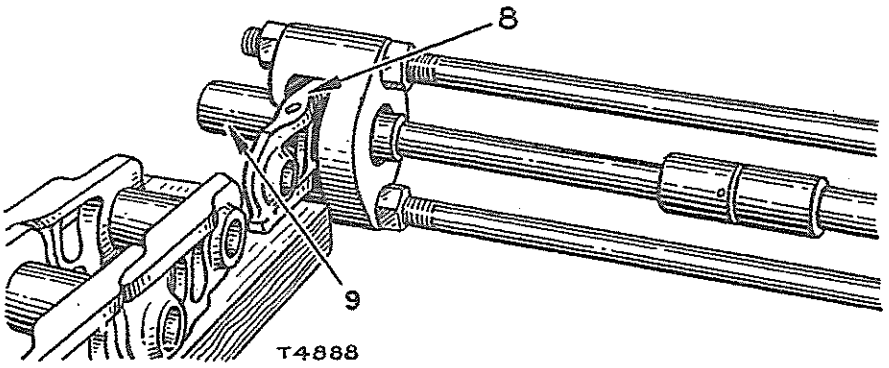

REMOVING BUSHING
8—Link. 9—Bushing.

Bushing Installation

Place the assembly collar **(12)** over the long end of the bushing pusher **(11)** and insert the long end of the pusher through the link **(10)**, bushing **(9)** and the other link **(8)** and into the adapter **(5)**.

Insert the pin pusher **(2)** in the other end of the links to align the holes.

Fill in the space between the ram and bushing pusher with ram caps and press both links on the bushing in one operation.

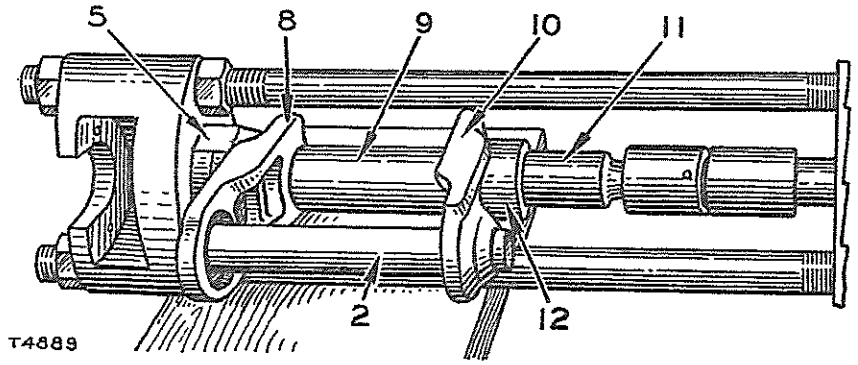

BUSHING INSTALLATION
2–Pin pusher. 8–Link. 9–Bushing. 10–Link. 11–Bushing pusher. 12–5F9450 Assembly Collar.

To continue the assembly of the track, place the links **(13)** and **(15)** over the ends on the previously assembled links **(8)** and **(10)**, and install the pin pusher **(2)** through the link **(15)**, the bushing **(9)** and link **(13)** and continue assembly by installing track links on bushing **(14)**.

After the links and bushings are assembled, install the track pin as outlined in the covering topic.

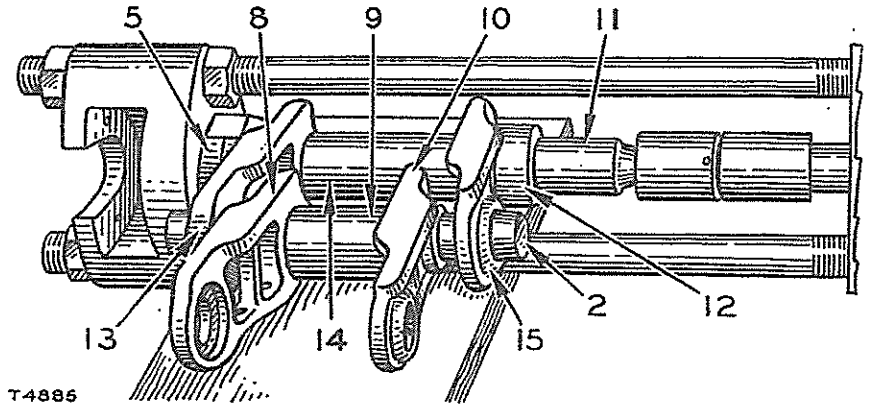

TRACK LINK AND BUSHING ASSEMBLY
2—Pin pusher. 5—Adapter. 8—Link. 9—Bushing. 10—Link. 11—Bushing pusher. 12—Assembly collar. 13—Link. 14—Bushing. 15—Link.

Track Carrier Rollers

The track carrier rollers support the weight of the track between the sprocket and front idler. The carrier roller brackets are of the cantilever type and are mounted on pads on the inner channel of the track roller frame.

REMOVAL

Insert a short piece of hardwood 4" x 4" or a steel pipe between the sprocket and the top section of the track and move the tractor back until the track is lifted off the carrier roller. The roller can then be removed from the shaft, or the bracket and roller removed as a unit.

CAUTION

Remove the track roller frame guards and observe the recoil spring as the tractor is backed. Care should be exercised to prevent complete compression of the recoil spring during this operation in order to prevent damage to the front idler and final drive parts.

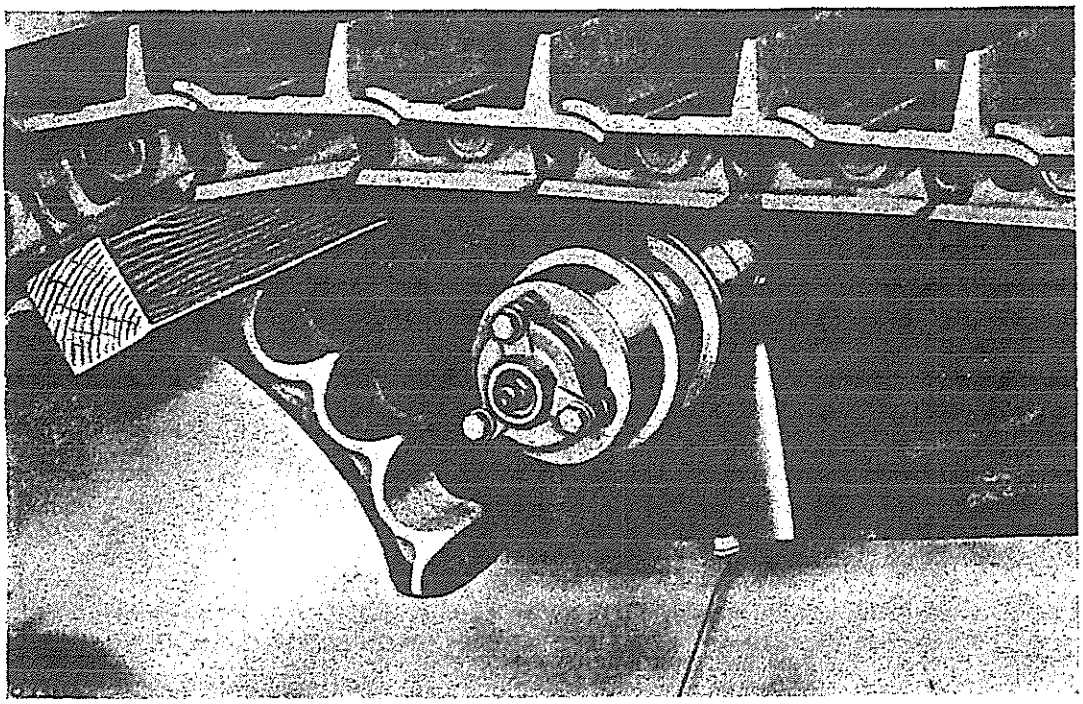

RAISING TRACK FROM CARRIER ROLLER

DISASSEMBLY AND ASSEMBLY

Take out the capscrews and remove the cap **(1)** and rubber ring seal **(2)**.

Flatten the lock **(7)** and remove the capscrews, lock and washer **(8)**.

Slide the roller **(9)** off the shaft.

If the seal **(10)** is worn or damaged, remove the snap ring **(11)** and install a new seal with the wiping edge toward the roller bracket **(12)**. If the seal sleeve **(6)** is badly grooved from contact with the seal, it should be replaced. To remove the sleeve, cut it with a chisel. Heat the new sleeve and slip it on the shaft.

Clean out the lubricant passage in the shaft before installing the roller.

If the shaft **(5)** is damaged or badly worn, it can be pressed out of the bracket **(12)** after the bracket is removed from the machine.

Press in the new shaft until the end is 8¼" from the face of the bracket.

Install new bushings **(3)** and **(4)** if the clearance exceeds .050".

Care should be taken not to damage the bushings when they are pressed in. White lead should be used on the outside of a bushing when pressing it into position. The bushing in the bracket end of the roller should be pressed in flush with the bottom of the counterbore or approximately 1 3/16" from the face of the hub.

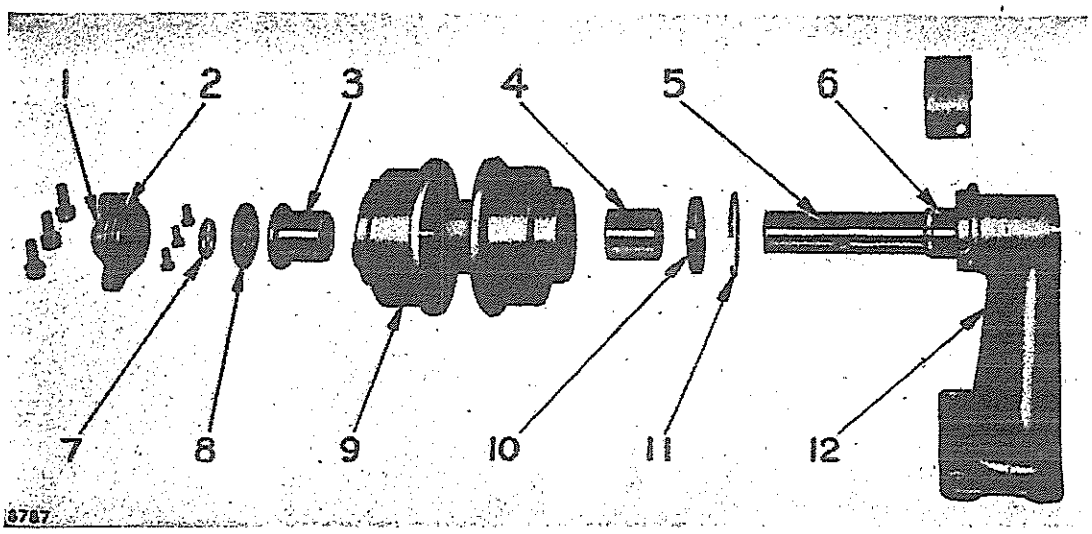

TRACK CARRIER ROLLER GROUP
1—Cap. 2—Rubber ring seal. 3—Bushing. 4—Bushing. 5—Shaft. 6—Seal sleeve. 7—Lock. 8—Lock and washer. 9—Roller. 10—Seal. 11—Snap ring. 12—Roller bracket.

Track Rollers

The track rollers support the tractor and distribute its weight along the length of the track. 6 track rollers, 2 single flange and 4 double flange, are used on each track roller frame. The single flange rollers are used at front and rear with the double flange rollers between them.

The track rollers are of the center thrust construction in which the flange at the center of the track roller shaft takes the side thrust of the roller. The amount of side movement or end clearance is determined by the machining limits of the track roller bushings, track roller overall width and shaft flange width.

REMOVAL

Remove the guard over the track adjusting screw and loosen the track adjustment as far as possible.

Place a block, approximately 12" high, in front of the track and run the tractor forward onto the block.

Then place a similar block behind the track and move the tractor backward to the position shown in the illustration. Any one or all of the track rollers can then be removed.

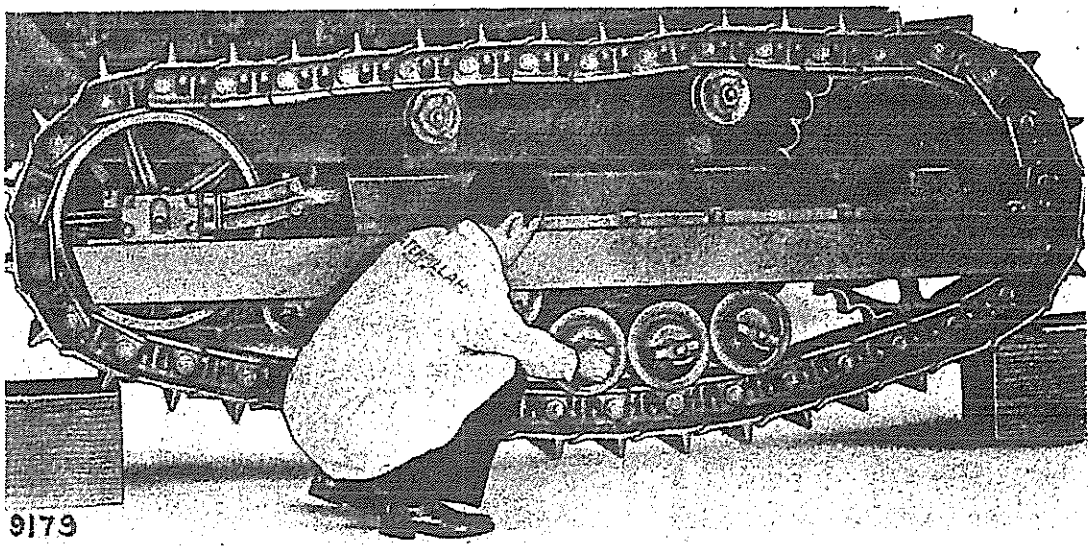

POSITION OF TRACTOR FOR REMOVING TRACK ROLLER

INSTALLATION

When installing the roller assemblies, be sure the face type seals remain in place in the end collars.

Place the rollers on the track in their proper relative positions with the notched end collars on the inside.

If the tractor is moved slightly forward, it will not be necessary to lift the rollers to install the capscrews in the end collars.

The tapping strips inside the roller frame may be replaced if any of the threads are damaged.

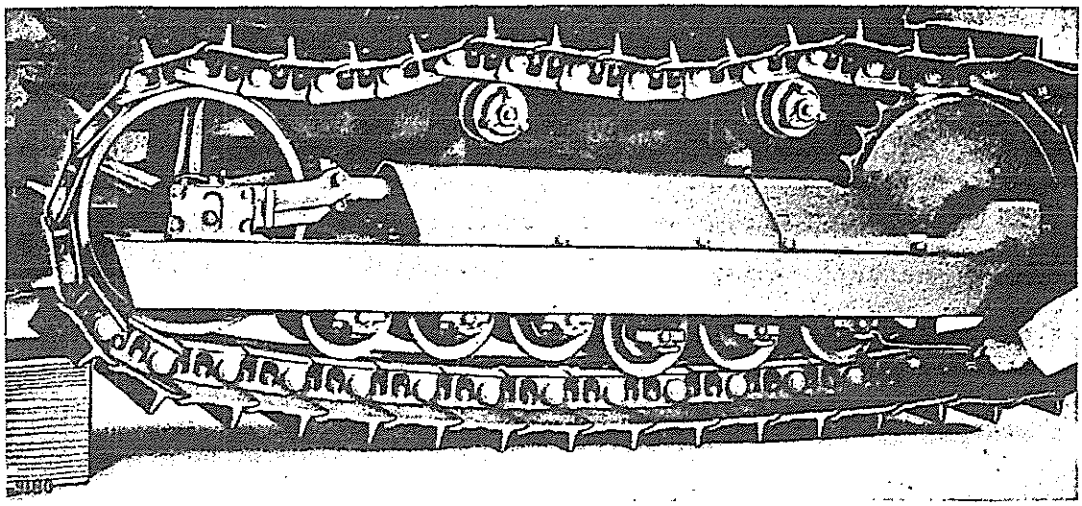

INSTALLING TRACK ROLLER

After removing the track roller assemblies, the end collars **(1)** may be slid off the shaft as shown.

The seal assembly **(B)** which is held from turning by dowels **(A)** may be lifted out of the end collar.

If the leather seal **(D)** only is worn or damaged, it can be removed and a new seal cemented to the bellows, otherwise the entire assembly should be replaced.

Soak the new assembly in warm mineral oil for about ½ hour before installing to soften the leather.

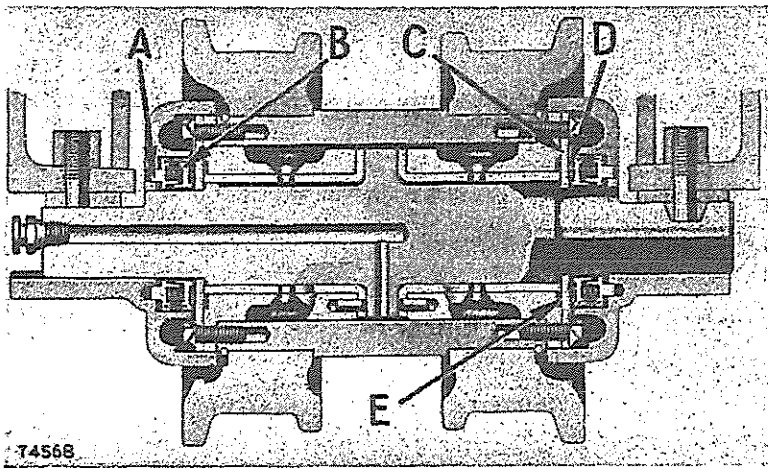

TRACK ROLLER CROSS-SECTION
A—Dowel. B—Seal assembly. C—Washer. D—Leather seal. E—Cork gasket.

Unlock and remove the capscrews which secure the washer **(C)** and composite bushing. If the washer is worn or rough, it can be turned over to provide a new wearing surface. It should be replaced if both sides are worn or rough.

Replace the cork gasket **(E)**.

The composite bushing can be pressed out of the roller by supporting the roller and pressing on the end of the shaft.

The bronze bushing **(2)** can be pressed out and replaced provided the cast iron bushing **(3)** is not damaged.

Press the bronze bushing **(2)** out of the cast iron bushing **(3)** and cut off the projecting dowels **(5)** with a hacksaw.

Smooth the face of the bushing **(3)** with a file.

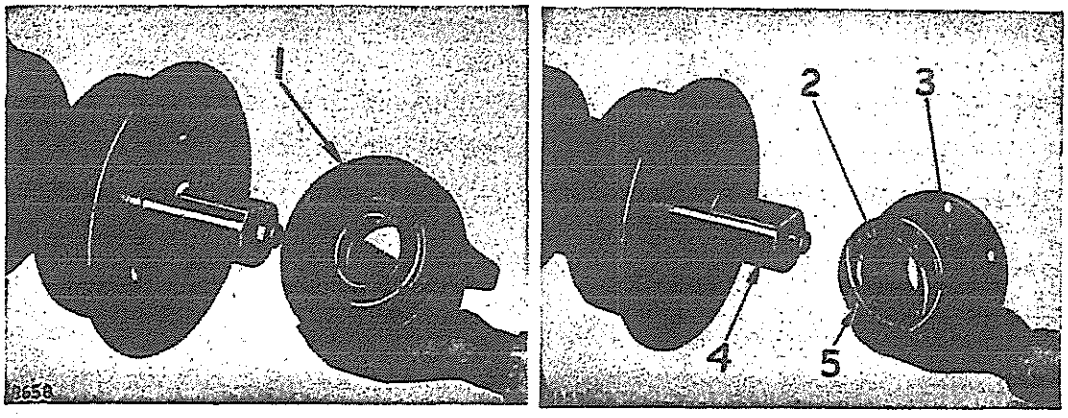

END COLLAR, SEAL AND BUSHING ASSEMBLY
1—End collar. 2—Bushing. 3—Bushing. 4—Shaft. 5—Dowel.

Press the new bronze bushing into place making certain the lubricant holes are aligned.

Drill two 19/64" holes 3/4" deep through the flange of the bronze bushing and wall of the cast iron bushing and install the proper dowels which do not extend above the face of the bushing.

Smooth the face of the bushing flange.

The shaft (4) should be replaced if badly worn or scored, or bent more than .005".

Install new bushings if the clearance exceeds .050".

ASSEMBLY

Care should be taken when pressing the composite bushings into place to see that the capscrew holes in the bushing flange are held in alignment with the holes in the roller hub.

This can best be done by screwing two studs 180° apart into the roller hub to act as guides.

White lead should be used on the outside of the bushing assembly when pressing it into place.

Install the shaft before pressing in the second bushing.

Front Idler

The front idler guides the track in position in front of the track rollers. Each front idler rotates on a hardened shaft **(1)** and center thrust bronze bushings **(3)** like the track rollers.

Bellows-type seals **(2)** keep lubricant in and dirt out.

The idler is mounted in two outer bearings **(4)** and end collars **(6)** which slide, against recoil spring pressure, back and forth on the track roller frame **(8)**.

The end collars slide on the hardened wear strips **(5)** and are held against the wear strips by rubber covered springs **(7)**.

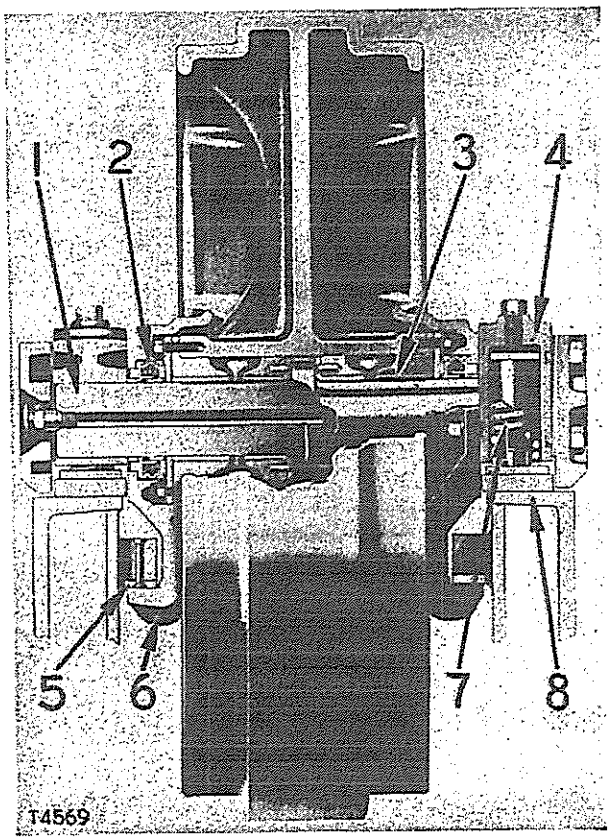

FRONT IDLER CROSS-SECTION

1—Shaft. 2—Seal. 3—Bushing. 4—Bearing. 5—Wear strip. 6—End collar. 7—Spring. 8—Track frame.

◆

REMOVAL
(Later Tractors)

Separate the track and lay it out flat as described in the topic, SEPARATING TRACK.

Remove the bolts **(A)** which hold the bearing arms **(1)** to the adjusting screw **(B)**.

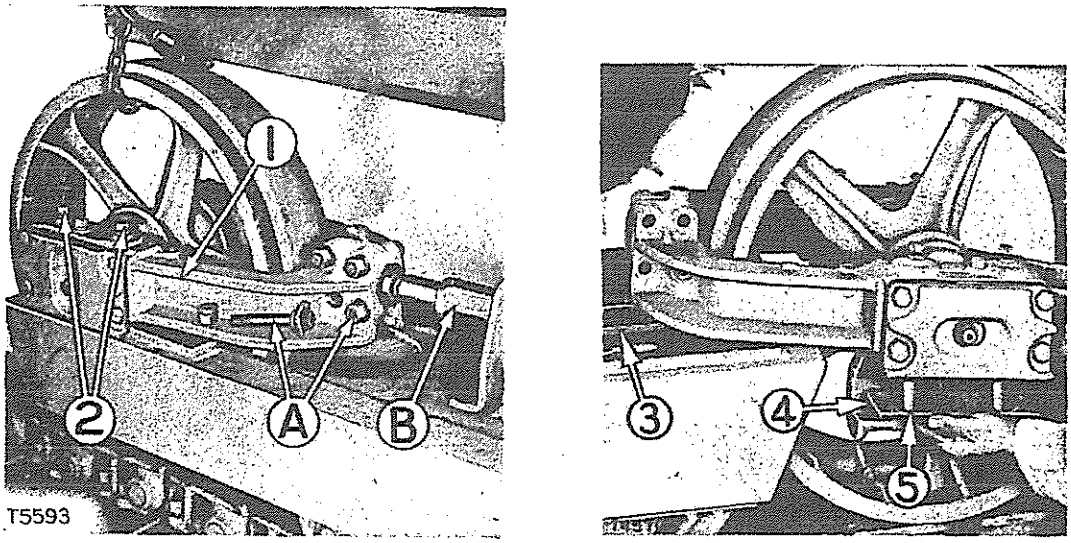

REMOVING FRONT IDLER ASSEMBLY
(Later Tractors)
1—Bearing arm. 2—Capscrews. 3—Wear strip. 4—Plate. 5—Spring. A—Bolts. B—Adjusting screw.

Loosen the two capscrews **(2)** in each bearing to relieve the pressure on the springs **(5)**.

Pull the idler forward off the track roller frame.

The plates **(4)** and springs **(5)** are free to fall out of the bearings unless held in place as the idler is removed.

The wear strips **(3)**, which are riveted to lugs on the track roller frame should be replaced if they are worn to a thickness of 1/4" or less.

DISASSEMBLY
(Later Tractors)

Remove the nut **(8)** and drive out the tapered pin **(11)**.

Slide the end collar assembly off the idler shaft.

If there is occasion to replace the end collar **(7)**, bearing **(9)** or plate **(12)**, they can be separated by removing the bolts which hold them together.

Examine the plate **(12)** for wear on the inside near the lower edge. If the plate is badly worn install a new one.

The seal **(10)**, shaft **(6)** and bearing construction is identical to that used in the track rollers.

Refer to the topic, TRACK ROLLERS, for information on the removal and installation of the shaft and bearings.

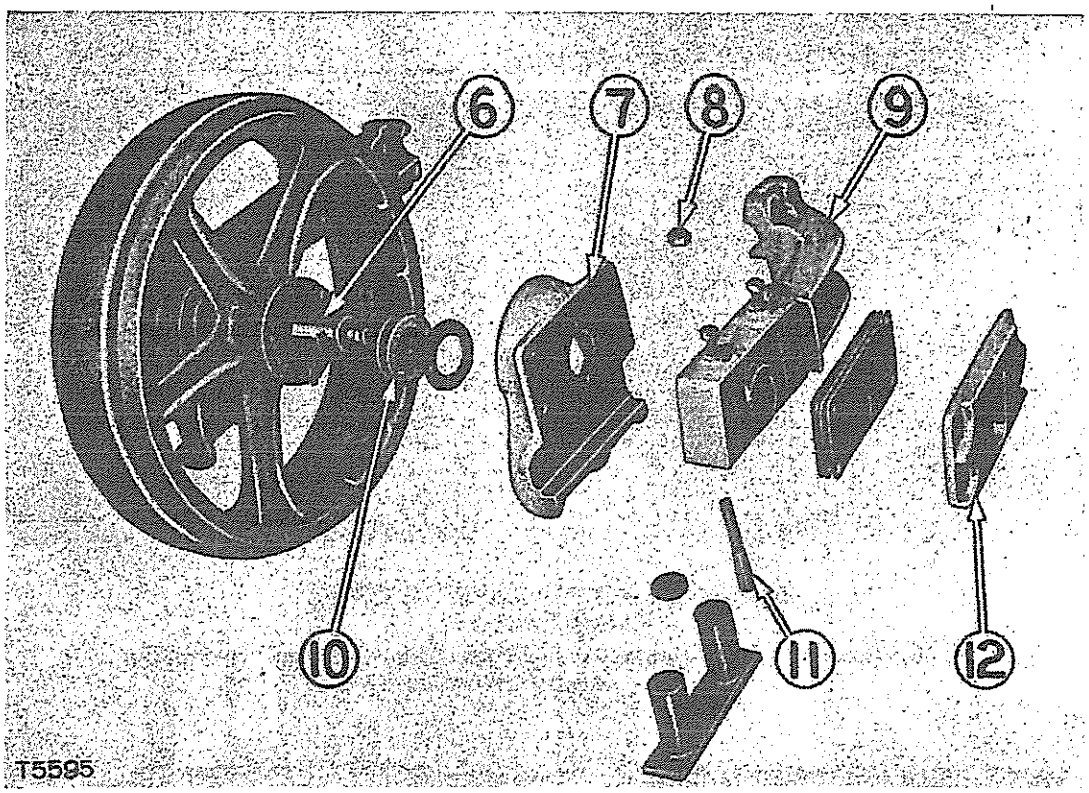

FRONT IDLER AND BEARING ASSEMBLY
(Later Tractors)
6—Shaft. 7—End collar. 8—Nut. 9—Bearing. 10—Seal. 11—Tapered pin. 12—Plate.

REMOVAL
(Earlier Tractors)

Separate the track and lay it out flat as described in the topic, SEPARATING TRACK.

Remove the capscrews which hold the arms **(1)** to the end collar bearings.

Loosen the two capscrews **(2)** in each bearing to relieve the pressure on the springs **(5)**.

Pull the idler forward off the track roller frame as shown.

The plates **(4)** and springs **(5)** are free to fall out of the bearings unless held in place as the idler is removed.

The wear strips **(3)**, which are riveted to lugs on the track roller frame, should be replaced if they are worn to a thickness of 1/4" or less.

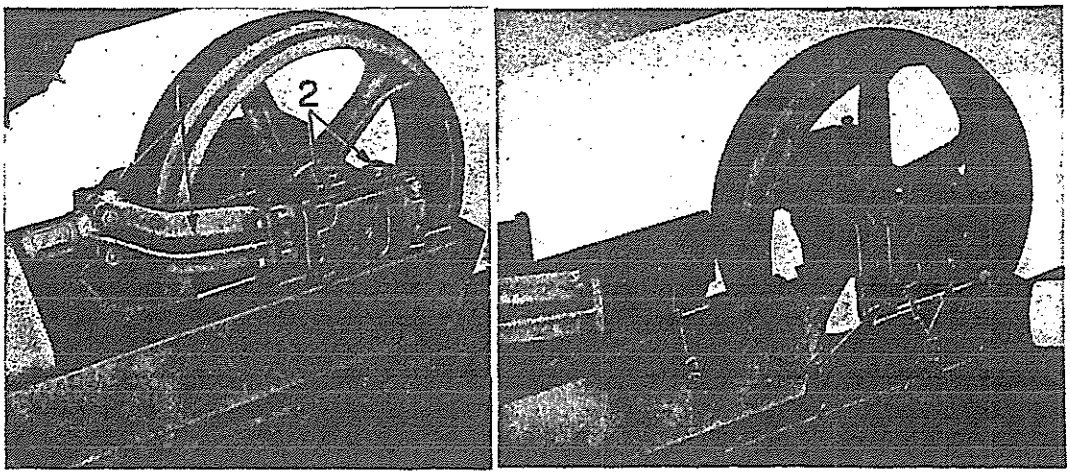

REMOVING FRONT IDLER ASSEMBLY
(Earlier Tractors)
1—Arms. 2—Capscrews. 3—Wear strip. 4—Plate. 5—Springs.

DISASSEMBLY
(Earlier Tractors)

Remove the nut and drive out the tapered pin **(11)**. Slide the end collar assembly off the idler shaft.

If there is occasion to replace the end collar **(7)**, bearing **(9)** or plate **(12)**, they can be separated by removing the bolts which hold them together.

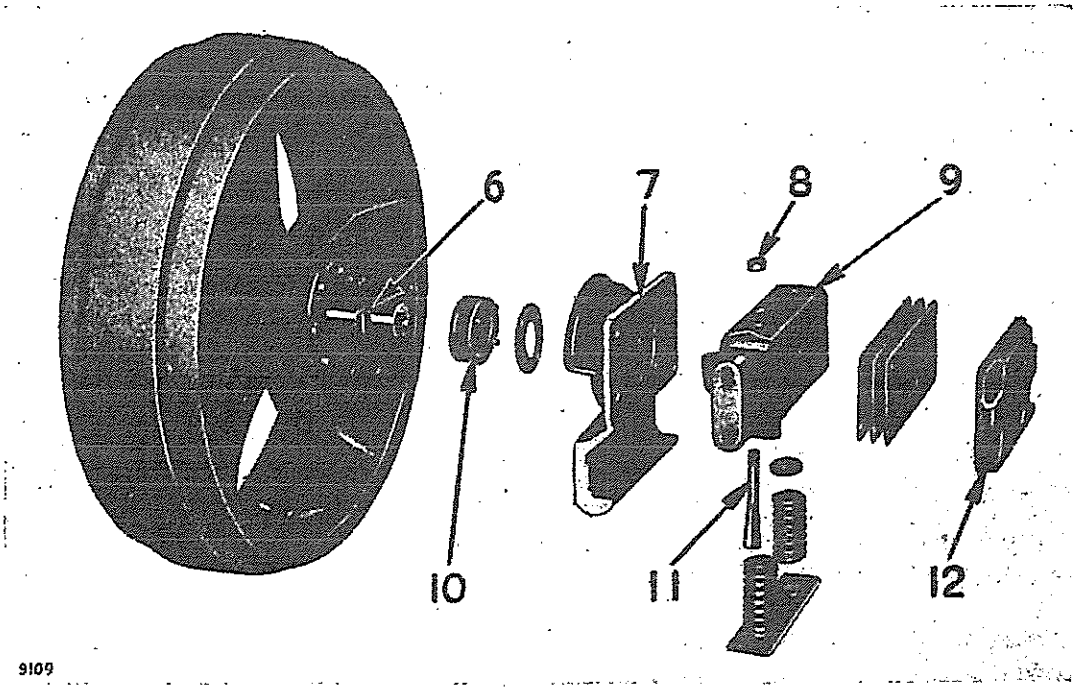

FRONT IDLER AND BEARING ASSEMBLY
(Earlier Tractors)
6—Shaft. 7—End collar. 8—Nut. 9—Bearing. 10—Seal. 11—Tapered pin. 12—Plate.

Examine the plate **(12)** for wear on the inside near the lower edge. If the plate is badly worn install a new one.

The seal **(10)**, shaft **(6)** and bearing construction is identical to that used in the track rollers.

Refer to the topic, TRACK ROLLERS, for information on the removal and installation of the shaft and bearings.

INSTALLATION

Place the seal and gasket in the end collar and slide the entire assembly onto the idler shaft.

Rotate the shaft so that the notch will be in line with the bore for the tapered pin.

Hold the end collar against the idler hub and install the pin.

Pull the pin into the hole securely by tightening the nut **(8)**.

Install the springs and plates in the end collar bearings and hold them in place while the idler is lifted up and slid onto the frame.

Install the capscrews which hold the arms to the end collar bearings.

Tighten the capscrews which compress the springs in the bearings.

NOTE

> Be sure the proper capscrews are used. They are 1½" long with threads over the entire length and when tightened, compress the springs to the proper length.

ADJUSTMENT

The shims **(13)** are for the purpose of centering the idler in the track roller frame so that it will guide the track between the flanges of the track rollers.

Examine the flanges on the first track roller back of the idler to determine if the idler needs to be shifted. If the track has been bearing heavily against the outside flange of the roller, the idler should be moved toward the opposite track.

This is accomplished by moving shims **(13)** from the bearing at the inner end of the idler hub to the outer bearing.

As the outer plate **(12)** wears it is advisable to remove shims (equal to wear) to prevent excessive side movement of the whole idler group.

FRONT IDLER ADJUSTING SHIMS

13—Shims.

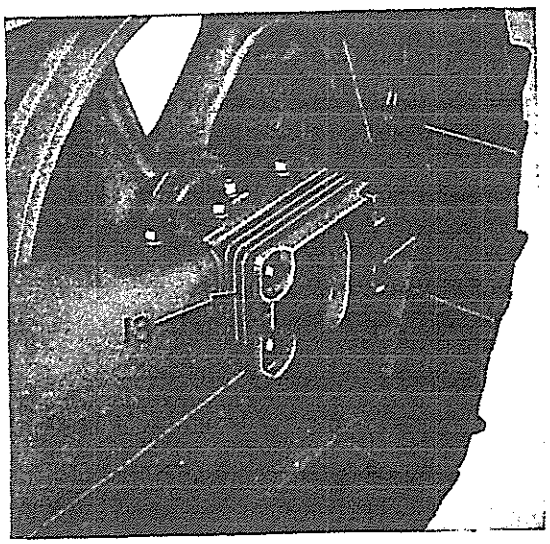

The parallel alignment of the front idler **(14)** with the track rollers and sprocket **(20)** is controlled by the position of the yoke **(16)**, adjusting screw **(17)**, recoil spring **(18)** and bracket **(19)** on the track roller frame.

If, after the correct adjustment is made with shims **(13)**, the track continues to bear more heavily against one side of the center flange **(15)** of the idler than against the other side, the parallel alignment of the yoke **(16)**, screw **(17)**, spring **(18)** and bracket **(19)** should be checked.

Misalignment can be caused by a number of things, for example, the front idler shaft can be bent or badly worn, yoke **(16)**, adjusting screw **(17)**, spring **(18)** or the track roller frame can be sprung.

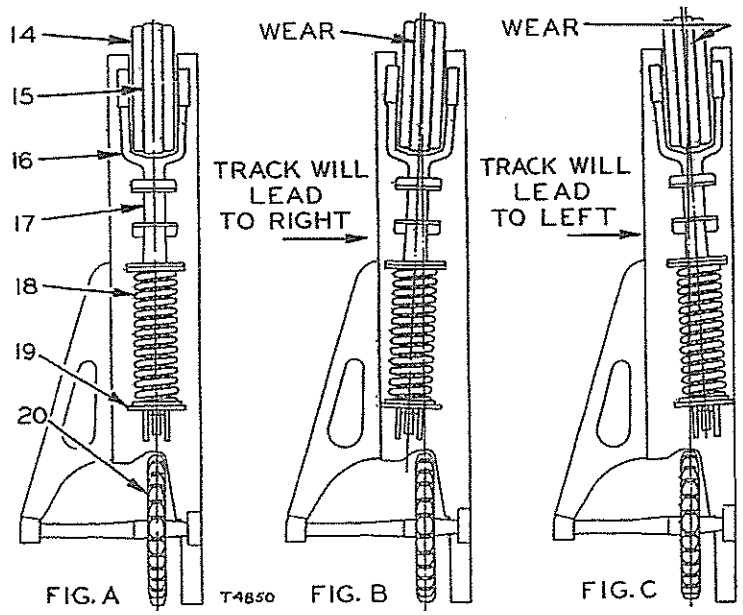

PARALLEL ALIGNMENT

14—Front idler. 15—Center flange. 16—Yoke. 17—Adjusting screw. 18—Recoil spring. 19—Bracket. 20—Sprocket.

Minor corrections can sometimes be made by rotating the recoil spring 180°.

Sometimes cutting off the bracket **(19)**, as exaggerated in Fig. B and C, and rewelding in a slightly different position will correct the difficulty.

Equalizer Spring Group

The equalizer spring supports the front end of the tractor and transfers the weight to the track roller frames.

The auxiliary springs hold the equalizer spring in the spring bracket and permit the equalizer spring to oscillate when the track frames pivot at the sprocket shaft.

AUXILIARY SPRING REMOVAL

Place a jack and a block of wood under the ends of both auxiliary springs **(3)** as shown and raise the jack just high enough to remove the load from the shackle **(4)**.

Remove the retainer pin **(1)** and drive the pin **(2)** out of the shackles.

Lower the jack to relieve the load on the springs and pull the jack away, allowing the shackles and springs to drop.

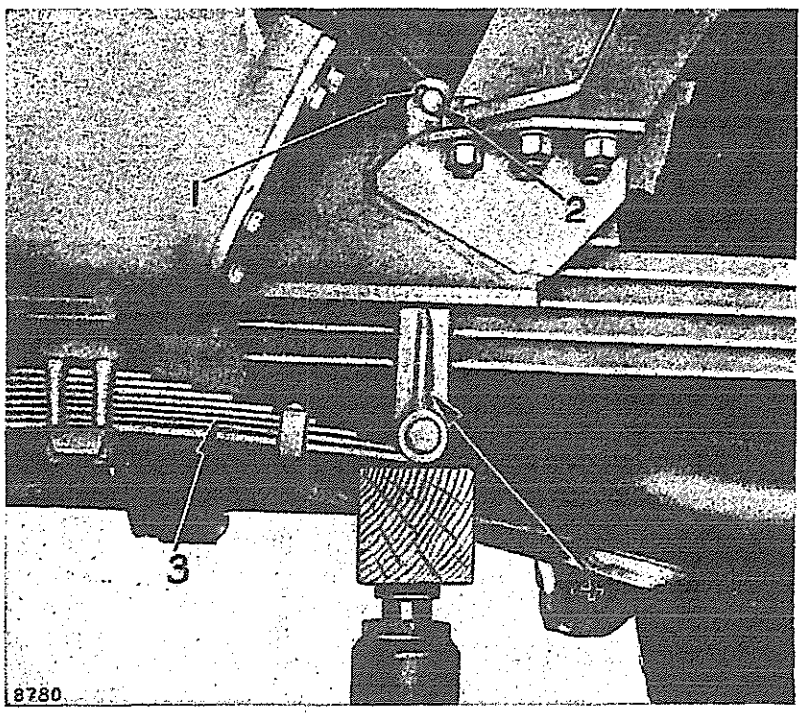

REMOVING AUXILIARY SPRING SHACKLE PIN
1—Retainer pin. 2—Pin. 3—Auxiliary spring. 4—Shackle.

Lower the other end of the spring assembly after driving out the pin from the upper ends of the shackles.

Either spring can be removed from the shackles after removing the retainer pins **(7)** and pins **(5)**.

To replace individual leaves in the spring, cut the clips **(8)** at the center on the under side of the lower leaf and remove the nuts and plate **(9)** from the clamp bolts **(6)**.

The bushings in the ends of the springs may be pressed out and replaced if worn.

When reassembling the spring, weld the clips together where they were cut.

The nuts on the clamp bolts must be pulled up tight and checked again after the tractor has been in operation for a short time.

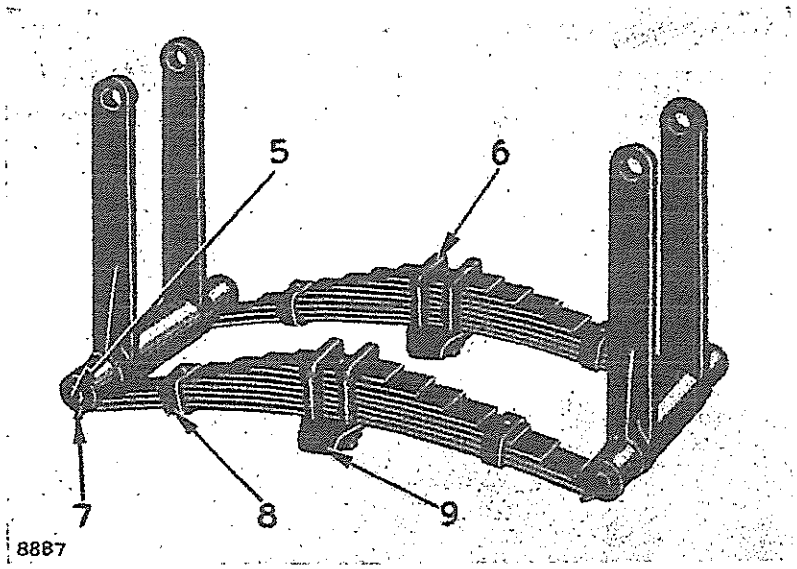

AUXILIARY SPRINGS AND SHACKLE
5—Pin. 6—Clamp bolt. 7—Retainer pin. 8—Clip. 9—Plate.

EQUALIZER SPRING REMOVAL
(Earlier Tractors)

Remove the auxiliary springs as described in the topic, AUXILIARY SPRING REMOVAL.

Remove the sheet metal guards from one of the track roller frames.

Loosen the two nuts **(7)** which clamp the track adjusting screw **(8)** and tighten the track by turning the adjusting screw.

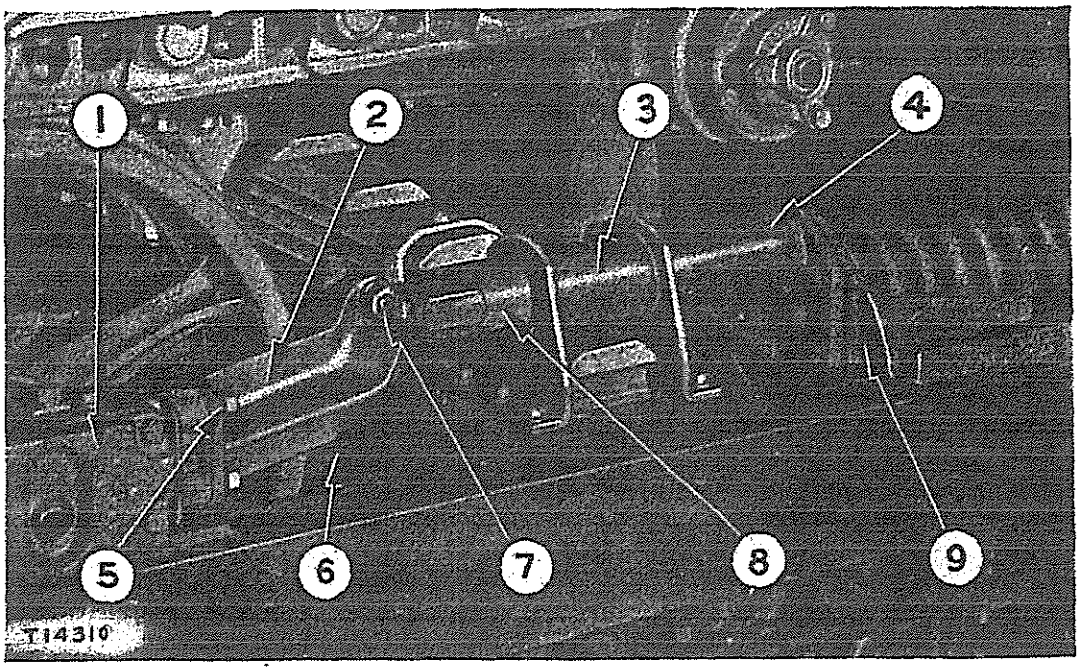

PREPARING TO REMOVE EQUALIZER SPRING
(Earlier Tractors)
1—Bearing assembly. 2—Arm. 3—Guide assembly. 4—Nut. 5—Capscrew. 6—Location of block. 7—Nut. 8—Adjusting screw. 9—Recoil spring pilot.

Place blocks at **(6)** between the idler and the cross member between the roller frame channels.

Turn the adjusting screw in the opposite direction until the idler is tight against the blocks.

Remove the two capscrews **(5)** from each of the arms **(2)**, and the four capscrews which hold the nut **(4)** to the recoil spring pilot **(9)**.

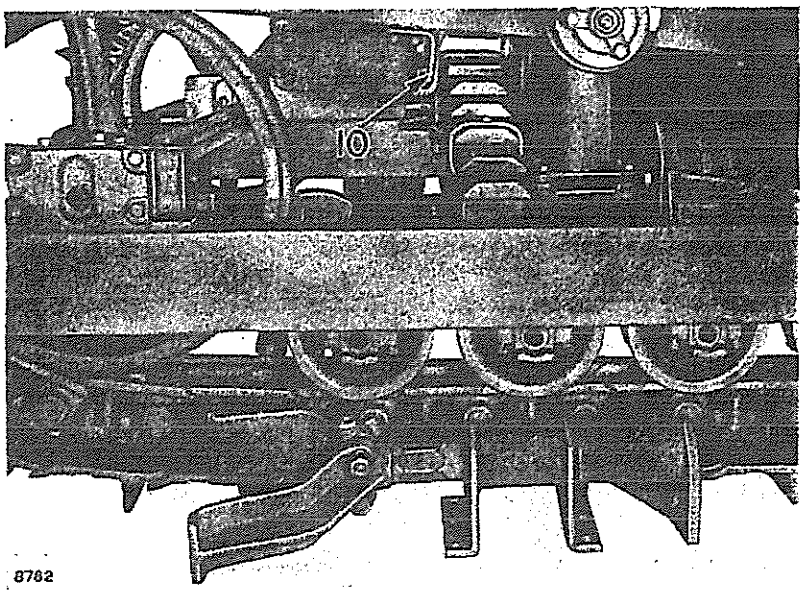

CLEARANCE FOR REMOVING EQUALIZER SPRING
(Earlier Tractors)
10—Bracket.

Remove the capscrews which hold the guide assembly **(3)** to the track frame.

Turn the adjusting screw into the nut **(4)** to pull the arms **(2)** away from the front idler bearing assemblies **(1)**.

Lift off the arms **(2)**, adjusting screw **(8)**, guide assembly **(3)** and nut **(4)** as a unit.

Raise the front end of the tractor until the bracket **(10)** clears the equalizer spring as shown.

The equalizer spring can then be removed by pulling it out the side.

Individual leaves can be replaced in the equalizer spring in the same manner as described in the topic, AUXILIARY SPRING REMOVAL.

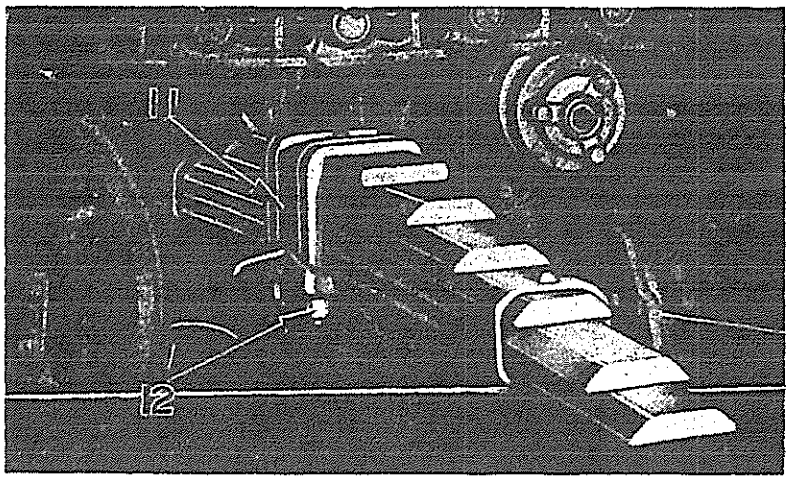

REMOVING EQUALIZER SPRING
(Earlier Tractors.)
11—Clamp bolt. 12—Nut.

It is important that the nuts **(12)** on the clamp bolts **(11)** be tightened periodically.

EQUALIZER SPRING REMOVAL
(Later Tractors)

Remove the auxiliary springs as described in the topic, AUXILIARY SPRING REMOVAL.

Remove all of the sheet metal guards from one of the track roller frames.

Break the track as described in the topic, SEPARATING TRACKS.

Disconnect one front idler as described in the topic, FRONT IDLER REMOVAL (LATER TRACTORS).

Remove the adjusting screw **(2)**, guide assembly **(3)** and adjusting nut **(4)** from the tractor as an assembly.

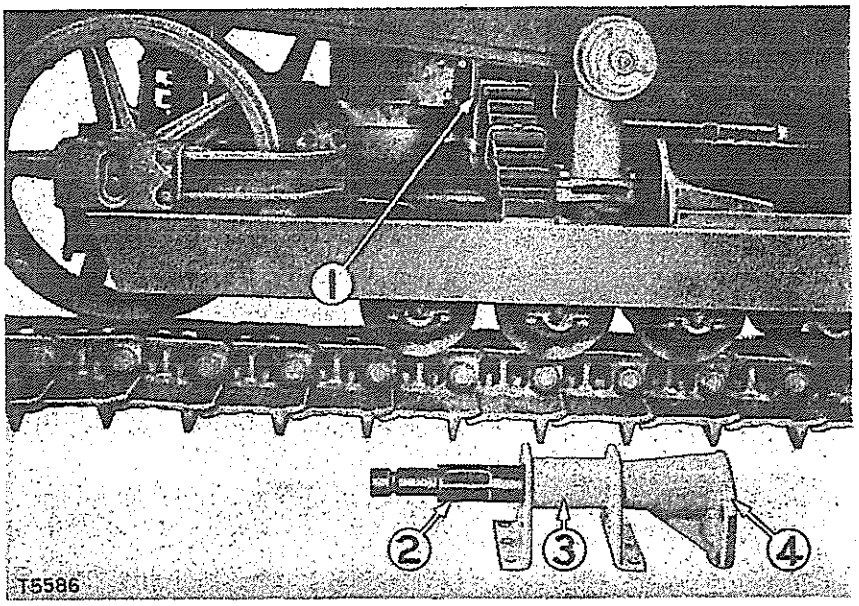

CLEARANCE FOR REMOVING EQUALIZER SPRING
(Later Tractor Illustrated)
1—Bracket. 2—Adjusting screw. 3—Guide assembly. 4—Adjusting nut.

Raise the front end of the tractor until the bracket **(1)** clears the equalizer spring.

The equalizer spring can then be removed by pulling it out the side.

Individual leaves can be replaced in the equalizer spring in the same manner as described in the topic, AUXILIARY SPRING REMOVAL.

It is important that the nuts **(6)** and clamps **(5)** be tightened periodically.

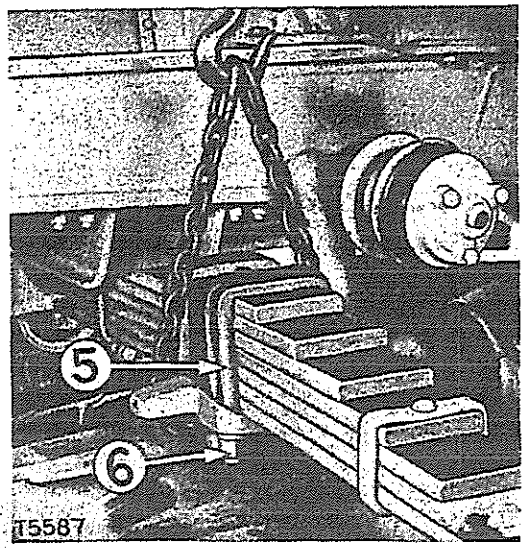

REMOVING EQUALIZER SPRING
5—Clamp. 6—Nut.

◆

Recoil Springs

The recoil springs are compressed and held to a length of 24 3/8" by the recoil spring bolt.

Normally the pressure of the recoil springs is not exerted against the track. However, should rocks or other obstructions get between the tracks and rollers, idler, or sprocket, the springs will recoil to avoid overstressing the track, final drive and idler shaft.

REMOVAL

Separate the track as described in the topic, SEPARATING TRACK.

Remove the adjusting screw, guide assembly and nut as described in the topic, EQUALIZER SPRING REMOVAL.

Remove the two capscrews **(4)** which hold the rear pilot **(3)** to the spring bracket **(2)**.

The recoil spring **(1)** can be lifted off the track roller frame.

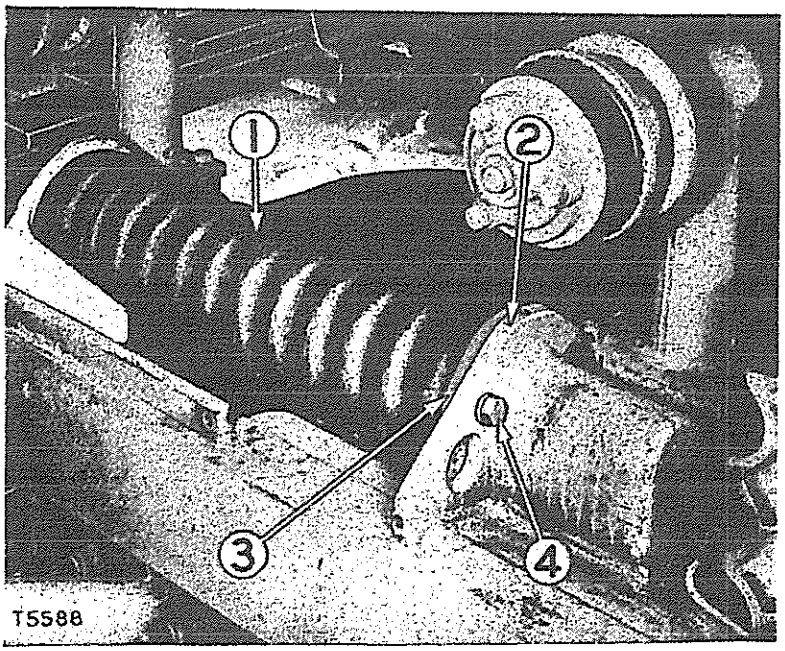

PREPARING TO REMOVE RECOIL SPRING
1—Recoil spring. 2—Recoil spring bracket. 3—Pilot. 4—Capscrew.

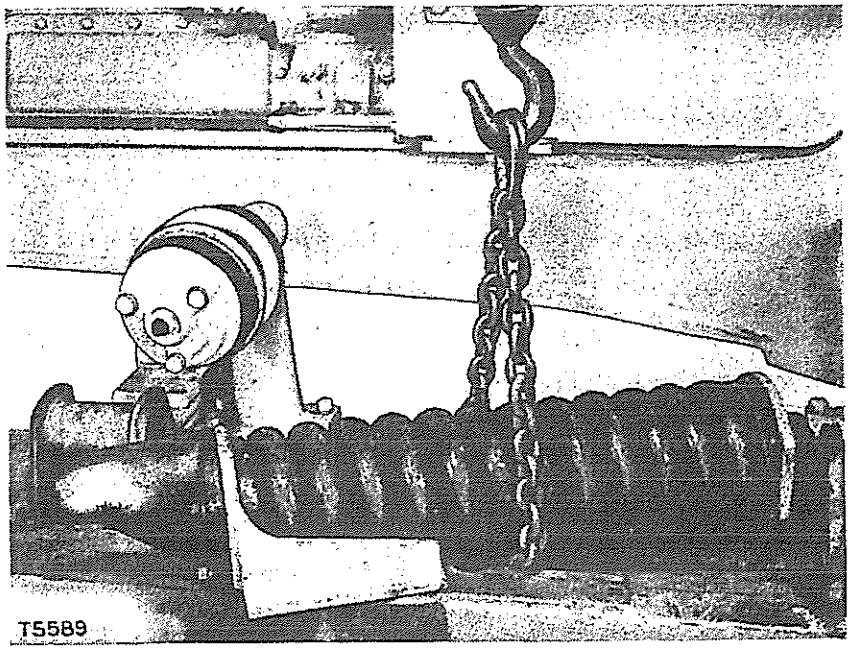

REMOVING RECOIL SPRING

DISASSEMBLY

Remove the lock nut and back off the adjusting nut to decompress the springs.

Slide the rear pilot, springs, sleeve and front pilot off the bolt.

When reassembling, tighten the adjusting nut until the outer spring is compressed to a length of 24 3/8".

Install and tighten the lock nut.

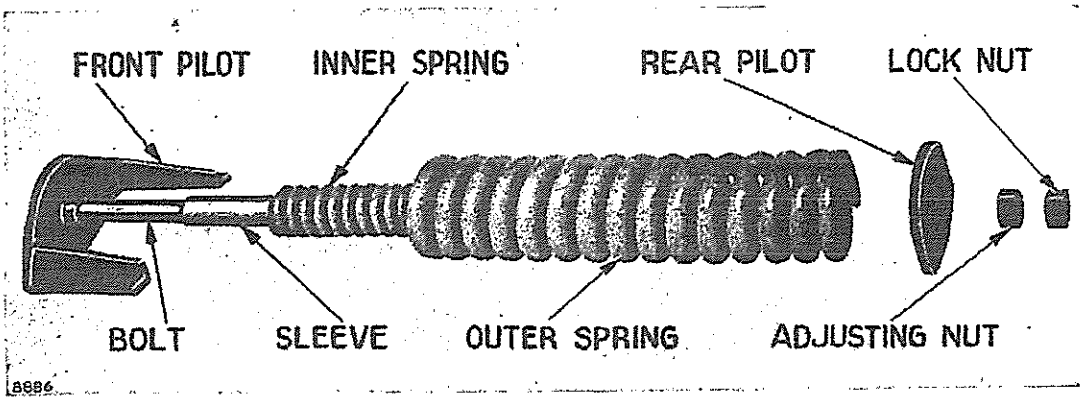

RECOIL ASSEMBLY

Track Roller Frame Assembly

The track roller frame assembly can be removed as a unit for servicing any of the assemblies mounted on it.

Separate the track and lay it out flat as described in the topic, SEPARATING TRACK.

Remove the track roller frame rear guard.

Take out the capscrews and remove the diagonal brace bearing cap **(1)**.

The hardened bearing shells **(5)** in the cap and in the diagonal brace **(6)** should be replaced if the clearance exceeds .040".



PRELIMINARY STEPS FOR REMOVING TRACK ROLLER FRAME ASSEMBLY
1—Diagonal brace bearing cap. 2—Outer frame bearing assembly. 3—Drawbar bracket. 4—Open end of channel. 5—Bearing shell.

Remove the capscrews which hold the outer frame bearing assembly **(2)** to the track roller frame.

These capscrews screw into a tapping strip inside the frame channel.

When the last capscrew is removed, the tapping strip will fall to the bottom of the channel.

When installing these capscrews, the tapping strip must be held in position by reaching through the open end of the channel at **(4)**.

Place a jack under the end of the drawbar bracket at **(3)** and raise the tractor until the steering clutch case clears the diagonal brace **(6)**.

Raise the end of the equalizer spring **(7)** until it is off the track roller frame.

Pry out the front end of the track and track frame assembly until the end of the equalizer spring is free of the support bracket on the track frame.

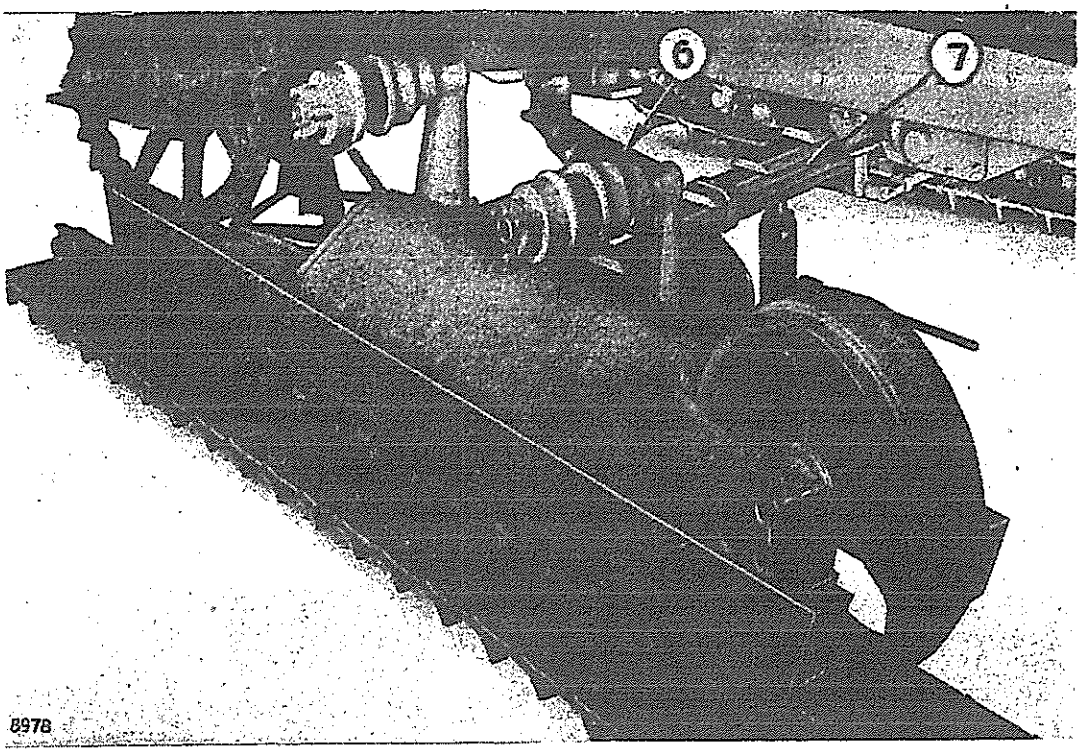

REMOVING TRACK ROLLER FRAME ASSEMBLY
(Earlier tractor illustrated — same principle on later tractors)
6—Diagonal brace. 7—Equalizer spring.

The track frame assembly can then be rolled out as shown and turned over.

Drawbar

The forward end of the drawbar **(4)** is attached to the underside of the steering clutch case by means of a pivot pin **(3)** and bracket **(1)**.

The rear end of the drawbar is supported by a plate **(6)** which allows the drawbar to swing freely, or to be pinned in any one of five positions.

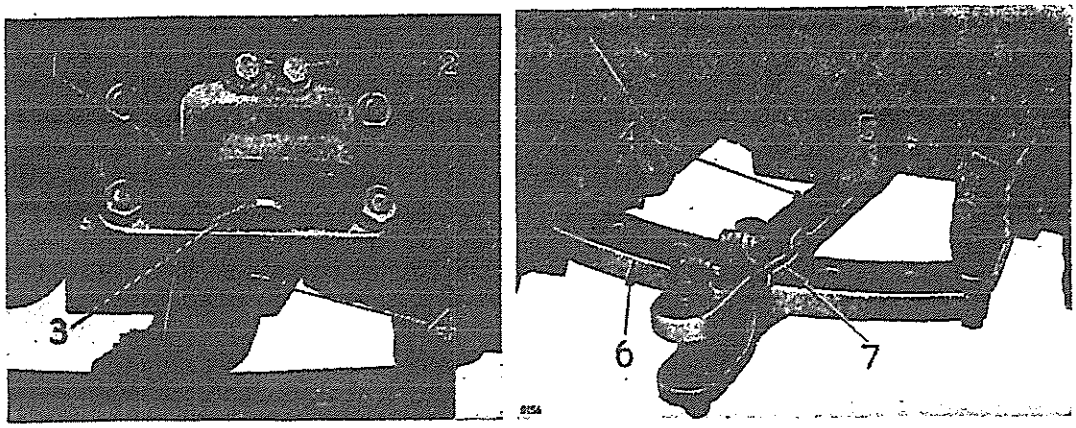

PRELIMINARY STEPS FOR REMOVING DRAWBAR
1—Bracket. 2—Capscrew. 3—Pin. 4—Drawbar. 5—Brace. 6—Plate. 7—Shoe.

REMOVAL

Support the drawbar by passing a chain or cable around it just back of the steering clutch case.

Remove the nuts and bolts holding the drawbar bracket **(1)** to the bracket on the steering clutch case.

Support the plate **(6)** and remove the nuts and bolts holding it to the braces **(5)**.

Lower the drawbar to the floor and slide out the plate **(6)**.

Remove the capscrews **(2)** and press out the pin **(3)** to separate the drawbar from the bracket **(1)**.

The shoe **(7)** is for the purpose of taking the wear when the drawbar is allowed to swing. It should be replaced when worn thin.

ATTACHMENTS

Installing Glass in Steel Cabs

Steel cab groups shipped from the factory do not have the glass installed. These instructions will give the information for making the installation or they can be used for glass replacement. Each new cab group contains ample filler strip and seal. In addition, an 8F3336 Filler Strip Installation Tool is provided.

The installation of glass in the steel cab is easier if the correct method is used. The window panel opening should be rubbed with paraffin or the seal should be lubricated with a soap and water solution.

CROSS-SECTION OF SEAL, GLASS AND FILLER STRIP INSTALLED

◆

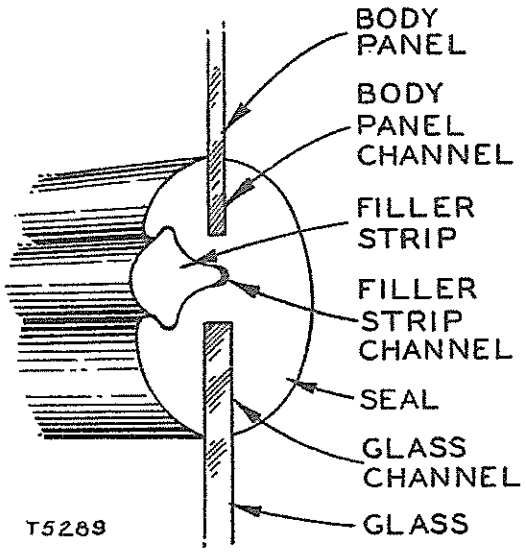

Place the seal **(2)** over the edge of the window panel opening **(1)**. The seal is cut to overlap the starting point by 1/8 inch per foot of body opening. This will assure a tight fit. Withdraw the seal slightly at the starting point and bring the ends together and force them over the body panel **(1)**. This will make a tight smooth joint.

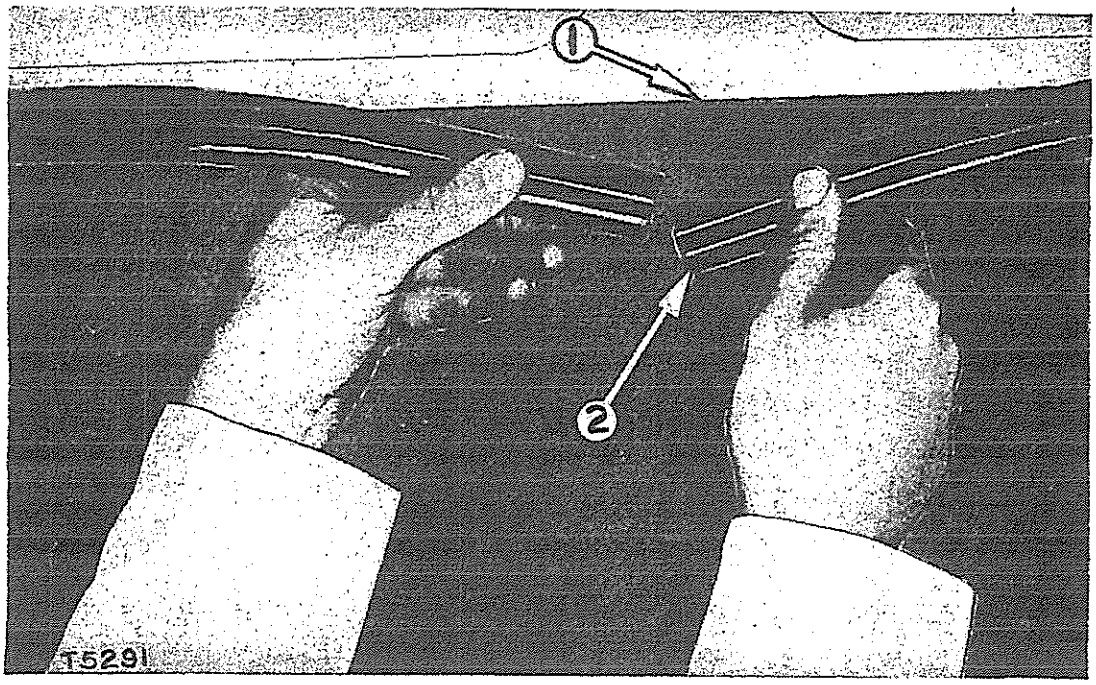

INSTALLING SEAL OVER PANEL
1—Edge of window panel opening. 2—Seal.

Starting at the lower corner, place the glass in the channel as far as it will go without forcing.

Working in both directions from the starting point, lift the glass channel lip **(3)** and the glass will slip into place.

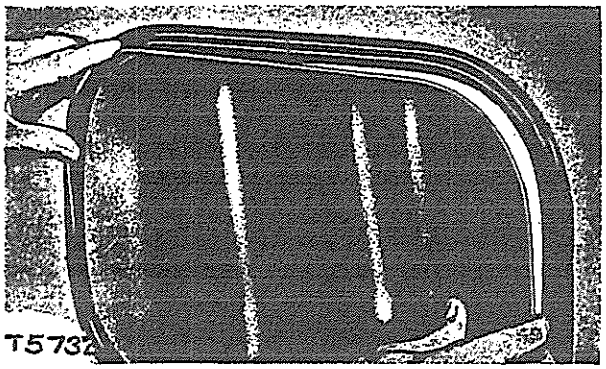

INSTALLING GLASS IN CHANNEL

◆

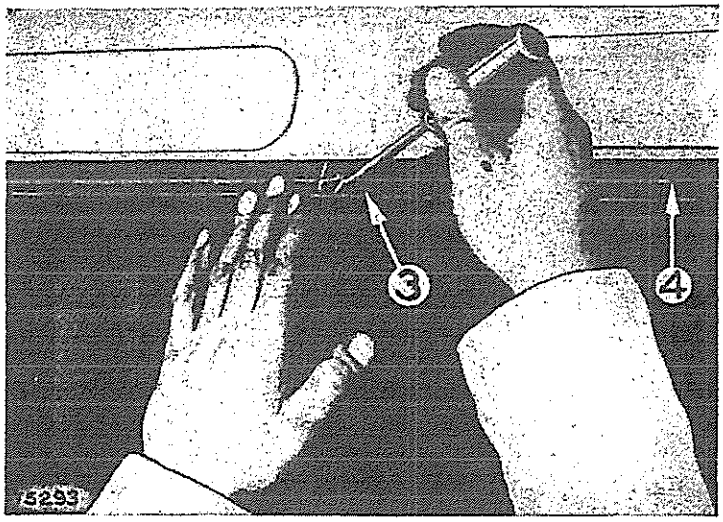

POSITIONING CHANNEL LIP OVER GLASS
3—Channel lip. 4—Filler channel.

Apply soap and water to the filler channel **(4)** before installing the filler strip **(5)**. Place the filler strip **(5)** in the 8F3336 Filler Strip Installation Tool **(6)**.

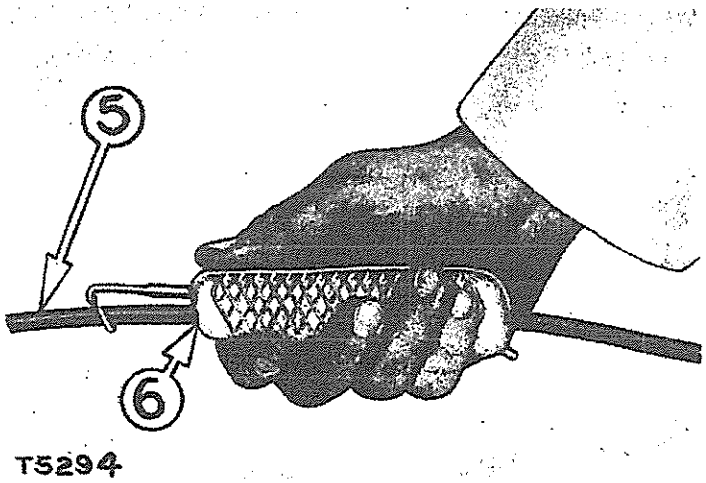

PREPARING TO INSTALL FILLER STRIP
5—Filler strip. 6—Installation tool.

At the top of the channel, approximately two inches away from the seal joint **(7)**, insert the filler strip and the eye of the installation tool into the filler strip channel. Hold the end of the filler strip in position with the thumb during the first motion of the tool.

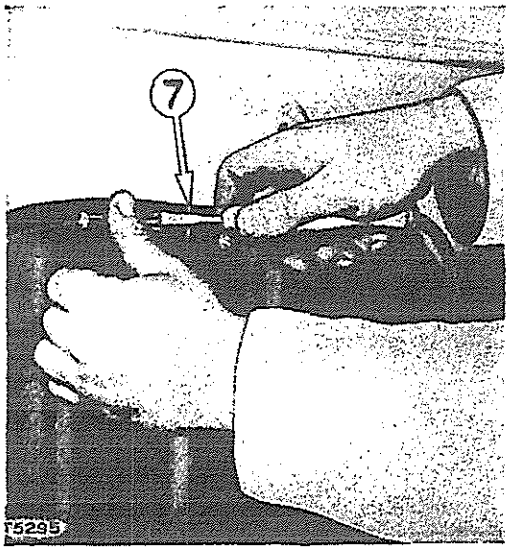

INSTALLING FILLER STRIP
7—Seal joint.

◆

Move the tool along the channel and thread the filler strip into the filler strip channel. The filler strip will feed through the handle and eye as the tool is pulled along. When rounding corners, jiggle the tool slightly to position the filler strip.

When the starting point is reached, remove the tool. Cut the filler strip so that it will overlap the starting point. Press the end of the filler strip into place with the spur **(8)** on the handle of the tool. This will cause the joint to be under pressure when both ends are forced into the filler strip channel. Re-position any part of the filler strip that is not properly seated, using the spur on the handle of the installation tool.

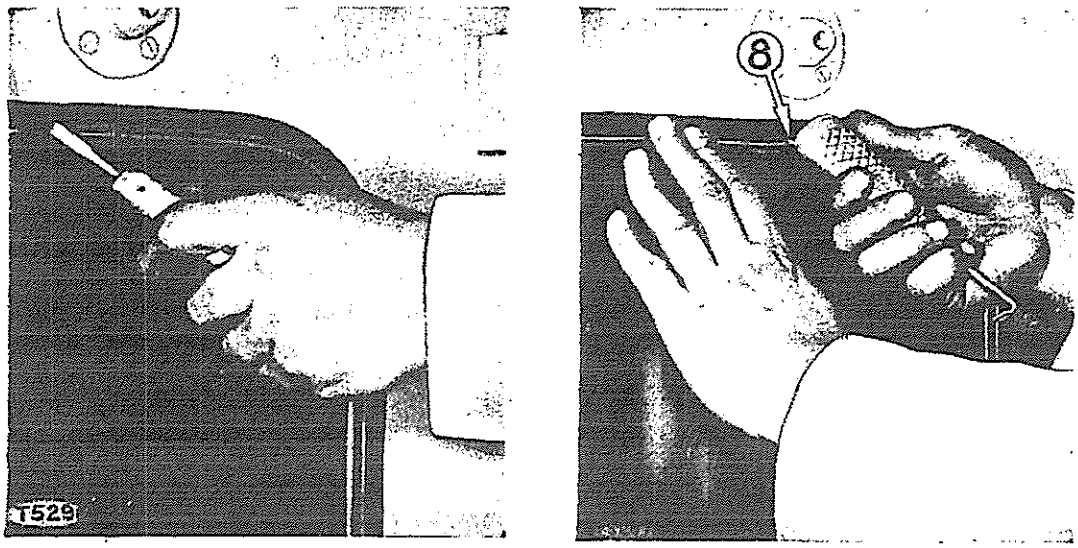

REMOVING TOOL AND POSITIONING THE FILLER STRIP
8—Spur.

Index

	Page
Adjustments:	
Bevel Gear	114
Brakes, Steering Clutch	122
Clutch, Flywheel	65, 81
Clutches, Steering	136
Final Drive	147
Front Idler	176
Gear Shift Interlock Mechanism	86
Auxiliary Spring	178
Bellows Seal, Final Drive	142
Bevel Gear	109
Bevel Gear and Pinion Setting	113
Brakes, Steering Clutch	120
Clearances and Tolerances	3
Clutch, Flywheel	42, 71
Clutches, Steering	123
Cooler, Oil	15
Dash	24
Diesel Engine:	
Installation	31
Removal	31
Drawbar	186
Engine and Flywheel Clutch Alignment	34
Equalizer Spring	179
Fan Belt Replacement	17
Fan Removal	18
Filler Cap, Fuel Tank	120
Final Drive:	137
Disassembly	139
Pinion	149
Flywheel Clutch Alignment, Engine and	34
Flywheel Clutch:	42, 71
Adjustment	65, 81
Assembly	61, 79
Disassembly	50, 76
Facings	79
Removal	45, 75
Flywheel Clutch Enclosure	71
Fork, Shifter	88
Frame, Track Roller	185
Front Idler	172
Fuel Tank and Filler Cap	119

	Page
Gear:	
Bevel	109
Final Drive	137
Transmission	94
Gear Shift:	
Interlock Mechanism	84
Mechanism	87
Glass Installation, Cab	189
Governor Control Assembly	22
Hood and Dash	24
Idler, Front	172
Idler Gears, Transmission	105
Installing Engine:	
Diesel Engine	31
Starting Engine	39
Levers:	
Flywheel Clutch Release	74
Gear Shift	89
Starter Pinion Engaging	73
Lifting Eyes	32
Oil:	
Cooler Removal	15
Pan Removal	20
Pump, Transmission	133
Pinion, Final Drive	149
Pump, Oil	133
Radiator	13
Recoil Springs	183
Regulator Housing Removal, Water Temperature	18
Removing Diesel Engine	31
Removing Starting Engine	36
Rollers:	
Track	168
Track Carrier	166
Roller Frame, Track	185
Seal, Bellows	142
Seat and Fuel Tank	119
Shifter Fork	88
Specifications, Tolerances and Clearances	3
Spring:	
Auxiliary	178
Equalizer	179
Recoil	183

	Page
Sprockets, Final Drive:	
Installation	143
Removal	142
Sprocket Shaft, Final Drive:	
Installation	147
Removal	146
Starter Pinion Engaging Levers	73
Starting Engine:	
Installation	39
Removal	36
Steering Clutch:	
Adjustment	136
Disassembly	125
Removal	123
Steering Clutch Brake:	
Adjustment	122
Removal	120
Steering Clutch Hydraulic Control Unit	129
Support, Engine Front	28
Tank, Fuel	119
Timing Gear Cover Removal	26
Tracks	154
Track:	
Carrier Rollers	166
Front Idlers	172
Links	158
Pins and Bushings	158
Removal	155
Rollers	168
Roller Frame	185
Transmission:	81
Gear Shift	87
Gear Shift Interlock	84
Installation	83
Removal	81
Water Pump Removal	18

12-59
FORM 30027-4
PRINTED IN U.S.A.