PEPB01440620
(D60, 65APE.6-PE20)

PARTS BOOK

D60A,P,PL,E-6

D65A,P,E-6

BULLDOZER

SERIAL NUMBERS

D60A	**- 31001**	AND UP
D60P	**- 32001**	AND UP
D60PL	**- 30001**	AND UP
D60E	**- 30001**	AND UP
D65A	**- 32001**	AND UP
D65P	**- 31001**	AND UP
D65E	**- 31001**	AND UP

RUTHZIL TRATOR COMERCIAL DE PEÇAS LTDA 11 97083-6812 ROLANDO

KOMATSU

FOREWORD

Due to a continuous program of research and development, some procedures, specification and parts may be altered in a constant effort to improve machines. Periodic revision may be made to this publication and mailed automatically to distributors.

It is recommended that users contact their distributor or dealer for information on the latest revision.

The satisfactory ordering and receiving of parts is dependent largely upon the proper use of available information. To avoid errors in ordering, the following procedures should be followed:

1. Give the Part number, catalog name and quantity of items needed.
2. Give the model number. The chassis serial number plate is located on the engine hood or dashboard near the operators seat.
3. When ordering parts for the engine be sure to give the serial number and model number of such unit.
4. Give the destination and method of shipment desired along with any special invoicing instruction.

The parts book is written using the following methods which should be throughly understood.

Fig. No.	Figure numbers are not applied in numerical order in either SECTION. Assignment of Fig. Nos. to drawings in both SECTIONS is made independently of each other. Therefore, the same Fig. Nos. may appear in both SECTIONS.
Description	Any of components parts of an assembly has one point (·) prefixed to its part name and is listed up in the line below the assembly name. Where a one-point-prefixed part has some component parts, any of these component parts has two point (· ·) prefixed to its part name.
Q'ty	Each "Qty" indicates the quantity of a part required per machine. In case of a component part of an assembly, however, it indicates the quantity of the part required per assembly.
Serial No.	This indicates the machine model-serial No. where the corresponding part is used. The following letters stand for machine models.

Engine						Chasis			
B D60A-6	F D65A-6	G GD37-6	A D60, 65A	C .... Clutch type
D D60P,PL-6	C D65P-6	Q GD40-2	S D60, 65S	T .... Torque Converter
M D60E-6	U D65E-6	R EG150	P D60, 65P	Type
E D60S-6	H D65S-6	T EC170V	L D60, 65PL	E D80, 65E

Remarks

Codes and marking to be entered in the column, "REMARKS", have the following meanings.

☆ The part to be supplied not as an individual part but as a component part together with associated parts. This marking will be followed by its associated part numbers.

▲ The part to be supplied not as a completely finished part but as a semi-finished part. When a semi-finished part has a part number, this marking will be followed by this part number.

△ This is a semi-finished part whose part number will be stated, following the part number of a completely finished part.

※ This part will be prohibited from being supplied and this marking will be followed by the part number of its replacing part.

□ This is the part which may be replaced by another part and this marking will be followed by the part number of its replacing part.

■ The numerals following this marking constitute the part number of a part to replace the having this marking. In case of supplying such a replacing part, however, attention should be paid to the column, "REMARKS" because other component parts should be sent together with the replacing part.

K A component part of a kit. This code will be followed by the part number of the kit. Other component parts of the kit will be enumerated in the service kit table.

US This code indicates undersized parts.

OS This code indicates oversized parts.

These US and OS parts will be entered in the line below their corresponding standard-sized parts.

OP This code indicates optional parts.

These optional parts will not be furnished for the standard machines but may be purchased on special orders.

NOTE : Whenever requisitions are to be made for parts by the use of part numbers prefixed by marking, ☆ , ▲ or ※ , those parts with only the numbers following the markings will be delivered in due course. In case of parts with a marking □ , those having only the numbers following the marking may be supplied.

In the column "REMARKS", other necessary information such as names of manufacturers of purchased parts, shipping destination (for instance, "For india"), etc., will be entered.

NOTE; From those produced in Oct'71, Engine serial No. is a number of 8 figures (For example; 26100101). However, a number of 6 figures is entered in Parts Book, amitting first 2 figures as follows.

Blank Engine Serial No. shows 100101~

Blank chassis Serial No. shows
D60A-6 ..... 31001~
D60P-6 ..... 32001~
D60,PL,E-6 ..... 30001~
D65A-6 ..... 32001~
D65P,E-6 ..... 31001~

E N G I N E

NH-220-CI-B Engine No. 140133~
NH-220-CI-D Engine No. 140133~
NH-220-CI-M Engine No. 140801~
NH-220-CI-F Engine No. 139167~
NH-220-CI-C Engine No. 140782~
NH-220-CI-U Engine No. 141757~

CONTENTS

		Fig. No.	Page
1.	**CYLINDER HEAD**		
	Cylinder Head	1101	11 - 2
	Rocker Arm and Housing	1103	11 - 4
	Rocker Arm Housing Cover	1105	11 - 6
	Compression Release	1107	11 - 8
	Air Intake Manifold and Connection	1111	11-10
	Air Cleaner	A1115A	S11-36
	Exhaust Manifold and Muffler	1121	11-44
	Water Manifold	1131	11-58
	Thermostat and Connector	1135	11-64
2.	**CYLINDER BLOCK**		
	Cylinder Block (1/2)	1201	12 - 2
	Cylinder Block (2/2)	1202	12 - 6
	Rear Cover	1205	12-10
	Gear Case Cover and Front Support	1211	12-12
	Oil Pan	1215	12-20
	Flywheel and Flywheel Housing	1221	12-32

	Fig. No.	Page
Crankshaft and Vibration Damper	A1231	S12-58
Piston and Connecting Rod	1235	12-64
Camshaft	1241	12-68
Cam Follower and Push Rod	1245	12-70
Power Take Off (1/2)	1261	12-74
Power Take Off (2/2)	1262	12-79

3. LUBRICATING OIL SYSTEM

Lubricating Oil Pump	1301	13 - 2
Lubricating Oil Filter	1311	13 - 8
Lubricating Oil Bypass Filter	1315	13-16
Lubricating Oil Piping	1321	13-20
P.T.O. Lubricating Oil Piping	1331	13-36
Lubricating Oil Cooler	1341	13-40
Oil Cooler (Steering Clutch)(D60)	1345	13-44
Oil Cooler (Torqflow and Steering Clutch)(D65)	1347	13-50

4. FUEL SYSTEM

PT Fuel Pump and Piping	1401	14 - 2
PT Fuel Pump Drive	1405	14 - 6
Fuel Filter	1411	14-10
Injector and Fuel Connection	1421	14-18
PT Fuel Pump (1/6)	1451	14-26
PT Fuel Pump (2/6)	1452	14-34
PT Fuel Pump (3/6)	1453	14-38
PT Fuel Pump (4/6)	1454	14-42
PT Fuel Pump (5/6)	1455	14-48
PT Fuel Pump (6/6)	1456	14-52

5. COOLING AND ELECTRICAL SYSTEMS

	Fig. No.	Page
Water Pump and Cooling Fan	A1501	S15 - 2
Corrosion Resistor	1511A	15 - 6
Alternator and Mounting	1521A	15-30
Starting Motor and Mounting	1525	15-40
Regulator and Safety Relay	1531	15-42
Alternator	1541A	15-46
Alternator (800W)	1545	15-49-7
Starting Motor	1551A	15-52

9. TOOL AND KIT

Tool	1901	19 - 2
Gasket Kit		19-10

CYLINDER HEAD

Fig. 1101 CYLINDER HEAD

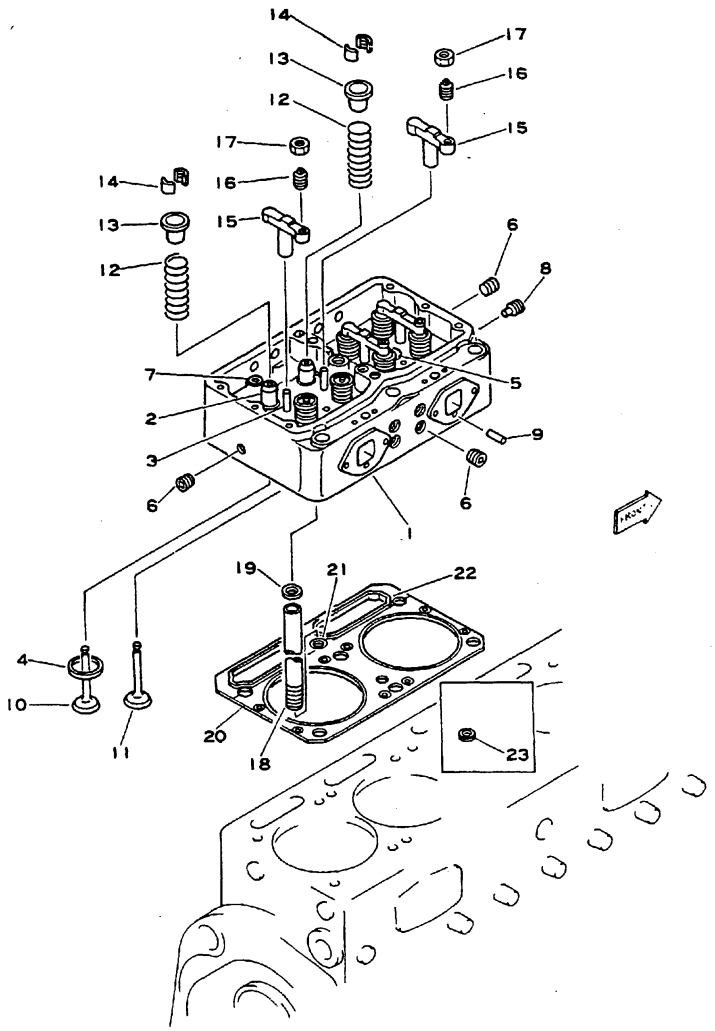

Fig. & Index No.	Komatsu Part No.	Cummins Part No.	Description	Q'ty	Serial No.
1101 -1	6610-10-1000	AR90583	CYLINDER HEAD ASS'Y, with valve	3	
2	6610-11-1311	66890	. GUIDE, valve	8	
3	6610-11-1140	123558	. GUIDE, cross-head, valve	4	
4	6610-11-1120	69965	. INSERT, exhaust valve seat, standard	4	
	6610-19-1120	69965-A	. INSERT, exhaust valve seat, oversize 0.005" (0.13 mm)	4	
	6610-18-1120	162333	. INSERT, exhaust valve seat, oversize 0.01" (0.25 mm)	4	
	6610-17-1120	69965-B	. INSERT, exhaust valve seat, oversize 0.02" (0.51 mm)	4	
	6610-16-1120	69965-C	. INSERT, exhaust valve seat, oversize 0.03" (0.76 mm)	4	
	6610-15-1120	69965-D	. INSERT, exhaust valve seat, oversize 0.04" (1.02 mm)	4	
5	6610-11-1130	8901-2	. SLEEVE, injector	2	
6	02720-41616		. PLUG, pipe	6	100101~
	(□02720-11616)	(409612)	. PLUG, pipe	6	100101~ •
7	6610-11-1461		. PLUG, pipe	2	100101~
	(□6610-11-1460)	(67861)	. PLUG, pipe	2	100101~ •
8	6610-11-1470	70459	. PLUG, fuse	1	100101~140878
9	6610-11-1420	105199	. PIN, dowel, groove, exhaust manifold	2	
10	6610-41-4210	144911	. VALVE, exhaust	4	
11	6610-41-4110	150288	. VALVE, intake	4	
12	6610-41-4410	111446	. SPRING, valve	8	
13	6610-41-4510	66871	. GUIDE, valve spring	8	
14	6600-01-3910	S-2037	. HALF COLLET, valve	16	
15	6610-41-5610	110472	CROSSHEAD, valve	12	
16	6610-41-5620	147389	SCREW, crosshead adjusting	12	
17	6710-41-5630	203131	NUT, crosshead adjusting screw	12	
18	6610-21-2610	9213	PIPE, lubricating oil	3	
19	6610-11-1710	129373	GASKET, lubricating oil pipe (KIT)	3	
20	6610-11-1811	AR90991	CYLINDER HEAD GASKET ASS'Y (KIT)	3	129276~
21	6610-11-1840	121446	. GROMMET (KIT)	1	
22	6610-11-1830	121384	. RING, push tube (KIT)	2	
23	6610-11-1821	193949	. GROMMET, oil and water (KIT)	8	129276~

Fig. 1103 ROCKER ARM AND HOUSING

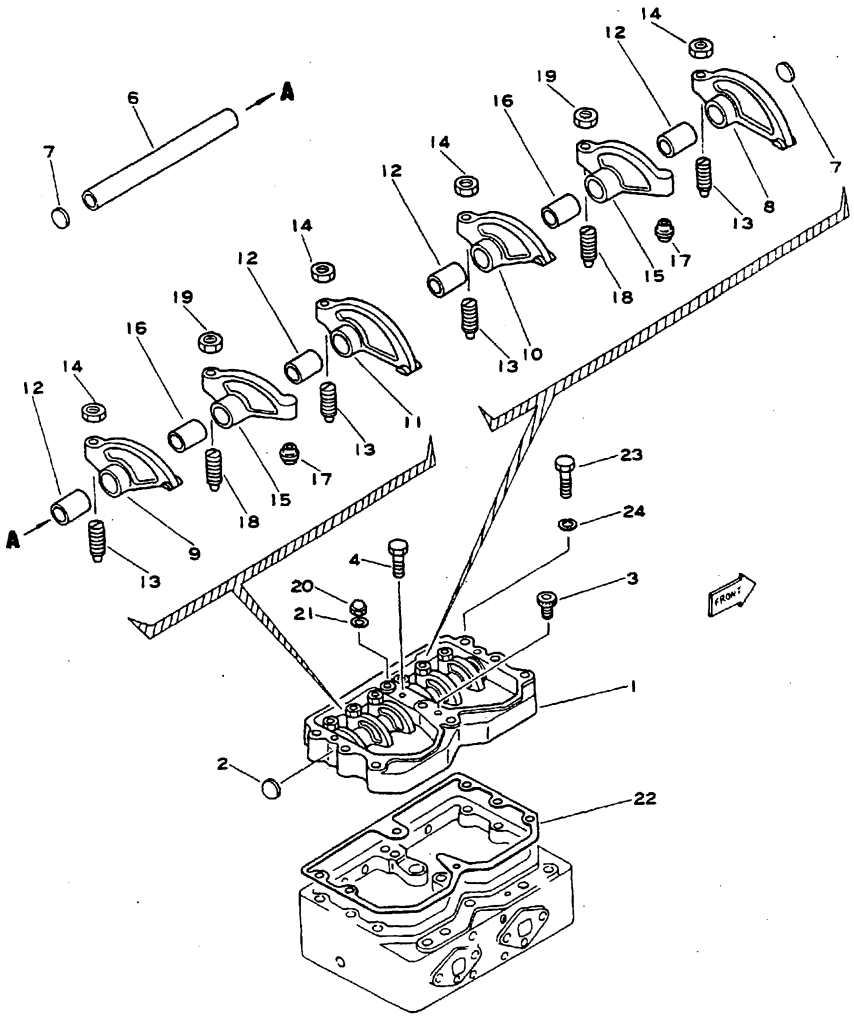

Fig. & Index No.	Komatsu Part No.	Cummins Part No.	Description	Q'ty	Serial No.
	6620-11-7010	BM-90513	ROCKER ARM HOUSING ASS'Y	3	
1103 -1	6610-11-7110	146259	. HOUSING	1	
2	6710-11-7150	175830	. PLUG, expansion	2	
3	6610-11-7140	62229	. PLUG, ventilator	1	
4	6710-11-7330	168319	. SCREW, rocker arm shaft	1	
	6610-41-5020	BM-68740	. ROCKER ARM SHAFT ASS'Y	1	
6	☆		. . SHAFT (6610-41-5210)	1	
7	6610-41-5220	161825	. . PLUG	2	
	6610-41-5030	BM-37749	. EXHAUST VALVE ARM ASS'Y (A), No.1, 3, 5 cylinder	1	
	6610-41-5050	BM-37750	. EXHAUST VALVE ARM ASS'Y (B), No.2, 4, 6 cylinder	1	
	6620-41-5030	BM-90512	. INTAKE VALVE ARM ASS'Y (C), No.1, 3, 5 cylinder	1	
	6620-41-5050	BM-90511	. INTAKE VALVE ARM ASS'Y (D), No.2, 4, 6 cylinder	1	
	6610-41-5040	BM-37524	. . ARM ASS'Y (A)	1	
	6610-41-5060	BM-37522	. . ARM ASS'Y (B)	1	
	6620-41-5040	BM-90509	. . ARM ASS'Y (C)	1	
	6620-41-5060	BM-90510	. . ARM ASS'Y (D)	1	
8	☆		. . . ARM (A) (6610-41-5421)	1	
9	☆		. . . ARM (B) (6610-41-5321)	1	
10	☆		. . . ARM (C) (6620-41-5720)	1	
11	☆		. . . ARM (D) (6620-41-5820)	1	
12	6610-41-5330	140330	. . . BUSHING	1	
13	6610-41-5350	103863	. . SCREW, adjusting	1	
14	6610-41-5360	107719	. . NUT	1	
	6610-41-5070	BM-68102	. INJECTOR ARM ASS'Y	2	
	6610-41-5080	BM-37699	. . ARM ASS'Y	1	
15	☆		. . . ARM (6610-41-5521)	1	
16	6710-41-5530		. . . BUSHING	1	
17	6610-41-5540	152173	. . . SOCKET, injector	1	
18	6610-41-5550	7199-3	. . SCREW, adjusting	1	
19	6600-01-2510	S-232	. . NUT	1	
20	6610-11-7310	9271	CAP, lubricating oil pipe	3	
21	6610-11-7320	9272	GASKET (KIT)	3	
22	6610-11-7811	418601	GASKET (KIT)	3	
23	02010-30889	108601	BOLT	19	BCDFGLMNU 100101~
					EH 145824~
				18	EH 100101~145823
					K 100101~
				16	RT 100101~
				17	QVWXYZ 100101~
24	02310-11632	70219	WASHER, spring	19	BCDFGMU 100101~ •
				18	E 100101~ •
				16	HRT 100101~ •
				17	Q 100101~ •

Fig. 1105 ROCKER ARM HOUSING COVER

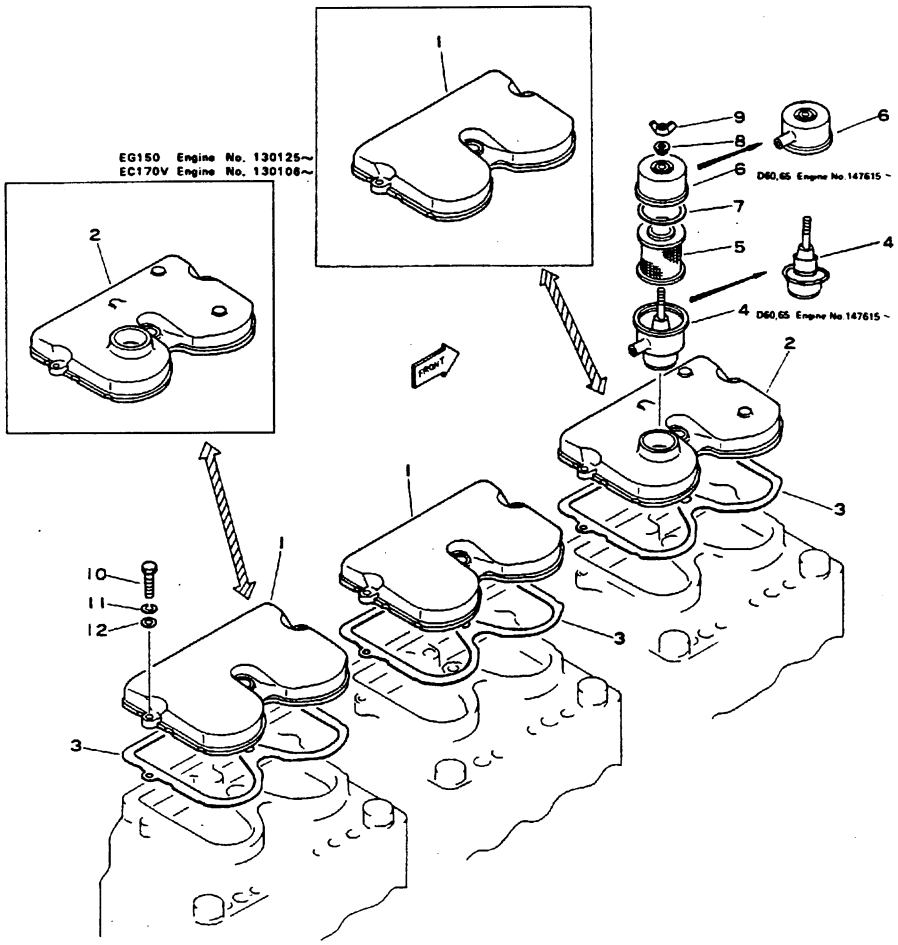

Fig & Index No.	Komatsu Part No.	Cummins Part No.	Description	Q'ty	Serial No.
1105 - 1	6610-11-8120	42357	COVER, housing	2	100101~
2	6610-11-8110	140391	COVER, housing	1	100101~
3	6610-11-8810	108692	GASKET (KIT)	3	100101~
	6620-21-7502		CRANKCASE BREATHER ASS'Y	1	147615~
	(□6620-21-7501)		CRANKCASE BREATHER ASS'Y	1	(100101~147614)
4	6620-21-7511		. BODY	1	100101~147614
	6620-21-7512		. BODY	1	147615~
5	6620-21-7550	123716	. ELEMENT	1	100101~
6	6620-21-7520	153587	. COVER	1	100101~147614
	6620-21-7521		. COVER	1	147615~
7	6620-21-7530	125019	. GASKET (KIT)	1	100101~
8	6620-21-7561		. WASHER, seal (KIT)	1	100101~147614
	6620-21-7562		. WASHER, seal (KIT)	1	147615~
	(□6620-21-7560)	402200	. WASHER, seal (KIT)	1	(100101~111373)
9	6620-21-7540	125017	. NUT, wing	1	100101~147614
	6620-21-7541		. NUT, wing	1	147615~
10	02010-20632	S-103-D	BOLT	9	100101~
11	02310-11224	70206	WASHER, spring	9	100101~
12	02300-11320	409602	WASHER	9	100101~

Fig. 1107 COMPRESSION RELEASE

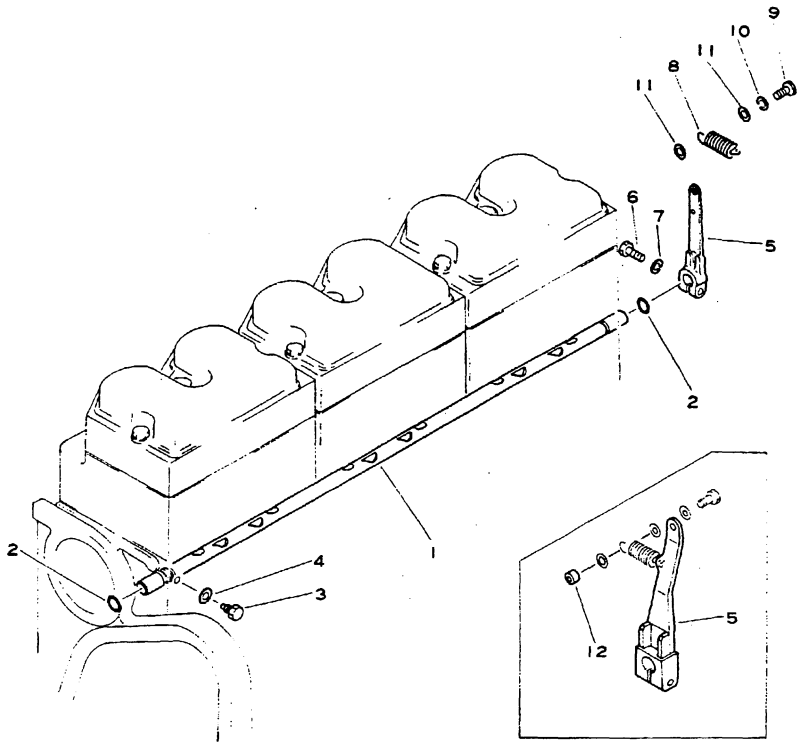

D60E, D65PE Engine No. 100101~
EG150, EC170V Engine No. 130106~

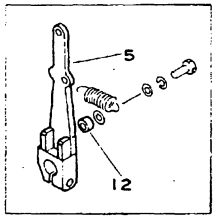

GD37 Engine No. 100101~

Fig & Index No.	Komatsu Part No.	Cummins Part No.	Description	Q'ty	Serial No.
1107 - 1	6623-41-8113	412933	SHAFT, compression release	1	100101~
2	02891-02016	43696	O-RING (KIT)	2	100101~
3	6610-41-8710	9237	SCREW, lock	1	100101~
4	6600-01-2620	S-679	WASHER	1	100101~
5	6610-41-8214	408854	LEVER, compression release	1	BDFQVWYZ 100101~126100
			■6610-41-8215 02010-50738 01602-01134		
	6610-41-8215		LEVER, compression release	1	BDFQVWYZ 126101~
	6691-41-8210	422590	LEVER, compression release	1	CLMNRTU 100101~
	6686-42-8210		LEVER, compression release	1	G 100101~
6	01010-31240		BOLT	1	100101~126100
	02010-50738		BOLT	1	126101~
7	01602-01236		WASHER, spring	1	100101~126100
	01602-01134		WASHER, spring	1	126101~
8	6610-41-8220	9223	SPRING	1	100101~
9	02030-20516	S-108	BOLT	1	BCDFMQUVWYZ 100101~
	02030-20522	S-138-A	BOLT	1	G 100101~ LN 100101~132154
	02030-20525		BOLT	1	LN 132155~ RT 130106~
10	02310-11020	70194	WASHER, spring	1	100101~
11	02300-11120	70233	WASHER	2	100101~
12	6691-41-8230	422600	SPACER	1	CGLMNRTU 100101~

Fig. 1111 AIR INTAKE MANIFOLD AND CONNECTION

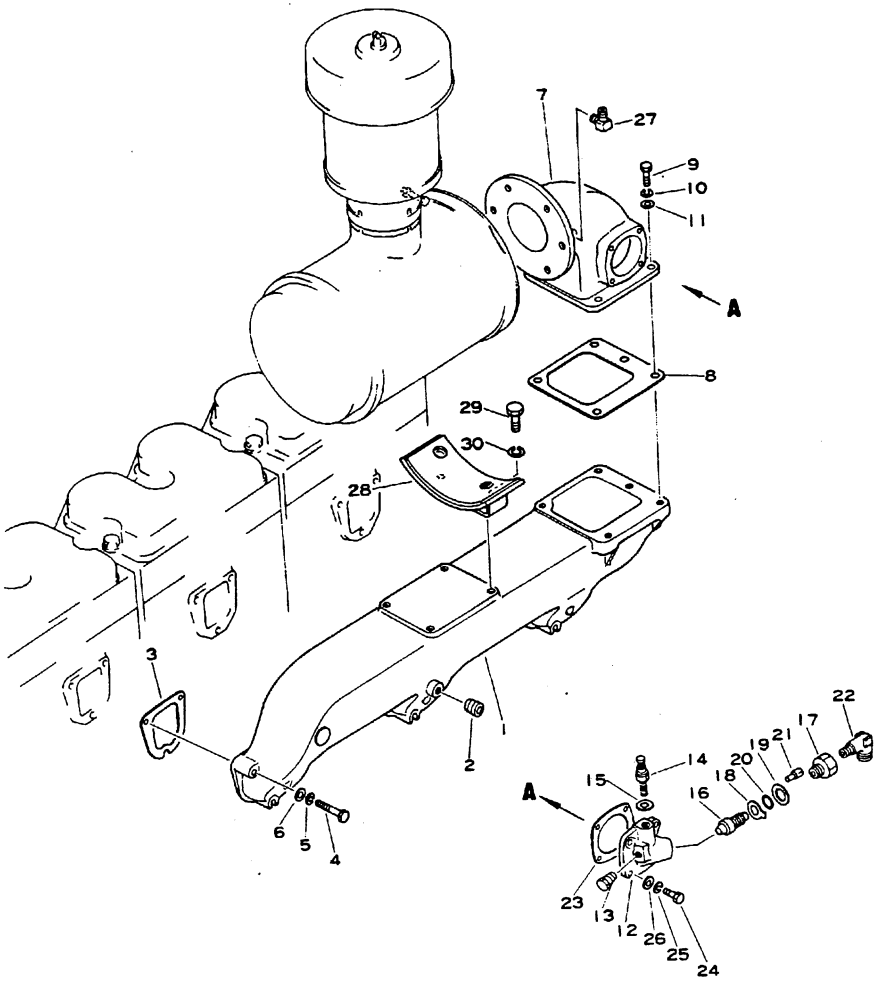

Fig. & Index No.	Komatsu Part No.	Cummins Part No.	Description	Q'ty	Serial No.
1111 -1	6631-11-4110		MANIFOLD, air intake	1	
2	02720-20204	68606	PLUG	1	
3	6610-11-4811	130653	GASKET (KIT)	3	
4	6645-13-4191	420291	BOLT, manifold to block	9	
5	02310-11224	70206	WASHER, spring	9	
6	02300-11320	409602	WASHER	9	
7	6631-11-4212		CONNECTOR, air intake	1	
8	6685-11-4222	430102	GASKET (KIT)	1	
9	01010-31235		BOLT	5	
10	01602-01236	409068	WASHER, spring	5	
11	01641-21223	409183	WASHER	5	
12	6675-11-4950	417360	COVER, cold starter	1	
13	6610-21-2720		PLUG	1	
14	600-815-2110		PREHEATER GLOW PLUG ASS'Y	1	
15	600-815-2190		. GASKET (KIT)	1	
	6610-81-4103	427163	PREHEATER NOZZLE ASS'Y	1	
16	6610-81-4112	69215	. NOZZLE ASS'Y	1	
17	6610-81-4132	125880	. ADAPTER, nozzle	1	
18	6610-81-4120	68178-1	. PLATE, lock (KIT)	1	
19	6610-81-4150	67946	. GASKET (KIT)	1	
20	6610-81-4240	414660	. O-RING (KIT)	1	
21	6610-81-4140		. PIN, groove	1	
22	6610-81-8820	405250	CONNECTOR, priming pump fuel line	1	
23	6675-11-4960	417370	GASKET (KIT)	1	
24	01010-30830		BOLT	4	
25	01602-00825	409151	WASHER, spring	4	
26	01641-20812	409076	WASHER	4	
27	08671-50721		ELBOW	1	
28	6631-11-4511		BRACKET, air cleaner	1	B 100101~140132
				1	C 100101~140781
				1	D 100101~140132
				1	F 100101~139166
				1	M 100101~140800
				1	U 100101~141756
	6632-11-4521		BRACKET, air cleaner	1	B 140133~
				1	C 140782~
				1	D 140133~
				1	F 139167~
				1	M 140801~
				1	U 141757~

Fig & Index No.	Komatsu Part No.	Cummins Part No.	Description	Q'ty		Serial No.
1111 -29	01010-31030		BOLT	4	B	100101~140132
				4	C	100101~140781
				4	D	100101~140132
				4	F	100101~139166
				4	M	100101~140800
				4	U	100101~141756
				2	B	140133~
				2	C	140782~
				2	D	140133~
				2	F	139167~
				2	M	140801~
				2	U	141757~
30	01602-01030	409067	WASHER, spring	4	B	100101~140132
				4	C	100101~140781
				4	D	100101~140132
				4	F	100101~139166
				4	M	100101~140800
				4	U	100101~141756
				2	B	140133~
				2	C	140782~
				2	D	140133~
				2	F	139167~
				2	M	140801~
				2	U	141757~

Fig. A1115A AIR CLEANER

(D60A Engine No. 140133 ~)
(D60P Engine No. 140133 ~)
(D60E Engine No. 140801 ~)
(D65A Engine No. 139167 ~)
(D65P Engine No. 140782 ~)
(D65E Engine No. 141757 ~)
(GD600 Engine No. 141402 ~)
(GD605 Engine No. 141893 ~)
(GD650 Engine No. 142411 ~)
(GD655 Engine No. 142423 ~)

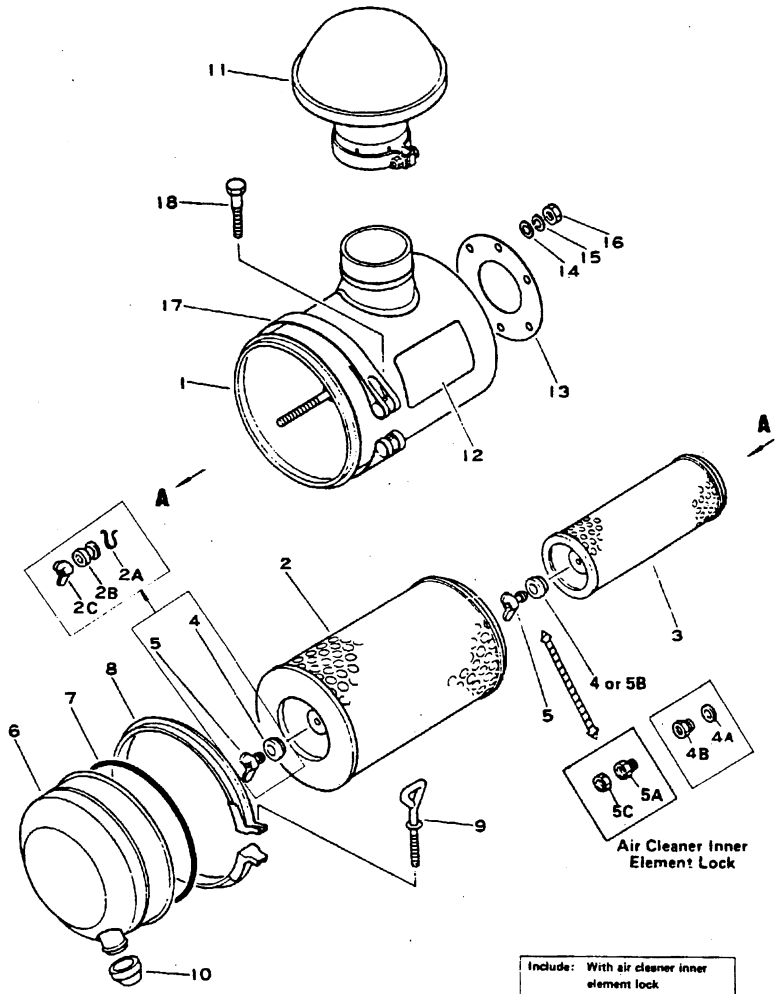

Include: With air cleaner inner element lock (Sandy dusty terrain specifications)

Fig & Index No.	Komatsu Part No.	Cummins Part No.	Description	Q'ty	Serial No.
	6631-81-7601		AIR CLEANER ASS'Y	1	B 140133~146123 C 140782~146123 D 140133~146123 F 139167~146123 M 140801~146123 U 141757~146123
	6131-81-7603		AIR CLEANER ASS'Y	1	BCDFMU 146124~
	6679-82-7100		AIR CLEANER ASS'Y	1	VWYZ 141402~143417
	6679-82-7101		AIR CLEANER ASS'Y	1	VWYZ 143418~
A1115A-1	6631-81-7610		. SHELL	1	B 140133~ C 140782~ D 140133~ F 139167~ M 140801~ U 141757~
	6679-82-7110		. SHELL	1	VWYZ 141402~
	(Order caution plate at the same time.)				
	6115-81-7601		. ELEMENT ASS'Y	1	B 140133~146123 C 140782~146123 D 140133~146123 F 139167~146123 M 140801~146123 U 141757~146123 V 141402~143417 W 141893~143417 Y 142411~143417 Z 142423~143417
	6115-81-7602		. ELEMENT ASS'Y	1	BCDFMU 146124~ VWYZ 143418~
2	600-181-2310		. . ELEMENT, outer	1	B 140133~146123 C 140782~146123 D 140133~146123 F 139167~146123 M 140801~146123 U 141757~146123 V 141402~143417 W 141893~143417 Y 142411~143417 Z 142423~143417
	600-181-2300		. . OUTER ELEMENT ASS'Y	1	BCDFMU 146124~ VWYZ 143418~
	☆		. . . ELEMENT, outer (600-181-2311)	1	BCDFMU 146124~ VWYZ 143418~
2A	04064-01510		. . . RING, snap	1	BCDFMU 146124~ VWYZ 143418~

Fig. & Index No.	Komatsu Part No.	Cummins Part No.	Description	Q'ty	Serial No.
A1115A-2B	600-181-4591		. . . WASHER, seal	1	BCDFMU 146124~ VWYZ 143418~
2C	600-181-2990		. . . NUT, wing	1	BCDFMU 146124~ VWYZ 143418~
3	6112-83-7620		. . ELMENT, inner	1	B 140133~146123 C 140782~146123 D 140133~146123 F 139167~146123 M 140801~146123 U 141757~146123 V 141402~143417 W 141893~143417 Y 142411~143417 Z 142423~143417
	600-181-2350		. . ELMENT, inner	1	BCDFMU 146124~ VWYZ 143418~
4	600-181-3270		. . WASHER	2	B 140133~146123 C 140782~146123 D 140133~146123 F 139167~146123 M 140801~146123 U 141757~146123 V 141402~143417 W 141893~143417 Y 142411~143417 Z 142423~143417
4A	600-181-7511		. . WASHER, seal	1	BCDFMU 146124~ WVYZ 143418~
4B	600-181-7910		. . NUT	1	BCDFMU 146124~ VWYZ 143418~
5	600-181-2360		. NUT, wing	2	B 140133~146123 C 140782~146123 D 140133~146123 F 139167~146123 M 140801~146123 U 141757~146123 V 141402~143417 W 141893~143417 Y 142411~143417 Z 142423~143417
6	600-181-3280		. COVER	1	† ~
7	6692-81-7130		. O-RING	1	† ~
8	6692-81-7170		. BAND	1	† ~
9	6692-81-7180		. BOLT	1	† ~
10	600-181-2550		. VALVE	1	† ~

† : Shows both Engine No. B140133, C140782, D140133, F139167, M140801, U141757, V141402, W141893, Y142411 and Z142423.

Fig. & Index No.	Komatsu Part No.	Cummins Part No.	Description	Q'ty	Serial No.
A1115A-11	600-181-2690		CAP	1	B 140133~ C 140782~ D 140133~ F 139167~ M 140801~ U 141757~
	600-181-3280		CAP	1	VWYZ 141402~
	600-181-2690		CAP, sandy dusty terrain spec. (OP)	1	VWYZ 141402~
12	09637-00160		PLATE, caution	1	100101~
13	6631-81-4381		GASKET (KIT)	1	† ~
14	01641-21016		WASHER	6	100101~
15	01602-01030		WASHER, spring	6	100101~
16	01582-01008		NUT	6	100101~
17	6691-11-4610		BAND	1	† ~
18	6643-11-4641		BOLT	1	100101~
	(□6643-11-4640)		BOLT	1	(100101~ •)
	The following parts are applicable to the Air Cleaner Inner Element Lock.				
		For Sudi Arabia			
	6631-81-7501		AIR CLEANER ASS'Y	1	B 142567~ U 143979~
1	6631-81-7610		. SHELL	1	B 140133~ U 141757~
	(Order caution plate at the same time.)				
	600-181-3500		. ELEMENT ASS'Y	1	B 142567~ U 143979~
2	600-181-2310		. . ELEMENT, outer	1	B 140133~ U 141757~
3	6112-83-7620		. . ELEMENT, inner	1	B 140133~ U 141757~
	600-181-2390		. . SEAL AND NUT ASS'Y	1	B 142567~ U 143979~
4	600-181-3270		. . . WASHER, seal	1	B 140133~ U 141757~
5	600-181-2360		. . . NUT, wing	1	B 140133~ U 141757~
	600-181-3690		. . SEAL AND NUT ASS'Y	1	B 142567~ U 143979~
5A	600-181-2380		. . . NUT	1	B 142567~ U 143979~
5B	600-181-3270		. . . WASHER, seal	1	B 140133~ U 141757~
5C	01580-11008		. NUT	1	B 142567~ U 143979~
6	600-181-3280		. COVER	1	B 140133~ U 141757~
7	6692-81-7130		. O-RING	1	B 140133~ U 141757~

† : Shows both Engine No. B140133, C140782, D140133, F139167, M140801, U141757, V141402, W141893, Y142411 and Z142423.

Fig & Index No.	Komatsu Part No.	Cummins Part No.	Description	Q'ty		Serial No.
A1115A-8	6692-81-7170		. BAND	1	B U	140133~ 141757~
9	6692-81-7180		. BOLT	1	B U	140133~ 141757~
10	600-181-2550		. VALVE	1	B U	140133~ 141757~

Fig. 1121 EXHAUST MANIFOLD AND MUFFLER

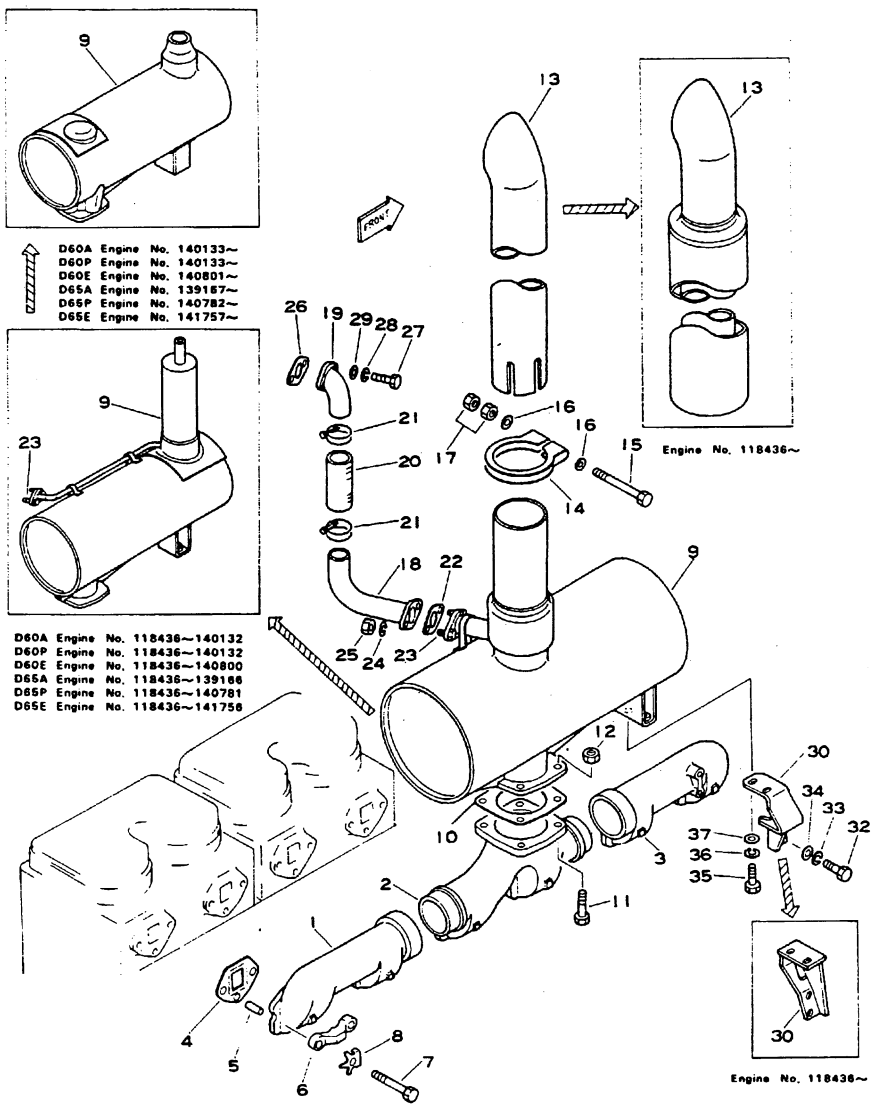

Fig. & Index No.	Komatsu Part No.	Cummins Part No.	Description	Q'ty	Serial No.
1121 - 1	6643-11-5130	133028	MANIFOLD, exhaust, rear	1	100101~
2	6643-11-5120	133027	MANIFOLD, exhaust, center	1	100101~
3	6643-11-5110	410300	MANIFOLD, exhaust, front	1	100101~
4	6620-11-5810	132977	GASKET (KIT)	6	100101~
5	(6610-11-1420)	(105199)	PIN, dowel (See Fig. 1101)	6	100101~
6	6610-11-5211		CLAMP, exhaust manifold	6	100101~
7	6610-11-5350		BOLT, clamp	12	100101~
8	6610-11-5220	114638	PLATE, lock (KIT)	12	100101~
9	6631-11-5711		MUFFLER	1	BDF100101~118435
*	6631-11-5754		MUFFLER	1	118436~ †
*	(□ 6631-11-5752)		MUFFLER	1	(118436~ †)
	6631-11-5755		MUFFLER	1	†† ~
*	6631-14-5710		MUFFLER (For cold weather) (OP)	1	B 100101~
10	6643-11-5750	139266	GASKET (KIT)	1	100101~
11	01050-61245		BOLT	4	100101~
12	6685-11-5550		NUT	4	100101~
13	6693-12-5730		PIPE, exhaust	1	BDF100101~118435
	6631-12-5730		PIPE, exhaust	1	118436~ †
	6691-11-5531		PIPE, exhaust	1	†† ~
14	6620-11-5742		CLAMP, exhaust pipe	1	100101~ †
	6693-12-5540		CLAMP, exhaust pipe	1	†† ~
15	01051-61415		BOLT	1	100101~ †
	6693-12-5550		BOLT	1	†† ~
16	01641-21423		WASHER	2	100101~
17	01582-21411		NUT, lock	2	100101~
* 18	6631-11-4711		PIPE	1	100101~ †
19	6631-11-4720		CONNECTOR	1	100101~ †
* 20	07260-04111		HOSE, joint	1	100101~ •
			(■ 07260-24111, 07280-05429)		
*	07260-24111		HOSE, joint	1	• ~ ††
* 21	07280-05729		CLAMP, hose	2	100101~ •
			(■ 07260-24111, 07280-05429)		
*	07280-05429		CLAMP, hose	2	• ~ ††
22	6120-11-5830		GASKET (KIT)	1	100101~ †

†: Shows both Engine No. B140132, C140781, D140132, F139166, M140800 and U141756.

Fig. & Index No.	Komatsu Part No.	Cummins Part No.	Description	Q'ty	Serial No.
1121 -23	01010-31030		BOLT	2	100101~ †
24	01602-01030		WASHER, spring	2	100101~ †
25	6112-13-1190		NUT	2	100101~ †
26	6631-11-4760		GASKET (KIT)	1	100101~ †
27	01010-31020		BOLT	2	B 100101~101691 D 100101~103247 F 100101~103655
	01010-51025		BOLT	2	B 101692~ CMU100101~ D 103248~ F 103656~ V 141402~ W 141893~ Y 142411~ Z 142423~
28	01602-01030		WASHER, spring	2	100101~ †
29	01641-21016		WASHER	2	100101~ †
30	6631-11-5721	415931	BRACKET, muffler	1	BDF100101~118435
	6631-12-5721		BRACKET, muffler	1	118436~ †
	6631-12-5722		BRACKET, muffler	1	†† ~
31	6631-11-5920		PLATE, shelter	1	BDF100101~118435
32	01010-31020		BOLT, bracket	2	100101~
33	01602-01030	409067	WASHER, spring	2	100101~
34	01642-21016	409154	WASHER	2	100101~
35	01050-31020		BOLT, muffler, mounting	2	BDF100101~104153
	01050-31025		BOLT, muffler, mounting	2	104154~
36	01602-01030		WASHER, spring	2	100101~
37	01643-31032		WASHER	2	100101~
* 38	6631-81-1510		PLATE, caution, muffler Japanese and English (Pasted on top of dashboard.) (Not shown)	1	123896~
*	6631-81-1540		PLATE, caution, muffler English (Pasted on top of dashboard.) (Not shown)	1	141264~

†† : Shows both Engine No. B140133, C140782, D140133, F139167, M140801, U141757, V141402, W141893, Y142411 and Z142423.

Fig. 1131 WATER MANIFOLD

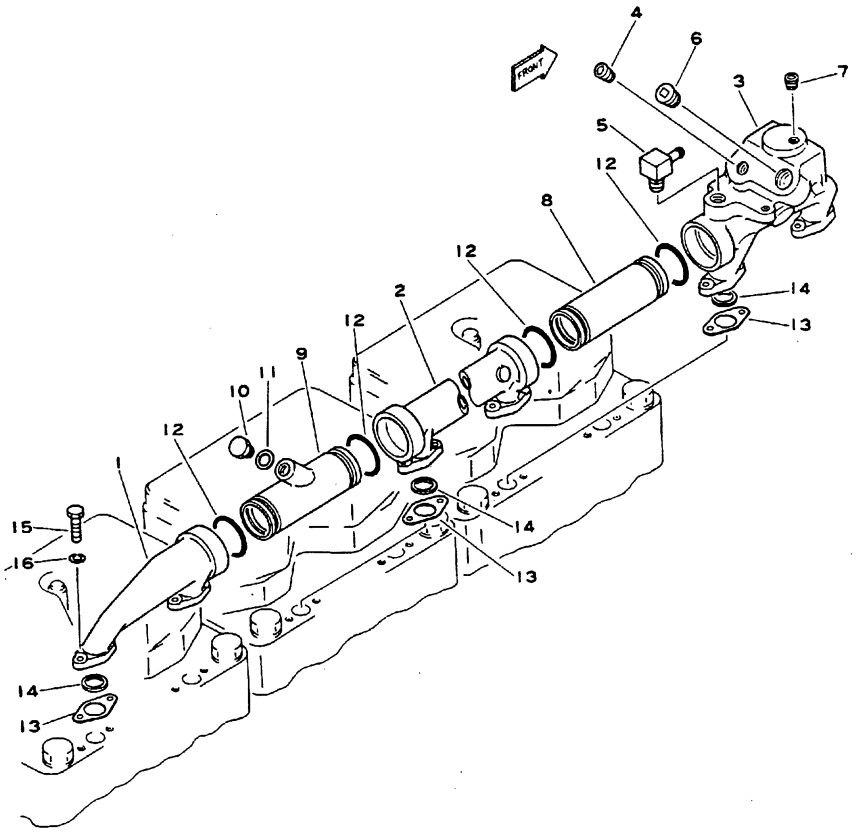

Fig. & Index No.	Komatsu Part No.	Cummins Part No.	Description	Q'ty	Serial No.
1131- 1	6610-11-6131	44730	MANIFOLD, water, rear	1	100101~
2	6610-11-6121	44733	MANIFOLD, water, center	1	100101~
3	6610-11-6111	21749	MANIFOLD, water, front	1	100101~
4	02720-20810	409610	PLUG, pipe	1	100101~
5	6631-11-6231		ELBOW	1	100101~
	(□6631-11-6230)		ELBOW	1	(100101~ •)
6	02720-21213	409611	PLUG, pipe	1	100101~
7	02720-20204		PLUG, pipe	1	100101~
8	6610-11-6140	70627	COUPLING	1	100101~
9	6631-11-6140		COUPLING	1	100101~
	6693-12-6150		COUPLING (For Cold Weather and car heater-30°C) (OP)	1	BCDFMU 100101~
	6631-12-6140		COUPLING (For Cold Weather and car heater-30°C) (OP)	1	EH 100101~
10	6672-12-6290		PLUG	1	100101~
11	07003-01621		GASKET (KIT)	1	100101~
12	02893-05043	70624	O-RING (KIT)	4	100101~
	6610-11-6080	BM-90021	WATER MANIFOLD GASKET ASS'Y (KIT)	6	100101~
13	6610-11-6810	156334	. PLATE, retaining (KIT)	1	100101~
14	6610-11-6820	160196	. RING, seal (KIT)	1	100101~
15	02030-30522	S-138-A	BOLT	12	100101~
16	02310-11020	70194	WASHER, spring	12	100101~

Fig. 1135 THERMOSTAT AND CONNECTOR

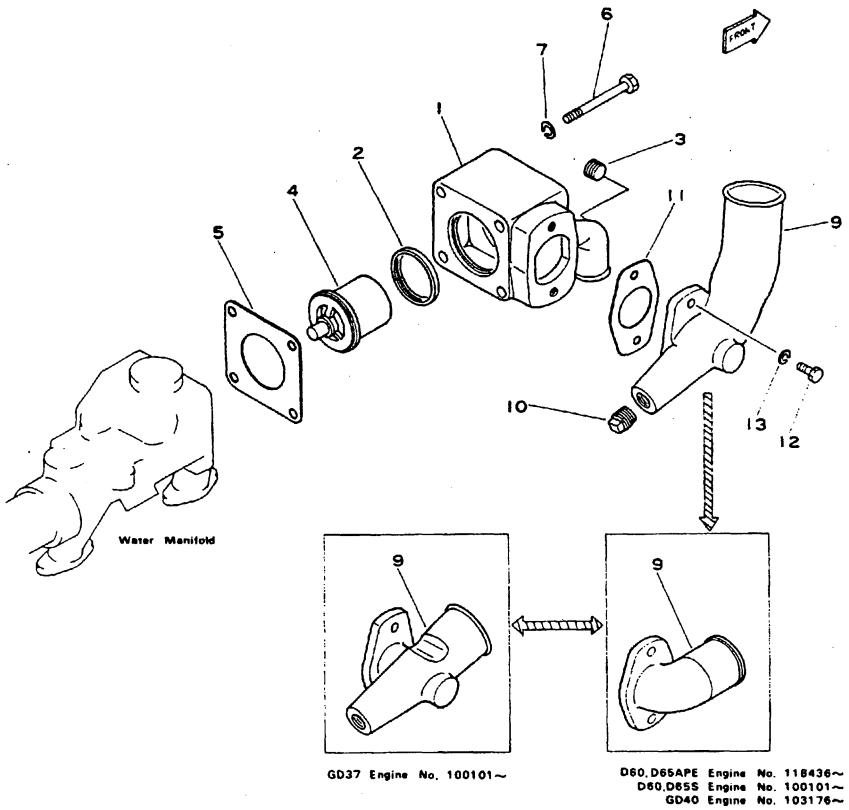

Fig & Index No.	Komatsu Part No.	Cummins Part No.	Description	Q'ty	Serial No.
	6675-12-6040	BM-73208	THERMOSTAT HOUSING ASS'Y	1	BCDEFGHMU 100101~
				Q	103176~
1135 -1	☆		. HOUSING (6620-11-6410)	1	BCDEFGHMU 100101~
				Q	103176~
2	6710-11-6451		. SEAL (KIT)	1	100101~
3	02720-20608	409609	PLUG	1	BCDEFGHMU 100101~
				Q	103176~
4	600-421-6610		THERMOSTAT	1	100101~
	(□6610-11-6500)	(135675)	THERMOSTAT	1	(100101~141259)
5	6620-11-6430	70411	GASKET (KIT)	1	100101~
6	02010-20689	S-105	BOLT	4	BCDFMU 118436~
				4	EGHQ 100101~
7	02310-11224	70206	WASHER, spring	4	100101~
9	6631-12-6310		CONNECTOR, outlet	1	BCDFMU 118436~
				1	EH 100101~
				1	Q 103176~
	6676-12-6310	410490	CONNECTOR, outlet	1	G 100101~
10	6600-01-2840	S-924	PLUG	1	G 100101~
11	6610-11-6330	9221	GASKET (KIT)	1	100101~
12	02010-20625	S-112	BOLT	2	100101~
13	02310-11224	70206	WASHER, spring	2	100101~

CYLINDER BLOCK

Fig. 1201 CYLINDER BLOCK (½)

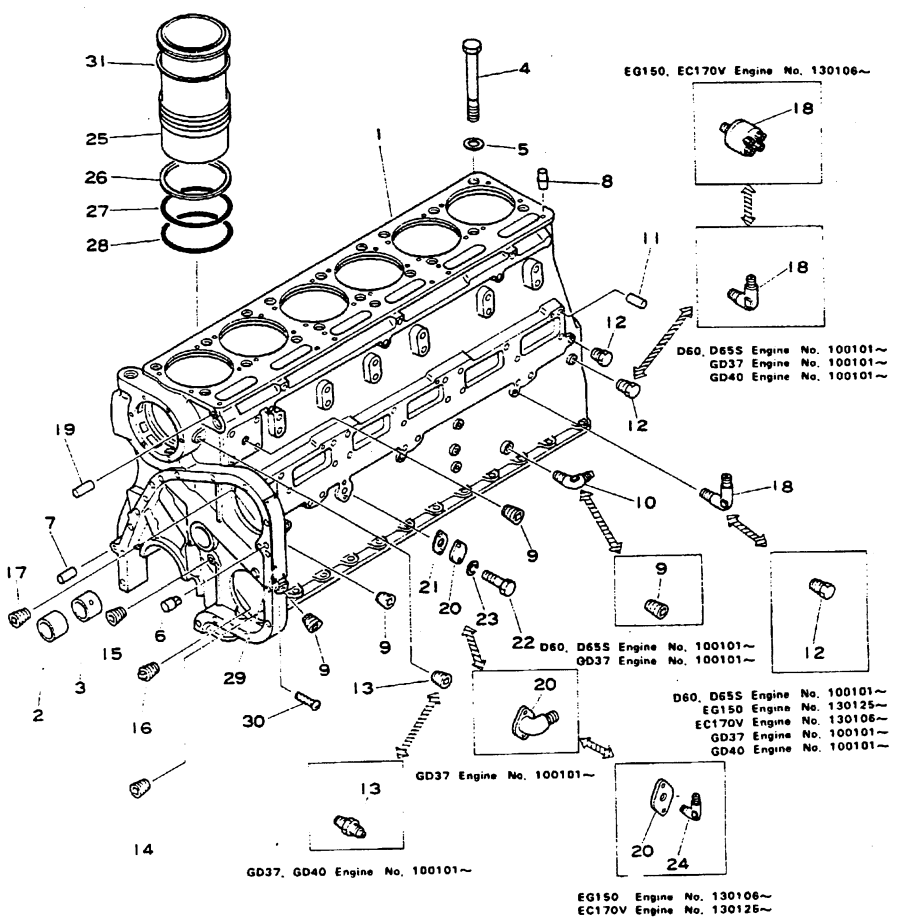

Fig & Index No.	Komatsu Part No.	Cummins Part No.	Description	Q'ty	Serial No.
	6631-21-1004	AR-90954	CYLINDER BLOCK ASS'Y	1	BCDFMU 100101~
	6631-22-1004	AR-91006	CYLINDER BLOCK ASS'Y	1	EH 100101~
	6679-20-1005	AR-91017	CYLINDER BLOCK ASS'Y	1	G 100101~
	6678-20-1013	AR-91018	CYLINDER BLOCK ASS'Y	1	Q 100101~
	6996-21-1017		CYLINDER BLOCK ASS'Y	1	R 130125~
	6667-25-1011		CYLINDER BLOCK ASS'Y	1	T 130106~
	6631-21-1023	AR-91010	. CYLINDER BLOCK ASS'Y	1	BCDFMU 100101~
	6631-22-1023	AR-91011	. CYLINDER BLOCK ASS'Y	1	EH 100101~
	6679-20-1013	AR-91009	. CYLINDER BLOCK ASS'Y	1	G 100101~
	6693-20-1023	AR-91007	. CYLINDER BLOCK ASS'Y	1	Q 100101~
	6643-21-1025	AR-91019	. CYLINDER BLOCK ASS'Y	1	RT 130106~
1201 -1	☆		. . BLOCK, cylinder (6643-21-1116)	1	
	6610-21-1040	BM-27253	. . CAMSHAFT BUSHING ASS'Y	1	
2	6610-21-1410	100670	. . . BUSHING, front	1	
3	6610-21-1420	157870	. . . BUSHING	6	
4	6610-11-1611	188329	. . BOLT	18	
5	6610-11-1620	123107	. . WASHER	18	
6	6620-21-3610	70653	. . PIN, dowel, gear cover	1	
7	6620-21-3620	60408	. . PIN, dowel, gear cover	1	
8	6610-11-1410	68445	. . PIN, dowel, cylinder head	6	BCDEFGHMQU • ~ ••
					RT 130106~
				9	BCDEFGHMQU •• ~
9	02720-20809	409610	. . PLUG	3	BCDFGMQRTU 100101~
				4	EH 100101~
10	02701-11208		. . ELBOW	1	BCDFGMQRTU 100101~
11	02400-10416		. . PIN, dowel, cam follower	6	
12	6610-21-2720		. . PLUG, oil header	5	
13	02720-20607		. . PLUG	3	GQ 100101~
				4	BCDEFHMRTU 112051~
	6684-91-4230	445130	. . CONNECTOR	1	GQ 100101~
14	02720-20204		. . PLUG	1	
15	02720-20810		. . PLUG	1	
16	6600-01-2860		. . PLUG	1	
17	02720-21214		. . PLUG	1	
18	6610-81-8820	405250	. CONNECTOR, to pressure gauge	1	BCDEFGHMQU 100101~
	6688-81-3921	194504	. SAFETY, control	1	RT 130106~
19	6610-21-2790	43468-E	. PIN, dowel	1	
20	6610-21-6730	132648	. FLANGE, oil header	1	BCDEFHMQU 100101~

Fig. & Index No.	Komatsu Part No.	Cummins Part No.	Description	Q'ty	Serial No.
	6600-01-3810	402720	. CONNECTOR	1	G 100101~
	6691-51-9930	425750	. FLANGE, oil header	1	RT 130106~
1201 -21	6610-21-5671	67963	. GASKET (KIT)	1	
22	02030-20625	S-129	. BOLT	2	BCDEFGHMQU 100101~
	02030-20632	S-103-D	. BOLT	2	RT 130106~
23	02310-11224	70206	. WASHER, spring	2	
24	02701-01008		. ELBOW	1	R 130125~
25	6610-21-2213		. LINER, cylinder	6	
26	6610-21-2240	183807	. SEAL, crevice (KIT)	6	
27	6610-21-2221	181448	. O-RING (KIT)	6	
28	6610-21-2250	181449	. O-RING (KIT)	6	
29	6620-81-1117		. PLATE, name (Limited supply)	1	BCDEFGHMRTU 100101~
30	04418-02550	409098	. SCREW	4	100101~
31	6610-29-2330	42486-A	SHIM, 0.007" (Service parts)	AR	100101~
	6610-28-2330	42486-B	SHIM, 0.008" (Service parts)	AR	100101~
	6610-27-2330	42486-C	SHIM, 0.009" (Service parts)	AR	100101~
	6610-26-2330	124320	SHIM, 0.020" (Service parts)	AR	100101~
	6610-25-2330	124331	SHIM, 0.031" (Service parts)	AR	100101~
	6610-24-2330	124454	SHIM, 0.062" (Service parts)	AR	100101~

Fig. 1202 CYLINDER BLOCK (3/3)

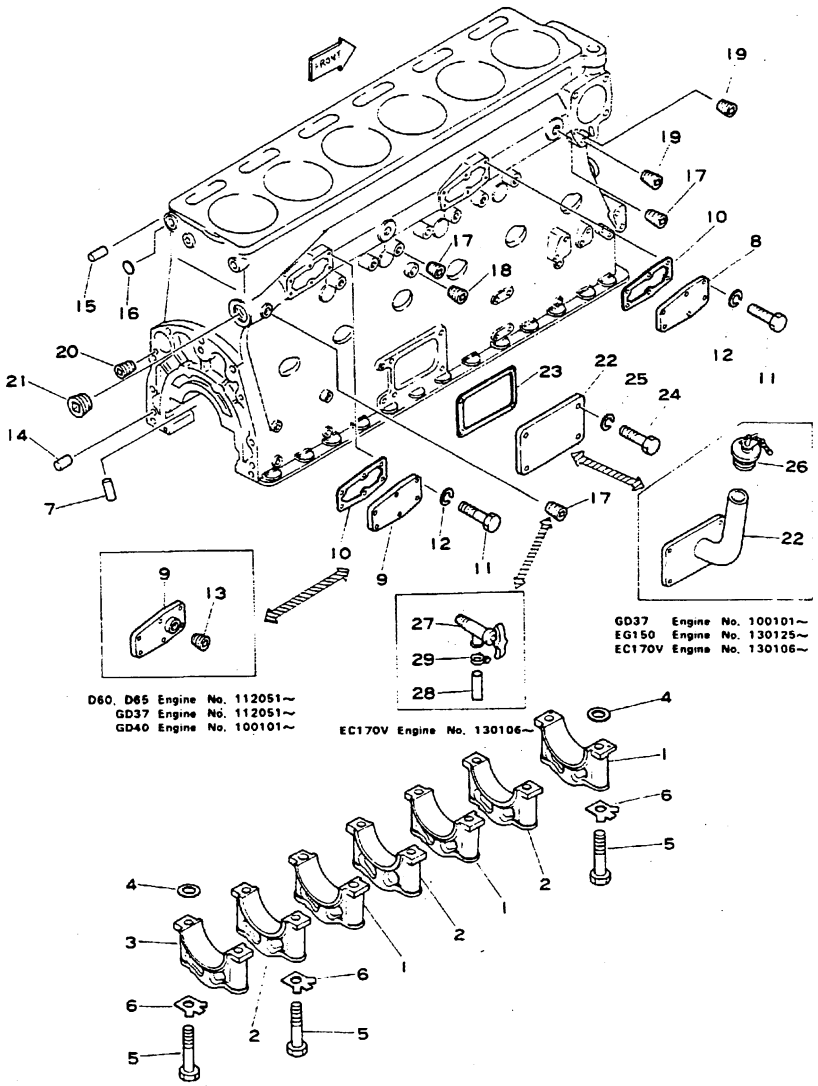

Fig. & Index No.	Komatsu Part No.	Cummins Part No.	Description	Q'ty	Serial No.
*	(6631-21-1004)		CYLINDER BLOCK ASS'Y	1	BCDFNYVWTZ 100101~
*	(□6631-21-1003)	AR-90954	CYLINDER BLOCK ASS'Y	1	(BCDFMUVWYZ 100101~138793)
*	(6631-22-1004)		CYLINDER BLOCK ASS'Y	1	EH 100101~
*	(□6631-22-1003)	AR-91006	CYLINDER BLOCK ASS'Y	1	(EH 100101~138793)
*	(6679-20-1005)		CYLINDER BLOCK ASS'Y	1	G 100101~
*	(□6679-20-1004)	AR-91017	CYLINDER BLOCK ASS'Y	1	(G 100101~138793)
*	(6693-20-1014)		CYLINDER BLOCK ASS'Y	1	K 100101~
*	(□6693-20-1013)	AR-90624	CYLINDER BLOCK ASS'Y	1	(K 100101~138793)
*	(6691-20-1004)		CYLINDER BLOCK ASS'Y	1	LN 100101~
*	(□6691-20-1003)	AR-91016	CYLINDER BLOCK ASS'Y	1	(LN 100101~138793)
*	(6678-20-1013)		CYLINDER BLOCK ASS'Y	1	Q.AA 100101~
*	(□6678-20-1012)	AR-91018	CYLINDER BLOCK ASS'Y	1	(Q.AA 100101~138793)
*	(6996-21-1016)		CYLINDER BLOCK ASS'Y	1	R 130125~154026
*	(□6996-21-1015)		CYLINDER BLOCK ASS'Y	1	(R 130125~138793)
*	(6996-21-1017)		CYLINDER BLOCK ASS'Y	1	R 154027~
*	(6667-25-1011)		CYLINDER BLOCK ASS'Y	1	T 130106~
*	(□6667-25-1010)		CYLINDER BLOCK ASS'Y	1	(T 130106~138793)
	(6631-21-1023)	(AR-91010)	. CYLINDER BLOCK ASS'Y	1	BCDFMUVWYZ 100101~
	(6631-22-1023)	(AR-91011)	. CYLINDER BLOCK ASS'Y	1	EH 100101~
	(6679-20-1013)	(AR-91009)	. CYLINDER BLOCK ASS'Y	1	G 100101~
	(6693-20-1023)	(AR-91007)	. CYLINDER BLOCK ASS'Y	1	KQ.AA 100101~
	(6691-20-1103)	(AR-91008)	. CYLINDER BLOCK ASS'Y	1	LN 100101~
	(6643-21-1025)	(AR-91019)	. CYLINDER BLOCK ASS'Y	1	RT 130106~
1202 -1	6610-29-1210	44548	. . CAP, main metal, No.1,3,5	3	100101~
	(△6610-21-1210)	(42645)	. . CAP, main metal, No.1.3.5	3	100101~
2	6610-29-1220	44550	. . CAP, main metal, No.2,4,6	3	100101~
	(△6610-21-1220)	(42646)	. . CAP, main metal, No.2.4.6	3	100101~
3	6610-29-1231	44549	. . CAP, main metal, No.7	1	100101~
	(△6610-21-1231)	(42647)	. . CAP, main metal, No.7	1	100101~
4	6610-21-1730	60575	. . RING, dowel	7	100101~
5	6610-21-1710	105953	. . BOLT	14	100101~
6	6610-21-1720	9427	. . WASHER, lock (KIT)	14	100101~
7	6610-21-1270	67211	. . PIN, dowel, main metal cap	2	100101~

Fig & Index No.	Komatsu Part No.	Cummins Part No.	Description	Q'ty	Serial No.
1202 - 7	6610-29-1270	410520	. . PIN, dowel, main metal cap (For service parts) (OS)	2	100101~
8	6610-21-6710	132019	. . COVER, water header	1	100101~
9	6610-21-6710	132019	. . COVER, water header	1	BDEFGHLN 100101~112050 KT 100101~ R 130125~154026
	6693-22-6710	412130	. . COVER, water header	1	BCDEFGHLMNUVWYZ 112051~ Q.AA 100101~ R 154027~
10	6610-21-6720	70089-1	. . GASKET (KIT)	2	100101~
11	02010-20419	S-114	. . BOLT	12	100101~
12	02310-10916	70189	. . WASHER, spring	12	100101~
13	02720-20607		. . PLUG	1	BCDEFGHLMNUVWYZ 112051~ Q.AA 100101~
14	6610-21-4570	9226	. . PIN, dowel, flywheel housing	2	100101~
15	6610-21-2770	400590	. . PIN, stopper	1	100101~
16	6600-01-2810	S-719	. . PLUG, expansion	1	G 100101~
17	02720-20607		. . PLUG, water header	3	BCDEFGHKLMNQRUVWYZ, A 100101~ 2 T 130106~
18	02720-21214		. . PLUG	1	100101~
19	02720-20810		. . PLUG	2	100101~
20	02720-20607		. . PLUG	1	100101~
21	6710-21-1260		. . PLUG, water header	1	100101~
	(□6600-01-2890)		. . PLUG, water header	1	(100101~ •)
22	6643-21-6761	412151	. COVER, hand hole	1	BCDEFHKLMNQUVWYZ, AA 100101~
	(□6643-21-6760)	(412150)	. COVER, hand hole	1	BDEFHKLN (100101~ •)
	6679-21-5550	411640	. BRACKET, oil filler	1	GT 100101~ R 130125~154024
22A	6691-22-6760		. COVER	1	R 154027~
23	6623-21-6770	65274	. GASKET (KIT)	1	100101~
24	02010-20625	S-112	. BOLT	4	100101~
25	02310-11224	70206	. WASHER, spring	4	100101~
26	07025-00100		. CAP	1	G 100101~
	(□6610-21-7200)	107981	. CAP	1	(G 100101~ •)
	6685-21-7200		. CAP	1	RT 130106~

Fig & Index No.	Komatsu Part No.	Cummins Part No.	Description	Q'ty	Serial No.
1202 - 27	6610-61-8411		COCK, drain	1	T 130106~
28	07270-01550		HOSE	1	T 130106~
29	07280-02323		CLAMP	1	T 130106~

Fig. 1205 REAR COVER

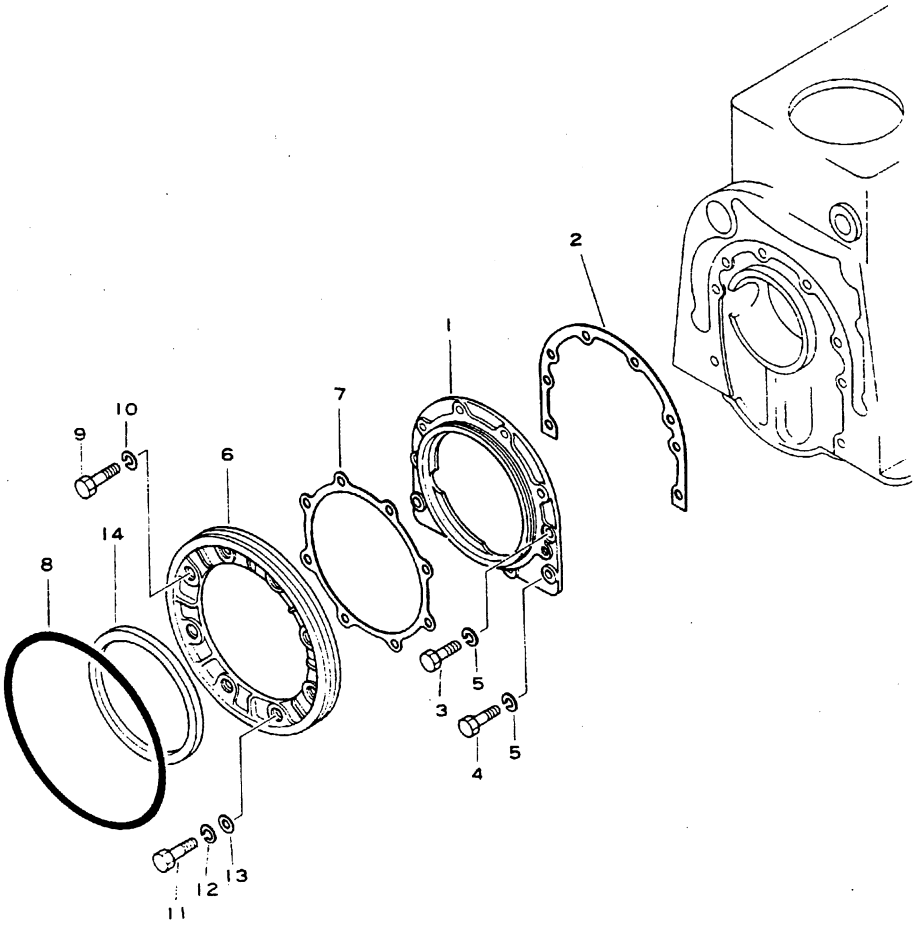

Fig. & Index No.	Komatsu Part No.	Cummins Part No.	Description		Q'ty	Serial No.
1205 -1	6645-21-1311	400531	PLATE, rear		1	
2	6610-21-1330	40662	GASKET	(KIT)	1	
3	02030-20625	S-129	BOLT		2	BCDEFGHMQU 100101~
	02030-20638	S-165	BOLT		4	RT 100101~
4	02030-20632		BOLT		2	BCDEFGHMQU 100101~
	02030-20638	S-165	BOLT		4	RT 100101~
5	02310-11224	70206	WASHER, spring		4	BCDEFGHMQU 100101~
					8	RT 100101~
6	6610-21-1340	400520	RETAINER, o-ring		1	BCDEFGHMQU 100101~
7	6610-21-1350	400540	GASKET	(KIT)	1	BCDEFGHMQU 100101~
8	07000-06240	409191	O-RING	(KIT)	1	BCDEFGHMQU 100101~
9	02030-20644	106549	BOLT		4	BCDEFGHMQU 100101~
10	02310-11224	70206	WASHER, spring		4	BCDEFGHMQU 100101~
11	02030-20416	S-121	BOLT		4	BCDEFGHMQU 100101~
12	02310-10916	70189	WASHER, spring		4	BCDEFGHMQU 100101~
13	02300-10920	409601	WASHER		1	BCDEFGHMQU 100101~
14	6610-21-1321	141744	SEAL, oil, rear	(KIT)	1	

Fig. 1211 GEAR CASE COVER AND FRONT SUPPORT

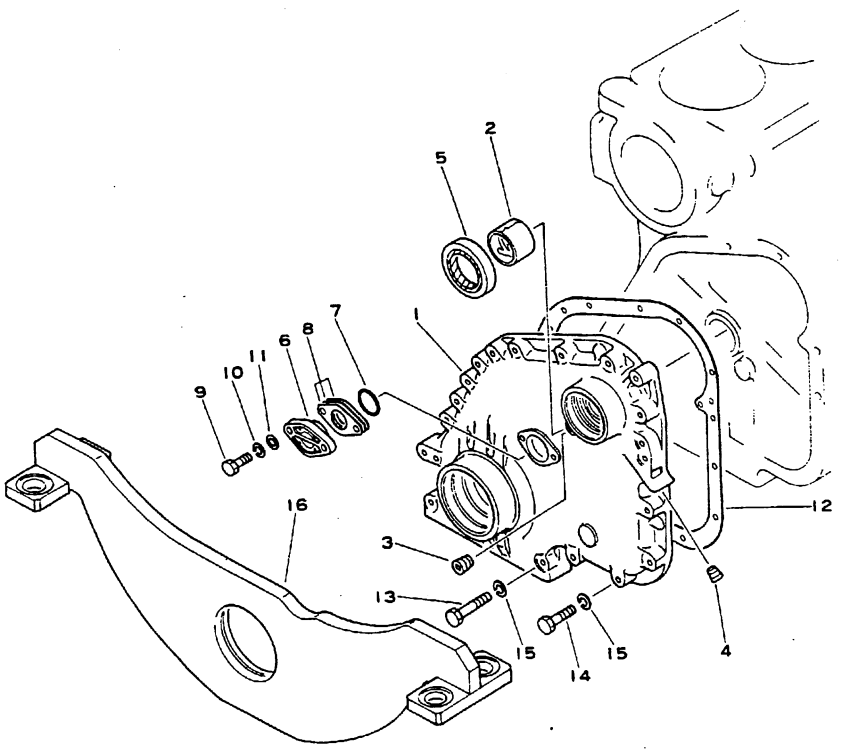

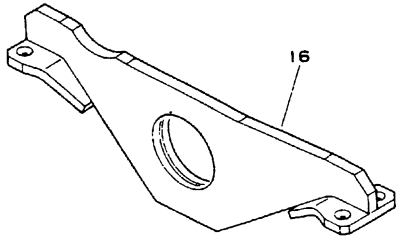

D60,D65S Engine No. 100101~

Fig. & Index No.	Komatsu Part No.	Cummins Part No.	Description	Q'ty	Serial No.
	6643-21-3011	AR-91025	GEAR CASE COVER ASS'Y	1	
1211 - 1	☆		. COVER (6643-21-3111)	1	
2	6610-21-3120	132770	. BUSHING	1	
3	02720-20608	409609	. PLUG	1	
4	02720-20204	68606	. PLUG	1	
5	6610-21-3511	149488	SEAL, oil, pump drive (KIT)	1	
6	6620-21-3210	138988	PLATE, thrust, camshaft	1	
7	6620-21-3240	67270	O-RING (KIT)	1	
8	6620-21-3040	AR-90441	SHIM ASS'Y (KIT)	1	
	6620-21-3310	68192-A	. SHIM, 0.254 mm	4	
	6620-21-3320	68192-B	. SHIM, 0.127 mm	4	
	6620-21-3330	68192-C	. SHIM, 0.051 mm	4	
9	02010-20619	S-117	BOLT	2	
10	02310-11224	70206	WASHER, spring	2	
11	02300-11320	409602	WASHER	2	
12	6685-21-3810		GASKET (KIT)	1	
13	02030-20764	S-131-C	BOLT	1	
14	02030-20751	100915	BOLT	15	
15	02310-11428	70195	WASHER, spring	16	
16	6631-21-3710		SUPPORT, front	1	BCDFMU 100101~
	6631-22-3715		SUPPORT, front	1	EH 100101~
	(□6631-22-3712)		SUPPORT, front	1	EH 100101~ *
	(□6631-22-3713)		SUPPORT, front	1	EH 100101~146540

Fig. 1215 OIL PAN

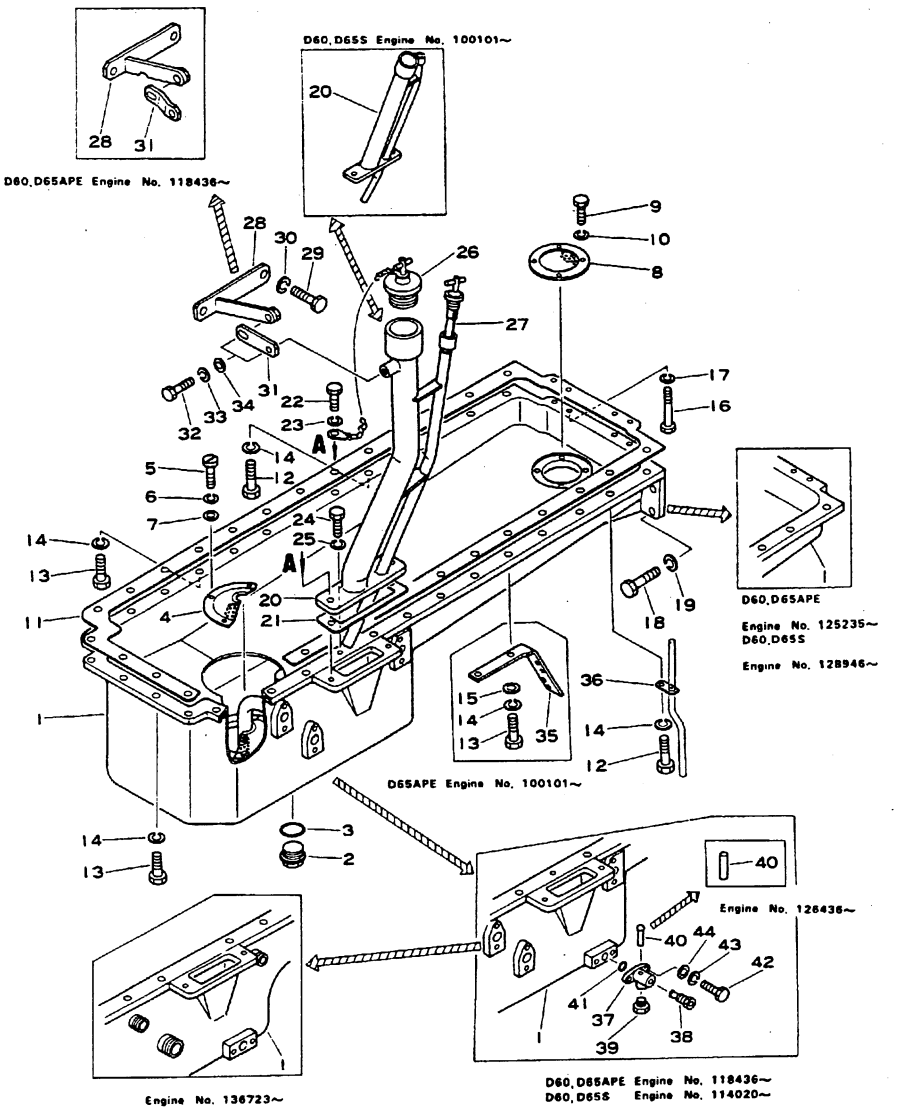

Fig. & Index No.	Komatsu Part No.	Cummins Part No.	Description	Q'ty	Serial No.
1215 -1	6692-21-5112		PAN, oil	1	BDF118436~125234 EH 114020~128945
	(Supplied as a set consisting of 6631-21-5110 and 02030-70529.)				
	6631-21-5110		PAN, oil	1	BCDFMU 125235~136722 EH 128946~136722
	6632-21-5110		PAN, oil	1	136723~
2	07044-13620		PLUG, drain	1	100101~136722
3	07002-03634		O-RING (KIT)	1	100101~136722
4	6672-22-5520	401620	SCREEN	2	100101~136723
5	01212-50612		SCREW	6	100101~136722
6	01602-00619	409615	WASHER, spring	6	100101~136722
7	01640-20610	409492	WASHER	6	100101~136722
8	6643-21-5520	411600	SCREEN	1	100101~136722
9	01010-30612		BOLT	4	100101~136722
10	01602-00619	409615	WASHER, spring	4	100101~136722
11	6623-21-5812		GASKET (KIT)	1	
12	6610-21-5720	70349	BOLT	24 23 23 23	EH 100101~ MB 101692~ CD 103248~ FU 103656~
13	02030-20744		BOLT	2	BDEHM 100101~
	02030-20738		BOLT	2	CFU103656~
14	01602-01134		WASHER, spring	30 31 28	BDM100101~ EH 100101~ CFU100101~
15	01640-21123		WASHER	2	CFU100101~
16	02030-30570	137761	BOLT	4	BDF100101~125234 EH 100101~128945
	02030-70529		BOLT	4	BCDFMU 125235~ EH 128945~
17	02310-11020	70194	WASHER, spring	4	100101~
18	01010-31240		BOLT	5	BDF100447~125234 EH 100447~128945
19	01602-01236		WASHER, spring	5	BDF100101~125234 EH 100101~128945
20	6631-21-5411	415941	BRACKET, oil filler and gauge	1	BDF100101~ •
	6631-21-5412		BRACKET, oil filler and gauge	1	BCDFMU • ~
	6693-22-5411	411551	BRACKET, oil filler and gauge	1	EH 100101~
21	6643-21-5421	421541	GASKET (KIT)	1	
22	01010-31230		BOLT	2	
23	01602-01236		WASHER, spring	2	
24	01010-30830		BOLT	1	
25	01602-00825		WASHER, spring	1	
26	6610-21-7200	107981	CAP, oil filler	1	

Fig. & Index No.	Komatsu Part No.	Cummins Part No.	Description	Q'ty	Serial No.
1215 -27	6631-21-5301		GAUGE, oil level	1	BCDFMU 100101~
	6693-22-5302		GAUGE, oil level	1	EH 100101~
28	6631-21-5420		BRACKET	1	BDF100101~118435
	(Supplied as a set consisting of 6631-21-5421 and 6631-21-5431.)				
	6631-21-5421		BRACKET	1	BCDFMU 118436~
29	02030-20925	S-151-C	BOLT	2	BCDFMU 100101~
30	02310-11836	70260	WASHER, spring	2	BCDFMU 100101~
31	6631-21-5430		PLATE	1	BDF100101~118435
	(Supplied as a set consisting of 6631-21-5421 and 6631-21-5431.)				
	6631-21-5431		PLATE	1	BCDFMU 118436~
32	01050-31025		BOLT	2	BCDFMU 100101~
33	01602-01030	409067	WASHER, spring	2	BCDFMU 100101~
34	01642-21016	409154	WASHER	2	BCDFMU 100101~
35	6632-21-5911		BRACKET	1	CFU100101~
36	6610-21-5730		CLAMP, hose	1	100101~
	6693-22-5600		VALVE ASS'Y	1	BCDFMU 118436~ EH 114020~
37	6693-22-5610		. BODY	1	BCDFMU 118436~ EH 114020~
38	6693-22-5620		. VALVE	1	BCDFMU 118436~ EH 114020~
39	07040-02412		. PLUG	1	BCDFMU 118436~ EH 114020~
40	04020-00514		. PIN, dowel	1	BCDFMU 118436~ EH 114020~
	(□ 04400-00310)		. RIVET	1	(BDF118436~126435) (EH 114020~126435)
41	07000-63028		O-RING	1	BCDFMU 118436~ EH 114020~
42	01010-31030		BOLT	2	BCDFMU 118436~ EH 114020~
43	01602-01030		WASHER, spring	2	BCDFMU 118436~ EH 114020~
44	01640-21016		WASHER	2	BCDFMU 118436~ EH 114020~

Fig. 1221 FLYWHEEL AND FLYWHEEL HOUSING

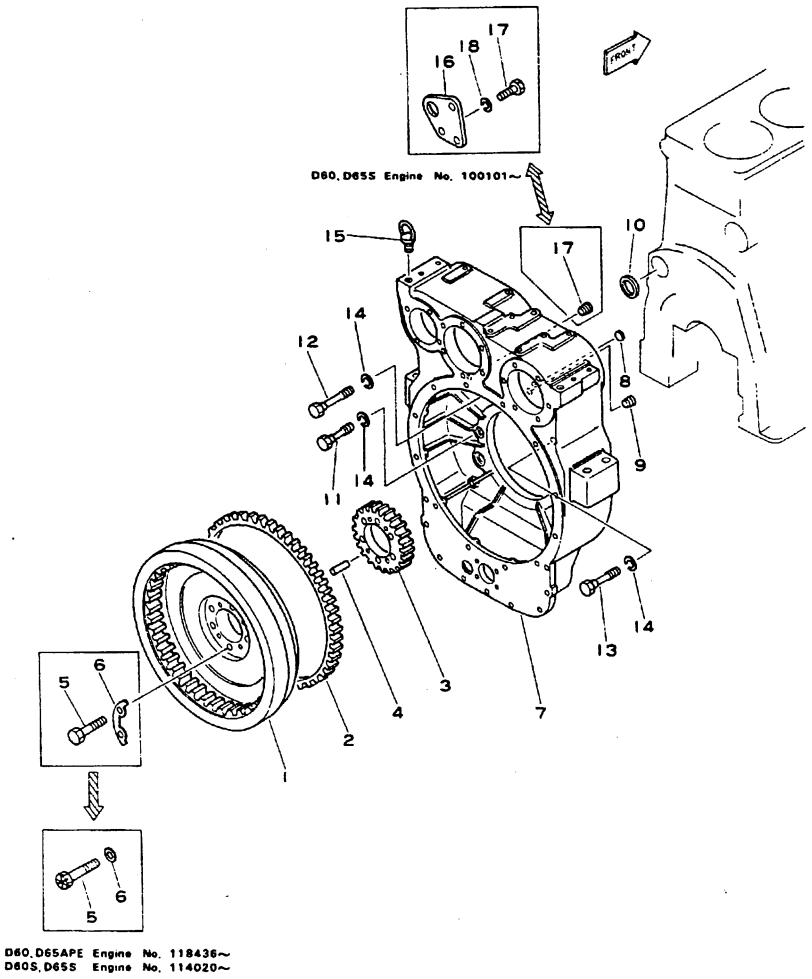

Fig & Index No.	Komatsu Part No.	Cummins Part No.	Description	Q'ty	Serial No.
	6631-31-1031		FLYWHEEL ASS'Y	1	
	6631-31-1041		. FLYWHEEL ASS'Y	1	
1221 -1			. . FLYWHEEL (6631-31-1310)	1	
2	6673-31-1321		. . GEAR, ring	1	
3	6631-31-1370		. GEAR	1	
4	6670-31-1330	402390	. PIN, dowel	2	
5	6631-31-1341		BOLT, flywheel to crankshaft	6	BCDFMU 118436~ EH 114020~
6	6631-31-3331	200861	WASHER, hard	6	BCDFMU 118436~ EH 114020~
	6631-21-4023		FLYWHEEL HOUSING ASS'Y	1	BCDFMU 118436~ EH 114020~
7			. HOUSING, flywheel (6631-21-4113)	1	BCDFMU 118436~ EH 114020~
8	07046-12016		. PLUG, expansion	2	
9	6100-21-1130		. PLUG	1	
10	6610-21-4580	9333-1	GASKET (KIT)	1	
11	6631-21-4350		BOLT	4	BCDFMU 118436~ EH 114020~
12	6600-01-2111	405171	BOLT	3	
13	6631-21-4590		BOLT	1	
14	6600-01-2740	405610	WASHER, spring	8	
15	04530-02438		BOLT, eye	2	
16	6631-21-4910		HANGER	1	EH
17	6100-21-1130		PLUG	1	BCDFMU
	01010-31030		BOLT	3	EH
18	01602-01030		WASHER, spring	3	EH

Fig. A1231 CRANKSHAFT AND VIBRATION DAMPER

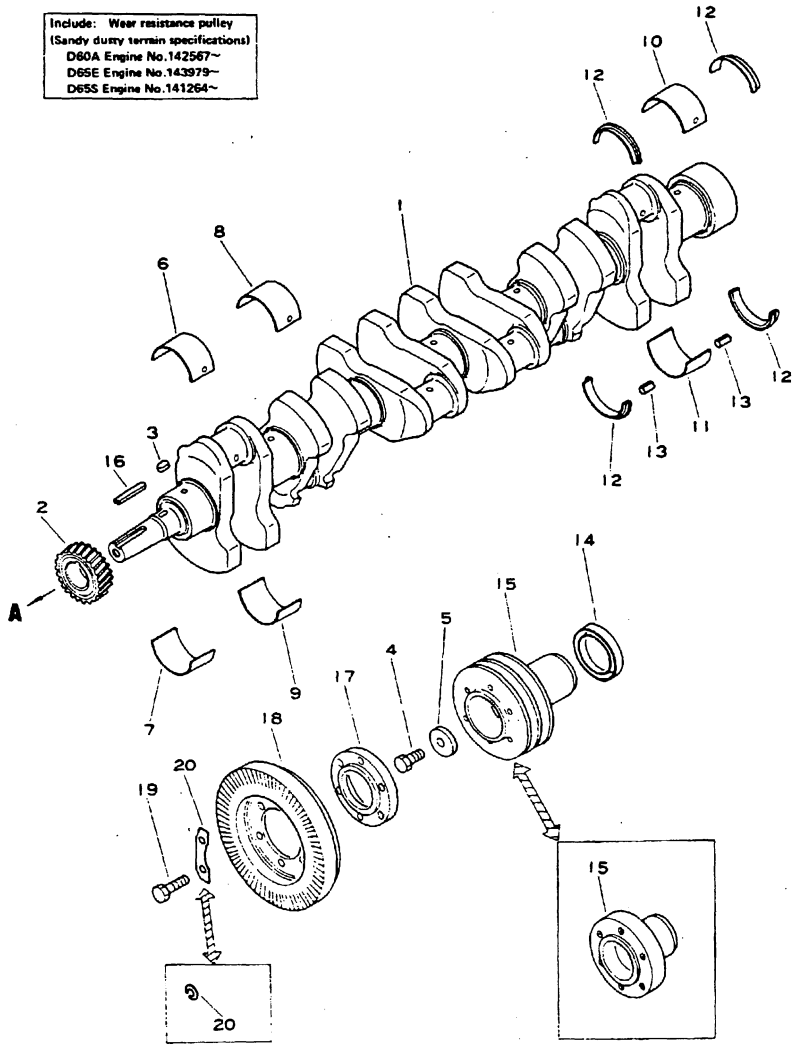

D80, D85A Engine No.100101~
GD37, GD40 Engine No.100101~
EG150, EC170V Engine No.130106~

Fig. & Index No.	Komatsu Part No.	Cummins Part No.	Description	Q'ty	Serial No.
	6631-31-1010	AR-90689	CRANKSHAFT ASS'Y	1	BCDFGMU 100101~
	6676-31-1010	AR-90874	CRANKSHAFT ASS'Y	1	EH 100101~
	6675-31-1011	BM-69171	CRANKSHAFT ASS'Y	1	Q 100101~
	6680-31-1011	AR-90521	CRANKSHAFT ASS'Y	1	RT 130106~
A1231-1	6623-31-1111	101109	. CRANKSHAFT	1	100101~
	02720-20204	68606	. . PLUG	6	100101~
2	6623-31-1120	190908	. GEAR, crankshaft	1	100101~
3	6610-31-1130	9300-1	. KEY, gear	1	100101~
4	6631-31-1430	415950	. BOLT	1	BDFGMUC 100101~
	6643-31-1430	140410	. BOLT	1	EH 100101~
	(□6676-33-1430)	(412480)	. BOLT	1	(EH 100101~111409)
	6670-31-1430		. BOLT	1	RT 130106~
5	6643-31-1440	140411	. RETAINER	1	BCDFGMQRTU 100101~
	6676-33-1440	412490	. RETAINER	1	EH 100101~
			STANDARD		
	6610-21-8010	BM-28978	METAL ASS'Y	1	100101~
	6610-21-8070		. MAIN METAL ASS'Y	1	100101~
	6610-21-8020		. . MAIN METAL ASS'Y, No.1,3,5	3	100101~
6	☆		. . . METAL, upper (6610-21-8110)	1	100101~
7	☆		. . . METAL, lower (6610-21-8120)	1	100101~
	6610-21-8030		. . MAIN METAL ASS'Y No.2,4,6	1	100101~
8	☆		. . . METAL, upper (6610-21-8130)	1	100101~
9	☆		. . . METAL, lower (6610-21-8140)	1	100101~
	6610-21-8040	412010	. . MAIN METAL ASS'Y, No.7	1	100101~
10	☆		. . . METAL, upper (6610-21-8150)	1	100101~
11	☆		. . . METAL, lower (6610-21-8160)	1	100101~

D60A Engine No.142567~ (サウジアラビア)
D65E Engine No.143979~ (サウジアラビア)
D65S Engine No.141264~ (イラク, アンゴラ)

Fig. & Index No.	Komatsu Part No.	Cummins Part No.	Description	Q'ty	Serial No.
	6610-21-8051		. THRUST METAL ASS'Y	1	100101~
A1231-12	☆		. . METAL, thrust (6610-21-8511)	4	100101~
			UNDERSIZE 0.25 mm		
	6610-29-8070		MAIN METAL ASS'Y	1	100101~
	6610-29-8020		. MAIN METAL ASS'Y, No.1,3,5	3	100101~
6	☆		. . METAL, upper (6610-29-8110)	1	100101~
7	☆		. . METAL, lower (6610-29-8120)	1	100101~
	6610-29-8030		. MAIN METAL ASS'Y, No.2,4,6	3	100101~
8	☆		. . METAL, upper (6610-29-8130)	1	100101~
9	☆		. . METAL, lower (6610-29-8140)	1	100101~
	6610-29-8040		. MAIN METAL ASS'Y, No.7	1	100101~
10	☆		. . METAL, upper (6610-29-8150)	1	100101~
11	☆		. . METAL, lower (6610-29-8160)	1	100101~
			UNDERSIZE 0.50 mm		
	6610-28-8070		MAIN METAL ASS'Y	1	100101~
	6610-28-8020		. MAIN METAL ASS'Y, No.1,3,5	3	100101~
6	☆		. . METAL, upper (6610-28-8110)	1	100101~
7	☆		. . METAL, lower (6610-28-8120)	1	100101~
	6610-28-8030		. MAIN METAL ASS'Y, No.2,4,6	3	100101~
8	☆		. . METAL, upper (6610-28-8130)	1	100101~
9	☆		. . METAL, lower (6610-28-8140)	1	100101~
	6610-28-8040		. MAIN METAL ASS'Y, No.7	1	100101~
10	☆		. . METAL, upper (661--28-8150)	1	100101~
11	☆		. . METAL, lower (6610-28-8160)	1	100101~
			UNDERSIZE 0.75 mm		
	6610-27-8070		MAIN METAL ASS'Y	1	100101~
	6610-27-8020		. MAIN METAL ASS'Y, No.1,3,5	3	100101~
6	☆		. . METAL, upper (6610-27-8110)	1	100101~
7	☆		. . METAL, lower (6610-27-8120)	1	100101~

Fig. & Index No.	Komatsu Part No.	Cummins Part No.	Description	Q'ty	Serial No.
	6610-27-8030		. MAIN METAL ASS'Y, No.2,4,6	3	100101~
A1231-8	☆		. . METAL, upper (6610-27-8130)	1	100101~
9	☆		. . METAL, lower (6610-27-8140)	1	100101~
	6610-27-8040		. MAIN METAL ASS'Y, No.7	1	100101~
10	☆		. . METAL, upper (6610-27-8150)	1	100101~
11	☆		. . METAL, lower (6610-27-8160)	1	100101~
			UNDERSIZE 1.00 mm		
	6610-26-8070		MAIN METAL ASS'Y	1	100101~
	6610-26-8020		. MAIN METAL ASS'Y, No.1,3,5	3	100101~
6	☆		. . METAL, upper (6610-26-8110)	1	100101~
7	☆		. . METAL, lower (6610-26-8120)	1	100101~
	6610-26-8030		. MAIN METAL ASS'Y, No.2,4,6	3	100101~
8	☆		. . METAL, upper (6610-26-8130)	1	100101~
9	☆		. . METAL, lower (6610-26-8140)	1	100101~
	6610-26-8040		. MAIN METAL ASS'Y, No.7	1	100101~
10	☆		. . METAL, upper (6610-26-8150)	1	100101~
11	☆		. . METAL, lower (6610-26-8160)	1	100101~
			OVERSIZE 0.25 mm		
	6610-29-8051		THRUST METAL ASS'Y	1	100101~
12	☆		. METAL (6610-21-8511)	2	100101~
	☆		. METAL (6610-29-8511)	2	100101~
			OVERSIZE 0.50 mm		
	6610-28-8051		THRUST METAL ASS'Y	1	100101~
12	☆		. METAL (6610-29-8511)	4	100101~
			OVERSIZE 0.75 mm		
	6610-27-8051		THRUST METAL ASS'Y	1	100101~
12	☆		. METAL (6610-29-8511)	2	100101~
	☆		. METAL (6610-28-8511)	2	100101~

Fig. & Index No.	Komatsu Part No.	Cummins Part No.	Description	Q'ty	Serial No.
			OVERSIZE 1.00 mm		
	6610-26-8051		THRUST METAL ASS'Y	1	100101~
A1231-12	☆		. METAL, thrust (6610-28-8511)	4	100101~
13	6610-21-1281	202903	PIN, roll	2	100101~
14	6610-21-3520	141743	SEAL, oil (KIT)	1	100101~
15	6691-31-1410	422450	PULLEY, crankshaft	1	BCDFLMNU 100101~
	6672-32-1411	402431	PULLEY, crnakshaft	1	EH 100101~114019 G 100101~ Q 100101~141230
	6693-32-1421		PULLEY, crnakshaft	1	EH 114020~ K 100101~ Q 141231~ VWYZ 141402~
	6689-31-1410		PULLEY, crnakshaft	1	RT 130106~
▽	6691-31-1420		PULLEY, crankshaft Wear Resistance Pulley (Sandy Dusty Terrain specification)	1	B 142567~ U 143979~
▽	6693-32-1441		PULLEY, crnakshaft Wear Resistance Pulley (Sandy Dusty Terrain specification)	1	H 141264~
16	6643-31-1421	142666	KEY, crnakshaft	1	100101~
17	6693-32-1452		SPACER	1	BCDEFGHKMQUVWYZ 100101~
	(□6693-32-1451)		SPACER	1	(BD 100101~120592) (E 100101~120796) (F 100101~1240494) (G 100101~120947) (H 100101~120982) (K 100101~120885) (Q 100101~120964)
	6681-31-1460	422510	PIN, dowel	1	LN 100101~
	04020-01228		PIN, dowel	1	RT 130106~
18	6684-31-8100	140345	DAMPER, vibration	1	BCDEFGHKMQUVWYZ 100101~
	6623-31-8102		DAMPER, vibration	1	LN 100101~
19	01050-31240		BOLT	6	BCDEFGHKMQUVWYZ 100101~
	01050-31225		BOLT	6	LNRT 130106~
20	6610-31-1362	402422	PLATE, lock (KIT)	3	BCDEFHKMUVWYZ 100101~
	02310-11632	70219	WASHER, spring	6	GQ 100101~
	01602-01236	409068	WASHER, spring	6	LNRT 100101~

▽ : Parts to be differed from standard machines.

Fig. 1235 PISTON AND CONNECTING ROD

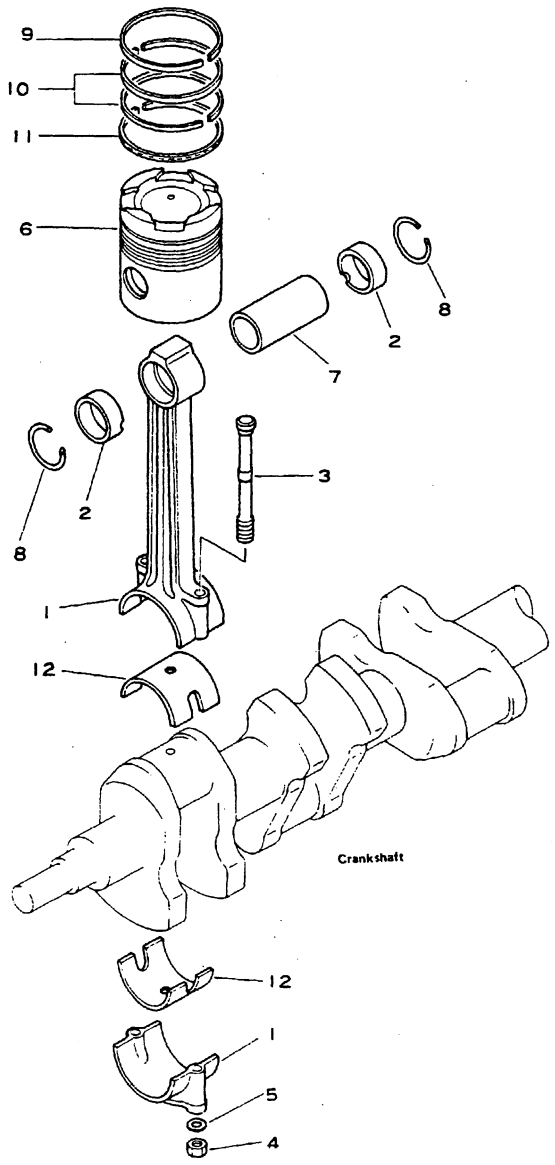

Fig & Index No.	Komatsu Part No.	Cummins Part No.	Description	Q'ty	Serial No.
	6620-31-3012		CONNECTING ROD ASS'Y	6	
1235 -1	☆		. ROD, connecting (6620-31-3112)	1	
2	6620-31-3120	43067	. BUSHING	2	
3	6610-31-3311		. BOLT	2	
4	6610-31-3320	69936	. NUT	2	
5	6610-31-3331	200861	. WASHER, hard	2	
	6620-31-2010	BM-55320	PISTON ASS'Y	6	
6	6620-31-2110	151850	. PISTON	1	
7	6620-31-2410	66877-1	. PIN, piston	1	
8	6610-31-2130	61908	. RING, snap	2	
	6620-31-2020	BM-35080	PISTON RING ASS'Y	1	
	6620-31-2030		. PISTON RING ASS'Y	6	
9	☆		.. RING (6610-31-2210)	1	
10	☆		. . RING (6610-31-2220)	2	
11	☆		. . RING, oil (6620-31-2230)	1	
			STANDARD		
	6610-31-3041		CRANKPIN METAL ASS'Y	6	
12	☆		. METAL (6610-31-3411)	2	
			UNDERSIZE 0.25 mm		
	6610-39-3041		CRANKPIN METAL ASS'Y	6	
12	☆		. METAL (6610-39-3411)	2	
			UNDERSIZE 0.50 mm		
	6610-38-3041		CRANKPIN METAL ASS'Y	6	
12	☆		. METAL (6610-38-3411)	2	
			UNDERSIZE 0.75 mm		
	6610-37-3041		CRANKPIN METAL ASS'Y	6	
12	☆		. METAL (6610-37-3411)	2	
			UNDERSIZE 1.00 mm		
	6610-36-3041		CRANKPIN METAL ASS'Y	6	
12	☆		. METAL (6610-36-3411)	2	

Fig. 1241 CAMSHAFT

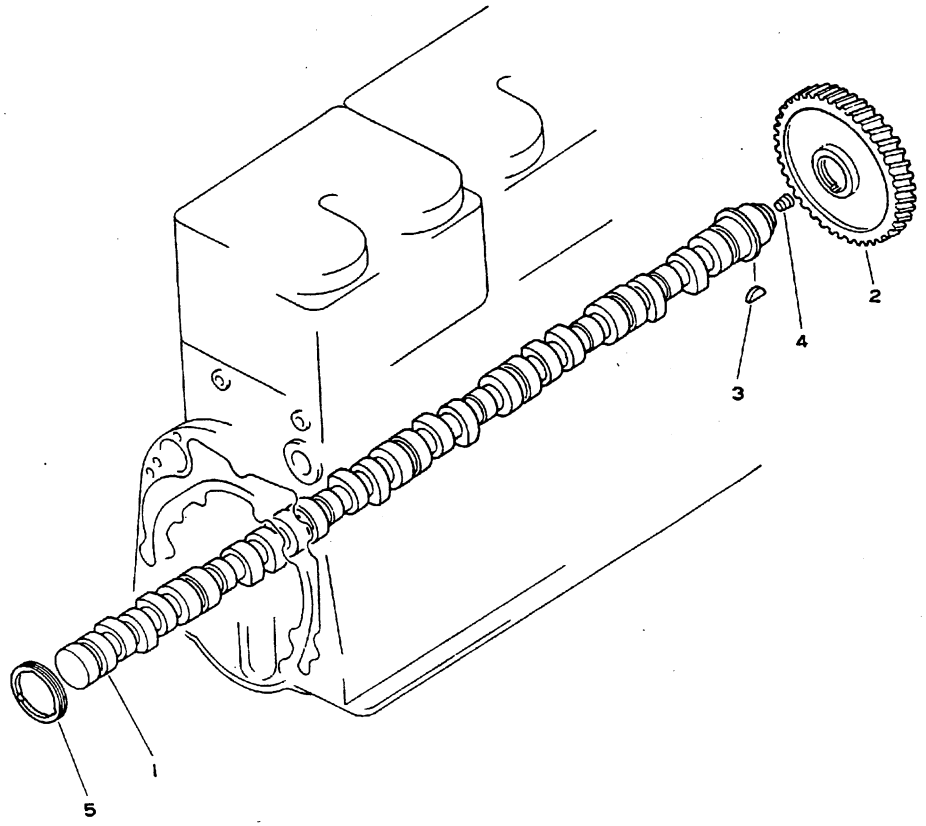

Fig. & Index No.	Komatsu Part No.	Cummins Part No.	Description	Q'ty	Serial No.
	6680-41-1011		CAMSHAFT ASS'Y	1	
	6680-41-1021		. CAMSHAFT ASS'Y	1	
1241 -1	6680-41-1111		. . CAMSHAFT	1	
2	6610-41-1210	109072	. . GEAR, camshaft	1	
3	02410-01025	69550	. . KEY, woodruff	1	
4	6620-41-1150		. . PLUG	1	
5	6610-41-1230	9235-1	. WASHER	1	

Fig. 1245 CAM FOLLOWER AND PUSH ROD

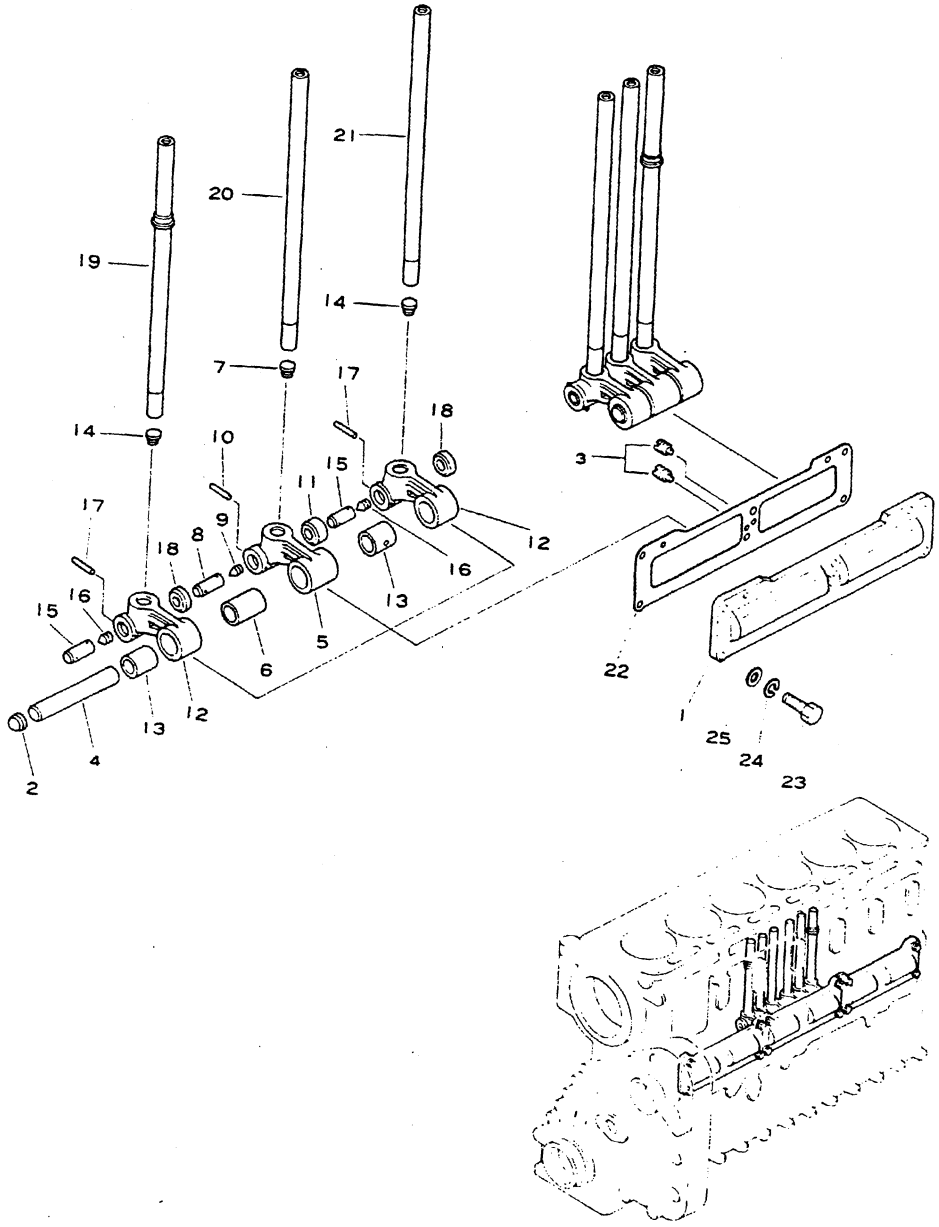

Fig. & Index No.	Komatsu Part No.	Cummins Part No.	Description	Q'ty	Serial No.
	6610-41-2010	BM-37625	CAM FOLLOWER HOUSING ASS'Y	3	
	6610-41-2020	BM-73976	. HOUSING ASS'Y	1	
1245 -1	6610-41-2111	44035	. . HOUSING, cam follower	1	
2	6710-41-2130	146261	. . PLUG, expansion	2	
3	6610-41-2120	69736	. SCREW, rocker lever shaft	2	
4	6610-41-2140	42443	. SHAFT, rocker lever	2	
	6610-41-2050	BM-37621	. INJECTOR CAM LEVER ASS'Y	2	
	6610-41-2060	BM-37496	. . LEVER AND BUSHING ASS'Y	1	
5	☆		. . . LEVER, injector cam (6610-41-2411)	1	
6	☆		. . . BUSHING (6610-41-2420)	1	
7	6610-41-2330	107738	. . . INSERT, lever	1	
	6610-41-3040	AR-90715	. . PIN ASS'Y	1	
8	☆		. . . PIN, injector cam roller (6610-41-2450)	1	
9	6610-41-2360	65116	. . . PLUG	1	
10	6610-41-2370	118939	. . PIN, roller	1	
11	6610-41-2440	7348-2	. . ROLLER, injector cam	1	
	6610-41-2030	BM-37634	. INTAKE AND EXHAUST LEVER ASS'Y	4	
	6610-41-2040	BM-37633	. . LEVER AND BUSHING ASS'Y	1	
12	☆		. . . LEVER, valve cam (6610-41-2311)	1	
13	☆		. . . BUSHING (6610-41-2320)	1	
14	6610-41-2330	107738	. . . INSERT, lever	1	
	6610-41-3050	AR-90716	. . PIN ASS'Y	1	
15	☆		. . . PIN, valve cam roller (6610-41-2350)	1	
16	6610-41-2360	65116	. . . PLUG	1	
17	6610-41-2370	118939	. . PIN, roller	1	
18	6610-41-2340	9260-1	. . ROLLER, valve cam	1	
	6710-41-3020		EXHAUST ROD ASS'Y	6	
19	☆		. ROD, exhaust (6710-41-3200)	1	106955~
	6610-41-3030	BM-47779	INJECTOR ROD ASS'Y	6	
20	☆		. ROD, injector (6610-41-3300)	1	
	6710-41-3010		INTAKE ROD ASS'Y	6	
21	☆		. ROD, intake (6710-41-3100)	1	106955~
	6610-41-2080	AR-90440	CAM FOLLOW HOUSING GASKET ASS'Y (KIT)	1	
22	6610-41-2810	120819	. GASKET, 0.80 mm (KIT)	3	
	6610-41-2820	9266	. GASKET, 0.38 mm (KIT)	3	
	6610-41-2830	9266-A	. GASKET, 0.18 mm (KIT)	9	112965~
23	02030-20625	S-129	BOLT	18	
24	02310-11224	70206	WASHER, spring	18	
25	02300-01320	409602	WASHER	18	

Fig. 1261 POWER TAKE OFF (½)

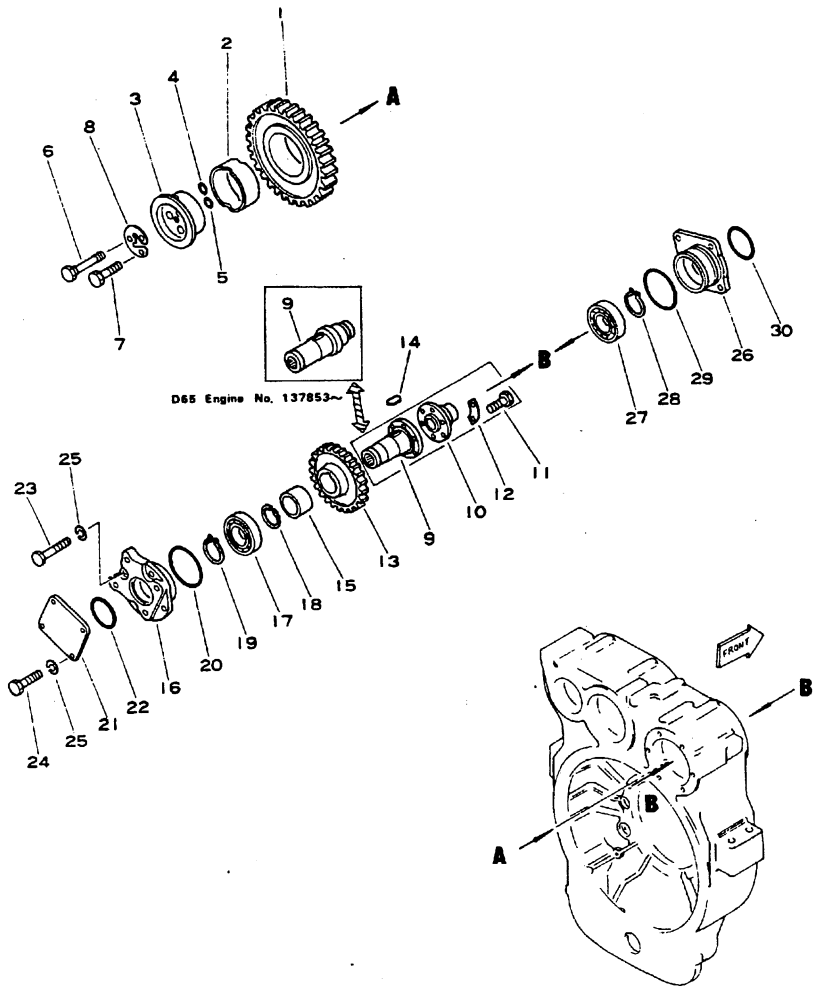

Fig & Index No.	Komatsu Part No.	Cummins Part No.	Description		Q'ty	Serial No.
	6631-21-4031		IDLER GEAR ASS'Y		1	
1261 - 1	6631-21-4321		. GEAR, idler		1	
2	6631-21-4371		. BUSHING		1	
3	6631-21-4311		SHAFT, idler gear		1	
4	07000-02010		O-RING	(KIT)	1	
5	07000-62015		O-RING	(KIT)	1	
6	6631-21-4380		BOLT		1	
7	6631-21-4360		BOLT		2	
8	6631-21-4390		PLATE, lock	(KIT)	1	
9	6631-21-4610		SHAFT, pump drive		1	BDEM 100101~
	6632-21-4611		SHAFT, pump drive		1	CFHU 137853~
10	6631-21-4640		SHAFT		1	BDEM 100101~ CFHU 100101~137852
11	01010-30820		BOLT		6	BDEM 100101~ CFHU 100101~137852
12	6631-21-4690		PLATE, lock	(KIT)	3	BDEM 100101~ CFHU 100101~137852
13	6631-21-4620		GEAR, pump drive		1	
14	04000-01235		KEY		1	
15	6631-21-4650		SPACER		1	
16	6631-21-4631		CASE, bearing		1	BDEM
	6632-21-4631		CASE, bearing		1	CFHU
17	06000-06209		BEARING, ball		1	
18	04065-08530		RING, snap		1	
19	04064-04518		RING, snap		1	
20	07000-62095		O-RING	(KIT)	1	
21	6681-21-4270		COVER		1	BDEM
	6645-21-4140		COVER		1	CFHU
22	07000-62070		O-RING	(KIT)	1	BDEM
	07000-62075		O-RING	(KIT)	1	CFHU
23	01010-31030		BOLT		4	
24	01010-31025		BOLT		4	
25	01602-01030		WASHER, spring		8	
26	6631-21-4660		CASE, bearing		1	
27	06000-06208		BEARING, ball		1	
28	04064-04018		RING, snap		1	
29	07000-63088		O-RING	(KIT)	1	
30	07000-62075		O-RING	(KIT)	1	

Fig. 1262 POWER TAKE OFF (3/3)

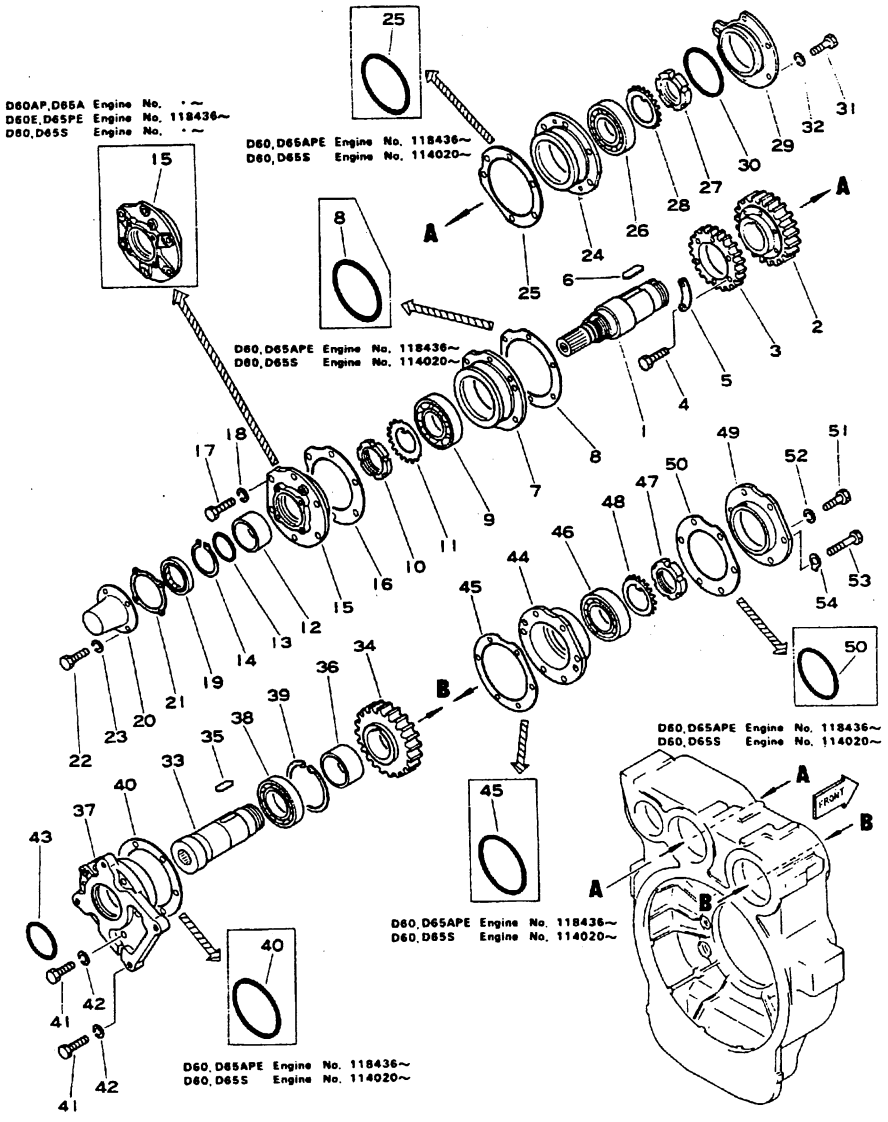

Fig. & Index No.	Komatsu Part No.	Cummins Part No.	Description	Q'ty	Serial No.
1262 -1	6631-21-4411		SHAFT, R.P.C.U.	1	
2	6631-21-4440		GEAR, R.P.C.U.	1	
3	6631-21-4450		GEAR, idler	1	
4	01050-31040		BOLT	6	
5	6631-21-4460		PLATE, lock (KIT)	3	
6	04000-01865		KEY	1	
7	6667-21-4470		CASE, bearing	1	BCDFMU 118436~ EH 114020~
8	6667-21-4670		O-RING (KIT)	1	BCDFMU 118436~ EH 114020~
9	06000-06213		BEARING, ball	1	
10	01530-06214		NUT, ring	1	
11	01658-26223		WASHER, lock (KIT)	1	
12	6631-21-4791		COLLAR (Without Rear Power Control Unit)	1	
13	07000-63040		O-RING (KIT)	3	
14	04064-04518		RING, snap (Without Rear Power Control Unit)	1	
15	6631-21-4774		COVER, bearing	1	BCDFMU 118436~ EH 114020~
16	6631-21-4570		GASKET (KIT)	1	
17	01010-31245		BOLT	6 6 6 6	BDM111490~ CFU111134~ E 110171~ H 111114~
18	01602-01236		WASHER, spring	6	
19	07012-00060		SEAL, oil (KIT)	1	
20	6631-21-4781		COVER (Without Rear Power Control Unit)	1	
21	6631-21-4880		GASKET (Without Rear Power Control Unit)	1	
22	01010-30612		BOLT (Without Rear Power Control Unit)	4	
23	01602-00619		WASHER, spring (Without Rear Power Control Unit)	4	
24	6631-21-4421		CASE, bearing	1	BCDFMU 118436~ EH 114020~
25	6631-21-4870		O-RING (KIT)	1 1	BCDFMU 118436~ EH 114020~
26	06001-00213		BEARING, roller	1	
27	01530-06214		NUT, ring	1	
28	01658-26223		WASHER, lock (KIT)	1	
29	6631-21-4431		COVER, bearing	1	
30	07000-65110		O-RING (KIT)	1	

Fig & Index No.	Komatsu Part No.	Cummins Part No.	Description		Q'ty	Serial No.
1262 -31	01010-31235		BOLT		2	
32	01650-01212		WASHER, lock	(KIT)	2	
33	6631-21-4510		SHAFT, pump drive		1	
34	6631-21-4520		GEAR, pump drive		1	
35	04000-01850		KEY		1	
36	6631-21-4550		SPACER		1	
37	6631-21-4531		CASE, bearing		1	BCDFMU 118436~ EH 114020~
38	06000-06214		BEARING, ball		1	
39	04065-01240		RING, snap		1	
40	6667-21-4630		O-RING	(KIT)	1	BCDFMU 118436~ EH 114020~
41	01010-31245		BOLT		10	
42	01602-01236		WASHER, spring		10	
43	07000-62085		O-RING	(KIT)	1	
44	6631-21-4581		CASE, bearing		1	BCDFMU 118436~ EH 114020~
45	6667-21-4670		O-RING	(KIT)	1	BDFMUC 118436~ EH 114020~
46	06001-00213		BEARING, roller		1	
47	01530-06214		NUT, ring		1	
48	01658-26223		WASHER, lock	(KIT)	1	
49	6631-21-4561		COVER		1	BCDFMU 118436~ EH 114020~
50	07000-65110		O-RING	(KIT)	1	BDFMUC 118436~ EH 114020~
51	01010-31240		BOLT		4	
52	01602-01236		WASHER, spring		4	
53	01010-31235		BOLT		2	
54	01650-01212		WASHER, lock	(KIT)	2	

LUBRICATING OIL SYSTEM

Fig. 1301 LUBRICATING OIL PUMP

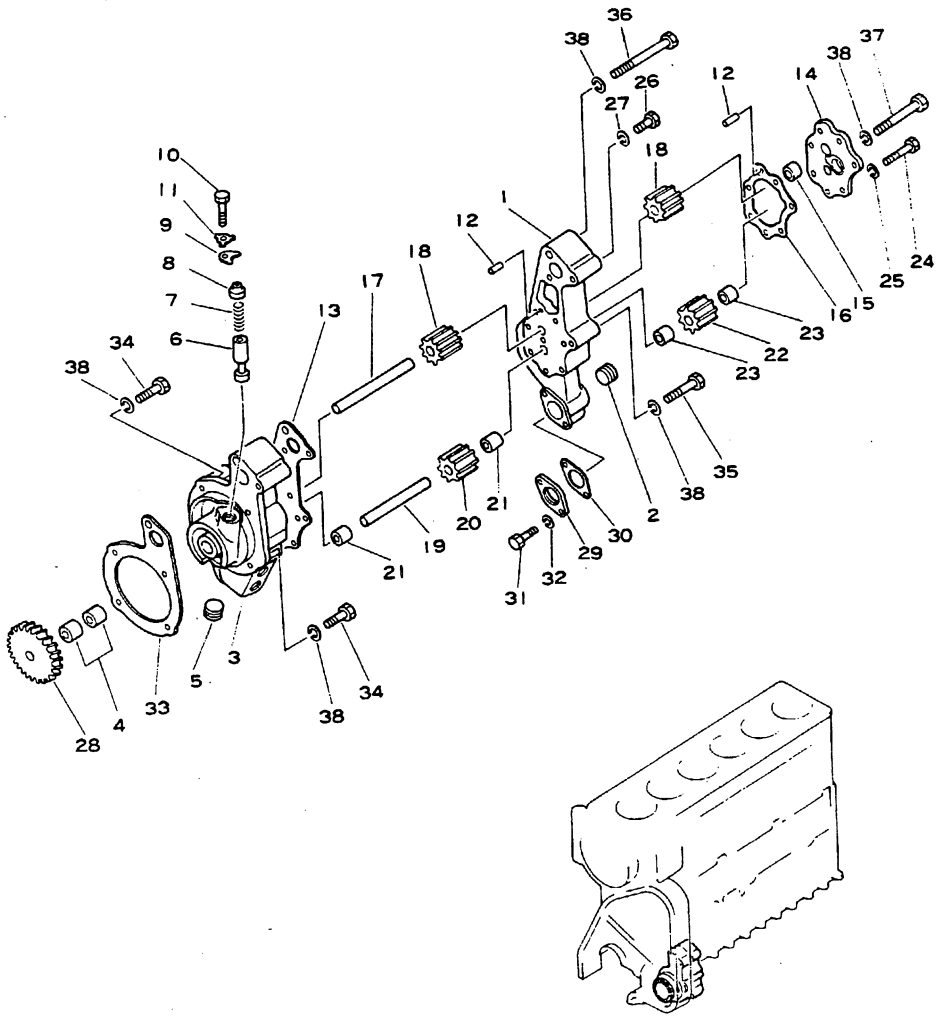

Fig. & Index No.	Komatsu Part No.	Cummins Part No.	Description	Q'ty	Serial No.
	6620-51-1020	AR-91052	LUBRICATING AND SCAVENGING PUMP ASS'Y	1	
1301 - 1	6610-51-1210	151917	. BODY, inner	1	
2	020720-21213	409611	. PLUG	1	
	6620-51-3030		. BODY ASS'Y	1	
3	☆		. . BODY (6620-51-1110)	1	
4	☆		. . BUSHING (6610-51-1120)	2	
5	02720-21213	409611	. . PLUG	1	
6	6610-51-1710	109333	. PLUNGER, regulator	1	
7	6610-51-1720	68274	. SPRING	1	
8	6610-51-1740	134596	. SEAT	1	
9	6610-51-1730	126304	. YOKE, retaining	1	
10	02010-20622	S-109	. BOLT	1	
11	6610-51-1750	109319	. PLATE, lock	1	
12	02400-20619	69519	. PIN, dowel	2	
13	6610-51-1610	151911	. GASKET (KIT)	1	
	6610-51-1500	BM-65777	. COVER ASS'Y	1	
14	☆		. . COVER (6610-51-1510)	1	
15	☆		. . BUSHING (6610-51-1120)	1	
16	6610-51-1620	133851	. GASKET (KIT)	1	
17	6610-51-1321	164164	. SHAFT, drive	1	
18	6610-51-1340	68588	. GEAR, drive	2	
19	6610-51-1330	133848	. SHAFT, idler	1	
	6610-51-1300		. GEAR ASS'Y	1	
20	☆		. . GEAR (6610-51-1360)	1	
21	☆		. . BUSHING (6610-51-1120)	2	
	6610-51-1400		. GEAR ASS'Y	1	
22	☆		. . GEAR (6610-51-1410)	1	
23	☆		. . BUSHING (6610-51-1120)	2	
24	02010-20676	S-102-D	. BOLT	6	
25	02310-11224	70206	. WASHER, spring	6	
26	02010-20564	S-147-B	. BOLT	2	
27	02310-11020	70194	. WASHER, spring	2	
28	6620-51-1380	125988	. GEAR, main drive	1	
29	6610-51-1640	134284	FLANGE, scavenging	1	
30	6610-51-1650	134825	GASKET (KIT)	1	
31	02010-20632	S-103-D	BOLT	2	
32	02310-11224	70206	WASHER, spring	2	
33	6610-51-1811	121907	GASKET (KIT)	1	
34	02030-20725	S-101-A	BOLT	2	
35	02030-20770	S-196-A	BOLT	1	
36	6600-01-2120	S-120-C	BOLT	1	
37	6610-51-1630	402650	BOLT	1	
38	02310-11428	70195	WASHER, spring	5	

Fig. 1311 LUBRICATING OIL FILTER

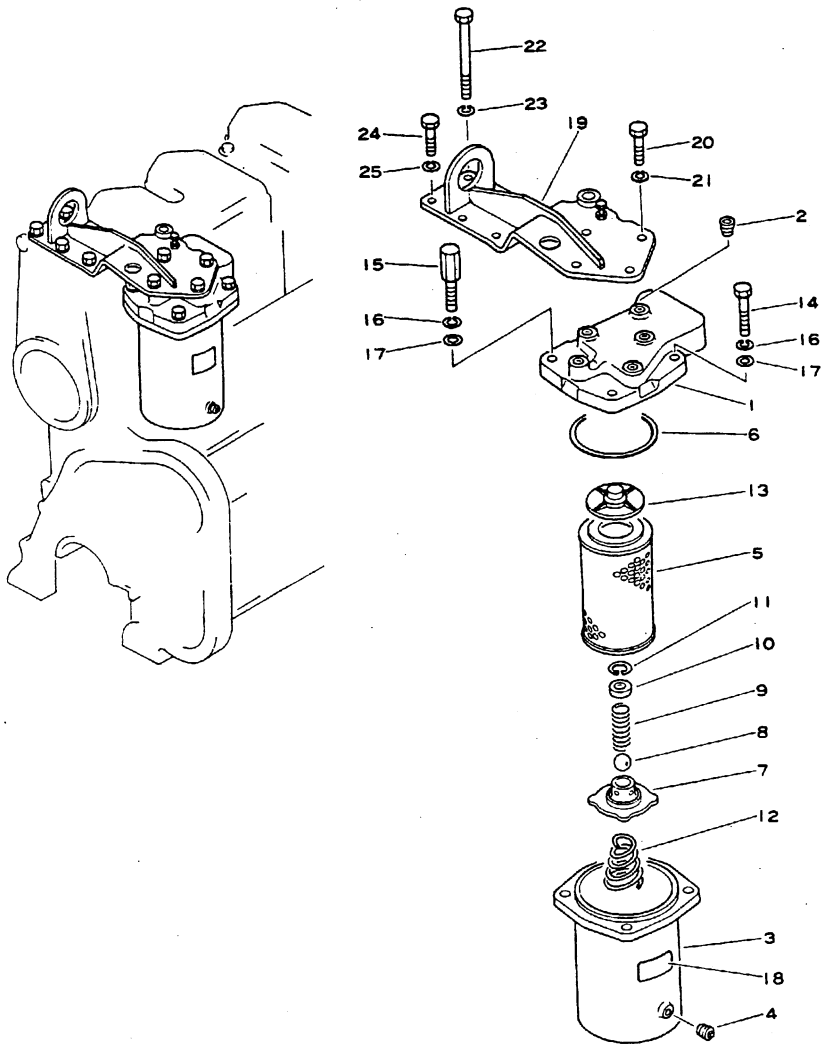

Fig. & Index No.	Komatsu Part No.	Cummins Part No.	Description	Q'ty	Serial No.
	6676-53-4002		OIL FILTER ASS'Y	1	BCDFMU
	6631-52-4001		OIL FILTER ASS'Y	1	EH
311 -1	6610-51-4110	20621	. HEAD, oil filter	1	
2	02720-20608	409609	. PLUG	1	
	6610-50-4210	AR-90498	. FILTER CASE ASS'Y	1	
	(Order caution plate at the same time.)				
3	☆		. . CASE (6610-51-4200)	1	
4	6610-51-4520	139090	. . PLUG, drain	1	
	6610-50-5100	AR-91001	. ELEMENT ASS'Y	1	
5	☆		. . ELEMENT (6610-51-4400)	1	
6	6610-51-4810		. . GASKET (KIT)	1	
	6610-51-4302	AR-90863	. RELIEF VALVE ASS'Y	1	
7	6610-51-4312	402682	. . RETAINER	1	
8	6610-51-4340	128805	. . BALL	1	
9	6610-51-4351	128804	. . SPRING	1	
10	6610-51-4360	128803	. . RETAINER	1	
11	6610-51-4331	402691	. . RING, snap	1	
12	6610-51-4510	128806	. SPRING	1	
13	6610-51-4130	402670	. RETAINER	1	
14	02010-20751	106069	. BOLT	2	
15	6631-51-4590		. BOLT	2	
16	02310-11428	70195	. WASHER, spring	4	
17	02300-11520	70230	. WASHER	4	
18	09645-00120		PLATE, caution, Japanese and English	1	
	09636-10120		PLATE, caution, English	1	
19	6631-22-6520		BRACKET	1	EH
20	6610-81-8150	405020	BOLT	4	EH
21	01602-01236	409068	WASHER, spring	4	EH
22	02011-20802	108603	BOLT	3	EH 100101~145823
					K 100101~
				2	EH 145824~
23	02310-11632	70219	WASHER, spring	3	EH 100101~145823
					K 100101~
				2	EH 145824~
24	01050-31230		BOLT	3	EH 100101~145823
					K 100101~
				2	EH 145824~
25	01602-01236	409068	WASHER, spring	3	EH 100101~145823
					K 100101~
				2	EH 145824~

Fig. 1315 LUBRICATING OIL BYPASS FILTER

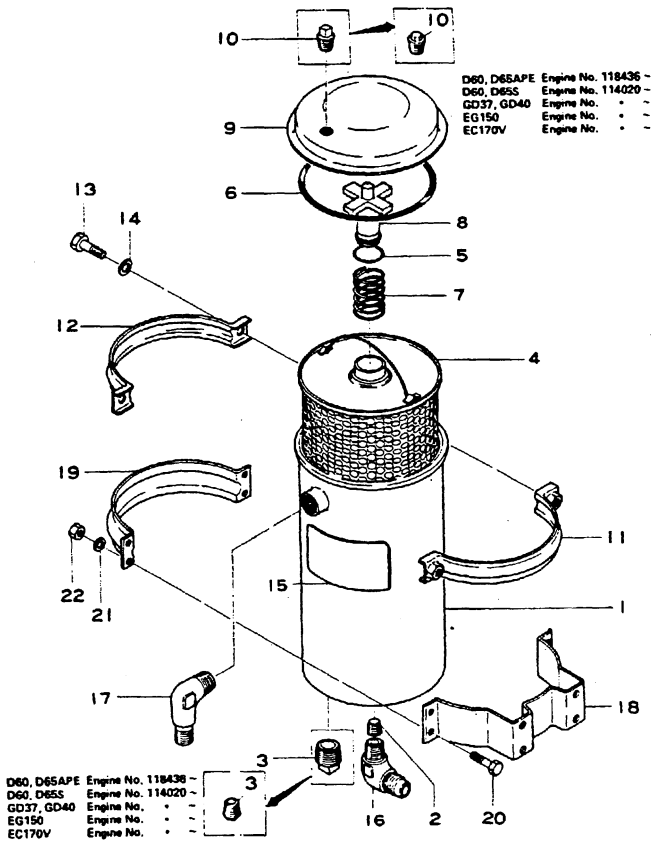

Fig. & Index No.	Komatsu Part No.	Cummins Part No.	Description	Q'ty	Serial No.
	6631-51-5000		BYPASS FILTER ASS'Y	1	
1315 -1	6610-51-5100	151310	. SHELL	1	
	(Order caution plate at the same time.)				
2	6610-51-5640	131911	. ORIFICE, plug	1	
3	6631-51-4520		. PLUG, drain	1	
	6610-51-5050	AR-91094	. CARTRIDGE ASS'Y	1	
4	☆		. . CARTRIDGE (6610-51-5300)	1	
5	6610-51-5620	116029	. . O-RING (KIT)	1	
6	02894-07201	145640	. . O-RING (KIT)	1	
7	6610-51-5630	150037	. SPRING, hold down	1	
8	6610-51-5610	150036	. SUPPORT, upper	1	
9	6610-51-5510	130040	. COVER, bypass filter	1	
10	6631-51-4520		. PLUG, cover	1	
11	6610-51-5530	150038	. COUPLING, half, cover	1	
12	6610-51-5520	150039	. COUPLING, half, cover	1	
13	02010-20532	70223	. BOLT, coupling	2	
14	02310-11020	70194	. WASHER, spring	2	
15	09644-00120		PLATE, caution, Japanese and English	1	
	09644-10120		PLATE, caution, English	1	
	6610-81-1642	407432	PLATE, caution, English and Spanish	1	
16	6600-01-3241		CONNECTOR, outlet	1	BCDEFHMU
	6600-02-3730	415290	CONNECTOR, outlet	1	GQ
	6691-51-9961	425781	CONNECTOR, outlet	1	R 130125~154026
17	02701-31006	68645	CONNECTOR, inlet	1	GQ
	6691-51-9951	425770	CONNECTOR, inlet	1	R
18	6610-51-5710	145664	BRACKET	2	GQR
19	6610-51-5720	145665	STRAP, mounting bracket	2	GQR
	6675-81-8510		STRAP, mounting bracket	2	CDEFHMU
20	02010-20419	S-114	BOLT	8	GQR
21	02310-10916	70189	WASHER, spring	8	GQR
22	02205-10406	70299	NUT	8	GQR

Fig. 1321 LUBRICATING OIL PIPING

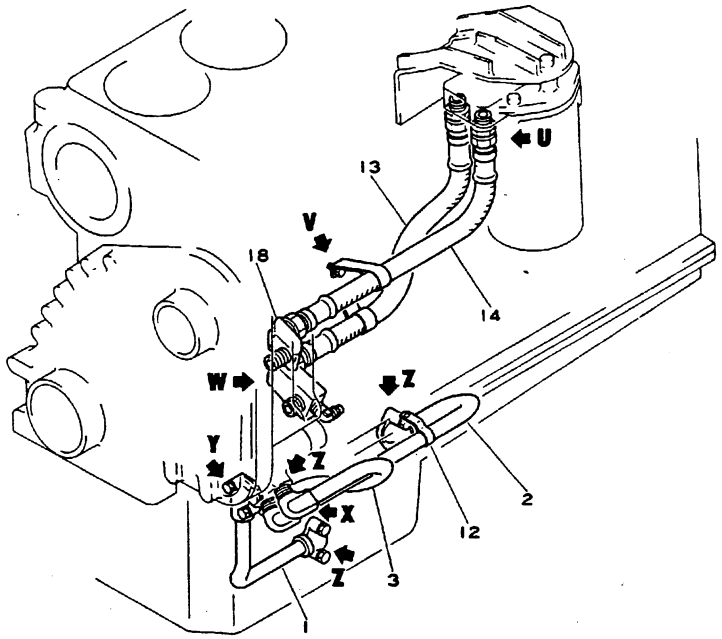

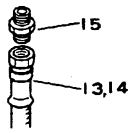

Detail U

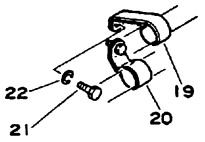

Detail V

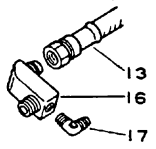

Detail W

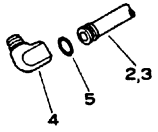

Detail X

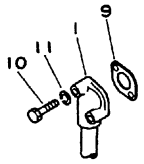

Detail Y

Engine No. 136723~

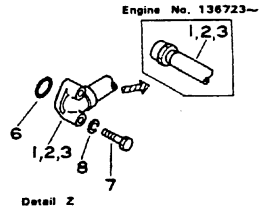

Detail Z

Fig. & Index No.	Komatsu Part No.	Cummins Part No.	Description	Q'ty	Serial No.
1321 - 1	6693-52-9230	412740	PIPE, main suction	1	100101~136722
	6632-51-9230		PIPE, main suction	1	136723~
2	6693-52-9210	412720	PIPE, scavenging	1	100101~136722
	6632-51-9210		PIPE, scavenging	1	136723~
3	6693-52-9220	412730	PIPE, scavenging pump to oil pan	1	100101~136722
	6632-51-9220		PIPE, scavenging pump to oil pan	1	136723~
4	6672-52-9281		ELBOW	2	100101~
5	07000-03022	409138	O-RING (KIT)	2	100101~
6	07000-03028	409102	O-RING (KIT)	3	100101~136722
7	01010-30845		BOLT	6	100101~136722
8	01602-00825	409151	WASHER, spring	6	100101~136722
9	(6610-51-1650)	134285	GASKET, flange (See Fig.1301) (KIT)	1	100101~
10	02010-20644	S-120	BOLT	2	100101~
11	02310-11224	70206	WASHER, spring	2	100101~
12	6691-51-9260	422790	CLAMP	1	BM 118414~ CD 118488~ FU 118448~
13	6631-51-9732		HOSE, fullflow, inlet	1	100101~
	(□6631-51-9731)	(416000)	HOSE, fullflow, inlet	1	(BD 100101~148274) (M 100101~148473) (F 100101~146123) (C 100101~147676) (U 100101~148161)
14	6693-52-9712		HOSE, fullflow, outlet	1	100101~
	(□6631-51-9710)	416010	HOSE, fullflow, outlet	1	(100101~ •)
	(□6631-51-9711)		HOSE, fullflow, outlet	1	(BD • ~148274) (M • ~148473) (F • ~146123) (C • ~147676) (U • ~148161)
15	6672-52-9911		CONNECTOR	2	100101~
16	6631-51-9920	416020	CONNECTOR	1	100101~
17	02701-11208	102584	ELBOW	1	100101~
18	6631-51-9930	416030	CONNECTOR	1	100101~
19	6631-51-9740	416040	CLAMP	1	100101~
20	6631-51-9750	416050	CLAMP	1	100101~
21	02030-20625	S-219	BOLT	2	100101~
22	02310-11224	70206	WASHER, spring	2	100101~

Fig. 1331 P. T. O. LUBRICATING OIL PIPING

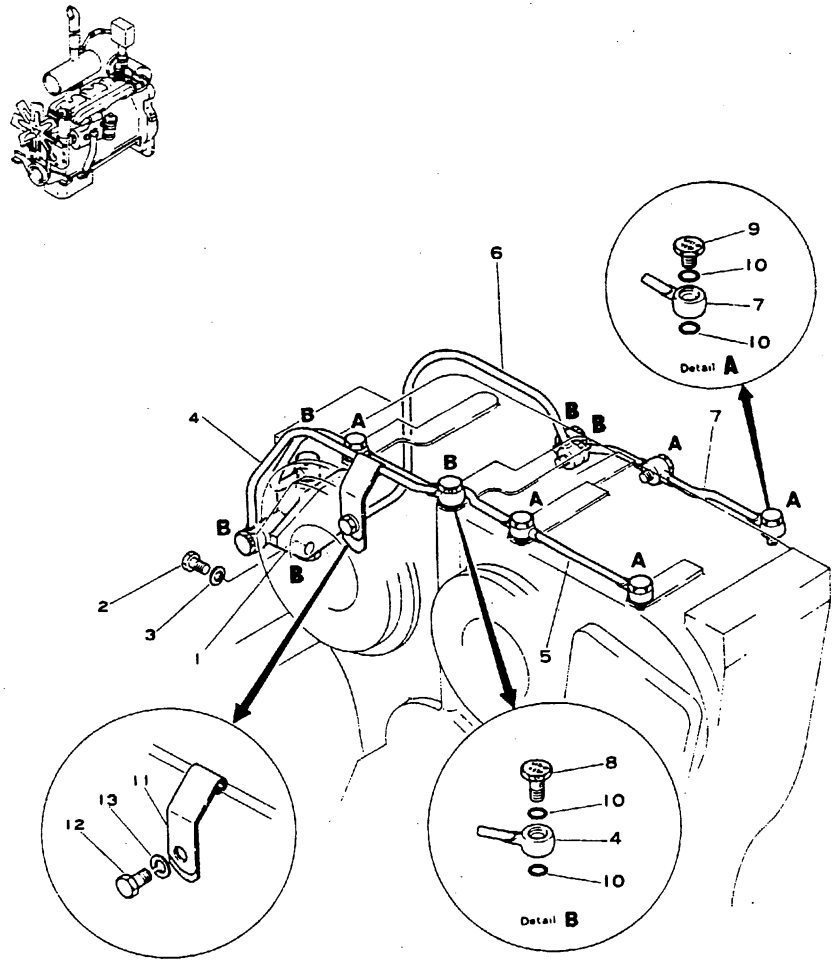

Fig. & Index No.	Komatsu Part No.	Cummins Part No.	Description	Q'ty	Serial No.
1331 -1	6631-51-9510		FLANGE	1	
2	01010-31030		BOLT	2	
3	01602-01030		WASHER, spring	2	
4	6631-51-9520		PIPE	1	
5	6631-51-9530		PIPE	1	
6	6631-51-9540		PIPE	1	
7	6631-51-9550		PIPE	1	
8	6631-51-9580		BOLT, joint	6	
9	6631-51-9590		BOLT, joint	5	
10	07000-02012		O-RING (KIT)	22	
11	6631-51-9680		CLAMP	1	
12	01010-31016		BOLT	1	EH
13	01602-01030		WASHER, spring	1	EH

Fig. 1341 LUBRICATING OIL COOLER

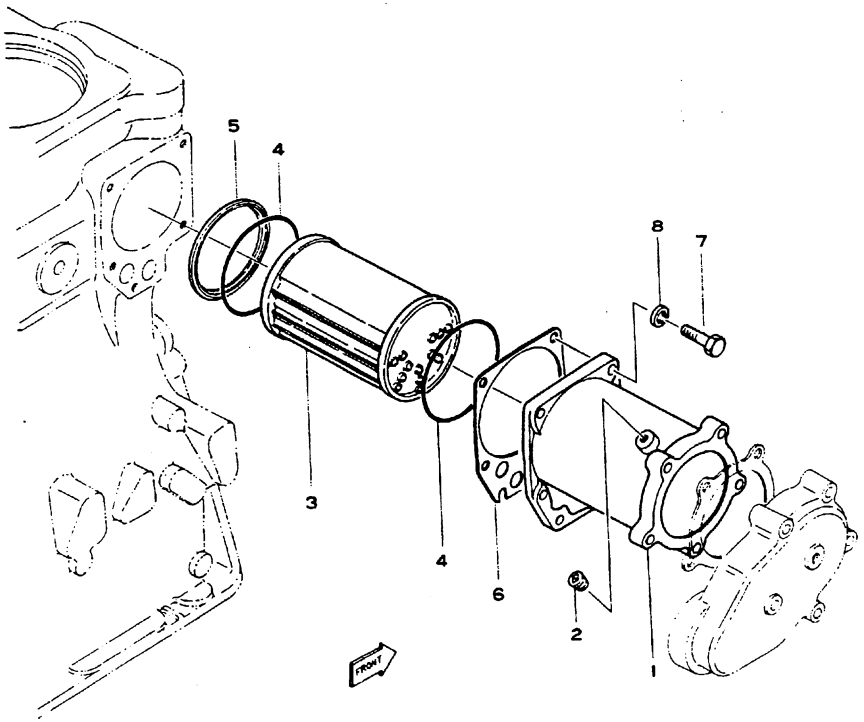

Fig. & Index No.	Komatsu Part No.	Cummins Part No.	Description		Q'ty	Serial No.
	6693-62-5200	AR-90532	OIL COOLER ASS'Y		1	
1341 -1	6693-62-5120		. HOUSING		1	
2	02720-20406	409608	. PLUG		1	
3	6620-61-5300	110848	. ELEMENT		1	
4	6620-61-5130	148293	. O-RING	(KIT)	2	
5	6620-61-5140	110827	. RETAINER		1	
6	6610-61-5811	121779	GASKET	(KIT)	1	
7	02010-20632	S-103-D	BOLT		5	
8	02310-11224	70206	WASHER, spring		5	

Fig. 1345 OIL COOLER (Steering Clutch) (D60)

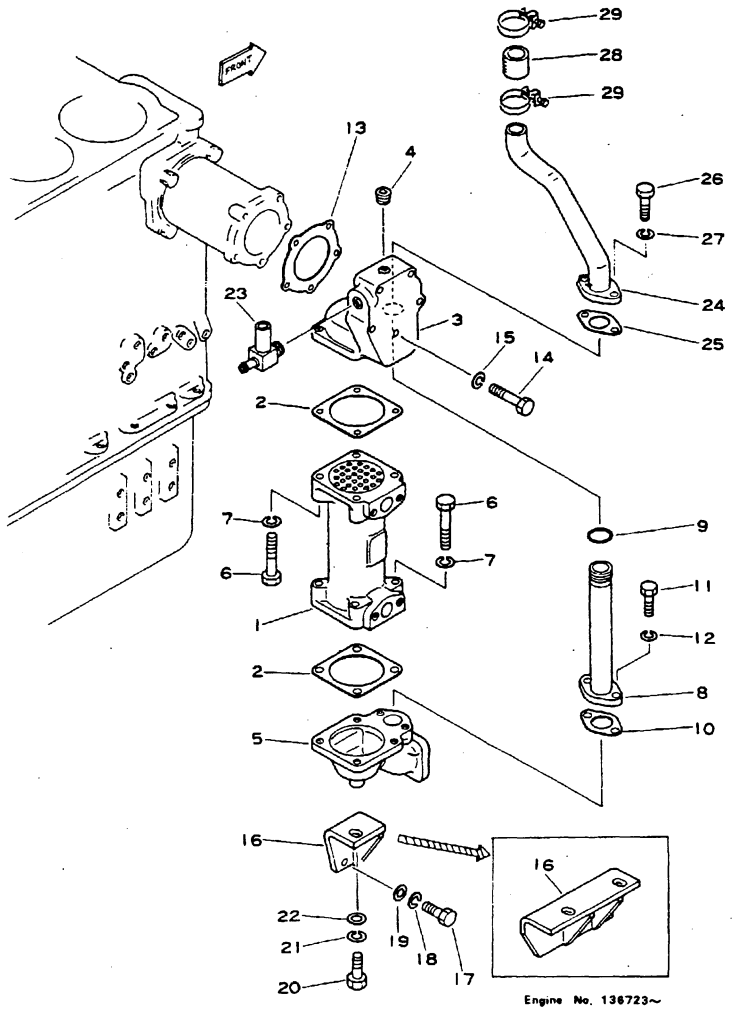

Fig. & Index No.	Komatsu Part No.	Cummins Part No.	Description	Q'ty	Serial No.
	6631-60-9201		OIL COOLER ASS'Y	1	100101~
1345 - 1	6693-62-9213		. COOLER, oil	1	100101~
2	6693-62-9241		. GASKET (KIT)	2	100101~
	6631-60-9011		. UPPER COVER ASS'Y	1	100101~
3	6631-61-9220		. . COVER, upper	1	100101~
4	02720-21214		. . PLUG	1	100101~
5	6631-61-9230		. COVER, lower	1	100101~
6	01010-31260		. BOLT	8	100101~
7	01602-01236		. WASHER, spring	8	100101~
8	6692-61-9270		. PIPE	1	100101~
9	07000-03035		. O-RING (KIT)	1	100101~
10	6121-61-6840		. GASKET (KIT)	1	100101~
11	01010-31030		. BOLT	2	100101~
12	01602-01030		. WASHER, spring	2	100101~
13	6693-62-9120		GASKET (KIT)	1	100101~
14	01010-31075		BOLT	5	100101~
15	01602-01030		WASHER, spring	5	100101~
16	6631-21-6930		BRACKET, oil cooler	1	100101~136722
	6631-21-6921		BRACKET, oil cooler	1	136723~
17	01050-31030		BOLT	2	100101~136722
				4	136723~
18	01602-01030		WASHER, spring	2	100101~136722
				4	136723~
19	01640-21016		WASHER	2	100101~136722
				4	136723~
20	01010-31230		BOLT	1	100101~
21	01602-01236		WASHER, spring	1	100101~
22	6110-23-6960		WASHER	1	100101~
23	6631-61-8670		CONNECTOR	1	100101~
24	6692-61-6512		PIPE, bypass	1	100101~
25	6121-61-6840		GASKET (KIT)	1	100101~
26	01010-31030		BOLT	2	100101~
27	01602-01030		WASHER, spring	2	100101~
28	6610-61-6531		HOSE	1	100101~
29	07281-00489		CLAMP	2	100101~

Fig. 1347 OIL COOLER (Torqflow and Steering Clutch) (D65)

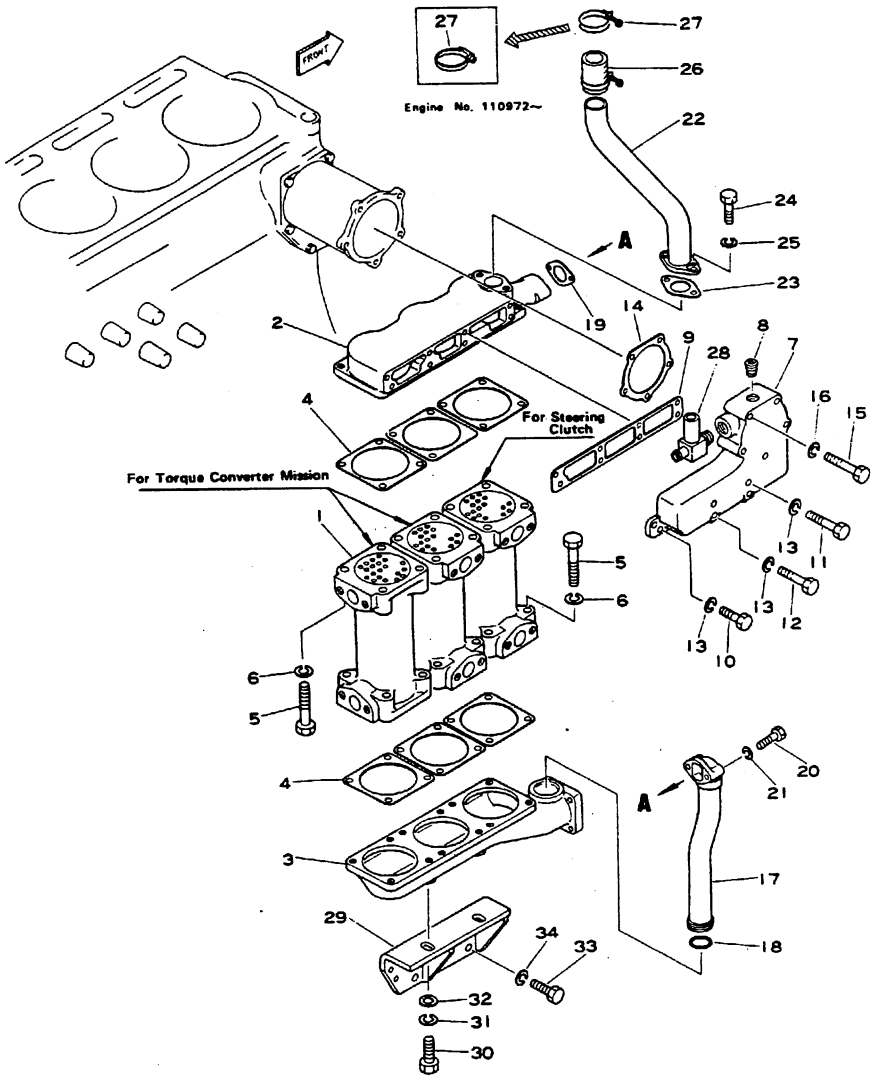

Fig. & Index No.	Komatsu Part No.	Cummins Part No.	Description	Q'ty	Serial No.
	6632-61-9104		OIL COOLER ASS'Y	1	
1347 -1	600-652-1111		. COOLER	3	100101~
2	6632-61-9321		. COVER, upper	1	100101~
3	6632-61-9231		. COVER, lower	1	100101~
4	6693-62-9241		. GASKET (KIT)	6	
5	01010-31260		. BOLT	24	
6	01602-01236		. WASHER, spring	24	
	6632-60-9011		. UPPER COVER ASS'Y	1	
7	☆		. . COVER (6632-61-9221)	1	
8	02720-21214		. . PLUG	1	
9	6632-61-9330		. GASKET (KIT)	1	
10	01010-31030		. BOLT	4	
11	01010-31070		. BOLT	2	
12	01010-31060		. BOLT	2	
13	01602-01030		. WASHER, spring	8	
14	6693-62-9120		GASKET (KIT)	1	
15	01010-31075		BOLT	5	
16	01602-01030		WASHER, spring	5	
17	6632-61-9272		PIPE	1	
18	07000-03035		O-RING (KIT)	1	
19	6632-61-9350		GASKET (KIT)	1	
20	01010-30850		BOLT	2	
21	01602-00825		WASHER, spring	2	
22	6632-61-6510		PIPE	1	
23	6121-61-6840		GASKET (KIT)	1	
24	01010-31030		BOLT	2	
25	01602-01030		WASHER, spring	2	
26	6610-61-6531		HOSE	1	
27	07281-00489		CLAMP, hose	2	
28	6631-61-8670		CONNECTOR	1	110101~
29	6631-21-6921		BRACKET	1	136723~
30	01010-31430		BOLT	2	
31	01602-01442		WASHER, spring	2	
32	01643-31445		WASHER	2	
33	01050-31030		BOLT	4	136723~
34	01602-01030		WASHER, spring	4	136723~

FUEL SYSTEM

Fig. 1401 PT FUEL PUMP AND PIPING

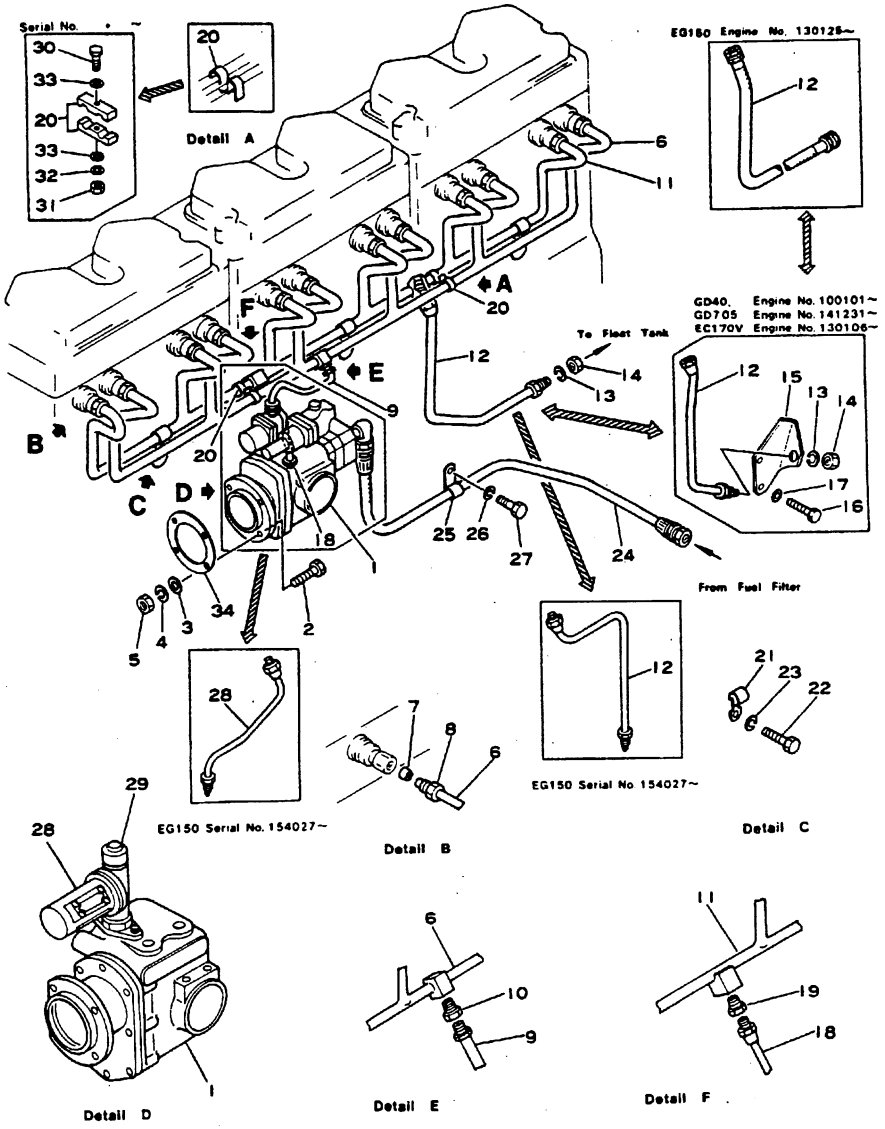

Fig. & Index No.	Komatsu Part No.	Cummins Part No.	Description	Q'ty	Serial No.
1401 - 1	6631-70-1001	AR-90995	PT FUEL PUMP ASS'Y(GR-J050)	1	BD 100101~101289
	6631-71-1000	AR-90964	PT FUEL PUMP ASS'Y(GR-J050)	1	BD 101290~101517
	6631-71-1001	AR-90996	PT FUEL PUMP ASS'Y(GR-J050)	1	E 100101~101517
	6631-71-1003		PT FUEL PUMP ASS'Y(GR-J050)	1	BDE 101518~
	(□6631-71-1002)	(AR-91038)	PT FUEL PUMP ASS'Y(GR0J050)	1	(BDE 101518~ •)
	6632-72-1001		PT FUEL PUMP ASS'Y(GR-J060)	1	CU 100101~
	(□6632-72-1000)	(AR-90980)	PT FUEL PUMP ASS'Y(GR-J060)	1	(CU 100101~ •)
	6632-70-1002		PT FUEL PUMP ASS'Y(GR-J051)	1	F 100101~101517
	(□6632-70-1001)	(AR-90997)	PT FUEL PUMP ASS'Y(GR-J051)	1	(F 100101~101349)
	6632-70-1004		PT FUEL PUMP ASS'Y(GR-J051)	1	F 101518~
	(□6632-70-1003)	(AR-91039)	PT FUEL PUMP ASS'Y(GR-J051)	1	(F 101518~ •)
	6679-72-1000	AR-90983	PT FUEL PUMP ASS'Y(GR-J081)	1	G 100101~101517
	6679-72-1001	AR-91036	PT FUEL PUMP ASS'Y(GR-J081)	1	G 101518~
	6632-73-1000	AR-91003	PT FUEL PUMP ASS'Y(GR-J055)	1	H 100101~101989
	6632-73-1002		PT FUEL PUMP ASS'Y(GR-J055)	1	H 101990~
	(□6632-73-1001)		PT FUEL PUMP ASS'Y(GR-J055)	1	(H 101990~ •)
	6693-70-1004	AR-90862	PT FUEL PUMP ASS'Y (GR-J037)	1	K 100101~101517
	6693-70-1005	AR-91046	PT FUEL PUMP ASS'Y (GR-J037)	1	K 101518~
	6691-70-1002	AR-90861	PT FUEL PUMP ASS'Y (GR-J036)	1	LN 100101~101517
	6691-70-1003	AR-91037	PT FUEL PUMP ASS'Y (GR-J036)	1	LN 101518~
	6631-72-1001		PT FUEL PUMP ASS'Y (GR-J080)	1	M 100101~
	(□6631-72-1000)	(AR-90979)	PT FUEL PUMP ASS'Y(GR-J080)	1	(M 100101~ •)
*	6678-70-1000	AR-90839	PT FUEL PUMP ASS'Y (GR-J028)	1	Q 100101~101517
*	6678-70-1002		PT FUEL PUMP ASS'Y (GR-J028)	1	Q 101518~143357
	(□6678-70-1001)		PT FUEL PUMP ASS'Y (GR-J028)	1	(Q 101518~ •)
*	6678-70-1003		PT FUEL PUMP ASS'Y (GR-J036)	1	Q 143358~
	6688-72-1000		PT FUEL PUMP ASS'Y (GR-J116)	1	R 130125~
	6688-71-1010		PT FUEL PUMP ASS'Y	1	T 130106~
	6679-70-1000		PT FUEL PUMP ASS'Y (GR-J102)	1	VY 141402~
	6679-70-1010		PT FUEL PUMP ASS'Y (GR-J102) (With Air Compressor) (OP)	1	VY 141402~
	6679-70-1020		PT FUEL PUMP ASS'Y (GR-J028)	1	WZ 141893~
	6679-70-1030		PT FUEL PUMP ASS'Y (GR-J028) (With Air Compressor) (OP)	1	WZ 141893~

Fig & Index No.	Komatsu Part No.	Cummins Part No.	Description	Q'ty	Serial No.
	6678-70-1003		PT FUEL PUMP ASS'Y (GR-J036)	1	AA 143358~
1401 -2	02010-20744	S-140	BOLT	3	100101~
	6600-01-2280	406990	BOLT	1	100101~
3	02300-11520	70230	WASHER	4	100101~
4	02310-11428	70195	WASHER, spring	4	100101~
5	02206-10707	S-274	NUT	4	100101~
	6643-71-8010	BM-28837	FUEL SUPPLY MANIFOLD ASS'Y	1	100101~
6	6623-71-8150	103512	. MANIFOLD	1	100101~
7	6610-71-8180	104536	. FERRULE	6	100101~
8	6610-71-8160	70829	. NUT	6	100101~
9	6676-73-8111	413741	TUBE, fuel supply	1	BCDEFGHKLMNTUVWY 100101~
	6679-71-8121	443911	TUBE, fuel supply	1	Q.AA 100101~
	6689-72-8111		TUBE, fuel supply	1	R 130125~
10	6610-71-8340		CONNECTOR	1	100101~
11	6623-71-8211		MANIFOLD, fuel drain	1	100101~101517
*	6623-71-8212		MANIFOLD, fuel drain	1	BCDEFGHKLMNTUVWY 101518~
				1	R 130125~154026
*	6686-72-8212		MANIFOLD, fuel drain	1	R 154027~
12	6631-71-9411		TUBE, fuel return, to tank	1	BDF100101~101517
	6631-71-9412		TUBE, fuel return, to tank	1	BCDFMU 101518~
*	6691-71-9412		TUBE, fuel return, to tank	1	QLN100101~101517
*	6691-71-9413	424183	TUBE, fuel return, to tank	1	LNQT.AA 101518~
	02750-03185		HOSE, fuel return, to tank	1	R 130125~
*	6679-71-9843		PIPE	1	G 100101~
13	01602-02268	409524	WASHER, spring	1	BCDFLMNQTU.AA 100101~
14	01582-02218		NUT	1	BCDFLMNQTU.AA 100101~
15	6691-21-6591		BRACKET	1	LNQT.AA 100101~
16	02030-30616	S-190-C	BOLT	2	BCDFLMNQTU.AA 100101~
17	02310-11224	70206	WASHER, spring	2	BCDFLMNU 100101~
	02300-11226	146174	WASHER	2	QT.AA 100101~

Fig & Index No.	Komatsu Part No.	Cummins Part No.	Description	Q'ty	Serial No.
1401 -18	6610-71-8290		TUBE, fuel return, to pump	1	BCDEFGHKLMNTUVWY 101518~
*	6610-71-8390		TUBE, fuel return, to pump	1	Q.AA 101518~
					R 130125~154026
*	6689-72-8390		TUBE, fuel return to pump	1	R 154027~
19	6610-71-8340		CONNECTOR	1	101518~
* 20	6610-71-8251	163646	CLIP	2	100101~
*	6610-71-8250		CLIP	4	100101~
21	6610-71-8240	70467	CLIP	3	100101~
22	02030-20616	S-190-C	BOLT	3	100101~
23	02310-11224	70206	WASHER, spring	3	100101~
24	6631-71-9550	416100	HOSE, filter to pump	1	BCDFMU 100101~145823
					VWYZ 100101~143417
*	6640-71-9551	404241	HOSE, filter to pump	1	EH 100101~
					Q.AA 137334~
	6623-71-9551		HOSE, filter to pump	1	GRT100101~
					BCDFMU 145824~
	6682-73-9551	414241	HOSE, filter to pump	1	Q 100101~137333
*	6655-71-9550		HOSE, filter to pump	1	VWYZ 143418~
* 25	6600-01-5570	406380	CLAMP	1	BCDEFHMU 100101~145823
					Q 100101~137333
					VWYZ 100101~143417
*	6600-01-5950	438000	CLAMP	1	GRT100101~
					BCDEFHMU 145824~
					VWYZ 143418~
26	02030-30738		BOLT	1	BCDFMU 100101~
					Q 100101~137333
*	02030-20616	S-190-C	BOLT	1	GRT100101~
					BCDEFHMU 145824~
					VWYZ 143418~
	6610-21-5720		BOLT	1	Q.AA 137334~
27	01602-01134		WASHER, spring	1	BCDGMQU.AA 100101~
*	02310-11224	70206	WASHER, spring	1	GRT100101~
					BCDEFHMU 145824~
					VWYZ 143418~

	Fig. & Index No.	Komatsu Part No.	Cummins Part No.	Description	Q'ty	Serial No.
	1401-28	08684-00139		METER, service	1	BDE100101~
		(□ 600-831-2360)		METER, service	1	(BDE100101~ •)
		08684-00148		METER, service	1	CFHKLNU 100101~
		(□ 600-831-2660)		METER, service	1	(FHLN 100101~ •)
		08684-00142		METER, service	1	M 100101~
		(□ 6110-83-3111)		METER, service	1	(M 100101~ •)
		08684-00233		METER, service	1	GQ.AA 100101~
		(□ 600-831-3160)		METER, service	1	(GQ 100101~ •)
	29	6610-71-1940	90521	CAP	1	100101~
*	30	02010-20425		BOLT	2	• ~
*	31	02205-30406		NUT	2	• ~
*	32	02310-10916		WASHER, spring	2	• ~
*	33	02300-10920		WASHER	4	• ~
*	34	6610-71-7821		GASKET (KIT)	1	100101~

Fig. 1405 PT FUEL PUMP DRIVE

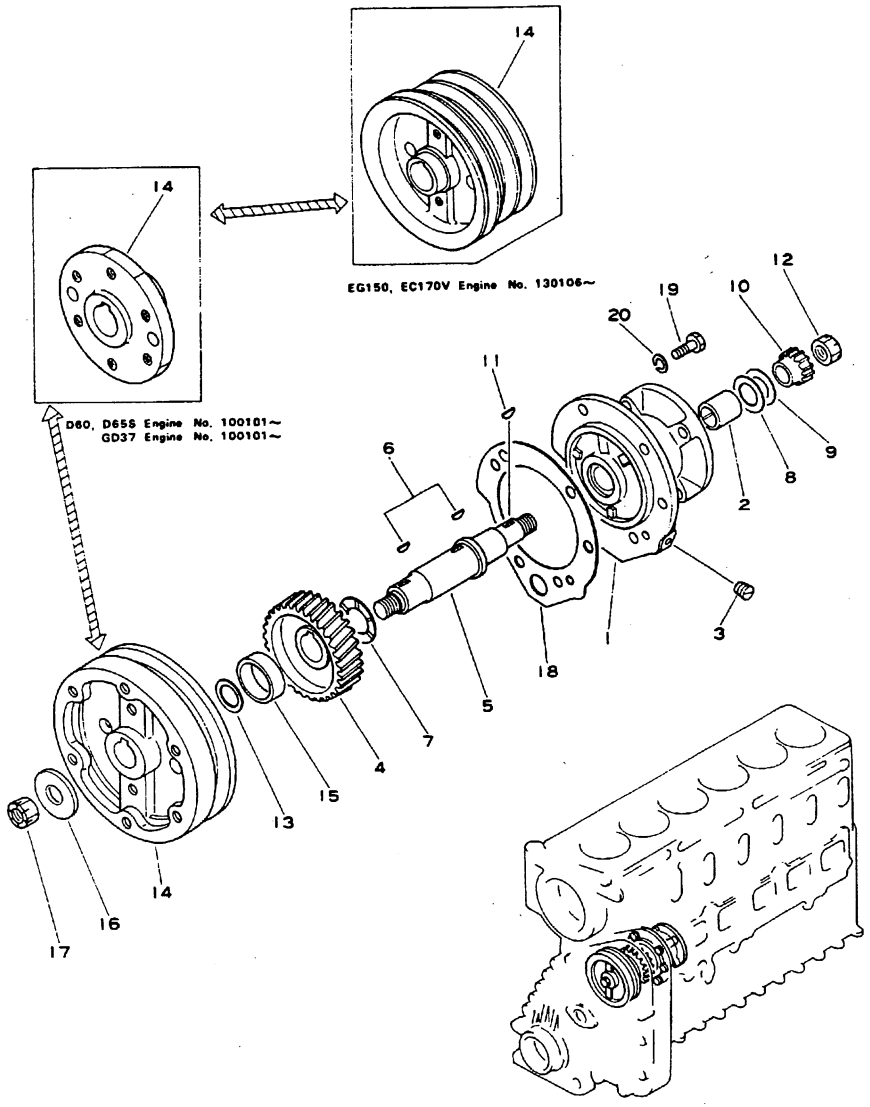

Fig. & Index No.	Komatsu Part No.	Cummins Part No.	Description	Q'ty	Serial No.
	6610-71-7011	BM-53986	FUEL PUMP DRIVE ASS'Y	1	
	6610-71-7020	BM-53987	. ACCESSORY DRIVE HOUSING ASS'Y	1	
1405 -1	☆		. . HOUSING (6610-71-7110)	1	
2	6610-71-7120	116391	. . BUSHING	1	
3	02720-20204	68606	. . PLUG	1	
4	6610-71-7220	121933	. GEAR, fuel pump drive	1	
5	6610-71-7210	121940	. SHAFT, fuel pump drive	1	
6	02410-01025	69550	. KEY, shaft, gear and pulley	2	
7	6610-71-7231	116388	. BEARING, thrust	1	
8	6610-71-7241	116389	. BEARING, thrust	1	
9	6610-71-7260	116390	. WASHER	1	
10	6610-71-7310	102975	. COUPLING, half, fuel pump	1	
11	02410-00619	S-316	. KEY	1	
12	6610-71-7280	105297	. NUT, lock	1	
13	6610-71-7251	181236	. SLINGER, oil	1	
	6631-71-7050	AR-90677	DRIVE PULLEY ASS'Y	1	BDM
	6676-71-7052		DRIVE PULLEY ASS'Y	1	CFU
	6693-72-7051	AR-90678	DRIVE COLLAR ASS'Y	1	EGH
	6676-71-7050	BM-26754	DRIVE PULLEY ASS'Y	1	RT 130106~
14	☆		. PULLEY (6631-71-7510)	1	BDM
	☆		. PULLEY (6691-71-7511)	1	CFU
	☆		. COLLAR (6693-72-7511)	1	EHG
	☆		. PULLEY (6676-71-7510)	1	RT 130106~
15	6610-71-7520	68680-1	. SLEEVE	1	
16	01643-32260		WASHER	1	108545~
17	6610-71-7280	105297	NUT, lock	1	
18	6610-71-7810	121937	GASKET (KIT)	1	
19	02030-20725	S-101-A	BOLT	2	BCDFMU
				5	EHRT
				1	G
20	02310-11428	70195	WASHER, spring	2	BCDFMU
				5	EHRT
				1	G

Fig. 1411 FUEL FILTER

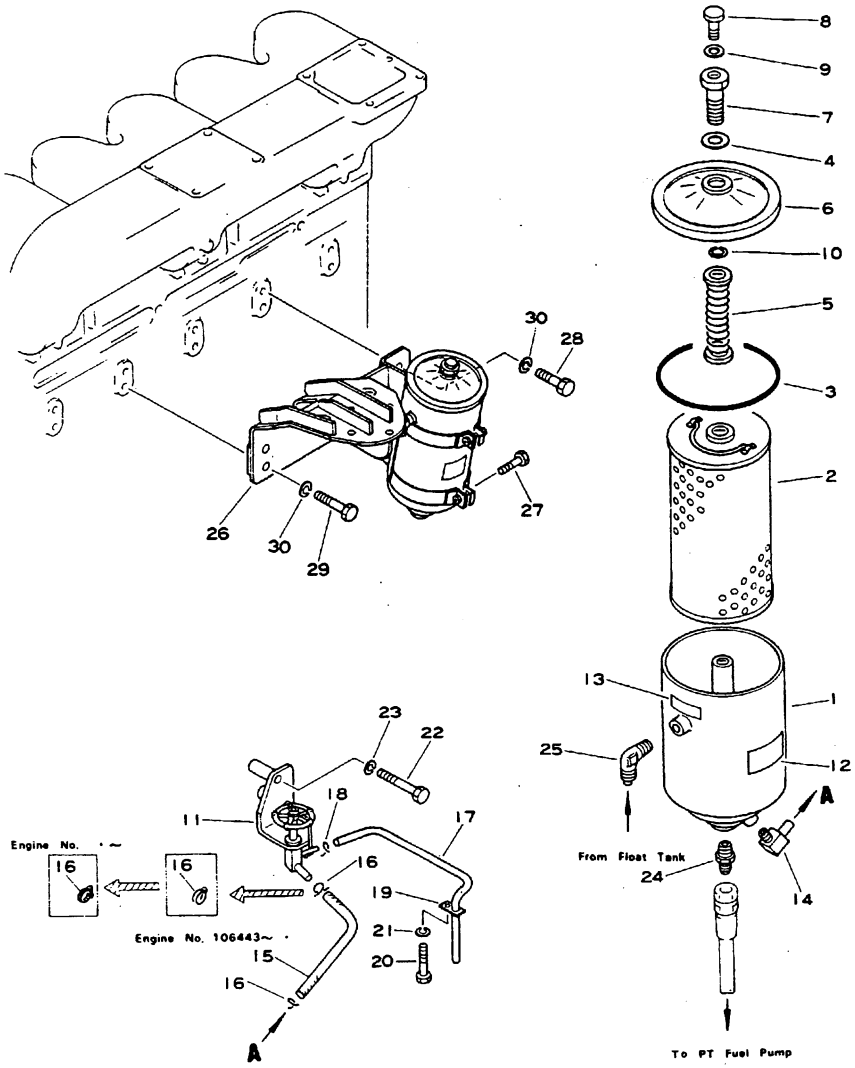

Fig. & Index No.	Komatsu Part No.	Cummins Part No.	Description	Q'ty	Serial No.
	6631-71-8002	AR-90944	FUEL FILTER ASS'Y	1	
1411 -1	6610-71-8403	403893	. BODY	1	
	(Order caution plate at the same time.)				
	6610-70-8603	AR-90812	. ELEMENT ASS'Y	1	
2	☆		. . ELEMENT (6610-72-8600)	1	
3	6610-71-8483	40413	. . O-RING (KIT)	1	
4	07005-02216		. . WASHER, seal (KIT)	1	
5	6610-71-8541	404271	. SPRING, set	1	
6	6610-71-8512	403922	. COVER	1	
	6610-70-8521	AR-90936	. CENTER BOLT ASS'Y	1	
7	☆		. . BOLT (6610-71-8522)	1	
8	01010-30812		. . BOLT	1	
9	6610-71-8690		. . WASHER, seal (KIT)	1	
10	6610-71-8531	403941	. RING, snap	1	
11	6631-71-8963		. COCK, drain	1	
12	09630-00100		PLATE, caution, Japanese and English	1	
	6610-81-1633	404373	PLATE, caution, English and Spanish	1	
13	6610-71-8580	403980	DECAL	1	
14	6672-71-8970		CONNECTOR	1	
15	07260-00925		TUBE	1	
16	07281-00197		CLAMP	2	
17	07270-00850	409118	TUBE	1	
18	04059-01012	409190	WIRE, lock	1	
19	6610-21-5730		PLATE	1	
20	02030-30738		BOLT	2	
21	01602-01134		WASHER, spring	2	
22	02030-20670		BOLT	2	
23	02310-11224	70206	WASHER, spring	2	
24	6600-02-3861		CONNECTOR, outlet	1	
25	6610-71-8490	404020	ELBOW, inlet	1	
26	6631-21-6511	416091	BRACKET	1	
27	01010-30840		BOLT	2	
28	02030-20925	S-151-C	BOLT	2	
29	02030-20944	S-181-A	BOLT	4	
30	02310-11836	70260	WASHER, spring	6	

Fig. 1421 INJECTOR AND FUEL CONNECTION

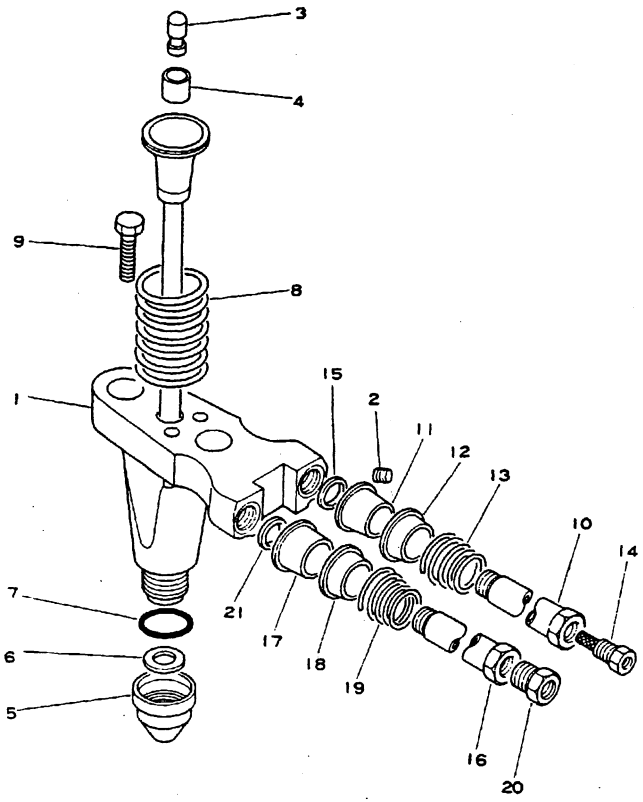

Fig. & Index No.	Komatsu Part No.	Cummins Part No.	Description	Q'ty	Serial No.
	6620-11-3011	BM-68974	INJECTOR ASS'Y	6	100101~
	6610-11-3021	BM-43000	. BODY AND PLUNGER ASS'Y	1	100101~
1421- 1	☆		. . BODY (6620-11-3110)	1	100101~
*	☆		. . PLUG, injector body (6610-11-3160)	2	100101~
*	☆		. . PLUG, injector body (6610-11-3140)	1	100101~
*	☆		. . PLUG, injector body (6610-11-3130)	2	100101~
*	☆		. . TOP, injector plunger (6610-11-3321)	1	100101~
	☆		. . PLUNGER (6610-11-3310)	1	100101~
2	6610-11-3550	132801	. . ORIFICE	1	100101~
	6610-11-3560	132802	. . ORIFICE	1	100101~
	6610-11-3570	131099	. . ORIFICE	1	100101~
	6610-11-3580	131100	. .ORIFICE	1	100101~
	6610-11-3610	131101	. . ORIFICE	1	100101~
	6610-11-3620	131102	. . ORIFICE	1	100101~
	6610-11-3630	131103	. . ORIFICE	1	100101~
	6610-11-3640	131104	. . ORIFICE	1	100101~
	6610-11-3650	131105	. . ORIFICE	1	100101~
	6610-11-3660	131106	. . ORIFICE	1	100101~
	6610-11-3670	131107	. . ORIFICE	1	100101~
	6610-11-3710	131108	. . ORIFICE	1	100101~
	6610-11-3720	132803	. . ORIFICE	1	100101~
	Use 6 suitable ORIFICE selected from among these listed herein.				
3	6610-11-3341	146814	. . LINK	1	100101~
4	6610-11-3331	148504	. . SLEEVE, retaining	1	100101~
	6620-11-3030	BM-68672	. INJECTOR CUP ASS'Y	1	100101~
5	☆		. . CUP (6620-11-3210)	1	100101~
6	6610-11-3230	62409	. . GASKET	1	100101~
	Used with injector plunger classes 0 to 8.				

Fig. & Index No.	Komatsu Part No.	Cummins Part No.	Description	Q'ty	Serial No.
1421- 6	6610-11-3240	109247	. . GASKET	1	100101~
	Used with injector plunger classes 10 to 19.				
	6610-11-3250	109248	. . GASKET	1	100101~
	Used with injector plunger classes 20 to 25.				
	6610-11-3260	117994	. . GASKET	1	100101~
	Used with injector plunger classes 30 to 35.				
	6610-11-3270	131270	. . GASKET	1	100101~
	Used with injector plunger classes 40 to 45.				
	Use 6 suitable GASKET selected from these listed here according to the class of injector plunger used together.				
* 7	6610-11-3221		. . O-RING	1	100101~
*	(□6610-11-3220)	70776	. . O-RING	1	(100101~ •)
8	6610-11-3350	62123	. SPRING	1	100101~
9	6620-11-3910	128388	BOLT	12	100101~
	6610-71-8020	BM-30073	INLET CONNECTION ASS'Y	6	100101~
	6610-71-8030	BM-30072	. INLET CONNECTION ASS'Y	1	100101~
10	6610-71-8311		. . PIPE	1	100101~
11	6610-71-8350	70854	. . GASKET	1	100101~
12	6610-71-8360	70847	. . RETAINER	1	100101~
13	6610-71-8370	70856	. . SPRING	1	100101~
14	6610-71-8330	70855	. . SCREEN	1	100101~
15	6610-71-8321		. GASKET	1	100101~
	6610-71-8040	BM-30075	OUTLET CONNECTION ASS'Y	6	100101~
	6610-71-8050	BM-30074	. OUTLET CONNECTION ASS'Y	1	100101~
16	6610-71-8311		. . PIPE	1	100101~
17	6610-71-8350	70854	. . GASKET	1	100101~
18	6610-71-8360	70847	. . RETAINER	1	100101~
19	6610-71-8370	70856	. . SPRING	1	100101~
20	6610-71-8340	S-1003-1	. . CONNECTOR	1	100101~
21	6610-71-8321		. GASKET	1	100101~

Fig. 1451 PT FUEL PUMP (1/6)

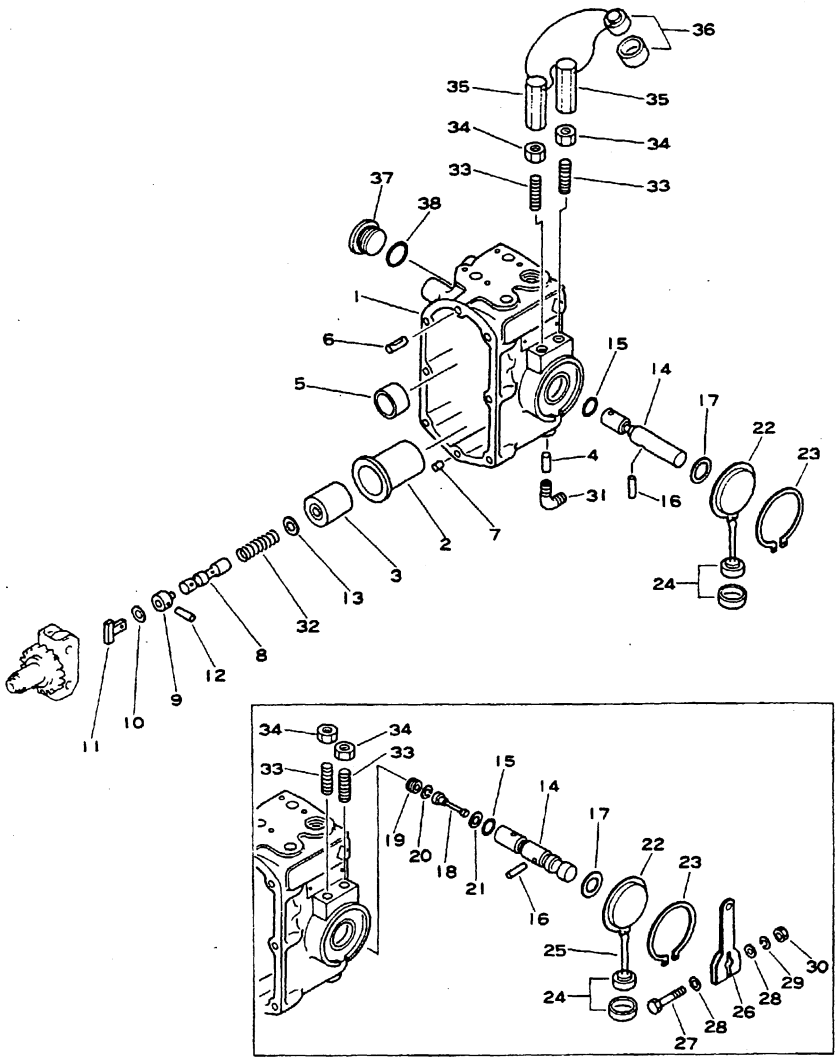

GD37 Engine No. 100101~

Fig. & Index No.	Komatsu Part No.	Cummins Part No.	Description	Q'ty	Serial No.
	(6631-71-1003)	(3325866)	PT FUEL PUMP ASS'Y (GR-J050)	1	BDE101518~
	(6632-72-1001)	(3325874)	PT FUEL PUMP ASS'Y (GR-J060)	1	CU 100101~
	(6632-70-1004)	(3325870)	PT FUEL PUMP ASS'Y (GR-J051)	1	F 101518~
	(6679-72-1001)	(AR-91036)	PT FUEL PUMP ASS'Y (GR-J081)	1	G 101518~
	(6632-73-1002)	(3325872)	PT FUEL PUMP ASS'Y (GR-J055)	1	H 101990~
	(6631-72-1001)	(3325868)	PT FUEL PUMP ASS'Y (GR-J080)	1	M 100101~
	(6678-70-1002)	(3325878)	PT FUEL PUMP ASS'Y (GR-J028)	1	Q 101518~143557
	(6678-70-1003)		PT FUEL PUMP ASS'Y (GR-J036)	1	Q 143558~
	(6688-72-1001)	(3325884)	PT FUEL PUMP ASS'Y (GR-J116)	1	R 130125~
	(6688-71-1001)	(3325886)	PT FUEL PUMP ASS'Y (GR-J123)	1	T 130106~
	6610-71-1011	BM-79291	. FUEL PUMP HOUSING ASS'Y	1	BCDEFHMQRTU 100101~
	6610-71-1010	BM-79290	. FUEL PUMP HOUSING ASS'Y	1	G 100101~
	6610-71-1020	BM-73902	. . FUEL PUMP HOUSING ASS'Y	1	
1451 -1	☆		. . . HOUSING (6610-71-1110)	1	100101~107686
	☆		. . . HOUSING (6610-71-1111)	1	107687~
	☆		. . . PLUG (6610-71-1170)	1	100101~107686
	☆		. . . PLUG (02720-20204)	1	107687~
	☆		. . . SLEEVE, throttle shaft (6610-71-1190) (OS)	1	
	☆		. . . SLEEVE, throttle shaft (6610-71-1130)(STD)	1	
2	☆		. . . HOUSING, spring pack (6610-71-1140)	1	100101~
	☆		. . . HOUSING, spring pack (6610-71-1141)	1	
	☆		. . . BARREL AND SLEEVE ASS'Y (6610-71-1030)(STD)	1	
	☆		. . . BARREL AND SLEEVE ASS'Y, 0.25 mm (6610-79-1030) (OS)	1	
	☆		. . . BARREL AND SLEEVE ASS'Y, 0.50 mm (6610-78-1030) (OS)	1	
3	☆		. . . . BARREL (6610-71-1210)(STD)	1	
	☆		. . . . BARREL, 0.25 mm (6610-79-1210) (OS)	1	
	☆		. . . . BARREL, 0.50 mm (6610-78-1210) (OS)	1	
	☆		. . . . SLEEVE (6610-71-1220)(STD)	1	
	☆		. . . . SLEEVE, 0.25 mm (6610-79-1220) (OS)	1	
	☆		. . . . SLEEVE, 0.50 mm (6610-78-1220) (OS)	1	
4	6610-71-1180	163733	. . . CLIP, barrel and sleeve	1	
5	☆		. . . BUSHING, tachometer drive gear (6610-71-1120)	1	
6	6610-71-1151	118227	. . . DOWEL, housing to cover	1	139527~
	(6610-71-1160)	(103729)	. . . DOWEL, housing to cover	1	(1007~139522)

Fig & Index No.	Komatsu Part No.	Cummins Part No.	Description	Q'ty	Serial No.
1451 -7	6610-71-1151	118227	. . . DOWEL, ring, housing to cover	1	139523~
	(□6610-71-1150)	(118227)	. . . DOWEL, ring, housing to cover	1	(1007~139522)
	6610-71-1041	BM-92730	. . GOVERNOR PLUNGER DRIVE ASS'Y, red, class 0	1	BDEF 100101~101691 GQ 100101~
	6631-71-1040	BM-98430	. . GOVERNOR PLUNGER DRIVE ASS'Y, red, class 0	1	BCDEFMU 101692~
	6610-79-1041	BM-92731	. . GOVERNOR PLUNGER DRIVE ASS'Y, blue, class 1	1	BDEF 100101~101691 GQ 100101~
	6631-79-1041	BM-98431	. . GOVERNOR PLUNGER DRIVE ASS'Y, blue, class 1	1	BCDEFHMU 101692~
	6610-78-1041	BM-92732	. . GOVERNOR PLUNGER DRIVE ASS'Y, green, class 2	1	BDEF 100101~101691 GQ 100101~
	6631-78-1041	BM-98432	. . GOVERNOR PLUNGER DRIVE ASS'Y, green, class 2	1	BCDEFHMU 101692~
	6610-77-1041	BM-92733	. . GOVERNOR PLUNGER DRIVE ASS'Y, yellow, class 3	1	BDEF 100101~101691 GQ 100101~
	6631-77-1041	BM-98433	. . GOVERNOR PLUNGER DRIVE ASS'Y, yellow, class 3	1	BCDEFHMU 101692~
	6610-76-1041	BM-92734	. . GOVERNOR PLUNGER DRIVE ASS'Y, brown, class 4	1	BDEF 100101~101691 GQ 100101~
	6631-76-1041	BM-98434	. . GOVERNOR PLUNGER DRIVE ASS'Y, brown, class 4	1	BCDEFHMU 101692~
	6610-75-1041	BM-92735	. . GOVERNOR PLUNGER DRIVE ASS'Y, black, class 5	1	BDEF 100101~101691 GQ 100101~
	6631-75-1041	BM-98435	. . GOVERNOR PLUNGER DRIVE ASS'Y, black, class 5	1	BCDEFHMU 101692~
	6610-74-1041	BM-92736	. . GOVERNOR PLUNGER DRIVE ASS'Y, gray, class 6 (Service only) (OS)	1	BDEF 100101~101691 GQ 100101~
	6631-74-1041	BM-98436	. . GOVERNOR PLUNGER DRIVE ASS'Y, gray, class 6 (Service only) (OS)	1	BCDEFHMU 101692~
	6610-73-1041	BM-92737	. . GOVERNOR PLUNGER DRIVE ASS'Y, purple, class 7 (Service only) (OS)	1	BDEF 100101~101691 GQ 100101~
	6631-73-1041	BM-98437	. . GOVERNOR PLUNGER DRIVE ASS'Y, purple, class 7 (Service only) (OS)	1	BCDEFHMU 101692~
8	6610-71-1411	169660	. . . PLUNGER, red, class 0	1	BDEF 100101~101691 GQ 100101~
	6631-71-1410	182530	. . . PLUNGER, red, class 0	1	BCDEFHMU 101692~
	6610-79-1411	169661	. . . PLUNGER, blue, class 1	1	BDEF 100101~101691 GQ 100101~
	6631-79-1410	182531	. . . PLUNGER, blue, class 1	1	BCDEFHMU 101692~

Fig & Index No.	Komatsu Part No.	Cummins Part No.	Description	Q'ty	Serial No.
	6610-78-1411	169662	. . . PLUNGER, green, class 2	1	BDEF 100101~101691 GQ 100101~
	6631-78-1410	182532	. . . PLUNGER, green, class 2	1	BCDEFHMU 101692~
	6610-77-1411	169663	. . . PLUNGER, yellow, class 3	1	BDEF 100101~101691 GQ 100101~
	6631-77-1410	182533	. . . PLUNGER, yellow, class 3	1	BCDEFHMU 101692~
	6610-76-1411	169664	. . . PLUNGER, brown, class 4	1	BDEF 100101~101691 GQ 100101~
	6631-76-1410	182534	. . . PLUNGER, brown, class 4	1	BCDEFHMU 101692~
	6610-75-1411	169665	. . . PLUNGER, black, class 5	1	BDEF 100101~101691 GQ 100101~
	6631-75-1410	182535	. . . PLUNGER, black, class 5	1	BCDEFHMU 101692~
	6610-74-1411	169666	. . . PLUNGER, gray, class 6 (Service only) (OS)	1	BDEF 100101~101691 GQ 100101~
	6631-74-1410	182536	. . . PLUNGER, gray, class 6 (Service only) (OS)	1	BCDEFHMU 101692~
	6610-73-1411	169667	. . . PLUNGER, purple, class 7 (Service only) (OS)	1	BDEF 100101~101691~ GQ 100101~
	6631-73-1410	182537	. . . PLUNGER, purple, class 7 (Service only) (OS)	1	BCDEFHMU 101692~
1451 -9	6610-71-1452	144302	. . . SPACER, plunger	1	
10	6610-71-1420	138905	. . . WASHER, thrust	1	
11	6610-71-1430	70690	. . . DRIVE, governor plunger	1	
12	6610-71-1440	137372	. . . PIN, governor plunger	1	
13	6610-71-1460	101841	. . . SHIM, plunger, 0.127 mm	AR	
	6610-71-1470	101842	. . . SHIM, plunger, 0.254 mm	AR	
	6610-71-1480	101843	. . . SHIM, plunger, 0.508 mm	AR	
	6610-71-1090	BM-78930	. . THROTTLE CONTROL SHAFT ASS'Y, red, class 0	1	BCDEFHMQU
	6610-71-1050	BM-74080	. . THROTTLE CONTROL SHAFT ASS'Y, red, class 0	1	G
	6610-79-1090	BM-78931	. . THROTTLE CONTROL SHAFT ASS'Y, blue, class 1	1	BCDEFHMQU
	6610-79-1050	BM-74081	. . THROTTLE CONTROL SHAFT ASS'Y, blue, class 1	1	G
	6610-78-1090	BM-78932	. . THROTTLE CONTROL SHAFT ASS'Y, green, class 2	1	BCDEFHMQU
	6610-78-1050	BM-74082	. . THROTTLE CONTROL SHAFT ASS'Y, green, class 2	1	G
	6610-77-1090	BM-78933	. . THROTTLE CONTROL SHAFT ASS'Y, yellow, class 3	1	BCDEFHMQU

Fig & Index No.	Komatsu Part No.	Cummins Part No.	Description	Q'ty	Serial No.
	6610-77-1050	BM-74083	. . THROTTLE CONTROL SHAFT ASS'Y, yellow, class 3	1	G
	6610-76-1090	BM-78934	. . THROTTLE CONTROL SHAFT ASS'Y, brown, class 4	1	BCDEFHMQU
	6610-76-1050	BM-74084	. . THROTTLE CONTROL SHAFT ASS'Y, brown, class 4	1	G
	6610-75-1090	BM-78935	. . THROTTLE CONTROL SHAFT ASS'Y, black, class 5	1	BCDEFHMQU
	6610-75-1050	BM-74085	. . THROTTLE CONTROL SHAFT ASS'Y, black, class 5	1	G
1451 -14	6610-71-1340	157940	. . . SHAFT, red, class 0	1	BCDEFHMQU
	6610-71-1310	149030	. . . SHAFT, red, class 0	1	G
	6610-79-1340	157941	. . . SHAFT, blue, class 1	1	BCDEFHMQU
	6610-79-1310	149031	. . . SHAFT, blue, class 1	1	G
	6610-78-1340	157942	. . . SHAFT, green, class 2	1	BCDEFHMQU
	6610-78-1310	149032	. . . SHAFT, green, class 2	1	G
	6610-77-1340	157943	. . . SHAFT, yellow, class 3	1	BCDEFHMQU
	6610-77-1310	149033	. . . SHAFT, yellow, class 3	1	G
	6610-76-1340	157944	. . . SHAFT, brown, class 4	1	BCDEFHMQU
	6610-76-1310	149034	. . . SHAFT, brown, class 4	1	G
	6610-75-1340	157945	. . . SHAFT, black, class 5	1	BCDEFHMQU
	6610-75-1310	149035	. . . SHAFT, black, class 5	1	G
15	6610-71-1320	100478	. . . O-RING (KIT)	1	
16	6610-71-1360	148976	. . . PIN, roll	1	
17	6610-71-1370	148916	. . . SPACER	2	
18	6610-71-1330	149040	. . . PLUNGER, fuel adjusting	1	G
19	6610-71-1350	142149	. . . SCREW, set	1	G
20	02310-10610	409605	. . . WASHER, spring	1	G
21	6610-71-1240	142179	. . . SHIM	1	G
22	6610-71-1730	100766	. COVER, throttle shaft	1	BCDEFHMQU
	6610-71-1740	148977	. COVER, throttle shaft	1	G
23	6600-01-3110	S-16026	. SNAPWIRE	1	
24	6610-71-1760	124019	. SEAL, lead	1	
25	6610-71-1771		. WIRE, seal	1	G
26	6610-71-1380	152094	. LEVER, throttle, shaft	1	G
27	02030-20438	S-159-B	. BOLT	1	G
28	6610-71-1840	70704	. WASHER	2	G
29	02310-10916	70189	. WASHER, spring	1	G
30	02216-10404	S-251	. NUT	1	G
31	6610-81-8820	405250	. CONNECTOR, priming pump	1	
32	6610-71-5160	138784	. SPRING, torque control	1	BDE 18542~139522 H 18542~ M 139523~
	6610-71-5170	139584	. SPRING, torque control	1	BDE 139523~ CU 100101~
	6610-71-5280	139587	. SPRING, torque control	1	F 18566~139522

Fig & Index No.	Komatsu Part No.	Cummins Part No.	Description	Q'ty	Serial No.
	6610-71-5180	139585	. SPRING, torque control	1	F 139523~
	6610-71-5100	138768	. SPRING, torque control	1	G 1007~
	6610-71-5460	138996	. SPRING, torque control	1	M 14248~139522
1451 -33	6610-71-1790	175578	. SCREW, set	2	BCDEFHMQU
	6610-71-1750	109915	. SCREW, set	2	G
34	02216-10404	S-251	. NUT, set screw	2	100101~
	(□6600-01-2580)		. NUT, set screw	2	(100101~ •)
35	6610-71-3180	110058	. NUT, adjusting screw	2	BCDEFHMQU
36	6610-71-1760	124019	. SEAL, lead	1	BCDEFHMQU
37	6610-71-1870	139473	. PLUG	1	
38	02891-02018	43696-A	. O-RING (KIT)	1	

Fig. 1452 PT FUEL PUMP (2/6)

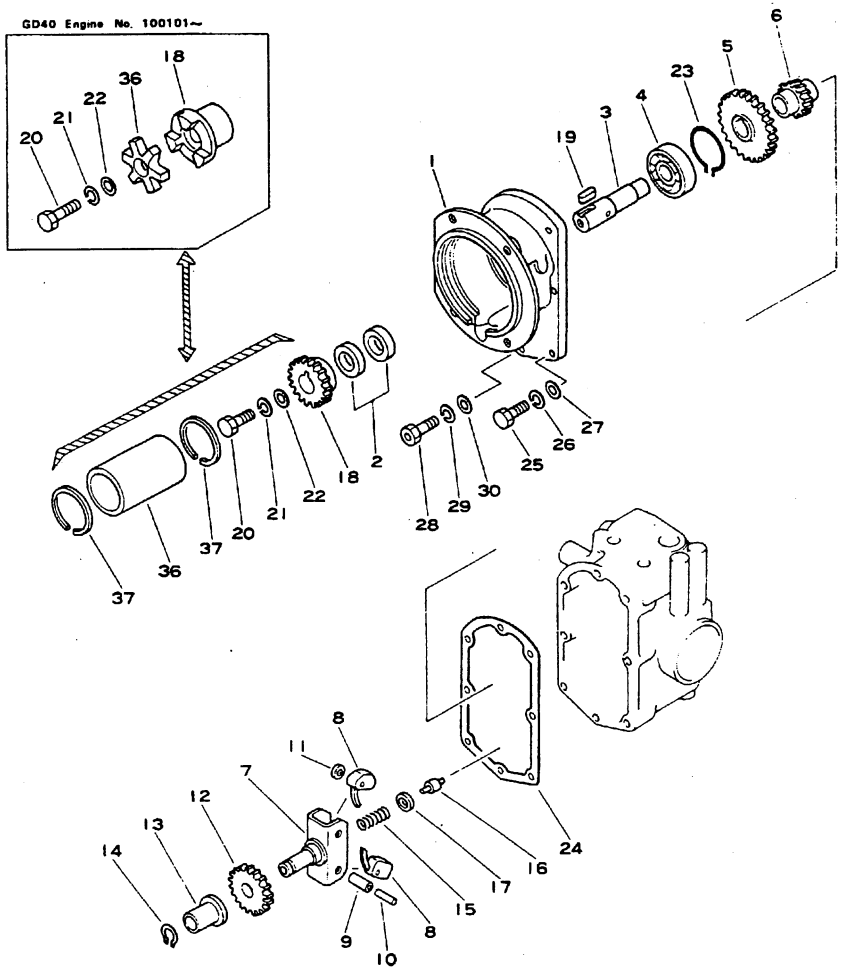

Fig. & Index No.	Komatsu Part No.	Cummins Part No.	Description	Q'ty	Serial No.
	(6631-71-1003)	(3325866)	PT FUEL PUMP ASS'Y (GR-J050)	1	BDE 101518~
	(6632-72-1001)	(3325874)	PT FUEL PUMP ASS'Y (GR-J060)	1	CU 100101~
	(6632-70-1004)	(3325870)	PT FUEL PUMP ASS'Y (GR-J051)	1	F 101518~
	(6679-72-1001)	(AR-91036)	PT FUEL PUMP ASS'Y (GR-J081)	1	G 101518~
	(6632-73-1002)	(3325872)	PT FUEL PUMP ASS'Y (GR-J055)	1	H 101990~
	(6631-72-1001)	(3325868)	PT FUEL PUMP ASS'Y (GR-J080)	1	M 100101~
	(6678-70-1002)	(3325878)	PT FUEL PUMP ASS'Y (GR-J028)	1	Q 101518~143357
	(6678-70-1003)		PT FUEL PUMP ASS'Y (GR-J036)	1	Q 143358~
	(6688-72-1001)	(3325884)	PT FUEL PUMP ASS'Y (GR-J116)	1	R 130125~
	(6688-71-1001)	(3325886)	PT FUEL PUMP ASS'Y (GR-J123)	1	T 130106~
	6691-71-2021		. MAIN SHAFT COVER AND GOVERNOR ASS'Y	1	BDEFH
	6632-70-2011		. MAIN SHAFT COVER AND GOVERNOR ASS'Y	1	CMU
	6610-71-2021		. MAIN SHAFT COVER AND GOVERNOR ASS'Y	1	G
	6610-71-2030	BM-53199	. . COVER AND SEAL ASS'Y	1	
1452 - 1	☆		. . . COVER, front (6610-71-2310)	1	
2	6610-71-2320	104038	. . . SEAL, oil (KIT)	2	
	6610-71-2040	BM-33876	. . FUEL PUMP DRIVE ASS'Y	1	
3	6610-71-2330	100192	. . . FUEL PUMP DRIVE ASS'Y	1	
4	6600-01-1240	S-1650	. . . BEARING	1	
5	6610-71-2340	103036	. . . GEAR, pump drive	1	
6	6610-71-2350	101983	. . . GEAR, tachometer drive	1	
	6691-71-2011		. . WEIGHT AND CARRIER ASS'Y	1	BDEFH
	6632-71-2011		. . WEIGHT AND CARRIER ASS'Y	1	CMU
	6610-71-2011	AR-41043	. . WEIGHT AND CARRIER ASS'Y	1	GQ 139523~
	6610-71-2051	AR-41017	. . . WEIGHT CARRIER ASS'Y	1	139523~
7	☆		. . . . CARRIER AND SHAFT ASS'Y (6610-71-2061)	1	
	☆	(211633)	. . . . . SHAFT (6710-71-2210)	1	139523~
	☆	(211632)	. . . . . CARRIER (6710-71-2220)	1	139523~
	☆	(70744)	. . . . . WIRE, brazing (6610-71-2230)	1	1007~139522
8	6610-71-2250	146437	. . . . WEIGHT, heavy	2	
9	6610-71-2260	108882	. . . . SHAFT, weight	2	
10	6710-71-2270	211635	. . . . PIN, pivot	2	
11	6610-71-2280	157594	. . . . WASHER, thrust	4	1007~139522
12	6710-71-2110	211636	. . . . GEAR, drive	1	139523~
13	6610-71-2121	163944	. . . BUSHING, governor weight	1	
14	6610-71-2131	163945	. . . RING, snap	1	
15	6691-71-2140	143852	. . . SPRING, weight assist	1	BDEF 18542~139522 H 18542~
	6610-71-2290	416920	. . . SPRING, weight assist	1	BDEF 139523~ M 14248~

Fig. & Index No.	Komatsu Part No.	Cummins Part No.	Description	Q'ty	Serial No.
	6610-71-2140	143847	. . . SPRING, weight assist	1	CU 14248~ GQ 1007~
1452 -16	6610-71-2150	144178	. . . PLUNGER, weight assist	1	
17	6610-71-2160	144179	. . . SHIM, weight assist	AR	
18	6610-71-2380	102974	. . COUPLING, half	1	BCDEFGHMU
	6684-71-2381	101918	. . COUPLING, half	1	Q G Overseas only
19	6610-71-2370	68174	. . KEY, coupling	1	
20	02030-20619	69793	. . BOLT	1	
21	02310-11224	70206	. . WASHER, spring	1	
22	02300-11320	409602	. . WASHER	1	
23	6610-71-2360	70699	. . RING, snap	1	
24	6610-71-2410	100764	. GASKET (KIT)	1	
25	02010-20432	S-105-C	. BOLT	6	
26	02310-10916	70189	. WASHER, spring	6	
27	6610-71-1840	70704	. WASHER	6	
28	02100-00332	118226	. BOLT	1	
29	02310-10814	409606	. WASHER, spring	1	
30	02300-10716	409600	. WASHER	1	
36	6610-71-7710	103369	. COUPLING	1	BCDEFGHMU
	6684-71-7711	162426	. COUPLING	1	Q
37	6610-71-7720	108739	. RING, snap	2	BCDEFGHMU

Fig. 1453 PT FUEL PUMP (3/6)

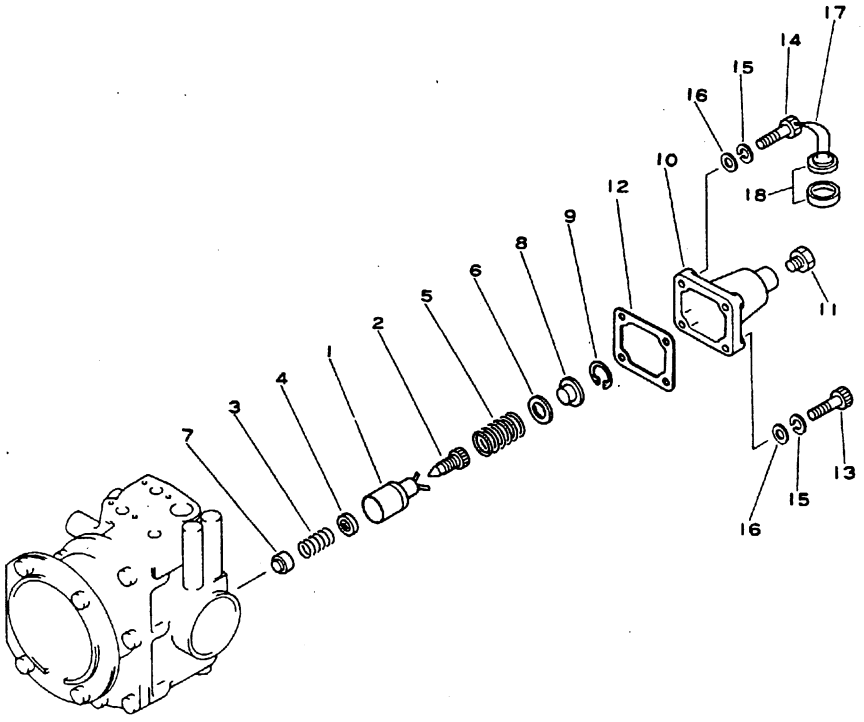

See Fig 451

Fig. & Index No.	Komatsu Part No.	Cummins Part No.	Description	Q'ty	Serial No.
	(6631-71-1003)	(3325866)	PT FUEL PUMP ASS'Y (GR-J050)	1	BDE101518~
	(6632-72-1001)	(3325874)	PT FUEL PUMP ASS'Y (GR-J060)	1	CU 100101~
	(6632-70-1004)	(3325870)	PT FUEL PUMP ASS'Y (GR-J051)	1	F 101518~
	(6679-72-1001)	(AR-91036)	PT FUEL PUMP ASS'Y (GR-J081)	1	G 101518~
	(6632-73-1002)	(3325872)	PT FUEL PUMP ASS'Y (GR-J055)	1	H 101990~
	(6631-72-1001)	(3325868)	PT FUEL PUMP ASS'Y (GR-J080)	1	M 100101~
	(6678-70-1002)	(3325878)	PT FUEL PUMP ASS'Y (GR-J028)	1	Q 101518~143357
	(6678-70-1003)		PT FUEL PUMP ASS'Y (GR-J036)	1	Q 143358~
	(6688-72-1000)	(3325884)	PT FUEL PUMP ASS'Y (GR-J116)	1	R 130125~
	(6688-71-1000)	(3325886)	PT FUEL PUMP ASS'Y (GR-J123)	1	T 130106~
	6610-71-1061	BM-69889	. IDLE SPRING PACK ASS'Y	1	
1453 - 1	6610-71-1071	BM-67416	. . GUIDE AND CLIP ASS'Y	1	
	☆	(209653)	. . . GUIDE, plunger (6610-71-1511)	1	
	☆	(204120)	. . . CLIP (6610-71-1551)	1	
2	6610-71-1530	70716	. . SCREW, idle adjusting	1	
3	6610-71-1520	144195	. . SPRING, idle	1	
4	6610-71-1540	70715	. . WASHER	1	
	6631-70-6030	AR-90701	. GOVERNOR HIGH SPEED SPRING ASS'Y	1	BDEM
	6632-70-6030	AR-90704	. GOVERNOR HIGH SPEED SPRING ASS'Y	1	CFHU
	6675-71-6030		. GOVERNOR HIGH SPEED SPRING ASS'Y	1	GQ
5	6610-71-5610	143256	. . SPRING, high speed	1	BDE18542~
	6610-71-5580	143254	. . SPRING, high speed	1	FH 18566~ CU 113392~
	6610-71-5500		. . SPRING, high speed	1	CU 33013~113391
	6610-71-2290		. . SPRING, high speed	1	M 14248~139522
	6610-71-5590	143255	. . SPRING, high speed	1	MQ 139523~
	6610-71-5570	143253	. . SPRING high speed	1	G 1926~139522
	6610-71-5560	143252	. . SPRING, high speed	1	G 139523~
6	6610-71-6350	70717	. . SHIM, governor spring, 0.51 mm	AR 5 6	BDEGM CFQU H
	6610-71-6360	70717-A	. . SHIM, governor spring, 0.25 mm	5 AR 2	CFQU G H
	6610-71-6370	70717-B	. . SHIM, governor spring, 0.127 mm	5 AR	CFQU G
7	6610-71-6460	140418	. PLUNGER, idle spring	1	BDEM 18542~
	6610-71-6630	139619	. PLUNGER, idle spring	1	F 18566~ CU 18566~113391
	6610-71-6610	140925	. PLUNGER, idle spring	1	H 40447~ CU 113392~
	6610-71-6680	141638	. PLUNGER, idle spring	1	G 20396~
	6610-71-6430	141625	. PLUNGER idle spring	1	Q 23020~139522
8	6610-71-1780	70713	. RETAINER, high speed spring	1	

Fig. & Index No.	Komatsu Part No.	Cummins Part No.	Description	Q'ty	Serial No.
1453 - 9	6600-01-3120	S-16240	. RING, snap	1	
10	6610-71-1810	44678	. COVER, spring pack	1	
11	6610-71-1850	70295	. PLUG	1	
12	6610-71-1821	70705	. GASKET (KIT)	1	
13	02100-00432	S-170-C	. BOLT	2	
14	6610-71-1880	138973	. BOLT	2	
15	6610-71-1230	181466	. WASHER, spring	4	
16	6610-71-1840	70704	. WASHER	4	
17	6610-71-1760	124019	. SEAL, lead	1	
18	6610-71-1771		. WIRE, lock	1	

Fig. 1454 PT FUEL PUMP (1/6)

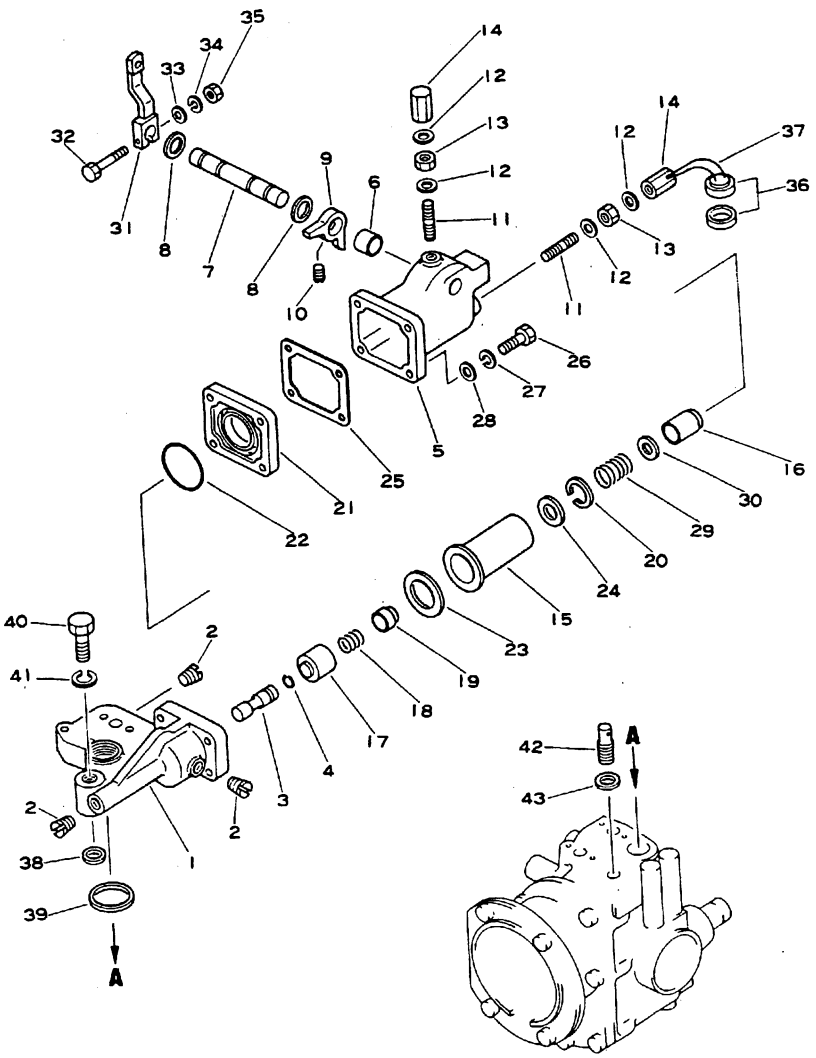

Fig. & Index No.	Komatsu Part No.	Cummins Part No.	Description	Q'ty	Serial No.
	(6631-71-1003)	(3325866)	PT FUEL PUMP ASS'Y (GR-J050)	1	BDE101518~
	(6632-72-1001)	(3325874)	PT FUEL PUMP ASS'Y (GR-J060)	1	CU 100101~
	(6632-70-1004)	(3325870)	PT FUEL PUMP ASS'Y (GR-J051)	1	F 101518~
	(6679-72-1001)	(AR-91036)	PT FUEL PUMP ASS'Y (GR-J081)	1	G 101518~
	(6632-73-1002)	(3325872)	PT FUEL PUMP ASS'Y (GR-J055)	1	H 101990~
	(6631-72-1001)	(3325868)	PT FUEL PUMP ASS'Y (GR-J080)	1	M 100101~
	(6678-70-1002)	(3325878)	PT FUEL PUMP ASS'Y (GR-J028)	1	Q 101518~143357
	(6678-70-1003)		PT FUEL PUMP ASS'Y (GR-J036)	1	Q 143358~
	(6688-72-1001)	(3325884)	PT FUEL PUMP ASS'Y (GR-J116)	1	R 130125~
	(6688-71-1001)	(3325886)	PT FUEL PUMP ASS'Y (GR-J123)	1	T 130106~
	6610-71-3010	BM-78803	. PACK AND MVS GOVERNOR ASS'Y	1	
	6610-71-3020	BM-78802	. . GOVERNOR HOUSING ASS'Y	1	
1454 -1	6610-71-3030	BM-78801	. . . HOUSING AND BARREL ASS'Y	1	
	☆		. . . . HOUSING, pressure senging (6610-71-3310)	1	
	☆		. . . . BARREL, MVS governor (6610-71-3320)	1	
2	02720-40204	68606	. . . PLUG	3	
3	6610-71-3350	154460	. . . PLUNGER, governor, red, class 0	1	
	6610-79-3350	154463	. . . PLUNGER, governor, blue, class 1	1	
	6610-78-3350	168906	. . . PLUNGER, governor, green, class 2 (Service only) (OS)	1	
	6610-77-3350	168907	. . . PLUNGER, governor, yellow, class 3 (Service only) (OS)	1	
4	6610-71-3370	148367	. . . RING, snap	1	
	6610-71-3040	BM-73135	. . SPRING AND IDLE PACK ASS'Y	1	
	6610-71-3050	BM-73134	. . . SPRING PACK ASS'Y	1	
	6610-71-3060	BM-30810	. . . . COVER AND BUSHING ASS'Y	1	
5	☆		. . . . . COVER (6610-71-3110)	1	
6	☆		. . . . . BUSHING (6610-71-3120)	2	
7	6610-71-3130	70835	. . . . SHAFT, throttle	1	
8	6610-71-3150	70915	. . . . O-RING (KIT)	1	
9	6610-71-3140	70834	. . . . STOP	1	
10	6610-71-3160	70813	. . . . SCREW, set	1	
11	6710-71-3170	109917	. . . . SCREW, set, adjusting	2	
12	6610-71-3190	112408	. . . . WASHER	4	
13	02216-10404	S-251	. . . . NUT	2	
14	6610-71-3180	110058	. . . . NUT	2	
15	6610-71-3210	108384	. . . . HOUSING, spring pack	1	
16	6610-71-3230	70836	. . . . PLUNGER, throttle	1	

Fig & Index No.	Komatsu Part No.	Cummins Part No.	Description	Q'ty	Serial No.
	6610-71-3070	BM-77531	. . . IDLE SPRING PACK ASS'Y	1	
1454 -17	6610-71-3240	70820	. . . . PLUNGER, governor spring	1	
18	6610-71-3260	70778	. . . . SPRING, idle	1	
19	6710-71-3250	70798	. . . . RETAINER, governor spring	1	
20	6610-71-3220	70823	. . . . RING, snap	1	
21	6610-71-3450	148254	. . PLATE, adapter	1	
22	02891-02047	145544	. . O-RING (KIT)	1	
23	6610-71-3440	148426	. . SHIM, housing	4	
24	6610-71-3410	153379	. . SHIM, idle spring, 0.508 mm	1	
	6610-71-3420	153380	. . SHIM, idle spring, 0.254 mm	1	
	6610-71-3430	153381	. . SHIM, idle spring, 0.127 mm	1	
	6610-71-3470	403700	. . SHIM, idle spring, 0.019 mm	2	
25	6610-71-1821	70705	. . GASKET (KIT)	1	
26	02100-00438	S-184-C	. . BOLT	4	
27	6610-71-1230	181466	. . WASHER, spring	4	
28	6610-71-1840	70704	. . WASHER	4	
	6631-70-6040	AR-90702	. MVS GOVERNOR SPRING ASS'Y	1	BDEHM
	6632-70-6040	AR-90705	. MVS GOVERNOR SPRING ASS'Y	1	CFU
	6680-71-6040	BM-67744	. MVS GOVERNOR SPRING ASS'Y	1	G
	6678-71-6040	AR-90838	. MVS GOVERNOR SPRING ASS'Y	1	Q
29	6610-71-6120	109686	. . SPRING, governor high speed	1	BDEHM
	6610-71-6230	107787	. . SPRING, governor high speed	1	CFU
	6610-71-6140	1109687	. . SPRING, governor high speed	1	G
	6610-71-6150	70822	. . SPRING, governor high speed	1	Q
30	6610-71-6310	70811	. . SHIM, 0.508 mm	2 AR 3	BDE GQ HM
	6610-71-6320	70811-A	. . SHIM, 0.254 mm	AR 3	GQ H
	6610-71-6330	70811-B	. . SHIM, 0.127 mm	AR	GQ
31	6680-71-3281	423641	. LEVER, throttle	1	Q 100101~
	6675-71-3281	413691	. LEVER, throttle	1	BDF101290~ CEGHMU 100101~
32	02030-20438	S-159-B	. BOLT	1	
33	6610-71-1840	70704	. WASHER	1	
34	01602-00720	70189	. WASHER, spring	1	
35	02216-10404	S-251	. NUT	1	
36	6610-71-1760	124019	. SEAL, lead	1	
37	6610-71-1771	124020	. WIRE, lock	1	
38	6610-71-3510	154087	. RING, seal (KIT)	1	

Fig & Index No.	Komatsu Part No.	Cummins Part No.	Description	Q'ty	Serial No.
1454 -39	6610-71-3530	154088	. RING, seal (KIT)	1	
40	6610-71-3560	109899	. BOLT	1	
41	6610-71-3550	106943	. DYNA-SEAL (KIT)	1	
42	6610-71-3540	126119	. ADAPTER	1	
43	6610-71-3520	154087	. RING, seal (KIT)	1	

Fig. 1455 PT FUEL PUMP (5/6)

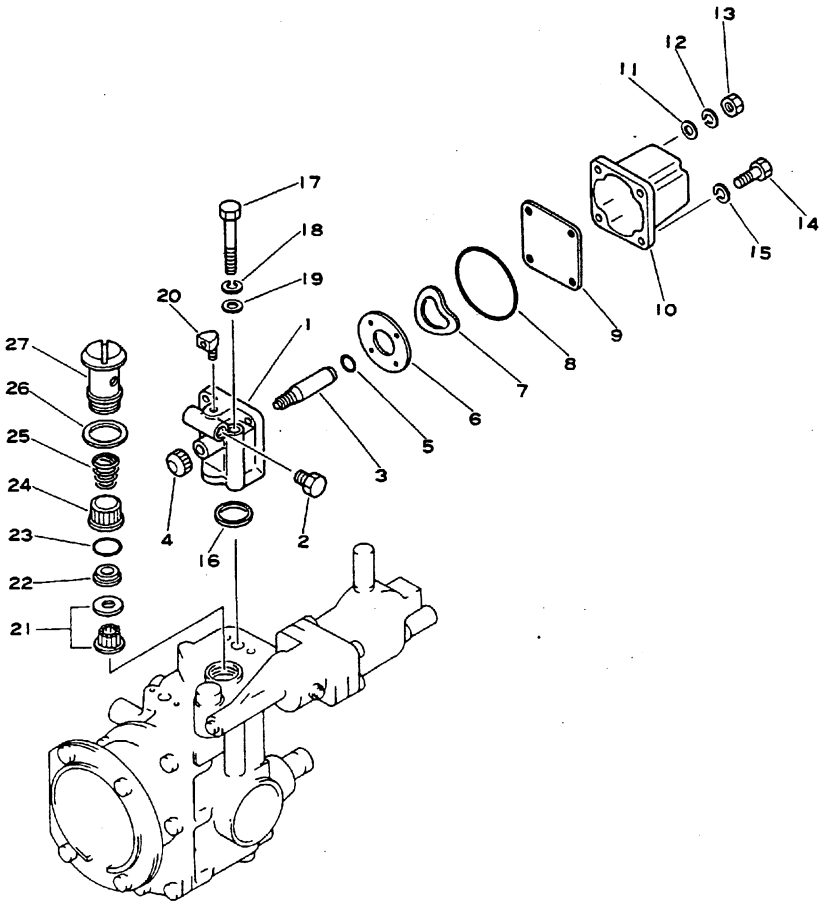

Fig. & Index No.	Komatsu Part No.	Cummins Part No.	Description	Q'ty	Serial No.
	(6631-71-1003)	(3325866)	PT FUEL PUMP ASS'Y (GR-J050)	1	BDE101518~
	(6632-72-1001)	(3325874)	PT FUEL PUMP ASS'Y (GR-J060)	1	CU 100101~
	(6632-70-1004)	(3325870)	PT FUEL PUMP ASS'Y (GR-J051)	1	F 101518~
	(6679-72-1001)	(AR-91036)	PT FUEL PUMP ASS'Y (GR-J081)	1	G 101518~
	(6632-73-1002)	(3325872)	PT FUEL PUMP ASS'Y (GR-J055)	1	H 101990~
	(6631-72-1001)	(3325868)	PT FUEL PUMP ASS'Y (GR-J080)	1	M 100101~
	(6678-70-1002)	(3325878)	PT FUEL PUMP ASS'Y (GR-J028)	1	Q 101518~143357
	(6678-70-1003)		PT FUEL PUMP ASS'Y (GR-J036)	1	Q 143358~
	(6688-72-1001)	(3325884)	PT FUEL PUMP ASS'Y (GR-J116)	1	R 130125~
	(6688-71-1001)	(3325886)	PT FUEL PUMP ASS'Y (GR-J123)	1	T 130106~
	6610-71-4010	BM-69986	. SHUTDOWN VALVE ASS'Y	1	
	6610-71-4020	BM-69985	. . SHUTDOWN VALVE ASS'Y, 24V	1	
1455 -1	☆		. . . HOUSING (6610-71-4210)	1	
2	6610-71-1830	70295	. . . PLUG	1	
3	6610-71-4221	196037	. . . SHAFT, manual override	1	
4	6610-71-4230	129838	. . . KNOB	1	
5	6610-71-4241	190876	. . . O-RING (KIT)	1	
6	6610-71-4140	129827	. . . VALVE, shutdown	1	
7	6610-71-4130	129768	. . . SPRING	1	
8	6610-71-4160	129888	. . . O-RING (KIT)	1	
9	6610-71-4120	129839	. . . SHIELD, fuel	1	
10	6610-71-4110	134076	. . . COIL, shutdown valve	1	
11	6600-01-2570	S-257	. . . . NUT	3	
12	02310-00712	S-607	. . . . WASHER, spring	2	
13	02300-00716	S-603-A	. . . . WASHER	2	
14	6600-01-2170	S-1214	. . . BOLT	4	
15	02310-10712	409607	. . . WASHER, spring	4	
16	6610-71-3520	154087	. . RING, seal (KIT)	1	
17	02100-00445	S-189-C	. . BOLT	2	
18	6610-71-1230	181466	. . WASHER, spring	2	
19	6610-71-3580	67684	. . WASHER	2	
20	6610-71-4412	S-1028	. CONNECTOR, fuel outlet	1	
	6610-71-3080	BM-73136	. FILTER SCREEN ASS'Y	1	
21	6610-71-3601	149767	. . SCREEN AND MAGNET	1	
22	6610-71-3840	138806	. . RETAINER	1	
23	6610-71-3850	70775	. . O-RING (KIT)	1	
24	6610-71-3700	137808	. . SCREEN, filter, upper	1	
25	6610-71-3830	70700	. . SPRING, filter	1	
26	6610-71-3820	70771	. . SEAL, filter cap (KIT)	1	
27	6610-71-3811	133374	. . CAP, filter	1	

Fig. 1456 PT FUEL PUMP (6/6)

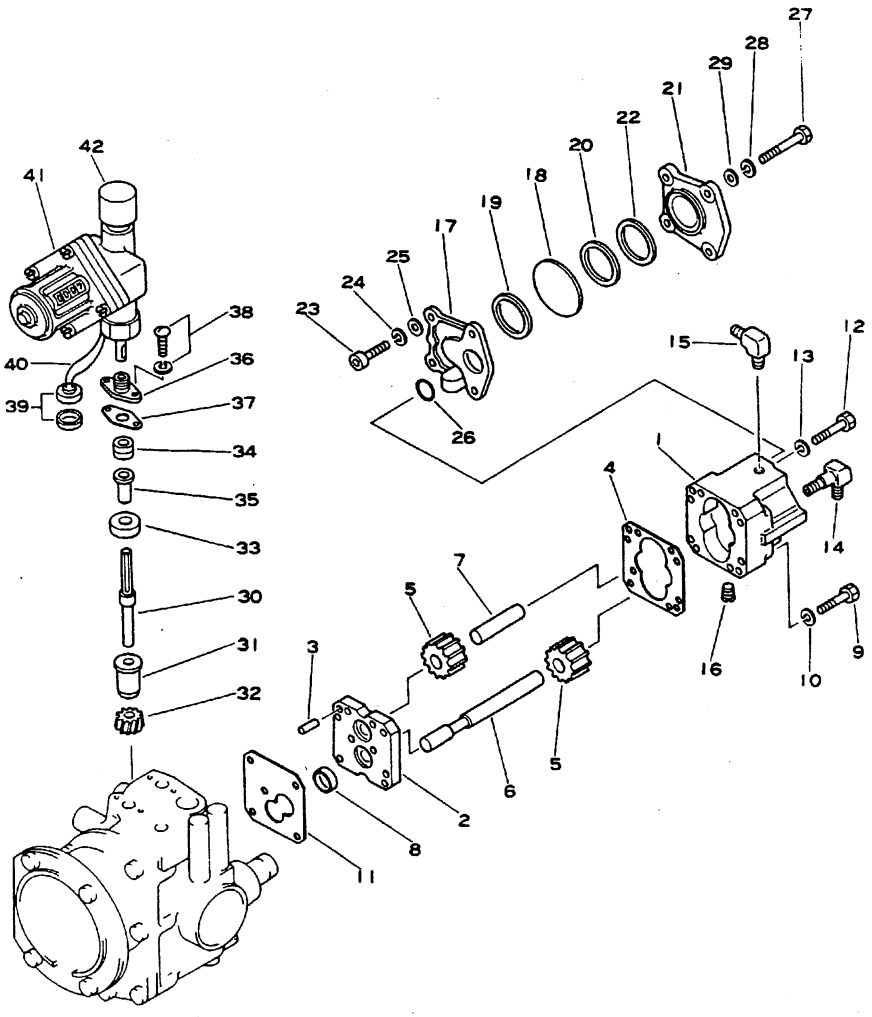

Fig & Index No.	Komatsu Part No.	Cummins Part No.	Description	Q'ty	Serial No.
	(6631-71-1003)	(3325866)	PT FUEL PUMP ASS'Y (GR-J050)	1	BDE101518~
	(6632-72-1001)	(3325874)	PT FUEL PUMP ASS'Y (GR-J060)	1	CU 100101~
	(6632-70-1004)	(3325870)	PT FUEL PUMP ASS'Y (GR-J051)	1	F 101518~
	(6679-72-1001)	(AR-91036)	PT FUEL PUMP ASS'Y (GR-J081)	1	G 101518~
	(6632-73-1002)	(3325872)	PT FUEL PUMP ASS'Y (GR-J055)	1	H 101990~
	(6631-72-1001)	(3325868)	PT FUEL PUMP ASS'Y (GR-J080)	1	M 100101~
	(6678-70-1002)	(3325878)	PT FUEL PUMP ASS'Y (GR-J028)	1	Q 101518~143357
	(6678-70-1003)		PT FUEL PUMP ASS'Y (GR-J036)	1	Q 143358~
	(6688-72-1001)	(3325884)	PT FUEL PUMP ASS'Y (GR-J116)	1	R 130125~
	(6688-71-1001)	(3325886)	PT FUEL PUMP ASS'Y (GR-J123)	1	T 130106~
	6620-71-2072	AR-91032	. GEAR PUMP ASS'Y	1	101518~144159
	(□6620-71-2071)	(AR-91032)	. GEAR PUMP ASS'Y	1	(101518~ •)
	6620-71-2073		. GEAR PUMP ASS'Y	1	144160~
			. . COVER AND HOUSING ASS'Y (6620-71-2081)	1	101518~144159
			. . COVER AND HOUSING ASS'Y (6620-71-2082)	1	144160~
1456 - 1	☆		. . . HOUSING (6620-71-2511)	1	101518~144159
	☆		. . . HOUSING (6620-71-2512)	1	144160~
2	☆		. . . COVER (6620-71-2521)	1	101518~
3	☆		. . . DOWEL (02400-20625)	2	
4	6610-71-2541	110855	. . GASKET (KIT)	1	
5	☆		. . GEAR (6620-71-2641)	2	
6	☆		. . SHAFT, drive (6620-71-2610)	1	
7	☆		. . SHAFT, idler (6620-71-2631)	1	101518~
8	6610-71-2530	101468	. . RING, dowel	1	
9	02100-00445	S-189-C	. . BOLT	2	
	02100-00457		. . BOLT	2	101518~
	BOLT (02100-00464) are removed when mounting pulsation damper Use BOLT (6600-01-2150) in stead of BOLT (02100-00464).				
10	6610-71-1230	181466	. . WASHER, spring	4	
11	6610-71-2811	210647	. GASKET (KIT)	1	
12	02100-00464	70790	. BOLT	4 6	100101~144159 144160~
13	6610-71-1230	181466	. WASHER, spring	4	
14	6610-71-2571	403971	. ELBOW, fuel inlet	1	100101~
15	6610-71-8190	175836	. ELBOW, valve	1	
16	02720-40204	68606	. PLUG	1	
	6610-71-2090	BM-76340	. PULSATION DAMPER ASS'Y	1	
17	6610-71-2710	153336	. . BODY, damper	1	
18	6610-71-2731	202897	. . DIAPHRAGM	1	
19	6610-71-2741	139988	. . O-RING (KIT)	1	
20	6610-71-2771	100099	. . O-RING (KIT)	1	
21	6610-71-2720	153338	. . COVER, damper	1	

Fig & Index No.	Komatsu Part No.	Cummins Part No.	Description	Q'ty	Serial No.
1456 -22	6610-71-2760	160514	. . WASHER, nylon	1	
23	02100-00432	S-170-C	. . BOLT	2	
24	6610-71-1230	181466	. . WASHER, spring	2	
25	6610-71-1840	70704	. . WASHER	4	
26	6610-71-2750	151900	. . SEAL (KIT)	2	
27	6600-01-2150	S-174-C	. BOLT	2	
28	6610-71-1230	181466	. WASHER, spring	2	
29	6610-71-1840	70704	. WASHER	2	
	6610-71-1081		. SERVICE METER DRIVE ASS'Y	1	100101~
	(□6610-71-1080)	(BM-28848)	. SERVICE METER DRIVE ASS'Y	1	100101~148090
30	6610-71-1611		. . SHAFT	1	100101~
	(□6610-71-1610)	(104087)	. . SHAFT	1	100101~148090
31	6610-71-1620	70723	. . BUSHING	1	
32	6610-71-1630	101981	. . GEAR	1	
33	6610-71-1911	70809	. SEAL, oil (KIT)	1	
34	6610-71-1960	210218	. WASHER, felt (KIT)	1	
35	6610-71-1970	189638	. SPACER	1	
36	6610-71-1920	155445	. HOUSING	1	
37	6610-71-1930	70732	. GASKET (KIT)	1	
38	6610-71-1951	70722-A	. BOLT	2	
39	6610-71-1760	124019	. SEAL, lead	1	
40	6610-71-1771	124020	. WIRE, lock	1	
41	(08684-00139)		METER, service	1	BDE
	(08684-00148)		METER, service	1	CFHU
	(08684-00233)		METER, service	1	GQ
	(6110-83-3111)		METER, service	1	M
42	(6610-71-1940)	(90521)	CAP	1	

COOLING AND ELECTRICAL SYSTEMS

Fig. 1501 WATER PUMP AND COOLING FAN (D60, D65APE Engine No. 100101 ~)

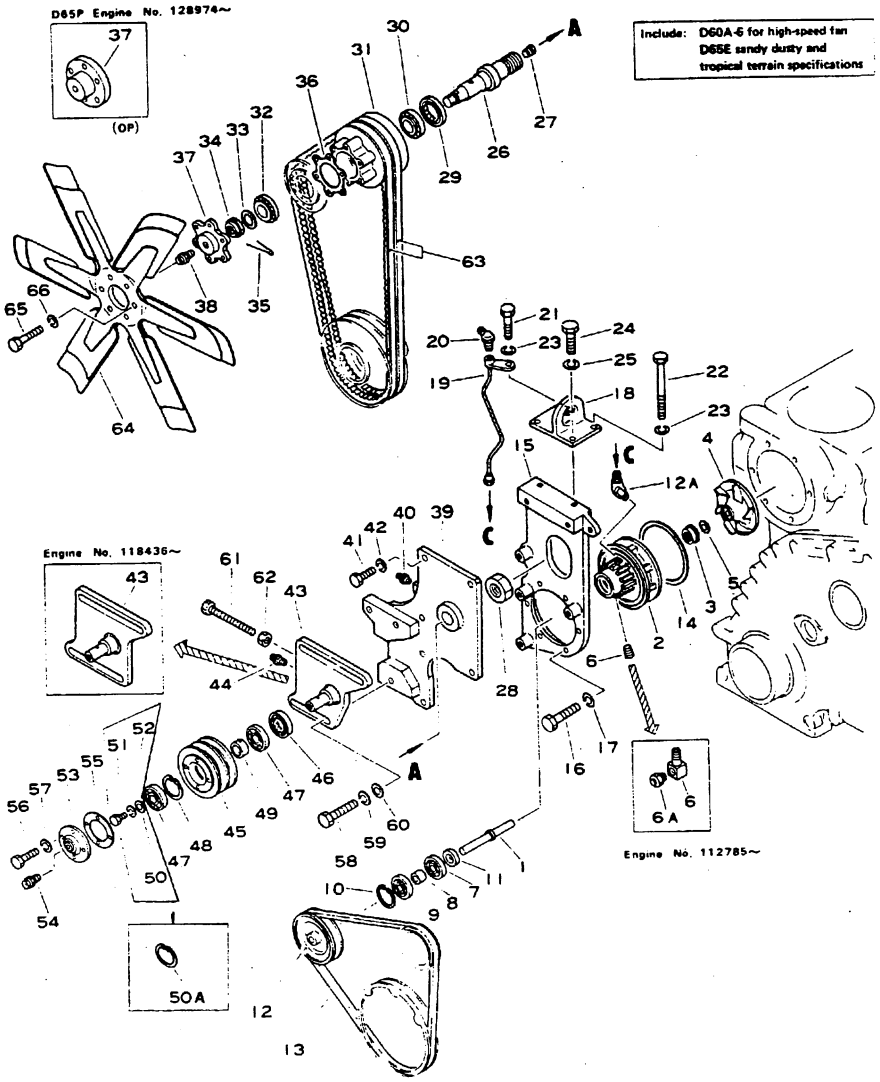

	Fig & Index No.	Komatsu Part No.	Cummins Part No.	Description	Q'ty	Serial No.
		6691-61-1300		WATER PUMP ASS'Y	1	100101~
		(□ 6676-63-1014)		WATER PUMP ASS'Y	1	(100101~ •)
		(□ 6631-61-1020)		WATER PUMP ASS'Y	1	(• ~112784)
		6685-61-1024	AR-90957	. WATER PUMP ASS'Y	1	100101~
	1501 -1	6610-61-1310	112719	. . SHAFT, water pump	1	100101~
	2	6671-61-1111	402981	. . BODY, water pump	1	100101~
*	3	6610-61-1512		. . SEAL, water pump (KIT)	1	100101~
*		(□ 6610-61-1511)	(170895)	. . SEAL, water pump (KIT)	1	(100101~138793)
	4	6610-61-1321		. . IMPELLER, water pump	1	100101~
	5	6610-61-1331		. . SEAL, ceramic (KIT)	1	100101~
	6	02720-20204	65606	. . PLUG, pump body	1	100101~112784
		(■ 6691-61-1930, 6127-61-3890)				
		6691-61-1930		. . NIPPLE	1	112785~
*	6A	07029-00000		. . VALVE, grease	1	112785~
*		(□ 6127-61-3890)		. . VALVE, grease	1	(112785~ •)
	7	6600-01-1221	69289	. . BEARING, ball	1	100101~
	8	6610-61-1130	67520-1	. . SPACER	1	100101~
	9	6600-01-1231	70171	. . BEARING, ball	1	100101~
	10	6610-61-1120	132427	. . RING, retaining	1	100101~
	11	6610-69-1210	185616	. . FILTER, dust (KIT)	1	100101~
	12	6623-61-1350	413390	. PULLEY, water pump	1	100101~
	12A	6631-61-1921	416201	. NIPPLE	1	104166~
	13	6676-83-6160	414740	V-BELT, pump drive	1	BDM100101~129485
		04120-21949		V-BELT, pump drive	1	BDM129486~
		600-736-5810	416930	V-BELT, pump drive	1	CFU100101~128830
		04120-21948		V-BELT, pump drive	1	CFU128831~
*		04120-11927		V-BELT, pump drive (For Cold Weather -30°C) (OP)	1	BDM129486~
*		04120-11926		V-BELT, pump drive (For Cold Weather -30°C) (OP)	1	CFU128831~
	14	6610-61-1810	9097	GASKET (KIT)	1	100101~
	15	6631-61-1211	416131	BRACKET, fan	1	100101~
	16	02030-20632	S-194	BOLT	6	100101~

D60A Engine No. 142567~ (サウジアラビア)
D65E Engine No. 143979~ (サウジアラビア)

Fig & Index No.	Komatsu Part No.	Cummins Part No.	Description	Q'ty	Serial No.
501-17	02310-11224	70206	WASHER, spring	6	100101~
18	6685-61-2222	436262	SUPPORT, fan bracket	1	100101~
19	6631-61-1911	416191	PIPE	1	100101~
20	6600-02-3850		FITTING, grease	1	100101~
21	02011-20808		BOLT	1	100101~
22	02011-20802	108603	BOLT	1	100101~
23	02310-11632	70219	WASHER, spring	2	100101~
24	01010-31220		BOLT	2	100101~
25	01602-01236	409068	WASHER, spring	2	100101~
	6631-61-2021	AR-90853	FAN HUB ASS'Y	1	100101~118435
	6631-61-2031	AR-91096	FAN HUB ASS'Y	1	118436~
26	6631-61-~~2310~~	416950	. SHAFT, fan hub	1	100101~
27	6100-21-1130		. PLUG	1	100101~
28	6610-61-2330	67532	. NUT, huglock	1	100101~
29	6610-61-2170	106276	. SEAL, oil (KIT)	1	100101~
30	6671-61-2141	143116	. BEARING, roller	1	100101~
31	6631-61-2112		. PULLEY, fan hub	1	100101~118435
	6631-61-2121		. PULLEY, fan hub	1	118436~
32	6610-61-2151	116759	. BEARING, roller	1	100101~
33	6671-61-2360	146651	. WASHER, bearing	1	100101~
34	6610-61-2350	146650	. NUT	1	100101~
35	6600-01-3420	S-510	. PIN	1	100101~
36	6671-61-2420	143108	. GASKET (KIT)	1	100101~
37	6631-61-2411	416171	SPACER, fan	1	BDFMU 100101~
	6632-61-2420		SPACER, fan	1	C 128974~
37A	6657-62-2431		SPACER, fan (For Cold Weather) (OP)	1	BDFMU 118436~
38	6127-61-3890	416660	VALVE, relief, grease	1	100101~
39	6631-61-1223	416183	BRACKET, water pump	1	100101~
40	07020-00000		FITTING, grease	1	100101~
	(□ 07020-00900)		FITTING, grease	1	(100101~ •)

Fig & Index No.	Komatsu Part No.	Cummins Part No.	Description	Q'ty	Serial No.
1501-41	01010-31230		BOLT	6	100101~
42	01602-01236	409068	WASHER, spring	6	100101~
	6631-61-2800		TENSION PULLEY ASS'Y	1	100101~118435
*	6631-61-2802		TENSION PULLEY ASS'Y	1	118436~
*	(□ 6631-61-2801)		TENSION PULLEY ASS'Y	1	(118436~145892)
43	6631-61-2811	416901	. BRACKET, tension pulley	1	100101~118435
*	6631-61-2820		. BRACKET, tension pulley	1	118436~145892
*	6631-61-2821		. BRACKET, tension pulley	1	145893~
44	07020-00000		. FITTING, grease	1	100101~118435
	07020-00675		. FITTING, grease	1	118436~
* 45	6631-61-2820	423020	. PULLEY, tension	1	100101~145892
*	6631-61-2821		. PULLEY, tension	1	145893~
46	07012-00038		. SEAL, oil (KIT)	1	100101~
47	06000-06205	409408	. BEARING, ball	2	100101~
48	04067-00052		. RING, snap	1	100101~
49	6691-61-2850	423150	. SPACER	1	100101~
* 50	6691-61-2860	423300	. WASHER, plate	1	100101~145892
* 50A	04064-02512		. RING, snap	1	145893~
* 51	01050-31020		. BOLT	1	100101~145892
* 52	01602-01030	409067	. WASHER, spring	1	100101~145892
* 53	6631-61-2840		. COVER, tension pulley	1	100101~145892
*	6631-61-2841		. COVER, tension pulley	1	145893~
54	6127-61-3890	416660	. VALVE, relief, grease	1	100101~
55	6691-61-2830		. GASKET (KIT)	1	100101~
56	01010-30616		. BOLT	4	100101~
57	01602-10619		. WASHER, spring	4	100101~
58	01050-31440		BOLT	3	100101~104346
	01010-31440		BOLT	3	104347~
59	01602-01442	409207	WASHER, spring	3	100101~
60	01643-31445		WASHER	3	100101~
	(□ 01641-21423)	(409168)	WASHER	3	(100101~100510)
	(□ 01640-21426)		WASHER	3	(100511~ •)
61	6631-61-2380		BOLT	1	100101~121396

Fig. & Index No.	Komatsu Part No.	Cummins Part No.	Description	Q'ty	Serial No.
1501-61	(□ 6631-61-3750)		BOLT	1	(100101~118435)
	6631-61-3750		BOLT	1	121397~
62	01580-01411		NUT	1	100101~
63	600-736-5580		V-BELT, fan drive	1	BDF100101~118435
	04121-02260		V-BELT, fan drive	1	BDF118436~
	(□ 04121-02259)		V-BELT, fan drive	1	(BDF118436~121396)
	04121-22272		V-BELT, fan drive	1	CMU100101~
	04120-01927		V-BELT, fan drive (For Cold Weather) (OP)	1	BDM • ~
	(□ 04120-01727)		V-BELT, fan drive (For Cold Weather) (OP)	1	(BD • ~ ••)
	(□ 04120-01926)		V-BELT, fan drive (For Cold Weather) (OP)	1	(BD •• ~ •••)
	04120-01926		V-BELT, fan drive (For Cold Weather) (OP)	1	CFU • ~
	(□ 04120-01725)		V-BELT, fan drive (For Cold Weather) (OP)	1	(F • ~ ••)
	(□ 04120-01924)		V-BELT, fan drive (For Cold Weather) (OP)	1	(F •• ~ •••)
	04121-12260		V-BELT, fan drive (For Cold Weather -30°C) (OP)	1	100101~
64	6631-61-3111		FAN, cooling	1	BDF100101~118435
	600-613-0716		FAN, cooling	1	118436~
	600-615-0716		FAN, cooling (Suction Type) (For Cold Weather) (OP)	1	118436~
65	02010-20638		BOLT	6	BDF100101~
	02010-20664		BOLT	6	CMU100101~
	02010-20676		BOLT (For Cold Weather) (OP)	6	118436~
66	02310-11224	70206	WASHER, spring	6	100101~

Fig. & Index No.	Komatsu Part No.	Cummins Part No.	Description	Q'ty	Serial No.
			For High-Speed fan, Sandy Dusty and Tropical Terrain Specifications (OP)		
			D60A Engine No. 142567~		
			D65E Engine No. 143979~		
* 1501-13	04120-21940		V-BELT, pump drive (For High-Speed Fan)	1	B 142567~
*	04120-21948		V-BELT, pump drive (For Sandy Dusty and Tropical Terrain Specifications)	1	U 143979~
*	6631-61-2040		FAN HUB ASS'Y (For High-Speed Fan)	1	B 142567~
*	6632-61-2050		FAN HUB ASS'Y (For Sandy Dusty and Tropical Terrain Specifications)	1	U 143979~
			Above Assembly is different from standard parts which are under parts.		
* 31	6631-61-2150		. PULLEY, fan hub (For High-Speed Fan)	1	B 142567~
*	6632-61-2150		. PULLEY, fan hub (For Sandy Dusty and Tropical Terrain Specifications)	1	U 143979~
* 37	6631-61-2411		SPACER, fan	1	B 142567~ U 143979~
* 63	04121-02260		V-BELT, fan drive (For High-Speed Fan)	1	B 142567~
*	04121-22271		V-BELT, fan drive (For Sandy Dusty and Tropical Terrain Specifications)	1	U 143979~
* 64	600-613-0716		FAN, cooling	1	B 142567~ U 143979~
* 65	02010-20638		BOLT	6	B 142567~ U 143979~

Fig. 1511A CORROSION RESISTOR (Engine No. 112051~)

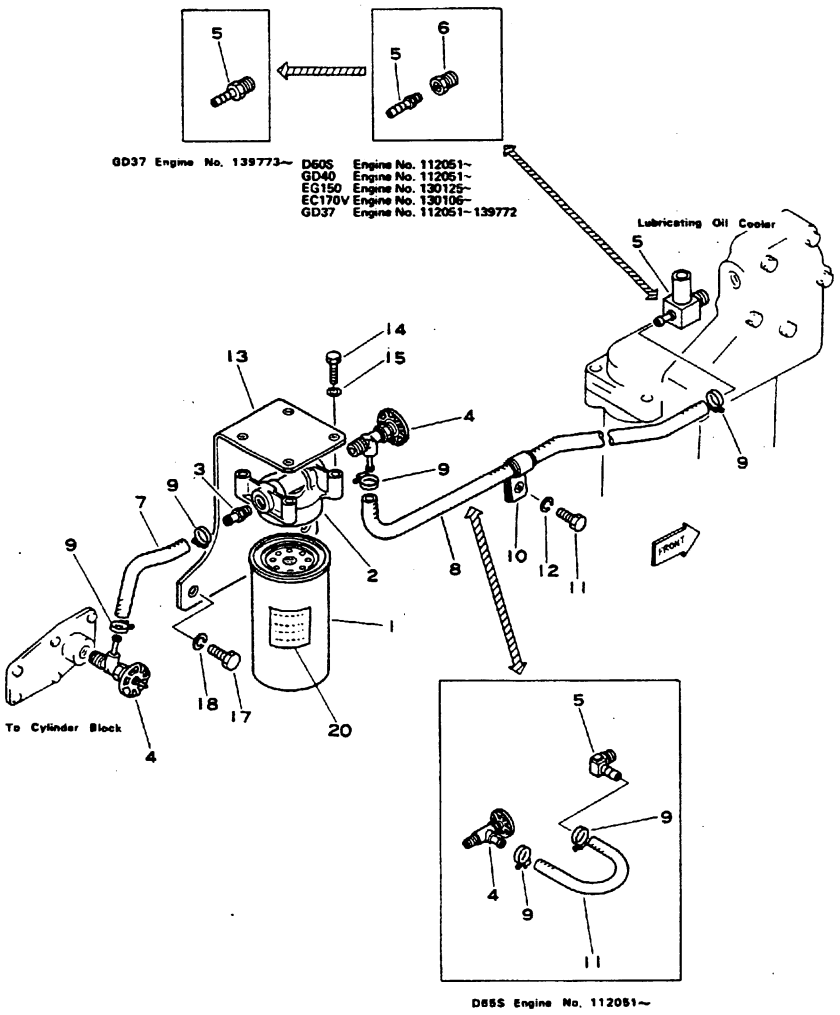

Fig & Index No.	Komatsu Part No.	Cummins Part No.	Description	Q'ty	Serial No.
	6710-61-8103		CORROSION RESISTOR ASS'Y	1	112051~
1511A-1	6710-61-8113		. CARTRIDGE	1	112051~
2	6710-61-8212		. HEAD	1	112051~
3	6710-61-8610		CONNECTOR	1	112051~
4	6710-61-8410		VALVE, shut-off	2	112051~
5	6631-61-8680		CONNECTOR	1	BCDFMU 112051~
	6710-61-8610		CONNECTOR	1	EQ 112051~
	6679-61-8610		CONNECTOR	1	G 139785~ R 130125~ T 130106~
	6710-61-8620		CONNECTOR	1	H 112051~
6	6600-01-3331		CONNECTOR	1	G 112051~139784
7	6631-61-8431		HOSE, block to resistor	1	112051~
8	6631-61-8421		HOSE, resistor to block	1	BCDEFGMQRTU 112051~
	07260-00922		HOSE, resitor to block	1	H 112051~
9	07281-00197		CLAMP	4	112051~
10	6631-61-8550		CLAMP	1	BCDFGMRTU 112051~
11	02010-70825		BOLT	1	BCDFGMRTU 112051~
12	02310-11632		WASHER, spring	1	BCDFGMRTU 112051~
13	6631-21-6110		BRACKET	1	112051~
14	02010-70632		BOLT	4	112051~
15	01602-00929		WASHER, spring	4	112051~
17	02010-70832		BOLT	2	112051~
18	02310-11632		WASHER, spring	2	112051~
20	09647-10100		PLATE, caution, English	1	100101~

Fig. 1521A ALTERNATOR AND MOUNTING

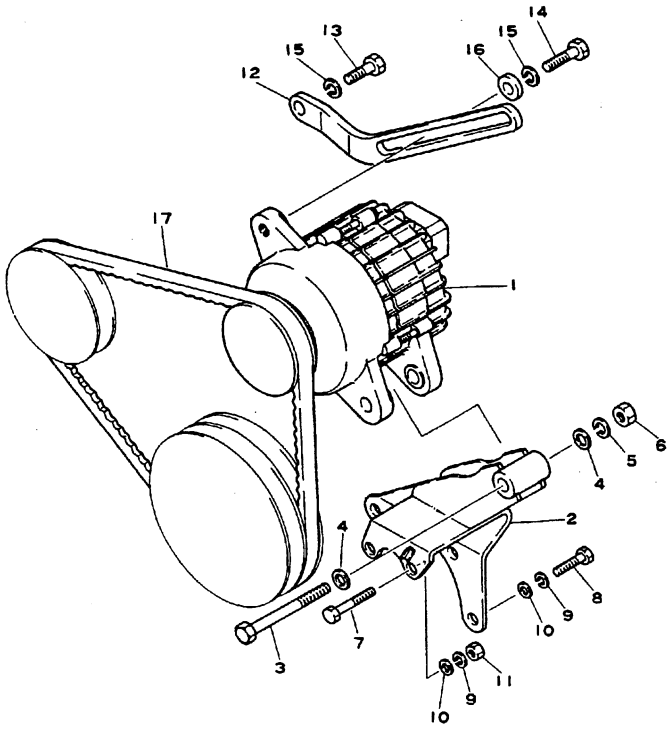

	Fig. & Index No.	Komatsu Part No.	Cummins Part No.	Description	Q'ty	Serial No.
*	1521A-1	600-821-3260		ALTERNATOR ASS'Y, 24V 0.3KW (NIKKO DENKI CO.)	1	BDM129486~ CFU128831~
*		600-821-8160		ALTERNATOR ASS'Y (NIKKO DENKI CO.) (For Cold Weather -30°C) (OP)	1	BDM129486~ CFU128831~ LN 100101~
	2	6631-21-6311		BRACKET	1	100101~
*		6631-24-6351		BRACKET (For Cold Weather -30°C) (OP)	1	BDM129486~ CFU128831~
*		6667-21-6310		BRACKET (For Cold Weather -30°C) (OP)	1	LN 100101~
	3	6112-21-6580		BOLT	1	BDM129486~ CFU128831~
*		6675-24-6321		BOLT (For Cold Weather -30°C) (OP)	1	BDM129486~ CFU128831~ LN 100101~
	4	01641-21423		WASHER (For Cold Weather -30°C) (OP)	2 2	BDM129486~ CFU128831~ LN 100101~
	5	01602-01442		WASHER, spring (For Cold Weather -30°C) (OP)	1 1	BDM129486~ CFU128831~ LN 100101~
	6	01580-01411		NUT (For Cold Weather -30°C) (OP)	1 1	BDM129486~ CFU128831~ LN 100101~
	7	02030-70757		BOLT (For Cold Weather -30°C) (OP)	2 2	100101~ LN 100101~
	8	02030-70732		BOLT (For Cold Weather -30°C) (OP)	3 3	100101~ LN 100101~
	9	02310-11428		WASHER, spring (For Cold Weather -30°C) (OP)	4 4	100101~ LN 100101~
	10	02300-11426		WASHER (For Cold Weather -30°C) (OP)	5 5	BDM129486~ CFU128831~ LN 100101~
	11	02215-10710		NUT (For Cold Weather -30°C) (OP)	1 1	100101~ LN 100101~
	12	6631-21-6381		PLATE, adjust (For Cold Weather -30°C) (OP)	1 1	BDM129486~ CFU128831~ LN 100101~
*		6631-24-6370		PLATE, adjust (For Cold Weather -30°C) (OP)	1	BDM129486~ CFU128831~
	13	01010-31230		BOLT (For Cold Weather -30°C) (OP)	1 1	100101~ LN 100101~
	14	01050-31235		BOLT (For Cold Weather -30°C) (OP)	1 1	100101~ LN 100101~

Fig & Index No.	Komatsu Part No.	Cummins Part No.	Description	Q'ty	Serial No.
* 1521A-14	01050-31240		BOLT (For Cold Weather -30°C) (OP)	1	BDM129486~ CFU128831~
15	01602-01236		WASHER, spring (For Cold Weather -30°C) (OP)	2 2	100101~ LN 100101~
16	6691-21-6360		PLATE, lock	1	100101~
*	01643-31032		WASHER (For Cold Weather -30°C) (OP)	1	LN 100101~
17	(04120-21949)		V-BELT	1	BDM129486~
	(04120-21948)		V-BELT	1	CFU128831~
*	(04120-11927)		V-BELT (For Cold Weather -30°C) (OP)	1	BDM129486~
*	(04120-11926)		V-BELT (For Cold Weather -30°C) (OP)	1	CFU128831~
*	(04120-31953)		V-BELT (For Cold Weather -30°C) (OP)	1	LN 100101~

Fig. 1525 STARTING MOTOR AND MOUNTING

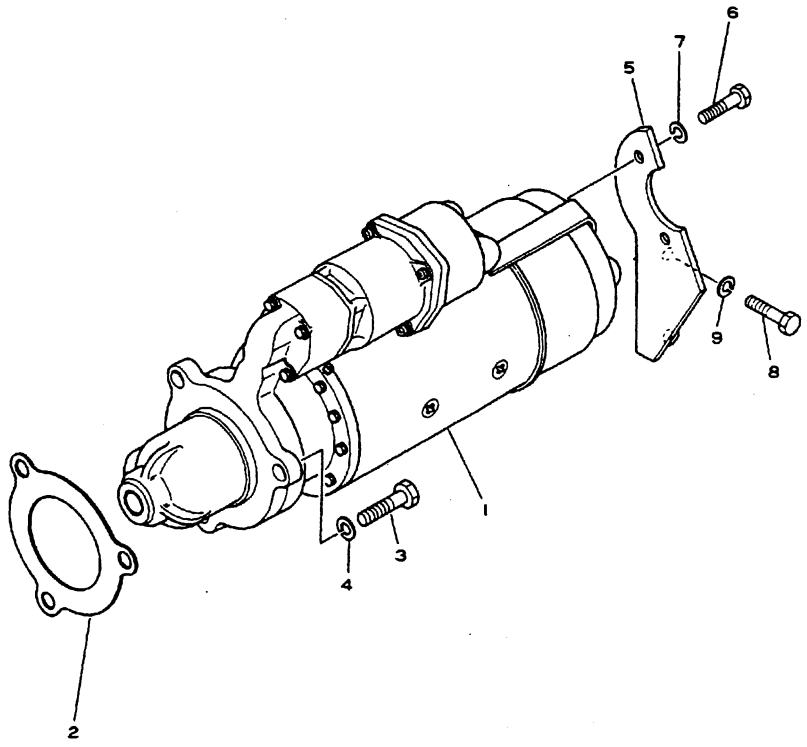

Fig. & Index No.	Komatsu Part No.	Cummins Part No.	Description	Q'ty	Serial No.
1525 -1	600-813-2411		STARTING MOTOR ASS'Y, 24V, 7.4KW (NIKKO DENKI CO.)	1	100101~ •
	600-813-2420		STARTING MOTOR ASS'Y, 24V, 7.4KW (NIKKO DENKI CO.)	1	• ~132064
	600-813-2413		STARTING MOTOR ASS'Y, 24V, 7.4KW (NIKKO DENKI CO.)	1	132065~
	(□ 600-813-2412)		STARTING MOTOR ASS'Y, 24V, 7.4KW (NIKKO DENKI CO.)	1	(132065~ •)
	600-813-2723		STARTING MOTOR ASS'Y, 24V, 11KW (NIKKO DENKI CO.) (For Cold Weather -30°C) (OP)	1	BCDEFHLMNQVWYZ 100101~
2	6610-81-2210	404490	GASKET (KIT)	1	100101~
3	01050-31645		BOLT	3	100101~
4	01602-01648	409303	WASHER, spring	3	100101~
5	6657-22-6362		BRACKET (For Cold Weather -30°C) (OP)	1	BCDEFHMQUVWYZ 100101~
	6691-24-6360		BRACKET (For Cold Weather -30°C) (OP)	1	LN 100101~
	6678-24-6360		BRACKET (For Cold Weather -30°C) (OP)	1	Q 100101~
6	01050-31020		BOLT (For Cold Weather -30°C) (OP)	2	BCDEFHMQUVWYZ 100101~
7	01602-01030		WASHER, spring (For Cold Weather -30°C) (OP)	2	BCDEFHMQUVWYZ 100101~
8	02010-70632		BOLT (For Cold Weather -30°C) (OP)	2	BCDEFHMQUVWYZ 100101~
9	01602-00929		WASHER, spring (For Cold Weather -30°C) (OP)	2	BCDEFHMQUVWYZ 100101~

Fig. 1531 REGULATOR AND SAFETY RELAY

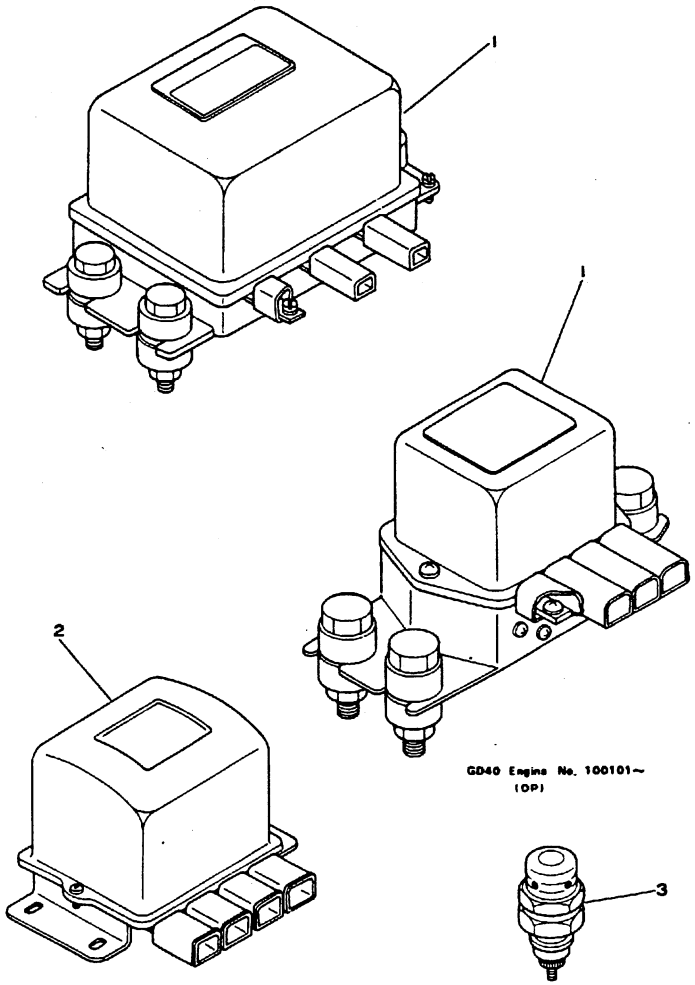

Fig. & Index No.		Komatsu Part No.	Cummins Part No.	Description	Q'ty	Serial No.
1531	-1	6004311-0-00		REGULATOR ASS'Y	1	BDF100101~129485 EHQ100101~130358 G 100101~130768 K 100101~112050 LN 100101~ RT 130106~
		600-822-5810		REGULATOR ASS'Y	1	VWYZ 141402~
*		600-822-5110		REGULATOR ASS'Y (For Sandy Dusty Terrain Spec.) (OP)	1	VWYZ 141402~
		600-822-8110		REGULATOR ASS'Y (For Cold Weather) (OP)	1	Q.AA 141402~
*		600-822-8110		REGULATOR ASS'Y (For Cold Weather -30°C) (OP)	1	BCDFLMNQU 100101~
	2	6684-81-3310	444550	SAFETY RELAY ASS'Y	1	BD 100101~129485 EHQ100101~130358 F 100101~128830 G 100101~130768 KLN100101~112050 R 130125~
		600-824-4940		SAFETY RELAY ASS'Y	1	BDM129485~
		600-824-4920		SAFETY RELAY ASS'Y	1	CFU128831~ EH 130359~ AA 143358~
		600-824-4950		SAFETY RELAY ASS'Y	1	G 133653~ Q 130359~
		600-814-2110		SAFETY RELAY ASS'Y	1	KLN112051~
		600-815-1510		SAFETY RELAY ASS'Y	1	T 130106~
		600-824-5120		SAFETY RELAY ASS'Y	1	VWYZ 141402~
*		600-824-5110		SAFETY RELAY ASS'Y (For Sandy Dusty Terrain Spec.) (OP)	1	VWYZ 141402~
*		600-824-8110		SAFETY RELAY ASS'Y (For Cold Weather -30°C) (OP)	1	BCDFMULN 100101~
*		600-824-5110		SAFETY RELAY ASS'Y (For Cold Weather -30°C) (OP)	1	EHQ100101~
*	3	600-815-2210		SIGNAL, heater	1	R 154027~

Fig. 1541A ALTERNATOR

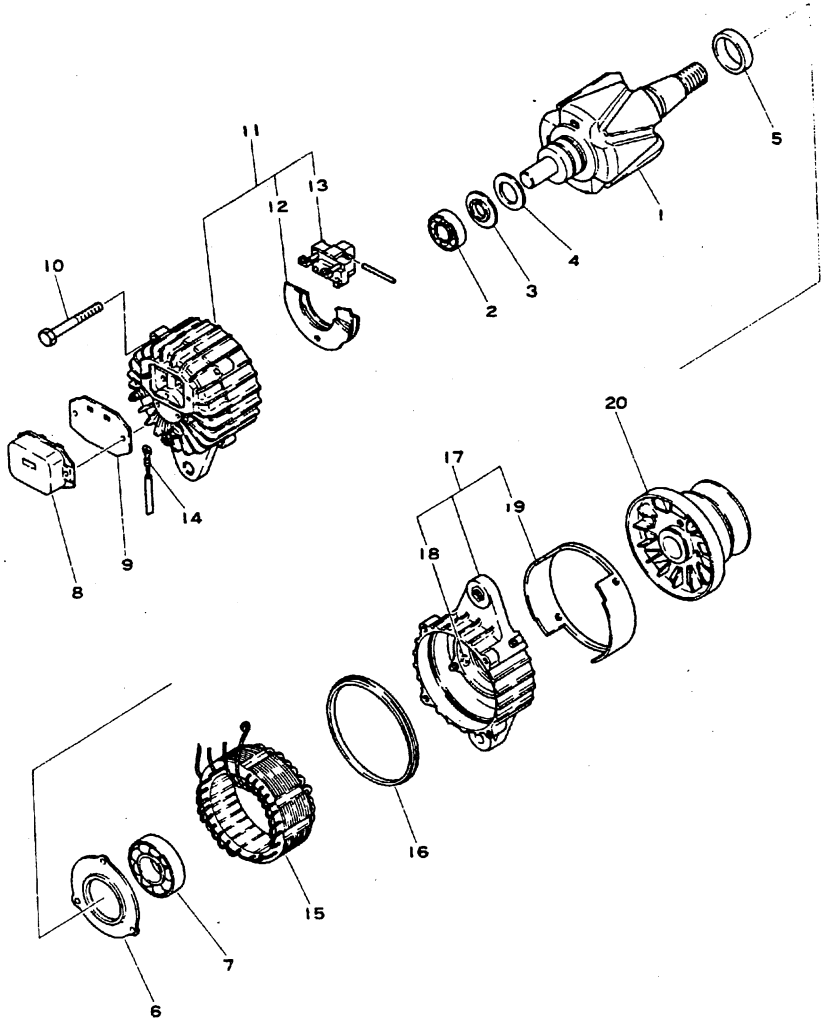

Fig. & Index No.	Komatsu Part No.	Cummins Part No.	Description	Q'ty	Serial No.
	(600-821-3260)		ALTERNATOR ASS'Y	1	BDM129486~ CFU128831~
	(600-821-3350)		ALTERNATOR ASS'Y	1	E 129542~ H 130061~ G 133653~ Q 127977~
	The NIKKO DENKI part number is that KD is removed from KOMATSU part number listed below.				
1541A-1	KD1-33100-0610		. ROTOR ASS'Y	1	† ~
2	KD1-0452-62027		. BEARING, ball	1	† ~
3	KD1-33926-0380		. RETAINER	1	† ~
4	KD1-33130-0172		. RING, slip	1	† ~
5	KD1-33923-0530		. COLLAR	1	† ~
6	KD0-33926-0370		. RETAINER	1	† ~
7	KD1-0452-63057		. BEARING, ball	1	† ~
8	KD1-44000-0580		. REGULATOR	1	† ~
9	KD1-33951-0280		. PACKING	1	† ~
10	KD0-0080-06652		. BOLT	4	† ~
11	KD0-33700-1360		. REAR BRACKET ASS'Y	1	† ~
12	KD1-33730-1250		. . RECTIFIER ASS'Y	1	† ~
13	KD1-33720-0530		. . HOLDER, brush	1	† ~
14	KD1-33785-1390		. WIRE, lead	1	† ~
15	KD1-33200-0710		. STATOR ASS'Y	1	† ~
16	KD1-33951-0270		. PACKING	1	† ~
17	KD1-33300-0450		. FRONT BRACKET ASS'Y	1	† ~
18	KD1-0345-05001		. . WASHER, seal	3	† ~
19	KD1-33761-0870		. . COVER	1	† ~
20	KD0-33400-0720		. PULLEY	1	BDM129486~ CFU128831~
	KD0-33400-0730		. PULLEY	1	E 129542~ H 130061~ G 133653~ Q 127977~

† : Shows both Engine No. BDM129486, CFU128831, E129542, H130061, G133653, Q127977.

Fig. 1545 ALTERNATOR (800W)

(D60A,P,E Engine No. 129486~)
(D65A,P,E Engine No. 128831~)
(D80,85A Engine No. 100101~) (For Cold Weather −30℃)

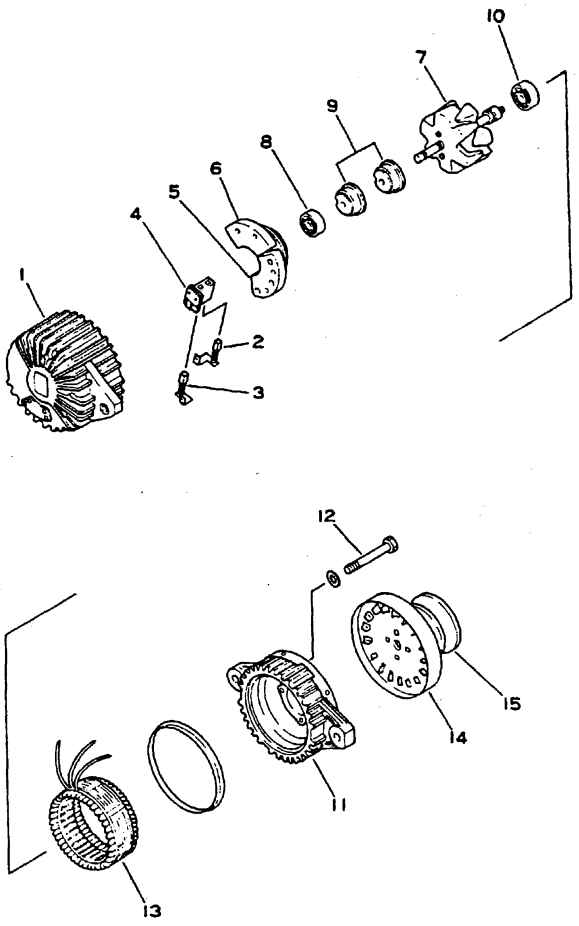

Fig. & Index No.	Komatsu Part No.	Cummins Part No.	Description	Q'ty	Serial No.
	600-821-8160		ALTERNATOR ASS'Y	1	BDM 129486~ CFU 128831~ LN 100101~
	The NIKKO DENKI parts number is that KD is removed from KOMATSU part number listed below.				
1545 - 1	KD7-33700-0080		. REAR BRACKET ASS'Y	1	BDM 129486~ CFU 128831~ LN 100101~
2	KD1-33740-0180		. . BRUSH	1	BDM 129486~ CFU 128831~ LN 100101~
3	KD1-33740-0190		. . BRUSH	1	BDM 129486~ CFU 128831~ LN 100101~
4	KD0-33720-0390		. . HOLDER, brush	1	BDM 129486~ CFU 128831~ LN 100101~
5	KD1-33730-0380		. . RECTIFIER ASS'Y (-)	1	BDM 129486~ CFU 128831~ LN 100101~
6	KD0-33730-0370		. . RECTIFIER ASS'Y (+)	1	BDM 129486~ CFU 128831~ LN 100101~
7	KD7-33100-0070		. ROTOR ASS'Y	1	BDM 129486~ CFU 128831~ LN 100101~
8	KD1-0472-63037		. . BEARING, ball	1	BDM 129486~ CFU 128831~ LN 100101~
9	KD1-33130-0140		. . RING, slip	2	BDM 129486~ CFU 128831~ LN 100101~
10	KD1-0472-63047		. . BEARING, ball	1	BDM 129486~ CFU 128831~ LN 100101~
11	KD7-33300-0020		. FRONT BRACKET ASS'Y	1	BDM 129486~ CFU 128831~ LN 100101~
12	KD0-0084-05852		. BOLT	4	BDM 129486~ CFU 128831~ LN 100101~
13	KD1-33200-0300		. STARTOR ASS'Y	1	BDM 129486~ CFU 128831~ LN 100101~
14	KD1-33421-0120		. FAN	1	BDM 129486~ CFU 128831~ LN 100101~
15	KD1-33411-0580		. PULLEY	1	BDM 129486~ CFU 128831~ LN 100101~
	KD7-09210-0060		. SEAL ASS'Y (Not shown)	1	BDM 129486~ CFU 128831~ LN 100101~

Fig. 1551A STARTING MOTOR (Engine No. 132065~)

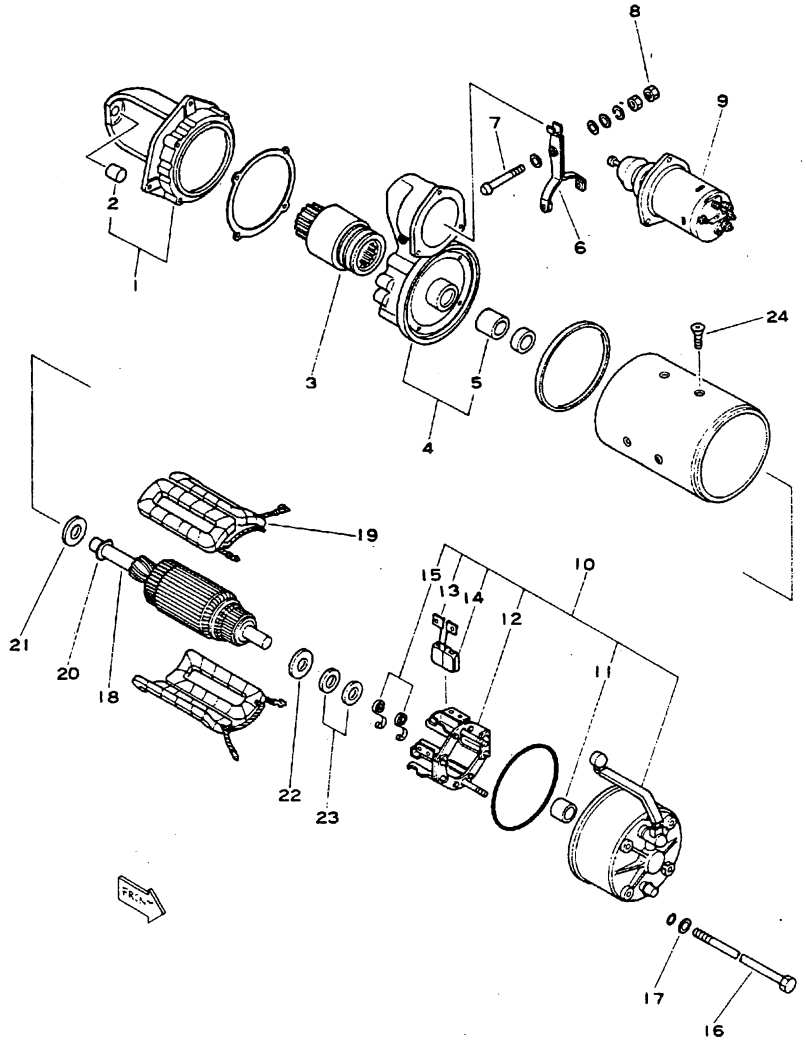

Fig. & Index No.	Komatsu Part No.	Cummins Part No.	Description	Q'ty	Serial No.
	600-813-2413		STARTING MOTOR ASS'Y	1	132888~
	(600-813-2412)		STARTING MOTOR ASS'Y	1	(132065~153944)
	The NIKKO DENKI part number is that KD is removed from KOMATSU part number listed below.				
1551A-1	KD1-21300-1970		. FRONT BRACKET ASS'Y	1	132065~
2	KD7-21351-0950		. . METAL	1	132065~
3	KD1-21500-1530		. OVER RUNNING CLUTCH ASS'Y	1	132065~
4	KD1-21600-1420		. CENTER BRACKET ASS'Y	1	132065~
5	KD7-21351-0970		. . METAL	1	132065~
6	KD1-21320-0790		. SHIFT LEVER ASS'Y	1	132065~
7	KD1-21303-0300		. PIN, lever	1	132065~
8	KD1-09279-0010		. NUT	1	132065~
9	KD0-47100-2670		. MAGNETIC SWITCH ASS'Y	1	132065~153944
	KD0-47100-2673		. MAGNETIC SWITCH ASS'Y	1	153945~
10	KD7-21700-0180		. REAR BRACKET ASS'Y	1	132065~
11	KD7-21351-0950		. . METAL	1	132065~
12	KD0-21750-1440		. . BRUSH HOLDER ASS'Y	1	132065~
13	KD1-21740-0450		. . BRUSH ASS'Y	4	132065~
14	KD1-21740-0460		. . BRUSH ASS'Y	4	132065~
15	KD1-21913-0220		. . SPRING, brush	8	132065~
16	KD0-21901-1660		. BOLT	4	132065~
17	KD1-31921-0020		. WASHER	4	132065~
18	KD1-21100-1210		. ARMATURE ASS'Y	1	132065~
19	KD1-21230-0900		. FIELD COIL ASS'Y	1	132065~
20	KD1-21181-0310		. STOPPER, pinion	1	132065~
21	KD1-21941-0600		. WASHER, insulate	1	132065~
22	KD1-21941-0580		. WASHER, insulate	1	132065~
23	KD1-21921-0980		. WASHER, adjust	2	132065~
24	KD1-0060-08162		. SCREW, dish	8	132065~
25	KD7-09210-0130		. SEAL ASS'Y (Not shown)	1	132065~

TOOL

Fig. 1901 TOOL

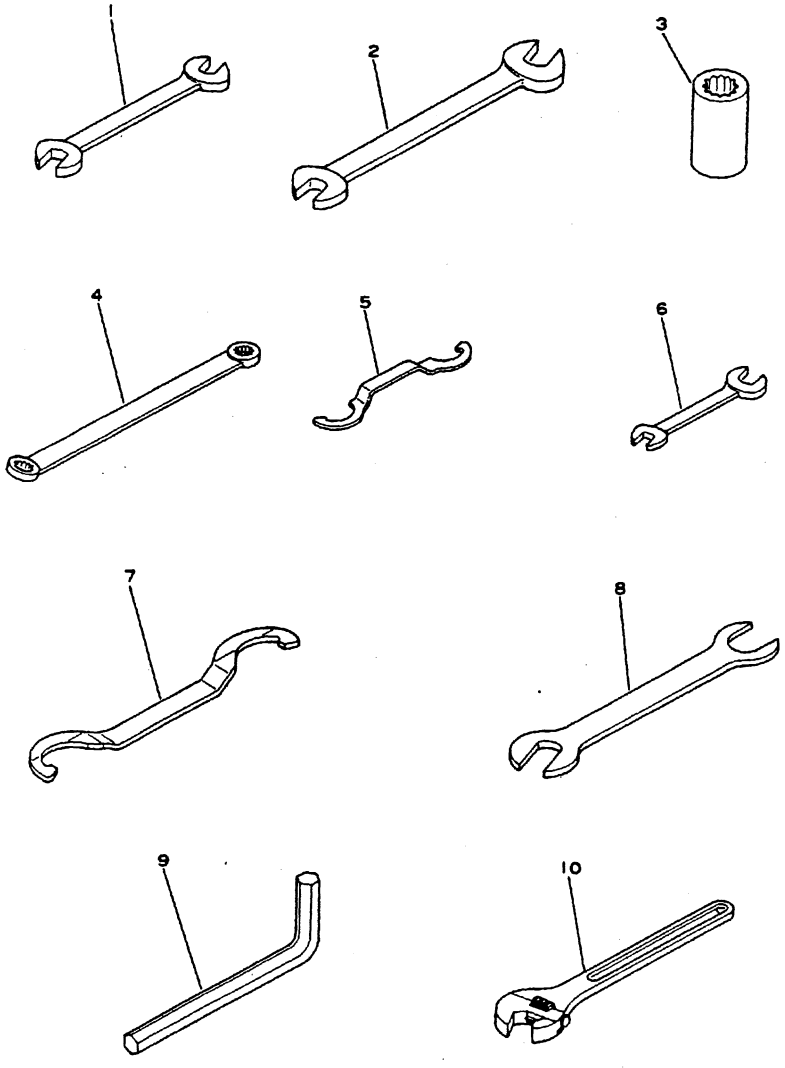

Fig. & Index No.	Komatsu Part No.	Cummins Part No.	Description	Q'ty	Serial No.
1901 - 1	09082-00911		WRENCH, open end, 3/8" x 7/16"	1	100101~
2	09082-01214		WRENCH, open end, 1/2" x 9/16"	1	100101~
3	09084-01524		WRENCH, socket, regular double hex, 5/8"	1	100101~
	(□6600-01-6550)		WRENCH, socket, regular double hex, 5/8"	1	(10010~126435)
4	6600-01-7420		WRENCH, hook	1	EH 100101~
5	6600-01-7610		WRENCH, optional combination	1	EGH100101~
6	6600-01-6280		WRENCH	1	BCDFMQU,AA 100101~
7	6600-01-7210		WRENCH	1	100101~
8	6600-01-7411		WRENCH	1	BCDFMU 100101~
9	6600-01-6320		WRENCH, bar	1	100101~
10	09014-00200		WRENCH	1	BCDEFHMU 100101~

GASKET KIT

For D60A, P, PL, E
D65A, P, E

Fig. & Index No.	Komatsu Part No.	Cummins Part No.	Description	Q'ty		Serial No.
1K- 1	6610-K1-0301		CYLINDER HEAD GASKET KIT	1		100101~114019
	6610-K1-0302		CYLINDER HEAD GASKET KIT	1		114020~129275
	6610-K1-0303		CYLINDER HEAD GASKET KIT	1	BD	129276~140132
					C	133382~140781
					F	129276~139166
					M	129276~140800
					U	129276~141751
	6610-K1-0304		CYLINDER HEAD GASKET KIT	1	BD	140133~147614
					C	140782~147614
					F	139167~147614
					M	140801~147614
					U	141752~147614
	6610-K1-0305		CYLINDER HEAD GASKET KIT	1	BCDFMU	147615~
	6610-11-1710	129373	. GASKET, lub. oil pipe	3		100101~
	6610-11-1810		. GASKET, cylinder head	3		100101~129275
	6610-11-1811		. GASKET, cylinder head	3		129276~
	6610-11-1850	131168	. RETAINER, grommet, cylinder head	24		100101~129275
	6610-11-7340	67282	. PLATE, lock, rocker arm housing	3		100101~114019
	6610-11-7320	9272	. GASKET, lub. oil pipe cap	3		100101~
	6610-11-7811	418601	. GASKET, rocker arm housing	3		100101~
	6610-11-8810	108692	. GASKET, rocker arm housing cover	3		100101~
	6620-21-7561	402200	. WASHER, seal, crankcase breather	1		100101~147614
	6620-21-7562		. WASHER, seal, crankcase breather	1		147615~
	6620-21-7530	125019	. GASKET, crankcase breather	1		100101~
	6610-11-4811	130653	. GASKET, air intake connector	3		100101~
	6685-11-4222	430102	. GASKET, air intake connector	1		100101~
	6675-11-4960	417370	. GASKET, cold starter cover	1		100101~
	6631-11-4380		. GASKET, air cleaner	1	BD	100101~140132
					C	133382~140781
					F	100101~139166
					M	100101~140800
					U	100101~141751
	6631-11-4381		. GASKET, air cleaner	1	BD	140133~
					C	140782~
					F	139167~
					M	140801~
					U	141752~
	6620-11-5810	132977	. GASKET, exhaust manifold	6		100101~
	6610-11-5220	114638	. PLATE, lock, exhaust manifold	13		100101~
	6643-11-5750	139266	. GASKET, muffler	1		100101~
	6120-11-5830		. GASKET, pipe, muffler	1		100101~
	6620-21-3330	68192-C	. SHIM, camshaft thrust plate 0.051 mm	4		100101~
	6620-21-3240	67270	. O-RING, camshaft thrust plate	1		100101~
	6685-21-3810		. GASKET, gear case cover	1		100101~

Fig. & Index No.	Komatsu Part No.	Cummins Part No.	Description	Q'ty		Serial No.
	6643-21-5421	421541	. GASKET, oil gauge guide	1		100101~
	07000-03032		. O-RING, oil pan drain plug	1		100101~
	07000-63028		. O-RING, oil pan valve	1		118436~
	6623-21-5812		. GASKET, oil pan	1		100101~
	6610-21-3520		. SEAL, oil, front	1		100101~
	6610-31-1362	402422	. PLATE, lock, vibration	3		100101~
	6610-31-1362	402422	. PLATE, lock, flywheel	3	BDFMU	100101~118435
	6610-21-4580	9333-1	. GASKET, camshaft	1		100101~
	6610-41-2810	120819	. GASKET, camfollower housing 0.80 mm	3		100101~
	6610-41-2820	9266	. GASKET, camfollower housing 0.38 mm	3		100101~
	6610-41-2830	9266-A	. GASKET, camfollwer housing 0.18 mm	3		100101~
	6610-51-1650		. GASKET, oil pump flange	1		100101~
	6610-51-1811	121907	. GASKET, oil pump	1		100101~
	6620-61-5130	148293	. O-RING, oil cooler	2		100101~
	6610-61-5811	121779	. GASKET, oi cooler	1		100101~
	07000-03028	409102	. O-RING, lub. oil pipe	3		100101~136722
				1		136723~
	07000-03022	409138	. O-RING, lub. oil pipe	2		100101~
	07000-02012		. O-RING, PTO lub. oil pipe	22		100101~
	6693-62-9241		. GASKET, oil cooler	2	BDM	100101~
				6	CFU	100101~
	07000-03035		. O-RING, oil cooler pipe	1		100101~
	6121-61-6840		. GASKET, oil cooler pipe	2	BDM	100101~
				1	CFU	100101~
	6693-62-9120		. GASKET, water inlet pipe	1		100101~
	6632-61-9330		. GASKET, oil cooler upper cover	1	CFU	100101~
	6632-61-9350		. GASKET, oil cooler pipe	1	CFU	100101~
	6631-11-4760		. GASKET, connector, muffler	1		100101~
	02893-05043	70624	. O-RING, water manifold coupling	4		100101~
	6610-11-6810	156334	. PLATE, retaining, water manifold	6		100101~
	6610-11-6820	160196	. RING, seal, water manifold	6		100101~
	6710-11-6451		. SEAL, oil, thermostat	1		100101~
	6620-11-6430	70411	. GASKET, thermostat housing	1		100101~
	6610-11-6330	9221	. GASKET, connector, water outlet	1		100101~
	07003-01621		. GASKET, water manifold plug	1		100101~
1K- 2	6610-K2-0301		CYLINDER BLOCK GASKET KIT	1	BDM	100101~118435
	6610-K2-0302		CYLINDER BLOCK GASKET KIT	1	BDM	118436~136722
	6610-K2-0303		CYLINDER BLOCK GASKET KIT	1	BDM	136723~
	6610-K2-1001		CYLINDER BLOCK GASKET KIT	1	FU	100101~118435
	6610-K2-1002		CYLINDER BLOCK GASKET KIT	1	CFU	118436~136722
	6610-K2-1003		CYLINDER BLOCK GASKET KIT	1	CFU	136723~

Fig & Index No.	Komatsu Part No.	Cummins Part No.	Description	Q'ty		Serial No.
	6610-21-6720	70089-1	. GASKET, water head cover	2		100101~
	02892-03031	68910	. O-RING, water bypass plug	1		100101~118435
	6610-21-1720	9427	. WASHER, lock, main cap	14		100101~
	6610-21-2240	183807	. SEAL, crevice, cylinder liner	6		100101~
	6610-21-2250	181449	. O-RING, cylinder liner	6		100101~
	6610-21-2221	181448	. O-RING, cylinder liner	6		100101~
	6610-21-5671		. GASKET, blind flange	1		100101~
	6623-21-6770	65274	. GASKET, hand hole cover	1		100101~
	6610-21-1330	40662	. GASKET, rear cover	1		100101~
	6610-21-1350	400540	. GASKET, rear cover retainer	1		100101~
	07000-06240	409191	. O-RING, rear cover retainer	1		100101~
	6610-21-1321	141744	. SEAL, oil, rear	1		100101~
	6610-21-3511	149488	. SEAL, oil, pump drive	1		100101~
	6620-21-3310	68192-A	. SHIM, camshaft thrust plate 0.254 mm	4		100101~
	6620-21-3320	68192B	. SHIM, camshaft thrust plate 0.127 mm	4		100101~
	6610-71-7810	121937	. GASKET, accessory drive housing	1		100101~
	6671-61-2420	143108	. GASKET, fan spacer	1		100101~
	6610-61-2170	106276	. SEAL, oil fan hab	1		100101~
	07012-00038		. SEAL, oil, tension pulley	1		100101~
	6691-61-2830		. GASKET, tension pulley	1		100101~
	6610-81-2210	404490	. GASKET, starter	1		100101~
	02891-02016	43696	. O-RING, compression release shaft	2		100101~
1K- 3	6610-K3-0001		WATER PUMP GASKET KIT	1		100101~
	(□6610-K3-0000)		WATER PUMP GASKET KIT	1		(100101~138794)
	(6610-61-1512)		. SEAL, water pump	1		100101~
	(□6610-61-1511)	(170895)	. SEAL, water pump	1		(100101~138794)
	6610-61-1331		. SEAT, ceramic	1		100101~
	6610-61-1810	9097	. GASKET, water pump	1		100101~
	6610-69-1210	185616	. FILTER, dust	1		100101~
4	6610-K4-0301		PTO GASKET KIT	1	BDM	100101~118435
	6610-K4-0302		PTO GASKET KIT	1	BDM	118436~
	6610-K4-1001		PTO GASKET KIT	1	FU	100101~118435
	6610-K4-1002		PTO GASKET KIT	1	CFU	118436~137852
	6610-K4-1003		PTO GASKET KIT	1	CFU	137853~
	07000-62010		. O-RING, idler gear shaft	1		100101~
	07000-62015		. O-RING, idler gear shaft	1		100101~
	6631-21-4390		. PLATE, lock, idler gear shaft	1		100101~
	6631-21-4460		. PLATE, lock, idler gear	1		100101~
	07000-63040		. O-RING, R.P.C.U shaft	1		100101~
	6631-21-4480		. GASKET, bearing case	1		100101~118435
	6667-21-4670		. O-RING, bearing case	1		118436~

Fig & Index No.	Komatsu Part No.	Cummins Part No.	Description	Q'ty		Serial No.
	6631-21-4570		. GASKET, bearing cover	1		100101~
	07012-00060		. SEAL, oil bearing cover	1		100101~
	6631-21-4880		. GASKET, cover	1		100101~
	6631-21-4490		. GASKET, bearing case	1		100101~
	6631-21-4870		. O-RING, bearing case	1		118436~
	01658-26223		. WASHER, lock, R.P.C.U shaft	1		100101~
	07000-65110		. O-RING, bearing cover	1		100101~
	01650-01212		. WASHER, lock, bearing cover	4		100101~
	6631-21-4751		. GASKET, bearing case	1		100101~118435
	6667-21-4630		. O-RING, bearing case	1		118436~
	07000-62085		. O-RING, bearing case	1		100101~
	6631-21-4671		. GASKET, bearing case	1		100101~118435
	6667-21-4670		. O-RING, bearing case	1		118436~
	01658-26223		. WASHER, lock, pump drive shaft	1		100101~
	6631-21-4761		. GASKET, bearing case cover	1		100101~118435
	07000-65110		. O-RING, bearing case cover	1		118436~
	07000-62095		. O-RING, bearing case	1		100101~
	07000-62070		. O-RING, bearing case cover	1	BDM	100101~
	07000-60275		. O-RING, bearing case cover	1	CFU	100101~
	6631-21-4690		. PLATE, lock, pump drive shaft	1	BDM CFU	100101~ 100101~137852
	07000-63088		. O-RING, bearing case	1		100101~
	07000-62075		. O-RING, bearing case	1		100101~
1K- 6	6610-K6-0000		PT FUEL PUMP GASKET KIT	1		100101~101625
	6610-K6-0001		PT FUEL PUMP GASKET KIT	1		101626~104346
	6610-K6-0003		PT FUEL PUMP GASKET KIT	1		104347~
	(□6610-K6-0002)		PT FUEL PUMP GASKET KIT	1		104347~147126
	6610-71-1320	100478	. O-RING, throttle shaft	1		100101~
	02891-02018	43696-A	. O-RING, pump body plug	1		100101~
	6610-71-2320	1043038	. SEAL, oil front cover	2		100101~
	6610-71-2410	100764	. GASKET, cover housing	1		100101~
	6610-71-7821	413781	. GASKET, front cover	1		100101~
	6610-71-1821	70705	. GASKET, spring pack cover	2		100101~
	6610-71-3150	70815	. O-RING, throttle shaft	1		100101~
	02891-02047	145544	. O-RING, adapter plate	1		100101~
	6610-71-3510	154086	. RING, seal, pressure sensing housing	1		100101~
	6610-71-3520	154087	. RING, seal, pressure sensing housing	1		100101~
	6610-71-3530	154088	. RING, seal, pressure sensing housing	1		100101~
	6610-71-3550	106943	. DYNA-SEAL, pressure sensing housing	1		100101~
	6610-71-4241	190876	. O-RING, manual override shaft	1		100101~

Fig & Index No.	Komatsu Part No.	Cummins Part No.	Description	Q'ty	Serial No.
1K- 6	6610-71-4160	129888	. O-RING, coil to housing	1	100101~
	6610-71-3520	154087	. RING, seal, shutdown valve	1	100101~
	6610-71-3850	70775	. O-RING, filter cap	1	100101~
	6610-71-3820	70771	. SEAL, filter cap	1	100101~
	6610-71-2541	110855	. GASKET, gear pump	1	100101~
	6610-71-2810	139290	. GASKET, gear pump to fuel pump housing	1	100101~101625
	6610-71-2811	210647	. GASKET, gear pump to fuel pump housing	1	101626~
	6610-71-2771	100099	. O-RING, damper cover	1	100101~
	6610-71-2750	151900	. SEAL, damper body	1	100101~
	6610-71-1911	70809	. SEAL, oil service meter drive	1	100101~
	6610-71-1960	210218	. WASHER, felt, service meter drive	1	104346~
	6610-71-1930	70732	. GASKET, service meter drive	1	100101~
	6610-71-2741	139988	. O-RING, pulsation damper	1	147127~

CHASSIS

D60A-6 Serial No. 31001~
D60P-6 Serial No. 32001~
D60PL,E-6 Serial No. 30001~
D65A-6 Serial No. 32001~
D65P,E-6 Serial No. 31001~

CONTENTS

1. ENGINE RELATED PARTS AND ELECTRICAL SYSTEM

	Fig. No.	Page
Engine Attaching Parts	1101	11 - 2
Bypass Filter Bracket and Hose	1103	11 - 4
Compression Release Lever	1106	11 - 6
Fuel Control Lever (D60)	1111	11 - 8
Fuel Control Lever and Decelerator Pedal (D65)	1112A	11-12
Radiator	1121	11-16
Radiator Piping and Cover	1123	11-18
Fuel Tank	1131	11-62
Float Tank and Line	1132	11-66
Battery	1141	11-70
Instrument Panel	1145	11-74
Electrical System	1151A	11-100

2. CLUTCH, TORQUE CONVERTOR AND TRANSMISSION

Main Clutch Housing (D60)	1201A	12 - 8
Main Clutch Plate (D60)	1202	12-16
Inertia Brake (D60)	1203	12-20

	Fig. No.	Page
Main Clutch Booster (D60)	1204	12-24
Forward and Reverse Lever (D60)	1205	12-30
Torque Convertor Housing (D65)	1211	12-40
Turbine and Stator (D65)	1212	12-44
Pressure Relief Valve (D65)	1213	12-48
Scavenge Pump (D65)	1214	12-50
Torque Convertor Suction Line (D65)	1215	12-54
Universal Joint (D60)	1221	12-56
Universal Joint (D65)	1223	12-60
Transmission Case (D60)	1231	12-62
Main Shaft (D60)	1232	12-66
Counter Shaft (D60)	1233	12-72
Power Take Off Shaft (D60)	1234	12-76
Gear Shift Fork (D60)	1235	12-80
Gear Shift Lever (D60)	1236A	12-88
Torqflow Tranmission Case (D65)	1251	12-114
Torqflow Transmission Rear Cover (D65)	1252	12-118
Forward Clutch (D65)	1253	12-122
Reverse Clutch (D65)	1254	12-128
1st Clutch (D65)	1255	12-132
2nd Clutch and 3rd Clutch (D65)	1256	12-138
Torqflow Transmission Case Cover (D65)	1257	12-142
Torqflow Transmission Lever (D65)	1258	12-146
Torqflow Transmission Control Valve (1/2)(D65)	1261	12-150
Torqflow Transmission Control Valve (2/2)(D65)	1262	12-154
Torqflow Transmission Lubrication Valve (D65)	1265	12-158
Torqflow Transmission Oil Filter (D65)	1271A	12-166
Torqflow Transmission Change Lever (D65)	1281	12-168

3. FINAL DRIVE AND STEERING SYSTEM	Fig. No.	Page
Final Drive Case and Gear (D60A, PL, E, D65A, E)	1301	13 - 2
Final Drive Case and Gear (D60P, D65P)	1302	13-10
Drive Gear and Shaft	1303	13-16
Steering Case and Main Frame	1321	13-22
Bevel Gear and Shaft	1326	13-36
Steering Clutch	1327	13-40
Brake	1328	13-42
Steering Control Valve	1361	13-46
Main Clutch Lever and Brake Pedal	1364	13-62
Steering Lever	1365	13-68
Main Clutch Piping (D60)	1372	13-76
Steering Clutch Piping	1374	13-92
Oil Cooler Piping	1374A	13-98
Torqflow Piping (1/3)(D65)	1375A	13-110
Torqflow Piping	1375B	13-114
Torqflow Piping (3/3)(D65)	1375C	13-118
Steering Pump (D65)	1376A	13-124
Steering and Main Clutch Pump (D60)	1377	13-126
Torqflow Pump (D65)	1378A	13-134
Steering Filter	1379A	13-140

4. TRACK AND GUARD		
Track Frame (D60A, D65A)	1401	14 - 2
Track Frame (D60P, D65P)	1402	14 - 8
Track Frame (D60PL)	1403	14 -14
Track Frame (D60E, D65E)	1404	14- 18
Track Frame Cover (D60A, P, PL, D65A, P)	1406	14-30

	Fig. No.	Page
Track Frame Cover (D60E, D65E)	1407	14-34
Recoil Spring	1411	14-38
Front Idler	1413	14-44
Track Roller	1415	14-50
Carrier Roller	1417	14-58
Track Shoe (D60A, D65A)	1421	14-62
Track Shoe (D60P, PL, D65P)	1422	14-74
Track Shoe (D60E, D65E)	1423	14-80
Equalizer Bar	1431	14-92
Hitch	1437	14-102
Engine Hood and Guard (D60A, E, D65A, E)	1441	14-104
Engine Hood and Guard (D60P, PL, D65P)	1442	14-110
Fender and Floor Plate (D60A, E, D65A, E)	1443	14-116
Fender and Floor Plate (D60P, PL, D65P)	1444	14-124
Rear Frame and Cover (D60A, E, D65A, E)	1445	14-130
Rear Frame and Cover (D60P, PL, D65P)	1446	14-136
Under Guard (D60A, E, D65A, E)	1447	14-142
Under Guard (D60P, PL, D65P)	1448	14-146
Operator's Seat	1461A	14-170
Mark Plate	1471	14-178

5. WORK EQUIPMENT AND ITS CONTROL SYSTEM

Hydraulic Pump (D60)	1501	15 - 2
Hydraulic Pump (D65)	1502A	15-12
Hydraulic Tank, For Angle and Strainght Dozer	1511	15-22
Hydraulic Filter	1512	15-30
Hydraulic Control Valve (1/2), For Angle and Straight Dozer	1513	15-34
Hydraulic Control Valve (2/2), For Angle and Straight Dozer	1514	15-38

	Fig. No.	Page
Hydraulic Tank, For Straight Tilt Dozer (D60P, D65P)	1515	15-44
Hydraulic Control Valve (1/2), For Straight Tilt Dozer (D60P, D65P)	1516	15-48
Hydraulic Control Valve (2/2), For Straight Tilt Dozer (D60P, D65P)	1517	15-52
Blade Lift Cylinder (D60A, E, D65A, E)	1531	15-84
Blade Lift Cylinder (D60P, PL, D65P)	1532	15-90
Blade Tilt Cylinder (D60P, D65P)	1533	15-94
Hydraulic Piping (1/2), Hydraulic Pump to Tank For Angle and Straight Dozer	1541	15-106
Hydraulic Piping (2/2), Hydraulic Tank to Lift Cylinder For Angle and Straight Dozer	1542	15-110
Hydraulic Piping (1/3), Hydraulic Pump to Tank For Straight Tilt Dozer (D60P, D65P)	1543	15-116
Hydraulic Piping (2/3), Hydraulic Pump to Lift Cylinder For Straight Tilt Dozer (D60P, D65P)	1544	15-118
Hydraulic Piping (3/3), Hydraulic Tank to Tilt Cylinder For Straight Tilt Dozer (D60P, D65P)	1545	15-122
Blade Control Lever, For Angle and Straight Dozer	1551	15-140
Blade Control Lever, For Straight Tilt Dozer (D60P, D65P)	1552	15-142
Angle Blade (D60A, E, D65A, E)	1571	15-158
C-Frame (D60A, E, D65A, E)	1572	15-162
Straight and Straight Tilt Blade	1573	15-166
Straight Frame (D60P, D65P)	1574	15-170
Straight Tilt Frame (D60P, D65P)	1575	15-174
Straight Blade (D60PL)	1576	15-178
Straight Frame (D60PL)	1577	15-182

8. OPTIONAL PARTS

Canopy	1801	18 - 2
Head Guard	1805	18 - 6

	Fig. No.	Page
ROPS Canopy	1811	18-14
ROPS Canopy, with Sweep	1812	18-18
Cab Guard (D60A,D65A)	1813	18-24
Reinforced Angle Blade and Brace (D60A,E,D65A,E)	1831	18-30
Reinforced C-Frame (D60E,D65E)	1832	18-34
Straight Blade (D60A,D65A)	1833	18-36
Straight Frame (D60A,D65A)	1834	18-38
Straight Tilt Blade (D60A,E,D65A,E)	1835A	18-45-1
Straight Tilt Frame (D60A,E,D65A,E)	1836A	18-49-1
Angle Rake Dozer (D60A,D65A)	1837	18-50
Straight Rake Dozer (D60A,D65A)	1838	18-52
Straight Rake Frame (D60A,D65A)	1839	18-54
Straight Rake Dozer (D60P,D65P)	1840	18-58
Swing Drawbar (D60A,P,D65A,P)	1851	18-84
Engine Side Cover, For Jungle (D60A,D65A)	1854	18-92
Reinforced Fender (D60A,D65A)	1855	18-96
Reinforced Radiator Guard and Grille (D60A,D65A)	1856	18-100
Radiator Wire Net, Bonnet and Cover (D60A,D65A)	1857	18-102
Decelerator Pedal (D60A,P,PL,E)	1858	18-104
Front Hook and Reinforced Bottom Guard (D60A,E,D65A,E)	1859	18-108
Front Hook and Reinforced Bottom Guard (D60P,PL,D65P)	1860	18-110
Track Frame, Standard Center Guard (D60A,D65A)	1895A	18-158
Track Frame, Standard Center Guard and Mini Center Guard (D60P,D65P)	1896	18-162

9. TOOL AND KIT

Tool	1901	19- 2
Kit		19- 7

10. OPTIONAL PARTS FOR OVERSEAS

	Fig. No.	Page
Back-Up Alarm and Wiring (D60A,P,PL,E)	A1153	20-16
Back-Up Alarm and Wiring (D65A,P,E,D65S)	A1154	20-18
Suspension Seat	A1462	20-22
Tilt Cylinder for Mechanical Angle Power Tilt Dozer (D65A,E)	A1534	20-24
Hydraulic Piping (1/2), Hydraulic Pump to Tank for Angle Dozer (D60P,D65P)	A1541	20-28
Hydraulic Piping (2/2), Hydraulic Tank to Lift Cylinder	A1542	20-32
Hydraulic Piping (Dozer Group) For Mechanical Angle Power Tilt Dozer (D65A,E)	A1550	20-40
Hydraulic Piping (Chassis Group) For Mechanical Angle Power Tilt Dozer (D65A,E)	B1550	20-44
Dozer System, For Mechanical Angle Power Tilt Dozer (D65A,E)	A1576	20-50
Angle Blade, For Angle Dozer (D60P,D65P)	A1578	20-54
C-Frame, For Angle Dozer (D60P,D65P)	A1579	20-56
Cab Guard (D60A,D65A)	A1813	20-60
Reinforced Angle Dozer, For Malaysia (D60E,D65E)	A1837A	20-62
Reinforced C-Frame, For Malaysia (D60E,D65E)	A1838A	20-64
Perforated Engine Side Cover, For U.S.A. (D60P,D65P)	B1850	20-70
Perforated Engine Side Cover (D60P,D65P)	C1850	20-74
Radiator Dust Proof Grid (D60A)	D1850	20-76
Dust Proof Grid (Large-Capacity) (D60A)	E1850	20-78
Perforated Engine Side Cover (D60A,D65A,E)	A1854	20-80
Vandalisum Protection	A1871	20-92
Rear Working Lamp	A1875	20-94
Head Lamp and Shield, For Jungle	A1885	20-96
Hydraulic Tank with Fin, For Overseas (D60E)	A1888	20-98

ENGINE RELATED PARTS AND ELECTRICAL SYSTEM

Fig. 1101 ENGINE ATTACHING PARTS

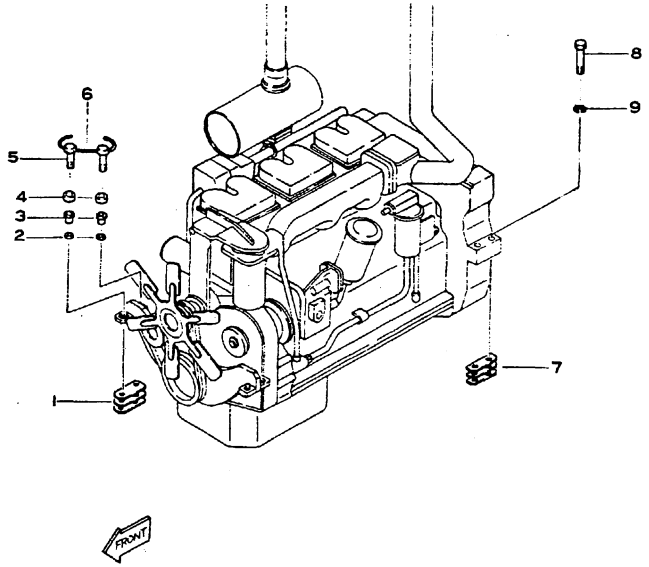

Fig & Index No.	Part No.	Description	Q'ty	Serial No.	Remarks
1101 - 1	6675-20-3920	SHIM, 1.0 mm	6		
2	6643-21-3982	BUSHING	4		
3	6643-21-3912	BUSHING, rubber	4		
4	6643-21-3871	SEAT	4		
5	6675-21-3864	BOLT	4		
6	Local purchase	WIRE, lock	2		
7	6672-22-3931	SHIM, 1.0 mm	6		
8	141-01-32111	BOLT	4		
9	01602-01854	WASHER, spring	4		

Fig. 1103 BYPASS FILTER BRACKET AND HOSE

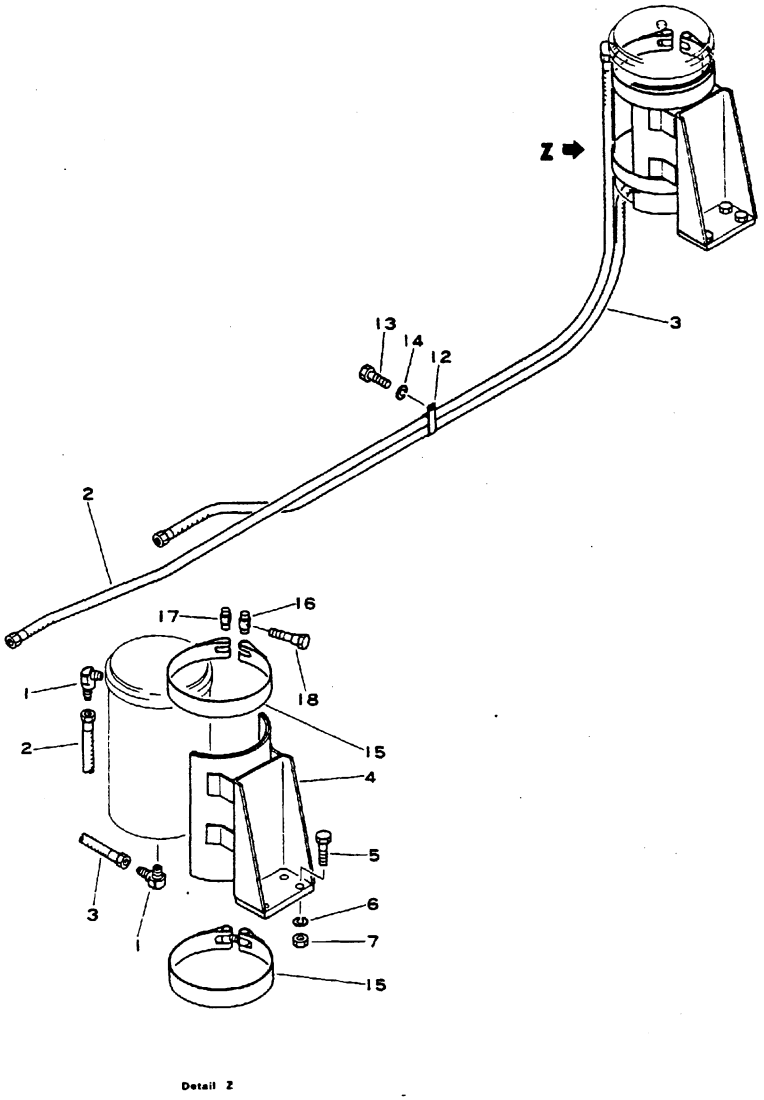

Detail Z

Fig. & Index No.	Part No.	Description	Q'ty	Serial No.	Remarks
1103 - 1	6600-01-3242	CONNECTOR	2		
2	02750-03265	HOSE ASS'Y	1		
3	02750-03180	HOSE ASS'Y	1		
4	141-01-33216	BRACKET	1	AC, AT, PC, PT, EC, ET	
	141-01-33216	BRACKET	1	LC30001~	
5	01010-31445	BOLT	4		
6	01602-01442	WASHER, spring	4		
7	01580-01411	NUT	4		
12	6600-01-5580	CLAMP, hose	4		
13	01010-31016	BOLT	4		
14	01602-01030	WASHER, spring	4		
15	145-01-31410	BAND	2		
16	6691-21-6550	PIN	2		
17	6691-21-6560	PIN	2		
18	145-01-31420	BOLT	2		

Fig. 1106 COMPRESSION RELEASE LEVER

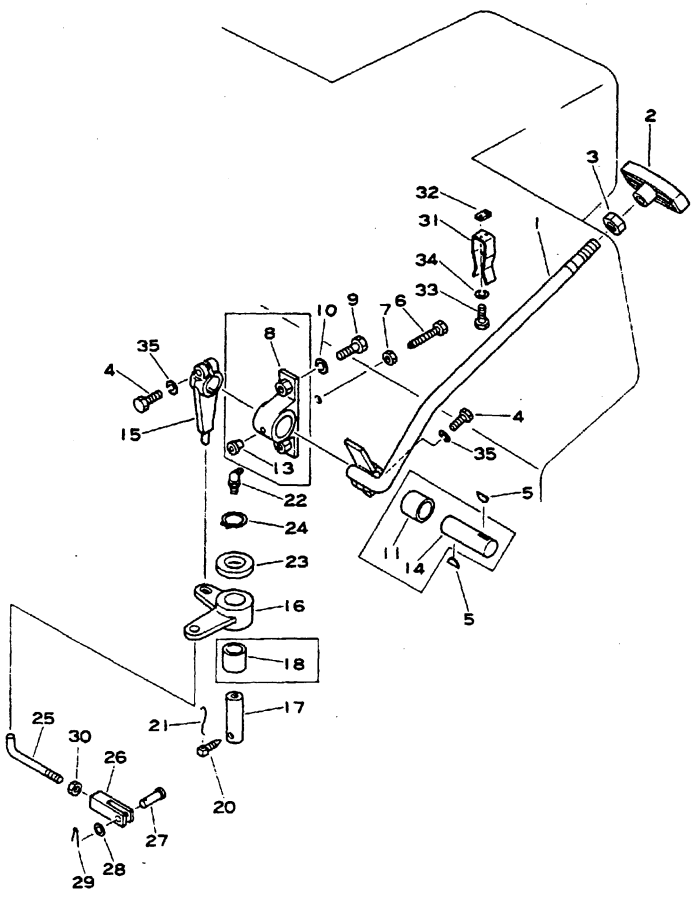

Fig. & Index No.	Part No.	Description	Q'ty	Serial No.	Remarks
1106 - 1	144-43-27110	LEVER	1		
2	09303-08038	HANDLE	1		
3	01582-01411	NUT	1		
4	01010-30825	BOLT	2		
5	04010-00516	KEY, woodruff	2		
6	135-43-15310	BOLT	1		
7	01582-01008	NUT	1		
8	144-43-27121	BRACKET	1		
9	01010-31235	BOLT	2		
10	01602-01236	WASHER, spring	2		
11	09360-02225	BUSHING	1		
13	07022-00045	FITTING	1		
14	144-43-17143	SHAFT	1		
15	144-43-17120	LEVER	1		
16	144-43-27131	LEVER	1		
17	141-43-28120	SHAFT	1		
18	09360-02022	BUSHING	1		
20	01306-00820	SCREW, set	1		
21	04059-01016	WIRE, lock	1		
22	07020-00675	FITTING, grease	1		
23	141-43-28130	COLLAR	1		
24	04064-02012	RING, snap	1		
25	144-43-17160	ROD	1		
26	04211-00844	YOKE, adjustable	1		
27	04205-00825	PIN	1		
28	01641-20812	WASHER	1		
29	04050-02012	PIN, cotter	1		
30	01580-00806	NUT	1		
31	141-43-18240	SPRING	1		
32	141-43-18131	NUT, square	1		
33	01210-20412	SCREW	2		
34	01601-00410	WASHER, spring	2		
35	01602-00825	WASHER, spring	2		

Fig. 1111 FUEL CONTROL LEVER (D60A,P,PL,E)

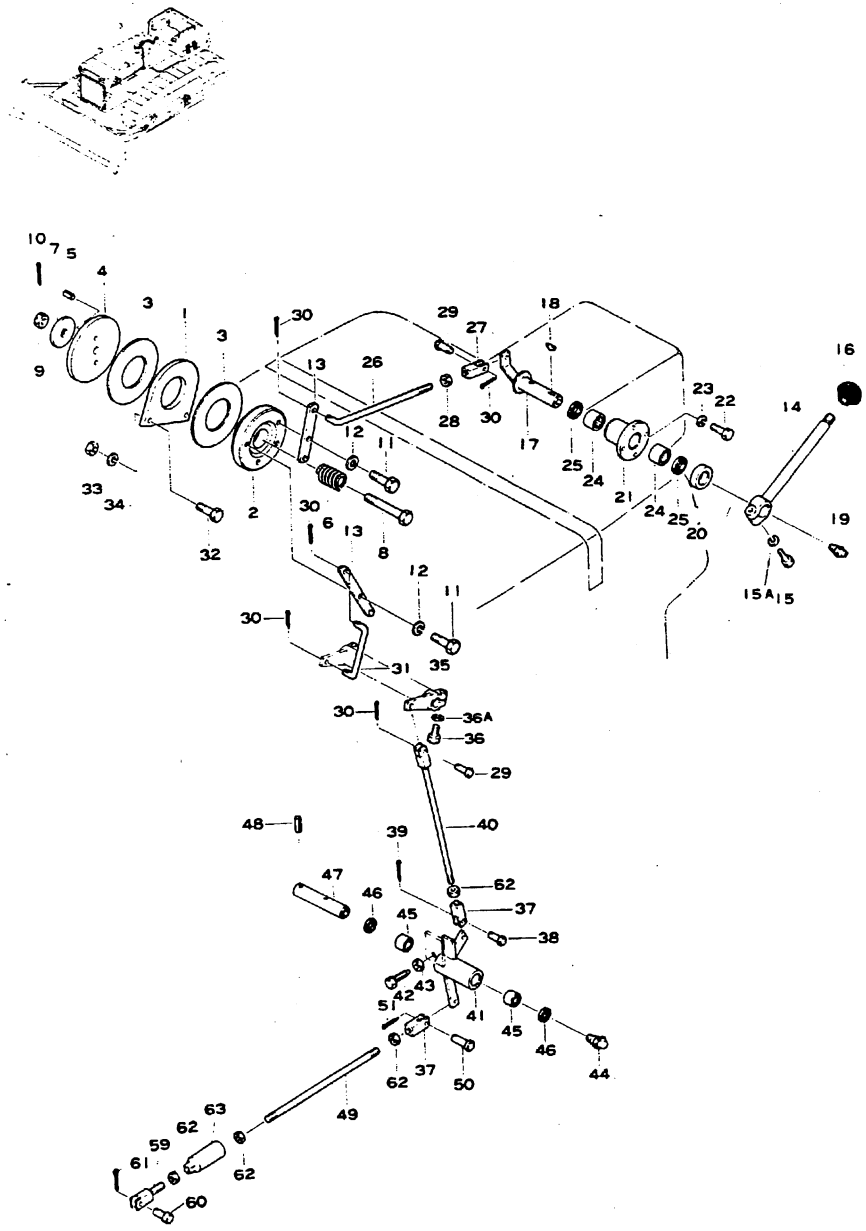

Fig. & Index No.	Part No.	Description	Q'ty	Serial No.	Remarks
1111 - 1	145-43-15250	DISC	1		
2	131-43-48210	DISC	1		
3	145-43-15260	FACING	2		
4	135-43-15241	DISC	1		
5	04025-00620	PIN, roll	2		
6	130-43-18134	SPRING	1		
7	135-43-15290	PLATE	1		
8	01052-31285	BOLT	1		
9	01593-01210	NUT	1		
10	04050-03025	PIN, cotter	1		
11	01010-30816	BOLT	4		
12	01602-00825	WASHER, spring	4		
13	145-43-15210	LEVER	2		
14	144-43-25110	LEVER, fuel control	1		
15	01010-30825	BOLT	1		
15A	01602-00825	WASHER, spring	1		
16	09304-01250	KNOB	1		
17	144-43-25120	SHAFT	1		
18	04010-00516	KEY, woodruff	1		
19	07020-00000	FITTING, grease	1		
20	140-43-16130	COLLAR	1		
21	140-43-16120	HOLDER	1		
22	01010-30616	BOLT	4		
23	01602-00619	WASHER, spring	4		
24	06120-02016	BEARING, needle	2		
25	06122-02004	SEAL, bearing	2		
26	144-43-25130	ROD	1		
27	04211-00844	YOKE, adjustable	1		
28	01580-00806	NUT	1		
29	04205-00822	PIN	1		
30	04050-02015	PIN, cotter	4		
31	144-43-25140	ROD	1		
32	01010-30830	BOLT	2		
33	01580-00806	NUT	2		
34	01602-00825	WASHER, spring	2		
35	144-43-25150	LEVER	2		
36	01010-30825	BOLT	2		
36A	01602-00825	WASHER, spring	2		
37	04211-00844	YOKE, adjustable	2		
38	04205-00822	PIN	2		
39	04050-02012	PIN, cotter	2		
40	04244-10827	ROD	1		
41	144-43-25160	LEVER	1		

FUEL CONTROL LEVER

Fig & Index No.	Part No.	Description	Q'ty	Serial No.	Remarks
1111 -42	135-43-15310	BOLT	1		
43	01582-01008	NUT	1		
44	07020-00000	FITTING, grease	1		
45	06120-01612	BEARING, needle	2		
46	06122-01603	SEAL, bearing	2		
47	144-43-25170	SHAFT	1		
48	04025-00524	PIN, roll	1		
49	04245-00852	ROD	1		
50	04205-00822	PIN	2		
51	04050-02012	PIN, cotter	2		
59	141-43-16460	JOINT	1		
60	04205-00822	PIN	1		
61	04050-02012	PIN, cotter	1		
62	01580-00806	NUT	4		
63	09290-10000	ABSORBER	1		

Fig. 1112A FUEL CONTROL LEVER AND DECELERATOR PEDAL (D65A,P,E)

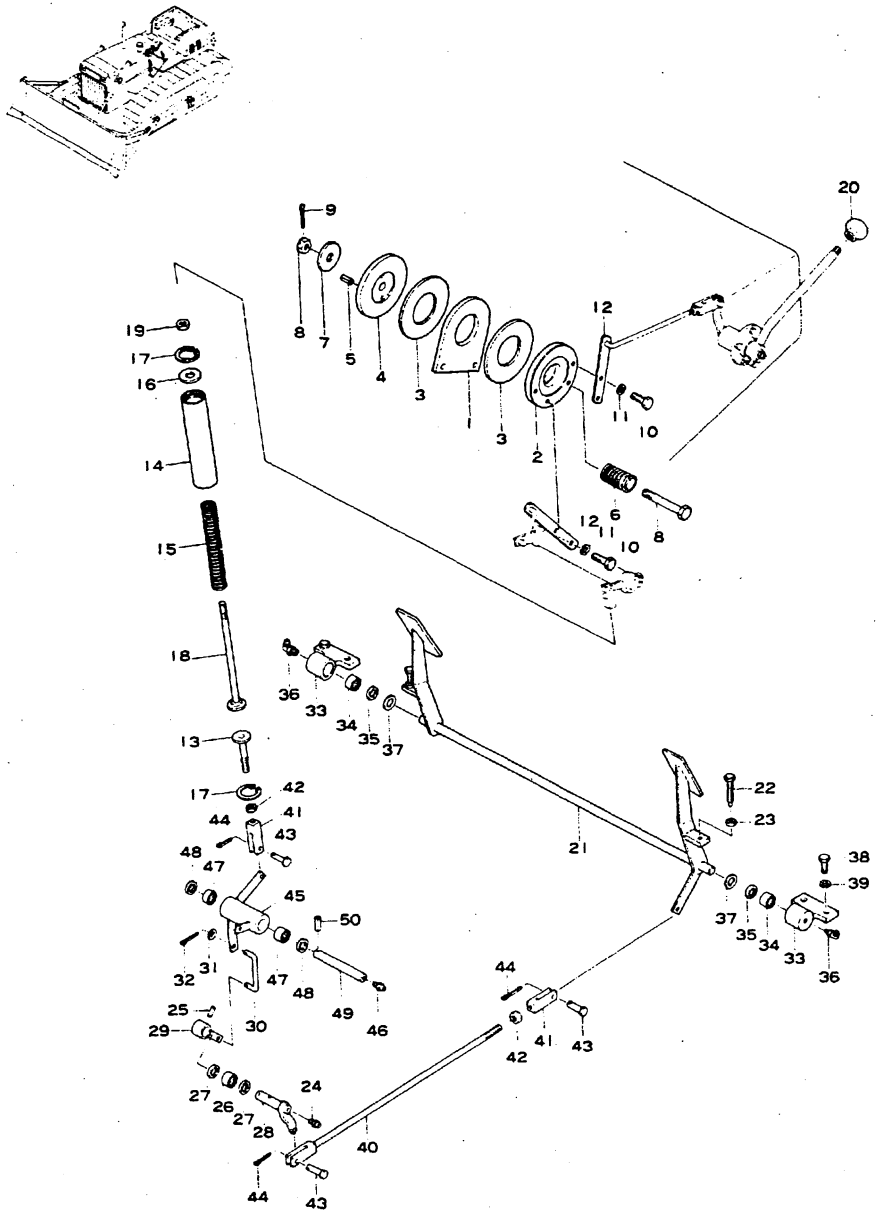

Fig. & Index No.	Part No.	Description	Q'ty	Serial No.	Remarks
1112A - 1	145-43-15250	DISC	1		
2	131-43-48210	DISC	1		
3	145-43-15260	FACING	2		
4	135-43-15241	DISC	1		
5	04025-00620	PIN, roll	2		
6	130-43-18134	SPRING	1		
7	135-43-15290	PLATE	1		
8	01052-31285	BOLT	1		
	01593-01210	NUT	1		
9	04050-03025	PIN, cotter	1		
10	01010-30816	BOLT	4		
11	01602-00825	WASHER, spring	4		
12	145-43-15210	LEVER	2		
13	144-43-25810	ROD	1		
14	135-43-15810	GUIDE	1		
15	135-43-15821	SPRING	1		
16	135-43-15830	PLATE	1		
17	04065-03815	RING, snap	2		
18	135-43-15841	ROD	1		
19	01580-00806	NUT	1		
20	09304-01250	KNOB	1		
21	144-43-25180	PEDAL, decelerator	1		
22	144-43-25830	BOLT	2		
23	01580-00806	NUT	2		
24	07020-00000	FITTING, grease	1		
25	04025-00524	PIN, roll	1		
26	06120-01612	BEARING, needle	1		
27	06122-01603	SEAL, bearing	2		
28	144-43-15621	SHAFT	1		
29	144-43-15650	LEVER	1		
30	144-43-15610	ROD	1		
31	01641-20812	WASHER	2		
32	04050-02012	PIN, cotter	2		
33	144-43-15281	BRACKET	2		
34	06120-01612	BEARING, needle	2		
35	06122-01603	SEAL, bearing	2		
36	07020-00900	FITTING, grease	2		
37	01643-01645	WASHER	2		
38	01010-31225	BOLT	4		
39	01602-01236	WASHER, spring	4		
40	04244-10854	ROD	1		
41	04211-00844	YOKE, adjustable	2		
42	01580-00806	NUT	2		

FUEL CONTROL LEVER AND DECELERATOR PEDAL

Fig. & Index No.	Part No.	Description	Q'ty	Serial No.	Remarks
1112A-43	04205-00822	PIN	4		
44	04050-02012	PIN, cotter	4		
45	144-43-25821	LEVER	1		
46	07020-00000	FITTING, grease	1		
47	06120-01612	BEARING, needle	2		
48	06122-01603	SEAL, bearing	2		
49	144-43-25170	SHAFT	1		
50	04025-00524	PIN, roll	1		

Fig. 1121 RADIATOR

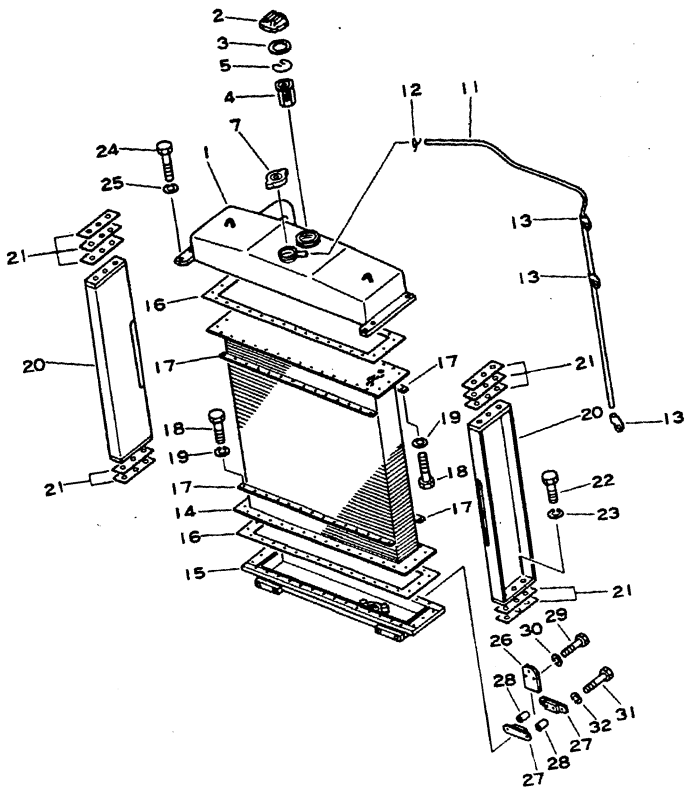

Fig. & Index No.	Part No.	Description	Q'ty	Serial No.	Remarks
	144-03-00016	RADIATOR ASS'Y	1	AC31001~ AT32001~32191 PC32001~ PT31001~31055 LC30001~ EC30001~ ET31001~31328	
	144-03-00020	RADIATOR ASS'Y Large capacity type(STD)	1	AT32192~ PT31056~ ET31329~	
1121 - 1	144-03-11117	. TANK, upper	1	AC31001~ AT32001~32191 PC32001~ PT31001~31055 LC30001~ EC30001~ ET31001~31328	
	144-03-11711	. TANK, upper Large capacity type(STD)	1	AT32192~ PT31056~ ET31329~	
2	07053-10000	. CAP, filler	1	AC28241~ AT28229~32191 PC28523~ PT30001~31055 LC28013~ EC28259~ ET28337~31328	
	07053-00000	. CAP, filler Large capacity type(STD)	1	AT32192~ PT31056~ ET31329~	
3	07053-00002	. . GASKET	1	AC28241~ AT28229~ PC28523~ LC28013~ EC28259~ ET28337~	
4	07056-00048	. STRAINER	1	AC28241~ AT28229~ PC28523~ PT30001~ LC28013~ EC28259~ ET28337~	
5	07057-03271	. RING, snap	1	AC28241~ AT28229~ PC28523~ PT30001~ LC28013~ EC28259~ ET28337~	
7	125-03-21210	. VALVE, pressure	1	AC31001~ AT32001~ PC32001~ PT31001~ LC30001~ EC30001~ ET31001~	

Fig & Index No.	Part No.	Description	Q'ty	Serial No.	Remarks
1121 -11	6675-61-7290	. PIPE, overflow	1	AC20006~ PC20006~ LC20006~ EC20006~ AT20006~32191 PT20006~31055 ET20006~31328	
	131-03-41480	. PIPE, overflow Large capacity type(STD)	1	AT32192~ PT31056~ ET31329~	
12	Local purchase	. WIRE, lock (04059-01010)	1	20006~	
13	6675-61-7380	. CLIP	3	20006~	
14	144-03-11181	. CORE	1	AC20006~ PC20006~ LC20006~ EC20006~ AT20006~32191 PT20006~31055 ET20006~31328	
	144-03-11721	. CORE Large capacity type(STD)	1	AT32192~ PT31056~ ET31329~	
15	144-03-11122	. TANK, lower	1	AC20298~ AT20804~32191 PC20488~ LC20488~	
	144-03-11730	. TANK, lower Large capacity type(STD)	1	AT32192~ PT31056~ ET31329~	
16	145-03-31261	. PACKING	2	AC20006~ PC20006~ LC20006~ EC20006~ AT20006~32191 PT20006~31055 ET20006~31328	
	144-03-11520	. PACKING Large capacity type(STD)	2	AT32192~ PT31056~ ET31329~	
17	145-03-31191	. PLATE	4	AC20006~ PC20006~ LC20006~ EC20006~ AT20006~32191 PT20006~31055 ET20006~31328	
	144-03-11530	. PLATE Large capacity type(STD)	4	AT32192~ PT31056~ ET31329~	
18	01010-31025	. BOLT	56	AC20006~ PC20006~ LC20006~ EC20006~ AT20006~32191 PT20006~31055 ET20006~31328	

Fig & Index No.	Part No.	Description	Q'ty	Serial No.	Remarks
	01010-31025	. BOLT Large capacity type(STD)	60	AT32192~ PT31056~ ET31329~	
1121 -19	01602-01030	. WASHER, spring	56	AC20006~ PC20006~ LC20006~ EC20006~ AT20006~32191 PT20006~31055 ET20006~31328	
	01602-01030	. WASHER, spring Large capacity type(STD)	60	AT32192~ PT31056~ ET31329~	
	144-999-1560	. SUPPORT	2	AC20054~ PC20054~ LC20054~ EC20054~ AT20054~32191 PT20054~31055 ET20054~31328	
	144-03-11820	. SUPPORT Large capacity type(STD)	2	AT32192~ PT31056~ ET31329~	
21	145-03-31291	. SHIM, 0.6 mm	10	20006~	
22	01010-31240	. BOLT	12	20006~	
23	01602-01236	. WASHER, spring	12	20006~	
24	01010-31240	. BOLT	4	20006~	
25	01602-01236	. WASHER, spring	4	20006~	
26	6675-61-7750	PLATE	2	20006~	
27	6675-61-7770	CUSHION	4	2009~	
28	6675-61-7780	SPACER	4	20006~	
29	01010-31025	BOLT	6	20006~	
30	01602-01030	WASHER, spring	6	20006~	
31	01010-31260	BOLT	4	20006~	
32	01602-01236	WASHER, spring	4	20006~	

Fig. 1123 RADIATOR PIPING AND COVER

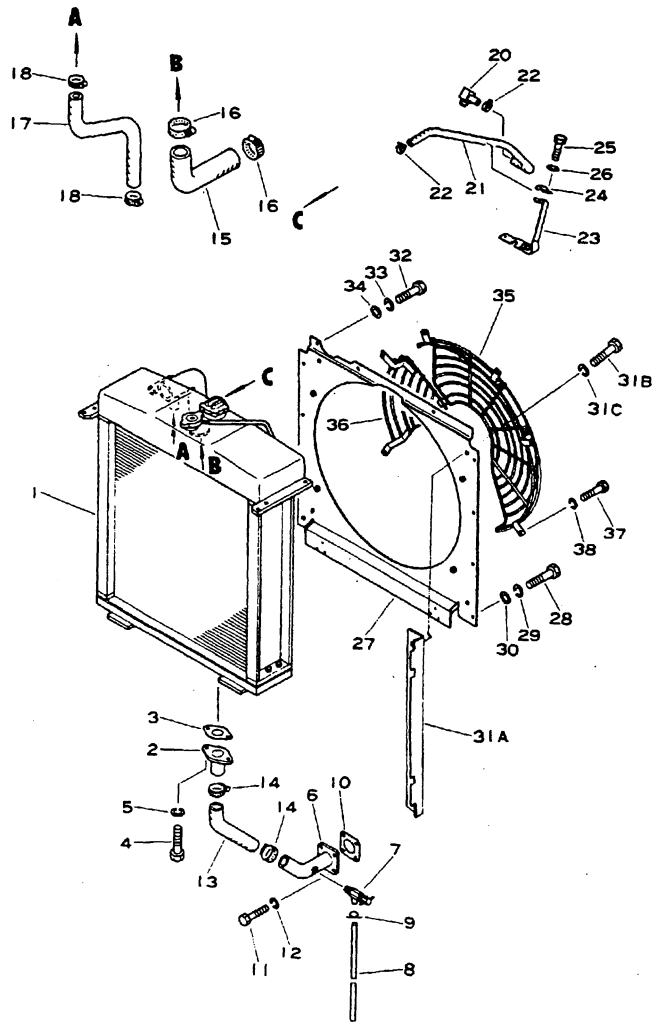

Fig & Index No.	Part No.	Description	Q'ty	Serial No.	Remarks
1123- 1	144-03-00016	RADIATOR ASS'Y	1	AC31001~ AT32001~32191 PC32001~ PT31001~31055 LC30001~ EC30001~ ET31001~31328	
	144-03-00020	RADIATOR ASS'Y Large capacity type(STD)	1	AT32192~ PT31056~ ET31329~	
2	144-03-12133	TUBE	1	20054~	
3	144-03-12170	PACKING	1	22388~	
4	01010-31235	BOLT	2	20006~	
5	01602-01236	WASHER, spring	2	20006~	
6	144-03-13142	TUBE	1	AC28241~ PC28523~ LC • ~ EC • ~	
	144-03-12152	TUBE	1	AT20024~ PT30001~ ET20295~	
7	07730-30004	VALVE	1	AC28241~ AT28229~ PC28523~ PT30001~ LC28013~ EC28259~ ET28337~	
8	07270-01530	TUBE, vinyl	1	22388~	
9	Local purchase	WIRE, lock (04059-01010)	1	22388~	
10	144-03-12160	PACKING	1	20006~	
11	01010-31030	BOLT	4	20006~	
12	01602-01030	WASHER, spring	4	20006~	
13	144-03-13150	HOSE	1	20024~	
14	07281-00809	CLAMP, hose	2	AC28858~ AT28884~ PC29174~ PT30001~ LC28061~ EC28787~ ET29046~	
15	144-03-11251	HOSE	1	AC28858~ AT28884~ PC29174~ PT30001~ LC28061~ EC28787~ ET29046~	
16	07281-00809	CLAMP, hose	2	AC28858~ AT28884~ PC29174~ PT30001~ LC28061~ EC28787~ ET29046~	

Fig & Index No.	Part No.	Description	Q'ty	Serial No.	Remarks
1123 -17	144-03-11241	HOSE	1	AC28858~ AT28884~ PC29174~ PT30001~ LC28061~ EC28787~ ET29046~	
18	07281-00419	CLAMP, hose	2	AC31001~ AT32001~ PC32001~ PT31001~ LC30001~ EC30001~ ET31001~	
20	6631-11-6231	ELBOW	1	20006~	
21	07260-00970	HOSE, rubber	1	20006~	
22	07280-01920	CLAMP, hose	2	20006~	
23	144-03-12211	BRACKET	1	20006~	
24	141-03-13380	CLIP	1	6046~	
25	01010-31222	BOLT	1	20006~	
26	01602-01236	WASHER, spring	1	20006~	
27	144-03-11355	SHROUD	1	AC31001~ AT32001~32191 PC32001~ PT31001~31055 LC30001~ EC30001~ ET31001~31328	
	144-03-11760	SHROUD Large capacity type(STD)	1	AT32192~ PT31056~ ET31329~	
28	01010-31230	BOLT	8	20006~	
29	01602-01236	WASHER, spring	8	20006~	
30	01643-31232	WASHER	8	20006~	
31A	144-03-11321	COVER	2	AC20006~28857 AT20006~28883 PC20006~29173 LC21081-28060 EC20295~28786 ET20295~29045	
	144-03-11770	COVER, L.H Large capacity type(STD)	1	AT32192~ PT30156~ ET31329~	
	144-03-11780	COVER, R.H Large capacity type(STD)	1	AT32192~ PT30156~ ET31329~	
31B	01010-31020	BOLT	4	AT32192~ PT30156~ ET31329~	
31C	01602-01030	WASHER	4	AT32192~ PT30156~ TE31329~	

Fig & Index No.	Part No.	Description	Q'ty	Serial No.	Remarks
1123 -35	144-03-11364	NET, wire, L.H	1	AC28858~ AT28884~ PC29174~ LC30001~ EC28787~ ET29046~	
36	144-03-11374	NET, wire, R.H	1	AC28858~ AT28884~ PC29174~ PT30001~ LC28061~ EC28787~ ET29046~	
37	01010-31020	BOLT	7	AC28858~ AT28884~ PC29174~ PT30001~ LC28061~ EC28787~ ET29046~	
38	01602-01030	WASHER, spring	7	AC28858~ PT28884~ PC29174~ LC28061~ EC28787~ ET29046~	

Fig. 1131 FUEL TANK

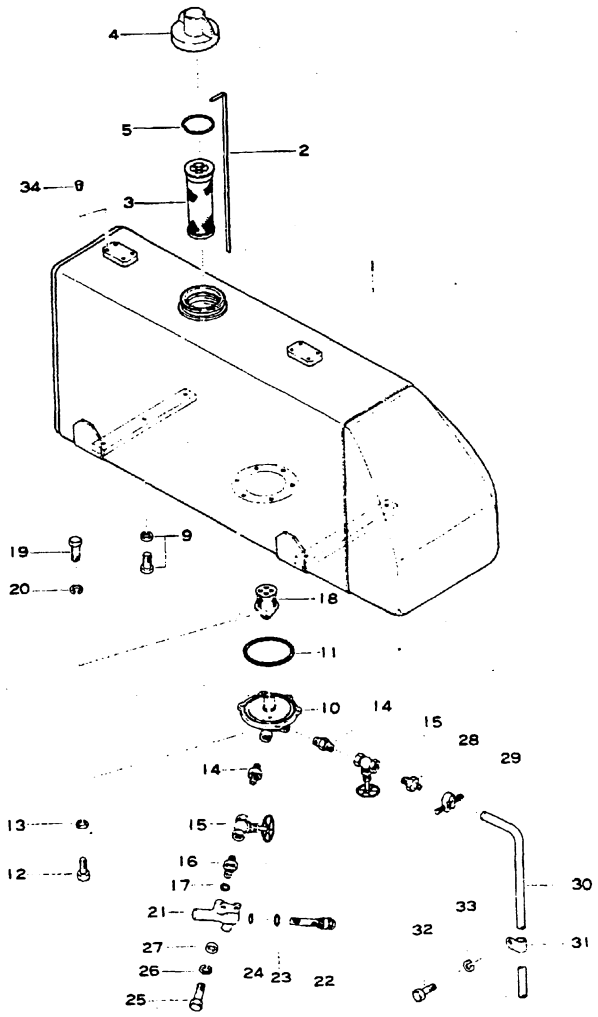

Fig & Index No.	Part No.	Description	Q'ty	Serial No.	Remarks
	141-04-00510	FUEL TANK ASS'Y	1	SC 20006~22387	
	141-04-00511	FUEL TANK ASS'Y	1	SC 22388~28864 ST 22388~28168	
	141-04-00512	FUEL TANK ASS'Y	1	SC 28865~ ST 28169~	
	144-04-00010	FUEL TANK ASS'Y	1	AC20006~22387	
	144-04-00011	FUEL TANK ASS'Y	1	AC22388~28240 EC22388~28258	
	144-04-00012	FUEL TANK ASS'Y	1	AC28241~ EC28259~	
	144-04-00110	FUEL TANK ASS'Y	1	AT20006~22387	
	144-04-00111	FUEL TANK ASS'Y	1	AT22388~28228 ET22388~28336	
	144-04-00112	FUEL TANK ASS'Y	1	AT28229~ ET28337~	
	144-04-00210	FUEL TANK ASS'Y	1	PC20006~22387	
	144-04-00211	FUEL TANK ASS'Y	1	PC22388~28522	
	144-04-00212	FUEL TANK ASS'Y	1	PC28523~ PT30001~	
	144-870-0010	FUEL TANK ASS'Y	1	LC21081~22387	
	144-870-0011	FUEL TANK ASS'Y	1	LC22388~28012	
	144-870-0012	FUEL TANK ASS'Y	1	LC28013~	
1131 - 1	141-04-31120	. TANK, fuel	1	S, A, P, E 20006~	
	144-870-1151	. TANK, fuel	1	LC21081~	
2	141-04-32111	. GAUGE, oil level	1	S, A, P 20006~	
	144-870-1120	. GUAGE, oil level	1	LC21081~	
3	130-04-11120	. STRAINER	1	20006~20053	□ 131-04-41120
	131-04-41120	. STRAINER	1	AC20054~28240 AT20054~28228 PC20054~28522 LC21081~28012 EC20295~28258 ET20295~28336	□ 07056-08516
	07056-08516	. STRAINER	1	AC28241~ AT28229~ PC28523~ PT30001~ LC28013~ EC28259~ ET28337~	
4	07050-00000	. CAP, filler	1	20006~	
5	110-04-11120	. RING, snap	1	20006~	
9	01040-31435	. BOLT	6	20006~22387	
	01010-31435	. BOLT	6	22388~	
	01602-01442	. WASHER, spring	6	20006~	

Fig & Index No.	Part No.	Description	Q'ty	Serial No.	Remarks
	141-04-00530	. LOWER STRAINER AND VALVE ASS'Y	1	20006~22387	
	141-04-00531	. LOWER STRAINER AND VALVE ASS'Y	1	22388~	
1131 -10	141-04-33110	. . FLANGE	1	20006~	
11	07000-02135	. . O-RING	1	20006~	
12	01010-31025	. . BOLT	6	20006~	
13	01602-01030	. . WASHER, spring	6	20006~	
14	145-04-14110	. . NIPPLE	2	20006~22387	
	131-04-54120	. . NIPPLE	2	22388~	
15	141-04-14140	. . VALVE	2	20006~20053	□ 07700-10504
	07700-10504	. . VALVE	2	20054~	
16	135-04-13150	. . NIPPLE	1	20006~22387	
	135-04-13151	. . NIPPLE	1	22388~	
17	07000-02015	. . O-RING	1	20006~	
18	131-04-43130	. . STRAINER	1	20006~ •	
19	01000-30812	. . BOLT	2	20006~22387	
	01010-30812	. . BOLT	2	22388~ •	
20	01602-00825	. . WASHER, spring	2	20006~ •	
21	141-04-33120	. . CASE	1	20006~	
22	145-04-33180	. . STRAINER	1	20006~	
23	07000-03038	. . O-RING	1	20006~	
24	07000-03032	. . O-RING	1	20006~	
25	01010-31030	. . BOLT	2	20006~	
26	01602-01030	. . WASHER, spring	2	20006~	
27	01643-01032	. . WASHER	2	20006~	
28	141-04-14120	. . NIPPLE	1	20006~22387	
	141-04-31170	. . NIPPLE	1	22388~	
29	145-04-14120	. . CLAMP	1	20006~22387	
	154-04-12460	. . CLAMP	1	22388~	
30	07270-01270	. . TUBE, vinyl	1	AC20006~28240 PC20006~28522 LC21081~28012 SC20006~28864 AT20006~28228 ST20006~28168 EC20295~28258 ET20295~28336	□ 07270-01260

Fig & Index No.	Part No.	Description	Q'ty	Serial No.	Remarks
	07270-01260	. . TUBE	1	AC28241~ PC28523~ LC28013~ SC 28865~ EC28259~ AT28229~ PT30001~ ST 28169~ ET28337~	
1131 -31	131-04-21130	. CLIP	1	SC 20006~28864 ST 20006~28168	
32	01010-31016	. BOLT	1	SC 20006~28864 ST 20006~28168	
33	01602-01030	. WASHER, spring	1	SC 20006~28864 ST 20006~28168	
34	07049-01012	. PLUG, wood, taper	8	22388~	

Fig. 1132 FLOAT TANK AND LINE

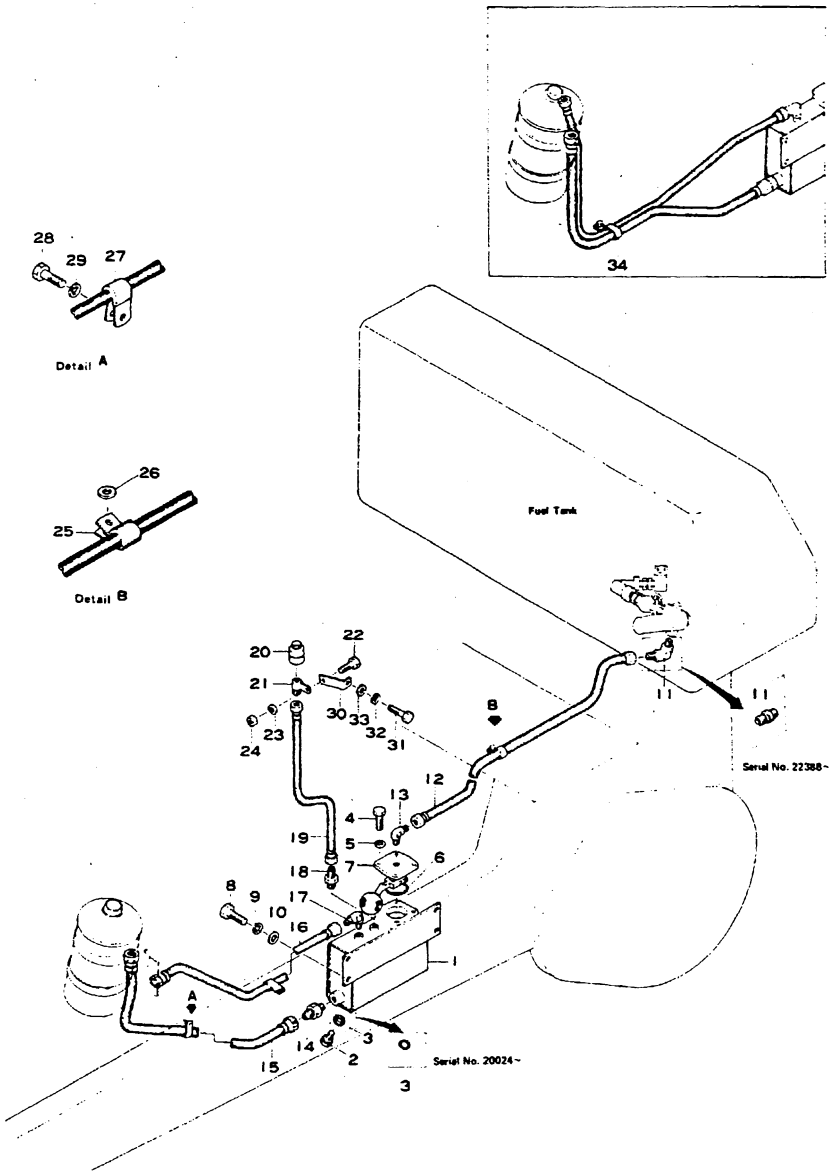

Fig. & Index No.	Part No.	Description	Q'ty	Serial No.	Remarks
	141-04-00540	FLOAT TANK ASS'Y	1	20006-22387	
	141-04-00541	FLOAT TANK ASS'Y	1	22388-	
1132- 1	6631-71-8812	· TANK, float	1	20006-	
2	07040-01409	· PLUG	1	20006-	
3	07003-01419	· PACKING	1	20006-20021	□ 07000-02011
	07000-02011	· O-RING	1	20024-	
4	01010-31025	· BOLT	4	20006-	
5	01602-01030	· WASHER, spring	4	20006-	
6	07000-03062	· O-RING	1	20006-	
7	6672-72-8701	· FLOAT VALVE ASS'Y	1	AC, EC 20006~24724 PC, LC 20006~24933 SC 20006~24816 AT, ET 20006~24764 ST 24638~24915	□ 6672-72-8702
	6672-72-8702	· FLOAT VALVE ASS'Y	1	AC, EC 24725~ PC, LC 24934~ SC 24817~ AT, ET 24765~ PT 30001~ ST 24916~	
8	01010-31025	· BOLT	4	20006-	
9	01602-01030	· WASHER, spring	4	20006-	
10	01640-21016	· WASHER	4	20006-	
11	135-04-14140	ELBOW	1	SC 20006-22387	
	6610-71-8490	ELBOW	1	A, PC, LC, E 20006-22387	
	135-04-21120	ELBOW	1	22388-	
12	145-04-34510	HOSE ASS'Y	1	S 20006-	
	141-01-13520	HOSE ASS'Y	1	A, P, LC, E 20006-	
13	6675-71-8850	CONNECTION	1	2005-22387	
	6675-71-8851	CONNECTION	1	22388-	
14	6672-72-2580	CONNECTOR	1	20006-22387	
	6672-72-2581	CONNECTOR	1	22388-	
15	145-04-34520	HOSE ASS'Y	1	20006-	
16	145-04-34530	HOSE ASS'Y	1	S 20006-	
	144-04-14210	HOSE ASS'Y	1	A, PC, E 20006~22387	

FLOAT TANK AND LINE

Fig & Index No.	Part No.	Description	Q'ty	Serial No.	Remarks
	144-04-14211	HOSE ASS'Y	1	A, P, LC, E 22388~	
1132 -17	6600-01-3240	CONNECTION	1	20006~	
18	6641-71-8930	CONNECTOR	1	20006~22387	
	6641-71-8931	CONNECTOR	1	22388~	
19	141-01-13510	HOSE ASS'Y	1	6357~	
20	6610-71-8910	BREATHER	1	2005~22387	
	6610-71-8911	BREATHER	1	22388~	
21	6641-71-8940	BRACKET	1	20006~	
22	01010-31016	BOLT	1	20006~	
	01010-31022	BOLT	1	~	
23	01602-01030	WASHER, spring	1	20006~	
24	01580-01008	NUT	1	20006~	
25	6600-01-5551	CLAMP	1	20006~	
26	01640-21016	WASHER	1	20006~22387 S 22388~	
27	6600-01-5580	CLAMP	2	A, PC 20006~20031	
			1	A, PC, LC, E 20032~22387	
	6600-01-5551	CLAMP	1	A, P, LC, E 20032~	
28	01010-31016	BOLT	2	A, PC 20006~20031	
			1	A, P, LC, E 20032~	
29	01602-01030	WASHER, spring	2	A, PC 20006~20031	
			1	A, P, LC, E 20032~	
30	144-04-14220	BRACKET	1	A, P, LC, E 20006~	
31	01010-31020	BOLT	1	A, P, LC, E 20006~	
32	01602-01030	WASHER, spring	1	A, P, LC, E 20006~	
33	01643-31032	WASHER	1	A, P, LC, E 20006~	
34	141-04-34110	CLIP	1	S 20006~ A, P, LC, E 22388~	

Fig. 1141 BATTERY

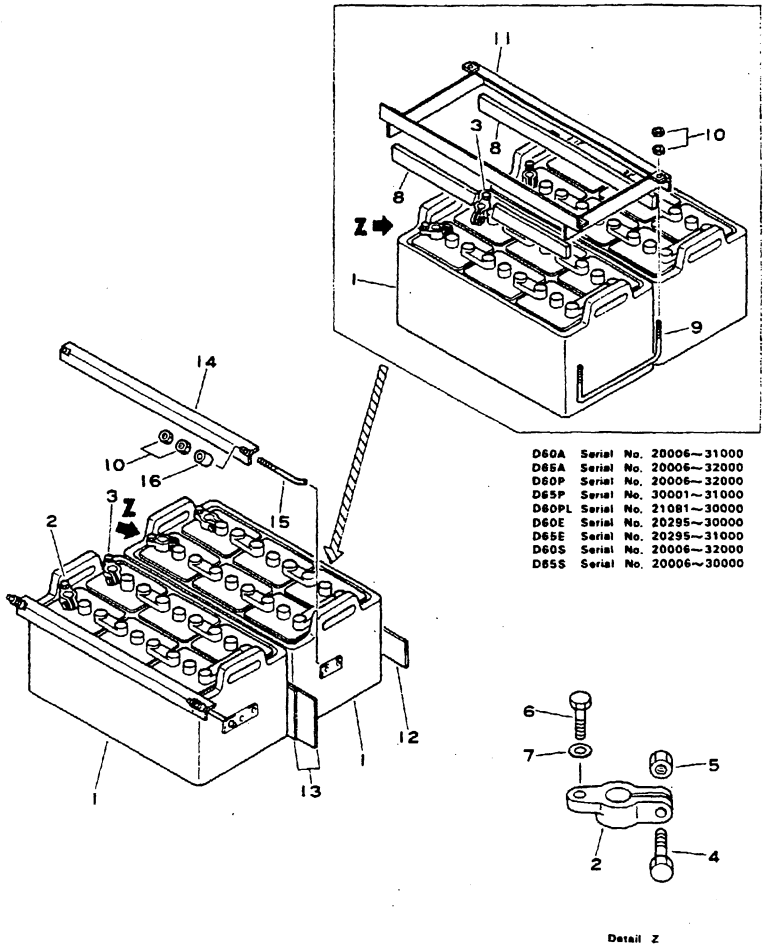

D60A Serial No. 20006~31000
D65A Serial No. 20006~32000
D60P Serial No. 20006~32000
D65P Serial No. 30001~31000
D60PL Serial No. 21081~30000
D60E Serial No. 20295~30000
D65E Serial No. 20295~31000
D60S Serial No. 20006~32000
D65S Serial No. 20006~30000

Fig & Index No.	Part No.	Description	Q'ty	Serial No.	Remarks
1141 - 1	08000-01220	BATTERY, 200Ah	2	AC20006~ AT20006~ PC20006~ PT30001~ LC21081~ EC20295~ ET20295~ SC 20006~ ST 20006~	Domestic Wet Type
	08000-11220	BATTERY, 200Ah	2	AC20006~ AT20006~ PC20006~ PT30001~ LC21081~ EC20295~ ET20295~ SC 20006~ ST 20006~	Oversea Dry Type
2	08000-00000	. TERMINAL, (+)	1	20006~	
3	08000-00001	. TERMINAL, (-)	1	20006~	
4	01010-30830	. BOLT	2	20006~	
5	01580-00806	. NUT	2	20006~	
6	01050-31018	. BOLT	2	20006~	
7	01640-21016	. WASHER	2	20006~	
8	141-06-11340	CUSHION	4	AC20006~31000 AT20006~32000 PC20006~32000 PT30001~31000 LC21081~30000 EC20295~30000 SC 20006~32000 ST 20006~30000	
9	141-06-31110	U-BOLT	4	AT20006~31000 AT20006~32000 PC20006~31000 PT30001~31000 LC21081~30000 EC20295~30000 ET20295~31000 SC 20006~32000 ST 20006~30000	
10	01580-11008	NUT	16	AT20006~31000 AT20006~32000 PC20006~32000 PT30001~31000 LC21081~30000 EC20295~30000 ET20295~31000 SC 20006~32000 ST 20006~30000	
			8	AC31001~ AT32001~ PC32001~ PT31001~ LC30001~ EC30001~ ET31001~ SC 32001~ ST 30001~	

Fig. & Index No.	Part No.	Description	Q'ty	Serial No.	Remarks
1141 -11	145-06-31120	BRACKET	2	AC20006~31000 AT20006~32000 PC20006~32000 PT30001~31000 LC21081~30000 EC20295~30000 ET20295~31000 SC 20006~32000 ST 20006~30000	
12	141-06-31120	CUSHION	1	AC31001~ AT32001~ PC32001~ PT31001~ LC30001~ EC30001~ ET31001~ SC 32001~ ST 30001~	
13	154-06-13271	SEAT	2	AC31001~ AT32001~ PC32001~ PT31001~ LC30001~ EC30001~ ET31001~ SC 32001~ ST 30001~	
14	154-06-13332	PLATE	2	AC31001~ AT32001~ PC32001~ PT31001~ LC30001~ EC30001~ ET31001~ SC 32001~ ST 30001~	
15	145-06-31160	BOLT	4	AC31001~ AT32001~ PC32001~ PT31001~ LC30001~ EC30001~ ET31001~ SC 32001~ ST 30001~	
16	175-06-31121	SPACER	4	AC31001~ AT32001~ PC32001~ PT31001~ LC30001~ EC30001~ ET31001~ SC 32001~ ST 30001~	

Fig. 1145 INSTRUMENT PANEL

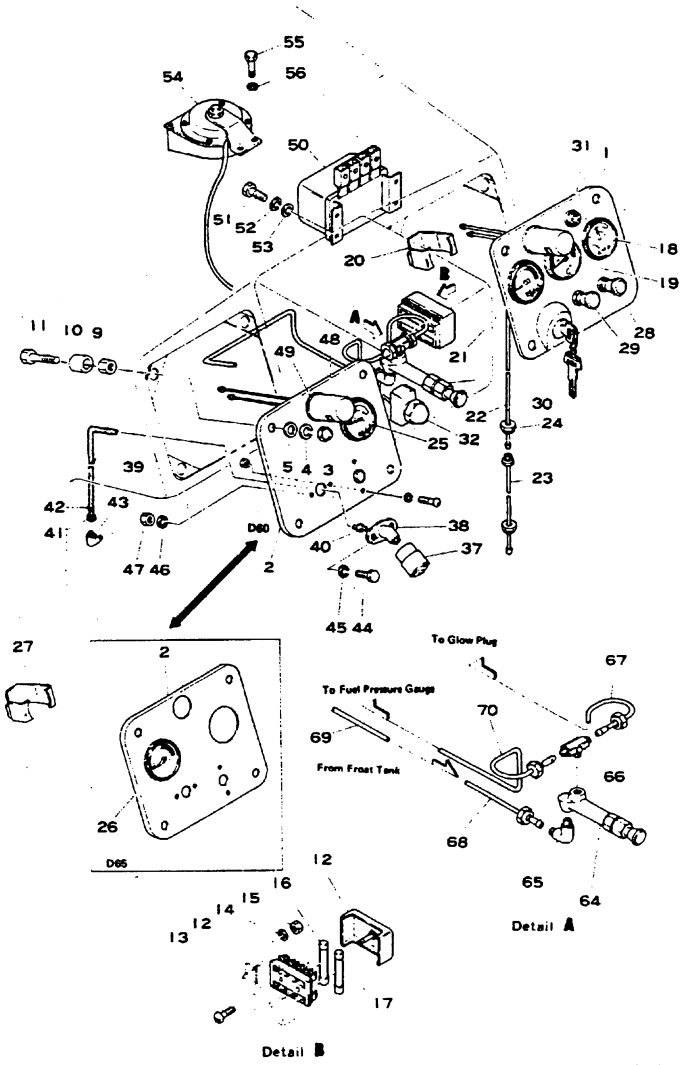

Fig. & Index No.	Part No.	Description	Q'ty	Serial No.	Remarks
1145 - 1	144-06-21114	PANEL	1		
2	144-06-21134	PANEL	1	C	
	144-06-22114	PANEL	1	T	
3	01546-01015	NUT	8		
4	01602-21030	WASHER, spring	8		
5	01642-21016	WASHER	8		
9	01582-11008	NUT	8		
10	141-06-32230	SPACER	8		
11	141-06-32240	BOLT	8		
12	08043-04000	BOX, fuse	1		
13	01210-40520	SCREW	2		
14	01601-20513	WASHER, spring	2		
15	01580-10504	NUT	2		
16	08040-01000	FUSE, 10A	2		
17	08040-02000	FUSE, 20A	2		
18	08651-03000	AMMETER	1		
19	08655-01000	GAUGE, water temperature	1		
			1		
20	08669-00000	CLIP	1		
21	08653-01000	GAUGE, oil pressure	1		
22	141-06-32120	TUBE	1		
23	141-06-32131	TUBE	1		
24	07201-50512	NUT, sleeve	1		
25	08653-02000	GAUGE, fuel pressure	1		
26	08656-01700	GAUGE, oil temperature	1	T	
27	08669-00000	CLIP	1	T	
28	08061-11000	SWITCH, lamp	1		
29	08060-00000	SWITCH, glow	1		
30	08086-00000	SWITCH, starting	1		
31	600-815-2210	SIGNAL, glow	1		
32	08064-10000	SWITCH, horn	1		
37	135-06-22180	INDICATOR, dust	1		
	144-06-21201	JOINT ASS'Y	1		
38	144-06-21180	. ELBOW	1		
39	144-06-21190	. HOSE	1		
40	135-06-22320	. NIPPLE	1		
41	135-06-22330	. SLEEVE	1		
42	135-06-22350	. CLAMP	2		
43	144-06-21160	ELBOW	1		
44	01010-50620	BOLT	2		
45	01602-20619	WASHER, spring	2		
46	01640-20610	WASHER	2		

Fig. & Index No.	Part No.	Description	Q'ty	Serial No.	Remarks
1145 -47	01580-10605	NUT	2		
48	135-06-13140	LAMP	2		
	08110-12410	. BULB	1		
49	135-06-13140	WASHER	2		
50	600-824-4940	RELAY, safety	1	C	
	600-824-4920	RELAY, safety	1	T	
51	01010-50612	BOLT	4		
52	01602-20619	WASHER, spring	4		
53	01640-20610	WASHER	4		
54	08160-22400	HORN	1		
55	01010-50816	BOLT	2		
56	01602-20825	WASHER, spring	2		
64	6610-81-3501	PUMP, priming	1		
65	6610-81-8820	ELBOW	1		
66	6610-81-3711	CONNECTOR	1		
67	140-06-16182	TUBE	1		
68	144-06-24312	TUBE	1		
69	144-06-24322	TUBE	1		
70	144-06-24331	TUBE	1		

Fig. 1151A ELECTRICAL SYSTEM

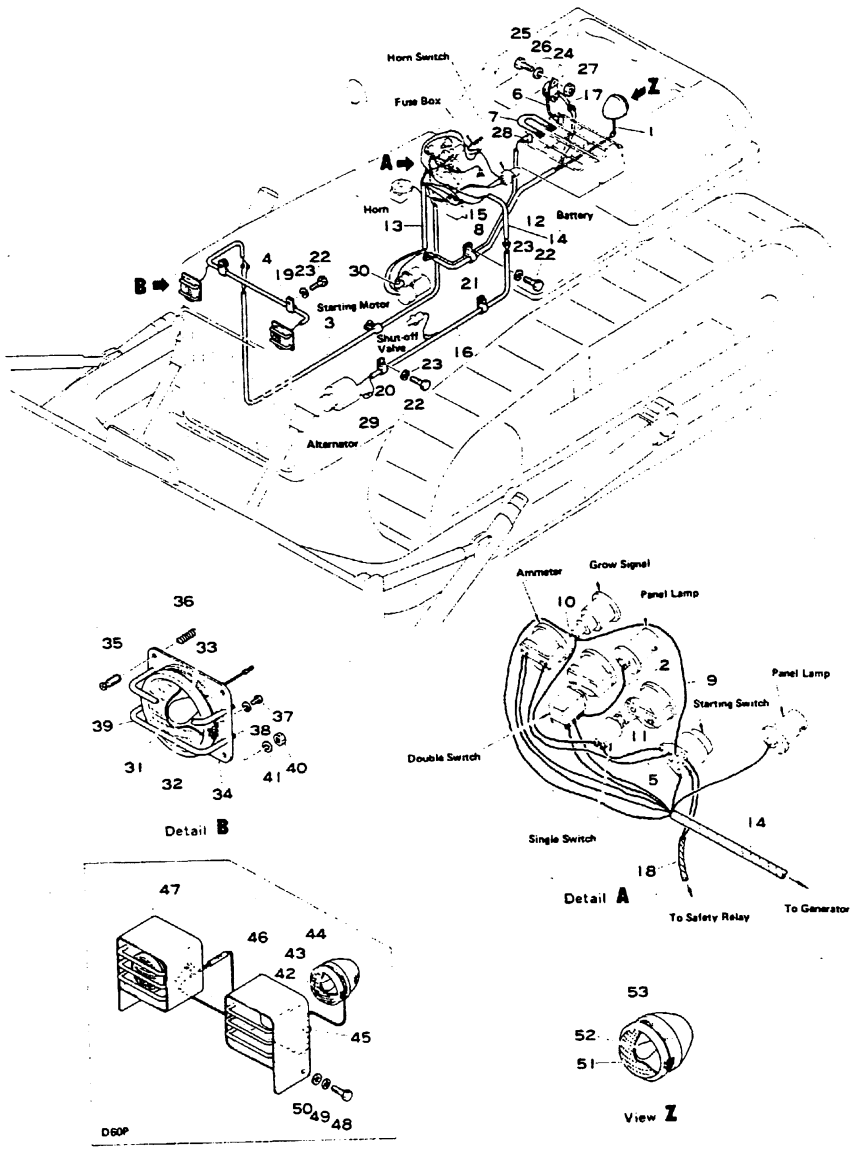

Fig & Index No.	Part No.	Description	Q'ty	Serial No.	Remarks
1151A- 1	144-06-24231	WIRE	1		
2	144-06-24231	WIRE	1		
3	144-06-24141	WIRE	1		
4	144-06-24152	WIRE	1	ALE	
	144-804-6210	WIRE	1	P	
5	144-06-24191	WIRE	1		
6	144-06-24222	WIRE	1		
7	144-06-14460	WIRE	1		
8	144-06-24181	WIRE	1		
9	144-06-24520	WIRE	1		
10	144-06-24530	WIRE	1		
11	144-06-24540	WIRE	1		
12	144-06-24133	WIRE ASS'Y	1		
13	144-06-24122	WIRE ASS'Y	1		
14	144-06-24115	WIRE ASS'Y	1		
15	144-06-14610	WIRE ASS'Y	1		
16	144-06-24162	WIRE ASS'Y	1		
17	141-06-34321	WIRE ASS'Y	1		
18	144-06-24171	WIRE ASS'Y	1		
19	08036-10814	CLIP	8		
20	08036-11214	CLIP	6		
21	08036-01414	CLIL	1		
22	01010-51016	BOLT	8		
23	01602-21030	WASHER, spring	8		
24	08088-10000	SWITCH, battery relay	1		
25	01010-50818	BOLT	2		
26	01602-20825	WASHER, spring	2		
27	01580-10806	NUT	2		
28	08038-00035	CAP	6		
29	08038-00519	CAP	4		
30	08038-02027	CAP	1		
	144-06-13102	HEAD LAMP ASS'Y, L.H	1		White
	144-826-1160	HEAD LAMP ASS'Y, L.H	1		Yellow Cold Weather
	144-06-13202	HEAD LAMP ASS'Y, R.H	1		White
	144-826-1120	HEAD LAMP ASS'Y, R.H	1		Yellow Cold Weather
31	144-06-13311	. LAMP	1		
32	08113-02480	. . BULB	1		
33	144-06-13330	. . HOLDER	1		
34	144-06-13130	. BRACKET, L.H	1		
	144-06-13220	. BRACKET, R.H	1		
35	131-06-43230	. SCREW	4		
36	144-06-13150	. SPRING	4		
37	01210-40408	. SCREW	1		

Fig & Index No.	Part No.	Description	Q'ty	Serial No.	Remarks
1151A-38	01601-00410	. WASHER, spring	1		
39	144-06-13120	. GUARD	2		
40	01580-00605	. NUT	4		
41	01602-00619	. WASHER, spring	4		
42	08128-32400	LAMP	2	P	
43	08113-02480	. BULB	1	P	
44	08128-00003	. HOLDER	1	P	
45	08037-01008	GROMMET	2	P	
46	144-804-6110	BRACKET, L.H	1	P	
47	144-804-6120	BRACKET, R.H	1	P	
48	01010-51225	BOLT	6	P	
49	01602-01236	WASHER, spring	6	P	
50	01643-01232	WASHER	6	P	
51	08128-02400	LAMP	1		
52	08113-02480	. BULB	1		
53	08128-00003	. HOLDER	1		

CLUTCH, TORQUE CONVERTOR AND TRANSMISSION

Fig. 1201A MAIN CLUTCH HOUSING

(D60A, P, PL, E, S Serial No. 20024~)

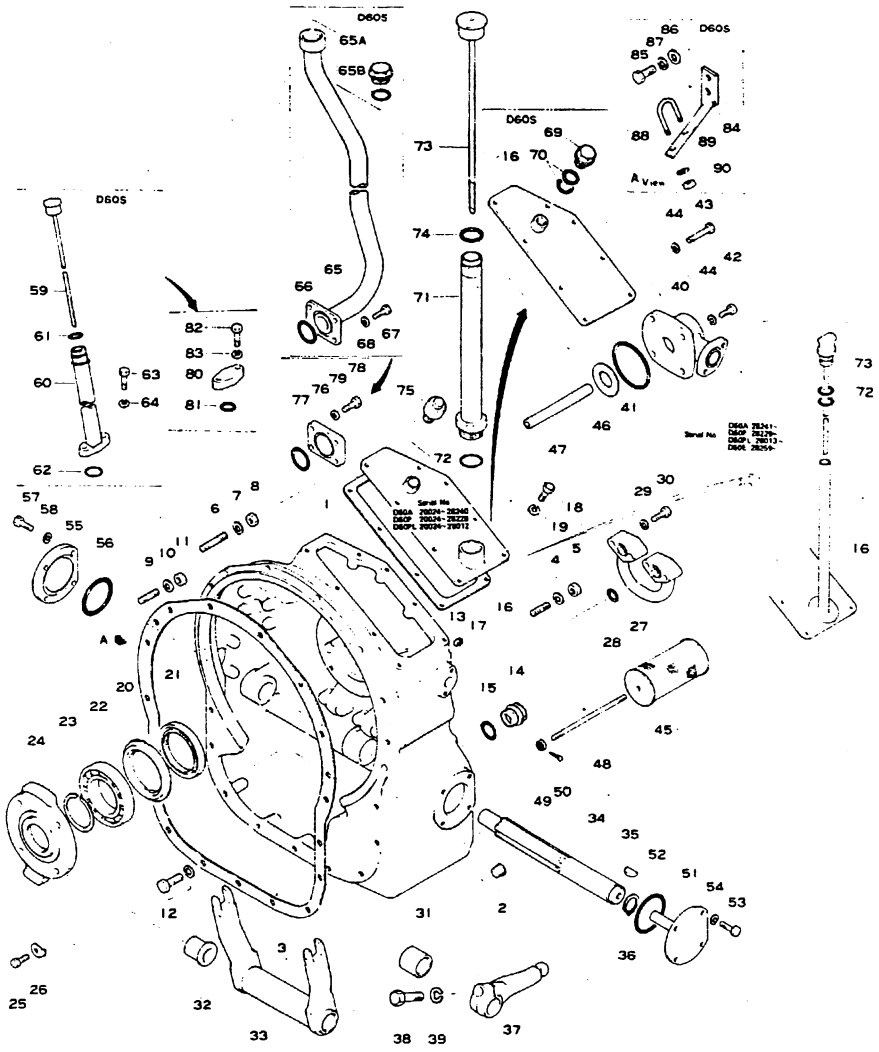

Fig. & Index No.	Part No.	Description	Q'ty	Serial No.	Remarks
1201A-	141-10-00511	MAIN CLUTCH ASS'Y	1	S 20024~20031	
	141-10-00512	MAIN CLUTCH ASS'Y	1	S 20032~21223	☐ 141-10-00513
	141-10-00513	MAIN CLUTCH ASS'Y	1	S 21224~22387	
	141-10-00514	MAIN CLUTCH ASS'Y	1	S 22388~25154	☐ 141-10-00515
	141-10-00515	MAIN CLUTCH ASS'Y	1	S 25155~26710	
	141-10-00516	MAIN CLUTCH ASS'Y	1	S 26711~28766	
	141-10-00517	MAIN CLUTCH ASS'Y	1	S 28767~	
	144-10-00011	MAIN CLUTCH ASS'Y	1	A, P, E 20024~20031	
	144-10-00012	MAIN CLUTCH ASS'Y	1	A, E 20032~21139 P, L 20032~21359	☐ 144-10-00013
	144-10-00013	MAIN CLUTCH ASS'Y	1	A, E 21140~22387 P, L 21360~22387	
	144-10-00014	MAIN CLUTCH ASS'Y	1	A, E 22388~25043 P, L 22388~25219	☐ 144-10-00015
	144-10-00015	MAIN CLUTCH ASS'Y	1	A, E 25044~26710 P, L 25220~26710	
	144-10-00016	MAIN CLUTCH ASS'Y	1	A 26711~28254 P 26711~28544 L 26711~28012 E 26711~28250	
	144-10-00017	MAIN CLUTCH ASS'Y	1	A 28255~ P 28545~ L 28013~ E 28251~	
	These assemblies consist of all parts shown in Figs. 1201A to 1204.				
	141-10-00521	. MAIN CLUTCH ASS'Y	1	S 20024~20031	
	141-10-00522	. MAIN CLUTCH ASS'Y	1	S 20032~22387	
	141-10-00523	. MAIN CLUTCH ASS'Y	1	S 22388~28766	
	141-10-00524	. MAIN CLUTCH ASS'Y	1	S 28767~	
	144-10-00021	. MAIN CLUTCH ASS'Y	1	A, P, L, E 20024~22387	
	144-10-00022	. MAIN CLUTCH ASS'Y	1	A 22388~28240 P 22388~28522 L 22388~28012 E 22388~28258	

Fig & Index No.	Part No.	Description	Q'ty	Serial No.	Remarks
	144-10-00023	. MAIN CLUTCH ASS'Y	1	A 28241~ P 28523~ L 28013~ E 28259~	
1201A- 1	141-10-32113	. . HOUSING, main clutch	1	A 20024~28254 P 20024~28544 L 20024~28012 E 20024~28250 S 20024~28766	■ 141-10-32114 07042-00617
	141-10-32114	. . HOUSING, main clutch	1	A 28255~ P 28545~ L 28013~ E 28251~ S 28767~	
2	07043-00617	. . PLUG, taper	1	20024~	
3	141-10-32120	. . GASKET	1	20006~	
4	01140-31230	. . STUD	6	20006~	
	01602-01236	. . WASHER, spring	6	20006~	
5	01582-01210	. . NUT	6	20006~	
6	01140-31235	. . STUD	1 2	S 20006~20031 A, P, L, E 20006~	
	01140-31255	. . STUD	1	S 20032~	
7	01602-01236	. . WASHER, spring	1 2	S 20006~ A, P, L, E 20006~	
8	01582-01210	. . NUT	1 2	S 20006~ A, P, L, E 20006~	
9	01140-31250	. . STUD	1	S 20006~20031	
	01140-31270	. . STUD	1	S 20032~	
10	01602-01236	. . WASHER, spring	1	S 20006~	
11	01582-01210	. . NUT	1	S 20006~	
12	01010-31240	. . BOLT	9	20006~	
	01602-01236	. . WASHER, spring	9	20006~	
13	07042-00415	. . PLUG, taper	1	A 20024~28254 P 20024~28544 E 20024~23250 S 20024~28766	
	07042-00617	. . PLUG, taper	1	A 28255~ P 28545~ E 28251~ S 28767~	
14	07044-03620	. . PLUG, magnetic	1	20006~22387	
	07044-13620	. . PLUG, magnetic	1	22388~	
15	07000-03032	. . O-RING	1	20006~	

Fig & Index No.	Part No.	Description	Q'ty	Serial No.	Remarks
1201A-16	141-10-32133	. COVER	1	S 20024~	
	144-10-19110	. COVER	1	A 20024~28247 P 20024~28532 L 20024~28012 E 20024~28243	
	144-10-19111	. COVER	1	A 28248~ P 28533~ L 28013~ E 28244~	
17	141-10-32142	. GASKET	1	20006~20031	
	141-10-32143	. GASKET	1	20032~	
18	01010-31025	. BOLT	8	20006~	
19	01602-01030	. WASHER, spring	8	20006~	
20	141-10-32210	. COLLAR	1	20006~	
21	07012-10085	. SEAL, oil	1	20006~	
22	06042-00214	. BEARING	1	20006~	
23	150-10-11360	. RING, snap	1	20006~	
24	141-10-32181	. RETAINER	1	20006~	
25	01010-31030	. BOLT	5	20006~	
26	150-10-11180	. WASHER	5	20006~	
27	141-10-32220	. TUBE	1	A, P, L, E 20006~	
28	07000-03025	. O-RING	2	A, P, L, E 20006~	
29	01010-31050	. BOLT	4	A, P, L, E 20006~	
30	01602-01030	. WASHER, spring	4	A, P, L, E 20006~	
31	170-10-16120	. BUSHING	1	20006~	
32	175-10-12230	. BUSHING	1	20006~	
33	150-10-11420	. YOKE	1	A, E 20006~21139 P, L 20006~21359 S 20006~21223	■ 141-10-32270 141-10-32260
	141-10-32270	. YOKE	1	A, E 21140~ P, L 21360~ S 21224~	
34	150-11-12420	. SHAFT	1	20006~	
35	04010-00732	. KEY, woodruff	1	20006~	
36	130-09-16420	. RING, snap	1	20006~	

Fig & Index No.	Part No.	Description	Q'ty	Serial No.	Remarks
1201A-37	141-10-32380	. LEVER	1	20024~	
38	01040-31650	. BOLT	1	20006~22387	
	01010-31650	. BOLT	1	22388~	
39	01602-01648	. WASHER, spring	1	20006~	
40	141-10-34250	. FLANGE	1	20006~	
41	07000-03095	. O-RING	1	20006~	
42	01010-31030	. BOLT	3	20006~	
43	01010-31055	. BOLT	1	20006~	
44	01602-01030	. WASHER, spring	4	20006~	
45	170-10-16351	. SCREEN	1	20006~	
46	170-10-16490	. GASKET	1	20006~	
47	170-10-16361	. SPACER	1	20006~	
48	170-10-16372	. STUD	1	20006~	
49	01593-01008	. NUT	1	20006~	
50	04050-02025	. PIN, cotter	1	20006~	
51	141-10-32153	. COVER	1	20024~	
52	07000-02080	. O-RING	1	20024~	
53	01010-31025	. BOLT	4	20006~	
54	01602-01030	. WASHER, spring	4	20006~	
55	141-10-32162	. COVER	1	20006~	
56	07000-02080	. O-RING	1	20024~	
57	01040-31030	. BOLT	4	20006~20031	
	01010-31025	. BOLT	4	20032~	
58	01602-01030	. WASHER, spring	4	20006~	
59	141-10-32311	. GAUGE, oil level	1	S 20006~	
60	141-10-32321	. TUBE	1	S 20006~	
61	07000-02018	. O-RING	1	S 20006~	
62	07000-03025	. O-RING	1	S 20006~	
63	01010-31035	. BOLT	2	S 20006~	
64	01602-01030	. WASHER, spring	2	S 20006~	
65	141-10-32373	. FILLER	1	S 20024~28811	
	141-10-32374	. FILLER	1	S 28812~	

Fig & Index No.	Part No.	Description	Q'ty	Serial No.	Remarks
1201A-65A	07041-03612	. CAP	1	S 20024~28811	
	09250-00028	. CAP	1	S 28812~	
65B	07000-03032	. O-RING	1	S 20024~28811	
	07000-03022	. O-RING	2	S 28812~	
66	07000-03048	. O-RING	1	S 20006~	
67	01010-31030	. BOLT	4	S 20006~	
68	01602-01030	. WASHER, spring	4	S 20006~	
69	07041-03612	. PLUG	1	S 20006~22387	
	07041-13612	. PLUG	1	S 22388~28811	
	09250-00028	. PLUG	1	S 28812~	
70	07000-03032	. O-RING	1	S 20006~28811	
	07000-03022	. O-RING	2	S 28812~	
71	144-10-12372	. FILLER	1	A, P 20024~20031	
	144-10-12373	. FILLER	1	A 20032~28247 P 20032~28532 L 20032~28012 E 20032~28243	
72	07000-03032	. O-RING	1	A 20006~28247 P 20006~28532 L 20006~28012 E 20006~28243	
	07000-03022	. O-RING	2	A 28248~ P 28533~ L 28013~ E 28244~	
73	144-10-12381	. GAUGE, oil level	1	A, P 20024~20031	
	144-10-12382	. GAUGE, oil level	1	A 20032~28247 P 20032~28532 L 20032~28012 E 20032~28243	
	144-10-12383	. GAUGE, oil level	1	A 28248~ P 28248~ L 28013~ E 28244~	
74	07000-03028	. O-RING	1	A 20042~28247 P 20042~28532 L 20042~28012 E 20042~28243	
75	07030-00252	. BREATHER	1	20006~	
76	144-10-12411	. COVER	1	A, P, L, E 20024~	
77	07000-03048	. O-RING	1	A, P, L, E 20024~	

MAIN CLUTCH HOUSING

Fig & Index No.	Part No.	Description	Q'ty	Serial No.	Remarks
1201A-78	01010-31025	. BOLT	4	A, P, L, E 20024~	
79	01602-01030	. WASHER, spring	4	A, P, L, E 20024~	
80	144-10-12421	. COVER	1	A, P, L, E 20024~	
81	07000-03025	. O-RING	1	A, P, L, E 20006~	
82	01010-31025	. BOLT	2	A, P, L, E 20024~	
83	01602-01030	. WASHER, spring	2	A, P, L, E 20006~	
84	141-10-37250	. BRACKET	1	S 20006~	
85	01010-31230	. BOLT	2	S 20006~	
86	01643-31232	. WASHER	2	S 20006~	
87	01602-01236	. WASHER, spring	2	S 20006~	
88	07283-03450	. U-BOLT	1	S 20006~	
89	01643-01032	. WASHER	2	S 20006~	
90	01599-01011	. NUT	2	S 20006~	

Fig. 1202 MAIN CLUTCH PLAT

(D60A, P, PL, E, S Serial No. 20006~)

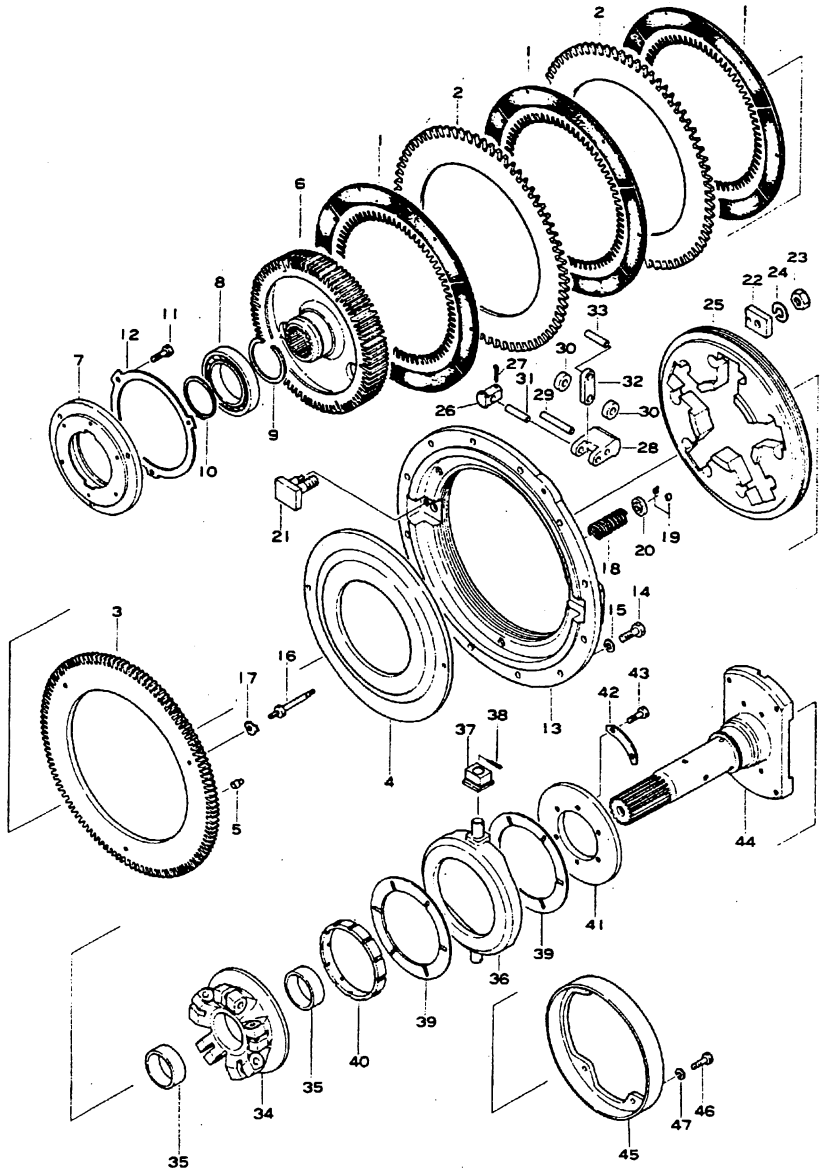

Fig. & Index No.	Part No.	Description	Q'ty	Serial No.	Remarks
	(141-10-00510)	MAIN CLUTCH ASS'Y	1	S 20006~20021	
	(141-10-00511)	MAIN CLUTCH ASS'Y	1	S 20024~20031	
	(141-10-00512)	MAIN CLUTCH ASS'Y	1	S 20032~21223	☐ 141-10-00513
	(141-10-00513)	MAIN CLUTCH ASS'Y	1	S 21224~22387	
	(141-10-00514)	MAIN CLUTCH ASS'Y	1	S 22388~25154	☐ 141-10-00515
	(141-10-00515)	MAIN CLUTCH ASS'Y	1	S 25155~26710	
	(141-10-00516)	MAIN CLUTCH ASS'Y	1	S 26711~28864	
	(141-10-00517)	MAIN CLUTCH ASS'Y	1	S 28865~	
	(144-10-00010)	MAIN CLUTCH ASS'Y	1	A, P 20006~20021	
	(144-10-00011)	MAIN CLUTCH ASS'Y	1	A, P 20024~20031	
	(144-10-00012)	MAIN CLUTCH ASS'Y	1 1	A 20032~21139 P, L 20032~21359	☐ 144-10-00013
	(144-10-00013)	MAIN CLUTCH ASS'Y	1 1	A 21140~22387 P, L 21360~22387	
	(144-10-00014)	MAIN CLUTCH ASS'Y	1	A 22388~25043 P, L 22388~25219	☐ 144-10-00015
	(144-10-00015)	MAIN CLUTCH ASS'Y	1	A 25044~26710 P, L 25220~26710	
	(144-10-00016)	MAIN CLUTCH ASS'Y	1	A 26711~28240 P 26711~28522 L 26711~28012 E 26711~28258	
	(144-10-00017)	MAIN CLUTCH ASS'Y	1	A 28241~ P 28523~ L 28013~ E 28259~	
	These assemblies consist of all parts shown in Figs. 1201 to 1204.				
1202 - 1	131-10-11110	. DISC	3	20006~	
2	131-10-11120	. PLATE	2	20006~	
3	150-10-11141	. PLATE, pressure	1	20006~	
4	141-10-31120	. HUB	1	20006~	
5	170-10-11310	. PIN, dowel	2	20006~	
6	150-10-11132	. HUB	1	20006~	
7	141-10-31210	. RETAINER	1	20006~	
8	06040-06015	. BEARING	1	20006~	

Fig & Index No.	Part No.	Description	Q'ty	Serial No.	Remarks
1202 - 9	04067-00115	. RING, snap	1	20006~	
10	04064-07525	. RING, snap	1	20006~	
11	01010-31030	. BOLT	3	20006~	
12	141-10-31220	. PLATE, lock	1	20006~	
13	150-10-11161	. BRACKET	1	20006~	
14	01010-31235	. BOLT	12	20006~	
15	01602-01236	. WASHER, spring	12	20006~	
16	150-10-11190	. GUIDE	3	20006~	
17	150-10-11180	. WASHER	3	20006~	
18	150-10-11221	. SPRING	3	20006~	
19	170-10-11342	. COLLAR	3	20006~	
20	150-10-11210	. COLLAR	3	20006~	
21	141-10-11260	. LOCK	2	20006~	
22	170-10-11410	. PLATE	2	20006~	
23	01500-31411	. NUT	2	20006~22387	
	01582-01411	. NUT	2	22388~	
24	01602-01442	. WASHER, spring	2	20006~	
25	150-10-11251	. RING	1	20006~	
26	150-10-11170	. BUSHING	10	20006~	
27	04050-04030	. PIN, cotter	10	20006~	
28	141-10-31130	. WEIGHT LINK	5	20006~	
29	170-10-11450	. PIN, weight link	5	20006~	
30	170-10-11460	. ROLLER	10	20006~	
31	170-10-11470	. PIN, link	5	20006~	
32	141-10-11340	. LINK	5	20006~	
33	170-10-91260	. PIN	5	20006~	
34	141-10-31140	. COLLAR	1	20006~	
35	141-10-11620	. BUSHING	2	20006~	
36	141-10-11431	. COLLAR	1	20006~	
37	170-10-11570	. BLOCK	2	A, E 20006~21139 P, L 20006~21359 S. 20006~21223	■ 141-10-32260 141-10-32270

Fig & Index No.	Part No.	Description	Q'ty	Serial No.	Remarks
	141-10-32260	. BLOCK	2	A, E 21140~ P, L 21360~ S 21224~	
1202 -38	04050-04035	. PIN, cotter	2	20006~	
39	141-10-11452	. PLATE	2	20006~	
40	141-10-31150	. BUSHING	1	20006~	
41	141-10-11460	. PLATE	1	20006~	
42	141-10-11470	. PLATE, lock	3	20006~	
43	01010-31030	. BOLT	6	20006~	
44	141-10-31110	. SHAFT	1	20006~	
45	131-10-42211	. DRUM, brake	1	20006~	
46	01010-31025	. BOLT	4	20006~	
47	01602-01030	. WASHER, spring	4	20006~	

Fig. 1203 INERTIA BRAKE (D60A, P, PL, E, S Serial No. 20006~)

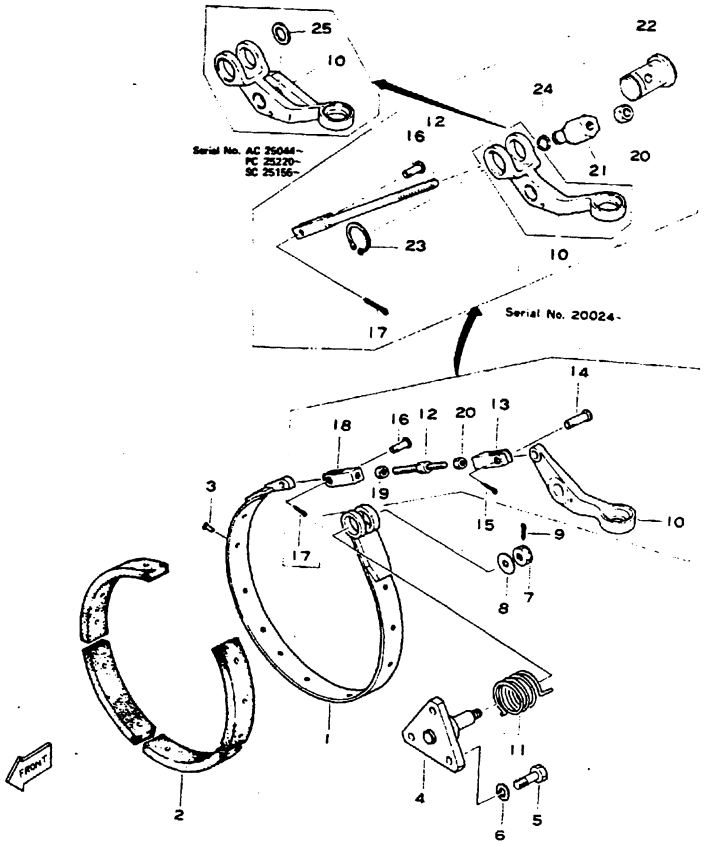

Fig & Index No.	Part No.	Description	Q'ty	Serial No.	Remarks
1203 -	(141-10-00510)	MAIN CLUTCH ASS'Y	1	S 20006~20021	
	(141-10-00511)	MAIN CLUTCH ASS'Y	1	S 20024~20031	
	(141-10-00512)	MAIN CLUTCH ASS'Y	1	S 20032~21223	□ 141-10-00513
	(141-10-00513)	MAIN CLUTCH ASS'Y	1	S 21224~22387	
	(141-10-00514)	MAIN CLUTCH ASS'Y	1	S 22388~25154	□ 141-10-00515
	(141-10-00515)	MAIN CLUTCH ASS'Y	1	S 25155~26710	
	(141-10-00516)	MAIN CLUTCH ASS'Y	1	S 26711~28864	
	(141-10-00517)	MAIN CLUTCH ASS'Y	1	S 28865~	

Fig & Index No.	Part No.	Description	Q'ty	Serial No.	Remarks
	(144-10-00010)	MAIN CLUTCH ASS'Y	1	A, P 20006~20021	
	(144-10-00011)	MAIN CLUTCH ASS'Y	1	A, P 20024~20031	
	(144-10-00012)	MAIN CLUTCH ASS'Y	1	A, E 20032~21139 P, L 20032~21359	□ 144-10-00013
	(144-10-00013)	MAIN CLUTCH ASS'Y	1	A, E 21140~22387 P, L 21360~22387	
	(144-10-00014)	MAIN CLUTCH ASS'Y	1	A, E 22388~25043 P, L 22388~25219	□ 144-10-00015
	(144-10-00015)	MAIN CLUTCH ASS'Y	1	A, E 25044~26710 P, L 25220~26710	
	(144-10-00016)	MAIN CLUTCH ASS'Y	1	A 26711~28240 P 26711~28522 L 26711~28012 E 26711~28258	
	(144-10-00017)	MAIN CLUTCH ASS'Y	1	A 28241~ P 28523~ L 28013~ E 28259~	
	These assemblies consist of all parts shown in Figs. 1201 to 1204.				
	141-10-00020	. INERTIA BRAKE ASS'Y	1	20006~	
1203 - 1	141-10-13110	. . BAND, inertia brake	1	20006~	
2	141-10-13120	. . LINING	4	20006~	
3	04412-00408	. . RIVET	12	20006~	
4	141-10-13140	. SHAFT	1	A 20006~21446 P, L 20006~21661 S 20006~21550	※ 141-10-33280
	141-10-33280	. SHAFT	1	A, E 21447~25043 P, L 21662~25212 S 21551~25154	■ 141-10-33290 141-10-32390 01640-21626
	141-10-33290	. SHAFT	1	A, E 25044~ P, L 25220~ S 25155~	
5	01010-31030	. BOLT	3	20006~20021	
	01010-31025	. BOLT	3	20024~	
6	01602-01030	. WASHER, spring	3	20006~	
7	01593-01008	. NUT	1	20006~	
8	01640-21016	. WASHER	1	20006~	

INERTIA BRAKE

Fig. & Index No.	Part No.	Description	Q'ty	Serial No.	Remarks
1203 - 9	04050-02022	. PIN, cotter	1	20006~	
10	141-10-33112	. LEVER	1	20006~20021	
	141-10-33210	. LEVER	1	A, E 20024~25043 P, L 20024~25219 S 20024~25154	■ 141-10-32390 141-10-33290 01640-21626
	141-10-32390	. LEVER	1	A, E 25044~ P, L 25220~ S 25155~	
11	141-10-13160	. SPRING	1	20006~	
12	141-10-13180	. BOLT	1	20006~20021	
	141-10-33220	. ROD	1	20024~	
13	141-10-13170	. YOKE	1	20006~20021	
14	04205-01028	. PIN	1	6357~20021	
15	04050-03015	. PIN, cotter	1	20006~	
16	04205-00822	. PIN	1	20006~	
17	04050-02012	. PIN, cotter	1	20006~	
18	04210-00832	. YOKE, adjustable	1	20006~20021	
19	01501-30805	. NUT	1	20006~20021	
20	141-10-33120	. NUT	1	20006~20021	
	01580-01008	. NUT	1	20024~	
21	141-10-33160	. NUT	1	20024~	
22	141-10-33150	. PIN	1	20004~	
23	04064-02512	. RING, snap	1	20024~	
24	130-09-16150	. RING, snap	1	A 20024~28240 P 20024~28522 L 20024~28012 S 20024~28864 E 20024~28258	
	04064-01610	. RING, snap	1	A 28241~ P 28523~ L 28013~ S 28865~ E 28259~	
25	01640-21626	. WASHER	1	A, E 25044~ P, L 25220~ S 25155~	

Fig. 1204 MAIN CLUTCH BOOSTER

(D60A, P, PL, E, S Serial No. 20006~)

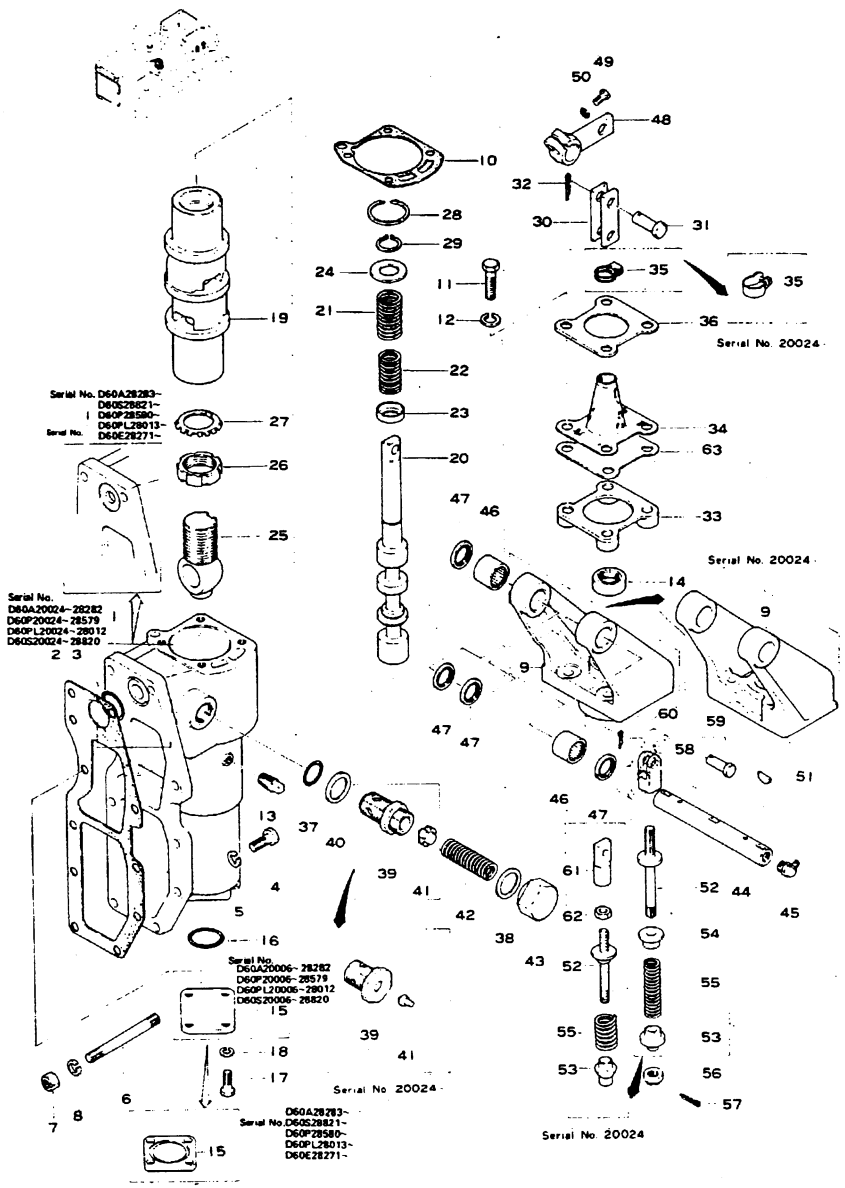

Fig. & Index No.	Part No.	Description	Q'ty	Serial No.	Remarks
1204 -	(141-10-00510)	MAIN CLUTCH ASS'Y	1	S 20006~20021	
	(141-10-00511)	MAIN CLUTCH ASS'Y	1	S 20024~20031	
	(141-10-00512)	MAIN CLUTCH ASS'Y	1	S 20032~21223	☐ 141-10-00513
	(141-10-00513)	MAIN CLUTCH ASS'Y	1	S 21224~22387	
	(141-10-00514)	MAIN CLUTCH ASS'Y	1	S 22388~25154	☐ 141-10-00515
	(141-10-00515)	MAIN CLUTCH ASS'Y	1	S 25155~26710	
	(141-10-00516)	MAIN CLUTCH ASS'Y	1	S 26711~28864	
	(141-10-00517)	MAIN CLUTCH ASS'Y	1	S 28865~	
	(144-10-00010)	MAIN CLUTCH ASS'Y	1	A, P 20006~20021	
	(144-10-00011)	MAIN CLUTCH ASS'Y	1	A, P 20024~20031	
	(144-10-00012)	MAIN CLUTCH ASS'Y	1 1	A, E 20032~21139 P 20032~20037 P, L 20042~21359	
	(144-10-00013)	MAIN CLUTCH ASS'Y	1	A, E 21140~22387 P, L 21360~22387	
	(144-10-00014)	MAIN CLUTCH ASS'Y .	1	A, E 22388~25043 P, L 22388~25219	☐ 144-10-00015
	(144-10-00015)	MAIN CLUTCH ASS'Y	1	A, E 25044~26710 P, L 25220~26710	
	(144-10-00016)	MAIN CLUTCH ASS'Y	1	A 26711~28240 P 26711~28522 L 26711~28012 E 26711~28258	
	(144-10-00017)	MAIN CLUTCH ASS'Y	1	A 28241~ P 28523~ L 28013~ E 28259~	
	These assemblies consist of all parts shown in Figs. 1201 to 1204.				
	141-10-00530	. MAIN CLUTCH BOOSTER ASS'Y	1	20006~20021	
	141-10-00531	. MAIN CLUTCH BOOSTER ASS'Y	1	20024~20031	
	141-10-00532	. MAIN CLUTCH BOOSTER ASS'Y	1	20032~22387	

Fig & Index No.	Part No.	Description	Q'ty	Serial No.	Remarks
	141-10-00533	· MAIN CLUTCH BOOSTER ASS'Y	1	22388~26710	❑ 141-10-00534
	141-10-00534	· MAIN CLUTCH BOOSTER ASS'Y	1	A 26711~28282 P 26711~28579 L 26711~28012 E 26711~28270 S 26711~28820	
	141-10-00535	· MAIN CLUTCH BOOSTER ASS'Y	1	A 28283~ P 28580~ L 28013~ E 28271~ S 28821~	
1204 - 1	141-10-34110	· · HOUSING	1	20006~20021	
	141-10-34111	· · HOUSING	1	A 20024~28282 P 20024~28579 L 20024~28012 E 20024~28270 S 20024~28820	
	141-10-34112	· · HOUSING	1	A 28283~ P 28580~ L 28013~ E 28271~ S 28821~	
2	141-10-34120	· · GASKET	1	20006~	
3	170-10-15130	· · O-RING	1	20006~	
4	01010-31030	· · BOLT	7	20006~	
5	01602-01030	· · WASHER, spring	7	20006~	
6	01140-31050	· · STUD	3	20006~	
7	01582-01008	· · NUT	3	20006~	
8	01602-01030	· · WASHER, spring	3	20006~	
9	141-10-34132	· · BRACKET	1	20006~20021	
	141-10-34133	· · BRACKET	1	20024~	
10	141-10-34150	· · GASKET	1	20006~	
11	01040-31060	· · BOLT	4	20006~20021	
	01010-31055	· · BOLT	4	20024~	
12	01602-01030	· · WASHER, spring	4	20006~	
13	07042-00108	· · PLUG, taper	1	20006~	
14	07011-10022	· · SEAL, oil	1	20006~20053	❑ 07012-10022
	07012-10022	· · SEAL, oil	1	A 20054~28282 P 20054~28579 L 20054~28012 E 20054~28270 S 20054~28820	
	07012-00022	· · SEAL, oil	1	A 28283~ P 28580~ L 28013~ E 28271~ S 28821~	

Fig & Index No.	Part No.	Description	Q'ty	Serial No.	Remarks
1204 -15	170-10-15150	· · COVER	1	A 20006~28282 P 20006~28579 L 20006~28012 E 20006~28270 S 20006~28020	
	141-10-34320	· · COVER	1	A 28283~ P 28580~ L 28013~ E 28271~ S 28821~	
16	07000-03040	· · O-RING	1	20006~	
17	01000-30820	· · BOLT	4	20006~22387	
	01010-30820	· · BOLT	4	22388~	
18	01602-00825	· · WASHER, spring	4	20006~	
19	170-10-15222	· · PISTON	1	20006~26710	■ 170-10-15223 170-10-15231 170-10-15243 170-10-15251
	170-10-15223	· · PISTON	1	26711~	
20	170-10-15242	· · VALVE	1	20006~26710	■ 170-10-15223 170-10-15231 170-10-15243 170-10-15251
	170-10-15243	· · VALVE	1	26711~	
21	131-10-25160	· · SPRING	1	20006~	
22	170-10-15272	· · SPRING	1	20006~	
23	170-10-15281	· · SPACER	1	20006~	
24	170-10-15290	· · WASHER	1	20006~	
25	170-10-15190	· · COUPLING	1	20006~	
26	01530-03912	· · NUT	1	20006~	
27	170-10-15210	· · WASHER, lock	1	A, E 20006~25047 P, L 20006~25664 S 20006~25562	
	170-10-15211	· · WASHER, lock	1	A, E 25048~ P, L 25665~ S 25563~	
28	130-09-15410	· · RING, snap	1	20006~26710	
	170-10-15231	· · RING, snap	1	26711~	
29	04064-02212	· · RING, snap	1	20006~26710	
	170-10-15251	· · RING, snap	1	26711~	
30	141-10-34170	· · LINK	2	20006~	
31	170-10-15370	· · PIN	2	20006~	

Fig & Index No.	Part No.	Description	Q'ty	Serial No.	Remarks
1204 -32	04050-03020	. . PIN, cotter	2	20006~	
33	141-10-34210	. . SPACER	1	20006~20021	
34	141-10-34220	. . BOOT	1	20006~	
35	07280-02323	. . CLAMP	1	20006~20021	
	150-14-15260	. . CLAMP	1	20024~	
	01210-20416	. . SCREW	1	20024~	
	01500-30404	. . NUT	1	20024~22387	
	01580-00403	. . NUT	1	22388~	
36	141-10-34230	. . PLATE	1	20006~	
	141-10-00550	. . RELIEF VALVE ASS'Y	1	20006~20021	
	141-10-00551	. . RELIEF VALVE ASS'Y	1	20024~22387	
	141-10-00552	. . RELIEF VALVE ASS'Y	1	22388~	
37	170-10-15330	. . . O-RING	1	20006~	
38	170-10-91130	. . . PACKING	1	20006~	
39	150-11-13220	. . . SEAT, valve	1	20006~20021	
	141-10-34280	. . . SEAT, valve	1	20024~	
40	170-10-15351	. . . GASKET	1	20006~20021	
	07000-02014	. . . O-RING	1	20024~	
41	150-11-13231	. . . VALVE, needle	1	20006~20021	
	141-10-34260	. . . VALVE, needle	1	20024~	
42	141-10-34140	. . . SPRING	1	20006~20021	
	141-10-34141	. . . SPRING	1	20024~	
43	150-11-13240	. . . NUT	1	20006~20021	
	141-10-34270	. . . PLUG	1	20024~22387	
	141-10-34271	. . . PLUG	1	22388~	
44	141-10-35111	. . SHAFT	1	20006~20021	
	141-10-35112	. . SHAFT	1	20024~20031	
	141-10-35113	. . SHAFT	1	20032~	
45	07020-00675	. . FITTING, grease	2 7 1	20006~20021 20024~22387 22388~	
46	06120-02216	. . BEARING, needle	2	20006~	
47	06122-02204	. . SEAL, bearing rubber	4	20006~	
48	141-10-35121	. . LEVER	1	20006~20021	

Fig & Index No.	Part No.	Description	Q'ty	Serial No.	Remarks
	141-10-35122	. . LEVER	1	20024~20031	
	141-10-35123	. . LEVER	1	20032~	
1204 -49	01000-30825	. . BOLT	1	20006~22387	
	01010-30825	. . BOLT	1	22388~	
50	01602-00825	. . WASHER, spring	1	20006~	
51	04010-00516	. . KEY, woodruff	3	20006~20031	
	04000-00538	. . KEY, feather	2	20032~	
	04000-00522	. . KEY, feather	1	20032~	
52	141-10-33130	. ROD	1	20006~20021	
	141-10-33230	. ROD	1	20024~	
	141-10-13240	. . GUIDE, spring, upper	1	20024~	Welded
53	141-10-13210	. GUIDE, spring, lower	1	20006~20021	
	141-10-33261	. GUIDE, spring, lower	1	20024~	
54	141-10-13240	. GUIDE, spring, upper	1	20006~20021	
55	141-10-33140	. SPRING	1	20006~20021	
	141-10-33250	. SPRING	1	20024~20031	
	141-10-33251	. SPRING	1	20032~	
56	01593-01008	. NUT	1	20006~	
57	04050-02018	. PIN, cotter	1	20006~	
58	04210-01040	. YOKE, adjustable	1	20006~20021	
59	04205-01028	. PIN	1	20006~20021	
60	04050-03015	. PIN, cotter	1	20006~20021	
61	141-10-33240	. JOINT	1	20024~	
62	01582-01008	. NUT	1	20024~	
63	141-10-34310	. PLATE	1	A 28283~ P 28580~ L 28013~ E 28271~ S 28821~	

Fig. 1205 FORWARD AND REVERSE LEVER (D60)

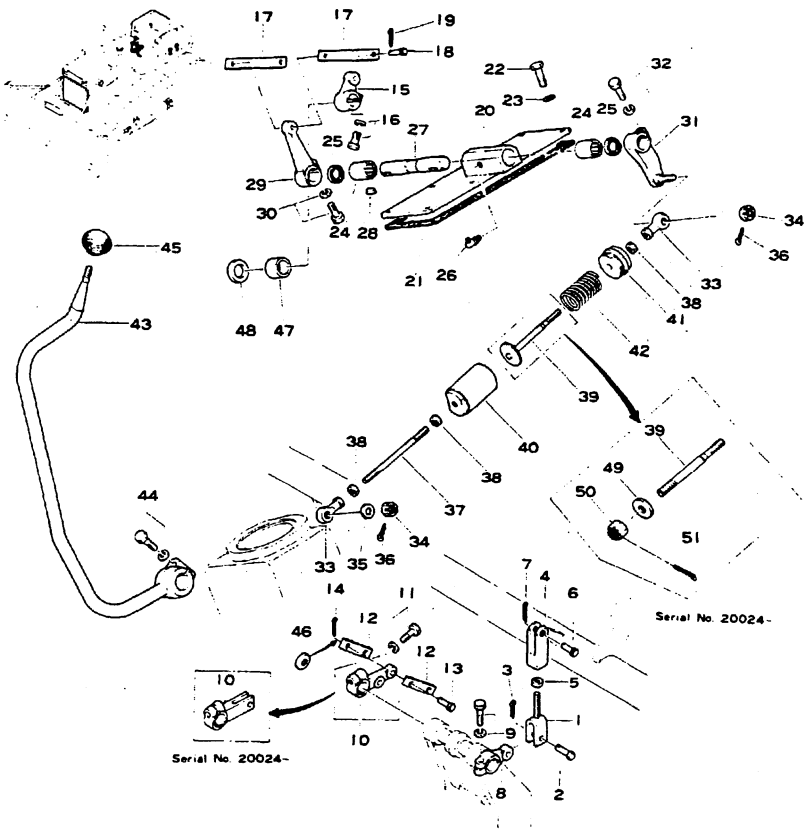

Fig. & Index No.	Part No.	Description	Q'ty	Serial No.	Remarks
1205 - 1	144-43-18121	ROD	1		
2	04205-01235	PIN	1		
3	04050-03020	PIN, cotter	1		
4	144-43-18210	YOKE, adjustable	1		
5	01582-01210	NUT	1		
6	04205-01235	PIN	1		
7	04050-03020	PIN, cotter	1		
8	141-43-33143	LEVER	1		
9	01010-30825	BOLT	1		
	01620-00825	WASHER, spring	1		
10	144-43-18313	LEVER	1		

Fig. & Index No.	Part No.	Description	Q'ty	Serial No.	Remarks
1205 -11	01010-30825	BOLT	1		
	01602-00825	WASHER, spring	1		
12	144-43-18181	PLATE	2		
13	144-43-18340	PIN	2		
14	04050-03015	PIN, cotter	2		
15	141-43-33512	LEVER	1		
16	01010-30825	BOLT	1		
	01602-00825	WASHER, spring	1		
17	141-43-33640	PLATE	2		
18	04205-01028	PIN	2		
19	04050-03015	PIN, cotter	2		
20	141-43-33522	BRACKET	1		
21	141-14-32461	GASKET	1		
22	01010-31025	BOLT	8		
23	01602-01030	WASHER, spring	8		
24	06120-02016	BEARING, needle	2		
25	06122-02004	SEAL, bearing	2		
26	07020-00900	FITTING, grease	1		
27	141-43-33531	SHAFT, lever	1		
28	04010-00519	KEY, woodruff	2		
29	141-43-33542	LEVER	1		
30	01010-30825	BOLT	1		
	01602-00825	WASHER, spring	1		
31	141-43-33553	LEVER	1		
32	01010-30825	BOLT	1		
	01602-00825	WASHER, spring	1		
33	04250-01056	END, rod	2		
34	01593-01008	NUT	2		
36	04050-02018	PIN, cotter	2		
37	144-43-18191	ROD	1		
38	01580-01008	NUT	3		
39	141-43-33611	ROD	1		
40	141-43-33621	HOLDER	1		
41	135-43-24250	PLUG	1		
42	141-43-15270	SPRING	1		
43	144-43-12113	LEVER, forward and reverse	1		
44	01010-31245	BOLT	1		
	01602-01236	WASHER, spring	1		
45	09304-01250	KNOB	1		
46	01640-21016	WASHER	1		
47	141-43-33150	SPACER	1		
48	01640-22232	WASHER	1		

FORWARD AND REVERSE LEVER

Fig. & Index No.	Part No.	Description	Q'ty	Serial No.	Remarks
1205 -49	141-43-33160	PLATE	1		
50	01590-01215	NUT	1		
51	04050-03020	PIN, cotter	1		

Fig. 1211 TORQUE CONVERTOR HOUSING

(D65A, P, E, S Serial No. 20006~)

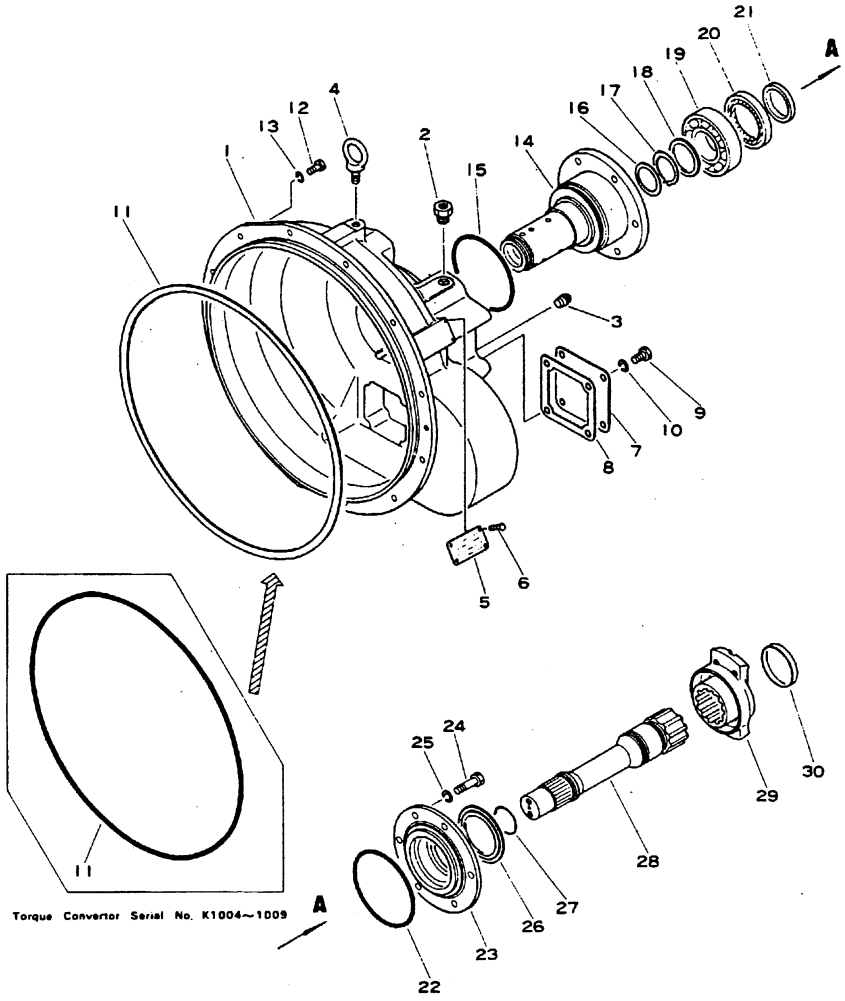

Fig. & Index No.	Part No.	Description	Q'ty	Torque Convertor Serial No.	Remarks
	144-13-21000	TORQUE CONVERTOR ASS'Y	1	K 1018~1023	
	144-13-11001	TORQUE CONVERTOR ASS'Y	1	K 1004~1017, 1024~	
	These assemblies consists of all parts shown in Figs. 1241 to 1243.				
1211 - 1	144-13-13110	. HOUSING, convertor	1	K 1004~1009	※ 144-13-13111
	144-13-23110	. HOUSING, covertor	1	K 1018~1023	
	144-13-13111	. HOUSING, covertor	1	K 1010~1017, 1024~	
2	144-13-13350	. NIPPLE	1	K 1004~	
3	07042-00108	. PLUG, taper	1	K 1004~	
4	04530-01628	. BOLT, eye	1	K 1004~	
5	09607-05080	. PLATE, name, torque convertor	1	K 1004~	Limited supply
6	04418-03060	. SCREW, tapping	4	K 1004~	
7	175-13-23220	. COVER	1	K 1004~	
8	175-13-23230	. GASKET	1	K 1004~1029	※ 175-13-23231
	175-13-23231	. GASKET	1	K 1030~	
9	01010-31220	. BOLT	4	K 1004~	
10	01602-01236	. WASHER, spring	4	K 1004~	
11	07000-05500	. O-RING	1	K 1004~1009	
	144-11-11150	. GASKET	1	K 1010~	
12	01010-31235	. BOLT	12	K 1004~	
13	01602-01236	. WASHER, spring	12	K 1004~	
14	144-13-12520	. SHAFT, stator	1	K 1004~	
15	07000-05140	. O-RING	1	K 1004~	
16	144-13-11720	. RING, seal	1	K 1004~	
17	04064-05520	. RING, snap	1	K 1004~	
18	145-13-21730	. SPACER	1	K 1004~	
19	06030-06311	. BEARING, ball	1	K 1004~1029	※ 06040-06311
	06040-06311	. BEARING, ball	1	K 1030~	
20	07011-10075	. SEAL, oil	1	K 1004~	

TORQUE CONVERTOR HOUSING

Fig & Index No.	Part No.	Description	Q'ty	Torque Convertor Serial No.	Remarks
1211 -21	144-13-11750	. SEAT	1	K 1004~	
22	07000-02135	. O-RING	1	K 1004~	
23	144-13-12720	. COVER	1	K 1004~	
24	01010-31245	. BOLT	6	K 1004~	
25	01602-01236	. WASHER, spring	6	K 1004~	
26	145-13-22730	. SEAL, oil	1	K 1004~	
27	145-13-21760	. O-RING	1	K 1004~	
28	144-13-11650	. SHAFT, turbine	1	K 1004~	
29	144-13-11660	. COUPLING	1	K 1004~	
	144-13-11670	. . FLANGE, coupling	1	K 1004~	Welded
30	144-13-11680	. COVER	1	K 1004~	

Fig. 1212 TURBINE AND STATOR (D65A, P, E, S Serial No. 20006~)

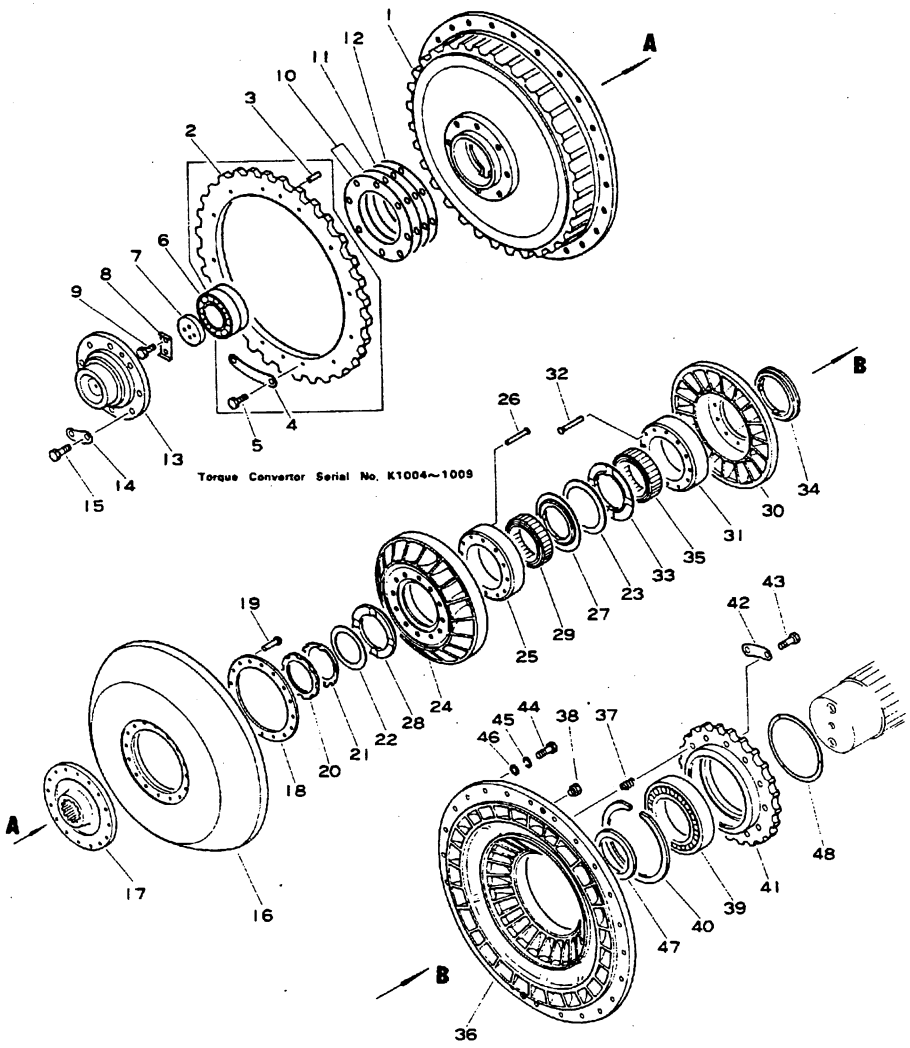

Fig. & Index No.	Part No.	Description	Q'ty	Torque Convertor Serial No.	Remarks
	(144-13-11001)	TORQUE CONVERTOR ASS'Y	1	K 1004~1017, 1024~	
	(144-13-21000)	TORQUE CONVERTOR ASS'Y	1	K 1018~1023	
	These assemblies consists of all parts shown in Figs. 1241 to 1243.				
1212 - 1	144-13-11210	. CASE	1	K 1004~1009	
	144-13-11211	. CASE	1	K 1010~1143	※ 144-13-11212
	144-13-11212	. CASE	1	K 1144~	
2	144-13-11220	. GEAR	1	K 1004~1009	
3	04020-01024	. PIN, dowel	2	K 1004~1009	
4	144-13-11230	. PLATE, lock	6	K 1004~1009	
5	01010-31225	. BOLT	12	K 1004~1009	
6	145-13-21240	. BEARING, ball	1	K 1004~1017	※ 144-13-11240
	144-13-11240	. BEARING, ball	1	K 1018~	
7	145-13-21690	. HOLDER	1	K 1004~	
8	145-13-21710	. WASHER, lock	1	K 1004~	
9	01010-61025	. BOLT	2	K 1004~	
10	144-13-11270	. SHIM, 0.1 mm	2	K 1004~	
11	144-13-11280	. SHIM, 0.3 mm	1	K 1004~	
12	144-13-11290	. SHIM, 0.05 mm	1	K 1004~	
13	144-13-11250	. PILOT	1	K 1004~	
14	144-13-11260	. PLATE, lock	4	K 1004~	
15	01010-31230	. BOLT	8	K 1004~	
	144-13-11510	. TURBINE ASS'Y	1	K 1004~	
16	144-13-11520	. . TURBINE	1	K 1004~1167	☆ 144-13-11510
	144-13-11521	. . TURBINE	1	K 1168~	☆ 144-13-11510
17	144-13-11530	. . BOSS, turbine	1	K 1004~1167	☆ 144-13-11510
	144-13-11531	. . BOSS, turbine	1	K 1168~	☆ 144-13-11510
18	144-13-11540	. . PLATE, side turbine	1	K 1004~1167	☆ 144-13-11510
	144-13-11541	. . PLATE, side turbine	1	K 1168~	☆ 144-13-11510
19	144-13-11550	. . RIVET	16	K 1004~	
20	145-13-22640	. NUT	1	K 1004~	

Fig & Index No.	Part No.	Description	Q'ty	Torque Convertor Serial No.	Remarks
1212 -21	145-13-22650	. WASHER, lock	1	K 1004~	
22	145-13-22660	. PLATE	1	K 1004~	
23	145-13-22670	. PLATE	1	K 1004~	
	144-13-12100	. FIRST STATOR ASS'Y	1	K 1004~1023	※ 144-13-12101
	144-13-12101	. FIRST STATOR ASS'Y	1	K 1024~	
	144-13-12210	. . FIRST STATOR SUB ASS'Y	1	K 1004~	
24	144-13-12110	. . . STATOR, first	1	K 1004~1077	☆ 144-13-12210
	144-13-12111	. . . STATOR, first	1	K 1078~	☆ 144-13-12210
25	144-13-12120	. . . RACE, outer	1	K 1004~1077	☆ 144-13-12210
	144-13-12121	. . . RACE, outer	1	K 1078~	☆ 144-13-12210
26	144-13-12190	. . . RIVET	12	K 1004~	
27	144-13-12150	. . BUSHING	1	K 1004~	
28	145-13-22140	. . BUSHING	1	K 1004~	
29	145-13-22160	. . WHEEL, free	1	K 1004~1023	※ 145-13-12160
	145-13-12160	. . WHEEL, free	1	K 1024~	
	144-13-12300	. SECOND STATOR ASS'Y	1	K 1004~1023	※ 144-13-12301
	144-13-12301	. SECOND STATOR ASS'Y	1	K 1024~	
	144-13-12410	. . SECOND STATOR SUB ASS'Y	1	K 1004~	
30	144-13-12310	. . . STATOR, second	1	K 1004~1077	☆ 144-13-12410
	144-13-12311	. . . STATOR, second	1	K 1078~	☆ 144-13-12410
31	144-13-12120	. . . RACE, outer	1	K 1004~1077	☆ 144-13-12410
	144-13-12121	. . . RACE, outer	1	K 1078~	☆ 144-13-12410
32	144-13-12190	. . . RIVET	12	K 1004~	
33	144-13-12350	. . BUSHING	1	K 1004~	
34	145-13-22140	. . BUSHING	1	K 1004~	
35	145-13-22160	. . WHEEL, free	1	K 1004~1023	※ 145-13-12160
	145-13-12160	. . WHEEL, free	1	K 1024~	
	144-13-11110	. PUMP ASS'Y	1	K 1004~1041	
	144-13-11111	. PUMP ASS'Y	1	K 1042~	
36	144-13-11120	. . PUMP	1	K 1004~1041	
	144-13-11121	. . PUMP	1	K 1042~	

Fig & Index No.	Part No.	Description	Q'ty	Torque Convertor Serial No.	Remarks
1212 -37	01190-01008	. . HELISERT	12	K 1004~	
38	07040-01409	. PLUG	2	K 1004~1041	
	07040-10807	. PLUG	2	K 1042~	
39	06032-00217	. BEARING, roller	1	K 1004~	
40	04067-00150	. RING, snap	1	K 1004~	
41	144-13-11140	. GEAR, bearing retainer	1	K 1004~	
42	144-13-11150	. PLATE, lock	6	K 1004~	
43	01010-31030	. BOLT	12	K 1004~	
44	01040-31030	. BOLT	24	K 1004~1113	□ 01010-61030
	144-13-11170	. BOLT	24	K 1114~4213	□ 01010-61030
	01010-61030	. BOLT	24	K 4214~	
45	01602-01030	. WASHER, spring	24	K 1004~	
46	01642-21016	. WASHER	24	K 1004~	
47	144-13-12690	. SPACER	1	K 1004~	
48	144-13-12710	. RING, seal	1	K 1004~1780	□ 144-13-12711
	144-13-12711	. RING, seal	1	K 1781~	

Fig. 1213 PRESSURE RELIEF VALVE (D65A, P, E, S Serial No. 20006~)

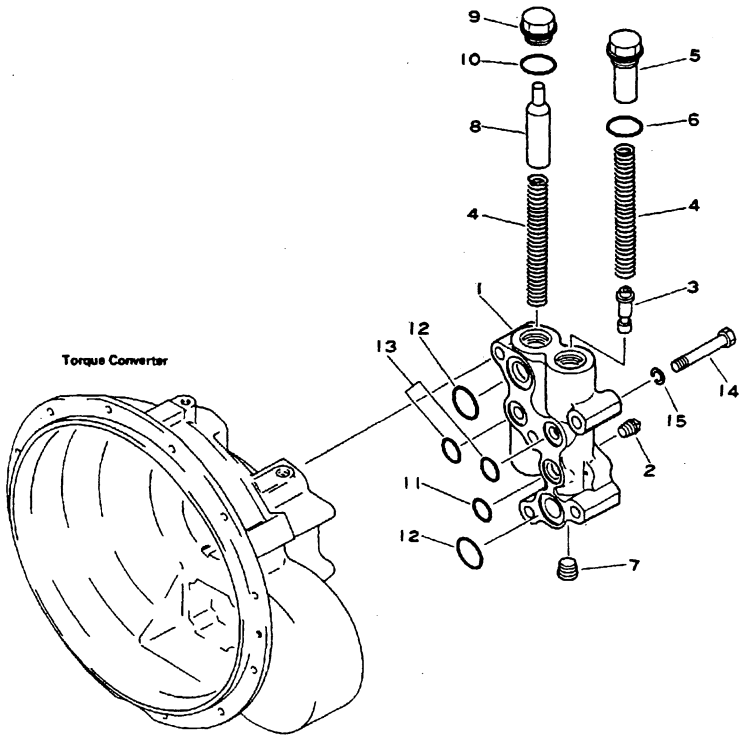

Fig. & Index No.	Part No.	Description	Q'ty	Torque Convertor Serial No.	Remarks
	(144-13-11001)	TORQUE CONVERTOR ASS'Y	1	K 1004~1017, 1024~	
	(144-13-21000)	TORQUE CONVERTOR ASS'Y	1	K 1018~1023	
	These assemblies consists of all parts shown in Figs. 1241 to 1243.				
	144-13-16600	. PRESSURE RELIEF VALVE ASS'Y	1	K 1004~	
1213 - 1	144-13-16610	. . BODY, valve	1	K 1004~1281	■ 144-13-16611 07042-00108
	144-13-16611	. . BODY, valve	1	K 1282~	
2	07042-00108	. . PLUG	1	K 1282~	
3	144-13-16650	. . SPOOL	1	K 1004~	
4	144-13-16660	. . SPRING	2	K 1004~	
5	144-13-16750	. . PLUG	1	K 1004~	
6	07000-03028	. . O-RING	1	K 1004~	
7	07043-00415	. . PLUG, taper	1	K 1004~	
8	135-13-26420	. . SPOOL	1	K 1004~	
9	07041-13012	. . PLUG	1	K 1004~	
10	07000-03028	. . O-RING	1	K 1004~	
11	07000-03022	. O-RING	1	K 1004~	
12	07000-03032	. O-RING	2	K 1004~	
13	07000-02020	. O-RING	2	K 1004~	
14	01010-31270	. BOLT	5	K 1004~	
15	01602-01236	. WASHER, spring	5	K 1004~	

Fig. 1214 SCAVENGE PUMP (D65A, P, E, S Serial No. 20006~)

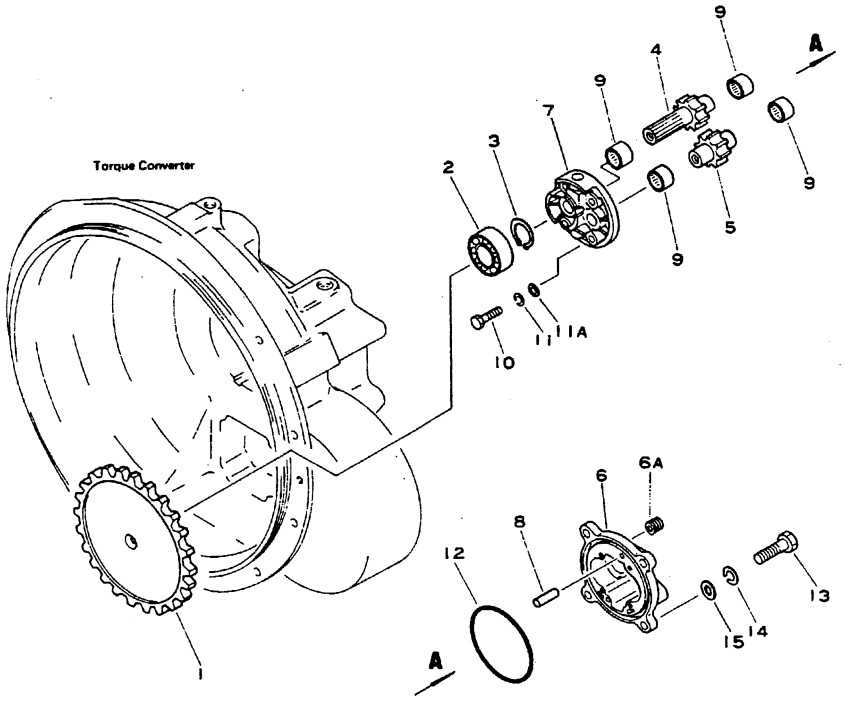

Fig. & Index No.	Part No.	Description	Q'ty	Torque Convertor Serial No.	Remarks
	(144-13-21000)	TORQUE CONVERTOR ASS'Y	1	K 1018~1023	
	(144-13-11001)	TORQUE CONVERTOR ASS'Y	1	K 1004~1017, 1024~	
	These assemblies consists of all parts shown in Figs. 1241 to 1243.				
1214 - 1	144-13-14110	. GEAR, scavenge pump drive	1	K 1004~2413	□ 144-13-14111
	144-13-14111	. GEAR, scavenge pump drive	1	K 2414~	
2	06030-05206	. BEARING, ball	1	K 1004~	
3	04064-03015	. RING, snap	1	K 1004~	
	135-13-23500	. SCAVENGE PUMP ASS'Y	1	K 1004~9850	□ 175-13-23500
	175-13-23500	. SCAVENGE PUMP ASS'Y	1	K 9851~	
4	135-13-23510	. . GEAR, drive	1	K 1004~9850	
	175-13-23510	. . GEAR, drive	1	K 9851~	
5	135-13-23520	. . GEAR, driven	1	K 1004~9850	
	175-13-23520	. . GEAR, driven	1	K 9851~	
6	135-13-23530	. . CASE, gear	1	K 1004~9850	
	175-13-00100	. . CASE ASS'Y	1	K 9851~	
	175-13-23530	. . . CASE, gear	1	K 9851~	☆ 175-13-00100
6A	01190-01011	. . . HELISERT	2	K 9851~	☆ 175-13-00100
7	195-13-13540	. . COVER, pump case	1	K 1004~9850	
	175-13-23540	. . COVER, pump case	1	K 9851~	
8	04020-00820	. . PIN, dowel	2	K 1004~	
9	195-13-13550	. . BEARING, needle	4	K 1004~9850	
10	01010-30830	. . BOLT	4	K 1004~9850	
	01010-30835	. . BOLT	4	K 9851~	
11	01602-00825	. . WASHER, spring	4	K 1004~	
11A	01641-20812	. . WASHER	4	K 9851~	
12	07000-62115	. . O-RING	1	K 1004~	
13	01010-31230	. BOLT	4	K 1004~9850	

SCAVENGE PUMP

Fig. & Index No.	Part No.	Description	Q'ty	Torque Convertor Serial No.	Remarks
1214 -13	01010-31235	. BOLT	4	K 9851~	
14	01602-01236	. WASHER, spring	4	K 1004~	
15	01641-21232	. WASHER	4	K 9851~	

Fig. 1215 TORQUE CONVERTOR SUCTION LINE

(D65A, P, E, S Serial No. 20006~)

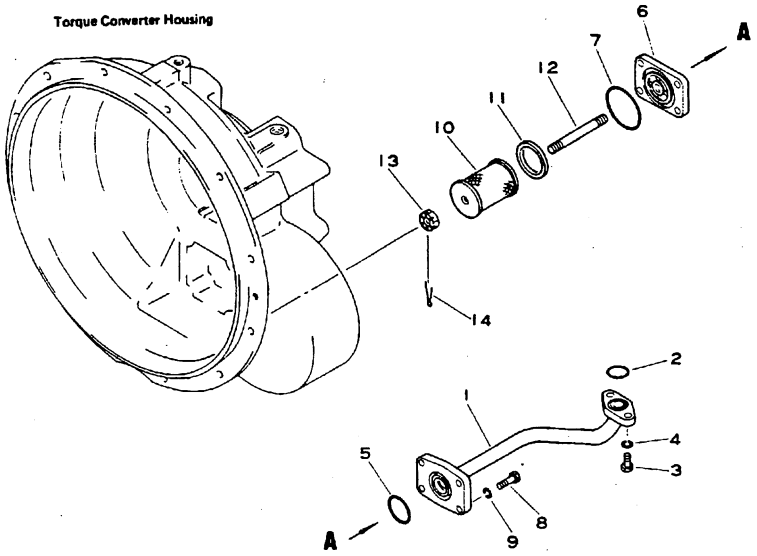

Fig & Index No.	Part No.	Description	Q'ty	Serial No.	Remarks
1215 - 1	144-11-11310	TUBE	1	20006~	
2	07000-03022	O-RING	1	20006~	
3	01010-31030	BOLT	2	20006~	
4	01602-01030	WASHER, spring	2	20006~	
5	07000-03042	O-RING	1	20006~	
6	144-11-11320	SEAT	1	20006~	
7	07000-03065	O-RING	1	20006~	
8	01000-30840	BOLT	4	20006~22387	
	01010-30840	BOLT	4	22388~	
9	01602-00825	WASHER, spring	4	20006~	
10	F6401-65110	FILTER, oil	1	20006~20031	
	195-13-13420	FILTER, oil	1	20032~	
11	F6803-61430	GASKET, filter	1	20006~20031	
	144-11-11330	GASKET, filter	1	20032~	
12	F6613-23120	STUD	1	20006~20031	
	144-11-11340	STUD	1	20032~24549	□ 144-11-11341
	144-11-11341	STUD	1	24550~	
13	01590-00607	NUT	1	20006~	
14	04050-01212	PIN, cotter	1	20006~	

Fig. 1221 UNIVERSAL JOINT (D60)

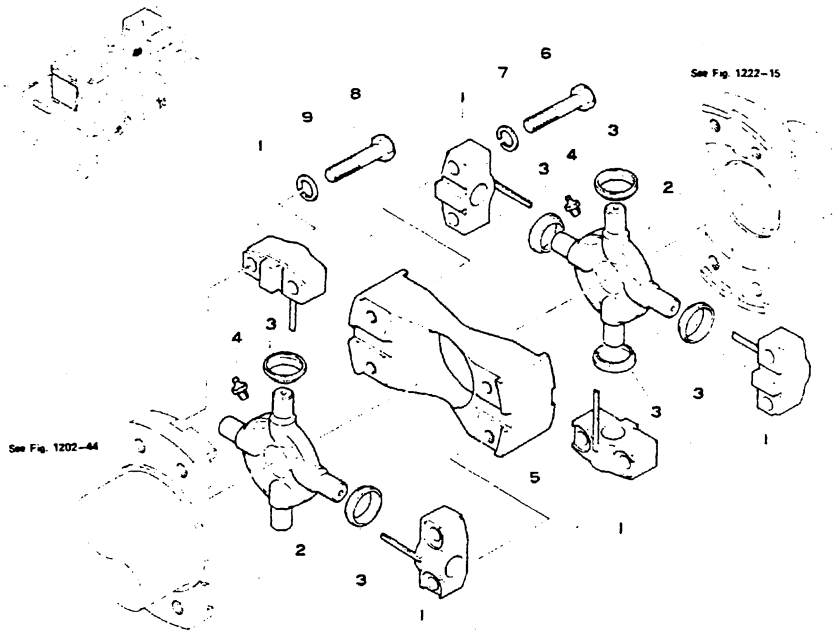

Fig & Index No.	Part No.	Description	Q'ty	Serial No.	Remarks
	144-15-00030	UNIVERSAL JOINT ASS'Y	1		
	145-14-00190	. SPIDER ASS'Y	2		
1221 - 1	170-66-11210	. . BEARING	4		
2	170-66-11220	. . SPIDER	1		
3	170-66-11380	. . SEAL, dust	4		
4	07020-00000	. . FITTING, grease	1		
5	144-15-16120	. YOKE	1		
6	131-10-46230	. BOLT	8		
7	01602-01030	. WASHER, spring	8		
8	131-10-46230	BOLT	8		
9	01602-01030	WASHER, spring	8		

Fig. 1223 UNIVERSAL JOINT (D65A, P, E, S Serial No. 20006~)

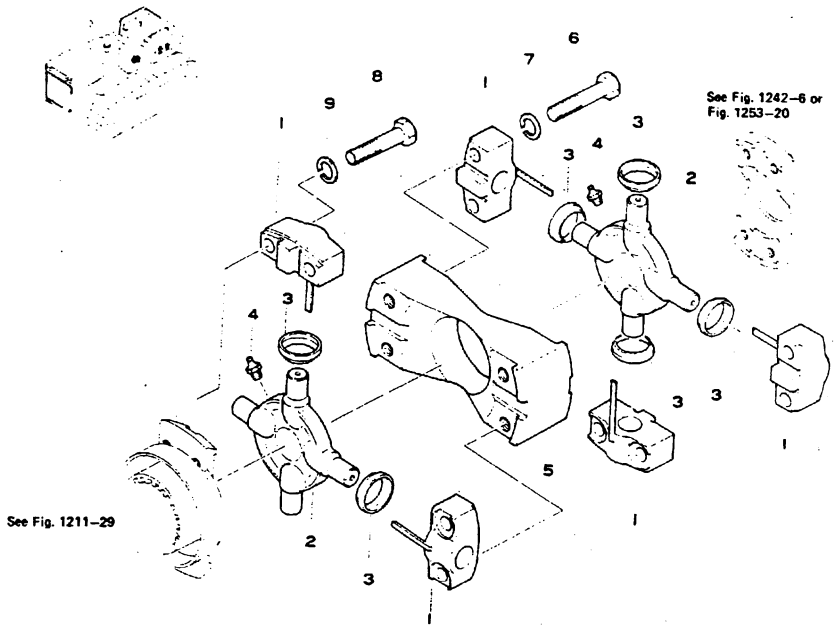

Fig & Index No.	Part No.	Description	Q'ty	Serial No.	Remarks
	144-15-00030	UNIVERSAL JOINT ASS'Y	1	20006~	
	145-14-00190	· SPIDER ASS'Y	2	20006~	
1223- 1	170-66-11210	· · BEARING	4	20006~	
2	170-66-11220	· · SPIDER	1	20006~	
3	170-66-11380	· · SEAL, dust	4	20006~	
4	07020-00000	· · FITTING, grease	1	20006~	
5	144-15-16120	· YOKE	1	20006~	
6	131-10-46230	· BOLT	8	20006~	
7	01602-01030	· WASHER, spring	8	20006~	
8	131-10-46230	BOLT	8	20006~	
9	01602-01030	WASHER, spring	8	20006~	

Fig. 1231 TRANSMISSION CASE (D60A, P, PL, E, S Serial No. 20006~)

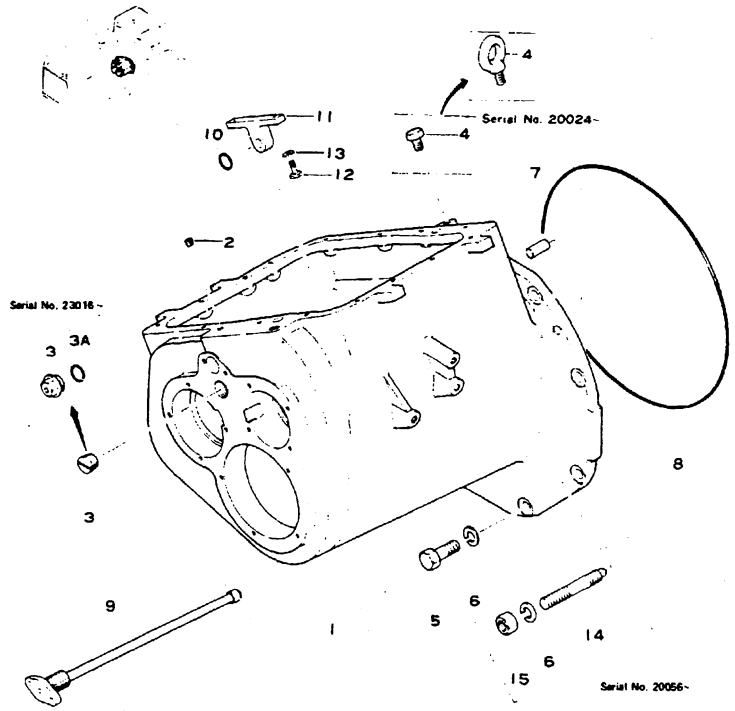

Fig & Index No.	Part No.	Description	Q'ty	Serial No.	Remarks
1231-	141-14-00510	TRANSMISSION ASS'Y	1	S 20006-20021	■ 141-14-00516 141-49-33286
	141-14-00511	TRANSMISSION ASS'Y	1	S 20024~20031	■ 141-14-00516 141-49-33286
	141-14-00512	TRANSMISSION ASS'Y	1	S 20032~20053	■ 141-14-00516 141-49-33286
	141-14-00513	TRANSMISSION ASS'Y	1	S 20054~22387	■ 141-14-00516 141-49-33286
	141-14-00514	TRANSMISSION ASS'Y	1	S 22388~23015	■ 141-14-00516 141-49-33286

Fig & Index No.	Part No.	Description	Q'ty	Serial No.	Remarks
	141-14-00515	TRANSMISSION ASS'Y	1	S 23016~24847	141-14-00516
	141-14-00516	TRANSMISSION ASS'Y	1	S 24848~28804	
	141-14-00517	TRANSMISSION ASS'Y	1	S 28805~	
	144-14-00010	TRANSMISSION ASS'Y	1	A, P 20006~20021	□ 144-14-00016
	144-14-00011	TRANSMISSION ASS'Y	1	A, P 20024~20031	
	144-14-00012	TRANSMISSION ASS'Y	1	A, P 20032~20053	□ 144-14-00016
	144-14-00013	TRANSMISSION ASS'Y	1	A, P, L, E 20054~22387	□ 144-14-00016
	144-14-00014	TRANSMISSION ASS'Y	1	A, P, L, E 22388~23015	□ 144-14-00016
	144-14-00015	TRANSMISSION ASS'Y	1	A, P, L, E 23016~24730	□ 144-14-00016
	144-14-00016	TRANSMISSION ASS'Y	1	A 24731~28240 P 24731~28522 L 24731~28012 E 24731~28246	
	144-14-00017	TRANSMISSION ASS'Y	1	A 28241~ P 28523~ L 28013~ E 28247~	
		—			
	These assemblies consist of all parts shown in Figs. 1231 to 1236A.				
	141-14-00520	• TRANSMISSION CASE ASS'Y	1 1	S 20006~22387 A, P, L, E 20006~22387	■ 141-14-00522(S only) 141-49-33286 □ 141-14-00522
	141-14-00521	• TRANSMISSION CASE ASS'Y	1 1	S 22388~23015 A, P, L, E 22388~23015	■ 141-14-00522(S only) 141-49-33286 141-14-00522
	141-14-00522	• TRANSMISSION CASE ASS'Y	1	23016~	
1231 - 1	141-14-31113	•• CASE, transmission	1	S 20006~23015	■ 141-14-31115(S only) 07041-13012 07000-03028 141-49-33286
			1	A, P, L, E 20006~23015	■ 141-14-31115 07041-13012 07000-03028
	141-14-31115	•• CASE, transmission	1	23016~	
2	07043-00211	•• PLUG, taper	1	20006~	
3	07043-01019	•• PLUG, taper	1	20006~23015	
	07041-13012	•• PLUG	1	23016~	
3A	07000-03028	•• O-RING	1	23016~	

TRANSMISSION CASE

Fig & Index No.	Part No.	Description	Q'ty	Serial No.	Remarks
	01040-31625	·· BOLT	2	20006-20021	❑ 04530-01628
	04530-01628	·· BOLT, eye	2	20024-	
1231- 5	01040-31850	· BOLT	8	20006-20055	
	01040-31850	· BOLT	7	20056-22387	
	01010-31850	· BOLT	7	22388-	
6	01602-01854	· WASHER, spring	8	20006-	
7	04020-01638	· PIN, dowel	1	20006-	
8	07000-05445	· O-RING	1	20006-	
9	141-14-37311	· TUBE	1	20006-20053	
	141-14-37312	· TUBE	1	20054-	
10	07000-03025	· O-RING	1	20006-	
11	141-14-37320	· SUPPORT	1	20006-	
12	01000-30825	· BOLT	2	20006-	
13	01602-00825	· WASHER, spring	2	20006-	
14	01120-31850	· STUD	1	20056-	
15	01582-01815	· NUT	1	20056-	

Fig. 1232 MAIN SHAFT (D60A, P, PL, E, S Serial No. 20006~)

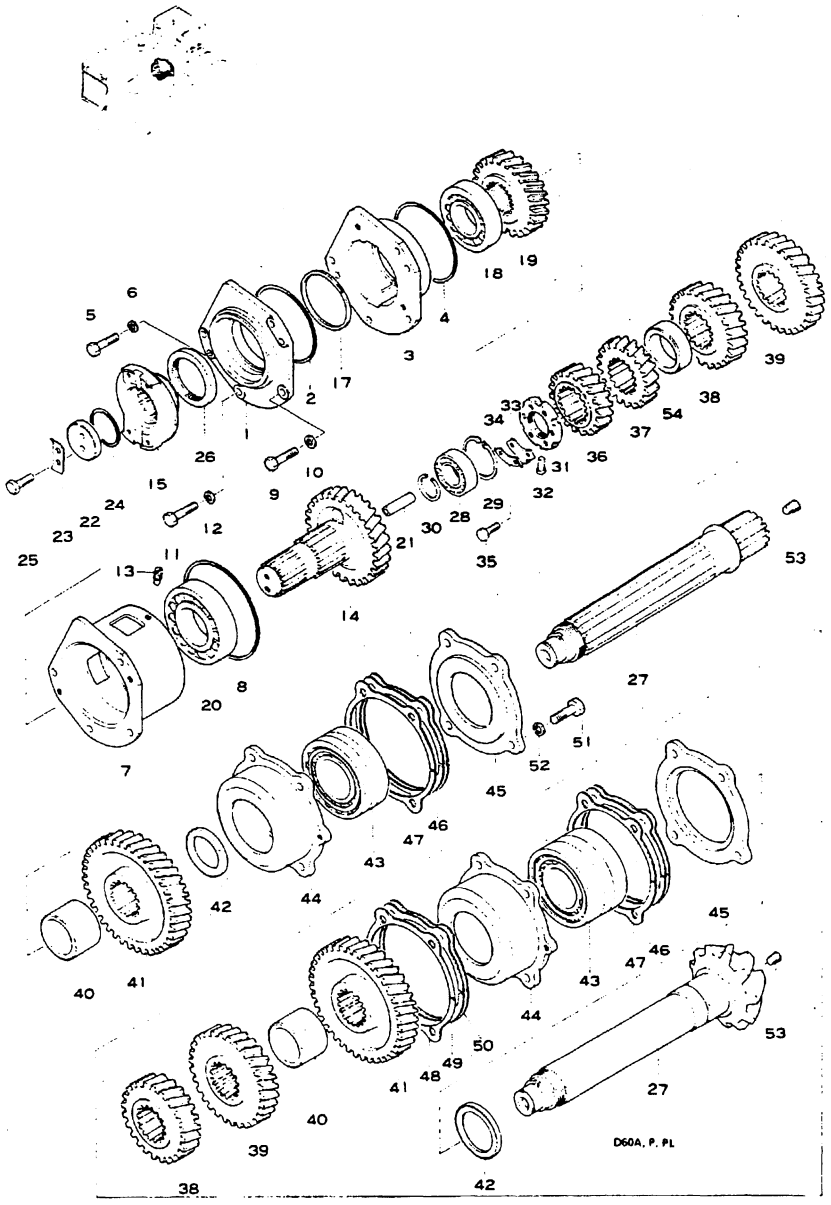

Fig. & Index No.	Part No.	Description	Q'ty	Serial No.	Remarks
	(141-14-00510)	TRANSMISSION ASS'Y	1	S 20006~20021	■ 141-14-00516 141-49-33286
	(141-14-00511)	TRANSMISSION ASS'Y	1	S 20024~20031	■ 141-14-00516 141-49-33286
	(141-14-00512)	TRANSMISSION ASS'Y	1	S 20032~20053	■ 141-14-00516 141-49-33286
	(141-14-00513)	TRANSMISSION ASS'Y	1	S 20054~22387	■ 141-14-00516 141-49-33286
	(141-14-00514)	TRANSMISSION ASS'Y	1	S 22388~23015	■ 141-14-00516 141-49-33286
	(141-14-00515)	TRANSMISSION ASS'Y	1	S 23016~24847	□ 141-14-00516
	(141-14-00516)	TRANSMISSION ASS'Y	1	S 24848~28804	
	(141-14-00517)	TRANSMISSION ASS'Y	1	S 28805~	
	(144-14-00010)	TRANSMISSION ASS'Y	1	A, P 20006~20021	□ 144-14-00016
	(144-14-00011)	TRANSMISSION ASS'Y	1	A, P 20024~20031	□ 144-14-00016
	(144-14-00012)	TRANSMISSION ASS'Y	1	A, P 20032~20053	□ 144-14-00016
	(144-14-00013)	TRANSMISSION ASS'Y	1	A, P, L, E 20054~22387	□ 144-14-00016
	(144-14-00014)	TRANSMISSION ASS'Y	1	A, P, L, E 22388~23015	□ 144-14-00016
	(144-14-00015)	TRANSMISSION ASS'Y	1	A, P, L, E 23016~24847	□ 144-14-00016
	(144-14-00016)	TRANSMISSION ASS'Y	1	A 24848~28240 P 24848~28522 L 24848~28012 E 24848~28246	
	(144-14-00017)	TRANSMISSION ASS'Y	1	A 28241~ P 28523~ L 28013~ E 28247~	
	These assemblies consist of all parts shown in Figs. 1231 to 1236A.				
1232 - 1	141-14-34113	· COVER	1	20006~	
2	07000-02140	· O-RING	1	20006~	
3	141-14-34123	· CAGE	1	20006~	
4	07000-05140	· O-RING	1	20006~	
5	01010-31040	· BOLT	2	20006~	
6	01602-01030	· WASHER, spring	2	20006~	
7	141-14-34181	· CAGE	1	20006~20053	
	141-14-34182	· CAGE	1	20054~	

Fig & Index No.	Part No.	Description	Q'ty	Serial No.	Remarks
1232 - 8	07000-05165	• O-RING	1	20006~	
9	01010-31055	• BOLT	2	20006~	
10	01602-01030	• WASHER, spring	2	20006~	
11	01016-31060	• BOLT	2	20006~	
12	01602-01030	• WASHER, spring	2	20006~	
13	01322-01216	• SETSCREW	1	20006~	
14	141-14-34134	• SHAFT, main	1	20006~20053	
	141-14-34135	• SHAFT, main	1	20054~	
15	141-14-34141	• COUPLING	1	20006~	
17	141-14-34190	• RING, seal	2	20006~	
18	140-09-13650	• BEARING	1	20006~20021	
	130-09-14580	• BEARING	1	A 20024~28240 P 20024~28522 L 20024~28012 E 20024~28246 S 20024~28804	□ 06030-22311
	06030-22311	• BEARING	1	A 28241~ P 28523~ L 28013~ E 28247~ S 28805~	
19	141-14-34162	• GEAR	1	20006~20053	
	141-14-34163	• GEAR	1	20054~	
20	130-09-13171	• BEARING, roller	1	20006~	
21	141-14-34171	• SLEEVE	1	20006~	
22	131-14-44560	• PLATE	1	20006~	
23	131-14-44180	• LOCK	1	20006~	
24	07000-05048	• O-RING	1	20006~	
25	01010-31025	• BOLT	2	20006~	
26	07012-00085	• SEAL, oil	1	S 20006~	
27	141-14-34212	• SHAFT	1	S 2006~20053	■ 141-14-34213 141-21-34112
	141-14-34213	• SHAFT	1	S 20054~22387	
	141-14-34214	• SHAFT	1	S 22388~	
	144-14-14212	• SHAFT	1	A, P 20006~20053	
	144-14-14214	• SHAFT	1	A, P, L, E 20054~	
28	140-09-13620	• BEARING	1	A 20006~28240 P 20006~28522 L 20006~28012 S 20006~28804 E 20006~28246	□ 06042-02208

Fig & Index No.	Part No.	Description	Q'ty	Serial No.	Remarks
	06042-02208	• BEARING	1	A 28241~ P 28523~ L 28013~ E 28247~ S 28805~	
1232 -29	04065-08025	• RING, snap	1	20006~	
30	140-09-15410	• RING, snap	1	A 20006~28240 P 20006~28522 L 20006~28012 E 20006~28246 S 20006~28804	□ 04064-04018
	04064-04018	• RING, snap	1	A 28241~ P 28523~ L 28013~ E 28247~ S 28805~	
31	141-14-34220	• NUT	1	20006~	
32	141-14-34230	• PIN	1	20006~	
33	141-14-34240	• PLATE, lock	1	20006~	
34	141-14-34250	• PLATE, lock	1	20006~	
35	01010-30616	• BOLT	2	20006~	
36	141-14-34262	• GEAR	1	S 20006~20053	
	141-14-34263	• GEAR	1	S 20054~	
	144-14-14410	• GEAR	1	A, P 20006~20053	
	144-14-14411	• GEAR	1	A, P, L, E 20054~	
37	144-14-14272	• GEAR	1	S 20006~20053	
	144-14-14273	• GEAR	1	S 20054~	
	144-14-14421	• GEAR	1	A, P 20006~20053	
	144-14-14422	• GEAR	1	A, P, L, E 20054~	
38	141-14-34281	• GEAR	1	S 20006~20053	
	141-14-34283	• GEAR	1	S 20054~	
	144-14-14260	• GEAR	1	A, P 20006~20053	
	144-14-14262	• GEAR	1	A, P, L, E 20054~	
39	141-14-34291	• GEAR	1	S 20006~20053	
	141-14-34293	• GEAR	1	S 20054~	
	144-14-14281	• GEAR	1	A, P 20006~20053	
	144-14-14282	• GEAR	1	A, P, L, E 20054~	

Fig & Index No.	Part No.	Description	Q'ty	Serial No.	Remarks
1232-40	131-14-45560	• COLLAR	1	20006~	
41	141-14-34312	• GEAR	1	S 20006~20053	
	141-14-34313	• GEAR	1	S 20054~	
	144-14-14291	• GEAR	1	A, P 20006~20053	
	144-14-14292	• GEAR	1	A, P, L, E 20054~	
42	141-14-34340	• COLLAR	1	S 20006~	
	144-14-14340	• COLLAR	1	A, P, L, E 20006~	
43	140-09-13630	• BEARING	1	S 20006~	
	130-09-14610	• BEARING	1	A, P, L, E 20006~	
44	141-14-34321	• CAGE	1	S 20006~	
	144-14-14320	• CAGE	1	A, P, L, E 20006~	
45	141-14-34330	• COVER	1	S 20006~	
	144-14-14330	• COVER	1	A, P, L, E 20006~	
	141-14-06010	• SHIM ASS'Y	1	20006~	
46	144-14-14360	• • SHIM, 0.2mm	4	20006~	
47	144-14-14370	• • SHIM, 0.1mm	2	20006~	
	144-14-05010	• SHIM ASS'Y	1	A, P, L, E 20006~	
48	144-14-14350	• • SHIM, 1.0mm	2	A, P, L, E 20006~	
49	144-14-14360	• • SHIM, 0.2mm	8	A, P, L, E 20006~	
50	144-14-14370	• • SHIM, 0.1mm	4	A, P, L, E 20006~	
51	01040-31450	• BOLT	4	S 20006~22387	
	01010-31450	• BOLT	4	S 22388~	
	01040-31465	• BOLT	4	A, P, L 20006~22387	
	01010-31465	• BOLT	4	A, P, L, E 22388~	
52	01602-01442	• WASHER, spring	4	20006~	
53	07043-00211	• PLUG, taper	1	20006~	
54	131-14-46182	• COLLAR	1	20054~	

Fig. 1233 COUNTER SHAFT (D60A, P, PL, E, S Serial No. 20006~)

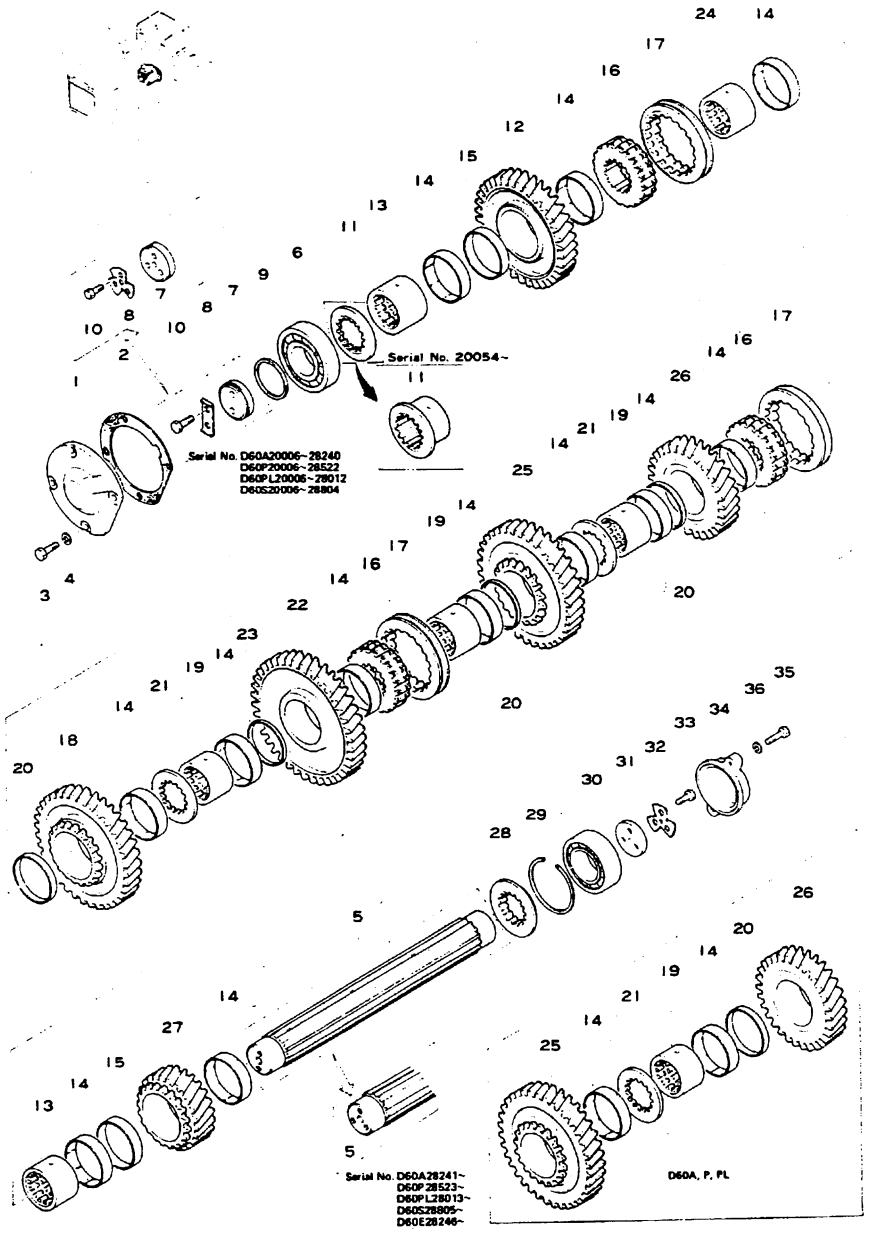

Fig & Index No.	Part No.	Description	Q'ty	Serial No.	Remarks
	(141-14-00510)	TRANSMISSION ASS'Y	1	S 20006~20021	■ 141-14-00516 141-49-33286
	(141-14-00511)	TRANSMISSION ASS'Y	1	S 20024~20031	■ 141-14-00516 141-49-33286
	(141-14-00512)	TRANSMISSION ASS'Y	1	S 20032~20053	■ 141-14-00516 141-49-33286
	(141-14-00513)	TRANSMISSION ASS'Y	1	S 20054~22387	■ 141-14-00516 141-49-33286
	(141-14-00514)	TRANSMISSION ASS'Y	1	S 22388~23015	■ 141-14-00516 141-49-33286
	(141-14-00515)	TRANSMISSION ASS'Y	1	S 23016~24847	□ 141-14-00516
	(141-14-00516)	TRANSMISSION ASS'Y	1	S 24848~28804	
	(141-14-00517)	TRANSMISSION ASS'Y	1	S 28805~	
	(144-14-00010)	TRANSMISSION ASS'Y	1	A, P 20006~20021	□ 144-14-00016
	(144-14-00011)	TRANSMISSION ASS'Y	1	A, P 20024~20031	□ 144-14-00016
	(144-14-00012)	TRANSMISSION ASS'Y	1	A, P 20024~20026, 20042~20053	□ 144-14-00016
	(144-14-00013)	TRANSMISSION ASS'Y	1	A, P, L, E 20054~22387	□ 144-14-00016
	(144-14-00014)	TRANSMISSION ASS'Y	1	A, P, L, E 22388~23015	□ 144-14-00016
	(144-14-00015)	TRANSMISSION ASS'Y	1	A, P, L, E 23016~24730	□ 144-14-00016
	(144-14-00016)	TRANSMISSION ASS'Y	1	A 24731~28240 P 24731~28522 L 24731~28012 E 24731~28246	
	(144-14-00017)	TRANSMISSION ASS'Y	1	A 28241~ P 28523~ L 28013~ E 28247~	
	These assemblies consist of all parts shown in Fig. 1231 to 1236A.				
1233- 1	141-14-35112	· COVER	1	20006~	
2	141-14-35411	· GASKET	1	20006~	
3	01010-31030	· BOLT	4	20006~	
4	01602-01030	· WASHER, spring	4	20006~	
5	141-14-35131	· SHAFT, counter	1	20006~20053	
	141-14-35132	· SHAFT, counter	1	A 20054~28240 P 20054~28522 L 20054~28012 S 20054~28804 E 20054~28246	

Fig. & Index No.	Part No.	Description	Q'ty	Serial No.	Remarks
	141-14-35133	. SHAFT, counter	1	A 28241~ P 28523~ L 28013~ E 28247~ S 28805~	
1233- 6	140-09-13610	. BEARING	1	A 20006~28240 P 20006~28522 L 20006~28012 E 20006~28246 S 20006~28804	☐ 06030-21311
	06030-21311	. BEARING	1	A 28241~ P 28523~ L 28013~ E 28247~ S 28805~	
7	141-14-35140	. HOLDER	1	A 20006~28240 P 20006~28522 L 20006~28012 E 20006~28246 S 20006~28804	
	141-14-35141	. HOLDER	1	A 28241~ P 28523~ L 28013~ E 28207~ S 28805~	
8	141-14-35150	. PLATE, lock	1	A 20006~28240 P 20006~28522 L 20006~28012 E 20006~28246 S 20006~28804	
	141-14-35390	. PLATE, lock	1	A 28241~ P 28523~ L 28013~ E 28247~ S 28805~	
9	131-11-11220	. RING, seal	1	20006~	
10	01010-31230	. BOLT	2	A 20006~28240 P 20006~28522 L 20006~28012 E 20006~28246 S 20006~28804	
			3	A 28241~ P 28583~ L 28013~ E 28207~ S 28805~	
11	141-14-35160	. COLLAR	1	20006~20053	
	141-14-35420	. RACE, inner	1	20054~	
12	141-14-35172	. GEAR	1	20006~20053	
	141-14-35173	. GEAR	1	20054~	
13	141-14-35180	. RACE, inner	2	20006~	
14	141-14-35190	. BUSHING	12	20006~	
15	141-14-35210	. COLLAR	2	20006~	
16	141-14-35221	. GEAR	3	20006~20021	
	141-14-35222	. GEAR	3	20024~20053	

Fig. & Index No.	Part No.	Description	Q'ty	Serial No.	Remarks
	141-14-35224	. GEAR	3	20054~	
1233-17	141-14-35231	. GEAR	3	20006~20053	
	141-14-35233	. GEAR	3	20054~	
18	141-14-35242	. GEAR	1	20006~20053	
	141-14-35243	. GEAR	1	20054~	
19	141-14-35250	. RACE, inner	3	20006~	
20	141-14-35260	. COLLAR	3	20006~	
21	141-14-35270	. SPACER	2	20006~20053	
	141-14-35271	. SPACER	2	20054~	
22	141-14-35282	. GEAR	1	S 20006~20053	
	141-14-35283	. GEAR	1	S 20054~	
	144-14-15130	. GEAR	1	A, P 20006~20053	
	144-14-15132	. GEAR	1	A, P, L, E 20054~	
23	141-14-35290	. COLLAR	1	20006~	
24	141-14-35310	. RACE, inner	1	20006~	
25	141-14-35321	. GEAR	1	S 20006~20053	
	141-14-35323	. GEAR	1	S 20054~	
	144-14-15110	. GEAR	1	A, P 20006~20053	
	144-14-15112	. GEAR	1	A, P, L, E 20054~	
26	141-14-35331	. GEAR	1	S 20006~20053	
	141-14-35333	. GEAR	1	S 20054~	
	144-14-15121	. GEAR	1	A, P 20006~20053	
	144-14-15122	. GEAR	1	A, P, L, E 20054~	
27	141-14-35342	. GEAR	1	20006~20053	
	141-14-35343	. GEAR	1	20054~	
28	141-14-35380	. COLLAR	1	20006~	
29	130-09-15440	. RING, snap	1	20006~	
30	130-09-31230	. BEARING	1	20006~	
31	141-14-35361	. HOLDER	1	20006~	
32	141-14-35390	. PLATE, lock	1	20006~	
33	01010-31225	. BOLT	3	20006~	
34	141-14-35371	. COVER	1	20006~	
35	01010-31035	. BOLT	2	20006~	
36	01602-01030	. WASHER, spring	2	20006~	

Fig. 1234 POWER TAKE OFF SHAFT

(D60A, P, PL, E, S Serial No. 20006~)

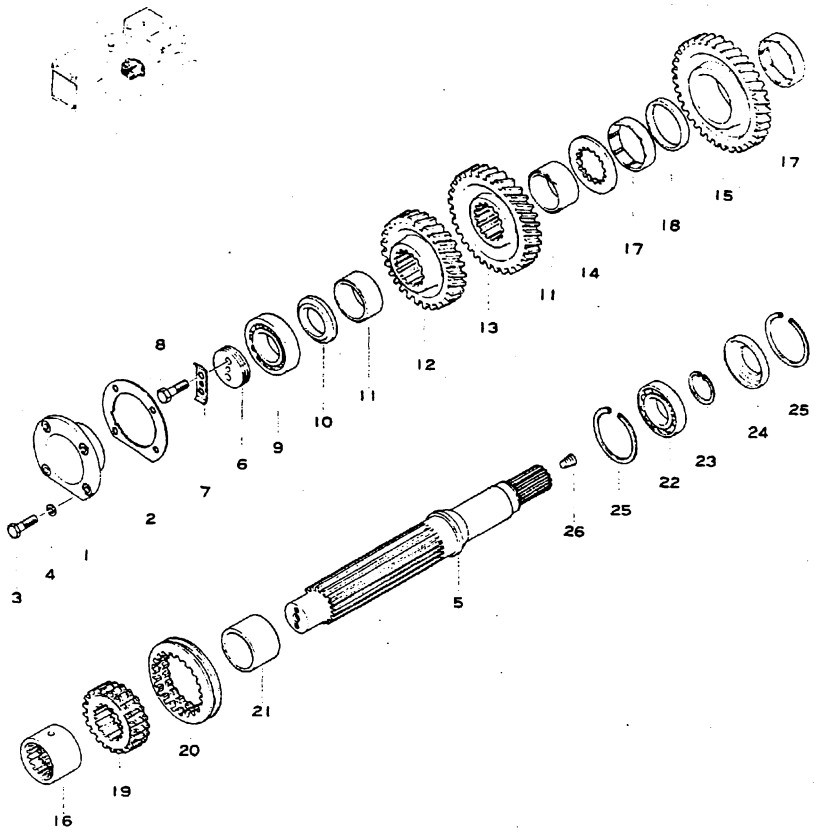

Fig. & Index No.	Part No.	Description	Q'ty	Serial No.	Remarks
1234-	(141-14-00510)	TRANSMISSION ASS'Y	1	S 20006-20021	■ 141-14-00516 141-49-33286
	(141-14-00511)	TRANSMISSION ASS'Y	1	S 20024~20031	■ 141-14-00516 141-49-33286
	(141-14-00512)	TRANSMISSION ASS'Y	1	S 20032~20053	■ 141-14-00516 141-49-33286
	(141-14-00513)	TRANSMISSION ASS'Y	1	S 20054~22387	■ 141-14-00516 141-49-33286
	(141-14-00514)	TRANSMISSION ASS'Y	1	S 22388~23015	■ 141-14-00516 141-49-33286
	(141-14-00515)	TRANSMISSION ASS'Y	1	S 23016~24847	□ 141-14-00516
	(141-14-00516)	TRANSMISSION ASS'Y	1	S 24847~28804	
	(141-14-00517)	TRANSMISSION ASS'Y	1	S 28805~	
	(144-14-00010)	TRANSMISSION ASS'Y	1	A, P 20006~20021	□ 144-14-00016
	(144-14-00011)	TRANSMISSION ASS'Y	1	A, P 20024~20031	□ 144-14-00016
	(144-14-00012)	TRANSMISSION ASS'Y	1	A, P 20032~20053	□ 144-14-00016
	(144-14-00013)	TRANSMISSION ASS'Y	1	A, P, L, E 20054~22387	□ 144-14-00016
	(144-14-00014)	TRANSMISSION ASS'Y	1	A, P, L, E 22388~23015	□ 144-14-00016
	(144-14-00015)	TRANSMISSION ASS'Y	1	A, P, L, E 23016~24730	□ 144-14-00016
	(144-14-00016)	TRANSMISSION ASS'Y	1	A 24731~28240 P 24731~28522 L 24731~28012 E 24731~28246	
	(144-14-00017)	TRANSMISSION ASS'Y	1	A 28241~ P 28523~ L 28013~ E 28247~	
	These assemblies consist of all parts shown in Figs. 1231 to 1236A.				
1234- 1	141-14-36190	• COVER	1	20006~	
2	141-14-36311	• GASKET	1	20006~	
3	01010-31030	• BOLT	4	20006~	
4	01602-01030	• WASHER, spring	4	20006~	
5	141-14-36140	• SHAFT, power take off	1	20006~20053	
	141-14-36141	• SHAFT, power take off	1	20054~	
6	141-14-36152	• HOLDER	1	20006~	
7	141-14-35150	• PLATE, lock	1	20006~	
8	01010-31230	• BOLT	2	20006~	
9	140-09-13640	• BEARING	1	A 20006~28240 P 20006~28522 L 20006~28012 E 20006~28258 S 20006~28864	
	06030-22211	• BEARING	1	A 28241~ P 28523~ L 28013~ E 28259~ S 28865~	
10	141-14-36250	• COLLAR	1	20006~	
11	131-14-46182	• COLLAR	2	20006~	
12	141-14-36172	• GEAR	1	20006~20053	

POWER TAKE OFF SHAFT

Fig. & Index No.	Part No.	Description	Q'ty	Serial No.	Remarks
	141-14-36173	• GEAR	1	20054~	
1234-13	141-14-36182	• GEAR	1	20006~20053	
	141-14-36183	• GEAR	1	20054~	
14	141-14-35270	• SPACER	1	20006~20053	
	141-14-35271	• SPACER	1	20054~	
15	144-14-16192	• GEAR	1	S 20006~20053	
	144-14-16193	• GEAR	1	S 20054~	
	144-14-16211	• GEAR	1	A, P 20006~20053	
	144-14-16212	• GEAR	1	A, P, L, E 20054~	
16	141-14-35250	• RACE, inner	1	20006~	
17	141-14-35190	• BUSHING	2	20006~	
18	141-14-35260	• COLLAR	1	20006~	
19	141-14-35221	• GEAR	1	20006~20021	
	141-14-35222	• GEAR	1	20024~20053	
	141-14-35224	• GEAR	1	20054~	
20	141-14-35231	• GEAR	1	20006~20053	
	141-14-35233	• GEAR	1	20054~	
21	131-14-45560	• COLLAR	1	20006~	
22	06041-00210	• BEARING	1	20006~	
23	04064-05020	• RING, snap	1	20006~	
24	141-14-36260	• COLLAR	1	20006~	
25	130-09-15610	• RING, snap	2	20006~	
26	07043-00211	• PLUG, taper	1	20006~	

Fig. 1235 GEAR SHIFT FORK (D60A, P, PL, E, S Serial No. 20006–)

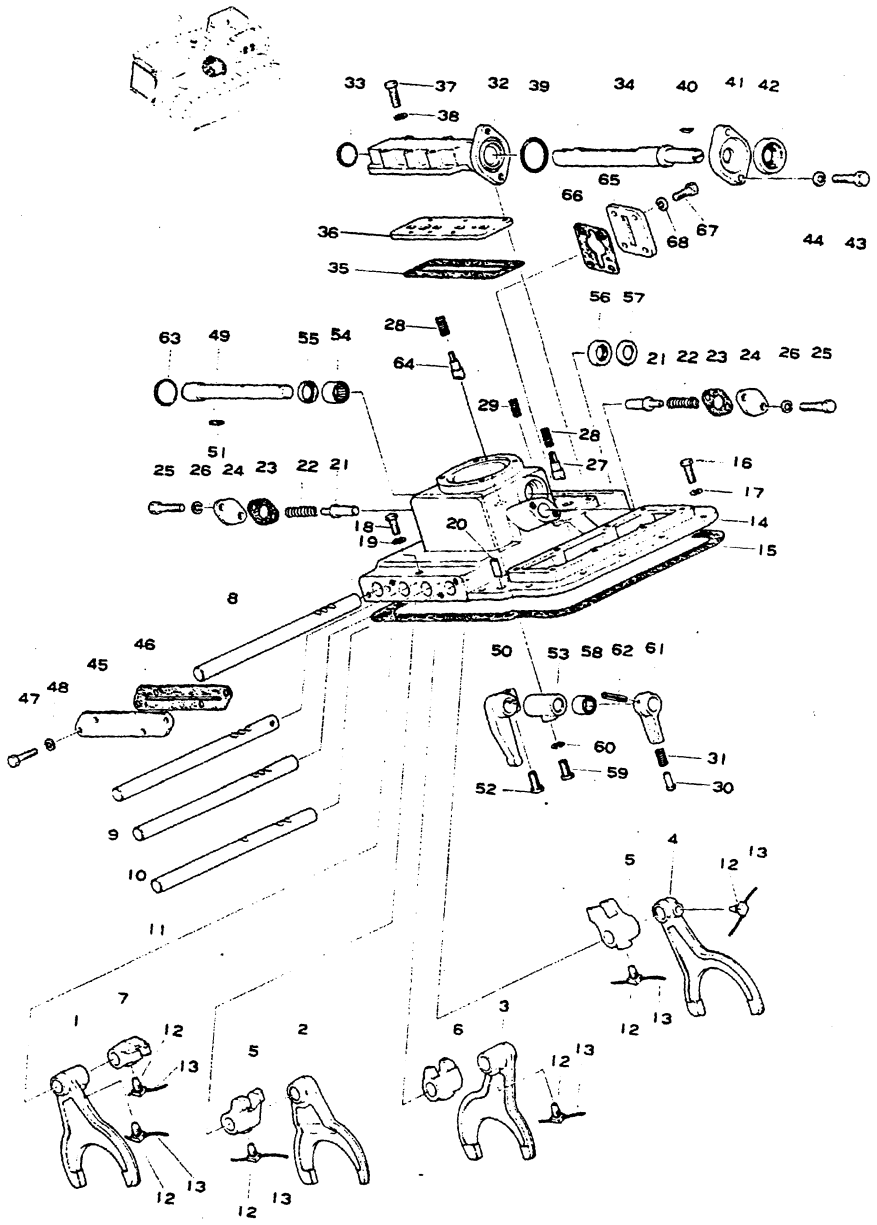

Fig. & Index No.	Part No.	Description	Q'ty	Serial No.	Remarks
	(141-14-00510)	TRANSMISSION ASS'Y	1	S 20006~20021	■ 141-14-00516 141-49-33286
	(141-14-00511)	TRANSMISSION ASS'Y	1	S 20024~20031	■ 141-14-00516 141-49-33286
	(141-14-00512)	TRANSMISSION ASS'Y	1	S 20032~20053	■ 141-14-00516 141-49-33286
	(141-14-00513)	TRANSMISSION ASS'Y	1	S 20054~22387	■ 141-14-00516 141-49-33286
	(141-14-00514)	TRANSMISSION ASS'Y	1	S 22388~23015	■ 141-14-00516 141-49-33286
	(141-14-00515)	TRANSMISSION ASS'Y	1	S 23016~24847	□ 141-14-00516
	(141-14-00516)	TRANSMISSION ASS'Y	1	S 24848~28804	
	(141-14-00517)	TRANSMISSION ASS'Y	1	S 28805~	
	(144-14-00010)	TRANSMISSION ASS'Y	1	A, P 20006~20021	□ 144-14-00016
	(144-14-00011)	TRANSMISSION ASS'Y	1	A, P 20024~20031	□ 144-14-00016
	(144-14-00012)	TRANSMISSION ASS'Y	1	A, P 20032~20053	□ 144-14-00016
	(144-14-00013)	TRANSMISSION ASS'Y	1	A, P, L, E 20054~22387	□ 144-14-00016
	(144-14-00014)	TRANSMISSION ASS'Y	1	A, P, L, E 22388~23015	□ 144-14-00016
	(144-14-00015)	TRANSMISSION ASS'Y	1	A, P, L, E 23016~24730	□ 144-14-00016
	(144-14-00016)	TRANSMISSION ASS'Y	1	A 24731~28240 P 24731~28522 L 24731~28012 E 24731~28246	
	(144-14-00017)	TRANSMISSION ASS'Y	1	A 28241~ P 28523~ L 28013~ E 28247~	
	These assemblies consist of all parts shown in Figs. 1231 to 1236A.				
1235- 1	141-14-32113	. FORK, forward and reverse gearshift	1	20006~20053	※ 141-14-32930
	141-14-32115	. FORK, forward and reverse gearshift	1	S 20054~24847 A, P, L, E 20054~24730	□ 141-14-32117
	141-14-32117	. FORK, forward and reverse gearshift	1	S 24848~ A, P, L, E 24731~	
2	141-14-32123	. FORK, 1st and 2nd gearshift	1	20006~20053	※ 141-14-32940
	141-14-32125	. FORK, 1st and 2nd gearshift	1	20054~	

Fig & Index No.	Part No.	Description	Q'ty	Serial No.	Remarks
1235- 3	141-14-32133	· FORK, 3rd and 4th gearshift	1	20006-20053	※ 141-14-32134
	141-14-32134	· FORK, 3rd and 4th gearshift	1	20054-	
4	141-14-32232	· FORK, 5th gearshift	1	20006-20053	※ 141-14-32233
	141-14-32233	· FORK, 5th gearshift	1	20054-	
5	141-14-32151	· BOSS	2	20006-20053	※ 141-14-32152
	141-14-32152	· BOSS	2	20054-	
6	141-14-32161	· BOSS	1	20006-20053	※ 141-14-32162
	141-14-32162	· BOSS	1	20054-	
7	141-14-32221	· BOSS	1	20006-20053	
	141-14-32223	· BOSS	1	S 20054-24847 A, P, L, E 20054-24730	
8	141-14-32970	· SHAFT	1	20006-20053	
	141-14-32174	· SHAFT	1	S 20054-24847 A, P, L, E 20054-24730	■ 141-14-32175 141-14-32117
	141-14-32175	· SHAFT	1	S 24848- A, P, L, E 24731-	
9	141-14-32181	· SHAFT	1	20006-20053	※ 141-14-32184
	141-14-32184	· SHAFT	1	20054-	
10	141-14-32191	· SHAFT	1	20006-20053	※ 141-14-32194
	141-14-32194	· SHAFT	1	20054-	
11	144-14-12111	· SHAFT	1	20006-20053	
	144-14-12114	· SHAFT	1	20054-	
12	141-14-32250	· BOLT	8	20006-20053	※ 170-14-13222
	170-14-13222	· BOLT	8	S 20054-24847 A, P, L, E 20054-24730	
			7	S 24848- A, P, L, E 24731-	
13	04059-01025	· WIRE, lock	8	20006-20053	※ 04059-01625
	04059-01625	· WIRE, lock	8	S 20054-24847 A, P, L, E 20054-24730	
			7	S 24848- A, P, L, E 24731-	
14	141-14-32392	· CASE	1	20006-20021	

Fig & Index No.	Part No.	Description	Q'ty	Serial No.	Remarks
	141-14-32312	· CASE	1	A, P 20006-20021	
	141-14-32313	· CASE	1	20024-20053	
	141-14-32315	· CASE	1	20054-	
1235-15	141-14-32321	· GASKET	1	20006-	
16	01010-31030	· BOLT	14	20006-	
17	01602-01030	· WASHER, spring	14	20006-	
18	01010-31065	· BOLT	1	20006-	
19	01602-01030	· WASHER, spring	1	20006-	
20	04020-01638	· PIN, dowel	2	20006-20021	
	141-14-32260	· PIN, dowel	2	20024-	
21	141-14-32331	· STOPPER	2	20006-	
22	141-14-32340	· SPRING	2	20006-	
23	141-14-32350	· GASKET	2	20006-	
24	141-14-32360	· COVER	2	20006-	
25	01010-31025	· BOLT	4	20006-	
26	01602-01030	· WASHER, spring	4	20006-	
27	141-14-32371	· PLUNGER	4	20006-20053	
			3	20054-	
28	141-14-32240	· SPRING	1	20006-20053	
	141-14-32241	· SPRING	1	20054-	
29	141-14-32380	· SPRING	3	20006-	
30	144-14-12120	· PLUNGER	1	20006-	
31	144-14-12130	· SPRING	1	20006-	
32	141-14-32412	· COVER	1	20006-	
33	07046-03520	· PLUG	1	20006-	
34	141-14-32421	· SHAFT	1	20006-	
35	141-14-32432	· GASKET	2	20006-	
36	141-14-32471	· PLATE	1	20006-	
37	01010-31070	· BOLT	6	20006-	
38	01602-01030	· WASHER, spring	6	20006-	
39	07000-03048	· O-RING	1	20006-	
40	04010-00519	· KEY, woodruff	1	20006-	
41	141-14-32441	· FLANGE	1	20006-	

Fig & Index No.	Part No.	Description	Q'ty	Serial No.	Remarks
1235 -42	07011-00020	. SEAL, oil	1	20006~	
43	01010-31035	. BOLT	2	20006~	
44	01602-01030	. WASHER, spring	2	20006~	
45	141-14-32510	. COVER	1	20006~	
46	141-14-32520	. GASKET	1	20006~20031	
	141-14-32521	. GASKET	1	20032~	
47	01010-31025	. BOLT	4	20006~	
48	01602-01030	. WASHER, spring	4	20006~	
49	141-14-32911	. SHAFT	1	S 20006~20021	
	141-14-32912	. SHAFT	1	S 20024~20031	
	141-14-32913	. SHAFT	1	S 20032~24847	■ 141-14-32914 141-43-32214 141-14-32824
	141-14-32914	. SHAFT	1	S 24848~	
	144-14-12160	. SHAFT	1	A, P 20006~20021	
	144-14-12152	. SHAFT	1	A, P 20024~20031	
	144-14-12153	. SHAFT	1	A, P, L, E 20032~24730	■ 144-14-12154 141-14-32824
	144-14-12154	. SHAFT	1	A, P, L, E 24731~	
50	141-14-32820	. LEVER	1	20006~20021	
	141-14-32821	. LEVER	1	20024~20031	
	141-14-32840	. LEVER	1	20032~20053	
	141-14-32823	. LEVER	1	S 20054~24867	■ 141-14-32824 141-43-32214 141-14-32914 } S用
				A, P, L, E 20054~24730	■ 141-14-32824 144-14-12154 } A.P.L用
	141-14-32824	. LEVER	1	S 24868~ A, P, L, E 24731~	
51	04010-00725	. KEY, woodruff	2	20006~20021, 20032~	
	04010-00522	. KEY, woodruff	2	20024~20031	
52	01040-31235	. BOLT	1	20006~20021	
	01010-31240	. BOLT	1	20024~	
53	141-14-32830	. COLLAR	1	20006~20021	
	01602-01236	. WASHER, spring	1	20024~	

Fig & Index No.	Part No.	Description	Q'ty	Serial No.	Remarks
1235 -54	06120-02820	. BEARING, needle	1	A, P 20006~20021	
	06120-02216	. BEARING, needle	1	A, P, L, E 20024~ S 20006~	
55	06122-02804	. SEAL, bearing	1	AP20006~20021	
56	07012-00022	. SEAL, oil	1 2	S 20006~20021 20024~	
	07012-00028	. SEAL, oil	1	A, P 20006~20021	
57	01640-22232	. WASHER	1	S 20006~20021	
	01640-22845	. WASHER	1	A, P 20006~20021	
	141-14-32920	. WASHER	2	20024~	
58	06120-02216	. BEARING, needle	1	20006~	
59	131-14-43160	. BOLT	1	20006~	
60	04059-01025	. WIRE, lock	1	20006~	
61	144-14-12140	. LEVER	1	20006~20021	
	144-14-12141	. LEVER	1	20024~	
62	04025-00640	. PIN, roll	1	20006~20021	
63	07046-04020	. PLUG	1	20006~20021	
64	141-14-32270	. PLUNGER	1	20054~	
65	141-14-32530	. COVER	1	20054~	
66	141-14-32540	. GASKET	1	20054~	
67	01000-30820	. BOLT	4	20054~22387	
	01010-30820	. BOLT	4	22388~	
68	01602-00825	. WASHER, spring	4	20054~	

Fig. 1236A GEAR SHIFT LEVER (D60A, P, PL, E, S Serial No. 20024~)

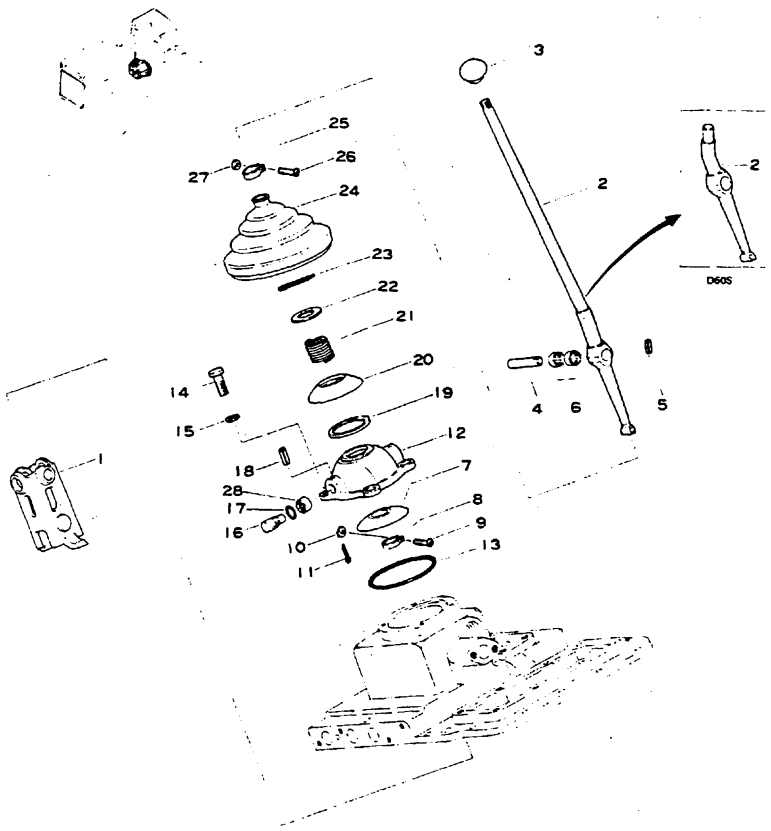

Fig & Index No.	Part No.	Description	Q'ty	Serial No.	Remarks
1236A-	(141-14-00511)	TRANSMISSION ASS'Y	1	S 20024~20031	■ 141-14-00516 141-49-33286
	(141-14-00512)	TRANSMISSION ASS'Y	1	S 20032~20053	■ 141-14-00516 141-49-33286
	(141-14-00513)	TRANSMISSION ASS'Y	1	S 20054~22387	■ 141-14-00516 141-49-33286
	(141-14-00514)	TRANSMISSION ASS'Y	1	S 22388~23015	■ 141-14-00516 141-49-33286
	(141-14-00515)	TRANSMISSION ASS'Y	1	S 23016~24847	□ 141-14-00516
	(141-14-00516)	TRANSMISSION ASS'Y	1	S 24848~28804	
	(141-14-00517)	TRANSMISSION ASS'Y	1	S 28805~	

Fig & Index No.	Part No.	Description	Q'ty	Serial No.	Remarks
	(144-14-00011)	TRANSMISSION ASS'Y	1	A, P 20024~20031	■ 144-14-00016
	(144-14-00012)	TRANSMISSION ASS'Y	1	A, P 20032~20053	■ 144-14-00016
	(144-14-00013)	TRANSMISSION ASS'Y	1	A, P, L, E 20054~22387	■ 144-14-00016
	(144-14-00014)	TRANSMISSION ASS'Y	1	A, P, L, E 22388~23015	■ 144-14-00016
	(144-14-00015)	TRANSMISSION ASS'Y	1	A, P, L, E 23016~23730	■ 144-14-00016
	(144-14-00016)	TRANSMISSION ASS'Y	1	A 23731~28240 P 23731~28522 L 23731~28012 E 23731~28246	
	(144-14-00017)	TRANSMISSION ASS'Y	1	A 28241~ P 28523~ L 28013~ E 28247~	
	These assemblies consists of all parts shown in Figs. 1231 to 1236A.				
1236A-1	141-14-32612	. GATE	1	20024~	
2	141-14-32622	. LEVER	1	S 20024~	
	144-14-13113	. LEVER	1	A, P, L, E 20024~	
3	09304-01250	. KNOB	1	A, P, L, E 20006~	
4	131-14-42630	. SHAFT	1	20006~	
5	04025-00412	. PIN, roll	1	20006~	
6	06120-01612	. BEARING, needle	1 2	20006~22387 22388~	
7	141-14-32770	. COVER	1	20024~	
8	170-14-12630	. CLIP	1	20006~	
9	170-14-12560	. SCREW	1	20006~22387	
	170-14-12561	. SCREW	1	22388~	
10	170-14-12570	. NUT	1	20006~22387	
	170-14-12571	. NUT	1	22388~	
11	04050-01012	. PIN, cotter	1	20006~	
12	141-14-32711	. ADAPTER	1	20024~	
13	07000-02100	. O-RING	1	20024~	
14	01010-31030	. BOLT	4	20006~	
15	01602-01030	. WASHER, spring	4	20006~	
16	141-14-32721	. SHAFT	2	20024~	
17	07000-02015	. O-RING	2	20006~	

GEAR SHIFT LEVER

Fig & Index No.	Part No.	Description	Q'ty	Serial No.	Remarks
1236A-18	04025-00432	• PIN, roll	2	20006-	
19	141-14-32760	• RING, seal	1	20024-	
20	141-14-32731	• COVER	1	20024-	
21	141-14-32751	• SPRING	1	20024-	
22	141-14-32780	• WASHER	1	20024-	
23	04050-05040	• PIN, cotter	1	20006-	
24	141-14-32630	• BOOT	1	20024-	
25	150-14-15260	• CLAMP	1	20006-	
26	01210-20416	• SCREW	1	20006 22387	
	01210-40416	• SCREW	1	22388-	
27	01500-30404	• NUT	1	20006-22387	
	01580-10403	• NUT	1	22388-	
28	06120-01612	• BEARING, needle	2	22388-	

Fig. 1251 TORQFLOW TRANSMISSION CASE (D65A Serial No. 32001 ~ / D65P, E Serial No. 31001 ~ / D65S Serial No. 30001 ~)

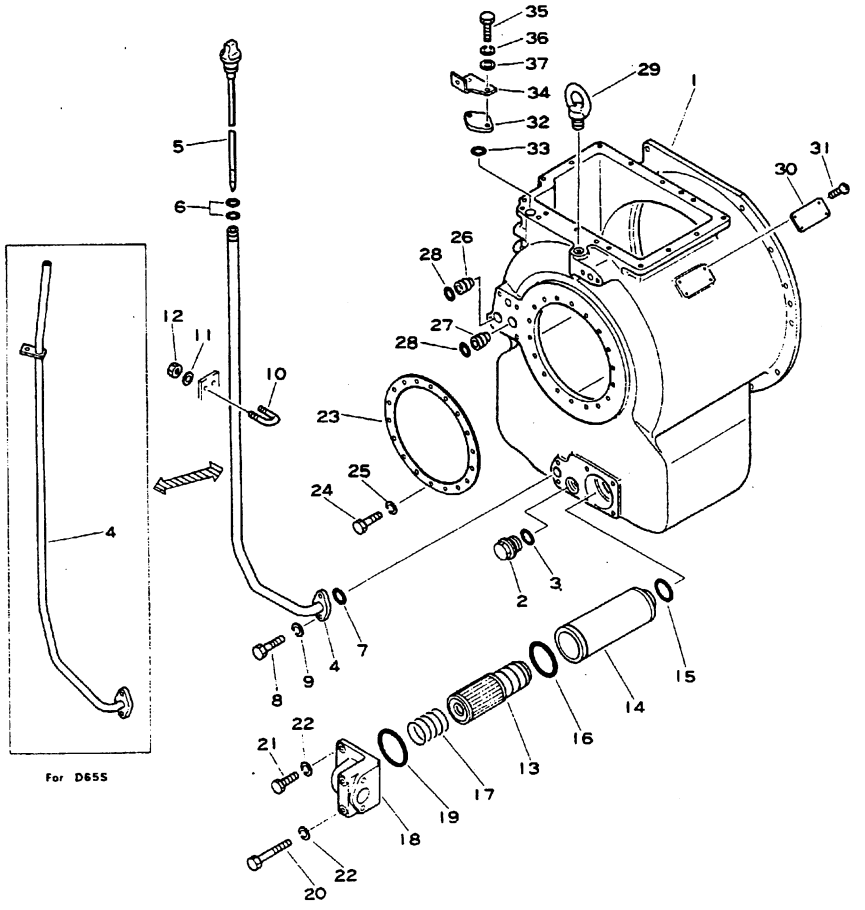

Fig. & Index No.	Part No.	Description	Q'ty	Serial No.	Remarks
	144-15-00014	TORQFLOW TRANSMISSION ASS'Y	1	A 32001~ E 31001~	
	14G-15-00011	TORQFLOW TRANSMISSION ASS'Y	1	P 31001~	
	141-15-00012	TORQFLOW TRANSMISSION ASS'Y	1	S 30001~	
	These assemblies consist of all parts shown in Figs. 1251 to 1265.				
1251 - 1	145-15-41350	. CASE, transmission	1	A 32001~ P, E 31001~ S 30001~	
2	07044-13620	. PLUG, drain	1	A 32001~ P, E 31001~ S 30001~	
3	07002-03634	. O-RING	1	A 32001~ P, E 31001~ S 30001~	
4	144-15-11670	. GUIDE, gauge	1	A 32001~ P, E 31001~	
	141-15-31322	. GUIDE, gauge	1	S 30001~	
5	144-15-11630	. GAUGE	1	A 32001~ P, E 31001~	
	141-15-31331	. GAUGE	1	S 30001~	
6	07000-03022	. O-RING	2	A 32001~ P, E 31001~ S 30001~	
7	07000-03025	. O-RING	1	A 32001~ P, E 31001~ S 30001~	
8	01010-31030	. BOLT	2	A 32001~ P, E 31001~ S 30001~	
9	01702-01030	. WASHER, spring	2	A 32001~ P, E 31001~ S 30001~	
10	07283-12236	. CLIP	1	A 32001~ P, E 31001~ S 30001~	
11	01643-31032	. WASHER	2	A 32001~ P, E 31001~ S 30001~	

Fig & Index No.	Part No.	Description	Q'ty	Serial No.	Remarks
1251 -12	01599-01011	. NUT	2	A 32001~ P, E 31001~ S 30001~	
13	145-14-31620	. MAGNET ASS'Y	1	A 32001~ P, E 31001~ S 30001~	
14	145-14-31660	. CASE	1	A 32001~ P, E 31001~ S 30001~	
15	07000-03045	. O-RING	1	A 32001~ P, E 31001~ S 30001~	
16	07000-02075	. O-RING	1	A 32001~ P, E 31001~ S 30001~	
17	145-14-31650	. SPRING	1	A 32001~ P, E 31001~ S 30001~	
18	145-15-41410	. COVER	1	A 32001~ P, E 31001~ S 30001~	
19	07000-62090	. O-RING	1	A 32001~ P, E 31001~ S 30001~	
20	144-15-21460	. BOLT	2	A 32001~ P, E 31001~ S 30001~	
21	01010-31025	. BOLT	2	A 32001~ P, E 31001~	
22	01602-01030	.WASHER, spring	4	A 32001~ P, E 31001~ S 30001~	
23	144-15-21390	. PLATE	1	A 32001~ P, E 31001~ S 30001~	
24	01010-31035	. BOLT	12	A 32001~ P, E 31001~ S 30001~	
25	01602-01030	. WASHER, spring	12	A 32001~ P, E 31001~ S 30001~	

Fig & Index No.	Part No.	Description	Q'ty	Serial No.	Remarks
1251 -26	145-15-44170	. SLEEVE	1	A 32001~ P, E 31001~ S 30001~	
27	144-15-24180	. SLEEVE	1	A 32001~ P, E 31001~ S 30001~	
28	07000-62018	. O-RING	2	A 32001~ P, E 31001~ S 30001~	
29	04530-02030	. BOLT, eye	1	A 32001~ P, E 31001~ S 30001~	
30	09608-05080	. PLATE, name	1	A 32001~ P, E 31001~ S 30001~	Limited Supply
31	04418-03060	. SCREW	4	A 32001~ P, E 31001~ S 30001~	
32	144-15-14150	. COVER	1	A 32001~ P, E 31001~ S 30001~	
33	07000-63025	. O-RING	1	A 32001~ P, E 31001~ S 30001~	
34	145-49-42450	. BRACKET	1	A 32001~ P, E 31001~ S 30001~	
35	01010-31035	. BOLT	2	A 32001~ P, E 31001~ S 30001~	
36	01602-01030	. WASHER, spring	2	A 32001~ P, E 31001~ S 30001~	
37	01643-31032	. WASHER	2	A 32001~ P, E 31001~ S 30001~	

Fig. 1252 TORQFLOW TRANSMISSION REAR COVER

(D65A Serial No. 32001 ~)
(D65P, E Serial No. 31001 ~)
(D65S Serial No. 30001 ~)

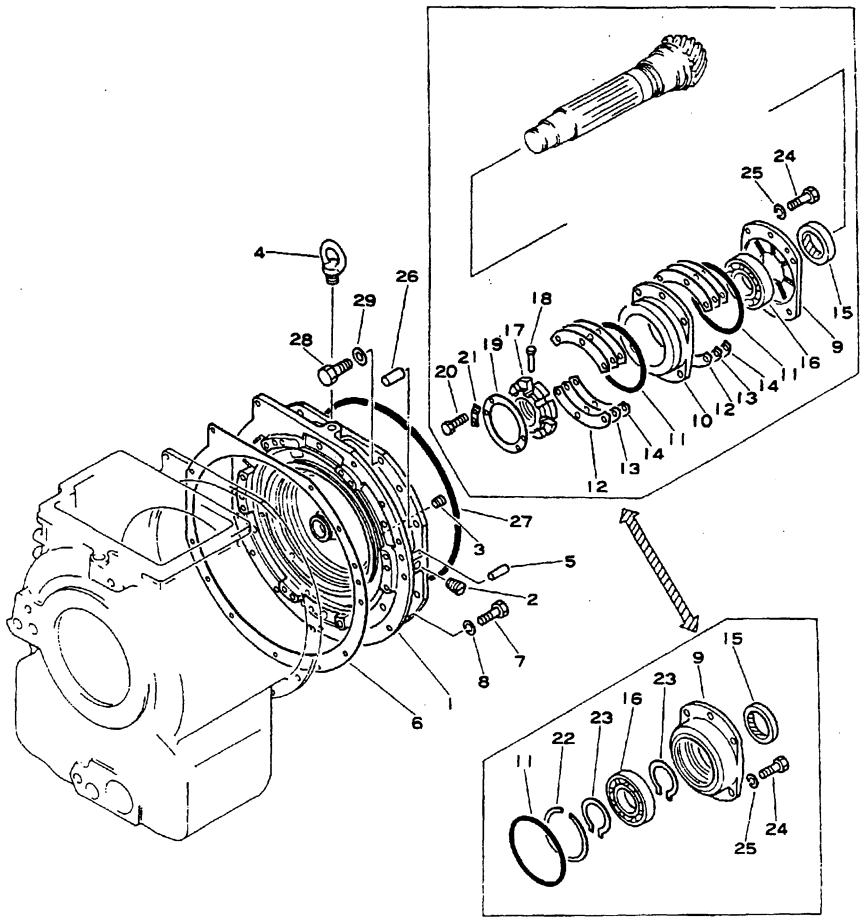

D65S Serial No. 30001~

Fig. & Index No.	Part No.	Description	Q'ty	Serial No.	Remarks
	(144-15-00014)	TORQFLOW TRANSMISSION ASS'Y	1	A 32001~ E 31001~	
	(14G-15-00011)	TORQFLOW TRANSMISSION ASS'Y	1	P 31001~	
	(141-15-00012)	TORQFLOW TRANSMISSION ASS'Y	1	S 30001~	
	These assemblies consist of all parts shown in Figs. 1251 to 1265.				
	145-15-00230	. REAR COVER ASS'Y	1	A 32001~ P, E 31001~ S 30001~	
1252 - 1	145-15-43110	. . COVER	1	A 32001~ P, E 31001~ S 30001~	☆145-15-00230
2	07043-00211	. . PLUG	2	A 32001~ P, E 31001~ S 30001~	
3	07043-00108	. . PLUG	1	A 32001~ P, E 31001~ S 30001~	
4	04530-02030	. BOLT, eye	1	A 32001~ P, E 31001~ S 30001~	
5	04020-01434	. PIN, dowel	1	A 32001~ P, E 31001~ S 30001~	
6	144-15-21120	. GASKET	1	A 32001~ P, E 31001~ S 30001~	
7	01010-31240	. BOLT	12	A 32001~ P, E 31001~ S 30001~	
8	01602-01236	. WASHER, spring	12	A 32001~ P, E 31001~ S 30001~	
9	144-822-1220	. CAGE	1	A 32001~ P, E 31001~	
	145-15-43210	. CAGE	1	S 30001~	
10	144-822-1230	. COVER	1	A 31001~ P, E 31001~	

Fig & Index No.	Part No.	Description	Q'ty	Serial No.	Remarks
1252 -11	07000-65160	. O-RING	2	A 32001~ P, E 31001~ S 30001~	
	144-15-06011	. SHIM ASS'Y	1	A 32001~ P, E 31001~	
12	144-15-21260	. . SHIM, 0.2 mm	8	A 32001~ P, E 31001~	
13	144-15-21270	. . SHIM, 1.0 mm	2	A 32001~ P, E 31001~	
14	144-15-21280	. . SHIM, 0.3 mm	6	A 32001~ P, E 31001~	
15	07012-20090	. SEAL, oil	1	A 32001~ P, E 31001~	
	07012-20070	. SEAL, oil	1	S 30001~	
16	144-15-22810	. BEARING	1	A 32001~ P, E 31001~	
	06040-06214	. BEARING	1	S 30001~	
17	135-15-11634	. NUT	1	A 32001~ P, E 31001~	
18	145-15-31331	. PIN	1	A 32001~ P, E 31001~	
19	145-15-31340	. RING	1	A 32001~ P, E 31001~	
20	01010-30610	. BOLT	4	A 32001~ P, E 31001~	
21	145-15-31350	. LOCK	2	A 32001~ P, E 31001~	
22	130-09-15720	. RING, snap	1	S 30001~	
23	04064-07025	. RING, snap	2	S 30001~	
24	01010-31460	. BOLT	4	A 32001~ P, E 31001~	
	01010-31440	. BOLT	4	S 30001~	
25	01602-01442	. WASHER, spring	4	A 32001~ P, E 31001~ S 30001~	
26	04020-01638	PIN, dowel	1	A 32001~ P, E 31001~ S 30001~	

Fig & Index No.	Part No.	Description	Q'ty	Serial No.	Remarks
1252 -27	07000-05445	O-RING	1	A 32001~ P, E 31001~ S 30001~	
28	01010-31845	BOLT	8	A 32001~ P, E 31001~ S 30001~	
29	01643-31845	WASHER	8	A 32001~ P, E 31001~ S 30001~	

Fig. 1253 FORWARD CLUTCH (D65A Serial No. 32001~)
(D65P, E Serial No. 31001~)
(D65S Serial No. 30001~)

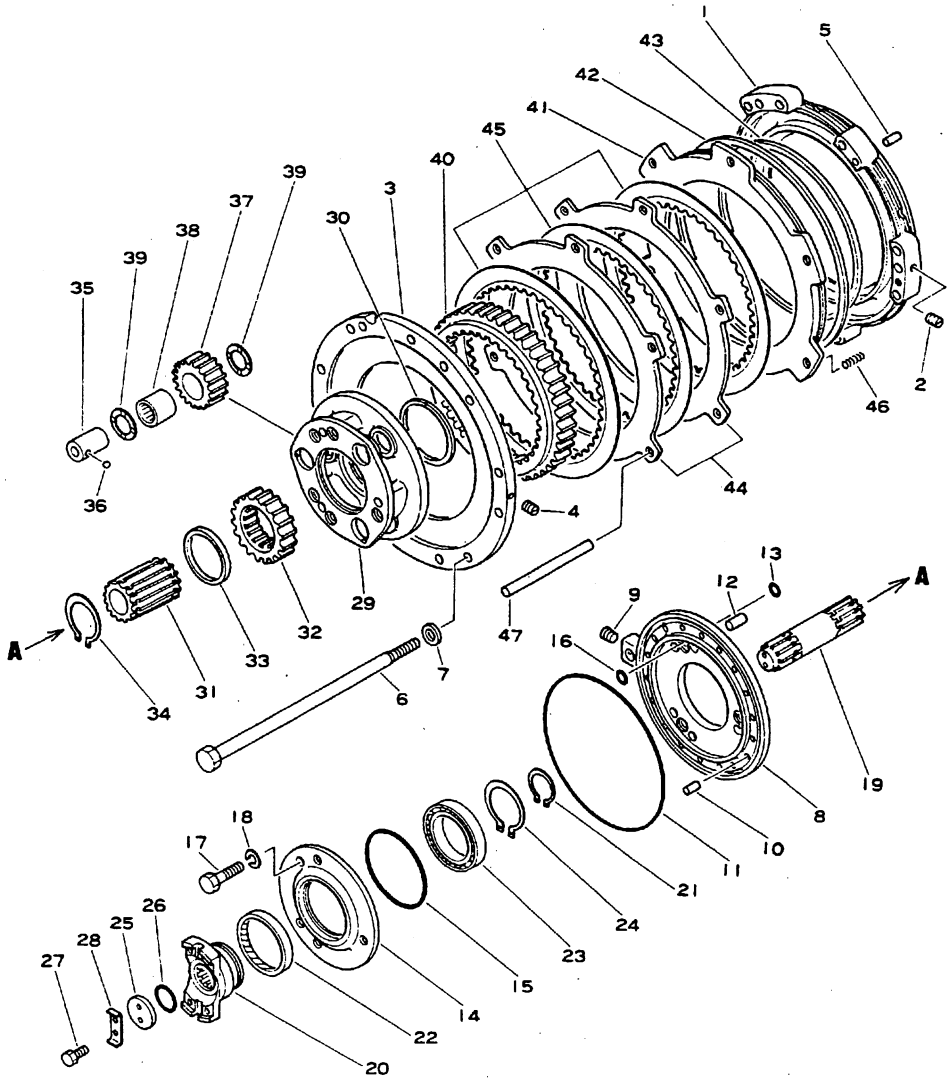

Fig & Index No.	Part No.	Description	Q'ty	Serial No.	Remarks
	(144-15-00014)	TORQFLOW TRANSMISSION ASS'Y	1	A 32001~ E 31001~	
	(14G-15-00011)	TORQFLOW TRANSMISSION ASS'Y	1	P 31001~	
	(141-15-00012)	TORQFLOW TRANSMISSION ASS'Y	1	S 30001~	
	These assemblies consists of all parts shown in Figs. 1251 to 1265.				
	145-15-00140	. HOUSING ASS'Y	1	A 32001~ P, E 31001~ S 30001~	
1253 - 1	145-15-41170	. . HOUSING	1	A 32001~ P, E 31001~ S 30001~	☆145-15-00140
2	145-14-11320	. . PLUG	2	A 32001~ P, E 31001~ S 30001~	
	145-15-00151	. PLATE ASS'Y	1	A 32001~ P, E 31001~ S 30001~	
3	145-15-41181	. . PLATE	1	A 32001~ P, E 31001~ S 30001~	☆145-15-00151
4	145-14-11320	. . PLUG	2	A 32001~ P, E 31001~ S 30001~	
5	04020-01228	. PIN, dowel	4	A 32001~ P, E 31001~ S 30001~	
6	144-15-21191	. BOLT	9	A 32001~ P, E 31001~ S 30001~	
7	145-14-11570	. WASHER	9	A 32001~ P, E 31001~ S 30001~	
	145-15-00160	. CAGE ASS'Y	1	A 32001~ P, E 31001~ S 30001~	
8	145-15-41210	. . CAGE	1	A 32001~ P, E 31001~ S 30001~	☆145-15-00160

Fig & Index No.	Part No.	Description	Q'ty	Serial No.	Remarks
1253 - 9	07043-00211	. . PLUG	1	A 32001~ P, E 31001~ S 30001~	
10	04020-01024	. PIN, dowel	6	A 32001~ P, E 31001~ S 30001~	
11	07000-05285	. O-RING (KIT)	1	A 32001~ P, E 31001~ S 30001~	
12	04020-01638	. PIN, dowel	3	A 32001~ P, E 31001~ S 30001~	
13	07000-62018	. O-RING (KIT)	5	A 32001~ P, E 31001~ S 30001~	
14	145-14-41220	. COVER	1	A 32001~ P, E 31001~ S 30001~	
15	07000-02145	. O-RING (KIT)	1	A 32001~ P, E 31001~ S 30001~	
16	07000-62018	. O-RING (KIT)	3	A 32001~ P, E 31001~ S 30001~	
17	01010-31450	. BOLT	5	A 32001~ P, E 31001~ S 30001~	
18	01602-01442	. WASHER, spring	5	A 32001~ P, E 31001~ S 30001~	
19	145-15-42210	. SHAFT	1	A 32001~ P, E 31001~ S 30001~	
20	144-15-22120	. COUPLING	1	A 32001~ P, E 31001~ S 30001~	
21	04064-05020	. RING, snap	1	A 32001~ P, E 31001~ S 30001~	
22	07012-10095	. SEAL, oil (KIT)	1	A 32001~ P, E 31001~ S 30001~	

Fig & Index No.	Part No.	Description	Q'ty	Serial No.	Remarks
1253 -23	06000-06016	. BEARING, ball	1	A 32001~ P, E 31001~ S 30001~	
24	04064-08025	. RING, snap	1	A 32001~ P, E 31001~ S 30001~	
25	04080-04508	. HOLDER	1	A 32001~ P, E 31001~ S 30001~	
26	07000-65042	. O-RING (KIT)	1	A 32001~ P, E 31001~ S 30001~	
27	01010-31022	. BOLT	2	A 32001~ P, E 31001~ S 30001~	
28	04081-04512	. PLATE, lock (KIT)	1	A 32001~ P, E 31001~ S 30001~	
29	145-15-42320	. CARRIER	1	A 32001~ P, E 31001~ S 30001~	
30	144-15-12260	. RING, seal	1	A 32001~ P, E 31001~ S 30001~	
31	145-15-42230	. SHAFT	1	A 32001~ P, E 31001~ S 30001~	
32	145-15-42110	. GEAR	1	A 32001~ P, E 31001~ S 30001~	
33	145-15-42190	. BUSHING	1	A 32001~ P, E 31001~ S 30001~	
34	04064-07525	. RING, snap	1	A 32001~ P, E 31001~ S 30001~	
35	145-15-42510	. SHAFT	3	A 32001~ P, E 31001~ S 30001~	
36	04260-00635	. BALL	3	A 32001~ P, E 31001~ S 30001~	

FORWARD CLUTCH

Fig & Index No.	Part No.	Description	Q'ty	Serial No.	Remarks
1253 -37	145-15-42460	. GEAR	3	A 32001~ P, E 31001~ S 30001~	
38	09232-03832	. BEARING, needle	3	A 32001~ P, E 31001~ S 30001~	
39	144-15-22561	. WASHER, thrust	6	A 32001~ P, E 31001~ S 30001~	
40	145-15-42611	. GEAR	1	A 32001~ P, E 31001~ S 30001~	
41	145-15-42740	. PISTON	1	A 32001~ P, E 31001~ S 30001~	
42	144-15-22871	. RING, seal	1	A 32001~ P, E 31001~ S 30001~	
43	144-15-22881	. RING, seal	1	A 32001~ P, E 31001~ S 30001~	
44	145-15-42760	. PLATE	2	A 32001~ P, E 31001~ S 30001~	
45	154-15-12715	. DISC	3	A 32001~ P, E 31001~ S 30001~	
46	145-14-12790	. SPRING	12	A 32001~ P, E 31001~ S 30001~	
47	144-15-22760	. PIN	6	A 32001~ P, E 31001~ S 30001~	

Fig. 1254 REVERSE CLUTCH (D65A Serial No. 32001~) (D65P, E Serial No. 31001~) (D65S Serial No. 30001~)

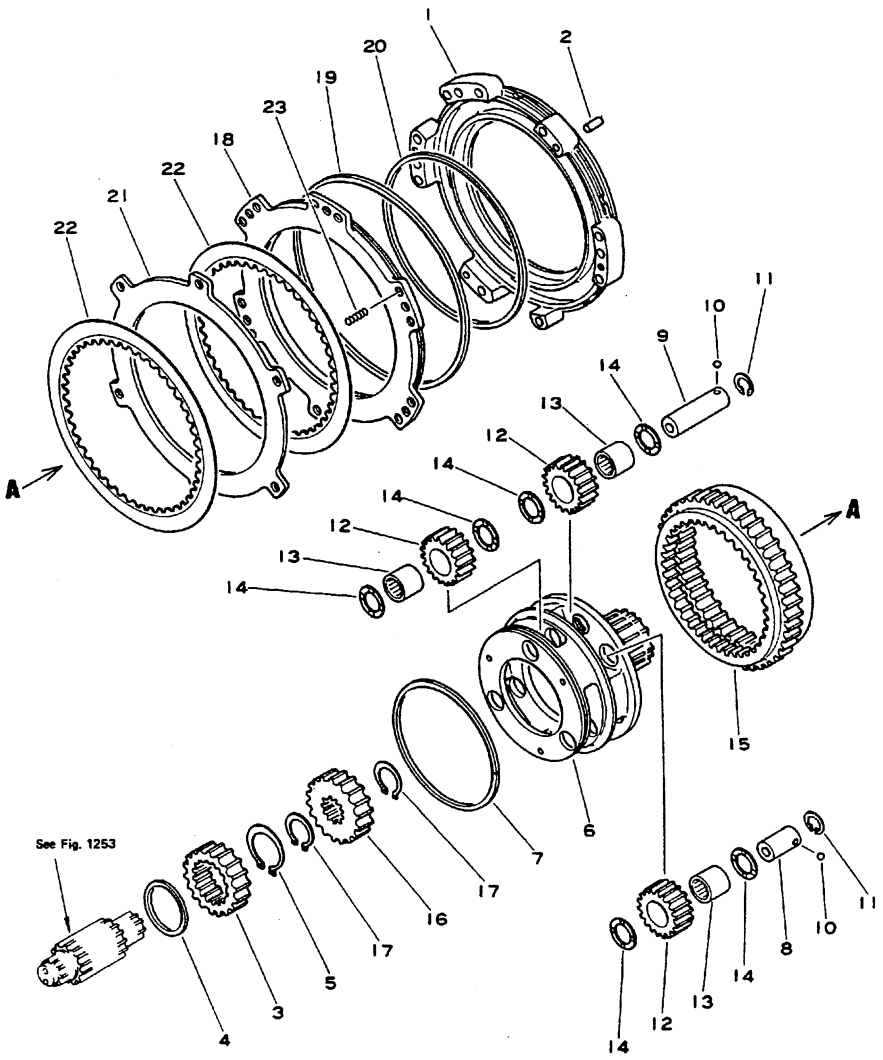

Fig. & Index No.	Part No.	Description	Q'ty	Serial No.	Remarks
	(144-15-00014)	TORQFLOW TRANSMISSION ASS'Y	1	A 32001~ E 31001~	
	(14G-15-00011)	TORQFLOW TRANSMISSION ASS'Y	1	P 31001~	
	(141-15-00012)	TORQFLOW TRANSMISSION ASS'Y	1	S 30001~	
	These assemblies consists of all parts shown in Figs. 1251 to 1265.				
1254 - 1	145-15-41160	. HOUSING	1	A 32001~ P, E 31001~ S 30001~	
2	04020-01228	. PIN, dowel	2	A 32001~ P, E 31001~ S 30001~	
3	145-15-42130	. GEAR	1	A 32001~ P, E 31001~ S 30001~	
4	145-15-42190	. BUSHING	1	A 32001~ P, E 31001~ S 30001~	
5	04064-07525	. RING, snap	1	A 32001~ P, E 31001~ S 30001~	
6	145-15-42330	. CARRIER	1	A 32001~ P, E 31001~ S 30001~	
7	07018-12455	. RING, seal	1	A 32001~ P, E 31001~ S 30001~	
8	145-15-42530	. SHAFT	3	A 32001~ P, E 31001~ S 30001~	
9	145-15-42520	. SHAFT	3	A 32001~ P, E 31001~ S 30001~	
10	04260-00635	. BALL	9	A 32001~ P, E 31001~ S 30001~	
11	04065-03815	. RING, snap	9	A 32001~ P, E 31001~ S 30001~	

REVERSE CLUTCH

Fig & Index No.	Part No.	Description	Q'ty	Serial No.	Remarks
1254 -12	145-15-42450	. GEAR	9	A 32001~ P, E 31001~ S 30001~	
13	09232-03838	. BEARING, needle	9	A 32001~ P, E 31001~ S 30001~	
14	144-15-22561	. WASHER, thrust	18	A 32001~ P, E 31001~ S 30001~	
15	145-15-42620	. GEAR	1	A 32001~ P, E 31001~ S 30001~	
16	145-15-42140	. GEAR	1	A 32001~ P, E 31001~ S 30001~	
17	04064-05020	. RING, snap	2	A 32001~ P, E 31001~ S 30001~	
18	145-15-42740	. PISTON	1	A 32001~ P, E 31001~ S 30001~	
19	144-15-22871	. RING, seal	1	A 32001~ P, E 31001~ S 30001~	
20	144-15-22881	. RING, seal	1	A 32001~ P, E 31001~ S 30001~	
21	145-15-42760	. PLATE	1	A 32001~ P, E 31001~ S 30001~	
22	154-15-12715	. DISC	2	A 32001~ P, E 31001~ S 30001~	
23	145-14-12790	. SPRING	12	A 32001~ P, E 31001~ S 30001~	

Fig. 1255 1ST CLUTCH (D65A Serial No. 32001~)
(D65P, E Serial No. 31001~)
(D65S Serial No. 30001~)

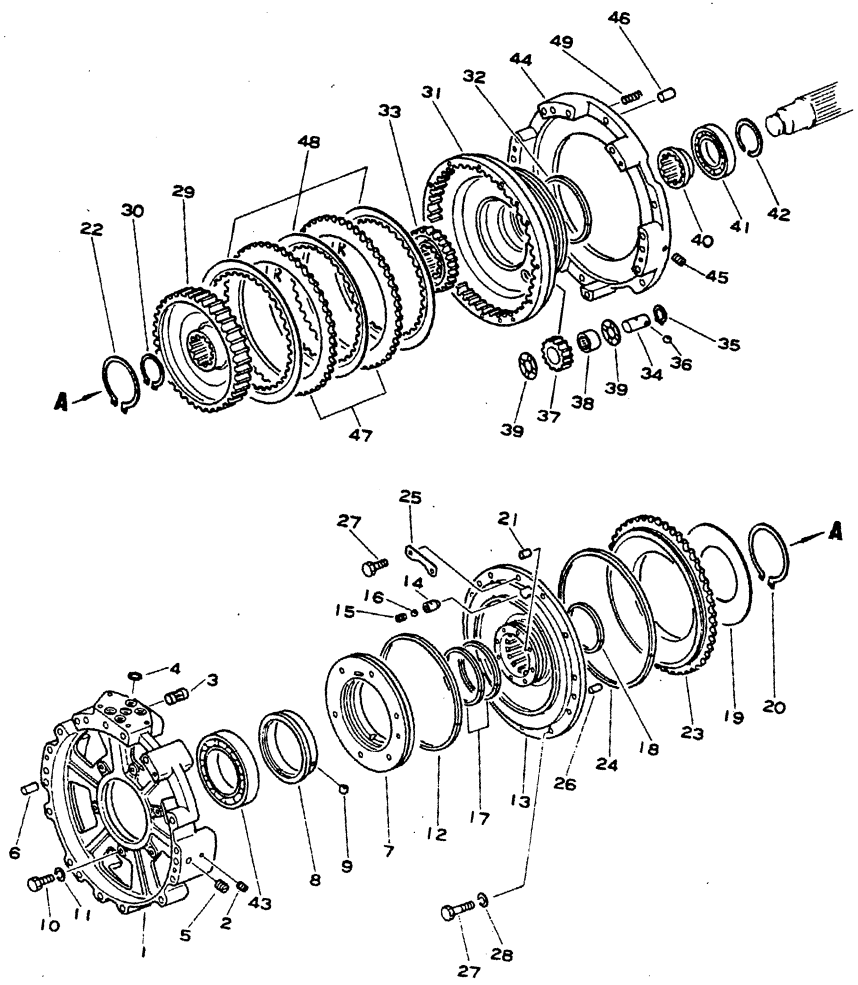

Fig. & Index No.	Part No.	Description	Q'ty	Serial No.	Remarks
	(144-15-00014)	TORQFLOW TRANSMISSION ASS'Y	1	A 32001~ E 31001~	
	(14G-15-00011)	TORQFLOW TRANSMISSION ASS'Y	1	P 31001~	
	(141-15-00012)	TORQFLOW TRANSMISSION ASS'Y	1	S 30001~	
	These assemblies consists of all parts shown in Figs. 1251 to 1265.				
	145-15-00130	. HOUSING ASS'Y	1	A 32001~ P, E 31001~ S 30001~	
1255 - 1	145-15-41150	. . HOUSING	1	A 32001~ P, E 31001~ S 30001~	☆ 145-15-00130
2	144-15-21320	. . PLUG	1	A 32001~ P, E 31001~ S 30001~	
3	09231-01430	. SLEEVE	9	A 32001~ P, E 31001~ S 30001~	
4	07000-63022	. O-RING	5	A 32001~ P, E 31001~ S 30001~	
5	234-15-12790	. PLUG	2	A 32001~ P, E 31001~ S 30001~	
6	04020-01228	. PIN, dowel	2	A 32001~ P, E 31001~ S 30001~	
7	145-15-41240	. CAGE	1	A 32001~ P, E 31001~ S 30001~	
8	145-15-41250	. COLLAR	1	A 32001~ P, E 31001~ S 30001~	
9	04260-00635	. BALL	1	A 32001~ P, E 31001~ S 30001~	
10	01010-31030	. BOLT	6	A 32001~ P, E 31001~ S 30001~	

Fig & Index No.	Part No.	Description	Q'ty	Serial No.	Remarks
1255 -11	01602-01030	. WASHER, spring	6	A 32001~ P, E 31001~ S 30001~	
12	07018-12605	. RING, seal	1	A 32001~ P, E 31001~ S 30001~	
	145-15-00170	. CYLINDER ASS'Y	1	A 32001~ P, E 31001~ S 30001~	
13	145-15-42260	. . CYLINDER	1	A 32001~ P, E 31001~ S 30001~	
14	145-15-42930	. . CARTRIDGE	1	A 32001~ P, E 31001~ S 30001~	
15	281-15-12660	. . SCREW	1	A 32001~ P, E 31001~ S 30001~	
16	04260-00952	. . BALL	1	A 32001~ P, E 31001~ S 30001~	
17	144-15-22891	. RING, seal	2	A 32001~ P, E 31001~ S 30001~	
18	145-15-42820	. RING, seal	1	A 32001~ P, E 31001~ S 30001~	
19	234-15-12270	. SPRING	1	A 32001~ P, E 31001~ S 30001~	
20	04070-00120	. RING, snap	1	A 32001~ P, E 31001~ S 30001~	
21	234-15-12810	. PIN	8	A 32001~ P, E 31001~ S 30001~	
22	04070-00105	. RING, snap	1	A 32001~ P, E 31001~ S 30001~	
23	145-15-42730	. PISTON	1	A 32001~ P, E 31001~ S 30001~	

Fig & Index No.	Part No.	Description	Q'ty	Serial No.	Remarks
1255 -24	145-15-42810	. RING, seal	1	A 32001~ P, E 31001~ S 30001~	
25	145-15-42910	. PLATE	1	A 32001~ P, E 31001~ S 30001~	
26	04020-01024	. PIN, dowel	3	A 32001~ P, E 31001~ S 30001~	
27	01010-31030	. BOLT	12	A 32001~ P, E 31001~ S 30001~	
28	01602-01030	. WASHER, spring	10	A 32001~ P, E 31001~ S 30001~	
29	144-15-22420	. GEAR	1	A 32001~ P, E 31001~ S 30001~	
30	04064-06525	. RING, snap	1	A 32001~ P, E 31001~ S 30001~	
31	145-15-42350	. CARRIER	1	A 32001~ P, E 31001~ S 30001~	
32	144-15-11290	. RING, seal	1	A 32001~ P, E 31001~ S 30001~	
33	145-15-42150	. GEAR	1	A 32001~ P, E 31001~ S 30001~	
34	145-15-42550	. SHAFT	3	A 32001~ P, E 31001~ S 30001~	
35	04065-03212	. RING, snap	3	A 32001~ P, E 31001~ S 30001~	
36	04260-00635	. BALL	3	A 32001~ P, E 31001~ S 30001~	
37	145-15-42440	. GEAR	3	A 32001~ P, E 31001~ S 30001~	
38	09232-03225	. BEARING, needle	3	A 32001~ P, E 31001~ S 30001~	

Fig & Index No.	Part No.	Description	Q'ty	Serial No.	Remarks
1255 -39	144-15-22571	. WASHER, thrust	6	A 32001~ P, E 31001~ S 30001~	
40	145-15-42180	. SPACER	1	A 32001~ P, E 31001~ S 30001~	
41	06042-01015	. BEARING	1	A 32001~ P, E 31001~ S 30001~	
42	144-15-22860	. RING, snap	1	A 32001~ P, E 31001~ S 30001~	
43	06040-06022	. BEARING	1	A 32001~ P, E 31001~ S 30001~	
	145-15-00120	. HOUSING ASS'Y	1	A 32001~ P, E 31001~ S 30001~	
44	145-15-41140	. . HOUSING	1	A 32001~ P, E 31001~ S 30001~	☆145-15-00120
45	145-14-11320	. . PLUG	2	A 32001~ P, E 31001~ S 30001~	
46	04020-01228	. PIN, dowel	2	A 32001~ P, E 31001~ S 30001~	
47	287-15-12990	. PLATE	2	A 32001~ P, E 31001~ S 30001~	
48	135-15-22712	. DISC	3	A 32001~ P, E 31001~ S 30001~	
49	170-14-22330	. SPRING	12	A 32001~ P, E 31001~ S 30001~	

Fig. 1256 2ND CLUTCH AND 3RD CLUTCH (D65A Serial No. 32001~) (D65P, E Serial No. 31001~) (D65S Serial No. 30001~)

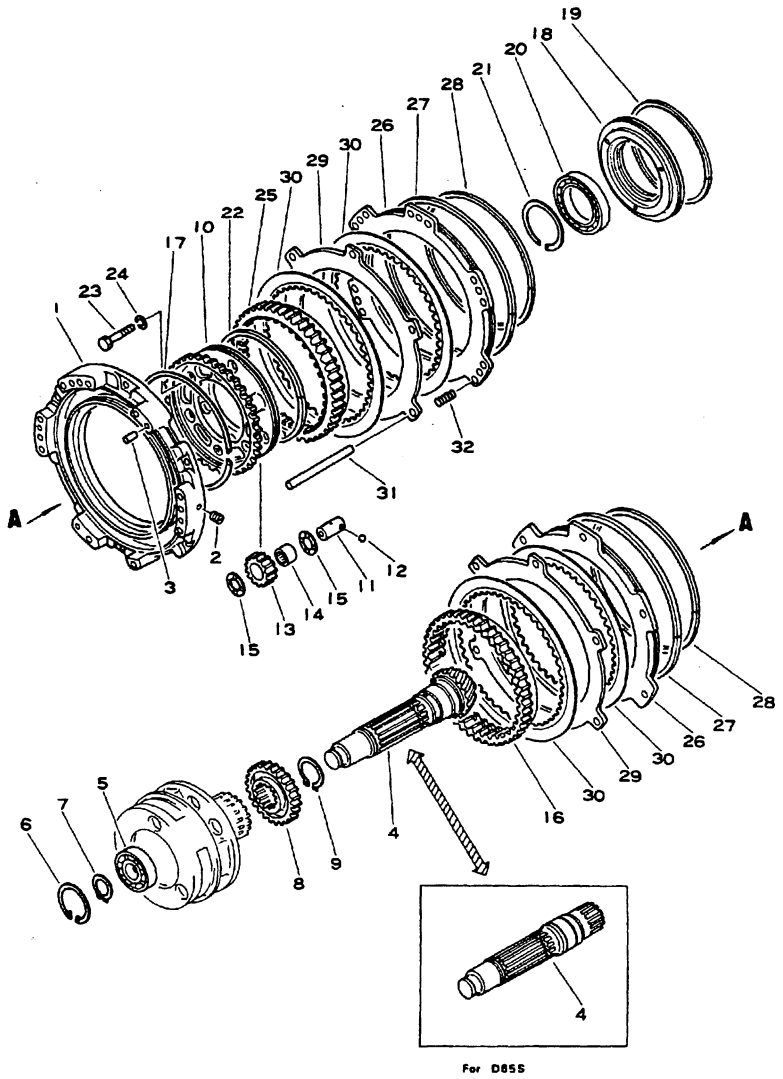

Fig & Index No.	Part No.	Description	Q'ty	Serial No.	Remarks
	(144-15-00014)	TORQFLOW TRANSMISSION ASS'Y	1	A 32001~ E 31001~	
	(14G-15-00011)	TORQFLOW TRANSMISSION ASS'Y	1	P 31001~	
	(141-15-00012)	TORQFLOW TRANSMISSION ASS'Y	1	S 30001~	
	These assemblies consists of all parts shown in Figs. 1251 to 1265.				
	145-15-00110	. HOUSING ASS'Y	1	A 32001~ P, E 31001~ S 30001~	
1256 - 1	145-15-41130	. . HOUSING	1	A 32001~ P, E 31001~ S 30001~	☆145-15-00110
2	145-14-11320	. . PLUG	2	A 32001~ P, E 31001~ S 30001~	
3	04020-01228	. PIN, dowel	2	A 32001~ P, E 31001~ S 30001~	
4	144-15-22172	. SHAFT	1	A 32001~ E 31001~	
	14G-15-12121	. SHAFT	1	P 31001~	
	145-15-42270	. SHAFT	1	S 30001~	
5	06042-02209	. BEARING	1	A 32001~ P, E 31001~ S 30001~	
6	04065-08530	. RING, snap	1	A 32001~ P, E 31001~ S 30001~	
7	145-15-42280	. RING, snap	1	A 32001~ P, E 31001~ S 30001~	
8	145-15-42160	. GEAR	1	A 32001~ P, E 31001~ S 30001~	
9	04064-06525	. RING, snap	1	A 32001~ P, E 31001~ S 30001~	
10	145-15-42380	. CARRIER	1	A 32001~ P, E 31001~ S 30001~	

Fig. & Index No.	Part No.	Description	Q'ty	Serial No.	Remarks
1256 -11	145-15-42540	. SHAFT	3	A 32001~ P, E 31001~ S 30001~	
12	04260-00635	. BALL	3	A 32001~ P, E 31001~ S 30001~	
13	145-15-42440	. GEAR	3	A 32001~ P, E 31001~ S 30001~	
14	09232-03225	. BEARING, needle	3	A 32001~ P, E 31001~ S 30001~	
15	144-15-22571	. WASHER, thrust	6	A 32001~ P, E 31001~ S 30001~	
16	145-15-42630	. GEAR	1	A 32001~ P, E 31001~ S 30001~	
17	154-15-12670	. RING, snap	1	A 32001~ P, E 31001~ S 30001~	
18	145-15-42290	. COVER	1	A 32001~ P, E 31001~ S 30001~	
19	07018-12455	. RING, seal	1	A 32001~ P, E 31001~ S 30001~	
20	130-09-13770	. BEARING	1	A 32001~ P, E 31001~ S 30001~	
21	130-09-16890	. RING, snap	1	A 32001~ P, E 31001~ S 30001~	
22	234-15-12350	. RING, seal	1	A 32001~ P, E 31001~ S 30001~	
23	01010-31060	. BOLT	3	A 32001~ P, E 31001~ S 30001~	
24	01602-01030	. WASHER, spring	3	A 32001~ P, E 31001~ S 30001~	

Fig. & Index No.	Part No.	Description	Q'ty	Serial No.	Remarks
1256 -25	145-15-42640	. GEAR	1	A 32001~ P, E 31001~ S 30001~	
26	145-15-42740	. PISTON	2	A 32001~ P, E 31001~ S 30001~	
27	144-15-22871	. RING, seal	2	A 32001~ P, E 31001~ S 30001~	
28	144-15-22881	. RING, seal	2	A 32001~ P, E 31001~ S 30001~	
29	145-15-42760	. PLATE	2	A 32001~ P, E 31001~ S 30001~	
30	154-15-12715	. DISC	4	A 32001~ P, E 31001~ S 30001~	
31	144-15-22760	. PIN	6	A 32001~ P, E 31001~ S 30001~	
32	170-14-22330	. SPRING	12	A 32001~ P, E 31001~ S 30001~	

Fig. 1257 TORQFLOW TRANSMISSION CASE COVER

(D65A Serial No. 32001~)
(D65P, E Serial No. 31001~)
(D65S Serial No. 30001~)

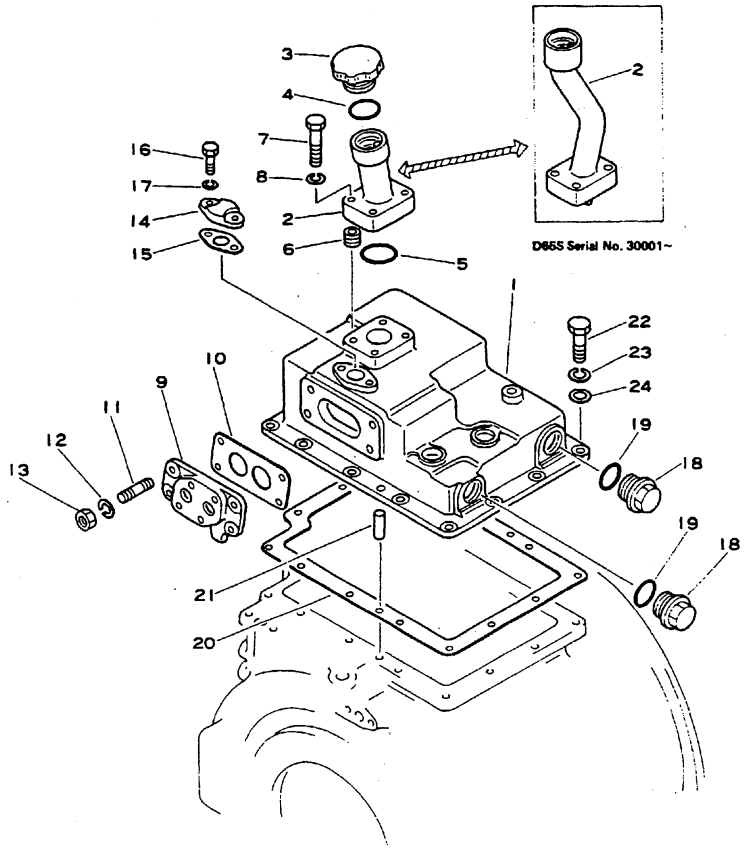

Fig. & Index No.	Part No.	Description	Q'ty	Serial No.	Remarks
	(144-15-00014)	TORQFLOW TRANSMISSION ASS'Y	1	A 32001~ E 31001~	
	(14G-15-00011)	TORQFLOW TRANSMISSION ASS'Y	1	P 31001~	
	(141-15-00012)	TORQFLOW TRANSMISSION ASS'Y	1	S 30001~	
	These assemblies consists of all parts shown in Figs. 1251 to 1265.				
1257 - 1	144-15-25511	. CASE	1	A 32001~ P, E 31001~ S 30001~	
2	144-15-21660	. FILLER, oil	1	A 32001~ P, E 31001~	
	141-15-31313	. FILLER, oil	1	S 30001~	
3	144-15-11640	. CAP, filler	1	A 32001~ P, E 31001~ S 30001~	
4	07000-03040	. O-RING	1	A 32001~ P, E 31001~ S 30001~	
5	07000-03048	. O-RING	1	A 32001~ P, E 31001~ S 30001~	
6	01190-01011	. HERISERT	4	A 32001~ P, E 31001~ S 30001~	
7	01010-31035	. BOLT	4	A 32001~ P, E 31001~ S 30001~	
8	01602-01030	. WASHER, spring	4	A 32001~ P, E 31001~ S 30001~	
9	175-15-45530	. COVER	1	A 32001~ P, E 31001~ S 30001~	
10	175-15-45540	. GASKET	1	A 32001~ P, E 31001~ S 30001~	

TORQFLOW TRANSMISSION CASE COVER

Fig & Index No.	Part No.	Description	Q'ty	Serial No.	Remarks
1257 -11	01124-31025	. STUD	4	A 32001~ P, E 31001~ S 30001~	
12	01602-01030	. WASHER, spring	4	A 32001~ P, E 31001~ S 30001~	
13	01580-01008	. NUT	4	A 32001~ P, E 31001~ S 30001~	
14	145-15-45830	. COVER	1	A 32001~ P, E 31001~ S 30001~	
15	145-15-45840	. GASKET	1	A 32001~ P, E 31001~ S 30001~	
16	01010-30825	. BOLT	2	A 32001~ P, E 31001~ S 30001~	
17	01602-00825	. WASHER, spring	2	A 32001~ P, E 31001~ S 30001~	
18	144-15-25530	. PLUG	2	A 32001~ P, E 31001~ S 30001~	
19	07002-03634	. O-RING	2	A 32001~ P, E 31001~ S 30001~	
20	144-15-25520	. GASKET, case	1	A 32001~ P, E 31001~ S 30001~	
21	04020-00820	. PIN, dowel	2	A 32001~ P, E 31001~ S 30001~	
22	01010-31030	. BOLT	14	A 32001~ P, E 31001~ S 30001~	
23	01602-01030	. WASHER, spring	14	A 32001~ P, E 31001~ S 30001~	
24	01640-21016	. WASHER	14	A 32001~ P, E 31001~ S 30001~	

Fig. 1258 TORQFLOW TRANSMISSION LEVER

(D65A Serial No. 32001~)
(D65P, E Serial No. 31001~)
(D65S Serial No. 30001~)

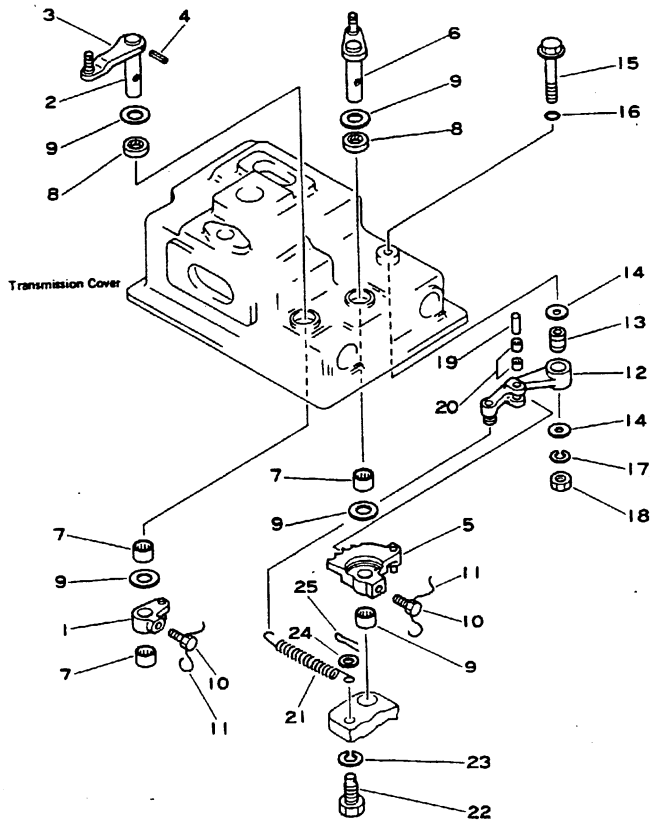

Fig. & Index No.	Part No.	Description	Q'ty	Serial No.	Remarks
	(144-15-00014)	TORQFLOW TRANSMISSION ASS'Y	1	A 32001~ E 31001~	
	(14G-15-00011)	TORQFLOW TRANSMISSION ASS'Y	1	P 31001~	
	(141-15-00012)	TORQFLOW TRANSMISSION ASS'Y	1	S 30001~	
	These assemblies consists of all parts shown in Figs. 1251 to 1265.				
1258 - 1	144-15-25560	. LEVER, forward and reverse	1	A 32001~ P, E 31001~ S 30001~	
2	144-15-25760	. SHAFT	1	A 32001~ P, E 31001~ S 30001~	
3	145-15-45750	. LEVER	1	A 32001~ P, E 31001~ S 30001~	
4	04025-00432	. PIN, roll	1	A 32001~ P, E 31001~ S 30001~	
5	144-15-25632	. LEVER, shift	1	A 32001~ P, E 31001~ S 30001~	
6	145-15-45740	. LEVER	1	A 32001~ P, E 31001~ S 30001~	
7	06120-02016	. BEARING, needle	4	A 32001~ P, E 31001~ S 30001~	
8	144-15-29110	. SEAL, oil	2	A 32001~ P, E 31001~ S 30001~	
9	144-15-25570	. WASHER	4	A 32001~ P, E 31001~ S 30001~	
10	125-15-11530	. BOLT	2	A 32001~ P, E 31001~ S 30001~	
11	04059-01010	. WIRE	2	A 32001~ P, E 31001~ S 30001~	

TORQFLOW TRANSMISSION LEVER

Fig & Index No.	Part No.	Description	Q'ty	Serial No.	Remarks
1258 -12	144-15-25682	. LEVER	1	A 32001~ P, E 31001~ S 30001~	
13	144-15-25670	. BUSHING	1	A 32001~ P, E 31001~ S 30001~	
14	175-15-45660	. WASHER	2	A 32001~ P, E 31001~ S 30001~	
15	175-15-45650	. BOLT	1	A 32001~ P, E 31001~ S 30001~	
16	07000-62008	. O-RING	1	A 32001~ P, E 31001~ S 30001~	
17	01602-01030	. WASHER, spring	1	A 32001~ P, E 31001~ S 30001~	
18	01580-01008	. NUT	1	A 32001~ P, E 31001~ S 30001~	
19	144-15-25690	. PIN	1	A 32001~ P, E 31001~ S 30001~	
20	144-15-29120	. BEARING	2	A 32001~ P, E 31001~ S 30001~	
21	144-15-25710	. SPRING	1	A 32001~ P, E 31001~ S 30001~	
22	144-15-25591	. BOLT	1	A 32001~ P, E 31001~ S 30001~	
23	01602-01442	. WASHER, spring	1	A 32001~ P, E 31001~ S 30001~	
24	01641-21016	. WASHER	1	A 32001~ P, E 31001~ S 30001~	
25	04050-02018	. PIN, cotter	1	A 32001~ P, E 31001~ S 30001~	

Fig. 1261 TORQFLOW TRANSMISSION CONTROL VALVE (½)

(D65A Serial No. 32001~)
(D65P, E Serial No. 31001~)
(D65S Serial No. 30001~)

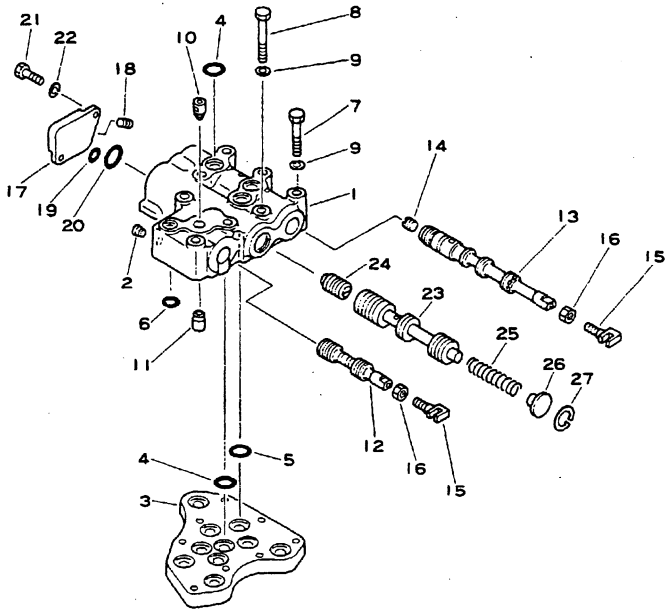

Fig & Index No.	Part No.	Description	Q'ty	Serial No.	Remarks
	(144-15-00014)	TORQFLOW TRANSMISSION ASS'Y	1	A 32001~ E 31001~	
	(14G-15-00011)	TORQFLOW TRANSMISSION ASS'Y	1	P 31001~	
	(141-15-00012)	TORQFLOW TRANSMISSION ASS'Y	1	S 30001~	
	These assemblies consists of all parts shown in Figs. 1251 to 1265.				
	144-15-00043	. CONTROL VALVE ASS'Y	1	A 32001~ P, E 31001~ S 30001~	
	145-15-00200	. . VALVE BODY ASS'Y	1	A 32001~ P, E 31001~ S 30001~	
1261 - 1	145-15-45210	. . . BODY	1	A 32001~ P, E 31001~ S 30001~	☆145-15-00200
2	07043-00108	. . . PLUG	1	A 32001~ P, E 31001~ S 30001~	
3	144-15-25110	. . SEAT, valve	1	A 32001~ P, E 31001~ S 30001~	
4	07000-63022	. . O-RING	10	A 32001~ P, E 31001~ S 30001~	
5	07000-63025	. . O-RING	3	A 32001~ P, E 31001~ S 30001~	
6	07000-62016	. . O-RING	1	A 32001~ P, E 31001~ S 30001~	
7	144-15-25160	. . BOLT	1	A 32001~ P, E 31001~ S 30001~	
8	01010-31075	. . BOLT	1	A 32001~ P, E 31001~ S 30001~	
9	01602-01030	. . WASHER, spring	2	A 32001~ P, E 31001~ S 30001~	

Fig & Index No.	Part No.	Description	Q'ty	Serial No.	Remarks
1261 -10	195-15-15671	. . DETENT	1	A 32001~ P, E 31001~ S 30001~	
11	175-15-45260	. . DETENT	1	A 32001~ P, E 31001~ S 30001~	
12	175-15-45220	. . SPOOL, directional	1	A 32001~ P, E 31001~ S 30001~	
13	175-15-45231	. . SPOOL, speed	1	A 32001~ P, E 31001~ S 30001~	
14	144-15-25210	. . PLUG	1	A 32001~ P, E 31001~ S 30001~	
15	09363-01053	. . YOKE	2	A 32001~ P, E 31001~ S 30001~	
16	01580-01008	. . NUT	2	A 32001~ P, E 31001~ S 30001~	
17	175-15-45470	. . COVER	1	A 32001~ P, E 31001~ S 30001~	
18	07043-00108	. . PLUG	1	A 32001~ P, E 31001~ S 30001~	
19	07000-62016	. . O-RING	1	A 32001~ P, E 31001~ S 30001~	
20	07000-63032	. . O-RING	1	A 32001~ P, E 31001~ S 30001~	
21	01010-31025	. . BOLT	2	A 32001~ P, E 31001~ S 30001~	
22	01602-01030	. . WASHER, spring	2	A 32001~ P, E 31001~ S 30001~	
23	175-15-45420	. . VALVE	1	A 32001~ P, E 31001~ S 30001~	

Fig & Index No.	Part No.	Description	Q'ty	Serial No.	Remarks
1261 -24	175-15-35430	. . PISTON	1	A 32001~ P, E 31001~ S 30001~	
25	195-15-15440	. . SPRING	1	A 32001~ P, E 31001~ S 30001~	
26	175-15-45450	. . RETAINER	1	A 32001~ P, E 31001~ S 30001~	
27	04065-03515	. . RING, snap	1	A 32001~ P, E 31001~ S 30001~	

Fig. 1262 TORQFLOW TRANSMISSION CONTROL VALVE (2/2)

(D65A Serial No. 32001~)
(D65P, E Serial No. 31001~)
(D65S Serial No. 30001~)

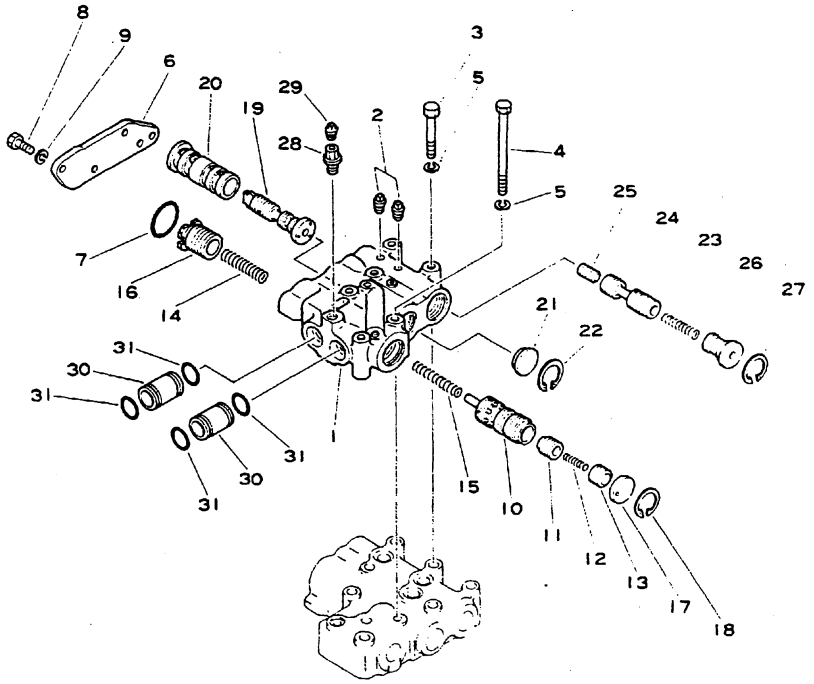

Fig & Index No.	Part No.	Description	Q'ty	Serial No.	Remarks
	(144-15-00014)	TORQFLOW TRANSMISSION ASS'Y	1	A 32001~ E 31001~	
	(14G-15-00011)	TORQFLOW TRANSMISSION ASS'Y	1	P 31001~	
	(141-15-00012)	TORQFLOW TRANSMISSION ASS'Y	1	S 30001~	
	These assemblies consists of all parts shown in Figs. 1251 to 1265.				
	(144-15-00043)	. CONTROL VALVE ASS'Y	1	A 32001~ P, E 31001~ S 30001~	
	145-15-00210	. . VALVE BODY ASS'Y	1	A 32001~ P, E 31001~ S 30001~	
1262 - 1	145-15-45110	. . . BODY	1	A 32001~ P, E 31001~ S 30001~	☆ 145-15-00210
2	07042-20108	. . . PLUG	2	A 32001~ P, E 31001~ S 30001~	
3	144-15-25180	. . BOLT	3	A 32001~ P, E 31001~ S 30001~	
4	175-15-45170	. . BOLT	3	A 32001~ P, E 31001~ S 30001~	
5	01602-01030	. . WASHER, spring	6	A 32001~ P, E 31001~ S 30001~	
6	145-15-45810	. . COVER	1	A 32001~ P, E 31001~ S 30001~	
7	07000-63045	. . O-RING	1	A 32001~ P, E 31001~ S 30001~	
8	01010-31025	. . BOLT	4	A 32001~ P, E 31001~ S 30001~	
9	01602-01030	. . WASHER, spring	4	A 32001~ P, E 31001~ S 30001~	

Fig & Index No.	Part No.	Description	Q'ty	Serial No.	Remarks
1262 -10	145-15-45220	. . VALVE, modulat	1	A 32001~ P, E 31001~ S 30001~	
11	145-15-45390	. . VALVE	1	A 32001~ P, E 31001~ S 30001~	
12	180-14-25560	. . SPRING	1	A 32001~ P, E 31001~ S 30001~	
13	287-15-15390	. . VALVE	1	A 32001~ P, E 31001~ S 30001~	
14	145-15-45310	. . SPRING	1	A 32001~ P, E 31001~ S 30001~	
15	145-15-45320	. . SPRING	1	A 32001~ P, E 31001~ S 30001~	
16	145-15-45230	. . VALVE	1	A 32001~ P, E 31001~ S 30001~	
17	145-15-45240	. . STOPPER	1	A 32001~ P, E 31001~ S 30001~	
18	04065-03815	. . RING, snap	1	A 32001~ P, E 31001~ S 30001~	
19	145-15-45260	. . VALVE, quick return	1	A 32001~ P, E 31001~ S 30001~	
20	145-15-45150	. . SLEEVE	1	A 32001~ P, E 31001~ S 30001~	
21	145-15-45420	. . STOPPER	1	A 32001~ P, E 31001~ S 30001~	
22	04065-03815	. . RING, snap	1	A 32001~ P, E 31001~ S 30001~	
23	145-15-45510	. . SPRING	1	A 32001~ P, E 31001~ S. 30001~	

Fig & Index No.	Part No.	Description	Q'ty	Serial No.	Remarks
1262 -24	145-15-45380	. . VALVE, reducing	1	A 32001~ P, E 31001~ S 30001~	
25	145-14-23720	. . PISTON	1	A 32001~ P, E 31001~ S 30001~	
26	145-15-45520	. . RETAINER	1	A 32001~ P, E 31001~ S 30001~	
27	04065-03815	. . RING, snap	1	A 32001~ P, E 31001~ S 30001~	
	145-15-00220	. . PLUG ASS'Y	1	A 32001~ P, E 31001~ S 30001~	
28	145-15-45910	. . . PLUG	1	A 32001~ P, E 31001~ S 30001~	☆145-15-00220
29	07042-20108	. . . PLUG	1	A 32001~ P, E 31001~ S 30001~	
30	145-15-45250	. SLEEVE	2	A 32001~ P, E 31001~ S 30001~	
31	07000-63028	. O-RING	4	A 32001~ P, E 31001~ S 30001~	

Fig. 1265 TORQFLOW TRANSMISSION LUBRICATION VALVE
(D65A Serial No. 32001~)
(D65P, E Serial No. 31001~)
(D65S Serial No. 30001~)

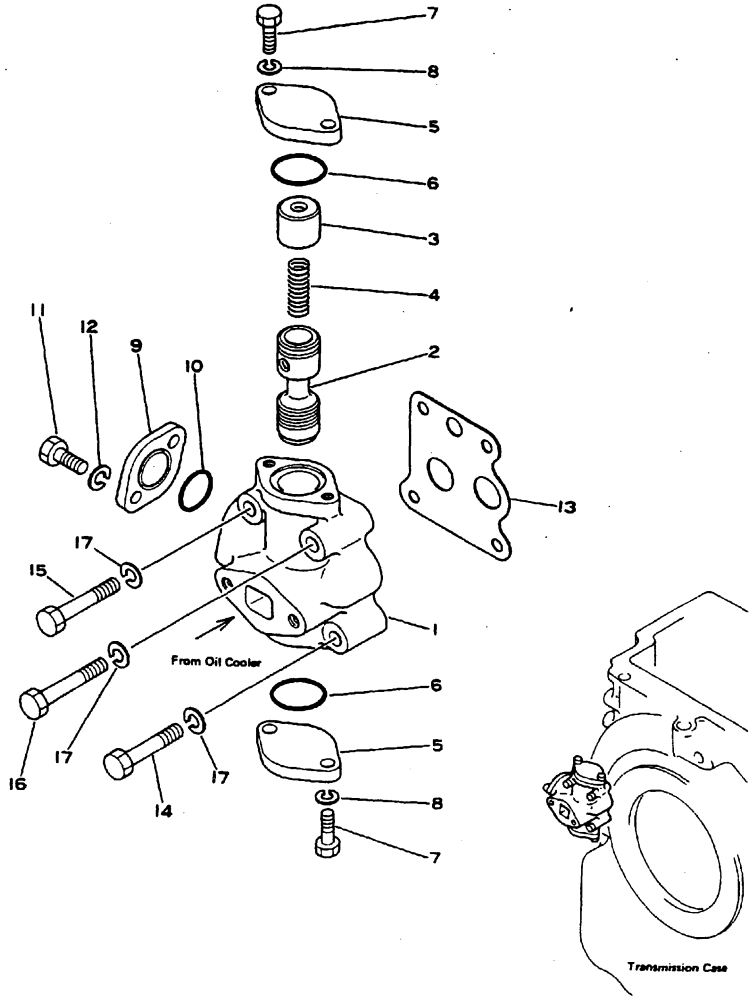

Fig & Index No.	Part No.	Description	Q'ty	Serial No.	Remarks
	(144-15-00014)	TORQFLOW TRANSMISSION ASS'Y	1	A 32001~ E 31001~	
	(14G-15-00011)	TORQFLOW TRANSMISSION ASS'Y	1	P 31001~	
	(141-15-00012)	TORQFLOW TRANSMISSION ASS'Y	1	S 30001~	
	These assemblies consists of all parts shown in Figs. 1251 to 1265.				
	145-15-00180	. LUBRICATION VALVE ASS'Y	1	A 32001~ P, E 31001~ S 30001~	
1265 - 1	154-15-14110	. . BODY	1	A 32001~ P, E 31001~ S 30001~	
2	144-15-14130	. . VALVE	1	A 32001~ P, E 31001~ S 30001~	
3	175-15-14140	. . GUIDE	1	A 32001~ P, E 31001~ S 30001~	
4	145-15-44160	. . SPRING	1	A 32001~ P, E 31001~ S 30001~	
5	154-15-14150	. . COVER	2	A 32001~ P, E 31001~ S 30001~	
6	07000-63032	. . O-RING (KIT)	2	A 32001~ P, E 31001~ S 30001~	
7	01010-30825	. . BOLT	4	A 32001~ P, E 31001~ S 30001~	
8	01602-00825	. . WASHER, spring	4	A 32001~ P, E 31001~ S 30001~	
9	144-15-141500	. . COVER	1	A 32001~ P, E 31001~ S 30001~	
10	7000-63025	. . O-RING (KIT)	1	A 32001~ P, E 31001~ S 30001~	

Fig & Index No.	Part No.	Description	Q'ty	Serial No.	Remarks
1265 -11	01010-51025	. . BOLT	2	A 32001~ P, E 31001~ S 30001~	
12	01602-01030	. . WASHER, spring	2	A 32001~ P, E 31001~ S 30001~	
13	154-15-14160	. GASKET (KIT)	1	A 32001~ P, E 31001~ S 30001~	
14	01010-31055	. BOLT	2	A 32001~ P, E 31001~ S 30001~	
15	01010-31060	. BOLT	1	A 32001~ P, E 31001~ S 30001~	
16	01010-31065	. BOLT	1	A 32001~ P, E 31001~ S 30001~	
17	01602-01030	. WASHER, spring	4	A 32001~ P, E 31001~ S 30001~	

Fig. 1271A TORQFLOW TRANSMISSION OIL FILTER

(D65A Serial No. 28247~28258, 28261~)
(D65P Serial No. 30001~)
(D65E Serial No. 28357~28367, 28370~)
(D65S Serial No. 28189~28202, 28204, 28208~)

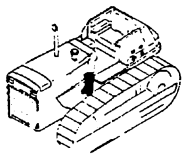

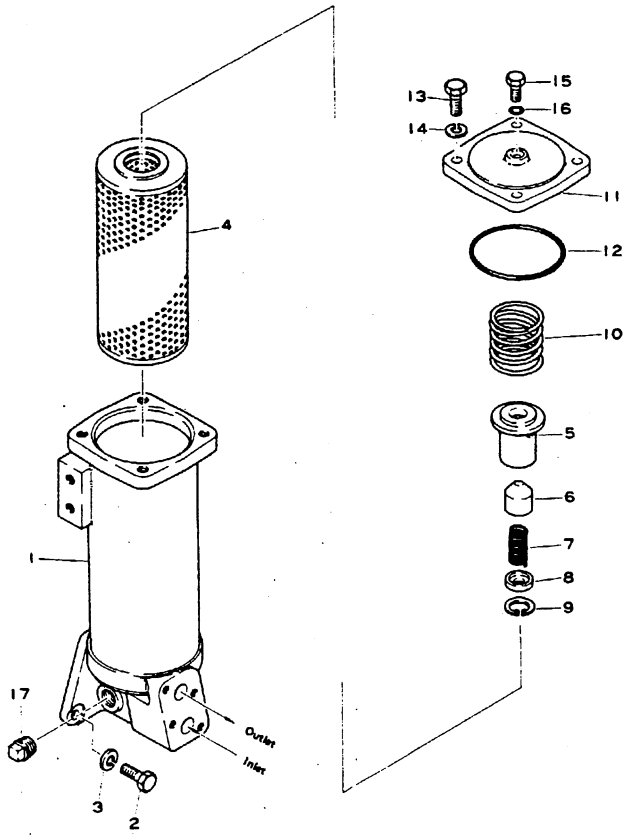

Fig. & Index No.	Part No.	Description	Q'ty	Serial No.	Remarks
	145-49-00032	TORQFLOW FILTER ASS'Y	1	A 28247~28258, 28261~ S 28189~28202, 28204, 28208~ E 28357~28367, 28370~ P 30001~	
1271A- 1	145-49-32411	. CASE	1	20006~	
2	01010-31230	. BOLT	3	20006~	
3	01602-01236	. WASHER, spring	3	20006~	
4	281-16-11290	. ELEMENT	1	A 28247~28258, 28261~ S 28189~28202, 28204, 28208~ E 28357~28367, 28370~ P 30001~	
5	141-49-33990	. GUIDE, spring	1	A 28247~28258, 28261~ S 28189~28202, 28204, 28208~ E 28357~28367 28370~ P 30001~	
6	141-49-33980	. VALVE	1	A 28247~28258, 28261~ S 28189~28202, 28204, 28208~ E 28357~28367, 28370~ P 30001~	
7	141-49-36172	. SPRING	1	A 28247~28258, 28261~ S 28189~28202, 28204, 28208~ E 28357~28367, 28370~ P 30001~	
8	141-49-33970	. PLATE	1	A 28247~28258, 28261~ S 28189~28202, 28204, 28208~ E 28357~28367, 28370~ P 30001~	
9	04065-03012	. RING, snap	1	A 28247~28258, 28261~ S 28189~28202, 28204, 28208~ E 28357~28367, 28370~ P 30001~	
10	6003200-4-40	. SPRING	1	20006~	
11	145-49-12430	. COVER	1	20006~	
12	07000-03098	. O-RING	1	20006~	
13	01010-31230	. BOLT	4	20006~	
14	01602-01236	. WASHER, spring	4	20006~	
15	145-49-12440	. BOLT	1	22388~	
16	07000-02010	. O-RING	1	20006~	
17	07042-00415	. PLUG	1	20006~	

Fig. 1281 TORQFLOW TRANSMISSION CHANGE LEVER (D65)

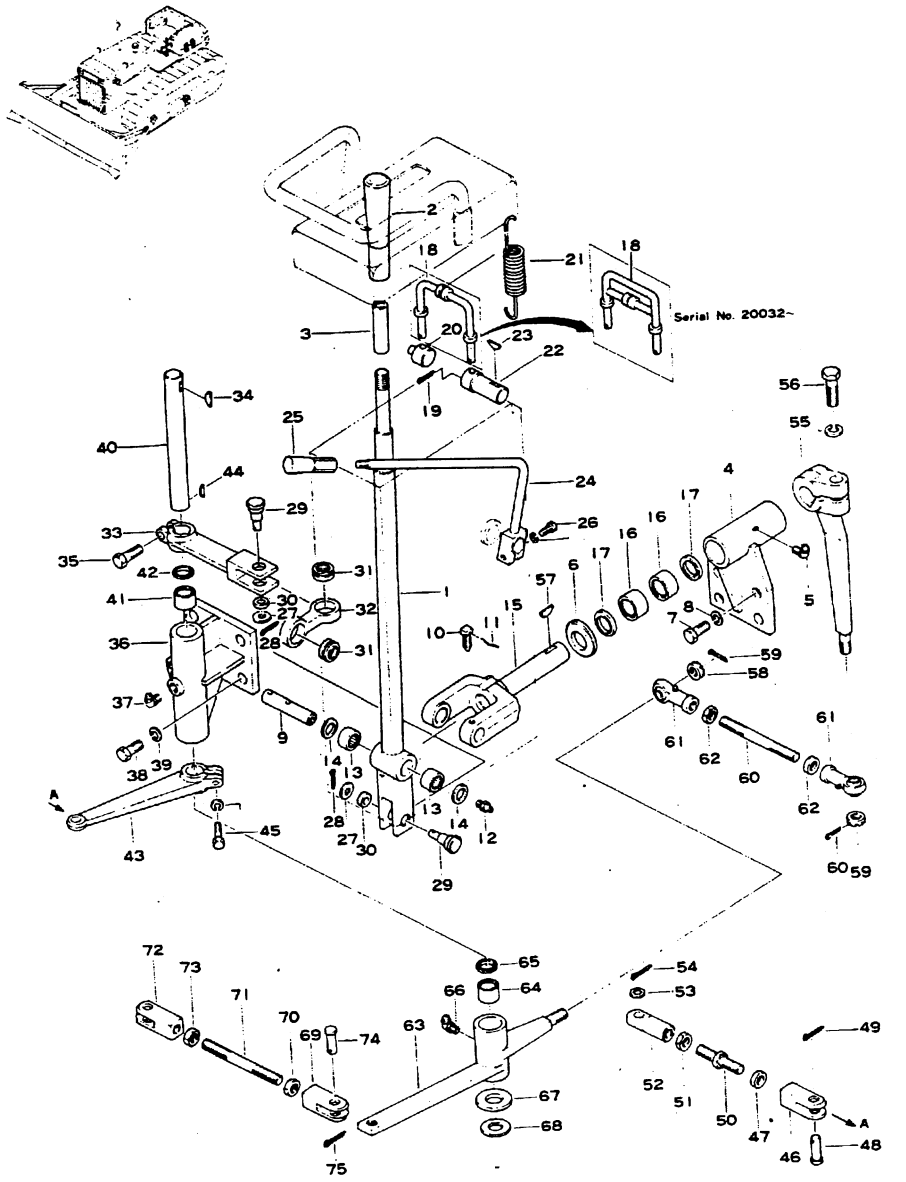

Fig & Index No.	Part No.	Description	Q'ty	Serial No.	Remarks
1281 - 1	144-43-11510	LEVER	1		
2	09305-11400	KNOB	1		
3	135-43-21470	BUSHING	1		
4	144-43-11311	BRACKET	1		
5	07020-00900	FITTING, grease	1		
6	01640-22232	WASHER	1		
7	01010-31225	BOLT	3		
8	01602-01236	WASHER, spring	3		
9	135-43-11171	SHAFT	1		
10	01306-00616	SCREW, set	1		
11	04059-01012	WIRE, lock	1		
12	07020-00000	FITTING, grease	1		
13	06120-01612	BEARING, needle	2		
14	06122-01603	SEAL, bearing	2		
15	135-43-16122	SHAFT	1		
16	06120-02216	BEARING, needle	2		
17	06122-02204	SEAL, bearing	2		
18	141-43-31610	GATE	1		
19	04050-02012	PIN, cotter	2		
20	145-43-11510	PIN	1		
21	135-43-21480	SPRING	1		
22	145-43-11520	PIN	1		
23	04010-00416	KEY, woodruff	1		
24	144-43-11411	LEVER	1		
25	145-43-11561	GRIP	1		
26	01010-30825	BOLT	1		
	01602-00825	WASHER, spring	1		
27	01642-20810	WASHER	2		
28	04050-02012	PIN, cotter	2		
29	131-15-12250	PIN	2		
30	131-15-12260	SPACER	2		
31	130-09-14430	BEARING	2		
32	175-15-16192	ROD	1		
33	144-43-11160	LEVER	1		
34	04010-00516	KEY, woodruff	1		
35	01010-30825	BOLT	1		
36	144-43-11530	BRACKET	1		
37	07020-00900	FITTING, grease	1		
38	01010-31225	BOLT	4		
39	01602-01236	WASHER, spring	4		
40	144-43-11151	SHAFT	1		
41	06120-02016	BEARING, needle	2		
42	06122-02004	SEAL, bearing	2		

Fig. & Index No.	Part No.	Description	Q'ty	Serial No.	Remarks
1281 -43	144-43-11620	LEVER	1		
44	04010-00516	KEY, woodruff	1		
45	01010-30825	BOLT	1		
	01602-00825	WASHER, spring	1		
46	04220-01040	YOKE	1		
47	01508-11006	NUT	1		
48	04205-01028	PIN	1		
49	04050-03015	PIN, cotter	1		
50	144-43-11581	ROD	1		
51	01582-01008	NUT	2		
52	04216-01045	JOINT, eye	1		
53	01641-21016	WASHER	1		
54	04050-03015	PIN, cotter	1		
55	144-43-11610	LEVER	1		
56	01010-31245	BOLT	1		
	01602-01236	WASHER, spring	1		
57	04010-00519	KEY, woodruff	1		
58	01593-01008	NUT	2		
59	04050-02018	PIN, cotter	2		
60	144-43-11220	ROD	1		
61	04250-01056	END, rod	2		
62	01582-01008	NUT	2		
63	144-43-11540	LEVER	1		
64	06120-02016	BEARING, needle	2		
65	06122-02004	SEAL, bearing	2		
66	07020-00900	FITTING, grease	1		
67	01640-22032	WASHER	1		
68	04064-02012	RING, snap	1		
69	04220-01040	YOKE	1		
70	01508-11006	NUT	1		
71	04248-01012	ROD	1		
72	04220-01040	YOKE	1		
73	01582-01008	NUT	1		
74	04205-01028	PIN	2		
75	04050-03015	PIN, cotter	2		

FINAL DRIVE AND STEERING SYSTEM

Fig. 1301 FINAL DRIVE CASE AND GEAR

(D60A, PL, E, S, D65A, E, S Serial No. 20006~)

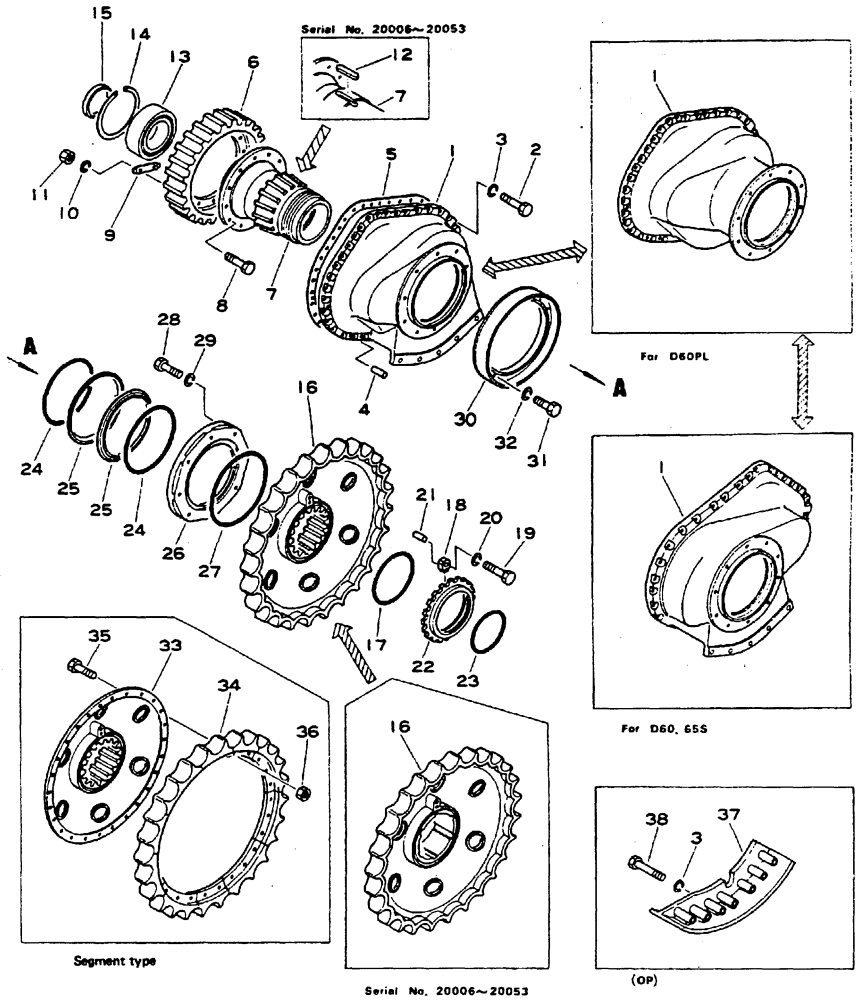

Fig & Index No.	Part No.	Description	Q'ty	Serial No.	Remarks
1301 - 1	141-27-31123	CASE, final drive, L.H	1	AC20006~28257 AT20006~28230 EC20295~28251 ET20295~28337	
	141-27-31124	CASE, final drive, L.H	1	AC28258~ AT28231~ EC28252~ ET28338~	
	144-870-1211	CASE, final drive, L.H	1	LC21081~24430	■ 144-870-1213 140-09-13131
	144-870-1212	CASE, final drive, L.H	1	LC24431~28012	■ 144-870-1213 140-09-13131
	144-870-1213	CASE, final drive, L.H	1	LC28013~	
	141-27-31113	CASE, final drive, L.H	1	SC 20006~28770 ST 20006~28167	
	141-27-31114	CASE, final drive, L.H	1	SC 28771~ ST 28168~	
	141-27-31113	CASE, final drive, R.H	1	AC20006~28257 AT20006~28230 EC20295~28251 ET20295~28337	
	141-27-31114	CASE, final drive, R.H	1	AC28258~ AT28231~ EC28252~ ET28338~	
	144-870-1221	CASE, final drive, R.H	1	LC21081~24430	■ 140-870-1223 140-09-13131
	144-870-1222	CASE, final drive, R.H	1	LC24431~28012	■ 144-870-1223 140-09-13131
	144-870-1223	CASE, final drive, R.H	1	LC28013~	
	141-27-31123	CASE, final drive, R.H	1	SC 20006~28770 ST 20006~28167	
	141-27-31124	CASE, final drive, R.H	1	SC 28771~ ST 28168~	
2	01040-31440	BOLT	66	20006~22387	
	01010-31440	BOLT	66	22388~	
3	01602-01442	WASHER, spring	66	20006~	
4	04020-01638	PIN, dowel	6	20006~	
5	145-27-31142	GASKET	2	20006~22387	□ 141-27-31240
	141-27-31240	GASKET	2	22388~	
6	141-27-31211	GEAR, final drive	2	AC, EC 20006~27030 AT, ET 20006~27090 LC21081~27302 SC 20006~27180 ST 20006~27259	■ 141-27-31212 141-27-31224(A, E, S only) 144-870-1261(L only) 01084-02060 141-27-31270 141-27-31280 141-27-31252

Fig & Index No.	Part No.	Description	Q'ty	Serial No.	Remarks
1301 - 6	141-27-31212	GEAR, final drive	2	AC27031~29599 LC27303~ • EC27031~ • AT27091~29989 ET27091~30134 SC 28181~30143 ST 27260~28772 AC27031~29137 (For Power Tilt) ET27031~28892 (For Power Tilt) AT27091~29866 (For Power Tilt) ET27091~29990 (For Power Tilt)	※ 145-27-41510
	145-27-31451	GEAR, final drive	2	AC29600~29891 LC • ~28080 EC • ~28996 AT29990~30559 ET30135~30185 SC 30144~30548 ST 28773~28872 AC29138~29329 (For Power Tilt) ET28893~ • (For Power Tilt) AT29867~30574 (For Power Tilt) ET29991~30236 (For Power Tilt)	※ 145-27-41510
	145-27-41510	GEAR, final drive	2	AC29892~ LC28081~ EC28997~ AT30560~ ET30186~ SC 30549~ ST 28873~ AC29330~ (For Power Tilt) ET • ~ (For Power Tilt) AT30575~ (For Power Tilt) ET30237~ (For Power Tilt)	
7	141-27-31221	HUB, final drive gear	2	A,S 20006~20053	
	141-27-31223	HUB, final drive gear	2	AC, EC 20054~27030 AT, ET 20054~27090 SC 20054~27180 ST 20054~27259	■ 141-27-31224 141-27-31212 01084-02060 141-27-31270 141-27-31252 141-27-31280

Fig & Index No.	Part No.	Description	Q'ty	Serial No.	Remarks
1301 - 7	141-27-31224	HUB, final drive gear	2	AC, EC 27031~ AT, ET 27091~ SC 27181~ ST 27260~	
	144-870-1261	HUB, final drive gear	2	LC21081~27302	■ 144-870-1262 141-27-31212 01084-02060 141-27-31270 141-27-31252 141-27-31280
	144-870-1262	HUB, final drive gear	2	LC27303~	
8	01084-01860	BOLT, reamer	24	AC, EC 20006~22590 AT, ST, ET 20006~22828 LC21081~22787 SC 20006~22633	※ 141-27-31260
	141-27-31260	BOLT, reamer	24	AC, EC 22591~27030 AT, ET 22829~27090 LC22788~27302 SC 22634~27180 ST 22829~27259	
	01084-02060	BOLT, reamer	24	AC, EC 27031~ AT, ET 27091~ LC27303~ SC 27181~ ST 27260~	
9	141-27-12230	PLATE, lock	12	AC, EC 20006~27030 AT, ET 20006~27090 LC21081~27302 SC 20006~27180 ST 20006~27259	
	141-27-31270	PLATE, lock	12	AC, EC 27031~ AT, ET 27091~ LC27303~ SC 27181~ ST 27260~	
10	141-27-31280	WASHER	24	AC, EC 27031~ AT, ET 27091~ LC27303~ SC 27181~ ST 27260~	
11	01500-31816	NUT	24	20006~22387	※ 141-27-31251

Fig & Index No.	Part No.	Description	Q'ty	Serial No.	Remarks
1301 -11	141-27-31251	NUT	24	AC, EC 22388~27030 AT, ET 22388~27090 LC22388~27302 SC 22388~27180 ST 22388~27259	
	141-27-31252	NUT	24	AC, EC 27031~ AT, ET 27091~ LC27302~ SC 27181~ ST 27260~	
12	170-27-12150	KEY	12	20006~20053	
13	140-09-13140	BEARING	2	AC20006~28257 AT20006~28230 LC21081~28012 EC20259~28251 ET20259~28337 SC 20006~28770 ST 20006~28167	❑ 06043-02228
	06043-02228	BEARING	2	AC28258~ AT28231~ LC28013~ EC28252~ ET28338~ SC 28771~ ST 28168~	
14	145-27-31430	RING, snap	2	AC20006~28257 AT20006~28230 LC21081~28012 EC20295~28251 ET20295~28337 SC 20006~28770 ST 20006~28167	❑ 04071-00250
	04071-00250	RING, snap	2	AC28258~ AT28231~ LC28013~ EC28252~ ET28338~ SC 28771~ ST 28168~	
15	141-27-31230	COLLAR	2	20006~	
16	141-27-32122	SPROCKET	2	20006~20053	
	141-27-32124	SPROCKET	2	20054~28168	❑ 141-27-32125
	141-27-32125	SPROCKET	2	AC28169~31000 AT28169~32000 LC28169~30000 EC28169~30000 ET28169~31000 SC 28169~32000 ST 28169~30000	

Fig & Index No.	Part No.	Description	Q'ty	Serial No.	Remarks
1301 -16	141-27-32126	SPROCKET	2	AC31001~ AT32001~ LC30001~ EC30001~ ET31001~ SC 32001~ ST 30001~	
	141-98-00140	. RIM, sprocket	2	20006~28168	For service parts
	141-98-00141	. RIM, sprocket	2	28619~	For service parts
17	07000-05270	O-RING	2	20006~	
18	141-27-32220	PLATE, lock	2	20006~	
19	01252-01635	BOLT	2	20006~	
20	01602-01648	WASHER, spring	2	20006~	
21	04020-01228	PIN, dowel	2	20006~	
22	141-27-32140	NUT	2	20006~	
23	07000-05230	O-RING	2	20006~	
	150-27-00025	FLOATING SEAL ASS'Y	2	AC20006~31000 AT20006~32000 LC21081~30000 EC20295~30000 ET20925~31000 SC 20006~32000 ST 20006~30000	❑ 150-27-00026
	150-27-00026	FLOATING SEAL ASS'Y	2	AC31001~ AT32001~ LC30001~ EC30001~ ET31001~ SC 32001~ ST 30001~	
	150-27-00270	. O-RING ASS'Y	1	20006~	
24	150-27-24120	. . O-RING	2	20006~	☆ 150-27-00270
	150-27-00260	. SEAL RING ASS'Y	1	AC20006~31000 AT20006~32000 LC21081~30000 EC20295~30000 ET20295~31000 SC 20006~32000 ST 20006~30000	❑ 150-27-00261
	150-27-00261	. SEAL RING ASS'Y	1	AC31001~ AT32001~ LC30001~ EC30001~ ET31001~ SC 32001~ ST 30001~	

Fig & Index No.	Part No.	Description	Q'ty	Serial No.	Remarks
1301 -25	150-27-24130	. . RING, seal	2	AC20006~31000 AT20006~32000 LC21081~30000 EC20295~30000 ET20295~31000 SC 20006~32000 ST 20006~30000	☆ 150-27-00260
	150-27-24131	. . RING, seal	2	AC31001~ AT32001~ LC30001~ EC30001~ ET31001~ SC 32001~ ST 30001~	☆ 150-27-00261
26	145-27-32140	GUARD	2	AC20006~31000 AT20006~32000 LC21081~30000 EC20295~30000 ET20295~31000 SC 20006~32000 ST 20006~30000	
	145-27-42220	GUARD	2	AC31001~ AT32001~ LC30001~ EC30001~ ET31001~ SC 32001~ ST 30001~	
27	07000-05345	O-RING	2	20006~	
28	01000-30822	BOLT	16	20006~22387	
	01010-30822	BOLT	16	AC22388~31000 AT22388~32000 LC22388~30000 EC22388~30000 ET22388~31000 SC 22388~32000 ST 22388~30000	
	145-27-42230	BOLT	16	AC31001~ AT32001~ LC30001~ EC30001~ ET31001~ SC 32001~ ST 30001~	
29	01602-00825	WASHER, spring	16	AC20006~31000 AT20006~32000 LC21081~30000 EC20295~30000 ET20295~31000 SC 20006~32000 ST 20006~30000	
	01602-01030	WASHER, spring	16	AC31001~ AT32001~ LC30001~ EC30001~ ET31001~ SC 32001~ ST 30001~	

Fig & Index No.	Part No.	Description	Q'ty	Serial No.	Remarks
1301 -30	145-27-32150	GUARD	2	AC, EC 20006~22871 AT, ST, ET 20006~23089 SC 20006~22728	❒ 141-27-32260
	141-27-32260	GUARD	2	AC, EC 22872~ AT, ST, ET 23090~ SC22729~	
	145-27-32150	GUARD	2	LC21081~23043	❒ 141-27-32260
	141-27-32260	GUARD	2	LC23044~	
31	01010-31020	BOLT	20	20006~	
32	01602-01030	WASHER, spring	20	20006~	
33	141-27-32113	BOSS, sprocket	2	20006~	For Segment type sprocket
34	141-27-32280	TEETH	18	20006~	For Segment type sprocket
35	154-27-12293	BOLT	54	20006~	For Segment type sprocket
36	01803-02228	NUT	54	20006~	For Segment type sprocket
	Supplied with sprocket cover as a set. (See Fig. 1406, 1407)				
37	145-942-1110	GUARD, wear, L.H	1	A, E 20006~ •	OP ■144-942-1120 144-942-1112
	144-942-1120	GUARD, wear, L.H	1	A, E • ~	OP
	145-942-1120	GUARD, wear, L.H	1	S 20006~ •	OP ■144-942-1130 144-942-1112
	144-942-1130	GUARD, wear, L.H	1	S • ~	OP
	145-942-1120	GUARD, wear, R.H	1	A, E 20006~ •	OP ■144-942-1130 144-942-1112
	144-942-1130	GUARD, wear, R.H	1	A, E • ~	OP
	145-942-1110	GUARD, wear, R.H	1	S 20006~ •	OP ■144-942-1120 144-942-1112
	144-942-1120	GUARD, wear, R.H	1	S • ~	OP
38	144-942-1110	BOLT	14	20006~22387	OP
	144-942-1111	BOLT	14	22388~ •	OP ℓ =130 mm
	144-942-1112	BOLT	14	• ~	OP ℓ =110 mm
	Remove fourteen bolts index No.2 and install bolt, index No.38 when installing wear guard.				

Fig. 1302 FINAL DRIVE CASE AND GEAR

(D60P, D65P Serial No. 20006~)

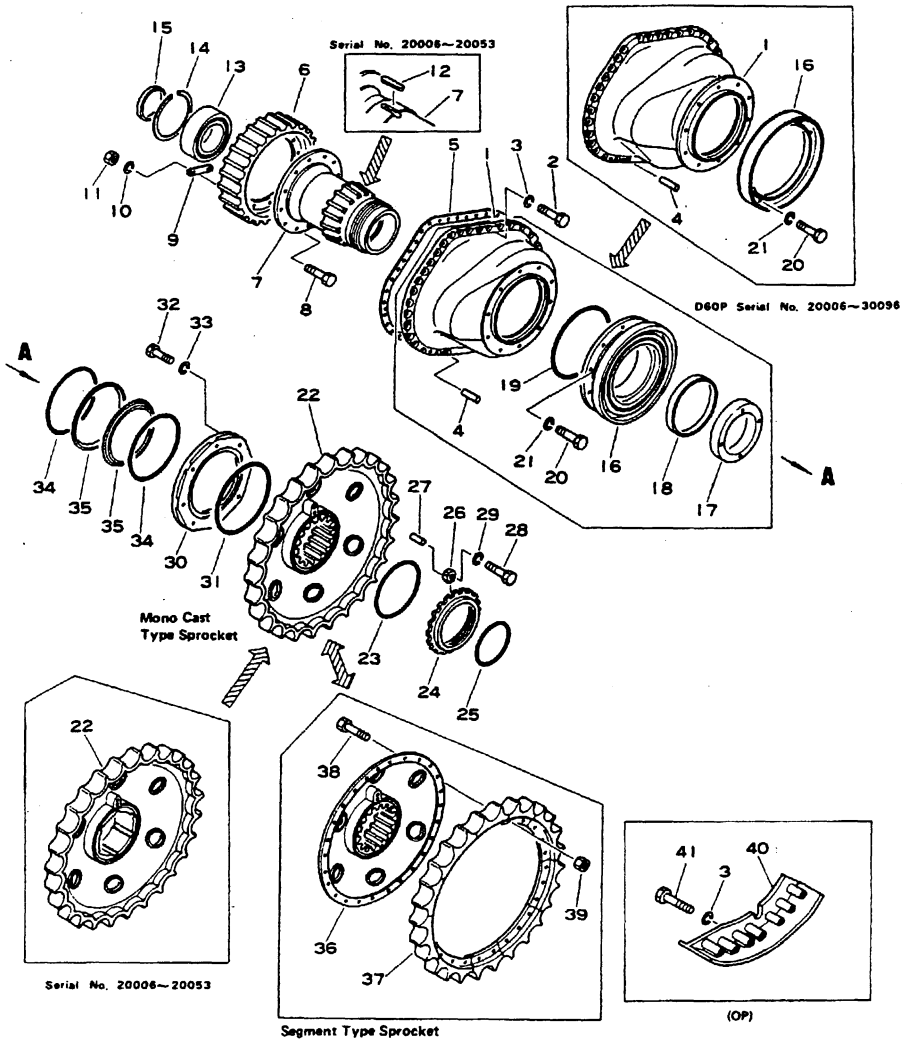

Fig. & Index No.	Part No.	Description	Q'ty	Serial No.	Remarks
1302 - 1	144-810-1112	CASE, fianl drive, L.H	1	C 20006~22387	
	144-810-1113	CASE, final drive, L.H	1	C 22388~24430	□ 144-810-1114
	144 910-1114	CASE, final drive, L.H	1	C 24431~28522	■ 144-810-1115 140-09-13131
	14 110-1115	CASE, final drive, L.H	1	C 28523~30096	
	14G-27-11120	CASE, final drive, L.H	1	C 30097~ T 30001~	
	144-810-1122	CASE, final drive, R.H	1	C 20006~22387	
	144-810-1123	CASE, final drive, R.H	1	C 22388~24430	□ 144-810-1124
	144-810-1124	CASE, final drive, R.H	1	C 24431~28522	■ 144-810-1125 140-09-13131
	144-810-1125	CASE, final drive, R.H	1	C 28523~30096	
	14G-27-11110	CASE, final drive, R.H	1	C 30097~ T 30001~	
2	01040-31440	BOLT	66	20006~22387	
	01010-31440	BOLT	66	22388~	
3	01602-01442	WASHER, spring	66	20006~	
4	04020-01638	PIN, dowel	6	20006~	
5	144-810-1165	GASKET	2	20006~22387	
	141-27-31240	GASKET	2	22388~	
6	141-27-31211	GEAR, final drive	2	C 20006~27302	■ 145-27-31142 141-27-31212 01084-02060 141-27-31270 141-27-31280 141-27-31252
	141-27-31212	GEAR, final drive	2	C 27303~ • C 27303~30034 (For power tilt)	※ 145-27-41510
	145-27-31451	GEAR, final drive	2	C • ~30553 C 30035~30491 (For power tilt) T 30001~30029	※ 145-27-41510
	145-27-41510	GEAR, final drive	2	C 30554~ C 30492~ (For power tilt) T 30030~	
7	144-810-1162	HUB, final drive gear	2	C 20006~20053	
	144-810-1164	HUB, final drive gear	2	C 20054~27302	■ 144-810-1165 141-27-31212 01084-02060 141-27-31270 141-27-31252 141-27-31280
	144-810-1165	HUB, final drive gear	2	C 27303~30096	
	14G-27-11140	HUB, final drive gear	2	C 30097~ T 30001~	
8	01084-01860	BOLT, reamer	24	C 20006~22787	※ 141-27-31260
	141-27-31260	BOLT, reamer	24	C 22788~27302	
	01084-02060	BOLT, reamer	24	C 27303~ T 30001~	

Fig & Index No.	Part No.	Description	Q'ty	Serial No.	Remarks
1302 - 9	141-27-12230	PLATE, lock	12	C 20006~27302	
	141-27-31270	PLATE, lock	12	C 27303~ T 30001~	
10	141-27-31280	WASHER	24	C 27303~ T 30001~	
11	01500-31816	NUT	24	C 20006~22387	※ 141-27-31251
	141-27-31251	NUT	24	C 22388~27302	
	141-27-31252	NUT	24	C 27303~ T 30001~	
12	170-27-12150	KEY	12	20006~20053	
13	140-09-13140	BEARING	2	20006~28522	□ 06043-02228
	06043-02228	BEARING	2	28523~	
14	145-27-31430	RING, snap	2	20006~28522	□ 04071-00250
	04071-00250	RING, snap	2	28523~	
15	141-27-31230	COLLAR	2	20006~	
16	144-810-1221	GUARD	2	C 20006~20053	
	145-27-32150	GUARD	2	C 20054~23043	
	141-27-32260	GUARD	2	C 23044~30096	
	14G-27-11130	GUARD	2	C 30097~ T 30001~	
17	14G-27-11150	BUSHING	2	C 30097~ T 30001~	
18	14G-27-11160	BUSHING	2	C 30097~ T 30001~	
19	07000-05345	O-RING	2	C 30097~ T 30001~	
20	01010-31020	BOLT	20	C 20006~30096	
	01010-31440	BOLT	20	C 30097~ T 30001~	
21	01602-01030	WASHER, spring	20	C 20006~30096	
	01602-01442	WASHER, spring	20	T 30001~	
22	141-27-32122	SPROCKET	2	C 20006~20053	
	141-27-32124	SPROCKET	2	C 20054~28168	
	141-27-32125	SPROCKET	2	C 28169~32000	
	141-27-32126	SPROCKET	2	C 32001~ T 30001~	
	141-98-00140	RIM, sprocket	1	C 20006~28168	Service only
	141-98-00141	RIM, sprocket	1	C 28169~ T 30001~	Service only
23	07000-05270	O-RING	2	20006~	
24	141-27-32140	NUT	2	20006~	
25	07000-05230	O-RING	2	20006~	
26	141-27-32220	PLATE, lock	2	20006~	
27	04020-01228	PIN, dowel	2	20006~	
28	01252-01635	BOLT	2	20006~	
29	01602-01648	WASHER, spring	2	20006~	

Fig & Index No.	Part No.	Description	Q'ty	Serial No.	Remarks
1302 -30	145-27-32140	GUARD	2	C 20006~32000 T 30001~31000	
	145-27-42220	GUARD	2	C 32001~ T 31001~	
31	07000-05345	O-RING	2	20006~	
32	01000-30822	BOLT	16	20006~22387	
	01010-30822	BOLT	16	C 22388~32000 T 30001~31000	
	145-27-42230	BOLT	16	C 32001~ T 31001~	
33	01602-00825	WASHER, spring	16	C 20006~32000 T 30001~31000	
	01602-01030	WASHER, spring	16	C 32001~ T 31001~	
	150-27-00025	FLOATING SEAL ASS'Y	2	20006~ •	□ 150-27-00026
	150-27-00026	FLOATING SEAL ASS'Y	2	• ~	
	150-27-00270	. O-RING ASS'Y	1	20006~	
34	150-27-24120	. . O-RING	2	20006~	☆ 150-27-00270
	150-27-00260	. SEAL RING ASS'Y	1	20006~ •	□ 150-27-00261
	150-27-00261	. SEAL RING ASS'Y	1	• ~	
35	150-27-24130	. . RING, seal	2	20006~ •	☆ 150-27-00260
	150-27-24131	. . RING, seal	2	• ~	☆ 150-27-00261
36	141-27-32113	BOSS, sprocket	2	C 20006~ T 30001~	Parts of Segment Type Sprocket
37	141-27-32280	TEETH	18	C 20006~ T 30001~	
38	154-27-12293	BOLT	54	C 20006~ T 30001~	
39	01803-02228	NUT	54	C 20006~ T 30001~	
	Supplied with D60P sprocket cover as a set. (See Fig.1406)				
40	145-942-1110	GUARD, wear, L.H	1	20006~ •	OP ■ 144-942-1120 144-942-1112
	144-942-1120	GUARD, wear, L.H	1	• ~	OP
	145-942-1120	GUARD, wear, R.H	1	20006~ •	OP ■ 144-942-1130 144-942-1112
	144-942-1130	GUARD, wear, R.H	1	• ~	OP
41	144-942-1110	BOLT	14	20006~22387	OP
	144-942-1111	BOLT	14	22388~ •	OP ℓ=130 mm
	144-942-1112	BOLT	14	• ~	OP ℓ=110 mm
	Remove fourteen bolts index No.2 and install bolt, index No.41 when installing wear guard.				

Fig. 1303 DRIVE GEAR AND SHAFT

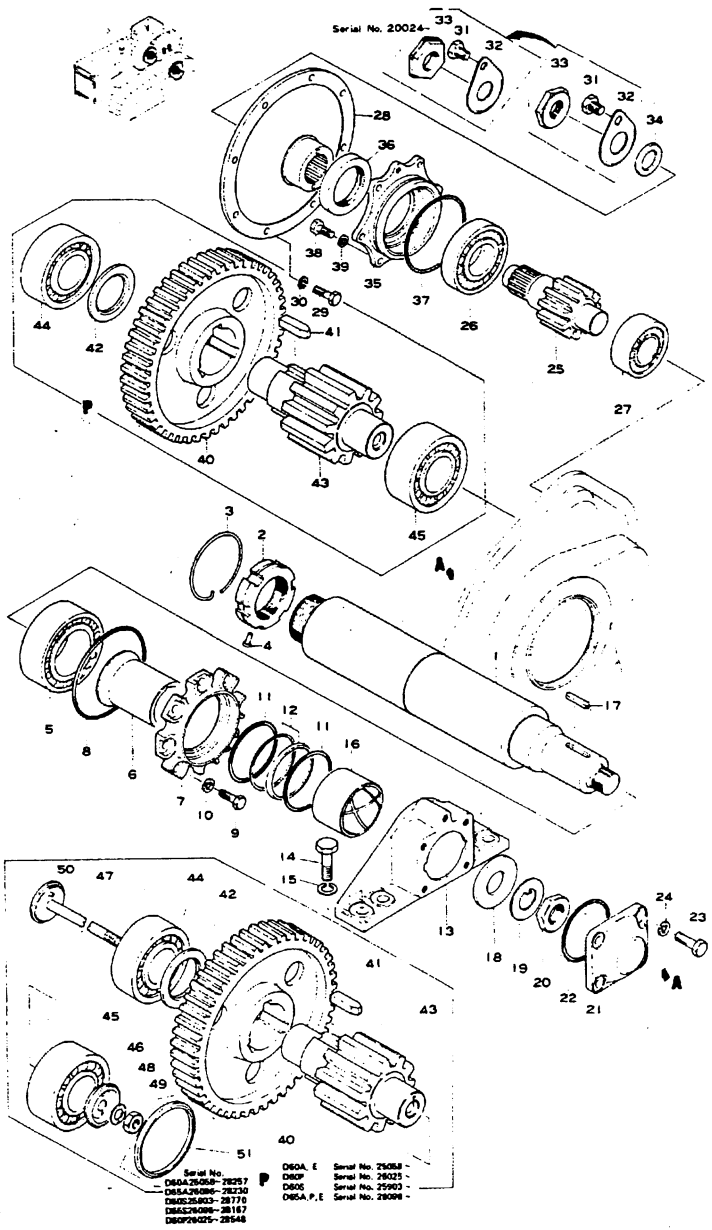

Fig & Index No.	Part No.	Description	Q'ty	Serial No.	Remarks
1303 - 1	141-27-32131	SHAFT, sprocket	2	A,S 20006-20021	
	141-27-32230	SHAFT, sprocket	2	A,S 20024~	
	144-810-1212	SHAFT, sprocket	2	P 20006-20021	
	144-810-1310	SHAFT, sprocket	2	P 20024~	
	144-870-1280	SHAFT, sprocket	2	L 21081~	
2	141-27-32240	NUT	2	20006~	
3	170-27-12480	RING, snap	2	20006~	
4	130-27-12131	PIN	2	20006~	
5	140-09-13420	BEARING	2	AC20006~28240 AT20006~28228 PC20006~28522 LC21081~28012 SC20006~28864 ST20006~28168 EC20295~28258 ET20295~28338	
	06030-23220	BEARING	2	AC28241~ AT28229~ PC28523~ PT30001~ LC28013~ SC28865~ ST28169~ EC28259~ ET28337~	
6	141-27-12640	COLLAR	2	20006~	
7	145-27-32430	RETAINER	2	20006~	
8	07000-05170	O-RING	2	20006~	
9	01010-31230	BOLT	16	20006~	
10	01602-01236	WASHER, spring	16	20006~	
	150-27-00015	SEAL RING ASS'Y	2	20006~ •	□ 150-27-00016
	150-27-00016	SEAL RING ASS'Y	2	• ~	
	150-27-00190	. O-RING ASS'Y	1	20006~	
11	150-27-24250	. . O-RING	2	20006~	☆ 150-27-00190
	150-27-00180	. SEAL RING ASS'Y	1	20006~ •	□ 150-27-00181
	150-27-00181	. SEAL RING ASS'Y	1	• ~	
12	150-27-24260	. . RING, seal	2	20006~ •	☆ 150-27-00180
	150-27-24261	. . RING, seal	2	• ~	☆ 150-27-00181
13	141-27-32160	SUPPORT, sprocket	2	20006~	
14	01040-32465	BOLT	8	20006~22387	
	01010-32465	BOLT	8	22388~	
15	01602-02472	WASHER, spring	8	20006~	
16	141-27-32190	BUSHING	2	20006~	
17	04000-01065	KEY, feather	2	20006~	
18	145-27-32450	WASHER	2	20006~	

Fig & Index No.	Part No.	Description	Q'ty	Serial No.	Remarks
1303 -19	135-27-12320	PLATE, lock	2	20006~	
20	145-27-12330	NUT	2	20006~22387	
	131-27-51110	NUT	2	22388~	
21	145-27-32461	CAP, bearing	2	20006~	
22	07000-03130	O-RING	2	20006~	
23	01040-31845	BOLT	8	20006~22387	
	01010-31845	BOLT	8	22388~	
24	01602-01854	WASHER, spring	8	20006~	
25	141-27-31141	PINION, 1st	2	20006~20031	※ 145-27-41210
	141-27-31142	PINION, 1st	2	20032~20053	※ 145-27-41210
	141-27-31143	PINION, 1st	2	AC20054~30146 PC20054~31012 LC20054~ • EC20054~ • AT20054~30795 PT20054~30115 ET20054~30371 SC 20054~30865 ST 20054~28970 AC20054~30146 (For Power Tilt) PC20054~30959 (For Power Tilt) AT20054~30836 (For Power Tilt)	※ 145-27-41210
	145-27-41210	PINION, 1st	2	AC30417~ PC31013~ LC • ~ EC • ~ AT30796~ PT30116~ ET30372~ SC 30866~ ST 28971~ AC30147~ (For Power Tilt) PC30960~ (For Power Tilt) AT30837~ (For Power Tilt)	

145-27-41230

Fig & Index No.	Part No.	Description	Q'ty	Serial No.	Remarks
1303 -26	130-09-13550	BEARING	2	AC20006~30146 PC20006~31012 LC20006~ • EC20006~ • AT20006~30795 PT20006~30115 ET20006~30371 SC 20006~30865 ST 20006~28970 AC20006~30146 (For Power Tilt) PC20006~30959 (For Power Tilt) AT20006~30836 (For Power Tilt)	※ 145-27-41220
	145-27-41220	BEARING	2	AC30417~ PC31013~ LC • ~ EC • ~ AT30796~ PT30116~ ET30372~ SC 30866~ ST 28971~ AC30147~ (For Power Tilt) PC30960~ (For Power Tilt) AT30837~ (For Power Tilt)	
27	140-09-13110	BEARING	2	AC20006~28240 AT20006~28228 PC20006~28522 LC21081~28012 SC 20006~28864 ST 20006~28168 EC20295~28258 ET20295~28336	※ 145-27-41230
	06043-02311	BEARING	2	AC28241~30146 AT28229~30795 PC28523~31012 PT30001~30115 LC28013~ • SC 28865~30865 ST 28169~28970 EC28259~ • ET28337~30371 AC28241~30146 (For Power Tilt) PC28523~30959 (For Power Tilt) AT28229~30836 (For Power Tilt)	※ 145-27-41230

Fig & Index No.	Part No.	Description	Q'ty	Serial No.	Remarks
1303 -27	145-27-41230	BEARING	2	AC30417~ PC31013~ LC • ~ EC • ~ AT30796~ PT30116~ ET30372~ SC 30866~ ST 28971~ AC30147~ (For Power Tilt) PC30960~ (For Power Tilt) AT30837~ (For Power Tilt)	
28	141-27-31190	FLANGE	2	20006~20053	
	141-27-31193	FLANGE	2	20054~	
29	01040-31430	BOLT	16	20006~22387	□ 01010-31430
	01010-31430	BOLT	16	22388~	
30	01602-01442	WASHER, spring	16	20006~	
31	145-27-11230	BOLT	2	20006~22387	
	131-27-51120	BOLT	2	22388~	
32	130-27-11655	PLATE, lock	2	20006~20053	
	130-27-51140	PLATE, lock	2	20054~	
33	130-27-11630	NUT	2	20006~20053	
	130-27-51150	NUT	2	20054~22387	
	130-27-51151	NUT	2	22388~	
34	145-27-11240	PACKING	2	20006~	
35	141-27-31132	CAGE, bearing	2	20006~	
36	07013-00090	SEAL, oil	2	20006~	
37	07000-05165	O-RING	2	20006~	
38	01010-31235	BOLT	12	20006~	
39	01602-01236	WASHER, spring	12	20006~	

Fig & Index No.	Part No.	Description	Q'ty	Serial No.	Remarks
1303 -40	141-27-31151	GEAR	2	AC20006~30146 PC20006~31012 LC20006~ • EC20006~ • AT20006~30795 PT20006~30115 ET20006~30371 SC 20006~30865 ST 20006~28970 AC20006~30146 (For Power Tilt) PC20006~30959 (For Power Tilt) AT20006~30836 (For Power Tilt)	※ 145-27-41310
	145-27-41310	GEAR	2	AC30417~ PC31013~ LC • ~ EC • ~ AT30796~ PT30116~ ET30372~ SC 30866~ ST 28971~ AC30147~ (For Power Tilt) PC30960~ (For Power Tilt) AT30837~ (For Power Tilt)	
41	141-27-31180	KEY	6	20006~	
42	141-27-31170	SPACER	2	20006~	
43	141-27-31161	PINION, 2nd	2	AC, EC 20006~25057 PC, LC 20006~26024 SC 20006~25902 AT, ST, ET 20006~26095	※ 145-27-41410
	141-27-31162	PINION, 2nd	2	AC25058~29891 PC26025~30553 LC26025~28080 EC25058~28996 AT26096~30559 PT26096~30029 ET26096~30185 SC 25903~30548 ST 26096~28872 AC25058~29329 (For Power Tilt) PC26025~30491 (For Power Tilt) AT26096~30574 (For Power Tilt) ET26096~30236 (For Power Tilt)	※ 145-27-41410

Fig & Index No.	Part No.	Description	Q'ty	Serial No.	Remarks
1303 -43	145-27-41410	PINION, 2nd	2	AC29892~ PC30554~ LC28081~ EC28997~ AT30560~ PT30030~ ET30186~ SC 30549~ ST 28873~ AC29330~ (For Power Tilt) PC30492~ (For Power Tilt) AT30575~ (For Power Tilt) ET30237~ (For Power Tilt)	
44	140-09-13120	BEARING	2	AC20006~30146 PC20006~31012 LC20006~ • EC20006~ • AT20006~30795 PT20006~30115 ET20006~30371 SC 20006~30865 ST 20006~28970 AC20006~30146 (For Power Tilt) PC20006~30959 (For Power Tilt) AT20006~30836 (For Power Tilt)	※ 140-09-13131
	140-09-13131	BEARING	2	AC30417~ PC31013~ LC • ~ EC • ~ AT30796~ PT30116~ ET30372~ SC 30866~ ST 28971~ AC30147~ (For Power Tilt) PC30960~ (For Power Tilt) AT30837~ (For Power Tilt)	
45	140-09-13130	BEARING	2	AC, EC 20006~25057 PC, LC 20006~26024 SC 20006~25902 AT, ST, ET 20006~26095	
	140-09-13131	BEARING	2	AC, EC 25058~ PC, LC 26025~ SC 25903~ T 26096~	

Fig & Index No.	Part No.	Description	Q'ty	Serial No.	Remarks
1303 -46	141-27-31310	HOLDER	2	AC, EC 25058~ PC, LC 26025~ SC 25903~ T 26096~	
47	141-27-31320	SHAFT	2	AC, EC 25058~ PC, LC 26025~ SC 25903~ T 26096~	
48	01653-22216	WASHER, lock	2	AC, EC 25058~ PC, LC 26025~ SC 25903~ T 26096~	
49	01583-02213	NUT	2	AC, EC 25058~ PC, LC 26025~ SC 25903~ T 26096~	
50	04020-00820	PIN, dowel	4	AC, EC 25058~ PC, LC 26025~ SC 25903~ T 26096~	
51	141-27-31330	SPACER	2	AC, EC 25058~28257 PC, LC 26025~28548 SC 25903~28770 AT, ET 26096~28230 ST 26096~28167	

Fig. 1321 STEERING CASE AND MAIN FRAME

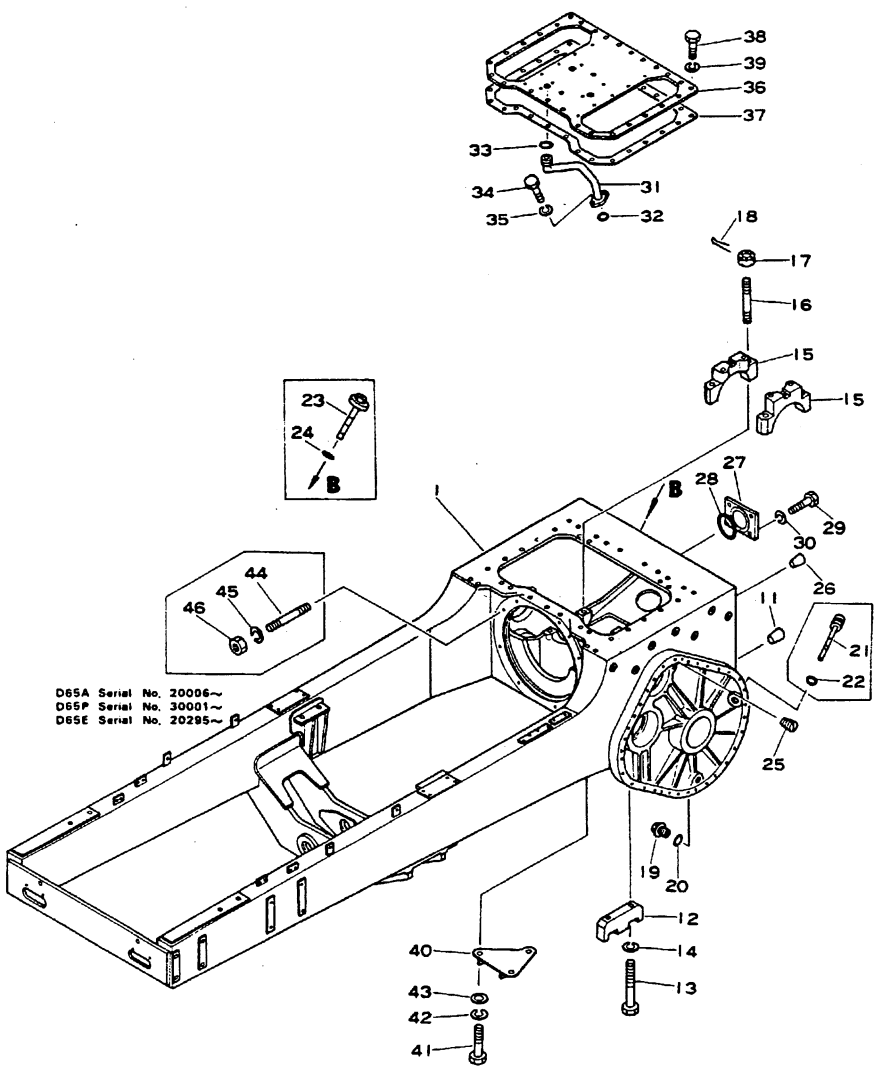

Fig. & Index No.	Part No.	Description	Q'ty	Serial No.	Remarks
1321 - 1	144-21-00025	STEERING CASE ASS'Y	1	AC, EC	
	144-21-00125	STEERING CASE ASS'Y	1	AT, ET	
	14G-21-00022	STEERING CASE ASS'Y	1	PT, PC, LC	
	144-21-11230	. TUBE	1		
	07000-03035	. O-RING	1		
	141-21-31260	. CLIP	1		
	01010-31020	. BOLT	2		
	01602-01030	. WASHER, spring	2		
	144-21-11222	. COVER	1		
	01010-31016	. BOLT	4		
	01602-01030	. WASHER, spring	4		
11	07049-03342	. PLUG, wood, taper	6		
12	145-21-31171	. CAP, diagonal brace	4		
13	01010-32295	. BOLT	8		
14	01602-02268	. WASHER, spring	8		
15	144-21-12191	. CAP, diagnoal brace	2		
16	01123-62200	. STUD	4		
17	01592-02226	. NUT	4		
18	04050-05040	. PIN, cotter	4		
19	07044-13620	. PLUG, magnetic	4		
20	07000-03032	. O-RING	4		
21	144-21-11261	. GAUGE, oil level, final drive	2		
22	07000-03032	. O-RING	2		
23	144-21-11252	. GAUGE, oil level, steering clutch case	1		
24	07000-03038	. O-RING	1		
25	135-21-11250	. PLUG	4		
26	07049-02430	. PLUG, wood, taper	12		
27	135-21-11210	. PLATE	1		
28	07000-03110	. O-RING	1		
29	01010-31630	. BOLT	4		
30	01602-01648	. WASHER, spring	4		
31	144-21-11453	. TUBE	1		
32	07000-02015	. O-RING	1		
33	07000-02018	. O-RING	1		
34	01010-31025	. BOLT	2		
35	01602-01030	. WASHER, spring	2		
36	144-21-11412	. COVER	1		
37	144-21-11421	. GASKET	1		
38	01010-31435	. BOLT	10		
39	01602-01442	. WASHER, spring	10		

STEERING CASE AND MAIN FRAME

Fig. & Index No.	Part No.	Description	Q'ty	Serial No.	Remarks
1321 -40	144-21-11490	. PLATE	1		
41	01010-32450	. BOLT	3		
42	01602-02472	. WASHER, spring	3		
43	01643-02460	. WASHER	3		
44	01120-31840	. STUD	8	T	
45	01602-01854	. WASHER, spring	8	T	
46	01582-11815	. NUT	8	T	

Fig. 1326 BEVEL GEAR AND SHFT

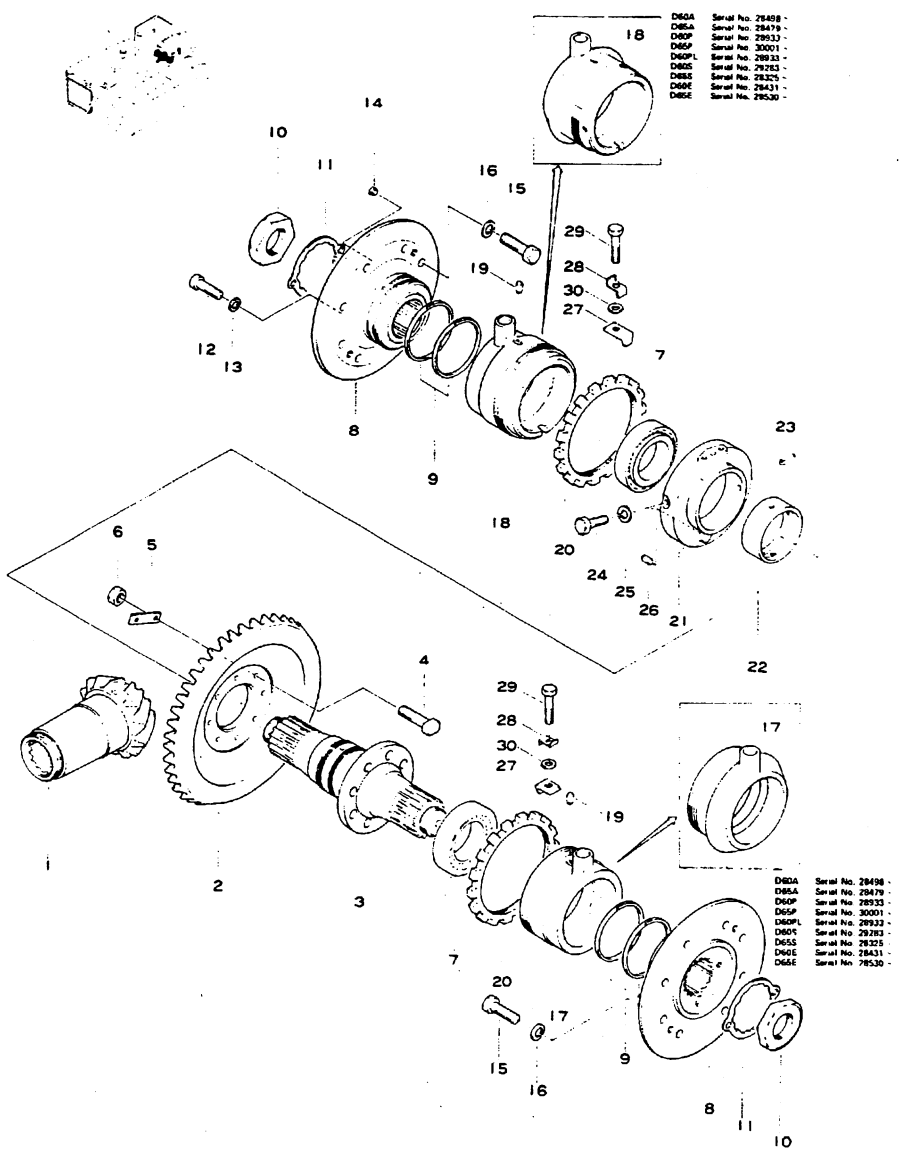

Fig. & Index No.	Part No.	Description	Q'ty	Serial No.	Remarks
1326 - 1	(141-21-34110)	SHAFT, pinion	1	S 20006~20021	
	(141-21-34111)	SHAFT, pinion	1	S 20024~20053	
	(141-21-34112)	SHAFT, pinion	1	S 20024~	
	See transmission for A, P, PL, E pinion shaft.				
2	141-21-32111	GEAR, bevel	1	AC, S, PC 20006~20021	
	144-21-12111	GEAR, bevel	1	AT20006~20021	
	141-21-32112	GEAR, bevel	1	A, PC, LC, S, E 20024~	
	14G-21-12110	GEAR, bevel	1	PT30001~	
3	144-21-12140	SHAFT	1	20006~20031	■ 144-21-12142 144-21-12413
	144-21-12141	SHAFT	1	20032~20053	■ 144-21-12142 144-21-12413
	144-21-12142	SHAFT	1	20054~	
4	144-21-12150	BOLT, reamer	8	20006~	
5	145-21-32160	PLATE, lock	4	AC, EC 20006~21776 PC, LC 20006~22021 SC 20006~21936 AT, ST, ET 20006~22346	
	144-21-12170	PLATE, lock	4	SC 21937~ AC, EC 21777~ PC, LC 22022~ T 22347~	
6	01500-31816	NUT	8	20006~22387	
	01582-01815	NUT	8	22388~	
7	141-21-32120	BEARING	2	AC20006~28240 AT20006~28228 PC20006~28522 LC21081~28012 SC20006~28864 ST20006~28168 EC20295~28258 ET20295~28336	
	06000-32215	BEARING	2	AC28241~ AT28229~ PC28523~ PT30001~ LC28013~ SC28865~ ST28169~ EC28259~ ET28337~	

Fig & Index No.	Part No.	Description	Q'ty	Serial No.	Remarks
1326 - 8	144-21-12411	HUB	2	20006~20031	■ 144-21-12413 144-21-12142
	144-21-12412	HUB	2	20032~20053	■ 144-21-12413 144-21-12142
	144-21-12413	HUB	2	20054~	
9	144-21-12370	RING, seal	4	20006~20021	
	144-21-12371	RING, seal	4	AC20024~ • EC20024~ • SC 20024~ • PC20024~ • LC20024~ • AT20024~30365 ET20024~30169 ST 20024~28832 PT20024~30025 AC20024~ • (For Power Tilt) EC20024~ • (For Power Tilt) PC20024~ • (For Power Tilt) AT20024~29145 (For Power Tilt) ET20024~30213 (For Power Tilt) PT20024~30278 (For Power Tilt)	□ 144-21-12374
	144-21-12372	RING, seal	4	AC • ~29811 EC • ~ • SC • ~30344 PC • ~30102 LC • ~ • AT30366~30371 ET30170 ST 28833~28834 PT30026~ • AC • ~ • (For Power Tilt) EC • ~ (For Power Tilt) PC • ~30286 (For Power Tilt) AT29146~30094 (For Power Tilt) ET30214 (For Power Tilt) PT30279~ • (For Power Tilt)	□ 144-21-12374

Fig & Index No.	Part No.	Description	Q'ty	Serial No.	Remarks
1326 - 9	144-21-12373	RING, seal	4	AC29812~29817 EC • ~ • SC 30345~30369 PC30103~30392 LC • ~ • AT30372~30384 ET30171~30176 ST 28835~28844 PT • ~ • AC • ~30146 (For Power Tilt) EC • ~ • (For Power Tilt) PC30287~30311 (For Power Tilt) AT30095~30276 (For Power Tilt) ET30215~ • (For Power Tilt) PT • ~ • (For Power Tilt)	□ 144-21-12374
	144-21-12374	RING, seal	4	AC29818~ EC • ~ SC 30370~ PC30393~ LC • ~ AT30385~ ET30177~ ST 28845~ PT • ~ AC30147~ (For Power Tilt) EC • ~ (For Power Tilt) PC30312~ (For Power Tilt) AT30277~ (For Power Tilt) ET • ~ (For Power Tilt) PT • ~ (For Power Tilt)	
10	130-27-51150	NUT	2	20006~22387	□ 130-27-51151
	130-27-51151	NUT	2	22388~	
11	144-21-12161	PLATE, lock	2	20006~	
12	01252-31020	BOLT, cap	4	20006~	
13	01602-01030	WASHER, spring	4	20006~	
14	07043-00108	PLUG, taper	2	20006~	
15	01040-31440	BOLT	16	20006~22387	
	01010-31440	BOLT	16	22388~	

Fig & Index No.	Part No.	Description	Q'ty	Serial No.	Remarks
1326 -16	01602-01442	WASHER, spring	16	20006~	
17	144-21-12211	CAGE, bearing, L.H.	1	AC20006~28497 AT20006~28478 PC20006~28932 LC20006~28932 SC 20006~29281 ST 20006~28324 EC20006~28430 ET20006~28529	
	144-21-12430	CAGE, bearing, L.H.	1	AC28498~ • AT28479~ • PC28933~ • PT30001~ • LC28933~ • SC 29282~ • ST 28325~ • EC28431~ • ET28530~ •	☐ 144-21-12431
	144-21-12431	CAGE, bearing, L.H.	1	• ~	
18	144-21-12221	CAGE, bearing, R.H.	1	AC20006~28497 AT20006~28478 PC20006~28932 LC21081~28932 SC 20006~29281 ST 20006~28324 EC20295~28430 ET20295~28529	
	144-21-12440	CAGE, bearing, R.H.	1	AC28498~ • AT28479~ • PC28933~ • PT30001~ • LC28933~ • SC 29282~ • ST 28325~ • EC28431~ • ET28530~ •	☐ 144-21-12441
	144-21-12441	CAGE, bearing, R.H.	1	• ~	
19	144-21-12320	PIN, dowel	2	20006~	
20	144-21-12310	SCREW	2	20006~	
21	144-21-12231	FLANGE	1	20006~20021	
	144-21-12232	FLANGE	1	20024~	
22	135-21-12240	BUSHING	1	20006~	
23	144-21-12360	PIN, roll	1	20006~	
24	01010-31025	BOLT	2	20006~	
25	01602-01030	WASHER, spring	2	20006~	
26	04020-01024	PIN, dowel	1	20006~	
27	144-21-12330	PLATE, lock	2	20006~	
28	144-21-12340	PLATE, lock	2	20006~	

Fig & Index No.	Part No.	Description	Q'ty	Serial No.	Remarks
1326 -29	01010-31040	BOLT	2	20006~	
30	01640-21016	WASHER	2	20006~	

Fig. 1327 STEERING CLUTCH

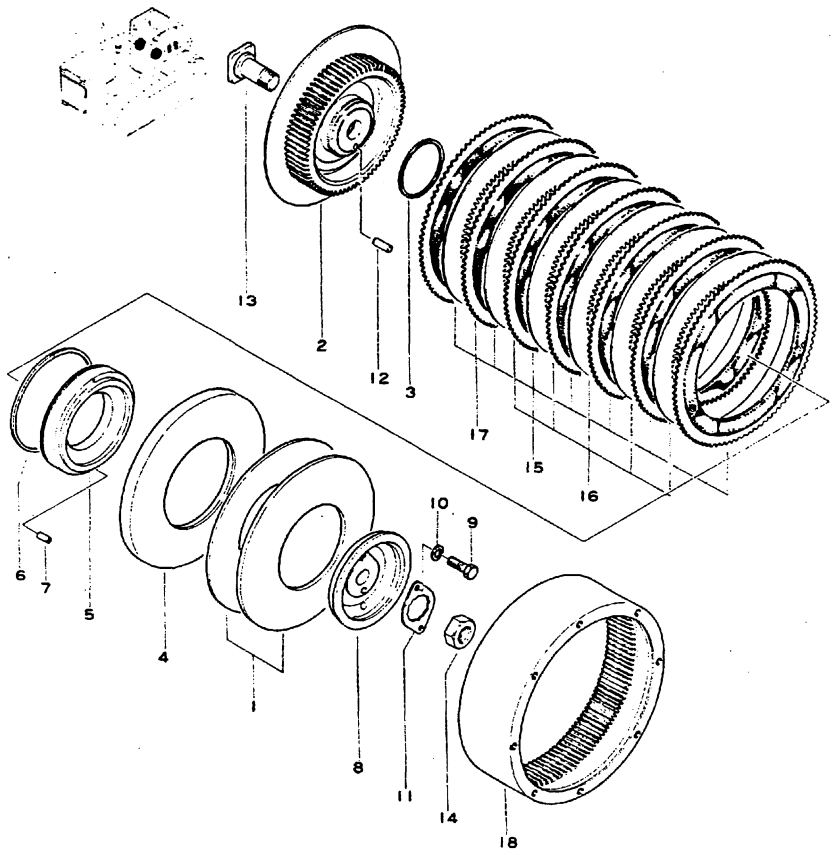

Fig & Index No.	Part No.	Description	Q'ty	Serial No.	Remarks
	141-21-00520	STEERING CLUTCH ASS'Y	2	20006-20021	□ 141-21-00522
	141-21-00521	STEERING CLUTCH ASS'Y	2	20024-21474	□ 141-21-00522
	141-21-00522	STEERING CLUTCH ASS'Y	2	21475-	
1327 - 1	131-21-43411	• SPRING	2	20006-	
2	131-21-43433	• DRUM, steering clutch	1	20006-	

Fig & Index No.	Part No.	Description	Q'ty	Serial No.	Remarks
1327 - 3	131-21-43520	• RING, seal	1	20006-	
4	131-21-43451	• PLATE, push	1	20006-	
5	131-21-43460	• PISTON	1	20006-20021	□ 141-21-33241
	141-21-33240	• PISTON	1	20024-21474	※ 141-21-33241
	141-21-33241	• PISTON	1	21475-	
6	131-21-43510	• RING, seal	1	20006-	
7	144-21-12251	• PIN	2	20006-	
8	141-21-33160	• FLANGE	1	20006-	
9	01010-31020	• BOLT	2	20006-	
10	01602-01030	• WASHER, spring	2	20006-	
11	131-21-43490	• PLATE, lock	1	20006-	
12	131-21-43480	• PIN	1	20006-	
13	131-21-43540	• BOLT	1	20006-	
14	01582-03024	• NUT	1	20006-	
15	145-21-13120	• LINING	7	20006-	
16	145-21-13130	• DISC (A)	5	20006-	
17	131-21-43440	• DISC (B)	1	20006-	
18	131-21-43421	• DRUM, brake	1	20006-	

Fig. 1328 BRAKE

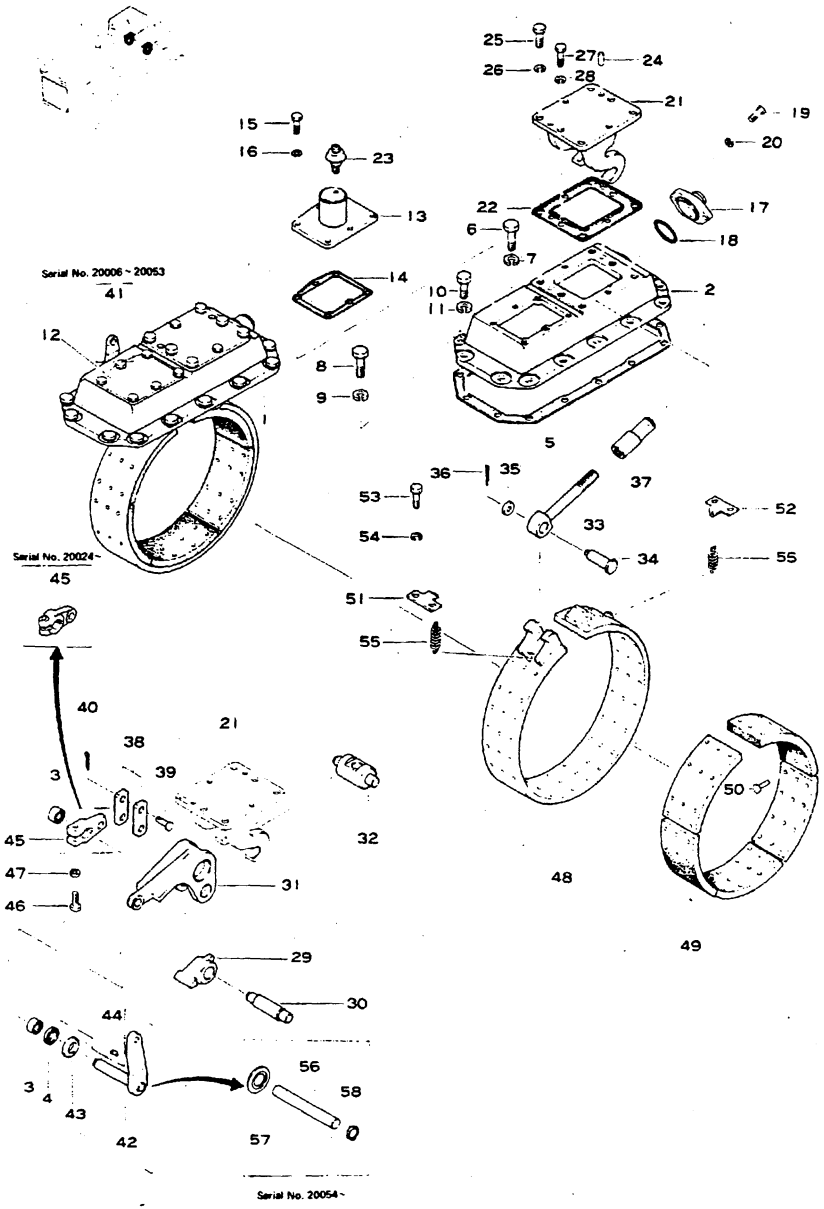

Fig. & Index No.	Part No.	Description	Q'ty	Serial No.	Remarks
1328 - 1	144-33-11120	COVER, R.H	1	20006-	
2	144-33-11140	COVER, L.H	1	20006-	
3	06120-02520	BEARING, needle	4	20006-	
4	07011-30025	SEAL, oil	2	20006-	
5	135-33-11180	GASKET	2	20006-20031	□ 141-33-31130
	141-33-31130	GASKET	2	20032-	
6	01040-31435	BOLT	8	20006-22387	
	01010-31435	BOLT	8	22388-	
7	01602-01442	WASHER, spring	8	20006-	
8	01040-31430	BOLT	2	20006-22387	
	01010-31430	BOLT	2	22388-	
9	01602-01442	WASHER, spring	2	20006-	
10	01040-31455	BOLT	18 14	S 20006-22387 A, P, LC, E 20006-22387	
	01010-31455	BOLT	18 14	S 22388- A, P, LC, E 22388-	
	01040-31485	BOLT	4	A, P, LC, E 20006-22387	
	01010-31485	BOLT	4	A, P, LC, E 22388-	
11	01602-01442	WASHER, spring	18	20006-	
12	144-33-11160	COVER, R.H	1	20006-	
13	144-33-11171	COVER, L.H	1	20006-	
14	144-33-11180	GASKET	2	20006-	
15	01010-31025	BOLT	12	20006-	
16	01602-01030	WASHER, spring	12	20006-	
17	144-33-11190	COVER	2	20006-22387	
	144-33-11191	COVER	2	22388-	
18	07000-03052	O-RING	2	20006-	
19	01010-31025	BOLT	4	20006-	
20	01602-01030	WASHER, spring	4	20006-	
21	144-33-11210	BRACKET	2	20006-20021	
	144-33-11410	BRACKET	2	20024-20053	□ 135-33-21210
	135-33-21210	BRACKET	2	20054-	
22	144-33-11220	GASKET	2	20006-	

Fig & Index No.	Part No.	Description	Q'ty	Serial No.	Remarks
1328-23	07030-00252	BREATHER	2 1	20006-20021 20024-	
24	04020-01228	PIN, dowel	4	20006-	
25	01040-31640	BOLT	12	20006-22387	
	01010-31640	BOLT	12	22388-	
26	01602-01648	WASHER, spring	12	20006-	
27	01010-31030	BOLT	4	20006-	
28	01602-01030	WASHER, spring	4	20006-	
29	130-809-5310	END	2	20006-	
30	144-33-11280	PIN	2	20006-	
31	144-33-11290	LEVER, brake	2	20006-	
32	144-33-11310	PIN	2	20006-	
33	144-33-11320	ROD	2	20006-	
34	144-33-11330	PIN	2	20006-	
35	01640-21626	WASHER	2	20006-	
36	04050-04025	PIN, cotter	2	20006-	
37	144-33-11340	NUT	2	20006-22387	
	135-33-21160	NUT	2	22388-	
38	144-33-11350	LINK, brake lever	4	20006-	
39	04205-01645	PIN	4	20006-	
40	04050-04025	PIN, cotter	4	20006-	
41	141-33-31111	SHAFT, R.H	1	S 20006-20053	
	144-33-31160	SHAFT, R.H	1	A, P 20006-20021	
	144-33-11361	SHAFT, R.H	1	A, P 20024-20053	
42	141-33-31120	SHAFT, L.H	1	S 20006-20053	
	144-33-11370	SHAFT, L.H	1	A, P 20006-20021	
	144-33-11371	SHAFT, L.H	1	A, P 20024-20053	
43	144-33-11380	COLLAR	2	20006-20053	
44	04010-00722	KEY, woodruff	2	20006-	
45	144-33-11390	LEVER	2	20006-20021	
	144-33-11430	LEVER	2	20024-	
46	01010-31245	BOLT	2	20006-	

Fig & Index No.	Part No.	Description	Q'ty	Serial No.	Remarks
1328-47	01602-01236	WASHER, spring	2	20006-	
	144-33-00510	BRAKE BAND ASS'Y	2	20006-	
48	144-33-11230	· BAND, brake	1	20006-	
49	135-33-11331	· LINING, brake	5	20006-	
50	04412-00512	· RIVET, brake lining	60	20006-	
51	144-33-11240	HANGER	1	20006-	
52	144-33-11250	HANGER	1	20006-	
53	01040-31425	BOLT	4	20006-22387	
	01010-31425	BOLT	4	22388-	
54	01602-01442	WASHER, spring	4	20006-	
55	144-33-11260	SPRING	2	20006-	
56	135-33-21120	SHAFT	2	20054-	
57	135-33-21130	COLLAR	2	20054-	
58	04064-02512	RING, snap	2	20054-	

Fig. 1361 STEERING CONTROL VALVE

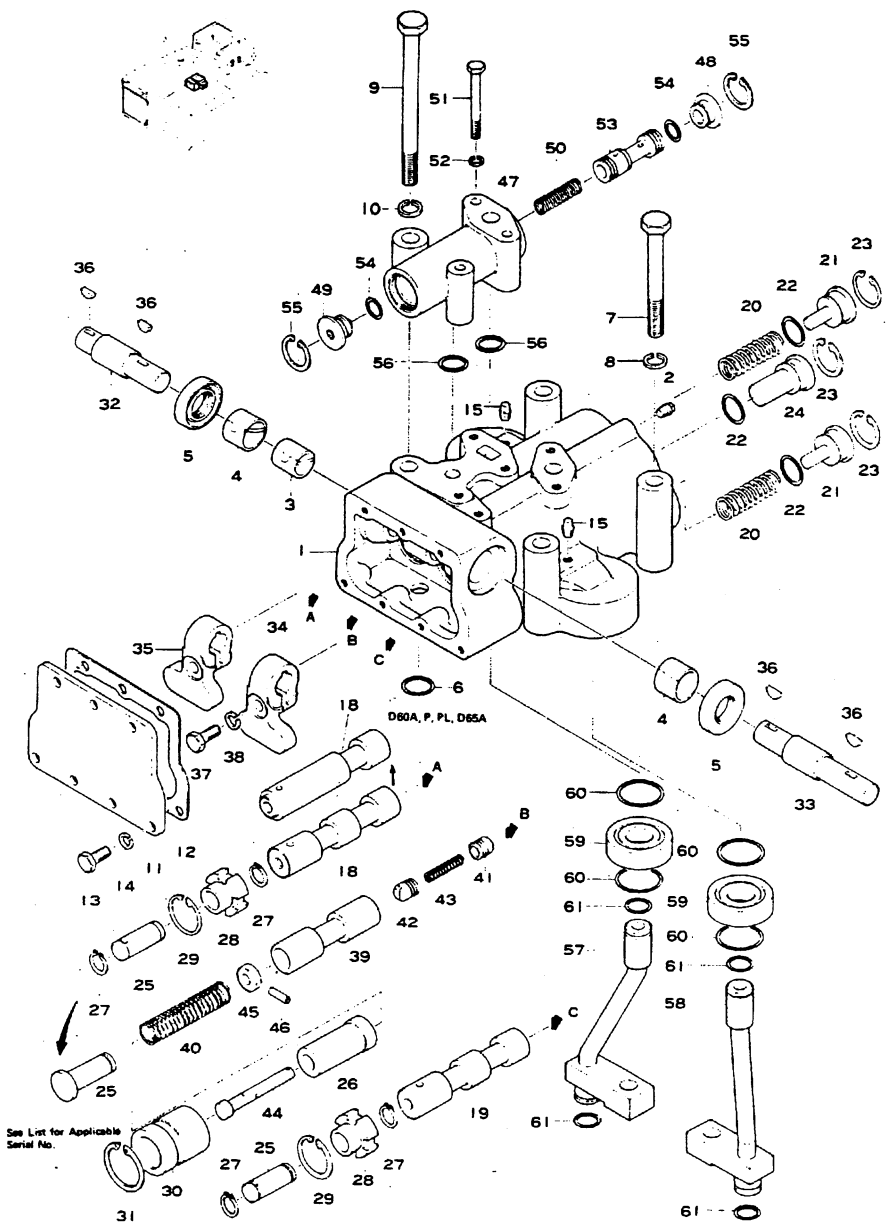

Fig & Index No.	Part No.	Description	Q'ty	Serial No.	Remarks
	144-40-00010	STEERING CONTROL VALVE ASS'Y	1	A, P 20006-20021	☐ 144-40-00014
	144-40-00011	STEERING CONTROL VALVE ASS'Y	1	A, P, LC, E 20024-22387	☐ 144-40-00014
	144-40-00012	STEERING CONTROL VALVE ASS'Y	1	AC, E 22388~23161, 23163, 23168~23332 P, LC 22388~23296, 23301~23490 AT22388~23321	☐ 144-40-00014
	144-40-00013	STEERING CONTROL VALVE ASS'Y	1	AC, E 23162, 23164~23167, 23333~24728 P, LC 23297~23300, 23491~24954 AT23322~24993	☐ 144-40-00014
	144-40-00014	STEERING CONTROL VALVE ASS'Y		AC, E24729~ PC, LC 24955~ AT24994~ PT30001~	
	141-40-00510	STEERING CONTROL VALVE ASS'Y	1	S 20006-20021	☐ 141-40-00514
	141-40-00511	STEERING CONTROL VALVE ASS'Y	1	S 20024-22387	☐ 141-40-00514
	141-40-00512	STEERING CONTROL VALVE ASS'Y	1	S 22388-23384, 23386-23393	☐ 141-40-00514
	141-40-00513	STEERING CONTROL VALVE ASS'Y	1	SC 23385, 23394-24825 ST24638-24916	☐ 141-40-00514
	141-40-00514	STEERING CONTROL VALVE ASS'Y	1	SC 24826- ST 24917-	
1361- 1	144-40-21313	· HOUSING, control valve	1	20006-	
2	07042-00108	· PLUG, taper	2	20006-	
3	145-40-31250	· BUSHING	1	20006-	
4	145-40-31260	· BUSHING	2	20006-	
5	07012-00025	· SEAL, oil	2	20006-	
6	07000-03020	· O-RING	2	20006-	
7	01041-31405	· BOLT	3	20006-22387	
	01011-31405	· BOLT	3	22388-	
8	01602-01442	· WASHER, spring	3	20006-	
9	144-40-21320	· BOLT	1	20006-22387	
	144-40-21321	· BOLT	1	22388-	
10	01602-01442	· WASHER, spring	1	20006-	
11	144-40-21120	· COVER	1	A, P, LC, E 20006-	

Fig & Index No.	Part No.	Description	Q'ty	Serial No.	Remarks
	141-40-31110	· COVER	1	S 20006~	
1361-12	144-40-21130	· GASKET	1	20006~	
13	01000-30820	· BOLT	7	20006~22387	
	01010-30820	· BOLT	7	22388~	
14	01602-00825	· WASHER, spring	7	20006~	
15	07042-00108	· PLUG, taper	2	20006~	
18	144-40-21141	· SPOOL	1	S 20006~	
	144-40-21720	· SPOOL	1	A,P,LC,E 20006~	
19	144-40-21151	· SPOOL	1	20006~	
20	144-40-21690	· SPRING	2	S 20006~	
	144-40-21730	· SPRING	2	A,P,LC,E 20006~	
21	144-40-21190	· STOPPER	2	20006~	
22	07000-03022	· O-RING	3	20006~	
23	04065-03212	· RING, snap	3	20006~	
24	144-40-21281	· STOPPER	1	20006~	
25	144-40-21170	· PLUNGER	2	S 20006~23384, 23386_23393 AC,E 20006~23161, 23163, 23168~23332 PC,LC 20006~23296, 23301~23490 AT20006~23321	※ 144-40-21171
	144-40-21171	· PLUNGER	2	S 23385,23394~ AC,E 23162, 23164,23167, 23333~ PC,LC 23297~23300 P,LC23491~ AT23322~	
26	144-40-21640	· VALVE	1	SC20006~24825 AC,E 20006~24728 PC,LC 20006~24954 AT20006~24993 ST20006~24916	■ 144-40-21741 144-40-21651 144-40-21771 144-40-21790 144-40-21830 144-40-21820 144-40-21750 144-40-21760
	144-40-21741	· VALVE	1	SC24926~ AC,E 24729~ PC,LC 24955~ AT24994~ PT30001~ ST24917~	
27	135-40-11210	· RING, snap	4	S 20006~23384, 23386~23393 AC,E 20006~23161, 2316 23168~23332 PC,LC 20006~23296, 23301~23490 AT20006~23321	

Fig & Index No.	Part No.	Description	Q'ty	Serial No.	Remarks
	135-40-11210	· RING, snap	2	SC24926~ AC,E 24729~ PC,LC 24955~ AT24994~ PT30001~ ST24917~	
1361-28	144-40-21160	· BUSHING	2	20006~	
29	04065-03815	· RING, snap	2	20006~	
30	144-40-21650	· BUSHING	1	SC20006~24825 AC,E 20006~24728 PC,LC 20006~24954 AT20006~24993 ST20006~24916	■ 144-40-21741 144-40-21651 144-40-21771 144-40-21790 144-40-21830 144-40-21820 144-40-21750 144-40-21760
	144-40-21651	· BUSHING	1	SC24826~ AC,E 24729~ PC,LC 24955~ AT24955~ PT30001~ ST24917~	
31	04065-04218	· RING, snap	1	20006~	
32	145-40-31270	· SHAFT	1	20006~	
33	144-40-21270	· SHAFT	1	S 20006~20021	
	144-40-11110	· SHAFT	1	S 20024~ A,P,LC,E 20006~	
34	144-40-21250	· LEVER, L.H	1	20006~	
35	144-40-21260	· LEVER, R.H	1	20006~	
36	04010-00516	· KEY, woodruff	4	20006~	
37	01000-30835	· BOLT	2	20006~22387	
	01010-30835	· BOLT	2	22388~	
38	01602-00825	· WASHER, spring	2	20006~	
39	144-40-21660	· VALVE	1	SC20006~24825 AC,E 20006~24728 PC,LC 20006~24954 AT20006~24993 ST20006~24916	■ 144-40-21741 144-40-21651 144-40-21771 144-40-21790 144-40-21830 144-40-21820 144-40-21750 144-40-21760
	144-40-21771	· VALVE	1	SC24826~ AC,E 24729~ PC,LC 24955~ AT24994~ PT30001~ ST24017~	
40	144-40-21710	· SPRING	1	SC20006~24825 AC,E 20006~24728 PC,LC 20006~24954 AT20006~24993 ST20006~24916	■ 144-40-21741 144-40-21651 144-40-21771 144-40-21790 144-40-21830 144-40-21820 144-40-21750 144-40-21760
	144-40-21790	· SPRING	1	SC24826~ AC,E24729~ PC,LC 24955~ AT24994~ PT30001~ ST24917~	

Fig & Index No.	Part No.	Description	Q'ty	Serial No.	Remarks
1361-41	144-40-21530	· VALVE	1	SC 20006-24825 AC, E 20006~24728 PC, LC 20006~24954 AT 20006~24993 ST 20006~24916	■ 144-40-21741 144-40-21651 144-40-21771 144-40-21790 144-40-21830 144-40-21820 144-40-21750 144-40-21760
	144-40-21830	· VALVE	1	SC 24826~ AC, E 24729~ PC, LC 24955~ AT 24994~ PT 30001~ ST 24917~	
42	144-40-21540	· VALVE	1	SC 20006-24825 AC, E 20006~24728 PC, LC 20006~24954 AT 20006~24993 ST 20006~24916	■ 144-40-21741 144-40-21651 144-40-21771 144-40-21790 144-40-21830 144-40-21820 144-40-21750 144-40-21760
	144-40-21820	· VALVE	1	SC 24826~ AC, E 24729~ PC, LC 24955~ AT 24994~ PT 30001~ ST 24917~	
43	144-40-21550	· SPRING	1	20006~	
44	144-40-21670	· PLUNGER	1	SC 20006-24825 AC, E 20006~24728 PC, LC 20006~24954 AT 20006~24993 ST 20006~24916	■ 144-40-21741 144-40-21651 144-40-21771 144-40-21790 144-40-21830 144-40-21820 144-40-21750 144-40-21760
	144-40-21750	· PLUNGER	1	SC 24826~ AC, E 24729~ PC, LC 24955~ AT 24994~ PT 30001~ ST 24917~	
45	144-40-21680	· PLATE	1	SC 20006-24825 AC, E 20006~24728 PC, LC 20006~24954 AT 20006~24993 ST 20006~24916	■ 144-40-21741 144-40-21651 144-40-21771 144-40-21790 144-40-21830 144-40-21820 144-40-21750 144-40-21760
	144-40-21760	· PLATE	1	SC 24826~ AC, E 24729~ PC, LC 24955~ AT 24994~ PT 30001~ ST 24917~	
46	04025-00320	· PIN, roll	1	20006~	
47	144-40-21330	· HOUSING	1	20006~	

Fig & Index No.	Part No.	Description	Q'ty	Serial No.	Remarks
1361-48	144-40-21340	· STOPPER	1	20006~	
49	144-40-21350	· STOPPER	1	20006~	
50	144-40-21621	· SPRING	1	20006~	
51	01010-31065	· BOLT	3	20006~	
52	01602-01030	· WASHER, spring	3	20006~	
53	145-14-33820	· VALVE	1	20006~	
54	07000-02018	· O-RING	2	20006~	
55	04065-03012	· RING, snap	2	20006~	
56	07000-03022	· O-RING	2	20006~	
57	144-40-21441	TUBE	1	20006~	
58	144-40-21451	TUBE	1	20006~	
59	144-40-21460	SLEEVE	2	20006~	
60	07000-03042	· O-RING	4	20006~	
61	07000-02018	O-RING	4	20006~	

Fig. 1364 MAIN CLUTCH LEVER AND BRAKE PEDAL

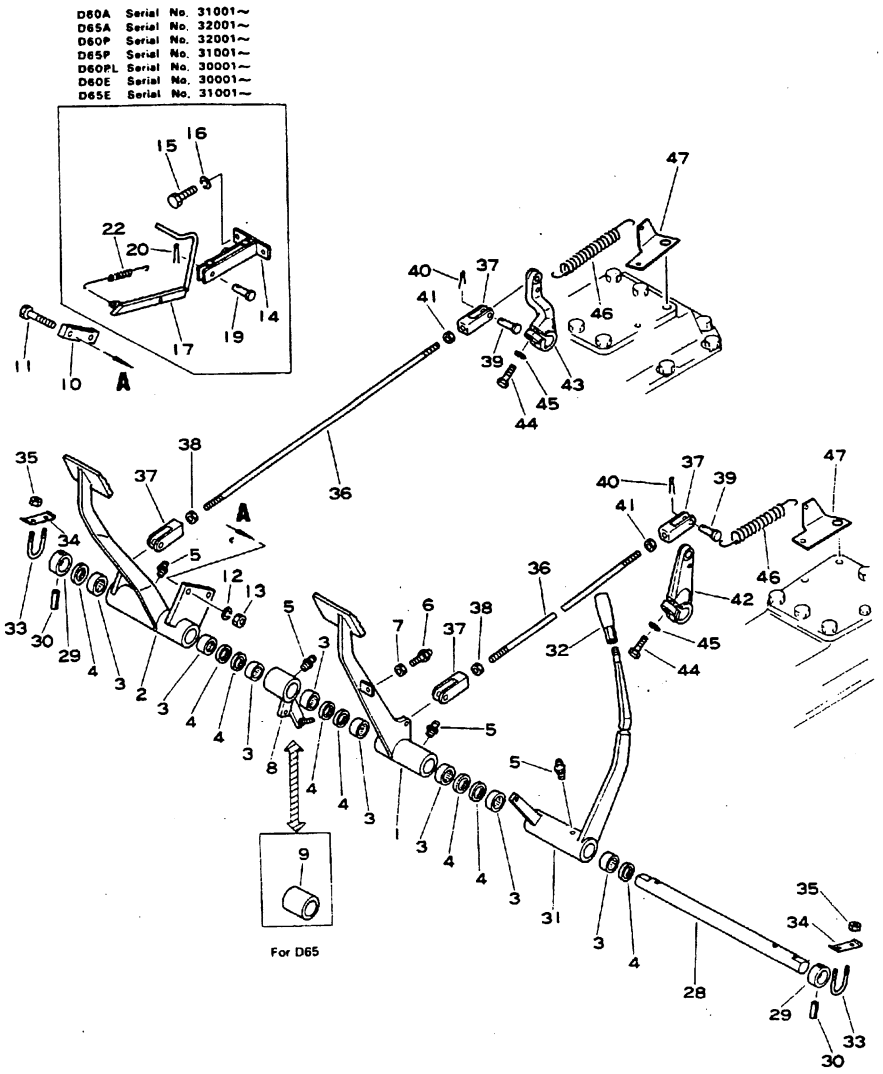

Fig. & Index No.	Part No.	Description	Q'ty	Serial No.	Remarks
1364 - 1	144-43-14541	PEDAL, brake, L.H	1		
2	144-43-14551	PEDAL, brake, R.H	1		
3	06120-03520	BEARING, needle	8		
4	06122-03504	SEAL, bearing	8		
5	07020-00675	FITTING, grease	4		
6	09311-11237	BUMPER	2		
7	01580-01210	NUT	2		
8	144-43-18153	LEVER	1	C	
9	144-43-14131	SPACER	1	T	
10	141-43-34210	STOPPER	1		
11	01050-31445	BOLT	2		
12	01602-01442	WASHER, spring	2		
13	01582-01411	NUT	2		
14	141-43-34233	BRACKET	1		
15	01010-31225	BOLT	2		
16	01602-01236	WASHER, spring	2		
17	141-43-34222	STOPPER	1		
19	04205-01235	PIN	1		
20	04050-03020	PIN, cotter	1		
22	144-43-14360	SPRING	1		
28	144-43-14141	SHAFT	1		
29	145-43-14331	COLLAR	2		
30	04025-00850	PIN, roll	2		
31	144-43-18112	LEVER, main clutch	1	C	
32	09305-11400	KNOB	1	C	
33	135-43-14280	U-BOLT	2		
34	135-43-14290	PLATE, lock	2		
35	01582-01411	NUT	4		
36	04248-01463	ROD	2		
37	04211-01478	YOKE, adjustable	2		
	04221-01478	YOKE, adjustable	2		
38	01501-31408	NUT	2		
	01582-01411	NUT	2		
39	04205-01438	PIN	4		
40	04050-04022	PIN, cotter	4		
41	01508-11408	NUT	2		
42	144-43-14680	LEVER, L.H	1		
43	144-43-14690	LEVER, R.H	1		
44	01010-31240	BOLT	2		
45	01602-01236	WASHER, spring	2		
46	144-43-14670	SPRING	2		
47	144-43-14643	BRACKET	2		

Fig. 1365 STEERING LEVER

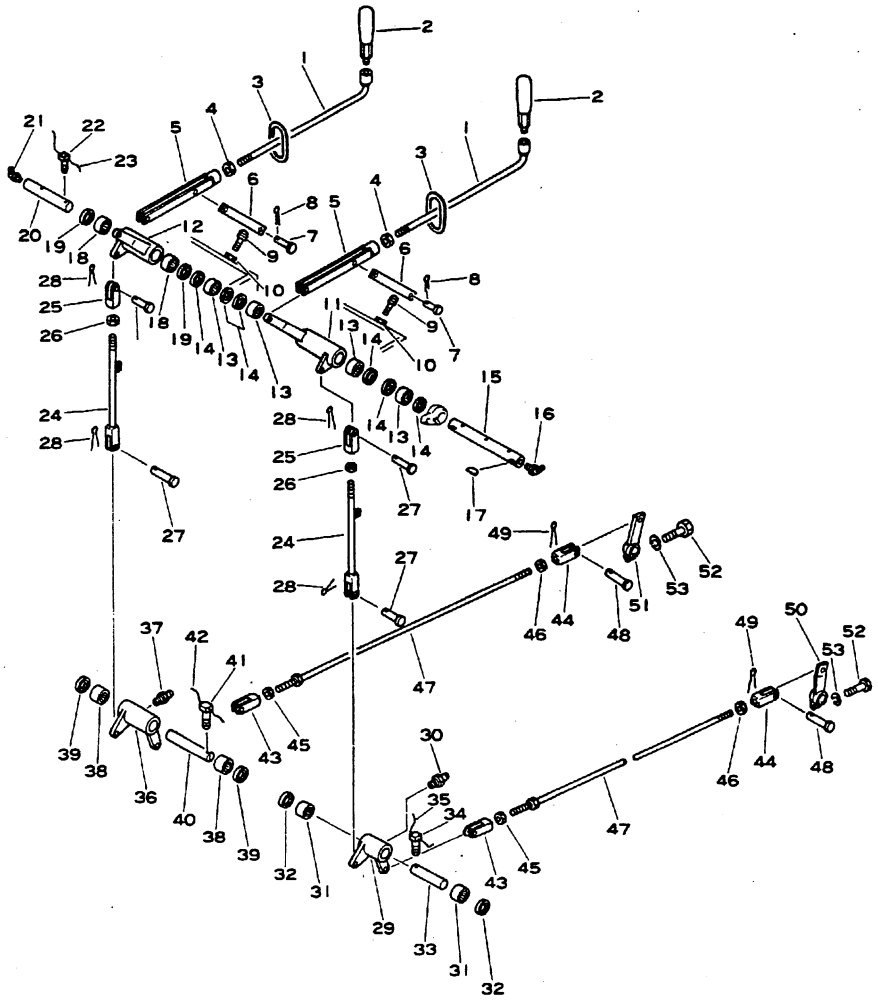

Fig. & Index No.	Part No.	Description	Q'ty	Serial No.	Remarks
1365 - 1	144-43-13110	LEVER, steering control	2		
2	09305-01400	KNOB	2		
3	141-43-13131	GUIDE	2		
4	01582-01613	NUT	2		
5	144-43-13120	JOINT	2		
6	144-43-13130	PLATE	2		
7	04205-01030	PIN	6		
8	04050-03015	PIN, cotter	6		
9	09311-11237	BUMPER	2		
10	01580-01210	NUT	2		
11	144-43-13140	LEVER, L.H	1		
12	144-43-13150	LEVER, R.H	1		
13	06120-02216	BEARING, needle	4		
14	06122-02204	SEAL, bearing	6		
15	144-43-13160	SHAFT	1		
16	07020-00675	FITTING, grease	1		
17	04010-00416	KEY, woodruff	2		
18	06120-02216	BEARING, needle	2		
19	06122-02204	SEAL, bearing	2		
20	144-43-13171	SHAFT	1		
21	07020-00675	FITTING, grease	1		
22	01306-00820	SCREW, set	1		
23	04059-01020	WIRE, lock	1		
24	04244-11027	ROD	2		
25	04211-01055	YOKE, adjustable	2		
26	01582-01008	NUT	2		
27	04205-01028	PIN	4		
28	04050-03015	PIN, cotter	4		
29	144-43-13190	LEVER, L.H	1		
30	07020-00000	FITTING, grease	1		
31	06120-02216	BEARING, needle	2		
32	06122-02204	SEAL, bearing	2		
33	144-43-13211	SHAFT	1		
34	01306-00820	SCREW, set	1		
35	04059-01020	WIRE, lock	1		
36	144-43-13221	LEVER, R.H	1		
37	07020-00000	FITTING, grease	1		
38	06120-02216	BEARING, needle	2		
39	06122-02204	SEAL, bearing	2		
40	144-43-13232	SHAFT	1		
41	01306-00820	SCREW, set	1		
42	04059-01020	WIRE, lock	1		
43	04211-01055	YOKE, adjustable	2		

STEERING LEVER

Fig. & Index No.	Part No.	Description	Q'ty	Serial No.	Remarks
1365 -44	04221-01055	YOKE, adjustable	2		
45	01582-01008	NUT	2		
46	01508-11006	NUT	2		
47	144-43-14562	ROD	2		
	☆	. NUT (01582-01008)	1		
48	04205-01028	PIN	4		
49	04050-03015	PIN, cotter	4		
50	144-43-13240	LEVER, L.H	1		
51	144-43-13250	LEVER, R.H	1		
52	01010-30825	BOLT	2		
53	01602-00825	WASHER, spring	2		

Fig. 1372 MAIN CLUTCH PIPING (D60)

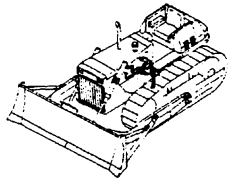

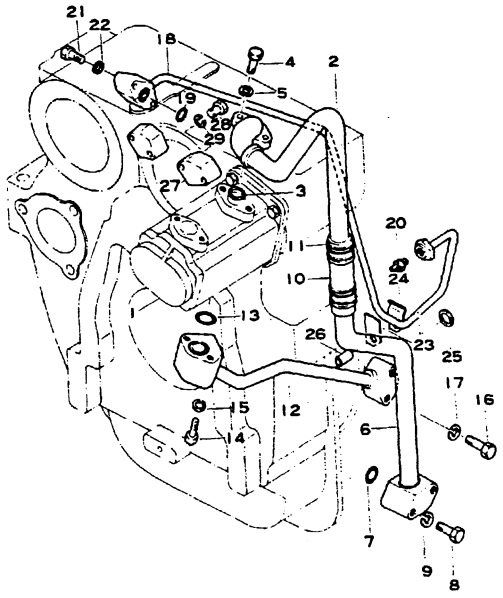

Fig. & Index No.	Part No.	Description	Q'ty	Serial No.	Remarks
1372 - 1	705-30-31203	TANDEM PUMP ASS'Y	1		See Fig. 1377
2	144-49-14112	TUBE	1		
3	07000-03032	O-RING	1		
4	01010-31030	BOLT	2		
5	01602-01030	WASHER, spring	2		
6	144-49-14122	TUBE	1		
7	07000-03035	O-RING	1		
8	01010-31075	BOLT	2		
9	01602-01030	WASHER, spring	2		
10	07260-03222	HOSE, rubber, low pressure	1		

Fig. & Index No.	Part No.	Description	Q'ty	Serial No.	Remarks
1372 -11	07280-05026	CLAMP, hose	4		
12	144-49-14141	TUBE	1		
13	07000-03025	O-RING	2		
14	01010-31060	BOLT	2		
15	01602-01030	WASHER, spring	2		
16	01010-31055	BOLT	2		
17	01602-01030	WASHER, spring	2		
18	144-10-17223	TUBE	1		
19	07000-03025	O-RING	1		
20	144-49-14160	ELBOW	1		
21	01010-31030	BOLT	2		
22	01602-01030	WASHER, spring	2		
23	144-10-17230	PLATE	1		
24	144-10-17240	CLIP	1		
25	01643-01032	WASHER	1		
26	144-10-17250	SEAT	1		
27	141-49-33390	PLATE	2		
28	01010-31220	BOLT	4		
29	01602-01236	WASHER, spring	4		

Fig. 1374 STEERING CLUTCH PIPING

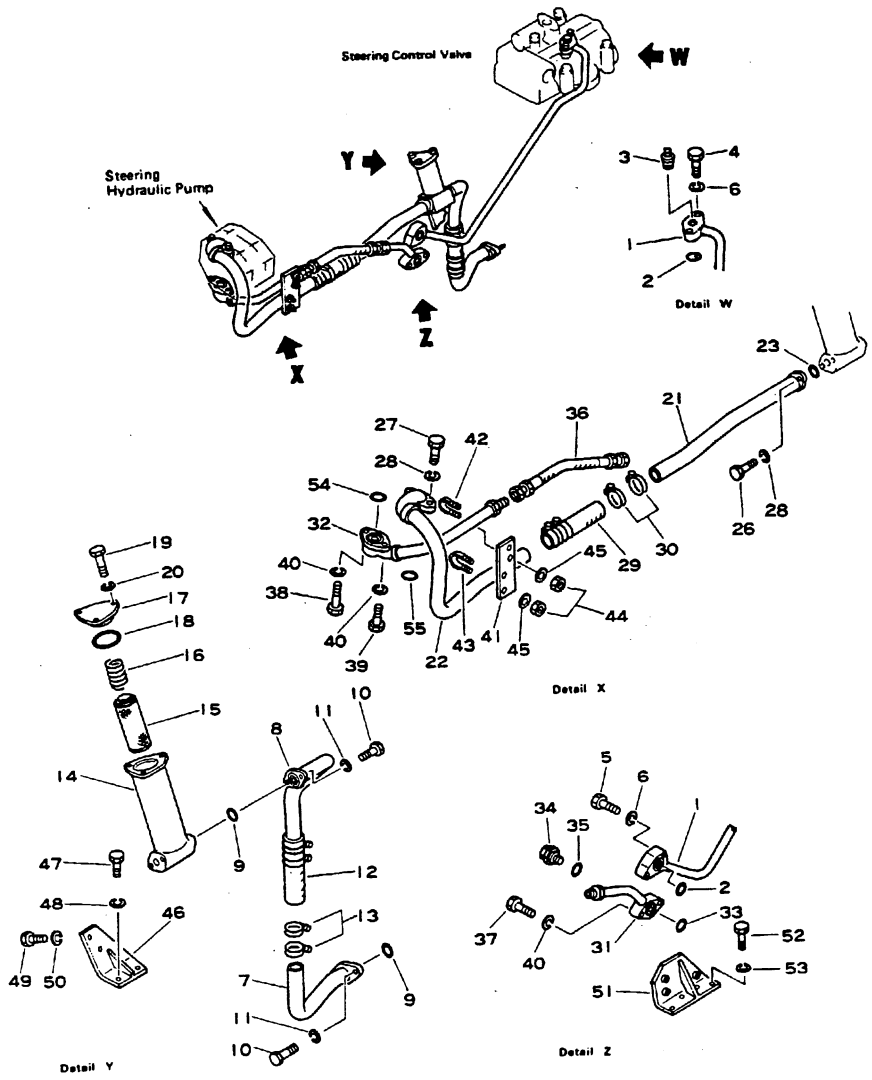

Fig. & Index No.	Part No.	Description	Q'ty	Serial No.	Remarks
1374 - 1	144-49-13611	TUBE	1		
2	07000-03025	O-RING	2		
3	07042-00108	PLUG, taper	1		
4	01010-31050	BOLT	2		
5	01010-31055	BOLT	2		
6	01602-01030	WASHER, spring	4		
7	144-49-18370	TUBE	1	AC31001~ AT32001~ PC32001~ PT31001~ LC30001~ EC30001~ ET31001~	
8	144-49-18380	TUBE	1	AC31001~ AT32001~ PC32001~ PT31001~ LC30001~ EC30001~ ET31001~	
9	07000-03032	O-RING	2		
10	01010-31030	BOLT	2		
11	01602-01030	WASHER, spring	2		
12	07260-24118	HOSE, rubber, low pressure	1	AC31001~ AT32001~ PC32001~ PT31001~ LC30001~ EC30001~ ET31001~	
13	07280-05429	CLAMP, hose	4		
	141-49-00512	STRAINER ASS'Y	1		
14	141-49-35112	. CASE	1		
15	144-49-13851	. STRAINER	1		
16	144-49-13860	. SPRING	1		
17	144-49-13840	. COVER	1		
18	07000-02060	. O-RING	1		
19	01010-31030	. BOLT	3		
20	01602-01030	. WASHER, spring			
21	144-49-18390	TUBE	1		
22	144-49-13512	TUBE	1		C
	144-49-13125	TUBE	1		T
23	07000-03032	O-RING	1		C
	07000-03025	O-RING	1		T
26	01010-31030	BOLT	2		
27	01010-31030	BOLT	2		C
	01010-31035	BOLT	2		T
28	01602-01030	WASHER, spring	4		

STEERING CLUTCH PIPING

Fig. & Index No.	Part No.	Description	Q'ty	Serial No.	Remarks
1374 -29	07260-24118	HOSE, rubber, low pressure	1		
30	07280-05429	CLAMP, hose	4		
31	144-49-13142	TUBE	1		
32	144-49-13562	TUBE	1	C	
	144-49-13133	TUBE	1	T	
33	07000-03025	O-RING	1		
34	07040-11007	PLUG	1		
35	07000-02008	O-RING	1		
36	07102-20504	HOSE, rubber	1		
37	01010-31050	BOLT	2		
38	01010-31050	BOLT	1	C	
	01010-31035	BOLT	1	T	
39	01010-31030	BOLT	1	C	
	01010-31035	BOLT	1	T	
40	01602-01030	WASHER, spring	4		
41	144-49-33351	PLATE	1		
42	07283-02236	CLIP, pipe	1		
43	07283-14346	CLIP, pipe	1		
44	01599-01011	NUT	4		
45	01643-31032	WASHER	4		
46	144-49-13870	WASHER	1		
47	01010-31430	BOLT	2		
48	01602-01442	WASHER, spring	2		
49	01010-31225	BOLT	2		
50	01602-01236	WASHER, spring	2		
51	144-49-13330	BRACKET	1		
52	01010-31225	BOLT	4		
53	01602-01236	WASHER, spring	4		
54	07000-03025	O-RING	1	C	
	07000-02020	O-RING	1	T	
55	07000-03032	O-RING	1	C	
	07000-03025	O-RING	1	T	

Fig. 1374A OIL COOLER PIPING

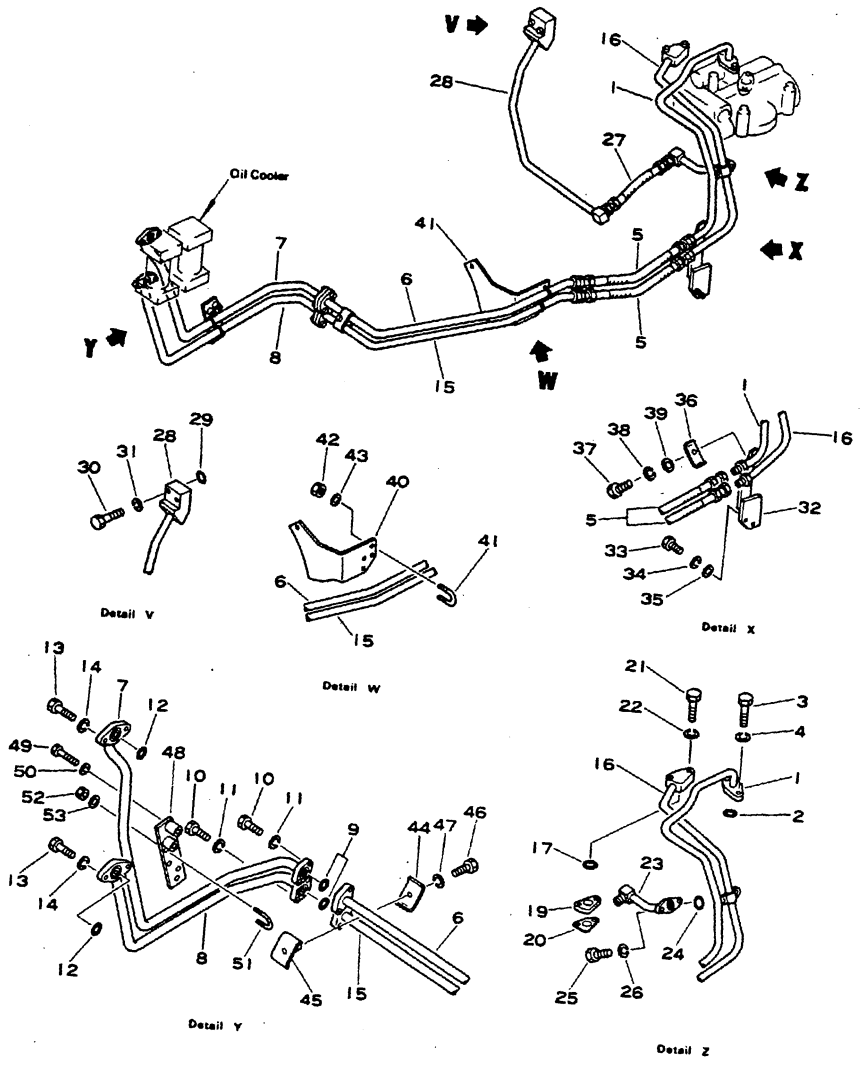

Fig. & Index No.	Part No.	Description	Q'ty	Serial No.	Remarks
1374A- 1	144-49-13634	TUBE	1		
2	07000-03025	O-RING	1		
3	01010-31080	BOLT	2		
4	01602-01030	WASHER, spring	2		
5	07102-20504	HOSE, rubber	2		
6	144-49-13415	TUBE	1	A, PC, LC, E	
	14G-49-11150	TUBE	1	PT	
7	144-49-18313	TUBE	1	C	
	144-49-13392	TUBE	1	T	
8	144-49-18323	TUBE	1	C	
	144-49-13382	TUBE	1	T	
9	07000-03025	O-RING	2		
10	01010-31030	BOLT	4		
11	01602-01030	WASHER, spring	4		
12	07000-03035	O-RING	2		
13	01010-31235	BOLT	4		
14	01602-01236	WASHER, spring	4		
15	144-49-13376	TUBE	1	A, PC, LC, E	
	14G-49-11160	TUBE	1	PT	
16	144-49-18414	TUBE	1	C	
	144-49-13643	TUBE	1	T	
17	07000-03025	O-RING	1		
19	144-49-13671	SPACER	1		
20	144-49-13680	GASKET	1		
21	01010-31075	BOLT	2		
22	01602-01030	WASHER, spring	2		
23	144-49-18352	TUBE	1		
24	07000-03025	O-RING	1		
25	01010-31030	BOLT	2		
26	01602-01030	WASHER, spring	2		
27	07102-20504	HOSE, rubber	1		
28	144-49-18283	TUBE	1	C	
29	07000-03022	O-RING	1	C	
30	01010-31065	BOLT	2	C	
31	01602-01030	WASHER, spring	2	C	
32	144-49-18550	BRACKET	1		
33	01010-31020	BOLT	1		
34	01602-01230	WASHER, spring	1		
35	01643-31232	WASHER	1		
36	144-49-18560	PLATE	1		
37	01010-31020	BOLT	1		
38	01602-01030	WASHER, spring	1		

OIL COOLER PIPING

Fig. & Index No.	Part No.	Description	Q'ty	Serial No.	Remarks
1374A-39	01643-31032	WASHER	1		
40	144-49-13462	BRACKET	1		
41	07283-02236	CLIP, pipe	2		
42	01599-01011	NUT	4		
43	01643-31032	WASHER	4		
44	144-49-13491	PLATE	1		
45	144-49-13472	CLAMP	1		
46	01010-31230	BOLT	1		
47	01602-01236	WASHER, spring	1		
48	144-49-13484	BRACKET	1	T	
	144-49-13950	BRACKET	1	C	
49	01010-31050	BOLT	2	T	
	01010-31065	BOLT	2	C	
50	01602-01030	WASHER, spring	2		
51	07283-02236	CLIP, pipe	2		
52	01599-01011	NUT	4		
53	01643-31032	WASHER	4		

Fig. 1375A TORQFLOW PIPING (1/3) (D65)

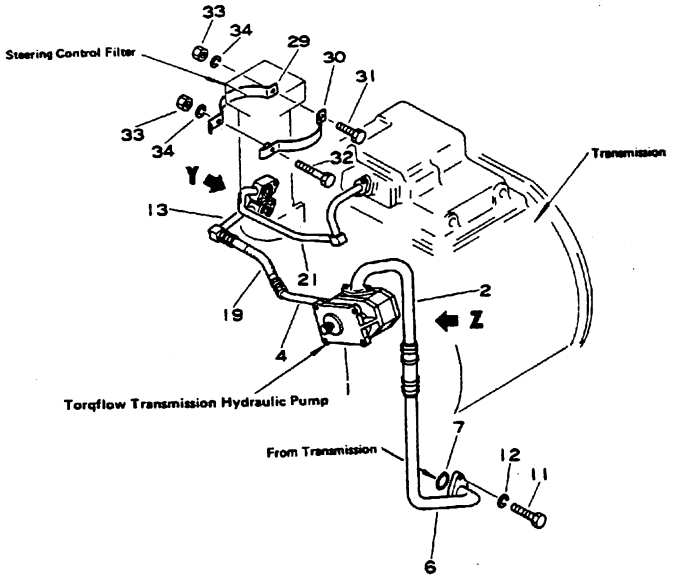

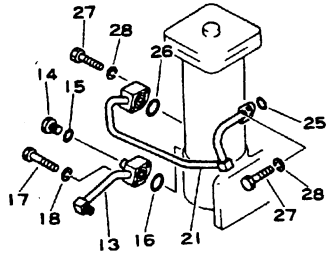

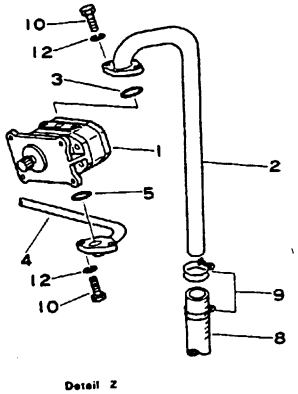

Fig. & Index No.	Part No.	Description	Q'ty	Serial No.	Remarks
1375A- 1	07432-71203	OIL PUMP ASS'Y	1		
2	144-49-12124	TUBE	1		
3	07000-03032	O-RING	1		
4	144-49-12135	TUBE	1		
5	07000-03020	O-RING	1		
6	144-49-12116	TUBE	1		
7	07000-03040	O-RING	1		
8	07260-23216	HOSE	1		
9	07280-04726	CLAMP	4		
10	01010-31035	BOLT	4		
11	01010-31030	BOLT	2		
12	01602-01030	WASHER, spring	6		
13	144-49-12145	TUBE	1		
14	07040-11007	PLUG	1		
15	07000-02008	O-RING	1		
16	07000-03025	O-RING	1		
17	01010-31050	BOLT	2		
18	01602-01030	WASHER, spring	2		
19	07102-20503	HOSE	1		
21	144-49-12811	TUBE	1		
25	07000-03025	O-RING	1		
26	07000-03028	O-RING	1		
27	01010-31030	BOLT	4		
28	01602-01030	WASHER, spring	4		
29	144-49-12560	CLAMP	1		
30	144-49-12570	CLAMP	1		
31	01010-31025	BOLT	1		
32	01010-31045	BOLT	1		
33	01580-01008	NUT	2		
34	01602-01030	WASHER, spring	2		

Fig. 1375B TORQFLOW PIPING (2/3) (D65)

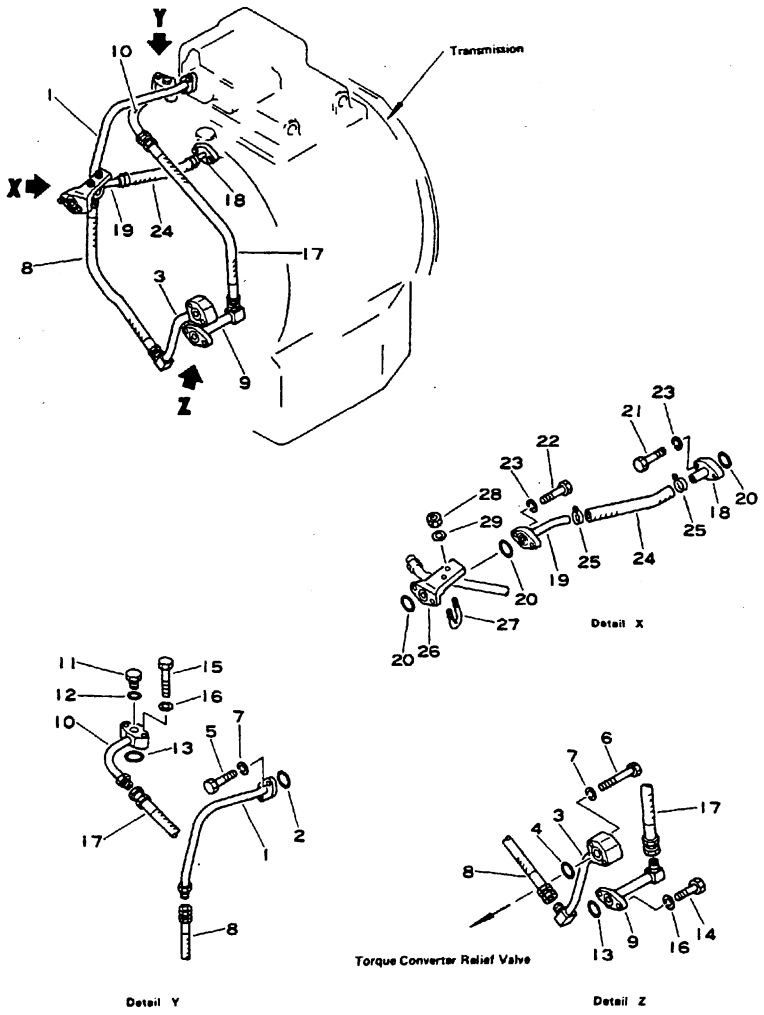

Fig. & Index No.	Part No.	Description	Q'ty	Serial No.	Remarks
1375B- 1	144-49-12382	TUBE	1		
2	07000-03028	O-RING	1		
3	144-49-12173	TUBE	1		
4	07000-03025	O-RING	1		
5	01010-31030	BOLT	2		
6	01010-31060	BOLT	2		
7	01602-01030	WASHER, spring	4		
8	07102-20504	HOSE	1		
9	144-49-12274	TUBE	1		
	144-49-12285	TUBE	1		
10	144-49-12286	TUBE	1		
11	07040-11007	PLUG	1		
12	07000-02008	O-RING	1		
13	07000-03025	O-RING	2		
14	01010-31030	BOLT	2		
15	01010-31050	BOLT	2		
16	01602-01030	WASHER, spring	4		
17	07102-20504	HOSE	1		
18	135-49-12351	TUBE	1		
19	144-49-12361	TUBE	1		
20	07000-03022	O-RING	3		
21	01010-31030	BOLT	2		
22	01010-31040	BOLT	2		
23	01602-01030	WASHER, spring	4		
24	07260-21420	HOSE	1		
25	07280-02323	CLAMP	2		
26	144-49-12650	BRACKET	1		
27	07283-02244	CLIP	1		
28	01599-01011	NUT	2		
29	01643-31032	WASHER	2		

Fig. 1375C TORQFLOW PIPING (3/3) (D65)

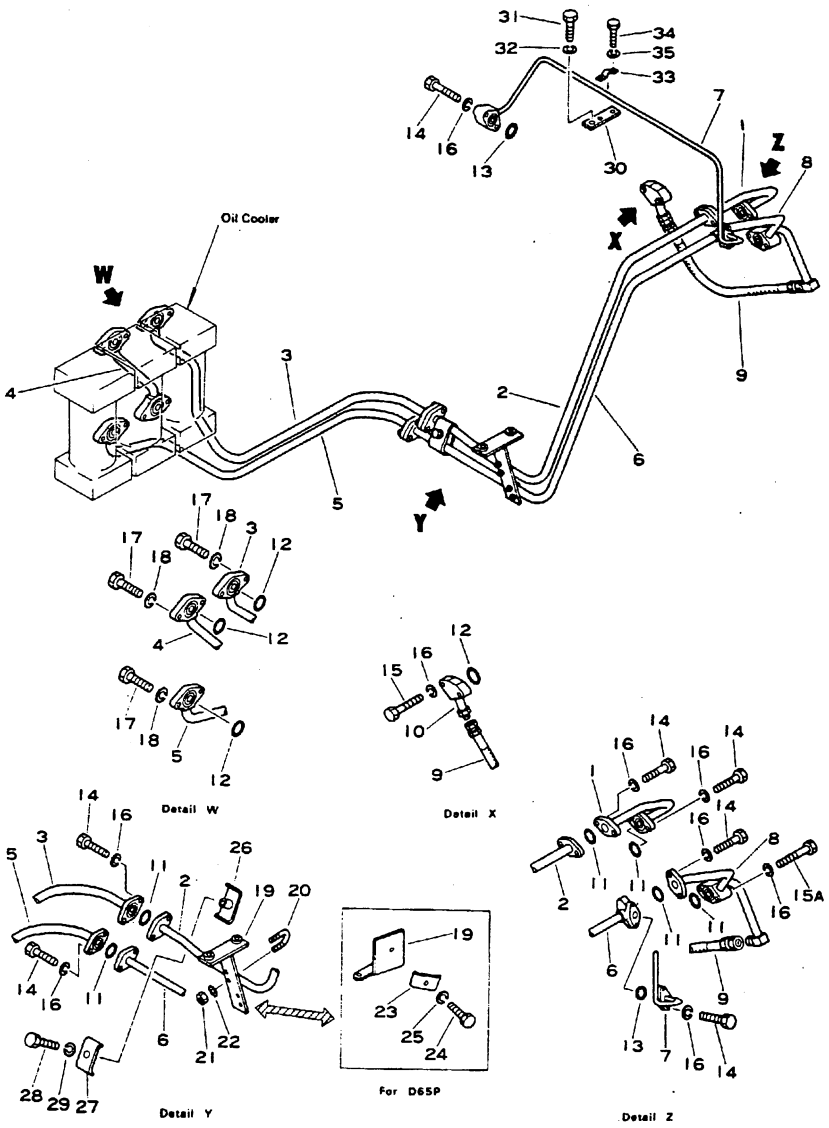

Fig. & Index No.	Part No.	Description	Q'ty	Serial No.	Remarks
1375C- 1	144-49-12740	TUBE	1	20006~	
2	144-49-12183	TUBE	1	A, E 20024~	
	14G-49-11120	TUBE	1	P 30001~	
3	144-49-12213	TUBE	1	A, E 20024~	
	14G-49-11110	TUBE	1	P 30001~	
4	145-49-32370	TUBE	1	20006~	
5	144-49-12223	TUBE	1	A, E 20024~	
	14G-49-11130	TUBE	1	P 30001~	
6	144-49-12244	TUBE	1	A, E 20024~	
	14G-49-11140	TUBE	1	P 30001~	
7	144-49-12253	TUBE	1	20024~20031	
	144-49-12254	TUBE	1	20032~	
8	144-49-12730	TUBE	1	20006~22387	
	144-49-12731	TUBE	1	22388~	
9	07102-00504	HOSE	1	20006~22387	
	07102-20504	HOSE	1	22388~	
10	144-49-12262	TUBE	1	20006~22387	
	144-49-12263	TUBE	1	22388~	
11	07000-03025	O-RING	6	20006~	
12	07000-03035	O-RING	5	20006~	
13	07000-02016	O-RING	2	20006~	
14	01010-31030	BOLT	14	20006~	
15	01010-31050	BOLT	2	20006~	
15A	01010-31050	BOLT	2	20006~22387	
	01010-31060	BOLT	2	22388~	
16	01602-01030	WASHER, spring	18	20006~	
17	01010-31235	BOLT	8	22388~	
18	01602-01236	WASHER, spring	8	22388~	
19	144-49-12533	BRACKET	1	A, E 20024~	
	14G-49-11180	BRACKET	1	P 30001~	
20	07283-12236	CLIP	2	A, E 20006~	

Fig & Index No.	Part No.	Description	Q'ty	Serial No.	Remarks
1375C-21	01599-01011	NUT	4	A, E 20006~	
22	01643-31032	WASHER	4	A, E 20006~	
23	14G-49-11210	CLAMP	1	P 30001~	
24	01010-31050	BOLT	1	P 30001~	
25	01602-01030	WASHER, spring	1	P 30001~	
26	144-49-13472	CLAMP	1	A, E 20024~	
	14G-49-11190	CLAMP	1	P 30001~	
27	144-49-13491	CLAMP	1	A, E 20024~	
	14G-49-11210	CLAMP	1	P 30001~	
28	01010-31230	BOLT	1	A, E 20006~	
	01010-31045	BOLT	1	P 30001~	
29	01602-01236	WASHER, spring	1	A, E 20006~	
	01602-01030	WASHER, spring	1	P 30001~	
30	144-49-12643	PLATE	1	A 20006~32000 P 30001~31000 E 20295~31000	
	144-49-12644	PLATE	1	A 32001~ P 31001~ E 31001~	
31	01010-31020	BOLT	1	20006~	
32	01602-01030	WASHER, spring	1	20006~	
33	07282-01048	CLIP	1	20006~	
34	01010-30612	BOLT	2	20006~	
35	01602-00619	WASHER, spring	2	20006~	

Fig. 1376A STEERING PUMP (D65A Serial No. 32001~)
(D65P, E Serial No. 31001~)
(D65S Serial No. 30001~)

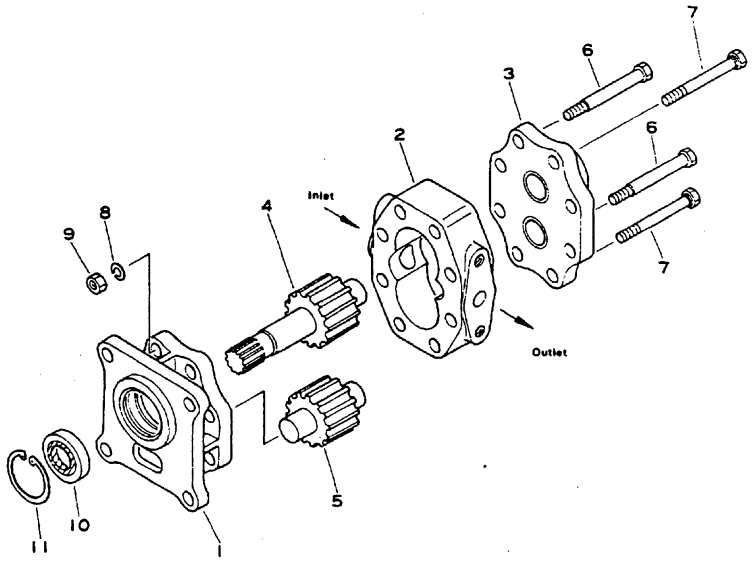

Fig & Index No.	Part No.	Description	Q'ty	Serial No.	Remarks
	07430-72203	OIL PUMP ASS'Y (FAR032-203)	1	A 32001~ P, E 31001~ S 30001~	
	Parts are supplied separately only to designated dealers which are equipped the pump tester.				
1376A- 1	07430-72111	. BRACKET ASS'Y	1	A 32001~ P, E 31001~ S 30001~	☆07430-72203
2	07430-71220	. CASE, gear	1	A 32001~ P, E 31001~ S 30001~	☆07430-72203
3	07430-71131	. HOUSING ASS'Y	1	A 32001~ P, E 31001~ S 30001~	☆07430-72203
4	07430-71042	. GEAR, drive	1	A 32001~ P, E 31001~ S 30001~	☆07430-72203
5	07430-71052	. GEAR, driven	1	A 32001~ P, E 31001~ S 30001~	☆07430-72203
6	07430-71070	. BOLT, reamer	2	A 32001~ P, E 31001~ S 30001~	☆07430-72203
7	01050-31280	. BOLT	6	A 32001~ P, E 31001~ S 30001~	☆07430-72203
8	01602-01236	. WASHER, spring	8	A 32001~ P, E 31001~ S 30001~	☆07430-72203
9	01582-11210	. NUT	8	A 32001~ P, E 31001~ S 30001~	☆07430-72203
10	07430-71160	. SEAL, oil	1	A 32001~ P, E 31001~ S 30001~	
11	04065-04518	. RING, snap	1	A 32001~ P, E 31001~ S 30001~	

Fig. 1377 STEERING AND MAIN CLUTCH PUMP

(D60A, P, PL, E, S Serial No. 20006~)

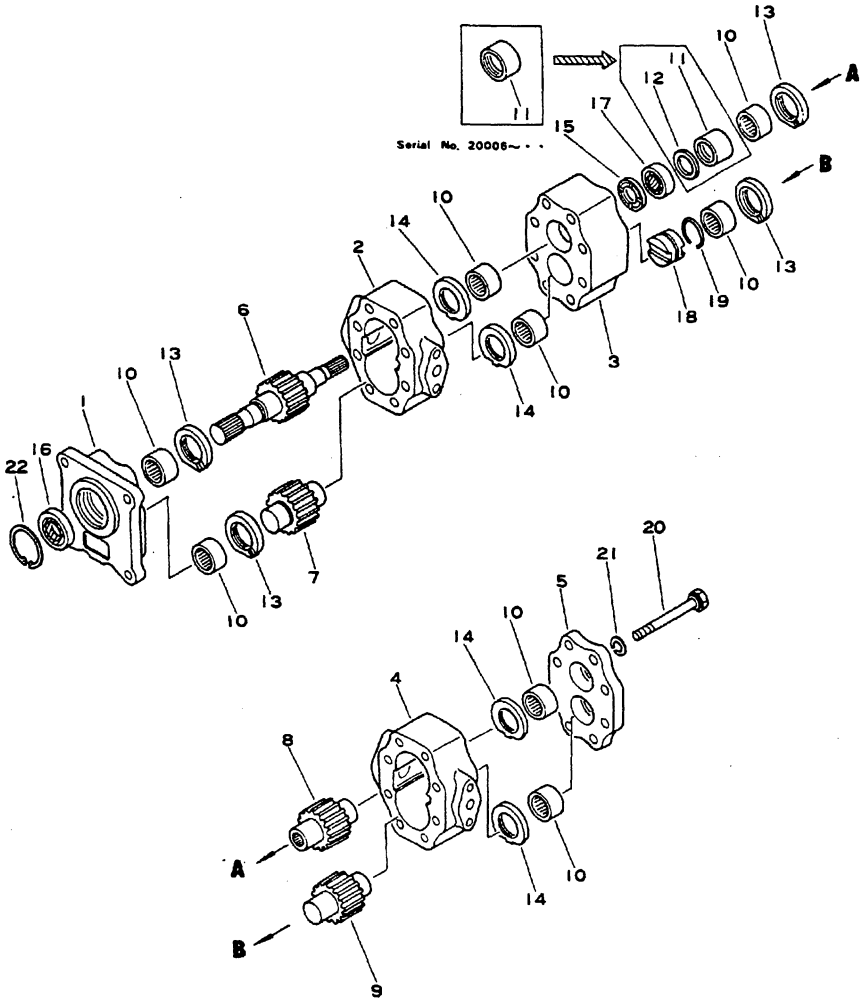

Fig & Index No.	Part No.	Description	Q'ty	Serial No.	Remarks
	(705-30-31200)	TANDEM PUMP ASS'Y	1	A 20006~23332 P, L 20006~23490 S 20006~23392	□705-30-31203
	(705-30-31201)	TANDEM PUMP ASS'Y	1	A 23333~ • P, L 23491~ • S 23393~ •	□705-30-31203
	(705-30-31202)	TANDEM PUMP ASS'Y	1	• ~ ••	□705-30-31203
	(705-30-31203)	TANDEM PUMP ASS'Y	1	•• ~	
	All components are available only to designated dealers.				
1377 - 1	705-30-30010	. BRACKET	1	A 20006~23332 P, L 20006~23490 S 20006~23392	☆ 705-30-31200
	705-30-30011	. BRACKET	1	A 23333~ P, L 23491~ S 23393~	☆ 705-30-31201 ☆ 705-30-31202 ☆ 705-30-31203
2	705-30-30020	. CASE, gear	1	20006~	☆ 705-30-31200 ☆ 705-30-31201 ☆ 705-30-31202 ☆ 705-30-31203
3	705-30-30030	. CARRIER	1	A 20006~23332 P, L 20006~23490 S 20006~23392	☆ 705-30-31200
	705-30-30031	. CARRIER	1	A 23333~ P, L 23491~ S 23393~	☆ 705-30-31201 ☆ 705-30-31202 ☆ 705-30-31203
4	705-30-31040	. CASE, gear	1	20006~	☆ 705-30-31200 ☆ 705-30-31201 ☆ 705-30-31202 ☆ 705-30-31203
5	705-30-30050	. HOUSING	1	A 20006~23332 P, L 20006~23490 S 20006~23392	☆ 705-30-31200
	705-30-30051	. HOUSING	1	A, P, L 23491~ S 23393~	☆ 705-30-31201 ☆ 705-30-31202 ☆ 705-30-31203
6	705-30-30060	. GEAR, drive	1	20006~ •	☆ 705-30-31200 ☆ 705-30-31201
	705-30-30062	. GEAR, drive	1	• ~	☆ 705-30-31202 ☆ 705-30-31203
7	705-30-30070	. GEAR, driven	1	20006~	☆ 705-30-31200 ☆ 705-30-31201 ☆ 705-30-31202 ☆ 705-30-31203

Fig & Index No.	Part No.	Description	Q'ty	Serial No.	Remarks
1377 - 8	705-30-31080	. GEAR, drive	1	20006~	☆ 705-30-31200 ☆ 705-30-31201 ☆ 705-30-31202 ☆ 705-30-31203
9	705-30-31090	. GEAR, driven	1	20006~	☆ 705-30-31200 ☆ 705-30-31201 ☆ 705-30-31202 ☆ 705-30-31203
10	705-30-30610	. BEARING, needle	8	20006~	☆ 705-30-31200 ☆ 705-30-31201 ☆ 705-30-31202 ☆ 705-30-31203
11	705-30-30620	. COLLAR	1	A 20006~23332 P, L 20006~23490 S 20006~23392	☆ 705-30-31200
	705-30-30621	. COLLAR	1	AC23333~30002 PC23491~ • LC23491~ • EC23333~ • SC23393~30670 AC23333~29956 (For Power Tilt) PC23491~30671 (For Power Tilt) EC23333~ • (For Power Tilt)	☆ 705-30-31201 ☆ 705-30-31202
	705-30-30622	. COLLAR	1	AC30003~ •• PC • ~ •• LC • ~ •• EC • ~ •• SC 30671~ •• AC29957~ •• (For Power Tilt) EC • ~ •• (For Power Tilt) PC30672~ •• (For Power Tilt)	☆ 705-30-31202 ☆ 705-30-31203
	705-30-30623	. COLLAR	1	•• ~	☆ 705-30-31203
12	705-30-30720	. PLATE	1	•• ~	☆ 705-30-31203
13	705-30-30630	. PLATE, side	4	20006~	☆ 705-30-31200 ☆ 705-30-31201 ☆ 705-30-31202 ☆ 705-30-31203
14	705-30-30640	. PLATE, side	4	20006~	☆ 705-30-31200 ☆ 705-30-31201 ☆ 705-30-31202 ☆ 705-30-31203
15	705-30-30650	. SPACER	1	A 20006~23332 P, L 20006~23490 S 20006~23392	☆ 705-30-31200
	705-30-30651	. SPACER	1	A 23333~ • P, L 23491~ • S 23393~ •	☆ 705-30-31201

Fig & Index No.	Part No.	Description	Q'ty	Serial No.	Remarks
1377 -15	705-30-30652	. SPACER	1	AC • ~30002 PC • ~ • LC • ~ • EC • ~ • SC • ~30670 AC • ~29956 (For Power Tilt) EC • ~ • (For Power Tilt) PC • ~30671 (For Power Tilt)	☆ 705-30-31202
	705-30-30653	. SPACER	1	AC30003~ •• PC • ~ •• LC • ~ •• EC • ~ •• SC 30671~ •• AC29957~ •• (For Power Tilt) EC • ~ •• (For Power Tilt) PC30672~ •• (For Power Tilt)	☆ 705-30-31203
16	07430-71160	. SEAL, oil	1	20006~	☆ 705-30-31200 ☆ 705-30-31201 ☆ 705-30-31202 ☆ 705-30-31203
17	705-30-30670	. SEAL, oil	1	AC20006~30002 PC20006~ • LC20006~ • EC20006~ • SC 20006~30670 AC20006~29956 (For Power Tilt) EC20006~ • (For Power Tilt) PC20006~30671 (For Power Tilt)	
	705-30-30671	. SEAL, oil	1	AC30003~ •• PC • ~ •• LC • ~ •• EC • ~ •• SC 30671~ •• AC29957~ •• (For Power Tilt) EC • ~ •• (For Power Tilt) PC30672~ •• (For Power Tilt)	☆ 705-30-31203
18	705-30-30680	. RING, seal	1	20006~	☆ 705-30-31200 ☆ 705-30-31201 ☆ 705-30-31202 ☆ 705-30-31203
19	705-30-30690	. RING, snap	1	20006~	☆ 705-30-31200 ☆ 705-30-31201 ☆ 705-30-31202 ☆ 705-30-31203

STEERING AND MAIN CLUTCH PUMP

Fig & Index No.	Part No.	Description	Q'ty	Serial No.	Remarks
1377 -20	705-30-31710	. BOLT	8	20006~	
21	01602-01236	. WASHER, spring	8	20006~	
22	04065-04518	. RING, snap	1	20006~	

Fig. 1378A TORQFLOW PUMP (D65A Serial No. 32001~) (D65P, E Serial No. 31001~) (D65S Serial No. 30001~)

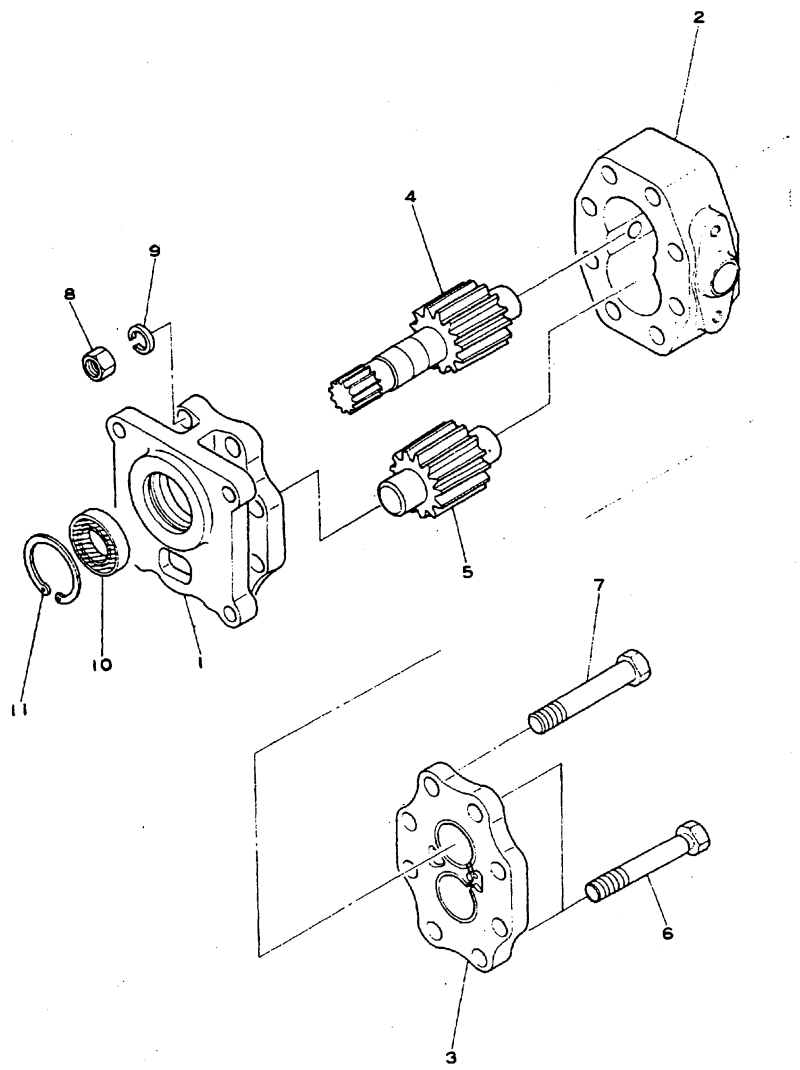

Fig. & Index No.	Part No.	Description	Q'ty	Serial No.	Remarks
	07432-71203	OIL PUMP ASS'Y (FAR040-203)	1	A 32001~ P, E 31001~ S 30001~	
	Parts are supplied separately only to designated dealers which are equipped the pump tester.				
1378A - 1	07430-72111	. BRACKET ASS'Y	1	A 32001~ P, E 31001~ S 30001~	☆07432-71203
2	07432-71220	. CASE, gear	1	A 32001~ P, E 31001~ S 30001~	☆07432-71203
3	07430-71131	. HOUSING ASS'Y	1	A 32001~ P, E 31001~ S 30001~	☆07432-71203
4	07432-71042	. GEAR, drive	1	A 32001~ P, E 31001~ S 30001~	☆07432-71203
5	07432-71052	. GEAR, driven	1	A 32001~ P, E 31001~ S 30001~	☆07432-71203
6	07430-11190	. BOLT, reamer	2	A 32001~ P, E 31001~ S 30001~	☆07432-71203
7	01050-31290	. BOLT	6	A 32001~ P, E 31001~ S 30001~	☆07432-71203
8	01582-11210	. NUT	8	A 32001~ P, E 31001~ S 30001~	☆07432-71203
9	01602-01236	. WASHER, spring	8	A 32001~ P, E 31001~ S 30001~	
10	07430-71160	. SEAL, oil	1	A 32001~ P, E 31001~ S 30001~	
11	04065-04518	. RING, snap	1	A 32001~ P, E 31001~ S 30001~	

Fig. 1379A STEERING FILTER

(D60A Serial No. 28285~28299, 28301, 28302, 28304~)
(D65A Serial No. 28247~28258, 28261~)
(D60P Serial No. 28582~)
(D65P Serial No. 30001~)
(D60PL Serial No. 28013~)
(D60E Serial No. 28272~28287, 28291~)
(D65E Serial No. 28357~28367, 28370~)
(D60S Serial No. 28824~28855, 28863~)
(D65S Serial No. 28189~28202, 28204, 28208~)

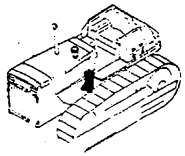

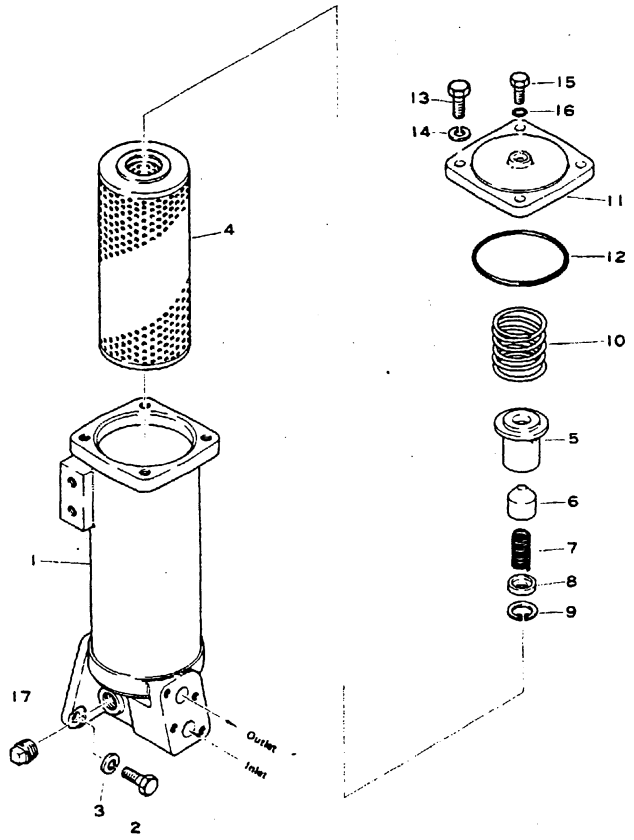

Fig. & Index No.	Part No.	Description	Q'ty	Serial No.	Remarks
	145-49-00032	STEERING FILTER ASS'Y	1	†	See NOTE
1379A- 1	145-49-32411	. CASE	1	20006~	
2	01010-31230	. BOLT	3	20006~	
3	01602-01236	. WASHER, spring	3	20006~	
4	281-16-11290	. ELEMENT	1	†	See NOTE
5	141-49-33990	. GUIDE, spring	1	†	See NOTE
6	141-49-33980	. VALVE	1	†	See NOTE
7	141-49-36172	. SPRING	1	†	See NOTE
8	141-49-33970	. PLATE	1	†	See NOTE
9	04065-03012	. RING, snap	1	†	See NOTE
10	6003200-4-40	. SPRING	1	20006~	
11	145-49-12430	. COVER	1	20006~	
12	07000-03098	. O-RING	1	20006~	
13	01010-31230	. BOLT	4	20006~	
14	01602-01236	. WASHER, spring	4	20006~	
15	145-49-12440	. BOLT	1	22388~	
16	07000-02010	. O-RING	1	20006~	
17	07042-00415	. PLUG	1	20006~	

NOTE: †: Shows both D60A-6 Serial No. 28285~28299, 28301, 28302, 28304~
D65A-6 Serial No. 28247~28258, 28261~
D60P-6 Serial No. 28582~28605, 28609~
D60PL-6 Serial No. 28013~
D65P Serial No. 30001~
D60S-6 Serial No. 28824~28855, 28863~
D60S-6 Serial No. 28189~28202, 28204, 28208
D60E-6 Serial No. 28272~28287, 28291~and
D60E-6 Serial No. 28357~28367, 28370~.

TRACK AND GUARD

Fig. 1401 TRACK FRAME (D60A, D65A Serial No. 20006~)

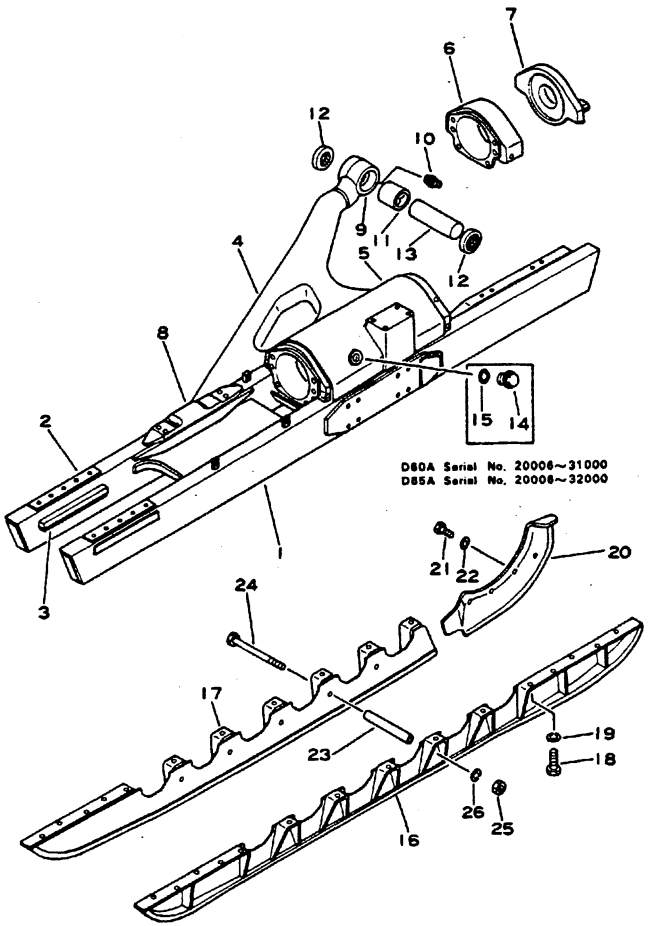

Fig & Index No.	Part No.	Description	Q'ty	Serial No.	Remarks
1401 -	144-30-00010	TRACK FRAME ASS'Y, L.H	1	20006~20021	
	144-30-00011	TRACK FRAME ASS'Y, L.H	1	20024~20031	
	144-30-00012	TRACK FRAME ASS'Y, L.H	1	C 20032~28240 T 20032~28228	
	144-30-00013	TRACK FRAME ASS'Y, L.H	1	C 28241~31000 T 28229~32000	
	144-30-00014	TRACK FRAME ASS'Y, L.H	1	C 31001~ T 32001~	
	144-30-00020	TRACK FRAME ASS'Y, R.H.	1	20006~20021	
	144-30-00021	TRACK FRAME ASS'Y, R.H	1	20024~20031	
	144-30-00022	TRACK FRAME ASS'Y, R.H	1	C 20032~28240 T 20032~28228	
	144-30-00023	TRACK FRAME ASS'Y, R.H	1	C 28241~31000 T 28229~32000	
	144-30-00024	TRACK FRAME ASS'Y, R.H	1	C 31001~ T 32001~	
	144-30-11115	. FRAME ASS'Y, L.H	1	20006~20021	
	144-30-11116	. FRAME ASS'Y, L.H	1	20024~20031	
	144-30-11117	. FRAME ASS'Y, L.H	1	C 20032~23349 T 20032~23546	□144-30-11119
	144-30-11118	. FRAME ASS'Y, L.H	1	C 23350~25047 T 23547~25478	□144-30-11119
	144-30-11119	. FRAME ASS'Y, L.H	1	C 25048~28246 T 25479~28228	
	144-30-11330	. FRAME ASS'Y, L.H	1	C 28247~ • T 28229~ •	□144-30-11331
	144-30-11331	. FRAME ASS'Y, L.H	1	C • ~31000 T • ~32000	
	144-30-11332	. FRAME ASS'Y, L.H	1	C 31001~ T 32001~	
	144-30-11125	. FRAME ASS'Y, R.H	1	C 20006~20021	
	144-30-11126	. FRAME ASS'Y, R.H	1	C 20024~20031	
	144-30-11127	. FRAME ASS'Y, R.H	1	C 20032~23349 T 20032~23546	□144-30-11129
	144-30-11128	. FRAME ASS'Y, R.H	1	C 23350~25047 T 23547~25478	□144-30-11129

Fig & Index No.	Part No.	Description	Q'ty	Serial No.	Remarks
	144-30-11129	. FRAME ASS'Y, R.H	1	C 25048~28246 T 25479~28228	
	144-30-11340	. FRAME ASS'Y, R.H	1	C 28247~ • T 28229~ •	☐ 144-30-11341
	144-30-11341	. FRAME ASS'Y, R.H	1	C • ~31000 T • ~32000	
	144-30-11342	. FRAME ASS'Y, R.H	1	C 31001~ T 32001~	
1401 - 1	144-30-11133	. . FRAME, track, L.H	1	20006~20021	
	144-30-11134	. . FRAME, track, L.H	1	20024~25047	☐ 144-30-11135
	144-30-11135	. . FRAME, track, L.H	1	25048~	
	144-30-11143	. . FRAME, track, R.H	1	20006~20021	
	144-30-11144	. . FRAME, track, R.H	1	20024~25047	☐ 144-30-11145
	144-30-11145	. . FRAME, track, R.H	1	25058~	
2	141-30-31250	. . . PLATE	2	C 20006~28246 T 20006~28228	Welded
	141-30-11190	. . . PLATE	2	C 28247~ T 28229~	
3	141-30-31260	. . . PLATE	2	C 20006~28246 T 20006~28228	Welded
	141-30-31262	. . . PLATE	2	C 28247~ T 28229~	
4	144-30-11152	. . BRACE, diagonal, L.H	1	A 20006~	
	144-30-11162	. . BRACE, diagonal, R.H	1	A 20006~	
5	144-30-11171	. . CABIN, L.H	1	C 20024~20031	
	144-30-11172	. . CABIN, L.H	1	C 20032~23349 T 20032~23546	☐ 144-30-11175
	144-30-11173	. . CABIN, L.H	1	C 23350~ • T 23547~ •	☐ 144-30-11175
	144-30-11175	. . CABIN, L.H	1	C • ~31000 T • ~32000	
	144-30-11176	. . CABIN, L.H	1	C 31001~ T 32001~	
	144-30-11181	. . CABIN, R.H	1	C 20024~20031	
	144-30-11182	. . CABIN, R.H	1	C 20032~23349 T 20032~23546	☐ 144-30-11185
	144-30-11183	. . CABIN, R.H	1	C 23350~ • T 23547~ •	☐ 144-30-11185
	144-30-11185	. . CABIN, R.H	1	C • ~31000 T • ~32000	
	144-30-11186	. . CABIN, R.H	1	C 31001~ T 32001~	
6	141-30-31210	. . . GUIDE, front, Welded	1	20006~20021	☆ 144-30-11171 144-30-11181

Fig & Index No.	Part No.	Description	Q'ty	Serial No.	Remarks
	141-30-31211	. . . GUIDE, front, Welded	1	20024~20031	☆ 144-30-11171 144-30-11181
	141-30-31212	. . . GUIDE, front, Welded	1	20032~28168	☆ 144-30-11175 144-30-11185
	141-30-31213	. . . GUIDE, front, Welded	1	28169~	☆ 144-30-11175 144-30-11176
1401 - 7	141-30-31221	. . . GUIDE, rear, Welded	1	20006~	☆ 144-30-11171 144-30-11172 144-30-11173 144-30-11175 144-30-11176 144-30-11181 144-30-11182 144-30-11183 144-30-11185 144-30-11186
8	141-30-31290	. . SEAT	1	C 20006~31000 T 20006~32000	
	144-813-1390	. . SEAT	1	C 31001~ T 32001~	
	145-30-00150	. BEARING ASS'Y	1	20006~	
9	145-30-31241	. . HEAD	1	20006~	
10	07020-00000	. . FITTING, grease	1	20006~	
11	145-30-31250	. . BUSHING	1	20006~	
12	145-30-31320	. . SEAL	2	20006~	
13	141-30-31350	. PIN	1	20006~	
14	07041-03012	PLUG	1	20006~22387	
	07041-13012	PLUG	1	C 22388~31000 T 22388~32000	
15	07000-03028	O-RING	1	C 20006~31000 T 20006~32000	
16	144-30-12112	GUARD, outer, L.H	1	20006~20021	
	144-30-12113	GUARD, outer, L.H	1	C 20024~28246 T 20024~28228	
	144-30-12114	GUARD, outer, L.H	1	C 28247~ T 28229~	
	144-30-12122	GUARD, outer, R.H	1	20006~20021	
	144-30-12123	GUARD, outer, R.H	1	C 20024~28246 T 20024~28228	
	144-30-12124	GUARD, outer, R.H	1	C 28247~ T 28229~	
17	144-30-12132	GUARD, inner, L.H	1	C 20006~28246 T 20006~28228	
	144-30-12133	GUARD, inner, L.H	1	C 28247~ T 28299~	

Fig & Index No.	Part No.	Description	Q'ty	Serial No.	Remarks
	144-30-12142	GUARD, inner, R.H	1	C 20006~28246 T 20006~28228	
	144-30-12143	GUARD, inner, R.H	1	C 28247~ T 28229~	
1401 -18	01040-31840	BOLT	52	20006~22387	
	01010-31840	BOLT	52	22388~	
19	01602-01854	WASHER, spring	52	20006~	
20	141-30-32151	GUARD, L.H	1	20006~	
	141-30-32161	GUARD, R.H	1	20006~	
21	01040-32050	BOLT	8	20006~22387	
	01010-32050	BOLT	8	22388~	
22	01602-02060	WASHER, spring	8	20006~	
23	141-30-32181	COLLAR	10	20006~	
24	141-30-32171	BOLT	10	20006~20053	
	09206-18310	BOLT	10	20054~22387	
	09205-18310	BOLT	10	22388~	
25	01503-31816	NUT	10	20006~22387	
	01580-01815	NUT	10	22388~	
26	01602-01854	WASHER, spring	10	20006~	

Fig. 1402 TRACK FRAME (D60P, D65P Serial No. 20006~)

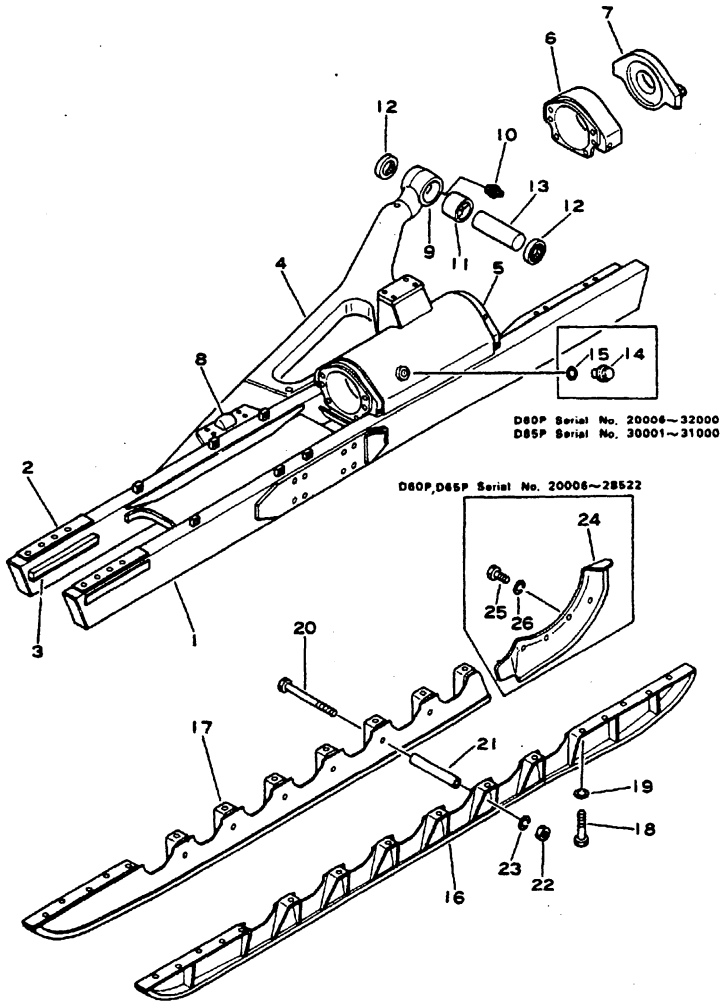

Fig & Index No.	Part No.	Description	Q'ty	Serial No.	Remarks
1402 -	144-813-0010	TRACK FRAME ASS'Y, L.H	1	20006~20021	
	144-813-0011	TRACK FRAME ASS'Y, L.H	1	20024~20031	
	144-813-0012	TRACK FRAME ASS'Y, L.H	1	20032~22387	
	144-813-0013	TRACK FRAME ASS'Y, L.H	1	22388~28072	
	144-813-0101	TRACK FRAME ASS'Y, L.H	1	28073~28522	
	144-813-0102	TRACK FRAME ASS'Y, L.H	1	C 28523~30854 T 30001~30086	
	144-813-0103	TRACK FRAME ASS'Y, L.H	1	C 30855~32000 T 30087~31000	
	144-813-0104	TRACK FRAME ASS'Y, L.H	1	C 32001~ T 31001~	
	144-813-0020	TRACK FRAME ASS'Y, R.H	1	20006~20021	
	144-813-0021	TRACK FRAME ASS'Y, R.H	1	20024~20031	
	144-813-0022	TRACK FRAME ASS'Y, R.H	1	20032~22387	
	144-813-0023	TRACK FRAME ASS'Y, R.H	1	22388~28072	
	144-813-0111	TRACK FRAME ASS'Y, R.H	1	28073~28522	
	144-813-0112	TRACK FRAME ASS'Y, R.H	1	C 28522~30854 T 30001~30086	
	144-813-0113	TRACK FRAME ASS'Y, R.H	1	C 30855~32000 T 30087~31000	
	144-813-0114	TRACK FRAME ASS'Y, R.H	1	C 32001~ T 31001~	
	144-813-1114	. FRAME ASS'Y, L.H	1	20006~20021	
	144-813-1115	. FRAME ASS'Y, L.H	1	20024~20031	
	144-813-1116	. FRAME ASS'Y, L.H	1	20032~23503	☐144-813-1118
	144-813-1117	. FRAME ASS'Y, L.H	1	23504~25448	☐144-813-1118
	144-813-1118	. FRAME ASS'Y, L.H	1	25449~28072	
	144-813-1512	. FRAME ASS'Y, L.H	1	28073~28522	
	144-813-1513	. FRAME ASS'Y, L.H	1	PC28523~30854 PT30001~30086	☐144-813-1514

Fig & Index No.	Part No.	Description	Q'ty	Serial No.	Remarks
	144-813-1514	. FRAME ASS'Y, R.H	1	PC30855~32000 PT30087~31000	
	144-813-1515	. FRAME ASS'Y, R.H	1	PC32001~ PT31001~	
	144-813-1124	. FRAME ASS'Y, R.H	1	20006~20021	
	144-813-1125	. FRAME ASS'Y, R.H	1	20024~20031	
	144-813-1126	. FRAME ASS'Y, R.H	1	20032~23503	□144-813-1128
	144-813-1127	. FRAME ASS'Y, R.H	1	23504~25488	□144-813-1128
	144-813-1128	. FRAME ASS'Y, R.H	1	25449~28072	
	144-813-1522	. FRAME ASS'Y, R.H	1	28073~28522	
	144-813-1523	. FRAME ASS'Y, R.H	1	PC28523~30854 PT30001~30086	□144-813-1524
	144-813-1524	. FRAME ASS'Y, R.H	1	PC30855~32000 PT30087~31000	
	144-813-1525	. FRAME ASS'Y, R.H	1	PC32001~ PT31001~	
1402 - 1	144-813-1133	. . FRAME, track, L.H	1	20006~20021	
	144-813-1134	. . FRAME, track, L.H	1	20024~25448	□144-813-1135
	144-813-1135	. . FRAME, track, L.H	1	25449~28072	
	144-813-1531	. . FRAME, track, L.H	1	28073~	
	144-813-1143	. . FRAME, track, R.H	1	20006~20021	
	144-813-1144	. . FRAME, track, R.H	1	20024~25448	□144-813-1145
	144-813-1145	. . FRAME, track, R.H	1	25449~28072	
	144-813-1541	. . FRAME, track, R.H	1	28073~	
2	141-30-31250	. . . PLATE	2	20006~28522	Welded
	141-30-11190	. . . PLATE	2	28523~	
3	141-30-31260	. . . PLATE	2	20006~28522	Welded
	141-30-31262	. . . PLATE	2	28523~	
4	144-813-1252	. . BRACE, diagonal, L.H	1	20006~	
	144-813-1262	. . BRACE, diagonal, R.H	1	20006~	
5	144-813-1172	. . CABIN, L.H	1	20006~20021	
	144-813-1173	. . CABIN, L.H	1	20024~20031	
	144-813-1174	. . CABIN, L.H	1	20032~23053	□144-813-1175
	144-813-1175	. . CABIN, L.H	1	23054~28072	
	144-813-1176	. . CABIN, L.H	1	28073~	
	144-813-1182	. . CABIN, R.H	1	20006~20021	

Fig & Index No.	Part No.	Description	Q'ty	Serial No.	Remarks
	144-813-1183	. . CABIN, R.H	1	20024~20031	
	144-813-1184	. . CABIN, R.H	1	20032~28072	
	144-813-1186	. . CABIN, R.H	1	28073~	
1402 - 6	141-30-31210	. . . GUIDE, front, Welded	1	20006~20021	☆ 144-813-1172 144-813-1182
	141-30-31211	. . . GUIDE, front, Welded	1	20024~20031	☆ 144-813-1173 144-813-1183
	141-30-31212	. . . GUIDE, front, Welded	1	20032~28168	☆ 144-813-1175 144-813-1184
	141-30-31213	. . . GUIDE, front, Welded	1	28169~	☆ 144-813-1176 144-813-1186
7	141-30-31221	. . . GUIDE, rear, Welded	1	20006~28072	☆ 144-813-1175 144-813-1184
	141-30-31222	. . . GUIDE, rear, Welded	1	28073~	☆ 144-813-1176 144-813-1186
8	144-813-1390	. . SEAT	1	20006~	
	144-813-0030	. BEARING ASS'Y, L.H	1	20006~22387	
	144-813-0031	. BEARING ASS'Y, L.H	1	22388~	
	144-813-0040	. BEARING ASS'Y, R.H	1	20006~22387	
	144-813-0041	. BEARING ASS'Y, R.H	1	22388~	
9	144-813-1270	. . HEAD, L.H	1	20006~22387	
	144-813-1271	. . HEAD, L.H	1	22388~ •	
	145-30-31241	. . HEAD, L.H	1	• ~	
	144-813-1280	. . HEAD, R.H	1	20006~22387	
	145-30-31241	. . HEAD, R.H	1	22388~	
10	07020-00000	. . FITTING, grease	1	20006~	
11	145-30-31250	. . BUSHING	1	20006~	
12	145-30-31320	. . SEAL	2	20006~	
13	141-30-31350	. PIN	1	20006~	
14	07041-03012	PLUG	1	20006~22387	
	07041-13012	PLUG	1	C 22388~32000 T 30001~31000	
15	07000-03028	O-RING	1	C 20006~32000 T 30001~31000	
16	144-813-2112	GUARD, outer, L.H	1	20006~20021	
	144-813-2113	GUARD, outer, L.H	1	20024~28072	

Fig & Index No.	Part No.	Description	Q'ty	Serial No.	Remarks
	144-813-1610	GUARD, outer, L.H	1	28073~28522	
	144-813-1611	GUARD, outer, L.H	1	C 28523~30854 T 28523~30086	
	144-813-1612	GUARD, outer, L.H	1	C 30855~ T 30087~	
	144-813-2122	GUARD, outer, R.H	1	20006~20021	
	144-813-2123	GUARD, outer, R.H	1	20024~28072	
	144-813-1620	GUARD, outer, R.H	1	28073~28522	
	144-813-1621	GUARD, outer, R.H	1	C 28523~30854 T 28523~30086	
	144-813-1622	GUARD, outer, R.H	1	C 30855~ T 30087~	
1402 -17	144-813-2132	GUARD, inner, L.H	1	20006~28072	
	144-813-1630	GUARD, inner, L.H	1	28073~28522	
	144-813-1631	GUARD, inner, L.H	1	C 28523~30854 T 28523~30086	
	144-813-1632	GUARD, inner, L.H	1	C 30855~ T 30087~	
	144-813-2142	GUARD, inner, R.H	1	20006~28072	
	144-813-1640	GUARD, inner, R.H	1	28073~28522	
	144-813-1641	GUARD, inner, R.H	1	C 28523~30854 T 28523~30086	
	144-813-1642	GUARD, inner, R.H	1	C 30855~ T 30087~	
18	01040-31840	BOLT	56	20006~22387	
	01010-31840	BOLT	56	22388~	
19	01602-01854	WASHER, spring	56	20006~	
20	141-30-32171	BOLT	12	20006~20053	
	09206-18310	BOLT	12	20054~22387	
	09205-18310	BOLT	12	22388~	
21	141-30-32181	COLLAR	12	20006~	
22	01503-31816	NUT	12	20006~22387	
	01580-01815	NUT	12	22388~	
23	01602-01854	WASHER, spring	12	20006~	
24	144-813-2151	GUARD, L.H	1	20006~28522	
	144-813-2161	GUARD, R.H	1	20006~28522	
25	01040-32050	BOLT	8	20006~22387	
	01010-32050	BOLT	8	22388~28522	
26	01602-02060	WASHER, spring	8	20006~28522	

Fig. 1403 TRACK FRAME (D60PL Serial No. 21081~)

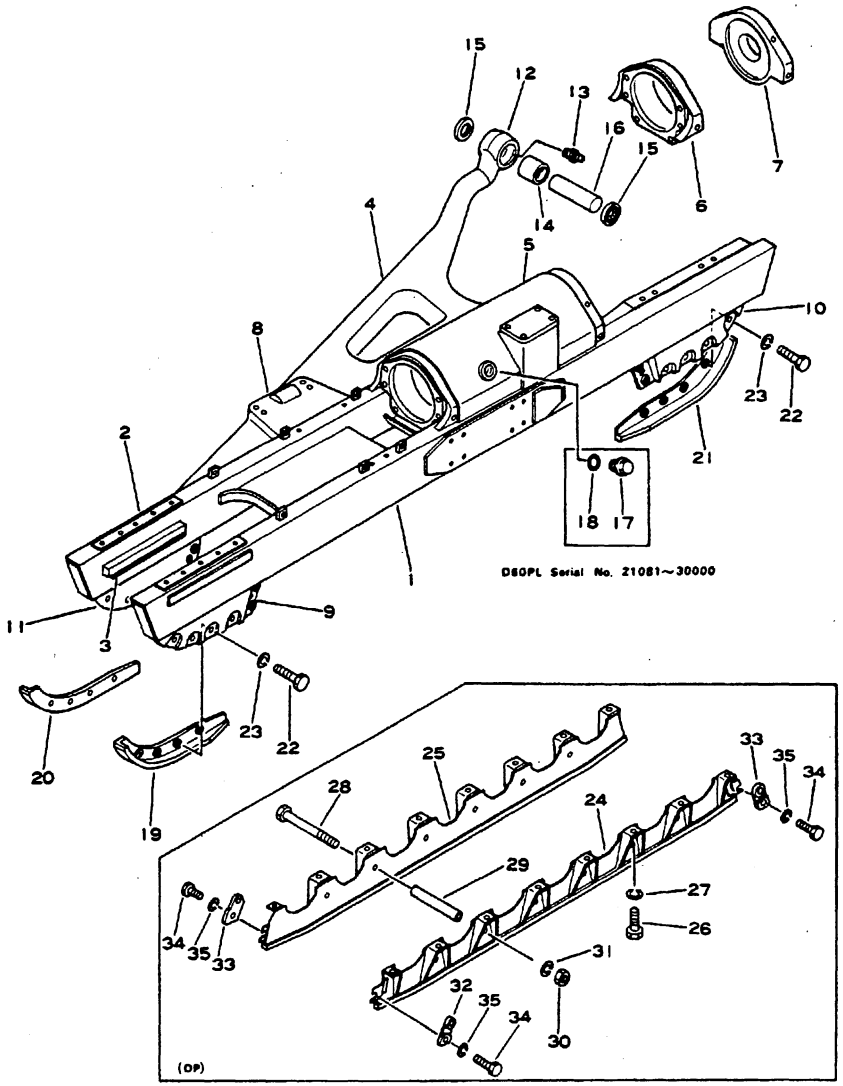

Fig & Index No.	Part No.	Description	Q'ty	Serial No.	Remarks
	144-870-0020	TRACK FRAME ASS'Y, L.H	1	21081~22387	
	144-870-0021	TRACK FRAME ASS'Y, L.H	1	22388~28012	
	144-870-0022	TRACK FRAME ASS'Y, L.H	1	28013~30000	
	144-870-0023	TRACK FRAME ASS'Y, L.H	1	30001~	
	144-870-0030	TRACK FRAME ASS'Y, R.H	1	21081~22387	
	144-870-0031	TRACK FRAME ASS'Y, R.H	1	22388~28012	
	144-870-0032	TRACK FRAME ASS'Y, R.H	1	28013~30000	
	144-870-0033	TRACK FRAME ASS'Y, R.H	1	30001~	
	144-870-1331	. FRAME ASS'Y, L.H	1	21081~23503	□ 144-870-1333
	144-870-1332	. FRAME ASS'Y, L.H	1	23504~25448	□ 144-870-1333
	144-870-1333	. FRAME ASS'Y, L.H	1	25449~28012	
	144-870-1334	. FRAME ASS'Y, L.H	1	28013~30000	
	144-870-1335	. FRAME ASS'Y, L.H	1	30001~	
	144-870-1341	. FRAME ASS'Y, R.H	1	21081~23503	□ 144-870-1343
	144-870-1342	. FRAME ASS'Y, R.H	1	23504~25448	□ 144-870-1343
	144-870-1343	. FRAME ASS'Y, R.H	1	25449~28012	
	144-870-1344	. FRAME ASS'Y, R.H	1	28013~30000	
	144-870-1345	. FRAME ASS'Y, R.H	1	30001~	
1403 - 1	144-870-1431	. . FRAME, track, L.H	1	21081~25448	□ 144-813-1432
	144-870-1432	. . FRAME, track, L.H	1	25449~	
	144-870-1441	. . FRAME, track, R.H	1	21081~25448	□ 144-870-1442
	144-870-1442	. . FRAME, track, R.H	1	25449~	
2	141-30-31250	. . . PLATE	2	21081~28012	Welded
	141-30-11190	. . . PLATE	2	28013~	
3	141-30-31260	. . . PLATE	2	21081~28012	Welded
	141-30-31262	. . . PLATE	2	28013~	

Fig & Index No.	Part No.	Description	Q'ty	Serial No.	Remarks
1403 - 4	144-870-1350	. . BRACE, diagonal, L.H	1	21081~	
	144-870-1360	. . BRACE, diagonal, R.H	1	21081~	
5	144-813-1174	. . CABIN, L.H	1	21081~30000	
	144-813-1178	. . CABIN, L.H	1	30001~	
	144-813-1184	. . CABIN, R.H	1	21081~30000	
	144-813-1188	. . CABIN, R.H	1	30001~	
6	141-30-31212	. . . GUIDE, front, Welded	1	21081~	☆ 144-813-1178 144-813-1188
	141-30-31213	. . . GUIDE, front, Welded	1	28169~	☆ 144-813-1178 144-813-1188
7	141-30-31221	. . . GUIDE, rear, Welded	1	21081~	☆ 144-813-1178 144-813-1188
8	144-813-1390	. . SEAT	1	20006~	
9	144-901-1151	. . GUARD, outer, L.H	1	21081~	
	144-901-1141	. . GUARD, outer, R.H	1	21081~	
10	144-901-1162	. . GUARD, L.H	1	21081~28012	
	144-901-1141	. . GUARD, L.H	1	28013~	
	144-901-1172	. . GUARD, R.H	1	21081~28012	
	144-901-1151	. . GUARD, R.H	1	28013~	
11	144-901-1141	. . GUARD, inner, L.H	1	21081~	
	144-901-1151	. . GUARD, inner, R.H	1	21081~	
	144-813-0030	. BEARING ASS'Y, L.H	1	20006~22387	
	144-813-0031	. BEARING ASS'Y, L.H	1	22388~	
	144-813-0040	. BEARING ASS'Y, R.H	1	20006~22387	
	144-813-0041	. BEARING ASS'Y, R.H	1	22388~	
12	144-813-1270	. . HEAD, L.H	1	21081~22387	
	144-813-1271	. . HEAD, L.H	1	22388~ •	
	145-30-31241	. . HEAD, L.H	1	• ~	
	144-813-1280	. . HEAD, R.H	1	21081~22387	
	145-30-31241	. . HEAD, R.H	1	22388~	
13	07020-00000	. . FITTING, grease	1	20006~	
14	145-30-31250	. . BUSHING	1	20006~	
15	145-30-31320	. . SEAL	2	20006~	

Fig & Index No.	Part No.	Description	Q'ty	Serial No.	Remarks
1403 -16	141-30-31350	. PIN	1	20006~	
17	07041-03012	PLUG	1	20006~22387	
	07041-13012	PLUG	1	22388~30000	
18	07000-03028	O-RING	1	20006~30000	
19	144-901-2190	GUARD, front, L.H	2 3	21081~ • • ~	
20	144-901-2180	GUARD, front, R.H	2 3	21081~ • • ~	
21	144-901-2212	GUARD, rear, L.H	1	21081~ •	
	144-901-2222	GUARD, rear, R.H	1	21081~ •	
22	01040-31635	BOLT	24	21081~22387	
	01010-31635	BOLT	24	22388~	
23	01602-01648	WASHER, spring	24	21081~	
24	144-813-2911	GUARD, outer, L.H	1	21081~	OP
	144-813-2921	GUARD, outer, R.H	1	21081~	OP
25	144-813-2931	GUARD, inner, L.H	1	21081~	OP
	144-813-2941	GUARD, inner, R.H	1	21081~	OP
26	01040-31840	BOLT	56	21081~22387	OP
	01010-31840	BOLT	56	22388~	OP
27	01602-01854	WASHER, spring	56	21081~	OP
28	141-30-32171	BOLT	12	20006~20053	OP
	09206-18310	BOLT	12	20054~22387	OP
	09205-18310	BOLT	12	22388~	OP
29	141-30-32181	COLLAR	12	21081~	OP
30	01503-31816	NUT	12	21081~22387	OP
	01580-01815	NUT	12	22388~	OP
31	01602-01854	WASHER, spring	12	21081~	OP
32	130-30-12180	PLATE	3	21081~	OP
33	130-30-12170	PLATE	3	21081~	OP
34	01010-31430	BOLT	12	21081~	OP
35	01602-01442	WASHER, spring	12	21081~	OP

Fig. 1404 TRACK FRAME (D60E, D65E Serial No. 20295~)

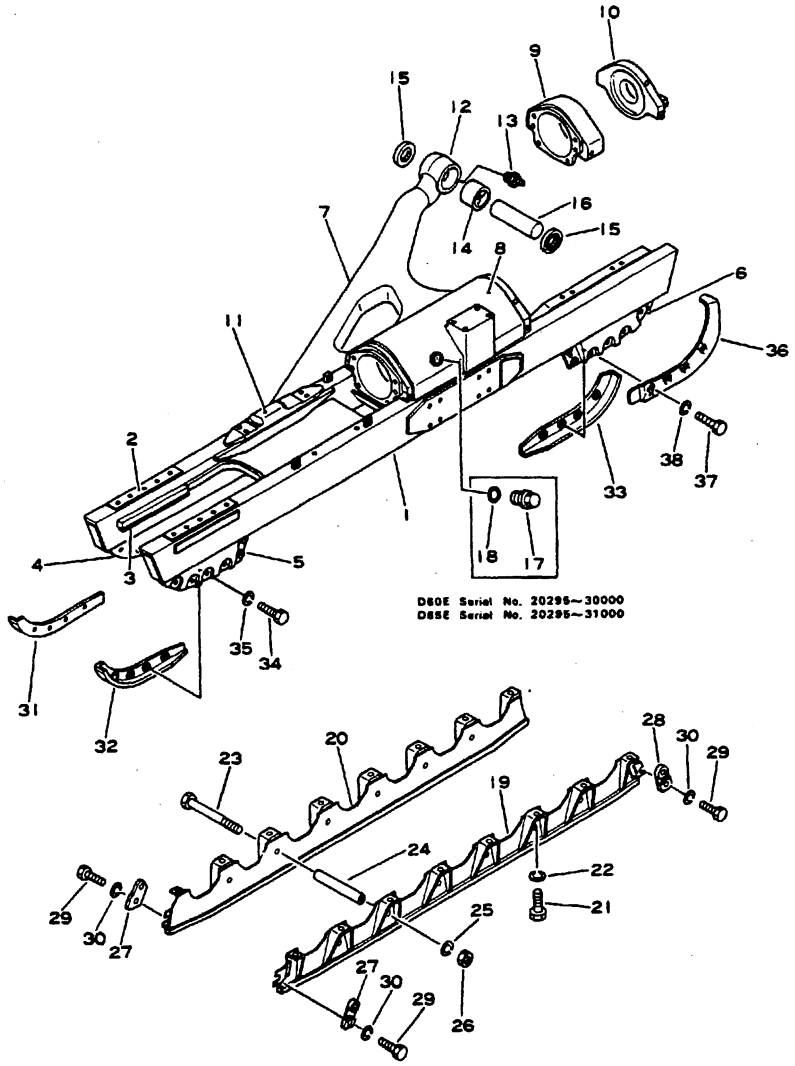

Fig & Index No.	Part No.	Description	Q'ty	Serial No.	Remarks
1404 -	144-871-0010	TRACK FRAME ASS'Y, L.H	1	C 20295~28246 T 20295~28337	
	144-871-0011	TRACK FRAME ASS'Y, L.H	1	C 28247~ •• T 28338~ ••	
	144-871-0012	TRACK FRAME ASS'Y, L.H	1	C •• ~30000 T •• ~31000	
	144-871-0013	TRACK FRAME ASS'Y, L.H	1	C 30001~ T 31001~	
	144-871-0020	TRACK FRAME ASS'Y, R.H	1	C 20295~28246 T 20295~28337	
	144-871-0021	TRACK FRAME ASS'Y, R.H	1	C 28247~ •• T 28338~ ••	
	144-871-0022	TRACK FRAME ASS'Y, R.H	1	C •• ~30000 T •• ~31000	
	144-871-0023	TRACK FRAME ASS'Y, R.H	1	C 30001~ T 31001~	
	144-871-2100	. TRACK FRAME ASS'Y, L.H	1	C 20295~ • T 20295~ •	☐ 144-871-2102
	144-871-2101	. TRACK FRAME ASS'Y, L.H	1	C • ~25047 T • ~25478	☐ 144-871-2102
	144-871-2102	. TRACK FRAME ASS'Y, L.H	1	C 25048~28246 T 25479~28337	
	144-871-2103	. TRACK FRAME ASS'Y, L.H	1	C 28247~ • T 28338~ •	☐ 144-871-2104
	144-871-2104	. TRACK FRAME ASS'Y, L.H	1	C • ~ •• T • ~ ••	
	144-871-2105	. TRACK FRAME ASS'Y, L.H	1	C •• ~30000 T •• ~31000	
	144-871-2106	. TRACK FRAME ASS'Y, L.H	1	C 30001~ T 31001~	
	144-871-2200	. TRACK FRAME ASS'Y, R.H	1	C 20295~ • T 20295~ •	☐ 144-871-2202
	144-871-2201	. TRACK FRAME ASS'Y, R.H	1	C • ~25047 T • ~25478	☐ 144-871-2202
	144-871-2202	. TRACK FRAME ASS'Y, R.H	1	C 25048~28246 T 25479~28337	

Fig & Index No.	Part No.	Description	Q'ty	Serial No.	Remarks
	144-871-2203	. TRACK FRAME ASS'Y, R.H	1	C 28247~ • T 28338~ •	□144-871-2204
	144-871-2204	. TRACK FRAME ASS'Y, R.H	1	C • ~ •• T • ~ ••	
	144-871-2205	. TRACK FRAME ASS'Y, R.H	1	C •• ~30000 T •• ~31000	
	144-871-2206	. TRACK FRAME ASS'Y, R.H	1	C 30001~ T 31001~	
1404 - 1	144-871-1110	. . FRAME, track, L.H	1	C 20295~25047 T 20295~25478	
	144-871-1111	. . FRAME, track, L.H	1	C 25048~28246 T 25479~28337	
	144-871-1112	. . FRAME, track, L.H	1	C 28247~ •• T 28338~ ••	
	144-871-1113	. . FRAME, track, L.H	1	C •• ~ T •• ~	
	144-871-1210	. . FRAME, track, R.H	1	C 20295~25047 T 20295~25478	
	144-871-1211	. . FRAME, track, R.H	1	C 25048~28246 T 25479~28337	
	144-871-1212	. . FRAME, track, R.H	1	C 28247~ •• T 28338~ ••	
	144-871-1213	. . FRAME, track, R.H	1	C •• ~ T •• ~	
2	141-30-31250	. . . PLATE	2	20295~	Welded
3	141-30-31260	. . . PLATE	2	20295~	Welded
4	144-901-1151	. . GUARD, front, L.H, inner	1	20295~	
	144-901-1141	. . GUARD, front, R.H, inner	1	20295~	
5	144-901-1141	. . GUARD, front, L.H, outer	1	20295~	
	144-901-1151	. . GUARD, front, R.H, outer	1	20295~	
6	144-901-1162	. . GUARD, rear, L.H	1	C 20295~28246 T 20295~28337	
	144-901-1141	. . GUARD, rear, L.H	1	C 28247~ T 28338~	
	144-901-1172	. . GUARD, rear, R.H	1	C 20295~28246 T 20295~28337	
	144-901-1151	. . GUARD, rear, R.H	1	C 28247~ T 28338~	
7	144-30-11152	. . BRACE, diagonal, L.H	1	20295~	

Fig & Index No.	Part No.	Description	Q'ty	Serial No.	Remarks
	144-30-11162	. . BRACE, diagonal, R.H	1	20295~	
1404 - 8	144-30-11172	. . CABIN, L.H	1	C 20295~ • T 20295~ •	
	144-30-11173	. . CABIN, L.H	1	C • ~25047 T • ~25478	
	144-30-11174	. . CABIN, L.H	1	C 25048~28246 T 25479~28337	
	144-30-11185	. . CABIN, L.H	1	C 28247~ •• T 28338~ ••	
	144-30-11175	. . CABIN, L.H	1	C •• ~30000 T •• ~31000	
	144-30-11176	. . CABIN, L.H	1	C 30001~ T 31001~	
	144-30-11182	. . CABIN, R.H	1	C 20295~ •• T 20295~ ••	
	144-30-11183	. . CABIN, R.H	1	C •• ~25047 T •• ~25478	
	144-30-11184	. . CABIN, R.H	1	C 25048~28246 T 25479~28337	
	144-30-11175	. . CABIN, R.H	1	C 28247~ •• T 28338~ ••	
	144-30-11185	. . CABIN, R.H	1	C •• ~30000 T •• ~31000	
	144-30-11186	. . CABIN, R.H	1	C 30001~ T 31001~	
9	141-30-31212	. . . GUIDE, front, Welded	1	20295~	☆ 144-30-11172 144-30-11182
10	141-30-31221	. . . GUIDE, rear, Welded	1	20295~	☆ 144-30-11172 144-30-11182
11	141-30-31290	. . SEAT	1	20295~ ••	
	144-813-1390	. . SEAT	1	•• ~	
	145-30-00150	. BEARING ASS'Y	1	20295~	
12	145-30-31241	. . HEAD	1	20295~	
13	07020-00000	. . FITTING, grease	1	20295~	
14	145-30-31250	. . BUSHING	1	20295~	
15	145-30-31320	. . SEAL, dust	2	20295~	
16	141-30-31350	. PIN	1	20295~	
17	07041-13012	PLUG	1	C 20295~30000 T 20295~31000	
18	07000-03028	O-RING	1	C 20295~30000 T 20295~31000	
19	144-871-2310	GUARD, L.H, outer	1	C 20295~28246 T 20295~28337	
	144-871-2311	GUARD, L.H, outer	1	C 28247~ T 28338~	
	144-871-2320	GUARD, R.H, outer	1	C 20295~28246 T 20295~28337	

Fig. & Index No.	Part No.	Description	Q'ty	Serial No.	Remarks
	144-871-2321	GUARD, R.H. outer	1	C 28247~ T 28338~	
1404 -20	144-871-2330	GUARD, L.H. inner	1	C 20295~28246 T 20295~28337	
	144-871-2331	GUARD, L.H. inner	1	C 28247~ T 28338~	
	144-871-2340	GUARD, R.H. inner	1	C 20295~28246 T 20295~28337	
	144-871-2341	GUARD, R.H. inner	1	C 28247~ T 28338~	
21	01010-31840	BOLT	32	20295~	
22	01602-01854	WASHER, spring	32	20295~	
23	09206-18310	BOLT	12	20295~22387	
	09205-18310	BOLT	12	22388~	
24	141-30-32181	COLLAR	12	20295~	
25	01503-31816	NUT	12	20295~22387	
	01580-01815	NUT	12	22388~	
26	01602-01854	WASHER, spring	12	20295~	
27	130-30-12170	PLATE	4	20295~	
28	130-30-12180	PLATE	2	20295~	
29	01040-31430	BOLT	12	20295~22387	
	01010-31430	BOLT	12	22388~	
30	01602-01442	WASHER, spring	12	20295~	
31	144-901-2180	GUIDE, front, L.H, inner	1	20295~	
	144-901-2190	GUIDE, front, R.H, inner	1	20295~	
32	144-901-2190	GUIDE, front, L.H, outer	1	20295~	
	144-901-2180	GUIDE, front, R.H, outer	1	20295~	
33	144-901-2222	GUIDE, rear, L.H	1	20295~	
	144-901-2212	GUIDE, rear, R.H	1	20295~	
34	01040-31635	BOLT	24	20295~22387	
	01010-31635	BOLT	24	22388~	
35	01602-01648	WASHER, spring	24	20295~	
36	141-30-32151	GUARD, L.H	1	20295~	
	141-30-32161	GUARD, R.H	1	20295~	
37	01040-32050	BOLT	8	20295~22387	
	01010-32050	BOLT	8	22388~	
38	01602-02060	WASHER, spring	8	20295~	

Fig. 1406 TRACK FRAME COVER

(D60A, P, PL, S, D65A, P, S Serial No. 20006~)

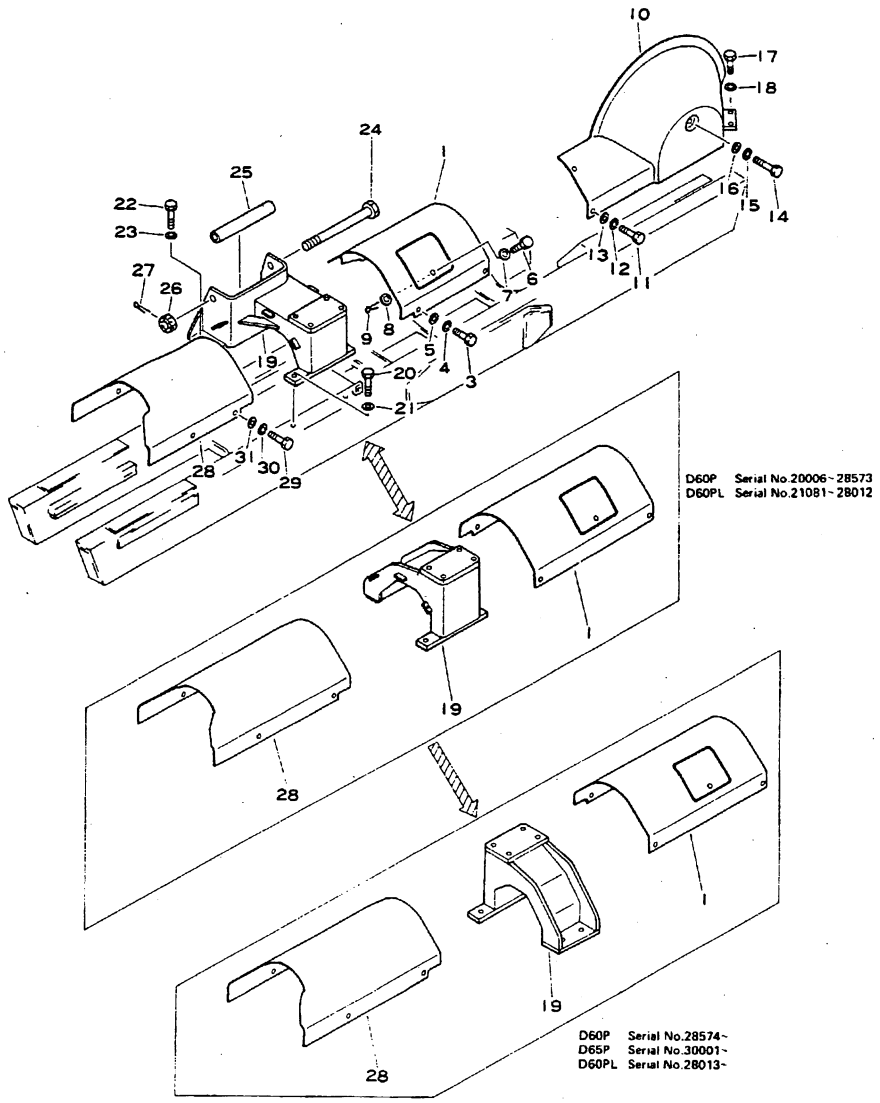

Fig. & Index No.	Part No.	Description	Q'ty	Serial No.	Remarks
1406 - 1	141-30-37110	COVER, L.H	1	SC 20006~28804 ST 20006~28180	
	141-30-37111	COVER, L.H	1	SC 28805~ ST 28181~	
	144-30-37111	COVER, L.H	1	AC20006~28280 AT20006~28245	
	144-30-37112	COVER, L.H	1	AC28281~ AT28246~	
	144-813-7112	COVER, L.H	1	PC20006~28573 LC21081~28012	
	144-813-7113	COVER, L.H	1	PC28013~ PT30001~ LC28013~	
	141-30-37120	COVER, R.H	1	SC 20006~28804 ST 20006~28180	
	141-30-37121	COVER, R.H	1	SC 28805~ ST 28181~	
	144-30-37121	COVER, R.H	1	AC20006~28280 AT20006~28245	
	144-30-37122	COVER, R.H	1	AC28281~ AT28246~	
	144-813-7122	COVER, R.H	1	PC20006~28573 LC21081~28012	
	144-813-7123	COVER, R.H	1	PC28574~ PT30001~ LC28013~	
3	01040-31425	BOLT	8	20006~22387	
	01010-31425	BOLT	8	AC22388~28280 AT22388~28245 PC22388~28573 LC22388~28012 SC 22388~28804 ST 22388~28180	
	01010-31430	BOLT	8	AC28281~ AT28246~ PC28574~ PT30001~ LC28013~ SC 28805~ ST 28181~	
4	01602-01442	WASHER, spring	8	20006~	
5	01640-21426	WASHER	8	20006~	
6	141-30-17160	BOLT	2	20006~	
7	01640-21020	WASHER	2	20006~	
8	01641-21016	WASHER	2	20006~	
9	04050-03015	PIN, cotter	2	20006~	
10	141-30-37160	COVER, L.H	1	20006~	
	141-30-37170	COVER, R.H	1	20006~	
	141-30-37230	COVER, L.H	1	20006~	For Segment type sprocket
	141-30-37240	COVER, R.H	1	20006~	For Segment type sprocket

Fig & Index No.	Part No.	Description	Q'ty	Serial No.	Remarks
1406 -11	01040-31425	BOLT	4	20006~22387	
	01010-31425	BOLT	4	22388~	
12	01602-01442	WASHER, spring	4	20006~	
13	01640-21426	WASHER	4	20006~	
14	01040-31465	BOLT	2	20006~22387	
	01010-31465	BOLT	2	22388~	
15	01602-01442	WASHER, spring	2	20006~	
16	01640-21426	WASHER	2	20006~	
17	01040-31435	BOLT	4	20006~22387	
	01010-31435	BOLT	4	22388~	
18	01602-01442	WASHER, spring	4	20006~	
19	141-30-37180	SUPPORT, L.H	1	S 20006~23630	☐ 141-30-37181
	141-30-37181	SUPPORT, L.H	1	SC 23631~28804 ST 23631~28180	
	141-30-37182	SUPPORT, L.H	1	SC 28805~ ST 28181~	
	144-30-37181	SUPPORT, L.H	1	AC20006~23567 AT20006~23837	
	144-30-37182	SUPPORT, L.H	1	AC23568~28280 AT23838~28245	
	144-30-37183	SUPPORT, R.H	1	AC28281~ AT28246~	
	141-30-37190	SUPPORT, R.H	1	S 20006~23630	☐ 141-30-37191
	141-30-37191	SUPPORT, R.H	1	SC 23631~28804 ST 23631~28180	
	141-30-37192	SUPPORT, R.H	1	SC 28805~ ST 28181~	
	144-30-37191	SUPPORT, R.H	1	AC20006~23567 AT20006~23837	☐ 144-30-37192
	144-30-37192	SUPPORT, R.H	1	AC23568~28280 AT23838~28245	
	144-30-37193	SUPPORT, R.H	1	AC28281~ AT28246~	
	144-813-7181	SUPPORT	2	PC, LC 20006~23534	☐ 144-813-7182
	144-813-7182	SUPPORT	2	PC23535~28573 LC28535~28012	
	144-813-7230	SUPPORT, L.H	1	P 28574~ LC28013~	
	144-813-7240	SUPPORT, R.H	1	P 28574~ LC28013~	
20	01040-32050	BOLT	4	A, S 20006~22387	
			8	PC, LC 20006~22387	

Fig & Index No.	Part No.	Description	Q'ty	Serial No.	Remarks
	01010-32050	BOLT	4	S, A 22388~	
			8	P, LC 22388~	
1406 -21	01602-02060	WASHER, spring	4	S, A 20006~	
			8	P, LC 20006~	
22	01010-32250	BOLT	8	S, A 20006~	
23	01602-02268	WASHER, spring	8	S, A 20006~	
24	145-30-37230	BOLT	2	S, A 20006~22387	
	141-30-37310	BOLT	2	S, A 22388~	
25	145-30-37240	COLLAR	2	S, A 20006~	
26	01590-03033	NUT	2	S, A 20006~	
27	04050-06045	PIN, cotter	2	S, A 20006~	
28	141-30-37210	COVER, L.H	1	S 20006~	
	144-30-37211	COVER, L.H	1	A 20006~	
	144-813-7211	COVER, L.H	1	PC20006~28072 LC20006~	
	144-813-7510	COVER, L.H	1	P 28073~	
	141-30-37220	COVER, R.H	1	S 20006~	
	144-30-37221	COVER, R.H	1	A 20006~	
	144-813-7221	COVER, R.H	1	PC20006~28072 LC21081~	
	144-813-7520	COVER, R.H	1	P 28073~	
29	01040-31425	BOLT	8	S, PC, LC 20006~22387	
			6	A 20006~22387	
	01010-21425	BOLT	8	S, P, LC 22388~	
			6	A 22388~	
30	01602-01442	WASHER, spring	8	S, P, LC 20006~	
			6	A 20006~	
31	01640-21426	WASHER	8	S, P, LC 20006~	
			6	A 20006~	

Fig. 1407 TRACK FRAME COVER (D60E, D65E)

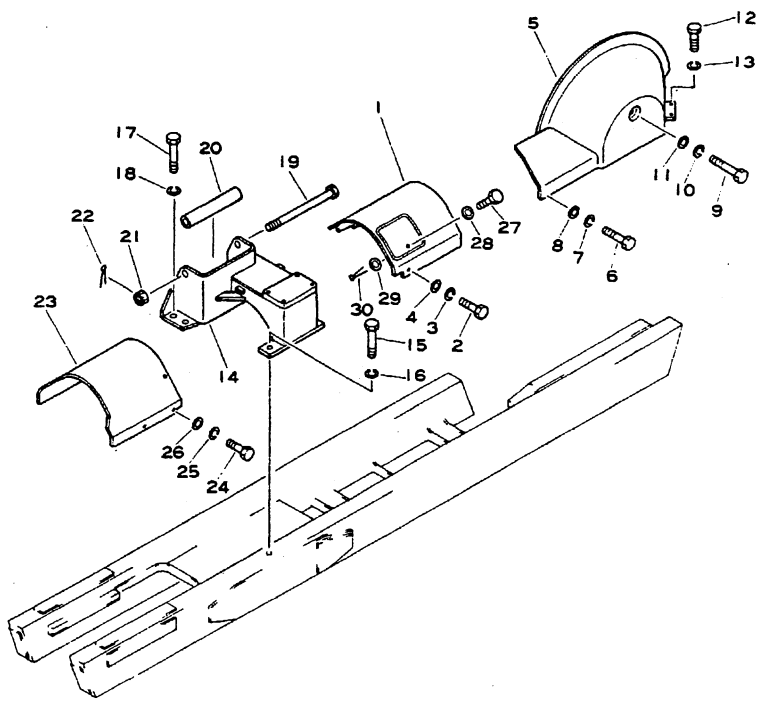

Fig & Index No.	Part No.	Description	Q'ty	Serial No.	Remarks
1407 - 1	144-30-37111	COVER, L.H	1		
	144-30-37121	COVER, R.H	1		
2	01010-31425	BOLT	8		
3	01602-01442	WASHER, spring	8		
4	01640-21426	WASHER	8		
5	141-30-37160	COVER, L.H	1		
	141-30-37170	COVER, R.H	1		
6	01010-31425	BOLT	4		
7	01602-01442	WASHER, spring	4		
8	01640-21426	WASHER	4		
9	01010-31465	BOLT	2		
10	01602-01442	WASHER, spring	2		
11	01640-21426	WASHER	2		
12	01010-31435	BOLT	4		
13	01602-01442	WASHER, spring	4		
14	144-30-37181	SUPPORT, L.H	1		
	144-30-37191	SUPPORT, R.H	1		
15	01010-32050	BOLT	4		
16	01602-02060	WASHER, spring	4		
17	01010-32250	BOLT	8		
18	01602-02268	WASHER, spring	8		
19	141-30-37310	BOLT	2		
20	145-30-37240	COLLAR	2		
21	01590-03033	NUT	2		
22	04050-06045	PIN, cotter	2		
23	144-871-1510	COVER, L.H	1		
	144-871-1520	COVER, R.H	1		
24	01010-31425	BOLT	10		
25	01602-01442	WASHER, spring	10		
26	01640-21426	WASHER	10		
27	141-30-17160	BOLT	2		
28	01640-21020	WASHER	2		
29	01641-21016	WASHER	2		
30	04050-03015	PIN, cotter	2		

Fig. 1411 RECOIL SPRING

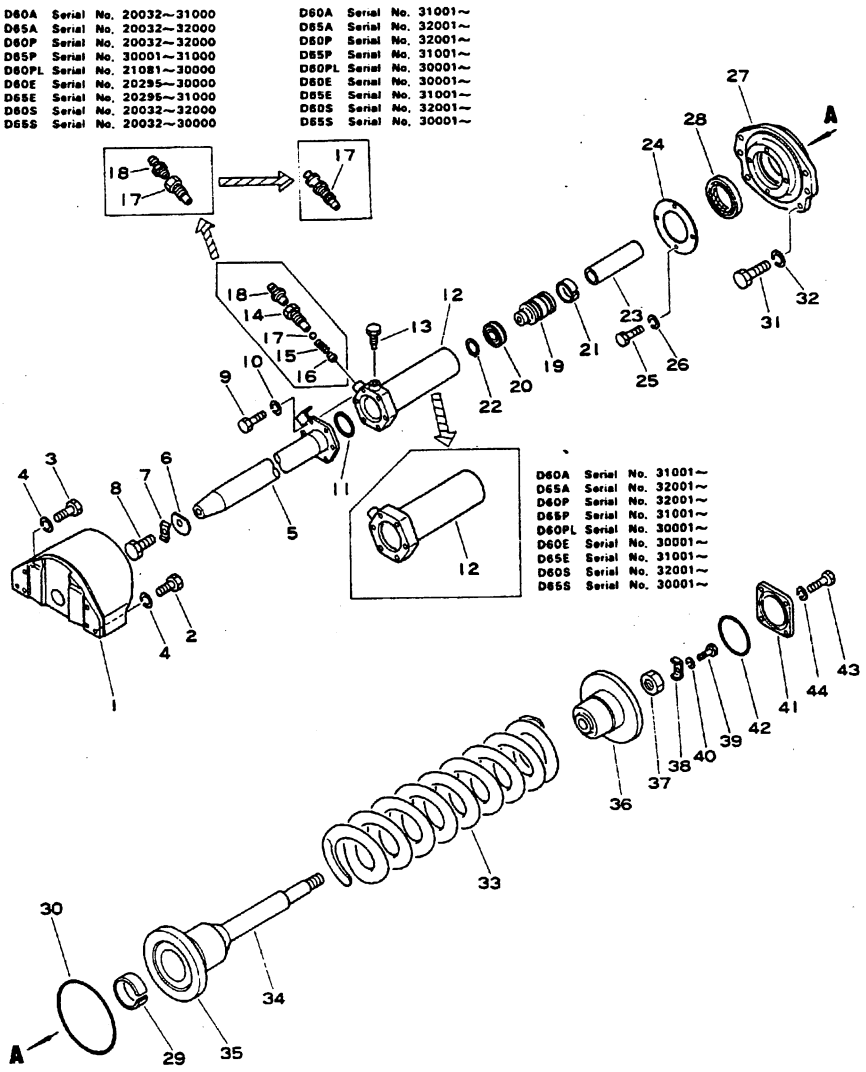

Fig & Index No.	Part No.	Description	Q'ty	Serial No.	Remarks
1411 - 1	141-30-34310	YOKE, front idler	2	S, P, LC, E 20006~	
	144-30-14311	YOKE, front idler, L.H	1	A 20006~	
	144-30-14321	YOKE, front idler, R.H	1	A 20006~	
2	01040-31655	BOLT	4	20006~22387	
	01010-31655	BOLT	4	22388~	
3	01040-31670	BOLT	8	20006~22387	
	01010-31670	BOLT	8	22388~	
4	01602-01648	WASHER, spring	12	20006~	
5	144-30-14241	ROD	2	A 20006~ •	□144-30-14250
	144-30-14250	ROD	2	AC • ~31000 AT • ~32000	
	144-30-14251	ROD	2	AC31001~ AT32001~	
	144-813-4251	ROD	2	PC20006~28072 LC21081~ •	□144-813-4260
	144-813-4510	ROD	2	PC28073 • PT30001~ •	□144-813-4520
	144-813-4520	ROD	2	PC • ~32000 PT • ~31000	
	144-813-4521	ROD	2	PC32001~ PT31001~	
	144-813-4260	ROD	2	LC • ~30000	
	144-813-4261	ROD	2	LC30001~	
	141-30-34240	ROD	2	E, S 20006~ •	□141-30-34280
	141-30-34280	ROD	2	EC • ~30000 ET • ~31000 SC • ~32000 ST • ~30000	
	141-30-34281	ROD	2	EC30001~ ET31001~ SC 32001~ ST 30001~	
6	141-30-14130	WASHER	2	20006~	
7	141-30-14140	PLATE, lock	2	20006~	
8	01040-31840	BOLT	2	20006~22387	
	01010-31840	BOLT	2	22388~	
9	01010-31235	BOLT	12	20006~	
10	01602-01236	WASHER, spring	12	20006~	
11	07000-15068	O-RING	2	20006~	
	141-30-00550	CYLINDER ASS'Y	2	20006~20031	

Fig. & Index No.	Part No.	Description	Q'ty	Serial No.	Remarks
	141-30-00551	CYLINDER ASS'Y	2	20032~22387	
	141-30-00552	CYLINDER ASS'Y	2	AC22388~28246 AT22388~28228 PC22388~28522 LC22388~28012 EC22388~28246 ET22388~28336 SC 22388~28804 ST 22388~28168	□ 141-30-00553
	141-30-00553	CYLINDER ASS'Y	2	AC28247~31000 AT28229~32000 PC28523~32000 PT30001~31000 LC28013~30000 EC28247~30000 ET28337~31000 SC 28805~32000 ST 28169~30000	
	141-30-00554	CYLINDER ASS'Y	2	AC31001~ AT32001~ PC32001~ PT31001~ LC30001~ EC30001~ ET31001~ SC 32001~ ST 30001~	
1411 -12	141-30-34210	. CYLINDER	1	AC20006~31000 AT20006~32000 PC20006~32000 PT30001~31000 LC21081~30000 EC20295~30000 ET20295~31000 SC 20006~32000 ST 20006~30000	
	141-30-34211	. CYLINDER	1	AC31001~ AT32001~ PC32001~ PT31001~ LC30001~ EC30001~ ET31001~ SC 32001~ ST 30001~	
13	141-30-34180	. PLUG, grease, outlet	1	20006~22387	
	125-30-14270	. PLUG, grease, outlet	1	AC22388~31000 AT22388~32000 PC22388~32000 PT30001~31000 LC22388~30000 EC22388~30000 ET22388~31000 SC 22388~32000 ST 22388~30000	
14	141-30-14381	. SEAT, grease fitting	1	20006~20031	□ 07959-00000
15	170-30-14180	. SPRING	1	20006~20031	□ 07959-00000

Fig. & Index No.	Part No.	Description	Q'ty	Serial No.	Remarks
1411 -16	141-30-14390	. PLUNGER	1	20006~20031	□ 07959-00000
17	04260-00635	. BALL, steel	1	20006~20031	□ 07959-00000
	07959-00000	. VALVE, lubricating	1	AC20032~31000 AT20032~32000 PC20032~32000 PT30001~31000 LC21081-30000 EC20295~30000 ET20295~31000 SC 20032~32000 ST 20032~30000	
	07959-20000	. VALVE, lubricating	1	AC31001~ AT32001~ PC32001~ PT31001~ LC30001~ EC30001~ ET31001~ SC 32001~ ST 30001~	
18	07020-00000	. FITTING, grease	1	AC20006~31000 AT20006~32000 PC20006~32000 PT31001~31000 LC21081~30000 EC20295~30000 ET20295~31000 SC 20006~32000 ST 20006~30000	
19	141-30-14180	. PISTON	1	AC20006~28246 AT20006~28228 PC20006~28522 LC20006~28012 EC20006~28246 ET20006~28336 SC 20006~28804 ST 20006~28168	■ 131-30-44140 07155-00720
	131-30-44140	. PISTON	1	AC28247~ AT28229~ PC28523~ PT30001~ LC28013~ EC28247~ ET28337~ SC 28805~ ST 28169~	
20	141-30-14190	. GASKET	1	20006~	
21	141-30-14210	. RING	2	AC20006~28246 AT20006~28228 PC20006~28522 LC20006~28012 EC20006~28246 ET20006~28336 SC 20006~28804 ST 20006~28168	

Fig & Index No.	Part No.	Description	Q'ty	Serial No.	Remarks
	07155-00720	. RING	2	AC28247~ AT28229~ PC28523~ PT30001~ LC28013~ EC28247~ ET28337~ SC28805~ ST28169~	
1411 -22	04064-04518	. RING, snap	1	20006~	
23	141-30-34160	COLLAR	1	20006~	
24	141-30-34270	COVER	2	20006~	
25	01010-31225	BOLT	8	20006~	
26	01602-01236	WASHER, spring	8	20006~	
27	141-30-34260	COVER	2	20006~20021	
	141-30-34261	COVER	2	20024~20031	
	141-30-34262	COVER	2	AC20032~28280 AT20032~28245 PC20032~28573 LC21081~28012 EC20095~28267 ET20095~28352 SC20032~28804 ST20032~28180	
	141-30-34263	COVER	2	AC28281~ AT28246~ PC28574~ PT30001~ LC28013~ EC28268~ ET28353~ SC28805~ ST28181~	
28	141-30-34230	SEAL, oil	2	20006~	
29	141-30-34140	BUSHING	2	20006~	
30	07000-05220	O-RING	2	20006~20031	
	07000-05230	O-RING	2	20032~	
31	01040-62055	BOLT	12	20006~22387	
	01010-62055	BOLT	12	22388~	
32	01602-02060	WASHER, spring	12	20006~	
33	141-30-34110	SPRING, recoil	2	20006~	
34	141-30-34120	BOLT	2	20006~	
35	141-30-34130	. PILOT	2	20006~	
36	141-30-34150	PILOT	2	20006~20021	

Fig & Index No.	Part No.	Description	Q'ty	Serial No.	Remarks
	141-30-34151	PILOT	2	20024~	
1411 -37	01503-33628	NUT	2	20006~22387	
	01580-03629	NUT	2	22388~	
38	141-30-34170	PLATE, lock	2	AC20006~23547 AT20006~24030 PC, LC 20006~23986 SC, ST 20006~23859	
	141-30-34171	PLATE, lock	2	AC23575~ AT24031~ PC, LC 23986~ PT30001~ SC, ST 23860~	
39	01010-31016	BOLT	2	20006~	
40	01602-01030	WASHER, spring	2	20006~	
41	141-30-14361	COVER	2	20006~	
42	07000-03115	O-RING	2	20006~	
43	01010-31230	BOLT	8	20006~	
44	01602-01236	WASHER, spring	8	20006~	

Fig. 1413 FRONT IDLER

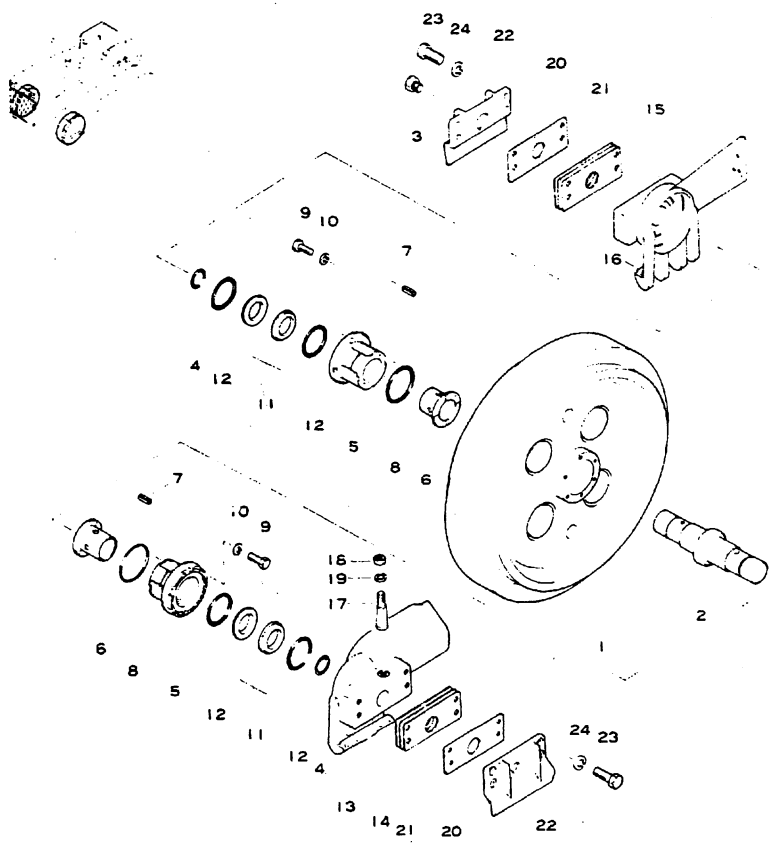

Fig. & Index No.	Part No.	Description	Q'ty	Serial No.	Remarks
1413 -	141-30-00530	IDLER ASS'Y	2	SC 20006~20031	□ 141-30-00536
	141-30-00531	IDLER ASS'Y	2	SC 20032~20053	□ 141-30-00536
	141-30-00532	IDLER ASS'Y	2	S 20054~22387	□ 141-30-00536
	141-30-00533	IDLER ASS'Y	2	S 22388~22722	□ 141-30-00536
	141-30-00534	IDLER ASS'Y	2	SC 22723~29188 ST 22723~ "	□ 141-30-00536
	141-30-00535	IDLER ASS'Y	2	SC 29189~30823 ST " ~28962	□ 141-30-00536
	141-30-00536	IDLER ASS'Y	2	SC 30824~ ST 28963~	

Fig. & Index No.	Part No.	Description	Q'ty	Serial No.	Remarks
	144-30-00030	IDLER ASS'Y	2	A, PC 20006~20031	□ 144-30-00036
	144-30-00031	IDLER ASS'Y	2	A, PC 20032~20053	□ 144-30-00036
	144-30-00032	IDLER ASS'Y	2	A, PC, LC 20054~22387	□ 144-30-00036
	144-30-00033	IDLER ASS'Y	2	AC22388~22867 AT22388~23089 PC, LC 22388~22824	□ 144-30-00036
	144-30-00034	IDLER ASS'Y	2	AC22868~28442 AT23090~28407 PC22825~28855 LC22825~ "	□ 144-30-00036
	144-30-00035	IDLER ASS'Y	2	AC28443~30109 AT28408~30049 PC28856~31002 PT30001~30093 LC " ~ " EC20295~29266 ET20295~30339	□ 144-30-00036
	144-30-00036	IDLER ASS'Y	2	AC30110~ AT30050~ PC31003~ PT30094~ LC " ~ EC29267~ ET30340~	
1413 - 1	141-30-33111	. IDLER	1	20006~	
2	141-30-33120	. SHAFT, idler	1	20006~20031	
	141-30-33121	. SHAFT, idler	1	20032~20053	
	141-30-33122	. SHAFT, idler	1	20054~	
3	07052-01624	. PLUG	1	20006~22387	
	07052-11624	. PLUG	1	22388~	
4	07000-03055	. O-RING	2	20006~	
	141-30-00540	. BUSHING ASS'Y	2	20006~22387	□ 141-30-00590 ■ 141-30-00543 141-30-33134 141-30-33144
	141-30-00541	. BUSHING ASS'Y	2	AC, EC 22388~22867 AT, ET 22388~23089 PC, LC 22388~22824 S 22388~22722	□ 141-30-00590 ■ 141-30-00543 141-30-33134 141-30-33144

Fig & Index No.	Part No.	Description	Q'ty	Serial No.	Remarks
	141-30-00542	. BUSHING ASS'Y	2	AC, EC 22868~28498 AT, ET 23090~28478 PC22825~28933 LC22825~28018 SC 22723~29281 ST 22723~28324	■141-30-00543 141-30-33134 141-30-33144
	141-30-00543	. BUSHING ASS'Y	1	AC, EC 28499~ AT, ET 28479~ PC28934~ PT30001~ LC28019~ SC 29282~ ST 28325~	
1413 - 5	141-30-36142	. . BUSHING	1	AC, EC 20006~22867 AT, ET 20006~23089 PC, LC 20006~22824 S 20006~22722	■141-30-36144 141-30-33134 141-30-33144
	141-30-36143	. . BUSHING	1	AC, EC 22868~28498 AT, ET 23090~28478 PC22825~28933 LC22825~28018 SC 22723~29281 ST 22723~28324	■141-30-36144 141-30-33134 141-30-33144
	141-30-36144	. . BUSHING	1	AC, EC 28499~ AT, ET 28479~ PC28934~ PT30001~ LC28019~ SC 29282~ ST 28325~	
6	141-30-36150	. . BUSHING	1	20006~	
7	04025-00512	. . PIN, roll	2	20006~22387	
	141-30-36310	. . PIN, roll	2	22388~	
8	07000-05105	. O-RING	2	20006~	
9	01010-31025	. . BOLT	12	20006~	
10	01602-01030	. WASHER, spring	12	20006~	
	100-27-00040	. SEAL RING ASS'Y	2	20006~20031	□141-30-00610

Fig & Index No.	Part No.	Description	Q'ty	Serial No.	Remarks
	141-30-00610	. SEAL RING ASS'Y	2	AC20032~30109 AT20032~30049 PC20032~31002 PT30001~30093 LC21081~28089 EC20295~29266 ET20295~30339 SC 20032~30823 ST 20032~28962	□141-30-00614
	141-30-00614	. SEAL RING ASS'Y	2	AC30110~ AT30050~ PC31003~ PT30094~ EC29267~ ET30340~ SC 30824~ ST 28963~	
1413 -11	100-27-11420	. . RING, seal	2	20006~20031	☆100-27-00040
	141-30-36280	. . RING, seal	2	AC20032~30109 AT20032~30049 PC20032~31002 PT30001~30093 LC21081~ • EC20295~29266 ET20295~30339 SC 20032~30823 ST 20032~28962	☆141-30-00610
	141-30-36282	. . RING, seal	2	AC30110~ AT30050~ PC31003~ PT30094~ EC29267~ ET30340~ SC 30824~ ST 28963~ LC • ~	☆141-30-00614
12	100-27-11430	. . O-RING	2	20006~20031	☆100-27-00040
	141-30-36290	. . O-RING	2	20032~	☆141-30-00610 ☆141-30-00614
13	141-30-33131	. BRACKET ASS'Y, L.H outer or R.H inner	1	AC, EC 20006~22867 AT, ET 20006~23089 PC, LC 20006~22824 S 20006~22722	■141-30-33134 141-30-33144 141-30-36144
	141-30-33132	. BRACKET ASS'Y, L.H outer or R.H inner	1	AC, EC 22868~23573 AT, ET 23090~24030 PC, LC 22825~23975 S 22723~23747	■141-30-33134 141-30-33144 141-30-36144

Fig & Index No.	Part No.	Description	Q'ty	Serial No.	Remarks
	141-30-33133	. BRACKET ASS'Y, L.H outer or R.H inner	1	AC, EC 23574~28442 AT, ET 24031~28407 PC23976~28855 LC23976~28855 SC23748~29188 ST23748~28314	■ 141-30-33134 141-30-33144 141-30-36144
	141-30-33134	. BRACKET ASS'Y, L.H outer or R.H inner	1	AC, EC 28443~ AT, ET 28408~ PC28856~ PT30001~ LC28856~ SC20189~ ST28315~	
1413 -14	141-30-33170	. . PLATE, guide	1	20006~	
15	141-30-33141	. BRACKET ASS'Y, L.H inner or R.H outer	1	AC, EC 20006~22824 AT, ET 20006~23089 PC, LC 20006~22824 S 20006~22722	■ 141-30-33144 141-30-33134 141-30-36144
	141-30-33142	. BRACKET ASS'Y, L.H inner or R.H outer	1	AC, EC 22868~23573 AT, ET 23090~24030 PC, LC 22825~23975 S 22723~23747	■ 141-30-33144 141-30-33134
	141-30-33143	. BRACKET ASS'Y, L.H inner to R.H outer	1	AC, EC 23574~28442 AT, ET 24031~28407 PC23976~28855 LC23976~28855 SC23748~29188 ST23748~28314	■ 141-30-33144 141-30-33134 141-30-36144
	141-30-33144	. BRACKET ASS'Y, L.H inner to R.H outer	1	AC, EC 28443~ AT, ET 28408~ PC28856~ PT30001~ LC28856~ SC29189~ ST28315~	
16	141-30-33170	. . PLATE, guide	1	20006~	
17	130-30-13170	. BOLT	2	20006~	
18	01500-31613	. NUT	2	20006~22387	
	01582-01613	. NUT	2	22388~	
19	01602-01648	. WASHER, spring	2	20006~	
20	141-30-33190	. SPACER	2	S 20006~	

Fig & Index No.	Part No.	Description	Q'ty	Serial No.	Remarks
1413 -21	141-30-33220	. SHIM, 1.0 mm	10 12	S 20006~ A, P, LC, E 20006~	
22	141-30-33181	. COVER	2	20006~22387	
	141-30-33182	. COVER	2	22388~	
23	01040-31650	. BOLT	8	20006~22387	
	01010-31650	. BOLT	8	22388~	
24	01602-01648	. WASHER, spring	8	20006~	

Fig. 1415 TRACK ROLLER

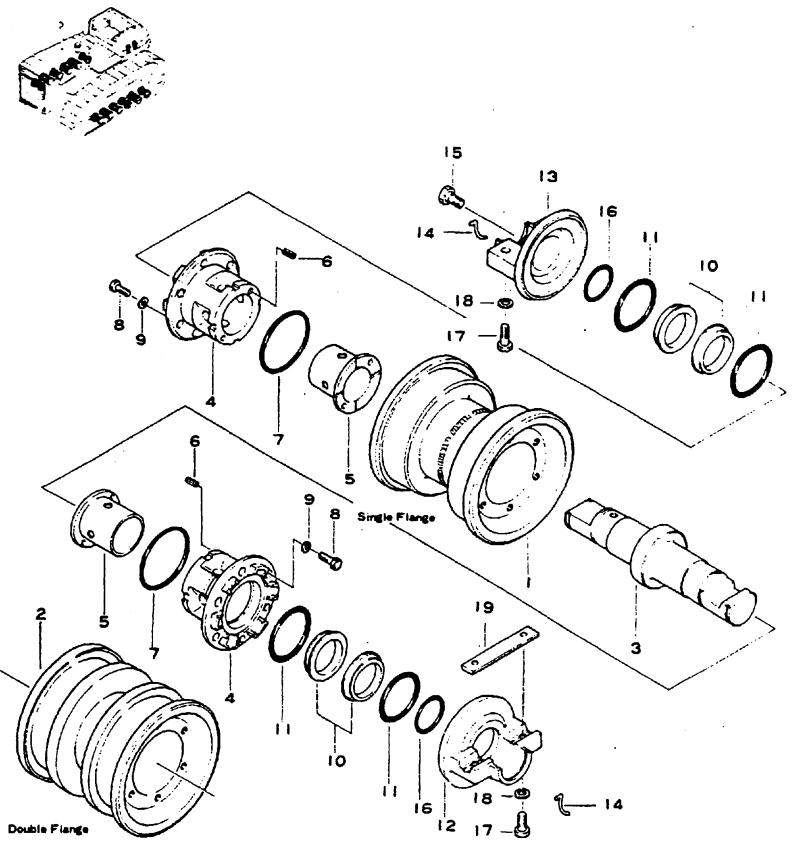

Fig & Index No.	Part No.	Description	Q'ty	Serial No.	Remarks
1415 -	141-30-00570	TRACK ROLLER ASS'Y, single flange	8	AC20006~22095 PC, LC 20006~22336 E 20295~22387 S 20006~22259	□141-30-00575
	141-30-00571	TRACK ROLLER ASS'Y, single flange	8	AC22096~22914, 22919 AT22096~23100 PC, LC 22337~23071, 23076 E 22388~ • S 22260~22962, 22972, 22978, 22981	□141-30-00575

Fig & Index No.	Part No.	Description	Q'ty	Serial No.	Remarks
1415 -	141-30-00572	TRACK ROLLER ASS'Y, single flange	8	AC22915~22918, 22920~25047 AT23101~25273 PC, LC 23072~23075, 23077~25238 E • ~ •• S 22963~22971, 22973~22977, 22979, 22980, 22982~25321	□141-30-00575
	141-30-00573	TRACK ROLLER ASS'Y, single flange	8	AC25048~28440 AT25274~28401 PC25239~28849 LC25239~28017 E •• ~ ••• SC 25322~29179 ST 25322~28311	□141-30-00575
	141-30-00574	TRACK ROLLER ASS'Y, single flange	8	AC28441~30109 AT28402-30049 PC28850~30715 PT30001~30799 LC28018~28089 EC ••• ~29266 ET ••• ~30339 SC 29180~30823 ST 28312~28962	□141-30-00575
	141-30-00575	TRACK ROLLER ASS'Y, single flange	8	AC30110~ AT30050~ PC30716~ PT30800~ LC28090~ EC29267~ ET30340~ SC 30824~ ST 28963~	
	141-30-00580	TRACK ROLLER ASS'Y, double flange	4 6	AC20006~22095 AT20006~22383 S 20006~22259 PC, LC 20006~22236 E 20295~22387	□141-30-00585
	141-30-00581	TRACK ROLLER ASS'Y, double flange	4 6	AC22096~22914, 22919~ AT22384~23100 S 22260~22962, 22972, 22978, 22981~ PC, LC 22337~23071, 23076 E 22388~ •	□141-30-00585

Fig & Index No.	Part No.	Description	Q'ty	Serial No.	Remarks
	141-30-00582	TRACK ROLLER ASS'Y, double flange	4	AC22915~22918, 22920~25047 AT23101~25273 S 22963~22971, 22973~22977, 22979, 22980, 22982~25321	141-30-00585
			6	PC, LC 23072~23075, 23077~25238 E • ~ ••	
	141-30-00583	TRACK ROLLER ASS'Y, double flange	4	AC25048~28440 AT25274~28401 SC 25322~29179 ST 25322~28311	□ 141-30-00585
			6	PC25239~28849 LC25239~28017 E •• ~ •••	
	141-30-00584	TRACK ROLLER ASS'Y, double flange	4	AC28441~30109 AT28402~30049 SC 29180~30823 ST 28312~28962	□ 141-30-00585
			6	PC28850~30715 PT30001~30799 LC28018~28089 EC ••• ~29266 ET ••• ~30339	
	141-30-00585	TRACK ROLLER ASS'Y, double flange	4	AC30110~ AT30050~ SC 30824~ ST 28963~	
			6	PC30716~ PT30800~ LC28090~ EC29267~ ET30340~	
1415 - 1	141-30-36111	. ROLLER, track, single flange	1	20006~	
2	141-30-36121	. ROLLER, track, double flange	1	20006~	
3	141-30-36130	. SHAFT, track roller	1	20006~	
	141-30-00590	. BUSHING ASS'Y	2	AC20006~22914, 22919 AT20006~23100 PC, LC 20006~23071, 23076 E 20295~ • S 20006~22962, 22972, 22978, 22981	■ 141-30-00592 141-30-36333 141-30-36343

Fig & Index No.	Part No.	Description	Q'ty	Serial No.	Remarks
	141-30-00591	. BUSHING ASS'Y	2	AC22915~22918, 22920~28498 AT23101~28478 PC, LC 23072~23075, 23077~28933 E • ~ ••• S 22963~22971, 22973~22977, 22979, 22980, 22982~28325	■ 141-30-00592 141-30-36333 141-30-31343
	141-30-00592	. BUSHING ASS'Y	2	AC28499~ AT28479~ P, LC 28934~ E ••• ~ ••• S 28326~	
1415 - 4	141-30-36142	. . BUSHING	1	AC20006~22914, 22919 AT20006~23100 PC, LC 20006~23071, 23076 E 20295~ • S 20006~22962, 22972, 22978, 22981	■ 141-30-36144 141-30-36333 141-30-36343
	141-30-36143	. . BUSHING	1	AC22915~22918, 22920~28498 AT23101~28478 PC, LC 23072~23075, 23077~28933 E • ~ ••• S 22963~22971, 22973~22977, 22979, 22980, 22982~28325	■ 141-30-36144 141-30-36333 141-30-36343
	141-30-36144	. . BUSHING	1	AC28499~ AT28479~ PC28934~ PT30001~ LC20006~ E ••• ~ S 28326~	
5	141-30-36150	. . BUSHING	1	20006~	
6	04025-00512	. . PIN, roll	2	20006~22387	
	141-30-36310	. . PIN, roll	2	22388~	
7	07000-05105	. O-RING	2	20006~	
8	01010-31025	. BOLT	12	20006~	
9	01602-01030	. WASHER, spring	12	20006~	
	100-27-00040	. SEAL RING ASS'Y	2	20006~20031	□ 141-30-00614

Fig & Index No.	Part No.	Description	Q'ty	Serial No.	Remarks
	141-30-00610	. SEAL RING ASS'Y	2	AC20032~30109 AT20032~30049 PC20032~30715 PT30001~30799 LC21081~28089 EC20295~29266 ET20295~30339 SC 20032~30823 ST 20032~28962	~141-30-00614
	141-30-00614	. SEAL RING ASS'Y	2	AC30110~ AT30050~ PC30716~ PT30800~ LC28090~ EC29267~ ET30340~ SC 30824~ ST 28963~	
1415 -10	100-27-11420	. . RING, seal	2	20006~20031	☆ 100-27-00040
	141-30-36280	. . RING, seal	2	AC20032~30109 AT20032~30049 PC20032~30715 PT30001~30799 LC21081~28089 EC20295~29266 ET20295~30339 SC 20032~30823 ST 20032~28962	☆ 141-30-00610
	141-30-36282	. . RING, seal	2	AC30110~ AT30050~ PC30716~ PT30800~ LC28090~ EC29267~ ET30340~ SC 30824~ ST 28963~	☆ 141-30-00614
11	100-27-11430	. . O-RING	2	20006~20031	☆ 100-27-00040
	141-30-36290	. . O-RING	2	20032~	☆ 141-30-00610 ☆ 141-30-00614
12	141-30-36160	. COLLAR, inner	1	AC20006~22095 AT20006~22383 PC, LC 20006~22336 E 20295~22387 S 20006~22259	
	141-30-36330	. COLLAR, inner	1	AC22096~22914, 22919 AT22384~23100 PC, LC 22337~23071, 23076 E 22388~ • S 22260~22962, 22972, 22978, 22981	

Fig & Index No.	Part No.	Description	Q'ty	Serial No.	Remarks
	141-30-36331	. COLLAR, inner	1	AC22915~22918, 22920~25047 AT23101~25273 PC, LC 23072~23075 23077~25238 E • ~ •• S 22963~22971, 22973~22977, 22979, 22980, 22982~25321	■ 141-30-36332 01010-31865
	141-30-36332	. COLLAR, inner	1	AC25048~28440 AT25274~28401 PC25239~28849 LC25239~28017 E •• ~ ••• SC 25322~29179 ST 25322~28311	■ 141-30-36333 141-30-36343 141-30-36144
	141-30-36333	. COLLAR, inner	1	AT28402~ PC28850~ PT30001~ LC28018~ E •••~ SC 29180~ ST 28312~	
1415 -13	141-30-36170	. COLLAR, outer	1	AC20006~22095 AT20006~22383 PC, LC 20006~22336 E 20295~22387 S 20006~22259	
	141-30-36340	. COLLAR, outer	1	AC22096~22914, 22919 AT22384~23100 PC, LC 22337~23071, 23076 E 22388~ • S 22260~22962, 22972, 22978, 22981	
	141-30-36341	. COLLAR, outer	1	AC22915~22918, 22920~25047 AT23101~25273 PC, LC 23072~23075, 23977~25238 E • ~ •• S 22963~22971, 22973~22977, 22979, 22980, 22982~25321	■ 141-30-36342 01010-51865
	141-30-36342	. COLLAR, outer	1	AC25048~28440 AT25274~28401 PC25239~28849 LC25239~28017 E •• ~ ••• SC 25322~29179 ST 25322~28311	■ 141-30-36343 141-30-36333 141-30-36144

Fig & Index No.	Part No.	Description	Q'ty	Serial No.	Remarks
	141-30-36343	. COLLAR, outer	1	AC28441~ AT28402~ PC28850~ PT30001~ LC28018~ E ***~ SC29180~ ST28312~	
1415 -14	141-30-36190	. RING	2	20006~	
15	07052-01624	. PLUG	1	20006~22387	
	07052-11624	. PLUG	1	22388~	
16	07000-03055	. O-RING	2	20006~	
17	01040-31860	BOLT	48	A,E,S 20006~22387	
			56	PC,LC 20006~22387	
	01010-31860	BOLT	48	A,E,S 22388~25047	
			56	PC,LC 22388~25047	
	01010-31865	BOLT	48	A,E,S 25048~	
			56	P,LC 25048~	
18	01602-01854	WASHER, spring	48	A,E,S 20006~	
			56	P,LC 20006~	
19	141-30-36180	KEY	12	A,E,S 20006~	
			14	P,LC 20006~	

Fig. 1417 CARRIER ROLLER

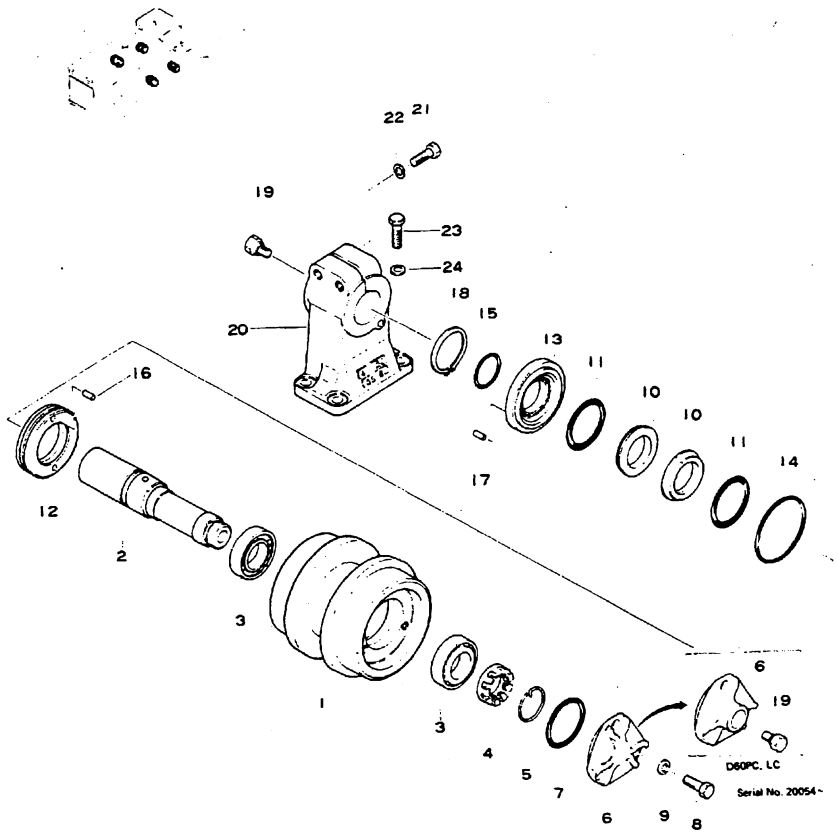

Fig & Index No.	Part No.	Description	Q'ty	Serial No.	Remarks
1417 -	141-30-00560	CARRIER ROLLER ASS'Y	4	20006~20053	□141-30-00564
	141-30-00561	CARRIER ROLLER ASS'Y	4	AC20054~22061 AT20054~22831 E 20295~ • SC, ST 20054~22655	□141-30-00564
	141-30-00562	CARRIER ROLLER ASS'Y	4	AC22602~29437 AT22832~28399 E • ~ •• SC 22656~29175 ST 22656~28310	□141-30-00564

Fig & Index No.	Part No.	Description	Q'ty	Serial No.	Remarks
	141-30-00563	CARRIER ROLLER ASS'Y	4	AC28438~30109 AT28400~30049 EC •• ~29266 ET •• ~30339 SC 29176~30823 ST 28311~28962	□141-30-00564
	141-30-00564	CARRIER ROLLER ASS'Y	4	AC30110~ AT30050~ EC29267~ ET30340~ SC 30824~ ST 28963~	
	144-813-0050	CARRIER ROLLER ASS'Y	4	PC, LC 20054~22795	□144-813-0053
	144-813-0051	CARRIER ROLLER ASS'Y	4	PC22796~28844 LC22796~28017	□144-813-0053
	144-813-0052	CARRIER ROLLER ASS'Y	4	PC28845~ PT30001~ LC28018~	□144-813-0053
	144-813-0053	CARRIER ROLLER ASS'Y	4	PC PT LC	
1417 - 1	141-30-35320	. ROLLER, carrier	1	20006~20053	
	141-30-35110	. ROLLER, carrier	1	20054~	
2	141-30-35120	. SHAFT, carrier roller	1	20006~	
3	06000-30210	. BEARING, roller	2	20006~24371	□06002-30210
	06002-30210	. BEARING, roller	2	24372~	
4	141-30-35140	. NUT	1	20006~	
5	141-30-35150	. RING	1	20006~	
6	141-30-35130	. COVER	1	A, E, S 20006~ PC20006~20053	
	144-813-5110	. COVER	1	P, LC 20054~	
7	07000-03085	. O-RING	1	20006~	
8	01010-31025	. BOLT	3	20006~	
9	01602-01030	. WASHER, spring	3	20006~	
	100-27-00040	. SEAL RING ASS'Y	1	20006~20031	□141-30-00614
	141-30-00610	. SEAL RING ASS'Y	1	AC20032~30109 AT20032~30049 PC20032~31002 PT30001~30093 LC21081~ • EC20295~29266 ET20295~30339 SC 20032~30823 ST 20032~28962	□141-30-00614

Fig & Index No.	Part No.	Description	Q'ty	Serial No.	Remarks
	141-30-00614	. SEAL RING ASS'Y	1	AC30110~ AT30050~ PC31003~ PT30094~ LC • ~ EC29267~ ET30340~ SC 30824~ ST 28963~	
1417 -10	100-27-11420	. . RING, seal	2	20006~20031	☆100-27-00040
	141-30-36280	. . RING, seal	2	AC20032~30109 AT20032~30049 PC20032~31002 PT30001~30093 LC21081~ • EC20295~29266 ET20295~30339 SC 20032~30823 ST 20032~28962	☆141-30-00610
	141-30-36282	. . RING, seal	2	AC30110~ AT30050~ PC31003~ PT30094~ LC • ~ EC29267~ ET30340~ SC 30824~ ST 28963~	☆141-30-00614
11	100-27-11430	. . O-RING	2	20006~20031	☆100-27-00040
	141-30-36290	. . O-RING	2	20032~	☆141-30-00610 ☆141-30-00614
12	141-30-35160	. SEAL	1	AC20006~22601 AT20006~22831 PC, LC 20006~22795 E 20295~ • S 20006~22655	■141-30-35161 141-30-35171
	141-30-35161	. SEAL	1	AC22606~28437 AT22832~28399 PC22796~28844 LC22796~28017 E • ~ •• SC 22656~29175 ST 22656~28310	■141-30-35162 141-30-35172
	141-30-35162	. SEAL	1	AC28438~ AT28400~ PC28845~ PT30001~ LC28018~ E •• ~ SC 29176~ ST 29311~	
13	141-30-35170	. COLLAR	1	AC20006~22601 AT20006~22831 PC20006~22795 E 20295~ • SC, ST 20006~22655	■141-30-35171 141-30-35161

Fig & Index No.	Part No.	Description	Q'ty	Serial No.	Remarks
	141-30-35171	. COLLAR	1	AC22606~28437 AT22832~28399 PC22796~28844 LC22796~28017 E • ~ •• SC 22656~29175 ST 22656~28310	■141-30-35172 141-30-35162
	141-30-35172	. COLLAR	1	AC28438~ AT28400~ PC28845~ PT30001~ LC28018~ E ••• ~ SC 29176~ ST 28311~	
1417 -14	07000-03120	. O-RING	1	20006~	
15	07000-03055	. O-RING	1	20006~	
16	04020-00616	. PIN, dowel	2	20006~	
17	04020-00616	. PIN, dowel	1	20006~	
18	04064-06020	. RING, snap	1	20006~	
19	07052-01624	. PLUG	1 1 2	A, E, S 20006~22387 P 20006~20053 PC, LC 20054~22388	
	07052-11624	. PLUG	1 2	A, E, S 22388~ P, LC 22388~	
20	141-30-35181	SUPPORT, carrier roller	4	20006~	
21	01040-31885	BOLT	8	20006~22387	
	01010-31885	BOLT	8	22388~	
22	01602-01854	WASHER, spring	8	20006~	
23	01040-31645	BOLT	16	20006~22387	
	01010-31645	BOLT	16	22388~	
24	01602-01648	WASHER, spring	16	20006~	

Fig. 1421 TRACK SHOE (D60A, D65A Serial No. 20006~)

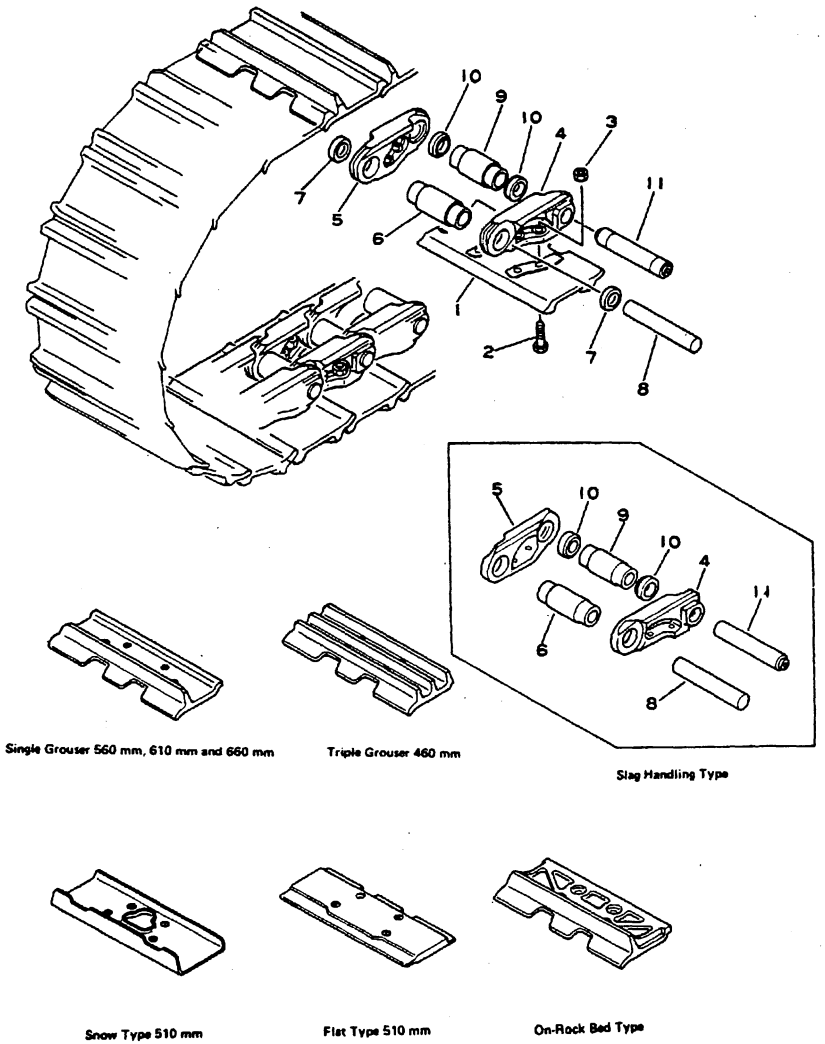

Fig. & Index No.	Part No.	Description	Q'ty	Serial No.	Remarks
		STANDARD TRACK SHOE			
		SINGLE GROUSER 510 mm WIDE			
	144-32-01000	. TRACK SHOE ASS'Y	1	20006~25154	□ 144-32-01006
	144-32-01003	. TRACK SHOE ASS'Y	1	C 25155~25460 T 25155~26152	□ 144-32-01006
	144-32-01004	. TRACK SHOE ASS'Y	1	C 25461~26152 T 26153~26246	□ 144-32-01006
	144-32-01005	. TRACK SHOE ASS'Y	1	C 26153~31000 T 26247~32000	□ 144-32-01006
	144-32-01006	. TRACK SHOE ASS'Y	1	C 31001~ T 32001~	
1421 - 1	144-32-11111	. SHOE	74	20006~	
2	144-32-11210	. BOLT	296	20006~25154	k 144-32-05000
	144-32-11211	. BOLT	296	25155~	k 144-32-05001
3	150-32-21331	. NUT	296	20006~25154	k 144-32-05000
	154-32-21330	. NUT	296	25155~	k 144-32-05001
	144-32-00010	. LINK ASS'Y	1	20006~25154	■ 144-32-00017 144-32-11211 154-32-21330
	144-32-00012	. LINK ASS'Y	1	C 25155~25460 T 25155~26152	□ 144-32-00017
	144-32-00013	. LINK ASS'Y	1	C 25461~26152 T 26153~26246	□ 144-32-00017
	144-32-00015	. LINK ASS'Y	1	C 26153~31000 T 26247~32000	□ 144-32-00017
	144-32-00017	. LINK ASS'Y	1	C 31001~ T 32001~	
4	144-32-11120	. . LINK, L.H	74	20006~25154	
	144-32-11121	. . LINK, L.H	74	C 25155~31000 T 25155~32000	□ 144-32-11122
	144-32-11122	. . LINK, L.H	74	C 31001~ T 32001~	
5	144-32-11130	. . LINK, R.H	74	20006~25154	
	144-32-11131	. . LINK, R.H	74	C 25155~31000 T 25155~32000	□ 144-32-11132
	144-32-11132	. . LINK, R.H	74	C 31001~ T 32001~	
6	144-32-11140	. . BUSHING, regular	70	C 20006~25460 T 20006~26152	□ 144-32-11142
	144-32-11142	. . BUSHING, regular	70	C 25461~ T 26153~	
7	150-32-11250	. . SEAL, regular, E-type	140	C 20006~26152 T 20006~26246	□ 144-32-11240
	144-32-11240	. . SEAL, regular, W-type	140	C 26153~ T 26247~	
8	144-32-11150	. . PIN, regular	70	C 20006~25460 T 20006~26152	□ 144-32-11151
	144-32-11151	. . PIN, regular	70	C 25461~ T 26153~	

Fig & Index No.	Part No.	Description	Q'ty	Serial No.	Remarks
1421 - 9	144-32-11170	. . BUSHING, master	4	C 20006-25460 T 20006-26152	144-32-11171
	144-32-11171	. . BUSHING, master	4	C 25461- T 26153-	
10	150-32-11260	. . SEAL, master, E-type	8	20006-	
11	144-32-11190	. . PIN, master	4	C 20006-25460 T 20006-26152	144-32-11192
	144-32-11192	. . PIN, master	4	C 25461- T 26153-	
	Select as required, not necessary to use all of the oversize parts.				
		OVERSIZE 0.10 mm			
	144-98-09110	BUSHING, regular	AR	C 20006-25460 T 20006-26152	144-98-09111
	144-98-09111	BUSHING, regular	AR	C 25461- T 26153-	
8	144-98-09010	PIN, regular	AR	C 20006-25460 T 20006-26152	144-98-09011
	144-98-09011	PIN, regular	AR	C 25461- T 26153-	
9	144-98-09140	BUSHING, master	AR	C 20006-25460 T 20006-26152	144-98-09141
	144-98-09141	BUSHING, master	AR	C 25461- T 26153-	
11	144-98-09040	PIN, master	AR	C 20006-25460 T 20006-26152	144-98-09041
	144-98-09041	PIN, master	AR	C 25461- T 26153-	
		OVERSIZE 0.15 mm			
6	144-98-09120	BUSHING, regular	AR	C 20006-25460 T 20006-26152	144-98-09121
	144-98-09121	BUSHING, regular	AR	C 25461- T 26153-	
8	144-98-09020	PIN, regular	AR	C 20006-25460 T 20006-26152	144-98-09021
	144-98-09021	PIN, regular	AR	C 25461- T 26153-	
9	144-98-09050	BUSHING, master	AR	C 20006-25460 T 20006-26152	144-98-09151
	144-98-09151	BUSHING, master	AR	C 25461- T 26153-	
11	144-98-09150	PIN, master	AR	C 20006-25460 T 20006-26152	144-98-09051

Fig & Index No.	Part No.	Description	Q'ty	Serial No.	Remarks
1421 -11	144-98-09051	PIN, master	AR	C 25461- T 26153-	
		OVERSIZE 0.18 mm			
6	144-98-09130	BUSHING, regular	AR	C 20006-25460 T 20006-26152	144-98-09131
	144-98-09131	BUSHING, regular	AR	C 25461- T 26153-	
8	144-98-09030	PIN, regular	AR	C 20006-25460 T 20006-26152	144-98-03031
	144-98-09031	PIN, regular	AR	C 25461- T 26153-	
9	144-98-09160	BUSHING, master	AR	C 20006-25460 T 20006-26152	144-98-09161
	144-98-09161	BUSHING, master	AR	C 25461- T 26153-	
11	144-98-09060	PIN, master	AR	C 20006-25460 T 20006-26152	144-98-09061
	144-98-09061	PIN, master	AR	C 25461- T 26153-	

Fig & Index No.	Part No.	Description	Q'ty	Serial No.	Remarks
		OPTIONAL TRACK SHOE			
		SINGLE GROUSER 560 mm WIDE			
	144-32-02000	TRACK SHOE ASS'Y	1	20006~25154	☐ 144-32-02005
	144-32-02002	TRACK SHOE ASS'Y	1	C 25155~25460 T 25155~26152	☐ 144-32-02005
	144-32-02003	TRACK SHOE ASS'Y	1	C 25461~26152 T 26153~26246	☐ 144-32-02005
	144-32-02004	TRACK SHOE ASS'Y	1	C 26153~31000 T 26247~32000	☐ 144-32-02005
	144-32-02005	TRACK SHOE ASS'Y	1	C 31001~ T 32001~	
1421 - 1	144-32-11340	. SHOE	74	20006~	
	See "STANDARD TRACK SHOE" for Index No.2 to 11, including oversize parts.				
		SINGLE GROUSER 610 mm WIDE			
	144-32-03000	TRACK SHOE ASS'Y	1	20006~25154	☐ 144-32-03005
	144-32-03002	TRACK SHOE ASS'Y	1	C 25155~25460 T 25155~26152	☐ 144-32-03005
	144-32-03003	TRACK SHOE ASS'Y	1	C 25461~26152 T 26153~26246	☐ 144-32-03005
	144-32-03004	TRACK SHOE ASS'Y	1	C 26153~31000 T 26247~32000	☐ 144-32-03005
	144-32-03005	TRACK SHOE ASS'Y	1	C 31001~ T 32001~	
1	144-32-11350	. SHOE	74	20006~	
	See "STANDARD TRACK SHOE" for Index No.2 to 11, including oversize parts.				
		SINGLE GROUSER 660 mm WIDE			
	144-32-04000	TRACK SHOE ASS'Y	1	20006~25154	☐ 144-32-04005
	144-32-04002	TRACK SHOE ASS'Y	1	C 25155~25460 T 25155~26152	☐ 144-32-04005
	144-32-04003	TRACK SHOE ASS'Y	1	C 25461~26152 T 26153~26246	☐ 144-32-04005
	144-32-04004	TRACK SHOE ASS'Y	1	C 26153~31000 T 26247~32000	☐ 144-32-04005
	144-32-04005	TRACK SHOE ASS'Y	1	C 31001~ T 32001~	
1	144-32-11360	. SHOE	74	20006~	
	See "STANDARD TRACK SHOE" for Index No.2 to 11, including oversize parts.				

Fig & Index No.	Part No.	Description	Q'ty	Serial No.	Remarks
		SNOW TYPE 510 mm WIDE			
	144-32-01100	TRACK SHOE ASS'Y	1	20006~25154	☐ 144-32-01107
	144-32-01103	TRACK SHOE ASS'Y	1	C 25155~25460 T 25155~26152	☐ 144-32-01107
	144-32-01104	TRACK SHOE ASS'Y	1	C 25461~26152 T 26153~26246	☐ 144-32-01107
	144-32-01105	TRACK SHOE ASS'Y	1	C 26153~31000 T 26247~32000	☐ 144-32-01107
	144-32-01106	TRACK SHOE ASS'Y	1	C 31001~ • T 32001~ •	☐ 144-32-01107
	144-32-01107	TRACK SHOE ASS'Y	1	C • ~ T • ~	
1421 - 1	144-32-11310	. SHOE	74	20006~ •	☐ 144-32-11311
	144-32-11311	. SHOE	74	• ~	
	See "STANDARD TRACK SHOE" for Index No.2 to 11, including oversize parts.				
		TRIPLE GROUSER 460 mm WIDE			
	144-32-01500	TRACK SHOE ASS'Y	1	22388~25154	☐ 144-32-01504
	144-32-01501	TRACK SHOE ASS'Y	1	C 25155~25460 T 25155~26152	☐ 144-32-01504
	144-32-01502	TRACK SHOE ASS'Y	1	C 25461~26152 T 26153~26246	☐ 144-32-01504
	144-32-01503	TRACK SHOE ASS'Y	1	C 26153~31000 T 26247~32000	☐ 144-32-01504
	144-32-01504	TRACK SHOE ASS'Y	1	C 31001~ T 32001~	
1	141-32-11291	. SHOE	74	22388~	
	See "STANDARD TRACK SHOE" for Index No.2 to 11, including oversize parts.				
		TRIPLE GROUSER 510 mm WIDE			
	144-32-04100	TRACK SHOE ASS'Y	1	C 20006~31000 T 20006~32000	☐ 144-32-04101
	144-32-04101	TRACK SHOE ASS'Y	1	C 31001~ T 32001~	
1	144-32-11450	. SHOE	74	20006~	
	See "STANDARD TRACK SHOE" for Index No.2 to 11, including oversize parts.				
		FLAT TYPE 510 mm WIDE			
	144-32-01400	TRACK SHOE ASS'Y	1	20006~25154	☐ 144-32-01405

Fig & Index No.	Part No.	Description	Q'ty	Serial No.	Remarks
	144-32-01402	TRACK SHOE ASS'Y	1	C 25155~25460 T 25155~26152	□ 144-32-01405
	144-32-01403	TRACK SHOE ASS'Y	1	C 25461~26152 T 26154~26246	□ 144-32-01405
	144-32-01404	TRACK SHOE ASS'Y	1	C 26153~31000 T 26247~32000	□ 144-32-01405
	144-32-01405	TRACK SHOE ASS'Y	1	C 31001~ T 32001~	
1421 - 1	141-32-11281	. SHOE	74	20006~	
2	150-32-21321	. BOLT	296	20006~25154	k 150-32-05001
	154-32-21320	. BOLT	296	25155~	k 154-32-05000
	See "STANDARD TRACK SHOE" for Index No.3 to 11, including oversize parts.				
		SINGLE GROUSER HEAVY DUTY 510 mm WIDE			
	144-32-04200	TRACK SHOE ASS'Y	1	C 22388~25460 T 22388~26152	□ 144-32-04204
	144-32-04201	TRACK SHOE ASS'Y	1	C 25461~26152 T 26153~26246	□ 144-32-04204
	144-32-04202	TRACK SHOE ASS'Y	1	C 26153~31000 T 26247~32000	□ 144-32-04204
	144-32-04203	TRACK SHOE ASS'Y	1	C 31001~ • T 32001~ •	□ 144-32-04204
	144-32-04204	TRACK SHOE ASS'Y	1	C • ~ T • ~	
1	144-32-11440	. SHOE	74	22388~ •	
	144-32-11441	. SHOE	74	• ~	
2	154-32-21320	. BOLT	296	C 22388~25460 T 22388~26152	k 154-32-05000
	144-32-11211	. BOLT	296	C 25461~ T 26153~	k 144-32-05001
	See "STANDARD TRACK SHOE" for Index No.3 to 11, including oversize parts.				
		ON-ROCKBED TYPE 510 mm WIDE			
	144-32-01300	TRACK SHOE ASS'Y	1	20006~25154	□ 144-32-01804
	144-32-01801	TRACK SHOE ASS'Y, long bushing type	1	C 25155~25460 T 25155~26152	□ 144-32-01804
	144-32-01802	TRACK SHOE ASS'Y, long bushing type	1	C 25461~26152 T 26143~26246	□ 144-32-01804
	144-32-01803	TRACK SHOE ASS'Y	1	C 26153~31000 T 26247~32000	□ 144-32-01804
	144-32-01804	TRACK SHOE ASS'Y	1	C 31001~ T 32001~	

Fig & Index No.	Part No.	Description	Q'ty	Serial No.	Remarks
1421 - 1	144-32-11320	. SHOE	74	20006~	
2	144-32-11210	. BOLT	296	20006~25154	k 144-32-05000
	144-32-11211	. BOLT	296	25155~	k 144-32-05001
3	150-32-21331	. NUT	296	20006~25154	k 144-32-05000
	154-32-21330	. NUT	296	25155~	k 144-32-05001
	144-32-00010	. LINK ASS'Y	1	20006~25154	■ 144-32-00017 144-32-11211 154-32-21330
	144-32-00021	. LINK ASS'Y	1	C 25155~25460 T 25155~26152	□ 144-32-00017
	144-32-00022	. LINK ASS'Y	1	C 25461~26152 T 26153~26246	□ 144-32-00017
	144-32-00023	. LINK ASS'Y	1	C 26153~31000 T 26247~32000	
	144-32-00017	. LINK ASS'Y	1	C 31001~ T 32001~	
4	144-32-11120	. . LINK, L.H	74	20006~25154	
	144-32-11121	. . LINK, L.H	74	C 25155~31000 T 25155~32000	□ 144-32-11122
	144-32-11122	. . LINK, L.H	74	C 31001~ T 32001~	
5	144-32-11130	. . LINK, R.H	74	20006~25154	
	144-32-11131	. . LINK, R.H	74	C 25155~31000 T 25155~32000	□ 144-32-11132
	144-32-11132	. . LINK, R.H	74	C 31001~ T 32001~	
6	144-32-11140	. . BUSHING, regular	70	20006~25154	□ 144-32-11142
	144-32-11141	. . BUSHING, regular, long type	70	C 25155~25460 T 25155~26152	□ 144-32-11143
	144-32-11143	. . BUSHING, regular, long type	70	C 25461~26152 T 26153~26246	
	144-32-11142	. . BUSHING, regular	70	C 26153~ T 26247~	
7	150-32-11250	. . SEAL, regular, E-type	140	20006~25154	□ 144-32-11240
	144-32-11240	. . SEAL, dust, regular, W-type	140	C 26153~ T 26247~	
8	144-32-11150	. . PIN, regular	70	C 20006~25460 T 20006~26152	□ 144-32-11151
	144-32-11151	. . PIN, regular	70	C 25461~ T 26153~	
9	144-32-11170	. . BUSHING, master	4	C 20006~25460 T 20006~26152	□ 144-32-11171

Fig & Index No.	Part No.	Description	Q'ty	Serial No.	Remarks
1421 - 9	144-32-11171	. . BUSHING, master	4	C 25461~ T 26153~	
10	150-32-11260	. . SEAL, master	8	20006~25154 C 31001~ T 32001~	
	144-32-11180	. . SPACER	8	C 25155~31000 T 25155~32000	
11	144-32-11190	. . PIN, master	4	C 20006~25460 T 20006~26152	□ 144-32-11192
	144-32-11192	. . PIN, master	4	C 25461~ T 26153~	
		OVERSIZE PARTS			
		See "STANDARD TRACK SHOE" oversize parts.			
		SLAG HANDLING TYPE (For High Temperature) 510 mm WIDE			
	144-32-01700	TRACK SHOE ASS'Y, long bushing type	1	22388~25154	□ 144-32-01703
	144-32-01701	TRACK SHOE ASS'Y, long bushing type	1	C 25155~25460 T 25155~26152	□ 144-32-01703
	144-32-01702	TRACK SHOE ASS'Y, long bushing type	1	C 25461~31000 T 26153~32000	□ 144-32-01703
	144-32-01703	TRACK SHOE ASS'Y, long bushing type	1	C 31001~ T 32001~	
1	144-32-11370	. SHOE	74	22388~	
2	144-32-11211	. BOLT	296	22388~	k 144-32-05001
3	154-32-21330	. NUT	296	22388~	k 144-32-05001
	144-32-00020	. LINK ASS'Y	1	22388~25154	□ 144-32-00024
	144-32-00021	. LINK ASS'Y	1	C 25155~25460 T 25155~26152	□ 144-32-00024
	144-32-00022	. LINK ASS'Y	1	C 25461~26152 T 26153~26246	□ 144-32-00024
	144-32-00023	. LINK ASS'Y	1	C 26153~31000 T 26247~32000	□ 144-32-00024
	144-32-00024	. LINK ASS'Y	1	C 31001~ T 32001~	
4	144-32-11120	. . LINK, L.H	74	22388~25154	
	144-32-11121	. . LINK, L.H	74	C 25155~31000 T 25155~32000	□ 144-32-00024
	144-32-11122	. . LINK, L.H	74	C 31001~ T 32001~	

Fig & Index No.	Part No.	Description	Q'ty	Serial No.	Remarks
1421 - 5	144-32-11130	. . LINK, R.H	74	22388~25154	
	144-32-11131	. . LINK, R.H	74	C 25155~31000 T 25155~32000	□ 144-32-00024
	144-32-11132	. . LINK, R.H	74	C 31001~ T 32001~	
6	144-32-11141	. . BUSHING, regular, long type	70	C 22388~25460 T 22388~26152	□ 144-32-11143
	144-32-11143	. . BUSHING, regular, long type	70	C 25461~ T 26153~	
8	144-32-11150	. . PIN, regular	70	C 22388~25460 T 22388~26152	□ 144-32-11151
	144-32-11151	. . PIN, regular	70	C 25461~ T 26153~	
9	144-32-11170	. . BUSHING, master	4	C 22388~25460 T 22388~26152	□ 144-32-11171
	144-32-11171	. . BUSHING, master	4	C 25461~ T 26153~	
10	144-32-11180	. . SPACER	8	22388~	
11	144-32-11190	. . PIN, master	4	C 22388~25460 T 22388~26152	□ 144-32-11192
	144-32-11192	. . PIN, master	4	C 25461~ T 26153~	

Fig & Index No.	Part No.	Description	Q'ty	Serial No.	Remarks
		OVERSIZE PARTS			
	Select as required, not necessary to use of the oversize parts.				
	See "STANDARD TRACK SHOE" for Index No.8 to 11. oversize pairs.				
		OVERSIZE 0.10 mm			
1421 - 6	144-98-09210	BUSHING, regular, long type	AR	C 22388-25460 T 22388-26152	☐ 144-98-09211
	144-98-09211	BUSHING, regular, long type	AR	C 25461- T 26153-	
		OVERSIZE 0.15 mm			
6	144-98-09220	BUSHING, regular, long type	AR	C 22388-25460 T 22388-26152	☐ 144-98-09221
	144-98-09221	BUSHING, regular, long type	AR	C 25461- T 26153-	
		OVERSIZE 0.18 mm			
6	144-98-09230	BUSHING, regular, long type	AR	C 22388-25460 T 22388-26152	☐ 144-98-09231
	144-98-09231	BUSHING, regular, long type	AR	C 25461- T 26153-	

Fig. 1422 TRACK SHOE (D60P,PL,D65P)

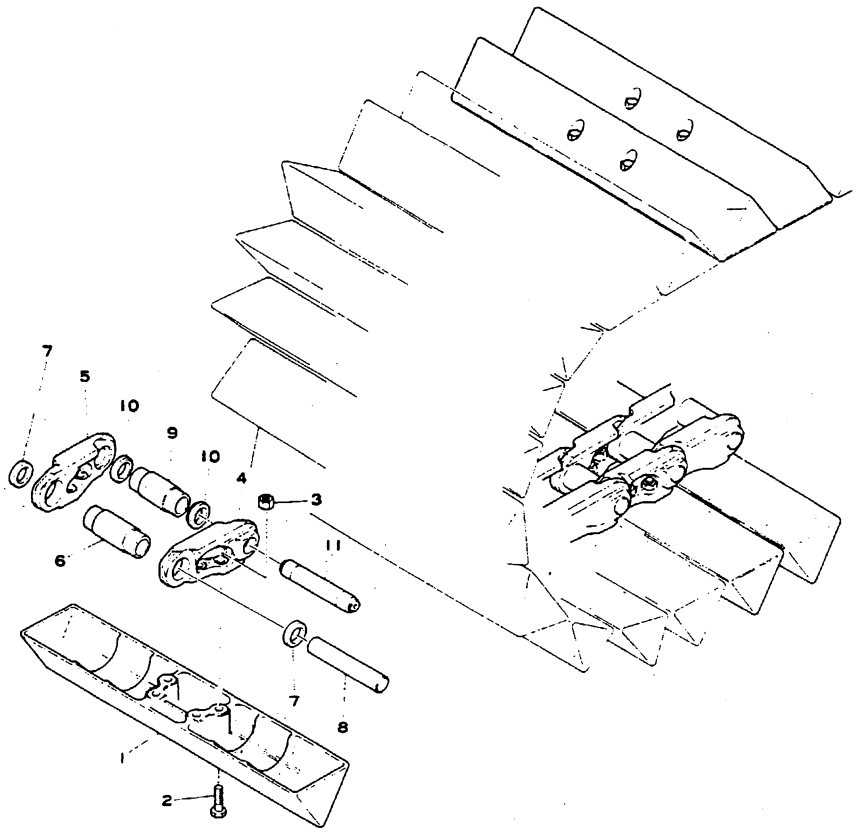

Fig. & Index No.	Part No.	Description	Q'ty	Serial No.	Remarks
		D60P, D65P STANDARD TRACK SHOE SWAMP TYPE 950 mm WIDE			
	144-820-0113	TRACK SHOE ASS'Y	1	P	
1422 -1	144-820-7115	. SHOE	88		
2	154-32-11210	. BOLT (kit 154-32-06000)	352		for users only
3	154-32-21330	. NUT (kit 154-32-06000)	352		for users only
	144-820-0023	. LINK ASS'Y	1		
4	144-32-11122	. . LINK, L.H	88		
5	144-32-11132	. . LINK, R.H	88		
6	144-820-7140	. . BUSHING, regular	84		
7	144-32-11240	. . SEAL, dust, W-type	168		
8	144-32-11151	. . PIN, regular	84		
9	144-820-7170	. . BUSHING, master	4		
10	150-32-11260	. . SEAL, dust, E-type	8		
11	144-32-11192	. . PIN, master	4		
2, 3	154-32-06000	TRACK SHOE SERVICE KIT One kit include 30 set of BOLT and NUT. One shoe ass'y has 352 set of BOLT and NUT.	12		for dealers and users.
		D60PL STANDARD TRACK SHOE SUPER SWAMP TYPE 1200 mm WIDE			
	144-870-0105	TRACK SHOE ASS'Y	1	L	
1	144-870-1110	. SHOE	84		
2	154-32-11210	. BOLT (kit 154-32-06000)	336		for users only
3	154-32-21330	. NUT (kit 154-32-06000)	336		for users only
	144-820-0023	. LINK ASS'Y	1		
4	144-32-11122	. . LINK, L.H	84		
5	144-32-11132	. . LINK, R.H	84		
6	144-820-7140	. . BUSHING, regular	80		
7	144-32-11240	. . SEAL, dust, W-type	160		
8	144-32-11151	. . PIN, regular	80		
9	144-820-7170	. . BUSHING, master	4		
10	150-32-11260	. . SEAL, dust, E-type	8		
11	144-32-11192	. . PIN, master	4		
2, 3	154-32-06000	TRACK SHOE SERVICE KIT One kit include 30 set of BOLT and NUT. One shoe ass'y has 352 set of BOLT and NUT.	12		for dealers and users.

Fig & Index No.	Part No.	Description	Q'ty	Serial No.	Remarks
		OVERSIZE PARTS			
	Select as required, not necessary to use all of the oversize parts.				
		OVERSIZE 0.10 mm			
1422 - 6	144-98-09112	BUSHING, regular	AR		
8	144-09-09011	PIN, regular	AR		
9	144-98-09142	BUSHING, master	AR		
11	144-98-09041	PIN, master	AR		
		OVERSIZE 0.15 mm			
6	144-98-09122	BUSHING, regular	AR		
8	144-98-09021	PIN, regular	AR		
9	144-98-09152	BUSHING, master	AR		
11	144-98-09051	PIN, master	AR		
		OVERSIZE 0.18 mm			
6	144-98-09132	BUSHING, regular	AR		
8	144-98-09031	PIN, regular	AR		
9	144-98-09162	BUSHING, master	AR		
11	144-98-09061	PIN, master	AR		
	D60, D65P OPTIONAL TRACK SHOE SINGLE GROUSER 950 mm WIDE				
	14G-32-01001	TRACK SHOE ASS'Y	1	P	
1	14G-32-11110	. SHOE	88		} for users only
2	144-32-11211	. BOLT (kit 144-32-05001)	352		
3	154-32-21330	. NUT (kit 144-32-05001)	352		
	Index No. 4~11 and oversize parts are shown in D60P, D65P STANDARD TRACK SHOE.				
	144-32-05001	TRACK SHOE SERVICE KIT One kit include 30 set of BOLT and NUT. One shoe ass'y has 352 set of BOLT and NUT.	12		} for dealers and users

Fig. 1423 TRACK SHOE (D60E, D65E Serial No. 20295~)

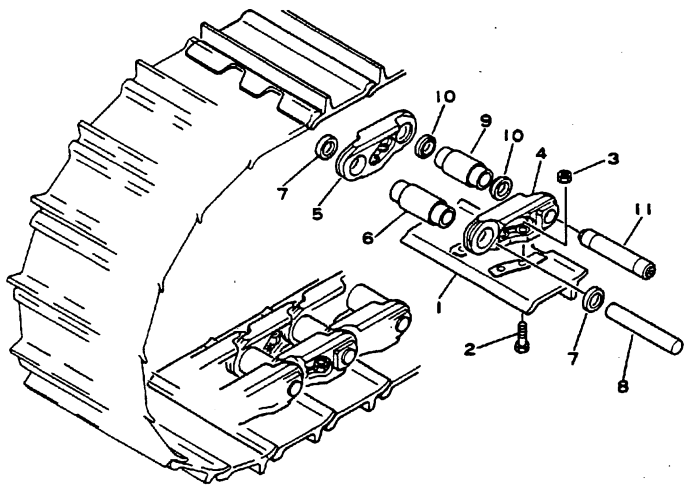

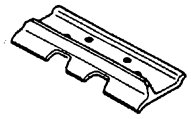

Single Grouser 560 mm, 610 mm and 660 mm

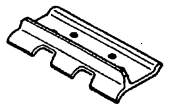

Single Grouser Heavy Duty 510 mm

Fig. & Index No.	Part No.	Description	Q'ty	Serial No.	Remarks
		STANDARD TRACK SHOE			
		SINGLE GROUSER 510 mm WIDE			
	144-32-02600	TRACK SHOE ASS'Y	1	C 20295~ • T 20295~ •	□ 144-32-02604
	144-32-02601	TRACK SHOE ASS'Y	1	C • ~ •• T • ~ ••	□ 144-32-02604
	144-32-02602	TRACK SHOE ASS'Y	1	C •• ~ ••• T •• ~ •••	□ 144-32-02604
	144-32-02603	TRACK SHOE ASS'Y	1	C ••• ~29400 T ••• ~30489	□ 144-32-02604
	144-32-02604	TRACK SHOE ASS'Y	1	C 29401~ T 30490~	
1423 - 1	144-32-11111	. SHOE, track, single	78	C 20295~ T 20295~	
2	144-32-11211	. BOLT, shoe	312	C 20295~ T 20295~	k 144-32-05001
3	154-32-21330	. NUT, shoe	312	C 20295~ T 20295~	k 144-32-05001
	141-32-00040	. LINK ASS'Y	1	C 20295~ • T 20295~ •	□ 141-32-00044
	141-32-00041	. LINK ASS'Y	1	C • ~ •• T • ~ ••	□ 141-32-00044
	141-32-00042	. LINK ASS'Y	1	C •• ~ ••• T •• ~ •••	□ 141-32-00044
	141-32-00043	. LINK ASS'Y	1	C ••• ~29400 T ••• ~30489	□ 141-32-00044
	141-32-00044	. LINK ASS'Y	1	C 29401~ T 30490~	
4	144-32-11120	. . LINK, L.H	78	C 20295~ ••• T 20295~ •••	
	144-32-11121	. . LINK, L.H	78	C ••• ~29400 T ••• ~30489	□ 144-32-11122
	144-32-11122	. . LINK, L.H	78	C 29401~ T 30490~	
5	144-32-11130	. . LINK, R.H	78	C 20295~ ••• T 20295~ •••	
	144-32-11131	. . LINK, R.H	78	C ••• ~29400 T ••• ~30489	□ 144-32-11132
	144-32-11132	. . LINK, R.H	78	C 29401~ T 30490~	
6	144-32-11140	. . BUSHING, regular	74	C 20295~ • T 20295~ •	
	144-32-11142	. . BUSHING, regular	74	C • ~ T • ~	
7	150-32-11250	. . SEAL, dust, E-type	148	C 20295~ •• T 20295~ ••	
	144-32-11240	. . SEAL, dust, W-type	148	C •• ~ T •• ~	

Fig & Index No.	Part No.	Description	Q'ty	Serial No.	Remarks
1423 - 8	144-32-11150	. . PIN, regular	74	C 20295~ • T 20295~ •	
	144-32-11151	. . PIN, regular	74	C • ~ T • ~	
9	144-32-11170	. . BUSHING, master	4	C 20295~ • T 20295~ •	
	144-32-11171	. . BUSHING, master	4	C • ~ T • ~	
10	150-32-11260	. . SEAL, dust, master	8	C 20295~ T 20295~	
11	144-32-11190	. . PIN, master	4	C 20295~ • T 20295~ •	
	144-32-11192	. . PIN, master	4	C • ~ T • ~	
		OPTIONAL TRACK SHOE			
		SINGLE GROUSER 560 mm WIDE			
	144-32-02100	TRACK SHOE ASS'Y	1	C 20295~25154 T 20295~25154	☐ 144-32-02104
	144-32-02101	TRACK SHOE ASS'Y	1	C 25155~ • T 25155~ •	☐ 144-32-02104
	144-32-02102	TRACK SHOE ASS'Y	1	C • ~ •• T • ~ ••	☐ 144-32-02104
	144-32-02103	TRACK SHOE ASS'Y	1	C •• ~29400 T •• ~30489	☐ 144-32-02104
	144-32-02104	TRACK SHOE ASS'Y	1	C 29401~ T 30490~	
1	144-32-11340	. SHOE, track, single	78	C 20295~ T 20295~	
	See "STANDARD TRACK SHOE" for Index No.2 to 11, including oversize parts.				
		SINGLE GROUSER 610 mm WIDE			
	144-32-02700	TRACK SHOE ASS'Y	1	C 20295~ • T 20295~ •	☐ 144-32-02704
	144-32-02701	TRACK SHOE ASS'Y	1	C • ~ •• T • ~ ••	☐ 144-32-02704
	144-32-02702	TRACK SHOE ASS'Y	1	C •• ~ ••• T •• ~ •••	☐ 144-32-02704
	144-32-02703	TRACK SHOE ASS'Y	1	C ••• ~29400 T ••• ~30489	☐ 144-32-02704
	144-32-02704	TRACK SHOE ASS'Y	1	C 29401~ T 30490~	
1	144-32-11350	. SHOE, track, single	78	C 20295~ T 20295~	
	See "STANDARD TRACK SHOE" for Index No.2 to 11, including oversize parts.				

Fig & Index No.	Part No.	Description	Q'ty	Serial No.	Remarks
		SINGLE GROUSER 660 mm WIDE			
	144-32-02800	TRACK SHOE ASS'Y	1	C 20295~ • T 20295~ •	☐ 144-32-02804
	144-32-02801	TRACK SHOE ASS'Y	1	C • ~ •• T • ~ ••	☐ 144-32-02804
	144-32-02802	TRACK SHOE ASS'Y	1	C •• ~ ••• T •• ~ •••	☐ 144-32-02804
	144-32-02803	TRACK SHOE ASS'Y	1	C ••• ~29400 T ••• ~30489	☐ 144-32-02804
	144-32-02804	TRACK SHOE ASS'Y	1	C 29401~ T 30490~	
1423 - 1	144-32-11360	. SHOE	78	C 20295~ T 20295~	
	See "STANDARD TRACK SHOE" for Index No.2 to 11, including oversize parts.				
		SINGLE GROUSER HEAVY DUTY 510 mm WIDE			
	144-32-02400	SHOE, track, single heavy duty	1	C 20295~ • T 20295~ •	☐ 144-32-02405
	144-32-02401	SHOE, track, single heavy duty	1	C • ~ •• T • ~ ••	☐ 144-32-02405
	144-32-02402	SHOE, track, single heavy duty	1	C •• ~ ••• T •• ~ •••	☐ 144-32-02405
	144-32-02403	SHOE, track, single heavy duty	1	C ••• ~29400 T ••• ~30489	☐ 144-32-02405
	144-32-02404	SHOE, track, single heavy duty	1	C 29401~ •••• T 30490~ ••••	☐ 144-32-02405
	144-32-02405	SHOE, track, single heavy duty	1	C ••••~ T ••••~	
1	144-32-11440	. SHOE	78	C 20295~ •••• T 20295~ ••••	
	144-32-11441	. SHOE	78	C ••••~ T ••••~	
	See "STANDARD TRACK SHOE" for Index No.2 to 11, including oversize parts.				
		SINGLE GROUSER ON-ROCK BED 510 mm WIDE			
	144-32-02500	TRACK SHOE ASS'Y	1	C 20295~ T 20295~	
	144-32-11320	. SHOE	78	C 20295~ T 20295~	
	See "STANDARD TRACK SHOE" for Index No.2 to 11, including oversize parts.				

Fig. 1431 EQUALIZER BAR

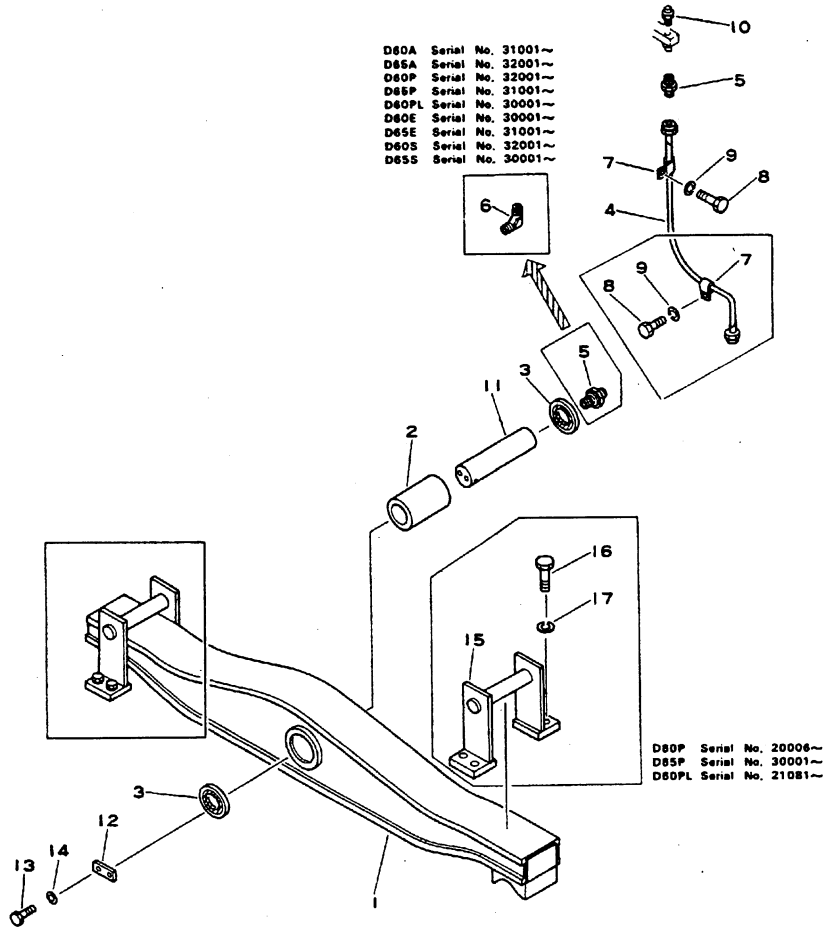

Fig & Index No.	Part No.	Description	Q'ty	Serial No.	Remarks
1431 - 1	141-50-31110	BAR, equalizer	1	S 20006~	
	144-50-11110	BAR, equalizer	1	A 20006~20031	
	144-50-11111	BAR, equalizer	1	A, E 20032~	
	144-812-1111	BAR, equalizer	1	PC20006~32000 PT30001~31000 LC21081~30000	
	144-812-1112	BAR, equalizer	1	PC32001~ PT31001~ LC30001	
	141-50-31130	. SEAT	2	20006~20031	Welded
	141-50-31150	. SEAT	2	20032~	Welded
2	144-50-11120	BUSHING	1	20006~	
3	130-09-12911	SEAL, dust	2	20006~	
4	141-50-31210	TUBE	1	S 20006~20031	
	141-50-31211	TUBE	1	S 20032~22387	
	141-50-31212	TUBE	1	SC 22388~32000 ST 22388~30000	
	141-50-31213	TUBE	1	SC 32001~ ST 30001	
	144-50-11210	TUBE	1	A 20006~20031	
	144-50-11211	TUBE	1	A, E 20032~22387	
	144-50-11212	TUBE	1	AC22388~31000 AT22388~32000 EC22388~30000 ET22388~31000	
	144-50-11213	TUBE	1	AC31001~ AT32001~ EC30001~ ET31001~	
	144-812-1210	TUBE	1	PC20006~20031	
	144-812-1211	TUBE	1	PC, LC 20032~22387	
	144-812-1212	TUBE	1	PC22388~32000 PT30001~31000 LC22388~30000	
	144-812-1213	TUBE	1	PC32001~ PT31001~ LC30001~	

Fig & Index No.	Part No.	Description	Q'ty	Serial No.	Remarks
	07200-00515	. SLEEVE	2	AC20006~31000	
				AT20006~32000	
				PC20006~32000	
				PT30001~31000	
				LC21081~30000	
				EC20295~30000	
				ET20295~31000	
				SC 20006~32000	
				ST 20006~30000	
			1	AC31001~	
				AT32001~	
				PC32001~	
				PT31001~	
				LC30001~	
				EC30001~	
				ET31001~	
				SC 32001~	
				ST 30001~	
	07201-00512	. NUT, sleeve	2	20006~22387	
	07201-50512	. NUT, sleeve	2	AC22388~31000	
				AT22388~32000	
				PC22388~32000	
				PT30001~31000	
				LC22388~30000	
				EC22388~30000	
				ET22388~31000	
				SC 22388~32000	
				ST 22388~30000	
	07202-50508	. NUT, union	1	AC31001~	
				AT32001~	
				PC32001~	
				PT31001~	
				LC30001~	
				EC30001~	
				ET31001~	
				SC 32001~	
				ST 30001~	
1431 - 5	07213-00510	NIPPLE	2	20032~22387	
	07213-50510	NIPPLE	2	AC22388~31000	
				AT22388~32000	
				PC22388~32000	
				PT30001~31000	
				LC22388~30000	
				EC22388~30000	
				ET22388~31000	
				SC 22388~32000	
				ST 22388~30000	
			1	AC31001~	
				AT32001~	
				PC32001~	
				PT31001~	
				LC30001~	
				EC30001~	
				ET31001~	
				SC 32001~	
				ST 30001~	

Fig & Index No.	Part No.	Description	Q'ty	Serial No.	Remarks
1431 - 6	07217-50510	ELBOW	1	AC31001~	
				AT32001~	
				PC32001~	
				PT31001~	
				LC30001~	
				EC30001~	
				ET31001~	
				SC 32001~	
				ST 30001~	
7	08036-10614	CLIP	1	20032~20037	
				AC20042~31000	
				PT20042~32000	
				PC20042~32000	
				PT30001~31000	
				LC21081~30000	
				EC20295~30000	
				ET20295~31000	
				SC 20042~32000	
				ST 20042~30000	
			2	AC31001~	
				AT32001~	
				PC32001~	
				PT31001~	
				LC30001~	
				EC30001~	
				ET31001~	
				SC 32001~	
				ST 30001~	
8	01010-31016	BOLT	1	20032~20037	
				AC20042~31000	
				AT20042~32000	
				PC20042~32000	
				PT30001~31000	
				LC21081~30000	
				EC20295~30000	
				ET20295~31000	
				SC 20042~32000	
				ST 20042~30000	
			2	AC31001~	
				AT32001~	
				PC32001~	
				PT31001~	
				LC30001~	
				EC30001~	
				ET31001~	
				SC 32001~	
				ST 30001~	

EQUALIZER BAR

Fig & Index No.	Part No.	Description	Q'ty	Serial No.	Remarks
1431 - 9	01602-01030	WASHER, spring	1	20032~20037 AC20042~31000 AT20042~32000 PC20042~32000 PT30001~31000 LC21081~30000 EC20295~30000 ET20295~31000 SC 20042~32000 ST 20042~30000	
			2	AC31001~ AT32001~ PC32001~ PT31001~ LC30001~ EC30001~ ET31001~ SC 32001~ ST 30001~	
10	07020-00900	FITTING, grease	1	20006~20031	
	07020-00000	FITTING, grease	1	20032~	
11	141-50-31120	PIN	1	20006~	
12	04082-00514	PLATE, lock	1	20006~	
13	01040-31435	BOLT	2	20006~22387	
	01010-31435	BOLT	2	22388~	
14	01602-01442	WASHER, spring	2	20006~	
15	144-812-1120	SUPPORT	2	P, LC 20006~	See Fig. 1406 for A, S See Fig. 1407 for E
16	01040-32050	BOLT	8	PC, LC 20006~22387	
	01010-32050	BOLT	8	P, LC 22388~	
17	01602-02060	WASHER, spring	8	P, LC 20006~	

Fig. 1437 HITCH (D60S, P, PL, D65S Serial No. 20006~)
(D60A Serial No. 28858~)
(D65A Serial No. 28884~)
(D65P Serial No. 30001~)
(D60E Serial No. 28787~)
(D65E Serial No. 29046~)

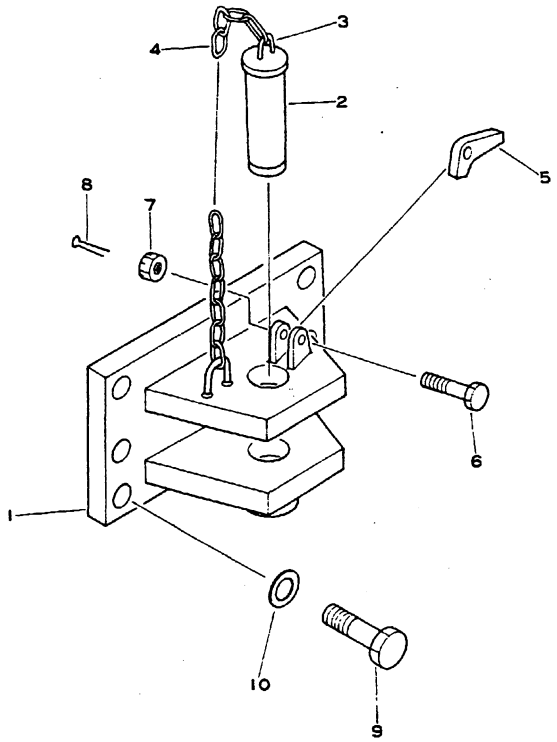

Fig. & Index No.	Part No.	Description	Q'ty	Serial No.	Remarks
	145-69-00010	HITCH ASS'Y	1	S, PC, LC 20006~22387	
	145-69-00011	HITCH ASS'Y	1	S, P, LC 22388~ AC28858~ AT28884 EC28787~ ET29046~	
1437 - 1	145-69-31110	. BRACKET	1	S, P, LC 20006~ AC28858~ AT28884~ EC28787~ ET29046~	

Fig. & Index No.	Part No.	Description	Q'ty	Serial No.	Remarks
1437 - 2	130-69-11190	. . PIN	1	S, P, LC 20006~ AC28858~ AT28884~ EC28787~ ET29046~	
3	130-70-12210	. . HOOK	2	S, P, LC 20006~ AC28858~ AT28884~ EC28787~ ET29046~	
4	150-70-13420	. . CHAIN	1	S, P, LC 20006~ AC28858~ ST28884~ EC28787~ ET29046~	
5	09249-00016	. RATCHET	1	S, P, LC 20006~ AC28858~ AT28884~ EC28787~ ET29046~	
6	01052-31260	. BOLT	1	S, P, LC 20006~ AC28858~ AT28884~ EC28787~ ET29046~	
7	01592-01215	. NUT	1	S, P, LC 20006~ AC28858~ AT28884~ EC28787~ ET29046~	
8	04050-03025	. PIN, cotter	1	S, P, LC 20006~ AC28858~ AT28884~ EC28787~ ET29046~	
9	01040-62465	BOLT	6	S, PC, LC 20006~22387	
	01010-62465	BOLT	6	S, P, LC 22388~ AC28858~ AT28787~ EC28787~ FT29046~	
10	01643-32460	WASHER, spring	6	S, P, L 20006~ AC28858~ AT28787~ FC28787~ ET29046~	

Fig. 1441 ENGINE HOOD AND GUARD (D60A, E, D65A, E)

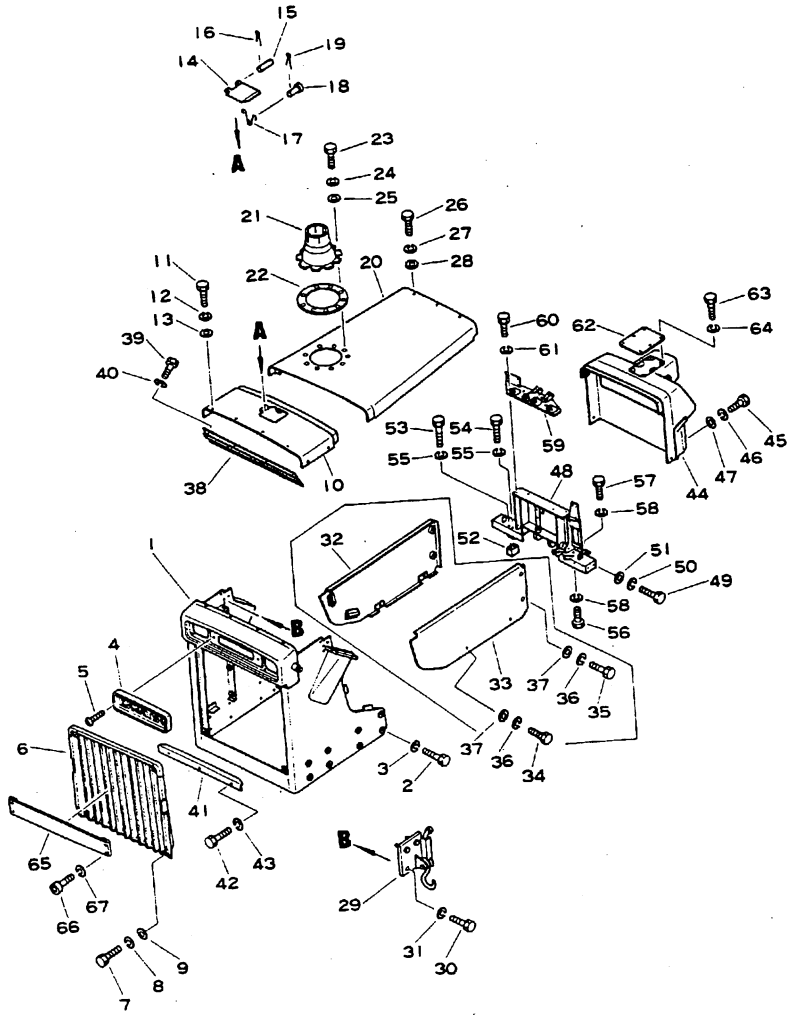

Fig & Index No.	Part No.	Description	Q'ty	Serial No.	Remarks
1441 - 1	144-54-11117	GUARD, radiator	1		
2	01010-22015	BOLT	16		
3	01602-02060	WASHER, spring	16		
4	144-54-11340	PLATE, mark	1		
5	01225-20830	SCREW	2		
6	144-54-11314	GRILLE, radiator	1		
7	01010-31425	BOLT	4		
8	01602-01442	WASHER, spring	4		
9	01643-31445	WASHER	4		
10	144-54-11121	COVER	1		
11	01010-31225	BOLT	8		
12	01602-01236	WASHER, spring	8		
13	01643-31232	WASHER	8		
14	141-54-11170	COVER, water filler	1		
15	131-54-11270	PIN	1		
16	04050-01610	PIN, cotter	2		
17	131-54-11150	SPRING	2		
18	04205-00618	PIN	2		
19	04050-01610	PIN, cotter	2		
20	144-54-11134	BONNET	1		
21	144-54-11250	BRACKET	1		
22	145-54-41280	PLATE	1		
23	01010-31235	BOLT	9		
24	01602-01236	WASHER, spring	9		
25	01643-31232	WASHER	9		
26	01010-31225	BOLT	5		
27	01602-01236	WASHER, spring	5		
28	01643-31232	WASHER	5		
29	144-54-11200	CATCHER ASS'Y, R.H	1		
	144-54-11300	CATCHER ASS'Y, L.H	1		
30	01010-31220	BOLT	6		
31	01602-01236	WASHER, spring	6		
32	144-54-11181	COVER, R.H	1		
33	144-54-11191	COVER, L.H	1		
34	01010-31230	BOLT	4		
35	01010-31245	BOLT	4		
36	01602-01236	WASHER, spring	8		
37	01643-31232	WASHER	8		
38	144-54-11413	COVER	1		
39	01010-31220	BOLT	4		
40	01602-01236	WASHER, spring	4		
41	144-54-11422	PLATE	1		
42	01010-30814	BOLT	3		

ENGINE HOOD AND GUARD

Fig. & Index No.	Part No.	Description	Q'ty	Serial No.	Remarks
1441 -43	01602-00825	WASHER, spring	3		
44	144-54-21212	DASHBOARD	1		
45	01010-31225	BOLT	6		
46	01602-01236	WASHER, spring	6		
47	01643-31232	WASHER	6		
48	144-54-21234	BRACKET	1		
49	01010-31445	BOLT	4		
50	01602-01442	WASHER, spring	4		
51	01643-31445	WASHER	4		
52	144-54-14290	SPACER	1		
53	144-54-14311	BOLT	1		
54	01010-31495	BOLT	1		
55	01602-01442	WASHER, spring	2		
56	01010-31485	BOLT	1		
57	01010-31435	BOLT	1		
58	01602-01442	WASHER, spring	2		
59	144-54-21240	BRACKET	1		
60	01010-31230	BOLT	4		
61	01602-01236	WASHER, spring	4		
62	144-54-21220	COVER	1		
63	01010-30816	BOLT	6		
64	01602-00825	WASHER, spring	6		
65	144-54-11291	BUMPER	1		
66	01252-31230	BOLT	4		
67	01602-01236	WASHER, spring	4		

Fig. 1442 ENGINE HOOD AND GUARD (D60P, PL, D65P)

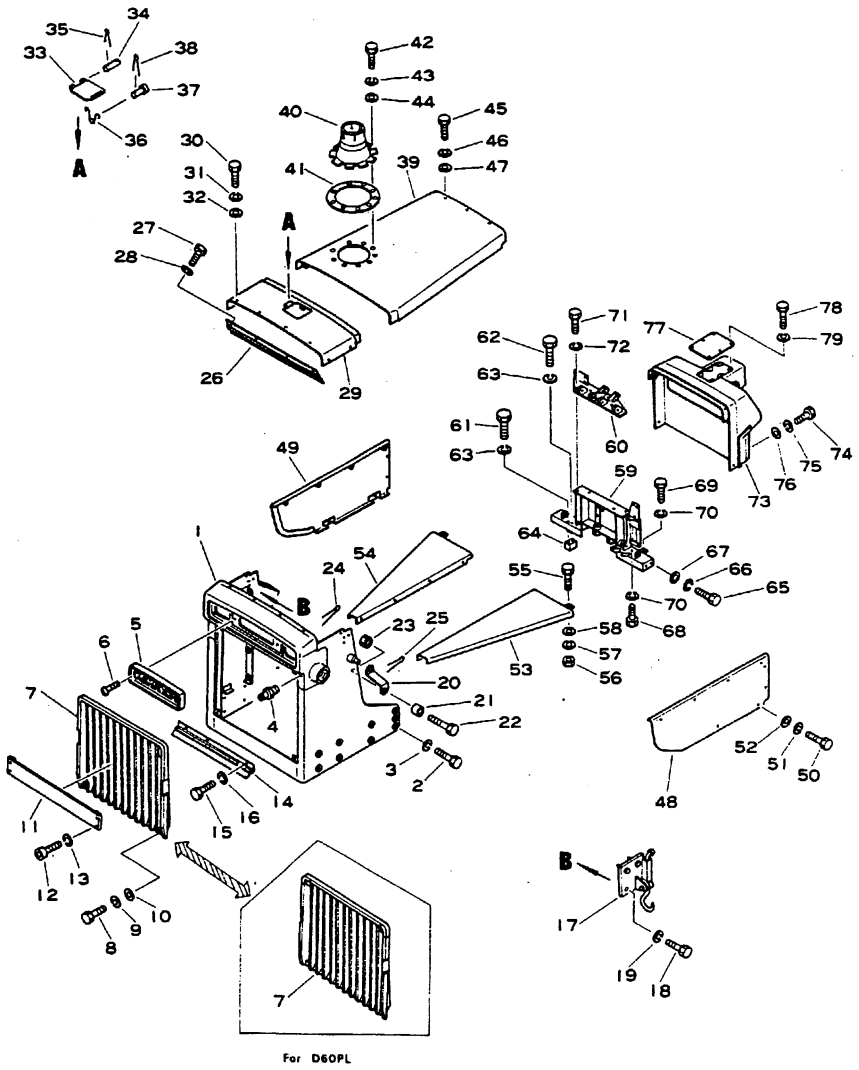

Fig. & Index No.	Part No.	Description	Q'ty	Serial No.	Remarks
1442 - 1	144-811-6111	GUARD, radiator	1	P	For Straight Dozer
	144-811-1310	GUARD, radiator	1	P	For Tilt Dozer
	144-870-1512	GUARD, radiator	1	L	
2	01019-22015	BOLT	18		
3	01602-02060	WASHER, spring	18		
4	07020-00000	FITTING, grease	2		
5	144-54-11340	PLATE, mark	1	L	
	141-54-31211	PLATE, mark	1	P	
6	01225-20830	SCREW	2	P	
			4	LC	
7	144-54-11313	GRILLE, radiator	1	LC	
	144-54-11520	GRILLE, radiator	1	P	
8	01010-31425	BOLT	4		
9	01602-01442	WASHER, spring	4		
10	01643-31445	WASHER	4		
11	144-54-11291	BUMPER	1		
12	01252-31230	BOLT	4		
13	01602-01236	WASHER, spring	4		
14	144-54-11422	PLATE	1		
15	01010-30814	BOLT	3		
16	01602-00825	WASHER, spring	3		
17	144-54-11200	CATCHER ASS'Y, R.H	1		
	144-54-11300	CATCHER ASS'Y, L.H	1		
18	01010-31220	BOLT	6		
19	01602-01236	WASHER, spring	6		
20	144-811-1221	PLATE	2	LC	
	144-811-6210	PLATE	2	P	
21	140-60-15460	TUBE	2		
22	01012-31245	BOLT	2		
23	01590-01215	NUT	2		
24	04050-03025	PIN, cotter	2		
25	04050-00060	PIN, cotter	2		
26	144-54-11413	COVER	1		
27	01010-31220	BOLT	4		
28	01602-01236	WASHER, spring	4		
29	144-54-11121	COVER	1	LC	
	144-811-6150	COVER	1	P	
30	01010-31225	BOLT	8		
31	01602-01236	WASHER, spring	8		
32	01643-31232	WASHER	8		
33	141-54-11170	COVER, water filler	1		
34	131-54-11270	PIN	1		
35	04050-01610	PIN, cotter	2		

Fig & Index No.	Part No.	Description	Q'ty	Serial No.	Remarks
1442 -36	131-54-11150	SPRING	2		
37	04205-00618	PIN	2		
38	04050-01610	PIN, cotter	2		
39	144-54-11134	BONNET	1		
40	144-54-11250	BRACKET	1		
41	145-54-41280	PLATE	1		
42	01010-31235	BOLT	9		
43	01602-01236	WASHER, spring	9		
44	01643-31232	WASHER	9		
45	01010-31225	BOLT	5		
46	01602-01236	WASHER, spring	5		
47	01643-31232	WASHER	5		
48	144-54-11171	COVER, L.H	1		
49	144-54-11161	COVER, R.H	1		
50	01010-31230	BOLT	16		
51	01602-01236	WASHER, spring	16		
52	01643-31232	WASHER	16		
53	144-811-1262	COVER, L.H	1	P	
	144-870-1550	COVER, L.H	1	LC	
54	144-811-1252	COVER, R.H	1		
55	01010-31230	BOLT	2		
56	01580-01210	NUT	2		
57	01602-01236	WASHER, spring	2		
58	01643-01232	WASHER	2		
59	144-54-21234	BRACKET	1		
60	144-54-21240	BRACKET	1		
61	144-54-14311	BOLT	1		
62	01010-31495	BOLT	1		
63	01602-01442	WASHER, spring	2		
64	144-54-14290	SPACER	1		
65	01010-31445	BOLT	4		
66	01602-01442	WASHER, spring	4		
67	01643-31445	WASHER	4		
68	01010-31485	BOLT	1		
69	01010-31435	BOLT	1		
70	01602-01442	WASHER, spring	2		
71	01010-31230	BOLT	4		
72	01602-01236	WASHER, spring	4		
73	144-54-21212	DASHBOARD	1		
74	01010-31225	BOLT	6		
75	01602-01236	WASHER, spring	6		
76	01643-31232	WASHER	6		
77	144-54-21220	COVER	1		

Fig & Index No.	Part No.	Description	Q'ty	Serial No.	Remarks
1442 -78	01010-30816	BOLT	6		
79	01602-00825	WASHER, spring	6		

Fig. 1443 FENDER AND FLOOR PLATE (D60A, E, D65A, E)

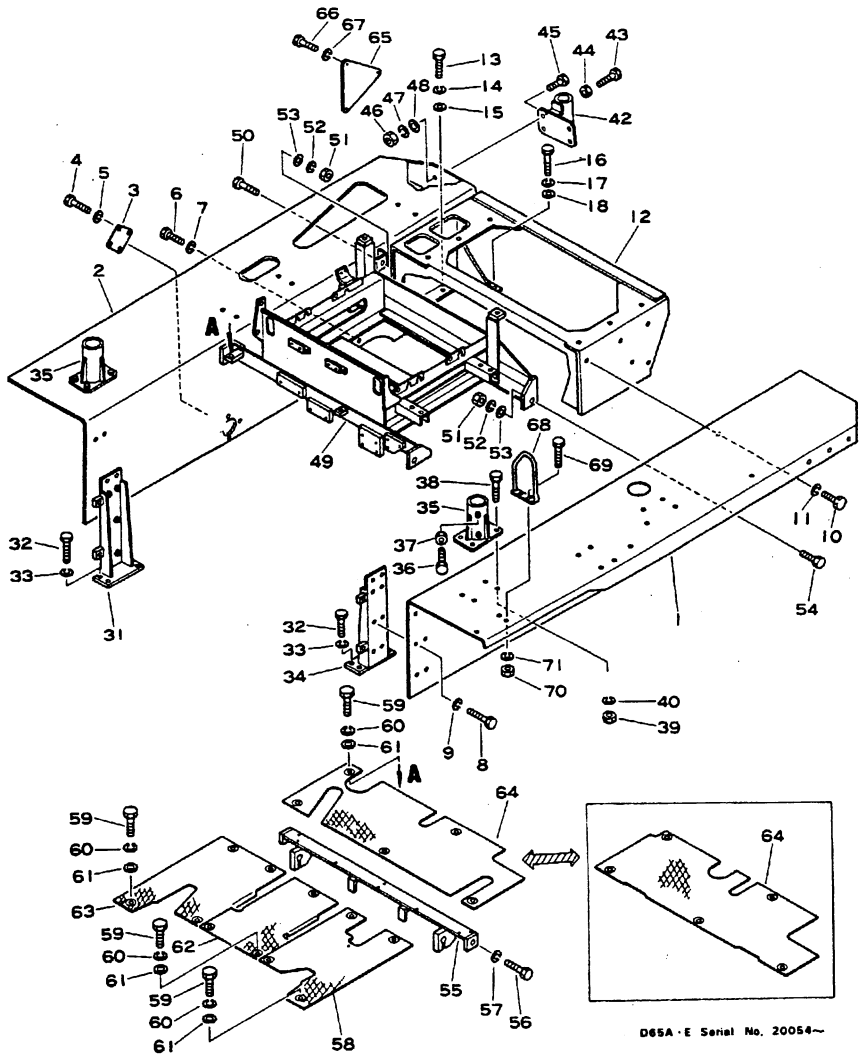

Fig & Index No.	Part No.	Description	Q'ty	Serial No.	Remarks
1443 - 1	144-54-14233	FENDER, L.H	1		
2	144-54-14240	FENDER, R.H	1		
3	144-54-14272	PLATE	1		
4	01010-31220	BOLT	6		
5	01602-01236	WASHER, spring	6		
6	01010-31635	BOLT	14		
7	01602-01648	WASHER, spring	14		
8	01010-31430	BOLT	12		
9	01602-01442	WASHER, spring	12		
10	01010-31440	BOLT	12		
11	01602-01442	WASHER, spring	12		
12	144-54-12142	BRACKET	1		
13	01010-31435	BOLT	6		
14	01602-01442	WASHER, spring	6		
15	01643-31445	WASHER	6		
16	01010-31440	BOLT	4		
17	01602-01442	WASHER, spring	4		
18	01643-31445	WASHER	4		
31	144-54-14181	BRACKET, R.H	1		
32	01010-31435	BOLT	8		
33	01602-01442	WASHER, spring	8		
34	144-54-14191	BRACKET, L.H	1		
35	09470-05415	BRACKET	2		
36	01016-31445	BOLT	4		
37	01580-01411	NUT	4		
38	01010-31440	BOLT	8		
39	01580-01411	NUT	8		
40	01602-01442	WASHER, spring	8		
42	144-54-14211	BRACKET	2		
43	01016-31445	BOLT	4		
44	01580-01411	NUT	4		
45	01010-31440	BOLT	8		
46	01580-01411	NUT	8		
47	01602-01442	WASHER, spring	8		
48	01643-31445	WASHER	8	20006~	•
49	144-54-12211	FRAME	1		
50	01050-31490	BOLT	1		
51	01582-01411	NUT	4		
52	01602-01442	WASHER, spring	4		
53	01643-31445	WASHER	4		
54	01050-31440	BOLT	3		
55	144-54-26112	FRAME	1	C	
	144-54-25114	FRAME	1	T	

FENDER AND FLOOR PLATE

Fig & Index No.	Part No.	Description	Q'ty	Serial No.	Remarks
1443 -56	01010-31435	BOLT	2		
57	01602-01442	WASHER, spring	2		
58	144-54-26122	PLATE	1	C	
	144-54-25123	PLATE	1	T	
59	01010-31230	BOLT	16		
60	01602-01236	WASHER, spring	16		
61	01643-31232	WASHER	16		
62	144-54-26131	PLATE	1		
63	144-54-26141	PLATE	1	C	
	144-54-25142	PLATE	1	T	
64	144-54-16165	PLATE	1	C	
	144-54-15156	PLATE	1	T	
65	144-54-14320	COVER	1		
66	01010-31430	BOLT	3		
67	01602-01442	WASHER, spring	3		
68	130-54-51330	HANDLE	4		
69	01010-31235	BOLT	8		
70	01580-01210	NUT	8		
71	01602-01236	WASHER, spring	8		

Fig. 1444 FENDER AND FLOOR PLATE (D60P, PL, D65P)

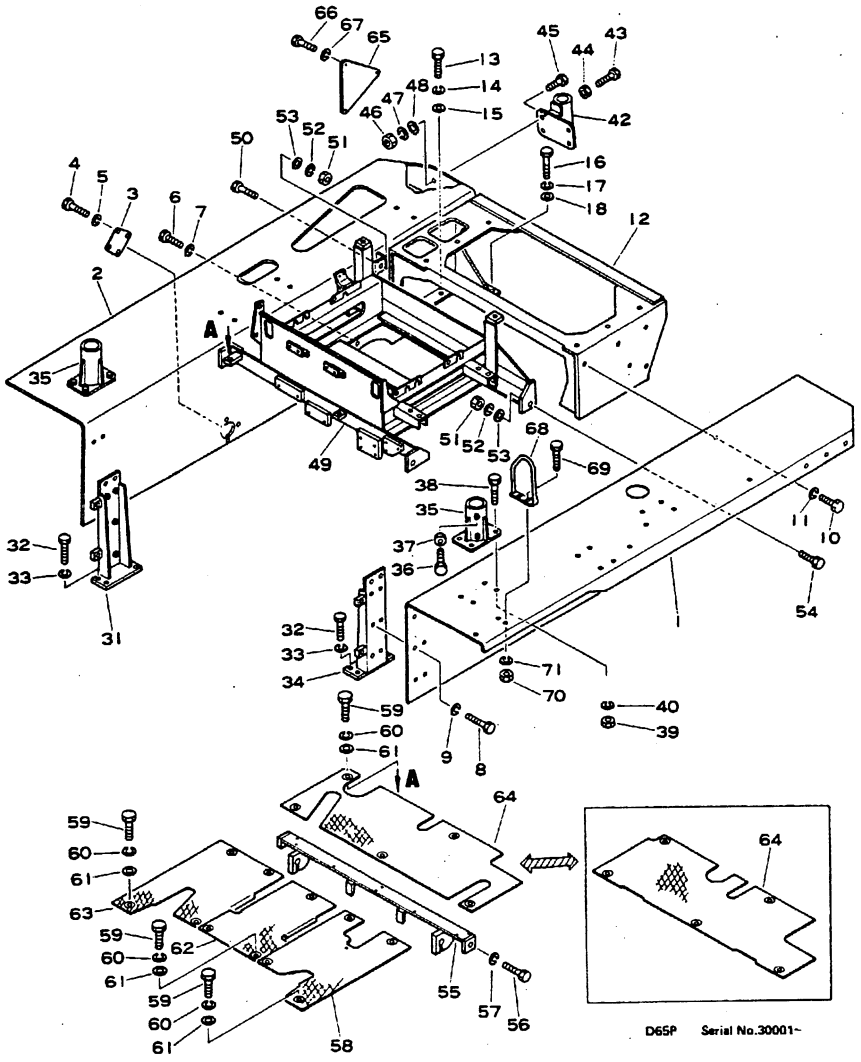

Fig. & Index No.	Part No.	Description	Q'ty	Serial No.	Remarks
1444 - 1	144-54-14233	FENDER, L.H	1	P	
	144-870-1584	FENDER, L.H	1	LC	
2	144-54-14240	FENDER, R.H	1	P	
	144-870-1593	FENDER, R.H	1	LC	
3	144-54-14272	PLATE	1		
4	01010-31220	BOLT	6		
5	01602-01236	WASHER, spring	6		
6	01010-31635	BOLT	14		
7	01602-01648	WASHER, spring	14		
8	01010-31430	BOLT	12		
9	01602-01442	WASHER, spring	12		
10	01010-31440	BOLT	12		
11	01602-01442	WASHER, spring	12		
12	144-54-12142	BRACKET	1		
13	01010-31435	BOLT	6		
14	01602-01442	WASHER, spring	6		
15	01643-31445	WASHER	6		
16	01010-31440	BOLT	4		
17	01602-01442	WASHER, spring	4		
18	01643-31445	WASHER	4		
31	144-54-14181	BRACKET, R.H	1		
32	01010-31435	BOLT	8		
33	01602-01442	WASHER, spring	8		
34	144-54-14191	BRACKET, L.H	1		
35	09470-05415	BRACKET	2		
36	01016-31445	BOLT	4		
37	01580-01411	NUT	4		
38	01010-31440	BOLT	8		
39	01580-01411	NUT	8		
40	01602-01442	WASHER, spring	8		
42	144-54-14211	BRACKET	2		
43	01016-31445	BOLT	4		
44	01580-01411	NUT	4		
45	01010-31440	BOLT	8		
46	01580-01411	NUT	8		
47	01602-01442	WASHER, spring	8		
48	01643-31445	WASHER	8	20006~	•
49	144-54-12211	FRAME	1		
50	01050-31490	BOLT	1		
51	01582-01411	NUT	4		
52	01602-01442	WASHER, spring	4		
53	01643-31445	WASHER	4		
54	01050-31440	BOLT	3		

FENDER AND FLOOR PLATE

Fig. & Index No.	Part No.	Description	Q'ty	Serial No.	Remarks
1444 -55	144-54-26112	FRAME	1	C	
	144-54-25114	FRAME	1	T	
56	01010-31435	BOLT	2		
57	01602-01442	WASHER, spring	2		
58	144-54-26122	PLATE	1	C	
	144-54-25123	PLATE	1	T	
59	01010-31230	BOLT	16		
60	01602-01236	WASHER, spring	16		
61	01643-31232	WASHER	16		
62	144-54-26131	PLATE	1		
63	144-54-26141	PLATE	1	C	
	144-54-25142	PLATE	1	T	
64	144-54-16165	PLATE	1	C	
	144-54-15156	PLATE	1	T	
65	144-54-14320	COVER	1		
66	01010-31430	BOLT	3		
67	01602-01442	WASHER, spring	3		
68	130-54-51330	HANDLE	4		
69	01010-31235	BOLT	8		
70	01580-01210	NUT	8		
71	01602-01236	WASHER, spring	8		

Fig. 1445 REAR FRAME AND COVER (D60A, E, D65A, E)

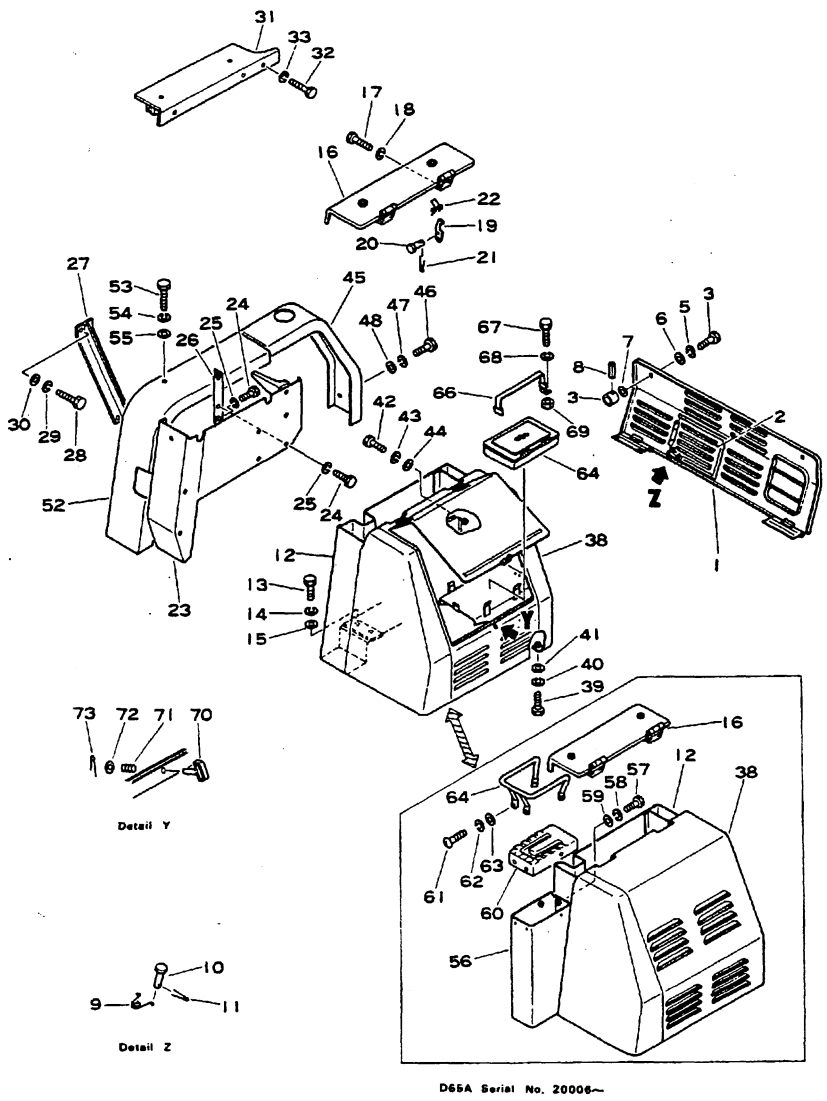

Fig. & Index No.	Part No.	Description	Q'ty	Serial No.	Remarks
1445 - 1	144-54-12182	COVER	1		
2	144-54-12172	. COVER	1		
3	141-54-33280	SPACER	2		
4	141-54-33270	BOLT	2		
5	01602-01236	WASHER, spring	2		
6	01643-31232	WASHER	2		
7	01641-21223	WASHER	2		
8	04025-00316	PIN, roll	2		
9	131-54-11150	SPRING	1		
10	04205-00616	PIN	2		
11	04050-01610	PIN, cotter	2		
12	144-870-1820	BOX	1	C	
	144-54-15533	BOX	1	T	
13	01010-31225	BOLT	4		
14	01602-01236	WASHER, spring	4		
15	01640-21223	WASHER	4		
16	144-54-16524	COVER	1	C	
	144-54-15563	COVER	1	T	
17	01010-31020	BOLT	4		
18	01602-01030	WASHER, spring	4		
19	131-57-43150	LEVER	1		
20	04205-01035	PIN	1		
21	04050-03015	PIN, cotter	1		
22	144-54-16170	SPRING	1		
23	144-54-15544	BOX	1		
24	01010-31225	BOLT	6		
25	01602-01236	WASHER, spring	6		
26	144-54-15731	FRAME	1		
27	144-54-15680	BRACKET	1		
28	01010-31225	BOLT	4		
29	01602-01236	WASHER, spring	4		
30	01643-31232	WASHER	4		
31	144-54-15573	COVER	1		
32	01010-31225	BOLT	2		
33	01602-01236	WASHER, spring	2		
38	144-54-15664	COVER	1		
39	01010-31230	BOLT	2		
40	01602-01236	WASHER, spring	2		
41	01643-31232	WASHER	2		
42	01010-31225	BOLT	2		
43	01602-01236	WASHER, spring	2		
44	01643-31232	WASHER	2		
45	144-54-15634	COVER	1		

REAR FRAME AND COVER

Fig & Index No.	Part No.	Description	Q'ty	Serial No.	Remarks
1445 -46	01010-31230	BOLT	3		
47	01602-01236	WASHER, spring	3		
48	01643-31232	WASHER	3		
52	144-54-15644	COVER	1		
53	01010-31225	BOLT	3		
54	01602-01236	WASHER, spring	3		
55	01643-31232	WASHER	3		
56	144-54-15552	COVER	1	T	
57	01010-31225	BOLT	3	T	
58	01602-01236	WASHER, spring	3	T	
59	01640-21223	WASHER	3	T	
60	144-54-15751	GUIDE	1	T	
61	01220-40825	SCREW	3	T	
62	01602-00825	WASHER, spring	3	T	
63	141-54-15770	WASHER	3	T	
64	144-54-15760	RAIL, hand	1	T	
65	09989-03046	BOX	1		
66	144-54-15780	BAND, rubber	1		
67	01010-50816	BOLT	2		
68	01602-20825	WASHER, spring	2		
69	01580-20806	NUT	2		
70	101-57-31210	LOCK	1		
71	09459-01614	SPRING	1		
72	01642-21016	WASHER	1		
73	04050-03015	PIN, cotter	1		

Fig. 1446 REAR FRAME AND COVER (D60P, PL, D65P)

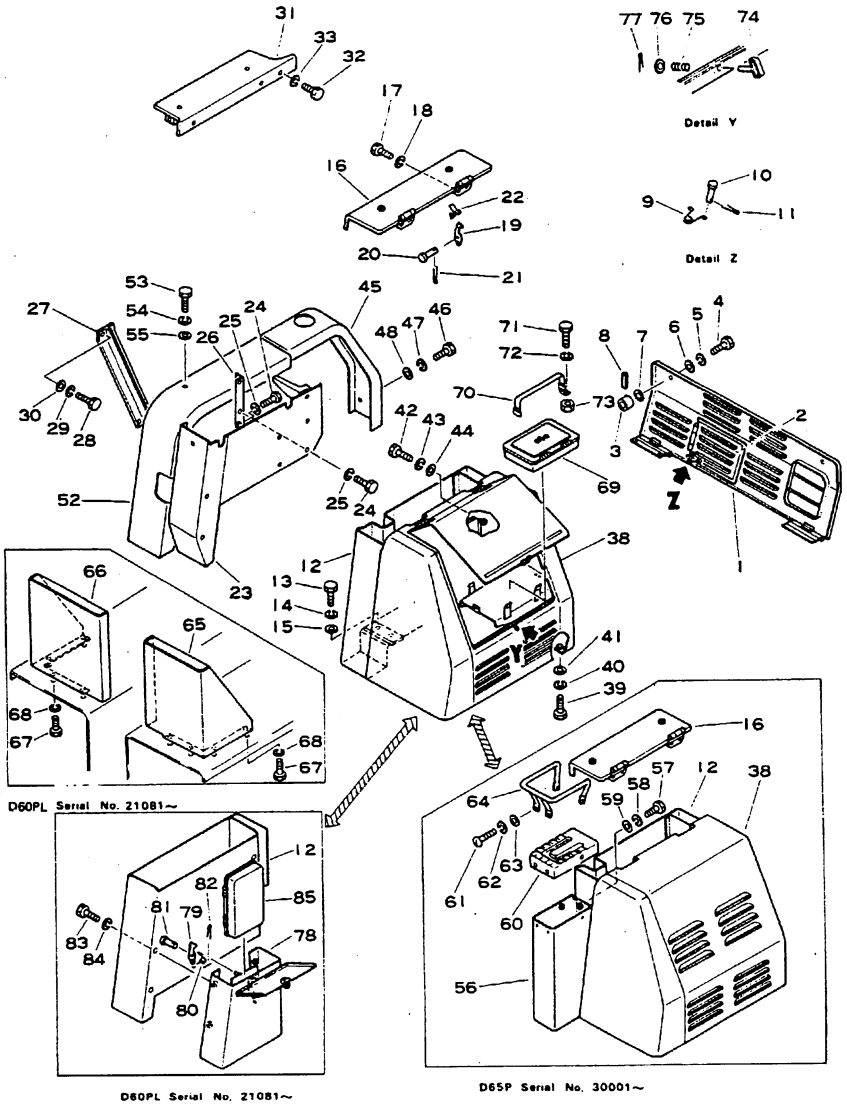

Fig & Index No.	Part No.	Description	Q'ty	Serial No.	Remarks
1446 - 1	144-54-12182	COVER	1		
2	144-54-12172	. COVER	1		
3	141-54-33280	SPACER	2		
4	141-54-33270	BOLT	2		
5	01602-01236	WASHER, spring	2		
6	01643-31232	WASHER	2		
7	01641-21223	WASHER	2		
8	04025-00316	PIN, roll	2		
9	131-54-11150	SPRING	1		
10	04205-00616	PIN	2		
11	04050-01610	PIN, cotter	2		
12	144-870-1820	BOX	1	C	
	144-54-15533	BOX	1	T	
13	01010-31225	BOLT	4		
14	01602-01236	WASHER, spring	4		
15	01640-21223	WASHER	4		
16	144-54-16524	COVER	1	C	
	144-54-15563	COVER	1	T	
17	01010-31020	BOLT	4		
18	01602-01030	WASHER, spring	4		
19	131-57-43150	LEVER	1		
20	04205-01035	PIN	1		
21	04050-03015	PIN, cotter	1		
22	144-54-16170	SPRING	1		
23	144-54-15544	BOX	1		
24	01010-31225	BOLT	6		
25	01602-01236	WASHER, spring	6		
26	144-54-15731	FRAME	1		
27	144-54-15680	BRACKET	1		For Straight Dozer
	144-978-2150	BRACKET	1	P	For Tilt Dozer
28	01010-31225	BOLT	4		
29	01602-01236	WASHER, spring	4		
30	01643-31232	WASHER	4		
31	144-54-15573	COVER	1		
32	01010-31225	BOLT	2		
33	01602-01236	WASHER, spring	2		
38	144-54-15664	COVER	1		
39	01010-31230	BOLT	2		
40	01602-01236	WASHER, spring	2		
41	01643-31232	WASHER	2		
42	01010-31225	BOLT	2		
43	01602-01236	WASHER, spring	2		
44	01643-31232	WASHER	2		

REAR FRAME AND COVER

Fig. & Index No.	Part No.	Description	Q'ty	Serial No.	Remarks
1446. -45	144-54-15634	COVER	1		
46	01010-31230	BOLT	3		
47	01602-01236	WASHER, spring	3		
48	01643-31232	WASHER	3		
52	144-54-15644	COVER	1		
53	01010-31225	BOLT	3		
54	01602-01236	WASHER, spring	3		
55	01643-31232	WASHER	3		
56	144-54-15552	COVER	1	T	
57	01010-31225	BOLT	3	T	
58	01602-01236	WASHER, spring	3	T	
59	01640-21223	WASHER	3	T	
60	144-54-15751	GUIDE	1	T	
61	01220-40825	SCREW	3	T	
62	01602-00825	WASHER, spring	3	T	
63	141-54-15770	WASHER	3	T	
64	144-54-15760	RAIL, hand	1	T	
65	144-870-1561	PLATE, L.H	1	LC	
66	144-870-1571	PLATE, R.H	1	LC	
67	01010-31220	BOLT	8	LC	
68	01602-01236	WASHER, spring	8	LC	
69	09989-03046	BOX	1	P	
70	144-54-15780	BAND, rubber	1	P	
71	01010-30816	BOLT	2	P	
72	01602-00825	WASHER, spring	2	P	
73	01580-10806	NUT	2	P	
74	101-57-31210	LOCK	1		
75	09459-01614	SPRING	1		
76	01642-21016	WASHER	1		
77	04050-03015	PIN, cotter	1		
78	144-870-1830	CASE	1	LC	
79	131-57-43150	PLATE	1	LC	
80	144-54-16170	SPRING	1	LC	
81	04205-11035	PIN	1	LC	
82	04050-03015	PIN, cotter	1	LC	
83	01010-51025	BOLT	4	LC	
84	01602-21030	WASHER, spring	4	LC	
85	09989-03046	BOX	1	LC	

Fig. 1447 UNDER GUARD (D60A, E, D65A, E)

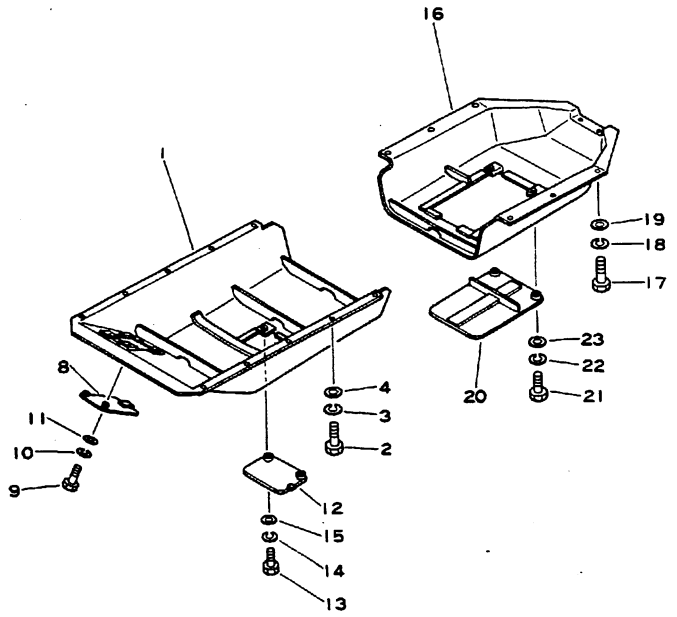

Fig. & Index No.	Part No.	Description	Q'ty	Serial No.	Remarks
1447 - 1	144-54-13215	GUARD, engine bottom, front	1		
2	01010-31645	BOLT	10		
3	01602-01648	WASHER, spring	10		
4	01643-31645	WASHER	10		
8	144-54-13261	COVER, access	1		
9	01010-31230	BOLT	2		
10	01602-01236	WASHER, spring	2		
11	01640-21223	WASHER	2		
12	144-54-13270	COVER, access	1		
13	01010-31230	BOLT	2		
14	01602-01236	WASHER, spring	2		
15	01640-21223	WASHER	2		
16	144-54-13220	GUARD, engine bottom, rear	1		
17	01010-31645	BOLT	8		
18	01602-01648	WASHER, spring	8		
19	01643-01645	WASHER	8		
20	144-54-13141	COVER, access	1		
21	01010-31230	BOLT	2		
22	01602-01236	WASHER, spring	2		
23	01640-21223	WASHER	2		

Fig. 1448 UNDER GUARD (D60P, PL, D65P)

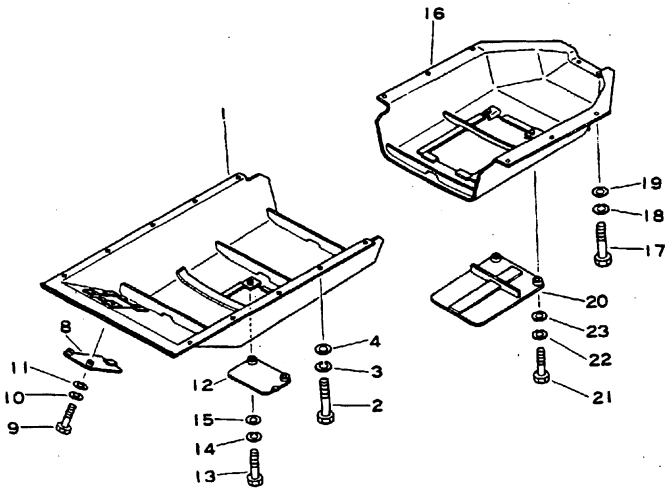

Fig & Index No.	Part No.	Description	Q'ty	Serial No.	Remarks
1448 - 1	144-811-4115	GUARD, engine bottom, front	1	P	
	144-870-1632	GUARD, engine bottom, front	1	LC	
2	01010-31645	BOLT	8		
3	01602-01648	WASHER, spring	8		
4	01643-31645	WASHER	8		
8	144-811-4131	COVER, access	1	P	
	144-870-1651	COVER, access	1	LC	
9	01010-31230	BOLT	2		
10	01602-01236	WASHER, spring	2		
11	01640-21223	WASHER	2		
12	144-811-4150	COVER, access	1	P	
	144-870-1661	COVER, access	1	LC	
13	01010-31230	BOLT	2		
14	01602-01236	WASHER, spring	2		
15	01640-21223	WASHER	2		
16	144-811-4122	GUARD, engine bottom, rear	1	P	
	144-870-1641	GUARD, engine bottom, rear	1	LC	
17	01040-31645	BOLT	8		
	01010-31645	BOLT	8		
18	01602-01648	WASHER, spring	8		
19	01643-01645	WASHER	8		
20	144-811-4140	COVER, access	1	P	
	144-870-1670	COVER, access	1	LC	
21	01010-31230	BOLT	2		
22	01602-01236	WASHER, spring	2		
23	01640-21223	WASHER	2		

Fig. 1461A OPERATOR'S SEAT

(D60A Serial No. 28858~)
(D65A Serial No. 28884~)
(D60P Serial No. 29174~)
(D65A Serial No. 30001~)
(D60PL Serial No. 28061~)
(D60S Serial No. 29567~)
(D65S Serial No. 28458~)
(D60E Serial No. 28787~)
(D65E Serial No. 29046~)

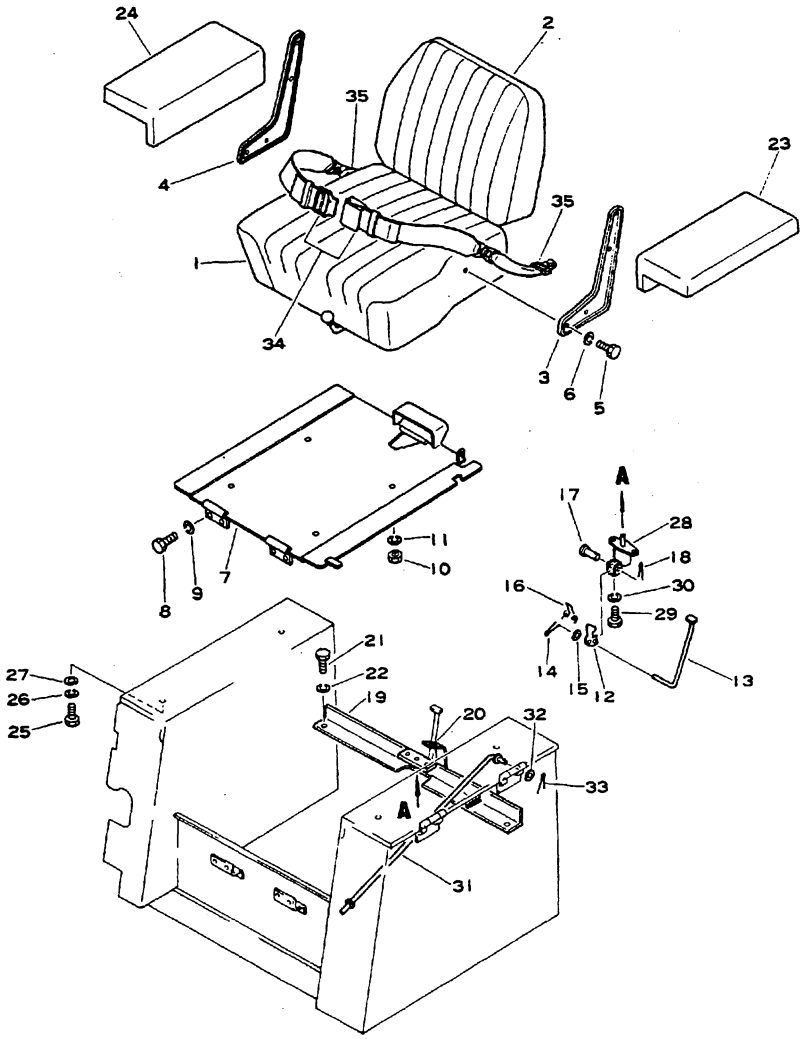

Fig. & Index No.	Part No.	Description	Q'ty	Serial No.	Remarks
	12F-57-11111	SEAT ASS'Y	1	† ~	
1461A-1	12F-57-11121	. CUAHION, seat	1	† ~	
2	12F-57-11221	. CUSHION, back	1	† ~	
3	12F-57-11230	. PLATE, L.H	1	† ~	
4	12F-57-11240	. PLATE, R.H	1	† ~	
5	01010-31020	. BOLT	8	† ~	
6	01602-01030	. WASHER, spring	8	† ~	
7	141-57-35112	PLATE	1	† ~	
8	01010-31225	BOLT	4	† ~	
9	01602-01236	WASHER, spring	4	† ~	
10	01580-01210	NUT	4	† ~	
11	01602-01236	WASHER, spring	4	† ~	
12	131-57-42340	PLATE	1	† ~	
13	131-57-42330	ROD	1	† ~	
14	04050-02012	PIN, cotter	1	† ~	
15	01641-20812	WASHER	1	† ~	
16	135-57-12230	SPRING	1	† ~	
17	135-43-16270	PIN	1	† ~	
18	04050-03015	PIN, cotter	1	† ~	
19	141-57-35150	FRAME	1	† ~	
20	08037-01008	GROMMET	1	† ~	
21	01010-31020	BOLT	2	† ~	
22	01602-01236	WASHER, spring	2	† ~	
23	144-57-11140	REST, arm, L.H	1	AC28858~ PC29174~ LC28061~ EC28787~	
	141-57-31610	REST, arm, L.H	1	ST 28458~	
	144-57-11150	REST, arm, L.H	1	AT28884~ PT30001~ ET29046~	
24	144-57-11150	REST, arm, R.H	1	AC28854~ AT28884~ PC29174~ PT30001~ LC28061~ EC28787~ ET29046~	

Shows both D60A Serial No. 28858, D60P Serial No. 29174, D60PL Serial No. 28061, D60S Serial No. 29567, D60E Serial No. 28787, D65A Serial No. 28884, D65P Serial No. 30001, D65S Serial No. 28458.

Fig & Index No.	Part No.	Description	Q'ty	Serial No.	Remarks
	141-57-31210	REST, arm, R.H	2 1	SC29567~ ST28458~	
1461A-25	01010-30816	BOLT	8	AC28854~ AT28884~ PC29174~ PT30001~ LC28061~ EC28787~ ET29046~	
	01010-30825	BOLT	8	SC29567~ ST28458~	
26	01602-00825	WASHER, spring	8	† ~	
27	01642-20810	WASHER	8	† ~	
28	131-57-42310	BOX	1	† ~	
29	01010-31020	BOLT	2	† ~	
30	01602-01030	WASHER, spring	2	SC 29567~ ST 28458~	
31	141-57-31551	ROD	1	SC 29567~ ST 28458~	
32	01641-21016	WASHER	1	SC 29567~ ST 28458~	
33	04050-03015	PIN, cotter	1	SC 29567~ ST 28458~	
34	09409-10000	BELT, lap (OP) (For domestic)	1	SC 29567~ ST 28458~	
	195-57-13150	BELT, lap (OP) (For U.S.A.)	1	SC 29567~ ST 28458~	
35	09409-30000	BELT, fether (OP) (For domestic)	2	SC 29567~ ST 28458~	
	135-57-32410	BELT, fether (OP) (For U.S.A.)	2	SC 29567~ ST 28458~	

These belts include each mounting parts.

Seat belt must be used when equipped with ROPS.

Shows both D60A Serial No. 28858, D60P Serial No. 29174.
D60PL Serial No. 28061, D60S Serial No. 29567, D60E Serial No. 28787.
D65A Serial No. 28884, D65P Serial No. 30001, D65S Serial No. 28458.

Fig. 1471 MARK AND PLATE

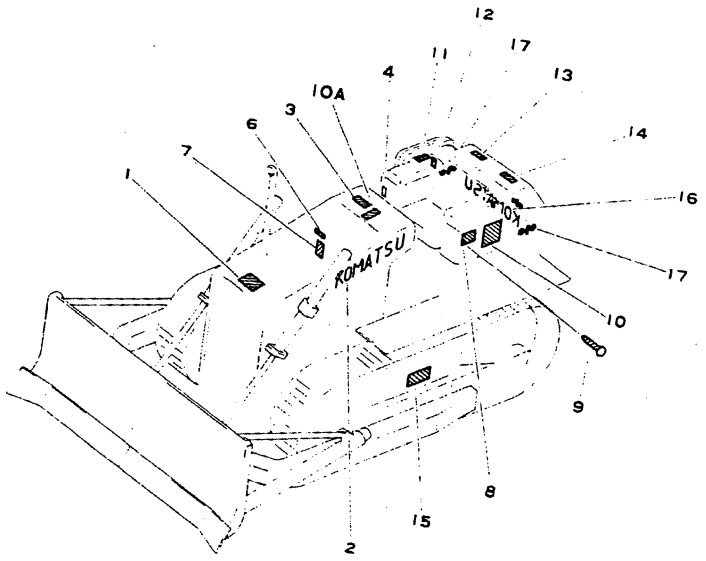

Fig. & Index No.	Part No.	Description	Q'ty	Serial No.	Remarks
1471 - 1	09650-00101	PLATE, caution, radiator	1		
2	09690-00900	PLATE, mark			
3	09654-00060	PLATE, caution, warning	1		
4	144-54-19130	PLATE, operating, blade lever	1		
6	09683-00050	PLATE, operating, starting switch	1		
7	09682-00021	PLATE, operating, decompression lever	1		
8	09602-01635	PLATE, name	1		Limited Supply
9	04418-03060	SCREW, tapping	4		
10	144-98-11210	CHART, oil	1	AC, EC	
	144-98-11220	CHART, oil	1	AT, ET	
	144-819-1150	CHART, oil	1	PC	
	14G-98-11110	CHART, oil	1	PT	
	144-870-1690	CHART, oil	1	LC	
10A	144-54-18120	PLATE, operating, shift	1	C	
	144-54-18130	PLATE, operating, shift	1	T	
11	09653-00080	PLATE, caution, hydraulic tank	1		
12	09655-00120	PLATE, caution, oil filter	1		
13	09656-00080	PLATE, caution	1		
14	09652-00100	PLATE, caution, water drain	1		
15	09657-00125	PLATE, caution, track shoe adjuster	1		
16	09692-05602	MARK, back	1	D60A	
	09692-05652	MARK, back	1	D65A	
	09692-05605	MARK, back	1	D60E	
	09692-05655	MARK, back	1	D65E	
	09692-05604	MARK, back	1	D60P	
	09692-49608	MARK, back	1	D60PL	
17	09691-05602	MARK, side	2	D60A	
	09691-05652	MARK, side	2	D65A	
	09691-05605	MARK, side	2	DD60E	
	09691-05655	MARK, side	2	D65E	
	09691-05604	MARK, side	2	D60P	
	09691-41608	MARK, side	2	D60PL	

WORK EQUIPMENT AND ITS CONTROL SYSTEM

Fig. 1501 HYDRAULIC PUMP (D60A, P, PL, E, D65S Serial No. 20006~)

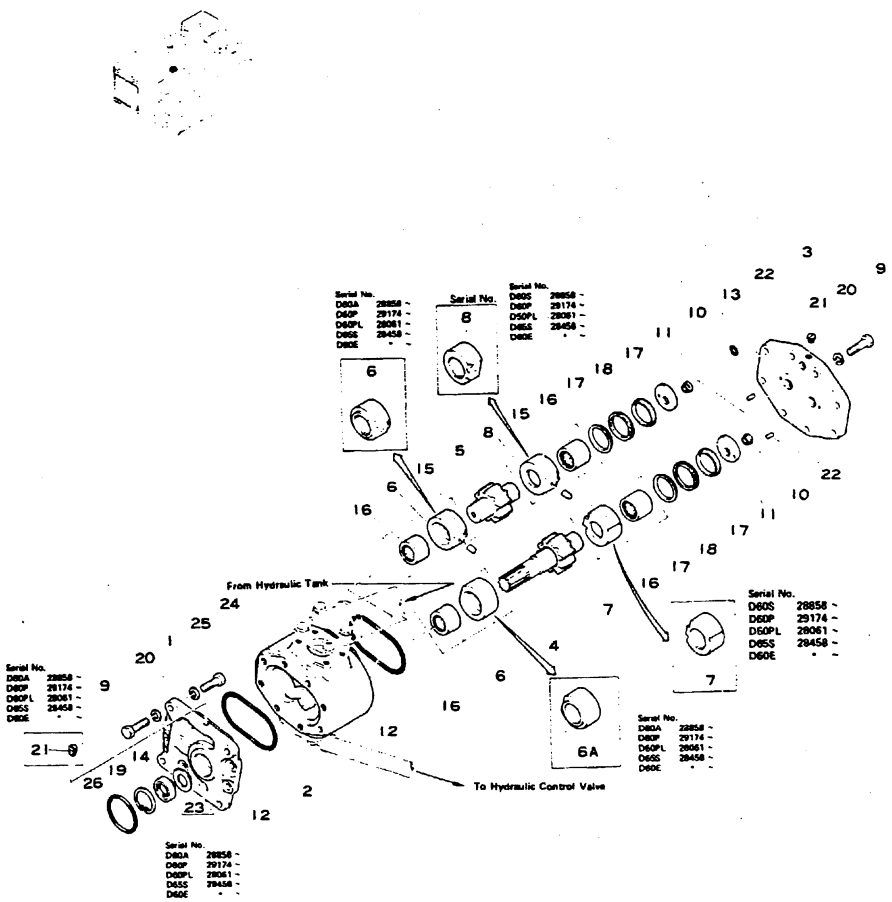

Fig & Index No.	Part No.	Description	Q'ty	Serial No.	Remarks
	(07443-67100)	HYDRAULIC PUMP ASS'Y	1	20006~20021	
	(07443-67500)	HYDRAULIC PUMP ASS'Y	1	AC20024~28857 PC20024~29173 LC21081~28060 ST24638~28457 EC20295~ •	☐ 07443-67503
	(07443-67503)	HYDRAULIC PUMP ASS'Y	1	AC28858~ PC29174~ LC28061~ ST 28458~ EC • ~	
1501 - 1	07440-66010	. BRACKET	1	AC20006~ • PC20006~ • LC21081~ • ST 20006~ • EC20295~ •	
	07440-67010	. BRACKET	1	AC • ~28857 PC • ~29173 LC • ~28060 ST • ~28457 EC • ~ ••	
	07440-67013	. BRACKET	1	AC28858~ PC29174~ LC28061~ ST 28458~ EC •• ~	
2	07443-66021	. CASE, gear	1	20006~20021	
	07443-66220	. CASE, gear	1	20024~	
3	07440-66030	. COVER	1	20006~	
4	07443-66041	. GEAR, drive	1	AC20006~28857 PC20006~29173 LC21081~28060 ST 20006~28457 EC20295~ •	
	07443-66043	. GEAR, drive	1	AC28858~ PC29174~ LC28061~ ST 28458~ EC • ~	
5	07443-66051	. GEAR, driven	1	AC20006~28857 PC20006~29173 LC21081~28060 ST 20006~28457 EC20295~	
	07443-66053	. GEAR, driven	1	AC28858~ PC29174~ LC28061~ ST 28458~ EC • ~	
6	07440-66060	. BUSHING	2	AC20006~ • PC20006~ • LC21081~ • ST 20006~ • EC20295~ •	

Fig & Index No.	Part No.	Description	Q'ty	Serial No.	Remarks
	07440-66065	. BUSHING	1	AC • ~28857 PC • ~29173 LC • ~28060 ST • ~28457 EC • ~ ••	
	07440-66361	. BUSHING	1	AC28858~ PC29174~ LC28061~ ST 28458~ EC •• ~	
1501 - 6A	07440-66160	. BUSHING	1	AC • ~28857 PC • ~29173 LC • ~28060 ST • ~28457 EC • ~ ••	
	07440-66461	. BUSHING	1	AC28858~ PC29174~ LC28061~ ST 28458~ EC •• ~	
7	07440-66070	. BUSHING	1	AC20006~ • PC20006~ • LC21081~ • ST 20006~ • EC20295~ •	
	07440-67273	. BUSHING	1	AC • ~28857 PC • ~29173 LC • ~28060 ST • ~28457 EC • ~ ••	
	07440-66471	. BUSHING	1	AC28858~ PC29174~ LC28061~ ST 28458~ EC •• ~	
8	07440-66270	. BUSHING	1	AC20006~ • PC20006~ • LC21081~ • ST 20006~ • EC20295~ •	
	07440-67073	. BUSHING	1	AC • ~28857 PC • ~29173 LC • ~28060 ST • ~28457 EC • ~ ••	
	07440-66371	. BUSHING	1	AC28858~ PC29174~ LC28061~ ST 28458~ EC •• ~	
9	07438-66080	. BOLT	16	20006~	
10	07438-66090	. COLLAR	2	20006~	
11	07440-66120	. PLATE, seal	2	20006~20021	
	07440-66121	. PLATE, seal	2	20024~	
12	07000-13140	. O-RING	2	20006~	

Fig & Index No.	Part No.	Description	Q'ty	Serial No.	Remarks
1501 -13	07000-12015	. O-RING	1	AC20006~ • PC20006~ • LC21081~ • ST 20006~ • EC20295~ •	
			2	AC • ~ PC • ~ LC • ~ ST • ~ EC • ~	
14	07438-11160	. SEAL, oil	1	AC20006~ • PC20006~ • LC21081~ •• ST 20006~ • EC20295~ •	□07438-11162
	07438-11162	. SEAL, oil	1	AC • ~ PC • ~ LC • ~ ST • ~ EC • ~	
15	07438-66170	. PIN	2	AC20006~28857 PC20006~29173 LC21081~28060 ST 20006~28457 EC20295~ •	
	07445-66170	. PIN	2	AC28858~ PC29174~ LC28061~ ST 28458~ EC • ~	
16	07440-66180	. BEARING, needle roller	4	AC20006~28857 PC20006~29173 LC21081~28060 ST 20006~28457 EC20295~ •	
17	07440-66190	. RING, back up	4	20006~20021	
	07440-66191	. RING, back up	4	20024~	
18	07440-66730	. U-RING	2	20006~	
19	04065-05520	. RING, snap	1	20006~	
20	01602-01442	. WASHER, spring	16	20006~	
21	07043-00211	. PLUG, taper	1	AC20006~28857 PC20006~29173 LC21081~28060 ST 20006~28457 EC20295~ •	
	07400-66001	. PLUG, taper	2	AC28858~ PC29174~ LC28061~ ST 28458~ EC • ~	
22	07445-66170	. PIN	2	AC20006~28857 PC20006~29173 LC21081~28060 ST 20006~28457 EC20295~ •	

Fig & Index No.	Part No.	Description	Q'ty	Serial No.	Remarks
	07438-66170	. PIN	2	AC28858~ PC29174~ LC28061~ ST28458~ EC • ~	
1501 -23	07440-66110	PLATE	1	AC28858~ PC29174~ LC28061~ ST28458~ EC • ~	
24	01010-31245	BOLT	4	20006~	
25	01602-01236	WASHER, spring	4	20006~	
26	070000-02085	O-RING	1	20006~	

Fig. 1502A HYDRAULIC PUMP
(D65A Serial No. 32001 ~)
(D65P,E Serial No. 31001 ~)

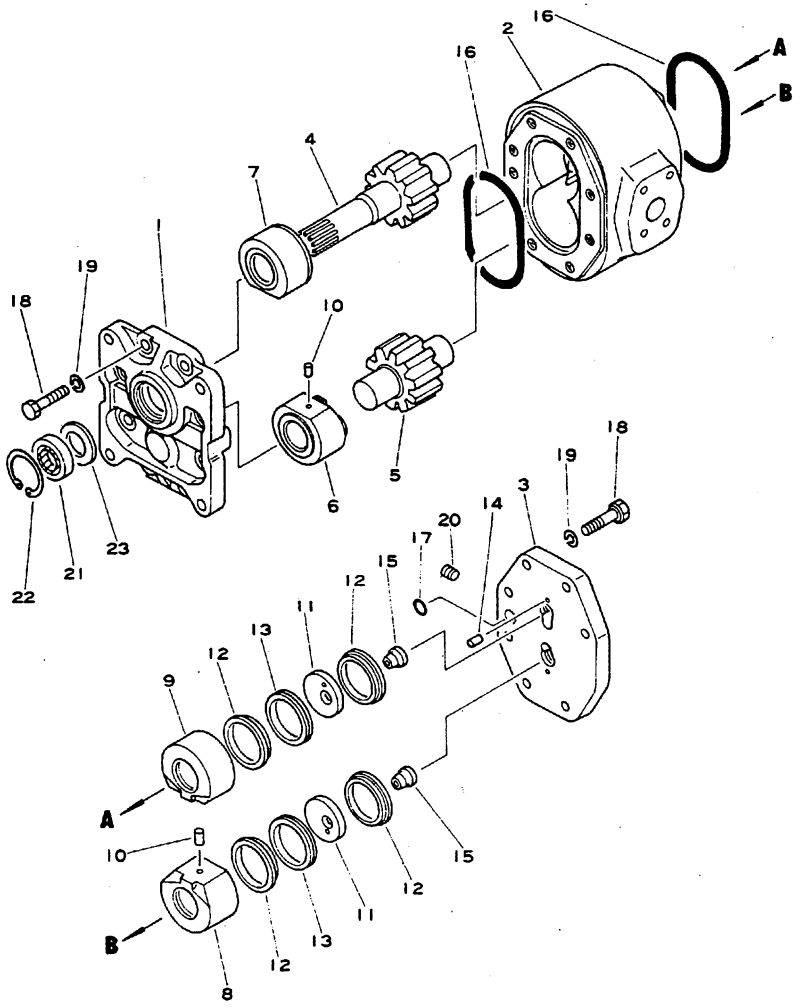

Fig. & Index No.	Part No.	Description	Q'ty	Serial No.	Remarks
	07441-67502	PUMP ASS'Y (PAR112)	1		
	Parts with a starmark are supplied separately only to designated dealers which are equipped the hydraulic pump tester.				
1502A - 1	☆	. BRACKET (07440-67013)	1		
2	☆	. CASE, gear (07441-66420)	1		
3	☆	. COVER (07440-66030)	1		
4	☆	. GEAR, drive (07441-66042)	1		
5	☆	. GEAR, driven (07441-66052)	1		
6	☆	. BUSHING ASS'Y (07440-66361)	1		
7	☆	. BUSHING ASS'Y (07440-66461)	1		
8	☆	. BUSHING (07440-66371)	1		
9	☆	. BUSHING ASS'Y (07440-66471)	1		
10	☆	. PIN (07445-66170)	2		
11	☆	. PLATE, seal (07440-66121)	2		
12	☆	. RING, back-up (07440-66191)	4		
13	☆	. U-RING (07440-66730)	2		
14	☆	. PIN (07438-66170)	2		
15	☆	. COLLAR (07438-66090)	2		
16	☆	. O-RING (07000-13140)	2		
17	☆	. O-RING (07400-12015)	2		
18	☆	. BOLT (07438-66080)	16		
19	☆	. WASHER, spring (01602-01442)	16		
20	☆	. PLUG (07400-66001)	2		
21	07438-11162	. SEAL, oil	1		
22	04065-05520	. RING, snap	1		
23	07440-66110	. PLATE	1		

Fig. 1511 HYDRAULIC TANK, For Angle and Straight Dozer

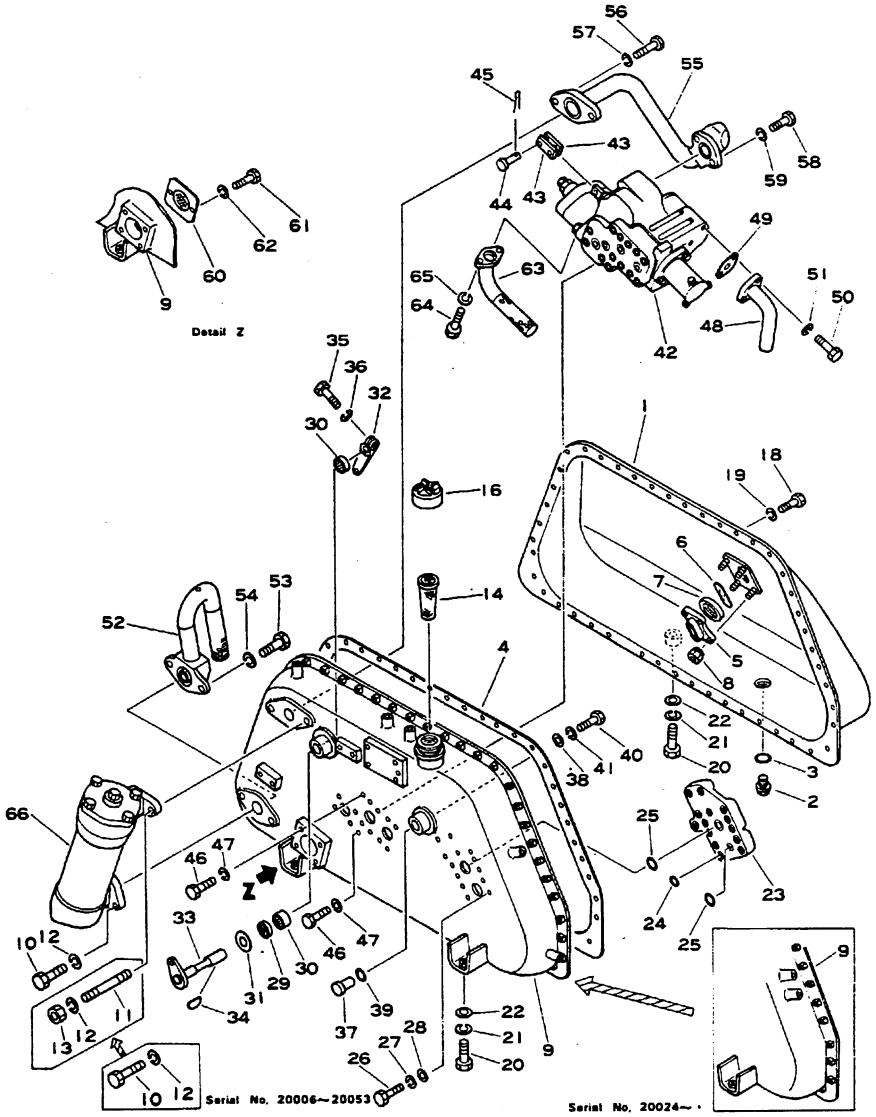

Fig. & Index No.	Part No.	Description	Q'ty	Serial No.	Remarks
	144-60-13006	HYDRAULIC TANK AND CONTROL VALVE ASS'Y	1		
1511 - 1	144-978-9350	. TANK, hydraulic	1		
2	07044-13620	. PLUG, magnetic	1		
3	07002-03634	. O-RING	1		
4	144-60-13170	. GASKET	1		
5	07715-21074	. CASE	1		
6	07715-00651	. COVER	1		
7	07715-11257	. RING	1		
8	01598-11011	. NUT	4		
9	144-60-13118	. TANK, hydraulic	1		
10	01010-31440	. BOLT	2		
11	01120-31440	. STUD	2		
12	01602-01442	. WASHER, spring	4		
13	01582-31411	. NUT	2		
14	141-60-33730	. STRAINER	1		
16	07051-00000	. CAP	1		
18	01010-51025	. BOLT	49		
19	01602-21030	. WASHER, spring	49		
20	01010-31440	. BOLT	5		
21	01602-01442	. WASHER, spring	5		
22	01643-31445	. WASHER	5		
23	144-60-13213	. COVER	1		
24	07000-02015	. O-RING	14		
25	07000-03042	. O-RING	2		
26	01010-51230	. BOLT	14		
27	01602-01236	. WASHER, spring	14		
28	01643-31232	. WASHER	14		
29	130-09-11450	. SEAL, oil	1		
30	06120-02016	. BEARING, needle	2		
31	130-60-43150	. PLATE	1		
32	141-60-33270	. LEVER	1		
33	144-60-13151	. LEVER	1		
34	04010-00519	. KEY, woodruff	1		
35	01010-30830	. BOLT	1		
36	01602-00825	. WASHER, spring	1		
37	140-60-13350	. PLUG	1		
38	140-60-13360	. COLLAR	1		
39	07000-03020	. O-RING	1		
40	01010-31090	. BOLT	1		
41	01602-01030	. WASHER, spring	1		
42	701-31-11002	. HYDRAULIC CONTROL VALVE ASS'Y	1		See Fig.1513

HYDRAULIC TANK

Fig & Index No.	Part No.	Description	Q'ty	Serial No.	Remarks
1511 -43	141-60-32170	. YOKE	2		
44	04205-01028	. PIN	2		
45	04050-03015	. PIN, cotter	2		
46	01010-31225	. BOLT	2		
47	01602-01236	. WASHER, spring	2		
48	144-60-12190	. TUBE	1		
49	144-60-12210	. PLATE	1		
50	01010-31030	. BOLT	2		
51	01602-01030	. WASHER, spring	2		
52	144-60-13230	. BAFFLE	1		
53	01010-31435	. BOLT	2		
54	01602-01442	. WASHER, spring	2		
55	144-60-13261	. TUBE	1		
56	01010-31440	. BOLT	2		
57	01602-01442	. WASHER, spring	2		
58	01010-31435	. BOLT	2		
59	01602-01442	. WASHER, spring	2		
60	144-60-13311	. STRAINER	1		
61	01010-31016	. BOLT	2		
62	01602-01030	. WASHER, spring	2		
63	144-920-5142	. BAFFLE	1		
64	01010-30825	. BOLT	2		
65	01602-00825	. WASHER, spring	2		
66	144-60-00033	HYDRAULIC FILTER ASS'Y	1		See Fig. 1512

Fig. 1512 HYDRAULIC FILTER (D60A, P, PL, E, D65A, P, E)

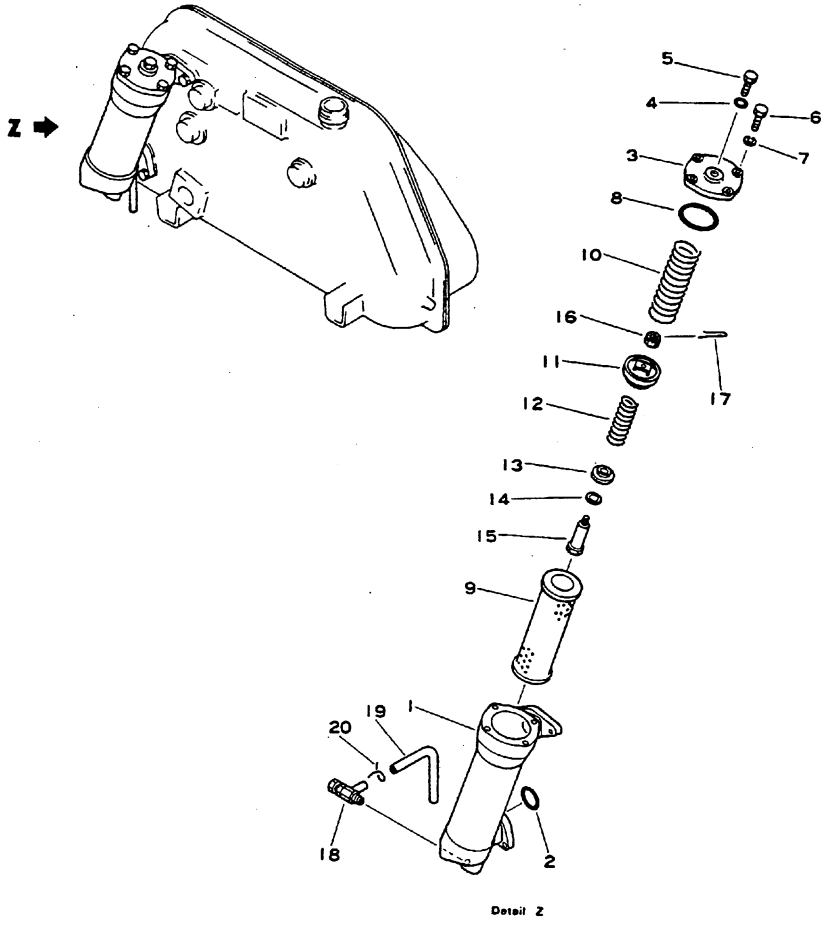

Fig. & Index No.	Part No.	Description	Q'ty	Serial No.	Remarks
	(144-60-00033)	HYDRAULIC FILTER ASS'Y	1		
1512 - 1	144-60-11111	. CASE	1		
2	07000-22055	. O-RING	2		
3	144-60-11140	. COVER	1		
4	07000-02008	. O-RING	1		
5	07060-01236	. BOLT	1		
6	01010-31230	. BOLT	4		
7	01602-01236	. WASHER, spring	4		
8	07000-05105	. O-RING	1		
9	144-60-11160	. ELEMENT	1		
10	145-60-17150	. SPRING	1		
11	144-60-11170	. CAGE	1		
12	135-60-17110	. SPRING	1		
13	145-60-17170	. VALVE	2		
14	01640-21226	. WASHER	1		
15	145-60-17191	. BOLT	1		
16	01590-00809	. NUT	1		
17	04050-02015	. PIN, cotter	1		
18	144-60-11151	. VALVE	1		
19	07270-01514	. TUBE, vinyl	1		
20	04059-01016	. WIRE, lock	1		

Fig. 1513 HYDRAULIC CONTROL VALVE (½), For Angle and Straight Dozer
(D60A, P, PL, E, D65A, P, E)

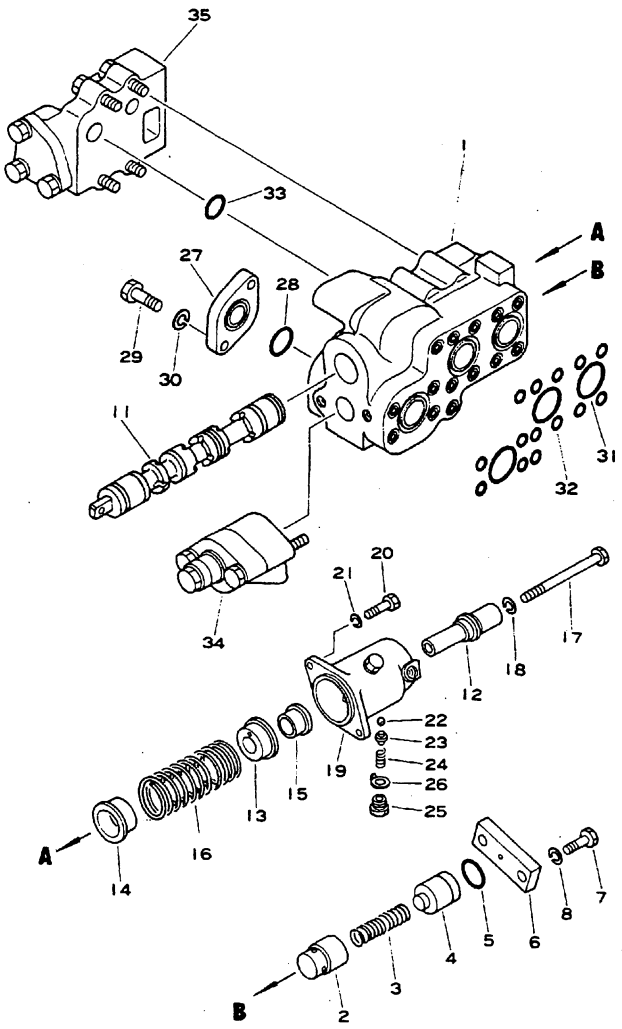

Fig. & Index No.	Part No.	Description	Q'ty	Serial No.	Remarks
	(701-31-11002)	HYDRAULIC CONTROL VALVE ASS'Y	1		
	701-31-31001	. HYDRAULIC CONTROL VALVE SUB ASS'Y	1		
1513 - 1	701-31-31310	. . BODY, control valve	1		
2	701-33-31120	. . VALVE	1		
3	701-33-31130	. . SPRING	1		
4	701-33-31150	. . SEAT	1		
5	07000-13035	. . O-RING	1		
6	701-33-31160	. . PLATE	1		
7	01010-31235	. . BOLT	2		
8	01602-01236	. . WASHER, spring	2		
11	701-33-31231	. . SPOOL	1		
12	701-31-31121	. . DETENT	1		
13	701-33-31380	. . RETAINER	1		
14	701-33-31390	. . RETAINER	1		
15	701-33-31281	. . COLLAR	1		
16	701-31-31130	. . SPRING	1		
17	701-33-31292	. . BOLT	1		
18	01602-01236	. . WASHER, spring	1		
19	701-33-31311	. . CASE	1		
20	01010-31030	. . BOLT	2		
21	01602-01030	. . WASHER, spring	2		
22	701-33-31320	. . BALL, steel	3		
23	701-33-31330	. . GUIDE	3		
24	701-33-31340	. . SPRING	3		
25	701-31-31150	. . PLUG	3		
26	01650-11816	. . WASHER, lock	3		
27	701-33-31360	. . PLATE	1		
28	07000-13040	. . O-RING	1		
29	01010-31440	. . BOLT	2		
30	01602-01442	. . WASHER, spring	2		
31	07000-13045	. . O-RING	3		
32	07000-12015	. . O-RING	14		
33	07000-13035	. . O-RING	2		
34	701-30-51002	. MAIN RELIEF VALVE ASS'Y	1		See Fig. 1514
35	701-30-63001	. SUCTION VALVE ASS'Y	1		See Fig. 1514

Fig. 1514 HYDRAULIC CONTROL VALVE (2/2), For Angle and Straight Dozer
(D60A, P, PL, E, D65A, P, E)

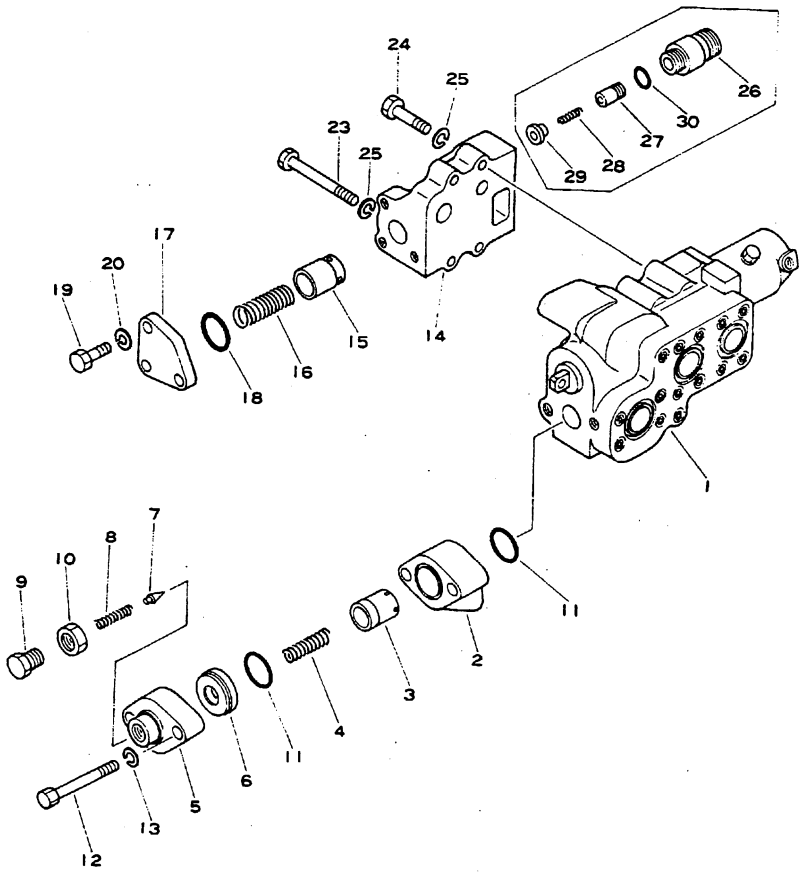

Fig. & Index No.	Part No.	Description	Q'ty	Serial No.	Remarks
	(701-31-11002)	HYDRAULIC CONTROL VALVE ASS'Y	1		
1514 - 1	(701-31-31001)	. HYDRAULIC CONTROL VALVE SUB ASS'Y	1		
	(701-30-51002)	. MAIN RELIEF VALVE ASS'Y	1		
2	701-30-51111	. . HOUSING, relief valve	1		
3	701-30-51120	. . VALVE, pressure regulator	1		
4	701-30-51130	. . SPRING	1		
5	701-30-51140	. . BODY	1		
6	701-30-51151	. . SEAT, valve	1		
7	701-30-51160	. . POPPET	1		
8	701-30-51171	. . SPRING	1		
9	701-10-51160	. . PLUG	1		
10	701-30-51190	. . NUT	1		
11	07000-13048	. . O-RING	2		
12	01011-31405	. . BOLT	2		
13	01602-01442	. . WASHER, spring	2		
	(701-30-63001)	. SUCTION VALVE ASS'Y	1		
14	701-30-63310	. . HOUSING, suction valve	1		
15	701-30-61120	. . VALVE, suction	1		
16	701-30-61130	. . SPRING	1		
17	701-30-62130	. . PLATE	1		
18	07000-13048	. . O-RING	1		
19	01010-31240	. . BOLT	3		
20	01602-01236	. . WASHER, spring	3		
23	01010-31255	. . BOLT	2		
24	01010-31255	. . BOLT	2		
25	01602-01236	. . WASHER, spring	4		
26	701-30-65111	. . BODY, suction valve	1		
27	701-13-31120	. . VALVE, suction	1		
28	701-30-65131	. . SPRING	1		
29	701-30-65121	. . SEAT	1		
30	07000-13028	. . O-RING	1		

Fig. 1515 HYDRAULIC TANK, For Straight Tilt Dozer (D60P, D65P)

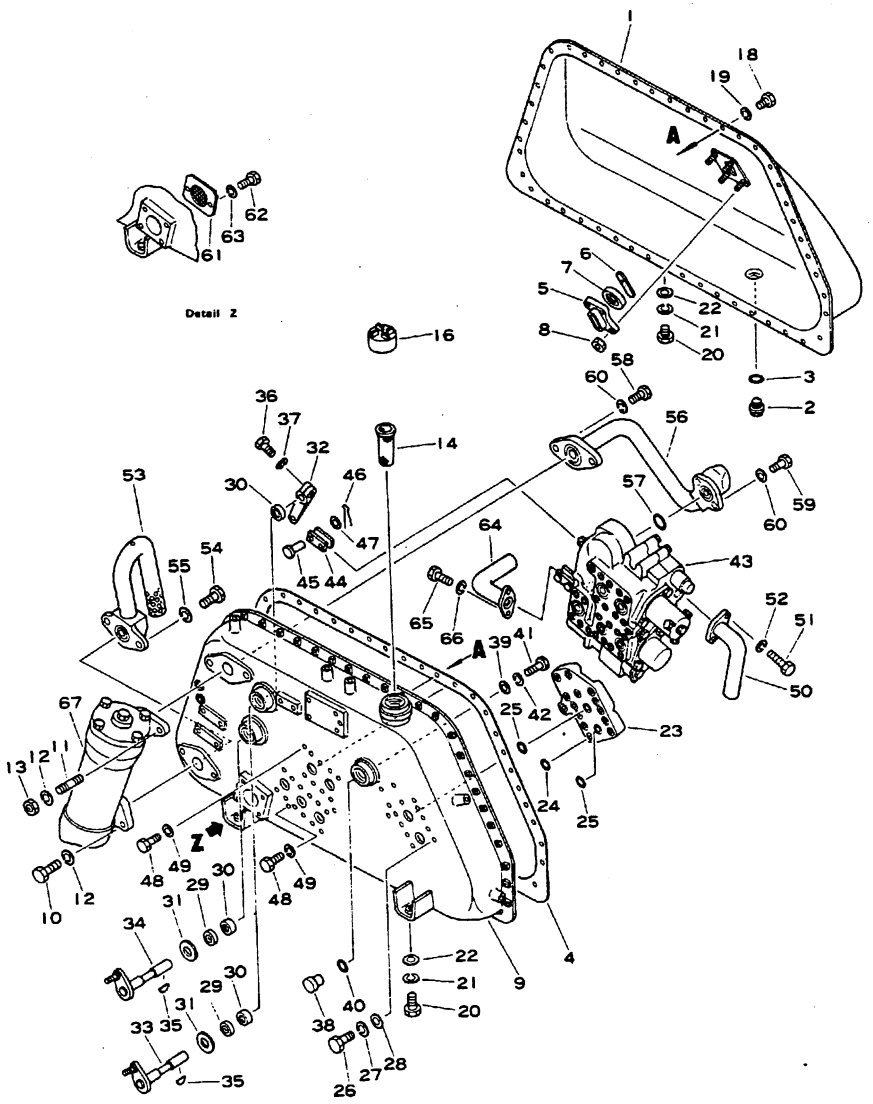

Fig. & Index No.	Part No.	Description	Q'ty	Serial No.	Remarks
	144-920-5004	HYDRAULIC TANK AND CONTROL VALVE ASS'Y	1		
1515 - 1	144-978-9350	. TANK, hydraulic	1		
2	07044-13620	. PLUG, magnetic	1		
3	07002-03034	. O-RING	1		
4	144-60-13170	. GASKET	1		
5	07715-21074	. CASE	1		
6	07715-00651	. COVER	1		
7	07715-11257	. RING	1		
8	01598-11011	. NUT	4		
9	144-920-6116	. TANK, hydraulic	1		
10	01010-31440	. BOLT	2		
11	01120-31440	. STUD	2		
12	01602-01442	. WASHER, spring	4		
13	01582-31411	. NUT	2		
14	141-60-33730	. STRAINER	1		
16	07051-00000	. CAP	1		
18	01010-51025	. BOLT	49		
19	01602-21030	. WASHER, spring	49		
20	01010-31440	. BOLT	5		
21	01602-01442	. WASHER, spring	5		
22	01643-01432	. WASHER	5		
23	144-60-13213	. COVER	1		
24	07000-02015	. O-RING	14		
25	07000-03042	. O-RING	2		
26	01010-51230	. BOLT	14		
27	01602-21236	. WASHER, spring	14		
28	01643-31232	. WASHER	14		
29	130-09-11450	. SEAL, oil	2		
30	06120-02016	. BEARING, needle	4		
31	130-60-43150	. PLATE	2		
32	141-60-33270	. LEVER	2		
33	144-920-6132	. LEVER	1		
34	144-920-6123	. LEVER	1		
35	04010-00519	. KEY	2		
36	01010-30830	. BOLT	2		
37	01602-00825	. WASHER, spring	2		
38	140-60-13350	. PLUG	1		
39	140-60-13360	. COLLAR	1		
40	07000-03020	. O-RING	1		
41	01010-31090	. BOLT			
42	01602-01030	. WASHER, spring	1		
43	701-33-12004	. HYDRAULIC CONTROL VALVE ASS'Y	1		See Fig. 1516

HYDRAULIC TANK

Fig & Index No.	Part No.	Description	Q'ty	Serial No.	Remarks
1515 -44	141-60-32170	. YOKE	4		
45	04205-01028	. PIN	4		
46	04050-03015	. PIN, cotter	4		
47	01641-01016	. WASHER	4		
48	01010-51225	. BOLT	3		
49	01602-21236	. WASHER, spring	3		
50	144-60-12190	. TUBE	1		
51	01010-31035	. BOLT	2		
52	01602-01030	. WASHER, spring	2		
53	144-60-13230	. BAFFLE	1		
54	01010-31435	. BOLT	2		
55	01602-01442	. WASHER, spring	2		
56	144-920-5312	. TUBE	1		
57	07000-23045	. O-RING	2		
58	01010-31440	. BOLT	2		
59	01010-31435	. BOLT	2		
60	01602-01442	. WASHER, spring	4		
61	144-60-13311	. STRAINER	1		
62	01010-31016	. BOLT	2		
63	01602-01030	. WASHER, spring	2		
64	144-920-5142	. BAFFLE	1		
65	01010-30825	. BOLT	2		
66	01602-00825	. WASHER, spring	2		
67	(144-60-00033)	HYDRAULIC FILTER ASS'Y	1		See Fig.1512

Fig. 1516 HYDRAULIC CONTROL VALVE ($\frac{1}{2}$), For Straight Tilt Dozer (D60P, D65P)

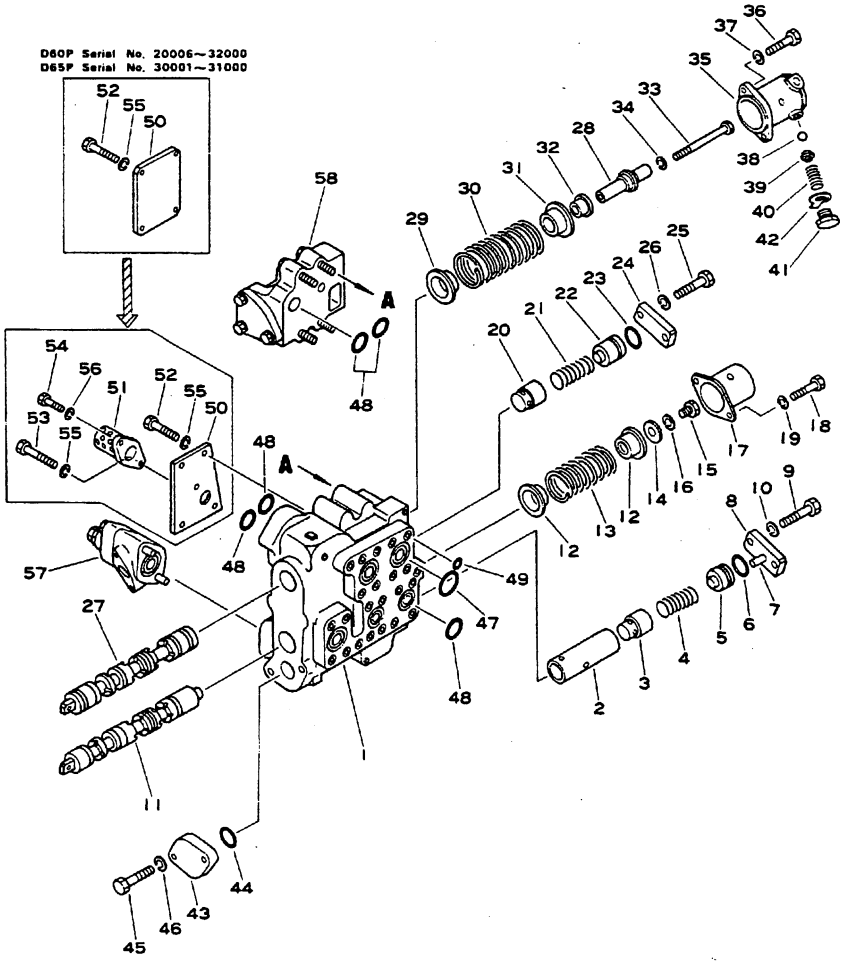

Fig. & Index No.	Part No.	Description	Q'ty	Serial No.	Remarks
	(701-33-1Z004)	HYDRAULIC CONTROL VALVE ASS'Y	1		
	701-33-32003	. VALVE BODY ASS'Y	1		
1516 - 1	☆	. . BODY, control valve (701-33-32113)	1		
2	701-33-32220	. . COLLAR	1		
3	701-33-32130	. . VALVE, check	1		
4	701-33-32140	. . SPRING	1		
5	701-33-32152	. . SEAT	1		
6	07000-13025	. . O-RING	1		
7	04020-00514	. . PIN, dowel	1		
8	701-33-32160	. . PLATE	1		
9	01010-31240	. . BOLT	2		
10	01602-01236	. . WASHER, spring	2		
11	☆	. . SPOOL (701-33-31450)	1		
12	701-33-31370	. . RETAINER	2		
13	701-33-32180	. . SPRING	1		
14	701-33-31210	. . WASHER	1		
15	01010-31220	. . BOLT	1		
16	01602-01236	. . WASHER, spring	1		
17	701-33-31221	. . CASE	1		
18	01010-31030	. . BOLT	2		
19	01602-01030	. . WASHER, spring	2		
20	701-33-31120	. . VALVE, check	1		
21	701-33-31130	. . SPRING	1		
22	701-33-31150	. . SEAT	1		
23	07000-13035	. . O-RING	1		
24	701-33-31160	. . PLATE	1		
25	01010-31235	. . BOLT	2		
26	01602-01236	. . WASHER, spring	2		
27	☆	. . SPOOL (701-33-31430)	1		
28	701-31-31121	. . DETENT	1		
29	701-33-31380	. . RETAINER	1		
30	701-31-31130	. . SPRING	1		
31	701-33-31390	. . RETAINER	1		
32	701-33-31281	. . COLLAR	1		
33	701-33-31292	. . BOLT	1		
34	01602-01236	. . WASHER, spring	1		
35	701-33-31311	. . CASE	1		
36	01010-31030	. . BOLT	2		
37	01602-01030	. . WASHER, spring	2		
38	701-33-31320	. . BALL	3		
39	701-33-31330	. . GUIDE	3		

Fig. & Index No.	Part No.	Description	Q'ty	Serial No.	Remarks
1516 -40	701-33-31340	. . SPRING	3		
41	701-31-31150	. . PLUG	3		
42	01650-11816	. . WASHER, lock	3		
43	701-33-31360	. . PLATE	1		
44	07000-13040	. . O-RING	1		
45	01010-31440	. . BOLT	2		
46	01602-01442	. . WASHER, spring	2		
47	07000-13045	. . O-RING	3		
48	07000-13035	. . O-RING	6		
49	07000-12015	. .. O-RING	23		
50	701-33-32170	. PLATE	1		
	701-33-32190	. PLATE	1		
51	701-33-32230	. BAFFLE	1		
52	01010-31240	. BOLT	4		
	01010-31240	. BOLT	3		
53	01010-31250	. BOLT	1		
54	01010-31025	. BOLT	1		
55	01602-01236	. WASHER, spring	4		
56	01602-01030	. WASHER, spring	1		
57	701-30-51002	. MAIN RELIEF VALVE ASS'Y	1		See Fig. 1517
58	701-30-62001	. SUCTION VALVE ASS'Y	1		See Fig. 1517

Fig. 1517 HYDRAULIC CONTROL VALVE (2/2), For Straight Tilt Dozer (D60P, D65P)

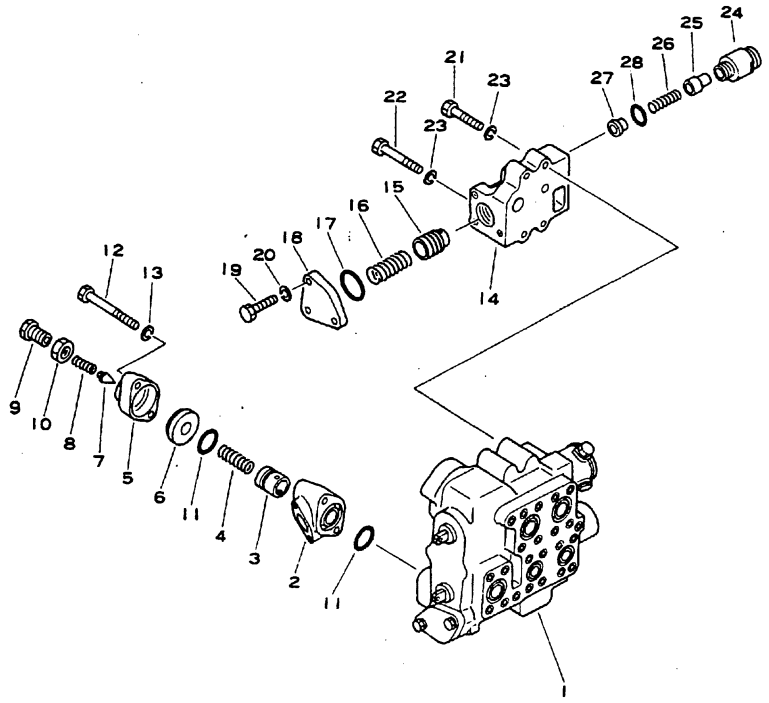

Fig. & Index No.	Part No.	Description	Q'ty	Serial No.	Remarks
	(701-33-12004)	HYDRAULIC CONTROL VALVE ASS'Y	1		
1517 - 1	(701-33-32003)	. VALVE BODY ASS'Y	1		
	(701-30-51002)	. MAIN RELIF VALVE ASS'Y	1		
2	☆	. . HOUSING, relief valve (701-30-51111)	1		
3	701-30-51120	. . VALVE, pressure regulator	1		
4	701-30-51130	. . SPRING	1		
5	701-30-51140	. . BODY	1		
6	701-30-51151	. . SEAT, valve	1		Order as a set
7	701-30-51160	. . POPPET	1		
8	701-30-51171	. . SPRING	1		
9	701-10-51160	. . PLUG	1		
10	701-30-51190	. . NUT	1		
11	07000-13048	. . O-RING	2		
12	01011-31405	. . BOLT	2		
13	01602-01442	. . WASHER, spring	2		
	(701-30-62001)	. SUCTION VALVE ASS'Y	1		
14	☆	. . HOUSING, vacuum check valve (701-30-62410)	1		
15	701-30-61120	. . VALVE, vacuum check	1		
16	701-30-61130	. . SPRING	1		
17	07000-13048	. . O-RING	1		
18	701-30-62130	. . PLATE	1		
19	01010-31240	. . BOLT	3		
20	01602-01236	. . WASHER, spring	3		
21	01011-31210	. . BOLT	2		
22	01010-31260	. . BOLT	2		
23	01602-01236	. . WASHER, spring	4		
24	701-30-65111	. . BODY	1		
25	701-13-31120	. . VALVE	1		
26	701-30-65131	. . SPRING	1		
27	701-30-65122	. . SEAT	1		
28	07002-03034	. . O-RING	1		

Fig. 1531 BLADE LIFT CYLINDER (D60A, E, D65A, E)

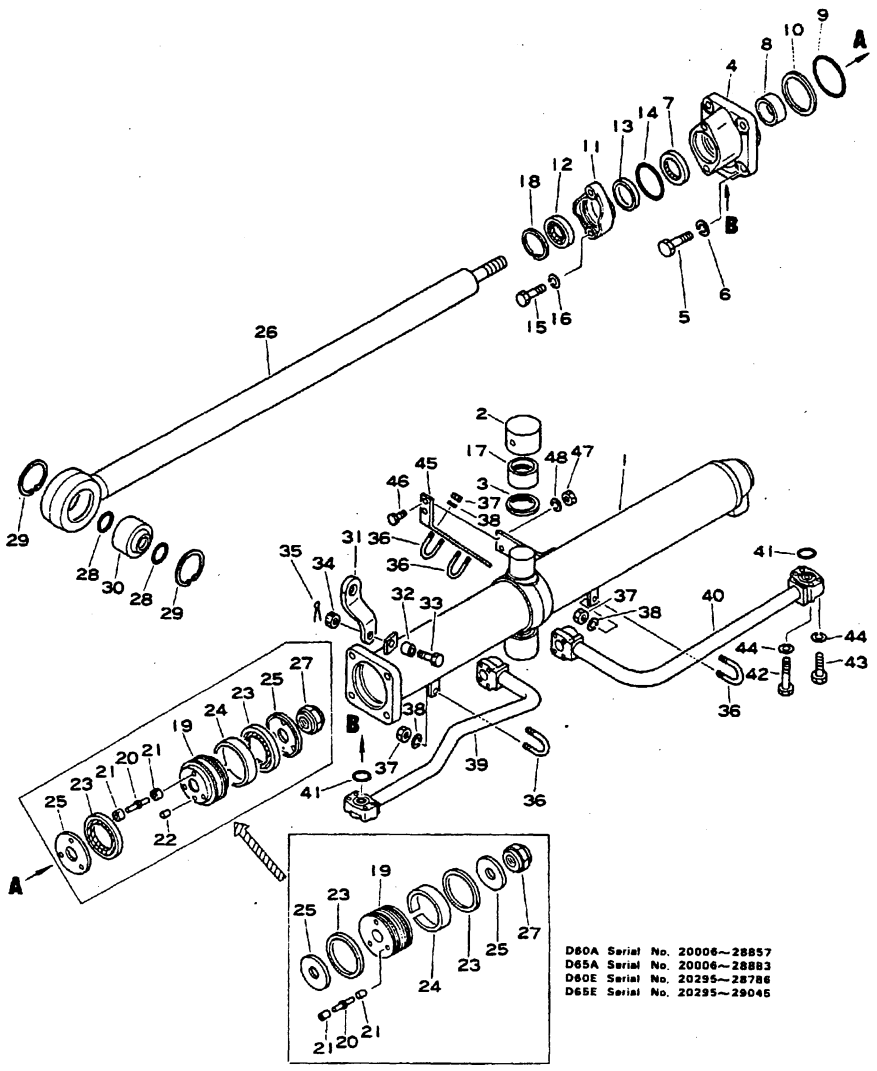

Fig. & Index No.	Part No.	Description	Q'ty	Serial No.	Remarks
	144-63-12100	HYDRAULIC CYLINDER ASS'Y, L.H	1		
	144-63-12200	HYDRAULIC CYLINDER ASS'Y, R.H	1		
1531 - 1	144-60-15374	. CYLINDER, L.H	1		
	144-60-15384	. CYLINDER, R.H	1		
2	144-60-15431	. BUSHING	2		
3	07145-00055	. SEAL, dust	2		
4	144-63-12130	. HEAD, cylinder	1		
5	01010-32055	. BOLT	4		
6	01602-02060	. WASHER, spring	4		
7	154-63-12173	. PACKING, rod	1		
8	07177-06530	. BUSHING	1		
9	07000-12105	. O-RING	1		
10	07146-02106	. RING, back-up	1		
11	144-63-12230	. GLAND	1		
12	07016-00658	. SEAL, dust	1		
13	07177-06515	. BUSHING	1		
14	07000-03078	. O-RING	1		
15	01010-31450	. BOLT	2		
16	01602-21442	. WASHER, spring	2		
17	144-60-15450	. BUSHING	2		
18	07179-00088	. RING, snap	1		
	144-63-12060	. PISTON ASS'Y	1		
19	144-63-12160	. . PISTON	1		
20	☆	. . VALVE, piston (130-63-12364)	3		
21	☆	. . SEAT, valve (130-63-12464)	6		
22	130-63-12761	. PIN	2		
23	113-63-22461	. PACKING, piston	2		
24	07155-01125	. RING, wear	1		
25	144-63-12260	. RETAINER	2		
26	144-63-12120	. ROD, piston	1		
27	144-63-12360	. NUT	1		
28	07000-03040	. O-RING	2		
29	04065-09030	. RING snap	2		
30	07137-04006	. BUSHING	1		
31	144-60-15491	. PLATE	1		
32	140-60-15460	. TUBE	1		
33	01012-51245	. BOLT	1		
34	01590-11215	. NUT	1		
35	04050-13035	. PIN, cotter	1		
36	07283-13442	. CLIP, pipe	4		
37	01599-01011	. NUT	8		

BLADE LIFT CYLINDER

Fig & Index No.	Part No.	Description	Q'ty	Serial No.	Remarks
1531 -38	01643-21032	. WASHER	8		
39	144-60-15513	TUBE, L.H	1		
	144-60-15533	TUBE, R.H	1		
40	144-60-15524	TUBE, L.H	1		
	144-60-15544	TUBE, R.H	1		
41	07000-13035	O-RING	4		
42	01010-31055	BOLT	8		
43	01010-31045	BOLT	8		
44	01602-01030	WASHER, spring	16		
45	144-60-15892	PLATE	2		
46	01010-31025	BOLT	4		
47	01503-31008	NUT	4		
48	01602-01030	WASHER, spring	4		

Fig. 1532 BLADE LIFT CYLINDER (D60P, PL, D65P Serial No. 20006~)

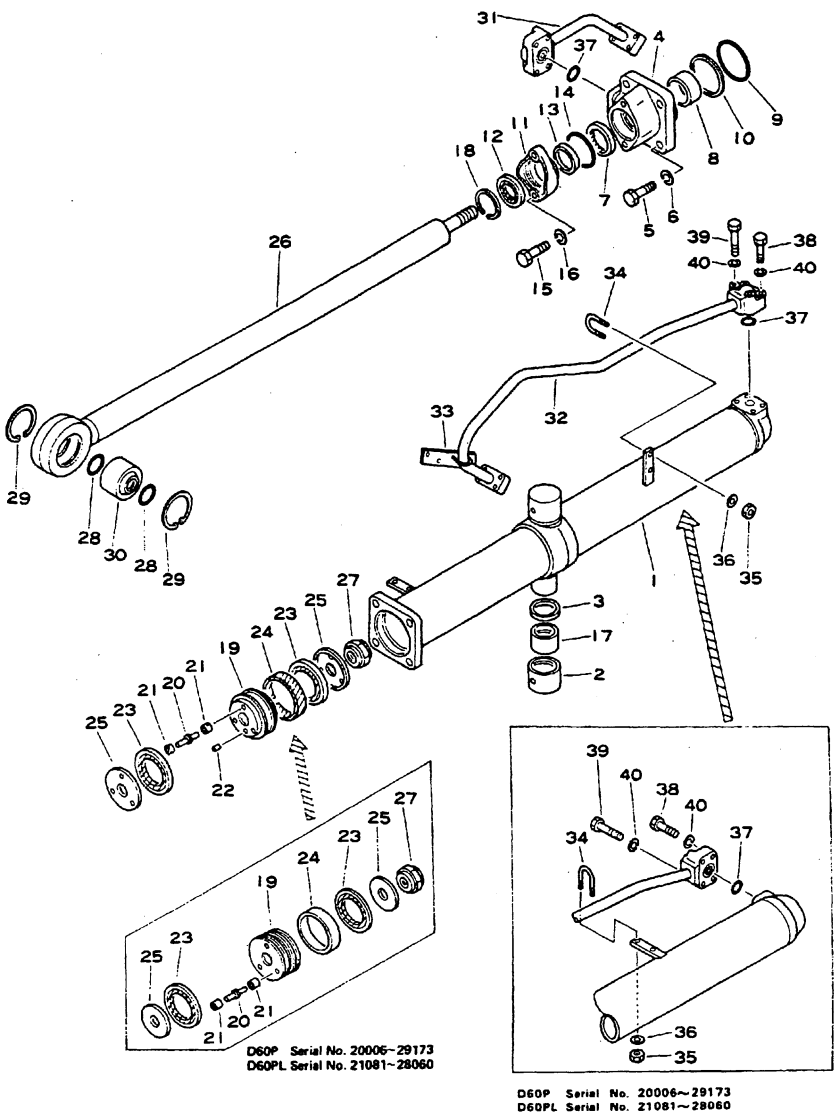

Fig. & Index No.	Part No.	Description	Q'ty	Serial No.	Remarks
	144-63-13100	HYDRAULIC CYLINDER ASS'Y, L.H	1		
	144-63-13200	HYDRAULIC CYLINDER ASS'Y, R.H	1		
1532 - 1	144-817-8114	. CYLINDER, L.H	1		
	144-817-8124	. CYLINDER, R.H	1		
2	144-60-15431	. BUSHING	2		
3	07145-00055	. SEAL, dust	2		
4	144-63-12130	. HEAD, cylinder	1		
5	01010-32055	. BOLT	4		
6	01602-02060	. WASHER, spring	4		
7	154-63-12173	. PACKING, rod	1		
8	07177-06530	. BUSHING	1		
9	07000-12105	. O-RING	1		
10	07146-02106	. RING, back-up	1		
11	144-63-12230	. GLAND	1		
12	07016-00658	. SEAL, dust	1		
13	07177-06515	. BUSHING	1		
14	07000-03078	. O-RING	1		
15	01010-31450	. BOLT	2		
16	01602-01442	. WASHER, spring	2		
17	144-60-15450	. BUSHING	2		
18	07179-00088	. RING, snap	1		
	144-63-12060	. PISTON ASS'Y	1		
19	144-63-12160	. . PISTON	1		
20	☆	. . VALVE, piston (130-63-12364)	3		
21	☆	. . SEAT, valve (130-63-12464)	6		
22	130-63-12761	. PIN	2		
23	113-63-22461	. U-PACKING	2		
24	07155-01125	. RING, wear	1		
25	144-63-12260	. RETAINER	2		
26	144-63-12120	. ROD, piston	1		
27	144-63-12360	. NUT, nylon	1		
28	07000-03040	. O-RING	2		
29	04065-09030	. RING, snap	2		
30	07137-04006	. BUSHING	1		
31	144-817-8312	TUBE, L.H	1		
	144-817-8322	TUBE, R.H	1		
32	144-817-8335	TUBE, L.H	1		
	144-817-8345	TUBE, R.H	1		
33	144-817-8351	PLATE	2		
34	07283-03442	CLIP, pipe	8		
35	01599-01011	NUT	16		

BLADE LIFT CYLINDER

Fig & Index No.	Part No.	Description	Q'ty	Serial No.	Remarks
1532 -36	01643-31032	WASHER	16		
37	07000-13035	O-RING	4		
38	01010-31055	BOLT	8		
39	01010-31045	BOLT	8		
40	01602-01030	WASHER, spring	16		

Fig. 1533 BLADE TILT CYLINDER (D60P, D65P)

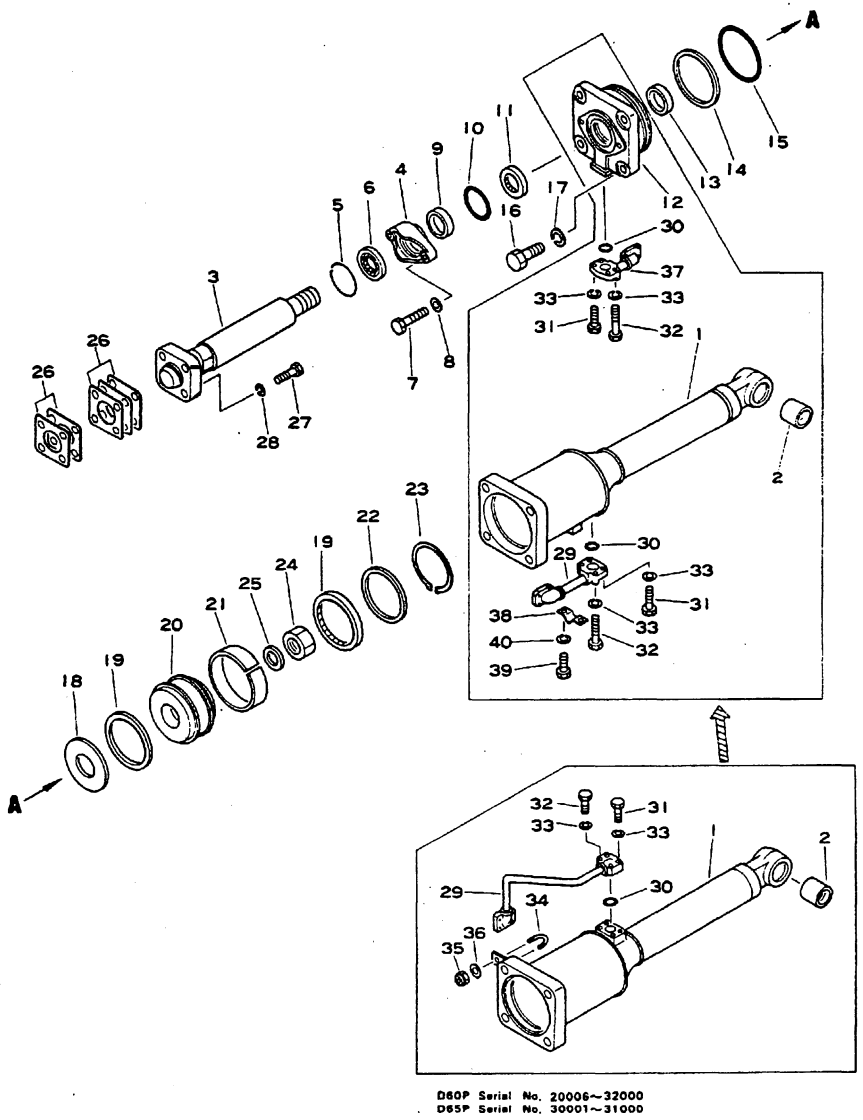

D60P Serial No. 20006~32000
D65P Serial No. 30001~31000

Fig. & Index No.	Part No.	Description	Q'ty	Serial No.	Remarks
	144-63-52101	TILT CYLINDER ASS'Y	1		
1533 - 1	144-917-8182	. CYLINDER	1		
2	144-917-8230	. BUSHING	1		
3	144-917-8153	. ROD, piston	1		
4	175-63-12430	. GLAND	1		
5	07179-00093	. RING, snap	1		
6	07016-00708	. SEAL, dust	1		
7	01010-51655	. BOLT	2		
8	01602-01648	. WASHER, spring	2		
9	07177-07015	. BUSHING	1		
10	07000-03090	. O-RING	1		
11	154-63-42373	. PACKING, rod	1		
12	144-63-42130	. HEAD, cylinder	1		
13	07177-07030	. BUSHING	1		
14	07146-05152	. RING, back-up	1		
15	07000-15150	. O-RING	1		
16	01010-82775	. BOLT	4		
17	01602-02783	. WASHER, spring	4		
18	130-63-52370	. RETAINER	1		
19	141-60-34411	. U-PACKING	2		
20	130-63-52171	. PISTON	1		
21	07155-01640	. RING, wear	1		
22	130-63-52380	. RETAINER	1		
23	04069-01352	. RING, snap	1		
24	144-63-42182	. NUT	1		
25	144-63-42170	. WASHER	1		
26	130-842-0510	. SHIM ASS'Y	1		
	130-842-2180	. . SHIM, 1.0 mm	3		
	130-842-2190	. . SHIM, 0.5 mm	2		
27	01010-31865	. BOLT	4		
28	01602-01854	. WASHER, spring	4		
29	144-917-8211	. TUBE	1		
30	07000-13025	. O-RING	2		
31	01010-50835	. BOLT	4		
32	01010-50845	. BOLT	4		
33	01602-00825	. WASHER, spring	8		
34	07283-02236	. CLIP, pipe	1	C 20006~32000 T 30001~31000	
35	01599-01011	. NUT, nylon	2	C 20006~32000 T 30001~31000	
36	01643-31032	. WASHER	2	C 20006~32000 T 30001~31000	
37	144-917-8220	. TUBE	1	C 32001~ T 31001~	

BLADE TILT CYLINDER

Fig & Index No.	Part No.	Description	Q'ty	Serial No.	Remarks
1533 -38	07282-02288	. CLAMP	1	C 32001~ T 31001~	
39	01010-31020	. BOLT	2	C 32001~ T 31001~	
40	01602-01030	. WASHER, spring	2	C 32001~ T 31001~	

Fig. 1541 HYDRAULIC PIPING (½), HYDRAULIC PUMP TO TANK
For Angle and Straight Dozer
(D60A, P, PL, E, D65A, P, E)

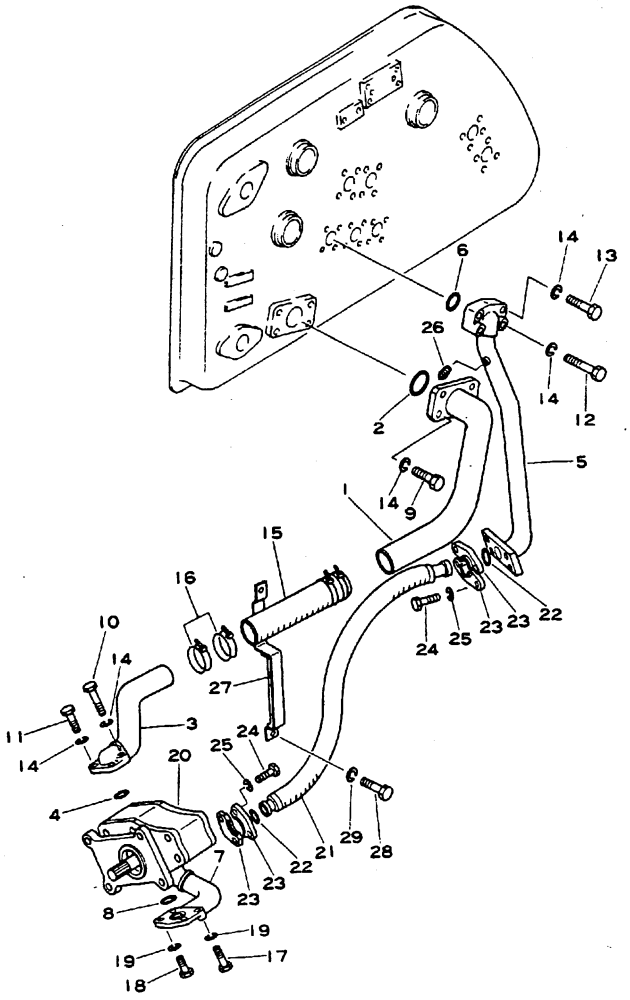

Fig. & Index No.	Part No.	Description	Q'ty	Serial No.	Remarks
1541 - 1	144-60-18114	TUBE	1		
2	07000-02075	O-RING	1		
3	144-60-18123	TUBE	1	C	
	144-60-17110	TUBE	1	T	
4	07000-02070	O-RING	1	C	
	07000-03058	O-RING	1	T	
5	144-60-18142	TUBE	1		
6	07000-23048	O-RING	1		
7	144-60-17121	TUBE	1		
8	07000-23040	O-RING	1		
9	01010-31240	BOLT	4		
10	01010-31280	BOLT	2	C	
	01010-31285	BOLT	2	T	
11	01010-31265	BOLT	2	C	
	01010-31240	BOLT	2	T	
12	01010-31275	BOLT	2		
13	01010-31255	BOLT	2		
14	01602-01236	WASHER, spring	12		
15	07260-05820	HOSE, rubber	1		
16	07280-08029	CLAMP, hose	4		
17	01010-31075	BOLT	2	C	
	01010-31070	BOLT	2	T	
18	01010-31060	BOLT	2	C	
	01010-31050	BOLT	2	T	
19	01602-01030	WASHER, spring	4		
20	(07443-67503)	HYDRAULIC PUMP ASS'Y	1	AC, EC, PC, LC	See Fig. 1501
	(07441-67502)	HYDRAULIC PUMP ASS'Y	1	AT, PT, ET	See Fig. 1502A
21	144-60-18730	HOSE	1		
22	07000-23032	O-RING	2		
23	07371-01250	FLANGE	4		
24	07372-01030	BOLT	8		
25	01602-01030	WASHER, spring	8		
26	07042-00108	PLUG, taper	1		
27	144-60-18480	CLAMP	1		
28	01010-31220	BOLT	2		
29	01602-01236	WASHER, spring	2		

Fig. 1542 HYDRAULIC PIPING (2/2), HYDRAULIC TANK TO LIFT CYLINDER
For Angle and Straight Dozer (D60A, P, PL, E, D65A, P, E)

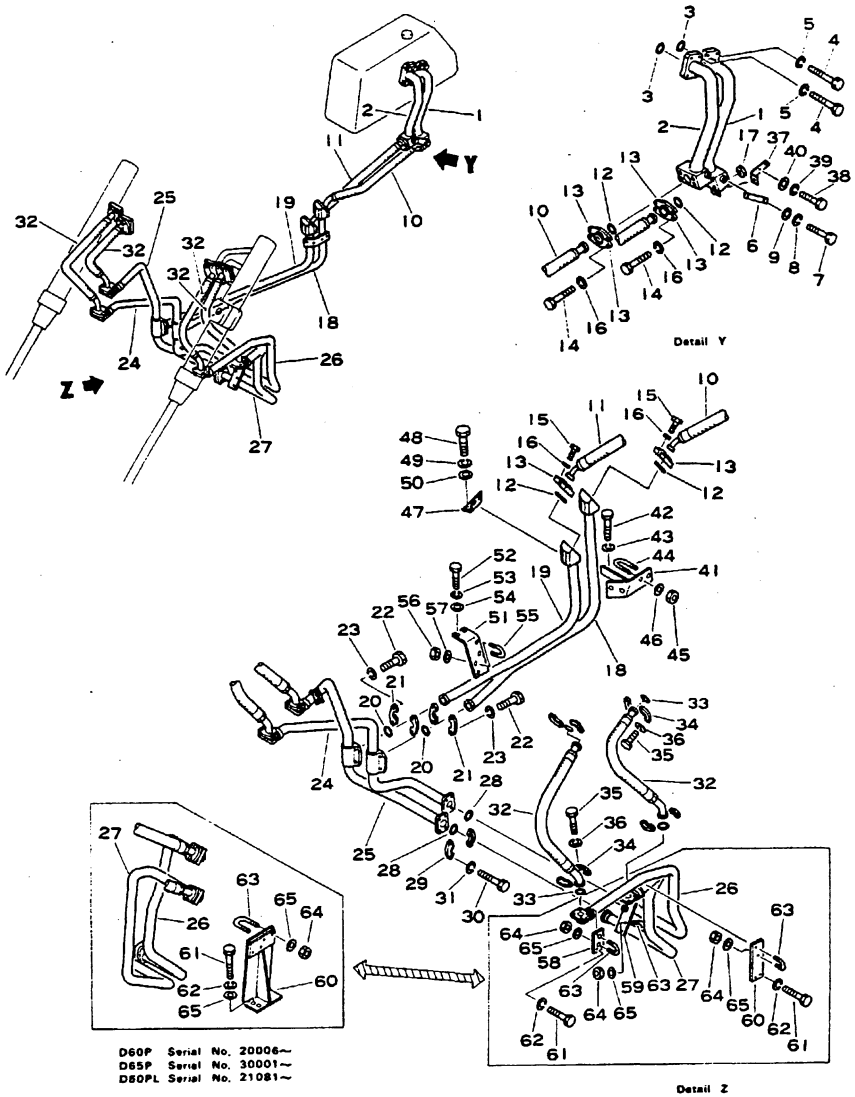

Fig. & Index No.	Part No.	Description	Q'ty	Serial No.	Remarks
1542 - 1	144-60-18274	TUBE	1		
2	144-60-18332	TUBE	1		
3	07000-23048	O-RING	2		
4	01010-31245	BOLT	8		
5	01602-01236	WASHER, spring	8		
6	144-60-18530	PLATE	1		
7	01010-31225	BOLT	2		
8	01602-01236	WASHER, spring	2		
9	01643-31232	WASHER	2		
10	07118-01209	HOSE	1		
11	07118-01211	HOSE	1		
12	07000-23038	O-RING	4		
13	07371-01250	FLANGE	8		
14	01010-31085	BOLT	8		
15	07372-01030	BOLT	8		
16	01602-01030	WASHER, spring	16		
17	01580-01008	NUT	8		
18	144-60-18284	TUBE	1		
19	144-60-18244	TUBE	1		
20	07000-23048	O-RING	1		
21	07371-01460	FLANGE	4		
22	07372-01235	BOLT	8		
23	01602-01236	WASHER, spring	8		
24	144-60-18253	TUBE, R.H	1		A, E
	144-817-9520	TUBE, R.H	1		P, LC
25	144-60-18293	TUBE, R.H	1		A, E
	144-817-9144	TUBE, R.H	1		LC
	144-817-9540	TUBE, R.H	1		P
26	144-60-18313	TUBE, L.H	1		A, E
	144-817-9134	TUBE, L.H	1		LC
	144-817-9530	TUBE, L.H	1		P
27	144-60-18263	TUBE, L.H	1		A, E
	144-817-9114	TUBE, L.H	1		LC
	144-817-9510	TUBE, L.H	1		P
28	07000-23038	O-RING	2		A, L, E, P
29	07371-01250	FLANGE	4		
30	07372-01030	BOLT	8		
31	01602-01030	WASHER, spring	8		
32	07114-01008	HOSE	4		A, E
	07114-01010	HOSE	4		P, LC
33	07000-23032	O-RING	8		
34	07371-01044	FLANGE	16		
35	07372-01030	BOLT	32		

Fig. & Index No.	Part No.	Description	Q'ty	Serial No.	Remarks
1542 -36	01602-01030	WASHER, spring	32		
37	144-60-18553	BRACKET	1		
38	01010-31225	BOLT	3		
39	01602-01236	WASHER, spring	3		
40	01643-31232	WASHER	3		
41	144-60-18593	BRACKET	1		
42	01010-31020	BOLT	2		
43	01602-01030	WASHER, spring	2		
44	07283-04346	CLIP, pipe	1		
45	01599-01011	NUT	2		
46	01643-31032	WASHER	2		
47	144-60-18350	PLATE	1		
48	01010-31025	BOLT	4		
49	01602-01030	WASHER, spring	4		
50	01643-31032	WASHER	4		
51	144-60-18455	PLATE	1		
52	01010-31025	BOLT	2		
53	01602-01030	WASHER, spring	2		
54	01643-31032	WASHER	2		
55	07283-04346	CLIP, pipe	2		
56	01599-01011	NUT	4		
57	01643-31032	WASHER	4		
58	144-60-18810	PLATE	2	A, E	
59	144-60-18721	PLATE	1	A, E	
60	144-60-18820	PLATE	2	A, E	
	144-817-9152	BRACKET	2	P, LC	
61	01010-31025	BOLT	8	A, E, P, LC	
62	01602-01030	WASHER, spring	8	A, E, P, LC	
63	07283-03442	CLIP, pipe	6 8	A, E P, LC	
64	01599-01011	NUT	12 16	A, E P, LC	
65	01643-31032	WASHER	12 16	A, E P, LC	

Fig. 1543 HYDRAULIC PIPING (1/3), HYDRAULIC PUMP TO TANK
For Straight Tilt Dozer (D60P, D65P)

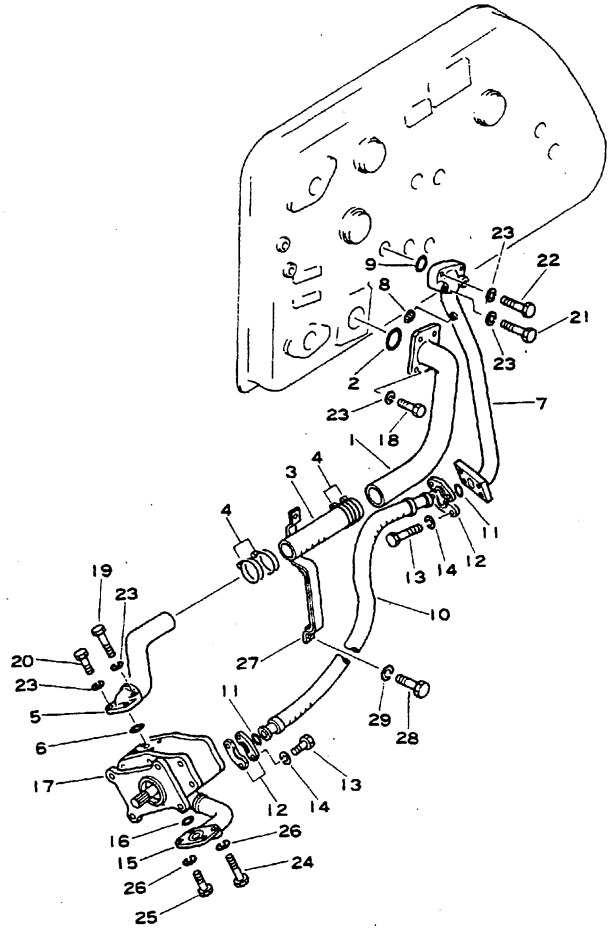

Fig. & Index No.	Part No.	Description	Q'ty	Serial No.	Remarks
1543 - 1	144-60-18114	TUBE	1		
2	07000-02075	O-RING	1		
3	07260-05820	HOSE	1		
4	07280-08029	CLAMP	4		
5	144-60-18123	TUBE	1		
6	07000-02070	O-RING	1		
7	144-920-9191	TUBE	1		
8	07042-00108	PLUG	1		
9	07000-23048	O-RING	1		
10	144-60-18730	HOSE	1		
11	07000-23032	O-RING	2		
12	07371-01250	FLANGE	4		
13	07372-01030	BOLT	8		
14	01602-01030	WASHER, spring	8		
15	144-60-17121	TUBE	1		
16	07000-23040	O-RING	1		
17	(07443-67503)	HYDRAULIC PUMP ASS'Y	1	PC	
	(07441-67502)	HYDRAULIC PUMP ASS'Y	1	PT	
18	01010-31240	BOLT	4		
19	01010-31280	BOLT	2		
20	01010-31265	BOLT	2		
21	01010-31275	BOLT	2		
22	01010-31255	BOLT	2		
23	01602-01236	WASHER, spring	12		
24	01010-31075	BOLT	2		
25	01010-31060	BOLT	2		
26	01602-01030	WASHER, spring	4		
27	144-60-18480	CLAMP	1		
28	01010-31220	BOLT	2		
29	01602-01236	WASHER, spring	2		

Fig. 1544 HYDRAULIC PIPING (2/3), HYDRAULIC TANK TO LIFT CYLINDER
For Straight Tilt Dozer (D60P, D65P)

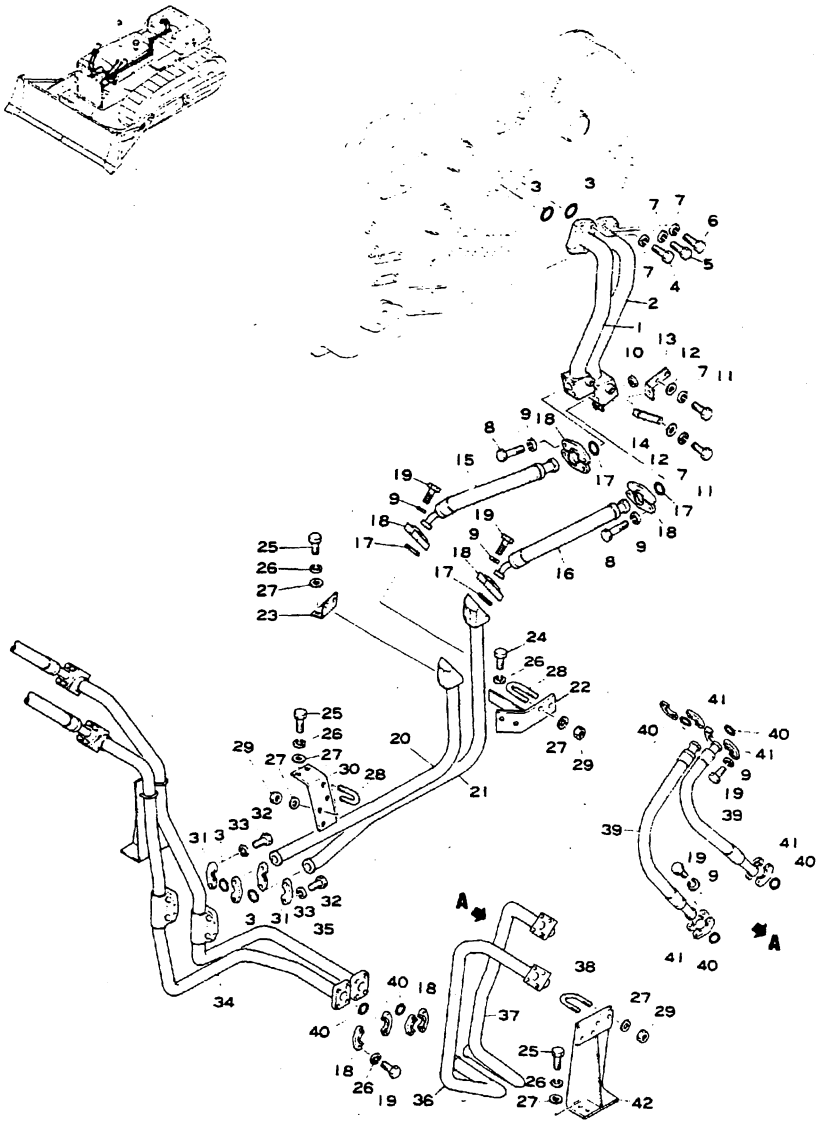

Fig. & Index No.	Part No.	Description	Q'ty	Serial No.	Remarks
1544 - 1	144-920-9530	TUBE	1		
2	144-920-9540	TUBE	1		
3	07000-23048	O-RING	4		
4	01010-31245	BOLT	4		
5	01010-31255	BOLT	2		
6	01010-31275	BOLT	2		
7	01602-01236	WASHER, spring	13		
8	01010-31085	BOLT	8		
9	01602-01030	WASHER, spring	48		
10	01580-01008	NUT	8		
11	01010-31225	BOLT	5		
12	01643-01232	WASHER	5		
13	144-60-18553	BRACKET	1		
14	144-60-18530	PLATE	1		
15	07118-01211	HOSE	1		
16	07118-01209	HOSE	1		
17	07000-23038	O-RING	4		
18	07371-01250	FLANGE	12		
19	07372-01030	BOLT	48		
20	144-60-18244	TUBE	1		
21	144-60-18284	TUBE	1		
22	144-60-18593	BRACKET	1		
23	144-60-18350	PLATE	1		
24	01010-31020	BOLT	2		
25	01010-31025	BOLT	14		
26	01602-01030	WASHER, spring	24		
27	01643-01032	WASHER	24		
28	07283-04346	CLIP	3		
29	01599-01011	NUT	14		
30	144-60-18455	PLATE	1		
31	07371-01460	FLANGE	4		
32	07372-01235	BOLT	8		
33	01602-01236	WASHER, spring	8		
34	144-817-9520	TUBE	1		
35	144-817-9540	TUBE	1		
36	144-817-9510	TUBE	1		
37	144-817-9530	TUBE	1		
38	07283-03442	CLIP	4		
39	07114-01010	HOSE	4		
40	07000-23032	O-RING	8		
41	07371-01044	FLANGE	16		
42	144-817-9152	BRACKET	2		

Fig. 1545 HYDRAULIC PIPING (3/3), HYDRAULIC TANK TO TILT CYLINDER
For Straight Tilt Dozer (D60P, D65P)

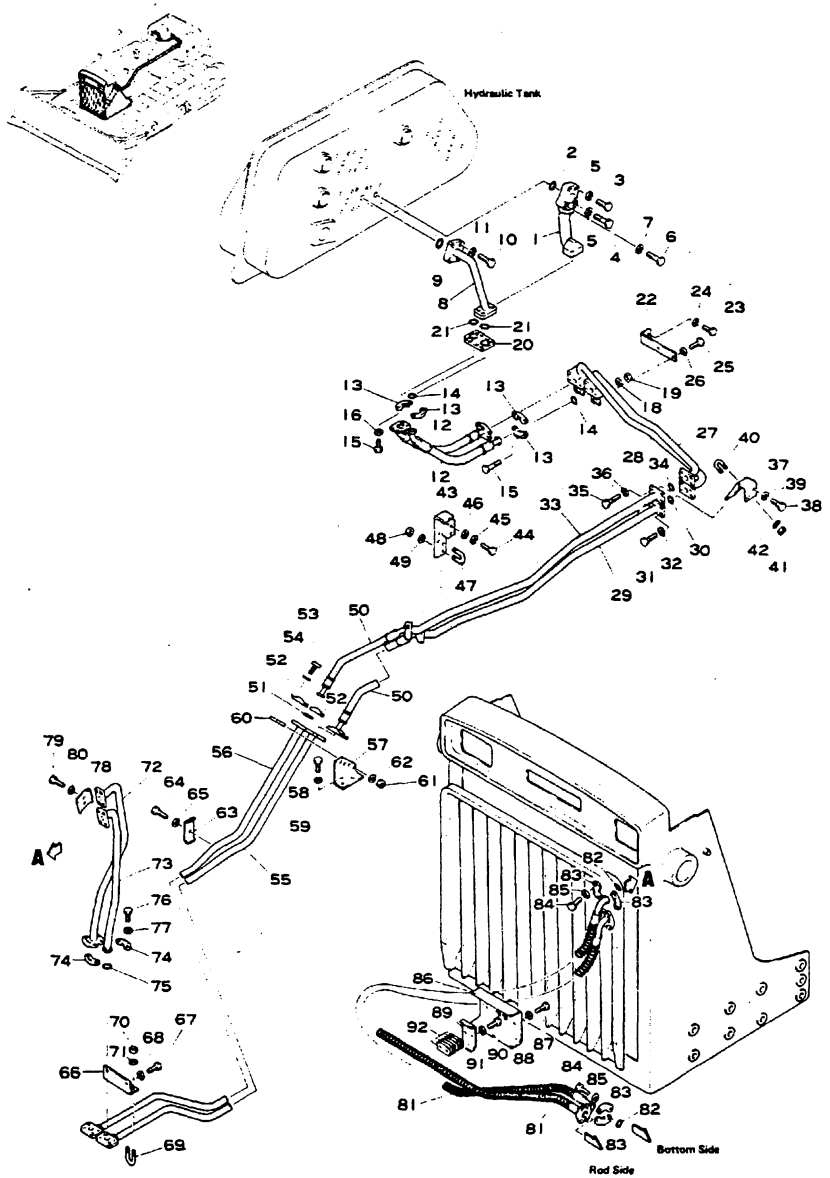

Fig. & Index No.	Part No.	Description	Q'ty	Serial No.	Remarks
1545 - 1	144-920-9114	TUBE	1		
2	07000-23038	O-RING	1		
3	01010-31050	BOLT	2		
4	01010-31060	BOLT	1		
5	01602-01030	WASHER, spring	3		
6	01010-31265	BOLT	1		
7	01602-01236	WASHER, spring	1		
8	144-920-9153	TUBE	1		
9	07000-23038	O-RING	1		
10	01010-31045	BOLT	4		
11	01602-01030	WASHER, spring	4		
12	07114-00505	HOSE	2		
13	07371-00500	FLANGE	8		
14	07000-23022	O-RING	4		
15	01010-30840	BOLT	8		
16	01602-00825	WASHER, spring	8		
17	01010-30865	BOLT	8		
18	01602-00825	WASHER, spring	8		
19	01580-00806	NUT	8		
20	144-920-9440	PLATE	1		
21	07000-23022	O-RING	2		
22	144-920-9212	BRACKET	1		
23	01010-31425	BOLT	1		
24	01602-01442	WASHER, spring	1		
25	01010-31230	BOLT	2		
26	01602-01236	WASHER, spring	2		
27	144-920-9124	TUBE	1		
28	144-920-9164	TUBE	1		
29	144-920-9133	TUBE	1		
30	07000-23025	O-RING	1		
31	01010-30830	BOLT	4		
32	01602-00825	WASHER, spring	4		
33	144-920-9183	TUBE	1		
34	07000-23025	O-RING	1		
35	01050-30830	BOLT	4		
36	01602-00825	WASHER, spring	4		
37	144-920-9321	BRACKET	1		
38	01010-31225	BOLT	2		
39	01602-01236	WASHER, spring	2		
40	07283-02236	CLIP	2		
41	01599-01011	NUT	4		
42	01643-31032	WASHER	4		
43	144-920-9330	BRACKET	1		

Fig & Index No.	Part No.	Description	Q'ty	Serial No.	Remarks
1545 -44	01010-31235	BOLT	2		
45	01602-01236	WASHER, spring	2		
46	01643-31232	WASHER	2		
47	07283-02244	CLIP	2		
48	01599-01011	NUT	4		
49	01643-31032	WASHER	4		
50	07114-00505	HOSE	2		
51	07000-23022	O-RING	4		
52	07371-00500	FLANGE	8		
53	07372-00830	BOLT	16		
54	01602-00825	WASHER, spring	16		
55	144-920-9272	TUBE	1		
56	144-920-9282	TUBE	1		
57	144-920-9390	BRACKET	1		
58	01010-31025	BOLT	2		
59	01602-01030	WASHER, spring	2		
60	07283-02236	CLIP	2		
61	01599-01011	NUT	4		
62	01643-31032	WASHER	4		
63	144-920-9480	CLAMP	1		
64	01010-31025	BOLT	1		
65	01602-01030	WASHER, spring	1		
66	144-920-9410	BRACKET	1		
67	01010-31225	BOLT	2		
68	01602-01236	WASHER, spring	2		
69	07283-02236	CLIP	2		
70	01599-01011	NUT	4		
71	01643-01032	WASHER	4		
72	144-917-9110	TUBE	1		
73	144-917-9120	TUBE	1		
74	07371-00500	FLANGE	4		
75	07000-23025	O-RING	2		
76	07372-00830	BOLT	8		
77	01602-00825	WASHER, spring	8		
78	144-920-9340	BRACKET	1		
79	01010-31025	BOLT	2		
80	01602-01030	WASHER, spring	2		
81	144-917-9130	HOSE	2	C 20006~32000 T 30001~31000	
	144-917-9150	HOSE	2	C 32001~ T 31001~	
82	07000-23022	O-RING	4		
83	07371-00500	FLANGE	8		
84	07372-00830	BOLT	16		

Fig & Index No.	Part No.	Description	Q'ty	Serial No.	Remarks
1545 -85	01602-00825	WASHER, spring	16		
86	144-920-9460	COVER	1		
87	01010-31225	BOLT	2		
88	01602-01236	WASHER, spring	2		
89	144-920-9470	CLAMP	1		
90	01010-31035	BOLT	2		
91	01602-01030	WASHER, spring	2		
92	144-920-9490	SPACER	6		

Fig. 1551 BLADE CONTROL LEVER, For Angle and Straight Dozer (D60A, P, PL, E, D65A, P, E)

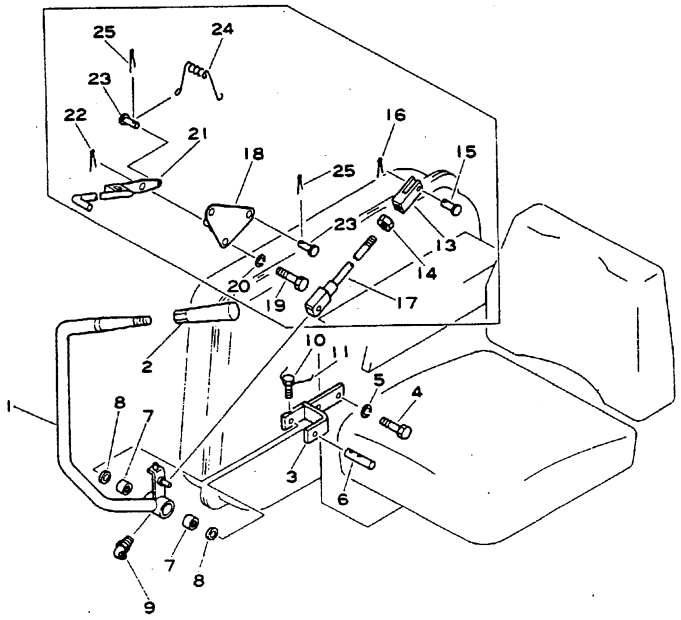

Fig. & Index No.	Part No.	Description	Q'ty	Serial No.	Remarks
1551 - 1	144-43-16211	LEVER, blade control	1	C	
	144-43-16511	LEVER, blade control	1	T	
2	09305-11400	KNOB	1		
3	144-43-16133	YOKE	1	20006~ •	■ 144-43-16134 01010-31235(2)
	144-43-16134	YOKE	1	• ~	
4	01010-31230	BOLT	2	20006~ •	
	01010-31235	BOLT	2	• ~	
5	01602-01236	WASHER, spring	2		
6	144-43-16170	SHAFT	1		
7	06120-01612	BEARING, needle	2		
8	06122-01603	SEAL, bearing	2		
9	07020-00900	FITTING, grease	1		
10	01306-00616	SCREW, set	1		
11	04059-01012	WIRE, lock	1		
13	04211-01055	YOKE, adjustable	1		
14	01582-01008	NUT	1		
15	04205-01028	PIN	2		
16	04050-03015	PIN, cotter	2		
17	144-43-16180	ROD	1		
	144-43-16190	. JOINT	1		
18	144-43-16230	PLATE	1		
19	01010-31225	BOLT	2		
20	01602-01236	WASHER, spring	2		
21	144-43-16240	BRACKET	1		
22	04050-03015	PIN, cotter	1		
23	144-43-16250	PIN	2		
24	141-54-12290	SPRING	1		
25	04050-01610	PIN, cotter	2		

Fig. 1552 BLADE CONTROL LEVER, For Straight Tilt Dozer (D60P, D65P Serial No. 20006 –)

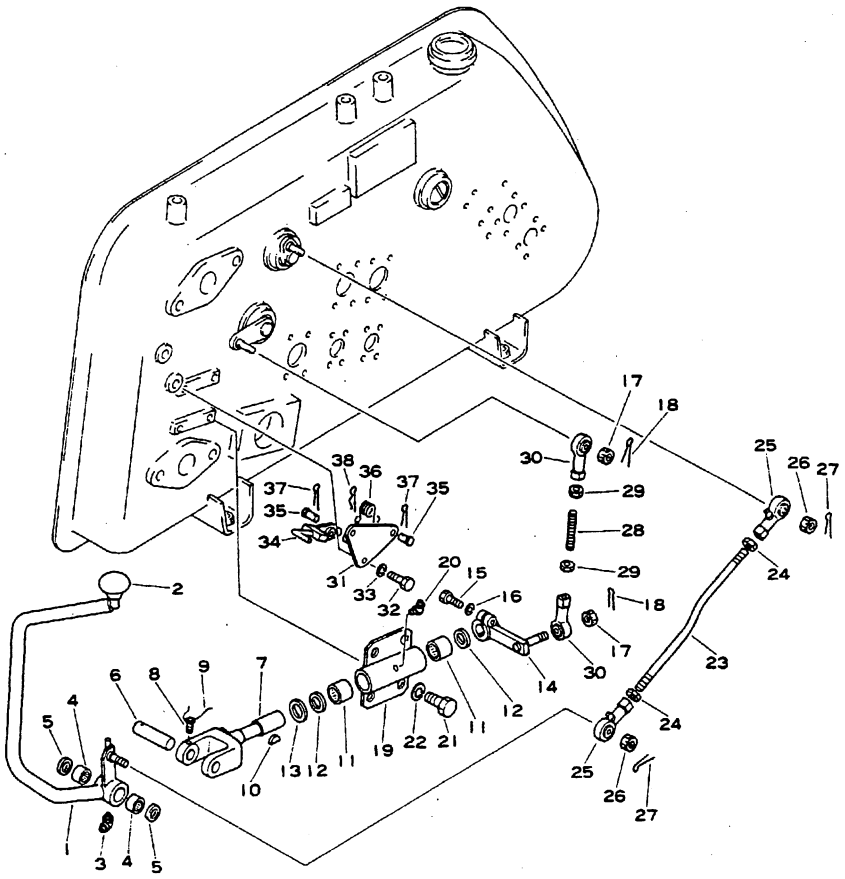

Fig. & Index No.	Part No.	Description	Q'ty	Serial No.	Remarks
1552 - 1	144-920-6513	LEVER	1		
2	09304-01250	KNOB	1		
3	07020-00900	FITTING, grease	1		
4	06120-01612	BEARING, needle	2		
5	06122-01603	SEAL, bearing	2		
6	144-43-16170	SHAFT	1		
7	144-920-6420	YOKE	1		
8	01306-00616	SCREW, set	1		
9	04059-01012	WIRE, lock	1		
10	04010-00519	KEY	1		
11	06120-02016	BEARING, needle	2		
12	06122-02004	SEAL, bearing	2		
13	130-60-43150	PLATE	1		
14	144-920-6450	LEVER	1		
15	01010-30830	BOLT	1		
16	01602-00825	WASHER, spring	1		
17	01593-31008	NUT	2		
18	04050-02018	PIN, cotter	2		
19	144-920-6410	BRACKET	1		
20	07020-00675	FITTING, grease	1		
21	01010-31225	BOLT	4		
22	01602-01236	WASHER, spring	4		
23	144-920-6540	ROD, lift	1		
24	01580-01008	NUT	2		
25	04250-01056	END, rod	2		
26	01593-01008	NUT	2		
27	04050-02018	PIN, cotter	2		
28	144-43-16340	ROD, tilt	1		
29	01580-01008	NUT	2		
30	04250-01056	END, rod	2		
31	144-920-6520	PLATE	1		
32	01010-31225	BOLT	2		
33	01602-01236	WASHER, spring	2		
34	144-920-6530	LOCK	1		
35	144-43-16250	PIN	2		
36	141-54-12290	SPRING	1		
37	04050-01610	PIN, cotter	2		
38	04052-01453	PIN, snap	1		

Fig. 1571 ANGLE BLADE (D60A, E, D65A, E Serial No. 20006 –)

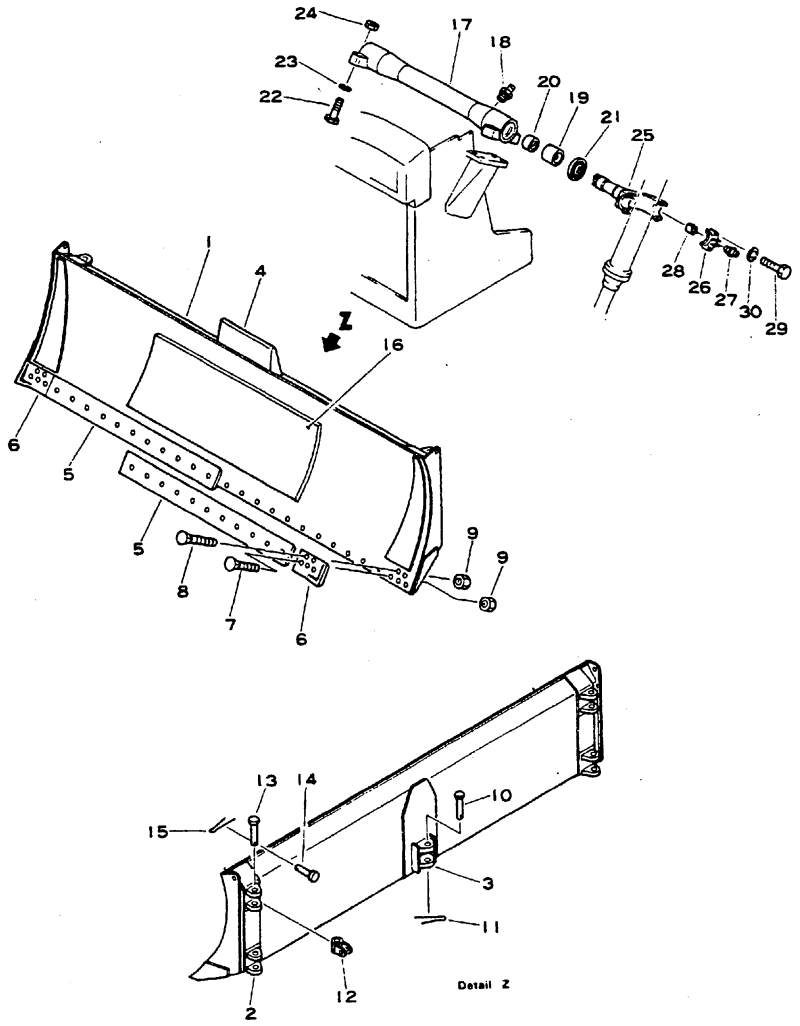

Fig. & Index No.	Part No.	Description	Q'ty	Serial No.	Remarks
	144-70-00011	BLADE ASS'Y	1		
1571 - 1	144-70-11112	. BLADE	1		
2	144-70-11210	. . BRACKET	4		144-70-11230
3	144-70-11220	. . BRACKET	1		144-70-11240
4	130-70-41310	. . PLATE, mark	1		
5	144-70-11131	. EDGE, cutting	2		
6	140-70-11170	. BIT, end, L.H	1		
	140-70-11180	. BIT, end, R.H	1		
7	02090-11270	. BOLT	28		
8	02091-11205	. BOLT	4		
9	02290-11219	. NUT	32		
10	130-70-41120	. PIN	1		
11	04050-08070	. PIN, cotter	1		
12	144-70-12130	. JOINT	4		
13	140-70-12110	. PIN	4		
14	140-70-12120	. PIN	4		
15	04050-05030	. PIN, cotter	4		
16	144-871-1840	PLATE	1or2		(OP)
17	144-70-15112	STAY	1		
18	07020-00675	FITTING, grease	2		
19	144-70-15181	BUSHING	2		
20	144-70-15171	BUSHING	2		
21	130-09-12370	SEAL, oil	2		
22	01051-61830	BOLT	8		
23	01602-01854	WASHER, spring	8		
24	01582-01815	NUT	8		
	144-70-00051	CYLINDER SUPPORT ASS'Y	2		
25	144-70-15212	. YOKE	1		
26	144-70-15222	. CAP	2		
27	07020-00000	. FITTING, grease	2		
28	144-70-15251	. PIN, roll	2		
29	01010-31470	. BOLT	4		
30	01602-01442	. WASHER, spring	4		

Fig. 1572 C-FRAME (D60A, E, D65A,E)

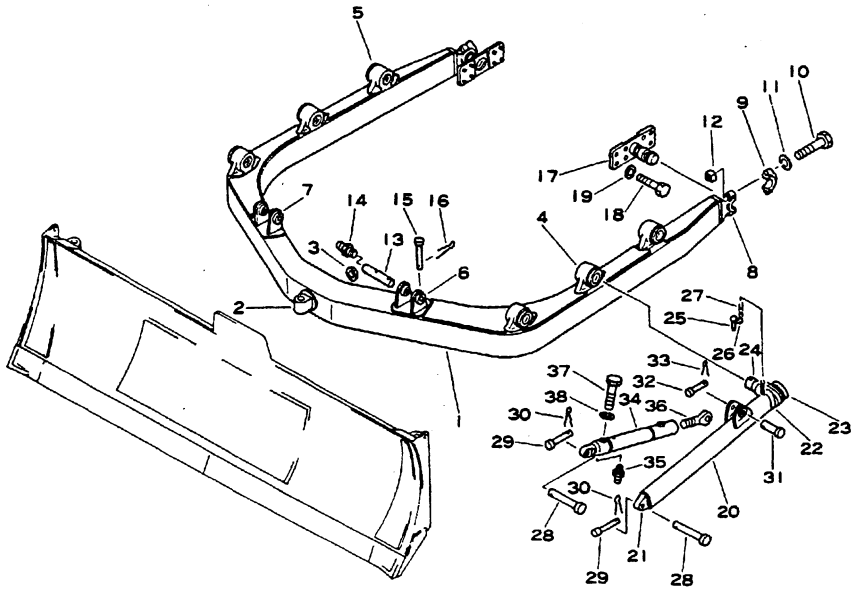

Fig. & Index No.	Part No.	Description	Q'ty	Serial No.	Remarks
	144-70-00040	C-FRAME ASS'Y	1		
1572 - 1	144-70-13511	. FRAME	1		
2	144-70-13120	. . SHAFT	1		
3	140-70-13130	. . COLLAR	1		
4	144-70-13210	. . BRACKET, L.H	3		
5	144-70-13220	. . BRACKET, R.H	3		
6	144-70-13520	. . BRACKET, L.H	1		
7	144-70-13530	. . BRACKET, R.H	1		
	140-70-00032	. PIVOT ASS'Y	2		
8	☆	. . PIVOT (140-70-13141)	1		
9	☆	. . CAP (140-70-13151)	1		
10	01011-62430	. . BOLT	2		
11	01602-02472	. . WASHER, spring	2		
12	130-70-13241	. . NUT	2		
13	144-817-4110	. SHAFT	2		
14	07020-00000	. FITTING, grease	2		
15	140-70-14230	. PIN	2		
16	04050-03015	. PIN, cotter	2		
17	144-70-13160	TRUNNION	2		
18	01010-32045	BOLT	16		
19	01602-02060	WASHER, spring	16		
	144-70-00020	ARM ASS'Y	2		
20	144-70-12141	. ARM	1		
21	140-70-12161	. . BOSS	1		
22	144-70-12150	. . STOPPER	1		
23	150-70-12120	. . BUSHING	1		
24	144-70-12181	. . PIN	1		
25	170-70-12150	. . PIN	1		
26	170-70-12160	. . HOOK	2		
27	150-70-13420	. . CHAIN	1		
28	130-70-12221	. PIN	2		
29	130-70-12231	. PIN	2		
30	04050-05030	. PIN, cotter	2		
31	150-70-13410	. PIN	1		
32	170-70-12240	. PIN	1		
33	04050-04025	. PIN, cotter	1		
	144-70-00031	BRACE ASS'Y	2		
34	144-70-12160	. BRACE	1		
35	07020-00000	. FITTING, grease	2		
36	140-70-12191	. JOINT	1		
37	130-70-52110	. SCREW, set	1		
38	01602-01442	. WASHER, spring	1		

Fig. 1573 STRAIGHT AND STRAIGHT TILT BLADE (D60P, D65P)

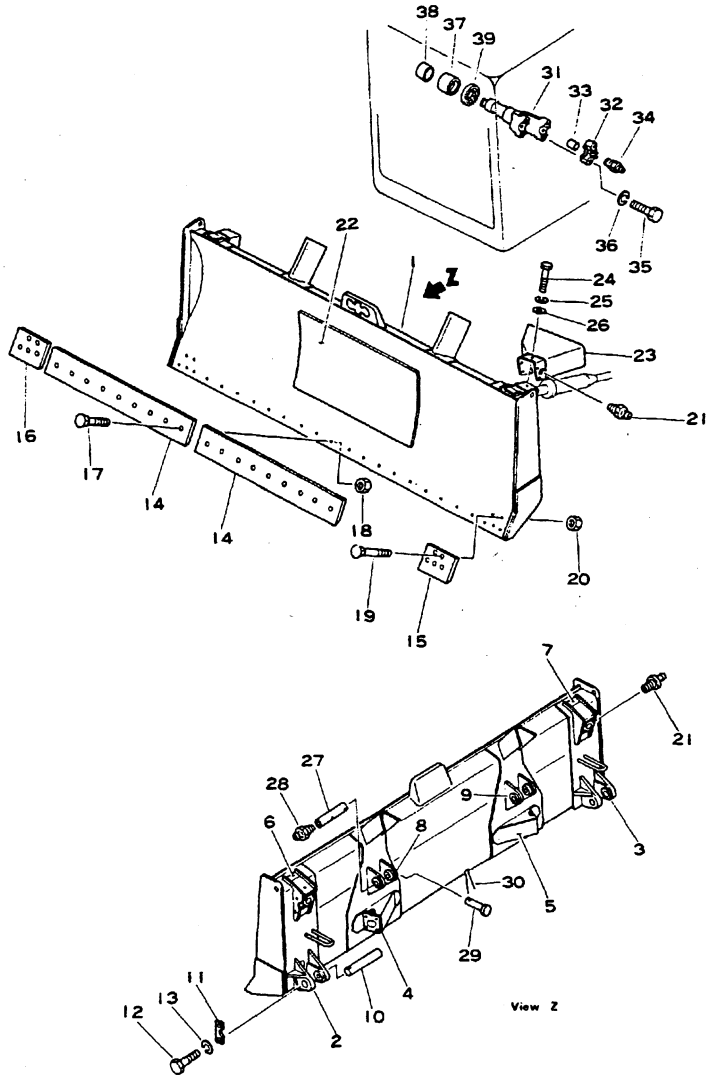

Fig. & Index No.	Part No.	Description	Q'ty	Serial No.	Remarks
	144-817-0101	BLADE ASS'Y	1		
1573 - 1	144-817-1512	. BLADE	1		
2	144-920-1760	. . BRACKET, L.H, lower	1		
3	144-920-1770	. . BRACKET, R.H, lower	1		
4	144-817-1341	. . BRACKET, L.H, center	1		
5	144-817-1331	. . BRACKET, R.H, center	1		
6	144-817-1350	. . BRACKET, L.H, upper	1		
7	144-817-1360	. . BRACKET, R.H, upper	1		
8	144-817-1520	. . BRACKET, L.H	1		
9	144-817-1530	. . BRACKET, R.H	1		
10	144-817-1160	. SHAFT	2		
11	144-920-1780	. PLATE, lock	2		
12	01010-31635	. BOLT	4		
13	01602-01648	. WASHER, spring	4		
14	144-70-11131	. EDGE, cutting	2		
15	13F-Z27-1571	. BIT, end, L.H	1		
16	13F-Z27-1581	. BIT, end, R.H	1		
17	02090-11270	. BOLT	28		
18	02290-11219	. NUT	28		
19	02091-11210	. BOLT	4		
20	02290-11219	. NUT	4		
21	07020-00000	. FITTING, grease	2		
22	144-871-1840	PLATE	1or2		(OP)
23	144-917-1161	COVER	1		
24	01010-31225	BOLT	5		
25	01602-01236	WASHER, spring	5		
26	01640-01223	WASHER	5		
27	144-817-4110	SHAFT	2		
28	07020-00000	FITTING, grease	2		
29	140-70-14230	PIN	2		
30	04050-03015	PIN, cotter	2		
	144-70-00051	CYLINDER SUPPORT ASS'Y	2		
31	144-70-15212	. YOKE	1		
32	144-70-15222	. CAP	2		
33	144-70-15251	. PIN, roll	2		
34	07020-00000	FITTING, grease	2		
35	01010-31470	. BOLT	4		
36	01602-01442	. WASHER, spring	4		
37	144-70-15181	BUSHING	2		
38	144-70-15171	BUSHING	2		
39	130-09-12370	SEAL, oil	2		

Fig. 1574 STRAIGHT FRAME (D60P, D65P Serial No. 20006~)

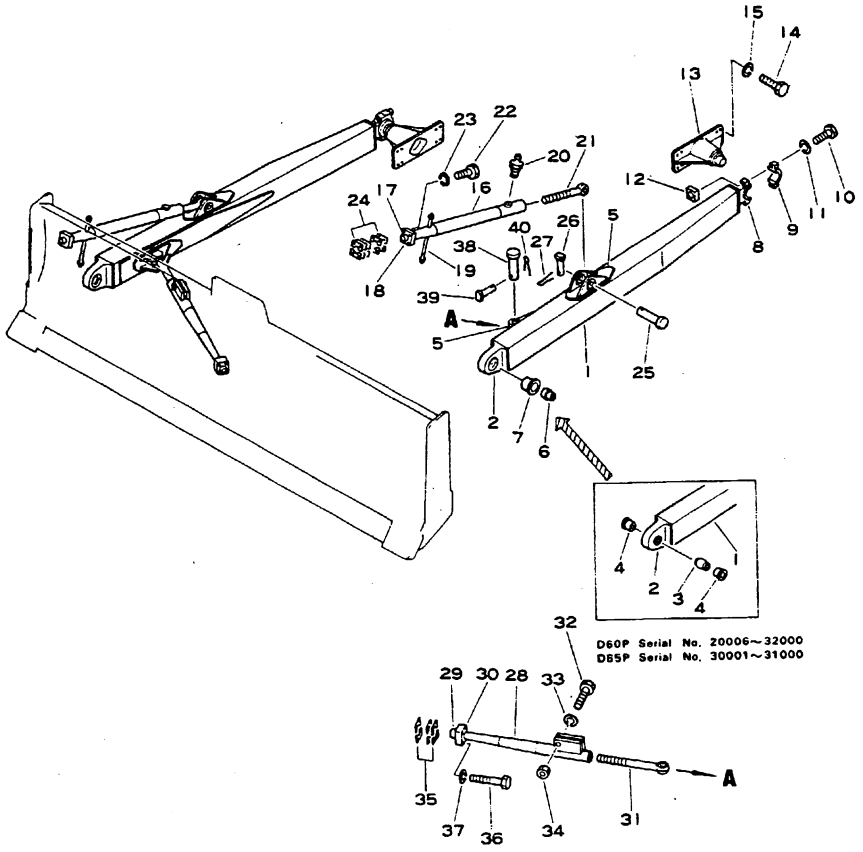

Fig & Index No.	Part No.	Description	Q'ty	Serial No.	Remarks
	144-917-0402	FRAME ASS'Y, L.H	1		
	144-917-0502	FRAME ASS'Y, R.H	1		
1574 - 1	144-917-3213	. FRAME, L.H	1		
	144-917-3223	. FRAME, R.H	1		
2	144-917-3232	. . JOINT	1		
3	144-817-3150	. . BEARING	1	C T	
4	140-920-3180	. . BEARING	2	C T	
5	144-920-3172	. . BRACKET	2		
6	13F-Z27-2260	. BUSHING	1	C T	
7	13F-Z27-2250	. BUSHING	1	C T	
	140-70-00032	. PIVOT ASS'Y	1		
8	140-70-13141	. . PIVOT	1		
9	140-70-13151	. . CAP	1		
10	01011-62430	. . BOLT	2		
11	01602-02472	. . WASHER, spring	2		
12	130-70-13241	. . NUT	2		
13	144-817-3170	TRUNNION	2		
14	01010-32050	BOLT	16		
15	01602-02060	WASHER, spring	16		
	144-817-0033	TILT BRACE ASS'Y	2		
16	144-817-2343	. BRACE, tilt	1		
17	144-817-2171	. . JOINT, ball	1		
18	144-817-2361	. . RETAINER	1		
19	144-817-2280	. . ROD	1		
20	07020-00000	. FITTING, grease	1		
21	144-817-2312	. BOLT	1		
22	01010-31865	. BOLT	4		
23	01602-01854	. WASHER, spring	4		
24	144-817-0620	. SHIM ASS'Y	1		
	☆	. . SHIM, 1.0 mm (144-817-2250)	8		
	☆	. . SHIM, 0.5 mm (144-817-2260)	6		
25	144-817-3161	PIN	1		
26	170-70-12240	PIN	1		
27	04050-04025	PIN, cotter	1		
	144-817-0023	CENTER BRACE ASS'Y	2		
28	144-817-2324	. BRACE, center	1		
29	144-920-2610	. . JOINT, ball	1		
30	144-817-2420	. . RETAINER	1		
31	144-817-2570	. JOINT	1		

STRAIGHT FRAME

Fig & Index No.	Part No.	Description	Q'ty	Serial No.	Remarks
1574 -32	01011-32025	. BOLT	1	20054~	
33	01643-22045	. WASHER	1	20054~	
34	01580-12016	. NUT	1	20054~	
35	144-817-0610	SHIM ASS'Y	1	20006~	
	144-817-2381	. SHIM, 1.0 mm	6	20006~	
	144-817-2391	. SHIM, 0.5 mm	4	20006~	
36	01010-32070	BOLT	4	22388~	
37	01643-22045	WASHER,	4	20006~	
38	144-817-3161	PIN	1	20006~	
39	170-70-12240	PIN	1	20006~	
40	04050-04025	PIN, cotter	1	20006~	

Fig. 1575 STRAIGHT TILT FRAME (D60P, D65P)

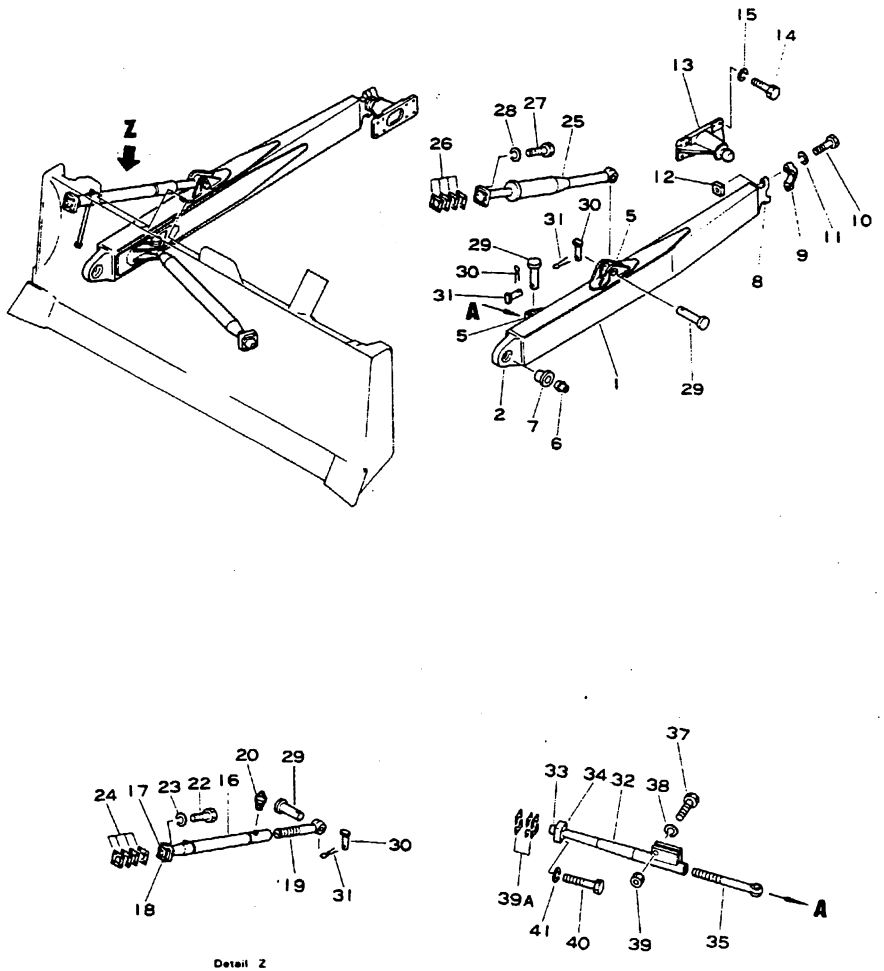

Fig. & Index No.	Part No.	Description	Q'ty	Serial No.	Remarks
	144-917-0402	FRAME ASS'Y, L.H	1		
	144-917-0502	FRAME ASS'Y, R.H	1		
1575 - 1	144-917-3213	. FRAME, L.H	1		
	144-917-3223	. FRAME, R.H	1		
2	144-917-3232	. . JOINT	1	C 32001~ T 31001~	
5	144-920-3172	. . BRACKET	2		
6	13F-Z27-2260	. BUSHING	1		
7	13F-Z27-2250	. BUSHING	1		
	140-70-00032	. PIVOT ASS'Y	1		
8	140-70-13141	. . PIVOT	1		
9	140-70-13151	. . CAP	1		
10	01011-62430	. . BOLT	2		
11	01602-02472	. . WASHER, spring	2		
12	130-70-13241	. . NUT	2		
13	144-817-3170	TRUNNION	2		
14	01010-52050	BOLT	16		
15	01602-02060	WASHER, spring	16		
	144-917-0303	TILT BRACE ASS'Y	1		
16	144-917-1180	. BRACE, tilt	1		
17	144-817-2171	. . JOINT, ball	1		
18	144-817-2361	. . RETAINER	1		
19	144-817-2312	. JOINT	1		
20	07020-00000	. FITTING, grease	1		
22	01010-31865	. BOLT	4		
23	01602-01854	. WASHER, spring	4		
24	144-817-0620	SHIM ASS'Y	1		
	144-817-2250	. SHIM, 1.0 mm	4		
	144-817-2260	. SHIM, 0.5 mm	4		
25	(144-63-52101)	TILT CYLINDER ASS'Y	1		
26	144-817-0620	SHIM ASS'Y	1		
	☆	. SHIM, 1.0 mm (144-817-2250)	8		
	☆	. SHIM, 0.5 mm (144-817-2260)	6		
27	01010-31865	BOLT	4		
28	01602-01854	WASHER, spring	4		
29	144-817-3161	PIN	4		
30	170-70-12240	PIN	4		
31	04050-04025	PIN, cotter	4		
	144-817-0023	CENTER BRACE ASS'Y	2		
32	144-817-2324	. BRACE, center	1		

STRAIGHT TILT FRAME

Fig & Index No.	Part No.	Description	Q'ty	Serial No.	Remarks
1575 -33	144-920-2610	. . JOINT, ball	1		
34	144-817-2420	. . RETAINER	1		
35	144-817-2570	. JOINT	1		
37	01011-32025	. BOLT	1		
38	01643-32045	. WASHER	1		
39	01580-12016	. NUT	1		
39A	144-920-0610	SHIM ASS'Y	1		
	☆	. SHIM, 1.0 mm (144-817-2381)	6		
	☆	. SHIM, 0.5 mm (144-817-2391)	4		
40	01010-32070	BOLT	4		
41	01643-22045	WASHER	4		

Fig. 1576 STRAIGHT BLADE (D60PL)

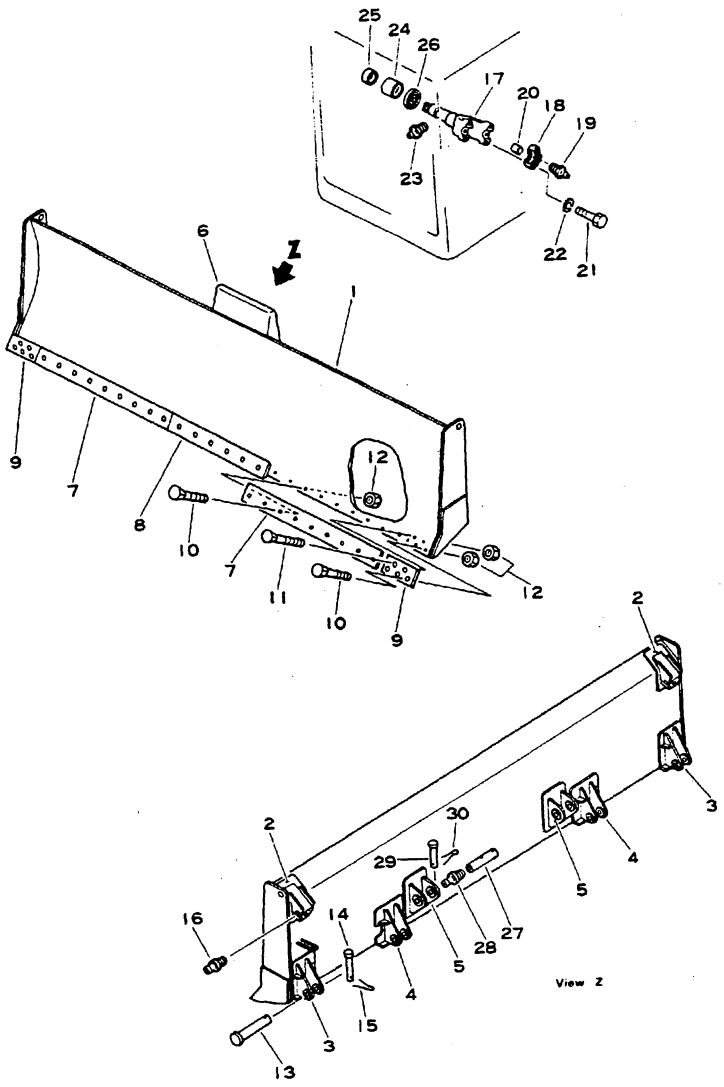

Fig & Index No.	Part No.	Description	Q'ty	Serial No.	Remarks
	144-870-0060	BLADE ASS'Y	1		
1576 - 1	144-870-1710	. BLADE	1		
2	140-870-3120	. . BRACKET, L.H	1		
	140-870-3130	. . BRACKET, R.H	1		
3	144-870-1880	. . BRACKET, L.H	1		
	144-870-1890	. . BRACKET, R.H	1		
4	144-870-1860	. . BRACKET, L.H	1		
	144-870-1870	. . BRACKET, R.H	1		
5	144-870-1720	. . BRACKET, L.H	1		
	144-870-1730	. . BRACKET, R.H	1		
6	130-70-41320	. . PLATE, mark	1		
7	130-70-11145	. EDGE, cutting	2		
8	140-870-3140	. EDGE, cutting	1		
9	13F-A70-1580	. BIT, end, R.H	1		
	13F-A70-1570	. BIT, end, L.H	1		
10	02090-11055	. BOLT	30		
11	02090-11085	. BOLT	4		
12	02290-11016	. NUT	34		
13	130-842-1140	. PIN	4		
14	130-842-1150	. PIN	4		
15	04050-03015	. PIN, cotter	4		
16	07020-00000	. FITTING, grease	2		
	144-70-00051	CYLINDER SUPPORT ASS'Y	2		
17	144-70-15212	. YOKE	1		
18	144-70-15222	. CAP	2		
19	07020-00000	. FITTING, grease	2		
20	144-70-15251	. PIN, roll	2		
21	01010-31470	. BOLT	4		
22	01602-01442	. WASHER, spring	4		
23	07020-00000	FITTING, grease	2		
24	144-70-15181	BUSHING	2		
25	144-70-15171	BUSHING	2		
26	130-09-12370	SEAL, oil	2		
27	144-817-4110	SHAFT	2		
28	07020-00000	FITTING, grease	2		
29	140-70-14230	PIN	2		
30	04050-03015	PIN, cotter	2		

Fig. 1577 STRAIGHT FRAME (D60PL)

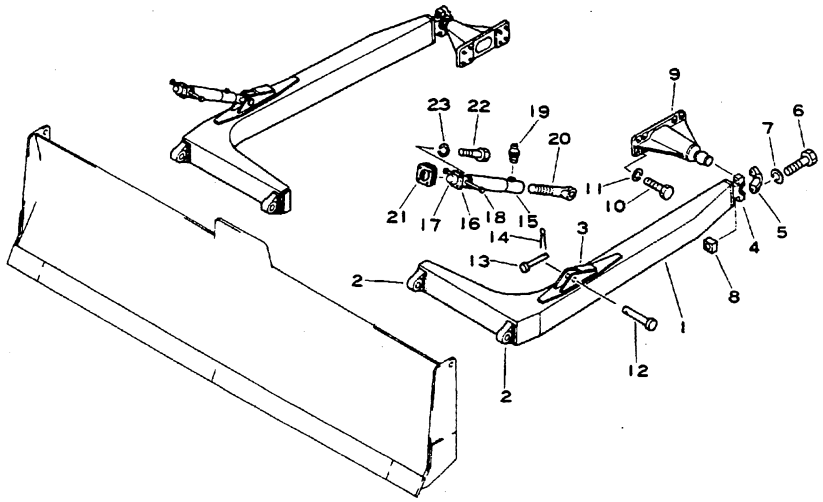

Fig. & Index No.	Part No.	Description	Q'ty	Serial No.	Remarks
1577 - 1	140-817-3110	L-FRAME, L.H	1		
	140-817-3120	L-FRAME, R.H	1		
2	130-842-3120	. JOINT	2		
3	140-817-3310	. BRACKET	1		
	140-70-00032	. PIVOT ASS'Y	1		
4	140-70-13141	. . PIVOT	1		
5	140-70-13151	. . CAP	1		
6	01011-62430	. . BOLT	2		
7	01602-02472	. . WASHER, spring	2		
8	130-70-13241	. . NUT	2		
9	144-870-1740	TRUNNION	2		
	144-870-1750	. FLANGE	1		
	144-920-3191	. SHAFT	1		
10	01040-32050	BOLT	16		
	01010-32050	BOLT	16		
11	01602-02060	WASHER, spring	16		
12	130-817-2122	SHAFT	2		
13	140-70-12150	PIN	2		
14	04050-03015	PIN, cotter	2		
	140-817-2110	ARM ASS'Y	2		
15	140-817-2120	. ARM	1		
16	130-842-2110	. RETAINER	1		
17	130-837-2121	. . PIN	1		
18	130-842-2130	. ROD	1		
19	07020-00000	. FITTING, grease	2		
20	130-842-2140	BOLT	2		
21	130-842-2170	SHIM ASS'Y	2		1 set consists of three 1.0 mm, three 0.5 mm and two 0.2 mm shims.
22	01040-31865	BOLT	8		
	01010-31865	BOLT	8		
23	01602-01854	WASHER, spring	8		

OPTIONAL PARTS

Fig. 1801 CANOPY (D60A, P, PL, E, D65A, P, E Serial No. 20006)

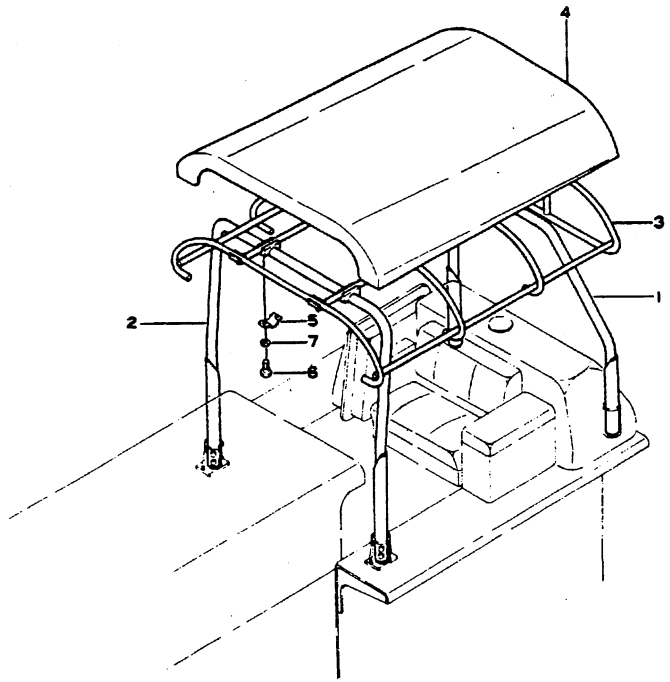

Fig & Index No.	Part No.	Description	Q'ty	Serial No.	Remarks
	144-906-0010	CANOPY ASS'Y	1	20006~22387	☐ 144-906-0011
	144-906-0011	CANOPY ASS'Y	1	22388~	
1801 - 1	144-906-1112	· POLE, rear	1	20006~	
2	144-906-1120	· POLE, front	1	20006~	
3	131-906-1124	· ROOF, canopy	1	20006~	
4	131-906-1114	· SHEET, canopy	1	20006~	
1801 - 5	131-906-1150	· CLIP	4	20006~	
6	01040-31435	· BOLT	8	20006-22387	
	01010-31435	· BOLT	8	22388~	
7	01602-01442	· WASHER, spring	8	20006~	

Fig. 1805 HEAD GUARD (D60A, P, PL, E, D65A, E Serial No. 20006)

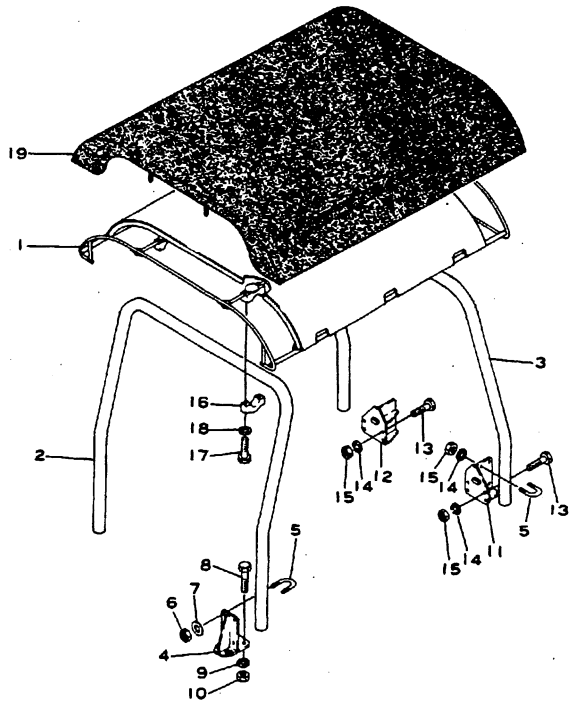

Fig & Index No.	Part No.	Description	Q'ty	Serial No.	Remarks
1805 - 1	141-973-1110	ROOF	1	20006~	
2	144-973-1110	POLE, front	1	20006~	
3	144-973-1120	POLE, rear	1	20006~	
4	144-973-1150	BRACKET	2	20006~	
5	141-973-1160	CLIP	8	20006~	
6	01599-01415	NUT	16	20006~	
7	01643-21432	WASHER	16	20006~	
1805 - 8	01010-51435	BOLT	8	20006~	
9	01602-21442	WASHER, spring	8	20006~	
10	01580-11411	NUT	8	20006~	
11	144-973-1160	BRACKET, L.H	1	20006~	
12	144-973-1170	BRACKET, R.H	1	20006~	
13	01010-51445	BOLT	8	20006~	
14	01602-21442	WASHER, spring	8	20006~	
15	01580-11411	NUT	8	20006~	
16	141-973-1120	CLIP	4	20006~	
17	01010-51475	BOLT	8	20006~	
18	01602-21442	WASHER, spring	8	20006~	
19	131-906-1114	SEAT	1	20006~	

Fig. 1811 ROPS CANOPY (D60A Serial No. 28858~)
(D65A Serial No. 28884~)
(D60P Serial No. 29174~)
(D65P Serial No. 30001~)
(D60PL Serial No. 28061~)
(D60E Serial No. 28787~)
(D65E Serial No. 29046~)

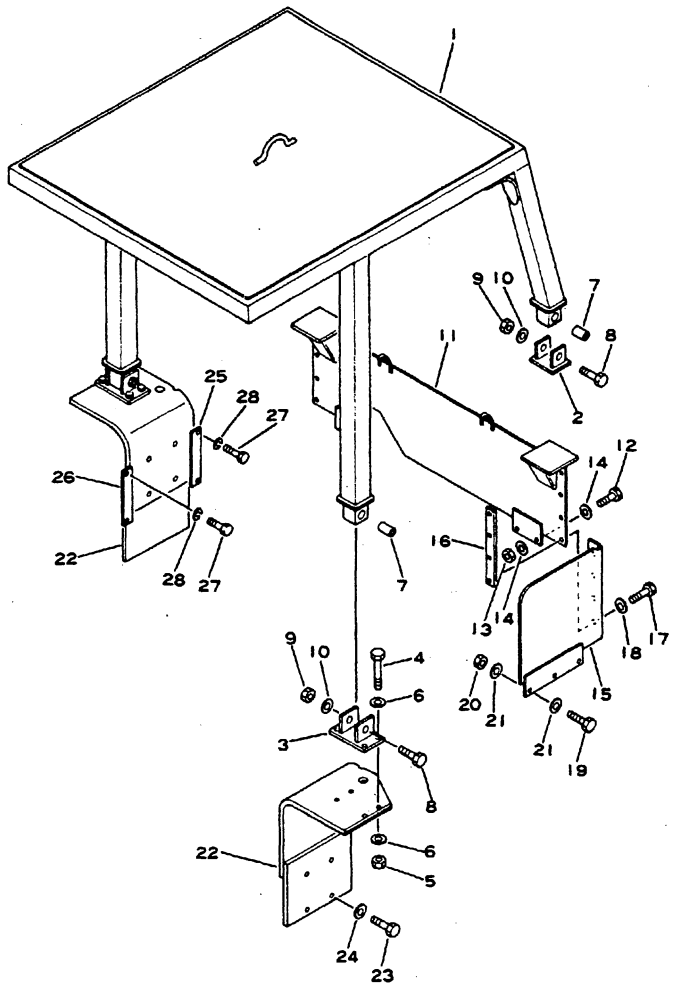

Fig. & Index No.	Part No.	Description	Q'ty	Serial No.	Remarks
1811 - 1	144-978-8410	GUARD	1	AC28858~ AT28884~ PC29174~ PT30001~ EC28787~ ET29045~	
2	141-978-2130	BRACKET, rear	2	AC28858~ AT28884~ PC29174~ PT30001~ EC28787~ ET29045~	
3	144-978-8420	BRACKET, front	2	AC28858~ AT28884~ PC29174~ PT30001~ EC28787~ ET29045~	
4	01011-32000	BOLT	8	AC28858~ AT28884~ PC29174~ PT30001~ EC28787~ ET29045~	
5	144-978-8260	NUT	8	AC28858~ AT28884~ PC29174~ PT30001~ EC28787~ ET29045~	
6	01643-32060	WASHER	16	AC28858~ AT28884~ PC29174~ PT30001~ EC28787~ ET29045~	
7	195-978-1311	ISOLATOR, vibration	4	AC28858~ AT28884~ PC29174~ PT30001~ EC28787~ ET29045~	
8	141-978-2150	BOLT	4	AC28858~ AT28884~ PC29174~ PT30001~ EC28787~ ET29045~	
9	175-978-3210	NUT	4	AC28858~ AT28884~ PC29174~ PT30001~ EC28787~ ET29045~	
10	01643-32780	WASHER	4	AC28858~ AT28884~ PC29174~ PT30001~ EC28787~ ET29045~	

Fig & Index No.	Part No.	Description	Q'ty	Serial No.	Remarks
1811 -11	144-978-8111	BRACKET	1	AC28858~ AT28884~ PC29174~ PT30001~ EC28787~ ET29045~	
12	01010-32060	BOLT	4	AC28858 AT28884~ PC29174~ PT30001~ EC28787~ ET29045~	
13	144-978-8260	NUT	4	AC28858~ AT28884~ PC29174~ PT30001~ EC28787~ ET29045~	
14	01643-32060	WASHER	8	AC28858~ AT28884~ PC29174~ PT30001~ EC28787~ ET29045~	
15	144-978-8121	BRACKET, L.H	1	AC28858~ AT28884~ PC29174~ PT30001~ EC28787~ ET29045~	
	144-978-8131	BRACKET, R.H	1	AC28858~ AT28884~ PC29174~ PT30001~ EC28787~ ET29045~	
16	144-978-8250	PLATE	2	AC28858~ AT28884~ PC29174~ PT30001~ EC28787~ ET29045~	
17	01010-32050	BOLT	8	AC28858~ AT28884~ PC29174~ PT30001~ EC28787~ ET29045~	
18	01643-32060	WASHER	8	AC28858~ AT28884~ PC29174~ PT30001~ EC28787~ ET29045~	
19	01010-32055	BOLT	6	AC28858~ AT28884~ PC29174~ PT30001~ EC28787~ ET29045~	

Fig & Index No.	Part No.	Description	Q'ty	Serial No.	Remarks
1811 -20	144-978-8260	NUT	6	AC28858~ AT28884~ PC29174~ PT30001~ EC28787~ ET29045~	
21	01643-32060	WASHER	12	AC28858~ AT28884~ PC29174~ PT30001~ EC28787~ ET29045~	
22	144-978-8320	BRACKET, L.H	1	AC28858~ AT28884~ PC29174~ PT30001~ EC28787~ ET29045~	
	144-978-8330	BRACKET, R.H	1	AC28858~ AT28884~ PC29174~ PT30001~ EC28787~ ET29045~	
23	01010-32055	BOLT	8	AC28858~ AT28884~ PC29174~ PT30001~ EC28787~ ET29045~	
24	01643-32060	WASHER	8	AC28858~ AT28884~ PC29174~ PT30001~ EC28787~ ET29045~	
25	144-978-8270	COVER	1	AC28858~ AT28884~ PC29174~ PT30001~ EC28787~ ET29045~	
26	144-978-8280	COVER	1	AC28858~ AT28884~ PC29174~ PT30001~ EC28787~ ET29045~	
27	01010-31220	BOLT	4	AC28858~ AT28884~ PC29174~ PT30001~ EC28787~ ET29045~	
28	01602-01236	WASHER, spring	4	AC28858~ AT28884~ PC29174~ PT30001~ EC28787~ ET29045~	

Fig. 1812 ROPS CANOPY, WITH SWEEP

(D60A Serial No. 28858~)
(D65A Serial No. 28884~)
(D60P Serial No. 29174~)
(D65P Serial No. 30001~)
(D60PL Serial No. 28061~)
(D60E Serial No. 28787~)
(D65E Serial No. 29046~)

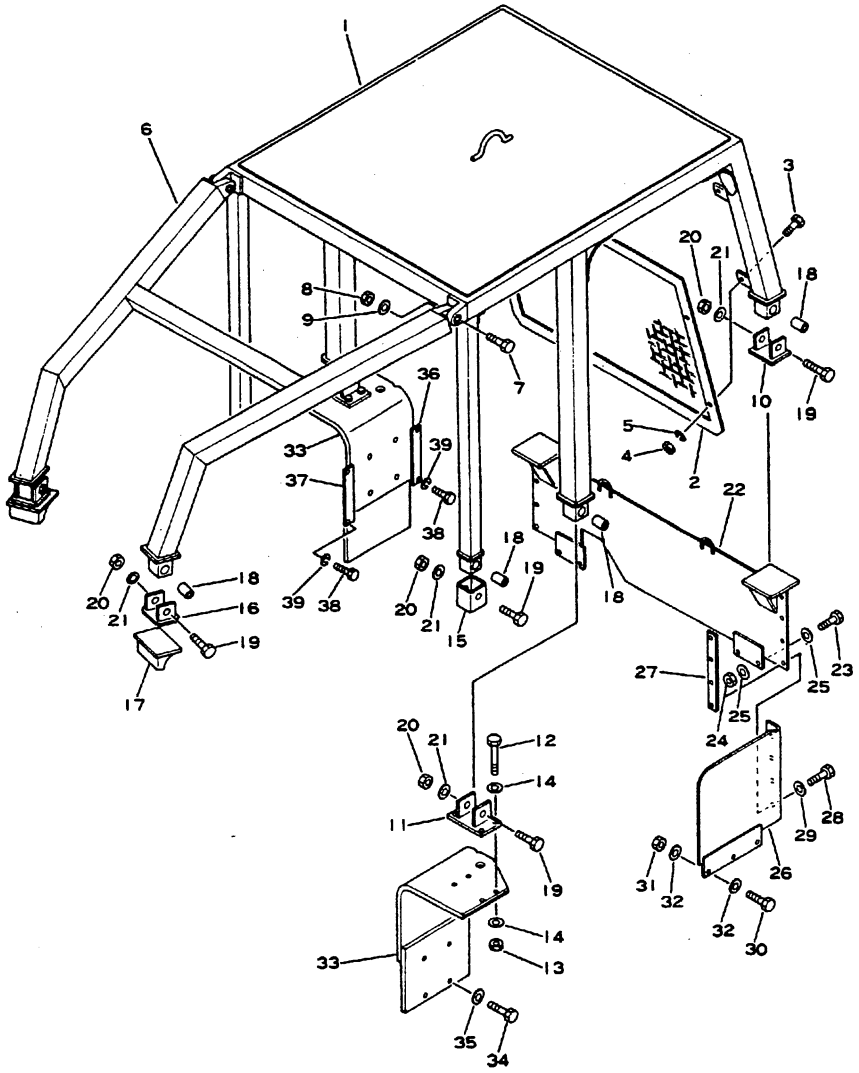

Fig & Index No.	Part No.	Description	Q'ty	Serial No.	Remarks
1812 - 1	144-978-8510	GUARD	1	AC28858~ AT28884~ PC29174~ PT30001~ EC28787~ ET29045~	
2	144-978-8540	SCREEN	1	AC28858~ AT28884~ PC29174~ PT30001~ EC28787~ ET29045~	
3	01010-31455	BOLT	7	AC28858~ AT28884~ PC29174~ PT30001~ EC28787~ ET29045~	
4	01580-01411	NUT	7	AC28858~ AT28884~ PC29174~ PT30001~ EC28787~ ET29045~	
5	01602-01442	WASHER, spring	7	AC28858~ AT28884~ PC29174~ PT30001~ EC28787~ ET29045~	
6	144-978-8560	SWEEP	1	AC28858~ AT28884~ PC29174~ PT30001~ EC28787~ ET29045~	
7	02010-82089	BOLT	2	AC28858~ AT28884~ PC29174~ PT30001~ EC28787~ ET29045~	
8	02205-12031	NUT	2	AC28858~ AT28884~ PC29174~ PT30001~ EC28787~ ET29045~	
9	01643-33380	WASHER	2	AC28858~ AT28884~ PC29174~ PT30001~ EC28787~ ET29045~	
10	144-978-2130	BRACKET	2	AC28858~ AT28884~ PC29174~ PT30001~ EC28787~ ET29045~	

Fig & Index No.	Part No.	Description	Q'ty	Serial No.	Remarks
1812 -11	144-978-8420	BRACKET	2	AC28858~ AT28884~ PC29174~ PT30001~ EC28787~ ET29045~	
12	01011-32000	BOLT	8	AC28858~ AT28884~ PC29174~ PT30001~ EC28787~ ET29045~	
13	144-978-8260	NUT	8	AC28858~ AT28884~ PC29174~ PT30001~ EC28787~ ET29045~	
14	01643-32060	WASHER	16	AC28858~ AT28884~ PC29174~ PT30001~ EC28787~ ET29045~	
15	144-978-8550	BRACKET	2	AC28858~ AT28884~ PC29174~ PT30001~ EC28787~ ET29045~	
16	144-978-8570	BRACKET	2	AC28858~ AT28884~ PC29174~ PT30001~ EC28787~ ET29045~	
17	141-978-2460	BRACKET	2	AC28858~ AT28884~ PC29174~ PT30001~ EC28787~ ET29045~	
18	195-978-1311	ISOLATOR, vibration	8	AC28858~ AT28884~ PC29174~ PT30001~ EC28787~ ET29045~	
19	141-978-2150	BOLT	8	AC28858~ AT28884~ PC29174~ PT30001~ EC28787~ ET29045~	
20	175-978-3210	NUT	8	AC28858~ AT28884~ PC29174~ PT30001~ EC28787~ ET29045~	

Fig & Index No.	Part No.	Description	Q'ty	Serial No.	Remarks
1812 -21	01643-32780	WASHER	8	AC28858~ AT28884~ PC29174~ PT30001~ EC28787~ ET29045~	
22	144-978-8111	BRACKET	1	AC28858~ AT28884~ PC29174~ PT30001~ EC28787~ ET29045~	
23	01010-32060	BOLT	4	AC28858~ AT28884~ PC29174~ PT30001~ EC28787~ ET29045~	
24	144-978-8260	NUT	4	AC28858~ AT28884~ PC29174~ PT30001~ EC28787~ ET29045~	
25	01643-32060	WASHER	8	AC28858~ AT28884~ PC29174~ PT30001~ EC28787~ ET29045~	
26	144-978-8121	BRACKET, L.H	1	AC28858~ AT28884~ PC29174~ PT30001~ EC28787~ ET29045~	
	144-978-8131	BRACKET, R.H	1	AC28858~ AT28884~ PC29174~ PT30001~ EC28787~ ET29045~	
27	144-978-8250	PLATE	2	AC28858~ AT28884~ PC29174~ PT30001~ EC28787~ ET29045~	
28	01010-32050	BOLT	8	AC28858~ AT28884~ PC29174~ PT30001~ EC28787~ ET29045~	
29	01643-32060	WASHER	8	AC28858~ AT28884~ PC29174~ PT30001~ EC28787~ ET29045~	

Fig & Index No.	Part No.	Description	Q'ty	Serial No.	Remarks
1812 -30	01010-32055	BOLT	6	AC28858~ AT28884~ PC29174~ PT30001~ EC28787~ ET29045~	
31	144-978-8260	NUT	6	AC28858~ AT28884~ PC29174~ PT30001~ EC28787~ ET29045~	
32	01643-32060	WASHER	12	AC28858~ AT28884~ PC29174~ PT30001~ EC28787~ ET29045~	
33	144-978-8320	BRACKET, L.H	1	AC28858~ AT28884~ PC29174~ PT30001~ EC28787~ ET29045~	
	144-978-8330	BRACKET, R.H	1	AC28858~ AT28884~ PC29174~ PT30001~ EC28787~ ET29045~	
34	01010-32055	BOLT	8	AC28858~ AT28884~ PC29174~ PT30001~ EC28787~ ET29045~	
35	01643-32060	WASHER	8	AC28858~ AT28884~ PC29174~ PT30001~ EC28787~ ET29045~	
36	144-978-8270	COVER	1	AC28858~ AT28884~ PC29174~ PT30001~ EC28787~ ET29045~	
37	144-978-8280	COVER	1	AC28858~ AT28884~ PC29174~ PT30001~ EC28787~ ET29045~	
38	01010-31220	BOLT	4	AC28858~ AT28884~ PC29174~ PT30001~ EC28787~ ET29045~	

Fig & Index No.	Part No.	Description	Q'ty	Serial No.	Remarks
1812 -39	01602-01236	WASHER, spring	4	AC28858~ AT28884~ PC29174~ PT30001~ EC28787~ ET29045~	

Fig. 1813 CAB GUARD (D60A, D65A Serial No. 20006-)

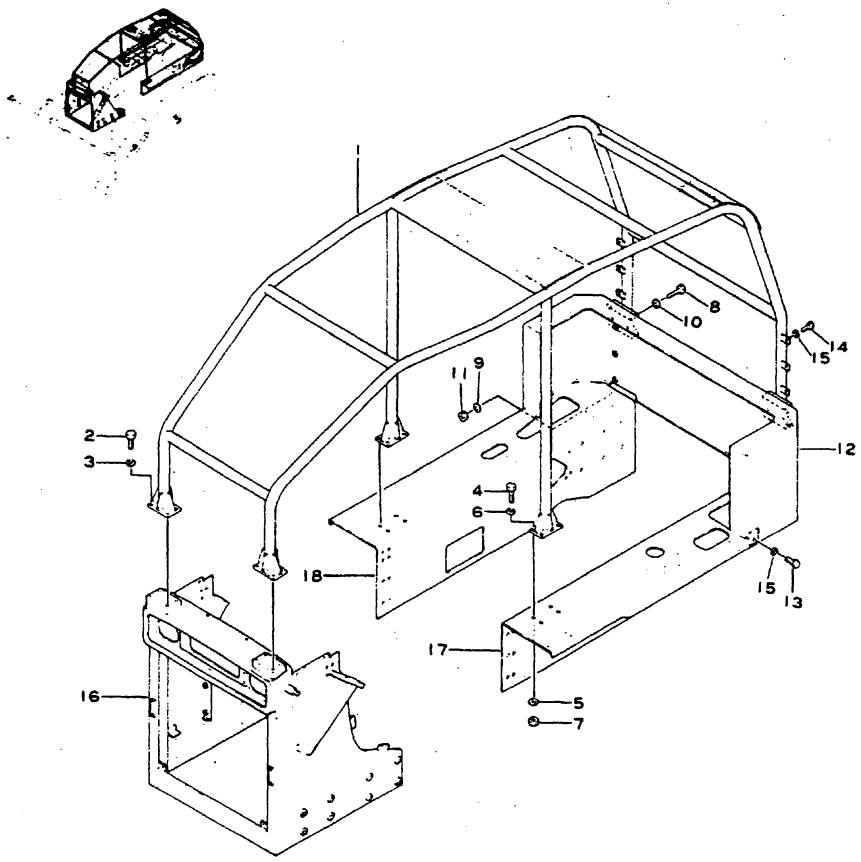

Fig & Index No.	Part No.	Description	Q'ty	Serial No.	Remarks
1813 - 1	144-919-1110	GUARD, cab	1	20006~	
2	01010-31435	BOLT	8	20006~	
3	01602-01442	WASHER, spring	8	20006~	
4	01010-31445	BOLT	8	20006~	
5	01643-31432	WASHER	8	20006~	
6	01602-01442	WASHER, spring	8	20006~	

Fig & Index No.	Part No.	Description	Q'ty	Serial No.	Remarks
1813 - 7	01503-31411	NUT	8	20006~	
8	01040-31445	BOLT	8	20006~	
9	01643-01432	WASHER	8	20006~	
10	01602-01442	WASHER, spring	8	20006~	
11	01503-31411	NUT	8	20006~	
12	144-919-1120	COVER, rear	1	20006~	
	01503-31210	· NUT	6	20006~	Welded
13	01040-31230	BOLT	2	20006~	
14	01040-31225	BOLT	6	20006~	
15	01602-01236	WASHER, spring	8	20006~	
16	144-919-1211	GUARD, radiator	1	20006~	Modified 144-54-11116
17	144-919-1221	FENDER, L.H	1	20006~	Modified 144-54-14128
18	144-919-1231	FENDER, R.H	1	20006~	Modified 144-54-14137

Parts to be removed from standard chassis when equipped with cab guard.

144-54-11113	GUARD, radiator	1	20006~20021	
144-54-11114	GUARD, radiator	1	20024~20053	
144-54-11116	GUARD, radiator	1	20054~	
144-54-14125	FENDER, L.H	1	20006~20021	
144-54-14126	FENDER, L.H	1	20024~20053	
144-54-14128	FENDER, L.H	1	20054~	
144-54-14135	FENDER, R.H	1	20006~20021	
144-54-14136	FENDER, R.H	1	20024~20053	
144-54-14137	FENDER, R.H	1	20054~	

Fig. 1831 REINFORCED ANGLE BLADE AND BRACE

(D60A, E, D65A, E Serial No. 20006~)

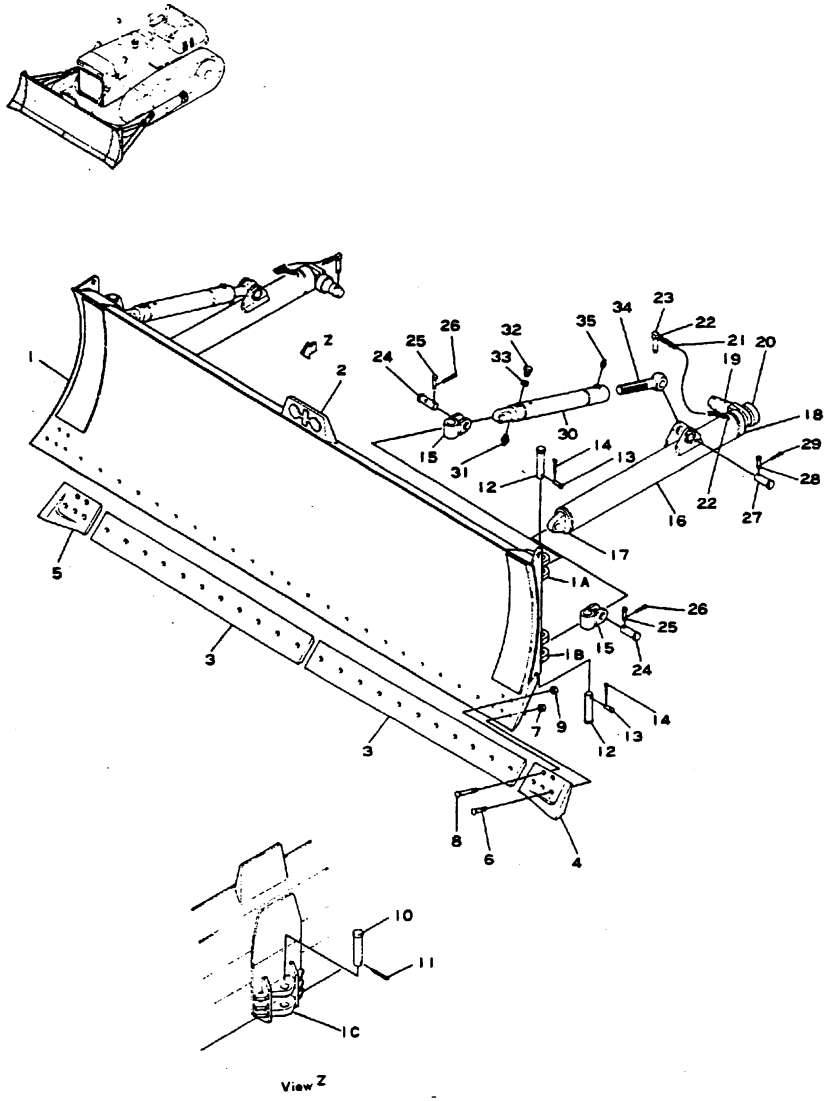

Fig. & Index No.	Part No.	Description	Q'ty	Serial No.	Remarks
	144-854-0010	REINFORCED BLADE ASS'Y	1	2000o~ •	OP
	144-854-0011	REINFORCED BLADE ASS'Y	1	A • ~ E 20295~24459	
1831 - 1	144-854-1210	. BLADE, reinforced	1	20006~	
	144-854-1211	. BLADE, reinforced	1	A • ~ E 20295~24459	
	144-854-1212	. BLADE, reinforced	1	24460~28258	
	144-854-1213	. BLADE, reinforced	1	28259~	
1A	144-854-1360	. . BRACKET, upper	2	20006~	Welded
1B	144-854-1370	. . BRACKET, lower	2	20006~	Welded
1C	144-854-1380	. . BRACKET, center	1	20006~	Welded
2	130-70-41310	. . PLATE, name	1	20006~	Welded
3	144-70-11131	. EDGE, cutting	2	20006~	
4	140-70-11170	. EDGE, end bit, L. H.	1	20006~	
5	140-70-11180	. EDGE, end bit, R. H.	1	20006~	
6	02090-01275	. BOLT	28	20006~	
7	02290-11219	. NUT	28	20006~	
8	02091-01210	. BOLT	4	20006~	
9	02290-01219	. NUT	4	20006~	
10	144-70-11120	. PIN	1	20006~	130-70-41120
11	04050-08070	. PIN, cotter	1	20006~	
12	140-70-12110	. PIN	4	20006~	
13	140-70-12120	. PIN	4	20006~	
14	04050-05030	. PIN, cotter	4	20006~	
15	140-70-12130	. JOINT	4	20006~	
	144-854-0020	ARM ASS'Y	2	20006~	
16	144-854-1220	. ARM	1	20006~	
17	144-854-1230	. . BOSS	1	20006~	
18	140-915-2140	. . STOPPER	1	20006~	
19	144-70-12181	. . PIN	1	20006~	
20	150-70-12120	. . BUSHING	1	20006~	
21	150-70-13420	. . CHAIN	1	20006~	

REINFORCED ANGLE BLADE AND BRACE

Fig & Index No.	Part No.	Description	Q'ty	Serial No.	Remarks
1831 -22	170-70-12160	. . HOOK	2	20006~	
23	170-70-12150	. . PIN	1	20006~	
24	130-70-12221	. PIN	2	20006~	
25	130-70-12231	. PIN	2	20006~	
26	04050-05030	. PIN, cotter	2	20006~	
27	150-70-13410	. PIN	1	20006~	
28	170-70-12240	. PIN	1	20006~	
29	04050-04025	. PIN, cotter	1	20006~	
	144-854-0030	BRACE ASS'Y	2	20006~	
30	144-854-1240	. BRACE	1	20006~	
31	07020-00000	. FITTING, grease	1	20006~	
32	144-854-1250	. SCREW, set	1	20006~	
33	01602-01442	. WASHER, spring	1	20006~	
34	144-817-2311	. JOINT	1	20006~	
35	07020-00000	. FITTING, grease	1	20006~	

Fig. 1832 REINFORCED C-FRAME (D60A, E, D65A, E Serial No. 20295~)

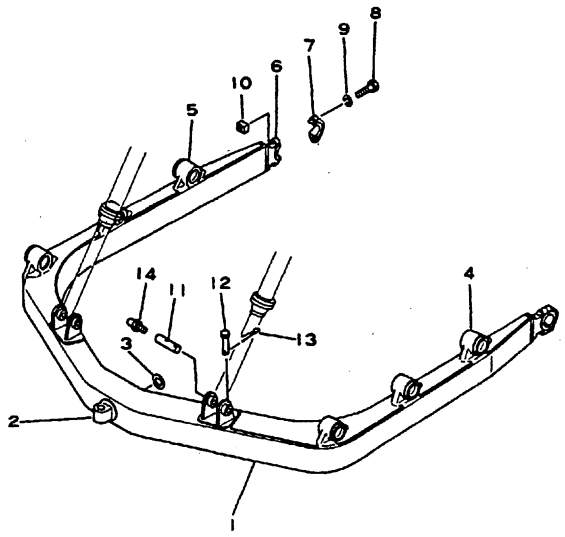

Fig. & Index No.	Part No.	Description	Q'ty	Serial No.	Remarks
	144-854-0040	FRAME ASS'Y	1	20295~	
1832 - 1	144-854-2710	. FRAME	1	20295~28258	
	144-854-2711	. FRAME	1	28259~	
2	144-70-13120	. . SHAFT	1	20295~28258	
	144-70-13130	. . SHAFT	1	28259~	
3	140-70-13130	· · COLLAR	1	20295~	
4	144-70-13210	· · BRACKET, L.H	3	20295~	
5	144-70-13220	· · BRACKET, R.H	3	20295~	
	140-70-00031	· PIVOT ASS'Y	2	20295~22387	
	140-70-00032	· PIVOT ASS'Y	2	22388~	
6	140-70-13141	· · PIVOT	1	20295~	※ 140-70-00031 or 140-70-00032
7	140-70-13151	· · CAP	1	20295~	※ 140-70-00031 or 140-70-00032
8	01041-62430	· · BOLT	2	20295~22387	
	01011-62430	· · BOLT	2	22388~	
9	01602-02472	· · WASHER, spring	2	20295~	
10	130-70-13241	· · NUT	2	20295~	
11	144-817-4110	· SHAFT	2	20295~	
12	140-70-14230	· PIN	2	20295~	
13	04050-03015	· PIN, cotter	2	20295~	
14	07020-00000	· FITTING, grease	2	20295~	

Fig. 1833 STRAIGHT BLADE (D60A, D65A Serial No. 20006~)

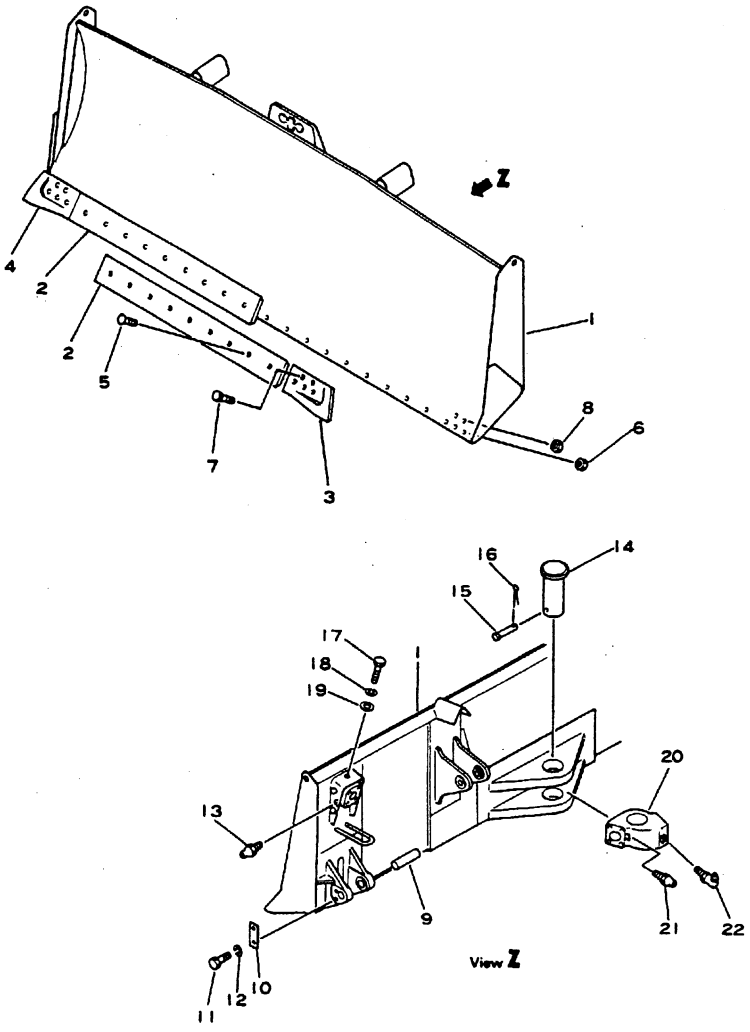

Fig & Index No.	Part No.	Description	Q'ty	Serial No.	Remarks
	144-920-0010	BLADE ASS'Y	1	20006~	OP
1833 - 1	144-920-1511	. BLADE	1	20006~	
	130-70-41320	. . PLATE, name	1	20006~	
2	144-920-1120	. EDGE, cutting	2	20006~	
3	140-70-11170	. BIT, end, L.H.	1	20006~ •	⌐ 13F-Z27-1581
	13F-Z27-1581	. BIT, end, L.H.	1	• ~	
4	140-70-11180	. BIT, end, R.H.	1	20006~ •	⌐ 13F-Z27-1571
	13F-Z27-1571	. BIT, end, R.H.	1	• ~	
5	02090-01275	. BOLT	24	20006~	
6	02290-01219	. NUT	24	20006~	
7	02091-01200	. BOLT	4	20006~	
8	02290-01219	. NUT	4	20006~	
9	144-817-1160	. SHAFT	2	20006~	
10	04082-00212	. PLATE, lock	2	20006~	
11	01040-31225	. BOLT	4	20006~ •	⌐ 01010-31225
	01010-31225	. BOLT	4	20006~	
12	01602-01236	. WASHER, spring	4	20006~	
13	07020-00000	. FITTING, grease	2	20006~	
14	144-920-1530	. PIN	1	20006~	
15	144-920-1540	. PIN	1	20006~	
16	04050-04020	. PIN, cotter	1	20006~	
17	01040-31225	. BOLT	5	20006~ •	⌐ 01010-31225
	01010-31225	. BOLT	5	20006~	
18	01602-01236	. WASHER, spring	5	20006~	
19	01640-21223	. WASHER	5	20006~	
20	144-920-2520	. JOINT	1	20006~	
21	07020-00000	. FITTING, grease	1	20006~	
22	07020-00675	. FITTING, grease	1	20006~	

Fig. 1834 STRAIGHT FRAME (D60A, D65A Serial No. 20006~)

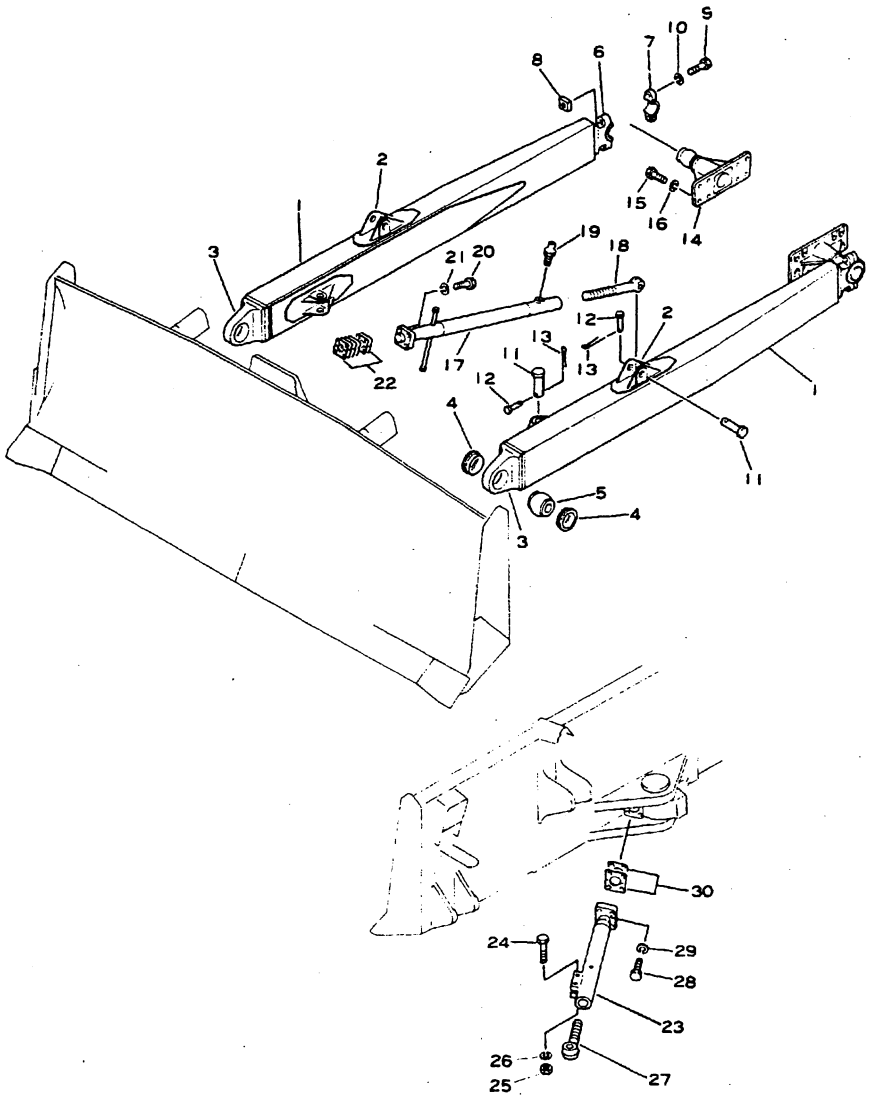

Fig. & Index No.	Part No.	Description	Q'ty	Serial No.	Remarks
	144-920-0040	FRAME ASS'Y, L.H	1	20006~	
	144-920-0050	FRAME ASS'Y, R.H	1	20006~	
1834 - 1	144-920-3111	. FRAME, L.H	1	20006~	
	144-920-3121	. FRAME, R.H	1	20006~	
2	144-920-3171	. . BRACKET	2	20006~	
3	144-920-3151	. . JOINT	1	20006~	
4	140-920-3180	. . BUSHING	2	20006~	
5	144-817-3150	. . BUSHING	1	20006~	
	140-70-00031	. PIVOT ASS'Y	1	20006~	
6	140-70-13141	. . BEARING	1	20006~	Welded
7	140-70-13151	. . CAP	1	20006~	
8	130-70-13241	. . NUT	2	20006~	
9	01041-62430	. . BOLT	2	20006~	
10	01602-02472	. . WASHER, spring	2	20006~	
11	144-817-3161	. PIN	2	20006~	
12	170-70-12240	. PIN	2	20006~	
13	04050-04025	. PIN, cotter	2	20006~	
14	144-920-3211	TRUNNION	2	20006~	
15	01040-32045	BOLT	16	20006~	
16	01602-02060	WASHER, spring	16	20006~	
	144-920-0020	BRACE ASS'Y, upper	2	20006~	
17	144-920-2111	. BRACE	1	20006~	
	144-817-2170	. . JOINT, ball	1	20006~	
	144-817-2360	. . RETAINER	1	20006~	
	140-907-2130	. . ROD	1	20006~	
18	144-920-2120	. JOINT	1	20006~	
19	07020-00000	. FITTING, grease	1	20006~	
20	01040-31865	. BOLT	4	20006~	
21	01602-01854	. WASHER, spring	4	20006~	
22	144-817-0620	. SHIM ASS'Y	1	20006~	
	144-817-2250	. . SHIM, 1.0 mm	4	20006~	
	144-817-2260	. . SHIM, 0.5 mm	4	20006~	

STRAIGHT FRAME

Fig & Index No.	Part No.	Description	Q'ty	Serial No.	Remarks
	144-920-0030	BRACE ASS'Y, lower	2	20006~	
1834 -23	144-920-2511	. BRACE	1	20006~	
	144-817-2331	. . JOINT, ball	1	20006~	
	144-817-2370	. . RETAINER	1	20006~	
24	01001-32200	. BOLT	2	20006~	
25	01500-32218	. NUT	2	20006~	
26	01602-02268	. WASHER, spring	2	20006~	
27	144-817-2310	. JOINT	1	20006~	
28	01040-32075	. BOLT	4	20006~	
29	01602-02060	. WASHER, spring	4	20006~	
30	144-817-0610	. SHIM ASS'Y	1	20006~	
	144-817-2381	. . SHIM, 1.0 mm	6	20006~	
	144-817-2391	. . SHIM, 0.5 mm	4	20006~	

Fig. 1835A STRAIGHT TILT BLADE (D60A,D65A Serial No. 22893~) (D60E,D65E Serial No. 22040~)

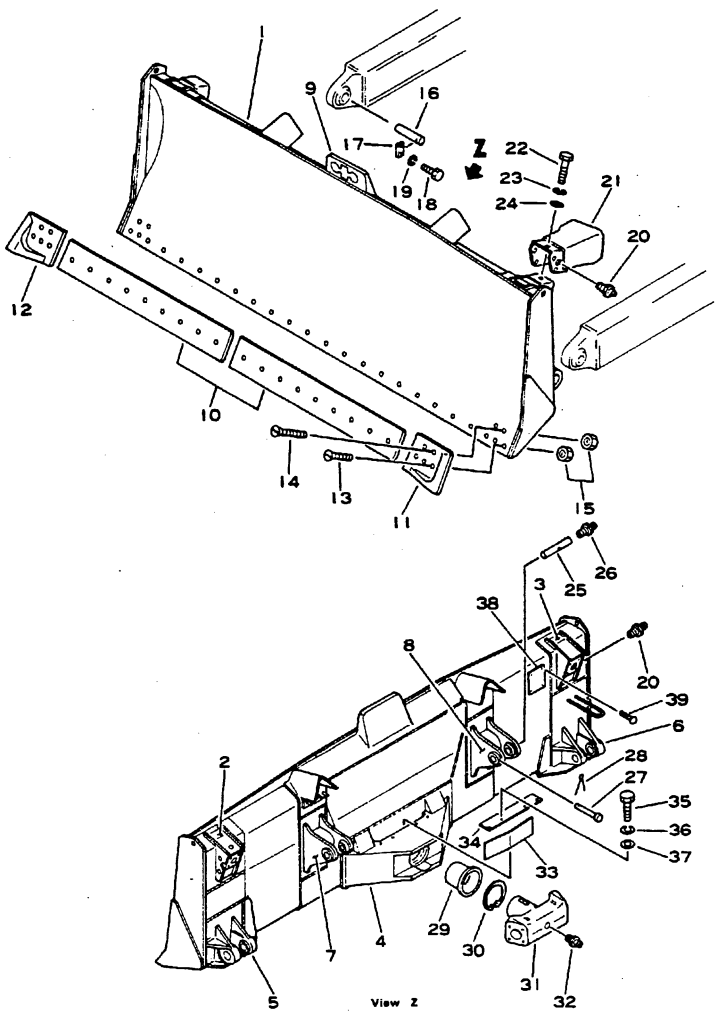

Fig. & Index No.	Part No.	Description	Q'ty	Serial No.	Remarks
	144-920-0110	BLADE ASS'Y	1	A 22893~ •	
	144-920-0111	BLADE ASS'Y	1	A • ~	
	144-871-0031	BLADE ASS'Y	1	E 20040~ •	
	144-871-0032	BLADE ASS'Y	1	E • ~	
1835A- 1	144-920-1710	. BLADE	1	A 22893~ •	
	144-920-1711	. BLADE	1	A • ~	
	144-871-1810	. BLADE	1	E 22040~ •	
	144-871-1811	. BLADE	1	E • ~	
2	144-920-1550	. . BRACKET, L. H.	1	A 22893~ E 22040~	
3	144-920-1560	. . BRACKET, R. H.	1	A 22893~ E 22040~	
4	144-920-1720	. . BRACKET, center	1	A 22893~ E 22040~	
5	144-920-1760	. . BRACKET, L. H.	1	A 22893~ E 22040~	
6	144-920-1770	. . BRACKET, R. H.	1	A 22893~ E 22040~	
7	144-920-1620	. . BRACKET, L. H.	1	A 22893~	
	144-871-1830	. . BRACKET, L. H.	1	E 22040~	
8	144-920-1610	. . BRACKET, R. H.	1	A 22893~	
	144-871-1820	. . BRACKET, R. H.	1	E 22040~	
9	130-817 5190	. . PLATE, mark	1	A 22893~ E 22040~	
10	144-920-1120	. EDGE, cutting	2	A 22893~ E 22040~	
11	140-70-11170	. BIT, end, L.H.	1	A 22893~ • E 22040~ •	□ 13F-Z27-1581
	13F-Z27-1581	. BIT, end, L.H.	1	• ~	
12	140-70-11180	. BIT, end, R.H.	1	A 22893~ • E 22040~ •	□ 13F-Z27-1571
	13F-Z27-1571	. BIT, end, R.H.	1	• ~	
13	02090-11270	. BOLT	24	A 22893~ E 22040~	
14	02091-11210	. BOLT	4	A 22893~ E 22040~	
15	02290-11219	. NUT	28	A 22893~ E 22040~	
16	144-817-1160	. SHAFT	2	A 22893~ E 22040~	
17	144-920-1780	. PLATE, lock	2	A 22893~ E 22040~	

STRAIGHT TILT BLADE

Fig. & Index No.	Part No.	Description	Q'ty	Serial No.	Remarks
1835A-18	01010-31635	. BOLT	4	A 22893~ E 22040~	
19	01602-01648	. WASHER, spring	4	A 22893~ E 22040~	
1835A-20	07020-00000	. FITTING, grease	2	A 22893~ E 22040~	
21	144-920-1160	. COVER	1	A 22893~ • E 22040~ •	
	144-920-1161	. COVER	1	A • ~ E • ~	
22	01010-31225	. BOLT	5	A 22893~ E 22040~	
23	01602-01236	. WASHER, spring	5	A 22893~ E 22040~	
24	01640-21223	. WASHER	5	A 22893~ E 22040~	
25	144-817-4110	. SHAFT	2	A 22893~ E 22040~	
26	07020-00000	. FITTING, grease	2	A 22893~ E 22040~	
27	140-70-14230	. PIN	2	A 22893~ E 22040~	
28	04050-03015	. PIN, cotter	2	A 22893~ E 22040~	
29	144-920-1750	. BOSHING	1	A 22893~ E 22040~	
30	04071-00180	. RING, snap	1	A 22893~ • E 22040~ •	
31	144-920-2730	. SHAFT	1	A 22893~ E 22040~	
32	07020-00000	. FITTING, grease	1	A 22893~ E 22040~	
33	140-920-1130	. SPRING	1	A 22893~ E 22040~	
34	144-920-1730	. COVER	1	A 22893~ E 22040~	
35	01010-31020	. BOLT	4	A 22893~ E 22040~	
36	01602-01030	. WASHER, spring	4	A 22893~ E 22040~	
37	01643-31032	. WASHER	4	A 22893~ E 22040~	
38	09601-00835	. PLATE, name	1	A 22893~ E 22040~	Limited supply
39	04418-03060	. SCREW	4	A 22893~ E 22040~	

Fig. 1836A STRAIGHT TILT FRAME (D60A,D65A Serial No. 22893~) (D60E,D65E Serial No. 22040~)

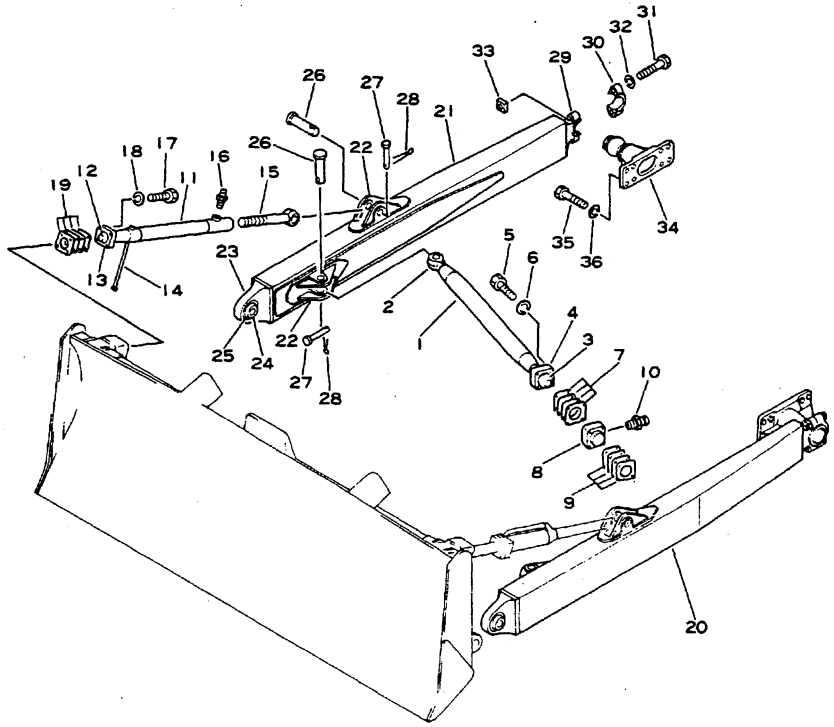

Fig. & Index No.	Part No.	Description	Q'ty	Serial No.	Remarks
	144-920-0120	CENTER BRACE ASS'Y	2	A 22893~ • E 22040~ •	
	144-920-0121	CENTER BRACE ASS'Y	2	A • ~ E • ~	
1836A- 1	144-920-2710	. BRACE, center	1	A 22893~ • E 22040~ •	All components are not listed below.
	144-920-2711	. BRACE, center	1	A • ~ E • ~	All components are not listed below.
2	144-920-2591	. . BOSS	1	A 22893~ • E 22040~ •	
	144-920-2592	. . BOSS	1	A • ~ E • ~	
3	144-920-2610	. . JOINT, ball	1		
4	144-817-2370	. . RETAINER	1	A 22893~ • E 20040~ •	
	144-817-2420	. . RETAINER	1	A • ~ E • ~	
5	144-920-2720	. BOLT	4	A 22893~ E 22040~	
6	01602-02060	. WASHER, spring	4	A 22893~ E 22040~	
7	144-920-0610	. SHIM ASS'Y	1	A 22893~ E 22040~	
	144-817-2381	. . SHIM, 1.0 mm	4	A 22893~ E 22040~	
	144-817-2391	. . SHIM, 0.5 mm	4	A 22893~ E 22040~	
8	144-920-1590	. RETAINER	1	A 22893~ E 22040~	
9	144-920-0620	. SHIM ASS'Y	2	A 22893~ E 22040~	
	144-920-2570	. . SHIM, 6.0 mm	2	A 22893~ E 22040~	
	144-817-2381	. . SHIM, 1.0 mm	8	A 22893~ E 22040~	
10	07020-00000	. FITTING, grease	1	A 22893~ E 22040~	
	144-920-0021	TILT BRACE ASS'Y	1	A 22893~ E 22040~	
11	144-920-2112	. BRACE, tilt	1	A 22893~ • E 22040~ •	All components are not listed below.
	144-920-2113	. BRACE, tilt	1	A • ~ E • ~	
12	144-817-2171	. . JOINT, ball	1	A 22893~ E 22040~	
13	144-817-2361	. . RETAINER	1	A 22893~ E 22040~	
14	144-817-2280	. . ROD	1	A 22893~ E 22040~	
15	144-920-2121	. JOINT	1	A 22893~ • E 22040~ •	
	144-920-2122	. JOINT	1	A • ~ E • ~	
16	07020-00000	. FITTING, grease	1	A 22893~ E 22040~	
17	01010-31865	. BOLT	4	A 22893~ E 22040~	

Fig. & Index No.	Part No.	Description	Q'ty	Serial No.	Remarks
1836A-18	01602-01854	. WASHER, spring	4	A 22893~ E 22040~	
19	144-817-0620	. SHIM ASS'Y	1	A 22893~ E 22040~	
	144-817-2250	. . SHIM, 1.0 mm	8	A 22893~ E 22040~	
	144-817-2260	. . SHIM, 0.5 mm	6	A 22893~ E 22040~	
	144-920-0130	FRAME ASS'Y, L. H.	1	A 22893~ • E 22040~ •	
	144-920-0131	FRAME ASS'Y, L. H.	1	A • ~ E • ~	
	144-920-0140	FRAME ASS'Y, R. H.	1	A 22893~ • E 22040~ •	
	144-920-0141	FRAME ASS'Y, R. H.	1	A • ~ E • ~	
20	144-920-3710	. FRAME, L. H.	1	A 22893~ • E 22040~ •	All components are not listed below.
	144-920-3711	. FRAME, L. H.	1	A • ~ E • ~	
21	144-920-3720	. FRAME, R. H.	1	A 22893~ • E 22040~ •	All components are not listed below.
	144-920-3721	. FRAME, R. H.	1	A • ~ E • ~	
22	144-920-3171	. . BRACKET	2	A 22893~ • E 22040~ •	Welded
	144-920-3172	. . BRACKET	2	A • ~ • E • ~	
23	144-920-3730	. . JOINT	1	A 22893~ • E 22040~ •	Welded
	144-920-3731	. . JOINT	1	A • ~ E • ~	
24	144-817-3150	. . BEARING	1	A 22893~ E 22040~	
25	140-920-3180	. . BEARING	2	A 22893~ E 22040~	Welded
26	144-817-3161	. PIN	2	A 22893~ E 22040~	
27	170-70-12240	. PIN	2	A 22893~ E 22040~	
28	04050-04020	. PIN, cotter	2	A 22893~ E 22040~	
	140-70-00032	. PIVOT ASS'Y	1	A 22893~ E 22040~	
29	140-70-13141	. . BEARING	1	A 22893~ E 22040~	
30	140-70-13151	. . CAP	1	A 22893~ E 22040~	
31	01011-62430	. . BOLT	2	A 22893~ E 22040~	
32	01602-02472	. . WASHER, spring	2	A 22893~ E 22040~	

Fig. & Index No.	Part No.	Description	Q'ty	Serial No.	Remarks
1836A-33	130-70-13241	. . NUT	2	A 22893~ E 22040~	
34	144-920-3211	TRUNNION	2	A 22893~ E 22040~	
35	01010-32045	BOLT	16	A 22893~ E 22040~	
36	01602-02060	WASHER, spring	16	A 22893~ E 22040~	

Fig. 1837 ANGLE RAKE DOZER (D60A, D65A Serial No. 20006~)

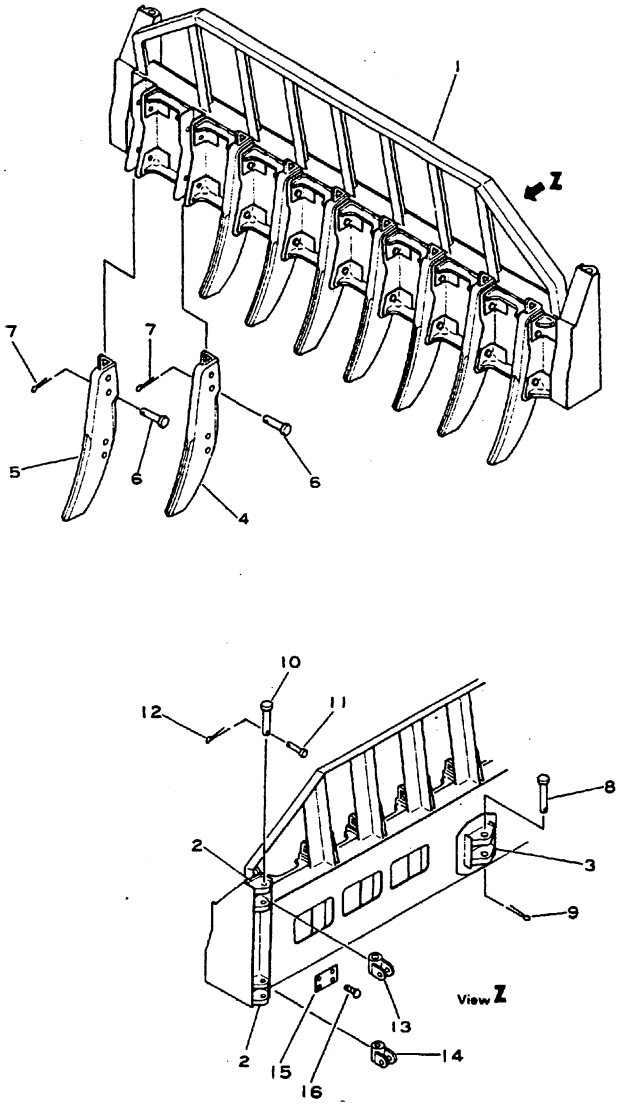

Fig. & Index No.	Part No.	Description	Q'ty	Serial No.	Remarks
	144-903-0100	ANGLE RAKE BLADE ASS'Y	1	20006~	
1837 - 1	140-903-2111	. BLADE, angle rake	1	20006~	
2	144-70-11210	. . BRACKET	4	20006~	
3	144-70-11220	. . BRACKET	1	20006~	
4	140-903-2120	. EDGE	7	20006~	
5	140-903-2130	. EDGE	2	20006~	
6	140-903-2140	. PIN	18	20006~	
7	04050-00070	. PIN, cotter	18	20006~	
▌ 8	144-70-11120	. PIN	1	20006~22387	□ 130-70-41120
	130-70-41120	. PIN	1	22388~	
9	04050-08070	. PIN, cotter	1	20006~	
10	140-70-12110	. PIN	4	20006~	
11	140-70-12120	. PIN	4	20006~	
12	04050-05030	. PIN, cotter	4	20006~	
13	144-70-12130	. JOINT	2	20006~	
14	144-903-2110	. JOINT	2	20006~	
▌ 15	09601-00835	PLATE, name	1	20006~	Limited supply
16	04418-03060	SCREW	4	20006~	

As for C-Frame, refer to Fig.1572.

Fig. 1838 STRAIGHT RAKE DOZER (D60A, D65A Serial No. 20006~)

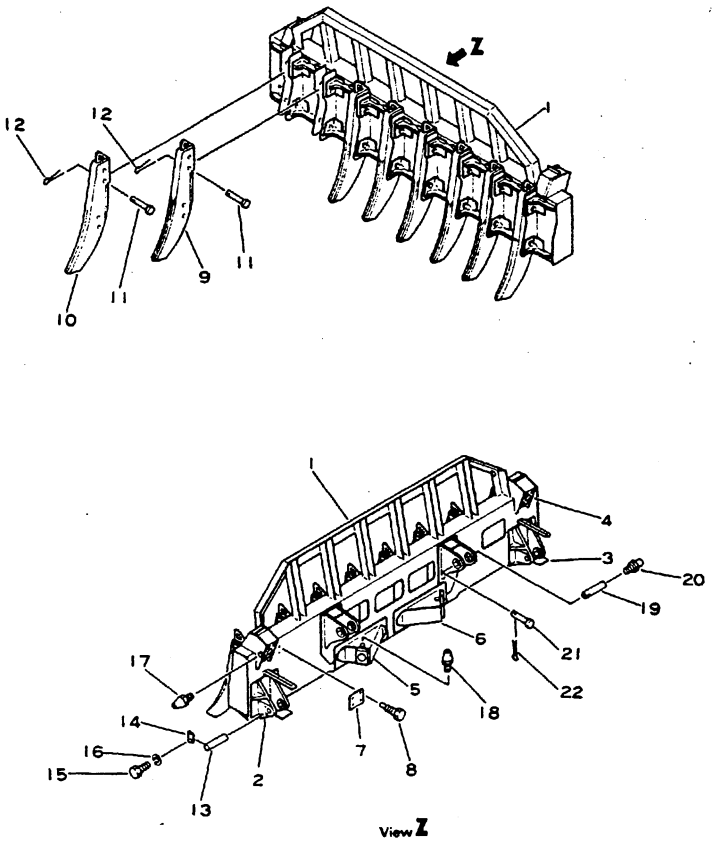

Fig. & Index No.	Part No.	Description	Q'ty	Serial No.	Remarks
	144-904-0010	STRAIGHT RAKE BLADE ASS'Y	1	20006~22892	
	144-904-0011	STRAIGHT RAKE BLADE ASS'Y	1	22893~	
1838 - 1	144-904-1110	. BLADE, straight rake	1	20006~22892	(■144-904-1111, 144-920-1780, 01010-31635, 01602-01648)
	144-904-1111	. BLADE, straight rake	1	22893~	
2	144-817-1320	. . BRACKET, lower, L.H	1	20006~22892	
	144-920-1760	. . BRACKET, lower, L.H	1	22893~	
3	144-817-1310	. . BRACKET, lower, R.H	1	20006~	
	144-920-1770	. . BRACKET, lower, R.H	1		
4	144-817-1270	. . RETAINER	2	20006~	
5	144-904-1120	. . BRACKET, center, L.H	1	20006~	
6	144-904-1130	. . BRACKET, center, R.H	1	20006~	
7	09601-00835	. PLATE, name	1	20006~	
8	04418-03060	. SCREW, tapping	4	20006~	
9	140-903-2120	. EDGE	6	20006~	
10	140-903-2130	. EDGE	2	20006~	
11	140-903-2140	. PIN	16	20006~	
12	04050-00070	. PIN, cotter	16	20006~	
13	144-817-1160	. SHAFT	2	20006~	
14	04082-00212	. PLATE, lock	2	20006~22892	
	144-920-1780	. PLATE, lock	2	22893~	
15	01010-31225	. BOLT	4	20006~22892	
	01010-31635	. BOLT	4	22893~	
16	01602-01236	. WASHER, spring	4	20006~22892	
	01602-01648	. WASHER, spring	4	22893~	
17	07020-00000	. FITTING, grease	2	20006~	

Fig & Index No.	Part No.	Description	Q'ty	Serial No.	Remarks
1838 -18	07020-00000	. FITTING, grease	2	20006~	
19	144-817-4110	SHAFT	2	20006~	
20	07020-00000	FITTING, grease	2	20006~	
21	140-70-14230	PIN	2	20006~	
22	04050-03015	PIN, cotter	2	20006~	

Fig. 1839 STRAIGHT RAKE FRAME (D60A, D65A Serial No. 20006~)

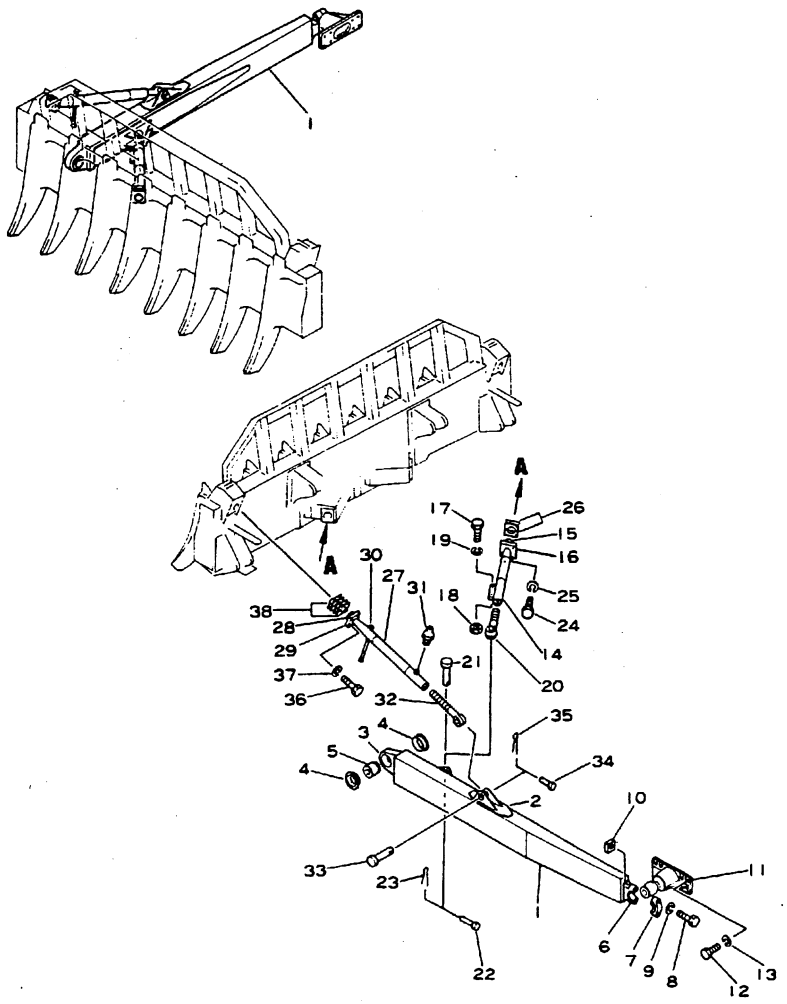

Fig. & Index No.	Part No.	Description	Q'ty	Serial No.	Remarks
	144-920-0040	FRAME ASS'Y, L.H	1	20006~	
	144-920-0050	FRAME ASS'Y, R.H	1	20006~	
1839 - 1	144-920-3111	. FRAME, L.H	1	20006~	All components are not listed below.
	144-920-3121	. FRAME, R.H	1	20006~	All components are not listed below.
2	144-920-3171	. . BRACKET	2	20006~	
3	144-920-3151	. . JOINT	1	20006~	
4	140-920-3180	. . BUSHING	2	20006~	
5	144-817-3150	. . BUSHING	1	20006~	
	140-70-00031	. PIVOT ASS'Y	1	20006~	
6	140-70-13141	. . BEARING	1	20006~	
7	140-70-13151	. . CAP	1	20006~	
8	01041-62430	. . BOLT	2	20006~	
9	01602-02472	. . WASHER, spring	2	20006~	
10	130-70-13241	. . NUT	2	20006~	
11	144-920-3211	TRUNNION	2	20006~	
	144-920-3161	. FLANGE	1	20006~	
	144-920-3191	. SHAFT	1	20006~	
12	01040-32045	BOLT	16	20006~	
13	01602-02060	WASHER, spring	16	20006~	
	144-817-0021	ARM ASS'Y	2	20006~24710	
	144-817-0022	ARM ASS'Y	2	24711~29848	
	144-817-0023	ARM ASS'Y	2	29849~	
14	144-817-2322	. ARM	1	20006~24710	All components are not listed below.
	144-817-2323	. ARM	1	24711~29848	
	144-817-2324	. ARM	1	29849~	
15	144-920-2610	. . JOINT, ball	1	20006~	
16	144-817-2420	. . RETAINER	1	20006~	
17	01001-32225	. BOLT	2	20006~29848	
	01011-32025	. BOLT	1	29849~	
18	01500-32218	. NUT	2	20006~29848	
	01580-12016	. NUT	1	29849~	

Fig & Index No.	Part No.	Description	Q'ty	Serial No.	Remarks
1839 -19	01602-02268	. WASHER, spring	2	20006~29848	
	01643-22045	. WASHER, spring	1	29849~	
20	144-817-2311	. JOINT	1	20006~24710	
	144-817-2312	. JOINT	1	24711~29848	
	144-817-2570	. JOINT	1	29849~	
21	144-817-3161	. PIN	1	20006~	
22	170-70-12240	. PIN	1	20006~	
23	04050-04025	. PIN, cotter	1	20006~	
24	01040-32070	. BOLT	4	20006~	
25	01602-02060	. WASHER, spring	4	20006~ •	
	01643-32060	. WASHER	4	• ~	
26	144-817-0610	. SHIM ASS'Y	1	20006~	
	144-817-2381	. . SHIM, 1.0 mm	6	20006~	
	144-817-2391	. . SHIM, 0.5 mm	4	20006~	
	144-817-0031	BRACE ASS'Y	2	20006~22387	
	144-817-0032	BRACE ASS'Y	2	22388~24710	
	144-817-0033	BRACE ASS'Y	2	24711~	
27	144-817-2342	. BRACE	1	20006~	All components are not listed below.
	144-817-2343	. BRACE	1	24711~	
28	144-817-2171	. . JOINT, ball	1	20006~	
29	144-817-2361	. . RETAINER	1	20006~	
30	144-817-2280	. . ROD	1	20006~	
31	07020-00000	. FITTING, grease	1	20006~	
32	144-817-2311	. JOINT	1	20006~24710	
	144-817-2312	. JOINT	1	24711~	
33	144-817-3161	. PIN	1	20006~	
34	170-70-12240	. PIN	1	20006~	
35	04050-04025	. PIN, cotter	1	20006~	
36	01040-31865	. BOLT	4	20006~22387	
	01010-31865	. BOLT	4	22388~	
37	01602-01854	. WASHER, spring	4	20006~	
	01643-31845	. WASHER, spring	4	22388~	

Fig & Index No.	Part No.	Description	Q'ty	Serial No.	Remarks
1839 -38	144-817-0620	. SHIM ASS'Y	1	20006~	
	144-817-2250	. . SHIM, 1.0 mm	8	20006~	
	144-817-2260	. . SHIM, 0.5 mm	6	20006~	

Fig. 1840 STRAIGHT RAKE DOZER (D60P, D65P Serial No. 20006~)

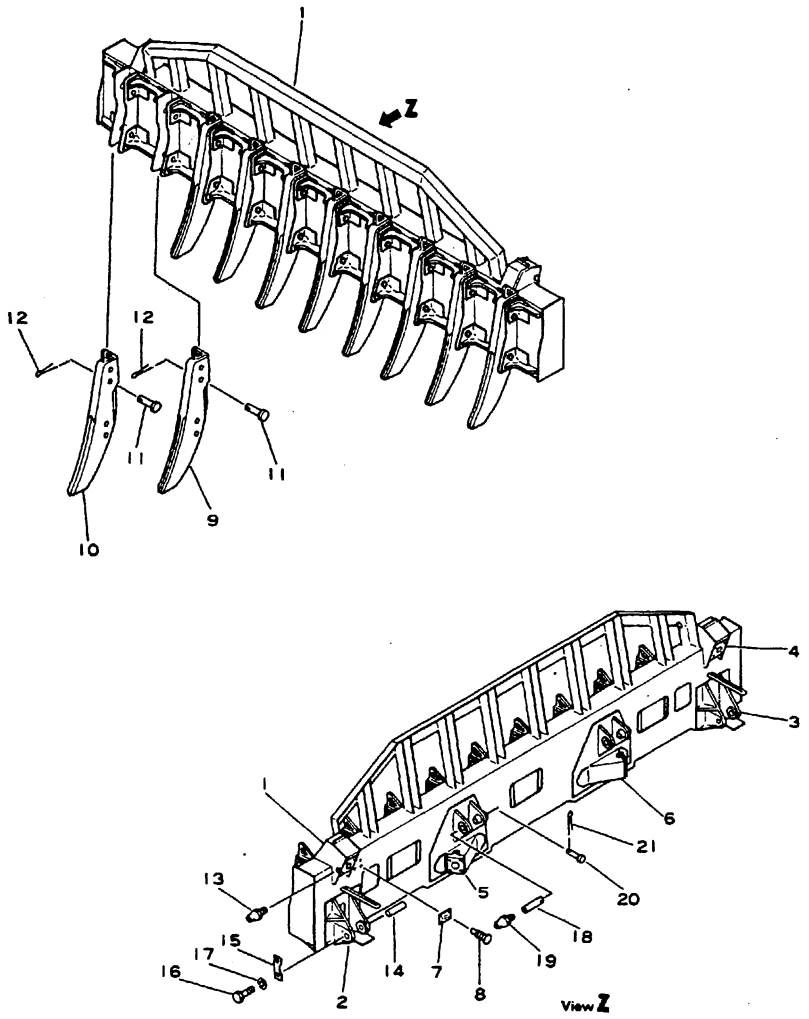

Fig & Index No.	Part No.	Description	Q'ty	Serial No.	Remarks
	144-904-0100	STRAIGHT RAKE BLADE ASS'Y	1	20006~25180	
	144-904-0101	STRAIGHT RAKE BLADE ASS'Y	1	20006~28072	
	144-904-0102	STRAIGHT RAKE BLADE ASS'Y	1	28073~	
1840 - 1	144-904-5110	. BLADE, straight rake	1	20006~25180	(■144-904-5111, 144-920-1780, 01010-31635, 01602-01648)
	144-904-5111	. BLADE, straight rake	1	25181~28072	
	144-904-7150	. BLADE, straight rake	1	28073~	
2	144-817-1320	. . BRACKET, lower, L.H	1	20006~25180	
	144-920-1760	. . BRACKET, lower, L.H	1	25181~	
3	144-817-1310	. . BRACKET, lower, R.H	1	20006~25180	
	144-920-1770	. . BRACKET, lower, R.H	1	25181~	
4	144-817-1270	. . RETAINER	2	20006~	
5	144-904-5120	. . BRACKET, center, L.H	1	20006~	
6	144-904-5130	. . BRACKET, center, R.H	1	20006~	
7	09601-00835	. PLATE, name	1	20006~	
8	04418-03060	. SCREW, tapping	4	20006~	
9	140-903-2120	. EDGE	8	20006~	
10	140-903-2130	. EDGE	2	20006~	
11	140-903-2140	. PIN	20	20006~	
12	04050-00070	. PIN, cotter	20	20006~	
13	07020-00000	. FITTING, grease	4	20006~	
14	144-817-1160	. SHAFT	2	20006~	
15	04082-00212	. PLATE, lock	2	20006~25180	
	144-920-1780	. PLATE, lock	2	25181~	
16	01010-31225	. BOLT	4	20006~25180	

Fig & Index No.	Part No.	Description	Q'ty	Serial No.	Remarks
1840 -16	01010-31635	. BOLT	4	25181~	
17	01602-01236	. WASHER, spring	4	20006~25180	
	01602-01648	. WASHER, spring	4	25181~	
18	144-817-4110	SHAFT	2	20006~	
19	07020-00000	FITTING, grease	2	20006~	
20	140-70-14230	PIN	2	20006~	
21	04050-03015	PIN, cotter	2	20006~	

Fig. 1851 SWING DRAWBAR (D60A, P, D65A, P Serial No. 20006~)

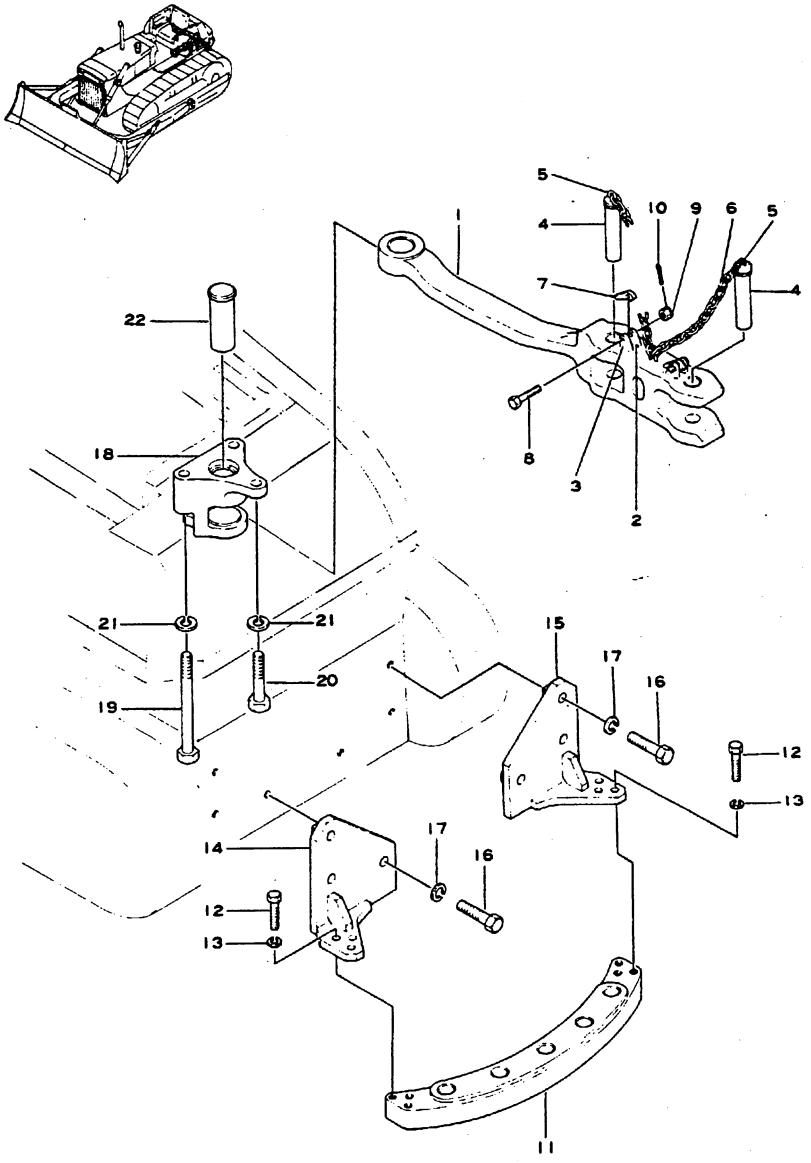

Fig. & Index No.	Part No.	Description	Q'ty	Serial No.	Remarks
	144-918-0010	SWING DRAWBAR ASS'Y	1	20006~	OP
	144-918-1100	. DRAWBAR ASS'Y	1	20006~	
1851 - 1	144-918-1110	. . DRAWBAR	1	20006~	
2	131-69-11120	. . PLATE	2	20006~	Welded to 144-918-1110
3	131-69-11130	. . PLATE	2	20006~	Welded to 144-918-1110
4	09242-45175	. . PIN	2	20006~	
5	130-70-12210	. . HOOK	3	20006~	Welded to 144-918-1110 and 09242-45175
6	09245-04830	. . CHAIN	2	20006~	
7	09249-00016	. LATCH	2	20006~	
8	01002-31260	. BOLT	2	20006~	
9	01511-01210	. NUT	2	20006~	
10	04050-03020	. PIN, cotter	2	20006~	
11	144-918-1120	. GUIDE	1	20006~	
12	01040-32070	. BOLT	6	20006~22387	
	01010-32070	. BOLT	6	22388~	
13	01602-02060	. WASHER, spring	6	20006~	
14	144-918-1130	. BRACKET, L.H	1	20006~	
15	144-918-1140	. BRACKET, R.H	1	20006~	
16	01040-63390	. BOLT	6	20006~	
17	01601-03382	. WASHER, spring	6	20006~	
18	144-918-1150	. SUPPORT	1	20006~	
19	01041-32450	. BOLT	2	20006~22387	
	01011-32450	. BOLT	2	22388~	
20	01040-32465	. BOLT	1	20006~22387	
	01010-32465	. BOLT	1	22388~	
21	01602-02472	. WASHER, spring	3	20006~	
22	144-918-1160	. PIN	1	20006~	

Fig. 1854 ENGINE SIDE COVER, For Jungle

(D60A, D65A Serial No. 20006~)

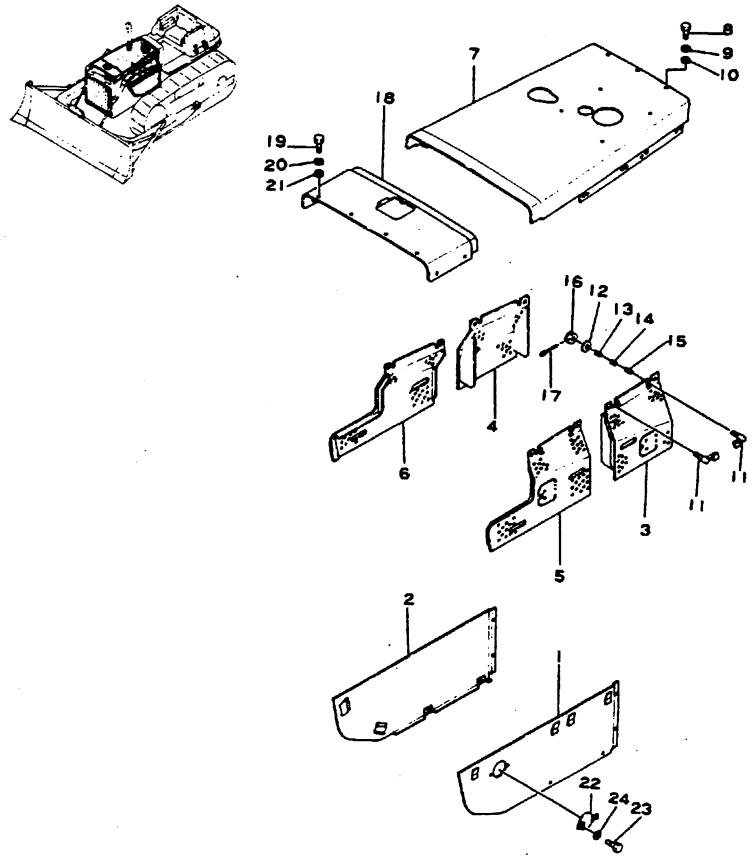

Fig & Index No.	Part No.	Description	Q'ty	Serial No.	Remarks
1854 - 1	144-854-1810	COVER, L.H	1	20006~	OP
	01503-31210	. NUT	2	20006~	Welded
2	144-854-1820	COVER, R.H	1	20006~	
3	144-854-1830	COVER, L.H	1	20006~	
	09455-07019	. HINGE	1	20006~	
4	144-854-1840	COVER, R.H	1	20006~	
5	144-854-1850	COVER, L.H	1	20006~	
	09455-07019	. HINGE	1	20006~	

Fig & Index No.	Part No.	Description	Q'ty	Serial No.	Remarks
1854 - 6	144-854-1860	COVER, R.H	1	20006~	
7	144-854-1870	BONNET, reinforced	1	20006~	
	01503-31210	. NUT	4	20006~	Welded
8	01040-31230	BOLT	5	20006~	
9	01602-01236	WASHER, spring	5	20006~	
10	01643-01232	WASHER	5	20006~	
11	144-854-1880	LEVER	8	20006~	
12	144-854-1890	WASHER	8	20006~	
13	144-854-1910	SPRING	8	20006~	
14	144-854-1920	SPRING	8	20006~	
15	144-854-1930	SPRING	8	20006~	
16	01513-31012	NUT	8	20006~	
17	04050-02018	PIN, cotter	8	20006~	
18	144-854-1420	COVER	1	20006~	
19	01040-31230	BOLT	8	20006~	
20	01602-01236	WASHER, spring	8	20006~	
21	01643-01232	WASHER	8	20006~	
22	144-855-1180	COVER	1	20006~	
23	01040-31235	BOLT	2	20006~	
24	01602-01236	WASHER, spring	2	20006~	

Parts to be removed from standard chassis when equipped with engine side cover for jungle.

144-54-11172	COVER, L.H	1	20006~20021	
144-54-11190	COVER, L.H	1	20024~	
144-54-11162	COVER, R.H	1	20006~20021	
144-54-11180	COVER, R.H	1	20024~	
144-54-11131	BONNET	1	20006~20021	
144-54-11132	BONNET	1	20024~20053	
01040-31225	BOLT	5	20006~	
01602-01236	WASHER, spring	5	20006~	
01643-01232	WASHER	5	20006~	

ENGINE SIDE COVER

Fig & Index No.	Part No.	Description	Q'ty	Serial No.	Remarks
1854 -	144-54-11121	COVER	1	20006~20021, 20054~	
	144-54-11122	COVER	1	20024~20053	
	01040-31225	BOLT	8	20006~	
	01602-01236	WASHER, spring	8	20006~	
	01643-01232	WASHER	8	20006~	

Fig. 1855 REINFORCED FENDER (D60A, D65A Serial No. 20006~)

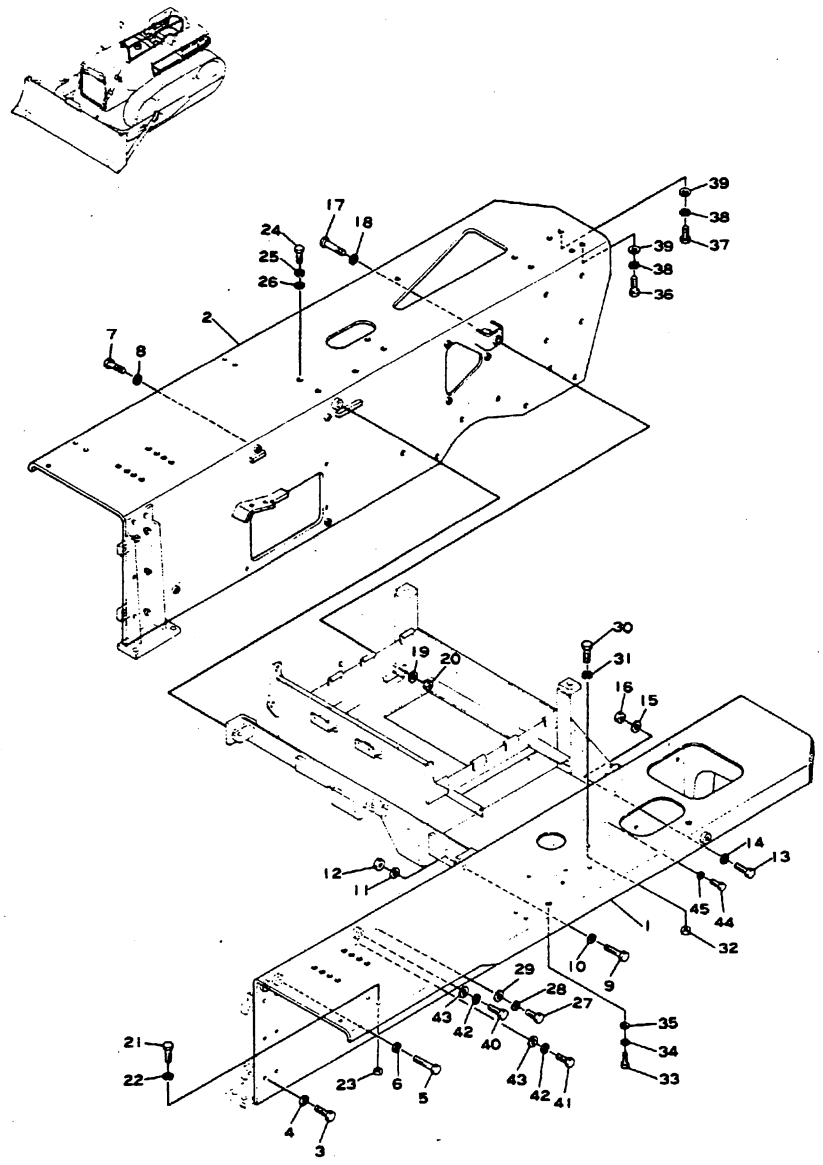

Fig & Index No.	Part No.	Description	Q'ty	Serial No.	Remarks
1855 - 1	144-854-1310	FENDER, L.H	1	20006~	OP
	01571-01016	. SEAT	1	20006~	Welded
2	144-854-1320	FENDER, R.H	1	20006~	
	01503-31411	. NUT	3	20006~	Welded
	01571-01016	. SEAT	1	20006~	Welded
	01571-01218	. SEAT	2	20006~	Welded
3	01040-31435	BOLT	12	20006~	
4	01602-01442	WASHER, spring	12	20006~	
5	01040-31460	BOLT	4	20006~	
6	01602-01442	WASHER, spring	4	20006~	
7	01040-31455	BOLT	2	20006~	
8	01602-01442	WASHER, spring	2	20006~	
9	01000-31455	BOLT	2	20006~	
10	01602-01442	WASHER, spring	2	20006~	
11	01643-01432	WASHER	2	20006~	
12	01500-31411	NUT	2	20006~	
13	01000-31445	BOLT	1	20006~	
14	01602-01442	WASHER, spring	1	20006~	
15	01643-01432	WASHER	1	20006~	
16	01500-31411	NUT	1	20006~	
17	01000-31495	BOLT	1	20006~	
18	01602-01442	WASHER, spring	1	20006~	
19	01643-01432	WASHER	1	20006~	
20	01500-31411	NUT	1	20006~	
21	01040-31235	BOLT	8	20006~	
22	01602-01236	WASHER, spring	8	20006~	
23	01503-31210	NUT	8	20006~	
24	01040-31235	BOLT	2	20006~	
25	01602-01236	WASHER, spring	2	20006~	
26	01643-01232	WASHER	2	20006~	
27	01040-31035	BOLT	1	20006~	
28	01602-01030	WASHER, spring	1	20006~	

Fig & Index No.	Part No.	Description	Q'ty	Serial No.	Remarks
1855 -29	01643-01032	WASHER	1	20006~	
30	01040-31440	BOLT	5	20006~	
31	01602-01442	WASHER, spring	5	20006~	
32	01503-31411	NUT	5	20006~	
33	01040-31235	BOLT	2	20006~	
34	01602-01236	WASHER, spring	2	20006~	
35	01643-01232	WASHER	2	20006~	
36	01040-31455	BOLT	2	20006~	
37	01040-31445	BOLT	2	20006~	
38	01602-01442	WASHER, spring	4	20006~	
39	01643-01432	WASHER	4	20006~	
40	01040-31250	BOLT	1	20006~	
41	01040-31235	BOLT	1	20006~	
42	01602-01236	WASHER, spring	2	20006~	Used when equipped with tilt dozer.
43	01643-01232	WASHER	2	20006~	
44	01040-31240	BOLT	2	20006~	
45	01602-01236	WASHER, spring	2	20006~	

Parts to be removed from standard chassis when equipped with reinforced fender.

144-54-14125	FENDER, L.H	1	20006~20021	
144-54-14126	FENDER, L.H	1	20024~20053	
144-54-14128	FENDER, L.H	1	20054~	
144-54-14135	FENDER, R.H	1	20006~20021	
144-54-14136	FENDER, R.H	1	20024~20053	
144-54-14137	FENDER, R.H	1	20054~	
01000-31440	BOLT	3	20006~	
01000-31490	BOLT	1	20006~	
01040-31030	BOLT	1	20006~	
01040-31230	BOLT	12	20006~	
01040-31425	BOLT	2	20006~	
01040-31430	BOLT	12	20006~	

Fig & Index No.	Part No.	Description	Q'ty	Serial No.	Remarks
1855 -	01040-31435	BOLT	5	20006~	
	01040-31440	BOLT	8	20006~	
	01040-31230	BOLT	2	20006~	For tilt dozer.

Fig. 1856 REINFORCED RADIATOR GUARD AND GRILLE
(D60A, D65A Serial No. 200006~)

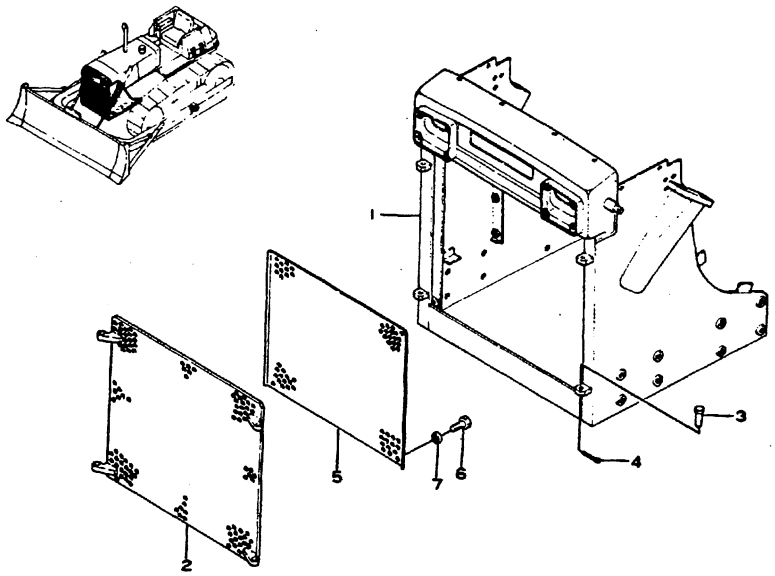

Fig. & Index No.	Part No.	Description	Q'ty	Serial No.	Remarks
1856 - 1	144-854-1631	GUARD, radiator	1	20006~	OP Modified 144-54-11116
	144-854-3110	GUARD, radiator	1	20006~	Used when equipped with tilt dozer. Modified 144-54-11116
2	144-854-1611	GRILLE, radiator	1	20006~	
	144-854-3120	GRILLE, radiator	1	20006~	Use when equipped with tilt dozer.
	135-854-1180	. BRACKET	4	20006~	Welded
3	135-854-1140	PIN	4	20006~	
4	04050-05035	PIN, cotter	4	20006~	
5	144-854-1660	COVER	1	20006~	
	144-854-3130	COVER	1	20006~	Used when equipped with tilt dozer.
6	01040-31225	BOLT	4	20006~	

Fig. & Index No.	Part No.	Description	Q'ty	Serial No.	Remarks
1856 - 7	01602-01236	WASHER, spring	4	20006~	
	Parts to be removed from standard chassis when equipped with reinforced radiator guard and grille.				
	144-54-11113	GUARD, radiator	1	20006~20021	
	144-54-11114	GUARD, radiator	1	20024~20053	
	144-54-11116	GUARD, radiator	1	20054~	
	144-54-11510	GUARD, radiator	1	20006~	For tilt dozer
	144-54-11311	GRILLE, radiator	1	20006~20021	
	144-54-11312	GRILLE, radiator	1	20024~20053	
	144-54-11313	GRILLE, radiator	1	20054~	
	144-54-11520	GRILLE, radiator	1	20006~	For tilt dozer
	01040-31425	BOLT	4	20006~20021, 20054~	
	01040-31430	BOLT	4	20024~20053	
	01602-01442	WASHER, spring	4	20006~	
	01643-01432	WASHER	4	20006~	
	144-54-11290	BUMPER	1	20024~	
	01252-21240	BOLT	4	20024~20053	
	01252-21230	BOLT	4	20054~	
	01602-01236	WASHER, spring	4	20024~	

Fig. 1857 RADIATOR WIRE NET, BONNET AND COVER

(D60A, D65A Serial No. 20006~)

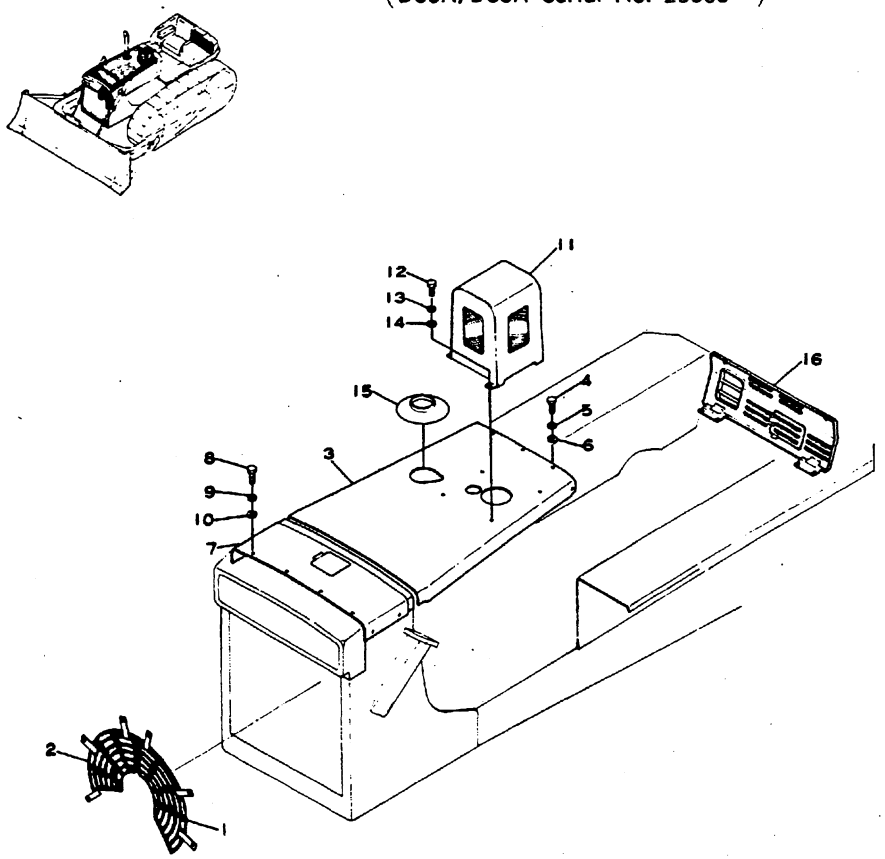

Fig. & Index No.	Part No.	Description	Q'ty	Serial No.	Remarks
1857 - 1	144-854-2110	NET, wire, L.H	1	20006~	OP Modified 144-03-11362
2	144-854-2120	NET, wire, R.H	1	20006~	Modified 144-03-11371
3	144-854-1410	BONNET, reinforced	1	20006~	
	01503-31210	. NUT	4	20006~	Welded
4	01040-31230	BOLT	5	20006~	
5	01602-01236	WASHER, spring	5	20006~	
6	01643-01232	WASHER	5	20006~	

Fig. & Index No.	Part No.	Description	Q'ty	Serial No.	Remarks
1857 - 7	144-854-1420	COVER	1	20006~	
8	01040-31230	BOLT	8	20006~	
9	01602-01236	WASHER, spring	8	20006~	
10	01643-01232	WASHER	8	20006~	
11	144-854-1430	COVER, precleaner	1	20006~	
12	01040-31230	BOLT	4	20006~	
13	01602-01236	WASHER, spring	4	20006~	
14	01643-01232	WASHER	4	20006~	
15	144-854-1440	COVER, bonnet exhaust pipe	1	20006~	
16	144-854-1330	COVER, rear, reinforced	1	20006~	
	144-854-1340	. COVER	1	20006~	Welded
	2900-10-4112	COVER	1	20006~	

Parts to be removed from standard chassis when equipped with radiator wire net, bonnet and covers.

144-03-11361	NET, wire, L.H	1	20006~20053	
144-03-11362	NET, wire, L.H	1	20054~	
144-03-11371	NET, wire, R.H	1	20006~	
144-54-11131	BONNET	1	20006~20021, 20054~	
144-54-11132	BONNET	1	20024~20053	
01040-31225	BOLT	5	20006~	
01602-01236	WASHER, spring	5	20006~	
01643-01232	WASHER	5	20006~	
144-54-11121	COVER	1	20006~20021, 20054~	
144-54-11122	COVER	1	20024~20053	
01040-31225	BOLT	8	20006~	
01602-01236	WASHER, spring	8	20006~	
01643-01232	WASHER	8	20006~	
144-54-12181	COVER, rear	1	20006~20053	
144-54-12182	COVER, rear	1	20054~	

Fig. 1858 DECELERATOR PEDAL (D60A, P, PL, E Serial No. 20006~)

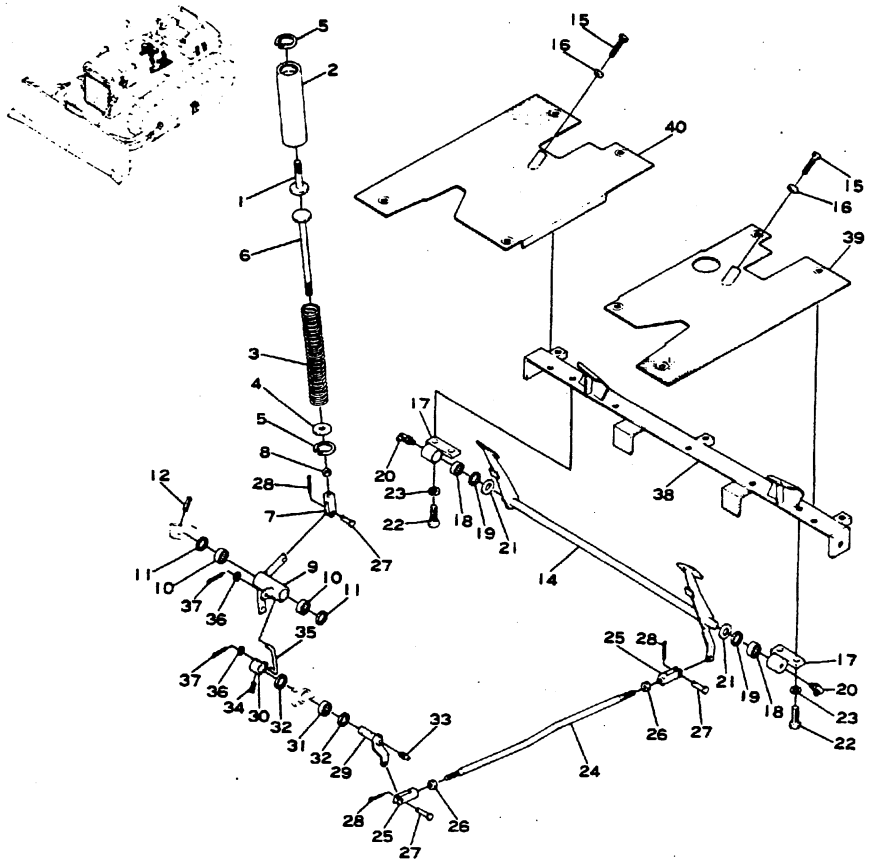

Fig & Index No.	Part No.	Description	Q'ty	Serial No.	Remarks
1858 - 1	144-43-25810	ROD	1	20006~	OP
2	135-43-15810	GUIDE	1	20006~	
3	135-43-15821	SPRING	1	20006~	
4	135-43-15830	PLATE	1	20006~	
5	04065-03815	RING, snap	2	20006~	

Fig & Index No.	Part No.	Description	Q'ty	Serial No.	Remarks
1858 - 6	135-43-15841	ROD	1	20006~	
7	04211-00844	YOKE, adjustable	1	20006~	
8	01580-00806	NUT	1	20006~	
9	144-43-25821	LEVER	1	20006~	
10	06120-01612	BEARING, needle	2	20006~	
11	06122-01603	SEAL, bearing	2	20006~	
12	04025-00524	PIN, roll	1	20006~	
13	04050-02012	PIN, cotter	3	20006~	
14	144-43-25180	PEDAL, decelerator	1	20006~	
15	144-43-25830	BOLT	2	20006~	
16	01580-00806	NUT	2	20006~	
17	144-43-15281	BRACKET	2	20006~	
18	06120-01612	BEARING, needle	2	20006~	
19	06122-01603	SEAL, bearing	2	20006~	
20	07020-00900	FITTING, grease	2	20006~	
21	01643-01645	WASHER	2	20006~	
22	01010-31225	BOLT	4	20006~	
23	01602-01236	WASHER, spring	4	20006~	
24	144-985-1130	ROD	1	20006~	
25	04211-00844	YOKE, adjustable	2	20006~	
26	01580-00806	NUT	2	20006~	

DECELERATOR PEDAL

Fig & Index No.	Part No.	Description	Q'ty	Serial No.	Remarks
1858 - 27	04205-00822	PIN	2	20006~	
28	04050-02012	PIN, cotter	2	20006~	
29	144-985-1140	SHAFT	1	200006~	
30	144-43-15650	LEVER	1	20006~	
31	06120-01612	BEARING, needle	1	20006~	
32	06122-01603	SEAL, bearing	2	20006~	
33	07020-00000	FITTING, grease	1	20006~	
34	04025-00524	PIN, roll	1	20006~	
35	144-43-15610	ROD	1	20006~	
36	01641-20812	WASHER	2	20006~	
37	04050-02012	PIN, cotter	2	20006~	
38	144-54-25114	FRAME	1	20006~	
39	144-985-1210	PLATE	1	20006~	144-54-25123 Reworked 144-54-25123
40	144-54-25142	PLATE	1	20006~	

Fig. 1859 FRONT HOOK AND REINFORCED BOTTOM GUARD
(D60A, E, D65A, E Serial No. 20006~)

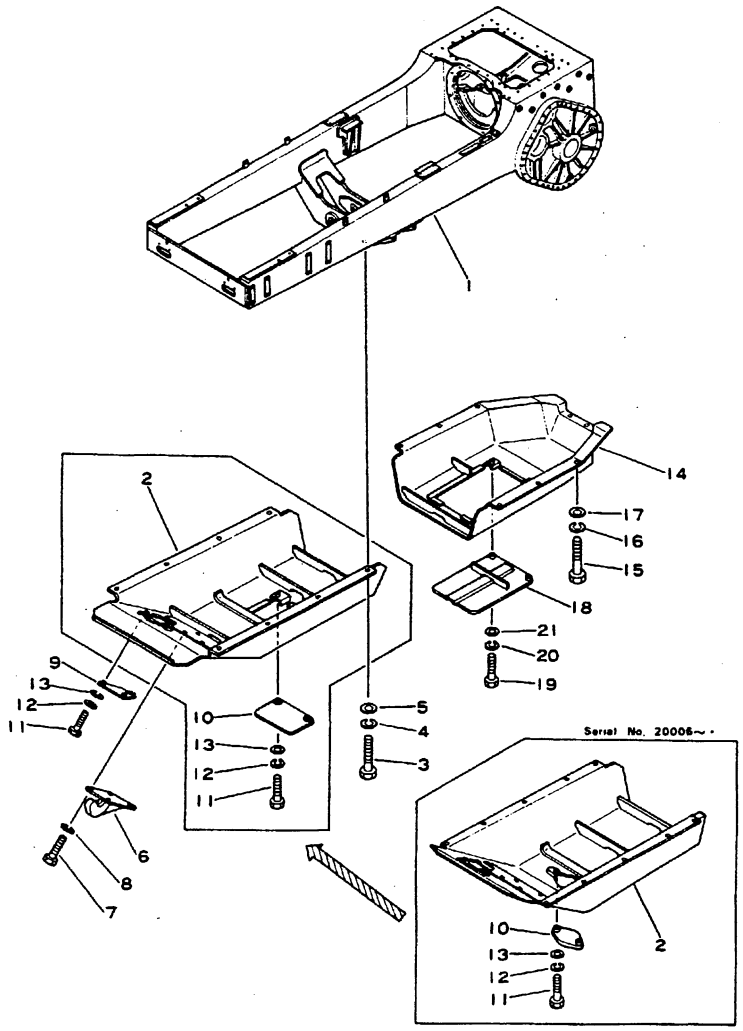

Fig & Index No.	Part No.	Description	Q'ty	Serial No.	Remarks
1859 - 1	144-913-2210	CASE AND FRAME	1	20006~	
2	144-913-2111	GUARD, bottom, front	1	20006~ •	
	144-913-2112	GUARD, bottom, front	1	• ~	
3	01010-31650	BOLT	10	20006~	
4	01602-01648	WASHER, spring	10	20006~	
5	01643-31645	WASHER	10	20006~	
6	141-958-2120	HOOK	1	20006~	
7	01010-32055	BOLT	4	20006~	
8	01602-02060	WASHER, spring	4	20006~	
9	144-913-2130	COVER	1	20006~	
10	144-913-2140	COVER	1	20006~ •	
	144-54-13270	COVER	1	• ~	
11	01010-31230	BOLT	4	20006~	
12	01602-01236	WASHER, spring	4	20006~	
13	01640-21223	WASHER	4	20006~	
14	144-854-1120	GUARD, bottom, rear	1	20006~	
15	01010-31650	BOLT	8	20006~	
16	01602-01648	WASHER, spring	8	20006~	
17	01643-31645	WASHER	8	20006~	
18	144-850-1130	COVER	1	20006~	
19	01010-31230	BOLT	2	20006~	
20	01602-01236	WASHER, spring	2	20006~	
21	01640-21223	WASHER	2	20006~	

Fig. 1860 FRONT HOOK AND REINFORCED BOTTOM GUARD

(D60P, PL, D65P Serial No. 20006~)

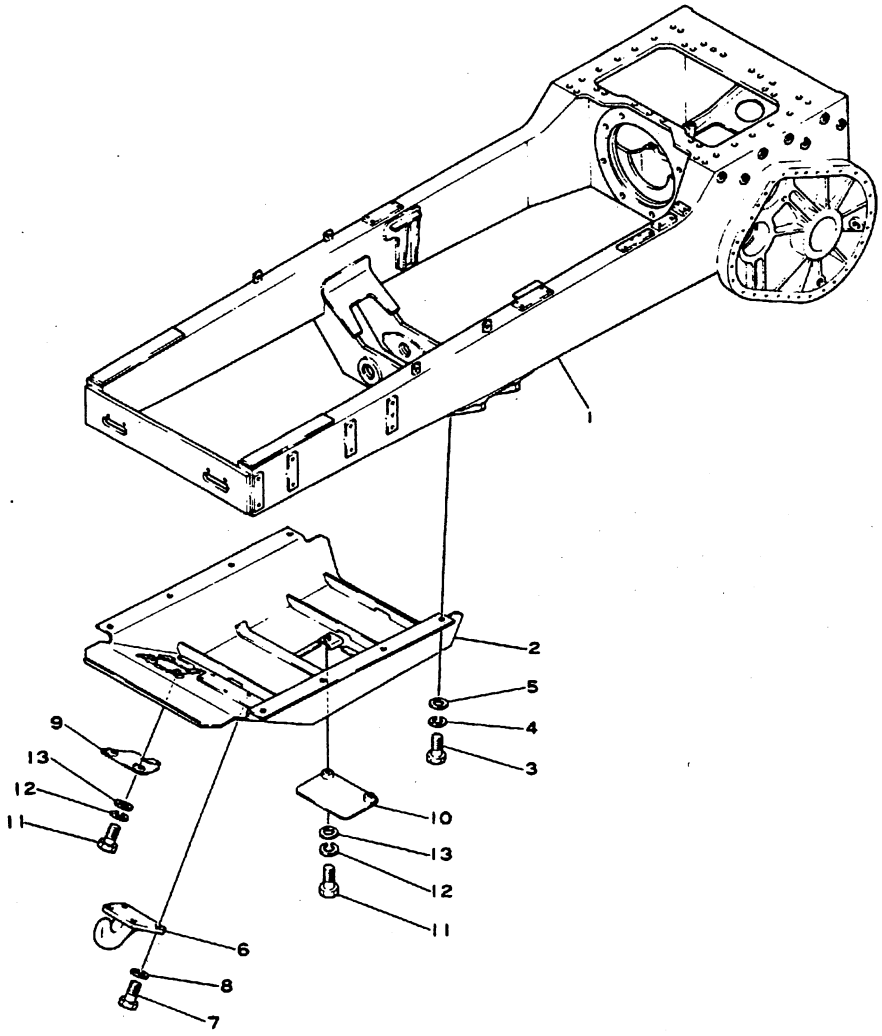

Fig & Index No.	Part No.	Description	Q'ty	Serial No.	Remarks
1860 - 1	144-825-1210	CASE AND FRAME	1	20006~	
2	144-825-1112	GUARD, bottom	1	20006~	
3	01010-31650	BOLT	8	20006~	
4	01602-01648	WASHER, spring	8	20006~	
5	01640-01626	WASHER	8	20006~	
6	141-958-2120	HOOK	1	20006~	
7	01010-32055	BOLT	4	20006~	
8	01602-02060	WASHER, spring	4	20006~	
9	144-913-2190	COVER	1	20006~	
10	144-811-4150	COVER	1	20006~	
11	01010-31230	BOLT	4	20006~	
12	01602-01236	WASHER, spring	4	20006~	
13	01640-01223	WASHER	4	20006~	

Fig. 1895A TRACK FRAME, STANDARD CENTER GUARD

(D60A Serial No. 31001~)
(D65A Serial No. 32001~)

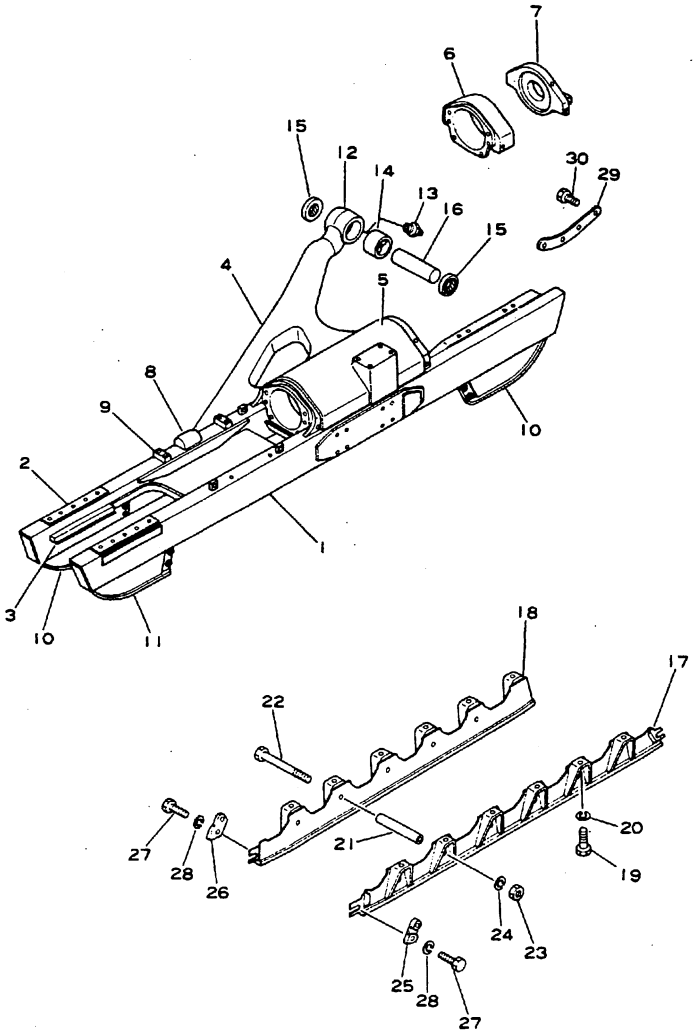

Fig. & Index No.	Part No.	Description	Q'ty	Serial No.	Remarks
	144-901-1119	TRACK FRAME ASS'Y L. H.	1	C 31001~ T 32001~	
	144-901-1129	TRACK FRAME ASS'Y R. H.	1	C 31001~ T 32001~	
1895A- 1	144-30-11136	. FRAME, track, L. H.	1	C 31001~ T 32001~	
	144-30-11146	. FRAME, track, R. H.	1	C 31001~ T 32001~	
2	141-30-11190	. . PLATE	2	C 31001~ T 32001~	(Welded)
3	141-30-31262	. . PLATE	2	C 31001~ T 32001~	(Welded)
4	144-30-11152	. BRACE, diagonal, L. H.	1	C 31001~ T 32001~	
	144-30-11162	. BRACE, diagonal, R. H.	1	C 31001~ T 32001~	
5	144 30-11176	. CABIN, L. H.	1	C 31001~ T 32001~	
	144-30-11186	. CABIN, R. H.	1	C 31001~ T 32001~	
6	141-30-31213	. . GUIDE, front	1	C 31001~ T 32001~	
7	141-30-31222	. . GUIDE, rear	1	C 31001~ T 32001~	
8	144-813-1390	. SEAT	1	C 31001~ T 32001~	
9	141-30-31340	. PLATE	2	C 31001~ T 32001~	
10	144-871-5351	. GUARD, outer, rear, inner, front, L. H.	2	C 31001~ T 32001~	(Welded)
	144-871-5361	. GUARD, outer, rear, inner, front, R. H.	2	C 31001~ T 32001~	(Welded)
11	144-871-5361	. GUARD, outer, front, L. H.	1	C 31001~ T 32001~	
	144-871-5351	. GUARD, outer, front, L. H.	1	C 31001~ T 32001~	
12	145-30-31241	. HEAD	1	C 31001~ T 32001~	
13	07020-00000	FITTING, grease	2	C 31001~ T 32001~	
14	145-30-31250	BUSHING	2	C 31001~ T 32001~	
15	145-30-31320	SEAL	4	C 31001~ T 32001~	

TRACK FRAME, STANDARD CENTER GUARD

Fig & Index No.	Part No.	Description	Q'ty	Serial No.	Remarks
1895A-16	141-30-31350	PIN	2	C 31001~ T 32001~	
17	144-901-2113	GUARD, outer, L. H.	1	C 31001~ T 32001~	
	144-901-2123	GUARD, outer, R. H.	1	C 31001~ T 32001~	
18	144-901-2133	GUARD, inner, L. H.	1	C 31001~ T 32001~	
	144-901-2143	GUARD, inner, R. H.	1	C 31001~ T 32001~	
19	01010-31840	BOLT	24	C 31001~ T 32001~	
20	01602-01854	WASHER, spring	24	C 31001~ T 32001~	
21	141-30-32181	COLLAR	10	C 31001~ T 32001~	
22	09205-18310	BOLT	10	C 31001~ T 32001~	
23	01580-01815	NUT	10	C 31001~ T 32001~	
24	01602-01854	WASHER, spring	10	C 31001~ T 32001~	
25	130-30-12170	PLATE, L. H. outer, front R. H. inner, front R. H. outer, rear	3	C 31001~ T 32001~	
26	130-30-12180	PLATE, L. H. inner, front L. H. outer, rear R. H. outer, front	3	C 31001~ T 32001~	
27	01010-31430	BOLT	12	C 31001~ T 32001~	
28	01602-01442	WASHER, spring	12	C 31001~ T 32001~	
29	144-901-2310	SPACER	2	C 31001~ T 32001~	
30	01010-32055	BOLT	8	C 31001~ T 32001~	

Fig. 1896 TRACK FRAME, STANDARD CENTER GUARD AND MINI CENTER GUARD

(D60P Serial No. 32001~)
(D65P Serial No. 31001~)

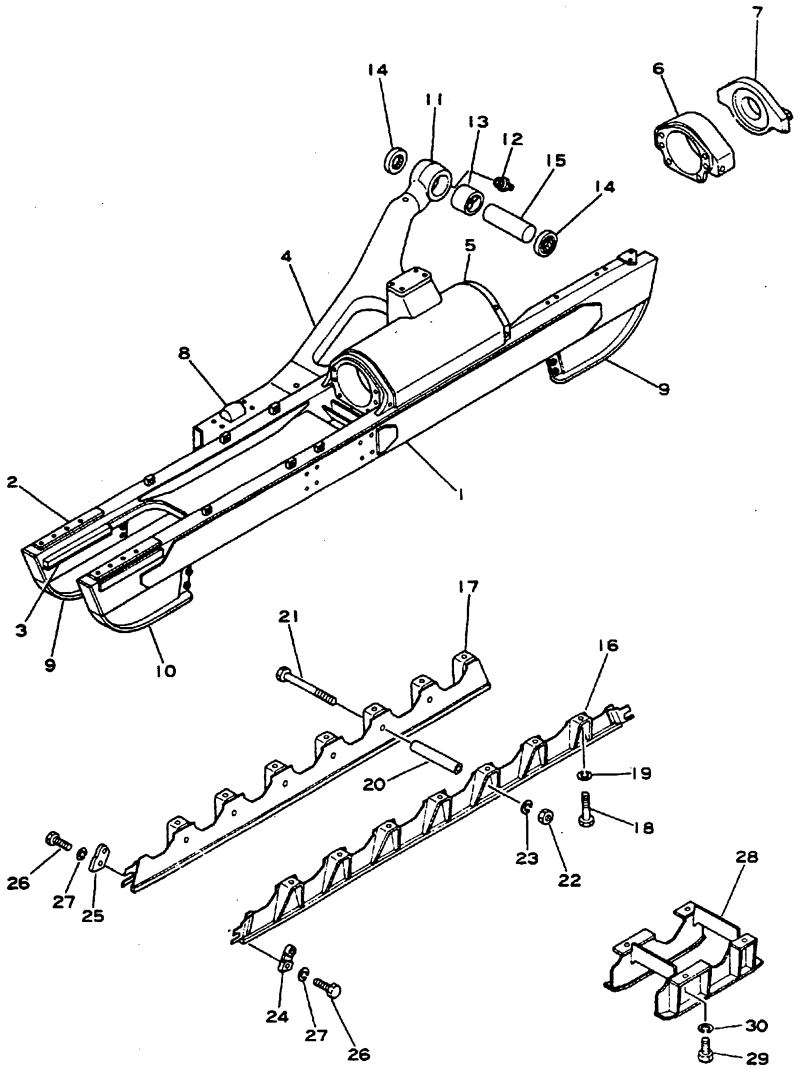

Standard Center Guard

Mini Center Guard

Fig. & Index No.	Part No.	Description	Q'ty	Serial No.	Remarks
	144-813-1830	TRACK FRAME, L. H.	1	C 32001~ T 31001~	
	144-813-1840	TRACK FRAME, R. H.	1	C 32001~ T 31001~	
1896 - 1	144-813-1810	. FRAME, track, L. H.	1	C 32001~ T 31001~	
	144-813-1820	. FRAME, track, R. H.	1	C 32001~ T 31001~	
2	141-30-11190	. . PLATE	2	C 32001~ T 31001~	(Welded)
3	141-30-31262	. . PLATE	2	C 32001~ T 31001~	(Welded)
4	144-813-1154	. BRACE, diagonal, L. H.	1	C 32001~ T 31001~	
	144-813-1164	. BRACE, diagonal, R. H.	1	C 32001~ T 31001~	
5	144-813-1178	. CABIN, L. H.	1	C 32001~ T 31001~	
	144-813-1188	. CABIN, R. H.	1	C 32001~ T 31001~	
6	141-30-31213	. . GUIDE, front	1	C 32001~ T 31001~	
7	141-30-31222	. . GUIDE, rear	1	C 32001~ T 31001~	
8	144-813-1390	. SEAT	1	C 32001~ T 31001~	
9	144-871-5351	. GUARD, outer, rear, L.H. inner, front	2	C 32001~ T 31001~	(Welded)
	144-871-5361	. GUARD, outer, rear, R.H. inner, front	2	C 32001~ T 31001~	(Welded)
10	144-871-5361	. GUARD, outer, front, L.H.	1	C 32001~ T 31001~	(Welded)
	144-871-5351	. GUARD, outer, front, R.H.	1	C 32001~ T 31001~	(Welded)
11	145-30-31241	. HEAD	1	C 32001~ T 31001~	
12	07020-00000	FITTING, grease	2	C 32001~ T 31001~	
13	145-30-31250	BUSHING	2	C 32001~ T 31001~	
14	145-30-31320	SEAL	4	C 32001~ T 31001~	
15	141-30-31350	PIN	2	C 32001~ T 31001~	
16	144-813-1762	GUARD, outer, L. H.	1	C 32001~ T 31001~	

Fig & Index No.	Part No.	Description	Q'ty	Serial No.	Remarks
1896 -16	144-813-1772	GUARD, outer, R. H.	1	C 32001~ T 31001~	
17	144-813-1782	GUARD, inner, L. H.	1	C 32001~ T 31001~	
	144-813-1792	GUARD, inner, R. H.	1	C 32001~ T 31001~	
18	01010-51840	BOLT	28	C 32001~ T 31001~	
19	01602-21854	WASHER, spring	28	C 32001~ T 31001~	
20	141-30-32181	COLLAR	12	C 32001~ T 31001~	
21	09205-28310	BOLT	12	C 32001~ T 31001~	
22	01580-11815	NUT	12	C 32001~ T 31001~	
23	01602-21854	WASHER, spring	12	C 32001~ T 31001~	
24	130-30-12170	PLATE, L.H. outer, front R.H. inner, front R.H. outer, rear	3	C 32001~ T 31001~	
25	130-30-12180	PLATE, L.H. inner, front L.H. outer, rear R.H. outer, front	3	C 32001~ T 31001~	
26	01010-51430	BOLT	12	C 32001~ T 31001~	
27	01602-21442	WASHER, spring	12	C 32001~ T 31001~	
28	144-813-2211	GUARD, center	2	C 32001~ T 31001~	
29	01010-51840	BOLT	8	C 32001~ T 31001~	
30	01602-21854	WASHER, spring	8	C 32001~ T 31001~	

TOOL

Fig. 1901 TOOL

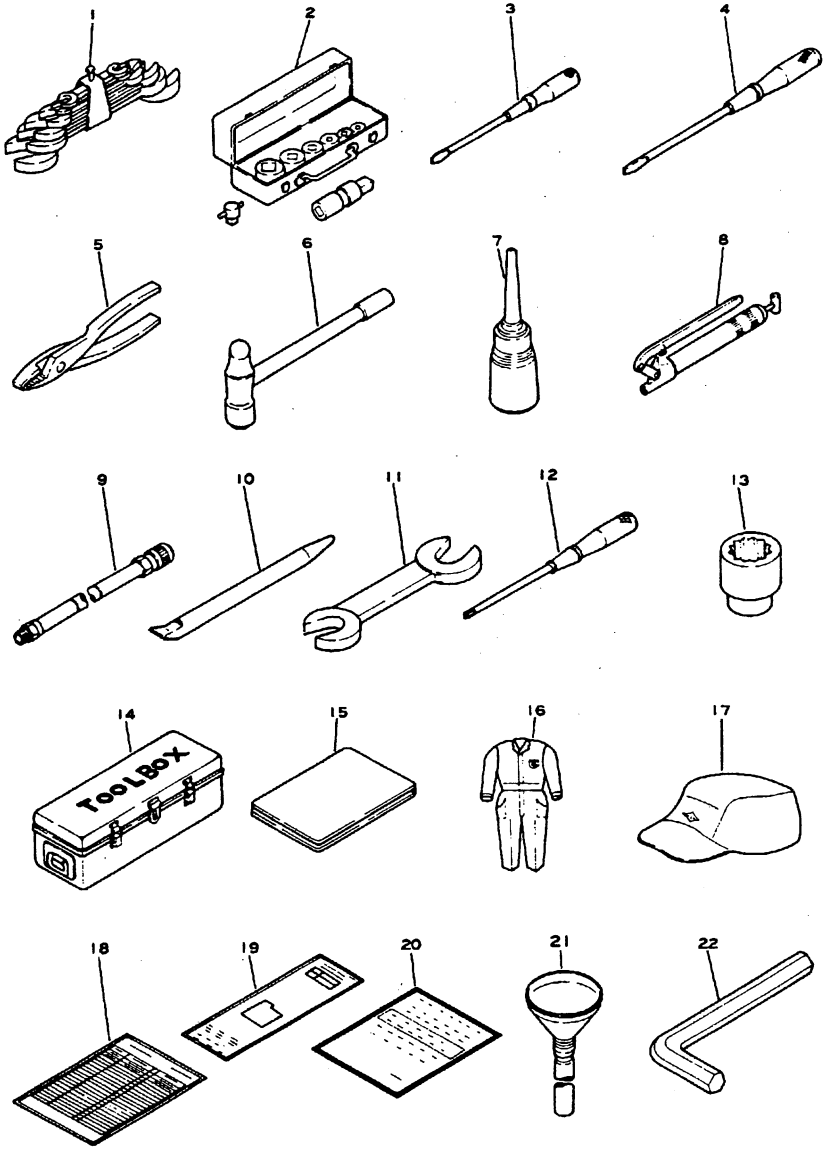

Fig. & Index No.	Part No.	Description	Q'ty	Serial No.	Remarks
1901 - 1	09000-10006	WRENCH SET	1	20006~22387	
	09002-00809	. WRENCH, 8 x 9	1	20006~22387	
	09002-01012	. WRENCH, 10 x 12	1	20006~22387	
	09002-01417	. WRENCH, 14 x 17	1	20006~22387	
	09002-01921	. WRENCH, 19 x 21	1	20006~22387	
	09002-02326	. WRENCH, 23 x 26	1	20006~22387	
	09002-02932	. WRENCH, 29 x 32	1	20006~22387	
	09000-30006	WRENCH SET	1	22388~	
	09002-00810	. WRENCH, 8 x 10	1	22388~	
	09002-01214	. WRENCH, 12 x 14	1	22388~	
	09002-01317	. WRENCH, 13 x 17	1	22388~	
	09002-01922	. WRENCH, 19 x 22	1	22388~	
	09002-02427	. WRENCH, 24 x 27	1	22388~	
	09002-03032	. WRENCH, 30 x 32	1	22388~	
2	09020-00282	SOCKET WRENCH SET	1	20006~22387	
	09020-10282	SOCKET WRENCH SET	1	22388~	
	09021-01016	. SOCKET, 10 x 16	1	20006~	
	09021-01319	. SOCKET, 13 x 19	1	22388~	
	09021-01422	. SOCKET, 14 x 22	1	20006~	
	09021-01725	. SOCKET, 17 x 25	1	20006~	
	09021-01928	. SOCKET, 19 x 28	1	20006~	
	09021-02131	. SOCKET, 21 x 31	1	20006~22387	
	09021-02233	. SOCKET, 22 x 33	1	22388~	
	09021-02334	. SOCKET, 23 x 34	1	20006~22387	
	09021-02436	. SOCKET, 24 x 36	1	22388~	
	09021-02637	. SOCKET, 26 x 37	1	20006~22387	
	09021-02739	. SOCKET, 27 x 39	1	22388~	
	09021-02941	. SOCKET, 29 x 41	1	20006~22387	
	09021-03044	. SOCKET, 30 x 44	1	22388~	
	09021-03246	. SOCKET, 32 x 46	1	20006~	
	09022-00150	. BAR, extension	1	20006~	
	09022-00250	. BAR, extension	1	20006~	

Fig & Index No.	Part No.	Description	Q'ty	Serial No.	Remarks
	09023-00300	. HANDLE	1	20006~	
	09024-00300	. HANDLE	1	20006~	
	09025-00075	. JOINT	1	20006~	
	09026-00250	. HANDLE	1	20006~	
	09027-00300	. BAR	1	20006~	
1901 - 3	09030-00075	SCREWDRIVER	1	20006~	
4	09030-00150	SCREWDRIVER	1	20006~	
5	09036-00150	PLIER	1	20006~	
6	09039-00150	HAMMER	1	20006~	
7	09040-00800	OILER	1	20006~	
8	07952-10000	PUMP, grease	1	20006~	
9	07951-11400	NOZZLE	1	20006~	
10	09055-00750	BAR, pinch	1	20006~	
11	09002-03235	WRENCH	1	20006~22387	
	09002-03236	WRENCH	1	22388~	
12	09031-00150	SCREWDRIVER	1	A, P, LC, E 20006~	
13	09021-03551	WRENCH, socket	1	A, P, LC, E 20006~22387	
	09021-03651	WRENCH, socket	1	A, P, LC, E 22388~	
14	09057-00800	BOX, tool	1	20006~	
15	09069-00280	CASE	1	20006~	
16	09980-00495	OVERALL	1	20006~	
17	09982-00057	CAP	1	20006~	
18	141-98-31141	TABLE, tool	1	S 20006~	
	144-98-11112	TABLE, tool	1	AC, PC, LC, EC 20006~22387	
	144-98-11114	TABLE, tool	1	AC, PC, LC, EC 22388~	
	144-98-11120	TABLE, tool	1	AT20006~22387	
	144-98-11122	TABLE, tool	1	AT22388~	
21	09279-00000	FUNNEL	1	A, P, LC, E 20006~	
22	09007-01040	WRENCH, allen	1	22388~	

KIT

For D65A, D65P, D65E, D65S

KIT

CONTENTS

K D65A,P,E,S-6 TORQFLOW TRANSMISSION SERVICE KIT

1. TORQUE CONVERTER SERVICE KIT

2. TORQFLOW TRANSMISSION SERVICE KIT
(D65A Serial No.20006~32000)
(D65P Serial No.30001~31000)
(D65E Serial No.20295~31000)
(D65S Serial No.20006~30000)

2A. TORQFLOW TRANSMISSION SERVICE KIT
(D65A Serial No.32001~)
(D65P Serial No.31001~)
(D65E Serial No.31001~)
(D65S Serial No.30001~)

Fig. & Index No.	Part No.	Description	Q'ty	Torque Converter Serial No.
K- 1	144-13-05010	TORQUE CONVERTER SERVICE KIT	1	K1004~
	175-13-23231	. GASKET, cover	1	K1004~
	07000-05500	. O-RING, housing	1	K1004~1009
	144-11-11150	. GASKET, housing	1	K1010~
	07000-05140	. O-RING, stator shaft	1	K1004~
	144-13-11720	. RING, seal, shaft	1	K1004~
	07011-10075	. SEAL, oil, turbine shaft	1	K1004~
	07000-02135	. O-RING, stator shaft cover	1	K1004~
	145-13-22730	. SEAL, oil, coupling	1	K1004~
	145-13-21760	. O-RING, turbine shaft	1	K1004~
	145-13-21710	. WASHER, lock, turbine shaft	1	K1004~
	144-13-11270	. SHIM, 0.1 mm, case	2	K1004~
	144-13-11280	. SHIM, 0.3 mm, case	1	K1004~
	144-13-11290	. SHIM, 0.05 mm, case	1	K1004~
	144-13-11260	. PLATE, lock, pilot	4	K1004~
	145-13-22650	. WASHER, lock, stator	1	K1004~
	144-13-11150	. PLATE, lock, pump gear	6	K1004~
	144-13-12711	. RING, seal, pump	1	K1004~
	07000-03028	. O-RING, relief valve	2	K1004~
	07000-03022	. O-RING, relief valve	1	K1004~
	07000-03032	. O-RING, relief valve	2	K1004~
	07000-02020	. O-RING, relief valve	2	K1004~
	07000-62115	. O-RING, scavenge pump	1	K1004~

Fig. & Index No.	Part No.	Description	Q'ty	Serial No.
K- 2A	144-15-05011	TORQFLOW TRANSMISSION SERVICE KIT	1	AT 32001~ PT, ET 31001~ ST 30001~
	07002-03634	. O-RING, drain plug	1	AT 32001~ PT, ET 31001~ ST 30001~
	07000-03022	. O-RING, level gauge	2	AT 32001~ PT, ET 31001~ ST 30001~
	07000-03025	. O-RING, level tube	1	AT 32001~ PT, ET 31001~ ST 30001~
	07000-03045	. O-RING, strainer	1	AT 32001~ PT, ET 31001~ ST 30001~
	07000-02075	. O-RING, strainer	1	AT 32001~ PT, ET 31001~ ST 30001~
	07000-62090	. O-RING, strainer	1	AT 32001~ PT, ET 31001~ ST 30001~
	07000-62018	. O-RING, sleeve	2	AT 32001~ PT, ET 31001~ ST 30001~
	07000-63025	. O-RING, cover	1	AT 32001~ PT, ET 31001~ ST 30001~
	144-15-21120	. GASKET, rear cover	1	AT 32001~ PT, ET 31001~ ST 30001~
	07000-65160	. O-RING	2	AT 32001~ PT, ET 31001~ ST 30001~
	144-15-06011	. SHIM ASS'Y	1	AT 32001~ PT, ET 31001~
	07012-20090	. SEAL, oil, shaft	1	AT 32001~ PT, ET 31001~
	07012-20070	. SEAL, oil, shaft	1	ST 30001~
	145-15-31350	. LOCK, shaft	2	AT 32001~ PT, ET 31001~
	07000-05445	. O-RING, rear cover	1	AT 32001~ PT, ET 31001~ ST 30001~
	07000-05285	. O-RING, cage	1	AT 32001~ PT, ET 31001~ ST 30001~
	07000-62018	. O-RING, cage	8	AT 32001~ PT, ET 31001~ ST 30001~
	07000-02145	. O-RING, cover	1	AT 32001~ PT, ET 31001~ ST 30001~

Fig & Index No.	Part No.	Description	Q'ty	Serial No.
K- 2A	07012-10095	. SEAL, oil, coupling	1	AT 32001~ PT,ET 31001~ ST 30001~
	07000-65042	. O-RING, coupling	1	AT 32001~ PT,ET 31001~ ST 30001~
	04081-04512	. PLATE, lock, coupling	1	AT 32001~ PT,ET 31001~ ST 30001~
	07000-63022	. O-RING, housing	5	AT 32001~ PT,ET 31001~ ST 30001~
	145-15-42910	. PLATE, lock, cylinder	1	AT 32001~ PT,ET 31001~ ST 30001~
	07000-03040	. O-RING, filler cap	1	AT 32001~ PT,ET 31001~ ST 30001~
	07000-03048	. O-RING, filler	1	AT 32001~ PT,ET 31001~ ST 30001~
	175-15-45540	. GASKET, cover	1	AT 32001~ PT,ET 31001~ ST 30001~
	145-15-45840	. GASKET, cover	1	AT 32001~ PT,ET 31001~ ST 30001~
	07002-03634	. O-RING, plug	2	AT 32001~ PT,ET 31001~ ST 30001~
	144-15-25520	. GASKET, case	1	AT 32001~ PT,ET 31001~ ST 30001~
	144-15-29110	. SEAL, oil, lever	2	AT 32001~ PT,ET 31001~ ST 30001~
	04059-01080	. WIRE, B.W.G. #19 d=1.06 mm ℓ=800 mm	1	AT 32001~ PT,ET 31001~ ST 30001~
	07000-62008	. O-RING, bolt	1	AT 32001~ PT,ET 31001~ ST 30001~
	04050-02018	. PIN, cotter	1	AT 32001~ PT,ET 31001~ ST 30001~
	07000-63022	. O-RING, control valve	10	AT 32001~ PT,ET 31001~ ST 30001~
	07000-63025	. O-RING, control valve	3	AT 32001~ PT,ET 31001~ ST 30001~
	07000-62016	. O-RING, control valve	2	AT 32001~ PT,ET 31001~ ST 30001~

Fig & Index No.	Part No.	Description	Q'ty	Serial No.
K- 2A	07000-63032	. O-RING, control valve	1	AT 32001~ PT,ET 31001~ ST 30001~
	07000-63045	. O-RING, control valve	1	AT 32001~ PT,ET 31001~ ST 30001~
	07000-63028	. O-RING, control valve	4	AT 32001~ PT,ET 31001~ ST 30001~
	07000-63032	. O-RING, lubricating valve	2	AT 32001~ PT,ET 31001~ ST 30001~
	154-15-14160	. GASKET, lubricating valve	1	AT 32001~ PT,ET 31001~ ST 30001~
	07000-63025	. O-RING, lubricating valve	1	AT 32001~ PT,ET 31001~ ST 30001~

OPTIONAL PARTS FOR OVERSEAS

STRAIGHT TILT DOZER ARRANGEMENT AN WORK EQUIPMENT

Applicable Machines

D60A Serial No.31001 up
D60E Serial No.30001 up
and
D65A Serial No.32001 up
D65E Serial No.31001 up

Consists of:

WORK EQUIPMENT	Fig No.	Page
Hydraulic Pump (D60A,P,PL,E, D65S Serial No.20006~)	1501	15-2
Hydraulic Pump (D65A Serial No.32001~ / D65P,E Serial No.31001~)	1502A	15-12
Hydraulic Filter (D60A,P,PL,E, D65A,P,E Serial No.20006~)	1512	15-30
Hydraulic Tank, For Straight Tilt Dozer (D60P, D65P Serial No.20006~)	1515	15-44
Hydraulic Control Valve (1/2), For Straight Tilt Dozer (D60P, D65P Serial No.20006~)	1516	15-48
Hydraulic Control Valve (2/2), For Straight Tilt Dozer (D60P, D65P Serial No.20006~)	1517	15-52
Blade Lift Cylinder (D60A,E, D65A,E Serial No.20006~)	1531	15-8
Blade Tilt Cylinder (D60P, D65P Serial No.20006~)	1533	15-9
Hydraulic Piping (1/3), Hydraulic Pump to Tank For Straight Tilt Dozer (D60P, D65P Serial No.20006~)	1543	15-11
Hydraulic Piping (2/3), Hydraulic Tank to Lift Cylinder For Straight Tilt Dozer (D60P, D65P Serial No.20006~)	1544	15-11
Hydraulic Piping (3/3), Hydraulic Tank to Tilt Cylinder For Straight Tilt Dozer (D60P, D65P Serial No.20006~)	1545	15-122
Blade Control Lever, For Straight Tilt Dozer (D60P, D65P Serial No.20006~)	1552	15-142

OPTIONAL PARTS

Straight Tilt Blade (D60A,D65A Serial No.22893~ / D60E,D65E Serial No.22040~)	A1835A	18-45-1
Straight Tilt Frame (D60A,D65A Serial No.22893~ / D60E,D65E Serial No.22040~)	A1836A	18-49-1

ANGLE DOZER ARRANGEMENT AN WORK EQUIPMENT

Applicable Machines

D60P-6 29174 up and D65P-6 30004 up

Consists of:

WORK EQUIPMENT	Fig. No.	Page
Hydraulic Pump (D60A, P, PL, E, D65S Serial No.20006~)	1501	15 - 2
Hydraulic Pump (D65A Serial No.20006~32000) (D65P, E Serial No.20006~31000)	1502	15 - 8
Hydraulic Pump (D65A Serial No.32001~) (D65P, E Serial No.31001~)	1502A	15-12
Hydraulic Tank, For Angle and Straight Dozer (D60A, P, PL, E, D65A, P, E Serial No.20006~)	1511	15-22
Hydraulic Filter (D60A, P, PL, E, D65A, P, E Serial No.20006~)	1512	15-30
Hydraulic Control Valve (1/2), For Angle and Straight Dozer (D60A, P, PL, E, D65A, P, E Serial No.20006~)	1513	15-34
Hydraulic Control Valve (2/2), For Angle and Straight Dozer (D60A, P, PL, E, D65A, P, E Serial No.20006~)	1514	15-38
Blade Lift Cylinder (D60P, PL, D65P Serial No.20006~)	1532	15-90
Blade Control Lever, For Angle and Straight Dozer (D60A, P, PL, E, D65A, P, E Serial No.20006~)	1551	15-140
Hydraulic Piping (1/2), Hydraulic Pump to Tank For D60P, D65P Angle Dozer (D60P Serial No.29174~) (D65P Serial No.30004~)	A1541	20-2
Hydraulic Piping (2/2), Hydraulic Tank to Lift Cylinder For D60P, D65P Angle Dozer (D60P Serial No.29174~) (D65P Serial No.30004~)	A1542	20-3
Angle Blade (D60P Serial No.29174~) (D65P Serial No.30004~)	A1578	20-5
C-Frame (D60P Serial No.29174~) (D65P Serial No.30004~)	A1579	20-5

MECHANICAL ANGLE POWER TILT DOZER ARRANGEMENT AN WORK EQUIPMENT

Applicable Machines

D65A 30693 up and D65E 30184 up

Consists of:

WORK EQUIPMENT

	Fig. No.	Page
Hydraulic Pump (D65A Serial No.20006~32000) (D65P,E Serial No.20006~31000)	1502	15- 2
Hydraulic Pump (D65A Serial No.32001~) (D65P,E Serial No.31001~)	1502A	15-12
Hydraulic Filter (D60A,P,PL,E, D65A,P,E Serial No.20006~)	1512	15-30
Hydraulic Tank, For Straight Tilt Dozer (D60P,D65P Serial No.20006~)	1515	15-44
Hydraulic Control Valve (1/2), For Straight Tilt Dozer (D60P,D65P Serial No.20006~)	1516	15-48
Hydraulic Control Valve (2/2), For Straight Tilt Dozer (D60P,D65P Serial No.20006~)	1517	15-52
Blade Lift Cylinder (D60A,D65A,E Serial No.20006~)	1531	15-84
Hydraulic Piping (1/2), Hydraulic Pump to Tank For Angle and Straight Dozer (D60A,P,PL,E, D65A,P,E Serial No.20006~)	1541	15-106
Blade Control Lever, For Straight Tilt Dozer (D60P,D65P Serial No.20006~)	1552	15-142
Angle Blade (D60A,E,D65A,E Serial No.20006~) See Index No.17 to 30.	1571	15-158

OPTIONAL PARTS

	Fig. No.	Page
Blade Tilt Cylinder, For Mechanical Angle Power Tilt Dozer (D65A Serial No.30693~) (D65E Serial No.30184~)	A1534	20-24
Hydraulic Piping (Dozer Group) (D65A Serial No.30693~) (D65E Serial No.30184~)	A1550	20-40
Hydraulic Piping (Chassis Group) (D65A Serial No.30693~) (D65E Serial No.30184~)	B1550	20-44
Dozer System, For Mechanical Angle Power Tilt Dozer (D65A Serial No.30693~) (D65E Serial No.30184~)	A1576	20-50

Fig. A1153 BACK-UP ALARM AND WIRING

(D60A,P,PL,E Serial No. 28858~)

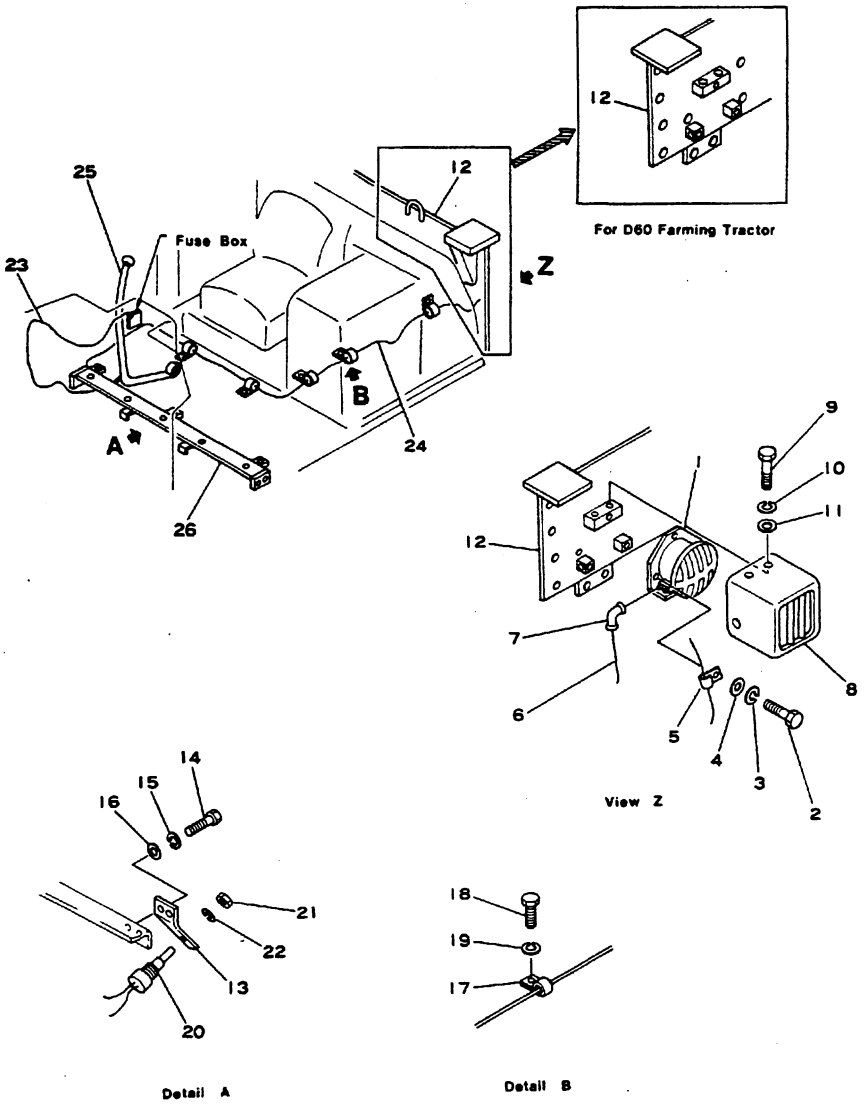

Fig. & Index No.	Part No.	Description	Q'ty	Serial No. D60
1153-1	175-06-39151	BACK-UP ALARM	1	28858~
2	01010-50612	BOLT	3	28858~
3	01602-20619	WASHER, spring	3	28858~
4	01640-20610	WASHER	3	28858~
5	08036-10810	CLIP	1	28858~
6	144-06-24630	WIRE	1	28858~
7	08038-00518	CAP	2	28858~
8	144-06-24660	COVER	1	28858~
9	01010-51225	BOLT	3	28858~
10	01602-21236	WASHER, spring	3	28858~
11	01643-31232	WASHER	3	28858~
12	144-978-8111	BRACKET (Modified part)	1	28858~
	144-851-2350	BRACKET (For D60 farming tractor)	1	28858~
13	144-951-1230	PLATE	1	28858~
14	01010-51025	BOLT	2	28858~
15	01602-21030	WASHER, spring	2	28858~
16	01643-31032	WASHER	2	28858~
17	08036-10814	CLIP	5	28858~
18	01010-51016	BOLT	5	28858~
19	01602-21030	WASHER, spring	5	28858~
20	08074-10000	SWITCH	1	28858~
21	01583-11811	NUT	1	28858~
22	01602-21854	WASHER, spring	1	28858~
23	144-06-24650	WIRE	1	28858~
24	144-06-24710	WIRE	1	28858~
25	144-43-12116	LEVER (Modified part)	1	28858~
26	144-54-26114	FRAME (Modified part)	1	28858~

Fig. A1154 BACK-UP ALARM AND WIRING

(D65A,P,E Serial No. 28884~)
(D65S Serial No. 28458~)

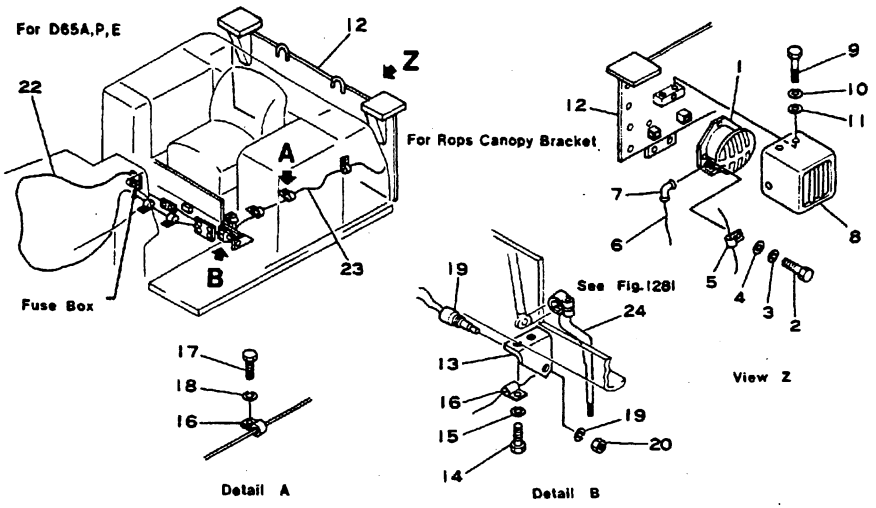

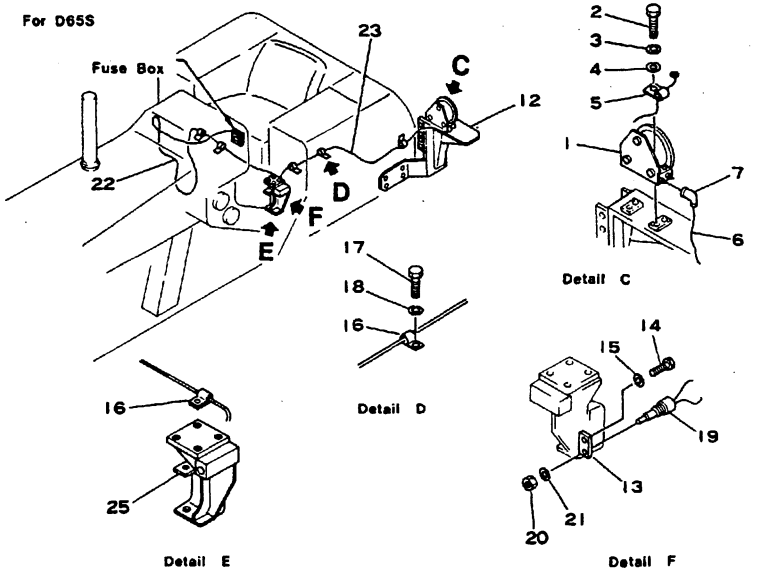

Fig. & Index No.	Part No.	Description		Q'ty	Serial No. D65A,P,E	Serial No. D65S
A1154- 1	175-06-39151	BACK-UP ALARM		1	28884~	28458~
2	01010-50612	BOLT		3	28884~	-----
				4	-----	28458~
3	01602-20619	WASHER, spring		3	28884~	-----
				4	-----	28458~
4	01640-20610	WASHER		3	28884~	-----
				4	-----	28458~
5	08036-10810	CLIP		1	28884~	28458~
6	144-06-24630	WIRE		1	28884~	28458~
7	08038-00518	CAP		2	28884~	28458~
8	144-06-24660	COVER		1	28884~	-----
9	01010-51225	BOLT		3	28884~	-----
10	01602-21236	WASHER, spring		3	28884~	-----
11	01643-31232	WASHER		3	28884~	-----
12	144-54-12211	BRACKET	(Modified part)	1	28884~	-----
	141-978-1510	BRACKET	(Modified part)	1	-----	28458~
13	141-951-1570	PLATE		1	28884~	-----
	141-951-1830	PLATE		1	-----	28458~
14	01010-51020	BOLT		2	28884~	-----
				1	-----	28458~
15	01602-21030	WASHER, spring		2	28884~	-----
				1	-----	28458~
16	08036-10814	CLIP		3	28884~	28458~
17	01010-51016	BOLT		3	28884~	28458~
18	01602-21030	WASHER, spring		3	28884~	28458~
19	08074-10000	SWITCH		1	28884~	28458~
20	01583-11811	NUT		1	28884~	28458~
21	01602-21854	WASHER, spring		1	28884~	28458~
22	144-06-24640	WIRE		1	28884~	28458~
23	144-06-24610	WIRE		1	28884~	-----
	141-06-34410	WIRE		1	-----	28458~
24	144-43-11610	LEVER	(Modified part)	1	28884~	-----
25	141-43-31510	BRACKET	(Modified part)	1	-----	28458~

Fig. A1462 SUSPENSION SEAT (D60A Serial No. 29182~)
(D60P Serial No. 29339~)
(D60PL Serial No. 28074~)
(D60E Serial No. • ~)
(D60S Serial No. 29872~)
(D65A Serial No. 29278~)
(D65E Serial No. 29537~)
(D65S Serial No. 28566~)

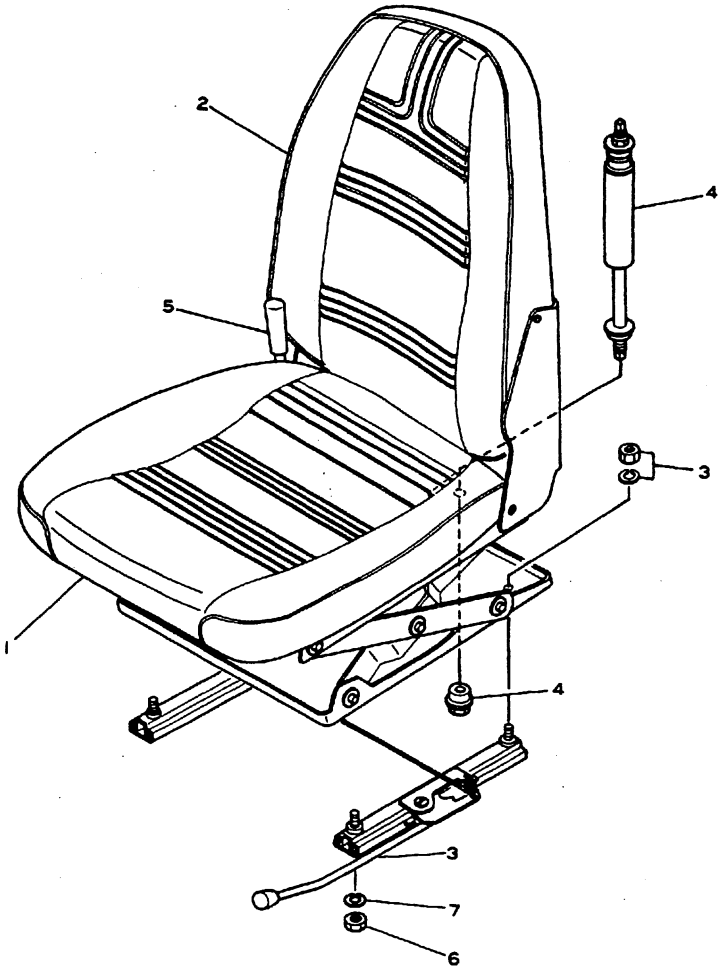

Fig. & Index No.	Part No.	Description	Q'ty	Serial No.
	141-57-37100	SEAT ASS'Y	1	†
A1462 - 1	141-57-37110	. CUSHION, seat	1	†
2	141-57-37120	. CUSHION, back	1	†
3	141-57-37130	. RAIL, slide	1	†
4	141-57-37140	. DAMPER	1	†
5	141-57-37150	. HANDLE, ratchet	1	†
6	02205-10508	NUT	4	†
7	01602-20825	WASHER, spring	4	†

NOTE: †Shows both D60A Serial No. 29182 up D60P Serial No. 29339 up
D60PL Serial No. 28074 up D60E Serial No. • up
D60S Serial No. 29872 up D65A Serial No. 29278 up
D65E Serial No. 29537 up D65S Serial No. 28566 up

Fig. A1534 TILT CYLINDER for Mechanical Angle Power Tilt Dozer
(D65A Serial No. 30693~)
(D65E Serial No. 30184~)

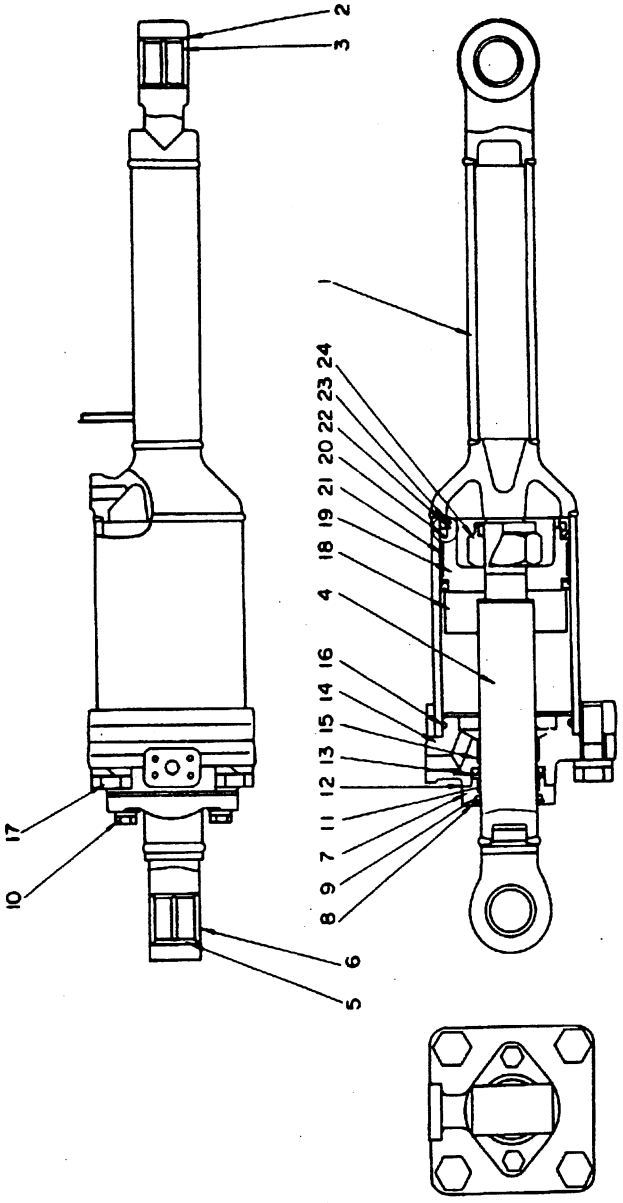

Fig. & Index No.	Part No.	Description	Q'ty	Serial No.
	144-63-53100	CYLINDER ASS'Y, L.H.	1	AT 30693~ ET 30184~
	144-63-53200	CYLINDER ASS'Y, R.H.	1	AT 30693~ ET 30184~
A1534 - 1	144-63-53140	. CYLINDER	1	AT 30693~ ET 30184~
2	07143-10505	. BUSHING	1	AT 30693~ ET 30184~
3	07145-00050	. SEAL, dust	2	AT 30693~ ET 30184~
4	144-63-53120	. ROD, piston	1	AT 30693~ ET 30184~
5	07143-10505	. BUSHING	1	AT 30693~ ET 30184~
6	07145-00050	. SEAL, dust	2	AT 30693~ ET 30184~
7	07178-07042	. GLAND	1	AT 30693~ ET 30184~
8	07179-00093	. RING, snap	1	AT 30693~ ET 30184~
9	07016-00708	. SEAL, dust	1	AT 30693~ ET 30184~
10	01010-51645	. BOLT	2	AT 30693~ ET 30184~
	01602-21648	. WASHER, spring	2	AT 30693~ ET 30184~
11	07177-07015	. BUSHING	1	AT 30693~ ET 30184~
12	07000-03090	. O-RING	1	AT 30693~ ET 30184~
13	154-63-42373	. U-PACKING	1	AT 30693~ ET 30184~
14	144-63-42130	. HEAD, cylinder	1	AT 30693~ ET 30184~
15	07177-07030	. BUSHING	1	AT 30693~ ET 30184~
16	07000-15150	. O-RING	1	AT 30693~ ET 30184~
	07146-05152	. RING, back-up	1	AT 30693~ ET 30184~
17	01010-82775	. BOLT	4	AT 30693~ ET 30184~
	01602-22783	. WASHER, spring	4	AT 30693~ ET 30184~
18	144-63-53170	. SPACER	1	AT 30693~ ET 30184~
19	130-63-52171	. PISTON	1	AT 30693~ ET 30184~
20	141-60-34411	. U-PACKING	2	AT 30693~ ET 30184~
21	07155-01640	. RING, wear	1	AT 30693~ ET 30184~

Fig & Index No.	Part No.	Description	Q'ty	Serial No.
A1534 -22	130-63-52380	. RETAINER	1	AT 30693~ ET 30184~
23	04069-01352	. RING, snap	1	AT 30693~ ET 30184~
24	07165-15252	. NUT	1	AT 30693~ ET 30184~

Fig. A1541 HYDRAULIC PIPING (1/2), HYDRAULIC PUMP TO TANK

For Angle Dozer

(D60P Serial No. 29174~)
(D65P Serial No. 30004~)

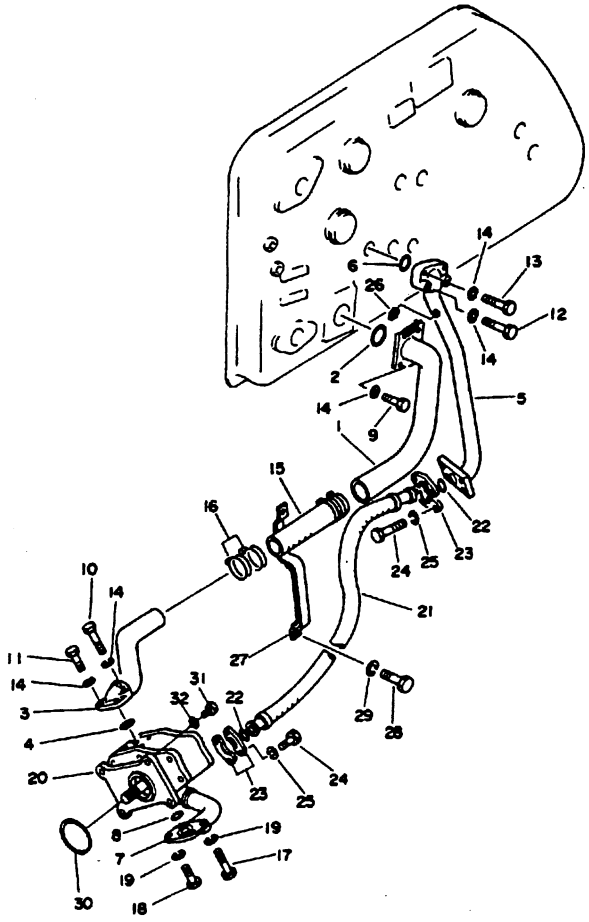

Fig. & Index No.	Part No.	Description	Q'ty	Serial No.
1541 - 1	144-60-18114	TUBE	1	20006~
2	07000-02075	O-RING	1	20006~
3	144-60-18123	TUBE	1	PC 20006~
	144-60-17110	TUBE	1	PT 20006~
4	07000-02070	O-RING	1	PC 20006~
	07000-03058	O-RING	1	PT 20006~
5	144-60-18142	TUBE	1	20006~
6	07000-23048	O-RING	1	20006~
7	144-60-17121	TUBE	1	20032~
8	07000-23040	O-RING	1	20006~
9	01010-31240	BOLT	4	20006~
10	01010-31280	BOLT	2	PC 20006~
	01010-31285	BOLT	2	PT 20006~
11	01010-31265	BOLT	2	PC 20006~
	01010-31240	BOLT	2	PT 20006~
12	01010-31275	BOLT	2	20006~
13	01010-31255	BOLT	2	20006~
14	01602-01236	WASHER, spring	12	20006~
15	07260-05820	HOSE, rubber	1	20006~
16	07280-07429	CLAMP, hose	4	20006~
17	01010-31075	BOLT	2	20006~
18	01010-31060	BOLT	2	20006~
19	01602-01030	WASHER, spring	4	20006~
20	(07443-67503)	HYDRAULIC PUMP ASS'Y	1	PC 29174~
	(07441-67502)	HYDRAULIC PUMP ASS'Y	1	PT 31001~
	(□07441-67500)	HYDRAULIC PUMP ASS Y	1	PT 30001~31000
21	144-60-18730	HOSE	1	20024~
22	07000-23038	O-RING	2	20006~
23	07371-01250	FLANGE	4	20006~
24	07372-01030	BOLT	8	20006~
25	01602-01030	WASHER, spring	8	20006~
26	07042-00108	PLUG, taper	1	20006~
27	144-60-18480	CLAMP	1	20006~

Fig & Index No.	Part No.	Description	Q'ty	Serial No.
A1541 -28	01010-31220	BOLT	2	20006~
29	01602-01236	WASHER, spring	2	20006~
30	07000-02085	O-RING	1	20006~
31	01010-31245	BOLT	4	20006~
32	01602-01236	WASHER, spring	4	20006~

Fig. A1542 HYDRAULIC PIPING (2/2), HYDRAULIC TANK TO LIFT CYLINDER

(D60P Serial No. 29174~)
(D65P Serial No. 30004~)

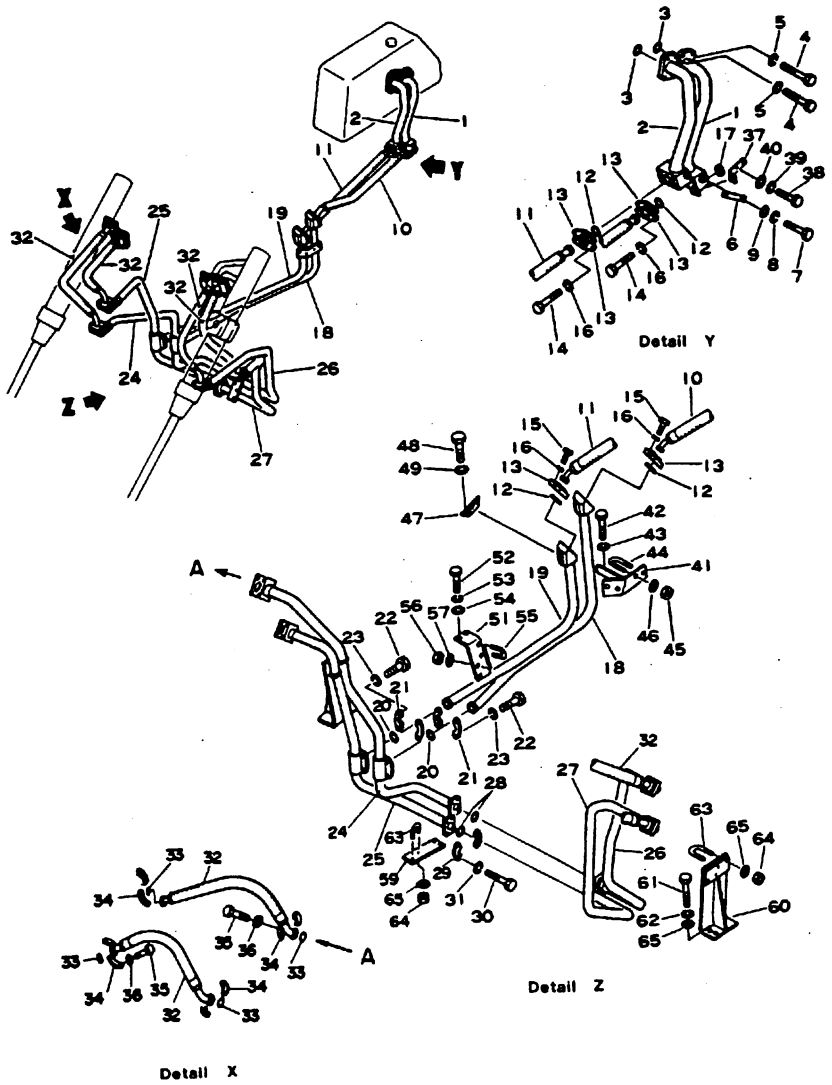

Fig & Index No.	Part No.	Description	Q'ty	Serial No.
.1542 - 1	144-60-18274	TUBE	1	20006~
2	144-60-18332	TUBE	1	20006~
3	07000-23048	O-RING	2	20006~
4	01010-31245	BOLT	8	20006~
5	01602-01236	WASHER, spring	8	20006~
6	144-60-18530	PLATE	1	20006~
7	01010-31225	BOLT	2	20006~
8	01602-01236	WASHER, spring	2	20006~
9	01643-31232	WASHER	2	20006~
10	07118-01209	HOSE	1	PC 28523~ PT 30001~
11	07118-01211	HOSE	1	PC 28523~ PT 30001~
12	07000-23038	O-RING	4	20006~
13	07371-01250	FLANGE	8	20006~
14	01010-31085	BOLT	8	20006~
15	07372-01030	BOLT	8	20006~
16	01602-01030	WASHER, spring	16	20006~
17	01580-01008	NUT	8	20006~
18	144-60-18284	TUBE	1	20006~
19	144-60-18244	TUBE	1	20006~
20	07000-23048	O-RING	2	20006~
21	07371-01460	FLANGE	4	20006~
22	07372-01235	BOLT	8	20006~
23	01602-01236	WASHER, spring	8	20006~
24	144-817-9520	TUBE, R.H.	1	P 28073~
25	144-817-9540	TUBE, R.H.	1	P 28073~
26	144-817-9530	TUBE, L.H.	1	P 28073~
27	144-817-9510	TUBE, L.H.	1	P 28073~
28	07000-23032	O-RING	2	P 20024~
29	07371-01250	FLANGE	4	20024~
30	07372-01030	BOLT	8	20026~
31	01602-01030	WASHER, spring	8	20006~
32	07114-01010	HOSE	4	P 20006~

Fig & Index No.	Part No.	Description	Q'ty	Serial No.
A1542 -33	07000-23032	O-RING	8	20006~
34	07371-01044	FLANGE	16	20006~
35	07372-01030	BOLT	32	20006~
36	01602-01030	WASHER, spring	32	20006~
37	144-60-18553	BRACKET	1	22388~
38	01010-31225	BOLT	3	20006~
39	01602-01236	WASHER, spring	3	20006~
40	01643-31232	WASHER	3	20006~
41	144-60-18593	BRACKET	1	20006~
42	01010-31020	BOLT	2	20006~
43	01602-01030	WASHER, spring	2	20006~
44	07283-04346	CLIP, pipe	1	20006~
45	01599-01011	NUT	2	20006~
46	01643-31032	WASHER	2	20006~
47	144-60-18350	PLATE	1	22388~
48	01010-31025	BOLT	4	22388~
49	01602-01030	WASHER, spring	4	22388~
51	144-60-18455	PLATE	1	20024~
52	01010-31025	BOLT	2	20006~
53	01602-01030	WASHER, spring	2	20006~
54	01643-31032	WASHER	2	20006~
55	07283-04346	CLIP, pipe	2	20006~
56	01599-01011	NUT	4	20006~
57	01643-31032	WASHER	4	20006~
59	144-60-18721	PLATE	1	20006~
60	144-817-9152	BRACKET	2	P 20006~
61	01010-31025	BOLT	8	A,E 22388~ P,LC 20006~
62	01602-01030	WASHER, spring	8	A,E 22388~ P,LC 20006~
63	07283-03442	CLIP, pipe	6 8	A,E 20006~ P,LC 20006~
64	01599-01011	NUT	12 16	A,E 20006~ P,LC 20006~
65	01643-31032	WASHER	20 16	A,E 20006~ P,LC 20006~

Fig. A1550 HYDRAULIC PIPING (DOZER GROUP)

For Mechanical Angle Power Tilt Dozer
(D65A Serial No. 30693~)
(D65E Serial No. 30184~)

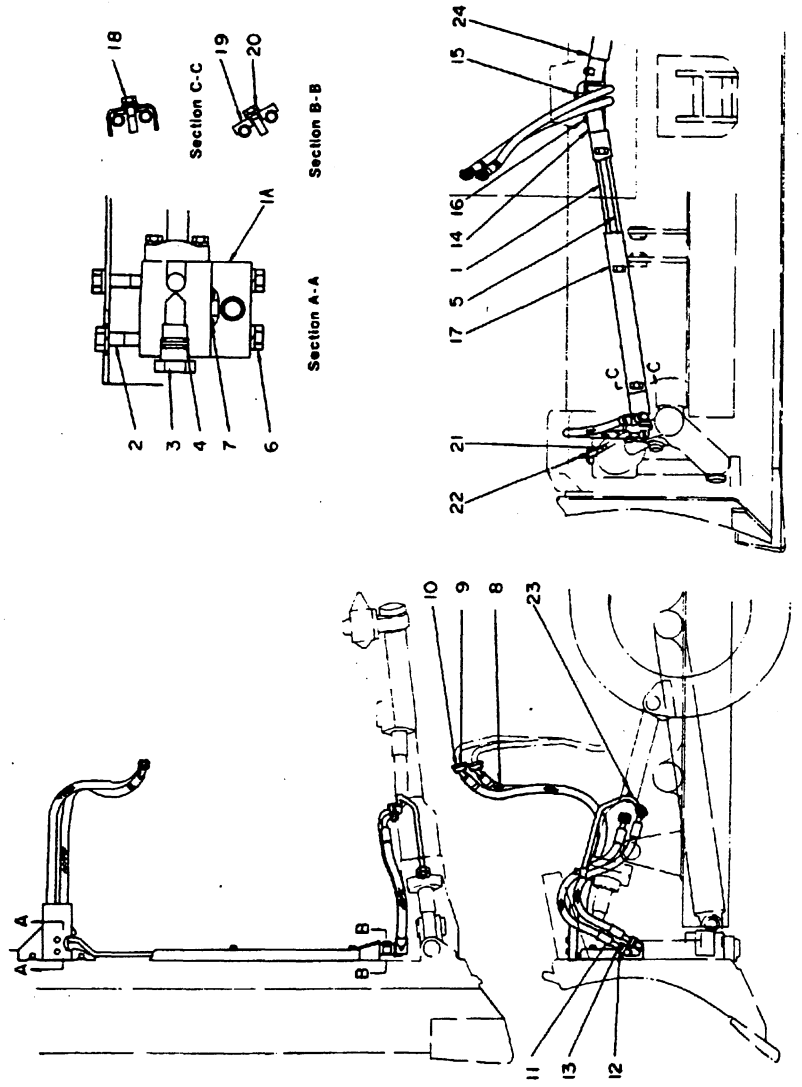

Fig. & Index No.	Part No.	Description	Q'ty	Serial No.
A1550 - 1	144-940-2110	TUBE	1	AT 30693~ ET 30184~
1A	☆	. BLOCK (144-940-2120)	1	AT 30693~ ET 30184~
2	01010-51245	BOLT Welded to 144-940-2110	1	AT 30693~ ET 30184~
	01602-21236	WASHER, spring	1	AT 30693~ ET 30184~
3	144-940-2130	COCK	2	AT 30693~ ET 30184~
4	07000-22021	O-RING	2	AT 30693~ ET 30184~
5	144-940-2140	TUBE	1	AT 30693~ ET 30184~
6	01010-51255	BOLT	2	AT 30693~ ET 30184~
	01602-21236	WASHER, spring	2	AT 30693~ ET 30184~
7	07000-23025	O-RING	1	AT 30693~ ET 30184~
8	07115-00515	HOSE	2	AT 30693~ ET 30184~
	07000-23022	O-RING	4	AT 30693~ ET 30184~
9	07371-00500	FLANGE	8	AT 30693~ ET 30184~
10	07372-20830	BOLT	16	AT 30693~ ET 30184~
	01602-20825	WASHER, spring	16	AT 30693~ ET 30184~
11	07118-00509	HOSE	4	AT 30693~ ET 30184~
	07000-23022	O-RING	8	AT 30693~ ET 30184~
12	07371-00500	FLANGE	16	AT 30693~ ET 30184~
13	07372-20830	BOLT	32	AT 30693~ ET 30184~
14	01602-20825	WASHER, spring	32	AT 30693~ ET 30184~
15	01010-51250	BOLT	1	AT 30693~ ET 30184~
	01602-21236	WASHER, spring	1	AT 30693~ ET 30184~
16	01010-51225	BOLT	2	AT 30693~ ET 30184~
	01602-21236	WASHER, spring	2	AT 30693~ ET 30184~
17	144-940-1140	COVER L.H.	1	AT 30693~ ET 30184~
	144-940-1150	COVER, R.H.	1	AT 30693~ ET 30184~

Fig & Index No.	Part No.	Description	Q'ty	Serial No.
A1550 -18	01010-51455	BOLT	6	AT 30693~ ET 30184~
	01602-21442	WASHER, spring	6	AT 30693~ ET 30184~
	01643-21426	WASHER	6	AT 30693~ ET 30184~
19	144-940-1180	CLAMP	2	AT 30693~ ET 30184~
20	01010-51445	BOLT	2	AT 30693~ ET 30184~
	01602-21442	WASHER, spring	2	20006~
21	144-940-2240	TUBE, L.H.	1	AT 30693~ † ET 30184~ †
	144-940-2260	. FLANGE (Welded)	1	AT 30693~ † ET 30184~ †
	144-940-2241	TUBE, L.H.	1	† ~
	144-940-2261	. FLANGE (Welded)	1	† ~
	144-940-2250	TUBE, R.H.	1	AT 30693~ † ET 30184~ †
	144-940-2260	. FLANGE (Welded)	1	AT 30693~ † ET 30184~ †
	144-940-2251	TUBE, R.H.	1	† ~
	144-940-2261	. FLANGE (Welded)	1	† ~
	07000-23022	O-RING	2	AT 30693~ ET 30184~
	01010-50845	BOLT	4	AT 30693~ ET 30184~
	01010-50835	BOLT	4	AT 30693~ ET 30184~
	01010-50835	BOLT	4	AT 30693~ ET 30184~
	01602-20825	WASHER, spring	8	AT 30693~ ET 30184~
22	07060-11230	BOLT	2	AT 30693~ † ET 30184~ †
	07002-11223	O-RING	2	AT 30693~ † ET 30184~ †
	07042-20108	PLUG	2	† ~
23	07283-12236	CLIP	2	AT 30693~ ET 30184~
	01599-01011	NUT	4	AT 30693~ ET 30184~
	01643-21032	WASHER	4	AT 30693~ ET 30184~
24	144-940-1130	COVER	1	AT 30693~ ET 30184~

Note: † of Serial No. Column Means the Products of August, '78.

Fig. B1550 HYDRAULIC PIPING (CHASSIS GROP)

For Mechanical Angle Power Tilt Dozer
(D65A Serial No. 30693~)
(D65E Serial No. 30184~)

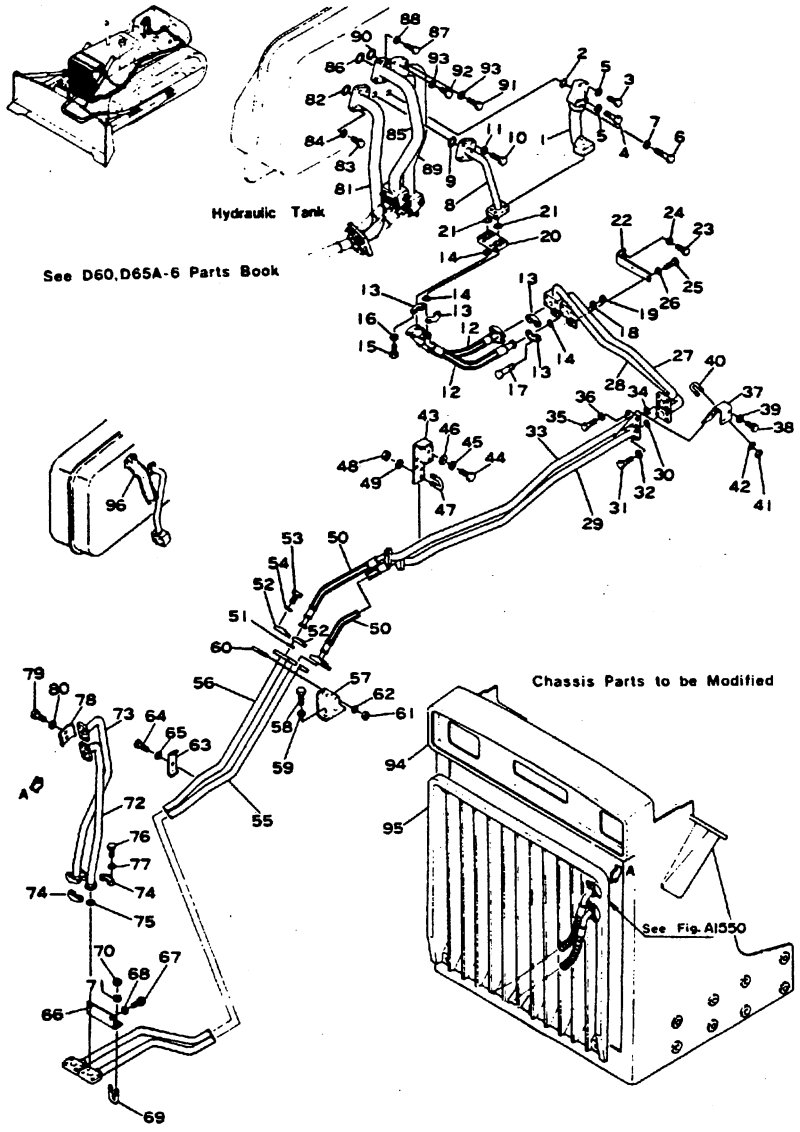

Fig & Index No.	Part No.	Description	Q'ty	Serial No.
550 - 1	144-920-9114	TUBE, between control valve and tilt cylinder rod side	1	AT 30693~ ET 30184~
2	07000-23038	O-RING	1	AT 30693~ ET 30184~
3	01010-31050	BOLT	2	AT 30693~ ET 30184~
4	01010-31060	BOLT	1	AT 30693~ ET 30184~
5	01602-01030	WASHER, spring	3	AT 30693~ ET 30184~
6	01010-31265	BOLT	1	AT 30693~ ET 30184~
7	01602-01236	WASHER, spring	1	AT 30693~ ET 30184~
8	144-920-9153	TUBE, between control valve and tilt cylinder bottom side	1	AT 30693~ ET 30184~
9	07000-23038	O-RING	1	AT 30693~ ET 30184~
10	01010-31045	BOLT	4	AT 30693~ ET 30184~
11	01602-01030	WASHER, spring	4	AT 30693~ ET 30184~
12	07114-00505	HOSE, rubber	2	AT 30693~ ET 30184~
13	07371-00500	FLANGE	8	AT 30693~ ET 30184~
14	07000-23022	O-RING	4	AT 30693~ ET 30184~
15	01010-30840	BOLT	8	AT 30693~ ET 30184~
16	01602-00825	WASHER, spring	8	AT 30693~ ET 30184~
17	01010-30865	BOLT	8	AT 30693~ ET 30184~
18	01602-00825	WASHER, spring	8	AT 30693~ ET 30184~
19	01580-00806	NUT	8	AT 30693~ ET 30184~
20	144-920-9440	PLATE	1	AT 30693~ ET 30184~
21	07000-23022	O-RING	2	AT 30693~ ET 30184~
22	144-920-9212	BRACKET	1	AT 30693~ ET 30184~
23	01010-31425	BOLT	1	AT 30693~ ET 30184~
24	01602-01442	WASHER, spring	1	AT 30693~ ET 30184~
25	01010-31230	BOLT	2	AT 30693~ ET 30184~

Fig & Index No.	Part No.	Description	Q'ty	Serial No.
B1550 -26	01602-01236	WASHER, spring	2	AT 30693~ ET 30184~
27	144-920-9124	TUBE, between valve and tilt cylinder bottom side	1	AT 30693~ ET 30184~
28	144-920-9164	TUBE, between valve and tilt cylinder rod side	1	AT 30693~ ET 30184~
29	144-920-9133	TUBE, between valve and tilt cylinder rod side	1	AT 30693~ ET 30184~
30	07000-23025	O-RING	1	AT 30693~ ET 30184~
31	01010-30825	BOLT	4	AT 30693~ ET 30184~
32	01602-00825	WASHER, spring	4	AT 30693~ ET 30184~
33	144-920-9183	TUBE, between valve and tilt cylinder bottom side	1	AT 30693~ ET 30184~
34	07000-23025	O-RING	1	AT 30693~ ET 30184~
35	01010-30830	BOLT	4	AT 30693~ ET 30184~
36	01602-00825	WASHER, spring	4	AT 30693~ ET 30184~
37	144-920-9321	BRACKET	1	AT 30693~ ET 30184~
38	01010-31225	BOLT	2	AT 30693~ ET 30184~
39	01602-01236	WASHER, spring	2	AT 30693~ ET 30184~
40	07283-02236	CLIP, pipe	2	AT 30693~ ET 30184~
41	01599-01011	NUT	4	AT 30693~ ET 30184~
42	01643-01032	WASHER, spring	4	AT 30693~ ET 30184~
43	144-920-9330	BRACKET	1	AT 30693~ ET 30184~
44	01010-31235	BOLT	2	AT 30693~ ET 30184~
45	01602-01236	WASHER, spring	2	AT 30693~ ET 30184~
46	01643-01232	WASHER	2	AT 30693~ ET 30184~
47	07283-02244	CLIP, pipe	2	AT 30693~ ET 30184~
48	01599-01011	NUT	4	AT 30693~ ET 30184~
49	01643-01032	WASHER	4	AT 30693~ ET 30184~

Fig & Index No.	Part No.	Description	Q'ty	Serial No.
1550 -50	07114-00505	HOSE, rubber	2	AT 30693~ ET 30184~
51	07000-23022	O-RING	4	AT 30693~ ET 30184~
52	07371-00500	FLANGE	8	AT 30693~ ET 30184~
53	07372-00830	BOLT	16	AT 30693~ ET 30184~
54	01602-00825	WASHER, spring	16	AT 30693~ ET 30184~
55	144-920-9272	TUBE, between valve and tilt cylinder rod side	1	AT 30693~ ET 30184~
56	144-920-9282	TUBE, between valve and tilt cylinder bottom side	1	AT 30693~ ET 30184~
57	144-920-9390	BRACKET	1	AT 30693~ ET 30184~
58	01010-31025	BOLT	2	AT 30693~ ET 30184~
59	01602-01030	WASHER, spring	2	AT 30693~ ET 30184~
60	07283-02236	CLIP, pipe	2	AT 30693~ ET 30184~
61	01599-01011	NUT	4	AT 30693~ ET 30184~
62	01643-01032	WASHER	4	AT 30693~ ET 30184~
63	144-920-9480	CLAMP	1	AT 30693~ ET 30184~
64	01010-31025	BOLT	1	AT 30693~ ET 30184~
65	01602-01030	WASHER, spring	1	AT 30693~ ET 30184~
66	144-920-9410	BRACKET	1	AT 30693~ ET 30184~
67	01010-31225	BOLT	2	AT 30693~ ET 30184~
68	01602-01236	WASHER, spring	2	AT 30693~ ET 30184~
69	07283-02236	CLIP, pipe	2	AT 30693~ ET 30184~
70	01599-01011	NUT	4	AT 30693~ ET 30184~
71	01643-01032	WASHER	4	AT 30693~ ET 30184~
72	144-920-9173	TUBE, between valve and tilt cylinder rod side	1	AT 30693~ ET 30184~
73	144-920-9143	TUBE, between valve and tilt cylinder bottom side	1	AT 30693~ ET 30184~

HYDRAULIC PIPING (CHASSIS GROP)

Fig & Index No.	Part No.	Description	Q'ty	Serial No.
B1550 -74	07371-00500	FLANGE	4	AT 30693~ ET 30184~
75	07000-23025	O-RING	2	AT 30693~ ET 30184~
76	07372-00830	BOLT	8	AT 30693~ ET 30184~
77	01602-00825	WASHER, spring	8	AT 30693~ ET 30184~
78	144-920-9340	BRACKET	1	AT 30693~ ET 30184~
79	01010-31025	BOLT	2	AT 30693~ ET 30184~
80	01602-01030	WASHER, spring	2	AT 30693~ ET 30184~
81	144-920-9191	TUBE, hydraulic pump to control valve	1	AT 30693~ ET 30184~
82	07000-23048	O-RING	1	AT 30693~ ET 30184~
83	01010-31245	BOLT	4	AT 30693~ ET 30184~
84	01602-01236	WASHER, spring	4	AT 30693~ ET 30184~
85	144-920-9530	TUBE, between control valve and lift cylinder	1	AT 30693~ ET 30184~
86	07000-23048	O-RING	1	AT 30693~ ET 30184~
87	01010-31245	BOLT	4	AT 30693~ ET 30184~
88	01602-01236	WASHER, spring	4	AT 30693~ ET 30184~
89	144-920-9540	TUBE. between control valve and lift cylinder	1	AT 30693~ ET 30184~
90	07000-23048	O-RING	1	AT 30693~ ET 30184~
91	01010-31275	BOLT	2	AT 30693~ ET 30184~
92	01010-31255	BOLT	2	AT 30693~ ET 30184~
93	01602-01236	WASHER, spring	4	AT 30693~ ET 30184~
94	144-54-11511	GUARD, radiator	1	AT 30693~ ET 30184~
	144-920-9560	. SEAT (For Piping Clip) (Welded)	1	AT 30693~ ET 30184~
95	144-54-11521	GRILLE, radiator	1	AT 30693~ ET 30184~
96	144-978-2150	BRACKET	1	AT 30693~ ET 30184~

Fig. A1576 DOZER SYSTEM For Mechanical Angle Power Tilt Dozer
(D65A Serial No. 30693~)
(D65E Serial No. 30184~)

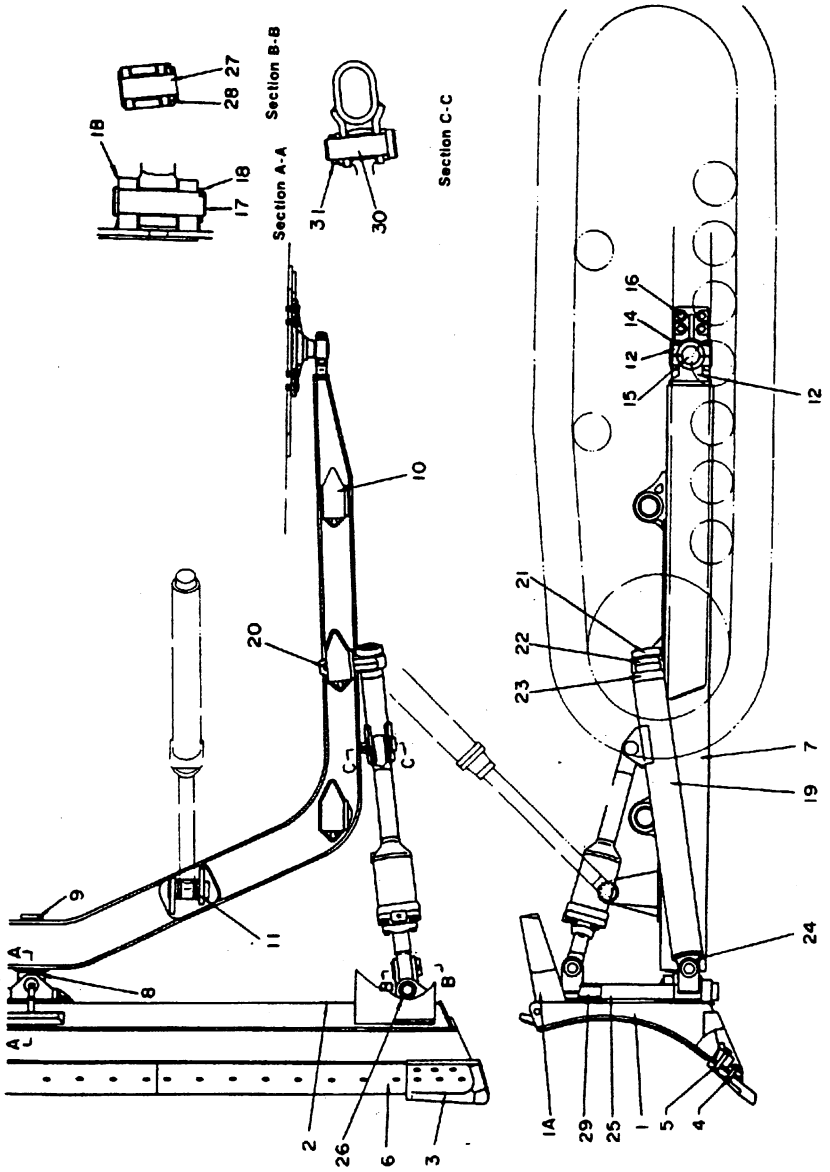

Fig & Index No.	Part No.	Description	Q'ty	Serial No.
A1576 - 1	144-940-1110	BLADE	1	AT 30693~ ET 30184~
1A	144-940-1160	. COVER, L.H. (Welded)	1	AT 30693~ ET 30184~
	144-940-1170	. COVER, R.H. (Welded)	1	AT 30693~ ET 30184~
1B	144-854-1380	. BRACKET (Welded)	1	AT 30693~ ET 30184~
2	09601-00835	PLATE, name (Limited supply)	1	AT 30693~ ET 30184~
	04418-03060	SCREW	4	AT 30693~ ET 30184~
3	150-70-21355	BIT, end, L.H. (150-70-21356)	1	AT 30693~ ET 30184~
	150-70-21345	BIT, end, R.H. (150-70-21346)	1	AT 30693~ ET 30184~
4	02091-11220	BOLT	6	AT 30693~ ET 30184~
	02290-11219	NUT	6	AT 30693~ ET 30184~
5	02090-11280	BOLT	30	AT 30693~ ET 30184~
	02290-11219	NUT	30	AT 30693~ ET 30184~
6	154-70-11313	EDGE, cutting	3	AT 30693~ ET 30184~
7	144-854-1261	FRAME	1	AT 30693~
	144-854-2711	FRAME	1	ET 30184~
8	144-70-13120	. SHAFT, center	1	AT 30693~ ET 30184~
9	140-70-13130	. COLLAR	1	AT 30693~ ET 30184~
10	144-70-13210	. BRACKET, L.H.	3	AT 30693~ ET 30184~
	144-70-13220	. BRACKET, R.H.	3	AT 30693~ ET 30184~
11	144-854-2810	. BRACKET, L.H.	1	AT 30693~
	144-854-2720	. BRACKET, L.H.	1	ET 30184~
	144-854-2820	. BRACKET, R.H.	1	AT 30693~
	144-854-2730	. BRACKET, R.H.	1	ET 30184~
12	140-70-00032	. PIVOT ASS'Y	2	AT 30693~ ET 30184~
14	01011-82430	. . BOLT	2	AT 30693~ ET 30184~
	01643-22460	. . WASHER	2	AT 30693~ ET 30184~
	130-70-13241	. . NUT	2	AT 30693~ ET 30184~

Fig & Index No.	Part No.	Description	Q'ty	Serial No.
A1576 -15	144-70-13160	TRUNNION	2	AT 30693~ ET 30184~
16	01010-52045	BOLT	16	AT 30693~ ET 30184~
	01602-22060	WASHER, spring	16	AT 30693~ ET 30184~
17	144-70-11160	PIN	1	AT 30693~ ET 30184~
18	04050-08080	PIN, cotter	1	AT 30693~ ET 30184~
19	144-854-1221	ARM ASS'Y	2	AT 30693~ ET 30184~
20	170-70-12151	. PIN	1	AT 30693~ ET 30184~
	170-70-12161	. ROCK	2	AT 30693~ ET 30184~
	09245-04830	. CHAIN	1	AT 30693~ ET 30184~
21	150-70-12120	. BUSHING	1	AT 30693~ ET 30184~
22	144-70-12181	. PIN	1	AT 30693~ ET 30184~
23	140-915-2140	. STOPPER	1	AT 30693~ ET 30184~
24	144-854-1231	. BOSS	1	AT 30693~ ET 30184~
25	144-854-2760	HOLDER	2	AT 30693~ ET 30184~
26	01593-14225	NUT	2	AT 30693~ ET 30184~
	144-871-5140	WASHER	2	AT 30693~ ET 30184~
	04050-08065	PIN, cotter	2	AT 30693~ ET 30184~
27	144-854-1280	PIN	4	AT 30693~ ET 30184~
28	144-854-1290	PIN	4	AT 30693~ ET 30184~
	04050-04025	PIN, cotter	4	AT 30693~ ET 30184~
29	140-915-2110	SHAFT	2	AT 30693~ ET 30184~
30	150-70-13410	PIN	2	AT 30693~ ET 30184~
31	170-70-12240	PIN	2	AT 30693~ ET 30184~
	04050-04025	PIN, cotter	2	AT 30693~ ET 30184~

Fig. A1578 ANGLE BLADE, For Angle Dozer

(D60P Serial No. 29174~)
(D65P Serial No. 30004~)

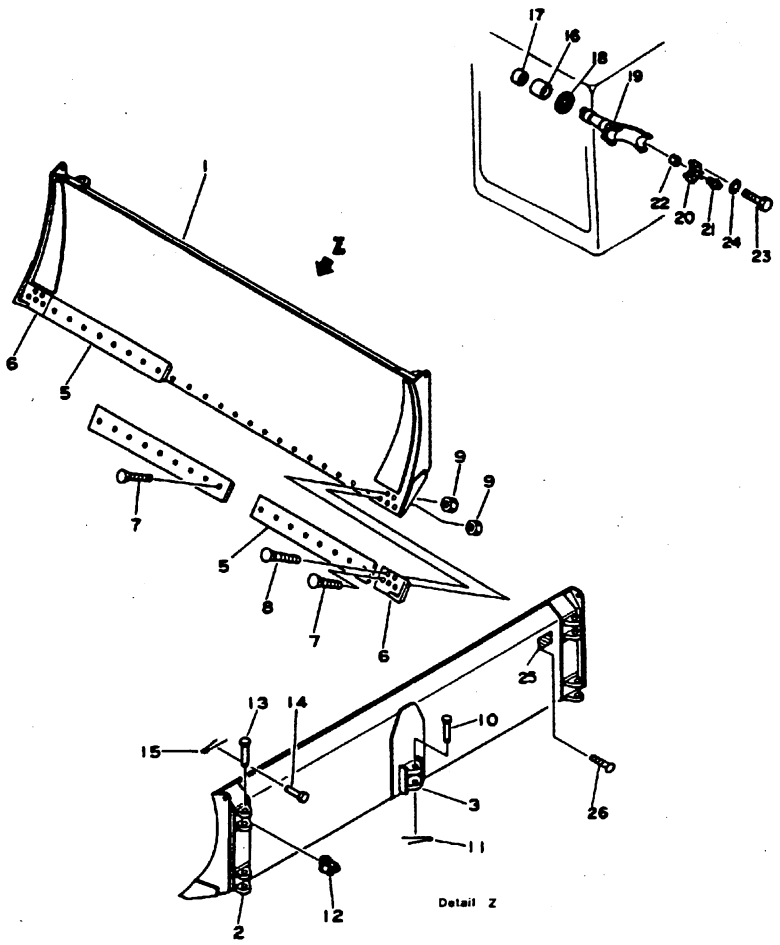

Fig & Index No.	Part No.	Description	Q'ty	Serial No.
	14G-Z26-0010	BLADE ASS'Y	1	C 29174~ T 30004~
A1578 - 1	14G-Z26-1110	. BLADE	1	C 29174~ T 30004~
2	144-70-11210	. . BRACKET	4	20006~
3	144-854-1380	. . BRACKET	1	C 29174~ T 30004~
4	130-70-51130	. EDGE, cutting, center	1	C 29174~ T 30004~
5	130-920-2180	. EDGE, cutting	2	C 29174~ T 30004~
6	13F-Z27-1581	. BIT, end, L.H.	1	C 29174~ T 30004~
	13F-Z27-1571	. BIT, end, R.H.	1	C 29174~ T 30004~
7	02090-11270	. BOLT	31	20006~
8	02091-11210	. BOLT	4	20006~
9	02290-11219	. NUT	35	20006~
10	144-70-11160	. PIN	1	C 29174~ T 30004~
11	04050-08085	. PIN, cotter	1	20006~
12	144-70-12130	. JOINT	4	20006~
13	140-70-12110	. PIN	4	20006~
14	140-70-12120	. PIN	4	20006~
15	04050-05030	. PIN, cotter	4	20006~
16	144-70-15181	BUSHING	2	20006~
17	144-70-15171	BUSHING	2	20006~
18	07011-00085	SEAL, oil	2	20006~
	144-70-00051	CYLINDER SUPPORT ASS'Y	3	22388~
19	☆	. YOKE (144-70-15212)	1	20006~
20	144-70-15220	. CAP	2	20006~
21	07020-00000	. FITTING, grease	2	20006~
22	144-70-15251	. PIN, roll	2	20006~
23	01010-51470	. BOLT	4	22388~
24	01602-21442	. WASHER, spring	4	20006~
25	09601-00835	PLATE, mark (Limited supply)	1	20006~
26	04418-03060	SCREW, tapping	4	20006~

Fig. A1579 C-FRAME, For Angle Dozer

(D60P Serial No. 29174~)
(D65P Serial No. 30004~)

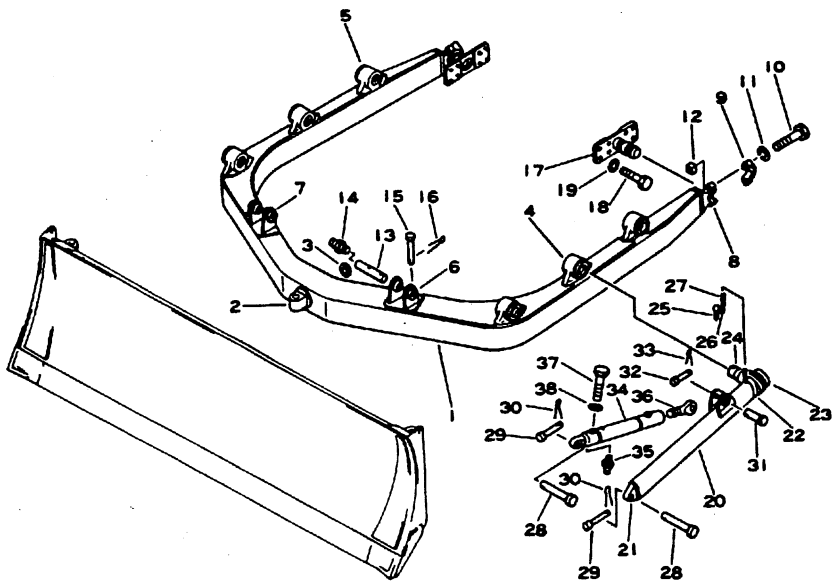

Fig. & Index No.	Part No.	Description	Q'ty	Serial No.
	14G-Z26-0020	C-FRAME ASS'Y	1	C 29174~ T 30004~
A1579 - 1	14G-Z26-1120	. FRAME	1	C 29174~ T 30004~
2	14G-926-5230	. SHAFT	1	C 29174~ T 30004~
3	14G-926-5240	. . COLLAR	1	C 29174~ T 30004~
4	144-70-13210	. . BRACKET, L.H.	3	20006~
5	144-70-13220	. . BRACKET, R.H.	3	20006~
6	14G-Z26-1130	. . BRACKET, L.H.	1	C 29174~ T 30004~
7	14G-Z26-1140	. . BRACKET, R.H.	1	C 29174~ T 30004~
	140-70-00032	. PIVOT ASS'Y	2	22388~
8	☆	. . PIVOT (140-70-13141)	1	20006~
9	☆	. . CAP (140-70-13151)	1	20006~
10	01011-62430	. . BOLT	2	22388~
11	01643-32460	. . WASHER	2	C 29174~ T 30004~
12	130-70-13241	. . NUT	2	20006~
13	144-817-4110	. SHAFT	2	20006~
14	07020-00000	. FITTING, grease	2	20006~
15	140-70-14230	. PIN	2	20006~
16	04050-03015	. PIN, cotter	2	20006~
17	144-817-3170	TRUNNION	2	C 29174~ T 30004~
18	01010-32045	BOLT	16	22388~
19	01643-32060	WASHER, spring	16	C 29174~ T 30004~
	144-70-00020	ARM ASS'Y	2	20006~
20	144-70-12141	. ARM	1	20006~
21	140-70-12161	. . BOSS	1	20006~
22	144-70-12150	. . STOPPER	1	20006~
23	150-70-12120	. . BUSHING	1	20006~
24	144-70-12181	. . PIN	1	20006~
25	170-70-12150	. . PIN	1	20006~
26	170-70-12160	. . HOOK	2	20006~
27	150-70-13420	. . CHAIN	1	20006~

Fig & Index No.	Part No.	Description	Q'ty	Serial No.
A1579 -28	130-70-12221	. PIN	2	20006~
29	130-70-12231	. PIN	2	20006~
30	04050-05030	. PIN, cotter	2	20006~
31	150-70-13410	. PIN	1	20006~
32	170-70-12240	. PIN	1	20006~
33	04050-04025	. PIN, cotter	1	20006~
34	144-70-00031	BRACE ASS'Y	2	22388~
35	07020-00000	. FITTING, grease	2	20006~
36	140-70-12191	. JOINT	1	20006~
37	130-70-52110	. SCREW, set	1	22388~
38	01602-01442	. WASHER, spring	1	20006~

Fig. A1813 CAB GUARD (D60A,D65A Serial No. 20006–)

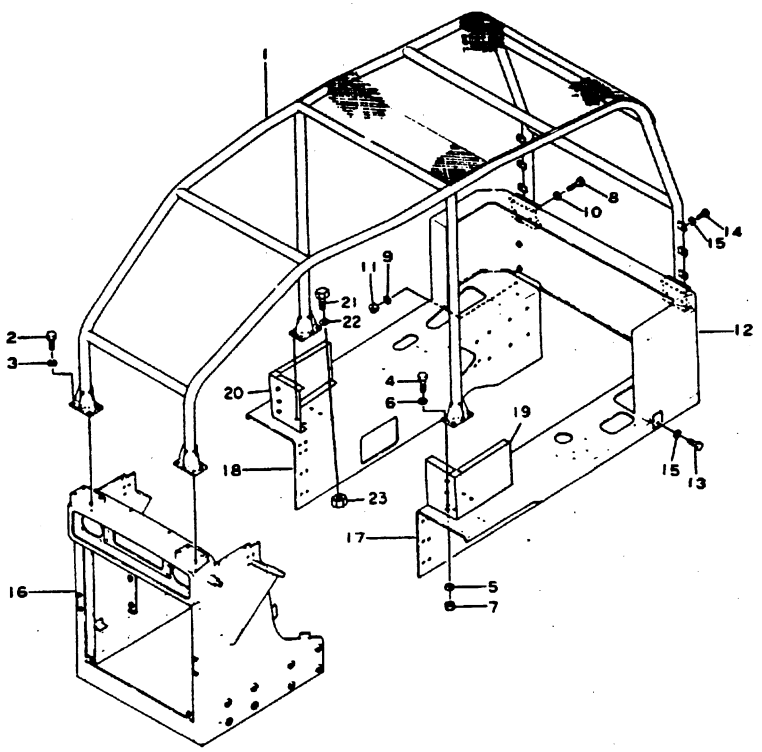

Fig. & Index No.	Part No.	Description	Q'ty	Serial No.
A1813 - 1	144-919-1110	GUARD, cab (OP)	1	20006~
2	01010-31435	BOLT	8	20006~
3	01602-01442	WASHER, spring	8	20006~
4	01010-31445	BOLT	8	20006~
5	01643-01432	WASHER	8	20006~
6	01602-01442	WASHER, spring	8	20006~
7	01580-01411	NUT	8	20006~
8	01010-31445	BOLT	8	20006~
9	01643-01432	WASHER	8	20006~
10	01602-01442	WASHER, spring	8	20006~
11	01580-01411	NUT	8	20006~
12	144-919-1120	COVER, rear	1	20006~
13	01010-31230	BOLT	2	20006~
14	01010-31225	BOLT	6	20006~
15	01602-01236	WASHER, spring	8	20006~
16	144-919-1211	GUARD, radiator (Modified 144-54-11116)	1	20006~
17	144-919-1221	FENDER, L.H. (Modified 144-54-14128)	1	20006~
18	144-919-1231	FENDER, R.H. (Modified 144-54-14137)	1	20006~
19	144-919-1150	COVER, L.H.	1	20006~
20	144-919-1160	COVER, R.H.	1	20006~
21	01010-51225	BOLT	10	20006~
22	01602-21236	WASHER, spring	10	20006~
23	01580-11210	NUT	10	20006~

Fig. A1837A REINFORCED ANGLE DOZER, For Malaysia
(D60E,D65E Serial No. 30001~)

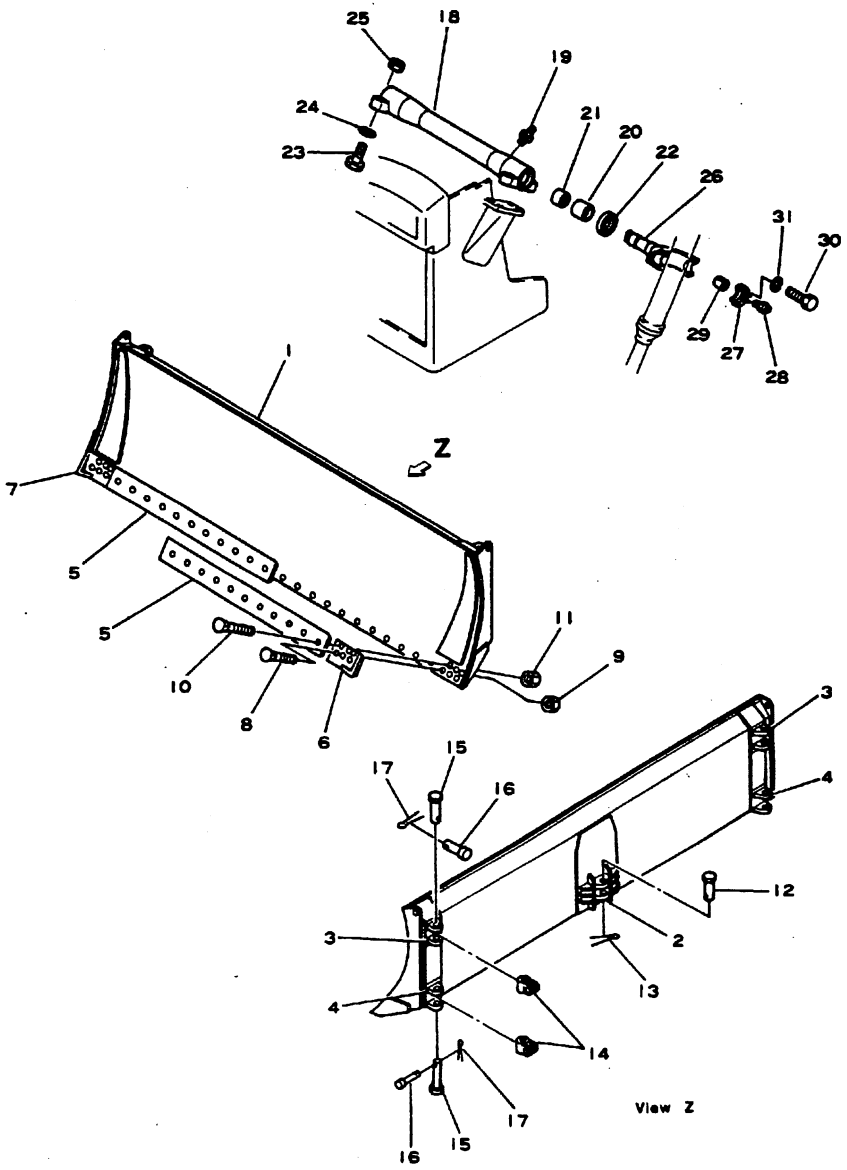

Fig & Index No.	Part No.	Description	Q'ty	Serial No.
1837A-▽ 1	144-871-5123	BLADE	1	E 30001~
▽ 2	144-854-1380	. BRACKET, center	1	E 30001~
▽ 3	144-854-6120	. BRACKET, upper	2	E 30001~
▽ 4	144-854-6130	. BRACKET, under	2	E 30001~
▽ 5	144-871-5130	EDGE, cutting	2	E 30001~
▽ 6	150-70-21356	END BIT, L.H.	1	E 20295~
▽ 7	150-70-21346	END BIT, R.H.	1	E 20295~
▽ 8	02090-11280	BOLT	28	E 20295~
9	02290-11219	NUT	28	E 20295~
▽ 10	02091-11220	BOLT	6	E 20295~
11	02290-11219	NUT	6	E 20295~
▼ 12	144-70-11160	PIN, center	1	E 30001~
▼ 13	04050-18080	PIN, cotter	1	E 30001~
▽ 14	144-854-6140	JOINT	4	E 30001~
▽ 15	144-854-6150	PIN	4	E 30001~
▽ 16	170-70-12240	PIN	4	E 30001~
▽ 17	04050-14025	PIN, cotter	4	E 30001~
18	144-70-15112	STAY	1	20006~
19	07020-00675	FITTING, grease	2	22388~
20	144-70-15181	BUSHING	2	20006~
21	144-70-15171	BUSHING	2	20006~
22	130-09-12370	SEAL, oil	2	20006~
23	01051-61830	BOLT	8	22388~
24	01602-01854	WASHER, spring	8	20006~
25	01582-01815	NUT	8	22388~
	144-70-00051	CYLINDER SUPPORT ASS'Y	2	22388~
26	144-70-15212	. YOKE	1	20006~
27	144-70-15222	. CAP	2	20006~
28	07020-00000	. FITTING, grease	2	20006~
29	144-70-15251	. PIN, roll	2	20006~
30	01010-31470	. BOLT	4	22388~
31	01602-01442	. WASHER, spring	4	20006~

▽ parts for MALAYSIA only
▼ parts for Reinforced Dozer

Fig. A1838A REINFORCED C-FRAME, For Malaysia
(D60E,D65E Serial No. 30001~)

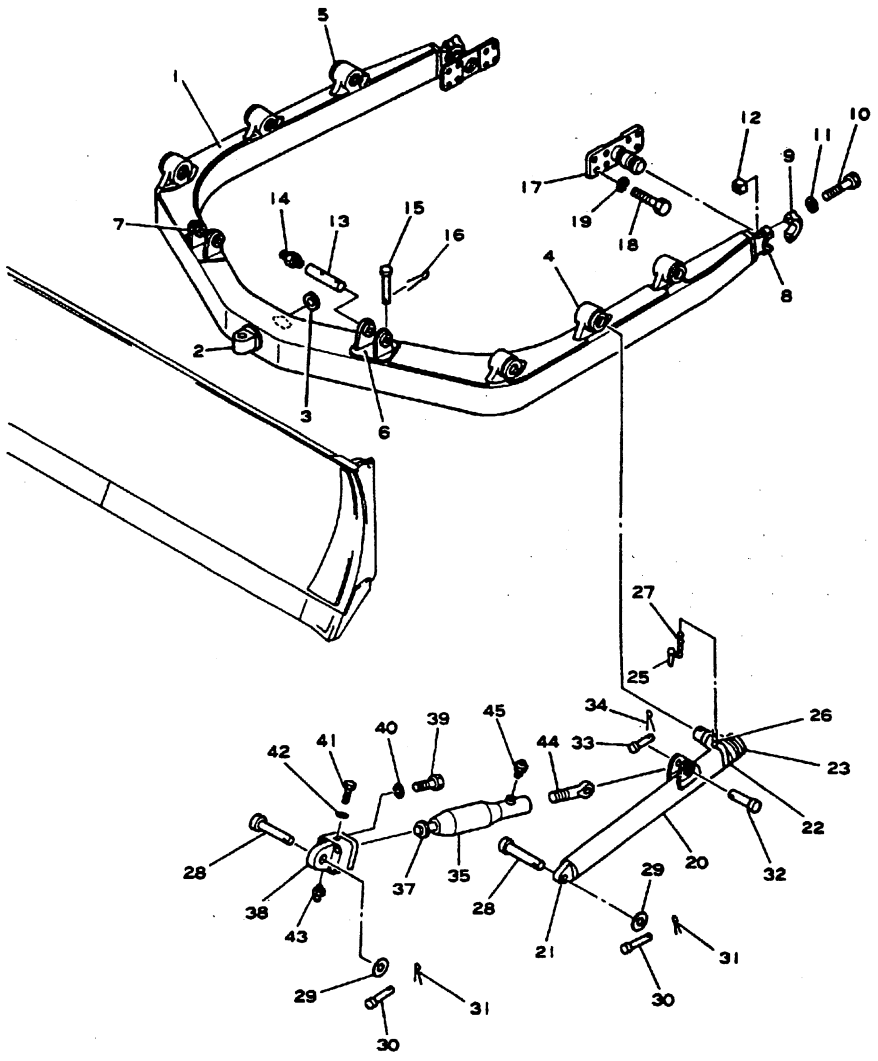

Fig. & Index No.	Part No.	Description	Q'ty	Serial No.
	144-854-0040	FRAME ASS'Y	1	E 20295~
A1838A-▼1	144-854-2711	. FRAME	1	E 30001~
▼ 2	144-854-2870	. . SHAFT	1	E 30001~
3	140-70-13130	. . COLLAR	1	E 20295~
4	144-70-13210	. . BRACKET L.H.	3	E 20295~
5	144-70-13220	. . BRACKET, R.H.	3	E 20295~
▼ 6	144-854-2720	. . BRACKET, L H.	1	E 30001~
▼ 7	144-854-2730	. . BRACKET, R.H.	1	E 30001~
	140-70-00032	. PIVOT ASS'Y	2	E 20295~
8	☆	. . PIVOT (140-70-13141)	1	E 20295~
9	140-70-13151	. . CAP	1	E 20295~
10	01011-62430	. . BOLT	2	22388~
11	01643-22460	. . WASHER	2	E 20295~
12	130-70-13241	. . NUT	2	E 20295~
13	144-817-4110	SHAFT	2	20006~
14	07020-00000	FITTING, grease	2	20006~
15	140-70-14230	PIN	2	20006~
16	04050-03015	PIN, cotter	2	20006~
17	144-70-13160	TRUNNION	2	20006~
18	01010-52045	BOLT	16	22388~
19	01643-22045	WASHER	16	20006~
▼ 20	144-854-1221	ARM ASS'Y	2	E 30001~
▼ 21	144-854-1231	. BOSS	1	E 30001~
▼ 22	140-915-2140	. STOPPER	1	E 20295~
23	150-70-12120	. BUSHING	1	E 20295~
24	144-70-12181	. PIN	1	E 20295~
25	170-70-12150	. PIN	1	E 20295~
26	170-70-12160	. HOOK	2	E 20295~
▼ 27	09245-04830	. CHAIN	1	E 22388~
▽ 28	144-817-3161	PIN	4	E 30001~
▽ 29	01640-04860	WASHER	4	E 30001~
▽ 30	170-70-12240	PIN	4	E 20295~
▽ 31	04050-14025	PIN, cotter	4	E 20295~

▽ parts for MALAYSIA only
▼ parts for Reinforced Dozer

REINFORCED C-FRAME

Fig & Index No.	Part No.	Description	Q'ty		Serial No.
▽ A1838A-32	150-70-13410	PIN	2		20006~
▽ 33	170-70-12240	PIN	2		20006~
▽ 34	04050-14025	PIN, cotter	2		20006~
	144-854-0033	BRACE ASS'Y	2	E	30001~
▽ 35	144-854-6170	. BRACE	1	E	30001~
▽ 36	144-854-6180	. . SHAFT	1	E	30001~
▽ 37	144-854-6190	. . PLATE	1	E	30001~
▽ 38	144-854-6160	. BRACKET	1	E	30001~
▼ 39	01010-52050	. BOLT	4	E	30001~
▼ 40	01602-02060	. WASHER, spring	4	E	30001~
▼ 41	150-70-12242	. SCREW, set	1	E	30001~
▼ 42	01602-01236	. WASHER, spring	1	E	30001~
43	07020-00000	. FITTING, grease	1	E	20295~
▼ 44	144-817-2311	. JOINT	1	E	30001~
▼ 45	07020-00000	. FITTING, grease	1	E	20295~

▽ parts for MALAYSIA only
▼ parts for Reinforced Dozer

Fig. B1850 PERFORATED ENGINE SIDE COVER For U.S.A.

(D60P Serial No. 32001~)
(D65P Serial No. 31001~)

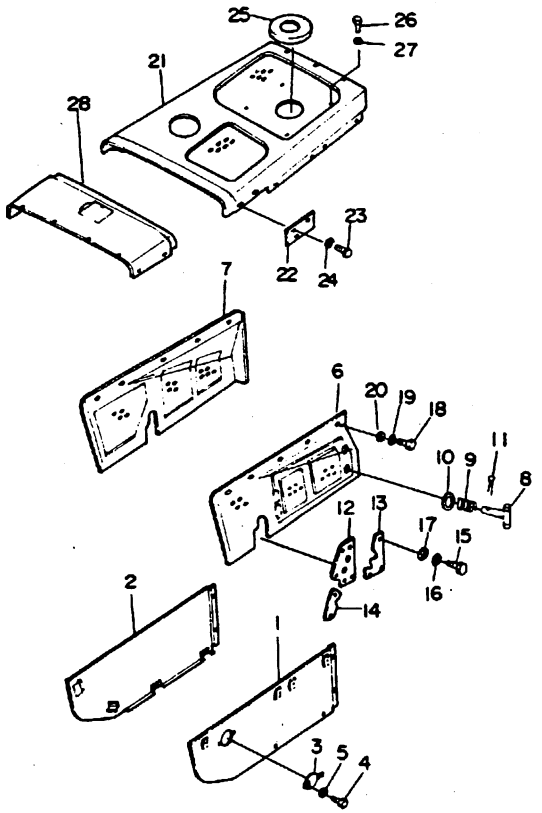

Fig & Index No.	Part No.	Description	Q'ty	Serial No.
B1850 - 1	144-854-2310	COVER, L.H.	1	PC 32001~ PT 31001~
2	144-854-2320	COVER, R.H.	1	PC 32001~ PT 31001~
3	144-855-1180	COVER	1	PC 32001~ PT 31001~
4	01010-51235	BOLT	2	PC 32001~ PT 31001~
5	01602-21236	WASHER, spring	2	PC 32001~ PT 31001~
6	14G-54-11212	COVER, side, L.H.	1	PC 32001~ PT 31001~
7	14G-54-11112	COVER, side, R.H.	1	PC 32001~ PT 31001~
8	101-57-31210	LOCK	4	PC 32001~ PT 31001~
9	09459-01614	SPRING	4	PC 32001~ PT 31001~
10	01642-21016	WASHER	4	PC 32001~ PT 31001~
11	04050-03015	PIN, cotter	4	PC 32001~ PT 31001~
12	14G-54-11160	PLATE	2	PC 32001~ PT 31001~
13	14G-54-11140	PLATE	2	PC 32001~ PT 31001~
14	14G-54-11150	PLATE	2	PC 32001~ PT 31001~
15	01010-51230	BOLT	10	PC 32001~ PT 31001~
16	01602-21236	WASHER, spring	10	PC 32001~ PT 31001~
17	01643-31232	WASHER	10	PC 32001~ PT 31001~
18	01010-51230	BOLT	10	PC 32001~ PT 31001~
19	01602-21236	WASHER, spring	10	PC 32001~ PT 31001~
20	01643-31232	WASHER	10	PC 32001~ PT 31001~
21	144-851-1914	HOOD	1	PC 32001~ PT 31001~
22	14G-54-11170	PLATE, L.H.	1	PC 32001~ PT 31001~
	14G-54-11180	PLATE, R.H.	1	PC 32001~ PT 31001~
23	01010-51225	BOLT	4	PC 32001~ PT 31001~
24	01602-21236	WASHER, spring	4	PC 32001~ PT 31001~
25	144-851-1990	RUBBER	1	PC 32001~ PT 31001~

PERFORATED ENGINE SIDE COVER

Fig. & Index No.	Part No.	Description	Q'ty	Serial No.
B1850 -26	01010-51230	BOLT	10	PC 32001~ PT 31001~
27	01602-21236	WASHER, spring	10	PC 32001~ PT 31001~
28	144-54-11580	COVER	1	PC 32001~ PT 31001~

Fig. C1850 PERFORATED ENGINE SIDE COVER

(D60P,D65P Serial No. 20006~)

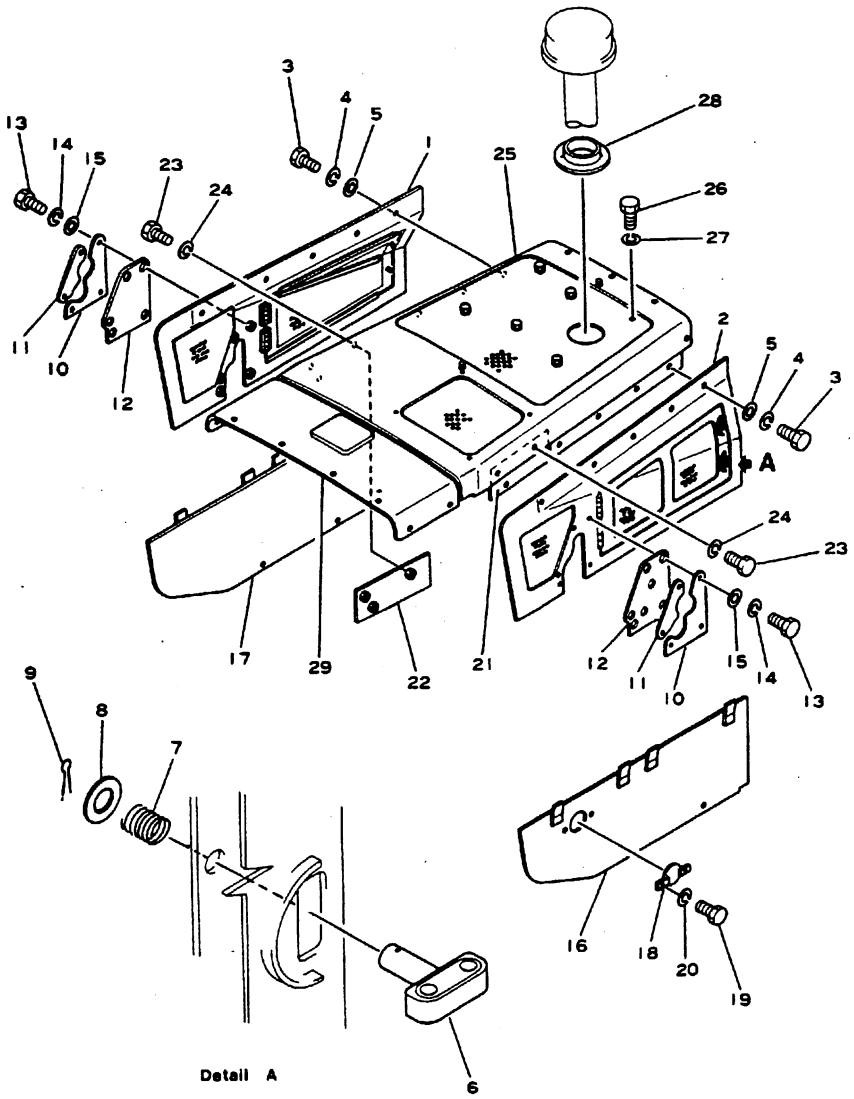

Fig & Index No.	Part No.	Description	Q'ty	Serial No. D60,65P	
C1850-1	14G-54-11112	COVER, R.H.	1	20006~	
2	14G-54-11212	COVER, L.H.	1	20006~	
3	01010-31230	BOLT	10	20006~	
4	01602-21236	WASHER, spring	10	20006~	
5	01643-31232	WASHER	10	20006~	
6	101-57-31210	LOCK	4	20006~	
7	09459-01614	SPRING	4	20006~	
8	01642-21016	WASHER	4	20006~	
9	04050-13015	PIN	4	20006~	
10	14G-54-11140	PLATE	2	20006~	
11	14G-54-11150	PLATE	2	20006~	
12	14G-54-11160	PLATE	2	20006~	
13	01010-31230	BOLT	10	20006~	
14	01602-21236	WASHER spring	10	20006~	
15	01643-01232	WASHER	10	20006~	
16	144-854-2310	COVER, L.H.	1	20006~	
17	144-854-2320	COVER, R.H.	1	20006~	
18	144-855-1180	COVER	1	20006~	
19	01010-31235	BOLT	2	20006~	
20	01602-21236	WASHER, spring	2	20006~	
21	14G-54-11170	PLATE, L.H.	1	20006~	
22	14G-54-11180	PLATE, R.H.	1	20006~	
23	01010-31225	BOLT	4	20006~	
24	01602-21236	WASHER, spring	4	20006~	
25	144-851-1914	BONNET	1	20006~	
26	01010-31230	BOLT	10	20006~	
27	01602-21236	WASHER, spring	10	20006~	
28	144-851-1990	BRACKET	1	20006~	
29	144-54-11580	COVER	1	20006~	

Fig. D1850 RADIATOR DUST PROOF GRID
(D60A Serial No. 20006~)

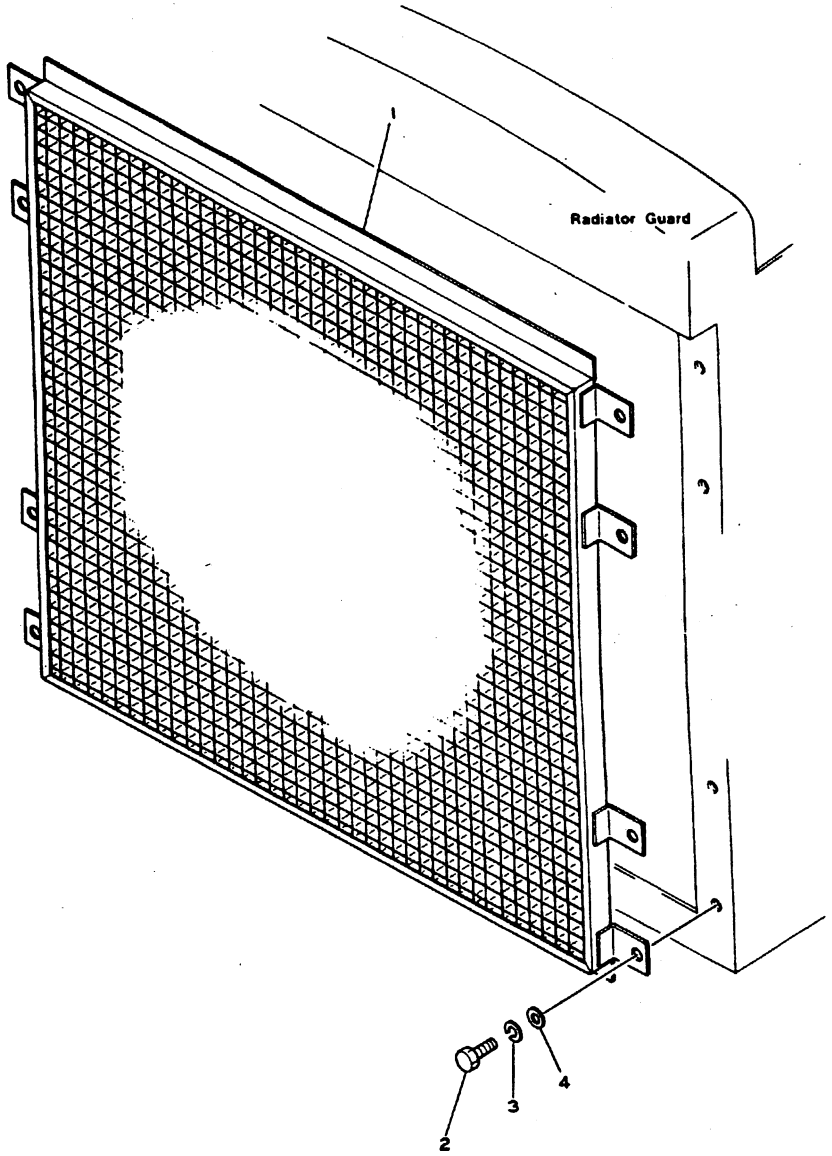

Fig & Index No.	Part No.	Description	Q'ty	Serial No. D60A	
D1850-1	144-850-5112	GRID, core	1	20006~	
2	01010-31020	BOLT	8	20006~	
3	01602-21030	WASHER, spring	8	20006~	
4	01643-01032	WASHER	8	20006~	

Fig. E1850 DUST PROOF GRID (LARGE-CAPACITY)
(D65A, E Serial No. 20006~)

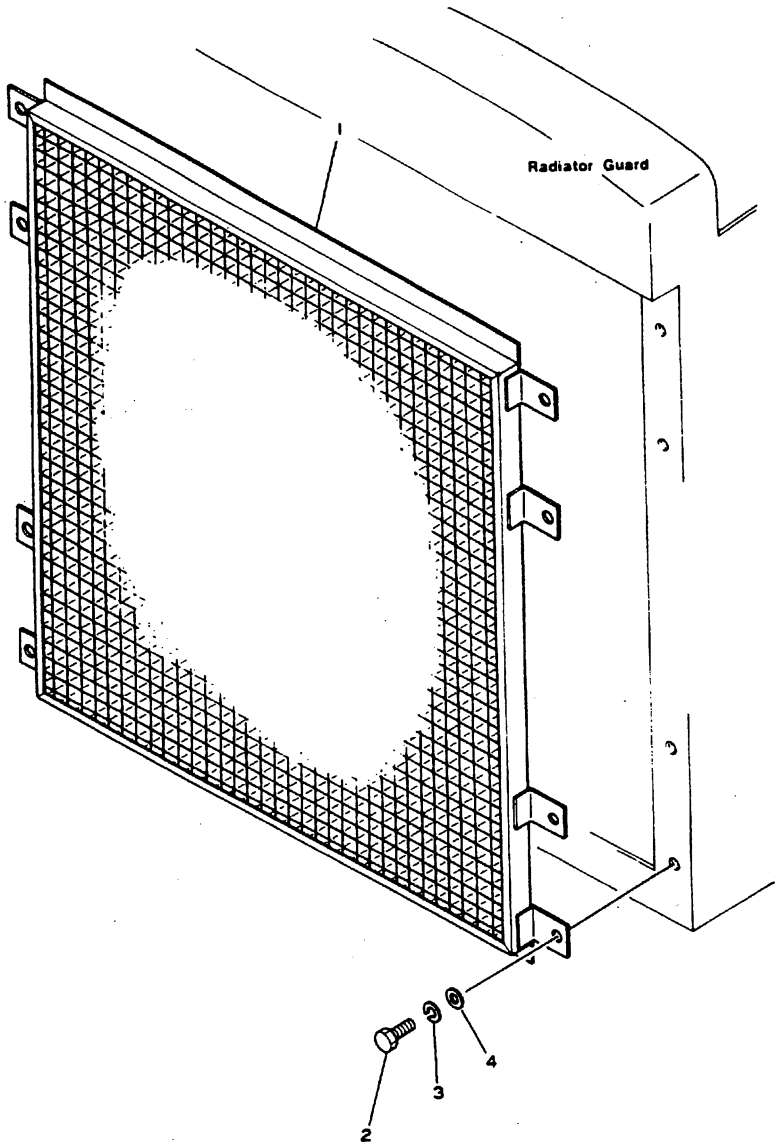

Fig. & Index No.	Part No.	Description	Q'ty	Serial No. D65A, E	
E1850-1	144-850-5311	GRID, core	1	20006~	
2	01010-31025	BOLT	8	20006~	
3	01602-21030	WASHER, spring	8	20006~	
4	01643-01032	WASHER	8	20006~	

Fig. A1854 PERFORATED ENGINE SIDE COVER

(D60A, D65E Serial No. 31001~)
(D65A Serial No. 32001~)

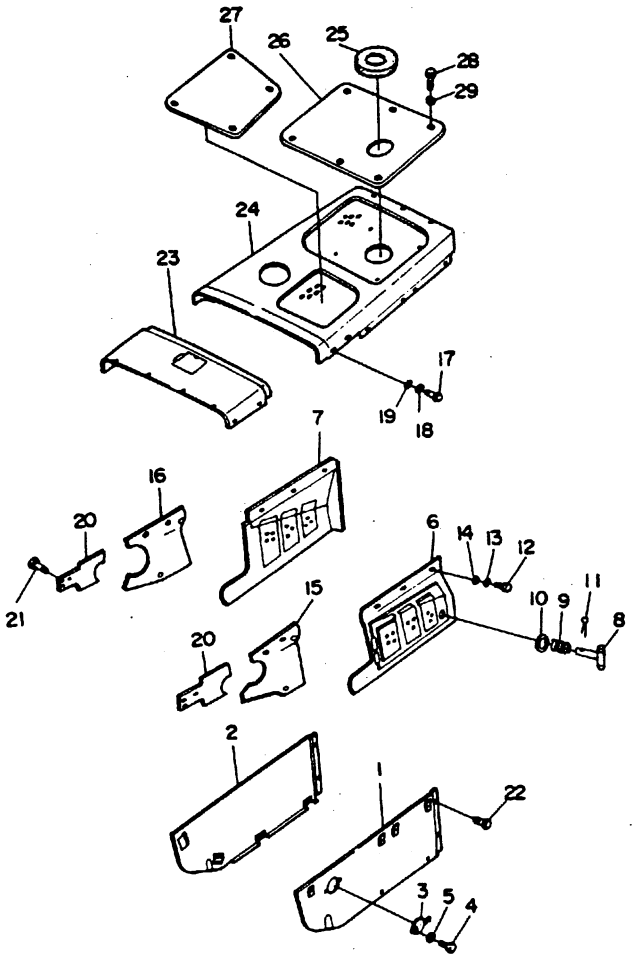

Fig & Index No.	Part No.	Description	Q'ty	Serial No.
1854 - 1	144-854-1810	COVER, L.H.	1	AC, ET 31001~ AT 32001~
2	144-854-1820	COVER, R.H.	1	AC, ET 31001~ AT 32001~
3	144-855-1180	COVER	1	AC, ET 31001~ AT 32001~
4	01010-51235	BOLT	2	AC, ET 31001~ AT 32001~
5	01602-21236	WASHER, spring	2	AC, ET 31001~ AT 32001~
6	144-851-1922	COVER, L.H.	1	AC, ET 31001~ AT 32001~
7	144-851-1932	COVER, R.H.	1	AC, ET 31001~ AT 32001~
8	101-57-31210	LOCK	4	AC, ET 31001~ AT 32001~
9	09459-01614	SPRING	4	AC, ET 31001~ AT 32001~
10	01642-21016	WASHER	4	AC, ET 31001~ AT 32001~
11	04050-03015	PIN	4	AC, ET 31001~ AT 32001~
12	01010-51230	BOLT	8	AC, ET 31001~ AT 32001~
13	01602-21236	WASHER, spring	8	AC, ET 31001~ AT 32001~
14	01643-31232	WASHER	8	AC, ET 31001~ AT 32001~
15	144-851-3811	COVER, L.H.	1	AC, ET 31001~ AT 32001~
16	144-851-3821	COVER, R.H.	1	AC, ET 31001~ AT 32001~
17	01010-51230	BOLT	8	AC, ET 31001~ AT 32001~
18	01602-21236	WASHER, spring	8	AC, ET 31001~ AT 32001~
19	01643-31232	WASHER	8	AC, ET 31001~ AT 32001~
20	144-851-3920	PLATE	2	AC, ET 31001~ AT 32001~
21	01010-51225	BOLT	6	AC, ET 31001~ AT 32001~
22	01010-51230	BOLT	4	AC, ET 31001~ AT 32001~
23	144-54-11580	COVER	1	AC, ET 31001~ AT 32001~
24	144-851-1914	HOOD	1	AC, ET 31001~ AT 32001~
25	144-851-1990	RUBBER	1	AC, ET 31001~ AT 32001~
26	144-851-3930	COVER, (for U.S.A.)	1	AC, ET 31001~ AT 32001~

PERFORATED ENGINE SIDE COVER

Fig & Index No.	Part No.	Description	Q'ty	Serial No.
A1854 -27	144-851-3940	COVER, (for U.S.A.)	1	AC, ET 31001~ AT 32001~
28	01010-51230	BOLT	10	AC, ET 31001~ AT 32001~
29	01602-21236	WASHER, spring	10	AC, ET 31001~ AT 32001~

Fig. A1871 VANDALISUM PROTECTION

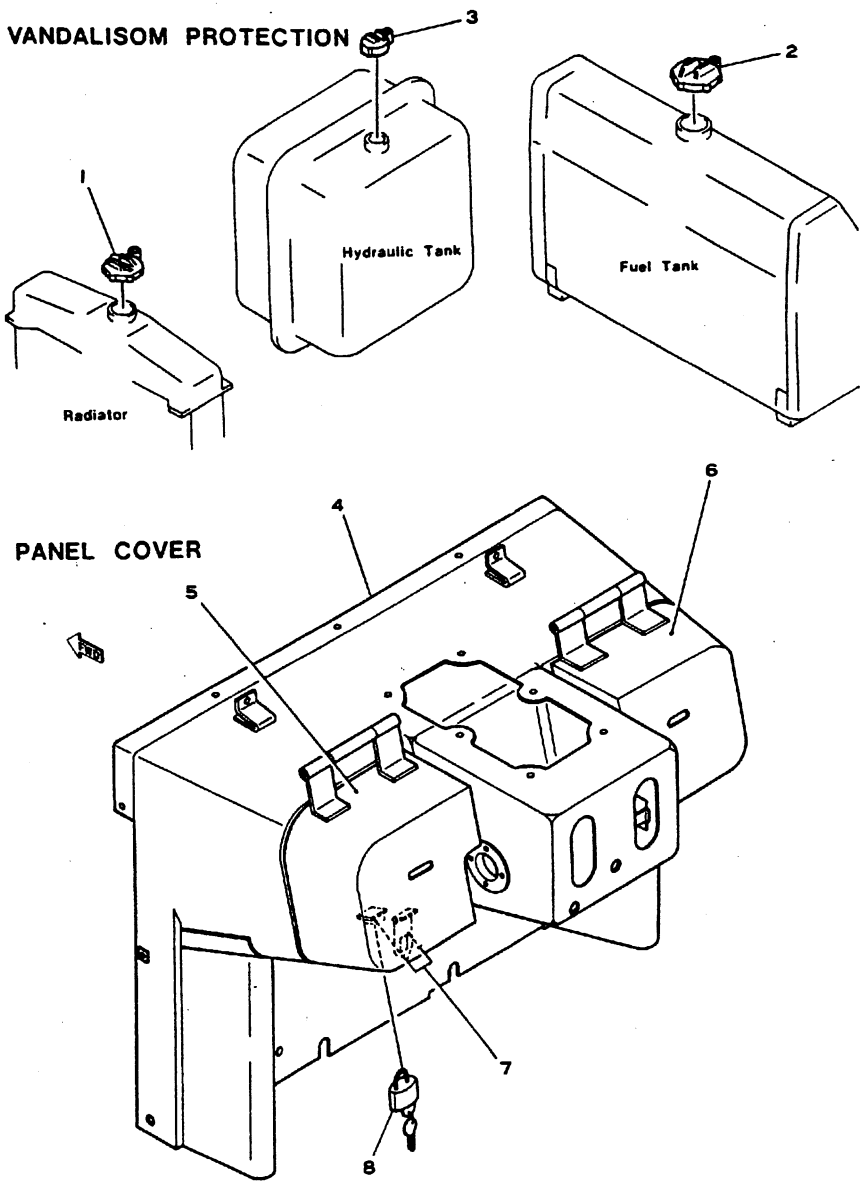

Fig & Index No.	Part No.	Description	Q'ty	Serial No.
A1871 - 1	07093-00000	CAP, radiator	1	AC 20024~
		(Replaced with 07053-10000)		AT 20024~
				EC 20295~
				ET 20295~
				PC 20024~
				LC 21081~
				PT 30001~
2	07091-01200	CAP, fuel tank	1	AC 20024~
		(Replaced with 07050-21200)		AT 20024~
				EC 20295~
				ET 20295~
				PC 20024~
				LC 21081~
				PT 30001~
3	07092-00000	CAP, hydraulic tank	1	AC 20024~
		(Replaced with 07051-00000)		AT 20024~
				EC 20295~
				ET 20295~
				PC 20024~
				LC 21081~
				PT 30001~
4	144-54-38121	DASHBOARD	1	AC 20024~
		(Replaced with 144-54-21212)		AT 20024~
				EC 20295~
				ET 20295~
				PC 20024~
				LC 21081~
				PT 30001~
5	144-54-38130	COVER, L.H.	1	AC 20024~
				AT 20024~
				EC 20295~
				ET 20295~
				PC 20024~
				LC 21081~
				PT 30001~
6	144-54-38140	COVER, R.H.	1	AC 20024~
				AT 20024~
				EC 20295~
				ET 20295~
				PC 20024~
				LC 21081~
				PT 30001~
7	144-54-38150	HINGE	1	AC 20024~
				AT 20024~
				EC 20295~
				ET 20295~
				PC 20024~
				LC 21081~
				PT 30001~
8	09460-00002	PAD LOCK AND KEY	1set	AC 20024~
				AT 20024~
				EC 20295~
				ET 20295~
				PC 20024~
				LC 21081~
				PT 30001~

Fig. A1875 REAR WORKING LAMP

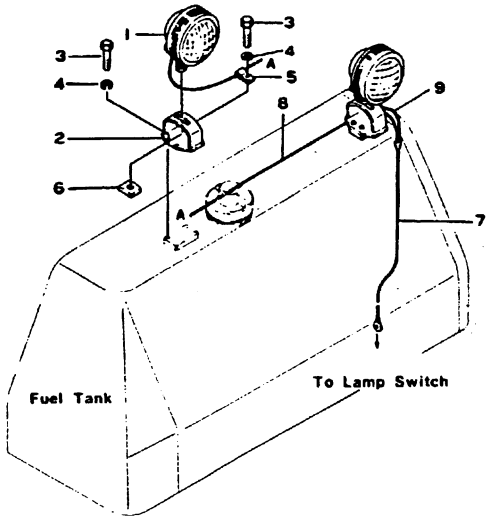

Fig. & Index No.	Part No.	Description	Q'ty	Serial No.
A1875 - 1	08128-02400	LAMP	2	20006~
	08113-02480	. BULB, sealed beam	1	20006~
2	144-998-1230	BRACKET	2	20006~
3	01040-31020	BOLT	8	20006~
4	01602-01030	WASHER, spring	8	20006~
5	08036-10814	CLIP	2	20006~
6	175-822-6980	SEAT	2	20006~
7	144-850-1110	WIRE ASS'Y, rear lamp to lamp switch	1	20006~
8	144-850-1120	WIRE ASS'Y, rear lamp to lamp switch	1	20006~
9	144-850-1130	WIRE ASS'Y, rear lamp to lamp switch	1	20006~

Fig. A1885 HEAD LAMP AND SHIELD, For Jungle

(D60A,P,PL,E,D65A,P,E Serial No. 20006~)

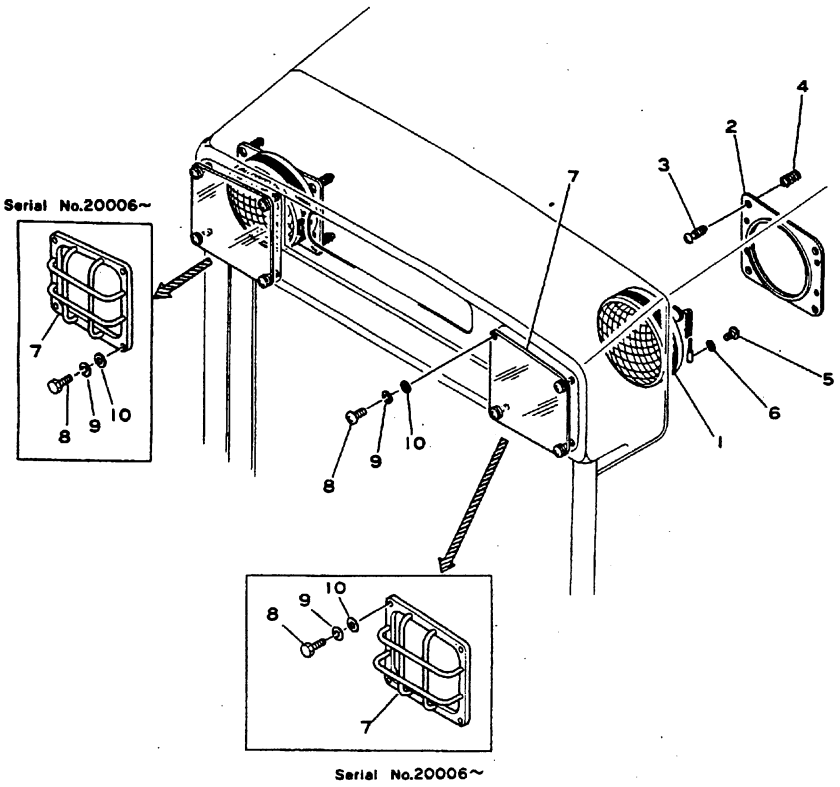

Fig & Index No.	Part No.	Description	Q'ty	Serial No.
	144-854-2520	HEAD LAMP ASS'Y, L.H.	1	20006~
	144-854-2530	HEAD LAMP ASS'Y, R.H.	1	20006~
A1885- 1	144-06-13310	. LAMP, head	1	20006~
	08113-02480	. . BULB, sealed beam	1	20006~
2	144-06-13130	. BRACKET, L.H.	1	20006~
	144-06-13220	. BRACKET, R.H.	1	20006~
3	131-06-43230	. SCREW	4	20006~
4	144-06-13150	. SPRING	4	20006~
5	01210-20408	. SCREW	1	20006~
6	01601-00410	. WASHER, spring	1	20006~ •
7	144-854-2510	SHIELD, head lamp	2	20006~ •
	144-854-2411	COVER; L.H.	1	20006~
	144-854-2421	COVER, R.H.	1	20006~
8	01220-20816	SCREW	8	20006~ •
	01010-51025	BOLT	8	20006~
9	01602-00825	WASHER, spring	8	20006~ •
	01602-21030	WASHER, spring	8	20006~
10	01641-20812	WASHER	8	20006~ •
	01641-21016	WASHER	8	20006~

Fig. A1888 HYDRAULIC TANK WITH FIN, For Overseas
(D60E Serial No. 20006~)

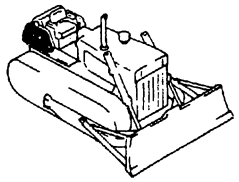

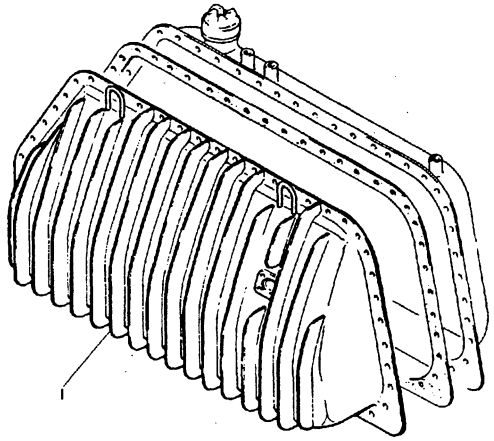

Fig & Index No.	Part No.	Description	Q'ty	Serial No.
A1888 - 1	144-871-5110	HYDRAULIC TANK, with fin (OP)	1	EC 20006~