KEPB034500

RUTHZIL TRATOR COMERCIAL DE PEÇAS LTDA 11 97083-6812 ROLANDO

PARTS BOOK

BULLDOZER

D61EX-23M0

SERIAL NUMBERS B50001 and up

ecot3

KOMATSU

KEPB034500

PARTS BOOK

D61EX-23M0
Serial No. B50001 and up

SAA6D107E-1D
Serial No. 36477692 and up

FOREWORD

When ordering a spare part, specify the part number, part name, and quantity required, and also specify your machine model code, machine serial number, engine serial number and the service meter reading.

This Parts Book describes not only standard items but also optional equipment and attachments. To order a part, please contact your nearest Komatsu distributor.

This Parts Book contains the information and special codes as follows:

ILLUSTRATION AND PARTS LIST

When you open this Parts Book, you will find an illustration following its figure number (FIG.) Each individual part in the illustration is given an index number. Following the illustration, the component parts of the unit are listed in the order of the index numbers shown in the illustration. The part number, part name, quantity and applicable serial number are given for each part as a parts list.

FIGURE NUMBER (FIG.)

The figure number (FIG.) is the number which shows the figure of the page. It is not the spare part number. The numbers are not always continuous.

PARTS LIST

Spare parts information are listed in the parts list page as follows:

Index:

This is the same as the index number in the illustration. The parts are listed in index number order.

Code:

Codes are used in this column and represent as follows:

A1 This part and the part specified in the line immediately above are interchangeable.

A2 The part specified in the line above can be used instead of this part.

A3 This part can be used instead of the part specified in the line immediately above.

A4 The part specified in the description column can be used instead of this part if it is used as a set.

B1 This shows discontinued part. The part specified in the above line is supplied instead.

B2 This shows a discontinued part. The part specified in the description column is supplied instead as a set.

C1 This part cannot be supplied as an individual part. It is supplied as an assembly.

C2 This part is supplied for authorized Komatsu distributors only. It cannot be supplied as an individual part. It is supplied as an assembly.

C3 This indicates a part supplied as semi-finished. It requires additional work before installation.

Part Number:

The number given in the part number column is the part number for the part shown. It is the identification code used when ordering that part. It is important that there be no mistake in this code number when ordering.

Description:

This gives the name of part that has the part number listed. The mark "•" is put in front of the component part name of an assembly part and the item is entered following the assembly. If a part marked with "•" is a sub assembly, its components are marked with "••".

Example: Tank Assembly
- •Tank
- •Cap
- ••Packing

Furthermore, the following marks and abbreviations are used in this column.

Kit	This indicates kit parts. For kit parts, refer to the section FIELD REPAIR SERVICE PARTS in this Parts Book.
D	Diameter
L	Length
LHS	Left-hand side
RHS	Right-hand side
T	Thickness
W	Width

Quantity (Qty):

This specifies the number of pieces used for one machine. However, if a part is included in the assembly and/or component, the quantity per such assembly and/or component is specified.
Code AR (as required) shall be used in the Quantity column if the part cannot be specified numbers requires per machine and/or component. In such case, any number of quantities may be ordered depend on the field service requirement.

Serial Numbers:

Applicable engine serial number is indicated for the engine volume. In the chassis volume, this indicates the machine serial number in which the part is used.

If the serial number is enclosed in parenthesis, it shows that it is the applicable serial number for exclusive use of the equipment of figure number (FIG.)

AVANT-PROPOS

Lorsque vous passez une commande d'une pièce de rechange, vous êtes prié de spécifier le numéro de la pièce, la désignation de la pièce et la quantité requise et d'indiquer également le code du modèle de la machine, le numéro de série de la machine, le numéro de série du moteur et la lecture du compteur de service du véhicule.

Sur le présent catalogue des pièces figurent non seulement les équipements standard, mais également les équipements et accessoires en option. Si vous désirez un équipement ou une pièce quelconque, vous êtes prié de prendre contact avec le concessionnaire Komatsu le plus proche.

Ce catalogue des pièces comprend les informations et codes spéciaux de la manière suivante:

FIGURES ET LISTES DES PIÈCES

Lorsque vous ouvrez le présent catalogue, vous pouvez rechercher les figures en fonction du numéro de figure (FIG.). Chaque pièce individuelle dans la figure est fournie d'un numéro de référence. D'après la figure, les éléments de l'unité sont énumérés dans l'ordre des numéros de référence montrés sur la figure. Le numéro de la pièce, la désignation de la pièce, la quantité et le numéro de série utilisés sont indiqués pour chaque pièce comme liste des pièces.

NUMÉRO DE FIGURE (FIG.)

Le numéro de figure (FIG.) est un numéro qui permet d'identifier une figure sur une page. Il ne représente pas le numéro de la pièce de rechange. Les numéros ne sont pas toujours séquentiels.

LISTE DES PIÈCES DE RECHANGE

Les informations des pièces de rechange sont données dans la page de la liste des pièces comme ci-après:

Numéro de référence (Index):

Les numéros de référence correspondent aux numéros de référence notés sur la figure et sont énumérés dans l'ordre des numéros de référence.

Codification (Code):

Les codes sont utilisés dans cette colonne et représentent comme ci-après:

A1 Cette pièce et la pièce qui figure sur la ligne juste au-dessus sont interchangeables.

A2 La pièce indiquée sur la ligne au-dessus peut être utilisée au lieu de cette pièce.

A3 Cette pièce peut être utilisée au lieu de la pièce indiquée sur la ligne juste au-dessus.

A4 La pièce indiquée dans la colonne de description peut être utilisée au lieu de cette pièce si elle est utilisée comme ensemble.

B1 Ceci montre la pièce dont la production est interrompue. La pièce indiquée dans la ligne au-dessus est fournie à sa place.

B2 Ceci montre la pièce dont la production est interrompue. La pièce indiquée dans la colonne de description est fournie à sa place comme ensemble.

C1 Cette pièce ne peut pas être fournie comme pièce individuelle. Elle est fournie en tant qu'ensemble.

C2 Cette pièce est fournie pour les distributeurs autorisés de Komatsu seulement. Elle ne peut pas être fournie comme pièce individuelle. Elle est fournie en tant qu'ensemble.

C3 Ceci indique une pièce fournie à l'état semi-fini. Ceci exige un travail additionnel avant l'installation.

Numéros de pièce (Part Number):

Les numéros indiqués dans cette colonne correspondent aux numéros des pièces représentées et constituent les codes à spécifier pour toute commande de pièce. Il est important de ne pas faire d'erreur avec ce code au moment de la commande.

Description (Description):

Ceci indique le nom de la pièce qui montre le numéro de la pièce énumérée. La marque "•" est placée devant le nom de la pièce du composant d'une pièce d'ensemble et l'item est introduit suivant l'ensemble. Si une pièce marquée avec "•" est un sous-ensemble, ses composants sont marqués avec "• •".
Exemple: Tank Assembly (Ensemble de réservoir)
• Tank
• Cap
• • Packing

En outre, les marques et abréviations suivantes sont utilisées dans cette colonne.

Kit Ceci indique les pièces de kit. Pour les pièces de kit, se référer à la Section FIELD REPAIR SERVICE PARTS de ce Catalogue des Pièces.
D Diamètre
L Longueur
LHS Côté gauche
RHS Côté droit
T Épaisseur
W Largeur

Quantité (Qty):

Ceci spécifie le nombre de pièces nécessaires pour l'équipement en question. S'il s'agit de pièces comprises dans un ensemble et/ou composant, et la quantité indiquée est le nombre de pièces nécessaires pour l'ensemble et/ou le composant en question.
Le code AR (comme requis) sera utilisé dans la colonne de Quantité si la pièce ne peut pas se présenter en nombres indiqués comme requis par machine et/ou composant. Dans ce cas, tout nombre de quantités peut être commandé selon la condition de service de champ.

Numéros de série (Serial Numbers):

Le numéro de série du moteur applicable est indiqué pour le volume du moteur. Dans le volume de la carrosserie, ceci indique le numéro de série de l'équipement sur lequel la pièce est utilisée.

Si le numéro de série est placé entre parenthèses, cela signifie qu'il s'agit d'un numéro de série destiné exclusivement à l'utilisation de l'équipement mentionné dans le numéro de figure (FIG.).

PREFAZIONE

Quando fate un ordinazione di una parte di ricambio, siete pregati di precisare il numero della parte, la designazione della parte e la quantità necessaria ed indicare anche il codice del modello della macchina, il numero di serie della macchina, il numero di serie del motore e la lettura dell'indicatore di servizio del veicolo.

Sul presente catalogo delle parti appaiono non solo le attrezzature standard, ma anche le attrezzature ed accessori in opzione. Se desiderate un'attrezzatura o una parte qualunque, siete pregati di prendere contatto con il concessionario Komatsu più vicino.

Questo catalogo delle parti comprende le informazioni ed i codici speciali nel modo seguente:

ILLUSTRAZIONI ED ELENCO DELLE PARTI

Quando aprite il presente catalogo, troverete una figura secondo il suo numero di figura (FIG.). Ogni parte individuale nella figura è fornita di un numero di riferimento. Secondo la figura, gli elementi dell'unità sono enumerati nell'ordine dei numeri di riferimento mostrati sulla figura. Il numero della parte, la designazione della parte, la quantità ed il numero di serie utilizzati sono indicati per ogni parte come elenco delle parti.

NUMERO DI FIGURA (FIG.)

Il numero di figura (FIG.) è il numero che indica la figura della pagina. Non rappresenta il numero della parte di ricambio. I numeri non sono sempre continui.

ELENCO DELLE PARTI DI RICAMBIO

Le informazioni dei pezzi di ricambio sono elencate nella pagina dell'elenco dei pezzi come segue:

Numero di riferimento (Index):

I numeri di riferimento corrispondono ai numeri di riferimento notati sulla figura e sono enumerati nell'ordine dei numeri di riferimento.

Codice (Code):

I codici sono usati in questa colonna e rappresentano come segue:

A1 Questa parte ed la parte specificata nella linea immediatamente sopra sono intercambiabili.

A2 La parte specificata nella linea sopra può essere usata anziché questa parte.

A3 Questa parte può essere usata anziché la parte specificata nella linea immediatamente sopra.

A4 La parte specificata nella colonna di descrizione può essere usata anziché questa parte se è usata come insieme.

B1 Ciò mostra la parte non più in produzione. La parte specificata nella suddetta linea è invece fornita.

B2 Ciò mostra una parte non più in produzione. La parte specificata nella colonna di descrizione è fornita invece come insieme.

C1 Questa parte non può essere fornita come pezzo individuale. È fornita come insieme.

C2 Questa parte è destinata solo ai distributori autorizzati Komatsu. Non può essere fornita come parte individuale. È fornita come insieme.

C3 Ciò indica una parte fornita come semifinito. Richiede un lavoro supplementare prima dell'installazione.

Numeri di parte (Part Number):

I numeri indicati in questa colonna corrispondono ai numeri delle parti rappresentate e costituiscono i codici da precisare per qualsiasi ordinazione di parte. È importante non fare un errore con questo codice al momento dell'ordinazione.

Descrizione (Description):

Ciò dà il nome della parte che presenta il numero di parte elencato. Il contrassegno "•" è messo davanti al nome della parte componente di una parte di gruppo e l'articolo è inserito dopo il gruppo. Se un pezzo segnato con "•" è un sotto-gruppo, i suoi componenti sono segnati con "• •".
Esempio: Tank Assembly
• Tank
• Cap
• • Packing

Inoltre, i seguenti contrassegni ed abbreviazioni sono usati in questa colonna.

Kit Ciò indica le parti di kit. Per le parti di kit, riferirsi alla sezione PARTI DI RICAMBIO PER SERVIZIO DI RIPARAZIONE IN SEDE in questo Catalogo delle Parti.
D Diametro
L Lunghezza
LHS Lato a sinistra
RHS Lato a destra
T Spessore
W Larghezza

Quantità (Qty):

Questo precisa il numero di parti necessarie per l'attrezzatura in questione. Se si tratta di parti comprese in un insieme e/o componente, e la quantità indicata è il numero di parti necessarie per l'insieme e/o il componente in questione.
Il codice AR (come richiesto) sarà utilizzato nella colonna di Quantità se la parte non può presentarsi in numeri indicati come richiesto per macchina e/o componente. In questo caso, qualsiasi numero di quantità può essere ordinato secondo la condizione di servizio di campo.

Numeri di serie (Serial Numbers):

Il numero di serie del motore applicabile è indicato per il volume del motore. Nel volume della carrozzeria, questo indica il numero di serie dell'attrezzatura sulla quale la parte è utilizzata.

Se il numero seriale è racchiuso tra parentesi, indica che è il numero di serie applicabile per uso esclusivo dell'attrezzatura del numero di figura (FIG.)

Bei der Bestellung von Teilen bitte die Teilenummer, die Teilebezeichnung und die Menge des jeweiligen Teils sowie die Modellnummer, die Seriennummer der Maschine, die Seriennummer des Motors und den Stand des Betriebsstundenzählers angeben.

In dieser Ersatzteilliste ist nicht nur das Standardzubehör aufgeführt, sondern auch als Sonderausstattung erhältliche Teile und Einrichtungen. Bestellungen nimmt Ihr zuständiger Komatsu-Händler entgegen.

Die folgenden Informationen und Kodes sind in der Ersatzteilliste enthalten:

Bilder und Ersatzteilliste

Beim Aufschlagen des Ersatzteilkatalogs finden Sie nach der Bildnummer (BILD) geordnete Bilder. Jedes Einzelteil einer Baugruppe ist mit einer Kennzahl versehen. Ausgehend von den Bildern sind die Bauteile der Baugruppe aufgeführt, und zwar geordnet nach den in den Bildern angegebenen Kennzahlen. Jedes Einzelteil wird mit Teilenummer, Teilebezeichnung und entsprechender Seriennummer angegeben.

Bildnummer (BILD)

Mit der Bildnummer (BILD) können Bilder auf einer Seite identifiziert werden. Es handelt sich dabei nicht um die Nummer des Lieferteils. Auch sind die Bilder nicht fortlaufend nummeriert.

Ersatzteilliste

Angaben zu den Ersatzteilen sind auf der Auflistungsseite wie folgt dargestellt::

Kennzahl (Index):

Hierbei handelt es sich um die Kennzahlen aus den Bildern. Die Bauteile sind nach diesen Kennzahlen geordnet aufgeführt.

Kode (Code):

In dieser Spalte werden Kodes mit den folgenden Bedeutungen benutzt:

A1 Dieses Teil ist mit dem in der vorangegangenen Zeile aufgeführten Teil austauschbar.

A2 Das in der vorangegangen Zeile aufgeführte Teil kann anstelle dieses Teils verwendet werden.

A3 Dieses Teil kann anstelle des in der vorangegangenen Zeile aufgeführten Teils verwendet werden.

A4 Anstelle dieses Teils kann das in der Spalte „Beschreibung“ aufgeführte Teil verwendet werden, wenn das Teil zusammen mit anderen Teilen als ein Bauteilsatz verwendet wird.

B1 Dieses Teil kann nicht mehr geliefert werden. Stattdessen wird das in der vorangegangenen Zeile aufgeführte Teil geliefert.

B2 Dieses Teil kann nicht mehr geliefert werden. Stattdessen wird das in der Spalte „Beschreibung“ aufgeführte Teil als ein Bauteilsatz geliefert.

C1 Dieses Teil kann nicht als Einzelteil, sondern nur als Baugruppe geliefert werden.

C2 Dieses Teil wird nur an autorisierte Komatsu-Händler geliefert. Es kann nicht als Einzelteil, sondern nur als Baugruppe geliefert werden.

C3 Hiermit werden Teile gekennzeichnet, die in vorbearbeitetem Zustand geliefert werden und für den Einbau nachbearbeitet werden müssen.

Teilenummer (Part Number):

Die in der Spalte „Teilenummer“ aufgeführte Nummer entspricht der Teilenummer für das betreffende Teil. Diese Nummer dient zur Identifizierung des Teils bei einer Bestellung. Deshalb sollte bei der Bestellung stets auf die genaue Angabe der Teilenummer geachtet werden.

Beschreibung (Description):

Hierunter wird die Bezeichnung des Teils mit der aufgeführten Teilenummer angegeben. Jedes Baugruppen-Bauteil ist mit dem vorangestellten Symbol „·“ gekennzeichnet und wird hinter der entsprechenden Baugruppe aufgeführt. Handelt es sich bei dem mit „·“ gekennzeichneten Bauteil um eine Baugruppe, sind die Bauteile dieser Baugruppe mit „· ·“ gekennzeichnet.

Beispiel: Tank Assembly
· Tank
· Cap
· · Packing

Zusätzlich werden die folgenden Zeichen und Abkürzungen in dieser Spalte verwendet:

Kit Hiermit werden Teile gekennzeichnet, die nur als Satz erhältlich sind. Siehe dazu den Abschnitt „FIELD REPAIR SERVICE PARTS“ dieses Ersatzteilkatalogs.
D Durchmesser
L Länge
LHS linke Seite
RHS Rechte Seite
T Dicke
W Breite

Menge (Qty):

Hierunter wird die Anzahl der Bauteile für eine Maschine angegeben. Im Falle einer Baugruppe oder eines Aggregats wird allerdings die Anzahl der Teile pro Baugruppe angegeben.
Der Kode AR (nach Bedarf) wird in dieser Spalte dann benutzt, wenn keine genaue Angabe darüber möglich ist, wie groß der Mengenbedarf pro Maschine und/oder Baugruppe ist. In diesem Fall kann eine beliebige Menge je nach Bedarf bestellt werden.

Serial Numbers (Seriennummern):

Im Ersatzteilkatalog für den Motor versteht man hierunter die Seriennummer des Motors, in den das betreffende Teil eingebaut ist. Im Ersatzteilkatalog für die Maschine versteht man hierunter die Seriennummer der Maschine, in die das entsprechende Teil eingebaut ist.
Wenn die Seriennummer in Klammern angegeben ist, ist diese Seriennummer ausschließlich für das in der Bildnummer (BILD) angegebene Zubehör bestimmt.

Ao solicitar uma peça, informe o número, nome e quantidade da peça necessária, bem como o código de modelo da máquina e seu número de série, o número do motor e a leitura do medidor de serviço.

Este catálogo de peças não somente especifica os acessórios padrões mas também as peças opcionais e aditamentos. Para pedir uma peça, entre em contato com o revendedor Komatsu mais próximo.

Este catálogo de peças contém as seguintes informações e códigos especiais:

LISTA DE PEÇAS E ILUSTRAÇÕES

Ao abrir este catálogo de peças, encontrar-se-á uma ilustração seguida do número da figura (FIG.). A cada peça individual na ilustração corresponde um número de índice. Seguindo a ilustração, as peças componentes da unidade são listadas na ordem dos números de índice nela indicados. O número, nome, quantidade e número de série aplicável da peça são aprsentados como uma lista de peças.

NÚMERO DA FIGURA (FIG.)

O número da figura (FIG.) é o número que mostra a ilustração da página. Não é um número para fornecimento de peças sobressalentes. Os números nem sempre são contínuos.ebene Zubehör bestimmt.

LISTA DE PEÇAS

As informações das peças sobressalentes são relacionadas na página com a lista de peças de acordo com o seguinte:

Índice (Index):

Este é o mesmo que o número de índice na ilustração. As peças são relacionadas na ordem dos números de índice.

Código (Code):

Códigos são utilizados nesta coluna e significam o seguinte:

A1 Esta peça e a peça especificada na linha imediatamente acima são intercambiáveis.

A2 A peça especificada na linha acima pode ser utilizada no lugar desta peça.

A3 Esta peça pode ser utilizada no lugar da peça especificada na linha imediatamente acima.

A4 A peça especificada na coluna “Descrição” pode ser utilizada no lugar desta peça se usada como um conjunto.

B1 Indica peça descontinuada. A peça especificada na linha acima é fornecida em seu lugar.

B2 Indica peça descontinuada. A peça especificada na coluna “Descrição” é fornecida em seu lugar como um conjunto.

C1 Esta peça não pode ser fornecida como peça individual. Ela é fornecida como um conjunto.

C2 Esta peça é fornecida somente para revendedores Komatsu autorizados. Não pode ser fornecida como peça individual. Ela é fornecida como um conjunto.

C3 Indica peça fornecida em condição semiacabada. Requer trabalho adicional antes da instalação.

Número da peça (Part Number):

O número indicado na coluna de números de peça corresponde ao número da peça exibida. É o código de identificação usado para o pedido da peça. É importante não enganar-se de número de código ao pedir a peça.

Descrição (Description):

Indica o nome da peça que tem o seu número de peça relacionado. O símbolo "•" é colocado na frente do nome peça do componente de uma peça de conjunto, e o item é lançado seguindo o conjunto. Se uma peça indicada com "•" é um subconjunto, os seus componentes são indicados por "• •".
Exemplo: Tank Assembly
• Tank
• Cap
• • Packing

Além disso, os seguintes símbolos e abreviações são usados nesta coluna.

Kit Indica peças de um jogo. Para peças de jogo, referir-se à seção "FIELD REPAIR SERVICE PARTS" neste catálogo de peças.

D Diâmetro
L Comprimento
LHS Lado esquerdo
RHS Lado direito
T Espessura
W Largura

Quantidade (Qty):

Indica o número de peças utilizadas em uma máquina. Contudo, se uma peça é incluída no conjunto e/ou componente, a quantidade por conjunto e/ou componente é especificada.
O código AR (como requerido) usar-se-á na coluna "Quantitade" caso o número de peças por máquina e/ou componente não possa ser especificado. Em tal caso, qualquer número de peças pode ser pedido dependendo dos requisitos de serviço em campo.

Números de série (Serial Numbers):

O número de série do motor aplicável é indicado para o volume do motor. No volume da carroceria, indica o número de série da máquina na qual a peça é utilizada.

Se o número de série está entre parêntesis, mostra que é o número de série aplicável para uso exclusivo do equipamento do número da figura (FIG.)

订购零件时，请注明需要零件的货号、品名、数量以及使用机器的车辆编号、发动机型号和系列号、工作时数。

此零件明细表上不仅记载了标准装备零件，还记载了选购零件、附件零件。如果您需要订货，请与最近的小松代理店联系。

为了清楚明了，零件手册中有如下规定：

图表

打开此零件清单后，可以看到附带图号（FIG.）的零件明细表图示。在图示上标有各种零件的索引号码。除图之外，还按索引号码的顺序列表表示货号、品名、数量、适用机型。

图号（FIG.）

图号表示该页图的号码。它不是补充零件用的货号。此号码不一定是连续号码。

零件表

从左栏开始按以下顺序显示零件的明细。

索引 (Index):

与图的索引号码一致，按索引号码顺序编制为表格形式。

代号 (Code):

此栏使用的代号如下所示：

A1　此行零件可与紧挨着的上一行零件互换使用。

A2　上一行的零件可取代此行零件来使用。

A3　此行零件可代替紧挨着的上一行零件使用。

A4　品名栏内的零件配套后，可取代此行零件来使用。

B1　该行零件已停止供应，用上一行的零件代替使用。

B2　该行零件已停止供应，品名栏内的零件配套后代替此行零件供应。

C1　此行零件拟成套供应，不以单一零件供应。

C2　此行零件主要面向特定的代理。不以单一零件供应，只拟成套供应。

C3　此行零件以半成品的形式供应，使用前必需再加工。

货号 (Part Number):

此栏所示的编号是图示零件的货号。它是在订货时需要标明的特定代号，是非常重要的。

品名 (Description):

表示相当于货号的零件名称。构成组装品的零件，在品名的前面有 “·”标记，记载在组装品之后。另外，如果标记 “·”的零件是组装品，则该构成零件的品名前标有 “· ·”标记。

例： TANK ASSEMBLY
· TANK
· CAP
· · PACKING

另外，说明栏可能显示以下代号。

Kit 表示修理包。关于修理包构件详情，请参考此零件清单中 “现场修理服务零件”部分的内容。
D 直径
L 全长
LHS 左侧
RHS 右侧
T 厚度
W 全宽

数量 (Qty):

表示一台机器中需要使用的该零件数量。但是，如果是组装零件的构成零件时，表示其组装件的件数。如果不能指定每个机器以及（或者）组装零件中必须的零件数量时，可以在零件数量栏中使用代码 AR。此时，数量由现场的服务要件决定，然后进行定购。

适用机型 (Serial Numbers):

发动机篇中表示该使用零件的发动机型号，在机体篇中表示该使用零件的车辆号码。

如果适用机型位于括号中，表明该适用机型专门用于图号 (FIG.) 中所指的设备。

ПРЕДИСЛОВИЕ

При заказе запчасти укажите номер части, наименование части и нужное количество: кроме того, укажите код модели вашей машины, серийный номер машины, серийный номер двигателя и показания счетчика мото-часов.

В Каталоге приведены не только стандартные изделия, но и дополнительное оборудование и принадлежности. Для заказа запчасти пожалуйста обратитесь к ближайшему дилеру "Комацу".

Содержащаяся в Каталоге информация и специальные коды разъясняются ниже:

РИСУНОК И ПЕРЕЧЕНЬ ЧАСТЕЙ

Раскрыв Каталог, вы увидите рисунок после номера рисунка (ПОЗ). Каждой отдельной части на рисунке присвоен позиционный номер. За рисунком следует перечень составных частей устройства в порядке номеров позиций рисунка. Перечень частей указывает для каждой части ее номер, наименование, количество и применимый серийный номер.

НОМЕР РИСУНКА (ПОЗ)

Номер рисунка (ПОЗ) – это номер, который указывает рисунок на странице. Он не является номером запчасти. Последовательность номеров не обязательно непрерывна.

ПЕРЕЧЕНЬ ЧАСТЕЙ

Данные запасных частей приведены на странице перечня частей следующим образом:

Индекс (Index):

То же, что номер позиции на рисунке. Части перечислены в порядке их позиционных номеров.

Код: (Code):

В этой колонке находятся коды, обозначающие следующее:

A1 Данная часть и часть, указанная в предыдущей строке, взаимозаменяемы.

A2 Вместо данной части можно использовать часть, указанную в предыдущей строке.

A3 Данную часть можно использовать вместо части, указанной в предыдущей строке.

A4 В комплекте, вместо данной части можно использовать указанную в колонке описания.

B1 Поставки этой части прекращены. Взамен поставляется часть, указанная в предыдущей строке.

B2 Поставки этой части прекращены. Взамен комплектом поставляется часть, указанная в колонке описания.

C1 Данная часть отдельно не поставляется. Она поставляется с узлом.

C2 Данная часть поставляется лишь уполномоченным дилерам "Комацу". Отдельно не поставляется. Поставляется с узлом.

C3 Обозначает часть, поставляемую без доводки. Требует предустановочной подготовки.

Номер части (Part Number):

Приведенный в колонке номеров частей номер является номером изображенной части. Это код-идентификатор для заказа данной части. Важно, чтобы при заказе этот кодовый номер был указан без ошибок.

Описание (Description):

Здесь приводится наименование части, обозначенной номером в перечне. Значок "·" ставится перед наименованием детали компонента, причем деталь записана после узла. Если помеченная "·" часть является подсборкой узла, то ее составные части обозначаются значком "··".

Пример: Tank Assembly
·Tank
·Cap
··Packing

Далее, в этой колонке используются следующие обозначения и сокращения.

Kit	Указывает на элементы комплекта. Элементы комплекта смотри в разделе ЗАПАСНЫЕ ЧАСТИ ДЛЯ РЕМОНТА В УСЛОВИЯХ ЭКСПЛУАТАЦИИ данного Каталога.
D	Диаметр
L	Длина
LHS	Левая сторона
RHS	Правая сторона
T	Толщина
W	Ширина

Количество (Qty):

Указывает общее число изделий в одной машине. Если же изделие является частью узла и/или устройства, то указывается количество в таком узле и/или устройстве.
При невозможности указать количество частей на машину и/или устройство, в колонке Количество проставляется код AR (по потребности). В таком случае можно заказывать любые количества в зависимости от потребностей обслуживания на месте.

Серийные номера (Serial Numbers):

В книге по двигателю приводится соответствующий серийный номер двигателя. В книге по шасси указывает на серийный номер машины, где используется данная часть.

Серийный номер, заключенный в круглые скобки означает, что он применяется только для оборудования с номером рисунка (ПОЗ.)

- رقم القطعة (Part Number)

الرقم الوارد في عمود رقم القطعة هو رقم القطعة الخاص بالقطعة المبينة. وهو الرمز المستخدم لطلب تلك القطعة. ومن الضروري عدم ارتكاب اي خطأ في تحديد هذا الرقم عند طلب القطع.

- الوصف (Description)

يعطي اسم القطعة المدرج رقمها في القائمة. توضع العلامة "٠" امام اسم المكون لمجموعة ما ويدرج البند بعد المجموعة. اذا كانت القطعة المشار اليها بالعلامة "٠" هي نفسها عبارة عن مجموعة مكونات, فان كلا من مكوناتها يشار اليها بالعلامة "٠٠".
مثال

Tank Assembly
·Tank
·Cap
··Packing

بالاضافة الى ذلك, العلامات والمختصرات التالية تستخدم في هذا العمود.

Kit	هذا يشير الى قطع الطقم. حول قطع الطقم, راجع قسم "قطع غيار خدمة الإصلاح الميداني" في كتاب القطع هذا.
D	قطر
L	طول
LHS	جانب اليد اليسارى
RHS	جانب اليد اليمنى
T	السمك
W	العرض

- الكمية (Qty)

هذا هو عدد القطع المستخدمة لآلية واحدة. اما بالنسبة لمجموعات المكونات ومجموعات القطع فانه يتم تحديد عدد القطع لكل مجموعة.
الرمز AR (حسب الطلب) سوف يستخدم في عمود الكمية اذا لم يتم تحديد عدد القطع المطلوبة لكل مانكة و/او للمجموعة. في مثل هذه الحالة, فان اي عدد من الكميات ربما يتم طلبه بشكل يعتمد على متطلبات مجال الخدمة.

- الرقم التسلسلي (Serial Numbers)

في كتاب قطع المحرك يشير هذا الرقم الى الرقم التسلسلي للمحرك الذي تستخدم فيه القطعة. في كتاب قطع الآلية, يشير هذا الرقم الى الرقم التسلسلي للآلية التي تستخدم فيها القطع.

في حالة وضع الرقم التسلسلي بين الأقواس، فهذا يعني أن هذا هو الرقم التسلسلي الساري للاستخدام الحصري للقطعة الموضحة بالشكل.

عند طلب القطع, يرجى تحديد رقم القطعة واسم القطعة والكمية المطلوبة من القطعة, مع تحديد رقم الموديل والرقم التسلسلي وقراءة عداد الخدمة.

قائمة القطع هذه لا تقتصر على الكميات القياسية فقط بل تشمل ايضاً القطع والملحقات الاختيارية. لطلب القطع, يرجى الاتصال باقرب موزع لمنتجات كوماتسو.

كتاب القطع هذا يحتوي على المعلومات ورموز التخصيص وكما مبين ادناه:

الشكل والقائمة

عندما تفتح كتاب القطع هذا, سوف تجد رسومًا توضيحية تتضمن رقم الشكل (الشكل). كل قطعة مفردة في الرسم يعطى لها رقم فهرس. في الرسم التالي, قطع المجموعة للوحدة تم ادراجها حسب ترتيب ارقام الفهرس المبينة في الرسم.. رقم القطعة, اسم القطعة, الكمية والرقم التسلسلي المطابق يعطى لكل قطعة حسب تسلسل القطع في القائمة.

رقم الشكل (الشكل)

رقم الشكل (الشكل) هو الرقم الذي يميز شكل ما داخل الصفحة. إنه ليس رقم القطعة. وليست الأرقام متتابعة دائمًا.

قائمة القطع

معلومات قطع الغيار مثبتة في صفحة قائمة القطع وكلاتي:

. الفهرست (Index)

هذا الرقم هو نفس رقم الفهرس الوارد في الشكل التوضيحي. تدرج القطع في القائمة مرتبة تبعاً لارقام الفهرس.

. الرمز (Code)

الرموز تستخدم في هذا العمود وتوصف كلاتي:

A1 هذه القطعة والقطعة المذكورة في السطر السابق مباشرة يمكن لكل منهما ان تحل محل الاخرى.

A2 القطعة المذكورة في السطر السابق يمكن استعمالها بدلاً من هذه القطعة.

A3 هذه القطعة يمكن استعمالها بدلاً من القطعة المذكورة في السطر السابق مباشرة.

A4 القطعة المذكورة في عمود الوصف يمكن استعمالها بدلاً من هذه القطعة اذا استخدمت كطقم.

B1 هذه القطعة توقف توريدها. يتم توريد القطعة المذكورة في السطر السابق بدلاً منها.

B2 هذه القطعة توقف توريدها. يتم توريد القطعة المذكورة في عمود "الوصف" بدلاً منها كطقم.

C1 هذه القطعة لا يمكن توريدها كقطعة منفردة. يتم توريدها كمجموعة.

C2 هذه القطعة يتم تجهيزها من قبل موزعين كوماتسو المرخصين فقط. لا يمكن تجهيزها كقطعة مفردة. يتم تجهيزها كمجموعة.

C3 هذا يشير الى قطعة موردة شبه مكتملة التصنيع. تتطلب استكمال تصنيعها قبل الاستعمال.

CONTENTS

CONTENTS

	FIG. NO	PAGE
ENGINE		
Exhaust Connector Clamp (#36477692-UP)	AXS00-001001	A001001
Cylinder Head	A1009-001001	A002001
Cylinder Head Cover (#36477692-UP)	AVC00-001001	A003001
Air Intake Manifold (#36477692-UP)	AIM00-001001	A004001
Air Intake Connector (#36477692-UP)	AIC00-001001	A005001
Air Transfer Connection (#36477692-UP)	AIT00-001001	A007001
Exhaust Manifold Mounting (#36477692-UP)	ATB40-001001	A008001
Exhaust Manifold (#36477692-UP)	ATB30-001001	A009001
Turbocharger Oil Piping (#36477692-UP)	ATP00-001001	A012001
Heat Shield, Turbocharger (#36477692-UP)	ASH00-001001	A013001
Lifting Arrangement (#36477692-UP)	ALA00-001001	A015001
Dust Seal (#36477692-UP)	ASR00-001001	A017001
Rear Gear Cover Fitting Parts (#36477692-UP)	ADR20-001001	B001001
Lubrication Oil Pump (#36477692-UP)	ALP00-001001	B002001
Front Gear Cover (#36477692-UP)	AGG00-001001	B003001
Rocker Arm (#36477692-UP)	ARL00-001001	B006001
Tappet and Block Plate (#36477692-UP)	ABB00-001001	B007001
Flywheel Housing (#36477692-UP)	A2219-001001	B008001
Flywheel (#36477692-UP)	AFW00-001001	B009001
Flywheel Mounting (#36477692-UP)	AFW10-001001	B010001
Engine Oil Pan (#36477692-UP)	AOP10-001001	B011001
Cylinder Block (#36477692-UP)	A2019-001001	B013001
Breather Related Parts (#36477692-UP)	ABR00-001001	B014001
Cabin Heater Plug (#36477692-UP)	AHC00-001001	B015001
Crankshaft (#36477692-UP)	A2319-001001	B016001
Vibration Damper (#36477692-UP)	ADA00-001001	B017001
Piston and Connecting Rod (#36477692-UP)	A2359-001001	B018001
Engine Oil Filler (#36477692-UP)	AOB10-001001	B019001
Oil Level Gauge (#36477692-UP)	ALG00-001001	B020001
Rear Gear Housing (#36477692-UP)	ABB20-001001	B021001
Engine Oil Filter (#36477692-UP)	ALF00-001001	C001001
Engine Oil Cooler (#36477692-UP)	ALC00-001001	C002001
Fuel Filter Piping (#36477692-UP)	AFF20-001001	D002001
Fuel Supply Pump (#36477692-UP)	AFP10-001001	D004001
Fuel Piping (#36477692-UP)	AFT00-001001	D005001
Fuel Filter Cartridge (#36477692-UP)	A4119-001001	D006001
Fuel Filter Mounting (#36477692-UP)	AFF30-001001	D007001
Fuel Filter (#36477692-UP)	AFF10-001001	D008001
Fuel Drain Piping (#36477692-UP)	AFD00-001001	D009001
Cooling Fan Belt Tensioner (#36477692-UP)	AWP20-001001	E001001
Water Pump (#36477692-UP)	A5019-002001	E003001
Water Outlet Connector (#36477692-UP)	AWO00-001001	E007001
Water Inlet Connector (#36477692-UP)	AWI10-001001	E008001
Thermostat (#36477692-UP)	AEC00-001001	E009001
Coolant Heater Plug (#36477692-UP)	ACH00-001001	E010001
Hydraulic Pump (#36477692-UP)	AHD10-001001	E011001
Idler Pulley (#36477692-UP)	AWP30-001001	E013001
Starting Motor Mounting (#36477692-UP)	ASM00-001001	F007001
Wiring Harness (#36477692-UP)	AWR00-001001	F009001
Engine Controller (#36477692-UP)	A4719-001001	G002001
Parts Performance, Camshaft (#36477692-UP)	APP10-001001	G003001
Parts Performance, Injector (#36477692-UP)	APP10-001002	G003002
Parts Performance, Common Rail (#36477692-UP)	APP10-001004	G003004
Engine Control Module (#36477692-UP)	APH00-001001	G004001
ENGINE RELATED PARTS		
Air Cleaner		
Air Cleaner, Mounting	A1410-501001	B001001
Air Cleaner, Inner Parts	A1410-501002	B001002
Air Cleaner, Sensor	A1410-501003	B001003
Rain Guard, For Air Intake Pipe With Rain Cap		
Rain Guard	A1470-501001	B002001
Pre-cleaner, For Auto Eject Type		

	FIG. NO	PAGE
Pre-cleaner	A1470-502001	B003001
Exhaust Pipe		
Exhaust Pipe	A1610-501001	B005001
Engine Oil Pan Drain Piping		
Engine Oil Pan Drain Piping	A2110-501001	B006001
Engine Mounting Bracket		
Engine Mounting Bracket	A2250-501001	B007001
Engine Mounting		
Engine Mounting	B0100-002001	B008001
Alternator, Inner Parts		
Alternator 60Amp. Mounting	A6010-501001	B009001
Alternator 60Amp, Inner Parts	A6010-502001	B009002
Alternator Cover	A6010-503001	B009003
Starting Motor 5,5 kW	A6052-001001	B009004
Water Pump Drive Belt	A6010-504001	B009005
Engine Wiring Harness		
Engine Wiring Harness, Battery Cable	B0500-001001	B010001
Engine Wiring Harness, Wiring Harness and Bracket (1/2)	B0500-001002	B010002
Engine Wiring Harness, Wiring Harness and Bracket (2/2)	B0500-001003	B010003
Engine Wiring Harness, Mounting	B0500-001004	B010004
Damper		
Damper	B0600-001001	B011001
COOLING SYSTEM		
Cooling System		
Cooling System, Radiator Core, Aftercooler and Oil Cooler	C0100-001001	C001001
Cooling System, Fan Motor (1/2)	C0100-001002	C001002
Cooling System, Fan Motor (2/2)	C0100-001003	C001003
Cooling System, Fan Motor Mounting	C0100-001004	C001004
Cooling System, Cover	C0100-001005	C001005
Cooling System, Fan Guard	C0100-001006	C001006
Cooling System, Shroud	C0100-001007	C001007
Cooling Piping		
Cooling Piping, Radiator Piping (1/2)	C0101-001001	C002001
Cooling Piping, Radiator Piping (2/2)	C0102-001002	C002002
Cooling Piping, Aftercooler Piping	C0103-001003	C002003
Fan Motor Piping		
Fan Motor Piping	C0103-001001	C003001
FUEL TANK AND RELATED PARTS		
Fuel Tank, Without Refuelling Pump		
Fuel Tank, Without Refuelling Pump, Tank and Breather	D0100-001001	D001001
Fuel Tank, Without Refuelling Pump, Tank Related Parts	D0100-001002	D001002
Fuel Tank, With Refuelling Pump		
Fuel Tank, With Refuelling Pump, Tank and Breather	D0100-002001	D002001
Fuel Tank, With Refuelling Pump, Sensor and Strainer	D0100-002002	D002002
Fuel Tank, With Refuelling Pump, Pump	D0100-002003	D002003
Fuel Supply Piping		
Fuel Supply Piping, Fuel Piping	D0200-001001	D003001
Fuel Supply Piping, Prefilter Piping	D0200-001002	D003002
ELECTRICAL SYSTEM		
Battery		
Battery 170Ah	E0110-001001	E001001
Electric Wiring Harness		
Electric Wiring Harness, Wiring Harness and Bracket (1/2)	E0200-001001	E002001
Electric Wiring Harness, Wiring Harness and Bracket (2/2)	E0200-001002	E002002
Battery Electric Wiring Harness		
Battery Electric Wiring Harness, Wiring Harness	E0210-001001	E003001
Battery Electric Wiring Harness, Tray	E0210-001002	E003002
Back-up Alarm		
Back-up Alarm	E0420-001001	E004001
POWER TRAIN AND FINAL DRIVE		
Final Drive, With Segmented Teeth		
Final Drive, Mounting	F2380-002001	F002001
Final Drive, Hub, L.H.	F2380-002002	F002002
Final Drive, Carrier, L.H.	F2380-002003	F002003

	FIG. NO	PAGE
Final Drive, HST Motor, L.H. (1/4)	F2380-002004	F002004
Final Drive, HST Motor, L.H. (2/4)	F2380-002005	F002005
Final Drive, HST Motor, L.H. (3/4)	F2380-002006	F002006
Final Drive, HST Motor, L.H. (4/4)	F2380-002007	F002007
Final Drive, Tooth, L.H.	F2380-002008	F002008
Final Drive, Hub, R.H.	F2380-002009	F002009
Final Drive, Carrier, R H.	F2380-002010	F002010
Final Drive, HST Motor, R.H. (1/4)	F2380-002011	F002011
Final Drive, HST Motor, R.H. (2/4)	F2380-002012	F002012
Final Drive, HST Motor, R.H. (3/4)	F2380-002013	F002013
Final Drive, HST Motor, R.H. (4/4)	F2380-002014	F002014
Final Drive, Tooth, R.H.	F2380-002015	F002015
HYDRAULIC SYSTEM		
Hydraulic Tank		
Hydraulic Tank, Tank and Element	H0100-001001	H001001
Hydraulic Tank, Tank Cover	H0100-001002	H001002
Hydraulic Tank, Charge Filter	H0100-001003	H001003
Hydraulic Tank, Drain Piping	H0100-001004	H001004
Hydraulic Tank, Reservoir Tank and Piping	H0100-001005	H001005
Hydraulic Tank, Mounting	H0100-001006	H001006
Control Valve, With Rear 1-attachment, Winch		
Control Valve, With Rear 1-attachment, Winch, Inner Parts (1/12)	H0120-001001	H002001
Control Valve, With Rear 1-attachment, Winch, Inner Parts (2/12)	H0120-001002	H002002
Control Valve, With Rear 1-attachment, Winch, Inner Parts (3/12)	H0120-001003	H002003
Control Valve, With Rear 1-attachment, Winch, Inner Parts (4/12)	H0120-001004	H002004
Control Valve, With Rear 1-attachment, Winch, Inner Parts (5/12)	H0120-001005	H002005
Control Valve, With Rear 1-attachment, Winch, Inner Parts (6/12)	H0120-001006	H002006
Control Valve, With Rear 1-attachment, Winch, Inner Parts (7/12)	H0120-001007	H002007
Control Valve, With Rear 1-attachment, Winch, Inner Parts (8/12)	H0120-001008	H002008
Control Valve, With Rear 1-attachment, Winch, Inner Parts (9/12)	H0120-001009	H002009
Control Valve, With Rear 1-attachment, Winch, Inner Parts (10/12)	H0120-001010	H002010
Control Valve, With Rear 1-attachment, Winch, Inner Parts (11/12)	H0120-001011	H002011
Control Valve, With Rear 1-attachment, Winch, Inner Parts (12/12)	H0120-001012	H002012
Control Valve, Mounting	H0120-001013	H002013
Control Valve, Elbow (1/2)	H0120-001014	H002014
Control Valve, Elbow (2/2)	H0120-001015	H002015
Control Valve, Without Rear 1-attachment, Winch		
Control Valve, Without Rear 1-attachment, Winch, Inner Parts (1/10)	H0120-002001	H003001
Control Valve, Without Rear 1-attachment, Winch, Inner Parts (2/10)	H0120-002002	H003002
Control Valve, Without Rear 1-attachment, Winch, Inner Parts (3/10)	H0120-002003	H003003
Control Valve, Without Rear 1-attachment, Winch, Inner Parts (4/10)	H0120-002004	H003004
Control Valve, Without Rear 1-attachment, Winch, Inner Parts (5/10)	H0120-002005	H003005
Control Valve, Without Rear 1-attachment, Winch, Inner Parts (6/10)	H0120-002006	H003006
Control Valve, Without Rear 1-attachment, Winch, Inner Parts (7/10)	H0120-002007	H003007
Control Valve, Without Rear 1-attachment, Winch, Inner Parts (8/10)	H0120-002008	H003008
Control Valve, Without Rear 1-attachment, Winch, Inner Parts (9/10)	H0120-002009	H003009
Control Valve, Without Rear 1-attachment, Winch, Inner Parts (10/10)	H0120-002010	H003010
Control Valve, Mounting	H0120-002011	H003011
Control Valve, Elbow (1/2)	H0120-002012	H003012
Control Valve, Elbow (2/2)	H0120-002013	H003013
Hydraulic Oil Pump		
Hydraulic Oil Pump, HST Pump (1/11)	H0210-002001	H004001
Hydraulic Oil Pump, HST Pump (2/11)	H0210-002002	H004002
Hydraulic Oil Pump, HST Pump (3/11)	H0210-002003	H004003
Hydraulic Oil Pump, HST Pump (4/11)	H0210-002004	H004004
Hydraulic Oil Pump, HST Pump (5/11)	H0210-002005	H004005
Hydraulic Oil Pump, HST Pump (6/11)	H0210-002006	H004006
Hydraulic Oil Pump, HST Pump (7/11)	H0210-002007	H004007
Hydraulic Oil Pump, HST Pump (8/11)	H0210-002008	H004008
Hydraulic Oil Pump, HST Pump (9/11)	H0210-002009	H004009
Hydraulic Oil Pump, HST Pump (10/11)	H0210-002010	H004010
Hydraulic Oil Pump, HST Pump (11/11)	H0210-002011	H004011
Hydraulic Oil Pump, Mounting (1/2)	H0210-002012	H004012
Hydraulic Oil Pump, Work Equipment and Fan Pump (1/4)	H0210-002013	H004013
Hydraulic Oil Pump, Work Equipment and Fan Pump (2/4)	H0210-002014	H004014
Hydraulic Oil Pump, Work Equipment and Fan Pump (3/4)	H0210-002015	H004015
Hydraulic Oil Pump, Work Equipment and Fan Pump (4/4)	H0210-002016	H004016

	FIG. NO	PAGE
Hydraulic Oil Pump, Mounting (2/2)	H0210-002017	H004017
Hydraulic Oil Pump, Charge Pump	H0210-002018	H004018
Hydraulic Oil Pump, Bracket	H0210-002019	H004019
Hydraulic Pump Piping		
Hydraulic Pump Piping, Charge Piping	H0310-001001	H005001
Hydraulic Pump Piping, Delivery Piping	H0310-001002	H005002
Hydraulic Tank Drain Piping		
Hydraulic Tank Drain Piping	H0320-001001	H006001
Drain Piping		
Drain Piping, Mounting	H0340-001001	H007001
Drain Piping, Motor Drain (1/2)	H0340-001002	H007002
Drain Piping, Motor Drain (2/2)	H0340-001003	H007003
Hydrostatic Transmission Control Piping		
Hydrostatic Transmission Control Piping, Mounting	H1310-001001	H008001
Hydrostatic Transmission Control Piping, Travel Motor Piping	H1310-001002	H008002
Proportional Pressure Control (PPC) Piping		
Proportional Pressure Control (PPC) Piping, Solenoid Valve	H1840-001001	H009001
Proportional Pressure Control (PPC) Piping, EPC Valve	H1840-001002	H009002
Proportional Pressure Control (PPC) Piping, Solenoid Valve Related Parts (1/2)	H1840-001003	H009003
Proportional Pressure Control (PPC) Piping, Solenoid Valve Related Parts (2/2)	H1840-001004	H009004
Proportional Pressure Control (PPC) Piping, Solenoid Valve Piping	H1840-001005	H009005
Proportional Pressure Control (PPC) Piping, Accumulator	H1840-001006	H009006
Proportional Pressure Control (PPC) Piping, Bypass Valve	H1840-001007	H009007
Proportional Pressure Control (PPC) Piping, Relief Valve	H1840-001008	H009008
Proportional Pressure Control (PPC) Piping, Plug	H1840-001009	H009009
Proportional Pressure Control (PPC) Piping, Bypass Valve Mounting	H1840-001010	H009010
Dozer Blade Lift Piping		
Dozer Blade Lift Piping, Plate	H2210-001001	H010001
Dozer Blade Lift Piping, Quick Drop Valve	H2210-001002	H010002
Dozer Blade Lift Piping, Quick Drop Valve Piping	H2210-001003	H010003
Dozer Blade Lift Piping, Lift Cylinder Piping (1/2)	H2210-001004	H010004
Dozer Blade Lift Piping, Lift Cylinder Piping (2/2)	H2210-001005	H010005
Dozer Blade Tilt Piping		
Dozer Blade Tilt Piping	H2220-001001	H011001

	FIG. NO	PAGE
Dozer Blade Angle Piping		
Dozer Blade Angle Piping	H2230-001001	H012001
Rear Hydraulic Piping, Provision For Rear 1-attachment		
Rear Hydraulic Piping	H2250-001001	H013001
Rear Hydraulic Piping, Provision For Winch		
Rear Hydraulic Piping, Valve Piping	H2250-002001	H014001
Rear Hydraulic Piping, Ripper Piping (1/2)	H2250-002002	H014002
Rear Hydraulic Piping, Ripper Piping (2/2)	H2250-002003	H014003
FRAME AND RELATED PARTS		
Frame		
Frame	J2100-002001	J001001
Suspension		
Suspension	J2700-001001	J002001
OPERATOR'S COMPARTMENT AND CONTROL SYSTEM		
Operator's Seat, Mechanical Suspension Type, Fabric, Tilt, Hi-Back Type, With Heater		
Operator's Seat, Inner Parts, Operator's Seat	K0110-001001	K001001
Operator's Seat, Mounting	K0110-001002	K001002
Operator's Seat, Mechanical Suspension Type, Fabric, Tilt, With Heater		
Operator's Seat, Inner Parts, Operator's Seat	K0110-005001	K005001
Operator's Seat, Mounting	K0110-005002	K005002
Operator's Seat Headrest, With Mechanical Suspension Type, Fabric, Tilt, With Heater		
Operator's Seat Headrest	K0150-001001	K007001
Seat Belt, For Mechanical Suspension Type, Tilt or Air Suspention Type		
Seat Belt	K0160-001001	K010001
Cab, With AM-FM Stereo Radio, Less Camera		
Cab, Body	K0210-002001	K012001
Cab, Door and Latch, L.H.	K0210-002002	K012002
Cab, Door Damper, Window and Wiper, L.H.	K0210-002003	K012003
Cab, Door and Latch, R.H.	K0210-002004	K012004
Cab, Door Damper, Window and Wiper, R.H.	K0210-002005	K012005
Cab, Door Related Parts	K0210-002006	K012006
Cab, Door Open Lock	K0210-002007	K012007

	FIG. NO	PAGE
Cab, Glass Window, Front and Rear	K0210-002008	K012008
Cab, Sash type Glass Window, L.H.	K0210-002009	K012009
Cab, Sash type Glass Window, R.H.	K0210-002010	K012010
Cab, Switch and Lamp	K0210-002011	K012011
Cab, Cab Wiring Harness	K0210-002012	K012012
Cab, Wiring Harness Mounting	K0210-002013	K012013
Cab, Wiper	K0210-002014	K012014
Cab, Washer Hose	K0210-002015	K012015
Cab, Radio	K0210-002016	K012016
Cab, Rubber Antenna	K0210-002017	K012017
Cab, Rubber Antenna Mounting and Speaker	K0210-002018	K012018
Cab, Roof Cover	K0210-002020	K012020
Cab, Garnish	K0210-002021	K012021
Cab, Rearview Mirror	K0210-002022	K012022
Cab, Air Conditioner Duct	K0210-002023	K012023
Cab, DC Converter	K0210-002024	K012024
Cab, Plug and Outside Seal	K0210-002025	K012025
Cab, Air Conditioner Unit	K0210-002026	K012026
Cab, Air Conditioner Condenser Unit	K0210-002027	K012027
Cab, Air Conditioner Recirculation Air Filter and Fresh Air Filter, Receiver	K0210-002028	K012028
Cab, Heater Piping	K0210-002029	K012029
Cab, Air Conditioner Unit Mounting	K0210-002030	K012030
Cab, Air Conditioner Cover	K0210-002031	K012031
Cab, Heater Unit	K0210-002032	K012032
Cab, Potentiometer	K0210-002033	K012033
Cab, PPC Valve for Travel	K0210-002034	K012034
Cab, Steering, Gear Shift Lever	K0210-002035	K012035
Cab, Parking Brake Lever	K0210-002036	K012036
Cab, Electric Lever for Blade	K0210-002037	K012037
Cab, Work Equipment Control Lever	K0210-002038	K012038
Cab, Work Equipment Lock Lever	K0210-002039	K012039
Cab, Console Cover, Rear	K0210-002040	K012040
Cab, Console	K0210-002041	K012041
Cab, Decelerator/Brake Pedal	K0210-002042	K012042
Cab, Hydrostatic Transmission (HST) Controller	K0210-002043	K012043
Cab, Dashboard Wiring Harness	K0210-002044	K012044
Cab, Dashboard Wiring Harness Mounting (1/2)	K0210-002045	K012045
Cab, Dashboard Wiring Harness Mounting (2/2)	K0210-002046	K012046
Cab, Fuse Box	K0210-002047	K012047
Cab, Horn Swtich	K0210-002048	K012048
Cab, Dashboard, Monitor Panel and Switch	K0210-002049	K012049
Cab, Floor Cover	K0210-002050	K012050
Cab, Armrest	K0210-002051	K012051
Cab, KOMTRAX Controller and Antenna	K0210-002052	K012052
Cab, Working Lamp	K0210-002053	K012053
Cab, With AM-FM Stereo Radio With Rearview Camera		
Cab, Body	K0210-006001	K015001
Cab, Door and Latch, L.H.	K0210-006002	K015002
Cab, Door Damper, Window and Wiper, L.H.	K0210-006003	K015003
Cab, Door and Latch, R.H.	K0210-006004	K015004
Cab, Door Damper, Window and Wiper, R.H.	K0210-006005	K015005
Cab, Door Related Parts	K0210-006006	K015006
Cab, Door Open Lock	K0210-006007	K015007
Cab, Glass Window, Front and Rear	K0210-006008	K015008
Cab, Sash type Glass Window, L.H.	K0210-006009	K015009
Cab, Sash type Glass Window, R.H.	K0210-006010	K015010
Cab, Switch and Lamp	K0210-006011	K015011
Cab, Cab Wiring Harness	K0210-006012	K015012
Cab, Wiring Harness Mounting	K0210-006013	K015013
Cab, Wiper	K0210-006014	K015014
Cab, Washer Hose	K0210-006015	K015015
Cab, Radio	K0210-006016	K015016
Cab, Rubber Antenna	K0210-006017	K015017
Cab, Rubber Antenna Mounting and Speaker	K0210-006018	K015018
Cab, Roof Cover	K0210-006020	K015020
Cab, Garnish	K0210-006021	K015021
Cab, Rearview Mirror	K0210-006022	K015022

	FIG. NO	PAGE
Cab, Air Conditioner Duct	K0210-006023	K015023
Cab, DC Converter	K0210-006024	K015024
Cab, Plug and Outside Seal	K0210-006025	K015025
Cab, Air Conditioner Unit	K0210-006026	K015026
Cab, Air Conditioner Condenser Unit	K0210-006027	K015027
Cab, Air Conditioner Recirculation Air Filter and Fresh Air Filter, Receiver	K0210-006028	K015028
Cab, Heater Piping	K0210-006029	K015029
Cab, Air Conditioner Unit Mounting	K0210-006030	K015030
Cab, Air Conditioner Cover	K0210-006031	K015031
Cab, Heater Unit	K0210-006032	K015032
Cab, Potentiometer	K0210-006033	K015033
Cab, PPC Valve for Travel	K0210-006034	K015034
Cab, Steering, Gear Shift Lever	K0210-006035	K015035
Cab, Parking Brake Lever	K0210-006036	K015036
Cab, Electric Lever for Blade	K0210-006037	K015037
Cab, Work Equipment Control Lever	K0210-006038	K015038
Cab, Work Equipment Lock Lever	K0210-006039	K015039
Cab, Console Cover, Rear	K0210-006040	K015040
Cab, Console	K0210-006041	K015041
Cab, Decelerator/Brake Pedal	K0210-006042	K015042
Cab, Hydrostatic Transmission (HST) Controller	K0210-006043	K015043
Cab, Dashboard Wiring Harness	K0210-006044	K015044
Cab, Dashboard Wiring Harness Mounting (1/2)	K0210-006045	K015045
Cab, Dashboard Wiring Harness Mounting (2/2)	K0210-006046	K015046
Cab, Fuse Box	K0210-006047	K015047
Cab, Horn Swtich	K0210-006048	K015048
Cab, Dashboard, Monitor Panel and Switch	K0210-006049	K015049
Cab, Floor Cover	K0210-006050	K015050
Cab, Armrest	K0210-006051	K015051
Cab, KOMTRAX Controller and Antenna	K0210-006052	K015052
Cab, Working Lamp	K0210-006053	K015053
Cab, Rearview Camera	K0210-006054	K015054
Cab Electrical Unit, Without 3D Machine Control Plug and Play		
Cab Electrical Unit	K0230-001001	K016001
Cab Electrical Unit, With 3D Machine Control Plug and Play		
Cab Electrical Unit, Cover	K0230-002001	K017001
Cab Electrical Unit, Wiring Harness	K0230-002002	K017002
Cab Electrical Unit, Bracket and Clip	K0230-002003	K017003
Cab Electrical Unit, Bracket	K0230-002004	K017004
Floor Mat		
Floor Mat	K0310-001001	K018001
Air Conditioner Piping		
Air Conditioner Piping, Piping and Bracket	K0710-001001	K019001
Air Conditioner Piping, Heater Piping	K0710-001002	K019002
Floor Mounting		
Floor Mounting	K2120-001001	K021001
Blade Control Plate		
Blade Control Plate	K2510-001001	K022001
Blade Control Plate, With 3D Machine Control Plug and Play		
Blade Control Plate	K2510-002001	K023001
Rear Work Equipment Control		
Rear Work Equipment Control, Bracket	K2520-001001	K024001
Rear Work Equipment Control, PPC Valve for Attachment	K2520-001002	K024002
Rear Work Equipment Control, Lever	K2520-001003	K024003
Handrail		
Handrail	K2810-001001	K025001
Window Washer Tank		
Window Washer Tank	K2910-001001	K026001
GUARD		
Radiator Guard		
Radiator Guard	M2110-001001	M001001
Engine Hood, Without 3D Machine Control Plug and Play		
Engine Hood, Without 3D Machine Control Plug and Play, Hood	M2141-001001	M002001
Engine Hood, Without 3D Machine Control Plug and Play, Door Cover	M2141-001002	M002002
Engine Hood, Without 3D Machine Control Plug and Play, Bracket	M2141-001003	M002003
Engine Hood, Without 3D Machine Control Plug and Play, Door Related Parts	M2141-001005	M002005
Engine Hood, Without 3D Machine Control Plug and Play, Door Related Parts	M2141-001005A	M002006

	FIG. NO	PAGE
Engine Hood, Without 3D Machine Control Plug and Play, Seal and Sheet	M2141-001006	M002007
Engine Hood, Without 3D Machine Control Plug and Play, Horn	M2141-001007	M002008
Engine Hood, Without 3D Machine Control Plug and Play, Bracket and Cover	M2141-001008	M002009
Engine Hood, Without 3D Machine Control Plug and Play, Related Parts	M2141-001009	M002010
Engine Hood, With 3D Machine Control Plug and Play		
Engine Hood, With 3D Machine Control Plug and Play, Hood	M2141-002001	M003001
Engine Hood, With 3D Machine Control Plug and Play, Door Cover	M2141-002002	M003002
Engine Hood, With 3D Machine Control Plug and Play, Bracket	M2141-002003	M003003
Engine Hood, With 3D Machine Control Plug and Play, Door Related Parts	M2141-002005	M003006
Engine Hood, With 3D Machine Control Plug and Play, Seal and Sheet	M2141-002006	M003007
Engine Hood, With 3D Machine Control Plug and Play, Horn	M2141-002007	M003008
Engine Hood, With 3D Machine Control Plug and Play, Bracket and Cover	M2141-002008	M003009
Engine Hood, With 3D Machine Control Plug and Play, Related Parts	M2141-002009	M003010
Rear Cover, With Rigid Type		
Rear Cover, With Rigid Type	M2240-002001	M004001
Rear Cover, Without Drawbar, Rigid Type		
Rear Cover, Without Drawbar, Rigid Type	M2240-001001	M005001

UNDER CARRIAGE

Front Idler		
Front Idler	R0110-001001	R001001
Idler Cushion		
Idler Cushion	R0120-001001	R002001
Track Roller	R0300-001000	R003000
Track Roller, Single Flange	R0200-001001	R003001
Track Roller, Double Flange	R0200-001002	R003002
Track Roller, Plate	R0200-001003	R003003
Carrier Roller		
Carrier Roller	R0300-002001	R005001
Track Shoe Assembly, Single Grouser Shoe, 600mm Width, Sealed and Lubricated Type		
Track Shoe Assembly	R0500-005001	R008001
Track Frame		
Track Frame	R2100-001001	R011001
Track Frame Related Parts		
Track Frame Related Parts	R2101-001001	R012001
Track Frame Cover		
Track Frame Cover, L.H.	R2130-002001	R013001
Track Frame Cover, R H.	R2130-002002	R013002
Track Roller Guard, With Track Roller Guard, Center and End Sections		
Track Roller Guard	R2200-002001	R015001
Track Roller Guard, With Segmented Full Track Roller Guard		
Track Roller Guard	R2200-003001	R016001

WORK EQUIPMENT

Dozer Blade, Wide Blade		
Dozer Blade	T2110-001001	T001001
Link		
Link, Trunnion	T2115-001001	T002001
Link, Cylinder Pin and Rod	T2115-001002	T002002
Dozer Blade, Wide Blade		
Dozer Blade, Power Angle Power Tilt Dozer, Inside Frame, Wide Blade	T2120-001001	T003001
Dozer Blade, Inside Frame		
Dozer Blade, Power Angle Power Tilt Dozer, Inside Frame	T2120-002001	T004001
Blade Lift Cylinder		
Blade Lift Cylinder, L.H.	T2140-001001	T005001
Blade Lift Cylinder, R.H.	T2140-001002	T005002
Tilt Cylinder		
Tilt Cylinder	T2150-001001	T006001
Angle Cylinder		
Angle Cylinder	T2153-001001	T007001
Dozer Hydraulic Piping		
Dozer Hydraulic Piping, Angle Cylinder Piping	T2160-001001	T008001
Dozer Hydraulic Piping, Tilt Cylinder Piping	T2160-001002	T008002
Dozer Hydraulic Piping, Lubrication Piping	T2160-001003	T008003
Ripper		
Ripper, Support	T2400-001001	T009001
Ripper, Shank and Ripper Point	T2400-001002	T009002
Ripper Cylinder		

	FIG. NO	PAGE
Ripper Cylinder	T2460-001001	T010001
Drawbar, With Hitch		
Drawbar, With Hitch	T2810-001001	T011001
Drawbar, Rigid Type		
Drawbar, Rigid Type, Long	T2810-002001	T012001
MARKS AND PLATES		
Marks and Plates, English, USA and Puerto Rico		
Marks and Plates (Spanish)	U0100-001001	U001001
Marks and Plates, English		
Marks and Plates (Portuguese)	U0100-002001	U002001
Caution Plates, KOMTRAX		
Caution Plates, KOMTRAX	U0205-001001	U003001
Balancing Position and Lift Point Mark		
Balancing Position and Lift Point Mark	U0400-001001	U004001
Balancing Mark		
Balancing Mark	U0400-002001	U005001
ROPS/FOPS Plate, English, USA and Puerto Rico		
ROPS/FOPS Plate (Spanish)	U0520-001001	U006001
ROPS/FOPS Plate, English		
ROPS/FOPS Plate (Portuguese)	U0520-003001	U007001
AUXILIAR PARTS AND TOOL		
Spare Parts		
Spare Parts (1/2)	V0100-00101	V001001
Spare Parts (2/2)	V0100-00102	V001002
Cap and Overall		
Cap and Overall	V0200-00101	V002001
Tool		
Tool	V0300-00101	V003001
FIELD REPAIR SERVICE PARTS		
Service Kit Parts		
Service Kit Parts	KIT	Y001001

ENGINE

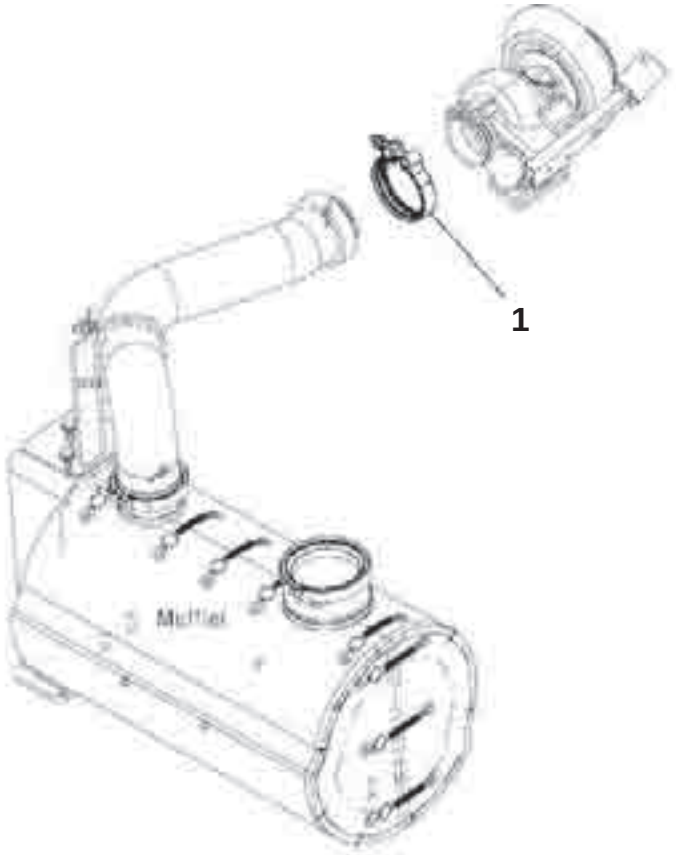

Exhaust Connector Clamp (#36477692-UP)

Index	Part Number	Description	Qty	Options
1	6742-01-3620	Clamp	1	SN:36477692--

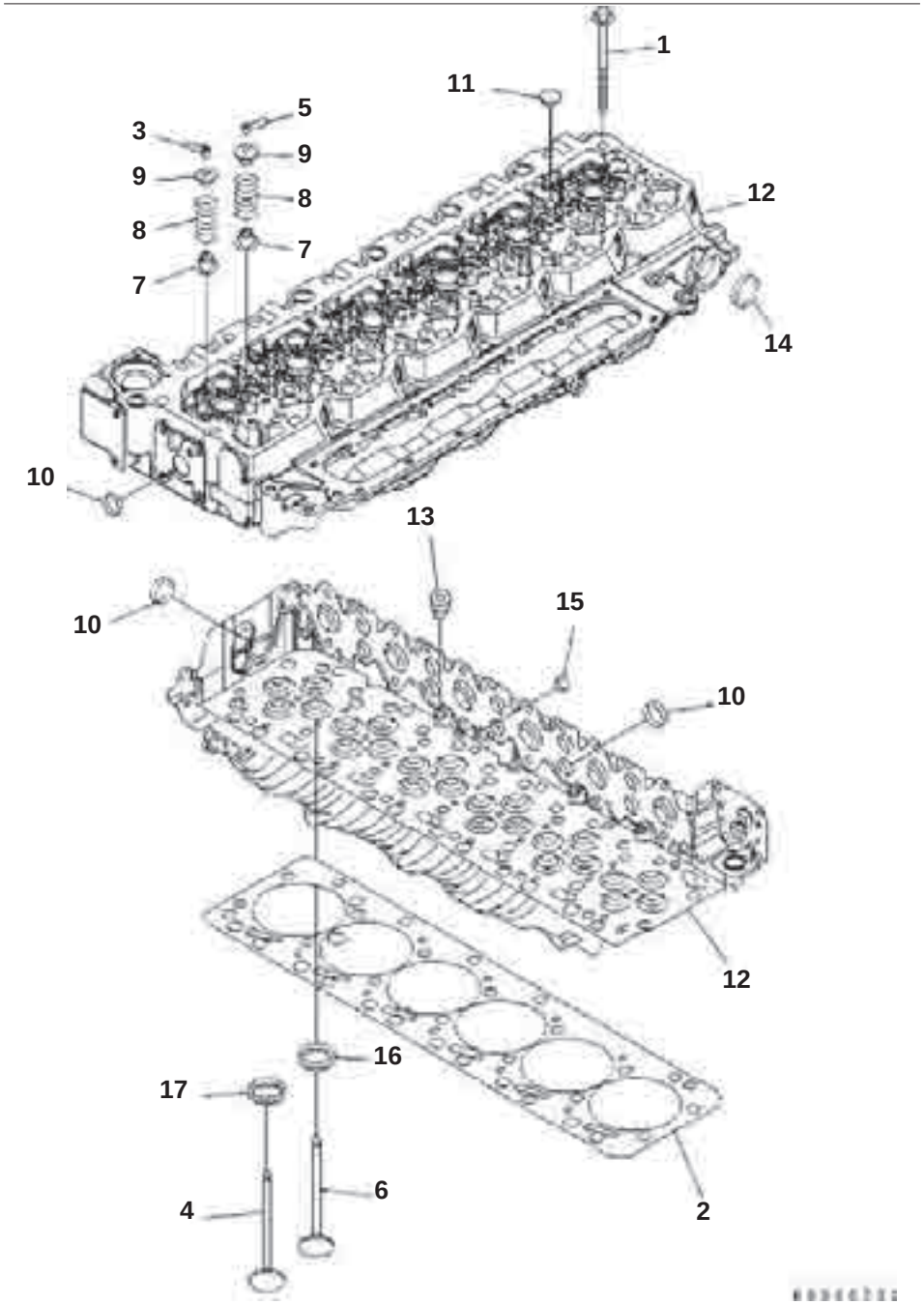

Index	Code	Part Number	Description	Qty	Options
1		6754-11-1610	Bolt	26	SN:36477692--
2		6754-11-1811	Gasket	1	SN:36477692--
		6754-11-1012	Cylinder, Head Ass'y	1	SN:36477692--
		6754-41-4200	· Valve Kit, Exhaust	12	SN:36477692--
3		6744-11-1020	· · Collet	2	SN:36477692--
4	C1		· · Valve	1	SN:36477692--
		6754-41-4100	· Valve Kit, Intake	12	SN:36477692--
5		6744-11-1020	· · Collet	2	SN:36477692--
6	C1		· · Valve	1	SN:36477692--
7		6754-41-4541	· Seal	24	SN:36477692--
8		6754-41-4430	· Spring	24	SN:36477692--
9		6754-41-4510	· Retainer	24	SN:36477692--
		6754-11-1101	· Head Ass'y, Cylinder	1	SN:36477692--
10		6732-21-1981	· · Plug	13	SN:36477692--
11		6735-21-5531	· · Plug	11	SN:36477692--
12	C1		· · Head, Cylinder	1	SN:36477692--
13		6754-11-1150	· · Plug	7	SN:36477692--
14		6744-11-1070	· · Plug	2	SN:36477692--
15		6754-11-1160	· · Plug	2	SN:36477692--
16		6754-11-1170	· · Insert, Intake	12	SN:36477692--
17		6754-11-1180	· · Insert, Exhaust	12	SN:36477692--

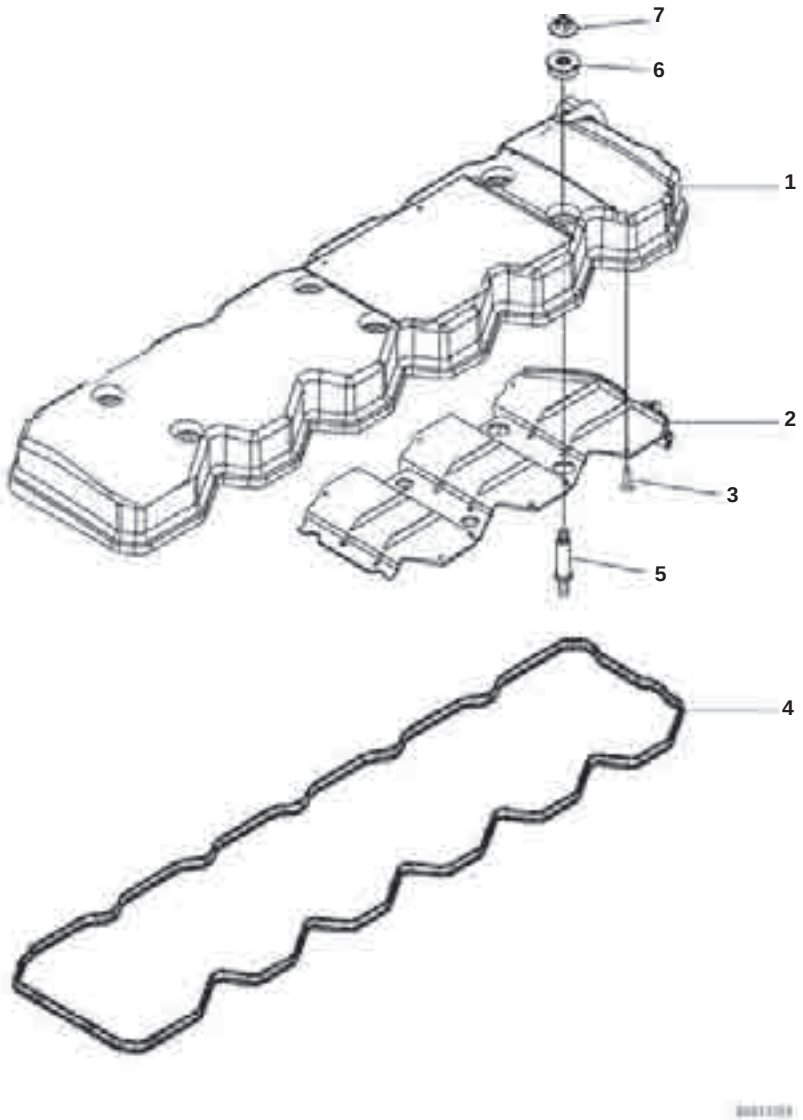

Cylinder Head Cover (#36477692-UP)

Index	Part Number	Description	Qty	Options
	6754-22-6210	Cover Assembly	1	SN:36477692--
1	6754-22-6220	‧ Cover	1	SN:36477692--
2	6754-11-8181	‧ ‧ Baffle, Breather	1	SN:36477692--
3	6754-11-8231	‧ ‧ Rivet	8	SN:36477692--
4	6754-11-8180	‧ Packing	1	SN:36477692--
5	6754-11-8150	Stud	6	SN:36477692--
6	6754-11-8211	Isolator	6	SN:36477692--
7	6754-11-8160	Nut	6	SN:36477692--

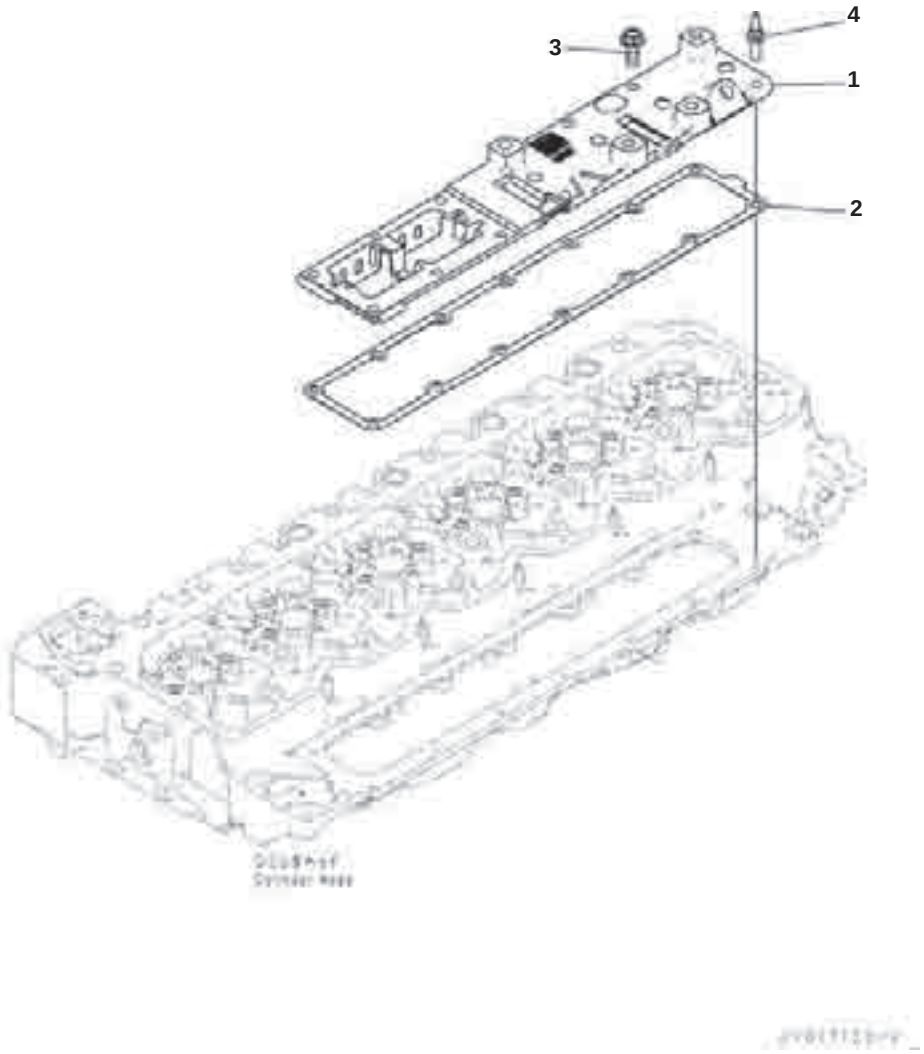

Air Intake Manifold (#36477692-UP)

Index	Part Number	Description	Qty	Options
1	6755-11-4210	Cover	1	SN:36477692--
2	6754-11-4280	Gasket	1	SN:36477692--
3	6732-11-4160	Bolt	2	SN:36477692--
4	6742-01-5195	Screw	1	SN:36477692--

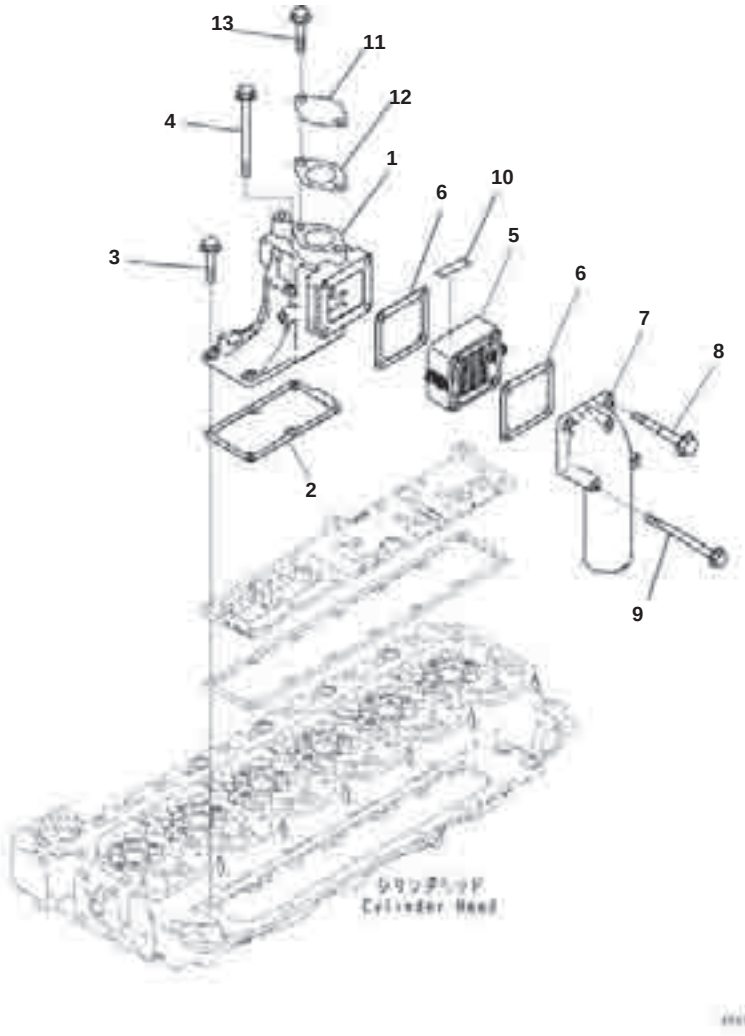

Air Intake Connector (#36477692-UP)

Index	Part Number	Description	Qty	Options
1	6755-11-4110	Connection	1	SN:36477692--
2	6754-11-4290	Gasket	1	SN:36477692--
3	6755-11-4160	Bolt	4	SN:36477692--
4	6746-11-4240	Bolt	2	SN:36477692--
5	6754-81-5110	Heater	1	SN:36477692--
6	6754-11-4120	Gasket	2	SN:36477692--
7	6755-11-4150	Pipe	1	SN:36477692--
8	6742-01-2441	Bolt	2	SN:36477692--
9	6742-01-4310	Bolt	2	SN:36477692--
10	6732-81-4630	Tag,Warning	1	SN:36477692--
11	6754-12-4140	Plate, Cover	1	SN:36477692--
12	6755-11-9110	Gasket	1	SN:36477692--
13	6735-71-3220	Bolt	2	SN:36477692--

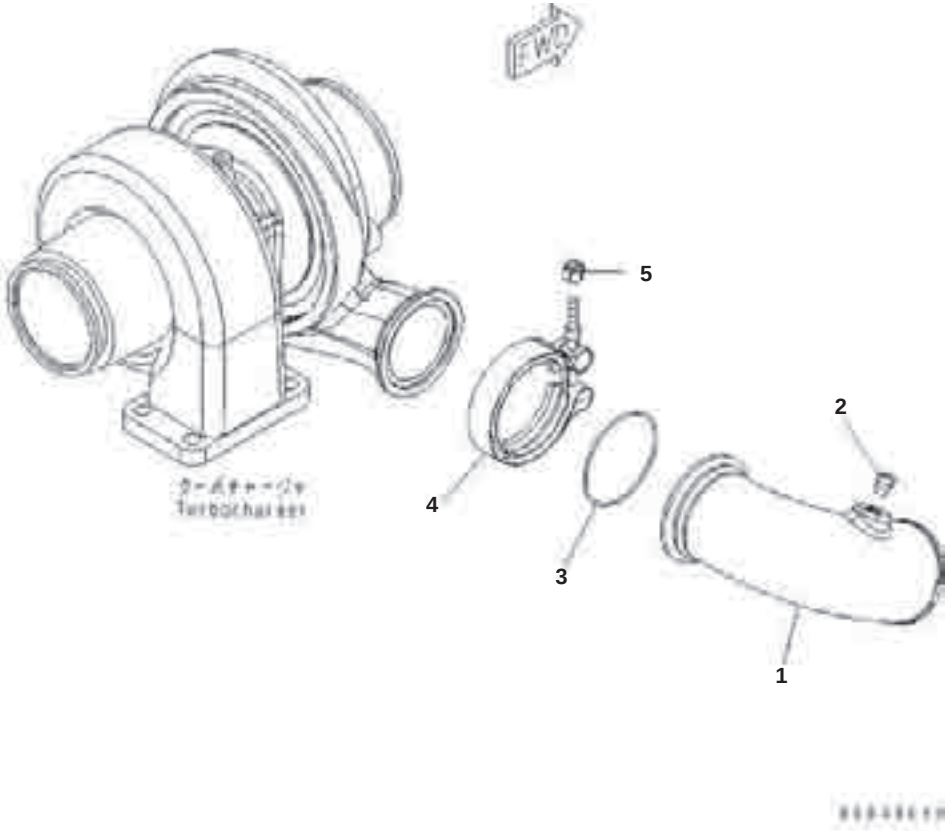

Air Transfer Connection (#36477692-UP)

Index	Part Number	Description	Qty	Options
1	6738-11-4320	Pipe, Air Transfer	1	SN:36477692--
2	07043-70108	Plug, Pipe	1	SN:36477692--
3	6738-11-4370	O-ring, Seal	1	SN:36477692--
4	1307683H1	Clamp, V-Band	1	SN:36477692--
5	6738-11-4390	Nut, Lock	1	SN:36477692--

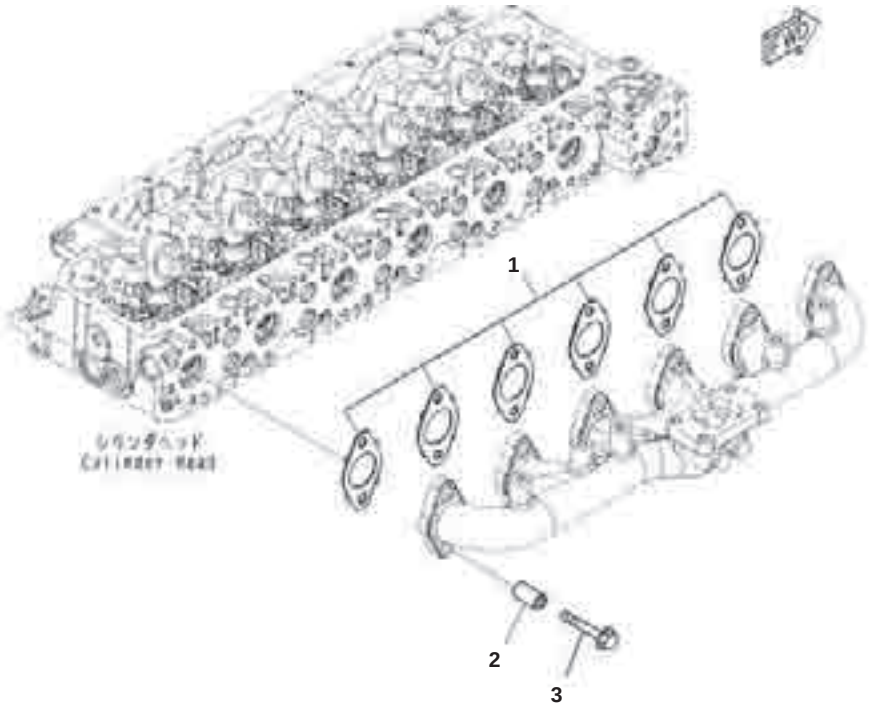

Exhaust Manifold Mounting (#36477692-UP)

Index	Part Number	Description	Qty	Options
1	6754-11-5141	Gasket	6	SN:36477692--
2	6754-11-5150	Spacer	12	SN:36477692--
3	6732-11-5860	Bolt	12	SN:36477692--

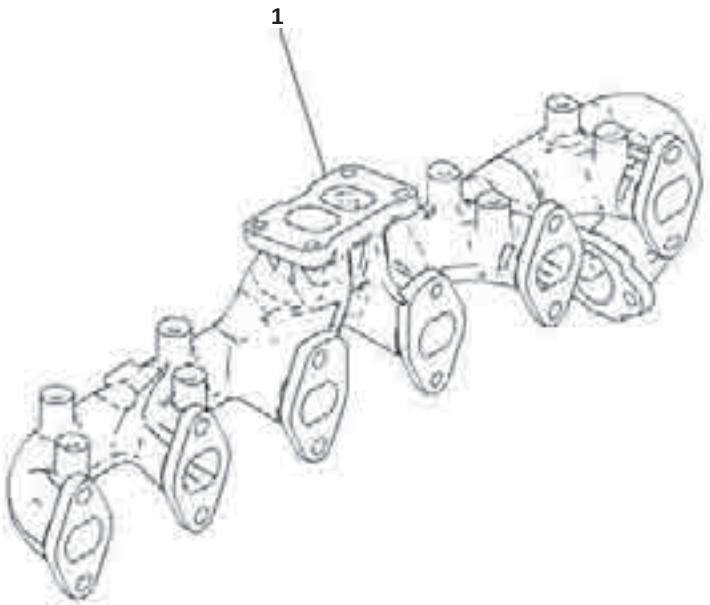

Index	Part Number	Description	Qty	Options
1	6754-11-5120	Manifold	1	SN:36477692--

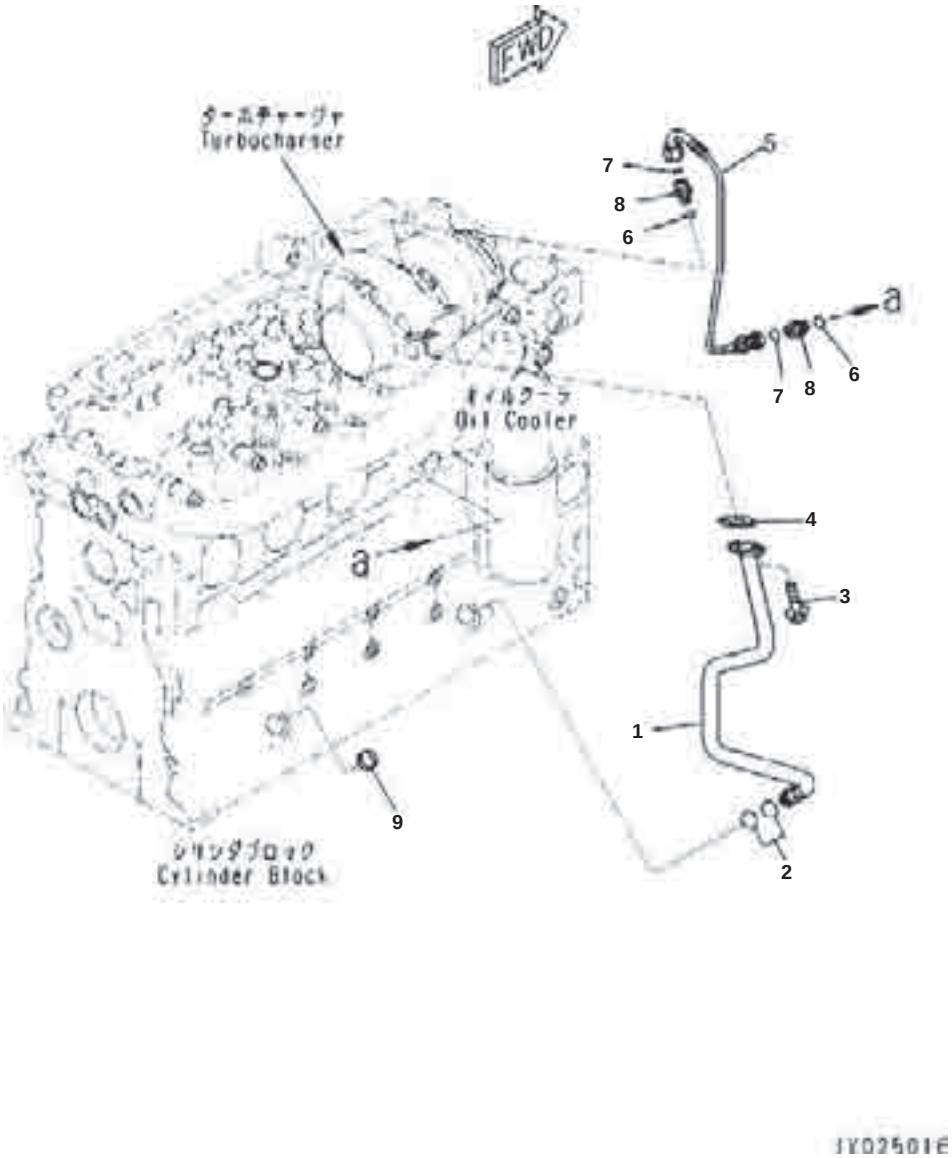

Turbocharger Oil Piping (#36477692-UP)

Index	Code	Part Number	Description	Qty	Options
1		6754-51-8200	Tube Assembly	1	SN:36477692--
2	C1		‧ Tube	1	SN:36477692--
3		6732-51-8330	‧ O-ring	2	SN:36477692--
4		6732-71-3220	Bolt	2	SN:36477692--
5		6754-51-8121	Gasket	1	SN:36477692--
6		6754-51-8220	Hose	1	SN:36477692--
7		6737-51-8770	O-ring	2	SN:36477692--
8		6732-81-8860	O-ring	2	SN:36477692--
9		6755-51-8230	Union	2	SN:36477692--
10		6735-21-5530	Plug	1	SN:36477692--

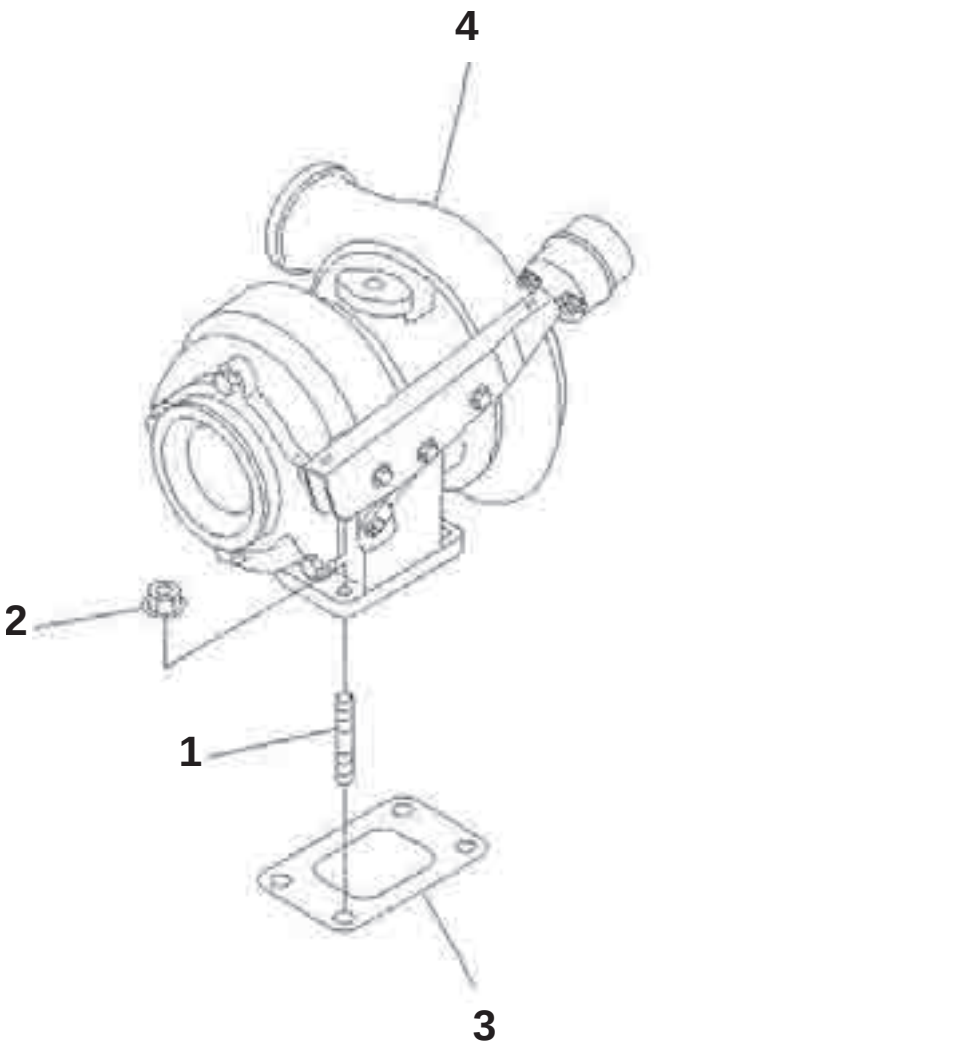

Heat Shield, Turbocharger (#36477692-UP)

Index	Part Number	Description	Qty	Options
1	6732-81-8810	Stud	4	SN:36477692--
2	6732-81-8820	Nut	4	SN:36477692--
3	6754-81-8710	Gasket	1	SN:36477692--
4	6754-82-8070	Turbocharger	1	SN:36477692--

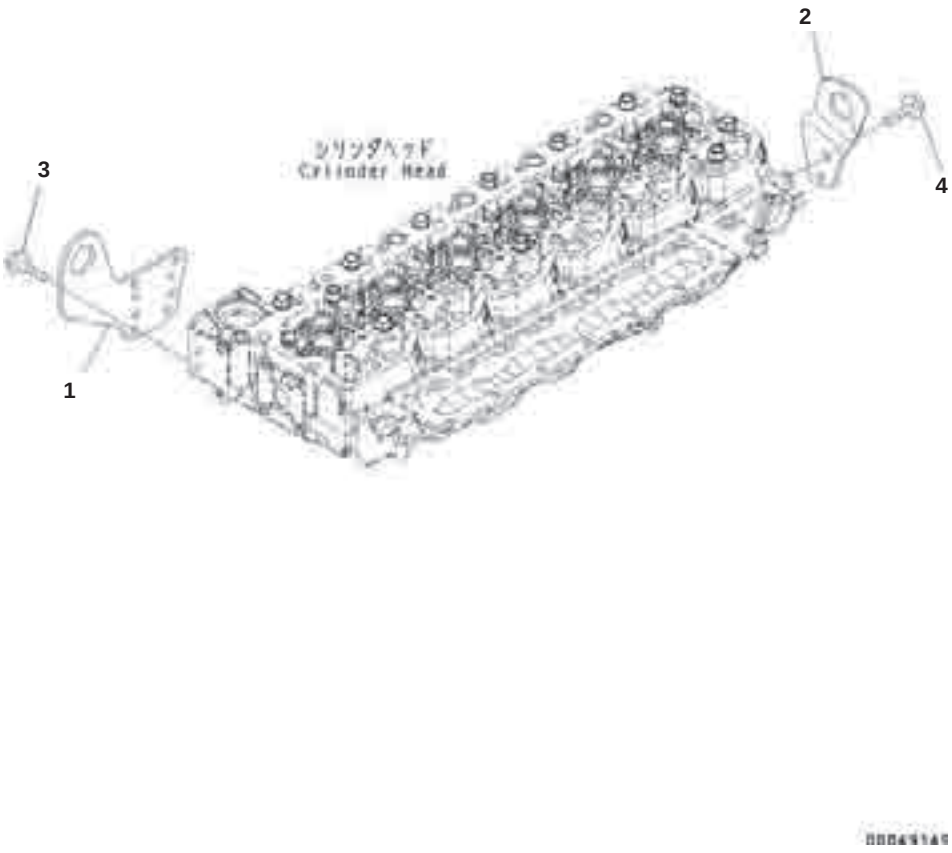

Lifting Arrangement (#36477692-UP)

Index	Part Number	Description	Qty	Options
1	6754-11-1911	Bracket, Front	1	SN:36477692--
2	6754-11-1940	Bracket	1	SN:36477692--
3	6735-71-3220	Bolt	1	SN:36477692--
4	6732-61-3140	Bolt	1	SN:36477692--

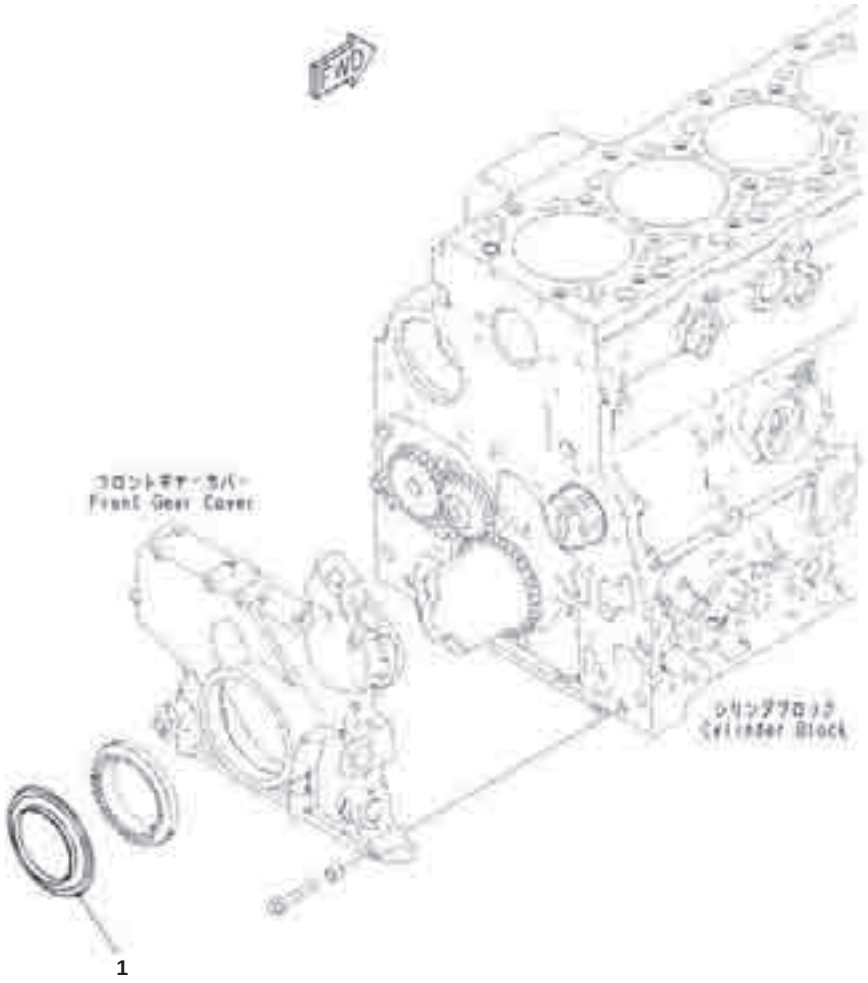

Dust Seal (#36477692-UP)

Index	Part Number	Description	Qty	Options
1	6754-21-3160	Seal, Dust	1	SN:36477692--

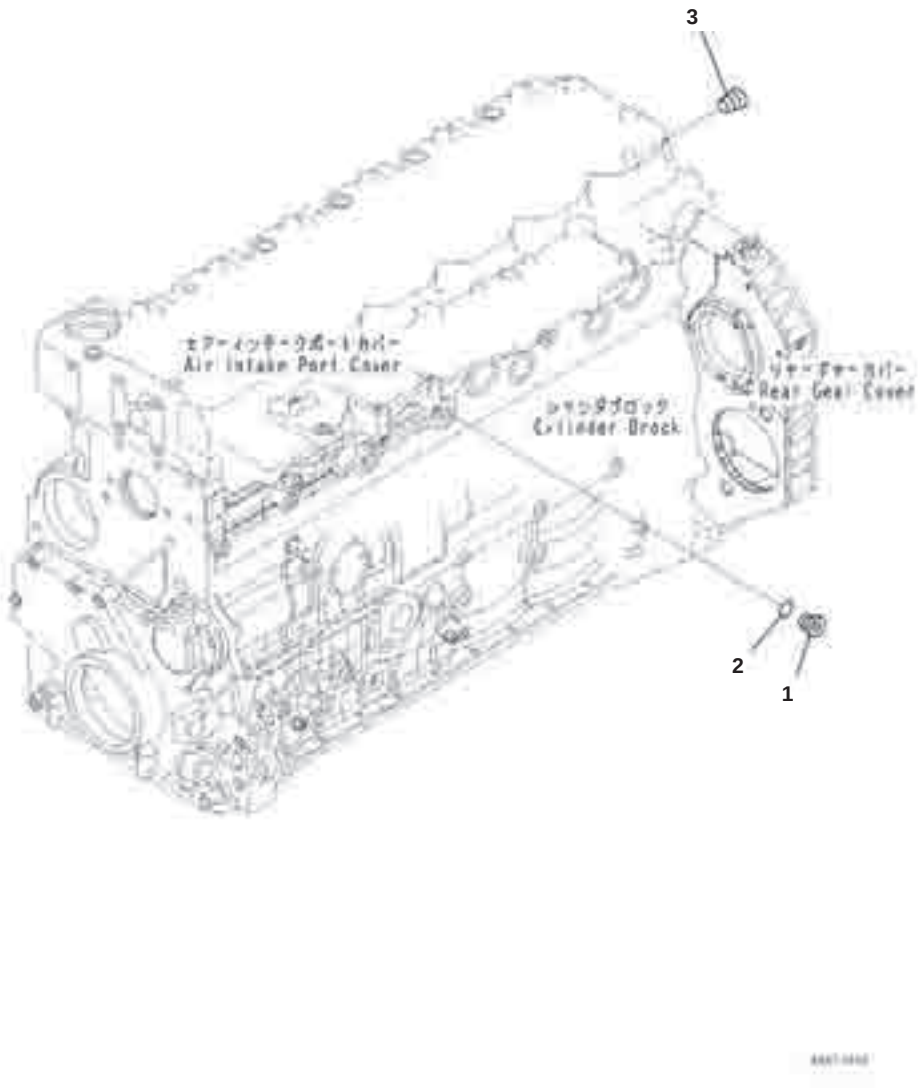

Rear Gear Cover Fitting Parts (#36477692-UP)

Index	Part Number	Description	Qty	Options
	6216-14-6830	Plug Assembly	1	SN:36477692--
1	6216-14-6890	･ Plug	1	SN:36477692--
2	6216-14-6840	･ Seal	1	SN:36477692--
3	6732-11-1920	Plug	1	SN:36477692--

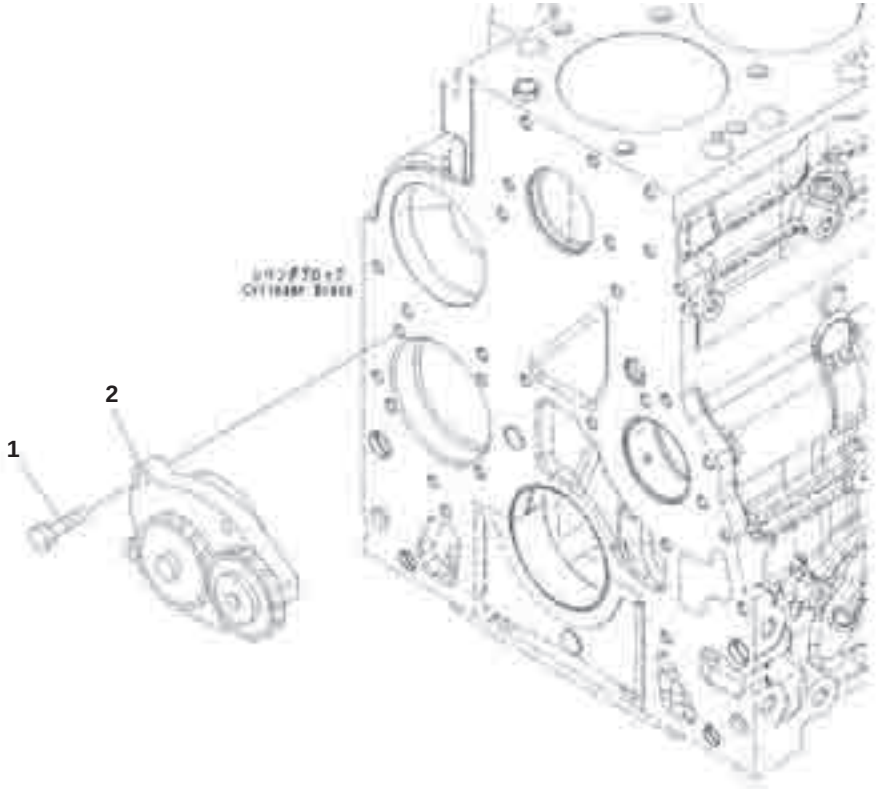

Lubrication Oil Pump (#36477692-UP)

Index	Part Number	Description	Qty	Options
1	6735-51-1120	Bolt	4	SN:36477692--
2	6754-51-1110	Pump Assembly, Oil	1	SN:36477692--

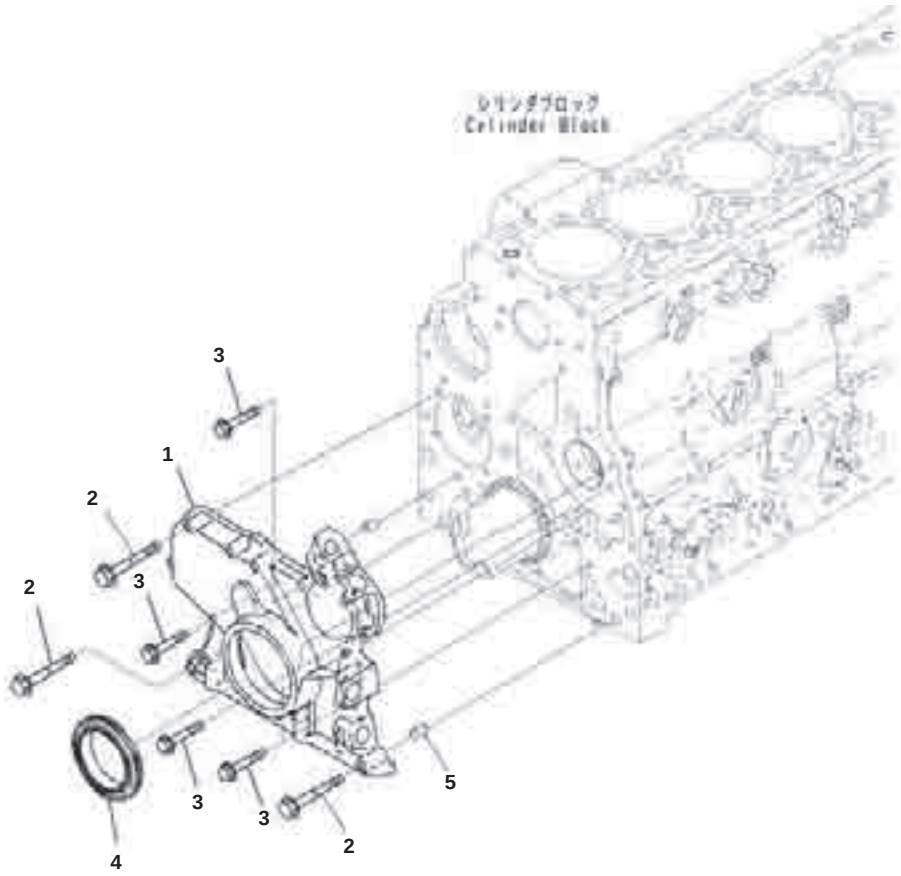

Front Gear Cover (#36477692-UP)

Index	Part Number	Description	Qty	Options
1	6755-21-6211	Cover	1	SN:36477692--
2	6735-61-2120	Bolt	7	SN:36477692--
3	6732-21-6630	Screw	6	SN:36477692--
4	6754-21-6230	Seal	1	SN:36477692--
5	6754-21-6220	Dowel, ring	2	SN:36477692--

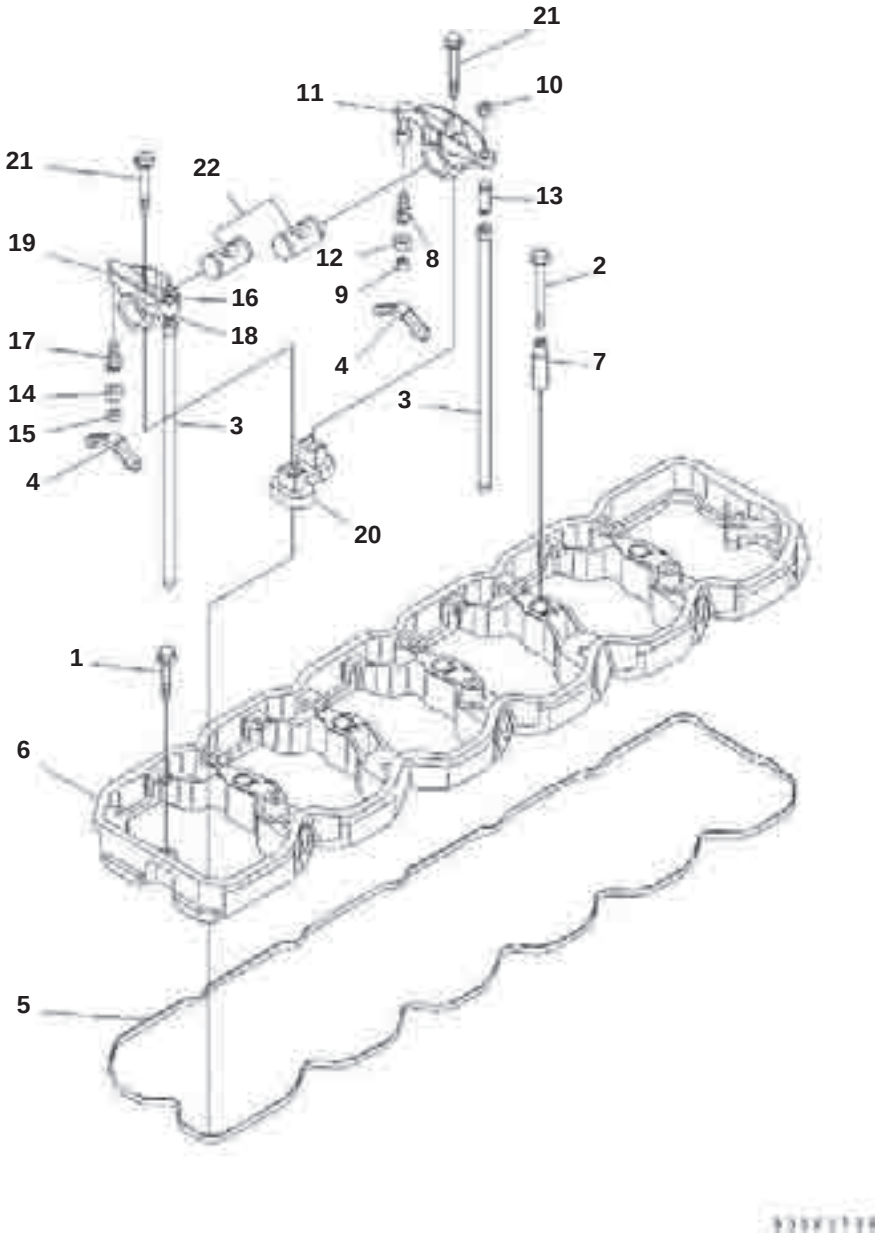

Rocker Arm (#36477692-UP)

Index	Code	Part Number	Description	Qty	Options
1		6736-21-3210	Bolt	2	SN:36477692--
2		6732-61-6150	Bolt	5	SN:36477692--
3		6754-41-3110	Rod	12	SN:36477692--
4		6754-41-5310	Crosshead	12	SN:36477692--
5		6754-41-7120	Gasket	1	SN:36477692--
		6754-12-7110	Housing Ass'y	1	SN:36477692--
6	C1		Housing	1	SN:36477692--
7	C1		Sleeve	5	SN:36477692--
		6754-41-5101	Arm Ass'y	6	SN:36477692--
		6754-41-5110	Arm Ass'y,Exhaust	1	SN:36477692--
8		6754-41-5170	Collet	1	SN:36477692--
9		6754-41-5260	Sleeve	1	SN:36477692--
			Lever Ass'y	1	SN:36477692--
10		6735-41-5550	Nut	1	SN:36477692--
11		6754-41-5150	Lever	1	SN:36477692--
12		6754-41-5130	Ball	1	SN:36477692--
13		6754-41-5140	Screw	1	SN:36477692--
		6754-41-5210	Arm Ass'y	1	SN:36477692--
14		6754-41-5170	Collet	1	SN:36477692--
15		6754-41-5160	Sleeve	1	SN:36477692--
	C1		Lever Ass'y	1	SN:36477692--
16		6735-41-5550	Nut	1	SN:36477692--
17		6754-41-5130	Ball	1	SN:36477692--
18		6754-41-5140	Screw	1	SN:36477692--
19		6754-41-5250	Lever	1	SN:36477692--
20		6754-41-5260	Support	1	SN:36477692--
21		6754-41-5180	Bolt	2	SN:36477692--
22		6754-41-5190	Shaft	2	SN:36477692--

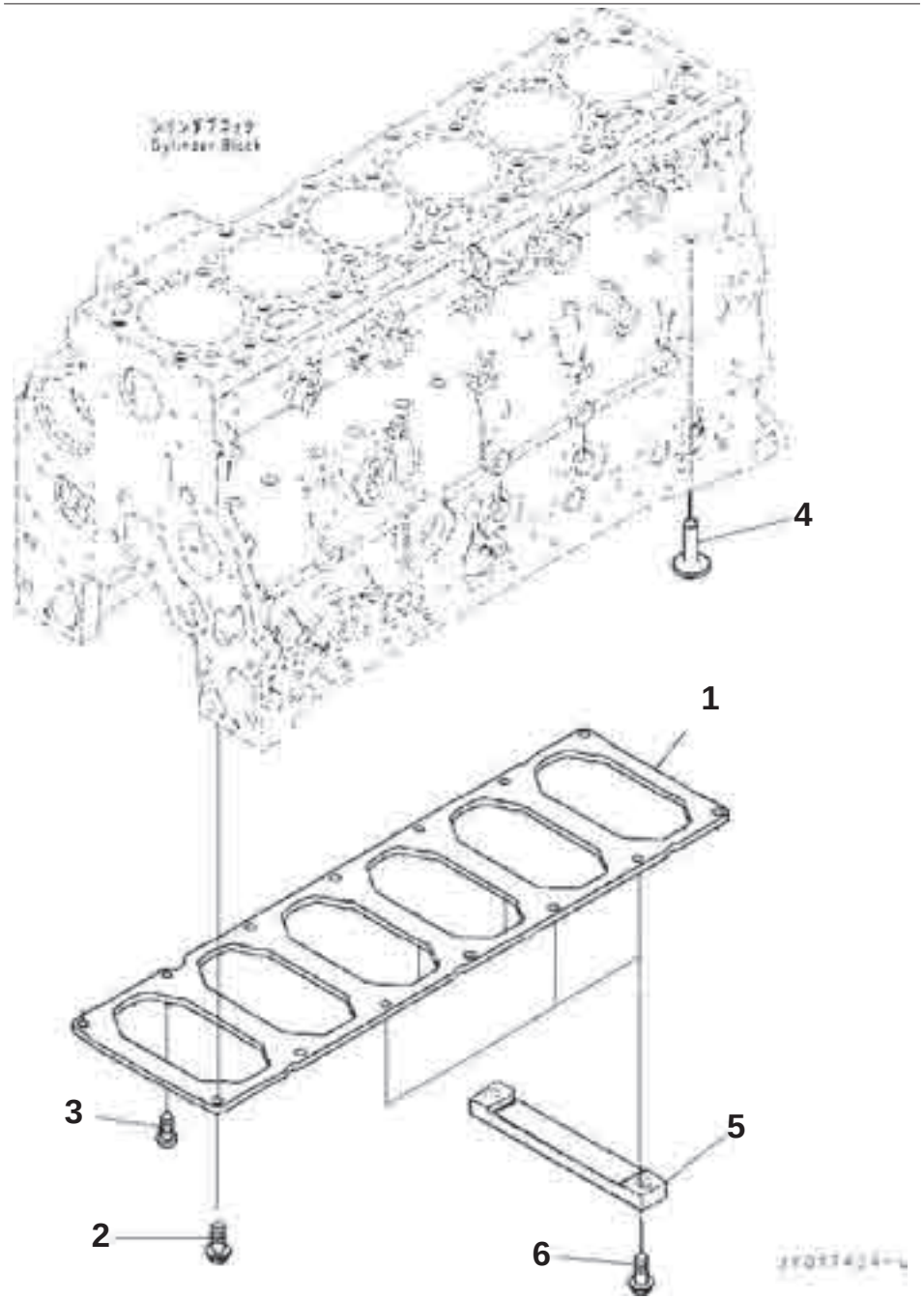

Tappet and Block Plate (#36477692-UP)

Index	Part Number	Description	Qty	Options
1	6754-21-5150	Plate	1	SN:36477692--
2	6735-71-3220	Bolt	7	SN:36477692--
3	6754-21-1920	Bolt	1	SN:36477692--
4	6754-41-2110	Tappet	12	SN:36477692--
5	6754-21-5170	Plate	3	SN:36477692--
6	6742-01-5504	Bolt	6	SN:36477692--

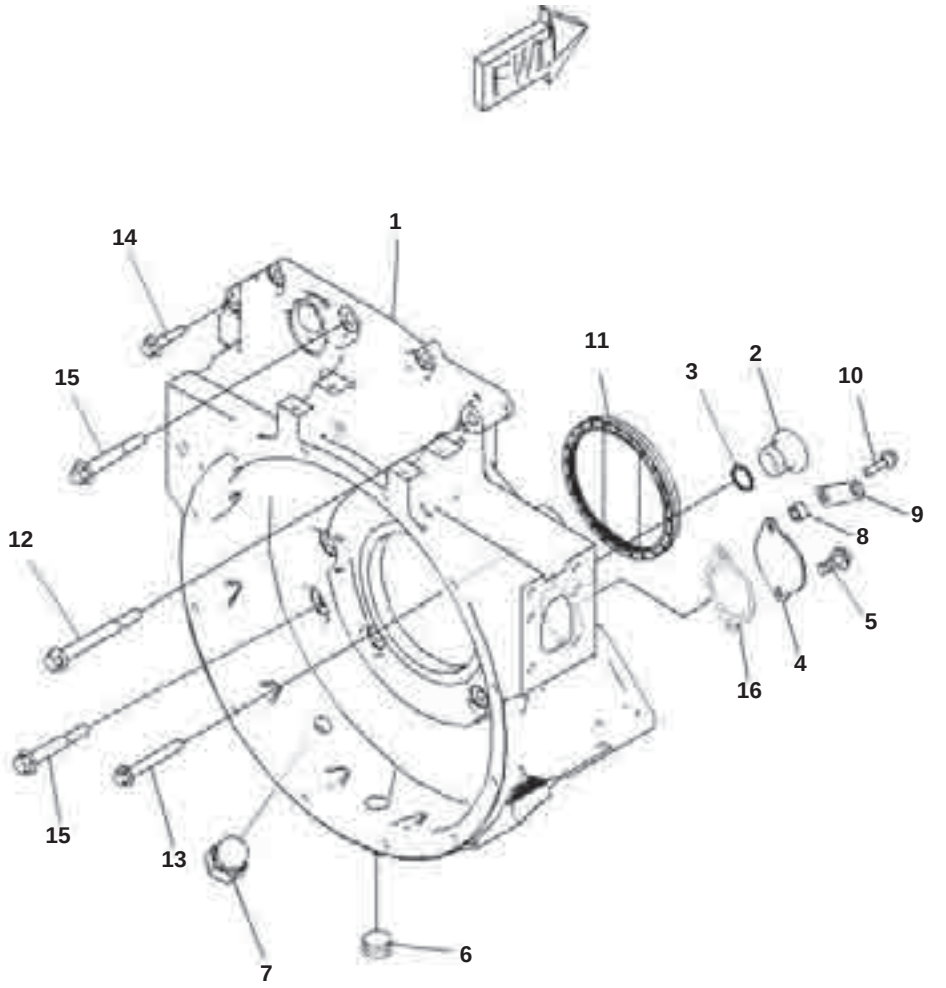

Flywheel Housing (#36477692-UP)

Index	Code	Part Number	Description	Qty	Options
1		6755-21-4130	Housing	1	SN:36477692--
2		6732-21-4150	Plug	1	SN:36477692--
3		6732-21-4161	O-ring	1	SN:36477692--
4		6732-21-4130	Plate	1	SN:36477692--
5		6732-21-3120	Bolt	1	SN:36477692--
6		6745-21-4110	Plug	1	SN:36477692--
7		6735-21-4150	Plug Assembly	1	SN:36477692--
	C1	6735-21-4170	‧ Plug	1	SN:36477692--
		6735-21-4160	‧ O-ring	1	SN:36477692--
8		6167-11-6640	Spacer	1	SN:36477692--
9		6301-11-4630	Plate	1	SN:36477692--
10		6732-21-6630	Screw	1	SN:36477692--
11		6731-22-1320	Seal, Oil	1	SN:36477692--
12		6754-21-4210	Bolt	2	SN:36477692--
13		6732-61-6120	Bolt	2	SN:36477692--
14		6742-01-5504	Bolt	10	SN:36477692--
15		6736-21-5350	Bolt	6	SN:36477692--
16		6742-01-5156	Gasket	1	SN:36477692--

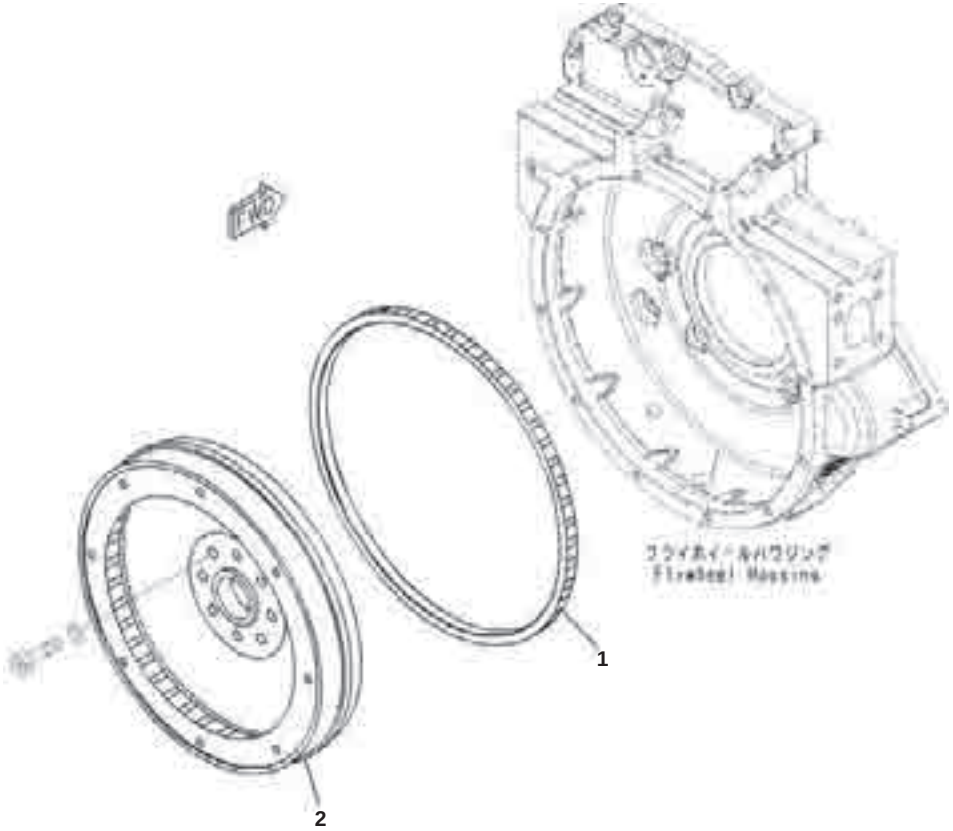

Flywheel (#36477692-UP)

Index	Code	Part Number	Description	Qty	Options
		6755-31-4110	Flywheel	1	SN:36477692--
1		6732-31-4180	' Gear, Ring	1	SN:36477692--
2	C1		' Flywheel	1	SN:36477692--

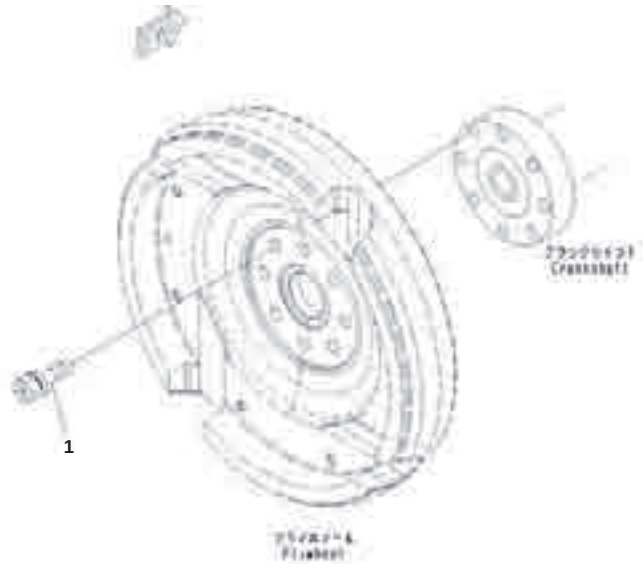

Flywheel Mounting (#36477692-UP)

Index	Part Number	Description	Qty	Options
1	6751-32-1350	Bolt	8	SN:36477692--

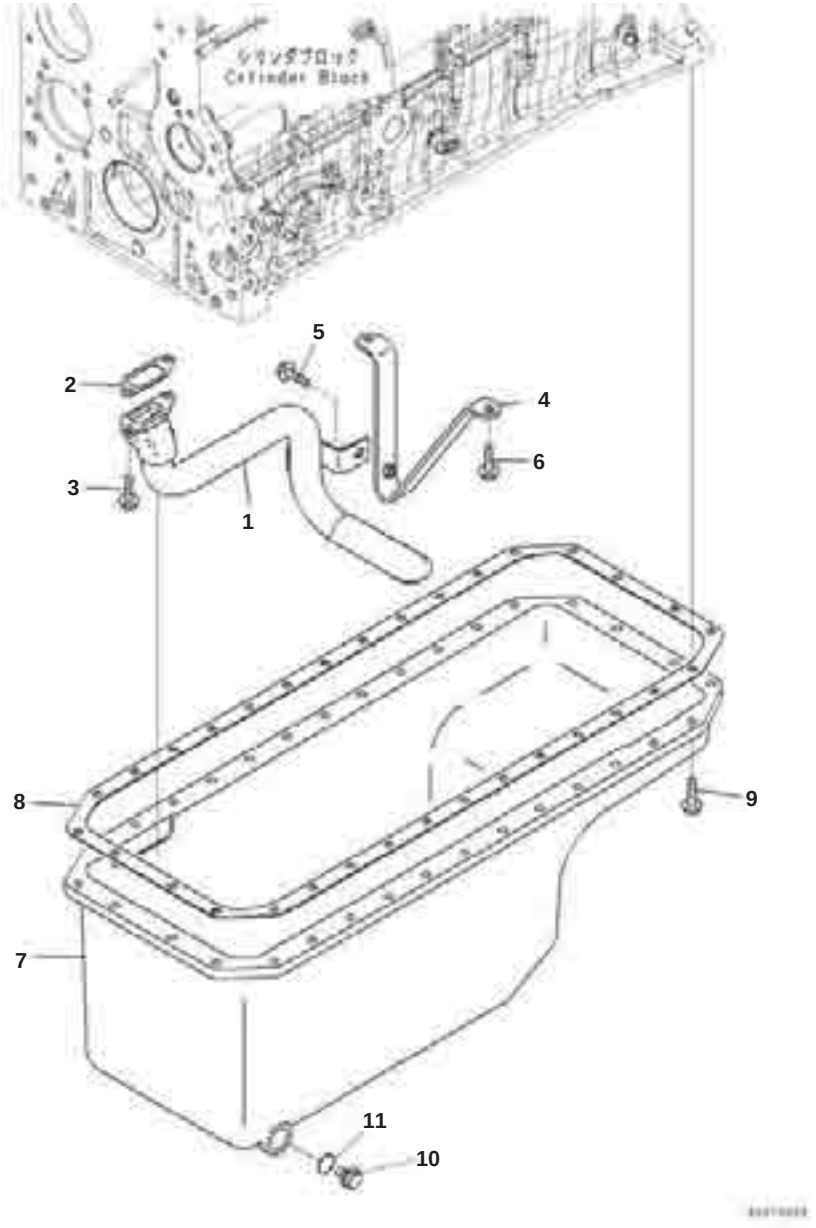

Engine Oil Pan (#36477692-UP)

Index	Part Number	Description	Qty	Options
1	6755-21-5840	Tube	1	SN:36477692--
2	6754-21-5530	Gasket	1	SN:36477692--
3	6732-71-3220	Bolt	2	SN:36477692--
4	6755-21-5850	Brace	1	SN:36477692--
5	01435-60816	Bolt	1	SN:36477692--
6	01435-61025	Bolt	7	SN:36477692--
7	6754-22-5110	Oil Pan	1	SN:36477692--
8	6754-22-5510	Gasket	1	SN:36477692--
9	6732-21-6630	Screw	32	SN:36477692--
10	6735-21-5670	Plug, Threaded	1	SN:36477692--
11	6735-21-5680	Seal	1	SN:36477692--

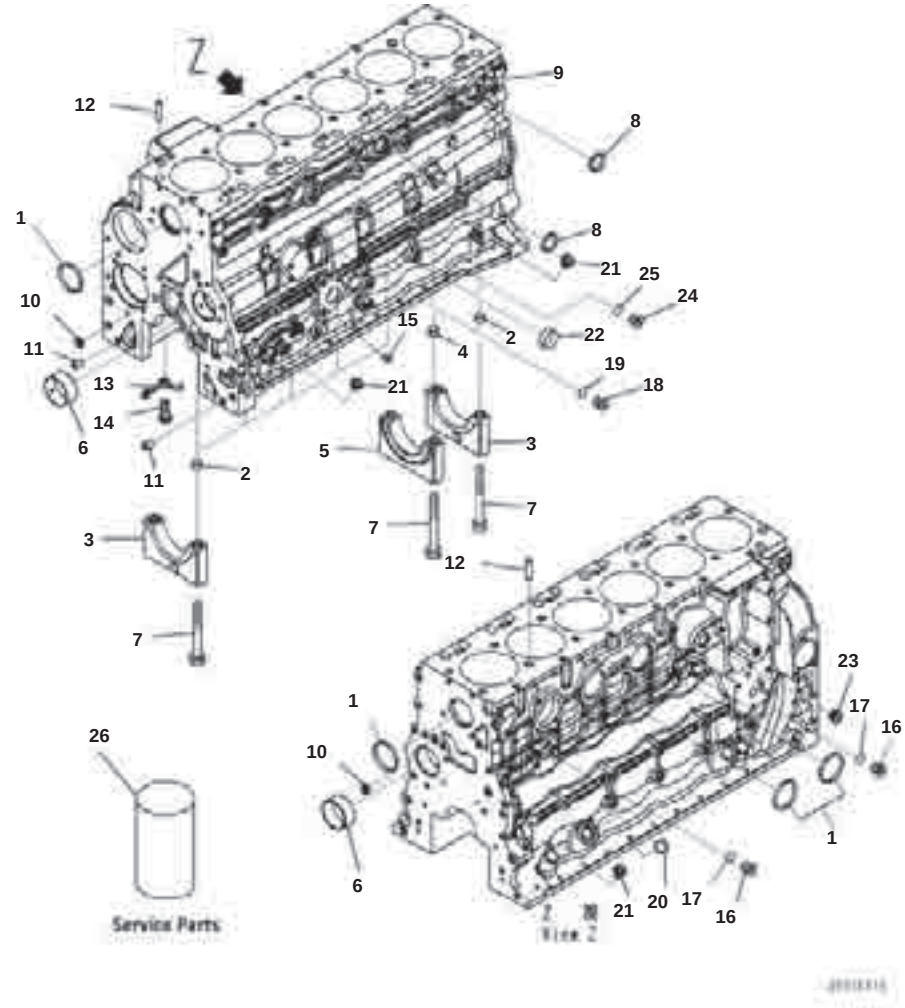

Cylinder Block (#36477692-UP)

Index	Code	Part Number	Description	Qty	Options
		6754-21-1017	Cylinder Block	1	SN:36477692--
1		6731-22-7140	· Plug	4	SN:36477692--
		6754-21-1221	· Cap Assembly	6	SN:36477692--
2	C1		· · Ring	2	SN:36477692--
3	C1		· · Cap	1	SN:36477692--
		6754-21-1241	· Cap Assembly	1	SN:36477692--
4	C1		· · Ring	2	SN:36477692--
5	C1		· · Cap	1	SN:36477692--
6		6732-21-1412	· Bushing	2	SN:36477692--
7		6732-21-1611	· Bolt	14	SN:36477692--
8		6742-01-1420	· Plug	3	SN:36477692--
9	C1		· Block Assembly	1	SN:36477692--
10		6732-21-1820	· Plug	2	SN:36477692--
11		6732-21-1810	· Plug	3	SN:36477692--
12		6732-21-6140	Ring	2	SN:36477692--
13		6754-21-1191	Nozzle	6	SN:36477692--
14		6754-21-1180	Joint	6	SN:36477692--
15		6754-71-5820	Plug	2	SN:36477692--
		6560-81-7110	Plug Assembly	2	SN:36477692--
16		6560-81-7120	· Plug	1	SN:36477692--
17		6560-81-7130	· O-ring	1	SN:36477692--
		6560-81-7110	Plug Assembly	1	SN:36477692--
18		6560-81-7120	· Plug	1	SN:36477692--
19		6735-21-1970	· O-ring	1	SN:36477692--
20		6735-21-5530	Plug	1	SN:36477692--
21		6732-21-5530	Plug	3	SN:36477692--
22		6742-01-1420	Plug	1	SN:36477692--
23		6732-11-1920	Plug	1	SN:36477692--
		6735-21-1910	Plug Assembly	1	SN:36477692--
24		6735-21-1920	· Plug	1	SN:36477692--
25		6735-21-1930	· O-ring	1	SN:36477692--
			Service Parts		
26		6754-29-2010	Sleeve	AR	SN:36477692--

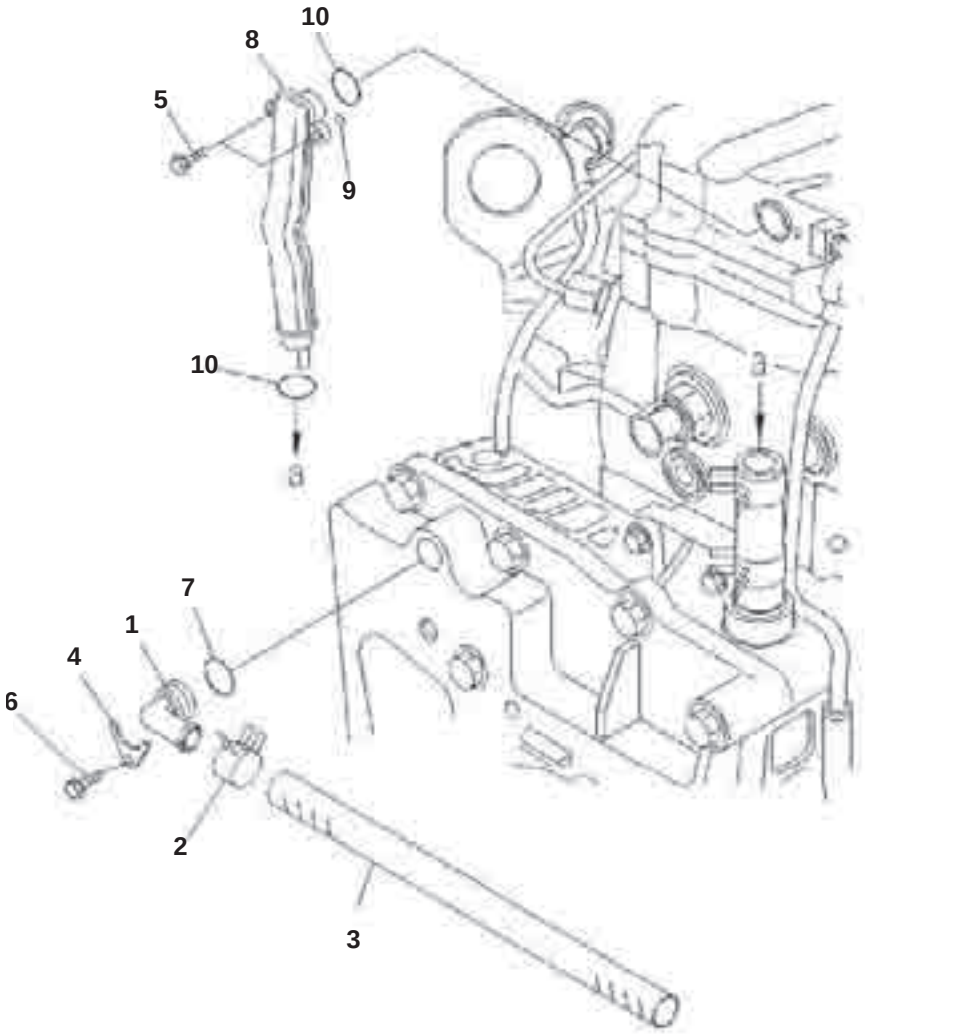

Breather Related Parts (#36477692-UP)

Index	Code	Part Number	Description	Qty	Options
1		6754-21-6140	Breather, Crancase	1	SN:36477692--
2		6754-21-6180	Clamp	1	SN:36477692--
3		6732-21-7520	Hose	1	SN:36477692--
4		6754-21-6150	Plate	1	SN:36477692--
5		6754-21-6280	Bolt	1	SN:36477692--
6		6754-21-6190	Screw	1	SN:36477692--
7		1241155H1	O-ring	1	SN:36477692--
8	C1	6754-21-8100	Tube, Ass'y	2	SN:36477692--
9		6754-21-6250	▪ O-ring	1	SN:36477692--
10		6754-21-6240	▪ O-ring	1	SN:36477692--

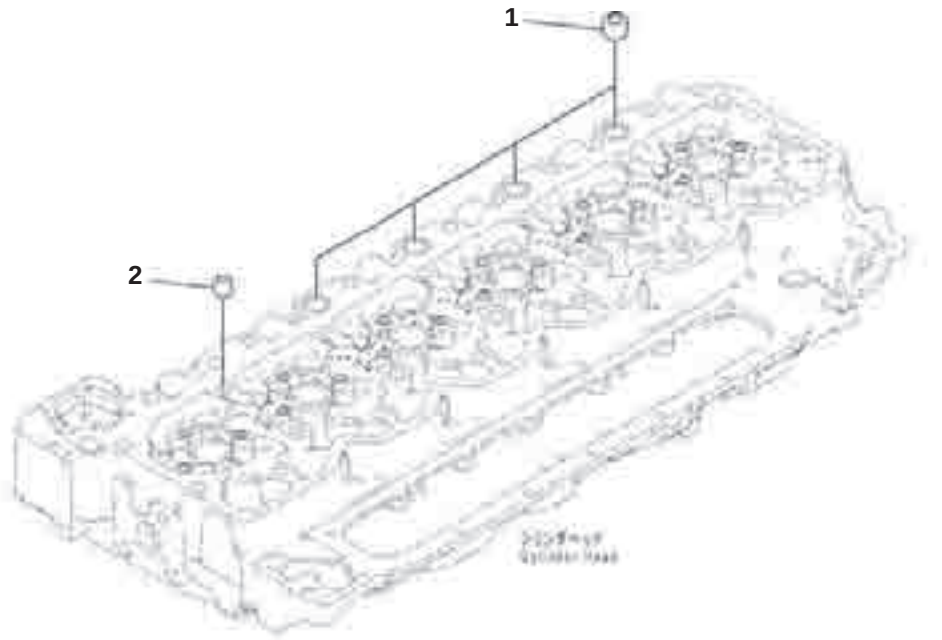

Cabin Heater Plug (#36477692-UP)

Index	Part Number	Description	Qty	Options
1	6732-11-1910	Plug, Pipe	4	SN:36477692--
2	6732-61-2240	O-ring	1	SN:36477692--

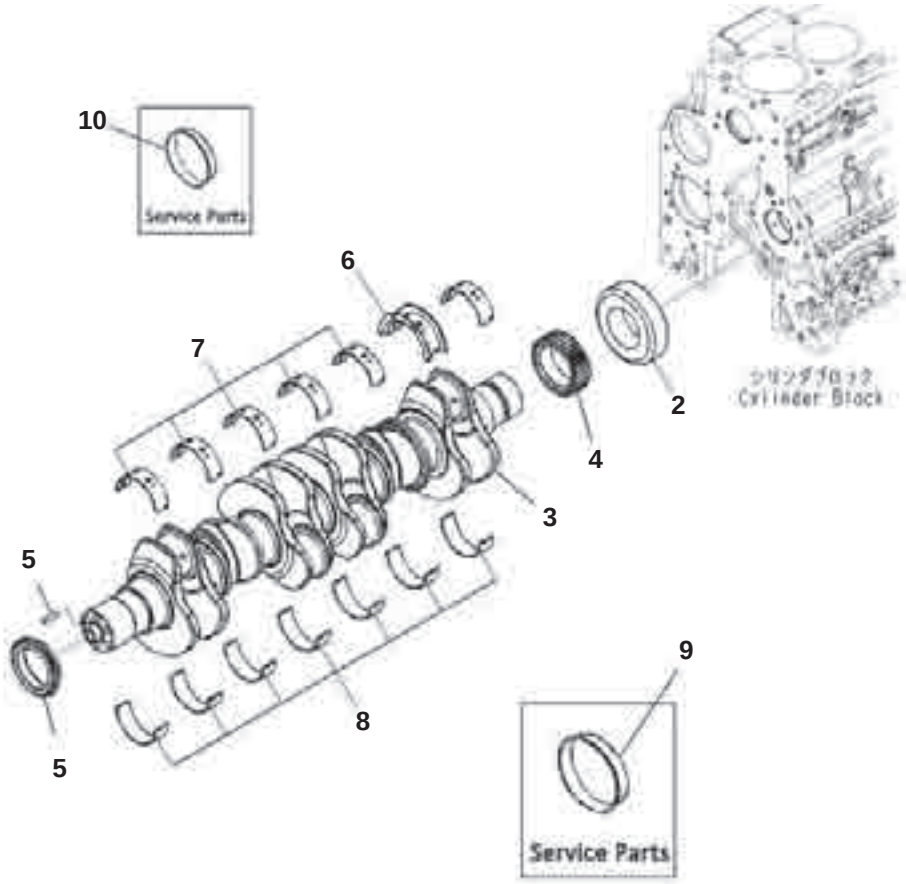

Crankshaft (#36477692-UP)

Index	Code	Part Number	Description	Qty	Options
		6754-32-1340	Crankshaft Ass'y	1	SN:36477692--
1	C1		･ Collar	1	SN:36477692--
2	C1		･ Crankshaft	1	SN:36477692--
3	C1		･ Gear	1	SN:36477692--
4	C1		･ Gear	1	SN:36477692--
5	C1		･ Dower, Pin	1	SN:36477692--
			Standard	1	SN:36477692--
		6754-22-8200	Main Metal Ass'y	AR	SN:36477692--
6	C1		･ Bearing, Thrust	1	SN:36477692--
7	C1		･ Bearing, Upper	6	SN:36477692--
8	C1		･ Bearing, Lower	7	SN:36477692--
			Oversize 0.25MM		SN:36477692--
		6754-29-8100	Main Metal Ass'y	AR	SN:36477692--
6	C1		･ Bearing, Thrust	1	SN:36477692--
7	C1		･ Bearing, Upper	6	SN:36477692--
8	C1		･ Bearing, Lower	7	SN:36477692--
			Oversize 0.50MM		SN:36477692--
		6754-28-8100	Main Metal Ass'y	AR	SN:36477692--
6	C1		･ Bearing, Thrust	1	SN:36477692--
7	C1		･ Bearing, Upper	6	SN:36477692--
8	C1		･ Bearing, Lower	7	SN:36477692--
			Oversize 0.75MM		SN:36477692--
		6754-27-8100	Main Metal Ass'y	AR	SN:36477692--
6	C1		･ Bearing, Thrust	1	SN:36477692--
7	C1		･ Bearing, Upper	6	SN:36477692--
8	C1		･ Bearing, Lower	7	SN:36477692--
			Oversize 1.00MM		SN:36477692--
		6754-26-8100	Main Metal Ass'y	AR	SN:36477692--
6	C1		･ Bearing, Thrust	1	SN:36477692--
7	C1		･ Bearing, Upper	6	SN:36477692--
8	C1		･ Bearing, Lower	7	SN:36477692--
			Service Pats		SN:36477692--
9		6736-39-1221	Sleeve	AR	SN:36477692--
10		6736-39-1140	Rear Seal Wear	AR	SN:36477692--

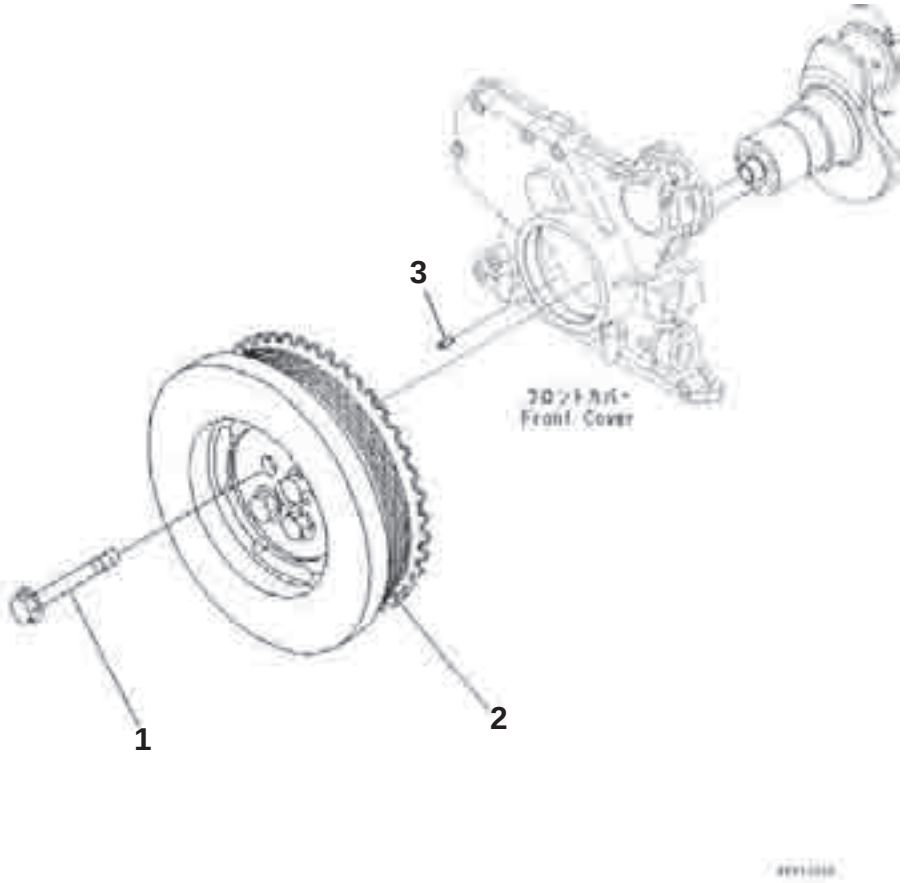

Vibration Damper (#36477692-UP)

Index	Part Number	Description	Qty	Options
1	6754-31-8120	Bolt	6	SN:36477692--
2	6754-31-8111	Damper	1	SN:36477692--
3	6754-31-8130	Pin	1	SN:36477692--

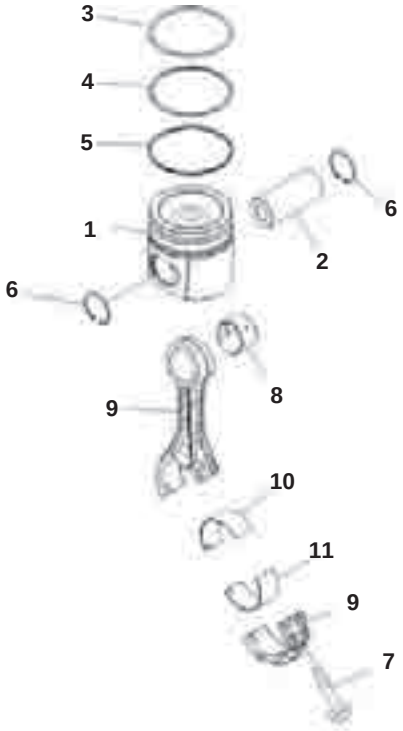

Piston and Connecting Rod (#36477692-UP)

Index	Code	Part Number	Description	Qty	Options
		6754-32-2110	Piston, Kit	6	SN:36477692--
1		6754-31-2111	· Piston	1	SN:36477692--
2		6754-31-2410	· Pin	1	SN:36477692--
		6754-31-2010	· Ring Assembly	1	SN:36477692--
3	C1		· · Ring, Top	1	SN:36477692--
4	C1		· · Ring, 2nd	1	SN:36477692--
5	C1		· · Ring, Oil	1	SN:36477692--
6		6732-31-2420	Ring	12	SN:36477692--
		6737-32-3121	Connecting Rod Assembly	6	SN:36477692--
7		6732-31-3320	· Screw	2	SN:36477692--
8		6732-31-3132	· Bushing	1	SN:36477692--
9	C1		· Rod, Connecting	1	SN:36477692--
10		6754-32-3410	Metal,Upper (Std)	6	SN:36477692--
11		6732-31-3420	Metal,Lower (Std)	6	SN:36477692--
			Service Parts		SN:36477692--
		6754-31-2120	Piston, kit (0,50mm oversize)	AR	SN:36477692--
1		6754-39-2111	· Piston	1	SN:36477692--
2		6754-31-2410	· Pin	1	SN:36477692--
		6732-31-2420	· Piston Ring Ass'y (0,50mm oversize)	1	SN:36477692--
3	C1		· · Ring,Top	1	SN:36477692--
4	C1		· · Ring, 2nd	1	SN:36477692--
5	C1		· · Ring, Oil	1	SN:36477692--
6		6732-31-2420	· Ring	2	SN:36477692--
					SN:36477692--
10		6754-32-3420	Bearing Connecting Rod (0,25mm Oversize)	AR	SN:36477692--
		6754-32-3430	Bearing Connecting Rod (0,50mm Oversize)	AR	SN:36477692--
		6754-32-3440	Bearing Connecting Rod (0,75mm Oversize)	AR	SN:36477692--
		6754-32-3450	Bearing Connecting Rod (1,00mm Oversize)	AR	SN:36477692--
11		6738-39-3400	Bearing Connecting Rod (0,25mm Oversize)	AR	SN:36477692--
		6738-38-3400	Bearing Connecting Rod (0,50mm Oversize)	AR	SN:36477692--
		6738-37-3400	Bearing Connecting Rod (0,75mm Oversize)	AR	SN:36477692--
		6738-36-3400	Bearing Connecting Rod (1,00mm Oversize)	AR	SN:36477692--

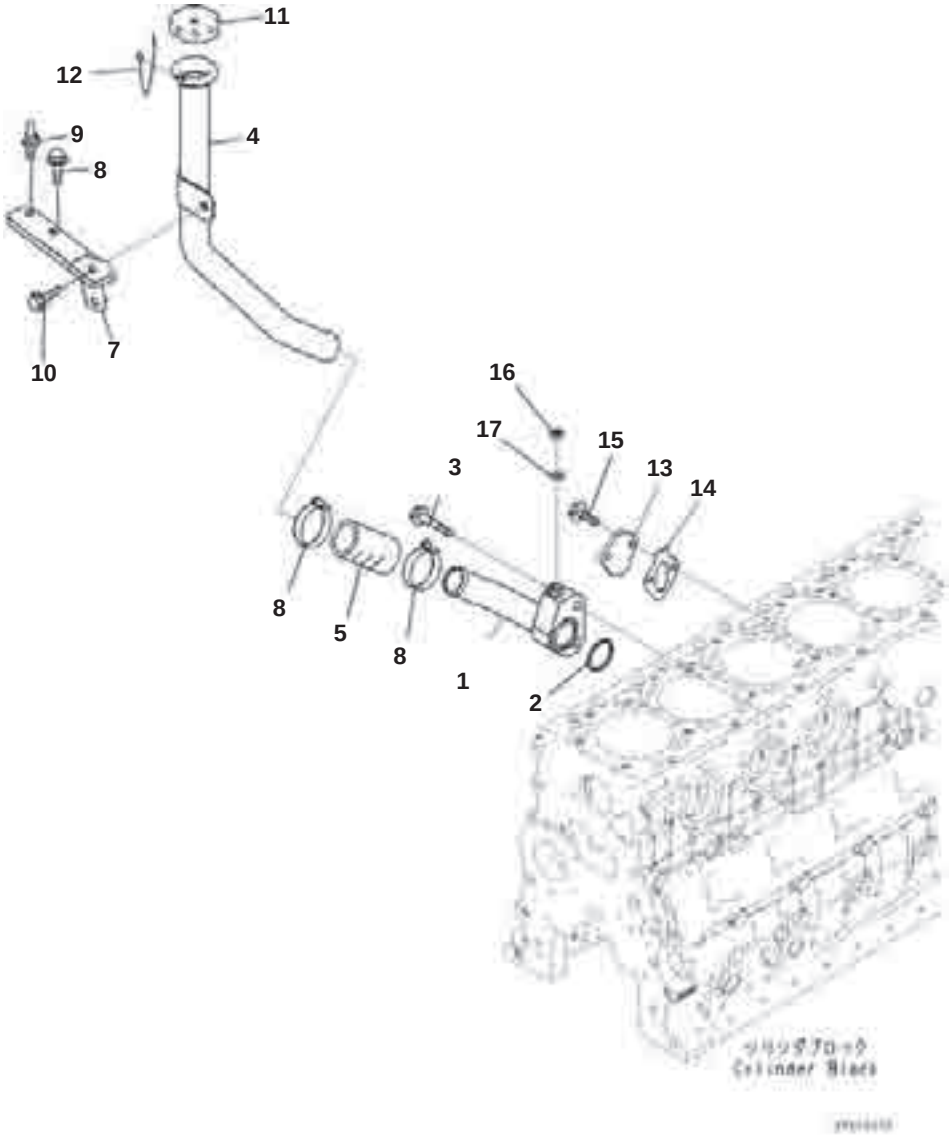

Engine Oil Filler (#36477692-UP)

Index	Code	Part Number	Description	Qty	Options
1		6755-51-9860	Connection, Oil Drain	1	SN:36477692--
2		6736-21-3360	Seal Ring	1	SN:36477692--
3		6742-01-3780	Bolt	2	SN:36477692--
4		6755-21-7180	Tube	1	SN:36477692--
5		6754-22-6110	Hose	1	SN:36477692--
6		6754-22-6120	Clamp	2	SN:36477692--
7		6755-21-7510	Brace	1	SN:36477692--
		6755-21-7190	Brace	1	SN:36477692--
8		6732-51-5130	Bolt	1	SN:36477692--
9		6731-72-5110	Bolt	1	SN:36477692--
10		01435-01020	Bolt	1	SN:36477692--
12		6136-21-7190	Chain	1	SN:36477692--
13		6736-71-5811	Plate	1	SN:36477692--
14		6735-61-6411	Gasket	1	SN:36477692--
15		01435-60820	Bolt	2	SN:36477692--
16		6216-24-5130	Plug Ass'y	1	SN:36477692--
	C1		' Plug	1	SN:36477692--
17		6735-21-1930	' O-ring	1	SN:36477692--

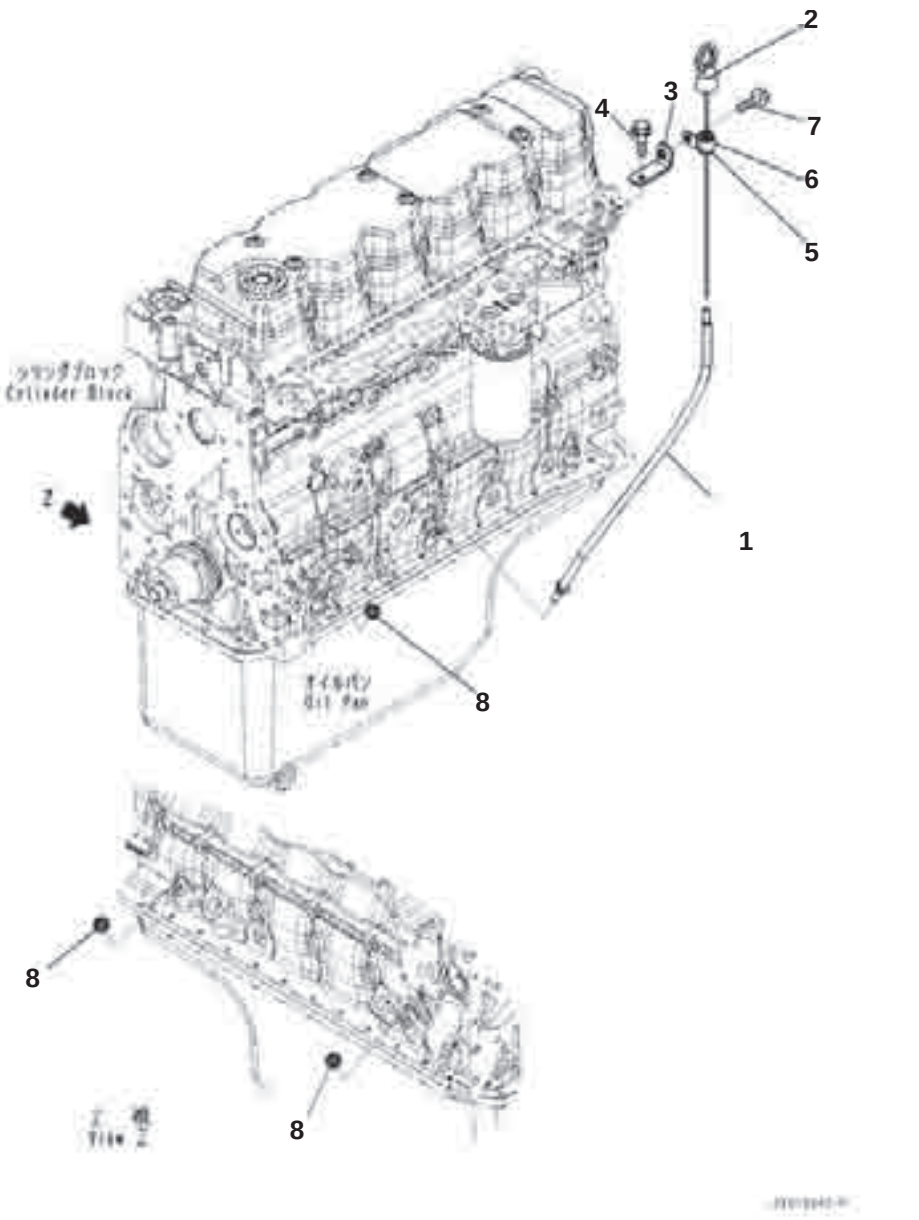

Oil Level Gauge (#36477692-UP)

Index	Part Number	Description	Qty	Options
1	6754-22-5450	Tube	1	SN:36477692--
2	6754-22-5410	Gauge	1	SN:36477692--
3	6755-21-5830	Brace	1	SN:36477692--
4	6736-21-3210	Bolt	1	SN:36477692--
5	07095-20211	Cushion	1	SN:36477692--
6	04434-51708	Clip	1	SN:36477692--
7	01435-00820	Bolt	1	SN:36477692--
8	6732-21-5530	Plug	3	SN:36477692--

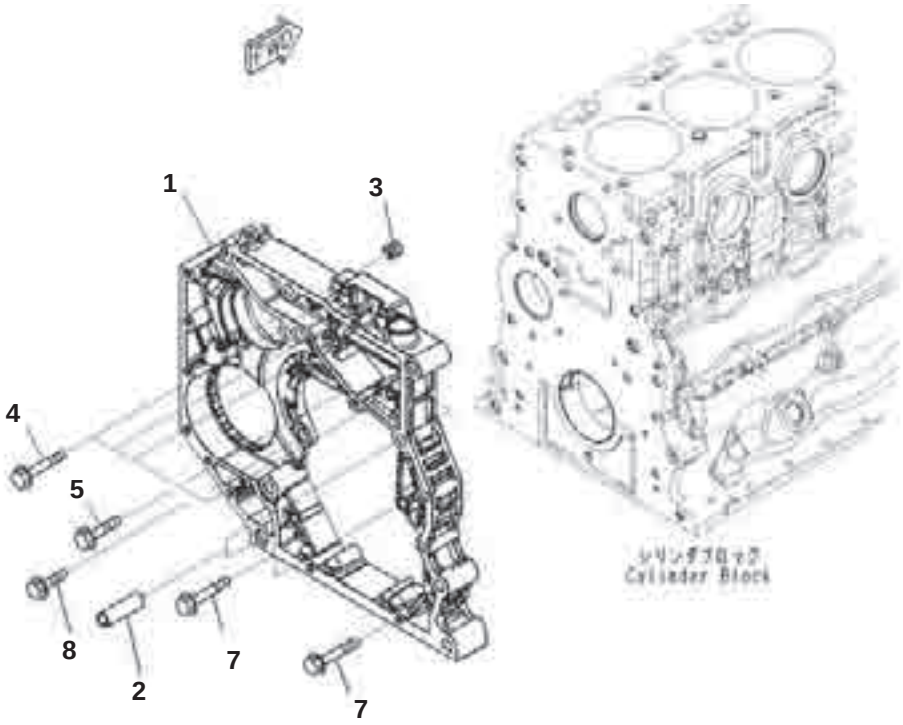

Rear Gear Housing (#36477692-UP)

Index	Part Number	Description	Qty	Options
	6754-21-3104	Housing Assembly,Rear Gear	1	SN:36477692--
1		▪ Housing,Rear Gear	1	SN:36477692--
2	6754-21-3120	▪ Pin	2	SN:36477692--
3	6754-21-3150	▪ Insert	2	SN:36477692--
4	6735-61-2120	Bolt	4	SN:36477692--
5	01435-61030	Bolt	2	SN:36477692--
6	6732-11-1720	Bolt	1	SN:36477692--
7	6754-21-3140	Bolt	3	SN:36477692--

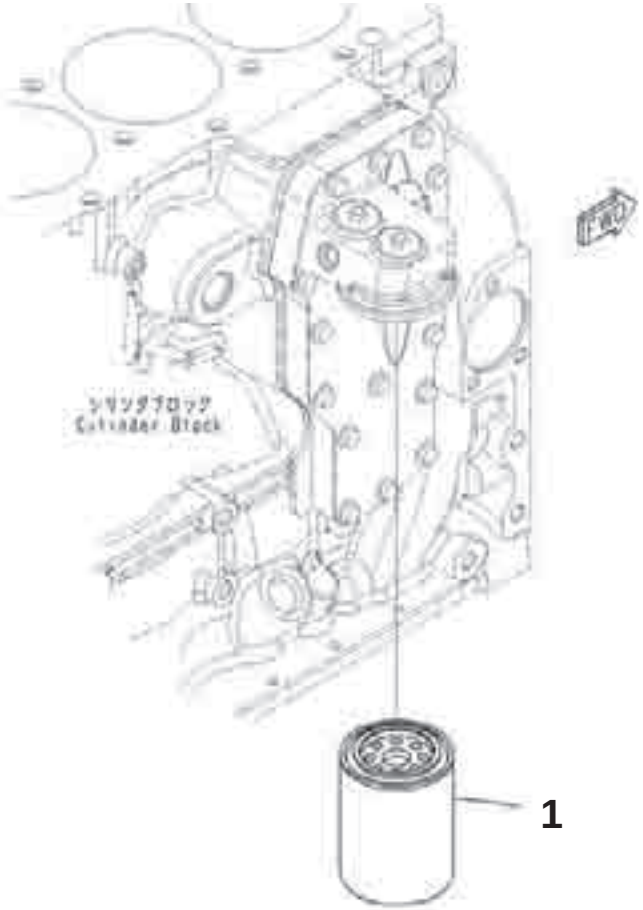

Engine Oil Filter (#36477692-UP)

Index	Part Number	Description	Qty	Options
1	6736-51-5142	Cartridge	1	SN:36477692--

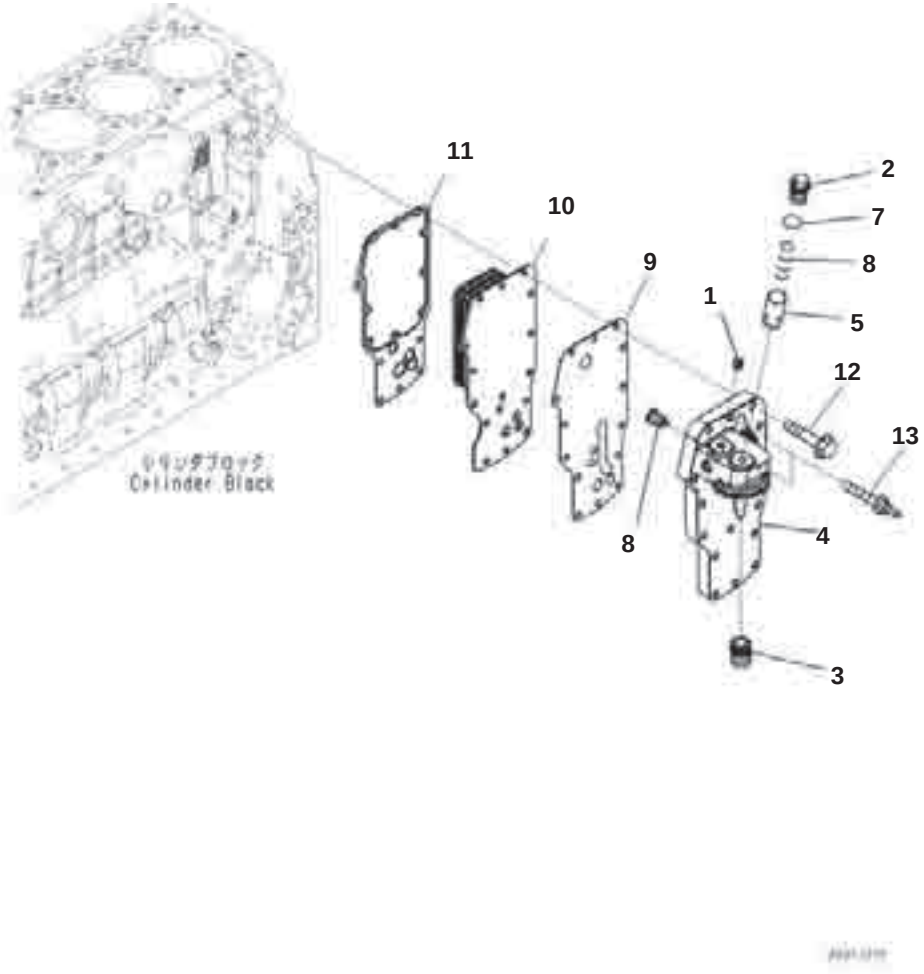

Engine Oil Cooler (#36477692-UP)

Index	Code	Part Number	Description	Qty	Options
1		1240101H1	Plug	2	SN:36477692--
2		6754-61-2260	Plug, Threaded	1	SN:36477692--
		6754-61-2231	Head Assembly	1	SN:36477692--
3		6736-61-5180	‧ Adapter	1	SN:36477692--
4	C1		‧ Head	1	SN:36477692--
5		6754-61-2250	Plunger	1	SN:36477692--
6		6735-61-2190	Spring	1	SN:36477692--
7		6732-51-4420	O-ring	1	SN:36477692--
8		6731-61-2151	Valve	1	SN:36477692--
9		6754-51-4440	Gasket	1	SN:36477692--
10		6754-61-2110	Core, Cooler	1	SN:36477692--
11		6754-61-2320	Gasket	1	SN:36477692--
12		6735-61-2120	Bolt	13	SN:36477692--
13		6754-81-9161	Bolt	2	SN:36477692--



Fuel Filter Piping (#36477692-UP)

Index	Part Number	Description	Qty	Options
1	6746-71-5620	Connector	1	SN:36477692--
2	6755-71-5161	Tube	1	SN:36477692--
3	6755-71-5171	Tube	1	SN:36477692--
4	6755-71-5310	Connector	1	SN:36477692--
5	6745-71-1130	Seal, Washer	1	SN:36477692--

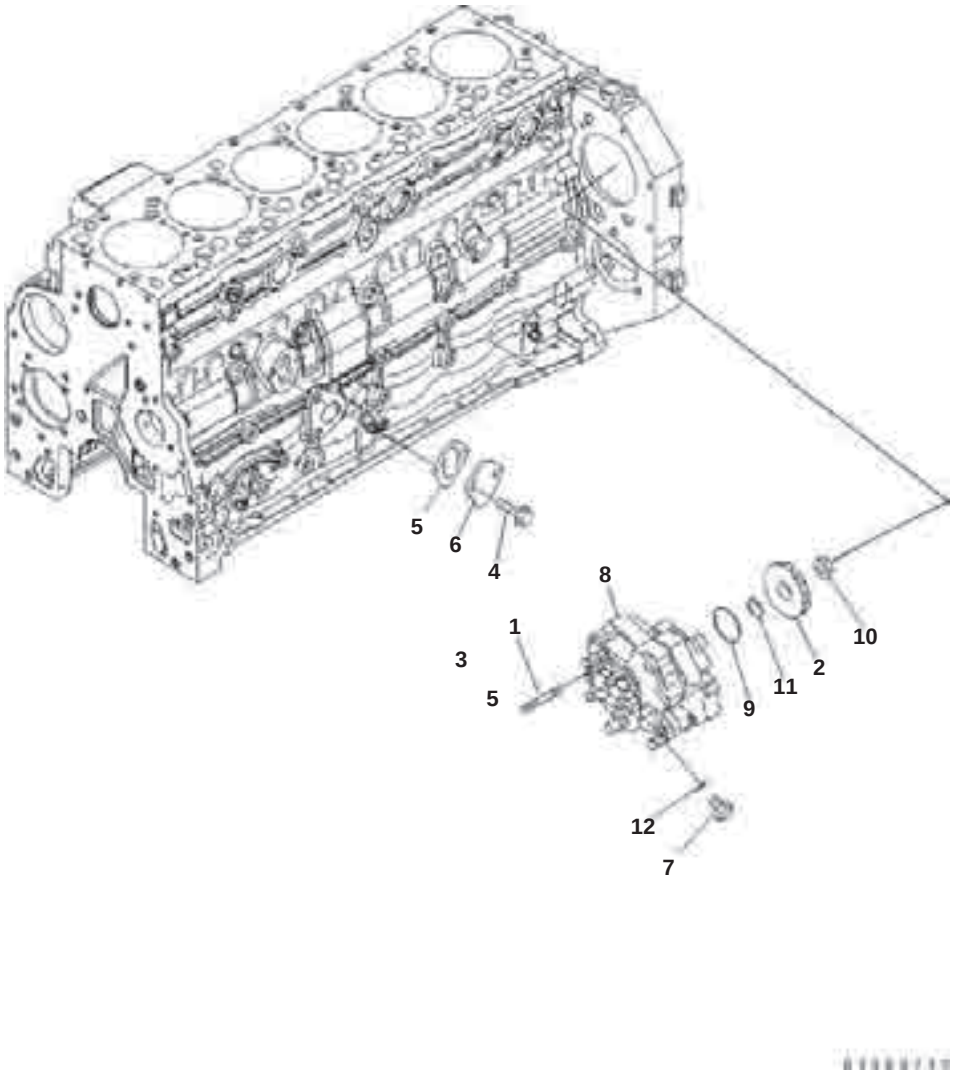

Fuel Supply Pump (#36477692-UP)

Index	Code	Part Number	Description	Qty	Options
1		6754-71-3131	Stud	3	SN:36477692--
2		6754-71-3110	Gear	1	SN:36477692--
3		6732-71-3210	Nut	3	SN:36477692--
4		01435-00820	Bolt	2	SN:36477692--
5		6735-71-6610	Gasket	1	SN:36477692--
6		6736-71-5830	Plate	1	SN:36477692--
		6754-72-1012	Pump Assembly	1	SN:36477692--
7		6754-71-1330	‧ Connector	1	SN:36477692--
8	C1		‧ Pump	1	SN:36477692--
9		6754-71-1320	‧ O-ring	1	SN:36477692--
10		6754-71-1340	‧ Nut	1	SN:36477692--
11		6754-71-1351	‧ Washer, Spring	1	SN:36477692--
12		6754-71-5350	‧ Washer	1	SN:36477692--

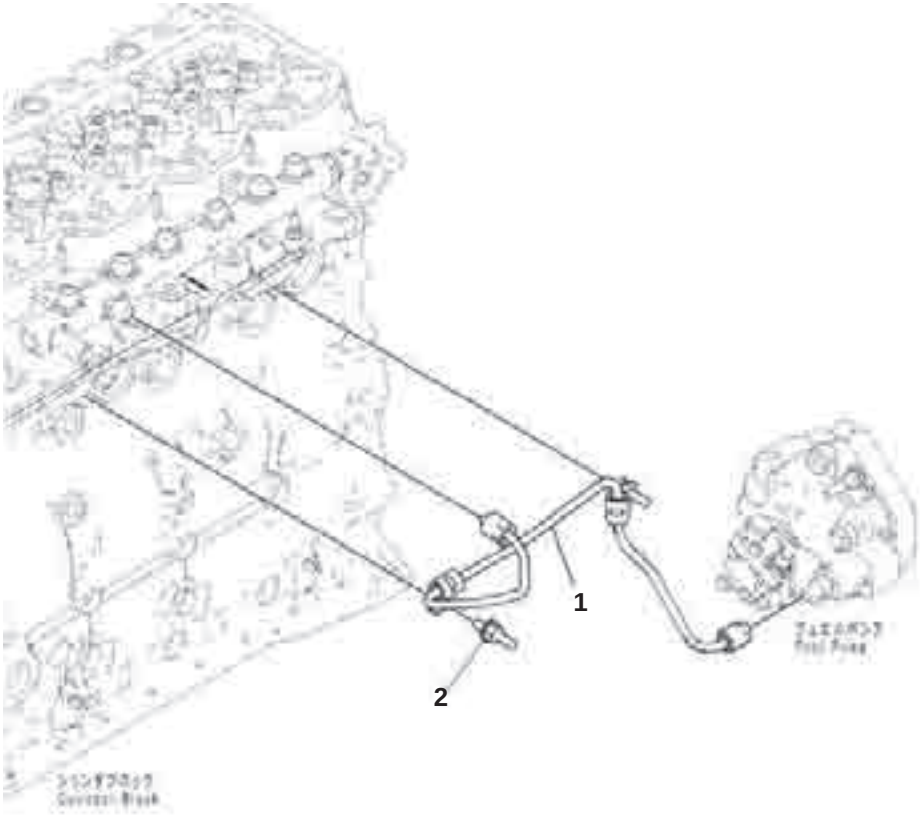

Fuel Piping (#36477692-UP)

Index	Part Number	Description	Qty	Options
1	6755-71-5150	Tube	1	SN:36477692--
2	6754-81-9320	Bolt	1	SN:36477692--

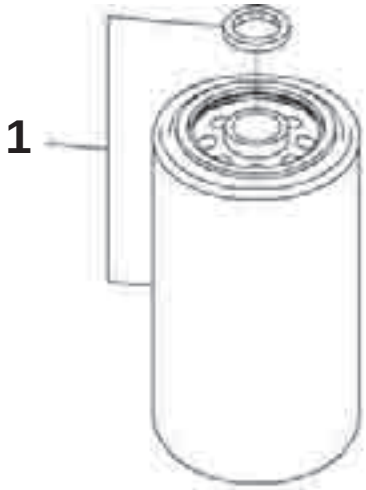

SAA6D107E-1D S/N 36477692-UP

Fuel Filter Cartridge (#36477692-UP)

Index	Part Number	Description	Qty	Options
1	600-319-3750	Cartridge	1	SN:36477692--

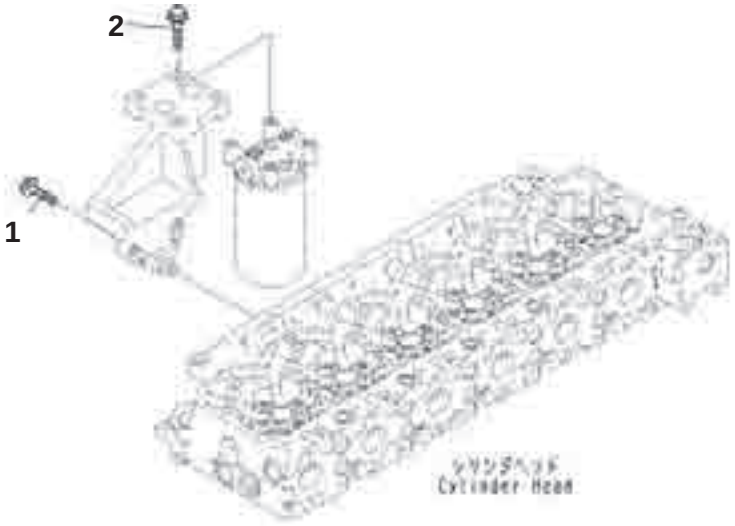

Fuel Filter Mounting (#36477692-UP)

Index	Part Number	Description	Qty	Options
1	6732-61-3110	Bolt	1	SN:36477692--
2	6735-61-2120	Bolt	3	SN:36477692--

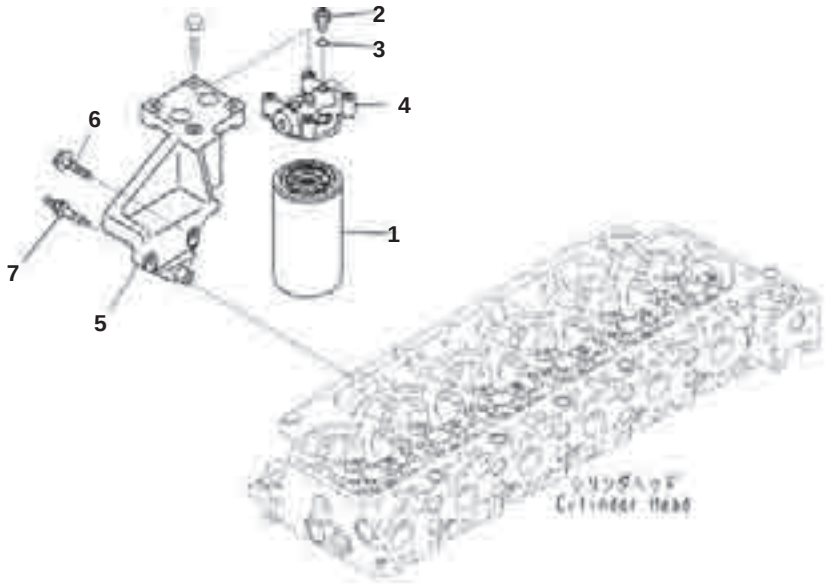

Fuel Filter (#36477692-UP)

Index	Code	Part Number	Description	Qty	Options
		6754-71-6370	Filter Assembly	1	SN:36477692--
1	C1		· Filter	1	SN:36477692--
		6732-21-1960	· Plug Assembly	2	SN:36477692--
2		6215-81-9510	· · Plug	1	SN:36477692--
3		6735-21-1970	· · O-ring	1	SN:36477692--
4		6754-71-6360	· Head	1	SN:36477692--
5		6755-71-5410	Support, Filter	1	SN:36477692--
6		6732-61-3110	Bolt	1	SN:36477692--
7		6745-72-6131	Bolt	1	SN:36477692--

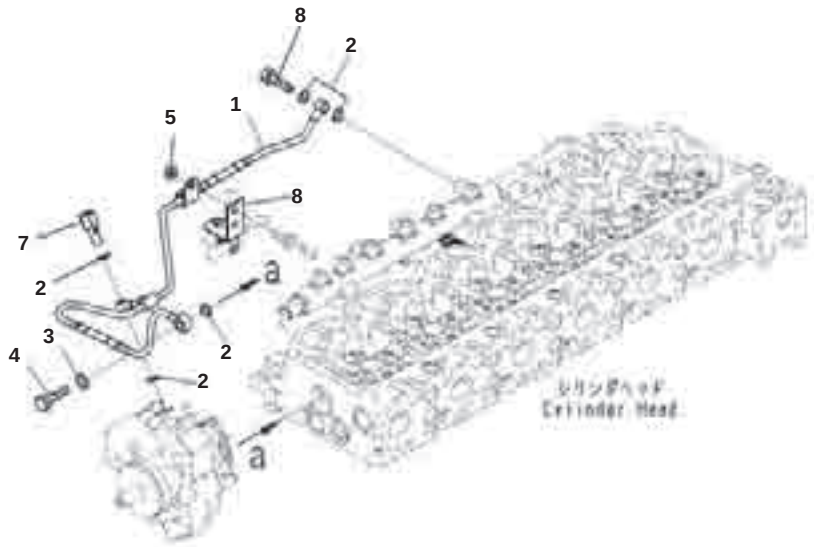

Fuel Drain Piping (#36477692-UP)

Index	Part Number	Description	Qty	Options
1	6755-71-5180	Tube, Drain	1	SN:36477692--
2	6745-71-1130	Seal, Washer	5	SN:36477692--
3	6731-74-5910	Washer, Seal	1	SN:36477692--
4	6754-71-5430	Valve, Check	1	SN:36477692--
5	6732-71-3210	Nut	1	SN:36477692--
6	6732-71-6510	Bolt, Joint	1	SN:36477692--
7	6755-71-5120	Joint	1	SN:36477692--
8	6755-71-5260	Brace	1	SN:36477692--

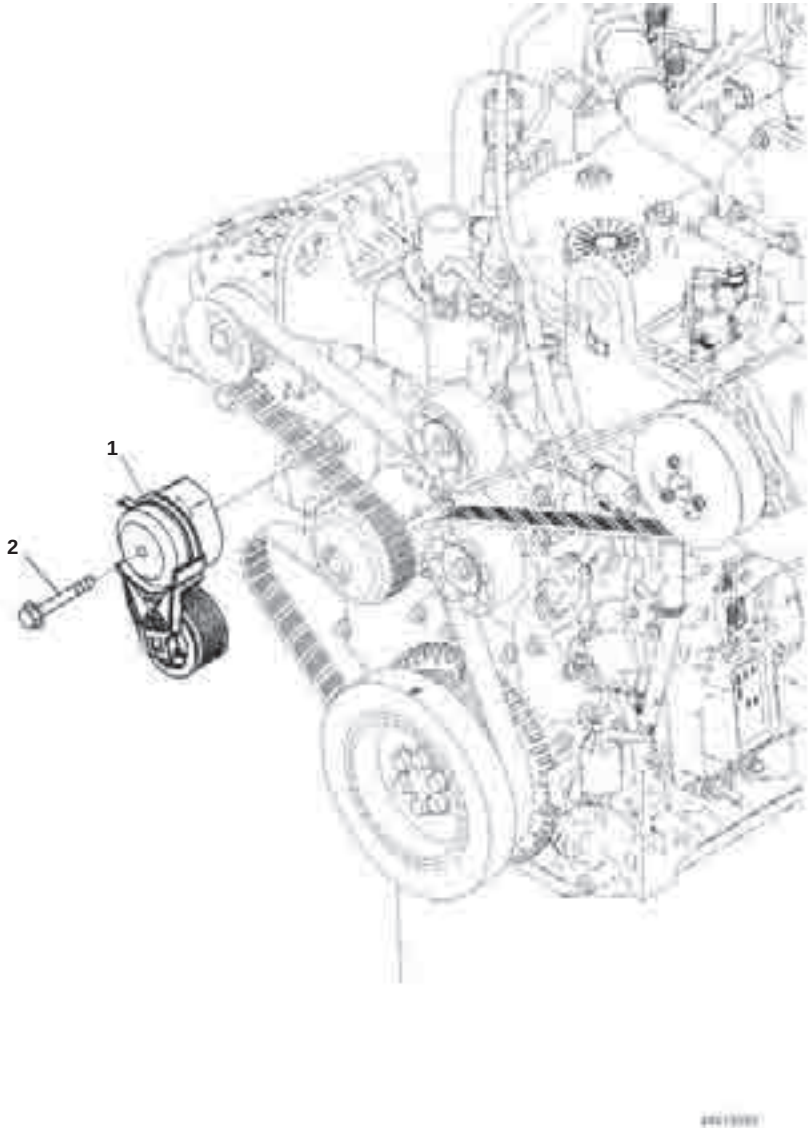

Cooling Fan Belt Tensioner (#36477692-UP)

Index	Part Number	Description	Qty	Options
1	6754-61-4111	Tensioner, Belt	1	SN:36477692--
2	6731-21-6220	Bolt	1	SN:36477692--

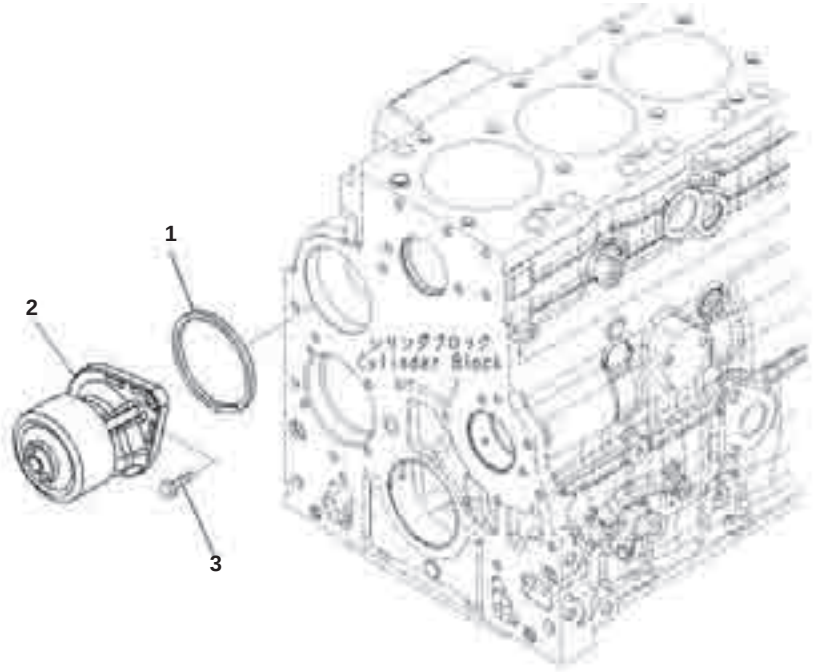

Water Pump (#36477692-UP)

Index	Code	Part Number	Description	Qty	Options
		6754-61-1010	Pump, Water Ass'y	1	SN:36477692--
1	C1		˙ Pump, Water	1	SN:36477692--
2		6736-61-1520	˙ Seal	1	SN:36477692--
3		01435-00825	Bolt	1	SN:36477692--

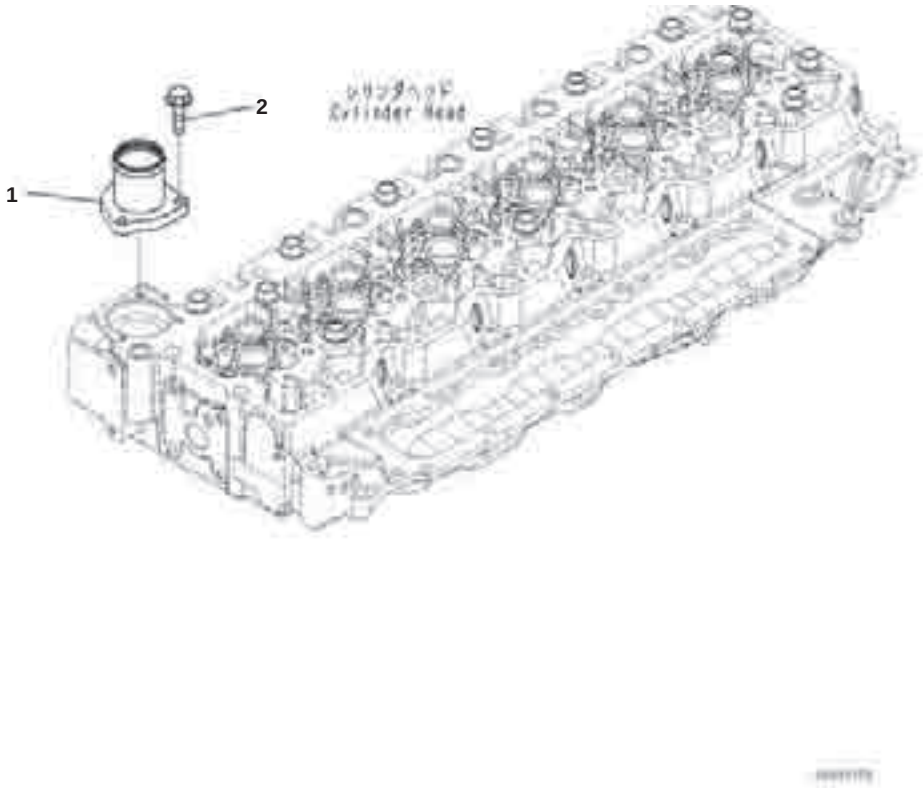

Water Outlet Connector (#36477692-UP)

Index	Part Number	Description	Qty	Options
1	6754-61-6320	Connector, Outlet	1	SN:36477692--
2	6735-71-5190	Bolt	3	SN:36477692--

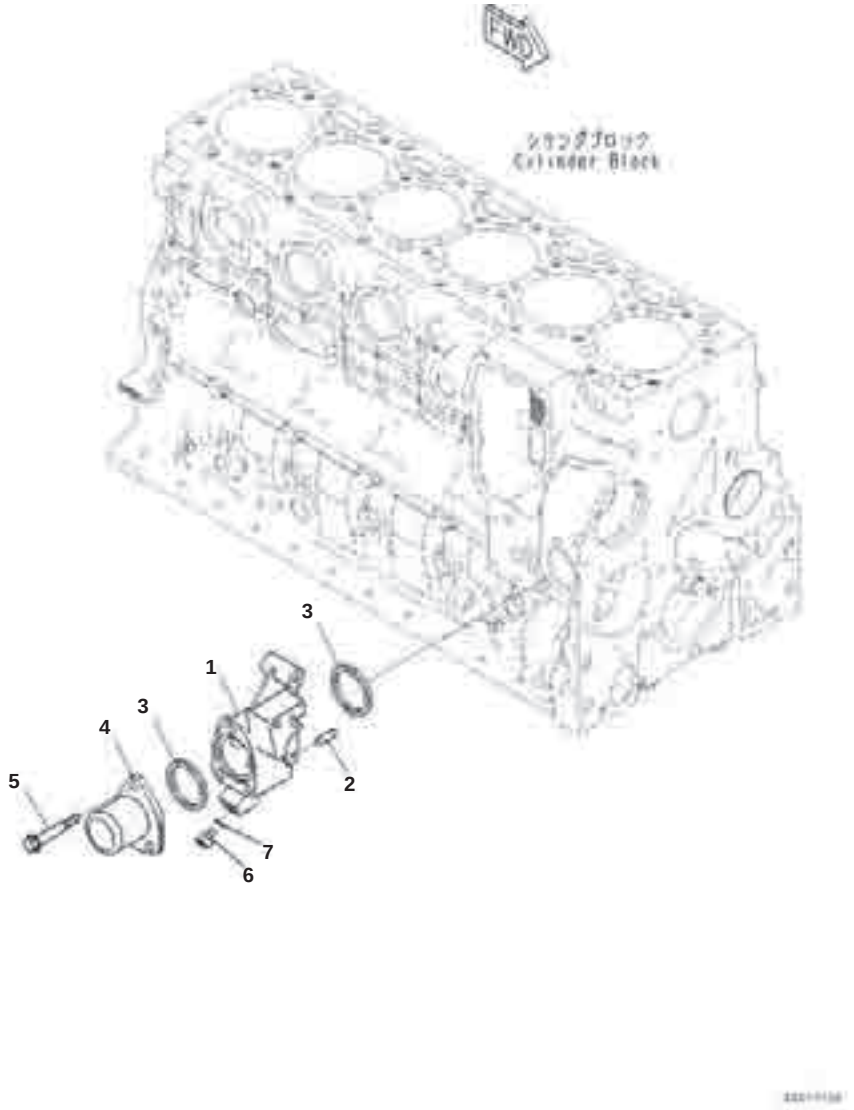

Water Inlet Connector (#36477692-UP)

Index	Part Number	Description	Qty	Options
	6755-61-6210	Connection	1	SN:36477692--
1	6755-61-6220	･ Connection	1	SN:36477692--
2	6737-32-2110	･ Pin	2	SN:36477692--
3	6732-61-6131	Seal Ring	2	SN:36477692--
4	6754-61-6120	Connector	1	SN:36477692--
5	6731-21-6220	Bolt	3	SN:36477692--
	6735-21-1910	Plug Assembly	1	SN:36477692--
6	6735-21-1920	･ Plug	1	SN:36477692--
7	6735-21-1930	･ O-ring	1	SN:36477692--

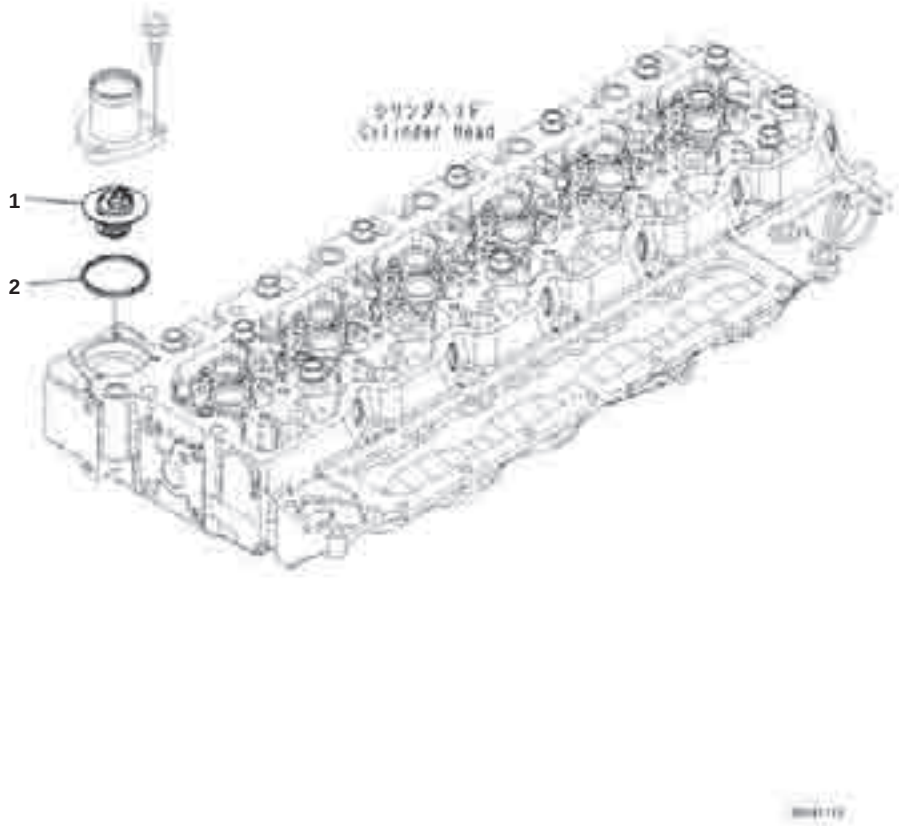

Thermostat (#36477692-UP)

Index	Code	Part Number	Description	Qty	Options
		6751-61-6212	Thermostat Assembly	1	SN:36477692--
1	C1		· Thermostat	1	SN:36477692--
2		6754-61-6230	· Seal	1	SN:36477692--

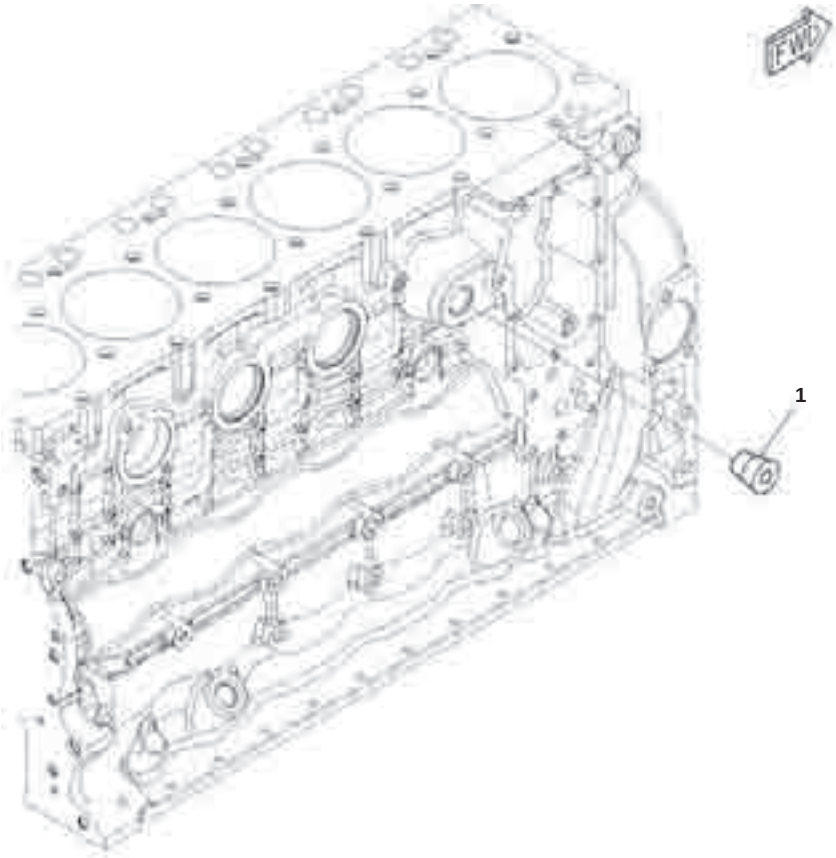

Coolant Heater Plug (#36477692-UP)

Index	Part Number	Description	Qty	Options
1	6732-11-1920	Plug	1	SN:36477692--

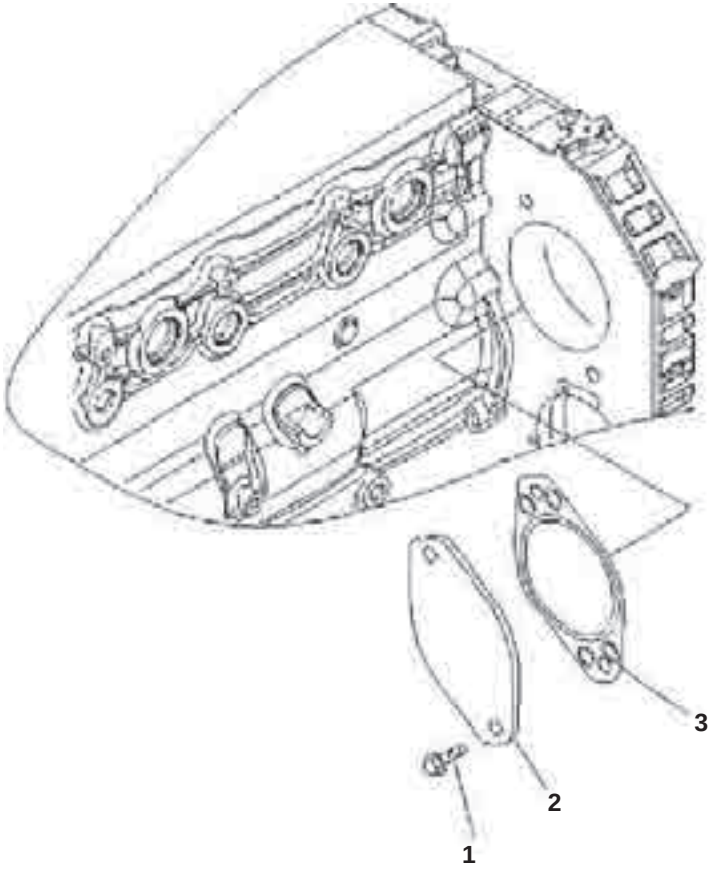

Hydraulic Pump (#36477692-UP)

Index	Part Number	Description	Qty	Options
1	6732-11-1720	Bolt	4	SN:36477692--
2	6732-21-9110	Plate	1	SN:36477692--
3	6754-22-9110	Gasket	1	SN:36477692--

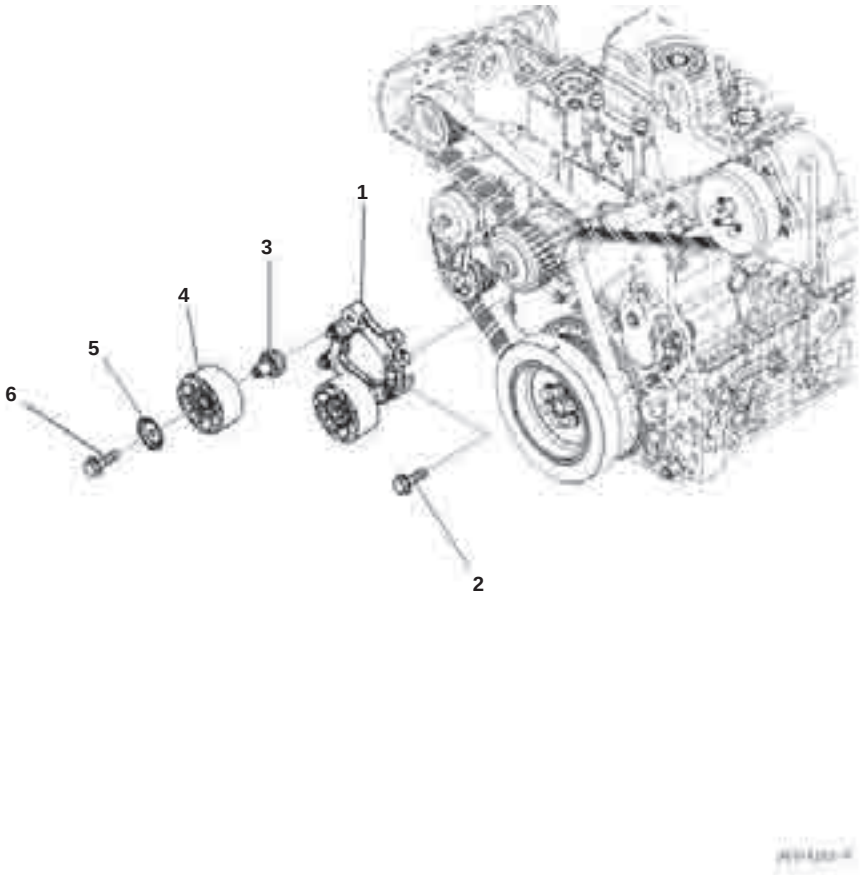

Idler Pulley (#36477692-UP)

Index	Part Number	Description	Qty	Options
1	6755-61-3120	Support	1	SN:36477692--
2	6754-81-9390	Bolt	4	SN:36477692--
3	6742-01-5123	Shaft	2	SN:36477692--
4	6755-61-3110	Pulley	2	SN:36477692--
5	6745-82-6530	Shield	2	SN:36477692--
6	6216-14-1120	Bolt	2	SN:36477692--

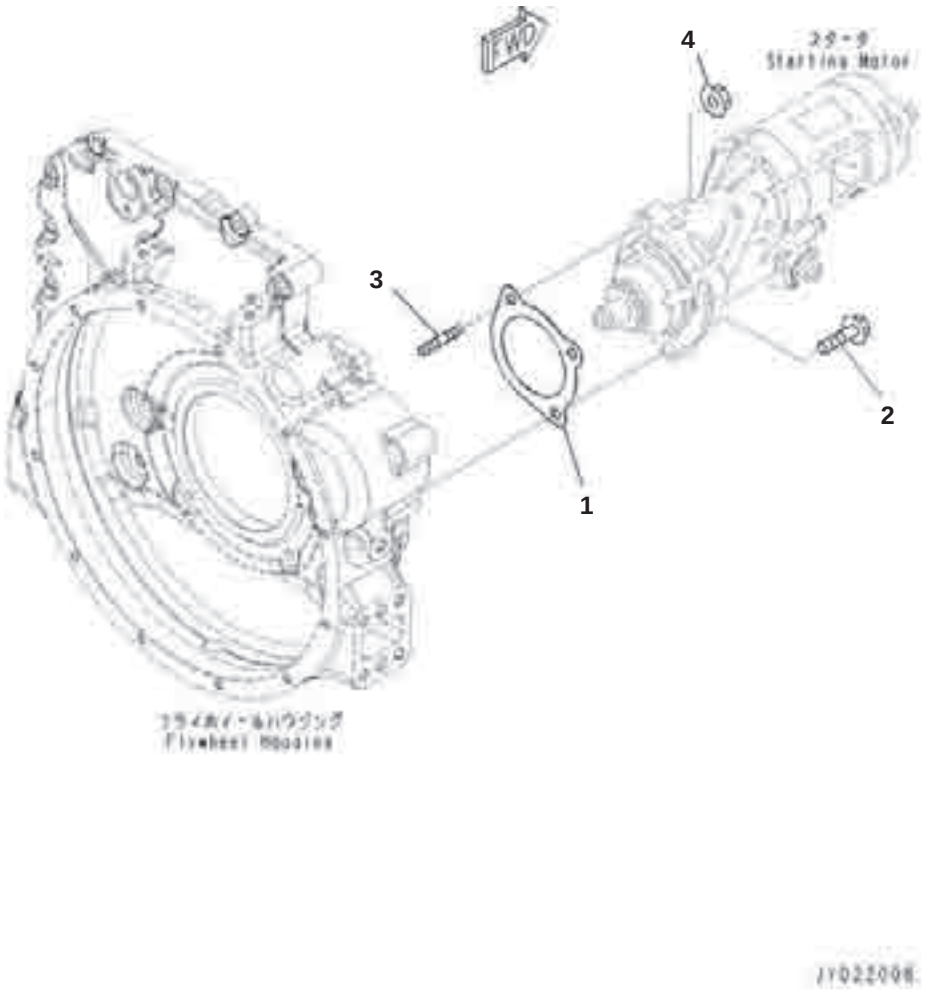

Starting Motor Mounting (#36477692-UP)

Index	Part Number	Description	Qty	Options
1	6754-81-6810	Gasket	1	SN:36477692--
2	6731-82-6810	Bolt	2	SN:36477692--
3	6735-81-6170	Stud	1	SN:36477692--
4	6736-81-6170	Nut	1	SN:36477692--

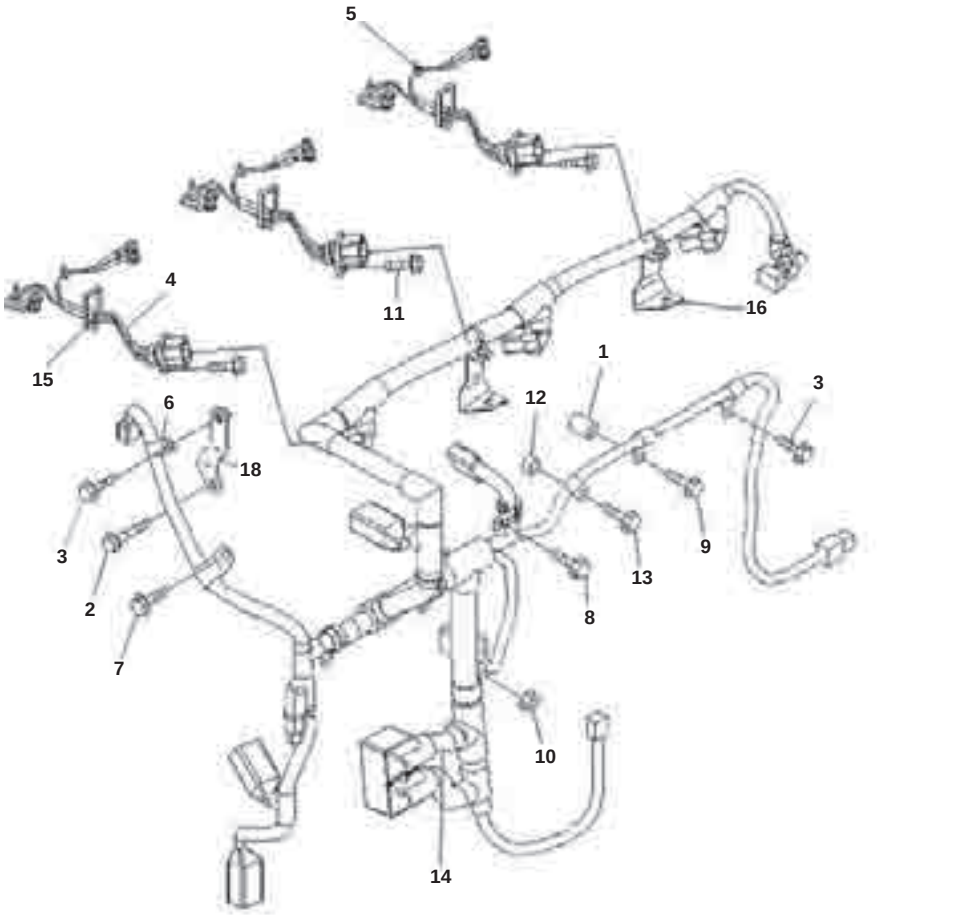

Index	Part Number	Description	Qty	Options
1	6731-21-1920	Spacer	2	SN:36477692--
2	6754-81-9390	Bolt	1	SN:36477692--
3	6216-74-6180	Bolt	2	SN:36477692--
4	6754-81-9210	Wiring Harness	3	SN:36477692--
5	6754-81-9230	Clip	6	SN:36477692--
6	6754-82-9410	Clip	1	SN:36477692--
7	6733-71-5680	Bolt	1	SN:36477692--
8	6736-81-5110	Bolt	2	SN:36477692--
9	6732-61-6140	Bolt	2	SN:36477692--
10	01584-00605	Nut	3	SN:36477692--
11	6732-21-4180	Bolt	3	SN:36477692--
12	6754-81-9330	Spacer	2	SN:36477692--
13	6731-61-1370	Bolt	1	SN:36477692--
14	6754-82-9210	Wiring Harness	1	SN:36477692--
15	6754-81-9220	Clip	3	SN:36477692--
16	6754-81-9340	Bracket	2	SN:36477692--
17	6754-81-9270	Bracket	1	SN:36477692--

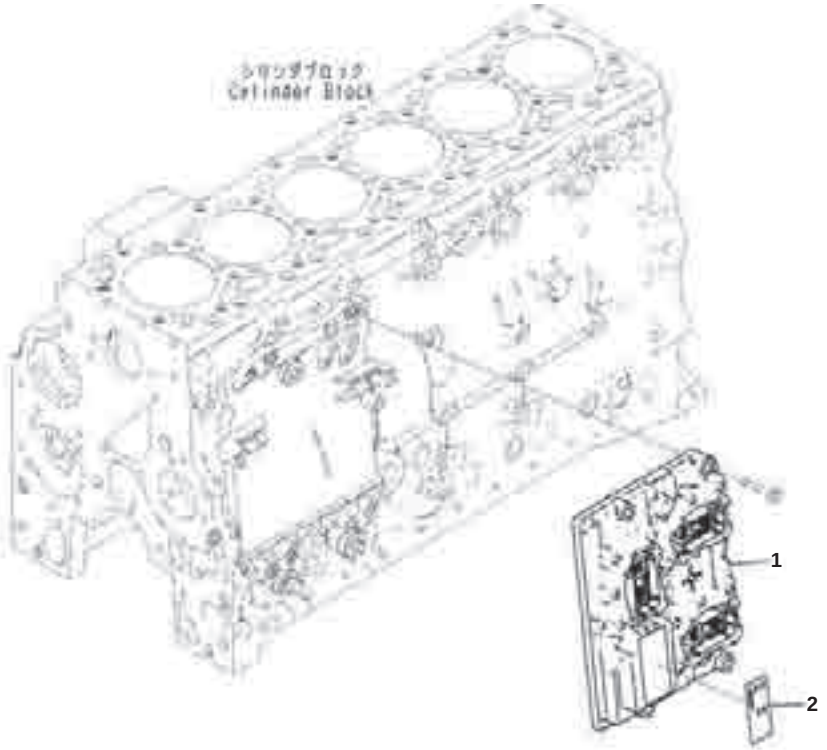

Engine Controller (#36477692-UP)

Index	Code	Part Number	Description	Qty	Options
1		13Y-01-17210	Controller Assembly	1	SN:36477692--
2	C1		' Plate	1	SN:36477692--

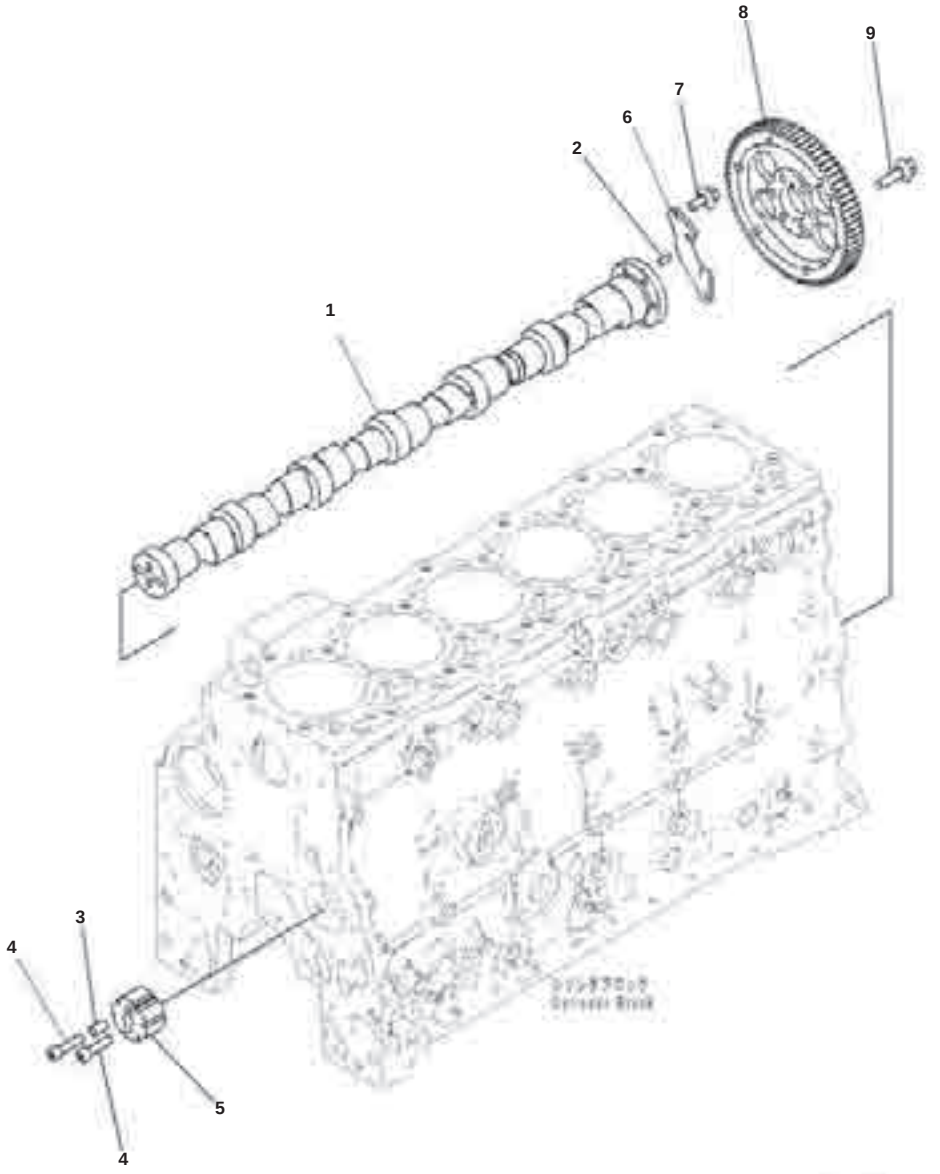

Parts Performance, Camshaft (#36477692-UP)

Index	Part Number	Description	Qty	Options
	6754-41-1100	Camshaft Assembly	1	SN:36477692--
	6754-41-1170	' Camshaft Assembly	1	SN:36477692--
1		' ' Camshaft	1	SN:36477692--
2	6732-21-6150	' ' Pin, Dowel	1	SN:36477692--
3	6754-41-1120	' Ring. Dowel	1	SN:36477692--
4	6754-41-1130	' Bolt	2	SN:36477692--
5	6754-41-1141	' Ring	1	SN:36477692--
6	6754-41-1161	Support	1	SN:36477692--
7	6736-21-5310	Bolt	2	SN:36477692--
8	6754-42-1150	Gear	1	SN:36477692--
9	01435-00825	Bolt	6	SN:36477692--

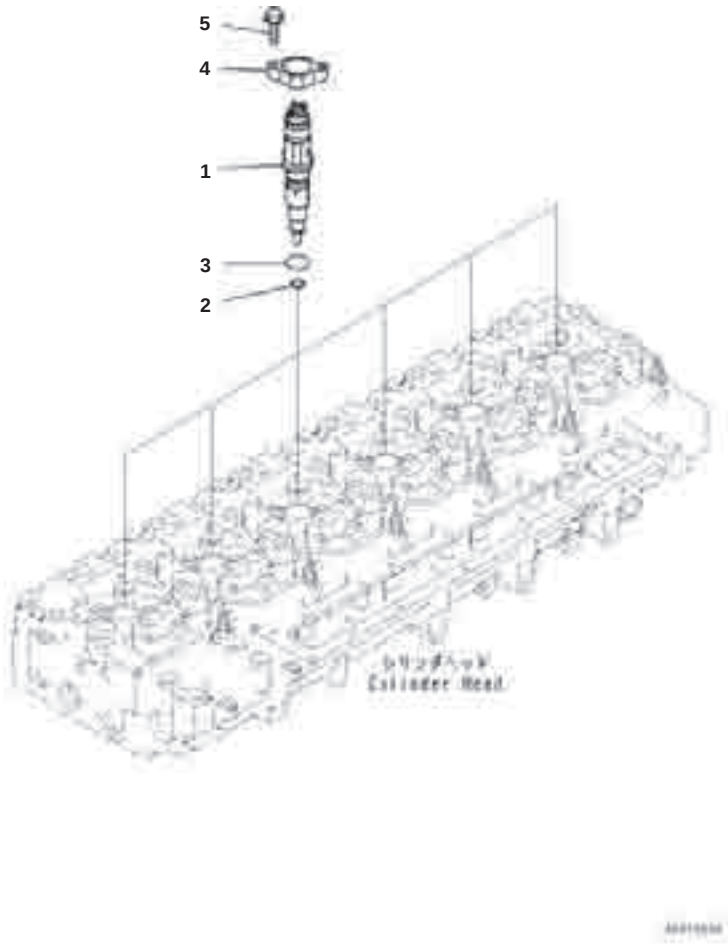

Parts Performance, Injector (#36477692-UP)

Index	Part Number	Description	Qty	Options
1	6754-11-3102	Injector	6	SN:36477692--
2	6754-11-3130	▪ Gasket	1	SN:36477692--
3	6754-11-3140	▪ O-ring	1	SN:36477692--
4	6754-11-3110	Clamp	6	SN:36477692--
5	6742-01-2630	Bolt	12	SN:36477692--

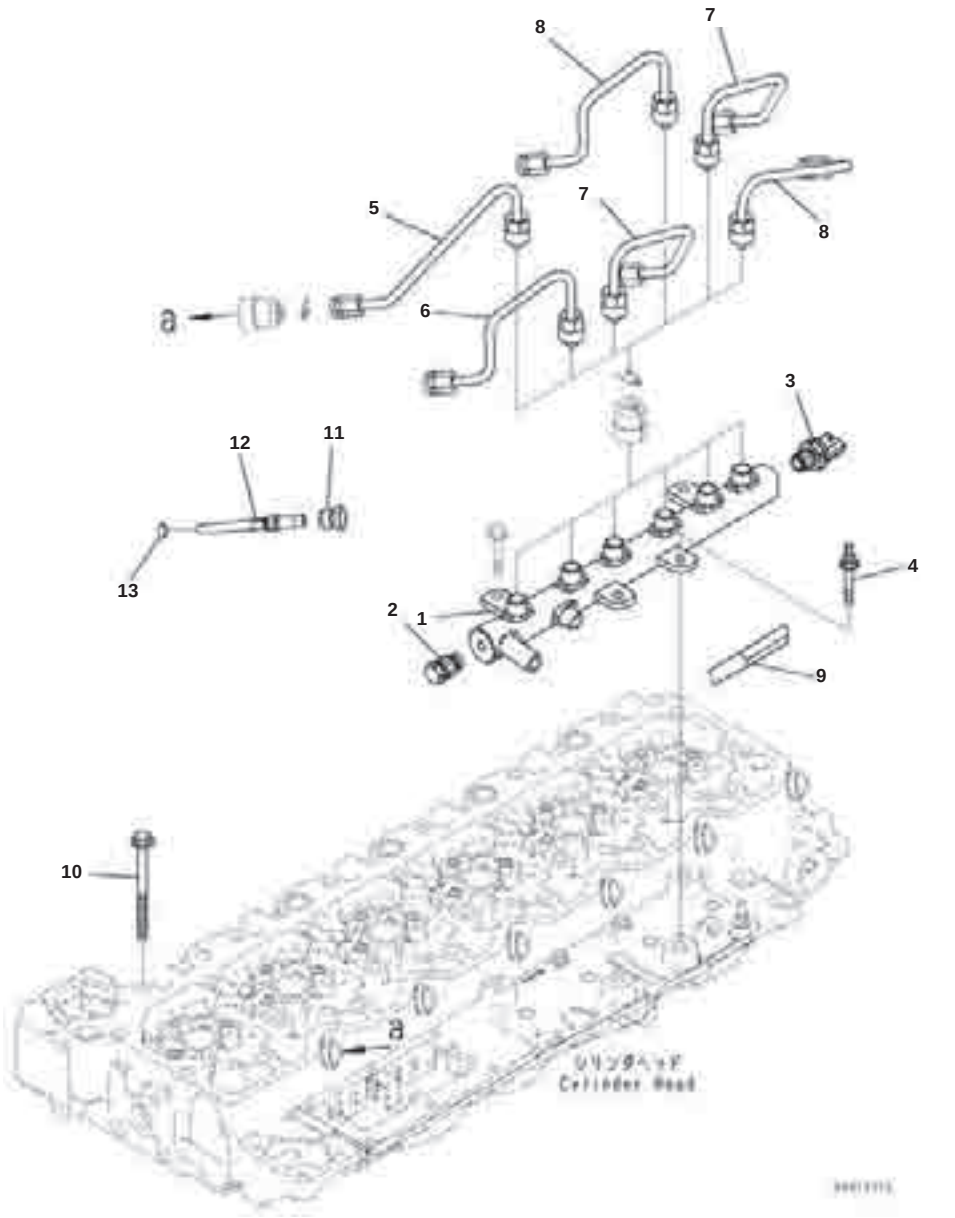

Parts Performance, Common Rail (#36477692-UP)

Index	Part Number	Description	Qty	Options
1	6755-71-1210	Common Rail Assembly	1	SN:36477692--
2	6754-71-1221	▪ Valve	1	SN:36477692--
3	6754-72-1212	▪ Sensor	1	SN:36477692--
4	6733-11-4150	Screw	2	SN:36477692--
5	6754-71-5210	Tube, No.1	1	SN:36477692--
6	6754-71-5220	Tube, No.2,3	2	SN:36477692--
7	6754-71-5230	Tube, No.4,5	2	SN:36477692--
8	6754-71-5240	Tube, No.6	1	SN:36477692--
9	6754-71-1991	Decal	1	SN:36477692--
10	6754-11-1610	Bolt	26	SN:36477692--
11	6754-71-5541	Retainer	6	SN:36477692--
12	6754-71-5511	Connector Ass'y	6	SN:36477692--
13	6745-71-5550	▪ O-Ring	1	SN:36477692--

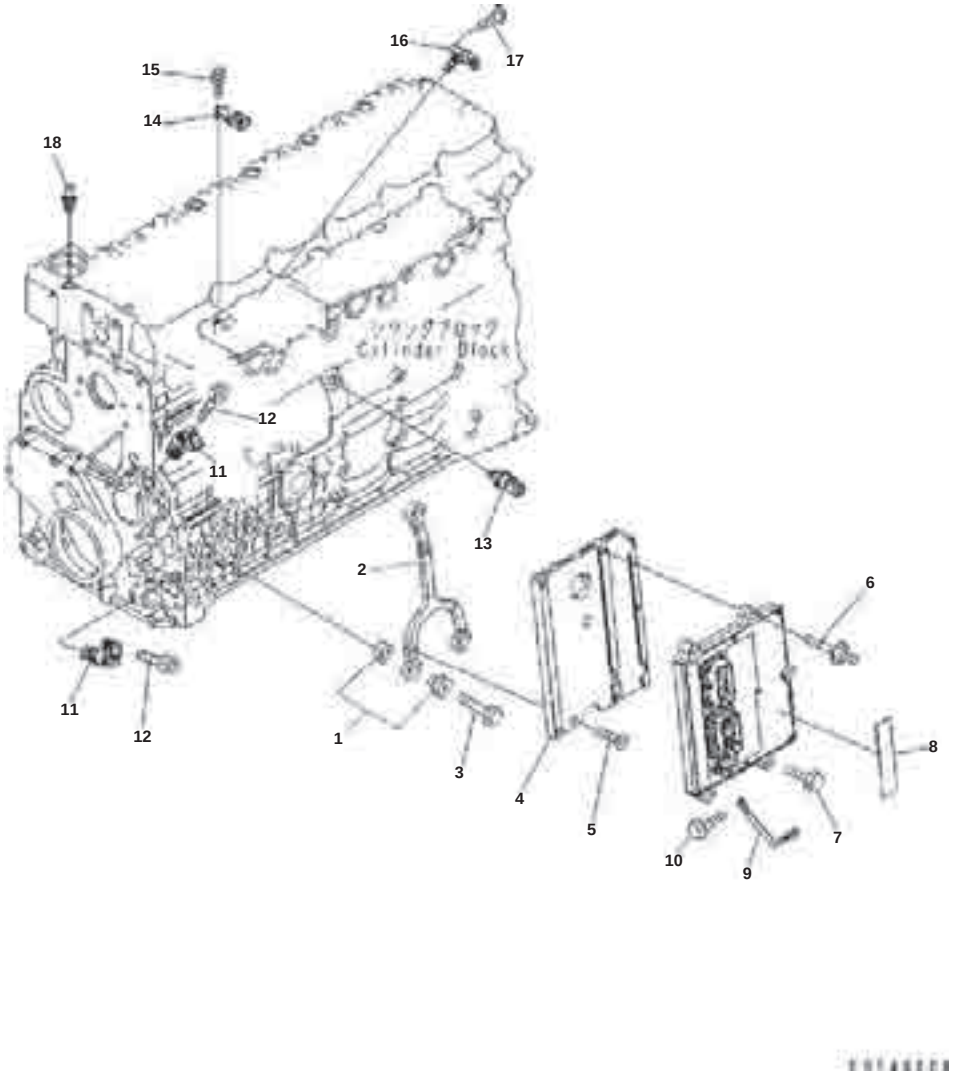

Engine Control Module (#36477692-UP)

Index	Part Number	Description	Qty	Options
1	6754-81-9470	Isolator	3	SN:36477692--
2	6754-81-9120	Bracket	1	SN:36477692--
3	6732-61-3170	Bolt	2	SN:36477692--
4	6754-81-9460	Support	2	SN:36477692--
5	6754-81-9150	Bolt	3	SN:36477692--
6	6754-81-9161	Bolt	3	SN:36477692--
7	6732-61-3110	Bolt	2	SN:36477692--
8	600-460-3000	Plate	1	SN:36477692--
9	6754-81-9170	Wire	1	SN:36477692--
10	6216-74-6180	Bolt	1	SN:36477692--
11	6271-81-9201	Sensor, Ass'y Position	2	SN:36477692--
	6271-81-9220	‧ O-ring	1	SN:36477692--
12	6216-84-9220	Bolt	2	SN:36477692--
13	6744-81-4010	Switch, Pressure	1	SN:36477692--
	6219-81-1990	‧ O-ring	1	SN:36477692--
14	6261-81-1900	Sensor, Temperature	1	SN:36477692--
15	6734-71-5520	Bolt	1	SN:36477692--
16	6754-81-2701	Sensor Assembly	1	SN:36477692--
	6754-81-2710	‧ O-ring	1	SN:36477692--
17	6754-81-9180	Screw	1	SN:36477692--
18	6261-81-6901	Sensor Ass'y, Temperature	1	SN:36477692--
	6216-84-9740	‧ Seal	1	SN:36477692--

ENGINE RELATED PARTS

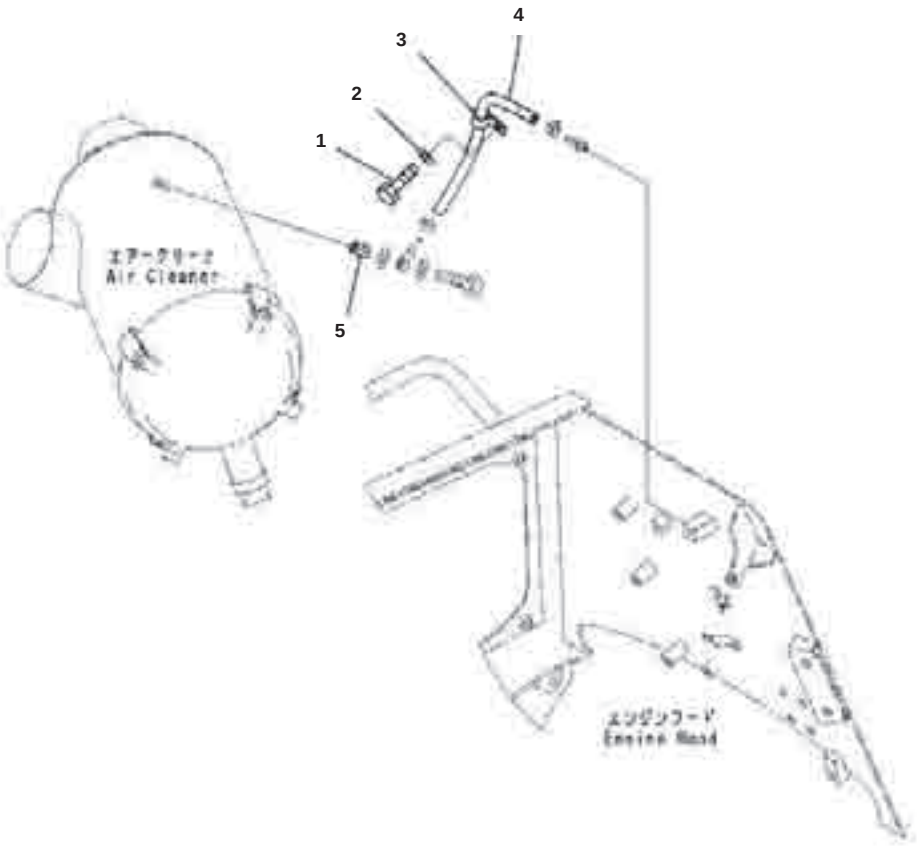

Index	Part Number	Description	Qty	Options
1	01010-81020	Bolt	1	SN:B50001--
2	01643-31032	Washer	1	SN:B50001--
3	04434-51410	Clip	1	SN:B50001--
4	6131-81-8811	Hose	1	SN:B50001--
5	6156-81-8990	Nipple	1	SN:B50001--

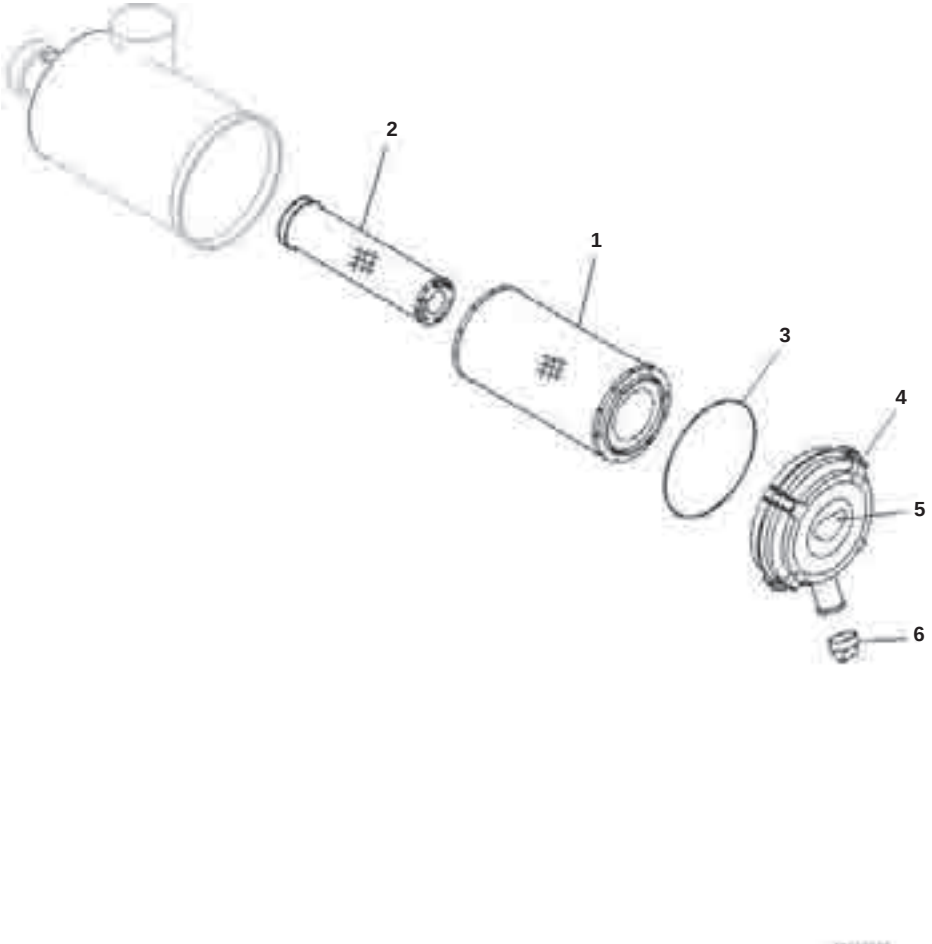

Air Cleaner, Inner Parts

Index	Code	Part Number	Description	Qty	Options
		6755-81-7600	Air Cleaner Assembly	1	SN:B50001---
		600-185-4100	· Element Assembly	1	SN:B50001---
1		600-185-4110	· · Element,Outer	1	SN:B50001---
2	C1		· · Element,Inner	1	SN:B50001---
3		600-184-1470	· · O-ring	1	SN:B50001---
4		600-184-1320	· Cover Assembly	1	SN:B50001---
5		600-184-2810	· · Plate, Mark	1	SN:B50001---
6		600-184-1350	· Valve, Vaquator	1	SN:B50001---

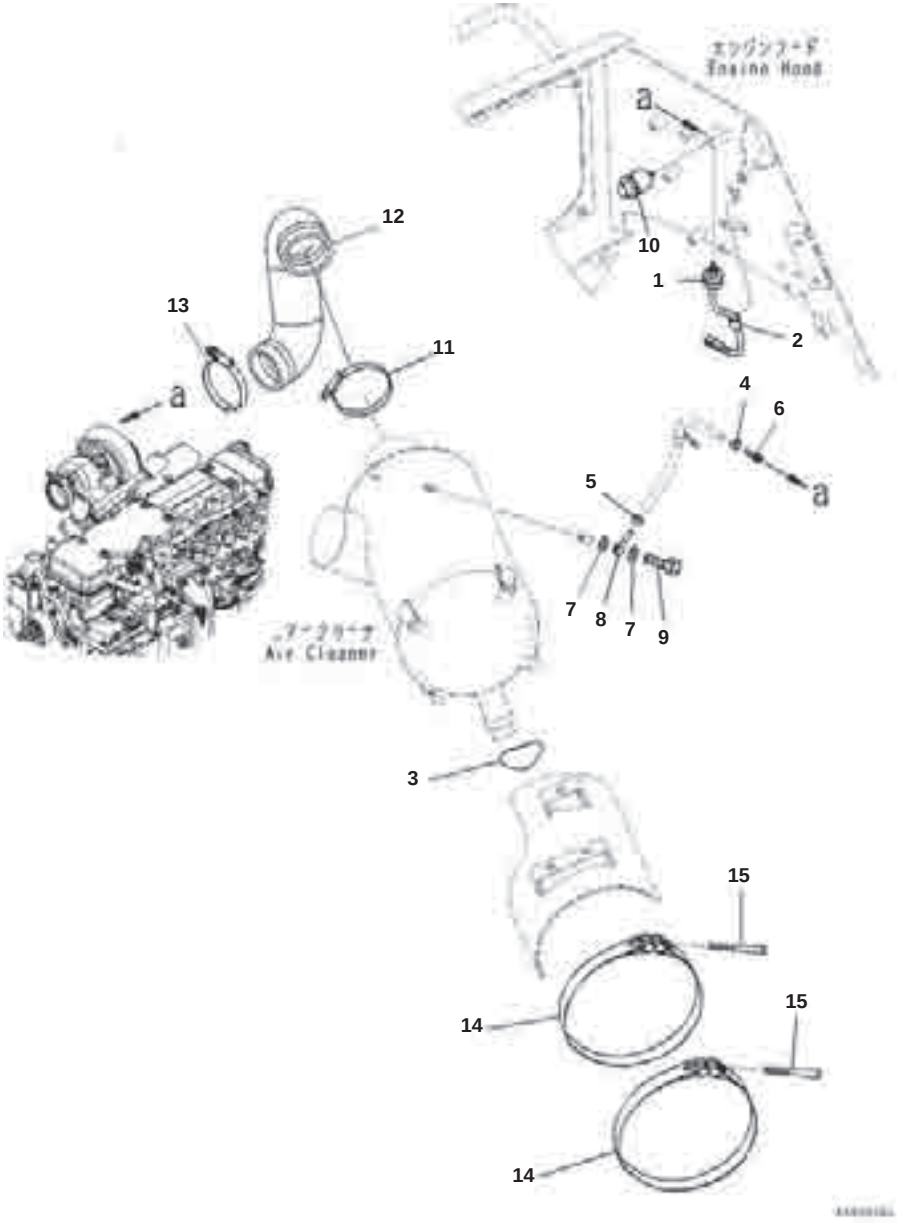

Index	Part Number	Description	Qty	Options
1	7861-93-1430	Sensor, Dust Indicator	1	SN:B50001---
2	08211-10720	Clip	1	SN:B50001---
3	13Y-02-11140	Mark	1	SN:B50001---
4	07285-00125	Clip	1	SN:B50001---
5	07285-00125	Clip	1	SN:B50001---
6	6131-81-8820	Nipple	1	SN:B50001---
7	07005-01012	Seal, Washer	2	SN:B50001---
8	6206-71-1770	Joint	1	SN:B50001---
9	07206-30710	Bolt, Joint	1	SN:B50001---
10	08672-01000	Indicator	1	SN:B50001---
11	07299-00130	Clamp	1	SN:B50001---
12	13Y-02-17250	Hose	1	SN:B50001---
13	07299-00120	Clamp	1	SN:B50001---
14	6150-11-5840	Band	2	SN:B50001---
15	6643-11-4641	Bolt	2	SN:B50001---

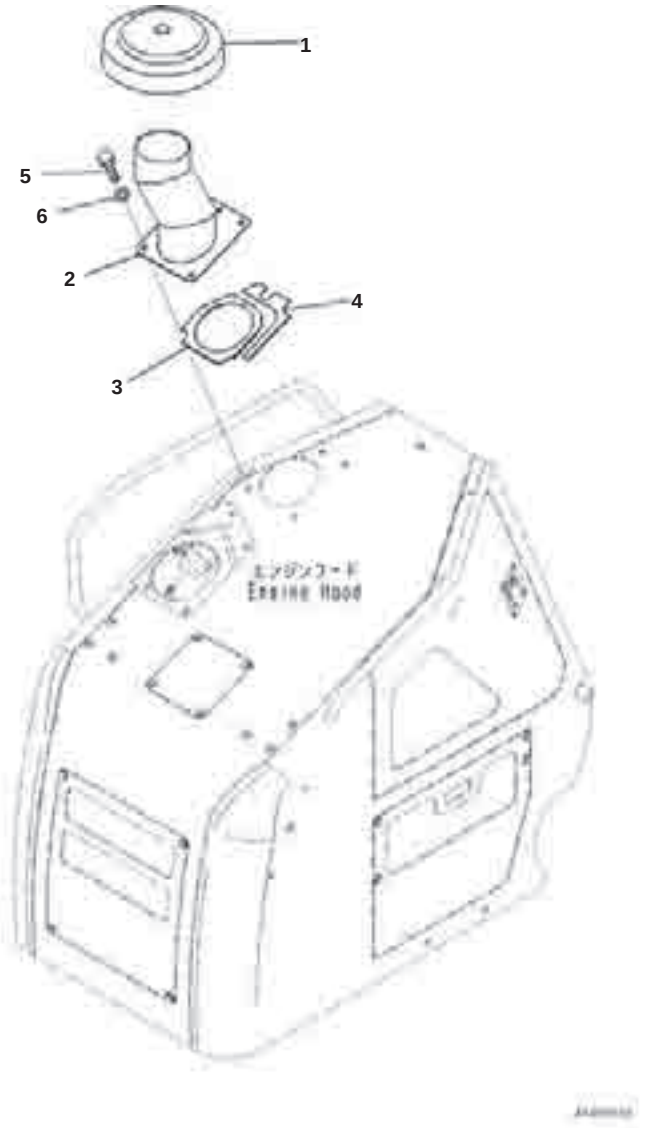

Rain Guard

Index	Part Number	Description	Qty	Options
1	566-02-42200	Cap Assembly	1	SN:B50001---
2	13Y-01-11323	Pipe	1	SN:B50001---
3	13Y-01-11332	▪ Sheet	1	SN:B50001---
4	13Y-01-11340	▪ Sheet	1	SN:B50001---
5	01010-81230	Bolt	4	SN:B50001---
6	01643-31232	Washer	4	SN:B50001---

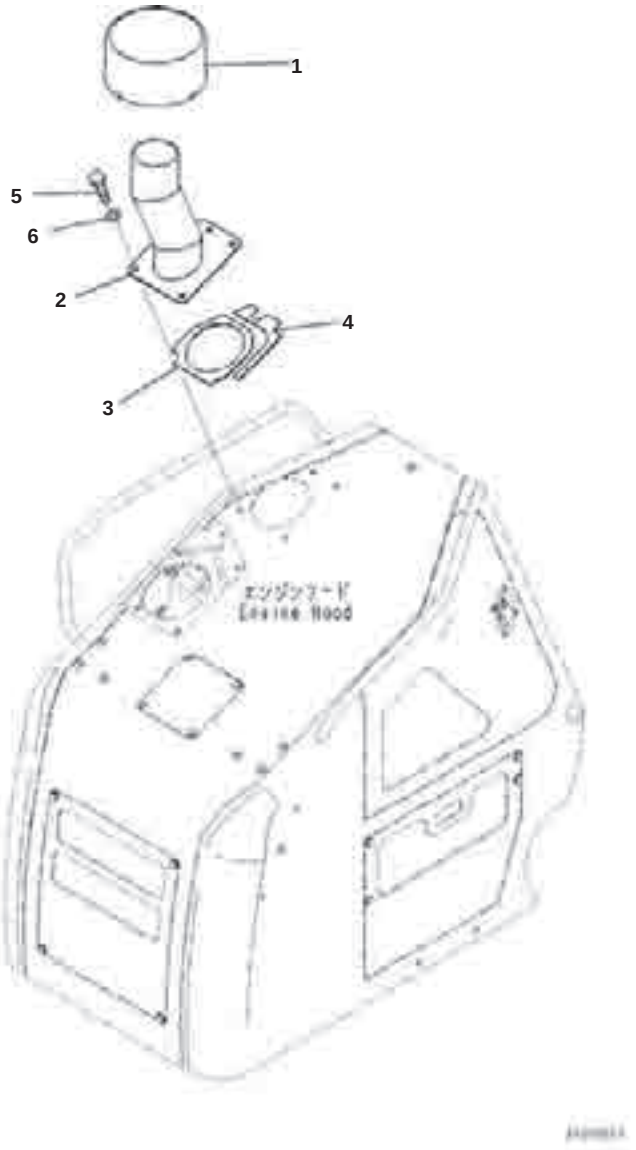

Pre-cleaner

Index	Part Number	Description	Qty	Options
1	11Y-01-31820	Pre-cleaner	1	SN:B50001---
2	13Y-01-11313	Pipe	1	SN:B50001---
3	13Y-01-11332	▪ Sheet	1	SN:B50001---
4	13Y-01-11340	▪ Sheet	1	SN:B50001---
5	01010-81230	Bolt	4	SN:B50001---
6	01643-31232	Washer	4	SN:B50001---

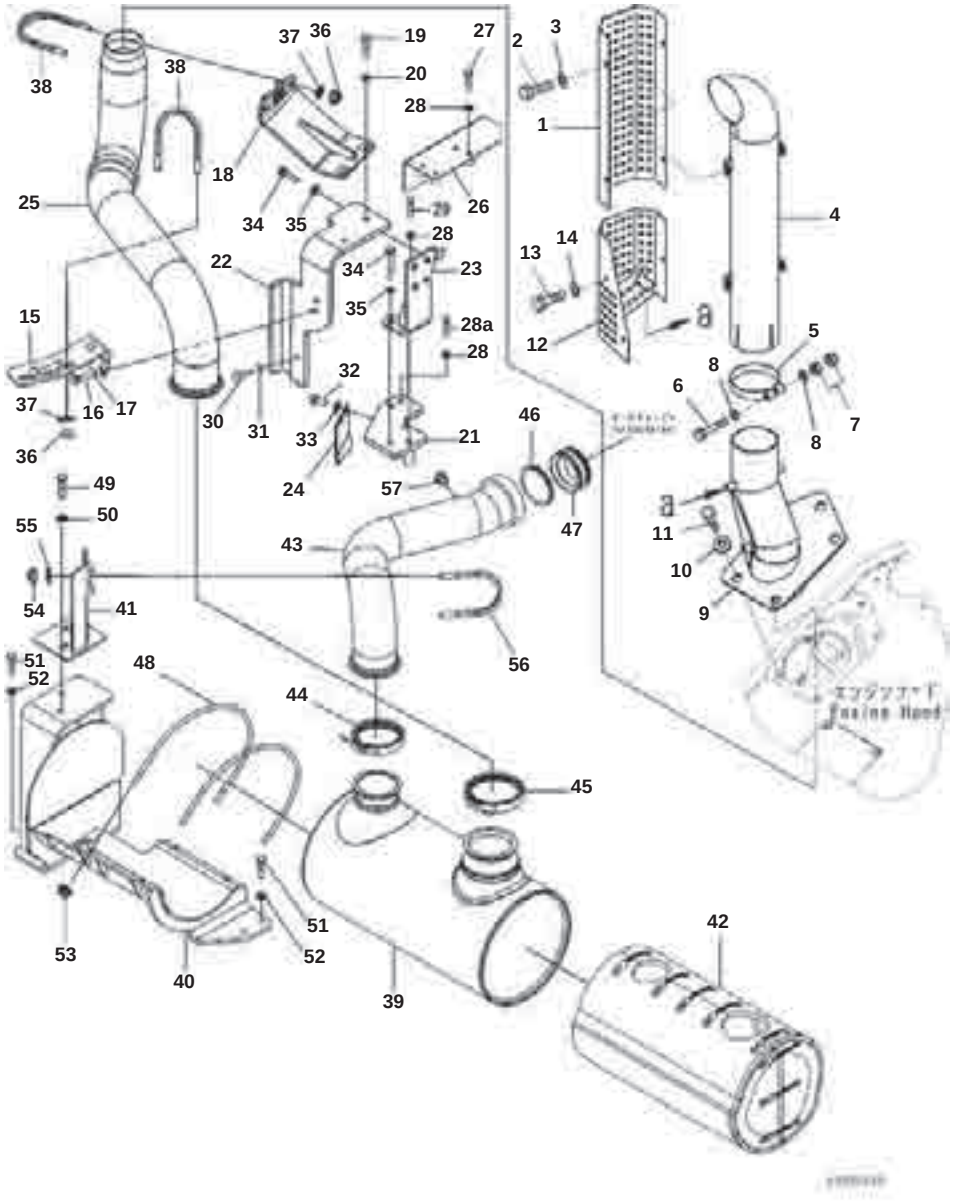

Exhaust Pipe

Index	Part Number	Description	Qty	Options
1	13Y-01-11791	Cover	1	SN:B50001---
2	01010-D1020	Bolt	1	SN:B50001---
3	01643-71032	Washer	1	SN:B50001---
4	13Y-01-12372	Pipe	1	SN:B50001---
5	421-02-31120	Clamp	1	SN:B50001---
6	01010-81285	Bolt	1	SN:B50001---
7	01580-11210	Nut	2	SN:B50001---
8	01640-21223	Washer	2	SN:B50001---
9	13Y-01-11772	Pipe	1	SN:B50001---
10	11Y-54-11370	Washer	4	SN:B50001---
11	01010-D1020	Bolt	4	SN:B50001---
12	13Y-01-11781	Cover	1	SN:B50001---
13	01010-D1020	Bolt	1	SN:B50001---
14	01643-71032	Washer	1	SN:B50001---
15	13Y-01-17181	Bracket	1	SN:B50001---
16	01010-81035	Bolt	2	SN:B50001---
17	01643-31032	Washer	2	SN:B50001---
18	13Y-01-12751	Bracket	1	SN:B50001---
19	01010-81035	Bolt	2	SN:B50001---
20	01643-31032	Washer	2	SN:B50001---
21	13Y-01-17110	Bracket	1	SN:B50001---
22	13Y-01-17121	Bracket	1	SN:B50001---
23	13Y-01-17130	Bracket	1	SN:B50001---
24	13Y-01-17140	Plate	1	SN:B50001---
25	13Y-02-17173	Tube	1	SN:B50001---
26	6755-81-9160	Cover	1	SN:B50001---
27	01010-E1045	Bolt	4	SN:B50001---
28	01643-31032	Washer	6	SN:B50001---
28a	01010-E1075	Bolt	1	SN:B50001--
29	01010-E1085	Bolt	1	SN:B50001---
30	01010-80830	Bolt	2	SN:B50001---
31	01643-30823	Washer	1	SN:B50001---
32	01010-81025	Bolt	1	SN:B50001---
33	01643-31032	Washer	1	SN:B50001---
34	01010-81035	Bolt	1	SN:B50001---
35	01643-31032	Washer	1	SN:B50001---
36	01597-01211	Nut	4	SN:B50001---
37	01643-31232	Washer	4	SN:B50001---
38	07283-31087	Clip	4	SN:B50001---
39	13Y-02-17120	Muffler	1	SN:B50001---
40	13Y-02-17133	Bracket	1	SN:B50001---
41	13Y-02-17141	Bracket, Clamp Mount	1	SN:B50001---
42	13Y-02-17281	Cover, Muffler	1	SN:B50001---
43	13Y-02-17164	Tube	1	SN:B50001---
44	13Y-02-17180	Clamp	1	SN:B50001---
45	13Y-02-17190	Clamp	1	SN:B50001---
46	6137-11-5291	Seal Ring	1	SN:B50001---

D61EX-23M0 S/N B50001

Exhaust Pipe

Index	Part Number	Description	Qty	Options
47	6754-11-5620	Tube	1	SN:B50001---
48	6754-11-5940	U-Bolt	2	SN:B50001---
49	01010-81035	Bolt	2	SN:B50001---
50	01643-31032	Washer	2	SN:B50001---
51	01010-81230	Bolt	4	SN:B50001---
52	01643-31232	Washer	4	SN:B50001---
53	01594-01008	Nut	4	SN:B50001---
54	01597-01211	Nut	2	SN:B50001---
55	01643-31232	Washer	2	SN:B50001---
56	07283-38981	Clip	1	SN:B50001---
57	07043-00108	Plug	1	SN:B50001---

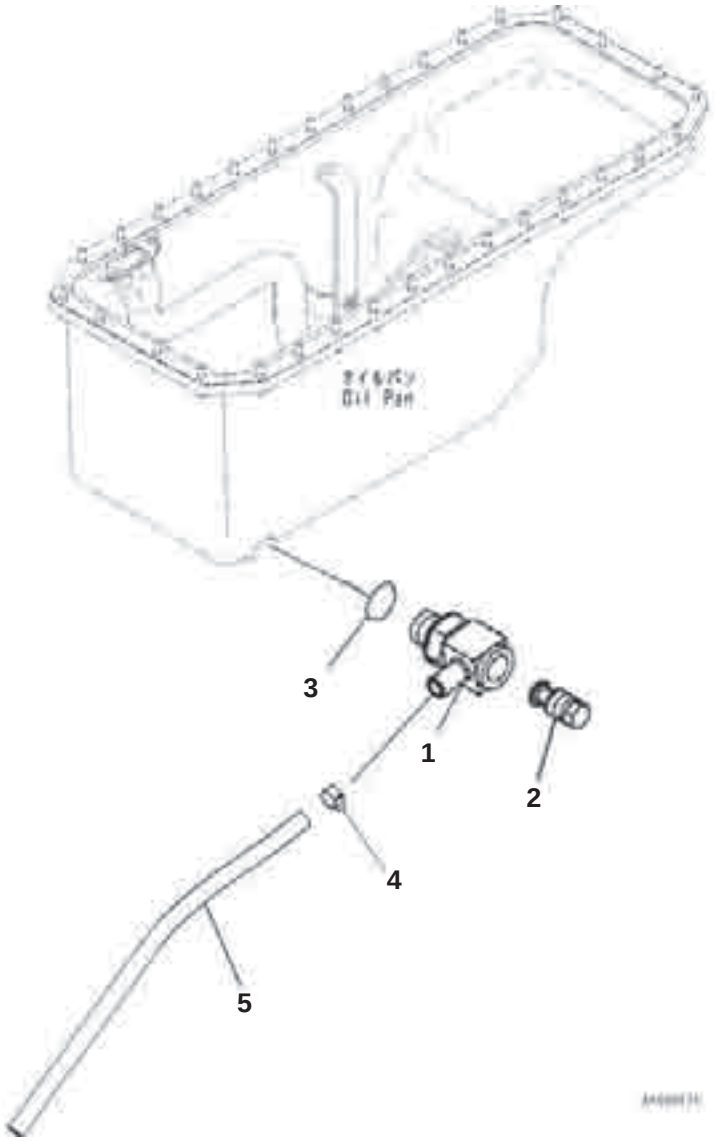

Engine Oil Pan Drain Piping

Index	Part Number	Description	Qty	Options
1	14X-01-35161	Elbow	1	SN:B50001--
2	07002-22434	O-ring	1	SN:B50001--
3	134-01-61840	Plug	1	SN:B50001--
4	07270-21550	Tube	1	SN:B50001---
5	07285-00180	Clip	1	SN:B50001---

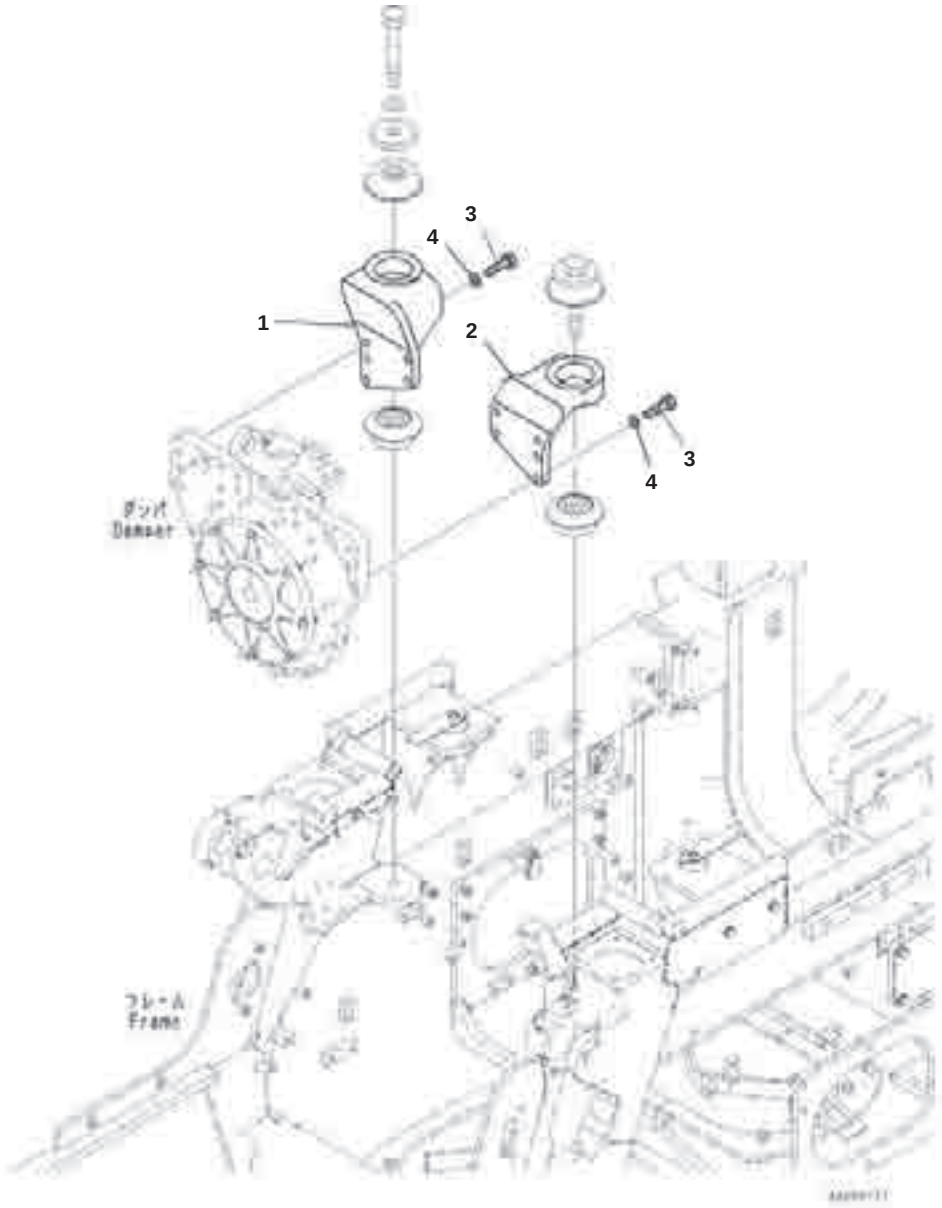

Engine Mounting Bracket

Index	Part Number	Description	Qty	Options
1	13Y-01-11581	Bracket	1	SN:B50001---
2	13Y-01-11591	Bracket	1	SN:B50001---
3	01010-81645	Bolt	10	SN:B50001---
4	01643-31645	Washer	10	SN:B50001---

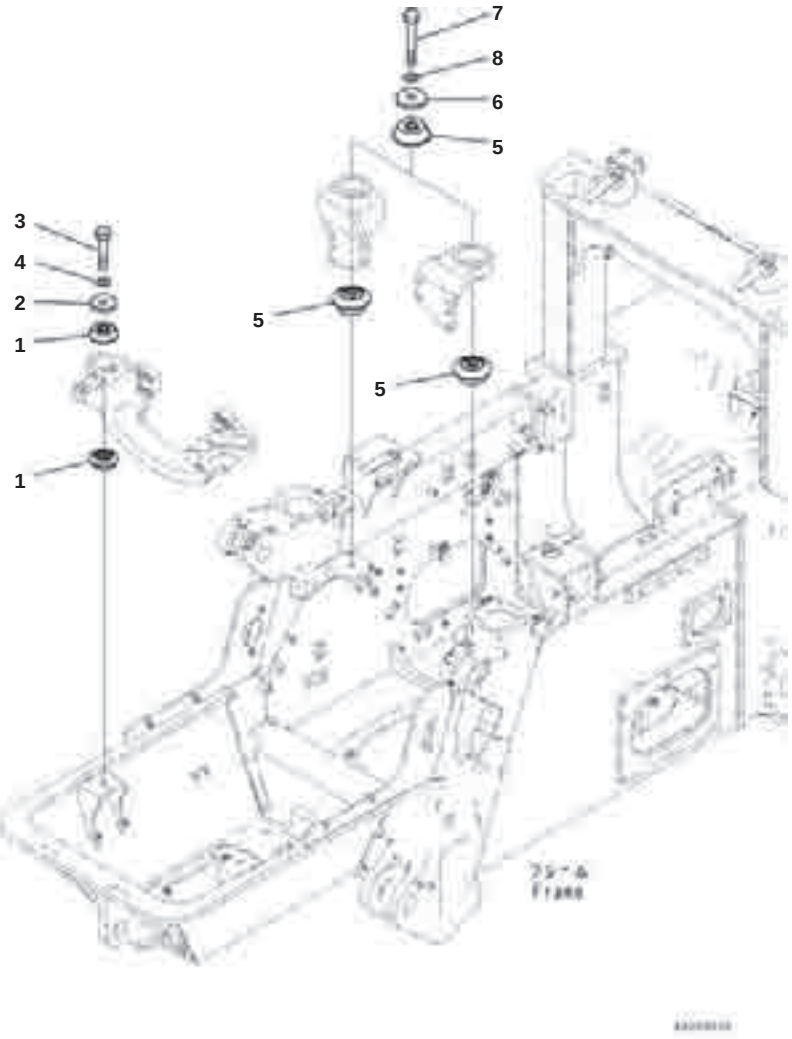

Engine Mounting

Index	Part Number	Description	Qty	Options
1	13Y-01-11550	Cushion	4	SN:B50001---
2	134-01-61461	Washer	2	SN:B50001---
3	01011-82035	Bolt	2	SN:B50001---
4	01643-32060	Washer	2	SN:B50001---
5	13Y-01-11560	Cushion	4	SN:B50001---
6	14X-01-65150	Washer	2	SN:B50001---
7	01011-82480	Bolt	2	SN:B50001---
8	01643-32460	Washer	2	SN:B50001---

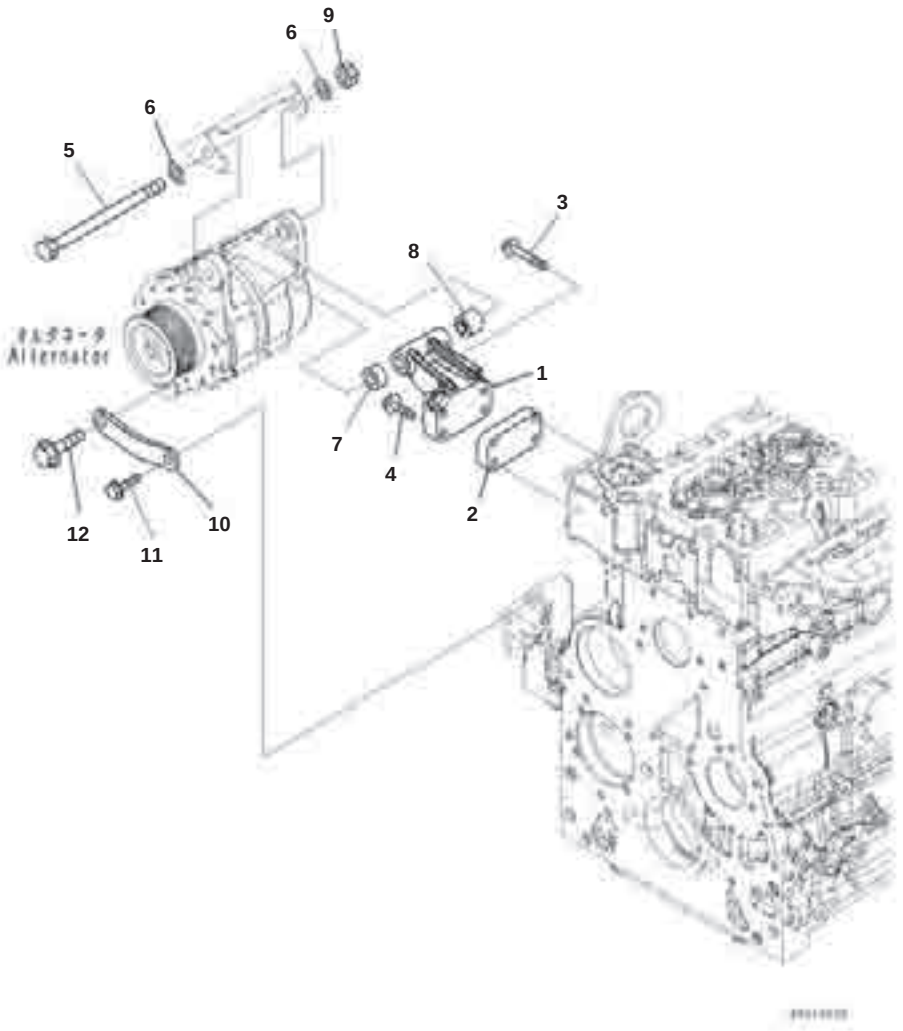

Alternator 60Amp. Mounting

Index	Part Number	Description	Qty	Options
1	6754-81-6140	Support Assembly	1	SN:B50001--
2	6755-81-6140	Support	1	SN:B50001--
3	01435-00885	Bolt	1	SN:B50001--
4	01435-00860	Bolt	3	SN:B50001--
5	6207-81-6980	Bolt	1	SN:B50001--
6	01641-21223	Washer	2	SN:B50001--
7	6732-81-6490	Spacer	1	SN:B50001--
8	6732-81-6530	Spacer	1	SN:B50001--
9	01580-11210	Nut	1	SN:B50001--
10	6755-81-6150	Brace	1	SN:B50001--
11	01435-01025	Bolt	1	SN:B50001--
12	01050-31230	Bolt	1	SN:B50001--

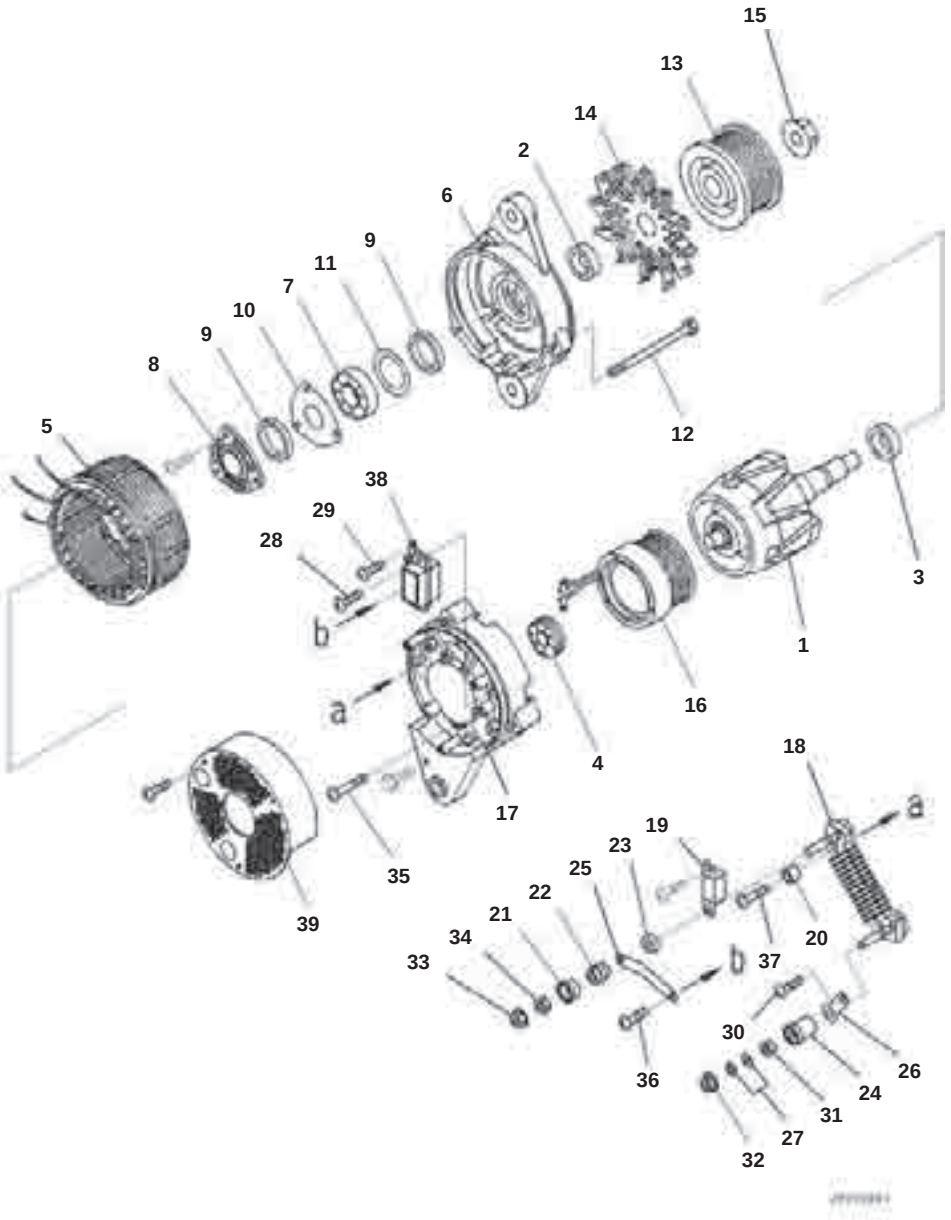

Alternator 60Amp, Inner Parts

Index	Part Number	Description	Qty	Options
	600-861-6111	Alternator, 60Amp.	1	SN:B50001--
1	KD0-35100-0418	· Rotor Assembly	1	SN:B50001--
2	KD0-35943-0240	· Collar	1	SN:B50001--
3	KD0-35923-0160	· Collar	1	SN:B50001--
4	KD0-09201-0980	· Bearing, Ball	1	SN:B50001--
5	KD0-35200-0528	· Stator Assembly	1	SN:B50001--
6	KD0-35300-0450	· Bracket Assembly	1	SN:B50001--
7	KD0-09201-1450	· · Bearing	1	SN:B50001--
8	KD0-35926-0070	· · Retainer	1	SN:B50001--
9	KD0-35951-0060	· · Packing	2	SN:B50001--
10	KD0-35926-0090	· · Retainer	1	SN:B50001--
11	KD1-33926-0730	· · Retainer	1	SN:B50001--
12	KD0-0275-06802	· Bolt	3	SN:B50001--
13	KD0-35411-0648	· Pulley	1	SN:B50001--
14	KD0-35421-0240	· Fan	1	SN:B50001--
15	KD0-09006-0730	· Nut	1	SN:B50001--
16	KD0-35120-0528	· Coil, Field	1	SN:B50001--
	KD0-35700-1140	· Bracket Assembly	1	SN:B50001--
17	KD0-35710-1330	· · Bracket	1	SN:B50001--
18	KD0-35730-0700	· · Rectifier Assembly	1	SN:B50001--
19	KD0-09170-2501	· · Condenser	1	SN:B50001--
20	KD0-35943-0170	· · Bushing	2	SN:B50001--
21	KD0-35943-0154	· · Bushing	1	SN:B50001--
22	KD0-35923-0134	· · Collar	1	SN:B50001--
23	KD0-35943-0160	· · Bushing	1	SN:B50001--
24	KD0-35943-0140	· · Bushing	1	SN:B50001--
25	KD0-35784-0210	· · Bar, Connect	1	SN:B50001--
26	KD0-35784-0290	· · Bar, Plate	1	SN:B50001--
27	KD0-09057-0220	· · Washer	2	SN:B50001--
28	KD0-0055-05202	· · Screw	2	SN:B50001--
29	KD0-0055-05122	· · Screw	2	SN:B50001--
30	KD0-09011-3540	· · Screw	1	SN:B50001--
31	KD0-35902-0010	· · Nut	1	SN:B50001--
32	KD0-09006-0370	· · Nut	1	SN:B50001--
33	KD0-33902-0080	· · Nut	1	SN:B50001--
34	KD0-33902-0090	· · Nut	1	SN:B50001--
35	KD0-0056-05302	· · Screw	3	SN:B50001--
36	KD0-09011-3540	· · Screw	2	SN:B50001--
37	KD0-0056-05302	· · Screw	2	SN:B50001--
38	KD0-35719-0201	· · Regulator Assembly	1	SN:B50001--
39	KD0-35761-0308	· Cover	1	SN:B50001--

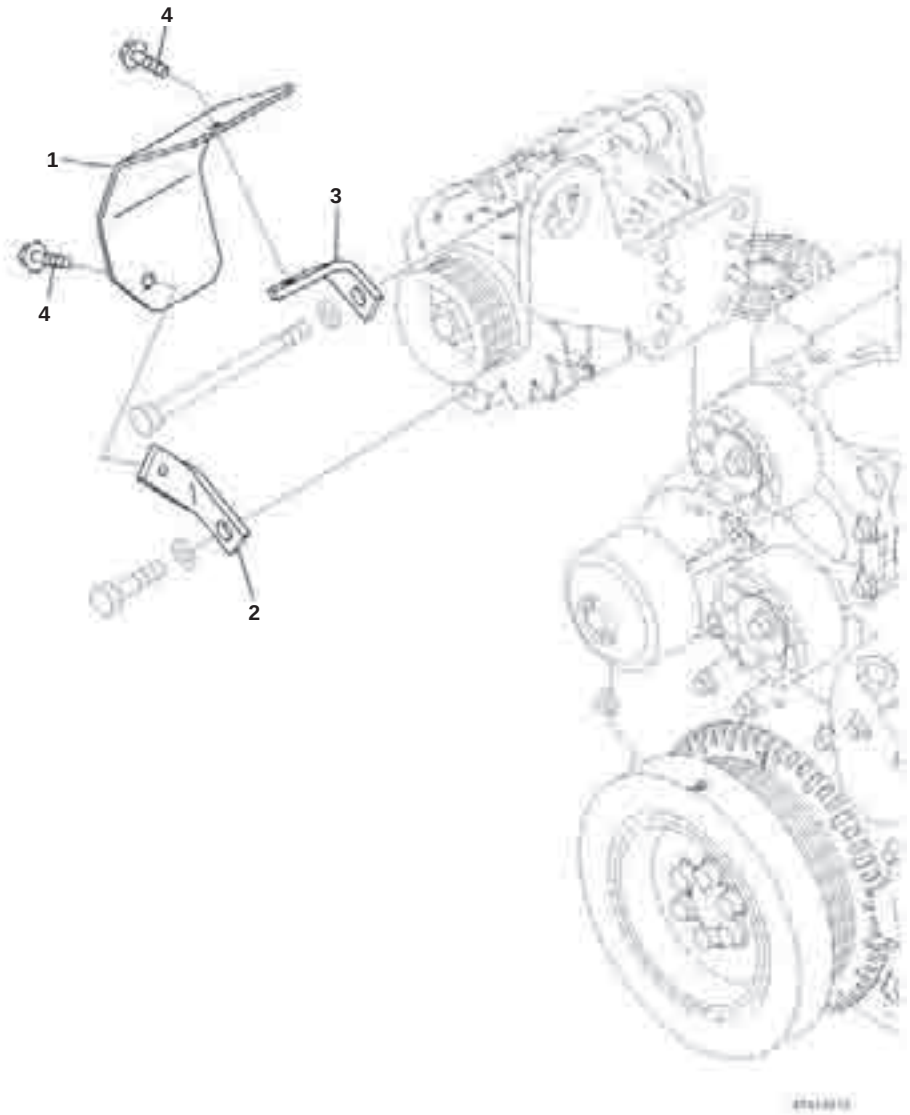

Alternator Cover

Index	Part Number	Description	Qty	Options
1	6755-81-6120	Cover	1	SN:B50001--
2	6754-81-6370	Plate	1	SN:B50001--
3	6754-81-6380	Plate	1	SN:B50001--
4	01435-00812	Bolt	2	SN:B50001--

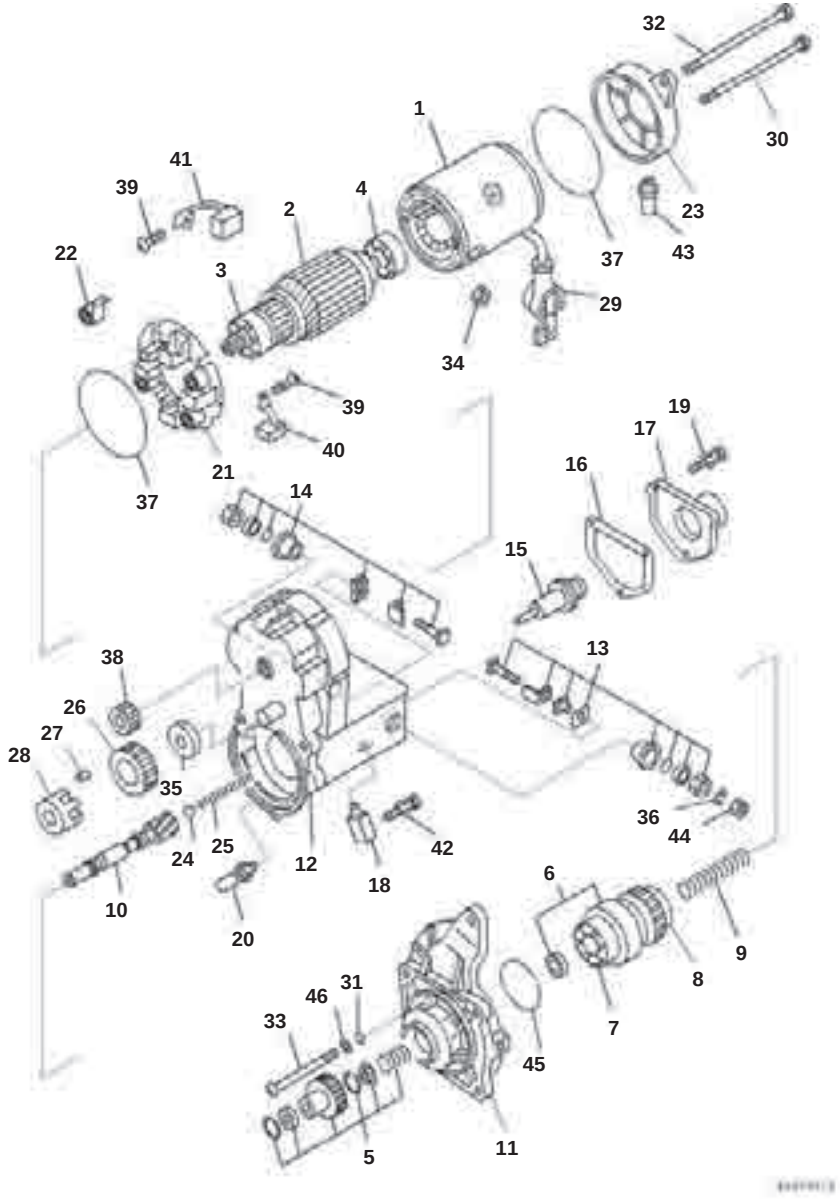

Starting Motor 5,5 kW

Index	Part Number	Description	Qty	Options
	600-863-5130	Starting Motor Assembly	1	SN:B50001--
1	ND028100-5410	· Yoke Assembly	1	SN:B50001--
2	ND028200-5250	· Armature Assembly	1	SN:B50001--
3	ND949100-3161	· · Bearing, Ball	1	SN:B50001--
	ND949100-5290	· · Bearing, Ball	1	SN:B50001--
4	ND949100-3540	· · Bearing, Ball	1	SN:B50001--
	ND028300-6551	· Clutch Assembly	1	SN:B50001--
5	ND028099-3270	· · Starting Motor Kit	1	SN:B50001--
6	ND028300-6751	· · Clutch Assembly	1	SN:B50001--
7	ND949100-4500	· · · Bearing, Ball	1	SN:B50001--
8	ND949100-1920	· · · Bearing, Ball	1	SN:B50001--
9	ND949170-4040	· · Spring	1	SN:B50001--
10	ND028381-0071	· · Shaft	1	SN:B50001--
12	ND153400-9890	· Switch Assembly	1	SN:B50001--
13	ND128099-5770	· · Starting Motor Kit	1	SN:B50001--
14	ND028099-5100	· · Starting Motor Kit	1	SN:B50001--
15	ND053660-0443	· · Plunger	1	SN:B50001--
16	ND053404-0240	· · Gasket	1	SN:B50001--
17	ND053505-0290	· · Cover	1	SN:B50001--
18	ND053480-7560	· · Bolt Assembly	1	SN:B50001--
19	ND949047-4440	· · Bolt	3	SN:B50001--
20	ND028065-0250	· · Bushing	1	SN:B50001--
21	ND028510-0880	· Holder Assembly, Brush	1	SN:B50001--
22	ND028520-0011	· · Spring	4	SN:B50001--
23	ND128501-1090	· Frame	1	SN:B50001--
24	ND949120-0240	· Ball	1	SN:B50001--
25	ND949170-4070	· Spring	1	SN:B50001--
26	ND028371-3210	· Pinion	1	SN:B50001--
27	ND028306-0070	· Roller	5	SN:B50001--
28	ND028063-0030	· Retainer	1	SN:B50001--
29	ND028062-0130	· Cover	1	SN:B50001--
30	ND949042-3680	· Bolt	1	SN:B50001--
31	ND90801-10050	· O-ring	3	SN:B50001--
32	ND949042-3690	· Bolt	1	SN:B50001--
33	ND949006-4720	· Screw	3	SN:B50001--
34	ND949056-4480	· Nut	1	SN:B50001--
35	ND028327-0171	· Retainer	1	SN:B50001--
36	ND90258-10001	· Washer	1	SN:B50001--
37	ND028901-0361	· Seal	2	SN:B50001--
38	ND028371-3200	· Pinion	1	SN:B50001--
39	ND949007-6530	· Screw	4	SN:B50001--
40	ND028530-1090	· Brush Assembly	2	SN:B50001--
41	ND028530-1100	· Brush Assembly	2	SN:B50001--
42	ND949007-6850	· Screw	1	SN:B50001--
43	ND028062-5790	· Cover	1	SN:B50001--
44	ND90170-10061	· Nut	1	SN:B50001--
45	ND028901-5190	· Seal	1	SN:B50001--

D61EX-23M0 S/N B50001
Starting Motor 5,5 kW

Index	Part Number	Description	Qty	Options
46	ND90200-06241	▪ Washer	3	SN:B50001--

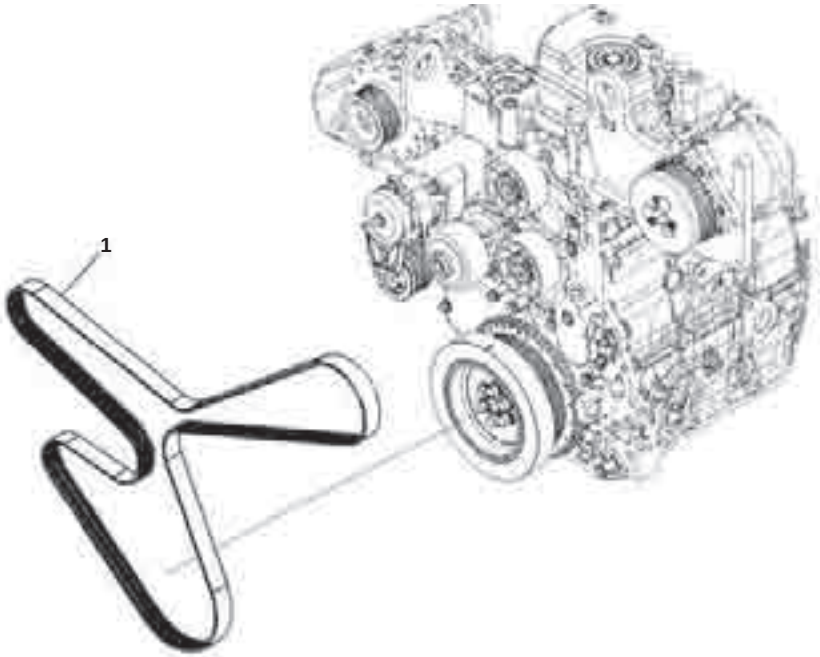

Water Pump Drive Belt

Index	Part Number	Description	Qty	Options
1	6755-61-3130	V-belt	1	SN:B50001--

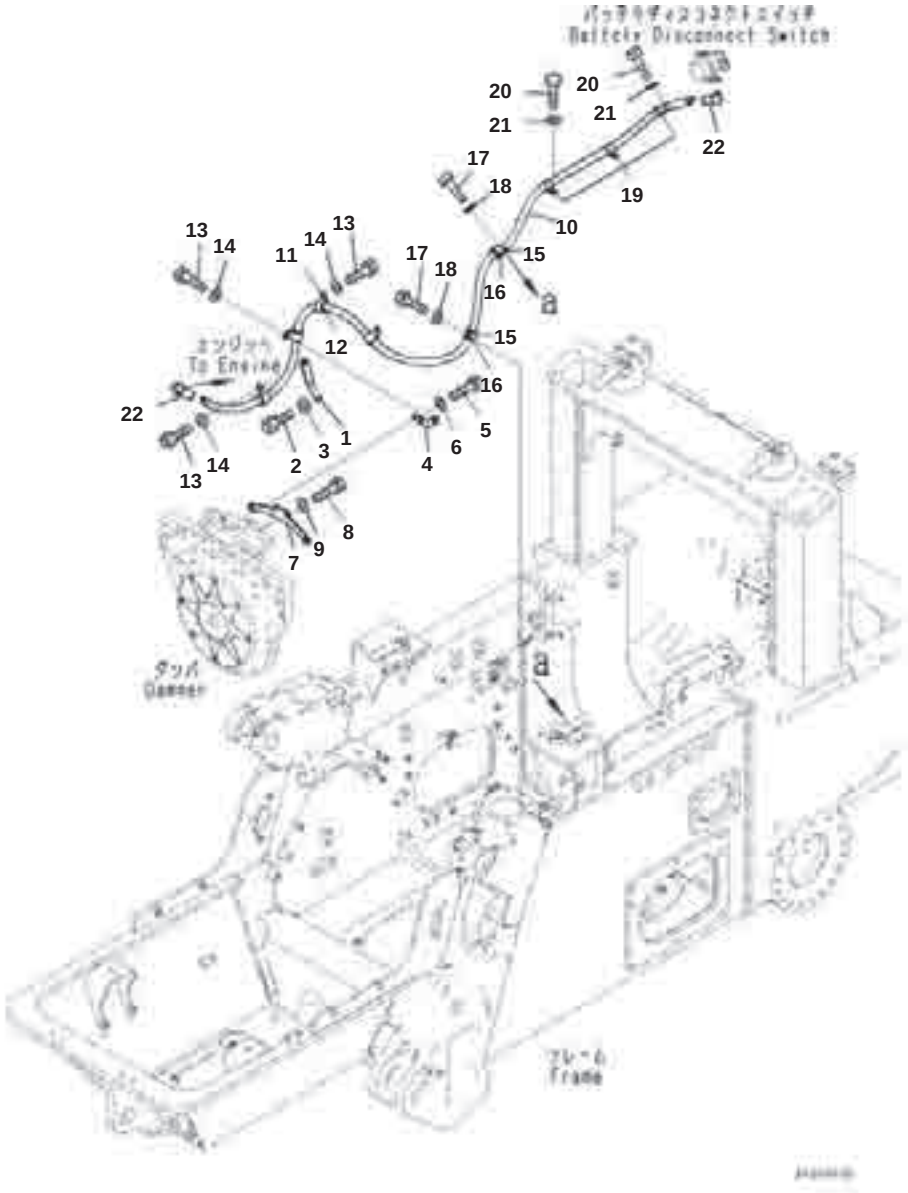

Engine Wiring Harness, Battery Cable

Index	Part Number	Description	Qty	Options
1	13Y-06-14420	Bracket	1	SN:B50001---
2	01010-80825	Bolt	2	SN:B50001---
3	01643-30823	Washer	2	SN:B50001---
4	13Y-06-14410	Bracket	1	SN:B50001---
5	01010-81025	Bolt	2	SN:B50001---
6	01643-31032	Washer	2	SN:B50001---
7	13Y-06-14283	Bracket	1	SN:B50001---
8	01010-81025	Bolt	2	SN:B50001---
9	01643-31032	Washer	2	SN:B50001---
10	13Y-06-14265	Cable	1	SN:B50001---
11	04434-53212	Clip	4	SN:B50001---
12	07095-20523	Cushion	4	SN:B50001---
13	01010-81030	Bolt	4	SN:B50001---
14	01643-31032	Washer	4	SN:B50001---
15	04434-53212	Clip	2	SN:B50001---
16	07095-20523	Cushion	2	SN:B50001---
17	01010-81020	Bolt	2	SN:B50001---
18	01643-31032	Washer	2	SN:B50001---
19	04434-52310	Clip	3	SN:B50001---
20	01010-81020	Bolt	3	SN:B50001---
21	01643-31032	Washer	3	SN:B50001---
22	11Y-06-11630	Cap	2	SN:B50001---

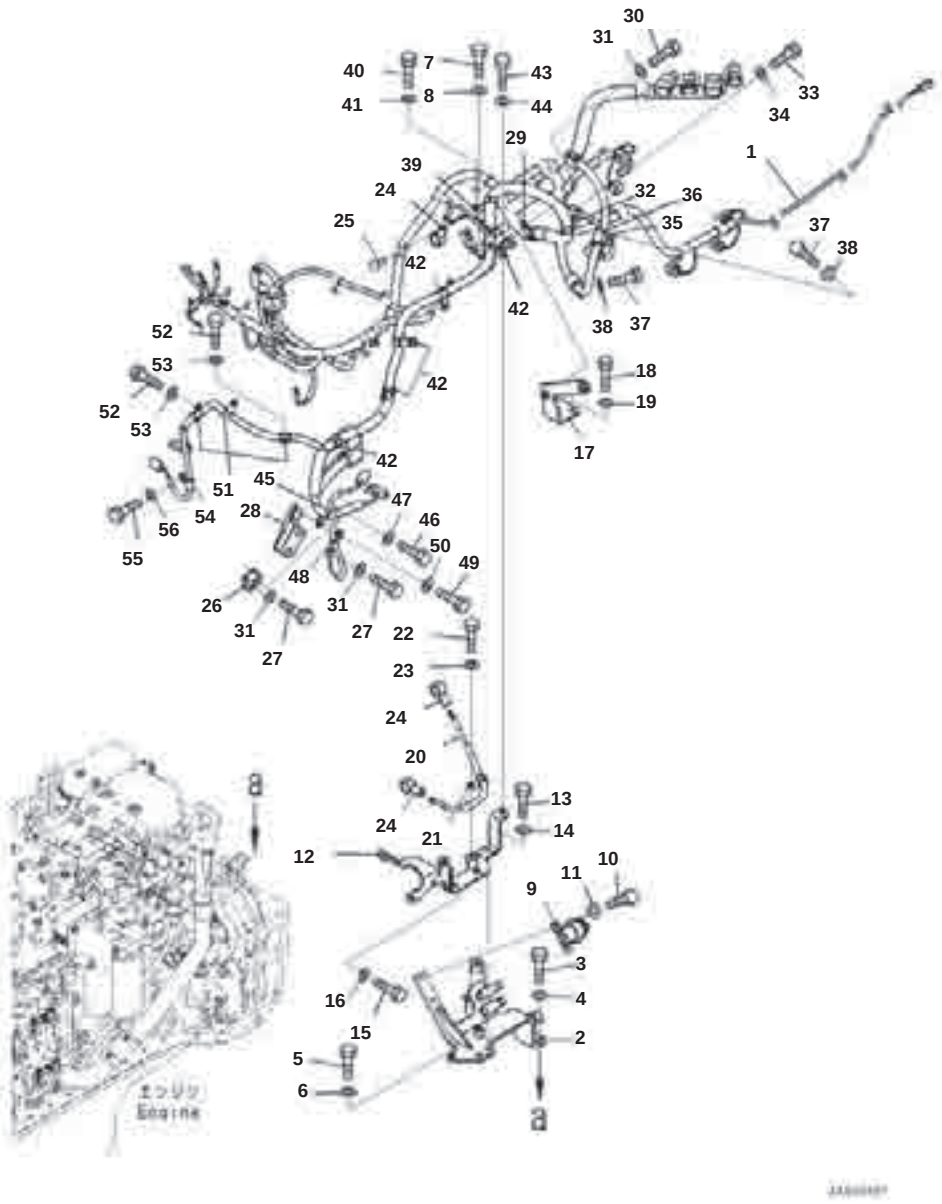

Engine Wiring Harness, Wiring Harness and Bracket (1/2)

Index	Part Number	Description	Qty	Options
1	13Y-06-17852	Wiring Harness	1	SN:B50001---
2	13Y-06-17111	Bracket	1	SN:B50001---
3	01010-81030	Bolt	2	SN:B50001---
4	01643-31032	Washer	2	SN:B50001---
5	01010-80850	Bolt	1	SN:B50001---
6	01643-30823	Washer	1	SN:B50001---
7	01010-81016	Bolt	1	SN:B50001---
8	01643-31032	Washer	1	SN:B50001---
9	600-815-2170	Switch, Heater	1	SN:B50001---
10	01010-80620	Bolt	2	SN:B50001---
11	01643-30623	Washer	2	SN:B50001---
12	13Y-06-14133	Bracket	1	SN:B50001---
13	01010-81025	Bolt	2	SN:B50001---
14	01643-31032	Washer	2	SN:B50001---
15	01010-80820	Bolt	1	SN:B50001---
16	01643-30823	Washer	1	SN:B50001---
17	13Y-06-14191	Bracket	1	SN:B50001---
18	01010-81025	Bolt	2	SN:B50001---
19	01643-31032	Washer	2	SN:B50001---
20	13Y-06-14352	Cable	1	SN:B50001---
21	600-051-2140	Clip	1	SN:B50001---
22	01010-81020	Bolt	1	SN:B50001---
23	01643-31032	Washer	1	SN:B50001---
24	08038-02027	Cap, Terminal	3	SN:B50001---
25	08038-00519	Cap, Terminal	1	SN:B50001---
26	13Y-06-14391	Bracket	1	SN:B50001---
27	01010-81020	Bolt	2	SN:B50001---
28	13Y-06-11131	Bracket	1	SN:B50001---
29	600-051-2260	Clip	1	SN:B50001---
30	01010-81020	Bolt	1	SN:B50001---
31	01643-31032	Washer	3	SN:B50001---
32	600-051-2220	Clip	1	SN:B50001---
33	01010-81020	Bolt	1	SN:B50001---
34	01643-31032	Washer	1	SN:B50001---
35	04434-51710	Clip	2	SN:B50001---
36	07095-20211	Cushion	2	SN:B50001---
37	01010-81025	Bolt	2	SN:B50001---
38	01643-31032	Washer	2	SN:B50001---
39	600-051-2220	Clip	1	SN:B50001---
40	01010-81020	Bolt	1	SN:B50001---
41	01643-31032	Washer	1	SN:B50001---
42	600-051-2180	Clip	5	SN:B50001---
43	01010-81020	Bolt	5	SN:B50001---
44	01643-31032	Washer	5	SN:B50001---
45	600-051-2140	Clip	1	SN:B50001---
46	01010-81020	Bolt	1	SN:B50001---
47	01643-31032	Washer	1	SN:B50001---

D61EX-23M0 S/N B50001

Engine Wiring Harness, Wiring Harness and Bracket (1/2)

Index	Part Number	Description	Qty	Options
48	600-051-2140	Clip	1	SN:B50001---
49	01010-81020	Bolt	1	SN:B50001---
50	01643-31032	Washer	1	SN:B50001---
51	600-051-6120	Clip	3	SN:B50001---
52	01010-81020	Bolt	3	SN:B50001---
53	01643-31032	Washer	3	SN:B50001---
54	600-051-6100	Clip	1	SN:B50001---
55	01010-81020	Bolt	1	SN:B50001---
56	01643-31032	Washer	1	SN:B50001---

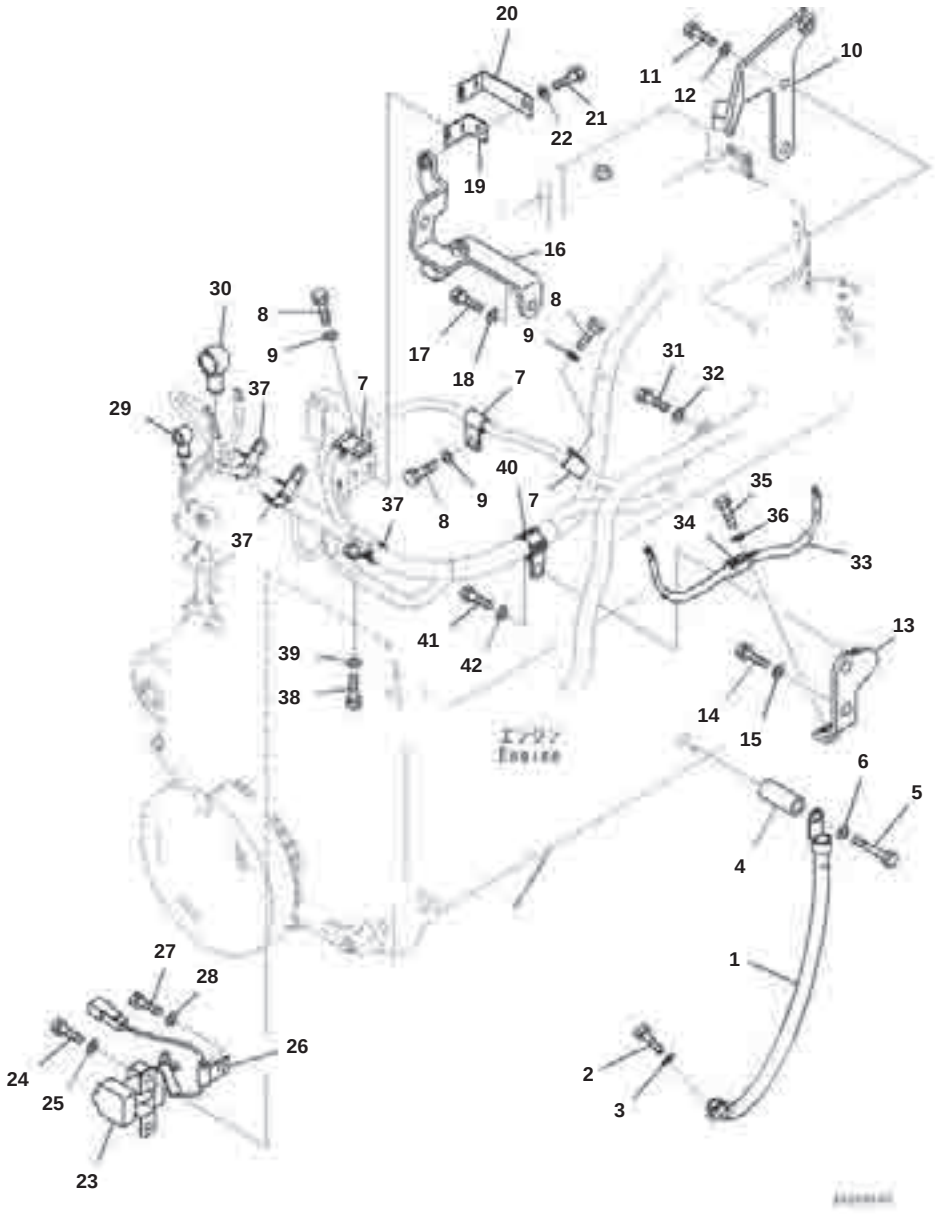

Engine Wiring Harness, Wiring Harness and Bracket (2/2)

Index	Part Number	Description	Qty	Options
1	13Y-06-14381	Cable	1	SN:B50001---
2	01010-81225	Bolt	1	SN:B50001---
3	01643-31232	Washer	1	SN:B50001---
4	14X-54-26640	Collar	1	SN:B50001---
5	01010-81275	Bolt	1	SN:B50001---
6	01643-31232	Washer	1	SN:B50001---
7	600-051-2100	Clip	3	SN:B50001---
9	01643-31032	Washer	3	SN:B50001---
10	13Y-06-14292	Bracket	1	SN:B50001---
11	01010-81235	Bolt	2	SN:B50001---
12	01643-31232	Washer	2	SN:B50001---
13	13Y-06-14272	Bracket	1	SN:B50001---
14	01010-81230	Bolt	2	SN:B50001---
15	01643-31232	Washer	2	SN:B50001---
16	13Y-06-14360	Bracket	1	SN:B50001---
17	01010-81025	Bolt	2	SN:B50001---
18	01643-31032	Washer	2	SN:B50001---
19	421-06-22910	Bracket	1	SN:B50001---
20	421-06-22920	Bracket	1	SN:B50001---
21	01010-80820	Bolt	1	SN:B50001---
22	01643-30823	Washer	1	SN:B50001---
23	124-06-64321	Switch, Starting	1	SN:B50001---
24	01010-80816	Bolt	3	SN:B50001---
25	01643-30823	Washer	3	SN:B50001---
26	600-051-2050	Clip	1	SN:B50001---
27	01010-81016	Bolt	1	SN:B50001---
28	01643-31032	Washer	1	SN:B50001---
29	08038-00519	Cap, Terminal	1	SN:B50001---
30	08038-02027	Cap, Terminal	1	SN:B50001---
31	01010-81020	Bolt	1	SN:B50001---
32	01643-31032	Washer	1	SN:B50001---
33	13Y-06-14312	Wiring Harness	1	SN:B50001---
34	600-051-2100	Clip	1	SN:B50001---
35	01010-81020	Bolt	1	SN:B50001---
36	01643-31032	Washer	1	SN:B50001---
37	600-051-2190	Clip	3	SN:B50001---
38	01010-81020	Bolt	3	SN:B50001---
39	01643-31032	Washer	3	SN:B50001---
40	600-051-2220	Clip	1	SN:B50001---
41	01010-81020	Bolt	1	SN:B50001---
42	01643-31032	Washer	1	SN:B50001---

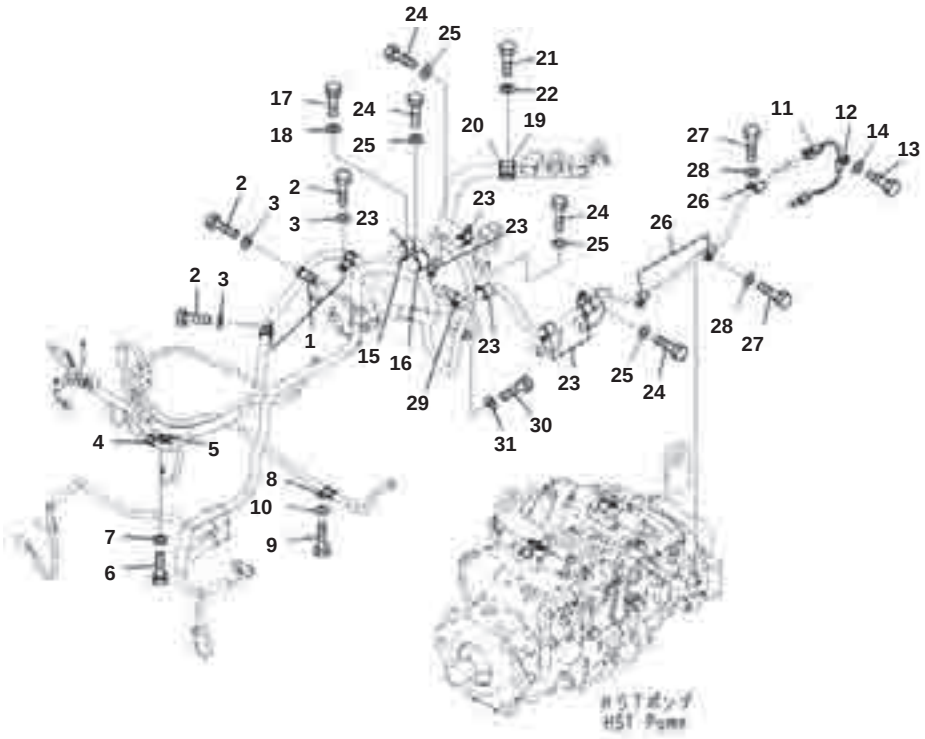

Engine Wiring Harness, Mounting

Index	Part Number	Description	Qty	Options
1	600-051-2190	Clip	3	SN:B50001---
2	01010-81020	Bolt	3	SN:B50001---
3	01643-31032	Washer	3	SN:B50001---
4	600-051-2140	Clip	1	SN:B50001---
5	600-051-2100	Clip	1	SN:B50001---
6	01010-81020	Bolt	1	SN:B50001---
7	01643-31032	Washer	1	SN:B50001---
8	600-051-2140	Clip	1	SN:B50001---
9	01010-81020	Bolt	1	SN:B50001---
10	01643-31032	Washer	1	SN:B50001---
11	7861-93-3320	Sensor, Oil Temperature	1	SN:B50001---
12	600-051-2050	Clip	1	SN:B50001---
13	01010-81020	Bolt	1	SN:B50001---
14	01643-31032	Washer	1	SN:B50001---
15	04434-53411	Clip	1	SN:B50001---
16	07095-20627	Cushion	1	SN:B50001---
17	01010-81030	Bolt	1	SN:B50001---
18	01643-31032	Washer	1	SN:B50001---
19	04434-53411	Clip	1	SN:B50001---
20	07095-20627	Cushion	1	SN:B50001---
21	01010-81020	Bolt	1	SN:B50001---
22	01643-31032	Washer	1	SN:B50001---
23	600-051-2180	Clip	6	SN:B50001---
24	01010-81020	Bolt	6	SN:B50001---
25	01643-31032	Washer	6	SN:B50001---
26	600-051-2080	Clip	3	SN:B50001---
27	01010-81020	Bolt	3	SN:B50001---
28	01643-31032	Washer	3	SN:B50001---
29	600-051-2140	Clip	1	SN:B50001---
30	01010-81020	Bolt	1	SN:B50001---
31	01643-31032	Washer	1	SN:B50001---

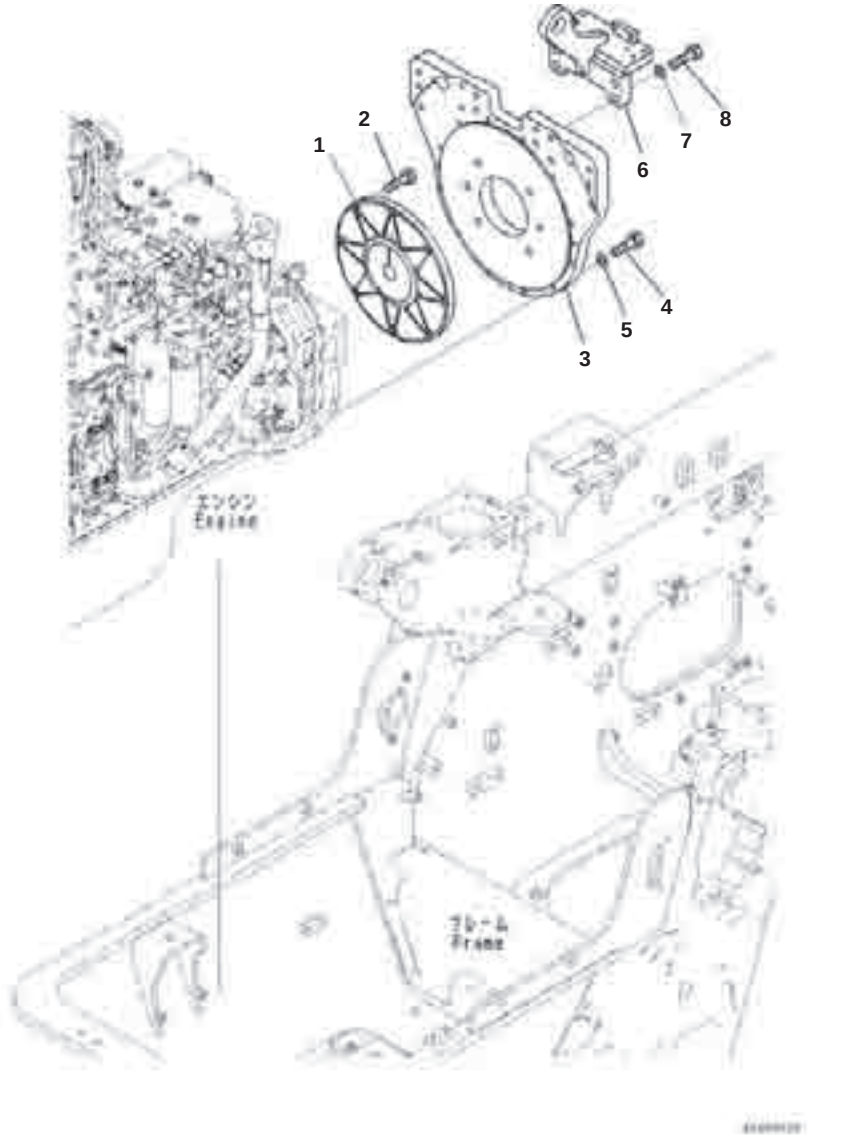

Damper

Index	Part Number	Description	Qty	Options
1	13Y-12-11111	Coupling	1	SN:B50001---
2	11Y-12-11130	Bolt	8	SN:B50001---
3	13Y-12-11132	Cover	1	SN:B50001---
4	13Y-01-12470	Bolt	12	SN:B50001---
5	01643-31032	Washer	12	SN:B50001---
6	13Y-01-11611	Bracket	1	SN:B50001---
7	01643-31645	Washer	4	SN:B50001---
8	01010-81660	Bolt	4	SN:B50001---

COOLING SYSTEM

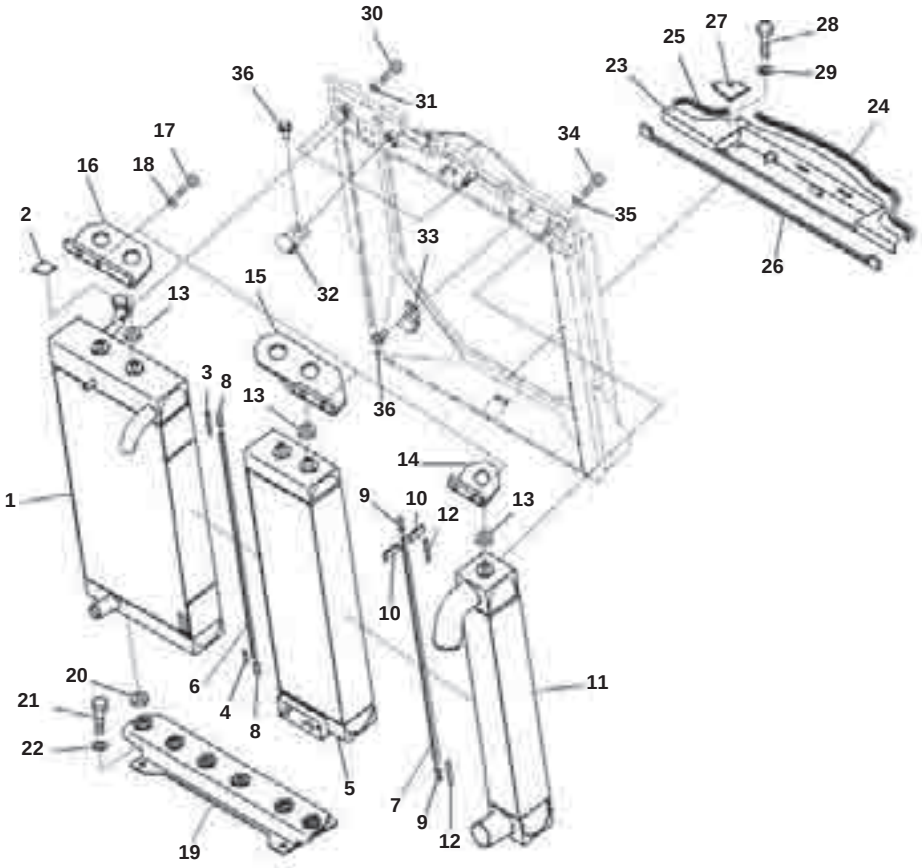

Cooling System, Radiator Core, Aftercooler and Oil Cooler

Index	Code	Part Number	Description	Qty	Options
		13Y-03-17180	Radiator Assembly	1	SN:B50001--
1	C1		· Radiator Core Assembly	1	SN:B50001---
2		12Y-03-13880	· · Cap	1	SN:B50001---
3		13Y-03-11180	· Seal	1	SN:B50001---
4		13Y-03-11190	· Seal	1	SN:B50001---
		13Y-03-17160	Oil Cooler Assembly	1	SN:B50001---
5	C1		· Oil Cooler	1	SN:B50001---
6		13Y-03-11142	· Seal	1	SN:B50001---
7		13Y-03-11152	· Seal	1	SN:B50001---
8		13Y-03-11160	· Seal	2	SN:B50001---
9		13Y-03-11171	· Seal	2	SN:B50001---
10		13Y-03-11430	· Seal	2	SN:B50001---
		13Y-03-17170	Aftercooler Assembly	1	SN:B50001---
11	C1		· Aftercooler	1	SN:B50001---
12		13Y-03-11410	· Seal	2	SN:B50001---
13		13Y-03-11281	Cushion	5	SN:B50001---
14		13Y-03-11212	Bracket	1	SN:B50001---
15		13Y-03-17331	Bracket	1	SN:B50001---
16		13Y-03-17340	Bracket	1	SN:B50001---
17		01010-81235	Bolt	8	SN:B50001---
18		01643-31232	Washer	8	SN:B50001---
19		13Y-03-17141	Bracket	1	SN:B50001---
20		13Y-03-11281	· Cushion	6	SN:B50001---
21		01010-81635	Bolt	4	SN:B50001---
22		01643-31645	Washer	4	SN:B50001---
23		13Y-03-11204	Cover Assembly	1	SN:B50001---
	C1		· Cover	1	SN:B50001---
24		13Y-03-11240	· Seal	1	SN:B50001---
25		13Y-03-11250	· Seal	1	SN:B50001---
26		13Y-03-11261	· Seal	1	SN:B50001---
27		13Y-03-11270	· Seal	1	SN:B50001---
28		01010-81225	Bolt	1	SN:B50001---
29		01643-31232	Washer	1	SN:B50001---
30		01010-81235	Bolt	1	SN:B50001---
31		01643-31032	Washer	1	SN:B50001---
32		04434-51210	Clip	3	SN:B50001---
33		07285-00110	Clip	1	SN:B50001---
34		01010-81235	Bolt	1	SN:B50001---
35		01643-31032	Washer	1	SN:B50001---
36		01010-81020	Bolt	2	SN:B50001---

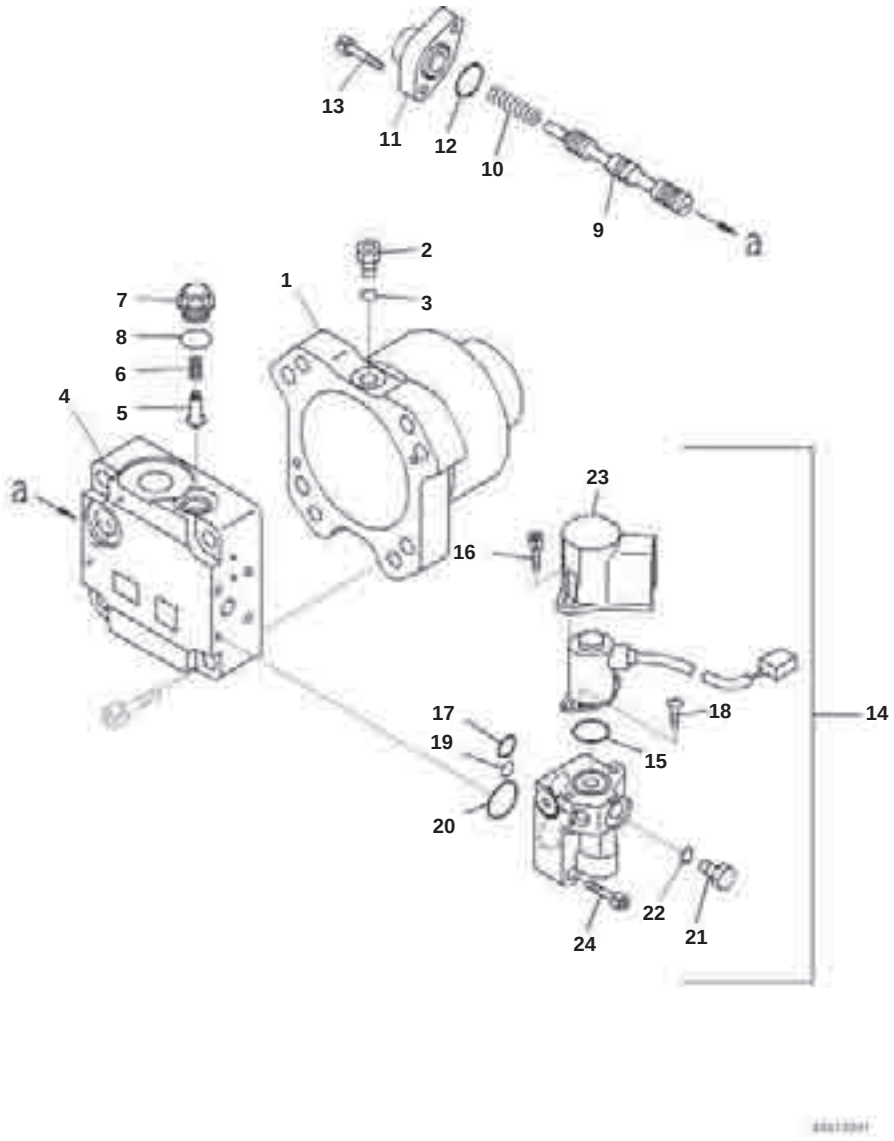

Cooling System, Fan Motor (1/2)

Index	Code	Part Number	Description	Qty	Options
		708-7S-00740	Motor Assembly	1	SN:B50001---
1	C2	(708-7S-11790)	· Case	1	SN:B50001---
2		07040-11007	· Plug	1	SN:B50001---
3		07002-21023	· O-ring	1	SN:B50001---
	C2	(708-7S-01620)	· Cover Subassembly	1	SN:B50001---
4	C1		· · Cover, End	1	SN:B50001---
5	C2	(708-7R-11210)	· · Valve	1	SN:B50001---
6		722-10-91130	· · Spring	1	SN:B50001---
7		709-32-12861	· · Plug	1	SN:B50001---
8		07002-21823	· · O-ring	1	SN:B50001---
9	C1		· · Spool	1	SN:B50001---
10	C2	(708-7S-18120)	· · Spring	1	SN:B50001---
11	C2	(708-7S-18750)	· · Cover	1	SN:B50001---
12	C2	(07000-E2025)	· · O-ring	1	SN:B50001---
13	C2	(01252-60620)	· · Bolt, Hexagon Socket Head	2	SN:B50001---
14		708-7S-01330	· · Valve Assembly, Pilot	1	SN:B50001---
15		702-21-55870	· · · O-ring	1	SN:B50001---
16		01252-60616	· · · Bolt, Hexagon Socket Head	2	SN:B50001---
17		708-7S-18360	· · · O-ring	1	SN:B50001---
18		702-21-54180	· · · Screw	2	SN:B50001---
19		07000-F1008	· · · O-ring	1	SN:B50001---
20		708-7S-18230	· · · O-ring	1	SN:B50001---
21		07040-11007	· · · Plug	1	SN:B50001---
22		07002-21023	· · · O-ring	1	SN:B50001---
23		708-1S-18180	· · · Cover	1	SN:B50001---
24		01252-60835	· · Bolt, Hexagon Socket Head	4	SN:B50001---

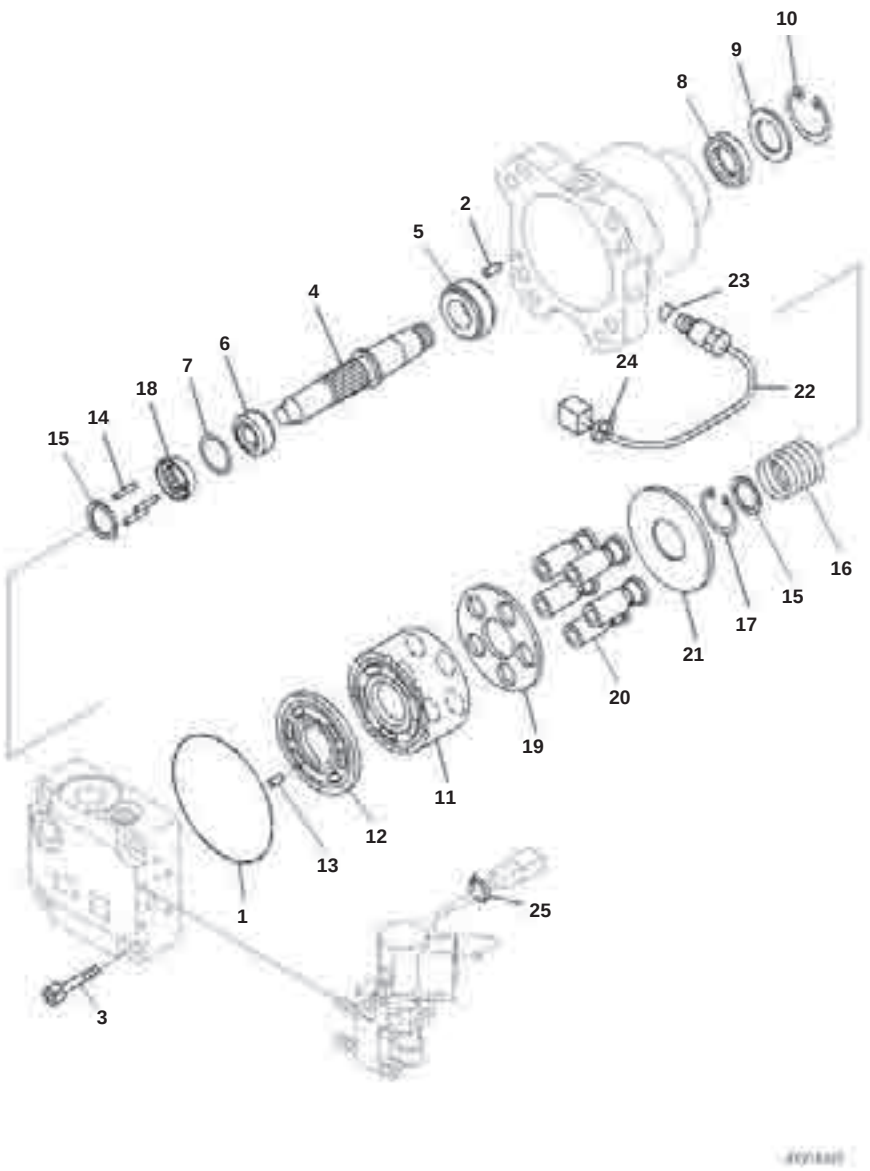

Index	Code	Part Number	Description	Qty	Options
1	C2	(07000-E2110)	O-ring	1	SN:B50001---
2	C2	(04020-00616)	Pin, Dowel	2	SN:B50001---
3	C2	(01252-61255)	Bolt, Hexagon Socket Head	4	SN:B50001---
4	C2	(708-7S-12330)	Shaft	1	SN:B50001---
5	C2	(708-7S-12140)	Bearing	1	SN:B50001---
6	C2	(708-7S-12220)	Bearing	1	SN:B50001---
7	C2	(708-7S-05110)	Shim Kit	1	SN:B50001---
	C1		･ Shim, T=0.85mm	1	SN:B50001---
	C1		･ Shim, T=1.05mm	1	SN:B50001---
	C1		･ Shim, T=1.25mm	1	SN:B50001---
	C1		･ Shim, T=0.75mm	1	SN:B50001---
	C1		･ Shim, T=0.95mm	1	SN:B50001---
	C1		･ Shim, T=1.15mm	1	SN:B50001---
8	C2	(708-7T-12330)	Seal, Oil	1	SN:B50001---
9		708-1S-11890	Spacer	1	SN:B50001---
10		04065-04518	Ring, Snap	1	SN:B50001---
11	C2	(708-7S-13130)	Block, Cylinder	1	SN:B50001---
12	C2	(708-7S-13250)	Plate, Valve	1	SN:B50001---
13	C2	(720-68-19610)	Pin	1	SN:B50001---
14	C2	(708-2L-23360)	Pin	3	SN:B50001---
15	C2	(708-7S-13530)	Spacer	2	SN:B50001---
16	C2	(708-7S-13560)	Spring	1	SN:B50001---
17	C2	(04065-03212)	Ring, Snap	1	SN:B50001---
18	C2	(708-7S-13550)	Guide, Retainer	1	SN:B50001---
19	C2	(708-7S-13360)	Retainer, Shoe	1	SN:B50001---
20	C2	(708-7S-13350)	Piston Subassembly	5	SN:B50001---
21	C2	(708-7S-13420)	Plate, Thrust	1	SN:B50001---
22		729-11-41000	Sensor	1	SN:B50001---
23		07002-21423	O-ring	1	SN:B50001---
24		20Y-62-22820	Band, Blue	1	SN:B50001---
25		20Y-62-22850	Band, Green	1	SN:B50001---

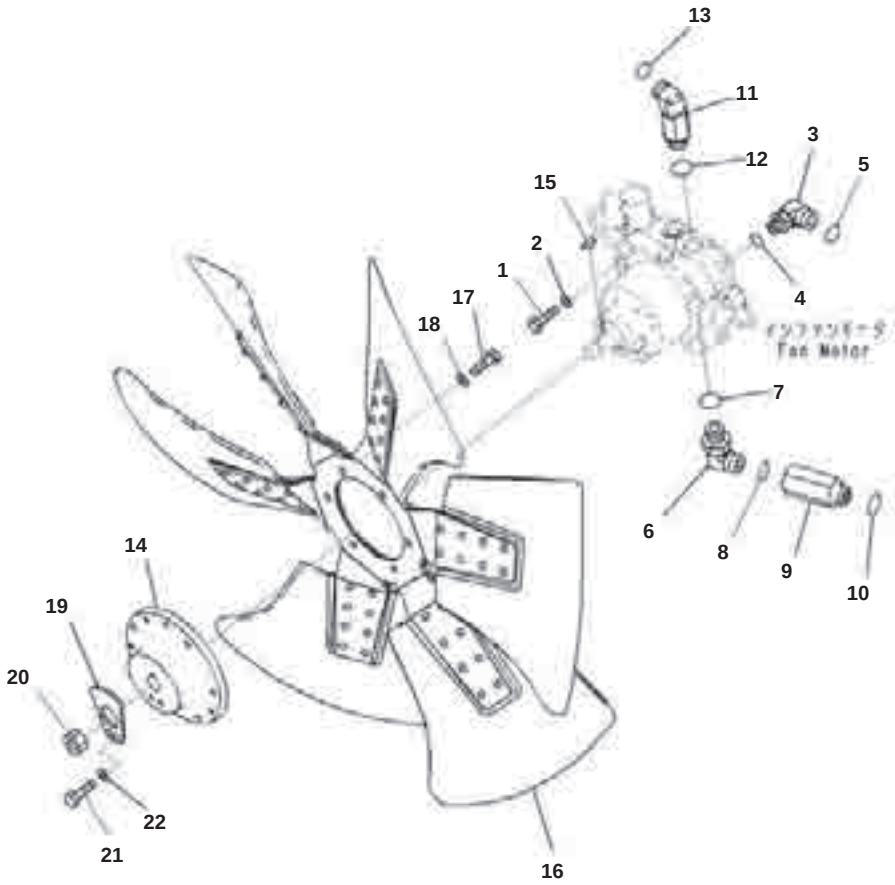

Index	Part Number	Description	Qty	Options
2	01643-31232	Washer	4	SN:B50001---
3	22M-62-21380	Elbow	1	SN:B50001---
4	07002-11823	O-ring	1	SN:B50001---
5	02896-11015	O-ring	1	SN:B50001---
6	02782-10522	Elbow	1	SN:B50001---
7	07002-12434	O-ring	1	SN:B50001---
8	02896-11015	O-ring	1	SN:B50001---
9	13Y-62-16350	Nipple	1	SN:B50001---
10	02896-11015	O-ring	1	SN:B50001---
11	14X-62-52921	Elbow	1	SN:B50001---
12	07002-12434	O-ring	1	SN:B50001---
13	02896-11015	O-ring	1	SN:B50001---
14	13Y-03-12521	Boss	1	SN:B50001---
15	04010-00722	Key	1	SN:B50001---
16	600-645-7850	Fan	1	SN:B50001---
17	01010-81030	Bolt	6	SN:B50001---
18	01643-31032	Washer	6	SN:B50001---
19	154-03-72270	Lock	1	SN:B50001---
20	01583-12012	Nut	1	SN:B50001---
21	01010-81020	Bolt	1	SN:B50001---
22	01643-31032	Washer	1	SN:B50001---

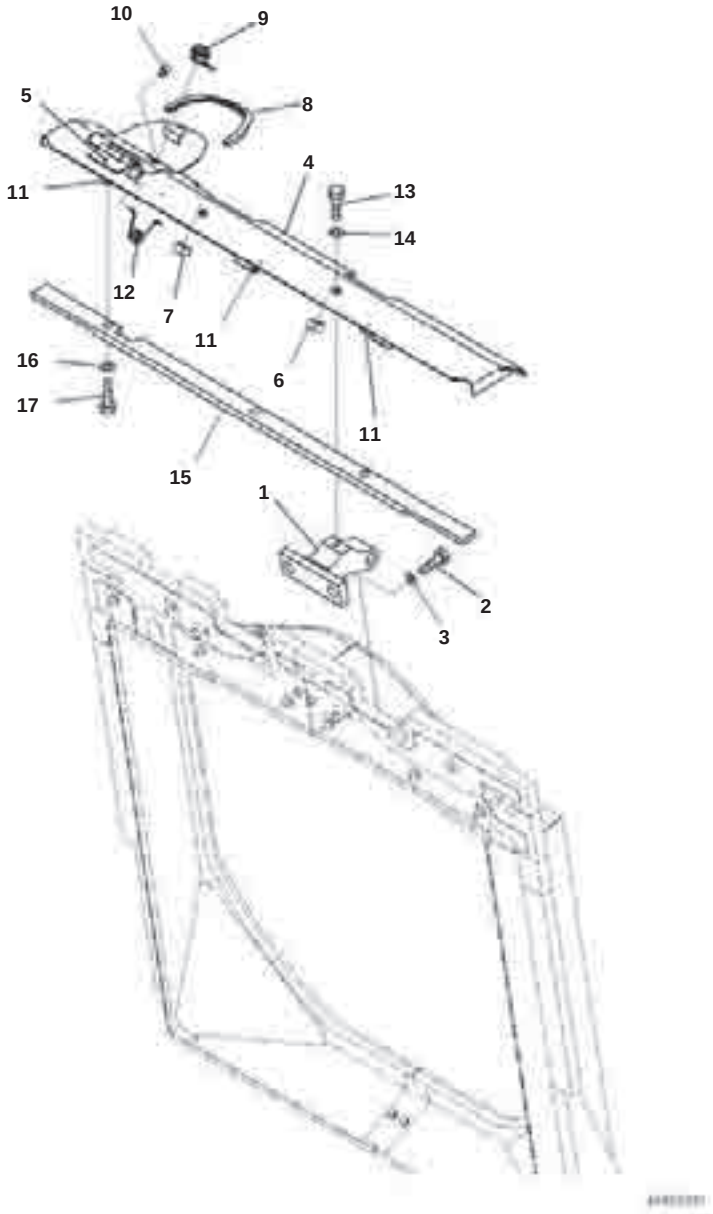

Index	Part Number	Description	Qty	Options
1	13Y-03-13332	Bracket	2	SN:B50001---
2	01643-31645	Washer	4	SN:B50001---
3	01010-81645	Bolt	4	SN:B50001---
4	13Y-03-13313	Cover	1	SN:B50001---
5	11Y-54-14220	▪ Hinge,Welded	1	SN:B50001---
6	13Y-03-12470	▪ Seal	1	SN:B50001---
7	13Y-03-12590	▪ Seal	1	SN:B50001---
9	205-60-71220	▪ Lock Assembly	1	SN:B50001---
10	415-54-11980	▪ Cushion	1	SN:B50001---
11	01571-00814	▪ Seat, Welded	3	SN:B50001---
12	09467-00006	▪ Spring	1	SN:B50001---
13	01010-D1225	Bolt	2	SN:B50001---
14	01643-71232	Washer	2	SN:B50001---
15	13Y-03-13340	Seal	1	SN:B50001---
16	113-43-23230	Washer	3	SN:B50001---
17	01010-80816	Bolt	3	SN:B50001---

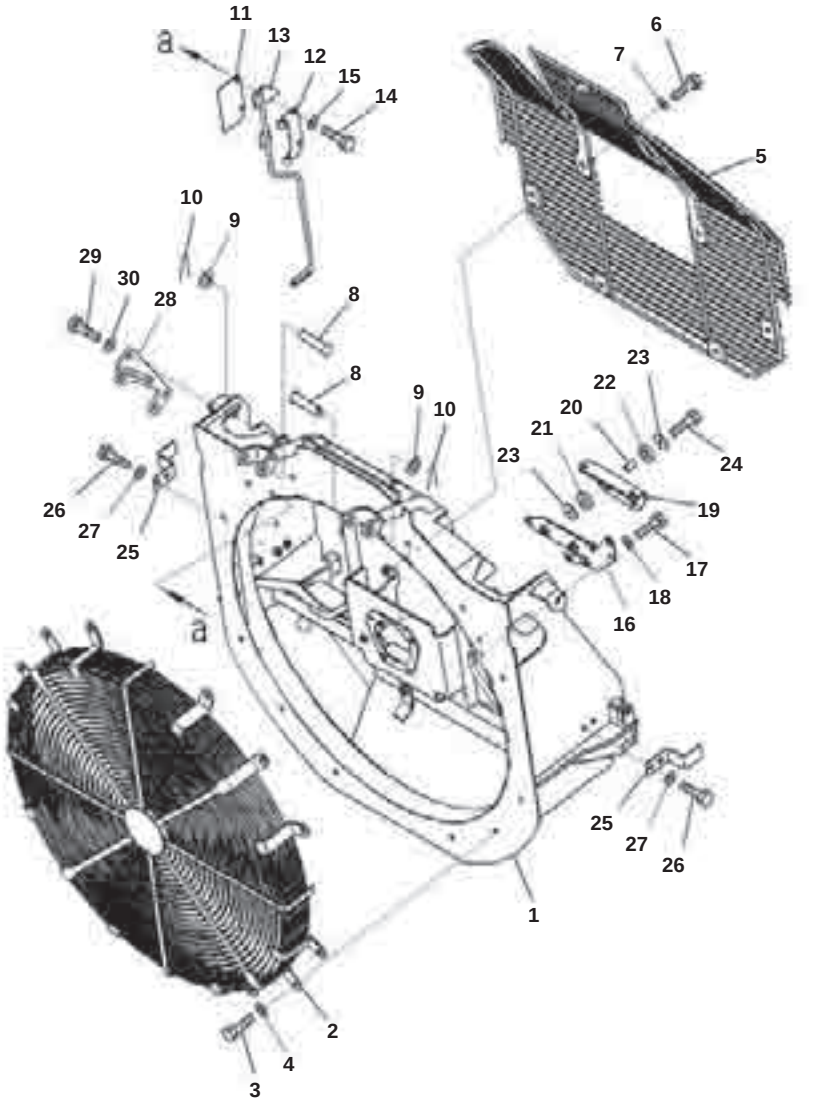

Index	Part Number	Description	Qty	Options
1	13Y-03-12314	Bracket	1	SN:B50001---
2	13Y-03-12321	Guard	1	SN:B50001---
3	01010-81020	Bolt	12	SN:B50001---
4	01643-31032	Washer	12	SN:B50001---
5	13Y-03-12332	Net	1	SN:B50001---
6	01010-D1030	Bolt	13	SN:B50001---
7	01643-71032	Washer	13	SN:B50001---
9	01640-22032	Washer	2	SN:B50001---
10	04050-15035	Pin, Cotter	2	SN:B50001---
11	12Y-03-13361	Plate	1	SN:B50001---
12	12Y-03-13351	Plate	1	SN:B50001---
13	13Y-03-12382	Bar	1	SN:B50001---
14	01010-D0820	Bolt	2	SN:B50001---
15	01643-70823	Washer	2	SN:B50001---
16	13Y-03-12413	Bracket	1	SN:B50001---
17	01010-D1025	Bolt	3	SN:B50001---
18	01643-71032	Washer	3	SN:B50001---
19	13Y-03-12532	Bracket	1	SN:B50001---
20	417-54-13470	Spacer	2	SN:B50001---
21	419-06-43150	Cushion	2	SN:B50001---
22	419-06-43160	Cushion	2	SN:B50001---
23	419-43-17920	Washer	4	SN:B50001---
24	01010-81250	Bolt	2	SN:B50001---
25	13Y-03-12491	Plate	2	SN:B50001---
26	01010-D1025	Bolt	4	SN:B50001---
27	01643-71032	Washer	4	SN:B50001---
28	13Y-03-12571	Plate	1	SN:B50001---
29	01010-D1230	Bolt	3	SN:B50001---
30	01643-71232	Washer	3	SN:B50001---

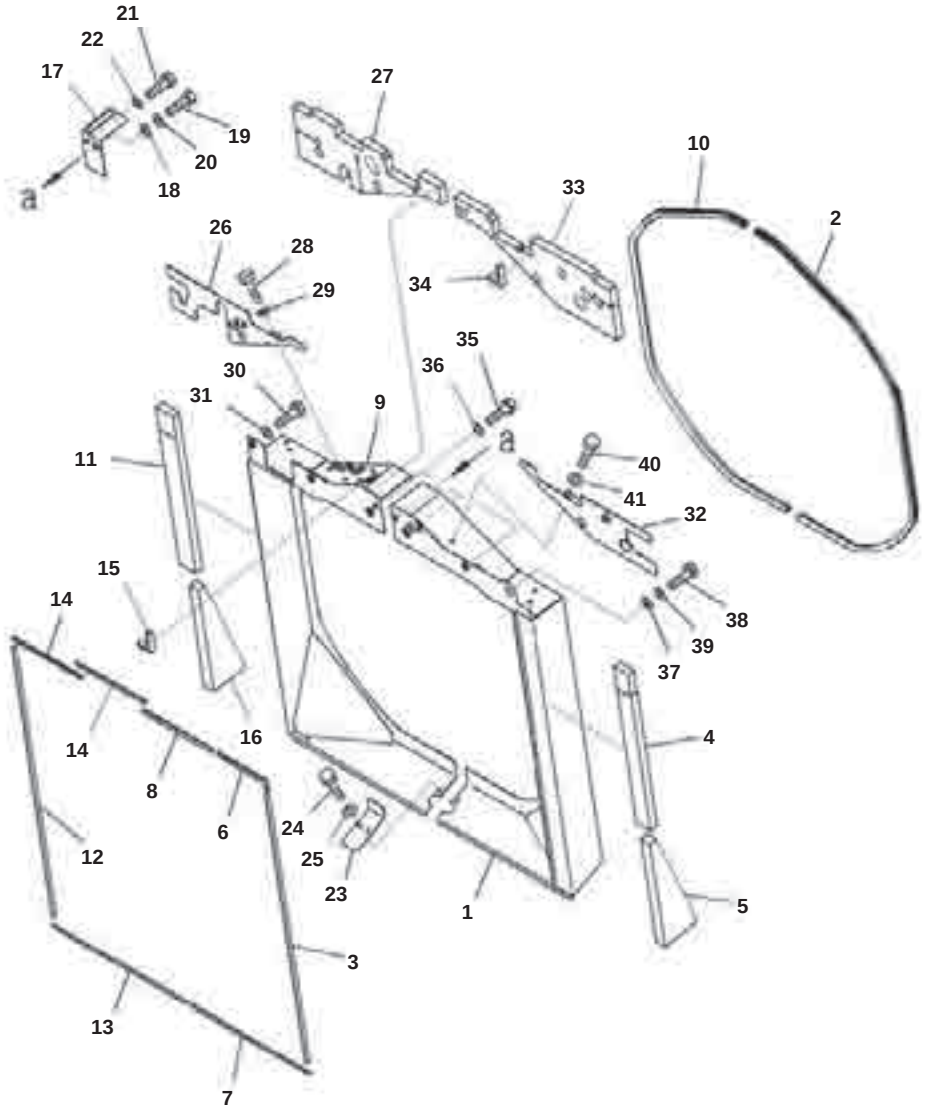

Index	Code	Part Number	Description	Qty	Options
		13Y-03-12303	Shroud Assembly	1	SN:B50001---
1	C1		･ Shroud,L.H.	1	SN:B50001---
2		13Y-03-12131	･ Seal	1	SN:B50001---
3		13Y-03-12162	･ Seal	1	SN:B50001---
4		13Y-03-12184	･ Seal	1	SN:B50001---
5		13Y-03-12194	･ Seal	1	SN:B50001---
6		13Y-03-12252	･ Seal	1	SN:B50001---
7		13Y-03-12371	･ Seal	1	SN:B50001---
8		13Y-03-12620	･ Seal	1	SN:B50001---
		13Y-03-12402	Shroud Assembly	1	SN:B50001---
9	C1		･ Shroud,R.H.	1	SN:B50001---
10		13Y-03-12131	･ Seal	1	SN:B50001---
11		13Y-03-12234	･ Seal	1	SN:B50001---
12		13Y-03-12242	･ Seal	1	SN:B50001---
13		13Y-03-12262	･ Seal	1	SN:B50001---
14		13Y-03-12291	･ Seal	2	SN:B50001---
15		13Y-03-12481	･ Seal	1	SN:B50001---
16		13Y-03-12612	･ Seal	1	SN:B50001---
17		13Y-03-12171	Cover	1	SN:B50001---
18		203-54-55660	Collar	1	SN:B50001---
19		01010-80825	Bolt	1	SN:B50001---
20		01643-30823	Washer	1	SN:B50001---
21		01010-80816	Bolt	1	SN:B50001---
22		01643-30823	Washer	1	SN:B50001---
23		13Y-03-12272	Plate	1	SN:B50001---
24		01010-80816	Bolt	2	SN:B50001---
25		01643-30823	Washer	2	SN:B50001---
		13Y-03-12103	Cover Assembly	1	SN:B50001---
27		13Y-03-12153	･ Seal	1	SN:B50001---
28		01010-80816	Bolt	2	SN:B50001---
29		01643-30823	Washer	2	SN:B50001---
30		01010-80820	Bolt	2	SN:B50001---
31		01643-30823	Washer	2	SN:B50001---
		13Y-03-12204	Cover Assembly	1	
32	C1		･ Cover	1	SN:B50001---
33		13Y-03-12223	･ Seal	1	SN:B50001---
34		13Y-03-12481	･ Seal	1	SN:B50001---
35		01010-80820	Bolt	3	SN:B50001---
36		01643-30823	Washer	3	SN:B50001---
37		203-54-55660	Collar	1	SN:B50001---
38		01010-80825	Bolt	1	SN:B50001---
39		01643-30823	Washer	1	SN:B50001---
40		01010-80816	Bolt	2	SN:B50001---
41		01643-30823	Washer	2	SN:B50001---

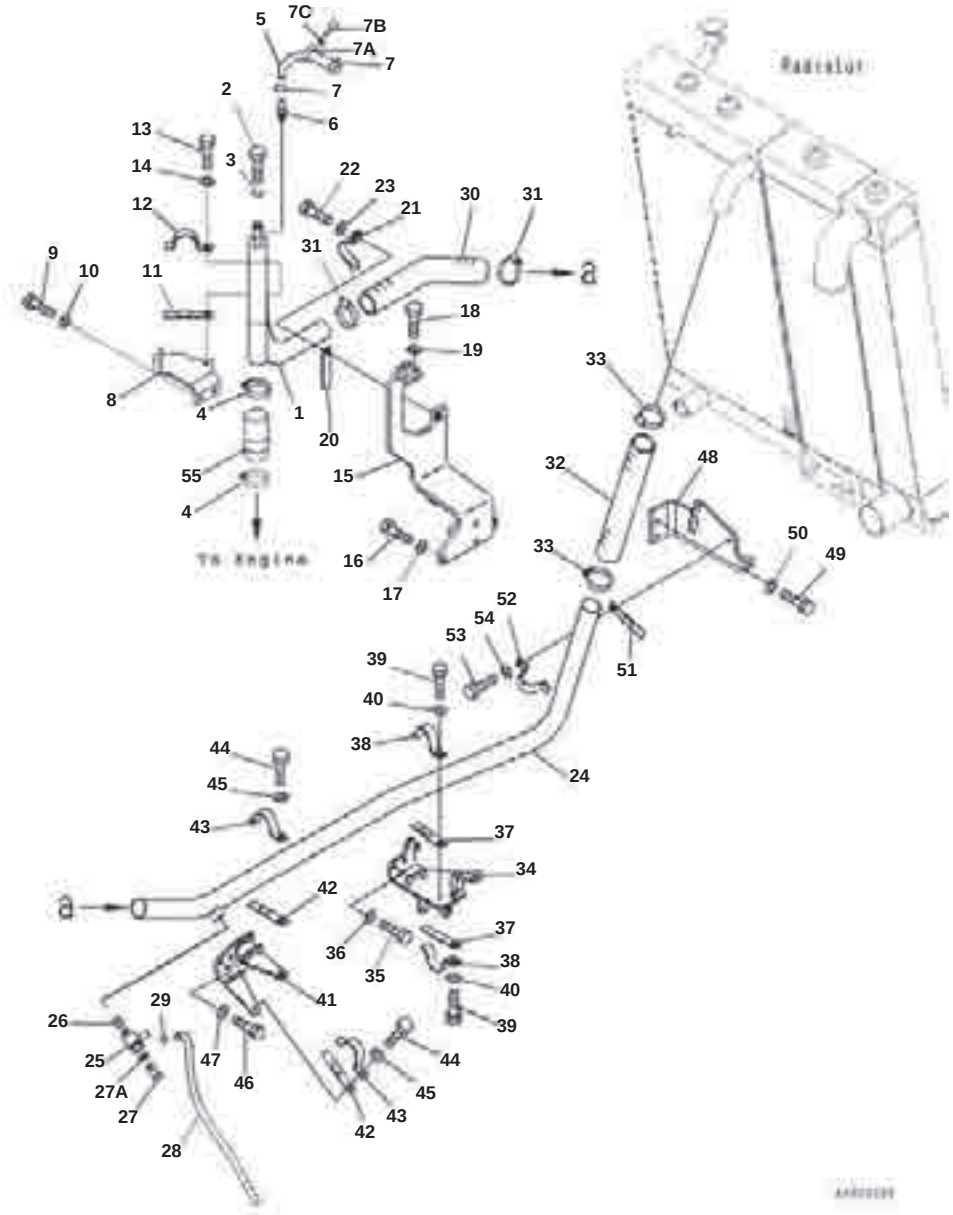

Index	Part Number	Description	Qty	Options
1	13Y-03-17211	Tube	1	SN:B50001---
2	07060-11230	Bolt	1	SN:B50001---
3	07002-11223	O-ring	1	SN:B50001---
4	07289-00055	Clamp	2	SN:B50001---
5	13Y-03-17220	Hose	1	SN:B50001---
6	120-04-41130	Nipple	1	SN:B50001---
7	11Y-09-11140	Clip	2	SN:B50001---
7A	04434-51610	Clip	1	SN:B50001---
7B	01010-81020	Bolt	1	SN:B50001---
7C	01043-31032	Washer	1	SN:B50001---
8	13Y-03-17240	Bracket	1	SN:B50001---
9	01010-81035	Bolt	2	SN:B50001---
10	01643-31032	Washer	2	SN:B50001---
11	11Y-03-32971	Bracket	1	SN:B50001---
12	11Y-03-32680	Clamp	1	SN:B50001---
13	01010-81035	Bolt	1	SN:B50001---
14	01643-31032	Washer	1	SN:B50001---
15	13Y-03-17232	Bracket	1	SN:B50001---
16	01010-81235	Bolt	3	SN:B50001---
17	01643-31232	Washer	3	SN:B50001---
18	01010-81040	Bolt	2	SN:B50001---
19	01643-31032	Washer	2	SN:B50001---
20	11Y-03-32971	Bracket	1	SN:B50001---
21	11Y-03-32680	Clamp	1	SN:B50001---
22	01010-81035	Bolt	1	SN:B50001---
23	01643-31032	Washer	1	SN:B50001---
24	13Y-03-17251	Tube	1	SN:B50001---
25	11Y-03-42741	Elbow	2	SN:B50001---
26	01583-51811	Nut	1	SN:B50001---
27	134-01-61840	Plug	1	SN:B50001---
27A	07002-11823	O-ring	1	SN:B50001---
28	07286-01465	Hose	1	SN:B50001---
29	07285-00180	Clip	1	SN:B50001--
30	13Y-03-15131	Hose	1	SN:B50001---
31	07289-00055	Clamp	2	SN:B50001---
32	13Y-03-15150	Hose	1	SN:B50001---
33	07289-00070	Clamp	2	SN:B50001---
34	13Y-03-15342	Bracket	1	SN:B50001---
35	01010-81025	Bolt	2	SN:B50001---
36	01643-31032	Washer	2	SN:B50001---
37	11Y-03-32971	Bracket	1	SN:B50001---
38	11Y-03-32680	Clamp	2	SN:B50001---
39	01010-81035	Bolt	1	SN:B50001---
40	01643-31032	Washer	2	SN:B50001---
41	13Y-03-15361	Bracket	1	SN:B50001---
42	11Y-03-32971	Bracket	1	SN:B50001---
43	11Y-03-32680	Clamp	2	SN:B50001---

D61EX-23M0 S/N B50001
Cooling Piping, Radiator Piping (1/2)

Index	Part Number	Description	Qty	Options
44	01010-81030	Bolt	2	SN:B50001---
45	01643-31032	Washer	2	SN:B50001---
46	01010-81025	Bolt	1	SN:B50001---
47	01643-31032	Washer	1	SN:B50001---
48	13Y-03-17260	Bracket	1	SN:B50001---
49	01010-81025	Bolt	1	SN:B50001---
50	01643-31032	Washer	1	SN:B50001---
51	11Y-03-32971	Bracket	1	SN:B50001---
52	11Y-03-32680	Clamp	1	SN:B50001---
53	01010-81025	Bolt	1	SN:B50001---
54	01643-31032	Washer	1	SN:B50001---
55	13Y-03-15111	Tube	1	SN:B50001---

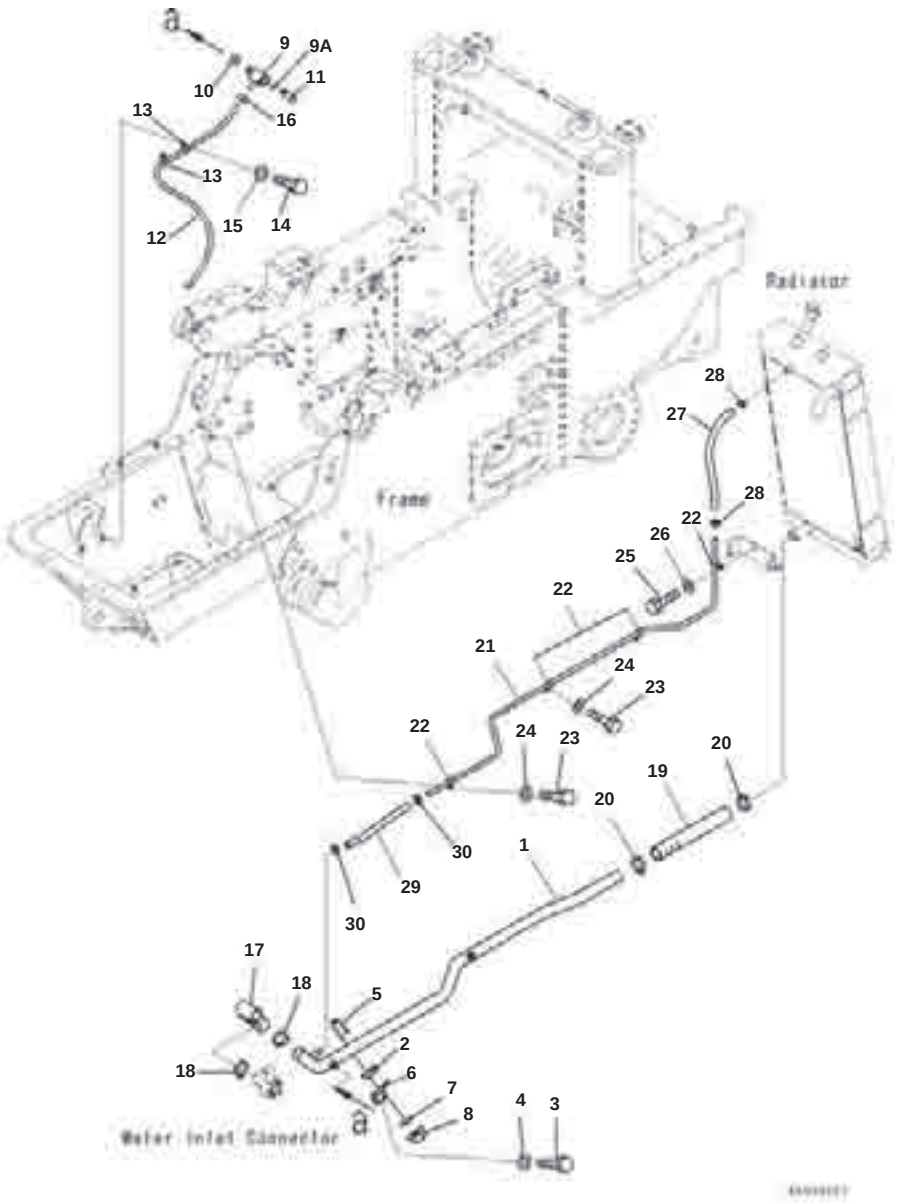

Index	Part Number	Description	Qty	Options
1	13Y-03-15221	Tube	1	SN:B50001---
2	07283-55161	Seat, Pipe Clip	1	SN:B50001---
3	01010-81025	Bolt	2	SN:B50001---
4	01643-31032	Washer	2	SN:B50001---
5	07283-35158	Clip, Pipe	1	SN:B50001---
6	13Y-03-15371	Bracket	1	SN:B50001---
7	01643-31032	Washer	2	SN:B50001---
8	01597-01009	Nut	2	SN:B50001---
9	11Y-03-42741	Elbow	1	SN:B50001---
9A	07002-11823	O-ring	1	SN:B50001---
10	01583-51811	Nut	1	SN:B50001---
11	134-01-61840	Plug	1	SN:B50001---
12	13Y-03-15241	Hose	1	SN:B50001---
13	04434-51810	Clip	2	SN:B50001---
14	01010-81020	Bolt	2	SN:B50001---
15	01643-31032	Washer	2	SN:B50001---
16	07285-00180	Clip	1	SN:B50001---
17	13Y-03-15210	Hose	1	SN:B50001---
18	07289-00055	Clamp	2	SN:B50001---
19	13Y-03-15150	Hose	1	SN:B50001---
20	07289-00070	Clamp	2	SN:B50001---
21	13Y-03-15172	Tube	1	SN:B50001---
22	04434-51910	Clip	4	SN:B50001---
23	01010-81020	Bolt	3	SN:B50001---
24	01643-31032	Washer	3	SN:B50001---
25	01010-81025	Bolt	1	SN:B50001---
26	01643-31032	Washer	1	SN:B50001---
27	13Y-03-15160	Hose	1	SN:B50001---
28	07281-00289	Clamp	2	SN:B50001---
29	13Y-03-15181	Hose	1	SN:B50001---
30	07281-00289	Clamp	2	SN:B50001---

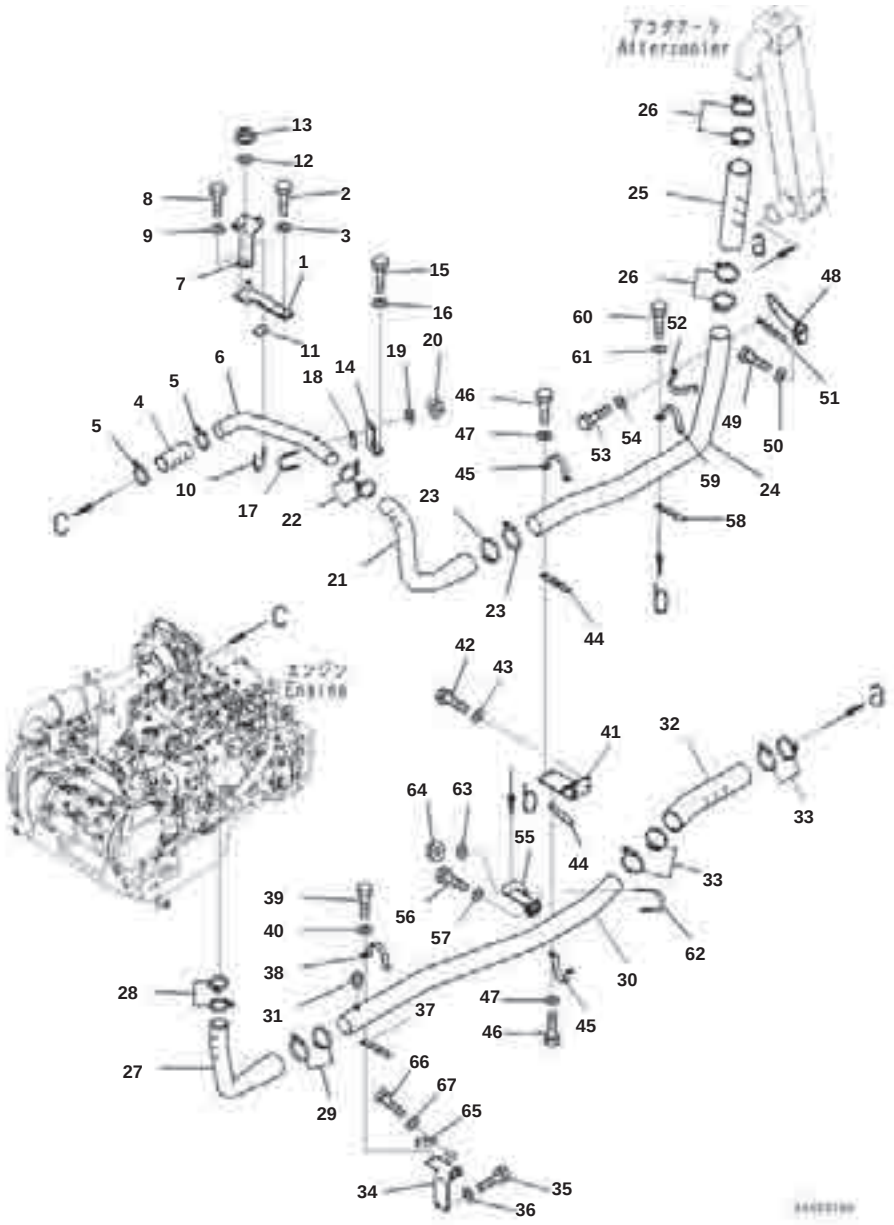

Index	Part Number	Description	Qty	Options
1	13Y-03-14322	Bracket	1	SN:B50001---
2	01010-80835	Bolt	3	SN:B50001---
3	01643-30823	Washer	3	SN:B50001---
4	13Y-03-14111	Hose	1	SN:B50001---
5	07299-00080	Clamp, Hose	2	SN:B50001---
6	13Y-03-17271	Tube	1	SN:B50001---
7	13Y-03-17280	Bracket	1	SN:B50001---
8	01010-81025	Bolt	2	SN:B50001---
9	01643-31032	Washer	2	SN:B50001---
10	07283-36365	Clip	1	SN:B50001---
11	07283-56374	Seat	1	SN:B50001---
12	01643-31032	Washer	2	SN:B50001---
13	01597-01009	Nut	2	SN:B50001---
14	13Y-03-14382	Plate	1	SN:B50001---
15	01010-81025	Bolt	2	SN:B50001---
16	01643-31032	Washer	2	SN:B50001---
17	07283-36365	Clip	1	SN:B50001---
18	07283-56374	Seat	1	SN:B50001---
19	01643-31032	Washer	2	SN:B50001---
20	01597-01009	Nut	2	SN:B50001---
21	13Y-03-14131	Hose	1	SN:B50001---
22	07299-00080	Clamp, Hose	2	SN:B50001---
23	07299-00095	Clamp, Hose	2	SN:B50001---
24	13Y-03-14141	Tube	1	SN:B50001---
25	13Y-03-14151	Hose	1	SN:B50001---
26	07299-00095	Clamp, Hose	4	SN:B50001---
27	13Y-03-14212	Hose	1	SN:B50001---
28	07299-00080	Clamp, Hose	2	SN:B50001---
29	07299-00095	Clamp, Hose	2	SN:B50001---
30	13Y-03-14221	Tube	1	SN:B50001---
31	07042-70108	Plug	1	SN:B50001---
32	13Y-03-14232	Hose	1	SN:B50001---
33	07299-00095	Clamp, Hose	4	SN:B50001---
34	13Y-03-17440	Bracket	1	SN:B50001---
35	01010-81025	Bolt	2	SN:B50001---
36	01643-31032	Washer	2	SN:B50001---
37	13Y-03-14410	Bracket	1	SN:B50001---
38	13Y-03-14350	Clamp	1	SN:B50001---
39	01010-81030	Bolt	1	SN:B50001---
40	01643-31032	Washer	1	SN:B50001---
41	13Y-03-14331	Bracket	1	SN:B50001---
42	01010-81025	Bolt	4	SN:B50001---
43	01643-31032	Washer	4	SN:B50001---
44	13Y-03-14410	Bracket	2	SN:B50001---
45	13Y-03-14350	Clamp	2	SN:B50001---
46	01010-81035	Bolt	2	SN:B50001---
47	01643-31032	Washer	2	SN:B50001---

D61EX-23M0 S/N B50001
Cooling Piping, Aftercooler Piping

Index	Part Number	Description	Qty	Options
48	13Y-03-14342	Bracket	1	SN:B50001---
49	01010-81025	Bolt	2	SN:B50001---
50	01643-31032	Washer	2	SN:B50001---
51	13Y-03-14410	Bracket	1	SN:B50001---
52	13Y-03-14350	Clamp	1	SN:B50001---
53	01010-81035	Bolt	1	SN:B50001---
54	01643-31032	Washer	1	SN:B50001---
55	13Y-03-14422	Bracket	1	SN:B50001---
56	01010-81025	Bolt	2	SN:B50001---
57	01643-31032	Washer	2	SN:B50001---
58	13Y-03-14410	Bracket	1	SN:B50001---
59	13Y-03-14350	Clamp	1	SN:B50001---
60	01010-81035	Bolt	1	SN:B50001---
61	01643-31032	Washer	1	SN:B50001---
62	07283-38981	Clip, Pipe	1	SN:B50001---
63	01643-31232	Washer	2	SN:B50001---
64	01597-01211	Nut	2	SN:B50001---
65	12Y-01-12530	Clip	1	SN:B50001---
66	01010-81025	Bolt	1	SN:B50001---
67	01643-31032	Washer	1	SN:B50001---

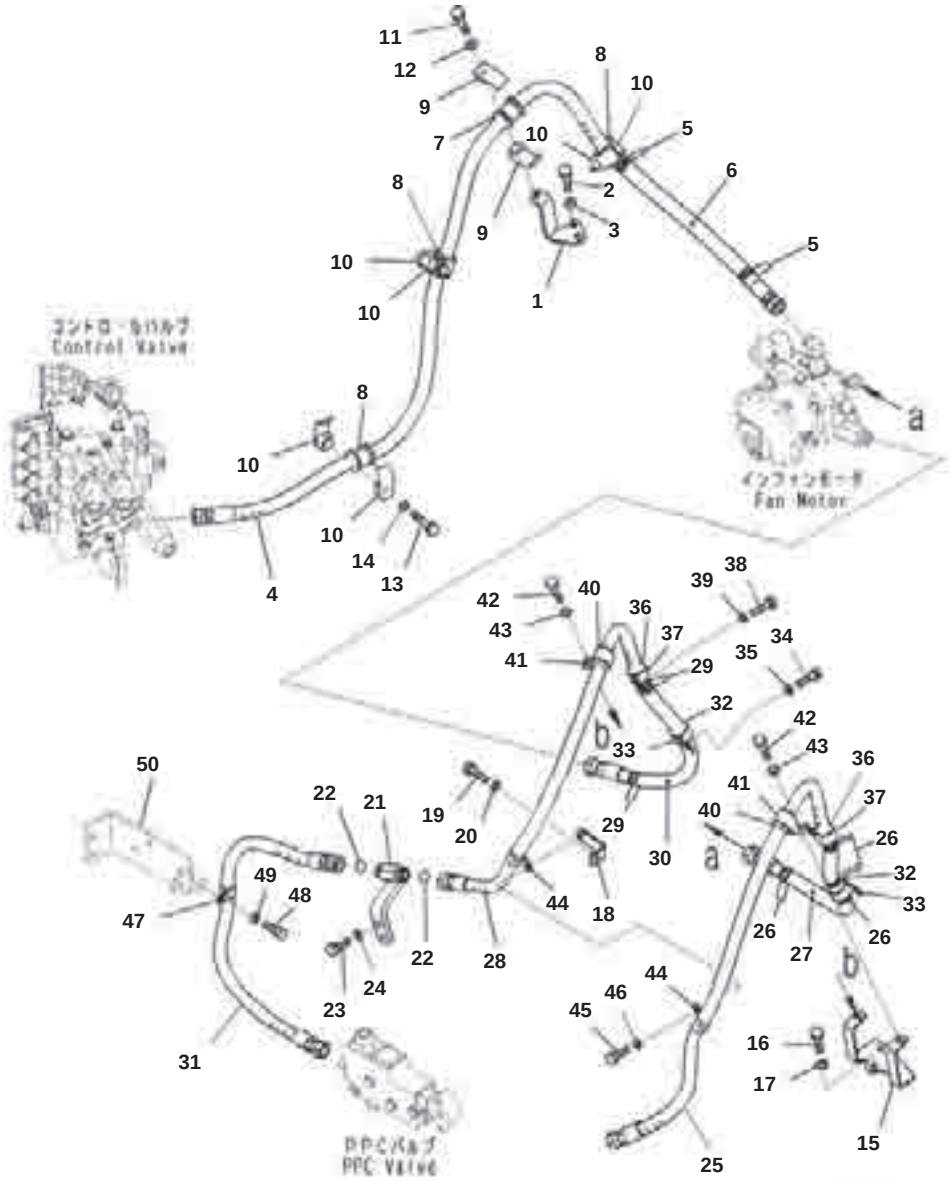

Fan Motor Piping

Index	Part Number	Description	Qty	Options
1	13Y-03-13371	Bracket	1	SN:B50001---
2	01010-81025	Bolt	2	SN:B50001---
3	01643-31032	Washer	2	SN:B50001---
4	13Y-03-16114	Hose	1	SN:B50001---
5	08034-20519	･ Band	4	SN:B50001---
6	13Y-03-16212	･ Cover	1	SN:B50001---
7	07095-00526	Cushion	1	SN:B50001---
8	07095-00526	Cushion	3	SN:B50001---
9	22P-62-13520	Clamp	2	SN:B50001---
10	22P-62-13520	Clamp	6	SN:B50001---
11	01010-81265	Bolt	1	SN:B50001---
12	01643-31232	Washer	1	SN:B50001---
13	01010-81265	Bolt	3	SN:B50001---
14	01643-31232	Washer	3	SN:B50001---
15	13Y-03-13361	Bracket	1	SN:B50001---
16	01010-81025	Bolt	2	SN:B50001---
17	01643-31032	Washer	2	SN:B50001---
18	13Y-03-16312	Bracket	1	SN:B50001---
19	01010-81025	Bolt	1	SN:B50001---
20	01643-31032	Washer	1	SN:B50001---
21	13Y-03-14430	Joint	1	SN:B50001---
22	02896-11015	O-ring	2	SN:B50001---
23	01010-81035	Bolt	2	SN:B50001---
24	01643-31032	Washer	2	SN:B50001---
25	13Y-03-16154	Hose	1	SN:B50001---
26	08034-20519	･ Band	7	SN:B50001---
27	13Y-03-16242	･ Cover	1	SN:B50001---
28	13Y-03-16133	Hose	1	SN:B50001---
29	08034-20519	･ Band	4	SN:B50001---
30	13Y-03-16223	･ Cover	1	SN:B50001---
31	13Y-03-16180	Hose	1	SN:B50001---
32	07095-20627	Cushion	2	SN:B50001---
33	04434-53412	Clip	2	SN:B50001---
34	01010-81225	Bolt	1	SN:B50001---
35	01643-31232	Washer	1	SN:B50001---
36	07095-20523	Cushion	2	SN:B50001---
37	04434-53212	Clip	2	SN:B50001---
38	01010-81225	Bolt	1	SN:B50001---
39	01643-31232	Washer	1	SN:B50001---
40	07095-20523	Cushion	2	SN:B50001---
41	04434-53211	Clip	2	SN:B50001---
42	01010-81025	Bolt	2	SN:B50001---
43	01643-31032	Washer	2	SN:B50001---
44	04434-52310	Clip	2	SN:B50001---
45	01010-81025	Bolt	1	SN:B50001---
46	01643-31032	Washer	1	SN:B50001---
47	04434-52310	Clip	1	SN:B50001---

D61EX-23M0 S/N B50001
Fan Motor Piping

Index	Part Number	Description	Qty	Options
48	01010-81025	Bolt	1	SN:B50001---
49	01643-31032	Washer	1	SN:B50001---
50	(13Y-03-15352)	Bracket		SN:B50001---

FUEL TANK AND RELATED PARTS

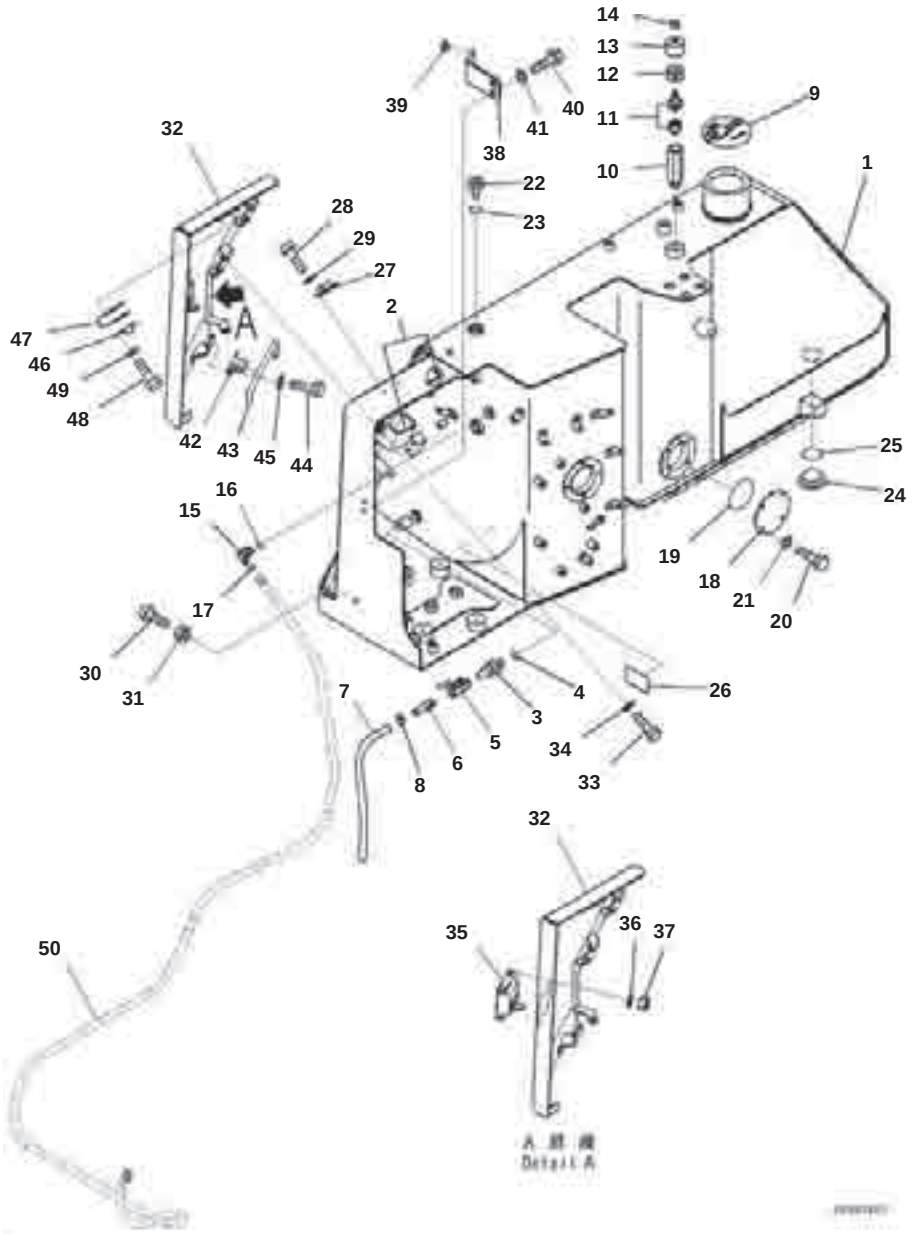

Fuel Tank, Without Refuelling Pump, Tank and Breather

Index	Part Number	Description	Qty	Options
1	13Y-04-11111	Tank	1	SN:B50001---
2	13Y-04-11241	･ Hinge,Welded	2	SN:B50001---
3	205-62-74690	Nipple	1	SN:B50001---
4	07002-11423	O-ring	1	SN:B50001---
5	07700-40240	Valve	1	SN:B50001---
6	120-04-41130	Nipple	1	SN:B50001---
7	07270-01035	Tube	1	SN:B50001---
8	07285-00115	Clip	1	SN:B50001---
9	17A-04-41411	Cap	1	SN:B50001---
10	154-04-72220	Adapter	1	SN:B50001---
11	22U-60-21520	Breather	1	SN:B50001---
12	421-60-35170	･ Element	1	SN:B50001---
13	421-60-35180	･ Cover	1	SN:B50001---
14	421-60-35190	･ Nut	1	SN:B50001---
15	02782-10313	Elbow	1	SN:B50001---
16	07002-11823	O-ring	1	SN:B50001---
17	02896-11009	O-ring	1	SN:B50001---
18	11Y-04-31180	Plate	1	SN:B50001---
19	07000-12085	O-ring	1	SN:B50001---
20	01010-81020	Bolt	4	SN:B50001---
21	01643-31032	Washer	4	SN:B50001---
22	07040-12412	Plug	1	SN:B50001---
24	363-60-21310	Plug	1	SN:B50001---
25	07002-15234	O-ring	1	SN:B50001---
26	13Y-04-11460	Sheet	1	SN:B50001---
27	205-54-51971	Dovetail	1	SN:B50001---
28	01010-80616	Bolt	2	SN:B50001---
29	01643-30623	Washer	2	SN:B50001---
30	20Y-54-11611	Stopper	1	SN:B50001---
31	01580-11008	Nut	1	SN:B50001---
32	13Y-04-11124	Cover	1	SN:B50001---
33	01010-81225	Bolt	4	SN:B50001---
34	01643-31232	Washer	4	SN:B50001---
35	13Y-54-11270	Lock	1	SN:B50001---
36	01643-30623	Washer	4	SN:B50001---
37	01580-10605	Nut	4	SN:B50001---
38	13Y-60-11281	Plate	1	SN:B50001---
39	14X-54-12960	Stopper	1	SN:B50001---
40	01010-81225	Bolt	2	SN:B50001---
41	01643-31232	Washer	2	SN:B50001---
42	198-54-19150	Spring	1	SN:B50001---
43	13Y-04-11260	Bar	1	SN:B50001---
44	01010-80616	Bolt	2	SN:B50001---
45	01643-30623	Washer	2	SN:B50001---
46	205-54-53550	Dovetail	1	SN:B50001---
47	14X-54-53860	Spacer, T=1mm	2	SN:B50001---
48	01010-80616	Bolt	2	SN:B50001---

D61EX-23M0 S/N B50001

Fuel Tank, Without Refuelling Pump, Tank and Breather

Index	Part Number	Description	Qty	Options
49	01643-30623	Washer	2	SN:B50001---
50	(02763-00333)	Hose, Face Seal Type		SN:B50001---

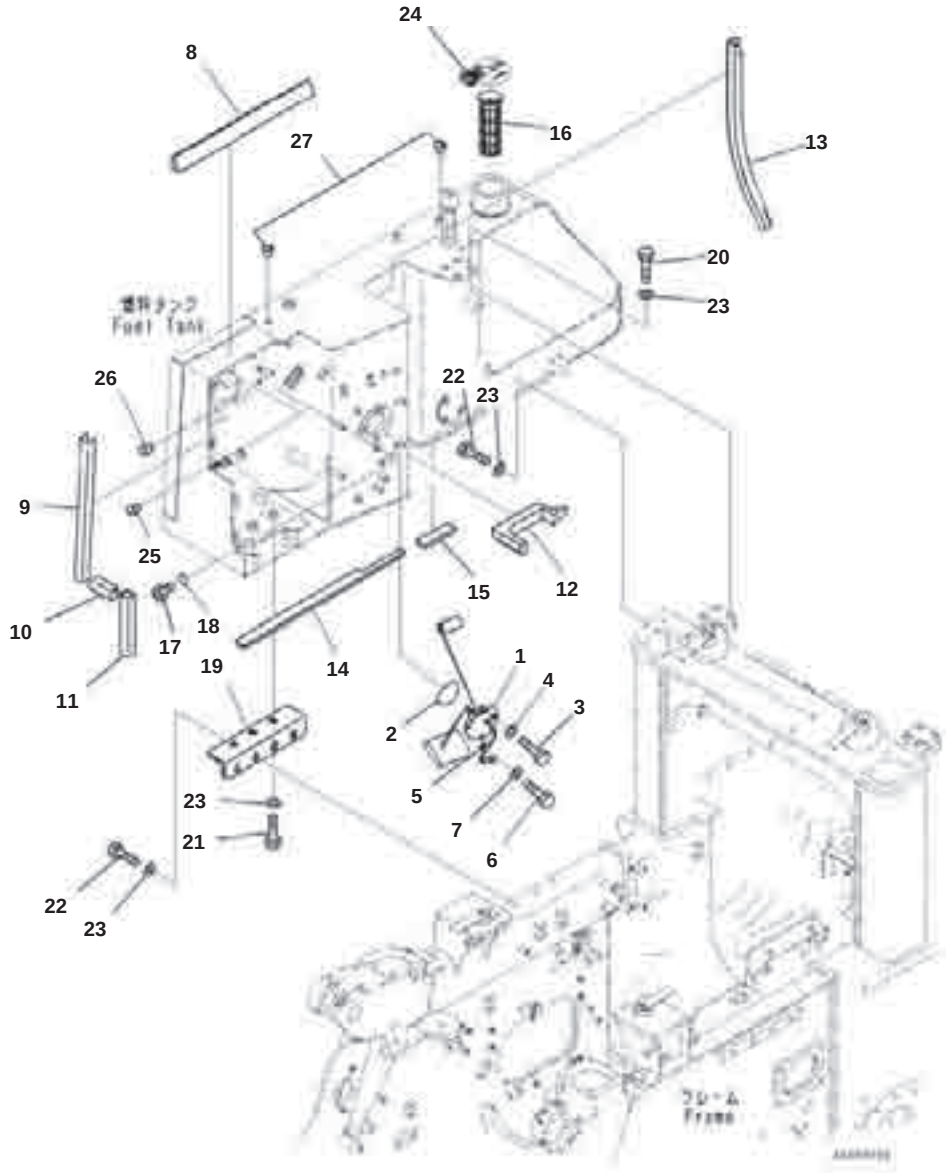

Fuel Tank, Without Refuelling Pump, Tank Related Parts

Index	Part Number	Description	Qty	Options
1	7861-93-4930	Sensor, Fuel Level	1	SN:B50001---
2	07000-12085	O-ring	1	SN:B50001---
3	01010-81020	Bolt	4	SN:B50001---
4	01643-31032	Washer	4	SN:B50001---
5	04434-50510	Clip	1	SN:B50001---
6	01010-81016	Bolt	1	SN:B50001---
7	01643-31032	Washer	1	SN:B50001---
8	13Y-54-11750	Seal	1	SN:B50001---
9	13Y-54-11730	Seal	1	SN:B50001---
10	13Y-54-11681	Seal	1	SN:B50001---
11	13Y-54-11910	Seal	1	SN:B50001---
12	13Y-54-11483	Seal	1	SN:B50001---
13	13Y-54-11631	Seal	1	SN:B50001---
14	13Y-54-11580	Seal	1	SN:B50001---
15	13Y-54-11470	Seal	1	SN:B50001---
16	07056-18422	Strainer	1	SN:B50001---
17	07040-12412	Plug	1	SN:B50001---
18	07002-12434	O-ring	1	SN:B50001---
19	13Y-04-11271	Bracket	1	SN:B50001---
20	01010-82065	Bolt	4	SN:B50001---
21	01010-82055	Bolt	3	SN:B50001---
22	01010-82045	Bolt	10	SN:B50001---
24	17A-04-41440	Lock	1	SN:B50001---
25	07049-00811	Plug	1	SN:B50001---
26	07049-01215	Plug	2	SN:B50001---
27	21J-46-12550	Cap	2	SN:B50001---

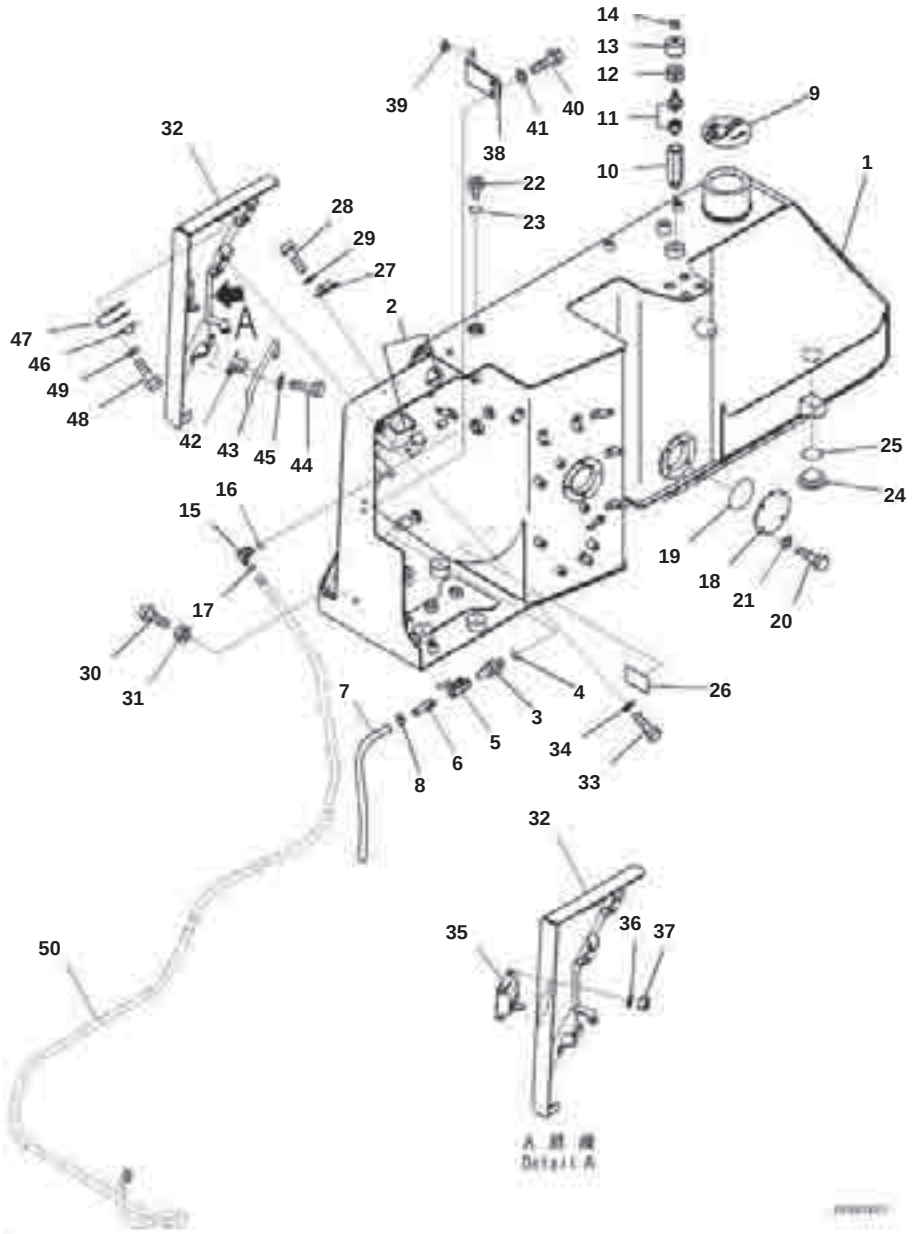

Fuel Tank, With Refuelling Pump, Tank and Breather

Index	Part Number	Description	Qty	Options
1	13Y-04-11111	Tank	1	SN:B50001---
2	13Y-04-11241	･ Hinge,Welded	2	SN:B50001---
3	205-62-74690	Nipple	1	SN:B50001---
4	07002-11423	O-ring	1	SN:B50001---
5	07700-40240	Valve	1	SN:B50001---
6	120-04-41130	Nipple	1	SN:B50001---
7	07270-01035	Tube	1	SN:B50001---
8	07285-00115	Clip	1	SN:B50001---
9	17A-04-41411	Cap	1	SN:B50001---
10	154-04-72220	Adapter	1	SN:B50001---
11	22U-60-21520	Breather	1	SN:B50001---
12	421-60-35170	･ Element	1	SN:B50001---
13	421-60-35180	･ Cover	1	SN:B50001---
14	421-60-35190	･ Nut	1	SN:B50001---
15	02782-10313	Elbow	1	SN:B50001---
16	07002-11823	O-ring	1	SN:B50001---
17	02896-11009	O-ring	1	SN:B50001---
18	11Y-04-31180	Plate	1	SN:B50001---
19	07000-12085	O-ring	1	SN:B50001---
20	01010-81020	Bolt	4	SN:B50001---
21	01643-31032	Washer	4	SN:B50001---
22	07040-12412	Plug	1	SN:B50001---
23	07002-12434	O-ring	1	SN:B50001---
24	363-60-21310	Plug	1	SN:B50001---
26	13Y-04-11460	Sheet	1	SN:B50001---
27	205-54-51971	Dovetail	1	SN:B50001---
28	01010-80616	Bolt	2	SN:B50001---
29	01643-30623	Washer	2	SN:B50001---
30	20Y-54-11611	Stopper	1	SN:B50001---
31	01580-11008	Nut	1	SN:B50001---
32	13Y-04-11124	Cover	1	SN:B50001---
33	01010-81225	Bolt	4	SN:B50001---
34	01643-31232	Washer	4	SN:B50001---
35	13Y-54-11270	Lock	1	SN:B50001---
36	01643-30623	Washer	4	SN:B50001---
37	01580-10605	Nut	4	SN:B50001---
38	13Y-60-11281	Plate	1	SN:B50001---
39	14X-54-12960	Stopper	1	SN:B50001---
40	01010-81225	Bolt	2	SN:B50001---
41	01643-31232	Washer	2	SN:B50001---
42	198-54-19150	Spring	1	SN:B50001---
43	13Y-04-11260	Bar	1	SN:B50001---
44	01010-80616	Bolt	2	SN:B50001---
45	01643-30623	Washer	2	SN:B50001---
46	205-54-53550	Dovetail	1	SN:B50001---
47	14X-54-53860	Spacer, T=1mm	2	SN:B50001---
48	01010-80616	Bolt	2	SN:B50001---

D61EX-23M0 S/N B50001
Fuel Tank, With Refuelling Pump, Tank and Breather

Index	Part Number	Description	Qty	Options
49	01643-30623	Washer	2	SN:B50001---
50	(02763-00333)	Hose, Face Seal Type		SN:B50001---

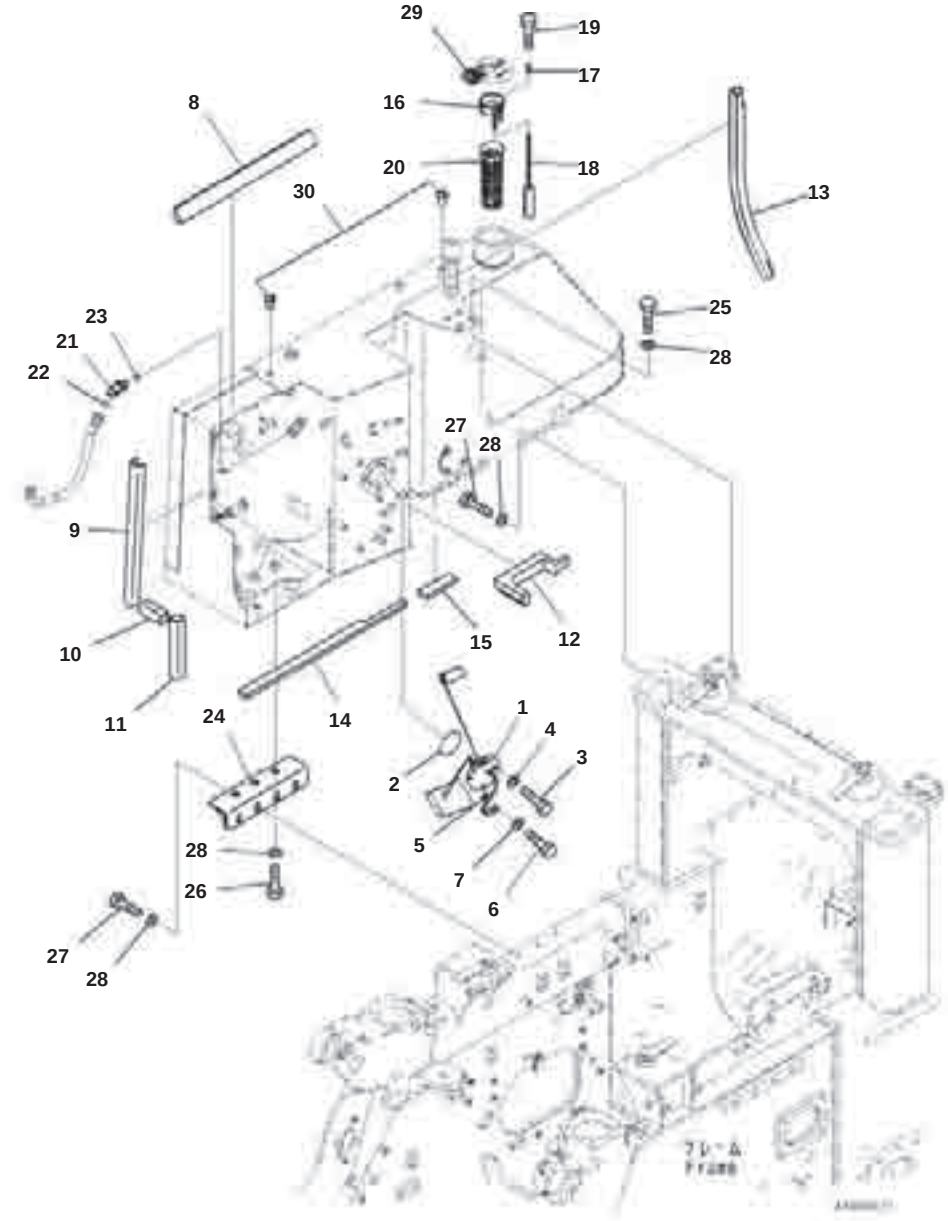

Fuel Tank, With Refuelling Pump, Sensor and Strainer

Index	Code	Part Number	Description	Qty	Options
1		7861-93-4930	Sensor, Fuel Level	1	SN:B50001---
2		07000-12085	O-ring	1	SN:B50001---
3		01010-81020	Bolt	4	SN:B50001---
4		01643-31032	Washer	4	SN:B50001---
5		04434-50510	Clip	1	SN:B50001---
6		01010-81016	Bolt	1	SN:B50001---
7		01643-31032	Washer	1	SN:B50001---
8		13Y-54-11750	Seal	1	SN:B50001---
9		13Y-54-11730	Seal	1	SN:B50001---
10		13Y-54-11681	Seal	1	SN:B50001---
11		13Y-54-11910	Seal	1	SN:B50001---
12		13Y-54-11483	Seal	1	SN:B50001---
13		13Y-54-11631	Seal	1	SN:B50001---
14		13Y-54-11580	Seal	1	SN:B50001---
15		13Y-54-11470	Seal	1	SN:B50001---
		22U-04-21241	Strainer Assembly	1	SN:B50001---
		22U-04-21200	･ Float Assembly	1	SN:B50001---
16	C1		･ ･ Guide	1	SN:B50001---
17		20Y-04-21580	･ ･ Cap	1	SN:B50001---
18		22U-04-21220	･ ･ Float	1	SN:B50001---
19	C1		･ ･ Screw	1	SN:B50001---
20		07056-18425	･ Strainer	1	SN:B50001---
21		02782-10522	Elbow	1	SN:B50001---
22		02896-11015	O-ring	1	SN:B50001---
23		07002-12434	O-ring	1	SN:B50001---
24		13Y-04-11271	Bracket	1	SN:B50001---
25		01010-82065	Bolt	4	SN:B50001---
26		01010-82055	Bolt	3	SN:B50001---
27		01010-82045	Bolt	10	SN:B50001---
28		01643-32060	Washer	17	SN:B50001---
29		17A-04-41440	Lock	1	SN:B50001---
30		21J-46-12550	Cap	2	SN:B50001---

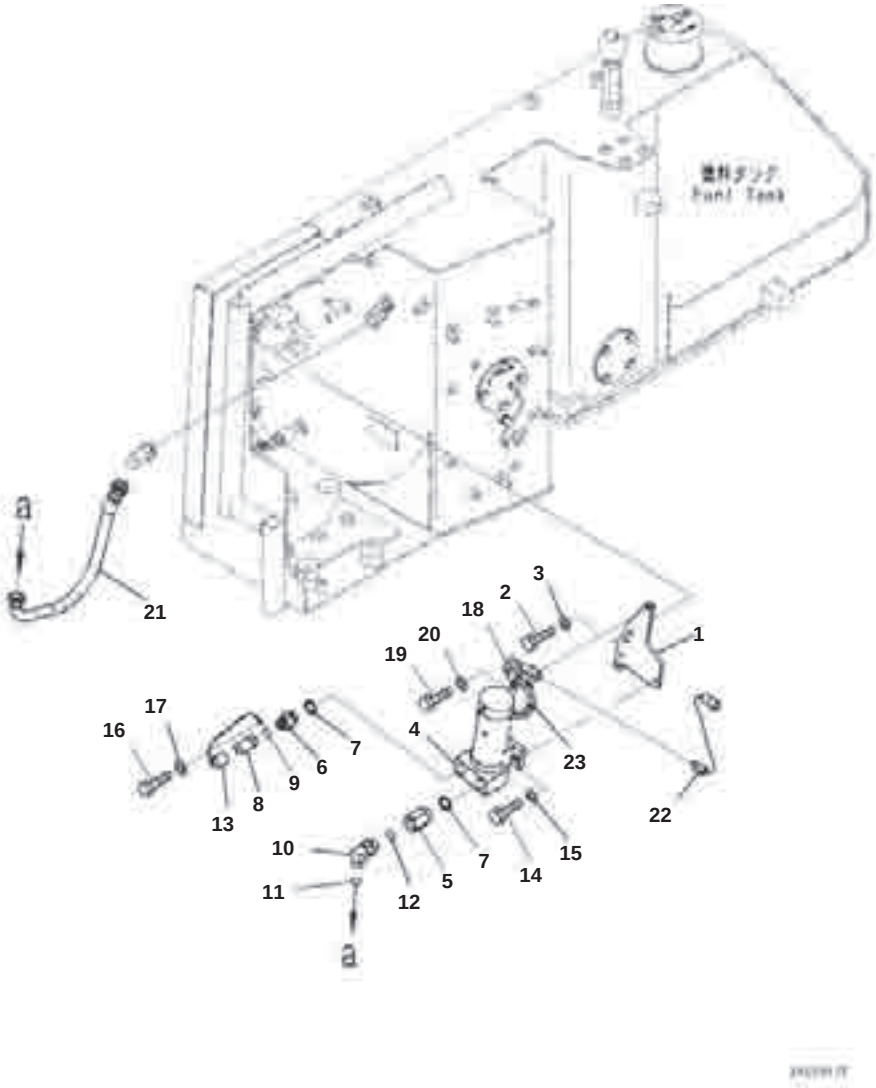

Fuel Tank, With Refuelling Pump, Pump

Index	Part Number	Description	Qty	Options
1	13Y-04-11441	Bracket	1	SN:B50001---
2	01010-81230	Bolt	2	SN:B50001---
3	01643-31232	Washer	2	SN:B50001---
4	14X-04-31510	Pump	1	SN:B50001---
5	14X-04-51441	Union	1	SN:B50001---
6	14X-04-31530	Union	1	SN:B50001---
7	205-04-K1370	Washer, Seal	2	SN:B50001---
8	134-62-63720	Coupling	1	SN:B50001---
9	208-38-11590	O-ring	1	SN:B50001---
10	02782-10522	Elbow	1	SN:B50001---
11	02896-11015	O-ring	1	SN:B50001---
12	07002-12434	O-ring	1	SN:B50001---
13	14X-04-31570	Cap	1	SN:B50001---
14	01010-80830	Bolt	2	SN:B50001---
15	01643-30823	Washer	2	SN:B50001---
16	01010-80820	Bolt	2	SN:B50001---
17	01643-30823	Washer	2	SN:B50001---
18	04435-51008	Clip	1	SN:B50001---
19	01010-80820	Bolt	1	SN:B50001---
20	01643-30823	Washer	1	SN:B50001---
21	13Y-04-11421	Hose Assembly	1	SN:B50001---
22	13Y-04-11431	Wiring Harness	1	SN:B50001---
23	08034-40521	Band	1	SN:B50001---

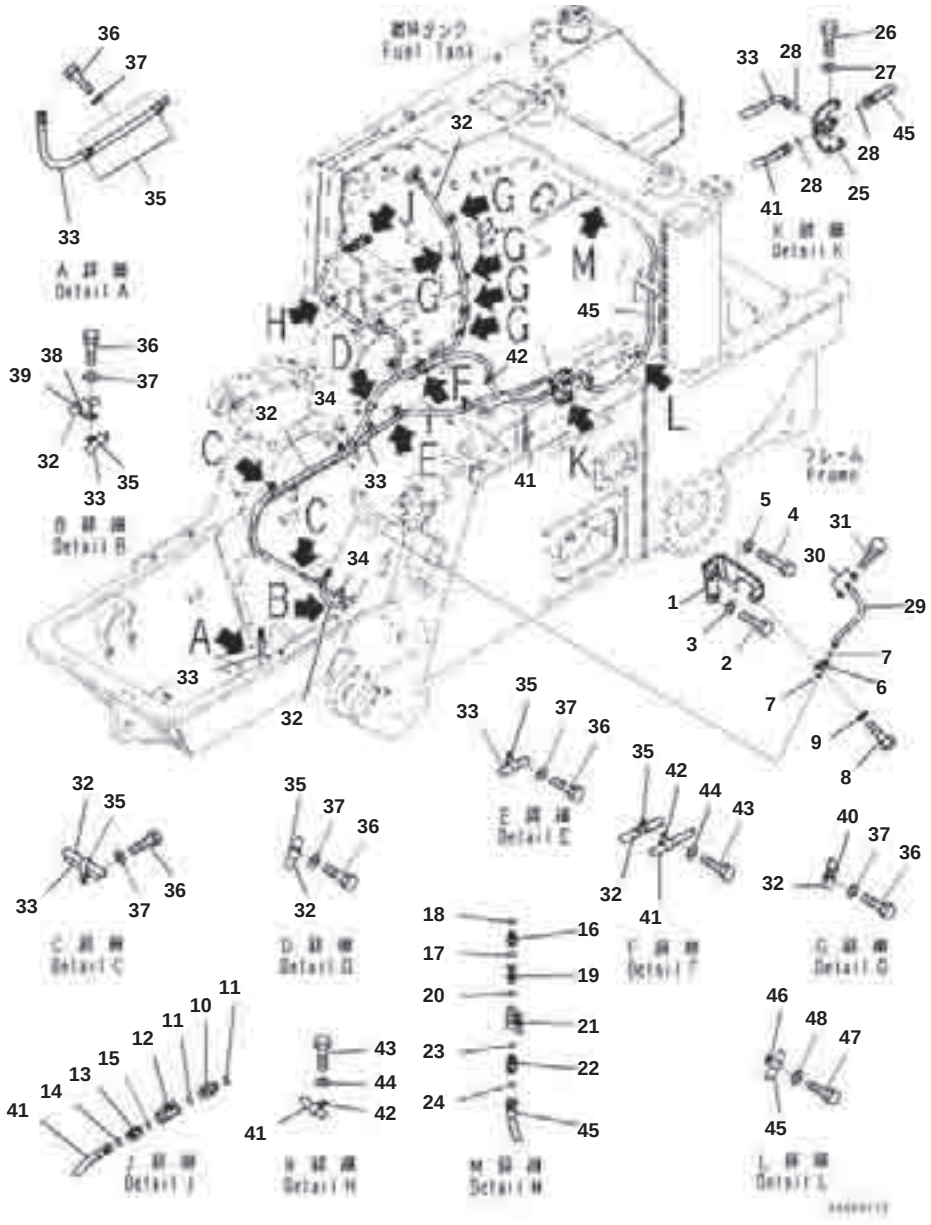

Index	Part Number	Description	Qty	Options
1	13Y-04-17320	Bracket	1	SN:B50001---
2	01010-80820	Bolt	1	SN:B50001---
3	01643-30823	Washer	1	SN:B50001---
4	01010-81230	Bolt	1	SN:B50001---
5	01643-30823	Washer	1	SN:B50001---
6	416-43-37420	Joint	1	SN:B50001---
7	02896-11009	O-ring	2	SN:B50001---
8	01010-81020	Bolt	1	SN:B50001---
9	01643-31032	Washer	1	SN:B50001---
11	07002-12034	O-ring	2	SN:B50001---
12	11Y-04-41621	Valve	1	SN:B50001---
13	02781-00315	Union	1	SN:B50001---
14	02896-11009	O-ring	1	SN:B50001---
15	07002-12034	O-ring	1	SN:B50001---
16	02781-00313	Union	1	SN:B50001---
17	07002-11823	O-ring	1	SN:B50001---
18	02896-11009	O-ring	1	SN:B50001---
19	13Y-04-11330	Union	1	SN:B50001---
20	12Y-04-11461	O-ring	1	SN:B50001---
21	12Y-04-11420	Valve	1	SN:B50001---
22	12Y-04-11430	Union	1	SN:B50001---
23	12Y-04-11461	O-ring	1	SN:B50001---
24	02896-11009	O-ring	1	SN:B50001---
25	13Y-04-12313	Bracket	1	SN:B50001---
26	01010-81025	Bolt	2	SN:B50001---
27	01643-31032	Washer	2	SN:B50001---
28	02896-11009	O-ring	3	SN:B50001---
29	13Y-04-12332	Hose	1	SN:B50001---
30	07005-01212	Seal, Washer	2	SN:B50001---
31	07206-30812	Bolt, Joint	1	SN:B50001---
32	02763-00333	Hose, Face Seal Type	1	SN:B50001---
33	13Y-04-12181	Hose	1	SN:B50001---
34	08034-20823	Band	2	SN:B50001---
35	04434-51910	Clip	13	SN:B50001---
36	01010-81020	Bolt	17	SN:B50001---
37	01643-31032	Washer	17	SN:B50001---
38	04434-52711	Clip	1	SN:B50001---
39	07095-20419	Cushion	1	SN:B50001---
40	04435-51910	Clip	5	SN:B50001---
41	13Y-04-12113	Hose	1	SN:B50001---
42	04434-51910	Clip	5	SN:B50001---
43	01010-81020	Bolt	4	SN:B50001---
44	01643-31032	Washer	4	SN:B50001---
45	13Y-04-12132	Hose	1	SN:B50001---
46	04434-51910	Clip	3	SN:B50001---
47	01010-81020	Bolt	3	SN:B50001---
48	01643-31032	Washer	3	SN:B50001---

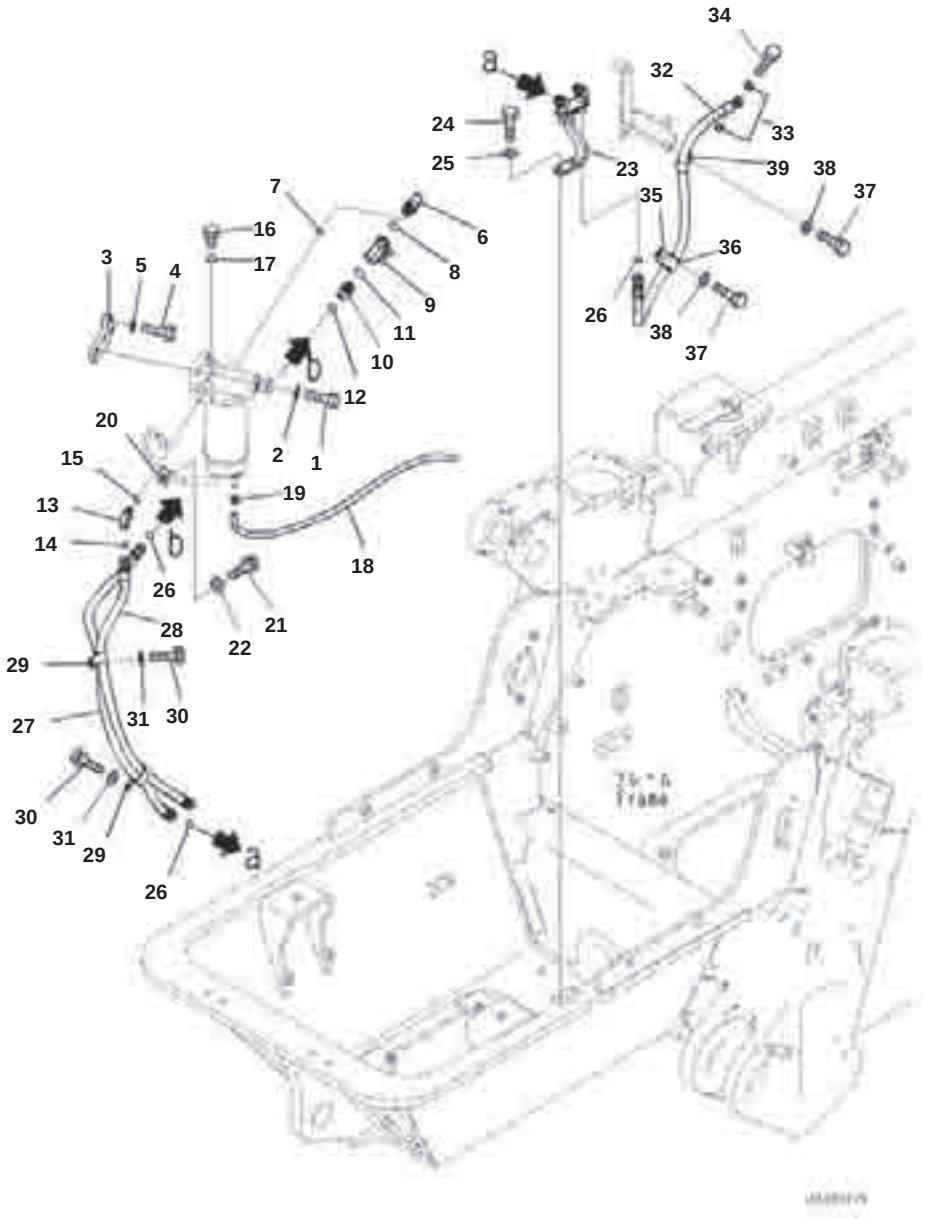

Fuel Supply Piping, Prefilter Piping

Index	Part Number	Description	Qty	Options
1	01010-81040	Bolt	2	SN:B50001---
2	01643-31032	Washer	2	SN:B50001---
3	13Y-04-11293	Plate	1	SN:B50001---
4	01010-81030	Bolt	2	SN:B50001---
5	01643-31032	Washer	2	SN:B50001---
6	13Y-04-11280	Elbow	1	SN:B50001---
7	07002-11423	O-ring	1	SN:B50001---
8	07002-12034	O-ring	1	SN:B50001---
9	11Y-04-41621	Valve	1	SN:B50001---
10	02781-00315	Union	1	SN:B50001---
11	07002-12034	O-ring	1	SN:B50001---
12	02896-11009	O-ring	1	SN:B50001---
13	02782-10311	Elbow	1	SN:B50001---
14	02896-11009	O-ring	1	SN:B50001---
15	07002-11423	O-ring	1	SN:B50001---
16	07040-11409	Plug	1	SN:B50001---
17	07002-11423	O-ring	1	SN:B50001---
18	07286-00870	Hose	1	SN:B50001---
19	07285-00125	Clip	1	SN:B50001---
20	04434-51008	Clip	1	SN:B50001---
21	01010-80816	Bolt	1	SN:B50001---
22	01643-30823	Washer	1	SN:B50001---
23	13Y-04-12271	Bracket	1	SN:B50001---
24	01010-81025	Bolt	2	SN:B50001---
25	01643-31032	Washer	2	SN:B50001---
26	02896-11009	O-ring	4	SN:B50001---
27	13Y-04-12212	Hose	1	SN:B50001---
28	13Y-04-12233	Hose	1	SN:B50001---
29	04435-51910	Clip	2	SN:B50001---
30	01010-81020	Bolt	2	SN:B50001---
31	01643-31032	Washer	2	SN:B50001---
32	13Y-04-12252	Hose	1	SN:B50001---
34	07206-31014	Bolt, Joint	1	SN:B50001---
35	04434-52711	Clip	1	SN:B50001---
36	07095-20419	Cushion	1	SN:B50001---
37	01010-81020	Bolt	2	SN:B50001---
38	01643-31032	Washer	2	SN:B50001---
39	04434-51910	Clip	1	SN:B50001---

ELECTRICAL SYSTEM

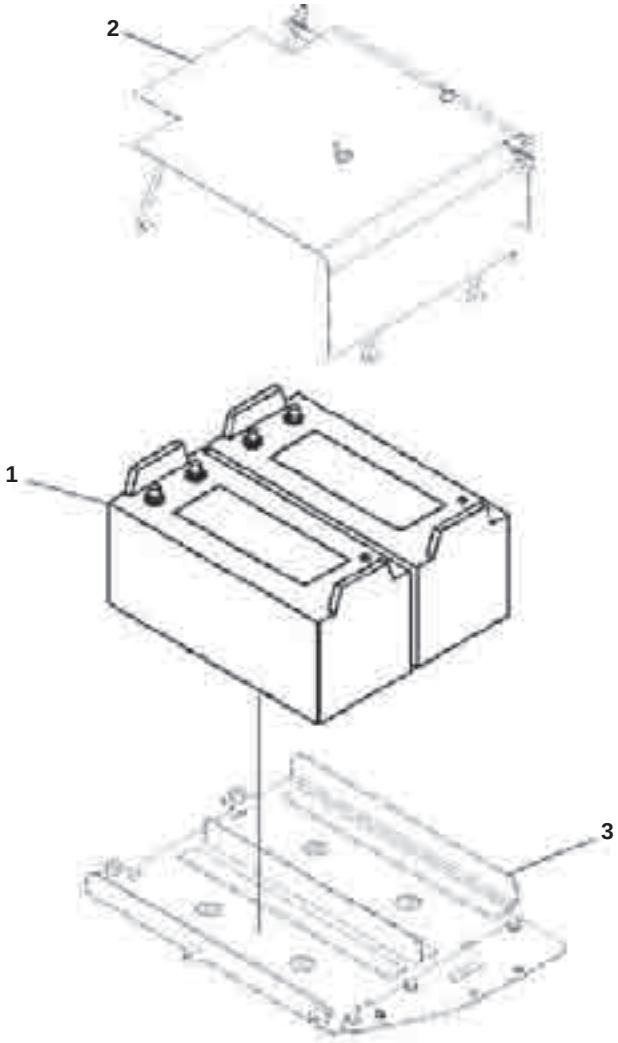

Battery 170Ah

Index	Part Number	Description	Qty	Options
1	134-06-61540	Battery 170Ah	2	SN:B50001---
	08000-00000	Terminal, (+)	2	SN:B50001---
	08000-00001	Terminal, (-)	2	SN:B50001---
2	(13Y-06-11122)	Sheet	1	SN:B50001---
3	(13Y-06-11111)	Support	1	SN:B50001---

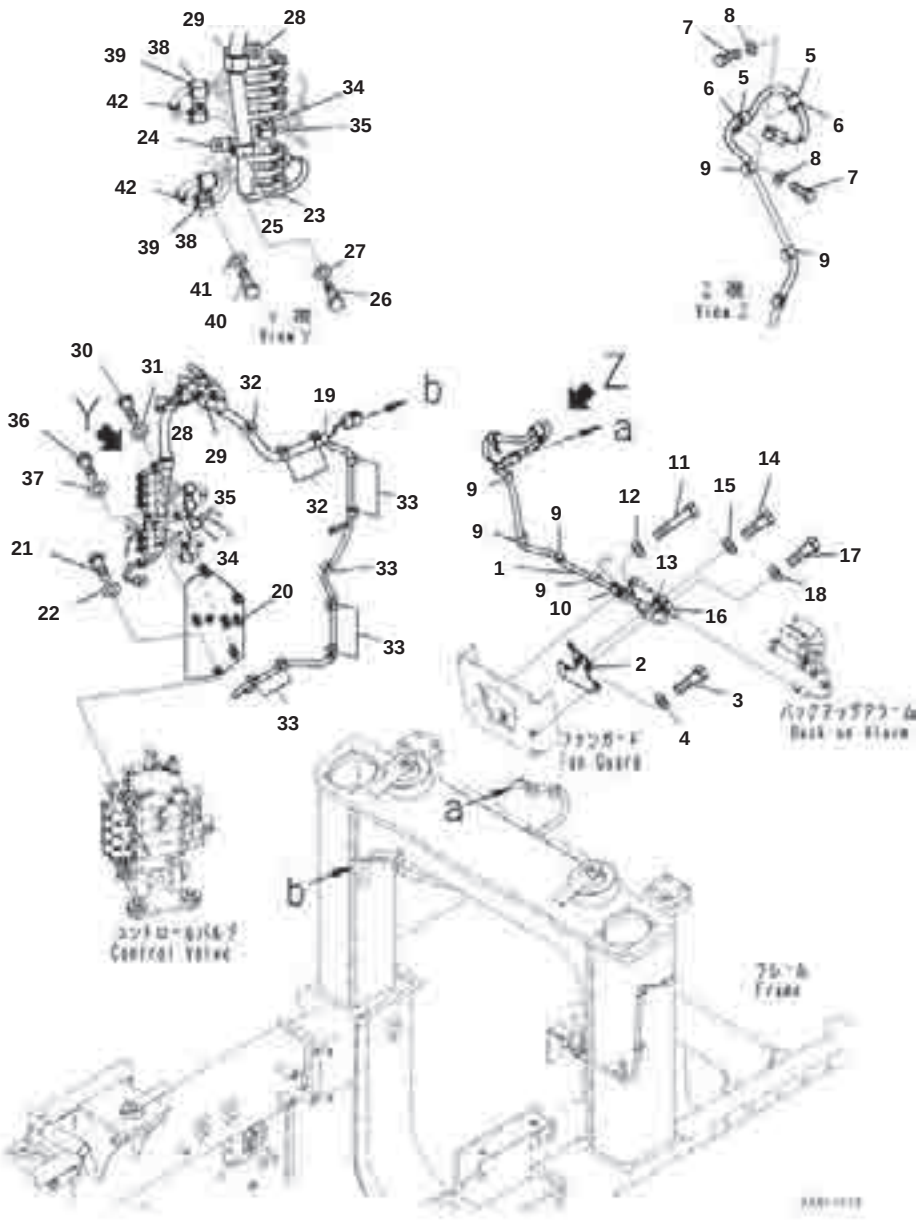

Electric Wiring Harness, Wiring Harness and Bracket (1/2)

Index	Part Number	Description	Qty	Options
1	13Y-06-11824	Wiring Harness	1	SN:B50001---
2	13Y-06-12282	Bracket	1	SN:B50001---
3	01010-81020	Bolt	2	SN:B50001---
4	01643-31032	Washer	2	SN:B50001---
5	04434-52110	Clip	2	SN:B50001---
6	07095-20314	Cushion	2	SN:B50001---
7	01010-81020	Bolt	2	SN:B50001---
8	01643-31032	Washer	2	SN:B50001---
9	08211-01020	Clip	7	SN:B50001---
10	04434-50610	Clip	2	SN:B50001---
11	01010-81060	Bolt	1	SN:B50001---
12	01643-31032	Washer	1	SN:B50001---
13	04434-50610	Clip	2	SN:B50001---
14	01010-81020	Bolt	1	SN:B50001---
15	01643-31032	Washer	1	SN:B50001---
16	04434-50610	Clip	1	SN:B50001---
17	01010-81020	Bolt	1	SN:B50001---
18	01643-31032	Washer	1	SN:B50001---
19	13Y-06-11814	Wiring Harness	1	SN:B50001---
20	13Y-06-11211	Bracket	1	SN:B50001---
21	01010-81025	Bolt	2	SN:B50001---
22	01643-31032	Washer	2	SN:B50001---
23	08211-00720	Clip	1	SN:B50001---
24	08057-12010	Clip	1	SN:B50001---
25	08211-01920	Clip	1	SN:B50001---
26	01010-81020	Bolt	1	SN:B50001---
27	01643-31032	Washer	1	SN:B50001---
28	04434-53211	Clip	2	SN:B50001---
29	07095-20523	Cushion	2	SN:B50001---
30	01010-81020	Bolt	2	SN:B50001---
31	01643-31032	Washer	2	SN:B50001---
32	08211-01920	Clip	3	SN:B50001---
33	08211-01020	Clip	7	SN:B50001---
34	04434-51710	Clip	2	SN:B50001---
35	07095-20211	Cushion	2	SN:B50001---
36	01010-81020	Bolt	2	SN:B50001---
37	01643-31032	Washer	2	SN:B50001---
38	04434-51710	Clip	4	SN:B50001---
39	07095-20211	Cushion	4	SN:B50001---
40	01010-81020	Bolt	2	SN:B50001---
41	01643-31032	Washer	2	SN:B50001---
42	08034-20414	Band	2	SN:B50001---

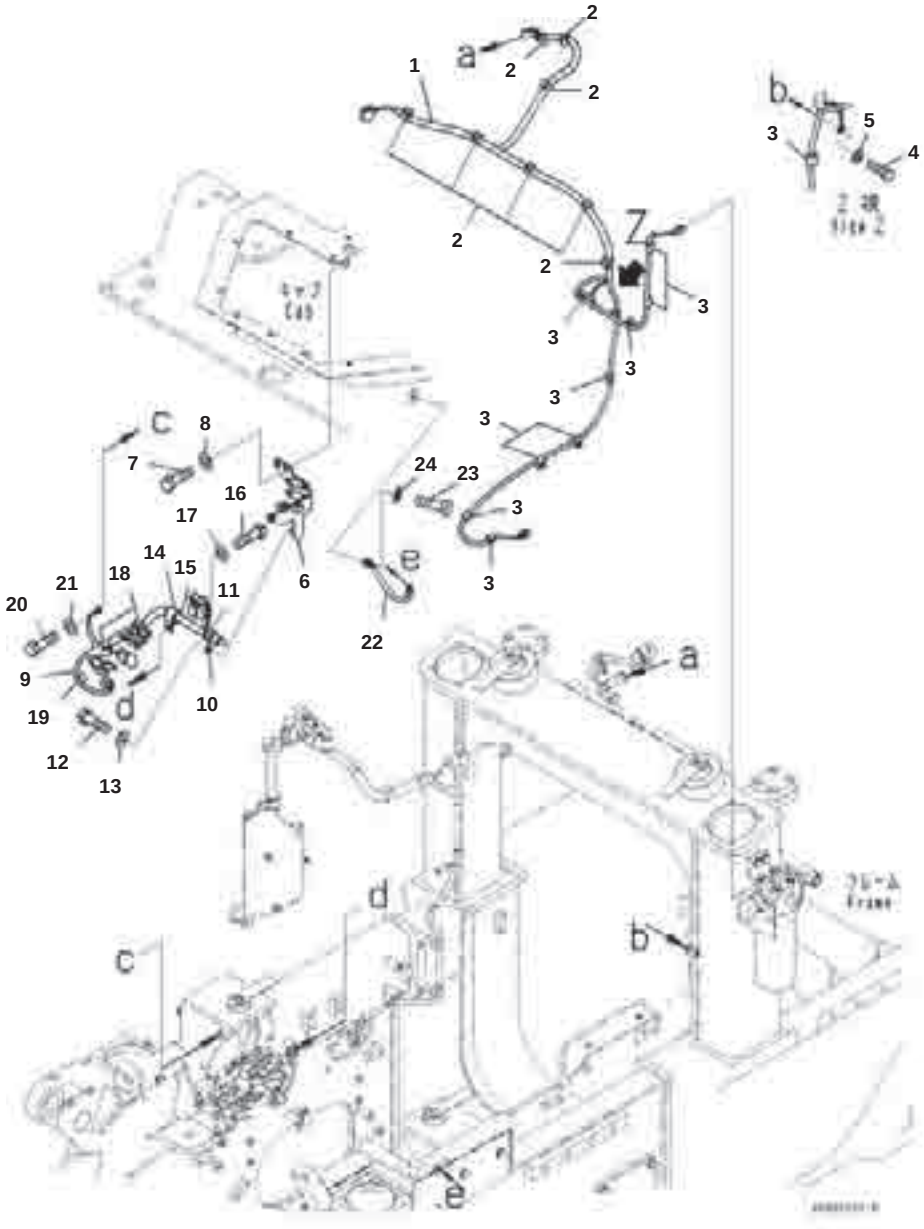

Electric Wiring Harness, Wiring Harness and Bracket (2/2)

Index	Part Number	Description	Qty	Options
1	13Y-06-11835	Wiring Harness	1	SN:B50001---
2	08211-01320	Clip	8	SN:B50001---
3	08211-00720	Clip	10	SN:B50001---
4	01010-81016	Bolt	1	SN:B50001---
5	01643-31032	Washer	1	SN:B50001---
6	13Y-06-11262	Bracket	1	SN:B50001---
7	01010-81025	Bolt	2	SN:B50001---
8	01643-31032	Washer	2	SN:B50001---
9	13Y-06-11932	Wiring Harness	1	SN:B50001---
10	04434-52711	Clip	1	SN:B50001---
11	07095-20419	Cushion	1	SN:B50001---
12	01010-81020	Bolt	1	SN:B50001---
13	01643-31032	Washer	1	SN:B50001---
14	04434-52711	Clip	1	SN:B50001---
15	07095-20419	Cushion	1	SN:B50001---
16	01010-81025	Bolt	1	SN:B50001---
17	01643-31032	Washer	1	SN:B50001---
18	08211-01520	Clip	2	SN:B50001---
19	08211-00720	Clip	1	SN:B50001---
20	01010-81016	Bolt	1	SN:B50001---
21	01643-31032	Washer	1	SN:B50001---
22	13Y-06-11270	Cable	1	SN:B50001---
23	01010-81020	Bolt	2	SN:B50001---
24	01643-31032	Washer	2	SN:B50001---

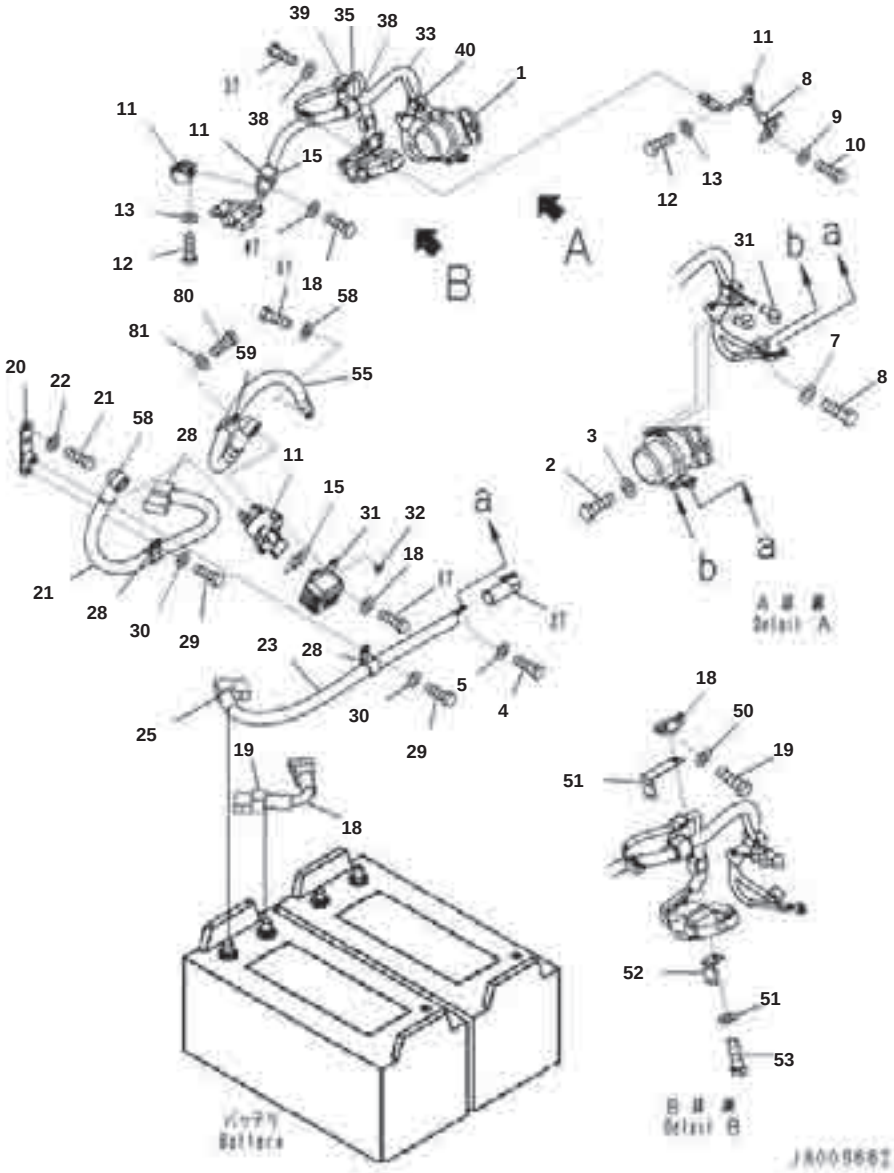

Index	Part Number	Description	Qty	Options
1	08088-30000	Switch, Battery Relay	1	SN:B50001--
2	01010-80825	Bolt	2	SN:B50001--
3	01643-30823	Washer	2	SN:B50001--
4	01010-80820	Bolt	1	SN:B50001--
5	01643-30823	Washer	1	SN:B50001--
6	01010-80820	Bolt	1	SN:B50001--
7	01643-30823	Washer	1	SN:B50001--
8	08155-02400	Lamp	1	SN:B50001--
9	01643-70823	Washer	2	SN:B50001--
10	01252-B0825	Bolt, Hexagon Socket Head	2	SN:B50001--
11	04434-50610	Clip	1	SN:B50001--
12	01010-81020	Bolt	1	SN:B50001--
13	01643-31032	Washer	1	SN:B50001--
14	08068-00001	Switch, Battery	1	SN:B50001--
15	09697-00001	Plate, Battery Disconnect Switch	1	SN:B50001--
16	01643-30823	Washer	2	SN:B50001--
17	01252-A0825	Bolt, Hexagon Socket Head	2	SN:B50001--
18	08028-64005	Cable, Ground	1	SN:B50001--
19	08038-42511	Cap	2	SN:B50001--
20	13Y-06-13270	Bracket	1	SN:B50001--
21	01010-81020	Bolt	2	SN:B50001--
22	01643-31032	Washer	2	SN:B50001--
23	08028-GD065	Cable, Ground	1	SN:B50001--
24	08028-ED070	Cable, Ground	1	SN:B50001--
25	14X-06-12280	Cover	1	SN:B50001--
26	14X-06-12270	Cover	1	SN:B50001--
27	11Y-06-11630	Cap	1	SN:B50001--
28	04434-52310	Clip	2	SN:B50001--
29	01010-81020	Bolt	2	SN:B50001--
30	01643-31032	Washer	2	SN:B50001--
31	2A5-06-11960	Cap	1	SN:B50001--
32	20T-54-74510	Cap	2	SN:B50001--
33	13Y-06-11866	Wiring Harness	1	SN:B50001--
34	08038-00519	Cap, Terminal	2	SN:B50001--
35	04434-52711	Clip	1	SN:B50001--
36	07095-20418	Cushion	1	SN:B50001--
37	01010-81020	Bolt	1	SN:B50001--
38	01643-31032	Washer	1	SN:B50001--
39	08211-00720	Clip	2	SN:B50001--
40	08211-01520	Clip	2	SN:B50001--
41	13Y-06-11151	Bracket	1	SN:B50001--
42	01010-81025	Bolt	1	SN:B50001--
43	01643-31032	Washer	1	SN:B50001--
44	04434-52711	Clip	1	SN:B50001--
45	07095-20418	Cushion	1	SN:B50001--
46	01010-81025	Bolt	1	SN:B50001--
47	01643-31032	Washer	1	SN:B50001--

D61EX-23M0 S/N B50001

Battery Electric Wiring Harness, Wiring Harness

Index	Part Number	Description	Qty	Options
48	11Y-06-41950	Bracket	1	SN:B50001--
49	01010-81025	Bolt	2	SN:B50001--
50	01643-31032	Washer	2	SN:B50001--
51	421-06-22920	Bracket	1	SN:B50001--
52	421-06-22910	Bracket	1	SN:B50001--
53	01010-80820	Bolt	1	SN:B50001--
54	01643-30823	Washer	1	SN:B50001--
55	13Y-06-11880	Cable	1	SN:B50001--
56	08038-00035	Cap, Terminal	2	SN:B50001--
57	01010-81020	Bolt	1	SN:B50001--
58	01643-31032	Washer	1	SN:B50001--
59	04434-52310	Clip	1	SN:B50001--
60	01010-81025	Bolt	1	SN:B50001--
61	01643-31032	Washer	1	SN:B50001--

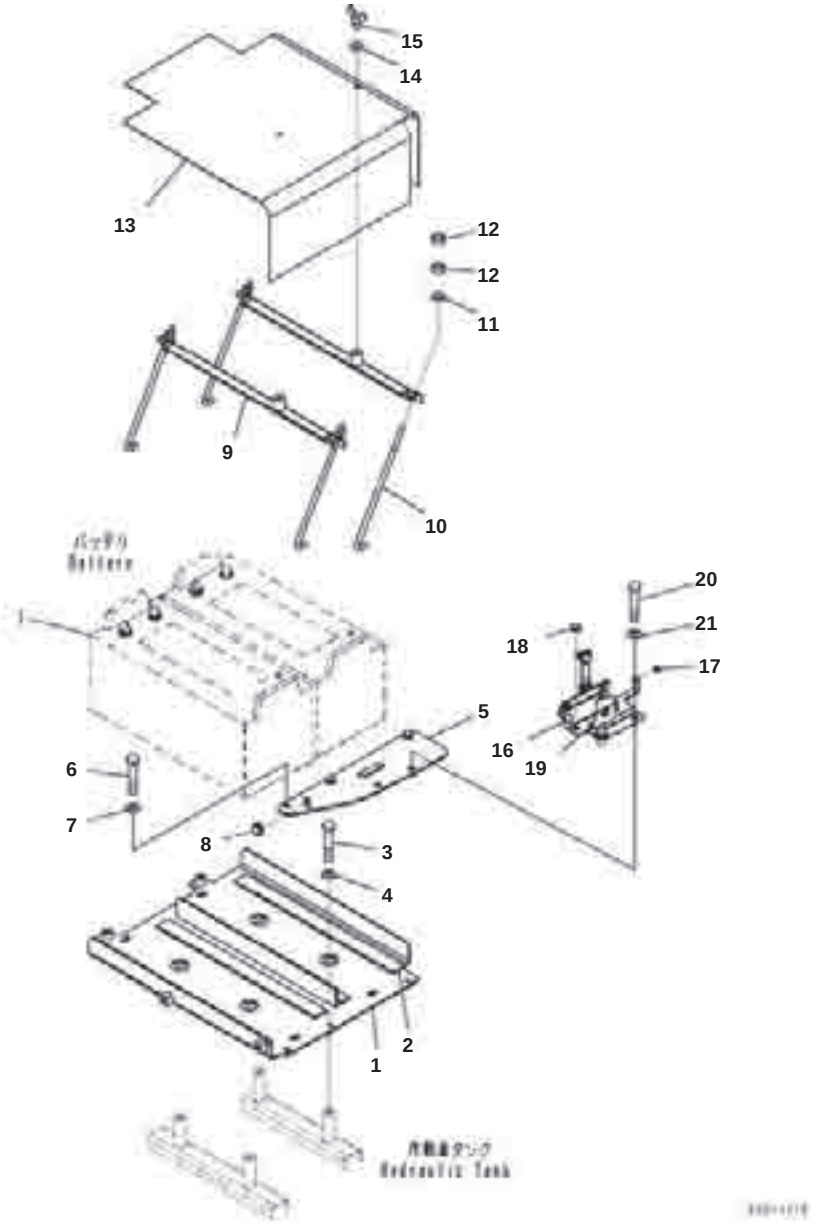

Battery Electric Wiring Harness, Tray

Index	Part Number	Description	Qty	Options
1	13Y-06-11111	Support	1	SN:B50001--
2	08007-03549	▪ Cushion, Battery	6	SN:B50001--
3	01010-81225	Bolt	4	SN:B50001--
4	01643-31232	Washer	4	SN:B50001--
5	13Y-06-11161	Bracket	1	SN:B50001--
6	01010-81025	Bolt	3	SN:B50001--
7	01643-31032	Washer	3	SN:B50001--
8	09415-00506	Cap	1	SN:B50001--
9	14X-06-62121	Holder	2	SN:B50001--
10	13Y-06-11140	Rod	4	SN:B50001--
11	01643-31032	Washer	4	SN:B50001--
13	13Y-06-11122	Sheet	1	SN:B50001--
14	01643-30823	Washer	2	SN:B50001--
15	01434-00820	Bolt, Wing	2	SN:B50001--

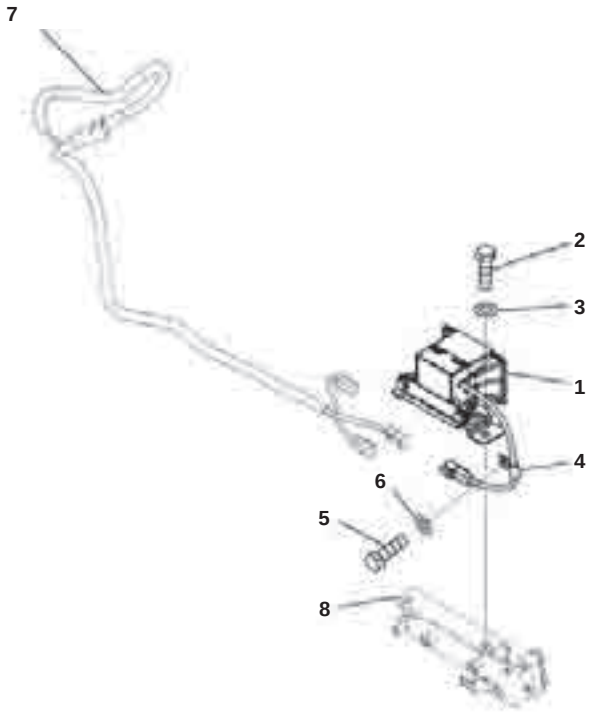

Back-up Alarm

Index	Part Number	Description	Qty	Options
1	20Y-06-41812	Alarm, Back-up	1	SN:B50001--
2	01010-D1020	Bolt	2	SN:B50001--
3	01643-71032	Washer	2	SN:B50001--
4	04434-50610	Clip	1	SN:B50001--
5	01010-D1020	Bolt	1	SN:B50001--
6	01643-71032	Washer	1	SN:B50001--
7	(13Y-06-11824)	Wiring Harness		SN:B50001--
8	(13Y-03-12532)	Bracket		SN:B50001--

POWER TRAIN AND FINAL DRIVE

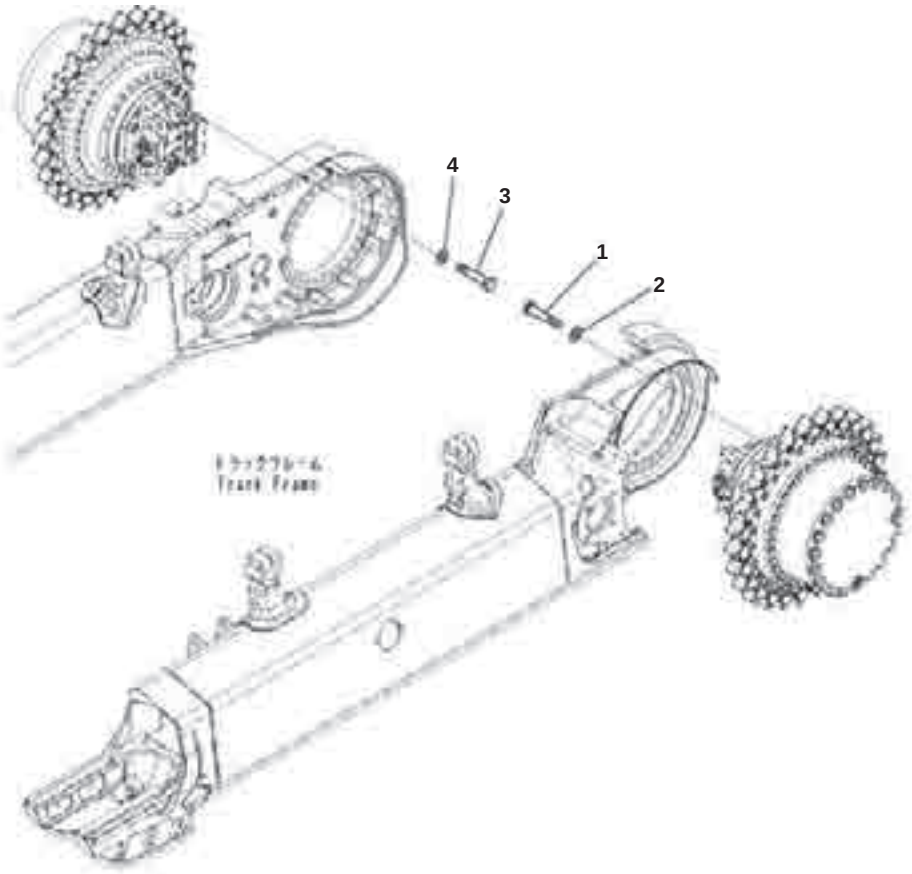

Final Drive, Mounting

Index	Part Number	Description	Qty	Options
1	01010-82085	Bolt	26	SN:B50001--
2	01643-32060	Washer	26	SN:B50001--
3	01010-82085	Bolt	26	SN:B50001--
4	01643-32060	Washer	26	SN:B50001--

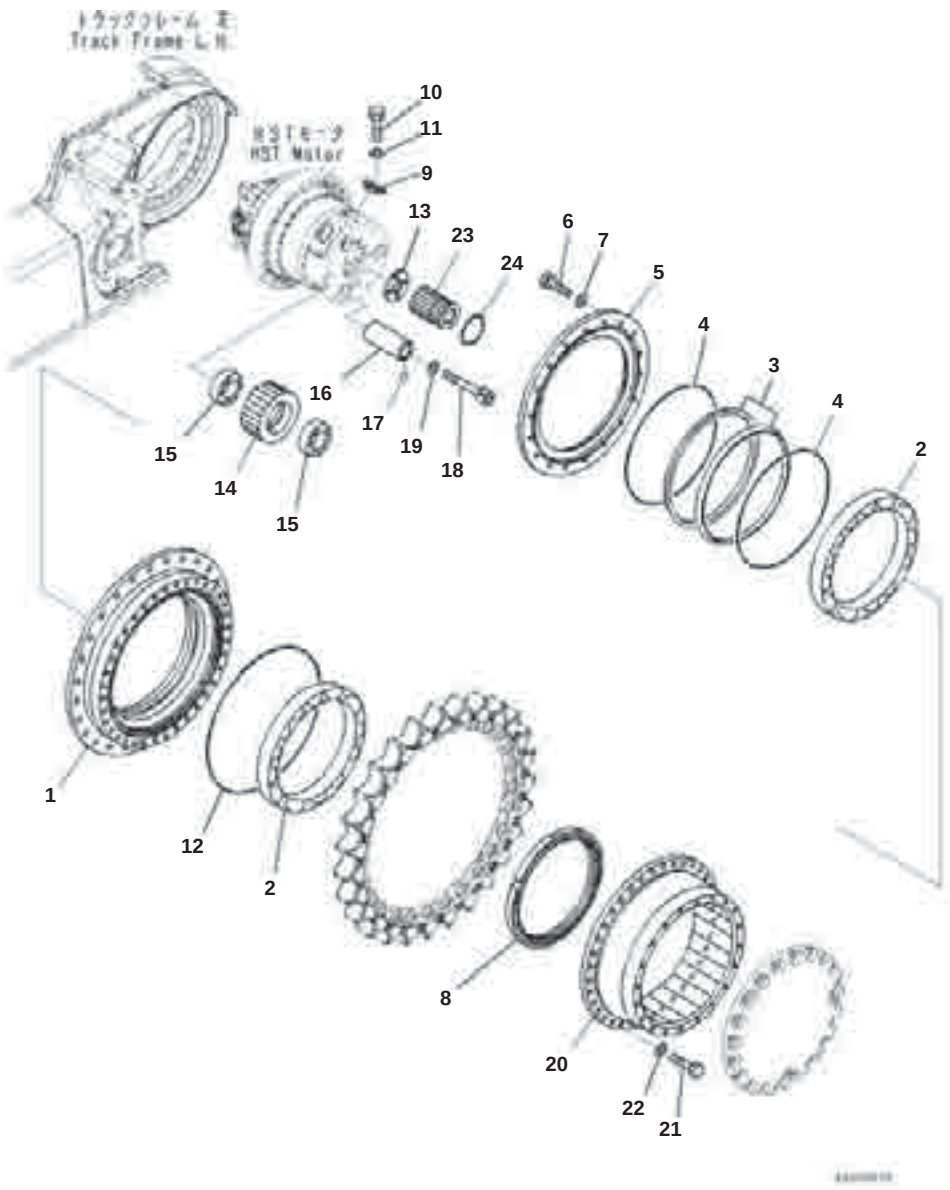

Index	Code	Part Number	Description	Qty	Options
		13Y-27-10100	Final Drive Assembly	1	SN:B50001--
1		13Y-27-11410	･ Hub	1	SN:B50001--
2		13Y-27-11310	･ Bearing	2	SN:B50001--
		13Y-27-11600	･ Seal Assembly	1	SN:B50001--
3	C1		･ ･ Seal	2	SN:B50001--
4	C1		･ ･ O-ring	2	SN:B50001--
5		13Y-27-11450	･ Cover	1	SN:B50001--
6		01010-81235	･ Bolt	18	SN:B50001--
7		01643-31232	･ Washer	18	SN:B50001--
8		13Y-27-11430	･ Nut	1	SN:B50001--
9		13Y-27-11440	･ Lock	1	SN:B50001--
10		01010-81030	･ Bolt	2	SN:B50001--
11		01643-31032	･ Washer	2	SN:B50001--
12		07000-75495	･ O-ring	1	SN:B50001--
13		13Y-27-11230	･ Washer, Thrust	1	SN:B50001--
14		13Y-27-11150	･ Gear	3	SN:B50001--
15		13Y-27-11320	･ Bearing	6	SN:B50001--
16		13Y-27-11220	･ Shaft	3	SN:B50001--
17		04260-00635	･ Ball, Steel	3	SN:B50001--
18		13Y-27-11260	･ Bolt	3	SN:B50001--
19		01643-52060	･ Washer, Flat	3	SN:B50001--
20		13Y-27-11160	･ Gear	1	SN:B50001--
21		01010-61650	･ Bolt	36	SN:B50001--
22		01643-31645	･ Washer	36	SN:B50001--
23		13Y-27-11140	･ Gear	1	SN:B50001--
24		13Y-27-11240	･ Washer, Thrust	1	SN:B50001--

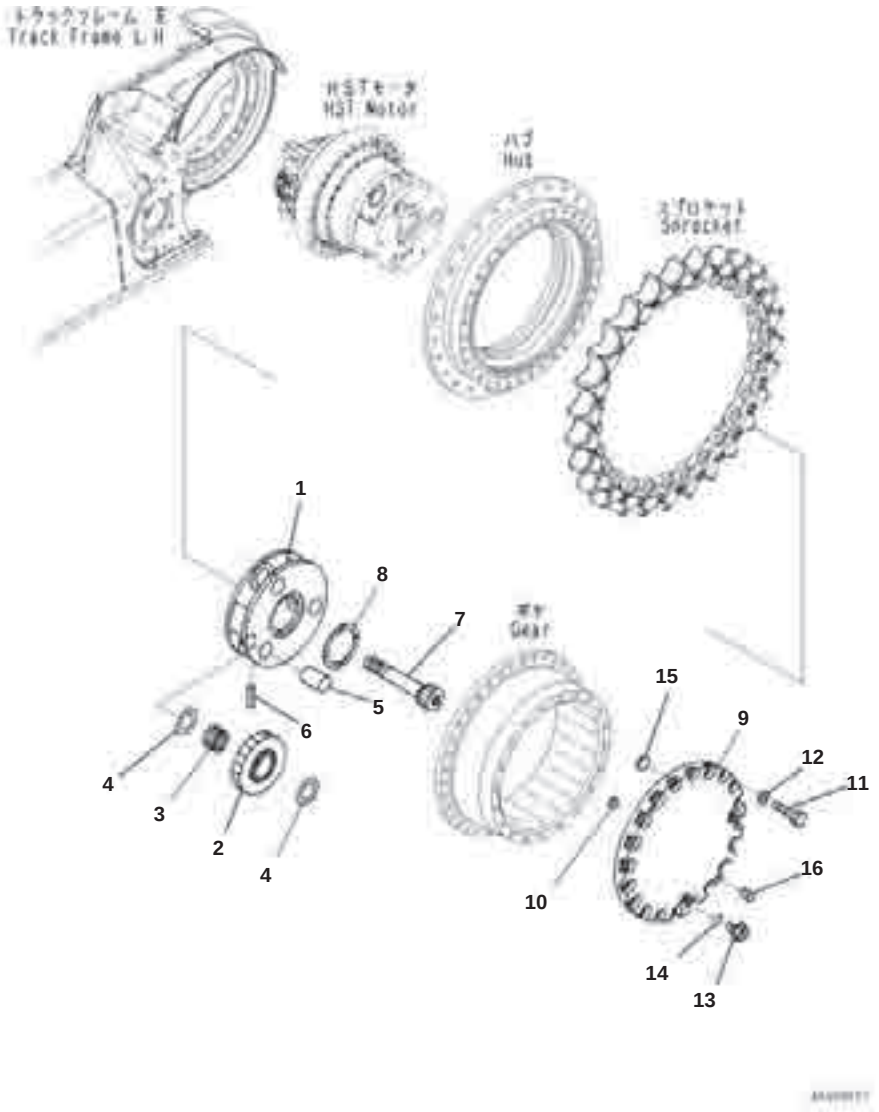

Index	Part Number	Description	Qty	Options
	13Y-27-10100	Final Drive Assembly	1	SN:B50001--
1	13Y-27-11210	▪ Carrier	1	SN:B50001--
2	13Y-27-11130	▪ Gear	3	SN:B50001--
3	13Y-27-11330	▪ Bearing	3	SN:B50001--
4	20Y-27-21250	▪ Washer, Thrust	6	SN:B50001--
5	21M-27-11240	▪ Pin	3	SN:B50001--
6	20Y-27-21280	▪ Pin	3	SN:B50001--
7	13Y-27-11120	▪ Shaft	1	SN:B50001--
8	20Y-27-11250	▪ Spacer	1	SN:B50001--
9	13Y-27-11421	▪ Cover	1	SN:B50001--
10	04260-01905	▪ Ball	1	SN:B50001--
11	01010-61440	▪ Bolt	20	SN:B50001--
12	01643-31445	▪ Washer, Flat	20	SN:B50001--
13	07044-12412	▪ Plug	2	SN:B50001--
14	07002-12434	▪ O-ring	2	SN:B50001--
15	11Y-27-11450	▪ Magnet	2	SN:B50001--
16	07049-01215	▪ Plug	2	SN:B50001--

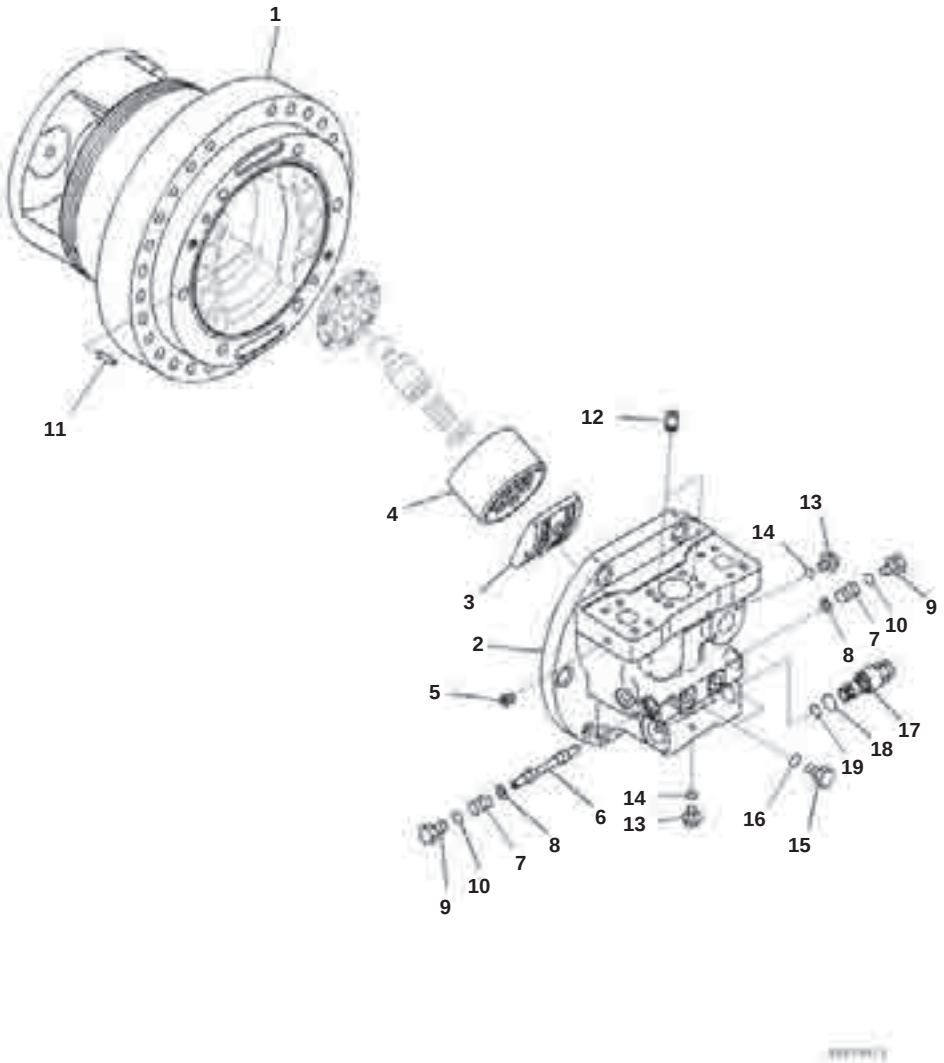

Final Drive, HST Motor, L.H. (1/4)

Index	Code	Part Number	Description	Qty	Options
		13Y-27-10100	Final Drive Assembly	1	SN:B50001--
		706-8J-01510	· Motor Assembly	1	SN:B50001--
1	C2	(706-8J-42410)	· · Case	1	SN:B50001--
	C2	(706-8J-00510)	· · Cover Assembly	1	SN:B50001--
2	C1		· · · Cover, End	1	SN:B50001--
3	C1		· · · Plate, Valve	1	SN:B50001--
4	C1		· · · Block, Cylinder	1	SN:B50001--
5	C1		· · · Plug	2	SN:B50001--
6	C1		· · Spool	1	SN:B50001--
7		706-8H-53120	· · Spring	2	SN:B50001--
8		706-8H-53130	· · Seat	2	SN:B50001--
9		706-77-72170	· · Plug	2	SN:B50001--
10		07002-62434	· · O-ring	2	SN:B50001--
11	C2	(706-86-71310)	· · Pin	1	SN:B50001--
12		708-3D-15110	· · Valve	2	SN:B50001--
13		708-8E-16160	· · Plug	2	SN:B50001--
14		07002-61023	· · O-ring	2	SN:B50001--
15		708-8H-11530	· · Plug	2	SN:B50001--
16		07002-61423	· · O-ring	2	SN:B50001--
17	C2	(706-8J-05200)	· · Valve, Relief	1	SN:B50001--
18		07002-62434	· · · O-ring	1	SN:B50001--
19		706-86-53530	· · · O-ring	1	SN:B50001--

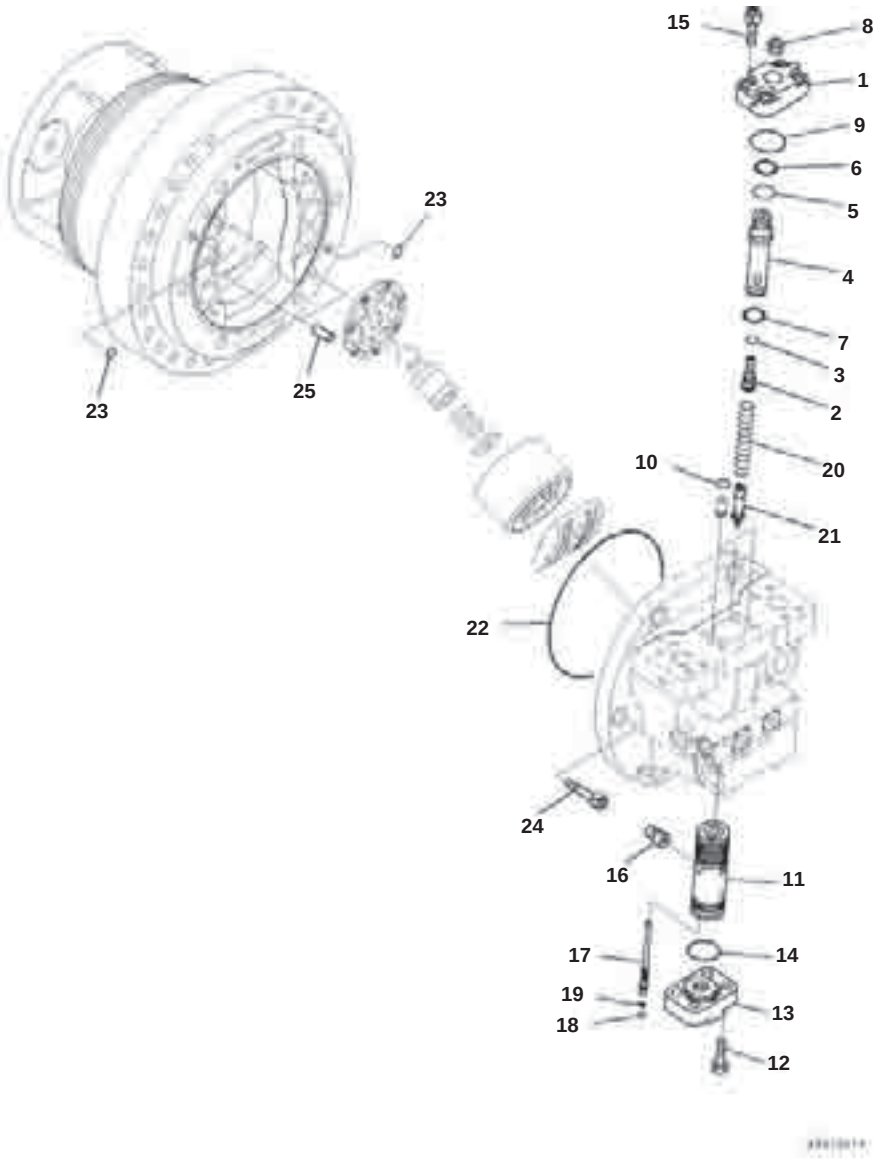

Final Drive, HST Motor, L.H. (2/4)

Index	Code	Part Number	Description	Qty	Options
		13Y-27-10100	Final Drive Assembly	1	SN:B50001--
		706-8J-01510	· Motor Assembly	1	SN:B50001--
	C2	(706-8J-00530)	· · Cover Subassembly	1	SN:B50001--
1	C2	(706-8J-51630)	· · · Cover	1	SN:B50001--
2	C2	(706-8H-51120)	· · · Screw	1	SN:B50001--
3	C2	(07000-B2014)	· · · O-ring	1	SN:B50001--
4	C2	(706-8H-51220)	· · · Sleeve	1	SN:B50001--
5	C2	(07000-B2030)	· · · O-ring	1	SN:B50001--
6	C2	(07001-02030)	· · · Ring, Back-up	1	SN:B50001--
7	C1		· · · Seal	1	SN:B50001--
8	C2	(01582-11210)	· · · Nut	1	SN:B50001--
9	C2	(07000-B2055)	· · O-ring	1	SN:B50001--
10	C2	(07000-B2012)	· · O-ring	2	SN:B50001--
11	C1		· · Piston Subassembly	1	SN:B50001--
12	C2	(01252-61445)	· · Bolt, Hexagon Socket Head	4	SN:B50001--
13	C2	(706-8H-51110)	· · Cover	1	SN:B50001--
14	C2	(07000-B2055)	· · O-ring	1	SN:B50001--
15	C2	(01252-61445)	· · Bolt, Hexagon Socket Head	4	SN:B50001--
16	C2	(706-8J-51620)	· · Pin	1	SN:B50001--
17	C2	(706-8J-71350)	· · Screw	1	SN:B50001--
18	C2	(07000-B1004)	· · O-ring	1	SN:B50001--
19	C2	(07001-01004)	· · Ring, Back-up	1	SN:B50001--
20	C2	(706-8J-51650)	· · Spring	1	SN:B50001--
21	C2	(706-8H-53210)	· · Seat	1	SN:B50001--
22	C2	(07000-A5300)	· · O-ring	1	SN:B50001--
23	C2	(07000-B2014)	· · O-ring	2	SN:B50001--
24	C2	(01252-62260)	· · Bolt, Hexagon Socket Head	6	SN:B50001--
25	C2	(04020-01434)	· · Pin, Dowel	2	SN:B50001--

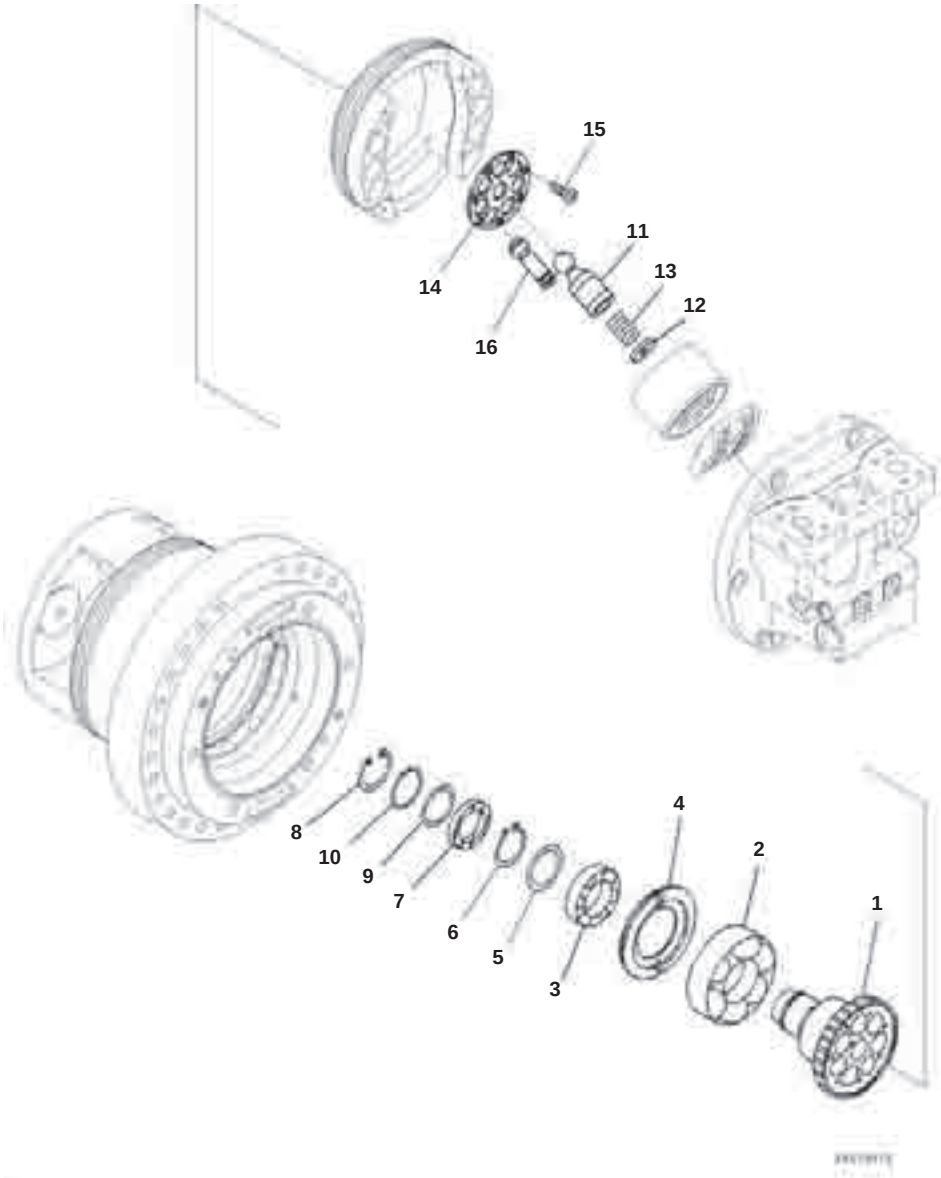

Index	Code	Part Number	Description	Qty	Options
		13Y-27-10100	Final Drive Assembly	1	SN:B50001--
		706-8J-01510	· Motor Assembly	1	SN:B50001--
1	C2	(706-8J-42430)	· · Shaft, Drive	1	SN:B50001--
2	C2	(706-8J-42450)	· · Bearing	1	SN:B50001--
3	C2	(706-8J-42460)	· · Bearing	1	SN:B50001--
4	C2	(706-8J-42440)	· · Retainer	1	SN:B50001--
5	C2	(706-8J-42470)	· · Spacer Kit	1	SN:B50001--
	C1		· · · Spacer, T=2.1mm	1	SN:B50001--
	C1		· · · Spacer, T=1.95mm	1	SN:B50001--
	C1		· · · Spacer, T=2.00mm	1	SN:B50001--
	C1		· · · Spacer, T=2.05mm	1	SN:B50001--
	C1		· · · Spacer, T=2.3mm	1	SN:B50001--
	C1		· · · Spacer, T=2.15mm	1	SN:B50001--
	C1		· · · Spacer, T=2.20mm	1	SN:B50001--
	C1		· · · Spacer, T=2.25mm	1	SN:B50001--
	C1		· · · Spacer, T=2.5mm	1	SN:B50001--
	C1		· · · Spacer, T=2.35mm	1	SN:B50001--
	C1		· · · Spacer, T=2.40mm	1	SN:B50001--
	C1		· · · Spacer, T=2.45mm	1	SN:B50001--
	C1		· · · Spacer, T=2.7mm	1	SN:B50001--
	C1		· · · Spacer, T=2.55mm	1	SN:B50001--
	C1		· · · Spacer, T=2.60mm	1	SN:B50001--
	C1		· · · Spacer, T=2.65mm	1	SN:B50001--
	C1		· · · Spacer, T=1.9mm	1	SN:B50001--
	C1		· · · Spacer, T=2.75mm	1	SN:B50001--
6		04064-06525	· · Ring, Snap, for Shaft Side	1	SN:B50001--
7		708-2G-12220	· · Seal, Oil	1	SN:B50001--
8		04065-07825	· · Ring, Snap	1	SN:B50001--
9		706-8J-42880	· · Spacer	1	SN:B50001--
10	C2	(706-8J-42720)	· · Spacer Kit	1	SN:B50001--
	C1		· · · Spacer, T=2.1mm	1	SN:B50001--
	C1		· · · Spacer, T=2.2mm	1	SN:B50001--
	C1		· · · Spacer, T=2.3mm	1	SN:B50001--
	C1		· · · Spacer, T=2.4mm	1	SN:B50001--
	C1		· · · Spacer, T=2.5mm	1	SN:B50001--
	C1		· · · Spacer, T=2.6mm	1	SN:B50001--
	C1		· · · Spacer, T=2.7mm	1	SN:B50001--
	C1		· · · Spacer, T=2.8mm	1	SN:B50001--
	C1		· · · Spacer, T=2.9mm	1	SN:B50001--
	C1		· · · Spacer, T=2.0mm	1	SN:B50001--
	C1		· · · Spacer, T=1.8mm	1	SN:B50001--
	C1		· · · Spacer, T=1.9mm	1	SN:B50001--
11	C2	(706-8J-42150)	· · Shaft	1	SN:B50001--
12	C2	(706-8J-41580)	· · Ring	1	SN:B50001--
13	C2	(706-8J-42110)	· · Spring	1	SN:B50001--
14	C2	(706-8J-42120)	· · Retainer	1	SN:B50001--
15	C2	(708-23-12350)	· · Screw	7	SN:B50001--

D61EX-23M0 S/N B50001
Final Drive, HST Motor, L.H. (3/4)

Index	Code	Part Number	Description	Qty	Options
16	C2	(706-8J-41881)	' ' Piston Subassembly	7	SN:B50001--

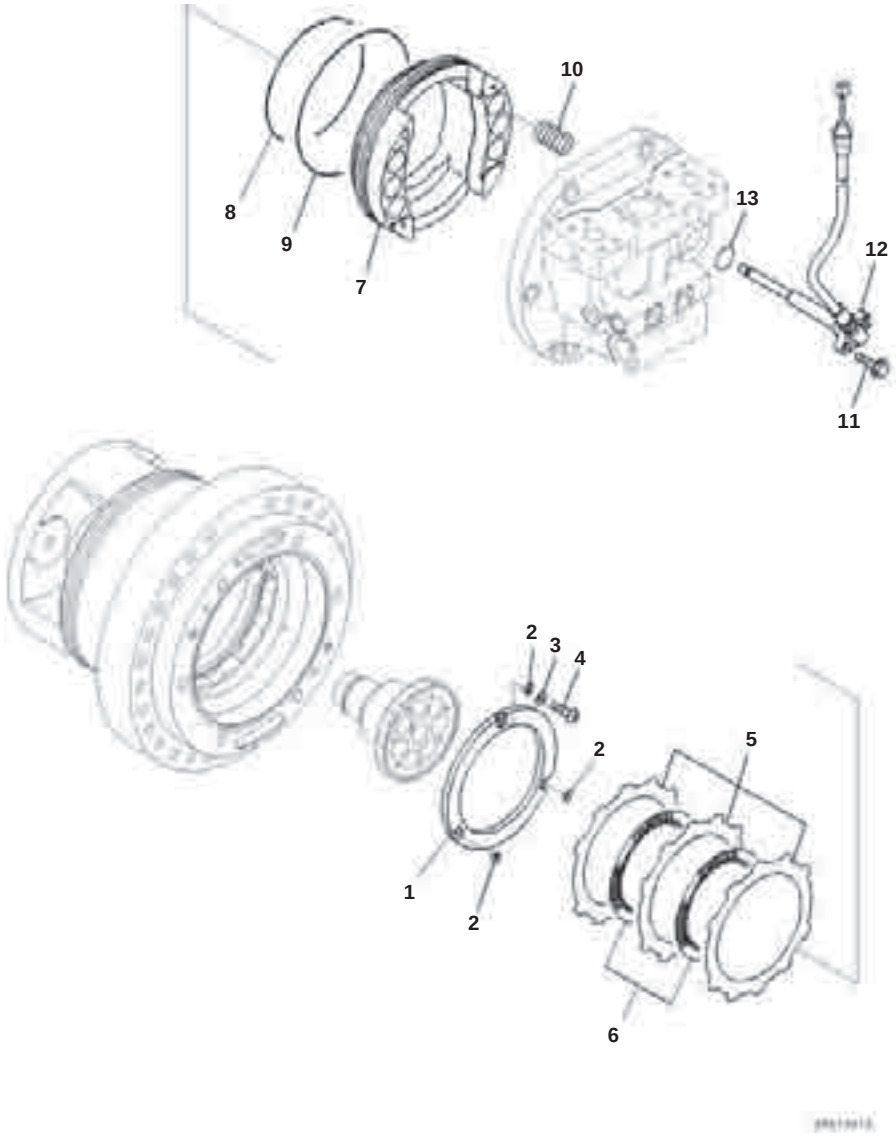

Final Drive, HST Motor, L.H. (4/4)

Index	Code	Part Number	Description	Qty	Options
		13Y-27-10100	Final Drive Assembly	1	SN:B50001--
		706-8J-01510	· Motor Assembly	1	SN:B50001--
1	C2	(706-8J-91240)	· · Plate	1	SN:B50001--
2	C2	(706-8J-91250)	· · Plate	3	SN:B50001--
3	C2	(706-8J-91280)	· · Washer	3	SN:B50001--
4	C2	(706-8J-91260)	· · Screw	3	SN:B50001--
5	C2	(706-8J-91220)	· · Plate	3	SN:B50001--
6	C2	(706-8J-91230)	· · Disc	2	SN:B50001--
7	C2	(706-8J-91210)	· · Piston, Brake	1	SN:B50001--
8	C2	(07000-B6245)	· · O-ring	1	SN:B50001--
9	C2	(07000-B5280)	· · O-ring	1	SN:B50001--
10	C2	(706-8J-91270)	· · Spring	6	SN:B50001--
11		01435-00825	· · Bolt	2	SN:B50001--
12		729-11-26000	· · Sensor Assembly	1	SN:B50001--
13		07000-B2040	· · O-ring	1	SN:B50001--



Final Drive, Tooth, L.H.

Index	Part Number	Description	Qty	Options
	13Y-27-10100	Final Drive Assembly	1	SN:B50001--
1	134-27-61460	▪ Teeth	9	SN:B50001--
2	09203-21865	▪ Bolt, Sprocket Teeth	27	SN:B50001--
3	01803-01824	▪ Nut	27	SN:B50001--

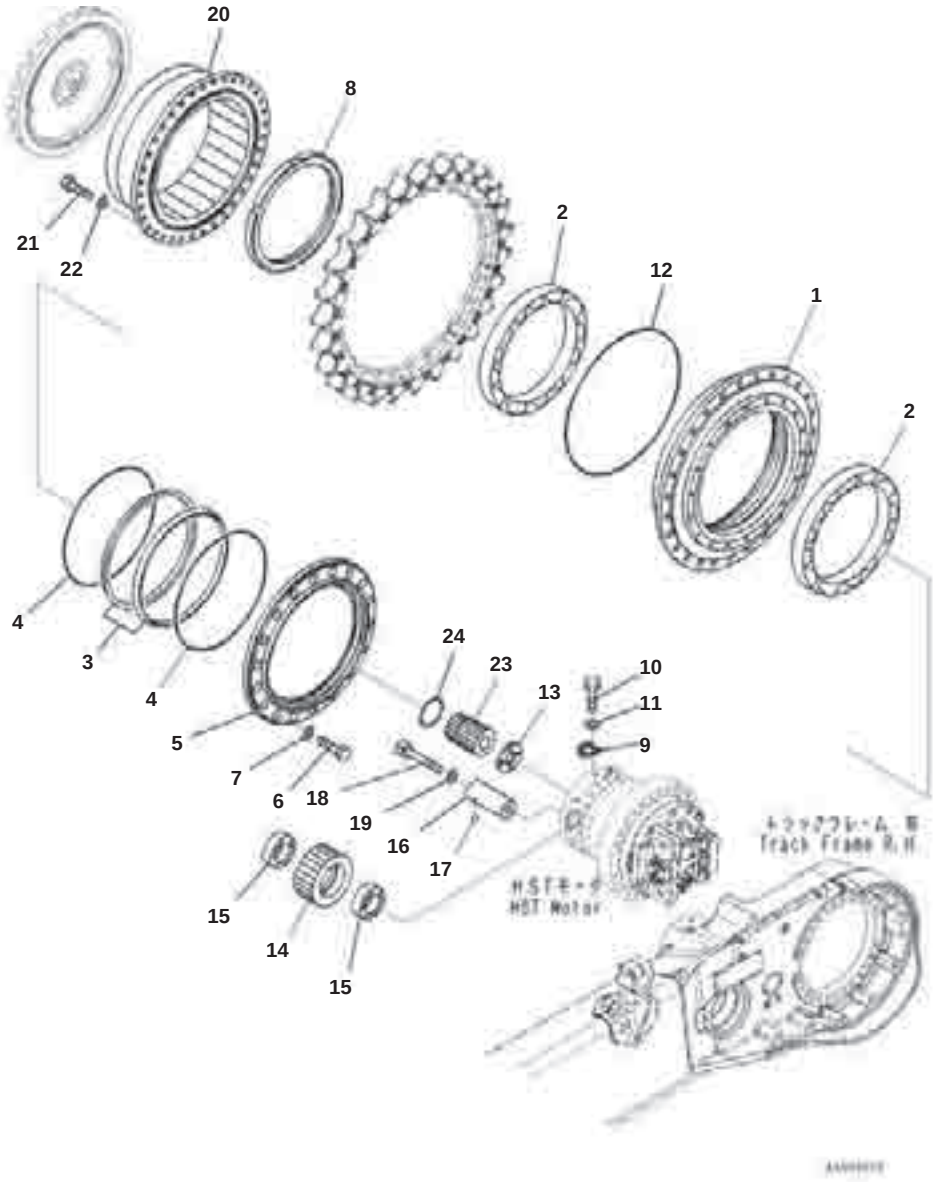

Final Drive, Hub, R.H.

Index	Code	Part Number	Description	Qty	Options
		13Y-27-10200	Final Drive Assembly	1	SN:B50001--
1		13Y-27-11410	･ Hub	1	SN:B50001--
2		13Y-27-11310	･ Bearing	2	SN:B50001--
		13Y-27-11600	･ Seal Assembly	1	SN:B50001--
3	C1		･ ･ Seal	2	SN:B50001--
4	C1		･ ･ O-ring	2	SN:B50001--
5		13Y-27-11450	･ Cover	1	SN:B50001--
6		01010-81235	･ Bolt	18	SN:B50001--
7		01643-31232	･ Washer	18	SN:B50001--
8		13Y-27-11430	･ Nut	1	SN:B50001--
9		13Y-27-11440	･ Lock	1	SN:B50001--
10		01010-81030	･ Bolt	2	SN:B50001--
11		01643-31032	･ Washer	2	SN:B50001--
12		07000-75495	･ O-ring	1	SN:B50001--
13		13Y-27-11230	･ Washer, Thrust	1	SN:B50001--
14		13Y-27-11150	･ Gear	3	SN:B50001--
15		13Y-27-11320	･ Bearing	6	SN:B50001--
16		13Y-27-11220	･ Shaft	3	SN:B50001--
17		04260-00635	･ Ball, Steel	3	SN:B50001--
18		13Y-27-11260	･ Bolt	3	SN:B50001--
19		01643-52060	･ Washer, Flat	3	SN:B50001--
20		13Y-27-11160	･ Gear	1	SN:B50001--
21		01010-61650	･ Bolt	36	SN:B50001--
22		01643-31645	･ Washer	36	SN:B50001--
23		13Y-27-11140	･ Gear	1	SN:B50001--
24		13Y-27-11240	･ Washer, Thrust	1	SN:B50001--

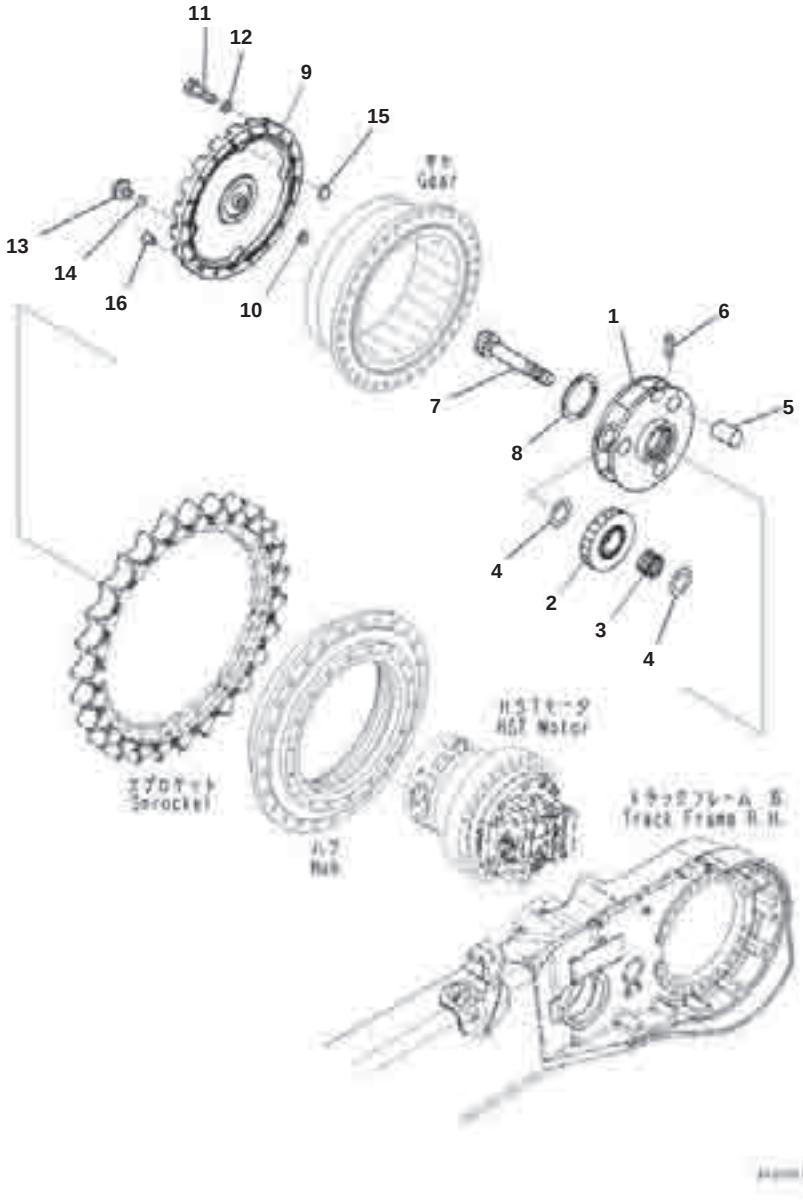

Final Drive, Carrier, R.H.

Index	Part Number	Description	Qty	Options
	13Y-27-10200	Final Drive Assembly	1	SN:B50001--
1	13Y-27-11210	▪ Carrier	1	SN:B50001--
2	13Y-27-11130	▪ Gear	3	SN:B50001--
3	13Y-27-11330	▪ Bearing	3	SN:B50001--
4	20Y-27-21250	▪ Washer, Thrust	6	SN:B50001--
5	21M-27-11240	▪ Pin	3	SN:B50001--
6	20Y-27-21280	▪ Pin	3	SN:B50001--
7	13Y-27-11120	▪ Shaft	1	SN:B50001--
8	20Y-27-11250	▪ Spacer	1	SN:B50001--
9	13Y-27-11421	▪ Cover	1	SN:B50001--
10	04260-01905	▪ Ball	1	SN:B50001--
11	01010-61440	▪ Bolt	20	SN:B50001--
12	01643-31445	▪ Washer, Flat	20	SN:B50001--
13	07044-12412	▪ Plug	2	SN:B50001--
14	07002-12434	▪ O-ring	2	SN:B50001--
15	11Y-27-11450	▪ Magnet	2	SN:B50001--
16	07049-01215	▪ Plug	2	SN:B50001--

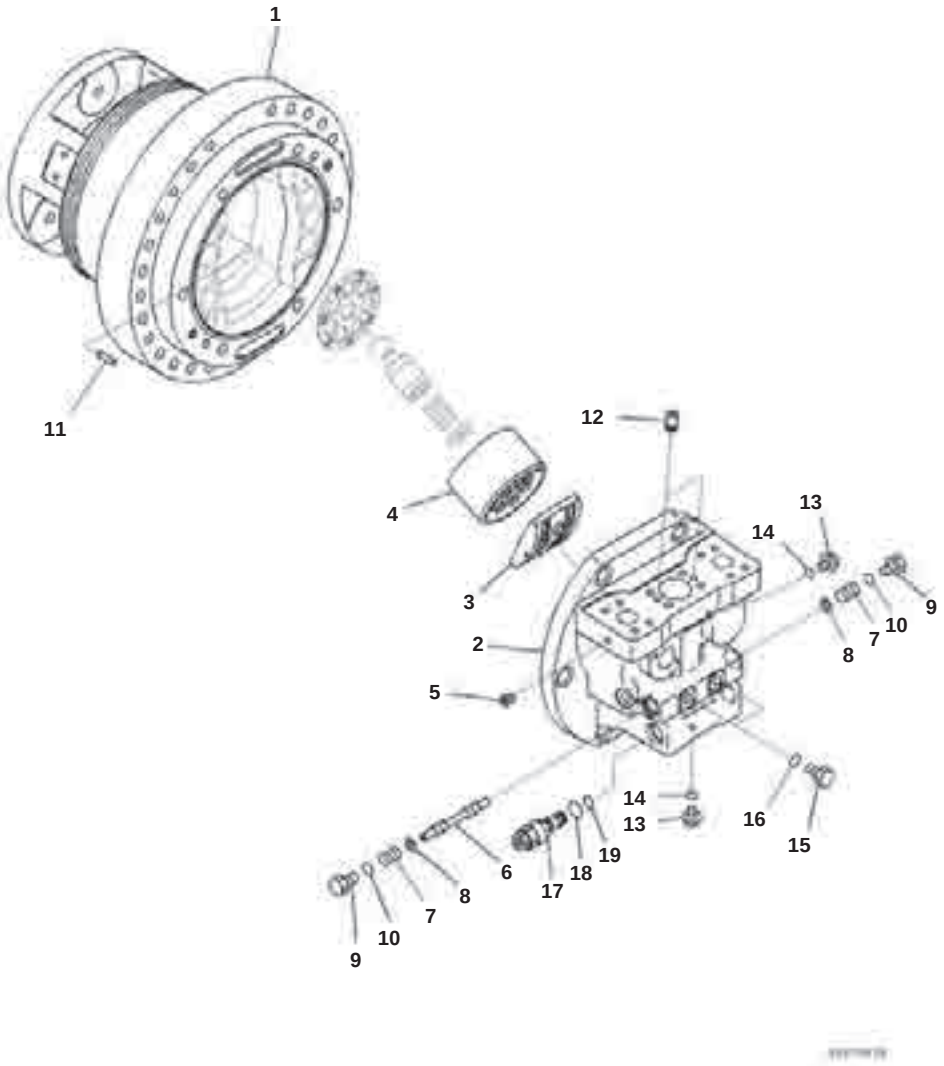

Final Drive, HST Motor, R.H. (1/4)

Index	Code	Part Number	Description	Qty	Options
		13Y-27-10200	Final Drive Assembly	1	SN:B50001--
		706-8J-01520	· Motor Assembly	1	SN:B50001--
1	C2	(706-8J-42410)	· · Case	1	SN:B50001--
	C2	(706-8J-00520)	· · Cover Assembly	1	SN:B50001--
2	C1		· · · Cover, End	1	SN:B50001--
3	C1		· · · Plate, Valve	1	SN:B50001--
4	C1		· · · Block, Cylinder	1	SN:B50001--
5	C1		· · · Plug	2	SN:B50001--
6	C1		· · Spool	1	SN:B50001--
7		706-8H-53120	· · Spring	2	SN:B50001--
8		706-8H-53130	· · Seat	2	SN:B50001--
9		706-77-72170	· · Plug	2	SN:B50001--
10		07002-62434	· · O-ring	2	SN:B50001--
11	C2	(706-86-71310)	· · Pin	1	SN:B50001--
12		708-3D-15110	· · Valve	2	SN:B50001--
13		708-8E-16160	· · Plug	2	SN:B50001--
14		07002-61023	· · O-ring	2	SN:B50001--
15		708-8H-11530	· · Plug	2	SN:B50001--
16		07002-61423	· · O-ring	2	SN:B50001--
17	C2	(706-8J-05200)	· · Valve, Relief	1	SN:B50001--
18		07002-62434	· · · O-ring	1	SN:B50001--
19		706-86-53530	· · · O-ring	1	SN:B50001--

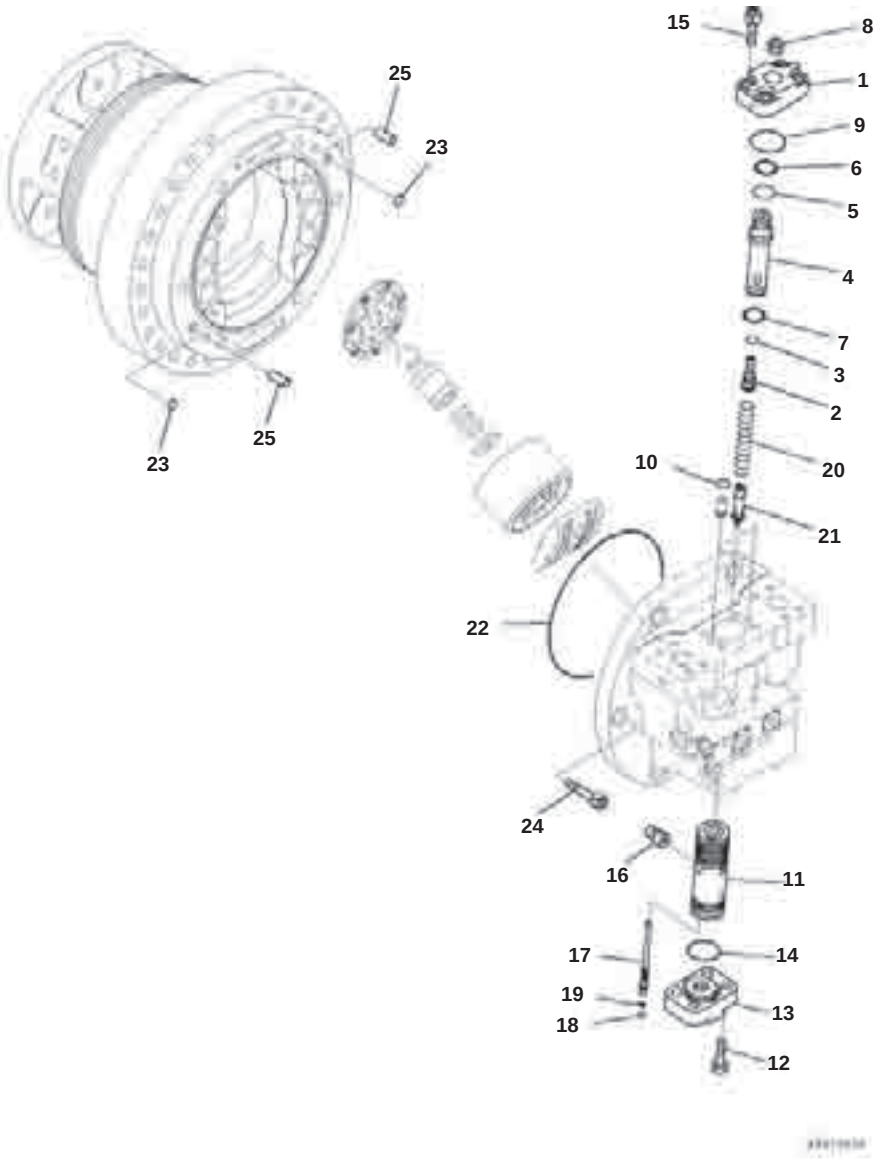

Final Drive, HST Motor, R.H. (2/4)

Index	Code	Part Number	Description	Qty	Options
		13Y-27-10200	Final Drive Assembly	1	SN:B50001--
		706-8J-01520	· Motor Assembly	1	SN:B50001--
	C2	(706-8J-00530)	· · Cover Subassembly	1	SN:B50001--
1	C2	(706-8J-51630)	· · · Cover	1	SN:B50001--
2	C2	(706-8H-51120)	· · · Screw	1	SN:B50001--
3	C2	(07000-B2014)	· · · O-ring	1	SN:B50001--
4	C2	(706-8H-51220)	· · · Sleeve	1	SN:B50001--
5	C2	(07000-B2030)	· · · O-ring	1	SN:B50001--
6	C2	(07001-02030)	· · · Ring, Back-up	1	SN:B50001--
7	C1		· · · Seal	1	SN:B50001--
8	C2	(01582-11210)	· · · Nut	1	SN:B50001--
9	C2	(07000-B2055)	· · O-ring	1	SN:B50001--
10	C2	(07000-B2012)	· · O-ring	2	SN:B50001--
11	C1		· · Piston Subassembly	1	SN:B50001--
12	C2	(01252-61445)	· · Bolt, Hexagon Socket Head	4	SN:B50001--
13	C2	(706-8H-51110)	· · Cover	1	SN:B50001--
14	C2	(07000-B2055)	· · O-ring	1	SN:B50001--
15	C2	(01252-61445)	· · Bolt, Hexagon Socket Head	4	SN:B50001--
16	C2	(706-8J-51620)	· · Pin	1	SN:B50001--
17	C2	(706-8J-71350)	· · Screw	1	SN:B50001--
18	C2	(07000-B1004)	· · O-ring	1	SN:B50001--
19	C2	(07001-01004)	· · Ring, Back-up	1	SN:B50001--
20	C2	(706-8J-51650)	· · Spring	1	SN:B50001--
21	C2	(706-8H-53210)	· · Seat	1	SN:B50001--
22	C2	(07000-A5300)	· · O-ring	1	SN:B50001--
23	C2	(07000-B2014)	· · O-ring	2	SN:B50001--
24	C2	(01252-62260)	· · Bolt, Hexagon Socket Head	6	SN:B50001--
25	C2	(04020-01434)	· · Pin, Dowel	2	SN:B50001--

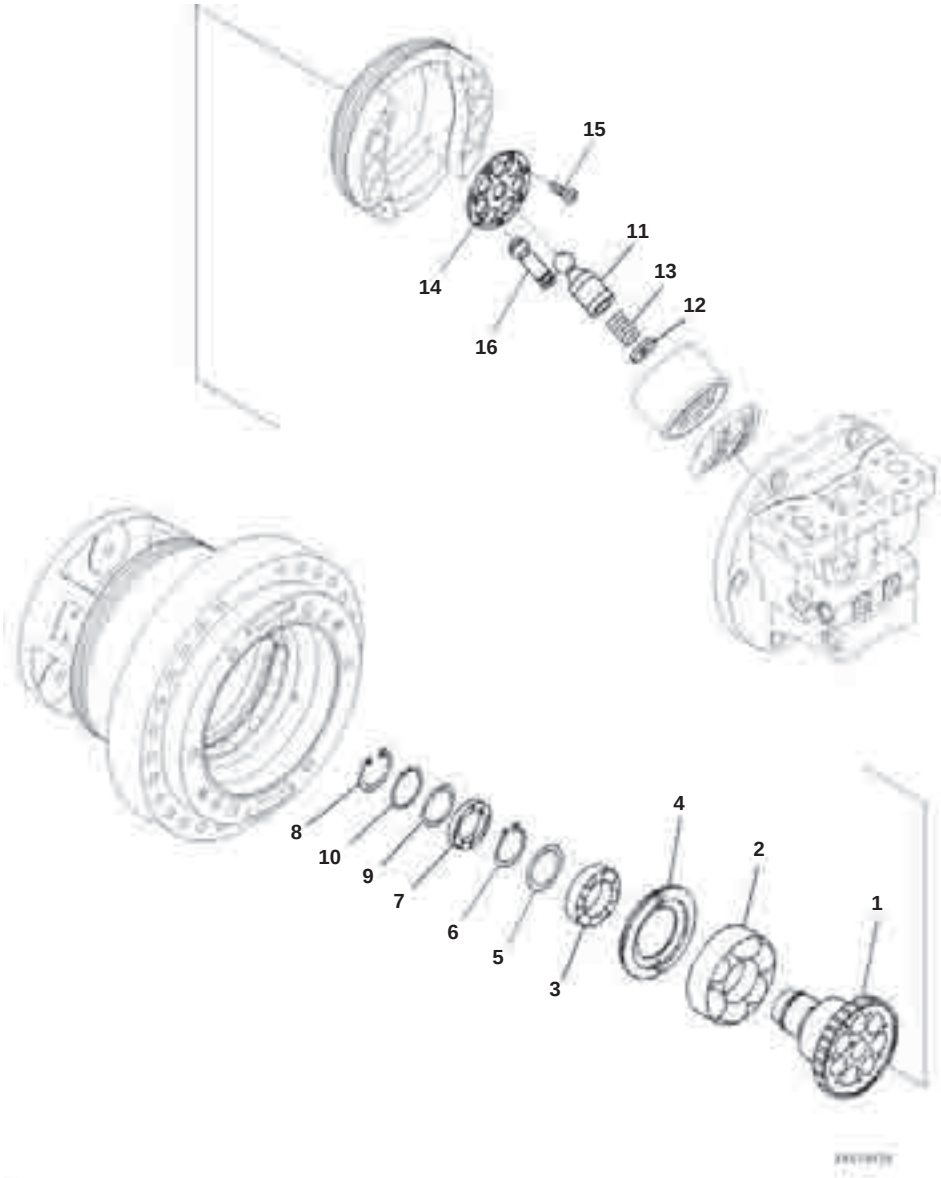

Final Drive, HST Motor, R.H. (3/4)

Index	Code	Part Number	Description	Qty	Options
		13Y-27-10200	Final Drive Assembly	1	SN:B50001--
		706-8J-01520	· Motor Assembly	1	SN:B50001--
1	C2	(706-8J-42430)	· · Shaft, Drive	1	SN:B50001--
2	C2	(706-8J-42450)	· · Bearing	1	SN:B50001--
3	C2	(706-8J-42460)	· · Bearing	1	SN:B50001--
4	C2	(706-8J-42440)	· · Retainer	1	SN:B50001--
5	C2	(706-8J-42470)	· · Spacer Kit	1	SN:B50001--
	C1		· · · Spacer, T=2.1mm	1	SN:B50001--
	C1		· · · Spacer, T=1.95mm	1	SN:B50001--
	C1		· · · Spacer, T=2.00mm	1	SN:B50001--
	C1		· · · Spacer, T=2.05mm	1	SN:B50001--
	C1		· · · Spacer, T=2.3mm	1	SN:B50001--
	C1		· · · Spacer, T=2.15mm	1	SN:B50001--
	C1		· · · Spacer, T=2.20mm	1	SN:B50001--
	C1		· · · Spacer, T=2.25mm	1	SN:B50001--
	C1		· · · Spacer, T=2.5mm	1	SN:B50001--
	C1		· · · Spacer, T=2.35mm	1	SN:B50001--
	C1		· · · Spacer, T=2.40mm	1	SN:B50001--
	C1		· · · Spacer, T=2.45mm	1	SN:B50001--
	C1		· · · Spacer, T=2.7mm	1	SN:B50001--
	C1		· · · Spacer, T=2.55mm	1	SN:B50001--
	C1		· · · Spacer, T=2.60mm	1	SN:B50001--
	C1		· · · Spacer, T=2.65mm	1	SN:B50001--
	C1		· · · Spacer, T=1.9mm	1	SN:B50001--
	C1		· · · Spacer, T=2.75mm	1	SN:B50001--
6		04064-06525	· · Ring, Snap, for Shaft Side	1	SN:B50001--
7		708-2G-12220	· · Seal, Oil	1	SN:B50001--
8		04065-07825	· · Ring, Snap	1	SN:B50001--
9		706-8J-42880	· · Spacer	1	SN:B50001--
10	C2	(706-8J-42720)	· · Spacer Kit	1	SN:B50001--
	C1		· · · Spacer, T=2.1mm	1	SN:B50001--
	C1		· · · Spacer, T=2.2mm	1	SN:B50001--
	C1		· · · Spacer, T=2.3mm	1	SN:B50001--
	C1		· · · Spacer, T=2.4mm	1	SN:B50001--
	C1		· · · Spacer, T=2.5mm	1	SN:B50001--
	C1		· · · Spacer, T=2.6mm	1	SN:B50001--
	C1		· · · Spacer, T=2.7mm	1	SN:B50001--
	C1		· · · Spacer, T=2.8mm	1	SN:B50001--
	C1		· · · Spacer, T=2.9mm	1	SN:B50001--
	C1		· · · Spacer, T=2.0mm	1	SN:B50001--
	C1		· · · Spacer, T=1.8mm	1	SN:B50001--
	C1		· · · Spacer, T=1.9mm	1	SN:B50001--
11	C2	(706-8J-42150)	· · Shaft	1	SN:B50001--
12	C2	(706-8J-41580)	· · Ring	1	SN:B50001--
13	C2	(706-8J-42110)	· · Spring	1	SN:B50001--
14	C2	(706-8J-42120)	· · Retainer	1	SN:B50001--
15	C2	(708-23-12350)	· · Screw	7	SN:B50001--

D61EX-23M0 S/N B50001
Final Drive, HST Motor, R.H. (3/4)

Index	Code	Part Number	Description	Qty	Options
16	C2	(706-8J-41881)	' ' Piston Subassembly	7	SN:B50001--

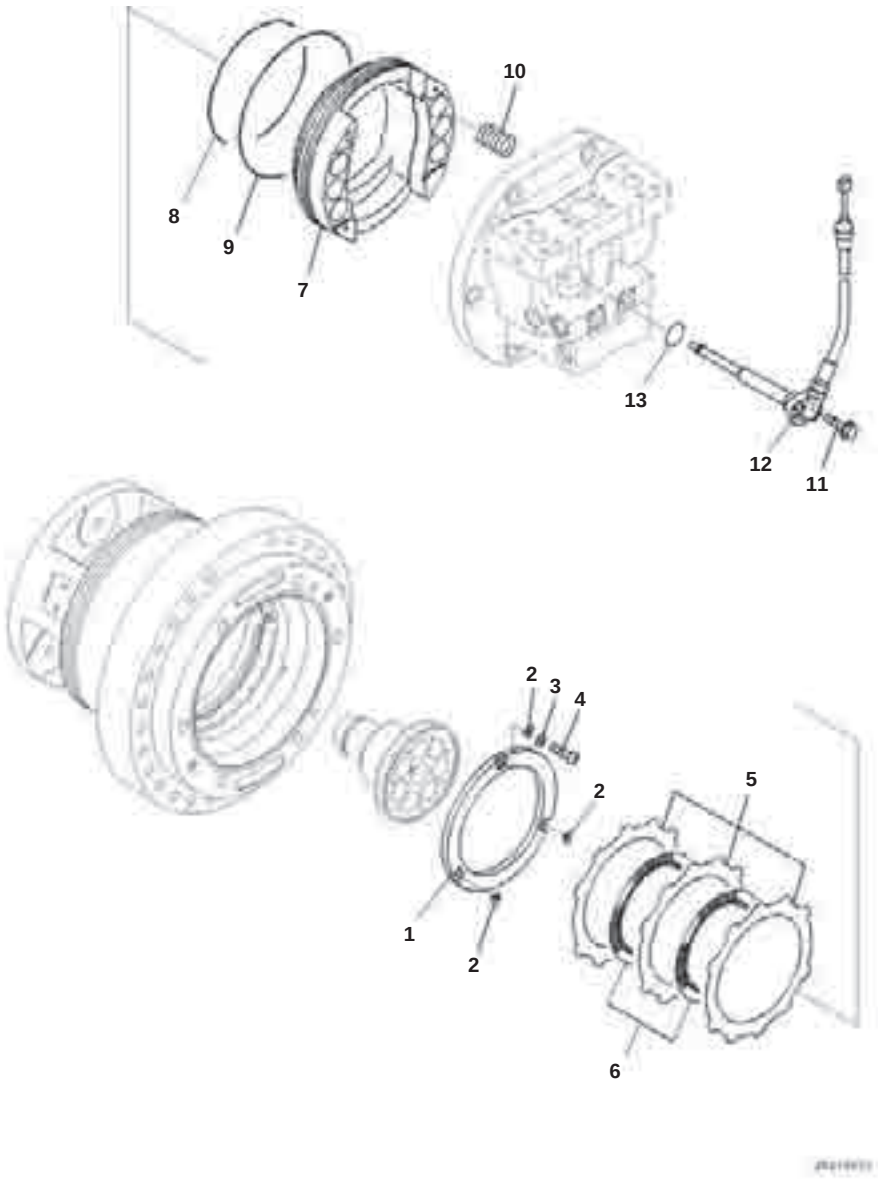

Index	Code	Part Number	Description	Qty	Options
		13Y-27-10200	Final Drive Assembly	1	SN:B50001--
		706-8J-01520	· Motor Assembly	1	SN:B50001--
1	C2	(706-8J-91240)	· · Plate	1	SN:B50001--
2	C2	(706-8J-91250)	· · Plate	3	SN:B50001--
3	C2	(706-8J-91280)	· · Washer	3	SN:B50001--
4	C2	(706-8J-91260)	· · Screw	3	SN:B50001--
5	C2	(706-8J-91220)	· · Plate	3	SN:B50001--
6	C2	(706-8J-91230)	· · Disc	2	SN:B50001--
7	C2	(706-8J-91210)	· · Piston, Brake	1	SN:B50001--
8	C2	(07000-B6245)	· · O-ring	1	SN:B50001--
9	C2	(07000-B5280)	· · O-ring	1	SN:B50001--
10	C2	(706-8J-91270)	· · Spring	6	SN:B50001--
11		01435-00825	· · Bolt	2	SN:B50001--
12		729-11-26000	· · Sensor Assembly	1	SN:B50001--
13		07000-B2040	· · O-ring	1	SN:B50001--



Final Drive, Tooth, R.H.

Index	Part Number	Description	Qty	Options
	13Y-27-10200	Final Drive Assembly	1	SN:B50001--
1	134-27-61460	▪ Teeth	9	SN:B50001--
2	09203-21865	▪ Bolt, Sprocket Teeth	27	SN:B50001--
3	01803-01824	▪ Nut	27	SN:B50001--

HYDRAULIC SYSTEM

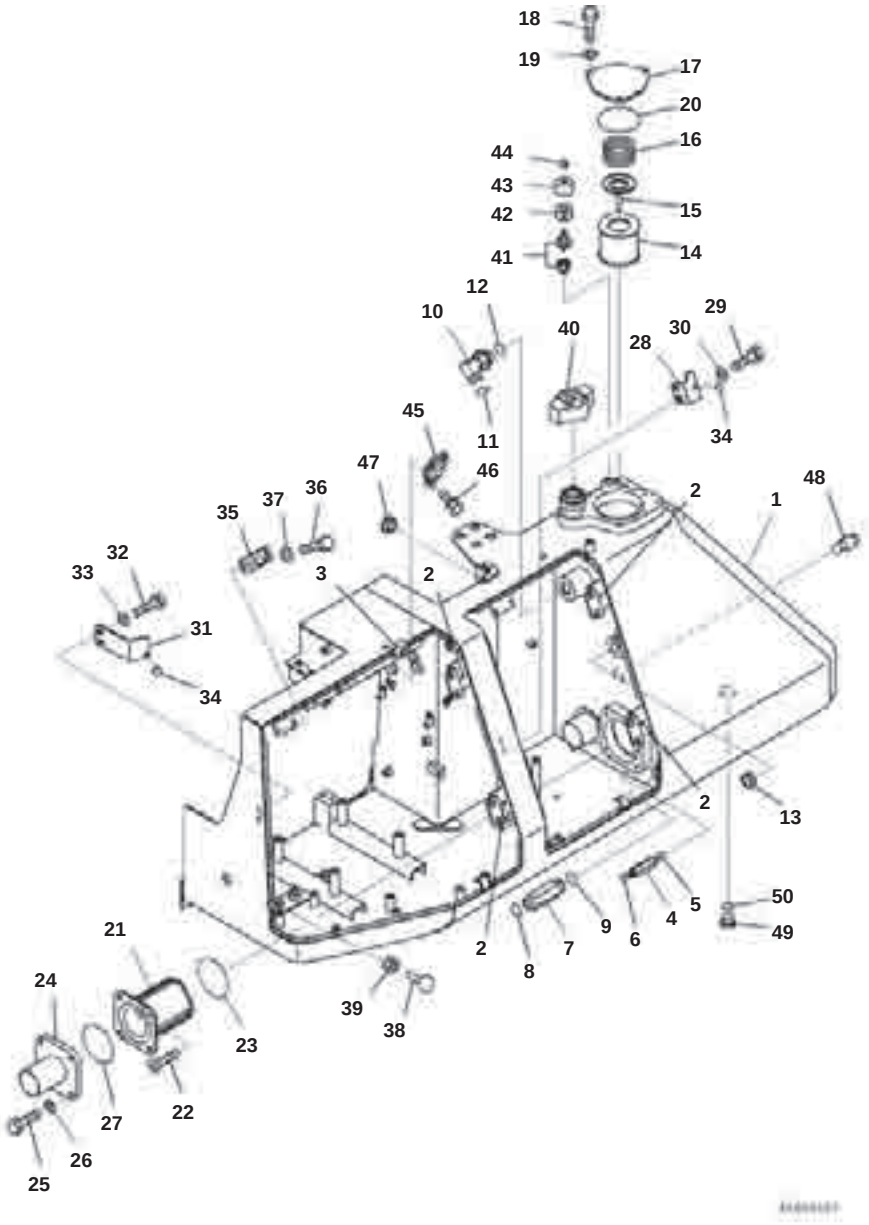

Index	Part Number	Description	Qty	Options
1	13Y-60-11112	Tank Assembly	1	SN:B50001--
2	13Y-04-11241	▪ Hinge,Welded	4	SN:B50001--
3	09455-12013	▪ Hinge,Welded	2	SN:B50001--
4	23B-60-72280	Union	1	SN:B50001--
5	02896-11009	O-ring	1	SN:B50001--
6	07002-11823	O-ring	1	SN:B50001--
7	23B-16-71270	Union	1	SN:B50001--
8	207-62-64740	O-ring	1	SN:B50001--
9	07002-13334	O-ring	1	SN:B50001--
10	21W-62-42640	Elbow	1	SN:B50001--
11	207-62-64740	O-ring	1	SN:B50001--
12	07002-13334	O-ring	1	SN:B50001--
13	20N-60-11143	Gauge	1	SN:B50001--
14	21W-60-41121	Element	1	SN:B50001--
15	21W-60-41170	Valve Assembly	1	SN:B50001--
16	198-49-11460	Spring	1	SN:B50001--
17	13Y-60-11340	Cover	1	SN:B50001--
18	01010-81025	Bolt	3	SN:B50001--
19	01643-31032	Washer	3	SN:B50001--
20	07000-12135	O-ring	1	SN:B50001--
21	17A-60-11121	Strainer	1	SN:B50001--
22	01224-40616	Screw	2	SN:B50001--
23	07000-12135	O-ring	1	SN:B50001--
24	13Y-62-15112	Tube	1	SN:B50001--
25	01010-81245	Bolt	4	SN:B50001--
26	01643-31232	Washer	4	SN:B50001--
27	07000-12135	O-ring	1	SN:B50001--
28	13Y-60-11320	Plate	1	SN:B50001--
29	01010-81230	Bolt	2	SN:B50001--
30	01643-31232	Washer	2	SN:B50001--
31	13Y-60-11281	Plate	1	SN:B50001--
32	01010-81225	Bolt	2	SN:B50001--
33	01643-31232	Washer	2	SN:B50001--
34	14X-54-12960	Stopper	2	SN:B50001--
35	205-54-51971	Dovetail	2	SN:B50001--
36	01010-80616	Bolt	4	SN:B50001--
37	01643-30623	Washer	4	SN:B50001--
38	20Y-54-11611	Stopper	2	SN:B50001--
39	01580-11008	Nut	2	SN:B50001--
40	07092-01000	Cap	1	SN:B50001--
41	22U-60-21520	Breather	1	SN:B50001--
42	421-60-35170	▪ Element	1	SN:B50001--
43	421-60-35180	▪ Cover	1	SN:B50001--
44	421-60-35190	▪ Nut	1	SN:B50001--
45	195-57-11530	Clip	1	SN:B50001--
46	01023-10512	Screw	3	SN:B50001--
47	112-860-1360	Grommet	1	SN:B50001--

D61EX-23M0 S/N B50001
Hydraulic Tank, Tank and Element

Index	Part Number	Description	Qty	Options
48	124-60-51150	Plug	1	SN:B50001--
49	07040-12414	Plug	1	SN:B50001--
50	07002-12434	O-ring	1	SN:B50001--

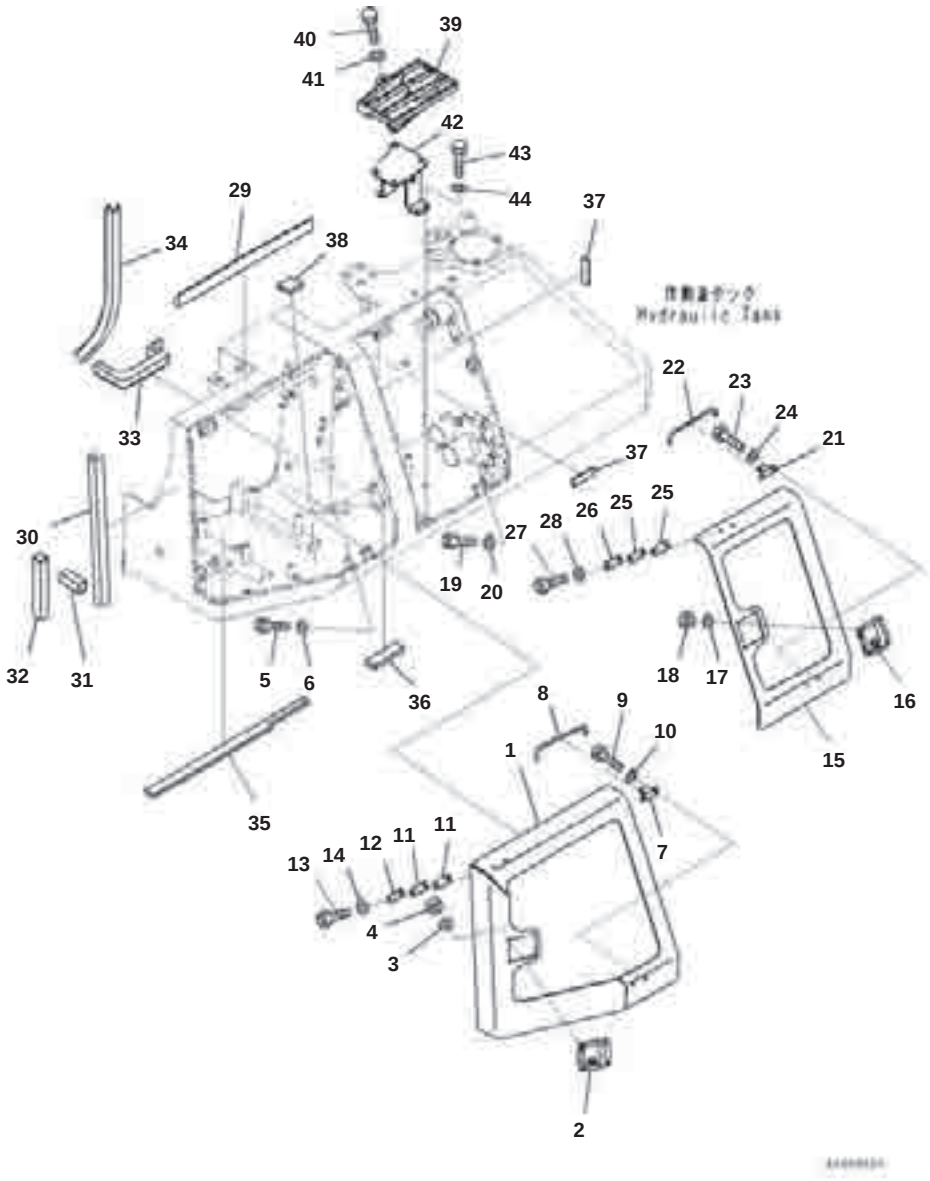

Index	Part Number	Description	Qty	Options
1	13Y-60-11124	Cover	1	SN:B50001--
2	13Y-54-11270	Lock	1	SN:B50001--
3	01643-30623	Washer	4	SN:B50001--
4	01580-10605	Nut	4	SN:B50001--
5	01010-81225	Bolt	4	SN:B50001--
6	01643-31232	Washer	4	SN:B50001--
7	198-54-19150	Spring	1	SN:B50001--
8	13Y-60-11220	Bar	1	SN:B50001--
9	01010-80612	Bolt	2	SN:B50001--
10	01643-30623	Washer	2	SN:B50001--
11	14X-54-53860	Spacer, T=1mm	2	SN:B50001--
12	205-54-53550	Dovetail	1	SN:B50001--
13	01010-80616	Bolt	2	SN:B50001--
14	01643-30623	Washer	2	SN:B50001--
15	13Y-60-11133	Cover	1	SN:B50001--
16	13Y-54-11270	Lock	1	SN:B50001--
17	01643-30623	Washer	4	SN:B50001--
18	01580-10605	Nut	4	SN:B50001--
19	01010-81225	Bolt	4	SN:B50001--
20	01643-31232	Washer	4	SN:B50001--
21	198-54-19150	Spring	1	SN:B50001--
22	13Y-60-11220	Bar	1	SN:B50001--
23	01010-80612	Bolt	2	SN:B50001--
24	01643-30623	Washer	2	SN:B50001--
25	14X-54-53860	Spacer, T=1mm	2	SN:B50001--
26	205-54-53550	Dovetail	1	SN:B50001--
27	01010-80616	Bolt	2	SN:B50001--
28	01643-30623	Washer	2	SN:B50001--
29	13Y-54-11750	Seal	1	SN:B50001--
30	13Y-54-11730	Seal	1	SN:B50001--
31	13Y-54-11681	Seal	1	SN:B50001--
32	13Y-54-11910	Seal	1	SN:B50001--
33	13Y-54-11592	Seal	1	SN:B50001--
34	13Y-54-11631	Seal	1	SN:B50001--
35	13Y-54-11580	Seal	1	SN:B50001--
36	13Y-54-11470	Seal	1	SN:B50001--
37	205-03-71440	Sheet	2	SN:B50001--
38	13Y-60-11440	Seal	1	SN:B50001--
39	13Y-62-15423	Step	1	SN:B50001--
40	01010-81230	Bolt	2	SN:B50001--
41	01643-31232	Washer	2	SN:B50001--
42	13Y-62-15432	Bracket	1	SN:B50001--
43	01010-81025	Bolt	3	SN:B50001--
44	01643-31032	Washer	3	SN:B50001--

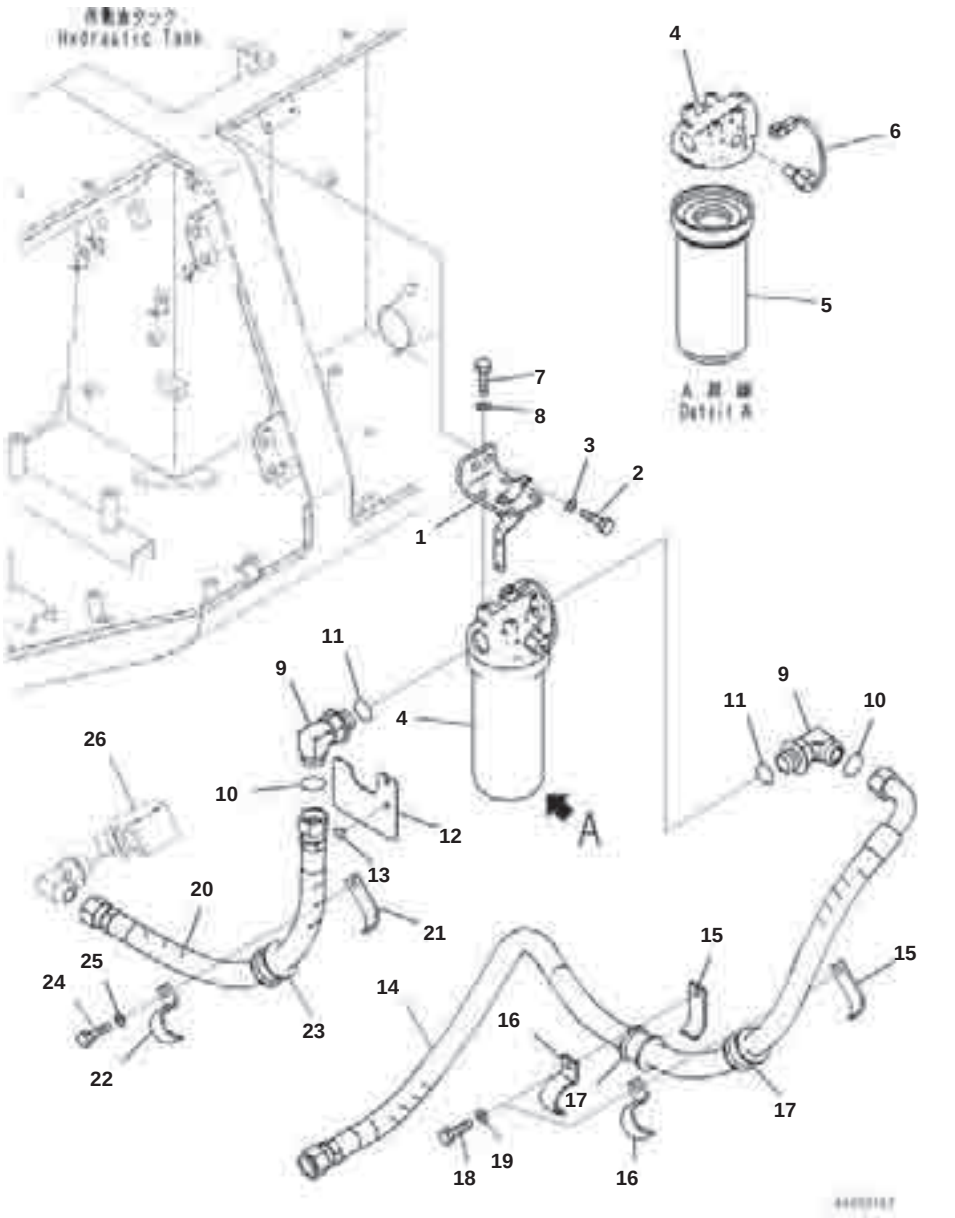

Hydraulic Tank, Charge Filter

Index	Part Number	Description	Qty	Options
1	13Y-62-15412	Bracket	1	SN:B50001--
2	01010-81235	Bolt	2	SN:B50001--
3	01643-31232	Washer	2	SN:B50001--
4	11Y-60-38701	Filter Assembly	1	SN:B50001--
5	11Y-60-28710	･ Cartridge	1	SN:B50001--
6	11Y-06-21340	･ Switch	1	SN:B50001--
	11Y-06-21350	･ ･ O-ring	1	SN:B50001--
	11Y-06-21360	･ ･ O-ring	1	SN:B50001--
7	01010-81035	Bolt	4	SN:B50001--
8	01643-31032	Washer	4	SN:B50001--
9	21W-62-42640	Elbow	2	SN:B50001--
10	207-62-64740	O-ring	2	SN:B50001--
11	07002-13334	O-ring	2	SN:B50001--
12	13Y-62-15440	Sheet	1	SN:B50001--
13	20T-54-74510	Cap	2	SN:B50001--
14	13Y-62-11114	Hose	1	SN:B50001--
15	418-62-32550	Clamp	2	SN:B50001--
16	418-62-32560	Clamp	2	SN:B50001--
17	21T-62-76840	Cushion	2	SN:B50001--
18	01010-81025	Bolt	2	SN:B50001--
19	01643-31032	Washer	2	SN:B50001--
20	13Y-62-11124	Hose	1	SN:B50001--
21	418-62-32550	Clamp	1	SN:B50001--
22	418-62-32560	Clamp	1	SN:B50001--
23	21T-62-76840	Cushion	1	SN:B50001--
24	01010-81025	Bolt	1	SN:B50001--
25	01643-31032	Washer	1	SN:B50001--
26	(13Y-62-12880)	Block		SN:B50001--

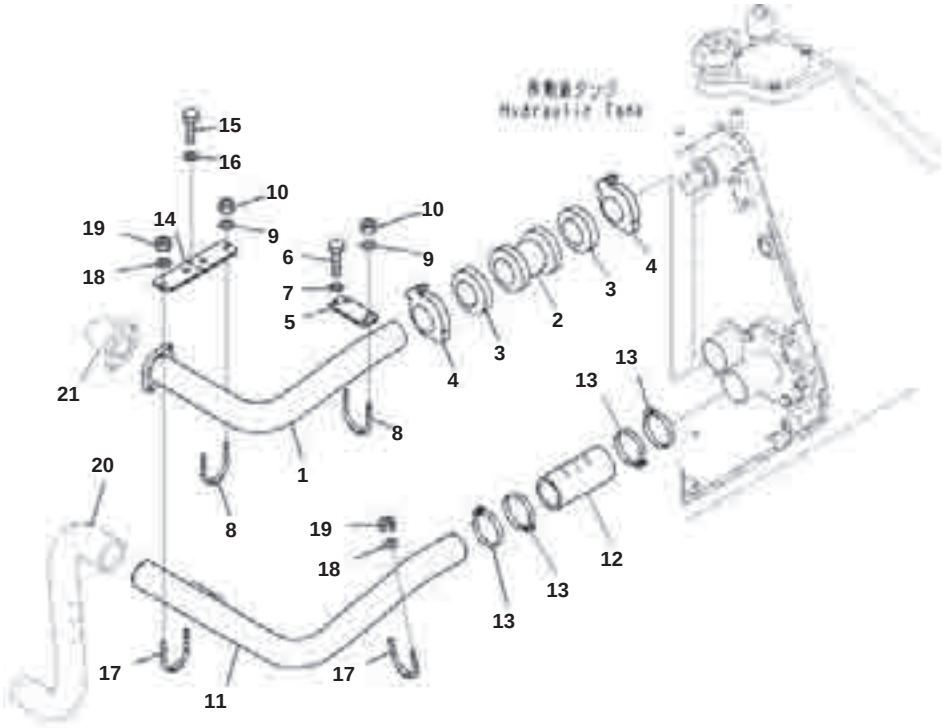

Hydraulic Tank, Drain Piping

Index	Part Number	Description	Qty	Options
1	13Y-62-11571	Tube	1	SN:B50001--
2	07332-02400	Coupling	1	SN:B50001--
3	07332-52400	▪ Gasket	2	SN:B50001--
4	07332-62400	▪ Clamp	2	SN:B50001--
5	13Y-62-11962	Bracket	1	SN:B50001--
6	01010-81025	Bolt	2	SN:B50001--
7	01643-31032	Washer	2	SN:B50001--
8	07283-37663	Clip	2	SN:B50001--
9	01643-31032	Washer	4	SN:B50001--
10	22P-70-12160	Nut	4	SN:B50001--
11	13Y-62-11922	Tube	1	SN:B50001--
12	07260-07420	Hose	1	SN:B50001--
13	07289-00095	Clamp	4	SN:B50001--
14	13Y-62-11972	Plate	1	SN:B50001--
15	01010-81025	Bolt	2	SN:B50001--
16	01643-31032	Washer	2	SN:B50001--
17	07283-37663	Clip	2	SN:B50001--
18	01643-31032	Washer	4	SN:B50001--
19	22P-70-12160	Nut	4	SN:B50001--
20	(13Y-62-11932)	Hose	1	SN:B50001--
21	(13Y-62-11760)	Tube	1	SN:B50001--

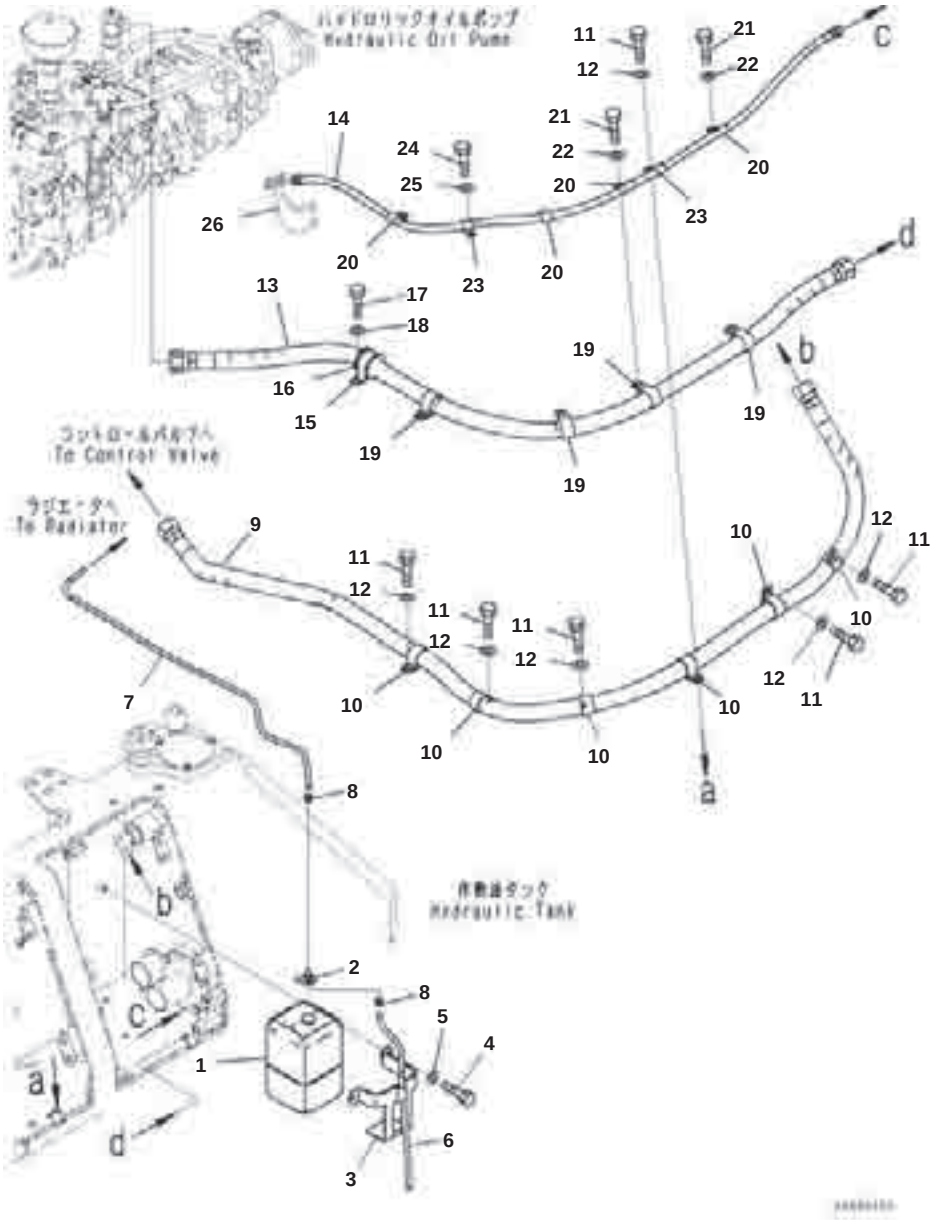

Hydraulic Tank, Reservoir Tank and Piping

Index	Part Number	Description	Qty	Options
1	17A-03-14111	Tank	1	SN:B50001--
2	17A-03-14120	▪ Cap	1	SN:B50001--
3	13Y-03-11341	Bracket	1	SN:B50001--
4	01010-81020	Bolt	2	SN:B50001--
5	01643-31032	Washer	2	SN:B50001--
6	208-03-58310	Hose	1	SN:B50001--
7	13Y-03-15191	Hose	1	SN:B50001--
8	07285-00110	Clip	2	SN:B50001--
9	13Y-62-11514	Hose	1	SN:B50001--
10	6217-21-7150	Clip	6	SN:B50001--
11	01010-81025	Bolt	6	SN:B50001--
12	01643-31032	Washer	6	SN:B50001--
13	13Y-62-11553	Hose	1	SN:B50001--
14	13Y-62-11533	Hose	1	SN:B50001--
15	196-916-1590	Clip	1	SN:B50001--
16	21T-62-76840	Cushion	1	SN:B50001--
17	01010-81025	Bolt	1	SN:B50001--
18	01643-31032	Washer	1	SN:B50001--
19	6217-21-7150	Clip	4	SN:B50001--
20	04434-51510	Clip	4	SN:B50001--
21	01010-81025	Bolt	4	SN:B50001--
22	01643-31032	Washer	4	SN:B50001--
23	04434-51510	Clip	2	SN:B50001--
24	01010-81025	Bolt	1	SN:B50001--
25	01643-31032	Washer	1	SN:B50001--
26	(13Y-62-12730)	Bracket		SN:B50001--

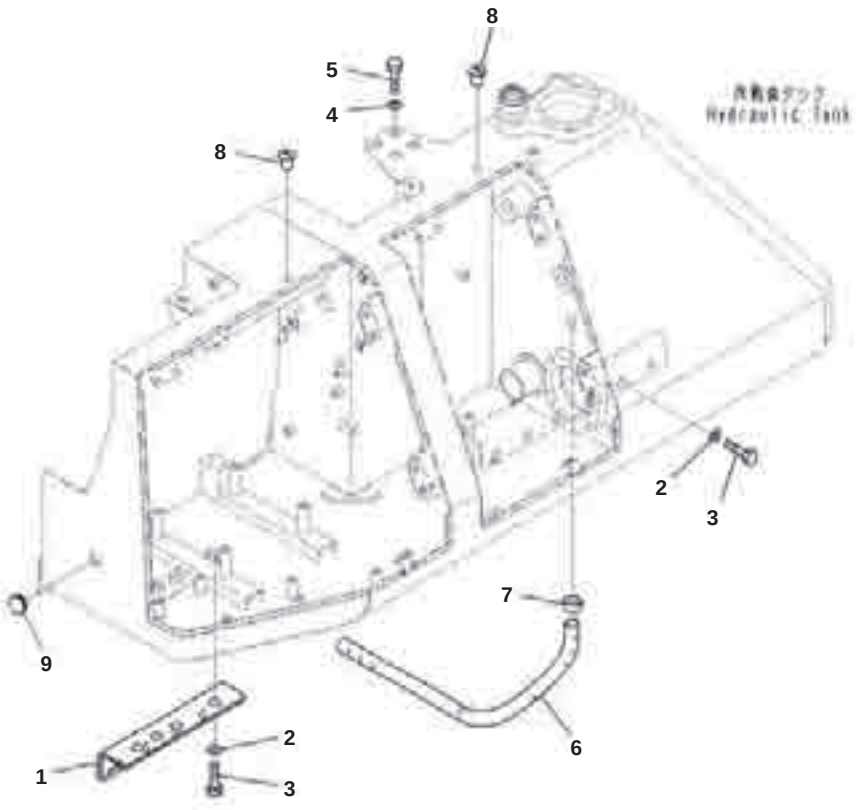

Hydraulic Tank, Mounting

Index	Part Number	Description	Qty	Options
1	13Y-04-11224	Bracket	1	SN:B50001--
2	01643-32060	Washer	14	SN:B50001--
3	01010-82045	Bolt	14	SN:B50001--
4	01643-32060	Washer	4	SN:B50001--
5	01010-82065	Bolt	4	SN:B50001--
6	07286-02687	Hose	1	SN:B50001--
7	07285-00280	Clip	1	SN:B50001--
8	21J-46-12550	Cap	2	SN:B50001--
9	09415-02520	Cap	1	SN:B50001--

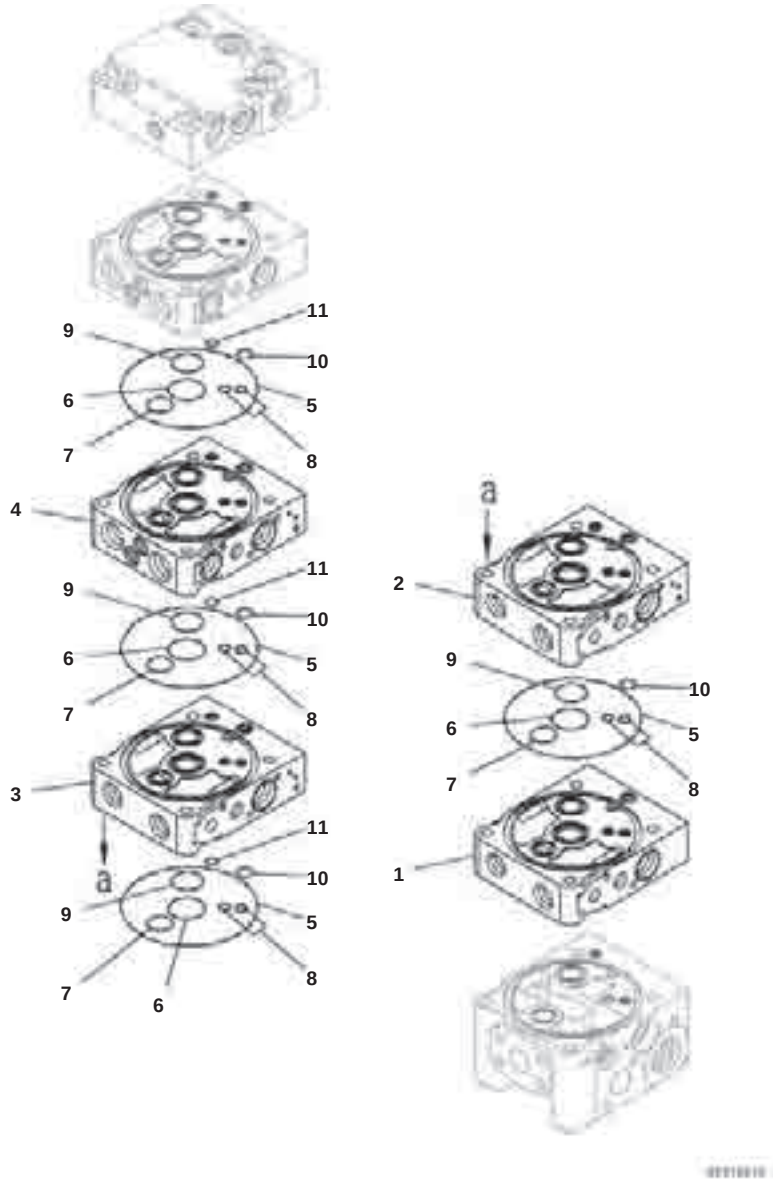

Control Valve, With Rear 1-attachment, Winch, Inner Parts (1/12)

Index	Code	Part Number	Description	Qty	Options
		723-25-11400	Valve, Control	1	SN:B50001--
	C1		· Body Group	1	SN:B50001--
1	C1		· · Valve Body	1	SN:B50001--
2	C1		· · Valve Body	1	SN:B50001--
3	C1		· · Valve Body	1	SN:B50001--
4	C1		· · Valve Body	1	SN:B50001--
5		07000-12120	· · O-ring	4	SN:B50001--
6		723-26-15830	· · O-ring	4	SN:B50001--
7		07000-12020	· · O-ring	4	SN:B50001--
8		07000-11008	· · O-ring	8	SN:B50001--
9		723-26-15840	· · O-ring	4	SN:B50001--
10		07000-12011	· · O-ring	4	SN:B50001--
11		07000-11009	· · O-ring	3	SN:B50001--

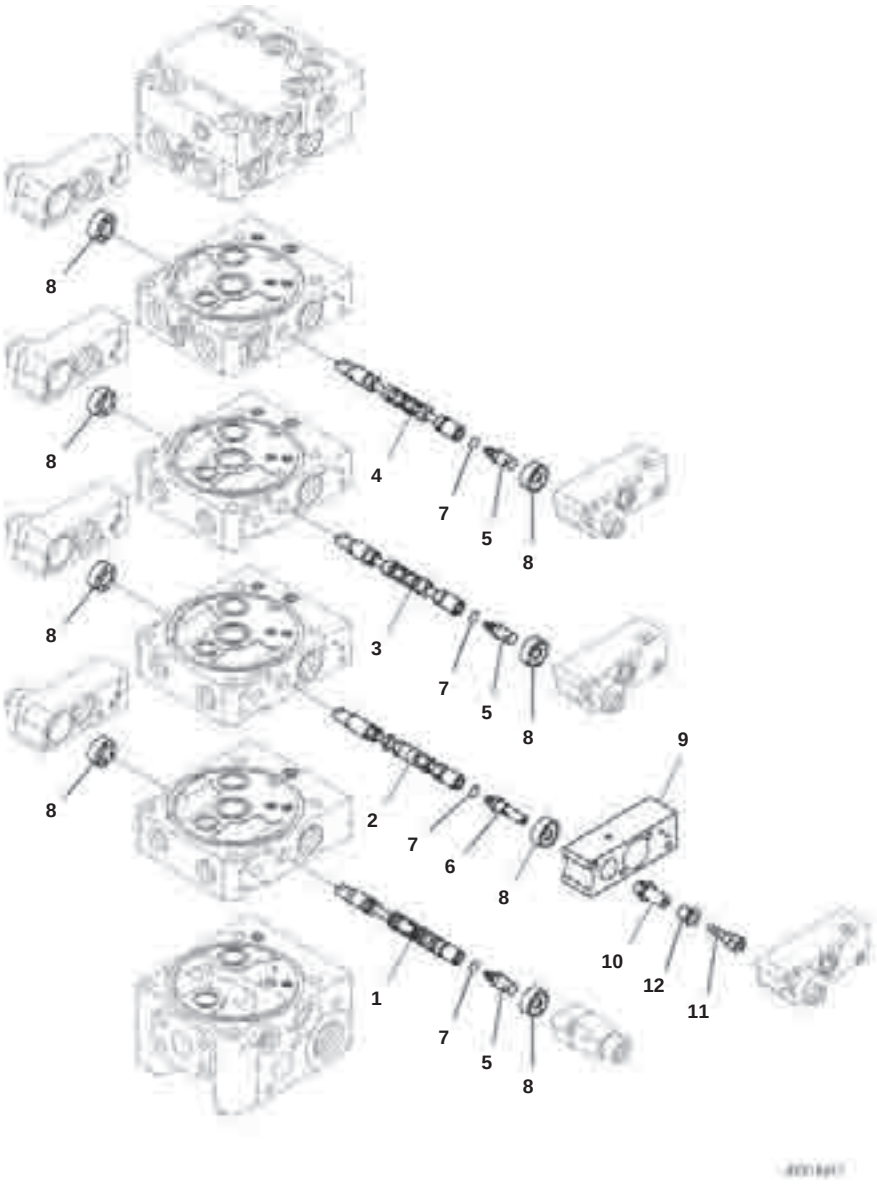

Control Valve, With Rear 1-attachment, Winch, Inner Parts (2/12)

Index	Code	Part Number	Description	Qty	Options
		723-25-11400	Valve, Control	1	SN:B50001--
	C1		· Body Group	1	SN:B50001--
1	C1		· · Spool	1	SN:B50001--
2	C1		· · Spool	1	SN:B50001--
3	C1		· · Spool	1	SN:B50001--
4	C1		· · Spool	1	SN:B50001--
5	C1		· · Plug	3	SN:B50001--
6	C1		· · Plug	1	SN:B50001--
7	C1		· · O-ring	4	SN:B50001--
8		723-26-15121	· · Retainer	8	SN:B50001--
9		723-26-17270	· · Plate	1	SN:B50001--
10		723-26-17220	· · Retainer	1	SN:B50001--
11		723-26-17230	· · Bolt	1	SN:B50001--
12		723-11-17353	· · Retainer	1	SN:B50001--

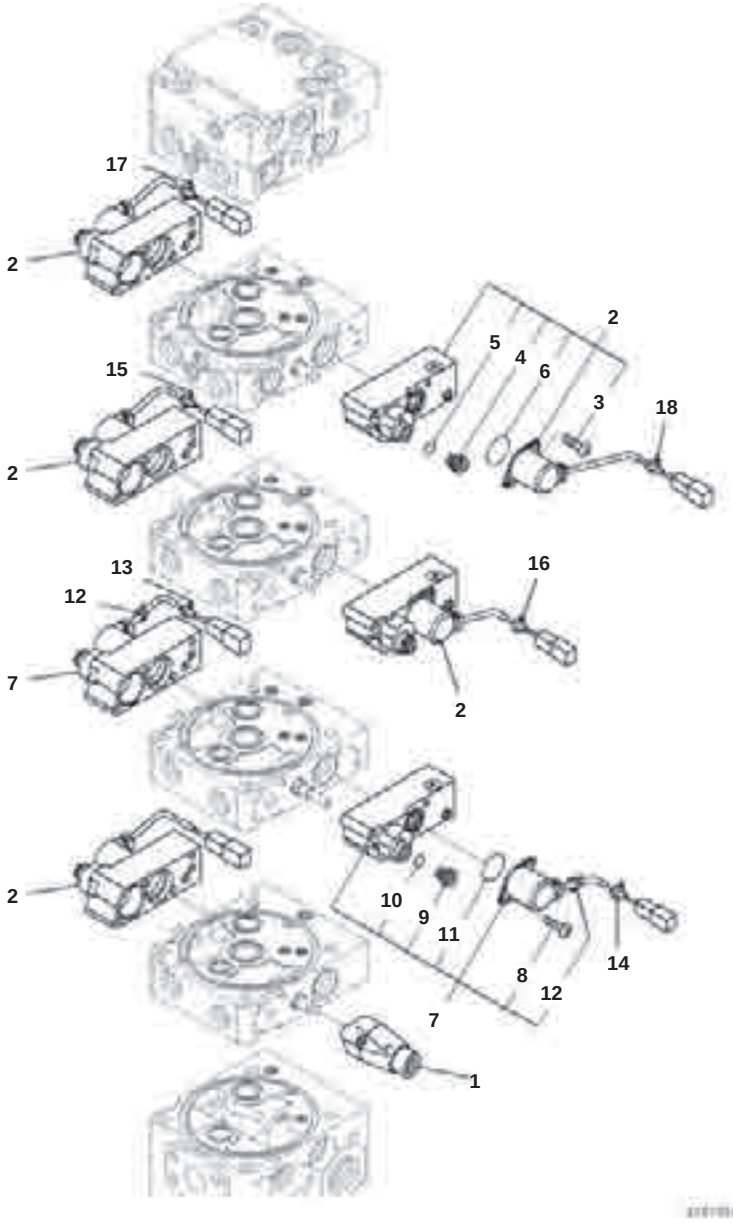

Control Valve, With Rear 1-attachment, Winch, Inner Parts (3/12)

Index	Code	Part Number	Description	Qty	Options
		723-25-11400	Valve, Control	1	SN:B50001--
	C1		· Body Group	1	SN:B50001--
1		723-26-15110	· · Case	1	SN:B50001--
2		702-21-62600	· · Case Subassembly	5	SN:B50001--
3		702-21-54180	· · · Screw	2	SN:B50001--
4		708-8E-16160	· · · Plug	1	SN:B50001--
5		07002-11023	· · · O-ring	2	SN:B50001--
6		700-80-61260	· · · O-ring	1	SN:B50001--
7		702-21-62700	· · Case Subassembly	2	SN:B50001--
8		702-21-54180	· · · Screw	2	SN:B50001--
9		708-8E-16160	· · · Plug	1	SN:B50001--
10		07002-11023	· · · O-ring	2	SN:B50001--
11		700-80-61260	· · · O-ring	1	SN:B50001--
12		08034-20414	· · · Band	1	SN:B50001--
13		21U-62-34710	· · Band, Yellow	1	SN:B50001--
14		21U-62-34730	· · Band, Green	1	SN:B50001--
15		21U-62-34750	· · Band, Blue	1	SN:B50001--
16		21U-62-34770	· · Band, White	1	SN:B50001--
17		21U-62-34760	· · Band, Red	1	SN:B50001--
18		21U-62-34740	· · Band, Orange	1	SN:B50001--

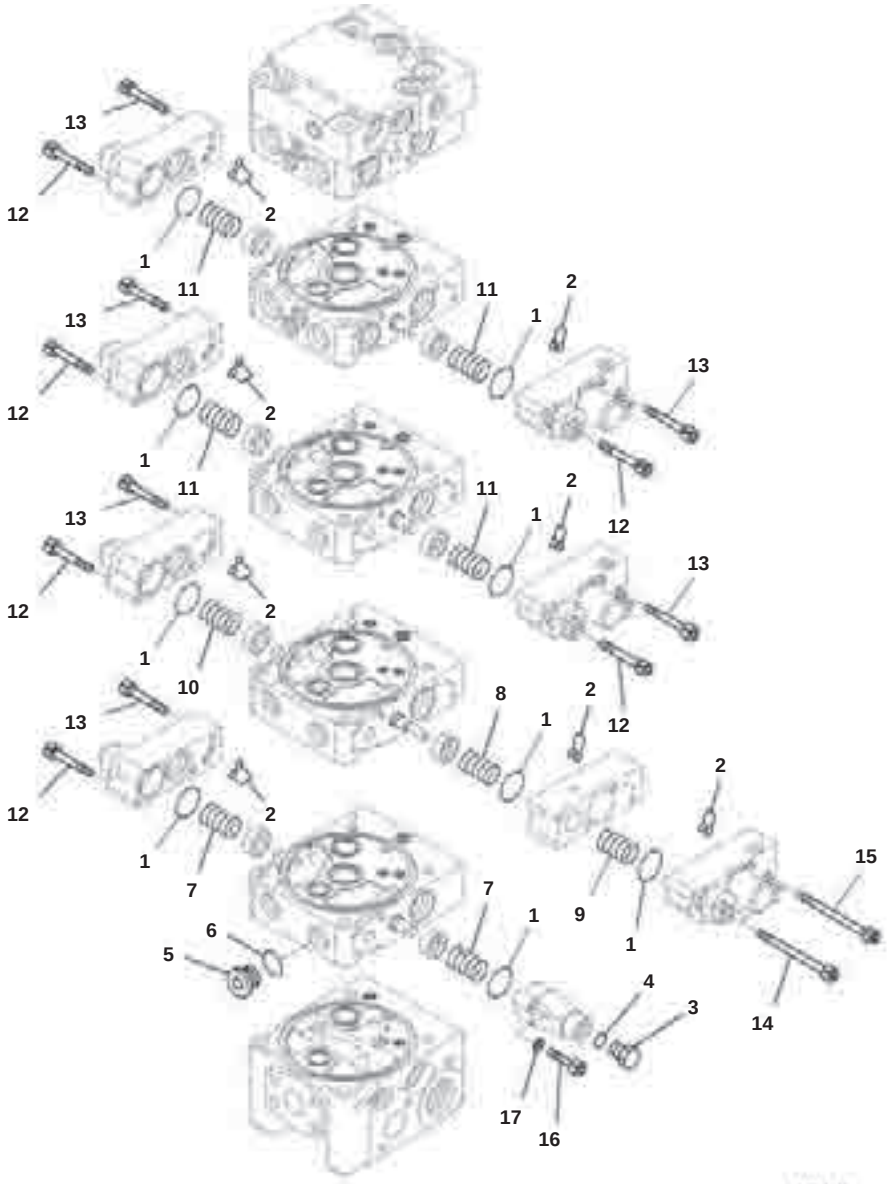

Control Valve, With Rear 1-attachment, Winch, Inner Parts (4/12)

Index	Code	Part Number	Description	Qty	Options
		723-25-11400	Valve, Control	1	SN:B50001--
	C1		· Body Group	1	SN:B50001--
1		575-41-17420	· · O-ring	9	SN:B50001--
2		07000-11006	· · O-ring	16	SN:B50001--
3		07040-11409	· · Plug	1	SN:B50001--
4		07002-11423	· · O-ring	1	SN:B50001--
5		720-2M-11550	· · Plug	1	SN:B50001--
6		07002-12034	· · O-ring	1	SN:B50001--
7		709-26-11450	· · Spring	2	SN:B50001--
8		723-26-14690	· · Spring	1	SN:B50001--
9		723-26-14790	· · Spring	1	SN:B50001--
10		723-26-16621	· · Spring	1	SN:B50001--
11		723-26-14580	· · Spring	4	SN:B50001--
12		01252-60645	· · Bolt, Hexagon Socket Head	18	SN:B50001--
13		01252-60640	· · Bolt, Hexagon Socket Head	6	SN:B50001--
14		723-26-17260	· · Bolt	3	SN:B50001--
15		702-16-55260	· · Bolt	1	SN:B50001--
16		01252-60630	· · Bolt, Hexagon Socket Head	2	SN:B50001--
17		01641-20608	· · Washer	2	SN:B50001--

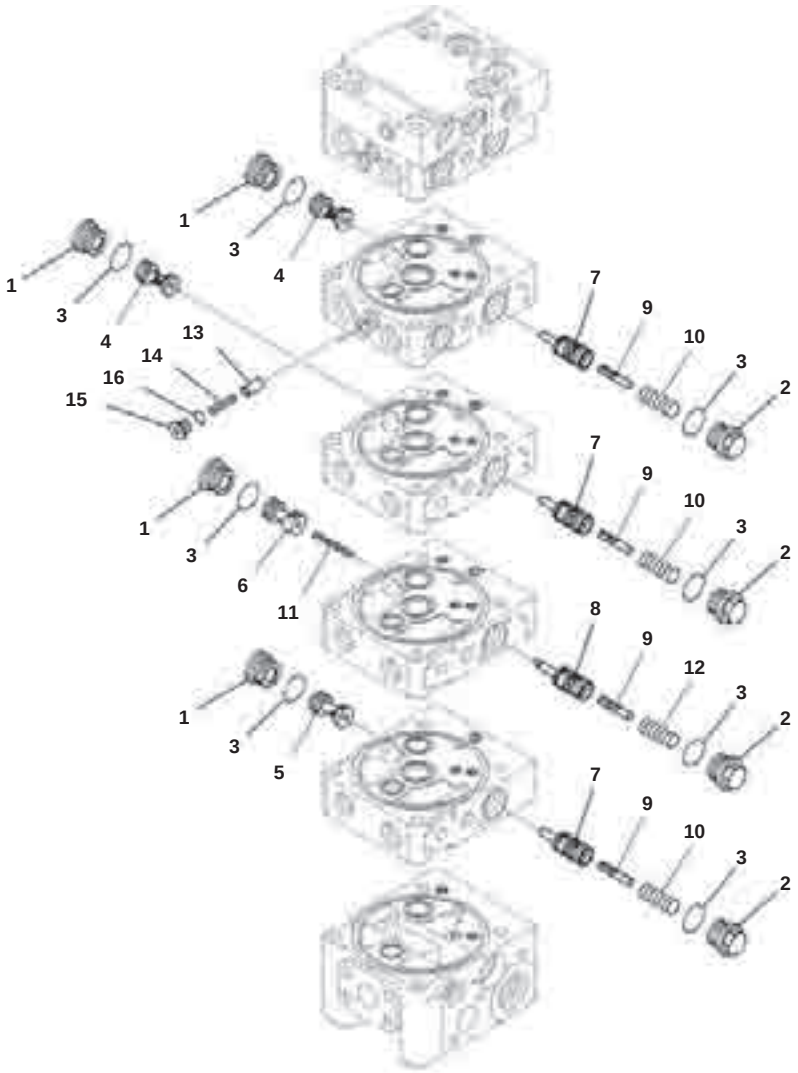

Control Valve, With Rear 1-attachment, Winch, Inner Parts (5/12)

Index	Code	Part Number	Description	Qty	Options
		723-25-11400	Valve, Control	1	SN:B50001--
	C1		· Body Group	1	SN:B50001--
1		723-26-15230	· · Plug	4	SN:B50001--
2		723-26-17240	· · Plug	4	SN:B50001--
3		07002-12434	· · O-ring	8	SN:B50001--
4	C1		· · Valve	2	SN:B50001--
5	C1		· · Valve	1	SN:B50001--
6	C1		· · Valve	1	SN:B50001--
7	C1		· · Valve	3	SN:B50001--
8	C1		· · Valve	1	SN:B50001--
9	C1		· · Piston	4	SN:B50001--
10		723-26-14230	· · Spring	3	SN:B50001--
11		723-26-14220	· · Spring	1	SN:B50001--
12		723-26-14240	· · Spring	1	SN:B50001--
13	C1		· · Valve	2	SN:B50001--
14		723-26-14150	· · Spring	2	SN:B50001--
15		723-26-15220	· · Plug	2	SN:B50001--
16		07002-11223	· · O-ring	2	SN:B50001--

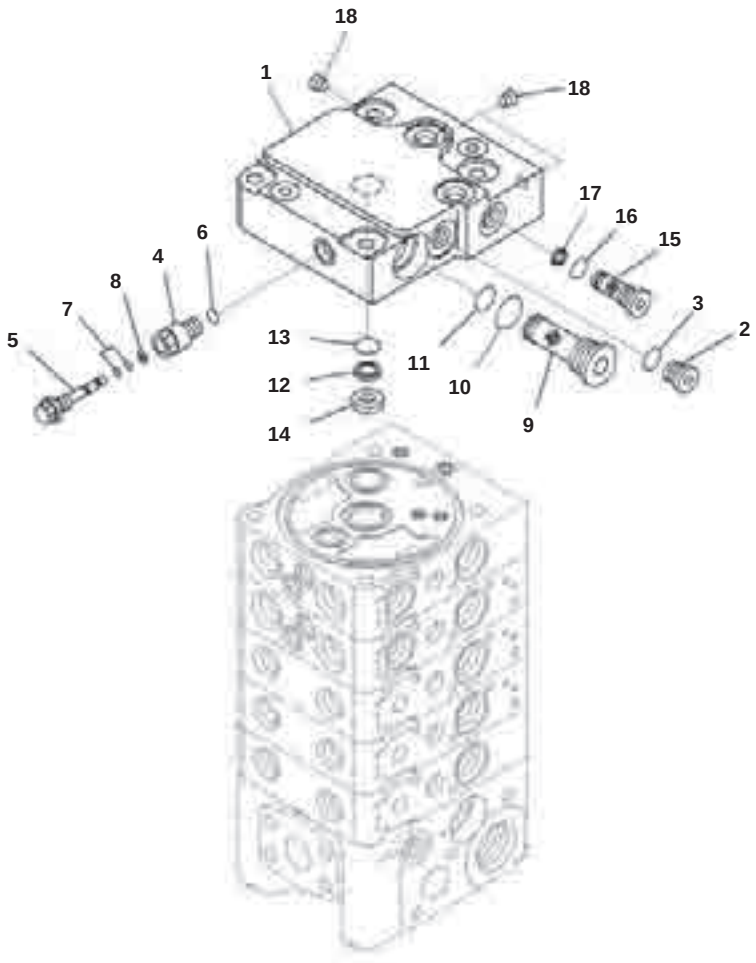

Control Valve, With Rear 1-attachment, Winch, Inner Parts (6/12)

Index	Code	Part Number	Description	Qty	Options
		723-25-11400	Valve, Control	1	SN:B50001--
	C1		· Cover Group	1	SN:B50001--
1	C1		· · Cover	1	SN:B50001--
2		702-21-55620	· · Plug	1	SN:B50001--
3		07002-11423	· · O-ring	1	SN:B50001--
4		723-11-38620	· · Plug	1	SN:B50001--
5		723-26-16990	· · Plug	1	SN:B50001--
6		07002-11223	· · O-ring	1	SN:B50001--
7		07000-11003	· · O-ring	2	SN:B50001--
8		723-26-17280	· · Ring, Back-up	1	SN:B50001--
9		723-11-14390	· · Filter	1	SN:B50001--
10		07002-12434	· · O-ring	1	SN:B50001--
11		723-11-19130	· · O-ring	1	SN:B50001--
12		702-21-53140	· · Filter	1	SN:B50001--
13		702-21-55420	· · O-ring	1	SN:B50001--
14	C1		· · Seat	1	SN:B50001--
15	C1		· · Filter	1	SN:B50001--
16		07002-11423	· · O-ring	1	SN:B50001--
17	C1		· · Seal	1	SN:B50001--
18	C1		· · Plug	3	SN:B50001--

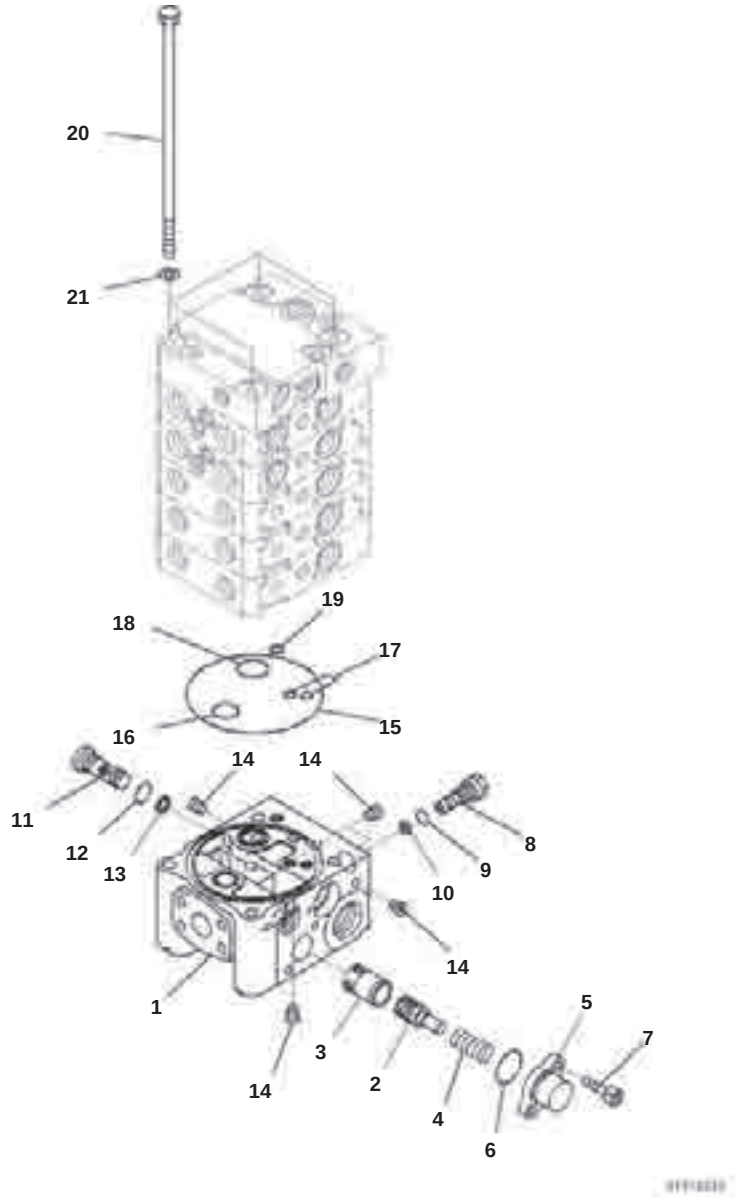

Control Valve, With Rear 1-attachment, Winch, Inner Parts (7/12)

Index	Code	Part Number	Description	Qty	Options
		723-25-11400	Valve, Control	1	SN:B50001--
	C1		· Cover Group	1	SN:B50001--
1	C1		· · Block	1	SN:B50001--
2	C1		· · Piston	1	SN:B50001--
3	C1		· · Sleeve	1	SN:B50001--
4		723-26-16380	· · Spring	1	SN:B50001--
5		723-26-16350	· · Flange	1	SN:B50001--
6		723-11-19110	· · O-ring	1	SN:B50001--
7		01252-60820	· · Bolt, Hexagon Socket Head	2	SN:B50001--
8		723-11-14250	· · Orifice	1	SN:B50001--
9		07002-10823	· · O-ring	1	SN:B50001--
10		722-12-15160	· · Seal	1	SN:B50001--
11	C1		· · Filter	1	SN:B50001--
12		07002-11423	· · O-ring	1	SN:B50001--
13	C1		· · Seal	1	SN:B50001--
14	C1		· · Plug	5	SN:B50001--
15		07000-12120	· · O-ring	1	SN:B50001--
16		07000-12020	· · O-ring	1	SN:B50001--
17		07000-11008	· · O-ring	2	SN:B50001--
18		723-26-15840	· · O-ring	1	SN:B50001--
19		07000-11009	· · O-ring	1	SN:B50001--
21		01643-31032	· Washer	4	SN:B50001--

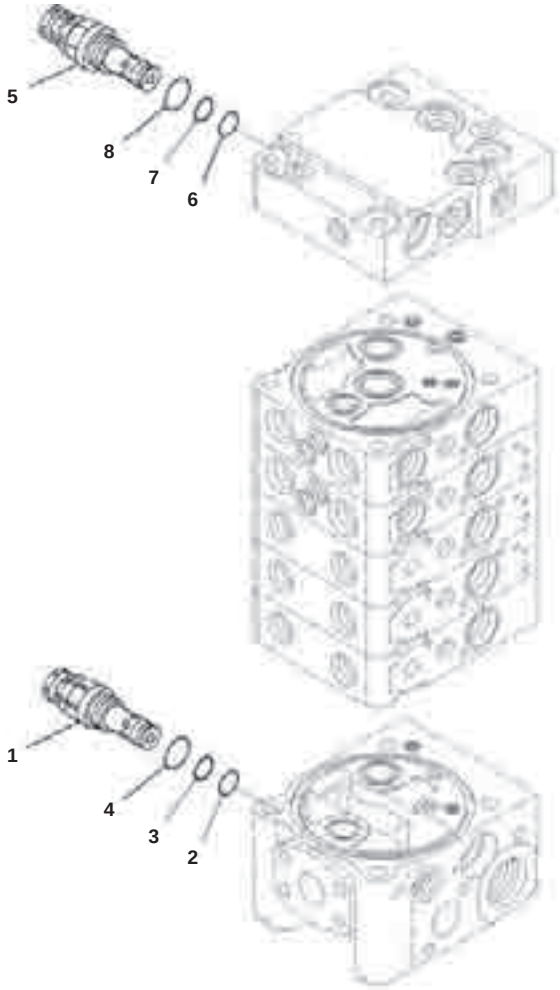

Control Valve, With Rear 1-attachment, Winch, Inner Parts (8/12)

Index	Part Number	Description	Qty	Options
	723-25-11400	Valve, Control	1	SN:B50001--
1	723-20-67300	' Valve, Relief	1	SN:B50001--
2	700-22-11410	' ' O-ring	1	SN:B50001--
3	700-80-64220	' ' Ring, Back-up	1	SN:B50001--
4	07002-12434	' ' O-ring	1	SN:B50001--
5	723-20-67500	' Valve, Relief	1	SN:B50001--
6	700-22-11410	' ' O-ring	1	SN:B50001--
7	700-80-64220	' ' Ring, Back-up	1	SN:B50001--
8	07002-12434	' ' O-ring	1	SN:B50001--

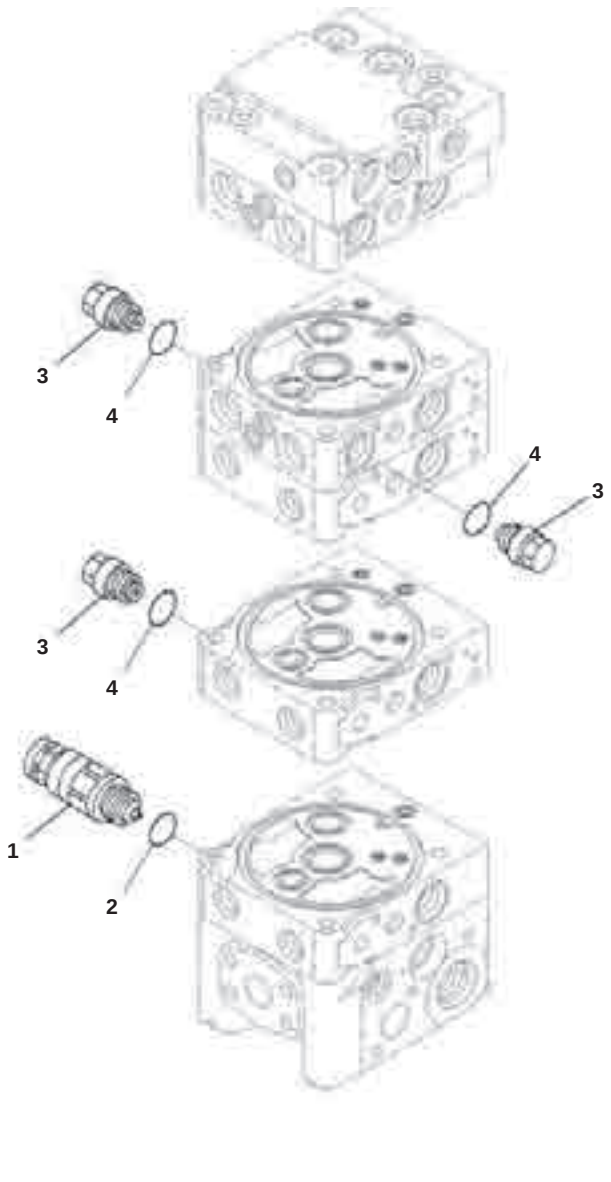

Control Valve, With Rear 1-attachment, Winch, Inner Parts (9/12)

Index	Part Number	Description	Qty	Options
	723-25-11400	Valve, Control	1	SN:B50001--
1	723-20-67400	' Valve Assembly, Suction and Relief	1	SN:B50001--
2	07002-12034	' ' O-ring	2	SN:B50001--
3	723-20-80100	' Valve Assembly, Suction	3	SN:B50001--
4	07002-12034	' ' O-ring	1	SN:B50001--

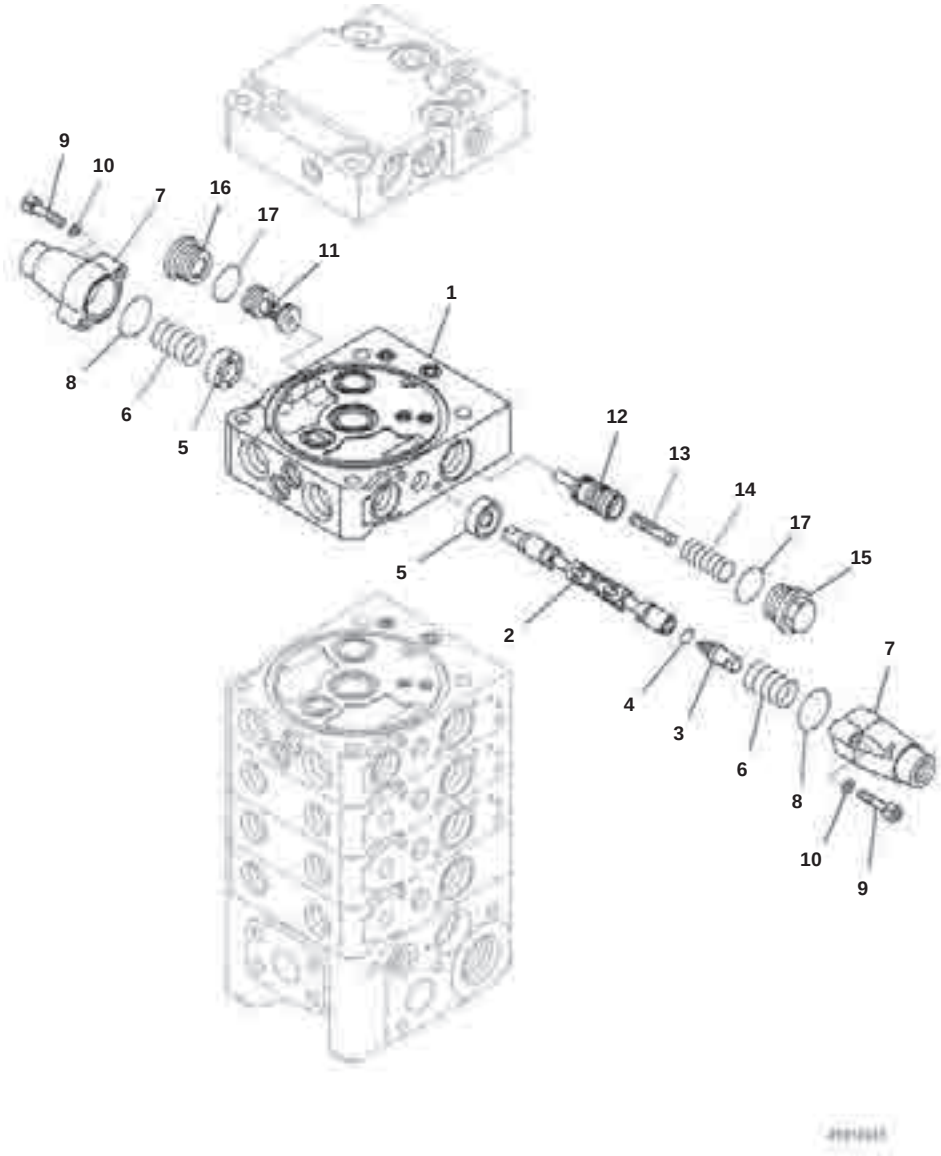

Control Valve, With Rear 1-attachment, Winch, Inner Parts (10/12)

Index	Code	Part Number	Description	Qty	Options
		723-25-11400	Valve, Control	1	SN:B50001--
	C1		· Valve Subassembly	1	SN:B50001--
1	C1		· · Valve Body	1	SN:B50001--
2	C1		· · Spool	1	SN:B50001--
3	C1		· · Plug	1	SN:B50001--
4	C1		· · O-ring	1	SN:B50001--
5		723-26-15121	· · Retainer	2	SN:B50001--
6		709-26-11450	· · Spring	2	SN:B50001--
7		723-26-15110	· · Case	2	SN:B50001--
8		575-41-17420	· · O-ring	2	SN:B50001--
9		01252-60630	· · Bolt, Hexagon Socket Head	4	SN:B50001--
10		01641-20608	· · Washer	4	SN:B50001--
11	C1		· · Valve	1	SN:B50001--
12	C1		· · Valve	1	SN:B50001--
13	C1		· · Piston	1	SN:B50001--
14		723-26-14230	· · Spring	1	SN:B50001--
15		723-26-17240	· · Plug	1	SN:B50001--
16		723-26-15230	· · Plug	1	SN:B50001--
17		07002-12434	· · O-ring	2	SN:B50001--

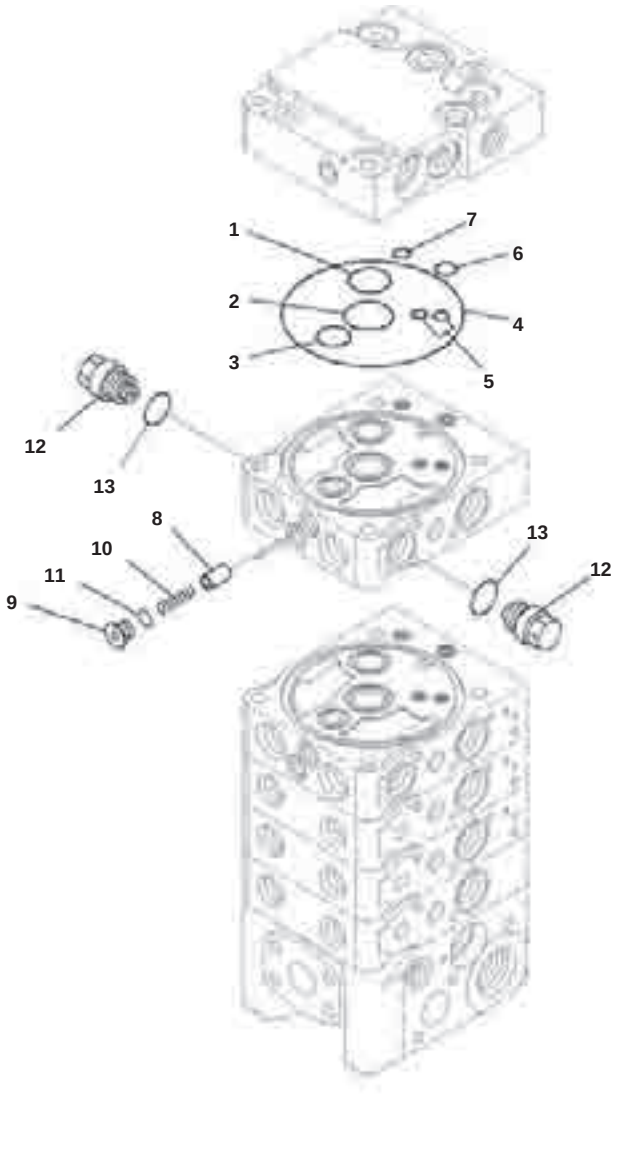

Control Valve, With Rear 1-attachment, Winch, Inner Parts (11/12)

Index	Code	Part Number	Description	Qty	Options
		723-25-11400	Valve, Control	1	SN:B50001--
	C1		· Valve Subassembly	1	SN:B50001--
1		723-26-15840	· · O-ring	1	SN:B50001--
2		723-26-15830	· · O-ring	1	SN:B50001--
3		07000-12020	· · O-ring	1	SN:B50001--
4		07000-12120	· · O-ring	1	SN:B50001--
5		07000-11008	· · O-ring	2	SN:B50001--
6		07000-12011	· · O-ring	1	SN:B50001--
7		07000-11009	· · O-ring	1	SN:B50001--
8	C1		· · Valve	2	SN:B50001--
9		723-26-15220	· · Plug	2	SN:B50001--
10		723-26-14150	· · Spring	2	SN:B50001--
11		07002-11223	· · O-ring	2	SN:B50001--
12		723-20-80100	· · Valve Assembly, Suction	2	SN:B50001--
13		07002-12034	· · · O-ring	1	SN:B50001--

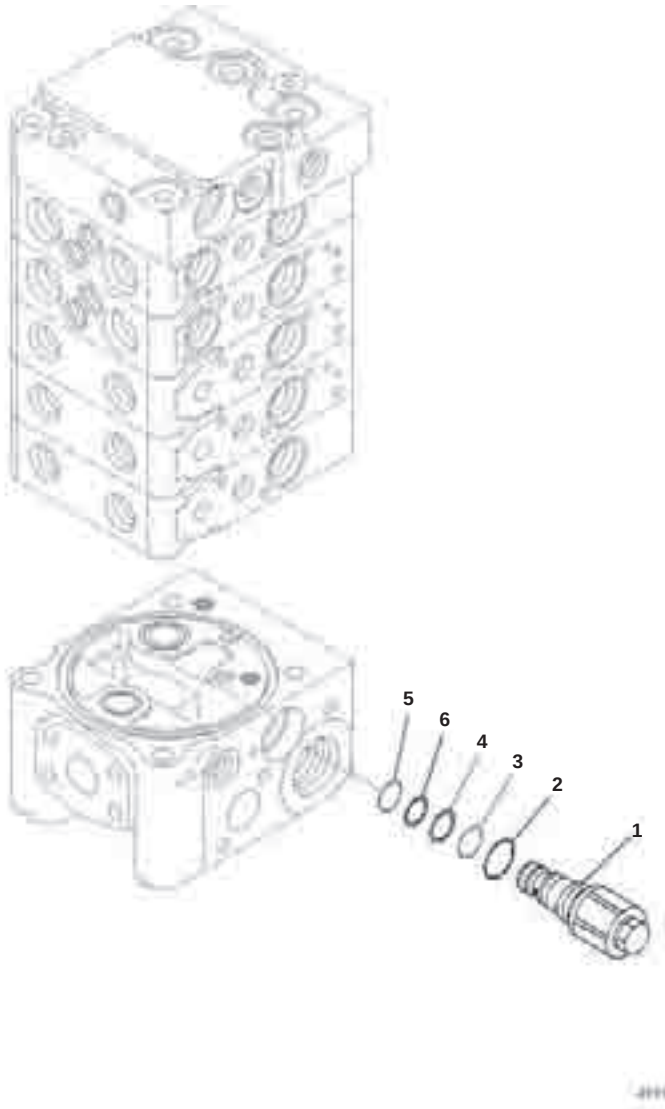

Control Valve, With Rear 1-attachment, Winch, Inner Parts (12/12)

Index	Part Number	Description	Qty	Options
	723-25-11400	Valve, Control	1	SN:B50001--
1	723-30-56300	' Valve Assembly	1	SN:B50001--
2	07002-12434	' ' O-ring	1	SN:B50001--
3	07000-12016	' ' O-ring	1	SN:B50001--
4	07001-02016	' ' Ring, Back-up	1	SN:B50001--
5	07000-12014	' ' O-ring	1	SN:B50001--
6	07001-02014	' ' Ring, Back-up	1	SN:B50001--

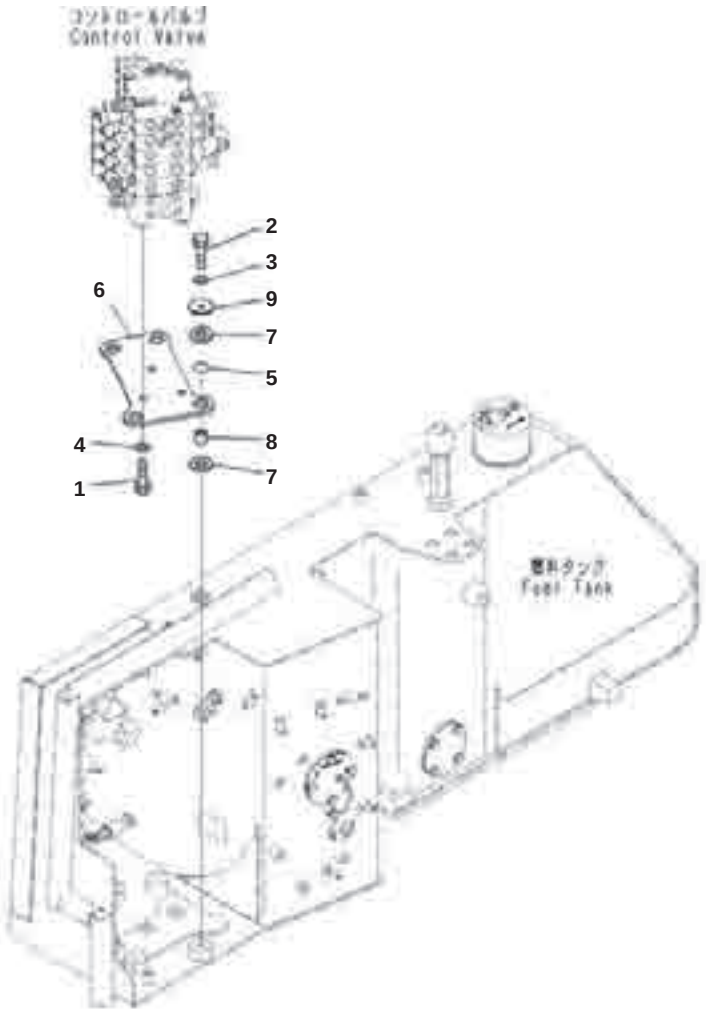

Control Valve, Mounting

Index	Part Number	Description	Qty	Options
1	01010-81435	Bolt	3	SN:B50001--
2	01010-81250	Bolt	4	SN:B50001--
3	01643-31232	Washer	4	SN:B50001--
4	01643-31445	Washer, Flat	3	SN:B50001--
5	07000-13025	O-ring	4	SN:B50001--
6	13Y-62-11231	Plate	1	SN:B50001--
7	14X-60-12120	Cushion	8	SN:B50001--
8	20X-62-21550	Spacer	4	SN:B50001--
9	283-62-18110	Plate	4	SN:B50001--

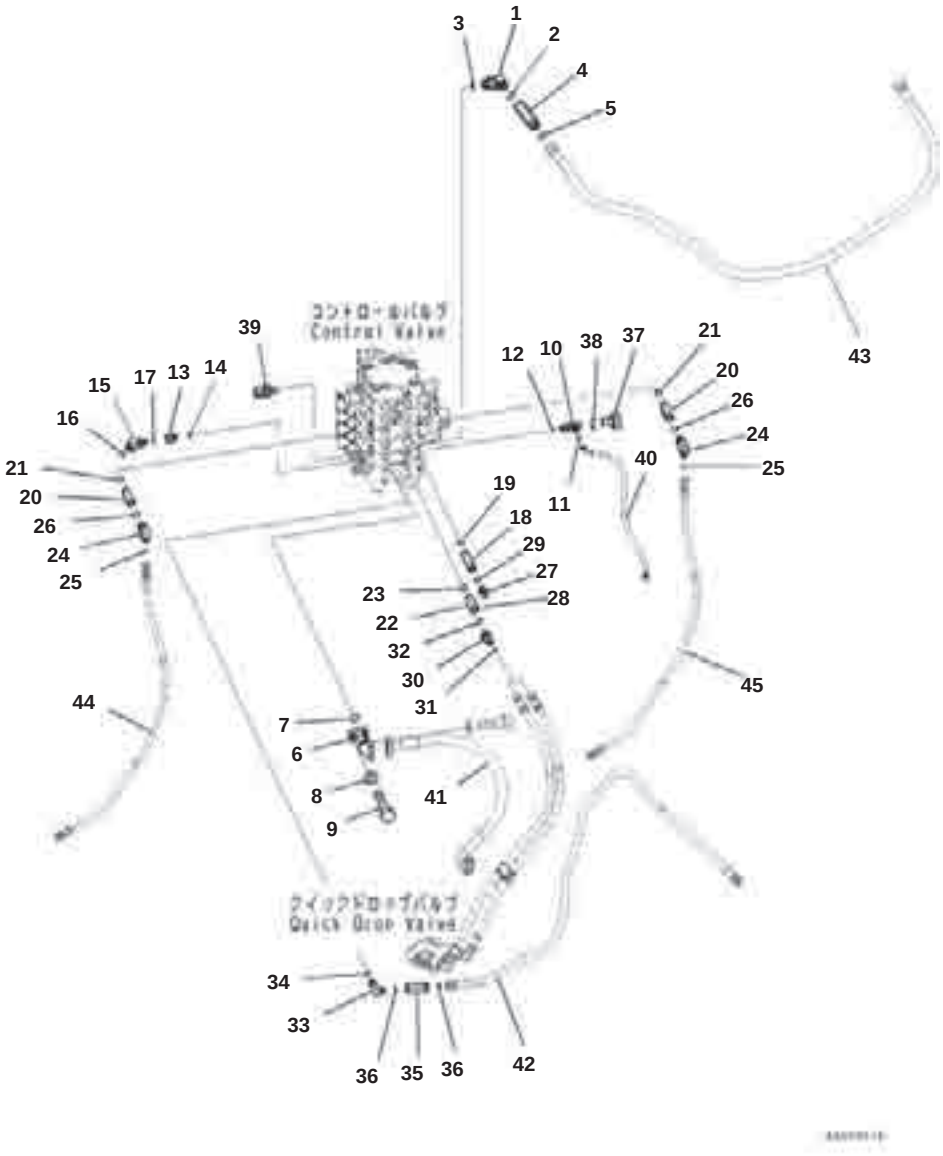

Control Valve, Elbow (1/2)

Index	Part Number	Description	Qty	Options
1	207-62-71410	Elbow	1	SN:B50001--
2	207-62-64740	O-ring	1	SN:B50001--
3	07002-13334	O-ring	1	SN:B50001--
4	13Y-62-11221	Joint	1	SN:B50001--
5	207-62-64740	O-ring	1	SN:B50001--
6	13Y-62-11211	Elbow	1	SN:B50001--
7	07000-13035	O-ring	1	SN:B50001--
8	01643-51032	Washer	4	SN:B50001--
9	07372-21040	Bolt	4	SN:B50001--
10	134-62-72241	Elbow	1	SN:B50001--
11	02896-11008	O-ring	1	SN:B50001--
12	07002-11423	O-ring	1	SN:B50001--
13	22L-62-25410	Joint	1	SN:B50001--
14	07002-11423	O-ring	1	SN:B50001--
15	22J-62-25121	Elbow	1	SN:B50001--
16	02896-11009	O-ring	1	SN:B50001--
17	07002-11423	O-ring	1	SN:B50001--
18	14X-62-52931	Joint	2	SN:B50001--
19	07002-12034	O-ring	2	SN:B50001--
20	203-62-61410	Joint	2	SN:B50001--
21	07002-12434	O-ring	2	SN:B50001--
23	07002-12434	O-ring	2	SN:B50001--
24	14X-62-33220	Elbow	2	SN:B50001--
25	02896-11012	O-ring	2	SN:B50001--
26	07002-12434	O-ring	2	SN:B50001--
27	02783-10315	Elbow	2	SN:B50001--
28	02896-11009	O-ring	2	SN:B50001--
29	07002-12034	O-ring	2	SN:B50001--
30	02783-10522	Elbow	2	SN:B50001--
31	02896-11015	O-ring	2	SN:B50001--
32	07002-12434	O-ring	2	SN:B50001--
33	02782-10518	Elbow	1	SN:B50001--
34	07002-12034	O-ring	1	SN:B50001--
35	13Y-62-16350	Nipple	1	SN:B50001--
36	02896-11015	O-ring	2	SN:B50001--
37	07040-11007	Plug	1	SN:B50001--
38	07002-11023	O-ring	1	SN:B50001--
39	7861-93-1812	Sensor, Pressure	1	SN:B50001--
40	(13Y-62-11331)	Hose		SN:B50001--
41	(07098-01010)	Hose, Flange Type		SN:B50001--
42	(13Y-03-16114)	Hose		SN:B50001--
43	(13Y-62-11514)	Hose		SN:B50001--
44	(13Y-62-12534)	Hose		SN:B50001--
45	(13Y-62-12514)	Hose		SN:B50001--

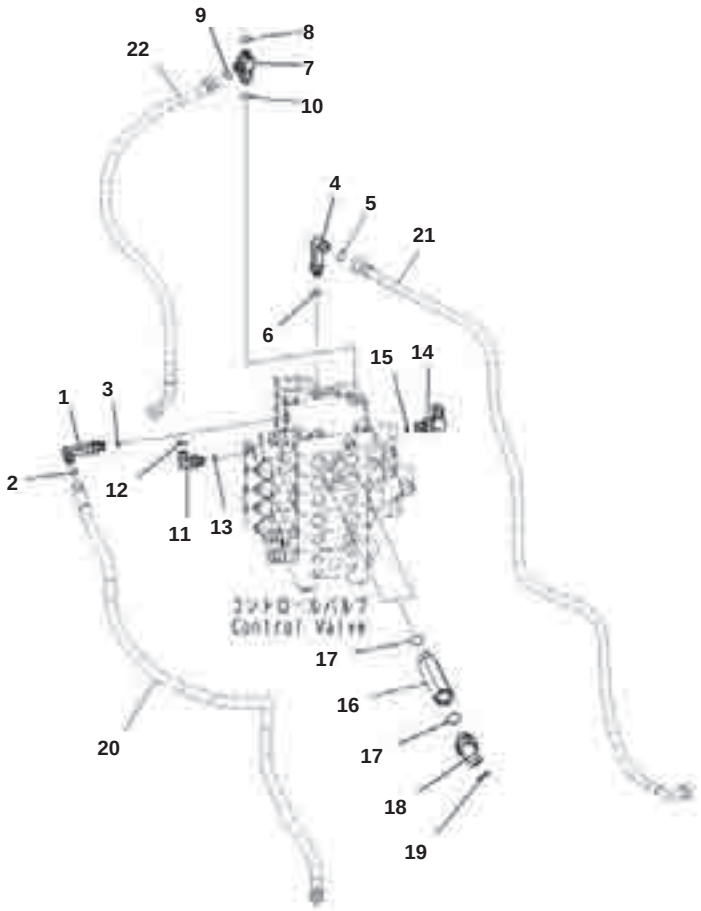

Index	Part Number	Description	Qty	Options
1	02782-10212	Elbow	1	SN:B50001--
2	02896-11008	O-ring	1	SN:B50001--
3	07002-11423	O-ring	1	SN:B50001--
4	02782-10312	Elbow	1	SN:B50001--
5	02896-11009	O-ring	1	SN:B50001--
6	07002-11423	O-ring	1	SN:B50001--
7	21K-62-72481	Tee	1	SN:B50001--
8	02896-11008	O-ring	1	SN:B50001--
9	02896-11009	O-ring	1	SN:B50001--
10	07002-11423	O-ring	1	SN:B50001--
11	02782-10210	Elbow	1	SN:B50001--
12	02896-11008	O-ring	1	SN:B50001--
13	07002-11423	O-ring	1	SN:B50001--
14	201-62-75420	Elbow, Green-Orange	1	SN:B50001--
15	07002-11423	O-ring	1	SN:B50001--
16	203-62-63770	Joint	2	SN:B50001--
17	07002-12434	O-ring	4	SN:B50001--
18	02783-10522	Elbow	2	SN:B50001--
19	02896-11015	O-ring	2	SN:B50001--
20	(13Y-62-11351)	Hose		SN:B50001--
21	(13Y-62-11862)	Hose		SN:B50001--

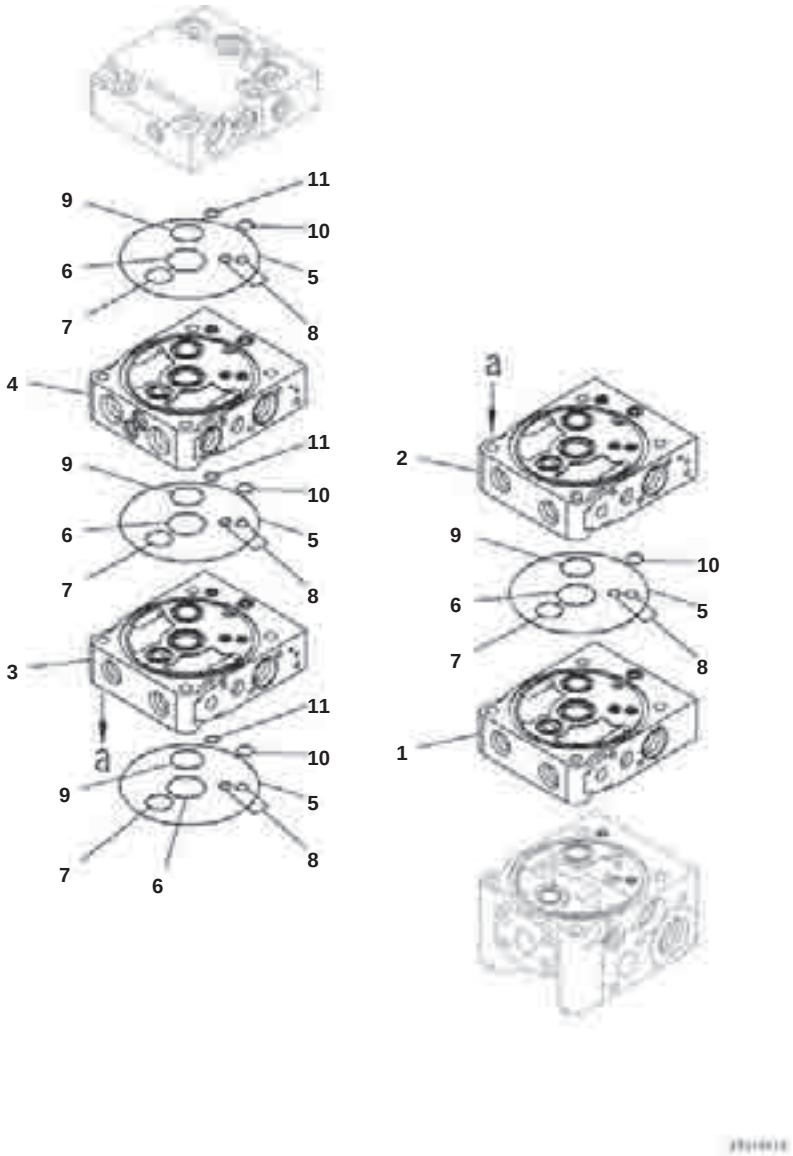

Control Valve, Without Rear 1-attachment, Winch, Inner Parts (1/10)

Index	Code	Part Number	Description	Qty	Options
		723-24-11800	Valve, Control	1	SN:B50001--
	C1		· Body Group	1	SN:B50001--
1	C1		· · Valve Body	1	SN:B50001--
2	C1		· · Valve Body	1	SN:B50001--
3	C1		· · Valve Body	1	SN:B50001--
4	C1		· · Valve Body	1	SN:B50001--
5		07000-12120	· · O-ring	4	SN:B50001--
6		723-26-15830	· · O-ring	4	SN:B50001--
7		07000-12020	· · O-ring	4	SN:B50001--
8		07000-11008	· · O-ring	8	SN:B50001--
9		723-26-15840	· · O-ring	4	SN:B50001--
10		07000-12011	· · O-ring	4	SN:B50001--
11		07000-11009	· · O-ring	3	SN:B50001--

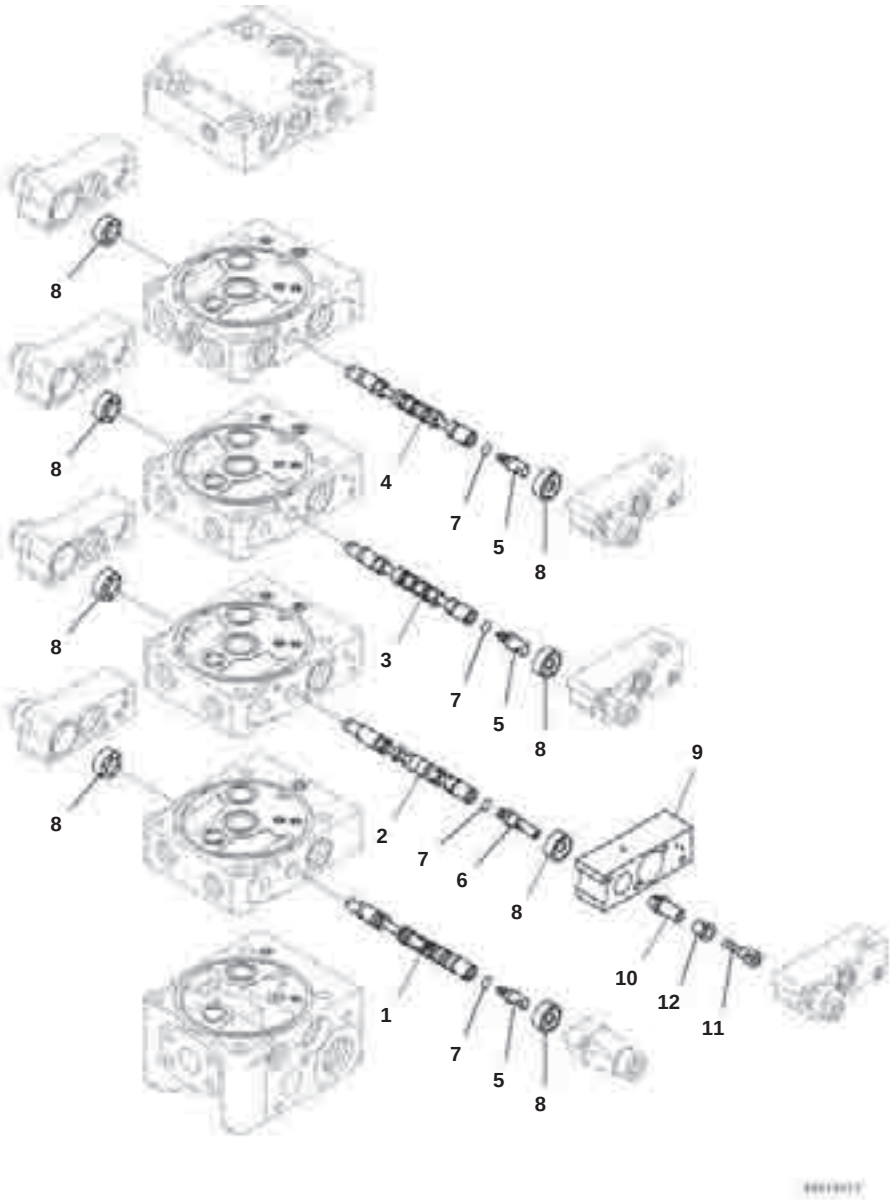

Control Valve, Without Rear 1-attachment, Winch, Inner Parts (2/10)

Index	Code	Part Number	Description	Qty	Options
		723-24-11800	Valve, Control	1	SN:B50001--
	C1		· Body Group	1	SN:B50001--
1	C1		· · Spool	1	SN:B50001--
2	C1		· · Spool	1	SN:B50001--
3	C1		· · Spool	1	SN:B50001--
4	C1		· · Spool	1	SN:B50001--
5	C1		· · Plug	3	SN:B50001--
6	C1		· · Plug	1	SN:B50001--
7	C1		· · O-ring	4	SN:B50001--
8		723-26-15121	· · Retainer	8	SN:B50001--
9		723-26-17270	· · Plate	1	SN:B50001--
10		723-26-17220	· · Retainer	1	SN:B50001--
11		723-26-17230	· · Bolt	1	SN:B50001--
12		723-11-17353	· · Retainer	1	SN:B50001--

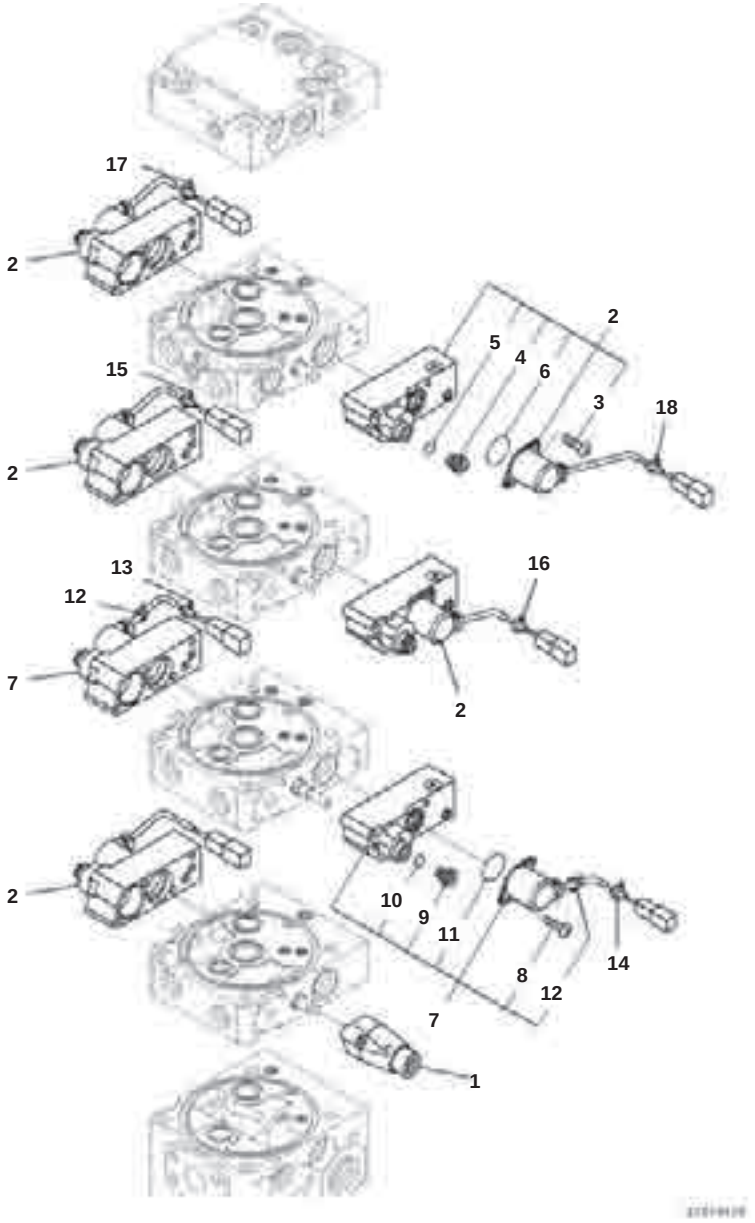

Control Valve, Without Rear 1-attachment, Winch, Inner Parts (3/10)

Index	Code	Part Number	Description	Qty	Options
		723-24-11800	Valve, Control	1	SN:B50001--
	C1		· Body Group	1	SN:B50001--
1		723-26-15110	· · Case	1	SN:B50001--
2		702-21-62600	· · Case Subassembly	5	SN:B50001--
3		702-21-54180	· · · Screw	2	SN:B50001--
4		708-8E-16160	· · · Plug	1	SN:B50001--
5		07002-11023	· · · O-ring	2	SN:B50001--
6		700-80-61260	· · · O-ring	1	SN:B50001--
7		702-21-62700	· · Case Subassembly	2	SN:B50001--
8		702-21-54180	· · · Screw	2	SN:B50001--
9		708-8E-16160	· · · Plug	1	SN:B50001--
10		07002-11023	· · · O-ring	2	SN:B50001--
11		700-80-61260	· · · O-ring	1	SN:B50001--
12		08034-20414	· · · Band	1	SN:B50001--
13		21U-62-34710	· · Band, Yellow	1	SN:B50001--
14		21U-62-34730	· · Band, Green	1	SN:B50001--
15		21U-62-34750	· · Band, Blue	1	SN:B50001--
16		21U-62-34770	· · Band, White	1	SN:B50001--
17		21U-62-34760	· · Band, Red	1	SN:B50001--
18		21U-62-34740	· · Band, Orange	1	SN:B50001--

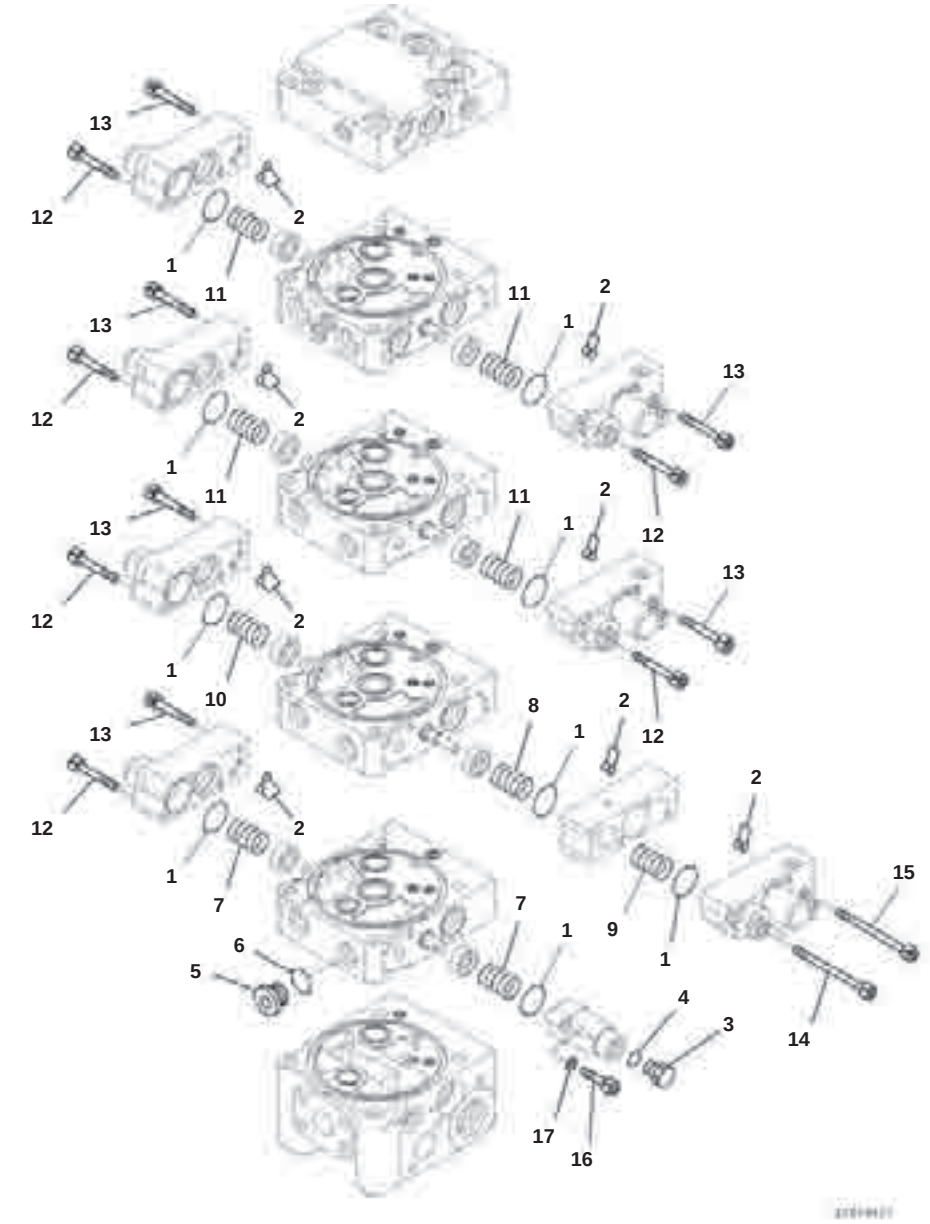

Control Valve, Without Rear 1-attachment, Winch, Inner Parts (4/10)

Index	Code	Part Number	Description	Qty	Options
		723-24-11800	Valve, Control	1	SN:B50001--
	C1		· Body Group	1	SN:B50001--
1		575-41-17420	· · O-ring	9	SN:B50001--
2		07000-11006	· · O-ring	16	SN:B50001--
3		07040-11409	· · Plug	1	SN:B50001--
4		07002-11423	· · O-ring	1	SN:B50001--
5		720-2M-11550	· · Plug	1	SN:B50001--
6		07002-12034	· · O-ring	1	SN:B50001--
7		709-26-11450	· · Spring	2	SN:B50001--
8		723-26-14690	· · Spring	1	SN:B50001--
9		723-26-14790	· · Spring	1	SN:B50001--
10		723-26-16621	· · Spring	1	SN:B50001--
11		723-26-14580	· · Spring	4	SN:B50001--
12		01252-60645	· · Bolt, Hexagon Socket Head	18	SN:B50001--
13		01252-60640	· · Bolt, Hexagon Socket Head	6	SN:B50001--
14		723-26-17260	· · Bolt	3	SN:B50001--
15		702-16-55260	· · Bolt	1	SN:B50001--
16		01252-60630	· · Bolt, Hexagon Socket Head	2	SN:B50001--
17		01641-20608	· · Washer	2	SN:B50001--

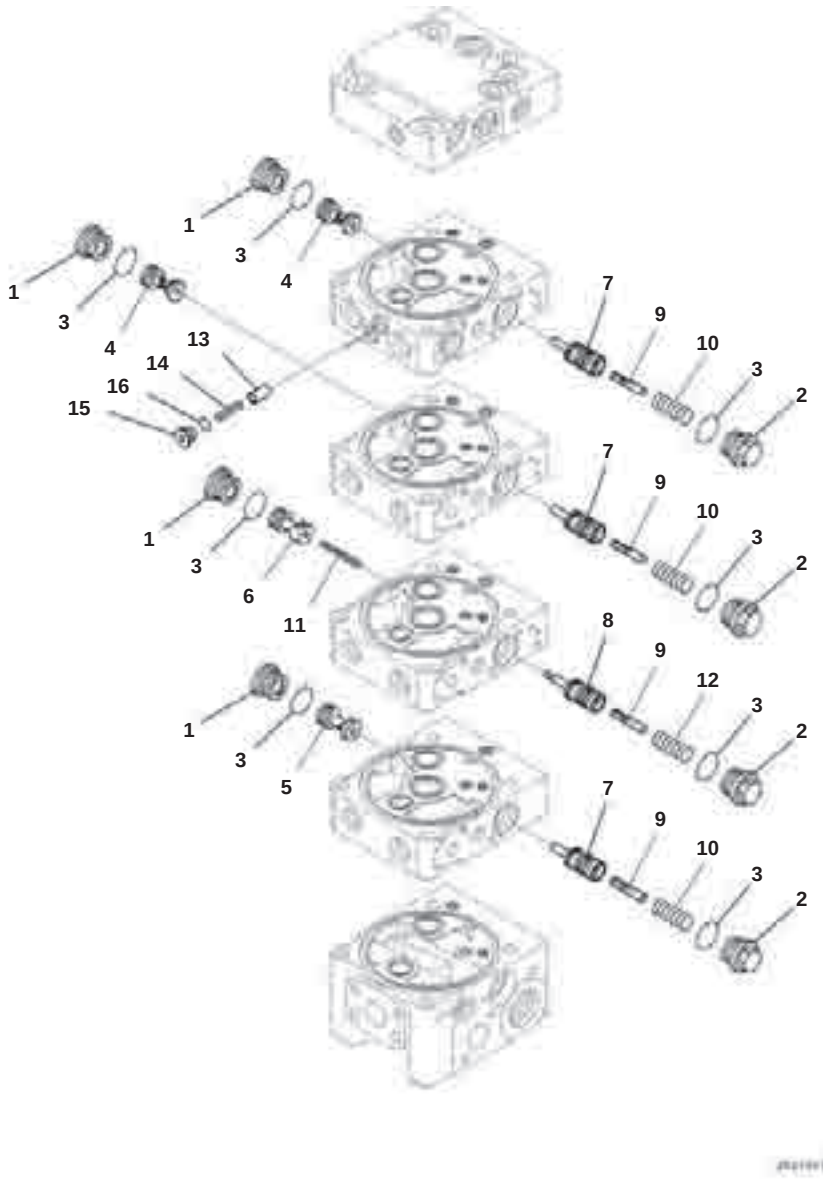

Control Valve, Without Rear 1-attachment, Winch, Inner Parts (5/10)

Index	Code	Part Number	Description	Qty	Options
		723-24-11800	Valve, Control	1	SN:B50001--
	C1		· Body Group	1	SN:B50001--
1		723-26-15230	· · Plug	4	SN:B50001--
2		723-26-17240	· · Plug	4	SN:B50001--
3		07002-12434	· · O-ring	8	SN:B50001--
4	C1		· · Valve	2	SN:B50001--
5	C1		· · Valve	1	SN:B50001--
6	C1		· · Valve	1	SN:B50001--
7	C1		· · Valve	3	SN:B50001--
8	C1		· · Valve	1	SN:B50001--
9	C1		· · Piston	4	SN:B50001--
10		723-26-14230	· · Spring	3	SN:B50001--
11		723-26-14220	· · Spring	1	SN:B50001--
12		723-26-14240	· · Spring	1	SN:B50001--
13	C1		· · Valve	2	SN:B50001--
14		723-26-14150	· · Spring	2	SN:B50001--
15		723-26-15220	· · Plug	2	SN:B50001--
16		07002-11223	· · O-ring	2	SN:B50001--

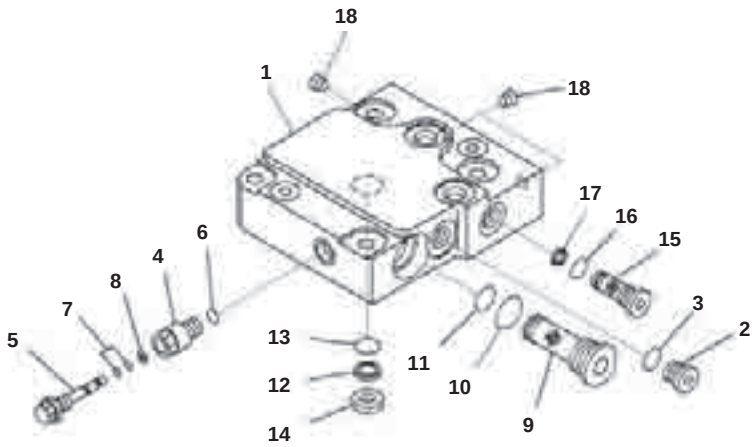

Control Valve, Without Rear 1-attachment, Winch, Inner Parts (6/10)

Index	Code	Part Number	Description	Qty	Options
		723-24-11800	Valve, Control	1	SN:B50001--
	C1		· Cover Group	1	SN:B50001--
1	C1		· · Cover	1	SN:B50001--
2		702-21-55620	· · Plug	1	SN:B50001--
3		07002-11423	· · O-ring	1	SN:B50001--
4		723-11-38620	· · Plug	1	SN:B50001--
5		723-26-16990	· · Plug	1	SN:B50001--
6		07002-11223	· · O-ring	1	SN:B50001--
7		07000-11003	· · O-ring	2	SN:B50001--
8		723-26-17280	· · Ring, Back-up	1	SN:B50001--
9		723-11-14390	· · Filter	1	SN:B50001--
10		07002-12434	· · O-ring	1	SN:B50001--
11		723-11-19130	· · O-ring	1	SN:B50001--
12		702-21-53140	· · Filter	1	SN:B50001--
13		702-21-55420	· · O-ring	1	SN:B50001--
14	C1		· · Seat	1	SN:B50001--
15	C1		· · Filter	1	SN:B50001--
16		07002-11423	· · O-ring	1	SN:B50001--
17	C1		· · Seal	1	SN:B50001--
18	C1		· · Plug	3	SN:B50001--

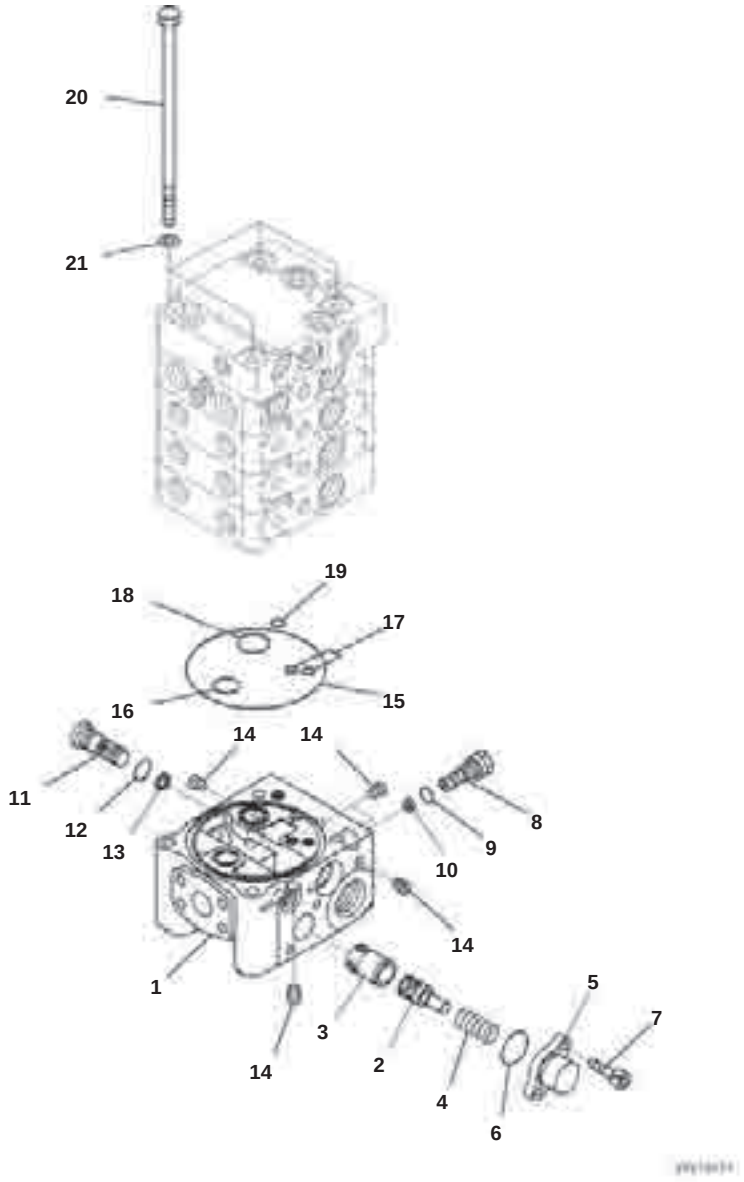

Control Valve, Without Rear 1-attachment, Winch, Inner Parts (7/10)

Index	Code	Part Number	Description	Qty	Options
		723-24-11800	Valve, Control	1	SN:B50001--
	C1		· Cover Group	1	SN:B50001--
1	C1		· · Block	1	SN:B50001--
2	C1		· · Piston	1	SN:B50001--
3	C1		· · Sleeve	1	SN:B50001--
4		723-26-16380	· · Spring	1	SN:B50001--
5		723-26-16350	· · Flange	1	SN:B50001--
6		723-11-19110	· · O-ring	1	SN:B50001--
7		01252-60820	· · Bolt, Hexagon Socket Head	2	SN:B50001--
8		723-11-14250	· · Orifice	1	SN:B50001--
9		07002-10823	· · O-ring	1	SN:B50001--
11	C1		· · Filter	1	SN:B50001--
12		07002-11423	· · O-ring	1	SN:B50001--
13	C1		· · Seal	1	SN:B50001--
14	C1		· · Plug	5	SN:B50001--
15		07000-12120	· · O-ring	1	SN:B50001--
16		07000-12020	· · O-ring	1	SN:B50001--
17		07000-11008	· · O-ring	2	SN:B50001--
18		723-26-15840	· · O-ring	1	SN:B50001--
19		07000-11009	· · O-ring	1	SN:B50001--
20		700-85-11111	· Bolt	4	SN:B50001--
21		01643-31032	· Washer	4	SN:B50001--

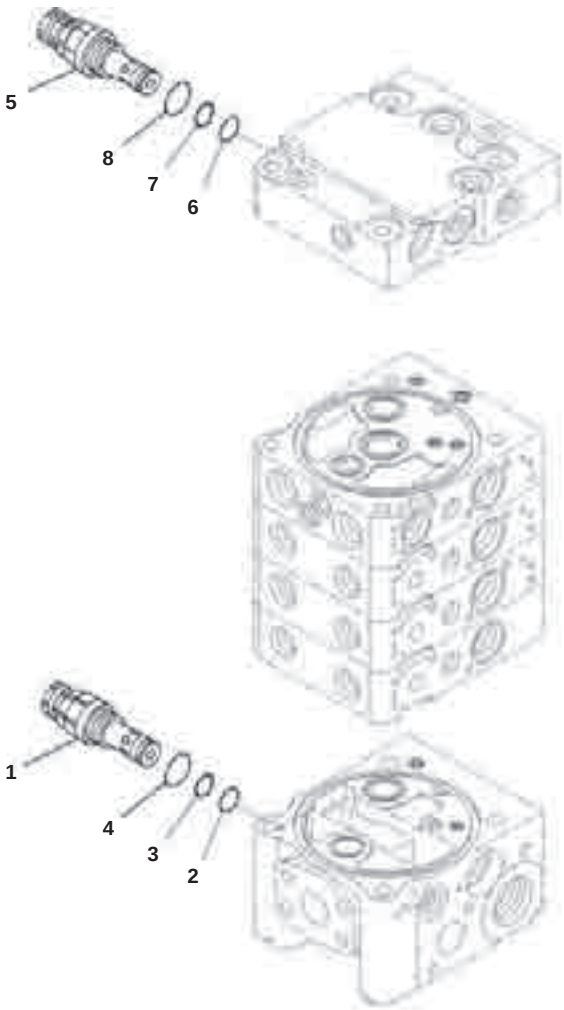

Control Valve, Without Rear 1-attachment, Winch, Inner Parts (8/10)

Index	Part Number	Description	Qty	Options
	723-24-11800	Valve, Control	1	SN:B50001--
1	723-20-67300	' Valve, Relief	1	SN:B50001--
2	700-22-11410	' ' O-ring	1	SN:B50001--
3	700-80-64220	' ' Ring, Back-up	1	SN:B50001--
4	07002-12434	' ' O-ring	1	SN:B50001--
5	723-20-67500	' Valve, Relief	1	SN:B50001--
6	700-22-11410	' ' O-ring	1	SN:B50001--
7	700-80-64220	' ' Ring, Back-up	1	SN:B50001--
8	07002-12434	' ' O-ring	1	SN:B50001--

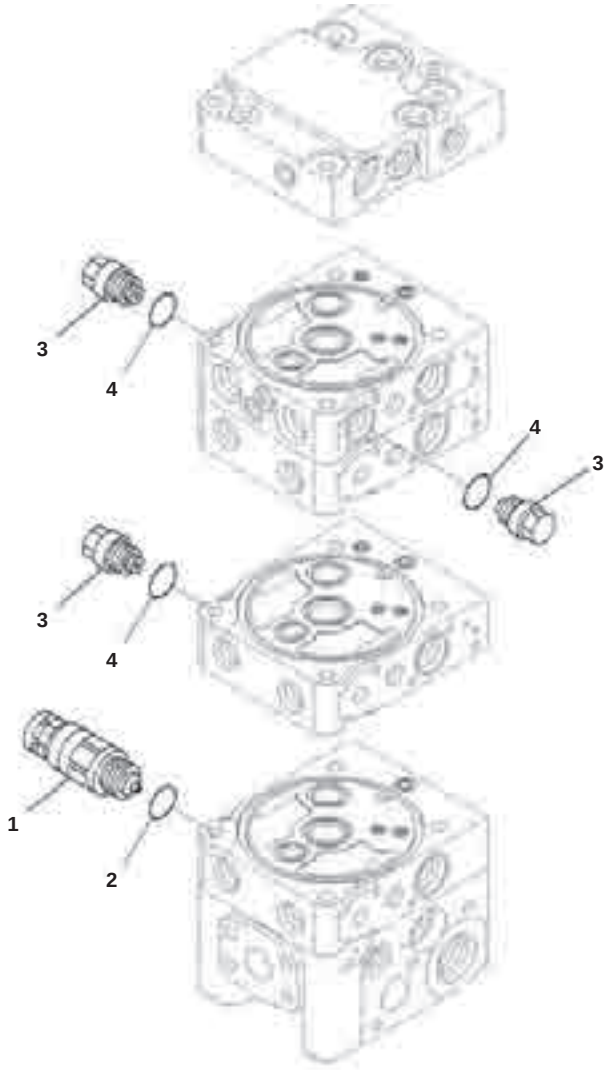

Control Valve, Without Rear 1-attachment, Winch, Inner Parts (9/10)

Index	Part Number	Description	Qty	Options
	723-24-11800	Valve, Control	1	SN:B50001--
1	723-20-67400	' Valve Assembly, Suction and Relief	1	SN:B50001--
2	07002-12034	' ' O-ring	2	SN:B50001--
3	723-20-80100	' Valve Assembly, Suction	3	SN:B50001--
4	07002-12034	' ' O-ring	1	SN:B50001--

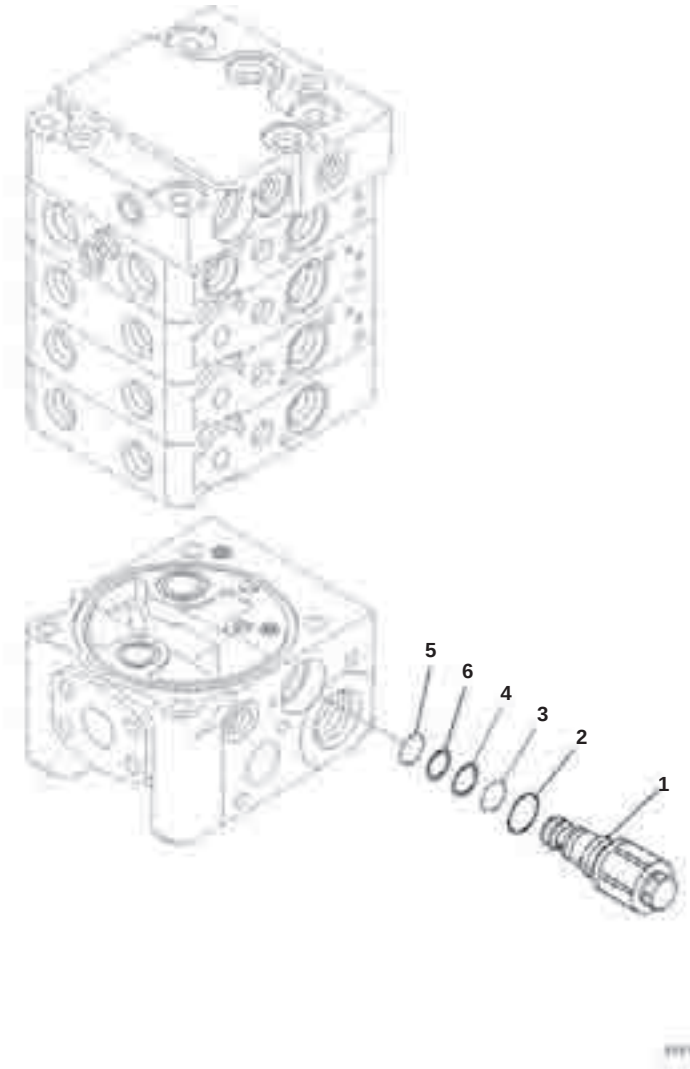

Control Valve, Without Rear 1-attachment, Winch, Inner Parts (10/10)

Index	Part Number	Description	Qty	Options
	723-24-11800	Valve, Control	1	SN:B50001--
1	723-30-56300	･ Valve Assembly	1	SN:B50001--
2	07002-12434	･ ･ O-ring	1	SN:B50001--
3	07000-12016	･ ･ O-ring	1	SN:B50001--
4	07001-02016	･ ･ Ring, Back-up	1	SN:B50001--
5	07000-12014	･ ･ O-ring	1	SN:B50001--
6	07001-02014	･ ･ Ring, Back-up	1	SN:B50001--

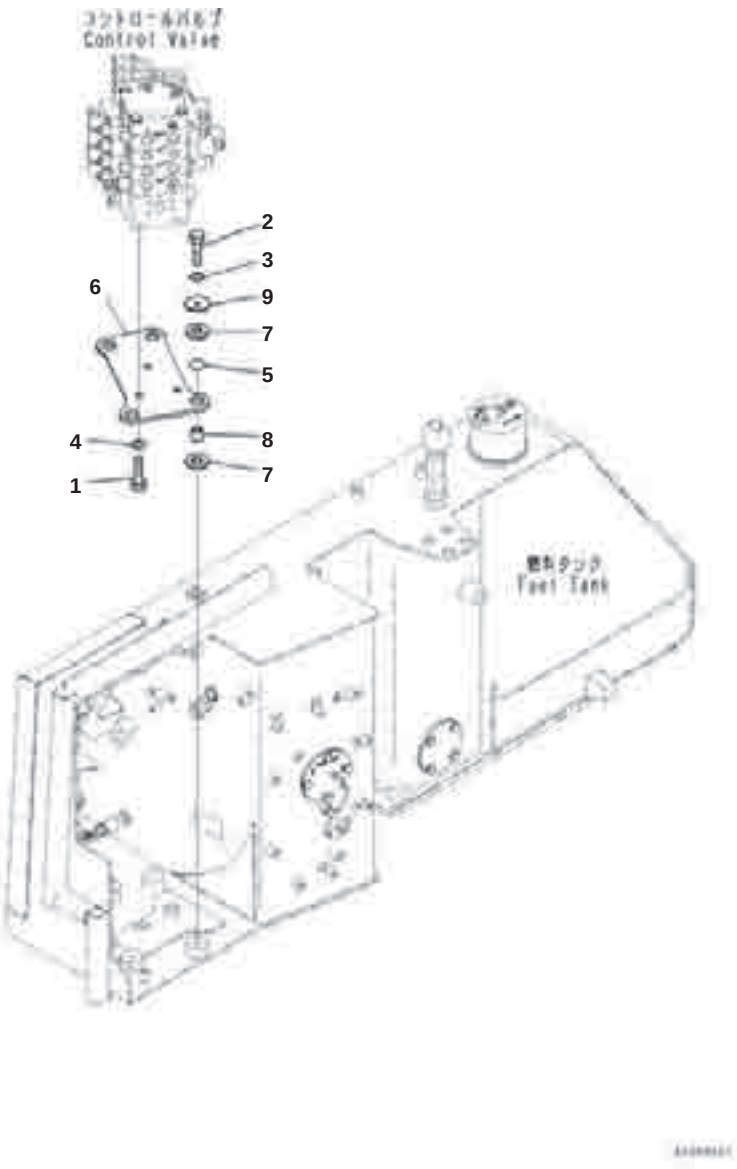

Index	Part Number	Description	Qty	Options
1	01010-81435	Bolt	3	SN:B50001--
2	01010-81250	Bolt	4	SN:B50001--
3	01643-31232	Washer	4	SN:B50001--
4	01643-31445	Washer, Flat	3	SN:B50001--
5	07000-13025	O-ring	4	SN:B50001--
6	13Y-62-11231	Plate	1	SN:B50001--
7	14X-60-12120	Cushion	8	SN:B50001--
8	20X-62-21550	Spacer	4	SN:B50001--
9	283-62-18110	Plate	4	SN:B50001--

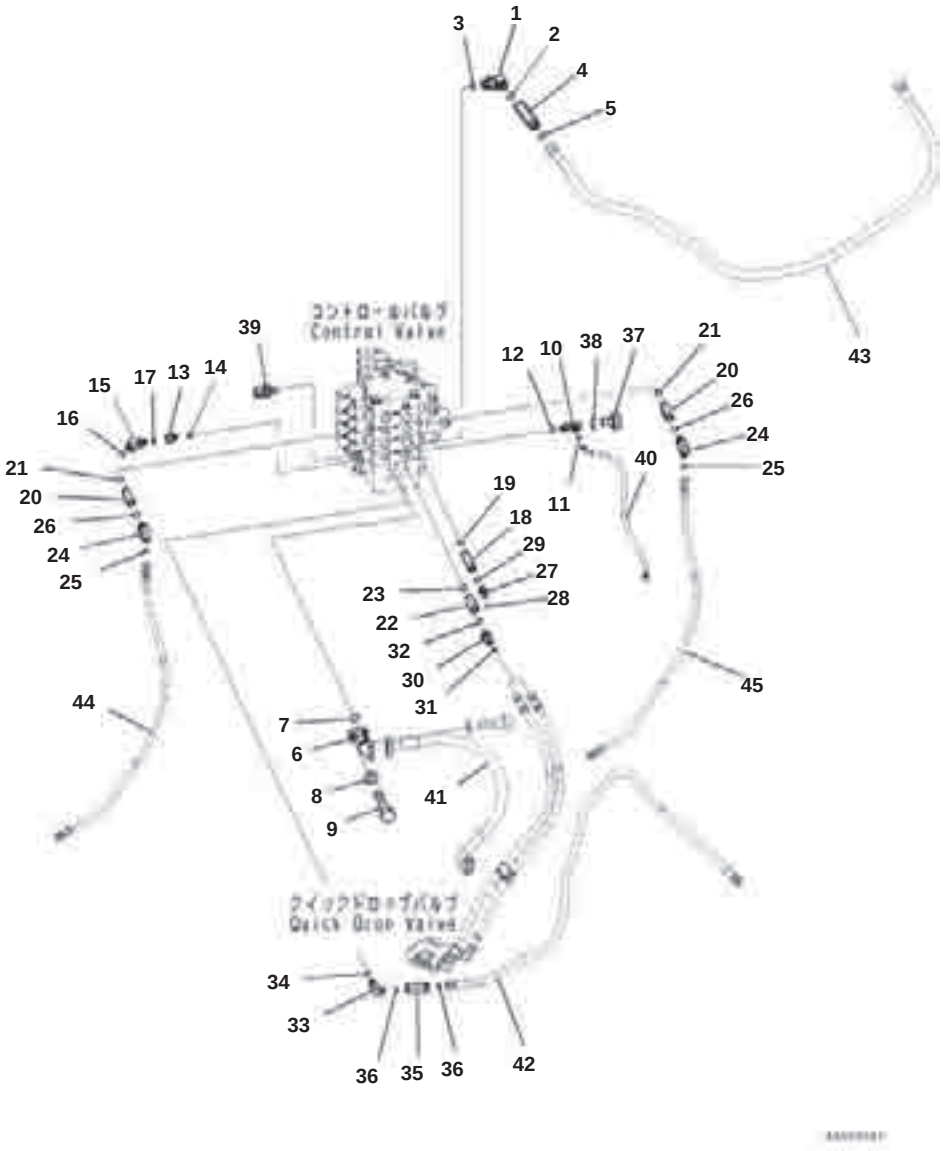

Control Valve, Elbow (1/2)

Index	Part Number	Description	Qty	Options
1	207-62-71410	Elbow	1	SN:B50001--
2	207-62-64740	O-ring	1	SN:B50001--
3	07002-13334	O-ring	1	SN:B50001--
4	13Y-62-11221	Joint	1	SN:B50001--
5	207-62-64740	O-ring	1	SN:B50001--
6	13Y-62-11211	Elbow	1	SN:B50001--
7	07000-13035	O-ring	1	SN:B50001--
8	01643-51032	Washer	4	SN:B50001--
9	07372-21040	Bolt	4	SN:B50001--
10	134-62-72241	Elbow	1	SN:B50001--
11	02896-11008	O-ring	1	SN:B50001--
13	22L-62-25410	Joint	1	SN:B50001--
14	07002-11423	O-ring	1	SN:B50001--
15	22J-62-25121	Elbow	1	SN:B50001--
16	02896-11009	O-ring	1	SN:B50001--
17	07002-11423	O-ring	1	SN:B50001--
18	14X-62-52931	Joint	2	SN:B50001--
19	07002-12034	O-ring	2	SN:B50001--
20	203-62-61410	Joint	2	SN:B50001--
21	07002-12434	O-ring	2	SN:B50001--
22	20T-62-81790	Joint	2	SN:B50001--
23	07002-12434	O-ring	2	SN:B50001--
24	14X-62-33220	Elbow	2	SN:B50001--
25	02896-11012	O-ring	2	SN:B50001--
26	07002-12434	O-ring	2	SN:B50001--
27	02783-10315	Elbow	2	SN:B50001--
28	02896-11009	O-ring	2	SN:B50001--
29	07002-12034	O-ring	2	SN:B50001--
30	02783-10522	Elbow	2	SN:B50001--
31	02896-11015	O-ring	2	SN:B50001--
32	07002-12434	O-ring	2	SN:B50001--
33	02782-10518	Elbow	1	SN:B50001--
34	07002-12034	O-ring	1	SN:B50001--
35	13Y-62-16350	Nipple	1	SN:B50001--
36	02896-11015	O-ring	2	SN:B50001--
37	07040-11007	Plug	1	SN:B50001--
38	07002-11023	O-ring	1	SN:B50001--
39	7861-93-1812	Sensor, Pressure	1	SN:B50001--
40	(13Y-62-11331)	Hose		SN:B50001--
41	(07098-01010)	Hose, Flange Type		SN:B50001--
42	(13Y-03-16114)	Hose		SN:B50001--
43	(13Y-62-11514)	Hose		SN:B50001--
44	(13Y-62-12534)	Hose		SN:B50001--
45	(13Y-62-12514)	Hose		SN:B50001--

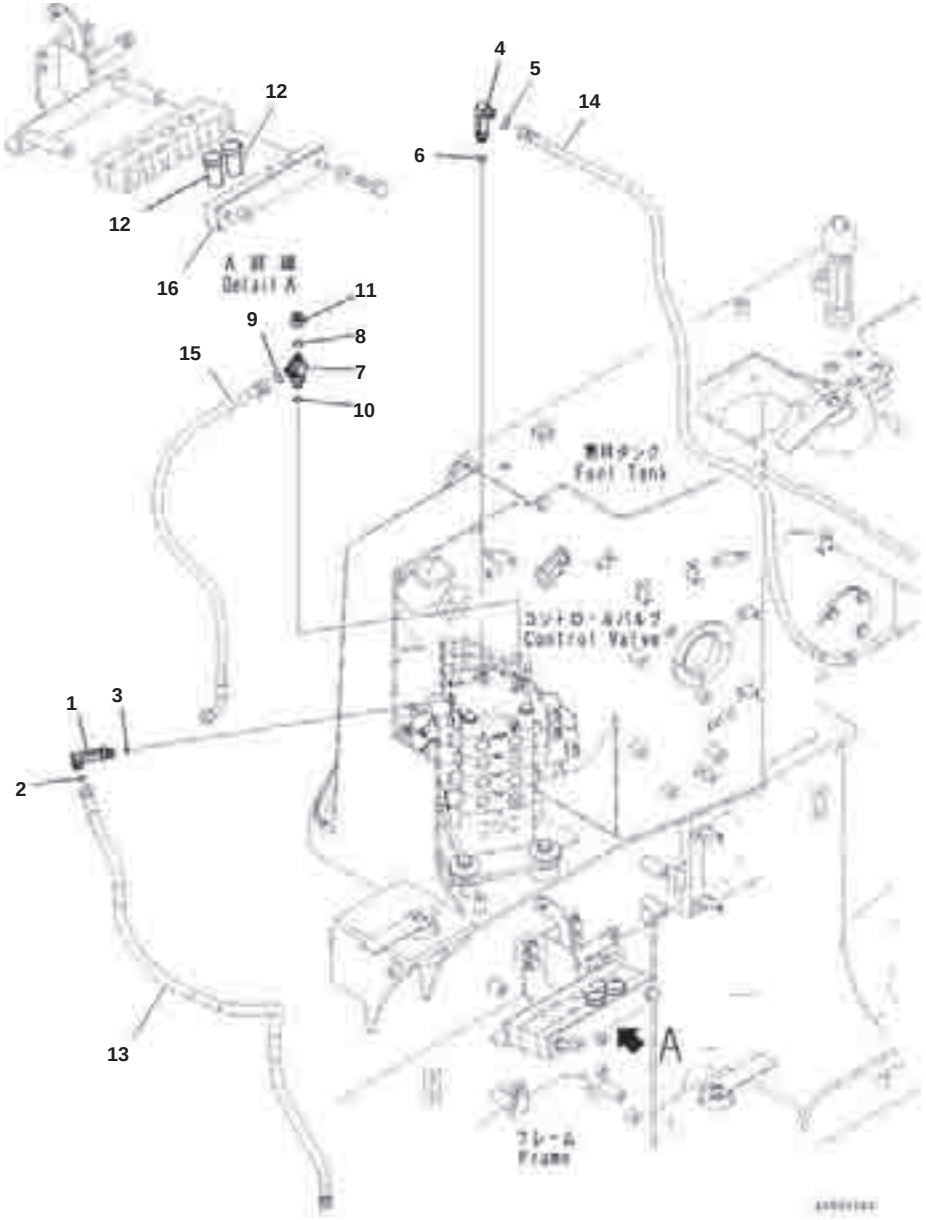

Index	Part Number	Description	Qty	Options
1	02782-10212	Elbow	1	SN:B50001--
2	02896-11008	O-ring	1	SN:B50001--
3	07002-11423	O-ring	1	SN:B50001--
4	02782-10312	Elbow	1	SN:B50001--
5	02896-11009	O-ring	1	SN:B50001--
6	07002-11423	O-ring	1	SN:B50001--
7	21K-62-72481	Tee	1	SN:B50001--
8	02896-11008	O-ring	1	SN:B50001--
9	02896-11009	O-ring	1	SN:B50001--
10	07002-11423	O-ring	1	SN:B50001--
11	02789-10210	Plug	1	SN:B50001--
13	(13Y-62-11351)	Hose		SN:B50001--
14	(13Y-62-11862)	Hose		SN:B50001--
15	(13Y-62-11771)	Hose		SN:B50001--
16	(13Y-62-11421)	Clamp		SN:B50001--

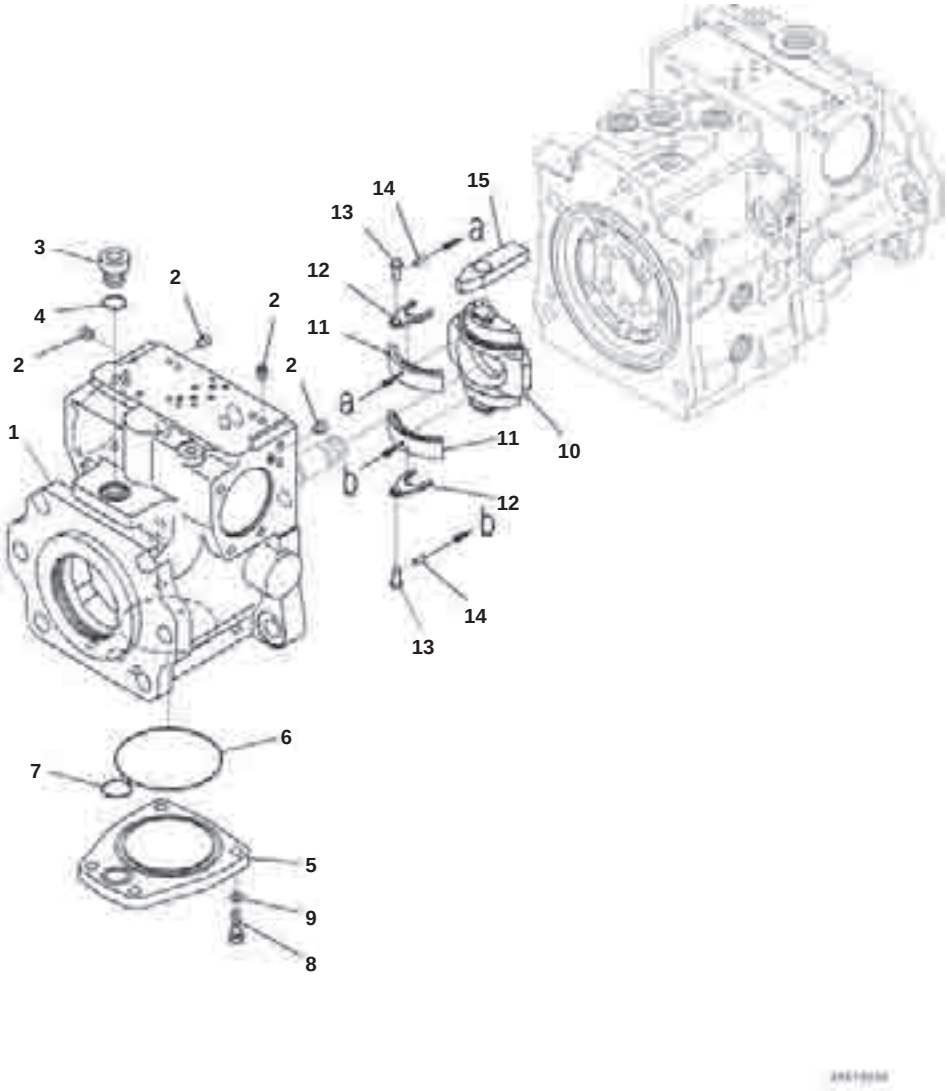

Hydraulic Oil Pump, HST Pump (1/11)

Index	Code	Part Number	Description	Qty	Options
		720-2G-00010	Pump Assembly	1	SN:B50001--
	C2	(720-2G-01010)	･ Pump Subassembly	1	SN:B50001--
	C2	(720-2G-04110)	･ ･ Case Assembly, Front	1	SN:B50001--
1	C1		･ ･ ･ Case, Front	1	SN:B50001--
2	C1		･ ･ ･ Plug	13	SN:B50001--
3		07040-12414	･ ･ Plug	1	SN:B50001--
4		07002-62434	･ ･ O-ring	1	SN:B50001--
5		720-2G-11130	･ ･ Plate	1	SN:B50001--
6		07000-A2115	･ ･ O-ring	1	SN:B50001--
7		07000-B3028	･ ･ O-ring	1	SN:B50001--
8		01010-81235	･ ･ Bolt	4	SN:B50001--
9		01643-31232	･ ･ Washer	4	SN:B50001--
10	C2	(720-2G-13410)	･ ･ Cam	1	SN:B50001--
11	C2	(720-2G-13610)	･ ･ Bearing	2	SN:B50001--
12	C2	(720-1G-13630)	･ ･ Plate	2	SN:B50001--
13	C2	(720-2M-13630)	･ ･ Pin	2	SN:B50001--
14	C2	(720-2M-13640)	･ ･ Pin	2	SN:B50001--
15	C2	(720-2G-14110)	･ ･ Slider	1	SN:B50001--

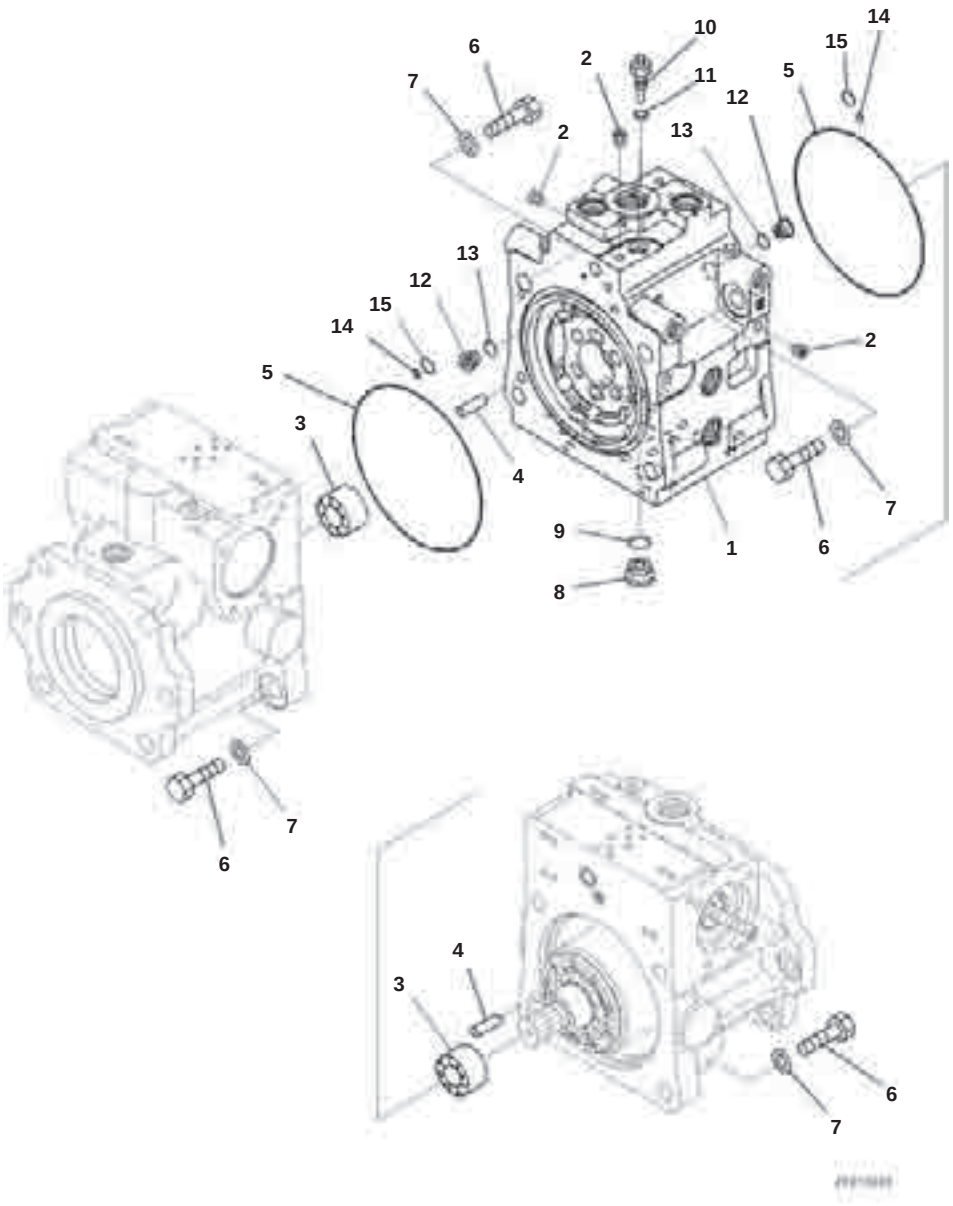

Hydraulic Oil Pump, HST Pump (2/11)

Index	Code	Part Number	Description	Qty	Options
		720-2G-00010	Pump Assembly	1	SN:B50001--
	C2	(720-2G-01010)	· Pump Subassembly	1	SN:B50001--
	C2	(720-2G-04130)	· · Cap Assembly	1	SN:B50001--
1	C1		· · · Cap, End	1	SN:B50001--
2	C1		· · · Plug	10	SN:B50001--
3	C2	(708-2H-12430)	· · Bearing	2	SN:B50001--
4	C2	(04020-01228)	· · Pin, Dowel	2	SN:B50001--
5	C2	(07000-A5195)	· · O-ring	2	SN:B50001--
6	C2	(01010-62065)	· · Bolt	8	SN:B50001--
7	C2	(01643-32060)	· · Washer	8	SN:B50001--
8		07040-12414	· · Plug	2	SN:B50001--
10		720-2M-11531	· · Plug	2	SN:B50001--
11		07002-61223	· · O-ring	2	SN:B50001--
12		723-56-31630	· · Plug	2	SN:B50001--
13		07002-61623	· · O-ring	2	SN:B50001--
14		07000-B2012	· · O-ring	2	SN:B50001--
15		07000-B2022	· · O-ring	2	SN:B50001--

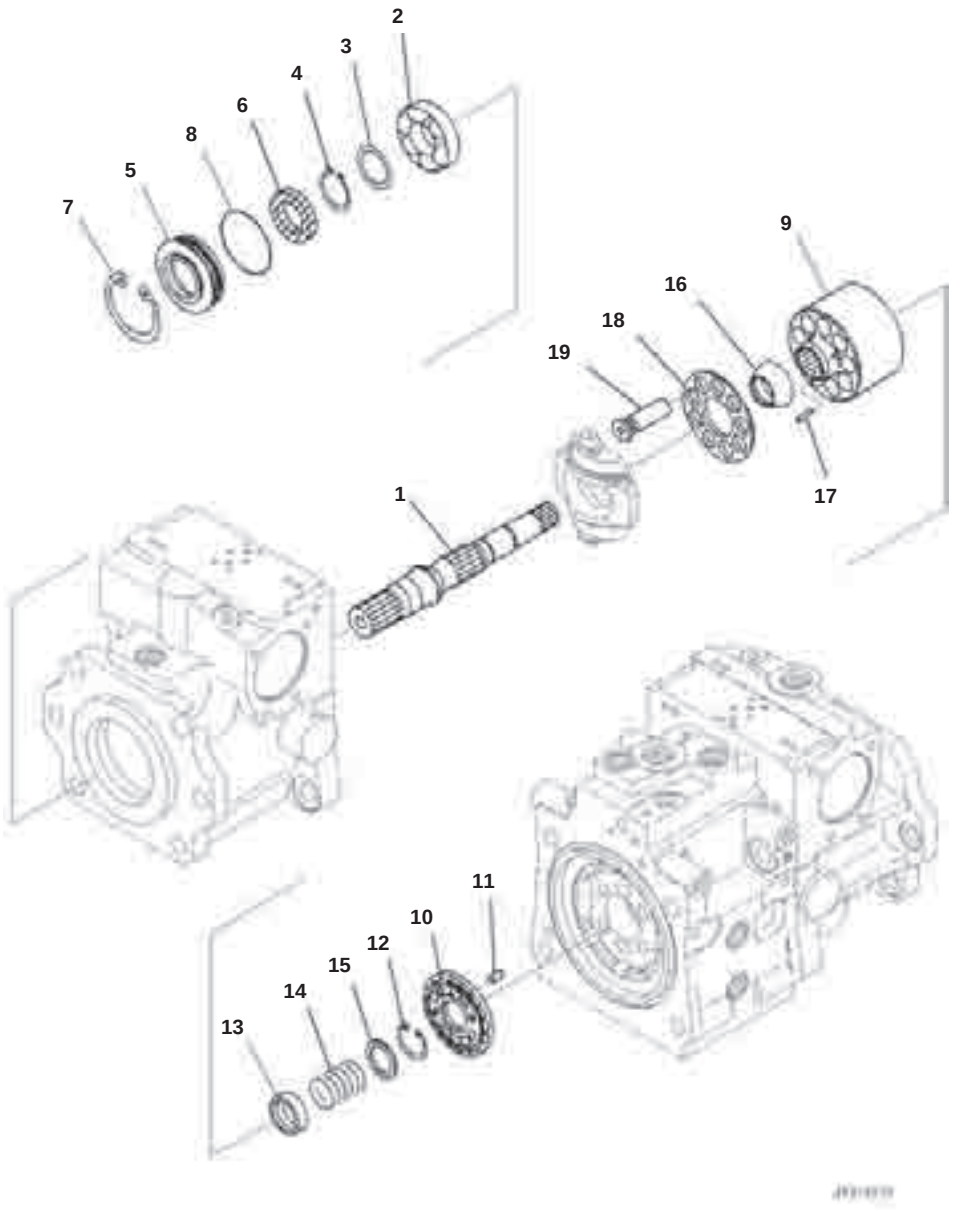

Hydraulic Oil Pump, HST Pump (3/11)

Index	Code	Part Number	Description	Qty	Options
		720-2G-00010	Pump Assembly	1	SN:B50001--
	C2	(720-2G-01010)	· Pump Subassembly	1	SN:B50001--
1	C2	(720-2G-12110)	· · Shaft,Front	1	SN:B50001--
2	C2	(708-2G-12251)	· · Bearing	1	SN:B50001--
3	C2	(708-2G-05010)	· · Washer Kit	1	SN:B50001--
	C1		· · · Washer, T=3.0mm	1	SN:B50001--
	C1		· · · Washer, T=3.1mm	1	SN:B50001--
	C1		· · · Washer, T=3.2mm	1	SN:B50001--
4	C2	(708-1F-12270)	· · Ring, Snap	1	SN:B50001--
5	C2	(720-2G-12320)	· · Cover	1	SN:B50001--
6		708-2G-12230	· · Seal, Oil	1	SN:B50001--
8		07000-A2095	· · O-ring	1	SN:B50001--
	C2	(720-2G-04310)	· · Block Assembly,Front	1	SN:B50001--
9	C1		· · · Cylinder Block	1	SN:B50001--
10	C1		· · · Plate, Valve	1	SN:B50001--
11	C2	(708-18-13230)	· · Pin	1	SN:B50001--
12	C2	(04065-05520)	· · Ring, Snap	1	SN:B50001--
13	C2	(708-2G-13131)	· · Seat	1	SN:B50001--
14	C2	(708-2G-13152)	· · Spring	1	SN:B50001--
15	C2	(708-2G-13141)	· · Seat	1	SN:B50001--
16	C2	(708-2G-13510)	· · Guide, Retainer	1	SN:B50001--
17	C2	(708-2H-23360)	· · Pin	3	SN:B50001--
18	C2	(708-2G-13341)	· · Retainer, Shoe	1	SN:B50001--
19	C2	(708-2G-13370)	· · Piston Subassembly	9	SN:B50001--

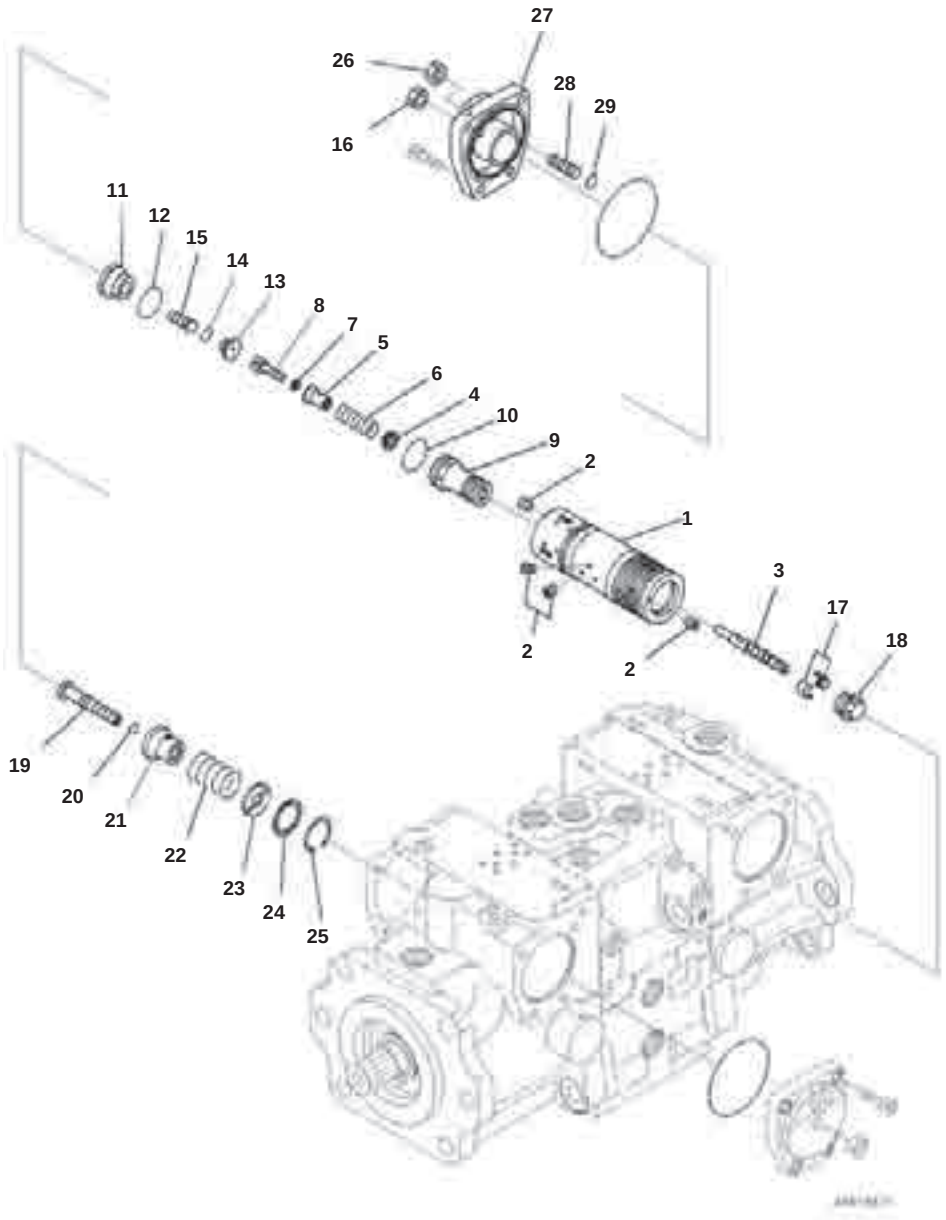

Hydraulic Oil Pump, HST Pump (4/11)

Index	Code	Part Number	Description	Qty	Options
		720-2G-00010	Pump Assembly	1	SN:B50001--
	C2	(720-2G-01010)	· Pump Subassembly	1	SN:B50001--
	C2	(720-2G-03110)	· · Valve Assembly, Servo	1	SN:B50001--
	C2	(720-2G-03120)	· · · Piston Assembly	1	SN:B50001--
1	C1		· · · · Piston	1	SN:B50001--
2	C1		· · · · Plug	10	SN:B50001--
3	C2	(720-2L-14120)	· · · Spool	1	SN:B50001--
4	C2	(720-2M-14550)	· · · Retainer	1	SN:B50001--
5	C2	(720-2M-14560)	· · · Retainer	1	SN:B50001--
6	C2	(720-2G-14130)	· · · Spring	1	SN:B50001--
7	C2	(723-11-17150)	· · · Washer	1	SN:B50001--
9	C2	(720-2M-14581)	· · · Sleeve	1	SN:B50001--
10	C2	(07000-B3032)	· · · O-ring	1	SN:B50001--
11	C2	(720-2M-14590)	· · · Plug	1	SN:B50001--
12	C2	(07000-B3024)	· · · O-ring	1	SN:B50001--
13	C2	(720-2M-14610)	· · · Plug	1	SN:B50001--
14	C2	(07000-B2012)	· · · O-ring	1	SN:B50001--
15	C2	(720-2G-14140)	· · · Screw	1	SN:B50001--
16	C2	(01582-11210)	· · · Nut	1	SN:B50001--
17	C2	(720-2M-14630)	· · · Retainer	2	SN:B50001--
18	C2	(720-2M-14640)	· · · Plug	1	SN:B50001--
19	C2	(720-2G-14150)	· · · Rod	1	SN:B50001--
20	C2	(07000-B2010)	· · · O-ring	1	SN:B50001--
21	C2	(720-2L-14130)	· · · Retainer	1	SN:B50001--
22	C2	(720-2G-14160)	· · · Spring	1	SN:B50001--
23	C2	(720-2L-14140)	· · · Retainer	1	SN:B50001--
24	C2	(720-2G-14170)	· · · Washer	1	SN:B50001--
25	C2	(720-2G-14180)	· · · Ring, Snap	1	SN:B50001--
26	C2	(01582-11210)	· · · Nut	1	SN:B50001--
27	C2	(720-2G-14190)	· · · Cover	1	SN:B50001--
28	C2	(720-2M-14170)	· · · Screw	1	SN:B50001--
29	C2	(07000-B1010)	· · · O-ring	1	SN:B50001--

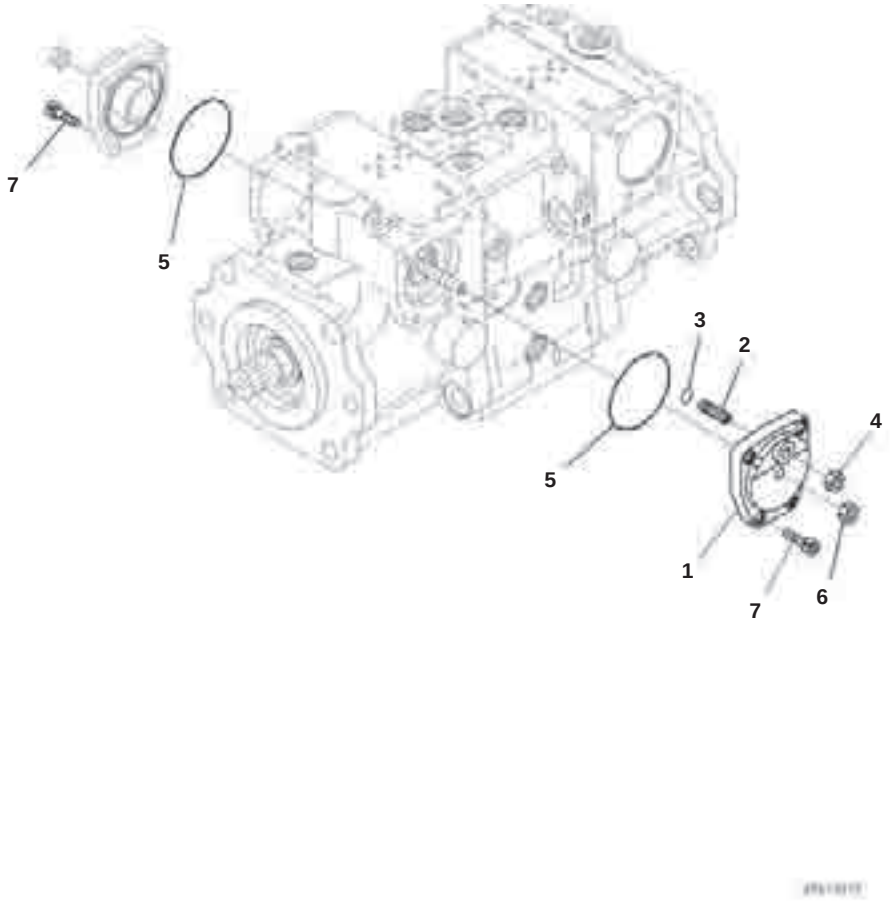

Hydraulic Oil Pump, HST Pump (5/11)

Index	Code	Part Number	Description	Qty	Options
		720-2G-00010	Pump Assembly	1	SN:B50001--
	C2	(720-2G-01010)	' Pump Subassembly	1	SN:B50001--
	C2	(720-2G-03130)	' ' Cover Assembly	1	SN:B50001--
1	C2	(720-2G-14210)	' ' ' Cover	1	SN:B50001--
2	C2	(720-2M-14170)	' ' ' Screw	1	SN:B50001--
3	C2	(07000-B1010)	' ' ' O-ring	1	SN:B50001--
4	C2	(01582-11210)	' ' ' Nut	1	SN:B50001--
5	C2	(07000-A2090)	' ' O-ring	2	SN:B50001--
6	C2	(01582-11210)	' ' Nut	1	SN:B50001--
7	C2	(01252-61030)	' ' Bolt, Hexagon Socket Head	8	SN:B50001--

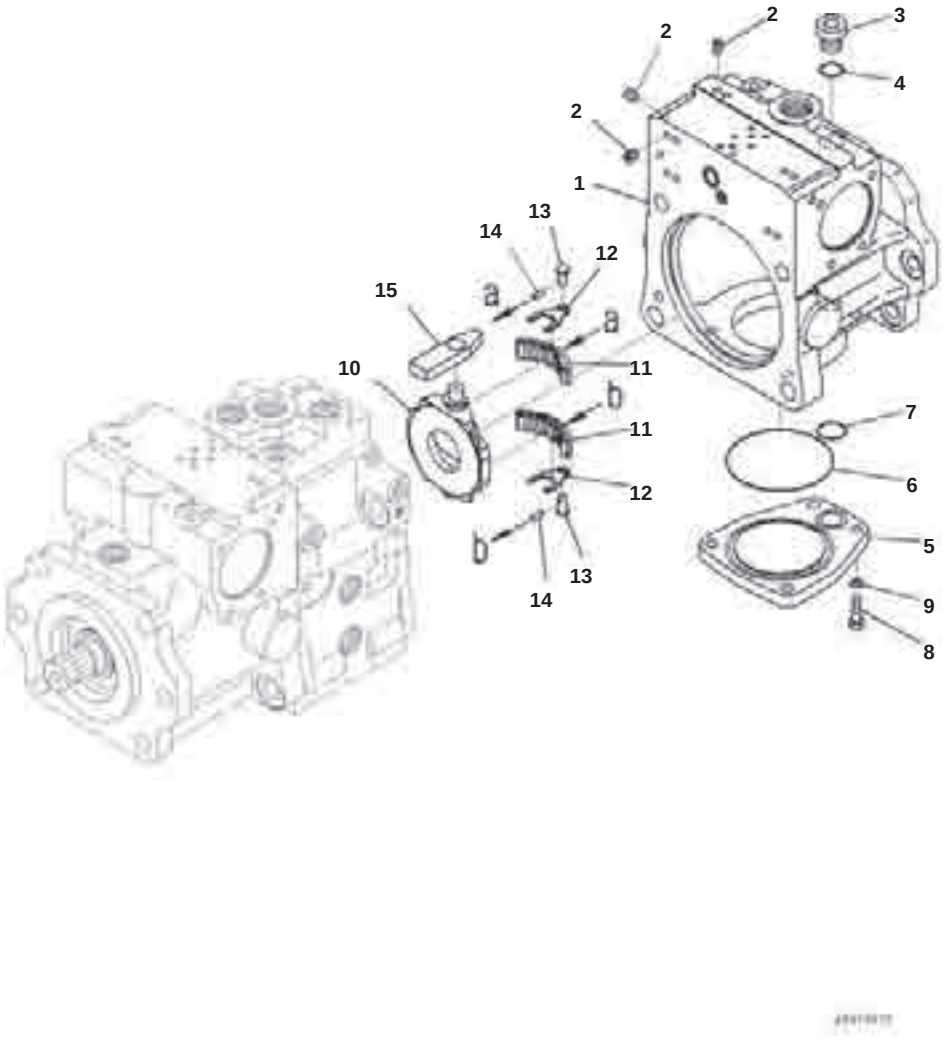

Hydraulic Oil Pump, HST Pump (6/11)

Index	Code	Part Number	Description	Qty	Options
		720-2G-00010	Pump Assembly	1	SN:B50001--
	C2	(720-2G-01010)	· Pump Subassembly	1	SN:B50001--
	C2	(720-2G-04120)	· · Case Assembly,Rear	1	SN:B50001--
1	C1		· · · Case,Rear	1	SN:B50001--
2	C1		· · · Plug	13	SN:B50001--
3		07040-12414	· · Plug	1	SN:B50001--
4		07002-62434	· · O-ring	1	SN:B50001--
5		720-2G-11130	· · Plate	1	SN:B50001--
6		07000-A2115	· · O-ring	1	SN:B50001--
7		07000-B3028	· · O-ring	1	SN:B50001--
8		01010-81235	· · Bolt	4	SN:B50001--
10	C2	(720-2G-13410)	· · Cam	1	SN:B50001--
11	C2	(720-2G-13610)	· · Bearing	2	SN:B50001--
12	C2	(720-1G-13630)	· · Plate	2	SN:B50001--
13	C2	(720-2M-13630)	· · Pin	2	SN:B50001--
14	C2	(720-2M-13640)	· · Pin	2	SN:B50001--
15	C2	(720-2G-14110)	· · Slider	1	SN:B50001--

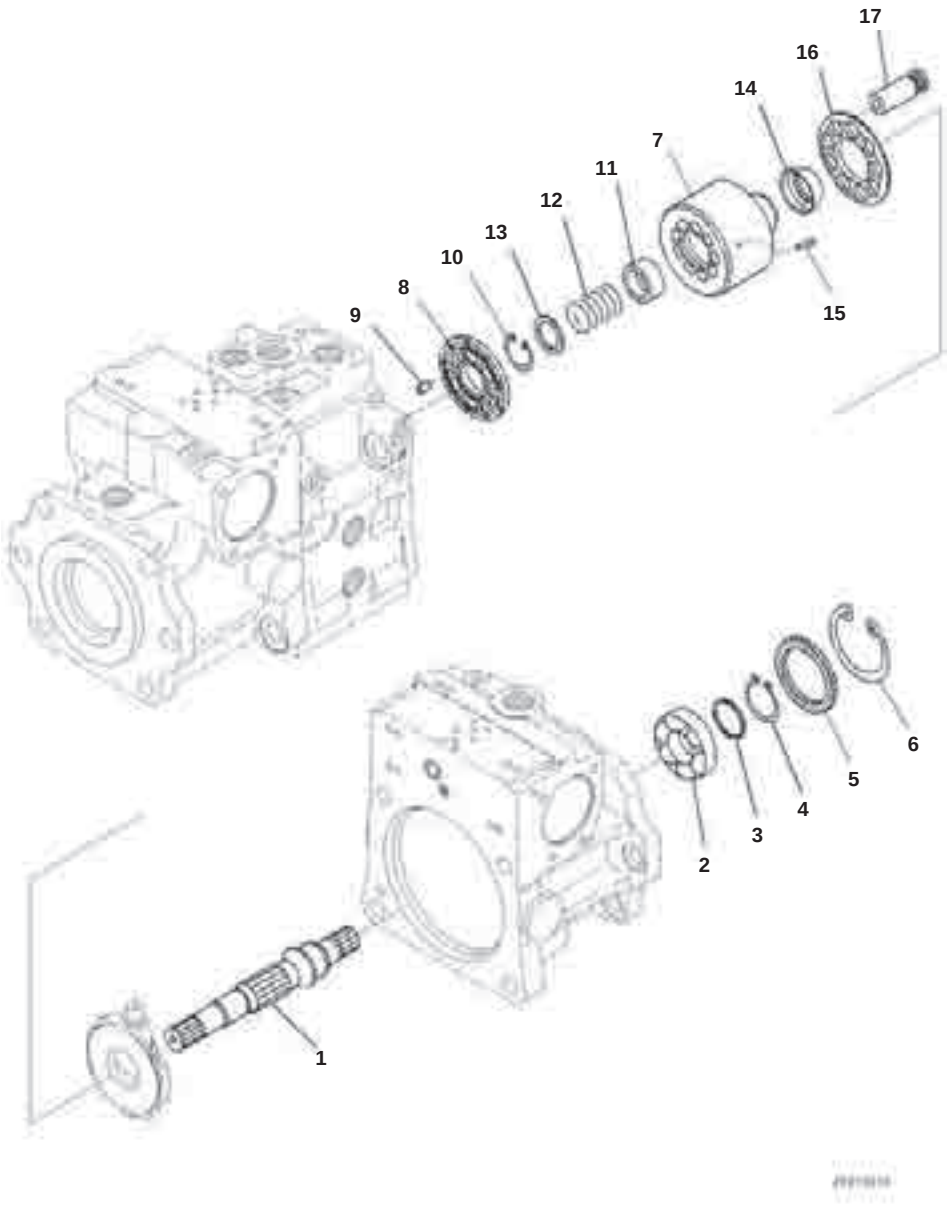

Hydraulic Oil Pump, HST Pump (7/11)

Index	Code	Part Number	Description	Qty	Options
		720-2G-00010	Pump Assembly	1	SN:B50001--
	C2	(720-2G-01010)	· Pump Subassembly	1	SN:B50001--
1	C2	(720-2G-12120)	· · Shaft,Rear	1	SN:B50001--
2	C2	(708-2G-12251)	· · Bearing	1	SN:B50001--
3	C2	(708-2G-05010)	· · Washer Kit	1	SN:B50001--
	C1		· · · Washer, T=3.0mm	1	SN:B50001--
	C1		· · · Washer, T=3.1mm	1	SN:B50001--
	C1		· · · Washer, T=3.2mm	1	SN:B50001--
4	C2	(708-1F-12270)	· · Ring, Snap	1	SN:B50001--
5		720-2G-14230	· · Washer	1	SN:B50001--
6		04065-01054	· · Ring, Snap	1	SN:B50001--
7	C1		Cylinder Block	1	SN:B50001--
8	C1		Plate, Valve	1	SN:B50001--
9	C2	(708-18-13230)	· · Pin	1	SN:B50001--
10	C2	(04065-05520)	· · Ring, Snap	1	SN:B50001--
11	C2	(708-2G-13131)	· · Seat	1	SN:B50001--
12	C2	(708-2G-13152)	· · Spring	1	SN:B50001--
13	C2	(708-2G-13141)	· · Seat	1	SN:B50001--
14	C2	(708-2G-13510)	· · Guide, Retainer	1	SN:B50001--
15	C2	(708-2H-23360)	· · Pin	3	SN:B50001--
16	C2	(708-2G-13341)	· · Retainer, Shoe	1	SN:B50001--
17	C2	(708-2G-13370)	· · Piston Subassembly	9	SN:B50001--

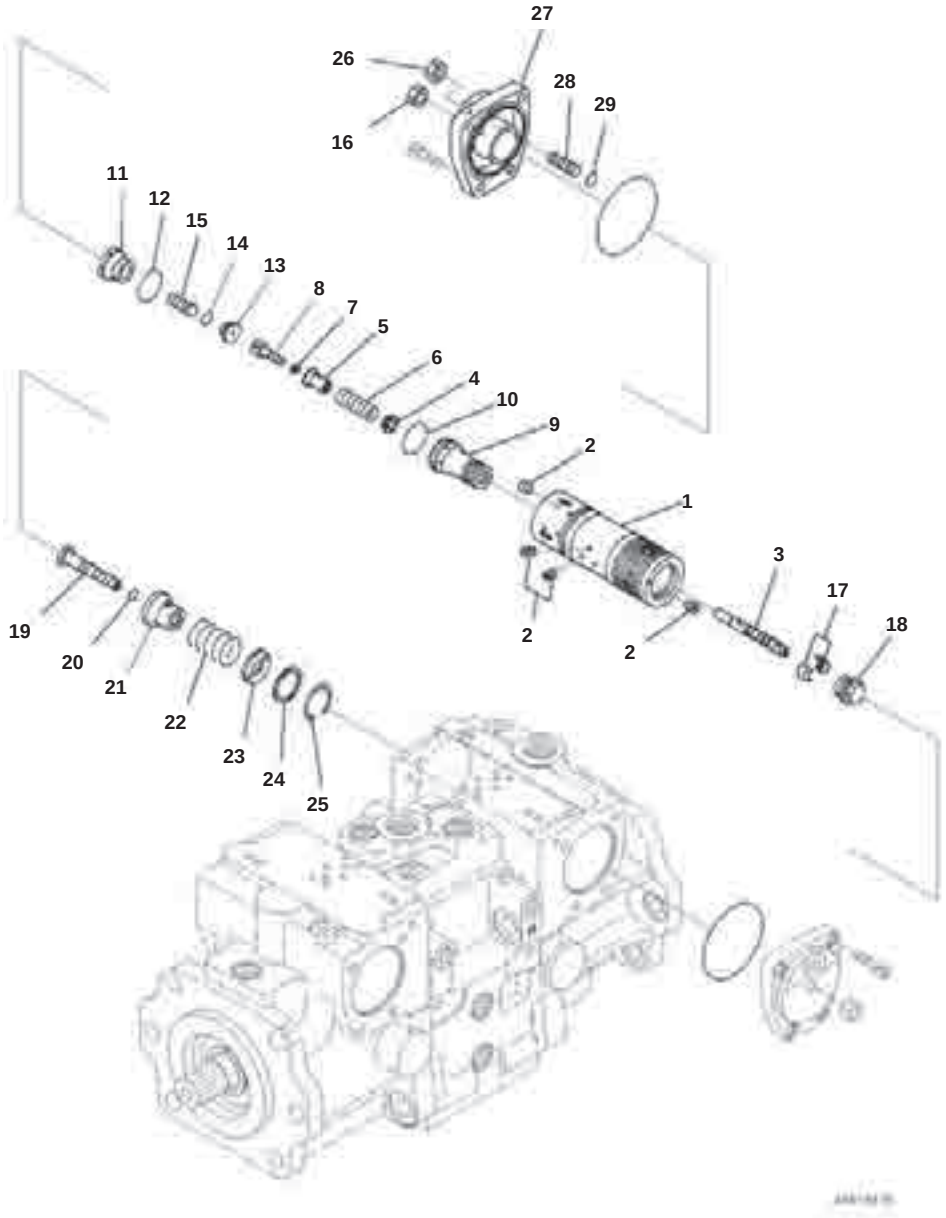

Hydraulic Oil Pump, HST Pump (8/11)

Index	Code	Part Number	Description	Qty	Options
		720-2G-00010	Pump Assembly	1	SN:B50001--
	C2	(720-2G-01010)	· Pump Subassembly	1	SN:B50001--
	C2	(720-2G-03110)	· · Valve Assembly, Servo	1	SN:B50001--
	C2	(720-2G-03120)	· · · Piston Assembly	1	SN:B50001--
1	C1		· · · · Piston	1	SN:B50001--
2	C1		· · · · Plug	10	SN:B50001--
3	C2	(720-2L-14120)	· · · Spool	1	SN:B50001--
4	C2	(720-2M-14550)	· · · Retainer	1	SN:B50001--
5	C2	(720-2M-14560)	· · · Retainer	1	SN:B50001--
6	C2	(720-2G-14130)	· · · Spring	1	SN:B50001--
7	C2	(723-11-17150)	· · · Washer	1	SN:B50001--
9	C2	(720-2M-14581)	· · · Sleeve	1	SN:B50001--
10	C2	(07000-B3032)	· · · O-ring	1	SN:B50001--
11	C2	(720-2M-14590)	· · · Plug	1	SN:B50001--
12	C2	(07000-B3024)	· · · O-ring	1	SN:B50001--
13	C2	(720-2M-14610)	· · · Plug	1	SN:B50001--
14	C2	(07000-B2012)	· · · O-ring	1	SN:B50001--
15	C2	(720-2G-14140)	· · · Screw	1	SN:B50001--
16	C2	(01582-11210)	· · · Nut	1	SN:B50001--
17	C2	(720-2M-14630)	· · · Retainer	2	SN:B50001--
18	C2	(720-2M-14640)	· · · Plug	1	SN:B50001--
19	C2	(720-2G-14150)	· · · Rod	1	SN:B50001--
20	C2	(07000-B2010)	· · · O-ring	1	SN:B50001--
21	C2	(720-2L-14130)	· · · Retainer	1	SN:B50001--
22	C2	(720-2G-14160)	· · · Spring	1	SN:B50001--
23	C2	(720-2L-14140)	· · · Retainer	1	SN:B50001--
24	C2	(720-2G-14170)	· · · Washer	1	SN:B50001--
25	C2	(720-2G-14180)	· · · Ring, Snap	1	SN:B50001--
26	C2	(01582-11210)	· · · Nut	1	SN:B50001--
27	C2	(720-2G-14190)	· · · Cover	1	SN:B50001--
28	C2	(720-2M-14170)	· · · Screw	1	SN:B50001--
29	C2	(07000-B1010)	· · · O-ring	1	SN:B50001--

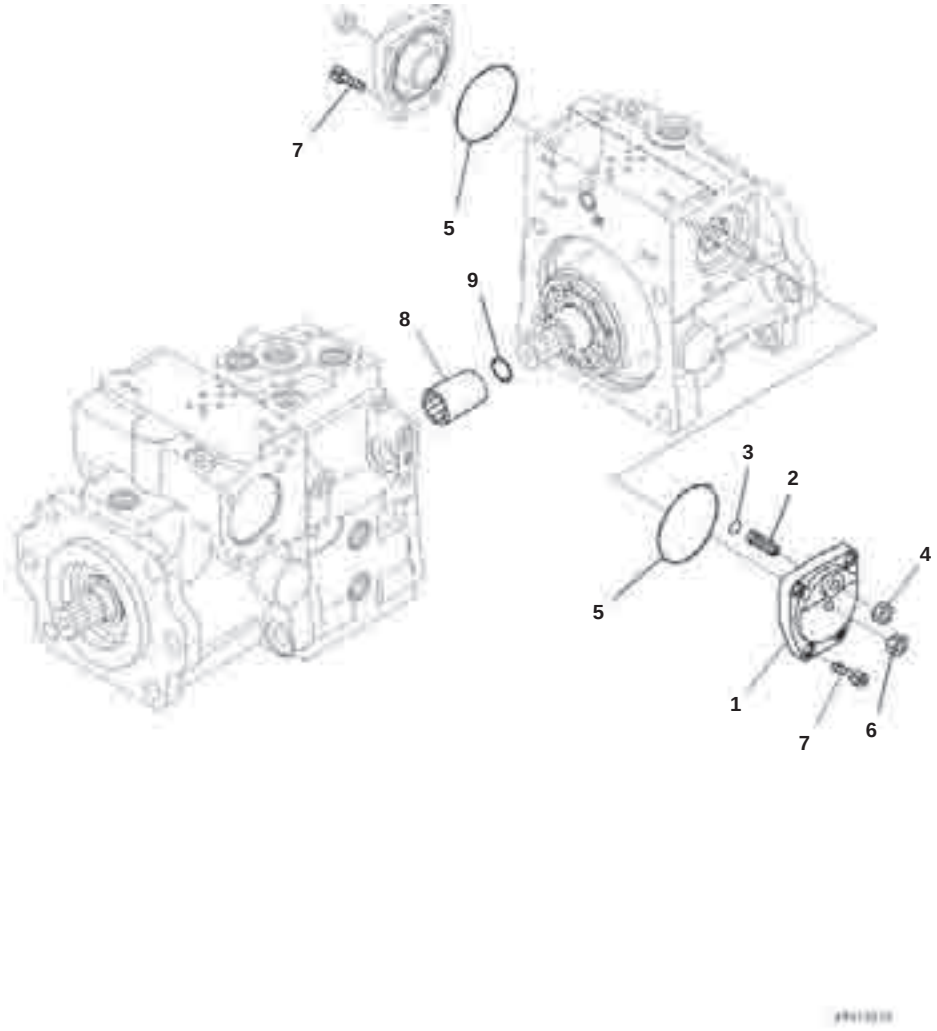

Hydraulic Oil Pump, HST Pump (9/11)

Index	Code	Part Number	Description	Qty	Options
		720-2G-00010	Pump Assembly	1	SN:B50001--
	C2	(720-2G-01010)	' Pump Subassembly	1	SN:B50001--
	C2	(720-2G-03130)	' ' Cover Assembly	1	SN:B50001--
1	C2	(720-2G-14210)	' ' ' Cover	1	SN:B50001--
2	C2	(720-2M-14170)	' ' ' Screw	1	SN:B50001--
3	C2	(07000-B1010)	' ' ' O-ring	1	SN:B50001--
4	C2	(01582-11210)	' ' ' Nut	1	SN:B50001--
5	C2	(07000-A2090)	' ' O-ring	2	SN:B50001--
6	C2	(01582-11210)	' ' Nut	1	SN:B50001--
7	C2	(01252-61030)	' ' Bolt, Hexagon Socket Head	8	SN:B50001--
8	C2	(708-2H-32130)	' ' Coupling	1	SN:B50001--

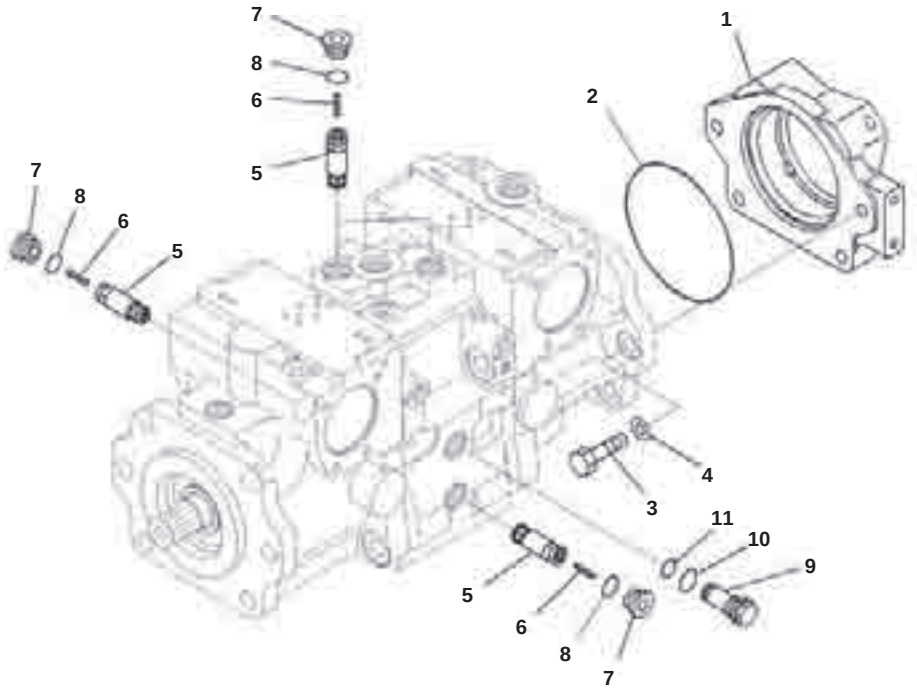

Hydraulic Oil Pump, HST Pump (10/11)

Index	Part Number	Description	Qty	Options
	720-2G-00010	Pump Assembly	1	SN:B50001--
1	720-2G-16110	▪ Plate	1	SN:B50001--
2	07000-A5160	▪ O-ring	1	SN:B50001--
3	01010-61650	▪ Bolt	4	SN:B50001--
4	01643-31645	▪ Washer	4	SN:B50001--
5	720-2M-03591	▪ Valve, Relief	4	SN:B50001--
6	720-2M-15250	▪ Spring	4	SN:B50001--
7	720-2M-15270	▪ Plug	4	SN:B50001--
8	07002-62434	▪ O-ring	4	SN:B50001--
9	720-2L-14190	▪ Plug	1	SN:B50001--
10	07002-62434	▪ O-ring	1	SN:B50001--

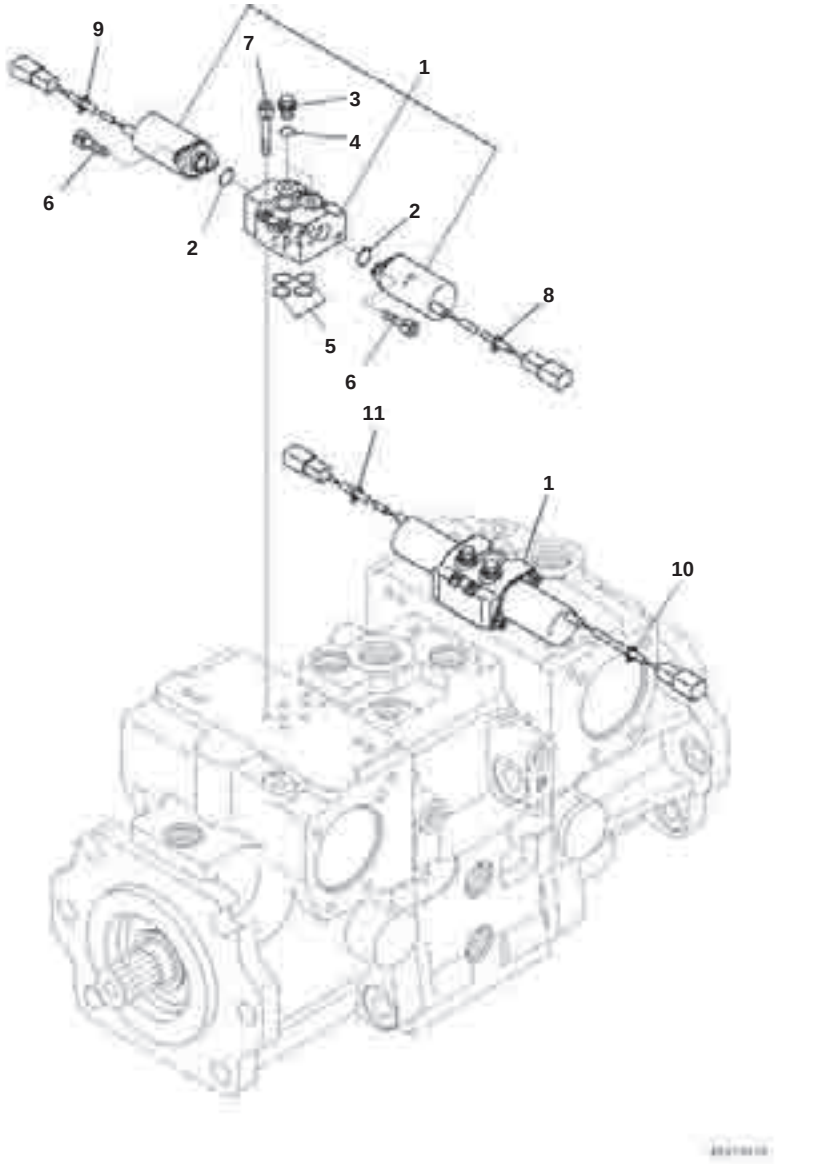

Index	Part Number	Description	Qty	Options
	720-2G-00010	Pump Assembly	1	SN:B50001--
1	702-21-07680	▪ Valve, Solenoid	2	SN:B50001--
2	702-21-53610	▪ ▪ O-ring	2	SN:B50001--
3	708-8E-16160	▪ ▪ Plug	2	SN:B50001--
4	07002-61023	▪ ▪ O-ring	2	SN:B50001--
5	702-16-58320	▪ ▪ O-ring	4	SN:B50001--
6	01252-60616	▪ ▪ Bolt, Hexagon Socket Head	4	SN:B50001--
7	01252-60635	▪ Bolt, Hexagon Socket Head	8	SN:B50001--
8	20Y-62-22790	▪ Band, Red	1	SN:B50001--
9	20Y-62-22810	▪ Band, Yellow	1	SN:B50001--
10	20Y-62-22820	▪ Band, Blue	1	SN:B50001--

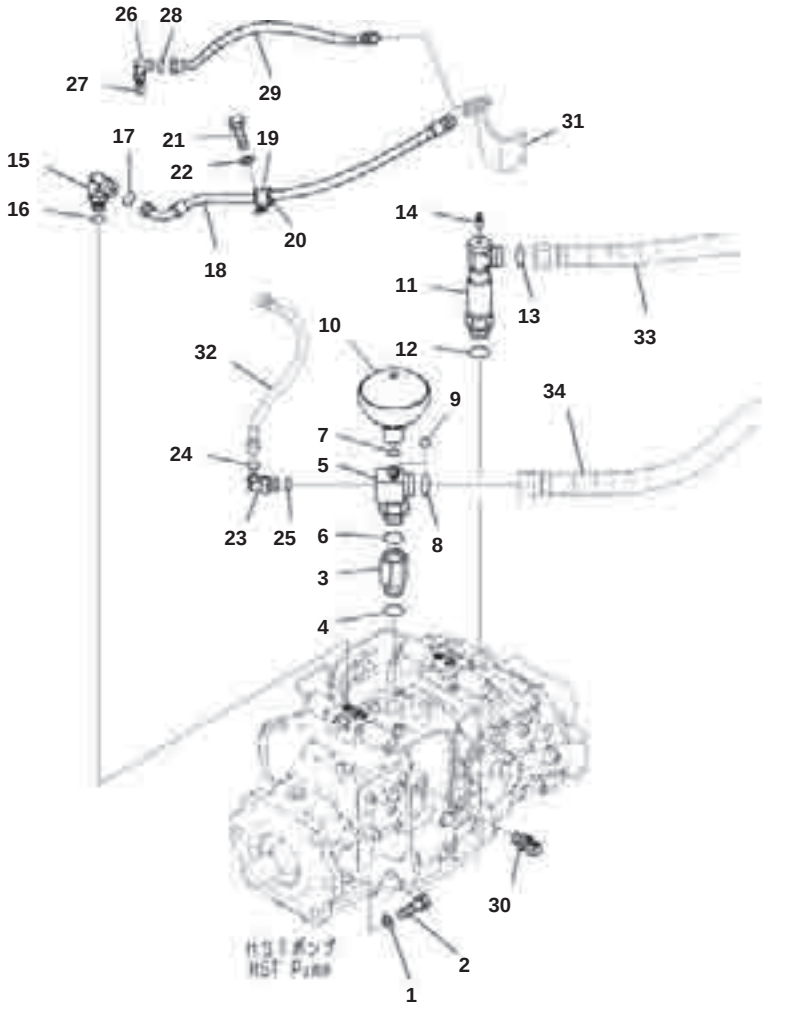

Hydraulic Oil Pump, Mounting (1/2)

Index	Part Number	Description	Qty	Options
1	01643-32060	Washer	6	SN:B50001--
2	01010-82055	Bolt	6	SN:B50001--
3	21W-62-43110	Joint	1	SN:B50001--
4	07002-13334	O-ring	1	SN:B50001--
5	13Y-62-11252	Tee	1	SN:B50001--
6	07002-13334	O-ring	1	SN:B50001--
7	07002-12034	O-ring	1	SN:B50001--
8	207-62-64740	O-ring	1	SN:B50001--
9	02896-11009	O-ring	1	SN:B50001--
10	425-62-23751	Accumulator	1	SN:B50001--
11	13Y-62-12710	Elbow	1	SN:B50001--
13	207-62-64740	O-ring	1	SN:B50001--
14	20B-27-11210	Bleeder	1	SN:B50001--
15	02782-10311	Elbow	1	SN:B50001--
16	07002-11423	O-ring	1	SN:B50001--
17	02896-11009	O-ring	1	SN:B50001--
18	13Y-62-12742	Hose	1	SN:B50001--
19	04434-52110	Clip	1	SN:B50001--
20	07095-20314	Cushion	1	SN:B50001--
21	01010-81020	Bolt	1	SN:B50001--
22	01643-31032	Washer	1	SN:B50001--
23	02782-10315	Elbow	1	SN:B50001--
24	02896-11009	O-ring	1	SN:B50001--
25	07002-12034	O-ring	1	SN:B50001--
26	02782-10311	Elbow	1	SN:B50001--
27	07002-11423	O-ring	1	SN:B50001--
28	02896-11009	O-ring	1	SN:B50001--
29	02774-00304	Hose	1	SN:B50001--
30	7861-93-1812	Sensor, Pressure	4	SN:B50001--
31	(13Y-62-12730)	Bracket		SN:B50001--
32	(02774-003A4)	Hose		SN:B50001--
33	(13Y-62-11553)	Hose		SN:B50001--
34	(13Y-62-11143)	Hose		SN:B50001--

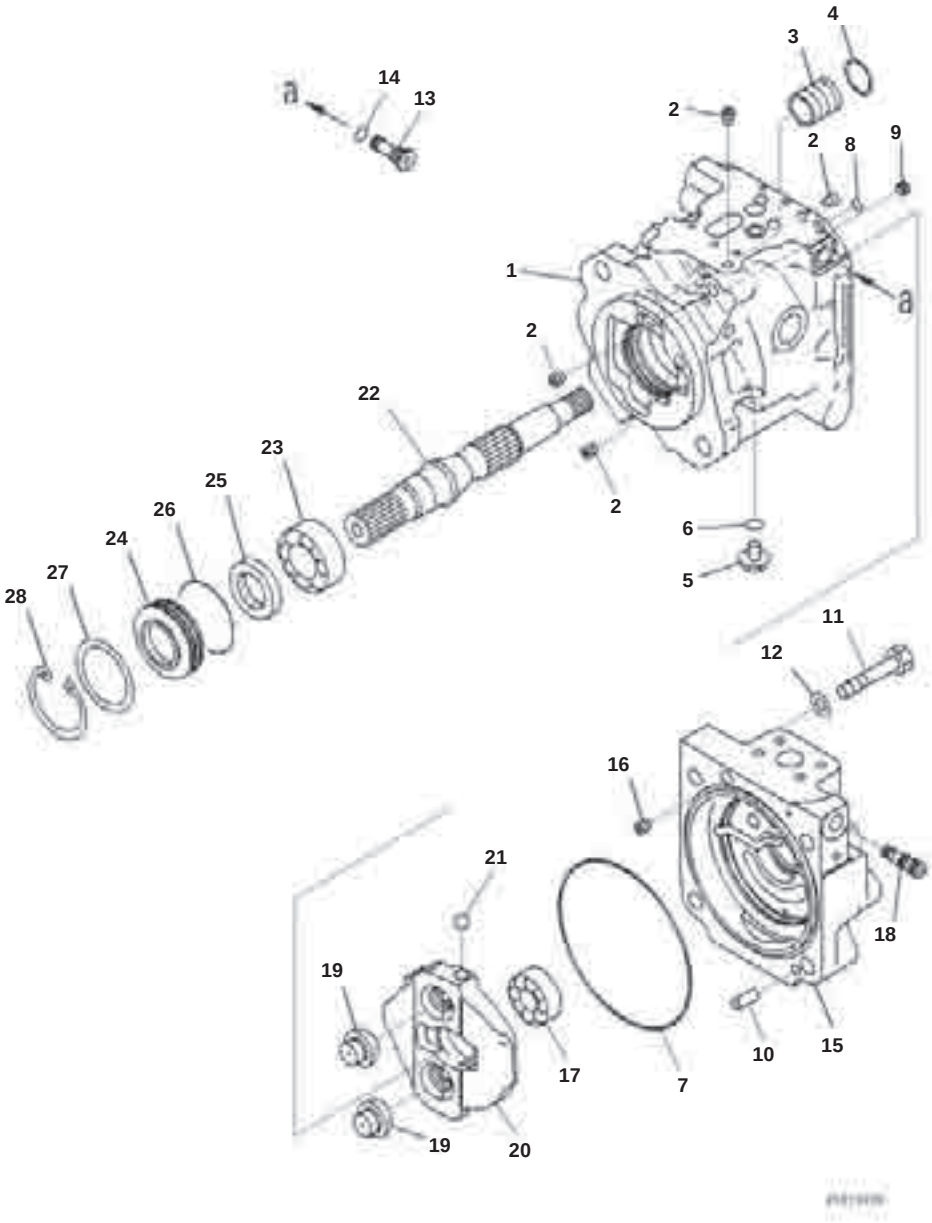

Hydraulic Oil Pump, Work Equipment and Fan Pump (1/4)

Index	Code	Part Number	Description	Qty	Options
		708-1W-00550	Pump Assembly	1	SN:B50001--
	C2	(708-1W-01230)	· Pump Subassembly	1	SN:B50001--
	C2	(708-1W-04780)	· · Case Assembly	1	SN:B50001--
1	C1		· · · Case	1	SN:B50001--
2	C1		· · · Plug	9	SN:B50001--
3	C1		· · · Sleeve	1	SN:B50001--
4	C1		· · · Ring	1	SN:B50001--
5		07040-11409	· · Plug	1	SN:B50001--
6		07002-61423	· · O-ring	1	SN:B50001--
7	C2	(708-1W-49170)	· · O-ring	1	SN:B50001--
8	C2	(07000-B1009)	· · O-ring	1	SN:B50001--
10	C2	(04020-01024)	· · Pin, Dowel	1	SN:B50001--
11	C2	(01010-61470)	· · Bolt	4	SN:B50001--
12	C2	(01643-31445)	· · Washer, Flat	4	SN:B50001--
13		708-1W-04320	· · Filter Assembly	1	SN:B50001--
14		07002-61423	· · · O-ring	1	SN:B50001--
	C2	(708-1W-04790)	· · Cap Subassembly	1	SN:B50001--
15	C1		· · · Cap, End	1	SN:B50001--
16	C1		· · · Plug	1	SN:B50001--
17	C2	(708-1W-42120)	· · Bearing	1	SN:B50001--
18		708-1W-04290	· · Valve, Shuttle	1	SN:B50001--
19	C2	(708-1W-43150)	· · Ball, Retainer	2	SN:B50001--
20	C2	(708-1W-43170)	· · Cam, Rocker	1	SN:B50001--
21	C2	(04260-01270)	· · Ball	1	SN:B50001--
22	C2	(708-1W-42150)	· · Shaft	1	SN:B50001--
23	C2	(708-1W-42110)	· · Bearing	1	SN:B50001--
24	C2	(708-1W-42140)	· · Case	1	SN:B50001--
25		708-1W-42130	· · Seal, Oil	1	SN:B50001--
26		07000-B2060	· · O-ring	1	SN:B50001--
27	C2	(708-1W-05821)	· · Spacer Kit	1	SN:B50001--
	C1		· · · Spacer, T=2.5mm	1	SN:B50001--
	C1		· · · Spacer, T=2.55mm	1	SN:B50001--
	C1		· · · Spacer, T=2.6mm	1	SN:B50001--
	C1		· · · Spacer, T=2.65mm	1	SN:B50001--
	C1		· · · Spacer, T=2.7mm	1	SN:B50001--
	C1		· · · Spacer, T=2.75mm	1	SN:B50001--
	C1		· · · Spacer, T=2.8mm	1	SN:B50001--
	C1		· · · Spacer, T=2.85mm	1	SN:B50001--
	C1		· · · Spacer, T=2.9mm	1	SN:B50001--
28		04065-06825	· · Ring, Snap	1	SN:B50001--

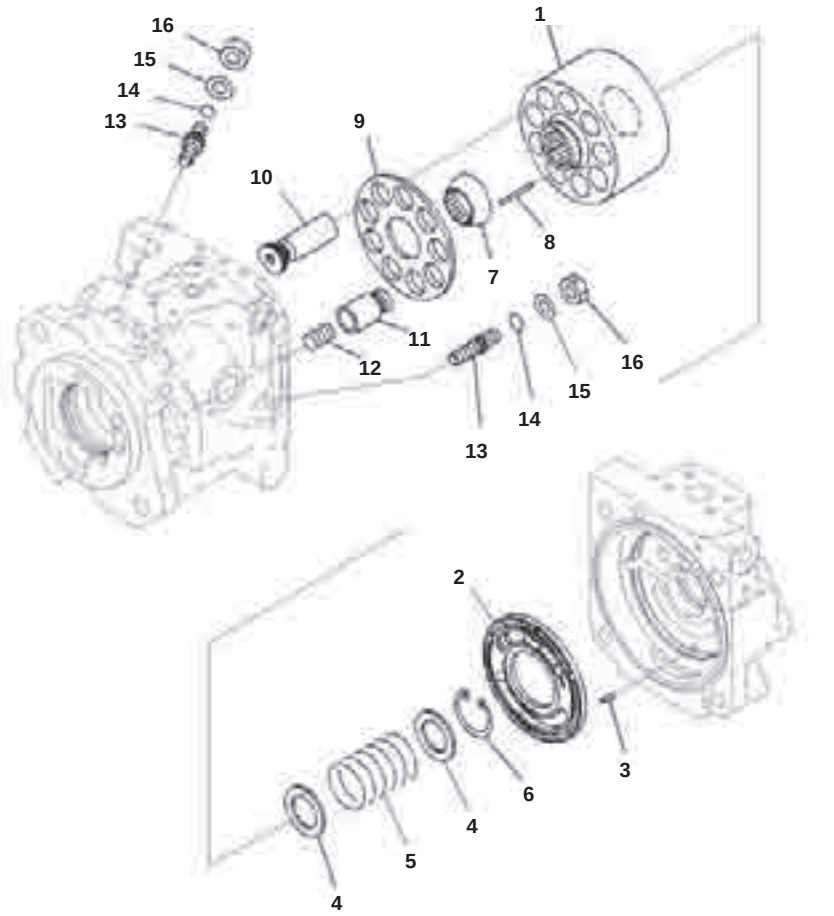

Hydraulic Oil Pump, Work Equipment and Fan Pump (2/4)

Index	Code	Part Number	Description	Qty	Options
		708-1W-00550	Pump Assembly	1	SN:B50001--
	C2	(708-1W-01230)	· Pump Subassembly	1	SN:B50001--
1	C2	(708-1W-43110)	· · Block, Cylinder	1	SN:B50001--
2	C2	(708-1W-43120)	· · Plate, Valve	1	SN:B50001--
3	C2	(720-68-19610)	· · Pin	1	SN:B50001--
4	C2	(708-1W-43130)	· · Seat	2	SN:B50001--
5	C2	(708-1W-43140)	· · Spring	1	SN:B50001--
6	C2	(04065-04818)	· · Ring, Snap	1	SN:B50001--
7	C2	(708-1W-43320)	· · Guide, Retainer	1	SN:B50001--
8	C2	(708-3T-13360)	· · Pin	3	SN:B50001--
9	C2	(708-1W-43341)	· · Retainer, Shoe	1	SN:B50001--
10	C2	(708-1U-13310)	· · Piston Subassembly	9	SN:B50001--
11	C2	(708-1W-44170)	· · Piston	1	SN:B50001--
12	C2	(708-1W-44140)	· · Spring	1	SN:B50001--
13	C2	(708-1U-14240)	· · Screw	2	SN:B50001--
14	C2	(07000-B2011)	· · O-ring	2	SN:B50001--
15	C2	(01643-31232)	· · Washer	2	SN:B50001--
16	C2	(01582-11210)	· · Nut	2	SN:B50001--

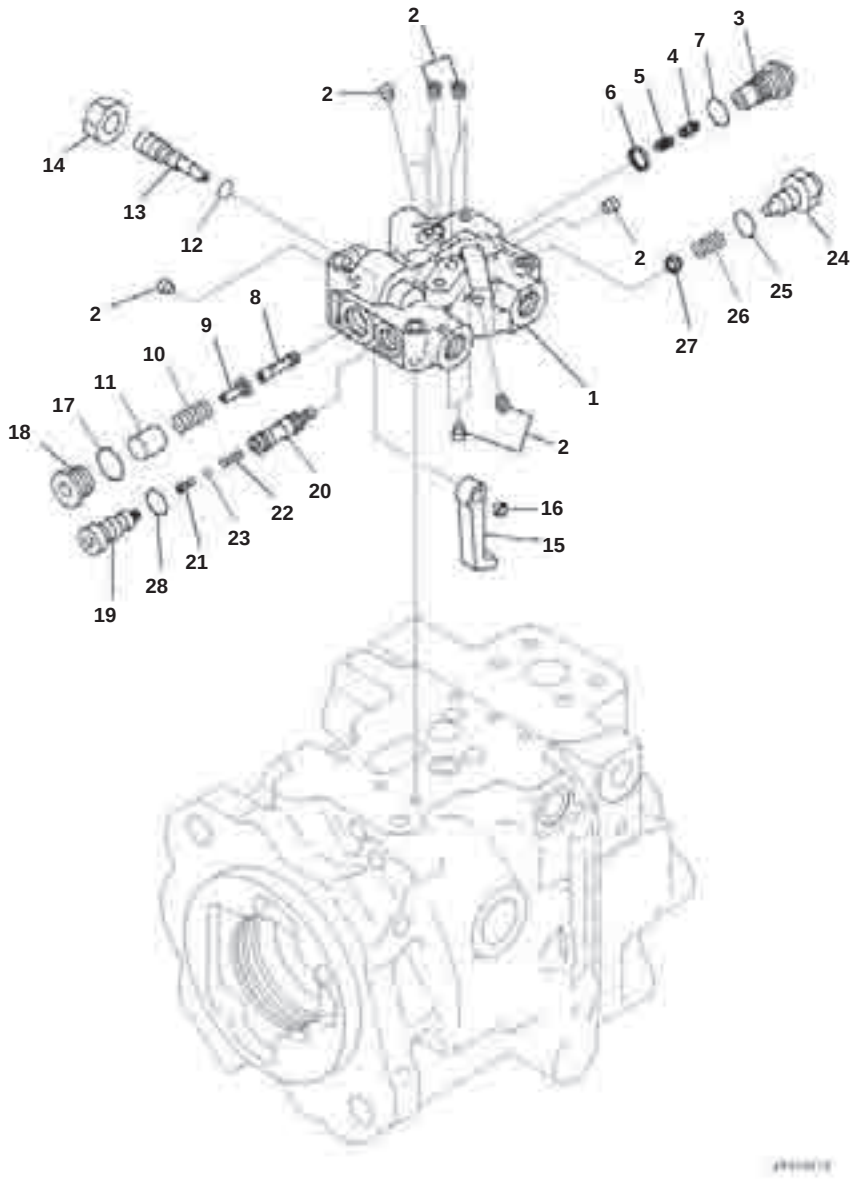

Hydraulic Oil Pump, Work Equipment and Fan Pump (3/4)

Index	Code	Part Number	Description	Qty	Options
		708-1W-00550	Pump Assembly	1	SN:B50001--
	C2	(708-1W-03960)	· Valve Assembly	1	SN:B50001--
	C1		· · Body Assembly	1	SN:B50001--
1	C1		· · · Body	1	SN:B50001--
2	C1		· · · Plug	11	SN:B50001--
	C1		· · Sleeve Subassembly	1	SN:B50001--
3	C1		· · · Sleeve	1	SN:B50001--
4	C1		· · · Piston	1	SN:B50001--
5	C1		· · · Piston	1	SN:B50001--
6	C1		· · · Seal	1	SN:B50001--
7		07002-61623	· · · O-ring	1	SN:B50001--
8	C1		· · Spool	1	SN:B50001--
9	C1		· · Seat	1	SN:B50001--
10	C1		· · Spring	1	SN:B50001--
11	C1		· · Retainer	1	SN:B50001--
12	C1		· · O-ring	1	SN:B50001--
13	C1		· · Plug	1	SN:B50001--
14	C1		· · Nut	1	SN:B50001--
15	C1		· · Lever	1	SN:B50001--
16	C1		· · Spacer	1	SN:B50001--
17		07002-61623	· · O-ring	1	SN:B50001--
18		723-56-31630	· · Plug	1	SN:B50001--
19	C1		· · Plug	1	SN:B50001--
	C1		· · Spool Assembly	1	SN:B50001--
20	C1		· · · Spool	1	SN:B50001--
21	C1		· · · Plug	1	SN:B50001--
22	C1		· · · Spring	1	SN:B50001--
23	C1		· · · Ball	1	SN:B50001--
24	C1		· · Plug	1	SN:B50001--
		01583-11207	· · · Nut	1	SN:B50001--
25	C1		· · O-ring	1	SN:B50001--
26	C1		· · Spring	1	SN:B50001--
27	C1		· · Seat	1	SN:B50001--

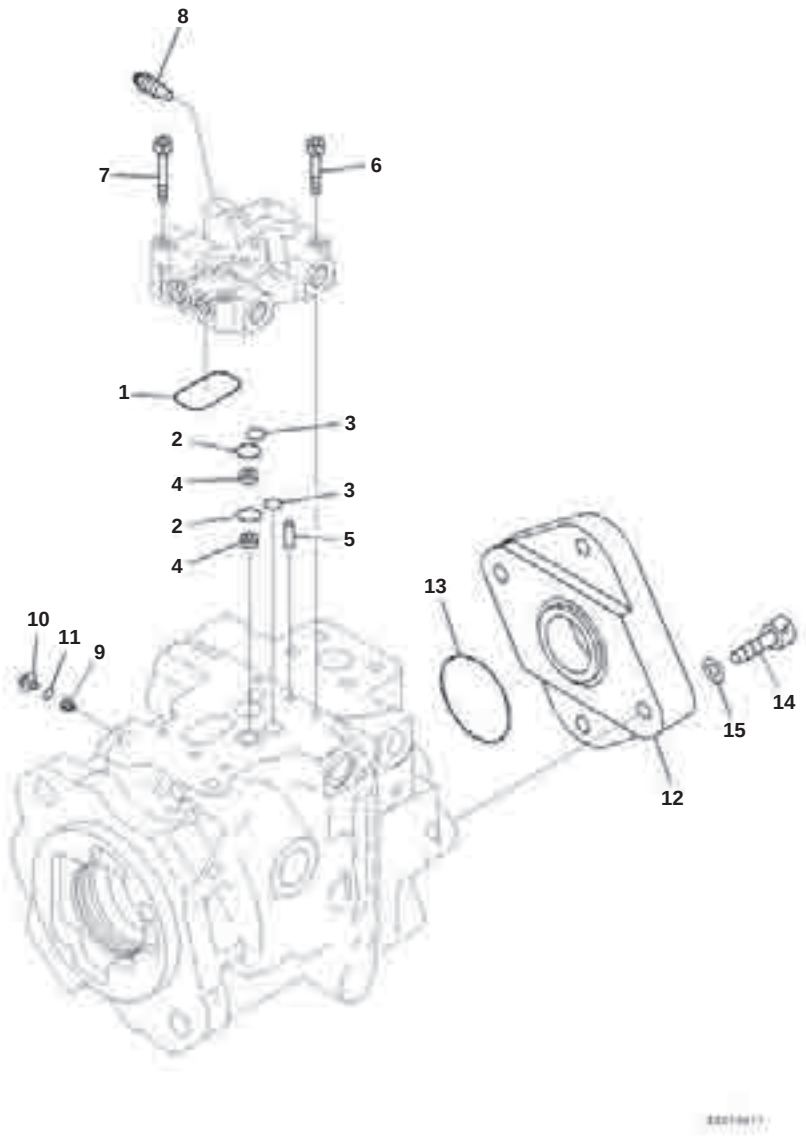

Hydraulic Oil Pump, Work Equipment and Fan Pump (4/4)

Index	Code	Part Number	Description	Qty	Options
		708-1W-00550	Pump Assembly	1	SN:B50001--
1		07000-B3040	' O-ring	1	SN:B50001--
2		07000-B2014	' O-ring	2	SN:B50001--
3		07000-B1009	' O-ring	2	SN:B50001--
4		708-2L-25480	' Filter	2	SN:B50001--
5	C2	(04020-00616)	' Pin, Dowel	2	SN:B50001--
6		01252-60630	' Bolt, Hexagon Socket Head	3	SN:B50001--
7		01252-60645	' Bolt, Hexagon Socket Head	1	SN:B50001--
8		20B-27-11210	' Bleeder	1	SN:B50001--
9	C2	(723-46-16780)	' Orifice	1	SN:B50001--
10		708-8E-16160	' Plug	1	SN:B50001--
11		07002-61023	' O-ring	1	SN:B50001--
12		708-1U-19120	' Plate	1	SN:B50001--
13		07000-B2060	' O-ring	1	SN:B50001--
14		01252-61235	' Bolt, Hexagon Socket Head	2	SN:B50001--
15		01643-31232	' Washer	2	SN:B50001--

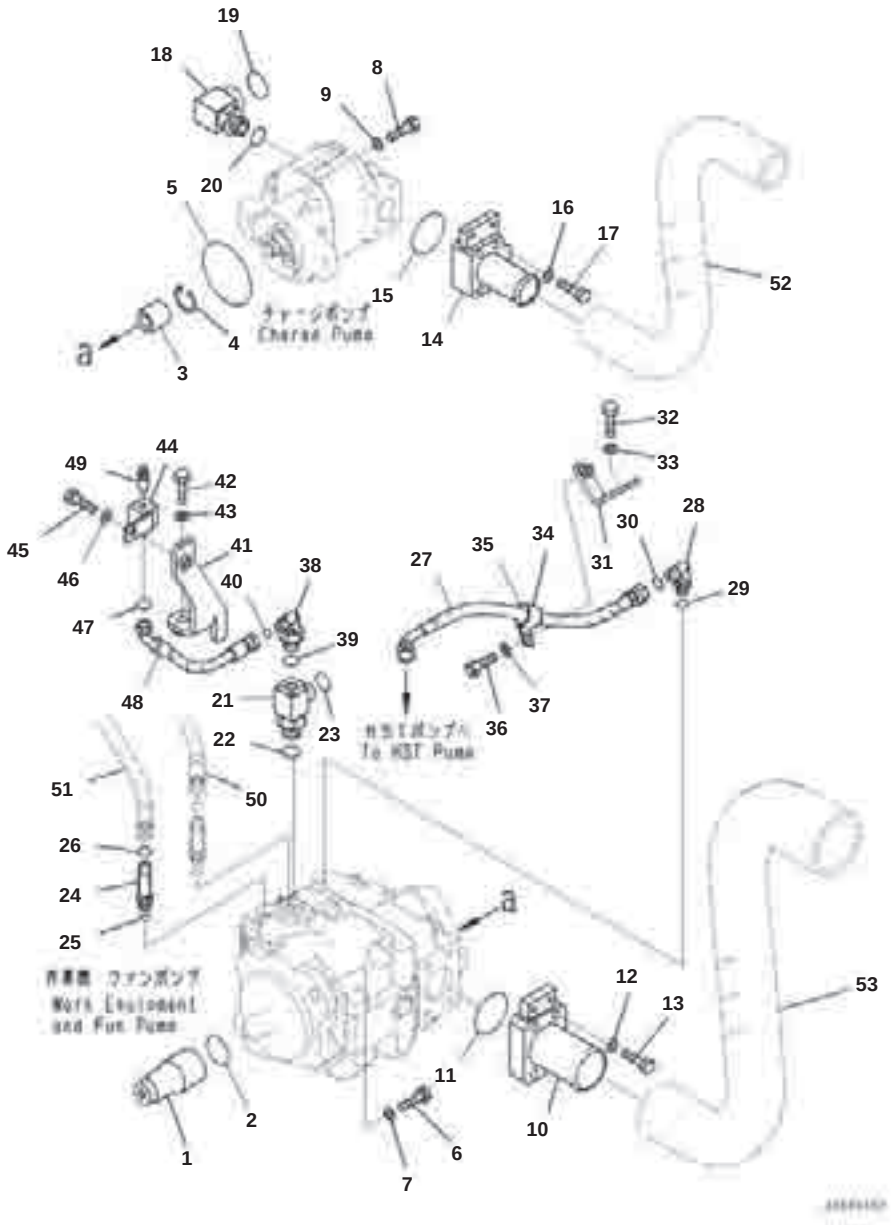

Hydraulic Oil Pump, Mounting (2/2)

Index	Part Number	Description	Qty	Options
1	13Y-60-11620	Coupling	1	SN:B50001--
2	07000-A2125	O-ring	1	SN:B50001--
3	708-1W-28150	Coupling	1	SN:B50001--
4	04065-02012	Ring, Snap	1	SN:B50001--
5	07000-A2100	O-ring	1	SN:B50001--
6	01010-81645	Bolt	2	SN:B50001--
7	01643-31645	Washer	2	SN:B50001--
8	01010-81235	Bolt	2	SN:B50001--
9	01643-31232	Washer	2	SN:B50001--
10	13Y-62-11262	Tube	1	SN:B50001--
11	07000-12060	O-ring	1	SN:B50001--
12	01643-51232	Washer	4	SN:B50001--
13	07372-51250	Bolt	4	SN:B50001--
14	13Y-62-11272	Tube	1	SN:B50001--
15	07000-13042	O-ring	1	SN:B50001--
16	01643-51032	Washer	4	SN:B50001--
17	07372-51055	Bolt	4	SN:B50001--
18	207-62-72131	Elbow	1	SN:B50001--
19	207-62-64740	O-ring	1	SN:B50001--
20	07002-12434	O-ring	1	SN:B50001--
21	20U-62-46570	Elbow	1	SN:B50001--
22	07002-12434	O-ring	1	SN:B50001--
23	02896-11015	O-ring	1	SN:B50001--
24	02782-1021A	Elbow	2	SN:B50001--
25	07002-11423	O-ring	2	SN:B50001--
26	02896-11008	O-ring	2	SN:B50001--
27	13Y-62-12782	Hose	1	SN:B50001--
28	02782-10311	Elbow	1	SN:B50001--
29	07002-11423	O-ring	1	SN:B50001--
30	02896-11009	O-ring	1	SN:B50001--
31	13Y-62-12811	Bracket	1	SN:B50001--
32	01010-81025	Bolt	2	SN:B50001--
33	01643-31032	Washer	2	SN:B50001--
35	07095-20314	Cushion	1	SN:B50001--
36	01010-81025	Bolt	1	SN:B50001--
37	01643-31032	Washer	1	SN:B50001--
38	11Y-62-12170	Elbow	1	SN:B50001--
39	07002-12034	O-ring	1	SN:B50001--
40	02896-11008	O-ring	1	SN:B50001--
41	13Y-62-12851	Bracket	1	SN:B50001--
42	01010-81240	Bolt	1	SN:B50001--
43	01643-31232	Washer	1	SN:B50001--
44	13Y-62-12860	Joint	1	SN:B50001--
45	01010-81025	Bolt	1	SN:B50001--
46	01643-31032	Washer	1	SN:B50001--
47	02896-11008	O-ring	1	SN:B50001--
48	13Y-62-12871	Hose	1	SN:B50001--

D61EX-23M0 S/N B50001
Hydraulic Oil Pump, Mounting (2/2)

Index	Part Number	Description	Qty	Options
49	20B-27-11210	Bleeder	1	SN:B50001--
50	(13Y-62-11331)	Hose		SN:B50001--
51	(13Y-62-11351)	Hose		SN:B50001--
52	(13Y-62-11942)	Hose		SN:B50001--
53	(13Y-62-11932)	Hose		SN:B50001--

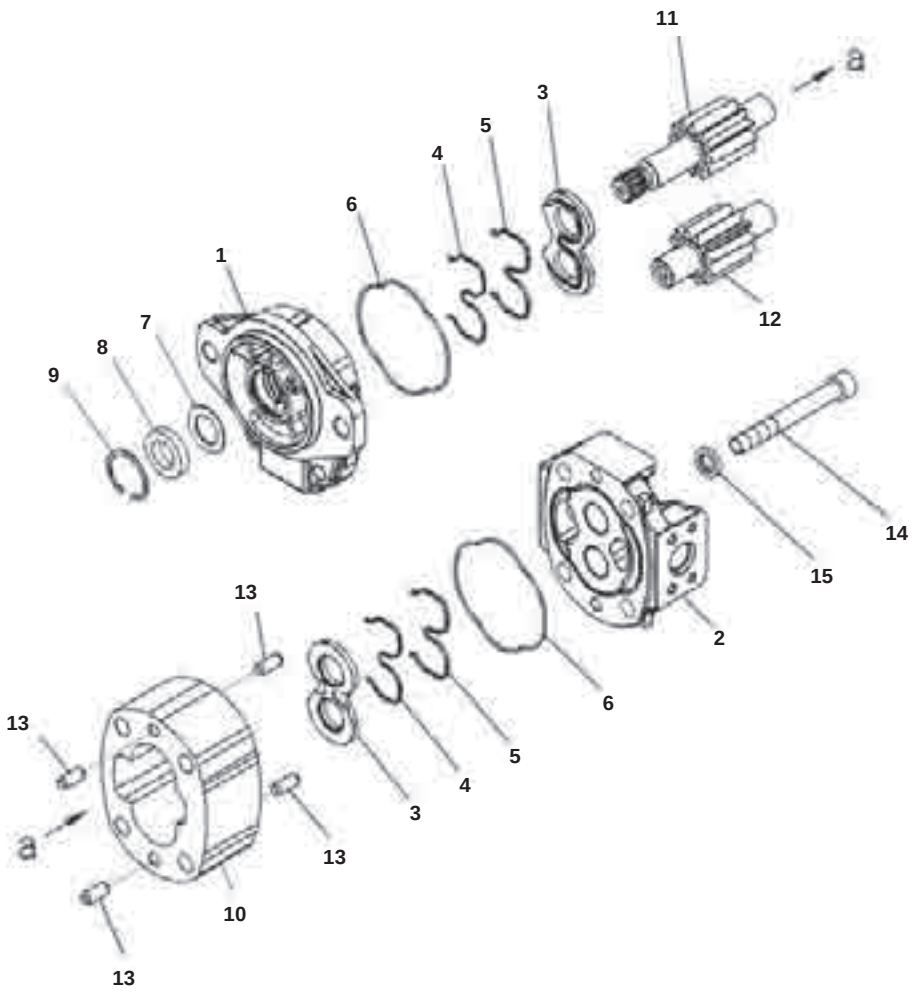

Hydraulic Oil Pump, Charge Pump

Index	Code	Part Number	Description	Qty	Options
		705-22-35260	Pump Assembly, Gear (SAR 56)	1	SN:B50001--
1	C2	(705-18-02820)	· Bracket Assembly	1	SN:B50001--
	C2	(705-17-02353)	· · Bushing	2	SN:B50001--
2	C2	(705-18-02C10)	· Cover Assembly	1	SN:B50001--
	C2	(705-17-02353)	· · Bushing	2	SN:B50001--
3		705-17-02612	· Plate	2	SN:B50001--
4		705-17-02430	· Ring, Back-up	2	SN:B50001--
5		705-17-02460	· Seal Ring	2	SN:B50001--
6		705-17-02360	· O-ring	2	SN:B50001--
7		705-17-02870	· Plate	1	SN:B50001--
8		705-17-02830	· Seal, Oil	1	SN:B50001--
9		04065-04018	· Ring, Snap	1	SN:B50001--
10	C2	(705-18-35150)	· Gear Case	1	SN:B50001--
11	C2	(705-18-35620)	· Gear, Drive	1	SN:B50001--
12	C2	(705-18-35810)	· Gear, Driven	1	SN:B50001--
13		04020-01024	· Pin, Dowel	4	SN:B50001--
14		01253-61410	· Bolt, Hexagon Socket Head	4	SN:B50001--
15		705-17-04980	· Washer	4	SN:B50001--

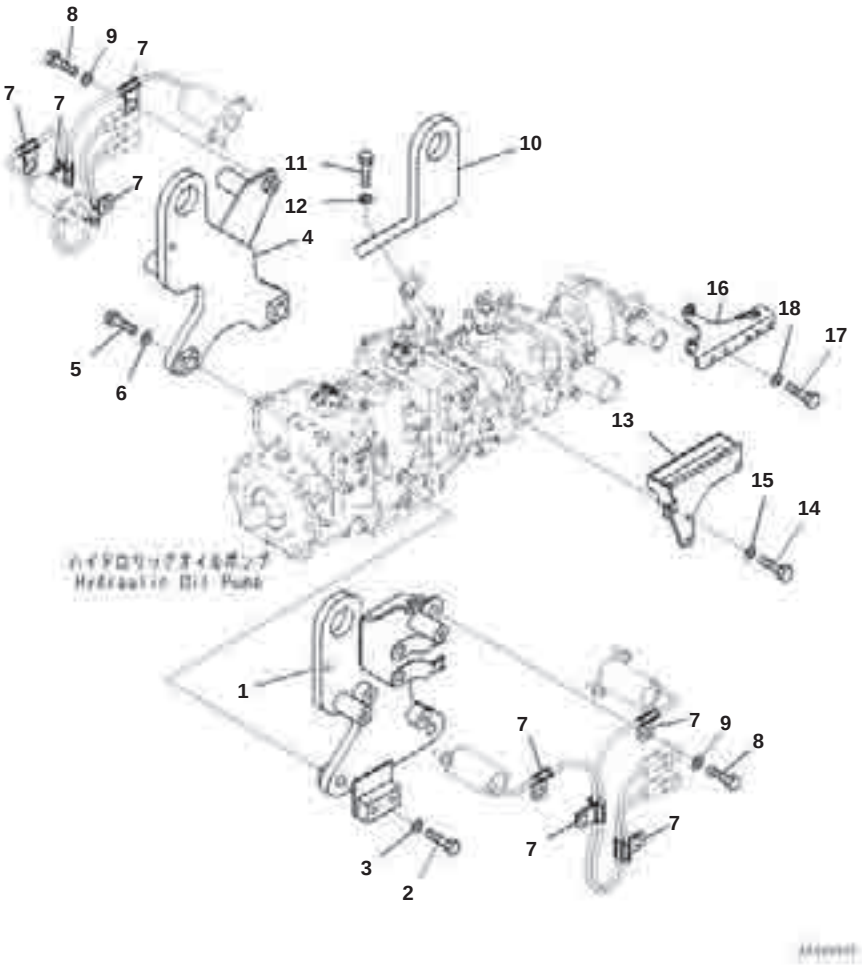

Hydraulic Oil Pump, Bracket

Index	Part Number	Description	Qty	Options
1	13Y-06-14223	Bracket	1	SN:B50001--
2	01010-81245	Bolt	2	SN:B50001--
3	01643-31232	Washer	2	SN:B50001--
4	13Y-06-14213	Bracket	1	SN:B50001--
5	01010-81245	Bolt	2	SN:B50001--
6	01643-31232	Washer	2	SN:B50001--
7	600-051-2060	Clip	12	SN:B50001--
8	01010-81020	Bolt	8	SN:B50001--
9	01643-31032	Washer	8	SN:B50001--
10	13Y-62-12840	Plate	1	SN:B50001--
11	01010-81030	Bolt	2	SN:B50001--
12	01643-31032	Washer	2	SN:B50001--
13	13Y-06-14232	Bracket	1	SN:B50001--
14	01010-81030	Bolt	2	SN:B50001--
15	01643-31032	Washer	2	SN:B50001--
16	13Y-06-14343	Bracket	1	SN:B50001--
17	01010-81025	Bolt	2	SN:B50001--
18	01643-31032	Washer	2	SN:B50001--

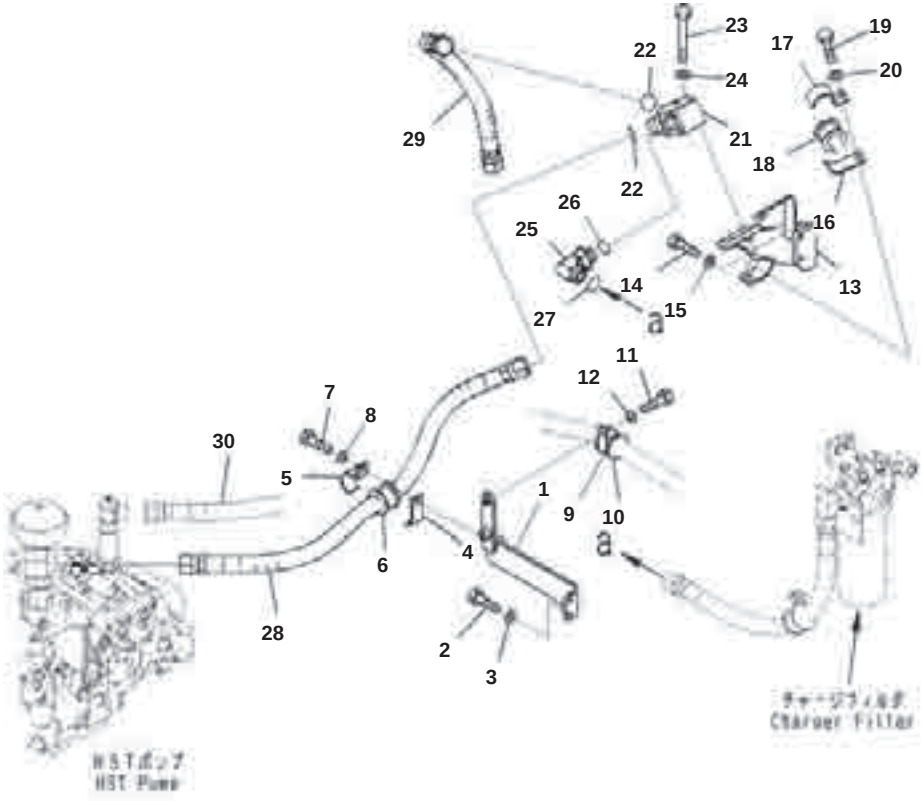

Hydraulic Pump Piping, Charge Piping

Index	Part Number	Description	Qty	Options
1	13Y-62-11162	Bracket	1	SN:B50001--
2	01010-81025	Bolt	2	SN:B50001--
3	01643-31032	Washer	2	SN:B50001--
4	418-62-32550	Clamp	1	SN:B50001--
5	418-62-32560	Clamp	1	SN:B50001--
6	21T-62-76840	Cushion	1	SN:B50001--
7	01010-81030	Bolt	1	SN:B50001--
8	01643-31032	Washer	1	SN:B50001--
9	196-916-1590	Clip	1	SN:B50001--
10	21T-62-76840	Cushion	1	SN:B50001--
11	01010-81025	Bolt	1	SN:B50001--
12	01643-31032	Washer	1	SN:B50001--
13	13Y-62-11173	Bracket	1	SN:B50001--
14	01010-81030	Bolt	2	SN:B50001--
15	01643-31032	Washer	2	SN:B50001--
16	418-62-32550	Clamp	1	SN:B50001--
17	418-62-32560	Clamp	1	SN:B50001--
18	21T-62-76840	Cushion	1	SN:B50001--
19	01010-81030	Bolt	1	SN:B50001--
20	01643-31032	Washer	1	SN:B50001--
21	13Y-62-12880	Block	1	SN:B50001--
22	207-62-64740	O-ring	2	SN:B50001--
23	01010-81085	Bolt	2	SN:B50001--
24	01643-31032	Washer	2	SN:B50001--
25	21W-62-42640	Elbow	1	SN:B50001--
26	07002-13334	O-ring	1	SN:B50001--
27	207-62-64740	O-ring	1	SN:B50001--
28	13Y-62-11143	Hose	1	SN:B50001--
29	13Y-62-11151	Hose	1	SN:B50001--
30	(13Y-62-11553)	Hose		SN:B50001--

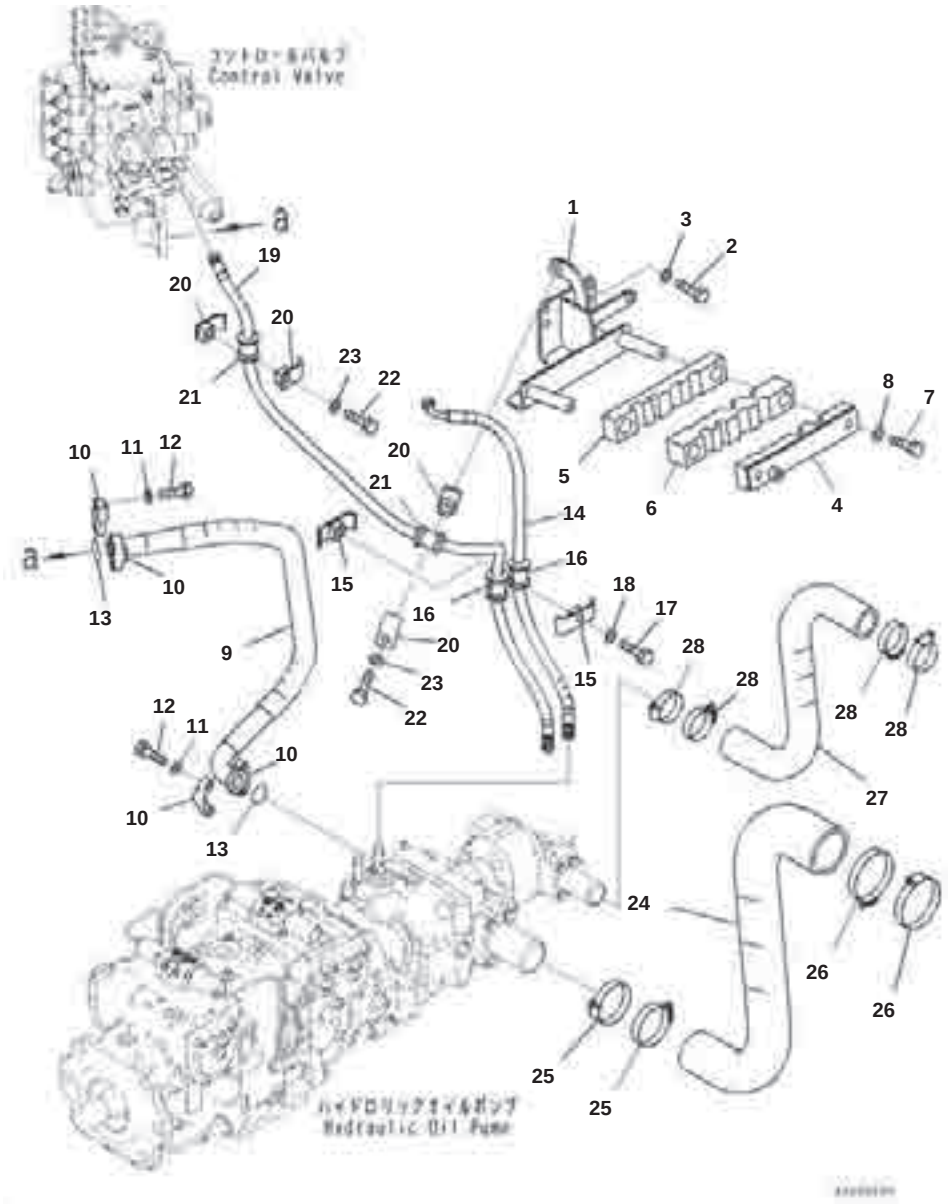

Hydraulic Pump Piping, Delivery Piping

Index	Part Number	Description	Qty	Options
1	13Y-62-11371	Bracket	1	SN:B50001--
2	01010-81225	Bolt	4	SN:B50001--
3	01643-31232	Washer	4	SN:B50001--
4	13Y-62-11421	Clamp	1	SN:B50001--
5	13Y-62-11381	Rubber	1	SN:B50001--
6	13Y-62-11391	Rubber	1	SN:B50001--
7	01010-81225	Bolt	2	SN:B50001--
8	01643-31232	Washer	2	SN:B50001--
9	07098-01010	Hose, Flange Type	1	SN:B50001--
10	07371-31049	Flange, Split	4	SN:B50001--
11	01643-51032	Washer	8	SN:B50001--
12	07372-21035	Bolt	8	SN:B50001--
13	07000-13032	O-ring	2	SN:B50001--
14	13Y-62-11331	Hose	1	SN:B50001--
15	22P-62-13540	Clamp	2	SN:B50001--
16	07095-00314	Cushion	2	SN:B50001--
17	01010-81260	Bolt	1	SN:B50001--
18	01643-31232	Washer	1	SN:B50001--
19	13Y-62-11351	Hose	1	SN:B50001--
20	22P-62-13510	Clamp	4	SN:B50001--
21	07095-00314	Cushion	2	SN:B50001--
22	01010-81260	Bolt	2	SN:B50001--
23	01643-31232	Washer	2	SN:B50001--
24	13Y-62-11932	Hose	1	SN:B50001--
25	07289-00080	Clamp	2	SN:B50001--
26	07289-00095	Clamp	2	SN:B50001--
27	13Y-62-11942	Hose	1	SN:B50001--
28	07289-00055	Clamp	4	SN:B50001--

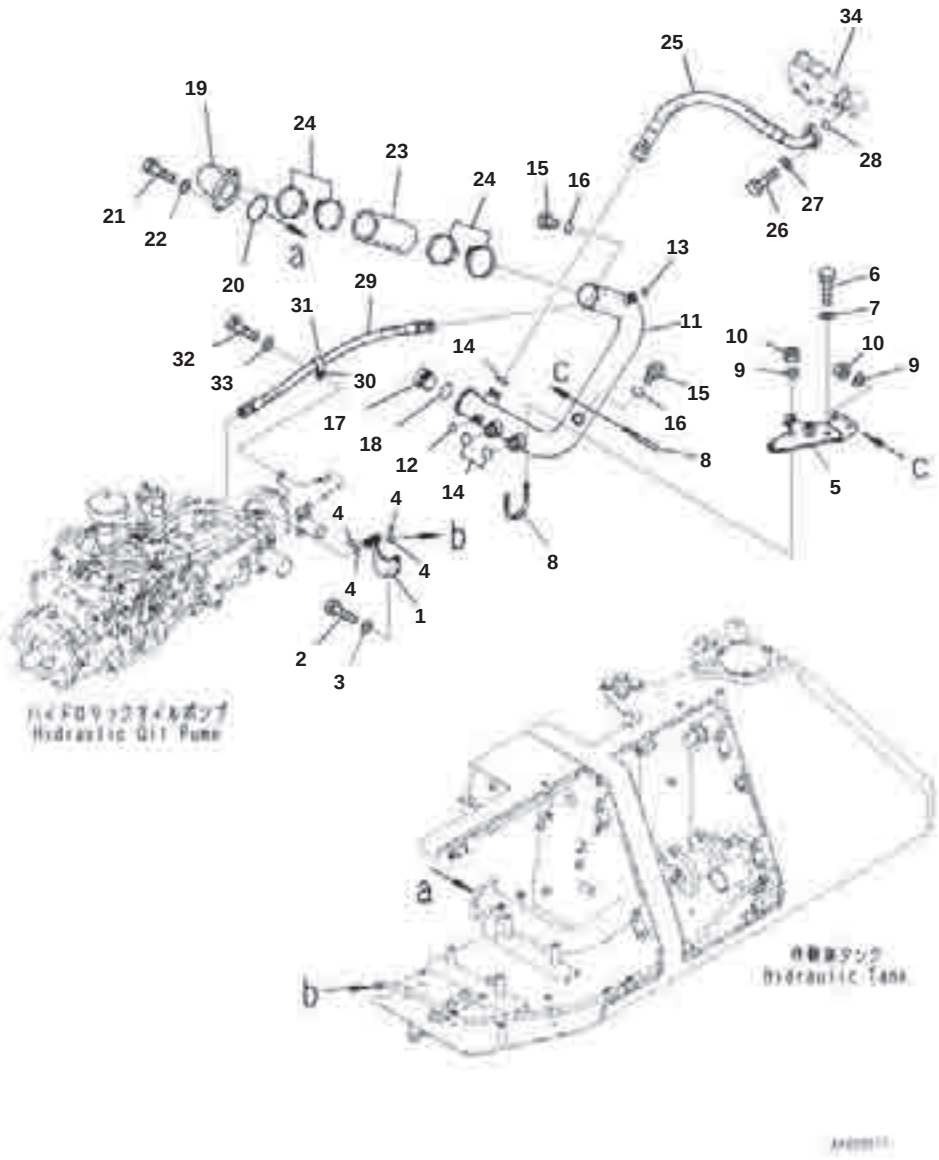

Index	Part Number	Description	Qty	Options
1	13Y-62-12730	Bracket	1	SN:B50001--
2	01010-81025	Bolt	2	SN:B50001--
3	01643-31032	Washer	2	SN:B50001--
4	02896-11009	O-ring	4	SN:B50001--
5	13Y-62-11592	Bracket	1	SN:B50001--
6	01010-81230	Bolt	2	SN:B50001--
7	01643-31232	Washer	2	SN:B50001--
8	07283-37663	Clip	2	SN:B50001--
9	01643-31032	Washer	4	SN:B50001--
10	01597-01009	Nut	4	SN:B50001--
11	13Y-62-11583	Tube	1	SN:B50001--
12	02896-11009	O-ring	1	SN:B50001--
13	02896-11015	O-ring	2	SN:B50001--
14	207-62-64740	O-ring	3	SN:B50001--
15	07040-12412	Plug	2	SN:B50001--
16	07002-12434	O-ring	2	SN:B50001--
17	07040-15223	Plug	1	SN:B50001--
18	07002-15234	O-ring	1	SN:B50001--
19	13Y-62-11760	Tube	1	SN:B50001--
20	07000-12080	O-ring	1	SN:B50001--
21	01010-81040	Bolt	2	SN:B50001--
22	01643-31032	Washer	2	SN:B50001--
23	07260-27422	Hose	1	SN:B50001--
24	07289-00095	Clamp	4	SN:B50001--
25	13Y-62-11642	Hose	1	SN:B50001--
26	01010-81035	Bolt	2	SN:B50001--
27	01643-31032	Washer	2	SN:B50001--
28	07000-13032	O-ring	1	SN:B50001--
29	13Y-62-11692	Hose	1	SN:B50001--
30	04434-53211	Clip	1	SN:B50001--
31	07095-20523	Cushion	1	SN:B50001--
32	01010-81025	Bolt	1	SN:B50001--
33	01643-31032	Washer	1	SN:B50001--

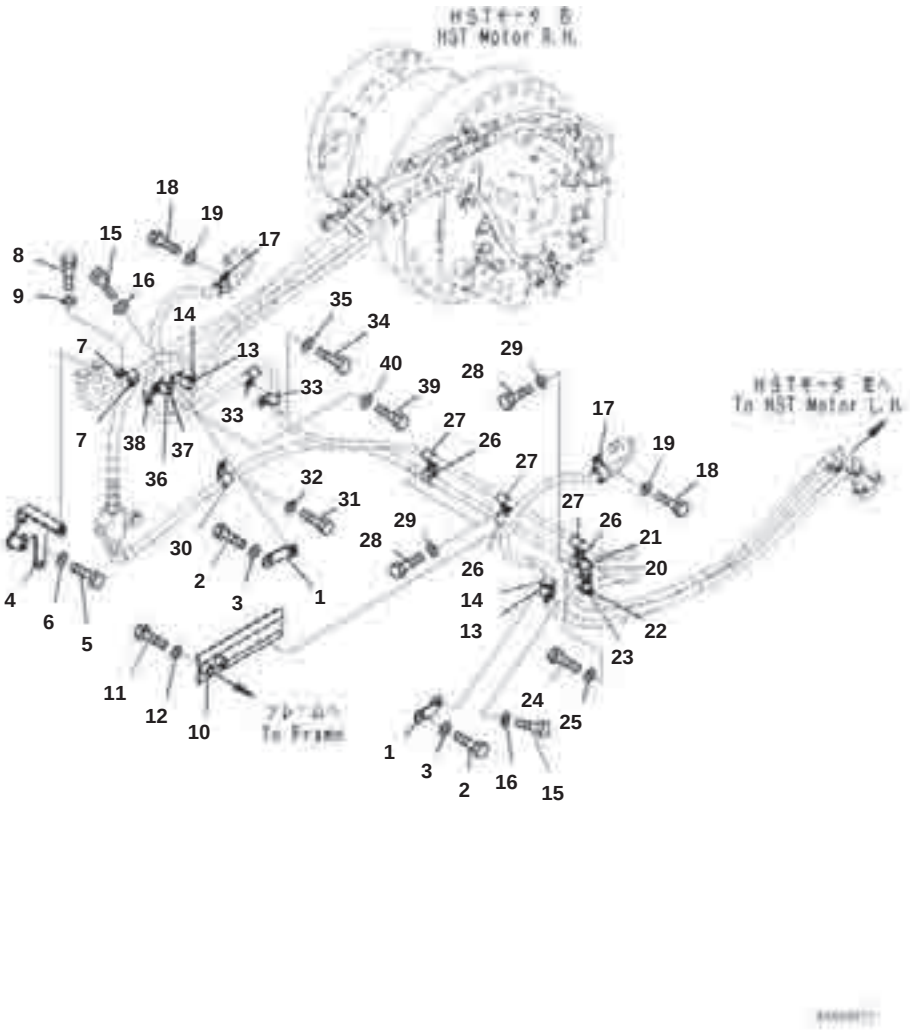

Drain Piping, Mounting

Index	Part Number	Description	Qty	Options
1	13Y-62-13612	Bracket	2	SN:B50001--
2	01010-81020	Bolt	2	SN:B50001--
3	01643-31032	Washer	2	SN:B50001--
4	13Y-62-13621	Bracket	1	SN:B50001--
5	01010-81020	Bolt	2	SN:B50001--
6	01643-31032	Washer	2	SN:B50001--
7	04434-51210	Clip	2	SN:B50001--
8	01010-81025	Bolt	1	SN:B50001--
9	01643-31032	Washer	1	SN:B50001--
10	13Y-62-13772	Bracket	1	SN:B50001--
11	01010-81035	Bolt	2	SN:B50001--
12	01643-31032	Washer	2	SN:B50001--
13	04434-52110	Clip	2	SN:B50001--
14	07095-20314	Cushion	2	SN:B50001--
15	01010-81020	Bolt	2	SN:B50001--
16	01643-31032	Washer	2	SN:B50001--
17	04434-51910	Clip	2	SN:B50001--
18	01010-81020	Bolt	2	SN:B50001--
19	01643-31032	Washer	2	SN:B50001--
20	04434-51710	Clip	1	SN:B50001--
21	07095-20211	Cushion	1	SN:B50001--
22	04434-52110	Clip	1	SN:B50001--
23	07095-20314	Cushion	1	SN:B50001--
24	01010-81020	Bolt	1	SN:B50001--
25	01643-31032	Washer	1	SN:B50001--
26	04434-51510	Clip	3	SN:B50001--
27	04434-51210	Clip	3	SN:B50001--
28	01010-81020	Bolt	3	SN:B50001--
29	01643-31032	Washer	3	SN:B50001--
30	04434-51510	Clip	1	SN:B50001--
31	01010-81020	Bolt	1	SN:B50001--
32	01643-31032	Washer	1	SN:B50001--
33	04434-51210	Clip	2	SN:B50001--
35	01643-31032	Washer	2	SN:B50001--
36	04434-51710	Clip	1	SN:B50001--
37	07095-20211	Cushion	1	SN:B50001--
38	04434-51210	Clip	1	SN:B50001--
39	01010-81020	Bolt	1	SN:B50001--
40	01643-31032	Washer	1	SN:B50001--

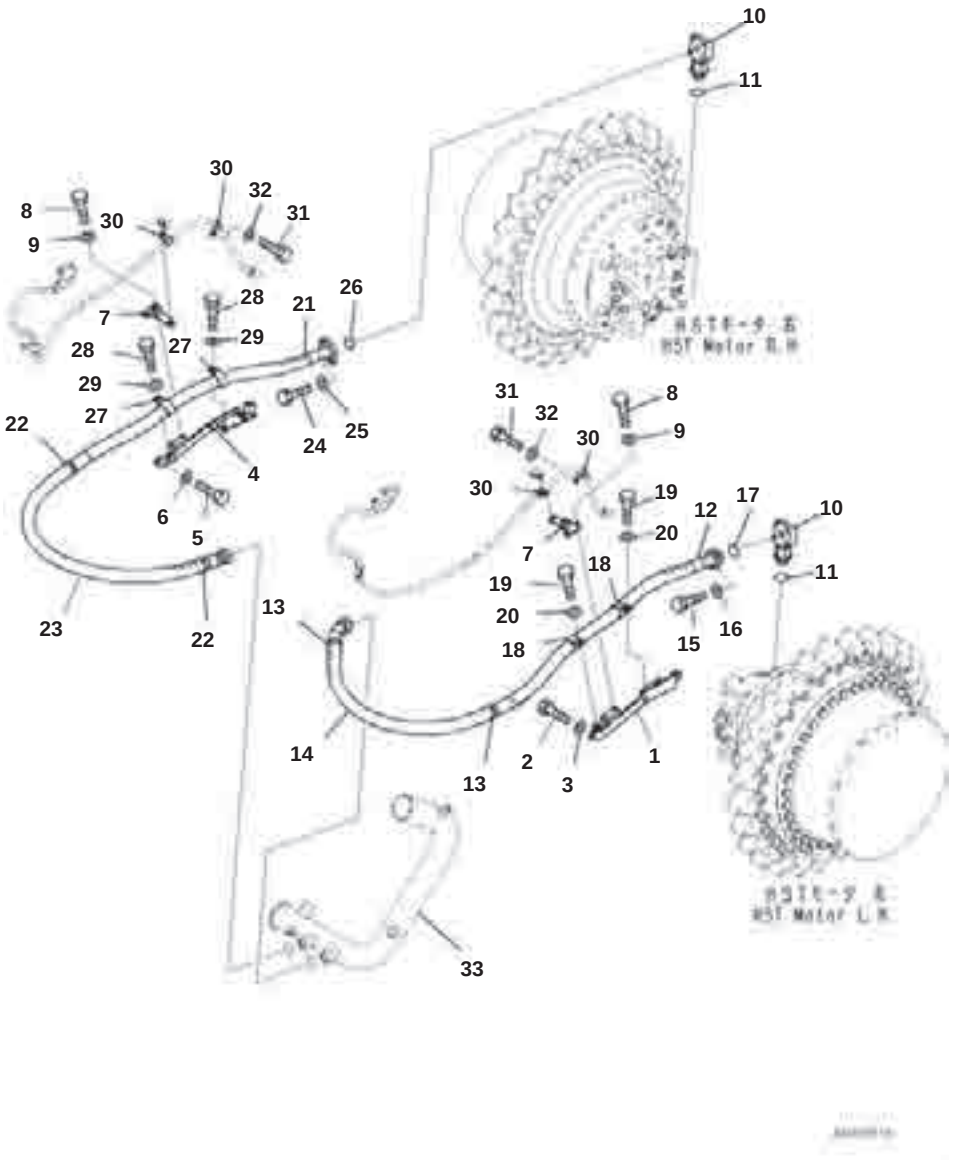

Drain Piping, Motor Drain (1/2)

Index	Part Number	Description	Qty	Options
1	13Y-62-13752	Bracket	1	SN:B50001--
2	01010-81225	Bolt	2	SN:B50001--
3	01643-31232	Washer	2	SN:B50001--
4	13Y-62-13761	Bracket	1	SN:B50001--
5	01010-81225	Bolt	2	SN:B50001--
6	01643-31232	Washer	2	SN:B50001--
7	13Y-62-13411	Bracket	2	SN:B50001--
8	01010-81025	Bolt	4	SN:B50001--
9	01643-31032	Washer	4	SN:B50001--
10	13Y-62-13254	Elbow	2	SN:B50001--
11	07002-63334	O-ring	2	SN:B50001--
12	13Y-62-13662	Hose Assembly	1	SN:B50001--
13	08034-20414	･ Band	2	SN:B50001--
14	13Y-62-13910	･ Cover	1	SN:B50001--
15	01010-81030	Bolt	2	SN:B50001--
16	01643-31032	Washer	2	SN:B50001--
17	07000-A3032	O-ring	1	SN:B50001--
18	6217-21-7150	Clip	2	SN:B50001--
19	01010-81025	Bolt	2	SN:B50001--
20	01643-31032	Washer	2	SN:B50001--
21	13Y-62-13213	Hose Assembly	1	SN:B50001--
22	08034-20414	･ Band	2	SN:B50001--
23	13Y-62-13920	･ Cover	1	SN:B50001--
24	01010-81030	Bolt	2	SN:B50001--
25	01643-31032	Washer	2	SN:B50001--
26	07000-A3032	O-ring	1	SN:B50001--
27	6217-21-7150	Clip	2	SN:B50001--
28	01010-81025	Bolt	2	SN:B50001--
29	01643-31032	Washer	2	SN:B50001--
30	04434-51510	Clip	4	SN:B50001--
31	01010-81025	Bolt	2	SN:B50001--
32	01643-31032	Washer	2	SN:B50001--
33	(13Y-62-11583)	Tube		SN:B50001--

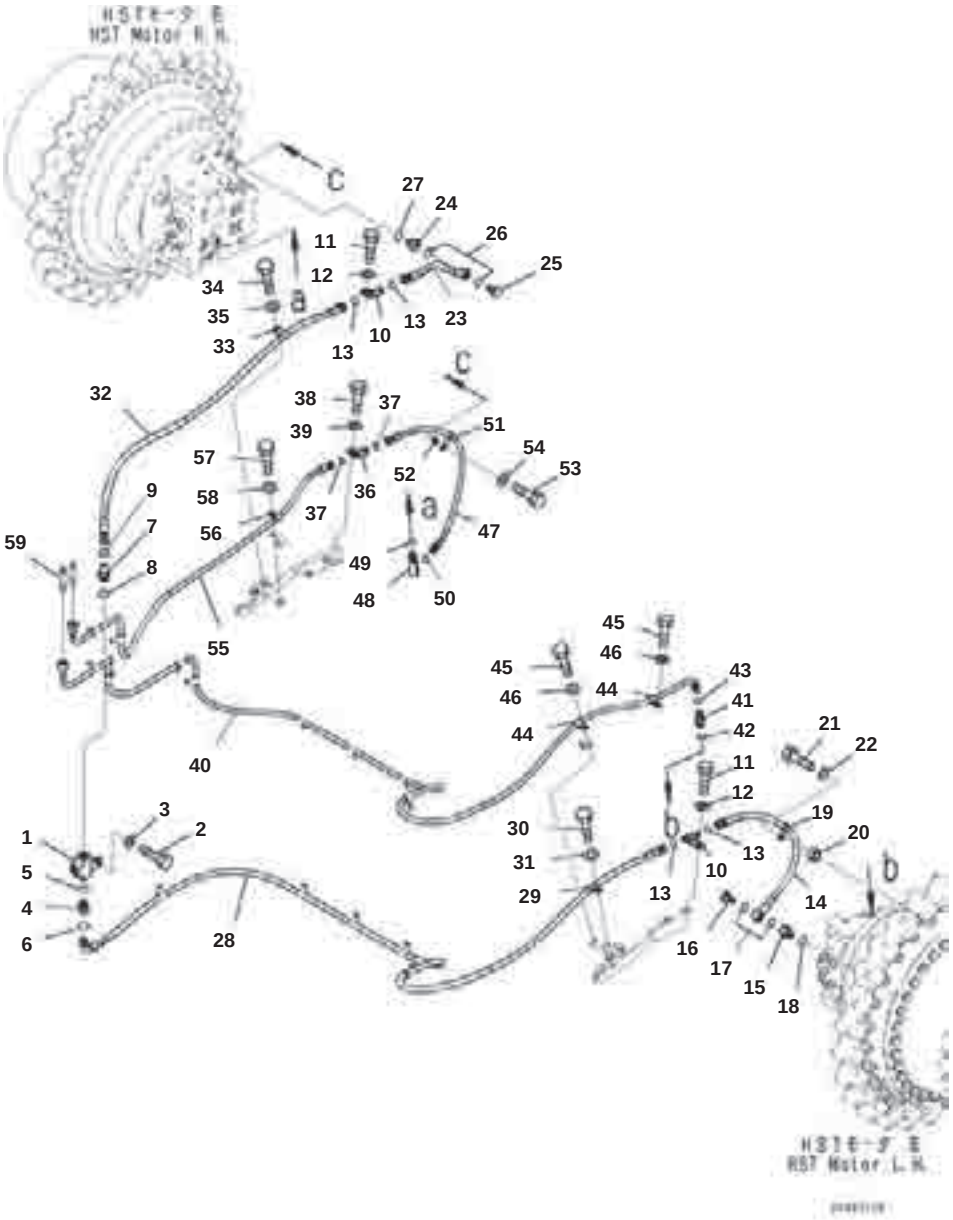

Index	Part Number	Description	Qty	Options
1	13Y-62-13261	Bracket	1	SN:B50001--
2	01010-81025	Bolt	2	SN:B50001--
3	01643-31032	Washer	2	SN:B50001--
4	02781-00315	Union	1	SN:B50001--
5	07002-12034	O-ring	1	SN:B50001--
6	02896-11009	O-ring	1	SN:B50001--
7	02783-10315	Elbow	1	SN:B50001--
8	07002-12034	O-ring	1	SN:B50001--
9	02896-11009	O-ring	1	SN:B50001--
10	13Y-62-13440	Joint	2	SN:B50001--
11	01010-81025	Bolt	2	SN:B50001--
12	01643-31032	Washer	2	SN:B50001--
13	02896-11009	O-ring	4	SN:B50001--
14	13Y-62-13314	Hose	1	SN:B50001--
15	11Y-62-12570	Union	1	SN:B50001--
16	203-62-57730	Bolt, Eye	1	SN:B50001--
17	07000-12018	O-ring	2	SN:B50001--
18	07002-11423	O-ring	1	SN:B50001--
19	04434-51510	Clip	1	SN:B50001--
20	424-54-14230	Spacer	1	SN:B50001--
21	01010-81025	Bolt	1	SN:B50001--
22	01643-31032	Washer	1	SN:B50001--
23	13Y-62-13431	Hose	1	SN:B50001--
24	11Y-62-12570	Union	1	SN:B50001--
25	203-62-57730	Bolt, Eye	1	SN:B50001--
26	07000-12018	O-ring	2	SN:B50001--
27	07002-11423	O-ring	1	SN:B50001--
28	13Y-62-13553	Hose	1	SN:B50001--
29	04434-51510	Clip	1	SN:B50001--
30	01010-81025	Bolt	1	SN:B50001--
31	01643-31032	Washer	1	SN:B50001--
32	13Y-62-13573	Hose	1	SN:B50001--
33	04434-51510	Clip	1	SN:B50001--
34	01010-81025	Bolt	1	SN:B50001--
35	01643-31032	Washer	1	SN:B50001--
36	418-43-37161	Joint	1	SN:B50001--
37	02896-11008	O-ring	2	SN:B50001--
38	01010-81025	Bolt	1	SN:B50001--
39	01643-31032	Washer	1	SN:B50001--
40	13Y-62-13513	Hose	1	SN:B50001--
41	13Y-62-13421	Elbow	1	SN:B50001--
42	07002-11423	O-ring	1	SN:B50001--
43	02896-11008	O-ring	1	SN:B50001--
44	04434-51210	Clip	2	SN:B50001--
45	01010-81025	Bolt	2	SN:B50001--
46	01643-31032	Washer	2	SN:B50001--
47	13Y-62-13333	Hose	1	SN:B50001--

D61EX-23M0 S/N B50001
Drain Piping, Motor Drain (2/2)

Index	Part Number	Description	Qty	Options
48	11Y-62-12270	Elbow	1	SN:B50001--
49	07002-11423	O-ring	1	SN:B50001--
50	02896-11008	O-ring	1	SN:B50001--
51	21T-72-23260	Clip	1	SN:B50001--
52	424-54-14230	Spacer	1	SN:B50001--
53	01010-81025	Bolt	1	SN:B50001--
54	01643-31032	Washer	1	SN:B50001--
55	13Y-62-13533	Hose	1	SN:B50001--
56	04434-51210	Clip	1	SN:B50001--
57	01010-81025	Bolt	1	SN:B50001--
58	01643-31032	Washer	1	SN:B50001--
59	(13Y-62-12331)	Nipple		SN:B50001--

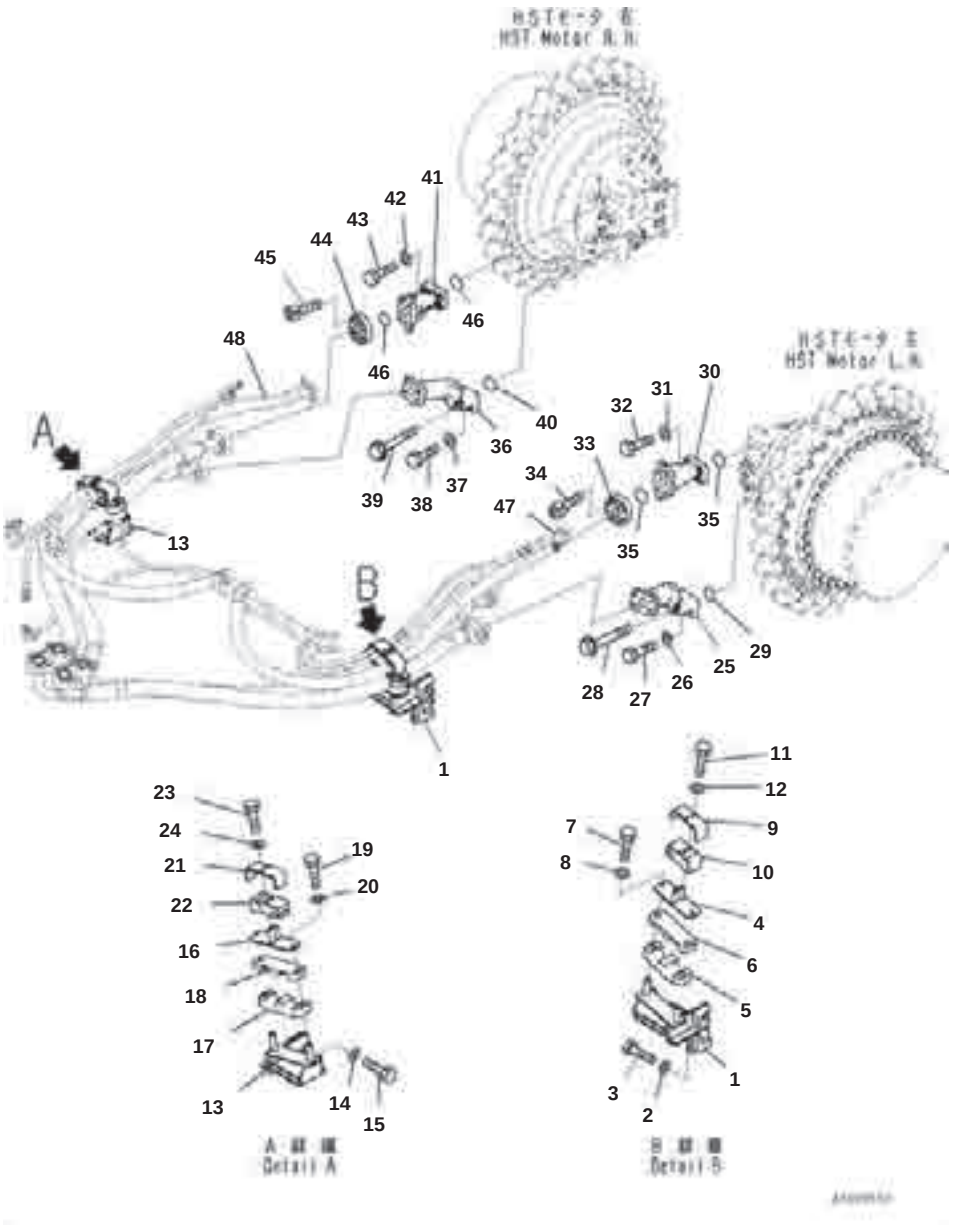

Hydrostatic Transmission Control Piping, Mounting

Index	Part Number	Description	Qty	Options
1	13Y-49-11414	Bracket	1	SN:B50001--
2	01643-31645	Washer	2	SN:B50001--
3	01010-81640	Bolt	2	SN:B50001--
4	13Y-49-11183	Bracket	1	SN:B50001--
5	13Y-49-11153	Cushion	1	SN:B50001--
6	13Y-49-11191	Cushion	1	SN:B50001--
7	01010-81030	Bolt	2	SN:B50001--
8	01643-31032	Washer	2	SN:B50001--
9	13Y-49-11161	Bracket	1	SN:B50001--
10	13Y-49-11173	Cushion	1	SN:B50001--
11	01010-81025	Bolt	2	SN:B50001--
12	01643-31032	Washer	2	SN:B50001--
13	13Y-49-11424	Bracket	1	SN:B50001--
14	01643-31645	Washer	2	SN:B50001--
15	01010-81640	Bolt	2	SN:B50001--
16	13Y-49-11183	Bracket	1	SN:B50001--
17	13Y-49-11153	Cushion	1	SN:B50001--
18	13Y-49-11191	Cushion	1	SN:B50001--
19	01010-81030	Bolt	2	SN:B50001--
20	01643-31032	Washer	2	SN:B50001--
21	13Y-49-11161	Bracket	1	SN:B50001--
22	13Y-49-11173	Cushion	1	SN:B50001--
23	01010-81025	Bolt	2	SN:B50001--
24	01643-31032	Washer	2	SN:B50001--
25	13Y-49-11114	Elbow	1	SN:B50001--
26	01643-51232	Washer	2	SN:B50001--
27	07372-51245	Bolt	2	SN:B50001--
28	01436-01200	Bolt	2	SN:B50001--
29	07000-B3038	O-ring	1	SN:B50001--
30	13Y-49-11132	Elbow	1	SN:B50001--
31	01643-51232	Washer	4	SN:B50001--
32	07372-51245	Bolt	4	SN:B50001--
33	13Y-49-11432	Flange	1	SN:B50001--
34	01252-A1235	Bolt, Hexagon Socket Head	4	SN:B50001--
35	07000-B3038	O-ring	2	SN:B50001--
36	13Y-49-11124	Elbow	1	SN:B50001--
37	01643-51232	Washer	2	SN:B50001--
38	07372-51245	Bolt	2	SN:B50001--
39	01436-01200	Bolt	2	SN:B50001--
40	07000-B3038	O-ring	1	SN:B50001--
41	13Y-49-11132	Elbow	1	SN:B50001--
42	01643-51232	Washer	4	SN:B50001--
43	07372-51245	Bolt	4	SN:B50001--
44	13Y-49-11432	Flange	1	SN:B50001--
45	01252-A1235	Bolt, Hexagon Socket Head	4	SN:B50001--
46	07000-B3038	O-ring	2	SN:B50001--
47	(13Y-62-13662)	Hose Assembly		SN:B50001--

D61EX-23M0 S/N B50001
Hydrostatic Transmission Control Piping, Mounting

Index	Part Number	Description	Qty	Options
48	(13Y-62-13213)	Hose Assembly		SN:B50001--

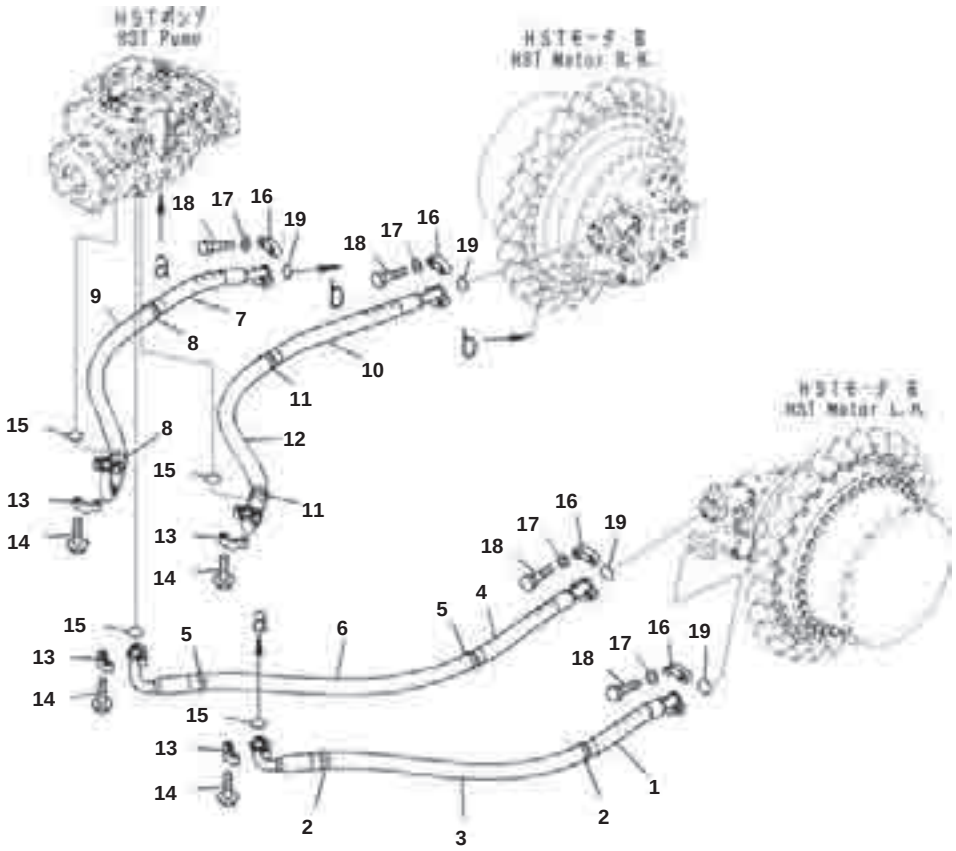

Hydrostatic Transmission Control Piping, Travel Motor Piping

Index	Part Number	Description	Qty	Options
1	13Y-49-11314	Hose	1	SN:B50001--
2	08034-20414	▪ Band	2	SN:B50001--
3	13Y-49-11442	▪ Cover	1	SN:B50001--
4	13Y-49-11334	Hose	1	SN:B50001--
5	08034-20414	▪ Band	2	SN:B50001--
6	13Y-49-11442	▪ Cover	1	SN:B50001--
7	13Y-49-11354	Hose	1	SN:B50001--
8	08034-20414	▪ Band	2	SN:B50001--
9	13Y-49-11442	▪ Cover	1	SN:B50001--
10	13Y-49-11374	Hose	1	SN:B50001--
11	08034-20414	▪ Band	2	SN:B50001--
12	13Y-49-11442	▪ Cover	1	SN:B50001--
13	07371-51260	Flange, Split	8	SN:B50001--
14	01435-01245	Bolt	16	SN:B50001--
15	07000-B3038	O-ring	4	SN:B50001--
16	07371-51260	Flange, Split	8	SN:B50001--
17	01643-51232	Washer	16	SN:B50001--
18	07372-51250	Bolt	16	SN:B50001--
19	07000-B3038	O-ring	4	SN:B50001--

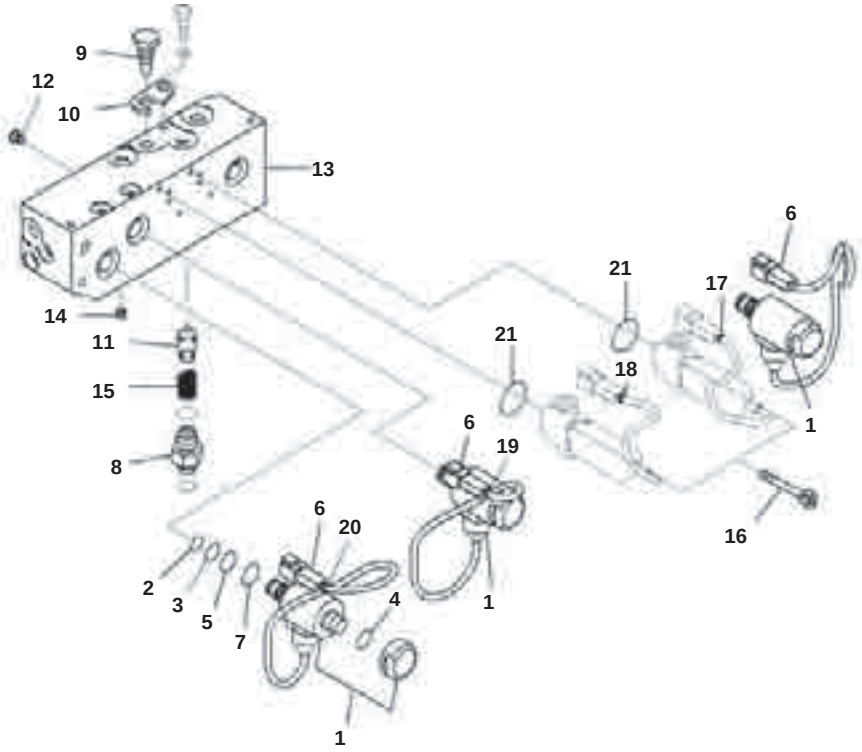

Proportional Pressure Control (PPC) Piping, Solenoid Valve

Index	Code	Part Number	Description	Qty	Options
		13Y-62-13700	Valve Assembly	1	SN:B50001--
1		11Y-60-11530	' Valve, Solenoid	3	SN:B50001--
2		07000-02012	' ' O-ring	1	SN:B50001--
3		07000-02014	' ' O-ring	1	SN:B50001--
4		07000-12016	' ' O-ring	1	SN:B50001--
5		07000-02018	' ' O-ring	1	SN:B50001--
6	C1		' ' Connector	1	SN:B50001--
7		203-60-62190	' ' O-ring	1	SN:B50001--
8		11Y-62-18420	' Union	1	SN:B50001--
9		11Y-62-31131	' Bolt	1	SN:B50001--
10		11Y-62-31170	' Plate	1	SN:B50001--
11		11Y-62-31180	' Valve	1	SN:B50001--
12		11Y-62-31210	' Plug	1	SN:B50001--
13		11Y-62-41111	' Block	1	SN:B50001--
14		14X-15-16461	' Plug	1	SN:B50001--
15		203-60-21260	' Spring	1	SN:B50001--
16		203-60-62220	' Bolt	4	SN:B50001--
17		21U-62-34710	' Band, Yellow	1	SN:B50001--
18		21U-62-34730	' Band, Green	1	SN:B50001--
19		21U-62-34750	' Band, Blue	1	SN:B50001--
20		21U-62-34780	' Band, Brown	1	SN:B50001--
21		700-93-11320	' O-ring	2	SN:B50001--

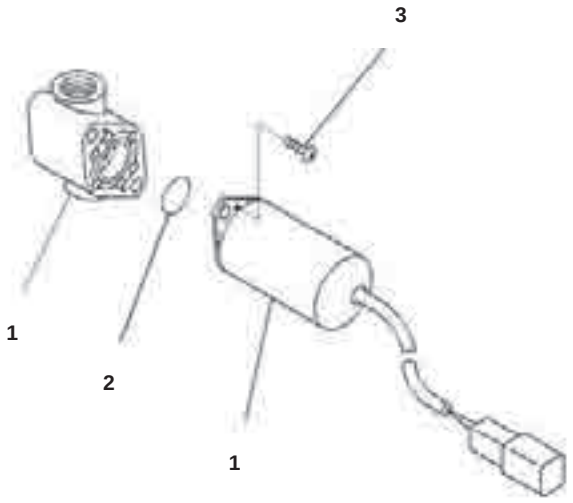

Proportional Pressure Control (PPC) Piping, EPC Valve

Index	Part Number	Description	Qty	Options
	13Y-62-13700	Valve Assembly	1	SN:B50001--
1	702-21-07311	▪ Valve, Solenoid	2	SN:B50001--
2	702-21-53680	▪ ▪ O-ring	1	SN:B50001--
3	702-21-53330	▪ ▪ Screw	2	SN:B50001--

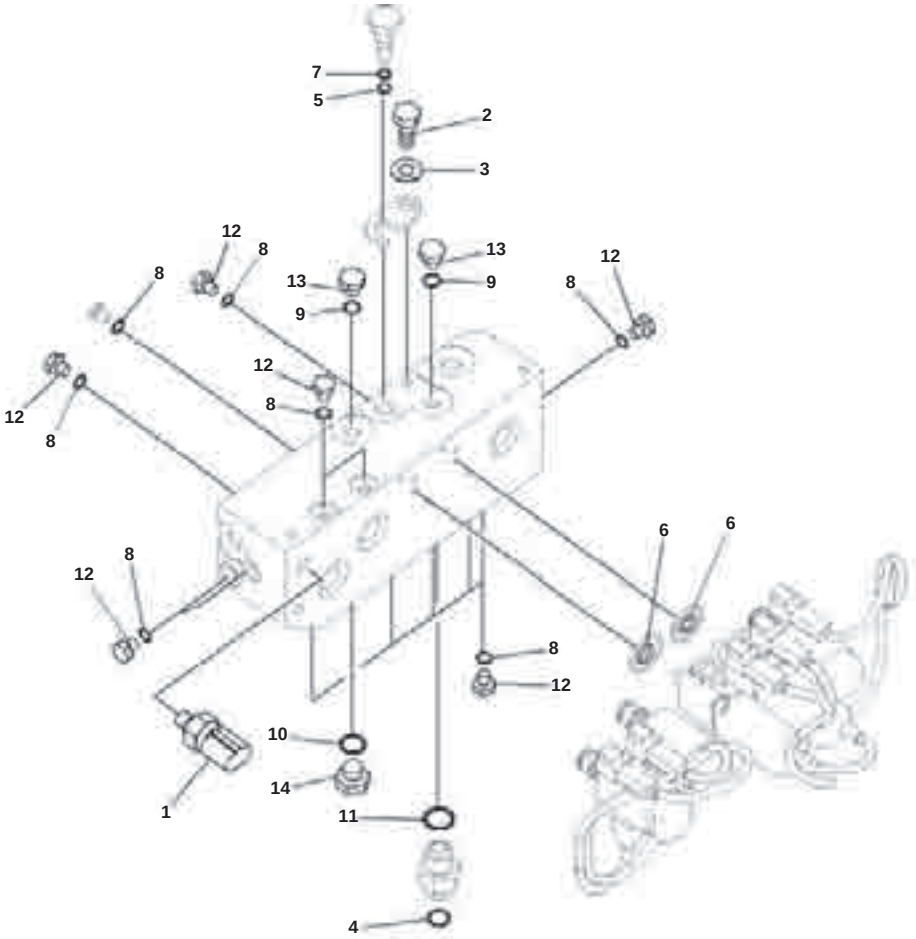

Proportional Pressure Control (PPC) Piping, Solenoid Valve Related Parts (1/2)

Index	Part Number	Description	Qty	Options
	13Y-62-13700	Valve Assembly	1	SN:B50001--
1	7861-93-1840	▪ Sensor	1	SN:B50001--
	07000-12011	▪ ▪ O-ring	1	SN:B50001--
2	01010-80816	▪ Bolt	1	SN:B50001--
3	01643-30823	▪ Washer	1	SN:B50001--
4	02896-11009	▪ O-ring	1	SN:B50001--
5	07000-11007	▪ O-ring	1	SN:B50001--
6	07000-12011	▪ O-ring	2	SN:B50001--
7	07001-01007	▪ Ring, Back-up	1	SN:B50001--
8	07002-10823	▪ O-ring	13	SN:B50001--
9	07002-11023	▪ O-ring	2	SN:B50001--
10	07002-11423	▪ O-ring	1	SN:B50001--
11	07002-12034	▪ O-ring	1	SN:B50001--
12	07040-10807	▪ Plug	12	SN:B50001--
13	07040-11007	▪ Plug	2	SN:B50001--
14	07040-11409	▪ Plug	1	SN:B50001--

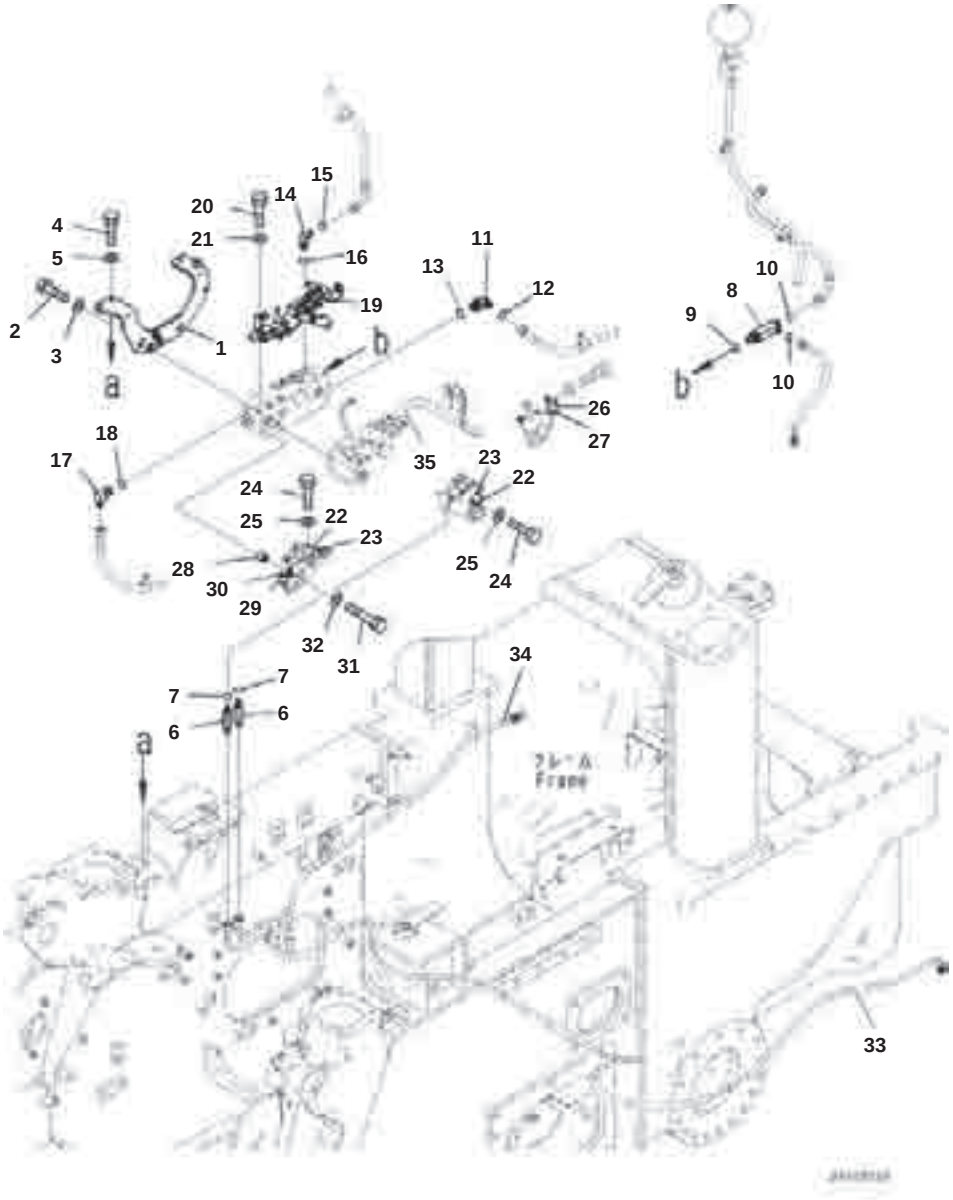

Proportional Pressure Control (PPC) Piping, Solenoid Valve Related Parts (2/2)

Index	Part Number	Description	Qty	Options
1	13Y-62-11792	Plate	1	SN:B50001--
2	01010-81030	Bolt	3	SN:B50001--
3	01643-31032	Washer	3	SN:B50001--
4	01010-81025	Bolt	3	SN:B50001--
5	01643-31032	Washer	3	SN:B50001--
6	13Y-62-12331	Nipple	2	SN:B50001--
7	07002-11423	O-ring	2	SN:B50001--
8	13Y-62-12341	Tee	1	SN:B50001--
9	07002-11823	O-ring	1	SN:B50001--
10	02896-11009	O-ring	2	SN:B50001--
11	02782-10315	Elbow	1	SN:B50001--
12	02896-11009	O-ring	1	SN:B50001--
13	07002-12034	O-ring	1	SN:B50001--
14	02782-10311	Elbow	1	SN:B50001--
15	02896-11009	O-ring	1	SN:B50001--
16	07002-11423	O-ring	1	SN:B50001--
17	20Y-62-22271	Elbow	1	SN:B50001--
18	07002-11423	O-ring	1	SN:B50001--
19	13Y-06-11350	Bracket	1	SN:B50001--
20	01010-80816	Bolt	2	SN:B50001--
21	01643-30823	Washer	2	SN:B50001--
22	04434-51510	Clip	2	SN:B50001--
23	07095-20211	Cushion	2	SN:B50001--
24	01010-81020	Bolt	2	SN:B50001--
25	01643-31032	Washer	2	SN:B50001--
26	04434-51610	Clip	1	SN:B50001--
	04434-51510	Clip	1	SN:B50001--
27	07095-20211	Cushion	1	SN:B50001--
28	175-79-83760	Spacer	1	SN:B50001--
29	04434-51610	Clip	1	SN:B50001--
	04434-51510	Clip	1	SN:B50001--
30	07095-20211	Cushion	1	SN:B50001--
31	01010-81040	Bolt	1	SN:B50001--
32	01643-31032	Washer	1	SN:B50001--
33	(13Y-62-13513)	Hose	1	SN:B50001--
34	(13Y-62-13533)	Hose	1	SN:B50001--
35	(13Y-06-11932)	Wiring Harness	1	SN:B50001--

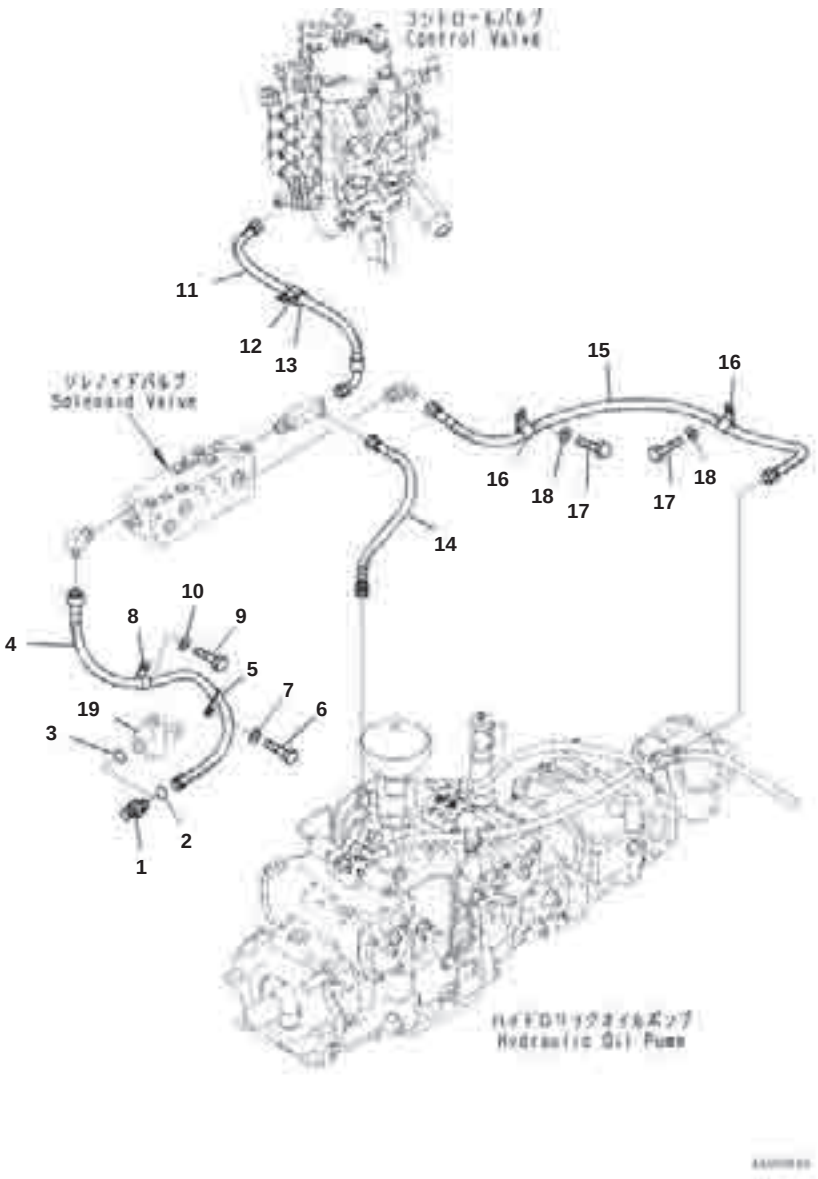

Proportional Pressure Control (PPC) Piping, Solenoid Valve Piping

Index	Part Number	Description	Qty	Options
1	02782-10315	Elbow	1	SN:B50001--
2	02896-11009	O-ring	1	SN:B50001--
3	07002-12034	O-ring	1	SN:B50001--
4	13Y-62-11883	Hose	1	SN:B50001--
5	04434-51510	Clip	1	SN:B50001--
6	01010-81025	Bolt	1	SN:B50001--
7	01643-31032	Washer	1	SN:B50001--
8	04434-51510	Clip	1	SN:B50001--
9	01010-81035	Bolt	1	SN:B50001--
10	01643-31032	Washer	1	SN:B50001--
11	13Y-62-11712	Hose	1	SN:B50001--
12	04434-52110	Clip	1	SN:B50001--
13	07095-20314	Cushion	1	SN:B50001--
14	02774-003A4	Hose	1	SN:B50001--
15	13Y-62-11750	Hose	1	SN:B50001--
16	04434-51510	Clip	2	SN:B50001--
17	01010-81020	Bolt	2	SN:B50001--
18	01643-31032	Washer	2	SN:B50001--
19	(13Y-62-13261)	Bracket	1	SN:B50001--

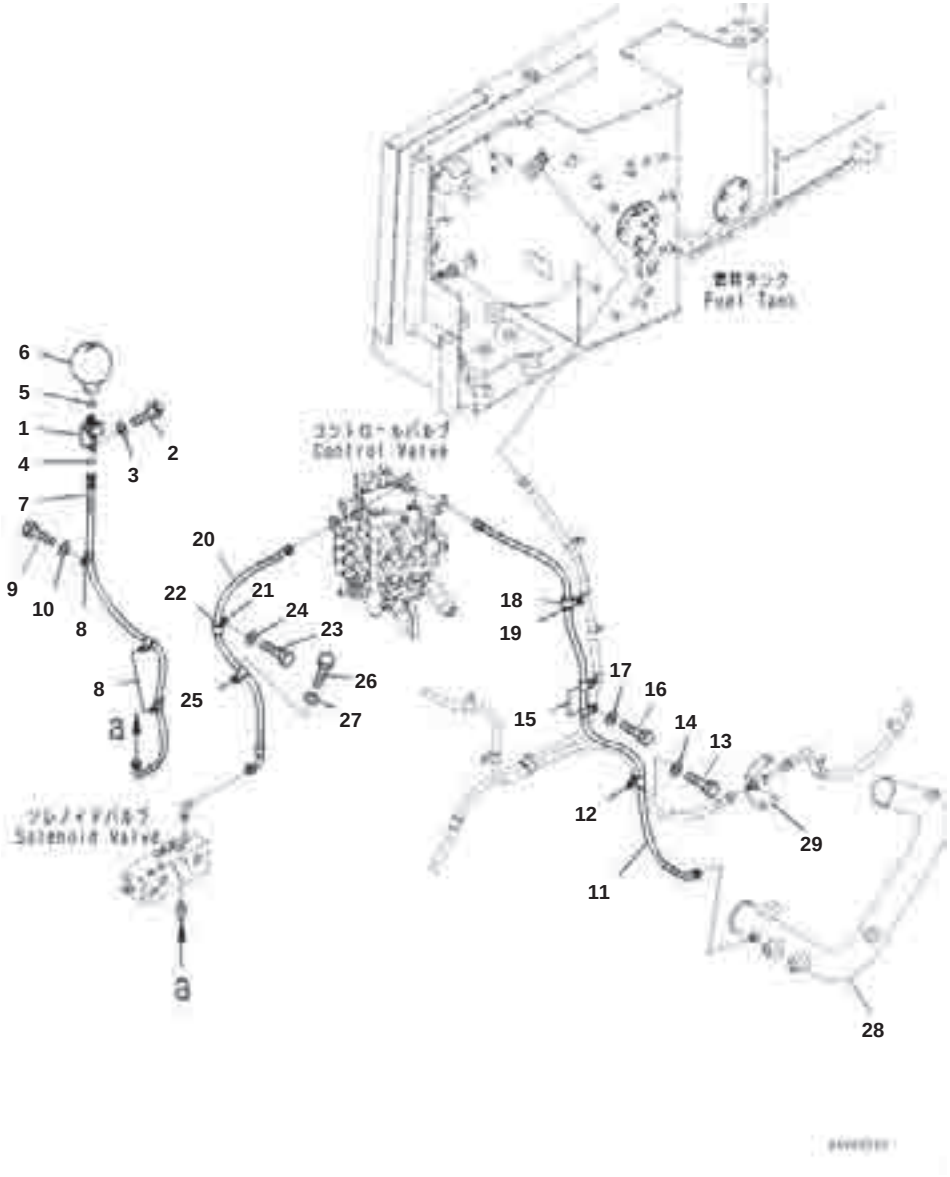

Index	Part Number	Description	Qty	Options
1	11Y-62-38411	Bracket	1	SN:B50001--
2	01010-81025	Bolt	2	SN:B50001--
3	01643-31032	Washer	2	SN:B50001--
4	02896-11009	O-ring	1	SN:B50001--
5	07002-12034	O-ring	1	SN:B50001--
6	22U-60-21341	Accumulator	1	SN:B50001--
7	13Y-62-11811	Hose	1	SN:B50001--
8	04434-51510	Clip	3	SN:B50001--
9	01010-81025	Bolt	3	SN:B50001--
10	01643-31032	Washer	3	SN:B50001--
11	13Y-62-11862	Hose	1	SN:B50001--
12	04434-51510	Clip	1	SN:B50001--
13	01010-81020	Bolt	1	SN:B50001--
14	01643-31032	Washer	1	SN:B50001--
15	04434-51510	Clip	2	SN:B50001--
16	01010-81020	Bolt	1	SN:B50001--
17	01643-31032	Washer	1	SN:B50001--
18	04434-52110	Clip	1	SN:B50001--
19	07095-20314	Cushion	1	SN:B50001--
20	13Y-62-11771	Hose	1	SN:B50001--
21	04434-52110	Clip	1	SN:B50001--
22	07095-20314	Cushion	1	SN:B50001--
23	01010-81025	Bolt	1	SN:B50001--
24	01643-31032	Washer	1	SN:B50001--
25	04434-51510	Clip	1	SN:B50001--
26	01010-81025	Bolt	1	SN:B50001--
27	01643-31032	Washer	1	SN:B50001--
28	(13Y-62-11583)	Tube		SN:B50001--
29	(13Y-04-12313)	Bracket		SN:B50001--

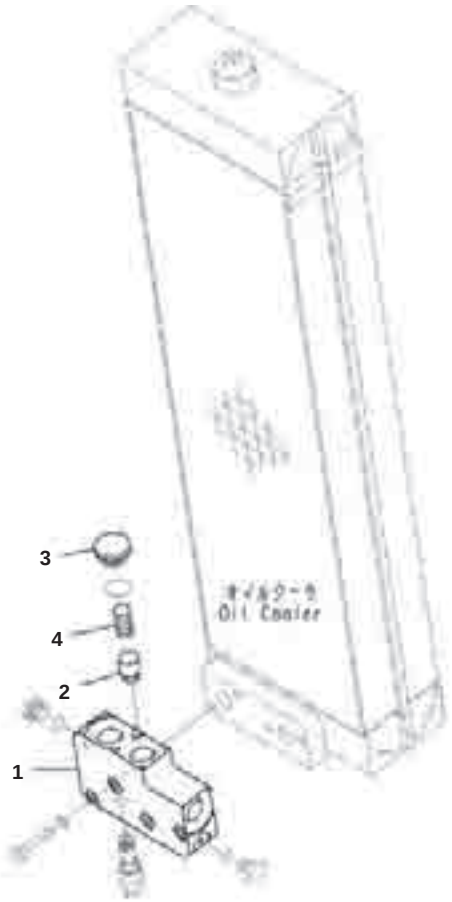

Proportional Pressure Control (PPC) Piping, Bypass Valve

Index	Code	Part Number	Description	Qty	Options
		13Y-62-11832	Valve Assembly	1	SN:B50001--
1	C1		▪ Block	1	SN:B50001--
2		13Y-62-11850	▪ Valve	1	SN:B50001--
3		20X-62-21670	▪ Plug	1	SN:B50001--
4		21W-62-35890	▪ Spring	1	SN:B50001--

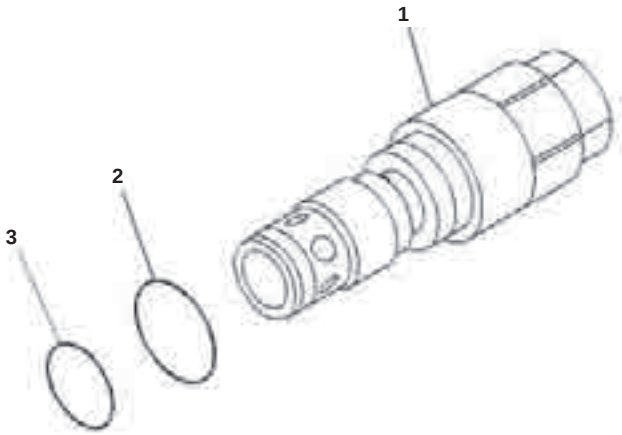

Proportional Pressure Control (PPC) Piping, Relief Valve

Index	Part Number	Description	Qty	Options
	13Y-62-11832	Valve Assembly	1	SN:B50001--
1	720-2M-03535	▪ Valve, Relief	1	SN:B50001--
2	07002-62434	▪ ▪ O-ring	1	SN:B50001--
3	706-86-53530	▪ ▪ O-ring	1	SN:B50001--

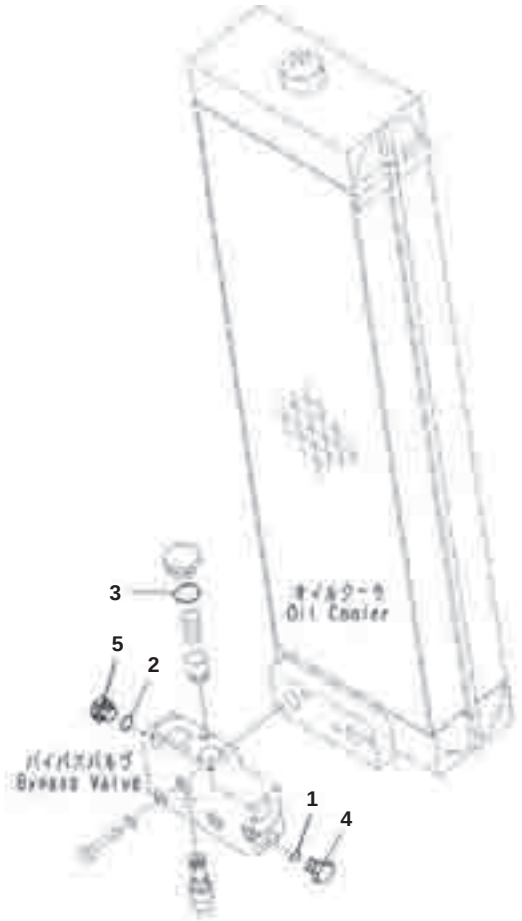

Proportional Pressure Control (PPC) Piping, Plug

Index	Part Number	Description	Qty	Options
	13Y-62-11832	Valve Assembly	1	SN:B50001--
1	07002-10823	▪ O-ring	1	SN:B50001--
2	07002-12034	▪ O-ring	1	SN:B50001--
3	07002-13334	▪ O-ring	1	SN:B50001--
4	07040-10807	▪ Plug	1	SN:B50001--
5	07040-12012	▪ Plug	1	SN:B50001--

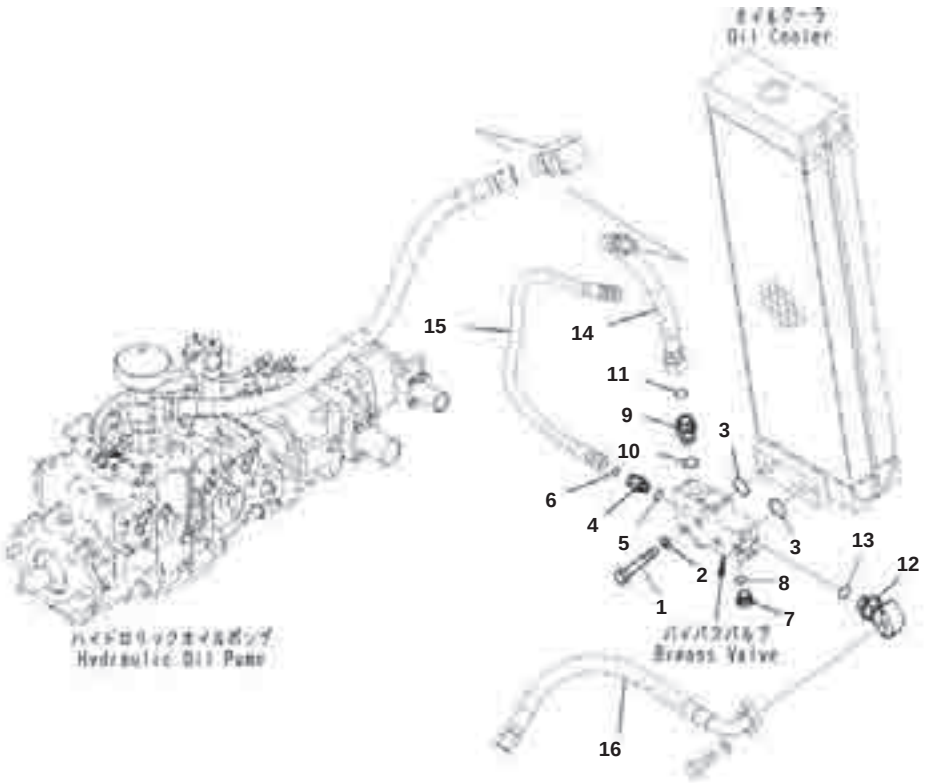

Proportional Pressure Control (PPC) Piping, Bypass Valve Mounting

Index	Part Number	Description	Qty	Options
1	01010-81070	Bolt	4	SN:B50001--
2	01643-31032	Washer	4	SN:B50001--
3	07000-13038	O-ring	2	SN:B50001--
4	02781-00522	Union	1	SN:B50001--
5	07002-12434	O-ring	1	SN:B50001--
6	02896-11015	O-ring	1	SN:B50001--
7	07040-12412	Plug	1	SN:B50001--
8	07002-12434	O-ring	1	SN:B50001--
9	207-62-72110	Union	1	SN:B50001--
10	07002-13334	O-ring	1	SN:B50001--
11	207-62-64740	O-ring	1	SN:B50001--
12	13Y-62-13291	Elbow	1	SN:B50001--
13	07002-13334	O-ring	1	SN:B50001--
14	(13Y-62-11151)	Hose		SN:B50001--
15	(13Y-03-16180)	Hose		SN:B50001--
16	(13Y-62-11642)	Hose		SN:B50001--

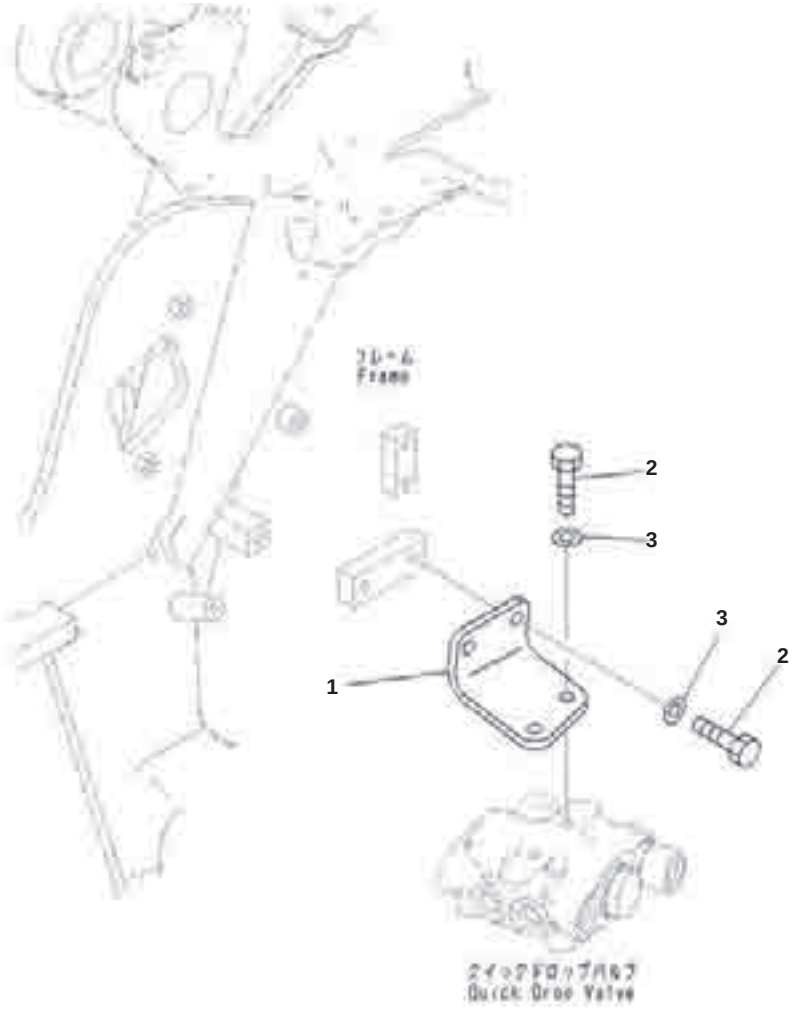

Dozer Blade Lift Piping, Plate

Index	Part Number	Description	Qty	Options
1	13Y-62-12820	Plate	1	SN:B50001--
2	01010-81230	Bolt	4	SN:B50001--
3	01643-31232	Washer	4	SN:B50001--

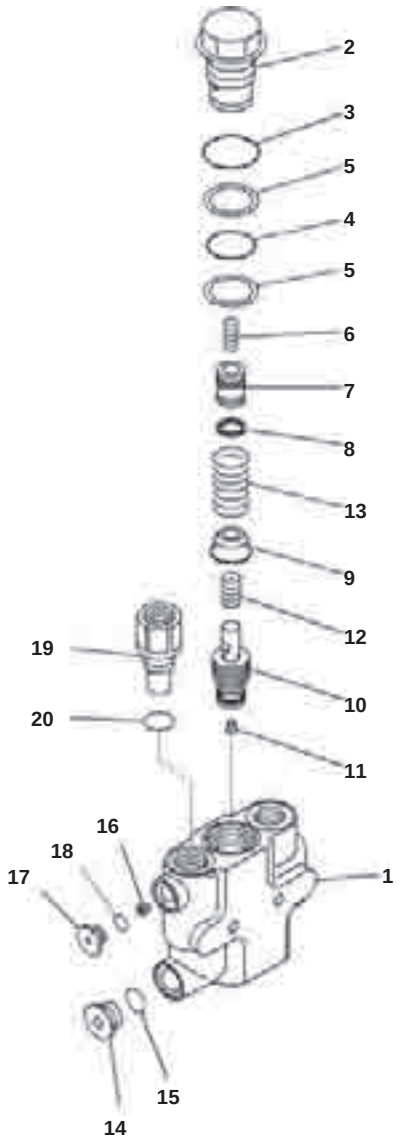

Dozer Blade Lift Piping, Quick Drop Valve

Index	Code	Part Number	Description	Qty	Options
		702-21-11600	Valve Assembly	1	SN:B50001--
1	C1		· Body	1	SN:B50001--
2	C1		· Plug	1	SN:B50001--
3		07002-14234	· O-ring	1	SN:B50001--
4		07000-13032	· O-ring	1	SN:B50001--
5		702-21-81610	· Ring, Back-up	2	SN:B50001--
6		723-36-41930	· Spring	1	SN:B50001--
7	C1		· Piston	1	SN:B50001--
8	C1		· Seal	1	SN:B50001--
9		702-21-81560	· Retainer	1	SN:B50001--
10	C1		· Valve	1	SN:B50001--
11	C1		· Plug, Tapered	1	SN:B50001--
12		702-21-81570	· Spring	1	SN:B50001--
13		702-21-81580	· Spring	1	SN:B50001--
14		720-2M-11550	· Plug	1	SN:B50001--
15		07002-12034	· O-ring	1	SN:B50001--
16	C2	(702-21-81620)	· Orifice	1	SN:B50001--
17		702-21-55620	· Plug	1	SN:B50001--
18		07002-11423	· O-ring	1	SN:B50001--
19		702-21-81640	· Plug	1	SN:B50001--
20		07000-13024	· O-ring	1	SN:B50001--

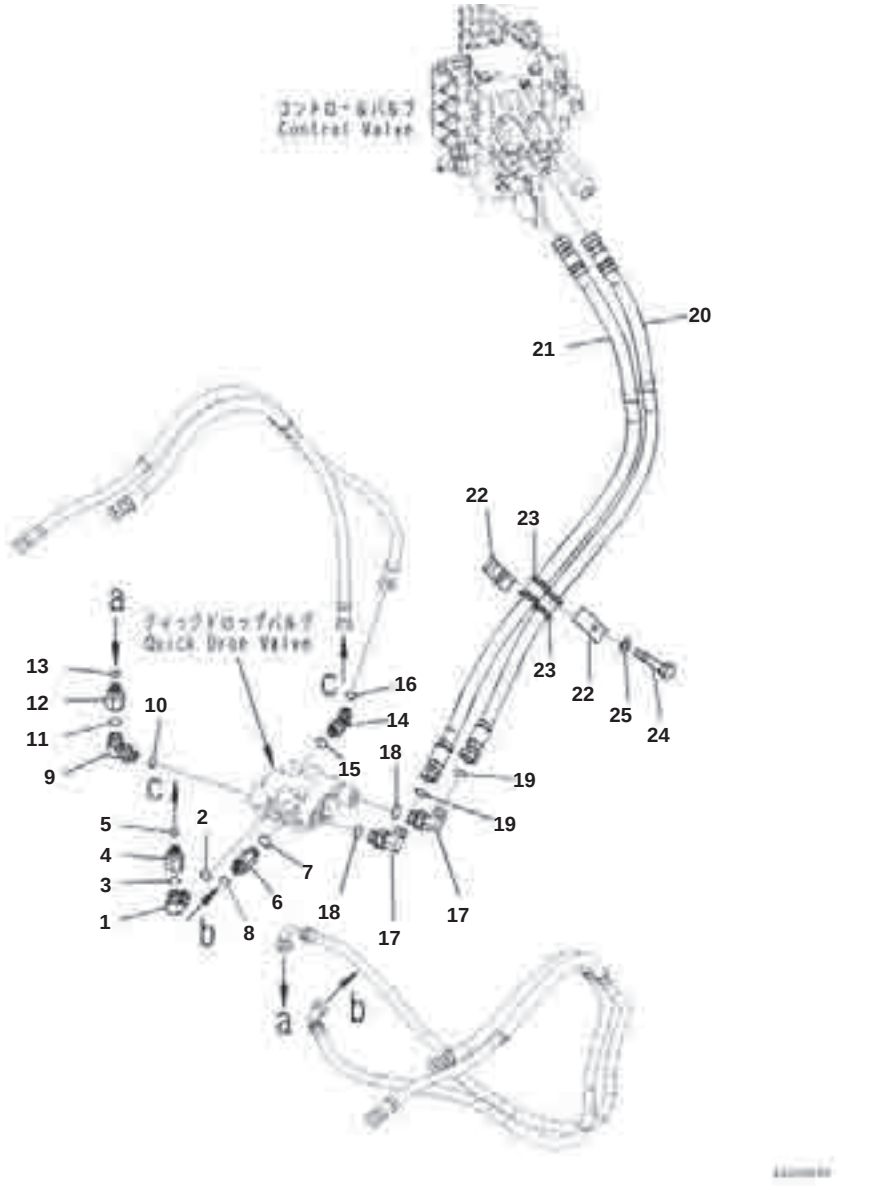

Dozer Blade Lift Piping, Quick Drop Valve Piping

Index	Part Number	Description	Qty	Options
1	02782-10516	Elbow	1	SN:B50001--
2	07002-12034	O-ring	1	SN:B50001--
3	02896-11015	O-ring	1	SN:B50001--
4	13Y-62-12830	Union	1	SN:B50001--
5	02896-11012	O-ring	1	SN:B50001--
6	427-43-28660	Union	1	SN:B50001--
7	07002-12034	O-ring	1	SN:B50001--
8	02896-11012	O-ring	1	SN:B50001--
9	02782-10516	Elbow	1	SN:B50001--
10	07002-12034	O-ring	1	SN:B50001--
11	02896-11015	O-ring	1	SN:B50001--
12	13Y-62-12830	Union	1	SN:B50001--
13	02896-11012	O-ring	1	SN:B50001--
14	02782-10422	Elbow	1	SN:B50001--
15	07002-12034	O-ring	1	SN:B50001--
16	02896-11012	O-ring	1	SN:B50001--
17	02782-10522	Elbow	2	SN:B50001--
18	07002-12434	O-ring	2	SN:B50001--
19	02896-11015	O-ring	2	SN:B50001--
20	13Y-62-12114	Hose	1	SN:B50001--
21	13Y-62-12134	Hose	1	SN:B50001--
22	22P-62-13550	Clamp	2	SN:B50001--
23	07095-00526	Cushion	2	SN:B50001--
24	01010-81270	Bolt	1	SN:B50001--
25	01643-31232	Washer	1	SN:B50001--

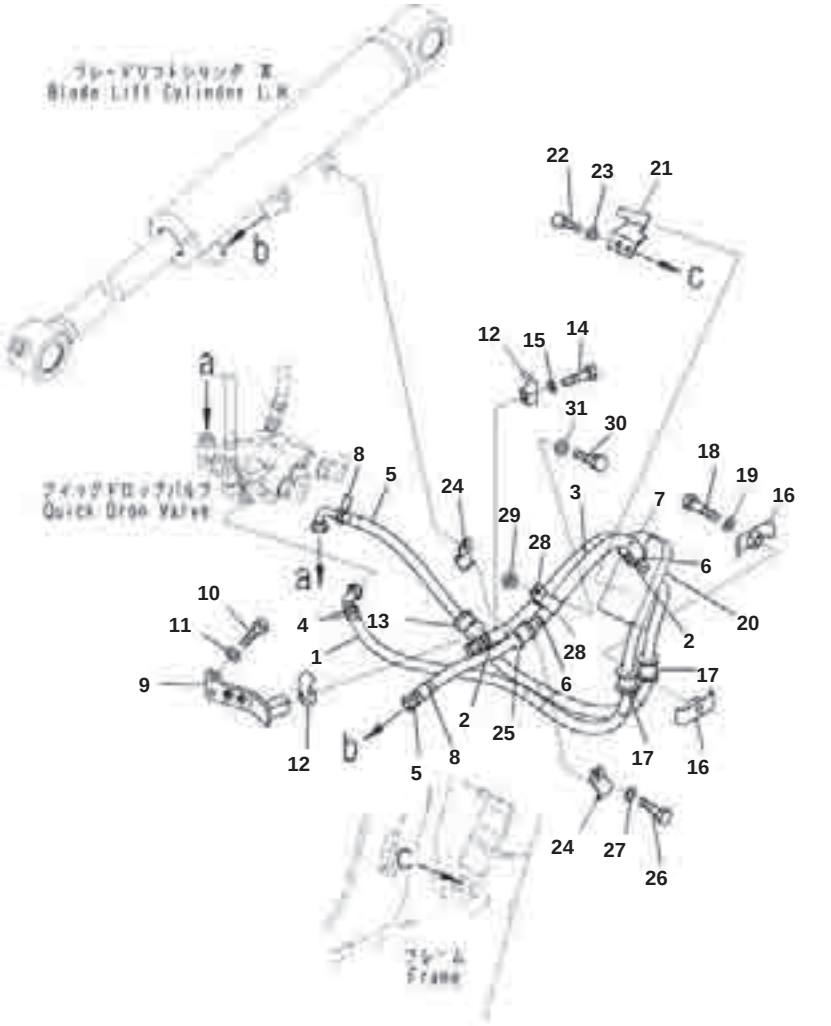

Dozer Blade Lift Piping, Lift Cylinder Piping (1/2)

Index	Part Number	Description	Qty	Options
1	13Y-62-12214	Hose	1	SN:B50001--
2	08034-20414	' Band	2	SN:B50001--
3	13Y-62-13940	' Cover	1	SN:B50001--
4	21U-62-34710	' Band, Yellow	2	SN:B50001--
5	13Y-62-12234	Hose	1	SN:B50001--
6	08034-20414	' Band	2	SN:B50001--
7	13Y-62-13930	' Cover	1	SN:B50001--
8	21U-62-34730	' Band, Green	3	SN:B50001--
9	13Y-62-12790	Bracket	1	SN:B50001--
10	01010-81035	Bolt	2	SN:B50001--
11	01643-31032	Washer	2	SN:B50001--
12	418-03-43880	Clamp	2	SN:B50001--
13	07095-00420	Cushion	1	SN:B50001--
14	01010-81265	Bolt	1	SN:B50001--
15	01643-31232	Washer	1	SN:B50001--
16	425-43-48220	Clamp	2	SN:B50001--
17	07095-00420	Cushion	2	SN:B50001--
18	01010-81260	Bolt	1	SN:B50001--
19	01643-31232	Washer	1	SN:B50001--
20	13Y-62-12250	Rubber	1	SN:B50001--
21	13Y-62-12261	Plate	1	SN:B50001--
22	01010-81020	Bolt	2	SN:B50001--
23	01643-31032	Washer	2	SN:B50001--
24	11Y-62-33591	Clamp	2	SN:B50001--
25	07095-00420	Cushion	1	SN:B50001--
26	01010-81030	Bolt	1	SN:B50001--
27	01643-31032	Washer	1	SN:B50001--
28	04434-52711	Clip	2	SN:B50001--
29	01580-11008	Nut	1	SN:B50001--
30	01010-81025	Bolt	1	SN:B50001--
31	01643-31032	Washer	1	SN:B50001--

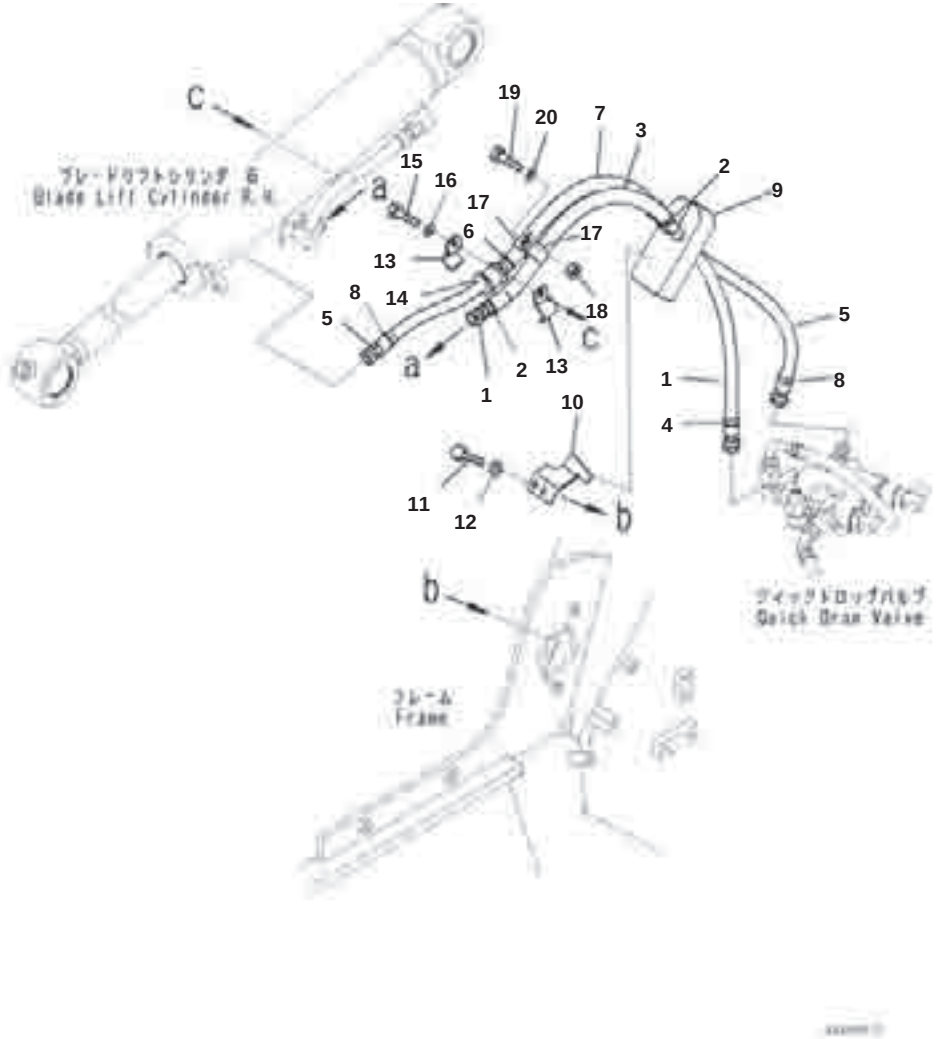

Dozer Blade Lift Piping, Lift Cylinder Piping (2/2)

Index	Part Number	Description	Qty	Options
1	13Y-62-12155	Hose	1	SN:B50001--
2	08034-20414	' Band	2	SN:B50001--
3	13Y-62-13940	' Cover	1	SN:B50001--
4	21U-62-34710	' Band, Yellow	1	SN:B50001--
5	13Y-62-12174	Hose	1	SN:B50001--
6	08034-20414	' Band	2	SN:B50001--
7	13Y-62-13930	' Cover	1	SN:B50001--
8	21U-62-34730	' Band, Green	2	SN:B50001--
9	13Y-62-12250	Rubber	1	SN:B50001--
10	13Y-62-12271	Plate	1	SN:B50001--
11	01010-81020	Bolt	2	SN:B50001--
12	01643-31032	Washer	2	SN:B50001--
13	11Y-62-33591	Clamp	2	SN:B50001--
14	07095-00420	Cushion	1	SN:B50001--
15	01010-81030	Bolt	1	SN:B50001--
16	01643-31032	Washer	1	SN:B50001--
17	04434-52711	Clip	2	SN:B50001--
18	01580-11008	Nut	1	SN:B50001--
19	01010-81025	Bolt	1	SN:B50001--
20	01643-31032	Washer	1	SN:B50001--

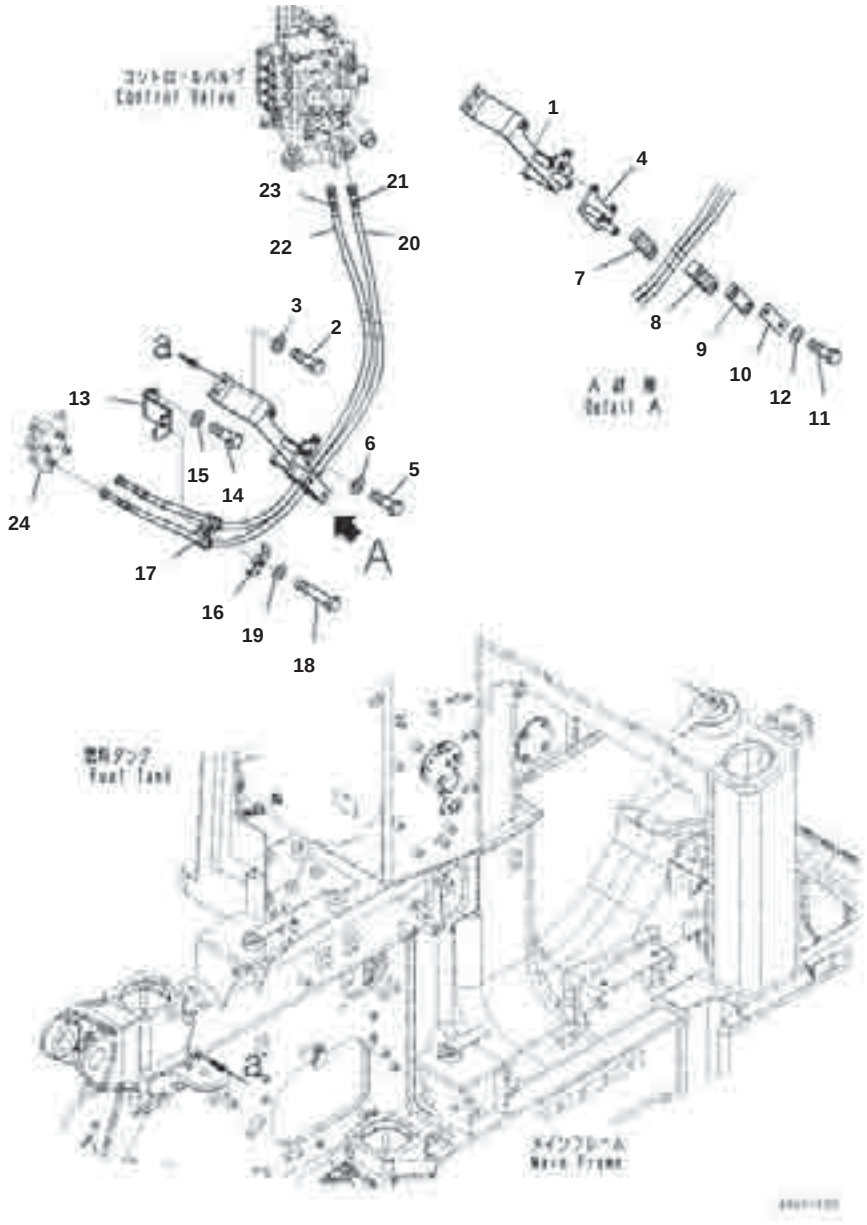

Dozer Blade Tilt Piping

Index	Part Number	Description	Qty	Options
1	13Y-62-12453	Bracket	1	SN:B50001--
2	01010-81025	Bolt	4	SN:B50001--
3	01643-31032	Washer	4	SN:B50001--
4	13Y-62-12483	Bracket	1	SN:B50001--
5	01010-81025	Bolt	2	SN:B50001--
6	01643-31032	Washer	2	SN:B50001--
7	13Y-62-12670	Cushion	1	SN:B50001--
8	13Y-62-12681	Cushion	1	SN:B50001--
9	13Y-62-12690	Cushion	1	SN:B50001--
10	13Y-62-16320	Plate	1	SN:B50001--
11	01010-81225	Bolt	2	SN:B50001--
12	01643-31232	Washer	2	SN:B50001--
13	13Y-62-12473	Bracket	1	SN:B50001--
14	01010-81025	Bolt	2	SN:B50001--
15	01643-31032	Washer	2	SN:B50001--
16	22P-62-13540	Clamp	2	SN:B50001--
17	07095-00317	Cushion	2	SN:B50001--
18	01010-81265	Bolt	1	SN:B50001--
19	01643-31232	Washer	1	SN:B50001--
20	13Y-62-12414	Hose	1	SN:B50001--
21	21U-62-34770	▪ Band, White	3	SN:B50001--
22	13Y-62-12434	Hose	1	SN:B50001--
23	21U-62-34750	▪ Band, Blue	3	SN:B50001--
24	(13Y-62-16152)	Bracket		SN:B50001--

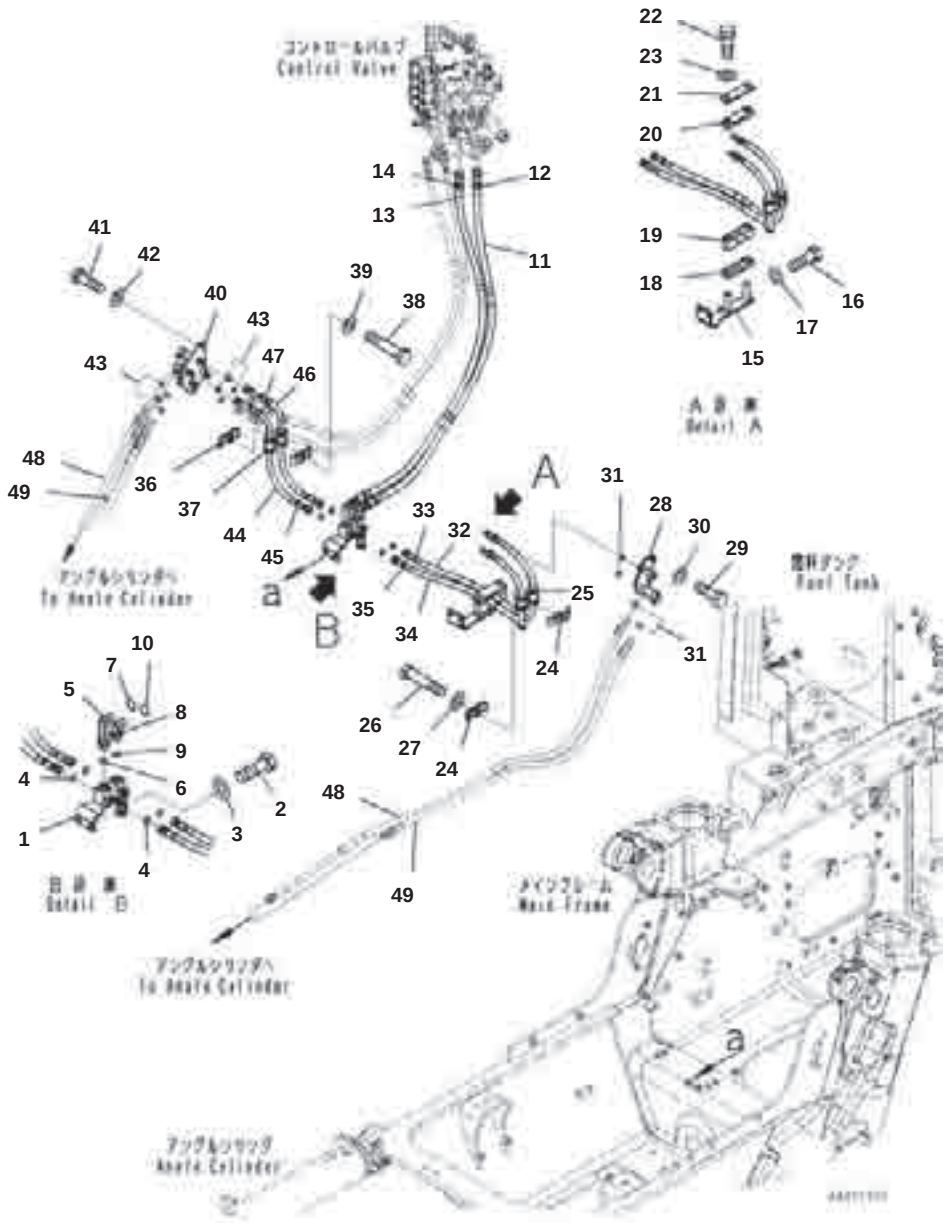

Index	Part Number	Description	Qty	Options
1	13Y-62-12592	Bracket	1	SN:B50001--
2	01010-81025	Bolt	2	SN:B50001--
3	01643-31032	Washer	2	SN:B50001--
4	02896-11009	O-ring	4	SN:B50001--
5	02782-10424	Elbow	1	SN:B50001--
6	07002-12034	O-ring	1	SN:B50001--
7	02896-11012	O-ring	1	SN:B50001--
8	02782-10422	Elbow	1	SN:B50001--
9	07002-12034	O-ring	1	SN:B50001--
10	02896-11012	O-ring	1	SN:B50001--
11	13Y-62-12514	Hose	1	SN:B50001--
12	21U-62-34740	▪ Band, Orange	3	SN:B50001--
13	13Y-62-12534	Hose	1	SN:B50001--
14	21U-62-34760	▪ Band, Red	3	SN:B50001--
15	13Y-62-12662	Bracket	1	SN:B50001--
16	01010-81025	Bolt	2	SN:B50001--
17	01643-31032	Washer	2	SN:B50001--
18	13Y-62-12690	Cushion	1	SN:B50001--
19	13Y-62-12681	Cushion	1	SN:B50001--
20	13Y-62-12670	Cushion	1	SN:B50001--
21	13Y-62-16320	Plate	1	SN:B50001--
22	01010-81225	Bolt	2	SN:B50001--
23	01643-31232	Washer	2	SN:B50001--
24	22P-62-13540	Clamp	2	SN:B50001--
25	07095-00318	Cushion	2	SN:B50001--
26	01010-81260	Bolt	1	SN:B50001--
27	01643-31232	Washer	1	SN:B50001--
28	13Y-62-16141	Bracket	1	SN:B50001--
29	01010-81240	Bolt	2	SN:B50001--
30	01643-31232	Washer	2	SN:B50001--
31	02896-11009	O-ring	4	SN:B50001--
32	13Y-62-12552	Hose	1	SN:B50001--
33	21U-62-34740	▪ Band, Orange	2	SN:B50001--
34	13Y-62-12572	Hose	1	SN:B50001--
35	21U-62-34760	▪ Band, Red	2	SN:B50001--
36	22P-62-13540	Clamp	2	SN:B50001--
37	07095-00318	Cushion	2	SN:B50001--
38	01010-81260	Bolt	1	SN:B50001--
39	01643-31232	Washer	1	SN:B50001--
40	13Y-62-16152	Bracket	1	SN:B50001--
41	01010-81240	Bolt	2	SN:B50001--
42	01643-31232	Washer	2	SN:B50001--
43	02896-11009	O-ring	8	SN:B50001--
44	13Y-62-12611	Hose	1	SN:B50001--
45	21U-62-34760	▪ Band, Red	2	SN:B50001--
46	13Y-62-12631	Hose	1	SN:B50001--
47	21U-62-34740	▪ Band, Orange	2	SN:B50001--

Reference:H2230-001001 Page:H012001

D61EX-23M0 S/N B50001
Dozer Blade Angle Piping

Index	Part Number	Description	Qty	Options
48	(13Y-62-16171)	Hose		SN:B50001--
49	(13Y-62-16161)	Hose		SN:B50001--

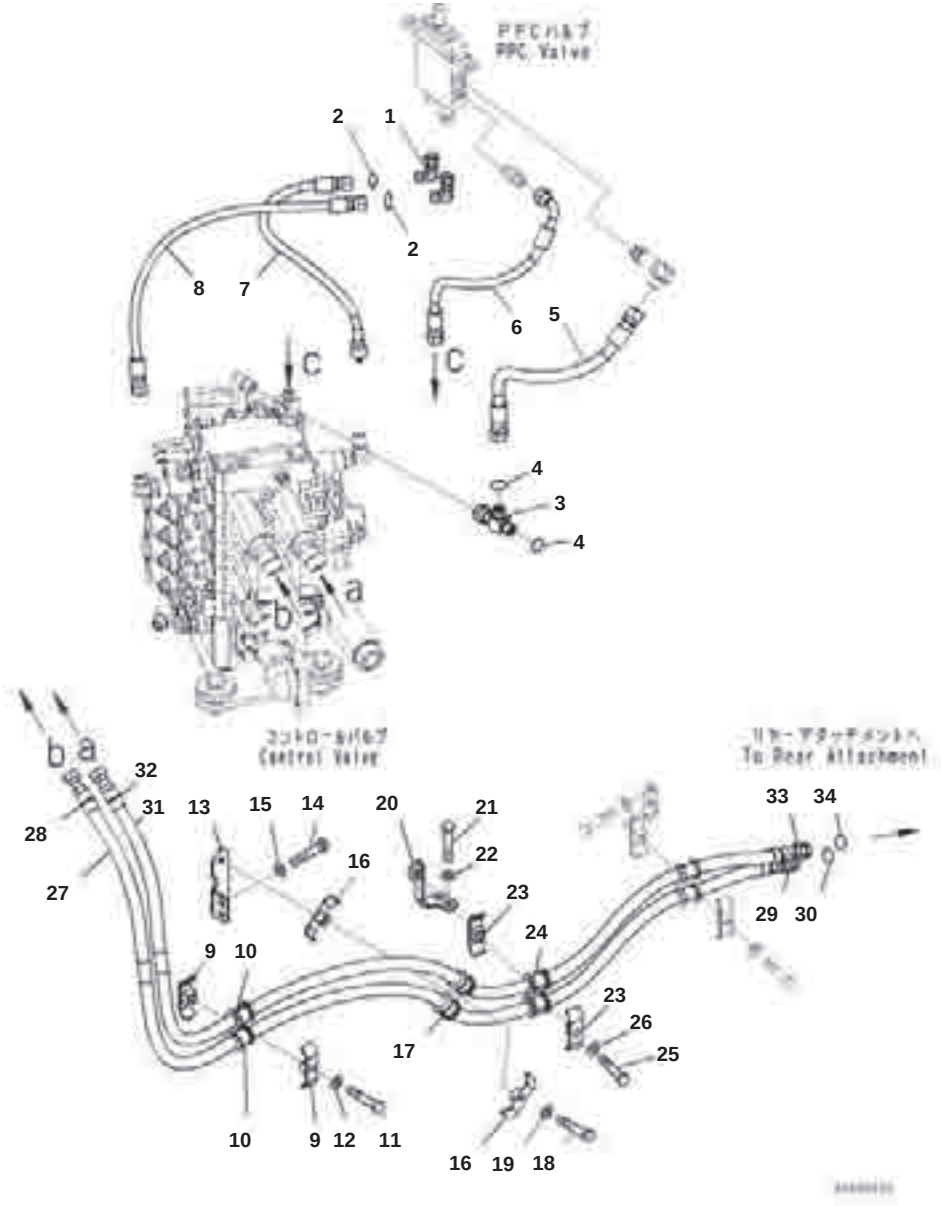

Rear Hydraulic Piping

Index	Part Number	Description	Qty	Options
1	416-62-44680	Elbow	2	SN:B50001--
2	02896-11008	O-ring	2	SN:B50001--
3	12Y-62-11661	Tee	1	SN:B50001--
4	02896-11009	O-ring	2	SN:B50001--
5	13Y-62-12941	Hose	1	SN:B50001--
6	13Y-62-12951	Hose	1	SN:B50001--
7	13Y-62-12961	Hose	1	SN:B50001--
8	13Y-62-12970	Hose	1	SN:B50001--
9	07094-30518	Clamp	2	SN:B50001--
10	07095-00525	Cushion	2	SN:B50001--
11	01010-81270	Bolt	1	SN:B50001--
12	01643-31232	Washer	1	SN:B50001--
13	13Y-78-11150	Bracket	1	SN:B50001--
14	01010-81225	Bolt	2	SN:B50001--
15	01643-31232	Washer	2	SN:B50001--
16	07094-30518	Clamp	2	SN:B50001--
17	07095-00525	Cushion	2	SN:B50001--
18	01010-81270	Bolt	1	SN:B50001--
19	01643-31232	Washer	1	SN:B50001--
20	13Y-78-11160	Bracket	1	SN:B50001--
21	01010-81225	Bolt	2	SN:B50001--
22	01643-31232	Washer	2	SN:B50001--
23	07094-30518	Clamp	2	SN:B50001--
24	07095-00525	Cushion	2	SN:B50001--
25	01010-81270	Bolt	1	SN:B50001--
26	01643-31232	Washer	1	SN:B50001--
27	13Y-78-11132	Hose	1	SN:B50001--
28	20Y-62-22820	Band, Blue	2	SN:B50001--
29	07376-70522	Plug	1	SN:B50001--
30	02896-11015	O-ring	1	SN:B50001--
31	13Y-78-11142	Hose	1	SN:B50001--
32	20Y-62-22790	Band, Red	2	SN:B50001--
33	07376-70522	Plug	1	SN:B50001--
34	02896-11015	O-ring	1	SN:B50001--

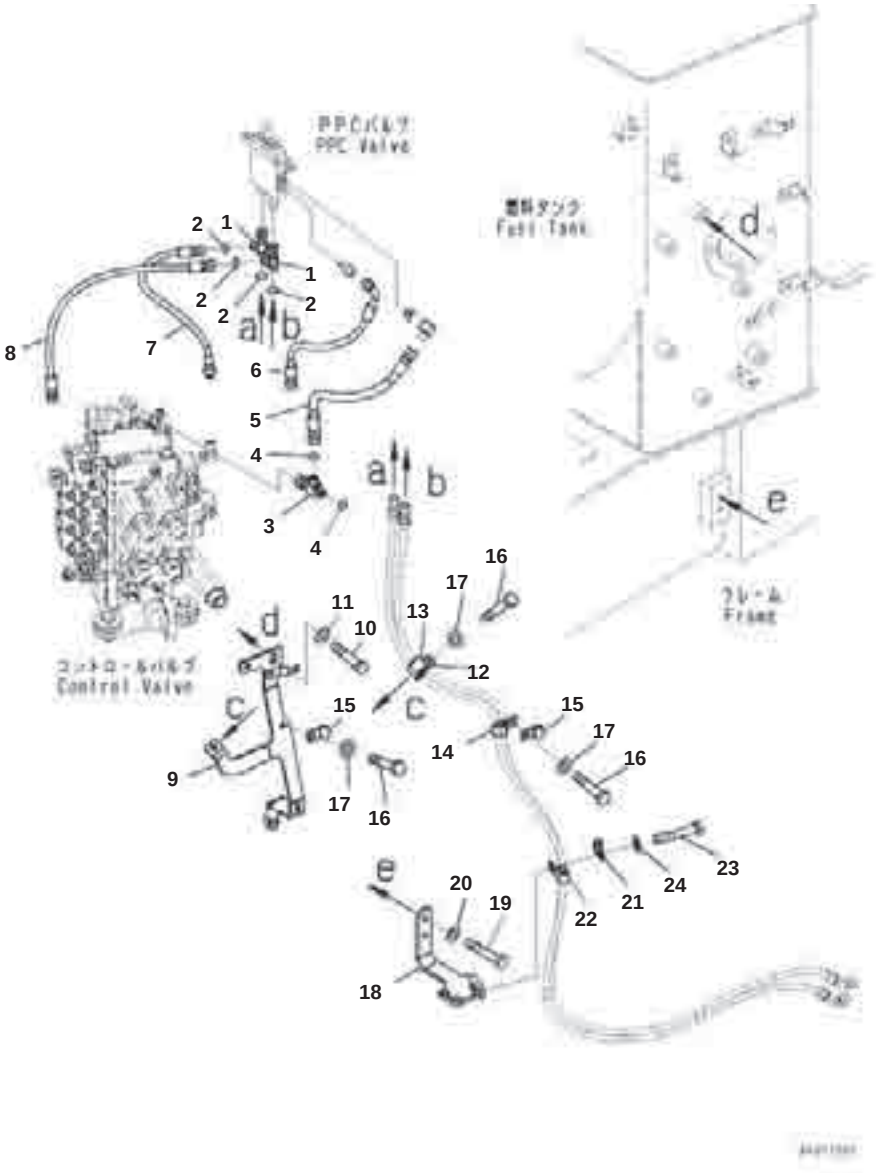

Rear Hydraulic Piping, Valve Piping

Index	Part Number	Description	Qty	Options
1	417-T81-3820	Tee	2	SN:B50001--
2	02896-11008	O-ring	4	SN:B50001--
3	12Y-62-11661	Tee	1	SN:B50001--
4	02896-11009	O-ring	2	SN:B50001--
5	13Y-62-12941	Hose	1	SN:B50001--
6	13Y-62-12951	Hose	1	SN:B50001--
7	13Y-62-12961	Hose	1	SN:B50001--
8	13Y-62-12970	Hose	1	SN:B50001--
9	13Y-960-1142	Bracket	1	SN:B50001--
10	01010-81020	Bolt	2	SN:B50001--
11	01643-31032	Washer	2	SN:B50001--
12	04434-51710	Clip	2	SN:B50001--
13	07095-20211	Cushion	2	SN:B50001--
14	04435-51210	Clip	1	SN:B50001--
15	04434-51410	Clip	2	SN:B50001--
16	01010-81025	Bolt	3	SN:B50001--
17	01643-31032	Washer	3	SN:B50001--
18	13Y-62-11181	Bracket	1	SN:B50001--
19	01010-81025	Bolt	2	SN:B50001--
20	01643-31032	Washer	2	SN:B50001--
21	04434-51410	Clip	1	SN:B50001--
22	04435-51210	Clip	1	SN:B50001--
23	01010-81025	Bolt	1	SN:B50001--
24	01643-31032	Washer	1	SN:B50001--

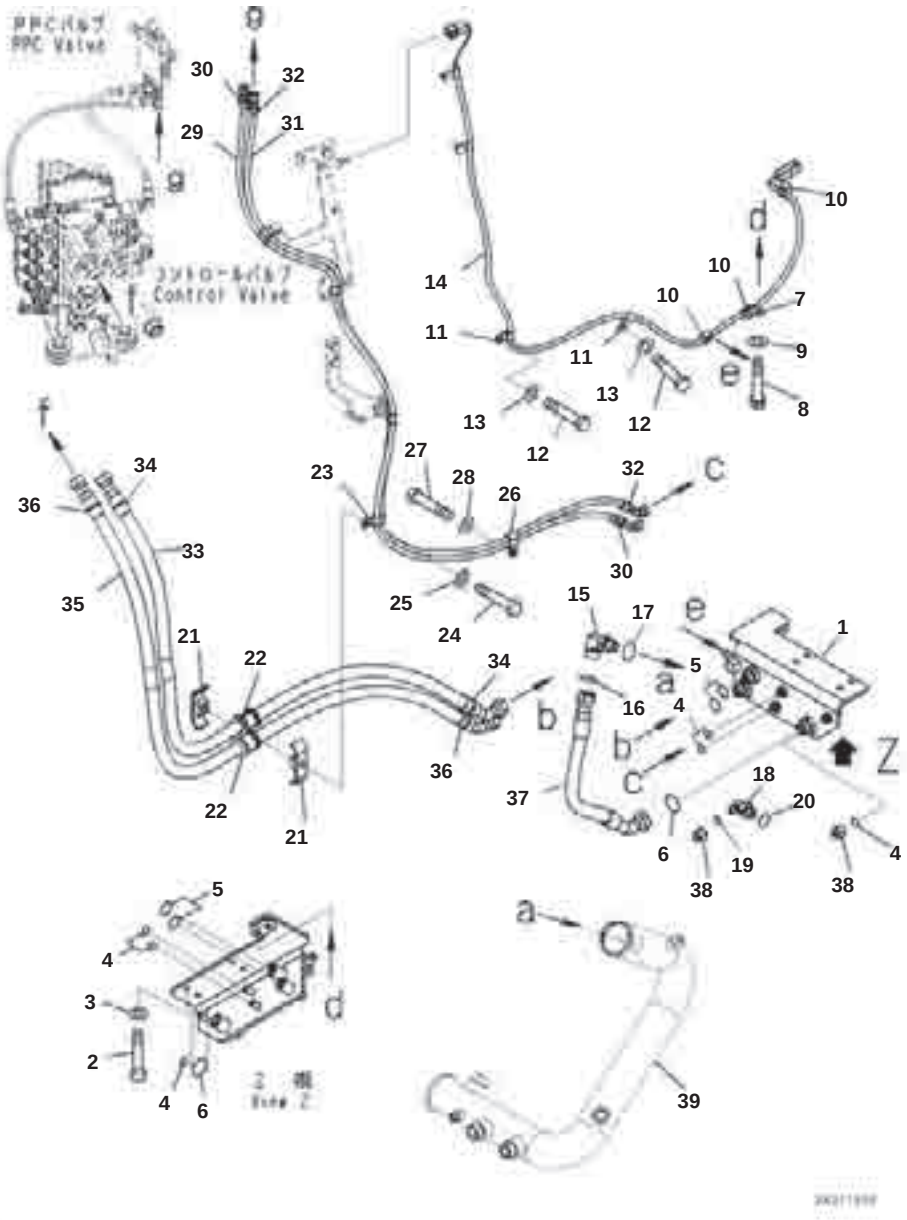

Rear Hydraulic Piping, Ripper Piping (1/2)

Index	Part Number	Description	Qty	Options
1	13Y-960-1132	Bracket	1	SN:B50001--
2	01010-81030	Bolt	4	SN:B50001--
3	01643-31032	Washer	4	SN:B50001--
4	02896-11008	O-ring	6	SN:B50001--
5	02896-11015	O-ring	4	SN:B50001--
6	02896-11018	O-ring	2	SN:B50001--
7	08057-12010	Clip	1	SN:B50001--
8	01010-81016	Bolt	1	SN:B50001--
9	01643-31032	Washer	1	SN:B50001--
10	08211-01020	Clip	3	SN:B50001--
11	04434-51410	Clip	2	SN:B50001--
12	01010-81025	Bolt	2	SN:B50001--
13	01643-31032	Washer	2	SN:B50001--
14	13Y-06-13782	Wiring Harness	1	SN:B50001--
15	02782-10628	Elbow	1	SN:B50001--
16	02896-11018	O-ring	1	SN:B50001--
17	07002-12434	O-ring	1	SN:B50001--
18	02782-10214	Elbow	1	SN:B50001--
19	02896-11008	O-ring	1	SN:B50001--
20	07002-12034	O-ring	1	SN:B50001--
21	07094-30518	Clamp	2	SN:B50001--
22	07095-00525	Cushion	2	SN:B50001--
23	04435-51212	Clip	1	SN:B50001--
24	01010-81270	Bolt	1	SN:B50001--
25	01643-31232	Washer	1	SN:B50001--
26	04435-51210	Clip	1	SN:B50001--
27	01010-81025	Bolt	1	SN:B50001--
28	01643-31032	Washer	1	SN:B50001--
29	13Y-62-18920	Hose	1	SN:B50001--
30	20Y-62-22810	Band, Yellow	2	SN:B50001--
31	13Y-62-18940	Hose	1	SN:B50001--
32	20Y-62-22850	Band, Green	2	SN:B50001--
33	13Y-62-18960	Hose	1	SN:B50001--
34	20Y-62-22790	Band, Red	2	SN:B50001--
35	13Y-62-18980	Hose	1	SN:B50001--
36	20Y-62-22820	Band, Blue	2	SN:B50001--
37	02776-00606	Hose	1	SN:B50001--
38	02789-10210	Plug	2	SN:B50001--
39	(13Y-62-11583)	Tube		SN:B50001--

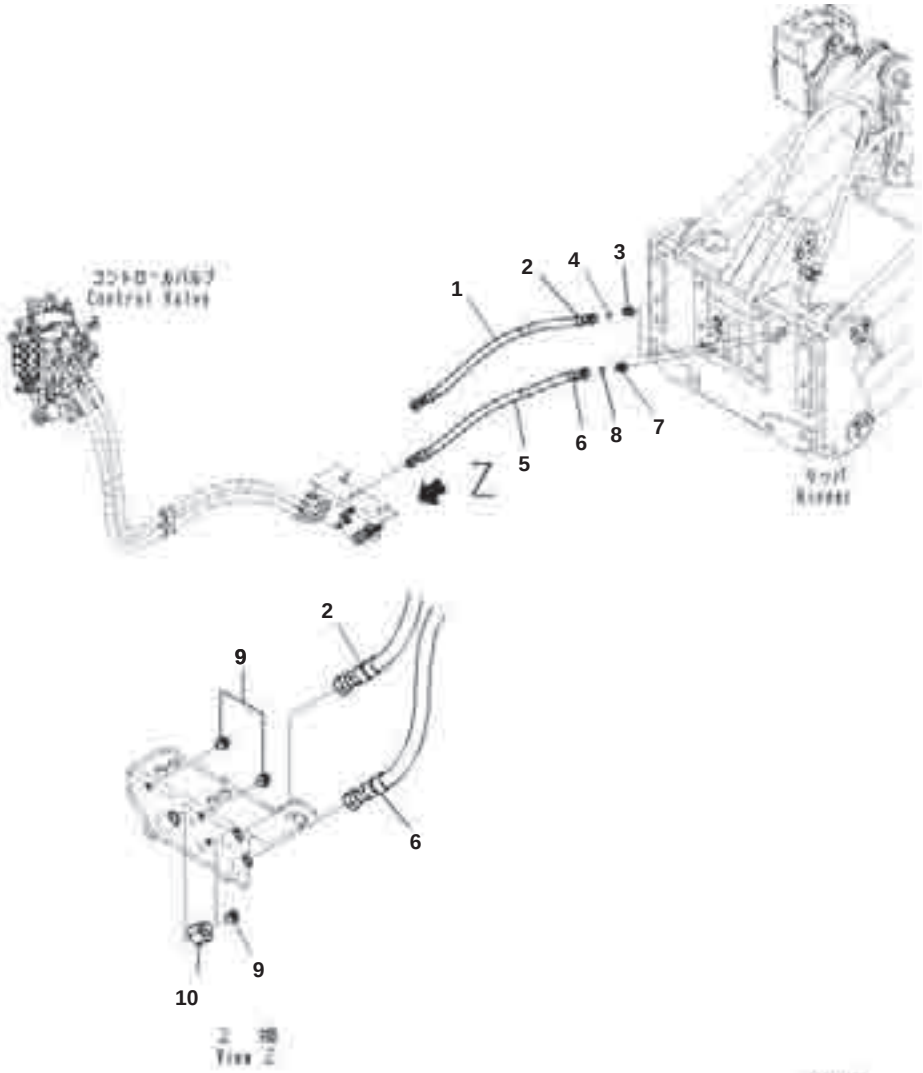

Rear Hydraulic Piping, Ripper Piping (2/2)

Index	Part Number	Description	Qty	Options
1	13Y-62-11431	Hose	1	SN:B50001--
2	20Y-62-22790	Band, Red	2	SN:B50001--
3	07376-70522	Plug	1	SN:B50001--
4	02896-11015	O-ring	1	SN:B50001--
5	13Y-62-11441	Hose	1	SN:B50001--
6	20Y-62-22820	Band, Blue	2	SN:B50001--
7	07376-70522	Plug	1	SN:B50001--
8	02896-11015	O-ring	1	SN:B50001--
9	02789-10210	Plug	3	SN:B50001--
10	02789-10628	Plug	1	SN:B50001--

MAIN FRAME AND RELATED PARTS

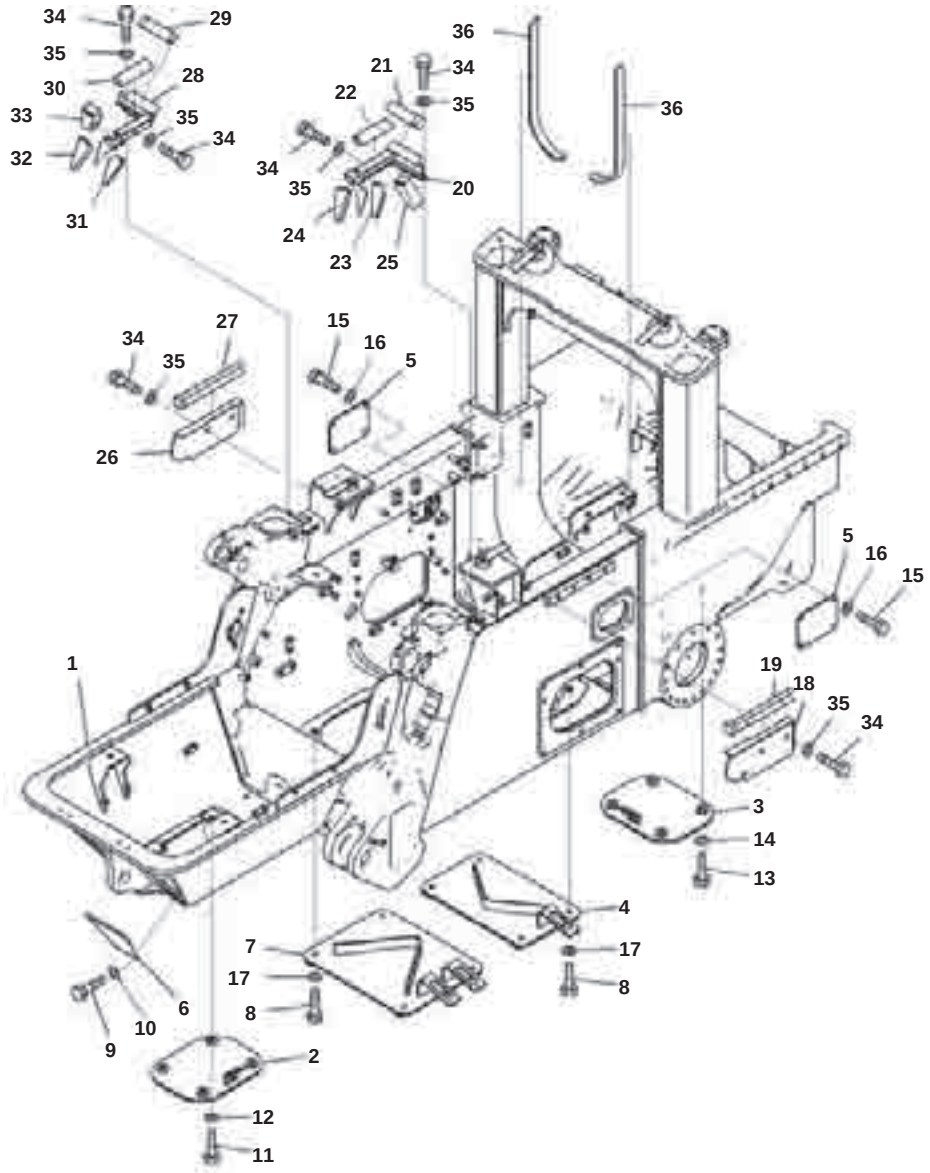

Frame

Index	Part Number	Description	Qty	Options
1	13Y-21-11103	Frame Assembly	1	SN:B50001--
2	13Y-21-11211	Cover	1	SN:B50001--
3	13Y-21-11211	Cover	1	SN:B50001--
4	13Y-21-11242	Cover	1	SN:B50001--
5	13Y-21-11282	Cover	2	SN:B50001--
6	13Y-21-11293	Plate	1	SN:B50001--
7	13Y-21-11312	Cover	1	SN:B50001--
8	01010-81645	Bolt	8	SN:B50001--
9	01010-81240	Bolt	4	SN:B50001--
10	01643-31232	Washer	4	SN:B50001--
11	01010-81245	Bolt	4	SN:B50001--
12	01643-31232	Washer	4	SN:B50001--
13	01010-81245	Bolt	4	SN:B50001--
14	01643-31232	Washer	4	SN:B50001--
15	01010-81225	Bolt	8	SN:B50001--
16	01643-31232	Washer	8	SN:B50001--
17	01643-31645	Washer	8	SN:B50001--
18	13Y-21-11333	Cover	1	SN:B50001--
19	13Y-21-11420	▪ Seal	1	SN:B50001--
20	13Y-21-11342	Bracket	1	SN:B50001--
21	13Y-21-11440	▪ Seal	1	SN:B50001--
22	13Y-21-11450	▪ Seal	1	SN:B50001--
23	13Y-21-11611	▪ Seal	1	SN:B50001--
24	13Y-21-11621	▪ Seal	1	SN:B50001--
25	13Y-21-11631	▪ Seal	1	SN:B50001--
26	13Y-21-11353	Cover	1	SN:B50001--
27	13Y-21-11420	▪ Seal	1	SN:B50001--
28	13Y-21-11362	Bracket	1	SN:B50001--
29	13Y-21-11440	▪ Seal	1	SN:B50001--
30	13Y-21-11450	▪ Seal	1	SN:B50001--
31	13Y-21-11611	▪ Seal	1	SN:B50001--
32	13Y-21-11621	▪ Seal	1	SN:B50001--
33	13Y-21-11661	▪ Seal	1	SN:B50001--
34	01010-81225	Bolt	8	SN:B50001--
35	01643-31232	Washer	8	SN:B50001--
36	13Y-54-11721	Seal	2	SN:B50001--

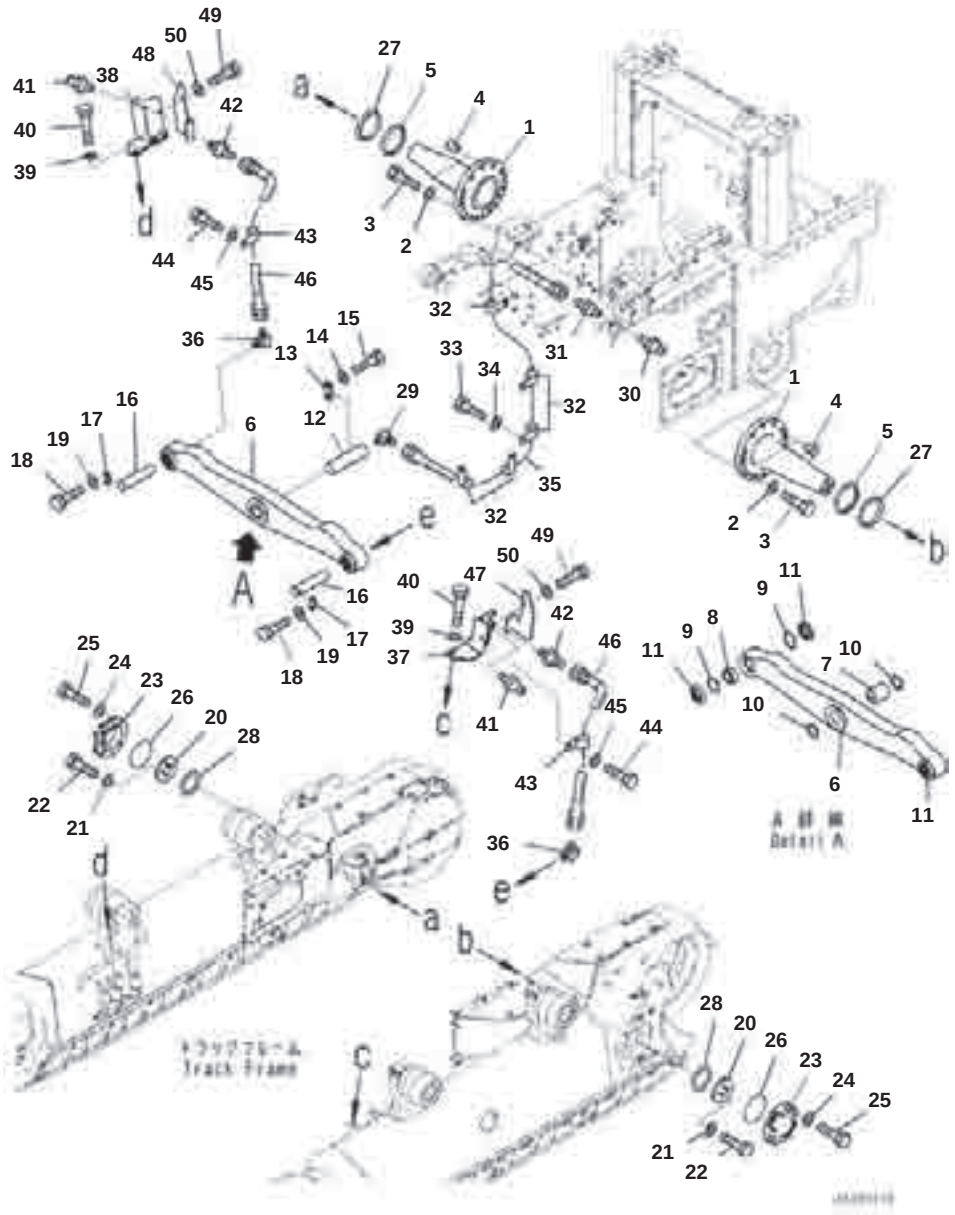

Suspension

Index	Code	Part Number	Description	Qty	Options
1		13Y-50-11111	Shaft	2	SN:B50001--
2		01643-32060	Washer	32	SN:B50001--
3		01010-82075	Bolt	32	SN:B50001--
4		07049-02025	Plug	4	SN:B50001--
5		14Y-30-18160	Ring	2	SN:B50001--
		13Y-50-17020	Equalizer Bar Assembly	1	SN:B50001--
6	C1		' Equalizer Bar	1	SN:B50001--
7		13F-50-31131	' Bushing	1	SN:B50001--
8		134-50-62150	' Bushing	2	SN:B50001--
9		04065-08530	' Ring, Snap	4	SN:B50001--
10		130-09-12911	' Seal, Dust	2	SN:B50001--
11		134-50-62160	' Seal	4	SN:B50001--
12		134-50-62121	Pin	1	SN:B50001--
13		14Y-50-11390	Lock	1	SN:B50001--
14		01643-31645	Washer	2	SN:B50001--
15		01010-81640	Bolt	2	SN:B50001--
16		13Y-50-12130	Pin	2	SN:B50001--
17		04082-00312	Lock	2	SN:B50001--
18		01010-81235	Bolt	4	SN:B50001--
19		01643-31232	Washer	4	SN:B50001--
20		13Y-50-11270	Spacer	2	SN:B50001--
21		01643-32060	Washer	8	SN:B50001--
22		01010-82055	Bolt	8	SN:B50001--
23		13Y-50-11210	Cover	2	SN:B50001--
24		01643-32060	Washer	8	SN:B50001--
25		01010-82055	Bolt	8	SN:B50001--
26		195-30-33190	O-ring	2	SN:B50001--
27		14Y-30-18150	Seal	2	SN:B50001--
28		13Y-50-11220	Spacer	2	SN:B50001--
29		203-62-42920	Elbow	1	SN:B50001--
30		07020-00000	Fitting, Grease	1	SN:B50001--
31		208-06-11220	Nipple	1	SN:B50001--
32		04434-51212	Clip	5	SN:B50001--
33		01010-81225	Bolt	5	SN:B50001--
34		01643-31232	Washer	5	SN:B50001--
35		13Y-50-12260	Hose	1	SN:B50001--
36		202-62-21430	Elbow	2	SN:B50001--
37		13Y-50-12210	Cover	1	SN:B50001--
38		13Y-50-12220	Cover	1	SN:B50001--
39		01643-32060	Washer	4	SN:B50001--
40		01011-82025	Bolt	4	SN:B50001--
41		07020-00000	Fitting, Grease	2	SN:B50001--
42		203-62-21740	Nipple	2	SN:B50001--
43		04434-51010	Clip	2	SN:B50001--
44		01010-81020	Bolt	2	SN:B50001--
45		01643-31032	Washer	2	SN:B50001--
46		13Y-50-12250	Hose	2	SN:B50001--

D61EX-23M0 S/N B50001
Suspension

Index	Code	Part Number	Description	Qty	Options
47		13Y-50-12230	Cover	1	SN:B50001--
48		13Y-50-12240	Cover	1	SN:B50001--
49		01010-81225	Bolt	4	SN:B50001--
50		01643-31232	Washer	4	SN:B50001--

OPERATOR'S COMPARTMENT AND CONTROL SYSTEM

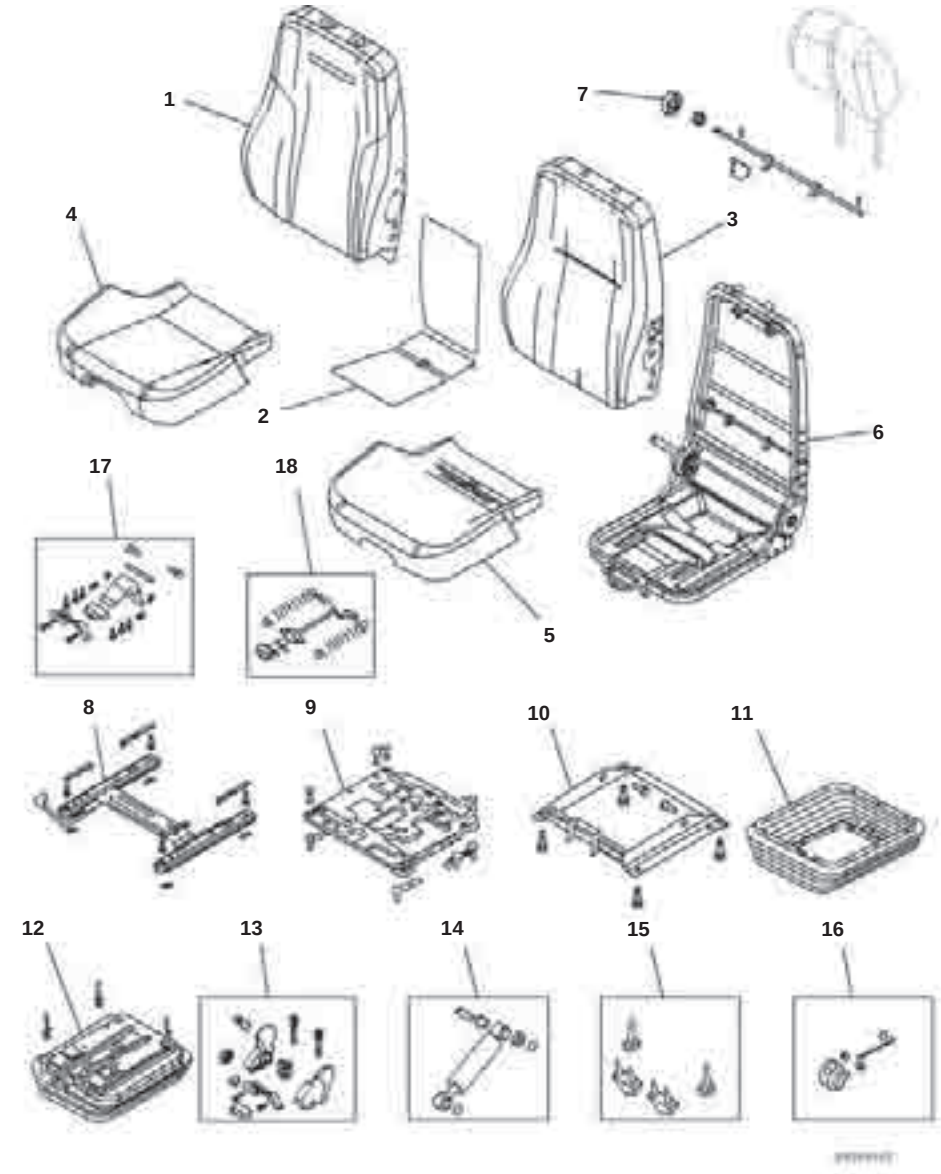

Index	Part Number	Description	Qty	Options
	17M-57-21501	Seat Assembly	1	SN:B50001--
	AS203500	▪ Upper Kit	1	SN:B50001--
1	AS203510	▪ ▪ Back Cover Kit	1	SN:B50001--
2	AS202810	▪ ▪ Heater Kit	1	SN:B50001--
3	AS203518	▪ ▪ Back Foam Kit	1	SN:B50001--
4	AS203514	▪ ▪ Seat Cover Kit	1	SN:B50001--
5	AS203521	▪ ▪ Seat Foam Kit	1	SN:B50001--
6	AS203523	▪ ▪ Frame Kit	1	SN:B50001--
7	AS203549	▪ ▪ Lumbar Kit	1	SN:B50001--
8	AS203532	▪ Sliderail Kit	1	SN:B50001--
9	AS203528	▪ Swivel Kit	1	SN:B50001--
10	AS203527	▪ Tilt Kit	1	SN:B50001--
11	AS203538	▪ Suspension Cover Kit	1	SN:B50001--
12	AS203537	▪ Suspension Kit	1	SN:B50001--
13	AS203541	▪ Plastic Parts Kit	1	SN:B50001--
14	AS198304	▪ Damper Kit	1	SN:B50001--
15	AS167554	▪ Up Stop and Bump Stop Kit	1	SN:B50001--
16	AS170373	▪ Ride Indicator Kit	1	SN:B50001--
17	AS203542	▪ Tilt Lever Kit	1	SN:B50001--
18	AS203547	▪ Height Adjuster Kit	1	SN:B50001--

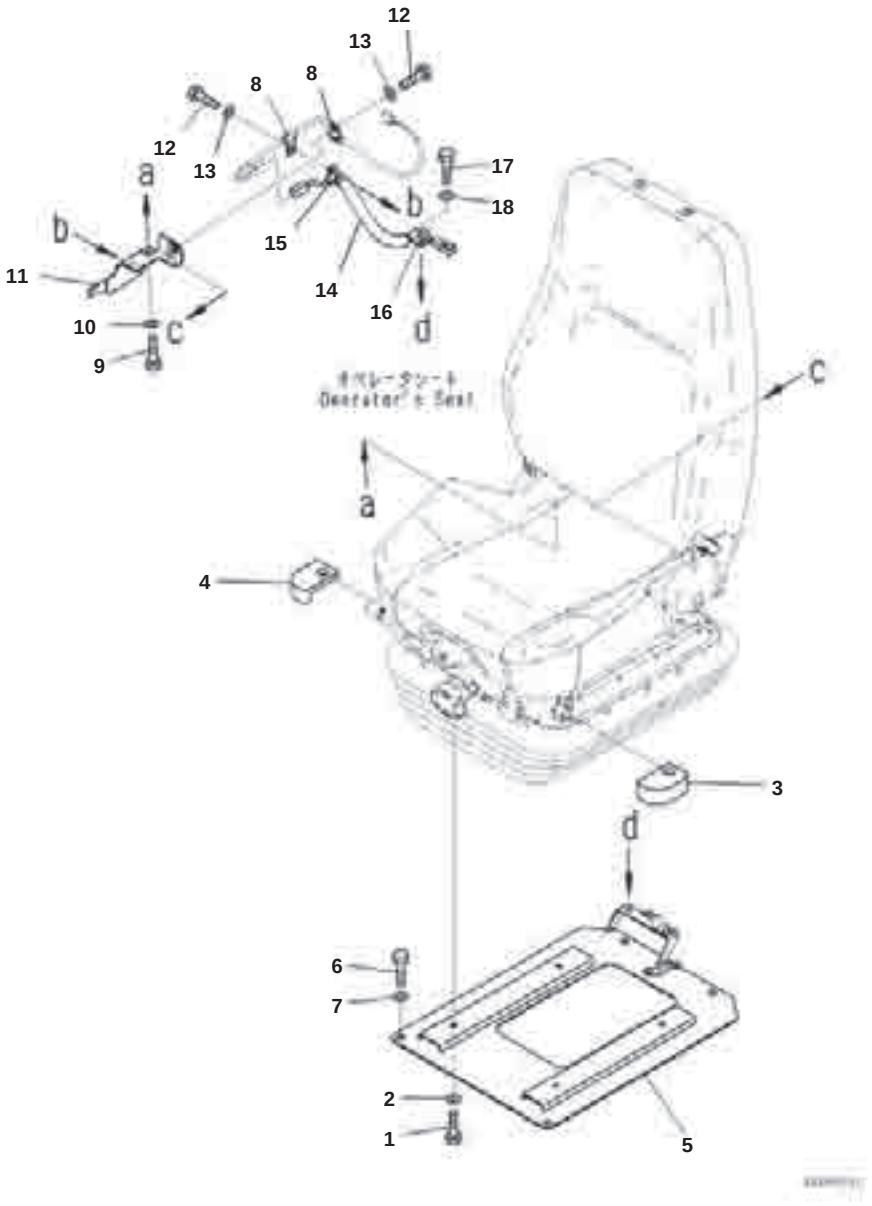

Index	Part Number	Description	Qty	Options
1	01010-D0820	Bolt	4	SN:B50001--
2	01643-70823	Washer	4	SN:B50001--
3	17A-57-51240	Cushion	1	SN:B50001--
4	17A-57-51250	Cushion	1	SN:B50001--
5	12Y-57-21211	Bracket	1	SN:B50001--
6	01010-D1230	Bolt	4	SN:B50001--
7	01643-71232	Washer	4	SN:B50001--
8	04434-50808	Clip	2	SN:B50001--
9	01010-D0820	Bolt	1	SN:B50001--
10	01643-70823	Washer	1	SN:B50001--
11	12Y-57-21240	Plate	1	SN:B50001--
12	01010-D0820	Bolt	2	SN:B50001--
13	01643-70823	Washer	2	SN:B50001--
14	17A-57-51171	Cable	1	SN:B50001--
15	04434-50608	Clip	1	SN:B50001--
16	04434-50608	Clip	1	SN:B50001--
17	01010-D0820	Bolt	1	SN:B50001--
18	01643-70823	Washer	1	SN:B50001--

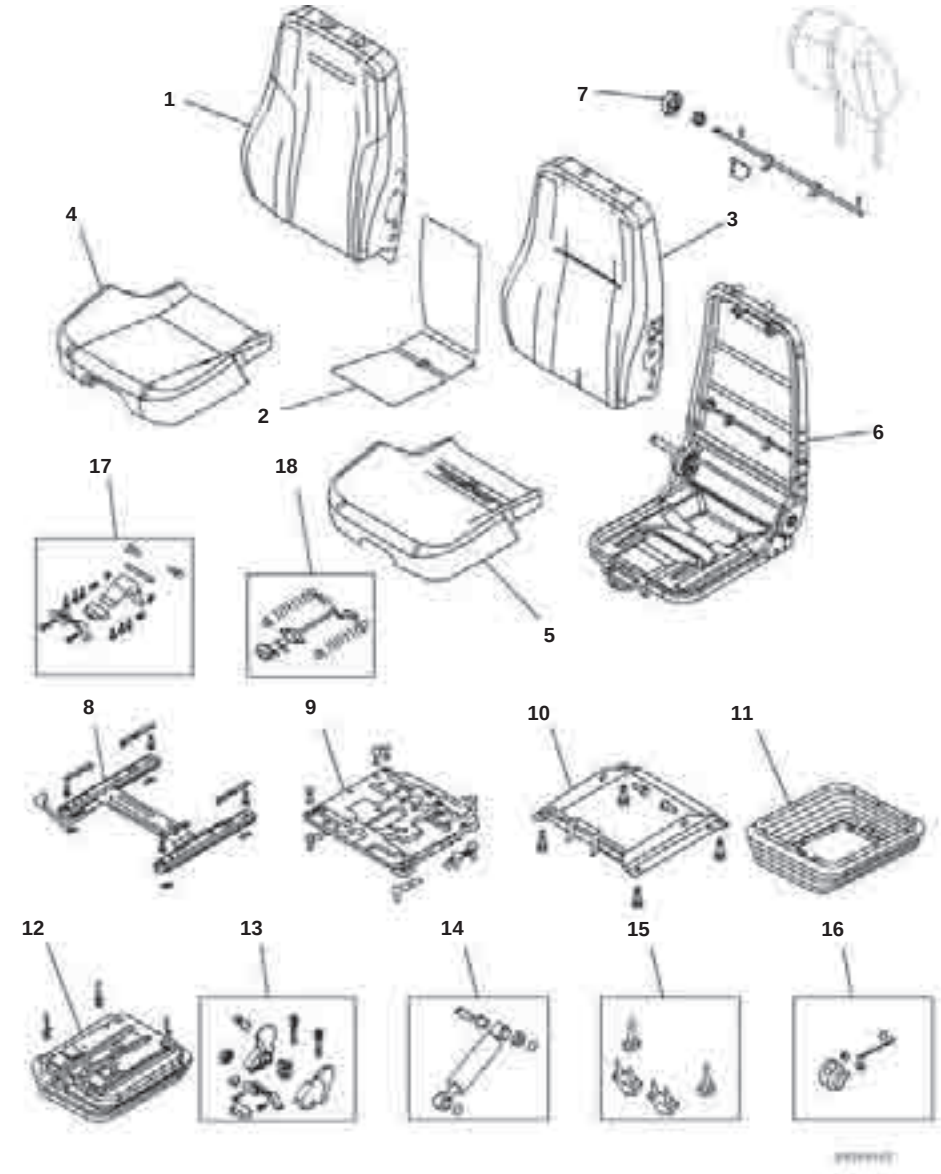

Index	Part Number	Description	Qty	Options
	17M-57-21401	Seat Assembly	1	SN:B50001--
1	AS203512	Back Cover Kit	1	SN:B50001--
2	AS202810	Heater Kit	1	SN:B50001--
3	AS203519	Back Foam Kit	1	SN:B50001--
4	AS203514	Seat Cover Kit	1	SN:B50001--
5	AS203521	Seat Foam Kit	1	SN:B50001--
6	AS203525	Frame Kit	1	SN:B50001--
7	AS203549	Lumbar Kit	1	SN:B50001--
8	AS203532	▪ Sliderail Kit	1	SN:B50001--
9	AS203528	▪ Swivel Kit	1	SN:B50001--
10	AS203527	▪ Tilt Kit	1	SN:B50001--
11	AS203538	▪ Suspension Cover Kit	1	SN:B50001--
12	AS203537	▪ Suspension Kit	1	SN:B50001--
13	AS203541	▪ Plastic Parts Kit	1	SN:B50001--
14	AS198304	▪ Damper Kit	1	SN:B50001--
15	AS167554	▪ Up Stop and Bump Stop Kit	1	SN:B50001--
16	AS170373	▪ Ride Indicator Kit	1	SN:B50001--
17	AS203542	▪ Tilt Lever Kit	1	SN:B50001--
18	AS203547	▪ Height Adjuster Kit	1	SN:B50001--

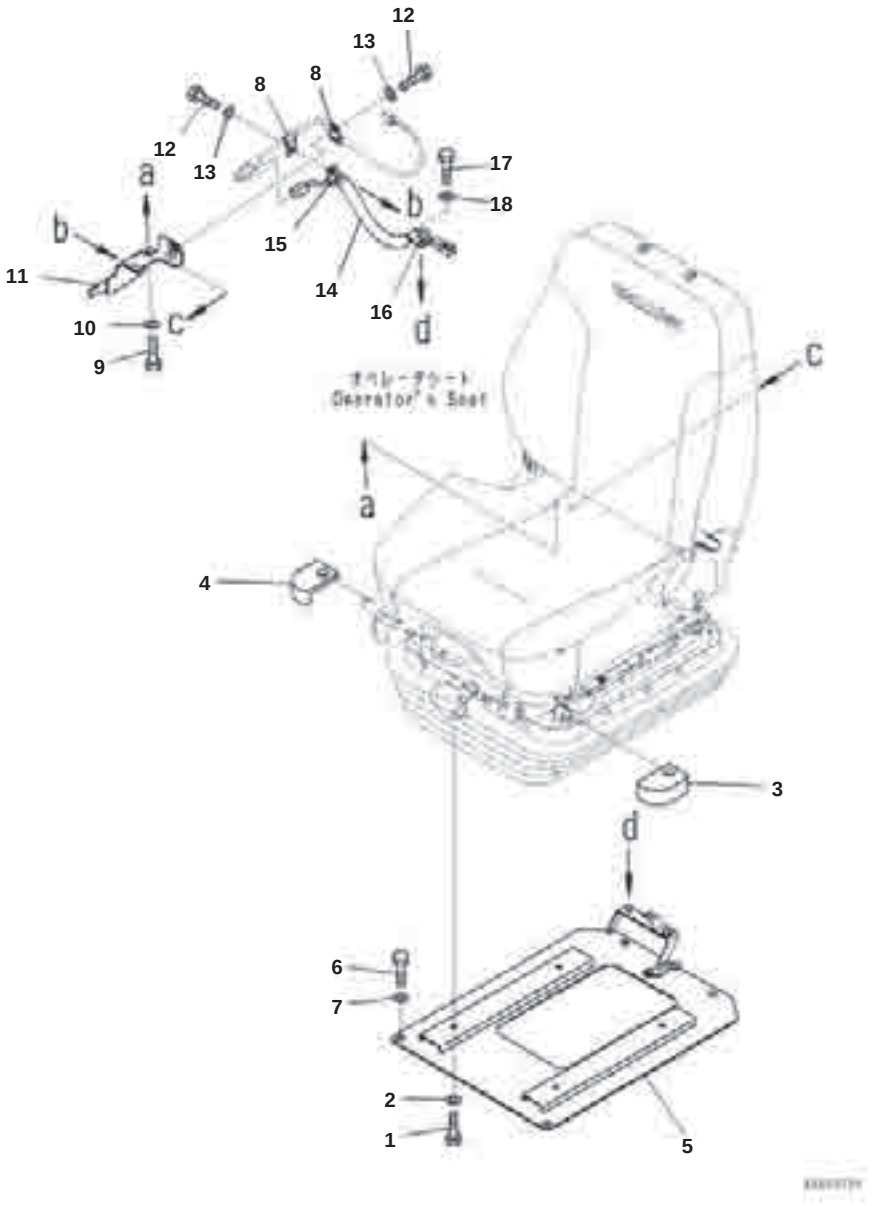

Index	Part Number	Description	Qty	Options
1	01010-D0820	Bolt	4	SN:B50001--
2	01643-70823	Washer	4	SN:B50001--
3	17A-57-51240	Cushion	1	SN:B50001--
4	17A-57-51250	Cushion	1	SN:B50001--
5	12Y-57-21211	Bracket	1	SN:B50001--
6	01010-D1230	Bolt	4	SN:B50001--
7	01643-71232	Washer	4	SN:B50001--
8	04434-50808	Clip	2	SN:B50001--
9	01010-D0820	Bolt	1	SN:B50001--
10	01643-70823	Washer	1	SN:B50001--
11	12Y-57-21240	Plate	1	SN:B50001--
12	01010-D0820	Bolt	2	SN:B50001--
13	01643-70823	Washer	2	SN:B50001--
14	17A-57-51171	Cable	1	SN:B50001--
15	04434-50608	Clip	1	SN:B50001--
16	04434-50608	Clip	1	SN:B50001--
17	01010-D0820	Bolt	1	SN:B50001--
18	01643-70823	Washer	1	SN:B50001--



Operator's Seat Headrest

Index	Part Number	Description	Qty	Options
1	17A-57-52190	Headrest	1	SN:B50001--

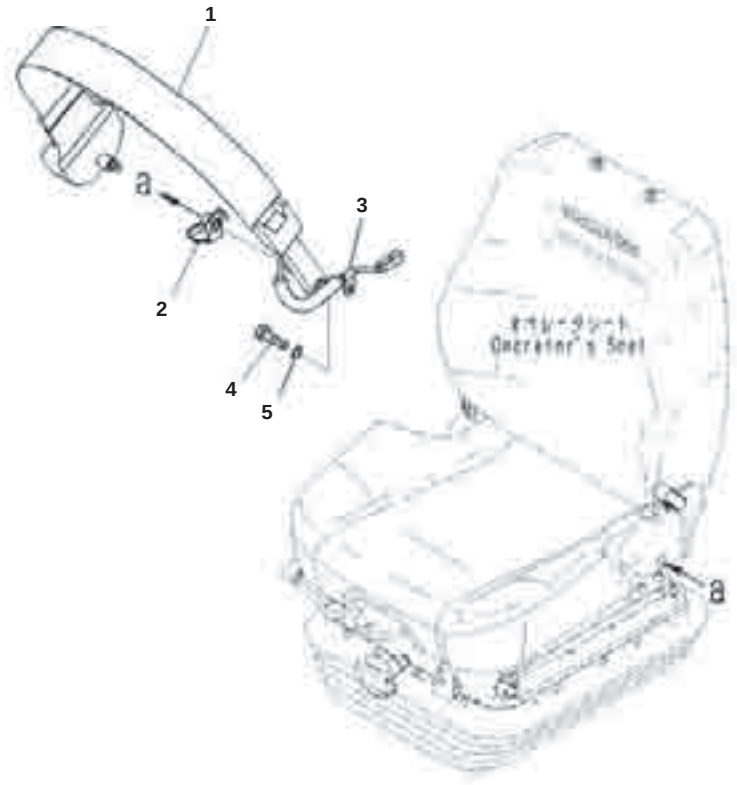

Seat Belt

Index	Part Number	Description	Qty	Options
1	17A-57-51211	Seat Belt Kit	1	SN:B50001--
2	17A-57-51230	▪ Bracket	1	SN:B50001--
3	04434-50608	Clip	1	SN:B50001--
4	01010-D0820	Bolt	1	SN:B50001--
5	01643-70823	Washer	1	SN:B50001--

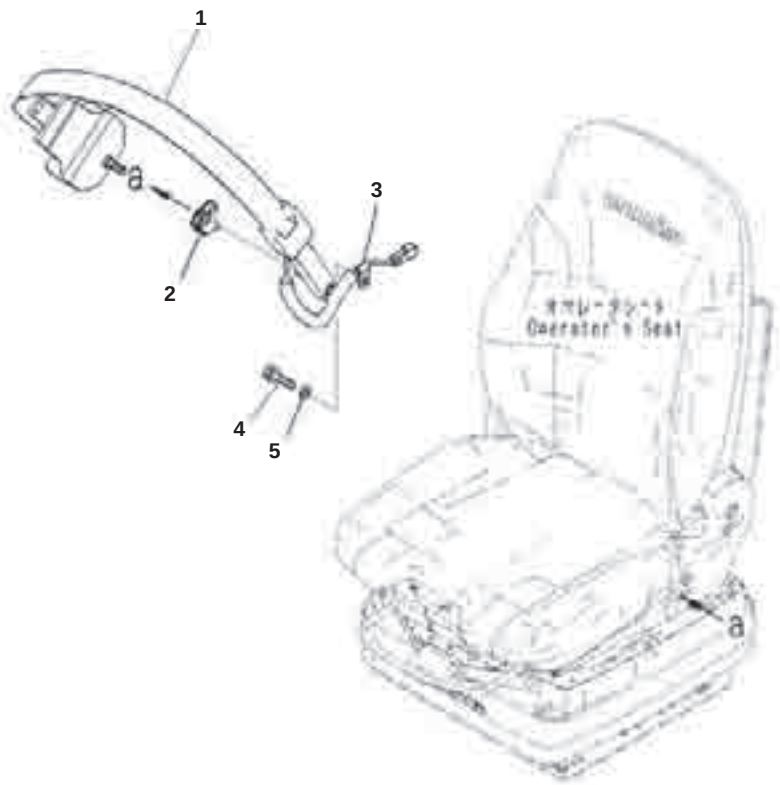

Seat Belt

Index	Part Number	Description	Qty	Options
1	12Y-57-21111	Seat Belt Kit	1	SN:B50001--
2	12Y-57-21121	▪ Bracket	1	SN:B50001--
3	04434-50608	Clip	1	SN:B50001--
4	01010-D0820	Bolt	1	SN:B50001--
5	01643-70823	Washer	1	SN:B50001--

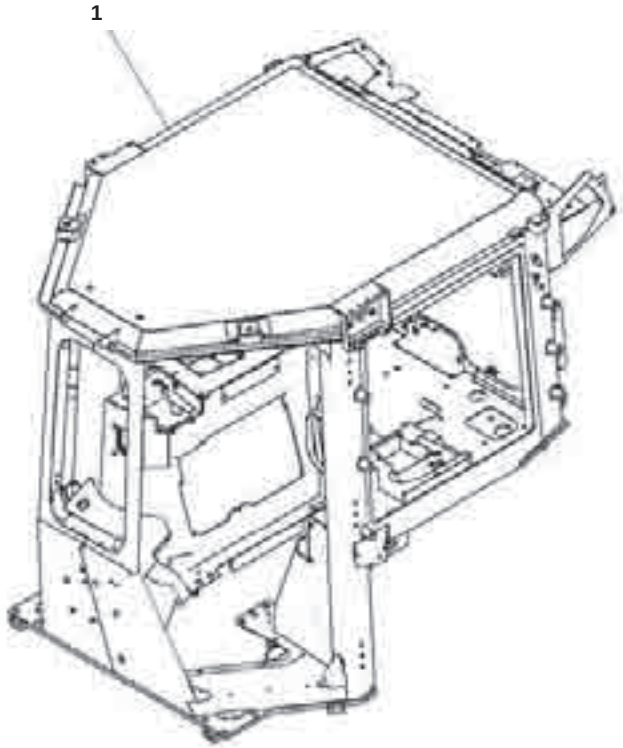

Index	Part Number	Description	Qty	Options
1	12Y-978-6201	Cab Assembly	1	SN:B50001--

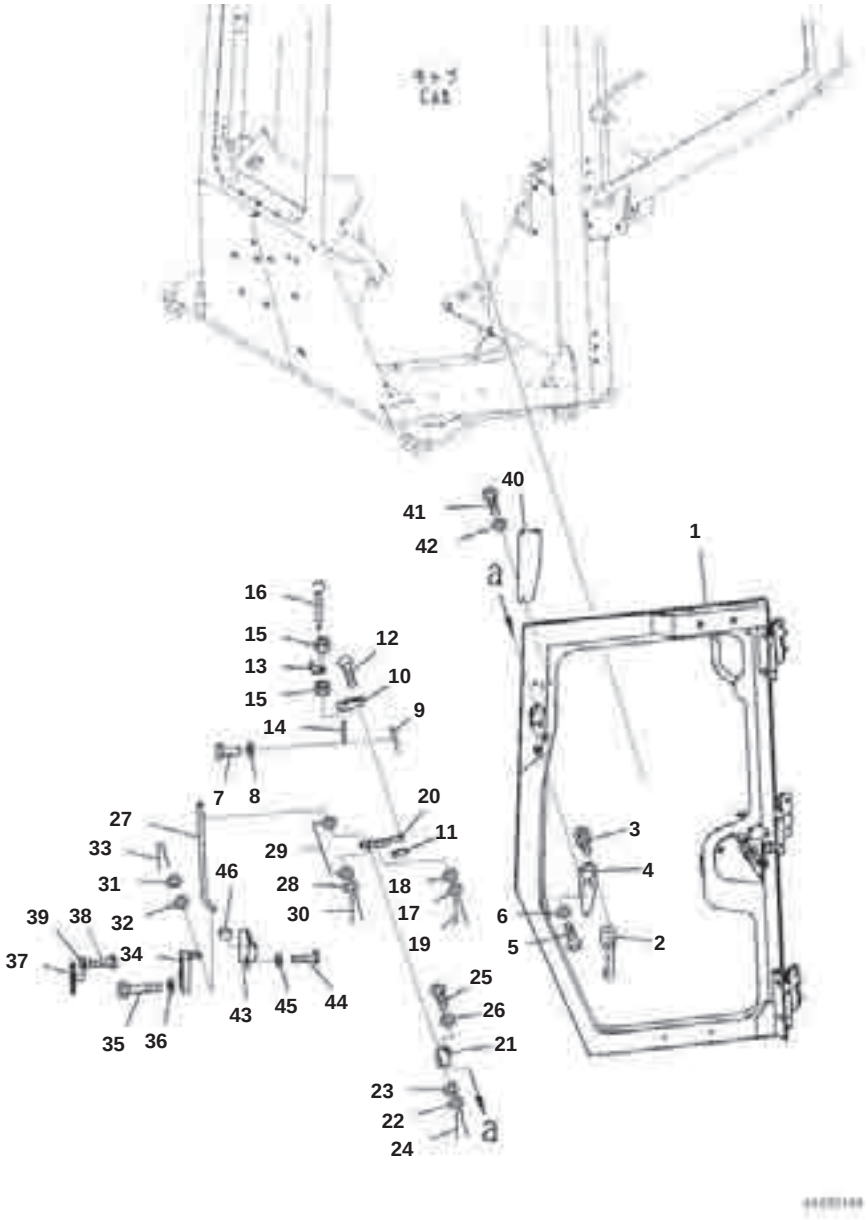

Index	Part Number	Description	Qty	Options
1	12Y-54-26111	Door	1	SN:B50001--
2	11Y-979-2571	Handle Assembly	1	SN:B50001--
3	01023-10520	Screw	5	SN:B50001--
4	12Y-978-3210	Plate	1	SN:B50001--
5	01245-00620	Screw	3	SN:B50001--
7	04205-10622	Pin	1	SN:B50001--
8	01643-70623	Washer	4	SN:B50001--
9	04050-11612	Pin, Cotter	1	SN:B50001--
10	12Y-978-3281	Knob	1	SN:B50001--
11	12Y-978-3290	Plate	1	SN:B50001--
12	01023-20410	Screw	2	SN:B50001--
13	12Y-978-3221	Plate	1	SN:B50001--
14	12Y-978-3241	Rod	1	SN:B50001--
15	01580-10605	Nut	2	SN:B50001--
16	17A-Z11-3332	Spring	1	SN:B50001--
17	01643-70623	Washer	1	SN:B50001--
18	12Y-978-3310	Rubber	1	SN:B50001--
19	04050-11612	Pin, Cotter	1	SN:B50001--
20	12Y-978-3251	Plate	1	SN:B50001--
21	12Y-978-3261	Plate	1	SN:B50001--
22	01643-70823	Washer	1	SN:B50001--
23	12Y-978-3360	Rubber	1	SN:B50001--
24	04050-12012	Pin, Cotter	1	SN:B50001--
25	01245-00620	Screw	2	SN:B50001--
26	01643-70623	Washer	2	SN:B50001--
27	17A-979-3320	Plate	1	SN:B50001--
28	01643-70623	Washer	1	SN:B50001--
29	12Y-978-3310	Rubber	1	SN:B50001--
30	04050-11612	Pin, Cotter	1	SN:B50001--
31	01643-70623	Washer	1	SN:B50001--
32	12Y-978-3310	Rubber	1	SN:B50001--
33	04050-11612	Pin, Cotter	1	SN:B50001--
34	195-Z11-4520	Lock	1	SN:B50001--
35	01010-D0635	Bolt	4	SN:B50001--
36	01643-70623	Washer	4	SN:B50001--
37	12Y-978-3480	Striker	1	SN:B50001--
38	01245-00825	Screw	4	SN:B50001--
39	01643-70823	Washer	4	SN:B50001--
40	14X-Y79-3310	Plate	1	SN:B50001--
41	01245-00620	Screw	3	SN:B50001--
42	01643-70623	Washer	3	SN:B50001--
43	12Y-978-3350	Bracket	1	SN:B50001--
44	01245-00620	Screw	2	SN:B50001--
45	01643-70623	Washer	2	SN:B50001--
46	12Y-978-3650	Sheet	1	SN:B50001--

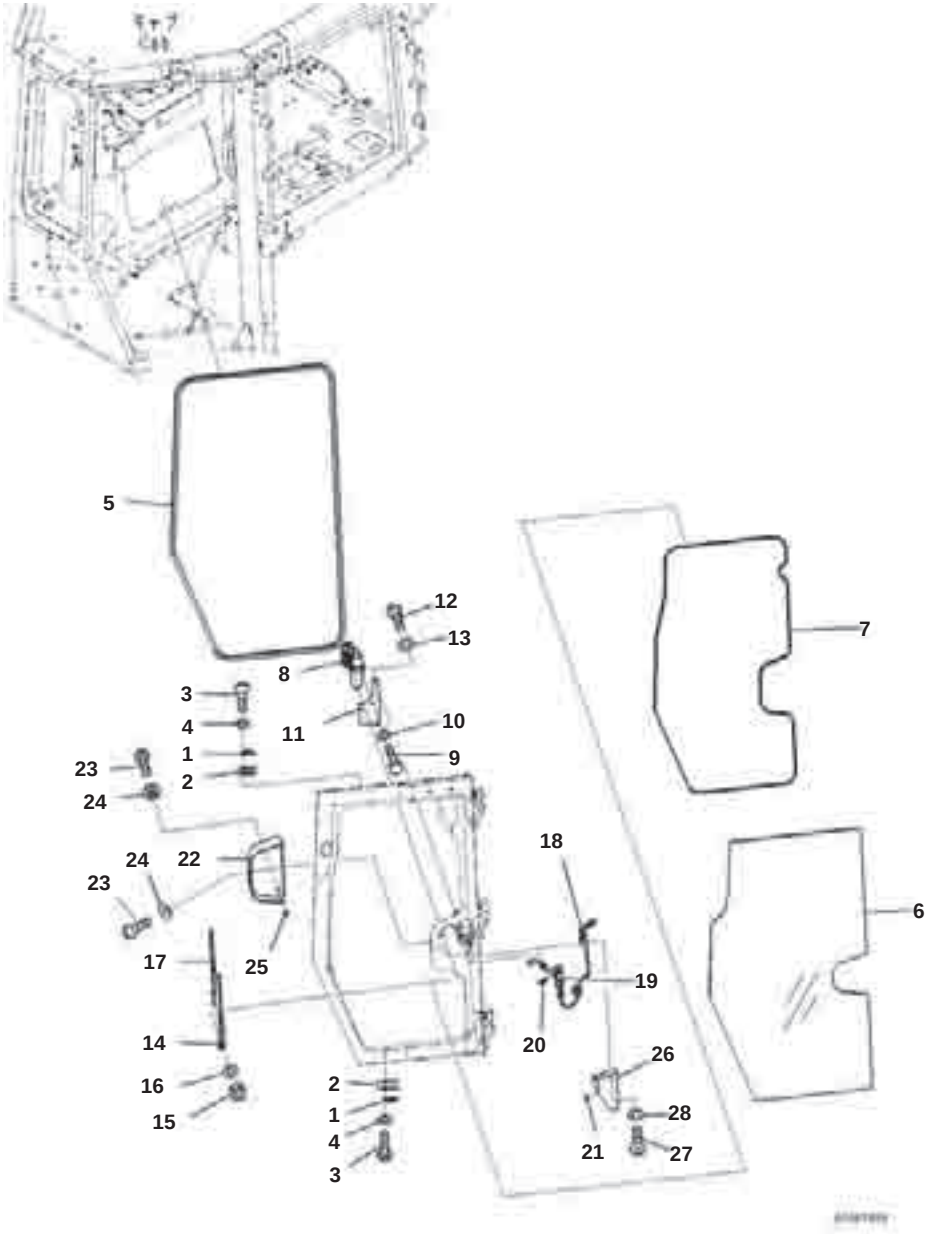

Cab, Door Damper, Window and Wiper, L.H.

Index	Part Number	Description	Qty	Options
1	14X-911-1690	Damper	2	SN:B50001--
2	14X-911-1761	Shim, T=1.2mm	4	SN:B50001--
3	01245-00620	Screw	4	SN:B50001--
4	01643-70623	Washer	4	SN:B50001--
5	12Y-54-26611	Seal	1	SN:B50001--
7	12Y-54-27290	Seal	1	SN:B50001--
8	12Y-978-2431	Wiper Motor	1	SN:B50001--
9	01010-80616	Bolt	2	SN:B50001--
10	01643-70623	Washer	2	SN:B50001--
11	12Y-54-26210	Plate	1	SN:B50001--
12	01245-00820	Screw	3	SN:B50001--
13	01643-70823	Washer	3	SN:B50001--
14	12Y-978-2490	Arm, Wiper	1	SN:B50001--
15	01580-10806	Nut	1	SN:B50001--
16	01640-20816	Washer	1	SN:B50001--
17	17A-Z11-2581	Wiper Blade	1	SN:B50001--
18	12Y-978-2126	Wiring Harness	1	SN:B50001--
19	08034-20519	Band	1	SN:B50001--
20	17A-Z11-4610	Valve	1	SN:B50001--
21	17A-Z11-2660	Cap	1	SN:B50001--
22	14X-Y79-3270	Cover	1	SN:B50001--
23	01245-00620	Screw	4	SN:B50001--
24	12Y-978-2660	Collar	4	SN:B50001--
25	17A-Z11-5651	Sheet	2	SN:B50001--
26	12Y-54-26650	Cover	1	SN:B50001--
27	01245-00620	Screw	4	SN:B50001--
28	01643-70623	Washer	4	SN:B50001--

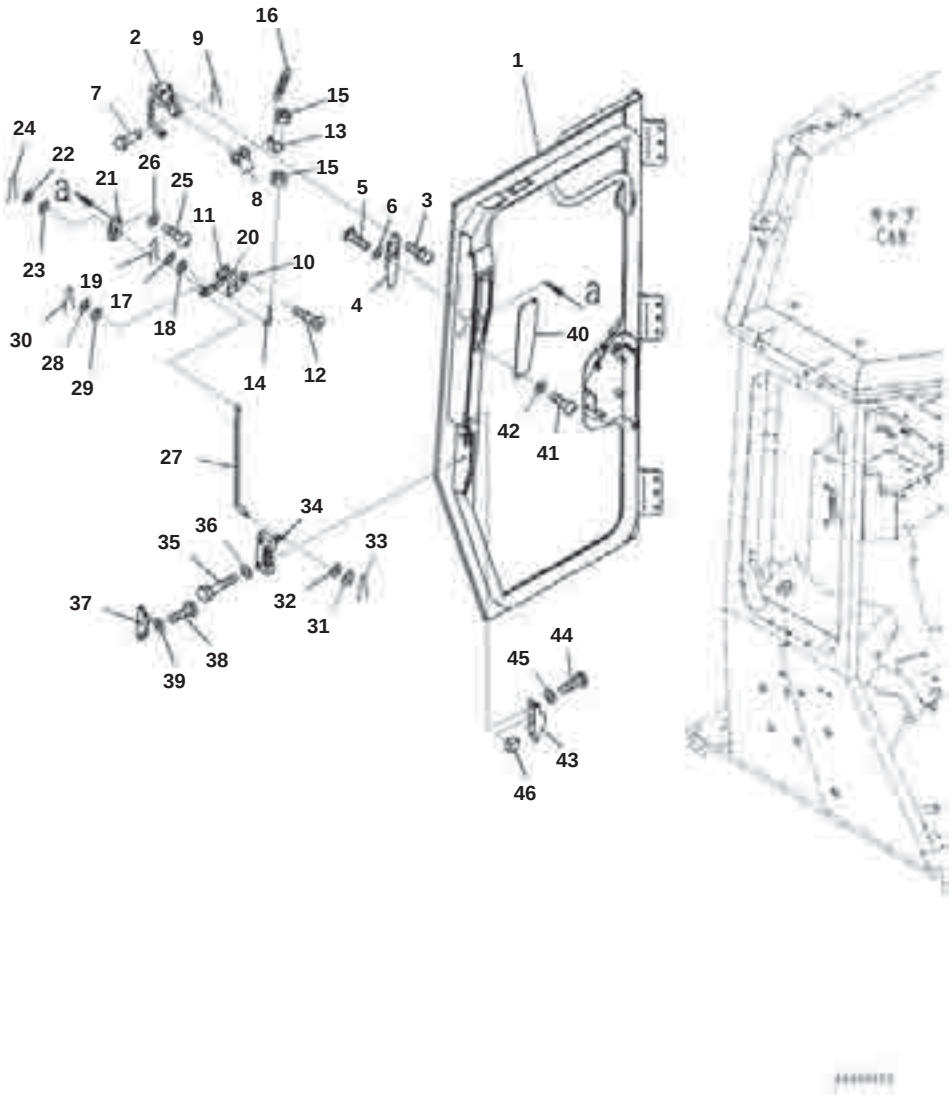

Index	Part Number	Description	Qty	Options
1	12Y-54-26121	Door	1	SN:B50001--
2	11Y-979-2571	Handle Assembly	1	SN:B50001--
3	01023-10520	Screw	5	SN:B50001--
4	12Y-978-3210	Plate	1	SN:B50001--
5	01245-00620	Screw	3	SN:B50001--
6	01643-70623	Washer	3	SN:B50001--
7	04205-10622	Pin	1	SN:B50001--
8	01643-70623	Washer	4	SN:B50001--
9	04050-11612	Pin, Cotter	1	SN:B50001--
10	12Y-978-3281	Knob	1	SN:B50001--
11	12Y-978-3290	Plate	1	SN:B50001--
12	01023-20410	Screw	2	SN:B50001--
13	12Y-978-3231	Plate	1	SN:B50001--
14	12Y-978-3241	Rod	1	SN:B50001--
15	01580-10605	Nut	2	SN:B50001--
16	17A-Z11-3332	Spring	1	SN:B50001--
17	01643-70623	Washer	1	SN:B50001--
18	12Y-978-3310	Rubber	1	SN:B50001--
19	04050-11612	Pin, Cotter	1	SN:B50001--
20	12Y-978-3470	Plate	1	SN:B50001--
21	12Y-978-3271	Plate	1	SN:B50001--
22	01643-70823	Washer	1	SN:B50001--
23	12Y-978-3360	Rubber	1	SN:B50001--
24	04050-12012	Pin, Cotter	1	SN:B50001--
25	01245-00620	Screw	2	SN:B50001--
26	01643-70623	Washer	2	SN:B50001--
27	17A-979-3330	Plate	1	SN:B50001--
28	01643-70623	Washer	1	SN:B50001--
29	12Y-978-3310	Rubber	1	SN:B50001--
30	04050-11612	Pin, Cotter	1	SN:B50001--
31	01643-70623	Washer	1	SN:B50001--
32	12Y-978-3310	Rubber	1	SN:B50001--
33	04050-11612	Pin, Cotter	1	SN:B50001--
34	195-Z11-4510	Lock	1	SN:B50001--
35	01010-D0635	Bolt	4	SN:B50001--
36	01643-70623	Washer	4	SN:B50001--
37	12Y-978-3480	Striker	1	SN:B50001--
38	01245-00825	Screw	4	SN:B50001--
39	01643-70823	Washer	4	SN:B50001--
40	14X-Y79-3310	Plate	1	SN:B50001--
41	01245-00620	Screw	3	SN:B50001--
42	01643-70623	Washer	3	SN:B50001--
44	01245-00620	Screw	2	SN:B50001--
45	01643-70623	Washer	2	SN:B50001--
46	12Y-978-3650	Sheet	1	SN:B50001--

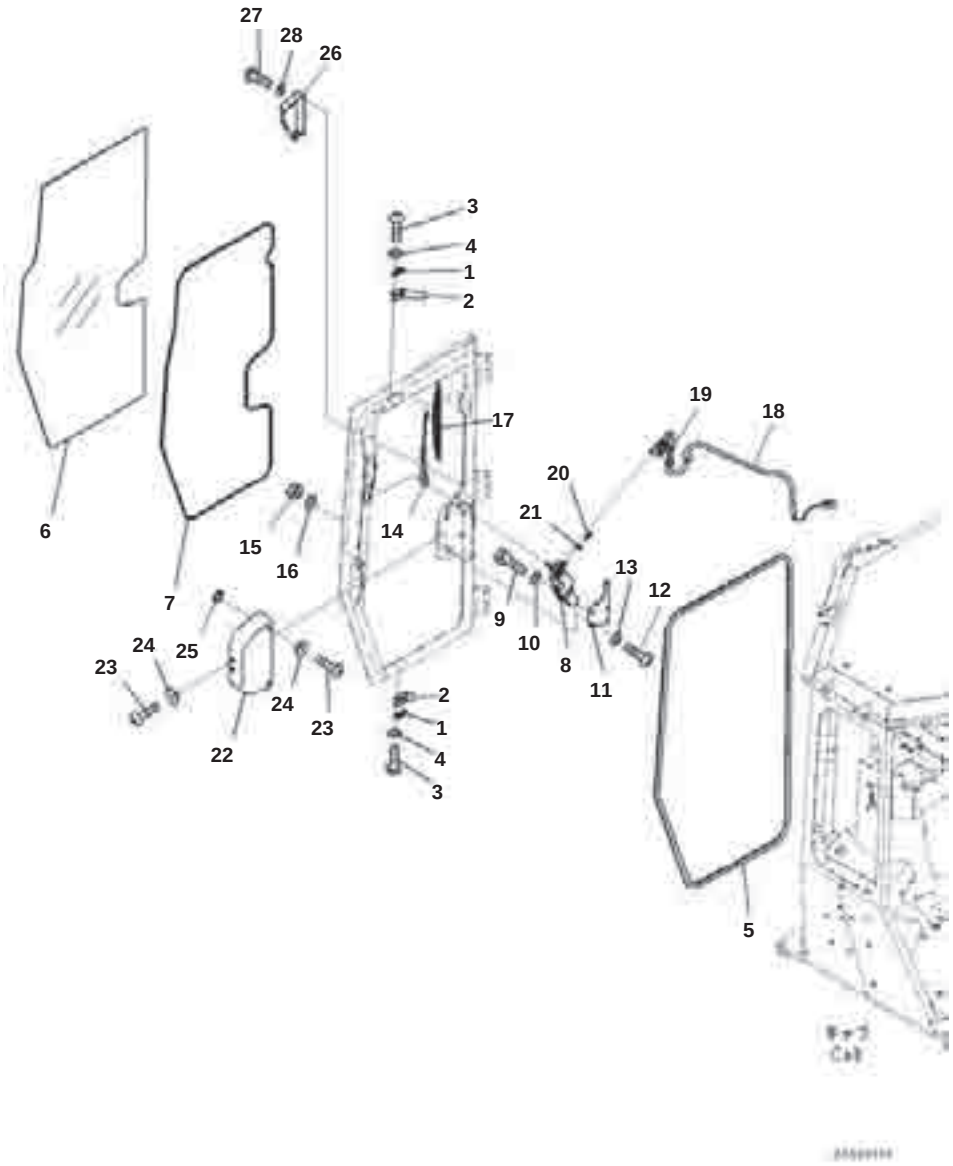

Cab, Door Damper, Window and Wiper, R.H.

Index	Part Number	Description	Qty	Options
1	14X-911-1690	Damper	2	SN:B50001--
2	14X-911-1761	Shim, T=1.2mm	4	SN:B50001--
3	01245-00620	Screw	4	SN:B50001--
4	01643-70623	Washer	4	SN:B50001--
5	12Y-54-26621	Seal	1	SN:B50001--
6	12Y-54-27281	Glass	1	SN:B50001--
7	12Y-54-27290	Seal	1	SN:B50001--
8	12Y-978-2441	Wiper Motor	1	SN:B50001--
9	01010-80616	Bolt	2	SN:B50001--
10	01643-70623	Washer	2	SN:B50001--
11	12Y-54-26210	Plate	1	SN:B50001--
12	01245-00820	Screw	3	SN:B50001--
13	01643-70823	Washer	3	SN:B50001--
14	12Y-978-2490	Arm, Wiper	1	SN:B50001--
15	01580-10806	Nut	1	SN:B50001--
16	01640-20816	Washer	1	SN:B50001--
17	17A-Z11-2581	Wiper Blade	1	SN:B50001--
18	12Y-978-2126	Wiring Harness	1	SN:B50001--
19	08034-20519	Band	1	SN:B50001--
20	17A-Z11-4610	Valve	1	SN:B50001--
21	17A-Z11-2660	Cap	1	SN:B50001--
22	14X-Y79-3270	Cover	1	SN:B50001--
23	01245-00620	Screw	4	SN:B50001--
24	12Y-978-2660	Collar	4	SN:B50001--
25	17A-Z11-5651	Sheet	2	SN:B50001--
26	12Y-54-26660	Cover	1	SN:B50001--
27	01245-00620	Screw	4	SN:B50001--
28	01643-70623	Washer	4	SN:B50001--

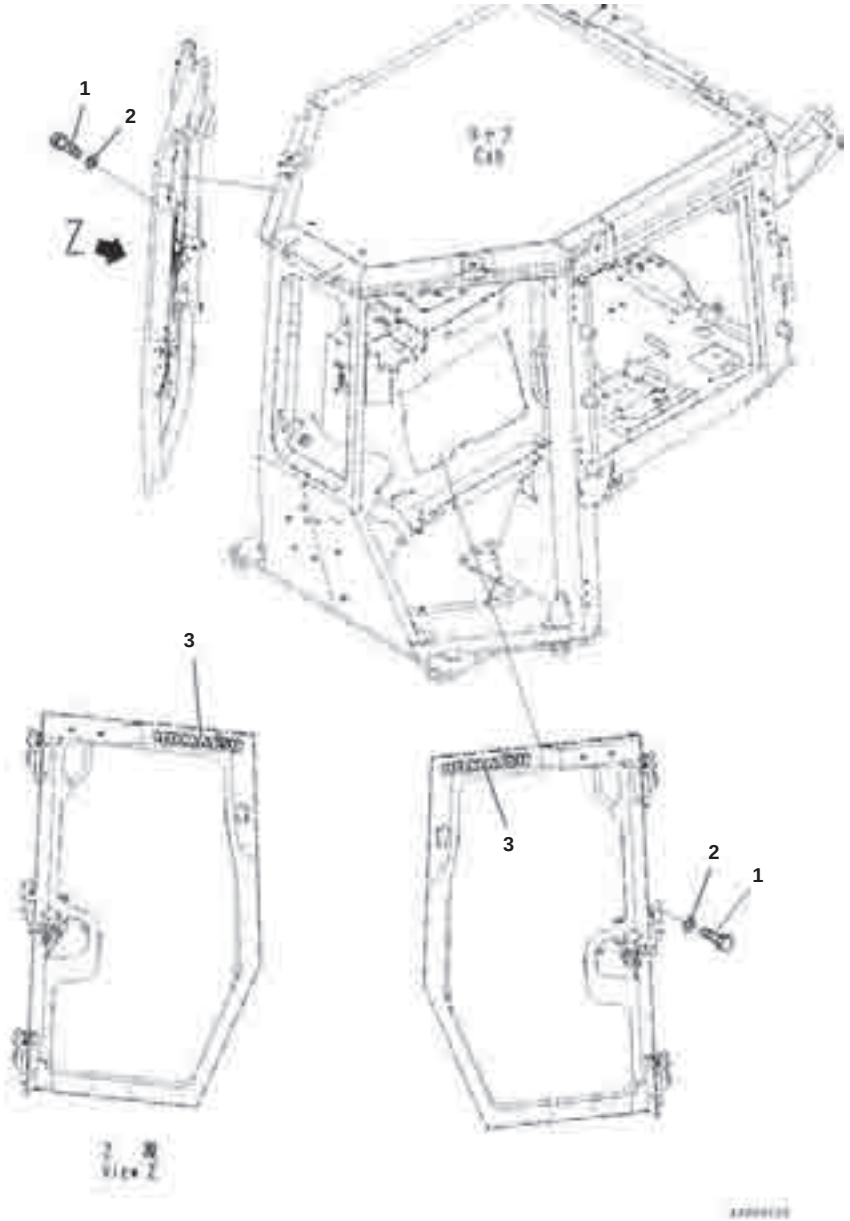

Index	Part Number	Description	Qty	Options
1	01010-D1035	Bolt	18	SN:B50001--
2	01643-71032	Washer	18	SN:B50001--
3	09693-00300	Emblem, KOMATSU	2	SN:B50001--

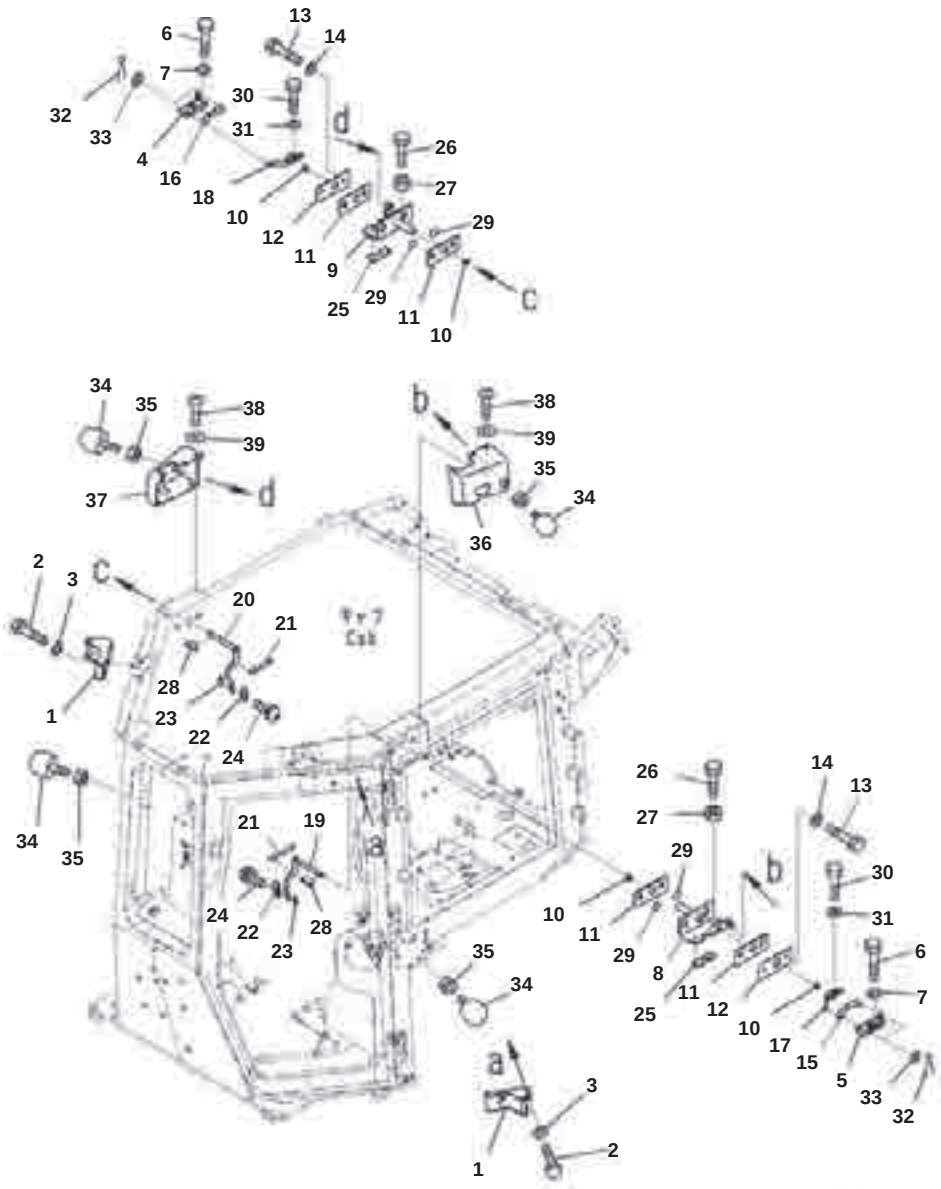

Index	Part Number	Description	Qty	Options
1	12Y-54-26430	Striker	2	SN:B50001--
2	01010-D1230	Bolt	4	SN:B50001--
3	01643-71232	Washer	4	SN:B50001--
4	195-Z11-4510	Lock	1	SN:B50001--
5	195-Z11-4520	Lock	1	SN:30001--
6	01010-D0635	Bolt	8	SN:B50001--
7	01643-70623	Washer	8	SN:B50001--
8	12Y-978-3512	Bracket	1	SN:B50001--
9	12Y-978-3522	Bracket	1	SN:B50001--
10	17A-Z11-1810	Bushing	4	SN:B50001--
11	12Y-978-3541	Rubber	4	SN:B50001--
12	12Y-978-3551	Plate	2	SN:B50001--
13	01010-D1230	Bolt	4	SN:B50001--
14	01643-71232	Washer	4	SN:B50001--
15	12Y-978-3561	Plate	1	SN:B50001--
16	12Y-978-3571	Plate	1	SN:B50001--
17	12Y-978-3580	Lever	1	SN:B50001--
18	12Y-978-3590	Lever	1	SN:B50001--
19	12Y-978-3613	Lever	1	SN:B50001--
20	12Y-978-3623	Lever	1	SN:B50001--
21	176-06-42170	Spring	2	SN:B50001--
22	12Y-978-3281	Knob	2	SN:B50001--
23	12Y-978-3290	Plate	2	SN:B50001--
24	01023-20410	Screw	4	SN:B50001--
25	17A-Z11-3680	Plate	2	SN:B50001--
26	01010-80620	Bolt	2	SN:B50001--
27	01580-10605	Nut	2	SN:B50001--
28	04010-00516	Key	2	SN:B50001--
29	07000-13025	O-ring	4	SN:B50001--
30	01010-80825	Bolt	2	SN:B50001--
31	01643-70823	Washer	2	SN:B50001--
32	04050-11612	Pin, Cotter	4	SN:B50001--
33	01640-20610	Washer	4	SN:B50001--
34	17A-Z11-3592	Stopper	4	SN:B50001--
35	01580-11210	Nut	4	SN:B50001--
36	12Y-54-26410	Cover	1	SN:B50001--
37	12Y-54-26420	Cover	1	SN:B50001--
38	01245-00620	Screw	8	SN:B50001--
39	12Y-978-2660	Collar	8	SN:B50001--

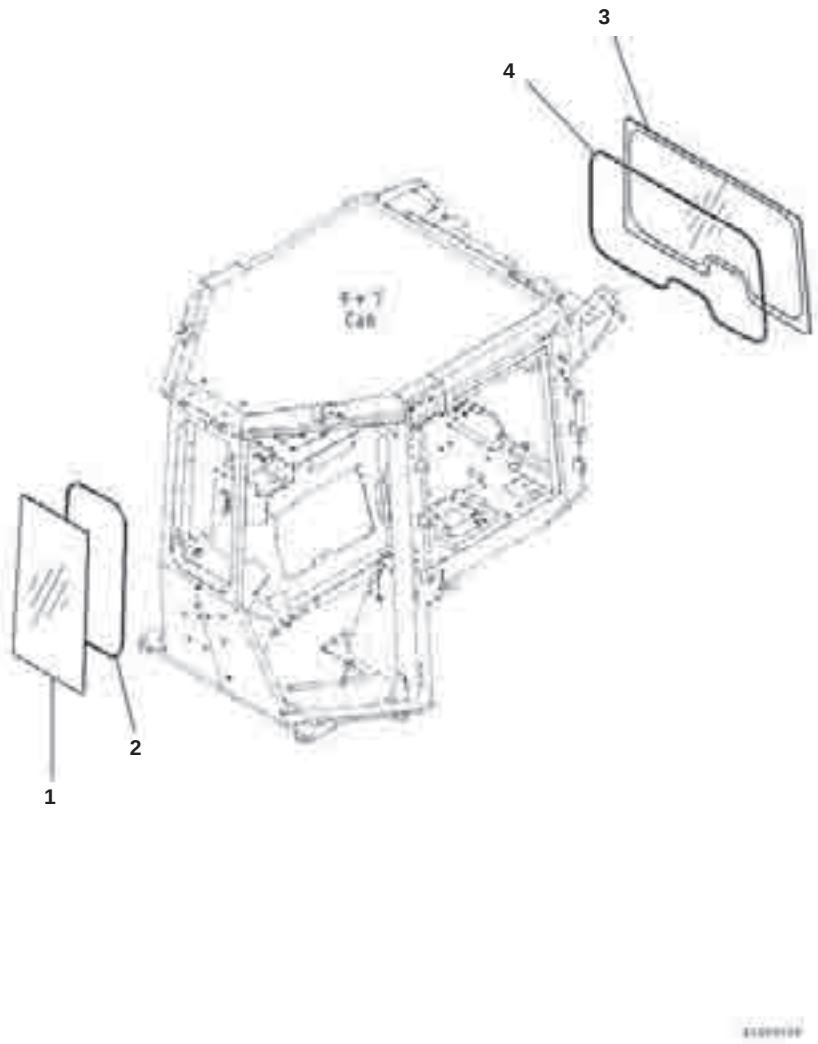

Cab, Glass Window, Front and Rear

Index	Part Number	Description	Qty	Options
1	12Y-978-1310	Glass	1	SN:B50001--
2	12Y-978-1320	Seal	1	SN:B50001--
3	12Y-54-27251	Glass	1	SN:B50001--
4	12Y-978-1341	Seal	1	SN:B50001--

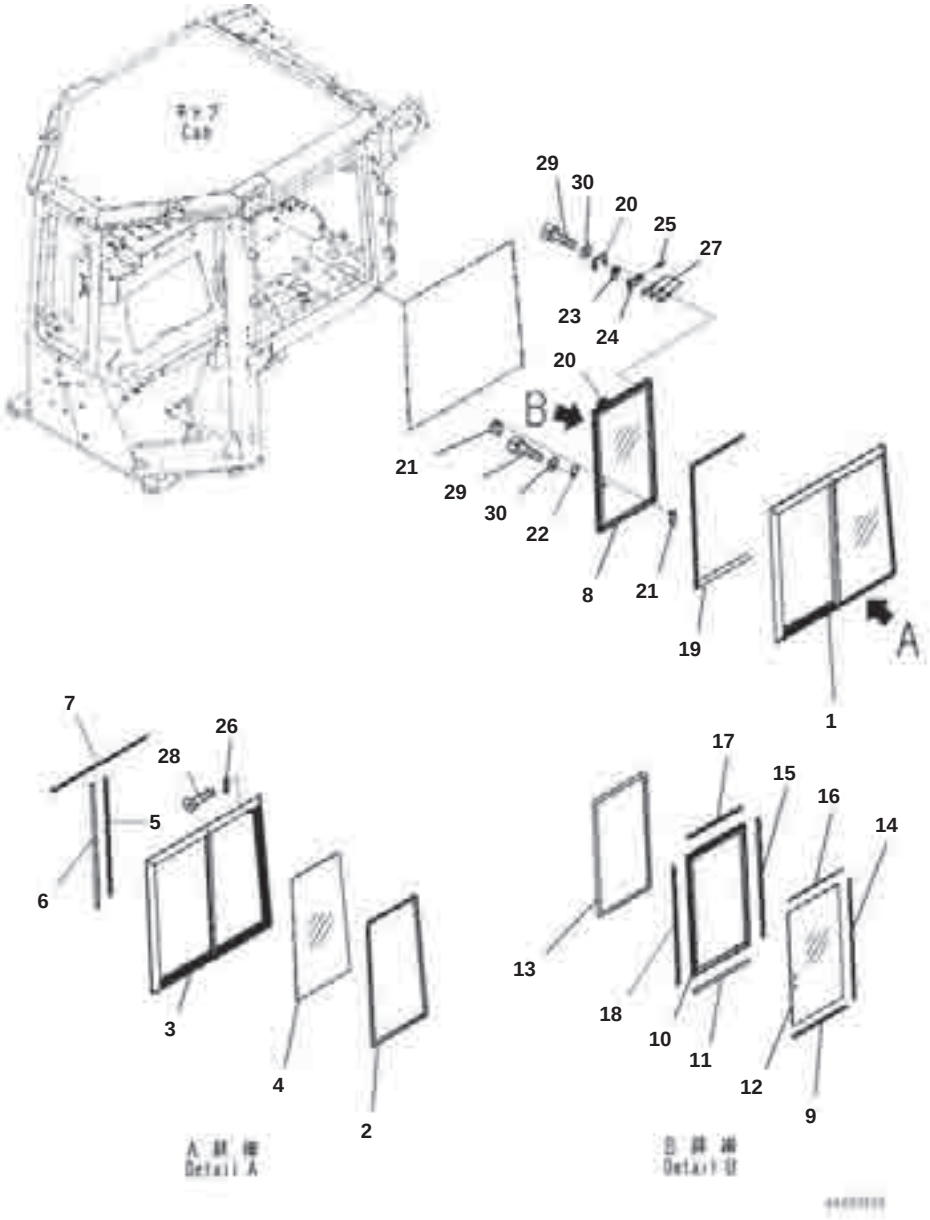

Cab, Sash type Glass Window, L.H.

Index	Code	Part Number	Description	Qty	Options
		12Y-54-27401	Sash Assembly	1	SN:B50001--
1		12Y-54-27411	· Sash Assembly	1	SN:B50001--
2		12Y-54-27361	· · Seal	1	SN:B50001--
3	C1		· · Frame	1	SN:B50001--
4		12Y-54-27450	· · Glass	1	SN:B50001--
5		12Y-54-27480	· · Seal	1	SN:B50001--
6		12Y-54-27490	· · Seal	1	SN:B50001--
7		12Y-54-27550	· · Seal	1	SN:B50001--
8		12Y-54-27431	· Sash Assembly	1	SN:B50001--
9		12Y-54-27390	· · Seal	1	SN:B50001--
10	C1		· · Frame	1	SN:B50001--
11		12Y-54-27470	· · Run Channel	1	SN:B50001--
12		12Y-54-27560	· · Glass	1	SN:B50001--
13		12Y-54-27571	· · Seal	1	SN:B50001--
14		12Y-54-27590	· · Seal	1	SN:B50001--
15		12Y-54-27611	· · Seal	1	SN:B50001--
16		12Y-54-27630	· · Seal	1	SN:B50001--
17		12Y-54-27671	· · Run Channel	1	SN:B50001--
18		12Y-54-27681	· · Run Channel	1	SN:B50001--
19		12Y-54-27641	· Seal	1	SN:B50001--
20		12Y-54-27690	· Plate	2	SN:B50001--
21		17A-Z11-1610	· Lock Assembly	1	SN:B50001--
22		17A-Z11-1620	· Striker	1	SN:B50001--
		195-Z11-1371	· Lock Assembly	2	SN:B50001--
23		195-Z11-3630	· · Lever	1	SN:B50001--
24		195-Z11-3640	· · Plate	1	SN:B50001--
25		195-Z11-3860	· · Pin, Spring	1	SN:B50001--
26		195-Z11-1381	· Stopper	1	SN:B50001--
27		195-Z11-3670	· Shim, T=0.5mm	6	SN:B50001--
28		01224-70316	· Screw	2	SN:B50001--
29		01252-B0514	· Bolt, Hexagon Socket Head	6	SN:B50001--
30		01641-50508	· Washer	6	SN:B50001--

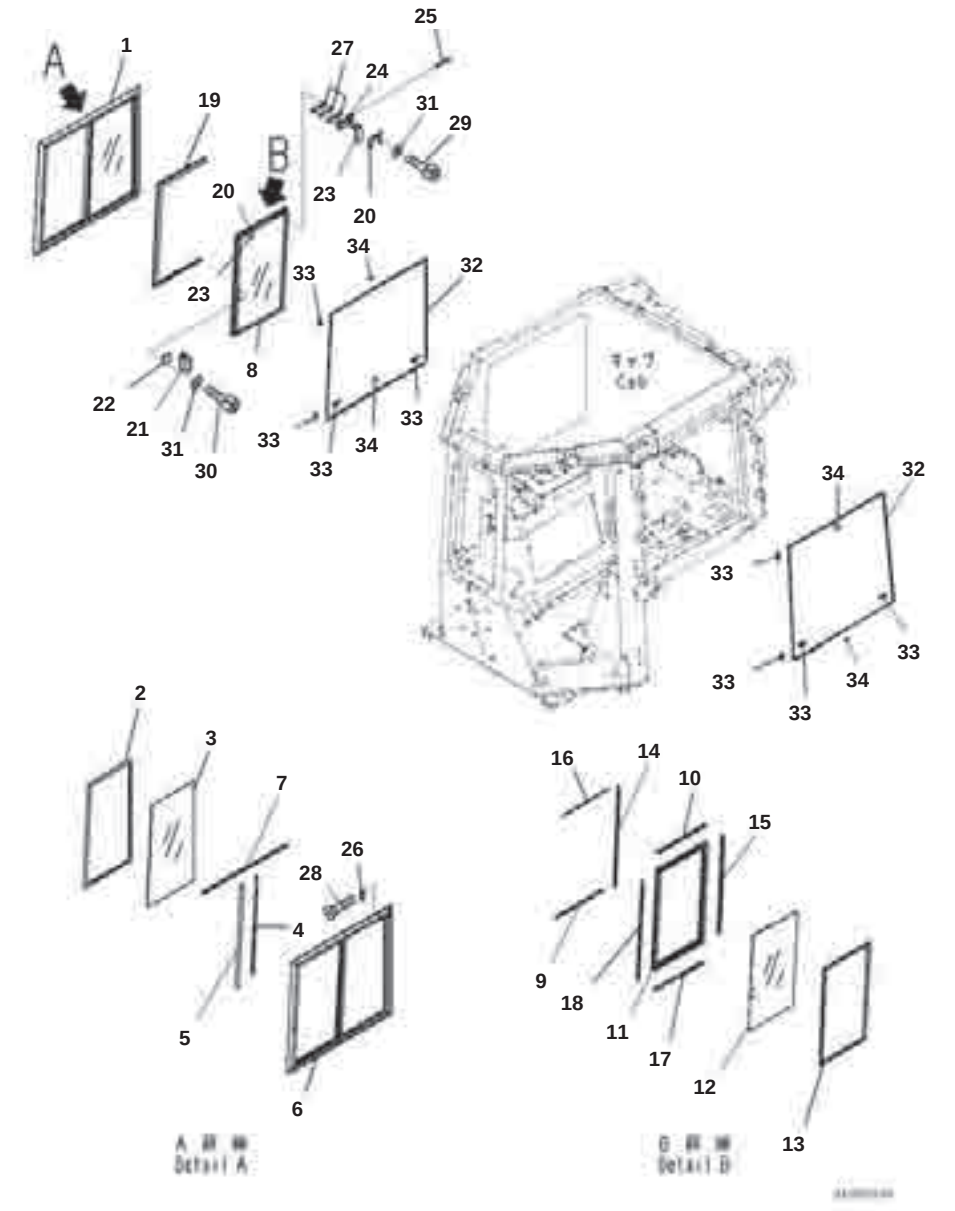

Cab, Sash type Glass Window, R.H.

Index	Code	Part Number	Description	Qty	Options
		12Y-54-27501	Sash Assembly	1	SN:B50001--
1		12Y-54-27511	· Sash Assembly	1	SN:B50001--
2		12Y-54-27371	· · Seal	1	SN:B50001--
3		12Y-54-27450	· · Glass	1	SN:B50001--
4		12Y-54-27480	· · Seal	1	SN:B50001--
5		12Y-54-27490	· · Seal	1	SN:B50001--
6	C1		· · Frame	1	SN:B50001--
7		12Y-54-27550	· · Seal	1	SN:B50001--
8		12Y-54-27531	· Sash Assembly	1	SN:B50001--
9		12Y-54-27390	· · Seal	1	SN:B50001--
10		12Y-54-27470	· · Run Channel	1	SN:B50001--
11	C1		· · Frame	1	SN:B50001--
12		12Y-54-27560	· · Glass	1	SN:B50001--
13		12Y-54-27571	· · Seal	1	SN:B50001--
14		12Y-54-27590	· · Seal	1	SN:B50001--
15		12Y-54-27620	· · Seal	1	SN:B50001--
16		12Y-54-27630	· · Seal	1	SN:B50001--
17		12Y-54-27671	· · Run Channel	1	SN:B50001--
18		12Y-54-27681	· · Run Channel	1	SN:B50001--
19		12Y-54-27641	· Seal	1	SN:B50001--
20		12Y-54-27690	· Plate	2	SN:B50001--
21		17A-Z11-1610	· Lock Assembly	1	SN:B50001--
22		17A-Z11-1620	· Striker	1	SN:B50001--
		195-Z11-1371	· Lock Assembly	2	SN:B50001--
23		195-Z11-3630	· · Lever	1	SN:B50001--
24		195-Z11-3640	· · Plate	1	SN:B50001--
25		195-Z11-3860	· · Pin, Spring	1	SN:B50001--
26		195-Z11-1381	· Stopper	1	SN:B50001--
27		195-Z11-3670	· Shim, T=0.5mm	6	SN:B50001--
28		01224-70316	· Screw	2	SN:B50001--
29		01252-80514	· Bolt	4	SN:B50001--
30		01252-B0514	· Bolt, Hexagon Socket Head	2	SN:B50001--
31		01641-50508	· Washer	6	SN:B50001--
32		12Y-54-27351	Seal	2	SN:B50001--
33		12Y-54-27331	Sheet	8	SN:B50001--
34		12Y-978-2870	Plate	4	SN:B50001--

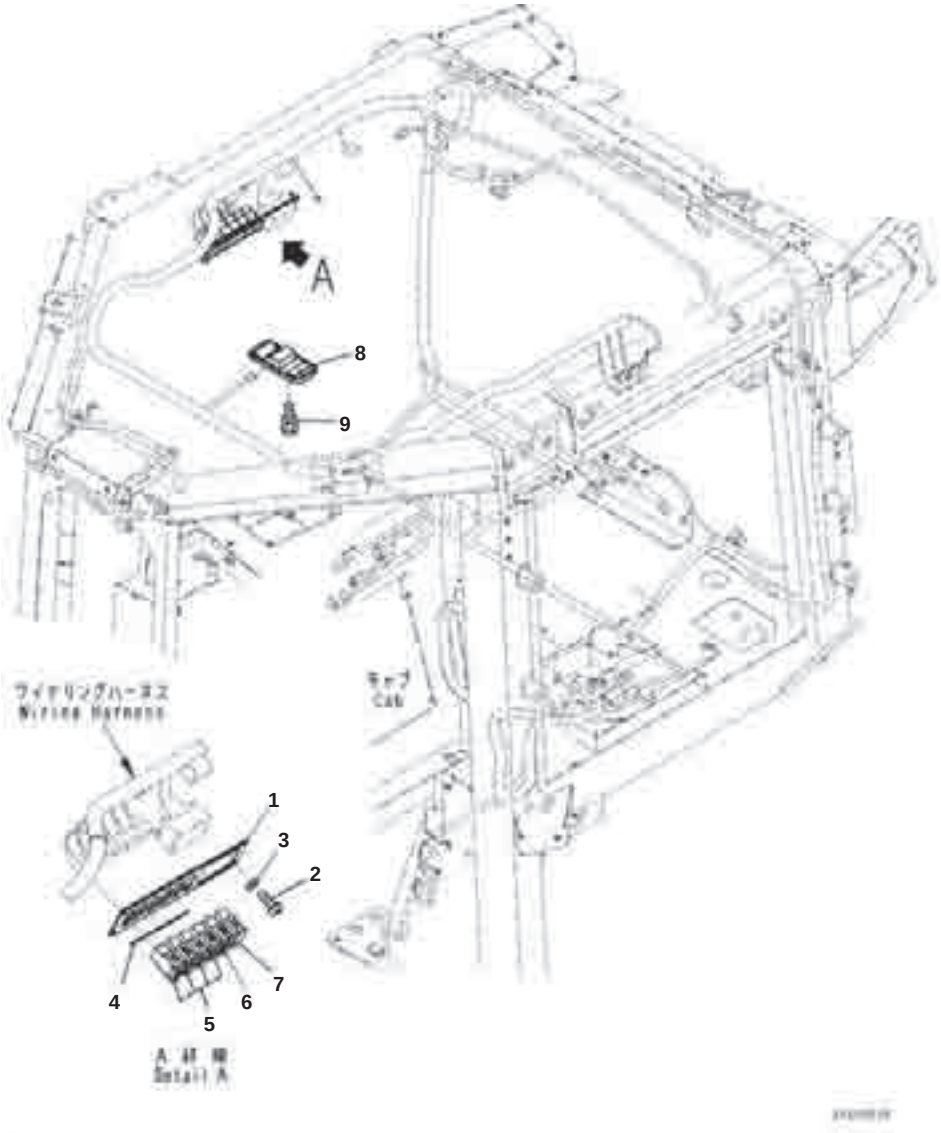

Index	Part Number	Description	Qty	Options
1	12Y-978-2271	Panel	1	SN:B50001--
2	01245-00620	Screw	4	SN:B50001--
3	01643-70623	Washer	4	SN:B50001--
4	12Y-54-28230	Plate	1	SN:B50001--
5	20Y-06-42140	Switch, Wiper	4	SN:B50001--
6	17A-06-42220	Switch, Wiper Intermittent Operation	1	SN:B50001--
7	20Y-06-42190	Cover	1	SN:B50001--
8	421-06-26210	Room Lamp	1	SN:B50001--
9	01023-10520	Screw	2	SN:B50001--

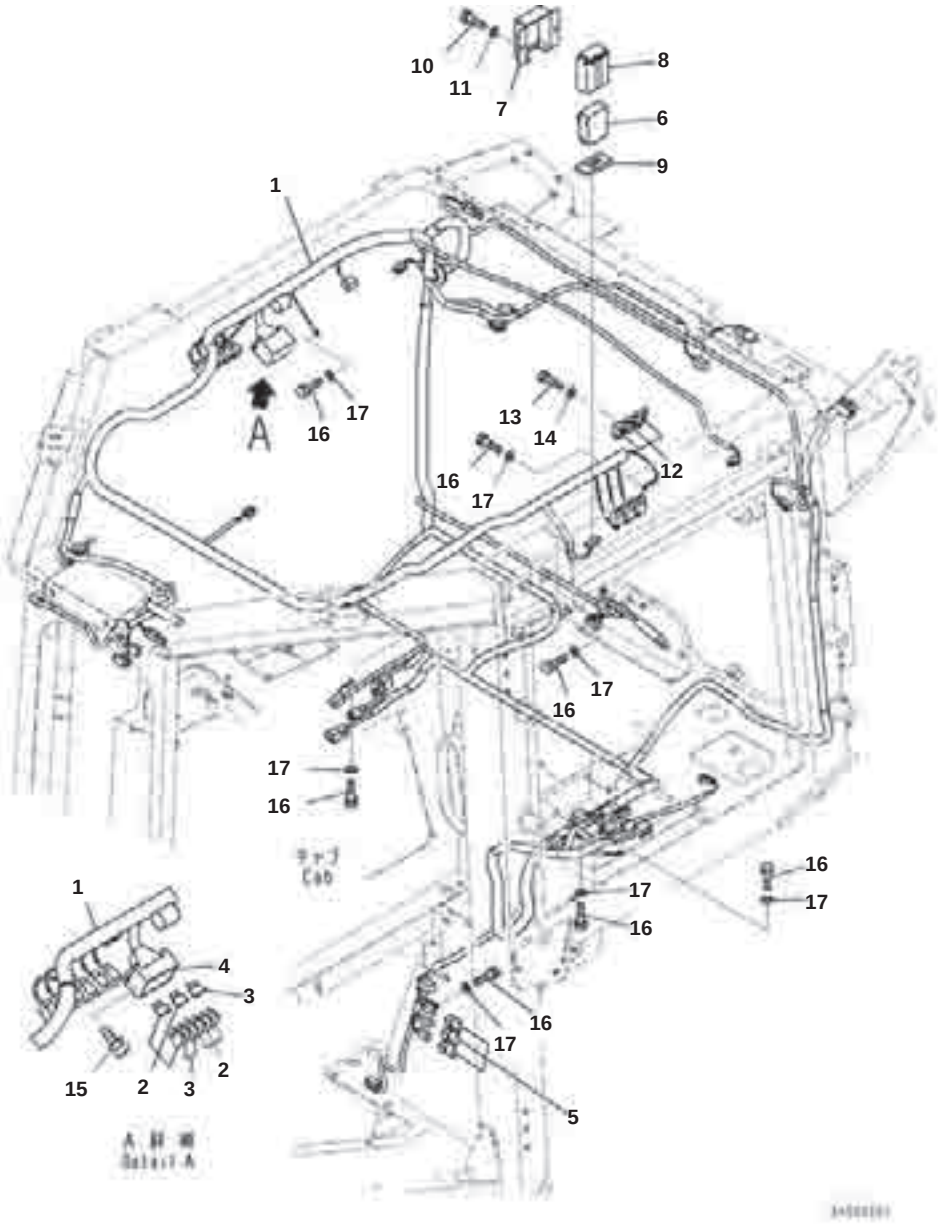

Index	Part Number	Description	Qty	Options
1	12Y-06-26122	Wiring Harness	1	SN:B50001--
2	08041-01000	Fuse, 10Amp.	6	SN:B50001--
3	08041-02000	Fuse, 20Amp.	3	SN:B50001--
4	08044-00600	Box Assembly, Fuse	1	SN:B50001--
5	21J-06-13661	Diode	3	SN:B50001--
6	14X-06-51710	Relay	1	SN:B50001--
7	14X-06-52631	Bracket	1	SN:B50001--
8	14X-06-52661	Sheet	1	SN:B50001--
9	14X-06-52740	Sheet	1	SN:B50001--
10	01010-80616	Bolt	2	SN:B50001--
12	7861-74-5100	Relay	3	SN:B50001--
13	01010-80616	Bolt	3	SN:B50001--
14	01643-30623	Washer	3	SN:B50001--
15	01023-10520	Screw	2	SN:B50001--
16	01010-80616	Bolt	7	SN:B50001--
17	01643-30623	Washer	7	SN:B50001--

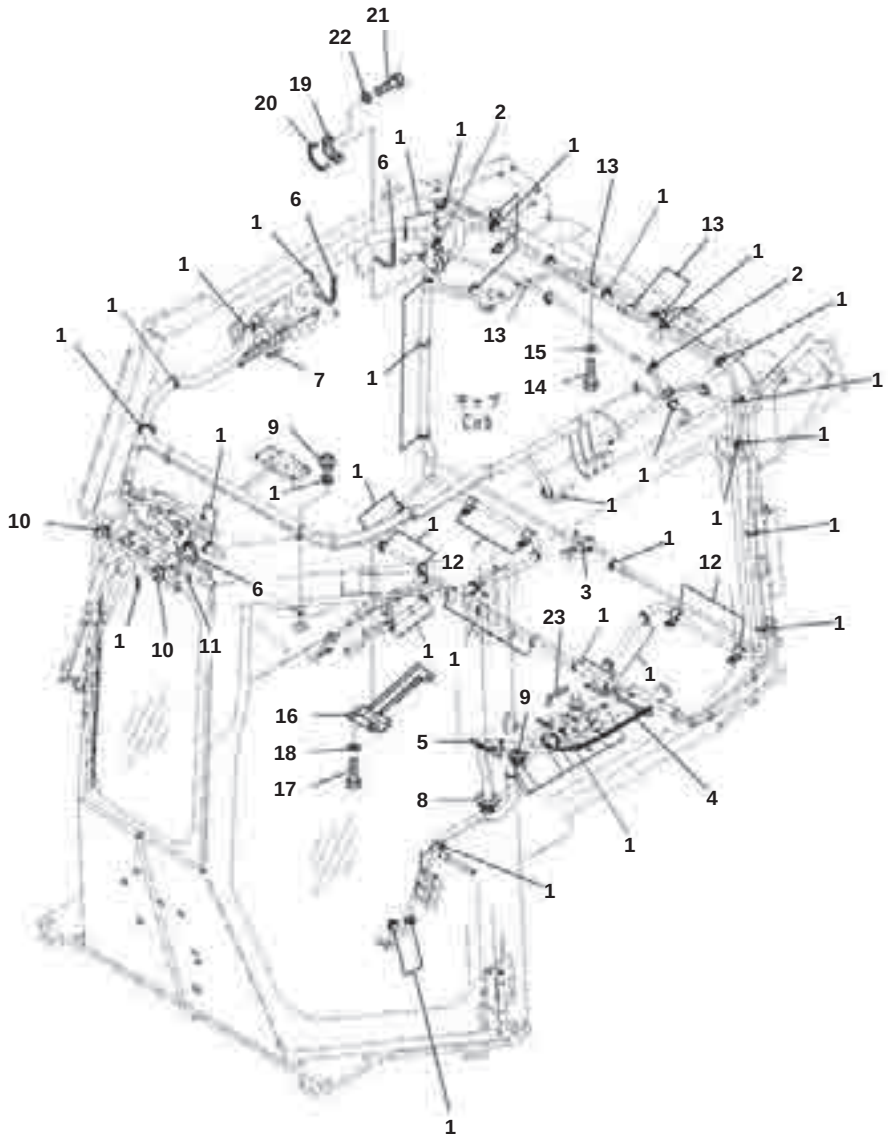

Index	Part Number	Description	Qty	Options
1	08034-20519	Band	61	SN:B50001--
2	08059-00310	Clip	2	SN:B50001--
3	08037-11025	Grommet	1	SN:B50001--
4	12Y-978-2184	Seal	1	SN:B50001--
5	12Y-978-2192	Seal	1	SN:B50001--
6	12Y-06-13151	Seal	3	SN:B50001--
7	12Y-978-2160	Seal	1	SN:B50001--
8	08037-12536	Grommet	1	SN:B50001--
9	08037-11425	Grommet	2	SN:B50001--
10	08037-02512	Grommet	2	SN:B50001--
11	09415-01008	Cap	1	SN:B50001--
12	04434-51710	Clip	4	SN:B50001--
13	04434-51008	Clip	4	SN:B50001--
14	01010-D0816	Bolt	4	SN:B50001--
15	01643-70823	Washer	4	SN:B50001--
16	12Y-06-26150	Cover	1	SN:B50001--
17	01010-81020	Bolt	3	SN:B50001--
18	01643-31032	Washer	3	SN:B50001--
19	12Y-06-26160	Bracket	1	SN:B50001--
20	12Y-06-26170	Sheet	1	SN:B50001--
21	01010-80616	Bolt	2	SN:B50001--
22	01643-30623	Washer	2	SN:B50001--
23	12Y-978-2172	Seal	1	SN:B50001--

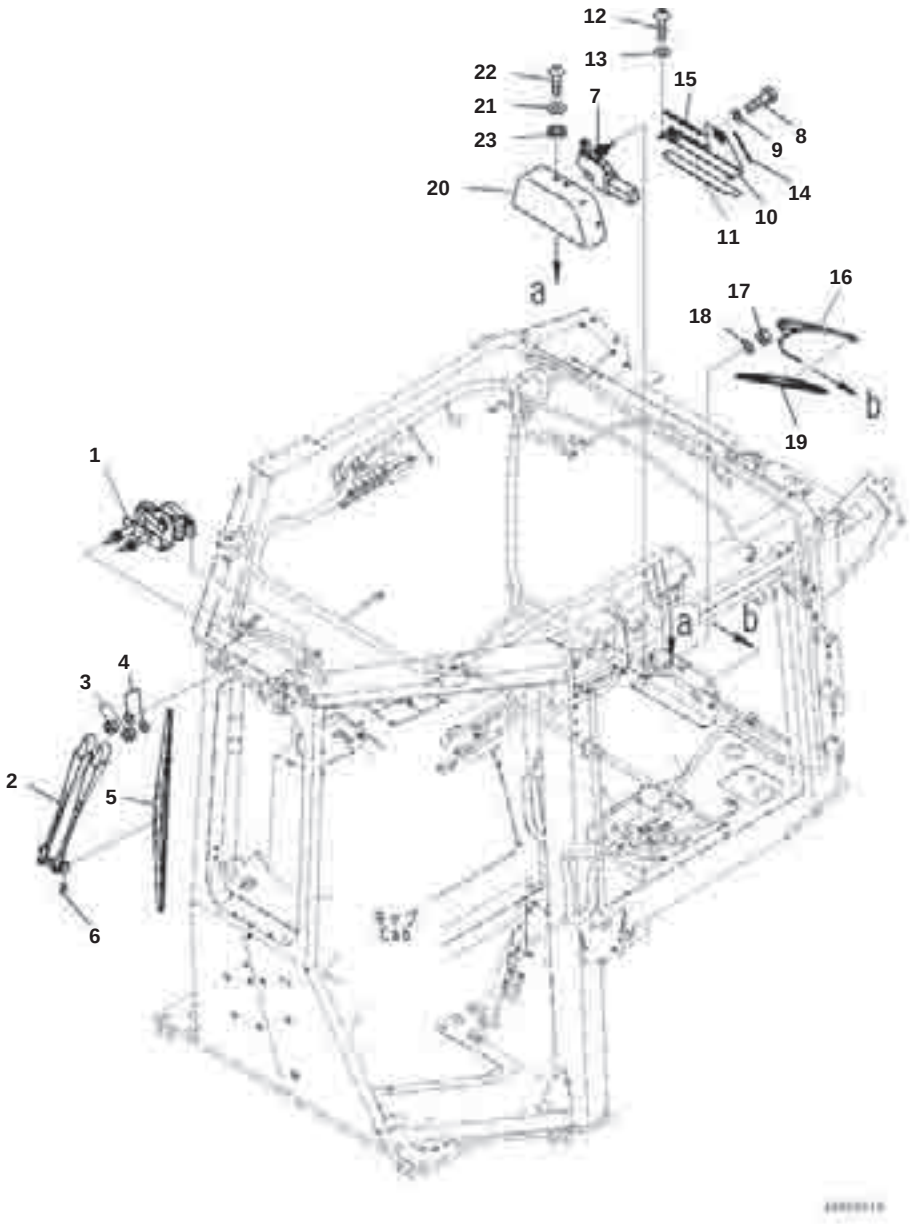

Index	Part Number	Description	Qty	Options
1	12Y-978-2411	Wiper Motor	1	SN:B50001--
2	12Y-978-2470	Arm, Wiper	1	SN:B50001--
3	01580-10806	Nut	2	SN:B50001--
4	01640-20816	Washer	2	SN:B50001--
5	12Y-978-2450	Wiper Blade	1	SN:B50001--
6	12Y-978-2460	Shim, T=0.4mm	2	SN:B50001--
7	12Y-978-2441	Wiper Motor	1	SN:B50001--
8	01010-80616	Bolt	2	SN:B50001--
9	01643-70623	Washer	2	SN:B50001--
10	12Y-978-2572	Bracket	1	SN:B50001--
11	12Y-978-2580	Sheet	1	SN:B50001--
12	01245-00825	Screw	2	SN:B50001--
13	01643-70823	Washer	2	SN:B50001--
14	12Y-06-13380	Seal	1	SN:B50001--
15	12Y-43-12861	Seal	1	SN:B50001--
16	17A-Z11-2570	Arm, Wiper	1	SN:B50001--
17	01580-10806	Nut	1	SN:B50001--
18	01640-20816	Washer	1	SN:B50001--
19	17A-Z11-2581	Wiper Blade	1	SN:B50001--
20	12Y-978-3391	Cover	1	SN:B50001--
21	17A-Z11-5651	Sheet	2	SN:B50001--
22	01245-00620	Screw	4	SN:B50001--
23	12Y-978-2660	Collar	4	SN:B50001--

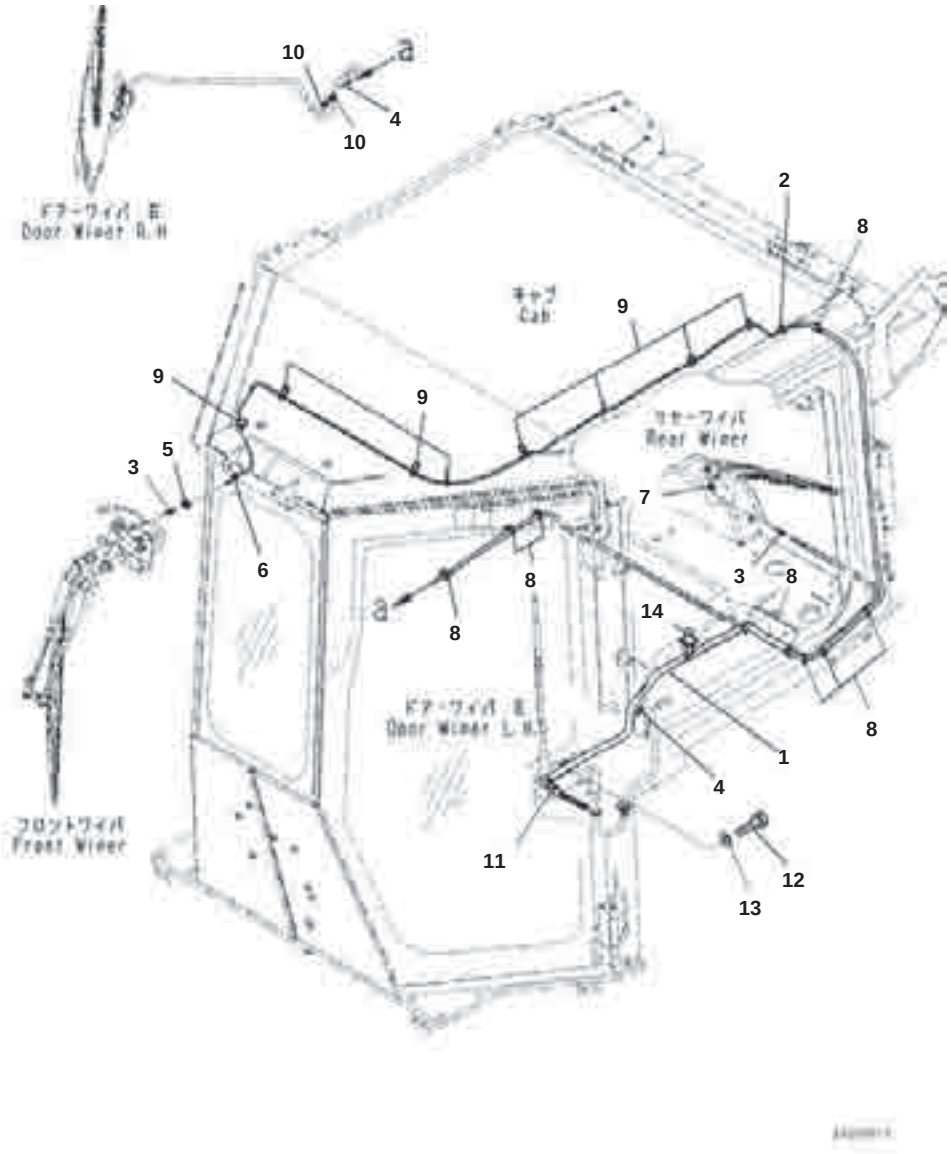

Index	Part Number	Description	Qty	Options
1	12Y-54-28411	Hose Assembly	1	SN:B50001--
2	17A-Z11-2660	･ Cap	1	SN:B50001--
3	17A-Z11-4610	･ Valve	2	SN:B50001--
4	22L-54-22990	･ Joint	2	SN:B50001--
5	17A-Z11-2660	Cap	1	SN:B50001--
6	08037-01008	Grommet	1	SN:B50001--
7	17A-Z11-2660	Cap	1	SN:B50001--
8	08034-20519	Band	9	SN:B50001--
9	08034-40521	Band	9	SN:B50001--
10	08034-40521	Band	2	SN:B50001--
11	04434-51710	Clip	1	SN:B50001--
12	01010-81020	Bolt	1	SN:B50001--
13	01643-31032	Washer	1	SN:B50001--
14	20Y-06-23472	Cigarette Lighter	1	SN:B50001--

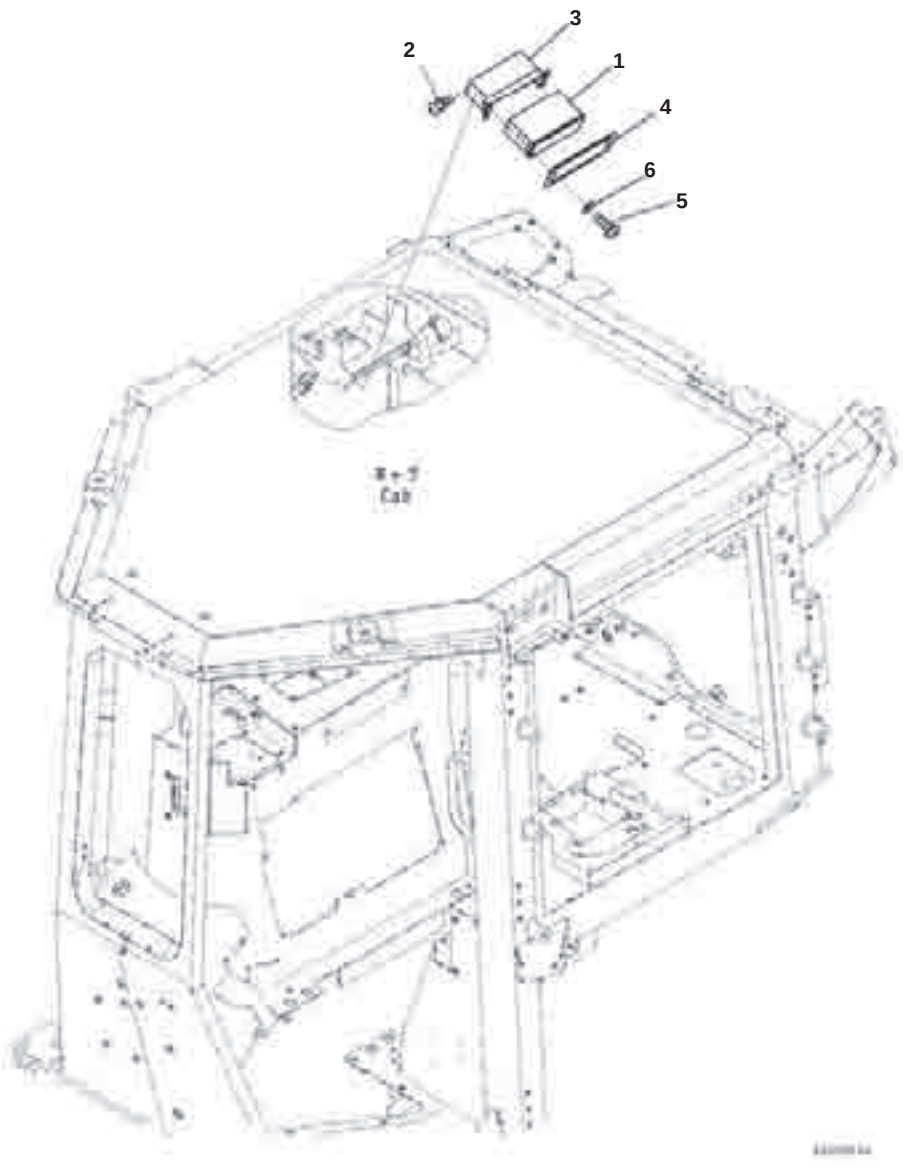

Index	Part Number	Description	Qty	Options
1	2A5-06-11922	Radio	1	SN:B50001--
2	01023-20510	Screw	4	SN:B50001--
3	12Y-54-28210	Bracket	1	SN:B50001--
4	12Y-54-28220	Plate	1	SN:B50001--
5	01245-00620	Screw	4	SN:B50001--
6	01643-70623	Washer	4	SN:B50001--

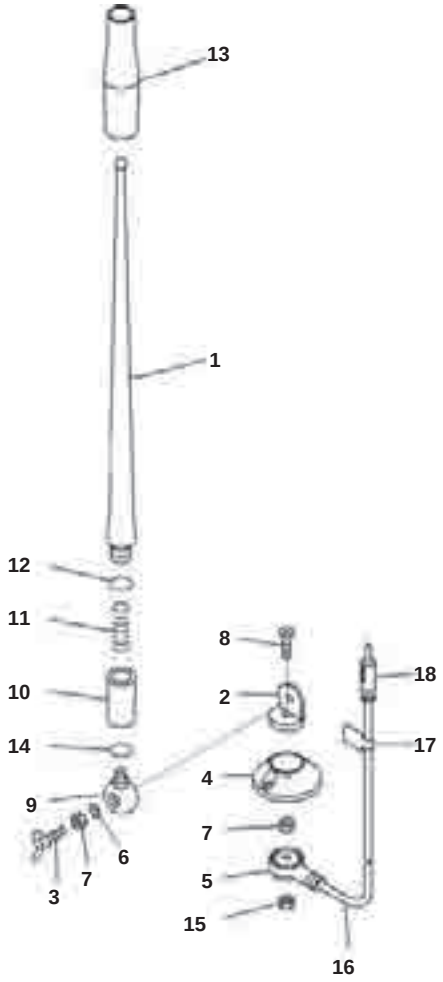

Index	Code	Part Number	Description	Qty	Options
		20Y-06-41990	Antenna	1	SN:B50001--
1		RFU419B-418-A	· Rod	1	SN:B50001--
2	C1		· Holder	1	SN:B50001--
3		RFU419B-418-D	· Bolt, Wing	1	SN:B50001--
4		RFU419B-418-E	· Base	1	SN:B50001--
5	C1		· Holder	1	SN:B50001--
6		RFU419B-418-B	· Washer, Spring	1	SN:B50001--
7		RFU419B-418-C	· Nut	2	SN:B50001--
8	C1		· Screw	1	SN:B50001--
9	C1		· Holder	1	SN:B50001--
10	C1		· Holder Assembly	1	SN:B50001--
11	C1		· Spring	1	SN:B50001--
12	C1		· O-ring	1	SN:B50001--
13	C1		· Tube	1	SN:B50001--
14	C1		· O-ring	1	SN:B50001--
15		REU419B-418-C	· Nut	1	SN:B50001--
16		RFU419B-418-F	· Cable	1	SN:B50001--
17	C1		· Plate	1	SN:B50001--
18	C1		· Plug	1	SN:B50001--

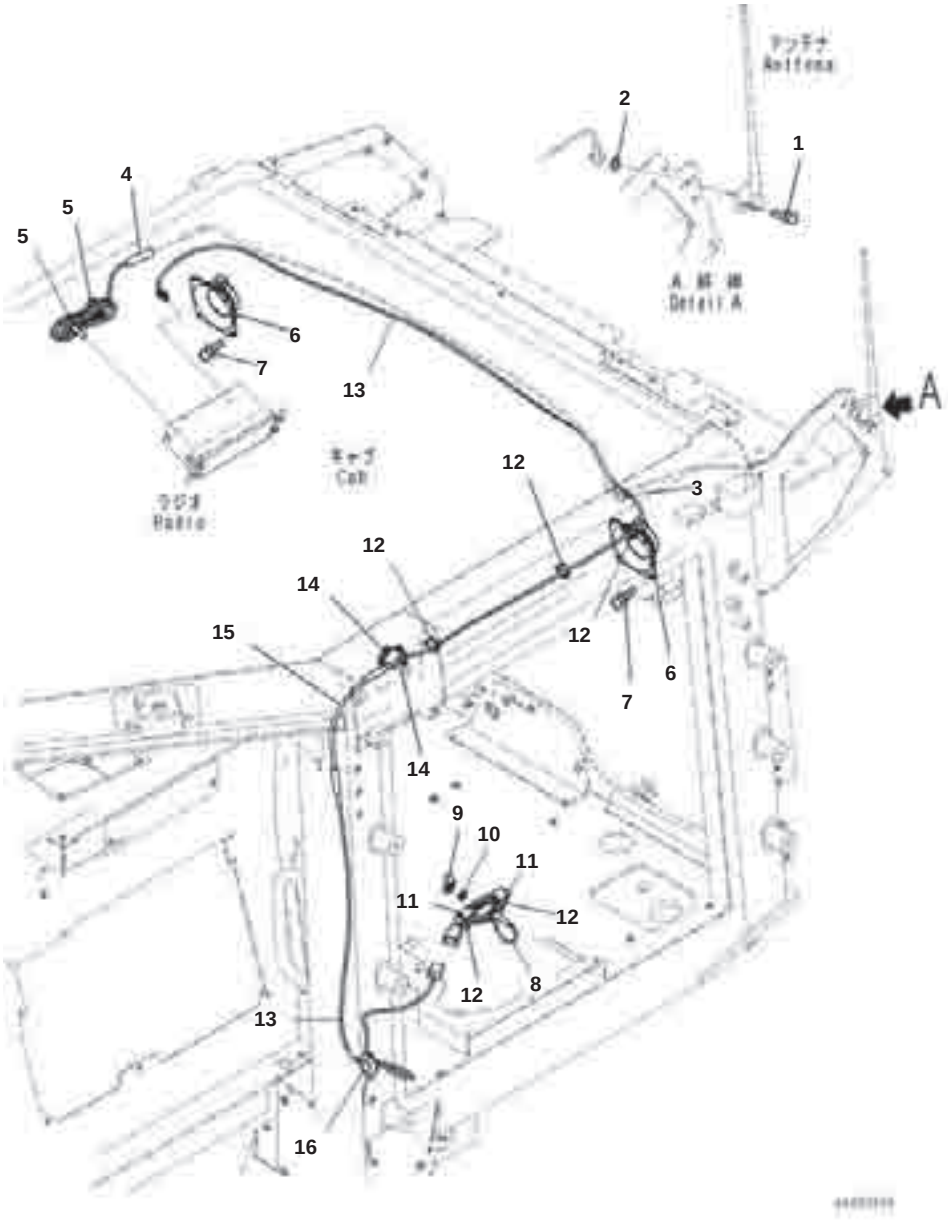

D61EX-23M0 S/N B50001
Cab, Rubber Antenna Mounting and Speaker

Index	Part Number	Description	Qty	Options
1	01023-20416	Screw	2	SN:B50001--
2	01643-70823	Washer	1	SN:B50001--
3	17A-Z11-2660	Cap	1	SN:B50001--
4	08912-51600	Cord	1	SN:B50001--
5	08034-20519	Band	2	SN:B50001--
6	08910-10000	Speaker	2	SN:B50001--
7	01023-20416	Screw	8	SN:B50001--
8	2A5-06-11940	Cable	1	SN:B50001--
9	2A5-06-12131	Cap	1	SN:B50001--
10	2A5-53-12580	Nut	1	SN:B50001--
11	20U-54-46520	Hook, Sticker Type	2	SN:B50001--
12	08034-20519	Band	5	SN:B50001--
13	56B-06-37150	Cable	1	SN:B50001--
14	12Y-06-26720	Trim	2	SN:B50001--
15	08210-00603	Tube, Spiral	1	SN:B50001--
16	08037-02512	Grommet	1	SN:B50001--

Reference:K0210-002018 Page:K012018

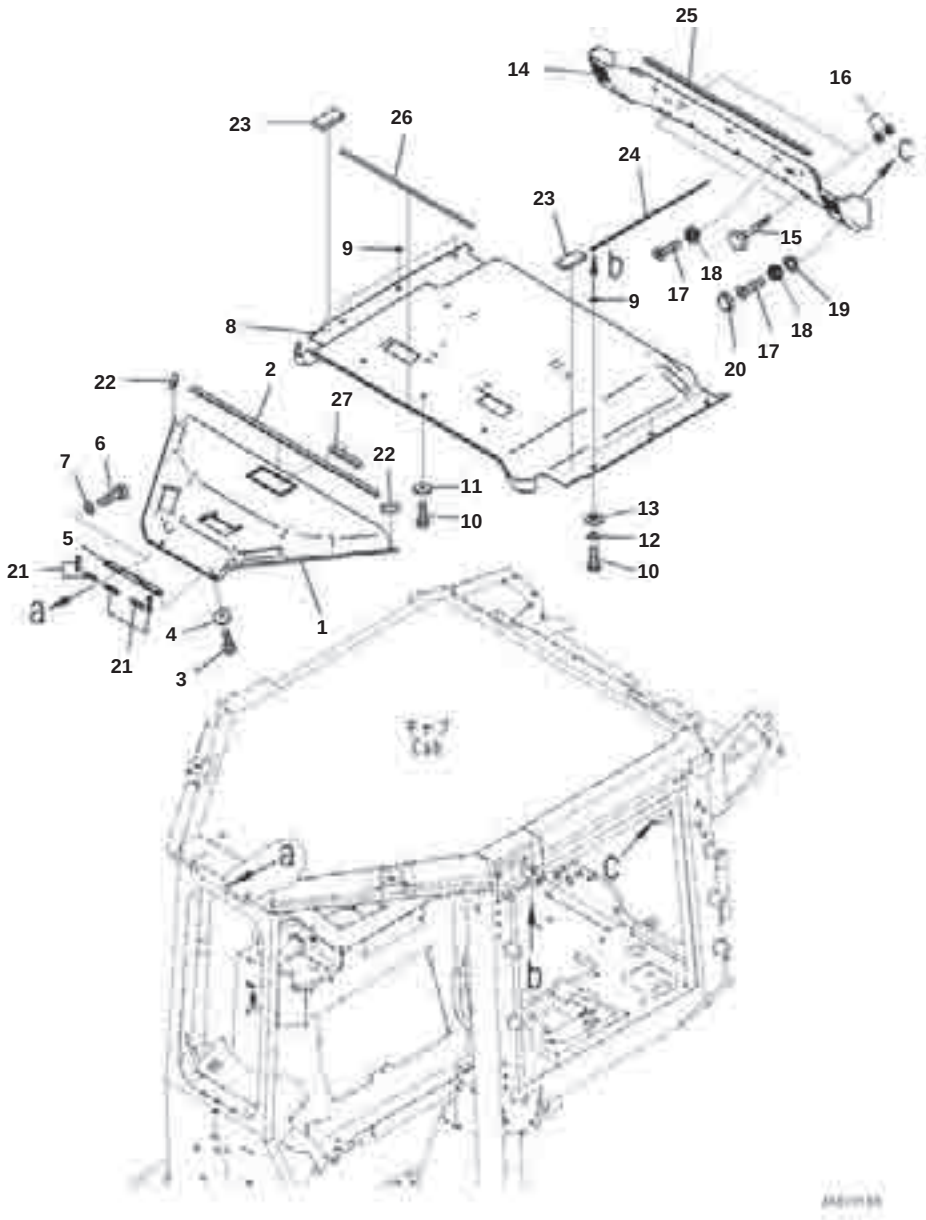

Index	Part Number	Description	Qty	Options
1	12Y-54-28611	Cover,Front	1	SN:B50001--
2	12Y-54-28730	･ Seal	1	SN:B50001--
3	01245-00620	Screw	2	SN:B50001--
4	17A-Z11-2813	Plate	2	SN:B50001--
5	12Y-54-28580	Plate	1	SN:B50001--
6	01010-80616	Bolt	2	SN:B50001--
7	01643-30623	Washer	2	SN:B50001--
8	12Y-54-28621	Cover,Rear	1	SN:B50001--
9	17A-Z11-5651	･ Sheet	6	SN:B50001--
10	01245-00620	Screw	11	SN:B50001--
11	17A-Z11-2813	Plate	5	SN:B50001--
12	01643-70623	Washer	6	SN:B50001--
13	20Y-53-12310	Collar	6	SN:B50001--
14	12Y-54-28641	Cover	1	SN:B50001--
15	12Y-978-2340	Knob	2	SN:B50001--
16	01598-00608	Nut	4	SN:B50001--
17	01240-00620	Screw	12	SN:B50001--
18	12Y-54-28691	Washer	12	SN:B50001--
19	17A-Z11-5651	Sheet	2	SN:B50001--
20	423-925-5860	Cap	12	SN:B50001--
21	12Y-978-1840	Seal	5	SN:B50001--
22	12Y-54-28720	Seal	2	SN:B50001--
23	12Y-54-28740	Seal	2	SN:B50001--
24	12Y-54-28750	Seal	1	SN:B50001--
25	12Y-54-28760	Seal	1	SN:B50001--
26	12Y-54-28770	Seal	1	SN:B50001--
27	12Y-54-28790	Seal	1	SN:B50001--

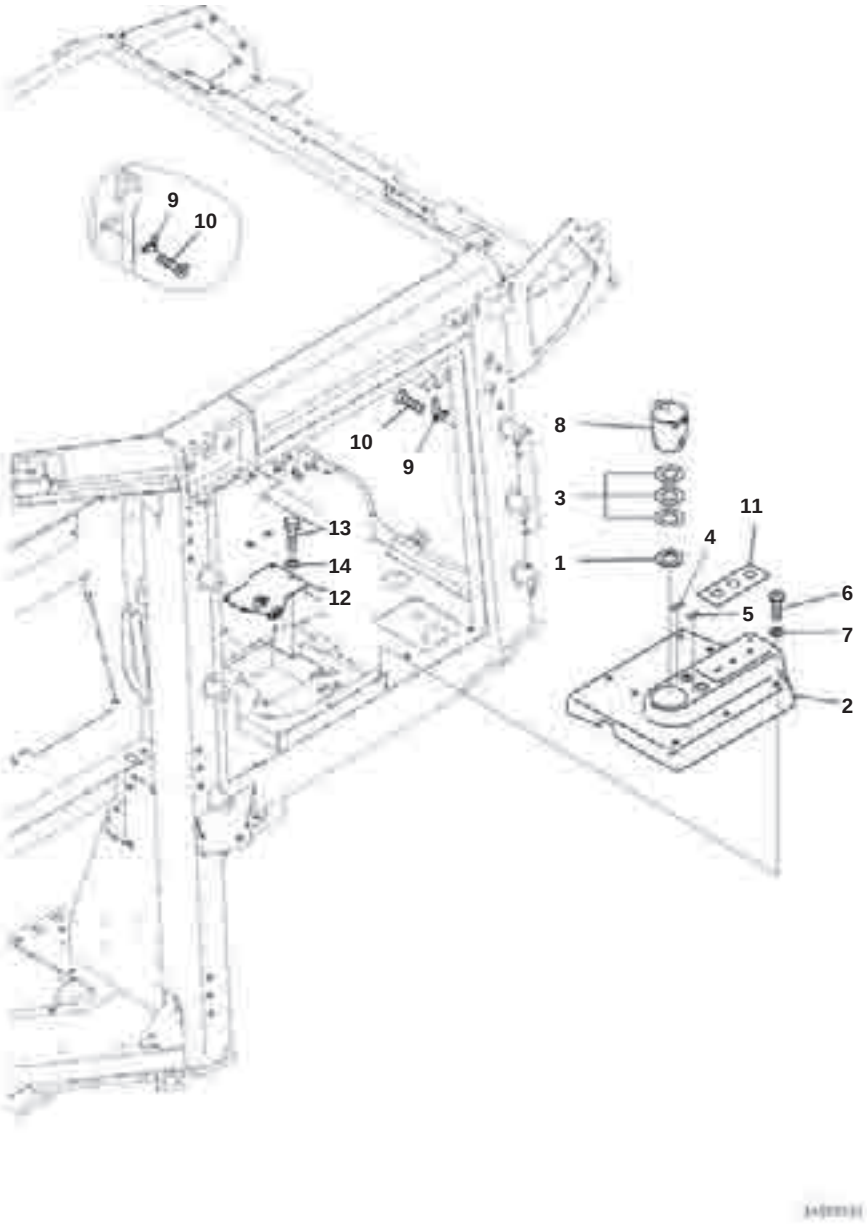

Index	Code	Part Number	Description	Qty	Options
		11Y-54-48670	Cover	1	SN:B50001--
1		12Y-54-28591	･ Sheet	1	SN:B50001--
2	C1		･ Cover	1	SN:B50001--
3		14X-Y79-2361	･ Sheet	3	SN:B50001--
4		2A5-00-11380	･ Plate, 24volt	1	SN:B50001--
5		2A5-00-11370	Plate, 12volt	1	SN:B50001--
6		01245-00630	Screw, Hexagon Socket Head	7	SN:B50001--
7		17A-Z11-2813	Plate	7	SN:B50001--
8		20Y-43-41491	Ashtray	1	SN:B50001--
9		205-54-51250	Hanger	2	SN:B50001--
10		01224-70410	Screw, Philips Head	4	SN:B50001--
11		12Y-979-1490	Plate	1	SN:B50001--
12		12Y-54-28971	Bracket	1	SN:B50001--
13		01010-80616	Bolt	4	SN:B50001--
14		01643-30623	Washer	4	SN:B50001--

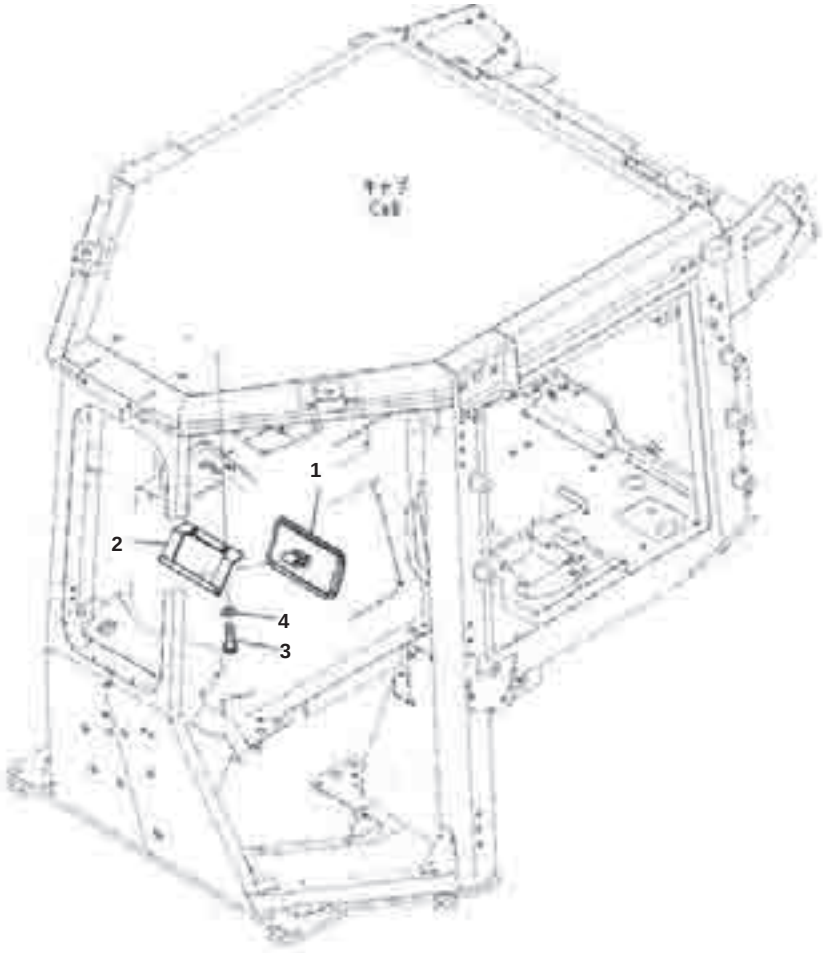

Index	Part Number	Description	Qty	Options
1	195-Z11-2180	Mirror	1	SN:B50001--
2	12Y-54-28510	Bracket	1	SN:B50001--
4	01643-70823	Washer	2	SN:B50001--

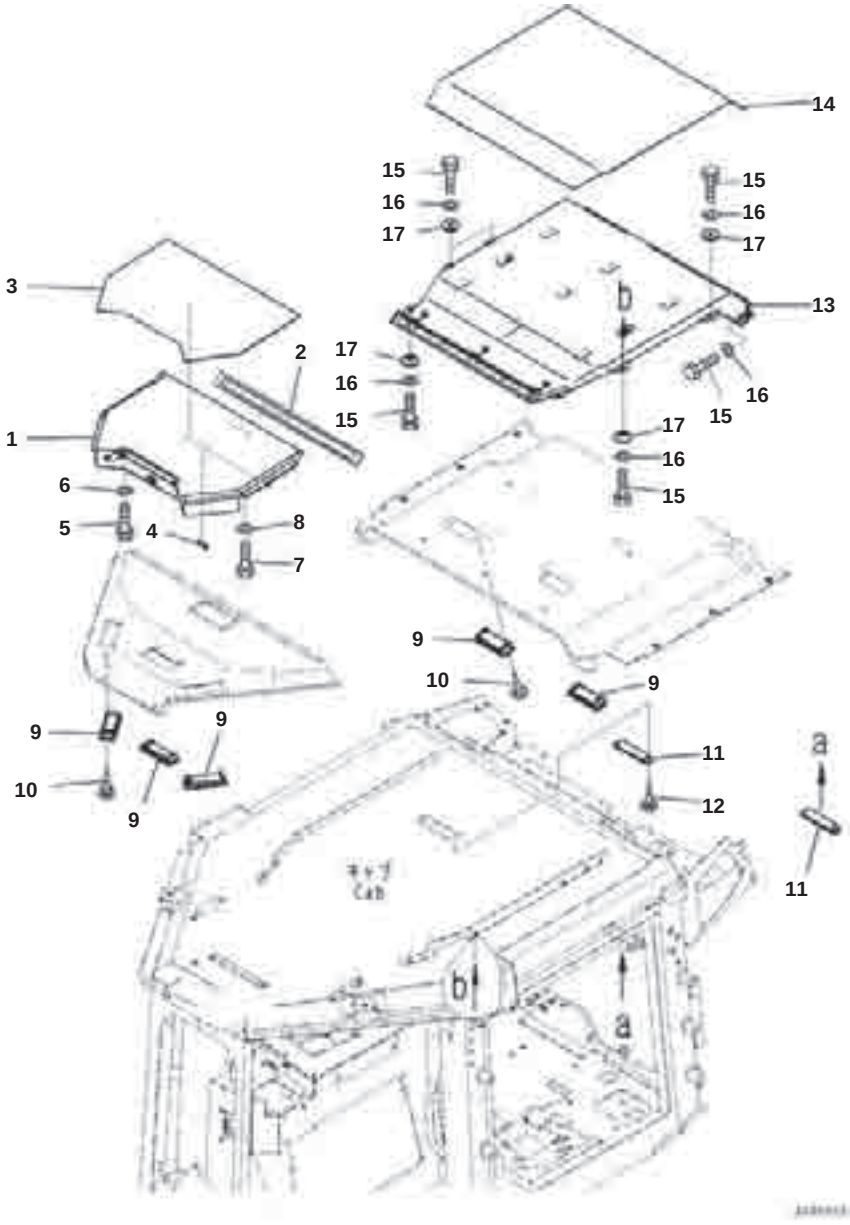

Index	Part Number	Description	Qty	Options
1	11Y-54-47710	Duct	1	SN:B50001--
	12Y-54-27850	Duct	1	SN:B50001--
2	12Y-978-1751	' Seal	1	SN:B50001--
3	12Y-978-1810	' Sheet	1	SN:B50001--
4	12Y-978-2160	Seal	1	SN:B50001--
5	01010-80612	Bolt	2	SN:B50001--
6	01643-30623	Washer	2	SN:B50001--
7	01010-80620	Bolt	4	SN:B50001--
8	01643-30623	Washer	4	SN:B50001--
9	17A-Z11-7161	Louver	5	SN:B50001--
10	01370-40412	Screw	10	SN:B50001--
11	12Y-978-2320	Louver	2	SN:B50001--
12	01370-40412	Screw	4	SN:B50001--
13	12Y-54-27712	Duct	1	SN:B50001--
14	12Y-54-27780	' Sheet	1	SN:B50001--
15	01010-80620	Bolt	8	SN:B50001--
16	01643-30623	Washer	8	SN:B50001--
17	20Y-53-12310	Collar	6	SN:B50001--

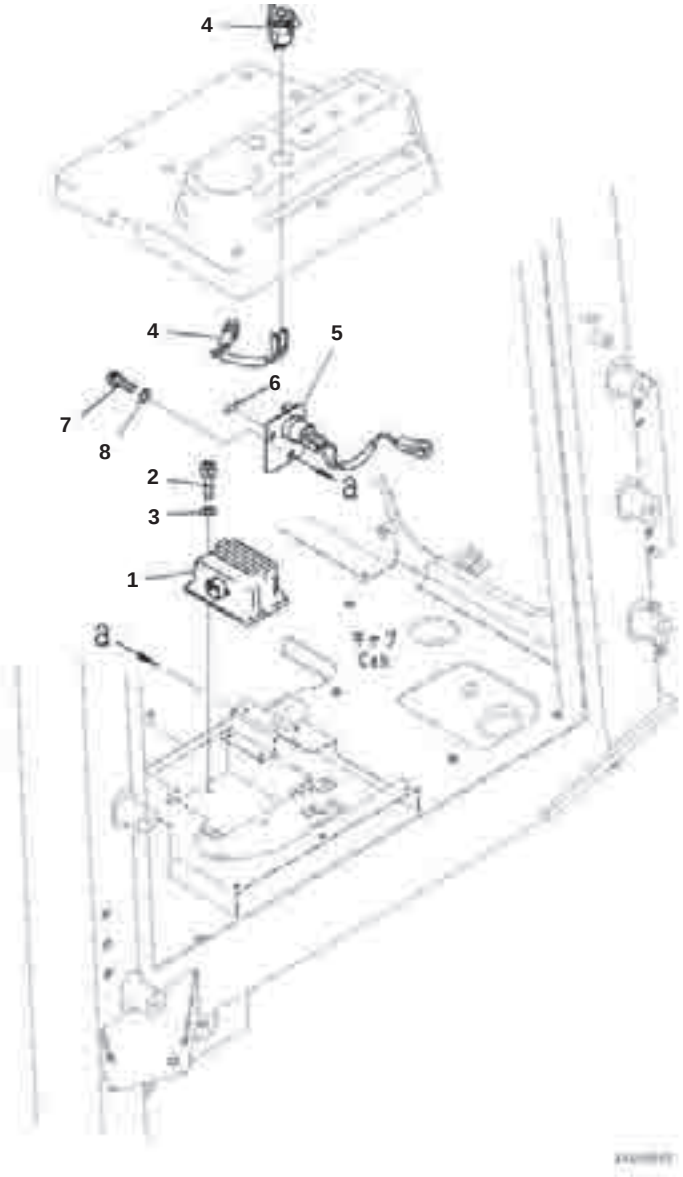

Index	Part Number	Description	Qty	Options
1	2A5-06-11881	Converter	1	SN:B50001--
2	01252-B0520	Bolt	2	SN:B50001--
4	14X-06-52491	Socket Assembly	2	SN:B50001--
5	12Y-54-28991	Bracket	1	SN:B50001--
6	2A5-00-11370	▪ Plate, 12volt	1	SN:B50001--
7	01245-00825	Screw	2	SN:B50001--
8	01643-70823	Washer	2	SN:B50001--

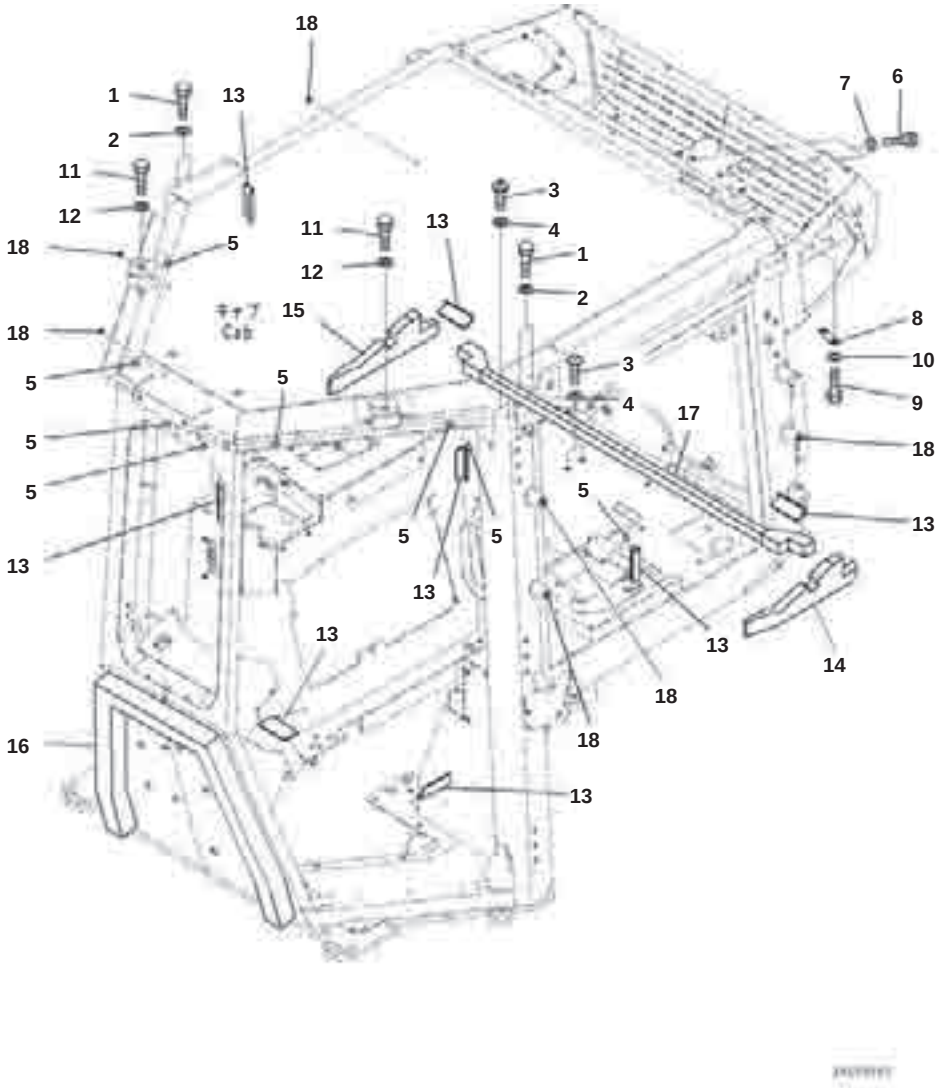

Index	Part Number	Description	Qty	Options
1	01010-81625	Bolt	4	SN:B50001--
2	01643-31645	Washer	4	SN:B50001--
3	01245-00820	Screw	4	SN:B50001--
4	01643-70823	Washer	4	SN:B50001--
5	12Y-978-2870	Plate	8	SN:B50001--
6	01010-D0820	Bolt	2	SN:B50001--
7	01643-70823	Washer	2	SN:B50001--
8	08193-20010	Clip	1	SN:B50001--
9	01010-D0816	Bolt	1	SN:B50001--
10	01643-70823	Washer	1	SN:B50001--
11	01010-82035	Bolt	2	SN:B50001--
12	01643-32060	Washer	2	SN:B50001--
13	12Y-978-3791	Sheet	8	SN:B50001--
14	11Y-Z78-1652	Seal	1	SN:B50001--
15	11Y-Z78-1981	Seal	1	SN:B50001--
16	12Y-54-26771	Seal	1	SN:B50001--
17	12Y-54-26711	Seal	1	SN:B50001--
18	20Y-53-11380	Cap	6	SN:B50001--

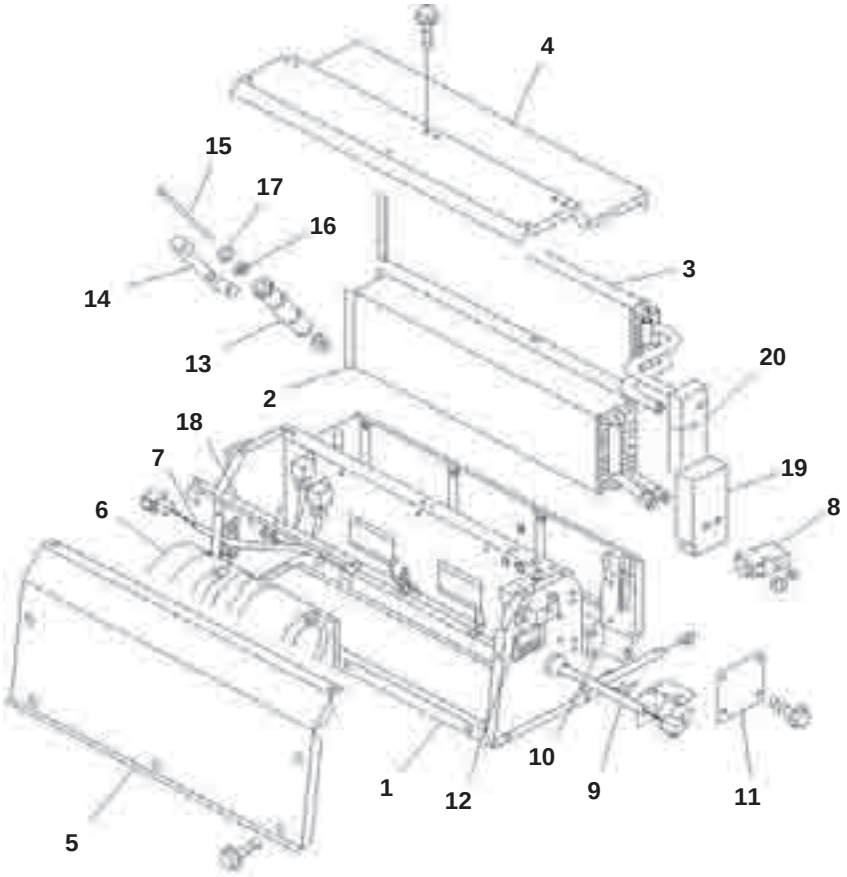

Index	Part Number	Description	Qty	Options
	12Y-979-6190	Air Conditioner Assembly	1	SN:B50001--
1	RD-3-16677-0	' Housing Assembly	1	SN:B50001--
2	RD-2-4087-0	' Evaporator Assembly	1	SN:B50001--
3	RD-1-2567-0	' Heater Core Assembly	1	SN:B50001--
4	RD-3-11518-0	' Cover	1	SN:B50001--
5	RD-3-11519-0	' Cover	1	SN:B50001--
6	RD-5-9204-3	' Motor Assembly	1	SN:B50001--
7	RD-3-14894-0	' Wiring Harness	1	SN:B50001--
8	RD-5-9513-0	' Valve, Expansion	1	SN:B50001--
9	RD-3-11536-0	' Bracket Assembly	1	SN:B50001--
10	RD-3-11753-0	' Seal	1	SN:B50001--
11	RD-3-11485-0	' Seal	1	SN:B50001--
13	RD-5-9062-0	' Resistor	1	SN:B50001--
14	RD-3-12262-0	' Bracket Assembly	1	SN:B50001--
16	RD-5-8666-00	' Washer	2	SN:B50001--
17	RD-5-8351-0	' Washer	2	SN:B50001--
18	RD-3-11762-0	' Support	1	SN:B50001--
19	RD-3-11763-0	' Gasket	1	SN:B50001--
20	RD-3-11764-0	' Gasket	1	SN:B50001--
	RD-5-11988-64.40	' Tube	2	SN:B50001--
	RD-5-7710-0	' Hose	2	SN:B50001--
	RD-5-8222-1-22	' Screw	21	SN:B50001--
	RD-5-4017-013	' O-ring	AR	SN:B50001--
	RD-5-4017-015	' O-ring	AR	SN:B50001--

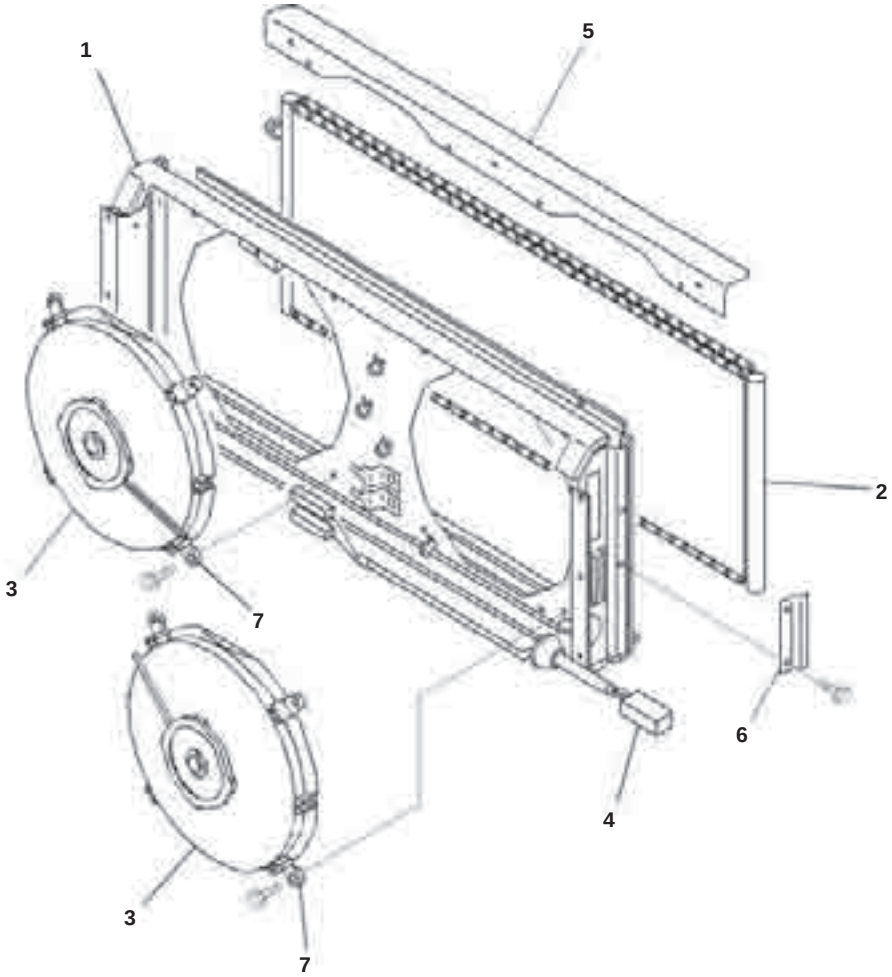

Index	Part Number	Description	Qty	Options
	12Y-979-1133	Condenser Assembly	1	SN:B50001--
1	RD-4-6597-0	' Bracket	1	SN:B50001--
2	RD-4-5452-0	' Condenser	1	SN:B50001--
3	RD-5-12218-1	' Motor Assembly	2	SN:B50001--
4	RD-3-11476-0	' Wiring Harness Assembly	1	SN:B50001--
5	RD-4-5437-0	' Bracket Assembly	1	SN:B50001--
6	RD-4-5614-0	' Bracket	2	SN:B50001--
7	RD-5-8636-0	' Bracket	8	SN:B50001--
	RD-5-4520-0	' Cable	5	SN:B50001--
	RD-5-4020-0	' Cable	1	SN:B50001--
	RD-5-8222-1-16	' Screw	7	SN:B50001--
	RD-5-8222-1-22	' Screw	8	SN:B50001--

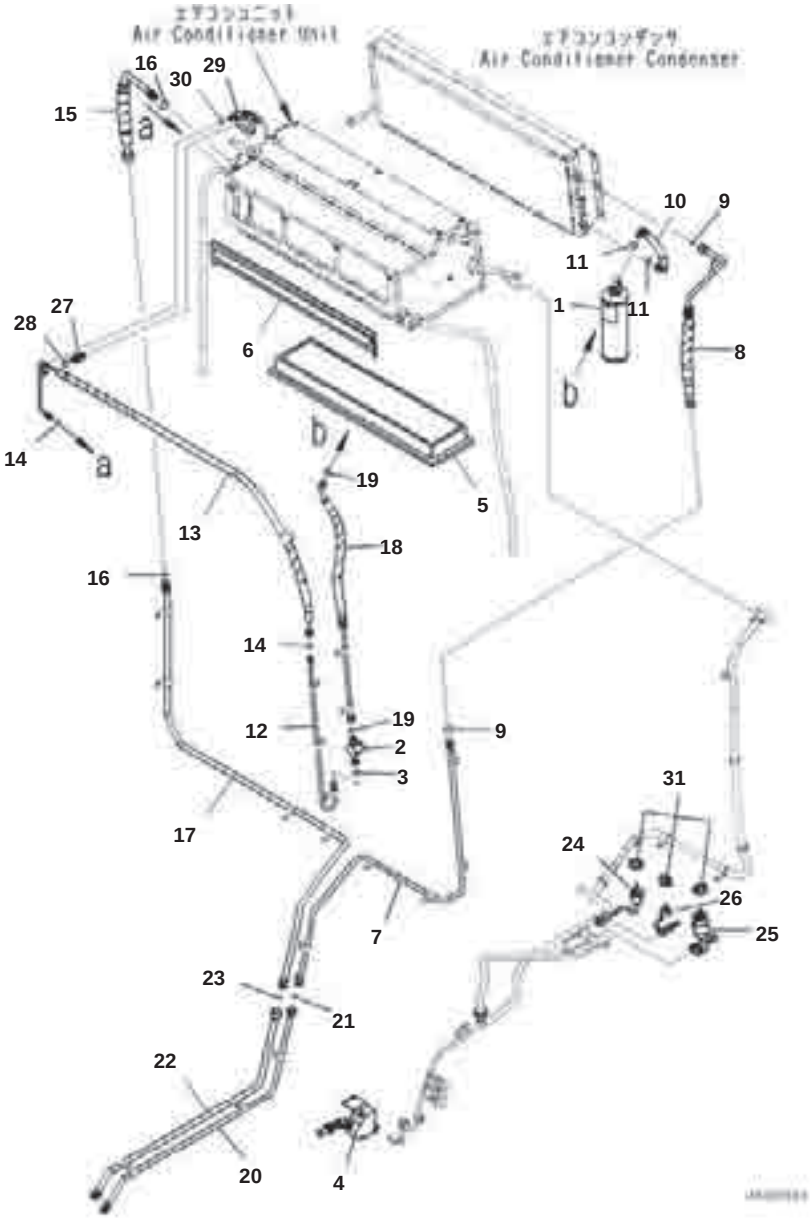

Cab, Air Conditioner Recirculation Air Filter and Fresh Air Filter, Receiver

Index	Part Number	Description	Qty	Options
1	12Y-979-1140	Receiver	1	SN:B50001--
2	12Y-979-1150	Gauge	1	SN:B50001--
3	12Y-979-2230	▪ O-ring	1	SN:B50001--
4	12Y-979-6160	Valve	1	SN:B50001--
5	12Y-979-1174	Filter,Fresh Air	1	SN:B50001--
6	12Y-979-6180	Filter,Recirculation Air	1	SN:B50001--
7	12Y-979-1212	Tube	1	SN:B50001--
8	12Y-979-1222	Hose Assembly	1	SN:B50001--
9	12Y-979-2150	▪ O-ring	2	SN:B50001--
10	12Y-979-1230	Hose	1	SN:B50001--
11	12Y-979-2230	▪ O-ring	2	SN:B50001--
12	12Y-979-1250	Tube	1	SN:B50001--
13	12Y-979-1262	Hose Assembly	1	SN:B50001--
14	12Y-979-2230	▪ O-ring	2	SN:B50001--
15	12Y-979-1271	Hose Assembly	1	SN:B50001--
16	12Y-979-2160	▪ O-ring	1	SN:B50001--
17	12Y-979-1283	Tube	1	SN:B50001--
18	12Y-979-1292	Hose Assembly	1	SN:B50001--
19	12Y-979-2230	▪ O-ring	2	SN:B50001--
20	12Y-979-1472	Tube	1	SN:B50001--
21	12Y-979-2150	▪ O-ring	1	SN:B50001--
22	12Y-979-1482	Tube	1	SN:B50001--
23	12Y-979-2160	▪ O-ring	1	SN:B50001--
24	12Y-979-1412	Switch, Mode Selector	1	SN:B50001--
25	12Y-979-1423	Switch, Brower Selector	1	SN:B50001--
26	12Y-979-1433	Switch, Temperature Control	1	SN:B50001--
27	12Y-979-1441	Switch, Pressure	1	SN:B50001--
28	12Y-979-2230	▪ O-ring	1	SN:B50001--
29	12Y-979-1570	Switch, Pressure	1	SN:B50001--
30	12Y-979-2230	▪ O-ring	1	SN:B50001--
31	12Y-979-1460	Knob	3	SN:B50001--

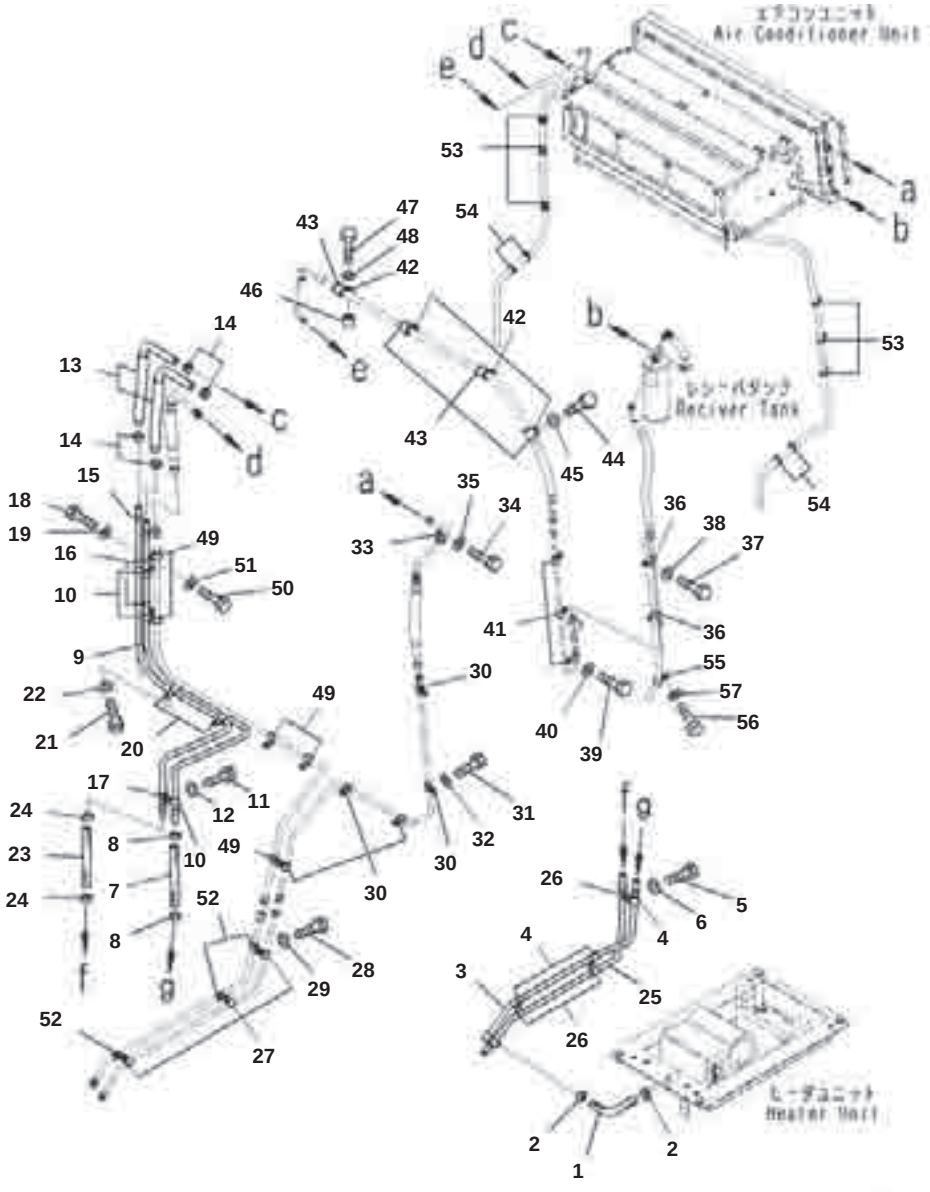

Index	Part Number	Description	Qty	Options
1		Hose	1	SN:B50001--
2	09479-02400	Clip	2	SN:B50001--
3	12Y-979-1543	Tube	1	SN:B50001--
4	04434-51610	Clip	3	SN:B50001--
5	01010-81020	Bolt	3	SN:B50001--
6	01643-31032	Washer	3	SN:B50001--
7	09483-10502	Hose	1	SN:B50001--
8	09479-02400	Clip	2	SN:B50001--
9	12Y-979-1512	Tube	1	SN:B50001--
10	04434-51610	Clip	3	SN:B50001--
11	01010-81020	Bolt	3	SN:B50001--
12	01643-31032	Washer	3	SN:B50001--
13	12Y-979-1563	Hose Assembly	2	SN:B50001--
14	09479-02400	Clip	4	SN:B50001--
15	12Y-979-1522	Tube	1	SN:B50001--
16	04434-51610	Clip	2	SN:B50001--
17	04434-51610	Clip	1	SN:B50001--
18	01010-81020	Bolt	2	SN:B50001--
19	01643-31032	Washer	2	SN:B50001--
20	04435-51610	Clip	2	SN:B50001--
21	01010-81020	Bolt	2	SN:B50001--
22	01643-31032	Washer	2	SN:B50001--
23	09483-10502	Hose	1	SN:B50001--
24	09479-02400	Clip	2	SN:B50001--
25	12Y-979-1533	Tube	1	SN:B50001--
26	04434-51610	Clip	3	SN:B50001--
27	04434-51210	Clip	3	SN:B50001--
28	01010-81020	Bolt	3	SN:B50001--
29	01643-31032	Washer	3	SN:B50001--
30	04434-51210	Clip	5	SN:B50001--
31	01010-81020	Bolt	5	SN:B50001--
32	01643-31032	Washer	5	SN:B50001--
33	04434-51208	Clip	1	SN:B50001--
34	01010-80816	Bolt	1	SN:B50001--
35	01643-30823	Washer	1	SN:B50001--
36	04434-51010	Clip	2	SN:B50001--
37	01010-81020	Bolt	2	SN:B50001--
38	01643-31032	Washer	2	SN:B50001--
39	01010-81020	Bolt	3	SN:B50001--
40	01643-31032	Washer	3	SN:B50001--
41	04434-51010	Clip	3	SN:B50001--
42	04434-52711	Clip	4	SN:B50001--
43	07095-20418	Cushion	4	SN:B50001--
44	01010-80816	Bolt	1	SN:B50001--
45	01643-30823	Washer	1	SN:B50001--
46	175-79-83760	Spacer	3	SN:B50001--
47	01010-80835	Bolt	3	SN:B50001--

D61EX-23M0 S/N B50001
Cab, Heater Piping

Index	Part Number	Description	Qty	Options
48	01643-30823	Washer	3	SN:B50001--
49	04434-51610	Clip	5	SN:B50001--
50	01010-81020	Bolt	4	SN:B50001--
51	01643-31032	Washer	4	SN:B50001--
52	04434-51610	Clip	3	SN:B50001--
53	08034-40521	Band	6	SN:B50001--
54	08034-20519	Band	4	SN:B50001--
55	04434-51608	Clip	1	SN:B50001--
56	01010-80816	Bolt	1	SN:B50001--
57	01643-30823	Washer	1	SN:B50001--

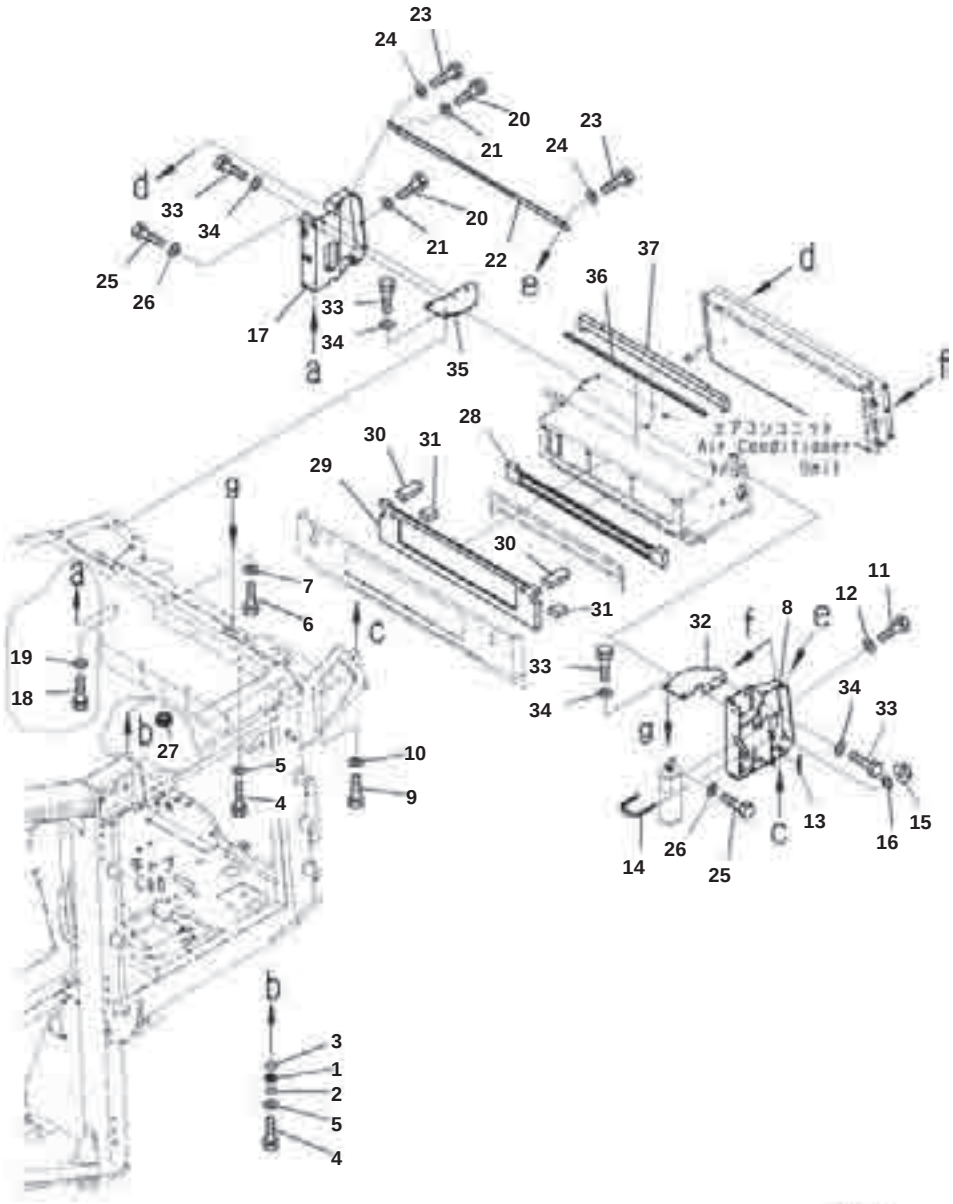

Cab, Air Conditioner Unit Mounting

Index	Part Number	Description	Qty	Options
1	12Y-979-2310	Collar	4	SN:B50001--
2	07000-11007	O-ring	4	SN:B50001--
3	07000-12016	O-ring	4	SN:B50001--
4	01010-D0830	Bolt	8	SN:B50001--
5	01643-70823	Washer	8	SN:B50001--
6	01010-D0820	Bolt	3	SN:B50001--
7	01643-70823	Washer	3	SN:B50001--
8	12Y-979-1324	Bracket	1	SN:B50001--
9	01010-D1025	Bolt	2	SN:B50001--
10	01643-71032	Washer	2	SN:B50001--
11	01010-D0820	Bolt	3	SN:B50001--
13	12Y-979-1850	Trim	1	SN:B50001--
14	07283-37663	Clip	2	SN:B50001--
15	01597-01009	Nut	4	SN:B50001--
16	01643-31032	Washer	4	SN:B50001--
17	12Y-979-6721	Bracket	1	SN:B50001--
18	01010-D1025	Bolt	2	SN:B50001--
19	01643-71032	Washer	2	SN:B50001--
20	01010-D0820	Bolt	3	SN:B50001--
21	01643-70823	Washer	3	SN:B50001--
22	12Y-979-1590	Plate	1	SN:B50001--
23	01010-D0820	Bolt	2	SN:B50001--
24	01643-70823	Washer	2	SN:B50001--
25	01010-D0820	Bolt	2	SN:B50001--
26	01643-70823	Washer	2	SN:B50001--
27	09415-01610	Cap	4	SN:B50001--
28	12Y-979-1342	Seal	1	SN:B50001--
29	12Y-979-1392	Seal	1	SN:B50001--
30	12Y-979-2341	Seal	2	SN:B50001--
31	12Y-979-2351	Seal	2	SN:B50001--
32	12Y-979-1661	Bracket	1	SN:B50001--
33	01010-D1025	Bolt	8	SN:B50001--
34	01643-71032	Washer	8	SN:B50001--
35	12Y-979-1760	Bracket	1	SN:B50001--
36	12Y-979-2361	Seal	1	SN:B50001--
37	12Y-979-2370	Seal	1	SN:B50001--

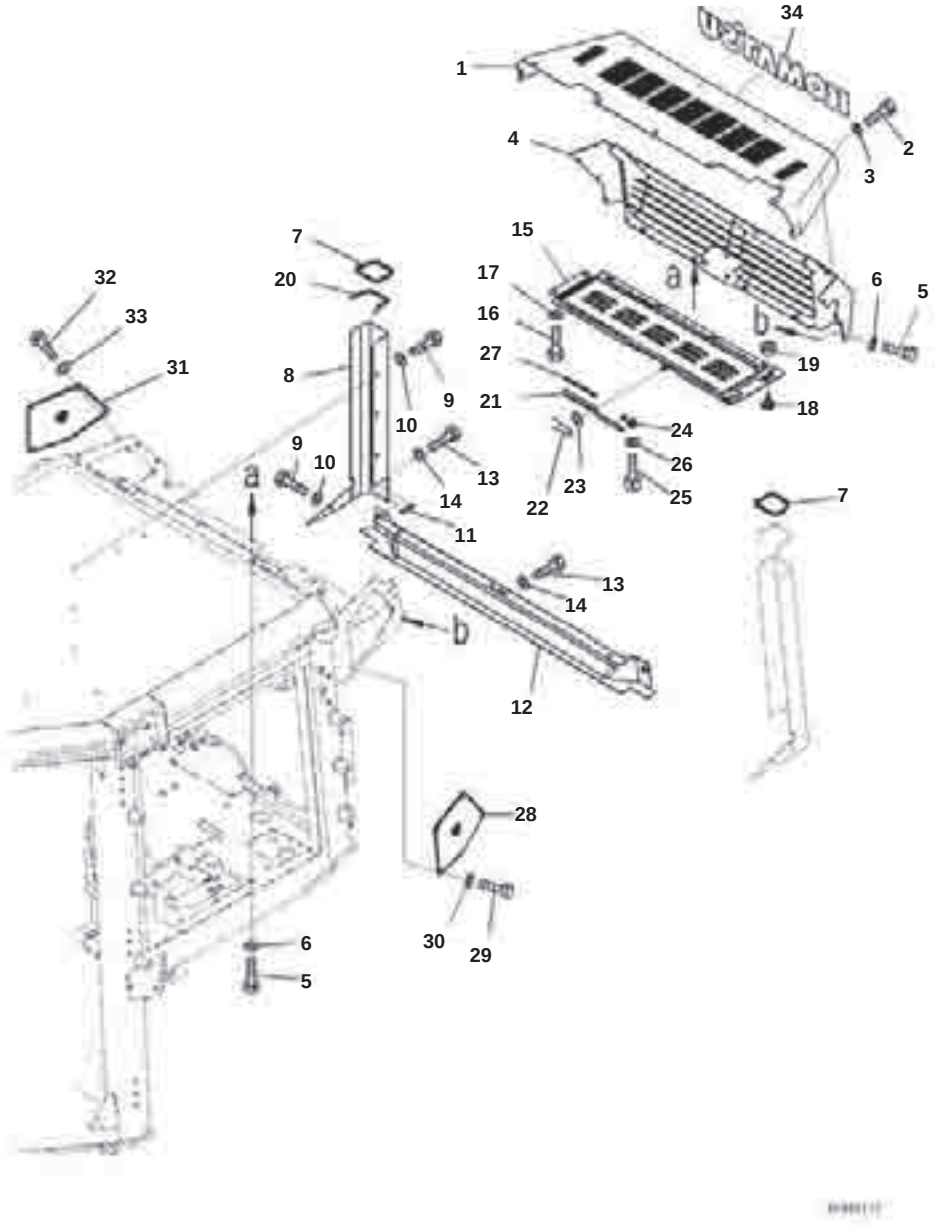

Index	Part Number	Description	Qty	Options
1	12Y-979-6610	Cover	1	SN:B50001--
2	01010-D0820	Bolt	11	SN:B50001--
3	01643-70823	Washer	11	SN:B50001--
4	12Y-979-6621	Cover	1	SN:B50001--
5	01010-D0820	Bolt	10	SN:B50001--
6	01643-70823	Washer	10	SN:B50001--
7	12Y-979-1690	Trim	2	SN:B50001--
8	12Y-979-1652	Cover	1	SN:B50001--
9	01010-D0820	Bolt	4	SN:B50001--
10	01643-70823	Washer	4	SN:B50001--
11	12Y-979-1860	Seal	1	SN:B50001--
12	12Y-979-6750	Cover	1	SN:B50001--
13	01010-D0820	Bolt	5	SN:B50001--
14	01643-70823	Washer	5	SN:B50001--
15	12Y-979-6660	Cover	1	SN:B50001--
16	01010-D0830	Bolt	2	SN:B50001--
17	01643-70823	Washer	2	SN:B50001--
18	12Y-979-1782	Knob	2	SN:B50001--
19	01598-00809	Nut	2	SN:B50001--
20	12Y-978-3492	Trim	1	SN:B50001--
21	12Y-979-6711	Plate	1	SN:B50001--
22	04050-11612	Pin, Cotter	2	SN:B50001--
23	01643-30623	Washer	2	SN:B50001--
24	12Y-979-1751	Plate	1	SN:B50001--
25	01252-80514	Bolt	2	SN:B50001--
26	01641-50508	Washer	2	SN:B50001--
27	12Y-06-13380	Seal	1	SN:B50001--
28	12Y-979-6630	Cover	1	SN:B50001--
29	01010-D0820	Bolt	4	SN:B50001--
30	01643-70823	Washer	4	SN:B50001--
31	12Y-979-6640	Cover	1	SN:B50001--
32	01010-D0820	Bolt	4	SN:B50001--
33	01643-70823	Washer	4	SN:B50001--
34	09690-F0710	Plate, Komatsu Logo	1	SN:B50001--

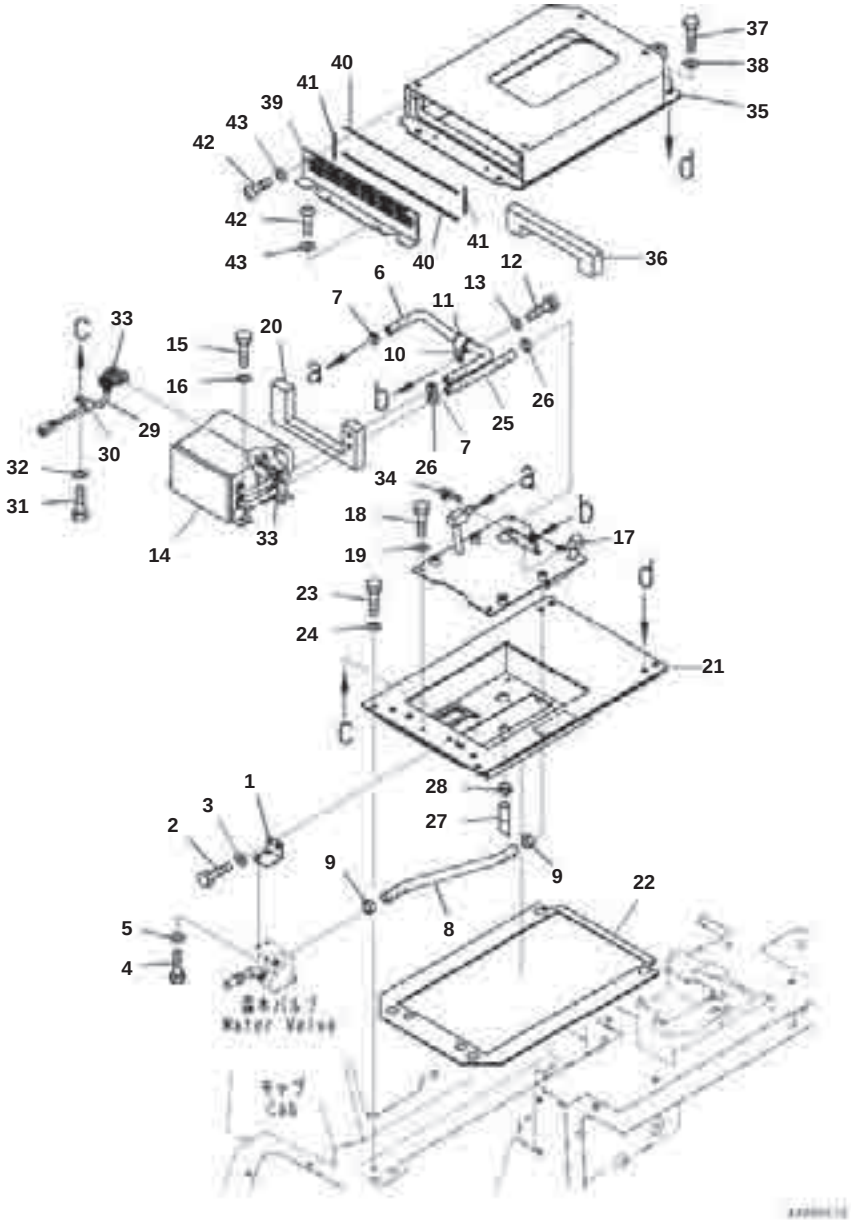

Index	Part Number	Description	Qty	Options
1	12Y-979-1350	Bracket	1	SN:B50001--
2	01010-81020	Bolt	2	SN:B50001--
3	01643-31032	Washer	2	SN:B50001--
4	01010-80616	Bolt	2	SN:B50001--
5	01643-30623	Washer	2	SN:B50001--
6	12Y-979-1361	Hose	1	SN:B50001--
7	11Y-09-11160	Clip	2	SN:B50001--
8	12Y-979-6350	Hose	1	SN:B50001--
9	09479-02400	Clip	2	SN:B50001--
10	04434-52711	Clip	1	SN:B50001--
11	07095-20420	Cushion	1	SN:B50001--
13	01643-31032	Washer	1	SN:B50001--
14	208-987-3680	Heater Assembly	1	SN:B50001--
15	01010-81020	Bolt	4	SN:B50001--
16	01643-31032	Washer	4	SN:B50001--
17	12Y-979-6320	Bracket	1	SN:B50001--
18	01010-81020	Bolt	4	SN:B50001--
19	01643-31032	Washer	4	SN:B50001--
20	12Y-977-1121	Seal	1	SN:B50001--
21	12Y-979-6311	Bracket	1	SN:B50001--
22	12Y-979-6360	▪ Seal	1	SN:B50001--
23	01010-81230	Bolt	4	SN:B50001--
24	01643-31232	Washer	4	SN:B50001--
25	12Y-979-6340	Hose	1	SN:B50001--
26	11Y-09-11160	Clip	2	SN:B50001--
27	22B-979-1880	Connector	1	SN:B50001--
28	07285-00230	Clip	1	SN:B50001--
29	12Y-977-1193	Wiring Harness	1	SN:B50001--
30	04434-51410	Clip	1	SN:B50001--
31	01010-81020	Bolt	1	SN:B50001--
32	01643-31032	Washer	1	SN:B50001--
33	08034-20519	Band	2	SN:B50001--
34	12Y-06-13380	Seal	1	SN:B50001--
35	12Y-57-21231	Bracket	1	SN:B50001--
36	12Y-57-11131	▪ Seal	1	SN:B50001--
37	01010-81230	Bolt	4	SN:B50001--
38	01643-31232	Washer	4	SN:B50001--
39	12Y-57-21251	Cover	1	SN:B50001--
40	12Y-57-11170	▪ Seal	2	SN:B50001--
41	12Y-57-11181	▪ Seal	2	SN:B50001--
42	01245-00620	Screw	4	SN:B50001--
43	01643-70623	Washer	4	SN:B50001--

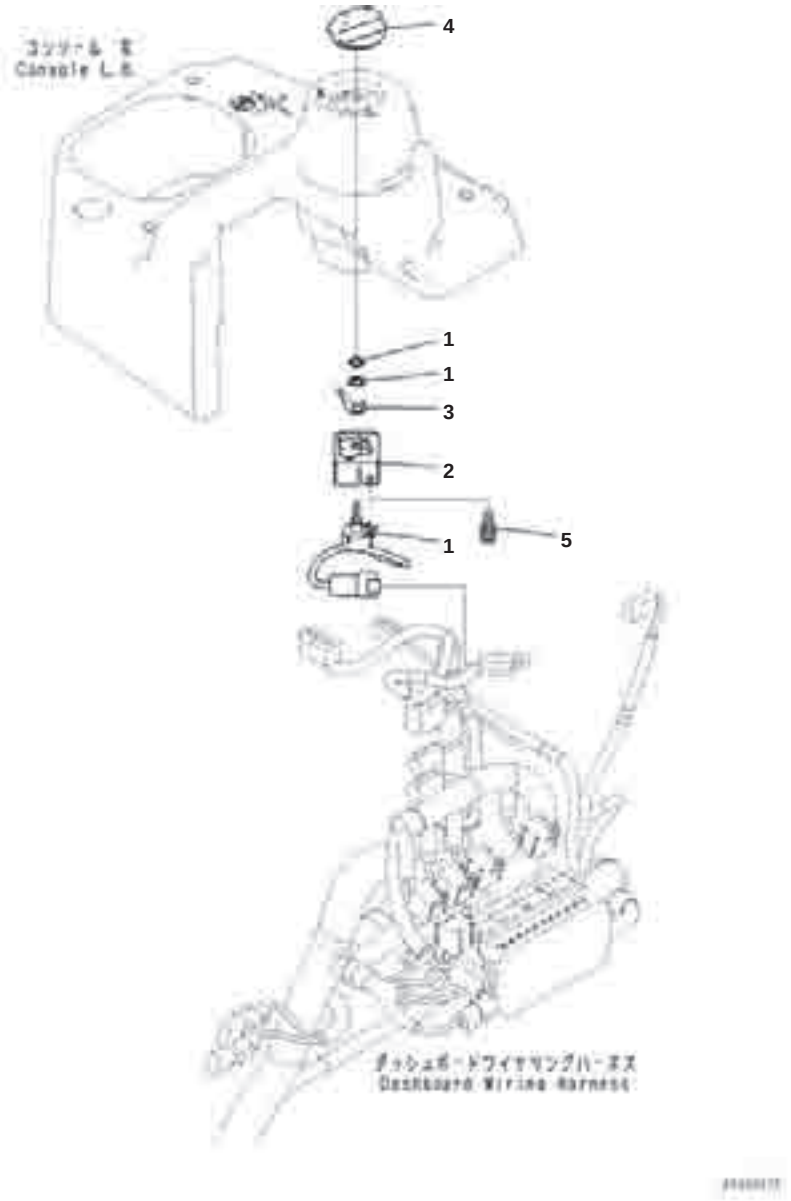

Index	Part Number	Description	Qty	Options
	12Y-06-11611	Potentiometer Assembly	1	SN:B50001--
1	12Y-06-11621	' Potentiometer	1	SN:B50001--
2	12Y-06-11631	' Bracket	1	SN:B50001--
3	22U-06-22460	' Spring	1	SN:B50001--
4	20Y-43-41781	Knob	1	SN:B50001--
	20Y-43-41780	Knob	1	SN:B50001--
5	01023-60512	Screw	2	SN:B50001--

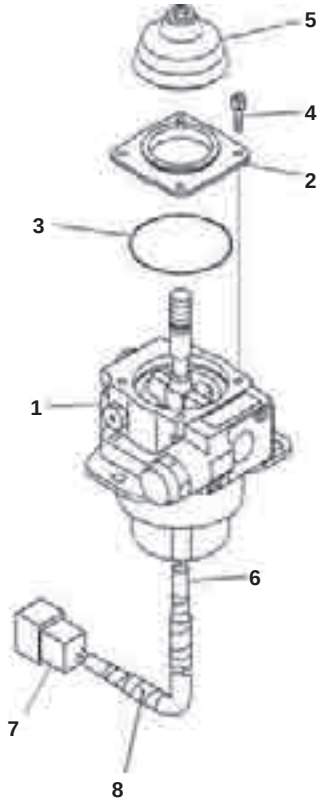

Index	Code	Part Number	Description	Qty	Options
1		702-16-02320	Lever Assembly	1	SN:B50001--
2		702-16-62730	･ Cover	1	SN:B50001--
3		702-16-62740	･ O-ring	1	SN:B50001--
4		01252-60512	･ Bolt	4	SN:B50001--
5		702-16-59330	･ Boot	1	SN:B50001--
6		702-16-62690	･ Tube	1	SN:B50001--
7	C1		･ Connector	1	SN:B50001--
8		08017-30702	･ Conduit	1	SN:B50001--

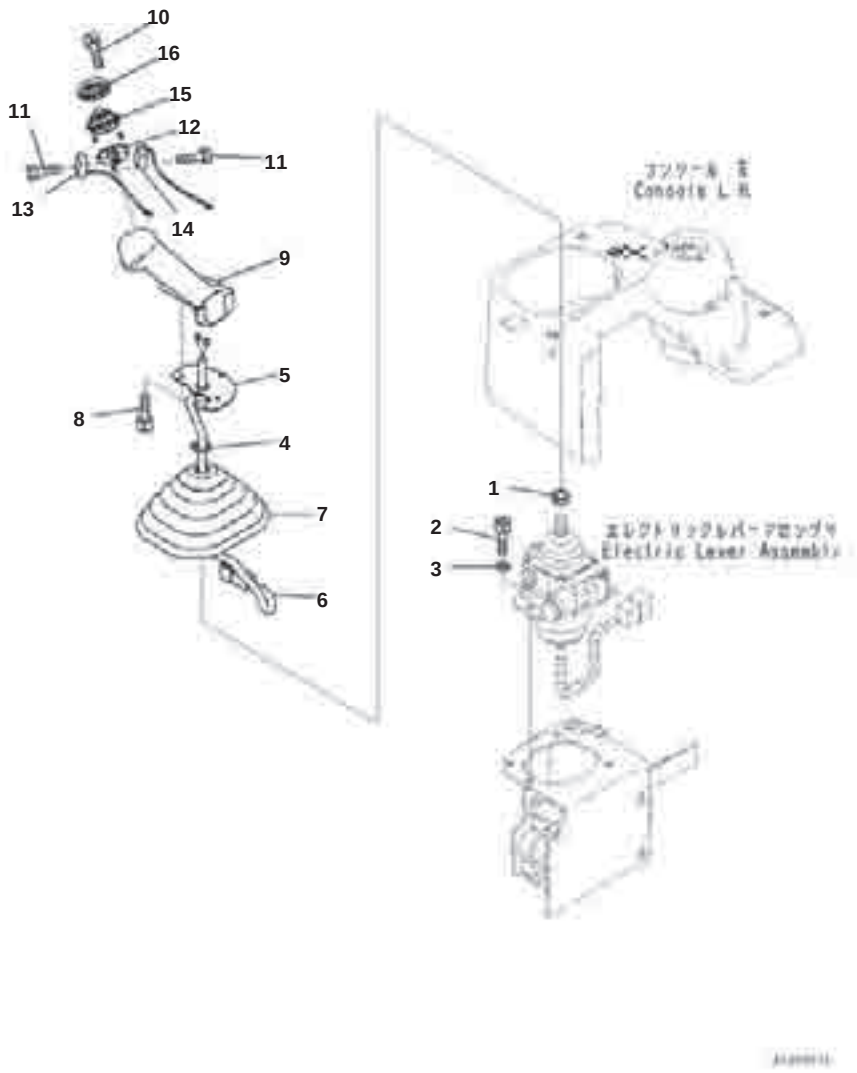

Index	Code	Part Number	Description	Qty	Options
1		20T-43-71190	Nut	1	SN:B50001--
2		01252-A0825	Bolt, Hexagon Socket Head	3	SN:B50001--
3		01643-30823	Washer	3	SN:B50001--
		12Y-43-21651	Lever Assembly	1	SN:B50001--
4		08034-20414	･ Band	1	SN:B50001--
5		11Y-43-11124	･ Bracket	1	SN:B50001--
6	C1		･ Wiring Harness	1	SN:B50001--
7		17A-43-46270	･ Boot	1	SN:B50001--
8		01252-B0510	Bolt, Hexagon Socket Head	3	SN:B50001--
9		19M-43-33111	Knob Assembly	1	SN:B50001--
10		19M-09-11510	･ Bolt	2	SN:B50001--
		19M-43-33141	･ Switch Assembly	1	SN:B50001--
11	C1		･ ･ Screw	4	SN:B50001--
12		19M-43-33171	･ ･ Plate	1	SN:B50001--
13		19M-43-33460	･ ･ Switch, Shift Down	1	SN:B50001--
14		19M-43-33470	･ ･ Switch, Shift Up	1	SN:B50001--
15		19M-43-33151	･ Rubber	1	SN:B50001--
16		19M-43-33161	･ Cover	1	SN:B50001--

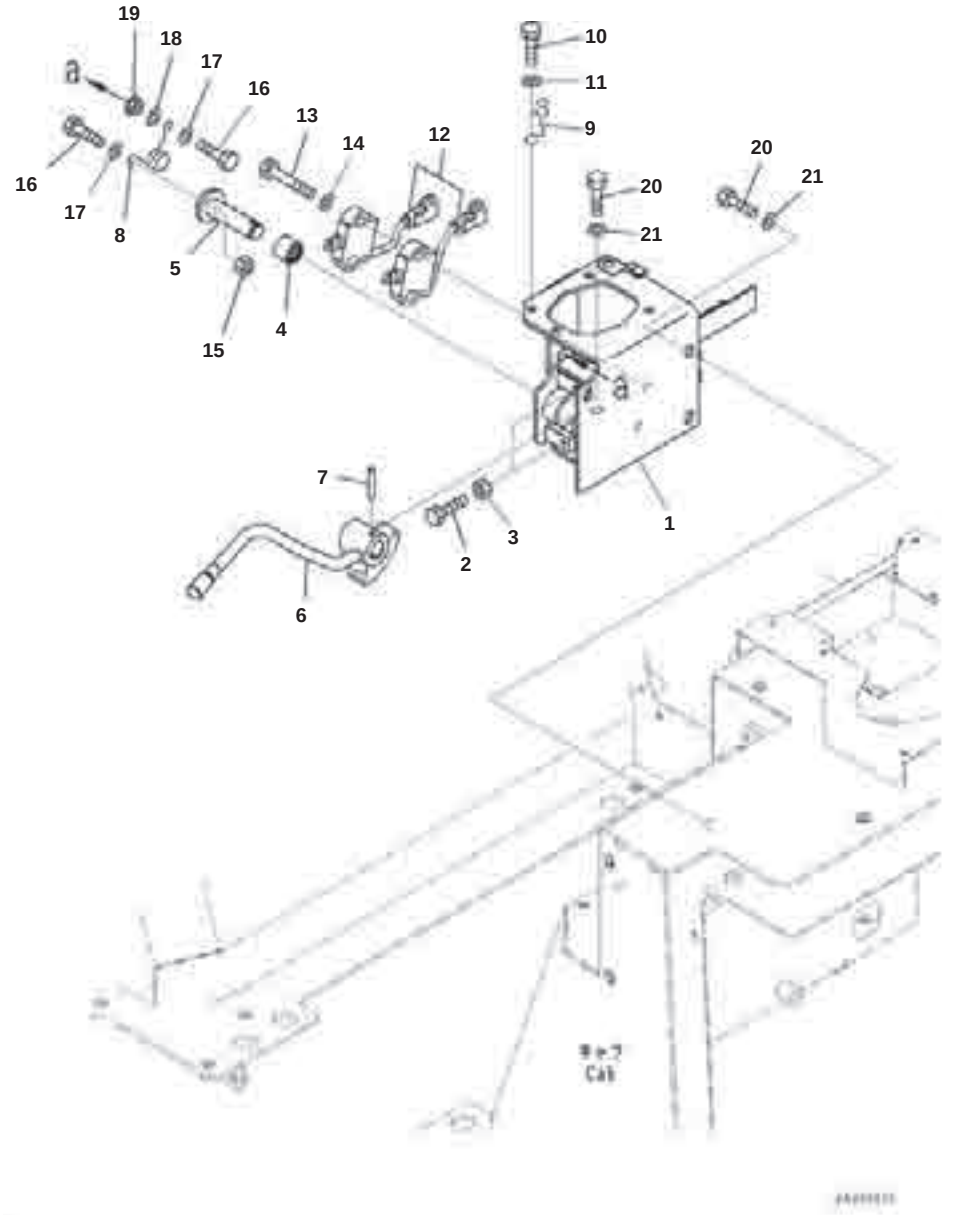

Index	Part Number	Description	Qty	Options
	12Y-43-21800	Lever Assembly	1	SN:B50001--
1	12Y-43-21820	▪ Bracket	1	SN:B50001--
2	01016-50825	▪ Bolt	2	SN:B50001--
3	01580-10806	▪ Nut	2	SN:B50001--
4	06124-02020	▪ Bearing	1	SN:B50001--
5	12Y-43-21810	▪ Lever	1	SN:B50001--
6	12Y-43-12432	▪ Lever	1	SN:B50001--
7	14X-43-14520	▪ Pin	1	SN:B50001--
8	14X-43-51840	▪ Spring	1	SN:B50001--
9	12Y-43-12491	▪ Hook	1	SN:B50001--
10	01010-80820	▪ Bolt	1	SN:B50001--
11	01643-30823	▪ Washer	1	SN:B50001--
12	11Y-06-11470	▪ Switch	2	SN:B50001--
13	01010-81050	▪ Bolt	2	SN:B50001--
14	01643-31032	▪ Washer	2	SN:B50001--
15	01580-10605	▪ Nut	1	SN:B50001--
16	01010-80625	▪ Bolt	2	SN:B50001--
17	01643-30623	▪ Washer	2	SN:B50001--
18	01643-30623	▪ Washer	1	SN:B50001--
19	01584-30605	▪ Nut	1	SN:B50001--
20	01010-81020	Bolt	5	SN:B50001--
21	01643-31032	Washer	5	SN:B50001--

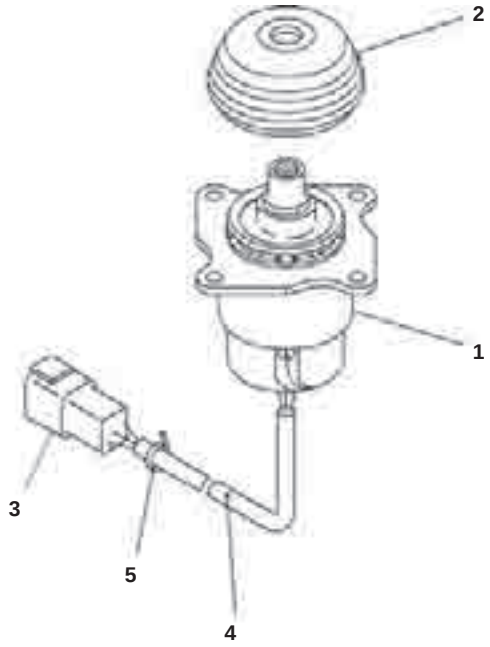

Index	Code	Part Number	Description	Qty	Options
1		702-16-02440	Lever Assembly	1	SN:B50001--
2		702-16-71280	･ Boot	1	SN:B50001--
3	C1		･ Connector	1	SN:B50001--
4		702-16-61390	･ Tube	1	SN:B50001--
5		08034-20414	･ Band	1	SN:B50001--

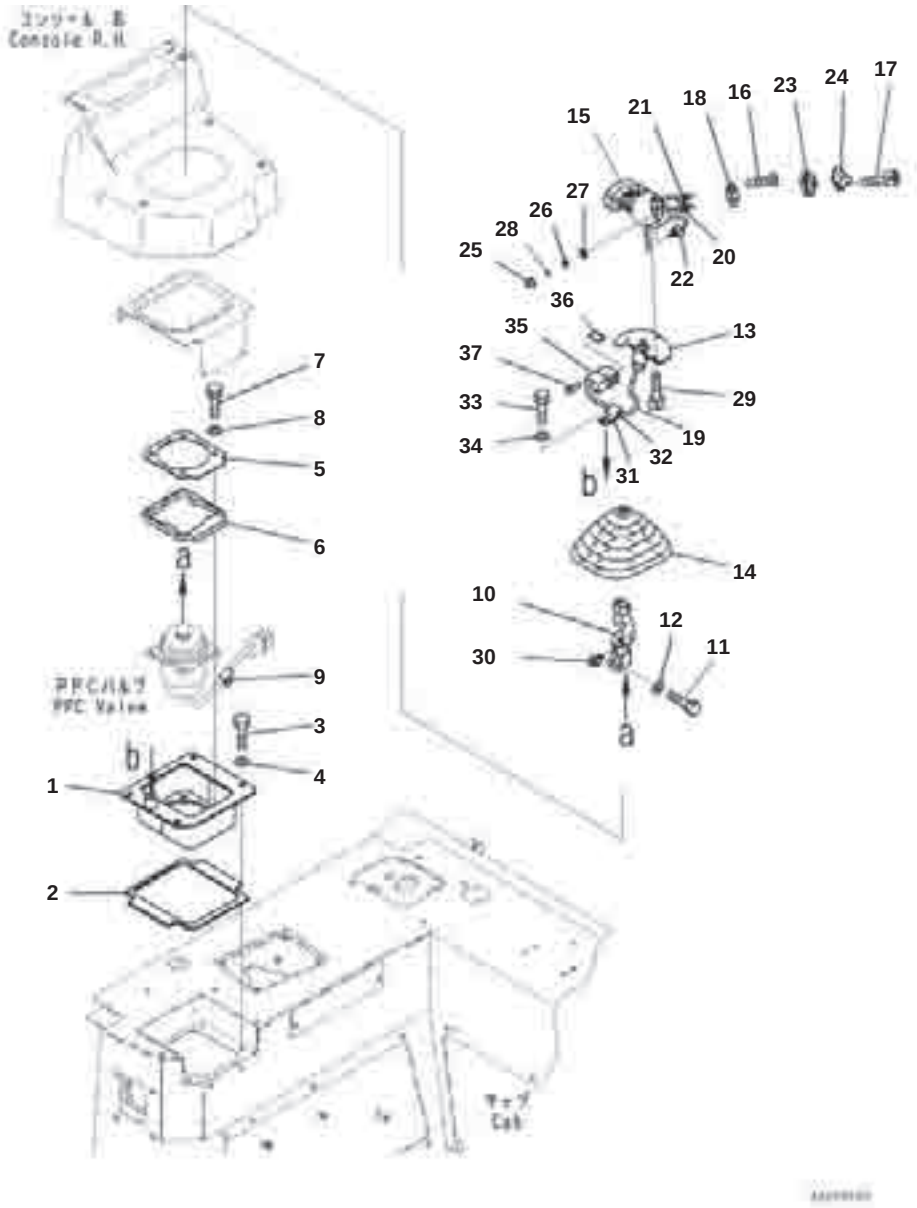

Cab, Work Equipment Control Lever

Index	Code	Part Number	Description	Qty	Options
1		12Y-43-21630	Bracket	1	SN:B50001--
2		12Y-43-12470	･ Sheet	1	SN:B50001--
3		01010-80825	Bolt	4	SN:B50001--
4		01643-30823	Washer	4	SN:B50001--
5		12Y-43-12440	Plate	1	SN:B50001--
6		12Y-43-12480	･ Sheet	1	SN:B50001--
7		01010-80825	Bolt	4	SN:B50001--
8		01643-30823	Washer	4	SN:B50001--
9		04434-50810	Clip	1	SN:B50001--
10		12Y-43-21611	Lever	1	SN:B50001--
11		07372-21030	Bolt	1	SN:B50001--
12		01641-21016	Washer	1	SN:B50001--
13		12Y-43-21661	Bracket	1	SN:B50001--
14		17A-43-46270	Boot	1	SN:B50001--
15		17A-43-46132	Knob Assembly	1	SN:B50001--
16	C1		･ Screw	2	SN:B50001--
17		19M-09-11510	･ Bolt	2	SN:B50001--
18		198-06-63440	･ Plate	1	SN:B50001--
19		17A-06-51341	･ Wiring Harness	1	SN:B50001--
20		17A-06-51330	･ ･ Switch,Blade Pitch	1	SN:B50001--
21		17A-06-51350	･ ･ Switch,Blade Float	1	SN:B50001--
22		17A-06-51360	･ ･ Switch,Blade Auto Pitch	1	SN:B50001--
23		17A-43-46711	･ Cover	1	SN:B50001--
24		17A-43-46731	･ Rubber	1	SN:B50001--
25		198-06-59540	･ Cover	1	SN:B50001--
26		198-06-59311	･ Nut	1	SN:B50001--
27		198-06-59320	･ Spacer	1	SN:B50001--
28		198-06-59330	･ Cap	1	SN:B50001--
29		01252-B0510	Bolt, Hexagon Socket Head	3	SN:B50001--
30		20Y-06-23940	Clip	1	SN:B50001--
31		04434-51310	Clip	1	SN:B50001--
32		198-06-53520	Cushion	1	SN:B50001--
33		01010-81020	Bolt	1	SN:B50001--
34		01643-31032	Washer	1	SN:B50001--
35		08192-29102	Connector Body	1	SN:B50001--
36		08192-19300	Wedge	1	SN:B50001--
37		08191-00770	Plug, Connector	2	SN:B50001--

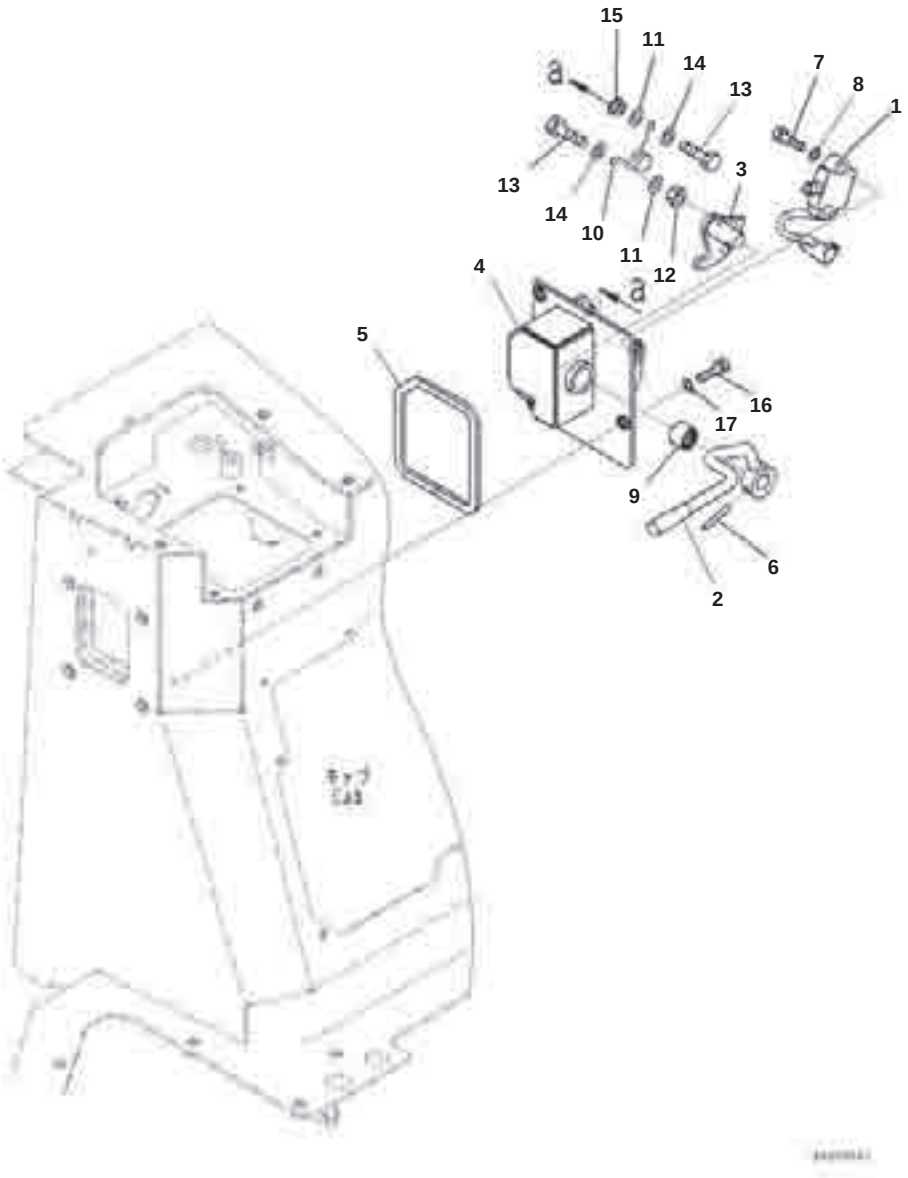

Index	Part Number	Description	Qty	Options
	12Y-43-21501	Lever Assembly	1	SN:B50001--
1	11Y-06-11470	▪ Switch	1	SN:B50001--
2	12Y-43-12532	▪ Lever	1	SN:B50001--
3	12Y-43-21541	▪ Lever	1	SN:B50001--
4	12Y-43-21591	▪ Bracket	1	SN:B50001--
5	12Y-43-21520	▪ ▪ Sheet	1	SN:B50001--
6	14X-43-14520	▪ Pin	1	SN:B50001--
7	01010-81035	▪ Bolt	2	SN:B50001--
8	01643-31032	▪ Washer	2	SN:B50001--
9	06124-02020	▪ Bearing	1	SN:B50001--
10	14X-43-51840	▪ Spring	1	SN:B50001--
11	01643-30623	▪ Washer	2	SN:B50001--
12	01580-10605	▪ Nut	1	SN:B50001--
13	01010-80625	▪ Bolt	2	SN:B50001--
14	01643-30623	▪ Washer	2	SN:B50001--
15	01584-30605	▪ Nut	1	SN:B50001--
16	01010-81025	Bolt	3	SN:B50001--
17	01643-31032	Washer	3	SN:B50001--

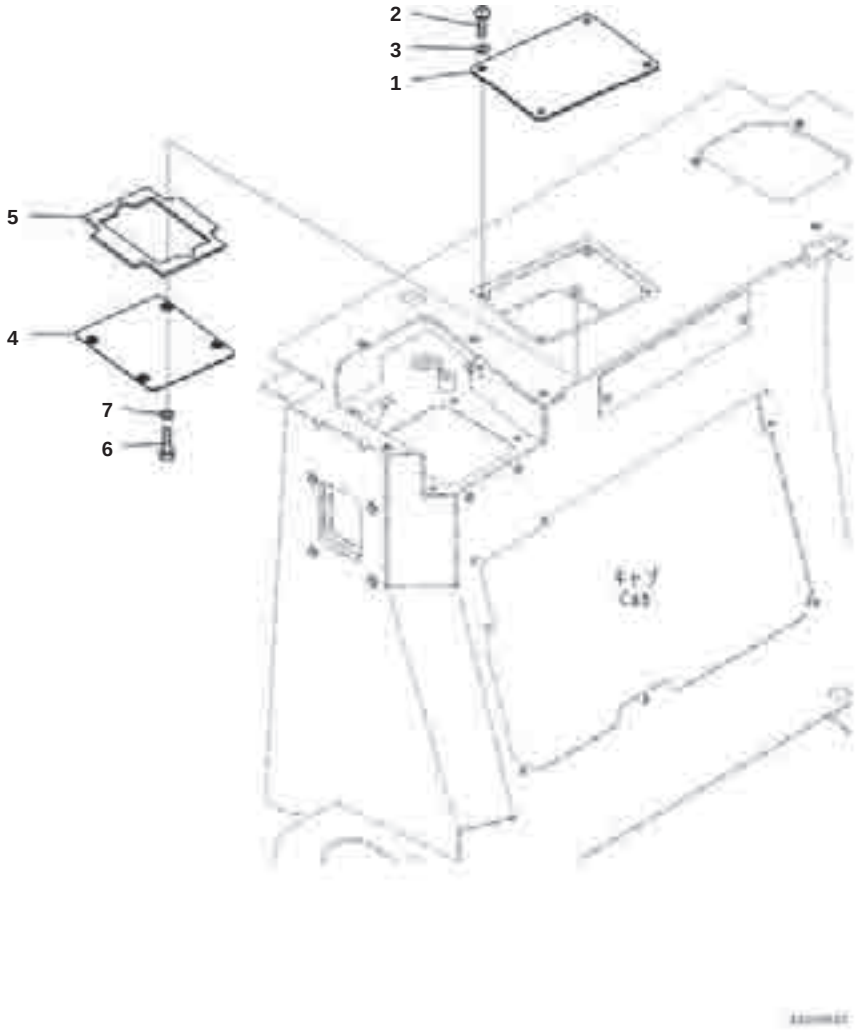

Index	Code	Part Number	Description	Qty	Options
1		12Y-78-11150	Cover	1	SN:B50001--
2		01245-00820	Screw	4	SN:B50001--
3		01643-70823	Washer	4	SN:B50001--
		12Y-78-11180	Cover	1	SN:B50001--
4	C1		･ Plate	1	SN:B50001--
5		12Y-78-11130	･ Sheet	1	SN:B50001--
6		01010-80825	Bolt	4	SN:B50001--
7		01643-30823	Washer	4	SN:B50001--

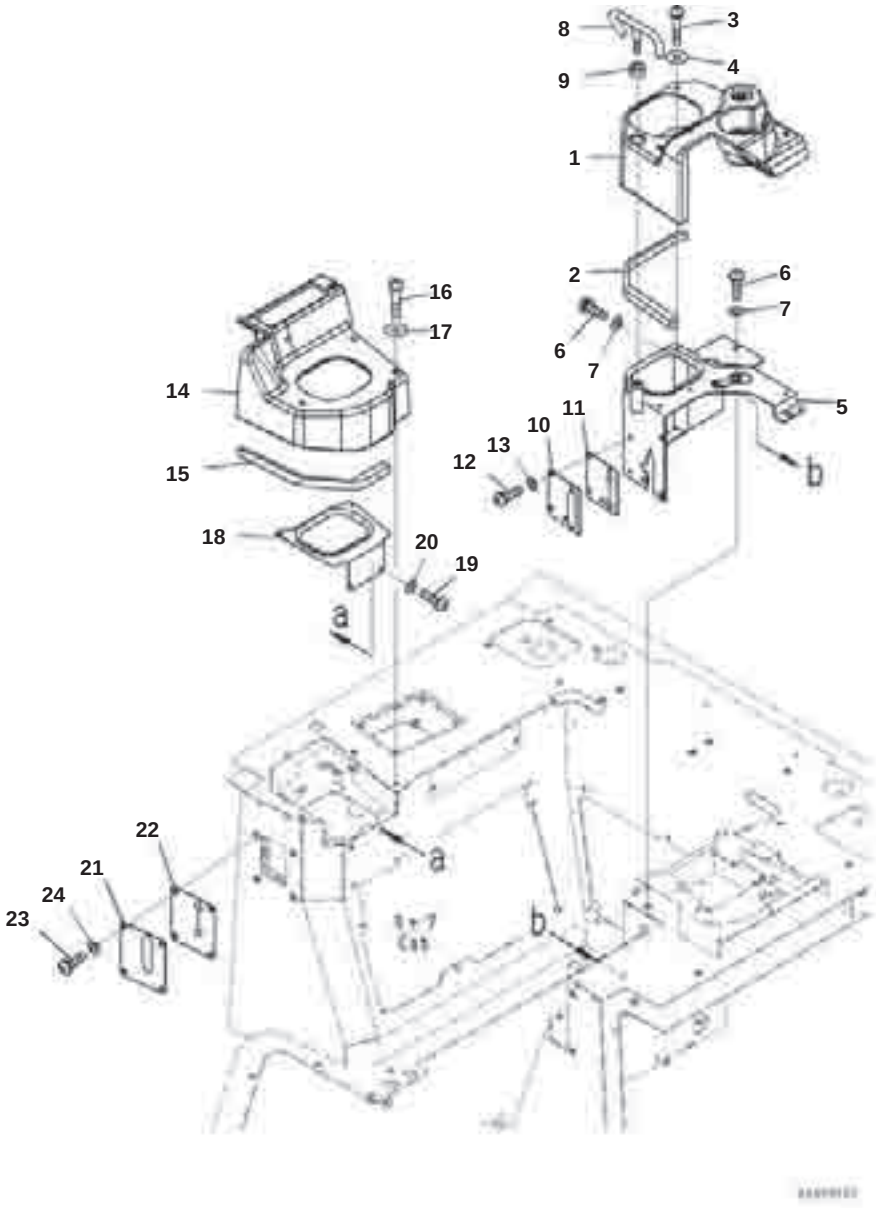

Index	Part Number	Description	Qty	Options
1	12Y-43-21710	Cover	1	SN:B50001--
2	12Y-43-12841	Seal	1	SN:B50001--
3	01245-00630	Screw, Hexagon Socket Head	4	SN:B50001--
4	17A-Z11-2813	Plate	4	SN:B50001--
6	01245-00825	Screw	5	SN:B50001--
7	01643-70823	Washer	5	SN:B50001--
8	12Y-43-21770	Handle	1	SN:B50001--
9	12Y-43-12790	Nut	1	SN:B50001--
10	12Y-43-12880	Cover	1	SN:B50001--
11	12Y-43-12732	' Sheet	1	SN:B50001--
12	01245-00825	Screw	4	SN:B50001--
13	01643-70823	Washer	4	SN:B50001--
14	12Y-43-21720	Cover	1	SN:B50001--
15	12Y-43-12852	Seal	1	SN:B50001--
16	01245-00630	Screw, Hexagon Socket Head	4	SN:B50001--
17	17A-Z11-2813	Plate	4	SN:B50001--
18	12Y-43-21640	Bracket	1	SN:B50001--
19	01245-00620	Screw	4	SN:B50001--
20	01643-70623	Washer	4	SN:B50001--
21	12Y-43-12781	Cover	1	SN:B50001--
22	12Y-43-12741	' Sheet	1	SN:B50001--
23	01245-00825	Screw	4	SN:B50001--
24	01643-70823	Washer	4	SN:B50001--

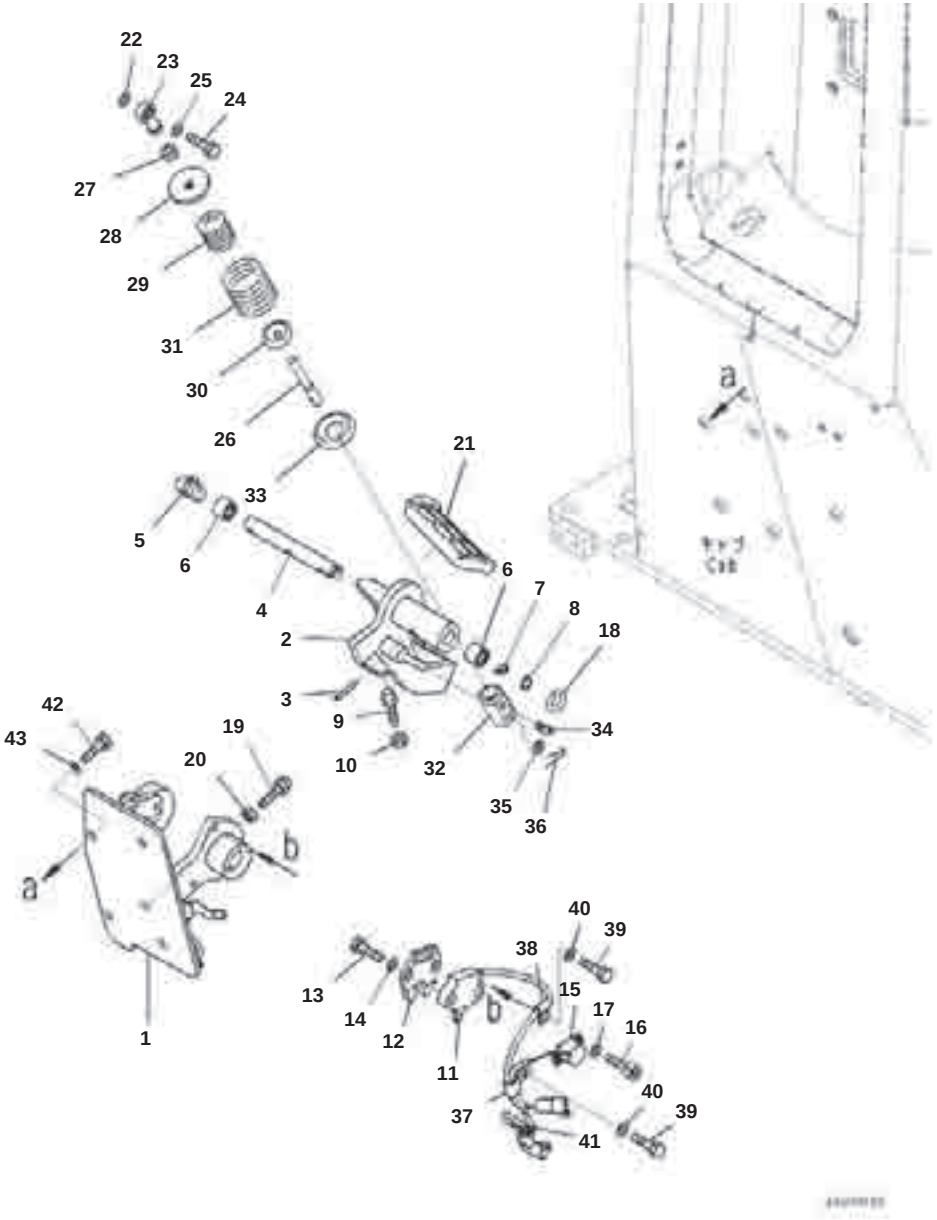

Index	Part Number	Description	Qty	Options
	12Y-43-21201	Pedal Assembly	1	SN:B50001--
1	12Y-43-21111	· Bracket	1	SN:B50001--
2	12Y-43-21121	· Pedal	1	SN:B50001--
3	14X-43-14520	· Pin	1	SN:B50001--
5	07020-00900	· Fitting, Grease	1	SN:B50001--
6	06124-02020	· Bearing	2	SN:B50001--
7	142-43-13180	· Spring	1	SN:B50001--
8	04064-01610	· Ring, Snap	1	SN:B50001--
9	09311-41237	· Bumper, Pedal	1	SN:B50001--
10	01580-11210	· Nut	1	SN:B50001--
11	11Y-06-22150	· Switch, Limit	1	SN:B50001--
12	12Y-43-21141	· Stopper	1	SN:B50001--
13	01010-81040	· Bolt	2	SN:B50001--
14	01643-31032	· Washer	2	SN:B50001--
15	17A-06-41981	· Sensor, Potentiometer	1	SN:B50001--
16	01252-60416	· Bolt, Hexagon Socket Head	2	SN:B50001--
17	01640-20408	· Washer	2	SN:B50001--
18	12Y-43-12160	· Plate	1	SN:B50001--
19	09311-41237	· Bumper, Pedal	1	SN:B50001--
20	01580-11210	· Nut	1	SN:B50001--
21	14X-43-13760	· Cap	1	SN:B50001--
22	01643-31032	· Washer	1	SN:B50001--
23	04250-81056	· End	1	SN:B50001--
24	01010-81040	· Bolt	1	SN:B50001--
25	01643-31032	· Washer	1	SN:B50001--
26	12Y-43-21231	· Rod	1	SN:B50001--
27	01582-11008	· Nut	1	SN:B50001--
28	12Y-43-21241	· Guide	1	SN:B50001--
29	12Y-43-21271	· Spring	1	SN:B50001--
30	12Y-43-21250	· Guide	1	SN:B50001--
31	12Y-43-21261	· Spring	1	SN:B50001--
32	12Y-43-21210	· Yoke	1	SN:B50001--
33	12Y-43-21220	· Guide	1	SN:B50001--
34	07020-00900	· Fitting, Grease	1	SN:B50001--
35	01640-21016	· Washer	1	SN:B50001--
36	04050-13020	· Pin, Cotter	1	SN:B50001--
37	04435-50810	· Clip	1	SN:B50001--
38	04434-50810	· Clip	1	SN:B50001--
39	01010-81020	· Bolt	2	SN:B50001--
40	01643-31032	· Washer	2	SN:B50001--
41	08034-40521	· Band	1	SN:30001--
42	01010-81030	Bolt	4	SN:B50001--
43	01643-31032	Washer	4	SN:B50001--

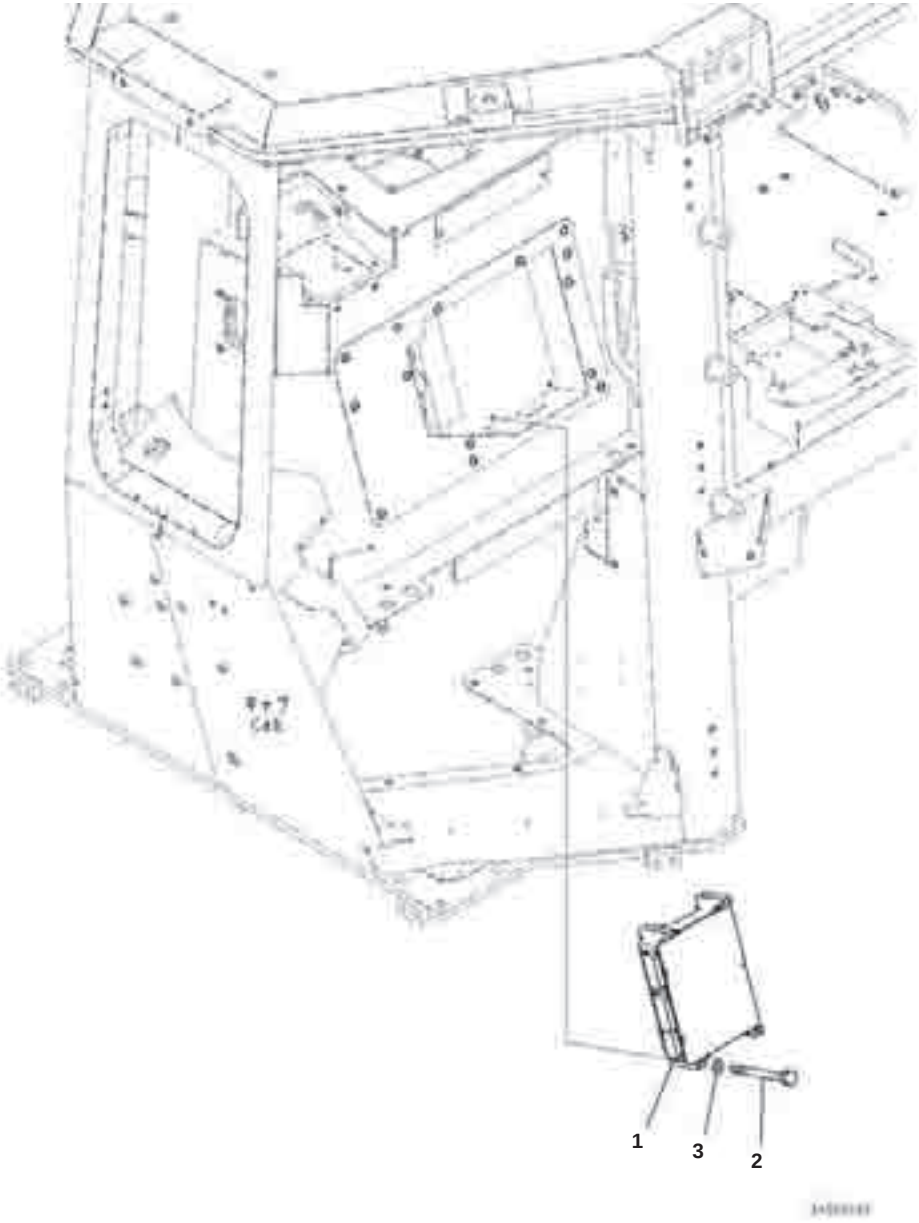

Index	Part Number	Description	Qty	Options
1	7830-75-5003	Controller	1	SN:B50001--
2	01010-80885	Bolt	4	SN:B50001--
3	01643-30823	Washer	4	SN:B50001--

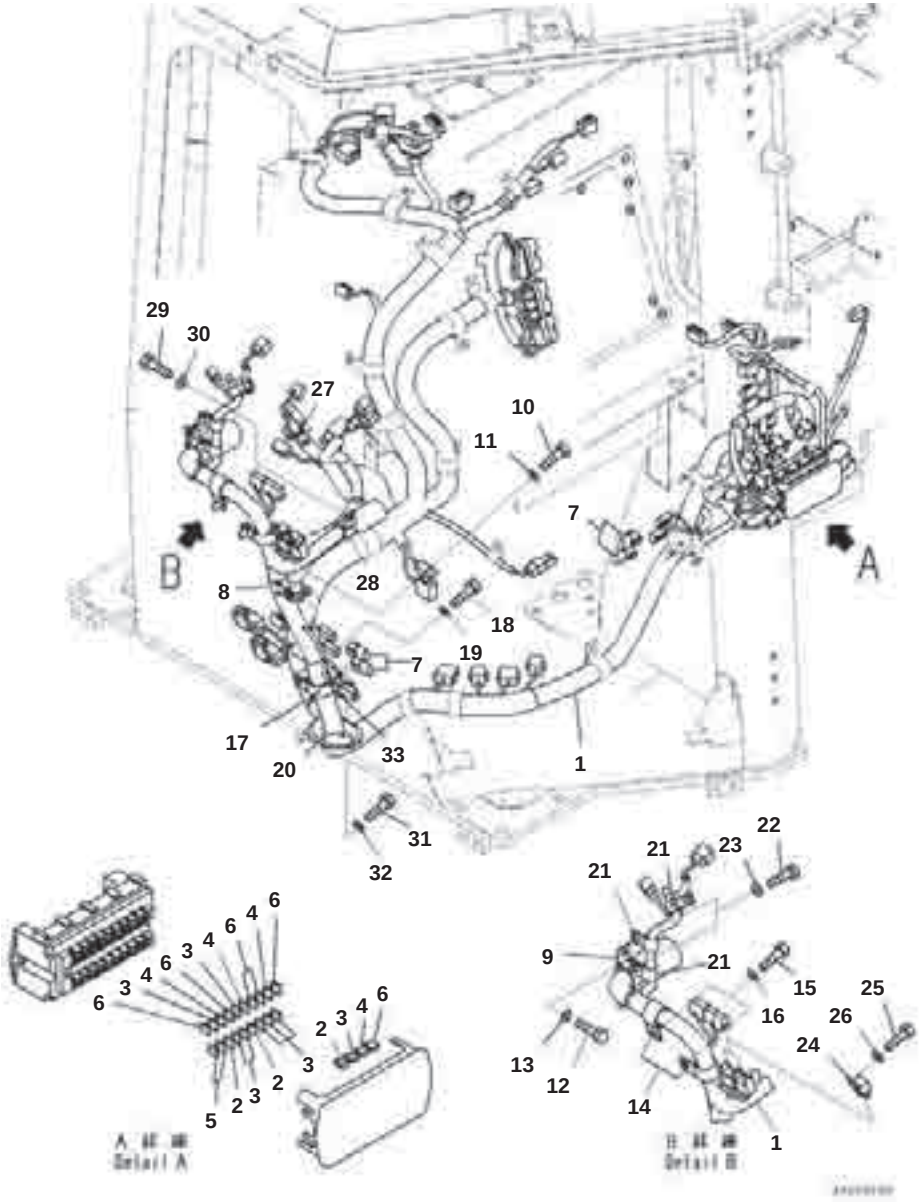

Index	Part Number	Description	Qty	Options
1	12Y-06-26111	Wiring Harness	1	SN:B50001--
2	08041-00500	▪ Fuse, 5Amp.	3	SN:B50001--
3	08041-01000	▪ Fuse, 10Amp.	8	SN:B50001--
4	08041-01500	▪ Fuse, 15Amp.	4	SN:B50001--
6	08041-03000	▪ Fuse, 30Amp.	6	SN:B50001--
7	21J-06-13661	▪ Diode	4	SN:B50001--
8	142-06-13540	Clip	1	SN:B50001--
9	04434-53211	Clip	1	SN:B50001--
10	01010-81020	Bolt	1	SN:B50001--
11	01643-31032	Washer	1	SN:B50001--
12	01010-81020	Bolt	1	SN:B50001--
13	01643-31032	Washer	1	SN:B50001--
14	04434-52711	Clip	2	SN:B50001--
15	01010-81020	Bolt	2	SN:B50001--
16	01643-31032	Washer	2	SN:B50001--
17	04434-53411	Clip	1	SN:B50001--
18	01010-81030	Bolt	1	SN:B50001--
19	01643-31032	Washer	1	SN:B50001--
20	12Y-06-26180	Grommet	1	SN:B50001--
21	04434-51410	Clip	3	SN:B50001--
22	01010-81020	Bolt	3	SN:B50001--
23	01643-31032	Washer	3	SN:B50001--
24	7861-74-5100	Relay	2	SN:B50001--
25	01010-80616	Bolt	2	SN:B50001--
26	01643-30623	Washer	2	SN:B50001--
27	08034-20519	Band	1	SN:B50001--
28	04434-52511	Clip	1	SN:B50001--
29	01010-81020	Bolt	1	SN:B50001--
30	01643-31032	Washer	1	SN:B50001--
31	01010-81020	Bolt	1	SN:B50001--
32	01643-31032	Washer	1	SN:B50001--
33	08034-20519	Band	1	SN:B50001--

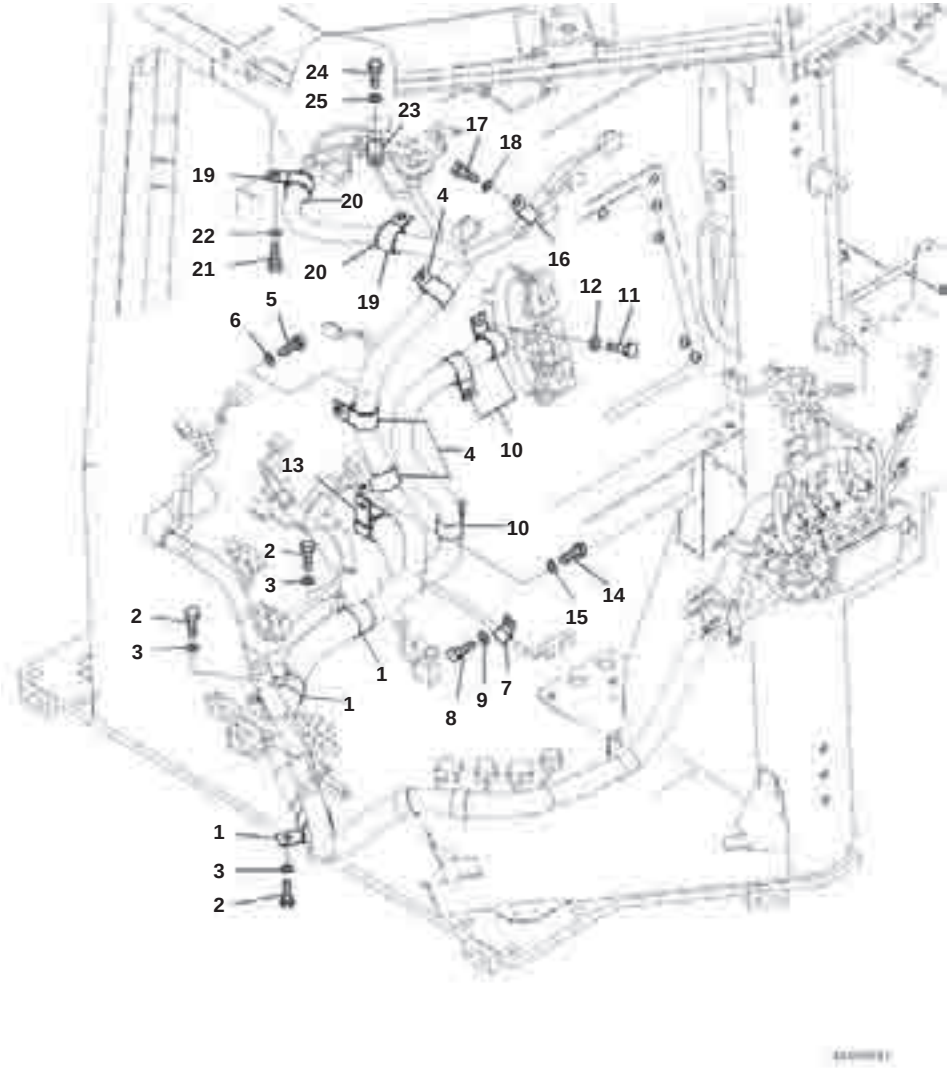

Cab, Dashboard Wiring Harness Mounting (1/2)

Index	Part Number	Description	Qty	Options
1	23S-62-25850	Clip	3	SN:B50001--
2	01010-81020	Bolt	3	SN:B50001--
3	01643-31032	Washer	3	SN:B50001--
4	04434-53411	Clip	3	SN:B50001--
6	01643-31032	Washer	3	SN:B50001--
7	04434-51010	Clip	1	SN:B50001--
8	01010-81020	Bolt	1	SN:B50001--
9	01643-31032	Washer	1	SN:B50001--
10	04434-53411	Clip	3	SN:B50001--
11	01010-81020	Bolt	3	SN:B50001--
12	01643-31032	Washer	3	SN:B50001--
13	23S-62-25850	Clip	1	SN:B50001--
14	01010-81020	Bolt	1	SN:B50001--
15	01643-31032	Washer	1	SN:B50001--
16	04434-51710	Clip	1	SN:B50001--
17	01010-81020	Bolt	1	SN:B50001--
18	01643-31032	Washer	1	SN:B50001--
19	04434-53411	Clip	2	SN:B50001--
20	07095-20625	Cushion	2	SN:B50001--
21	01010-81020	Bolt	2	SN:B50001--
22	01643-31032	Washer	2	SN:B50001--
23	04434-51410	Clip	1	SN:B50001--
24	01010-81020	Bolt	1	SN:B50001--
25	01643-31032	Washer	1	SN:B50001--

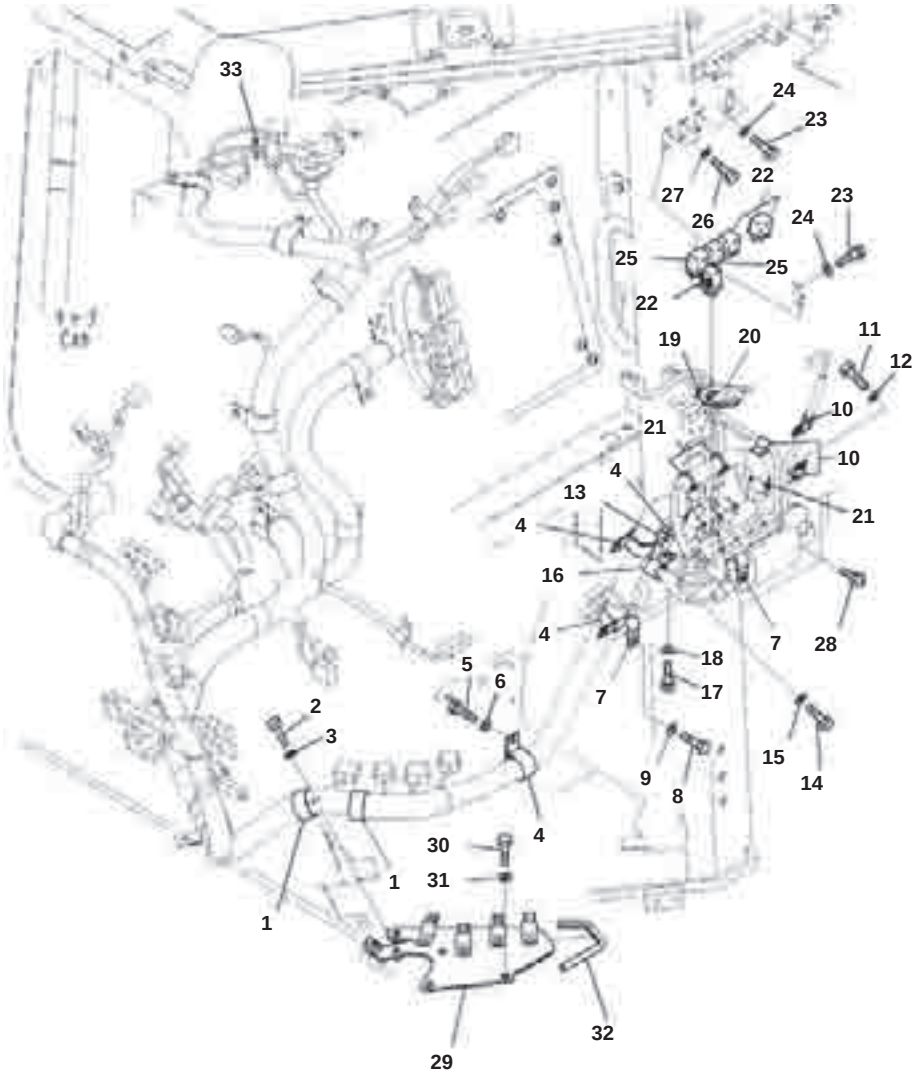

Cab, Dashboard Wiring Harness Mounting (2/2)

Index	Part Number	Description	Qty	Options
1	155-61-15350	Clip	2	SN:B50001--
2	01010-81020	Bolt	2	SN:B50001--
3	01643-31032	Washer	2	SN:B50001--
4	04434-53411	Clip	4	SN:B50001--
5	01010-81020	Bolt	4	SN:B50001--
6	01643-31032	Washer	4	SN:B50001--
7	04434-51410	Clip	2	SN:B50001--
8	01010-81020	Bolt	2	SN:B50001--
9	01643-31032	Washer	2	SN:B50001--
10	04434-51010	Clip	3	SN:B50001--
11	01010-D1020	Bolt	3	SN:B50001--
12	01643-71032	Washer	3	SN:B50001--
13	04434-53211	Clip	1	SN:B50001--
14	01010-81020	Bolt	1	SN:B50001--
15	01643-31032	Washer	1	SN:B50001--
16	04434-51910	Clip	1	SN:B50001--
17	01010-81020	Bolt	1	SN:B50001--
18	01643-31032	Washer	1	SN:B50001--
19	08034-20519	Band	1	SN:B50001--
20	12Y-43-12861	Seal	1	SN:B50001--
21	08034-20519	Band	3	SN:B50001--
22	569-06-61960	Relay	3	SN:B50001--
23	01010-80612	Bolt	4	SN:B50001--
24	01643-30623	Washer	4	SN:B50001--
25	569-06-61970	Relay	2	SN:B50001--
26	01010-80612	Bolt	2	SN:B50001--
27	01643-30623	Washer	2	SN:B50001--
28	01023-10620	Screw	2	SN:B50001--
29	12Y-06-26131	Bracket	1	SN:B50001--
30	01010-81020	Bolt	2	SN:B50001--
31	01643-31032	Washer	2	SN:B50001--
32	12Y-06-26140	Trim	1	SN:B50001--
33	08034-20519	Band	1	SN:B50001--

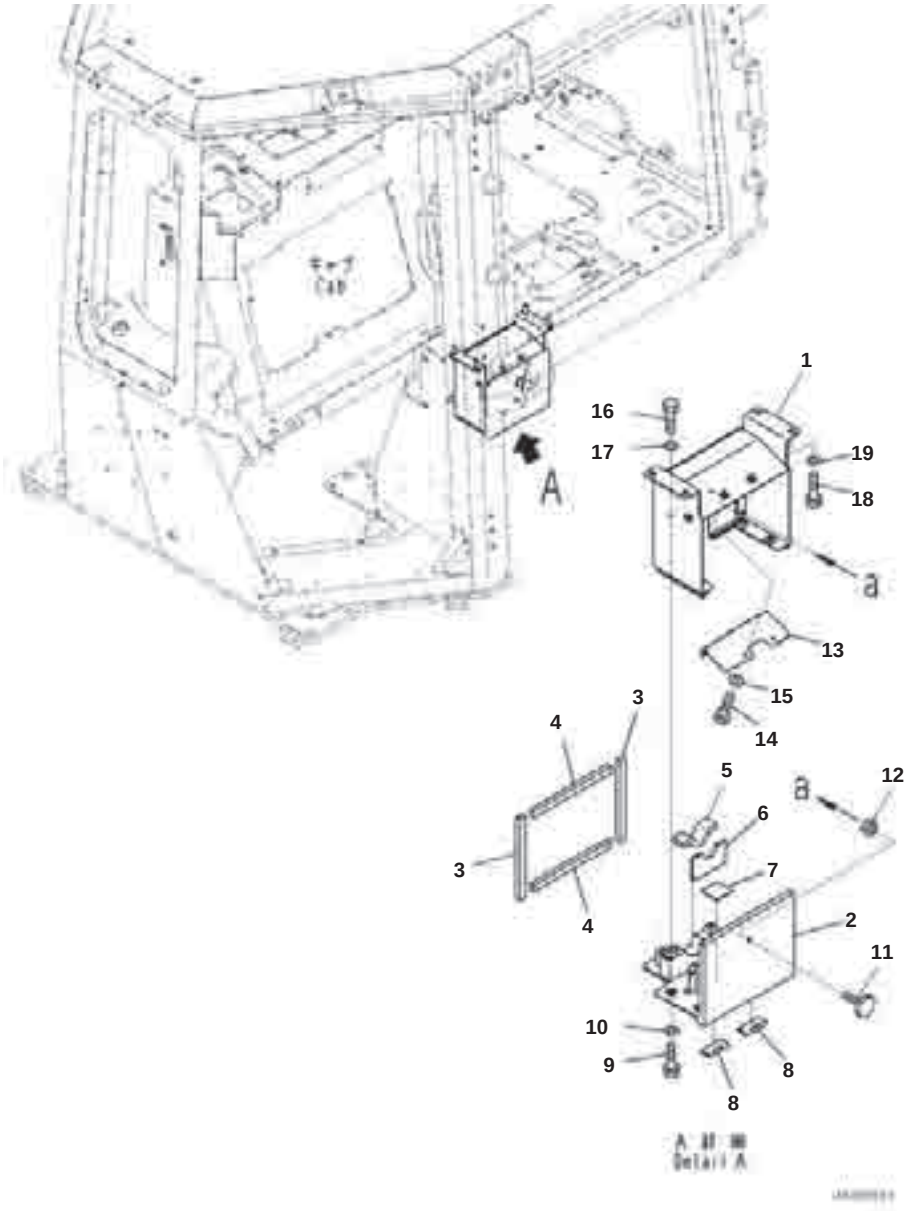

Index	Part Number	Description	Qty	Options
1	12Y-06-26411	Bracket	1	SN:B50001--
2	12Y-06-26421	Cover	1	SN:B50001--
3	12Y-06-26440	▪ Seal	2	SN:B50001--
4	12Y-06-26450	▪ Seal	2	SN:B50001--
5	12Y-06-26460	▪ Seal	1	SN:B50001--
6	12Y-06-26470	▪ Seal	1	SN:B50001--
7	17M-54-67740	▪ Sheet	1	SN:B50001--
8	09455-12013	▪ Hinge,Welded	2	SN:B50001--
9	01010-D0825	Bolt	4	SN:B50001--
10	01643-70823	Washer	4	SN:B50001--
11	134-X78-7450	Knob	1	SN:B50001--
12	01598-00809	Nut	1	SN:B50001--
13	12Y-06-26431	Bracket	1	SN:B50001--
14	01010-80612	Bolt	2	SN:B50001--
15	01643-30623	Washer	2	SN:B50001--
16	01010-D0825	Bolt	2	SN:B50001--
17	01643-70823	Washer	2	SN:B50001--
18	01010-81030	Bolt	4	SN:B50001--
19	01643-31032	Washer	4	SN:B50001--

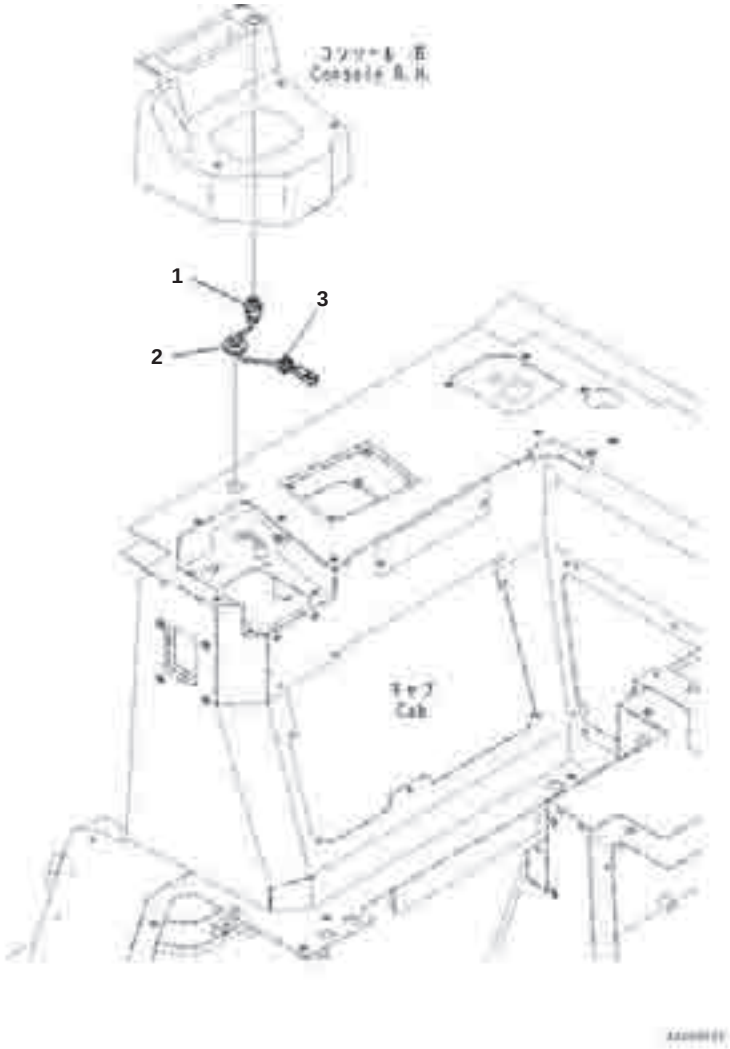

Index	Part Number	Description	Qty	Options
1	423-06-51130	Switch, Horn	1	SN:B50001--
2	08037-02512	Grommet	1	SN:B50001--
3	08034-20519	Band	1	SN:B50001--

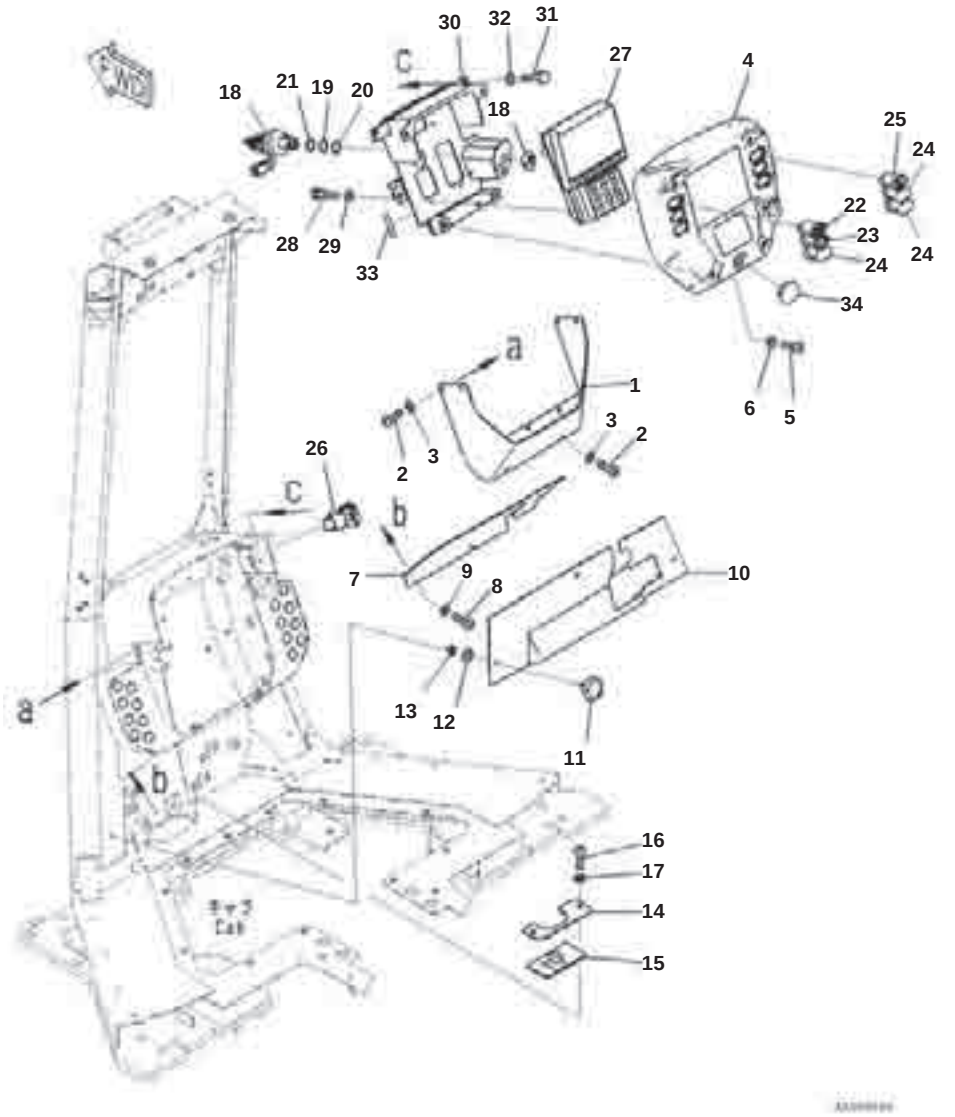

Cab, Dashboard, Monitor Panel and Switch

Index	Part Number	Description	Qty	Options
1	12Y-54-27121	Cover	1	SN:B50001--
2	01245-00825	Screw	6	SN:B50001--
3	01643-70823	Washer	6	SN:B50001--
4	17A-54-51511	Cover	1	SN:B50001--
5	01245-00620	Screw	4	SN:B50001--
6	01643-70623	Washer	4	SN:B50001--
7	12Y-54-27131	Cover	1	SN:B50001--
8	01245-00825	Screw	5	SN:B50001--
9	01643-70823	Washer	5	SN:B50001--
10	12Y-54-27151	Cover	1	SN:B50001--
11	561-06-86280	Screw	3	SN:B50001--
12	01640-20610	Washer	3	SN:B50001--
13	195-54-78790	Ring, Snap	3	SN:B50001--
14	12Y-54-27161	Cover	1	SN:B50001--
15	12Y-54-27171	Grommet	1	SN:B50001--
16	01245-00825	Screw	2	SN:B50001--
17	01643-70823	Washer	2	SN:B50001--
18	14X-06-52191	Switch, Starting	1	SN:B50001--
19	20Y-43-41750	Washer	2	SN:B50001--
20	20Y-43-41790	Washer	2	SN:B50001--
21	23S-15-45860	Shim, T=0.5mm	2	SN:B50001--
22	17A-06-51650	Switch, Head Lamp	1	SN:B50001--
23	17A-06-51661	Switch, Rear Lamp	1	SN:B50001--
24	20Y-06-42190	Cover	3	SN:B50001--
25	12Y-06-11771	Switch, Heater	1	SN:B50001--
26	08085-00001	Switch, Engine Stop	1	SN:B50001--
27	7831-69-8200	Monitor	1	SN:B50001--
28	01010-80616	Bolt	4	SN:B50001--
29	01643-30623	Washer	4	SN:B50001--
30	17A-54-51531	Bracket	1	SN:B50001--
31	01010-D0820	Bolt	4	SN:B50001--
32	01643-70823	Washer	4	SN:B50001--
33	12Y-978-2160	Seal	1	SN:B50001--
34	134-54-78370	Cap	1	SN:B50001--

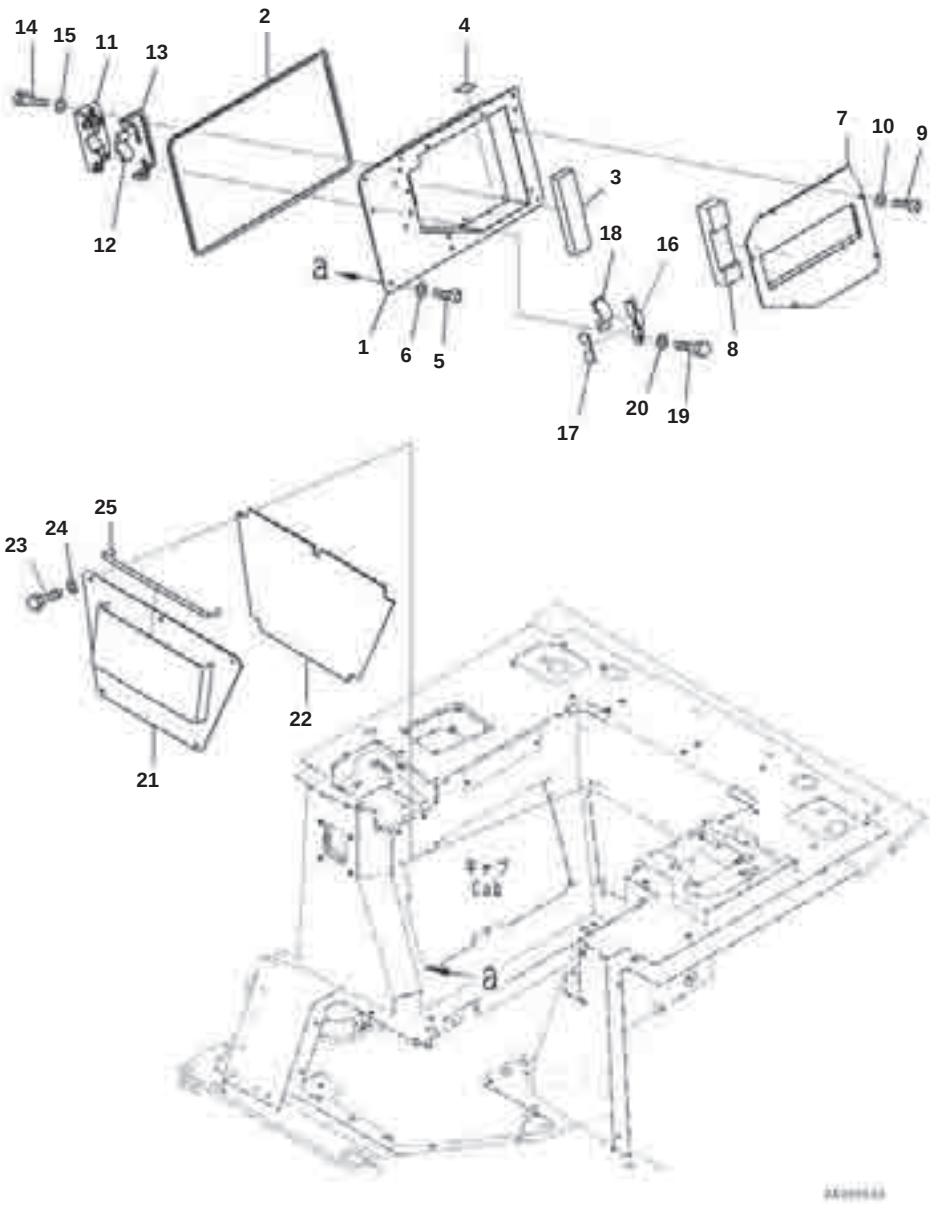

Index	Part Number	Description	Qty	Options
1	12Y-54-28861	Bracket	1	SN:B50001--
2	12Y-54-28870	▪ Seal	1	SN:B50001--
3	12Y-54-28880	▪ Sheet	1	SN:B50001--
4	17M-54-67740	▪ Sheet	1	SN:B50001--
5	01245-00825	Screw	8	SN:B50001--
6	01643-70823	Washer	8	SN:B50001--
7	12Y-54-28911	Cover	1	SN:B50001--
8	12Y-54-28890	▪ Sheet	1	SN:B50001--
9	01245-00825	Screw	6	SN:B50001--
10	01643-70823	Washer	6	SN:B50001--
11	12Y-54-28921	Cover	1	SN:B50001--
12	12Y-54-28940	▪ Seal	1	SN:B50001--
13	12Y-54-28950	▪ Seal	1	SN:B50001--
14	01010-D0825	Bolt	4	SN:B50001--
15	01643-70823	Washer	4	SN:B50001--
16	12Y-54-28981	Bracket	1	SN:B50001--
17	12Y-54-28930	▪ Seal	1	SN:B50001--
18	12Y-54-28940	▪ Seal	1	SN:B50001--
19	01010-D0825	Bolt	2	SN:B50001--
20	01643-70823	Washer	2	SN:B50001--
21	12Y-54-28850	Cover	1	SN:B50001--
22	11Y-Z78-3940	▪ Sheet	1	SN:B50001--
23	01010-D0825	Bolt	5	SN:B50001--
24	01643-70823	Washer	5	SN:B50001--
25	12Y-978-2990	Trim	1	SN:B50001--

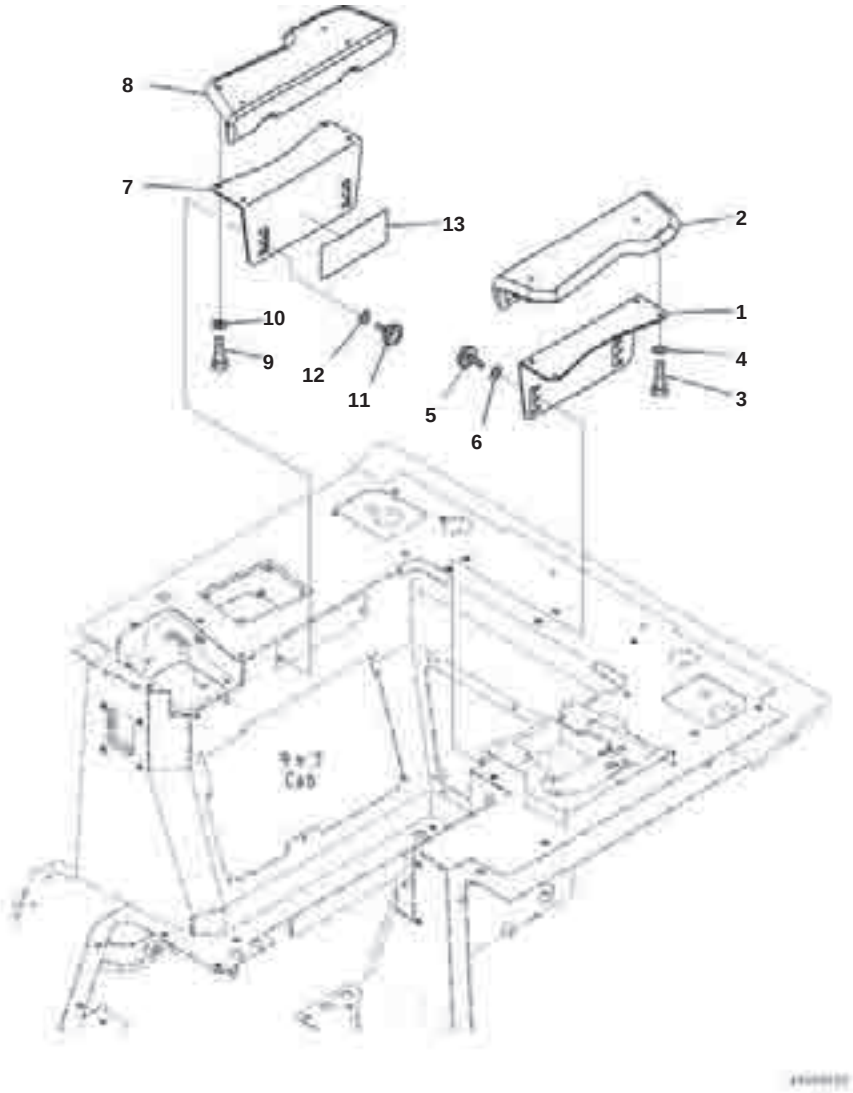

Index	Part Number	Description	Qty	Options
1	12Y-54-28780	Plate	1	SN:B50001--
2	12Y-54-28841	Armrest Assembly	1	SN:B50001--
3	01010-80820	Bolt	4	SN:B50001--
4	01643-30823	Washer	4	SN:B50001--
5	195-54-68760	Knob	2	SN:B50001--
6	01643-71032	Washer	2	SN:B50001--
7	12Y-54-28780	Plate	1	SN:B50001--
8	12Y-54-28821	Armrest Assembly	1	SN:B50001--
9	01010-80820	Bolt	4	SN:B50001--
10	01643-30823	Washer	4	SN:B50001--
11	195-54-68760	Knob	2	SN:B50001--
12	01643-71032	Washer	2	SN:B50001--
13	12Y-978-2840	Plate	1	SN:B50001--

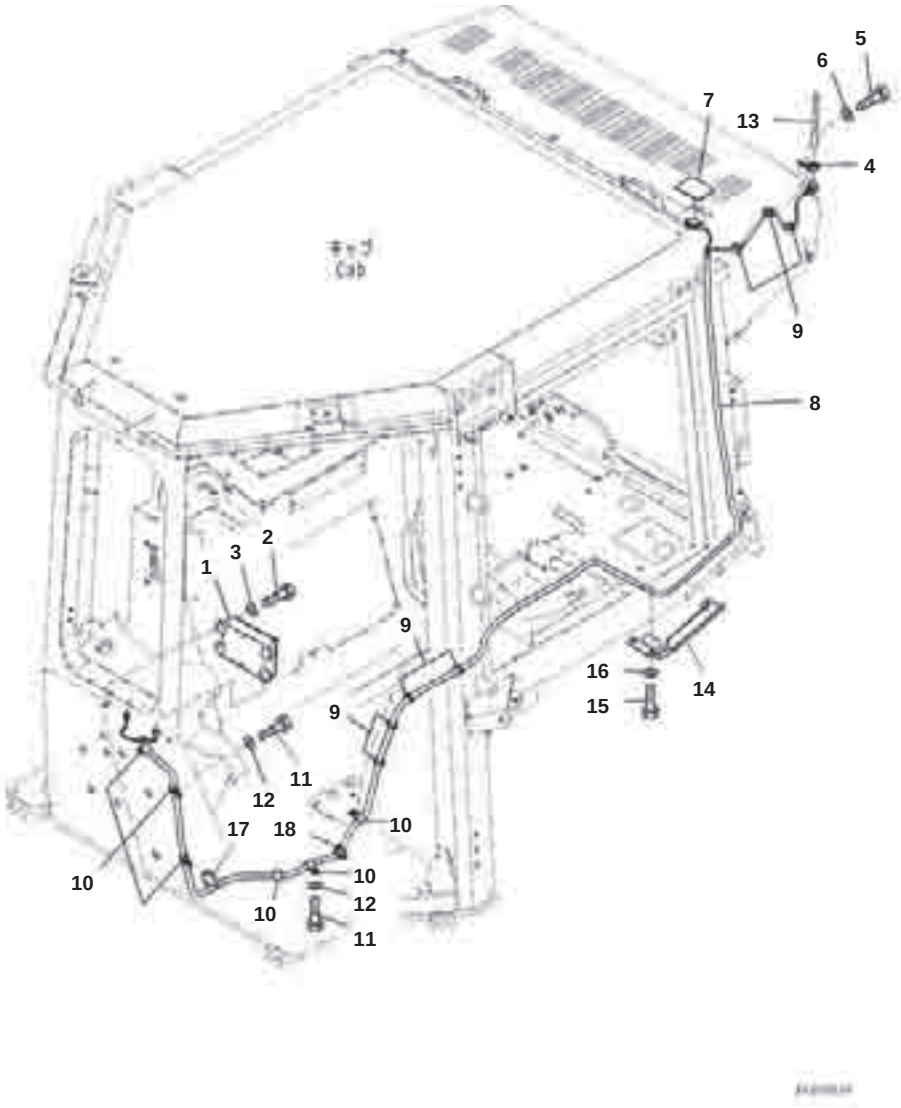

Cab, KOMTRAX Controller and Antenna

Index	Part Number	Description	Qty	Options
1	7826-25-3006	Controller, KOMTRAX	1	SN:B50001--
2	01010-80625	Bolt	4	SN:B50001--
3	01643-30623	Washer	4	SN:B50001--
4	12Y-06-26310	Bracket	1	SN:B50001--
5	01010-D0830	Bolt	2	SN:B50001--
6	01643-70823	Washer	2	SN:B50001--
7	12Y-06-13170	Cover	1	SN:B50001--
8	12Y-06-26321	Cable	1	SN:B50001--
9	08034-20519	Band	7	SN:B50001--
10	04434-51410	Clip	6	SN:B50001--
11	01010-81020	Bolt	6	SN:B50001--
12	01643-31032	Washer	6	SN:B50001--
13	8A13-10-2100	Antenna	1	SN:B50001--
14	12Y-06-26331	Cover	1	SN:B50001--
15	01010-81020	Bolt	3	SN:B50001--
16	01643-31032	Washer	3	SN:B50001--
17	08034-20834	Band	1	SN:B50001--
18	08034-40521	Band	1	SN:B50001--

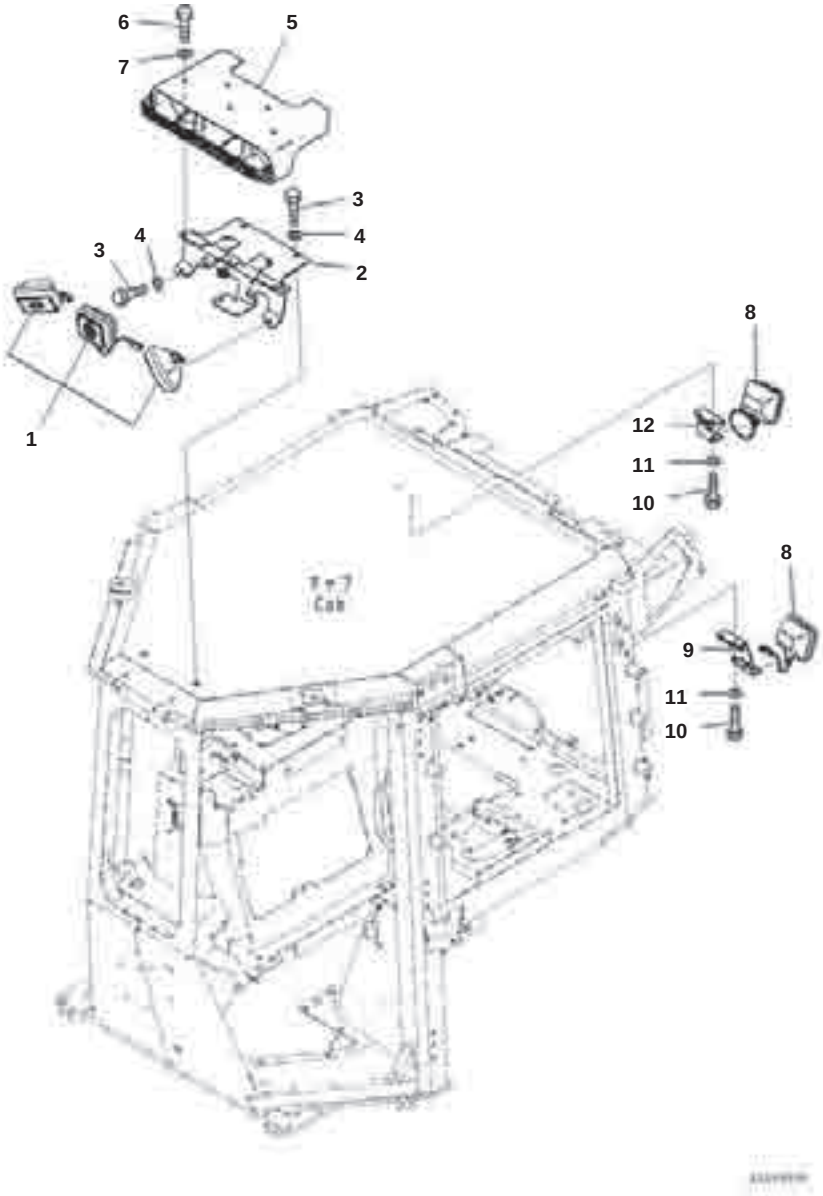

Index	Part Number	Description	Qty	Options
1	11Y-06-11372	Lamp Assembly, Working	3	SN:B50001--
	421-06-23330	▪ Bulb, 70watt	1	SN:B50001--
2	12Y-06-26221	Bracket	1	SN:B50001--
3	01010-81225	Bolt	4	SN:B50001--
4	01643-31232	Washer	4	SN:B50001--
5	12Y-06-26231	Cover	1	SN:B50001--
6	01010-81025	Bolt	5	SN:B50001--
7	01643-31032	Washer	5	SN:B50001--
8	11Y-06-11372	Lamp Assembly, Working	2	SN:B50001--
	421-06-23330	▪ Bulb, 70watt	1	SN:B50001--
9	12Y-06-26211	Bracket	1	SN:B50001--
10	01010-D0825	Bolt	4	SN:B50001--
11	01643-70823	Washer	4	SN:B50001--
12	12Y-06-26291	Bracket	1	SN:B50001--

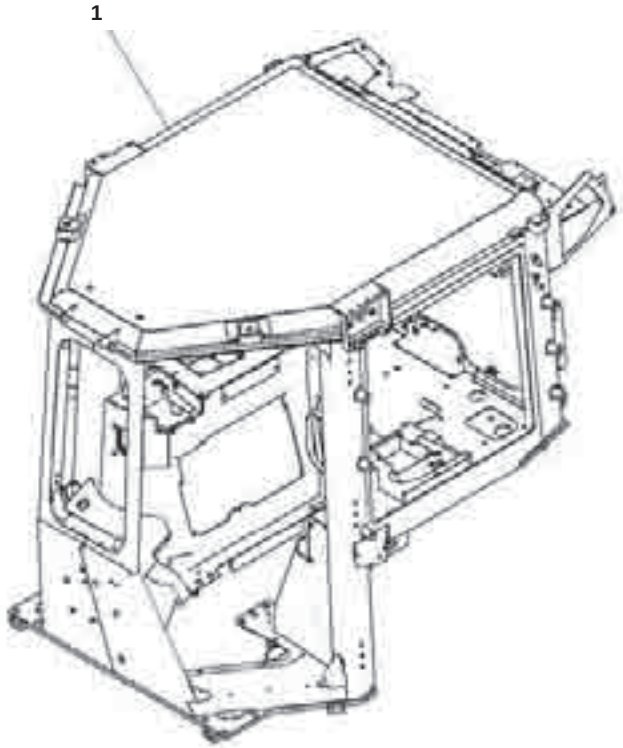

Index	Part Number	Description	Qty	Options
1	12Y-978-6201	Cab Assembly	1	SN:B50001--

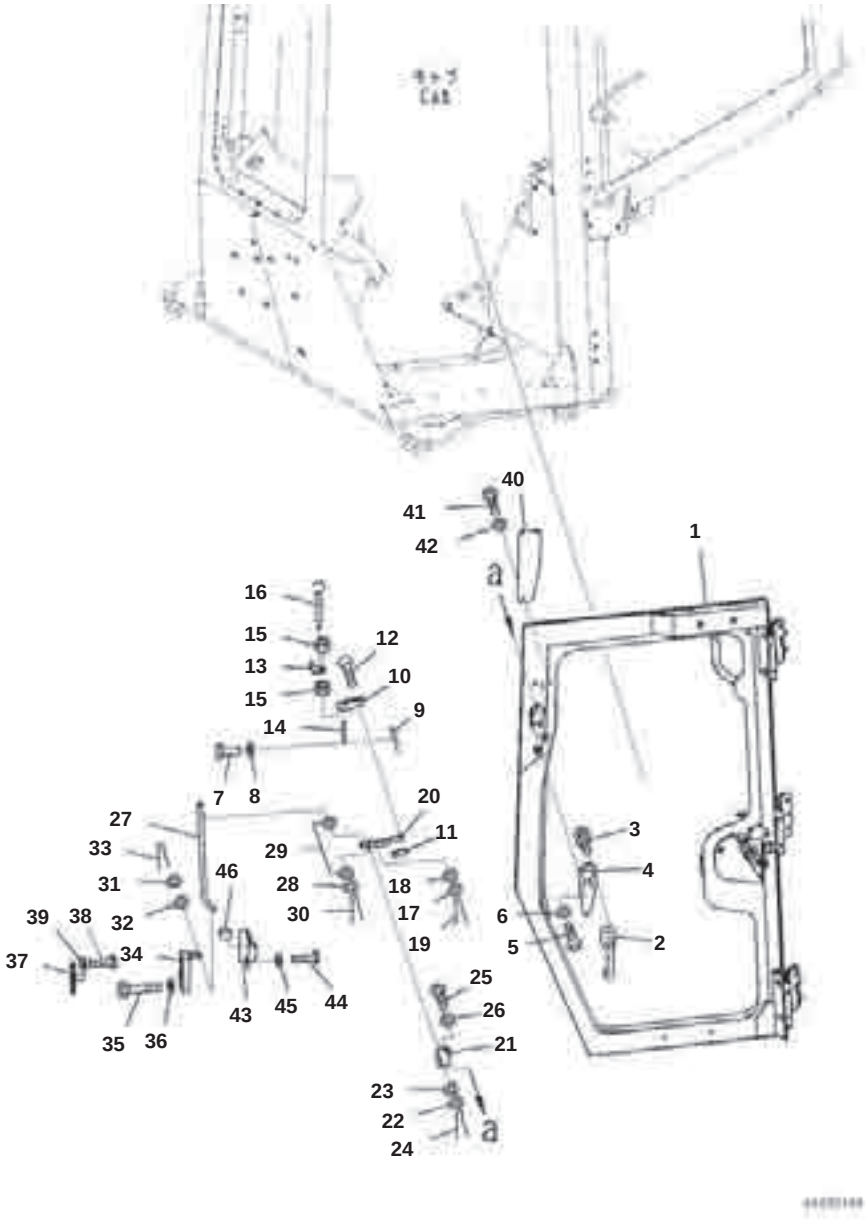

Index	Part Number	Description	Qty	Options
1	12Y-54-26111	Door	1	SN:B50001--
2	11Y-979-2571	Handle Assembly	1	SN:B50001--
3	01023-10520	Screw	5	SN:B50001--
4	12Y-978-3210	Plate	1	SN:B50001--
5	01245-00620	Screw	3	SN:B50001--
6	01643-70623	Washer	3	SN:B50001--
7	04205-10622	Pin	1	SN:B50001--
8	01643-70623	Washer	4	SN:B50001--
9	04050-11612	Pin, Cotter	1	SN:B50001--
10	12Y-978-3281	Knob	1	SN:B50001--
11	12Y-978-3290	Plate	1	SN:B50001--
12	01023-20410	Screw	2	SN:B50001--
13	12Y-978-3221	Plate	1	SN:B50001--
14	12Y-978-3241	Rod	1	SN:B50001--
15	01580-10605	Nut	2	SN:B50001--
16	17A-Z11-3332	Spring	1	SN:B50001--
17	01643-70623	Washer	1	SN:B50001--
18	12Y-978-3310	Rubber	1	SN:B50001--
19	04050-11612	Pin, Cotter	1	SN:B50001--
20	12Y-978-3251	Plate	1	SN:B50001--
21	12Y-978-3261	Plate	1	SN:B50001--
22	01643-70823	Washer	1	SN:B50001--
23	12Y-978-3360	Rubber	1	SN:B50001--
24	04050-12012	Pin, Cotter	1	SN:B50001--
25	01245-00620	Screw	2	SN:B50001--
26	01643-70623	Washer	2	SN:B50001--
27	17A-979-3320	Plate	1	SN:B50001--
28	01643-70623	Washer	1	SN:B50001--
29	12Y-978-3310	Rubber	1	SN:B50001--
30	04050-11612	Pin, Cotter	1	SN:B50001--
31	01643-70623	Washer	1	SN:B50001--
32	12Y-978-3310	Rubber	1	SN:B50001--
33	04050-11612	Pin, Cotter	1	SN:B50001--
34	195-Z11-4520	Lock	1	SN:B50001--
35	01010-D0635	Bolt	4	SN:B50001--
36	01643-70623	Washer	4	SN:B50001--
37	12Y-978-3480	Striker	1	SN:B50001--
38	01245-00825	Screw	4	SN:B50001--
39	01643-70823	Washer	4	SN:B50001--
40	14X-Y79-3310	Plate	1	SN:B50001--
41	01245-00620	Screw	3	SN:B50001--
42	01643-70623	Washer	3	SN:B50001--
43	12Y-978-3350	Bracket	1	SN:B50001--
44	01245-00620	Screw	2	SN:B50001--
45	01643-70623	Washer	2	SN:B50001--
46	12Y-978-3650	Sheet	1	SN:B50001--

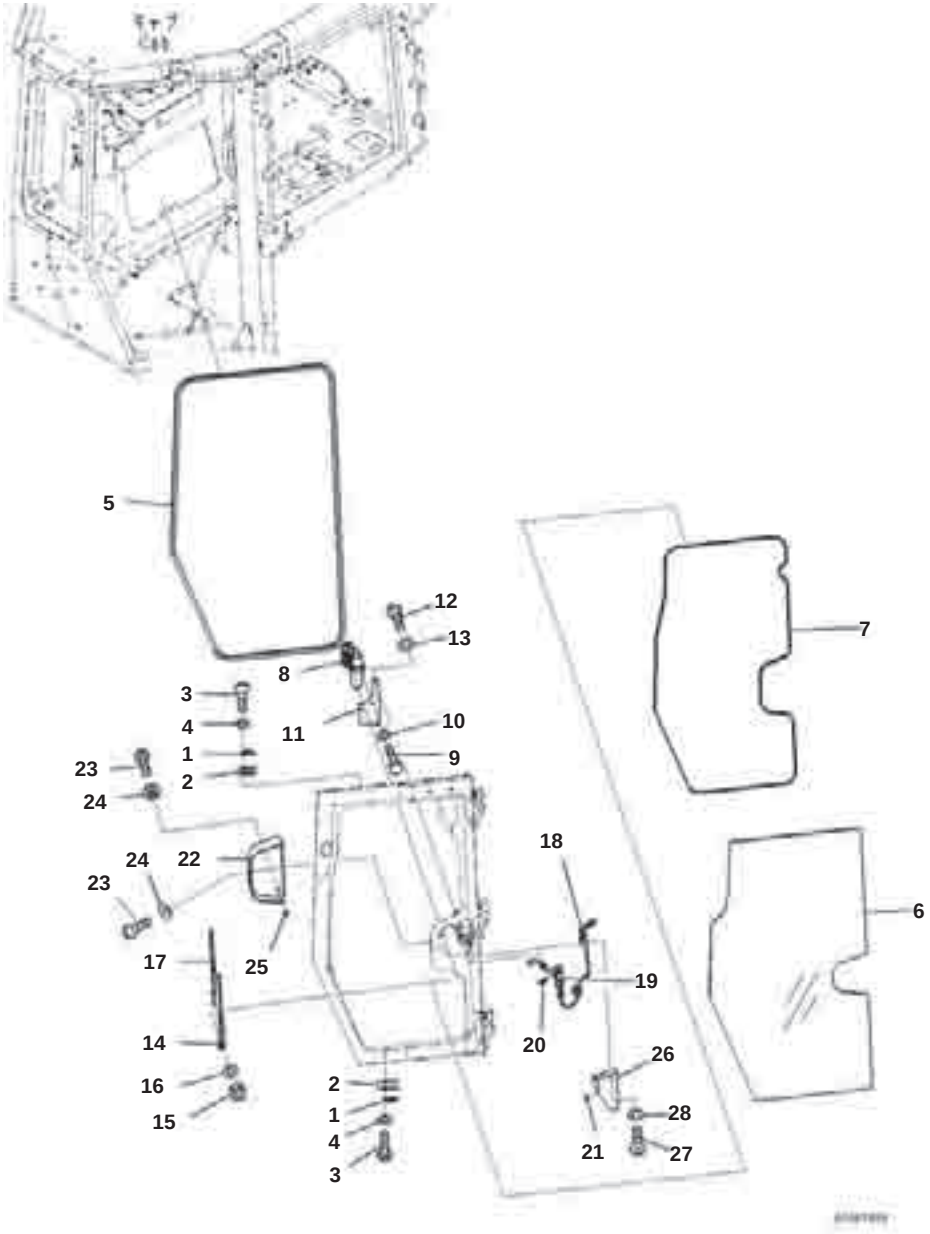

Cab, Door Damper, Window and Wiper, L.H.

Index	Part Number	Description	Qty	Options
1	14X-911-1690	Damper	2	SN:B50001--
2	14X-911-1761	Shim, T=1.2mm	4	SN:B50001--
3	01245-00620	Screw	4	SN:B50001--
4	01643-70623	Washer	4	SN:B50001--
5	12Y-54-26611	Seal	1	SN:B50001--
6	12Y-54-27271	Glass	1	SN:B50001--
7	12Y-54-27290	Seal	1	SN:B50001--
8	12Y-978-2431	Wiper Motor	1	SN:B50001--
9	01010-80616	Bolt	2	SN:B50001--
10	01643-70623	Washer	2	SN:B50001--
11	12Y-54-26210	Plate	1	SN:B50001--
12	01245-00820	Screw	3	SN:B50001--
13	01643-70823	Washer	3	SN:B50001--
14	12Y-978-2490	Arm, Wiper	1	SN:B50001--
15	01580-10806	Nut	1	SN:B50001--
16	01640-20816	Washer	1	SN:B50001--
17	17A-Z11-2581	Wiper Blade	1	SN:B50001--
18	12Y-978-2126	Wiring Harness	1	SN:B50001--
19	08034-20519	Band	1	SN:B50001--
20	17A-Z11-4610	Valve	1	SN:B50001--
21	17A-Z11-2660	Cap	1	SN:B50001--
22	14X-Y79-3270	Cover	1	SN:B50001--
23	01245-00620	Screw	4	SN:B50001--
24	12Y-978-2660	Collar	4	SN:B50001--
25	17A-Z11-5651	Sheet	2	SN:B50001--
26	12Y-54-26650	Cover	1	SN:B50001--
27	01245-00620	Screw	4	SN:B50001--
28	01643-70623	Washer	4	SN:B50001--

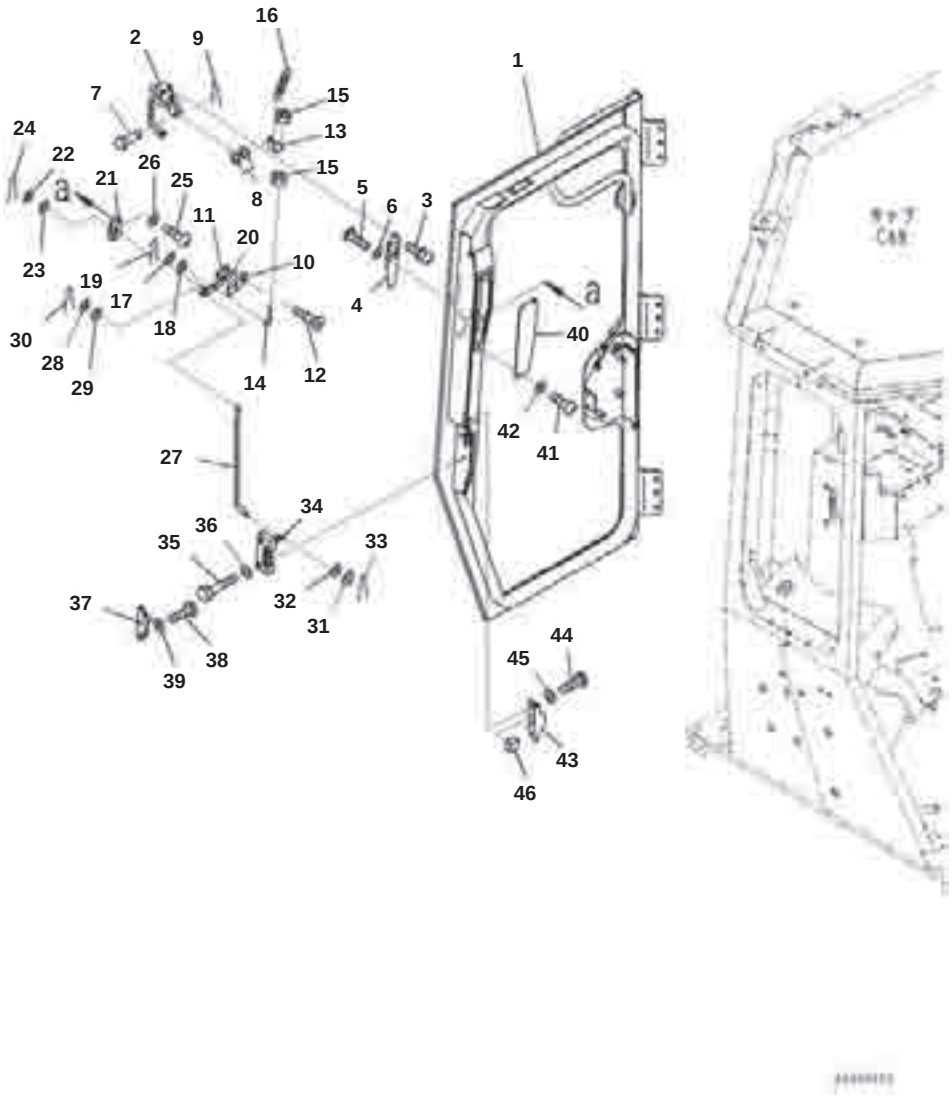

Index	Part Number	Description	Qty	Options
1	12Y-54-26121	Door	1	SN:B50001--
2	11Y-979-2571	Handle Assembly	1	SN:B50001--
3	01023-10520	Screw	5	SN:B50001--
4	12Y-978-3210	Plate	1	SN:B50001--
5	01245-00620	Screw	3	SN:B50001--
6	01643-70623	Washer	3	SN:B50001--
7	04205-10622	Pin	1	SN:B50001--
8	01643-70623	Washer	4	SN:B50001--
9	04050-11612	Pin, Cotter	1	SN:B50001--
10	12Y-978-3281	Knob	1	SN:B50001--
11	12Y-978-3290	Plate	1	SN:B50001--
12	01023-20410	Screw	2	SN:B50001--
13	12Y-978-3231	Plate	1	SN:B50001--
14	12Y-978-3241	Rod	1	SN:B50001--
15	01580-10605	Nut	2	SN:B50001--
16	17A-Z11-3332	Spring	1	SN:B50001--
17	01643-70623	Washer	1	SN:B50001--
18	12Y-978-3310	Rubber	1	SN:B50001--
19	04050-11612	Pin, Cotter	1	SN:B50001--
20	12Y-978-3470	Plate	1	SN:B50001--
21	12Y-978-3271	Plate	1	SN:B50001--
22	01643-70823	Washer	1	SN:B50001--
23	12Y-978-3360	Rubber	1	SN:B50001--
24	04050-12012	Pin, Cotter	1	SN:B50001--
25	01245-00620	Screw	2	SN:B50001--
26	01643-70623	Washer	2	SN:B50001--
27	17A-979-3330	Plate	1	SN:B50001--
28	01643-70623	Washer	1	SN:B50001--
29	12Y-978-3310	Rubber	1	SN:B50001--
30	04050-11612	Pin, Cotter	1	SN:B50001--
31	01643-70623	Washer	1	SN:B50001--
32	12Y-978-3310	Rubber	1	SN:B50001--
33	04050-11612	Pin, Cotter	1	SN:B50001--
34	195-Z11-4510	Lock	1	SN:B50001--
35	01010-D0635	Bolt	4	SN:B50001--
36	01643-70623	Washer	4	SN:B50001--
37	12Y-978-3480	Striker	1	SN:B50001--
38	01245-00825	Screw	4	SN:B50001--
39	01643-70823	Washer	4	SN:B50001--
40	14X-Y79-3310	Plate	1	SN:B50001--
41	01245-00620	Screw	3	SN:B50001--
42	01643-70623	Washer	3	SN:B50001--
43	12Y-978-3350	Bracket	1	SN:B50001--
44	01245-00620	Screw	2	SN:B50001--
45	01643-70623	Washer	2	SN:B50001--
46	12Y-978-3650	Sheet	1	SN:B50001--

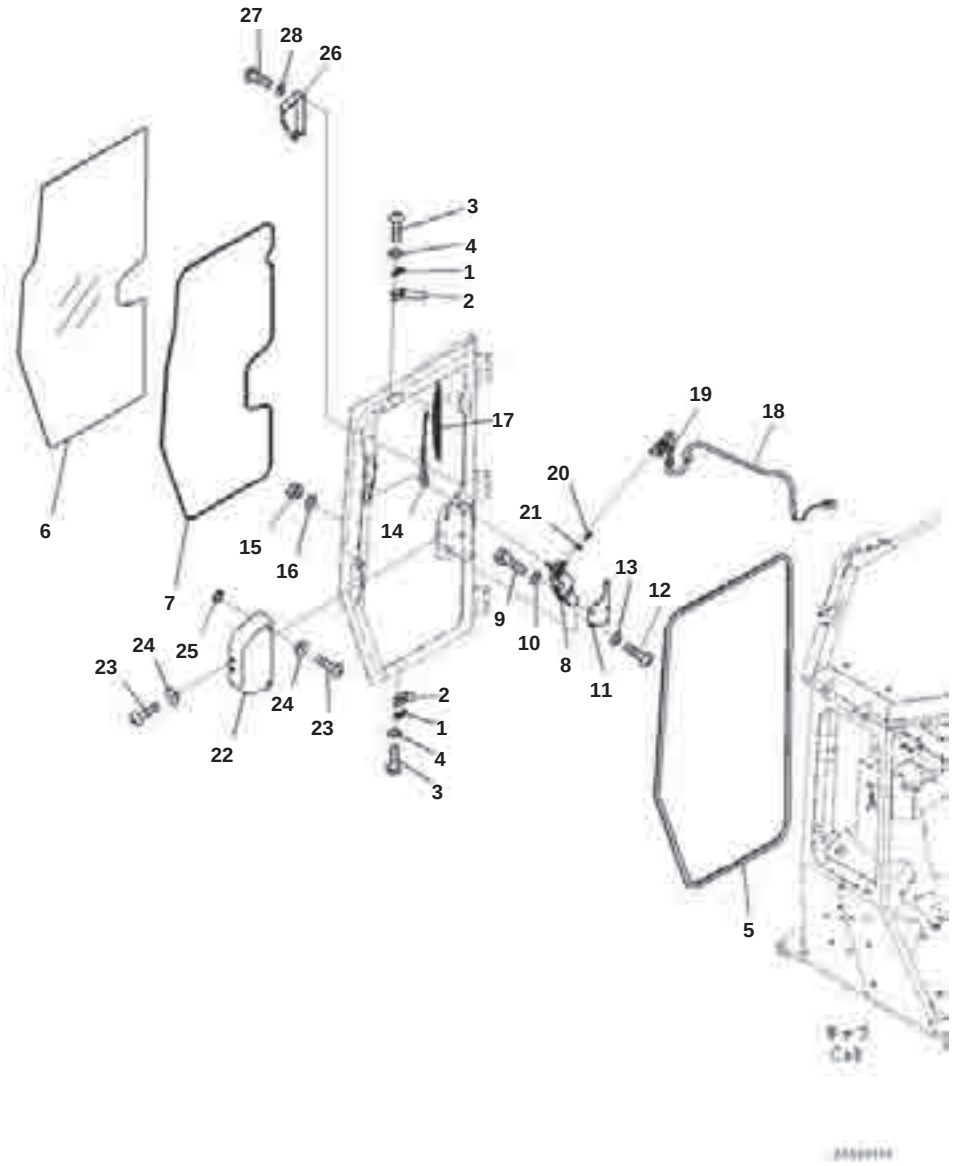

Cab, Door Damper, Window and Wiper, R.H.

Index	Part Number	Description	Qty	Options
1	14X-911-1690	Damper	2	SN:B50001--
2	14X-911-1761	Shim, T=1.2mm	4	SN:B50001--
3	01245-00620	Screw	4	SN:B50001--
4	01643-70623	Washer	4	SN:B50001--
5	12Y-54-26621	Seal	1	SN:B50001--
6	12Y-54-27281	Glass	1	SN:B50001--
7	12Y-54-27290	Seal	1	SN:B50001--
8	12Y-978-2441	Wiper Motor	1	SN:B50001--
9	01010-80616	Bolt	2	SN:B50001--
10	01643-70623	Washer	2	SN:B50001--
11	12Y-54-26210	Plate	1	SN:B50001--
12	01245-00820	Screw	3	SN:B50001--
13	01643-70823	Washer	3	SN:B50001--
14	12Y-978-2490	Arm, Wiper	1	SN:B50001--
15	01580-10806	Nut	1	SN:B50001--
16	01640-20816	Washer	1	SN:B50001--
17	17A-Z11-2581	Wiper Blade	1	SN:B50001--
18	12Y-978-2126	Wiring Harness	1	SN:B50001--
19	08034-20519	Band	1	SN:B50001--
20	17A-Z11-4610	Valve	1	SN:B50001--
21	17A-Z11-2660	Cap	1	SN:B50001--
22	14X-Y79-3270	Cover	1	SN:B50001--
23	01245-00620	Screw	4	SN:B50001--
24	12Y-978-2660	Collar	4	SN:B50001--
25	17A-Z11-5651	Sheet	2	SN:B50001--
26	12Y-54-26660	Cover	1	SN:B50001--
27	01245-00620	Screw	4	SN:B50001--
28	01643-70623	Washer	4	SN:B50001--

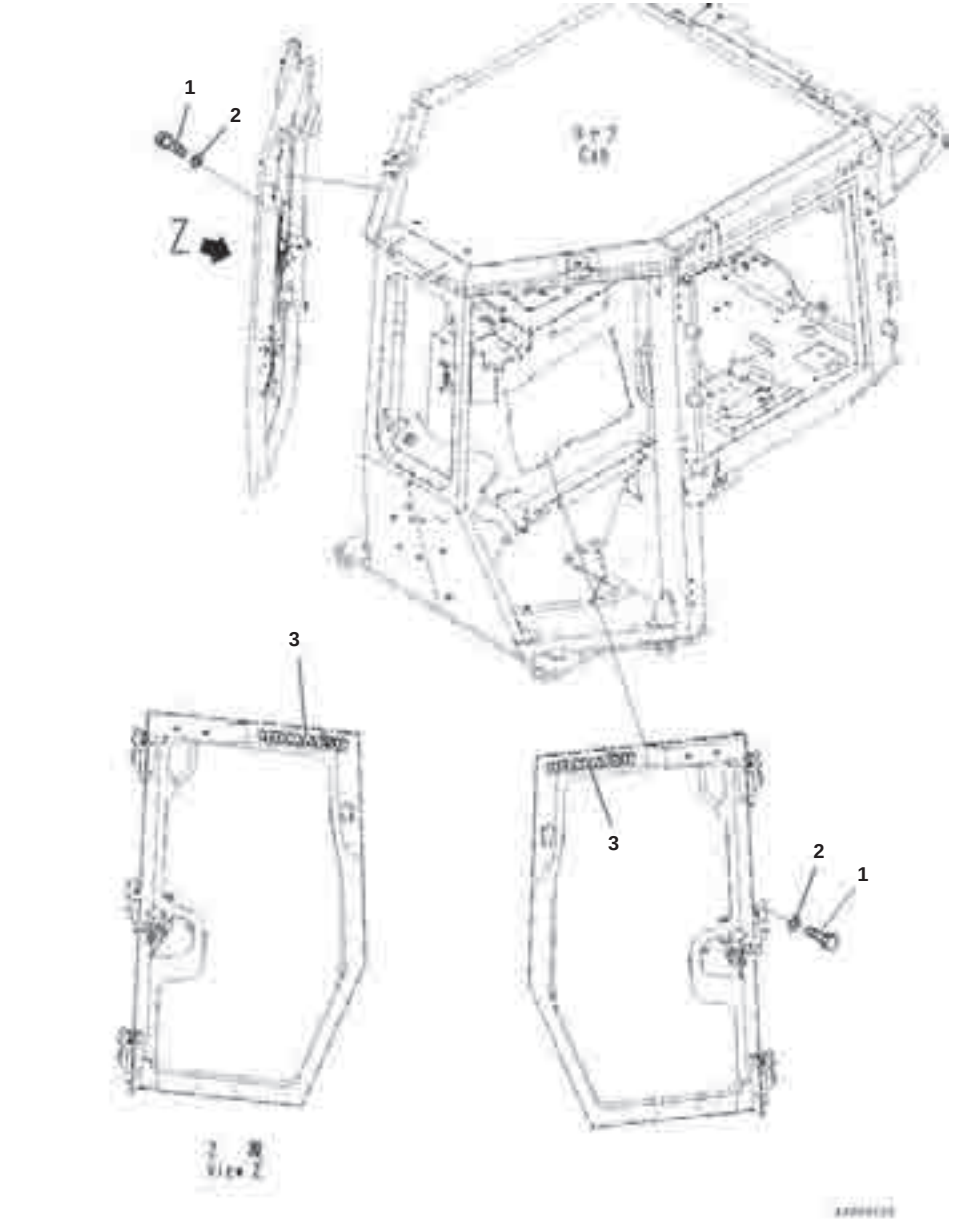

Index	Part Number	Description	Qty	Options
1	01010-D1035	Bolt	18	SN:B50001--
2	01643-71032	Washer	18	SN:B50001--
3	09693-00300	Emblem, KOMATSU	2	SN:B50001--

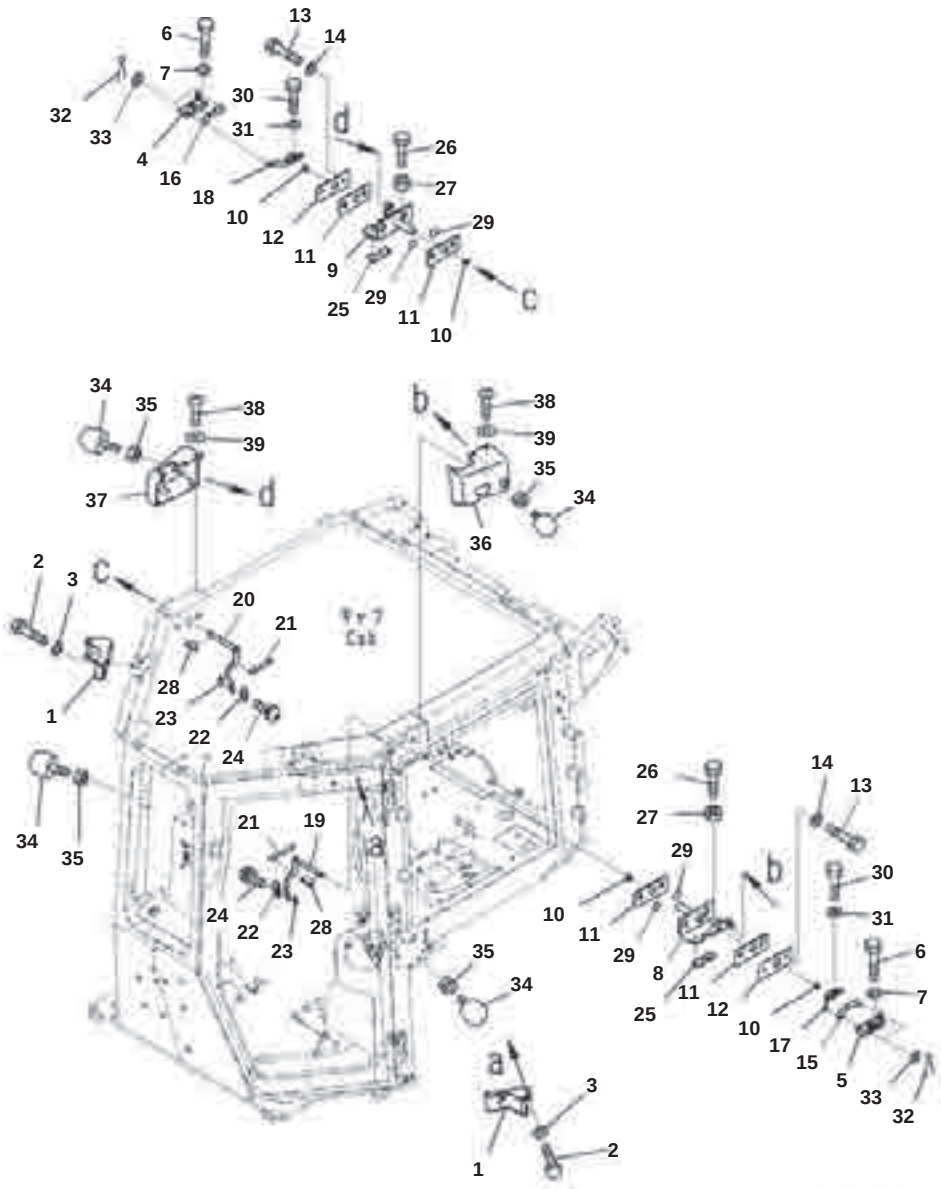

Index	Part Number	Description	Qty	Options
1	12Y-54-26430	Striker	2	SN:B50001--
2	01010-D1230	Bolt	4	SN:B50001--
3	01643-71232	Washer	4	SN:B50001--
4	195-Z11-4510	Lock	1	SN:B50001--
5	195-Z11-4520	Lock	1	SN:B50001--
6	01010-D0635	Bolt	8	SN:B50001--
7	01643-70623	Washer	8	SN:B50001--
8	12Y-978-3512	Bracket	1	SN:B50001--
9	12Y-978-3522	Bracket	1	SN:B50001--
10	17A-Z11-1810	Bushing	4	SN:B50001--
11	12Y-978-3541	Rubber	4	SN:B50001--
12	12Y-978-3551	Plate	2	SN:B50001--
13	01010-D1230	Bolt	4	SN:B50001--
14	01643-71232	Washer	4	SN:B50001--
15	12Y-978-3561	Plate	1	SN:B50001--
16	12Y-978-3571	Plate	1	SN:B50001--
17	12Y-978-3580	Lever	1	SN:B50001--
18	12Y-978-3590	Lever	1	SN:B50001--
19	12Y-978-3613	Lever	1	SN:B50001--
20	12Y-978-3623	Lever	1	SN:B50001--
21	176-06-42170	Spring	2	SN:B50001--
22	12Y-978-3281	Knob	2	SN:B50001--
23	12Y-978-3290	Plate	2	SN:B50001--
24	01023-20410	Screw	4	SN:B50001--
25	17A-Z11-3680	Plate	2	SN:B50001--
26	01010-80620	Bolt	2	SN:B50001--
27	01580-10605	Nut	2	SN:B50001--
28	04010-00516	Key	2	SN:B50001--
29	07000-13025	O-ring	4	SN:B50001--
30	01010-80825	Bolt	2	SN:B50001--
31	01643-70823	Washer	2	SN:B50001--
32	04050-11612	Pin, Cotter	4	SN:B50001--
33	01640-20610	Washer	4	SN:B50001--
34	17A-Z11-3592	Stopper	4	SN:B50001--
35	01580-11210	Nut	4	SN:B50001--
36	12Y-54-26410	Cover	1	SN:B50001--
37	12Y-54-26420	Cover	1	SN:B50001--
38	01245-00620	Screw	8	SN:B50001--
39	12Y-978-2660	Collar	8	SN:B50001--

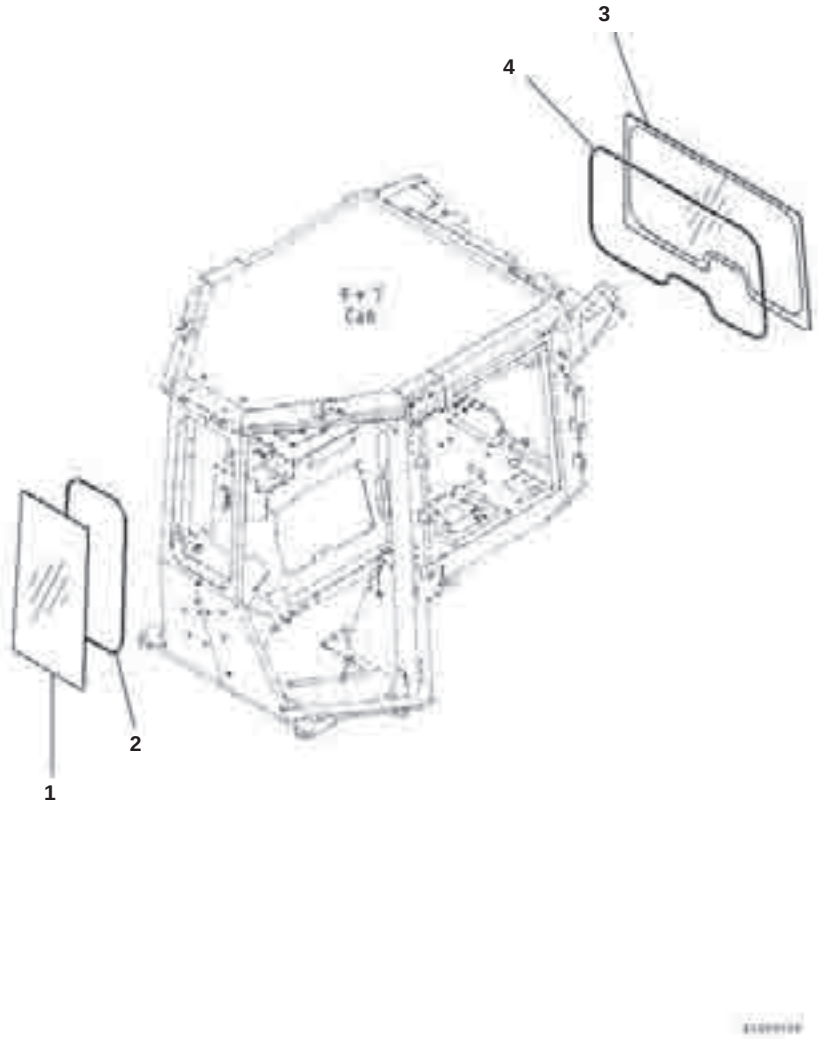

Index	Part Number	Description	Qty	Options
1	12Y-978-1310	Glass	1	SN:B50001--
2	12Y-978-1320	Seal	1	SN:B50001--
3	12Y-54-27251	Glass	1	SN:B50001--
4	12Y-978-1341	Seal	1	SN:B50001--

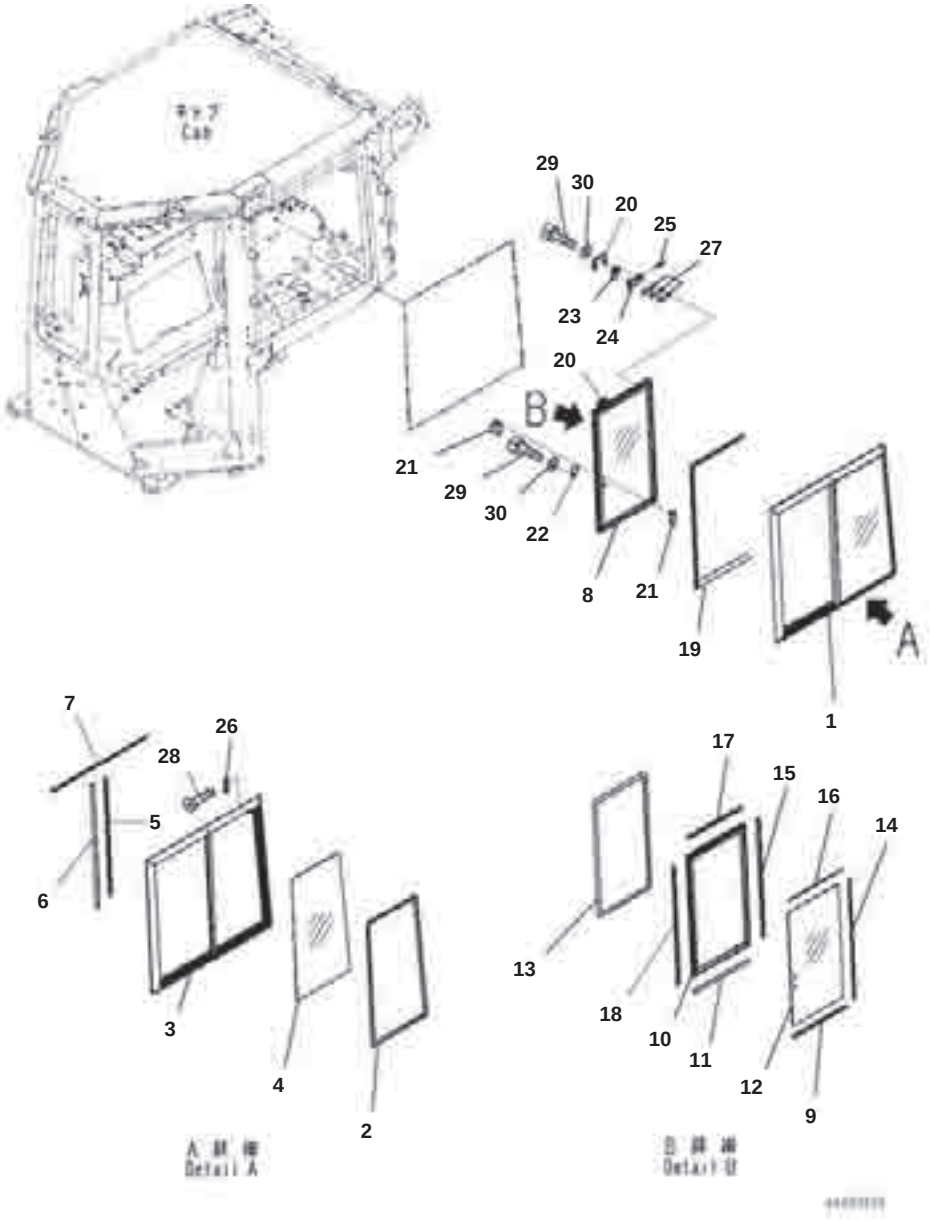

Cab, Sash type Glass Window, L.H.

Index	Code	Part Number	Description	Qty	Options
		12Y-54-27401	Sash Assembly	1	SN:B50001--
1		12Y-54-27411	· Sash Assembly	1	SN:B50001--
2		12Y-54-27361	· · Seal	1	SN:B50001--
3	C1		· · Frame	1	SN:B50001--
4		12Y-54-27450	· · Glass	1	SN:B50001--
5		12Y-54-27480	· · Seal	1	SN:B50001--
6		12Y-54-27490	· · Seal	1	SN:B50001--
7		12Y-54-27550	· · Seal	1	SN:B50001--
8		12Y-54-27431	· Sash Assembly	1	SN:B50001--
9		12Y-54-27390	· · Seal	1	SN:B50001--
10	C1		· · Frame	1	SN:B50001--
11		12Y-54-27470	· · Run Channel	1	SN:B50001--
12		12Y-54-27560	· · Glass	1	SN:B50001--
13		12Y-54-27571	· · Seal	1	SN:B50001--
14		12Y-54-27590	· · Seal	1	SN:B50001--
15		12Y-54-27611	· · Seal	1	SN:B50001--
16		12Y-54-27630	· · Seal	1	SN:B50001--
17		12Y-54-27671	· · Run Channel	1	SN:B50001--
18		12Y-54-27681	· · Run Channel	1	SN:B50001--
19		12Y-54-27641	· Seal	1	SN:B50001--
20		12Y-54-27690	· Plate	2	SN:B50001--
21		17A-Z11-1610	· Lock Assembly	1	SN:B50001--
22		17A-Z11-1620	· Striker	1	SN:B50001--
		195-Z11-1371	· Lock Assembly	2	SN:B50001--
23		195-Z11-3630	· · Lever	1	SN:B50001--
24		195-Z11-3640	· · Plate	1	SN:B50001--
25		195-Z11-3860	· · Pin, Spring	1	SN:B50001--
26		195-Z11-1381	· Stopper	1	SN:B50001--
27		195-Z11-3670	· Shim, T=0.5mm	6	SN:B50001--
28		01224-70316	· Screw	2	SN:B50001--
29		01252-B0514	· Bolt, Hexagon Socket Head	6	SN:B50001--
30		01641-50508	· Washer	6	SN:B50001--

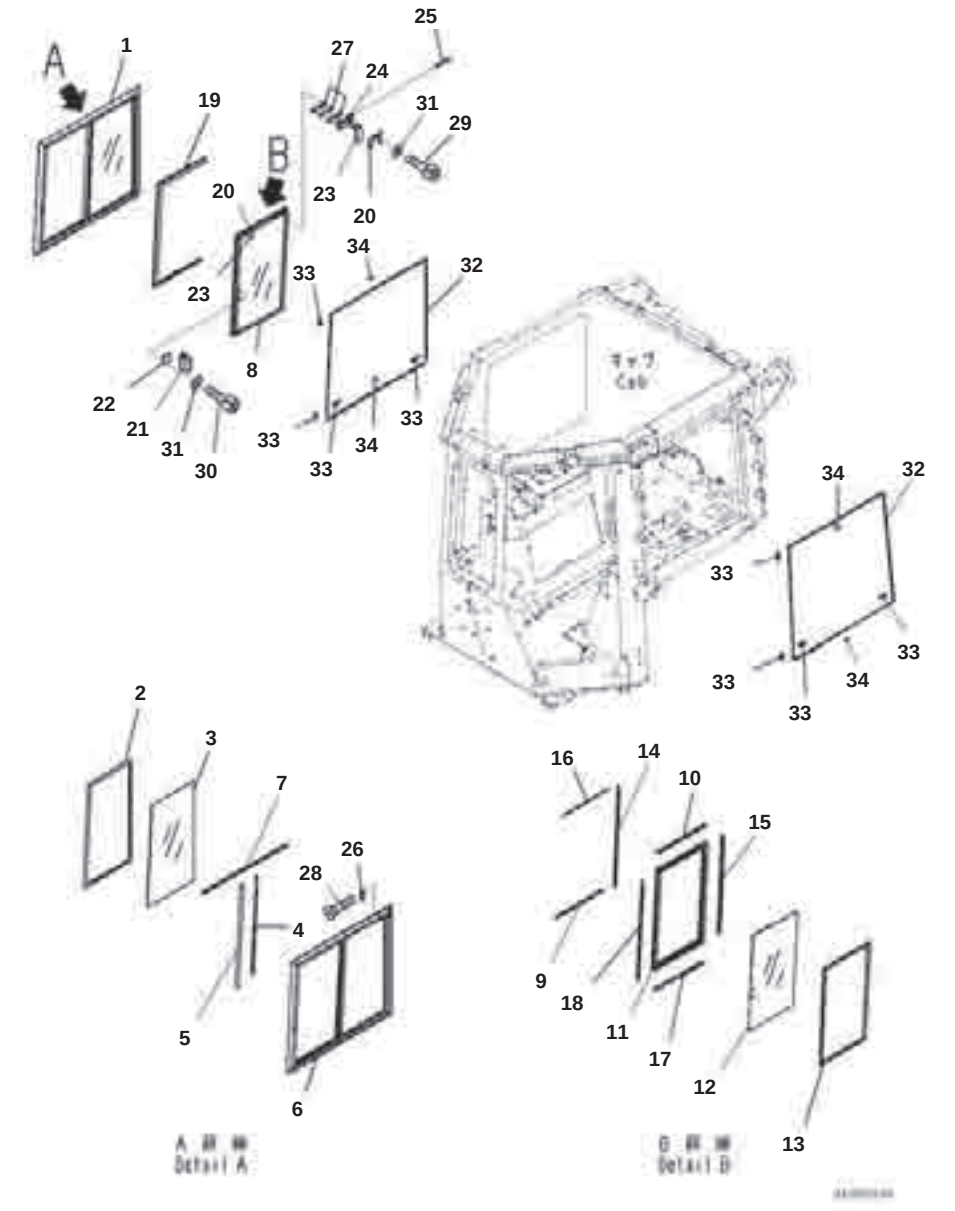

Cab, Sash type Glass Window, R.H.

Index	Code	Part Number	Description	Qty	Options
		12Y-54-27501	Sash Assembly	1	SN:B50001--
1		12Y-54-27511	· Sash Assembly	1	SN:B50001--
2		12Y-54-27371	· · Seal	1	SN:B50001--
3		12Y-54-27450	· · Glass	1	SN:B50001--
4		12Y-54-27480	· · Seal	1	SN:B50001--
5		12Y-54-27490	· · Seal	1	SN:B50001--
6	C1		· · Frame	1	SN:B50001--
7		12Y-54-27550	· · Seal	1	SN:B50001--
8		12Y-54-27531	· Sash Assembly	1	SN:B50001--
9		12Y-54-27390	· · Seal	1	SN:B50001--
10		12Y-54-27470	· · Run Channel	1	SN:B50001--
11	C1		· · Frame	1	SN:B50001--
12		12Y-54-27560	· · Glass	1	SN:B50001--
13		12Y-54-27571	· · Seal	1	SN:B50001--
14		12Y-54-27590	· · Seal	1	SN:B50001--
15		12Y-54-27620	· · Seal	1	SN:B50001--
16		12Y-54-27630	· · Seal	1	SN:B50001--
17		12Y-54-27671	· · Run Channel	1	SN:B50001--
18		12Y-54-27681	· · Run Channel	1	SN:B50001--
19		12Y-54-27641	· Seal	1	SN:B50001--
20		12Y-54-27690	· Plate	2	SN:B50001--
21		17A-Z11-1610	· Lock Assembly	1	SN:B50001--
22		17A-Z11-1620	· Striker	1	SN:B50001--
		195-Z11-1371	· Lock Assembly	2	SN:B50001--
23		195-Z11-3630	· · Lever	1	SN:B50001--
24		195-Z11-3640	· · Plate	1	SN:B50001--
25		195-Z11-3860	· · Pin, Spring	1	SN:B50001--
26		195-Z11-1381	· Stopper	1	SN:B50001--
27		195-Z11-3670	· Shim, T=0.5mm	6	SN:B50001--
28		01224-70316	· Screw	2	SN:B50001--
29		01252-80514	· Bolt	4	SN:B50001--
30		01252-B0514	· Bolt, Hexagon Socket Head	2	SN:B50001--
31		01641-50508	· Washer	6	SN:B50001--
32		12Y-54-27351	Seal	2	SN:B50001--
33		12Y-54-27331	Sheet	8	SN:B50001--
34		12Y-978-2870	Plate	4	SN:B50001--

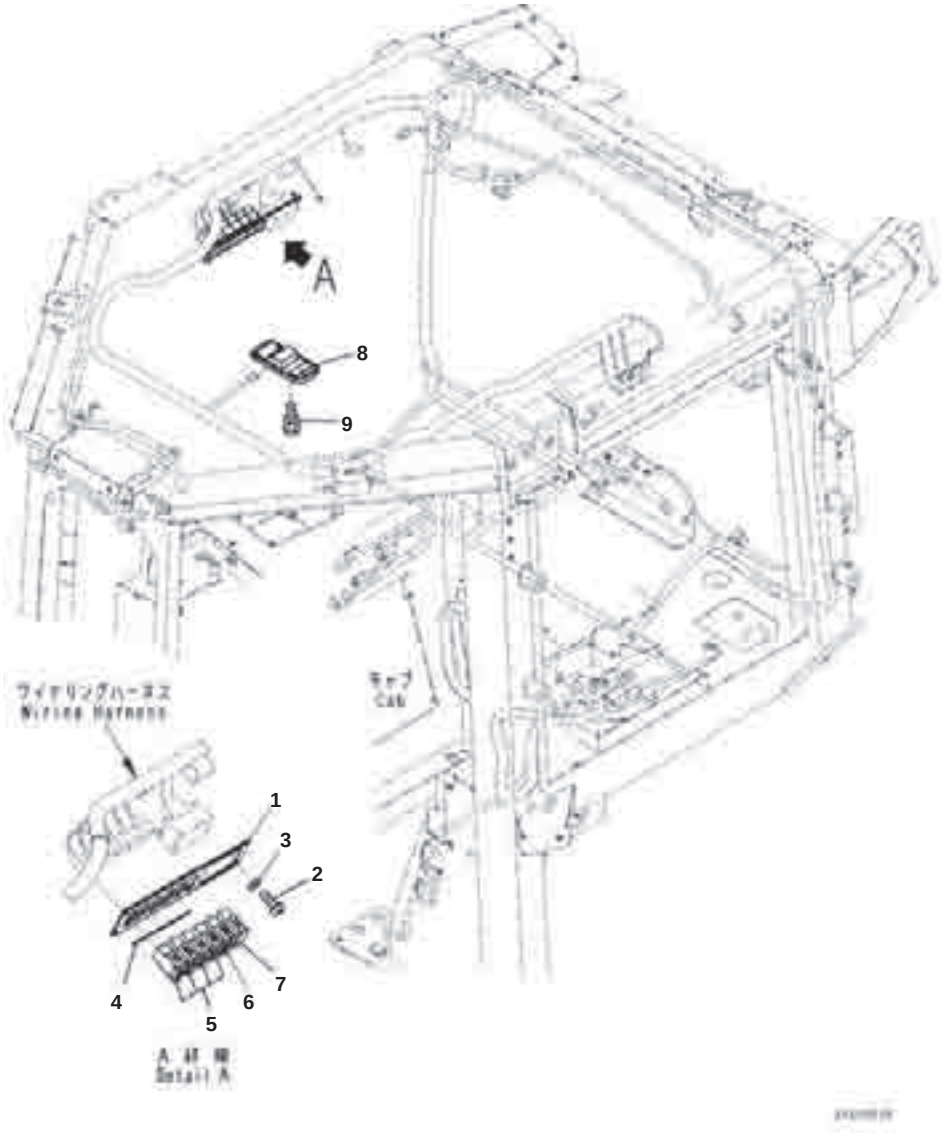

Index	Part Number	Description	Qty	Options
1	12Y-978-2271	Panel	1	SN:B50001--
2	01245-00620	Screw	4	SN:B50001--
3	01643-70623	Washer	4	SN:B50001--
4	12Y-54-28230	Plate	1	SN:B50001--
5	20Y-06-42140	Switch, Wiper	4	SN:B50001--
6	17A-06-42220	Switch, Wiper Intermittent Operation	1	SN:B50001--
7	20Y-06-42190	Cover	1	SN:B50001--
8	421-06-26210	Room Lamp	1	SN:B50001--
9	01023-10520	Screw	2	SN:B50001--

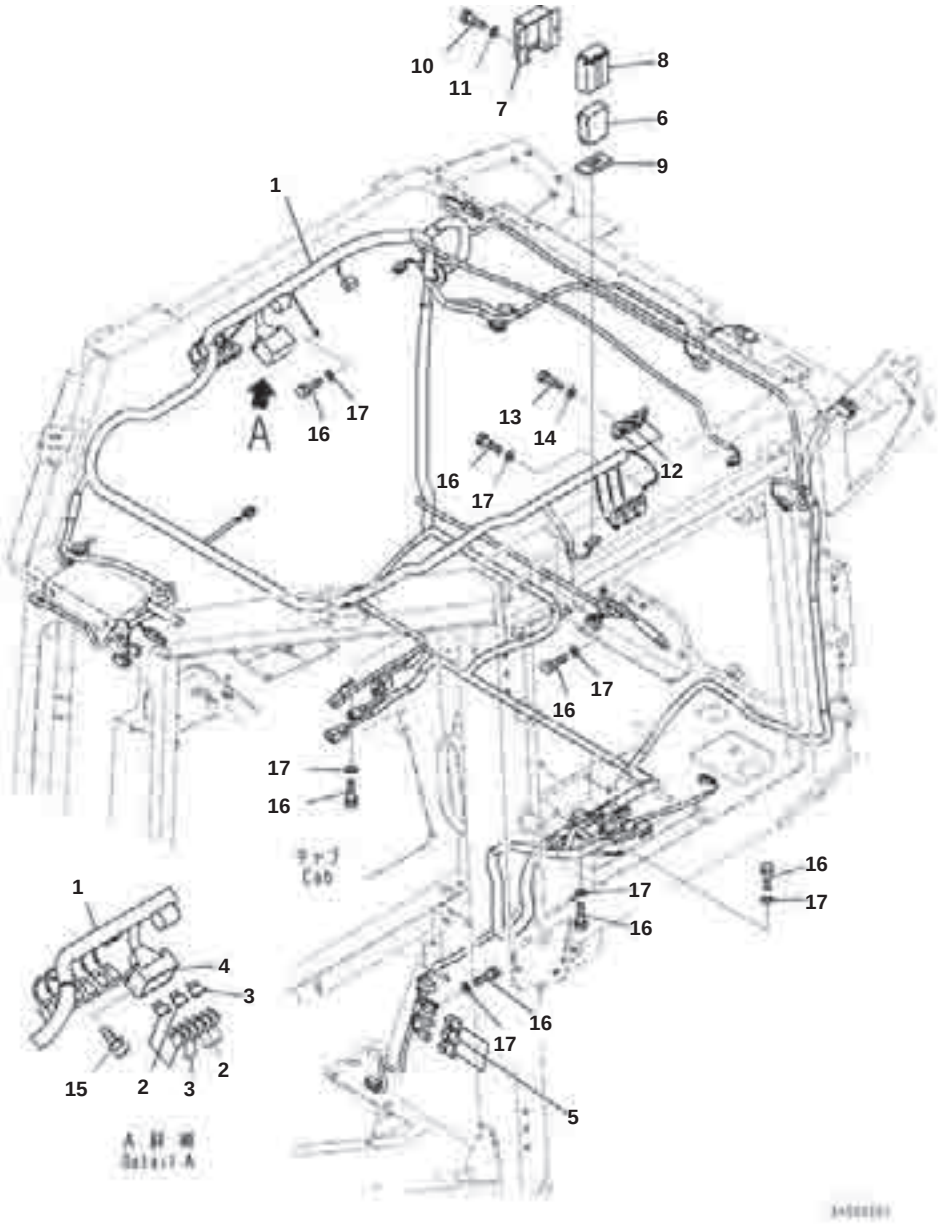

Index	Part Number	Description	Qty	Options
1	12Y-06-26122	Wiring Harness	1	SN:B50001--
2	08041-01000	Fuse, 10Amp.	6	SN:B50001--
3	08041-02000	Fuse, 20Amp.	3	SN:B50001--
4	08044-00600	Box Assembly, Fuse	1	SN:B50001--
5	21J-06-13661	Diode	3	SN:B50001--
6	14X-06-51710	Relay	1	SN:B50001--
7	14X-06-52631	Bracket	1	SN:B50001--
8	14X-06-52661	Sheet	1	SN:B50001--
9	14X-06-52740	Sheet	1	SN:B50001--
10	01010-80616	Bolt	2	SN:B50001--
11	01643-30623	Washer	2	SN:B50001--
12	7861-74-5100	Relay	3	SN:B50001--
13	01010-80616	Bolt	3	SN:B50001--
14	01643-30623	Washer	3	SN:B50001--
15	01023-10520	Screw	2	SN:B50001--
16	01010-80616	Bolt	7	SN:B50001--
17	01643-30623	Washer	7	SN:B50001--

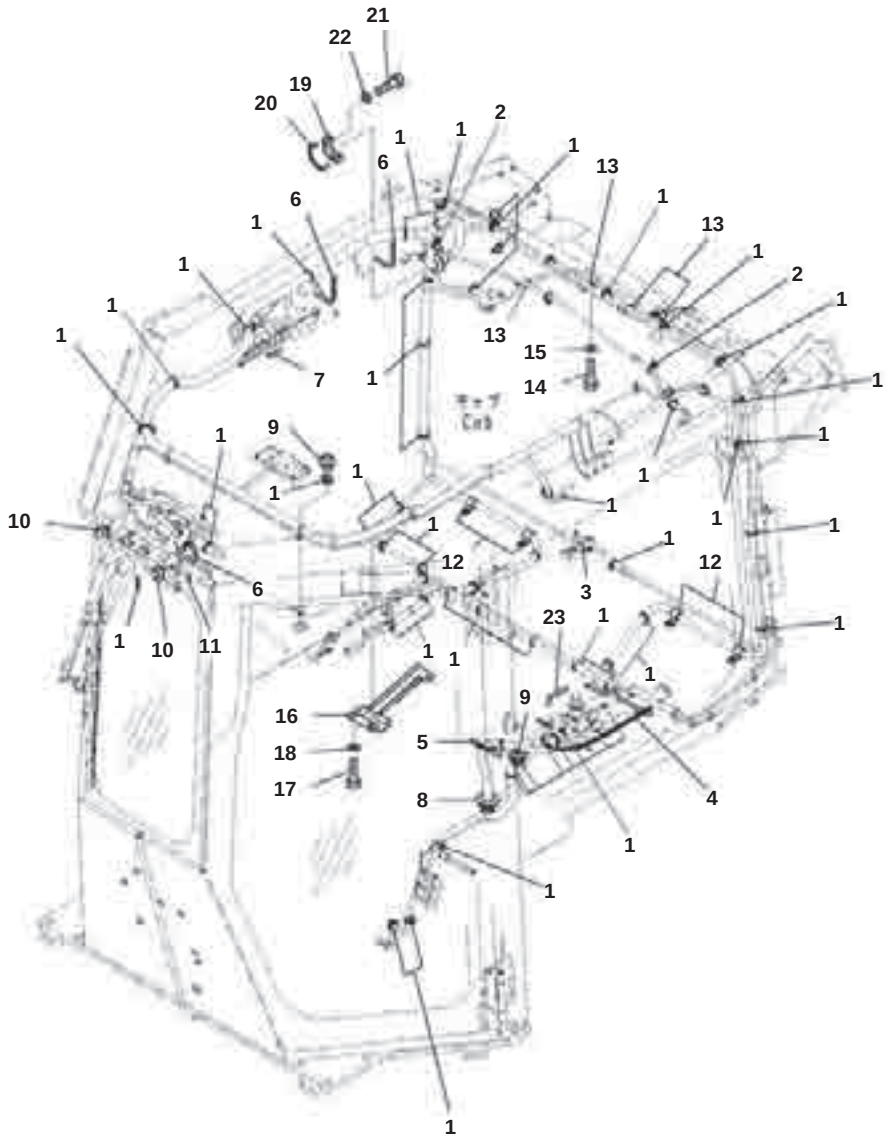

Index	Part Number	Description	Qty	Options
1	08034-20519	Band	61	SN:B50001--
2	08059-00310	Clip	2	SN:B50001--
3	08037-11025	Grommet	1	SN:B50001--
4	12Y-978-2184	Seal	1	SN:B50001--
5	12Y-978-2192	Seal	1	SN:B50001--
6	12Y-06-13151	Seal	3	SN:B50001--
7	12Y-978-2160	Seal	1	SN:B50001--
8	08037-12536	Grommet	1	SN:B50001--
9	08037-11425	Grommet	2	SN:B50001--
10	08037-02512	Grommet	2	SN:B50001--
11	09415-01008	Cap	1	SN:B50001--
12	04434-51710	Clip	4	SN:B50001--
13	04434-51008	Clip	4	SN:B50001--
14	01010-D0816	Bolt	4	SN:B50001--
15	01643-70823	Washer	4	SN:B50001--
16	12Y-06-26150	Cover	1	SN:B50001--
17	01010-81020	Bolt	3	SN:B50001--
18	01643-31032	Washer	3	SN:B50001--
19	12Y-06-26160	Bracket	1	SN:B50001--
20	12Y-06-26170	Sheet	1	SN:B50001--
21	01010-80616	Bolt	2	SN:B50001--
22	01643-30623	Washer	2	SN:B50001--
23	12Y-978-2172	Seal	1	SN:B50001--

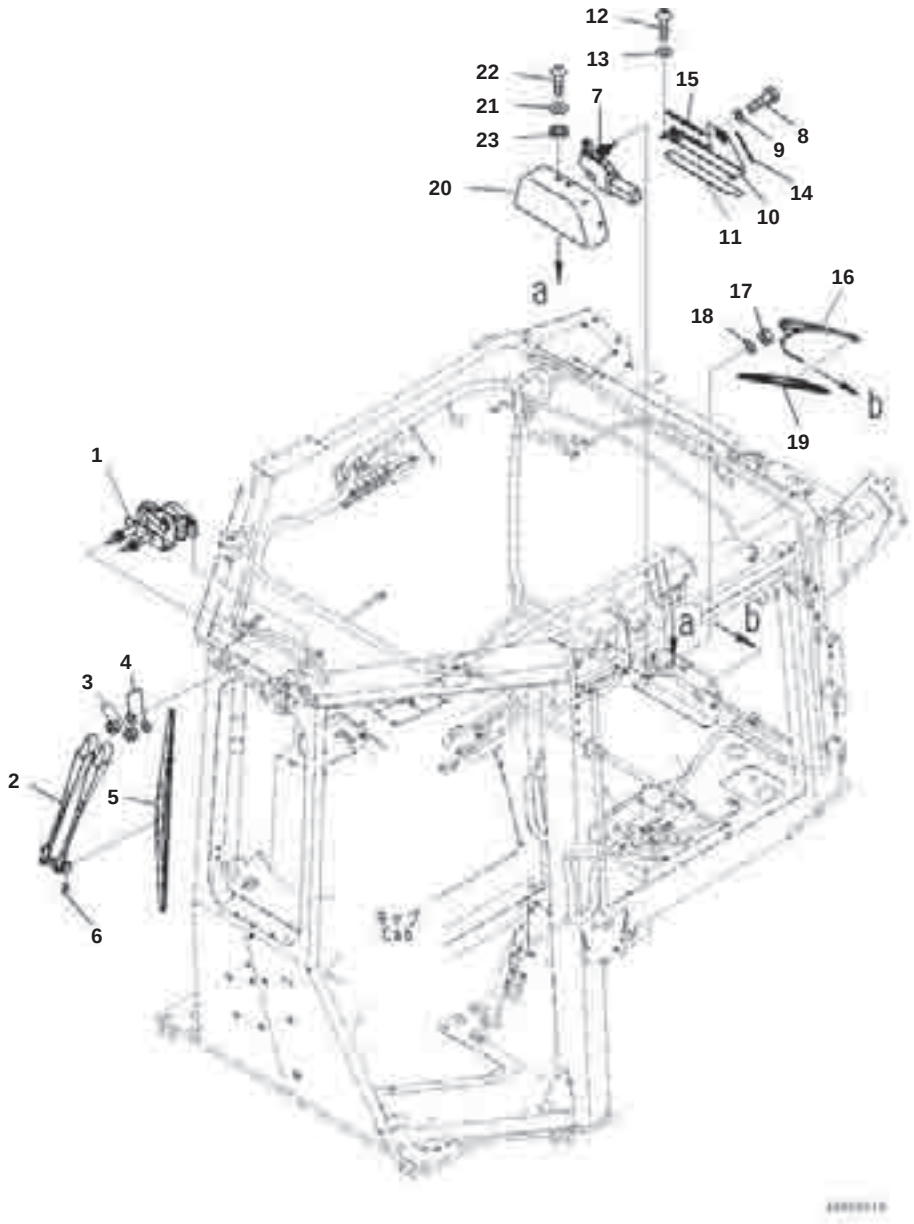

Index	Part Number	Description	Qty	Options
1	12Y-978-2411	Wiper Motor	1	SN:B50001--
2	12Y-978-2470	Arm, Wiper	1	SN:B50001--
3	01580-10806	Nut	2	SN:B50001--
4	01640-20816	Washer	2	SN:B50001--
5	12Y-978-2450	Wiper Blade	1	SN:B50001--
6	12Y-978-2460	Shim, T=0.4mm	2	SN:B50001--
7	12Y-978-2441	Wiper Motor	1	SN:B50001--
8	01010-80616	Bolt	2	SN:B50001--
9	01643-70623	Washer	2	SN:B50001--
10	12Y-978-2572	Bracket	1	SN:B50001--
11	12Y-978-2580	Sheet	1	SN:B50001--
12	01245-00825	Screw	2	SN:B50001--
13	01643-70823	Washer	2	SN:B50001--
14	12Y-06-13380	Seal	1	SN:B50001--
15	12Y-43-12861	Seal	1	SN:B50001--
16	17A-Z11-2570	Arm, Wiper	1	SN:B50001--
17	01580-10806	Nut	1	SN:B50001--
18	01640-20816	Washer	1	SN:B50001--
19	17A-Z11-2581	Wiper Blade	1	SN:B50001--
20	12Y-978-3391	Cover	1	SN:B50001--
21	17A-Z11-5651	Sheet	2	SN:B50001--
22	01245-00620	Screw	4	SN:B50001--
23	12Y-978-2660	Collar	4	SN:B50001--

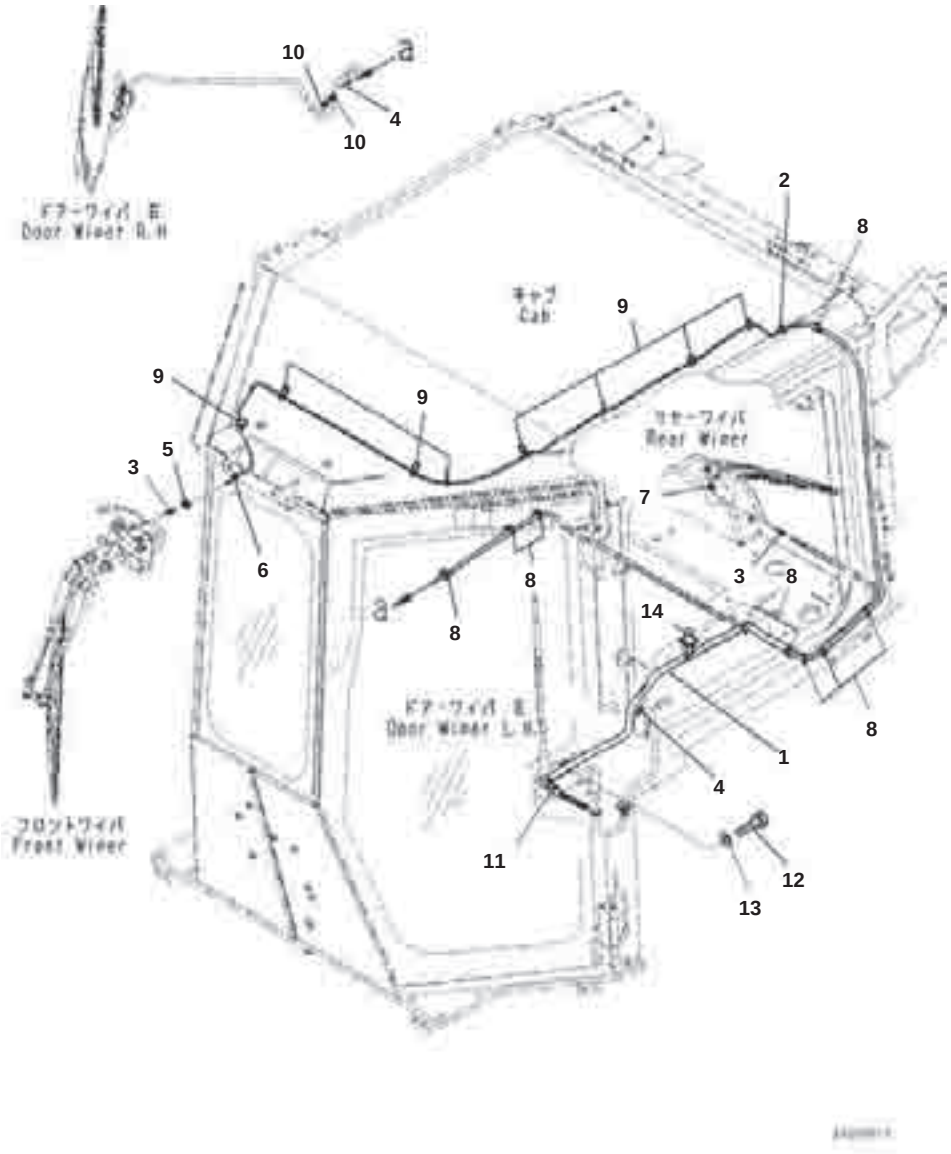

Index	Part Number	Description	Qty	Options
1	12Y-54-28411	Hose Assembly	1	SN:B50001--
2	17A-Z11-2660	･ Cap	1	SN:B50001--
3	17A-Z11-4610	･ Valve	2	SN:B50001--
4	22L-54-22990	･ Joint	2	SN:B50001--
5	17A-Z11-2660	Cap	1	SN:B50001--
6	08037-01008	Grommet	1	SN:B50001--
7	17A-Z11-2660	Cap	1	SN:B50001--
8	08034-20519	Band	9	SN:B50001--
9	08034-40521	Band	9	SN:B50001--
10	08034-40521	Band	2	SN:B50001--
11	04434-51710	Clip	1	SN:B50001--
12	01010-81020	Bolt	1	SN:B50001--
13	01643-31032	Washer	1	SN:B50001--
14	20Y-06-23472	Cigarette Lighter	1	SN:B50001--

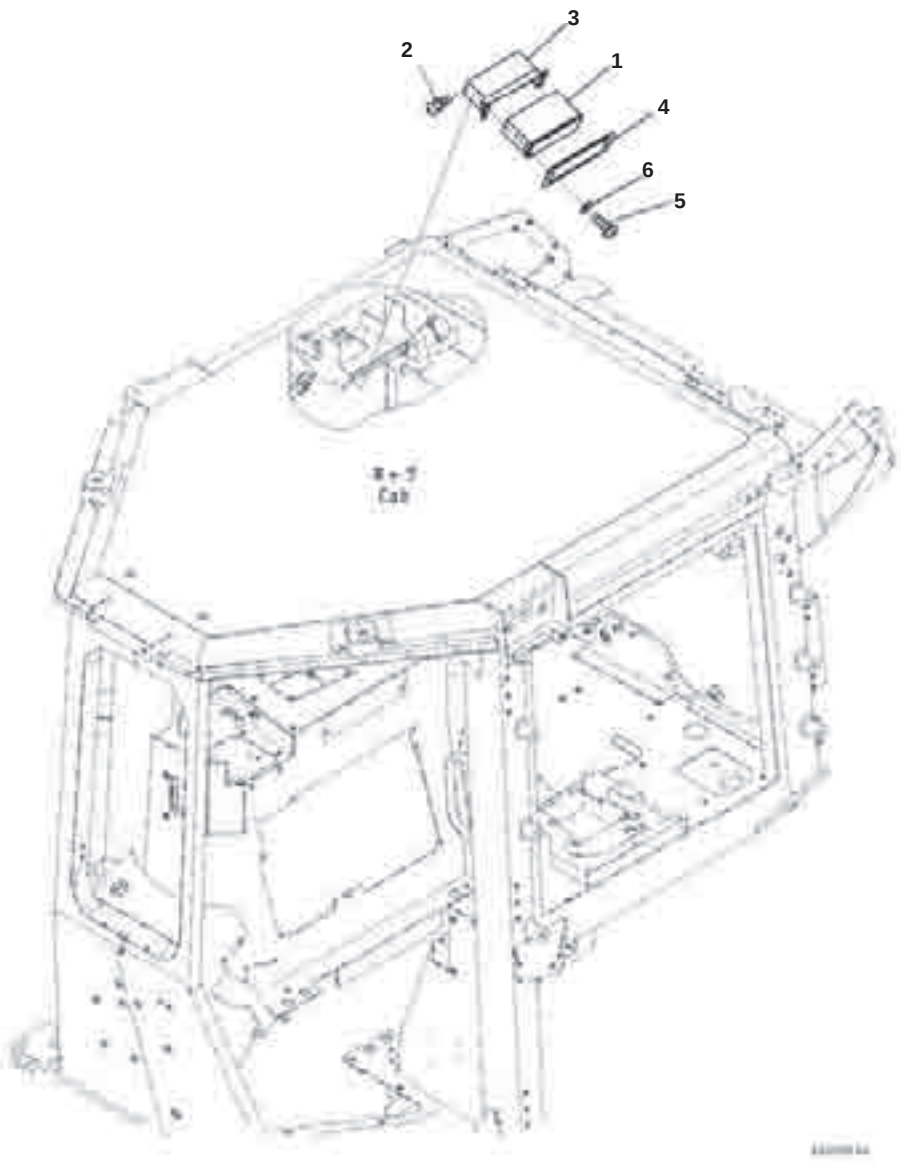

Index	Part Number	Description	Qty	Options
1	2A5-06-11932	Radio	1	SN:B50001--
2	01023-20510	Screw	4	SN:B50001--
3	12Y-54-28210	Bracket	1	SN:B50001--
4	12Y-54-28220	Plate	1	SN:B50001--
5	01245-00620	Screw	4	SN:B50001--
6	01643-70623	Washer	4	SN:B50001--

Reference:K0210-006016 Page:K015016

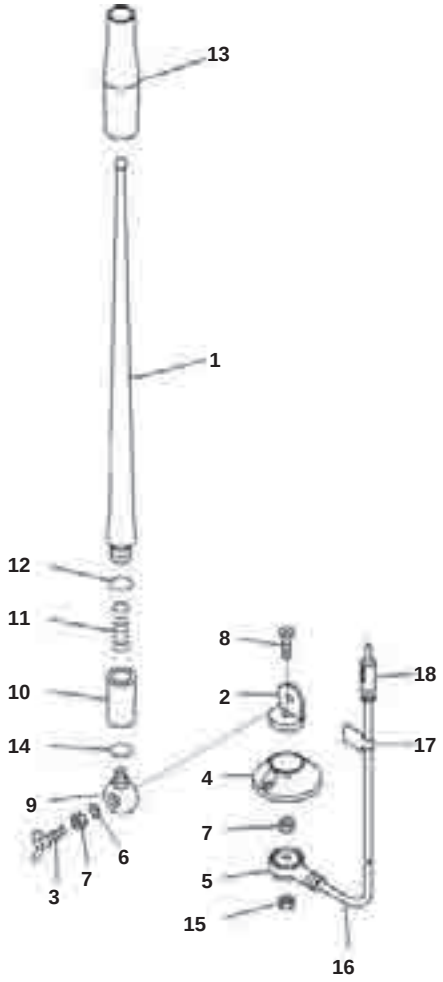

Index	Code	Part Number	Description	Qty	Options
		20Y-06-41990	Antenna	1	SN:B50001--
1		RFU419B-418-A	· Rod	1	SN:B50001--
2	C1		· Holder	1	SN:B50001--
3		RFU419B-418-D	· Bolt, Wing	1	SN:B50001--
4		RFU419B-418-E	· Base	1	SN:B50001--
5	C1		· Holder	1	SN:B50001--
6		RFU419B-418-B	· Washer, Spring	1	SN:B50001--
7		RFU419B-418-C	· Nut	2	SN:B50001--
8	C1		· Screw	1	SN:B50001--
9	C1		· Holder	1	SN:B50001--
10	C1		· Holder Assembly	1	SN:B50001--
11	C1		· Spring	1	SN:B50001--
12	C1		· O-ring	1	SN:B50001--
13	C1		· Tube	1	SN:B50001--
14	C1		· O-ring	1	SN:B50001--
15		REU419B-418-C	· Nut	1	SN:B50001--
16		RFU419B-418-F	· Cable	1	SN:B50001--
17	C1		· Plate	1	SN:B50001--
18	C1		· Plug	1	SN:B50001--

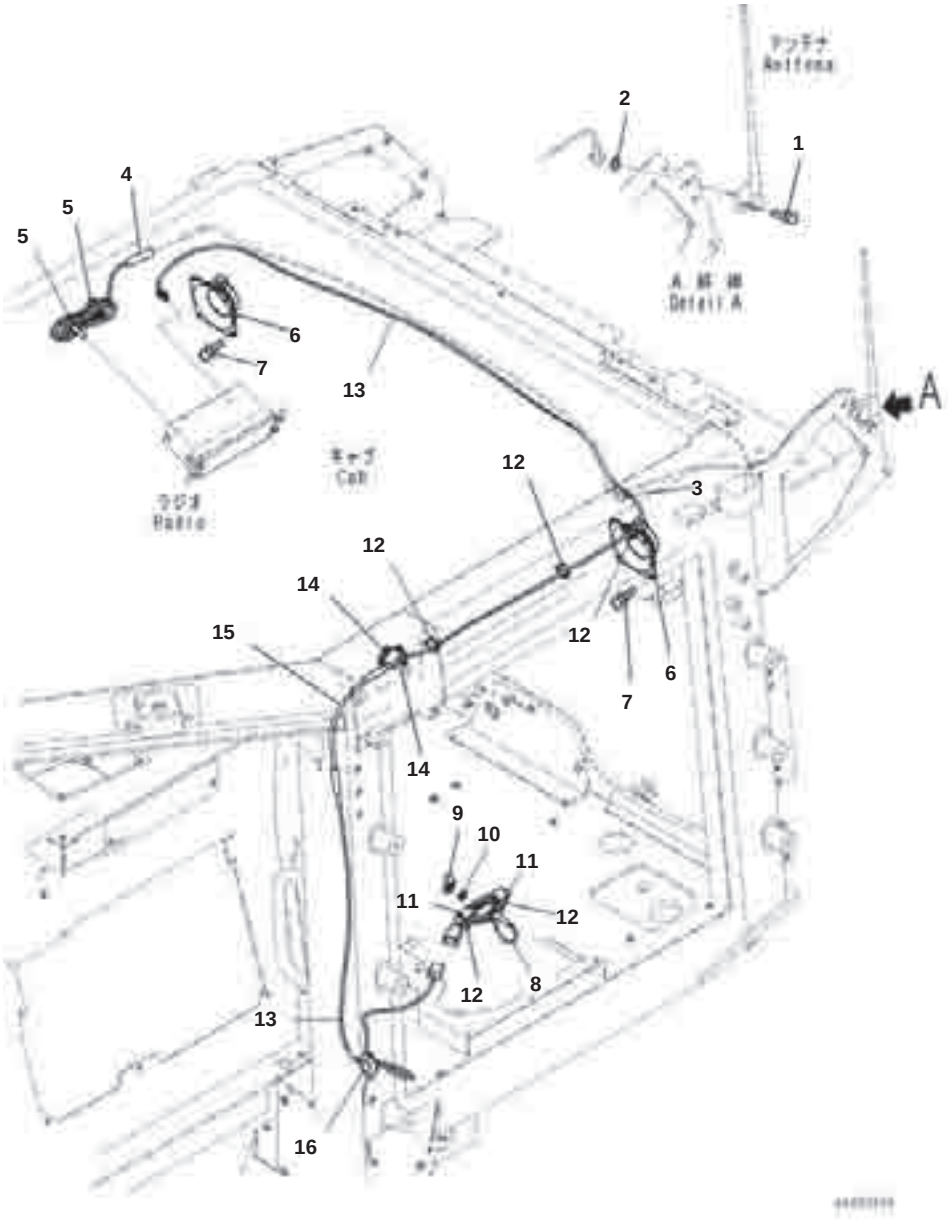

Cab, Rubber Antenna Mounting and Speaker

Index	Part Number	Description	Qty	Options
1	01023-20416	Screw	2	SN:B50001--
2	01643-70823	Washer	1	SN:B50001--
3	17A-Z11-2660	Cap	1	SN:B50001--
4	08912-51600	Cord	1	SN:B50001--
5	08034-20519	Band	2	SN:B50001--
6	08910-10000	Speaker	2	SN:B50001--
7	01023-20416	Screw	8	SN:B50001--
8	2A5-06-11940	Cable	1	SN:B50001--
9	2A5-06-12131	Cap	1	SN:B50001--
10	2A5-53-12580	Nut	1	SN:B50001--
11	20U-54-46520	Hook, Sticker Type	2	SN:B50001--
12	08034-20519	Band	5	SN:B50001--
13	56B-06-37150	Cable	1	SN:B50001--
14	12Y-06-26720	Trim	2	SN:B50001--
15	08210-00603	Tube, Spiral	1	SN:B50001--
16	08037-02512	Grommet	1	SN:B50001--

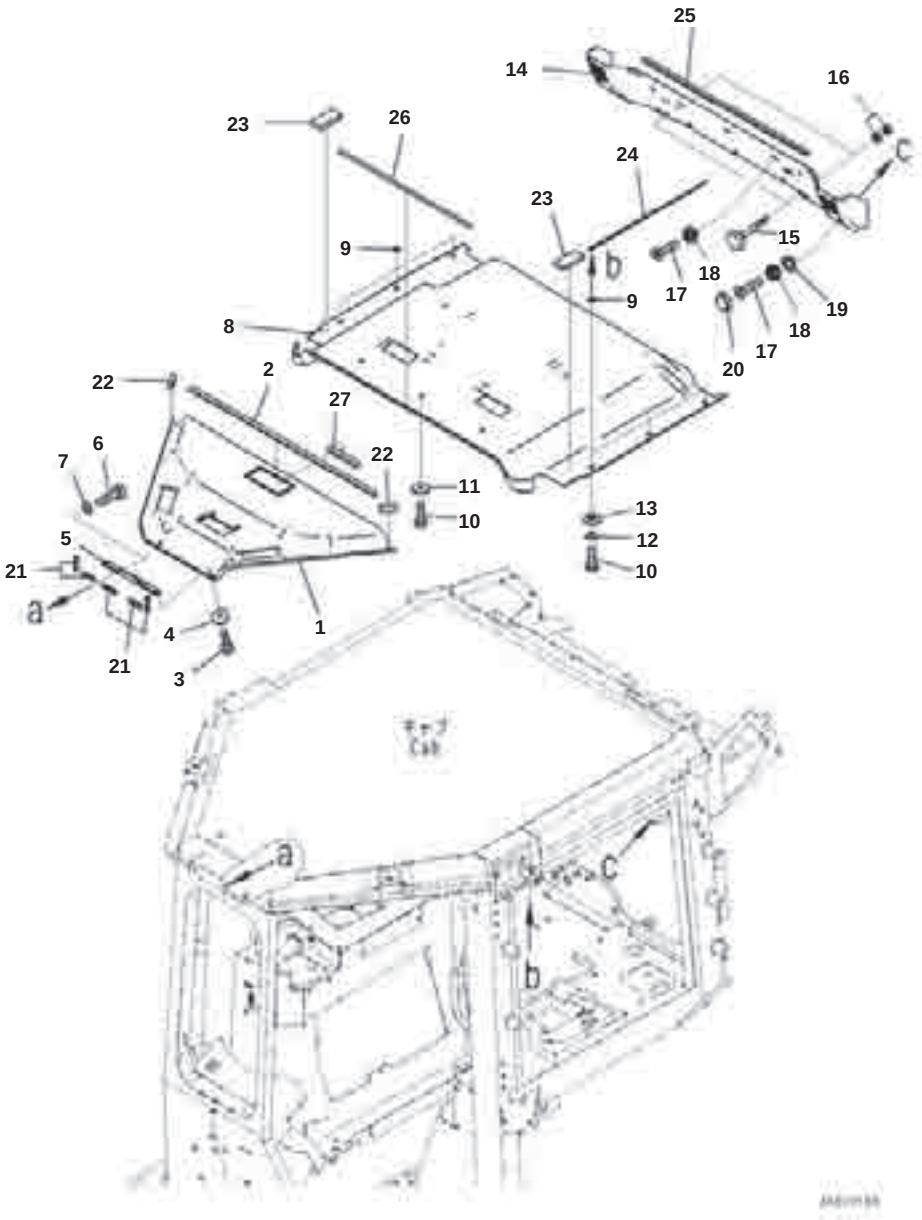

Index	Part Number	Description	Qty	Options
1	12Y-54-28611	Cover,Front	1	SN:B50001--
2	12Y-54-28730	･ Seal	1	SN:B50001--
3	01245-00620	Screw	2	SN:B50001--
4	17A-Z11-2813	Plate	2	SN:B50001--
5	12Y-54-28580	Plate	1	SN:B50001--
6	01010-80616	Bolt	2	SN:B50001--
7	01643-30623	Washer	2	SN:B50001--
8	12Y-54-28621	Cover,Rear	1	SN:B50001--
9	17A-Z11-5651	･ Sheet	6	SN:B50001--
10	01245-00620	Screw	11	SN:B50001--
11	17A-Z11-2813	Plate	5	SN:B50001--
12	01643-70623	Washer	6	SN:B50001--
13	20Y-53-12310	Collar	6	SN:B50001--
14	12Y-54-28641	Cover	1	SN:B50001--
15	12Y-978-2340	Knob	2	SN:B50001--
16	01598-00608	Nut	4	SN:B50001--
17	01240-00620	Screw	12	SN:B50001--
18	12Y-54-28691	Washer	12	SN:B50001--
19	17A-Z11-5651	Sheet	2	SN:B50001--
20	423-925-5860	Cap	12	SN:B50001--
21	12Y-978-1840	Seal	5	SN:B50001--
22	12Y-54-28720	Seal	2	SN:B50001--
23	12Y-54-28740	Seal	2	SN:B50001--
24	12Y-54-28750	Seal	1	SN:B50001--
25	12Y-54-28760	Seal	1	SN:B50001--
26	12Y-54-28770	Seal	1	SN:B50001--
27	12Y-54-28790	Seal	1	SN:B50001--

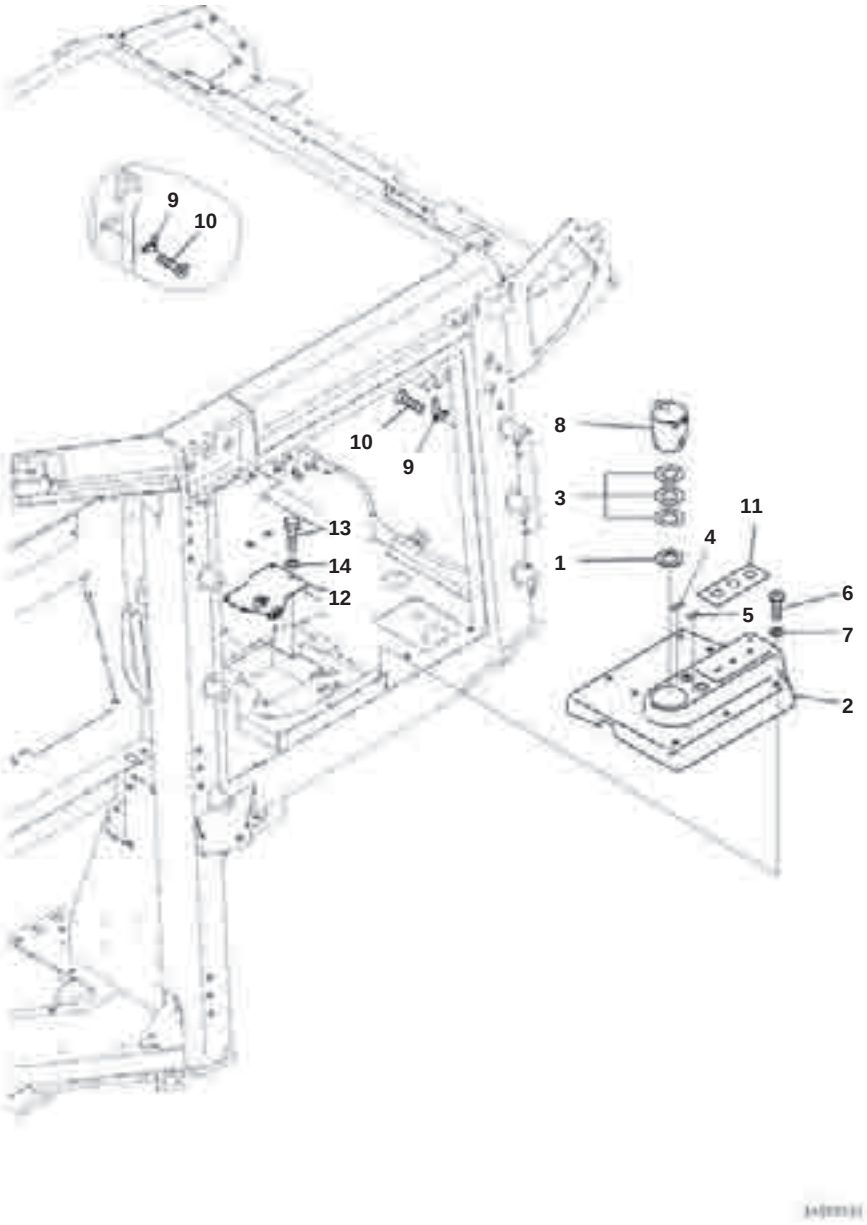

Index	Code	Part Number	Description	Qty	Options
		11Y-54-48670	Cover	1	SN:B50001--
1		12Y-54-28591	･ Sheet	1	SN:B50001--
2	C1		･ Cover	1	SN:B50001--
3		14X-Y79-2361	･ Sheet	3	SN:B50001--
4		2A5-00-11380	･ Plate, 24volt	1	SN:B50001--
5		2A5-00-11370	Plate, 12volt	1	SN:B50001--
6		01245-00630	Screw, Hexagon Socket Head	7	SN:B50001--
7		17A-Z11-2813	Plate	7	SN:B50001--
8		20Y-43-41491	Ashtray	1	SN:B50001--
9		205-54-51250	Hanger	2	SN:B50001--
10		01224-70410	Screw, Philips Head	4	SN:B50001--
11		12Y-979-1490	Plate	1	SN:B50001--
12		12Y-54-28971	Bracket	1	SN:B50001--
13		01010-80616	Bolt	4	SN:B50001--
14		01643-30623	Washer	4	SN:B50001--

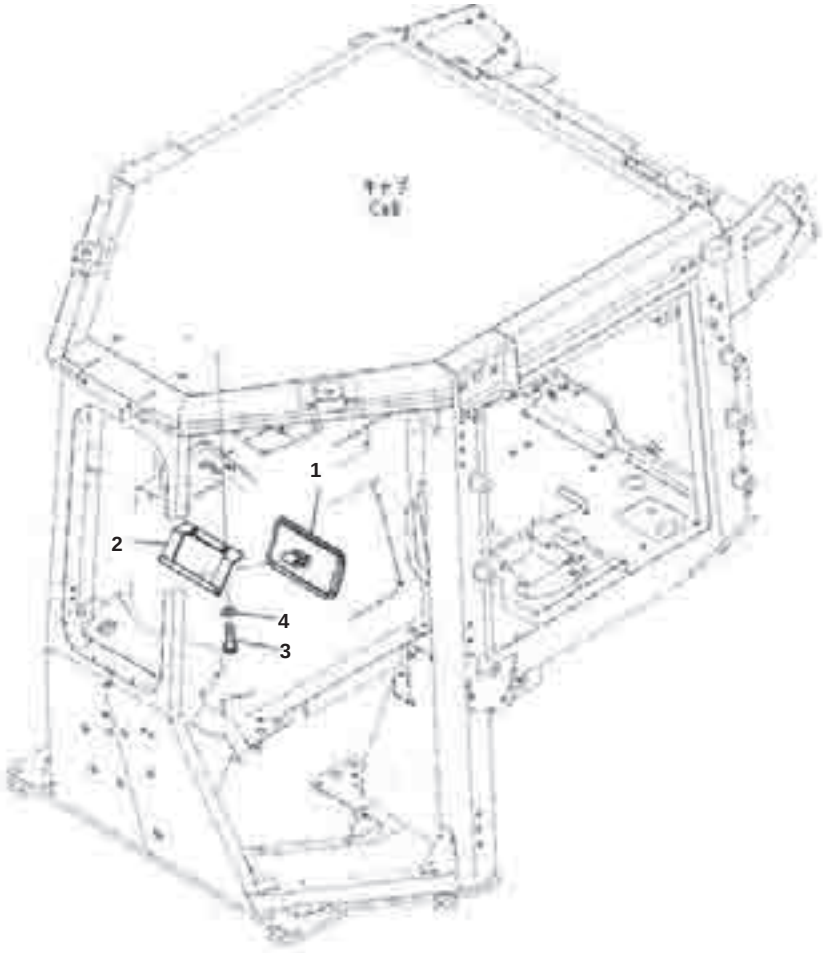

Index	Part Number	Description	Qty	Options
1	195-Z11-2180	Mirror	1	SN:B50001--
2	12Y-54-28510	Bracket	1	SN:B50001--
3	01245-00825	Screw	2	SN:B50001--
4	01643-70823	Washer	2	SN:B50001--

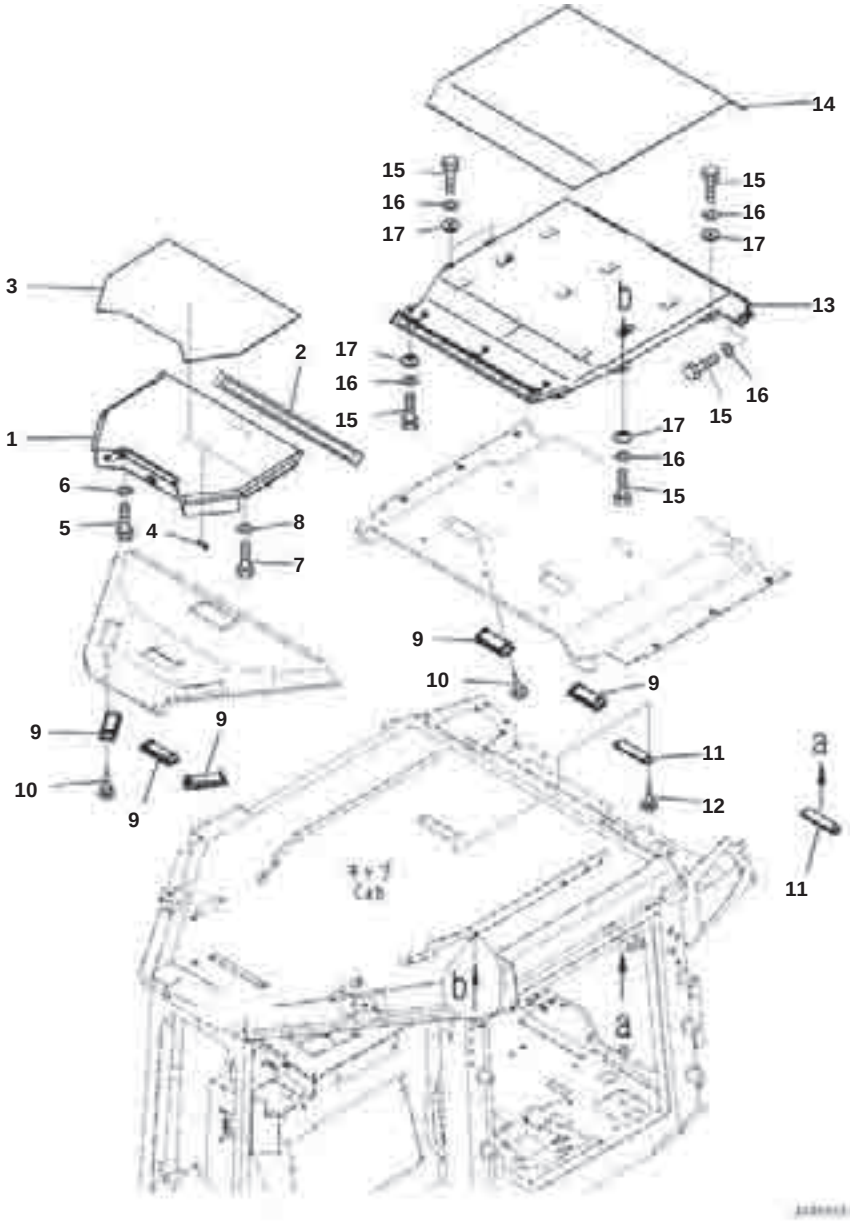

Index	Part Number	Description	Qty	Options
1	11Y-54-47710	Duct	1	SN:B50001--
	12Y-54-27850	Duct	1	SN:B50001--
2	12Y-978-1751	･ Seal	1	SN:B50001--
3	12Y-978-1810	･ Sheet	1	SN:B50001--
4	12Y-978-2160	Seal	1	SN:B50001--
5	01010-80612	Bolt	2	SN:B50001--
6	01643-30623	Washer	2	SN:B50001--
7	01010-80620	Bolt	4	SN:B50001--
8	01643-30623	Washer	4	SN:B50001--
9	17A-Z11-7161	Louver	5	SN:B50001--
10	01370-40412	Screw	10	SN:B50001--
11	12Y-978-2320	Louver	2	SN:B50001--
12	01370-40412	Screw	4	SN:B50001--
13	12Y-54-27712	Duct	1	SN:B50001--
14	12Y-54-27780	･ Sheet	1	SN:B50001--
15	01010-80620	Bolt	8	SN:B50001--
16	01643-30623	Washer	8	SN:B50001--
17	20Y-53-12310	Collar	6	SN:B50001--

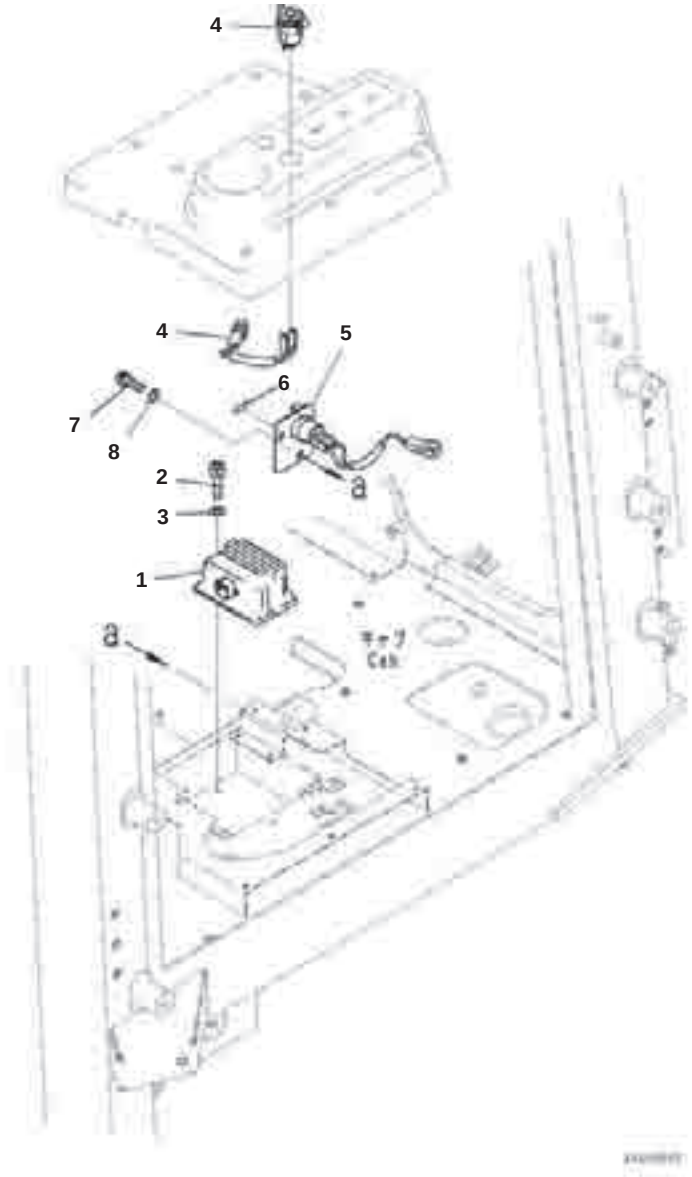

Index	Part Number	Description	Qty	Options
1	2A5-06-11881	Converter	1	SN:B50001--
2	01252-B0520	Bolt	2	SN:B50001--
3	01640-50508	Washer	2	SN:B50001--
4	14X-06-52491	Socket Assembly	2	SN:B50001--
5	12Y-54-28991	Bracket	1	SN:B50001--
6	2A5-00-11370	▪ Plate, 12volt	1	SN:B50001--
7	01245-00825	Screw	2	SN:B50001--
8	01643-70823	Washer	2	SN:B50001--

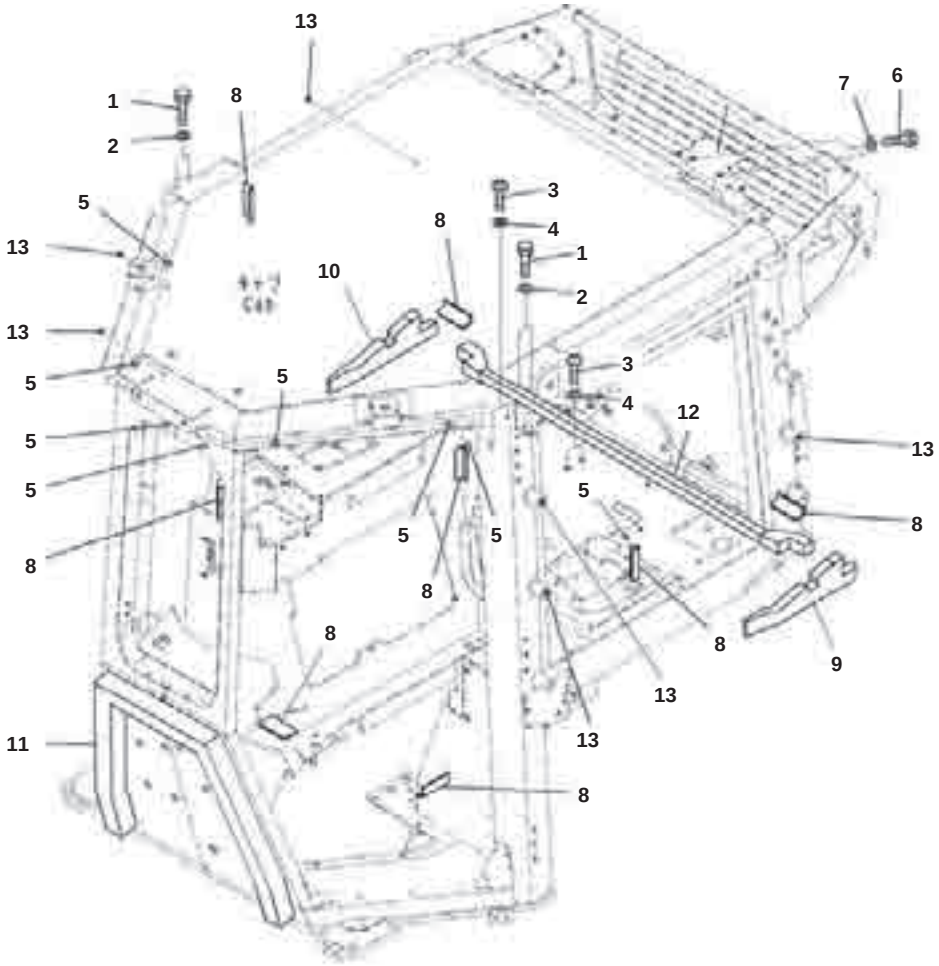

Cab, Plug and Outside Seal

Index	Part Number	Description	Qty	Options
1	01010-81625	Bolt	4	SN:B50001--
2	01643-31645	Washer	4	SN:B50001--
3	01245-00820	Screw	4	SN:B50001--
4	01643-70823	Washer	4	SN:B50001--
5	12Y-978-2870	Plate	8	SN:B50001--
6	01010-82035	Bolt	2	SN:B50001--
7	01643-32060	Washer	2	SN:B50001--
8	12Y-978-3791	Sheet	8	SN:B50001--
9	11Y-Z78-1652	Seal	1	SN:B50001--
10	11Y-Z78-1981	Seal	1	SN:B50001--
11	12Y-54-26771	Seal	1	SN:B50001--
12	12Y-54-26711	Seal	1	SN:B50001--
13	20Y-53-11380	Cap	6	SN:B50001--

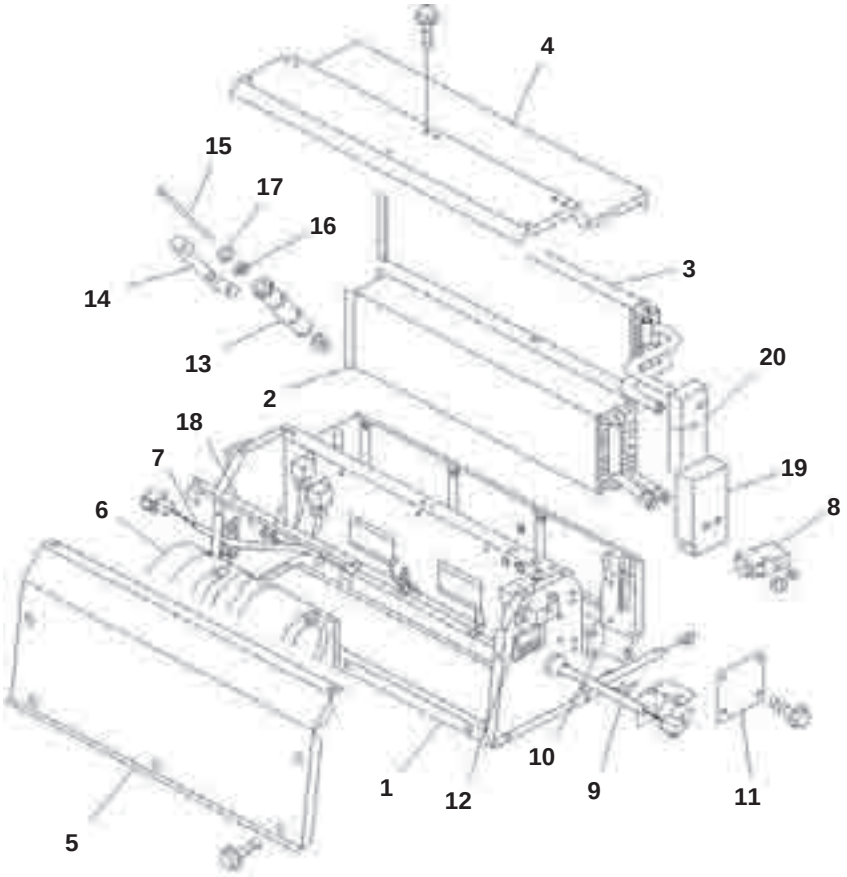

Index	Part Number	Description	Qty	Options
	12Y-979-6190	Air Conditioner Assembly	1	SN:B50001--
1	RD-3-16677-0	· Housing Assembly	1	SN:B50001--
2	RD-2-4087-0	· Evaporator Assembly	1	SN:B50001--
3	RD-1-2567-0	· Heater Core Assembly	1	SN:B50001--
4	RD-3-11518-0	· Cover	1	SN:B50001--
5	RD-3-11519-0	· Cover	1	SN:B50001--
6	RD-5-9204-3	· Motor Assembly	1	SN:B50001--
7	RD-3-14894-0	· Wiring Harness	1	SN:B50001--
8	RD-5-9513-0	· Valve, Expansion	1	SN:B50001--
9	RD-3-11536-0	· Bracket Assembly	1	SN:B50001--
10	RD-3-11753-0	· Seal	1	SN:B50001--
11	RD-3-11485-0	· Seal	1	SN:B50001--
12	RD-5-4531-24	· Thermostat	1	SN:B50001--
13	RD-5-9062-0	· Resistor	1	SN:B50001--
14	RD-3-12262-0	· Bracket Assembly	1	SN:B50001--
15	RD-5-4601-0-7.500	· Screw	1	SN:B50001--
16	RD-5-8666-00	· Washer	2	SN:B50001--
17	RD-5-8351-0	· Washer	2	SN:B50001--
18	RD-3-11762-0	· Support	1	SN:B50001--
19	RD-3-11763-0	· Gasket	1	SN:B50001--
20	RD-3-11764-0	· Gasket	1	SN:B50001--
	RD-5-11988-64.40	· Tube	2	SN:B50001--
	RD-5-7710-0	· Hose	2	SN:B50001--
	RD-5-8222-1-22	· Screw	21	SN:B50001--
	RD-5-4017-013	· O-ring	AR	SN:B50001--
	RD-5-4017-015	· O-ring	AR	SN:B50001--

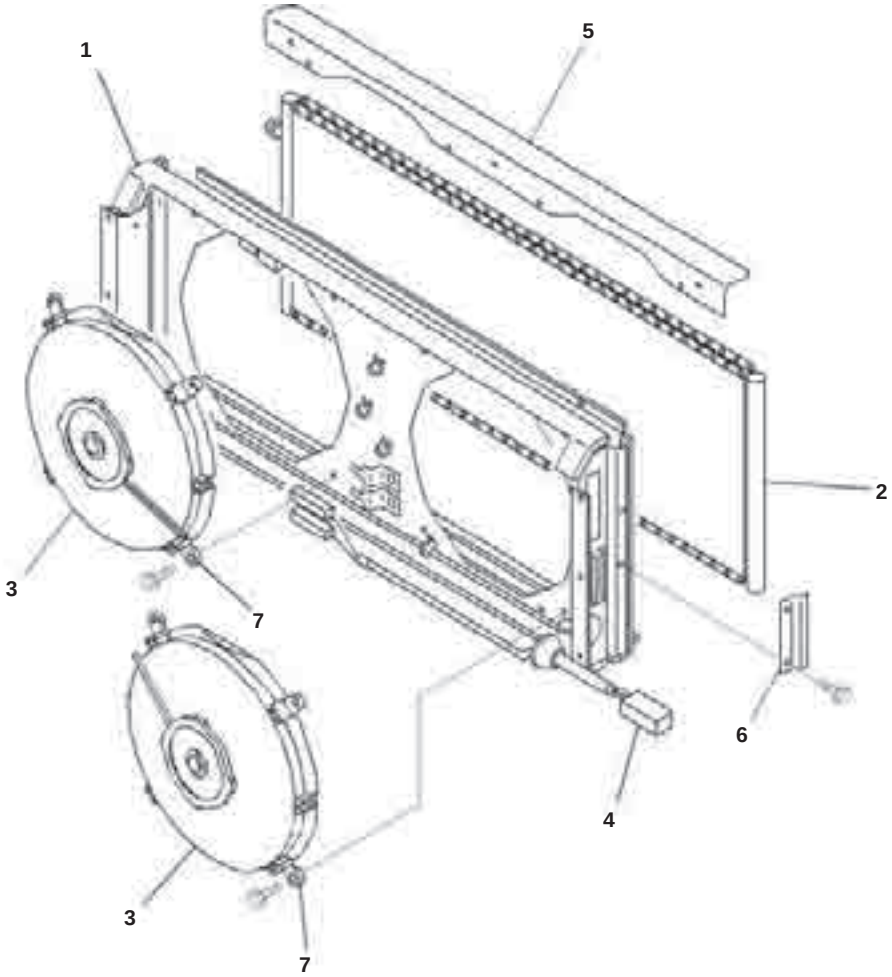

Index	Part Number	Description	Qty	Options
	12Y-979-1133	Condenser Assembly	1	SN:B50001--
1	RD-4-6597-0	･ Bracket	1	SN:B50001--
2	RD-4-5452-0	･ Condenser	1	SN:B50001--
3	RD-5-12218-1	･ Motor Assembly	2	SN:B50001--
4	RD-3-11476-0	･ Wiring Harness Assembly	1	SN:B50001--
5	RD-4-5437-0	･ Bracket Assembly	1	SN:B50001--
6	RD-4-5614-0	･ Bracket	2	SN:B50001--
7	RD-5-8636-0	･ Bracket	8	SN:B50001--
	RD-5-4520-0	･ Cable	5	SN:B50001--
	RD-5-4020-0	･ Cable	1	SN:B50001--
	RD-5-8222-1-16	･ Screw	7	SN:B50001--
	RD-5-8222-1-22	･ Screw	8	SN:B50001--

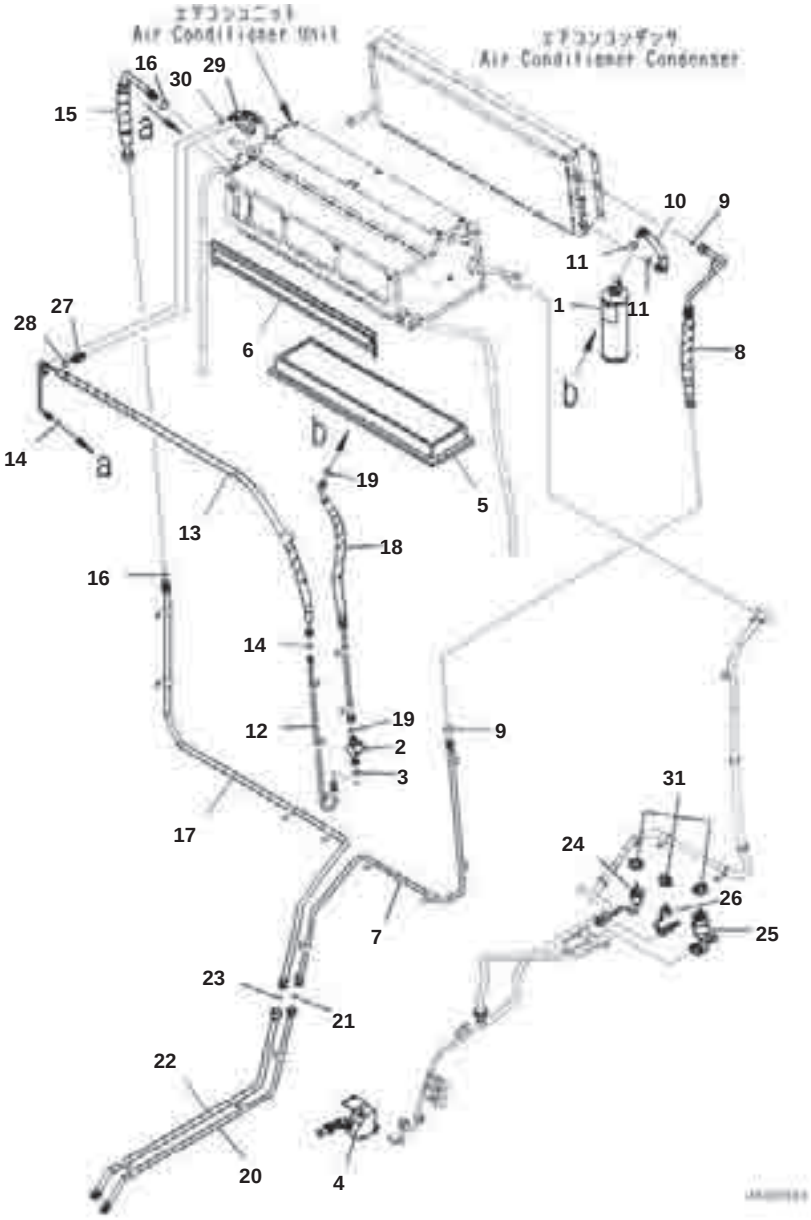

Cab, Air Conditioner Recirculation Air Filter and Fresh Air Filter, Receiver

Index	Part Number	Description	Qty	Options
1	12Y-979-1140	Receiver	1	SN:B50001--
2	12Y-979-1150	Gauge	1	SN:B50001--
3	12Y-979-2230	▪ O-ring	1	SN:B50001--
4	12Y-979-6160	Valve	1	SN:B50001--
5	12Y-979-1174	Filter,Fresh Air	1	SN:B50001--
6	12Y-979-6180	Filter,Recirculation Air	1	SN:B50001--
7	12Y-979-1212	Tube	1	SN:B50001--
8	12Y-979-1222	Hose Assembly	1	SN:B50001--
9	12Y-979-2150	▪ O-ring	2	SN:B50001--
10	12Y-979-1230	Hose	1	SN:B50001--
11	12Y-979-2230	▪ O-ring	2	SN:B50001--
12	12Y-979-1250	Tube	1	SN:B50001--
13	12Y-979-1262	Hose Assembly	1	SN:B50001--
14	12Y-979-2230	▪ O-ring	2	SN:B50001--
15	12Y-979-1271	Hose Assembly	1	SN:B50001--
16	12Y-979-2160	▪ O-ring	2	SN:B50001--
17	12Y-979-1283	Tube	1	SN:B50001--
18	12Y-979-1292	Hose Assembly	1	SN:B50001--
19	12Y-979-2230	▪ O-ring	2	SN:B50001--
20	12Y-979-1472	Tube	1	SN:B50001--
21	12Y-979-2150	▪ O-ring	1	SN:B50001--
22	12Y-979-1482	Tube	1	SN:B50001--
23	12Y-979-2160	▪ O-ring	1	SN:B50001--
24	12Y-979-1412	Switch, Mode Selector	1	SN:B50001--
25	12Y-979-1423	Switch, Brower Selector	1	SN:B50001--
26	12Y-979-1433	Switch, Temperature Control	1	SN:B50001--
27	12Y-979-1441	Switch, Pressure	1	SN:B50001--
28	12Y-979-2230	▪ O-ring	1	SN:B50001--
29	12Y-979-1570	Switch, Pressure	1	SN:B50001--
30	12Y-979-2230	▪ O-ring	1	SN:B50001--
31	12Y-979-1460	Knob	3	SN:B50001--

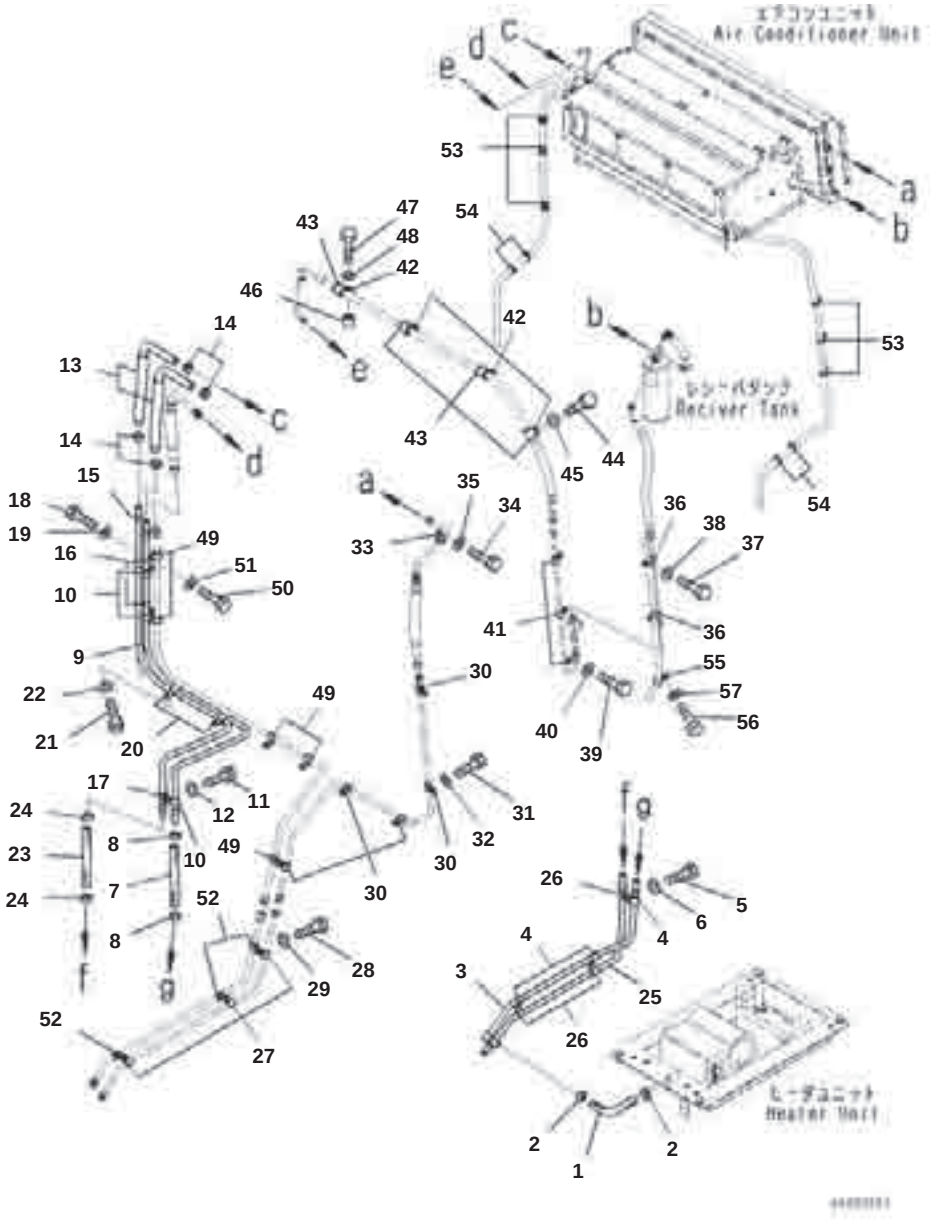

Index	Part Number	Description	Qty	Options
1	12Y-979-1552	Hose	1	SN:B50001--
2	09479-02400	Clip	2	SN:B50001--
3	12Y-979-1543	Tube	1	SN:B50001--
4	04434-51610	Clip	3	SN:B50001--
5	01010-81020	Bolt	3	SN:B50001--
6	01643-31032	Washer	3	SN:B50001--
7	09483-10502	Hose	1	SN:B50001--
8	09479-02400	Clip	2	SN:B50001--
9	12Y-979-1512	Tube	1	SN:B50001--
10	04434-51610	Clip	3	SN:B50001--
11	01010-81020	Bolt	3	SN:B50001--
12	01643-31032	Washer	3	SN:B50001--
13	12Y-979-1563	Hose Assembly	2	SN:B50001--
14	09479-02400	Clip	4	SN:B50001--
15	12Y-979-1522	Tube	1	SN:B50001--
16	04434-51610	Clip	2	SN:B50001--
17	04434-51610	Clip	1	SN:B50001--
18	01010-81020	Bolt	2	SN:B50001--
19	01643-31032	Washer	2	SN:B50001--
20	04435-51610	Clip	2	SN:B50001--
21	01010-81020	Bolt	2	SN:B50001--
22	01643-31032	Washer	2	SN:B50001--
23	09483-10502	Hose	1	SN:B50001--
24	09479-02400	Clip	2	SN:B50001--
25	12Y-979-1533	Tube	1	SN:B50001--
26	04434-51610	Clip	3	SN:B50001--
27	04434-51210	Clip	3	SN:B50001--
28	01010-81020	Bolt	3	SN:B50001--
29	01643-31032	Washer	3	SN:B50001--
30	04434-51210	Clip	5	SN:B50001--
31	01010-81020	Bolt	5	SN:B50001--
32	01643-31032	Washer	5	SN:B50001--
33	04434-51208	Clip	1	SN:B50001--
34	01010-80816	Bolt	1	SN:B50001--
35	01643-30823	Washer	1	SN:B50001--
36	04434-51010	Clip	2	SN:B50001--
37	01010-81020	Bolt	2	SN:B50001--
38	01643-31032	Washer	2	SN:B50001--
39	01010-81020	Bolt	3	SN:B50001--
40	01643-31032	Washer	3	SN:B50001--
41	04434-51010	Clip	3	SN:B50001--
42	04434-52711	Clip	4	SN:B50001--
43	07095-20418	Cushion	4	SN:B50001--
44	01010-80816	Bolt	1	SN:B50001--
45	01643-30823	Washer	1	SN:B50001--
46	175-79-83760	Spacer	3	SN:B50001--
47	01010-80835	Bolt	3	SN:B50001--

D61EX-23M0 S/N B50001
Cab, Heater Piping

Index	Part Number	Description	Qty	Options
48	01643-30823	Washer	3	SN:B50001--
49	04434-51610	Clip	5	SN:B50001--
50	01010-81020	Bolt	4	SN:B50001--
51	01643-31032	Washer	4	SN:B50001--
52	04434-51610	Clip	3	SN:B50001--
53	08034-40521	Band	6	SN:B50001--
54	08034-20519	Band	4	SN:B50001--
55	04434-51608	Clip	1	SN:B50001--
56	01010-80816	Bolt	1	SN:B50001--
57	01643-30823	Washer	1	SN:B50001--

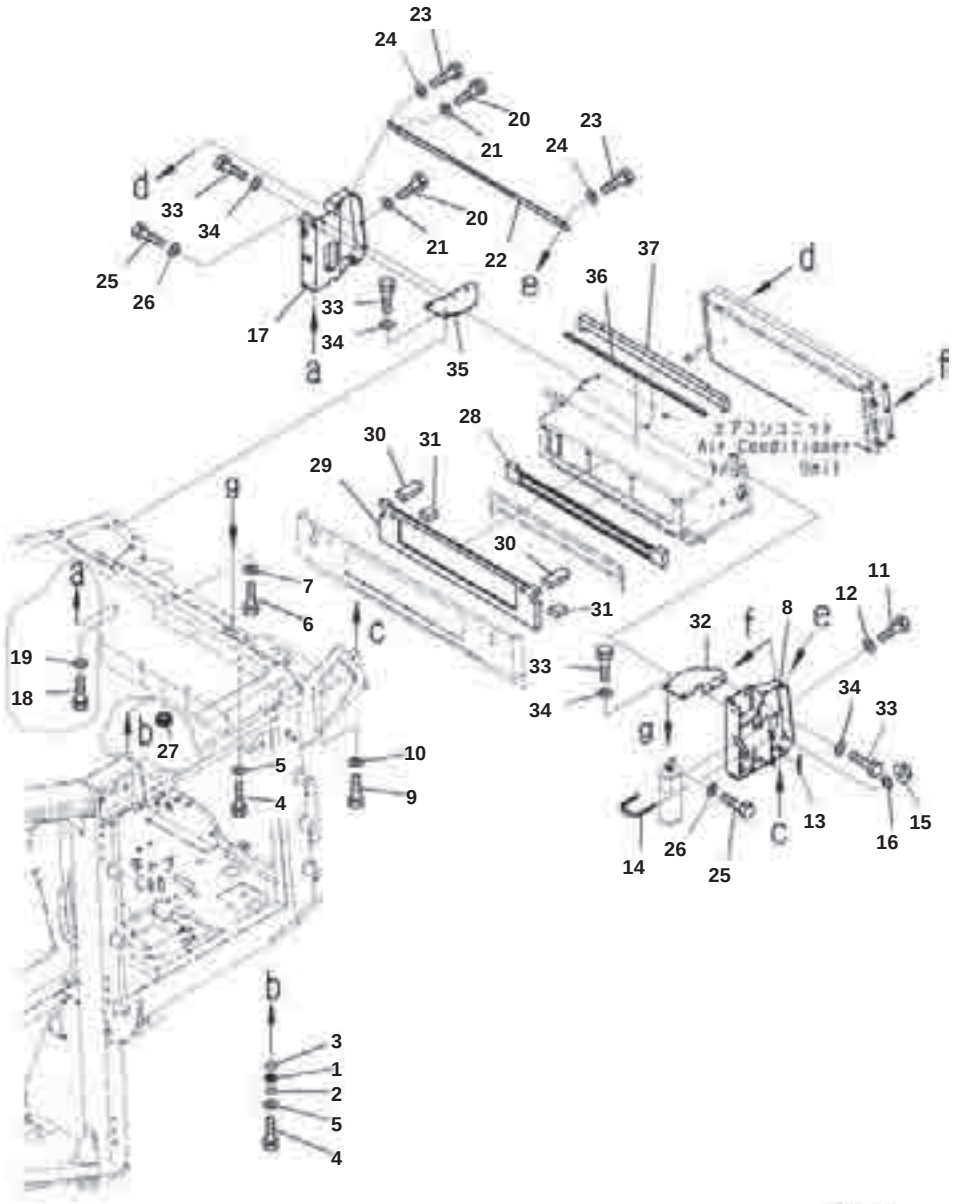

Cab, Air Conditioner Unit Mounting

Index	Part Number	Description	Qty	Options
1	12Y-979-2310	Collar	4	SN:B50001--
2	07000-11007	O-ring	4	SN:B50001--
3	07000-12016	O-ring	4	SN:B50001--
4	01010-D0830	Bolt	8	SN:B50001--
5	01643-70823	Washer	8	SN:B50001--
6	01010-D0820	Bolt	3	SN:B50001--
7	01643-70823	Washer	3	SN:B50001--
8	12Y-979-1324	Bracket	1	SN:B50001--
9	01010-D1025	Bolt	2	SN:B50001--
10	01643-71032	Washer	2	SN:B50001--
11	01010-D0820	Bolt	3	SN:B50001--
12	01643-70823	Washer	3	SN:B50001--
13	12Y-979-1850	Trim	1	SN:B50001--
14	07283-37663	Clip	2	SN:B50001--
15	01597-01009	Nut	4	SN:B50001--
16	01643-31032	Washer	4	SN:B50001--
17	12Y-979-6721	Bracket	1	SN:B50001--
18	01010-D1025	Bolt	2	SN:B50001--
19	01643-71032	Washer	2	SN:B50001--
20	01010-D0820	Bolt	3	SN:B50001--
21	01643-70823	Washer	3	SN:B50001--
22	12Y-979-1590	Plate	1	SN:B50001--
23	01010-D0820	Bolt	2	SN:B50001--
24	01643-70823	Washer	2	SN:B50001--
25	01010-D0820	Bolt	2	SN:B50001--
26	01643-70823	Washer	2	SN:B50001--
27	09415-01610	Cap	4	SN:B50001--
28	12Y-979-1342	Seal	1	SN:B50001--
29	12Y-979-1392	Seal	1	SN:B50001--
30	12Y-979-2341	Seal	2	SN:B50001--
31	12Y-979-2351	Seal	2	SN:B50001--
32	12Y-979-1661	Bracket	1	SN:B50001--
33	01010-D1025	Bolt	8	SN:B50001--
34	01643-71032	Washer	8	SN:B50001--
35	12Y-979-1760	Bracket	1	SN:B50001--
36	12Y-979-2361	Seal	1	SN:B50001--
37	12Y-979-2370	Seal	1	SN:B50001--

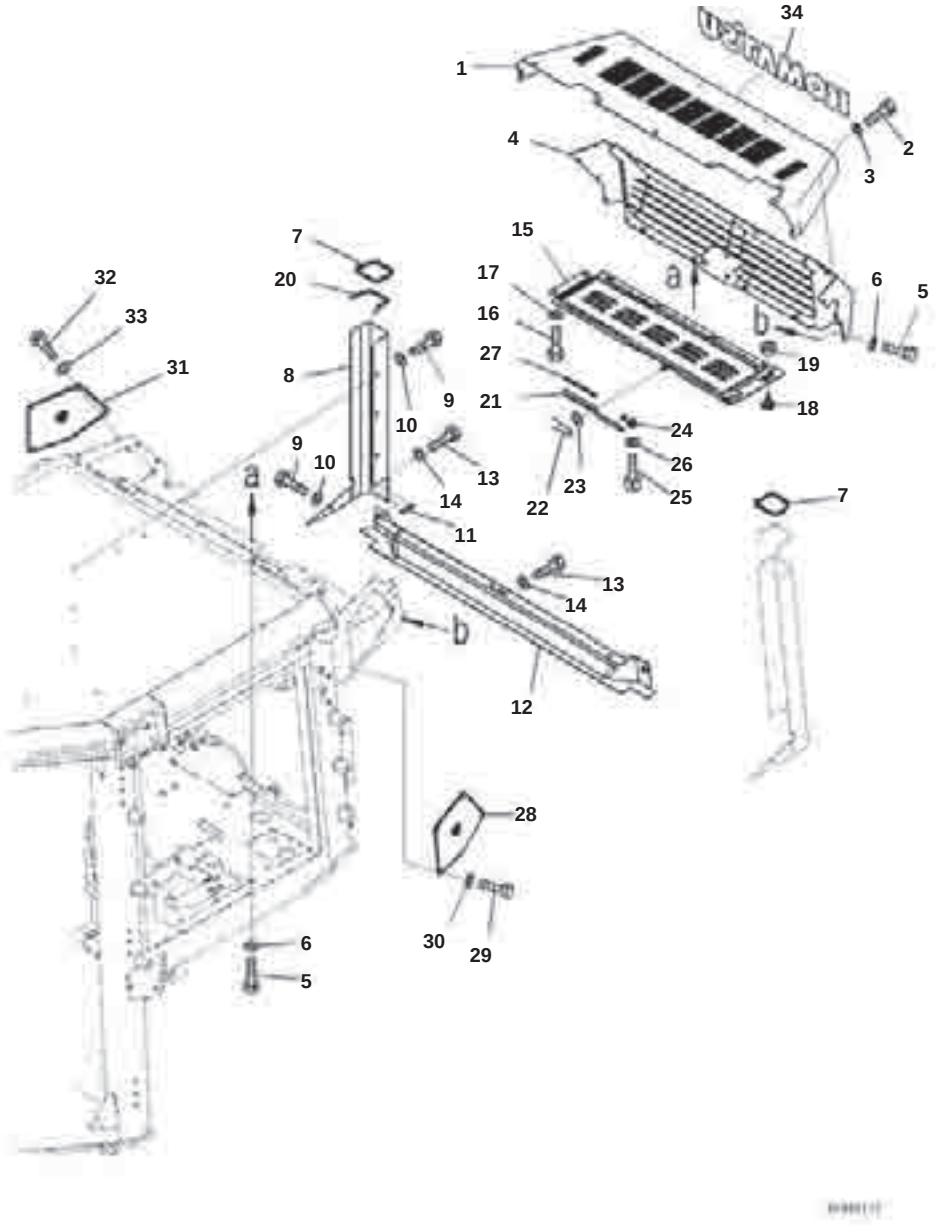

Index	Part Number	Description	Qty	Options
1	12Y-979-6610	Cover	1	SN:B50001--
2	01010-D0820	Bolt	11	SN:B50001--
3	01643-70823	Washer	11	SN:B50001--
4	12Y-979-6621	Cover	1	SN:B50001--
5	01010-D0820	Bolt	10	SN:B50001--
6	01643-70823	Washer	10	SN:B50001--
7	12Y-979-1690	Trim	2	SN:B50001--
8	12Y-979-1652	Cover	1	SN:B50001--
9	01010-D0820	Bolt	4	SN:B50001--
10	01643-70823	Washer	4	SN:B50001--
11	12Y-979-1860	Seal	1	SN:B50001--
12	12Y-979-6750	Cover	1	SN:B50001--
13	01010-D0820	Bolt	5	SN:B50001--
14	01643-70823	Washer	5	SN:B50001--
15	12Y-979-6660	Cover	1	SN:B50001--
16	01010-D0830	Bolt	2	SN:B50001--
17	01643-70823	Washer	2	SN:B50001--
18	12Y-979-1782	Knob	2	SN:B50001--
19	01598-00809	Nut	2	SN:B50001--
20	12Y-978-3492	Trim	1	SN:B50001--
21	12Y-979-6711	Plate	1	SN:B50001--
22	04050-11612	Pin, Cotter	2	SN:B50001--
23	01643-30623	Washer	2	SN:B50001--
24	12Y-979-1751	Plate	1	SN:B50001--
25	01252-80514	Bolt	2	SN:B50001--
26	01641-50508	Washer	2	SN:B50001--
27	12Y-06-13380	Seal	1	SN:B50001--
28	12Y-979-6630	Cover	1	SN:B50001--
29	01010-D0820	Bolt	4	SN:B50001--
30	01643-70823	Washer	4	SN:B50001--
31	12Y-979-6640	Cover	1	SN:B50001--
32	01010-D0820	Bolt	4	SN:B50001--
33	01643-70823	Washer	4	SN:B50001--
34	09690-F0710	Plate, Komatsu Logo	1	SN:B50001--

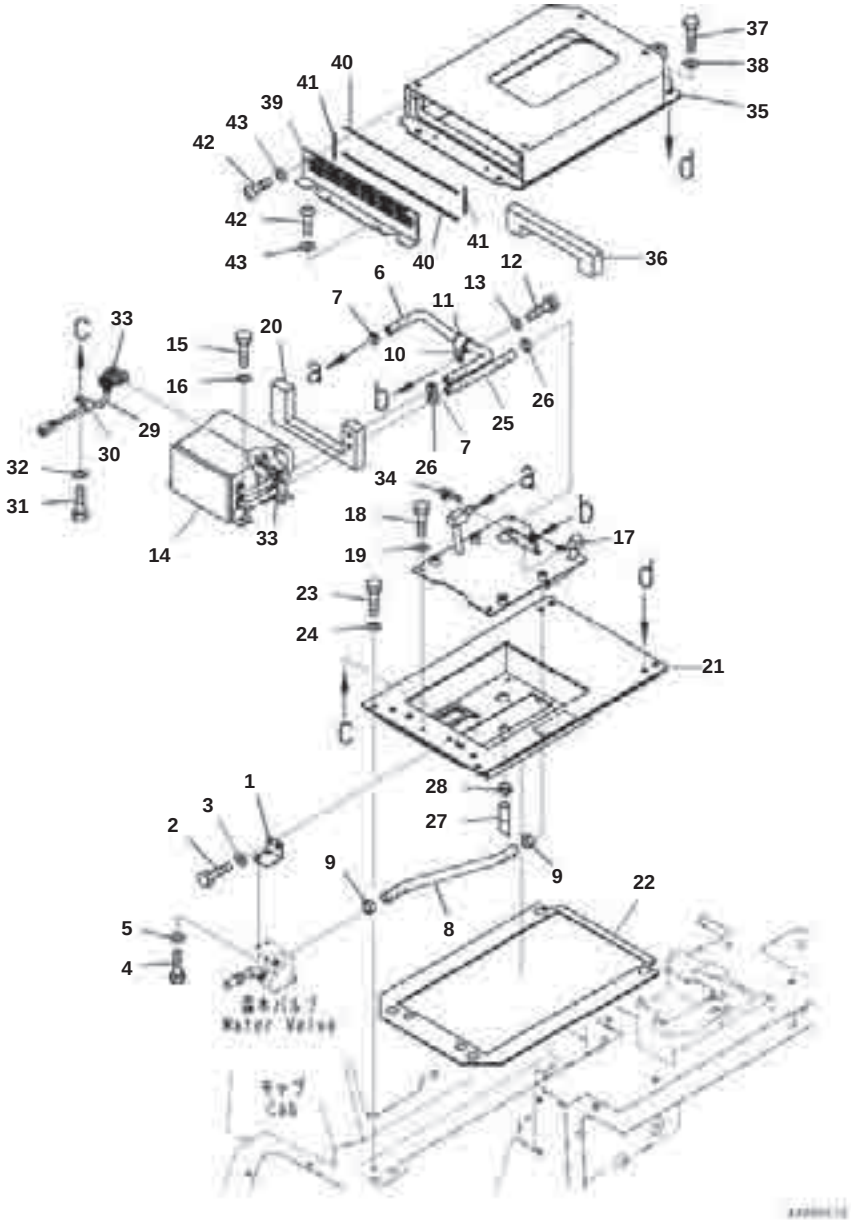

Index	Part Number	Description	Qty	Options
1	12Y-979-1350	Bracket	1	SN:B50001--
2	01010-81020	Bolt	2	SN:B50001--
3	01643-31032	Washer	2	SN:B50001--
4	01010-80616	Bolt	2	SN:B50001--
5	01643-30623	Washer	2	SN:B50001--
6	12Y-979-1361	Hose	1	SN:B50001--
7	11Y-09-11160	Clip	2	SN:B50001--
8	12Y-979-6350	Hose	1	SN:B50001--
9	09479-02400	Clip	2	SN:B50001--
10	04434-52711	Clip	1	SN:B50001--
11	07095-20420	Cushion	1	SN:B50001--
12	01010-81020	Bolt	1	SN:B50001--
13	01643-31032	Washer	1	SN:B50001--
14	208-987-3680	Heater Assembly	1	SN:B50001--
15	01010-81020	Bolt	4	SN:B50001--
16	01643-31032	Washer	4	SN:B50001--
17	12Y-979-6320	Bracket	1	SN:B50001--
18	01010-81020	Bolt	4	SN:B50001--
19	01643-31032	Washer	4	SN:B50001--
20	12Y-977-1121	Seal	1	SN:B50001--
21	12Y-979-6311	Bracket	1	SN:B50001--
22	12Y-979-6360	▪ Seal	1	SN:B50001--
23	01010-81230	Bolt	4	SN:B50001--
24	01643-31232	Washer	4	SN:B50001--
25	12Y-979-6340	Hose	1	SN:B50001--
26	11Y-09-11160	Clip	2	SN:B50001--
27	22B-979-1880	Connector	1	SN:B50001--
28	07285-00230	Clip	1	SN:B50001--
29	12Y-977-1193	Wiring Harness	1	SN:B50001--
30	04434-51410	Clip	1	SN:B50001--
31	01010-81020	Bolt	1	SN:B50001--
32	01643-31032	Washer	1	SN:B50001--
33	08034-20519	Band	2	SN:B50001--
34	12Y-06-13380	Seal	1	SN:B50001--
35	12Y-57-21231	Bracket	1	SN:B50001--
36	12Y-57-11131	▪ Seal	1	SN:B50001--
37	01010-81230	Bolt	4	SN:B50001--
38	01643-31232	Washer	4	SN:B50001--
39	12Y-57-21251	Cover	1	SN:B50001--
40	12Y-57-11170	▪ Seal	2	SN:B50001--
41	12Y-57-11181	▪ Seal	2	SN:B50001--
42	01245-00620	Screw	4	SN:B50001--
43	01643-70623	Washer	4	SN:B50001--

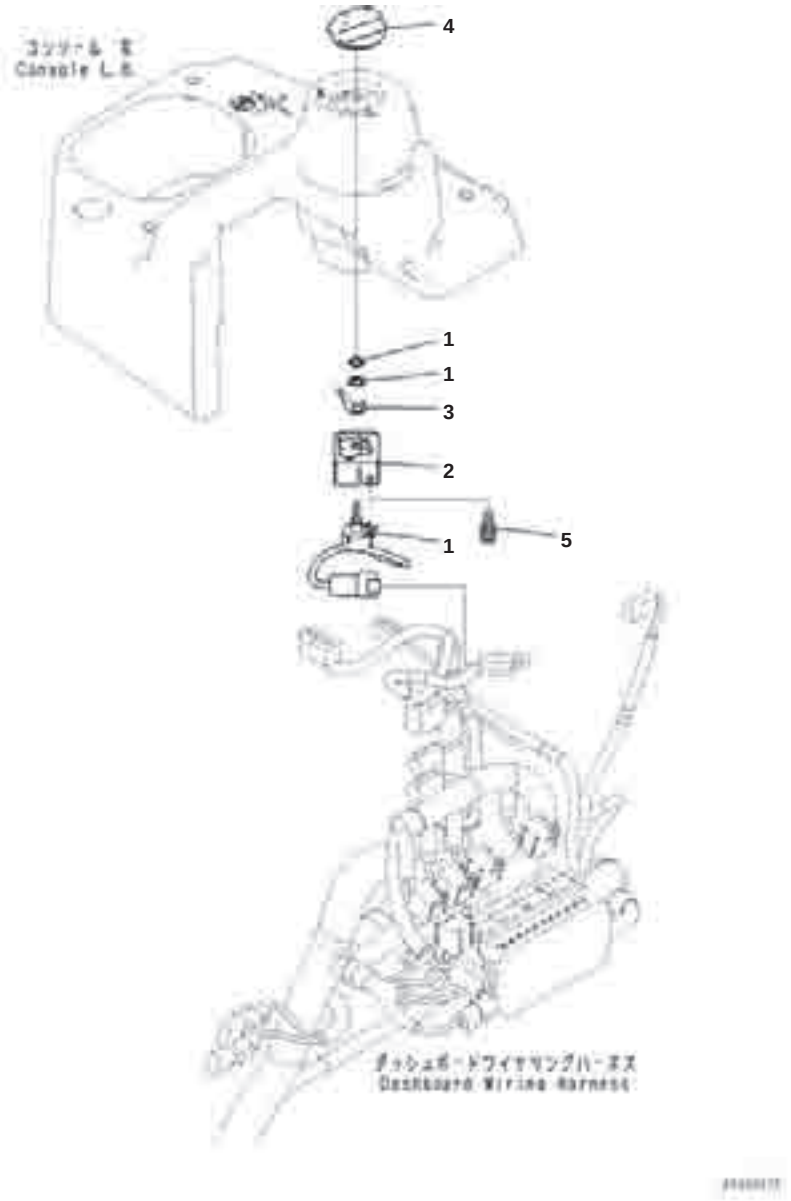

Index	Part Number	Description	Qty	Options
	12Y-06-11611	Potentiometer Assembly	1	SN:B50001--
1	12Y-06-11621	' Potentiometer	1	SN:B50001--
2	12Y-06-11631	' Bracket	1	SN:B50001--
3	22U-06-22460	' Spring	1	SN:B50001--
4	20Y-43-41781	Knob	1	SN:B50001--
	20Y-43-41780	Knob	1	SN:B50001--
5	01023-60512	Screw	2	SN:B50001--

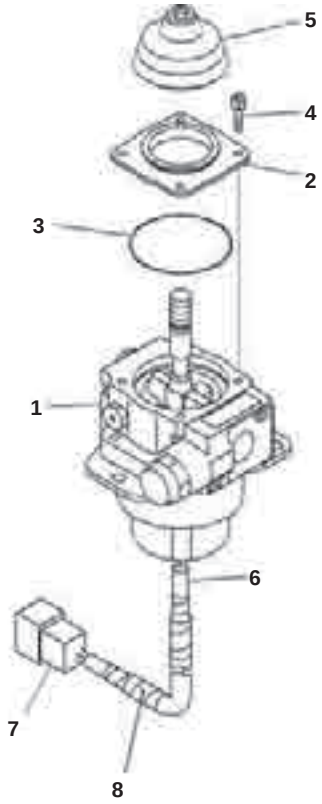

Index	Code	Part Number	Description	Qty	Options
1		702-16-02320	Lever Assembly	1	SN:B50001--
2		702-16-62730	･ Cover	1	SN:B50001--
3		702-16-62740	･ O-ring	1	SN:B50001--
4		01252-60512	･ Bolt	4	SN:B50001--
5		702-16-59330	･ Boot	1	SN:B50001--
6		702-16-62690	･ Tube	1	SN:B50001--
7	C1		･ Connector	1	SN:B50001--
8		08017-30702	･ Conduit	1	SN:B50001--

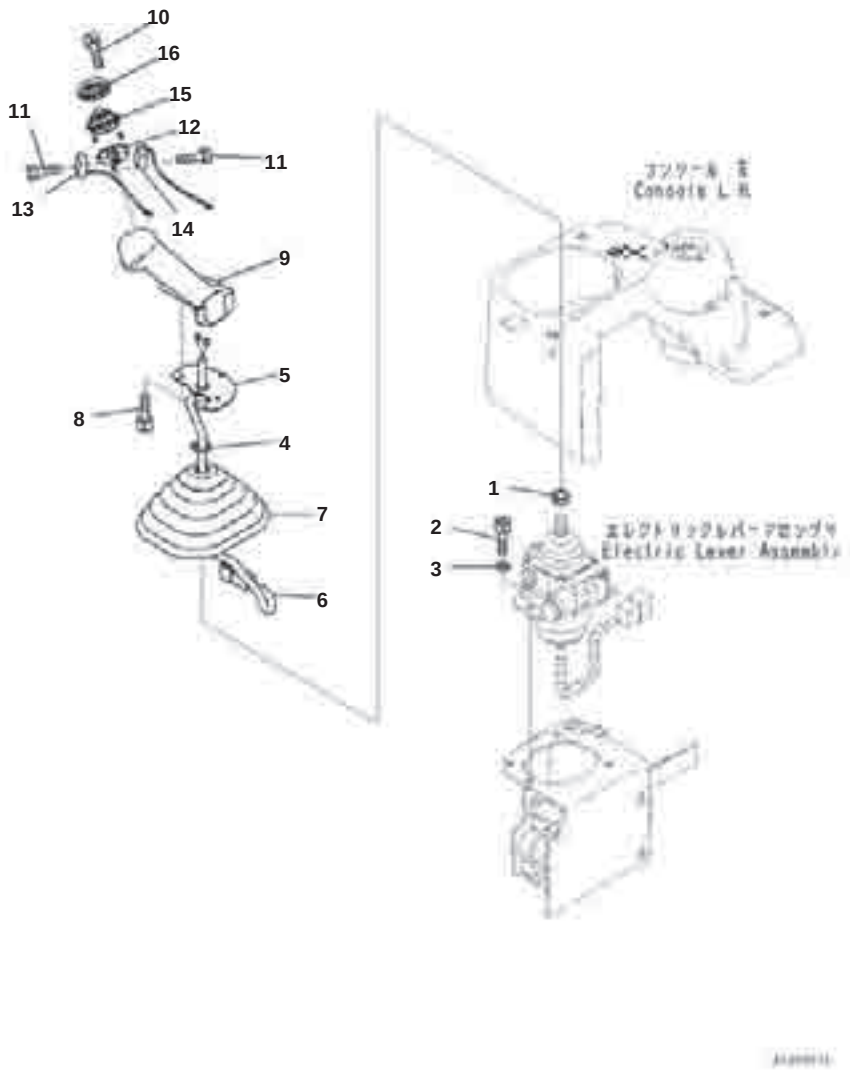

Index	Code	Part Number	Description	Qty	Options
1		20T-43-71190	Nut	1	SN:B50001--
2		01252-A0825	Bolt, Hexagon Socket Head	3	SN:B50001--
3		01643-30823	Washer	3	SN:B50001--
		12Y-43-21651	Lever Assembly	1	SN:B50001--
4		08034-20414	･ Band	1	SN:B50001--
5		11Y-43-11124	･ Bracket	1	SN:B50001--
6	C1		･ Wiring Harness	1	SN:B50001--
7		17A-43-46270	･ Boot	1	SN:B50001--
8		01252-B0510	Bolt, Hexagon Socket Head	3	SN:B50001--
9		19M-43-33111	Knob Assembly	1	SN:B50001--
10		19M-09-11510	･ Bolt	2	SN:B50001--
		19M-43-33141	･ Switch Assembly	1	SN:B50001--
11	C1		･ ･ Screw	4	SN:B50001--
12		19M-43-33171	･ ･ Plate	1	SN:B50001--
13		19M-43-33460	･ ･ Switch, Shift Down	1	SN:B50001--
14		19M-43-33470	･ ･ Switch, Shift Up	1	SN:B50001--
15		19M-43-33151	･ Rubber	1	SN:B50001--
16		19M-43-33161	･ Cover	1	SN:B50001--

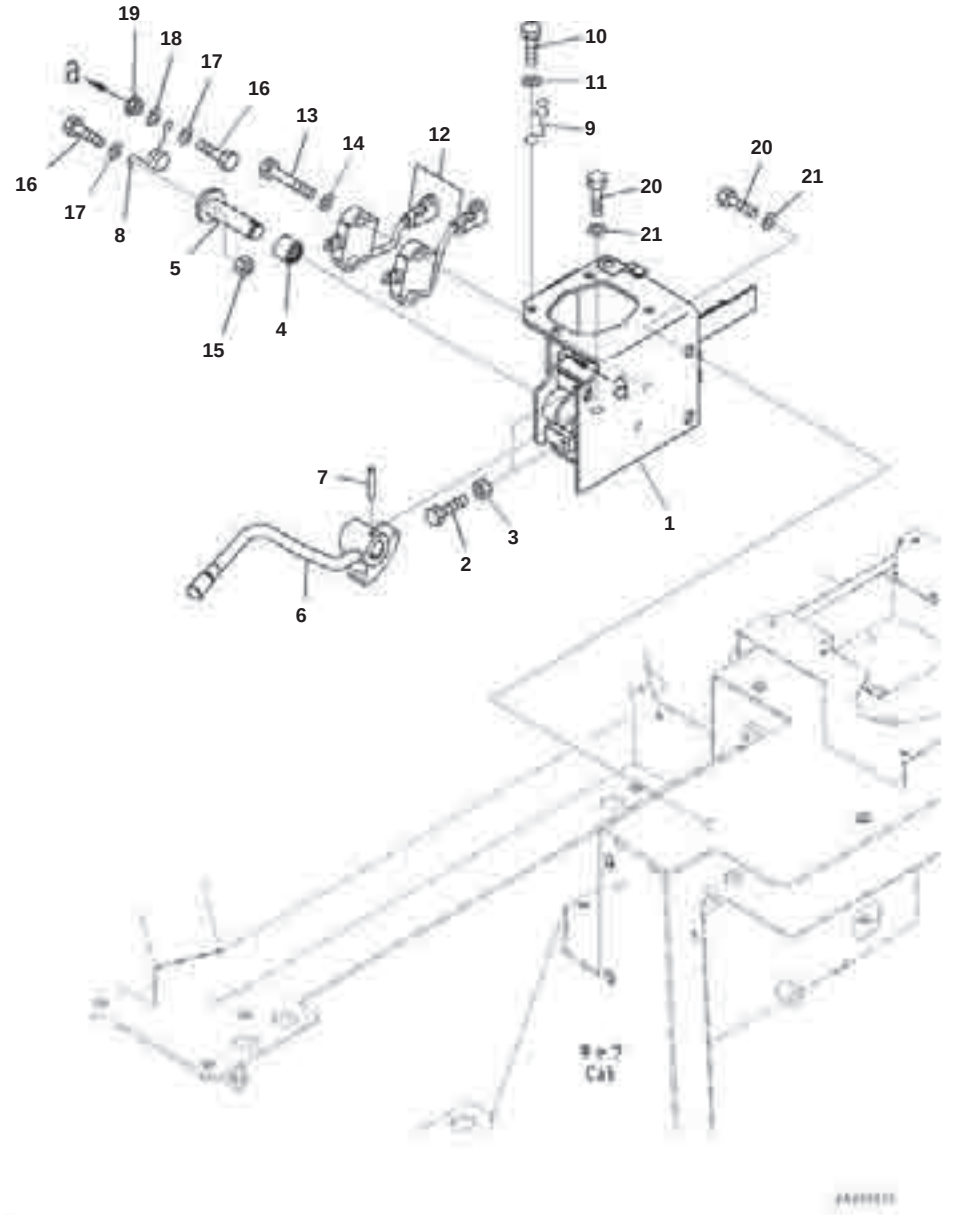

Index	Part Number	Description	Qty	Options
	12Y-43-21800	Lever Assembly	1	SN:B50001--
1	12Y-43-21820	▪ Bracket	1	SN:B50001--
2	01016-50825	▪ Bolt	2	SN:B50001--
3	01580-10806	▪ Nut	2	SN:B50001--
4	06124-02020	▪ Bearing	1	SN:B50001--
5	12Y-43-21810	▪ Lever	1	SN:B50001--
6	12Y-43-12432	▪ Lever	1	SN:B50001--
7	14X-43-14520	▪ Pin	1	SN:B50001--
8	14X-43-51840	▪ Spring	1	SN:B50001--
9	12Y-43-12491	▪ Hook	1	SN:B50001--
10	01010-80820	▪ Bolt	1	SN:B50001--
11	01643-30823	▪ Washer	1	SN:B50001--
12	11Y-06-11470	▪ Switch	2	SN:B50001--
13	01010-81050	▪ Bolt	2	SN:B50001--
14	01643-31032	▪ Washer	2	SN:B50001--
15	01580-10605	▪ Nut	1	SN:B50001--
16	01010-80625	▪ Bolt	2	SN:B50001--
17	01643-30623	▪ Washer	2	SN:B50001--
18	01643-30623	▪ Washer	1	SN:B50001--
19	01584-30605	▪ Nut	1	SN:B50001--
20	01010-81020	Bolt	5	SN:B50001--
21	01643-31032	Washer	5	SN:B50001--

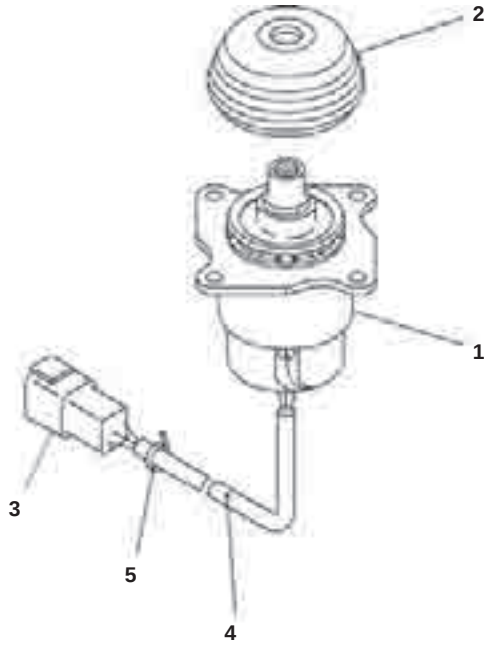

Index	Code	Part Number	Description	Qty	Options
1		702-16-02440	Lever Assembly	1	SN:B50001--
2		702-16-71280	･ Boot	1	SN:B50001--
3	C1		･ Connector	1	SN:B50001--
4		702-16-61390	･ Tube	1	SN:B50001--
5		08034-20414	･ Band	1	SN:B50001--

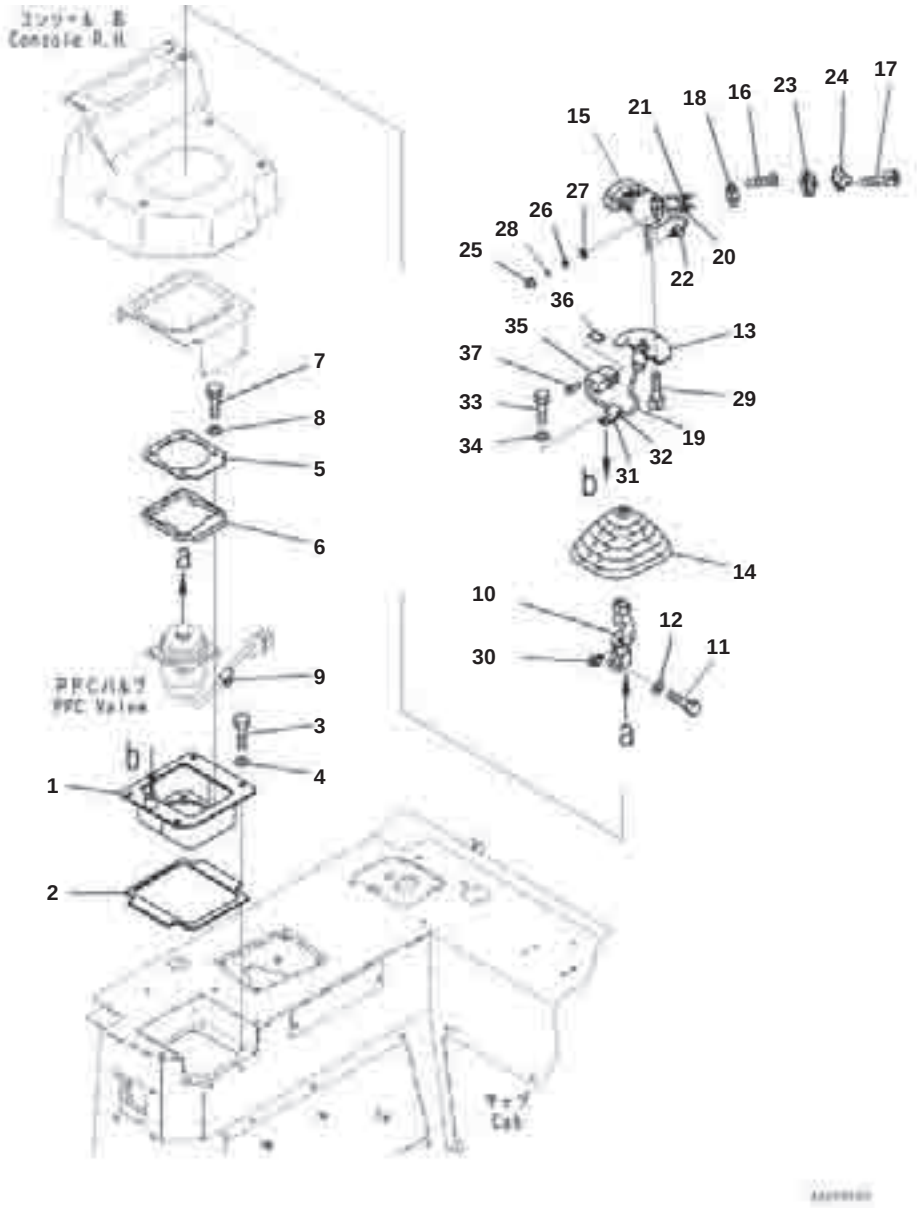

Cab, Work Equipment Control Lever

Index	Code	Part Number	Description	Qty	Options
1		12Y-43-21630	Bracket	1	SN:B50001--
2		12Y-43-12470	･ Sheet	1	SN:B50001--
3		01010-80825	Bolt	4	SN:B50001--
4		01643-30823	Washer	4	SN:B50001--
5		12Y-43-12440	Plate	1	SN:B50001--
6		12Y-43-12480	･ Sheet	1	SN:B50001--
7		01010-80825	Bolt	4	SN:B50001--
8		01643-30823	Washer	4	SN:B50001--
9		04434-50810	Clip	1	SN:B50001--
10		12Y-43-21611	Lever	1	SN:B50001--
11		07372-21030	Bolt	1	SN:B50001--
12		01641-21016	Washer	1	SN:B50001--
13		12Y-43-21661	Bracket	1	SN:B50001--
14		17A-43-46270	Boot	1	SN:B50001--
15		17A-43-46132	Knob Assembly	1	SN:B50001--
16	C1		･ Screw	2	SN:B50001--
17		19M-09-11510	･ Bolt	2	SN:B50001--
18		198-06-63440	･ Plate	1	SN:B50001--
19		17A-06-51341	･ Wiring Harness	1	SN:B50001--
20		17A-06-51330	･ ･ Switch,Blade Pitch	1	SN:B50001--
21		17A-06-51350	･ ･ Switch,Blade Float	1	SN:B50001--
22		17A-06-51360	･ ･ Switch,Blade Auto Pitch	1	SN:B50001--
23		17A-43-46711	･ Cover	1	SN:B50001--
24		17A-43-46731	･ Rubber	1	SN:B50001--
25		198-06-59540	･ Cover	1	SN:B50001--
26		198-06-59311	･ Nut	1	SN:B50001--
27		198-06-59320	･ Spacer	1	SN:B50001--
28		198-06-59330	･ Cap	1	SN:B50001--
29		01252-B0510	Bolt, Hexagon Socket Head	3	SN:B50001--
30		20Y-06-23940	Clip	1	SN:B50001--
31		04434-51310	Clip	1	SN:B50001--
32		198-06-53520	Cushion	1	SN:B50001--
33		01010-81020	Bolt	1	SN:B50001--
34		01643-31032	Washer	1	SN:B50001--
35		08192-29102	Connector Body	1	SN:B50001--
36		08192-19300	Wedge	1	SN:B50001--
37		08191-00770	Plug, Connector	2	SN:B50001--

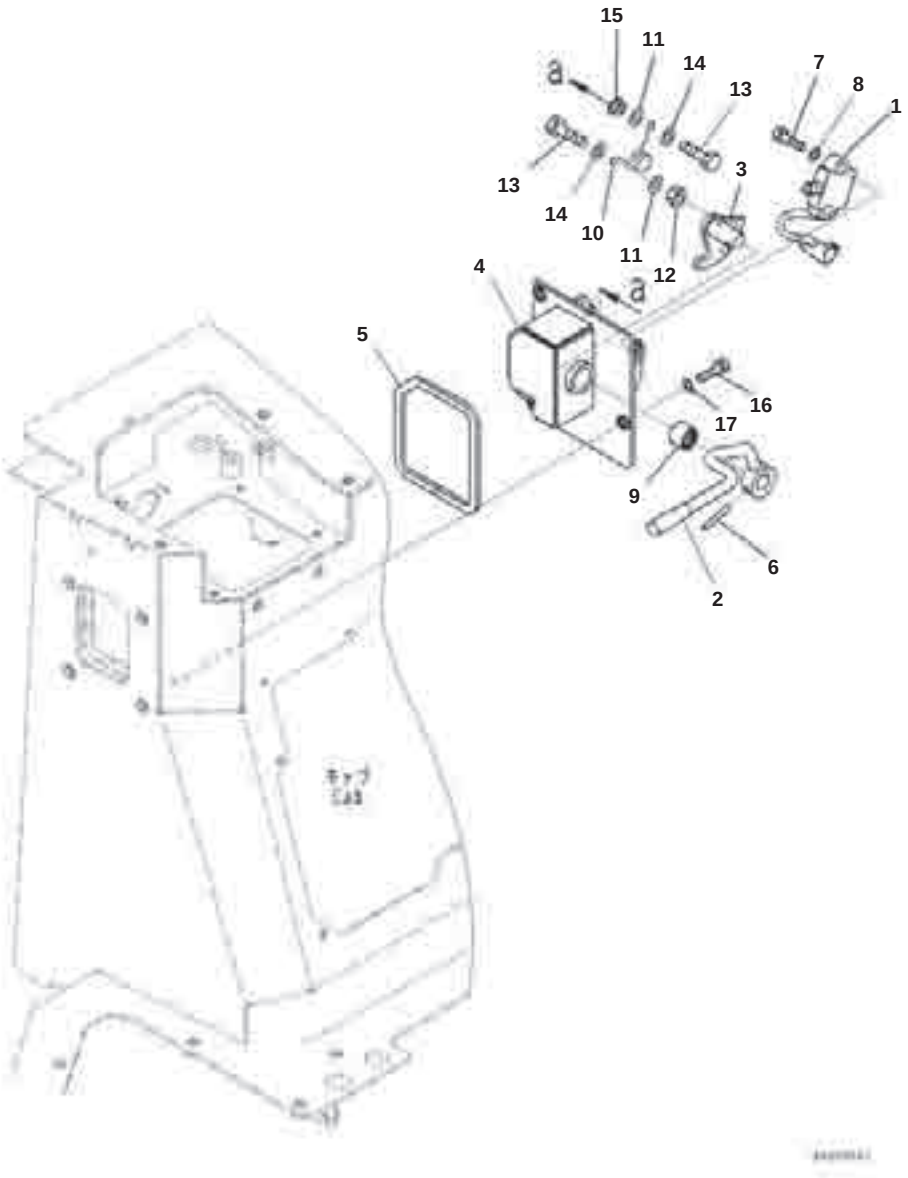

Index	Part Number	Description	Qty	Options
	12Y-43-21501	Lever Assembly	1	SN:B50001--
1	11Y-06-11470	▪ Switch	1	SN:B50001--
2	12Y-43-12532	▪ Lever	1	SN:B50001--
3	12Y-43-21541	▪ Lever	1	SN:B50001--
4	12Y-43-21591	▪ Bracket	1	SN:B50001--
5	12Y-43-21520	▪ ▪ Sheet	1	SN:B50001--
6	14X-43-14520	▪ Pin	1	SN:B50001--
7	01010-81035	▪ Bolt	2	SN:B50001--
8	01643-31032	▪ Washer	2	SN:B50001--
9	06124-02020	▪ Bearing	1	SN:B50001--
10	14X-43-51840	▪ Spring	1	SN:B50001--
11	01643-30623	▪ Washer	2	SN:B50001--
12	01580-10605	▪ Nut	1	SN:B50001--
13	01010-80625	▪ Bolt	2	SN:B50001--
14	01643-30623	▪ Washer	2	SN:B50001--
15	01584-30605	▪ Nut	1	SN:B50001--
16	01010-81025	Bolt	3	SN:B50001--
17	01643-31032	Washer	3	SN:B50001--

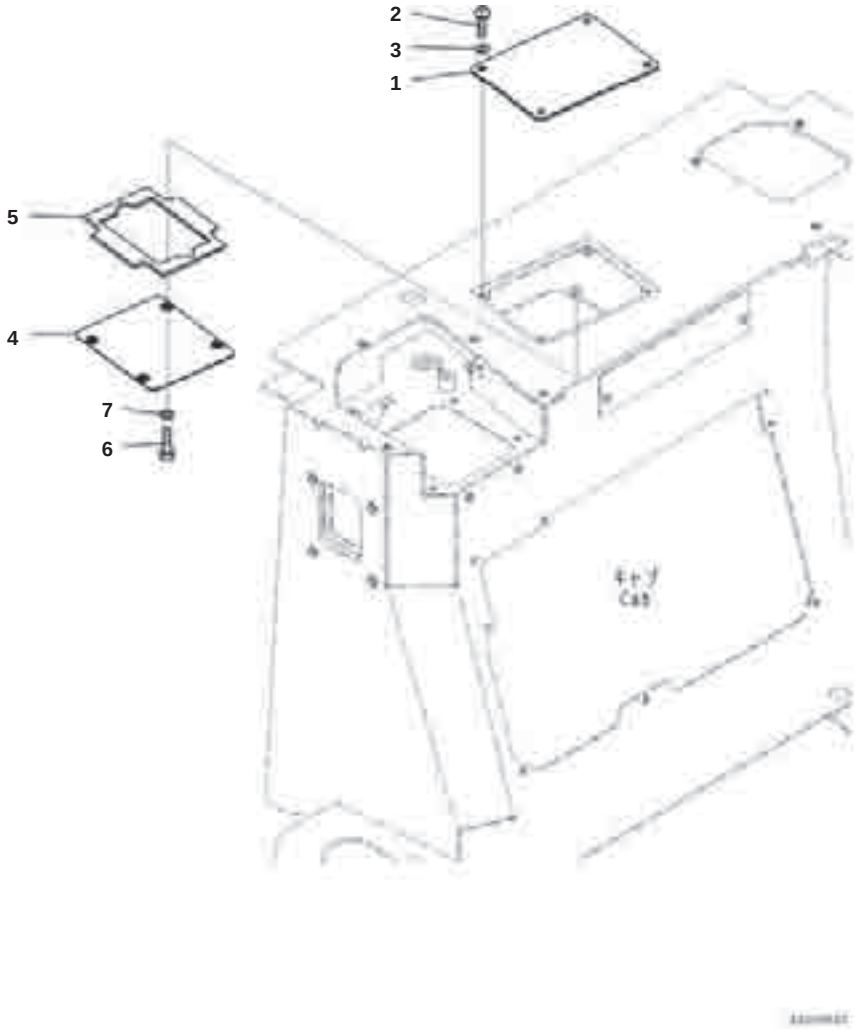

Index	Code	Part Number	Description	Qty	Options
1		12Y-78-11150	Cover	1	SN:B50001--
2		01245-00820	Screw	4	SN:B50001--
3		01643-70823	Washer	4	SN:B50001--
		12Y-78-11180	Cover	1	SN:B50001--
4	C1		' Plate	1	SN:B50001--
5		12Y-78-11130	' Sheet	1	SN:B50001--
6		01010-80825	Bolt	4	SN:B50001--
7		01643-30823	Washer	4	SN:B50001--

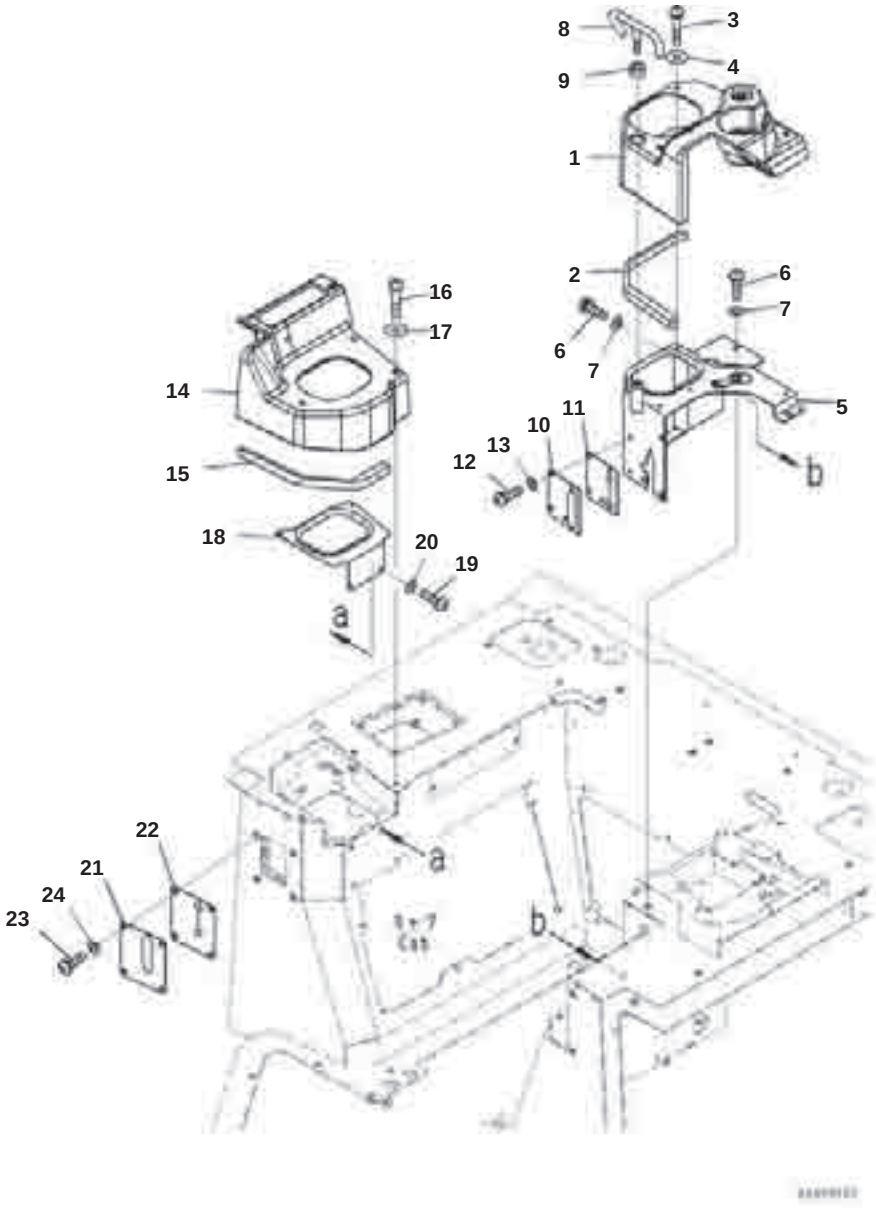

Index	Part Number	Description	Qty	Options
1	12Y-43-21710	Cover	1	SN:B50001--
2	12Y-43-12841	Seal	1	SN:B50001--
3	01245-00630	Screw, Hexagon Socket Head	4	SN:B50001--
4	17A-Z11-2813	Plate	4	SN:B50001--
5	12Y-43-21751	Bracket	1	SN:B50001--
6	01245-00825	Screw	5	SN:B50001--
7	01643-70823	Washer	5	SN:B50001--
8	12Y-43-21770	Handle	1	SN:B50001--
9	12Y-43-12790	Nut	1	SN:B50001--
10	12Y-43-12880	Cover	1	SN:B50001--
11	12Y-43-12732	' Sheet	1	SN:B50001--
12	01245-00825	Screw	4	SN:B50001--
13	01643-70823	Washer	4	SN:B50001--
14	12Y-43-21720	Cover	1	SN:B50001--
15	12Y-43-12852	Seal	1	SN:B50001--
16	01245-00630	Screw, Hexagon Socket Head	4	SN:B50001--
17	17A-Z11-2813	Plate	4	SN:B50001--
18	12Y-43-21640	Bracket	1	SN:B50001--
19	01245-00620	Screw	4	SN:B50001--
20	01643-70623	Washer	4	SN:B50001--
21	12Y-43-12781	Cover	1	SN:B50001--
22	12Y-43-12741	' Sheet	1	SN:B50001--
23	01245-00825	Screw	4	SN:B50001--
24	01643-70823	Washer	4	SN:B50001--

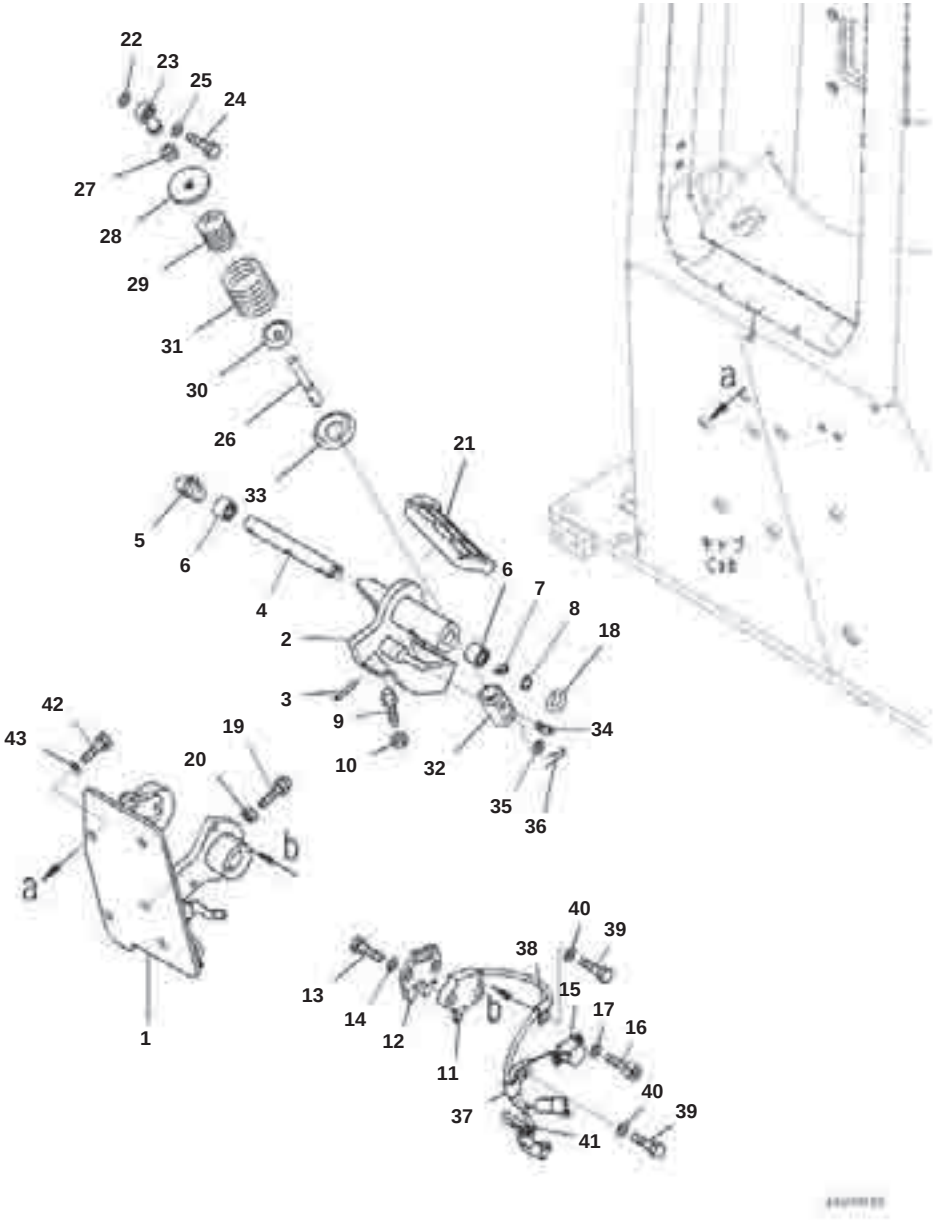

Index	Part Number	Description	Qty	Options
	12Y-43-21201	Pedal Assembly	1	SN:B50001--
1	12Y-43-21111	· Bracket	1	SN:B50001--
2	12Y-43-21121	· Pedal	1	SN:B50001--
3	14X-43-14520	· Pin	1	SN:B50001--
4	12Y-43-21130	· Shaft	1	SN:B50001--
5	07020-00900	· Fitting, Grease	1	SN:B50001--
6	06124-02020	· Bearing	2	SN:B50001--
7	142-43-13180	· Spring	1	SN:B50001--
8	04064-01610	· Ring, Snap	1	SN:B50001--
9	09311-41237	· Bumper, Pedal	1	SN:B50001--
10	01580-11210	· Nut	1	SN:B50001--
11	11Y-06-22150	· Switch, Limit	1	SN:B50001--
12	12Y-43-21141	· Stopper	1	SN:B50001--
13	01010-81040	· Bolt	2	SN:B50001--
14	01643-31032	· Washer	2	SN:B50001--
15	17A-06-41981	· Sensor, Potentiometer	1	SN:B50001--
16	01252-60416	· Bolt, Hexagon Socket Head	2	SN:B50001--
17	01640-20408	· Washer	2	SN:B50001--
18	12Y-43-12160	· Plate	1	SN:B50001--
19	09311-41237	· Bumper, Pedal	1	SN:B50001--
20	01580-11210	· Nut	1	SN:B50001--
21	14X-43-13760	· Cap	1	SN:B50001--
22	01643-31032	· Washer	1	SN:B50001--
23	04250-81056	· End	1	SN:B50001--
24	01010-81040	· Bolt	1	SN:B50001--
25	01643-31032	· Washer	1	SN:B50001--
26	12Y-43-21231	· Rod	1	SN:B50001--
27	01582-11008	· Nut	1	SN:B50001--
28	12Y-43-21241	· Guide	1	SN:B50001--
29	12Y-43-21271	· Spring	1	SN:B50001--
30	12Y-43-21250	· Guide	1	SN:B50001--
31	12Y-43-21261	· Spring	1	SN:B50001--
32	12Y-43-21210	· Yoke	1	SN:B50001--
33	12Y-43-21220	· Guide	1	SN:B50001--
34	07020-00900	· Fitting, Grease	1	SN:B50001--
35	01640-21016	· Washer	1	SN:B50001--
36	04050-13020	· Pin, Cotter	1	SN:B50001--
37	04435-50810	· Clip	1	SN:B50001--
38	04434-50810	· Clip	1	SN:B50001--
39	01010-81020	· Bolt	2	SN:B50001--
40	01643-31032	· Washer	2	SN:B50001--
41	08034-40521	· Band	1	SN:B50001--
42	01010-81030	Bolt	4	SN:B50001--
43	01643-31032	Washer	4	SN:B50001--

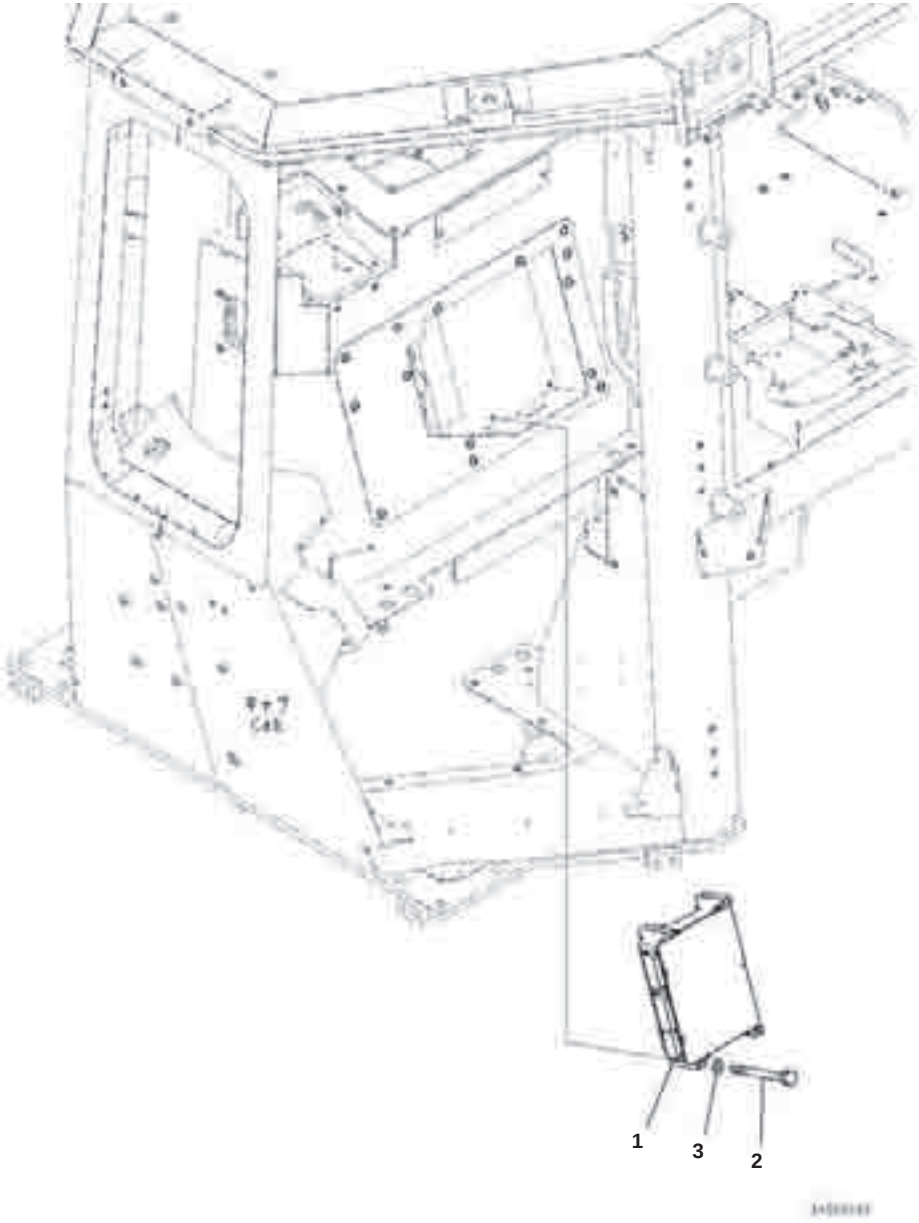

Index	Part Number	Description	Qty	Options
1	7830-75-5003	Controller	1	SN:B50001--
2	01010-80885	Bolt	4	SN:B50001--
3	01643-30823	Washer	4	SN:B50001--

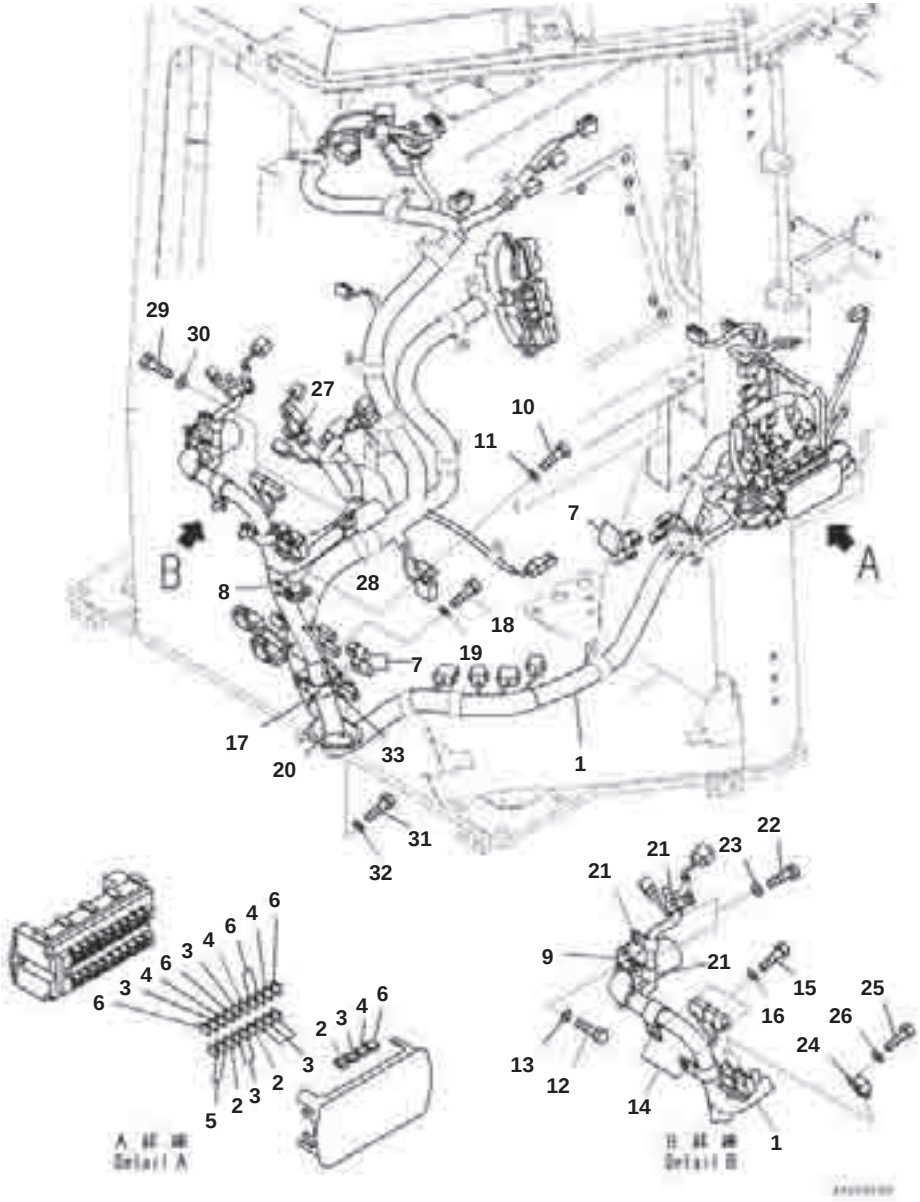

Index	Part Number	Description	Qty	Options
1	12Y-06-26111	Wiring Harness	1	SN:B50001--
2	08041-00500	▪ Fuse, 5Amp.	3	SN:B50001--
3	08041-01000	▪ Fuse, 10Amp.	8	SN:B50001--
4	08041-01500	▪ Fuse, 15Amp.	4	SN:B50001--
5	08041-02000	▪ Fuse, 20Amp.	2	SN:B50001--
6	08041-03000	▪ Fuse, 30Amp.	6	SN:B50001--
7	21J-06-13661	▪ Diode	4	SN:B50001--
8	142-06-13540	Clip	1	SN:B50001--
9	04434-53211	Clip	1	SN:B50001--
10	01010-81020	Bolt	1	SN:B50001--
11	01643-31032	Washer	1	SN:B50001--
12	01010-81020	Bolt	1	SN:B50001--
13	01643-31032	Washer	1	SN:B50001--
14	04434-52711	Clip	2	SN:B50001--
15	01010-81020	Bolt	2	SN:B50001--
16	01643-31032	Washer	2	SN:B50001--
17	04434-53411	Clip	1	SN:B50001--
18	01010-81030	Bolt	1	SN:B50001--
19	01643-31032	Washer	1	SN:B50001--
20	12Y-06-26180	Grommet	1	SN:B50001--
21	04434-51410	Clip	3	SN:B50001--
22	01010-81020	Bolt	3	SN:B50001--
23	01643-31032	Washer	3	SN:B50001--
24	7861-74-5100	Relay	2	SN:B50001--
25	01010-80616	Bolt	2	SN:B50001--
26	01643-30623	Washer	2	SN:B50001--
27	08034-20519	Band	1	SN:B50001--
28	04434-52511	Clip	1	SN:B50001--
29	01010-81020	Bolt	1	SN:B50001--
30	01643-31032	Washer	1	SN:B50001--
31	01010-81020	Bolt	1	SN:B50001--
32	01643-31032	Washer	1	SN:B50001--
33	08034-20519	Band	1	SN:B50001--

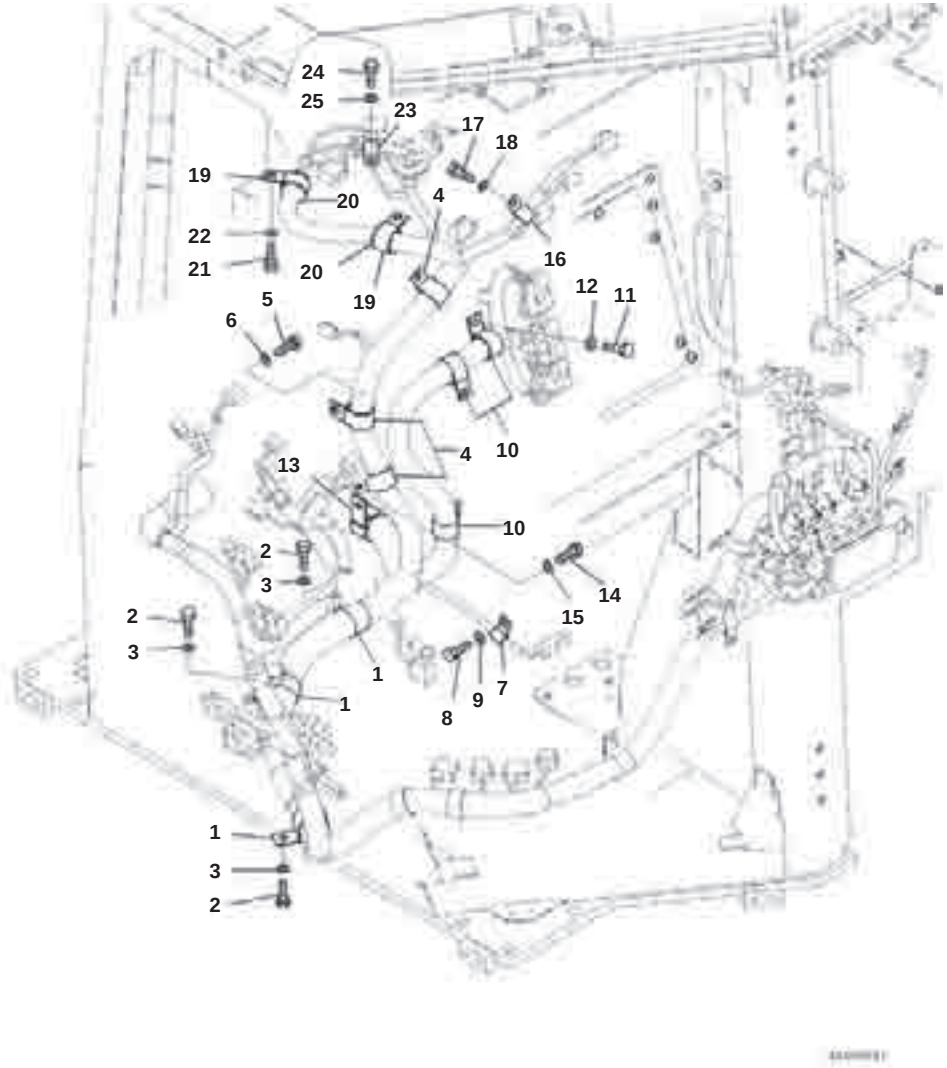

Cab, Dashboard Wiring Harness Mounting (1/2)

Index	Part Number	Description	Qty	Options
1	23S-62-25850	Clip	3	SN:B50001--
2	01010-81020	Bolt	3	SN:B50001--
3	01643-31032	Washer	3	SN:B50001--
4	04434-53411	Clip	3	SN:B50001--
5	01010-81020	Bolt	3	SN:B50001--
6	01643-31032	Washer	3	SN:B50001--
7	04434-51010	Clip	1	SN:B50001--
8	01010-81020	Bolt	1	SN:B50001--
9	01643-31032	Washer	1	SN:B50001--
10	04434-53411	Clip	3	SN:B50001--
11	01010-81020	Bolt	3	SN:B50001--
12	01643-31032	Washer	3	SN:B50001--
13	23S-62-25850	Clip	1	SN:B50001--
14	01010-81020	Bolt	1	SN:B50001--
15	01643-31032	Washer	1	SN:B50001--
16	04434-51710	Clip	1	SN:B50001--
17	01010-81020	Bolt	1	SN:B50001--
18	01643-31032	Washer	1	SN:B50001--
19	04434-53411	Clip	2	SN:B50001--
20	07095-20625	Cushion	2	SN:B50001--
21	01010-81020	Bolt	2	SN:B50001--
22	01643-31032	Washer	2	SN:B50001--
23	04434-51410	Clip	1	SN:B50001--
24	01010-81020	Bolt	1	SN:B50001--
25	01643-31032	Washer	1	SN:B50001--

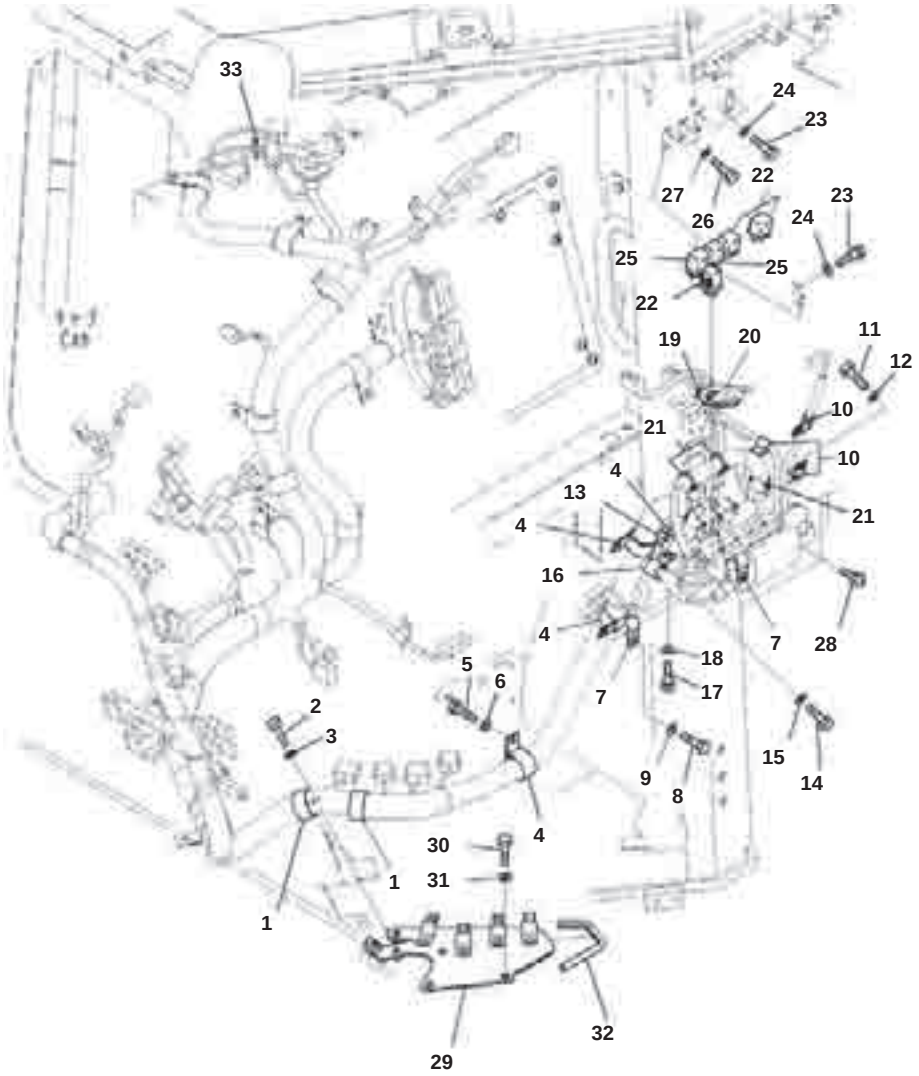

Cab, Dashboard Wiring Harness Mounting (2/2)

Index	Part Number	Description	Qty	Options
1	155-61-15350	Clip	2	SN:B50001--
2	01010-81020	Bolt	2	SN:B50001--
3	01643-31032	Washer	2	SN:B50001--
4	04434-53411	Clip	4	SN:B50001--
5	01010-81020	Bolt	4	SN:B50001--
6	01643-31032	Washer	4	SN:B50001--
7	04434-51410	Clip	2	SN:B50001--
8	01010-81020	Bolt	2	SN:B50001--
9	01643-31032	Washer	2	SN:B50001--
10	04434-51010	Clip	3	SN:B50001--
11	01010-D1020	Bolt	3	SN:B50001--
12	01643-71032	Washer	3	SN:B50001--
13	04434-53211	Clip	1	SN:B50001--
14	01010-81020	Bolt	1	SN:B50001--
15	01643-31032	Washer	1	SN:B50001--
16	04434-51910	Clip	1	SN:B50001--
17	01010-81020	Bolt	1	SN:B50001--
18	01643-31032	Washer	1	SN:B50001--
19	08034-20519	Band	1	SN:B50001--
20	12Y-43-12861	Seal	1	SN:B50001--
21	08034-20519	Band	3	SN:B50001--
22	569-06-61960	Relay	3	SN:B50001--
23	01010-80612	Bolt	4	SN:B50001--
24	01643-30623	Washer	4	SN:B50001--
25	569-06-61970	Relay	2	SN:B50001--
26	01010-80612	Bolt	2	SN:B50001--
27	01643-30623	Washer	2	SN:B50001--
28	01023-10620	Screw	2	SN:B50001--
29	12Y-06-26131	Bracket	1	SN:B50001--
30	01010-81020	Bolt	2	SN:B50001--
31	01643-31032	Washer	2	SN:B50001--
32	12Y-06-26140	Trim	1	SN:B50001--
33	08034-20519	Band	1	SN:B50001--

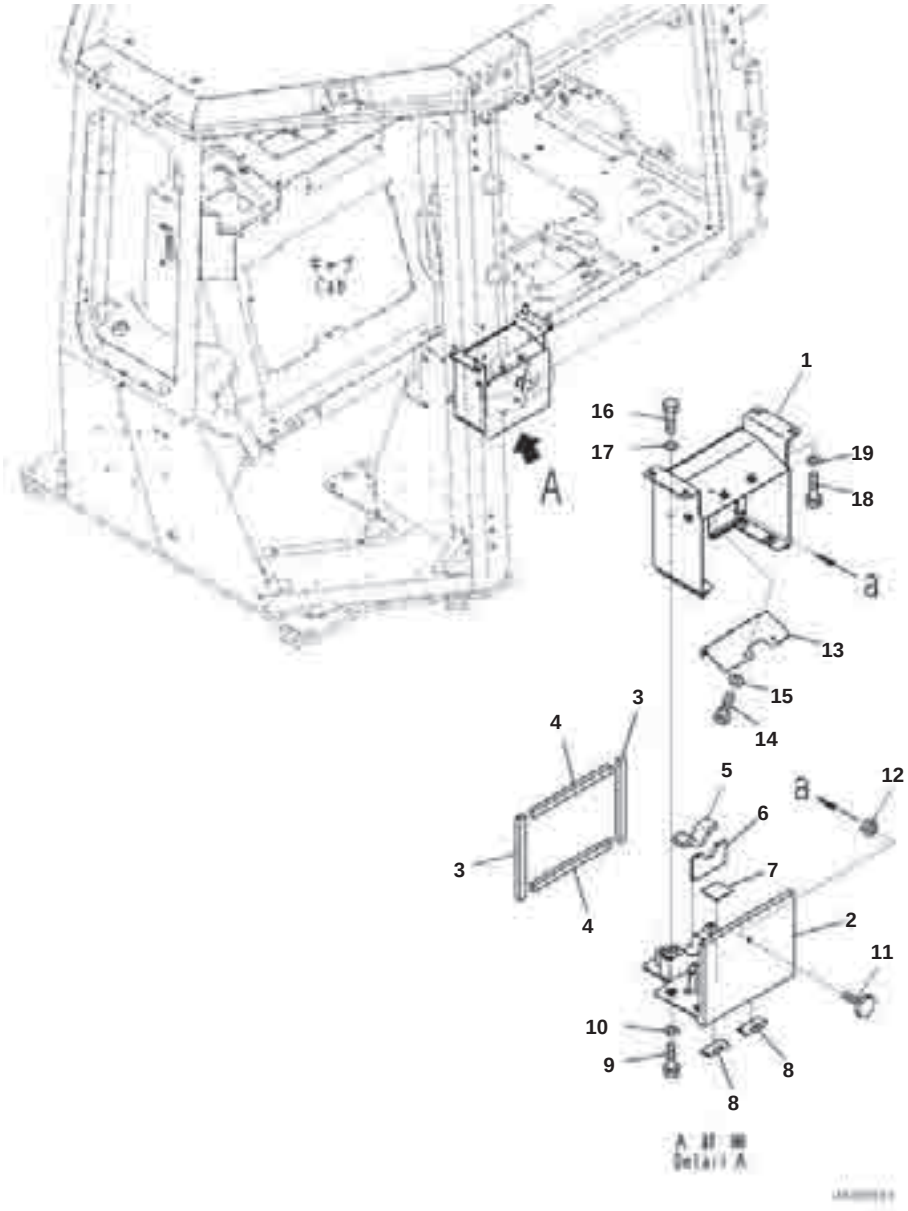

Index	Part Number	Description	Qty	Options
1	12Y-06-26411	Bracket	1	SN:B50001--
2	12Y-06-26421	Cover	1	SN:B50001--
3	12Y-06-26440	▪ Seal	2	SN:B50001--
4	12Y-06-26450	▪ Seal	2	SN:B50001--
5	12Y-06-26460	▪ Seal	1	SN:B50001--
6	12Y-06-26470	▪ Seal	1	SN:B50001--
7	17M-54-67740	▪ Sheet	1	SN:B50001--
8	09455-12013	▪ Hinge,Welded	2	SN:B50001--
9	01010-D0825	Bolt	4	SN:B50001--
10	01643-70823	Washer	4	SN:B50001--
11	134-X78-7450	Knob	1	SN:B50001--
12	01598-00809	Nut	1	SN:B50001--
13	12Y-06-26431	Bracket	1	SN:B50001--
14	01010-80612	Bolt	2	SN:B50001--
15	01643-30623	Washer	2	SN:B50001--
16	01010-D0825	Bolt	2	SN:B50001--
17	01643-70823	Washer	2	SN:B50001--
18	01010-81030	Bolt	4	SN:B50001--
19	01643-31032	Washer	4	SN:B50001--

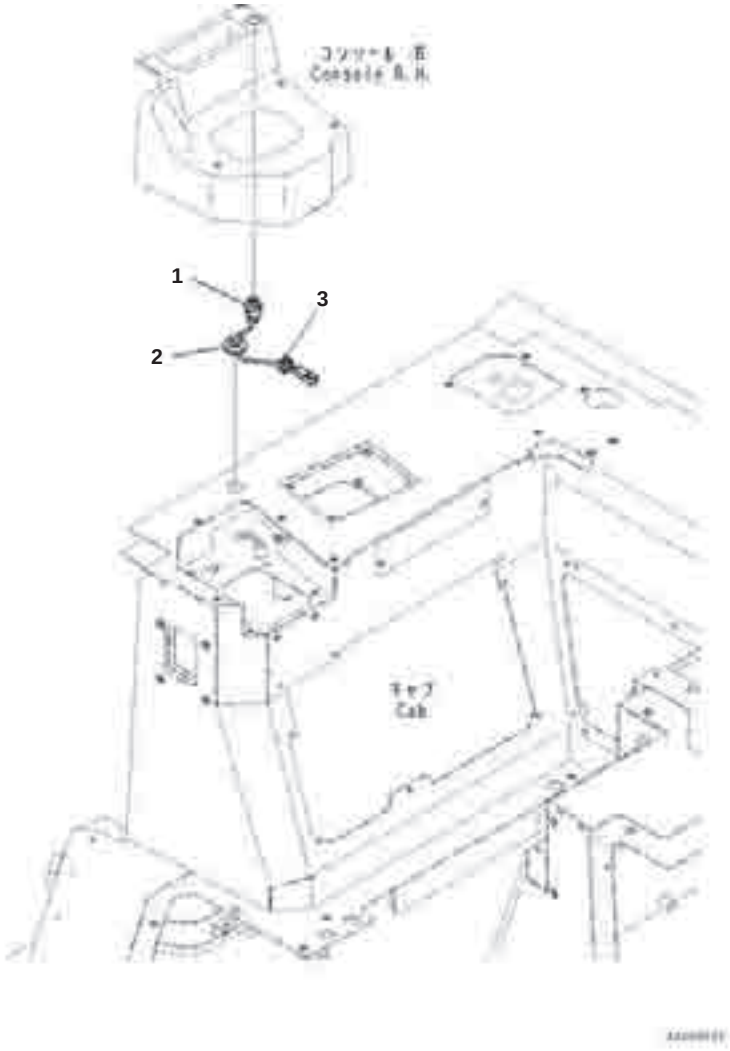

Index	Part Number	Description	Qty	Options
1	423-06-51130	Switch, Horn	1	SN:B50001--
2	08037-02512	Grommet	1	SN:B50001--
3	08034-20519	Band	1	SN:B50001--

Reference:K0210-006047 Page:K015048

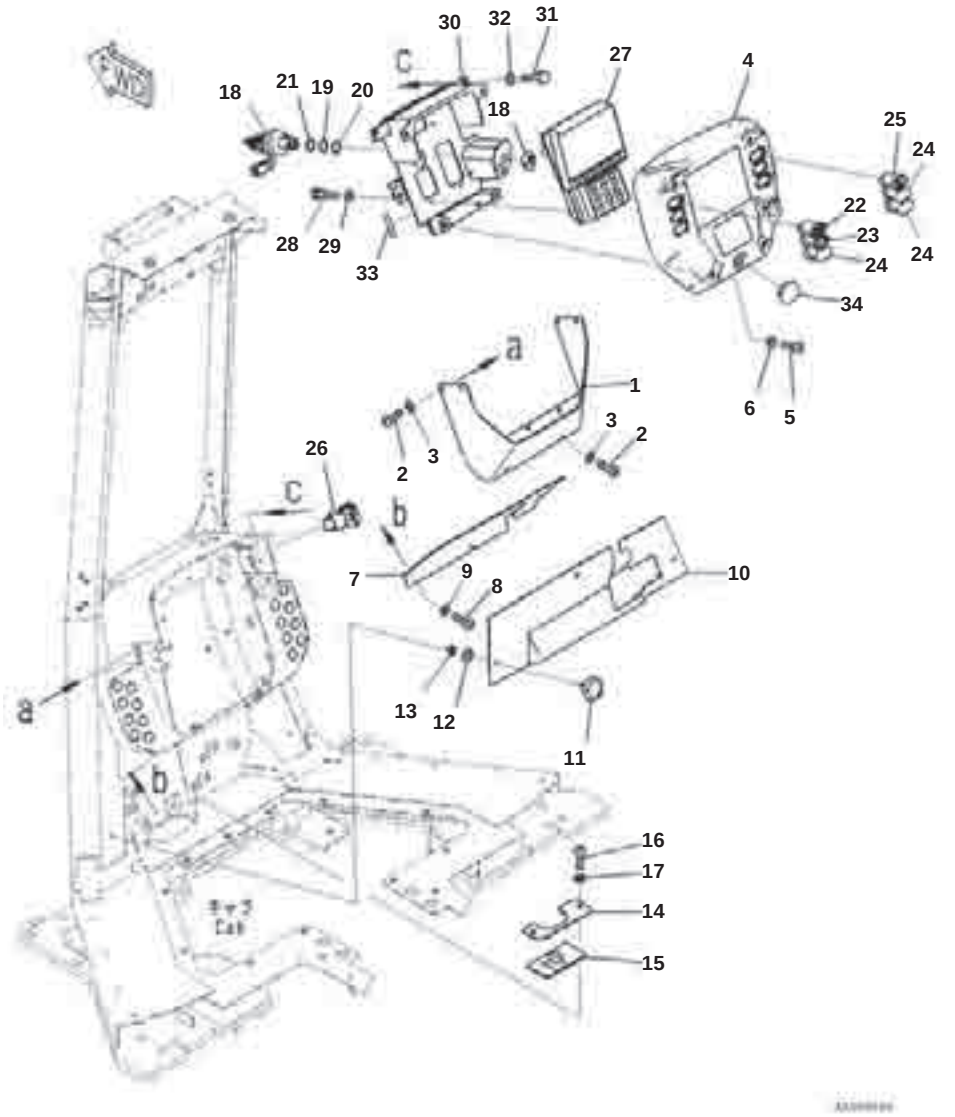

Cab, Dashboard, Monitor Panel and Switch

Index	Part Number	Description	Qty	Options
1	12Y-54-27121	Cover	1	SN:B50001--
2	01245-00825	Screw	6	SN:B50001--
3	01643-70823	Washer	6	SN:B50001--
4	17A-54-51511	Cover	1	SN:B50001--
5	01245-00620	Screw	4	SN:B50001--
6	01643-70623	Washer	4	SN:B50001--
7	12Y-54-27131	Cover	1	SN:B50001--
8	01245-00825	Screw	5	SN:B50001--
9	01643-70823	Washer	5	SN:B50001--
10	12Y-54-27151	Cover	1	SN:B50001--
11	561-06-86280	Screw	3	SN:B50001--
12	01640-20610	Washer	3	SN:B50001--
13	195-54-78790	Ring, Snap	3	SN:B50001--
14	12Y-54-27161	Cover	1	SN:B50001--
15	12Y-54-27171	Grommet	1	SN:B50001--
16	01245-00825	Screw	2	SN:B50001--
17	01643-70823	Washer	2	SN:B50001--
18	14X-06-52191	Switch, Starting	1	SN:B50001--
19	20Y-43-41750	Washer	2	SN:B50001--
20	20Y-43-41790	Washer	2	SN:B50001--
21	23S-15-45860	Shim, T=0.5mm	2	SN:B50001--
22	17A-06-51650	Switch, Head Lamp	1	SN:B50001--
23	17A-06-51661	Switch, Rear Lamp	1	SN:B50001--
24	20Y-06-42190	Cover	3	SN:B50001--
25	12Y-06-11771	Switch, Heater	1	SN:B50001--
26	08085-00001	Switch, Engine Stop	1	SN:B50001--
27	7831-69-8200	Monitor	1	SN:B50001--
28	01010-80616	Bolt	4	SN:B50001--
29	01643-30623	Washer	4	SN:B50001--
30	17A-54-51531	Bracket	1	SN:B50001--
31	01010-D0820	Bolt	4	SN:B50001--
32	01643-70823	Washer	4	SN:B50001--
33	12Y-978-2160	Seal	1	SN:B50001--
34	134-54-78370	Cap	1	SN:B50001--

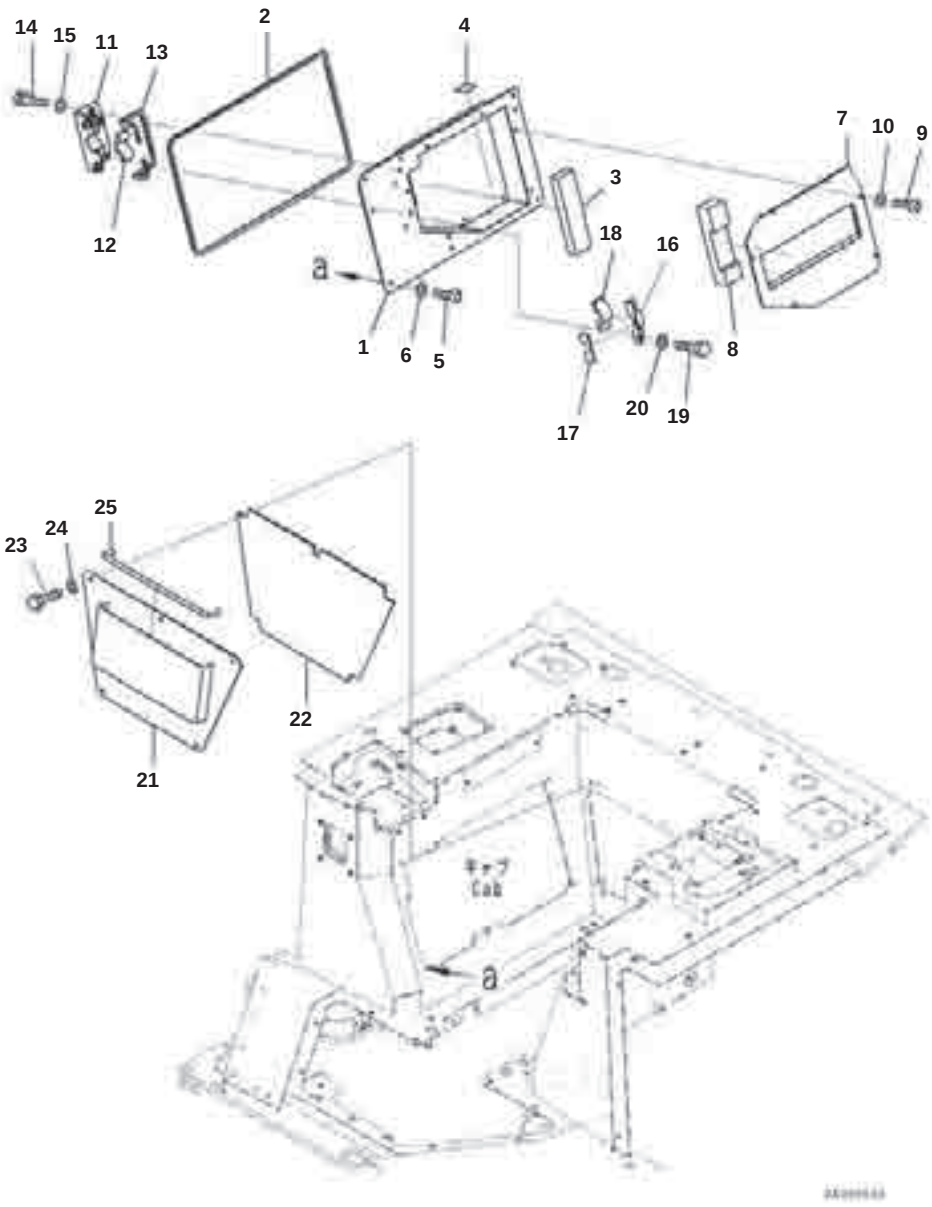

Index	Part Number	Description	Qty	Options
1	12Y-54-28861	Bracket	1	SN:B50001--
2	12Y-54-28870	▪ Seal	1	SN:B50001--
3	12Y-54-28880	▪ Sheet	1	SN:B50001--
4	17M-54-67740	▪ Sheet	1	SN:B50001--
5	01245-00825	Screw	8	SN:B50001--
6	01643-70823	Washer	8	SN:B50001--
7	12Y-54-28911	Cover	1	SN:B50001--
8	12Y-54-28890	▪ Sheet	1	SN:B50001--
9	01245-00825	Screw	6	SN:B50001--
10	01643-70823	Washer	6	SN:B50001--
11	12Y-54-28921	Cover	1	SN:B50001--
12	12Y-54-28940	▪ Seal	1	SN:B50001--
13	12Y-54-28950	▪ Seal	1	SN:B50001--
14	01010-D0825	Bolt	4	SN:B50001--
15	01643-70823	Washer	4	SN:B50001--
16	12Y-54-28981	Bracket	1	SN:B50001--
17	12Y-54-28930	▪ Seal	1	SN:B50001--
18	12Y-54-28940	▪ Seal	1	SN:B50001--
19	01010-D0825	Bolt	2	SN:B50001--
20	01643-70823	Washer	2	SN:B50001--
21	12Y-54-28850	Cover	1	SN:B50001--
22	11Y-Z78-3940	▪ Sheet	1	SN:B50001--
23	01010-D0825	Bolt	5	SN:B50001--
24	01643-70823	Washer	5	SN:B50001--
25	12Y-978-2990	Trim	1	SN:B50001--

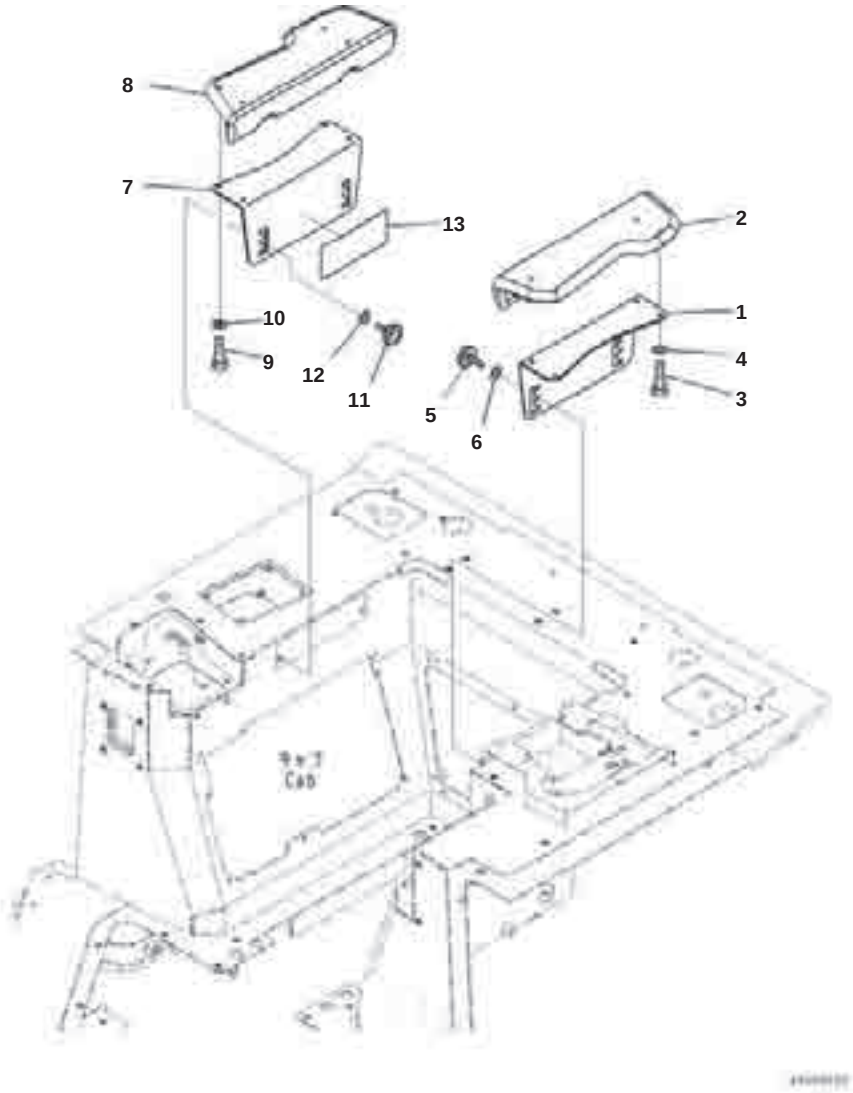

Index	Part Number	Description	Qty	Options
1	12Y-54-28780	Plate	1	SN:B50001--
2	12Y-54-28841	Armrest Assembly	1	SN:B50001--
3	01010-80820	Bolt	4	SN:B50001--
4	01643-30823	Washer	4	SN:B50001--
5	195-54-68760	Knob	2	SN:B50001--
6	01643-71032	Washer	2	SN:B50001--
7	12Y-54-28780	Plate	1	SN:B50001--
8	12Y-54-28821	Armrest Assembly	1	SN:B50001--
9	01010-80820	Bolt	4	SN:B50001--
10	01643-30823	Washer	4	SN:B50001--
11	195-54-68760	Knob	2	SN:B50001--
12	01643-71032	Washer	2	SN:B50001--
13	12Y-978-2840	Plate	1	SN:B50001--

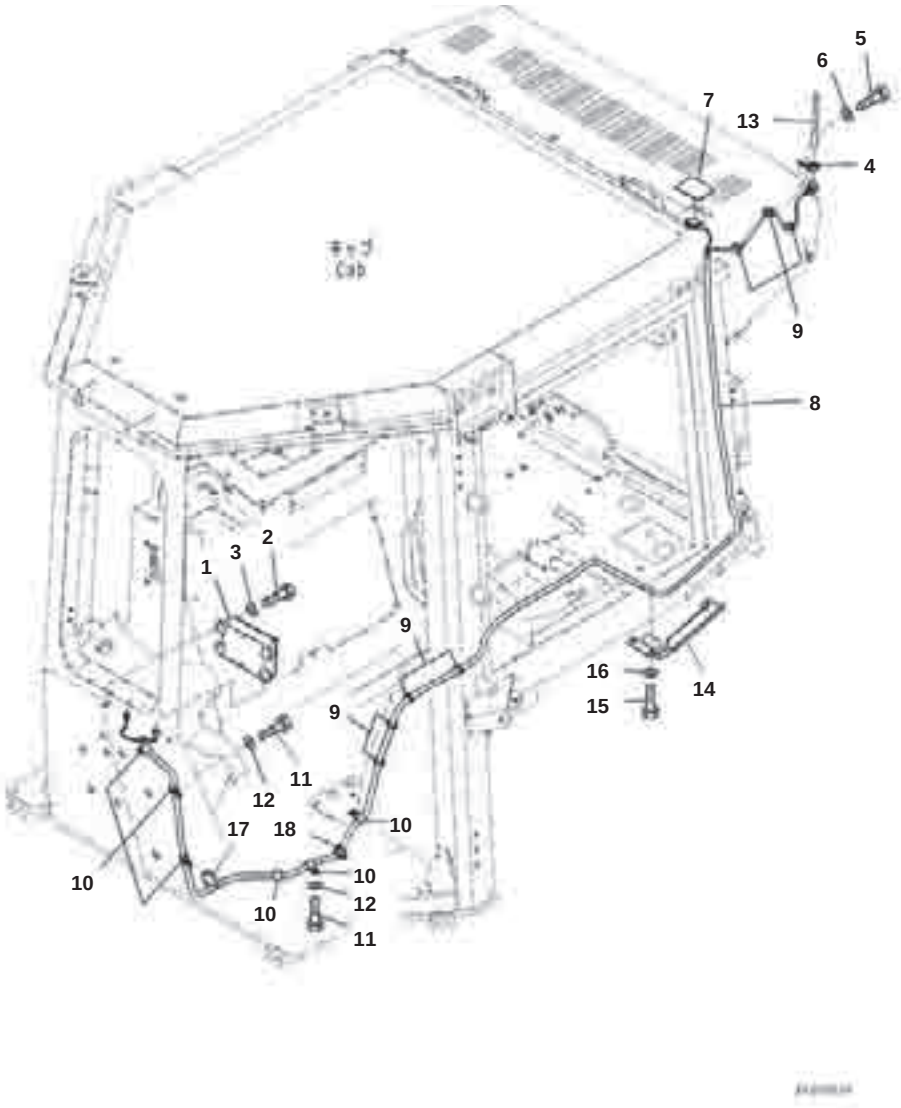

Cab, KOMTRAX Controller and Antenna

Index	Part Number	Description	Qty	Options
1	7826-25-3006	Controller, KOMTRAX	1	SN:B50001--
2	01010-80625	Bolt	4	SN:B50001--
3	01643-30623	Washer	4	SN:B50001--
4	12Y-06-26310	Bracket	1	SN:B50001--
5	01010-D0830	Bolt	2	SN:B50001--
6	01643-70823	Washer	2	SN:B50001--
7	12Y-06-13170	Cover	1	SN:B50001--
8	12Y-06-26321	Cable	1	SN:B50001--
9	08034-20519	Band	7	SN:B50001--
10	04434-51410	Clip	6	SN:B50001--
11	01010-81020	Bolt	6	SN:B50001--
12	01643-31032	Washer	6	SN:B50001--
13	8A13-10-2100	Antenna	1	SN:B50001--
14	12Y-06-26331	Cover	1	SN:B50001--
15	01010-81020	Bolt	3	SN:B50001--
16	01643-31032	Washer	3	SN:B50001--
17	08034-20834	Band	1	SN:B50001--
18	08034-40521	Band	1	SN:B50001--

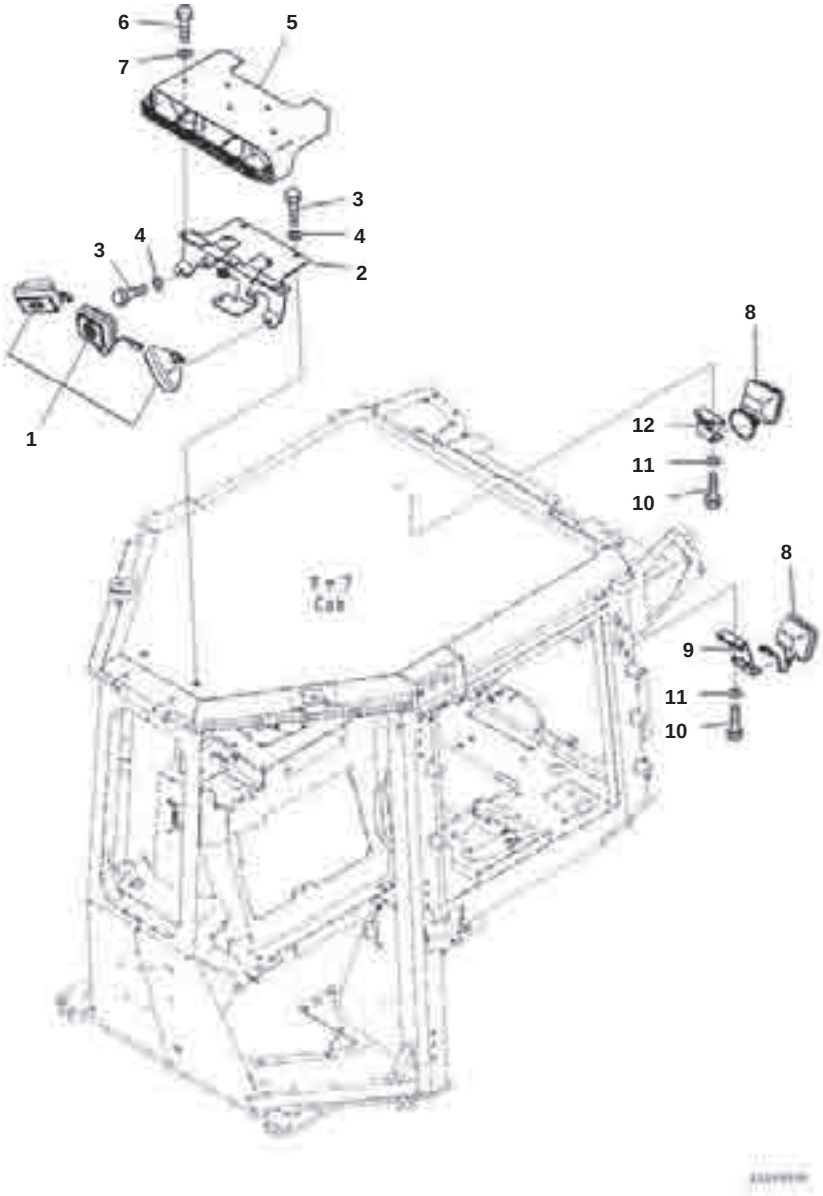

Index	Part Number	Description	Qty	Options
1	11Y-06-11372	Lamp Assembly, Working	3	SN:B50001--
	421-06-23330	▪ Bulb, 70watt	1	SN:B50001--
2	12Y-06-26221	Bracket	1	SN:B50001--
3	01010-81225	Bolt	4	SN:B50001--
4	01643-31232	Washer	4	SN:B50001--
5	12Y-06-26231	Cover	1	SN:B50001--
6	01010-81025	Bolt	5	SN:B50001--
7	01643-31032	Washer	5	SN:B50001--
8	11Y-06-11372	Lamp Assembly, Working	2	SN:B50001--
	421-06-23330	▪ Bulb, 70watt	1	SN:B50001--
9	12Y-06-26211	Bracket	1	SN:B50001--
10	01010-D0825	Bolt	4	SN:B50001--
11	01643-70823	Washer	4	SN:B50001--
12	12Y-06-26291	Bracket	1	SN:B50001--

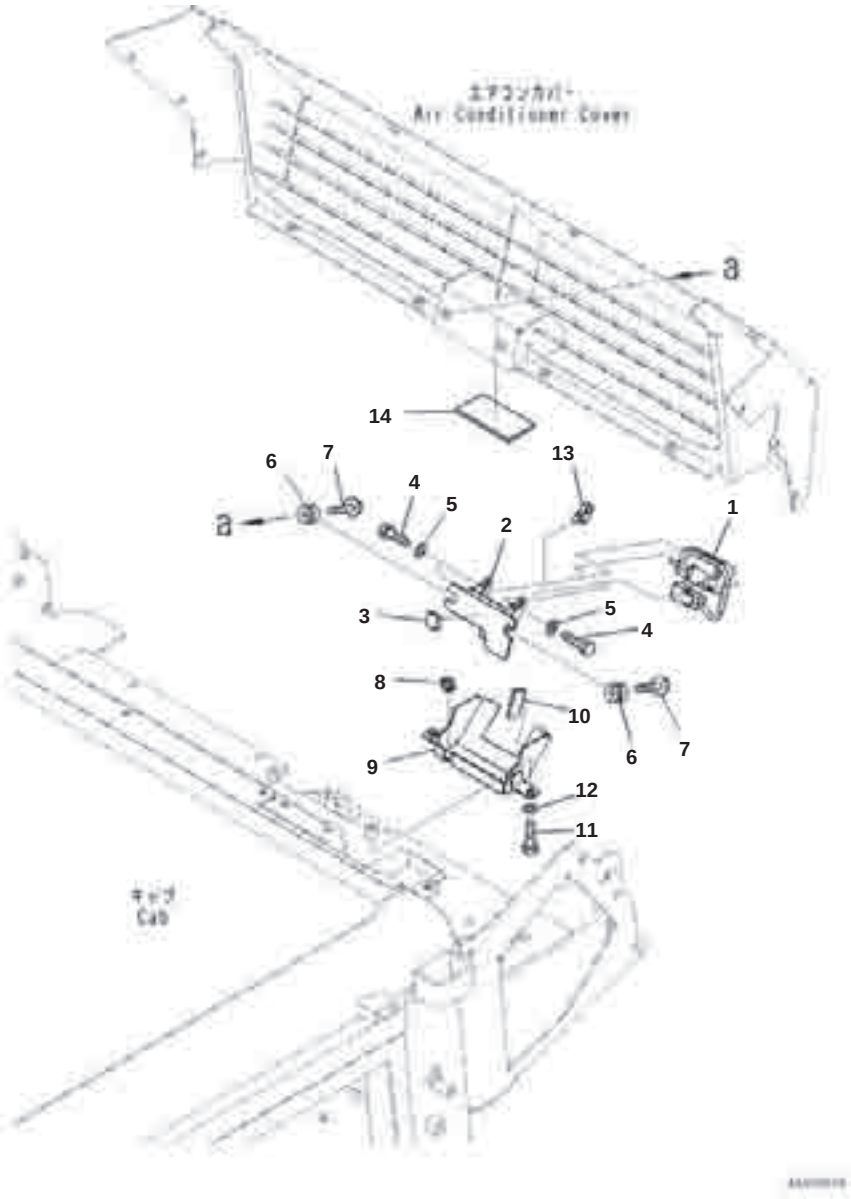

Index	Part Number	Description	Qty	Options
1	7835-33-2001	Camera	1	SN:B50001--
2	12Y-06-26272	Bracket	1	SN:B50001--
3	2A5-06-11851	▪ Sheet	1	SN:B50001--
4	01010-80616	Bolt	3	SN:B50001--
5	01643-30623	Washer	3	SN:B50001--
6	20Y-810-1240	Cushion	2	SN:B50001--
7	01435-00830	Bolt	2	SN:B50001--
8	175-06-81610	Grommet	1	SN:B50001--
9	12Y-06-26261	Cover	1	SN:B50001--
10	12Y-06-27720	▪ Seal	1	SN:B50001--
11	01010-D0816	Bolt	2	SN:B50001--
12	01643-70823	Washer	2	SN:B50001--
13	20Y-06-23940	Clip	1	SN:B50001--
14	12Y-978-3791	Sheet	1	SN:B50001--

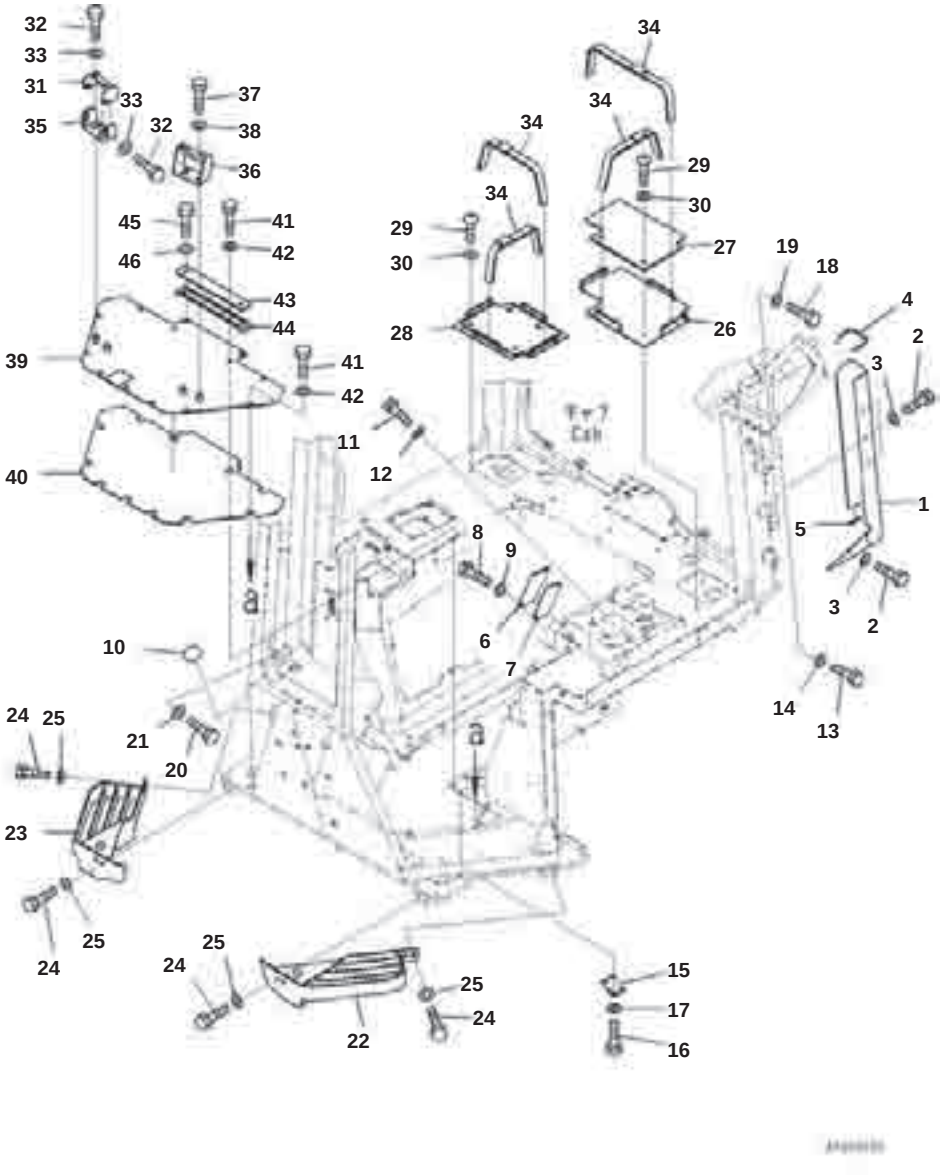

Index	Part Number	Description	Qty	Options
1	12Y-979-1642	Cover	1	SN:B50001--
2	01010-D0820	Bolt	4	SN:B50001--
3	01643-70823	Washer	4	SN:B50001--
4	12Y-978-3492	Trim	1	SN:B50001--
5	12Y-979-1860	Seal	1	SN:B50001--
6	11Y-06-46830	Cover	1	SN:B50001--
7	11Y-06-46840	･ Sheet	1	SN:B50001--
8	01010-D0820	Bolt	2	SN:B50001--
9	01643-70823	Washer	2	SN:B50001--
10	12Y-06-26760	Plate	1	SN:B50001--
11	01010-D1020	Bolt	1	SN:B50001--
12	01643-71032	Washer	1	SN:B50001--
13	01010-D1016	Bolt	2	SN:B50001--
14	01643-71032	Washer	2	SN:B50001--
15	12Y-06-26771	Plate	1	SN:B50001--
16	01010-81020	Bolt	2	SN:B50001--
17	01643-31032	Washer	2	SN:B50001--
18	01010-D0816	Bolt	4	SN:B50001--
19	01643-70823	Washer	4	SN:B50001--
20	01010-D1025	Bolt	2	SN:B50001--
21	01643-71032	Washer	2	SN:B50001--
22	12Y-54-27931	Bracket	1	SN:B50001--
23	12Y-54-27941	Bracket	1	SN:B50001--
24	01010-D1225	Bolt	8	SN:B50001--
25	01643-71232	Washer	8	SN:B50001--
26	12Y-54-28311	Bracket	1	SN:B50001--
27	12Y-54-28331	･ Sheet	1	SN:B50001--
28	12Y-54-28320	Bracket	1	SN:B50001--
29	01245-00620	Screw	8	SN:B50001--
30	01643-70623	Washer	8	SN:B50001--
31	12Y-43-21310	Plate	1	SN:B50001--
32	01010-D1020	Bolt	4	SN:B50001--
33	01643-71032	Washer	4	SN:B50001--
34	423-54-42790	Band	4	SN:B50001--
35	12Y-43-21321	Plate	1	SN:B50001--
36	12Y-43-21330	Bracket	1	SN:B50001--
37	01010-D1020	Bolt	2	SN:B50001--
38	01643-71032	Washer	2	SN:B50001--
39	12Y-978-2912	Cover	1	SN:B50001--
40	12Y-978-2920	･ Sheet	1	SN:B50001--
41	01010-81230	Bolt	11	SN:B50001--
42	01643-31232	Washer	11	SN:B50001--
43	17A-54-25560	Cover	1	SN:B50001--
44	17A-54-25570	･ Sheet	1	SN:B50001--
45	01010-81230	Bolt	2	SN:B50001--
46	01643-31232	Washer	2	SN:B50001--

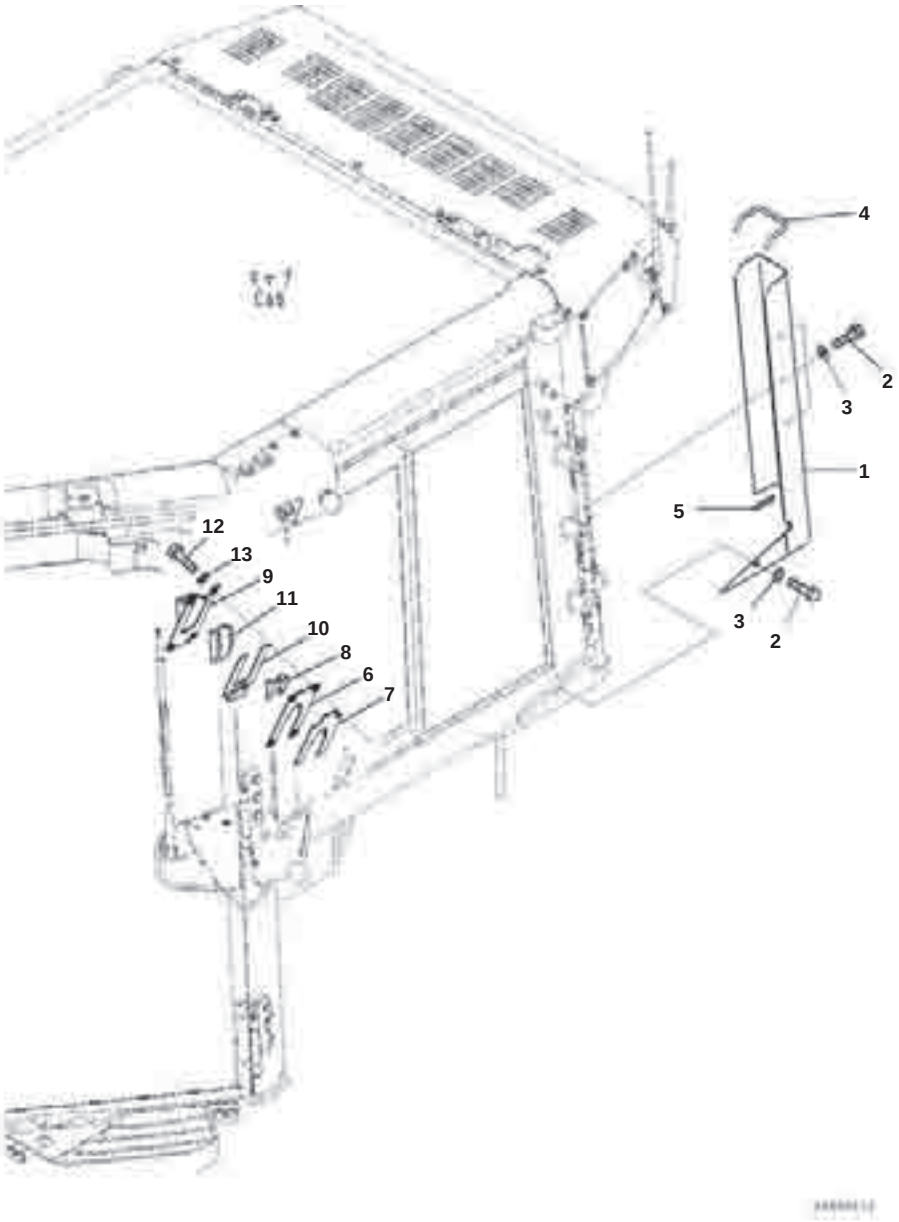

Index	Part Number	Description	Qty	Options
1	12Y-979-6670	Cover	1	SN:B50001--
2	01010-D0820	Bolt	4	SN:B50001--
3	01643-70823	Washer	4	SN:B50001--
4	12Y-978-3492	Trim	1	SN:B50001--
5	12Y-979-1860	Seal	1	SN:B50001--
6	12Y-06-26831	Cover	1	SN:B50001--
7	12Y-06-26841	▪ Sheet	1	SN:B50001--
8	12Y-06-26850	▪ Cushion	1	SN:B50001--
9	12Y-06-26880	Cover	1	SN:B50001--
10	12Y-06-26910	▪ Sheet	1	SN:B50001--
11	12Y-06-26920	▪ Cushion	1	SN:B50001--
12	01010-D0835	Bolt	4	SN:B50001--
13	01643-70823	Washer	4	SN:B50001--

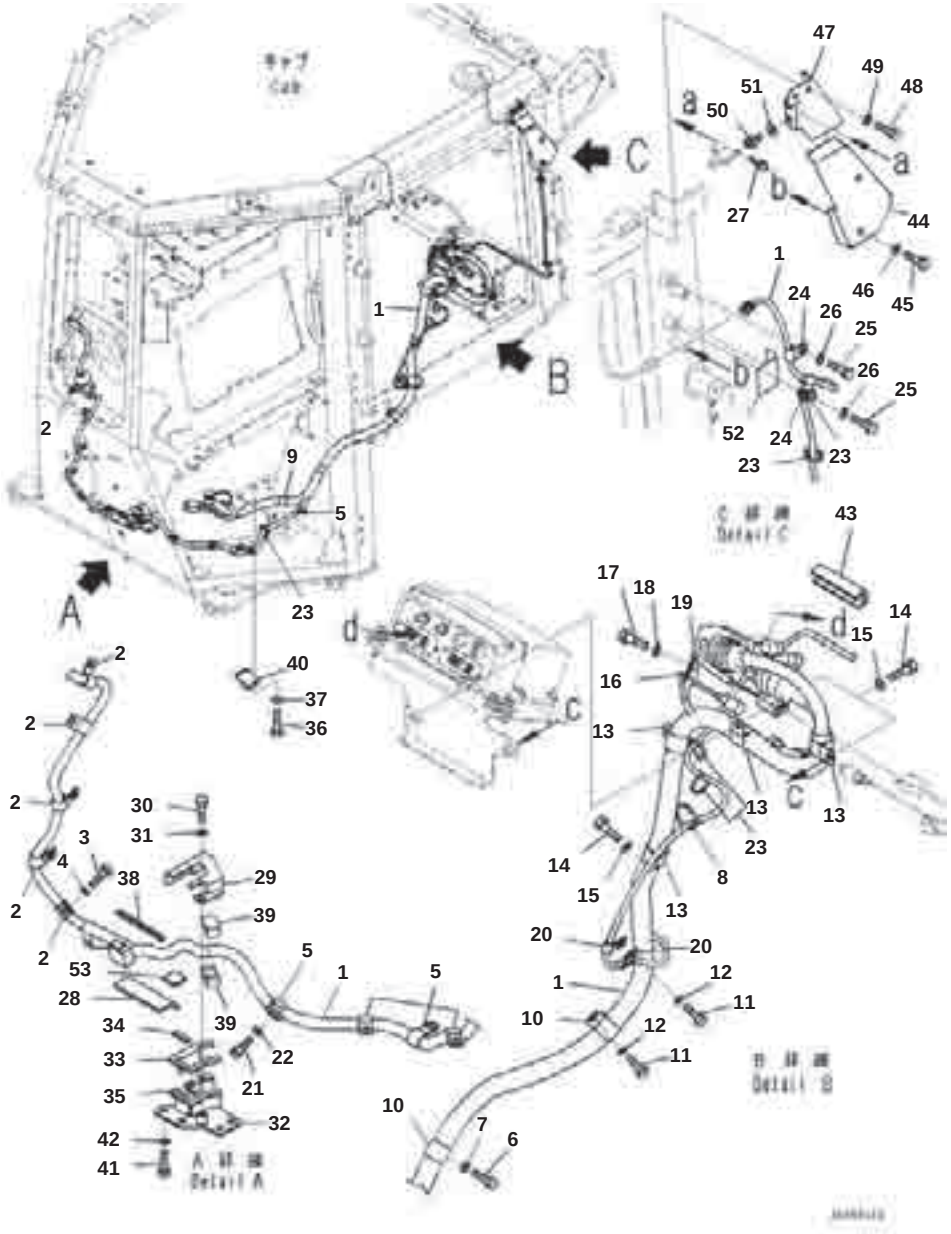

Index	Part Number	Description	Qty	Options
1	12Y-06-26871	Wiring Harness	1	SN:B50001--
2	04434-51410	Clip	6	SN:B50001--
3	01010-81020	Bolt	6	SN:B50001--
4	01643-31032	Washer	6	SN:B50001--
5	04434-51710	Clip	5	SN:B50001--
6	01010-81020	Bolt	3	SN:B50001--
7	01643-31032	Washer	3	SN:B50001--
8	08034-20519	Band	1	SN:B50001--
9	04434-52711	Clip	1	SN:B50001--
10	142-06-13540	Clip	2	SN:B50001--
11	01010-81020	Bolt	2	SN:B50001--
12	01643-31032	Washer	2	SN:B50001--
13	142-06-13540	Clip	4	SN:B50001--
14	01010-D1020	Bolt	4	SN:B50001--
15	01643-71032	Washer	4	SN:B50001--
16	04434-50610	Clip	1	SN:B50001--
17	01010-D1020	Bolt	1	SN:B50001--
18	01643-71032	Washer	1	SN:B50001--
19	04434-51010	Clip	1	SN:B50001--
20	04434-50810	Clip	2	SN:B50001--
21	01010-81020	Bolt	2	SN:B50001--
22	01643-31032	Washer	2	SN:B50001--
23	08034-20519	Band	7	SN:B50001--
24	04434-50810	Clip	2	SN:B50001--
25	01010-D1020	Bolt	2	SN:B50001--
26	01643-71032	Washer	2	SN:B50001--
27	01023-60308	Screw	1	SN:B50001--
28	12Y-978-3791	Sheet	1	SN:B50001--
29	12Y-06-26681	Cover	1	SN:B50001--
30	01010-80820	Bolt	2	SN:B50001--
31	01643-30823	Washer	2	SN:B50001--
32	12Y-06-26691	Cover	1	SN:B50001--
33	12Y-06-26781	▪ Sheet	1	SN:B50001--
34	12Y-06-26961	▪ Sheet	1	SN:B50001--
35	01580-00806	▪ Nut	1	SN:B50001--
36	01010-81020	Bolt	2	SN:B50001--
37	01643-31032	Washer	2	SN:B50001--
38	12Y-06-13380	Seal	1	SN:B50001--
39	12Y-06-26731	Cushion	2	SN:B50001--
40	12Y-06-26771	Plate	1	SN:B50001--
41	01010-81020	Bolt	2	SN:B50001--
42	01643-31032	Washer	2	SN:B50001--
43	12Y-978-3791	Sheet	1	SN:B50001--
44	12Y-06-26661	Cover	1	SN:B50001--
45	01010-D0816	Bolt	2	SN:B50001--
46	01643-70823	Washer	2	SN:B50001--
47	12Y-06-26951	Cover	1	SN:B50001--

D61EX-23M0 S/N B50001
Cab Electrical Unit, Wiring Harness

Index	Part Number	Description	Qty	Options
48	01010-D0816	Bolt	2	SN:B50001--
49	01643-70823	Washer	2	SN:B50001--
50	14X-06-63860	Plug	1	SN:B50001--
51	01643-71032	Washer	1	SN:B50001--
52	12Y-06-27731	Plate	1	SN:B50001--
53	12Y-06-28130	Seal	1	SN:B50001--

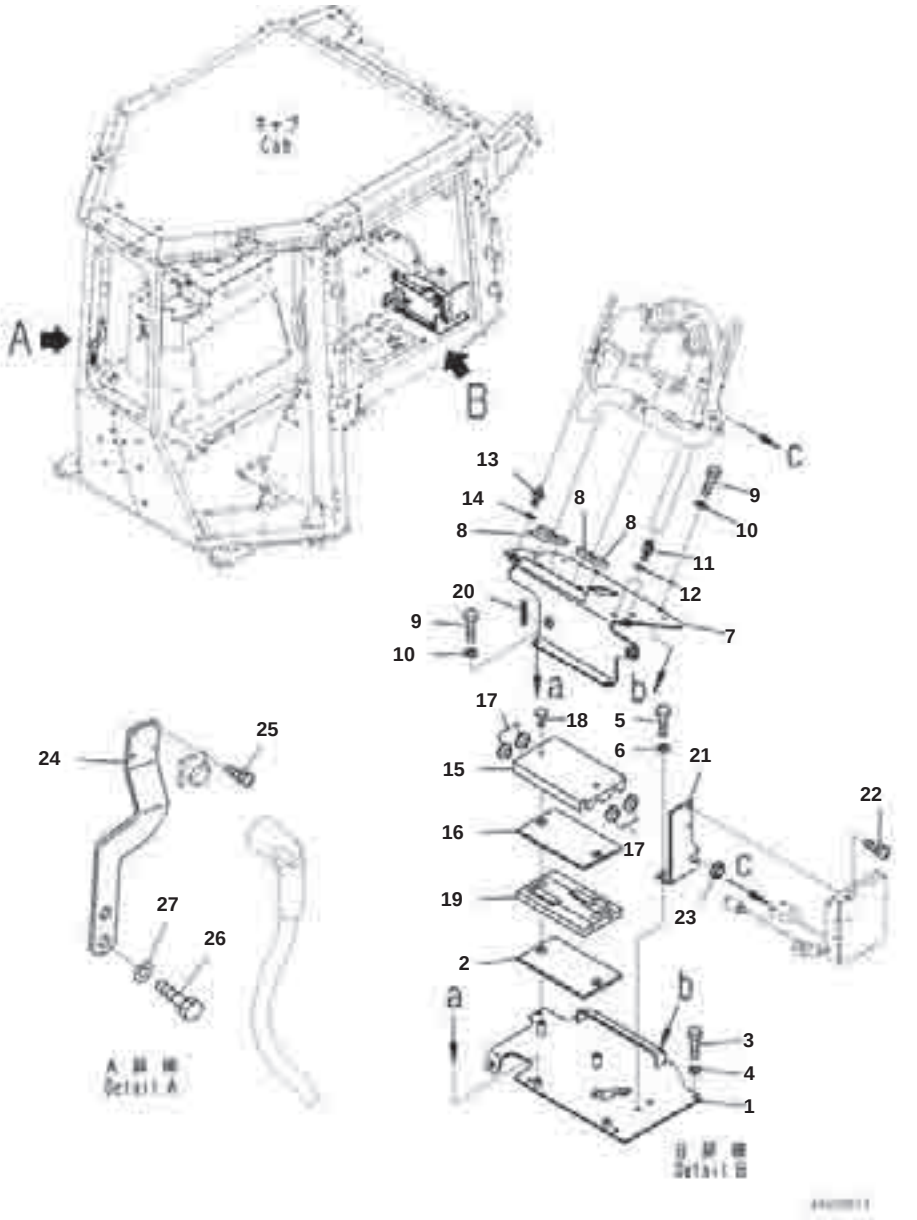

Index	Part Number	Description	Qty	Options
1	12Y-06-26611	Bracket	1	SN:B50001--
2	12Y-06-27760	▪ Cushion	1	SN:B50001--
3	01010-D0625	Bolt	4	SN:B50001--
4	01643-70623	Washer	4	SN:B50001--
5	01010-D0825	Bolt	2	SN:B50001--
6	01643-70823	Washer	2	SN:B50001--
7	12Y-06-26641	Bracket	1	SN:B50001--
8	14X-06-63391	▪ Sheet	4	SN:B50001--
9	01010-D0616	Bolt	4	SN:B50001--
10	01643-70623	Washer	4	SN:B50001--
11	14X-06-63850	Plug	2	SN:B50001--
12	01643-71032	Washer	2	SN:B50001--
13	14X-06-63860	Plug	1	SN:B50001--
14	01643-71032	Washer	1	SN:B50001--
15	12Y-06-27750	Cover	1	SN:B50001--
16	11Y-06-32540	▪ Cushion	1	SN:B50001--
17	20S-54-12310	▪ Grommet	4	SN:B50001--
18	01232-10616	Screw	2	SN:B50001--
19	12Y-06-26931	Cushion	1	SN:B50001--
20	12Y-978-2160	Seal	1	SN:B50001--
21	12Y-06-27740	Bracket	1	SN:B50001--
22	01023-20512	Screw	2	SN:B50001--
23	22W-22-17460	Grommet	1	SN:B50001--
24	12Y-06-26991	Bracket	1	SN:B50001--
25	01023-20208	Screw	4	SN:B50001--
26	01010-D1025	Bolt	2	SN:B50001--
27	01643-71032	Washer	2	SN:B50001--

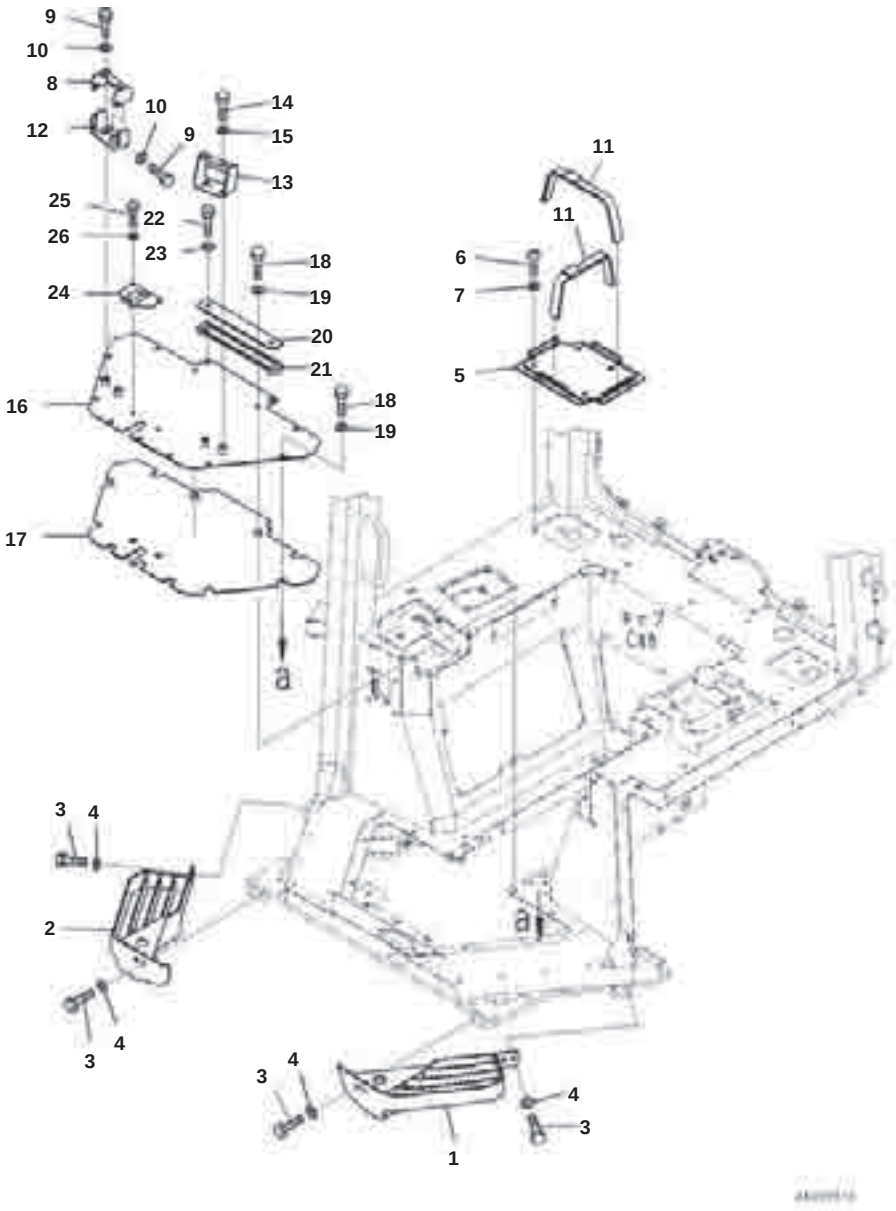

Index	Part Number	Description	Qty	Options
1	12Y-54-27931	Bracket	1	SN:B50001--
2	12Y-54-27941	Bracket	1	SN:B50001--
3	01010-D1225	Bolt	8	SN:B50001--
4	01643-71232	Washer	8	SN:B50001--
5	12Y-54-28320	Bracket	1	SN:B50001--
6	01245-00620	Screw	4	SN:B50001--
7	01643-70623	Washer	4	SN:B50001--
8	12Y-43-21310	Plate	1	SN:B50001--
9	01010-D1020	Bolt	4	SN:B50001--
10	01643-71032	Washer	4	SN:B50001--
11	423-54-42790	Band	2	SN:B50001--
12	12Y-43-21321	Plate	1	SN:B50001--
13	12Y-43-21330	Bracket	1	SN:B50001--
14	01010-D1020	Bolt	2	SN:B50001--
15	01643-71032	Washer	2	SN:B50001--
16	12Y-54-26721	Cover	1	SN:B50001--
17	12Y-54-26731	▪ Sheet	1	SN:B50001--
18	01010-81230	Bolt	11	SN:B50001--
19	01643-31232	Washer	11	SN:B50001--
20	17A-54-25560	Cover	1	SN:B50001--
21	17A-54-25570	▪ Sheet	1	SN:B50001--
22	01010-81230	Bolt	2	SN:B50001--
23	01643-31232	Washer	2	SN:B50001--
24	12Y-06-27771	Cover	1	SN:B50001--
25	01010-80820	Bolt	2	SN:B50001--
26	01643-30823	Washer	2	SN:B50001--

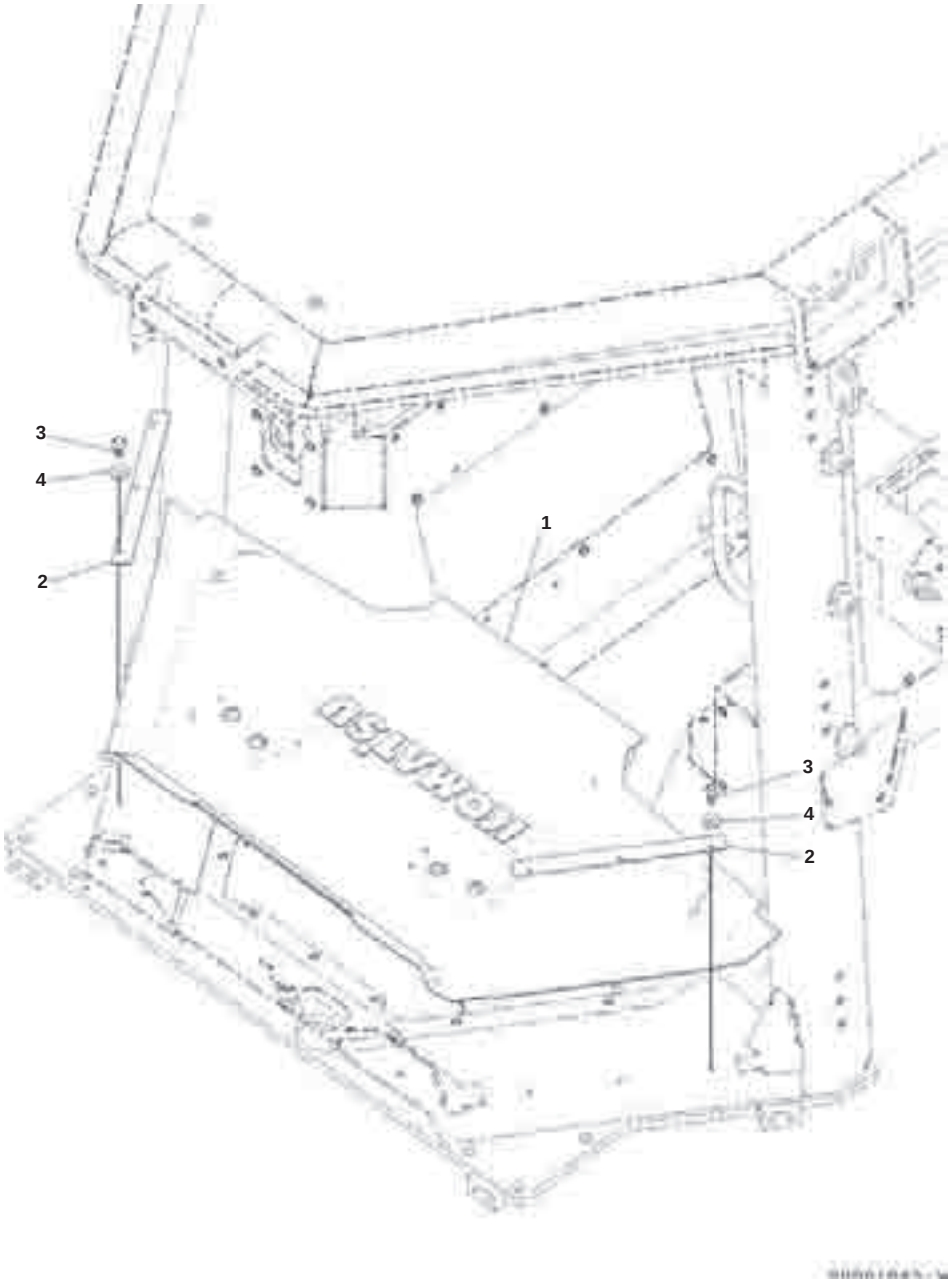

Index	Part Number	Description	Qty	Options
1	12Y-54-28711	Mat	1	SN:B50001--
2	12Y-978-2890	Plate	2	SN:B50001--
3	01245-00620	Screw	6	SN:B50001--
4	01643-70623	Washer	6	SN:B50001--

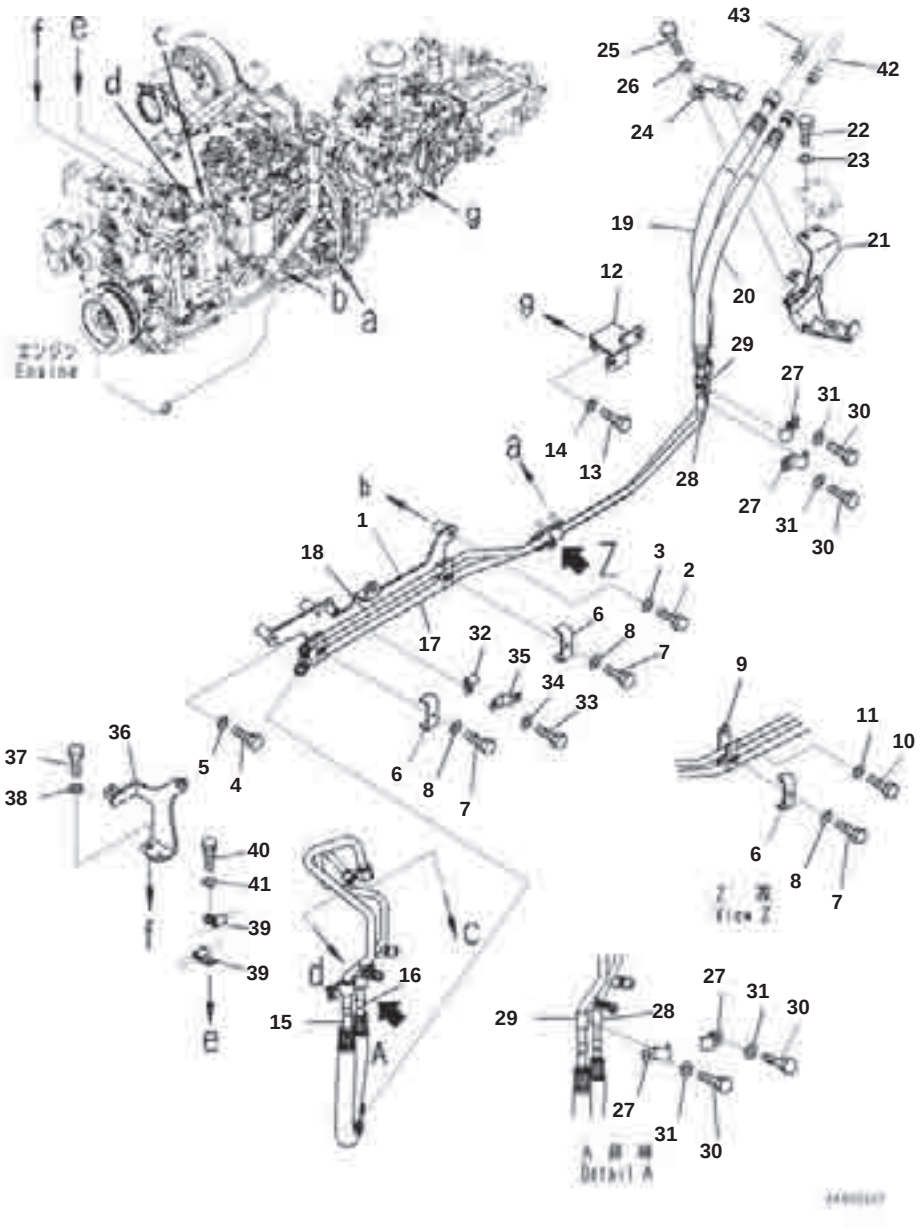

Air Conditioner Piping, Piping and Bracket

Index	Part Number	Description	Qty	Options
1	13Y-979-1122	Bracket	1	SN:B50001--
2	01010-81260	Bolt	1	SN:B50001--
3	01643-31232	Washer	1	SN:B50001--
4	01010-80855	Bolt	2	SN:B50001--
5	01643-30823	Washer	2	SN:B50001--
6	13Y-979-1221	Plate	3	SN:B50001--
8	01643-30823	Washer	3	SN:B50001--
9	13Y-979-1111	Bracket	1	SN:B50001--
10	01010-80825	Bolt	1	SN:B50001--
11	01643-30823	Washer	1	SN:B50001--
12	13Y-979-1143	Bracket	1	SN:B50001--
13	01010-81020	Bolt	2	SN:B50001--
14	01643-31032	Washer	2	SN:B50001--
15	13Y-979-1152	Hose	1	SN:B50001--
16	13Y-979-1162	Hose	1	SN:B50001--
17	13Y-979-1172	Tube	1	SN:B50001--
18	13Y-979-1182	Tube	1	SN:B50001--
19	13Y-979-1192	Hose	1	SN:B50001--
20	13Y-979-1212	Hose	1	SN:B50001--
21	12Y-06-26622	Bracket	1	SN:B50001--
22	01010-81025	Bolt	2	SN:B50001--
23	01643-31032	Washer	2	SN:B50001--
24	13Y-979-1440	Bracket	1	SN:B50001--
25	01010-81025	Bolt	1	SN:B50001--
26	01643-31032	Washer	1	SN:B50001--
27	11Y-979-8780	Clamp	4	SN:B50001--
28	11Y-979-8270	Cover	2	SN:B50001--
29	11Y-979-8280	Cover	2	SN:B50001--
30	01010-81020	Bolt	4	SN:B50001--
31	01643-31032	Washer	4	SN:B50001--
32	600-051-2080	Clip	1	SN:B50001--
33	01010-80840	Bolt	1	SN:B50001--
34	01643-30823	Washer	1	SN:B50001--
35	08193-20010	Clip	1	SN:B50001--
36	13Y-01-11952	Bracket	1	SN:B50001--
37	01010-81025	Bolt	2	SN:B50001--
38	01643-31032	Washer	2	SN:B50001--
39	600-051-2100	Clip	2	SN:B50001--
40	01010-81020	Bolt	1	SN:B50001--
41	01643-31032	Washer	1	SN:B50001--
42	(12Y-979-1472)	Tube		SN:B50001--
	(12Y-979-1472)	Tube		SN:B50001--
	(12Y-979-1472)	Tube		SN:B50001--
43	(12Y-979-1482)	Tube		SN:B50001--
	(12Y-979-1482)	Tube		SN:B50001--
	(12Y-979-1482)	Tube		SN:B50001--

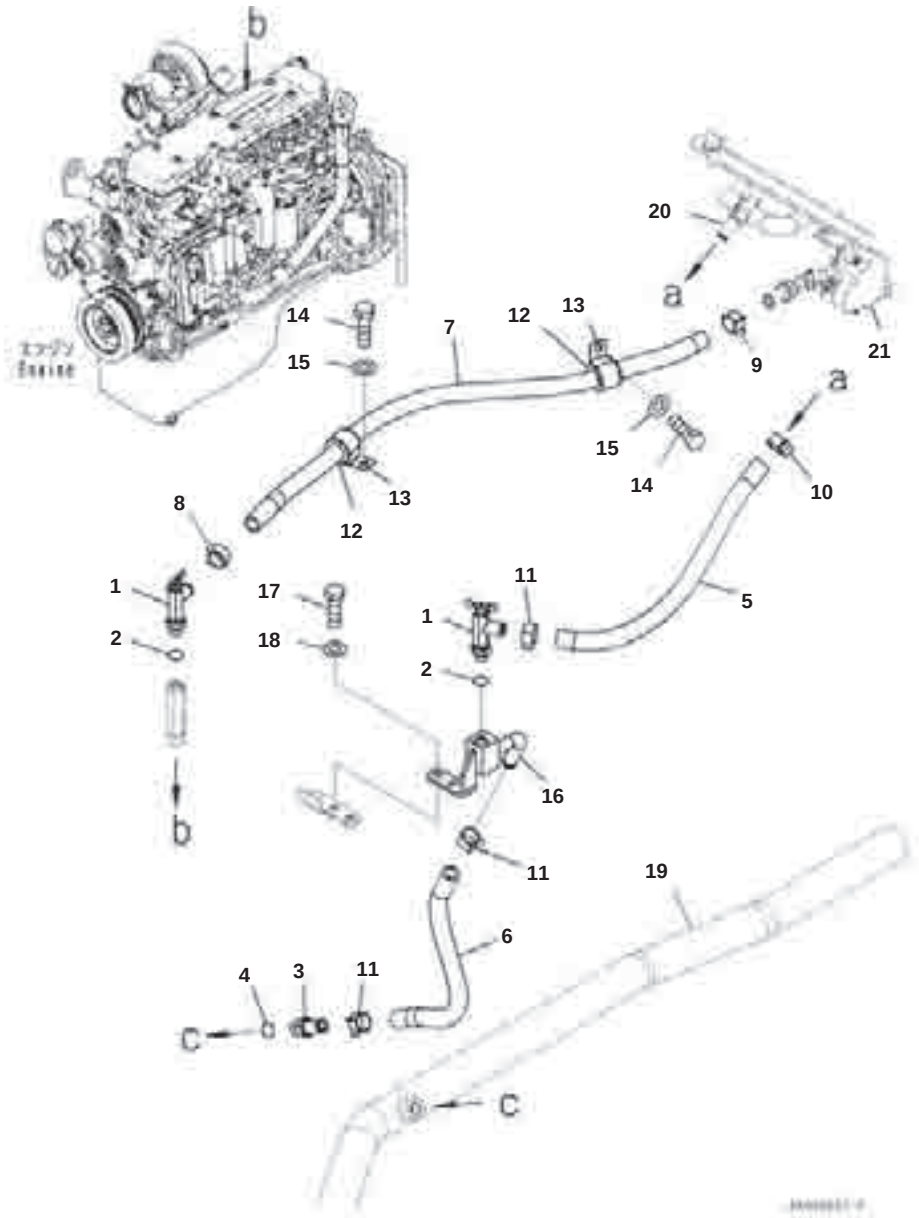

Air Conditioner Piping, Heater Piping

Index	Part Number	Description	Qty	Options
1	17A-911-4510	Valve	2	SN:B50001--
2	07002-11623	O-ring	2	SN:B50001--
3	13Y-03-15252	Joint	1	SN:B50001--
4	07002-11823	O-ring	1	SN:B50001--
5	13Y-979-1360	Hose	1	SN:B50001--
6	13Y-979-1370	Hose	1	SN:B50001--
8	09479-12400	Clip	1	SN:B50001--
9	09479-12400	Clip	1	SN:B50001--
10	09479-12400	Clip	1	SN:B50001--
11	09479-12400	Clip	3	SN:B50001--
12	07095-20523	Cushion	2	SN:B50001--
13	04434-53211	Clip	2	SN:B50001--
14	01010-81020	Bolt	2	SN:B50001--
15	01643-31032	Washer	2	SN:B50001--
16	13Y-979-1350	Joint	1	SN:B50001--
17	01010-81025	Bolt	2	SN:B50001--
18	01643-31032	Washer	2	SN:B50001--
19	(13Y-03-15221)	Tube		SN:B50001--
20	(12Y-979-1533)	Tube		SN:B50001--
	(12Y-979-1533)	Tube		SN:B50001--
	(12Y-979-1533)	Tube		SN:B50001--
	(12Y-979-1533)	Tube		SN:B50001--
21	(12Y-979-6160)	Valve		SN:B50001--
	(12Y-979-6160)	Valve		SN:B50001--
	(12Y-979-6160)	Valve		SN:B50001--
	(12Y-979-6160)	Valve		SN:B50001--

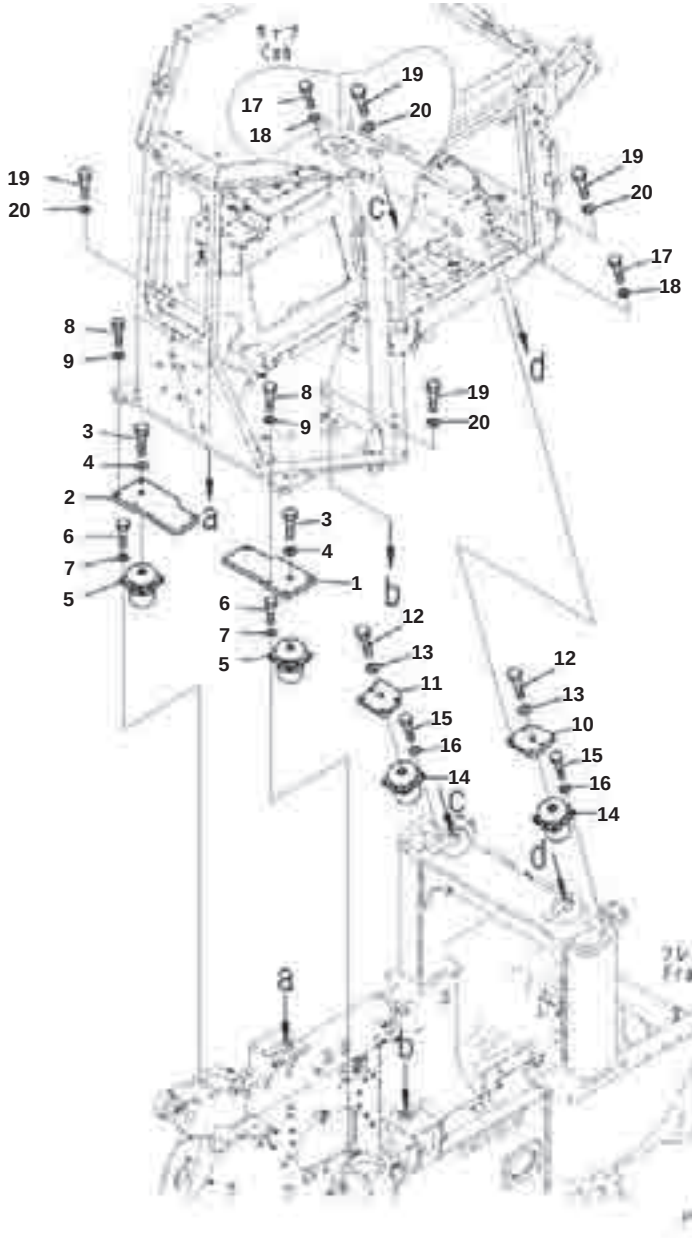

Index	Part Number	Description	Qty	Options
1	13Y-54-11352	Plate	1	SN:B50001--
2	13Y-54-11371	Plate	1	SN:B50001--
3	154-54-73130	Bolt	2	SN:B50001--
4	01643-32060	Washer	2	SN:B50001--
5	8A31-54-1110	Cushion	2	SN:B50001--
6	01010-81235	Bolt	8	SN:B50001--
8	198-54-42260	Bolt	8	SN:B50001--
9	01643-71645	Washer	8	SN:B50001--
10	13Y-54-11780	Plate	1	SN:B50001--
11	13Y-54-11790	Plate	1	SN:B50001--
12	01010-82460	Bolt	2	SN:B50001--
13	01643-32460	Washer	2	SN:B50001--
14	17A-54-46120	Cushion	2	SN:B50001--
15	01010-81435	Bolt	8	SN:B50001--
16	01643-31445	Washer, Flat	8	SN:B50001--
17	01010-81645	Bolt	8	SN:B50001--
18	01643-31645	Washer	8	SN:B50001--
19	01010-82460	Bolt	4	SN:B50001--
20	01643-32460	Washer	4	SN:B50001--

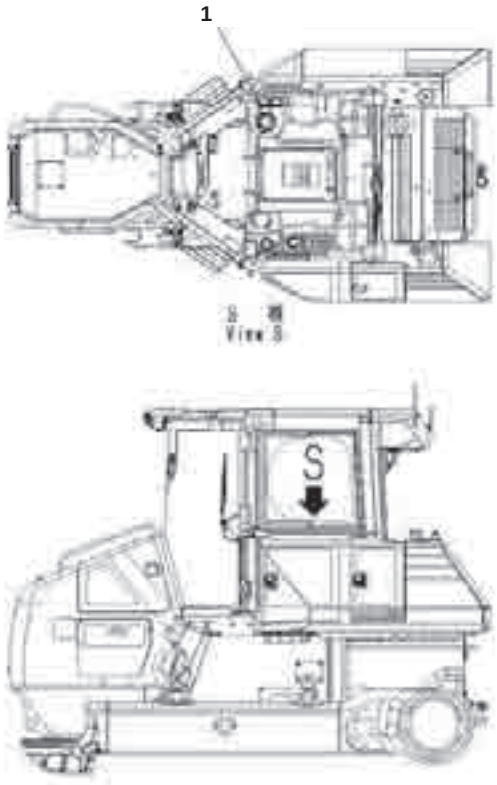

Index	Part Number	Description	Qty	Options
1	13Y-98-11150	Plate, Work Equipment Control Lever Pattern	1	SN:B50001--

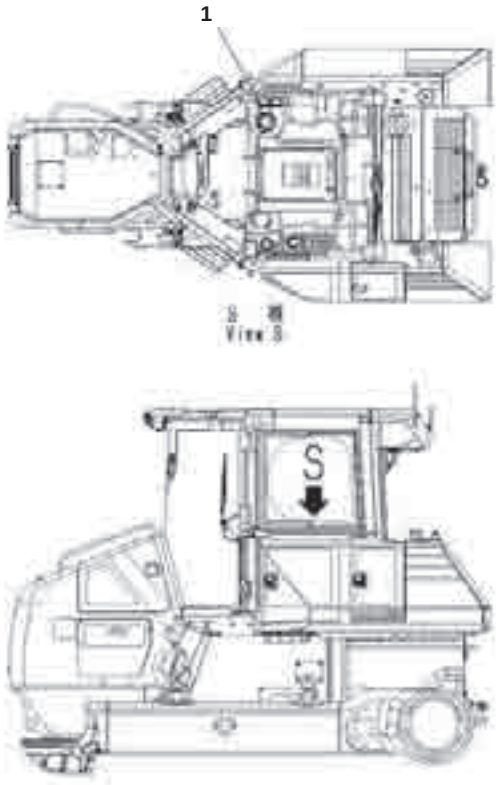

Index	Part Number	Description	Qty	Options
1	13Y-98-11160	Plate, Work Equipment Control Lever Pattern	1	SN:B50001--

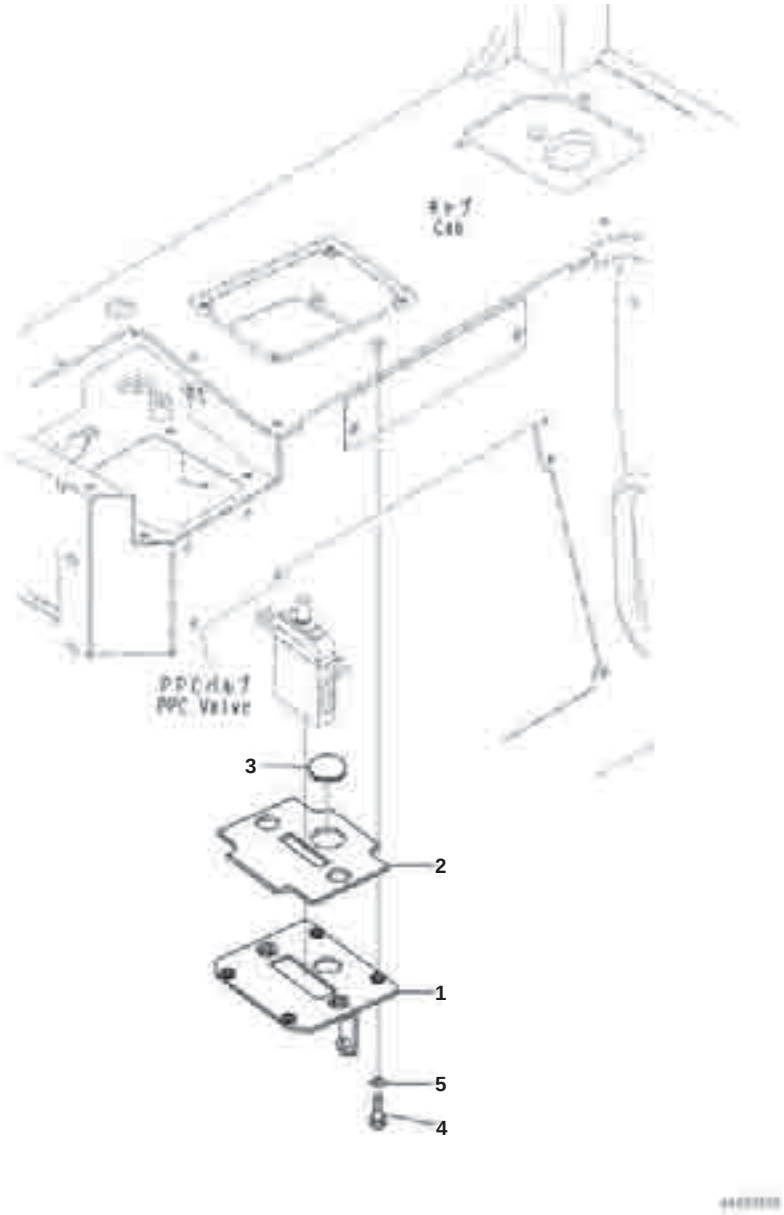

Rear Work Equipment Control, Bracket

Index	Part Number	Description	Qty	Options
1	13Y-960-1030	Bracket	1	SN:B50001--
2	13Y-960-1020	▪ Sheet	1	SN:B50001--
3	09415-02512	Cap	1	SN:B50001--
4	01010-80825	Bolt	4	SN:B50001--
5	01643-30823	Washer	4	SN:B50001--

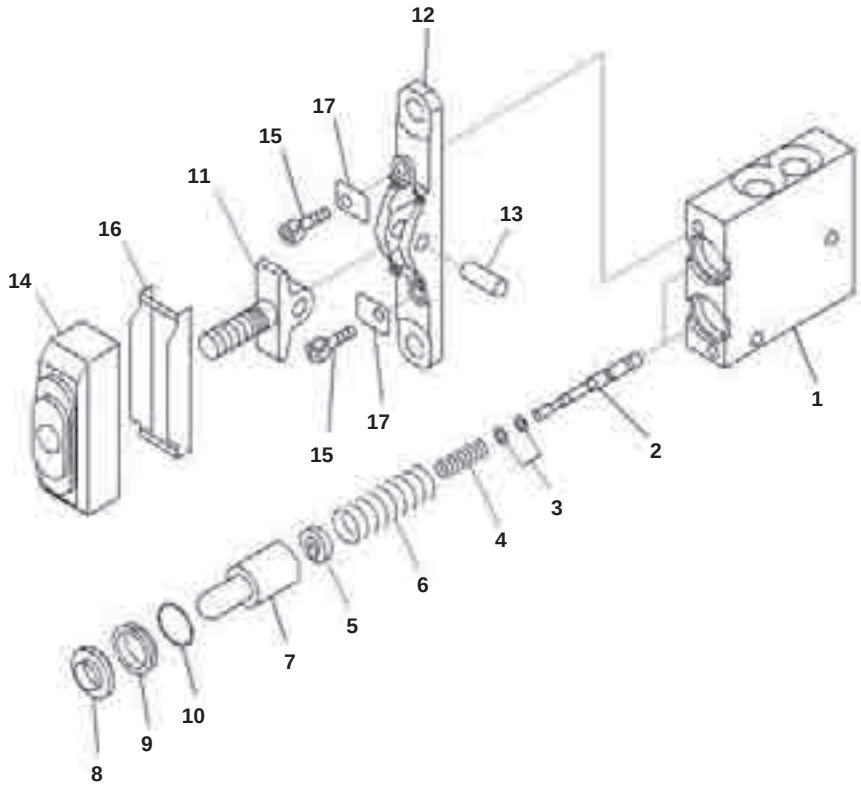

Rear Work Equipment Control, PPC Valve for Attachment

Index	Code	Part Number	Description	Qty	Options
		702-16-01230	Valve Assembly, PPC	1	SN:B50001--
1	C1		･ Body	1	SN:B50001--
2	C1		･ Valve	2	SN:B50001--
3		702-16-51140	･ Shim, T=0.30mm	2	SN:B50001--
		702-16-54670	･ Shim, T=0.20mm	4	SN:B50001--
4		702-16-54550	･ Spring	2	SN:B50001--
5		702-16-54571	･ Retainer	2	SN:B50001--
6		702-16-54560	･ Spring	2	SN:B50001--
7		702-16-53170	･ Piston	2	SN:B50001--
8		702-16-51270	･ Seal	2	SN:B50001--
9		702-16-54580	･ Collar	2	SN:B50001--
10		702-16-54590	･ O-ring	2	SN:B50001--
11	C1		･ Lever	1	SN:B50001--
12	C1		･ Plate	1	SN:B50001--
13	C1		･ Shaft	1	SN:B50001--
14		702-16-54641	･ Boot	1	SN:B50001--
15		01252-30625	･ Bolt	2	SN:B50001--
16		702-16-54660	･ Plate	1	SN:B50001--
17		702-16-54650	･ Plate	2	SN:B50001--

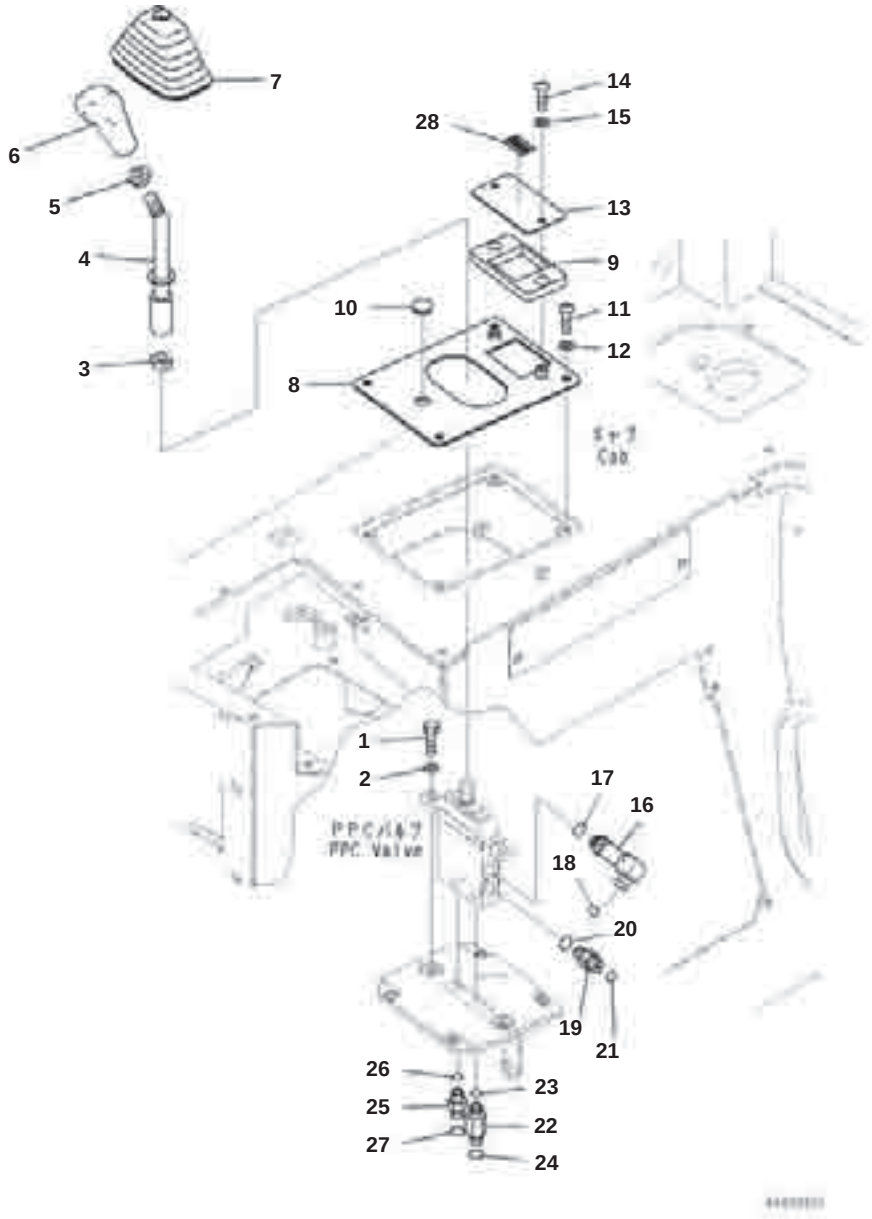

Rear Work Equipment Control, Lever

Index	Part Number	Description	Qty	Options
1	01010-81030	Bolt	2	SN:B50001--
2	01643-31032	Washer	2	SN:B50001--
3	01583-11408	Nut	1	SN:B50001--
4	12Y-78-21160	Lever	1	SN:B50001--
5	20T-43-71190	Nut	1	SN:B50001--
6	17A-43-42240	Knob	1	SN:B50001--
7	421-43-28431	Boot	1	SN:B50001--
8	13Y-960-1120	Bracket	1	SN:B50001--
9	12Y-960-1590	Seal	1	SN:B50001--
10	09415-01008	Cap	1	SN:B50001--
11	01245-00820	Screw	4	SN:B50001--
12	01643-70823	Washer	4	SN:B50001--
13	13Y-960-1220	Plate	1	SN:B50001--
14	01245-00616	Screw	2	SN:B50001--
15	01643-70623	Washer	2	SN:B50001--
16	12Y-62-13332	Elbow	1	SN:B50001--
17	07000-12011	O-ring	1	SN:B50001--
18	02896-11009	O-ring	1	SN:B50001--
19	21W-62-44510	Nipple	1	SN:B50001--
20	07000-12011	O-ring	1	SN:B50001--
21	02896-11008	O-ring	1	SN:B50001--
22	13Y-62-12350	Nipple	1	SN:B50001--
23	07000-12011	O-ring	1	SN:B50001--
24	02896-11008	O-ring	1	SN:B50001--
25	11Y-62-12140	Nipple	1	SN:B50001--
26	07000-12011	O-ring	1	SN:B50001--
27	02896-11008	O-ring	1	SN:B50001--
28	14X-78-21180	Plate	1	SN:B50001--

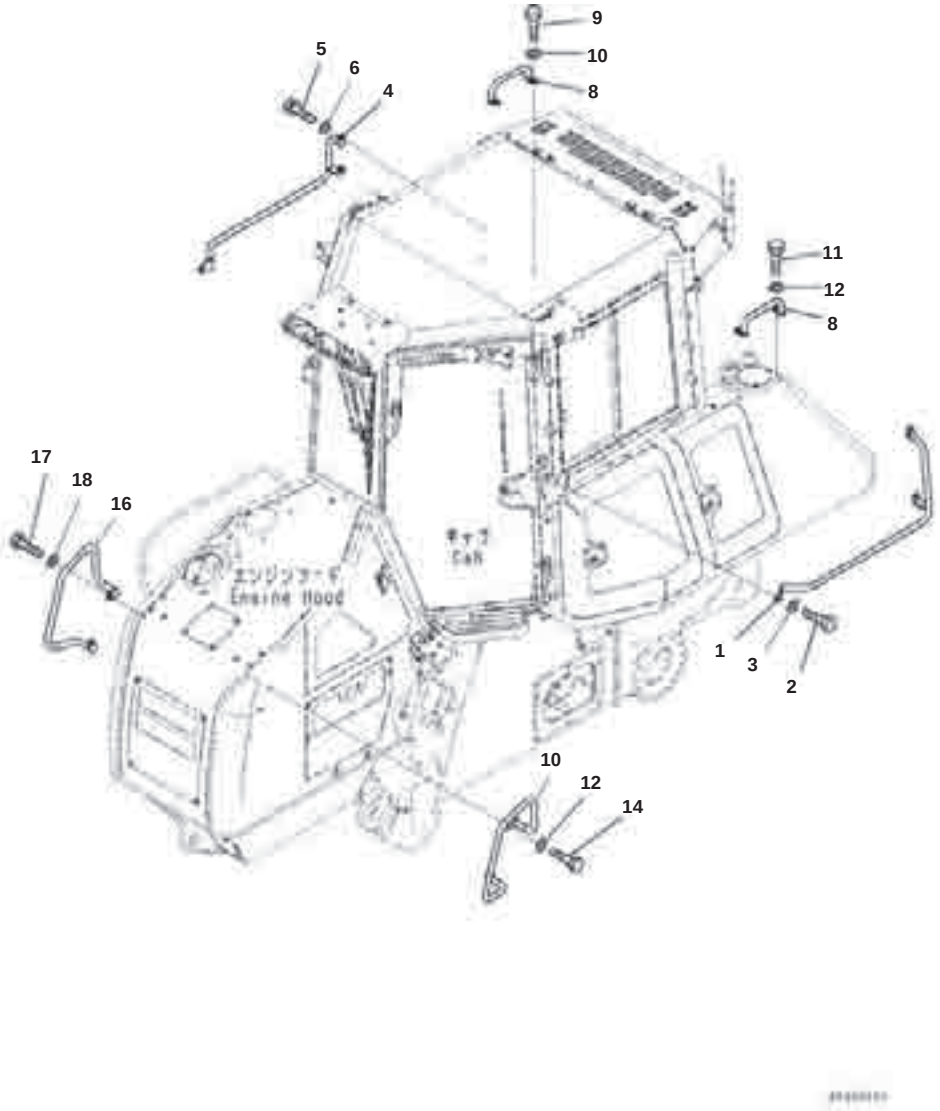

Handrail

Index	Part Number	Description	Qty	Options
1	13Y-54-12713	Handrail	1	SN:B50001--
2	01010-D1230	Bolt	3	SN:B50001--
3	01643-71232	Washer	3	SN:B50001--
4	11Y-54-44511	Handrail	1	SN:B50001--
5	01010-D1230	Bolt	3	SN:B50001--
6	01643-71232	Washer	3	SN:B50001--
7	13Y-54-11362	Handrail	1	SN:B50001--
8	13Y-54-11362	Handrail	1	SN:B50001--
9	01010-81225	Bolt	4	SN:B50001--
10	01643-31232	Washer	4	SN:B50001--
11	01010-81235	Bolt	2	SN:B50001--
12	01643-31232	Washer	2	SN:B50001--
13	13Y-54-11381	Handrail	1	SN:B50001--
14	01010-81235	Bolt	2	SN:B50001--
15	01643-31232	Washer	2	SN:B50001--
16	13Y-54-11391	Handrail	1	SN:B50001--
17	01010-81235	Bolt	2	SN:B50001--
18	01643-31232	Washer	2	SN:B50001--

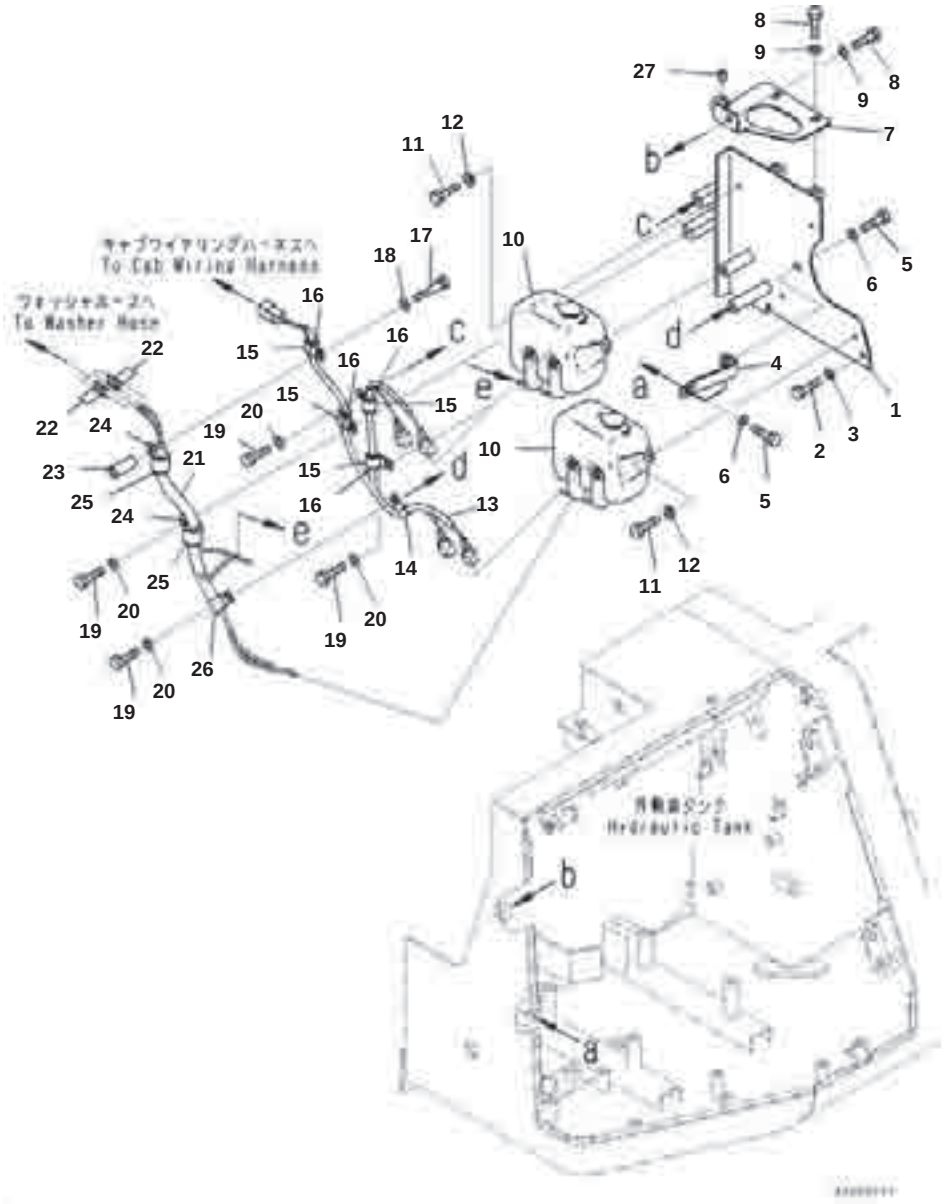

Index	Part Number	Description	Qty	Options
1	13Y-911-1113	Bracket	1	SN:B50001--
2	01010-81020	Bolt	2	SN:B50001--
3	01643-31032	Washer	2	SN:B50001--
4	13Y-911-1172	Bracket	1	SN:B50001--
5	01010-81025	Bolt	2	SN:B50001--
6	01643-31032	Washer	2	SN:B50001--
7	13Y-911-1180	Bracket	1	SN:B50001--
8	01010-81020	Bolt	3	SN:B50001--
9	01643-31032	Washer	3	SN:B50001--
10	13Y-911-1210	Tank Assembly	2	SN:B50001--
11	01010-80620	Bolt	4	SN:B50001--
12	21T-43-11770	Washer	4	SN:B50001--
13	13Y-06-12874	Wiring Harness	1	SN:B50001--
14	04434-51010	Clip	1	SN:B50001--
15	04434-51710	Clip	4	SN:B50001--
16	07095-20211	Cushion	4	SN:B50001--
17	01010-81075	Bolt	1	SN:B50001--
18	01643-31032	Washer	1	SN:B50001--
19	01010-81020	Bolt	4	SN:B50001--
20	01643-31032	Washer	4	SN:B50001--
21	13Y-911-1132	Hose Assembly	1	SN:B50001--
22	195-979-8590	▪ Valve	4	SN:B50001--
23	14X-54-26640	Collar	1	SN:B50001--
24	04434-52711	Clip	2	SN:B50001--
25	07095-20419	Cushion	2	SN:B50001--
26	04434-51710	Clip	1	SN:B50001--
27	415-54-11980	Cushion	1	SN:B50001--

GUARD AND RELATED PARTS

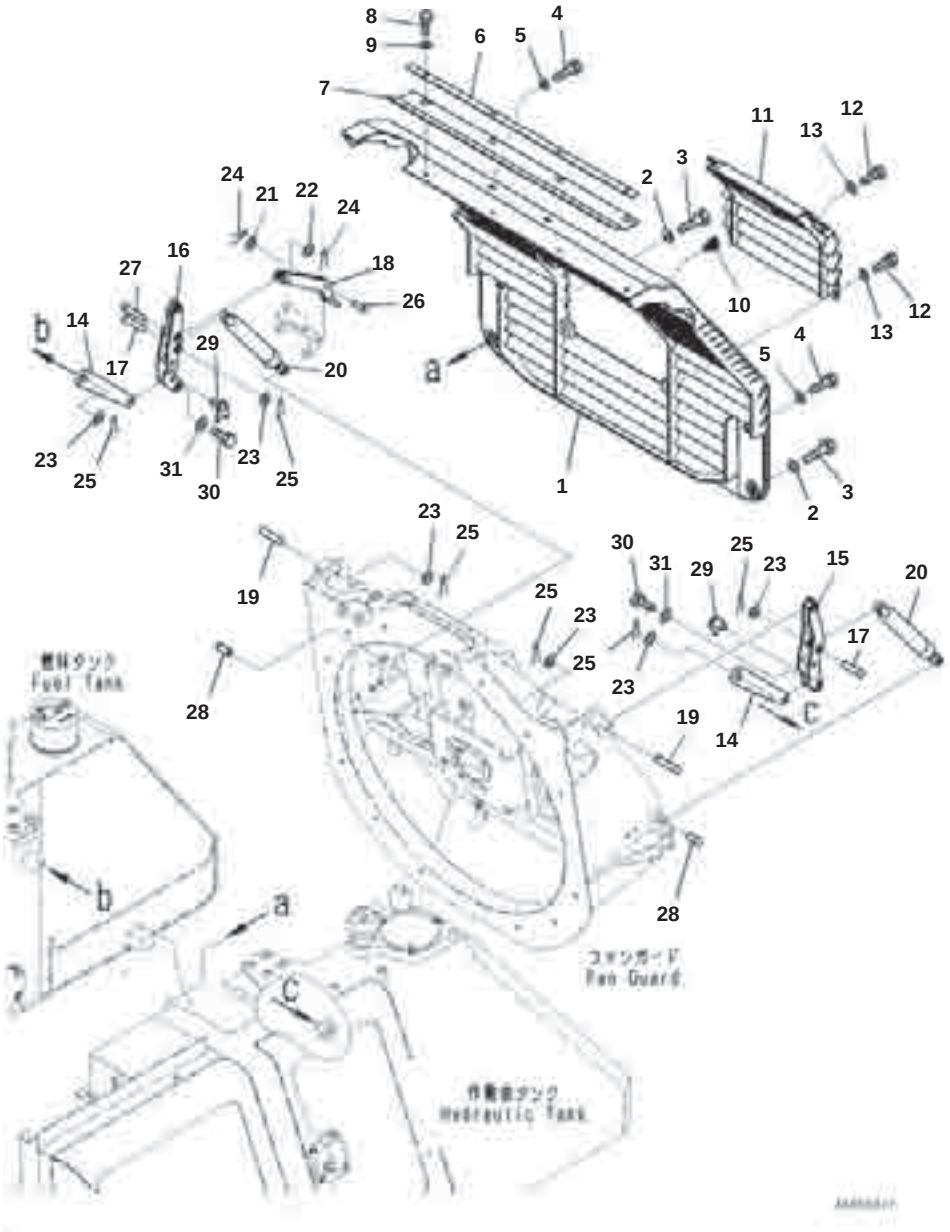

Radiator Guard

Index	Part Number	Description	Qty	Options
1	13Y-03-13115	Mask	1	SN:B50001--
2	14X-54-56780	Washer	2	SN:B50001--
3	01010-D1650	Bolt	2	SN:B50001--
4	01010-D1235	Bolt	4	SN:B50001--
5	01643-71232	Washer	4	SN:B50001--
6	13Y-03-13122	Sheet	1	SN:B50001--
7	13Y-03-13171	Sheet	1	SN:B50001--
8	01010-D0820	Bolt	4	SN:B50001--
9	01643-70823	Washer	4	SN:B50001--
10	22L-46-12150	Cap	8	SN:B50001--
11	13Y-03-13252	Mask	1	SN:B50001--
12	01010-D1225	Bolt	4	SN:B50001--
13	01643-71232	Washer	4	SN:B50001--
14	13Y-03-13131	Link	2	SN:B50001--
15	13Y-03-13142	Link	1	SN:B50001--
16	13Y-03-13153	Link	1	SN:B50001--
17	8220-74-1610	Pin	2	SN:B50001--
18	13Y-03-13181	Link	1	SN:B50001--
19	13Y-03-13190	Pin	2	SN:B50001--
20	13Y-03-13214	Spring, Gas	2	SN:B50001--
21	01640-21016	Washer	1	SN:B50001--
22	01640-21223	Washer, Flat	1	SN:B50001--
23	01640-21426	Washer, Flat	6	SN:B50001--
24	04050-13020	Pin, Cotter	2	SN:B50001--
25	04050-14025	Pin, Cotter	6	SN:B50001--
26	04205-11035	Pin	1	SN:B50001--
27	418-844-1310	Pin	1	SN:B50001--
28	04205-11435	Pin	2	SN:B50001--
29	13Y-03-13221	Pin	2	SN:B50001--
30	01010-81016	Bolt	2	SN:B50001--
31	417-43-16210	Washer	2	SN:B50001--

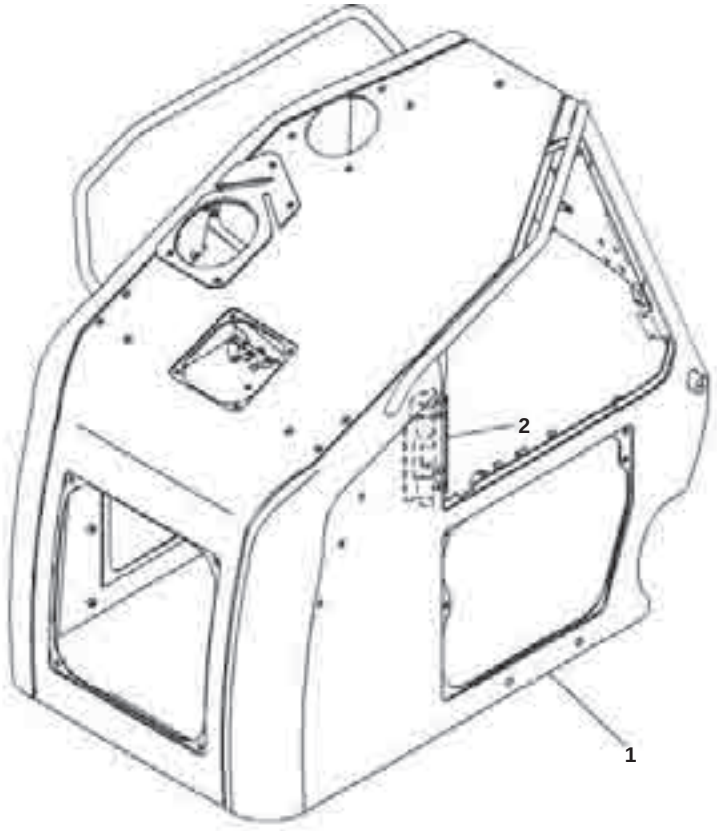

Engine Hood, Without 3D Machine Control Plug and Play, Hood

Index	Part Number	Description	Qty	Options
1	13Y-54-11114	Hood	1	SN:B50001--
2	13Y-54-11212	▪ Hinge,Welded	1	SN:B50001--

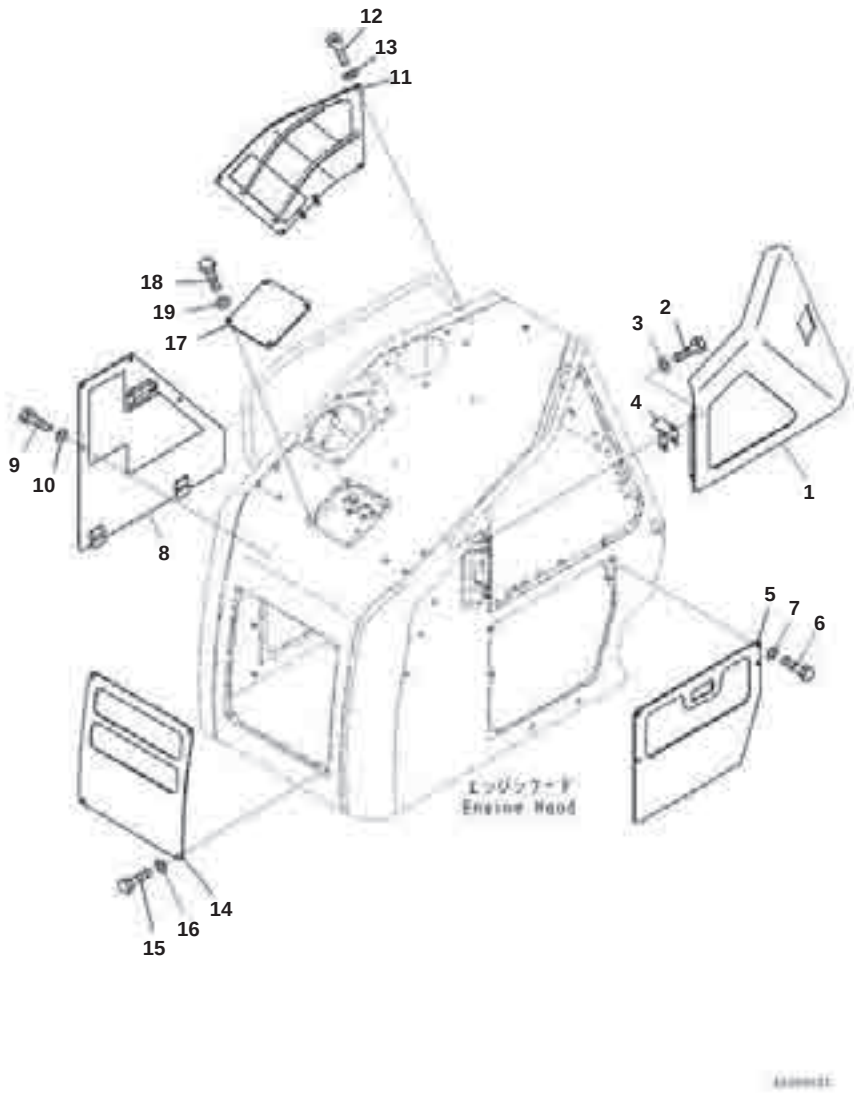

Engine Hood, Without 3D Machine Control Plug and Play, Door Cover

Index	Part Number	Description	Qty	Options
1	13Y-54-11122	Cover	1	SN:B50001--
2	01010-81230	Bolt	4	SN:B50001--
3	01643-31232	Washer	4	SN:B50001--
4	22H-01-11580	Shim, T=1.0mm	8	SN:B50001--
5	13Y-54-11133	Cover	1	SN:B50001--
6	01010-81225	Bolt	4	SN:B50001--
7	01643-31232	Washer	4	SN:B50001--
8	13Y-54-11142	Cover	1	SN:B50001--
9	01010-81225	Bolt	4	SN:B50001--
10	01643-31232	Washer	4	SN:B50001--
11	13Y-54-11152	Cover	1	SN:B50001--
12	01010-81225	Bolt	4	SN:B50001--
13	01643-31232	Washer	4	SN:B50001--
14	13Y-54-11162	Cover	1	SN:B50001--
15	01010-81225	Bolt	4	SN:B50001--
16	01643-31232	Washer	4	SN:B50001--
17	13Y-54-11831	Plate	1	SN:B50001--
18	01010-81025	Bolt	4	SN:B50001--
19	01643-31032	Washer	4	SN:B50001--

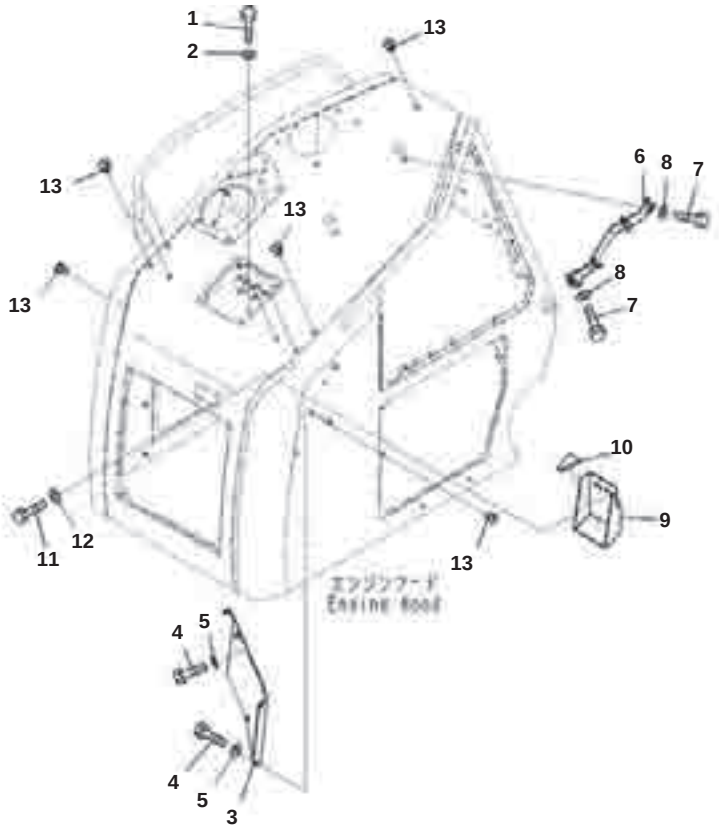

Engine Hood, Without 3D Machine Control Plug and Play, Bracket

Index	Part Number	Description	Qty	Options
1	01010-81025	Bolt	1	SN:B50001--
2	01643-31032	Washer	1	SN:B50001--
3	13Y-54-13112	Cover	1	SN:B50001--
4	01010-81025	Bolt	3	SN:B50001--
5	01643-31032	Washer	3	SN:B50001--
6	13Y-06-14371	Bracket	1	SN:B50001--
7	01010-81025	Bolt	2	SN:B50001--
8	01643-31032	Washer	2	SN:B50001--
9	13Y-06-17280	Bracket	1	SN:B50001--
10	13Y-06-11290	▪ Seal	1	SN:B50001--
11	01010-81030	Bolt	2	SN:B50001--
12	01643-31032	Washer	2	SN:B50001--
13	21J-46-12550	Cap	9	SN:B50001--

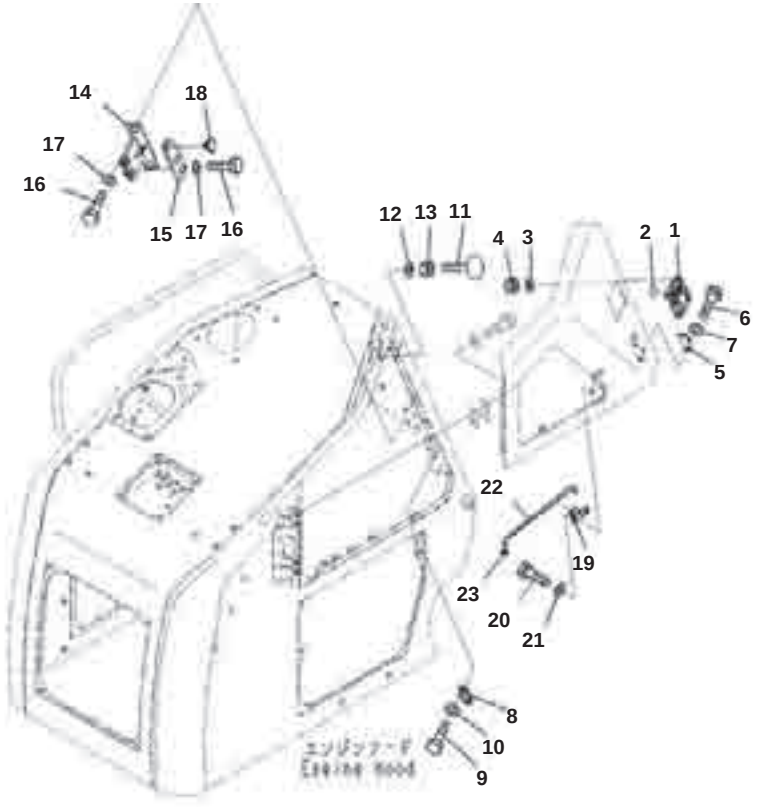

Engine Hood, Without 3D Machine Control Plug and Play, Door Related Parts

Index	Part Number	Description	Qty	Options
1	13Y-54-11270	Lock	1	SN:B50001--
2	14X-54-62250	Plate	1	SN:B50001--
3	01643-30623	Washer	4	SN:B50001--
4	01580-10605	Nut	4	SN:B50001--
5	205-54-53550	Dovetail	1	SN:B50001--
6	01010-80616	Bolt	2	SN:B50001--
7	01643-30623	Washer	2	SN:B50001--
8	205-54-51971	Dovetail	1	SN:B50001--
9	01010-80616	Bolt	2	SN:B50001--
10	01643-30623	Washer	2	SN:B50001--
11	20Y-54-11611	Stopper	1	SN:B50001--
12	01643-31032	Washer	1	SN:B50001--
13	01580-11008	Nut	1	SN:B50001--
14	13Y-54-11242	Bracket	1	SN:B50001--
15	13Y-54-11251	Plate	1	SN:B50001--
16	01010-81230	Bolt	4	SN:B50001--
17	01643-31232	Washer	4	SN:B50001--
18	14X-54-12960	Stopper	1	SN:B50001--
19	198-54-19150	Spring	1	SN:B50001--
20	01010-80616	Bolt	2	SN:B50001--
21	01643-30623	Washer	2	SN:B50001--
22	13Y-54-11221	Bar	1	SN:B50001--
23	20Y-54-18980	Grommet	1	SN:B50001--

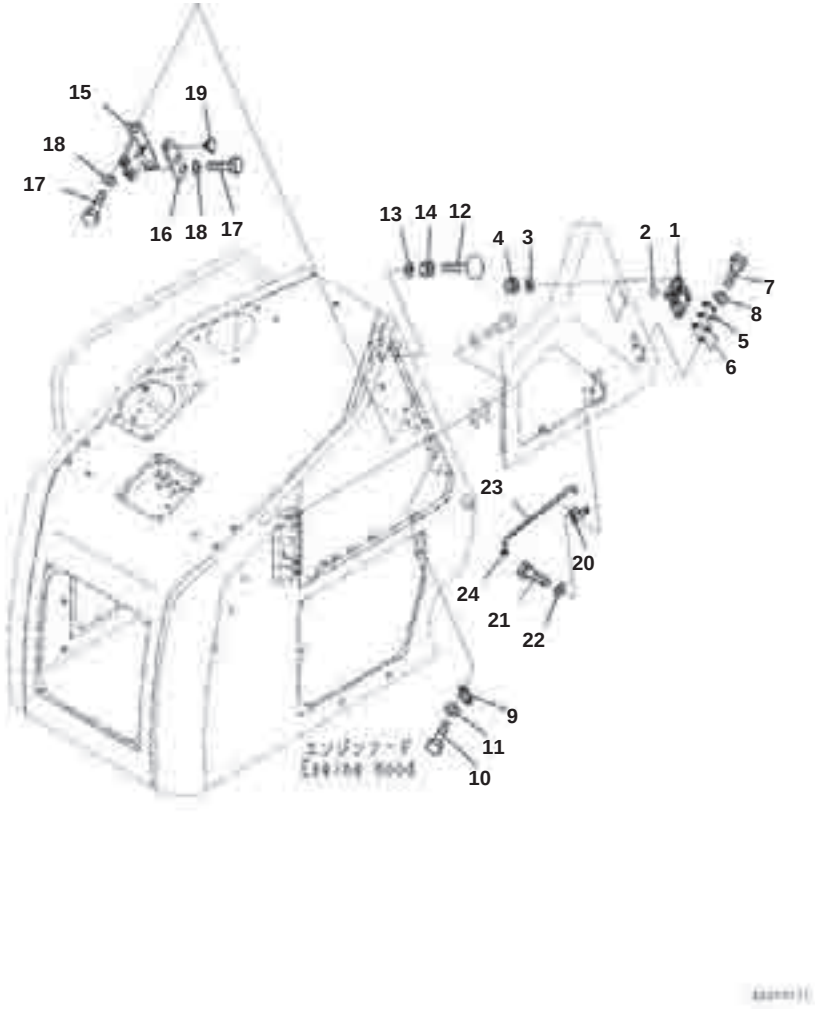

Engine Hood, Without 3D Machine Control Plug and Play, Door Related Parts

Index	Part Number	Description	Qty	Options
1	13Y-54-11270	Lock	1	SN:B50001--
2	14X-54-62250	Plate	1	SN:B50001--
3	01643-30623	Washer	4	SN:B50001--
4	01580-10605	Nut	4	SN:B50001--
5	205-54-53550	Dovetail	1	SN:B50001--
6	14X-54-53860	Spacer, T=1mm	4	SN:B50001--
7	01010-80616	Bolt	2	SN:B50001--
8	01643-30623	Washer	2	SN:B50001--
9	205-54-51971	Dovetail	1	SN:B50001--
10	01010-80616	Bolt	2	SN:B50001--
11	01643-30623	Washer	2	SN:B50001--
12	20Y-54-11611	Stopper	1	SN:B50001--
13	01643-31032	Washer	1	SN:B50001--
14	01580-11008	Nut	1	SN:B50001--
15	13Y-54-11242	Bracket	1	SN:B50001--
16	13Y-54-11251	Plate	1	SN:B50001--
17	01010-81230	Bolt	4	SN:B50001--
18	01643-31232	Washer	4	SN:B50001--
19	14X-54-12960	Stopper	1	SN:B50001--
20	198-54-19150	Spring	1	SN:B50001--
21	01010-80616	Bolt	2	SN:B50001--
22	01643-30623	Washer	2	SN:B50001--
23	13Y-54-11221	Bar	1	SN:B50001--
24	20Y-54-18980	Grommet	1	SN:B50001--

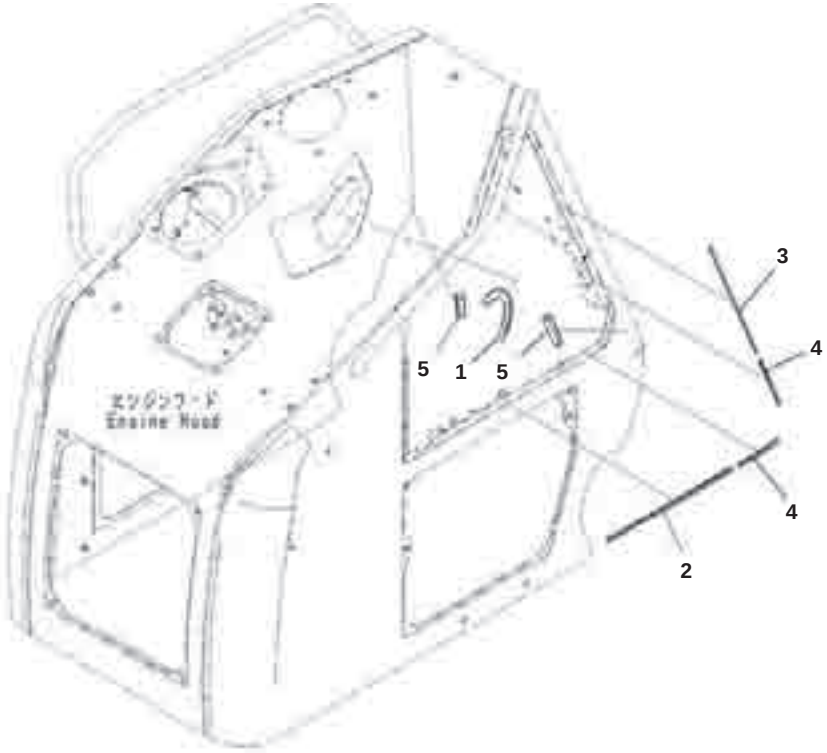

Engine Hood, Without 3D Machine Control Plug and Play, Seal and Sheet

Index	Part Number	Description	Qty	Options
1	13Y-54-11930	Seal	1	SN:B50001--
2	13Y-54-11552	Sheet	1	SN:B50001--
3	13Y-54-11541	Sheet	1	SN:B50001--
4	13Y-54-11561	Sheet	2	SN:B50001--
5	13Y-54-11460	Seal	2	SN:B50001--

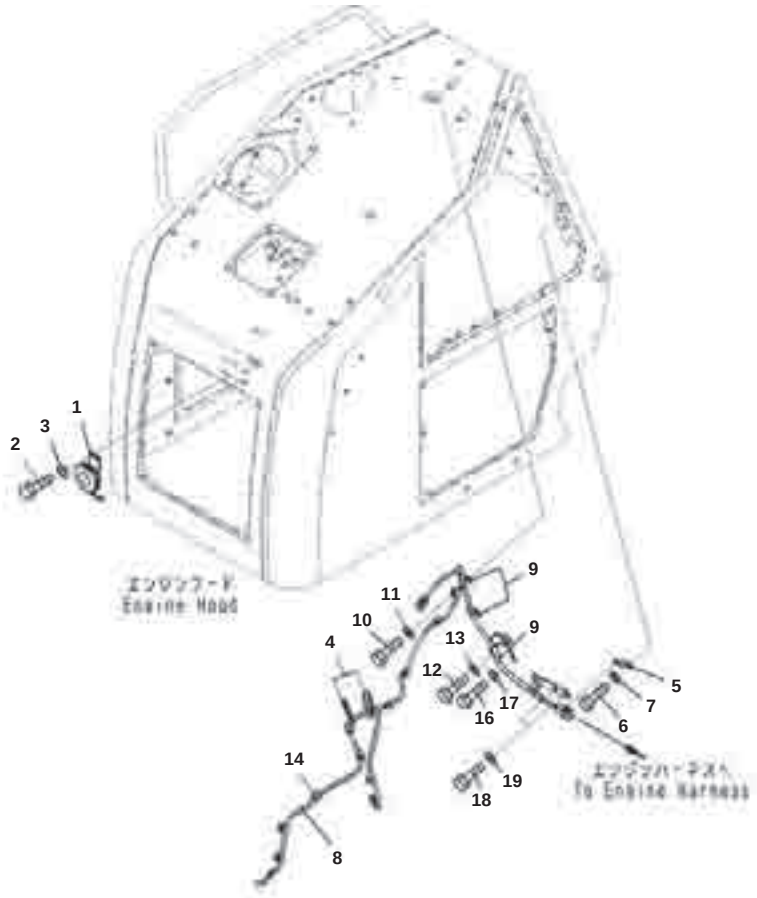

Engine Hood, Without 3D Machine Control Plug and Play, Horn

Index	Part Number	Description	Qty	Options
1	13Y-06-17210	Horn	1	SN:B50001--
2	01010-80816	Bolt	2	SN:B50001--
3	01643-30823	Washer	2	SN:B50001--
4	176-911-4160	Grommet	2	SN:B50001--
5	08193-20010	Clip	1	SN:B50001--
6	01010-81020	Bolt	1	SN:B50001--
7	01643-31032	Washer	1	SN:B50001--
8	13Y-06-17871	Wiring Harness	1	SN:B50001--
9	04434-51010	Clip	3	SN:B50001--
10	01010-81020	Bolt	2	SN:B50001--
11	01643-31032	Washer	2	SN:B50001--
12	01010-81020	Bolt	1	SN:B50001--
13	01643-31032	Washer	1	SN:B50001--
14	08211-10720	Clip	12	SN:B50001--
15	13Y-06-17A50	Plate	1	SN:B50001--
16	01010-81016	Bolt	1	SN:B50001--
17	01643-31032	Washer	1	SN:B50001--
18	01010-81225	Bolt	2	SN:B50001--
19	01643-31232	Washer	2	SN:B50001--

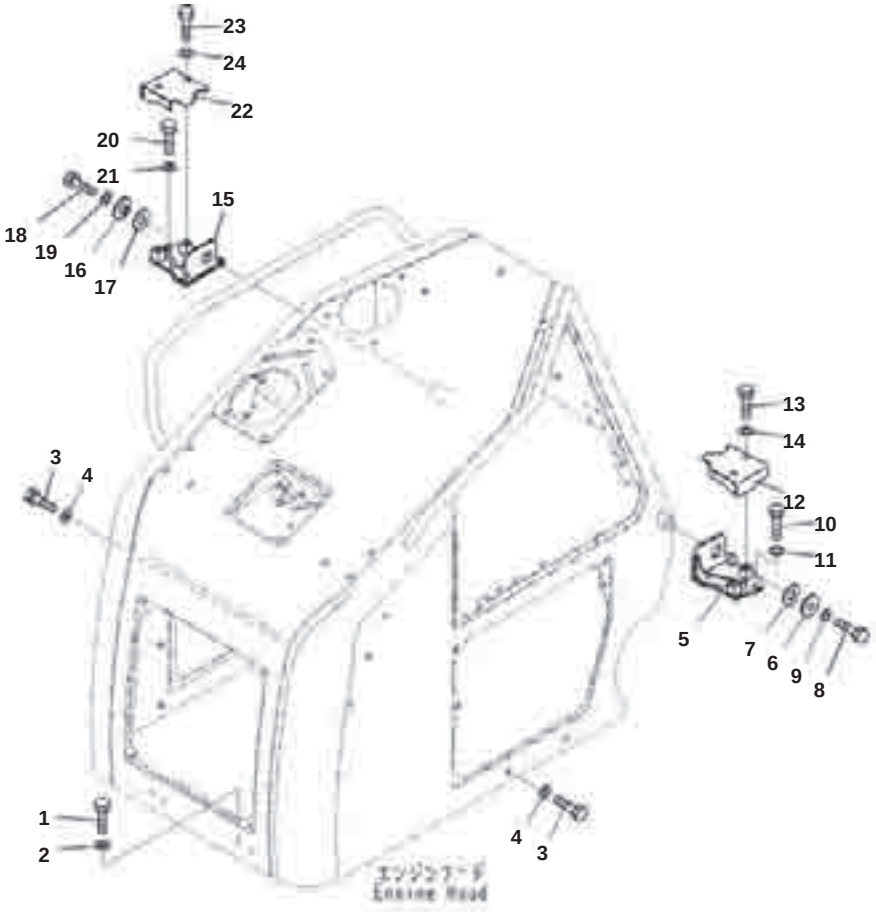

Engine Hood, Without 3D Machine Control Plug and Play, Bracket and Cover

Index	Part Number	Description	Qty	Options
1	01010-81640	Bolt	4	SN:B50001--
2	01643-31645	Washer	4	SN:B50001--
3	01010-81640	Bolt	4	SN:B50001--
4	01643-31645	Washer	4	SN:B50001--
5	13Y-54-12123	Bracket	1	SN:B50001--
6	13Y-54-11331	Spacer	1	SN:B50001--
7	13Y-54-11341	Spacer	1	SN:B50001--
8	01010-81650	Bolt	1	SN:B50001--
9	01643-31645	Washer	1	SN:B50001--
10	01010-81230	Bolt	3	SN:B50001--
11	01643-31232	Washer	3	SN:B50001--
12	13Y-54-12152	Cover	1	SN:B50001--
13	01010-81230	Bolt	2	SN:B50001--
14	01643-31232	Washer	2	SN:B50001--
15	13Y-54-12133	Bracket	1	SN:B50001--
16	13Y-54-11331	Spacer	1	SN:B50001--
17	13Y-54-11341	Spacer	1	SN:B50001--
18	01010-81650	Bolt	1	SN:B50001--
19	01643-31645	Washer	1	SN:B50001--
20	01010-81230	Bolt	3	SN:B50001--
21	01643-31232	Washer	3	SN:B50001--
22	13Y-54-12162	Cover	1	SN:B50001--
23	01010-81230	Bolt	2	SN:B50001--
24	01643-31232	Washer	2	SN:B50001--

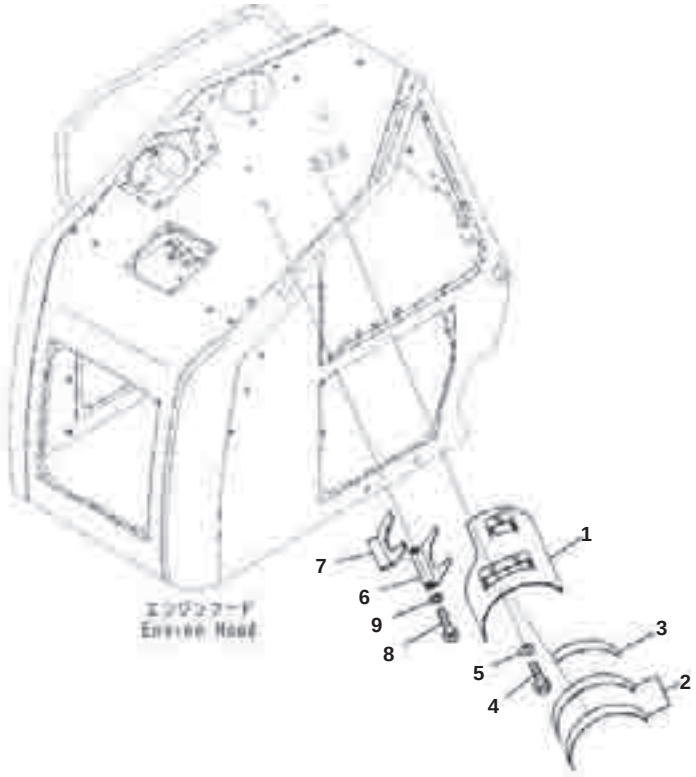

Engine Hood, Without 3D Machine Control Plug and Play, Related Parts

Index	Part Number	Description	Qty	Options
1	13Y-54-11231	Bracket	1	SN:B50001--
2	13Y-54-11511	▪ Sheet	2	SN:B50001--
3	13Y-54-11521	▪ Sheet	1	SN:B50001--
4	01010-81225	Bolt	3	SN:B50001--
5	01643-31232	Washer	3	SN:B50001--
6	13Y-54-11311	Bracket	1	SN:B50001--
7	13Y-54-11490	Sheet	1	SN:B50001--
8	01010-81025	Bolt	2	SN:B50001--
9	01643-31032	Washer	2	SN:B50001--

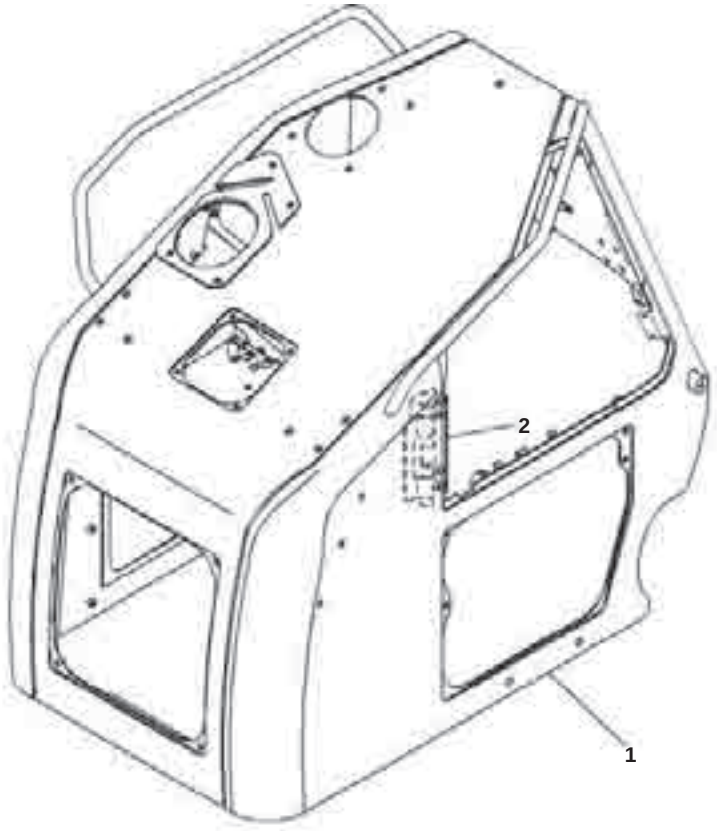

Engine Hood, With 3D Machine Control Plug and Play, Hood

Index	Part Number	Description	Qty	Options
1	13Y-54-11114	Hood	1	SN:B50001--
2	13Y-54-11212	▪ Hinge,Welded	1	SN:B50001--

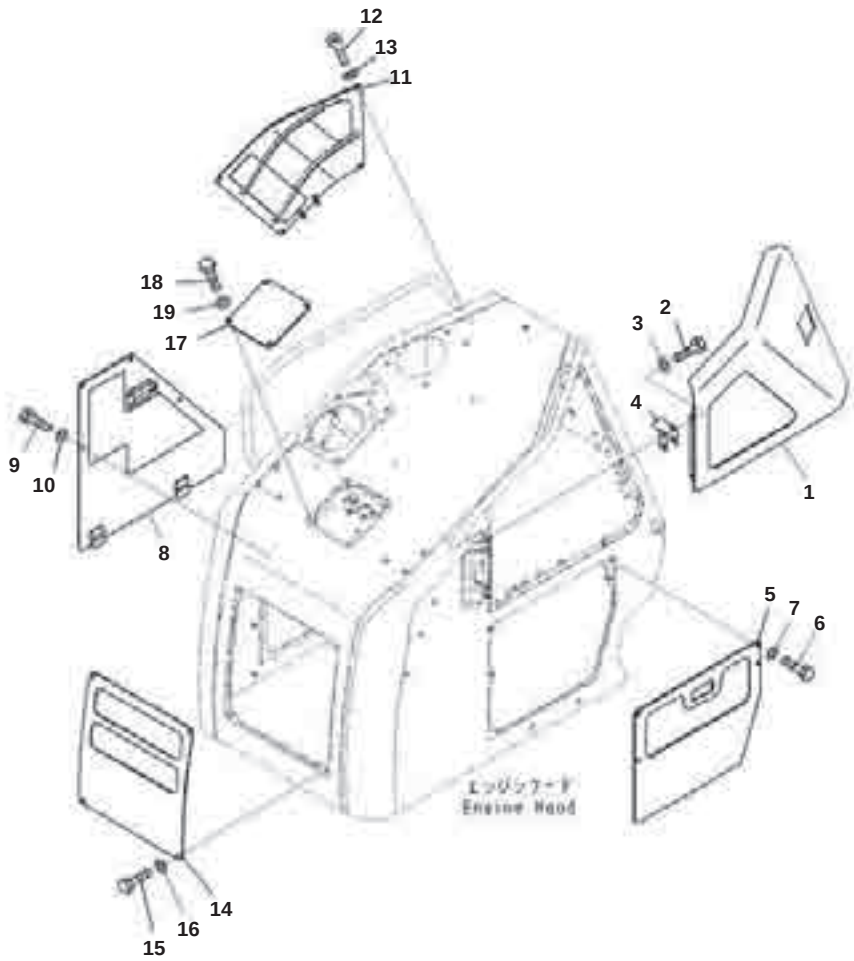

Index	Part Number	Description	Qty	Options
1	13Y-54-11122	Cover	1	SN:B50001--
2	01010-81230	Bolt	4	SN:B50001--
3	01643-31232	Washer	4	SN:B50001--
4	22H-01-11580	Shim, T=1.0mm	8	SN:B50001--
5	13Y-54-11133	Cover	1	SN:B50001--
6	01010-81225	Bolt	4	SN:B50001--
7	01643-31232	Washer	4	SN:B50001--
8	13Y-54-11142	Cover	1	SN:B50001--
9	01010-81225	Bolt	4	SN:B50001--
10	01643-31232	Washer	4	SN:B50001--
11	13Y-54-11152	Cover	1	SN:B50001--
12	01010-81225	Bolt	4	SN:B50001--
13	01643-31232	Washer	4	SN:B50001--
14	13Y-54-11162	Cover	1	SN:B50001--
15	01010-81225	Bolt	4	SN:B50001--
16	01643-31232	Washer	4	SN:B50001--
17	13Y-54-11831	Plate	1	SN:B50001--
18	01010-81025	Bolt	4	SN:B50001--
19	01643-31032	Washer	4	SN:B50001--

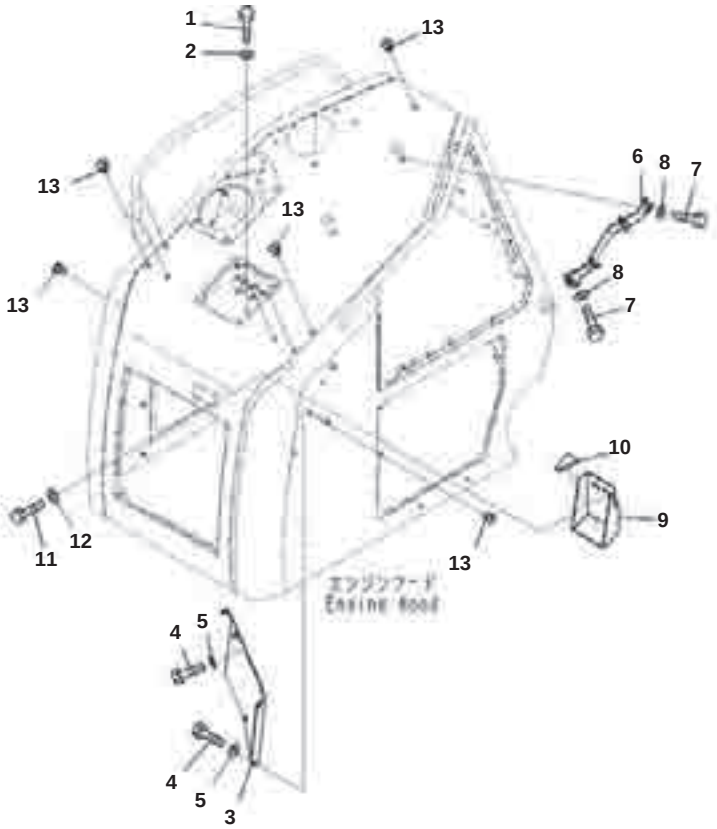

Engine Hood, With 3D Machine Control Plug and Play, Bracket

Index	Part Number	Description	Qty	Options
1	01010-81025	Bolt	1	SN:B50001--
2	01643-31032	Washer	1	SN:B50001--
3	13Y-54-13112	Cover	1	SN:B50001--
4	01010-81025	Bolt	3	SN:B50001--
5	01643-31032	Washer	3	SN:B50001--
6	13Y-06-14371	Bracket	1	SN:B50001--
7	01010-81025	Bolt	2	SN:B50001--
8	01643-31032	Washer	2	SN:B50001--
9	13Y-06-17280	Bracket	1	SN:B50001--
10	13Y-06-11290	▪ Seal	1	SN:B50001--
11	01010-81030	Bolt	2	SN:B50001--
12	01643-31032	Washer	2	SN:B50001--
13	21J-46-12550	Cap	9	SN:B50001--

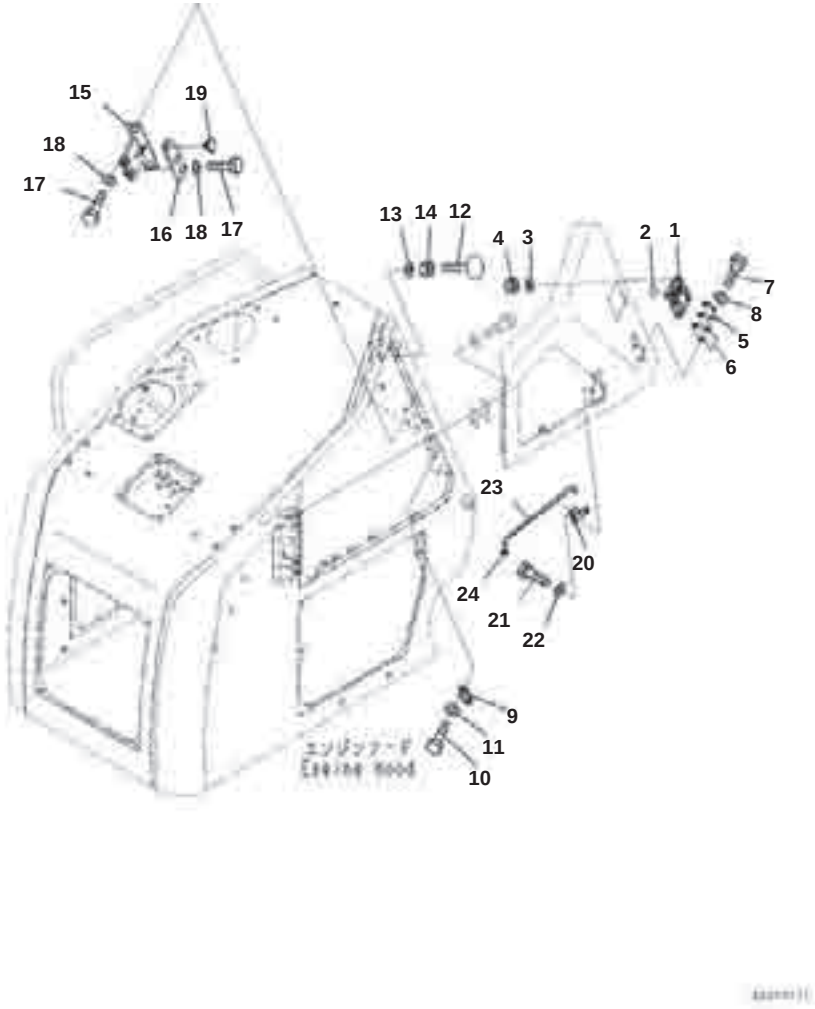

Engine Hood, With 3D Machine Control Plug and Play, Door Related Parts

Index	Part Number	Description	Qty	Options
1	13Y-54-11270	Lock	1	SN:B50001--
2	14X-54-62250	Plate	1	SN:B50001--
3	01643-30623	Washer	4	SN:B50001--
4	01580-10605	Nut	4	SN:B50001--
5	205-54-53550	Dovetail	1	SN:B50001--
6	14X-54-53860	Spacer, T=1mm	4	SN:B50001--
7	01010-80616	Bolt	2	SN:B50001--
8	01643-30623	Washer	2	SN:B50001--
9	205-54-51971	Dovetail	1	SN:B50001--
10	01010-80616	Bolt	2	SN:B50001--
11	01643-30623	Washer	2	SN:B50001--
12	20Y-54-11611	Stopper	1	SN:B50001--
13	01643-31032	Washer	1	SN:B50001--
14	01580-11008	Nut	1	SN:B50001--
15	13Y-54-11242	Bracket	1	SN:B50001--
16	13Y-54-11251	Plate	1	SN:B50001--
17	01010-81230	Bolt	4	SN:B50001--
18	01643-31232	Washer	4	SN:B50001--
19	14X-54-12960	Stopper	1	SN:B50001--
20	198-54-19150	Spring	1	SN:B50001--
21	01010-80616	Bolt	2	SN:B50001--
22	01643-30623	Washer	2	SN:B50001--
23	13Y-54-11221	Bar	1	SN:B50001--
24	20Y-54-18980	Grommet	1	SN:B50001--

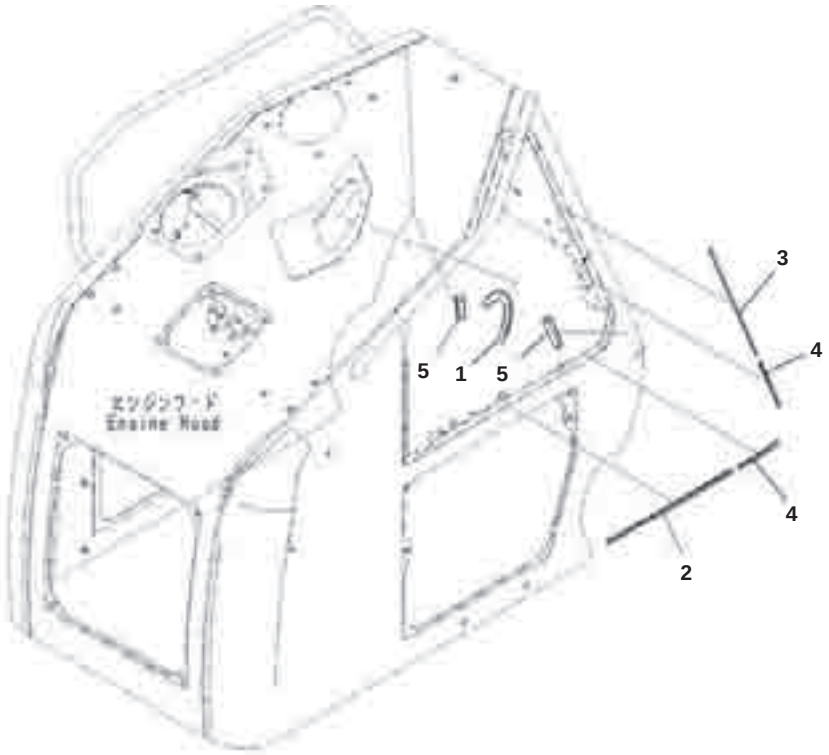

Engine Hood, With 3D Machine Control Plug and Play, Seal and Sheet

Index	Part Number	Description	Qty	Options
1	13Y-54-11930	Seal	1	SN:B50001--
2	13Y-54-11552	Sheet	1	SN:B50001--
3	13Y-54-11541	Sheet	1	SN:B50001--
4	13Y-54-11561	Sheet	2	SN:B50001--
5	13Y-54-11460	Seal	2	SN:B50001--

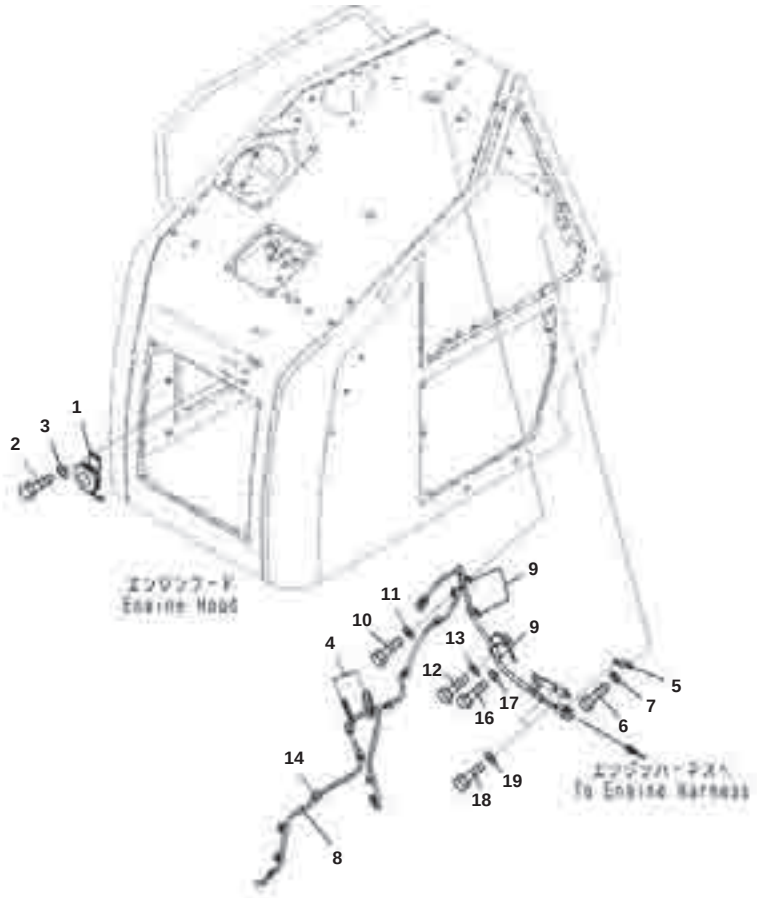

Engine Hood, With 3D Machine Control Plug and Play, Horn

Index	Part Number	Description	Qty	Options
1	13Y-06-17210	Horn	1	SN:B50001--
2	01010-80816	Bolt	2	SN:B50001--
3	01643-30823	Washer	2	SN:B50001--
4	176-911-4160	Grommet	2	SN:B50001--
5	08193-20010	Clip	1	SN:B50001--
6	01010-81020	Bolt	1	SN:B50001--
7	01643-31032	Washer	1	SN:B50001--
8	13Y-06-17871	Wiring Harness	1	SN:B50001--
9	04434-51010	Clip	3	SN:B50001--
10	01010-81020	Bolt	2	SN:B50001--
11	01643-31032	Washer	2	SN:B50001--
12	01010-81020	Bolt	1	SN:B50001--
13	01643-31032	Washer	1	SN:B50001--
14	08211-10720	Clip	12	SN:B50001--
15	13Y-06-17A50	Plate	1	SN:B50001--
16	01010-81016	Bolt	1	SN:B50001--
17	01643-31032	Washer	1	SN:B50001--
18	01010-81225	Bolt	2	SN:B50001--
19	01643-31232	Washer	2	SN:B50001--

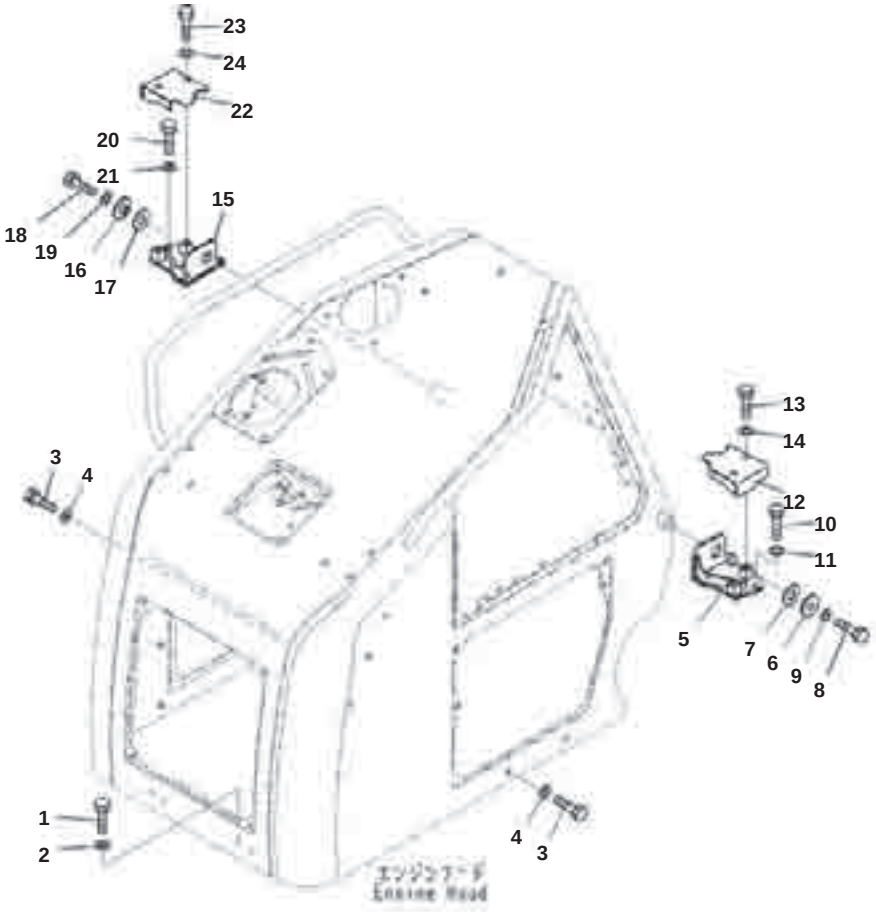

Engine Hood, With 3D Machine Control Plug and Play, Bracket and Cover

Index	Part Number	Description	Qty	Options
1	01010-81640	Bolt	4	SN:B50001--
2	01643-31645	Washer	4	SN:B50001--
3	01010-81640	Bolt	4	SN:B50001--
4	01643-31645	Washer	4	SN:B50001--
5	13Y-54-12123	Bracket	1	SN:B50001--
6	13Y-54-11331	Spacer	1	SN:B50001--
7	13Y-54-11341	Spacer	1	SN:B50001--
8	01010-81650	Bolt	1	SN:B50001--
9	01643-31645	Washer	1	SN:B50001--
10	01010-81230	Bolt	3	SN:B50001--
11	01643-31232	Washer	3	SN:B50001--
12	13Y-54-12152	Cover	1	SN:B50001--
13	01010-81230	Bolt	2	SN:B50001--
14	01643-31232	Washer	2	SN:B50001--
15	13Y-54-12133	Bracket	1	SN:B50001--
16	13Y-54-11331	Spacer	1	SN:B50001--
17	13Y-54-11341	Spacer	1	SN:B50001--
18	01010-81650	Bolt	1	SN:B50001--
19	01643-31645	Washer	1	SN:B50001--
20	01010-81230	Bolt	3	SN:B50001--
21	01643-31232	Washer	3	SN:B50001--
22	13Y-54-12162	Cover	1	SN:B50001--
23	01010-81230	Bolt	2	SN:B50001--
24	01643-31232	Washer	2	SN:B50001--

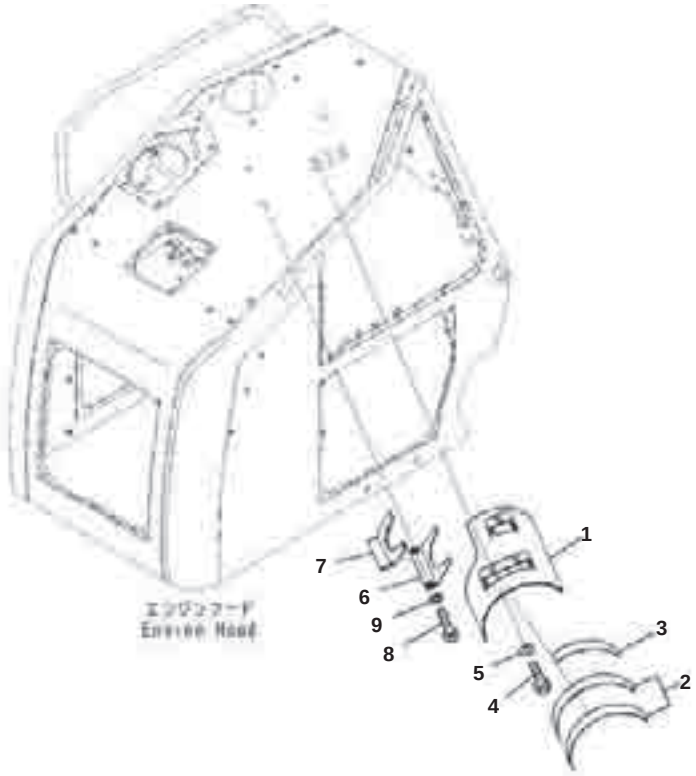

Engine Hood, With 3D Machine Control Plug and Play, Related Parts

Index	Part Number	Description	Qty	Options
1	13Y-54-11231	Bracket	1	SN:B50001--
2	13Y-54-11511	▪ Sheet	2	SN:B50001--
3	13Y-54-11521	▪ Sheet	1	SN:B50001--
4	01010-81225	Bolt	3	SN:B50001--
5	01643-31232	Washer	3	SN:B50001--
6	13Y-54-11311	Bracket	1	SN:B50001--
7	13Y-54-11490	▪ Sheet	1	SN:B50001--
8	01010-81025	Bolt	2	SN:B50001--
9	01643-31032	Washer	2	SN:B50001--

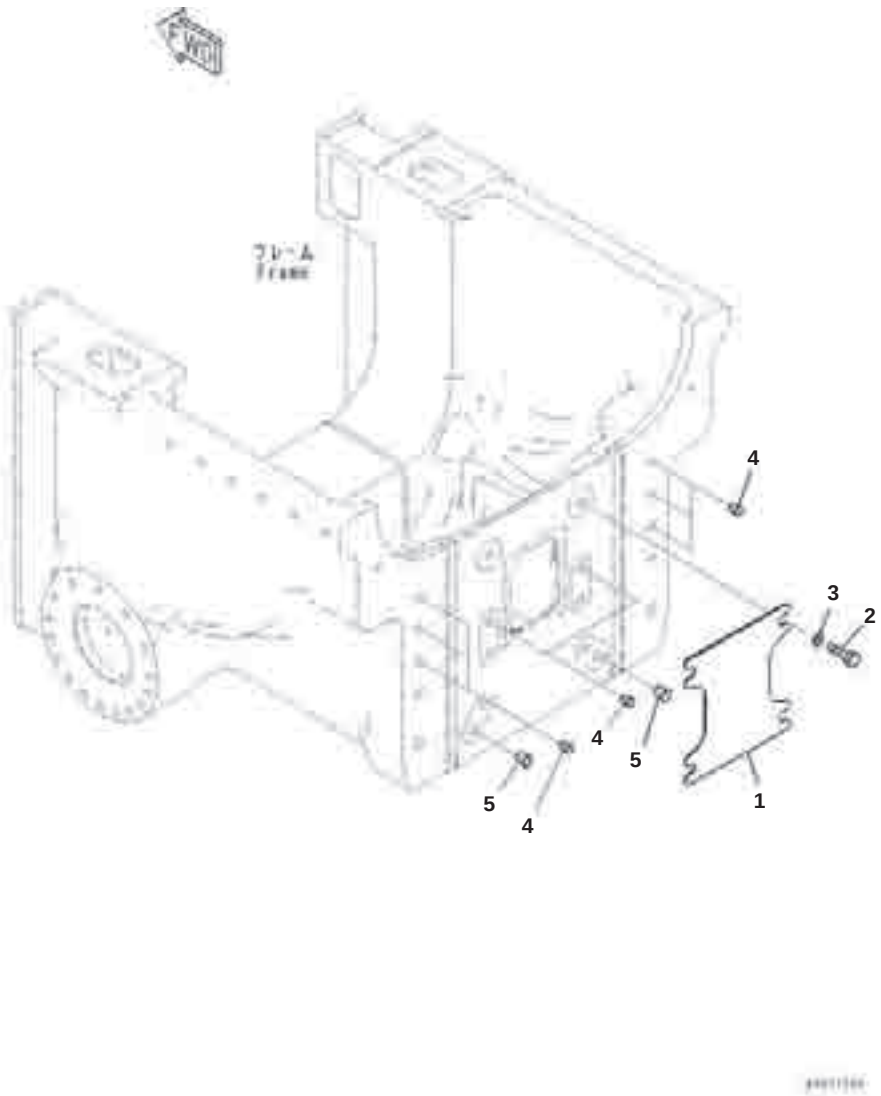

Rear Cover, With Rigid Type

Index	Part Number	Description	Qty	Options
1	13Y-21-11561	Plate	1	SN:B50001--
2	01010-82450	Bolt	4	SN:B50001--
3	01643-32460	Washer	4	SN:B50001--
4	07049-02430	Plug	8	SN:B50001--
5	07049-03038	Plug, Cork	2	SN:B50001--

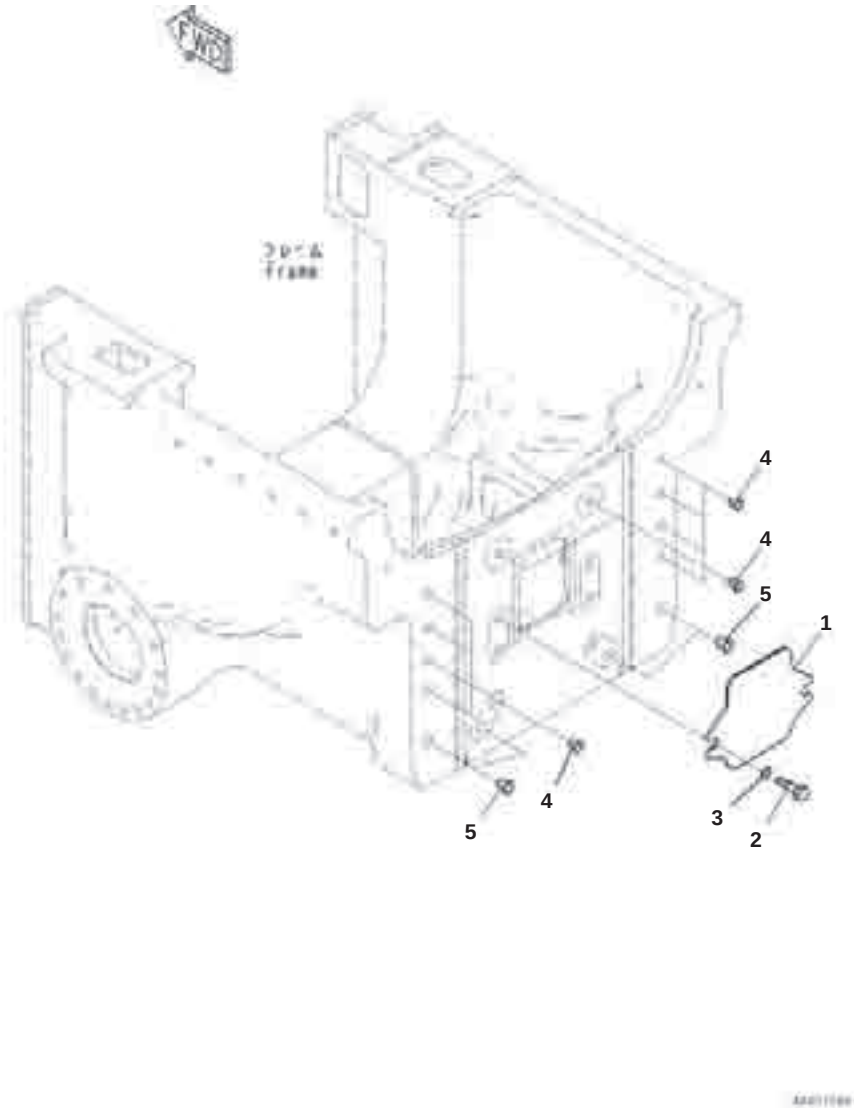

Rear Cover, Without Drawbar, Rigid Type

Index	Part Number	Description	Qty	Options
1	13Y-21-11551	Plate	1	SN:B50001--
2	01010-82450	Bolt	2	SN:B50001--
3	01643-32460	Washer	2	SN:B50001--
4	07049-02430	Plug	14	SN:B50001--
5	07049-03038	Plug, Cork	4	SN:B50001--

UNDER CARRIAGE

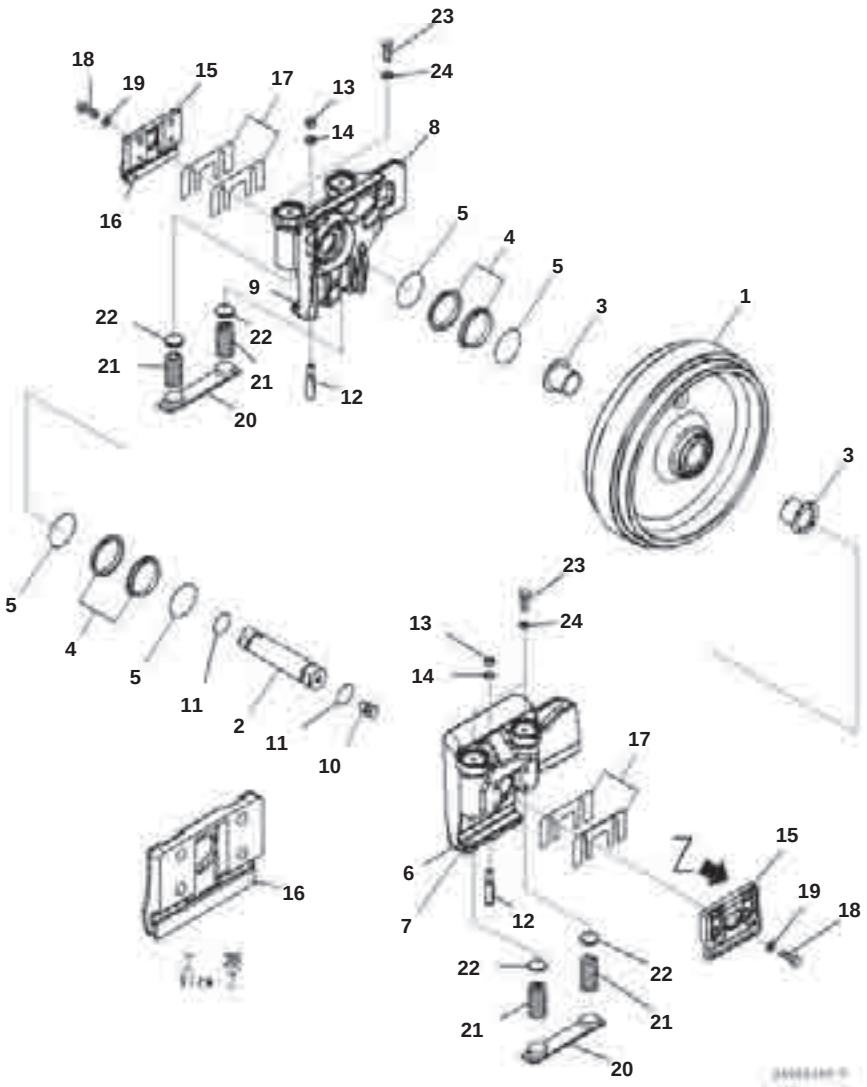

Front Idler

Index	Code	Part Number	Description	Qty	Options
		13Y-30-00030	Idler Assembly	2	SN:B50001--
1		134-30-62233	' Idler	1	SN:B50001--
2		134-30-62241	' Shaft	1	SN:B50001--
3		134-30-62251	' Bushing	2	SN:B50001--
		205-30-00220	' Floating Seal Assembly	2	SN:B50001--
4	C1		' ' Seal	2	SN:B50001--
5	C1		' ' O-ring	2	SN:B50001--
6		13Y-30-15113	' Support	1	SN:B50001--
7		13Y-30-15150	' ' Plate,Welded	1	SN:B50001--
8		13Y-30-15123	' Support	1	SN:B50001--
9		13Y-30-15150	' ' Plate,Welded	1	SN:B50001--
10		07052-31624	' Plug	1	SN:B50001--
11		07000-12055	' O-ring	2	SN:B50001--
12		130-30-13170	' Bolt	2	SN:B50001--
13		01582-11613	' Nut	2	SN:B50001--
14		01643-31645	' Washer	2	SN:B50001--
15		13Y-30-15231	' Guide	2	SN:B50001--
16		134-30-62320	' ' Plate,Welded	1	SN:B50001--
17		13Y-30-15221	' Shim, T=1mm	12	SN:B50001--
18		01010-81645	' Bolt	8	SN:B50001--
19		01643-31645	' Washer	8	SN:B50001--
20		13Y-30-15162	' Plate	2	SN:B50001--
21		155-30-13230	' Spring	4	SN:B50001--
22		195-30-17960	' Plate	4	SN:B50001--
23		01016-51245	' Bolt	4	SN:B50001--
24		01643-31232	' Washer	4	SN:B50001--

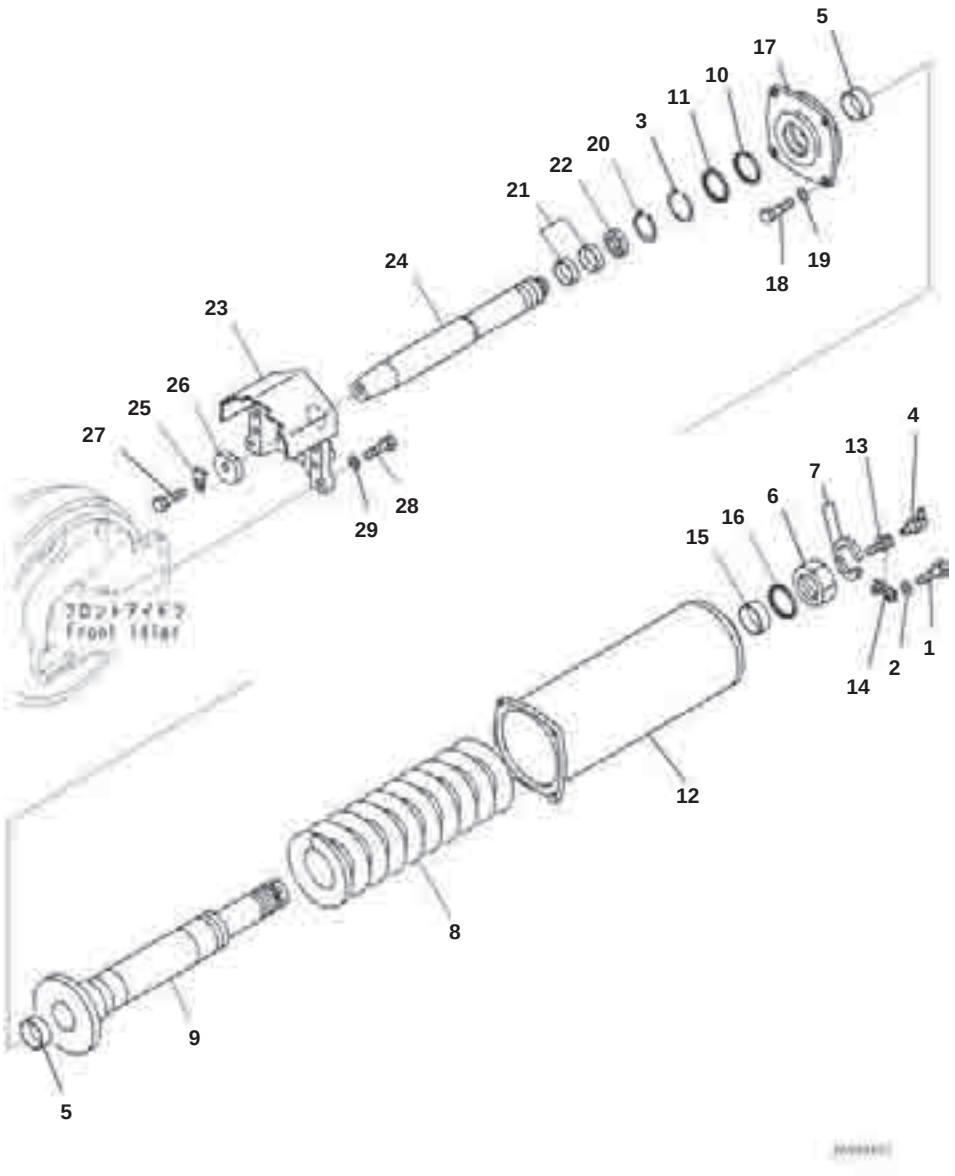

Index	Part Number	Description	Qty	Options
1	01010-80830	Bolt	4	SN:B50001--
2	01643-30823	Washer	4	SN:B50001--
3	04077-00090	Ring	2	SN:B50001--
4	07020-00900	Fitting, Grease	2	SN:B50001--
5	07177-07530	Bushing	4	SN:B50001--
6	14X-30-13310	Nut	2	SN:B50001--
7	14X-30-13241	Spacer	4	SN:B50001--
8	134-30-73161	Spring	2	SN:B50001--
9	134-30-63154	Cylinder	2	SN:B50001--
10	17M-50-24360	Seal	2	SN:B50001--
11	134-30-63181	Spacer	2	SN:B50001--
12	134-30-63210	Cabin, Recoil Spring	2	SN:B50001--
13	203-30-42260	Valve	2	SN:B50001--
14	14X-30-13174	Plate	2	SN:B50001--
15	07177-08030	Bushing	2	SN:B50001--
16	195-50-22860	Seal	2	SN:B50001--
17	134-30-63220	Holder	2	SN:B50001--
18	01010-81235	Bolt	8	SN:B50001--
19	01643-31232	Washer	8	SN:B50001--
20	04064-04518	Ring, Snap	2	SN:B50001--
21	07155-00720	Ring, Wear	4	SN:B50001--
22	09370-00070	U-packing	2	SN:B50001--
23	13Y-30-15312	Yoke	2	SN:B50001--
24	134-30-63142	Piston	2	SN:B50001--
25	154-30-11540	Lock	2	SN:B50001--
26	154-30-11332	Washer	2	SN:B50001--
27	01010-82055	Bolt	2	SN:B50001--
28	01010-81660	Bolt	12	SN:B50001--
29	01643-31645	Washer	12	SN:B50001--

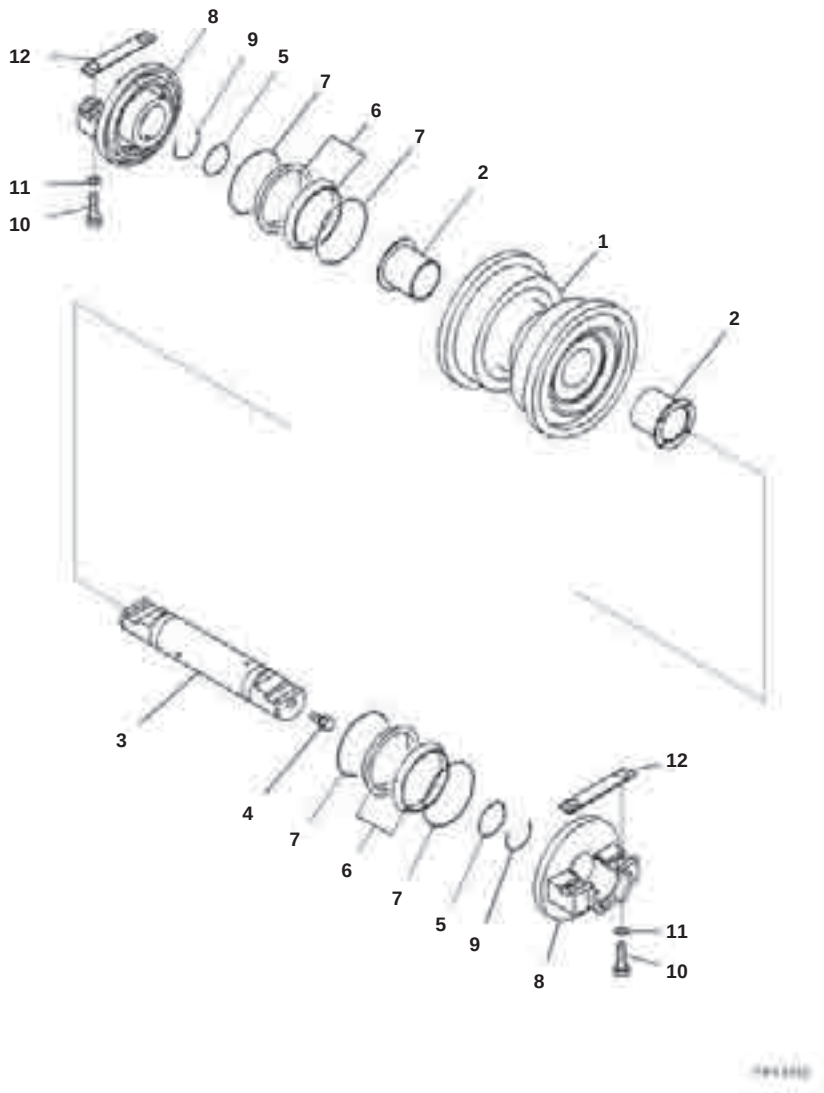

Track Roller, Single Flange

Index	Code	Part Number	Description	Qty	Options
		131-30-00345	Track Roller Assembly, Single Flange	12	SN:B50001--
1		131-30-61311	· Roller, Track, Single Flanged	1	SN:B50001--
2		131-30-61330	· Bushing	2	SN:B50001--
3		131-30-36131	· Shaft	1	SN:B50001--
4		07052-31217	· Plug	1	SN:B50001--
5		07000-02055	· O-ring	2	SN:B50001--
		205-30-00220	· Floating Seal Assembly	2	SN:B50001--
6	C1		· · Seal	2	SN:B50001--
7	C1		· · O-ring	2	SN:B50001--
8		131-30-61351	· Collar	2	SN:B50001--
9		131-30-36150	· Ring, Snap	2	SN:B50001--
10		01010-81670	Bolt	48	SN:B50001--
11		01643-31645	Washer	48	SN:B50001--
12		131-30-36160	Key	24	SN:B50001--

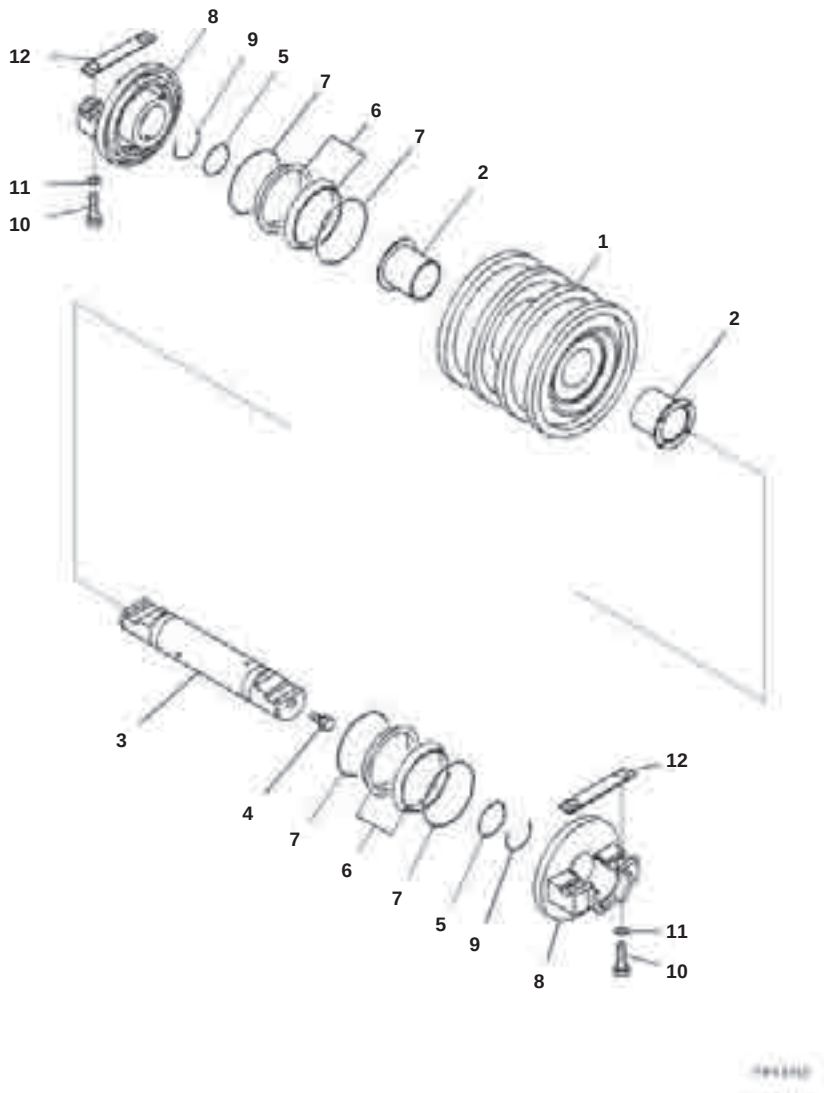

Track Roller, Double Flange

Index	Code	Part Number	Description	Qty	Options
1		131-30-61321	Roller, Track, Double Flanged	1	SN:B50001--
2		131-30-61330	Bushing	2	SN:B50001--
3		131-30-36131	Shaft	1	SN:B50001--
4		07052-31217	Plug	1	SN:B50001--
5		07000-02055	O-ring	2	SN:B50001--
		205-30-00220	Floating Seal Assembly	2	SN:B50001--
6	C1		‧ Seal	2	SN:B50001--
7	C1		‧ O-ring	2	SN:B50001--
8		131-30-61351	Collar	2	SN:B50001--
9		131-30-36150	Ring, Snap	2	SN:B50001--
10		01010-81670	Bolt	16	SN:B50001--
11		01643-31645	Washer	16	SN:B50001--
12		131-30-36160	Key	8	SN:B50001--

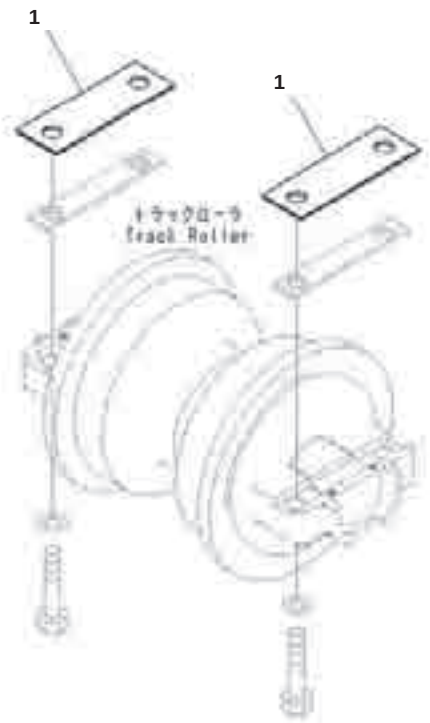

Track Roller, Plate

Index	Part Number	Description	Qty	Options
1	13Y-30-11211	Plate	28	SN:B50001--

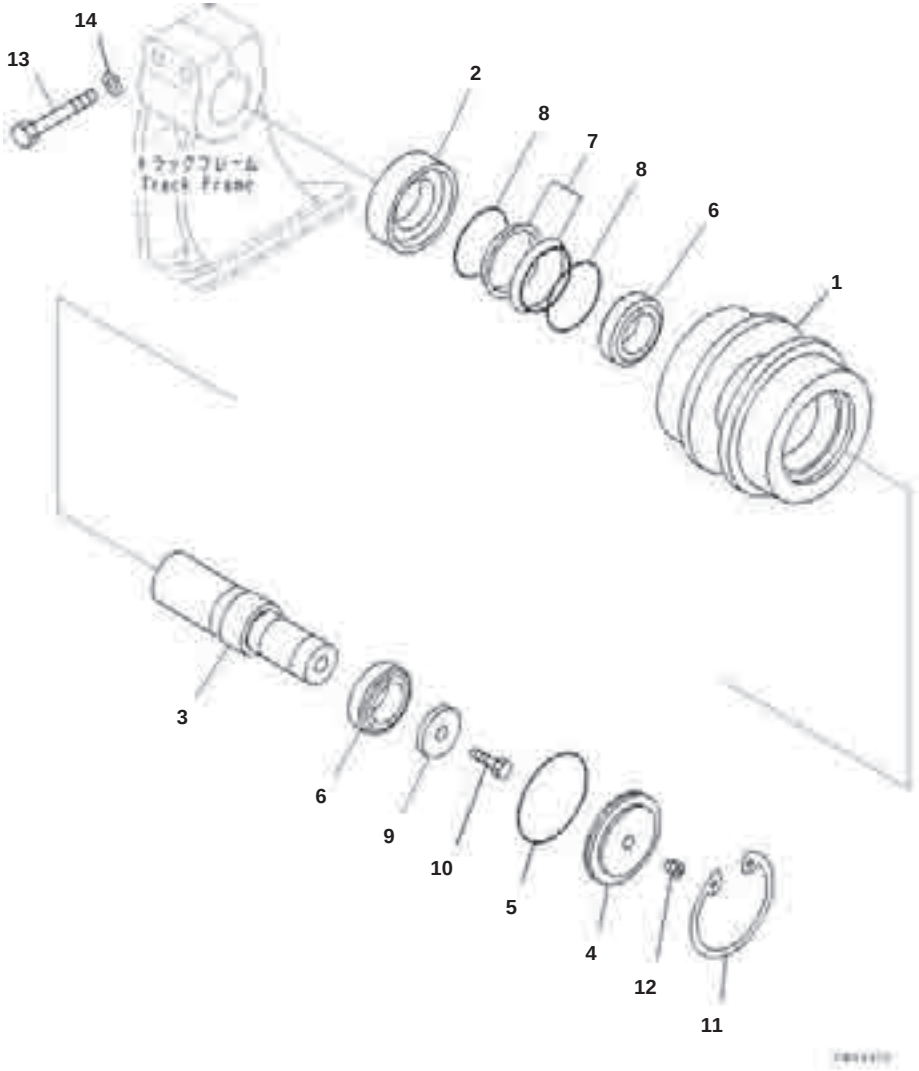

Carrier Roller

Index	Code	Part Number	Description	Qty	Options
		134-30-00110	Carrier Roller Assembly	4	SN:B50001--
1		134-30-62210	･ Roller	1	SN:B50001--
2		14X-30-15140	･ Ring	1	SN:B50001--
3		134-30-62220	･ Shaft	1	SN:B50001--
4		14X-30-15131	･ Cover	1	SN:B50001--
5		07000-12105	･ O-ring	1	SN:B50001--
6		14X-30-15240	･ Bearing	2	SN:B50001--
		141-30-00616	･ Floating Seal Assembly	1	SN:B50001--
7	C1		･ ･ Seal	2	SN:B50001--
8	C1		･ ･ O-ring	2	SN:B50001--
9		14X-30-15251	･ Holder	1	SN:B50001--
10		01010-81630	･ Bolt	1	SN:B50001--
11		04065-01154	･ Ring	1	SN:B50001--
12		20Y-30-16330	･ Plug	1	SN:B50001--
13		01010-82085	Bolt	8	SN:B50001--
14		01643-32060	Washer	8	SN:B50001--

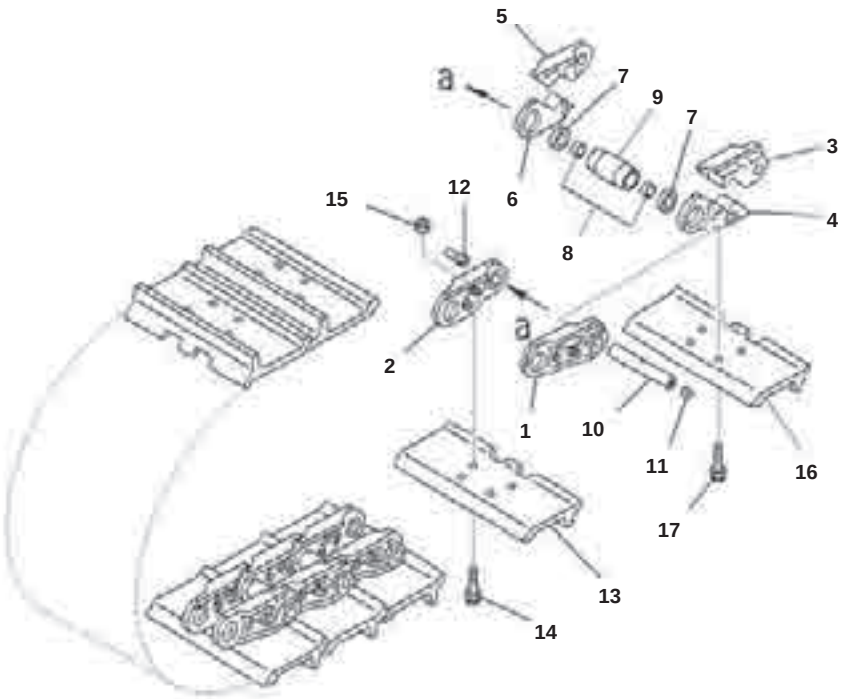

Index	Part Number	Description	Qty	Options
	134-32-01112	Track Shoe Assembly	1	SN:B50001--
1	134-32-61120	･ Link,L.H.	90	SN:B50001--
2	134-32-61130	･ Link,R.H.	90	SN:B50001--
3	134-32-61320	･ Link, Master,L.H.	2	SN:B50001--
4	134-32-61331	･ Link, Master,L.H.	2	SN:B50001--
5	134-32-61420	･ Link, Master,R.H.	2	SN:B50001--
6	134-32-61431	･ Link, Master,R.H.	2	SN:B50001--
7	134-32-63200	･ Seal Assembly	184	SN:B50001--
8	134-32-61190	･ Spacer	184	SN:B50001--
9	134-32-61140	･ Bushing	92	SN:B50001--
10	134-32-61150	･ Pin	92	SN:B50001--
11	07059-11830	･ Plug, Large	92	SN:B50001--
12	07059-20721	･ Plug, Small	92	SN:B50001--
13	134-32-61110	･ Shoe	90	SN:B50001--
14	154-32-21323	･ Bolt, (Kit : K01)	360	SN:B50001--
15	134-32-61221	･ Nut, (Kit : K01)	360	SN:B50001--
16	134-32-61110	･ Shoe	2	SN:B50001--
17	134-32-61310	･ Bolt, Master Track Shoe	8	SN:B50001--

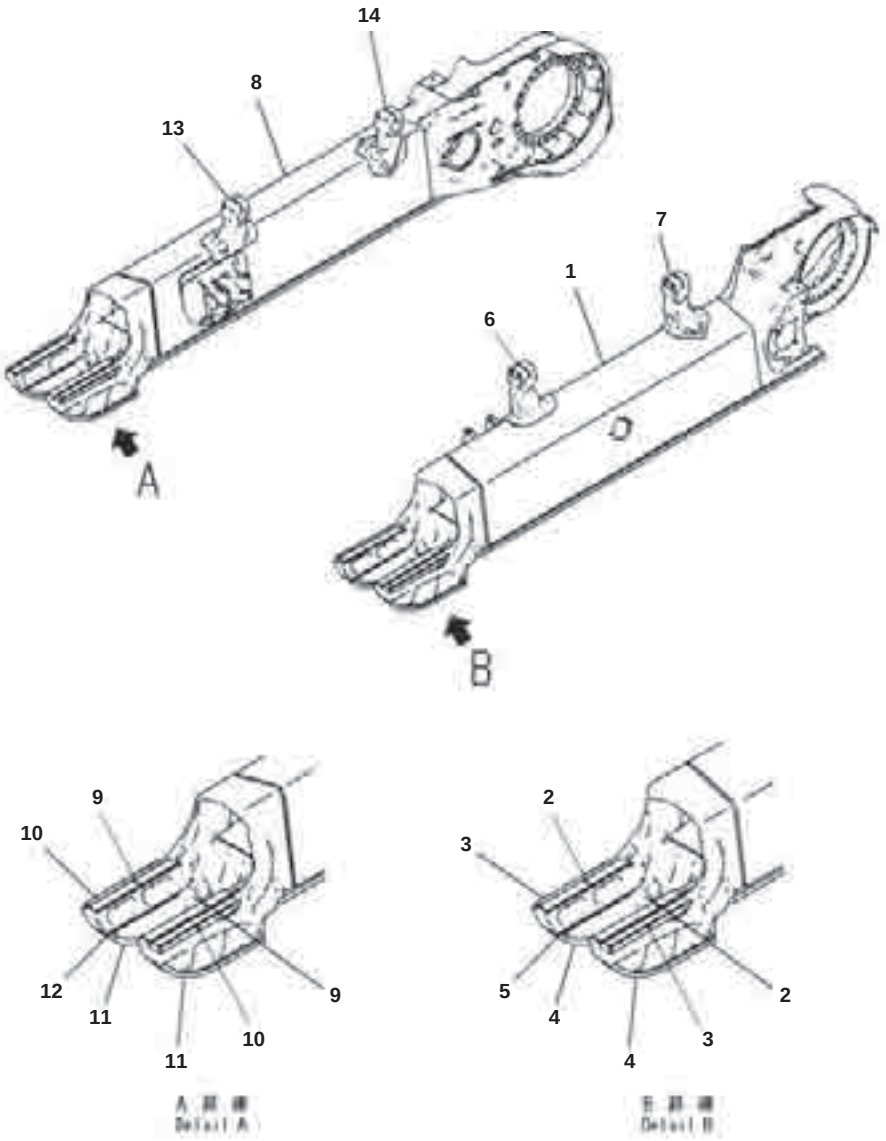

Track Frame

Index	Part Number	Description	Qty	Options
1	13Y-30-12114	Frame	1	SN:B50001--
2	13Y-30-12C51	･ Plate,Welded	2	SN:B50001--
3	13Y-30-12C60	･ Plate,Welded	2	SN:B50001--
4	13Y-30-12C70	･ Plate,Welded	2	SN:B50001--
5	13Y-30-12C80	･ Plate,Welded	2	SN:B50001--
6	13Y-30-12411	･ Bracket,Welded	1	SN:B50001--
7	13Y-30-12420	･ Bracket,Welded	1	SN:B50001--
8	13Y-30-12124	Frame	1	SN:B50001--
9	13Y-30-12C51	･ Plate,Welded	2	SN:B50001--
10	13Y-30-12C60	･ Plate,Welded	2	SN:B50001--
11	13Y-30-12C70	･ Plate,Welded	2	SN:B50001--
12	13Y-30-12C80	･ Plate,Welded	2	SN:B50001--
13	13Y-30-12411	･ Bracket,Welded	1	SN:B50001--
14	13Y-30-12420	･ Bracket,Welded	1	SN:B50001--

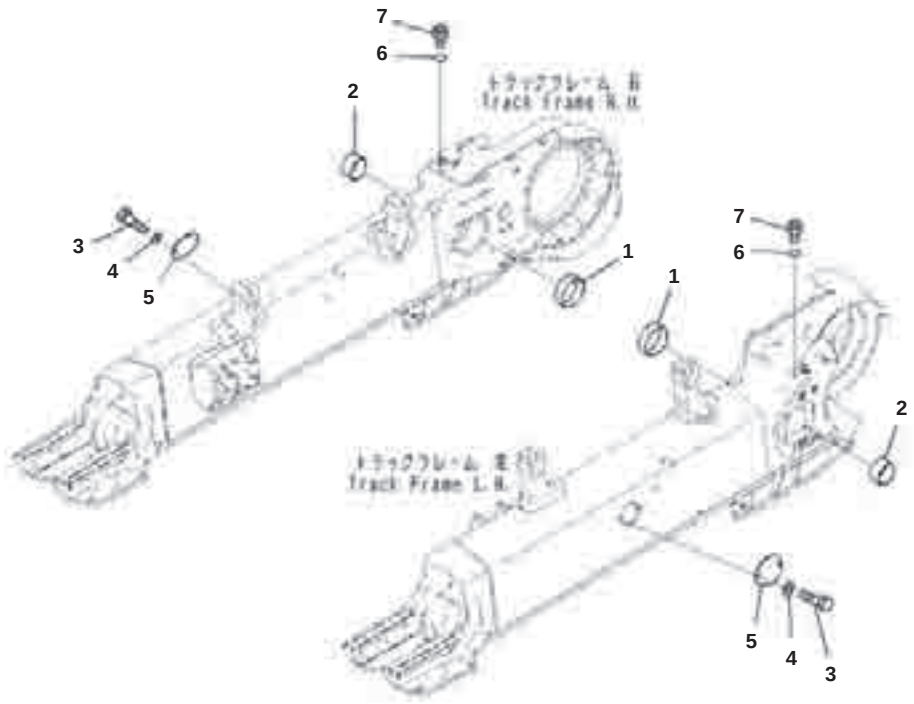

Track Frame Related Parts

Index	Part Number	Description	Qty	Options
1	14Y-30-18130	Bushing	2	SN:B50001--
2	14Y-30-18140	Bushing	2	SN:B50001--
3	01010-81225	Bolt	4	SN:B50001--
4	01643-31232	Washer	4	SN:B50001--
5	14Y-30-11277	Cover	2	SN:B50001--
6	07002-12434	O-ring	2	SN:B50001--
7	07040-12414	Plug	2	SN:B50001--

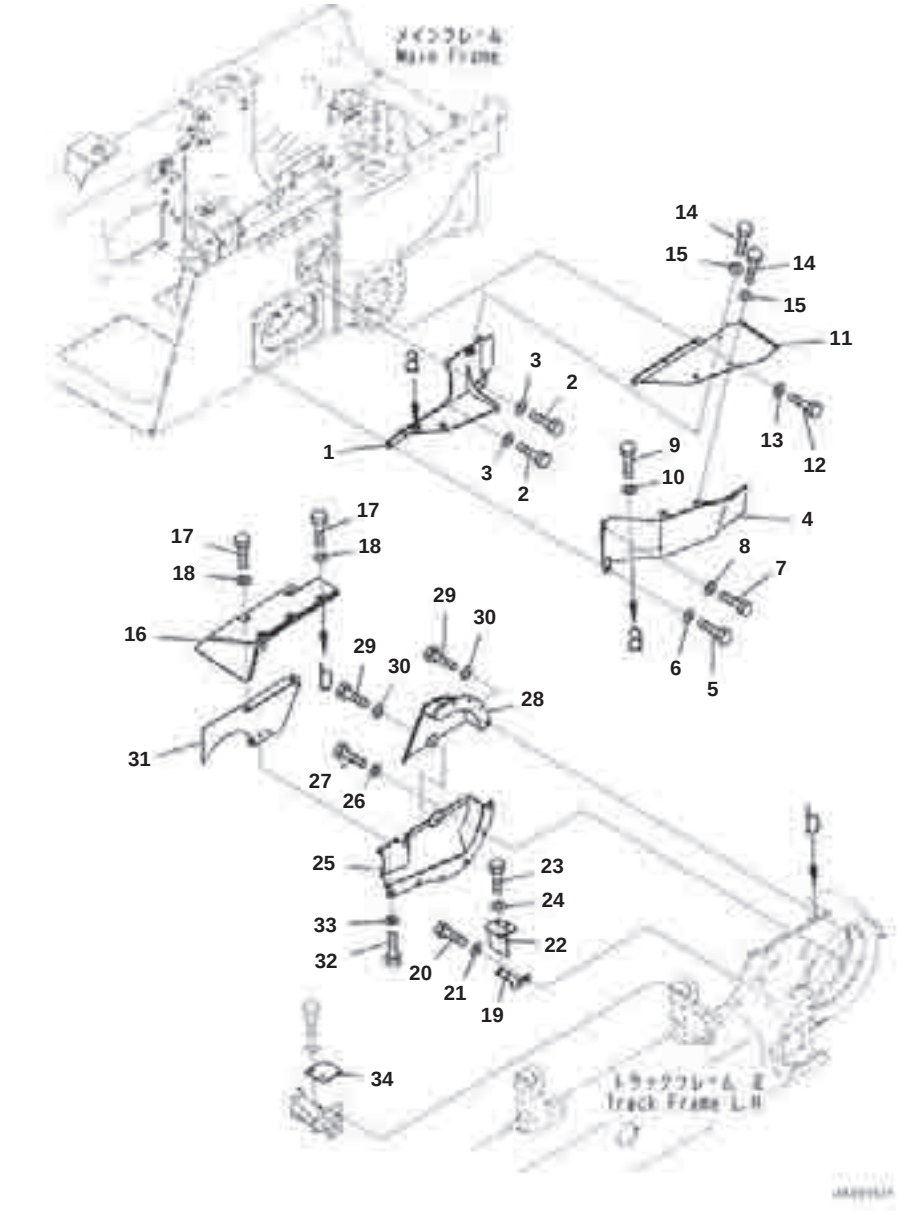

Track Frame Cover, L.H.

Index	Part Number	Description	Qty	Options
1	13Y-30-14212	Cover	1	SN:B50001--
2	01010-81250	Bolt	3	SN:B50001--
3	01643-31232	Washer	3	SN:B50001--
4	13Y-30-14431	Cover	1	SN:B50001--
5	01010-81260	Bolt	1	SN:B50001--
6	01643-31232	Washer	1	SN:B50001--
7	01010-81250	Bolt	1	SN:B50001--
8	01643-31232	Washer	1	SN:B50001--
9	01010-81225	Bolt	2	SN:B50001--
10	01643-31232	Washer	2	SN:B50001--
11	13Y-30-14222	Cover	1	SN:B50001--
12	01010-81250	Bolt	3	SN:B50001--
13	01643-31232	Washer	3	SN:B50001--
14	01010-81225	Bolt	3	SN:B50001--
15	01643-31232	Washer	3	SN:B50001--
16	13Y-30-14481	Cover	1	SN:B50001--
17	01010-81230	Bolt	5	SN:B50001--
18	01643-31232	Washer	5	SN:B50001--
19	13Y-30-14231	Bracket	1	SN:B50001--
20	01010-81230	Bolt	2	SN:B50001--
21	01643-31232	Washer	2	SN:B50001--
22	13Y-30-14241	Cover	1	SN:B50001--
23	01010-81230	Bolt	2	SN:B50001--
24	01643-31232	Washer	2	SN:B50001--
25	13Y-30-14252	Cover	1	SN:B50001--
26	01643-31645	Washer	6	SN:B50001--
27	01010-81635	Bolt	6	SN:B50001--
28	13Y-30-14271	Cover	1	SN:B50001--
29	01010-81230	Bolt	5	SN:B50001--
30	01643-31232	Washer	5	SN:B50001--
31	13Y-30-14261	Cover	1	SN:B50001--
32	01010-81230	Bolt	1	SN:B50001--
33	01643-31232	Washer	1	SN:B50001--
34	(13Y-30-14291)	Cover		SN:B50001--

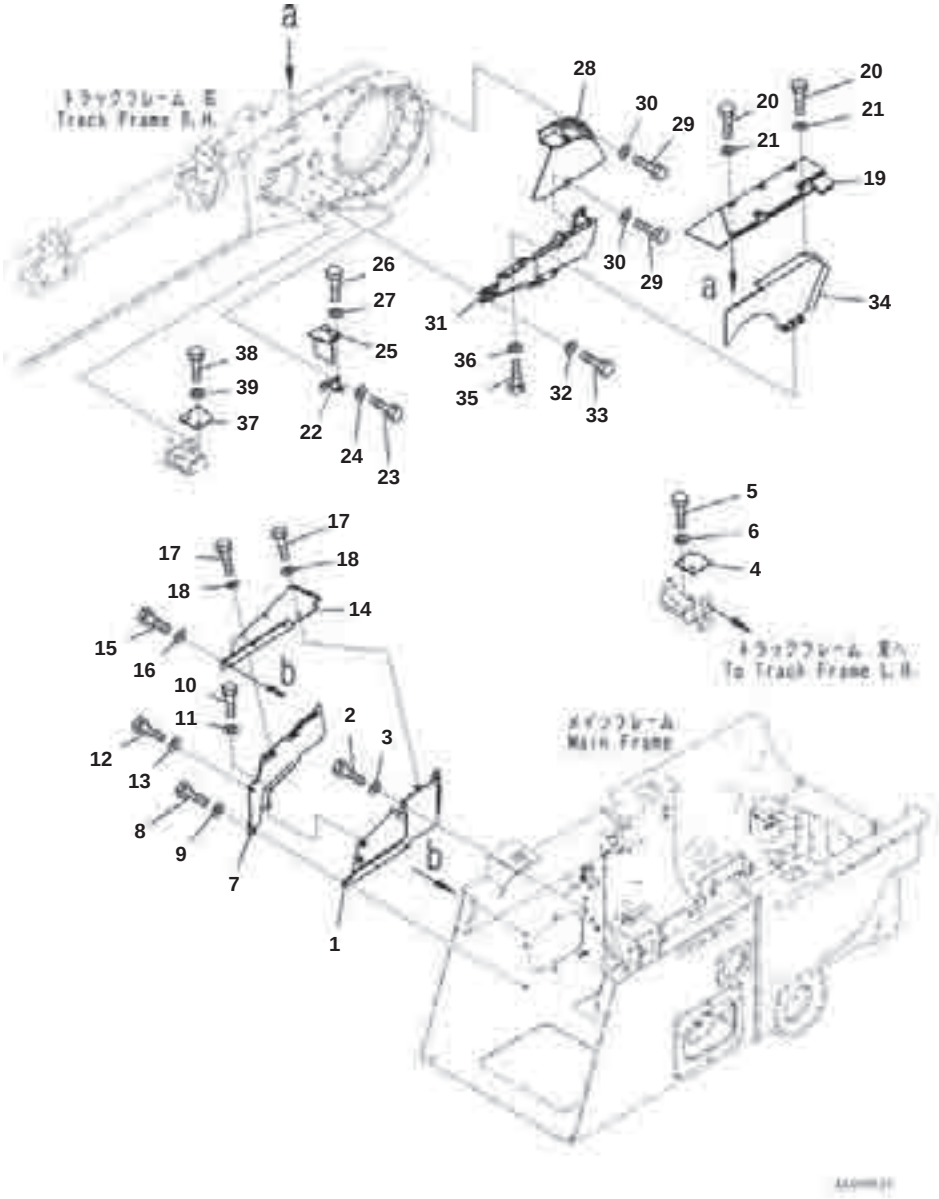

Track Frame Cover, R.H.

Index	Part Number	Description	Qty	Options
1	13Y-30-14312	Cover	1	SN:B50001--
2	01010-81250	Bolt	3	SN:B50001--
3	01643-31232	Washer	3	SN:B50001--
4	13Y-30-14291	Cover	1	SN:B50001--
5	01010-81230	Bolt	2	SN:B50001--
6	01643-31232	Washer	2	SN:B50001--
7	13Y-30-14531	Cover	1	SN:B50001--
8	01010-81260	Bolt	1	SN:B50001--
9	01643-31232	Washer	1	SN:B50001--
10	01010-81225	Bolt	2	SN:B50001--
11	01643-31232	Washer	2	SN:B50001--
12	01010-81250	Bolt	1	SN:B50001--
13	01643-31232	Washer	1	SN:B50001--
14	13Y-30-14322	Cover	1	SN:B50001--
15	01010-81250	Bolt	3	SN:B50001--
16	01643-31232	Washer	3	SN:B50001--
17	01010-81225	Bolt	3	SN:B50001--
18	01643-31232	Washer	3	SN:B50001--
19	13Y-30-14581	Cover	1	SN:B50001--
20	01010-81230	Bolt	5	SN:B50001--
21	01643-31232	Washer	5	SN:B50001--
22	13Y-30-14331	Bracket	1	SN:B50001--
23	01010-81230	Bolt	2	SN:B50001--
24	01643-31232	Washer	2	SN:B50001--
25	13Y-30-14341	Cover	1	SN:B50001--
26	01010-81230	Bolt	2	SN:B50001--
27	01643-31232	Washer	2	SN:B50001--
28	13Y-30-14371	Cover	1	SN:B50001--
29	01010-81230	Bolt	5	SN:B50001--
30	01643-31232	Washer	5	SN:B50001--
31	13Y-30-14352	Cover	1	SN:B50001--
32	01643-31645	Washer	6	SN:B50001--
33	01010-81635	Bolt	6	SN:B50001--
34	13Y-30-14361	Cover	1	SN:B50001--
35	01010-81230	Bolt	1	SN:B50001--
36	01643-31232	Washer	1	SN:B50001--
37	13Y-30-14291	Cover	1	SN:B50001--
38	01010-81230	Bolt	2	SN:B50001--
39	01643-31232	Washer	2	SN:B50001--

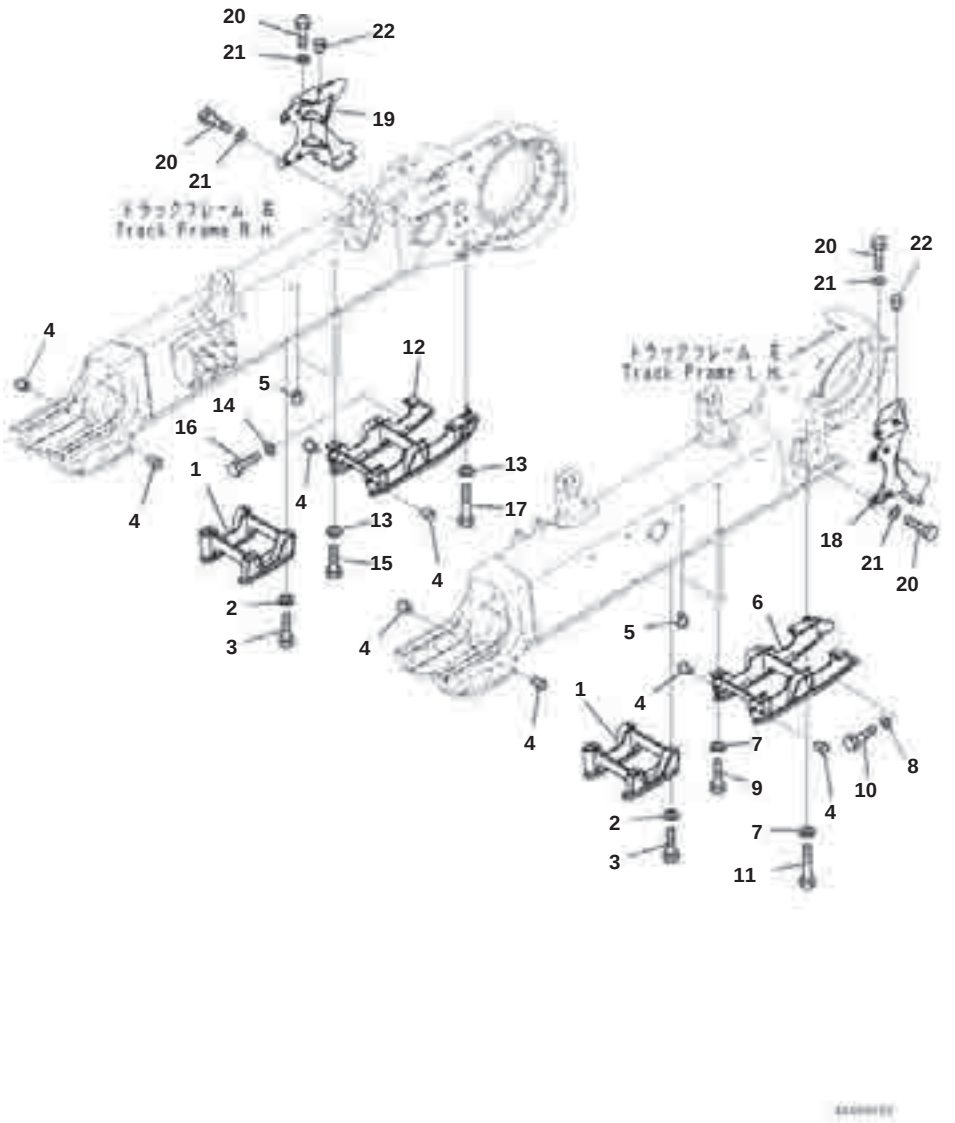

Track Roller Guard

Index	Part Number	Description	Qty	Options
1	13Y-30-16531	Guard	2	SN:B50001--
2	13Y-30-16190	Washer	8	SN:B50001--
3	01010-81645	Bolt	8	SN:B50001--
4	07049-01215	Plug	16	SN:B50001--
5	07049-01620	Plug	12	SN:B50001--
6	13Y-30-16514	Guard	1	SN:B50001--
7	13Y-30-16190	Washer	7	SN:B50001--
8	13Y-30-16190	Washer	2	SN:B50001--
9	01010-81645	Bolt	6	SN:B50001--
10	01010-81645	Bolt	2	SN:B50001--
11	01010-81675	Bolt	1	SN:B50001--
12	13Y-30-16524	Guard	1	SN:B50001--
13	13Y-30-16190	Washer	7	SN:B50001--
14	13Y-30-16190	Washer	2	SN:B50001--
15	01010-81645	Bolt	6	SN:B50001--
16	01010-81675	Bolt	1	SN:B50001--
17	01010-81645	Bolt	2	SN:B50001--
18	13Y-30-14133	Guard	1	SN:B50001--
19	13Y-30-14143	Guard	1	SN:B50001--
20	01010-81645	Bolt	10	SN:B50001--
21	01643-31645	Washer	10	SN:B50001--
22	07049-01215	Plug	2	SN:B50001--

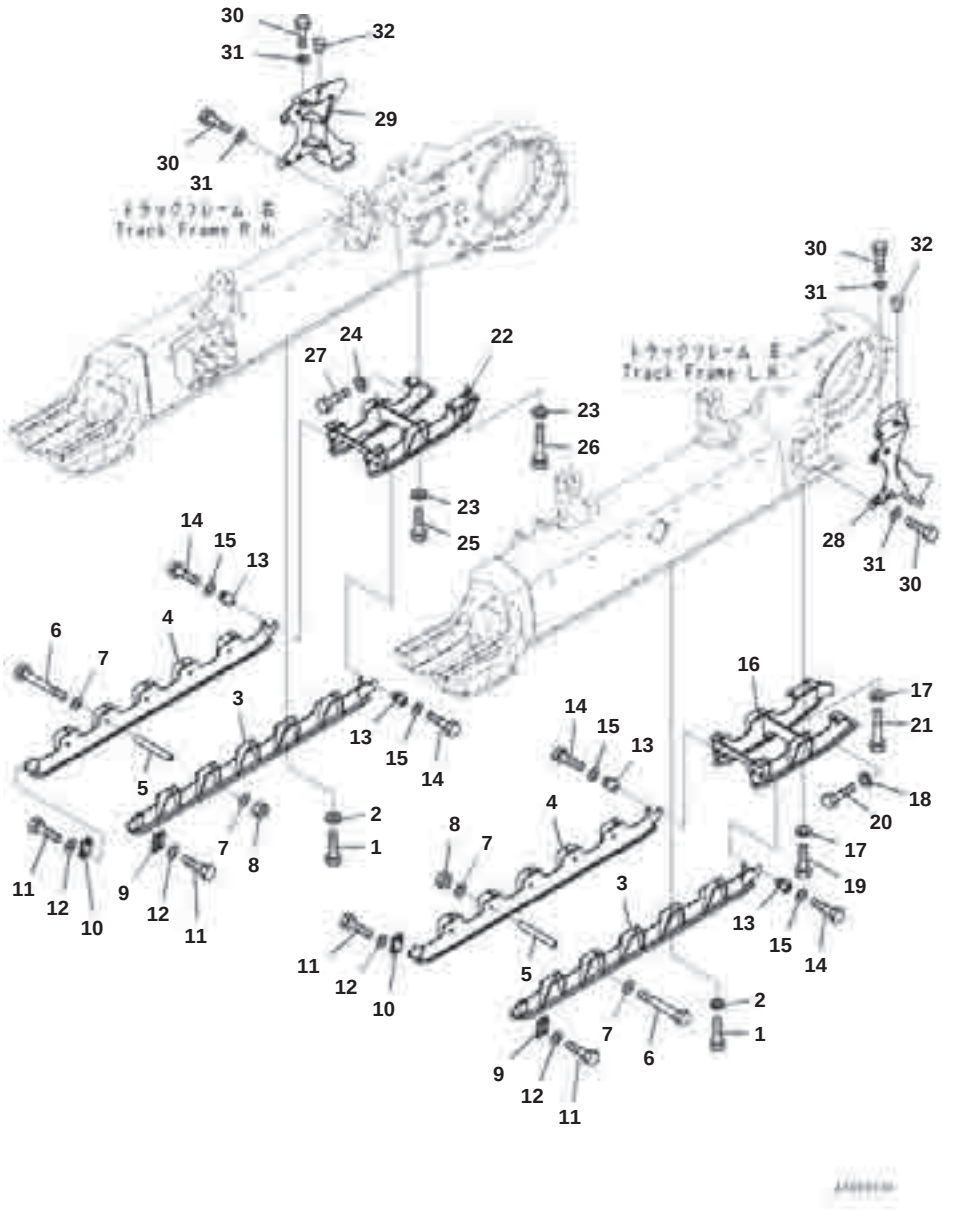

Track Roller Guard

Index	Part Number	Description	Qty	Options
1	01010-81645	Bolt	20	SN:B50001--
2	13Y-30-16190	Washer	20	SN:B50001--
3	13Y-30-16551	Guard	2	SN:B50001--
4	13Y-30-16561	Guard	2	SN:B50001--
5	13Y-30-16180	Pipe	10	SN:B50001--
6	09205-18305	Bolt	10	SN:B50001--
7	01643-31845	Washer	20	SN:B50001--
8	01580-11815	Nut	10	SN:B50001--
9	13Y-30-11171	Bracket	2	SN:B50001--
10	13Y-30-11181	Bracket	2	SN:B50001--
11	01010-81245	Bolt	8	SN:B50001--
12	01643-31232	Washer	8	SN:B50001--
13	134-30-61450	Plate	4	SN:B50001--
14	01010-81230	Bolt	8	SN:B50001--
15	01643-31232	Washer	8	SN:B50001--
16	13Y-30-16514	Guard	1	SN:B50001--
17	13Y-30-16190	Washer	7	SN:B50001--
18	13Y-30-16190	Washer	2	SN:B50001--
19	01010-81645	Bolt	6	SN:B50001--
20	01010-81645	Bolt	2	SN:B50001--
21	01010-81675	Bolt	1	SN:B50001--
22	13Y-30-16524	Guard	1	SN:B50001--
23	13Y-30-16190	Washer	7	SN:B50001--
24	13Y-30-16190	Washer	2	SN:B50001--
25	01010-81645	Bolt	6	SN:B50001--
26	01010-81675	Bolt	1	SN:B50001--
27	01010-81645	Bolt	2	SN:B50001--
28	13Y-30-14133	Guard	1	SN:B50001--
29	13Y-30-14143	Guard	1	SN:B50001--
30	01010-81645	Bolt	10	SN:B50001--
31	01643-31645	Washer	10	SN:B50001--
32	07049-01215	Plug	2	SN:B50001--

WORK EQUIPMENT

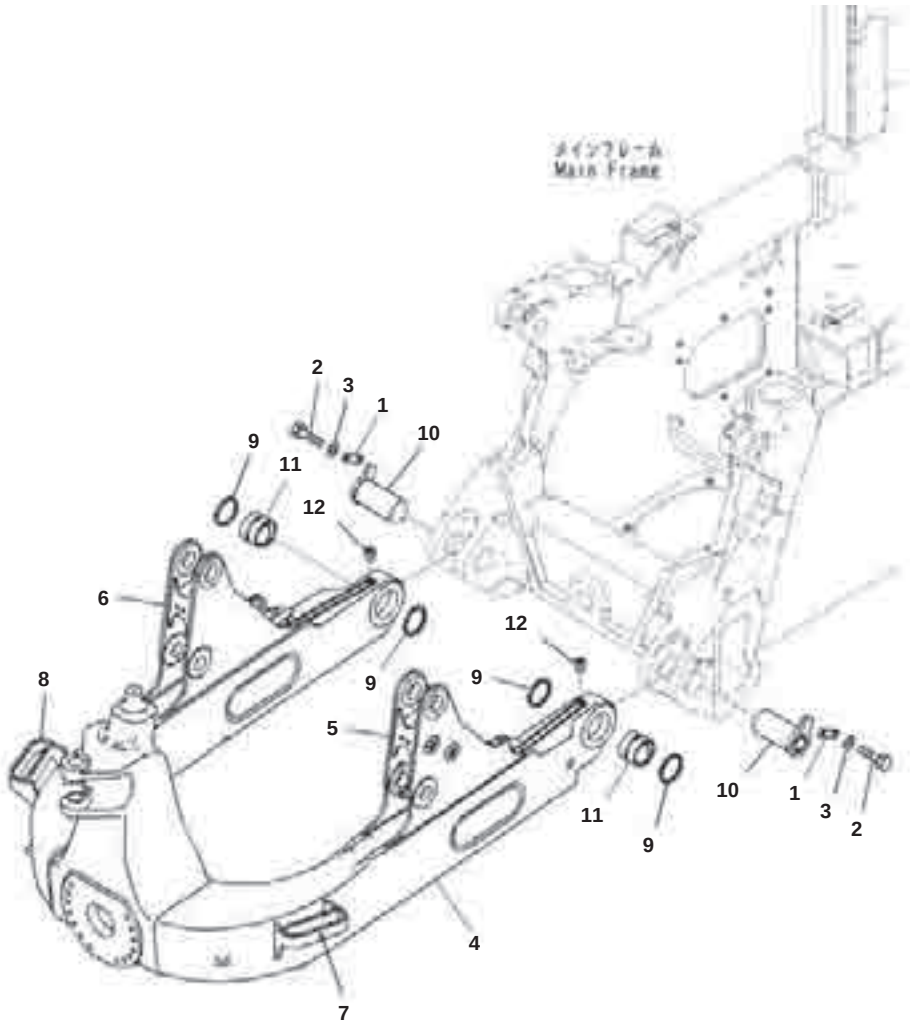

Index	Part Number	Description	Qty	Options
1	205-70-66580	Plate	2	SN:B50001--
2	01010-81230	Bolt	4	SN:B50001--
3	01643-31232	Washer	4	SN:B50001--
4	13Y-72-14102	Frame Assembly	1	SN:B50001--
5	13Y-72-14142	▪ Bracket,Welded	1	SN:B50001--
6	13Y-72-14152	▪ Bracket,Welded	1	SN:B50001--
7	13Y-72-14161	▪ Step,Welded	1	SN:B50001--
8	13Y-72-14171	▪ Step,Welded	1	SN:B50001--
9	707-77-85010	Seal, Dust	4	SN:B50001--
10	13Y-72-14240	Pin	2	SN:B50001--
11	134-72-71850	Bushing	2	SN:B50001--
12	07043-70108	Plug	2	SN:B50001--

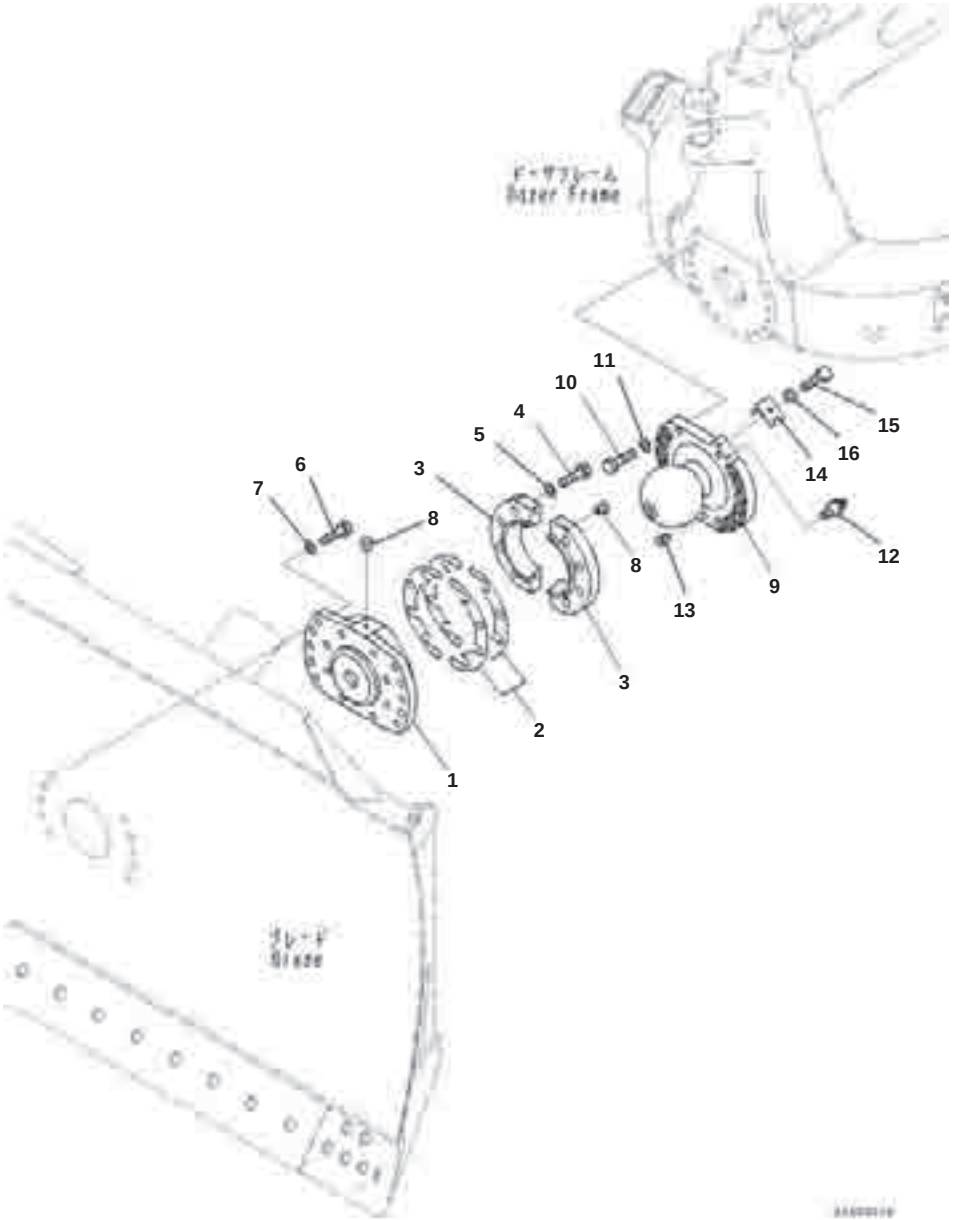

Link, Trunnion

Index	Part Number	Description	Qty	Options
1	134-72-62442	Bearing	1	SN:B50001--
2	134-72-72450	Shim, T=0.5mm	4	SN:B50001--
	134-72-72460	Shim, T=1.0mm	14	SN:B50001--
3	134-72-71151	Cap	2	SN:B50001--
4	01011-82405	Bolt	8	SN:B50001--
5	01643-32460	Washer	8	SN:B50001--
6	01010-82060	Bolt	10	SN:B50001--
7	01643-32060	Washer	10	SN:B50001--
8	07049-01215	Plug	5	SN:B50001--
9	13Y-72-17470	Trunnion	1	SN:B50001--
10	01010-82065	Bolt	14	SN:B50001--
11	01643-32060	Washer	14	SN:B50001--
12	07020-00000	Fitting, Grease	1	SN:B50001--
13	07049-02228	Plug, Cork	3	SN:B50001--
14	14X-72-51530	Bracket	1	SN:B50001--
15	01010-81045	Bolt	1	SN:B50001--
16	01643-31032	Washer	1	SN:B50001--

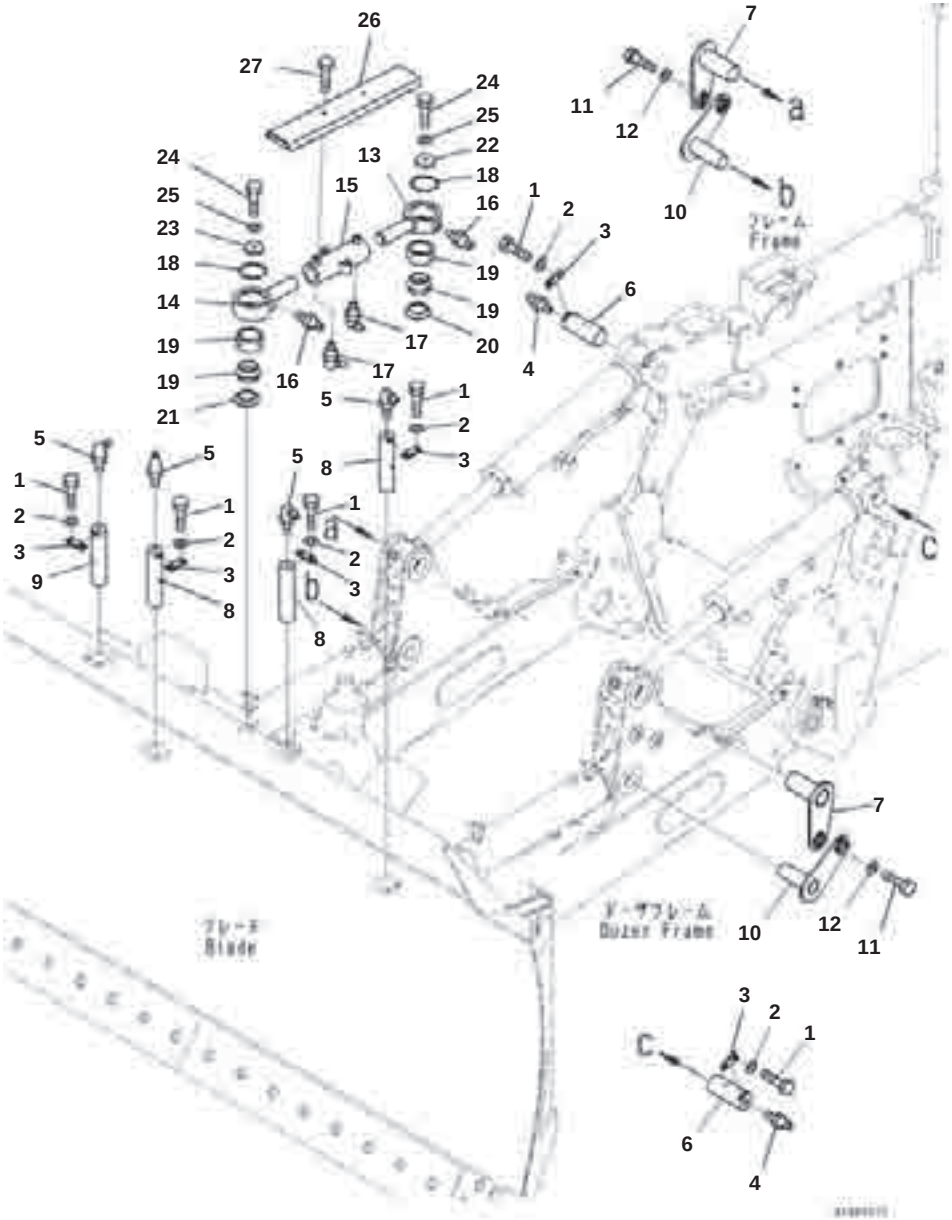

Index	Part Number	Description	Qty	Options
1	01010-81230	Bolt	12	SN:B50001--
2	01643-51232	Washer	12	SN:B50001--
3	04082-00212	Lock	6	SN:B50001--
4	07020-00000	Fitting, Grease	2	SN:B50001--
5	07020-00900	Fitting, Grease	4	SN:B50001--
6	134-72-61521	Pin	2	SN:B50001--
7	13Y-72-14260	Pin	2	SN:B50001--
8	13Y-72-14270	Pin	3	SN:B50001--
9	13Y-72-14270	Pin	1	SN:B50001--
10	13Y-72-14250	Pin	2	SN:B50001--
11	01010-81220	Bolt	4	SN:B50001--
12	124-54-26540	Washer	4	SN:B50001--
13	13Y-72-14362	Rod	1	SN:B50001--
14	13Y-72-14371	Rod	1	SN:B50001--
15	13Y-72-14381	Bar	1	SN:B50001--
16	07020-00000	Fitting, Grease	2	SN:B50001--
17	07020-00900	Fitting, Grease	2	SN:B50001--
18	04065-09030	Ring, Snap	2	SN:B50001--
19	707-46-05120	Bushing	2	SN:B50001--
20	13Y-72-14340	Spacer	1	SN:B50001--
21	13Y-72-14340	Spacer	1	SN:B50001--
22	13Y-72-14410	Plate	1	SN:B50001--
23	13Y-72-14410	Plate	1	SN:B50001--
24	01010-81230	Bolt	2	SN:B50001--
25	01643-31232	Washer	2	SN:B50001--
26	13Y-72-14391	Cover	1	SN:B50001--
27	01010-81225	Bolt	2	SN:B50001--

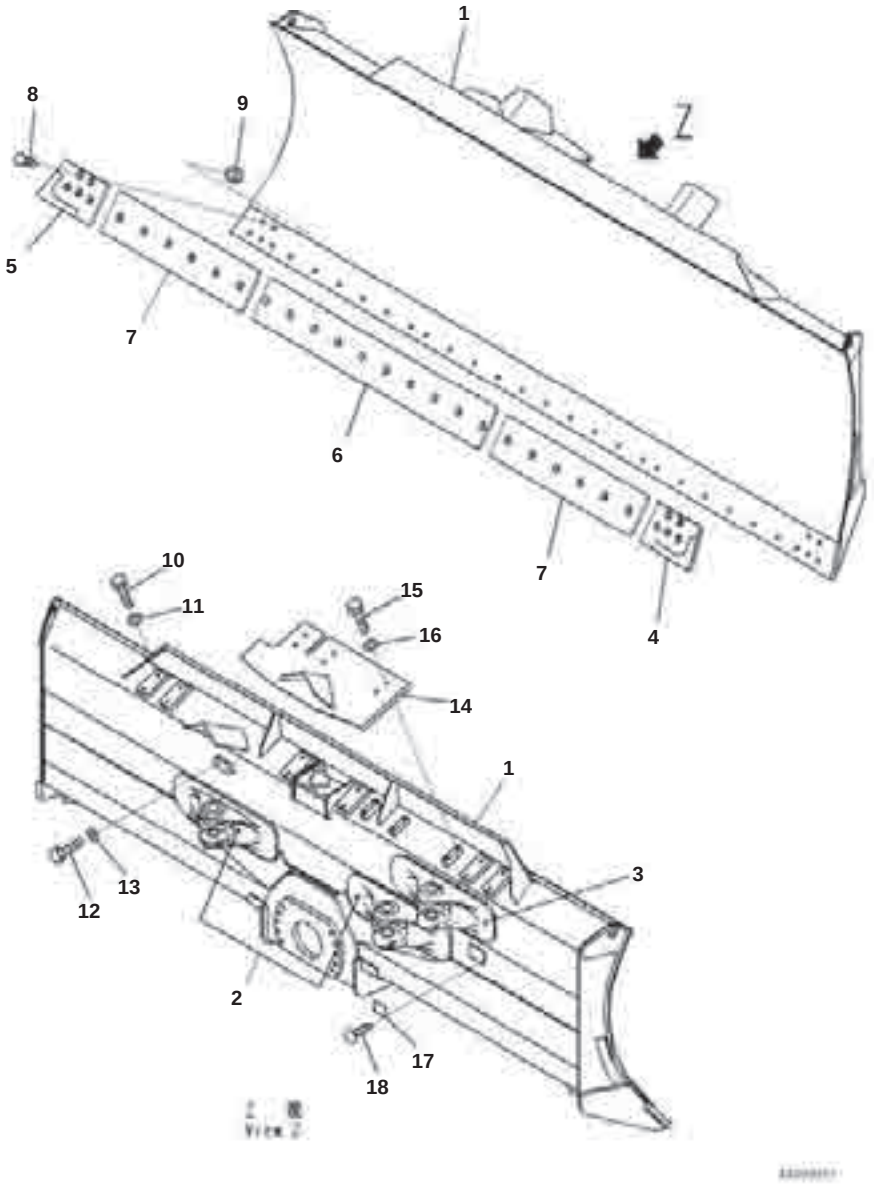

Dozer Blade, Power Angle Power Tilt Dozer, Inside Frame, Wide Blade

Index	Code	Part Number	Description	Qty	Options
1		13Y-72-11105	Blade Assembly	1	SN:B50001--
2		13Y-72-11160	' Bracket,Welded	2	SN:B50001--
3		13Y-72-11170	' Bracket,Welded	1	SN:B50001--
4		134-72-61450	End Bit	1	SN:B50001--
5		134-72-61460	End Bit	1	SN:B50001--
6		13G-72-61410	Cutting Edge	1	SN:B50001--
7		13G-72-61420	Cutting Edge	2	SN:B50001--
8		02090-11265	Bolt	32	SN:B50001--
9		02290-11219	Nut	32	SN:B50001--
10		01010-81625	Bolt	12	SN:B50001--
11		01643-31645	Washer	12	SN:B50001--
12		01010-81016	Bolt	2	SN:B50001--
13		01643-31032	Washer	2	SN:B50001--
14		13Y-72-11183	Cover	1	SN:B50001--
15		01010-81225	Bolt	6	SN:B50001--
16		01643-31232	Washer	6	SN:B50001--
17	C2	(09601-50000)	Plate, Name (Limited Supply), EU Regulation	1	SN:B50001--
18		04418-13060	Screw	4	SN:B50001--

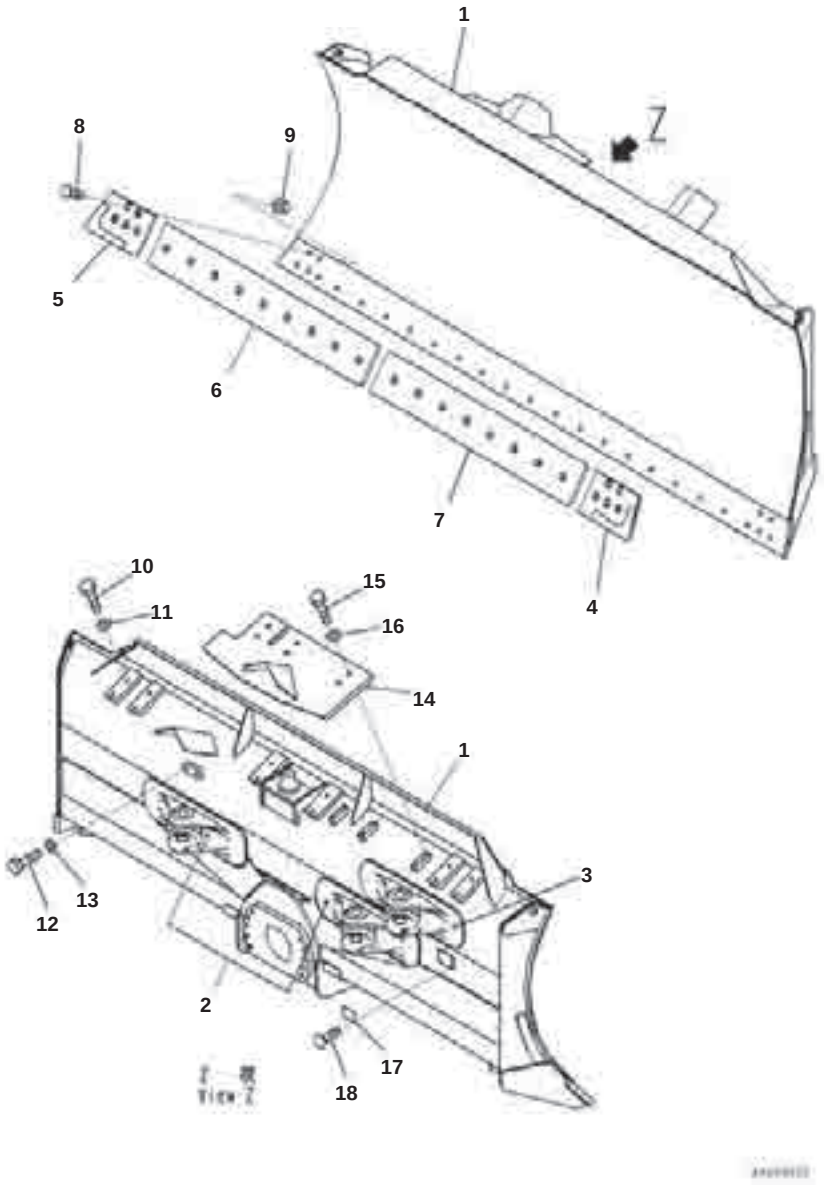

Dozer Blade, Power Angle Power Tilt Dozer, Inside Frame

Index	Code	Part Number	Description	Qty	Options
1		13Y-72-13103	Blade Assembly	1	SN:B50001--
2		13Y-72-11160	' Bracket,Welded	2	SN:B50001--
3		13Y-72-11170	' Bracket,Welded	1	SN:B50001--
4		134-72-61450	End Bit	1	SN:B50001--
5		134-72-61460	End Bit	1	SN:B50001--
6		134-72-61410	Cutting Edge	1	SN:B50001--
7		134-72-61420	Cutting Edge	1	SN:B50001--
8		02090-11265	Bolt	27	SN:B50001--
9		02290-11219	Nut	27	SN:B50001--
10		01010-81625	Bolt	12	SN:B50001--
11		01643-31645	Washer	12	SN:B50001--
12		01010-81016	Bolt	2	SN:B50001--
13		01643-31032	Washer	2	SN:B50001--
14		13Y-72-11183	Cover	1	SN:B50001--
15		01010-81225	Bolt	6	SN:B50001--
16		01643-31232	Washer	6	SN:B50001--
17	C2	(09601-50000)	Plate, Name (Limited Supply), EU Regulation	1	SN:B50001--
18		04418-13060	Screw	4	SN:B50001--

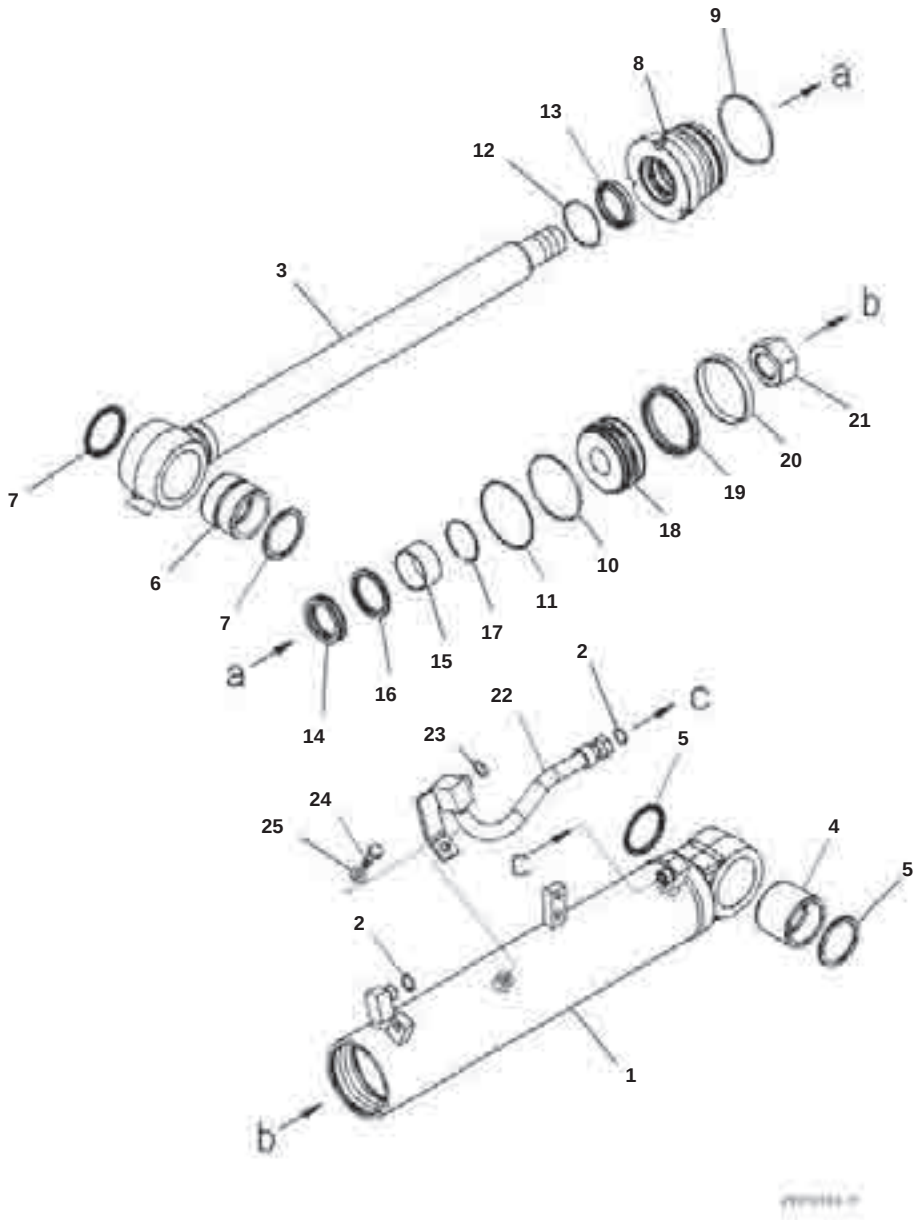

Blade Lift Cylinder, L.H.

Index	Part Number	Description	Qty	Options
	707-E0-00610	Cylinder Assembly	1	SN:B50001--
1	707-11-10J70	▪ Cylinder	1	SN:B50001--
2	02896-61012	▪ O-ring, (Kit : K02)	2	SN:B50001--
3	707-58-55A40	▪ Rod, Piston	1	SN:B50001--
4	07143-10606	▪ Bushing	1	SN:B50001--
5	07145-00060	▪ Seal, Dust, (Kit : K02)	2	SN:B50001--
6	07144-10606	▪ Bushing	1	SN:B50001--
7	07145-00060	▪ Seal, Dust, (Kit : K02)	2	SN:B50001--
8	707-29-10A80	▪ Head, Cylinder	1	SN:B50001--
9	07000-12100	▪ O-ring, (Kit : K02)	1	SN:B50001--
10	07000-B2095	▪ O-ring, (Kit : K02)	1	SN:B50001--
11	707-35-10960	▪ Ring, Back-up, (Kit : K02)	1	SN:B50001--
12	07179-12069	▪ Ring, Snap	1	SN:B50001--
13	707-56-55740	▪ Seal, Dust, (Kit : K02)	1	SN:B50001--
14	707-51-55860	▪ Packing, Rod, (Kit : K02)	1	SN:B50001--
15	707-52-90301	▪ Bushing	1	SN:B50001--
16	707-51-55650	▪ Ring, Buffer, (Kit : K02)	1	SN:B50001--
17	707-75-55110	▪ Ring, Snap	1	SN:B50001--
18	707-36-10470	▪ Piston	1	SN:B50001--
19	707-44-10150	▪ Ring, Piston, (Kit : K02)	1	SN:B50001--
20	07156-01012	▪ Ring, Wear, (Kit : K02)	1	SN:B50001--
21	707-67-39020	▪ Nut	1	SN:B50001--
22	707-86-48980	Tube	1	SN:B50001--
23	02896-61012	O-ring, (Kit : K02)	1	SN:B50001--
24	01010-81020	Bolt	1	SN:B50001--
25	01643-31032	Washer	1	SN:B50001--

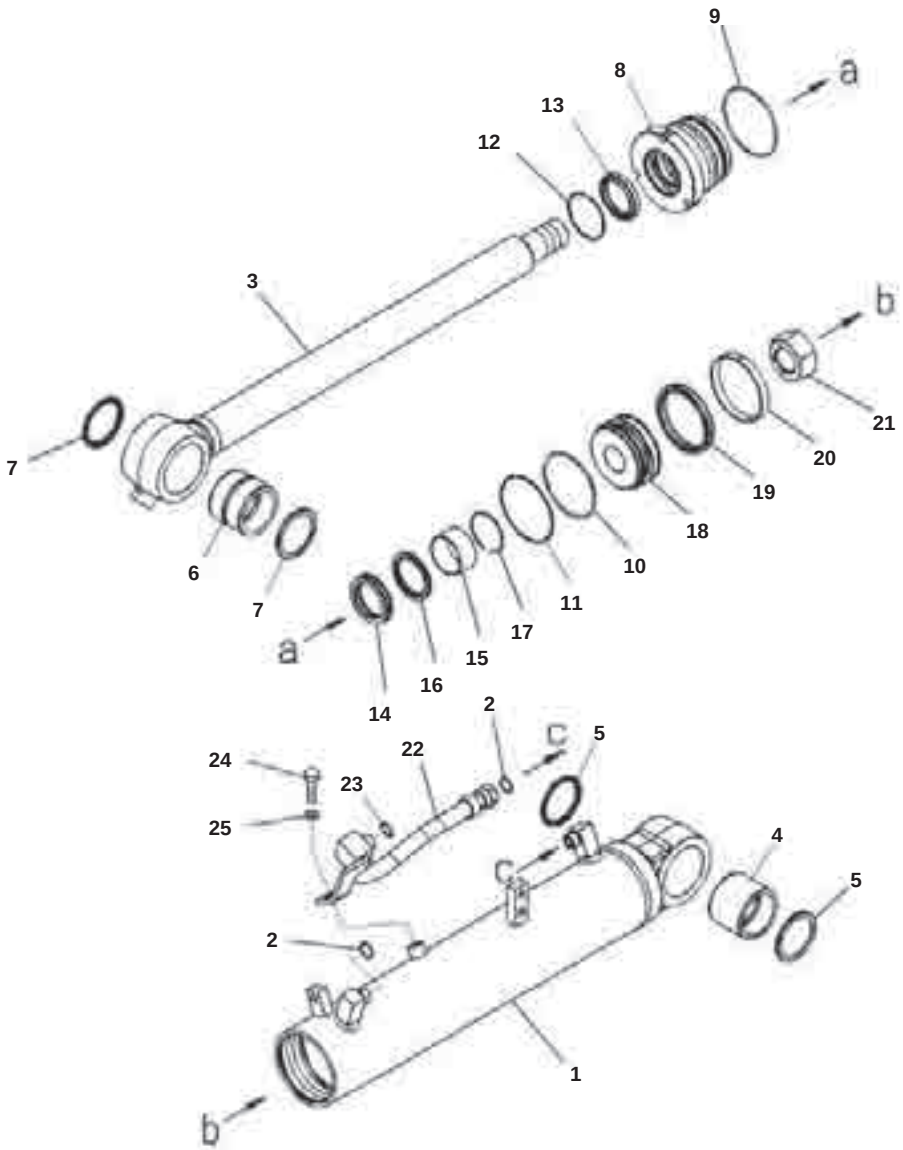

Blade Lift Cylinder, R.H.

Index	Part Number	Description	Qty	Options
	707-E0-00620	Cylinder Assembly	1	SN:B50001--
1	707-11-10J80	▪ Cylinder	1	SN:B50001--
2	02896-61012	▪ O-ring, (Kit : K02)	2	SN:B50001--
3	707-58-55A40	▪ Rod, Piston	1	SN:B50001--
4	07143-10606	▪ Bushing	1	SN:B50001--
5	07145-00060	▪ Seal, Dust, (Kit : K02)	2	SN:B50001--
6	07144-10606	▪ Bushing	1	SN:B50001--
7	07145-00060	▪ Seal, Dust, (Kit : K02)	2	SN:B50001--
8	707-29-10A80	▪ Head, Cylinder	1	SN:B50001--
9	07000-12100	▪ O-ring, (Kit : K02)	1	SN:B50001--
10	07000-B2095	▪ O-ring, (Kit : K02)	1	SN:B50001--
11	707-35-10960	▪ Ring, Back-up, (Kit : K02)	1	SN:B50001--
12	07179-12069	▪ Ring, Snap	1	SN:B50001--
13	707-56-55740	▪ Seal, Dust, (Kit : K02)	1	SN:B50001--
14	707-51-55860	▪ Packing, Rod, (Kit : K02)	1	SN:B50001--
15	707-52-90301	▪ Bushing	1	SN:B50001--
16	707-51-55650	▪ Ring, Buffer, (Kit : K02)	1	SN:B50001--
17	707-75-55110	▪ Ring, Snap	1	SN:B50001--
18	707-36-10470	▪ Piston	1	SN:B50001--
19	707-44-10150	▪ Ring, Piston, (Kit : K02)	1	SN:B50001--
20	07156-01012	▪ Ring, Wear, (Kit : K02)	1	SN:B50001--
21	707-67-39020	▪ Nut	1	SN:B50001--
22	707-86-48990	Tube	1	SN:B50001--
23	02896-61012	O-ring, (Kit : K02)	1	SN:B50001--
24	01010-81020	Bolt	1	SN:B50001--
25	01643-31032	Washer	1	SN:B50001--

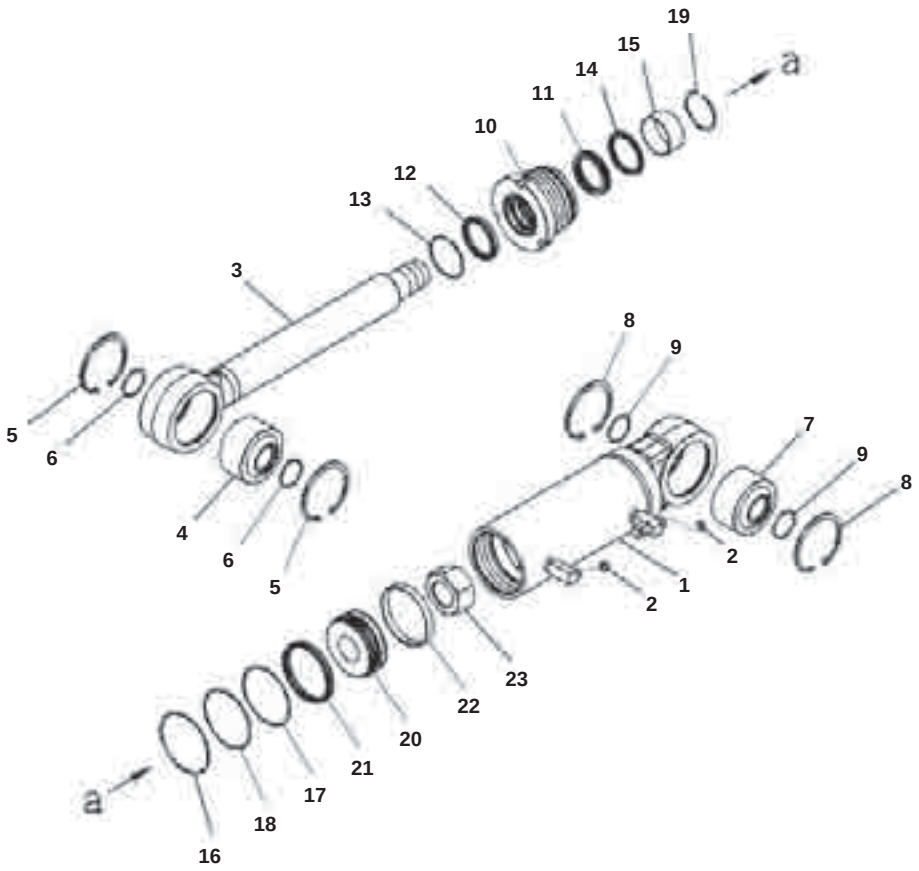

Index	Part Number	Description	Qty	Options
	707-E0-00570	Cylinder Assembly	1	SN:B50001--
1	707-11-12C60	' Cylinder	1	SN:B50001--
2	02896-61009	' O-ring, (Kit : K03)	2	SN:B50001--
3	707-58-70A80	' Rod, Piston	1	SN:B50001--
4	07137-05008	' Bushing	1	SN:B50001--
5	04065-01104	' Ring, Snap	2	SN:B50001--
6	07000-13050	' O-ring, (Kit : K03)	2	SN:B50001--
7	07137-05008	' Bushing	1	SN:B50001--
8	04065-01104	' Ring, Snap	2	SN:B50001--
9	07000-13050	' O-ring, (Kit : K03)	2	SN:B50001--
10	707-29-12180	' Head, Cylinder	1	SN:B50001--
11	707-51-70860	' Packing, Rod, (Kit : K03)	1	SN:B50001--
12	707-56-70740	' Seal, Dust, (Kit : K03)	1	SN:B50001--
13	07179-12084	' Ring, Snap	1	SN:B50001--
14	707-51-70650	' Ring, Buffer, (Kit : K03)	1	SN:B50001--
15	707-52-90461	' Bushing	1	SN:B50001--
16	07000-12120	' O-ring, (Kit : K03)	1	SN:B50001--
17	07000-B2115	' O-ring, (Kit : K03)	1	SN:B50001--
18	707-35-11160	' Ring, Back-up, (Kit : K03)	1	SN:B50001--
19	707-75-70110	' Ring, Snap	1	SN:B50001--
20	707-36-12170	' Piston	1	SN:B50001--
21	707-44-12150	' Ring, Piston, (Kit : K03)	1	SN:B50001--
22	07156-01215	' Ring, Wear, (Kit : K03)	1	SN:B50001--
23	707-67-52030	' Nut	1	SN:B50001--

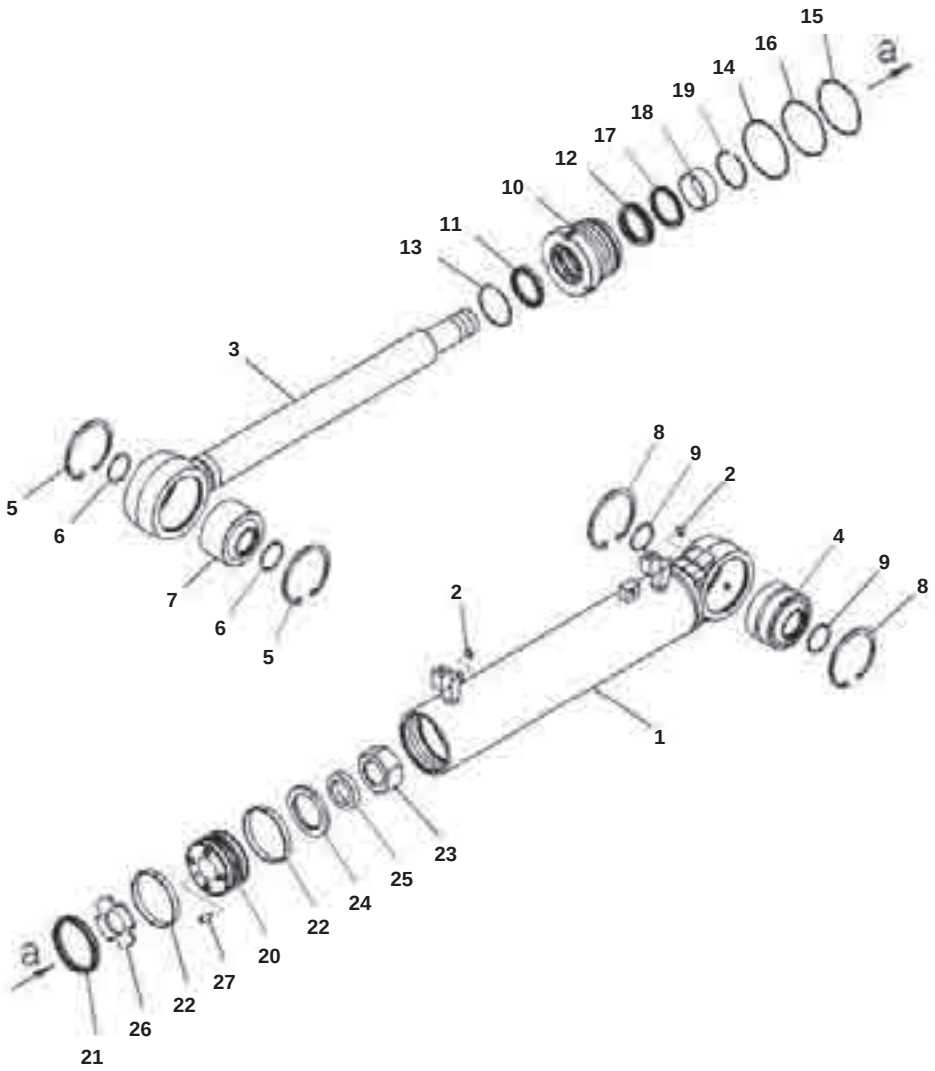

Angle Cylinder

Index	Part Number	Description	Qty	Options
	707-E0-00590	Cylinder Assembly	2	SN:B50001--
1	707-11-11H20	˙ Cylinder	1	SN:B50001--
2	02896-61009	˙ O-ring, (Kit : K04)	2	SN:B50001--
3	721-58-65160	˙ Rod, Piston	1	SN:B50001--
4	707-46-05040	˙ Bushing	1	SN:B50001--
5	04065-01104	˙ Ring, Snap	2	SN:B50001--
6	07000-13050	˙ O-ring, (Kit : K04)	2	SN:B50001--
7	07137-05008	˙ Bushing	1	SN:B50001--
8	04065-01104	˙ Ring, Snap	2	SN:B50001--
9	07000-13050	˙ O-ring, (Kit : K04)	2	SN:B50001--
10	707-29-11090	˙ Head, Cylinder	1	SN:B50001--
11	707-56-65740	˙ Seal, Dust, (Kit : K04)	1	SN:B50001--
12	707-51-65860	˙ Packing, Rod, (Kit : K04)	1	SN:B50001--
13	07179-12079	˙ Ring, Snap	1	SN:B50001--
14	07000-12110	˙ O-ring, (Kit : K04)	1	SN:B50001--
15	07000-B2105	˙ O-ring, (Kit : K04)	1	SN:B50001--
16	707-35-11060	˙ Ring, Back-up, (Kit : K04)	1	SN:B50001--
17	707-51-65650	˙ Ring, Buffer, (Kit : K04)	1	SN:B50001--
18	707-52-90401	˙ Bushing	1	SN:B50001--
19	707-75-65110	˙ Ring, Snap	1	SN:B50001--
20	707-91-91111	˙ Piston	1	SN:B50001--
21	707-44-11150	˙ Ring, Piston, (Kit : K04)	1	SN:B50001--
22	07156-01112	˙ Ring, Wear, (Kit : K04)	2	SN:B50001--
23	707-67-48020	˙ Nut	1	SN:B50001--
24	707-69-11011	˙ Slider	1	SN:B50001--
25	707-81-45252	˙ Collar	1	SN:B50001--
26	707-40-11321	˙ Retainer	1	SN:B50001--
27	707-88-60310	˙ Pin	1	SN:B50001--

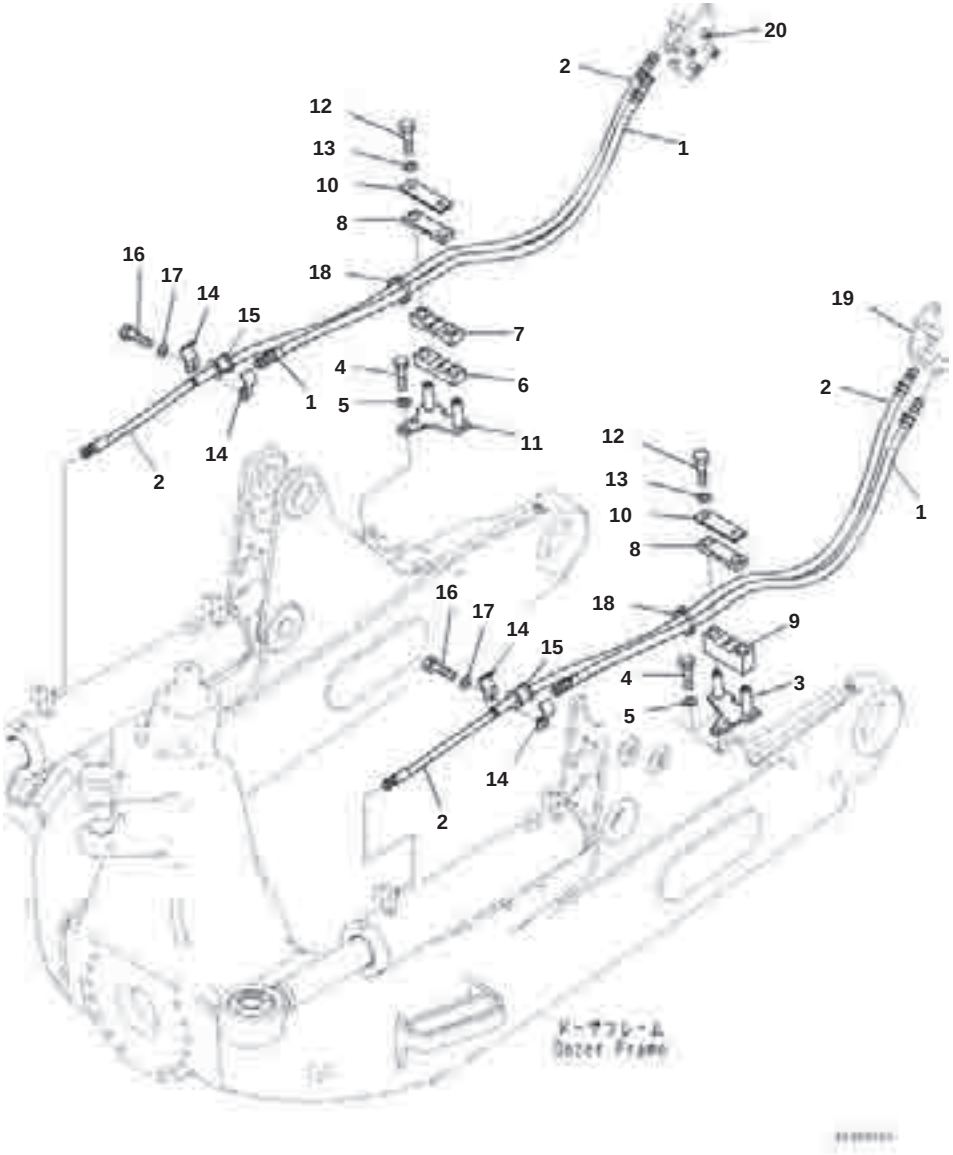

Dozer Hydraulic Piping, Angle Cylinder Piping

Index	Part Number	Description	Qty	Options
1	13Y-62-16161	Hose	2	SN:B50001--
2	13Y-62-16171	Hose	2	SN:B50001--
3	13Y-62-16253	Bracket	1	SN:B50001--
4	01010-81230	Bolt	4	SN:B50001--
5	01643-31232	Washer	4	SN:B50001--
6	13Y-62-16422	Cushion	1	SN:B50001--
7	13Y-62-16431	Cushion	1	SN:B50001--
8	13Y-62-16441	Cushion	2	SN:B50001--
9	13Y-62-16452	Cushion	1	SN:B50001--
10	13Y-62-16470	Plate	2	SN:B50001--
11	13Y-62-16263	Bracket	1	SN:B50001--
12	01010-81225	Bolt	4	SN:B50001--
13	01643-31232	Washer	4	SN:B50001--
14	11Y-62-33591	Clamp	4	SN:B50001--
15	07095-00421	Cushion	2	SN:B50001--
16	01010-81025	Bolt	2	SN:B50001--
17	01643-31032	Washer	2	SN:B50001--
18	08034-20876	Band	2	SN:B50001--
19	(13Y-62-16141)	Bracket		SN:B50001--
20	(13Y-62-16152)	Bracket		SN:B50001--

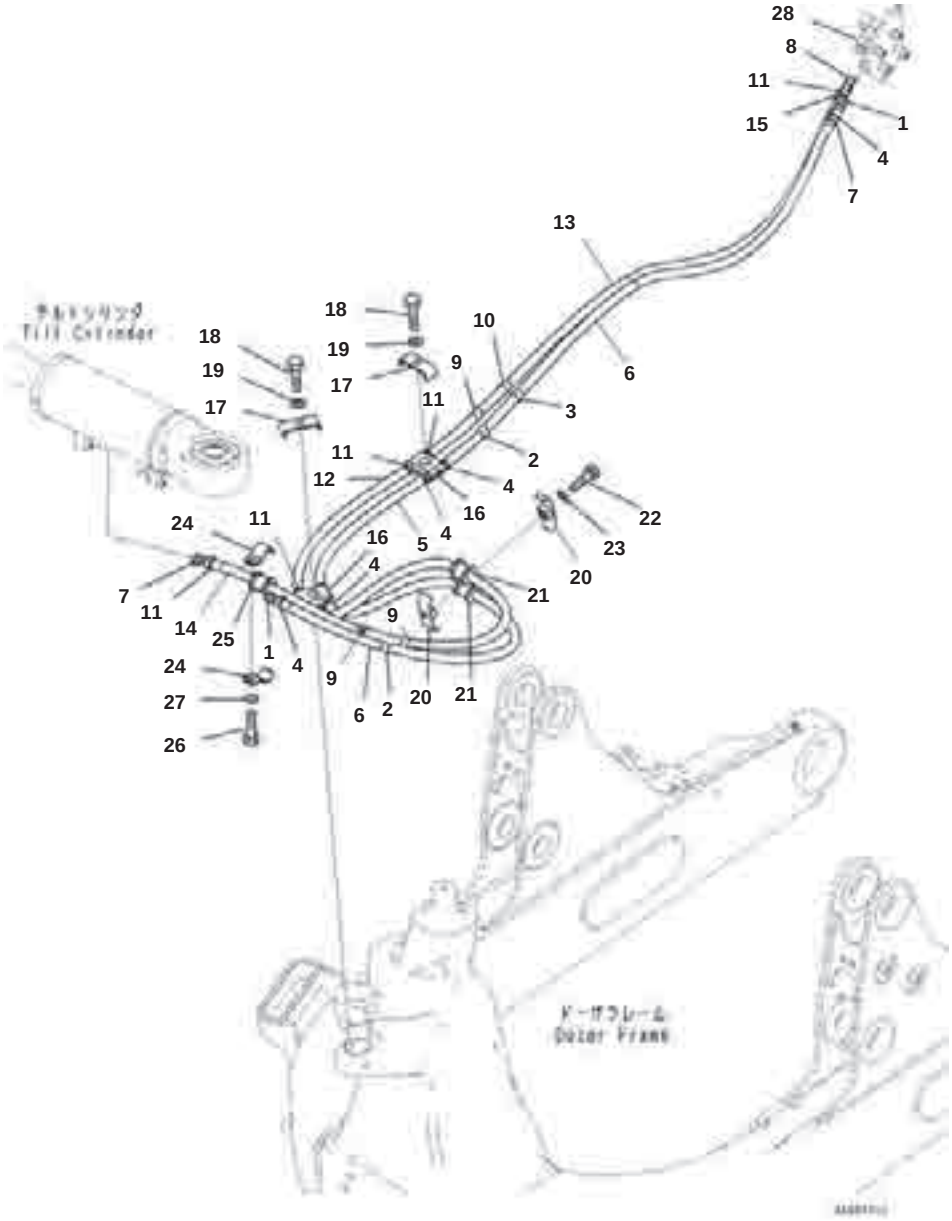

Dozer Hydraulic Piping, Tilt Cylinder Piping

Index	Part Number	Description	Qty	Options
1	13Y-62-16181	Hose	1	SN:B50001--
2	08024-21920	▪ Tape, White	2	SN:B50001--
3	08024-31920	▪ Tape, Vinyl	1	SN:B50001--
4	08034-20414	▪ Band	6	SN:B50001--
5	13Y-62-16410	▪ Cover	1	SN:B50001--
6	14X-62-55110	▪ Cover	2	SN:B50001--
7	21U-62-34770	▪ Band, White	1	SN:B50001--
8	13Y-62-16191	Hose	1	SN:B50001--
9	08024-11920	▪ Tape, Vinyl, Red	3	SN:B50001--
10	08024-31920	▪ Tape, Vinyl	1	SN:B50001--
11	08034-20414	▪ Band	6	SN:B50001--
12	11Y-62-29150	▪ Cover	1	SN:B50001--
13	13Y-62-16280	▪ Cover	1	SN:B50001--
14	13Y-62-16290	▪ Cover	1	SN:B50001--
15	21U-62-34750	▪ Band, Blue	1	SN:B50001--
16	134-62-73470	Cushion	2	SN:B50001--
17	13Y-62-16230	Plate	4	SN:B50001--
18	01010-81225	Bolt	2	SN:B50001--
19	01643-31232	Washer	2	SN:B50001--
20	425-43-48220	Clamp	2	SN:B50001--
21	07095-00421	Cushion	2	SN:30001--
22	01010-81260	Bolt	1	SN:30001--
23	01643-31232	Washer	1	SN:30001--
24	11Y-62-33591	Clamp	2	SN:30001--
25	07095-00421	Cushion	1	SN:30001--
26	01010-81025	Bolt	1	SN:30001--
27	01643-31032	Washer	1	SN:30001--
28	(13Y-62-16152)	Bracket		SN:30001--

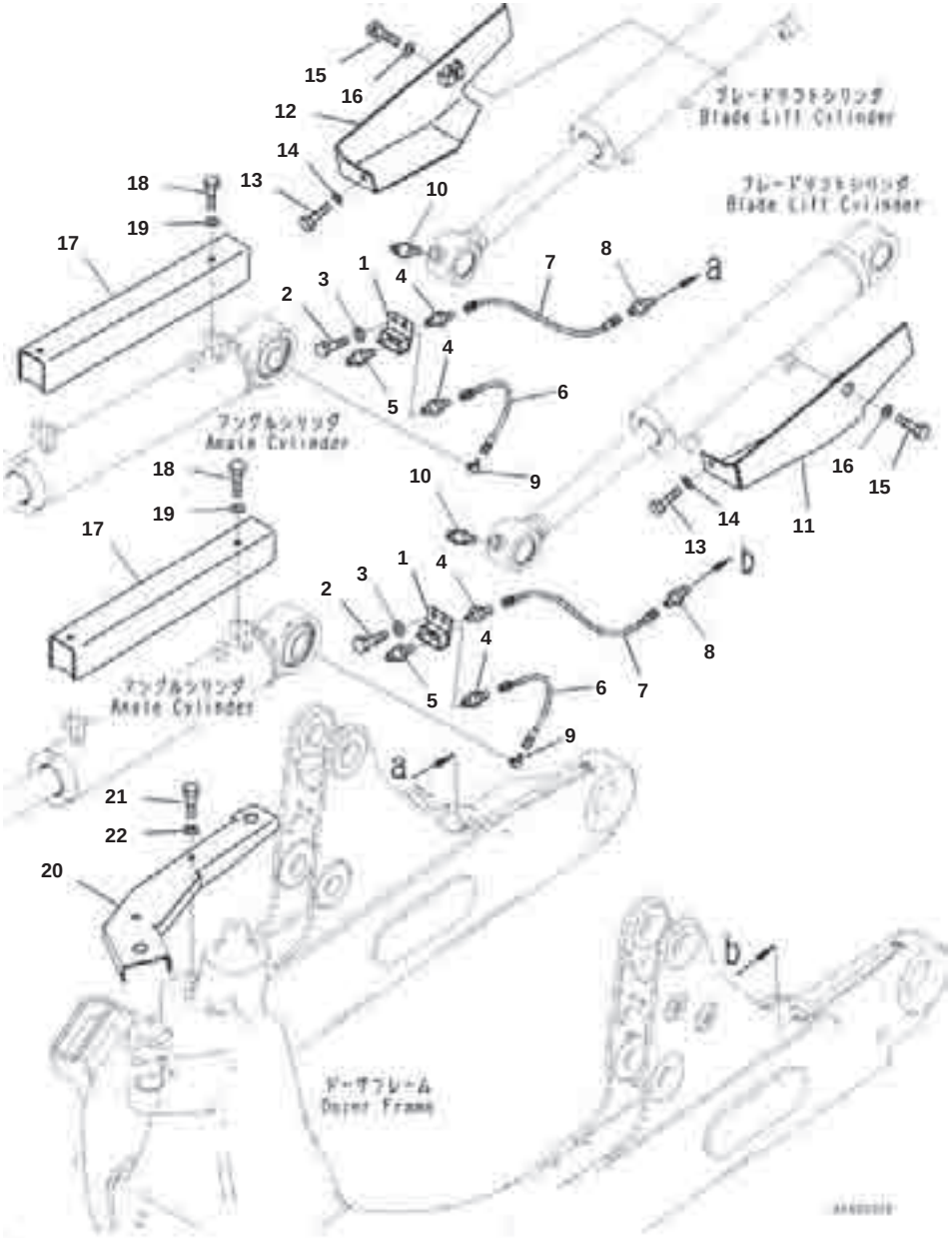

Dozer Hydraulic Piping, Lubrication Piping

Index	Part Number	Description	Qty	Options
1	13Y-72-14332	Bracket	2	SN:B50001--
2	01010-81230	Bolt	4	SN:B50001--
3	01643-31232	Washer	4	SN:B50001--
4	203-62-21740	Nipple	4	SN:B50001--
5	07020-00000	Fitting, Grease	4	SN:B50001--
6	13Y-72-14310	Hose	2	SN:B50001--
7	13Y-72-14321	Hose	2	SN:B50001--
8	203-62-21740	Nipple	2	SN:B50001--
9	202-62-21430	Elbow	2	SN:B50001--
10	07020-00000	Fitting, Grease	2	SN:B50001--
11	13Y-62-16333	Cover	1	SN:B50001--
12	13Y-62-16343	Cover	1	SN:B50001--
13	01010-81230	Bolt	2	SN:B50001--
14	01643-31232	Washer	2	SN:B50001--
15	01016-51245	Bolt	2	SN:B50001--
16	01643-31232	Washer	2	SN:B50001--
17	13Y-62-16122	Cover	2	SN:B50001--
18	01010-81225	Bolt	4	SN:B50001--
19	01643-31232	Washer	4	SN:B50001--
20	13Y-62-16133	Cover	1	SN:B50001--
21	01010-81225	Bolt	2	SN:B50001--
22	01643-31232	Washer	2	SN:B50001--

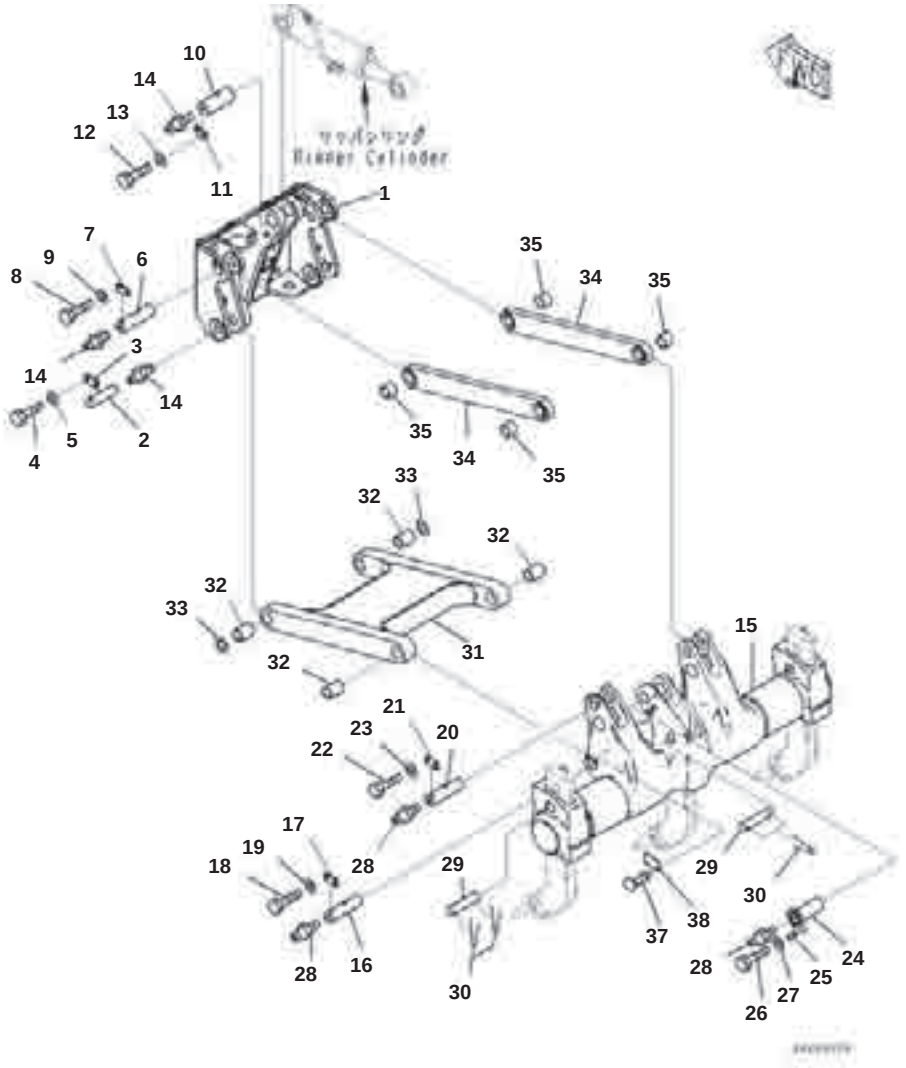

Index	Code	Part Number	Description	Qty	Options
1		13Y-78-11111	Support	1	SN:B50001--
2		14X-78-11310	Pin	2	SN:B50001--
3		04082-00212	Lock	2	SN:B50001--
4		01010-81230	Bolt	4	SN:B50001--
5		01643-51232	Washer	4	SN:B50001--
6		14X-78-21730	Pin	2	SN:B50001--
7		04082-00212	Lock	2	SN:B50001--
8		01010-81230	Bolt	4	SN:B50001--
9		01643-51232	Washer	4	SN:B50001--
10		144-874-8491	Pin	1	SN:B50001--
11		04082-00514	Lock	1	SN:B50001--
12		01010-81435	Bolt	2	SN:B50001--
13		01643-31445	Washer, Flat	2	SN:B50001--
14		07020-00000	Fitting, Grease	5	SN:B50001--
15		14X-78-21612	Beam	1	SN:B50001--
16		14X-78-21720	Pin	2	SN:B50001--
17		04082-00212	Lock	2	SN:B50001--
18		01010-81230	Bolt	4	SN:B50001--
19		01643-51232	Washer	4	SN:B50001--
20		14X-78-21730	Pin	2	SN:B50001--
21		04082-00212	Lock	2	SN:B50001--
22		01010-81230	Bolt	4	SN:B50001--
23		01643-51232	Washer	4	SN:B50001--
24		14X-78-21750	Pin	1	SN:B50001--
25		205-70-66580	Plate	1	SN:B50001--
26		01010-81230	Bolt	2	SN:B50001--
27		01643-31232	Washer	2	SN:B50001--
28		07020-00000	Fitting, Grease	5	SN:B50001--
29		144-78-11570	Pin	3	SN:B50001--
30		04050-10060	Pin, Cotter	6	SN:B50001--
31		144-78-11174	Link	1	SN:B50001--
32		141-78-11321	Bushing	4	SN:B50001--
33		14X-78-21920	Spacer	2	SN:B50001--
34		144-78-11162	Link	2	SN:B50001--
35		141-78-11311	Bushing	4	SN:B50001--
36	C2	(09601-50000)	Plate, Name (Limited Supply), EU Regulation	1	SN:B50001--
37		04418-13060	Screw	4	SN:B50001--

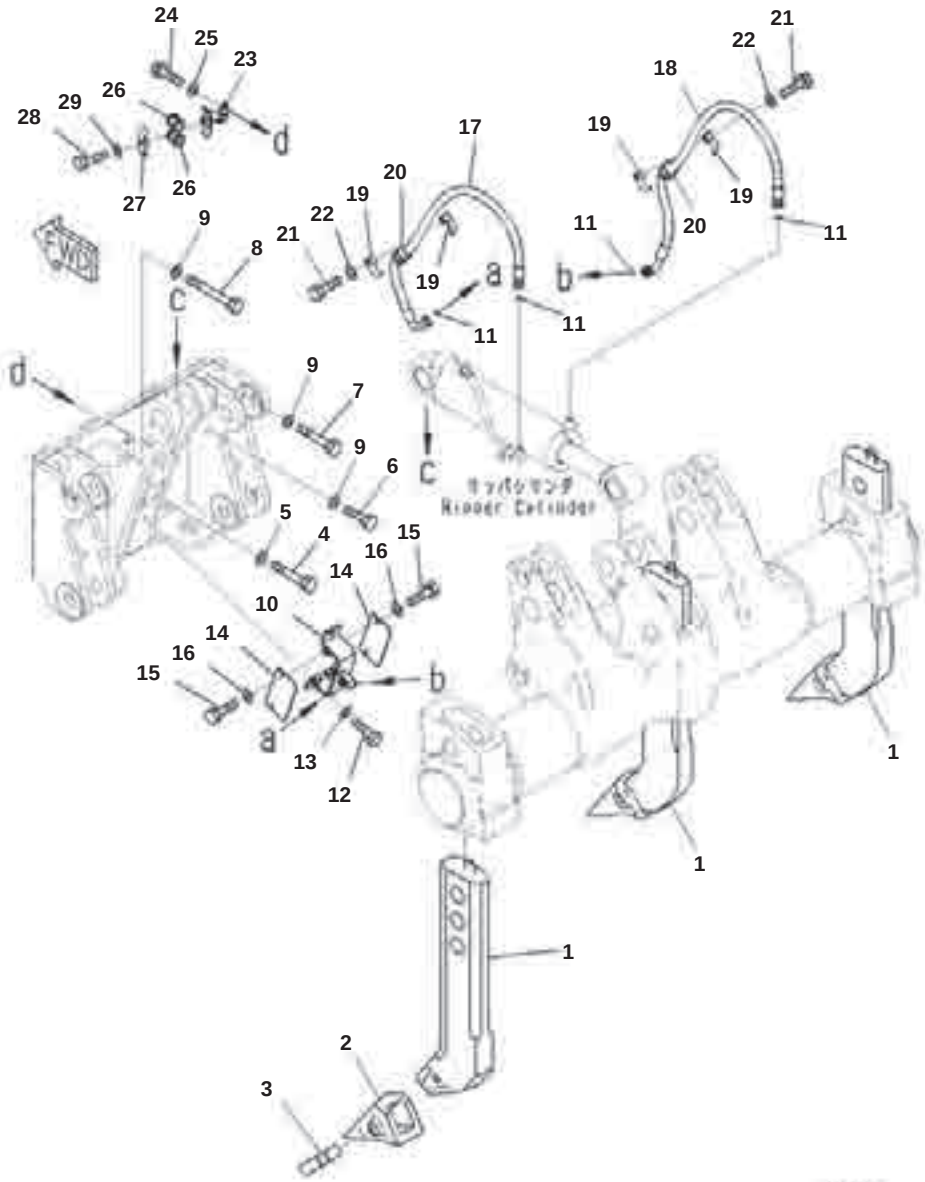

Ripper, Shank and Ripper Point

Index	Part Number	Description	Qty	Options
1	144-78-11245	Shank	3	SN:B50001--
2	141-78-11253	Point	3	SN:B50001--
3	09244-02508	Pin	3	SN:B50001--
4	01010-83085	Bolt	4	SN:B50001--
5	01643-33080	Washer	4	SN:B50001--
6	01010-82475	Bolt	8	SN:B50001--
7	01011-82425	Bolt	2	SN:B50001--
8	142-30-18220	Bolt	2	SN:B50001--
9	01643-32460	Washer	12	SN:B50001--
10	13Y-78-11122	Bracket	1	SN:B50001--
11	02896-11015	O-ring	4	SN:B50001--
12	01010-81235	Bolt	2	SN:B50001--
13	01643-31232	Washer	2	SN:B50001--
14	13Y-78-11180	Plate	2	SN:B50001--
15	01010-81025	Bolt	4	SN:B50001--
16	01643-31032	Washer	4	SN:B50001--
17	13Y-62-16362	Hose	1	SN:B50001--
18	13Y-62-16382	Hose	1	SN:B50001--
19	425-62-42640	Clamp	4	SN:B50001--
20	07095-00627	Cushion	2	SN:B50001--
21	01010-81270	Bolt	2	SN:B50001--
22	01643-31232	Washer	2	SN:B50001--
23	13Y-78-11231	Bracket	1	SN:B50001--
24	01010-81225	Bolt	2	SN:B50001--
25	01643-31232	Washer	2	SN:B50001--
26	07095-00525	Cushion	2	SN:B50001--
27	22P-62-13550	Clamp	1	SN:B50001--
28	01010-81245	Bolt	1	SN:B50001--
29	01643-31232	Washer	1	SN:B50001--

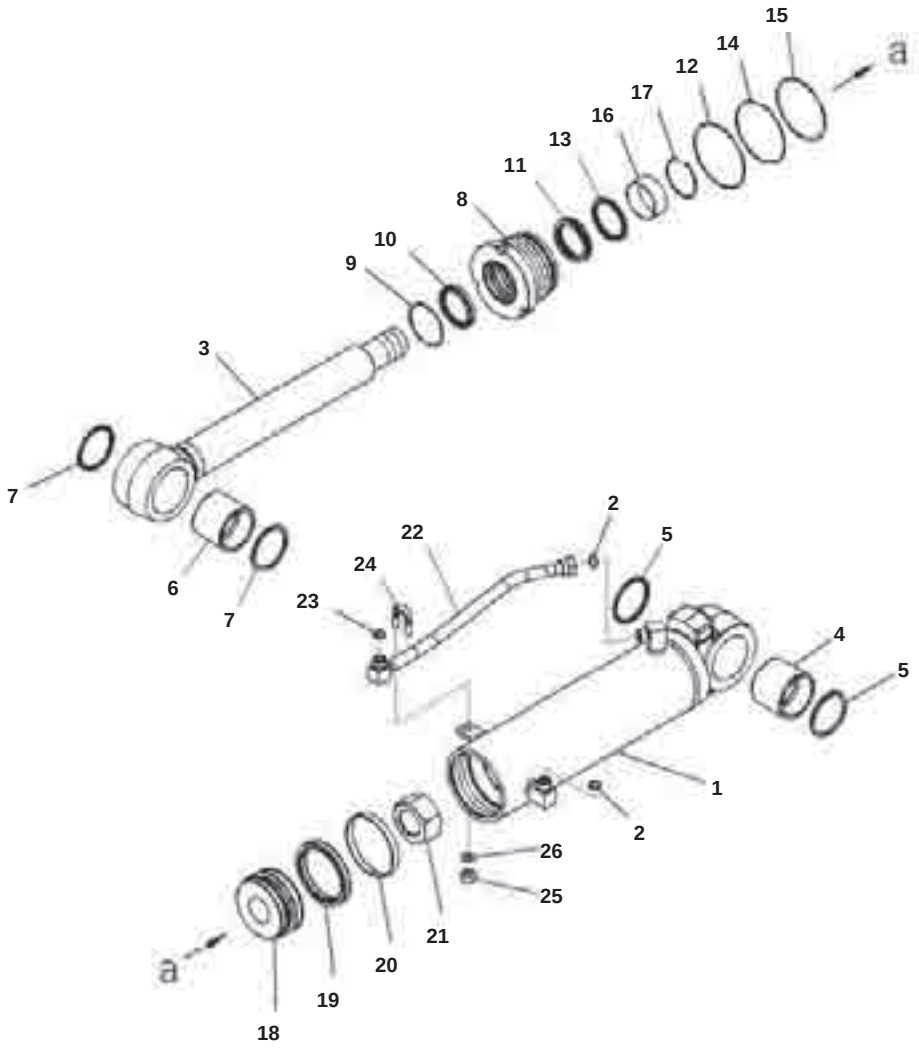

Index	Part Number	Description	Qty	Options
	707-E0-00600	Cylinder Assembly	1	SN:B50001--
1	707-11-12C70	･ Cylinder	1	SN:B50001--
2	02896-61015	･ O-ring, (Kit : K05)	2	SN:B50001--
3	707-58-70A20	･ Rod, Piston	1	SN:B50001--
4	07143-10707	･ Bushing	1	SN:B50001--
5	07145-00075	･ Seal, Dust, (Kit : K05)	2	SN:B50001--
6	07143-10707	･ Bushing	1	SN:B50001--
7	07145-00075	･ Seal, Dust, (Kit : K05)	2	SN:B50001--
8	707-29-12660	･ Head, Cylinder	1	SN:B50001--
9	07179-12084	･ Ring, Snap	1	SN:B50001--
10	707-56-70740	･ Seal, Dust, (Kit : K05)	1	SN:B50001--
11	707-51-70860	･ Packing, Rod, (Kit : K05)	1	SN:B50001--
12	07000-12125	･ O-ring, (Kit : K05)	1	SN:B50001--
13	707-51-70650	･ Ring, Buffer, (Kit : K05)	1	SN:B50001--
14	707-35-11210	･ Ring, Back-up, (Kit : K05)	1	SN:B50001--
15	07000-B2120	･ O-ring, (Kit : K05)	1	SN:B50001--
16	707-52-90451	･ Bushing	1	SN:B50001--
17	707-75-70110	･ Ring, Snap	1	SN:B50001--
18	707-36-12840	･ Piston	1	SN:B50001--
19	707-44-12250	･ Ring, Piston, (Kit : K05)	1	SN:B50001--
20	707-39-12520	･ Ring, Wear, (Kit : K05)	1	SN:B50001--
21	707-67-52030	･ Nut	1	SN:B50001--
22	707-86-55780	Tube	1	SN:B50001--
23	02896-61015	O-ring, (Kit : K05)	1	SN:B50001--
24	07283-32236	Clip, Pipe	1	SN:B50001--
25	01597-01009	Nut	2	SN:B50001--
26	01643-31032	Washer	2	SN:B50001--

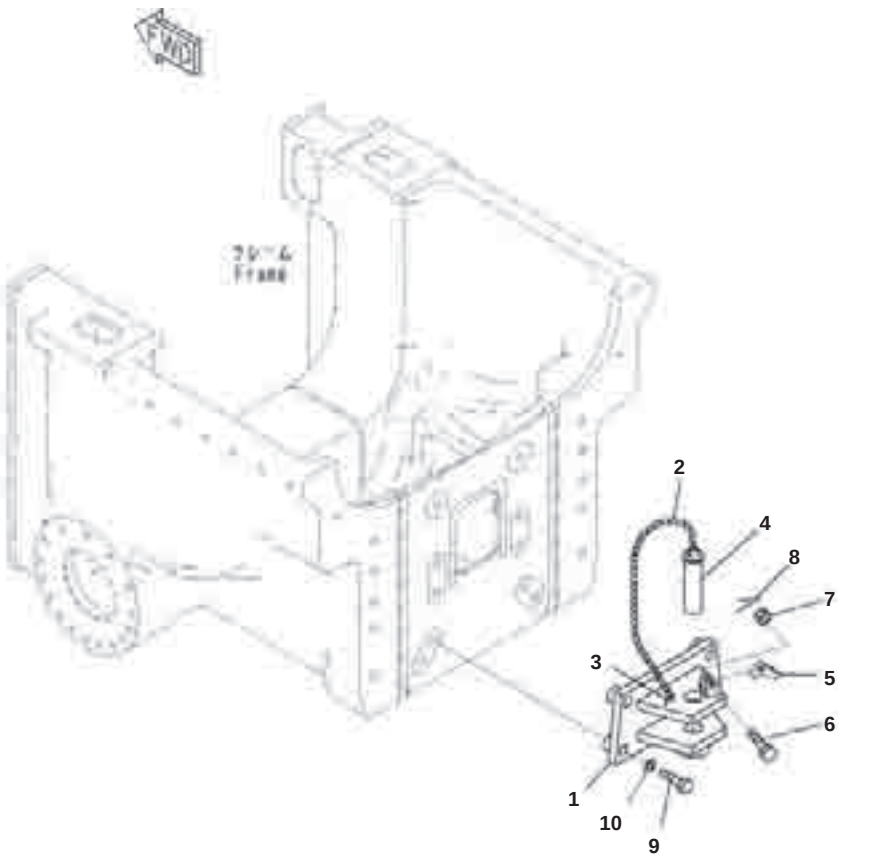

Drawbar, With Hitch

Index	Part Number	Description	Qty	Options
	131-69-00211	Drawbar Assembly	1	SN:B50001--
	131-69-41101	' Drawbar	1	SN:B50001--
1	131-69-41111	' ' Bracket	1	SN:B50001--
2	09245-04830	' ' Chain	1	SN:B50001--
3	09245-50060	' ' Hook,Welded	2	SN:B50001--
4	130-69-11190	' ' Pin	1	SN:B50001--
5	09249-00016	' ' Latch	1	SN:B50001--
6	01052-51260	' ' Bolt	1	SN:B50001--
7	01592-11215	' ' Nut, Slotted	1	SN:B50001--
8	04050-03020	' ' Pin, Cotter	1	SN:B50001--
9	01010-82490	Bolt	4	SN:B50001--
10	01643-32460	Washer	4	SN:B50001--

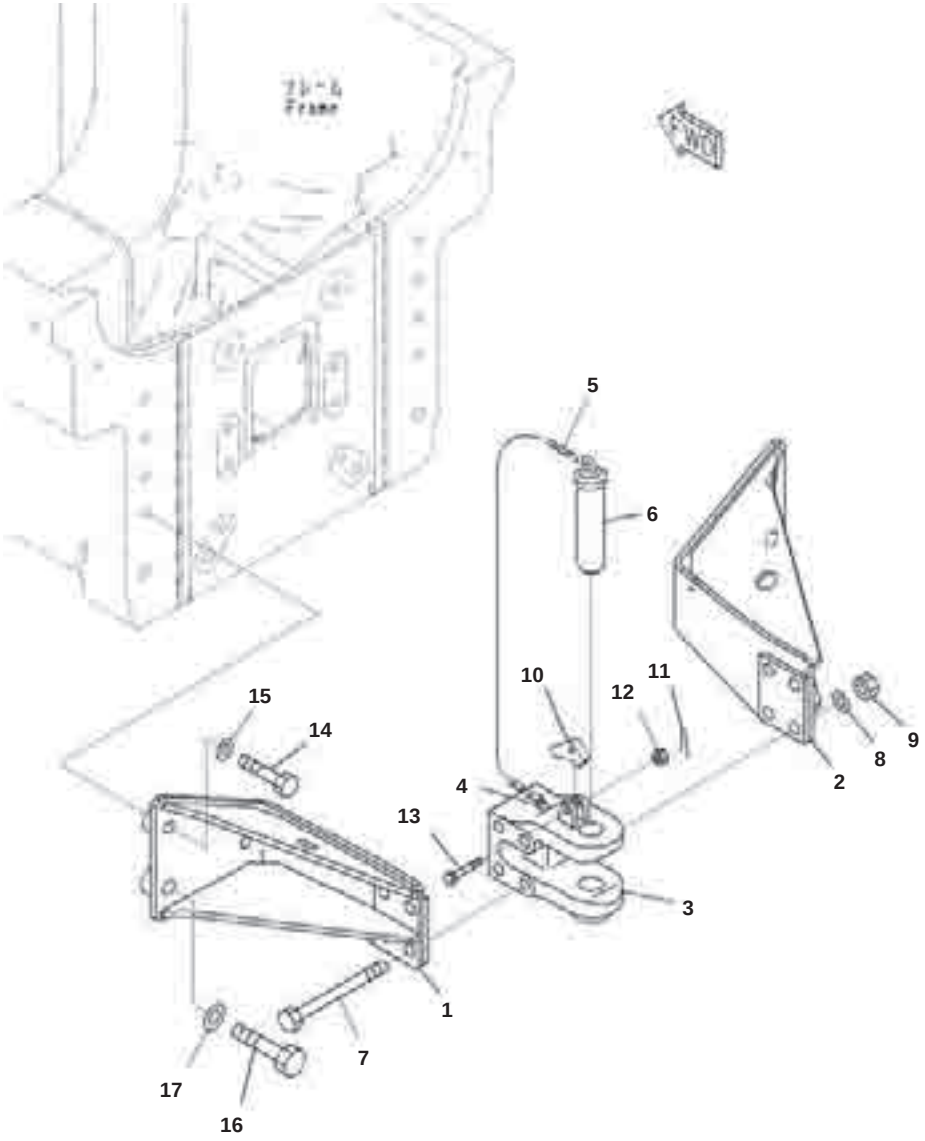

Drawbar, Rigid Type, Long

Index	Code	Part Number	Description	Qty	Options
1		134-69-61111	Bracket	1	SN:B50001--
2		134-69-61121	Bracket	1	SN:B50001--
		144-69-11120	Drawbar Assembly	1	SN:B50001--
3	C1		･ Drawbar	1	SN:B50001--
4		09245-50060	･ Hook,Welded	1	SN:B50001--
5		09245-24830	･ Chain	1	SN:B50001--
6		09247-45180	･ Pin, Drawbar	1	SN:B50001--
7		144-69-11161	Bolt	4	SN:B50001--
8		01643-32460	Washer	4	SN:B50001--
9		01580-12419	Nut	4	SN:B50001--
10		09249-00016	Latch	1	SN:B50001--
11		04050-03025	Pin, Cotter	1	SN:B50001--
12		01592-11215	Nut, Slotted	1	SN:B50001--
13		01052-51260	Bolt	1	SN:B50001--
14		01010-82480	Bolt	4	SN:B50001--
15		01643-32460	Washer	4	SN:B50001--
16		01010-83090	Bolt	2	SN:B50001--
17		01643-33080	Washer	2	SN:B50001--

MARKS AND PLATES

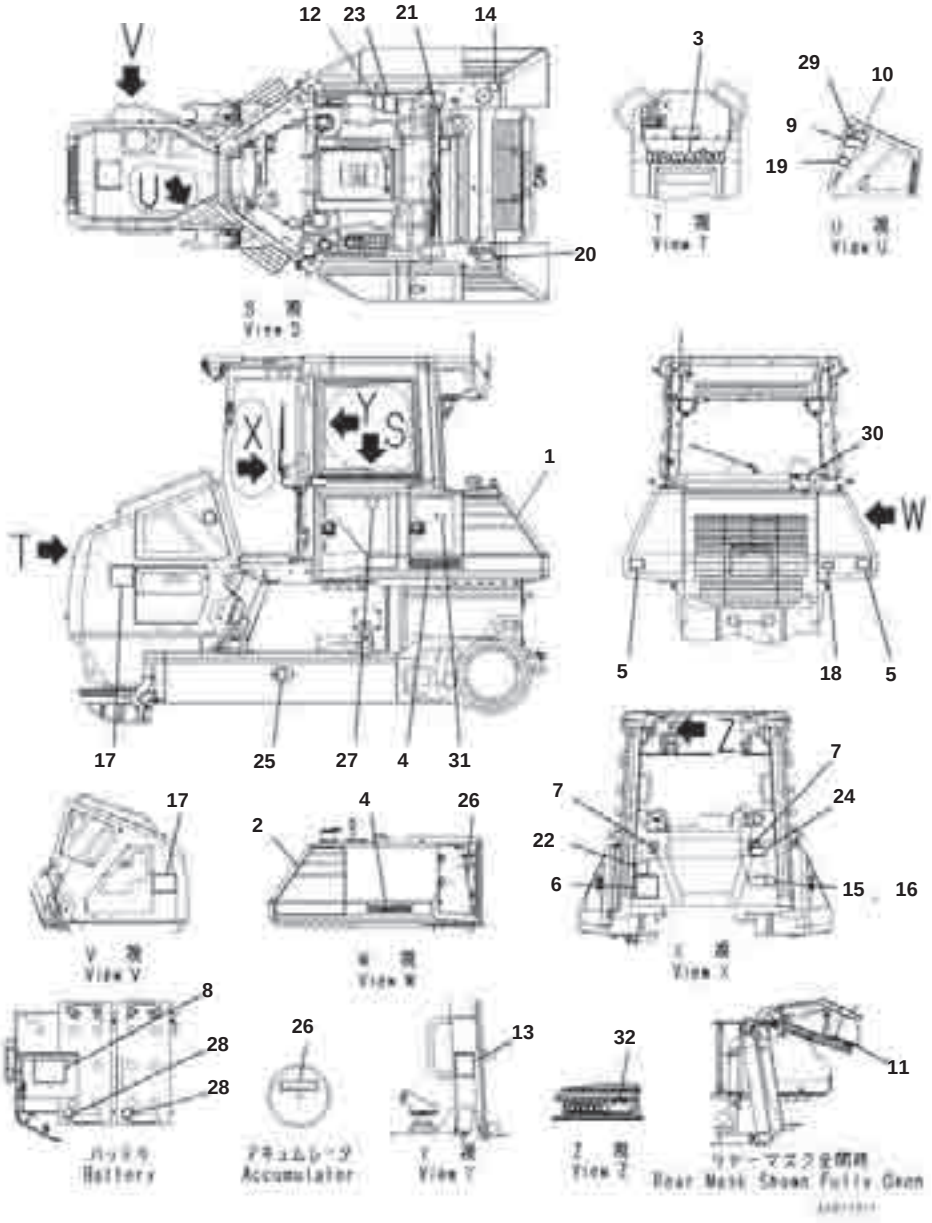

Index	Code	Part Number	Description	Qty	Options
1		13Y-98-11210	Plate, Machine Model	1	SN:B50001--
2		13Y-98-11220	Plate, Machine Model	1	SN:B50001--
3		09690-P0630	Plate, Komatsu Logo	1	SN:B50001--
4		09690-P0400	Plate, Komatsu Logo	2	SN:B50001--
5		14X-98-35181	Plate, Reflector	2	SN:B50001--
6		13Y-98-17130	Oil Chart	1	SN:B50001--
7		14X-98-11170	Plate, Operating, Lock	2	SN:B50001--
8		13Y-98-11170	Plate, Fuse	1	SN:B50001--
9		09637-70163	Plate, Service Instruction, Air Cleaner	1	SN:B50001--
10		12Y-98-11330	Plate, Caution, Hood	1	SN:B50001--
11		13Y-98-11250	Plate, Stripe, Red-White	2	SN:B50001--
12		09802-11000	Plate, Warning, Before Operating and Traveling	1	SN:B50001--
13		09833-31000	Plate, Warning, Traveling In Reverse	1	SN:B50001--
14		09669-0000E	Plate, Caution, Diesel Fuel	1	SN:B50001--
15	C2	(09601-19050)	Plate, Name (Limited Supply)	1	SN:B50001--
16		04418-13060	Screw	4	SN:B50001--
17		09812-11000	Plate, Danger, Keep a Safe Distance	2	SN:B50001--
18		09667-41000	Plate, Caution, Rotating Object	1	SN:B50001--
19		09667-41000	Plate, Caution, Rotating Object	1	SN:B50001--
20		09653-01001	Plate, Warning, High Temperature	1	SN:B50001--
21		09668-01001	Plate, Warning, Hot Water	1	SN:B50001--
22		09651-01001	Plate, Warning, Read Manual Before Operating	1	SN:B50001--
23		09654-31001	Plate, Warning, Before Leaving Seat	1	SN:B50001--
24		09663-01001	Tag, Danger, Do Not Operate	1	SN:B50001--
25		09657-01004	Plate, Warning, Track Adjustment	2	SN:B50001--
26		09659-51000	Plate, Warning, Explosion Hazard	2	SN:B50001--
27		09808-01000	Plate, Warning, Battery Cables	1	SN:B50001--
28	C1		Plate, Danger, Battery	2	SN:B50001--
29		20Y-0041710	Plate, Pre Filter Caution	1	SN:B50001--
30		09642-11000	Plate, Notice, Coolant	1	SN:B50001--
31		09642-11000	Plate, Notice, Coolant	1	SN:B50001--
32		17A-Z11-4950	Plate, Fuse	1	SN:B50001--

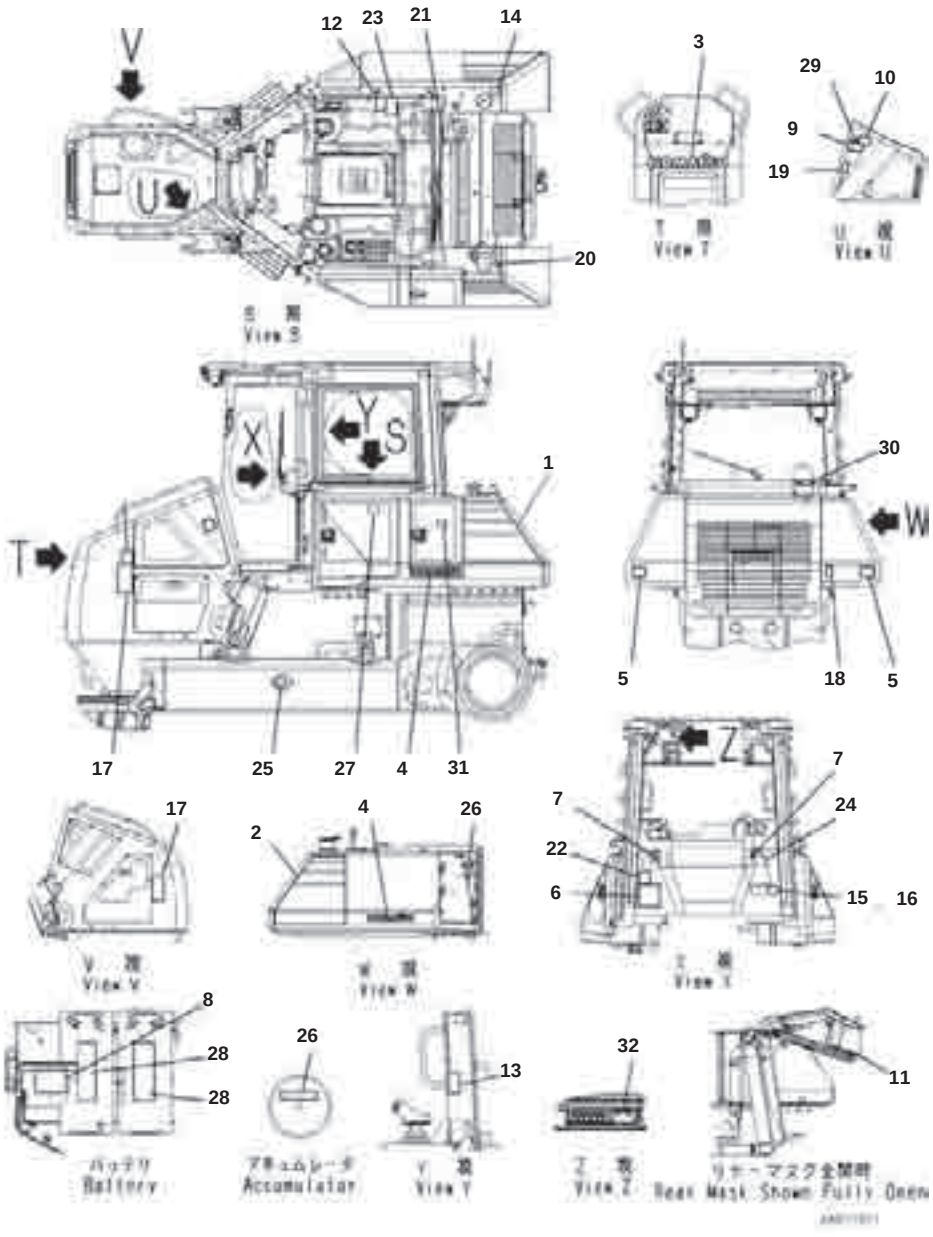

Index	Code	Part Number	Description	Qty	Options
1		13Y-98-11210	Plate, Machine Model	1	SN:B50001--
2		13Y-98-11220	Plate, Machine Model	1	SN:B50001--
3		09690-P0630	Plate, Komatsu Logo	1	SN:B50001--
4		09690-P0400	Plate, Komatsu Logo	2	SN:B50001--
5		14X-98-35181	Plate, Reflector	2	SN:B50001--
6		13Y-98-17130	Oil Chart	1	SN:B50001--
7		14X-98-11170	Plate, Operating, Lock	2	SN:B50001--
8		13Y-98-11170	Plate, Fuse	1	SN:B50001--
9		09637-51263	Plate, Service Instruction, Air Cleaner	1	SN:B50001--
10		12Y-98-11330	Plate, Caution, Hood	1	SN:B50001--
11		13Y-98-11250	Plate, Stripe, Red-White	2	SN:B50001--
12		09802-17100	Plate, Warning, Before Operating and Traveling	1	SN:B50001--
13		09833-37000	Plate, Warning, Swinging and Traveling in Reverse	1	SN:B50001--
14		09669-0000E	Plate, Caution, Diesel Fuel	1	SN:B50001--
15	C2	(09601-19050)	Plate, Name (Limited Supply)	1	SN:B50001--
16		04418-13060	Screw	4	SN:B50001--
17		09812-17000	Plate, Danger, Keep a Safe Distance	2	SN:B50001--
18		09667-41000	Plate, Caution, Rotating Object	1	SN:B50001--
19		09667-47100	Plate, Caution, Rotating Object	1	SN:B50001--
20		09653-07101	Plate, Warning, High Temperature	1	SN:B50001--
21		09668-07101	Plate, Warning, Hot Water	1	SN:B50001--
22		09651-07101	Plate, Warning, Read Manual Before Operating	1	SN:B50001--
23		09654-37101	Plate, Warning, Before Leving Seat	1	SN:B50001--
24		09663-07001	Tag, Danger, Do Not Operate	1	SN:B50001--
25		09657-07102	Plate, Warning, Track Adjustment	2	SN:B50001--
26		09659-57100	Plate, Warning, Explosion Hazard	2	SN:B50001--
27		09808-07100	Plate, Warning, Battery Cables	1	SN:B50001--
28	C1		Plate, Danger, Battery	2	SN:B50001--
29		134-98-72240	Plate, Pre Filter Caution	1	SN:B50001--
30		09642-17000	Plate, Notice, Coolant	1	SN:B50001--
31		09642-17000	Plate, Notice, Coolant	1	SN:B50001--
32		17A-Z11-4950	Plate, Fuse	1	SN:B50001--

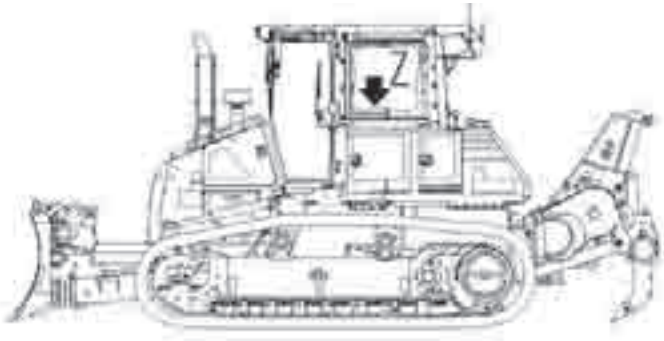

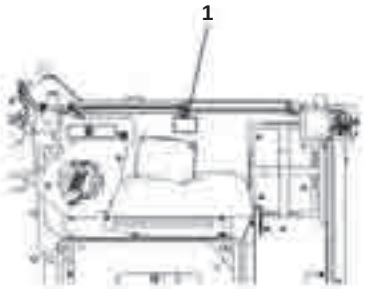

Index	Part Number	Description	Qty	Options
1	09845-00480	Plate, Caution, Blast Site	1	SN:B50001--

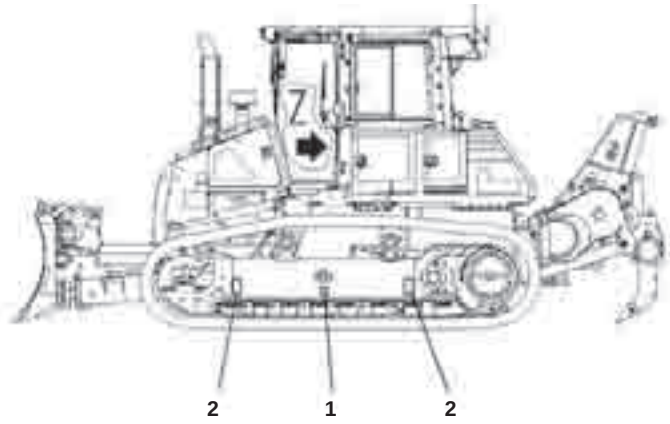

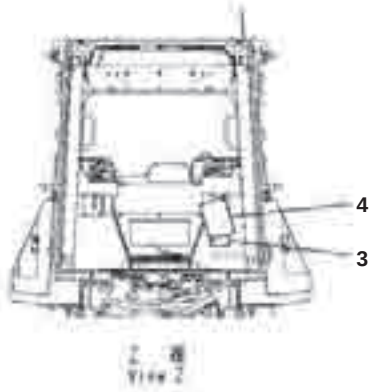

Balancing Position and Lift Point Mark

Index	Part Number	Description	Qty	Options
1	09960-00611	Mark, Balancing Position	2	SN:B50001--
2	09960-01601	Mark, Lift Point and Tie Down Point Marks	4	SN:B50001--
3	17A-98-41510	Plate, Lift Point and Tie Down Point Marks	1	SN:B50001--
4	126-98-51180	Table, Balancing Position	1	SN:B50001--

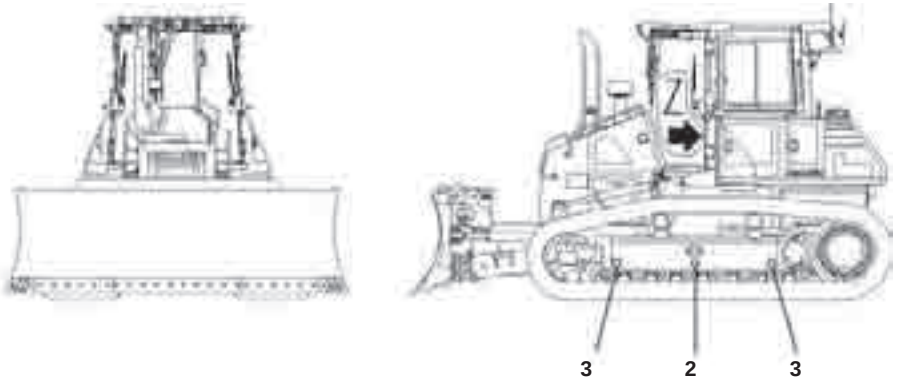

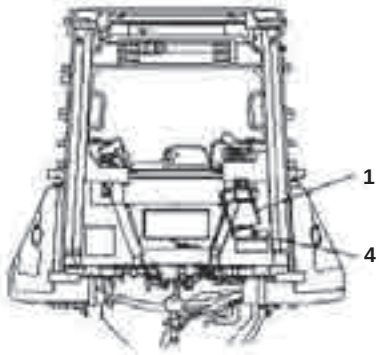

Z 視
View Z

Balancing Mark

Index	Part Number	Description	Qty	Options
1	126-98-51180	Table, Balancing Position	1	SN:B50001--
2	09960-00611	Mark, Balancing Position	2	SN:B50001--
3	09960-00801	Mark, Lift Point	4	SN:B50001--
4	14X-98-61510	Plate, Lift Point and Tie Down Point Marks	1	SN:B50001--



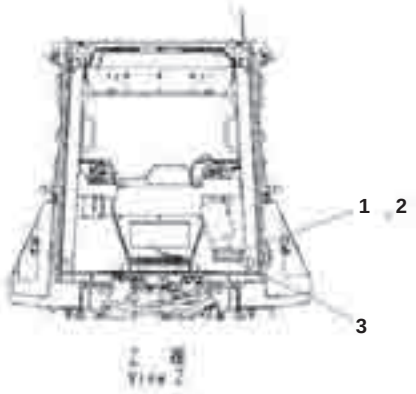

Index	Part Number	Description	Qty	Options
1	04418-13060	Screw	4	SN:B50001--
2	(09620-A2001)	Plate, Name, ROPS/FOPS (Limited Supply)	1	SN:B50001--
3	09620-A2070	Plate, Warning, ROPS/FOPS	1	SN:B50001--



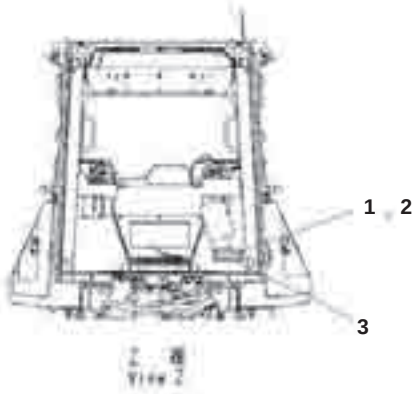

Index	Code	Part Number	Description	Qty	Options
1		04418-13060	Screw	4	SN:B50001--
2	C2	(09620-A2001)	Plate, Name, ROPS/FOPS (Limited Supply)	1	SN:B50001--
3		09620-A2160	Plate, Warning, ROPS/FOPS	1	SN:B50001--

ACCESSORY

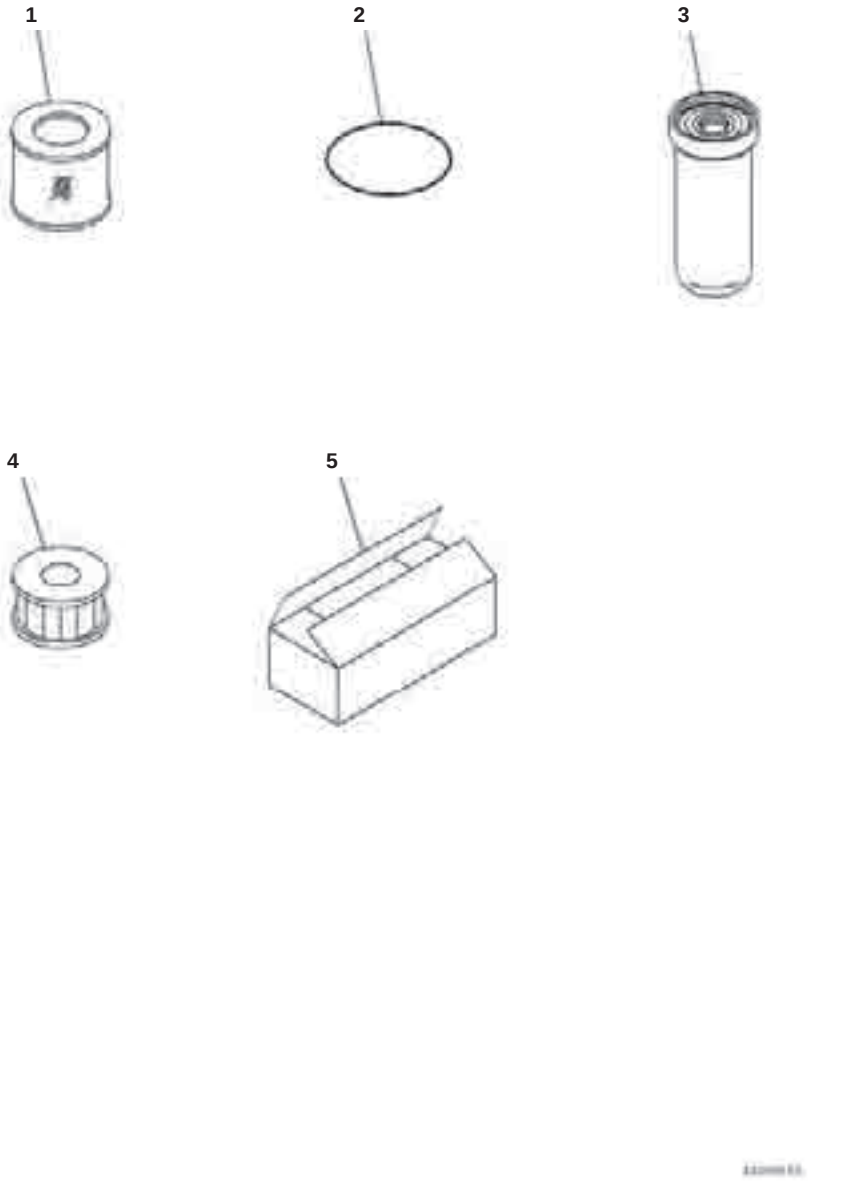

Index	Part Number	Description	Qty	Options
1	21W-60-41121	Element	1	SN:B50001--
2	07000-12135	O-ring	1	SN:B50001--
3	11Y-60-28710	Cartridge	1	SN:B50001--
4	421-60-35170	Element	4	SN:B50001--
5	09059-00800	Box	1	SN:B50001--

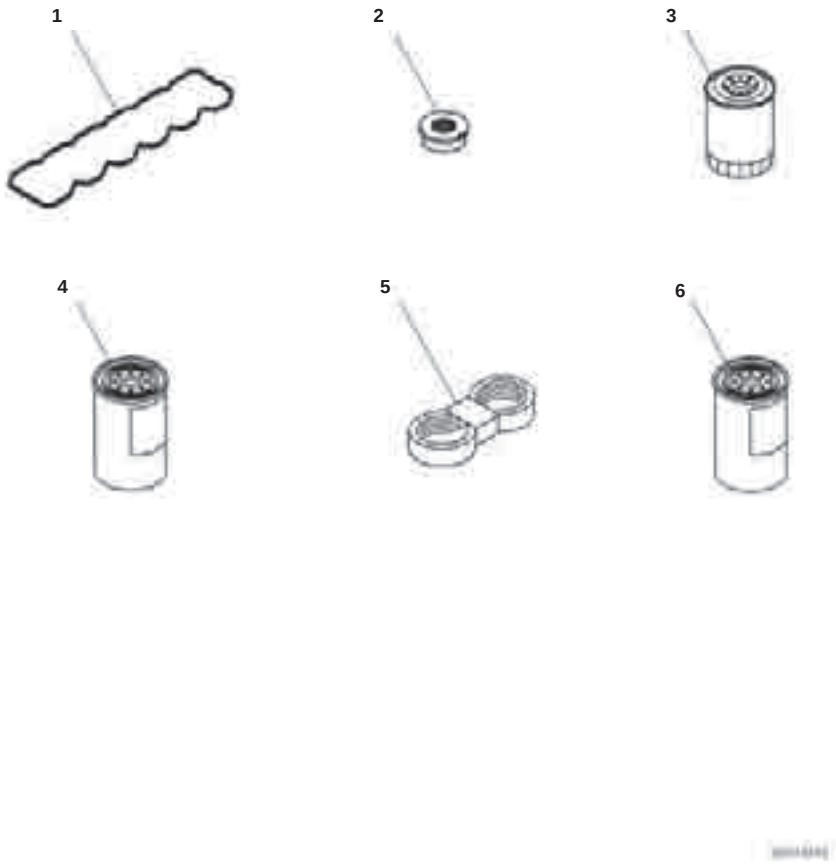

Index	Part Number	Description	Qty	Options
1	6754-11-8181	Packing	1	SN:B50001---
2	6754-11-8211	Isolator	6	SN:B50001---
3	6736-51-5142	Cartridge, Oil Filter	1	SN:B50001---
4	600-319-3750	Cartridge, Fuel Filter	1	SN:B50001---
5	6755-61-3130	V-belt	1	SN:B50001---
6	600-319-3610	Cartridge, Fuel Prefilter	1	SN:B50001---

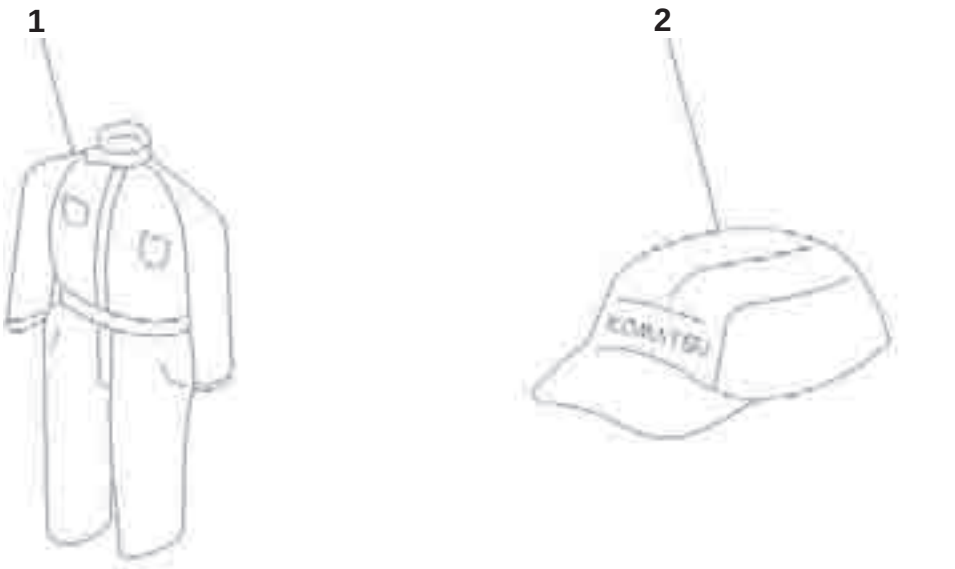

Index	Part Number	Description	Qty	Options
1	09980-10550	Overall	1	SN:B50001--
2	09982-10057	Cap	1	SN:B50001--

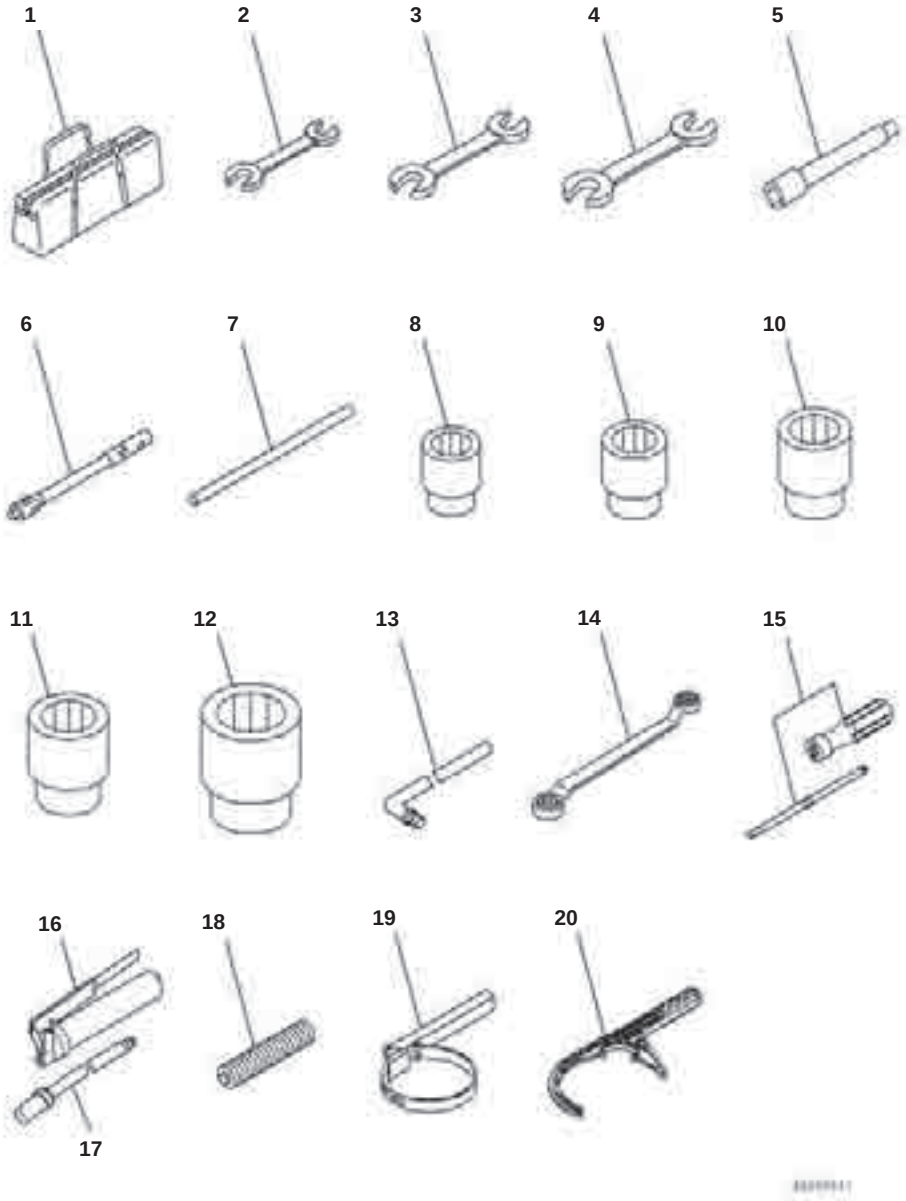

Index	Part Number	Description	Qty	Options
1	09056-04613	Bag	1	SN:B50001--
2	09002-00810	Wrench, W=8X10mm	1	SN:B50001--
3	09002-01317	Wrench, W=13X17mm	1	SN:B50001--
4	09002-01922	Wrench, W=19X22mm	1	SN:B50001--
5	09022-00150	Extension	1	SN:B50001--
6	09023-00300	Handle	1	SN:B50001--
7	09027-00300	Bar, Socket Wrench	1	SN:B50001--
8	09021-01725	Socket, W=17mm	1	SN:B50001--
9	09021-01928	Socket, W=19mm	1	SN:B50001--
10	09021-02233	Socket, W=22mm	1	SN:B50001--
11	09021-02436	Socket, W=24mm	1	SN:B50001--
12	09021-03653	Socket, W=36mm	1	SN:B50001--
13	09024-00300	Handle	1	SN:B50001--
14	09011-01719	Wrench, Ring	1	SN:B50001--
15	09033-00190	Driver	1	SN:B50001--
	07952-70004	Pump Assembly	1	SN:B50001--
16	07950-10450	･ Pump	1	SN:B50001--
17	07951-41017	･ Nozzle	1	SN:B50001--
18	07950-90403	Cartridge, Grease	1	SN:B50001--
19	09019-28036	Wrench	1	SN:B50001--
20	6212-82-0110	Wrench	1	SN:B50001--

SERVICE KIT AND COMPONENT PARTS

D61EX-23M0 S/N B50001
Service Kit Parts

Index	Part Number	Description	Qty	Options
K01	134-32-05010	Shoe Bolt and Nut Kit		SN:B50001--
	134-32-61221	' Nut	30	SN:B50001--
	154-32-21323	' Bolt	30	SN:B50001--
K02	707-99-34250	Seal Kit, Hydraulic Cylinder		SN:B50001--
	02896-61012	' O-ring	3	SN:B50001--
	07000-12100	' O-ring	1	SN:B50001--
	07000-B2095	' O-ring	1	SN:B50001--
	07145-00060	' Seal, Dust	4	SN:B50001--
	07156-01012	' Ring, Wear	1	SN:B50001--
	707-35-10960	' Ring, Back-up	1	SN:B50001--
	707-44-10150	' Ring, Piston	1	SN:B50001--
	707-51-55650	' Ring, Buffer	1	SN:B50001--
	707-51-55860	' Packing, Rod	1	SN:B50001--
	707-56-55740	' Seal, Dust	1	SN:B50001--
K03	707-99-42220	Seal Kit, Hydraulic Cylinder		SN:B50001--
	02896-61009	' O-ring	2	SN:B50001--
	07000-12120	' O-ring	1	SN:B50001--
	07000-13050	' O-ring	4	SN:B50001--
	07000-B2115	' O-ring	1	SN:B50001--
	07156-01215	' Ring, Wear	1	SN:B50001--
	707-35-11160	' Ring, Back-up	1	SN:B50001--
	707-44-12150	' Ring, Piston	1	SN:B50001--
	707-51-70650	' Ring, Buffer	1	SN:B50001--
	707-51-70860	' Packing, Rod	1	SN:B50001--
	707-56-70740	' Seal, Dust	1	SN:B50001--
K04	707-99-36690	Seal Kit, Hydraulic Cylinder		SN:B50001--
	02896-61009	' O-ring	2	SN:B50001--
	07000-12110	' O-ring	1	SN:B50001--
	07000-13050	' O-ring	4	SN:B50001--
	07000-B2105	' O-ring	1	SN:B50001--
	07156-01112	' Ring, Wear	2	SN:B50001--
	707-35-11060	' Ring, Back-up	1	SN:B50001--
	707-44-11150	' Ring, Piston	1	SN:B50001--
	707-51-65650	' Ring, Buffer	1	SN:B50001--
	707-51-65860	' Packing, Rod	1	SN:B50001--
	707-56-65740	' Seal, Dust	1	SN:B50001--
K05	707-99-42300	Seal Kit, Hydraulic Cylinder		SN:B50001--
	02896-61015	' O-ring	3	SN:B50001--
	07000-12125	' O-ring	1	SN:B50001--
	07000-B2120	' O-ring	1	SN:B50001--
	07145-00075	' Seal, Dust	4	SN:B50001--
	707-35-11210	' Ring, Back-up	1	SN:B50001--
	707-39-12520	' Ring, Wear	1	SN:B50001--
	707-44-12250	' Ring, Piston	1	SN:B50001--
	707-51-70650	' Ring, Buffer	1	SN:B50001--
	707-51-70860	' Packing, Rod	1	SN:B50001--
	707-56-70740	' Seal, Dust	1	SN:B50001--

NUMERICAL INDEX

PARTS Nº	FIG. Nº	INDEX	PAGE
01010-61440	F2380-002003	11	F002003
01010-61440	F2380-002010	11	F002010
01010-61470	H0210-002013	11	H004013
01010-61650	F2380-002002	21	F002002
01010-61650	F2380-002009	21	F002009
01010-61650	H0210-002010	3	H004010
01010-62065	H0210-002002	6	H004002
01010-80612	H0100-001002	23	H001002
01010-80612	H0100-001002	9	H001002
01010-80612	K0210-002022	5	K012023
01010-80612	K0210-002045	23	K012046
01010-80612	K0210-002045	26	K012046
01010-80612	K0210-002046	14	K012047
01010-80612	K0210-006022	5	K015023
01010-80612	K0210-006045	23	K015046
01010-80612	K0210-006045	26	K015046
01010-80612	K0210-006046	14	K015047
01010-80616	D0100-001001	28	D001001
01010-80616	D0100-001001	44	D001001
01010-80616	D0100-001001	48	D001001
01010-80616	D0100-002001	28	D002001
01010-80616	D0100-002001	44	D002001
01010-80616	D0100-002001	48	D002001
01010-80616	H0100-001001	36	H001001
01010-80616	H0100-001002	13	H001002
01010-80616	H0100-001002	27	H001002
01010-80616	K0210-002003	9	K012003
01010-80616	K0210-002005	9	K012005
01010-80616	K0210-002012	10	K012012
01010-80616	K0210-002012	13	K012012
01010-80616	K0210-002012	16	K012012
01010-80616	K0210-002013	21	K012013
01010-80616	K0210-002014	8	K012014
01010-80616	K0210-002019	6	K012019
01010-80616	K0210-002019	6	K012020
01010-80616	K0210-002020	13	K012021
01010-80616	K0210-002031	4	K012032
01010-80616	K0210-002043	25	K012044
01010-80616	K0210-002048	28	K012049
01010-80616	K0210-006003	9	K015003
01010-80616	K0210-006005	9	K015005
01010-80616	K0210-006012	10	K015012
01010-80616	K0210-006012	13	K015012
01010-80616	K0210-006012	16	K015012
01010-80616	K0210-006013	21	K015013
01010-80616	K0210-006014	8	K015014
01010-80616	K0210-006019	6	K015019
01010-80616	K0210-006020	13	K015021
01010-80616	K0210-006031	4	K015032
01010-80616	K0210-006043	25	K015044

PARTS Nº	FIG. Nº	INDEX	PAGE
01010-80616	K0210-006048	28	K015049
01010-80616	K0210-006053	4	K015054
01010-80616	M2141-001005	20	M002005
01010-80616	M2141-001005	6	M002005
01010-80616	M2141-001005	9	M002005
01010-80616	M2141-001005A	10	M002006
01010-80616	M2141-001005A	21	M002006
01010-80616	M2141-001005A	7	M002006
01010-80616	M2141-002005	10	M003006
01010-80616	M2141-002005	21	M003006
01010-80616	M2141-002005	7	M003006
01010-80620	B0500-001002	10	B010002
01010-80620	K0210-002007	26	K012007
01010-80620	K0210-002022	15	K012023
01010-80620	K0210-002022	7	K012023
01010-80620	K0210-006007	26	K015007
01010-80620	K0210-006022	15	K015023
01010-80620	K0210-006022	7	K015023
01010-80620	K2910-001001	11	K026001
01010-80625	K0210-002035	16	K012036
01010-80625	K0210-002038	13	K012039
01010-80625	K0210-002051	2	K012052
01010-80625	K0210-006035	16	K015036
01010-80625	K0210-006038	13	K015039
01010-80625	K0210-006051	2	K015052
01010-80816	B0500-001003	24	B010003
01010-80816	C0100-001005	17	C001005
01010-80816	C0100-001007	21	C001007
01010-80816	C0100-001007	24	C001007
01010-80816	C0100-001007	28	C001007
01010-80816	C0100-001007	40	C001007
01010-80816	D0200-001002	21	D003002
01010-80816	H1840-001003	2	H009003
01010-80816	H1840-001004	20	H009004
01010-80816	K0210-002028	34	K012029
01010-80816	K0210-002028	44	K012029
01010-80816	K0210-002028	56	K012029
01010-80816	K0210-006028	34	K015029
01010-80816	K0210-006028	44	K015029
01010-80816	K0210-006028	56	K015029
01010-80816	M2141-001007	2	M002008
01010-80816	M2141-002007	2	M003008
01010-80820	B0500-001002	15	B010002
01010-80820	B0500-001003	21	B010003
01010-80820	C0100-001007	30	C001007
01010-80820	C0100-001007	35	C001007
01010-80820	D0100-002003	16	D002003
01010-80820	D0100-002003	19	D002003
01010-80820	D0200-001001	2	D003001
01010-80820	E0210-001001	4	E003001

PARTS Nº	FIG. Nº	INDEX	PAGE
01010-80820	E0210-001001	53	E003001
01010-80820	E0210-001001	6	E003001
01010-80820	K0210-002035	10	K012036
01010-80820	K0210-002050	3	K012051
01010-80820	K0210-002050	9	K012051
01010-80820	K0210-006035	10	K015036
01010-80820	K0210-006050	3	K015051
01010-80820	K0210-006050	9	K015051
01010-80820	K0230-002002	30	K017002
01010-80820	K0230-002004	25	K017004
01010-80825	B0500-001001	2	B010001
01010-80825	C0100-001007	19	C001007
01010-80825	C0100-001007	38	C001007
01010-80825	E0210-001001	2	E003001
01010-80825	K0210-002007	30	K012007
01010-80825	K0210-002037	3	K012038
01010-80825	K0210-002037	7	K012038
01010-80825	K0210-002039	6	K012040
01010-80825	K0210-006007	30	K015007
01010-80825	K0210-006037	3	K015038
01010-80825	K0210-006037	7	K015038
01010-80825	K0210-006039	6	K015040
01010-80825	K0710-001001	10	K019001
01010-80825	K2520-001001	4	K024001
01010-80830	A1610-501001	30	B005001
01010-80830	D0100-002003	14	D002003
01010-80830	R0120-001001	1	R002001
01010-80835	C0103-001003	2	C002003
01010-80835	K0210-002028	47	K012029
01010-80835	K0210-006028	47	K015029
01010-80840	K0710-001001	33	K019001
01010-80850	B0500-001002	5	B010002
01010-80855	K0710-001001	4	K019001
01010-80885	K0210-002042	2	K012043
01010-80885	K0210-006042	2	K015043
01010-81016	B0500-001002	7	B010002
01010-81016	B0500-001003	27	B010003
01010-81016	D0100-001002	6	D001002
01010-81016	D0100-002002	6	D002002
01010-81016	E0200-001002	20	E002002
01010-81016	E0200-001002	4	E002002
01010-81016	H2250-002002	8	H014002
01010-81016	M2110-001001	30	M001001
01010-81016	M2141-001007	16	M002008
01010-81016	M2141-002007	16	M003008
01010-81016	T2120-001001	12	T003001
01010-81016	T2120-002001	12	T004001
01010-81020	A1410-501001	1	B001001
01010-81020	B0500-001001	17	B010001
01010-81020	B0500-001001	20	B010001

PARTS Nº	FIG. Nº	INDEX	PAGE
01010-81020	B0500-001002	22	B010002
01010-81020	B0500-001002	27	B010002
01010-81020	B0500-001002	30	B010002
01010-81020	B0500-001002	33	B010002
01010-81020	B0500-001002	40	B010002
01010-81020	B0500-001002	43	B010002
01010-81020	B0500-001002	46	B010002
01010-81020	B0500-001002	49	B010002
01010-81020	B0500-001002	52	B010002
01010-81020	B0500-001002	55	B010002
01010-81020	B0500-001003	31	B010003
01010-81020	B0500-001003	35	B010003
01010-81020	B0500-001003	38	B010003
01010-81020	B0500-001003	41	B010003
01010-81020	B0500-001004	13	B010004
01010-81020	B0500-001004	2	B010004
01010-81020	B0500-001004	21	B010004
01010-81020	B0500-001004	24	B010004
01010-81020	B0500-001004	27	B010004
01010-81020	B0500-001004	30	B010004
01010-81020	B0500-001004	6	B010004
01010-81020	B0500-001004	9	B010004
01010-81020	C0100-001001	36	C001001
01010-81020	C0100-001004	21	C001004
01010-81020	C0100-001006	3	C001006
01010-81020	C0101-001001	7B	C002001
01010-81020	C0102-001002	14	C002002
01010-81020	C0102-001002	23	C002002
01010-81020	D0100-001001	20	D001001
01010-81020	D0100-001002	3	D001002
01010-81020	D0100-002001	20	D002001
01010-81020	D0100-002002	3	D002002
01010-81020	D0200-001001	36	D003001
01010-81020	D0200-001001	43	D003001
01010-81020	D0200-001001	47	D003001
01010-81020	D0200-001001	8	D003001
01010-81020	D0200-001002	30	D003002
01010-81020	D0200-001002	37	D003002
01010-81020	E0200-001001	14	E002001
01010-81020	E0200-001001	17	E002001
01010-81020	E0200-001001	26	E002001
01010-81020	E0200-001001	3	E002001
01010-81020	E0200-001001	30	E002001
01010-81020	E0200-001001	36	E002001
01010-81020	E0200-001001	40	E002001
01010-81020	E0200-001001	7	E002001
01010-81020	E0200-001002	12	E002002
01010-81020	E0200-001002	23	E002002
01010-81020	E0210-001001	12	E003001
01010-81020	E0210-001001	21	E003001

PARTS Nº	FIG. Nº	INDEX	PAGE
01010-81020	E0210-001001	29	E003001
01010-81020	E0210-001001	37	E003001
01010-81020	E0210-001001	57	E003001
01010-81020	H0100-001005	4	H001005
01010-81020	H0210-002012	21	H004012
01010-81020	H0210-002019	8	H004019
01010-81020	H0340-001001	15	H007001
01010-81020	H0340-001001	18	H007001
01010-81020	H0340-001001	2	H007001
01010-81020	H0340-001001	24	H007001
01010-81020	H0340-001001	28	H007001
01010-81020	H0340-001001	31	H007001
01010-81020	H0340-001001	39	H007001
01010-81020	H0340-001001	5	H007001
01010-81020	H1840-001004	24	H009004
01010-81020	H1840-001005	17	H009005
01010-81020	H1840-001006	13	H009006
01010-81020	H1840-001006	16	H009006
01010-81020	H2210-001004	22	H010004
01010-81020	H2210-001005	11	H010005
01010-81020	H2250-002001	10	H014001
01010-81020	J2700-001001	44	J002001
01010-81020	K0210-002013	17	K012013
01010-81020	K0210-002015	12	K012015
01010-81020	K0210-002028	11	K012029
01010-81020	K0210-002028	18	K012029
01010-81020	K0210-002028	21	K012029
01010-81020	K0210-002028	28	K012029
01010-81020	K0210-002028	31	K012029
01010-81020	K0210-002028	37	K012029
01010-81020	K0210-002028	39	K012029
01010-81020	K0210-002028	5	K012029
01010-81020	K0210-002028	50	K012029
01010-81020	K0210-002031	15	K012032
01010-81020	K0210-002031	18	K012032
01010-81020	K0210-002031	2	K012032
01010-81020	K0210-002031	31	K012032
01010-81020	K0210-002035	20	K012036
01010-81020	K0210-002037	33	K012038
01010-81020	K0210-002041	39	K012042
01010-81020	K0210-002043	10	K012044
01010-81020	K0210-002043	12	K012044
01010-81020	K0210-002043	15	K012044
01010-81020	K0210-002043	22	K012044
01010-81020	K0210-002043	29	K012044
01010-81020	K0210-002043	31	K012044
01010-81020	K0210-002044	11	K012045
01010-81020	K0210-002044	14	K012045
01010-81020	K0210-002044	17	K012045
01010-81020	K0210-002044	2	K012045

PARTS Nº	FIG. Nº	INDEX	PAGE
01010-81020	K0210-002044	21	K012045
01010-81020	K0210-002044	24	K012045
01010-81020	K0210-002044	8	K012045
01010-81020	K0210-002045	14	K012046
01010-81020	K0210-002045	17	K012046
01010-81020	K0210-002045	2	K012046
01010-81020	K0210-002045	30	K012046
01010-81020	K0210-002045	5	K012046
01010-81020	K0210-002045	8	K012046
01010-81020	K0210-002051	11	K012052
01010-81020	K0210-002051	15	K012052
01010-81020	K0210-006013	17	K015013
01010-81020	K0210-006015	12	K015015
01010-81020	K0210-006028	11	K015029
01010-81020	K0210-006028	18	K015029
01010-81020	K0210-006028	21	K015029
01010-81020	K0210-006028	28	K015029
01010-81020	K0210-006028	31	K015029
01010-81020	K0210-006028	37	K015029
01010-81020	K0210-006028	39	K015029
01010-81020	K0210-006028	5	K015029
01010-81020	K0210-006028	50	K015029
01010-81020	K0210-006031	12	K015032
01010-81020	K0210-006031	15	K015032
01010-81020	K0210-006031	18	K015032
01010-81020	K0210-006031	2	K015032
01010-81020	K0210-006031	31	K015032
01010-81020	K0210-006035	20	K015036
01010-81020	K0210-006037	33	K015038
01010-81020	K0210-006041	39	K015042
01010-81020	K0210-006043	10	K015044
01010-81020	K0210-006043	12	K015044
01010-81020	K0210-006043	15	K015044
01010-81020	K0210-006043	22	K015044
01010-81020	K0210-006043	29	K015044
01010-81020	K0210-006043	31	K015044
01010-81020	K0210-006044	11	K015045
01010-81020	K0210-006044	14	K015045
01010-81020	K0210-006044	17	K015045
01010-81020	K0210-006044	2	K015045
01010-81020	K0210-006044	21	K015045
01010-81020	K0210-006044	24	K015045
01010-81020	K0210-006044	5	K015045
01010-81020	K0210-006044	8	K015045
01010-81020	K0210-006045	14	K015046
01010-81020	K0210-006045	17	K015046
01010-81020	K0210-006045	2	K015046
01010-81020	K0210-006045	30	K015046
01010-81020	K0210-006045	5	K015046
01010-81020	K0210-006045	8	K015046

PARTS Nº	FIG. Nº	INDEX	PAGE
01010-81020	K0210-006051	11	K015052
01010-81020	K0210-006051	15	K015052
01010-81020	K0230-001001	16	K016001
01010-81020	K0230-002002	11	K017002
01010-81020	K0230-002002	21	K017002
01010-81020	K0230-002002	3	K017002
01010-81020	K0230-002002	36	K017002
01010-81020	K0230-002002	41	K017002
01010-81020	K0230-002002	6	K017002
01010-81020	K0710-001001	13	K019001
01010-81020	K0710-001001	30	K019001
01010-81020	K0710-001001	40	K019001
01010-81020	K0710-001002	14	K019002
01010-81020	K2910-001001	19	K026001
01010-81020	K2910-001001	2	K026001
01010-81020	K2910-001001	8	K026001
01010-81020	M2141-001007	10	M002008
01010-81020	M2141-001007	12	M002008
01010-81020	M2141-001007	6	M002008
01010-81020	M2141-002007	10	M003008
01010-81020	M2141-002007	12	M003008
01010-81020	M2141-002007	6	M003008
01010-81020	T2140-001001	24	T005001
01010-81020	T2140-001002	24	T005002
01010-81025	A1610-501001	32	B005001
01010-81025	B0500-001001	5	B010001
01010-81025	B0500-001001	8	B010001
01010-81025	B0500-001002	13	B010002
01010-81025	B0500-001002	18	B010002
01010-81025	B0500-001002	37	B010002
01010-81025	B0500-001003	17	B010003
01010-81025	C0101-001001	35	C002001
01010-81025	C0101-001001	46	C002001
01010-81025	C0101-001001	49	C002001
01010-81025	C0101-001001	53	C002001
01010-81025	C0102-001002	25	C002002
01010-81025	C0102-001002	3	C002002
01010-81025	C0103-001001	16	C003001
01010-81025	C0103-001001	19	C003001
01010-81025	C0103-001001	2	C003001
01010-81025	C0103-001001	42	C003001
01010-81025	C0103-001001	45	C003001
01010-81025	C0103-001001	48	C003001
01010-81025	C0103-001003	15	C002003
01010-81025	C0103-001003	35	C002003
01010-81025	C0103-001003	42	C002003
01010-81025	C0103-001003	49	C002003
01010-81025	C0103-001003	56	C002003
01010-81025	C0103-001003	66	C002003
01010-81025	C0103-001003	8	C002003
01010-81025	D0200-001001	26	D003001
01010-81025	D0200-001002	24	D003002
01010-81025	E0200-001001	21	E002001
01010-81025	E0200-001002	16	E002002
01010-81025	E0200-001002	7	E002002
01010-81025	E0210-001001	42	E003001
01010-81025	E0210-001001	46	E003001
01010-81025	E0210-001001	49	E003001
01010-81025	E0210-001001	60	E003001
01010-81025	E0210-001002	6	E003002
01010-81025	H0100-001001	18	H001001
01010-81025	H0100-001002	43	H001002
01010-81025	H0100-001003	18	H001003
01010-81025	H0100-001003	24	H001003
01010-81025	H0100-001004	15	H001004
01010-81025	H0100-001004	6	H001004
01010-81025	H0100-001005	11	H001005
01010-81025	H0100-001005	17	H001005
01010-81025	H0100-001005	21	H001005
01010-81025	H0100-001005	24	H001005
01010-81025	H0210-002017	32	H004017
01010-81025	H0210-002017	36	H004017
01010-81025	H0210-002017	45	H004017
01010-81025	H0210-002019	17	H004019
01010-81025	H0310-001001	11	H005001
01010-81025	H0310-001001	2	H005001
01010-81025	H0320-001001	2	H006001
01010-81025	H0320-001001	32	H006001
01010-81025	H0340-001001	8	H007001
01010-81025	H0340-001002	19	H007002
01010-81025	H0340-001002	28	H007002
01010-81025	H0340-001002	31	H007002
01010-81025	H0340-001002	8	H007002
01010-81025	H0340-001003	11	H007003
01010-81025	H0340-001003	11	H007003
01010-81025	H0340-001003	2	H007003
01010-81025	H0340-001003	21	H007003
01010-81025	H0340-001003	23	H007003
01010-81025	H0340-001003	30	H007003
01010-81025	H0340-001003	34	H007003
01010-81025	H0340-001003	38	H007003
01010-81025	H0340-001003	45	H007003
01010-81025	H0340-001003	53	H007003
01010-81025	H0340-001003	57	H007003
01010-81025	H1840-001004	4	H009004
01010-81025	H1840-001005	6	H009005
01010-81025	H1840-001006	2	H009006
01010-81025	H1840-001006	23	H009006
01010-81025	H1840-001006	26	H009006
01010-81025	H1840-001006	9	H009006
01010-81025	H2210-001004	30	H010004
01010-81025	H2210-001005	19	H010005
01010-81025	H2220-001001	14	H011001
01010-81025	H2220-001001	2	H011001
01010-81025	H2220-001001	5	H011001
01010-81025	H2230-001001	16	H012001
01010-81025	H2230-001001	2	H012001
01010-81025	H2250-002001	16	H014001
01010-81025	H2250-002001	19	H014001
01010-81025	H2250-002001	23	H014001
01010-81025	H2250-002002	12	H014002
01010-81025	H2250-002002	27	H014002
01010-81025	K0210-002038	16	K012039
01010-81025	K0210-002052	6	K012053
01010-81025	K0210-006038	16	K015039
01010-81025	K0210-006052	6	K015053
01010-81025	K0710-001001	22	K019001
01010-81025	K0710-001001	25	K019001
01010-81025	K0710-001001	37	K019001
01010-81025	K0710-001002	17	K019002
01010-81025	K2910-001001	5	K026001
01010-81025	M2141-001002	18	M002002
01010-81025	M2141-001003	1	M002003
01010-81025	M2141-001003	4	M002003
01010-81025	M2141-001003	7	M002003
01010-81025	M2141-001009	8	M002010
01010-81025	M2141-002002	18	M003002
01010-81025	M2141-002003	1	M003003
01010-81025	M2141-002003	4	M003003
01010-81025	M2141-002003	7	M003003
01010-81025	M2141-002009	8	M003010
01010-81025	T2160-001001	16	T008001
01010-81025	T2160-001002	26	T008002
01010-81025	T2400-001002	15	T009002
01010-81030	B0500-001001	13	B010001
01010-81030	B0500-001002	3	B010002
01010-81030	B0500-001004	17	B010004
01010-81030	C0100-001004	17	C001004
01010-81030	C0101-001001	44	C002001
01010-81030	C0103-001003	39	C002003
01010-81030	D0200-001002	4	D003002
01010-81030	F2380-002002	10	F002002
01010-81030	F2380-002009	10	F002009
01010-81030	H0210-002019	11	H004019
01010-81030	H0210-002019	14	H004019
01010-81030	H0310-001001	14	H005001
01010-81030	H0310-001001	19	H005001
01010-81030	H0310-001001	7	H005001
01010-81030	H0340-001001	23	H005001
01010-81030	H0340-001002	15	H007002
01010-81030	H0340-001002	24	H007002

PARTS Nº	FIG. Nº	INDEX	PAGE
01010-81030	H0340-001003	19	H007003
01010-81030	H0340-001003	7	H007003
01010-81030	H1840-001004	2	H009004
01010-81030	H2210-001004	26	H010004
01010-81030	H2210-001005	15	H010005
01010-81030	H2250-002002	2	H014002
01010-81030	K0210-002041	42	K012042
01010-81030	K0210-002043	18	K012044
01010-81030	K0210-002046	18	K012047
01010-81030	K0210-006041	42	K015042
01010-81030	K0210-006043	18	K015044
01010-81030	K0210-006046	18	K015047
01010-81030	K2520-001003	1	K024003
01010-81030	M2141-001003	11	M002003
01010-81030	M2141-002003	11	M003003
01010-81035	A1610-501001	16	B005001
01010-81035	A1610-501001	19	B005001
01010-81035	A1610-501001	34	B005001
01010-81035	A1610-501001	49	B005001
01010-81035	C0101-001001	13	C002001
01010-81035	C0101-001001	22	C002001
01010-81035	C0101-001001	39	C002001
01010-81035	C0101-001001	9	C002001
01010-81035	C0103-001001	23	C003001
01010-81035	C0103-001003	46	C002003
01010-81035	C0103-001003	53	C002003
01010-81035	C0103-001003	60	C002003
01010-81035	H0100-001003	7	H001003
01010-81035	H0320-001001	26	H006001
01010-81035	H0340-001001	11	H007001
01010-81035	H1840-001005	9	H009005
01010-81035	H2210-001004	10	H010004
01010-81035	K0210-002038	7	K012039
01010-81035	K0210-006038	7	K015039
01010-81040	C0101-001001	18	C002001
01010-81040	D0200-001002	1	D003002
01010-81040	H0320-001001	21	H006001
01010-81040	H1840-001004	31	H009004
01010-81040	K0210-002041	13	K012042
01010-81040	K0210-002041	24	K012042
01010-81040	K0210-006041	13	K015042
01010-81040	K0210-006041	24	K015042
01010-81045	T2115-001001	15	T002001
01010-81050	K0210-002035	13	K012036
01010-81050	K0210-006035	13	K015036
01010-81060	E0200-001001	11	E002001
01010-81070	H1840-001010	1	H009010
01010-81075	K2910-001001	17	K026001
01010-81085	H0310-001001	23	H005001
01010-81220	T2115-001002	11	T002002
01010-81225	B0500-001003	2	B010003
01010-81225	C0100-001001	28	C001001
01010-81225	C0103-001001	34	C003001
01010-81225	C0103-001001	38	C003001
01010-81225	D0100-001001	33	D001001
01010-81225	D0100-001001	40	D001001
01010-81225	D0100-002001	33	D002001
01010-81225	D0100-002001	40	D002001
01010-81225	E0210-001002	3	E003002
01010-81225	H0100-001001	32	H001001
01010-81225	H0100-001002	19	H001002
01010-81225	H0100-001002	5	H001002
01010-81225	H0310-001002	2	H005002
01010-81225	H0310-001002	7	H005002
01010-81225	H0340-001002	2	H007002
01010-81225	H0340-001002	5	H007002
01010-81225	H2220-001001	11	H011001
01010-81225	H2230-001001	22	H012001
01010-81225	H2250-001001	14	H013001
01010-81225	H2250-001001	21	H013001
01010-81225	J2100-002001	15	J001001
01010-81225	J2100-002001	34	J001001
01010-81225	J2700-001001	33	J002001
01010-81225	J2700-001001	49	J002001
01010-81225	K0210-002052	3	K012053
01010-81225	K0210-006052	3	K015053
01010-81225	K2810-001001	9	K025001
01010-81225	M2141-001002	12	M002002
01010-81225	M2141-001002	15	M002002
01010-81225	M2141-001002	6	M002002
01010-81225	M2141-001002	9	M002002
01010-81225	M2141-001007	18	M002008
01010-81225	M2141-001009	4	M002010
01010-81225	M2141-002002	12	M003002
01010-81225	M2141-002002	15	M003002
01010-81225	M2141-002002	6	M003002
01010-81225	M2141-002002	9	M003002
01010-81225	M2141-002007	18	M003008
01010-81225	M2141-002009	4	M003010
01010-81225	R2101-001001	3	R012001
01010-81225	R2130-002001	14	R013001
01010-81225	R2130-002001	9	R013001
01010-81225	R2130-002002	10	R013002
01010-81225	R2130-002002	17	R013002
01010-81225	T2115-001002	27	T002002
01010-81225	T2120-001001	15	T003001
01010-81225	T2120-002001	15	T004001
01010-81225	T2160-001001	12	T008001
01010-81225	T2160-001002	18	T008002
01010-81225	T2160-001003	18	T008003
01010-81225	T2160-001003	21	T008003
01010-81225	T2400-001002	24	T009002
01010-81230	A1470-501001	5	B002001
01010-81230	A1470-502001	5	B003001
01010-81230	A1610-501001	51	B005001
01010-81230	B0500-001003	14	B010003
01010-81230	D0100-002003	2	D002003
01010-81230	D0200-001001	4	D003001
01010-81230	H0100-001001	29	H001001
01010-81230	H0100-001002	40	H001002
01010-81230	H0320-001001	6	H006001
01010-81230	H2210-001001	2	H010001
01010-81230	K0210-002031	23	K012032
01010-81230	K0210-002031	37	K012032
01010-81230	K0210-006031	23	K015032
01010-81230	K0210-006031	37	K015032
01010-81230	K0230-001001	41	K016001
01010-81230	K0230-001001	45	K016001
01010-81230	K0230-002004	18	K017004
01010-81230	K0230-002004	22	K017004
01010-81230	M2141-001002	2	M002002
01010-81230	M2141-001005	16	M002005
01010-81230	M2141-001005A	17	M002006
01010-81230	M2141-001008	10	M002009
01010-81230	M2141-001008	13	M002009
01010-81230	M2141-001008	20	M002009
01010-81230	M2141-001008	23	M002009
01010-81230	M2141-002002	2	M003002
01010-81230	M2141-002005	17	M003006
01010-81230	M2141-002008	10	M003009
01010-81230	M2141-002008	13	M003009
01010-81230	M2141-002008	20	M003009
01010-81230	M2141-002008	23	M003009
01010-81230	R2130-002001	17	R013001
01010-81230	R2130-002001	20	R013001
01010-81230	R2130-002001	23	R013001
01010-81230	R2130-002001	29	R013001
01010-81230	R2130-002001	32	R013001
01010-81230	R2130-002002	20	R013002
01010-81230	R2130-002002	23	R013002
01010-81230	R2130-002002	26	R013002
01010-81230	R2130-002002	29	R013002
01010-81230	R2130-002002	35	R013002
01010-81230	R2130-002002	38	R013002
01010-81230	R2130-002002	5	R013002
01010-81230	R2200-003001	14	R016001
01010-81230	T2110-001001	2	T001001
01010-81230	T2115-001002	1	T002002
01010-81230	T2115-001002	24	T002002
01010-81230	T2160-001001	4	T008001

PARTS Nº	FIG. Nº	INDEX	PAGE
01010-81230	T2160-001003	13	T008003
01010-81230	T2160-001003	2	T008003
01010-81230	T2400-001001	18	T009001
01010-81230	T2400-001001	22	T009001
01010-81230	T2400-001001	26	T009001
01010-81230	T2400-001001	4	T009001
01010-81230	T2400-001001	8	T009001
01010-81235	B0500-001003	11	B010003
01010-81235	C0100-001001	17	C001001
01010-81235	C0100-001001	30	C001001
01010-81235	C0100-001001	34	C001001
01010-81235	C0101-001001	16	C002001
01010-81235	F2380-002002	6	F002002
01010-81235	F2380-002009	6	F002009
01010-81235	H0100-001003	2	H001003
01010-81235	H0210-002001	8	H004001
01010-81235	H0210-002006	8	H004006
01010-81235	H0210-002017	8	H004017
01010-81235	J2700-001001	18	J002001
01010-81235	K2120-001001	6	K021001
01010-81235	K2810-001001	11	K025001
01010-81235	K2810-001001	14	K025001
01010-81235	K2810-001001	17	K025001
01010-81235	R0120-001001	18	R002001
01010-81235	T2400-001002	12	T009002
01010-81240	H0210-002017	42	H004017
01010-81240	H2230-001001	29	H012001
01010-81240	H2230-001001	41	H012001
01010-81240	J2100-002001	9	J001001
01010-81245	H0100-001001	25	H001001
01010-81245	H0210-002019	2	H004019
01010-81245	H0210-002019	5	H004019
01010-81245	J2100-002001	11	J001001
01010-81245	J2100-002001	13	J001001
01010-81245	R2200-003001	11	R016001
01010-81245	T2400-001002	28	T009002
01010-81250	C0100-001006	24	C001006
01010-81250	H0120-001013	2	H002013
01010-81250	H0120-002011	2	H003011
01010-81250	R2130-002001	12	R013001
01010-81250	R2130-002001	2	R013001
01010-81250	R2130-002001	7	R013001
01010-81250	R2130-002002	12	R013002
01010-81250	R2130-002002	15	R013002
01010-81250	R2130-002002	2	R013002
01010-81260	H0310-001002	17	H005002
01010-81260	H0310-001002	22	H005002
01010-81260	H2210-001004	18	H010004
01010-81260	H2230-001001	26	H012001
01010-81260	H2230-001001	38	H012001
01010-81260	K0710-001001	2	K019001
01010-81260	R2130-002001	5	R013001
01010-81260	R2130-002002	8	R013002
01010-81260	T2160-001002	22	T008002
01010-81265	C0103-001001	11	C003001
01010-81265	C0103-001001	13	C003001
01010-81265	H2210-001004	14	H010004
01010-81265	H2220-001001	18	H011001
01010-81270	H2210-001003	24	H010003
01010-81270	H2250-001001	11	H013001
01010-81270	H2250-001001	18	H013001
01010-81270	H2250-001001	25	H013001
01010-81270	H2250-002002	24	H014002
01010-81270	T2400-001002	21	T009002
01010-81275	B0500-001003	5	B010003
01010-81285	A1610-501001	6	B005001
01010-81435	H0120-001013	1	H002013
01010-81435	H0120-002011	1	H003011
01010-81435	K2120-001001	15	K021001
01010-81435	T2400-001001	12	T009001
01010-81625	K0210-002024	1	K012025
01010-81625	K0210-006024	1	K015025
01010-81625	T2120-001001	10	T003001
01010-81625	T2120-002001	10	T004001
01010-81630	R0300-002001	10	R005001
01010-81635	C0100-001001	21	C001001
01010-81635	R2130-002001	27	R013001
01010-81635	R2130-002002	33	R013002
01010-81640	H0340-001003	15	H007003
01010-81640	H0340-001003	3	H007003
01010-81640	J2700-001001	15	J002001
01010-81640	M2141-001008	1	M002009
01010-81640	M2141-001008	3	M002009
01010-81640	M2141-002008	1	M003009
01010-81640	M2141-002008	3	M003009
01010-81645	A2250-501001	3	B007001
01010-81645	C0100-001005	3	C001005
01010-81645	H0210-002017	6	H004017
01010-81645	J2100-002001	8	J001001
01010-81645	K2120-001001	17	K021001
01010-81645	R0110-001001	18	R001001
01010-81645	R2200-002001	10	R015001
01010-81645	R2200-002001	15	R015001
01010-81645	R2200-002001	17	R015001
01010-81645	R2200-002001	20	R015001
01010-81645	R2200-002001	3	R015001
01010-81645	R2200-002001	9	R015001
01010-81645	R2200-003001	1	R016001
01010-81645	R2200-003001	19	R016001
01010-81645	R2200-003001	20	R016001
01010-81645	R2200-003001	25	R016001
01010-81645	R2200-003001	27	R016001
01010-81645	R2200-003001	30	R016001
01010-81650	M2141-001008	18	M002009
01010-81650	M2141-001008	8	M002009
01010-81650	M2141-002008	18	M003009
01010-81650	M2141-002008	8	M003009
01010-81660	B0600-001001	8	B011001
01010-81660	R0120-001001	28	R002001
01010-81670	R0200-001001	10	R003001
01010-81670	R0200-001002	10	R003002
01010-81675	R2200-002001	11	R015001
01010-81675	R2200-002001	16	R015001
01010-81675	R2200-003001	21	R016001
01010-81675	R2200-003001	26	R016001
01010-82035	K0210-002024	11	K012025
01010-82035	K0210-006024	6	K015025
01010-82045	D0100-001002	22	D001002
01010-82045	D0100-002002	27	D002002
01010-82045	H0100-001006	3	H001006
01010-82055	D0100-001002	21	D001002
01010-82055	D0100-002002	26	D002002
01010-82055	H0210-002012	2	H004012
01010-82055	J2700-001001	22	J002001
01010-82055	J2700-001001	25	J002001
01010-82055	R0120-001001	27	R002001
01010-82060	T2115-001001	6	T002001
01010-82065	D0100-001002	20	D001002
01010-82065	D0100-002002	25	D002002
01010-82065	H0100-001006	5	H001006
01010-82065	T2115-001001	10	T002001
01010-82075	J2700-001001	3	J002001
01010-82085	F2380-002001	1	F002001
01010-82085	F2380-002001	3	F002001
01010-82085	R0300-002001	13	R005001
01010-82450	M2240-001001	2	M005001
01010-82450	M2240-002001	2	M004001
01010-82460	K2120-001001	12	K021001
01010-82460	K2120-001001	19	K021001
01010-82475	T2400-001002	6	T009002
01010-82480	T2810-002001	14	T012001
01010-82490	T2810-001001	9	T011001
01010-83085	T2400-001002	4	T009002
01010-83090	T2810-002001	16	T012001
01010-D0616	K0230-002003	9	K017003
01010-D0625	K0230-002003	3	K017003
01010-D0635	K0210-002002	35	K012002
01010-D0635	K0210-002004	35	K012004
01010-D0635	K0210-006004	35	K015004
01010-D0635	K0210-006007	6	K015007
01010-D0816	K0210-002013	14	K012013
01010-D0816	K0210-002024	9	K012025
01010-D0816	K0210-006013	14	K015013
01010-D0816	K0210-006053	11	K015054
01010-D0816	K0230-001001	18	K016001
01010-D0816	K0230-002002	45	K017002
01010-D0816	K0230-002002	48	K017002
01010-D0820	C0100-001006	14	C001006
01010-D0820	K0110-001002	1	K001002
01010-D0820	K0110-001002	12	K001002
01010-D0820	K0110-001002	17	K001002
01010-D0820	K0110-001002	9	K001002
01010-D0820	K0110-002003	1	K002003
01010-D0820	K0110-005002	1	K005002
01010-D0820	K0110-005002	12	K005002
01010-D0820	K0110-005002	17	K005002
01010-D0820	K0110-005002	9	K005002
01010-D0820	K0160-001001	4	K010001
01010-D0820	K0160-002001	4	K011001
01010-D0820	K0210-002024	6	K012025
01010-D0820	K0210-002029	11	K012030
01010-D0820	K0210-002029	20	K012030
01010-D0820	K0210-002029	23	K012030
01010-D0820	K0210-002029	25	K012030
01010-D0820	K0210-002029	6	K012030
01010-D0820	K0210-002030	13	K012031
01010-D0820	K0210-002030	2	K012031
01010-D0820	K0210-002030	29	K012031
01010-D0820	K0210-002030	32	K012031
01010-D0820	K0210-002030	5	K012031
01010-D0820	K0210-002030	9	K012031
01010-D0820	K0210-002048	31	K012049
01010-D0820	K0210-006029	11	K015030
01010-D0820	K0210-006029	20	K015030
01010-D0820	K0210-006029	23	K015030
01010-D0820	K0210-006029	25	K015030
01010-D0820	K0210-006029	6	K015030
01010-D0820	K0210-006030	13	K015031
01010-D0820	K0210-006030	2	K015031
01010-D0820	K0210-006030	29	K015031
01010-D0820	K0210-006030	32	K015031
01010-D0820	K0210-006030	5	K015031
01010-D0820	K0210-006030	9	K015031
01010-D0820	K0210-006048	31	K015049
01010-D0820	K0230-001001	2	K016001
01010-D0820	K0230-001001	8	K016001
01010-D0820	K0230-002001	2	K017001
01010-D0820	M2110-001001	8	M001001
01010-D0825	K0210-002046	16	K012047
01010-D0825	K0210-002046	9	K012047
01010-D0825	K0210-002049	14	K012050
01010-D0825	K0210-002049	19	K012050
01010-D0825	K0210-002049	23	K012050
01010-D0825	K0210-002052	10	K012053
01010-D0825	K0210-006046	16	K015047
01010-D0825	K0210-006046	9	K015047
01010-D0825	K0210-006049	14	K015050
01010-D0825	K0210-006049	19	K015050
01010-D0825	K0210-006049	23	K015050
01010-D0825	K0210-006052	10	K015053
01010-D0825	K0230-002003	5	K017003
01010-D0830	K0210-002029	4	K012030
01010-D0830	K0210-002030	16	K012031
01010-D0830	K0210-002051	5	K012052
01010-D0830	K0210-006029	4	K015030
01010-D0830	K0210-006030	16	K015031
01010-D0830	K0210-006051	5	K015052
01010-D0835	K0230-002001	12	K017001
01010-D1016	K0230-001001	13	K016001
01010-D1020	A1610-501001	11	B005001
01010-D1020	A1610-501001	13	B005001
01010-D1020	A1610-501001	2	B005001
01010-D1020	E0420-001001	2	E004001
01010-D1020	E0420-001001	5	E004001
01010-D1020	K0210-002045	11	K012046
01010-D1020	K0210-006045	11	K015046
01010-D1020	K0230-001001	11	K016001
01010-D1020	K0230-001001	32	K016001
01010-D1020	K0230-001001	37	K016001
01010-D1020	K0230-002002	14	K017002
01010-D1020	K0230-002002	17	K017002
01010-D1020	K0230-002002	25	K017002
01010-D1020	K0230-002004	14	K017004
01010-D1020	K0230-002004	9	K017004
01010-D1025	C0100-001006	17	C001006
01010-D1025	C0100-001006	26	C001006
01010-D1025	K0210-002029	18	K012030
01010-D1025	K0210-002029	33	K012030
01010-D1025	K0210-002029	9	K012030
01010-D1025	K0210-006029	18	K015030
01010-D1025	K0210-006029	33	K015030
01010-D1025	K0210-006029	9	K015030
01010-D1025	K0230-001001	20	K016001
01010-D1025	K0230-002003	26	K017003
01010-D1030	C0100-001006	6	C001006
01010-D1035	K0210-002006	1	K012006
01010-D1035	K0210-006006	1	K015006
01010-D1225	C0100-001005	13	C001005
01010-D1225	K0230-001001	24	K016001
01010-D1225	K0230-002004	3	K017004
01010-D1225	M2110-001001	12	M001001
01010-D1230	C0100-001006	29	C001006
01010-D1230	K0110-001002	6	K001002
01010-D1230	K0110-002003	4	K002003
01010-D1230	K0110-005002	6	K005002
01010-D1230	K0210-002007	13	K012007
01010-D1230	K0210-002007	2	K012007
01010-D1230	K0210-006007	13	K015007
01010-D1230	K0210-006007	2	K015007
01010-D1230	K2810-001001	2	K025001
01010-D1230	K2810-001001	5	K025001
01010-D1235	M2110-001001	4	M001001
01010-D1650	M2110-001001	3	M001001
01010-E1045	A1610-501001	27	B005001
01010-E1075	A1610-501001	28a	B005001
01010-E1085	A1610-501001	29	B005001
01011-82025	J2700-001001	40	J002001
01011-82035	B0100-002001	3	B008001
01011-82405	T2115-001001	4	T002001
01011-82425	T2400-001002	7	T009002
01011-82480	B0100-002001	7	B008001
01016-50825	K0210-002035	2	K012036
01016-50825	K0210-006035	2	K015036
01016-51245	R0110-001001	23	R001001
01016-51245	T2160-001003	15	T008003
01023-10512	H0100-001001	46	H001001
01023-10520	K0210-002002	3	K012002
01023-10520	K0210-002004	3	K012004
01023-10520	K0210-002011	9	K012011
01023-10520	K0210-002012	15	K012012
01023-10520	K0210-006002	3	K015002
01023-10520	K0210-006004	3	K015004
01023-10520	K0210-006011	9	K015011
01023-10520	K0210-006012	15	K015012
01023-10620	K0210-002045	28	K012046
01023-10620	K0210-006045	28	K015046
01023-20208	K0230-002003	25	K017003
01023-20410	K0210-002002	12	K012002
01023-20410	K0210-002004	12	K012004
01023-20410	K0210-002007	24	K012007
01023-20410	K0210-006002	12	K015002
01023-20410	K0210-006004	12	K015004
01023-20410	K0210-006007	24	K015007
01023-20416	K0210-002018	1	K012018
01023-20416	K0210-002018	7	K012018
01023-20416	K0210-006018	1	K015018
01023-20416	K0210-006018	7	K015018
01023-20510	K0210-002016	2	K012016

PARTS Nº	FIG. Nº	INDEX	PAGE
01023-20510	K0210-006016	2	K015016
01023-20512	K0230-002003	22	K017003
01023-60308	K0230-002002	27	K017002
01023-60512	K0210-002032	5	K012033
01023-60512	K0210-006032	5	K015033
01043-31032	C0101-001001	7C	C002001
01050-31230	A6010-501001	12	B009001
01052-51260	T2810-001001	6	T011001
01052-51260	T2810-002001	13	T012001
01224-40616	H0100-001001	22	H001001
01224-70316	K0210-002009	28	K012009
01224-70316	K0210-002010	28	K012010
01224-70316	K0210-006009	28	K015009
01224-70316	K0210-006010	28	K015010
01224-70410	K0210-002020	10	K012021
01224-70410	K0210-006020	10	K015021
01232-10616	K0230-002003	18	K017003
01240-00620	K0210-002019	17	K012019
01240-00620	K0210-002019	17	K012020
01240-00620	K0210-006019	17	K015019
01245-00616	K2520-001003	14	K024003
01245-00620	K0210-002002	25	K012002
01245-00620	K0210-002002	41	K012002
01245-00620	K0210-002002	44	K012002
01245-00620	K0210-002002	5	K012002
01245-00620	K0210-002003	23	K012003
01245-00620	K0210-002003	27	K012003
01245-00620	K0210-002003	3	K012003
01245-00620	K0210-002004	25	K012004
01245-00620	K0210-002004	41	K012004
01245-00620	K0210-002004	44	K012004
01245-00620	K0210-002004	5	K012004
01245-00620	K0210-002005	23	K012005
01245-00620	K0210-002005	27	K012005
01245-00620	K0210-002005	3	K012005
01245-00620	K0210-002007	38	K012007
01245-00620	K0210-002011	2	K012011
01245-00620	K0210-002014	22	K012014
01245-00620	K0210-002016	5	K012016
01245-00620	K0210-002019	10	K012019
01245-00620	K0210-002019	10	K012020
01245-00620	K0210-002019	3	K012020
01245-00620	K0210-002031	42	K012032
01245-00620	K0210-002040	19	K012041
01245-00620	K0210-002048	5	K012049
01245-00620	K0210-006002	25	K015002
01245-00620	K0210-006002	41	K015002
01245-00620	K0210-006002	44	K015002
01245-00620	K0210-006002	5	K015002
01245-00620	K0210-006003	23	K015003
01245-00620	K0210-006003	27	K015003
01245-00620	K0210-006003	3	K015003
01245-00620	K0210-006004	25	K015004
01245-00620	K0210-006004	41	K015004
01245-00620	K0210-006004	44	K015004
01245-00620	K0210-006004	5	K015004
01245-00620	K0210-006005	23	K015005
01245-00620	K0210-006005	27	K015005
01245-00620	K0210-006005	3	K015005
01245-00620	K0210-006007	38	K015007
01245-00620	K0210-006011	2	K015011
01245-00620	K0210-006014	22	K015014
01245-00620	K0210-006016	5	K015016
01245-00620	K0210-006019	10	K015019
01245-00620	K0210-006019	3	K015019
01245-00620	K0210-006031	42	K015032
01245-00620	K0210-006040	19	K015041
01245-00620	K0210-006048	5	K015049
01245-00620	K0230-001001	29	K016001
01245-00620	K0230-002004	6	K017004
01245-00620	K0310-001001	3	K018001
01245-00630	K0210-002020	6	K012021
01245-00630	K0210-002040	16	K012041
01245-00630	K0210-002040	3	K012041
01245-00630	K0210-006020	6	K015021
01245-00630	K0210-006040	16	K015041
01245-00630	K0210-006040	3	K015041
01245-00820	K0210-002003	12	K012003
01245-00820	K0210-002005	12	K012005
01245-00820	K0210-002024	3	K012025
01245-00820	K0210-002039	2	K012040
01245-00820	K0210-006003	12	K015003
01245-00820	K0210-006005	12	K015005
01245-00820	K0210-006024	3	K015025
01245-00820	K0210-006039	2	K015040
01245-00820	K2520-001003	11	K024003
01245-00825	K0210-002002	38	K012002
01245-00825	K0210-002004	38	K012004
01245-00825	K0210-002014	12	K012014
01245-00825	K0210-002023	7	K012024
01245-00825	K0210-002040	12	K012041
01245-00825	K0210-002040	23	K012041
01245-00825	K0210-002040	6	K012041
01245-00825	K0210-002048	16	K012049
01245-00825	K0210-002048	2	K012049
01245-00825	K0210-002048	8	K012049
01245-00825	K0210-002049	5	K012050
01245-00825	K0210-002049	9	K012050
01245-00825	K0210-006002	38	K015002
01245-00825	K0210-006004	38	K015004
01245-00825	K0210-006014	12	K015014
01245-00825	K0210-006021	3	K015022
01245-00825	K0210-006023	7	K015024
01245-00825	K0210-006040	12	K015041
01245-00825	K0210-006040	23	K015041
01245-00825	K0210-006040	6	K015041
01245-00825	K0210-006048	16	K015049
01245-00825	K0210-006048	2	K015049
01245-00825	K0210-006048	8	K015049
01245-00825	K0210-006049	5	K015050
01245-00825	K0210-006049	9	K015050
01252-30625	K2520-001002	15	K024002
01252-60416	K0210-002041	16	K012042
01252-60416	K0210-006041	16	K015042
01252-60512	K0210-002033	4	K012034
01252-60512	K0210-006033	4	K015034
01252-60616	C0100-001002	16	C001002
01252-60616	H0210-002011	6	H004011
01252-60620	C0100-001002	13	C001002
01252-60630	H0120-001004	16	H002004
01252-60630	H0120-001010	9	H002010
01252-60630	H0120-002004	16	H003004
01252-60630	H0210-002016	6	H004016
01252-60635	H0210-002011	7	H004011
01252-60640	H0120-001004	13	H002004
01252-60640	H0120-002004	13	H003004
01252-60645	H0120-001004	12	H002004
01252-60645	H0120-002004	12	H003004
01252-60645	H0210-002016	7	H004016
01252-60820	H0120-001007	7	H002007
01252-60820	H0120-002007	7	H003007
01252-60835	C0100-001002	24	C001002
01252-61030	H0210-002005	7	H004005
01252-61030	H0210-002009	7	H004009
01252-61235	H0210-002016	14	H004016
01252-61255	C0100-001003	3	C001003
01252-61445	F2380-002005	12	F002005
01252-61445	F2380-002005	15	F002005
01252-61445	F2380-002012	12	F002012
01252-61445	F2380-002012	15	F002012
01252-62260	F2380-002005	24	F002005
01252-62260	F2380-002012	24	F002012
01252-80514	K0210-002010	29	K012010
01252-80514	K0210-002030	25	K012031
01252-80514	K0210-006010	29	K015010
01252-80514	K0210-006030	25	K015031
01252-A0825	E0210-001001	17	E003001
01252-A0825	K0210-002034	2	K012035
01252-A0825	K0210-006034	2	K015035
01252-A1235	H0340-001003	34	H007003

PARTS Nº	FIG. Nº	INDEX	PAGE
01252-A1235	H0340-001003	45	H007003
01252-B0510	K0210-002034	8	K012035
01252-B0510	K0210-002037	29	K012038
01252-B0510	K0210-006034	8	K015035
01252-B0510	K0210-006037	29	K015038
01252-B0514	K0210-002009	29	K012009
01252-B0514	K0210-002010	30	K012010
01252-B0514	K0210-006009	29	K015009
01252-B0514	K0210-006010	30	K015010
01252-B0520	K0210-002023	2	K012024
01252-B0520	K0210-006023	2	K015024
01252-B0825	E0210-001001	10	E003001
01253-61410	H0210-002018	14	H004018
01370-40412	K0210-002022	10	K012023
01370-40412	K0210-002022	12	K012023
01370-40412	K0210-006022	10	K015023
01370-40412	K0210-006022	12	K015023
01434-00820	E0210-001002	15	E003002
01435-00812	A6010-503001	4	B009003
01435-00825	F2380-002007	11	F002007
01435-00825	F2380-002014	11	F002014
01435-00830	K0210-006053	7	K015054
01435-00860	A6010-501001	4	B009001
01435-00885	A6010-501001	3	B009001
01435-01025	A6010-501001	11	B009001
01435-01245	H1310-001002	14	H008002
01436-01200	H0340-001003	28	H007003
01436-01200	H0340-001003	39	H007003
01571-00814	C0100-001005	11	C001005
01580-00806	K0230-002002	35	K017002
01580-10605	D0100-001001	37	D001001
01580-10605	D0100-002001	37	D002001
01580-10605	H0100-001002	18	H001002
01580-10605	H0100-001002	4	H001002
01580-10605	K0210-002002	15	K012002
01580-10605	K0210-002004	15	K012004
01580-10605	K0210-002007	27	K012007
01580-10605	K0210-002035	15	K012036
01580-10605	K0210-002038	12	K012039
01580-10605	K0210-006002	15	K015002
01580-10605	K0210-006004	15	K015004
01580-10605	K0210-006007	27	K015007
01580-10605	K0210-006035	15	K015036
01580-10605	K0210-006038	12	K015039
01580-10605	M2141-001005	4	M002005
01580-10605	M2141-001005A	4	M002006
01580-10605	M2141-002005	4	M003006
01580-10806	K0210-002003	15	K012003
01580-10806	K0210-002005	15	K012005
01580-10806	K0210-002014	17	K012014
01580-10806	K0210-002014	3	K012014
01580-10806	K0210-002035	3	K012036
01580-10806	K0210-006003	15	K015003
01580-10806	K0210-006005	15	K015005
01580-10806	K0210-006014	17	K015014
01580-10806	K0210-006014	3	K015014
01580-10806	K0210-006035	3	K015036
01580-11008	D0100-001001	31	D001001
01580-11008	D0100-002001	31	D002001
01580-11008	H0100-001001	39	H001001
01580-11008	H2210-001004	29	H010004
01580-11008	H2210-001005	18	H010005
01580-11008	M2141-001005	13	M002005
01580-11008	M2141-001005A	14	M002006
01580-11008	M2141-002005	14	M003006
01580-11210	A1610-501001	7	B005001
01580-11210	A6010-501001	9	B009001
01580-11210	K0210-002007	35	K012007
01580-11210	K0210-002041	10	K012042
01580-11210	K0210-002041	20	K012042
01580-11210	K0210-006007	35	K015007
01580-11210	K0210-006041	10	K015042
01580-11210	K0210-006041	20	K015042
01580-11815	R2200-003001	8	R016001
01580-12419	T2810-002001	9	T012001
01582-11008	K0210-002041	27	K012042
01582-11008	K0210-006041	27	K015042
01582-11210	F2380-002005	8	F002005
01582-11210	F2380-002012	8	F002012
01582-11210	H0210-002004	16	H004004
01582-11210	H0210-002004	26	H004004
01582-11210	H0210-002005	4	H004005
01582-11210	H0210-002005	6	H004005
01582-11210	H0210-002008	16	H004008
01582-11210	H0210-002008	26	H004008
01582-11210	H0210-002009	4	H004009
01582-11210	H0210-002009	6	H004009
01582-11210	H0210-002014	16	H004014
01582-11613	R0110-001001	13	R001001
01583-11207	H0210-002015	25	H004015
01583-11408	K2520-001003	3	K024003
01583-12012	C0100-001004	20	C001004
01583-51811	C0101-001001	26	C002001
01583-51811	C0102-001002	10	C002002
01584-30605	K0210-002035	19	K012036
01584-30605	K0210-002038	15	K012039
01584-30605	K0210-006035	19	K015036
01584-30605	K0210-006038	15	K015039
01592-11215	T2810-001001	7	T011001
01592-11215	T2810-002001	12	T012001
01594-01008	A1610-501001	53	B005001
01597-01009	C0102-001002	8	C002002
01597-01009	C0103-001003	13	C002003
01597-01009	C0103-001003	20	C002003
01597-01009	H0320-001001	10	H006001
01597-01009	K0210-002029	15	K012030
01597-01009	K0210-006029	15	K015030
01597-01009	T2460-001001	25	T010001
01597-01211	A1610-501001	36	B005001
01597-01211	A1610-501001	54	B005001
01597-01211	C0103-001003	64	C002003
01598-00608	K0210-002019	16	K012019
01598-00608	K0210-002019	16	K012020
01598-00608	K0210-006019	16	K015019
01598-00809	K0210-002030	19	K012031
01598-00809	K0210-002046	12	K012047
01598-00809	K0210-006030	19	K015031
01598-00809	K0210-006046	12	K015047
01640-20408	K0210-002041	17	K012042
01640-20408	K0210-006041	17	K015042
01640-20610	K0210-002007	33	K012007
01640-20610	K0210-002048	12	K012049
01640-20610	K0210-006007	33	K015007
01640-20610	K0210-006048	12	K015049
01640-20816	K0210-002003	16	K012003
01640-20816	K0210-002005	16	K012005
01640-20816	K0210-002014	18	K012014
01640-20816	K0210-002014	4	K012014
01640-20816	K0210-006003	16	K015003
01640-20816	K0210-006005	16	K015005
01640-20816	K0210-006014	18	K015014
01640-20816	K0210-006014	4	K015014
01640-21016	K0210-002041	35	K012042
01640-21016	K0210-006041	35	K015042
01640-21016	M2110-001001	21	M001001
01640-21223	A1610-501001	8	B005001
01640-21223	M2110-001001	22	M001001
01640-21426	M2110-001001	23	M001001
01640-22032	C0100-001006	9	C001006
01640-50508	K0210-006023	3	K015024
01641-20608	H0120-001004	17	H002004
01641-20608	H0120-001010	10	H002010
01641-20608	H0120-002004	17	H003004
01641-21016	K0210-002037	12	K012038
01641-21016	K0210-006037	12	K015038
01641-21223	A6010-501001	6	B009001
01641-50508	K0210-002009	30	K012009
01641-50508	K0210-002010	31	K012010
01641-50508	K0210-002030	26	K012031
01641-50508	K0210-006009	30	K015009

PARTS Nº	FIG. Nº	INDEX	PAGE
01641-50508	K0210-006010	31	K015010
01641-50508	K0210-006030	26	K015031
01643-30623	B0500-001002	11	B010002
01643-30623	D0100-001001	29	D001001
01643-30623	D0100-001001	36	D001001
01643-30623	D0100-001001	45	D001001
01643-30623	D0100-001001	49	D001001
01643-30623	D0100-002001	29	D002001
01643-30623	D0100-002001	36	D002001
01643-30623	D0100-002001	45	D002001
01643-30623	D0100-002001	49	D002001
01643-30623	H0100-001001	37	H001001
01643-30623	H0100-001002	10	H001002
01643-30623	H0100-001002	14	H001002
01643-30623	H0100-001002	17	H001002
01643-30623	H0100-001002	24	H001002
01643-30623	H0100-001002	28	H001002
01643-30623	H0100-001002	3	H001002
01643-30623	K0210-002012	14	K012012
01643-30623	K0210-002012	17	K012012
01643-30623	K0210-002013	22	K012013
01643-30623	K0210-002019	7	K012019
01643-30623	K0210-002019	7	K012020
01643-30623	K0210-002020	14	K012021
01643-30623	K0210-002022	16	K012023
01643-30623	K0210-002022	6	K012023
01643-30623	K0210-002022	8	K012023
01643-30623	K0210-002030	23	K012031
01643-30623	K0210-002031	5	K012032
01643-30623	K0210-002035	17	K012036
01643-30623	K0210-002035	18	K012036
01643-30623	K0210-002038	11	K012039
01643-30623	K0210-002038	14	K012039
01643-30623	K0210-002043	26	K012044
01643-30623	K0210-002045	24	K012046
01643-30623	K0210-002045	27	K012046
01643-30623	K0210-002046	15	K012047
01643-30623	K0210-002048	29	K012049
01643-30623	K0210-002051	3	K012052
01643-30623	K0210-006012	11	K015012
01643-30623	K0210-006012	14	K015012
01643-30623	K0210-006012	17	K015012
01643-30623	K0210-006013	22	K015013
01643-30623	K0210-006019	7	K015019
01643-30623	K0210-006020	14	K015021
01643-30623	K0210-006022	16	K015023
01643-30623	K0210-006022	6	K015023
01643-30623	K0210-006022	8	K015023
01643-30623	K0210-006030	23	K015031
01643-30623	K0210-006031	5	K015032
01643-30623	K0210-006035	17	K015036
01643-30623	K0210-006035	18	K015036
01643-30623	K0210-006038	11	K015039
01643-30623	K0210-006038	14	K015039
01643-30623	K0210-006043	26	K015044
01643-30623	K0210-006045	24	K015046
01643-30623	K0210-006045	27	K015046
01643-30623	K0210-006046	15	K015047
01643-30623	K0210-006048	29	K015049
01643-30623	K0210-006051	3	K015052
01643-30623	K0210-006053	5	K015054
01643-30623	M2141-001005	10	M002005
01643-30623	M2141-001005	21	M002005
01643-30623	M2141-001005	3	M002005
01643-30623	M2141-001005	7	M002005
01643-30623	M2141-001005A	11	M002006
01643-30623	M2141-001005A	22	M002006
01643-30623	M2141-001005A	3	M002006
01643-30623	M2141-001005A	8	M002006
01643-30623	M2141-002005	11	M003006
01643-30623	M2141-002005	22	M003006
01643-30623	M2141-002005	3	M003006
01643-30623	M2141-002005	8	M003006
01643-30823	A1610-501001	31	B005001
01643-30823	B0500-001001	3	B010001
01643-30823	B0500-001002	16	B010002
01643-30823	B0500-001002	6	B010002
01643-30823	B0500-001003	22	B010003
01643-30823	B0500-001003	25	B010003
01643-30823	C0100-001007	20	C001007
01643-30823	C0100-001007	22	C001007
01643-30823	C0100-001007	25	C001007
01643-30823	C0100-001007	29	C001007
01643-30823	C0100-001007	31	C001007
01643-30823	C0100-001007	36	C001007
01643-30823	C0100-001007	39	C001007
01643-30823	C0100-001007	41	C001007
01643-30823	C0103-001003	3	C002003
01643-30823	D0100-002003	15	D002003
01643-30823	D0100-002003	17	D002003
01643-30823	D0100-002003	20	D002003
01643-30823	D0200-001001	3	D003001
01643-30823	D0200-001001	5	D003001
01643-30823	D0200-001002	22	D003002
01643-30823	E0210-001001	16	E003001
01643-30823	E0210-001001	3	E003001
01643-30823	E0210-001001	5	E003001
01643-30823	E0210-001001	54	E003001
01643-30823	E0210-001001	7	E003001
01643-30823	E0210-001002	14	E003002
01643-30823	H1840-001003	3	H009003
01643-30823	H1840-001004	21	H009004
01643-30823	K0210-002028	35	K012029
01643-30823	K0210-002028	45	K012029
01643-30823	K0210-002028	48	K012029
01643-30823	K0210-002028	57	K012029
01643-30823	K0210-002034	3	K012035
01643-30823	K0210-002035	11	K012036
01643-30823	K0210-002037	4	K012038
01643-30823	K0210-002037	8	K012038
01643-30823	K0210-002039	7	K012040
01643-30823	K0210-002042	3	K012043
01643-30823	K0210-002050	10	K012051
01643-30823	K0210-002050	4	K012051
01643-30823	K0210-006028	35	K015029
01643-30823	K0210-006028	45	K015029
01643-30823	K0210-006028	48	K015029
01643-30823	K0210-006028	57	K015029
01643-30823	K0210-006034	3	K015035
01643-30823	K0210-006035	11	K015036
01643-30823	K0210-006037	4	K015038
01643-30823	K0210-006037	8	K015038
01643-30823	K0210-006039	7	K015040
01643-30823	K0210-006042	3	K015043
01643-30823	K0210-006050	10	K015051
01643-30823	K0210-006050	4	K015051
01643-30823	K0230-002002	31	K017002
01643-30823	K0230-002004	26	K017004
01643-30823	K0710-001001	11	K019001
01643-30823	K0710-001001	34	K019001
01643-30823	K0710-001001	5	K019001
01643-30823	K0710-001001	8	K019001
01643-30823	K2520-001001	5	K024001
01643-30823	M2141-001007	3	M002008
01643-30823	M2141-002007	3	M003008
01643-30823	R0120-001001	2	R002001
01643-31032	A1410-501001	2	B001001
01643-31032	A1610-501001	17	B005001
01643-31032	A1610-501001	20	B005001
01643-31032	A1610-501001	28	B005001
01643-31032	A1610-501001	33	B005001
01643-31032	A1610-501001	35	B005001
01643-31032	A1610-501001	50	B005001
01643-31032	B0500-001001	14	B010001
01643-31032	B0500-001001	18	B010001
01643-31032	B0500-001001	21	B010001
01643-31032	B0500-001001	6	B010001
01643-31032	B0500-001001	9	B010001
01643-31032	B0500-001002	14	B010002
01643-31032	B0500-001002	19	B010002

PARTS Nº	FIG. Nº	INDEX	PAGE
01643-31032	B0500-001002	23	B010002
01643-31032	B0500-001002	31	B010002
01643-31032	B0500-001002	34	B010002
01643-31032	B0500-001002	38	B010002
01643-31032	B0500-001002	4	B010002
01643-31032	B0500-001002	41	B010002
01643-31032	B0500-001002	44	B010002
01643-31032	B0500-001002	47	B010002
01643-31032	B0500-001002	50	B010002
01643-31032	B0500-001002	53	B010002
01643-31032	B0500-001002	56	B010002
01643-31032	B0500-001002	8	B010002
01643-31032	B0500-001003	18	B010003
01643-31032	B0500-001003	28	B010003
01643-31032	B0500-001003	32	B010003
01643-31032	B0500-001003	36	B010003
01643-31032	B0500-001003	39	B010003
01643-31032	B0500-001003	42	B010003
01643-31032	B0500-001003	9	B010003
01643-31032	B0500-001004	10	B010004
01643-31032	B0500-001004	14	B010004
01643-31032	B0500-001004	18	B010004
01643-31032	B0500-001004	22	B010004
01643-31032	B0500-001004	25	B010004
01643-31032	B0500-001004	28	B010004
01643-31032	B0500-001004	3	B010004
01643-31032	B0500-001004	31	B010004
01643-31032	B0500-001004	7	B010004
01643-31032	B0600-001001	5	B011001
01643-31032	C0100-001001	31	C001001
01643-31032	C0100-001001	35	C001001
01643-31032	C0100-001004	18	C001004
01643-31032	C0100-001004	22	C001004
01643-31032	C0100-001006	4	C001006
01643-31032	C0101-001001	10	C002001
01643-31032	C0101-001001	14	C002001
01643-31032	C0101-001001	19	C002001
01643-31032	C0101-001001	23	C002001
01643-31032	C0101-001001	36	C002001
01643-31032	C0101-001001	40	C002001
01643-31032	C0101-001001	45	C002001
01643-31032	C0101-001001	47	C002001
01643-31032	C0101-001001	50	C002001
01643-31032	C0101-001001	54	C002001
01643-31032	C0102-001002	15	C002002
01643-31032	C0102-001002	24	C002002
01643-31032	C0102-001002	26	C002002
01643-31032	C0102-001002	4	C002002
01643-31032	C0102-001002	7	C002002
01643-31032	C0103-001001	17	C003001
01643-31032	C0103-001001	20	C003001
01643-31032	C0103-001001	24	C003001
01643-31032	C0103-001001	3	C003001
01643-31032	C0103-001001	43	C003001
01643-31032	C0103-001001	46	C003001
01643-31032	C0103-001001	49	C003001
01643-31032	C0103-001003	12	C002003
01643-31032	C0103-001003	16	C002003
01643-31032	C0103-001003	19	C002003
01643-31032	C0103-001003	36	C002003
01643-31032	C0103-001003	40	C002003
01643-31032	C0103-001003	43	C002003
01643-31032	C0103-001003	47	C002003
01643-31032	C0103-001003	50	C002003
01643-31032	C0103-001003	54	C002003
01643-31032	C0103-001003	57	C002003
01643-31032	C0103-001003	61	C002003
01643-31032	C0103-001003	67	C002003
01643-31032	C0103-001003	9	C002003
01643-31032	D0100-001001	21	D001001
01643-31032	D0100-001002	4	D001002
01643-31032	D0100-001002	7	D001002
01643-31032	D0100-002001	21	D002001
01643-31032	D0100-002002	4	D002002
01643-31032	D0100-002002	7	D002002
01643-31032	D0200-001001	27	D003001
01643-31032	D0200-001001	37	D003001
01643-31032	D0200-001001	44	D003001
01643-31032	D0200-001001	48	D003001
01643-31032	D0200-001001	9	D003001
01643-31032	D0200-001002	2	D003002
01643-31032	D0200-001002	25	D003002
01643-31032	D0200-001002	31	D003002
01643-31032	D0200-001002	38	D003002
01643-31032	D0200-001002	5	D003002
01643-31032	E0200-001001	12	E002001
01643-31032	E0200-001001	15	E002001
01643-31032	E0200-001001	18	E002001
01643-31032	E0200-001001	22	E002001
01643-31032	E0200-001001	27	E002001
01643-31032	E0200-001001	31	E002001
01643-31032	E0200-001001	37	E002001
01643-31032	E0200-001001	4	E002001
01643-31032	E0200-001001	41	E002001
01643-31032	E0200-001001	8	E002001
01643-31032	E0200-001002	13	E002002
01643-31032	E0200-001002	17	E002002
01643-31032	E0200-001002	21	E002002
01643-31032	E0200-001002	24	E002002
01643-31032	E0200-001002	5	E002002
01643-31032	E0200-001002	8	E002002
01643-31032	E0210-001001	13	E003001
01643-31032	E0210-001001	22	E003001
01643-31032	E0210-001001	30	E003001
01643-31032	E0210-001001	38	E003001
01643-31032	E0210-001001	43	E003001
01643-31032	E0210-001001	47	E003001
01643-31032	E0210-001001	50	E003001
01643-31032	E0210-001001	58	E003001
01643-31032	E0210-001001	61	E003001
01643-31032	E0210-001002	11	E003002
01643-31032	E0210-001002	7	E003002
01643-31032	F2380-002002	11	F002002
01643-31032	F2380-002009	11	F002009
01643-31032	H0100-001001	19	H001001
01643-31032	H0100-001002	44	H001002
01643-31032	H0100-001003	19	H001003
01643-31032	H0100-001003	25	H001003
01643-31032	H0100-001003	8	H001003
01643-31032	H0100-001004	16	H001004
01643-31032	H0100-001004	18	H001004
01643-31032	H0100-001004	7	H001004
01643-31032	H0100-001004	9	H001004
01643-31032	H0100-001005	12	H001005
01643-31032	H0100-001005	18	H001005
01643-31032	H0100-001005	22	H001005
01643-31032	H0100-001005	25	H001005
01643-31032	H0100-001005	5	H001005
01643-31032	H0120-001007	21	H002007
01643-31032	H0120-002007	21	H003007
01643-31032	H0210-002012	22	H004012
01643-31032	H0210-002017	33	H004017
01643-31032	H0210-002017	37	H004017
01643-31032	H0210-002017	46	H004017
01643-31032	H0210-002019	12	H004019
01643-31032	H0210-002019	15	H004019
01643-31032	H0210-002019	18	H004019
01643-31032	H0210-002019	9	H004019
01643-31032	H0310-001001	12	H005001
01643-31032	H0310-001001	15	H005001
01643-31032	H0310-001001	20	H005001
01643-31032	H0310-001001	24	H005001
01643-31032	H0310-001001	3	H005001
01643-31032	H0310-001001	8	H005001
01643-31032	H0320-001001	22	H006001
01643-31032	H0320-001001	27	H006001
01643-31032	H0320-001001	3	H006001
01643-31032	H0320-001001	33	H006001
01643-31032	H0320-001001	9	H006001
01643-31032	H0340-001001	12	H007001

PARTS Nº	FIG. Nº	INDEX	PAGE
01643-31032	H0340-001001	16	H007001
01643-31032	H0340-001001	19	H007001
01643-31032	H0340-001001	25	H007001
01643-31032	H0340-001001	29	H007001
01643-31032	H0340-001001	3	H007001
01643-31032	H0340-001001	32	H007001
01643-31032	H0340-001001	35	H007001
01643-31032	H0340-001001	40	H007001
01643-31032	H0340-001001	6	H007001
01643-31032	H0340-001001	9	H007001
01643-31032	H0340-001002	16	H007002
01643-31032	H0340-001002	20	H007002
01643-31032	H0340-001002	25	H007002
01643-31032	H0340-001002	29	H007002
01643-31032	H0340-001002	32	H007002
01643-31032	H0340-001002	9	H007002
01643-31032	H0340-001003	12	H007003
01643-31032	H0340-001003	12	H007003
01643-31032	H0340-001003	20	H007003
01643-31032	H0340-001003	22	H007003
01643-31032	H0340-001003	24	H007003
01643-31032	H0340-001003	3	H007003
01643-31032	H0340-001003	31	H007003
01643-31032	H0340-001003	35	H007003
01643-31032	H0340-001003	39	H007003
01643-31032	H0340-001003	46	H007003
01643-31032	H0340-001003	54	H007003
01643-31032	H0340-001003	58	H007003
01643-31032	H0340-001003	8	H007003
01643-31032	H1840-001004	25	H009004
01643-31032	H1840-001004	3	H009004
01643-31032	H1840-001004	32	H009004
01643-31032	H1840-001004	5	H009004
01643-31032	H1840-001005	10	H009005
01643-31032	H1840-001005	18	H009005
01643-31032	H1840-001005	7	H009005
01643-31032	H1840-001006	10	H009006
01643-31032	H1840-001006	14	H009006
01643-31032	H1840-001006	17	H009006
01643-31032	H1840-001006	24	H009006
01643-31032	H1840-001006	27	H009006
01643-31032	H1840-001006	3	H009006
01643-31032	H1840-001010	2	H009010
01643-31032	H2210-001004	11	H010004
01643-31032	H2210-001004	23	H010004
01643-31032	H2210-001004	27	H010004
01643-31032	H2210-001004	31	H010004
01643-31032	H2210-001005	12	H010005
01643-31032	H2210-001005	16	H010005
01643-31032	H2210-001005	20	H010005
01643-31032	H2220-001001	15	H011001
01643-31032	H2220-001001	3	H011001
01643-31032	H2220-001001	6	H011001
01643-31032	H2230-001001	17	H012001
01643-31032	H2230-001001	3	H012001
01643-31032	H2250-002001	11	H014001
01643-31032	H2250-002001	17	H014001
01643-31032	H2250-002001	20	H014001
01643-31032	H2250-002001	24	H014001
01643-31032	H2250-002002	13	H014002
01643-31032	H2250-002002	28	H014002
01643-31032	H2250-002002	3	H014002
01643-31032	H2250-002002	9	H014002
01643-31032	J2700-001001	45	J002001
01643-31032	K0210-002013	18	K012013
01643-31032	K0210-002015	13	K012015
01643-31032	K0210-002028	12	K012029
01643-31032	K0210-002028	19	K012029
01643-31032	K0210-002028	22	K012029
01643-31032	K0210-002028	29	K012029
01643-31032	K0210-002028	32	K012029
01643-31032	K0210-002028	38	K012029
01643-31032	K0210-002028	40	K012029
01643-31032	K0210-002028	51	K012029
01643-31032	K0210-002028	6	K012029
01643-31032	K0210-002029	16	K012030
01643-31032	K0210-002031	13	K012032
01643-31032	K0210-002031	16	K012032
01643-31032	K0210-002031	19	K012032
01643-31032	K0210-002031	3	K012032
01643-31032	K0210-002031	32	K012032
01643-31032	K0210-002035	14	K012036
01643-31032	K0210-002035	21	K012036
01643-31032	K0210-002037	34	K012038
01643-31032	K0210-002038	17	K012039
01643-31032	K0210-002038	8	K012039
01643-31032	K0210-002041	14	K012042
01643-31032	K0210-002041	22	K012042
01643-31032	K0210-002041	25	K012042
01643-31032	K0210-002041	40	K012042
01643-31032	K0210-002041	43	K012042
01643-31032	K0210-002043	11	K012044
01643-31032	K0210-002043	13	K012044
01643-31032	K0210-002043	16	K012044
01643-31032	K0210-002043	19	K012044
01643-31032	K0210-002043	23	K012044
01643-31032	K0210-002043	30	K012044
01643-31032	K0210-002043	32	K012044
01643-31032	K0210-002044	12	K012045
01643-31032	K0210-002044	15	K012045
01643-31032	K0210-002044	18	K012045
01643-31032	K0210-002044	22	K012045
01643-31032	K0210-002044	25	K012045
01643-31032	K0210-002044	3	K012045
01643-31032	K0210-002044	6	K012045
01643-31032	K0210-002044	9	K012045
01643-31032	K0210-002045	15	K012046
01643-31032	K0210-002045	18	K012046
01643-31032	K0210-002045	3	K012046
01643-31032	K0210-002045	31	K012046
01643-31032	K0210-002045	6	K012046
01643-31032	K0210-002045	9	K012046
01643-31032	K0210-002046	19	K012047
01643-31032	K0210-002051	12	K012052
01643-31032	K0210-002051	16	K012052
01643-31032	K0210-002052	7	K012053
01643-31032	K0210-006013	18	K015013
01643-31032	K0210-006015	13	K015015
01643-31032	K0210-006028	12	K015029
01643-31032	K0210-006028	19	K015029
01643-31032	K0210-006028	22	K015029
01643-31032	K0210-006028	29	K015029
01643-31032	K0210-006028	32	K015029
01643-31032	K0210-006028	38	K015029
01643-31032	K0210-006028	40	K015029
01643-31032	K0210-006028	51	K015029
01643-31032	K0210-006028	6	K015029
01643-31032	K0210-006029	16	K015030
01643-31032	K0210-006031	13	K015032
01643-31032	K0210-006031	16	K015032
01643-31032	K0210-006031	19	K015032
01643-31032	K0210-006031	3	K015032
01643-31032	K0210-006031	32	K015032
01643-31032	K0210-006035	14	K015036
01643-31032	K0210-006035	21	K015036
01643-31032	K0210-006037	34	K015038
01643-31032	K0210-006038	17	K015039
01643-31032	K0210-006038	8	K015039
01643-31032	K0210-006041	14	K015042
01643-31032	K0210-006041	22	K015042
01643-31032	K0210-006041	25	K015042
01643-31032	K0210-006041	40	K015042
01643-31032	K0210-006041	43	K015042
01643-31032	K0210-006043	11	K015044
01643-31032	K0210-006043	13	K015044
01643-31032	K0210-006043	16	K015044
01643-31032	K0210-006043	19	K015044
01643-31032	K0210-006043	23	K015044
01643-31032	K0210-006043	30	K015044
01643-31032	K0210-006043	32	K015044

PARTS Nº	FIG. Nº	INDEX	PAGE
01643-31032	K0210-006044	12	K015045
01643-31032	K0210-006044	15	K015045
01643-31032	K0210-006044	18	K015045
01643-31032	K0210-006044	22	K015045
01643-31032	K0210-006044	25	K015045
01643-31032	K0210-006044	3	K015045
01643-31032	K0210-006044	6	K015045
01643-31032	K0210-006044	9	K015045
01643-31032	K0210-006045	15	K015046
01643-31032	K0210-006045	18	K015046
01643-31032	K0210-006045	3	K015046
01643-31032	K0210-006045	31	K015046
01643-31032	K0210-006045	6	K015046
01643-31032	K0210-006045	9	K015046
01643-31032	K0210-006046	19	K015047
01643-31032	K0210-006051	12	K015052
01643-31032	K0210-006051	16	K015052
01643-31032	K0210-006052	7	K015053
01643-31032	K0230-001001	17	K016001
01643-31032	K0230-002002	12	K017002
01643-31032	K0230-002002	22	K017002
01643-31032	K0230-002002	37	K017002
01643-31032	K0230-002002	4	K017002
01643-31032	K0230-002002	42	K017002
01643-31032	K0230-002002	7	K017002
01643-31032	K0710-001001	14	K019001
01643-31032	K0710-001001	23	K019001
01643-31032	K0710-001001	26	K019001
01643-31032	K0710-001001	31	K019001
01643-31032	K0710-001001	38	K019001
01643-31032	K0710-001001	41	K019001
01643-31032	K0710-001002	15	K019002
01643-31032	K0710-001002	18	K019002
01643-31032	K2520-001003	2	K024003
01643-31032	K2910-001001	18	K026001
01643-31032	K2910-001001	20	K026001
01643-31032	K2910-001001	3	K026001
01643-31032	K2910-001001	6	K026001
01643-31032	K2910-001001	9	K026001
01643-31032	M2141-001002	19	M002002
01643-31032	M2141-001003	12	M002003
01643-31032	M2141-001003	2	M002003
01643-31032	M2141-001003	5	M002003
01643-31032	M2141-001003	8	M002003
01643-31032	M2141-001005	12	M002005
01643-31032	M2141-001005A	13	M002006
01643-31032	M2141-001007	11	M002008
01643-31032	M2141-001007	13	M002008
01643-31032	M2141-001007	17	M002008
01643-31032	M2141-001007	7	M002008
01643-31032	M2141-001009	9	M002010
01643-31032	M2141-002002	19	M003002
01643-31032	M2141-002003	12	M003003
01643-31032	M2141-002003	2	M003003
01643-31032	M2141-002003	5	M003003
01643-31032	M2141-002003	8	M003003
01643-31032	M2141-002005	13	M003006
01643-31032	M2141-002007	11	M003008
01643-31032	M2141-002007	13	M003008
01643-31032	M2141-002007	17	M003008
01643-31032	M2141-002007	7	M003008
01643-31032	M2141-002009	9	M003010
01643-31032	T2115-001001	16	T002001
01643-31032	T2120-001001	13	T003001
01643-31032	T2120-002001	13	T004001
01643-31032	T2140-001001	25	T005001
01643-31032	T2140-001002	25	T005002
01643-31032	T2160-001001	17	T008001
01643-31032	T2160-001002	27	T008002
01643-31032	T2400-001002	16	T009002
01643-31032	T2460-001001	26	T010001
01643-31232	A1470-501001	6	B002001
01643-31232	A1470-502001	6	B003001
01643-31232	A1610-501001	37	B005001
01643-31232	A1610-501001	52	B005001
01643-31232	A1610-501001	55	B005001
01643-31232	B0500-001003	12	B010003
01643-31232	B0500-001003	15	B010003
01643-31232	B0500-001003	3	B010003
01643-31232	B0500-001003	6	B010003
01643-31232	C0100-001001	18	C001001
01643-31232	C0100-001001	29	C001001
01643-31232	C0100-001004	2	C001004
01643-31232	C0101-001001	17	C002001
01643-31232	C0103-001001	12	C003001
01643-31232	C0103-001001	14	C003001
01643-31232	C0103-001001	35	C003001
01643-31232	C0103-001003	39	C003001
01643-31232	C0103-001003	63	C002003
01643-31232	D0100-001001	34	D001001
01643-31232	D0100-001001	41	D001001
01643-31232	D0100-002001	34	D002001
01643-31232	D0100-002001	41	D002001
01643-31232	D0100-002003	3	D002003
01643-31232	E0210-001002	4	E003002
01643-31232	F2380-002002	7	F002002
01643-31232	F2380-002009	7	F002009
01643-31232	H0100-001001	26	H001001
01643-31232	H0100-001001	30	H001001
01643-31232	H0100-001001	33	H001001
01643-31232	H0100-001002	20	H001002
01643-31232	H0100-001002	41	H001002
01643-31232	H0100-001002	6	H001002
01643-31232	H0100-001003	3	H001003
01643-31232	H0120-001013	3	H002013
01643-31232	H0120-002011	3	H003011
01643-31232	H0210-002001	9	H004001
01643-31232	H0210-002014	15	H004014
01643-31232	H0210-002016	15	H004016
01643-31232	H0210-002017	43	H004017
01643-31232	H0210-002017	9	H004017
01643-31232	H0210-002019	3	H004019
01643-31232	H0210-002019	6	H004019
01643-31232	H0310-001002	18	H005002
01643-31232	H0310-001002	23	H005002
01643-31232	H0310-001002	3	H005002
01643-31232	H0310-001002	8	H005002
01643-31232	H0320-001001	7	H006001
01643-31232	H0340-001002	3	H007002
01643-31232	H0340-001002	6	H007002
01643-31232	H2210-001001	3	H010001
01643-31232	H2210-001003	25	H010003
01643-31232	H2210-001004	15	H010004
01643-31232	H2210-001004	19	H010004
01643-31232	H2220-001001	12	H011001
01643-31232	H2220-001001	19	H011001
01643-31232	H2230-001001	23	H012001
01643-31232	H2230-001001	27	H012001
01643-31232	H2230-001001	30	H012001
01643-31232	H2230-001001	39	H012001
01643-31232	H2230-001001	42	H012001
01643-31232	H2250-001001	12	H013001
01643-31232	H2250-001001	15	H013001
01643-31232	H2250-001001	19	H013001
01643-31232	H2250-001001	22	H013001
01643-31232	H2250-001001	26	H013001
01643-31232	H2250-002002	25	H014002
01643-31232	J2100-002001	10	J001001
01643-31232	J2100-002001	12	J001001
01643-31232	J2100-002001	14	J001001
01643-31232	J2100-002001	16	J001001
01643-31232	J2100-002001	35	J001001
01643-31232	J2700-001001	19	J002001
01643-31232	J2700-001001	34	J002001
01643-31232	J2700-001001	50	J002001
01643-31232	K0210-002031	24	K012032
01643-31232	K0210-002031	38	K012032
01643-31232	K0210-002052	4	K012053
01643-31232	K0210-006031	24	K015032
01643-31232	K0210-006031	38	K015032

PARTS Nº	FIG. Nº	INDEX	PAGE
01643-31232	K0210-006052	4	K015053
01643-31232	K0230-001001	42	K016001
01643-31232	K0230-001001	46	K016001
01643-31232	K0230-002004	19	K017004
01643-31232	K0230-002004	23	K017004
01643-31232	K0710-001001	3	K019001
01643-31232	K2810-001001	10	K025001
01643-31232	K2810-001001	12	K025001
01643-31232	K2810-001001	15	K025001
01643-31232	K2810-001001	18	K025001
01643-31232	M2141-001002	10	M002002
01643-31232	M2141-001002	13	M002002
01643-31232	M2141-001002	16	M002002
01643-31232	M2141-001002	3	M002002
01643-31232	M2141-001002	7	M002002
01643-31232	M2141-001005	17	M002005
01643-31232	M2141-001005A	18	M002006
01643-31232	M2141-001007	19	M002008
01643-31232	M2141-001008	11	M002009
01643-31232	M2141-001008	14	M002009
01643-31232	M2141-001008	21	M002009
01643-31232	M2141-001008	24	M002009
01643-31232	M2141-001009	5	M002010
01643-31232	M2141-002002	10	M003002
01643-31232	M2141-002002	13	M003002
01643-31232	M2141-002002	16	M003002
01643-31232	M2141-002002	3	M003002
01643-31232	M2141-002002	7	M003002
01643-31232	M2141-002005	18	M003006
01643-31232	M2141-002007	19	M003008
01643-31232	M2141-002008	11	M003009
01643-31232	M2141-002008	14	M003009
01643-31232	M2141-002008	21	M003009
01643-31232	M2141-002008	24	M003009
01643-31232	M2141-002009	5	M003010
01643-31232	R0110-001001	24	R001001
01643-31232	R0120-001001	19	R002001
01643-31232	R2101-001001	4	R012001
01643-31232	R2130-002001	10	R013001
01643-31232	R2130-002001	13	R013001
01643-31232	R2130-002001	15	R013001
01643-31232	R2130-002001	18	R013001
01643-31232	R2130-002001	21	R013001
01643-31232	R2130-002001	24	R013001
01643-31232	R2130-002001	3	R013001
01643-31232	R2130-002001	30	R013001
01643-31232	R2130-002001	33	R013001
01643-31232	R2130-002001	6	R013001
01643-31232	R2130-002001	8	R013001
01643-31232	R2130-002002	11	R013002
01643-31232	R2130-002002	13	R013002
01643-31232	R2130-002002	16	R013002
01643-31232	R2130-002002	18	R013002
01643-31232	R2130-002002	21	R013002
01643-31232	R2130-002002	24	R013002
01643-31232	R2130-002002	27	R013002
01643-31232	R2130-002002	3	R013002
01643-31232	R2130-002002	30	R013002
01643-31232	R2130-002002	36	R013002
01643-31232	R2130-002002	39	R013002
01643-31232	R2130-002002	6	R013002
01643-31232	R2130-002002	9	R013002
01643-31232	R2200-003001	12	R016001
01643-31232	R2200-003001	15	R016001
01643-31232	T2110-001001	3	T001001
01643-31232	T2115-001002	25	T002002
01643-31232	T2120-001001	16	T003001
01643-31232	T2120-002001	16	T004001
01643-31232	T2160-001001	13	T008001
01643-31232	T2160-001001	5	T008001
01643-31232	T2160-001002	19	T008002
01643-31232	T2160-001002	23	T008002
01643-31232	T2160-001003	14	T008003
01643-31232	T2160-001003	16	T008003
01643-31232	T2160-001003	19	T008003
01643-31232	T2160-001003	22	T008003
01643-31232	T2160-001003	3	T008003
01643-31232	T2400-001001	27	T009001
01643-31232	T2400-001002	13	T009002
01643-31232	T2400-001002	22	T009002
01643-31232	T2400-001002	25	T009002
01643-31232	T2400-001002	29	T009002
01643-31445	F2380-002003	12	F002003
01643-31445	F2380-002010	12	F002010
01643-31445	H0120-001013	4	H002013
01643-31445	H0120-002011	4	H003011
01643-31445	H0210-002013	12	H004013
01643-31445	K2120-001001	16	K021001
01643-31445	T2400-001001	13	T009001
01643-31645	A2250-501001	4	B007001
01643-31645	B0600-001001	7	B011001
01643-31645	C0100-001001	22	C001001
01643-31645	C0100-001005	2	C001005
01643-31645	F2380-002002	22	F002002
01643-31645	F2380-002009	22	F002009
01643-31645	H0210-002010	4	H004010
01643-31645	H0210-002017	7	H004017
01643-31645	H0340-001003	14	H007003
01643-31645	H0340-001003	2	H007003
01643-31645	J2100-002001	17	J001001
01643-31645	J2700-001001	14	J002001
01643-31645	K0210-002024	2	K012025
01643-31645	K0210-006024	2	K015025
01643-31645	K2120-001001	18	K021001
01643-31645	M2141-001008	19	M002009
01643-31645	M2141-001008	2	M002009
01643-31645	M2141-001008	4	M002009
01643-31645	M2141-001008	9	M002009
01643-31645	M2141-002008	19	M003009
01643-31645	M2141-002008	2	M003009
01643-31645	M2141-002008	4	M003009
01643-31645	M2141-002008	9	M003009
01643-31645	R0110-001001	14	R001001
01643-31645	R0110-001001	19	R001001
01643-31645	R0120-001001	29	R002001
01643-31645	R0200-001001	11	R003001
01643-31645	R0200-001002	11	R003002
01643-31645	R2130-002001	26	R013001
01643-31645	R2130-002002	32	R013002
01643-31645	R2200-002001	21	R015001
01643-31645	R2200-003001	31	R016001
01643-31645	T2120-001001	11	T003001
01643-31645	T2120-002001	11	T004001
01643-31845	R2200-003001	7	R016001
01643-32060	B0100-002001	4	B008001
01643-32060	D0100-002002	28	D002002
01643-32060	F2380-002001	2	F002001
01643-32060	F2380-002001	4	F002001
01643-32060	H0100-001006	2	H001006
01643-32060	H0100-001006	4	H001006
01643-32060	H0210-002002	7	H004002
01643-32060	H0210-002012	1	H004012
01643-32060	J2700-001001	2	J002001
01643-32060	J2700-001001	21	J002001
01643-32060	J2700-001001	24	J002001
01643-32060	J2700-001001	39	J002001
01643-32060	K0210-002024	12	K012025
01643-32060	K0210-006024	7	K015025
01643-32060	K2120-001001	4	K021001
01643-32060	R0300-002001	14	R005001
01643-32060	T2115-001001	11	T002001
01643-32060	T2115-001001	7	T002001
01643-32460	B0100-002001	8	B008001
01643-32460	K2120-001001	13	K021001
01643-32460	K2120-001001	20	K021001
01643-32460	M2240-001001	3	M005001
01643-32460	M2240-002001	3	M004001
01643-32460	T2115-001001	5	T002001
01643-32460	T2400-001002	9	T009002
01643-32460	T2810-001001	10	T011001

PARTS Nº	FIG. Nº	INDEX	PAGE
01643-32460	T2810-002001	15	T012001
01643-32460	T2810-002001	8	T012001
01643-33080	T2400-001002	5	T009002
01643-33080	T2810-002001	17	T012001
01643-51032	H0120-001014	8	H002014
01643-51032	H0120-002012	8	H003012
01643-51032	H0210-002017	16	H004017
01643-51032	H0310-001002	11	H005002
01643-51232	H0210-002017	12	H004017
01643-51232	H0340-001003	26	H007003
01643-51232	H0340-001003	31	H007003
01643-51232	H0340-001003	37	H007003
01643-51232	H0340-001003	42	H007003
01643-51232	H1310-001002	17	H008002
01643-51232	T2115-001002	2	T002002
01643-51232	T2400-001001	19	T009001
01643-51232	T2400-001001	23	T009001
01643-51232	T2400-001001	5	T009001
01643-51232	T2400-001001	9	T009001
01643-52060	F2380-002002	19	F002002
01643-52060	F2380-002009	19	F002009
01643-70623	K0210-002002	17	K012002
01643-70623	K0210-002002	26	K012002
01643-70623	K0210-002002	28	K012002
01643-70623	K0210-002002	31	K012002
01643-70623	K0210-002002	36	K012002
01643-70623	K0210-002002	42	K012002
01643-70623	K0210-002002	45	K012002
01643-70623	K0210-002002	8	K012002
01643-70623	K0210-002003	10	K012003
01643-70623	K0210-002003	28	K012003
01643-70623	K0210-002003	4	K012003
01643-70623	K0210-002004	17	K012004
01643-70623	K0210-002004	26	K012004
01643-70623	K0210-002004	28	K012004
01643-70623	K0210-002004	31	K012004
01643-70623	K0210-002004	36	K012004
01643-70623	K0210-002004	42	K012004
01643-70623	K0210-002004	45	K012004
01643-70623	K0210-002004	6	K012004
01643-70623	K0210-002004	8	K012004
01643-70623	K0210-002005	10	K012005
01643-70623	K0210-002005	28	K012005
01643-70623	K0210-002005	4	K012005
01643-70623	K0210-002007	7	K012007
01643-70623	K0210-002011	3	K012011
01643-70623	K0210-002014	9	K012014
01643-70623	K0210-002016	6	K012016
01643-70623	K0210-002019	12	K012019
01643-70623	K0210-002019	12	K012020
01643-70623	K0210-002031	43	K012032
01643-70623	K0210-002040	20	K012041
01643-70623	K0210-002048	6	K012049
01643-70623	K0210-006002	17	K015002
01643-70623	K0210-006002	26	K015002
01643-70623	K0210-006002	28	K015002
01643-70623	K0210-006002	31	K015002
01643-70623	K0210-006002	36	K015002
01643-70623	K0210-006002	42	K015002
01643-70623	K0210-006002	45	K015002
01643-70623	K0210-006002	6	K015002
01643-70623	K0210-006002	8	K015002
01643-70623	K0210-006003	10	K015003
01643-70623	K0210-006003	28	K015003
01643-70623	K0210-006003	4	K015003
01643-70623	K0210-006004	17	K015004
01643-70623	K0210-006004	26	K015004
01643-70623	K0210-006004	28	K015004
01643-70623	K0210-006004	31	K015004
01643-70623	K0210-006004	36	K015004
01643-70623	K0210-006004	42	K015004
01643-70623	K0210-006004	45	K015004
01643-70623	K0210-006004	8	K015004
01643-70623	K0210-006005	10	K015005
01643-70623	K0210-006005	28	K015005
01643-70623	K0210-006005	4	K015005
01643-70623	K0210-006007	7	K015007
01643-70623	K0210-006011	3	K015011
01643-70623	K0210-006014	9	K015014
01643-70623	K0210-006016	6	K015016
01643-70623	K0210-006019	12	K015019
01643-70623	K0210-006031	43	K015032
01643-70623	K0210-006040	20	K015041
01643-70623	K0210-006048	6	K015049
01643-70623	K0230-001001	30	K016001
01643-70623	K0230-002003	10	K017003
01643-70623	K0230-002003	4	K017003
01643-70623	K0230-002004	7	K017004
01643-70623	K0310-001001	4	K018001
01643-70623	K2520-001003	15	K024003
01643-70823	C0100-001006	15	C001006
01643-70823	E0210-001001	9	E003001
01643-70823	K0110-001002	10	K001002
01643-70823	K0110-001002	13	K001002
01643-70823	K0110-001002	18	K001002
01643-70823	K0110-001002	2	K001002
01643-70823	K0110-005002	10	K005002
01643-70823	K0110-005002	13	K005002
01643-70823	K0110-005002	18	K005002
01643-70823	K0110-005002	2	K005002
01643-70823	K0160-001001	5	K010001
01643-70823	K0160-002001	5	K011001
01643-70823	K0210-002002	22	K012002
01643-70823	K0210-002002	39	K012002
01643-70823	K0210-002003	13	K012003
01643-70823	K0210-002004	22	K012004
01643-70823	K0210-002004	39	K012004
01643-70823	K0210-002005	13	K012005
01643-70823	K0210-002007	31	K012007
01643-70823	K0210-002013	15	K012013
01643-70823	K0210-002014	13	K012014
01643-70823	K0210-002018	2	K012018
01643-70823	K0210-002021	4	K012022
01643-70823	K0210-002023	8	K012024
01643-70823	K0210-002024	10	K012025
01643-70823	K0210-002024	4	K012025
01643-70823	K0210-002024	7	K012025
01643-70823	K0210-002029	21	K012030
01643-70823	K0210-002029	24	K012030
01643-70823	K0210-002029	26	K012030
01643-70823	K0210-002029	5	K012030
01643-70823	K0210-002029	7	K012030
01643-70823	K0210-002030	10	K012031
01643-70823	K0210-002030	14	K012031
01643-70823	K0210-002030	17	K012031
01643-70823	K0210-002030	3	K012031
01643-70823	K0210-002030	30	K012031
01643-70823	K0210-002030	33	K012031
01643-70823	K0210-002030	6	K012031
01643-70823	K0210-002039	3	K012040
01643-70823	K0210-002040	13	K012041
01643-70823	K0210-002040	24	K012041
01643-70823	K0210-002040	7	K012041
01643-70823	K0210-002046	10	K012047
01643-70823	K0210-002046	17	K012047
01643-70823	K0210-002048	17	K012049
01643-70823	K0210-002048	3	K012049
01643-70823	K0210-002048	32	K012049
01643-70823	K0210-002048	9	K012049
01643-70823	K0210-002049	10	K012050
01643-70823	K0210-002049	15	K012050
01643-70823	K0210-002049	20	K012050
01643-70823	K0210-002049	24	K012050
01643-70823	K0210-002049	6	K012050
01643-70823	K0210-002051	6	K012052
01643-70823	K0210-002052	11	K012053
01643-70823	K0210-006002	22	K015002
01643-70823	K0210-006002	39	K015002
01643-70823	K0210-006003	13	K015003

PARTS Nº	FIG. Nº	INDEX	PAGE
01643-70823	K0210-006004	22	K015004
01643-70823	K0210-006004	39	K015004
01643-70823	K0210-006005	13	K015005
01643-70823	K0210-006007	31	K015007
01643-70823	K0210-006013	15	K015013
01643-70823	K0210-006014	13	K015014
01643-70823	K0210-006018	2	K015018
01643-70823	K0210-006021	4	K015022
01643-70823	K0210-006023	8	K015024
01643-70823	K0210-006024	4	K015025
01643-70823	K0210-006029	12	K015030
01643-70823	K0210-006029	21	K015030
01643-70823	K0210-006029	24	K015030
01643-70823	K0210-006029	26	K015030
01643-70823	K0210-006029	5	K015030
01643-70823	K0210-006029	7	K015030
01643-70823	K0210-006030	10	K015031
01643-70823	K0210-006030	14	K015031
01643-70823	K0210-006030	17	K015031
01643-70823	K0210-006030	3	K015031
01643-70823	K0210-006030	30	K015031
01643-70823	K0210-006030	33	K015031
01643-70823	K0210-006030	6	K015031
01643-70823	K0210-006039	3	K015040
01643-70823	K0210-006040	13	K015041
01643-70823	K0210-006040	24	K015041
01643-70823	K0210-006040	7	K015041
01643-70823	K0210-006046	10	K015047
01643-70823	K0210-006046	17	K015047
01643-70823	K0210-006048	17	K015049
01643-70823	K0210-006048	3	K015049
01643-70823	K0210-006048	32	K015049
01643-70823	K0210-006048	9	K015049
01643-70823	K0210-006049	10	K015050
01643-70823	K0210-006049	15	K015050
01643-70823	K0210-006049	20	K015050
01643-70823	K0210-006049	24	K015050
01643-70823	K0210-006049	6	K015050
01643-70823	K0210-006051	6	K015052
01643-70823	K0210-006052	11	K015053
01643-70823	K0210-006053	12	K015054
01643-70823	K0230-001001	19	K016001
01643-70823	K0230-001001	3	K016001
01643-70823	K0230-001001	9	K016001
01643-70823	K0230-002001	13	K017001
01643-70823	K0230-002001	3	K017001
01643-70823	K0230-002002	46	K017002
01643-70823	K0230-002002	49	K017002
01643-70823	K0230-002003	6	K017003
01643-70823	K2520-001003	12	K024003
01643-70823	M2110-001001	9	M001001
01643-71032	A1610-501001	14	B005001
01643-71032	A1610-501001	3	B005001
01643-71032	C0100-001006	18	C001006
01643-71032	C0100-001006	27	C001006
01643-71032	C0100-001006	7	C001006
01643-71032	E0420-001001	3	E004001
01643-71032	E0420-001001	6	E004001
01643-71032	K0210-002006	2	K012006
01643-71032	K0210-002029	10	K012030
01643-71032	K0210-002029	19	K012030
01643-71032	K0210-002029	34	K012030
01643-71032	K0210-002045	12	K012046
01643-71032	K0210-002050	12	K012051
01643-71032	K0210-002050	6	K012051
01643-71032	K0210-006006	2	K015006
01643-71032	K0210-006029	10	K015030
01643-71032	K0210-006029	19	K015030
01643-71032	K0210-006029	34	K015030
01643-71032	K0210-006045	12	K015046
01643-71032	K0210-006050	12	K015051
01643-71032	K0210-006050	6	K015051
01643-71032	K0230-001001	12	K016001
01643-71032	K0230-001001	14	K016001
01643-71032	K0230-001001	21	K016001
01643-71032	K0230-001001	33	K016001
01643-71032	K0230-001001	38	K016001
01643-71032	K0230-002002	15	K017002
01643-71032	K0230-002002	18	K017002
01643-71032	K0230-002002	26	K017002
01643-71032	K0230-002002	51	K017002
01643-71032	K0230-002003	12	K017003
01643-71032	K0230-002003	14	K017003
01643-71032	K0230-002003	27	K017003
01643-71032	K0230-002004	10	K017004
01643-71032	K0230-002004	15	K017004
01643-71232	C0100-001005	14	C001005
01643-71232	C0100-001006	30	C001006
01643-71232	K0110-001002	7	K001002
01643-71232	K0110-002003	5	K002003
01643-71232	K0110-005002	7	K005002
01643-71232	K0210-002007	14	K012007
01643-71232	K0210-002007	3	K012007
01643-71232	K0210-006007	14	K015007
01643-71232	K0210-006007	3	K015007
01643-71232	K0230-001001	25	K016001
01643-71232	K0230-002004	4	K017004
01643-71232	K2810-001001	3	K025001
01643-71232	K2810-001001	6	K025001
01643-71232	M2110-001001	13	M001001
01643-71232	M2110-001001	5	M001001
01643-71645	K2120-001001	9	K021001
01803-01824	F2380-002008	3	F002008
01803-01824	F2380-002015	3	F002015
02090-11265	T2120-001001	8	T003001
02090-11265	T2120-002001	8	T004001
02290-11219	T2120-001001	9	T003001
02290-11219	T2120-002001	9	T004001
02763-00333	D0100-001001	50	D001001
02763-00333	D0100-002001	50	D002001
02763-00333	D0200-001001	32	D003001
02774-00304	H0210-002012	29	H004012
02774-003A4	H0210-002012	32	H004012
02774-003A4	H1840-001005	14	H009005
02776-00606	H2250-002002	37	H014002
02781-00313	D0200-001001	16	D003001
02781-00315	D0200-001001	13	D003001
02781-00315	D0200-001002	10	D003002
02781-00315	H0340-001003	4	H007003
02781-00522	H1840-001010	4	H009010
02782-10210	H0120-001015	11	H002015
02782-10212	H0120-001015	1	H002015
02782-10212	H0120-002013	1	H003013
02782-10214	H2250-002002	18	H014002
02782-1021A	H0210-002017	24	H004017
02782-10311	D0200-001002	13	D003002
02782-10311	H0210-002012	15	H004012
02782-10311	H0210-002012	26	H004012
02782-10311	H0210-002017	28	H004017
02782-10311	H1840-001004	14	H009004
02782-10312	H0120-001015	4	H002015
02782-10312	H0120-002013	4	H003013
02782-10313	D0100-001001	15	D001001
02782-10313	D0100-002001	15	D002001
02782-10315	H0210-002012	23	H004012
02782-10315	H1840-001004	11	H009004
02782-10315	H1840-001005	1	H009005
02782-10422	H2210-001003	14	H010003
02782-10422	H2230-001001	8	H012001
02782-10424	H2230-001001	5	H012001
02782-10516	H2210-001003	1	H010003
02782-10516	H2210-001003	9	H010003
02782-10518	H0120-001014	33	H002014
02782-10518	H0120-002012	33	H003012
02782-10522	C0100-001004	6	C001004
02782-10522	D0100-002002	21	D002002
02782-10522	D0100-002003	10	D002003
02782-10522	H2210-001003	17	H010003
02782-10628	H2250-002002	15	H014002
02783-10315	H0120-001014	27	H002014

PARTS Nº	FIG. Nº	INDEX	PAGE
02783-10315	H0120-002012	27	H003012
02783-10315	H0340-001003	7	H007003
02783-10522	H0120-001014	30	H002014
02783-10522	H0120-001015	18	H002015
02783-10522	H0120-002012	30	H003012
02789-10210	H0120-002013	11	H003013
02789-10210	H2250-002002	38	H014002
02789-10210	H2250-002003	9	H014003
02789-10628	H2250-002003	10	H014003
02896-11008	H0120-001014	11	H002014
02896-11008	H0120-001015	12	H002015
02896-11008	H0120-001015	2	H002015
02896-11008	H0120-001015	8	H002015
02896-11008	H0120-002012	11	H003012
02896-11008	H0120-002013	2	H003013
02896-11008	H0120-002013	8	H003013
02896-11008	H0210-002017	26	H004017
02896-11008	H0210-002017	40	H004017
02896-11008	H0210-002017	47	H004017
02896-11008	H0340-001003	37	H007003
02896-11008	H0340-001003	43	H007003
02896-11008	H0340-001003	50	H007003
02896-11008	H2250-001001	2	H013001
02896-11008	H2250-002001	2	H014001
02896-11008	H2250-002002	19	H014002
02896-11008	H2250-002002	4	H014002
02896-11008	K2520-001003	21	K024003
02896-11008	K2520-001003	24	K024003
02896-11008	K2520-001003	27	K024003
02896-11009	D0100-001001	17	D001001
02896-11009	D0100-002001	17	D002001
02896-11009	D0200-001001	14	D003001
02896-11009	D0200-001001	18	D003001
02896-11009	D0200-001001	24	D003001
02896-11009	D0200-001001	28	D003001
02896-11009	D0200-001001	7	D003001
02896-11009	D0200-001002	12	D003002
02896-11009	D0200-001002	14	D003002
02896-11009	D0200-001002	26	D003002
02896-11009	H0100-001001	5	H001001
02896-11009	H0120-001014	16	H002014
02896-11009	H0120-001014	28	H002014
02896-11009	H0120-001015	5	H002015
02896-11009	H0120-001015	9	H002015
02896-11009	H0120-002012	16	H003012
02896-11009	H0120-002012	28	H003012
02896-11009	H0120-002013	5	H003013
02896-11009	H0120-002013	9	H003013
02896-11009	H0210-002012	17	H004012
02896-11009	H0210-002012	24	H004012
02896-11009	H0210-002012	28	H004012
02896-11009	H0210-002012	9	H004012
02896-11009	H0210-002017	30	H004017
02896-11009	H0320-001001	12	H006001
02896-11009	H0320-001001	4	H006001
02896-11009	H0340-001003	13	H007003
02896-11009	H0340-001003	6	H007003
02896-11009	H0340-001003	9	H007003
02896-11009	H1840-001003	4	H009003
02896-11009	H1840-001004	10	H009004
02896-11009	H1840-001004	12	H009004
02896-11009	H1840-001004	15	H009004
02896-11009	H1840-001005	2	H009005
02896-11009	H1840-001006	4	H009006
02896-11009	H2230-001001	31	H012001
02896-11009	H2230-001001	4	H012001
02896-11009	H2230-001001	43	H012001
02896-11009	H2250-001001	4	H013001
02896-11009	H2250-002001	4	H014001
02896-11009	K2520-001003	18	K024003
02896-11012	H0120-001014	25	H002014
02896-11012	H0120-002012	25	H003012
02896-11012	H2210-001003	13	H010003
02896-11012	H2210-001003	16	H010003
02896-11012	H2210-001003	5	H010003
02896-11012	H2210-001003	8	H010003
02896-11012	H2230-001001	10	H012001
02896-11012	H2230-001001	7	H012001
02896-11015	C0100-001004	10	C001004
02896-11015	C0100-001004	13	C001004
02896-11015	C0100-001004	5	C001004
02896-11015	C0100-001004	8	C001004
02896-11015	C0103-001001	22	C003001
02896-11015	D0100-002002	22	D002002
02896-11015	D0100-002003	11	D002003
02896-11015	H0120-001014	31	H002014
02896-11015	H0120-001014	36	H002014
02896-11015	H0120-001015	19	H002015
02896-11015	H0120-002012	31	H003012
02896-11015	H0120-002012	36	H003012
02896-11015	H0210-002017	23	H004017
02896-11015	H0320-001001	13	H006001
02896-11015	H1840-001010	6	H009010
02896-11015	H2210-001003	11	H010003
02896-11015	H2210-001003	19	H010003
02896-11015	H2210-001003	3	H010003
02896-11015	H2250-001001	30	H013001
02896-11015	H2250-001001	34	H013001
02896-11015	H2250-002002	5	H014002
02896-11015	H2250-002003	4	H014003
02896-11015	H2250-002003	8	H014003
02896-11015	T2400-001002	11	T009002
02896-11018	H2250-002002	16	H014002
02896-11018	H2250-002002	6	H014002
02896-61009	KIT	K03	Y001001
02896-61009	KIT	K04	Y001001
02896-61009	T2150-001001	2	T006001
02896-61009	T2153-001001	2	T007001
02896-61012	KIT	K02	Y001001
02896-61012	T2140-001001	2	T005001
02896-61012	T2140-001001	23	T005001
02896-61012	T2140-001002	2	T005002
02896-61012	T2140-001002	23	T005002
02896-61015	KIT	K05	Y001001
02896-61015	T2460-001001	2	T010001
02896-61015	T2460-001001	23	T010001
04010-00516	K0210-002007	28	K012007
04010-00516	K0210-006007	28	K015007
04010-00722	C0100-001004	15	C001004
04020-00616	C0100-001003	2	C001003
04020-00616	H0210-002016	5	H004016
04020-01024	H0210-002013	10	H004013
04020-01024	H0210-002018	13	H004018
04020-01228	H0210-002002	4	H004002
04020-01434	F2380-002005	25	F002005
04020-01434	F2380-002012	25	F002012
04050-03020	T2810-001001	8	T011001
04050-03025	T2810-002001	11	T012001
04050-10060	T2400-001001	30	T009001
04050-11612	K0210-002002	19	K012002
04050-11612	K0210-002002	30	K012002
04050-11612	K0210-002002	33	K012002
04050-11612	K0210-002002	9	K012002
04050-11612	K0210-002004	19	K012004
04050-11612	K0210-002004	30	K012004
04050-11612	K0210-002004	33	K012004
04050-11612	K0210-002004	9	K012004
04050-11612	K0210-002007	32	K012007
04050-11612	K0210-002030	22	K012031
04050-11612	K0210-006002	19	K015002
04050-11612	K0210-006002	30	K015002
04050-11612	K0210-006002	33	K015002
04050-11612	K0210-006002	9	K015002
04050-11612	K0210-006004	19	K015004
04050-11612	K0210-006004	30	K015004
04050-11612	K0210-006004	33	K015004
04050-11612	K0210-006004	9	K015004
04050-11612	K0210-006007	32	K015007
04050-11612	K0210-006030	22	K015031
04050-12012	K0210-002002	24	K012002

PARTS Nº	FIG. Nº	INDEX	PAGE
04050-12012	K0210-002004	24	K012004
04050-12012	K0210-006002	24	K015002
04050-12012	K0210-006004	24	K015004
04050-13020	K0210-002041	36	K012042
04050-13020	K0210-006041	36	K015042
04050-13020	M2110-001001	24	M001001
04050-14025	M2110-001001	25	M001001
04050-15035	C0100-001006	10	C001006
04064-01610	K0210-002041	8	K012042
04064-01610	K0210-006041	8	K015042
04064-04518	R0120-001001	20	R002001
04064-06525	F2380-002006	6	F002006
04064-06525	F2380-002013	6	F002013
04065-01054	H0210-002007	6	H004007
04065-01104	T2150-001001	5	T006001
04065-01104	T2150-001001	8	T006001
04065-01104	T2153-001001	5	T007001
04065-01104	T2153-001001	8	T007001
04065-01154	R0300-002001	11	R005001
04065-02012	H0210-002017	4	H004017
04065-03212	C0100-001003	17	C001003
04065-04018	H0210-002018	9	H004018
04065-04518	C0100-001003	10	C001003
04065-04818	H0210-002014	6	H004014
04065-05520	H0210-002003	12	H004003
04065-05520	H0210-002007	10	H004007
04065-06825	H0210-002013	28	H004013
04065-07825	F2380-002006	8	F002006
04065-07825	F2380-002013	8	F002013
04065-08530	J2700-001001	9	J002001
04065-09030	T2115-001002	18	T002002
04077-00090	R0120-001001	3	R002001
04082-00212	T2115-001002	3	T002002
04082-00212	T2400-001001	17	T009001
04082-00212	T2400-001001	21	T009001
04082-00212	T2400-001001	3	T009001
04082-00212	T2400-001001	7	T009001
04082-00312	J2700-001001	17	J002001
04082-00514	T2400-001001	11	T009001
04205-10622	K0210-002002	7	K012002
04205-10622	K0210-002004	7	K012004
04205-10622	K0210-006002	7	K015002
04205-10622	K0210-006004	7	K015004
04205-11035	M2110-001001	26	M001001
04205-11435	M2110-001001	28	M001001
04250-81056	K0210-002041	23	K012042
04250-81056	K0210-006041	23	K015042
04260-00635	F2380-002002	17	F002002
04260-00635	F2380-002009	17	F002009
04260-01270	H0210-002013	21	H004013
04260-01905	F2380-002003	10	F002003
04260-01905	F2380-002010	10	F002010
04418-13060	T2120-001001	18	T003001
04418-13060	T2120-002001	18	T004001
04418-13060	T2400-001001	37	T009001
04418-13060	U0100-001001	16	U001001
04418-13060	U0100-002001	16	U002001
04418-13060	U0520-001001	1	U006001
04418-13060	U0520-003001	1	U007001
04434-50510	D0100-001002	5	D001002
04434-50510	D0100-002002	5	D002002
04434-50608	K0110-001002	15	K001002
04434-50608	K0110-001002	16	K001002
04434-50608	K0110-005002	15	K005002
04434-50608	K0110-005002	16	K005002
04434-50608	K0160-001001	3	K010001
04434-50608	K0160-002001	3	K011001
04434-50610	E0200-001001	10	E002001
04434-50610	E0200-001001	13	E002001
04434-50610	E0200-001001	16	E002001
04434-50610	E0210-001001	11	E003001
04434-50610	E0420-001001	4	E004001
04434-50610	K0230-002002	16	K017002
04434-50808	K0110-001002	8	K001002
04434-50808	K0110-005002	8	K005002
04434-50810	K0210-002037	9	K012038
04434-50810	K0210-002041	38	K012042
04434-50810	K0210-006037	9	K015038
04434-50810	K0210-006041	38	K015042
04434-50810	K0230-002002	20	K017002
04434-50810	K0230-002002	24	K017002
04434-51008	D0200-001002	20	D003002
04434-51008	K0210-002013	13	K012013
04434-51008	K0210-006013	13	K015013
04434-51010	J2700-001001	43	J002001
04434-51010	K0210-002028	36	K012029
04434-51010	K0210-002028	41	K012029
04434-51010	K0210-002044	7	K012045
04434-51010	K0210-002045	10	K012046
04434-51010	K0210-006028	36	K015029
04434-51010	K0210-006028	41	K015029
04434-51010	K0210-006044	7	K015045
04434-51010	K0210-006045	10	K015046
04434-51010	K0230-002002	19	K017002
04434-51010	K2910-001001	14	K026001
04434-51010	M2141-001007	9	M002008
04434-51010	M2141-002007	9	M003008
04434-51208	K0210-002028	33	K012029
04434-51208	K0210-006028	33	K015029
04434-51210	C0100-001001	32	C001001
04434-51210	H0340-001001	27	H007001
04434-51210	H0340-001001	33	H007001
04434-51210	H0340-001001	38	H007001
04434-51210	H0340-001001	7	H007001
04434-51210	H0340-001003	44	H007003
04434-51210	H0340-001003	56	H007003
04434-51210	K0210-002028	27	K012029
04434-51210	K0210-002028	30	K012029
04434-51210	K0210-006028	27	K015029
04434-51210	K0210-006028	30	K015029
04434-51212	J2700-001001	32	J002001
04434-51310	K0210-002037	31	K012038
04434-51310	K0210-006037	31	K015038
04434-51410	A1410-501001	3	B001001
04434-51410	H2250-002001	15	H014001
04434-51410	H2250-002001	21	H014001
04434-51410	H2250-002002	11	H014002
04434-51410	K0210-002031	30	K012032
04434-51410	K0210-002043	21	K012044
04434-51410	K0210-002044	23	K012045
04434-51410	K0210-002045	7	K012046
04434-51410	K0210-002051	10	K012052
04434-51410	K0210-006031	30	K015032
04434-51410	K0210-006043	21	K015044
04434-51410	K0210-006044	23	K015045
04434-51410	K0210-006045	7	K015046
04434-51410	K0210-006051	10	K015052
04434-51410	K0230-002002	2	K017002
04434-51510	H0100-001005	20	H001005
04434-51510	H0100-001005	23	H001005
04434-51510	H0340-001001	26	H007001
04434-51510	H0340-001001	30	H007001
04434-51510	H0340-001002	30	H007002
04434-51510	H0340-001003	19	H007003
04434-51510	H0340-001003	29	H007003
04434-51510	H0340-001003	33	H007003
04434-51510	H1840-001004	22	H009004
04434-51510	H1840-001004	26	H009004
04434-51510	H1840-001004	29	H009004
04434-51510	H1840-001005	16	H009005
04434-51510	H1840-001005	5	H009005
04434-51510	H1840-001005	8	H009005
04434-51510	H1840-001006	12	H009006
04434-51510	H1840-001006	15	H009006
04434-51510	H1840-001006	25	H009006
04434-51510	H1840-001006	8	H009006
04434-51608	K0210-002028	55	K012029
04434-51608	K0210-006028	55	K015029
04434-51610	C0101-001001	7A	C002001
04434-51610	H1840-001004	26	H009004

PARTS Nº	FIG. Nº	INDEX	PAGE
04434-51610	H1840-001004	29	H009004
04434-51610	K0210-002028	10	K012029
04434-51610	K0210-002028	16	K012029
04434-51610	K0210-002028	17	K012029
04434-51610	K0210-002028	26	K012029
04434-51610	K0210-002028	4	K012029
04434-51610	K0210-002028	49	K012029
04434-51610	K0210-002028	52	K012029
04434-51610	K0210-006028	10	K015029
04434-51610	K0210-006028	16	K015029
04434-51610	K0210-006028	17	K015029
04434-51610	K0210-006028	26	K015029
04434-51610	K0210-006028	4	K015029
04434-51610	K0210-006028	49	K015029
04434-51610	K0210-006028	52	K015029
04434-51710	B0500-001002	35	B010002
04434-51710	E0200-001001	34	E002001
04434-51710	E0200-001001	38	E002001
04434-51710	H0340-001001	20	H007001
04434-51710	H0340-001001	36	H007001
04434-51710	H2250-002001	12	H014001
04434-51710	K0210-002013	12	K012013
04434-51710	K0210-002015	11	K012015
04434-51710	K0210-002044	16	K012045
04434-51710	K0210-006013	12	K015013
04434-51710	K0210-006015	11	K015015
04434-51710	K0210-006044	16	K015045
04434-51710	K0230-002002	5	K017002
04434-51710	K2910-001001	15	K026001
04434-51710	K2910-001001	26	K026001
04434-51810	C0102-001002	13	C002002
04434-51910	C0102-001002	22	C002002
04434-51910	D0200-001001	35	D003001
04434-51910	D0200-001001	42	D003001
04434-51910	D0200-001001	46	D003001
04434-51910	D0200-001002	39	D003002
04434-51910	H0340-001001	17	H007001
04434-51910	K0210-002045	16	K012046
04434-51910	K0210-006045	16	K015046
04434-52110	E0200-001001	5	E002001
04434-52110	H0210-002012	19	H004012
04434-52110	H0340-001001	13	H007001
04434-52110	H0340-001001	22	H007001
04434-52110	H1840-001005	12	H009005
04434-52110	H1840-001006	18	H009006
04434-52110	H1840-001006	21	H009006
04434-52310	B0500-001001	19	B010001
04434-52310	C0103-001001	44	C003001
04434-52310	C0103-001001	47	C003001
04434-52310	E0210-001001	28	E003001
04434-52310	E0210-001001	59	E003001
04434-52511	K0210-002043	28	K012044
04434-52511	K0210-006043	28	K015044
04434-52711	D0200-001001	38	D003001
04434-52711	D0200-001002	35	D003002
04434-52711	E0200-001002	10	E002002
04434-52711	E0200-001002	14	E002002
04434-52711	E0210-001001	35	E003001
04434-52711	E0210-001001	44	E003001
04434-52711	H2210-001004	28	H010004
04434-52711	H2210-001005	17	H010005
04434-52711	K0210-002028	42	K012029
04434-52711	K0210-002031	10	K012032
04434-52711	K0210-002043	14	K012044
04434-52711	K0210-006028	42	K015029
04434-52711	K0210-006031	10	K015032
04434-52711	K0210-006043	14	K015044
04434-52711	K0230-002002	9	K017002
04434-52711	K2910-001001	24	K026001
04434-53211	C0103-001001	41	C003001
04434-53211	E0200-001001	28	E002001
04434-53211	H0320-001001	30	H006001
04434-53211	K0210-002043	9	K012044
04434-53211	K0210-002045	13	K012046
04434-53211	K0210-006043	9	K015044
04434-53211	K0210-006045	13	K015046
04434-53211	K0710-001002	13	K019002
04434-53212	B0500-001001	11	B010001
04434-53212	B0500-001001	15	B010001
04434-53212	C0103-001001	37	C003001
04434-53411	B0500-001004	15	B010004
04434-53411	B0500-001004	19	B010004
04434-53411	K0210-002043	17	K012044
04434-53411	K0210-002044	10	K012045
04434-53411	K0210-002044	19	K012045
04434-53411	K0210-002044	4	K012045
04434-53411	K0210-002045	4	K012046
04434-53411	K0210-006043	17	K015044
04434-53411	K0210-006044	10	K015045
04434-53411	K0210-006044	19	K015045
04434-53411	K0210-006044	4	K015045
04434-53411	K0210-006045	4	K015046
04434-53412	C0103-001001	33	C003001
04435-50810	K0210-002041	37	K012042
04435-50810	K0210-006041	37	K015042
04435-51008	D0100-002003	18	D002003
04435-51210	H2250-002001	14	H014001
04435-51210	H2250-002001	22	H014001
04435-51210	H2250-002002	26	H014002
04435-51212	H2250-002002	23	H014002
04435-51610	K0210-002028	20	K012029
04435-51610	K0210-006028	20	K015029
04435-51910	D0200-001001	40	D003001
04435-51910	D0200-001002	29	D003002
06124-02020	K0210-002035	4	K012036
06124-02020	K0210-002038	9	K012039
06124-02020	K0210-002041	6	K012042
06124-02020	K0210-006035	4	K015036
06124-02020	K0210-006038	9	K015039
06124-02020	K0210-006041	6	K015042
07000-02012	H1840-001001	2	H009001
07000-02014	H1840-001001	3	H009001
07000-02018	H1840-001001	5	H009001
07000-02055	R0200-001001	5	R003001
07000-02055	R0200-001002	5	R003002
07000-11003	H0120-001006	7	H002006
07000-11003	H0120-002006	7	H003006
07000-11006	H0120-001004	2	H002004
07000-11006	H0120-002004	2	H003004
07000-11007	H1840-001003	5	H009003
07000-11007	K0210-002029	2	K012030
07000-11007	K0210-006029	2	K015030
07000-11008	H0120-001001	8	H002001
07000-11008	H0120-001007	17	H002007
07000-11008	H0120-001011	5	H002011
07000-11008	H0120-002000	8	H003000
07000-11008	H0120-002007	17	H003007
07000-11009	H0120-001001	11	H002001
07000-11009	H0120-001007	19	H002007
07000-11009	H0120-001011	7	H002011
07000-11009	H0120-002000	11	H003000
07000-11009	H0120-002007	19	H003007
07000-12011	H0120-001001	10	H002001
07000-12011	H0120-001011	6	H002011
07000-12011	H0120-002000	10	H003000
07000-12011	H1840-001003	1	H009003
07000-12011	H1840-001003	6	H009003
07000-12011	K2520-001003	17	K024003
07000-12011	K2520-001003	20	K024003
07000-12011	K2520-001003	23	K024003
07000-12011	K2520-001003	26	K024003
07000-12014	H0120-001012	5	H002012
07000-12014	H0120-002010	5	H003010
07000-12016	H0120-001012	3	H002012
07000-12016	H0120-002010	3	H003010
07000-12016	H1840-001001	4	H009001
07000-12016	K0210-002029	3	K012030
07000-12016	K0210-006029	3	K015030
07000-12018	H0340-001003	17	H007003
07000-12018	H0340-001003	26	H007003

PARTS Nº	FIG. Nº	INDEX	PAGE
07000-12020	H0120-001001	7	H002001
07000-12020	H0120-001007	16	H002007
07000-12020	H0120-001011	3	H002011
07000-12020	H0120-002000	7	H003000
07000-12020	H0120-002007	16	H003007
07000-12055	R0110-001001	11	R001001
07000-12060	H0210-002017	11	H004017
07000-12080	H0320-001001	20	H006001
07000-12085	D0100-001001	19	D001001
07000-12085	D0100-001002	2	D001002
07000-12085	D0100-002001	19	D002001
07000-12085	D0100-002002	2	D002002
07000-12100	KIT	K02	Y001001
07000-12100	T2140-001001	9	T005001
07000-12100	T2140-001002	9	T005002
07000-12105	R0300-002001	5	R005001
07000-12110	KIT	K04	Y001001
07000-12110	T2153-001001	14	T007001
07000-12120	H0120-001001	5	H002001
07000-12120	H0120-001007	15	H002007
07000-12120	H0120-001011	4	H002011
07000-12120	H0120-002000	5	H003000
07000-12120	H0120-002007	15	H003007
07000-12120	KIT	K03	Y001001
07000-12120	T2150-001001	16	T006001
07000-12125	KIT	K05	Y001001
07000-12125	T2460-001001	12	T010001
07000-12135	H0100-001001	20	H001001
07000-12135	H0100-001001	23	H001001
07000-12135	H0100-001001	27	H001001
07000-12135	V0100-00101	2	V001001
07000-13024	H2210-001002	20	H010002
07000-13025	H0120-001013	5	H002013
07000-13025	H0120-002011	5	H003011
07000-13025	K0210-002007	29	K012007
07000-13025	K0210-006007	29	K015007
07000-13032	H0310-001002	13	H005002
07000-13032	H0320-001001	28	H006001
07000-13032	H2210-001002	4	H010002
07000-13035	H0120-001014	7	H002014
07000-13035	H0120-002012	7	H003012
07000-13038	H1840-001010	3	H009010
07000-13042	H0210-002017	15	H004017
07000-13050	KIT	K03	Y001001
07000-13050	KIT	K04	Y001001
07000-13050	T2150-001001	6	T006001
07000-13050	T2150-001001	9	T006001
07000-13050	T2153-001001	6	T007001
07000-13050	T2153-001001	9	T007001
07000-75495	F2380-002002	12	F002002
07000-75495	F2380-002009	12	F002009
07000-A2090	H0210-002005	5	H004005
07000-A2090	H0210-002009	5	H004009
07000-A2095	H0210-002003	8	H004003
07000-A2100	H0210-002017	5	H004017
07000-A2115	H0210-002001	6	H004001
07000-A2115	H0210-002006	6	H004006
07000-A2125	H0210-002017	2	H004017
07000-A3032	H0340-001002	17	H007002
07000-A3032	H0340-001002	26	H007002
07000-A5160	H0210-002010	2	H004010
07000-A5195	H0210-002002	5	H004002
07000-A5300	F2380-002005	22	F002005
07000-A5300	F2380-002012	22	F002012
07000-B1004	F2380-002005	18	F002005
07000-B1004	F2380-002012	18	F002012
07000-B1009	H0210-002013	8	H004013
07000-B1009	H0210-002016	3	H004016
07000-B1010	H0210-002004	29	H004004
07000-B1010	H0210-002005	3	H004005
07000-B1010	H0210-002008	29	H004008
07000-B1010	H0210-002009	3	H004009
07000-B2010	H0210-002004	20	H004004
07000-B2010	H0210-002008	20	H004008
07000-B2011	H0210-002014	14	H004014
07000-B2012	F2380-002005	10	F002005
07000-B2012	F2380-002012	10	F002012
07000-B2012	H0210-002002	14	H004002
07000-B2012	H0210-002004	14	H004004
07000-B2012	H0210-002008	14	H004008
07000-B2014	F2380-002005	23	F002005
07000-B2014	F2380-002005	3	F002005
07000-B2014	F2380-002012	23	F002012
07000-B2014	F2380-002012	3	F002012
07000-B2014	H0210-002016	2	H004016
07000-B2022	H0210-002002	15	H004002
07000-B2030	F2380-002005	5	F002005
07000-B2030	F2380-002012	5	F002012
07000-B2040	F2380-002007	13	F002007
07000-B2040	F2380-002014	13	F002014
07000-B2055	F2380-002005	14	F002005
07000-B2055	F2380-002005	9	F002005
07000-B2055	F2380-002012	14	F002012
07000-B2055	F2380-002012	9	F002012
07000-B2060	H0210-002013	26	H004013
07000-B2060	H0210-002016	13	H004016
07000-B2095	KIT	K02	Y001001
07000-B2095	T2140-001001	10	T005001
07000-B2095	T2140-001002	10	T005002
07000-B2105	KIT	K04	Y001001
07000-B2105	T2153-001001	15	T007001
07000-B2115	KIT	K03	Y001001
07000-B2115	T2150-001001	17	T006001
07000-B2120	KIT	K05	Y001001
07000-B2120	T2460-001001	15	T010001
07000-B3024	H0210-002004	12	H004004
07000-B3024	H0210-002008	12	H004008
07000-B3028	H0210-002001	7	H004001
07000-B3028	H0210-002006	7	H004006
07000-B3032	H0210-002004	10	H004004
07000-B3032	H0210-002008	10	H004008
07000-B3038	H0340-001003	29	H007003
07000-B3038	H0340-001003	35	H007003
07000-B3038	H0340-001003	40	H007003
07000-B3038	H0340-001003	46	H007003
07000-B3038	H1310-001002	15	H008002
07000-B3038	H1310-001002	19	H008002
07000-B3040	H0210-002016	1	H004016
07000-B5280	F2380-002007	9	F002007
07000-B5280	F2380-002014	9	F002014
07000-B6245	F2380-002007	8	F002007
07000-B6245	F2380-002014	8	F002014
07000-E2025	C0100-001002	12	C001002
07000-E2110	C0100-001003	1	C001003
07000-F1008	C0100-001002	19	C001002
07001-01004	F2380-002005	19	F002005
07001-01004	F2380-002012	19	F002012
07001-01007	H1840-001003	7	H009003
07001-02014	H0120-001012	6	H002012
07001-02014	H0120-002010	6	H003010
07001-02016	H0120-001012	4	H002012
07001-02016	H0120-002010	4	H003010
07001-02030	F2380-002005	6	F002005
07001-02030	F2380-002012	6	F002012
07002-10823	H0120-001007	9	H002007
07002-10823	H0120-002007	9	H003007
07002-10823	H1840-001003	8	H009003
07002-10823	H1840-001009	1	H009009
07002-11023	H0120-001003	10	H002003
07002-11023	H0120-001003	5	H002003
07002-11023	H0120-001014	38	H002014
07002-11023	H0120-002003	10	H003003
07002-11023	H0120-002003	5	H003003
07002-11023	H0120-002012	38	H003012
07002-11023	H1840-001003	9	H009003
07002-11223	C0101-001001	3	C002001
07002-11223	H0120-001005	16	H002005
07002-11223	H0120-001006	6	H002006
07002-11223	H0120-001011	11	H002011
07002-11223	H0120-002005	16	H003005

PARTS Nº	FIG. Nº	INDEX	PAGE
07002-11223	H0120-002006	6	H003006
07002-11423	D0100-001001	4	D001001
07002-11423	D0100-002001	4	D002001
07002-11423	D0200-001002	15	D003002
07002-11423	D0200-001002	17	D003002
07002-11423	D0200-001002	7	D003002
07002-11423	H0120-001004	4	H002004
07002-11423	H0120-001006	16	H002006
07002-11423	H0120-001006	3	H002006
07002-11423	H0120-001007	12	H002007
07002-11423	H0120-001014	12	H002014
07002-11423	H0120-001014	14	H002014
07002-11423	H0120-001014	17	H002014
07002-11423	H0120-001015	10	H002015
07002-11423	H0120-001015	13	H002015
07002-11423	H0120-001015	15	H002015
07002-11423	H0120-001015	3	H002015
07002-11423	H0120-001015	6	H002015
07002-11423	H0120-002004	4	H003004
07002-11423	H0120-002006	16	H003006
07002-11423	H0120-002006	3	H003006
07002-11423	H0120-002007	12	H003007
07002-11423	H0120-002012	14	H003012
07002-11423	H0120-002012	17	H003012
07002-11423	H0120-002013	10	H003013
07002-11423	H0120-002013	3	H003013
07002-11423	H0120-002013	6	H003013
07002-11423	H0210-002012	16	H004012
07002-11423	H0210-002012	27	H004012
07002-11423	H0210-002017	25	H004017
07002-11423	H0210-002017	29	H004017
07002-11423	H0340-001003	18	H007003
07002-11423	H0340-001003	27	H007003
07002-11423	H0340-001003	42	H007003
07002-11423	H0340-001003	49	H007003
07002-11423	H1840-001003	10	H009003
07002-11423	H1840-001004	16	H009004
07002-11423	H1840-001004	18	H009004
07002-11423	H1840-001004	7	H009004
07002-11423	H2210-001002	18	H010002
07002-11623	K0710-001002	2	K019002
07002-11823	C0100-001004	4	C001004
07002-11823	C0101-001001	27A	C002001
07002-11823	C0102-001002	9A	C002002
07002-11823	D0100-001001	16	D001001
07002-11823	D0100-002001	16	D002001
07002-11823	D0200-001001	17	D003001
07002-11823	H0100-001001	6	H001001
07002-11823	H1840-001004	9	H009004
07002-11823	K0710-001002	4	K019002
07002-12034	D0200-001001	11	D003001
07002-12034	D0200-001001	15	D003001
07002-12034	D0200-001002	11	D003002
07002-12034	D0200-001002	8	D003002
07002-12034	H0120-001004	6	H002004
07002-12034	H0120-001009	2	H002009
07002-12034	H0120-001009	4	H002009
07002-12034	H0120-001011	13	H002011
07002-12034	H0120-001014	19	H002014
07002-12034	H0120-001014	29	H002014
07002-12034	H0120-001014	34	H002014
07002-12034	H0120-002004	6	H003004
07002-12034	H0120-002009	2	H003009
07002-12034	H0120-002009	4	H003009
07002-12034	H0120-002012	19	H003012
07002-12034	H0120-002012	29	H003012
07002-12034	H0120-002012	34	H003012
07002-12034	H0210-002012	25	H004012
07002-12034	H0210-002012	7	H004012
07002-12034	H0210-002017	39	H004017
07002-12034	H0340-001003	5	H007003
07002-12034	H0340-001003	8	H007003
07002-12034	H1840-001003	11	H009003
07002-12034	H1840-001004	13	H009004
07002-12034	H1840-001005	3	H009005
07002-12034	H1840-001006	5	H009006
07002-12034	H1840-001009	2	H009009
07002-12034	H2210-001002	15	H010002
07002-12034	H2210-001003	10	H010003
07002-12034	H2210-001003	15	H010003
07002-12034	H2210-001003	2	H010003
07002-12034	H2210-001003	7	H010003
07002-12034	H2230-001001	6	H012001
07002-12034	H2230-001001	9	H012001
07002-12034	H2250-002002	20	H014002
07002-12434	C0100-001004	12	C001004
07002-12434	C0100-001004	7	C001004
07002-12434	D0100-001002	18	D001002
07002-12434	D0100-002001	23	D002001
07002-12434	D0100-002002	23	D002002
07002-12434	D0100-002003	12	D002003
07002-12434	F2380-002003	14	F002003
07002-12434	F2380-002010	14	F002010
07002-12434	H0100-001001	50	H001001
07002-12434	H0120-001005	3	H002005
07002-12434	H0120-001006	10	H002006
07002-12434	H0120-001008	4	H002008
07002-12434	H0120-001008	8	H002008
07002-12434	H0120-001010	17	H002010
07002-12434	H0120-001012	2	H002012
07002-12434	H0120-001014	21	H002014
07002-12434	H0120-001014	23	H002014
07002-12434	H0120-001014	26	H002014
07002-12434	H0120-001014	32	H002014
07002-12434	H0120-001015	17	H002015
07002-12434	H0120-002005	3	H003005
07002-12434	H0120-002006	10	H003006
07002-12434	H0120-002008	4	H003008
07002-12434	H0120-002008	8	H003008
07002-12434	H0120-002010	2	H003010
07002-12434	H0120-002012	21	H003012
07002-12434	H0120-002012	23	H003012
07002-12434	H0120-002012	26	H003012
07002-12434	H0120-002012	32	H003012
07002-12434	H0210-002017	20	H004017
07002-12434	H0210-002017	22	H004017
07002-12434	H0320-001001	16	H006001
07002-12434	H1840-001010	5	H009010
07002-12434	H1840-001010	8	H009010
07002-12434	H2210-001003	18	H010003
07002-12434	H2250-002002	17	H014002
07002-12434	R2101-001001	6	R012001
07002-13334	H0100-001001	12	H001001
07002-13334	H0100-001001	9	H001001
07002-13334	H0100-001003	11	H001003
07002-13334	H0120-001014	3	H002014
07002-13334	H0120-002012	3	H003012
07002-13334	H0210-002012	4	H004012
07002-13334	H0210-002012	6	H004012
07002-13334	H0310-001001	26	H005001
07002-13334	H1840-001009	3	H009009
07002-13334	H1840-001010	10	H009010
07002-13334	H1840-001010	13	H009010
07002-14234	H2210-001002	3	H010002
07002-15234	D0100-001001	25	D001001
07002-15234	H0320-001001	18	H006001
07002-21023	C0100-001002	22	C001002
07002-21023	C0100-001002	3	C001002
07002-21423	C0100-001003	23	C001003
07002-21823	C0100-001002	8	C001002
07002-22434	A2110-501001	2	B006001
07002-61023	F2380-002004	14	F002004
07002-61023	F2380-002011	14	F002011
07002-61023	H0210-002011	4	H004011
07002-61023	H0210-002016	11	H004016
07002-61223	H0210-002002	11	H004002
07002-61423	F2380-002004	16	F002004
07002-61423	F2380-002011	16	F002011
07002-61423	H0210-002013	14	H004013
07002-61423	H0210-002013	6	H004013

PARTS Nº	FIG. Nº	INDEX	PAGE
07002-61623	H0210-002002	13	H004002
07002-61623	H0210-002015	17	H004015
07002-61623	H0210-002015	7	H004015
07002-62434	F2380-002004	10	F002004
07002-62434	F2380-002004	18	F002004
07002-62434	F2380-002011	10	F002011
07002-62434	F2380-002011	18	F002011
07002-62434	H0210-002001	4	H004001
07002-62434	H0210-002006	4	H004006
07002-62434	H0210-002010	10	H004010
07002-62434	H0210-002010	8	H004010
07002-62434	H1840-001008	2	H009008
07002-63334	H0340-001002	11	H007002
07005-01012	A1410-501003	7	B001003
07005-01212	D0200-001001	30	D003001
07020-00000	J2700-001001	30	J002001
07020-00000	J2700-001001	41	J002001
07020-00000	T2115-001001	12	T002001
07020-00000	T2115-001002	16	T002002
07020-00000	T2115-001002	4	T002002
07020-00000	T2160-001003	10	T008003
07020-00000	T2160-001003	5	T008003
07020-00000	T2400-001001	14	T009001
07020-00000	T2400-001001	28	T009001
07020-00900	K0210-002041	34	K012042
07020-00900	K0210-002041	5	K012042
07020-00900	K0210-006041	34	K015042
07020-00900	K0210-006041	5	K015042
07020-00900	R0120-001001	4	R002001
07020-00900	T2115-001002	17	T002002
07020-00900	T2115-001002	5	T002002
07040-10807	H1840-001003	12	H009003
07040-10807	H1840-001009	4	H009009
07040-11007	C0100-001002	2	C001002
07040-11007	C0100-001002	21	C001002
07040-11007	H0120-001014	37	H002014
07040-11007	H0120-002012	37	H003012
07040-11007	H1840-001003	13	H009003
07040-11409	D0200-001002	16	D003002
07040-11409	H0120-001004	3	H002004
07040-11409	H0120-002004	3	H003004
07040-11409	H0210-002013	5	H004013
07040-11409	H1840-001003	14	H009003
07040-12012	H1840-001009	5	H009009
07040-12412	D0100-001001	22	D001001
07040-12412	D0100-001002	17	D001002
07040-12412	D0100-002001	22	D002001
07040-12412	H0320-001001	15	H006001
07040-12412	H1840-001010	7	H009010
07040-12414	H0100-001001	49	H001001
07040-12414	H0210-002001	3	H004001
07040-12414	H0210-002002	8	H004002
07040-12414	H0210-002006	3	H004006
07040-12414	R2101-001001	7	R012001
07040-15223	H0320-001001	17	H006001
07042-70108	C0103-001003	31	C002003
07043-00108	A1610-501001	57	B005001
07043-70108	T2110-001001	12	T001001
07044-12412	F2380-002003	13	F002003
07044-12412	F2380-002010	13	F002010
07049-00811	D0100-001002	25	D001002
07049-01215	D0100-001002	26	D001002
07049-01215	F2380-002003	16	F002003
07049-01215	F2380-002010	16	F002010
07049-01215	R2200-002001	22	R015001
07049-01215	R2200-002001	4	R015001
07049-01215	R2200-003001	32	R016001
07049-01215	T2115-001001	8	T002001
07049-01620	R2200-002001	5	R015001
07049-02025	J2700-001001	4	J002001
07049-02228	T2115-001001	13	T002001
07049-02430	M2240-001001	4	M005001
07049-02430	M2240-002001	4	M004001
07049-03038	M2240-001001	5	M005001
07049-03038	M2240-002001	5	M004001
07052-31217	R0200-001001	4	R003001
07052-31217	R0200-001002	4	R003002
07052-31624	R0110-001001	10	R001001
07056-18422	D0100-001002	16	D001002
07056-18425	D0100-002002	20	D002002
07059-11830	R0500-005001	11	R008001
07059-20721	R0500-005001	12	R008001
07060-11230	C0101-001001	2	C002001
07092-01000	H0100-001001	40	H001001
07094-30518	H2250-001001	16	H013001
07094-30518	H2250-001001	23	H013001
07094-30518	H2250-001001	9	H013001
07094-30518	H2250-002002	21	H014002
07095-00314	H0310-001002	16	H005002
07095-00314	H0310-001002	21	H005002
07095-00317	H2220-001001	17	H011001
07095-00318	H2230-001001	25	H012001
07095-00318	H2230-001001	37	H012001
07095-00420	H2210-001004	13	H010004
07095-00420	H2210-001004	17	H010004
07095-00420	H2210-001004	25	H010004
07095-00420	H2210-001005	14	H010005
07095-00421	T2160-001001	15	T008001
07095-00421	T2160-001002	21	T008002
07095-00421	T2160-001002	25	T008002
07095-00525	H2250-001001	10	H013001
07095-00525	H2250-001001	17	H013001
07095-00525	H2250-001001	24	H013001
07095-00525	H2250-002002	22	H014002
07095-00525	T2400-001002	26	T009002
07095-00526	C0103-001001	7	C003001
07095-00526	C0103-001001	8	C003001
07095-00526	H2210-001003	23	H010003
07095-00627	T2400-001002	20	T009002
07095-20211	B0500-001002	36	B010002
07095-20211	E0200-001001	35	E002001
07095-20211	E0200-001001	39	E002001
07095-20211	H0340-001001	21	H007001
07095-20211	H0340-001001	37	H007001
07095-20211	H1840-001004	23	H009004
07095-20211	H1840-001004	27	H009004
07095-20211	H1840-001004	30	H009004
07095-20211	H2250-002001	13	H014001
07095-20211	K2910-001001	16	K026001
07095-20314	E0200-001001	6	E002001
07095-20314	H0210-002012	20	H004012
07095-20314	H0210-002017	35	H004017
07095-20314	H0340-001001	14	H007001
07095-20314	H0340-001001	23	H007001
07095-20314	H1840-001005	13	H009005
07095-20314	H1840-001006	19	H009006
07095-20314	H1840-001006	22	H009006
07095-20418	E0210-001001	36	E003001
07095-20418	E0210-001001	45	E003001
07095-20418	K0210-002028	43	K012029
07095-20418	K0210-006028	43	K015029
07095-20419	D0200-001001	39	D003001
07095-20419	D0200-001002	36	D003002
07095-20419	E0200-001002	11	E002002
07095-20419	E0200-001002	15	E002002
07095-20419	K2910-001001	25	K026001
07095-20420	K0210-002031	11	K012032
07095-20420	K0210-006031	11	K015032
07095-20523	B0500-001001	12	B010001
07095-20523	B0500-001001	16	B010001
07095-20523	C0103-001001	36	C003001
07095-20523	C0103-001001	40	C003001
07095-20523	E0200-001001	29	E002001
07095-20523	H0320-001001	31	H006001
07095-20523	K0710-001002	12	K019002
07095-20625	K0210-002044	20	K012045
07095-20625	K0210-006044	20	K015045
07095-20627	B0500-001004	16	B010004
07095-20627	B0500-001004	20	B010004
07095-20627	C0103-001001	32	C003001

PARTS Nº	FIG. Nº	INDEX	PAGE
07098-01010	H0120-001014	41	H002014
07098-01010	H0120-002012	41	H003012
07098-01010	H0310-001002	9	H005002
07137-05008	T2150-001001	4	T006001
07137-05008	T2150-001001	7	T006001
07137-05008	T2153-001001	7	T007001
07143-10606	T2140-001001	4	T005001
07143-10606	T2140-001002	4	T005002
07143-10707	T2460-001001	4	T010001
07143-10707	T2460-001001	6	T010001
07144-10606	T2140-001001	6	T005001
07144-10606	T2140-001002	6	T005002
07145-00060	KIT	K02	Y001001
07145-00060	T2140-001001	5	T005001
07145-00060	T2140-001001	7	T005001
07145-00060	T2140-001002	5	T005002
07145-00060	T2140-001002	7	T005002
07145-00075	KIT	K05	Y001001
07145-00075	T2460-001001	5	T010001
07145-00075	T2460-001001	7	T010001
07155-00720	R0120-001001	21	R002001
07156-01012	KIT	K02	Y001001
07156-01012	T2140-001001	20	T005001
07156-01012	T2140-001002	20	T005002
07156-01112	KIT	K04	Y001001
07156-01112	T2153-001001	22	T007001
07156-01215	KIT	K03	Y001001
07156-01215	T2150-001001	22	T006001
07177-07530	R0120-001001	5	R002001
07177-08030	R0120-001001	15	R002001
07179-12069	T2140-001001	12	T005001
07179-12069	T2140-001002	12	T005002
07179-12079	T2153-001001	13	T007001
07179-12084	T2150-001001	13	T006001
07179-12084	T2460-001001	9	T010001
07206-30710	A1410-501003	9	B001003
07206-30812	D0200-001001	31	D003001
07206-31014	D0200-001002	34	D003002
07260-07420	H0100-001004	12	H001004
07260-27422	H0320-001001	23	H006001
07270-01035	D0100-001001	7	D001001
07270-01035	D0100-002001	7	D002001
07270-21550	A2110-501001	4	B006001
07281-00289	C0102-001002	28	C002002
07281-00289	C0102-001002	30	C002002
07283-31087	A1610-501001	38	B005001
07283-32236	T2460-001001	24	T010001
07283-35158	C0102-001002	5	C002002
07283-36365	C0103-001003	10	C002003
07283-36365	C0103-001003	17	C002003
07283-37663	H0100-001004	17	H001004
07283-37663	H0100-001004	8	H001004
07283-37663	H0320-001001	8	H006001
07283-37663	K0210-002029	14	K012030
07283-37663	K0210-006029	14	K015030
07283-38981	A1610-501001	56	B005001
07283-38981	C0103-001003	62	C002003
07283-55161	C0102-001002	2	C002002
07283-56374	C0103-001003	11	C002003
07283-56374	C0103-001003	18	C002003
07285-00110	C0100-001001	33	C001001
07285-00110	H0100-001005	8	H001005
07285-00115	D0100-001001	8	D001001
07285-00115	D0100-002001	8	D002001
07285-00125	A1410-501003	4	B001003
07285-00125	A1410-501003	5	B001003
07285-00125	D0200-001002	19	D003002
07285-00180	A2110-501001	5	B006001
07285-00180	C0101-001001	29	C002001
07285-00180	C0102-001002	16	C002002
07285-00230	K0210-002031	28	K012032
07285-00230	K0210-006031	28	K015032
07285-00280	H0100-001006	7	H001006
07286-00870	D0200-001002	18	D003002
07286-01465	C0101-001001	28	C002001
07286-02687	H0100-001006	6	H001006
07289-00055	C0101-001001	31	C002001
07289-00055	C0101-001001	4	C002001
07289-00055	C0102-001002	18	C002002
07289-00055	H0310-001002	28	H005002
07289-00070	C0101-001001	33	C002001
07289-00070	C0102-001002	20	C002002
07289-00080	H0310-001002	25	H005002
07289-00095	H0100-001004	13	H001004
07289-00095	H0310-001002	26	H005002
07289-00095	H0320-001001	24	H006001
07299-00080	C0103-001003	22	C002003
07299-00080	C0103-001003	28	C002003
07299-00080	C0103-001003	5	C002003
07299-00095	C0103-001003	23	C002003
07299-00095	C0103-001003	26	C002003
07299-00095	C0103-001003	29	C002003
07299-00095	C0103-001003	33	C002003
07299-00120	A1410-501003	13	B001003
07299-00130	A1410-501003	11	B001003
07332-02400	H0100-001004	2	H001004
07332-52400	H0100-001004	3	H001004
07332-62400	H0100-001004	4	H001004
07371-31049	H0310-001002	10	H005002
07371-51260	H1310-001002	13	H008002
07371-51260	H1310-001002	16	H008002
07372-21030	K0210-002037	11	K012038
07372-21030	K0210-006037	11	K015038
07372-21035	H0100-001002	12	H005002
07372-21040	H0120-001014	9	H002014
07372-21040	H0120-002012	9	H003012
07372-51055	H0210-002017	17	H004017
07372-51245	H0340-001003	27	H007003
07372-51245	H0340-001003	32	H007003
07372-51245	H0340-001003	38	H007003
07372-51245	H0340-001003	43	H007003
07372-51250	H0210-002017	13	H004017
07372-51250	H1310-001002	18	H008002
07376-70522	H2250-001001	29	H013001
07376-70522	H2250-001001	33	H013001
07376-70522	H2250-002003	3	H014003
07376-70522	H2250-002003	7	H014003
07700-40240	D0100-001001	5	D001001
07700-40240	D0100-002001	5	D002001
07950-10450	V0300-00101	16	V003001
07950-90403	V0300-00101	18	V003001
07951-41017	V0300-00101	17	V003001
07952-70004	V0300-00101	15	V003001
08000-00000	E0110-001001	1	E001001
08000-00001	E0110-001001	1	E001001
08007-03549	E0210-001002	2	E003002
08017-30702	K0210-002033	8	K012034
08017-30702	K0210-006033	8	K015034
08024-11920	T2160-001002	9	T008002
08024-21920	T2160-001002	2	T008002
08024-31920	T2160-001002	10	T008002
08024-31920	T2160-001002	3	T008002
08028-64005	E0210-001001	18	E003001
08028-ED070	E0210-001001	24	E003001
08028-GD065	E0210-001001	23	E003001
08034-20414	E0200-001001	42	E002001
08034-20414	H0120-001003	12	H002003
08034-20414	H0120-002003	12	H003003
08034-20414	H0340-001002	13	H007002
08034-20414	H0340-001002	22	H007002
08034-20414	H1310-001002	11	H008002
08034-20414	H1310-001002	2	H008002
08034-20414	H1310-001002	5	H008002
08034-20414	H1310-001002	8	H008002
08034-20414	H2210-001001	2	H010004
08034-20414	H2210-001004	6	H010004
08034-20414	H2210-001005	2	H010005
08034-20414	H2210-001005	6	H010005
08034-20414	K0210-002034	4	K012035
08034-20414	K0210-002036	5	K012037

PARTS Nº	FIG. Nº	INDEX	PAGE
08034-20414	K0210-006034	4	K015035
08034-20414	K0210-006036	5	K015037
08034-20414	T2160-001002	11	T008002
08034-20414	T2160-001002	4	T008002
08034-20519	C0103-001001	26	C003001
08034-20519	C0103-001001	29	C003001
08034-20519	C0103-001001	5	C003001
08034-20519	K0110-002003	6	K002003
08034-20519	K0210-002003	19	K012003
08034-20519	K0210-002005	19	K012005
08034-20519	K0210-002013	1	K012013
08034-20519	K0210-002015	8	K012015
08034-20519	K0210-002018	12	K012018
08034-20519	K0210-002018	5	K012018
08034-20519	K0210-002028	54	K012029
08034-20519	K0210-002031	33	K012032
08034-20519	K0210-002043	27	K012044
08034-20519	K0210-002043	33	K012044
08034-20519	K0210-002045	19	K012046
08034-20519	K0210-002045	21	K012046
08034-20519	K0210-002045	33	K012046
08034-20519	K0210-002047	3	K012048
08034-20519	K0210-002051	9	K012052
08034-20519	K0210-006003	19	K015003
08034-20519	K0210-006005	19	K015005
08034-20519	K0210-006013	1	K015013
08034-20519	K0210-006015	8	K015015
08034-20519	K0210-006018	12	K015018
08034-20519	K0210-006018	5	K015018
08034-20519	K0210-006028	54	K015029
08034-20519	K0210-006031	33	K015032
08034-20519	K0210-006043	27	K015044
08034-20519	K0210-006043	33	K015044
08034-20519	K0210-006045	19	K015046
08034-20519	K0210-006045	21	K015046
08034-20519	K0210-006045	33	K015046
08034-20519	K0210-006047	3	K015048
08034-20519	K0210-006051	9	K015052
08034-20519	K0230-002002	23	K017002
08034-20519	K0230-002002	8	K017002
08034-20823	D0200-001001	34	D003001
08034-20834	K0210-002051	17	K012052
08034-20834	K0210-006051	17	K015052
08034-20876	T2160-001001	18	T008001
08034-40521	D0100-002003	23	D002003
08034-40521	K0210-002015	10	K012015
08034-40521	K0210-002015	9	K012015
08034-40521	K0210-002028	53	K012029
08034-40521	K0210-002041	41	K012042
08034-40521	K0210-002051	18	K012052
08034-40521	K0210-006015	10	K015015
08034-40521	K0210-006015	9	K015015
08034-40521	K0210-006028	53	K015029
08034-40521	K0210-006041	41	K015042
08034-40521	K0210-006051	18	K015052
08037-01008	K0210-002015	6	K012015
08037-01008	K0210-006015	6	K015015
08037-02512	K0210-002013	10	K012013
08037-02512	K0210-002018	16	K012018
08037-02512	K0210-002047	2	K012048
08037-02512	K0210-006013	10	K015013
08037-02512	K0210-006018	16	K015018
08037-02512	K0210-006047	2	K015048
08037-11025	K0210-002013	3	K012013
08037-11025	K0210-006013	3	K015013
08037-11425	K0210-002013	9	K012013
08037-11425	K0210-006013	9	K015013
08037-12536	K0210-002013	8	K012013
08037-12536	K0210-006013	8	K015013
08038-00035	E0210-001001	56	E003001
08038-00519	B0500-001002	25	B010002
08038-00519	B0500-001003	29	B010003
08038-00519	E0210-001001	34	E003001
08038-02027	B0500-001002	24	B010002
08038-02027	B0500-001003	30	B010003
08038-42511	E0210-001001	19	E003001
08041-00500	K0210-002043	2	K012044
08041-00500	K0210-006043	2	K015044
08041-01000	K0210-002012	2	K012012
08041-01000	K0210-002043	3	K012044
08041-01000	K0210-006012	2	K015012
08041-01000	K0210-006043	3	K015044
08041-01500	K0210-002043	4	K012044
08041-01500	K0210-006043	4	K015044
08041-02000	K0210-002012	3	K012012
08041-02000	K0210-006012	3	K015012
08041-02000	K0210-006043	5	K015044
08041-03000	K0210-002043	6	K012044
08041-03000	K0210-006043	6	K015044
08044-00600	K0210-002012	4	K012012
08044-00600	K0210-006012	4	K015012
08057-12010	E0200-001001	24	E002001
08057-12010	H2250-002002	7	H014002
08059-00310	K0210-002013	2	K012013
08059-00310	K0210-006013	2	K015013
08068-00001	E0210-001001	14	E003001
08085-00001	K0210-002048	26	K012049
08085-00001	K0210-006048	26	K015049
08088-30000	E0210-001001	1	E003001
08155-02400	E0210-001001	8	E003001
08191-00770	K0210-002037	37	K012038
08191-00770	K0210-006037	37	K015038
08192-19300	K0210-002037	36	K012038
08192-19300	K0210-006037	36	K015038
08192-29102	K0210-002037	35	K012038
08192-29102	K0210-006037	35	K015038
08193-20010	K0210-002024	8	K012025
08193-20010	K0710-001001	35	K019001
08193-20010	M2141-001007	5	M002008
08193-20010	M2141-002007	5	M003008
08210-00603	K0210-002018	15	K012018
08210-00603	K0210-006018	15	K015018
08211-00720	E0200-001001	23	E002001
08211-00720	E0200-001002	19	E002002
08211-00720	E0200-001002	3	E002002
08211-00720	E0210-001001	39	E003001
08211-01020	E0200-001001	33	E002001
08211-01020	E0200-001001	9	E002001
08211-01020	H2250-002002	10	H014002
08211-01320	E0200-001002	2	E002002
08211-01520	E0200-001002	18	E002002
08211-01520	E0210-001001	40	E003001
08211-01920	E0200-001001	25	E002001
08211-01920	E0200-001001	32	E002001
08211-10720	A1410-501003	2	B001003
08211-10720	M2141-001007	14	M002008
08211-10720	M2141-002007	14	M003008
08672-01000	A1410-501003	10	B001003
08910-10000	K0210-002018	6	K012018
08910-10000	K0210-006018	6	K015018
08912-51600	K0210-002018	4	K012018
08912-51600	K0210-006018	4	K015018
09002-00810	V0300-00101	2	V003001
09002-01317	V0300-00101	3	V003001
09002-01922	V0300-00101	4	V003001
09011-01719	V0300-00101	14	V003001
09019-28036	V0300-00101	19	V003001
09021-01725	V0300-00101	8	V003001
09021-01928	V0300-00101	9	V003001
09021-02233	V0300-00101	10	V003001
09021-02436	V0300-00101	11	V003001
09021-03653	V0300-00101	12	V003001
09022-00150	V0300-00101	5	V003001
09023-00300	V0300-00101	6	V003001
09024-00300	V0300-00101	13	V003001
09027-00300	V0300-00101	7	V003001
09033-00190	V0300-00101	15	V003001
09056-04613	V0300-00101	1	V003001
09059-00800	V0100-00101	5	V001001
09203-21865	F2380-002008	2	F002008

PARTS Nº	FIG. Nº	INDEX	PAGE
09203-21865	F2380-002015	2	F002015
09205-18305	R2200-003001	6	R016001
09244-02508	T2400-001002	3	T009002
09245-04830	T2810-001001	2	T011001
09245-24830	T2810-002001	5	T012001
09245-50060	T2810-001001	3	T011001
09245-50060	T2810-002001	4	T012001
09247-45180	T2810-002001	6	T012001
09249-00016	T2810-001001	5	T011001
09249-00016	T2810-002001	10	T012001
09311-41237	K0210-002041	19	K012042
09311-41237	K0210-002041	9	K012042
09311-41237	K0210-006041	19	K015042
09311-41237	K0210-006041	9	K015042
09370-00070	R0120-001001	22	R002001
09415-00506	E0210-001002	8	E003002
09415-01008	K0210-002013	11	K012013
09415-01008	K0210-006013	11	K015013
09415-01008	K2520-001003	10	K024003
09415-01610	K0210-002029	27	K012030
09415-01610	K0210-006029	27	K015030
09415-02512	K2520-001001	3	K024001
09415-02520	H0100-001006	9	H001006
09455-12013	H0100-001001	3	H001001
09455-12013	K0210-002046	8	K012047
09455-12013	K0210-006046	8	K015047
09467-00006	C0100-001005	12	C001005
09479-02400	K0210-002028	14	K012029
09479-02400	K0210-002028	2	K012029
09479-02400	K0210-002028	24	K012029
09479-02400	K0210-002028	8	K012029
09479-02400	K0210-002031	9	K012032
09479-02400	K0210-006028	14	K015029
09479-02400	K0210-006028	2	K015029
09479-02400	K0210-006028	24	K015029
09479-02400	K0210-006028	8	K015029
09479-02400	K0210-006031	9	K015032
09479-12400	K0710-001002	10	K019002
09479-12400	K0710-001002	11	K019002
09479-12400	K0710-001002	8	K019002
09479-12400	K0710-001002	9	K019002
09483-10502	K0210-002028	23	K012029
09483-10502	K0210-002028	7	K012029
09483-10502	K0210-006028	23	K015029
09483-10502	K0210-006028	7	K015029
09601-19050	U0100-001001	15	U001001
09601-19050	U0100-002001	15	U002001
09601-50000	T2120-001001	17	T003001
09601-50000	T2120-002001	17	T004001
09601-50000	T2400-001001	36	T009001
09620-A2001	U0520-001001	2	U006001
09620-A2001	U0520-003001	2	U007001
09620-A2070	U0520-001001	3	U006001
09620-A2160	U0520-003001	3	U007001
09637-51263	U0100-002001	9	U002001
09637-70163	U0100-001001	9	U001001
09642-11000	U0100-001001	30	U001001
09642-11000	U0100-001001	31	U001001
09642-17000	U0100-002001	30	U002001
09642-17000	U0100-002001	31	U002001
09651-01001	U0100-001001	22	U001001
09651-07101	U0100-002001	22	U002001
09653-01001	U0100-001001	20	U001001
09653-07101	U0100-002001	20	U002001
09654-31001	U0100-001001	23	U001001
09654-37101	U0100-002001	23	U002001
09657-01004	U0100-001001	25	U001001
09657-07102	U0100-002001	25	U002001
09659-51000	U0100-001001	26	U001001
09659-57100	U0100-002001	26	U002001
09663-01001	U0100-001001	24	U001001
09663-07001	U0100-002001	24	U002001
09667-41000	U0100-001001	18	U001001
09667-41000	U0100-001001	19	U001001
09667-41000	U0100-002001	18	U002001
09667-47100	U0100-002001	19	U002001
09668-01001	U0100-001001	21	U001001
09668-07101	U0100-002001	21	U002001
09669-0000E	U0100-001001	14	U001001
09669-0000E	U0100-002001	14	U002001
09690-F0710	K0210-002030	34	K012031
09690-F0710	K0210-006030	34	K015031
09690-P0400	U0100-001001	4	U001001
09690-P0400	U0100-002001	4	U002001
09690-P0630	U0100-001001	3	U001001
09690-P0630	U0100-002001	3	U002001
09693-00300	ENTRY	3	
09693-00300	K0210-002006	3	K012006
09697-00001	E0210-001001	15	E003001
09802-11000	U0100-001001	12	U001001
09802-17100	U0100-002001	12	U002001
09808-01000	U0100-001001	27	U001001
09808-07100	U0100-002001	27	U002001
09812-11000	U0100-001001	17	U001001
09812-17000	U0100-002001	17	U002001
09833-31000	U0100-001001	13	U001001
09833-37000	U0100-002001	13	U002001
09845-00480	U0205-001001	1	U003001
09960-00611	U0400-001001	1	U004001
09960-00611	U0400-002001	2	U005001
09960-00801	U0400-002001	3	U005001
09960-01601	U0400-001001	2	U004001
09980-10550	V0200-00101	1	V002001
09982-10057	V0200-00101	2	V002001
112-860-1360	H0100-001001	47	H001001
113-43-23230	C0100-001005	16	C001005
11Y-01-31820	A1470-502001	1	B003001
11Y-03-32680	C0101-001001	12	C002001
11Y-03-32680	C0101-001001	21	C002001
11Y-03-32680	C0101-001001	38	C002001
11Y-03-32680	C0101-001001	43	C002001
11Y-03-32680	C0101-001001	52	C002001
11Y-03-32971	C0101-001001	11	C002001
11Y-03-32971	C0101-001001	20	C002001
11Y-03-32971	C0101-001001	37	C002001
11Y-03-32971	C0101-001001	42	C002001
11Y-03-32971	C0101-001001	51	C002001
11Y-03-42741	C0101-001001	25	C002001
11Y-03-42741	C0102-001002	9	C002002
11Y-04-31180	D0100-001001	18	D001001
11Y-04-31180	D0100-002001	18	D002001
11Y-04-41621	D0200-001001	12	D003001
11Y-04-41621	D0200-001002	9	D003002
11Y-06-11372	K0210-002052	1	K012053
11Y-06-11372	K0210-002052	8	K012053
11Y-06-11372	K0210-006052	1	K015053
11Y-06-11372	K0210-006052	8	K015053
11Y-06-11470	K0210-002035	12	K012036
11Y-06-11470	K0210-002038	1	K012039
11Y-06-11470	K0210-006035	12	K015036
11Y-06-11470	K0210-006038	1	K015039
11Y-06-11630	B0500-001001	22	B010001
11Y-06-11630	E0210-001001	27	E003001
11Y-06-21340	H0100-001003	6	H001003
11Y-06-21350	H0100-001003	6	H001003
11Y-06-21360	H0100-001003	6	H001003
11Y-06-22150	K0210-002041	11	K012042
11Y-06-22150	K0210-006041	11	K015042
11Y-06-32540	K0230-002003	16	K017003
11Y-06-41950	E0210-001001	48	E003001
11Y-06-46830	K0230-001001	6	K016001
11Y-06-46840	K0230-001001	7	K016001
11Y-09-11140	C0101-001001	7	C002001
11Y-09-11160	K0210-002031	26	K012032
11Y-09-11160	K0210-002031	7	K012032
11Y-09-11160	K0210-006031	26	K015032
11Y-09-11160	K0210-006031	7	K015032
11Y-12-11130	B0600-001001	2	B011001
11Y-27-11450	F2380-002003	15	F002003
11Y-27-11450	F2380-002010	15	F002010

PARTS Nº	FIG. Nº	INDEX	PAGE
11Y-43-11124	K0210-002034	5	K012035
11Y-43-11124	K0210-006034	5	K015035
11Y-54-11370	A1610-501001	10	B005001
11Y-54-14220	C0100-001005	5	C001005
11Y-54-44511	K2810-001001	4	K025001
11Y-54-47710	K0210-002022	1	K012023
11Y-54-47710	K0210-006022	1	K015023
11Y-54-48670	K0210-002020	1	K012021
11Y-54-48670	K0210-006020	1	K015021
11Y-60-11530	H1840-001001	1	H009001
11Y-60-28710	H0100-001003	5	H001003
11Y-60-28710	V0100-00101	3	V001001
11Y-60-38701	H0100-001003	4	H001003
11Y-62-12140	K2520-001003	25	K024003
11Y-62-12170	H0210-002017	38	H004017
11Y-62-12270	H0340-001003	48	H007003
11Y-62-12570	H0340-001003	15	H007003
11Y-62-12570	H0340-001003	24	H007003
11Y-62-18420	H1840-001001	8	H009001
11Y-62-29150	T2160-001002	12	T008002
11Y-62-31131	H1840-001001	9	H009001
11Y-62-31170	H1840-001001	10	H009001
11Y-62-31180	H1840-001001	11	H009001
11Y-62-31210	H1840-001001	12	H009001
11Y-62-33591	H2210-001004	24	H010004
11Y-62-33591	H2210-001005	13	H010005
11Y-62-33591	T2160-001001	14	T008001
11Y-62-33591	T2160-001002	24	T008002
11Y-62-38411	H1840-001006	1	H009006
11Y-62-41111	H1840-001001	13	H009001
11Y-979-2571	K0210-002002	2	K012002
11Y-979-2571	K0210-002004	2	K012004
11Y-979-2571	K0210-006002	2	K015002
11Y-979-2571	K0210-006004	2	K015004
11Y-979-8270	K0710-001001	28	K019001
11Y-979-8280	K0710-001001	29	K019001
11Y-979-8780	K0710-001001	27	K019001
11Y-Z78-1652	K0210-002024	14	K012025
11Y-Z78-1652	K0210-006024	9	K015025
11Y-Z78-1981	K0210-002024	15	K012025
11Y-Z78-1981	K0210-006024	10	K015025
11Y-Z78-3940	K0210-002049	22	K012050
11Y-Z78-3940	K0210-006049	22	K015050
120-04-41130	C0101-001001	6	C002001
120-04-41130	D0100-001001	6	D001001
120-04-41130	D0100-002001	6	D002001
124-06-64321	B0500-001003	23	B010003
124-54-26540	T2115-001002	12	T002002
124-60-51150	H0100-001001	48	H001001
126-98-51180	U0400-001001	4	U004001
126-98-51180	U0400-002001	1	U005001
12Y-01-12530	C0103-001003	65	C002003
12Y-03-13351	C0100-001006	12	C001006
12Y-03-13361	C0100-001006	11	C001006
12Y-03-13880	C0100-001001	2	C001001
12Y-04-11420	D0200-001001	21	D003001
12Y-04-11430	D0200-001001	22	D003001
12Y-04-11461	D0200-001001	20	D003001
12Y-04-11461	D0200-001001	23	D003001
12Y-06-11611	K0210-002032	1	K012033
12Y-06-11611	K0210-006032	1	K015033
12Y-06-11621	K0210-002032	1	K012033
12Y-06-11621	K0210-006032	1	K015033
12Y-06-11631	K0210-002032	2	K012033
12Y-06-11631	K0210-006032	2	K015033
12Y-06-11771	K0210-002048	25	K012049
12Y-06-11771	K0210-006048	25	K015049
12Y-06-13151	K0210-002013	6	K012013
12Y-06-13151	K0210-006013	6	K015013
12Y-06-13170	K0210-002051	7	K012052
12Y-06-13170	K0210-006051	7	K015052
12Y-06-13380	K0210-002014	14	K012014
12Y-06-13380	K0210-002030	27	K012031
12Y-06-13380	K0210-002031	34	K012032
12Y-06-13380	K0210-006014	14	K015014
12Y-06-13380	K0210-006030	27	K015031
12Y-06-13380	K0210-006031	34	K015032
12Y-06-13380	K0230-002002	38	K017002
12Y-06-26111	K0210-002043	1	K012044
12Y-06-26111	K0210-006043	1	K015044
12Y-06-26122	K0210-002012	1	K012012
12Y-06-26122	K0210-006012	1	K015012
12Y-06-26131	K0210-002045	29	K012046
12Y-06-26131	K0210-006045	29	K015046
12Y-06-26140	K0210-002045	32	K012046
12Y-06-26140	K0210-006045	32	K015046
12Y-06-26150	K0210-002013	16	K012013
12Y-06-26150	K0210-006013	16	K015013
12Y-06-26160	K0210-002013	19	K012013
12Y-06-26160	K0210-006013	19	K015013
12Y-06-26170	K0210-002013	20	K012013
12Y-06-26170	K0210-006013	20	K015013
12Y-06-26180	K0210-002043	20	K012044
12Y-06-26180	K0210-006043	20	K015044
12Y-06-26211	K0210-002052	9	K012053
12Y-06-26211	K0210-006052	9	K015053
12Y-06-26221	K0210-002052	2	K012053
12Y-06-26221	K0210-006052	2	K015053
12Y-06-26231	K0210-002052	5	K012053
12Y-06-26231	K0210-006052	5	K015053
12Y-06-26261	K0210-006053	9	K015054
12Y-06-26272	K0210-006053	2	K015054
12Y-06-26291	K0210-002052	12	K012053
12Y-06-26291	K0210-006052	12	K015053
12Y-06-26310	K0210-002051	4	K012052
12Y-06-26310	K0210-006051	4	K015052
12Y-06-26321	K0210-002051	8	K012052
12Y-06-26321	K0210-006051	8	K015052
12Y-06-26331	K0210-002051	14	K012052
12Y-06-26331	K0210-006051	14	K015052
12Y-06-26411	K0210-002046	1	K012047
12Y-06-26411	K0210-006046	1	K015047
12Y-06-26421	K0210-002046	2	K012047
12Y-06-26421	K0210-006046	2	K015047
12Y-06-26431	K0210-002046	13	K012047
12Y-06-26431	K0210-006046	13	K015047
12Y-06-26440	K0210-002046	3	K012047
12Y-06-26440	K0210-006046	3	K015047
12Y-06-26450	K0210-002046	4	K012047
12Y-06-26450	K0210-006046	4	K015047
12Y-06-26460	K0210-002046	5	K012047
12Y-06-26460	K0210-006046	5	K015047
12Y-06-26470	K0210-002046	6	K012047
12Y-06-26470	K0210-006046	6	K015047
12Y-06-26611	K0230-002003	1	K017003
12Y-06-26622	K0710-001001	21	K019001
12Y-06-26641	K0230-002003	7	K017003
12Y-06-26661	K0230-002002	44	K017002
12Y-06-26681	K0230-002002	29	K017002
12Y-06-26691	K0230-002002	32	K017002
12Y-06-26720	K0210-002018	14	K012018
12Y-06-26720	K0210-006018	14	K015018
12Y-06-26731	K0230-002002	39	K017002
12Y-06-26760	K0230-001001	10	K016001
12Y-06-26771	K0230-001001	15	K016001
12Y-06-26771	K0230-002002	40	K017002
12Y-06-26781	K0230-002002	33	K017002
12Y-06-26831	K0230-002001	6	K017001
12Y-06-26841	K0230-002001	7	K017001
12Y-06-26850	K0230-002001	8	K017001
12Y-06-26871	K0230-002002	1	K017002
12Y-06-26880	K0230-002001	9	K017001
12Y-06-26910	K0230-002001	10	K017001
12Y-06-26920	K0230-002001	11	K017001
12Y-06-26931	K0230-002003	19	K017003
12Y-06-26951	K0230-002002	47	K017002
12Y-06-26961	K0230-002002	34	K017002
12Y-06-26991	K0230-002003	24	K017003
12Y-06-27720	K0210-006053	10	K015054
12Y-06-27731	K0230-002002	52	K017002

PARTS Nº	FIG. Nº	INDEX	PAGE
12Y-06-27740	K0230-002003	21	K017003
12Y-06-27750	K0230-002003	15	K017003
12Y-06-27760	K0230-002003	2	K017003
12Y-06-27771	K0230-002004	24	K017004
12Y-06-28130	K0230-002002	53	K017002
12Y-43-12160	K0210-002041	18	K012042
12Y-43-12160	K0210-006041	18	K015042
12Y-43-12432	K0210-002035	6	K012036
12Y-43-12432	K0210-006035	6	K015036
12Y-43-12440	K0210-002037	5	K012038
12Y-43-12440	K0210-006037	5	K015038
12Y-43-12470	K0210-002037	2	K012038
12Y-43-12470	K0210-006037	2	K015038
12Y-43-12480	K0210-002037	6	K012038
12Y-43-12480	K0210-006037	6	K015038
12Y-43-12491	K0210-002035	9	K012036
12Y-43-12491	K0210-006035	9	K015036
12Y-43-12532	K0210-002038	2	K012039
12Y-43-12532	K0210-006038	2	K015039
12Y-43-12732	K0210-002040	11	K012041
12Y-43-12732	K0210-006040	11	K015041
12Y-43-12741	K0210-002040	22	K012041
12Y-43-12741	K0210-006040	22	K015041
12Y-43-12781	K0210-002040	21	K012041
12Y-43-12781	K0210-006040	21	K015041
12Y-43-12790	K0210-002040	9	K012041
12Y-43-12790	K0210-006040	9	K015041
12Y-43-12841	K0210-002040	2	K012041
12Y-43-12841	K0210-006040	2	K015041
12Y-43-12852	K0210-002040	15	K012041
12Y-43-12852	K0210-006040	15	K015041
12Y-43-12861	K0210-002014	15	K012014
12Y-43-12861	K0210-002045	20	K012046
12Y-43-12861	K0210-006014	15	K015014
12Y-43-12861	K0210-006045	20	K015046
12Y-43-12880	K0210-002040	10	K012041
12Y-43-12880	K0210-006040	10	K015041
12Y-43-21111	K0210-002041	1	K012042
12Y-43-21111	K0210-006041	1	K015042
12Y-43-21121	K0210-002041	2	K012042
12Y-43-21121	K0210-006041	2	K015042
12Y-43-21130	K0210-006041	4	K015042
12Y-43-21141	K0210-002041	12	K012042
12Y-43-21141	K0210-006041	12	K015042
12Y-43-21201	K0210-002041	1	K012042
12Y-43-21201	K0210-006041	1	K015042
12Y-43-21210	K0210-002041	32	K012042
12Y-43-21210	K0210-006041	32	K015042
12Y-43-21220	K0210-002041	33	K012042
12Y-43-21220	K0210-006041	33	K015042
12Y-43-21231	K0210-002041	26	K012042
12Y-43-21231	K0210-006041	26	K015042
12Y-43-21241	K0210-002041	28	K012042
12Y-43-21241	K0210-006041	28	K015042
12Y-43-21250	K0210-002041	30	K012042
12Y-43-21250	K0210-006041	30	K015042
12Y-43-21261	K0210-002041	31	K012042
12Y-43-21261	K0210-006041	31	K015042
12Y-43-21271	K0210-002041	29	K012042
12Y-43-21271	K0210-006041	29	K015042
12Y-43-21310	K0230-001001	31	K016001
12Y-43-21310	K0230-002004	8	K017004
12Y-43-21321	K0230-001001	35	K016001
12Y-43-21321	K0230-002004	12	K017004
12Y-43-21330	K0230-001001	36	K016001
12Y-43-21330	K0230-002004	13	K017004
12Y-43-21501	K0210-002038	1	K012039
12Y-43-21501	K0210-006038	1	K015039
12Y-43-21520	K0210-002038	5	K012039
12Y-43-21520	K0210-006038	5	K015039
12Y-43-21541	K0210-002038	3	K012039
12Y-43-21541	K0210-006038	3	K015039
12Y-43-21591	K0210-002038	4	K012039
12Y-43-21591	K0210-006038	4	K015039
12Y-43-21611	K0210-002037	10	K012038
12Y-43-21611	K0210-006037	10	K015038
12Y-43-21630	K0210-002037	1	K012038
12Y-43-21630	K0210-006037	1	K015038
12Y-43-21640	K0210-002040	18	K012041
12Y-43-21640	K0210-006040	18	K015041
12Y-43-21651	K0210-002034	3	K012035
12Y-43-21651	K0210-006034	3	K015035
12Y-43-21661	K0210-002037	13	K012038
12Y-43-21661	K0210-006037	13	K015038
12Y-43-21710	K0210-002040	1	K012041
12Y-43-21710	K0210-006040	1	K015041
12Y-43-21720	K0210-002040	14	K012041
12Y-43-21720	K0210-006040	14	K015041
12Y-43-21751	K0210-006040	5	K015041
12Y-43-21770	K0210-002040	8	K012041
12Y-43-21770	K0210-006040	8	K015041
12Y-43-21800	K0210-002035	1	K012036
12Y-43-21800	K0210-006035	1	K015036
12Y-43-21810	K0210-002035	5	K012036
12Y-43-21810	K0210-006035	5	K015036
12Y-43-21820	K0210-002035	1	K012036
12Y-43-21820	K0210-006035	1	K015036
12Y-54-26111	K0210-002002	1	K012002
12Y-54-26111	K0210-006002	1	K015002
12Y-54-26121	K0210-002004	1	K012004
12Y-54-26121	K0210-006004	1	K015004
12Y-54-26210	K0210-002003	11	K012003
12Y-54-26210	K0210-002005	11	K012005
12Y-54-26210	K0210-006003	11	K015003
12Y-54-26210	K0210-006005	11	K015005
12Y-54-26410	K0210-002007	36	K012007
12Y-54-26410	K0210-006007	36	K015007
12Y-54-26420	K0210-002007	37	K012007
12Y-54-26420	K0210-006007	37	K015007
12Y-54-26430	K0210-002007	1	K012007
12Y-54-26430	K0210-006007	1	K015007
12Y-54-26611	K0210-002003	5	K012003
12Y-54-26611	K0210-006003	5	K015003
12Y-54-26621	K0210-002005	5	K012005
12Y-54-26621	K0210-006005	5	K015005
12Y-54-26650	K0210-002003	26	K012003
12Y-54-26650	K0210-006003	26	K015003
12Y-54-26660	K0210-002005	26	K012005
12Y-54-26660	K0210-006005	26	K015005
12Y-54-26711	K0210-002024	17	K012025
12Y-54-26711	K0210-006024	12	K015025
12Y-54-26721	K0230-002004	16	K017004
12Y-54-26731	K0230-002004	17	K017004
12Y-54-26771	K0210-002024	16	K012025
12Y-54-26771	K0210-006024	11	K015025
12Y-54-27121	K0210-002048	1	K012049
12Y-54-27121	K0210-006048	1	K015049
12Y-54-27131	K0210-002048	7	K012049
12Y-54-27131	K0210-006048	7	K015049
12Y-54-27151	K0210-002048	10	K012049
12Y-54-27151	K0210-006048	10	K015049
12Y-54-27161	K0210-002048	14	K012049
12Y-54-27161	K0210-006048	14	K015049
12Y-54-27171	K0210-002048	15	K012049
12Y-54-27171	K0210-006048	15	K015049
12Y-54-27251	K0210-002008	3	K012008
12Y-54-27251	K0210-006008	3	K015008
12Y-54-27271	K0210-006003	6	K015003
12Y-54-27281	K0210-002005	6	K012005
12Y-54-27281	K0210-006005	6	K015005
12Y-54-27290	K0210-002003	7	K012003
12Y-54-27290	K0210-002005	7	K012005
12Y-54-27290	K0210-006003	7	K015003
12Y-54-27290	K0210-006005	7	K015005
12Y-54-27331	K0210-002010	33	K012010
12Y-54-27331	K0210-006010	33	K015010
12Y-54-27351	K0210-002010	32	K012010
12Y-54-27351	K0210-006010	32	K015010
12Y-54-27361	K0210-002009	2	K012009
12Y-54-27361	K0210-006009	2	K015009

PARTS Nº	FIG. Nº	INDEX	PAGE
12Y-54-27371	K0210-002010	2	K012010
12Y-54-27371	K0210-006010	2	K015010
12Y-54-27390	K0210-002009	9	K012009
12Y-54-27390	K0210-002010	9	K012010
12Y-54-27390	K0210-006009	9	K015009
12Y-54-27390	K0210-006010	9	K015010
12Y-54-27401	K0210-002009	1	K012009
12Y-54-27401	K0210-006009	1	K015009
12Y-54-27411	K0210-002009	1	K012009
12Y-54-27411	K0210-006009	1	K015009
12Y-54-27431	K0210-002009	8	K012009
12Y-54-27431	K0210-006009	8	K015009
12Y-54-27450	K0210-002009	4	K012009
12Y-54-27450	K0210-002010	3	K012010
12Y-54-27450	K0210-006009	4	K015009
12Y-54-27450	K0210-006010	3	K015010
12Y-54-27470	K0210-002009	11	K012009
12Y-54-27470	K0210-002010	10	K012010
12Y-54-27470	K0210-006009	11	K015009
12Y-54-27470	K0210-006010	10	K015010
12Y-54-27480	K0210-002009	5	K012009
12Y-54-27480	K0210-002010	4	K012010
12Y-54-27480	K0210-006009	5	K015009
12Y-54-27480	K0210-006010	4	K015010
12Y-54-27490	K0210-002009	6	K012009
12Y-54-27490	K0210-002010	5	K012010
12Y-54-27490	K0210-006009	6	K015009
12Y-54-27490	K0210-006010	5	K015010
12Y-54-27501	K0210-002010	1	K012010
12Y-54-27501	K0210-006010	1	K015010
12Y-54-27511	K0210-002010	1	K012010
12Y-54-27511	K0210-006010	1	K015010
12Y-54-27531	K0210-002010	8	K012010
12Y-54-27531	K0210-006010	8	K015010
12Y-54-27550	K0210-002009	7	K012009
12Y-54-27550	K0210-002010	7	K012010
12Y-54-27550	K0210-006009	7	K015009
12Y-54-27550	K0210-006010	7	K015010
12Y-54-27560	K0210-002009	12	K012009
12Y-54-27560	K0210-002010	12	K012010
12Y-54-27560	K0210-006009	12	K015009
12Y-54-27560	K0210-006010	12	K015010
12Y-54-27571	K0210-002009	13	K012009
12Y-54-27571	K0210-002010	13	K012010
12Y-54-27571	K0210-006009	13	K015009
12Y-54-27571	K0210-006010	13	K015010
12Y-54-27590	K0210-002009	14	K012009
12Y-54-27590	K0210-002010	14	K012010
12Y-54-27590	K0210-006009	14	K015009
12Y-54-27590	K0210-006010	14	K015010
12Y-54-27611	K0210-002009	15	K012009
12Y-54-27611	K0210-006009	15	K015009
12Y-54-27620	K0210-002010	15	K012010
12Y-54-27620	K0210-006010	15	K015010
12Y-54-27630	K0210-002009	16	K012009
12Y-54-27630	K0210-002010	16	K012010
12Y-54-27630	K0210-006009	16	K015009
12Y-54-27630	K0210-006010	16	K015010
12Y-54-27641	K0210-002009	19	K012009
12Y-54-27641	K0210-002010	19	K012010
12Y-54-27641	K0210-006009	19	K015009
12Y-54-27641	K0210-006010	19	K015010
12Y-54-27671	K0210-002009	17	K012009
12Y-54-27671	K0210-002010	17	K012010
12Y-54-27671	K0210-006009	17	K015009
12Y-54-27671	K0210-006010	17	K015010
12Y-54-27681	K0210-002009	18	K012009
12Y-54-27681	K0210-002010	18	K012010
12Y-54-27681	K0210-006009	18	K015009
12Y-54-27681	K0210-006010	18	K015010
12Y-54-27690	K0210-002009	20	K012009
12Y-54-27690	K0210-002010	20	K012010
12Y-54-27690	K0210-006009	20	K015009
12Y-54-27690	K0210-006010	20	K015010
12Y-54-27712	K0210-002022	13	K012023
12Y-54-27712	K0210-006022	13	K015023
12Y-54-27780	K0210-002022	14	K012023
12Y-54-27780	K0210-006022	14	K015023
12Y-54-27850	K0210-002022	1	K012023
12Y-54-27850	K0210-006022	1	K015023
12Y-54-27931	K0230-001001	22	K016001
12Y-54-27931	K0230-002004	1	K017004
12Y-54-27941	K0230-001001	23	K016001
12Y-54-27941	K0230-002004	2	K017004
12Y-54-28210	K0210-002016	3	K012016
12Y-54-28210	K0210-006016	3	K015016
12Y-54-28220	K0210-002016	4	K012016
12Y-54-28220	K0210-006016	4	K015016
12Y-54-28230	K0210-002011	4	K012011
12Y-54-28230	K0210-006011	4	K015011
12Y-54-28311	K0230-001001	26	K016001
12Y-54-28320	K0230-001001	28	K016001
12Y-54-28320	K0230-002004	5	K017004
12Y-54-28331	K0230-001001	27	K016001
12Y-54-28411	K0210-002015	1	K012015
12Y-54-28411	K0210-006015	1	K015015
12Y-54-28510	K0210-002021	2	K012022
12Y-54-28510	K0210-006021	2	K015022
12Y-54-28580	K0210-002019	5	K012019
12Y-54-28580	K0210-002019	5	K012020
12Y-54-28580	K0210-006019	5	K015019
12Y-54-28591	K0210-002020	1	K012021
12Y-54-28591	K0210-006020	1	K015021
12Y-54-28611	K0210-002019	1	K012019
12Y-54-28611	K0210-002019	1	K012020
12Y-54-28611	K0210-006019	1	K015019
12Y-54-28621	K0210-002019	8	K012019
12Y-54-28621	K0210-002019	8	K012020
12Y-54-28621	K0210-006019	8	K015019
12Y-54-28641	K0210-002019	14	K012019
12Y-54-28641	K0210-002019	14	K012020
12Y-54-28641	K0210-006019	14	K015019
12Y-54-28691	K0210-002019	18	K012019
12Y-54-28691	K0210-002019	18	K012020
12Y-54-28691	K0210-006019	18	K015019
12Y-54-28711	K0310-001001	1	K018001
12Y-54-28720	K0210-002019	22	K012019
12Y-54-28720	K0210-002019	22	K012020
12Y-54-28720	K0210-006019	22	K015019
12Y-54-28730	K0210-002019	2	K012019
12Y-54-28730	K0210-002019	2	K012020
12Y-54-28730	K0210-006019	2	K015019
12Y-54-28740	K0210-002019	23	K012019
12Y-54-28740	K0210-002019	23	K012020
12Y-54-28740	K0210-006019	23	K015019
12Y-54-28750	K0210-002019	24	K012019
12Y-54-28750	K0210-002019	24	K012020
12Y-54-28750	K0210-006019	24	K015019
12Y-54-28760	K0210-002019	25	K012019
12Y-54-28760	K0210-002019	25	K012020
12Y-54-28760	K0210-006019	25	K015019
12Y-54-28770	K0210-002019	26	K012019
12Y-54-28770	K0210-002019	26	K012020
12Y-54-28770	K0210-006019	26	K015019
12Y-54-28780	K0210-002050	1	K012051
12Y-54-28780	K0210-002050	7	K012051
12Y-54-28780	K0210-006050	1	K015051
12Y-54-28780	K0210-006050	7	K015051
12Y-54-28790	K0210-002019	27	K012020
12Y-54-28790	K0210-006019	27	K015019
12Y-54-28821	K0210-002050	8	K012051
12Y-54-28821	K0210-006050	8	K015051
12Y-54-28841	K0210-002050	2	K012051
12Y-54-28841	K0210-006050	2	K015051
12Y-54-28850	K0210-002049	21	K012050
12Y-54-28850	K0210-006049	21	K015050
12Y-54-28861	K0210-002049	1	K012050
12Y-54-28861	K0210-006049	1	K015050
12Y-54-28870	K0210-002049	2	K012050
12Y-54-28870	K0210-006049	2	K015050
12Y-54-28880	K0210-002049	3	K012050
12Y-54-28880	K0210-006049	3	K015050
12Y-54-28890	K0210-002049	8	K012050
12Y-54-28890	K0210-006049	8	K015050
12Y-54-28911	K0210-002049	7	K012050
12Y-54-28911	K0210-006049	7	K015050
12Y-54-28921	K0210-002049	11	K012050
12Y-54-28921	K0210-006049	11	K015050
12Y-54-28930	K0210-002049	17	K012050
12Y-54-28930	K0210-006049	17	K015050
12Y-54-28940	K0210-002049	12	K012050
12Y-54-28940	K0210-002049	18	K012050
12Y-54-28940	K0210-006049	12	K015050
12Y-54-28940	K0210-006049	18	K015050
12Y-54-28950	K0210-002049	13	K012050
12Y-54-28950	K0210-006049	13	K015050
12Y-54-28971	K0210-002020	12	K012021
12Y-54-28971	K0210-006020	12	K015021
12Y-54-28981	K0210-002049	16	K012050
12Y-54-28981	K0210-006049	16	K015050
12Y-54-28991	K0210-002023	5	K012024
12Y-54-28991	K0210-006023	5	K015024
12Y-57-11131	K0210-002031	36	K012032
12Y-57-11131	K0210-006031	36	K015032
12Y-57-11170	K0210-002031	40	K012032
12Y-57-11170	K0210-006031	40	K015032
12Y-57-11181	K0210-002031	41	K012032
12Y-57-11181	K0210-006031	41	K015032
12Y-57-21111	K0160-002001	1	K011001
12Y-57-21121	K0160-002001	2	K011001
12Y-57-21211	K0110-001002	5	K001002
12Y-57-21211	K0110-005002	5	K005002
12Y-57-21221	K0110-002003	3	K002003
12Y-57-21231	K0210-002031	35	K012032
12Y-57-21231	K0210-006031	35	K015032
12Y-57-21240	K0110-001002	11	K001002
12Y-57-21240	K0110-005002	11	K005002
12Y-57-21251	K0210-002031	39	K012032
12Y-57-21251	K0210-006031	39	K015032
12Y-62-11661	H2250-001001	3	H013001
12Y-62-11661	H2250-002001	3	H014001
12Y-62-13332	K2520-001003	16	K024003
12Y-78-11130	K0210-002039	5	K012040
12Y-78-11130	K0210-006039	5	K015040
12Y-78-11150	K0210-002039	1	K012040
12Y-78-11150	K0210-006039	1	K015040
12Y-78-11180	K0210-002039	3	K012040
12Y-78-11180	K0210-006039	3	K015040
12Y-78-21160	K2520-001003	4	K024003
12Y-960-1590	K2520-001003	9	K024003
12Y-977-1121	K0210-002031	20	K012032
12Y-977-1121	K0210-006031	20	K015032
12Y-977-1193	K0210-002031	29	K012032
12Y-977-1193	K0210-006031	29	K015032
12Y-978-1310	K0210-002008	1	K012008
12Y-978-1310	K0210-006008	1	K015008
12Y-978-1320	K0210-002008	2	K012008
12Y-978-1320	K0210-006008	2	K015008
12Y-978-1341	K0210-002008	4	K012008
12Y-978-1341	K0210-006008	4	K015008
12Y-978-1751	K0210-002022	2	K012023
12Y-978-1751	K0210-006022	2	K015023
12Y-978-1810	K0210-002022	3	K012023
12Y-978-1810	K0210-006022	3	K015023
12Y-978-1840	K0210-002019	21	K012019
12Y-978-1840	K0210-002019	21	K012020
12Y-978-1840	K0210-006019	21	K015019
12Y-978-2126	K0210-002003	18	K012003
12Y-978-2126	K0210-002005	18	K012005
12Y-978-2126	K0210-006003	18	K015003
12Y-978-2126	K0210-006005	18	K015005
12Y-978-2160	K0210-002013	7	K012013
12Y-978-2160	K0210-002022	4	K012023
12Y-978-2160	K0210-002048	33	K012049
12Y-978-2160	K0210-006013	7	K015013
12Y-978-2160	K0210-006022	4	K015023
12Y-978-2160	K0210-006048	33	K015049
12Y-978-2160	K0230-002003	20	K017003
12Y-978-2172	K0210-002013	23	K012013
12Y-978-2172	K0210-006013	23	K015013
12Y-978-2184	K0210-002013	4	K012013
12Y-978-2184	K0210-006013	4	K015013
12Y-978-2192	K0210-002013	5	K012013
12Y-978-2192	K0210-006013	5	K015013
12Y-978-2271	K0210-002011	1	K012011
12Y-978-2271	K0210-006011	1	K015011
12Y-978-2320	K0210-002022	11	K012023
12Y-978-2320	K0210-006022	11	K015023
12Y-978-2340	K0210-002019	15	K012019
12Y-978-2340	K0210-002019	15	K012020
12Y-978-2340	K0210-006019	15	K015019
12Y-978-2411	K0210-002014	1	K012014
12Y-978-2411	K0210-006014	1	K015014
12Y-978-2431	K0210-002003	8	K012003
12Y-978-2431	K0210-006003	8	K015003
12Y-978-2441	K0210-002005	8	K012005
12Y-978-2441	K0210-002014	7	K012014
12Y-978-2441	K0210-006005	8	K015005
12Y-978-2441	K0210-006014	7	K015014
12Y-978-2450	K0210-002014	5	K012014
12Y-978-2450	K0210-006014	5	K015014
12Y-978-2460	K0210-002014	6	K012014
12Y-978-2460	K0210-006014	6	K015014
12Y-978-2470	K0210-002014	2	K012014
12Y-978-2470	K0210-006014	2	K015014
12Y-978-2490	K0210-002003	14	K012003
12Y-978-2490	K0210-002005	14	K012005
12Y-978-2490	K0210-006003	14	K015003
12Y-978-2490	K0210-006005	14	K015005
12Y-978-2572	K0210-002014	10	K012014
12Y-978-2572	K0210-006014	10	K015014
12Y-978-2580	K0210-002014	11	K012014
12Y-978-2580	K0210-006014	11	K015014
12Y-978-2660	K0210-002003	24	K012003
12Y-978-2660	K0210-002005	24	K012005
12Y-978-2660	K0210-002007	39	K012007
12Y-978-2660	K0210-002014	23	K012014
12Y-978-2660	K0210-006003	24	K015003
12Y-978-2660	K0210-006005	24	K015005
12Y-978-2660	K0210-006007	39	K015007
12Y-978-2660	K0210-006014	23	K015014
12Y-978-2840	K0210-002050	13	K012051
12Y-978-2840	K0210-006050	13	K015051
12Y-978-2870	K0210-002010	34	K012010
12Y-978-2870	K0210-002024	5	K012025
12Y-978-2870	K0210-006010	34	K015010
12Y-978-2870	K0210-006024	5	K015025
12Y-978-2890	K0310-001001	2	K018001
12Y-978-2912	K0230-001001	39	K016001
12Y-978-2920	K0230-001001	40	K016001
12Y-978-2990	K0210-002049	25	K012050
12Y-978-2990	K0210-006049	25	K015050
12Y-978-3210	K0210-002002	4	K012002
12Y-978-3210	K0210-002004	4	K012004
12Y-978-3210	K0210-006002	4	K015002
12Y-978-3210	K0210-006004	4	K015004
12Y-978-3221	K0210-002002	13	K012002
12Y-978-3221	K0210-002002	13	K015002
12Y-978-3231	K0210-002004	13	K012004
12Y-978-3231	K0210-006004	13	K015004
12Y-978-3241	K0210-002002	14	K012002
12Y-978-3241	K0210-002004	14	K012004
12Y-978-3241	K0210-006002	14	K015002
12Y-978-3241	K0210-006004	14	K015004
12Y-978-3251	K0210-002002	20	K012002
12Y-978-3251	K0210-006002	20	K015002
12Y-978-3261	K0210-002002	21	K012002
12Y-978-3261	K0210-006002	21	K015002
12Y-978-3271	K0210-002004	21	K012004
12Y-978-3271	K0210-006004	21	K015004

PARTS Nº	FIG. Nº	INDEX	PAGE
12Y-978-3281	K0210-002002	10	K012002
12Y-978-3281	K0210-002004	10	K012004
12Y-978-3281	K0210-002007	22	K012007
12Y-978-3281	K0210-006002	10	K015002
12Y-978-3281	K0210-006004	10	K015004
12Y-978-3281	K0210-006007	22	K015007
12Y-978-3290	K0210-002002	11	K012002
12Y-978-3290	K0210-002004	11	K012004
12Y-978-3290	K0210-002007	23	K012007
12Y-978-3290	K0210-006002	11	K015002
12Y-978-3290	K0210-006004	11	K015004
12Y-978-3290	K0210-006007	23	K015007
12Y-978-3310	K0210-002002	18	K012002
12Y-978-3310	K0210-002002	29	K012002
12Y-978-3310	K0210-002002	32	K012002
12Y-978-3310	K0210-002004	18	K012004
12Y-978-3310	K0210-002004	29	K012004
12Y-978-3310	K0210-002004	32	K012004
12Y-978-3310	K0210-006002	18	K015002
12Y-978-3310	K0210-006002	29	K015002
12Y-978-3310	K0210-006002	32	K015002
12Y-978-3310	K0210-006004	18	K015004
12Y-978-3310	K0210-006004	29	K015004
12Y-978-3310	K0210-006004	32	K015004
12Y-978-3350	K0210-002002	43	K012002
12Y-978-3350	K0210-006002	43	K015002
12Y-978-3350	K0210-006004	43	K015004
12Y-978-3360	K0210-002002	23	K012002
12Y-978-3360	K0210-002004	23	K012004
12Y-978-3360	K0210-006002	23	K015002
12Y-978-3360	K0210-006004	23	K015004
12Y-978-3391	K0210-002014	20	K012014
12Y-978-3391	K0210-006014	20	K015014
12Y-978-3470	K0210-002004	20	K012004
12Y-978-3470	K0210-006004	20	K015004
12Y-978-3480	K0210-002002	37	K012002
12Y-978-3480	K0210-002004	37	K012004
12Y-978-3480	K0210-006002	37	K015002
12Y-978-3480	K0210-006004	37	K015004
12Y-978-3492	K0210-002030	20	K012031
12Y-978-3492	K0210-006030	20	K015031
12Y-978-3492	K0230-001001	4	K016001
12Y-978-3492	K0230-002001	4	K017001
12Y-978-3512	K0210-002007	8	K012007
12Y-978-3512	K0210-006007	8	K015007
12Y-978-3522	K0210-002007	9	K012007
12Y-978-3522	K0210-006007	9	K015007
12Y-978-3541	K0210-002007	11	K012007
12Y-978-3541	K0210-006007	11	K015007
12Y-978-3551	K0210-002007	12	K012007
12Y-978-3551	K0210-006007	12	K015007
12Y-978-3561	K0210-002007	15	K012007
12Y-978-3561	K0210-006007	15	K015007
12Y-978-3571	K0210-002007	16	K012007
12Y-978-3571	K0210-006007	16	K015007
12Y-978-3580	K0210-002007	17	K012007
12Y-978-3580	K0210-006007	17	K015007
12Y-978-3590	K0210-002007	18	K012007
12Y-978-3590	K0210-006007	18	K015007
12Y-978-3613	K0210-002007	19	K012007
12Y-978-3613	K0210-006007	19	K015007
12Y-978-3623	K0210-002007	20	K012007
12Y-978-3623	K0210-006007	20	K015007
12Y-978-3650	K0210-002002	46	K012002
12Y-978-3650	K0210-002004	46	K012004
12Y-978-3650	K0210-006002	46	K015002
12Y-978-3650	K0210-006004	46	K015004
12Y-978-3791	K0210-002024	13	K012025
12Y-978-3791	K0210-006024	8	K015025
12Y-978-3791	K0210-006053	14	K015054
12Y-978-3791	K0230-002002	28	K017002
12Y-978-3791	K0230-002002	43	K017002
12Y-978-6201	K0210-002001	1	K012001
12Y-978-6201	K0210-006001	1	K015001
12Y-979-1133	K0210-002026	2	K012027
12Y-979-1133	K0210-006026	3	K015027
12Y-979-1140	K0210-002027	1	K012028
12Y-979-1140	K0210-006027	1	K015028
12Y-979-1150	K0210-002027	2	K012028
12Y-979-1150	K0210-006027	2	K015028
12Y-979-1174	K0210-002027	5	K012028
12Y-979-1174	K0210-006027	5	K015028
12Y-979-1212	K0210-002027	7	K012028
12Y-979-1212	K0210-006027	7	K015028
12Y-979-1222	K0210-002027	8	K012028
12Y-979-1222	K0210-006027	8	K015028
12Y-979-1230	K0210-002027	10	K012028
12Y-979-1230	K0210-006027	10	K015028
12Y-979-1250	K0210-002027	12	K012028
12Y-979-1250	K0210-006027	12	K015028
12Y-979-1262	K0210-002027	13	K012028
12Y-979-1262	K0210-006027	13	K015028
12Y-979-1271	K0210-002027	15	K012028
12Y-979-1271	K0210-006027	15	K015028
12Y-979-1283	K0210-002027	17	K012028
12Y-979-1283	K0210-006027	17	K015028
12Y-979-1292	K0210-002027	18	K012028
12Y-979-1292	K0210-006027	18	K015028
12Y-979-1324	K0210-002029	8	K012030
12Y-979-1324	K0210-006029	8	K015030
12Y-979-1342	K0210-002029	28	K012030
12Y-979-1342	K0210-006029	28	K015030
12Y-979-1350	K0210-002031	1	K012032
12Y-979-1350	K0210-006031	1	K015032
12Y-979-1361	K0210-002031	6	K012032
12Y-979-1361	K0210-006031	6	K015032
12Y-979-1392	K0210-002029	29	K012030
12Y-979-1392	K0210-006029	29	K015030
12Y-979-1412	K0210-002027	24	K012028
12Y-979-1412	K0210-006027	24	K015028
12Y-979-1423	K0210-002027	25	K012028
12Y-979-1423	K0210-006027	25	K015028
12Y-979-1433	K0210-002027	26	K012028
12Y-979-1433	K0210-006027	26	K015028
12Y-979-1441	K0210-002027	27	K012028
12Y-979-1441	K0210-006027	27	K015028
12Y-979-1460	K0210-002027	31	K012028
12Y-979-1460	K0210-006027	31	K015028
12Y-979-1472	K0210-002027	20	K012028
12Y-979-1472	K0210-006027	20	K015028
12Y-979-1472	K0710-001001	42	K019001
12Y-979-1472	K0710-001001	42	K019001
12Y-979-1472	K0710-001001	42	K019001
12Y-979-1482	K0210-002027	22	K012028
12Y-979-1482	K0210-006027	22	K015028
12Y-979-1482	K0710-001001	43	K019001
12Y-979-1482	K0710-001001	43	K019001
12Y-979-1482	K0710-001001	43	K019001
12Y-979-1490	K0210-002020	11	K012021
12Y-979-1490	K0210-006020	11	K015021
12Y-979-1512	K0210-002028	9	K012029
12Y-979-1512	K0210-006028	9	K015029
12Y-979-1522	K0210-002028	15	K012029
12Y-979-1522	K0210-006028	15	K015029
12Y-979-1533	K0210-002028	25	K012029
12Y-979-1533	K0210-006028	25	K015029
12Y-979-1533	K0710-001002	20	K019002
12Y-979-1533	K0710-001002	20	K019002
12Y-979-1533	K0710-001002	20	K019002
12Y-979-1543	K0210-002028	3	K012029
12Y-979-1543	K0210-006028	3	K015029
12Y-979-1552	K0210-006028	1	K015029
12Y-979-1563	K0210-002028	13	K012029
12Y-979-1563	K0210-006028	13	K015029
12Y-979-1570	K0210-002027	29	K012028
12Y-979-1570	K0210-006027	29	K015028
12Y-979-1590	K0210-002029	22	K012030
12Y-979-1590	K0210-006029	22	K015030
12Y-979-1642	K0230-001001	1	K016001

PARTS Nº	FIG. Nº	INDEX	PAGE
12Y-979-1652	K0210-002030	8	K012031
12Y-979-1652	K0210-006030	8	K015031
12Y-979-1661	K0210-002029	32	K012030
12Y-979-1661	K0210-006029	32	K015030
12Y-979-1690	K0210-002030	7	K012031
12Y-979-1690	K0210-006030	7	K015031
12Y-979-1751	K0210-002030	24	K012031
12Y-979-1751	K0210-006030	24	K015031
12Y-979-1760	K0210-002029	35	K012030
12Y-979-1760	K0210-006029	35	K015030
12Y-979-1782	K0210-002030	18	K012031
12Y-979-1782	K0210-006030	18	K015031
12Y-979-1850	K0210-002029	13	K012030
12Y-979-1850	K0210-006029	13	K015030
12Y-979-1860	K0210-002030	11	K012031
12Y-979-1860	K0210-006030	11	K015031
12Y-979-1860	K0230-001001	5	K016001
12Y-979-1860	K0230-002001	5	K017001
12Y-979-2150	K0210-002027	21	K012028
12Y-979-2150	K0210-002027	9	K012028
12Y-979-2150	K0210-006027	21	K015028
12Y-979-2150	K0210-006027	9	K015028
12Y-979-2160	K0210-002027	16	K012028
12Y-979-2160	K0210-002027	23	K012028
12Y-979-2160	K0210-006027	16	K015028
12Y-979-2160	K0210-006027	23	K015028
12Y-979-2230	K0210-002027	11	K012028
12Y-979-2230	K0210-002027	14	K012028
12Y-979-2230	K0210-002027	19	K012028
12Y-979-2230	K0210-002027	28	K012028
12Y-979-2230	K0210-002027	3	K012028
12Y-979-2230	K0210-002027	30	K012028
12Y-979-2230	K0210-006027	11	K015028
12Y-979-2230	K0210-006027	14	K015028
12Y-979-2230	K0210-006027	19	K015028
12Y-979-2230	K0210-006027	28	K015028
12Y-979-2230	K0210-006027	3	K015028
12Y-979-2230	K0210-006027	30	K015028
12Y-979-2310	K0210-002029	1	K012030
12Y-979-2310	K0210-006029	1	K015030
12Y-979-2341	K0210-002029	30	K012030
12Y-979-2341	K0210-006029	30	K015030
12Y-979-2351	K0210-002029	31	K012030
12Y-979-2351	K0210-006029	31	K015030
12Y-979-2361	K0210-002029	36	K012030
12Y-979-2361	K0210-006029	36	K015030
12Y-979-2370	K0210-002029	37	K012030
12Y-979-2370	K0210-006029	37	K015030
12Y-979-6160	K0210-002027	4	K012028
12Y-979-6160	K0210-006027	4	K015028
12Y-979-6160	K0710-001002	21	K019002
12Y-979-6160	K0710-001002	21	K019002
12Y-979-6160	K0710-001002	21	K019002
12Y-979-6160	K0710-001002	21	K019002
12Y-979-6180	K0210-002027	6	K012028
12Y-979-6180	K0210-006027	6	K015028
12Y-979-6190	K0210-002025	1	K012026
12Y-979-6190	K0210-006025	1	K015026
12Y-979-6311	K0210-002031	21	K012032
12Y-979-6311	K0210-006031	21	K015032
12Y-979-6320	K0210-002031	17	K012032
12Y-979-6320	K0210-006031	17	K015032
12Y-979-6340	K0210-002031	25	K012032
12Y-979-6340	K0210-006031	25	K015032
12Y-979-6350	K0210-002031	8	K012032
12Y-979-6350	K0210-006031	8	K015032
12Y-979-6360	K0210-002031	22	K012032
12Y-979-6360	K0210-006031	22	K015032
12Y-979-6610	K0210-002030	1	K012031
12Y-979-6610	K0210-006030	1	K015031
12Y-979-6621	K0210-002030	4	K012031
12Y-979-6621	K0210-006030	4	K015031
12Y-979-6630	K0210-002030	28	K012031
12Y-979-6630	K0210-006030	28	K015031
12Y-979-6640	K0210-002030	31	K012031
12Y-979-6640	K0210-006030	31	K015031
12Y-979-6660	K0210-002030	15	K012031
12Y-979-6660	K0210-006030	15	K015031
12Y-979-6670	K0230-002001	1	K017001
12Y-979-6711	K0210-002030	21	K012031
12Y-979-6711	K0210-006030	21	K015031
12Y-979-6721	K0210-002029	17	K012030
12Y-979-6721	K0210-006029	17	K015030
12Y-979-6750	K0210-002030	12	K012031
12Y-979-6750	K0210-006030	12	K015031
12Y-98-11330	U0100-001001	10	U001001
12Y-98-11330	U0100-002001	10	U002001
130-09-12911	J2700-001001	10	J002001
130-30-13170	R0110-001001	12	R001001
130-69-11190	T2810-001001	4	T011001
131-30-00345	R0200-001001	1	R003001
131-30-36131	R0200-001001	3	R003001
131-30-36131	R0200-001002	3	R003002
131-30-36150	R0200-001001	9	R003001
131-30-36150	R0200-001002	9	R003002
131-30-36160	R0200-001001	12	R003001
131-30-36160	R0200-001002	12	R003002
131-30-61311	R0200-001001	1	R003001
131-30-61321	R0200-001002	1	R003002
131-30-61330	R0200-001001	2	R003001
131-30-61330	R0200-001002	2	R003002
131-30-61351	R0200-001001	8	R003001
131-30-61351	R0200-001002	8	R003002
131-69-00211	T2810-001001	1	T011001
131-69-41101	T2810-001001	1	T011001
131-69-41111	T2810-001001	1	T011001
134-01-61461	B0100-002001	2	B008001
134-01-61840	A2110-501001	3	B006001
134-01-61840	C0101-001001	27	C002001
134-01-61840	C0102-001002	11	C002002
134-06-61540	E0110-001001	1	E001001
134-27-61460	F2380-002008	1	F002008
134-27-61460	F2380-002015	1	F002015
134-30-00110	R0300-002001	1	R005001
134-30-61450	R2200-003001	13	R016001
134-30-62210	R0300-002001	1	R005001
134-30-62220	R0300-002001	3	R005001
134-30-62233	R0110-001001	1	R001001
134-30-62241	R0110-001001	2	R001001
134-30-62251	R0110-001001	3	R001001
134-30-62320	R0110-001001	16	R001001
134-30-63142	R0120-001001	24	R002001
134-30-63154	R0120-001001	9	R002001
134-30-63181	R0120-001001	11	R002001
134-30-63210	R0120-001001	12	R002001
134-30-63220	R0120-001001	17	R002001
134-30-73161	R0120-001001	8	R002001
134-32-01112	R0500-005001	1	R008001
134-32-05010	KIT	K01	Y001001
134-32-61110	R0500-005001	13	R008001
134-32-61110	R0500-005001	16	R008001
134-32-61120	R0500-005001	1	R008001
134-32-61130	R0500-005001	2	R008001
134-32-61140	R0500-005001	9	R008001
134-32-61150	R0500-005001	10	R008001
134-32-61190	R0500-005001	8	R008001
134-32-61221	KIT	K01	Y001001
134-32-61221	R0500-005001	15	R008001
134-32-61310	R0500-005001	17	R008001
134-32-61320	R0500-005001	3	R008001
134-32-61331	R0500-005001	4	R008001
134-32-61420	R0500-005001	5	R008001
134-32-61431	R0500-005001	6	R008001
134-32-63200	R0500-005001	7	R008001
134-50-62121	J2700-001001	12	J002001
134-50-62150	J2700-001001	8	J002001
134-50-62160	J2700-001001	11	J002001
134-54-78370	K0210-002048	34	K012049
134-54-78370	K0210-006048	34	K015049
134-62-63720	D0100-002003	8	D002003

PARTS Nº	FIG. Nº	INDEX	PAGE
134-62-72241	H0120-001014	10	H002014
134-62-72241	H0120-002012	10	H003012
134-62-73470	T2160-001002	16	T008002
134-69-61111	T2810-002001	1	T012001
134-69-61121	T2810-002001	2	T012001
134-72-61410	T2120-002001	6	T004001
134-72-61420	T2120-002001	7	T004001
134-72-61450	T2120-001001	4	T003001
134-72-61450	T2120-002001	4	T004001
134-72-61460	T2120-001001	5	T003001
134-72-61460	T2120-002001	5	T004001
134-72-61521	T2115-001002	6	T002002
134-72-62442	T2115-001001	1	T002001
134-72-71151	T2115-001001	3	T002001
134-72-71850	T2110-001001	11	T001001
134-72-72450	T2115-001001	2	T002001
134-72-72460	T2115-001001	2	T002001
134-98-72240	U0100-002001	29	U002001
134-X78-7450	K0210-002046	11	K012047
134-X78-7450	K0210-006046	11	K015047
13F-50-31131	J2700-001001	7	J002001
13G-72-61410	T2120-001001	6	T003001
13G-72-61420	T2120-001001	7	T003001
13Y-01-11313	A1470-502001	2	B003001
13Y-01-11323	A1470-501001	2	B002001
13Y-01-11332	A1470-501001	3	B002001
13Y-01-11332	A1470-502001	3	B003001
13Y-01-11340	A1470-501001	4	B002001
13Y-01-11340	A1470-502001	4	B003001
13Y-01-11550	B0100-002001	1	B008001
13Y-01-11560	B0100-002001	5	B008001
13Y-01-11581	A2250-501001	1	B007001
13Y-01-11591	A2250-501001	2	B007001
13Y-01-11611	B0600-001001	6	B011001
13Y-01-11772	A1610-501001	9	B005001
13Y-01-11781	A1610-501001	12	B005001
13Y-01-11791	A1610-501001	1	B005001
13Y-01-11952	K0710-001001	36	K019001
13Y-01-12372	A1610-501001	4	B005001
13Y-01-12470	B0600-001001	4	B011001
13Y-01-12751	A1610-501001	18	B005001
13Y-01-17110	A1610-501001	21	B005001
13Y-01-17121	A1610-501001	22	B005001
13Y-01-17130	A1610-501001	23	B005001
13Y-01-17140	A1610-501001	24	B005001
13Y-01-17181	A1610-501001	15	B005001
13Y-02-11140	A1410-501003	3	B001003
13Y-02-17120	A1610-501001	39	B005001
13Y-02-17133	A1610-501001	40	B005001
13Y-02-17141	A1610-501001	41	B005001
13Y-02-17164	A1610-501001	43	B005001
13Y-02-17173	A1610-501001	25	B005001
13Y-02-17180	A1610-501001	44	B005001
13Y-02-17190	A1610-501001	45	B005001
13Y-02-17250	A1410-501003	12	B001003
13Y-02-17281	A1610-501001	42	B005001
13Y-03-11142	C0100-001001	6	C001001
13Y-03-11152	C0100-001001	7	C001001
13Y-03-11160	C0100-001001	8	C001001
13Y-03-11171	C0100-001001	9	C001001
13Y-03-11180	C0100-001001	3	C001001
13Y-03-11190	C0100-001001	4	C001001
13Y-03-11204	C0100-001001	23	C001001
13Y-03-11212	C0100-001001	14	C001001
13Y-03-11240	C0100-001001	24	C001001
13Y-03-11250	C0100-001001	25	C001001
13Y-03-11261	C0100-001001	26	C001001
13Y-03-11270	C0100-001001	27	C001001
13Y-03-11281	C0100-001001	13	C001001
13Y-03-11281	C0100-001001	20	C001001
13Y-03-11341	H0100-001005	3	H001005
13Y-03-11410	C0100-001001	12	C001001
13Y-03-11430	C0100-001001	10	C001001
13Y-03-12103	C0100-001007	25	C001007
13Y-03-12131	C0100-001007	10	C001007
13Y-03-12131	C0100-001007	2	C001007
13Y-03-12153	C0100-001007	27	C001007
13Y-03-12162	C0100-001007	3	C001007
13Y-03-12171	C0100-001007	17	C001007
13Y-03-12184	C0100-001007	4	C001007
13Y-03-12194	C0100-001007	5	C001007
13Y-03-12204	C0100-001007	31	C001007
13Y-03-12223	C0100-001007	33	C001007
13Y-03-12234	C0100-001007	11	C001007
13Y-03-12242	C0100-001007	12	C001007
13Y-03-12252	C0100-001007	6	C001007
13Y-03-12262	C0100-001007	13	C001007
13Y-03-12272	C0100-001007	23	C001007
13Y-03-12291	C0100-001007	14	C001007
13Y-03-12303	C0100-001007	1	C001007
13Y-03-12314	C0100-001006	1	C001006
13Y-03-12321	C0100-001006	2	C001006
13Y-03-12332	C0100-001006	5	C001006
13Y-03-12371	C0100-001007	7	C001007
13Y-03-12382	C0100-001006	13	C001006
13Y-03-12402	C0100-001007	8	C001007
13Y-03-12413	C0100-001006	16	C001006
13Y-03-12470	C0100-001005	6	C001005
13Y-03-12481	C0100-001007	15	C001007
13Y-03-12481	C0100-001007	34	C001007
13Y-03-12491	C0100-001006	25	C001006
13Y-03-12521	C0100-001004	14	C001004
13Y-03-12532	C0100-001006	19	C001006
13Y-03-12532	E0420-001001	8	E004001
13Y-03-12571	C0100-001006	28	C001006
13Y-03-12590	C0100-001005	7	C001005
13Y-03-12612	C0100-001007	16	C001007
13Y-03-12620	C0100-001007	8	C001007
13Y-03-13115	M2110-001001	1	M001001
13Y-03-13122	M2110-001001	6	M001001
13Y-03-13131	M2110-001001	14	M001001
13Y-03-13142	M2110-001001	15	M001001
13Y-03-13153	M2110-001001	16	M001001
13Y-03-13171	M2110-001001	7	M001001
13Y-03-13181	M2110-001001	18	M001001
13Y-03-13190	M2110-001001	19	M001001
13Y-03-13214	M2110-001001	20	M001001
13Y-03-13221	M2110-001001	29	M001001
13Y-03-13252	M2110-001001	11	M001001
13Y-03-13313	C0100-001005	4	C001005
13Y-03-13332	C0100-001005	1	C001005
13Y-03-13340	C0100-001005	15	C001005
13Y-03-13361	C0103-001001	15	C003001
13Y-03-13371	C0103-001001	1	C003001
13Y-03-14111	C0103-001003	4	C002003
13Y-03-14131	C0103-001003	21	C002003
13Y-03-14141	C0103-001003	24	C002003
13Y-03-14151	C0103-001003	25	C002003
13Y-03-14212	C0103-001003	27	C002003
13Y-03-14221	C0103-001003	30	C002003
13Y-03-14232	C0103-001003	32	C002003
13Y-03-14322	C0103-001003	1	C002003
13Y-03-14331	C0103-001003	41	C002003
13Y-03-14342	C0103-001003	48	C002003
13Y-03-14350	C0103-001003	38	C002003
13Y-03-14350	C0103-001003	45	C002003
13Y-03-14350	C0103-001003	52	C002003
13Y-03-14350	C0103-001003	59	C002003
13Y-03-14382	C0103-001003	14	C002003
13Y-03-14410	C0103-001003	37	C002003
13Y-03-14410	C0103-001003	44	C002003
13Y-03-14410	C0103-001003	51	C002003
13Y-03-14410	C0103-001003	58	C002003
13Y-03-14422	C0103-001003	55	C002003
13Y-03-14430	C0103-001001	21	C003001
13Y-03-15111	C0101-001001	55	C002001
13Y-03-15131	C0101-001001	30	C002001
13Y-03-15150	C0101-001001	32	C002001
13Y-03-15150	C0102-001002	19	C002002
13Y-03-15160	C0102-001002	27	C002002
13Y-03-15172	C0102-001002	21	C002002
13Y-03-15181	C0102-001002	29	C002002
13Y-03-15191	H0100-001005	7	H001005
13Y-03-15210	C0102-001002	17	C002002
13Y-03-15221	C0102-001002	1	C002002
13Y-03-15221	K0710-001002	19	K019002
13Y-03-15241	C0102-001002	12	C002002
13Y-03-15252	K0710-001002	3	K019002
13Y-03-15342	C0101-001001	34	C002001
13Y-03-15352	C0103-001001	50	C003001
13Y-03-15361	C0101-001001	41	C002001
13Y-03-15371	C0102-001002	6	C002002
13Y-03-16114	C0103-001001	4	C003001
13Y-03-16114	H0120-001014	42	H002014
13Y-03-16114	H0120-002012	42	H003012
13Y-03-16133	C0103-001001	28	C003001
13Y-03-16154	C0103-001001	25	C003001
13Y-03-16180	C0103-001001	31	C003001
13Y-03-16180	H1840-001010	15	H009010
13Y-03-16212	C0103-001001	6	C003001
13Y-03-16223	C0103-001001	30	C003001
13Y-03-16242	C0103-001001	27	C003001
13Y-03-16312	C0103-001001	18	C003001
13Y-03-17141	C0100-001001	19	C001001
13Y-03-17160	C0100-001001	4	C001001
13Y-03-17170	C0100-001001	10	C001001
13Y-03-17180	C0100-001001	1	C001001
13Y-03-17211	C0101-001001	1	C002001
13Y-03-17220	C0101-001001	5	C002001
13Y-03-17232	C0101-001001	15	C002001
13Y-03-17240	C0101-001001	8	C002001
13Y-03-17251	C0101-001001	24	C002001
13Y-03-17260	C0101-001001	48	C002001
13Y-03-17271	C0103-001003	6	C002003
13Y-03-17280	C0103-001003	7	C002003
13Y-03-17331	C0100-001001	15	C001001
13Y-03-17340	C0100-001001	16	C001001
13Y-03-17440	C0103-001003	34	C002003
13Y-04-11111	D0100-001001	1	D001001
13Y-04-11111	D0100-002001	1	D002001
13Y-04-11124	D0100-001001	32	D001001
13Y-04-11124	D0100-002001	32	D002001
13Y-04-11224	H0100-001006	1	H001006
13Y-04-11241	D0100-001001	2	D001001
13Y-04-11241	D0100-002001	2	D002001
13Y-04-11241	H0100-001001	2	H001001
13Y-04-11260	D0100-001001	43	D001001
13Y-04-11260	D0100-002001	43	D002001
13Y-04-11271	D0100-001002	19	D001002
13Y-04-11271	D0100-002002	24	D002002
13Y-04-11280	D0200-001002	6	D003002
13Y-04-11293	D0200-001002	3	D003002
13Y-04-11330	D0200-001001	19	D003001
13Y-04-11421	D0100-002003	21	D002003
13Y-04-11431	D0100-002003	22	D002003
13Y-04-11441	D0100-002003	1	D002003
13Y-04-11460	D0100-001001	26	D001001
13Y-04-11460	D0100-002001	26	D002001
13Y-04-12113	D0200-001001	41	D003001
13Y-04-12132	D0200-001001	45	D003001
13Y-04-12181	D0200-001001	33	D003001
13Y-04-12212	D0200-001002	27	D003002
13Y-04-12233	D0200-001002	28	D003002
13Y-04-12252	D0200-001002	32	D003002
13Y-04-12271	D0200-001002	23	D003002
13Y-04-12313	D0200-001001	25	D003001
13Y-04-12313	H1840-001006	29	H009006
13Y-04-12332	D0200-001001	29	D003001
13Y-04-17320	D0200-001001	1	D003001
13Y-06-11111	E0110-001001	3	E001001
13Y-06-11111	E0210-001002	1	E003002
13Y-06-11122	E0110-001001	2	E001001
13Y-06-11122	E0210-001002	13	E003002
13Y-06-11131	B0500-001002	28	B010002
13Y-06-11140	E0210-001002	10	E003002
13Y-06-11151	E0210-001001	41	E003001
13Y-06-11161	E0210-001002	5	E003002
13Y-06-11211	E0200-001001	20	E002001
13Y-06-11262	E0200-001002	6	E002002
13Y-06-11270	E0200-001002	22	E002002
13Y-06-11290	M2141-001003	10	M002003
13Y-06-11290	M2141-002003	10	M003003
13Y-06-11350	H1840-001004	19	H009004
13Y-06-11814	E0200-001001	19	E002001
13Y-06-11824	E0200-001001	1	E002001
13Y-06-11824	E0420-001001	7	E004001
13Y-06-11835	E0200-001002	1	E002002
13Y-06-11866	E0210-001001	33	E003001
13Y-06-11880	E0210-001001	55	E003001
13Y-06-11932	E0200-001002	9	E002002
13Y-06-11932	H1840-001004	35	H009004
13Y-06-12282	E0200-001001	2	E002001
13Y-06-12874	K2910-001001	13	K026001
13Y-06-13270	E0210-001001	20	E003001
13Y-06-13782	H2250-002002	14	H014002
13Y-06-14133	B0500-001002	12	B010002
13Y-06-14191	B0500-001002	17	B010002
13Y-06-14213	H0210-002019	4	H004019
13Y-06-14223	H0210-002019	1	H004019
13Y-06-14232	H0210-002019	13	H004019
13Y-06-14265	B0500-001001	10	B010001
13Y-06-14272	B0500-001003	13	B010003
13Y-06-14283	B0500-001001	7	B010001
13Y-06-14292	B0500-001003	10	B010003
13Y-06-14312	B0500-001003	33	B010003
13Y-06-14343	H0210-002019	16	H004019
13Y-06-14352	B0500-001002	20	B010002
13Y-06-14360	B0500-001003	16	B010003
13Y-06-14371	M2141-001003	6	M002003
13Y-06-14371	M2141-002003	6	M003003
13Y-06-14381	B0500-001003	1	B010003
13Y-06-14391	B0500-001002	26	B010002
13Y-06-14410	B0500-001001	4	B010001
13Y-06-14420	B0500-001001	1	B010001
13Y-06-17111	B0500-001002	2	B010002
13Y-06-17210	M2141-001007	1	M002008
13Y-06-17210	M2141-002007	1	M003008
13Y-06-17280	M2141-001003	9	M002003
13Y-06-17280	M2141-002003	9	M003003
13Y-06-17852	B0500-001002	1	B010002
13Y-06-17871	M2141-001007	8	M002008
13Y-06-17871	M2141-002007	8	M003008
13Y-06-17A50	M2141-001007	15	M002008
13Y-06-17A50	M2141-002007	15	M003008
13Y-12-11111	B0600-001001	1	B011001
13Y-12-11132	B0600-001001	3	B011001
13Y-21-11103	J2100-002001	1	J001001
13Y-21-11211	J2100-002001	2	J001001
13Y-21-11211	J2100-002001	3	J001001
13Y-21-11242	J2100-002001	4	J001001
13Y-21-11282	J2100-002001	5	J001001
13Y-21-11293	J2100-002001	6	J001001
13Y-21-11312	J2100-002001	7	J001001
13Y-21-11333	J2100-002001	18	J001001
13Y-21-11342	J2100-002001	20	J001001
13Y-21-11353	J2100-002001	26	J001001
13Y-21-11362	J2100-002001	28	J001001
13Y-21-11420	J2100-002001	19	J001001
13Y-21-11420	J2100-002001	27	J001001
13Y-21-11440	J2100-002001	21	J001001
13Y-21-11440	J2100-002001	29	J001001
13Y-21-11450	J2100-002001	22	J001001
13Y-21-11450	J2100-002001	30	J001001
13Y-21-11551	M2240-001001	1	M005001
13Y-21-11561	M2240-002001	1	M004001
13Y-21-11611	J2100-002001	23	J001001
13Y-21-11611	J2100-002001	31	J001001
13Y-21-11621	J2100-002001	24	J001001
13Y-21-11621	J2100-002001	32	J001001
13Y-21-11631	J2100-002001	25	J001001

PARTS Nº	FIG. Nº	INDEX	PAGE
13Y-21-11661	J2100-002001	33	J001001
13Y-27-10100	F2380-002002	1	F002002
13Y-27-10100	F2380-002003	1	F002003
13Y-27-10100	F2380-002004	1	F002004
13Y-27-10100	F2380-002005	1	F002005
13Y-27-10100	F2380-002006	1	F002006
13Y-27-10100	F2380-002007	1	F002007
13Y-27-10100	F2380-002008	1	F002008
13Y-27-10200	F2380-002009	1	F002009
13Y-27-10200	F2380-002010	1	F002010
13Y-27-10200	F2380-002011	1	F002011
13Y-27-10200	F2380-002012	1	F002012
13Y-27-10200	F2380-002013	1	F002013
13Y-27-10200	F2380-002014	1	F002014
13Y-27-10200	F2380-002015	1	F002015
13Y-27-11120	F2380-002003	7	F002003
13Y-27-11120	F2380-002010	7	F002010
13Y-27-11130	F2380-002003	2	F002003
13Y-27-11130	F2380-002010	2	F002010
13Y-27-11140	F2380-002002	23	F002002
13Y-27-11140	F2380-002009	23	F002009
13Y-27-11150	F2380-002002	14	F002002
13Y-27-11150	F2380-002009	14	F002009
13Y-27-11160	F2380-002002	20	F002002
13Y-27-11160	F2380-002009	20	F002009
13Y-27-11210	F2380-002003	1	F002003
13Y-27-11210	F2380-002010	1	F002010
13Y-27-11220	F2380-002002	16	F002002
13Y-27-11220	F2380-002009	16	F002009
13Y-27-11230	F2380-002002	13	F002002
13Y-27-11230	F2380-002009	13	F002009
13Y-27-11240	F2380-002002	24	F002002
13Y-27-11240	F2380-002009	24	F002009
13Y-27-11260	F2380-002002	18	F002002
13Y-27-11260	F2380-002009	18	F002009
13Y-27-11310	F2380-002002	2	F002002
13Y-27-11310	F2380-002009	2	F002009
13Y-27-11320	F2380-002002	15	F002002
13Y-27-11320	F2380-002009	15	F002009
13Y-27-11330	F2380-002003	3	F002003
13Y-27-11330	F2380-002010	3	F002010
13Y-27-11410	F2380-002002	1	F002002
13Y-27-11410	F2380-002009	1	F002009
13Y-27-11421	F2380-002003	9	F002003
13Y-27-11421	F2380-002010	9	F002010
13Y-27-11430	F2380-002002	8	F002002
13Y-27-11430	F2380-002009	8	F002009
13Y-27-11440	F2380-002002	9	F002002
13Y-27-11440	F2380-002009	9	F002009
13Y-27-11450	F2380-002002	5	F002002
13Y-27-11450	F2380-002009	5	F002009
13Y-27-11600	F2380-002002	2	F002002
13Y-27-11600	F2380-002009	2	F002009
13Y-30-00030	R0110-001001	1	R001001
13Y-30-11171	R2200-003001	9	R016001
13Y-30-11181	R2200-003001	10	R016001
13Y-30-11211	R0200-001003	1	R003003
13Y-30-12114	R2100-001001	1	R011001
13Y-30-12124	R2100-001001	8	R011001
13Y-30-12411	R2100-001001	13	R011001
13Y-30-12411	R2100-001001	6	R011001
13Y-30-12420	R2100-001001	14	R011001
13Y-30-12420	R2100-001001	7	R011001
13Y-30-12C51	R2100-001001	2	R011001
13Y-30-12C51	R2100-001001	9	R011001
13Y-30-12C60	R2100-001001	10	R011001
13Y-30-12C60	R2100-001001	3	R011001
13Y-30-12C70	R2100-001001	11	R011001
13Y-30-12C70	R2100-001001	4	R011001
13Y-30-12C80	R2100-001001	12	R011001
13Y-30-12C80	R2100-001001	5	R011001
13Y-30-14133	R2200-002001	18	R015001
13Y-30-14133	R2200-003001	28	R016001
13Y-30-14143	R2200-002001	19	R015001
13Y-30-14143	R2200-003001	29	R016001
13Y-30-14212	R2130-002001	1	R013001
13Y-30-14222	R2130-002001	11	R013001
13Y-30-14231	R2130-002001	19	R013001
13Y-30-14241	R2130-002001	22	R013001
13Y-30-14252	R2130-002001	25	R013001
13Y-30-14261	R2130-002001	31	R013001
13Y-30-14271	R2130-002001	28	R013001
13Y-30-14291	R2130-002001	34	R013001
13Y-30-14291	R2130-002002	37	R013002
13Y-30-14291	R2130-002002	4	R013002
13Y-30-14312	R2130-002002	1	R013002
13Y-30-14322	R2130-002002	14	R013002
13Y-30-14331	R2130-002002	22	R013002
13Y-30-14341	R2130-002002	25	R013002
13Y-30-14352	R2130-002002	31	R013002
13Y-30-14361	R2130-002002	34	R013002
13Y-30-14371	R2130-002002	28	R013002
13Y-30-14431	R2130-002001	4	R013001
13Y-30-14481	R2130-002001	16	R013001
13Y-30-14531	R2130-002002	7	R013002
13Y-30-14581	R2130-002002	19	R013002
13Y-30-15113	R0110-001001	6	R001001
13Y-30-15123	R0110-001001	8	R001001
13Y-30-15150	R0110-001001	7	R001001
13Y-30-15150	R0110-001001	9	R001001
13Y-30-15162	R0110-001001	20	R001001
13Y-30-15221	R0110-001001	17	R001001
13Y-30-15231	R0110-001001	15	R001001
13Y-30-15312	R0120-001001	23	R002001
13Y-30-16180	R2200-003001	5	R016001
13Y-30-16190	R2200-002001	13	R015001
13Y-30-16190	R2200-002001	14	R015001
13Y-30-16190	R2200-002001	6	R015001
13Y-30-16190	R2200-002001	7	R015001
13Y-30-16190	R2200-002001	8	R015001
13Y-30-16190	R2200-003001	17	R016001
13Y-30-16190	R2200-003001	18	R016001
13Y-30-16190	R2200-003001	2	R016001
13Y-30-16190	R2200-003001	23	R016001
13Y-30-16190	R2200-003001	24	R016001
13Y-30-16514	R2200-002001	6	R015001
13Y-30-16514	R2200-003001	16	R016001
13Y-30-16524	R2200-002001	12	R015001
13Y-30-16524	R2200-003001	22	R016001
13Y-30-16531	R2200-002001	1	R015001
13Y-30-16551	R2200-003001	3	R016001
13Y-30-16561	R2200-003001	4	R016001
13Y-49-11114	H0340-001003	25	H007003
13Y-49-11124	H0340-001003	36	H007003
13Y-49-11132	H0340-001003	30	H007003
13Y-49-11132	H0340-001003	41	H007003
13Y-49-11153	H0340-001003	17	H007003
13Y-49-11153	H0340-001003	5	H007003
13Y-49-11161	H0340-001003	21	H007003
13Y-49-11161	H0340-001003	9	H007003
13Y-49-11173	H0340-001003	10	H007003
13Y-49-11173	H0340-001003	22	H007003
13Y-49-11183	H0340-001003	16	H007003
13Y-49-11183	H0340-001003	4	H007003
13Y-49-11191	H0340-001003	18	H007003
13Y-49-11191	H0340-001003	6	H007003
13Y-49-11314	H1310-001002	1	H008002
13Y-49-11334	H1310-001002	4	H008002
13Y-49-11354	H1310-001002	7	H008002
13Y-49-11374	H1310-001002	10	H008002
13Y-49-11414	H0340-001003	1	H007003
13Y-49-11424	H0340-001003	13	H007003
13Y-49-11432	H0340-001003	33	H007003
13Y-49-11432	H0340-001003	44	H007003
13Y-49-11442	H1310-001002	12	H008002
13Y-49-11442	H1310-001002	3	H008002
13Y-49-11442	H1310-001002	6	H008002
13Y-49-11442	H1310-001002	9	H008002
13Y-50-11111	J2700-001001	1	J002001
13Y-50-11210	J2700-001001	23	J002001

PARTS Nº	FIG. Nº	INDEX	PAGE
13Y-50-11220	J2700-001001	28	J002001
13Y-50-11270	J2700-001001	20	J002001
13Y-50-12130	J2700-001001	16	J002001
13Y-50-12210	J2700-001001	37	J002001
13Y-50-12220	J2700-001001	38	J002001
13Y-50-12230	J2700-001001	47	J002001
13Y-50-12240	J2700-001001	48	J002001
13Y-50-12250	J2700-001001	46	J002001
13Y-50-12260	J2700-001001	35	J002001
13Y-50-17020	J2700-001001	6	J002001
13Y-54-11114	M2141-001001	1	M002001
13Y-54-11114	M2141-002001	1	M003001
13Y-54-11122	M2141-001002	1	M002002
13Y-54-11122	M2141-002002	1	M003002
13Y-54-11133	M2141-001002	5	M002002
13Y-54-11133	M2141-002002	5	M003002
13Y-54-11142	M2141-001002	8	M002002
13Y-54-11142	M2141-002002	8	M003002
13Y-54-11152	M2141-001002	11	M002002
13Y-54-11152	M2141-002002	11	M003002
13Y-54-11162	M2141-001002	14	M002002
13Y-54-11162	M2141-002002	14	M003002
13Y-54-11212	M2141-001001	2	M002001
13Y-54-11212	M2141-002001	2	M003001
13Y-54-11221	M2141-001005	22	M002005
13Y-54-11221	M2141-001005A	23	M002006
13Y-54-11221	M2141-002005	23	M003006
13Y-54-11231	M2141-001009	1	M002010
13Y-54-11231	M2141-002009	1	M003010
13Y-54-11242	M2141-001005	14	M002005
13Y-54-11242	M2141-001005A	15	M002006
13Y-54-11242	M2141-002005	15	M003006
13Y-54-11251	M2141-001005	15	M002005
13Y-54-11251	M2141-001005A	16	M002006
13Y-54-11251	M2141-002005	16	M003006
13Y-54-11270	D0100-001001	35	D001001
13Y-54-11270	D0100-002001	35	D002001
13Y-54-11270	H0100-001002	16	H001002
13Y-54-11270	H0100-001002	2	H001002
13Y-54-11270	M2141-001005	1	M002005
13Y-54-11270	M2141-001005A	1	M002006
13Y-54-11270	M2141-002005	1	M003006
13Y-54-11311	M2141-001009	6	M002010
13Y-54-11311	M2141-002009	6	M003010
13Y-54-11331	M2141-001008	16	M002009
13Y-54-11331	M2141-001008	6	M002009
13Y-54-11331	M2141-002008	16	M003009
13Y-54-11331	M2141-002008	6	M003009
13Y-54-11341	M2141-001008	17	M002009
13Y-54-11341	M2141-001008	7	M002009
13Y-54-11341	M2141-002008	17	M003009
13Y-54-11341	M2141-002008	7	M003009
13Y-54-11352	K2120-001001	1	K021001
13Y-54-11362	K2810-001001	7	K025001
13Y-54-11362	K2810-001001	8	K025001
13Y-54-11371	K2120-001001	2	K021001
13Y-54-11381	K2810-001001	13	K025001
13Y-54-11391	K2810-001001	16	K025001
13Y-54-11460	M2141-001006	5	M002007
13Y-54-11460	M2141-002006	5	M003007
13Y-54-11470	D0100-001002	15	D001002
13Y-54-11470	D0100-002002	15	D002002
13Y-54-11470	H0100-001002	36	H001002
13Y-54-11483	D0100-001002	12	D001002
13Y-54-11483	D0100-002002	12	D002002
13Y-54-11490	M2141-001009	7	M002010
13Y-54-11490	M2141-002009	7	M003010
13Y-54-11511	M2141-001009	2	M002010
13Y-54-11511	M2141-002009	2	M003010
13Y-54-11521	M2141-001009	3	M002010
13Y-54-11521	M2141-002009	3	M003010
13Y-54-11541	M2141-001006	3	M002007
13Y-54-11541	M2141-002006	3	M003007
13Y-54-11552	M2141-001006	2	M002007
13Y-54-11552	M2141-002006	2	M003007
13Y-54-11561	M2141-001006	4	M002007
13Y-54-11561	M2141-002006	4	M003007
13Y-54-11580	D0100-001002	14	D001002
13Y-54-11580	D0100-002002	14	D002002
13Y-54-11580	H0100-001002	35	H001002
13Y-54-11592	H0100-001002	33	H001002
13Y-54-11631	D0100-001002	13	D001002
13Y-54-11631	D0100-002002	13	D002002
13Y-54-11631	H0100-001002	34	H001002
13Y-54-11681	D0100-001002	10	D001002
13Y-54-11681	D0100-002002	10	D002002
13Y-54-11681	H0100-001002	31	H001002
13Y-54-11721	J2100-002001	36	J001001
13Y-54-11730	D0100-001002	9	D001002
13Y-54-11730	D0100-002002	9	D002002
13Y-54-11730	H0100-001002	30	H001002
13Y-54-11750	D0100-001002	8	D001002
13Y-54-11750	D0100-002002	8	D002002
13Y-54-11750	H0100-001002	29	H001002
13Y-54-11780	K2120-001001	10	K021001
13Y-54-11790	K2120-001001	11	K021001
13Y-54-11831	M2141-001002	17	M002002
13Y-54-11831	M2141-002002	17	M003002
13Y-54-11910	D0100-001002	11	D001002
13Y-54-11910	D0100-002002	11	D002002
13Y-54-11910	H0100-001002	32	H001002
13Y-54-11930	M2141-001006	1	M002007
13Y-54-11930	M2141-002006	1	M003007
13Y-54-12123	M2141-001008	5	M002009
13Y-54-12123	M2141-002008	5	M003009
13Y-54-12133	M2141-001008	15	M002009
13Y-54-12133	M2141-002008	15	M003009
13Y-54-12152	M2141-001008	12	M002009
13Y-54-12152	M2141-002008	12	M003009
13Y-54-12162	M2141-001008	22	M002009
13Y-54-12162	M2141-002008	22	M003009
13Y-54-12713	K2810-001001	1	K025001
13Y-54-13112	M2141-001003	3	M002003
13Y-54-13112	M2141-002003	3	M003003
13Y-60-11112	H0100-001001	1	H001001
13Y-60-11124	H0100-001002	1	H001002
13Y-60-11133	H0100-001002	15	H001002
13Y-60-11220	H0100-001002	22	H001002
13Y-60-11220	H0100-001002	8	H001002
13Y-60-11281	D0100-001001	38	D001001
13Y-60-11281	D0100-002001	38	D002001
13Y-60-11281	H0100-001001	31	H001001
13Y-60-11320	H0100-001001	28	H001001
13Y-60-11340	H0100-001001	17	H001001
13Y-60-11440	H0100-001002	38	H001002
13Y-60-11620	H0210-002017	1	H004017
13Y-62-11114	H0100-001003	14	H001003
13Y-62-11124	H0100-001003	20	H001003
13Y-62-11143	H0210-002012	34	H004012
13Y-62-11143	H0310-001001	28	H005001
13Y-62-11151	H0310-001001	29	H005001
13Y-62-11151	H1840-001010	14	H009010
13Y-62-11162	H0310-001001	1	H005001
13Y-62-11173	H0310-001001	13	H005001
13Y-62-11181	H2250-002001	18	H014001
13Y-62-11211	H0120-001014	6	H002014
13Y-62-11211	H0120-002012	6	H003012
13Y-62-11221	H0120-001014	4	H002014
13Y-62-11221	H0120-002012	4	H003012
13Y-62-11231	H0120-001013	6	H002013
13Y-62-11231	H0120-002011	6	H003011
13Y-62-11252	H0210-002012	5	H004012
13Y-62-11262	H0210-002017	10	H004017
13Y-62-11272	H0210-002017	14	H004017
13Y-62-11331	H0120-001014	40	H002014
13Y-62-11331	H0120-002012	40	H003012
13Y-62-11331	H0210-002017	50	H004017
13Y-62-11331	H0310-001002	14	H005002
13Y-62-11351	H0120-001015	20	H002015
13Y-62-11351	H0120-002013	13	H003013

PARTS Nº	FIG. Nº	INDEX	PAGE
13Y-62-11351	H0210-002017	51	H004017
13Y-62-11351	H0310-001002	19	H005002
13Y-62-11371	H0310-001002	1	H005002
13Y-62-11381	H0310-001002	5	H005002
13Y-62-11391	H0310-001002	6	H005002
13Y-62-11421	H0120-002013	16	H003013
13Y-62-11421	H0310-001002	4	H005002
13Y-62-11431	H2250-002003	1	H014003
13Y-62-11441	H2250-002003	5	H014003
13Y-62-11514	H0100-001005	9	H001005
13Y-62-11514	H0120-001014	43	H002014
13Y-62-11514	H0120-002012	43	H003012
13Y-62-11533	H0100-001005	14	H001005
13Y-62-11553	H0100-001005	13	H001005
13Y-62-11553	H0210-002012	33	H004012
13Y-62-11553	H0310-001001	30	H005001
13Y-62-11571	H0100-001004	1	H001004
13Y-62-11583	H0320-001001	11	H006001
13Y-62-11583	H0340-001002	33	H007002
13Y-62-11583	H1840-001006	28	H009006
13Y-62-11583	H2250-002002	39	H014002
13Y-62-11592	H0320-001001	5	H006001
13Y-62-11642	H0320-001001	25	H006001
13Y-62-11642	H1840-001010	16	H009010
13Y-62-11692	H0320-001001	29	H006001
13Y-62-11712	H1840-001005	11	H009005
13Y-62-11750	H1840-001005	15	H009005
13Y-62-11760	H0100-001004	21	H001004
13Y-62-11760	H0320-001001	19	H006001
13Y-62-11771	H0120-002013	15	H003013
13Y-62-11771	H1840-001006	20	H009006
13Y-62-11792	H1840-001004	1	H009004
13Y-62-11811	H1840-001006	7	H009006
13Y-62-11832	H1840-001007	1	H009007
13Y-62-11832	H1840-001008	1	H009008
13Y-62-11832	H1840-001009	1	H009009
13Y-62-11850	H1840-001007	2	H009007
13Y-62-11862	H0120-001015	21	H002015
13Y-62-11862	H0120-002013	14	H003013
13Y-62-11862	H1840-001006	11	H009006
13Y-62-11883	H1840-001005	4	H009005
13Y-62-11922	H0100-001004	11	H001004
13Y-62-11932	H0100-001004	20	H001004
13Y-62-11932	H0210-002017	53	H004017
13Y-62-11932	H0310-001002	24	H005002
13Y-62-11942	H0210-002017	52	H004017
13Y-62-11942	H0310-001002	27	H005002
13Y-62-11962	H0100-001004	5	H001004
13Y-62-11972	H0100-001004	14	H001004
13Y-62-12114	H2210-001003	20	H010003
13Y-62-12134	H2210-001003	21	H010003
13Y-62-12155	H2210-001005	1	H010005
13Y-62-12174	H2210-001005	5	H010005
13Y-62-12214	H2210-001004	1	H010004
13Y-62-12234	H2210-001004	5	H010004
13Y-62-12250	H2210-001004	20	H010004
13Y-62-12250	H2210-001005	9	H010005
13Y-62-12261	H2210-001004	21	H010004
13Y-62-12271	H2210-001005	10	H010005
13Y-62-12331	H0340-001003	59	H007003
13Y-62-12331	H1840-001004	6	H009004
13Y-62-12341	H1840-001004	8	H009004
13Y-62-12350	K2520-001003	22	K024003
13Y-62-12414	H2220-001001	20	H011001
13Y-62-12434	H2220-001001	22	H011001
13Y-62-12453	H2220-001001	1	H011001
13Y-62-12473	H2220-001001	13	H011001
13Y-62-12483	H2220-001001	4	H011001
13Y-62-12514	H0120-001014	45	H002014
13Y-62-12514	H0120-002012	45	H003012
13Y-62-12514	H2230-001001	11	H012001
13Y-62-12534	H0120-001014	44	H002014
13Y-62-12534	H0120-002012	44	H003012
13Y-62-12534	H2230-001001	13	H012001
13Y-62-12552	H2230-001001	32	H012001
13Y-62-12572	H2230-001001	34	H012001
13Y-62-12592	H2230-001001	1	H012001
13Y-62-12611	H2230-001001	44	H012001
13Y-62-12631	H2230-001001	46	H012001
13Y-62-12662	H2230-001001	15	H012001
13Y-62-12670	H2220-001001	7	H011001
13Y-62-12670	H2230-001001	20	H012001
13Y-62-12681	H2220-001001	8	H011001
13Y-62-12681	H2230-001001	19	H012001
13Y-62-12690	H2220-001001	9	H011001
13Y-62-12690	H2230-001001	18	H012001
13Y-62-12710	H0210-002012	11	H004012
13Y-62-12730	H0100-001005	26	H001005
13Y-62-12730	H0210-002012	31	H004012
13Y-62-12730	H0320-001001	1	H006001
13Y-62-12742	H0210-002012	18	H004012
13Y-62-12782	H0210-002017	27	H004017
13Y-62-12790	H2210-001004	9	H010004
13Y-62-12811	H0210-002017	31	H004017
13Y-62-12820	H2210-001001	1	H010001
13Y-62-12830	H2210-001003	12	H010003
13Y-62-12830	H2210-001003	4	H010003
13Y-62-12840	H0210-002019	10	H004019
13Y-62-12851	H0210-002017	41	H004017
13Y-62-12860	H0210-002017	44	H004017
13Y-62-12871	H0210-002017	48	H004017
13Y-62-12880	H0100-001003	26	H001003
13Y-62-12880	H0310-001001	21	H005001
13Y-62-12941	H2250-001001	5	H013001
13Y-62-12941	H2250-002001	5	H014001
13Y-62-12951	H2250-001001	6	H013001
13Y-62-12951	H2250-002001	6	H014001
13Y-62-12961	H2250-001001	7	H013001
13Y-62-12961	H2250-002001	7	H014001
13Y-62-12970	H2250-001001	8	H013001
13Y-62-12970	H2250-002001	8	H014001
13Y-62-13213	H0340-001002	21	H007002
13Y-62-13213	H0340-001003	48	H007003
13Y-62-13254	H0340-001002	10	H007002
13Y-62-13261	H0340-001003	1	H007003
13Y-62-13261	H1840-001005	19	H009005
13Y-62-13291	H1840-001010	12	H009010
13Y-62-13314	H0340-001003	14	H007003
13Y-62-13333	H0340-001003	47	H007003
13Y-62-13411	H0340-001002	7	H007002
13Y-62-13421	H0340-001003	41	H007003
13Y-62-13431	H0340-001003	23	H007003
13Y-62-13440	H0340-001003	10	H007003
13Y-62-13513	H0340-001003	40	H007003
13Y-62-13513	H1840-001004	33	H009004
13Y-62-13533	H0340-001003	55	H007003
13Y-62-13533	H1840-001004	34	H009004
13Y-62-13553	H0340-001003	28	H007003
13Y-62-13573	H0340-001003	32	H007003
13Y-62-13612	H0340-001001	1	H007001
13Y-62-13621	H0340-001001	4	H007001
13Y-62-13662	H0340-001002	12	H007002
13Y-62-13662	H0340-001003	47	H007003
13Y-62-13700	H1840-001001	1	H009001
13Y-62-13700	H1840-001002	1	H009002
13Y-62-13700	H1840-001003	1	H009003
13Y-62-13752	H0340-001002	1	H007002
13Y-62-13761	H0340-001002	4	H007002
13Y-62-13772	H0340-001001	10	H007001
13Y-62-13910	H0340-001002	14	H007002
13Y-62-13920	H0340-001002	23	H007002
13Y-62-13930	H2210-001004	7	H010004
13Y-62-13930	H2210-001005	7	H010005
13Y-62-13940	H2210-001004	3	H010004
13Y-62-13940	H2210-001005	3	H010005
13Y-62-15112	H0100-001001	24	H001001
13Y-62-15412	H0100-001003	1	H001003
13Y-62-15423	H0100-001002	39	H001002
13Y-62-15432	H0100-001002	42	H001002
13Y-62-15440	H0100-001003	12	H001003

PARTS Nº	FIG. Nº	INDEX	PAGE
13Y-62-16122	T2160-001003	17	T008003
13Y-62-16133	T2160-001003	20	T008003
13Y-62-16141	H2230-001001	28	H012001
13Y-62-16141	T2160-001001	19	T008001
13Y-62-16152	H2220-001001	24	H011001
13Y-62-16152	H2230-001001	40	H012001
13Y-62-16152	T2160-001001	20	T008001
13Y-62-16152	T2160-001002	28	T008002
13Y-62-16161	H2230-001001	49	H012001
13Y-62-16161	T2160-001001	1	T008001
13Y-62-16171	H2230-001001	48	H012001
13Y-62-16171	T2160-001001	2	T008001
13Y-62-16181	T2160-001002	1	T008002
13Y-62-16191	T2160-001002	8	T008002
13Y-62-16230	T2160-001002	17	T008002
13Y-62-16253	T2160-001001	3	T008001
13Y-62-16263	T2160-001001	11	T008001
13Y-62-16280	T2160-001002	13	T008002
13Y-62-16290	T2160-001002	14	T008002
13Y-62-16320	H2220-001001	10	H011001
13Y-62-16320	H2230-001001	21	H012001
13Y-62-16333	T2160-001003	11	T008003
13Y-62-16343	T2160-001003	12	T008003
13Y-62-16350	C0100-001004	9	C001004
13Y-62-16350	H0120-001014	35	H002014
13Y-62-16350	H0120-002012	35	H003012
13Y-62-16362	T2400-001002	17	T009002
13Y-62-16382	T2400-001002	18	T009002
13Y-62-16410	T2160-001002	5	T008002
13Y-62-16422	T2160-001001	6	T008001
13Y-62-16431	T2160-001001	7	T008001
13Y-62-16441	T2160-001001	8	T008001
13Y-62-16452	T2160-001001	9	T008001
13Y-62-16470	T2160-001001	10	T008001
13Y-62-18920	H2250-002002	29	H014002
13Y-62-18940	H2250-002002	31	H014002
13Y-62-18960	H2250-002002	33	H014002
13Y-62-18980	H2250-002002	35	H014002
13Y-72-11105	T2120-001001	1	T003001
13Y-72-11160	T2120-001001	2	T003001
13Y-72-11160	T2120-002001	2	T004001
13Y-72-11170	T2120-001001	3	T003001
13Y-72-11170	T2120-002001	3	T004001
13Y-72-11183	T2120-001001	14	T003001
13Y-72-11183	T2120-002001	14	T004001
13Y-72-13103	T2120-002001	1	T004001
13Y-72-14102	T2110-001001	4	T001001
13Y-72-14142	T2110-001001	5	T001001
13Y-72-14152	T2110-001001	6	T001001
13Y-72-14161	T2110-001001	7	T001001
13Y-72-14171	T2110-001001	8	T001001
13Y-72-14240	T2110-001001	10	T001001
13Y-72-14250	T2115-001002	10	T002002
13Y-72-14260	T2115-001002	7	T002002
13Y-72-14270	T2115-001002	8	T002002
13Y-72-14270	T2115-001002	9	T002002
13Y-72-14310	T2160-001003	6	T008003
13Y-72-14321	T2160-001003	7	T008003
13Y-72-14332	T2160-001003	1	T008003
13Y-72-14340	T2115-001002	20	T002002
13Y-72-14340	T2115-001002	21	T002002
13Y-72-14362	T2115-001002	13	T002002
13Y-72-14371	T2115-001002	14	T002002
13Y-72-14381	T2115-001002	15	T002002
13Y-72-14391	T2115-001002	26	T002002
13Y-72-14410	T2115-001002	22	T002002
13Y-72-14410	T2115-001002	23	T002002
13Y-72-17470	T2115-001001	9	T002001
13Y-78-11111	T2400-001001	1	T009001
13Y-78-11122	T2400-001002	10	T009002
13Y-78-11132	H2250-001001	27	H013001
13Y-78-11142	H2250-001001	31	H013001
13Y-78-11150	H2250-001001	13	H013001
13Y-78-11160	H2250-001001	20	H013001
13Y-78-11180	T2400-001002	14	T009002
13Y-78-11231	T2400-001002	23	T009002
13Y-911-1113	K2910-001001	1	K026001
13Y-911-1132	K2910-001001	21	K026001
13Y-911-1172	K2910-001001	4	K026001
13Y-911-1180	K2910-001001	7	K026001
13Y-911-1210	K2910-001001	10	K026001
13Y-960-1020	K2520-001001	2	K024001
13Y-960-1030	K2520-001001	1	K024001
13Y-960-1120	K2520-001003	8	K024003
13Y-960-1132	H2250-002002	1	H014002
13Y-960-1142	H2250-002001	9	H014001
13Y-960-1220	K2520-001003	13	K024003
13Y-979-1111	K0710-001001	9	K019001
13Y-979-1122	K0710-001001	1	K019001
13Y-979-1143	K0710-001001	12	K019001
13Y-979-1152	K0710-001001	15	K019001
13Y-979-1162	K0710-001001	16	K019001
13Y-979-1172	K0710-001001	17	K019001
13Y-979-1182	K0710-001001	18	K019001
13Y-979-1192	K0710-001001	19	K019001
13Y-979-1212	K0710-001001	20	K019001
13Y-979-1221	K0710-001001	6	K019001
13Y-979-1350	K0710-001002	16	K019002
13Y-979-1360	K0710-001002	5	K019002
13Y-979-1370	K0710-001002	6	K019002
13Y-979-1440	K0710-001001	24	K019001
13Y-98-11150	K2510-001001	1	K022001
13Y-98-11160	K2510-002001	1	K023001
13Y-98-11170	U0100-001001	8	U001001
13Y-98-11170	U0100-002001	8	U002001
13Y-98-11210	U0100-001001	1	U001001
13Y-98-11210	U0100-002001	1	U002001
13Y-98-11220	U0100-001001	2	U001001
13Y-98-11220	U0100-002001	2	U002001
13Y-98-11250	U0100-001001	11	U001001
13Y-98-11250	U0100-002001	11	U002001
13Y-98-17130	U0100-001001	6	U001001
13Y-98-17130	U0100-002001	6	U002001
141-30-00616	R0300-002001	6	R005001
141-78-11253	T2400-001002	2	T009002
141-78-11311	T2400-001001	35	T009001
141-78-11321	T2400-001001	32	T009001
142-06-13540	K0210-002043	8	K012044
142-06-13540	K0210-006043	8	K015044
142-06-13540	K0230-002002	10	K017002
142-06-13540	K0230-002002	13	K017002
142-30-18220	T2400-001002	8	T009002
142-43-13180	K0210-002041	7	K012042
142-43-13180	K0210-006041	7	K015042
144-69-11120	T2810-002001	2	T012001
144-69-11161	T2810-002001	7	T012001
144-78-11162	T2400-001001	34	T009001
144-78-11174	T2400-001001	31	T009001
144-78-11245	T2400-001002	1	T009002
144-78-11570	T2400-001001	29	T009001
144-874-8491	T2400-001001	10	T009001
14X-01-35161	A2110-501001	1	B006001
14X-01-65150	B0100-002001	6	B008001
14X-04-31510	D0100-002003	4	D002003
14X-04-31530	D0100-002003	6	D002003
14X-04-31570	D0100-002003	13	D002003
14X-04-51441	D0100-002003	5	D002003
14X-06-12270	E0210-001001	26	E003001
14X-06-12280	E0210-001001	25	E003001
14X-06-51710	K0210-002012	6	K012012
14X-06-51710	K0210-006012	6	K015012
14X-06-52191	K0210-002048	18	K012049
14X-06-52191	K0210-006048	18	K015049
14X-06-52491	K0210-002023	4	K012024
14X-06-52491	K0210-006023	4	K015024
14X-06-52631	K0210-002012	7	K012012
14X-06-52631	K0210-006012	7	K015012
14X-06-52661	K0210-002012	8	K012012
14X-06-52661	K0210-006012	8	K015012
14X-06-52740	K0210-002012	9	K012012

PARTS Nº	FIG. Nº	INDEX	PAGE
14X-06-52740	K0210-006012	9	K015012
14X-06-62121	E0210-001002	9	E003002
14X-06-63391	K0230-002003	8	K017003
14X-06-63850	K0230-002003	11	K017003
14X-06-63860	K0230-002002	50	K017002
14X-06-63860	K0230-002003	13	K017003
14X-15-16461	H1840-001001	14	H009001
14X-30-13174	R0120-001001	14	R002001
14X-30-13241	R0120-001001	7	R002001
14X-30-13310	R0120-001001	6	R002001
14X-30-15131	R0300-002001	4	R005001
14X-30-15140	R0300-002001	2	R005001
14X-30-15240	R0300-002001	6	R005001
14X-30-15251	R0300-002001	9	R005001
14X-43-13760	K0210-002041	21	K012042
14X-43-13760	K0210-006041	21	K015042
14X-43-14520	K0210-002035	7	K012036
14X-43-14520	K0210-002038	6	K012039
14X-43-14520	K0210-002041	3	K012042
14X-43-14520	K0210-006035	7	K015036
14X-43-14520	K0210-006038	6	K015039
14X-43-14520	K0210-006041	3	K015042
14X-43-51840	K0210-002035	8	K012036
14X-43-51840	K0210-002038	10	K012039
14X-43-51840	K0210-006035	8	K015036
14X-43-51840	K0210-006038	10	K015039
14X-54-12960	D0100-001001	39	D001001
14X-54-12960	D0100-002001	39	D002001
14X-54-12960	H0100-001001	34	H001001
14X-54-12960	M2141-001005	18	M002005
14X-54-12960	M2141-001005A	19	M002006
14X-54-12960	M2141-002005	19	M003006
14X-54-26640	B0500-001003	4	B010003
14X-54-26640	K2910-001001	23	K026001
14X-54-53860	D0100-001001	47	D001001
14X-54-53860	D0100-002001	47	D002001
14X-54-53860	H0100-001002	11	H001002
14X-54-53860	H0100-001002	25	H001002
14X-54-53860	M2141-001005A	6	M002006
14X-54-53860	M2141-002005	6	M003006
14X-54-56780	M2110-001001	2	M001001
14X-54-62250	M2141-001005	2	M002005
14X-54-62250	M2141-001005A	2	M002006
14X-54-62250	M2141-002005	2	M003006
14X-60-12120	H0120-001013	7	H002013
14X-60-12120	H0120-002011	7	H003011
14X-62-33220	H0120-001014	24	H002014
14X-62-33220	H0120-002012	24	H003012
14X-62-52921	C0100-001004	11	C001004
14X-62-52931	H0120-001014	18	H002014
14X-62-52931	H0120-002012	18	H003012
14X-62-55110	T2160-001002	6	T008002
14X-72-51530	T2115-001001	14	T002001
14X-78-11310	T2400-001001	2	T009001
14X-78-21180	K2520-001003	28	K024003
14X-78-21612	T2400-001001	15	T009001
14X-78-21720	T2400-001001	16	T009001
14X-78-21730	T2400-001001	20	T009001
14X-78-21730	T2400-001001	6	T009001
14X-78-21750	T2400-001001	24	T009001
14X-78-21920	T2400-001001	33	T009001
14X-911-1690	K0210-002003	1	K012003
14X-911-1690	K0210-002005	1	K012005
14X-911-1690	K0210-006003	1	K015003
14X-911-1690	K0210-006005	1	K015005
14X-911-1761	K0210-002003	2	K012003
14X-911-1761	K0210-002005	2	K012005
14X-911-1761	K0210-006003	2	K015003
14X-911-1761	K0210-006005	2	K015005
14X-98-11170	U0100-001001	7	U001001
14X-98-11170	U0100-002001	7	U002001
14X-98-35181	U0100-001001	5	U001001
14X-98-35181	U0100-002001	5	U002001
14X-98-61510	U0400-002001	4	U005001
14X-Y79-2361	K0210-002020	3	K012021
14X-Y79-2361	K0210-006020	3	K015021
14X-Y79-3270	K0210-002003	22	K012003
14X-Y79-3270	K0210-002005	22	K012005
14X-Y79-3270	K0210-006003	22	K015003
14X-Y79-3270	K0210-006005	22	K015005
14X-Y79-3310	K0210-002002	40	K012002
14X-Y79-3310	K0210-002004	40	K012004
14X-Y79-3310	K0210-006002	40	K015002
14X-Y79-3310	K0210-006004	40	K015004
14Y-30-11277	R2101-001001	5	R012001
14Y-30-18130	R2101-001001	1	R012001
14Y-30-18140	R2101-001001	2	R012001
14Y-30-18150	J2700-001001	27	J002001
14Y-30-18160	J2700-001001	5	J002001
14Y-50-11390	J2700-001001	13	J002001
154-03-72270	C0100-001004	19	C001004
154-04-72220	D0100-001001	10	D001001
154-04-72220	D0100-002001	10	D002001
154-30-11332	R0120-001001	26	R002001
154-30-11540	R0120-001001	25	R002001
154-32-21323	KIT	K01	Y001001
154-32-21323	R0500-005001	14	R008001
154-54-73130	K2120-001001	3	K021001
155-30-13230	R0110-001001	21	R001001
155-61-15350	K0210-002045	1	K012046
155-61-15350	K0210-006045	1	K015046
175-06-81610	K0210-006053	8	K015054
175-79-83760	H1840-001004	28	H009004
175-79-83760	K0210-002028	46	K012029
175-79-83760	K0210-006028	46	K015029
176-06-42170	K0210-002007	21	K012007
176-06-42170	K0210-006007	21	K015007
176-911-4160	M2141-001007	4	M002008
176-911-4160	M2141-002007	4	M003008
17A-03-14111	H0100-001005	1	H001005
17A-03-14120	H0100-001005	2	H001005
17A-04-41411	D0100-001001	9	D001001
17A-04-41411	D0100-002001	9	D002001
17A-04-41440	D0100-001002	24	D001002
17A-04-41440	D0100-002002	29	D002002
17A-06-41981	K0210-002041	15	K012042
17A-06-41981	K0210-006041	15	K015042
17A-06-42220	K0210-002011	6	K012011
17A-06-42220	K0210-006011	6	K015011
17A-06-51330	K0210-002037	20	K012038
17A-06-51330	K0210-006037	20	K015038
17A-06-51341	K0210-002037	19	K012038
17A-06-51341	K0210-006037	19	K015038
17A-06-51350	K0210-002037	21	K012038
17A-06-51350	K0210-006037	21	K015038
17A-06-51360	K0210-002037	22	K012038
17A-06-51360	K0210-006037	22	K015038
17A-06-51650	K0210-002048	22	K012049
17A-06-51650	K0210-006048	22	K015049
17A-06-51661	K0210-002048	23	K012049
17A-06-51661	K0210-006048	23	K015049
17A-43-42240	K2520-001003	6	K024003
17A-43-46132	K0210-002037	15	K012038
17A-43-46132	K0210-006037	15	K015038
17A-43-46270	K0210-002034	7	K012035
17A-43-46270	K0210-002037	14	K012038
17A-43-46270	K0210-006034	7	K015035
17A-43-46270	K0210-006037	14	K015038
17A-43-46711	K0210-002037	23	K012038
17A-43-46711	K0210-006037	23	K015038
17A-43-46731	K0210-002037	24	K012038
17A-43-46731	K0210-006037	24	K015038
17A-54-25560	K0230-001001	43	K016001
17A-54-25560	K0230-002004	20	K017004
17A-54-25570	K0230-001001	44	K016001
17A-54-25570	K0230-002004	21	K017004
17A-54-46120	K2120-001001	14	K021001
17A-54-51511	K0210-002048	4	K012049
17A-54-51511	K0210-006048	4	K015049
17A-54-51531	K0210-002048	30	K012049
17A-54-51531	K0210-006048	30	K015049
17A-57-51171	K0110-001002	14	K001002
17A-57-51171	K0110-005002	14	K005002
17A-57-51211	K0160-001001	1	K010001
17A-57-51240	K0110-001002	3	K001002
17A-57-51240	K0110-005002	3	K005002
17A-57-51250	K0110-001002	4	K001002
17A-57-51250	K0110-005002	4	K005002
17A-57-52190	K0150-001001	1	K007001
17A-60-11121	H0100-001001	21	H001001
17A-911-4510	K0710-001002	1	K019002
17A-979-3320	K0210-002002	27	K012002
17A-979-3320	K0210-006002	27	K015002
17A-979-3330	K0210-002004	27	K012004
17A-979-3330	K0210-006004	27	K015004
17A-98-41510	U0400-001001	3	U004001
17A-Z11-1610	K0210-002009	21	K012009
17A-Z11-1610	K0210-002010	21	K012010
17A-Z11-1610	K0210-006009	21	K015009
17A-Z11-1610	K0210-006010	21	K015010
17A-Z11-1620	K0210-002009	22	K012009
17A-Z11-1620	K0210-002010	22	K012010
17A-Z11-1620	K0210-006009	22	K015009
17A-Z11-1620	K0210-006010	22	K015010
17A-Z11-1810	K0210-002007	10	K012007
17A-Z11-1810	K0210-006007	10	K015007
17A-Z11-2570	K0210-002014	16	K012014
17A-Z11-2570	K0210-006014	16	K015014
17A-Z11-2581	K0210-002003	17	K012003
17A-Z11-2581	K0210-002005	17	K012005
17A-Z11-2581	K0210-002014	19	K012014
17A-Z11-2581	K0210-006003	17	K015003
17A-Z11-2581	K0210-006005	17	K015005
17A-Z11-2581	K0210-006014	19	K015014
17A-Z11-2660	K0210-002003	21	K012003
17A-Z11-2660	K0210-002005	21	K012005
17A-Z11-2660	K0210-002015	2	K012015
17A-Z11-2660	K0210-002015	5	K012015
17A-Z11-2660	K0210-002015	7	K012015
17A-Z11-2660	K0210-002018	3	K012018
17A-Z11-2660	K0210-006003	21	K015003
17A-Z11-2660	K0210-006005	21	K015005
17A-Z11-2660	K0210-006015	2	K015015
17A-Z11-2660	K0210-006015	5	K015015
17A-Z11-2660	K0210-006015	7	K015015
17A-Z11-2660	K0210-006018	3	K015018
17A-Z11-2813	K0210-002019	11	K012019
17A-Z11-2813	K0210-002019	11	K012020
17A-Z11-2813	K0210-002019	4	K012019
17A-Z11-2813	K0210-002019	4	K012020
17A-Z11-2813	K0210-002020	7	K012021
17A-Z11-2813	K0210-002040	17	K012041
17A-Z11-2813	K0210-002040	4	K012041
17A-Z11-2813	K0210-006019	11	K015019
17A-Z11-2813	K0210-006019	4	K015019
17A-Z11-2813	K0210-006020	7	K015021
17A-Z11-2813	K0210-006040	17	K015041
17A-Z11-2813	K0210-006040	4	K015041
17A-Z11-3332	K0210-002002	16	K012002
17A-Z11-3332	K0210-002004	16	K012004
17A-Z11-3332	K0210-006002	16	K015002
17A-Z11-3332	K0210-006004	16	K015004
17A-Z11-3592	K0210-002007	34	K012007
17A-Z11-3592	K0210-006007	34	K015007
17A-Z11-3680	K0210-002007	25	K012007
17A-Z11-3680	K0210-006007	25	K015007
17A-Z11-4610	K0210-002003	20	K012003
17A-Z11-4610	K0210-002005	20	K012005
17A-Z11-4610	K0210-002015	3	K012015
17A-Z11-4610	K0210-006003	20	K015003
17A-Z11-4610	K0210-006005	20	K015005
17A-Z11-4610	K0210-006015	3	K015015
17A-Z11-4950	U0100-001001	32	U001001
17A-Z11-4950	U0100-002001	32	U002001
17A-Z11-5651	K0210-002003	25	K012003
17A-Z11-5651	K0210-002005	25	K012005
17A-Z11-5651	K0210-002014	21	K012014
17A-Z11-5651	K0210-002019	19	K012019
17A-Z11-5651	K0210-002019	19	K012020
17A-Z11-5651	K0210-002019	9	K012019
17A-Z11-5651	K0210-002019	9	K012020
17A-Z11-5651	K0210-006003	25	K015003
17A-Z11-5651	K0210-006005	25	K015005
17A-Z11-5651	K0210-006014	21	K015014
17A-Z11-5651	K0210-006019	19	K015019
17A-Z11-5651	K0210-006019	9	K015019
17A-Z11-7161	K0210-002022	9	K012023
17A-Z11-7161	K0210-006022	9	K015023
17M-50-24360	R0120-001001	10	R002001
17M-54-67740	K0210-002046	7	K012047
17M-54-67740	K0210-002049	4	K012050
17M-54-67740	K0210-006046	7	K015047
17M-54-67740	K0210-006049	4	K015050
17M-57-21401	K0110-005001	1	K005001
17M-57-21501	K0110-001001	1	K001001
195-30-17960	R0110-001001	22	R001001
195-30-33190	J2700-001001	26	J002001
195-50-22860	R0120-001001	16	R002001
195-54-68760	K0210-002050	11	K012051
195-54-68760	K0210-002050	5	K012051
195-54-68760	K0210-006050	11	K015051
195-54-68760	K0210-006050	5	K015051
195-54-78790	K0210-002048	13	K012049
195-54-78790	K0210-006048	13	K015049
195-57-11530	H0100-001001	45	H001001
195-979-8590	K2910-001001	22	K026001
195-Z11-1371	K0210-002009	22	K012009
195-Z11-1371	K0210-002010	22	K012010
195-Z11-1371	K0210-006009	22	K015009
195-Z11-1371	K0210-006010	22	K015010
195-Z11-1381	K0210-002009	26	K012009
195-Z11-1381	K0210-002010	26	K012010
195-Z11-1381	K0210-006009	26	K015009
195-Z11-1381	K0210-006010	26	K015010
195-Z11-2180	K0210-002021	1	K012022
195-Z11-2180	K0210-006021	1	K015022
195-Z11-3630	K0210-002009	23	K012009
195-Z11-3630	K0210-002010	23	K012010
195-Z11-3630	K0210-006009	23	K015009
195-Z11-3630	K0210-006010	23	K015010
195-Z11-3640	K0210-002009	24	K012009
195-Z11-3640	K0210-002010	24	K012010
195-Z11-3640	K0210-006009	24	K015009
195-Z11-3640	K0210-006010	24	K015010
195-Z11-3670	K0210-002009	27	K012009
195-Z11-3670	K0210-002010	27	K012010
195-Z11-3670	K0210-006009	27	K015009
195-Z11-3670	K0210-006010	27	K015010
195-Z11-3860	K0210-002009	25	K012009
195-Z11-3860	K0210-002010	25	K012010
195-Z11-3860	K0210-006009	25	K015009
195-Z11-3860	K0210-006010	25	K015010
195-Z11-4510	K0210-002004	34	K012004
195-Z11-4510	K0210-002007	4	K012007
195-Z11-4510	K0210-006004	34	K015004
195-Z11-4510	K0210-006007	4	K015007
195-Z11-4520	K0210-002002	34	K012002
195-Z11-4520	K0210-002007	5	K012007
195-Z11-4520	K0210-006002	34	K015002
195-Z11-4520	K0210-006007	5	K015007
196-916-1590	H0100-001005	15	H001005
196-916-1590	H0310-001001	9	H005001
198-06-53520	K0210-002037	32	K012038
198-06-53520	K0210-006037	32	K015038
198-06-59311	K0210-002037	26	K012038
198-06-59311	K0210-006037	26	K015038
198-06-59320	K0210-002037	27	K012038
198-06-59320	K0210-006037	27	K015038
198-06-59330	K0210-002037	28	K012038
198-06-59330	K0210-006037	28	K015038

PARTS Nº	FIG. Nº	INDEX	PAGE
198-06-59540	K0210-002037	25	K012038
198-06-59540	K0210-006037	25	K015038
198-06-63440	K0210-002037	18	K012038
198-06-63440	K0210-006037	18	K015038
198-49-11460	H0100-001001	16	H001001
198-54-19150	D0100-001001	42	D001001
198-54-19150	D0100-002001	42	D002001
198-54-19150	H0100-001002	21	H001002
198-54-19150	H0100-001002	7	H001002
198-54-19150	M2141-001005	19	M002005
198-54-19150	M2141-001005A	20	M002006
198-54-19150	M2141-002005	20	M003006
198-54-42260	K2120-001001	8	K021001
19M-09-11510	K0210-002034	10	K012035
19M-09-11510	K0210-002037	17	K012038
19M-09-11510	K0210-006034	10	K015035
19M-09-11510	K0210-006037	17	K015038
19M-43-33111	K0210-002034	9	K012035
19M-43-33111	K0210-006034	9	K015035
19M-43-33141	K0210-002034	10	K012035
19M-43-33141	K0210-006034	10	K015035
19M-43-33151	K0210-002034	15	K012035
19M-43-33151	K0210-006034	15	K015035
19M-43-33161	K0210-002034	16	K012035
19M-43-33161	K0210-006034	16	K015035
19M-43-33171	K0210-002034	12	K012035
19M-43-33171	K0210-006034	12	K015035
19M-43-33460	K0210-002034	13	K012035
19M-43-33460	K0210-006034	13	K015035
19M-43-33470	K0210-002034	14	K012035
19M-43-33470	K0210-006034	14	K015035
201-62-75420	H0120-001015	14	H002015
202-62-21430	J2700-001001	36	J002001
202-62-21430	T2160-001003	9	T008003
203-30-42260	R0120-001001	13	R002001
203-54-55660	C0100-001007	18	C001007
203-54-55660	C0100-001007	37	C001007
203-60-21260	H1840-001001	15	H009001
203-60-62190	H1840-001001	7	H009001
203-60-62220	H1840-001001	16	H009001
203-62-21740	J2700-001001	42	J002001
203-62-21740	T2160-001003	4	T008003
203-62-21740	T2160-001003	8	T008003
203-62-42920	J2700-001001	29	J002001
203-62-57730	H0340-001003	16	H007003
203-62-57730	H0340-001003	25	H007003
203-62-61410	H0120-001014	20	H002014
203-62-61410	H0120-002012	20	H003012
203-62-63770	H0120-001015	16	H002015
205-03-71440	H0100-001002	37	H001002
205-04-K1370	D0100-002003	7	D002003
205-30-00220	R0110-001001	3	R001001
205-30-00220	R0200-001001	5	R003001
205-30-00220	R0200-001002	5	R003002
205-54-51250	K0210-002020	9	K012021
205-54-51250	K0210-006020	9	K015021
205-54-51971	D0100-001001	27	D001001
205-54-51971	D0100-002001	27	D002001
205-54-51971	H0100-001001	35	H001001
205-54-51971	M2141-001005	8	M002005
205-54-51971	M2141-001005A	9	M002006
205-54-51971	M2141-002005	9	M003006
205-54-53550	D0100-001001	46	D001001
205-54-53550	D0100-002001	46	D002001
205-54-53550	H0100-001002	12	H001002
205-54-53550	H0100-001002	26	H001002
205-54-53550	M2141-001005	5	M002005
205-54-53550	M2141-001005A	5	M002006
205-54-53550	M2141-002005	5	M003006
205-60-71220	C0100-001005	9	C001005
205-62-74690	D0100-001001	3	D001001
205-62-74690	D0100-002001	3	D002001
205-70-66580	T2110-001001	1	T001001
205-70-66580	T2400-001001	25	T009001
207-62-64740	H0100-001001	11	H001001
207-62-64740	H0100-001001	8	H001001
207-62-64740	H0100-001003	10	H001003
207-62-64740	H0120-001014	2	H002014
207-62-64740	H0120-001014	5	H002014
207-62-64740	H0120-002012	2	H003012
207-62-64740	H0120-002012	5	H003012
207-62-64740	H0210-002012	13	H004012
207-62-64740	H0210-002012	8	H004012
207-62-64740	H0210-002017	19	H004017
207-62-64740	H0310-001001	22	H005001
207-62-64740	H0310-001001	27	H005001
207-62-64740	H0320-001001	14	H006001
207-62-64740	H1840-001010	11	H009010
207-62-71410	H0120-001014	1	H002014
207-62-71410	H0120-002012	1	H003012
207-62-72110	H1840-001010	9	H009010
207-62-72131	H0210-002017	18	H004017
208-03-58310	H0100-001005	6	H001005
208-06-11220	J2700-001001	31	J002001
208-38-11590	D0100-002003	9	D002003
208-987-3680	K0210-002031	14	K012032
208-987-3680	K0210-006031	14	K015032
20B-27-11210	H0210-002012	14	H004012
20B-27-11210	H0210-002016	8	H004016
20B-27-11210	H0210-002017	49	H004017
20N-60-11143	H0100-001001	13	H001001
20S-54-12310	K0230-002003	17	K017003
20T-43-71190	K0210-002034	1	K012035
20T-43-71190	K0210-006034	1	K015035
20T-43-71190	K2520-001003	5	K024003
20T-54-74510	E0210-001001	32	E003001
20T-54-74510	H0100-001003	13	H001003
20T-62-81790	H0120-002012	22	H003012
20U-54-46520	K0210-002018	11	K012018
20U-54-46520	K0210-006018	11	K015018
20U-62-46570	H0210-002017	21	H004017
20X-62-21550	H0120-001013	8	H002013
20X-62-21550	H0120-002011	8	H003011
20X-62-21670	H1840-001007	3	H009007
20Y-0041710	U0100-001001	29	U001001
20Y-04-21580	D0100-002002	17	D002002
20Y-06-23472	K0210-002015	14	K012015
20Y-06-23472	K0210-006015	14	K015015
20Y-06-23940	K0210-002037	30	K012038
20Y-06-23940	K0210-006037	30	K015038
20Y-06-23940	K0210-006053	13	K015054
20Y-06-41812	E0420-001001	1	E004001
20Y-06-41990	K0210-002017	1	K012017
20Y-06-41990	K0210-006017	1	K015017
20Y-06-42140	K0210-002011	5	K012011
20Y-06-42140	K0210-006011	5	K015011
20Y-06-42190	K0210-002011	7	K012011
20Y-06-42190	K0210-002048	24	K012049
20Y-06-42190	K0210-006011	7	K015011
20Y-06-42190	K0210-006048	24	K015049
20Y-27-11250	F2380-002003	8	F002003
20Y-27-11250	F2380-002010	8	F002010
20Y-27-21250	F2380-002003	4	F002003
20Y-27-21250	F2380-002010	4	F002010
20Y-27-21280	F2380-002003	6	F002003
20Y-27-21280	F2380-002010	6	F002010
20Y-30-16330	R0300-002001	12	R005001
20Y-43-41491	K0210-002020	8	K012021
20Y-43-41491	K0210-006020	8	K015021
20Y-43-41750	K0210-002048	19	K012049
20Y-43-41750	K0210-006048	19	K015049
20Y-43-41780	K0210-002032	4	K012033
20Y-43-41780	K0210-006032	4	K015033
20Y-43-41781	K0210-002032	4	K012033
20Y-43-41781	K0210-006032	4	K015033
20Y-43-41790	K0210-002048	20	K012049
20Y-43-41790	K0210-006048	20	K015049
20Y-53-11380	K0210-002024	18	K012025
20Y-53-11380	K0210-006024	13	K015025
20Y-53-12310	K0210-002019	13	K012019

PARTS Nº	FIG. Nº	INDEX	PAGE
20Y-53-12310	K0210-002019	13	K012020
20Y-53-12310	K0210-002022	17	K012023
20Y-53-12310	K0210-006019	13	K015019
20Y-53-12310	K0210-006022	17	K015023
20Y-54-11611	D0100-001001	30	D001001
20Y-54-11611	D0100-002001	30	D002001
20Y-54-11611	H0100-001001	38	H001001
20Y-54-11611	M2141-001005	11	M002005
20Y-54-11611	M2141-001005A	12	M002006
20Y-54-11611	M2141-002005	12	M003006
20Y-54-18980	M2141-001005	23	M002005
20Y-54-18980	M2141-001005A	24	M002006
20Y-54-18980	M2141-002005	24	M003006
20Y-62-22271	H1840-001004	17	H009004
20Y-62-22790	H0210-002011	8	H004011
20Y-62-22790	H2250-001001	32	H013001
20Y-62-22790	H2250-002002	34	H014002
20Y-62-22790	H2250-002003	2	H014003
20Y-62-22810	H0210-002011	9	H004011
20Y-62-22810	H2250-002002	30	H014002
20Y-62-22820	C0100-001003	24	C001003
20Y-62-22820	H0210-002011	10	H004011
20Y-62-22820	H2250-001001	28	H013001
20Y-62-22820	H2250-002002	36	H014002
20Y-62-22820	H2250-002003	6	H014003
20Y-62-22850	C0100-001003	25	C001003
20Y-62-22850	H2250-002002	32	H014002
20Y-810-1240	K0210-006053	6	K015054
21J-06-13661	K0210-002012	5	K012012
21J-06-13661	K0210-002043	7	K012044
21J-06-13661	K0210-006012	5	K015012
21J-06-13661	K0210-006043	7	K015044
21J-46-12550	D0100-001002	27	D001002
21J-46-12550	D0100-002002	30	D002002
21J-46-12550	H0100-001006	8	H001006
21J-46-12550	M2141-001003	13	M002003
21J-46-12550	M2141-002003	13	M003003
21K-62-72481	H0120-001015	7	H002015
21K-62-72481	H0120-002013	7	H003013
21M-27-11240	F2380-002003	5	F002003
21M-27-11240	F2380-002010	5	F002010
21T-43-11770	K2910-001001	12	K026001
21T-62-76840	H0100-001003	17	H001003
21T-62-76840	H0100-001003	23	H001003
21T-62-76840	H0100-001005	16	H001005
21T-62-76840	H0310-001001	10	H005001
21T-62-76840	H0310-001001	18	H005001
21T-62-76840	H0310-001001	6	H005001
21T-72-23260	H0340-001003	51	H007003
21U-62-34710	H0120-001003	13	H002003
21U-62-34710	H0120-002003	13	H003003
21U-62-34710	H1840-001001	17	H009001
21U-62-34710	H2210-001004	4	H010004
21U-62-34710	H2210-001005	4	H010005
21U-62-34730	H0120-001003	14	H002003
21U-62-34730	H0120-002003	14	H003003
21U-62-34730	H1840-001001	18	H009001
21U-62-34730	H2210-001004	8	H010004
21U-62-34730	H2210-001005	8	H010005
21U-62-34740	H0120-001003	18	H002003
21U-62-34740	H0120-002003	18	H003003
21U-62-34740	H2230-001001	12	H012001
21U-62-34740	H2230-001001	33	H012001
21U-62-34740	H2230-001001	47	H012001
21U-62-34750	H0120-001003	15	H002003
21U-62-34750	H0120-002003	15	H003003
21U-62-34750	H1840-001001	19	H009001
21U-62-34750	H2220-001001	23	H011001
21U-62-34750	T2160-001002	15	T008002
21U-62-34760	H0120-001003	17	H002003
21U-62-34760	H0120-002003	17	H003003
21U-62-34760	H2230-001001	14	H012001
21U-62-34760	H2230-001001	35	H012001
21U-62-34760	H2230-001001	45	H012001
21U-62-34770	H0120-001003	16	H002003
21U-62-34770	H0120-002003	16	H003003
21U-62-34770	H2220-001001	21	H011001
21U-62-34770	T2160-001002	7	T008002
21U-62-34780	H1840-001001	20	H009001
21W-60-41121	H0100-001001	14	H001001
21W-60-41121	V0100-00101	1	V001001
21W-60-41170	H0100-001001	15	H001001
21W-62-35890	H1840-001007	4	H009007
21W-62-42640	H0100-001001	10	H001001
21W-62-42640	H0100-001003	9	H001003
21W-62-42640	H0310-001001	25	H005001
21W-62-43110	H0210-002012	3	H004012
21W-62-44510	K2520-001003	19	K024003
22B-979-1880	K0210-002031	27	K012032
22B-979-1880	K0210-006031	27	K015032
22H-01-11580	M2141-001002	4	M002002
22H-01-11580	M2141-002002	4	M003002
22J-62-25121	H0120-001014	15	H002014
22J-62-25121	H0120-002012	15	H003012
22L-46-12150	M2110-001001	10	M001001
22L-54-22990	K0210-002015	4	K012015
22L-54-22990	K0210-006015	4	K015015
22L-62-25410	H0120-001014	13	H002014
22L-62-25410	H0120-002012	13	H003012
22M-62-21380	C0100-001004	3	C001004
22P-62-13510	H0310-001002	20	H005002
22P-62-13520	C0103-001001	10	C003001
22P-62-13520	C0103-001001	9	C003001
22P-62-13540	H0310-001002	15	H005002
22P-62-13540	H2220-001001	16	H011001
22P-62-13540	H2230-001001	24	H012001
22P-62-13540	H2230-001001	36	H012001
22P-62-13550	H2210-001003	22	H010003
22P-62-13550	T2400-001002	27	T009002
22P-70-12160	H0100-001004	10	H001004
22P-70-12160	H0100-001004	19	H001004
22U-04-21200	D0100-002002	16	D002002
22U-04-21220	D0100-002002	18	D002002
22U-04-21241	D0100-002002	16	D002002
22U-06-22460	K0210-002032	3	K012033
22U-06-22460	K0210-006032	3	K015033
22U-60-21341	H1840-001006	6	H009006
22U-60-21520	D0100-001001	11	D001001
22U-60-21520	D0100-002001	11	D002001
22U-60-21520	H0100-001001	41	H001001
22W-22-17460	K0230-002003	23	K017003
23B-16-71270	H0100-001001	7	H001001
23B-60-72280	H0100-001001	4	H001001
23S-15-45860	K0210-002048	21	K012049
23S-15-45860	K0210-006048	21	K015049
23S-62-25850	K0210-002044	1	K012045
23S-62-25850	K0210-002044	13	K012045
23S-62-25850	K0210-006044	1	K015045
23S-62-25850	K0210-006044	13	K015045
283-62-18110	H0120-001013	9	H002013
283-62-18110	H0120-002011	9	H003011
2A5-00-11370	K0210-002020	5	K012021
2A5-00-11370	K0210-002023	6	K012024
2A5-00-11370	K0210-006020	5	K015021
2A5-00-11370	K0210-006023	6	K015024
2A5-00-11380	K0210-002020	4	K012021
2A5-00-11380	K0210-006020	4	K015021
2A5-06-11851	K0210-006053	3	K015054
2A5-06-11881	K0210-002023	1	K012024
2A5-06-11881	K0210-006023	1	K015024
2A5-06-11922	K0210-002016	1	K012016
2A5-06-11932	K0210-006016	1	K015016
2A5-06-11940	K0210-002018	8	K012018
2A5-06-11940	K0210-006018	8	K015018
2A5-06-11960	E0210-001001	31	E003001
2A5-06-12131	K0210-002018	9	K012018
2A5-06-12131	K0210-006018	9	K015018
2A5-53-12580	K0210-002018	10	K012018
2A5-53-12580	K0210-006018	10	K015018
363-60-21310	D0100-001001	24	D001001

PARTS Nº	FIG. Nº	INDEX	PAGE
363-60-21310	D0100-002001	24	D002001
415-54-11980	C0100-001005	10	C001005
415-54-11980	K2910-001001	27	K026001
416-43-37420	D0200-001001	6	D003001
416-62-44680	H2250-001001	1	H013001
417-43-16210	M2110-001001	31	M001001
417-54-13470	C0100-001006	20	C001006
417-T81-3820	H2250-002001	1	H014001
418-03-43880	H2210-001004	12	H010004
418-43-37161	H0340-001003	36	H007003
418-62-32550	H0100-001003	15	H001003
418-62-32550	H0100-001003	21	H001003
418-62-32550	H0310-001001	16	H005001
418-62-32550	H0310-001001	4	H005001
418-62-32560	H0100-001003	16	H001003
418-62-32560	H0100-001003	22	H001003
418-62-32560	H0310-001001	17	H005001
418-62-32560	H0310-001001	5	H005001
418-844-1310	M2110-001001	27	M001001
419-06-43150	C0100-001006	21	C001006
419-06-43160	C0100-001006	22	C001006
419-43-17920	C0100-001006	23	C001006
421-02-31120	A1610-501001	5	B005001
421-06-22910	B0500-001003	19	B010003
421-06-22910	E0210-001001	52	E003001
421-06-22920	B0500-001003	20	B010003
421-06-22920	E0210-001001	51	E003001
421-06-23330	K0210-002052	1	K012053
421-06-23330	K0210-002052	8	K012053
421-06-23330	K0210-006052	1	K015053
421-06-23330	K0210-006052	8	K015053
421-06-26210	K0210-002011	8	K012011
421-06-26210	K0210-006011	8	K015011
421-43-28431	K2520-001003	7	K024003
421-60-35170	D0100-001001	12	D001001
421-60-35170	D0100-002001	12	D002001
421-60-35170	H0100-001001	42	H001001
421-60-35170	V0100-00101	4	V001001
421-60-35180	D0100-001001	13	D001001
421-60-35180	D0100-002001	13	D002001
421-60-35180	H0100-001001	43	H001001
421-60-35190	D0100-001001	14	D001001
421-60-35190	D0100-002001	14	D002001
421-60-35190	H0100-001001	44	H001001
423-06-51130	K0210-002047	1	K012048
423-06-51130	K0210-006047	1	K015048
423-54-42790	K0230-001001	34	K016001
423-54-42790	K0230-002004	11	K017004
423-925-5860	K0210-002019	20	K012019
423-925-5860	K0210-002019	20	K012020
423-925-5860	K0210-006019	20	K015019
424-54-14230	H0340-001003	20	H007003
424-54-14230	H0340-001003	52	H007003
425-43-48220	H2210-001004	16	H010004
425-43-48220	T2160-001002	20	T008002
425-62-23751	H0210-002012	10	H004012
425-62-42640	T2400-001002	19	T009002
427-43-28660	H2210-001003	6	H010003
561-06-86280	K0210-002048	11	K012049
561-06-86280	K0210-006048	11	K015049
566-02-42200	A1470-501001	1	B002001
569-06-61960	K0210-002045	22	K012046
569-06-61960	K0210-006045	22	K015046
569-06-61970	K0210-002045	25	K012046
569-06-61970	K0210-006045	25	K015046
56B-06-37150	K0210-002018	13	K012018
56B-06-37150	K0210-006018	13	K015018
575-41-17420	H0120-001004	1	H002004
575-41-17420	H0120-001010	8	H002010
575-41-17420	H0120-002004	1	H003004
600-051-2050	B0500-001003	26	B010003
600-051-2050	B0500-001004	12	B010004
600-051-2060	H0210-002019	7	H004019
600-051-2080	B0500-001004	26	B010004
600-051-2080	K0710-001001	32	K019001
600-051-2100	B0500-001003	34	B010003
600-051-2100	B0500-001003	7	B010003
600-051-2100	B0500-001004	5	B010004
600-051-2100	K0710-001001	39	K019001
600-051-2140	B0500-001002	21	B010002
600-051-2140	B0500-001002	45	B010002
600-051-2140	B0500-001002	48	B010002
600-051-2140	B0500-001004	29	B010004
600-051-2140	B0500-001004	4	B010004
600-051-2140	B0500-001004	8	B010004
600-051-2180	B0500-001002	42	B010002
600-051-2180	B0500-001004	23	B010004
600-051-2190	B0500-001003	37	B010003
600-051-2190	B0500-001004	1	B010004
600-051-2220	B0500-001002	32	B010002
600-051-2220	B0500-001002	39	B010002
600-051-2220	B0500-001003	40	B010003
600-051-2260	B0500-001002	29	B010002
600-051-6100	B0500-001002	54	B010002
600-051-6120	B0500-001002	51	B010002
600-184-1320	A1410-501002	4	B001002
600-184-1350	A1410-501002	6	B001002
600-184-1470	A1410-501002	3	B001002
600-184-2810	A1410-501002	5	B001002
600-185-4100	A1410-501002	1	B001002
600-185-4110	A1410-501002	1	B001002
600-319-3610	V0100-00102	6	V001002
600-319-3750	V0100-00102	4	V001002
600-645-7850	C0100-001004	16	C001004
600-815-2170	B0500-001002	9	B010002
600-861-6111	A6010-502001	1	B009002
600-863-5130	A6052-001001	1	B009004
6131-81-8811	A1410-501001	4	B001001
6131-81-8820	A1410-501003	6	B001003
6137-11-5291	A1610-501001	46	B005001
6150-11-5840	A1410-501003	14	B001003
6156-81-8990	A1410-501001	5	B001001
6206-71-1770	A1410-501003	8	B001003
6207-81-6980	A6010-501001	5	B009001
6212-82-0110	V0300-00101	20	V003001
6217-21-7150	H0100-001005	10	H001005
6217-21-7150	H0100-001005	19	H001005
6217-21-7150	H0340-001002	18	H007002
6217-21-7150	H0340-001002	27	H007002
6643-11-4641	A1410-501003	15	B001003
6732-81-6490	A6010-501001	7	B009001
6732-81-6530	A6010-501001	8	B009001
6736-51-5142	V0100-00102	3	V001002
6754-11-5620	A1610-501001	47	B005001
6754-11-5940	A1610-501001	48	B005001
6754-11-8181	V0100-00102	1	V001002
6754-11-8211	V0100-00102	2	V001002
6754-81-6140	A6010-501001	1	B009001
6754-81-6370	A6010-503001	2	B009003
6754-81-6380	A6010-503001	3	B009003
6755-61-3130	A6010-504001	1	B009005
6755-61-3130	V0100-00102	5	V001002
6755-81-6120	A6010-503001	1	B009003
6755-81-6140	A6010-501001	2	B009001
6755-81-6150	A6010-501001	10	B009001
6755-81-7600	A1410-501002	1	B001002
6755-81-9160	A1610-501001	26	B005001
700-22-11410	H0120-001008	2	H002008
700-22-11410	H0120-001008	6	H002008
700-22-11410	H0120-002008	2	H003008
700-22-11410	H0120-002008	6	H003008
700-80-61260	H0120-001003	11	H002003
700-80-61260	H0120-001003	6	H002003
700-80-61260	H0120-002003	11	H003003
700-80-61260	H0120-002003	6	H003003
700-80-64220	H0120-001008	3	H002008
700-80-64220	H0120-001008	7	H002008
700-80-64220	H0120-002008	3	H003008
700-80-64220	H0120-002008	7	H003008
700-85-11111	H0120-002007	20	H003007

PARTS Nº	FIG. Nº	INDEX	PAGE
700-93-11320	H1840-001001	21	H009001
702-16-01230	K2520-001002	1	K024002
702-16-02320	K0210-002033	1	K012034
702-16-02320	K0210-006033	1	K015034
702-16-02440	K0210-002036	1	K012037
702-16-02440	K0210-006036	1	K015037
702-16-51140	K2520-001002	3	K024002
702-16-51270	K2520-001002	8	K024002
702-16-53170	K2520-001002	7	K024002
702-16-54550	K2520-001002	4	K024002
702-16-54560	K2520-001002	6	K024002
702-16-54571	K2520-001002	5	K024002
702-16-54580	K2520-001002	9	K024002
702-16-54590	K2520-001002	10	K024002
702-16-54641	K2520-001002	14	K024002
702-16-54650	K2520-001002	17	K024002
702-16-54660	K2520-001002	16	K024002
702-16-54670	K2520-001002	3	K024002
702-16-55260	H0120-001004	15	H002004
702-16-55260	H0120-002004	15	H003004
702-16-58320	H0210-002011	5	H004011
702-16-59330	K0210-002033	5	K012034
702-16-59330	K0210-006033	5	K015034
702-16-61390	K0210-002036	4	K012037
702-16-61390	K0210-006036	4	K015037
702-16-62690	K0210-002033	6	K012034
702-16-62690	K0210-006033	6	K015034
702-16-62730	K0210-002033	2	K012034
702-16-62730	K0210-006033	2	K015034
702-16-62740	K0210-002033	3	K012034
702-16-62740	K0210-006033	3	K015034
702-16-71280	K0210-002036	2	K012037
702-16-71280	K0210-006036	2	K015037
702-21-07311	H1840-001002	1	H009002
702-21-07680	H0210-002011	1	H004011
702-21-11600	H2210-001002	1	H010002
702-21-53140	H0120-001006	12	H002006
702-21-53140	H0120-002006	12	H003006
702-21-53330	H1840-001002	3	H009002
702-21-53610	H0210-002011	2	H004011
702-21-53680	H1840-001002	2	H009002
702-21-54180	C0100-001002	18	C001002
702-21-54180	H0120-001003	3	H002003
702-21-54180	H0120-001003	8	H002003
702-21-54180	H0120-002003	3	H003003
702-21-54180	H0120-002003	8	H003003
702-21-55420	H0120-001006	13	H002006
702-21-55420	H0120-002006	13	H003006
702-21-55620	H0120-001006	2	H002006
702-21-55620	H0120-002006	2	H003006
702-21-55620	H2210-001002	17	H010002
702-21-55870	C0100-001002	15	C001002
702-21-62600	H0120-001003	2	H002003
702-21-62600	H0120-002003	2	H003003
702-21-62700	H0120-001003	7	H002003
702-21-62700	H0120-002003	7	H003003
702-21-81560	H2210-001002	9	H010002
702-21-81570	H2210-001002	12	H010002
702-21-81580	H2210-001002	13	H010002
702-21-81610	H2210-001002	5	H010002
702-21-81620	H2210-001002	16	H010002
702-21-81640	H2210-001002	19	H010002
705-17-02353	H0210-002018	1	H004018
705-17-02353	H0210-002018	2	H004018
705-17-02360	H0210-002018	6	H004018
705-17-02430	H0210-002018	4	H004018
705-17-02460	H0210-002018	5	H004018
705-17-02612	H0210-002018	3	H004018
705-17-02830	H0210-002018	8	H004018
705-17-02870	H0210-002018	7	H004018
705-17-04980	H0210-002018	15	H004018
705-18-02820	H0210-002018	1	H004018
705-18-02C10	H0210-002018	2	H004018
705-18-35150	H0210-002018	10	H004018
705-18-35620	H0210-002018	11	H004018
705-18-35810	H0210-002018	12	H004018
705-22-35260	H0210-002018	1	H004018
706-77-72170	F2380-002004	9	F002004
706-77-72170	F2380-002011	9	F002011
706-86-53530	F2380-002004	19	F002004
706-86-53530	F2380-002011	19	F002011
706-86-53530	H1840-001008	3	H009008
706-86-71310	F2380-002004	11	F002004
706-86-71310	F2380-002011	11	F002011
706-8H-51110	F2380-002005	13	F002005
706-8H-51110	F2380-002012	13	F002012
706-8H-51120	F2380-002005	2	F002005
706-8H-51120	F2380-002012	2	F002012
706-8H-51220	F2380-002005	4	F002005
706-8H-51220	F2380-002012	4	F002012
706-8H-53120	F2380-002004	7	F002004
706-8H-53120	F2380-002011	7	F002011
706-8H-53130	F2380-002004	8	F002004
706-8H-53130	F2380-002011	8	F002011
706-8H-53210	F2380-002005	21	F002005
706-8H-53210	F2380-002012	21	F002012
706-8J-00510	F2380-002004	1	F002004
706-8J-00520	F2380-002011	1	F002011
706-8J-00530	F2380-002005	1	F002005
706-8J-00530	F2380-002012	1	F002012
706-8J-01510	F2380-002004	1	F002004
706-8J-01510	F2380-002005	1	F002005
706-8J-01510	F2380-002006	1	F002006
706-8J-01510	F2380-002007	1	F002007
706-8J-01520	F2380-002011	1	F002011
706-8J-01520	F2380-002012	1	F002012
706-8J-01520	F2380-002013	1	F002013
706-8J-01520	F2380-002014	1	F002014
706-8J-05200	F2380-002004	17	F002004
706-8J-05200	F2380-002011	17	F002011
706-8J-41580	F2380-002006	12	F002006
706-8J-41580	F2380-002013	12	F002013
706-8J-41881	F2380-002006	16	F002006
706-8J-41881	F2380-002013	16	F002013
706-8J-42110	F2380-002006	13	F002006
706-8J-42110	F2380-002013	13	F002013
706-8J-42120	F2380-002006	14	F002006
706-8J-42120	F2380-002013	14	F002013
706-8J-42150	F2380-002006	11	F002006
706-8J-42150	F2380-002013	11	F002013
706-8J-42410	F2380-002004	1	F002004
706-8J-42410	F2380-002011	1	F002011
706-8J-42430	F2380-002006	1	F002006
706-8J-42430	F2380-002013	1	F002013
706-8J-42440	F2380-002006	4	F002006
706-8J-42440	F2380-002013	4	F002013
706-8J-42450	F2380-002006	2	F002006
706-8J-42450	F2380-002013	2	F002013
706-8J-42460	F2380-002006	3	F002006
706-8J-42460	F2380-002013	3	F002013
706-8J-42470	F2380-002006	5	F002006
706-8J-42470	F2380-002013	5	F002013
706-8J-42720	F2380-002006	10	F002006
706-8J-42720	F2380-002013	10	F002013
706-8J-42880	F2380-002006	9	F002006
706-8J-42880	F2380-002013	9	F002013
706-8J-51620	F2380-002005	16	F002005
706-8J-51620	F2380-002012	16	F002012
706-8J-51630	F2380-002005	1	F002005
706-8J-51630	F2380-002012	1	F002012
706-8J-51650	F2380-002005	20	F002005
706-8J-51650	F2380-002012	20	F002012
706-8J-71350	F2380-002005	17	F002005
706-8J-71350	F2380-002012	17	F002012
706-8J-91210	F2380-002007	7	F002007
706-8J-91210	F2380-002014	7	F002014
706-8J-91220	F2380-002007	5	F002007
706-8J-91220	F2380-002014	5	F002014
706-8J-91230	F2380-002007	6	F002007
706-8J-91230	F2380-002014	6	F002014

PARTS Nº	FIG. Nº	INDEX	PAGE
706-8J-91240	F2380-002007	1	F002007
706-8J-91240	F2380-002014	1	F002014
706-8J-91250	F2380-002007	2	F002007
706-8J-91250	F2380-002014	2	F002014
706-8J-91260	F2380-002007	4	F002007
706-8J-91260	F2380-002014	4	F002014
706-8J-91270	F2380-002007	10	F002007
706-8J-91270	F2380-002014	10	F002014
706-8J-91280	F2380-002007	3	F002007
706-8J-91280	F2380-002014	3	F002014
707-11-10J70	T2140-001001	1	T005001
707-11-10J80	T2140-001002	1	T005002
707-11-11H20	T2153-001001	1	T007001
707-11-12C60	T2150-001001	1	T006001
707-11-12C70	T2460-001001	1	T010001
707-29-10A80	T2140-001001	8	T005001
707-29-10A80	T2140-001002	8	T005002
707-29-11090	T2153-001001	10	T007001
707-29-12180	T2150-001001	10	T006001
707-29-12660	T2460-001001	8	T010001
707-35-10960	KIT	K02	Y001001
707-35-10960	T2140-001001	11	T005001
707-35-10960	T2140-001002	11	T005002
707-35-11060	KIT	K04	Y001001
707-35-11060	T2153-001001	16	T007001
707-35-11160	KIT	K03	Y001001
707-35-11160	T2150-001001	18	T006001
707-35-11210	KIT	K05	Y001001
707-35-11210	T2460-001001	14	T010001
707-36-10470	T2140-001001	18	T005001
707-36-10470	T2140-001002	18	T005002
707-36-12170	T2150-001001	20	T006001
707-36-12840	T2460-001001	18	T010001
707-39-12520	KIT	K05	Y001001
707-39-12520	T2460-001001	20	T010001
707-40-11321	T2153-001001	26	T007001
707-44-10150	KIT	K02	Y001001
707-44-10150	T2140-001001	19	T005001
707-44-10150	T2140-001002	19	T005002
707-44-11150	KIT	K04	Y001001
707-44-11150	T2153-001001	21	T007001
707-44-12150	KIT	K03	Y001001
707-44-12150	T2150-001001	21	T006001
707-44-12250	KIT	K05	Y001001
707-44-12250	T2460-001001	19	T010001
707-46-05040	T2153-001001	4	T007001
707-46-05120	T2115-001002	19	T002002
707-51-55650	KIT	K02	Y001001
707-51-55650	T2140-001001	16	T005001
707-51-55650	T2140-001002	16	T005002
707-51-55860	KIT	K02	Y001001
707-51-55860	T2140-001001	14	T005001
707-51-55860	T2140-001002	14	T005002
707-51-65650	KIT	K04	Y001001
707-51-65650	T2153-001001	17	T007001
707-51-65860	KIT	K04	Y001001
707-51-65860	T2153-001001	12	T007001
707-51-70650	KIT	K03	Y001001
707-51-70650	KIT	K05	Y001001
707-51-70650	T2150-001001	14	T006001
707-51-70650	T2460-001001	13	T010001
707-51-70860	KIT	K03	Y001001
707-51-70860	KIT	K05	Y001001
707-51-70860	T2150-001001	11	T006001
707-51-70860	T2460-001001	11	T010001
707-52-90301	T2140-001001	15	T005001
707-52-90301	T2140-001002	15	T005002
707-52-90401	T2153-001001	18	T007001
707-52-90451	T2460-001001	16	T010001
707-52-90461	T2150-001001	15	T006001
707-56-55740	KIT	K02	Y001001
707-56-55740	T2140-001001	13	T005001
707-56-55740	T2140-001002	13	T005002
707-56-65740	KIT	K04	Y001001
707-56-65740	T2153-001001	11	T007001
707-56-70740	KIT	K03	Y001001
707-56-70740	KIT	K05	Y001001
707-56-70740	T2150-001001	12	T006001
707-56-70740	T2460-001001	10	T010001
707-58-55A40	T2140-001001	3	T005001
707-58-55A40	T2140-001002	3	T005002
707-58-70A20	T2460-001001	3	T010001
707-58-70A80	T2150-001001	3	T006001
707-67-39020	T2140-001001	21	T005001
707-67-39020	T2140-001002	21	T005002
707-67-48020	T2153-001001	23	T007001
707-67-52030	T2150-001001	23	T006001
707-67-52030	T2460-001001	21	T010001
707-69-11011	T2153-001001	24	T007001
707-75-55110	T2140-001001	17	T005001
707-75-55110	T2140-001002	17	T005002
707-75-65110	T2153-001001	19	T007001
707-75-70110	T2150-001001	19	T006001
707-75-70110	T2460-001001	17	T010001
707-77-85010	T2110-001001	9	T001001
707-81-45252	T2153-001001	25	T007001
707-86-48980	T2140-001001	22	T005001
707-86-48990	T2140-001002	22	T005002
707-86-55780	T2460-001001	22	T010001
707-88-60310	T2153-001001	27	T007001
707-91-91111	T2153-001001	20	T007001
707-99-34250	KIT	K02	Y001001
707-99-36690	KIT	K04	Y001001
707-99-42220	KIT	K03	Y001001
707-99-42300	KIT	K05	Y001001
707-E0-00570	T2150-001001	1	T006001
707-E0-00590	T2153-001001	1	T007001
707-E0-00600	T2460-001001	1	T010001
707-E0-00610	T2140-001001	1	T005001
707-E0-00620	T2140-001002	1	T005002
708-18-13230	H0210-002003	11	H004003
708-18-13230	H0210-002007	9	H004007
708-1F-12270	H0210-002003	4	H004003
708-1F-12270	H0210-002007	4	H004007
708-1S-11890	C0100-001003	9	C001003
708-1S-18180	C0100-001002	23	C001002
708-1U-13310	H0210-002014	10	H004014
708-1U-14240	H0210-002014	13	H004014
708-1U-19120	H0210-002016	12	H004016
708-1W-00550	H0210-002013	1	H004013
708-1W-00550	H0210-002014	1	H004014
708-1W-00550	H0210-002015	1	H004015
708-1W-00550	H0210-002016	1	H004016
708-1W-01230	H0210-002013	1	H004013
708-1W-01230	H0210-002014	1	H004014
708-1W-03960	H0210-002015	1	H004015
708-1W-04290	H0210-002013	18	H004013
708-1W-04320	H0210-002013	13	H004013
708-1W-04780	H0210-002013	1	H004013
708-1W-04790	H0210-002013	1	H004013
708-1W-05821	H0210-002013	27	H004013
708-1W-28150	H0210-002017	3	H004017
708-1W-42110	H0210-002013	23	H004013
708-1W-42120	H0210-002013	17	H004013
708-1W-42130	H0210-002013	25	H004013
708-1W-42140	H0210-002013	24	H004013
708-1W-42150	H0210-002013	22	H004013
708-1W-43110	H0210-002014	1	H004014
708-1W-43120	H0210-002014	2	H004014
708-1W-43130	H0210-002014	4	H004014
708-1W-43140	H0210-002014	5	H004014
708-1W-43150	H0210-002013	19	H004013
708-1W-43170	H0210-002013	20	H004013
708-1W-43320	H0210-002014	7	H004014
708-1W-43341	H0210-002014	9	H004014
708-1W-44140	H0210-002014	12	H004014
708-1W-44170	H0210-002014	11	H004014
708-1W-49170	H0210-002013	7	H004013
708-23-12350	F2380-002006	15	F002006
708-23-12350	F2380-002013	15	F002013

PARTS Nº	FIG. Nº	INDEX	PAGE
708-2G-05010	H0210-002003	3	H004003
708-2G-05010	H0210-002007	3	H004007
708-2G-12220	F2380-002006	7	F002006
708-2G-12220	F2380-002013	7	F002013
708-2G-12230	H0210-002003	6	H004003
708-2G-12251	H0210-002003	2	H004003
708-2G-12251	H0210-002007	2	H004007
708-2G-13131	H0210-002003	13	H004003
708-2G-13131	H0210-002007	11	H004007
708-2G-13141	H0210-002003	15	H004003
708-2G-13141	H0210-002007	13	H004007
708-2G-13152	H0210-002003	14	H004003
708-2G-13152	H0210-002007	12	H004007
708-2G-13341	H0210-002003	18	H004003
708-2G-13341	H0210-002007	16	H004007
708-2G-13370	H0210-002003	19	H004003
708-2G-13370	H0210-002007	17	H004007
708-2G-13510	H0210-002003	16	H004003
708-2G-13510	H0210-002007	14	H004007
708-2H-12430	H0210-002002	3	H004002
708-2H-23360	H0210-002003	17	H004003
708-2H-23360	H0210-002007	15	H004007
708-2H-32130	H0210-002009	8	H004009
708-2L-23360	C0100-001003	14	C001003
708-2L-25480	H0210-002016	4	H004016
708-3D-15110	F2380-002004	12	F002004
708-3D-15110	F2380-002011	12	F002011
708-3T-13360	H0210-002014	8	H004014
708-7R-11210	C0100-001002	5	C001002
708-7S-00740	C0100-001002	1	C001002
708-7S-01330	C0100-001002	14	C001002
708-7S-01620	C0100-001002	3	C001002
708-7S-05110	C0100-001003	7	C001003
708-7S-11790	C0100-001002	1	C001002
708-7S-12140	C0100-001003	5	C001003
708-7S-12220	C0100-001003	6	C001003
708-7S-12330	C0100-001003	4	C001003
708-7S-13130	C0100-001003	11	C001003
708-7S-13250	C0100-001003	12	C001003
708-7S-13350	C0100-001003	20	C001003
708-7S-13360	C0100-001003	19	C001003
708-7S-13420	C0100-001003	21	C001003
708-7S-13530	C0100-001003	15	C001003
708-7S-13550	C0100-001003	18	C001003
708-7S-13560	C0100-001003	16	C001003
708-7S-18120	C0100-001002	10	C001002
708-7S-18230	C0100-001002	20	C001002
708-7S-18360	C0100-001002	17	C001002
708-7S-18750	C0100-001002	11	C001002
708-7T-12330	C0100-001003	8	C001003
708-8E-16160	F2380-002004	13	F002004
708-8E-16160	F2380-002011	13	F002011
708-8E-16160	H0120-001003	4	H002003
708-8E-16160	H0120-001003	9	H002003
708-8E-16160	H0120-002003	4	H003003
708-8E-16160	H0120-002003	9	H003003
708-8E-16160	H0210-002011	3	H004011
708-8E-16160	H0210-002016	10	H004016
708-8H-11530	F2380-002004	15	F002004
708-8H-11530	F2380-002011	15	F002011
709-26-11450	H0120-001004	7	H002004
709-26-11450	H0120-001010	6	H002010
709-26-11450	H0120-002004	7	H003004
709-32-12861	C0100-001002	7	C001002
720-1G-13630	H0210-002001	12	H004001
720-1G-13630	H0210-002006	12	H004006
720-2G-00010	H0210-002001	1	H004001
720-2G-00010	H0210-002002	1	H004002
720-2G-00010	H0210-002003	1	H004003
720-2G-00010	H0210-002004	1	H004004
720-2G-00010	H0210-002005	1	H004005
720-2G-00010	H0210-002006	1	H004006
720-2G-00010	H0210-002007	1	H004007
720-2G-00010	H0210-002008	1	H004008
720-2G-00010	H0210-002009	1	H004009
720-2G-00010	H0210-002010	1	H004010
720-2G-01010	H0210-002001	1	H004001
720-2G-01010	H0210-002002	1	H004002
720-2G-01010	H0210-002003	1	H004003
720-2G-01010	H0210-002004	1	H004004
720-2G-01010	H0210-002005	1	H004005
720-2G-01010	H0210-002006	1	H004006
720-2G-01010	H0210-002007	1	H004007
720-2G-01010	H0210-002008	1	H004008
720-2G-01010	H0210-002009	1	H004009
720-2G-03110	H0210-002004	1	H004004
720-2G-03110	H0210-002008	1	H004008
720-2G-03120	H0210-002004	1	H004004
720-2G-03120	H0210-002008	1	H004008
720-2G-03130	H0210-002005	1	H004005
720-2G-03130	H0210-002009	1	H004009
720-2G-04110	H0210-002001	1	H004001
720-2G-04120	H0210-002006	1	H004006
720-2G-04130	H0210-002002	1	H004002
720-2G-04310	H0210-002003	8	H004003
720-2G-11130	H0210-002001	5	H004001
720-2G-11130	H0210-002006	5	H004006
720-2G-12110	H0210-002003	1	H004003
720-2G-12120	H0210-002007	1	H004007
720-2G-12320	H0210-002003	5	H004003
720-2G-13410	H0210-002001	10	H004001
720-2G-13410	H0210-002006	10	H004006
720-2G-13610	H0210-002001	11	H004001
720-2G-13610	H0210-002006	11	H004006
720-2G-14110	H0210-002001	15	H004001
720-2G-14110	H0210-002006	15	H004006
720-2G-14130	H0210-002004	6	H004004
720-2G-14130	H0210-002008	6	H004008
720-2G-14140	H0210-002004	15	H004004
720-2G-14140	H0210-002008	15	H004008
720-2G-14150	H0210-002004	19	H004004
720-2G-14150	H0210-002008	19	H004008
720-2G-14160	H0210-002004	22	H004004
720-2G-14160	H0210-002008	22	H004008
720-2G-14170	H0210-002004	24	H004004
720-2G-14170	H0210-002008	24	H004008
720-2G-14180	H0210-002004	25	H004004
720-2G-14180	H0210-002008	25	H004008
720-2G-14190	H0210-002004	27	H004004
720-2G-14190	H0210-002008	27	H004008
720-2G-14210	H0210-002005	1	H004005
720-2G-14210	H0210-002009	1	H004009
720-2G-14230	H0210-002007	5	H004007
720-2G-16110	H0210-002010	1	H004010
720-2L-14120	H0210-002004	3	H004004
720-2L-14120	H0210-002008	3	H004008
720-2L-14130	H0210-002004	21	H004004
720-2L-14130	H0210-002008	21	H004008
720-2L-14140	H0210-002004	23	H004004
720-2L-14140	H0210-002008	23	H004008
720-2L-14190	H0210-002010	9	H004010
720-2M-03535	H1840-001008	1	H009008
720-2M-03591	H0210-002010	5	H004010
720-2M-11531	H0210-002002	10	H004002
720-2M-11550	H0120-001004	5	H002004
720-2M-11550	H0120-002004	5	H003004
720-2M-11550	H2210-001002	14	H010002
720-2M-13630	H0210-002001	13	H004001
720-2M-13630	H0210-002006	13	H004006
720-2M-13640	H0210-002001	14	H004001
720-2M-13640	H0210-002006	14	H004006
720-2M-14170	H0210-002004	28	H004004
720-2M-14170	H0210-002005	2	H004005
720-2M-14170	H0210-002008	28	H004008
720-2M-14170	H0210-002009	2	H004009
720-2M-14550	H0210-002004	4	H004004
720-2M-14550	H0210-002008	4	H004008
720-2M-14560	H0210-002004	5	H004004
720-2M-14560	H0210-002008	5	H004008

PARTS Nº	FIG. Nº	INDEX	PAGE
720-2M-14581	H0210-002004	9	H004004
720-2M-14581	H0210-002008	9	H004008
720-2M-14590	H0210-002004	11	H004004
720-2M-14590	H0210-002008	11	H004008
720-2M-14610	H0210-002004	13	H004004
720-2M-14610	H0210-002008	13	H004008
720-2M-14630	H0210-002004	17	H004004
720-2M-14630	H0210-002008	17	H004008
720-2M-14640	H0210-002004	18	H004004
720-2M-14640	H0210-002008	18	H004008
720-2M-15250	H0210-002010	6	H004010
720-2M-15270	H0210-002010	7	H004010
720-68-19610	C0100-001003	13	C001003
720-68-19610	H0210-002014	3	H004014
721-58-65160	T2153-001001	3	T007001
722-10-91130	C0100-001002	6	C001002
722-12-15160	H0120-001007	10	H002007
723-11-14250	H0120-001007	8	H002007
723-11-14250	H0120-002007	8	H003007
723-11-14390	H0120-001006	9	H002006
723-11-14390	H0120-002006	9	H003006
723-11-17150	H0210-002004	7	H004004
723-11-17150	H0210-002008	7	H004008
723-11-17353	H0120-001002	12	H002002
723-11-17353	H0120-002002	12	H003002
723-11-19110	H0120-001007	6	H002007
723-11-19110	H0120-002007	6	H003007
723-11-19130	H0120-001006	11	H002006
723-11-19130	H0120-002006	11	H003006
723-11-38620	H0120-001006	4	H002006
723-11-38620	H0120-002006	4	H003006
723-20-67300	H0120-001008	1	H002008
723-20-67300	H0120-002008	1	H003008
723-20-67400	H0120-001009	1	H002009
723-20-67400	H0120-002009	1	H003009
723-20-67500	H0120-001008	5	H002008
723-20-67500	H0120-002008	5	H003008
723-20-80100	H0120-001009	3	H002009
723-20-80100	H0120-001011	12	H002011
723-20-80100	H0120-002009	3	H003009
723-24-11800	H0120-002000	1	H003000
723-24-11800	H0120-002002	1	H003002
723-24-11800	H0120-002003	1	H003003
723-24-11800	H0120-002004	1	H003004
723-24-11800	H0120-002005	1	H003005
723-24-11800	H0120-002006	1	H003006
723-24-11800	H0120-002007	1	H003007
723-24-11800	H0120-002008	1	H003008
723-24-11800	H0120-002009	1	H003009
723-24-11800	H0120-002010	1	H003010
723-25-11400	H0120-001001	1	H002001
723-25-11400	H0120-001002	1	H002002
723-25-11400	H0120-001003	1	H002003
723-25-11400	H0120-001004	1	H002004
723-25-11400	H0120-001005	1	H002005
723-25-11400	H0120-001006	1	H002006
723-25-11400	H0120-001007	1	H002007
723-25-11400	H0120-001008	1	H002008
723-25-11400	H0120-001009	1	H002009
723-25-11400	H0120-001010	1	H002010
723-25-11400	H0120-001011	1	H002011
723-25-11400	H0120-001012	1	H002012
723-26-14150	H0120-001005	14	H002005
723-26-14150	H0120-001011	10	H002011
723-26-14150	H0120-002005	14	H003005
723-26-14220	H0120-001005	11	H002005
723-26-14220	H0120-002005	11	H003005
723-26-14230	H0120-001005	10	H002005
723-26-14230	H0120-001010	14	H002010
723-26-14230	H0120-002005	10	H003005
723-26-14240	H0120-001005	12	H002005
723-26-14240	H0120-002005	12	H003005
723-26-14580	H0120-001004	11	H002004
723-26-14580	H0120-002004	11	H003004
723-26-14690	H0120-001004	8	H002004
723-26-14690	H0120-002004	8	H003004
723-26-14790	H0120-001004	9	H002004
723-26-14790	H0120-002004	9	H003004
723-26-15110	H0120-001003	1	H002003
723-26-15110	H0120-001010	7	H002010
723-26-15110	H0120-002003	1	H003003
723-26-15121	H0120-001002	8	H002002
723-26-15121	H0120-001010	5	H002010
723-26-15121	H0120-002002	8	H003002
723-26-15220	H0120-001005	15	H002005
723-26-15220	H0120-001011	9	H002011
723-26-15220	H0120-002005	15	H003005
723-26-15230	H0120-001005	1	H002005
723-26-15230	H0120-001010	16	H002010
723-26-15230	H0120-002005	1	H003005
723-26-15830	H0120-001001	6	H002001
723-26-15830	H0120-001011	2	H002011
723-26-15830	H0120-002000	6	H003000
723-26-15840	H0120-001001	9	H002001
723-26-15840	H0120-001007	18	H002007
723-26-15840	H0120-001011	1	H002011
723-26-15840	H0120-002000	9	H003000
723-26-15840	H0120-002007	18	H003007
723-26-16350	H0120-001007	5	H002007
723-26-16350	H0120-002007	5	H003007
723-26-16380	H0120-001007	4	H002007
723-26-16380	H0120-002007	4	H003007
723-26-16621	H0120-001004	10	H002004
723-26-16621	H0120-002004	10	H003004
723-26-16990	H0120-001006	5	H002006
723-26-16990	H0120-002006	5	H003006
723-26-17220	H0120-001002	10	H002002
723-26-17220	H0120-002002	10	H003002
723-26-17230	H0120-001002	11	H002002
723-26-17230	H0120-002002	11	H003002
723-26-17240	H0120-001005	2	H002005
723-26-17240	H0120-001010	15	H002010
723-26-17240	H0120-002005	2	H003005
723-26-17260	H0120-001004	14	H002004
723-26-17260	H0120-002004	14	H003004
723-26-17270	H0120-001002	9	H002002
723-26-17270	H0120-002002	9	H003002
723-26-17280	H0120-001006	8	H002006
723-26-17280	H0120-002006	8	H003006
723-30-56300	H0120-001012	1	H002012
723-30-56300	H0120-002010	1	H003010
723-36-41930	H2210-001002	6	H010002
723-46-16780	H0210-002016	9	H004016
723-56-31630	H0210-002002	12	H004002
723-56-31630	H0210-002015	18	H004015
729-11-26000	F2380-002007	12	F002007
729-11-26000	F2380-002014	12	F002014
729-11-41000	C0100-001003	22	C001003
7826-25-3006	K0210-002051	1	K012052
7826-25-3006	K0210-006051	1	K015052
7830-75-5003	K0210-002042	1	K012043
7830-75-5003	K0210-006042	1	K015043
7831-69-8200	K0210-002048	27	K012049
7831-69-8200	K0210-006048	27	K015049
7835-33-2001	K0210-006053	1	K015054
7861-74-5100	K0210-002012	12	K012012
7861-74-5100	K0210-002043	24	K012044
7861-74-5100	K0210-006012	12	K015012
7861-74-5100	K0210-006043	24	K015044
7861-93-1430	A1410-501003	1	B001003
7861-93-1812	H0120-001014	39	H002014
7861-93-1812	H0120-002012	39	H003012
7861-93-1812	H0210-002012	30	H004012
7861-93-1840	H1840-001003	1	H009003
7861-93-3320	B0500-001004	11	B010004
7861-93-4930	D0100-001002	1	D001002
7861-93-4930	D0100-002002	1	D002002
8220-74-1610	M2110-001001	17	M001001
8A13-10-2100	K0210-002051	13	K012052
8A13-10-2100	K0210-006051	13	K015052

PARTS Nº	FIG. Nº	INDEX	PAGE
8A31-54-1110	K2120-001001	5	K021001
AS167554	K0110-001001	15	K001001
AS167554	K0110-005001	15	K005001
AS170373	K0110-001001	16	K001001
AS170373	K0110-005001	16	K005001
AS198304	K0110-001001	14	K001001
AS198304	K0110-005001	14	K005001
AS202810	K0110-001001	2	K001001
AS202810	K0110-005001	2	K005001
AS203500	K0110-001001	1	K001001
AS203510	K0110-001001	1	K001001
AS203512	K0110-005001	1	K005001
AS203514	K0110-001001	4	K001001
AS203514	K0110-005001	4	K005001
AS203518	K0110-001001	3	K001001
AS203519	K0110-005001	3	K005001
AS203521	K0110-001001	5	K001001
AS203521	K0110-005001	5	K005001
AS203523	K0110-001001	6	K001001
AS203525	K0110-005001	6	K005001
AS203527	K0110-001001	10	K001001
AS203527	K0110-005001	10	K005001
AS203528	K0110-001001	9	K001001
AS203528	K0110-005001	9	K005001
AS203532	K0110-001001	8	K001001
AS203532	K0110-005001	8	K005001
AS203537	K0110-001001	12	K001001
AS203537	K0110-005001	12	K005001
AS203538	K0110-001001	11	K001001
AS203538	K0110-005001	11	K005001
AS203541	K0110-001001	13	K001001
AS203541	K0110-005001	13	K005001
AS203542	K0110-001001	17	K001001
AS203542	K0110-005001	17	K005001
AS203547	K0110-001001	18	K001001
AS203547	K0110-005001	18	K005001
AS203549	K0110-001001	7	K001001
AS203549	K0110-005001	7	K005001
KD0-0055-05122	A6010-502001	29	B009002
KD0-0055-05202	A6010-502001	28	B009002
KD0-0056-05302	A6010-502001	35	B009002
KD0-0056-05302	A6010-502001	37	B009002
KD0-0275-06802	A6010-502001	12	B009002
KD0-09006-0370	A6010-502001	32	B009002
KD0-09006-0730	A6010-502001	15	B009002
KD0-09011-3540	A6010-502001	30	B009002
KD0-09011-3540	A6010-502001	36	B009002
KD0-09057-0220	A6010-502001	27	B009002
KD0-09170-2501	A6010-502001	19	B009002
KD0-09201-0980	A6010-502001	4	B009002
KD0-09201-1450	A6010-502001	7	B009002
KD0-33902-0080	A6010-502001	33	B009002
KD0-33902-0090	A6010-502001	34	B009002
KD0-35100-0418	A6010-502001	1	B009002
KD0-35120-0528	A6010-502001	16	B009002
KD0-35200-0528	A6010-502001	5	B009002
KD0-35300-0450	A6010-502001	6	B009002
KD0-35421-0240	A6010-502001	14	B009002
KD0-35700-1140	A6010-502001	16	B009002
KD0-35710-1330	A6010-502001	17	B009002
KD0-35719-0201	A6010-502001	38	B009002
KD0-35730-0700	A6010-502001	18	B009002
KD0-35761-0308	A6010-502001	39	B009002
KD0-35784-0210	A6010-502001	25	B009002
KD0-35784-0290	A6010-502001	26	B009002
KD0-35902-0010	A6010-502001	31	B009002
KD0-35923-0134	A6010-502001	22	B009002
KD0-35923-0160	A6010-502001	3	B009002
KD0-35926-0070	A6010-502001	8	B009002
KD0-35926-0090	A6010-502001	10	B009002
KD0-35943-0140	A6010-502001	24	B009002
KD0-35943-0154	A6010-502001	21	B009002
KD0-35943-0160	A6010-502001	23	B009002
KD0-35943-0170	A6010-502001	20	B009002
KD0-35943-0240	A6010-502001	2	B009002
KD0-35951-0060	A6010-502001	9	B009002
KD1-33926-0730	A6010-502001	11	B009002
ND028062-0130	A6052-001001	29	B009004
ND028062-5790	A6052-001001	43	B009004
ND028063-0030	A6052-001001	28	B009004
ND028065-0250	A6052-001001	20	B009004
ND028099-3270	A6052-001001	5	B009004
ND028099-5100	A6052-001001	14	B009004
ND028100-5410	A6052-001001	1	B009004
ND028200-5250	A6052-001001	2	B009004
ND028300-6551	A6052-001001	4	B009004
ND028300-6751	A6052-001001	6	B009004
ND028306-0070	A6052-001001	27	B009004
ND028327-0171	A6052-001001	35	B009004
ND028371-3200	A6052-001001	38	B009004
ND028371-3210	A6052-001001	26	B009004
ND028381-0071	A6052-001001	10	B009004
ND028510-0880	A6052-001001	21	B009004
ND028520-0011	A6052-001001	22	B009004
ND028530-1090	A6052-001001	40	B009004
ND028530-1100	A6052-001001	41	B009004
ND028901-0361	A6052-001001	37	B009004
ND028901-5190	A6052-001001	45	B009004
ND053404-0240	A6052-001001	16	B009004
ND053480-7560	A6052-001001	18	B009004
ND053505-0290	A6052-001001	17	B009004
ND053660-0443	A6052-001001	15	B009004
ND128099-5770	A6052-001001	13	B009004
ND128501-1090	A6052-001001	23	B009004
ND153400-9890	A6052-001001	12	B009004
ND90170-10061	A6052-001001	44	B009004
ND90200-06241	A6052-001001	46	B009004
ND90258-10001	A6052-001001	36	B009004
ND90801-10050	A6052-001001	31	B009004
ND949006-4720	A6052-001001	33	B009004
ND949007-6530	A6052-001001	39	B009004
ND949007-6850	A6052-001001	42	B009004
ND949042-3680	A6052-001001	30	B009004
ND949042-3690	A6052-001001	32	B009004
ND949047-4440	A6052-001001	19	B009004
ND949056-4480	A6052-001001	34	B009004
ND949100-1920	A6052-001001	8	B009004
ND949100-3161	A6052-001001	3	B009004
ND949100-3540	A6052-001001	4	B009004
ND949100-4500	A6052-001001	7	B009004
ND949100-5290	A6052-001001	3	B009004
ND949120-0240	A6052-001001	24	B009004
ND949170-4040	A6052-001001	9	B009004
ND949170-4070	A6052-001001	25	B009004
RD-1-2567-0	K0210-002025	3	K012026
RD-1-2567-0	K0210-006025	3	K015026
RD-2-4087-0	K0210-002025	2	K012026
RD-2-4087-0	K0210-006025	2	K015026
RD-3-11476-0	K0210-002026	4	K012027
RD-3-11476-0	K0210-006026	4	K015027
RD-3-11485-0	K0210-002025	11	K012026
RD-3-11485-0	K0210-006025	11	K015026
RD-3-11518-0	K0210-002025	4	K012026
RD-3-11518-0	K0210-006025	4	K015026
RD-3-11519-0	K0210-002025	5	K012026
RD-3-11519-0	K0210-006025	5	K015026
RD-3-11536-0	K0210-002025	9	K012026
RD-3-11536-0	K0210-006025	9	K015026
RD-3-11753-0	K0210-002025	10	K012026
RD-3-11753-0	K0210-006025	10	K015026
RD-3-11762-0	K0210-002025	18	K012026
RD-3-11762-0	K0210-006025	18	K015026
RD-3-11763-0	K0210-002025	19	K012026
RD-3-11763-0	K0210-006025	19	K015026
RD-3-11764-0	K0210-002025	20	K012026
RD-3-11764-0	K0210-006025	20	K015026
RD-3-12262-0	K0210-002025	14	K012026
RD-3-12262-0	K0210-006025	14	K015026
RD-3-14894-0	K0210-002025	7	K012026

PARTS Nº	FIG. Nº	INDEX	PAGE
RD-3-14894-0	K0210-006025	7	K015026
RD-3-16677-0	K0210-002025	1	K012026
RD-3-16677-0	K0210-006025	1	K015026
RD-4-5437-0	K0210-002026	5	K012027
RD-4-5437-0	K0210-006026	5	K015027
RD-4-5452-0	K0210-002026	2	K012027
RD-4-5452-0	K0210-006026	2	K015027
RD-4-5614-0	K0210-002026	6	K012027
RD-4-5614-0	K0210-006026	6	K015027
RD-4-6597-0	K0210-002026	1	K012027
RD-4-6597-0	K0210-006026	1	K015027
RD-5-119886440	K0210-002025	20	K012026
RD-5-119886440	K0210-006025	20	K015026
RD-5-12218-1	K0210-002026	3	K012027
RD-5-12218-1	K0210-006026	3	K015027
RD-5-4017-013	K0210-002025	20	K012026
RD-5-4017-013	K0210-006025	20	K015026
RD-5-4017-015	K0210-002025	20	K012026
RD-5-4017-015	K0210-006025	20	K015026
RD-5-4020-0	K0210-002026	7	K012027
RD-5-4020-0	K0210-006026	7	K015027
RD-5-4520-0	K0210-002026	7	K012027
RD-5-4520-0	K0210-006026	7	K015027
RD-5-4531-24	K0210-006025	12	K015026
RD-5-460107500	K0210-006025	15	K015026
RD-5-7710-0	K0210-002025	20	K012026
RD-5-7710-0	K0210-006025	20	K015026
RD-5-8222-1-16	K0210-002026	7	K012027
RD-5-8222-1-16	K0210-006026	7	K015027
RD-5-8222-1-22	K0210-002025	20	K012026
RD-5-8222-1-22	K0210-002026	7	K012027
RD-5-8222-1-22	K0210-006025	20	K015026
RD-5-8222-1-22	K0210-006026	7	K015027
RD-5-8351-0	K0210-002025	17	K012026
RD-5-8351-0	K0210-006025	17	K015026
RD-5-8636-0	K0210-002026	7	K012027
RD-5-8636-0	K0210-006026	7	K015027
RD-5-8666-00	K0210-002025	16	K012026
RD-5-8666-00	K0210-006025	16	K015026
RD-5-9062-0	K0210-002025	13	K012026
RD-5-9062-0	K0210-006025	13	K015026
RD-5-9204-3	K0210-002025	6	K012026
RD-5-9204-3	K0210-006025	6	K015026
RD-5-9513-0	K0210-002025	8	K012026
RD-5-9513-0	K0210-006025	8	K015026
REU419B-418-C	K0210-002017	15	K012017
REU419B-418-C	K0210-006017	15	K015017
RFU419B-418-A	K0210-002017	1	K012017
RFU419B-418-A	K0210-006017	1	K015017
RFU419B-418-B	K0210-002017	6	K012017
RFU419B-418-B	K0210-006017	6	K015017
RFU419B-418-C	K0210-002017	7	K012017
RFU419B-418-C	K0210-006017	7	K015017
RFU419B-418-D	K0210-002017	3	K012017
RFU419B-418-D	K0210-006017	3	K015017
RFU419B-418-E	K0210-002017	4	K012017
RFU419B-418-E	K0210-006017	4	K015017
RFU419B-418-F	K0210-002017	16	K012017
RFU419B-418-F	K0210-006017	16	K015017