OUTUBRO 2010

https://truckmanualshub.com/

OUTUBRO 2010

FEN013000

PARTS BOOK

RUTHZIL TRATOR COMERCIAL DE PEÇAS LTDA 11 97083-6812 ROLANDO

D65PX-16
Serial No. 80232 and up

SAA6D114E-3E
Serial No. 26858933 and up

https://truckmanualshub.com/

FOREWORD

When ordering a spare part, specify the part number, part name, and quantity required, and also specify your machine model code, machine serial number, engine serial number and the service meter reading.

This Parts Book describes not only standard items but also optional equipment and attachments. To order a part, please contact your nearest Komatsu distributor.

This Parts Book contains the information and special codes as follows:

ILLUSTRATION AND PARTS LIST

When you open this Parts Book, you will find an illustration following its figure number (FIG.) Each individual part in the illustration is given an index number. Following the illustration, the component parts of the unit are listed in the order of the index numbers shown in the illustration. The part number, part name, quantity and applicable serial number are given for each part as a parts list.

FIGURE NUMBER (FIG.)

The figure number (FIG.) is the number which shows the figure of the page. It is not the spare part number. The numbers are not always continuous.

PARTS LIST

Spare parts information are listed in the parts list page as follows:

Index:

This is the same as the index number in the illustration. The parts are listed in index number order.

Code:

Codes are used in this column and represent as follows:

A1 This part and the part specified in the line immediately above are interchangeable.

A2 The part specified in the line above can be used instead of this part.

A3 This part can be used instead of the part specified in the line immediately above.

A4 The part specified in the description column can be used instead of this part if it is used as a set.

B1 This shows discontinued part. The part specified in the above line is supplied instead.

B2 This shows a discontinued part. The part specified in the description column is supplied instead as a set.

C1 This part cannot be supplied as an individual part. It is supplied as an assembly.

C2 This part is supplied for authorized Komatsu distributors only. It cannot be supplied as an individual part. It is supplied as an assembly.

C3 This indicates a part supplied as semi-finished. It requires additional work before installation.

Part Number:

The number given in the part number column is the part number for the part shown. It is the identification code used when ordering that part. It is important that there be no mistake in this code number when ordering.

Description:

This gives the name of part that has the part number listed. The mark "･" is put in front of the component part name of an assembly part and the item is entered following the assembly. If a part marked with "･" is a sub assembly, its components are marked with "･･".

Example: Tank Assembly
･Tank
･Cap
･･Packing

Furthermore, the following marks and abbreviations are used in this column.

Kit	This indicates kit parts. For kit parts, refer to the section FIELD REPAIR SERVICE PARTS in this Parts Book.
D	Diameter
L	Length
LHS	Left-hand side
RHS	Right-hand side
T	Thickness
W	Width

Quantity (Qty):

This specifies the number of pieces used for one machine. However, if a part is included in the assembly and/or component, the quantity per such assembly and/or component is specified.
Code AR (as required) shall be used in the Quantity column if the part cannot be specified numbers requires per machine and/or component. In such case, any number of quantities may be ordered depend on the field service requirement.

Serial Numbers:

Applicable engine serial number is indicated for the engine volume. In the chassis volume, this indicates the machine serial number in which the part is used.

If the serial number is enclosed in parenthesis, it shows that it is the applicable serial number for exclusive use of the equipment of figure number (FIG.)

https://truckmanualshub.com/

AVANT-PROPOS

Lorsque vous passez une commande d'une pièce de rechange, vous êtes prié de spécifier le numéro de la pièce, la désignation de la pièce et la quantité requise et d'indiquer également le code du modèle de la machine, le numéro de série de la machine, le numéro de série du moteur et la lecture du compteur de service du véhicule.

Sur le présent catalogue des pièces figurent non seulement les équipements standard, mais également les équipements et accessoires en option. Si vous désirez un équipement ou une pièce quelconque, vous êtes prié de prendre contact avec le concessionnaire Komatsu le plus proche.

Ce catalogue des pièces comprend les informations et codes spéciaux de la manière suivante:

FIGURES ET LISTES DES PIÈCES

Lorsque vous ouvrez le présent catalogue, vous pouvez rechercher les figures en fonction du numéro de figure (FIG.). Chaque pièce individuelle dans la figure est fournie d'un numéro de référence. D'après la figure, les éléments de l'unité sont énumérés dans l'ordre des numéros de référence montrés sur la figure. Le numéro de la pièce, la désignation de la pièce, la quantité et le numéro de série utilisés sont indiqués pour chaque pièce comme liste des pièces.

NUMÉRO DE FIGURE (FIG.)

Le numéro de figure (FIG.) est un numéro qui permet d'identifier une figure sur une page. Il ne représente pas le numéro de la pièce de rechange. Les numéros ne sont pas toujours séquentiels.

LISTE DES PIÈCES DE RECHANGE

Les informations des pièces de rechange sont données dans la page de la liste des pièces comme ci-après:

Numéro de référence (Index):

Les numéros de référence correspondent aux numéros de référence notés sur la figure et sont énumérés dans l'ordre des numéros de référence.

Codification (Code):

Les codes sont utilisés dans cette colonne et représentent comme ci-après:

A1 Cette pièce et la pièce qui figure sur la ligne juste au-dessus sont interchangeables.

A2 La pièce indiquée sur la ligne au-dessus peut être utilisée au lieu de cette pièce.

A3 Cette pièce peut être utilisée au lieu de la pièce indiquée sur la ligne juste au-dessus.

A4 La pièce indiquée dans la colonne de description peut être utilisée au lieu de cette pièce si elle est utilisée comme ensemble.

B1 Ceci montre la pièce dont la production est interrompue. La pièce indiquée dans la ligne au-dessus est fournie à sa place.

B2 Ceci montre la pièce dont la production est interrompue. La pièce indiquée dans la colonne de description est fournie à sa place comme ensemble.

C1 Cette pièce ne peut pas être fournie comme pièce individuelle. Elle est fournie en tant qu'ensemble.

C2 Cette pièce est fournie pour les distributeurs autorisés de Komatsu seulement. Elle ne peut pas être fournie comme pièce individuelle. Elle est fournie en tant qu'ensemble.

C3 Ceci indique une pièce fournie à l'état semi-fini. Ceci exige un travail additionnel avant l'installation.

Numéros de pièce (Part Number):

Les numéros indiqués dans cette colonne correspondent aux numéros des pièces représentées et constituent les codes à spécifier pour toute commande de pièce. Il est important de ne pas faire d'erreur avec ce code au moment de la commande.

Description (Description):

Ceci indique le nom de la pièce qui montre le numéro de la pièce énumérée. La marque "•" est placée devant le nom de la pièce du composant d'une pièce d'ensemble et l'item est introduit suivant l'ensemble. Si une pièce marquée avec "•" est un sous-ensemble, ses composants sont marqués avec "• •".
Exemple: Tank Assembly (Ensemble de réservoir)
• Tank
• Cap
• • Packing

En outre, les marques et abréviations suivantes sont utilisées dans cette colonne.

Kit Ceci indique les pièces de kit. Pour les pièces de kit, se référer à la Section FIELD REPAIR SERVICE PARTS de ce Catalogue des Pièces.
D Diamètre
L Longueur
LHS Côté gauche
RHS Côté droit
T Épaisseur
W Largeur

Quantité (Qty):

Ceci spécifie le nombre de pièces nécessaires pour l'équipement en question. S'il s'agit de pièces comprises dans un ensemble et/ou composant, et la quantité indiquée est le nombre de pièces nécessaires pour l'ensemble et/ou le composant en question.
Le code AR (comme requis) sera utilisé dans la colonne de Quantité si la pièce ne peut pas se présenter en nombres indiqués comme requis par machine et/ou composant. Dans ce cas, tout nombre de quantités peut être commandé selon la condition de service de champ.

Numéros de série (Serial Numbers):

Le numéro de série du moteur applicable est indiqué pour le volume du moteur. Dans le volume de la carrosserie, ceci indique le numéro de série de l'équipement sur lequel la pièce est utilisée.

Si le numéro de série est placé entre parenthèses, cela signifie qu'il s'agit d'un numéro de série destiné exclusivement à l'utilisation de l'équipement mentionné dans le numéro de figure (FIG.).

https://truckmanualshub.com/

PREFAZIONE

Quando fate un ordinazione di una parte di ricambio, siete pregati di precisare il numero della parte, la designazione della parte e la quantità necessaria ed indicare anche il codice del modello della macchina, il numero di serie della macchina, il numero di serie del motore e la lettura dell'indicatore di servizio del veicolo.

Sul presente catalogo delle parti appaiono non solo le attrezzature standard, ma anche le attrezzature ed accessori in opzione. Se desiderate un'attrezzatura o una parte qualunque, siete pregati di prendere contatto con il concessionario Komatsu più vicino.

Questo catalogo delle parti comprende le informazioni ed i codici speciali nel modo seguente:

ILLUSTRAZIONI ED ELENCO DELLE PARTI

Quando aprite il presente catalogo, troverete una figura secondo il suo numero di figura (FIG.). Ogni parte individuale nella figura è fornita di un numero di riferimento. Secondo la figura, gli elementi dell'unità sono enumerati nell'ordine dei numeri di riferimento mostrati sulla figura. Il numero della parte, la designazione della parte, la quantità ed il numero di serie utilizzati sono indicati per ogni parte come elenco delle parti.

NUMERO DI FIGURA (FIG.)

Il numero di figura (FIG.) è il numero che indica la figura della pagina. Non rappresenta il numero della parte di ricambio. I numeri non sono sempre continui.

ELENCO DELLE PARTI DI RICAMBIO

Le informazioni dei pezzi di ricambio sono elencate nella pagina dell'elenco dei pezzi come segue:

Numero di riferimento (Index):

I numeri di riferimento corrispondono ai numeri di riferimento notati sulla figura e sono enumerati nell'ordine dei numeri di riferimento.

Codice (Code):

I codici sono usati in questa colonna e rappresentano come segue:

A1 Questa parte ed la parte specificata nella linea immediatamente sopra sono intercambiabili.

A2 La parte specificata nella linea sopra può essere usata anziché questa parte.

A3 Questa parte può essere usata anziché la parte specificata nella linea immediatamente sopra.

A4 La parte specificata nella colonna di descrizione può essere usata anziché questa parte se è usata come insieme.

B1 Ciò mostra la parte non più in produzione. La parte specificata nella suddetta linea è invece fornita.

B2 Ciò mostra una parte non più in produzione. La parte specificata nella colonna di descrizione è fornita invece come insieme.

C1 Questa parte non può essere fornita come pezzo individuale. È fornita come insieme.

C2 Questa parte è destinata solo ai distributori autorizzati Komatsu. Non può essere fornita come parte individuale. È fornita come insieme.

C3 Ciò indica una parte fornita come semifinito. Richiede un lavoro supplementare prima dell'installazione.

Numeri di parte (Part Number):

I numeri indicati in questa colonna corrispondono ai numeri delle parti rappresentate e costituiscono i codici da precisare per qualsiasi ordinazione di parte. È importante non fare un errore con questo codice al momento dell'ordinazione.

Descrizione (Description):

Ciò dà il nome della parte che presenta il numero di parte elencato. Il contrassegno "•" è messo davanti al nome della parte componente di una parte di gruppo e l'articolo è inserito dopo il gruppo. Se un pezzo segnato con "•" è un sotto-gruppo, i suoi componenti sono segnati con "• •".
Esempio: Tank Assembly
• Tank
• Cap
• • Packing

Inoltre, i seguenti contrassegni ed abbreviazioni sono usati in questa colonna.

Kit Ciò indica le parti di kit. Per le parti di kit, riferirsi alla sezione PARTI DI RICAMBIO PER SERVIZIO DI RIPARAZIONE IN SEDE in questo Catalogo delle Parti.
D Diametro
L Lunghezza
LHS Lato a sinistra
RHS Lato a destra
T Spessore
W Larghezza

Quantità (Qty):

Questo precisa il numero di parti necessarie per l'attrezzatura in questione. Se si tratta di parti comprese in un insieme e/o componente, e la quantità indicata è il numero di parti necessarie per l'insieme e/o il componente in questione.
Il codice AR (come richiesto) sarà utilizzato nella colonna di Quantità se la parte non può presentarsi in numeri indicati come richiesto per macchina e/o componente. In questo caso, qualsiasi numero di quantità può essere ordinato secondo la condizione di servizio di campo.

Numeri di serie (Serial Numbers):

Il numero di serie del motore applicabile è indicato per il volume del motore. Nel volume della carrozzeria, questo indica il numero di serie dell'attrezzatura sulla quale la parte è utilizzata.

Se il numero seriale è racchiuso tra parentesi, indica che è il numero di serie applicabile per uso esclusivo dell'attrezzatura del numero di figura (FIG.)

https://truckmanualshub.com/

VORWORT

Bei der Bestellung von Teilen bitte die Teilenummer, die Teilebezeichnung und die Menge des jeweiligen Teils sowie die Modellnummer, die Seriennummer der Maschine, die Seriennummer des Motors und den Stand des Betriebsstundenzählers angeben.

In dieser Ersatzteilliste ist nicht nur das Standardzubehör aufgeführt, sondern auch als Sonderausstattung erhältliche Teile und Einrichtungen. Bestellungen nimmt Ihr zuständiger Komatsu-Händler entgegen.

Die folgenden Informationen und Kodes sind in der Ersatzteilliste enthalten:

Bilder und Ersatzteilliste

Beim Aufschlagen des Ersatzteilkatalogs finden Sie nach der Bildnummer (BILD) geordnete Bilder. Jedes Einzelteil einer Baugruppe ist mit einer Kennzahl versehen. Ausgehend von den Bildern sind die Bauteile der Baugruppe aufgeführt, und zwar geordnet nach den in den Bildern angegebenen Kennzahlen. Jedes Einzelteil wird mit Teilenummer, Teilebezeichnung und entsprechender Seriennummer angegeben.

Bildnummer (BILD)

Mit der Bildnummer (BILD) können Bilder auf einer Seite identifiziert werden. Es handelt sich dabei nicht um die Nummer des Lieferteils. Auch sind die Bilder nicht fortlaufend nummeriert.

Ersatzteilliste

Angaben zu den Ersatzteilen sind auf der Auflistungsseite wie folgt dargestellt::

Kennzahl (Index):

Hierbei handelt es sich um die Kennzahlen aus den Bildern. Die Bauteile sind nach diesen Kennzahlen geordnet aufgeführt.

Kode (Code):

In dieser Spalte werden Kodes mit den folgenden Bedeutungen benutzt:

A1 Dieses Teil ist mit dem in der vorangegangenen Zeile aufgeführten Teil austauschbar.

A2 Das in der vorangegangen Zeile aufgeführte Teil kann anstelle dieses Teils verwendet werden.

A3 Dieses Teil kann anstelle des in der vorangegangenen Zeile aufgeführten Teils verwendet werden.

A4 Anstelle dieses Teils kann das in der Spalte „Beschreibung“ aufgeführte Teil verwendet werden, wenn das Teil zusammen mit anderen Teilen als ein Bauteilsatz verwendet wird.

B1 Dieses Teil kann nicht mehr geliefert werden. Stattdessen wird das in der vorangegangenen Zeile aufgeführte Teil geliefert.

B2 Dieses Teil kann nicht mehr geliefert werden. Stattdessen wird das in der Spalte „Beschreibung“ aufgeführte Teil als ein Bauteilsatz geliefert.

C1 Dieses Teil kann nicht als Einzelteil, sondern nur als Baugruppe geliefert werden.

C2 Dieses Teil wird nur an autorisierte Komatsu-Händler geliefert. Es kann nicht als Einzelteil, sondern nur als Baugruppe geliefert werden.

C3 Hiermit werden Teile gekennzeichnet, die in vorbearbeitetem Zustand geliefert werden und für den Einbau nachbearbeitet werden müssen.

Teilenummer (Part Number):

Die in der Spalte „Teilenummer“ aufgeführte Nummer entspricht der Teilenummer für das betreffende Teil. Diese Nummer dient zur Identifizierung des Teils bei einer Bestellung. Deshalb sollte bei der Bestellung stets auf die genaue Angabe der Teilenummer geachtet werden.

Beschreibung (Description):

Hierunter wird die Bezeichnung des Teils mit der aufgeführten Teilenummer angegeben. Jedes Baugruppen-Bauteil ist mit dem vorangestellten Symbol „·“ gekennzeichnet und wird hinter der entsprechenden Baugruppe aufgeführt. Handelt es sich bei dem mit „·“ gekennzeichneten Bauteil um eine Baugruppe, sind die Bauteile dieser Baugruppe mit „· ·“ gekennzeichnet.
Beispiel: Tank Assembly
· Tank
· Cap
· · Packing

Zusätzlich werden die folgenden Zeichen und Abkürzungen in dieser Spalte verwendet:

Kit Hiermit werden Teile gekennzeichnet, die nur als Satz erhältlich sind. Siehe dazu den Abschnitt „FIELD REPAIR SERVICE PARTS“ dieses Ersatzteilkatalogs.
D Durchmesser
L Länge
LHS linke Seite
RHS Rechte Seite
T Dicke
W Breite

Menge (Qty):

Hierunter wird die Anzahl der Bauteile für eine Maschine angegeben. Im Falle einer Baugruppe oder eines Aggregats wird allerdings die Anzahl der Teile pro Baugruppe angegeben.
Der Kode AR (nach Bedarf) wird in dieser Spalte dann benutzt, wenn keine genaue Angabe darüber möglich ist, wie groß der Mengenbedarf pro Maschine und/oder Baugruppe ist. In diesem Fall kann eine beliebige Menge je nach Bedarf bestellt werden.

Serial Numbers (Seriennummern):

Im Ersatzteilkatalog für den Motor versteht man hierunter die Seriennummer des Motors, in den das betreffende Teil eingebaut ist. Im Ersatzteilkatalog für die Maschine versteht man hierunter die Seriennummer der Maschine, in die das entsprechende Teil eingebaut ist.
Wenn die Seriennummer in Klammern angegeben ist, ist diese Seriennummer ausschließlich für das in der Bildnummer (BILD) angegebene Zubehör bestimmt.

https://truckmanualshub.com/

INTRODUÇÃO

Ao solicitar uma peça, informe o número, nome e quantidade da peça necessária, bem como o código de modelo da máquina e seu número de série, o número do motor e a leitura do medidor de serviço.

Este catálogo de peças não somente especifica os acessórios padrões mas também as peças opcionais e aditamentos. Para pedir uma peça, entre em contato com o revendedor Komatsu mais próximo.

Este catálogo de peças contém as seguintes informações e códigos especiais:

LISTA DE PEÇAS E ILUSTRAÇÕES

Ao abrir este catálogo de peças, encontrar-se-á uma ilustração seguida do número da figura (FIG.). A cada peça individual na ilustração corresponde um número de índice. Seguindo a ilustração, as peças componentes da unidade são listadas na ordem dos números de índice nela indicados. O número, nome, quantidade e número de série aplicável da peça são aprsentados como uma lista de peças.

NÚMERO DA FIGURA (FIG.)

O número da figura (FIG.) é o número que mostra a ilustração da página. Não é um número para fornecimento de peças sobressalentes. Os números nem sempre são contínuos.ebene Zubehör bestimmt.

LISTA DE PEÇAS

As informações das peças sobressalentes são relacionadas na página com a lista de peças de acordo com o seguinte:

Índice (Index):

Este é o mesmo que o número de índice na ilustração. As peças são relacionadas na ordem dos números de índice.

Código (Code):

Códigos são utilizados nesta coluna e significam o seguinte:

A1 Esta peça e a peça especificada na linha imediatamente acima são intercambiáveis.

A2 A peça especificada na linha acima pode ser utilizada no lugar desta peça.

A3 Esta peça pode ser utilizada no lugar da peça especificada na linha imediatamente acima.

A4 A peça especificada na coluna “Descrição” pode ser utilizada no lugar desta peça se usada como um conjunto.

B1 Indica peça descontinuada. A peça especificada na linha acima é fornecida em seu lugar.

B2 Indica peça descontinuada. A peça especificada na coluna “Descrição” é fornecida em seu lugar como um conjunto.

C1 Esta peça não pode ser fornecida como peça individual. Ela é fornecida como um conjunto.

C2 Esta peça é fornecida somente para revendedores Komatsu autorizados. Não pode ser fornecida como peça individual. Ela é fornecida como um conjunto.

C3 Indica peça fornecida em condição semiacabada. Requer trabalho adicional antes da instalação.

Número da peça (Part Number):

O número indicado na coluna de números de peça corresponde ao número da peça exibida. É o código de identificação usado para o pedido da peça. É importante não enganar-se de número de código ao pedir a peça.

Descrição (Description):

Indica o nome da peça que tem o seu número de peça relacionado. O símbolo "•" é colocado na frente do nome peça do componente de uma peça de conjunto, e o item é lançado seguindo o conjunto. Se uma peça indicada com "•" é um subconjunto, os seus componentes são indicados por "• •".
Exemplo: Tank Assembly
• Tank
• Cap
• • Packing

Além disso, os seguintes símbolos e abreviações são usados nesta coluna.

Kit Indica peças de um jogo. Para peças de jogo, referir-se à seção "FIELD REPAIR SERVICE PARTS" neste catálogo de peças.

D Diâmetro
L Comprimento
LHS Lado esquerdo
RHS Lado direito
T Espessura
W Largura

Quantidade (Qty):

Indica o número de peças utilizadas em uma máquina. Contudo, se uma peça é incluída no conjunto e/ou componente, a quantidade por conjunto e/ou componente é especificada.
O código AR (como requerido) usar-se-á na coluna "Quantitade" caso o número de peças por máquina e/ou componente não possa ser especificado. Em tal caso, qualquer número de peças pode ser pedido dependendo dos requisitos de serviço em campo.

Números de série (Serial Numbers):

O número de série do motor aplicável é indicado para o volume do motor. No volume da carroceria, indica o número de série da máquina na qual a peça é utilizada.

Se o número de série está entre parêntesis, mostra que é o número de série aplicável para uso exclusivo do equipamento do número da figura (FIG.)

https://truckmanualshub.com/

前言

订购零件时，请注明需要零件的货号、品名、数量以及使用机器的车辆编号、发动机型号和系列号、工作时数。

此零件明细表上不仅记载了标准装备零件，还记载了选购零件、附件零件。如果您需要订货，请与最近的小松代理店联系。

为了清楚明了，零件手册中有如下规定：

图表

打开此零件清单后，可以看到附带图号（FIG.）的零件明细表图示。在图示上标有各种零件的索引号码。除图之外，还按索引号码的顺序列表表示货号、品名、数量、适用机型。

图号（FIG.）

图号表示该页图的号码。它不是补充零件用的货号。此号码不一定是连续号码。

零件表

从左栏开始按以下顺序显示零件的明细。

索引 (Index):

与图的索引号码一致，按索引号码顺序编制为表格形式。

代号 (Code):

此栏使用的代号如下所示：

A1　此行零件可与紧挨着的上一行零件互换使用。

A2　上一行的零件可取代此行零件来使用。

A3　此行零件可代替紧挨着的上一行零件使用。

A4　品名栏内的零件配套后，可取代此行零件来使用。

B1　该行零件已停止供应，用上一行的零件代替使用。

B2　该行零件已停止供应，品名栏内的零件配套后代替此行零件供应。

C1　此行零件拟成套供应，不以单一零件供应。

C2　此行零件主要面向特定的代理。不以单一零件供应，只拟成套供应。

C3　此行零件以半成品的形式供应，使用前必需再加工。

货号 (Part Number):

此栏所示的编号是图示零件的货号。它是在订货时需要标明的特定代号，是非常重要的。

品名 (Description):

表示相当于货号的零件名称。构成组装品的零件，在品名的前面有 “·” 标记，记载在组装品之后。
另外，如果标记 “·” 的零件是组装品，则该构成零件的品名前标有 “· ·” 标记。
例： TANK ASSEMBLY
· TANK
· CAP
· · PACKING

另外，说明栏可能显示以下代号。

Kit 表示修理包。关于修理包构件详情，请参考此零件清单中 “现场修理服务零件” 部分的内容。
D 直径
L 全长
LHS 左侧
RHS 右侧
T 厚度
W 全宽

数量 (Qty):

表示一台机器中需要使用的该零件数量。但是，如果是组装零件的构成零件时，表示其组装件的件数。
如果不能指定每个机器以及（或者）组装零件中必须的零件数量时，可以在零件数量栏中使用代码 AR。
此时，数量由现场的服务要件决定，然后进行定购。

适用机型 (Serial Numbers):

发动机篇中表示该使用零件的发动机型号，在机体篇中表示该使用零件的车辆号码。

如果适用机型位于括号中，表明该适用机型专门用于图号 (FIG.) 中所指的设备。

https://truckmanualshub.com/

ПРЕДИСЛОВИЕ

При заказе запчасти укажите номер части, наименование части и нужное количество; кроме того, укажите код модели вашей машины, серийный номер машины, серийный номер двигателя и показания счетчика мото-часов.

В Каталоге приведены не только стандартные изделия, но и дополнительное оборудование и принадлежности. Для заказа запчасти пожалуйста обратитесь к ближайшему дилеру "Комацу".

Содержащаяся в Каталоге информация и специальные коды разъясняются ниже:

РИСУНОК И ПЕРЕЧЕНЬ ЧАСТЕЙ

Раскрыв Каталог, вы увидите рисунок после номера рисунка (ПОЗ). Каждой отдельной части на рисунке присвоен позиционный номер. За рисунком следует перечень составных частей устройства в порядке номеров позиций рисунка. Перечень частей указывает для каждой части ее номер, наименование, количество и применимый серийный номер.

НОМЕР РИСУНКА (ПОЗ)

Номер рисунка (ПОЗ) – это номер, который указывает рисунок на странице. Он не является номером запчасти. Последовательность номеров не обязательно непрерывна.

ПЕРЕЧЕНЬ ЧАСТЕЙ

Данные запасных частей приведены на странице перечня частей следующим образом:

Индекс (Index):

То же, что номер позиции на рисунке. Части перечислены в порядке их позиционных номеров.

Код: (Code):

В этой колонке находятся коды, обозначающие следующее:

A1 Данная часть и часть, указанная в предыдущей строке, взаимозаменяемы.

A2 Вместо данной части можно использовать часть, указанную в предыдущей строке.

A3 Данную часть можно использовать вместо части, указанной в предыдущей строке.

A4 В комплекте, вместо данной части можно использовать указанную в колонке описания.

B1 Поставки этой части прекращены. Взамен поставляется часть, указанная в предыдущей строке.

B2 Поставки этой части прекращены. Взамен комплектом поставляется часть, указанная в колонке описания.

C1 Данная часть отдельно не поставляется. Она поставляется с узлом.

C2 Данная часть поставляется лишь уполномоченным дилерам "Комацу". Отдельно не поставляется. Поставляется с узлом.

C3 Обозначает часть, поставляемую без доводки. Требует предустановочной подготовки.

Номер части (Part Number):

Приведенный в колонке номеров частей номер является номером изображенной части. Это код-идентификатор для заказа данной части. Важно, чтобы при заказе этот кодовый номер был указан без ошибок.

Описание (Description):

Здесь приводится наименование части, обозначенной номером в перечне. Значок "·" ставится перед наименованием детали компонента, причем деталь записана после узла. Если помеченная "·" часть является подсборкой узла, то ее составные части обозначаются значком "··".

Пример: Tank Assembly
·Tank
·Cap
··Packing

Далее, в этой колонке используются следующие обозначения и сокращения.

Kit	Указывает на элементы комплекта. Элементы комплекта смотри в разделе ЗАПАСНЫЕ ЧАСТИ ДЛЯ РЕМОНТА В УСЛОВИЯХ ЭКСПЛУАТАЦИИ данного Каталога.
D	Диаметр
L	Длина
LHS	Левая сторона
RHS	Правая сторона
T	Толщина
W	Ширина

Количество (Qty):

Указывает общее число изделий в одной машине. Если же изделие является частью узла и/или устройства, то указывается количество в таком узле и/или устройстве.
При невозможности указать количество частей на машину и/или устройство, в колонке Количество проставляется код AR (по потребности). В таком случае можно заказывать любые количества в зависимости от потребностей обслуживания на месте.

Серийные номера (Serial Numbers):

В книге по двигателю приводится соответствующий серийный номер двигателя. В книге по шасси указывает на серийный номер машины, где используется данная часть.

Серийный номер, заключенный в круглые скобки означает, что он применяется только для оборудования с номером рисунка (ПОЗ.)

. رقم القطعة (Part Number)

الرقم الوارد في عمود رقم القطعة هو رقم القطعة الخاص بالقطعة المبينة. وهو الرمز المستخدم لطلب تلك القطعة. ومن الضروري عدم ارتكاب اي خطأ في تحديد هذا الرقم عند طلب القطع.

. الوصف (Description)

يعطي اسم القطعة المدرج رقمها في القائمة. توضع العلامة "٠" امام اسم المكون لمجموعة ما ويدرج البند بعد المجموعة. اذا كانت القطعة المشار اليها بالعلامة "٠" هي نفسها عبارة عن مجموعة مكونات, فان كلا من مكوناتها يشار اليها بالعلامة "٠٠".
مثال

Tank Assembly
٠Tank
٠Cap
٠٠Packing

بالاضافة الى ذلك, العلامات والمختصرات التالية تستخدم في هذا العمود.

Kit	هذا يشير الى قطع الطقم. حول قطع الطقم, راجع قسم "قطع غيار خدمة الإصلاح الميداني" في كتاب القطع هذا.
D	قطر
L	طول
LHS	جانب اليد اليسارى
RHS	جانب اليد اليمنى
T	السمك
W	العرض

. الكمية (Qty)

هذا هو عدد القطع المستخدمة لآلية واحدة. اما بالنسبة لمجموعات المكونات ومجموعات القطع فانه يتم تحديد عدد القطع لكل مجموعة.
الرمز AR (حسب الطلب) سوف يستخدم في عمود الكمية اذا لم يتم تحديد عدد القطع المطلوبة لكل مانكة و/او للمجموعة. في مثل هذه الحالة, فان اي عدد من الكميات ربما يتم طلبه بشكل يعتمد على متطلبات مجال الخدمة.

. الرقم التسلسلي (Serial Numbers)

في كتاب قطع المحرك يشير هذا الرقم الى الرقم التسلسلي للمحرك الذي تستخدم فيه القطعة. قي كتاب قطع الآلية, يشير هذا الرقم الى الرقم التسلسلي للآلية التي تستخدم فيها القطع.

في حالة وضع الرقم التسلسلي بين الأقواس، فهذا يعني أن هذا هو الرقم التسلسلي الساري للاستخدام الحصري للقطعة الموضحة بالشكل.

مقدمة

عند طلب القطع, يرجى تحديد رقم القطعة واسم القطعة والكمية المطلوبة من القطعة, مع تحديد رقم الموديل والرقم التسلسلي وقراءة عداد الخدمة.

قائمة القطع هذه لا تقتصر على الكميات القياسية فقط بل تشمل ايضاً القطع والملحقات الاختيارية. لطلب القطع, يرجى الاتصال باقرب موزع لمنتجات كوماتسو.

كتاب القطع هذا يحتوي على المعلومات ورموز التخصيص وكما مبين ادناه:

الشكل والقائمة

عندما تفتح كتاب القطع هذا, سوف تجد رسومًا توضيحية تتضمن رقم الشكل (الشكل). كل قطعة مفردة في الرسم يعطى لها رقم فهرس. في الرسم التالي, قطع المجموعة للوحدة تم ادراجها حسب ترتيب ارقام الفهرس المبينة في الرسم.. رقم القطعة, اسم القطعة, الكمية والرقم التسلسلي المطابق يعطى لكل قطعة حسب تسلسل القطع في القائمة.

رقم الشكل (الشكل)

رقم الشكل (الشكل) هو الرقم الذي يميز شكل ما داخل الصفحة. إنه ليس رقم القطعة. وليست الأرقام متتابعة دائمًا.

قائمة القطع

معلومات قطع الغيار مثبتة في صفحة قائمة القطع وكلاتي:

. الفهرست (Index)

هذا الرقم هو نفس رقم الفهرس الوارد في الشكل التوضيحي. تدرج القطع في القائمة مرتبة تبعاً لارقام الفهرس.

. الرمز (Code)

الرموز تستخدم في هذا العمود وتوصف كلاتي:

A1 هذه القطعة والقطعة المذكورة في السطر السابق مباشرة يمكن لكل منهما ان تحل محل الاخرى.

A2 القطعة المذكورة في السطر السابق يمكن استعمالها بدلاً من هذه القطعة.

A3 هذه القطعة يمكن استعمالها بدلاً من القطعة المذكورة في السطر السابق مباشرة.

A4 القطعة المذكورة في عمود الوصف يمكن استعمالها بدلاً من هذه القطعة اذا استخدمت كطقم.

B1 هذه القطعة توقف توريدها. يتم توريد القطعة المذكورة في السطر السابق بدلاً منها.

B2 هذه القطعة توقف توريدها. يتم توريد القطعة المذكورة في عمود "الوصف" بدلاً منها كطقم.

C1 هذه القطعة لا يمكن توريدها كقطعة منفردة. يتم توريدها كمجموعة.

C2 هذه القطعة يتم تجهيزها من قبل موزعين كوماتسو المرخصين فقط. لا يمكن تجهيزها كقطعة مفردة. يتم تجهيزها كمجموعة.

C3 هذا يشير الى قطعة موردة شبه مكتملة التصنيع. تتطلب استكمال تصنيعها قبل الاستعمال.

https://truckmanualshub.com/

CONTENTS

FOREWORD 2

	FIG No.	PAGE
ENGINE CYLINDER HEAD AND ITS RELATED PARTS		
Cylinder Head	(X16-0A90280)	
	A1009-001001	50
Breather	(BR 9338)	
	ABR00-001001	51
Air Intake Manifold	(IM 9081)	
	AIM00-001001	52
Air Intake Connector	(IC 9467)	
	AIC00-001001	53
Air Intake Connector Mounts	(IC 9426)	
	AIC20-001001	54
Air Intake Heater	(AH 9155)	
	AAH00-001001	55
Air Pipe	(X16-0A11210)	
	A1310-001001	56
Exhaust Manifold	(TB913-17)	
	ATB30-001001	57
Turbocharger	(X16-0A90640)	
	A1539-001001	58
Turbocharger Exhaust Gas Connector	(XS -9258)	
	AXS00-001001	59
Turbocharger Oil Pipe Related Parts	(X16-0A11120)	
	A1510-001001	60
Turbocharger Oil Piping	(TP973-87)	
	ATP00-001001	61
Exhaust Muffler	(X16-0A11310)	
	A1610-001001	62
Exhaust Connection	(IT 9039)	
	AIT00-001001	63
Heat Shield, For 60Amp. Alternator	(X16-0A11240)	
	A1570-001001	64
Heat Shield, For 90Amp. Alternator	(X16-0A11250)	
	A1570-002001	65
Rocker Arm Housing And Rocker Arm	(RL 9753)	
	ARL00-001001	66
Engine Lifting	(X16-0A11141)	
	A1010-001001	67
Engine Lifting Bolt	(LA 9119)	
	ALA10-001001	68
ENGINE CYLINDER BLOCK AND ITS RELATED PARTS		
Camshaft	(X16-0A90490)	
	A2419-001001	70
Spare Parts, For 60Amp. Alternator	(X16-0A20310)	
	B9999-504001	71
Spare Parts, For 90Amp. Alternator	(X16-0A20320)	
	B9999-505001	72
Tappet	(BB 9080)	
	ABB00-001001	73
Front Gear Train Cover	(DF 9706)	
	ADF10-001001	74
Front Cover	(X16-0A11330)	
	A2049-001001	75

https://truckmanualshub.com/

Accessory Drive Pulley ..... (PA 9001)
APA00-001001 76
Flywheel Housing ..... (X16-0A90570)
A2219-001001 77
Flywheel ..... (FW90289)
AFW00-001001 78
Flywheel Mounts ..... (FW90290)
AFW10-001001 79
Engine Oil Pan ..... (X16-0A11270)
A2119-001001 80
Engine Oil Level Sensor ..... (SD 9057)
ASD00-001001 81
Cylinder Block ..... (X16-0A90310)
A2019-001001 82
Breather Hose ..... (X16-0A10590)
A2080-001001 83
Cabin Heater Plug ..... (HC 9045)
AHC00-001001 84
Crankshaft ..... (X16-0A90340)
A2319-001001 85
Piston and Connecting Rod ..... (X16-0A90630)
A2359-001001 86
Engine Oil Filler ..... (OB 9528)
AOB10-001001 87
Oil Level Gauge ..... (LG90408)
ALG00-001001 88

ENGINE LUBRICATING SYSTEM

Coolant Piping ..... (RP 9097)
ARP00-001001 90
Engine Oil Pump ..... (LP 9724)
ALP00-001001 91
Engine Oil Filter ..... (LF 9102)
ALF00-001001 92
Engine Oil Cooler ..... (LC 9275)
ALC00-001001 93

ENGINE FUEL SYSTEM

Fuel Supply Pump Support ..... (FP90238)
AFP20-001001 96
Fuel Injection Pump ..... (X16-0A90360)
Inner Parts A4019-001001 97
Mounting A4019-001002 98
Fuel Injector ..... (X16-0A90550)
A4219-001001 99
Fuel Injection Piping ..... (PP98356)
APP50-001001 100
Fuel Piping ..... (FT 9378)
AFT00-001001 101
Fuel Return Fitting ..... (X16-0A11360)
A4230-001001 102
Fuel Filter Plumbing ..... (FF 9581)
AFF20-001001 103
Fuel Filter Cartridge ..... (X16-0B90580)
Service Only A4119-002001 104
Fuel Filter ..... (FF90290)
AFF10-003001 105
Pre Filter ..... (X16-0A10970)
B9999-503001 106

https://truckmanualshub.com/

Fuel System Accessory .....(FS 9907)
AFS20-001001 107
Fuel Transfer Pump .....(FS 9746)
AFS00-001001 108
Fuel Inlet Fitting .....(X16-0A11350)
A4110-001001 109
ENGINE COOLING SYSTEM
Cooling Fan Drive Mounts, With Hardened Pulley .....(FA 9406)
AFA20-002001 112
Cooling Fan Drive Mounts .....(FA 9739)
AFA20-001001 113
Cooling Fan Drive Pulley .....(FA 9536)
AFA10-001001 114
Cooling Fan Drive Pulley, With Hardened Pulley .....(PA 9017)
APA00-002001 115
Cooling Fan Belt Tensioner .....(WP 9144)
AWP20-001001 116
Water Pump .....(X16-0A90210)
A5019-001001 117
Water Pump Drive Belt, For 60Amp. Alternator .....(WP 9055)
AWP10-001001 118
Water Pump Drive Belt, For 90Amp. Alternator .....(WP 9056)
AWP10-002001 119
Water Outlet Connector .....(WO 9089)
AWO00-001001 120
Water Inlet Connector .....(WI 9267)
AWI10-001001 121
Thermostat .....(EC 9041)
AEC00-001001 122
Plug, Torque Converter Cooling .....(TK 90-22)
ATK00-001001 123
Corrosion Piping .....(WF 9136)
AWF00-001001 124
ENGINE ELECTRICAL SYSTEM
Damper .....(DA 9728)
ADA00-001001 126
Alternator Mounts .....(EH 9502)
AEH20-001001 127
Alternator, 60Amp. .....(EE 9186)
AEE00-001001 128
Alternator, 90Amp. .....(EE 9194)
AEE00-002001 129
Alternator Cover, For 60Amp. Alternator .....(X16-0A10730)
A6010-001001 130
Alternator Cover, For 90Amp. Alternator .....(X16-0A10980)
A6010-002001 131
Starter Motor Mounts .....(SM 9785)
ASM00-001001 132
Starter Motor, 7.5KW .....(ST 9199)
AST00-001001 133
Starter Motor, 11KW .....(ST 9259)
AST00-002001 135
Electric Wiring .....(WR 9536)
AWR00-001001 137
Electric Controller .....(X16-0A90650)
A4719-001001 138

Electric Controller Piping .....(PH 9164)
APH10-001001 139
Electric Controller Mounts .....(PH90K923)
APH00-001001 140
ENGINE ACCESSORIES AND OTHERS
Cover .....(VC 9248)
AVC00-001001 142
ENGINE AUXILIARY PARTS AND TOOL
Spare Parts, For 60Amp. Alternator .....(X16-0A02110)
B9999-501001 144
Spare Parts, For 90Amp. Alternator .....(X16-0A02120)
B9999-502001 145
ENGINE MARKS AND PLATES
Caution Plates, EU Exhaust Emissions 3rd Regulations .....(AP 9514)
AAP00-001001 148
Caution Plates .....(X16-0A80010)
A9810-001001 149
Caution Plates, For EU Safety Regulation .....(X16-0B90620)
A9810-003001 150
FIELD REPAIR SERVICE PARTS
Repair Service Parts .....(X16-0A90560)
A8110-001001 152
ENGINE RELATED PARTS
Air Cleaner, With Pre-cleaner .....(X22-1050111)
Cap A1470-501001 154
Air Cleaner A1470-501002 155
Mounting A1470-501003 156
Air Cleaner, With Air Intake Rain Cap .....(X22-1052671)
Pre-Cleaner A1470-502001 157
Mounting (1/2) A1470-502002 158
Air Cleaner A1470-501002 155
Mounting (2/2) A1470-501003 156
Exhaust Pipe .....(X22-1057400)
A1610-501001 159
Guard .....(X22-1059470)
A6910-501001 160
Spare Parts, For 60Amp. Alternator .....(X22-0909071)
A9020-503001 161
Spare Parts, For 90Amp. Alternator .....(X22-1130421)
A9020-504001 162
Engine Mounts .....(X22-1050131)
B0100-001001 163
Engine Wiring Harness .....(X22-1050141)
Earth B0500-001001 164
Wiring Harness (1/3) B0500-001002 165
Wiring Harness (2/3) B0500-001003 166
Wiring Harness (3/3) B0500-001004 167
Damper .....(X22-1050152)
B0600-001001 168
COOLING SYSTEM
Radiator .....(X22-1050162)
Radiator Core and Aftercooler C0100-001001 170
Frame C0100-001002 171
Piping C0100-001003 172
Oil Cooler C0100-001004 173
Cooling Fan Motor (1/2) C0100-001005 174
Cooling Fan Motor (2/2) C0100-001006 176

Motor Mounting C0100-001007 177
Baffle C0100-001008 178
Mounting C0100-001009 179
Window Washer Tank C0100-001010 180
Fan Net C0100-001011 181

FUEL SYSTEM

Fuel Tank ..... (X22-1050172)
D0100-001001 184
Fuel Tank, With Refuel Pump ..... (X22-1173550)
D0100-002001 186
Fuel Supply Piping ..... (X22-1050181)
Piping D0200-001001 188
Pre Filter Bracket D0200-001002 189

ELECTRICAL SYSTEM

Battery, Large Capacity ..... (X22-1050191)
E0100-001001 192
Battery, For EU Noise Reguration ..... (X22-1058120)
E0100-003001 193
Battery, Large Capacity, For EU Noise Reguration ..... (X22-1058130)
E0100-004001 194
Battery ..... (X22-1055341)
E0100-002001 195
Battery, With Refuel Pump ..... (X22-1173480)
E0100-005001 196
Battery, With Refuel Pump, For Large Capacity Battery ..... (X22-1173490)
E0100-006001 197
Electric Wiring ..... (X22-1050201)
Wiring Harness (1/2) E0200-001001 198
Bracket E0200-001002 200
Holder E0200-001003 201
Mounting E0200-001004 202
Wiring Harness (2/2) E0200-001005 203
Sensor E0200-001006 204
Electric Wiring, For ROPS Canopy ..... (X22-1172570)
Wiring Harness (1/2) E0200-002001 205
Bracket E0200-002002 207
Holder E0200-002003 208
Mounting E0200-002004 209
Wiring Harness (2/2) E0200-002005 210
Sensor E0200-002006 211
Electric Wiring, With Refuel Pump ..... (X22-1173470)
Wiring Harness (1/2) E0200-003001 212
Bracket E0200-003002 214
Holder E0200-002003 208
Mounting E0200-002004 209
Wiring Harness (2/2) E0200-002005 210
Sensor E0200-002006 211
Beacon Lamp, For ROPS Canopy ..... (X22-1172850)
E0201-002001 215
Beacon Lamp ..... (X22-1053712)
E0201-001001 216
Front Working Lamp ..... (X22-1050221)
E0300-001001 217
Front Working Lamp and Rear side Working Lamp ..... (X22-1054392)
E0310-001001 218
Additional Working Lamp, With Additional Front Working Lamp ..... (X22-1059600)
E0310-002001 219

Additional Rear side Working Lamp, With Additional Rear Working Lamp .....(X22-1059610) E0310-003001 220
Additional Rear side Working Lamp, With Additional Rear Working Lamp, For ROPS Canopy .....(X22-1172890) E0310-006001 221
Front Working Lamp and Rear side Working Lamp, For ROPS Canopy .....(X22-1172870) E0310-004001 222
Front Working Lamp and Rear side Working Lamp, With Additional Front Working Lamp, For ROPS Canopy .....(X22-1172880) E0310-005001 223
Back-up Alarm, For Cab Configuration .....(X22-1052151) E0420-001001 224
POWER TRANSMITTING SYSTEM
Universal Joint .....(X22-1050230) F2200-001001 226
Power Train, Without Power Angle Power Tilt Dozer .....(X22-1050241)
Bevel Gear and Shaft F2300-001001 227
Brake F2300-001002 228
Carrier F2300-001003 230
Steering Case (1/2) F2300-001004 231
Steering Case (2/2) F2300-001005 232
Steering Case Cover and Steering Valve Control Lever F2300-001006 233
Steering Valve F2300-001007 234
H.S.S. Gear F2300-001008 236
Steering Case Cover Related Parts F2300-001009 237
1st Housing F2300-001010 238
2nd, 3rd, Forward and Reverse Housing F2300-001011 239
Transmission Carrier (1/2) F2300-001012 241
Transmission Carrier (2/2) F2300-001013 243
Transmission Case F2300-001014 244
Input and Output Shaft F2300-001015 245
Transmission E.C.M.V. Valve F2300-001016 246
Transmission E.C.M.V. Valve Mounts F2300-001017 247
Relief Valve F2300-001018 248
Relief Valve Mounting F2300-001019 249
Block F2300-001020 250
Pump and Turbine F2300-001021 251
Torque Converter Case F2300-001022 253
Scavenging Pump Mounts F2300-001023 254
Power takeoff Gear F2300-001024 255
Strainer F2300-001025 256
Mounting (1/2) F2300-001026 257
Gear Pump, SAL (2) 45+ 45 (1/2) F2300-001027 258
Gear Pump, SAL (2) 45+ 45 (2/2) F2300-001028 259
Power Train to Hydrostatic Tank Piping (1/2) F2300-001029 260
Power Train to Hydrostatic Tank Piping (2/2) F2300-001030 262
Oil Filler F2300-001031 263
Wiring Harness F2300-001032 264
Wiring Harness Clamp F2300-001033 265
Piping F2300-001034 267
Mounting (2/2) F2300-001035 268
Final Drive, Torque Shaft F2300-001036 269
Power Train, With Power Angle Power Tilt Dozer .....(X22-1053321)
Bevel Gear and Shaft F2300-001001 227
Brake F2300-001002 228
Carrier F2300-001003 230
Steering Case (1/2) F2300-001004 231
Steering Case (2/2) F2300-001005 232

Steering Case Cover and Steering Valve Control Lever F2300-001006 233
Steering Valve F2300-001007 234
H.S.S. Gear F2300-001008 236
Steering Case Cover Related Parts F2300-001009 237
1st Housing F2300-001010 238
2nd, 3rd, Forward and Reverse Housing F2300-001011 239
Transmission Carrier (1/2) F2300-001012 241
Transmission Carrier (2/2) F2300-001013 243
Transmission Case F2300-001014 244
Input and Output Shaft F2300-001015 245
Transmission E.C.M.V. Valve F2300-001016 246
Transmission E.C.M.V. Valve Mounts F2300-001017 247
Relief Valve F2300-001018 248
Relief Valve Mounting F2300-001019 249
Block F2300-001020 250
Pump and Turbine F2300-001021 251
Torque Converter Case F2300-001022 253
Scavenging Pump Mounts F2300-001023 254
Power takeoff Gear F2300-001024 255
Strainer F2300-001025 256
Mounting (1/2) F2300-001026 257
Gear Pump, SAL (2) 45+ 45 (1/2) F2300-001027 258
Gear Pump, SAL (2) 45+ 45 (2/2) F2300-001028 259
Power Train to Hydrostatic Tank Piping (1/2) F2300-001029 260
Power Train to Hydrostatic Tank Piping (2/2) F2300-001030 262
Oil Filler F2300-001031 263
Wiring Harness F2300-001032 264
Wiring Harness Clamp F2300-001033 265
Piping F2300-001034 267
Mounting (2/2) F2300-001035 268
Final Drive, Torque Shaft F2300-002036 270
Final Drive, Segmented, For Machine With Power Angle Power Tilt Dozer ..... (X22-0852030)
Pinion and Gear, LHS F2380-001001 271
Carrier, LHS F2380-001002 273
Sprocket Hub, LHS F2380-001003 275
Pinion and Gear, RHS F2380-001004 276
Carrier, RHS F2380-001005 278
Sprocket Hub, RHS F2380-001006 280
Mounting F2380-001007 281
Final Drive, Segmented, With Rotary Type Rubber Shoe, For Machine With Power Angle Power Tilt Dozer ..... (X22-0872850)
Pinion and Gear, LHS F2380-001001 271
Carrier, LHS F2380-001002 273
Sprocket Hub, LHS F2380-003003 282
Pinion and Gear, RHS F2380-001004 276
Carrier, RHS F2380-001005 278
Sprocket Hub, RHS F2380-003006 283
Mounting F2380-001007 281
Final Drive, Segmented, With Power Angle Power Tilt Dozer ..... (X22-1058110)
Pinion and Gear, LHS F2380-001001 271
Carrier, LHS F2380-001002 273
Sprocket Hub, LHS F2380-003003 282
Pinion and Gear, RHS F2380-001004 276
Carrier, RHS F2380-001005 278
Sprocket Hub, RHS F2380-003006 283
Mounting F2380-005007 284

https://truckmanualshub.com/

Final Drive, Segmented, With Power Angle Power Tilt Dozer, With Rotary Type Rubber Shoe .....(X22-1058090)
Pinion and Gear, LHS F2380-001001 271
Carrier, LHS F2380-001002 273
Sprocket Hub, LHS F2380-001003 275
Pinion and Gear, RHS F2380-001004 276
Carrier, RHS F2380-001005 278
Sprocket Hub, RHS F2380-001006 280
Mounting F2380-005007 284
Power Train Piping, Without Power Angle Power Tilt Dozer .....(X22-1050261)
Piping F2730-001001 285
Bracket F2730-001002 286
Mounting F2730-001003 287
Power Train Piping, For Machine With Power Angle Power Tilt Dozer .....(X22-1059100)
Piping F2730-001001 285
Bracket F2730-001002 286
Mounting F2730-002003 288
Steering Control Related Parts .....(X22-1050270)
Rod F2820-001001 289
Parking Brake Control Cable F2820-001002 290
HYDRAULIC SYSTEM
Hydraulic Oil Tank .....(X22-1050282)
H0110-001001 292
Hydraulic Oil Tank, For Machine With Rear Actuator .....(X22-1058140)
H0110-002001 294
Hydraulic Oil Pump and Motor .....(X22-1050291)
Inner Parts (1/7) H0210-001001 296
Inner Parts (2/7) H0210-001002 297
Inner Parts (3/7) H0210-001003 298
Inner Parts (4/7) H0210-001004 299
Inner Parts (5/7) H0210-001005 300
Inner Parts (6/7) H0210-001006 301
Inner Parts (7/7) H0210-001007 302
Pump Mounting (1/2) H0210-001008 303
HSS Motor (1/2) H0210-001009 304
HSS Motor (2/2) H0210-001010 306
Motor Mounting H0210-001011 307
Cooling Fan Pump (1/5) H0210-001012 308
Cooling Fan Pump (2/5) H0210-001013 310
Cooling Fan Pump (3/5) H0210-001014 311
Cooling Fan Pump (4/5) H0210-001015 312
Cooling Fan Pump (5/5) H0210-001016 313
Pump Mounting (2/2) H0210-001017 314
Hydraulic Oil Pump Piping .....(X22-1050301)
Suction and Delivery Piping H0310-001001 315
HSS Motor Piping H0310-001002 317
Fan Motor Related Parts H0310-001003 318
Fan Motor Piping H0310-001004 319
Dozer Blade Lift Piping, For Machine With Power Angle Power Tilt Dozer .....(X22-1050752)
Piping (1/2) H2210-001001 320
Valve H2210-001002 321
Piping (2/2) H2210-001003 322
Clamp H2210-001004 323
Lift Cylinder Piping H2210-001005 325
Dozer Blade Lift Piping, Without Power Angle Power Tilt Dozer .....(X22-1053412)
Piping (1/2) H2210-001001 320
Valve H2210-001002 321
Piping (2/2) H2210-001003 322

Clamp H2210-001004 323
Lift Cylinder Piping H2210-002005 326
Dozer Blade Lift Piping, With Blade Cylinder Wired Hose ..... (X22-1172230)
Piping (1/2) H2210-003001 327
Valve H2210-003002 328
Piping (2/2) H2210-003003 329
Clamp H2210-003004 330
Lift Cylinder Piping H2210-003005 332
Dozer Blade Lift Piping, Power Angle Power Tilt Dozer, Inside Frame, With Blade Cylinder Wired Hose (X22-1172250)
Piping (1/2) H2210-003001 327
Valve H2210-003002 328
Piping (2/2) H2210-003003 329
Clamp H2210-003004 330
Lift Cylinder Piping H2210-004005 333
Dozer Blade Tilt Piping, With Power Angle Power Tilt Dozer ..... (X22-1050761)
H2220-001001 334
Clamp H2220-001002 335
Dozer Blade Tilt Piping ..... (X22-1053421)
H2220-002001 336
Track Frame Cover H2220-002002 337
Dozer Blade Tilt Piping, With Power Tilt Pitch Dozer ..... (X22-1057730)
Hose H2220-004001 338
Track Frame Cover H2220-004002 339
Dozer Blade Angle Piping ..... (X22-1050771)
H2230-001001 340
Clamp H2230-001002 341
Rear Hydraulic Piping ..... (X22-1052161)
H2250-001001 343

FRAME AND ITS RELATED PARTS

Main Frame ..... (X22-1050342)
J2100-001001 346
Main Frame, With Power Angle Power Tilt Dozer, Inside Frame ..... (X22-1057470)
J2100-002001 347
Main Frame, With Refuel Pump ..... (X22-1173520)
J2100-003001 348
Main Frame, With Power Angle Power Tilt Dozer, Inside Frame, Refuel Pump ..... (X22-1173540)
J2100-004001 349
Equalizer Bar And Pivot Shaft, With Power Angle Power Tilt Dozer ..... (X22-1050791)
J2700-001001 350
Equalizer Bar And Pivot Shaft ..... (X22-1052681)
J2700-002001 352

OPERATOR'S COMPARTMENT AND CONTROL SYSTEM

Operator's Seat, Suspension Type, Fabric Type, Reclining Type ..... (X22-1054411)
K0110-001001 356
Operator's Seat, Air Suspension Type, Fabric Type, Operator's Seat Turn Type ..... (X22-1058400)
K0110-009001 357
Operator's Seat, Suspension Type, Reclining Type, Hi-Back Type Operator's Seat, Fabric Type ..... (X22-1058350)
K0110-004001 358
Operator's Seat, Suspension Type, Fabric Type, Reclining Type, Hi-Back Type Operator's Seat,
Operator's Seat Turn Type, With Headrest ..... (X22-1058360)
K0110-005001A 359
Operator's Seat, Suspension Type, Reclining Type, Hi-Back Type Operator's Seat ..... (X22-1058370)
K0110-006001 360
Operator's Seat, Suspension Type, Operator's Seat Turn Type, Reclining Type ..... (X22-1058390)
K0110-008001 361
Operator's Seat, Suspension Type, Fabric Type, Operator's Seat Turn Type, Reclining Type ..... (X22-1058380)
K0110-007001 362

Operator's Seat, Suspension Type, Reclining Type .....(X22-1058340)
K0110-003001 363
Operator's Seat, Suspension Type, Fabric Type, Reclining Type, Operator's Seat Turn Type .....(X22-1058330)
K0110-002001 364
Operator's Seat, Suspension Type, Hi-Back Type Operator's Seat, Fabric Type, Turn And Reclining Type .....(X22-1171760)
K0110-010001 365
Operator's Seat, Air Suspension Type, Hi-Back Type Operator's Seat, With Headrest, Turn And Reclining Type .....(X22-1171770)
K0110-011001 366
Operator's Seat, Suspension Type, Fabric, Turn Type, Reclining, Headrest .....(X22-1173900)
K0110-012001 367
Operator's Seat, Provision For Air Suspension Type, Fabric, Turn Type, Headrest, KAB .....(X22-1174210)
K0110-013001 368
Seat Belt, Suspension Type, With Belt Retractor .....(X21-1308500)
K0160-001001 369
ROPS Cab, With AM-FM Stereo Radio For North America, TH300 Type KOMTRAX .....(X22-1058420)
Cab Body K0210-002001 370
Door and Latch, LHS K0210-002002 371
Door Dumper, Window and Wiper LHS K0210-002003 373
Door Cover, LHS K0210-002004 375
Door and Latch, RHS K0210-002005 376
Door Dumper, Window and Wiper, RHS K0210-002006 378
Door Cover, RHS K0210-002007 380
Door Hinge K0210-002008 381
Door Open Lock (1/2) K0210-002009 382
Door Open Lock, LHS K0210-002010 383
Door Open Lock, RHS K0210-002011 384
Door Open Lock (2/2) K0210-002012 385
Glass Windows, Front and Rear K0210-002013 386
Sash type Glass Windows, LHS K0210-002014 387
Sash type Glass Windows, RHS K0210-002015 389
Wiper and Room Lamp K0210-002016 391
Radio K0210-002017 392
Rubber Antenna K0210-002018 393
Rubber Antenna Mounting K0210-002019 394
Roof Cover (1/2) K0210-002020 395
Roof Cover (2/2) K0210-002021 396
Rearview Mirror K0210-002022 398
Outside Cover K0210-002023 399
Air Conditioner Unit K0210-002024 400
Air Conditioner Unit Mounting K0210-002025 402
Air Conditioner Duct (1/3) K0210-002026 403
Air Conditioner Piping K0210-002027 405
Air Conditioner Duct (2/3) K0210-002028 407
Air Conditioner Duct (3/3) K0210-002029 408
Console Box K0210-002030 410
Travel Control Lever (1/2) K0210-002031 411
Travel Control Lever (2/2) K0210-002032 412
Console Slider K0210-002033 414
Parking Brake Lever K0210-002034 415
Work Equipment Lock Lever K0210-002035 417
Floor Frame Inside Cover K0210-002036A 419
Brake Pedal K0210-002037 420
Decelerator Pedal K0210-002038 422
Controller and Relay K0210-002039 424
Floor, Harness (1/3) K0210-002040 425

Floor, Harness (2/3) K0210-002041 427
Floor, Harness (3/3) K0210-002042 429
Window Washer Piping K0210-002043 430
Dashboard Cover (1/2) K0210-002044 431
Floor, Switch K0210-002045 432
Foot Rest K0210-002046 433
Dashboard Cover (2/2) K0210-002047 434
Floor Cover K0210-002048 435
KOMTRAX Controller K0210-002049 437
Decal K0210-002050 438
Related Parts K0210-002051A 439
ROPS Cab, For EU Noise Reguration, Provision For Radio Installation, TH300 Type KOMTRAX ..... (X22-1058451)
Cab Body K0210-002001 370
Door and Latch, LHS K0210-002002 371
Door Dumper, Window and Wiper LHS K0210-002003 373
Door Cover, LHS K0210-002004 375
Door and Latch, RHS K0210-002005 376
Door Dumper, Window and Wiper, RHS K0210-002006 378
Door Cover, RHS K0210-002007 380
Door Hinge K0210-002008 381
Door Open Lock (1/2) K0210-002009 382
Door Open Lock, LHS K0210-002010 383
Door Open Lock, RHS K0210-002011 384
Door Open Lock (2/2) K0210-002012 385
Glass Windows, Front and Rear K0210-002013 386
Sash type Glass Windows, LHS K0210-002014 387
Sash type Glass Windows, RHS K0210-002015 389
Wiper and Room Lamp K0210-002016 391
Cover K0210-005017 440
Rubber Antenna K0210-002018 393
Rubber Antenna Mounting K0210-002019 394
Roof Cover (1/2) K0210-002020 395
Roof Cover (2/2) K0210-002021 396
Rearview Mirror K0210-002022 398
Outside Cover K0210-002023 399
Air Conditioner Unit K0210-002024 400
Air Conditioner Unit Mounting K0210-002025 402
Air Conditioner Duct (1/3) K0210-002026 403
Air Conditioner Piping K0210-002027 405
Air Conditioner Duct (2/3) K0210-002028 407
Air Conditioner Duct (3/3) K0210-002029 408
Console Box K0210-002030 410
Travel Control Lever (1/2) K0210-002031 411
Travel Control Lever (2/2) K0210-002032 412
Console Slider K0210-002033 414
Parking Brake Lever K0210-002034 415
Work Equipment Lock Lever K0210-002035 417
Floor Frame Inside Cover K0210-002036A 419
Brake Pedal K0210-002037 420
Decelerator Pedal K0210-002038 422
Controller and Relay K0210-002039 424
Floor, Harness (1/3) K0210-002040 425
Floor, Harness (2/3) K0210-002041 427
Floor, Harness (3/3) K0210-002042 429
Window Washer Piping K0210-002043 430
Dashboard Cover (1/2) K0210-002044 431
Floor, Switch K0210-005045 441

Foot Rest K0210-002046 433
Dashboard Cover (2/2) K0210-002047 434
Floor Cover K0210-002048 435
KOMTRAX Controller K0210-002049 437
Decal K0210-005050 442
Related Parts K0210-002051A 439
ROPS Cab, For EU Noise Reguration, With AM/FM Radio For Asia and EU, TH300 Type KOMTRAX ..(X22-1058440)
Cab Body K0210-002001 370
Door and Latch, LHS K0210-002002 371
Door Dumper, Window and Wiper LHS K0210-002003 373
Door Cover, LHS K0210-002004 375
Door and Latch, RHS K0210-002005 376
Door Dumper, Window and Wiper, RHS K0210-002006 378
Door Cover, RHS K0210-002007 380
Door Hinge K0210-002008 381
Door Open Lock (1/2) K0210-002009 382
Door Open Lock, LHS K0210-002010 383
Door Open Lock, RHS K0210-002011 384
Door Open Lock (2/2) K0210-002012 385
Glass Windows, Front and Rear K0210-002013 386
Sash type Glass Windows, LHS K0210-002014 387
Sash type Glass Windows, RHS K0210-002015 389
Wiper and Room Lamp K0210-002016 391
Radio K0210-004017 443
Rubber Antenna K0210-002018 393
Rubber Antenna Mounting K0210-002019 394
Roof Cover (1/2) K0210-002020 395
Roof Cover (2/2) K0210-002021 396
Rearview Mirror K0210-002022 398
Outside Cover K0210-002023 399
Air Conditioner Unit K0210-002024 400
Air Conditioner Unit Mounting K0210-002025 402
Air Conditioner Duct (1/3) K0210-002026 403
Air Conditioner Piping K0210-002027 405
Air Conditioner Duct (2/3) K0210-002028 407
Air Conditioner Duct (3/3) K0210-002029 408
Console Box K0210-002030 410
Travel Control Lever (1/2) K0210-002031 411
Travel Control Lever (2/2) K0210-002032 412
Console Slider K0210-002033 414
Parking Brake Lever K0210-002034 415
Work Equipment Lock Lever K0210-002035 417
Floor Frame Inside Cover K0210-002036A 419
Brake Pedal K0210-002037 420
Decelerator Pedal K0210-002038 422
Controller and Relay K0210-002039 424
Floor, Harness (1/3) K0210-002040 425
Floor, Harness (2/3) K0210-002041 427
Floor, Harness (3/3) K0210-002042 429
Window Washer Piping K0210-002043 430
Dashboard Cover (1/2) K0210-002044 431
Floor, Switch K0210-005045 441
Foot Rest K0210-002046 433
Dashboard Cover (2/2) K0210-002047 434
Floor Cover K0210-002048 435
KOMTRAX Controller K0210-002049 437
Decal K0210-005050 442

Related Parts K0210-002051A 439
ROPS Cab, Provision For Radio Installation, TH300 Type KOMTRAX ..... (X22-1058431)
Cab Body K0210-002001 370
Door and Latch, LHS K0210-002002 371
Door Dumper, Window and Wiper LHS K0210-002003 373
Door Cover, LHS K0210-002004 375
Door and Latch, RHS K0210-002005 376
Door Dumper, Window and Wiper, RHS K0210-002006 378
Door Cover, RHS K0210-002007 380
Door Hinge K0210-002008 381
Door Open Lock (1/2) K0210-002009 382
Door Open Lock, LHS K0210-002010 383
Door Open Lock, RHS K0210-002011 384
Door Open Lock (2/2) K0210-002012 385
Glass Windows, Front and Rear K0210-002013 386
Sash type Glass Windows, LHS K0210-002014 387
Sash type Glass Windows, RHS K0210-002015 389
Wiper and Room Lamp K0210-002016 391
Cover K0210-005017 440
Rubber Antenna K0210-002018 393
Rubber Antenna Mounting K0210-002019 394
Roof Cover (1/2) K0210-002020 395
Roof Cover (2/2) K0210-002021 396
Rearview Mirror K0210-002022 398
Outside Cover K0210-002023 399
Air Conditioner Unit K0210-002024 400
Air Conditioner Unit Mounting K0210-002025 402
Air Conditioner Duct (1/3) K0210-002026 403
Air Conditioner Piping K0210-002027 405
Air Conditioner Duct (2/3) K0210-002028 407
Air Conditioner Duct (3/3) K0210-002029 408
Console Box K0210-002030 410
Travel Control Lever (1/2) K0210-002031 411
Travel Control Lever (2/2) K0210-002032 412
Console Slider K0210-002033 414
Parking Brake Lever K0210-002034 415
Work Equipment Lock Lever K0210-002035 417
Floor Frame Inside Cover K0210-002036A 419
Brake Pedal K0210-002037 420
Decelerator Pedal K0210-002038 422
Controller and Relay K0210-002039 424
Floor, Harness (1/3) K0210-002040 425
Floor, Harness (2/3) K0210-002041 427
Floor, Harness (3/3) K0210-002042 429
Window Washer Piping K0210-002043 430
Dashboard Cover (1/2) K0210-002044 431
Floor, Switch K0210-002045 432
Foot Rest K0210-002046 433
Dashboard Cover (2/2) K0210-002047 434
Floor Cover K0210-002048 435
KOMTRAX Controller K0210-002049 437
Decal K0210-002050 438
Related Parts K0210-002051A 439
ROPS Cab, With Rear View Monitoring System, With AM-FM Stereo Radio For North America, TH300 Type KOMTRAX ..... (X22-1172920)
Cab Body K0210-002001 370
Door and Latch, LHS K0210-007002 444

Door Dumper, Window and Wiper LHS K0210-007003 446
Door Cover, LHS K0210-007004 448
Door and Latch, RHS K0210-007005 449
Door Dumper, Window and Wiper, RHS K0210-007006 451
Door Cover, RHS K0210-007007 453
Door Hinge K0210-007008 454
Door Open Lock (1/2) K0210-007009 455
Door Open Lock, LHS K0210-007010 456
Door Open Lock, RHS K0210-007011 457
Door Open Lock (2/2) K0210-007012 458
Glass Windows, Front and Rear K0210-007013 459
Sash type Glass Windows, LHS K0210-007014 460
Sash type Glass Windows, RHS K0210-007015 462
Wiper and Room Lamp K0210-007016 464
Radio K0210-007017 465
Rubber Antenna K0210-007018 466
Rubber Antenna Mounting K0210-007019 467
Roof Cover (1/2) K0210-007020 468
Roof Cover (2/2) K0210-007021 469
Rearview Mirror K0210-007022 471
Outside Cover K0210-007023 472
Air Conditioner Unit K0210-007024 473
Air Conditioner Unit Mounting K0210-007025 475
Air Conditioner Duct (1/3) K0210-007026 476
Air Conditioner Piping K0210-007027 478
Air Conditioner Duct (2/3) K0210-007028 480
Air Conditioner Duct (3/3) K0210-002029 408
Console Box K0210-007030 481
Travel Control Lever (1/2) K0210-007031 482
Travel Control Lever (2/2) K0210-007032 483
Console Slider K0210-007033 485
Parking Brake Lever K0210-007034 486
Work Equipment Lock Lever K0210-007035 488
Floor Frame Inside Cover K0210-002036A 419
Brake Pedal K0210-007037 490
Decelerator Pedal K0210-007038 492
Controller and Relay K0210-007039 494
Floor, Harness (1/3) K0210-002040 425
Floor, Harness (2/3) K0210-007041 495
Floor, Harness (3/3) K0210-007042 497
Window Washer Piping K0210-007043 498
Dashboard Cover (1/2) K0210-007044 499
Floor, Switch K0210-007045 500
Foot Rest K0210-007046 501
Dashboard Cover (2/2) K0210-007047 502
Floor Cover K0210-007048 503
KOMTRAX Controller K0210-007049 505
Wiring Harness K0210-007050 506
Decal K0210-002050 438
Related Parts K0210-007052 507
Rear Camera K0210-007053 508

ROPS Cab, With Rear View Monitoring System, Provision For Radio Installation, TH300 Type KOMTRAX ..... (X22-1172930)

Cab Body K0210-002001 370
Door and Latch, LHS K0210-007002 444
Door Dumper, Window and Wiper LHS K0210-007003 446
Door Cover, LHS K0210-007004 448

Door and Latch, RHS K0210-007005 449
Door Dumper, Window and Wiper, RHS K0210-007006 451
Door Cover, RHS K0210-007007 453
Door Hinge K0210-007008 454
Door Open Lock (1/2) K0210-007009 455
Door Open Lock, LHS K0210-007010 456
Door Open Lock, RHS K0210-007011 457
Door Open Lock (2/2) K0210-007012 458
Glass Windows, Front and Rear K0210-007013 459
Sash type Glass Windows, LHS K0210-007014 460
Sash type Glass Windows, RHS K0210-007015 462
Wiper and Room Lamp K0210-007016 464
Cover K0210-008017 510
Rubber Antenna K0210-007018 466
Rubber Antenna Mounting K0210-007019 467
Roof Cover (1/2) K0210-007020 468
Roof Cover (2/2) K0210-007021 469
Rearview Mirror K0210-007022 471
Outside Cover K0210-007023 472
Air Conditioner Unit K0210-007024 473
Air Conditioner Unit Mounting K0210-007025 475
Air Conditioner Duct (1/3) K0210-007026 476
Air Conditioner Piping K0210-007027 478
Air Conditioner Duct (2/3) K0210-007028 480
Air Conditioner Duct (3/3) K0210-002029 408
Console Box K0210-007030 481
Travel Control Lever (1/2) K0210-007031 482
Travel Control Lever (2/2) K0210-007032 483
Console Slider K0210-007033 485
Parking Brake Lever K0210-007034 486
Work Equipment Lock Lever K0210-007035 488
Floor Frame Inside Cover K0210-002036A 419
Brake Pedal K0210-007037 490
Decelerator Pedal K0210-007038 492
Controller and Relay K0210-007039 494
Floor, Harness (1/3) K0210-002040 425
Floor, Harness (2/3) K0210-007041 495
Floor, Harness (3/3) K0210-007042 497
Window Washer Piping K0210-007043 498
Dashboard Cover (1/2) K0210-007044 499
Floor, Switch K0210-007045 500
Foot Rest K0210-007046 501
Dashboard Cover (2/2) K0210-007047 502
Floor Cover K0210-007048 503
KOMTRAX Controller K0210-007049 505
Wiring Harness K0210-007050 506
Decal K0210-002050 438
Related Parts K0210-007052 507
Rear Camera K0210-007053 508
ROPS Cab, EU Regulation Guard Level 2, With Rear View Monitoring System, With AM-FM Stereo Radio With Cassette For Europe And Asia, TH300 Type KOMTRAX ..... (X22-1172940)
Cab Body K0210-002001 370
Door and Latch, LHS K0210-007002 444
Door Dumper, Window and Wiper LHS K0210-007003 446
Door Cover, LHS K0210-007004 448
Door and Latch, RHS K0210-007005 449
Door Dumper, Window and Wiper, RHS K0210-007006 451

Door Cover, RHS K0210-007007 453
Door Hinge K0210-007008 454
Door Open Lock (1/2) K0210-007009 455
Door Open Lock, LHS K0210-007010 456
Door Open Lock, RHS K0210-007011 457
Door Open Lock (2/2) K0210-007012 458
Glass Windows, Front and Rear K0210-007013 459
Sash type Glass Windows, LHS K0210-007014 460
Sash type Glass Windows, RHS K0210-007015 462
Wiper and Room Lamp K0210-007016 464
Radio K0210-009017 511
Rubber Antenna K0210-007018 466
Rubber Antenna Mounting K0210-007019 467
Roof Cover (1/2) K0210-007020 468
Roof Cover (2/2) K0210-007021 469
Rearview Mirror K0210-007022 471
Outside Cover K0210-007023 472
Air Conditioner Unit K0210-007024 473
Air Conditioner Unit Mounting K0210-007025 475
Air Conditioner Duct (1/3) K0210-007026 476
Air Conditioner Piping K0210-007027 478
Air Conditioner Duct (2/3) K0210-007028 480
Air Conditioner Duct (3/3) K0210-002029 408
Console Box K0210-007030 481
Travel Control Lever (1/2) K0210-007031 482
Travel Control Lever (2/2) K0210-007032 483
Console Slider K0210-007033 485
Parking Brake Lever K0210-007034 486
Work Equipment Lock Lever K0210-007035 488
Floor Frame Inside Cover K0210-002036A 419
Brake Pedal K0210-007037 490
Decelerator Pedal K0210-007038 492
Controller and Relay K0210-007039 494
Floor, Harness (1/3) K0210-002040 425
Floor, Harness (2/3) K0210-007041 495
Floor, Harness (3/3) K0210-007042 497
Window Washer Piping K0210-007043 498
Dashboard Cover (1/2) K0210-007044 499
Floor, Switch K0210-009045 512
Foot Rest K0210-007046 501
Dashboard Cover (2/2) K0210-007047 502
Floor Cover K0210-007048 503
KOMTRAX Controller K0210-007049 505
Wiring Harness K0210-007050 506
Decal K0210-005050 442
Related Parts K0210-007052 507
Rear Camera K0210-007053 508

ROPS Cab, EU Regulation Guard Level 2, With Rear View Monitoring System, Provision For Radio Installation, TH300 Type KOMTRAX ..... (X22-1172950)

Cab Body K0210-002001 370
Door and Latch, LHS K0210-007002 444
Door Dumper, Window and Wiper LHS K0210-007003 446
Door Cover, LHS K0210-007004 448
Door and Latch, RHS K0210-007005 449
Door Dumper, Window and Wiper, RHS K0210-007006 451
Door Cover, RHS K0210-007007 453
Door Hinge K0210-007008 454

Door Open Lock (1/2) K0210-007009 455
Door Open Lock, LHS K0210-007010 456
Door Open Lock, RHS K0210-007011 457
Door Open Lock (2/2) K0210-007012 458
Glass Windows, Front and Rear K0210-007013 459
Sash type Glass Windows, LHS K0210-007014 460
Sash type Glass Windows, RHS K0210-007015 462
Wiper and Room Lamp K0210-007016 464
Cover K0210-008017 510
Rubber Antenna K0210-007018 466
Rubber Antenna Mounting K0210-007019 467
Roof Cover (1/2) K0210-007020 468
Roof Cover (2/2) K0210-007021 469
Rearview Mirror K0210-007022 471
Outside Cover K0210-007023 472
Air Conditioner Unit K0210-007024 473
Air Conditioner Unit Mounting K0210-007025 475
Air Conditioner Duct (1/3) K0210-007026 476
Air Conditioner Piping K0210-007027 478
Air Conditioner Duct (2/3) K0210-007028 480
Air Conditioner Duct (3/3) K0210-002029 408
Console Box K0210-007030 481
Travel Control Lever (1/2) K0210-007031 482
Travel Control Lever (2/2) K0210-007032 483
Console Slider K0210-007033 485
Parking Brake Lever K0210-007034 486
Work Equipment Lock Lever K0210-007035 488
Floor Frame Inside Cover K0210-002036A 419
Brake Pedal K0210-007037 490
Decelerator Pedal K0210-007038 492
Controller and Relay K0210-007039 494
Floor, Harness (1/3) K0210-002040 425
Floor, Harness (2/3) K0210-007041 495
Floor, Harness (3/3) K0210-007042 497
Window Washer Piping K0210-007043 498
Dashboard Cover (1/2) K0210-007044 499
Floor, Switch K0210-009045 512
Foot Rest K0210-007046 501
Dashboard Cover (2/2) K0210-007047 502
Floor Cover K0210-007048 503
KOMTRAX Controller K0210-007049 505
Wiring Harness K0210-007050 506
Decal K0210-005050 442
Related Parts K0210-007052 507
Rear Camera K0210-007053 508

ROPS Cab, With Rear View Monitoring System, With AM-FM Stereo Radio With Cassette, TH300 Type KOMTRAX ..... (X22-1174590)

Cab Body K0210-012001 513
Door and Latch, LHS K0210-002002 371
Door Dumper, Window and Wiper LHS K0210-002003 373
Door Cover, LHS K0210-002004 375
Door and Latch, RHS K0210-002005 376
Door Dumper, Window and Wiper, RHS K0210-002006 378
Door Cover, RHS K0210-002007 380
Door Hinge K0210-002008 381
Door Open Lock (1/2) K0210-002009 382
Door Open Lock, LHS K0210-002010 383

Door Open Lock, RHS K0210-002011 384
Door Open Lock (2/2) K0210-002012 385
Glass Windows, Front and Rear K0210-002013 386
Sash type Glass Windows, LHS K0210-002014 387
Sash type Glass Windows, RHS K0210-002015 389
Wiper and Room Lamp K0210-002016 391
Radio K0210-012017 514
Rubber Antenna K0210-002018 393
Rubber Antenna Mounting K0210-002019 394
Roof Cover (1/2) K0210-002020 395
Roof Cover (2/2) K0210-002021 396
Rearview Mirror K0210-002022 398
Outside Cover K0210-002023 399
Air Conditioner Unit K0210-002024 400
Air Conditioner Unit Mounting K0210-002025 402
Air Conditioner Duct (1/3) K0210-002026 403
Air Conditioner Piping K0210-002027 405
Air Conditioner Duct (2/3) K0210-002028 407
Air Conditioner Duct (3/3) K0210-012029 515
Console Box K0210-002030 410
Travel Control Lever (1/2) K0210-002031 411
Travel Control Lever (2/2) K0210-002032 412
Console Slider K0210-002033 414
Parking Brake Lever K0210-002034 415
Work Equipment Lock Lever K0210-002035 417
Floor Frame Inside Cover K0210-012036 517
Brake Pedal K0210-002037 420
Decelerator Pedal K0210-002038 422
Controller and Relay K0210-012039 518
Floor, Harness (1/3) K0210-012040 519
Floor, Harness (2/3) K0210-002041 427
Floor, Harness (3/3) K0210-002042 429
Window Washer Piping K0210-002043 430
Dashboard Cover (1/2) K0210-012044 521
Floor, Switch K0210-002045 432
Foot Rest K0210-002046 433
Dashboard Cover (2/2) K0210-002047 434
Floor Cover K0210-012048 522
KOMTRAX Controller K0210-002049 437
Wiring Harness K0210-012050 524
Decal K0210-012051 525
Related Parts K0210-002051A 439
Rear Camera K0210-012053 526
ROPS Cab, With AM/FM Radio For Asia and EU, TH300 Type KOMTRAX ..... (X22-1174580)
Cab Body K0210-012001 513
Door and Latch, LHS K0210-002002 371
Door Dumper, Window and Wiper LHS K0210-002003 373
Door Cover, LHS K0210-002004 375
Door and Latch, RHS K0210-002005 376
Door Dumper, Window and Wiper, RHS K0210-002006 378
Door Cover, RHS K0210-002007 380
Door Hinge K0210-002008 381
Door Open Lock (1/2) K0210-002009 382
Door Open Lock, LHS K0210-002010 383
Door Open Lock, RHS K0210-002011 384
Door Open Lock (2/2) K0210-002012 385
Glass Windows, Front and Rear K0210-002013 386

https://truckmanualshub.com/

Sash type Glass Windows, LHS K0210-002014 387
Sash type Glass Windows, RHS K0210-002015 389
Wiper and Room Lamp K0210-002016 391
Radio K0210-012017 514
Rubber Antenna K0210-002018 393
Rubber Antenna Mounting K0210-002019 394
Roof Cover (1/2) K0210-002020 395
Roof Cover (2/2) K0210-002021 396
Rearview Mirror K0210-002022 398
Outside Cover K0210-002023 399
Air Conditioner Unit K0210-002024 400
Air Conditioner Unit Mounting K0210-002025 402
Air Conditioner Duct (1/3) K0210-002026 403
Air Conditioner Piping K0210-002027 405
Air Conditioner Duct (2/3) K0210-002028 407
Air Conditioner Duct (3/3) K0210-012029 515
Console Box K0210-002030 410
Travel Control Lever (1/2) K0210-002031 411
Travel Control Lever (2/2) K0210-002032 412
Console Slider K0210-002033 414
Parking Brake Lever K0210-002034 415
Work Equipment Lock Lever K0210-002035 417
Floor Frame Inside Cover K0210-012036 517
Brake Pedal K0210-002037 420
Decelerator Pedal K0210-002038 422
Controller and Relay K0210-012039 518
Floor, Harness (1/3) K0210-012040 519
Floor, Harness (2/3) K0210-002041 427
Floor, Harness (3/3) K0210-002042 429
Window Washer Piping K0210-002043 430
Dashboard Cover (1/2) K0210-012044 521
Floor, Switch K0210-002045 432
Foot Rest K0210-002046 433
Dashboard Cover (2/2) K0210-002047 434
Floor Cover K0210-012048 522
KOMTRAX Controller K0210-002049 437
Decal K0210-012051 525
Related Parts K0210-002051A 439
Floor Mat ..... (X22-1053572)
K0310-001001 527
ROPS Canopy ..... (X22-1172750)
Canopy K0410-002001 528
Roof Cover K0410-002002 529
Rearview Mirror K0410-002003 530
Cover K0410-002004 531
Console Box K0410-002005 532
Travel Control Lever (1/2) K0410-002006 533
Travel Control Lever (2/2) K0410-002007 534
Console Slider K0410-002008 536
Parking Brake Lever K0410-002009 537
Work Equipment Lock Lever K0410-002010 538
Floor Frame Inside Cover K0410-002011 539
Brake Pedal K0410-002012 540
Decelerator Pedal K0410-002013 542
Controller and Relay K0410-002014 543
Floor, Harness (1/3) K0410-002015 544
Floor, Harness (2/3) K0410-002016 545

Floor, Harness (3/3) K0410-002017 546
Dashboard Cover K0410-002018 547
Monitor K0410-002019 548
Floor, Switch K0410-002020 549
Protector K0410-002021 550
Floor Cover K0410-002022 551
KOMTRAX Controller K0410-002023 553
Related Parts K0410-002024 554
Air Conditioner Unit ..... (X22-1050361)
Air Conditioner Condenser Unit K0710-001001 555
Air Conditioner Condenser Unit Mounting K0710-001002 556
Piping (1/2) K0710-001003 557
Compressor K0710-001004 558
Duct K0710-001005 559
Piping (2/2) K0710-001006 560
Air Conditioner Unit Mounting K0710-001007 562
Heater Unit Mounting K0710-001008 563
Bolt K0710-001009 564
Air Conditioner Unit, With Hardened Pulley ..... (X22-1172140)
Air Conditioner Condenser Unit K0710-002001 565
Air Conditioner Condenser Unit Mounting K0710-002002 566
Piping (1/2) K0710-002003 567
Compressor K0710-002004 568
Duct K0710-002005 569
Piping (2/2) K0710-002006 570
Air Conditioner Unit Mounting K0710-002007 572
Heater Unit Mounting K0710-002008 573
Bolt K0710-002009 574
Parts For Less Air Conditioner, Without Air Conditioner ..... (X22-1172510)
K0710-003001 575
Fire Extinguisher, English ..... (X22-1058530)
K0830-001001 576
Fire Extinguisher, For ROPS Canopy ..... (X22-1173280)
K0830-004001 577
Cup Holder ..... (X22-1173450)
K0860-002001 578
Lunch Box Holder ..... (X22-1173460)
K0890-002001 579
Dozer Control, For Machine Without Rear Actuator ..... (X22-1058461)
Armrest K2110-001001 580
Lever K2110-001002 581
PPC Valve for Blade K2110-001003 582
Hose K2110-001004 584
Dozer Control, With Power Angle Power Tilt Dozer ..... (X22-1058501)
Armrest K2110-005001 585
Lever K2110-005002 586
PPC Valve for PAT (1/2) K2110-005003 587
PPC Valve for PAT (2/2) K2110-005004 588
Hose K2110-005005 590
Dozer Control, With Power Angle Power Tilt Dozer, For Machine With Rear Actuator ..... (X22-1058511)
Armrest K2110-006001 591
Lever K2110-005002 586
PPC Valve for PAT (1/2) K2110-005003 587
PPC Valve for PAT (2/2) K2110-005004 588
Hose K2110-005005 590
PPC Valve for Ripper K2110-006006 592
Attachment Lever K2110-006007 593

Dozer Control, With Power Tilt Pitch Dozer, For Machine With Rear Actuator ....(X22-1058491)
- Armrest K2110-006001 591
- Lever K2110-004002 595
- PPC Valve for Blade K2110-001003 582
- Hose K2110-004004 596
- PPC Valve for Ripper K2110-006006 592
- Attachment Lever K2110-004006 597

Dozer Control, For Machine With Rear Actuator ....(X22-1058471)
- Armrest K2110-006001 591
- Lever K2110-001002 581
- PPC Valve for Blade K2110-001003 582
- Hose K2110-002004 599
- PPC Valve for Ripper K2110-006006 592
- Attachment Lever K2110-002006 600

Dozer Control, With Power Tilt Pitch Dozer ....(X22-1058481)
- Armrest K2110-005001 585
- Lever K2110-004002 595
- PPC Valve for Blade K2110-001003 582
- Hose K2110-003004 602

Dozer Control, With Power Angle Power Tilt Dozer, For Machine With Rear Actuator, ROPS Canopy ...(X22-1172820)
- Armrest K2110-012001 603
- Lever K2110-005002 586
- PPC Valve for PAT (1/2) K2110-005003 587
- PPC Valve for PAT (2/2) K2110-005004 588
- Hose K2110-012005 604
- PPC Valve for Ripper K2110-006006 592
- Attachment Lever K2110-012007 605

Dozer Control, With Power Angle Power Tilt Dozer, ROPS Canopy ....(X22-1172810)
- Armrest K2110-011001 607
- Lever K2110-005002 586
- PPC Valve for PAT (1/2) K2110-005003 587
- PPC Valve for PAT (2/2) K2110-005004 588
- Hose K2110-012005 604

Dozer Control, With Power Tilt Pitch Dozer, ROPS Canopy ....(X22-1172790)
- Armrest K2110-011001 607
- Lever K2110-004002 595
- PPC Valve for Blade K2110-001003 582
- Hose K2110-003004 602

Dozer Control, With Power Tilt Pitch Dozer, For Machine With Rear Actuator, ROPS Canopy ....(X22-1172800)
- Armrest K2110-012001 603
- Lever K2110-004002 595
- PPC Valve for Blade K2110-001003 582
- Hose K2110-003004 602
- PPC Valve for Ripper K2110-006006 592
- Attachment Lever K2110-004006 597

Dozer Control, For Machine Without Rear Actuator, ROPS Canopy ....(X22-1172770)
- Armrest K2110-011001 607
- Lever K2110-001002 581
- PPC Valve for Blade K2110-001003 582
- Hose K2110-001004 584

Dozer Control, For Machine With Rear Actuator, ROPS Canopy ....(X22-1172780)
- Armrest K2110-012001 603
- Lever K2110-001002 581
- PPC Valve for Blade K2110-001003 582
- Hose K2110-001004 584
- PPC Valve for Ripper K2110-006006 592
- Attachment Lever K2110-002006 600

Floor Frame Mounts ....(X22-1054351)
K2120-001001 608
Floor Frame Cover, Operator's Seat Turn Type ....(X22-1053581)
K2130-001001 609
Floor Frame Cover ....(X22-1053862)
K2130-002001 610
Windshield Washer Tank ....(X22-1050371)
K2910-001001 611
Electric Harness, For ROPS Canopy ....(X22-1172590)
K2910-002001 613
GUARDS AND COVERS
Dozer Blade Lift Cylinder Support ....(X22-1050380)
M2111-001001 616
Radiator Mask, Hinged, Strengthened ....(X22-1050392)
M2120-001001 617
Radiator Mask, Hinged ....(X22-1051631)
M2120-002001 618
Front Guard Group, For Engine Hood And Sides ....(X22-1050401)
Hood M2140-001001 619
Hood Side Cover M2140-001002 620
Hood Support, Front Side M2140-001003 621
Radiator Cover M2140-001004 622
Hood Mounting M2140-001005 623
Hood Support, Rear Side M2140-001006 624
Hood Side Cover Lock M2140-001007 625
Hood Support Rear Side Cover M2140-001008 626
Tool Box M2140-001009 627
Front Guard Group, For Engine Hood And Sides, For EU Noise Reguration ....(X22-1051151)
Hood M2140-002001 628
M2140-002002 629
Hood Support, Front Side M2140-001003 621
Radiator Cover M2140-001004 622
Hood Mounting M2140-001005 623
Hood Support, Rear Side M2140-001006 624
Hood Side Cover Lock M2140-001007 625
Hood Support Rear Side Cover M2140-001008 626
Tool Box M2140-001009 627
Engine Side Cover, For Engine Hood And Sides ....(X22-1050411)
M2142-001001 631
Engine Side Cover, For Engine Hood And Sides, For EU Noise Reguration ....(X22-1052871)
M2142-002001 632
Fender Group, For Machine With 3-spool Valve Hydraulics ....(X22-1050421)
Fender M2210-001001 633
Inner Parts (1/10) M2210-001002 634
Inner Parts (2/10) M2210-001003 635
Inner Parts (3/10) M2210-001004 636
Inner Parts (4/10) M2210-001005 637
Inner Parts (5/10) M2210-001006 638
Inner Parts (6/10) M2210-001007 639
Inner Parts (7/10) M2210-001008 640
Inner Parts (8/10) M2210-001009 641
Inner Parts (9/10) M2210-001010 642
Inner Parts (10/10) M2210-001011 643
Control Valve Mounting M2210-001012 644
Hydraulic Piping M2210-001013 645
PPC Lock Solenoid Valve With Accumulator M2210-001014 646
Control Valve Steering Piping M2210-001015 648

Control Valve Wiring Harness M2210-001016 649
Filter M2210-001017 650
Handrail M2210-001018 651
Grease Pump Holder M2210-001019 652
Mounting M2210-001020 653
Under Cover M2210-001021 654
Fender Group, For Machine With 5-spool Valve Hydraulics, With Power Angle Power Tilt Dozer ..... (X22-1055741)
Fender M2210-001001 633
Inner Parts (1/12) M2210-003002 655
Inner Parts (2/12) M2210-003003 656
Inner Parts (3/12) M2210-003004 657
Inner Parts (4/12) M2210-003005 658
Inner Parts (5/12) M2210-003006 659
Inner Parts (6/12) M2210-003007 660
Inner Parts (7/12) M2210-003008 661
Inner Parts (8/12) M2210-003009 662
Inner Parts (9/12) M2210-003010 664
Inner Parts (10/12) M2210-003011 665
Inner Parts (11/12) M2210-003012 666
Inner Parts (12/12) M2210-003013 667
Control Valve Mounting M2210-001012 644
Hydraulic Piping M2210-003015 668
PPC Lock Solenoid Valve With Accumulator M2210-003016 669
Control Valve Steering Piping M2210-003017A 671
Control Valve Wiring Harness M2210-001016 649
Filter M2210-001017 650
Handrail M2210-003020 673
Grease Pump Holder M2210-001019 652
Mounting M2210-001020 653
Under Cover M2210-001021 654
Fender Group, For Machine With 5-spool Valve Hydraulics, With Power Angle Power Tilt Dozer, For Machine With Ripper ..... (X22-1057920)
Fender M2210-001001 633
Inner Parts (1/12) M2210-003002 655
Inner Parts (2/12) M2210-003003 656
Inner Parts (3/12) M2210-003004 657
Inner Parts (4/12) M2210-003005 658
Inner Parts (5/12) M2210-003006 659
Inner Parts (6/12) M2210-003007 660
Inner Parts (7/12) M2210-003008 661
Inner Parts (8/12) M2210-003009 662
Inner Parts (9/12) M2210-003010 664
Inner Parts (10/12) M2210-003011 665
Inner Parts (11/12) M2210-003012 666
Inner Parts (12/12) M2210-003013 667
Control Valve Mounting M2210-001012 644
Hydraulic Piping M2210-006015 674
PPC Lock Solenoid Valve With Accumulator M2210-003016 669
Control Valve Steering Piping M2210-006017A 676
Control Valve Wiring Harness M2210-001016 649
Filter M2210-001017 650
Handrail M2210-003020 673
Grease Pump Holder M2210-001019 652
Mounting M2210-001020 653
Under Cover M2210-001021 654

Fender Group, For Machine With 5-spool Valve Hydraulics, With Power Tilt Pitch Dozer, For Machine With Ripper ..... (X22-1057910)
Fender M2210-001001 633
Inner Parts (1/12) M2210-005002 678
Inner Parts (2/12) M2210-005003 679
Inner Parts (3/12) M2210-005004 680
Inner Parts (4/12) M2210-005005 681
Inner Parts (5/12) M2210-005006 682
Inner Parts (6/12) M2210-005007 683
Inner Parts (7/12) M2210-005008 684
Inner Parts (8/12) M2210-005009 685
Inner Parts (9/12) M2210-005010 687
Inner Parts (10/12) M2210-005011 688
Inner Parts (11/12) M2210-005012 689
Inner Parts (12/12) M2210-005013 690
Control Valve Mounting M2210-001012 644
Hydraulic Piping M2210-005015 691
PPC Lock Solenoid Valve With Accumulator M2210-005016 693
Control Valve Steering Piping M2210-005017 695
Control Valve Wiring Harness M2210-005018 697
Filter M2210-001017 650
Handrail M2210-001018 651
Grease Pump Holder M2210-001019 652
Mounting M2210-001020 653
Under Cover M2210-001021 654
Fender Group, For Machine With 5-spool Valve Hydraulics, With Power Tilt Pitch Dozer ..... (X22-1057900)
Fender M2210-001001 633
Inner Parts (1/12) M2210-005002 678
Inner Parts (2/12) M2210-005003 679
Inner Parts (3/12) M2210-005004 680
Inner Parts (4/12) M2210-005005 681
Inner Parts (5/12) M2210-005006 682
Inner Parts (6/12) M2210-005007 683
Inner Parts (7/12) M2210-005008 684
Inner Parts (8/12) M2210-005009 685
Inner Parts (9/12) M2210-005010 687
Inner Parts (10/12) M2210-005011 688
Inner Parts (11/12) M2210-005012 689
Inner Parts (12/12) M2210-005013 690
Control Valve Mounting M2210-001012 644
Hydraulic Piping M2210-004015 698
PPC Lock Solenoid Valve With Accumulator M2210-005016 693
Control Valve Steering Piping M2210-004017 699
Control Valve Wiring Harness M2210-005018 697
Filter M2210-001017 650
Handrail M2210-001018 651
Grease Pump Holder M2210-001019 652
Mounting M2210-001020 653
Under Cover M2210-001021 654
Fender Group, For Machine With 4-spool Valve Hydraulics, For Machine With Ripper ..... (X22-1055731)
Fender M2210-001001 633
Inner Parts (1/11) M2210-002002 701
Inner Parts (2/11) M2210-002003 702
Inner Parts (3/11) M2210-002004 703
Inner Parts (4/11) M2210-002005 704
Inner Parts (5/11) M2210-002006 705
Inner Parts (6/11) M2210-002007 706

Inner Parts (7/11) M2210-002008 707
Inner Parts (8/11) M2210-002009 709
Inner Parts (9/11) M2210-002010 710
Inner Parts (10/11) M2210-002011 711
Inner Parts (11/11) M2210-002012 712
Control Valve Mounting M2210-001012 644
Hydraulic Piping M2210-002014 713
PPC Lock Solenoid Valve With Accumulator M2210-002015 714
Control Valve Steering Piping M2210-002016 716
Control Valve Wiring Harness M2210-001016 649
Filter M2210-001017 650
Handrail M2210-001018 651
Grease Pump Holder M2210-001019 652
Mounting M2210-001020 653
Under Cover M2210-001021 654
Fender Cover ..... (X22-1050432)
Battery Box Cover M2211-001001 717
Valve Cover M2211-001002 719
Step M2211-001003 720
Mounting M2211-001004 721
Fender Cover, With Handrail, Operator's Seat, ROPS Canopy ..... (X22-1172550)
Battery Box Cover M2211-002001 722
Valve Cover M2211-002002 724
Step M2211-002003 725
Mounting M2211-002004 726
Fender Cover, With Handrail, Operator's Seat, Refuel Pump ..... (X22-1173510)
Battery Box Cover M2211-003001 727
Valve Cover M2211-002002 724
Step M2211-002003 725
Mounting M2211-002004 726
Shovel Holder ..... (X22-1056561)
M2214-001001 729
Rear Cover, Strengthened ..... (X22-1050441)
M2240-001001 730
Rear Cover, Strengthened, For Machine With Ripper ..... (X22-1053441)
M2240-002001 731
Under Guard, Strengthened ..... (X22-1050451)
M2810-001001 732
Under Guard, Hinged, For EU Noise Reguration ..... (X22-1057500)
M2810-004001 733
Under Guard, Hinged ..... (X22-1052050)
M2810-002001 734
Under Guard, Strengthened, For EU Noise Reguration ..... (X22-1056970)
M2810-003001 735
Front Pull Hook ..... (X22-1053520)
M2811-001001 736
UNDERCARRIAGE
Front Idler ..... (X22-1050461)
R0110-001001 738
Idler Cushion ..... (X22-1050471)
R0120-001001 739
Track Roller, Plus Type, For Long Track ..... (X21-1361980)
(1/3) R0200-002001 740
(2/3) R0200-002002 741
(3/3) R0200-002003 742
Track Roller ..... (X22-0220731)
(1/3) R0200-003001 743

https://truckmanualshub.com/

(2/3) R0200-003002 744
(3/3) R0200-003003 745
Carrier Roller, Plus Type ..... (X21-1361990)
R0300-001001 746
Carrier Roller ..... (X22-0220751)
R0300-002001 747
Track Link Assembly, Heavy Duty, Supply Parts ..... (X21-1459040)
R0500-007001 748
Track Link Assembly, Swamp Shoe, Heavy Duty, Supply Parts ..... (X21-1459050)
R0500-008001 749
Track Shoe Assembly, Provision For Single Grouser Shoe, 915mm Width, Sealed And Lubricated Links, Plus Type ..... (X21-1361950)
R0500-001001 750
Track Link Assembly, Supply Parts ..... (X21-1369580)
Plus Type R0500-002001 751
Track Shoe Assembly, Provision For Single Grouser Shoe, 760mm Width, Sealed And Lubricated Links, Plus Type ..... (X21-1457160)
R0500-003001 752
Track Shoe Assembly, Single Grouser, 760mm Width, Heavy Duty ..... (X21-1458120)
R0500-004001 753
Track Shoe Assembly, Single Grouser, 915mm Width, Heavy Duty ..... (X21-1458130)
R0500-005001 754
Track Shoe Assembly, Swamp Shoe, 940mm Width, Heavy Duty ..... (X21-1458140)
R0500-006001 755
Track Frame ..... (X22-1050621)
R2100-001001 756
Track Frame, With Power Angle Power Tilt Dozer ..... (X22-1050881)
R2100-002001 757
Track Frame, With Power Angle Power Tilt Dozer, Plus Type ..... (X22-1059350)
R2100-004001 758
Track Frame, Plus Type ..... (X22-1059320)
R2100-003001 759
Track Roller Guard ..... (X22-0762570)
R2200-001001 760
Track Roller Guard, Plus Type ..... (X22-1018340)
R2200-002001 761
Track Roller Guard, Full Roller Guard ..... (X22-1055041)
R2200-003001 762
Track Roller Guard, Full Roller Guard, Plus Type ..... (X22-1057700)
R2200-004001 763
WORK EQUIPMENT
Dozer Frame ..... (X22-1050521)
T2110-001001 766
Dozer Frame, With Power Angle Power Tilt Dozer ..... (X22-1050812)
T2110-002001 767
Dozer Frame, With Power Tilt Pitch Dozer ..... (X22-1057860)
T2110-003001 768
Dozer Arm And Brace ..... (X22-0220770)
T2115-001001 769
Dozer Arm And Brace, With Power Tilt Pitch Dozer ..... (X22-0229030)
T2115-002001 770
Dozer Arm And Brace, With Power Angle Power Tilt Dozer ..... (X22-1050821)
T2115-003001 771
Dozer Blade ..... (X22-1050701)
T2120-001001 772
Dozer Blade, With Power Angle Power Tilt Dozer ..... (X22-1050911)
T2120-002001 773

Dozer Blade, With 3000mm, Power Angle Power Tilt Blade .....(X22-1174300)
T2120-003001A 774
Dozer Blade Lift Cylinder .....(X22-1050711)
Inner Parts, LHS T2140-001001 776
Inner Parts, Reduction Gear T2140-001002 778
T2140-001003 780
Dozer Blade Lift Cylinder, With Power Angle Power Tilt Dozer .....(X22-1050841)
Inner Parts, LHS T2140-002001 781
Inner Parts, Reduction Gear T2140-002002 783
T2140-002003 785
Dozer Blade Tilt Cylinder .....(X22-1050561)
Inner Parts T2150-001001 786
Dozer Blade Tilt Cylinder, With Power Angle Power Tilt Dozer .....(X22-1050851)
Inner Parts T2150-002001 787
Dozer Frame Related Parts .....(X22-1058250)
Inner Parts T2151-001001 788
Dozer Blade Angle Cylinder, With Power Angle Power Tilt Dozer .....(X22-1050861)
Inner Parts T2153-001001 789
Dozer Blade Tilt Cylinder Piping .....(X22-1050571)
T2160-001001 790
Dozer Blade Tilt Cylinder Piping, With Power Tilt Pitch Dozer .....(X22-1057810)
T2160-004001 791
Dozer Blade Tilt Cylinder Piping, With Power Angle Power Tilt Dozer .....(X22-1050871)
(1/2) T2160-002001 792
(2/2) T2160-002002 793
Drawbar, Rigid Type .....(X22-0221680)
T2810-001001 795
Drawbar .....(X22-1050931)
T2810-003001 796
Drawbar, For EU Noise Reguration .....(X22-1058550)
T2810-004001 797
Drawbar, Rigid Type, For EU Noise Reguration .....(X22-1058640)
T2810-005001 798
Drawbar, Rigid Type, With Scraper .....(X22-0221690)
T2810-002001 799
Drawbar, With Additional Counter Weight .....(X22-1057190)
T2810-006001 800
Drawbar, With Additional Counter Weight, EU Regulation Guard Level 2 .....(X22-1059580)
T2810-007001 801
Drawbar, For EU Safety Regulation .....(X22-1173750)
T2810-008001 802
Drawbar, With Additional Counter Weight, For EU Safety Regulation .....(X22-1173770)
T2810-009001 803
Drawbar, Rigid Type, For EU Safety Regulation .....(X22-1173780)
T2810-010001 804
Counterweight .....(X22-1057200)
T2820-001001 805
Counterweight .....(X22-1059590)
T2820-002001 806
MARKS AND PLATES
Marks And Plates, English, For North America, Text Type .....(X22-1058000)
U0100-001001 808
Marks And Plates, English, With Power Angle Power Tilt Dozer, Text Type .....(X22-1058030)
U0100-003001 810
Marks And Plates, English, For EU Noise Reguration .....(X22-1058010)
U0100-002001 812

Marks And Plates, English .....(X22-1170290)
U0100-007001 814
Marks And Plates, English, Text Type .....(X22-1170300)
U0100-008001 815
Marks And Plates, Spanish, Text Type .....(X22-1170310)
U0100-009001 816
Marks And Plates, Spanish .....(X22-1170320)
U0100-010001 817
Marks And Plates, French .....(X22-1170330)
U0100-011001 818
Marks And Plates, Germany .....(X22-1170340)
U0100-012001 819
Marks And Plates, Turkish .....(X22-1170350)
U0100-013001 820
Marks And Plates, French, Text Type .....(X22-1170360)
U0100-014001 821
Marks And Plates, Spanish, EU Regulation Guard Level 2 .....(X22-1170370)
U0100-015001 822
Marks And Plates, French, EU Regulation Guard Level 2 .....(X22-1170380)
U0100-016001 823
Marks And Plates, Germany, EU Regulation Guard Level 2 .....(X22-1170390)
U0100-017001 824
Marks And Plates, Italian, EU Regulation Guard Level 2 .....(X22-1170400)
U0100-018001 825
Marks And Plates, Portuguese, EU Regulation Guard Level 2 .....(X22-1170410)
U0100-019001 826
Marks And Plates, English, With Power Tilt Pitch Dozer .....(X22-1170430)
U0100-021001 827
Marks And Plates, English, Text Type, With Power Tilt Pitch Dozer, For North America .....(X22-1170440)
U0100-022001 828
Marks And Plates, English, Text Type, With Power Tilt Pitch Dozer .....(X22-1170450)
U0100-023001 829
Marks And Plates, Spanish, Text Type, With Power Tilt Pitch Dozer .....(X22-1170460)
U0100-024001 830
Marks And Plates, Spanish, With Power Tilt Pitch Dozer .....(X22-1170470)
U0100-025001 831
Marks And Plates, French, With Power Tilt Pitch Dozer .....(X22-1170480)
U0100-026001 832
Marks And Plates, Germany, With Power Tilt Pitch Dozer .....(X22-1170490)
U0100-027001 833
Marks And Plates, Turkish, With Power Tilt Pitch Dozer .....(X22-1170500)
U0100-028001 834
Marks And Plates, French, Text Type, With Power Tilt Pitch Dozer .....(X22-1170510)
U0100-029001 835
Marks And Plates, English, EU Regulation Guard Level 2, With Power Tilt Pitch Dozer .....(X22-1170520)
U0100-030001 836
Marks And Plates, Spanish, EU Regulation Guard Level 2, With Power Tilt Pitch Dozer .....(X22-1170530)
U0100-031001 838
Marks And Plates, French, EU Regulation Guard Level 2, With Power Tilt Pitch Dozer .....(X22-1170540)
U0100-032001 839
Marks And Plates, Germany, EU Regulation Guard Level 2, With Power Tilt Pitch Dozer .....(X22-1170550)
U0100-033001 840
Marks And Plates, Italian, EU Regulation Guard Level 2, With Power Tilt Pitch Dozer .....(X22-1170560)
U0100-034001 841
Marks And Plates, Portuguese, EU Regulation Guard Level 2, With Power Tilt Pitch Dozer .....(X22-1170570)
U0100-035001 842

Marks And Plates, English, With Power Angle Power Tilt Dozer .....(X22-1170590)
U0100-037001 843
Marks And Plates, English, Text Type, With Power Angle Power Tilt Dozer .....(X22-1170600)
U0100-038001 844
Marks And Plates, English, Text Type, For North America, With Power Angle Power Tilt Dozer .....(X22-1170610)
U0100-039001 845
Marks And Plates, Spanish, With Power Angle Power Tilt Dozer .....(X22-1170620)
U0100-040001 846
Marks And Plates, French, With Power Angle Power Tilt Dozer .....(X22-1170630)
U0100-041001 847
Marks And Plates, Germany, With Power Angle Power Tilt Dozer .....(X22-1170640)
U0100-042001 848
Marks And Plates, Turkish, With Power Angle Power Tilt Dozer .....(X22-1170650)
U0100-043001 849
Marks And Plates, French, Text Type, With Power Angle Power Tilt Dozer .....(X22-1170660)
U0100-044001 850
Marks And Plates, English, EU Regulation Guard Level 2, With Power Angle Power Tilt Dozer .....(X22-1170670)
U0100-045001 851
Marks And Plates, Spanish, EU Regulation Guard Level 2, With Power Angle Power Tilt Dozer .....(X22-1170680)
U0100-046001 853
Marks And Plates, French, EU Regulation Guard Level 2, With Power Angle Power Tilt Dozer .....(X22-1170690)
U0100-047001 854
Marks And Plates, Germany, EU Regulation Guard Level 2, With Power Angle Power Tilt Dozer .....(X22-1170700)
U0100-048001 855
Marks And Plates, Italian, EU Regulation Guard Level 2, With Power Angle Power Tilt Dozer .....(X22-1170710)
U0100-049001 856
Marks And Plates, Portuguese, EU Regulation Guard Level 2, For 3000mm, Power Angle Power Tilt Blade, Power Angle Power Tilt Dozer, Inside Frame .....(X22-1170720)
U0100-050001 857
Marks And Plates, Italian .....(X22-1171610)
U0100-052001 859
Marks And Plates, Italian, With Power Tilt Pitch Dozer .....(X22-1171620)
U0100-053001 860
Marks And Plates, Italian, With Power Angle Power Tilt Dozer .....(X22-1171630)
U0100-054001 861
Marks And Plates, Portuguese .....(X22-1171640)
U0100-055001 862
Marks And Plates, Portuguese, With Power Tilt Pitch Dozer .....(X22-1171650)
U0100-056001 863
Marks And Plates, Portuguese, With Power Angle Power Tilt Dozer .....(X22-1171660)
U0100-057001 864
Marks And Plates, With Power Tilt Pitch Dozer, For EU Safety Regulation .....(X22-1173810)
U0100-060001 865
Marks And Plates, For EU Safety Regulation, Power Angle Power Tilt Dozer, Inside Frame .....(X22-1173820)
U0100-061001 867
Marks And Plates, For EU Safety Regulation .....(X22-1173800)
U0100-059001 869
Marks And Plates, Turkish-English, EU New Noise Arrangement 2, EU Safety Regulation, For Power Angle Power Tilt Pitch Dozer .....(X22-1175300)
U0100-066001 871
Marks And Plates, Turkish-English, EU New Noise Arrangement 2, EU Safety Regulation .....(X22-1175290)
U0100-065001 873
Marks And Plates, Turkish-English, EU New Noise Arrangement 2, EU Safety Regulation, For Power Angle Power Tilt Dozer, Inside Frame .....(X22-1175310)
U0100-067001 875
Fire Prevention Plates .....(X22-1130070)
U0203-001001 877

https://truckmanualshub.com/

Caution Plates .....(X22-1175510)
U0205-001001 878
Balancing Mark .....(X22-0514220)
U0400-001001 879
ROPS/FOPS Plate, English .....(X22-1058040)
U0520-002001 880
ROPS/FOPS Plate, Spanish .....(X22-1171230)
U0520-003001 881
ROPS/FOPS Plate, French .....(X22-1171240)
U0520-004001 882
ROPS/FOPS Plate, Germany .....(X22-1171250)
U0520-005001 883
ROPS/FOPS Plate, Turkish .....(X22-1171260)
U0520-006001 884
ROPS/FOPS Plate, Italian .....(X22-1171270)
U0520-007001 885
ROPS/FOPS Plate, Portuguese .....(X22-1171280)
U0520-008001 886
ROPS/FOPS Plate, For EU Safety Regulation .....(X22-1173700)
U0520-009001 887
AUXILIARY PARTS AND TOOL
Spare Parts .....(X22-1059130)
V0100-001001 890
Cap And Overall .....(X22-0016710)
V0200-001001 891
Tool .....(X22-1055381)
V0300-001001 892
OTHER EQUIPMENT
Fuel Self Charge Pump .....(X22-1173400)
W1113-001001 894
Parts For Machine Transportation .....(X22-0227680)
W9970-001001 896
FIELD REPAIR SERVICE PARTS
Service Kit Parts .....(Y99-0000002)
KIT 898

https://truckmanualshub.com/

https://truckmanualshub.com/

ENGINE CYLINDER HEAD AND ITS RELATED PARTS

FIG. A1009-001001 Cylinder Head

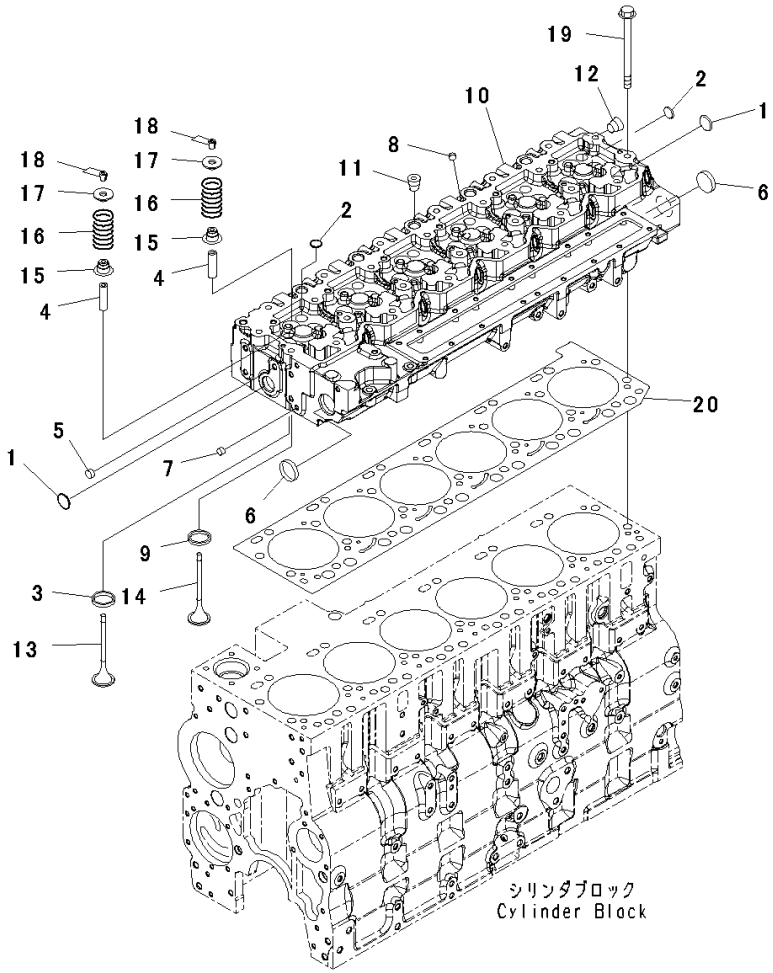

Index	Code	Part Number	Description	Qty	Serial Number
		6745-11-1190	Head Assembly	1	26858351-
		6745-11-1121	• Head Assembly, Cylinder	1	26858351-
1		6742-01-2920	• • Plug	2	26858351-
2		6735-21-5530	• • Plug	18	26858351-
3	C1		• • Insert, Exhaust	12	26858351-
4		6744-41-4130	• • Guide	24	26858351-
5		6744-41-4110	• • Plug	1	26858351-
6		6744-11-1070	• • Plug	2	26858351-
7		6744-41-4120	• • Plug	1	26858351-
8		6754-11-1160	• • Plug	6	26858351-
9	C1		• • Insert	12	26858351-
10		6745-11-1131	• • Head, Cylinder	1	26858351-
11		6732-11-1910	• Plug	5	26858351-
12		6732-11-1920	• Plug	1	26858351-
		6732-21-1960	• Plug Assembly, (Not Shwon)	1	26858351-
13		6745-41-4161	Valve, Intake	12	26858351-
14		6745-41-4151	Valve, Exhaust	12	26858351-
15		6744-41-4080	Seal	24	26858351-
16		6744-41-4031	Spring	24	26858351-
17		6744-41-4050	Retainer	24	26858351-
18		6732-41-4520	Collet	48	26858351-
19		6743-11-1610	Bolt	26	26858351-
20		6745-11-1811	Gasket	1	26858351-

https://truckmanualshub.com/

FIG. ABR00-001001 Breather

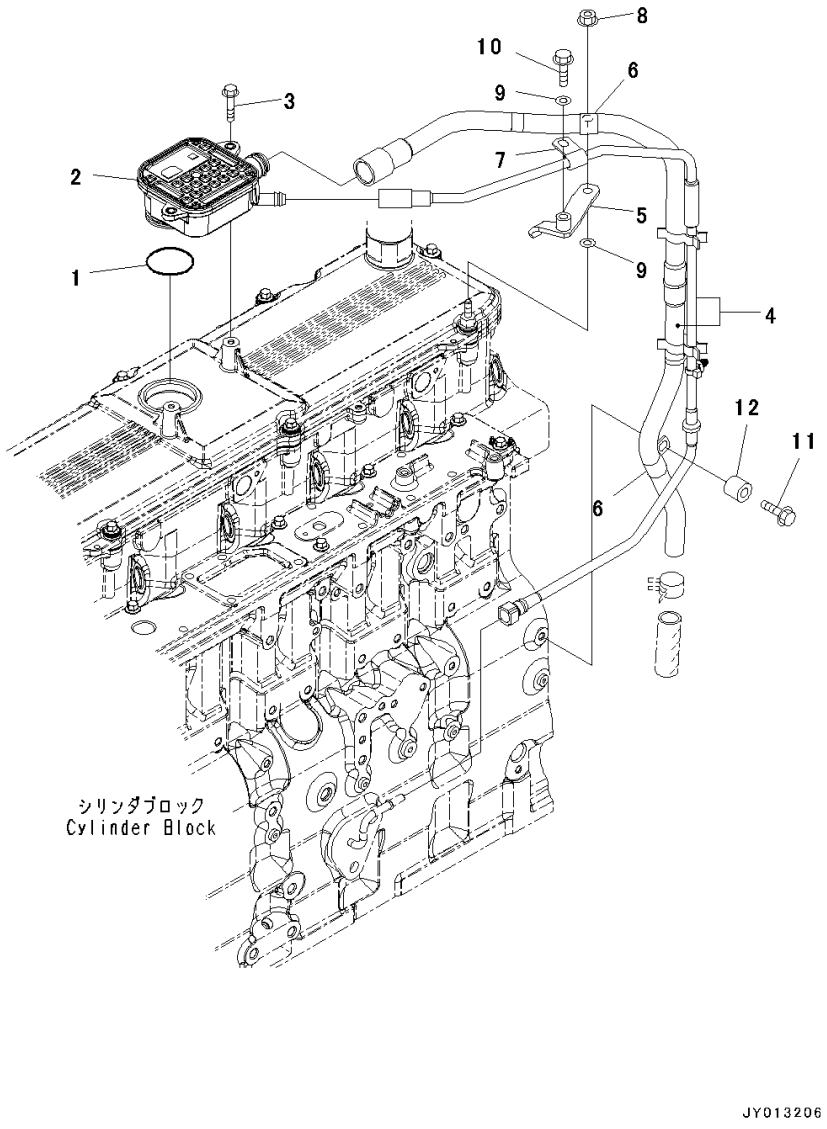

Index	Code	Part Number	Description	Qty	Serial Number
		6745-21-7110	Housing Assembly	1	26858351-
1		6745-21-7120	• O-ring	1	26858351-
2		6745-21-7130	• Housing	1	26858351-
3		6735-71-5190	Bolt	2	26858351-
4		6745-21-7180	Tube	1	26858351-
5		6745-11-8250	Brace	1	26858351-
6		6216-24-5730	Clip	2	26858351-
7		04434-51008	Clip	1	26858351-
8		6732-71-3210	Nut	1	26858351-
9		01643-30823	Washer	2	26858351-
10		6731-71-6270	Screw	1	26858351-
11		6732-61-6140	Bolt	1	26858351-
12		6152-11-4970	Spacer	1	26858351-

https://truckmanualshub.com/

FIG. AIM00-001001 Air Intake Manifold

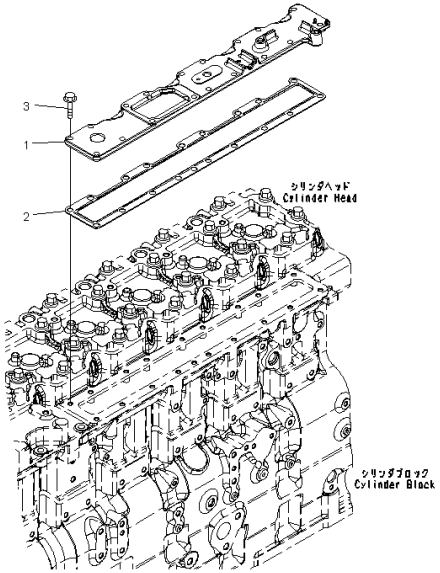

Index	Code	Part Number	Description	Qty	Serial Number
1		6745-11-4110	Cover	1	26858351-
2		6745-11-4120	Gasket	1	26858351-
3		6732-21-6630	Screw	9	26858351-

https://truckmanualshub.com/

FIG. AIC00-001001 Air Intake Connector

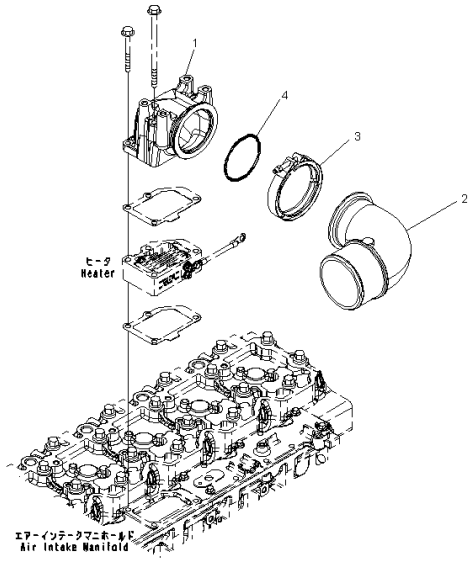

Index	Code	Part Number	Description	Qty	Serial Number
1		6745-11-4190	Connector	1	26858351-
2		6745-11-4140	Connector	1	26858351-
3		6745-11-4150	Clamp	1	26858351-
4		6745-11-4161	O-ring	1	26858351-

https://truckmanualshub.com/

FIG. AIC20-001001 Air Intake Connector Mounts

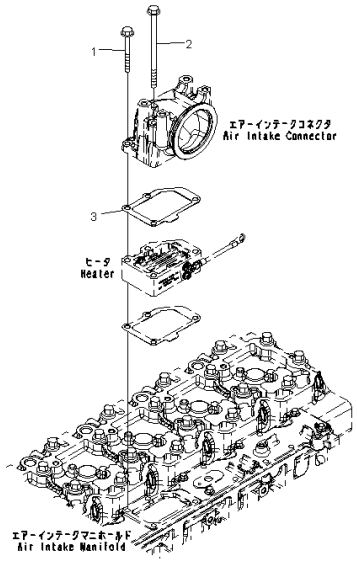

Index	Code	Part Number	Description	Qty	Serial Number
1		6736-81-8730	Bolt	2	26858351-
2		6745-11-4180	Bolt	2	26858351-
3		6745-81-4120	Gasket	1	26858351-

https://truckmanualshub.com/

FIG. AAH00-001001 Air Intake Heater

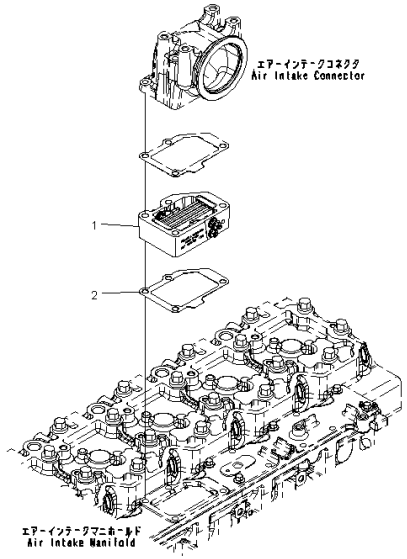

Index	Code	Part Number	Description	Qty	Serial Number
1		6745-81-4111	Heater	1	26858351-
2		6745-81-4120	Gasket	1	26858351-

https://truckmanualshub.com/

FIG. A1310-001001 Air Pipe

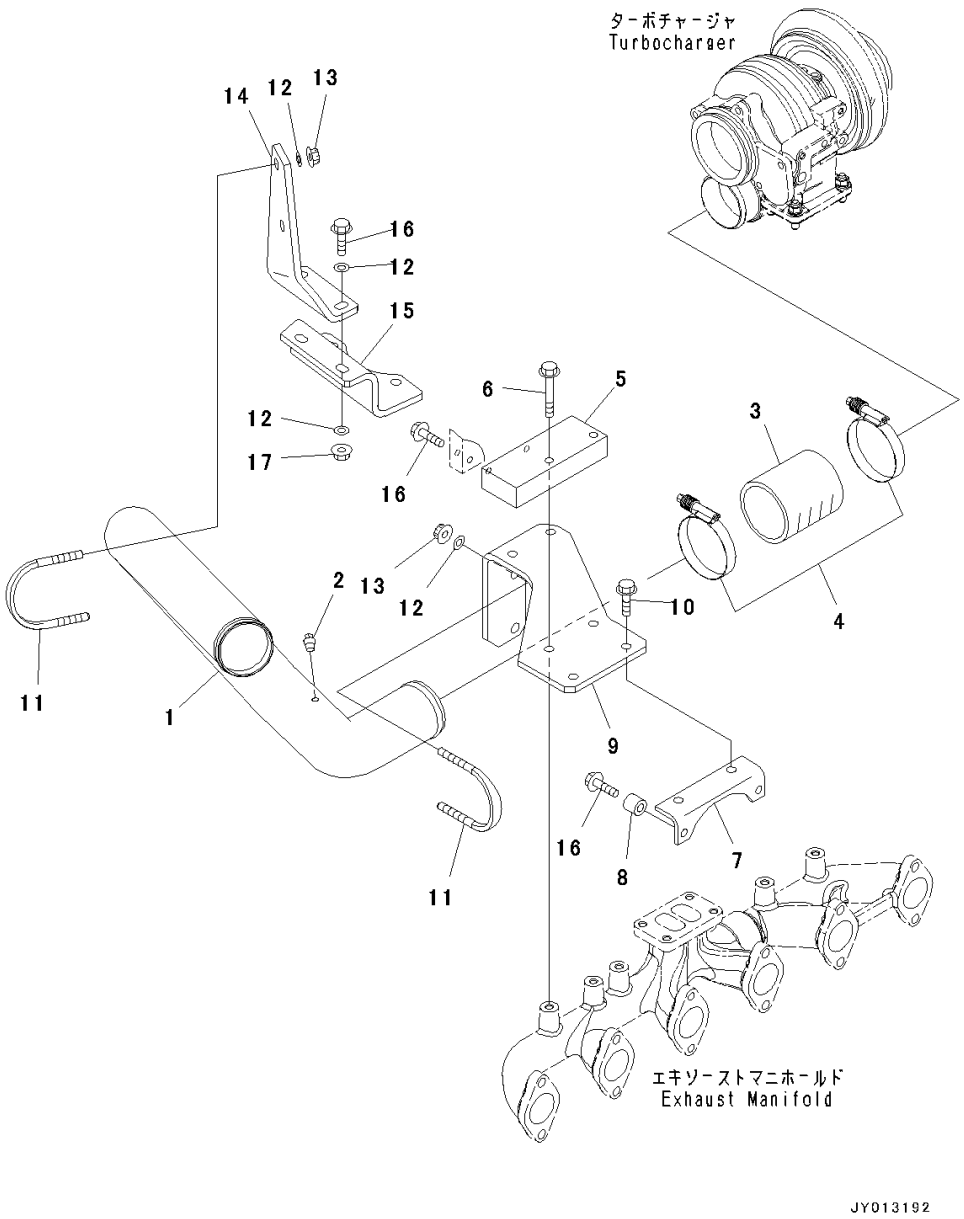

Index	Code	Part Number	Description	Qty	Serial Number
1		6745-81-7290	Tube	1	26858351-
2		07042-20108	Plug	1	26858351-
3		6933-11-4410	Hose	1	26858351-
4		07299-00080	Clamp	2	26858351-
5		6745-11-6220	Plate	1	26858351-
6		01435-01065	Bolt	2	26858351-
7		6745-11-5250	Bracket	1	26858351-
8		6152-11-4970	Spacer	2	26858351-
9		6745-11-6230	Bracket	1	26858351-
10		01435-01025	Bolt	2	26858351-
11		07283-37663	Clip	2	26858351-
12		01643-31032	Washer	8	26858351-
13		01595-01008	Nut	4	26858351-
14		6745-81-7280	Bracket	1	26858351-
15		6745-81-7250	Bracket	1	26858351-
16		01435-01040	Bolt	6	26858351-
17		01584-01008	Nut	2	26858351-

https://truckmanualshub.com/

FIG. ATB30-001001 Exhaust Manifold

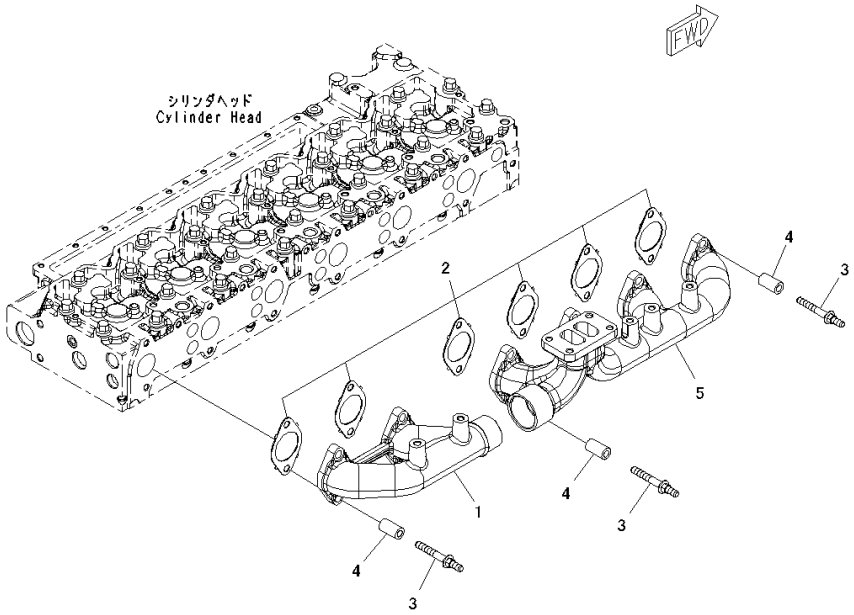

Index	Code	Part Number	Description	Qty	Serial Number
1		6745-11-5110	Manifold	1	26858351-
2		6745-11-5811	Gasket	6	26858351-
3		6745-11-5170	Bolt	12	26858351-
4		6754-11-5150	Spacer	12	26858351-
5		6745-11-5210	Manifold	1	26858351-

https://truckmanualshub.com/

FIG. A1539-001001 Turbocharger

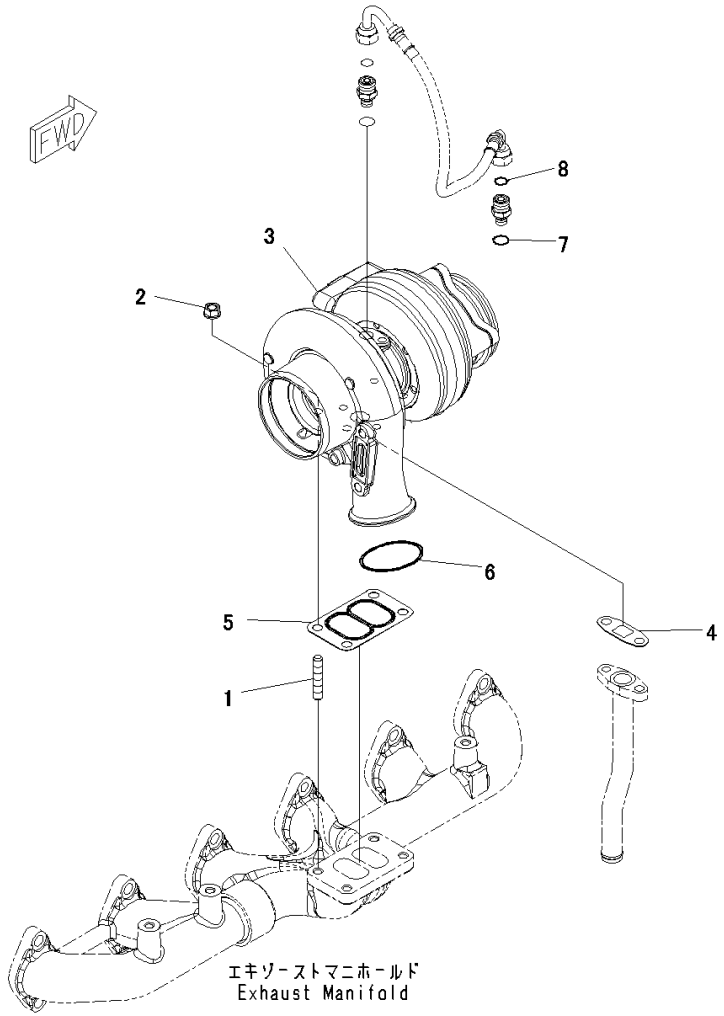

Index	Code	Part Number	Description	Qty	Serial Number
1		6732-81-8810	Stud	4	26858351-
2		6732-81-8820	Nut	4	26858351-
		6745-81-8080	Turbocharger	1	26858351-
3	C1		• Turbocharger	1	26858351-
4		6207-51-7690	• Gasket	1	26858351-
5		6732-81-8830	• Gasket	1	26858351-
6		6738-11-4370	• O-ring	1	26858351-
7		6736-51-8710	• O-ring	1	26858351-
8		6732-81-8860	• O-ring	1	26858351-

https://truckmanualshub.com/

FIG. AXS00-001001 Turbocharger Exhaust Gas Connector

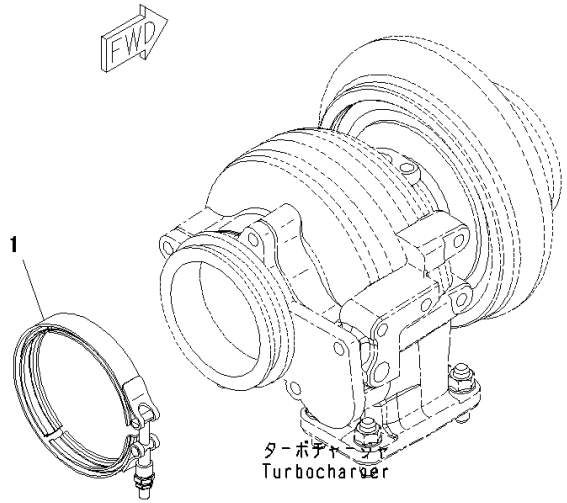

JY013215

Index	Code	Part Number	Description	Qty	Serial Number
1		6742-01-3620	Clamp	1	26858351-

https://truckmanualshub.com/

FIG. A1510-001001 Turbocharger Oil Pipe Related Parts

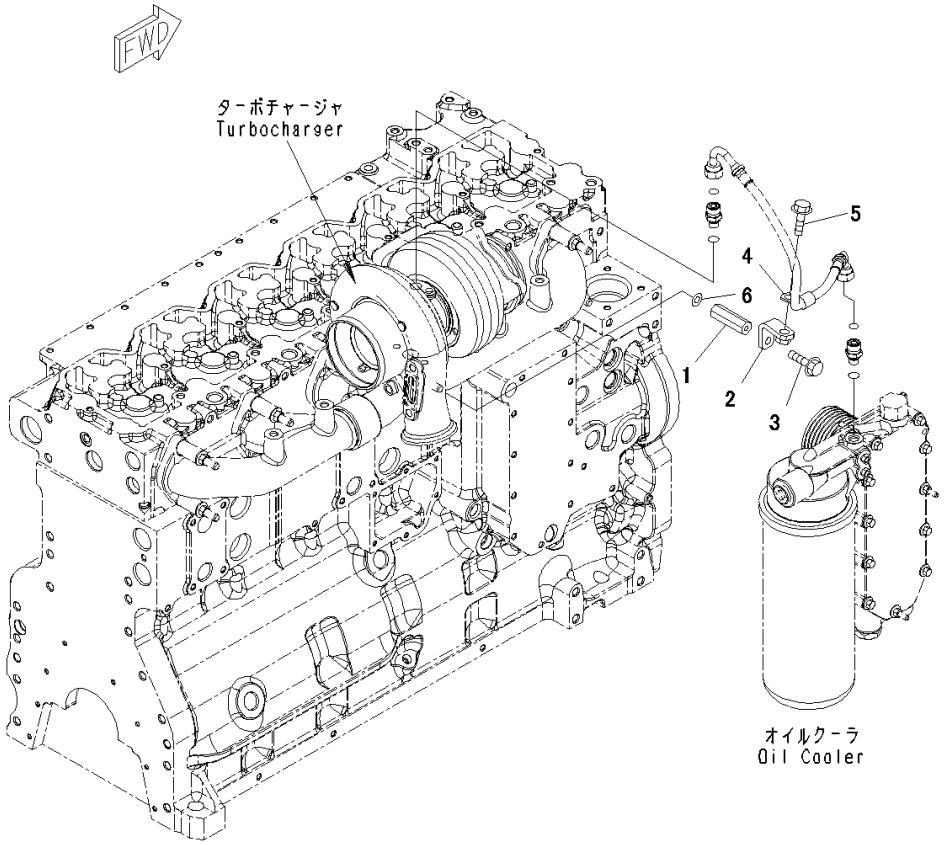

Index	Code	Part Number	Description	Qty	Serial Number
1		6745-51-8520	Nut	1	26858351-
2		6745-51-8510	Brace	1	26858351-
3		01435-00820	Bolt	1	26858351-
4		6151-53-8280	Clip	1	26858351-
5		01435-01020	Bolt	1	26858351-
6		01643-31032	Washer	1	26858351-

https://truckmanualshub.com/

FIG. ATP00-001001 Turbocharger Oil Piping

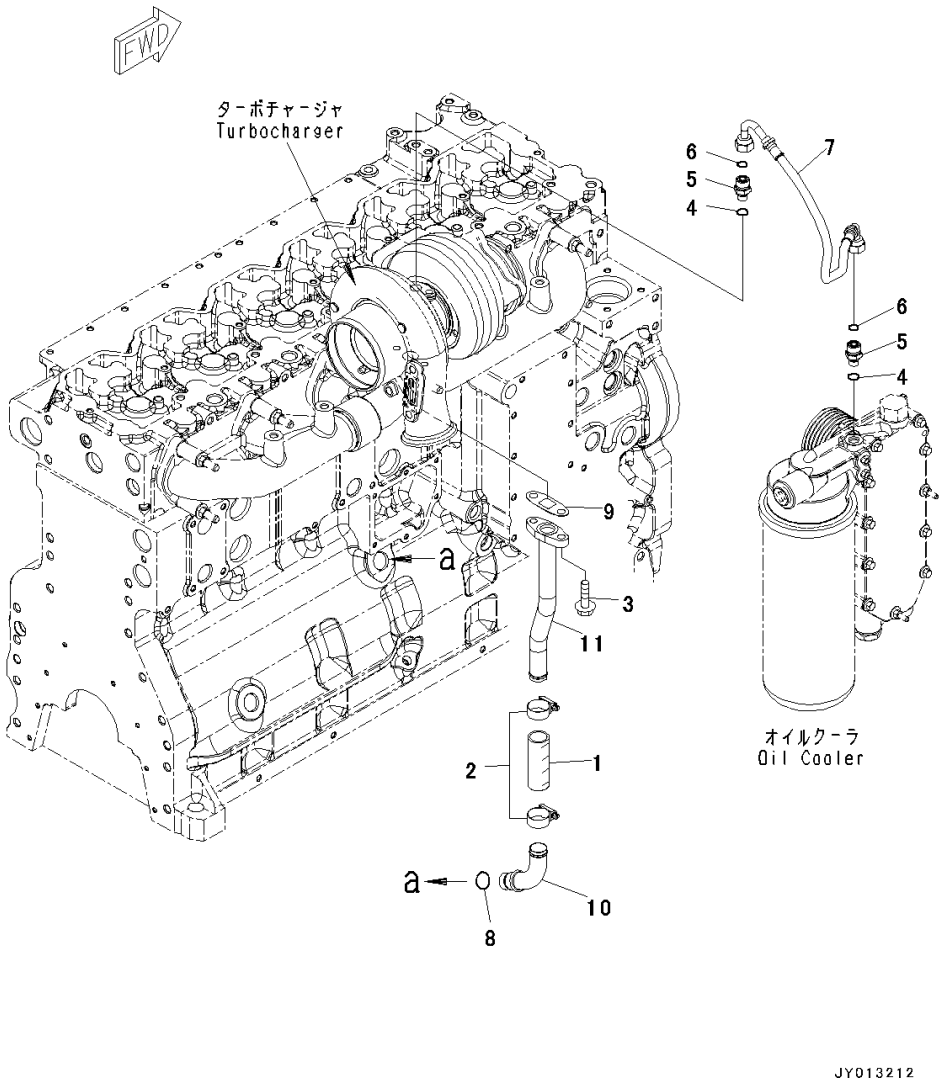

Index	Code	Part Number	Description	Qty	Serial Number
1		6732-51-8370	Hose	1	26858351-
2		07281-00359	Clamp	2	26858351-
3		6732-71-3220	Bolt	2	26858351-
		6732-51-8180	Connector Assembly	2	26858351-
4		6736-51-8710	• O-ring	1	26858351-
5		6732-81-8850	• Connector	1	26858351-
6		6732-81-8860	• O-ring	1	26858351-
7		6735-51-8230	Hose	1	26858351-
8		6731-51-8150	O-ring	1	26858351-
9		6207-51-7690	Gasket	1	26858351-
10		6745-51-8110	Tube	1	26858351-
11		6745-51-8150	Tube	1	26858351-

https://truckmanualshub.com/

FIG. A1610-001001 Exhaust Muffler

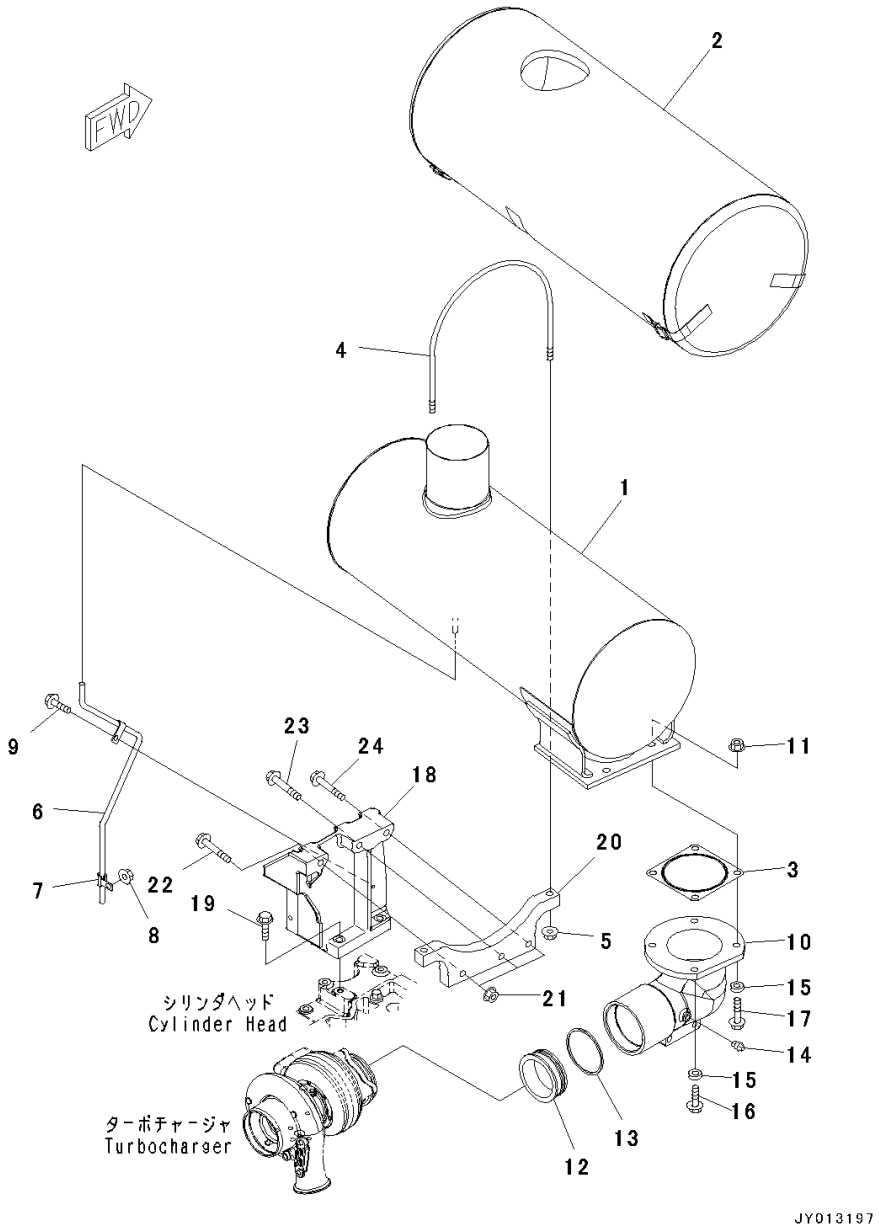

Index	Code	Part Number	Description	Qty	Serial Number
1		6745-11-5380	Muffler	1	26858351-
2		6745-11-5190	Cover	1	26858351-
3		6211-11-5490	Gasket	1	26858351-
4		6222-11-5940	U-bolt	1	26858351-
5		01594-01008	Nut	2	26858351-
6		6745-11-5820	Tube	1	26858351-
7		6151-53-8190	Clip	1	26858351-
8		01584-30806	Nut	1	26858351-
9		01435-00816	Bolt	1	26858351-
10		6745-11-5131	Elbow	1	26858351-
11		01584-01210	Nut	4	26858351-
12		207-01-68170	Tube	1	26858351-
13		6151-11-5280	Seal Ring	1	26858351-
14		07042-20108	Plug	1	26858351-
15		6127-11-5180	Washer	4	26858351-
16		01435-01245	Bolt	2	26858351-
17		01435-01255	Bolt	2	26858351-
18		6745-11-5180	Bracket	1	26858351-
19		01435-01040	Bolt	3	26858351-
20		6745-11-6210	Bracket	1	26858351-
21		01584-01008	Nut	3	26858351-
22		01435-01085	Bolt	1	26858351-
23		01435-01095	Bolt	1	26858351-
24		01436-01005	Bolt	1	26858351-

https://truckmanualshub.com/

FIG. AIT00-001001 Exhaust Connection

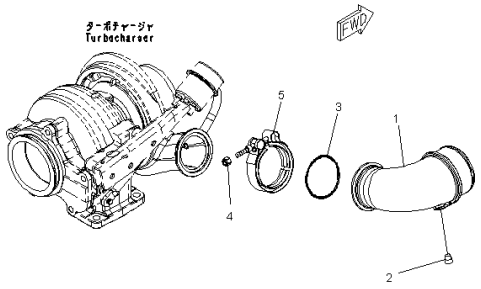

Index	Code	Part Number	Description	Qty	Serial Number
1		1307682H1	Pipe	1	26858351-
2		1240101H1	Plug	1	26858351-
3		6738-11-4370	O-ring	1	26858351-
4		6738-11-4390	Nut	1	26858351-
5		6738-11-4380	Clamp	1	26858351-

https://truckmanualshub.com/

FIG. A1570-001001 Heat Shield, For 60Amp. Alternator

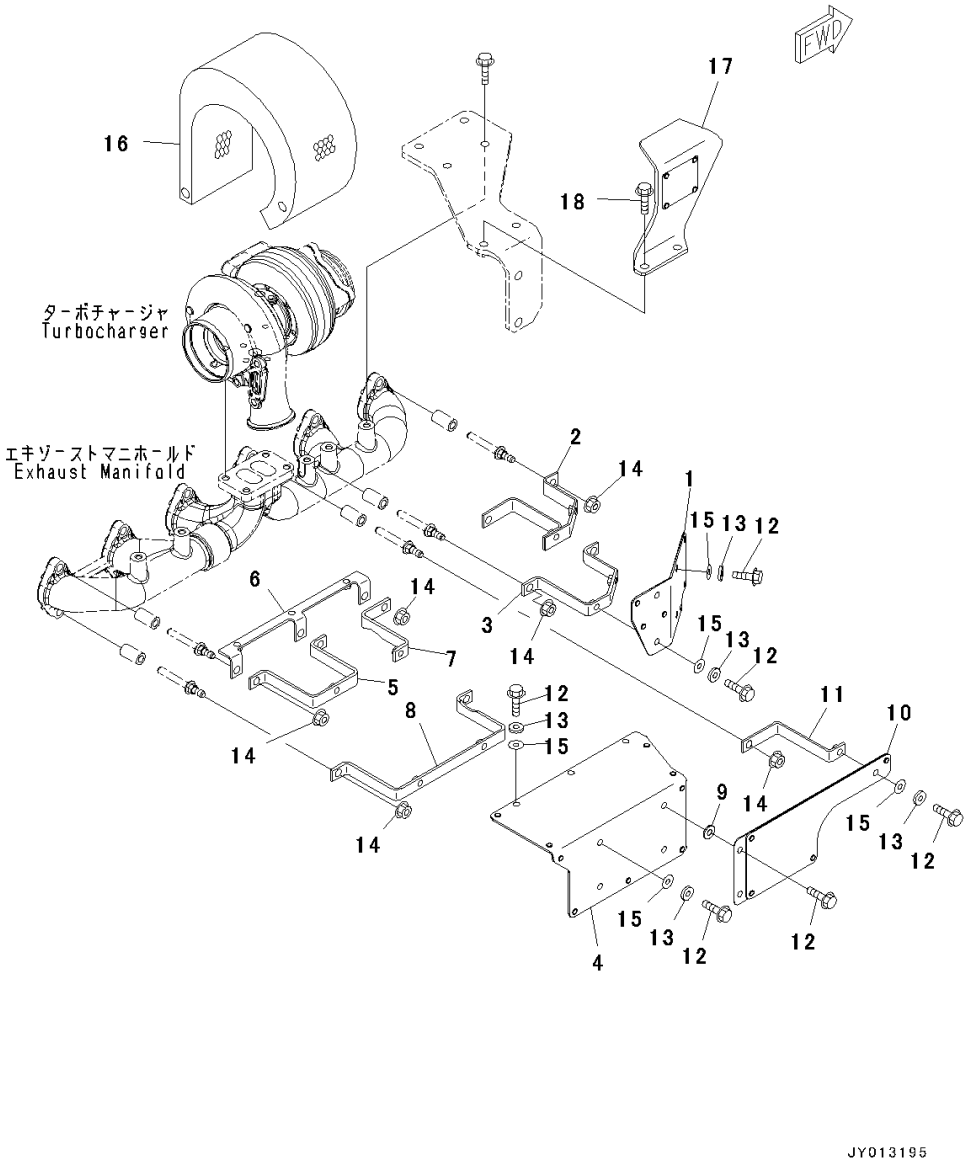

Index	Code	Part Number	Description	Qty	Serial Number
1		6745-81-8471	Cover	1	26858351-
2		6745-81-8420	Bracket	1	26858351-
3		6745-81-8410	Bracket	1	26858351-
4		6745-81-8481	Cover	1	26858351-
5		6745-81-8490	Bracket	1	26858351-
6		6745-81-8510	Bracket	1	26858351-
7		6745-81-8520	Bracket	1	26858351-
8		6745-81-8531	Bracket	1	26858351-
9		154-61-16570	Washer	2	26858351-
10		6745-81-8540	Cover	1	26858351-
11		6745-81-8550	Bracket	1	26858351-
12		01435-00820	Bolt	12	26858351-
13		6201-81-6560	Spacer	10	26858351-
14		01584-01008	Nut	10	26858351-
15		01643-31032	Washer	10	26858351-
16		6745-81-8562	Cover	1	26858351-
17		6745-11-6170	Plate	1	26858351-
18		01435-01025	Bolt	2	26858351-

https://truckmanualshub.com/

FIG. A1570-002001 Heat Shield, For 90Amp. Alternator

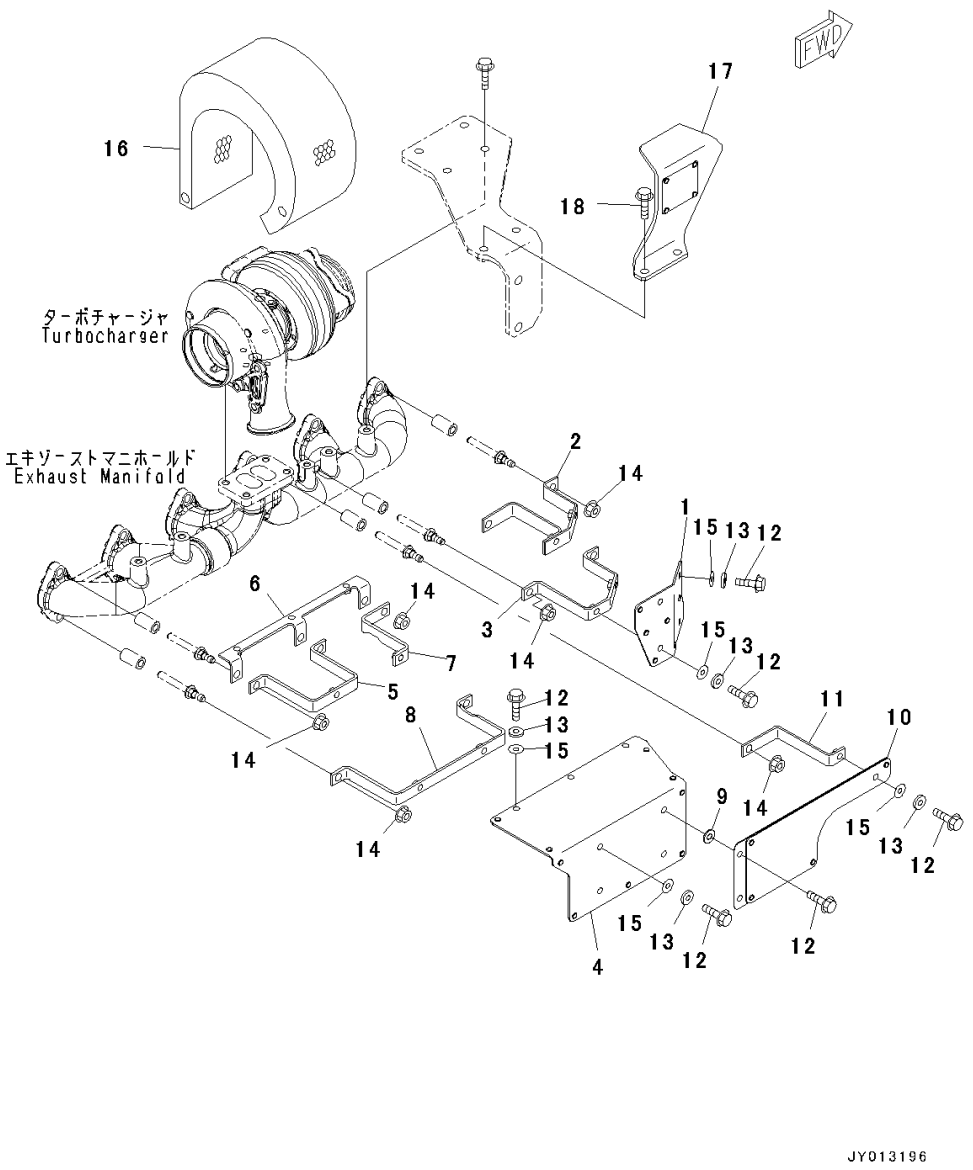

Index	Code	Part Number	Description	Qty	Serial Number
1		6745-81-8570	Cover	1	26858351-
2		6745-81-8420	Bracket	1	26858351-
3		6745-81-8410	Bracket	1	26858351-
4		6745-81-8481	Cover	1	26858351-
5		6745-81-8490	Bracket	1	26858351-
6		6745-81-8510	Bracket	1	26858351-
7		6745-81-8520	Bracket	1	26858351-
8		6745-81-8531	Bracket	1	26858351-
9		154-61-16570	Washer	2	26858351-
10		6745-81-8540	Cover	1	26858351-
11		6745-81-8550	Bracket	1	26858351-
12		01435-00820	Bolt	12	26858351-
13		6201-81-6560	Spacer	10	26858351-
14		01584-01008	Nut	10	26858351-
15		01643-31032	Washer	10	26858351-
16		6745-81-8562	Cover	1	26858351-
17		6745-11-6170	Plate	1	26858351-
18		01435-01025	Bolt	2	26858351-

https://truckmanualshub.com/

FIG. ARL00-001001 Rocker Arm Housing And Rocker Arm

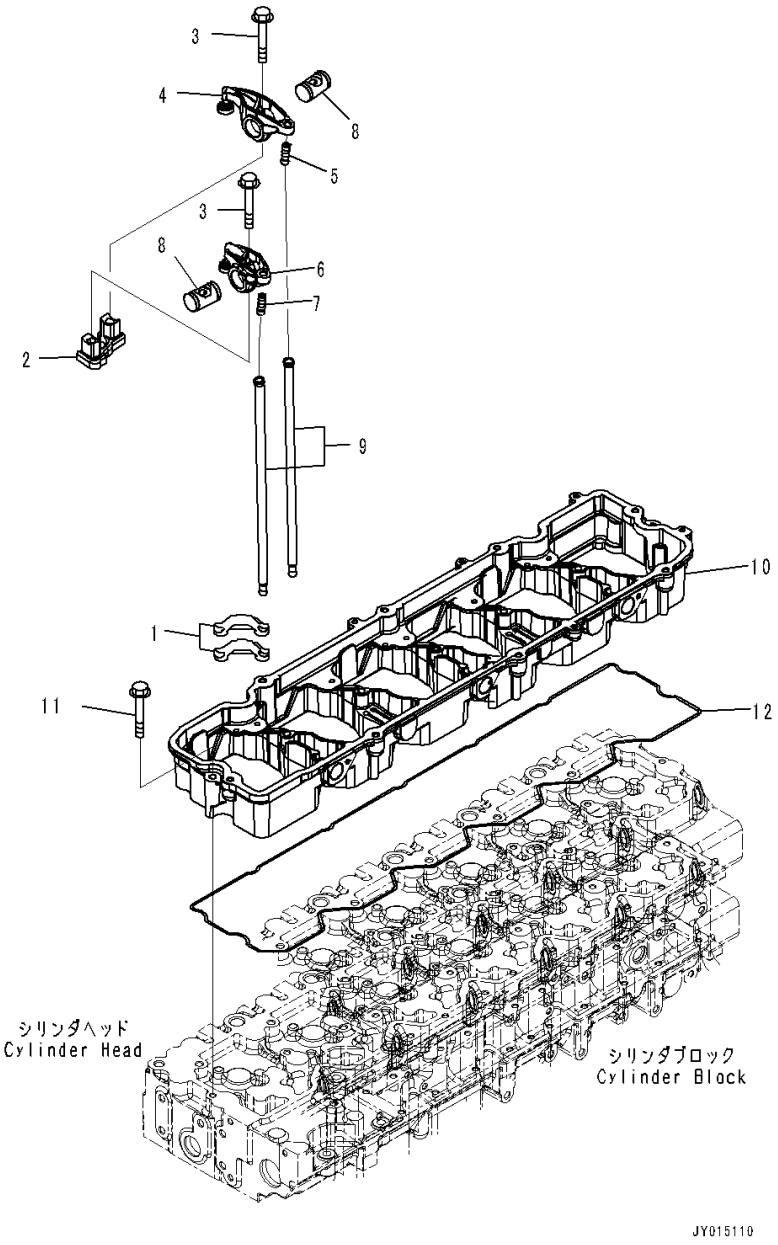

Index	Code	Part Number	Description	Qty	Serial Number
1		6744-41-5010	Crosshead	12	26858351-
	C1		Lever Assembly	6	26858537-
2		6744-41-5030	• Support	1	26858351-
3		6744-41-3020	• Bolt	2	26858351-
4		6745-41-5401	• Lever Assembly	1	26858537-
5		6745-41-5430	• • Screw	1	26858351-
6		6745-41-5201	• Lever Assembly	1	26858537-
7		6745-41-5430	• • Screw	1	26858351-
8		6745-41-5110	• Shaft	2	26858351-
9		6745-41-3100	Rod	12	26858351-
10		6745-11-7111	Housing	1	26858351-
11		6733-61-3150	Bolt	7	26858351-
12		6745-11-7810	Gasket	1	26858351-

https://truckmanualshub.com/

FIG. A1010-001001 Engine Lifting

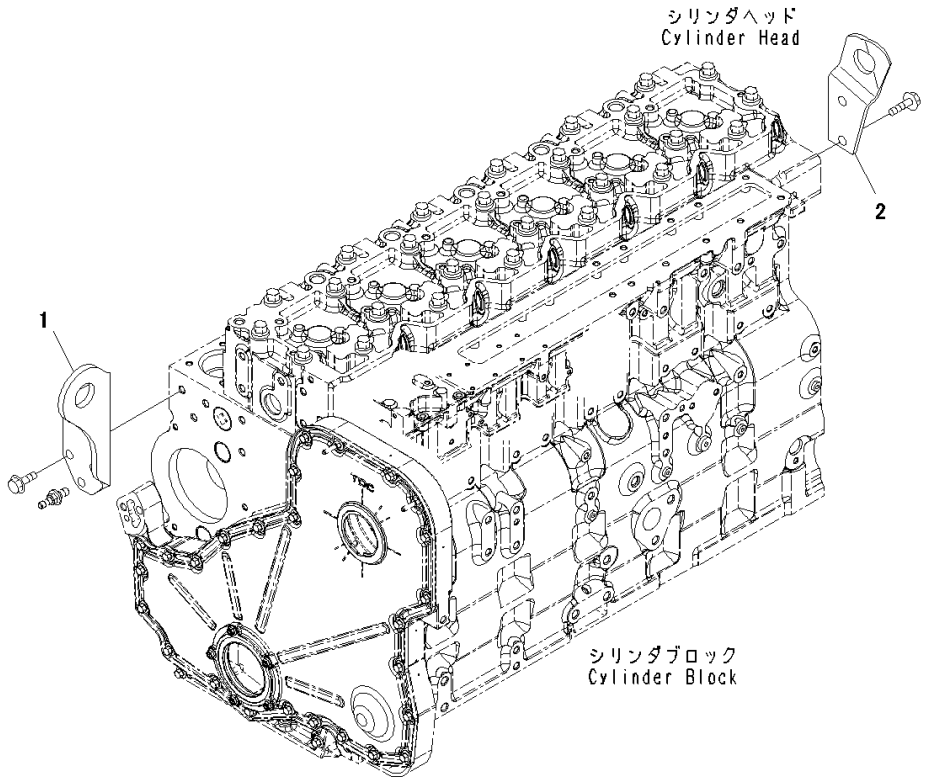

Index	Code	Part Number	Description	Qty	Serial Number
1		6745-11-5162	Bracket	1	26858351-
2		6745-21-1330	Bracket	1	26858351-

https://truckmanualshub.com/

FIG. ALA10-001001 Engine Lifting Bolt

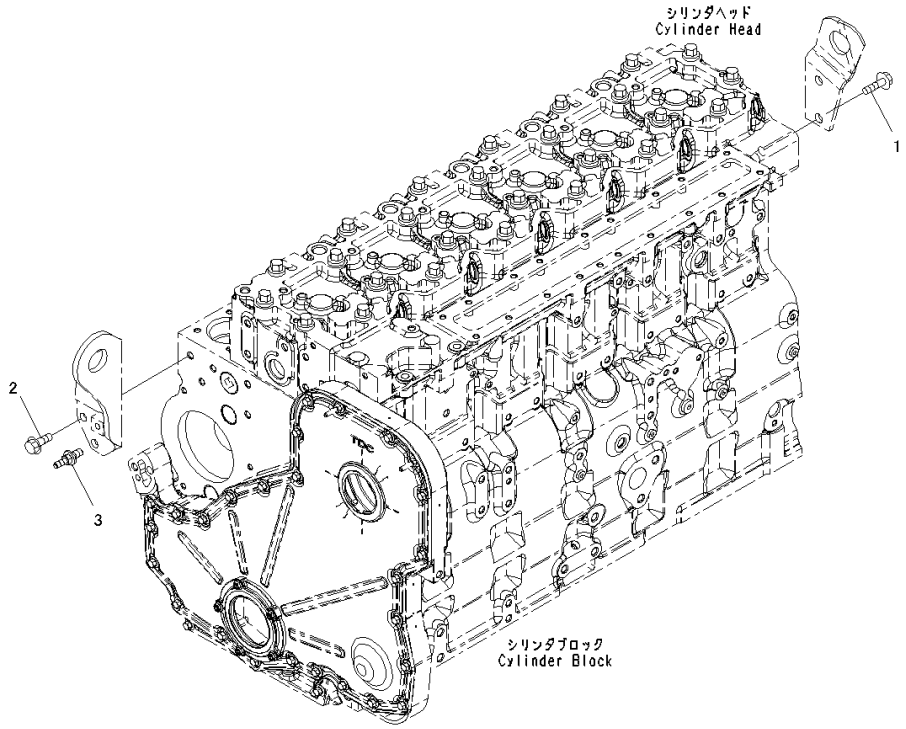

Index	Code	Part Number	Description	Qty	Serial Number
1		6732-51-5130	Bolt	2	26858351-
2		6732-61-3140	Bolt	2	26858351-
3		6745-61-3220	Bolt	1	26858351-

https://truckmanualshub.com/

https://truckmanualshub.com/

ENGINE CYLINDER BLOCK AND ITS RELATED PARTS

FIG. A2419-001001 Camshaft

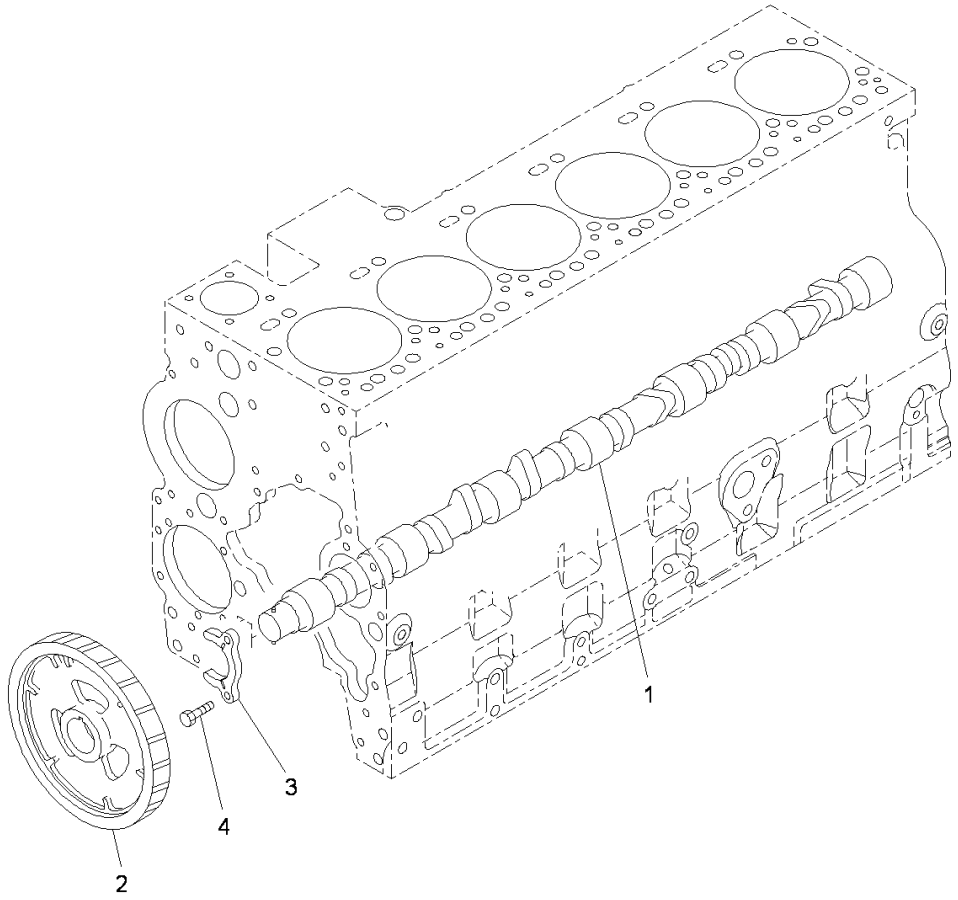

Index	Code	Part Number	Description	Qty	Serial Number
1		6745-41-1110	Camshaft Assembly	1	26858351-
2		6745-41-1130	Gear	1	26858351-
3		6744-41-1010	Support	1	26858351-
4		6732-41-1260	Bolt	2	26858351-

https://truckmanualshub.com/

FIG. B9999-504001 Spare Parts, For 60Amp. Alternator

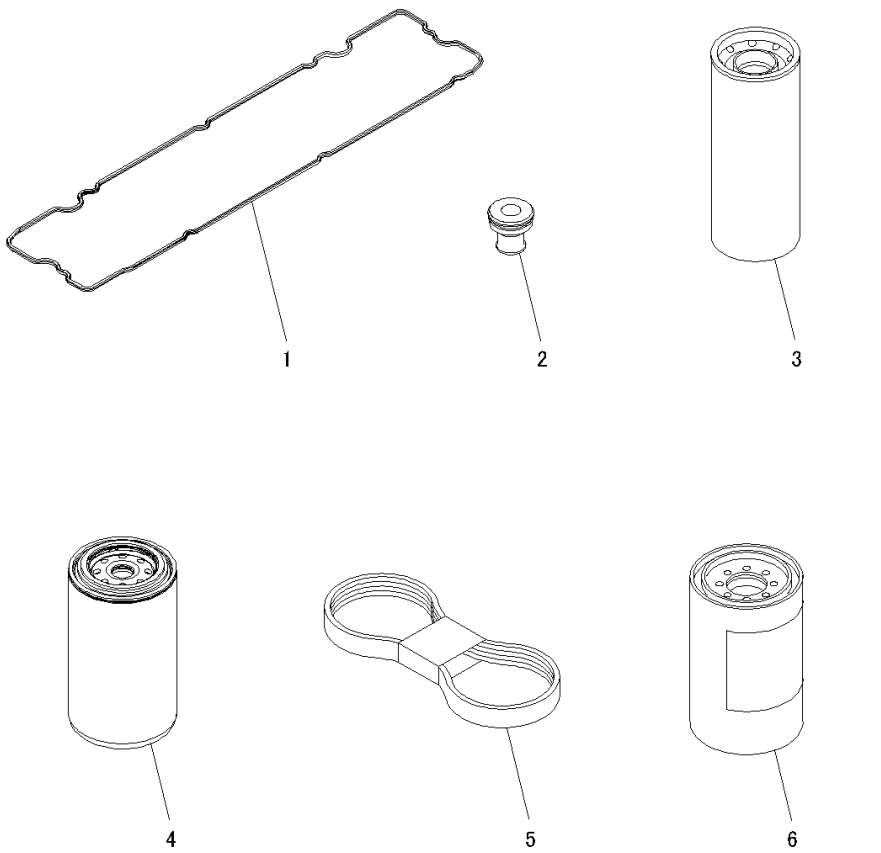

Index	Code	Part Number	Description	Qty	Serial Number
1		6745-11-8810	Gasket	1	26858933-
2		6745-11-8160	Isolator	8	26858933-
3		6742-01-4540	Cartridge	1	26858933-
4		600-319-3750	Cartridge	1	26858933-
5		6741-61-1621	Belt	1	26858933-
6		600-319-3610	Cartridge Assembly	1	26858933-

https://truckmanualshub.com/

FIG. B9999-505001 Spare Parts, For 90Amp. Alternator

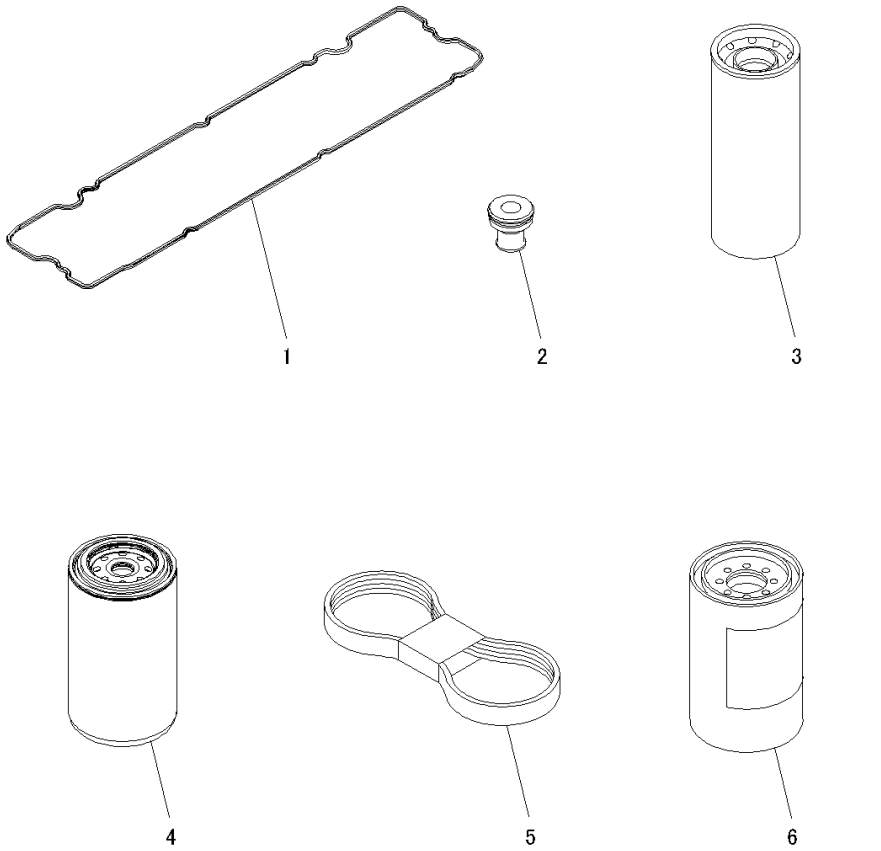

Index	Code	Part Number	Description	Qty	Serial Number
1		6745-11-8810	Gasket	1	26858933-
2		6745-11-8160	Isolator	8	26858933-
3		6742-01-4540	Cartridge	1	26858933-
4		600-319-3750	Cartridge	1	26858933-
5		6743-61-1411	Belt	1	26858933-
6		600-319-3610	Cartridge Assembly	1	26858933-

https://truckmanualshub.com/

FIG. ABB00-001001 Tappet

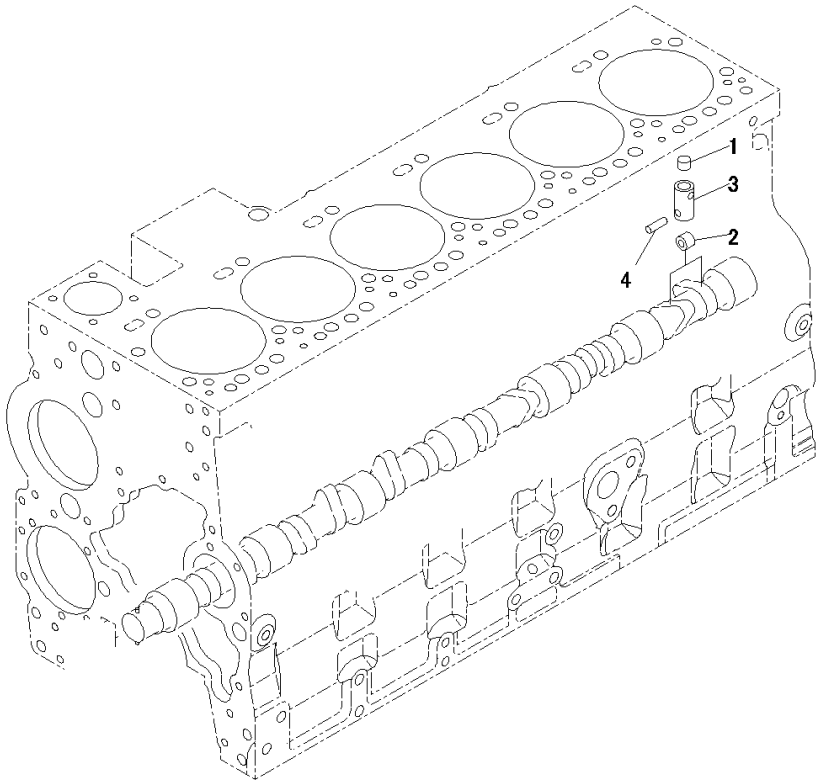

JY013242

Index	Code	Part Number	Description	Qty	Serial Number
		6745-41-2100	Tappet Assembly	12	26858351-
1		6745-41-2110	• Socket	1	26858351-
2		6745-41-2120	• Roller	1	26858351-
3		6745-41-2130	• Tappet	1	26858351-
4		6745-41-2140	• Pin	1	26858351-

https://truckmanualshub.com/

FIG. ADF10-001001 Front Gear Train Cover

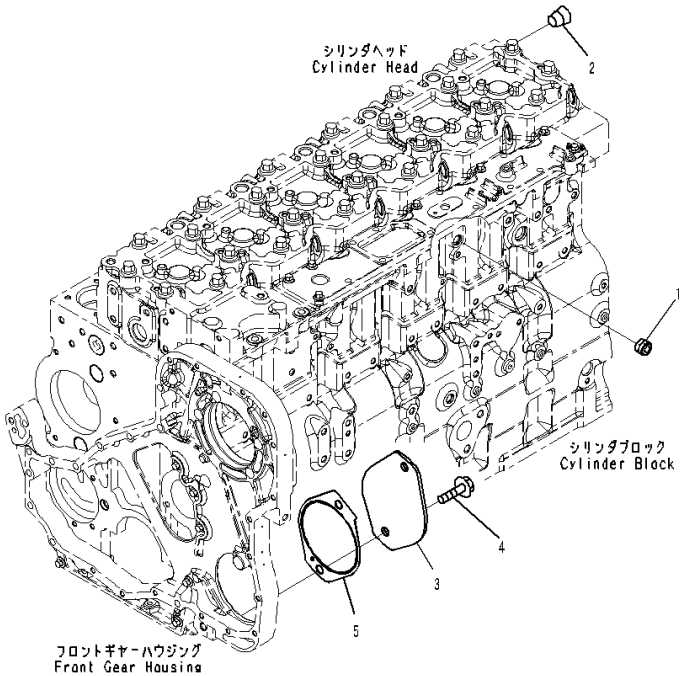

Index	Code	Part Number	Description	Qty	Serial Number
1		6732-11-1910	Plug	2	26858351-
2		6732-11-1920	Plug	1	26858351-
3		6741-21-3320	Plate	1	26858351-
4		6732-51-5130	Bolt	2	26858351-
5		6741-21-3330	Gasket	1	26858351-

https://truckmanualshub.com/

FIG. A2049-001001 Front Cover

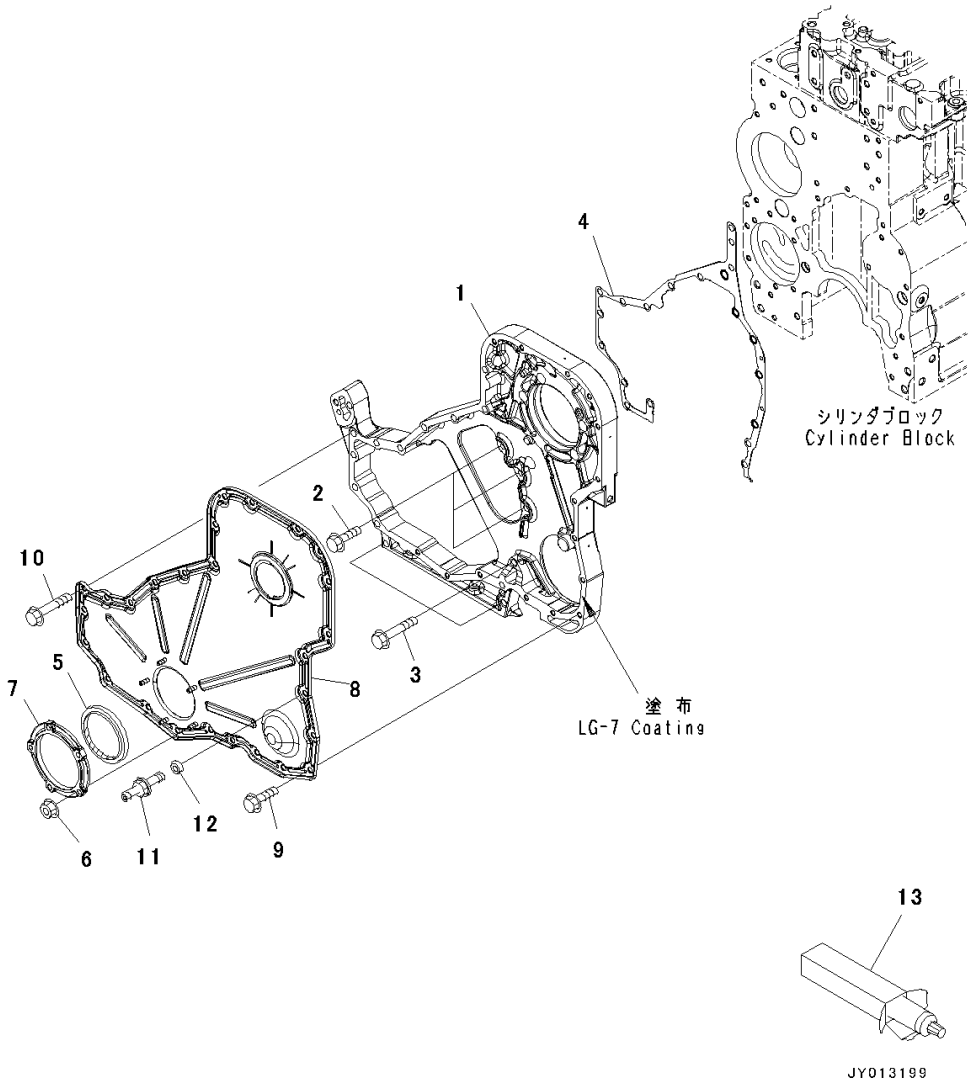

Index	Code	Part Number	Description	Qty	Serial Number
1		6745-21-3111	Housing	1	26858351-
2		6742-01-0540	Bolt	3	26858351-
3		6741-21-3820	Bolt	3	26858351-
4		6741-21-3810	Gasket	1	26858351-
		6742-01-0550	Seal Kit	1	26858351-
5		6742-01-0950	• Seal	1	26858351-
6		6741-21-3541	• Nut	5	26858351-
7		6741-21-3530	Carrier	1	26858351-
8		6745-21-3210	Cover	1	26858351-
9		6736-21-5310	Bolt	14	26858351-
10		6742-01-0530	Bolt	11	26858351-
11		6732-21-3990	Bolt	1	26858351-
12		6130-12-1961	Spacer	1	26858351-
13		09920-00150	Liquid gasket, LG-7, 150G	AR	26858351-

https://truckmanualshub.com/

FIG. APA00-001001 Accessory Drive Pulley

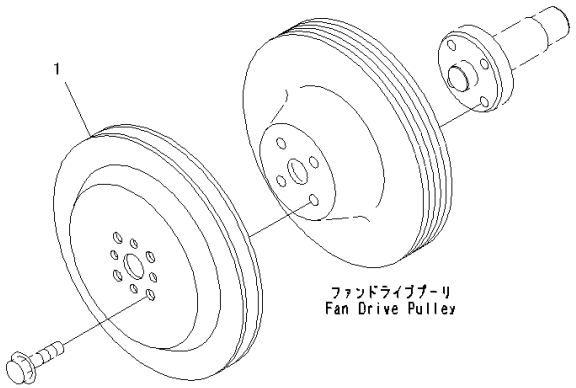

Index	Code	Part Number	Description	Qty	Serial Number
1		6732-81-2810	Pulley	1	26858351-

https://truckmanualshub.com/

FIG. A2219-001001 Flywheel Housing

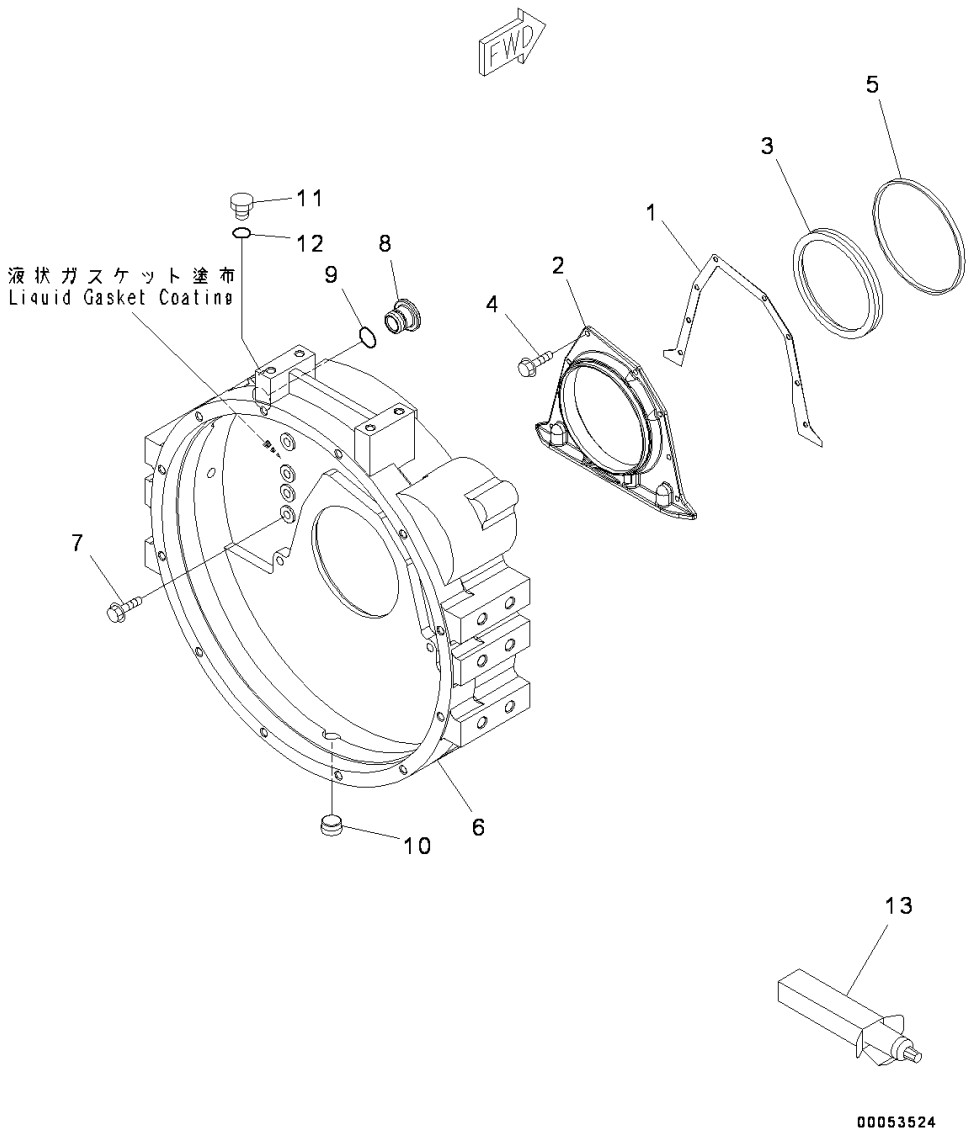

Index	Code	Part Number	Description	Qty	Serial Number
1		6743-21-4190	Gasket	1	26858351-
2		6742-01-5053	Cover	1	26858351-
3		6732-21-1311	Seal	1	26858351-
4		6732-21-4290	Bolt	8	26858351-
5		6732-21-4171	Seal Ring	1	26858351-
6		6741-21-4110	Housing	1	26858351-
7		6732-21-4220	Bolt	12	26858351-
8		6732-21-4150	Plug	1	26858351-
9		6732-21-4161	O-ring	1	26858351-
10		6732-11-1920	Plug	1	26858351-
11		6215-81-9530	Plug	1	26858351-
12		6215-81-9730	O-ring	1	26858351-
13		09920-00150	Liquid gasket, LG-7, 150G	AR	26858351-

https://truckmanualshub.com/

FIG. AFW00-001001 Flywheel

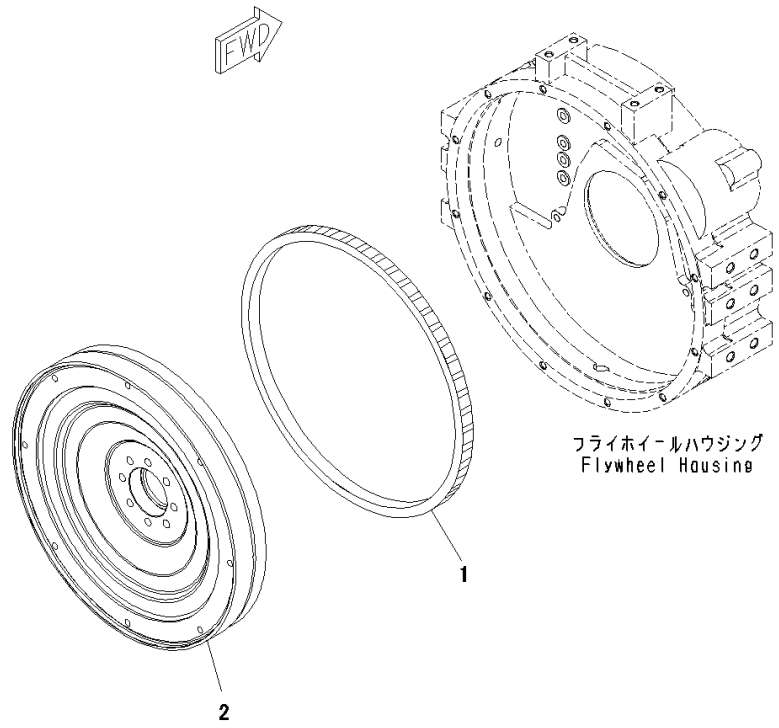

Index	Code	Part Number	Description	Qty	Serial Number
		6745-31-4200	Flywheel	1	26858351-
1		6741-31-4180	• Gear, Ring	1	26858351-
2		6745-31-4210	• Flywheel	1	26858351-

https://truckmanualshub.com/

FIG. AFW10-001001 Flywheel Mounts

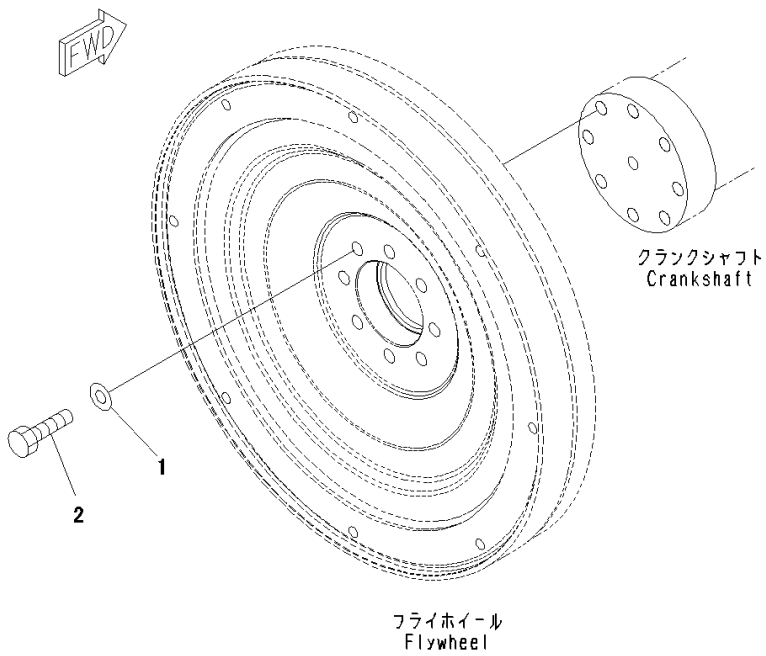

Index	Code	Part Number	Description	Qty	Serial Number
1		6162-43-5350	Washer	8	26858351-
2		6732-31-4140	Bolt	8	26858351-

https://truckmanualshub.com/

FIG. A2119-001001 Engine Oil Pan

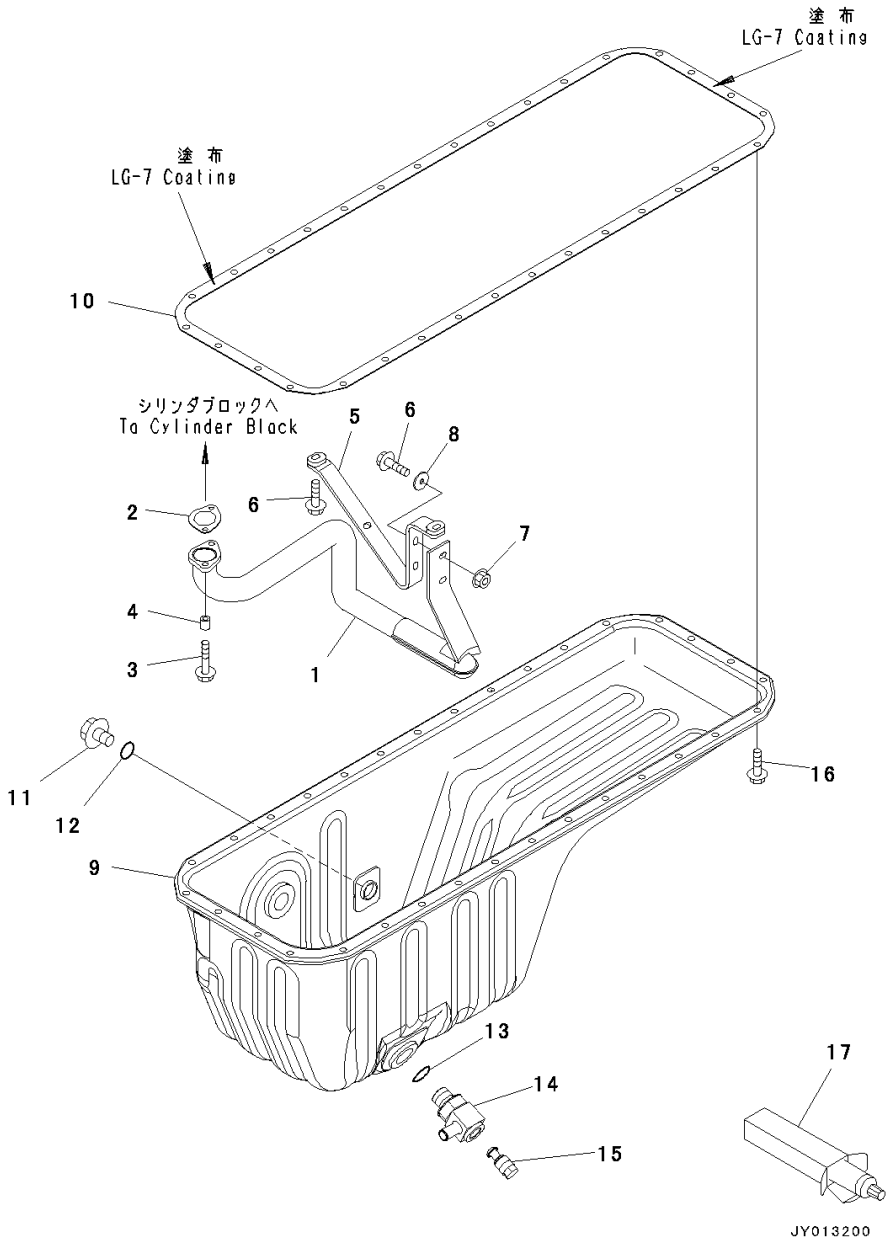

Index	Code	Part Number	Description	Qty	Serial Number
1		6745-51-2110	Connection	1	26858351-
2		6743-51-5550	Gasket	1	26858351-
3		6742-01-2630	Bolt	2	26858351-
4		6742-01-0310	Spacer	2	26858351-
5		6745-51-2120	Brace	1	26858351-
6		6735-71-5190	Bolt	4	26858351-
7		01584-00605	Nut	2	26858351-
8		6742-01-2690	Washer	2	26858351-
9		6745-21-5310	Pan	1	26858351-
10		6745-21-5130	Gasket	1	26858351-
11		6736-21-5320	Plug	1	26858351-
12		6732-21-5170	Gasket	1	26858351-
13		07002-22434	O-ring	1	26858351-
14		14X-01-35161	Elbow	1	26858351-
15		134-01-61840	Plug	1	26858351-
16		6732-21-5160	Bolt	32	26858351-
17		09920-00150	Liquid gasket, LG-7, 150G	AR	26858351-

https://truckmanualshub.com/

FIG. ASD00-001001 Engine Oil Level Sensor

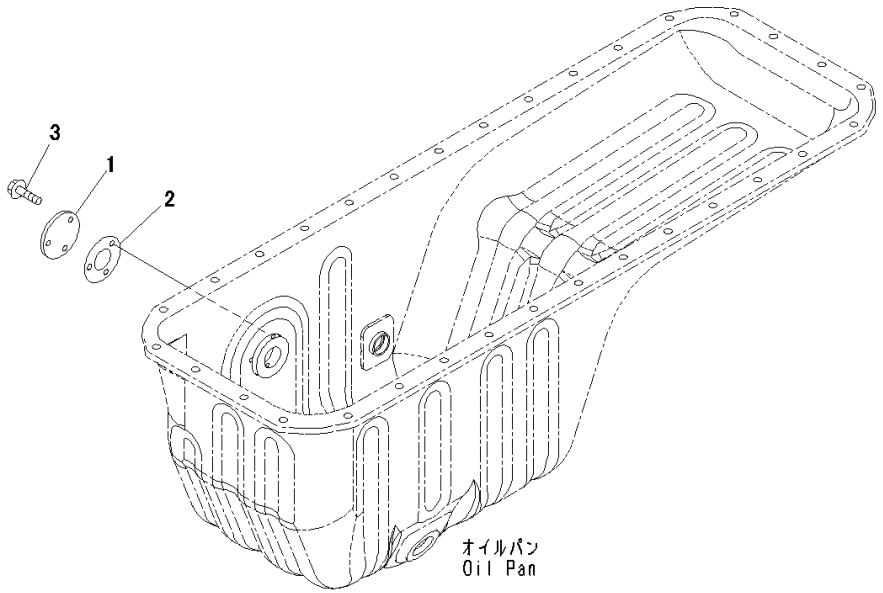

JY013211

Index	Code	Part Number	Description	Qty	Serial Number
1		6136-21-5770	Plate	1	26858351-
2		6136-21-5870	Gasket	1	26858351-
3		6733-71-5680	Bolt	3	26858351-

https://truckmanualshub.com/

FIG. A2019-001001 Cylinder Block

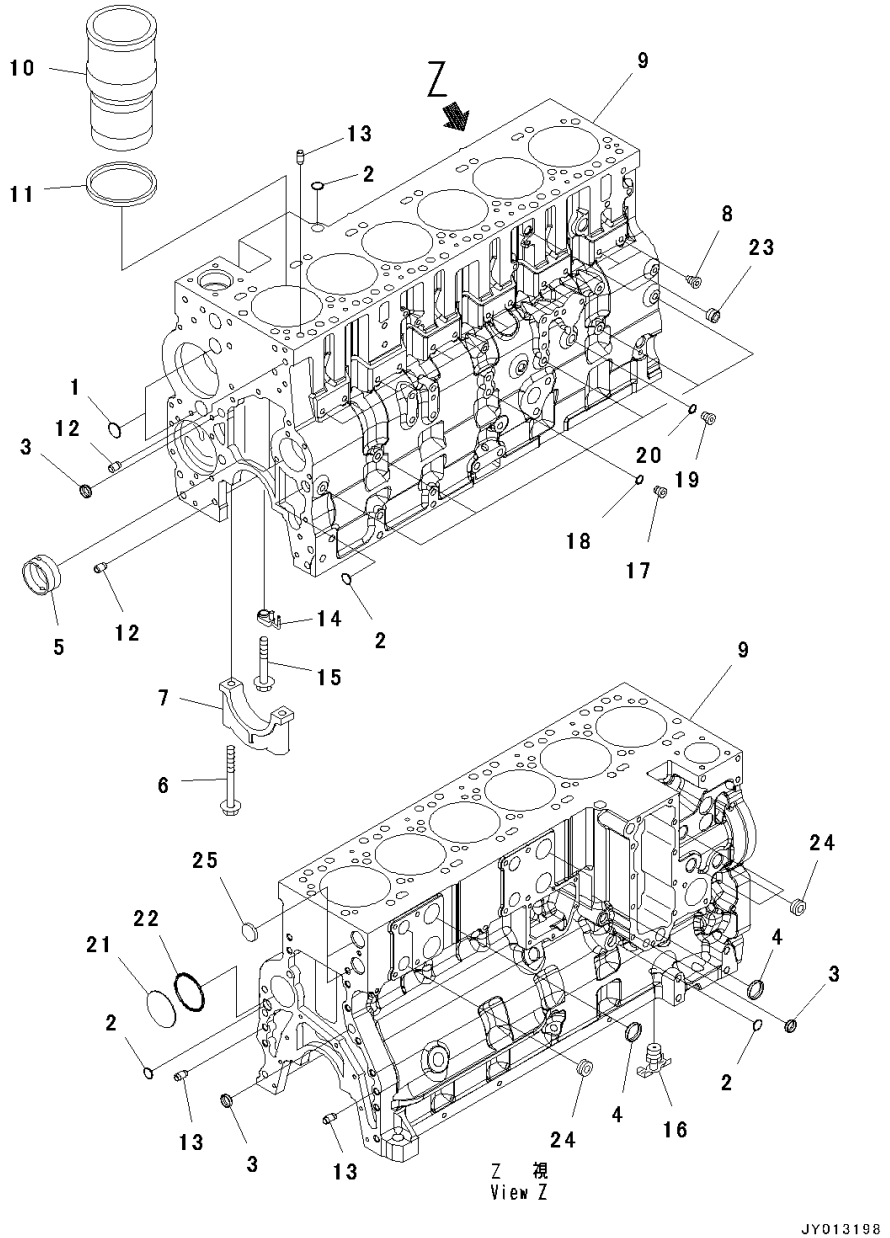

Index	Code	Part Number	Description	Qty	Serial Number
		6745-21-1190	Cylinder Block	1	26858351-
	C1		• Cylinder Block	1	26859764-
	C1		• Cylinder Block	1	26858351-26859763
1		143066	• • Plug, Expansion	3	26859764-
		6742-01-1360	• • Plug	3	26858351-26859763
2		6742-01-1370	• • Plug	4	26858351-
3		6732-21-1810	• • Plug	3	26858351-
4		6742-01-1420	• • Plug	3	26858351-
5		6742-01-5160	• • Bushing	7	26858351-
6		6741-21-1140	• • Bolt	14	26858351-
7	C3	6741-21-1130	• • Cap	7	26858351-
8		6745-41-2151	• • Guide	12	26858351-
9	C1		• • Cylinder Block	1	26859764-
	C1		• • Cylinder Block	1	26858351-26859763
		6742-01-5159	Liner Kit	6	26858351-
10		6741-21-2210	• Liner	1	26858351-
11		6742-01-1520	• Seal	1	26858351-
		6745-21-1290	Cylinder Block	1	26858351-
12		6732-21-6120	• Pin, Dowel	2	26858351-
13		6742-01-1470	• Pin	4	26858351-
14		6745-21-1611	• Nozzle	6	26858351-
15		6736-11-4460	• Bolt	6	26858351-
16		6216-94-3450	• Cock	1	26858351-
		6732-21-1960	• Plug Assembly	6	26858351-
17		6215-81-9510	• • Plug	1	26858351-
18		6215-81-9710	• • O-ring	1	26858351-
		6735-21-1910	• Plug Assembly	2	26858351-
19		6735-21-1920	• • Plug	1	26858351-
20		6735-21-1930	• • O-ring	1	26858351-
21		6742-01-1480	• Plug	1	26858351-
22		6742-01-4080	• O-ring	1	26858351-
23		6732-11-1910	• Plug	1	26858351-
24		6732-11-1920	• Plug	7	26858351-
25		6742-01-1380	• Plug	2	26858351-

https://truckmanualshub.com/

FIG. A2080-001001 Breather Hose

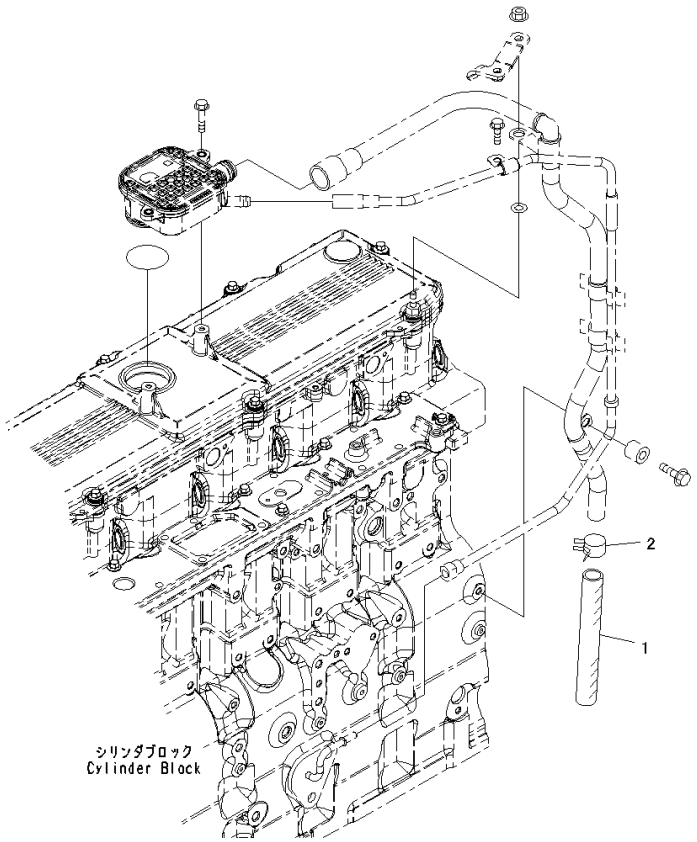

Index	Code	Part Number	Description	Qty	Serial Number
1		07286-01918	Hose	1	26858351-
2		07285-00220	Clip	1	26858351-

https://truckmanualshub.com/

FIG. AHC00-001001 Cabin Heater Plug

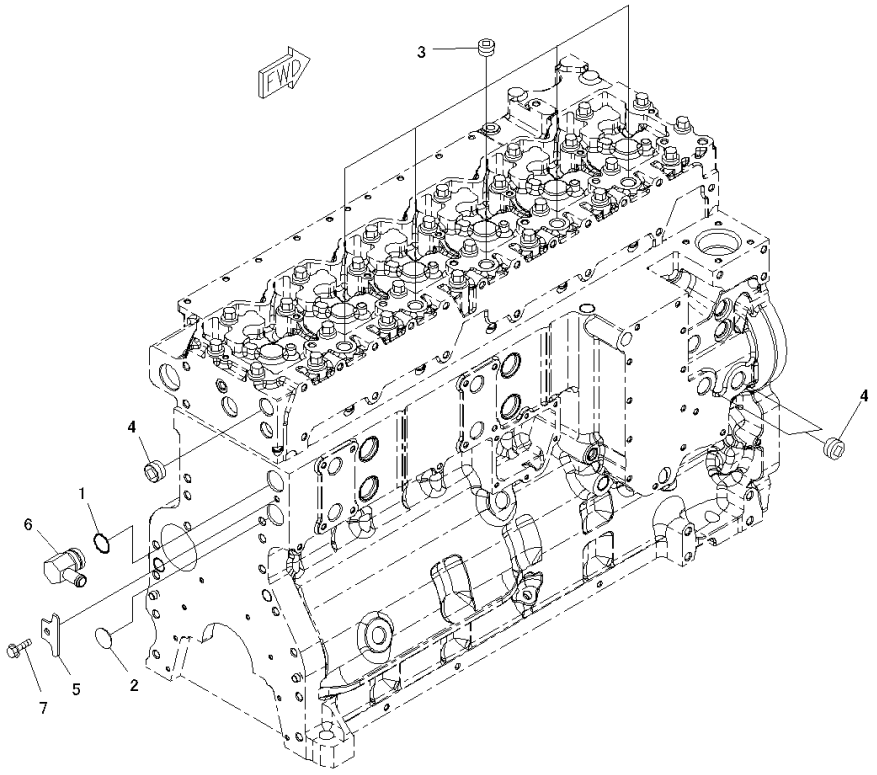

Index	Code	Part Number	Description	Qty	Serial Number
1		1241155H1	O-ring	1	26858351-
2		6742-01-1380	Plug	1	26858351-
3		6732-11-1910	Plug	5	26858351-
4		6732-11-1920	Plug	3	26858351-
5		1294859H1	Plate	1	26858351-
6		6741-61-7110	Connector	1	26858351-
7		6736-21-5310	Bolt	1	26858351-

https://truckmanualshub.com/

FIG. A2319-001001 Crankshaft

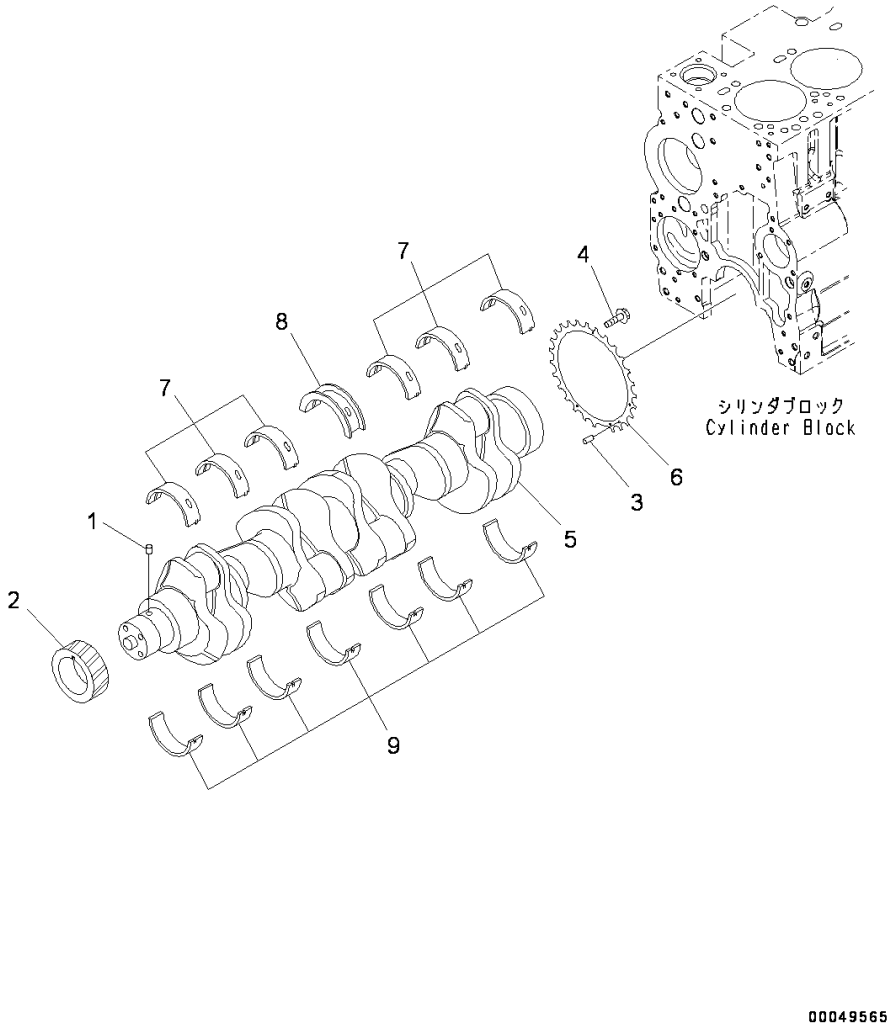

Index	Code	Part Number	Description	Qty	Serial Number
		6745-31-1120	Crankshaft	1	26858351-
1	C1		• Pin, Dowel	1	26858351-
2	C1		• Gear	1	26858351-
	C1		• Crankshaft Assembly	1	26858351-
3	C1		• • Pin, Dowel	1	26858351-
4	C1		• • Bolt	4	26858351-
5	C1		• • Crankshaft	1	26858351-
6	C1		• • Ring	1	26858351-
		6742-01-5199	Main Metal Assembly	1	26858351-
7	C1		• Metal	6	26858351-
8	C1		• Metal	1	26858351-
9	C1		• Metal	7	26858351-
		6742-21-8500	Thrust Metal Assembly	1	26858351-
	C1		• Metal	1	26858351-
	C1		• Metal	1	26858351-

https://truckmanualshub.com/

FIG. A2359-001001 Piston and Connecting Rod

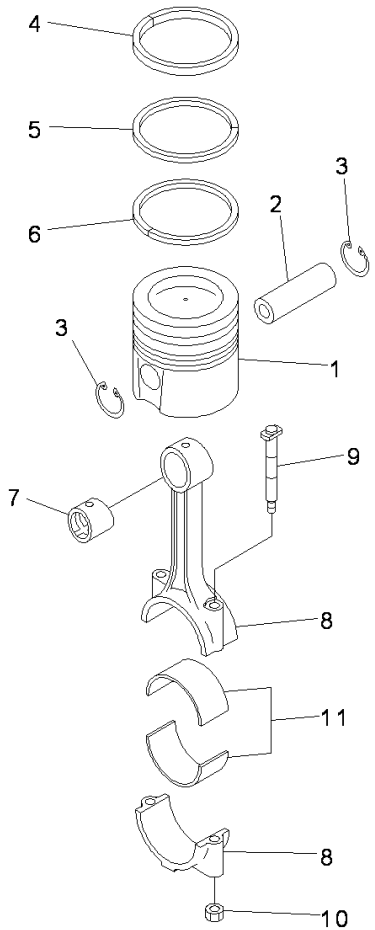

00049566

Index	Code	Part Number	Description	Qty	Serial Number
1		6745-31-2150	Piston	6	26858351-
2		6745-31-2140	Pin	6	26858351-
3		6742-01-5309	Ring, Snap	12	26858351-
		6745-31-2020	Piston Ring Assembly	6	26858351-
4	C1		• Ring	1	26858351-
5	C1		• Ring	1	26858351-
6	C1		• Ring	1	26858351-
		6743-31-3101	Rod Assembly	6	26858351-
7		6743-31-3121	• Bushing	1	26858351-
8	C1		• Rod	1	26858351-
9		1304869H1	• Bolt	2	26858351-
10		6742-01-4340	• Nut	2	26858351-
11		6743-31-3210	Metal	12	26858351-

https://truckmanualshub.com/

FIG. AOB10-001001 Engine Oil Filler

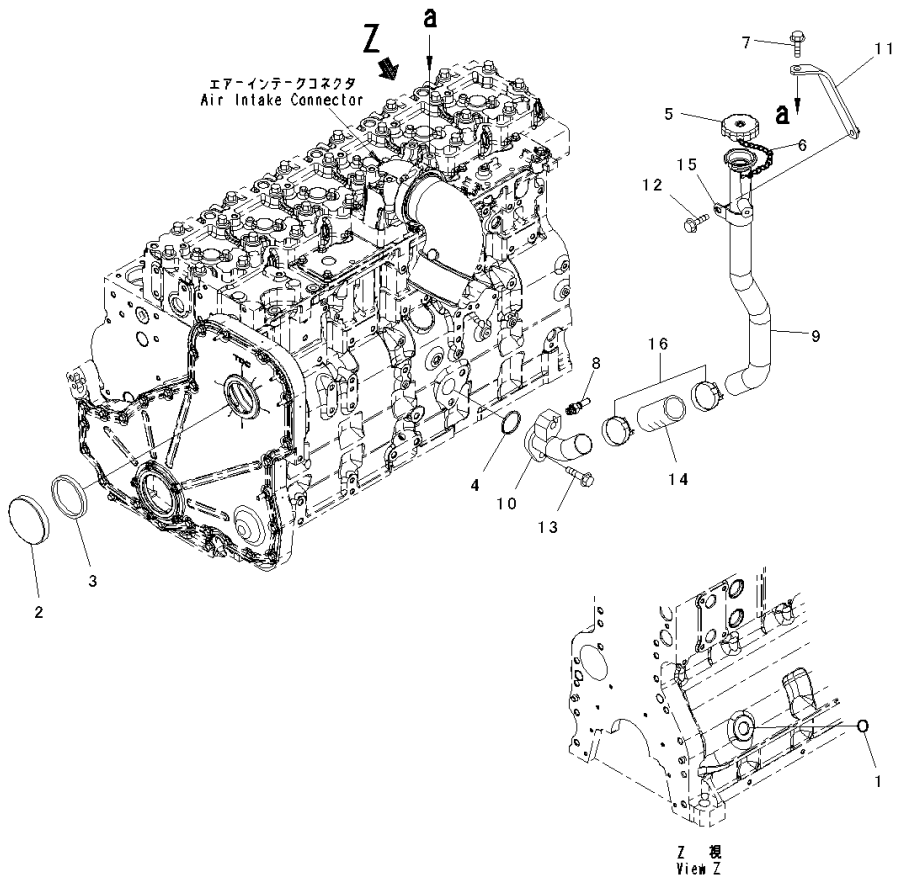

Index	Code	Part Number	Description	Qty	Serial Number
1		6735-21-5530	Plug	1	26858351-
2		6732-21-3190	Cover	1	26858351-
3		6732-21-3220	Seal Ring	1	26858351-
4		6736-21-3360	Seal Ring	1	26858351-
5		6136-21-7120	Cap Assembly	1	26858351-
6		6136-21-7190	Chain	1	26858351-
7		6732-61-3140	Bolt	1	26858351-
8		6745-21-7240	Connector	1	26858351-
9		6745-21-7160	Tube	1	26858351-
10		6745-21-7150	Tube	1	26858351-
11		6745-21-7171	Brace	1	26858351-
12		01435-00816	Bolt	1	26858351-
13		01435-01235	Bolt	2	26858351-
14		6127-11-5960	Hose	1	26858351-
15		6217-21-7150	Clip	1	26858351-
16		07281-00489	Clamp, Hose	2	26858351-

https://truckmanualshub.com/

FIG. ALG00-001001 Oil Level Gauge

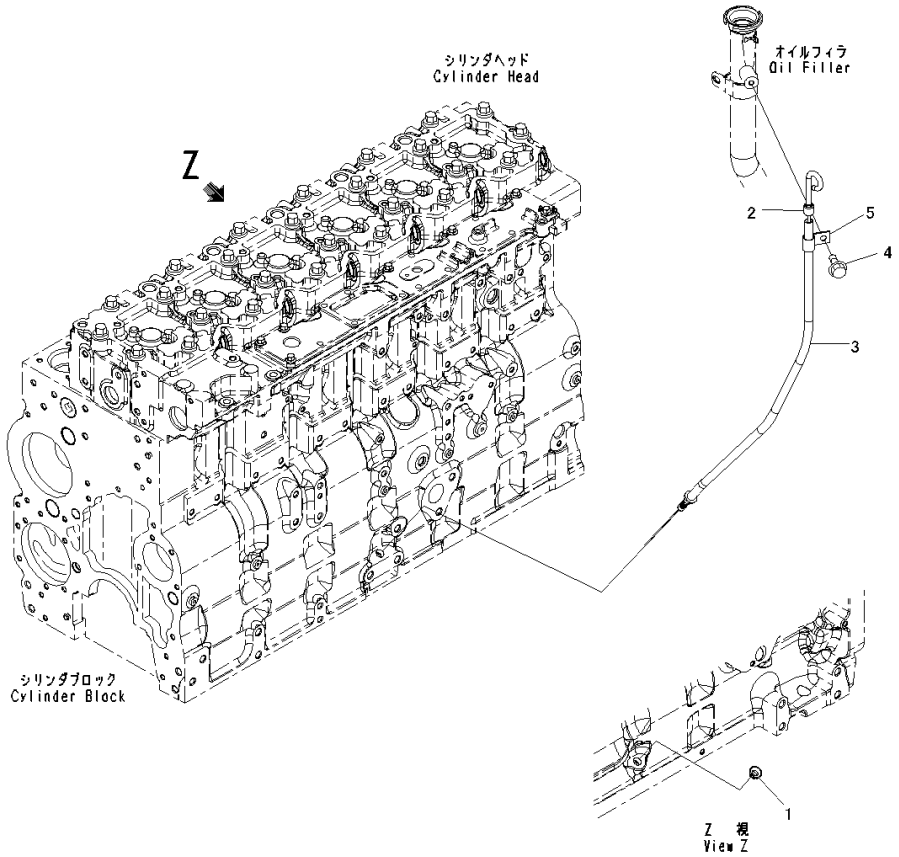

Index	Code	Part Number	Description	Qty	Serial Number
1		6743-22-5110	Plug	1	26858351-
2		6745-21-5220	Gauge	1	26858351-
3		6731-22-5410	Tube	1	26858351-
4		01435-00812	Bolt	1	26858351-
5		04434-51208	Clip	1	26858351-

https://truckmanualshub.com/

https://truckmanualshub.com/

ENGINE LUBRICATING SYSTEM

FIG. ARP00-001001 Coolant Piping

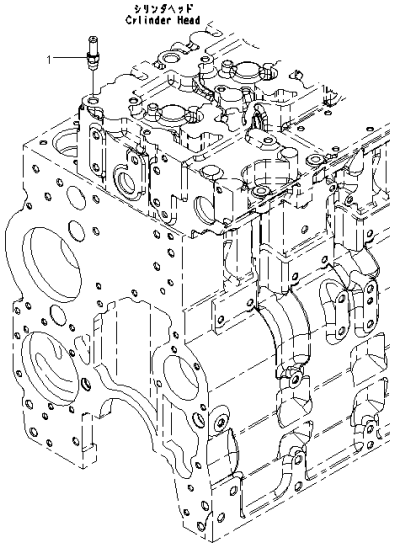

Index	Code	Part Number	Description	Qty	Serial Number
1		6745-61-6120	Fitting	1	26858351-

https://truckmanualshub.com/

FIG. ALP00-001001 Engine Oil Pump

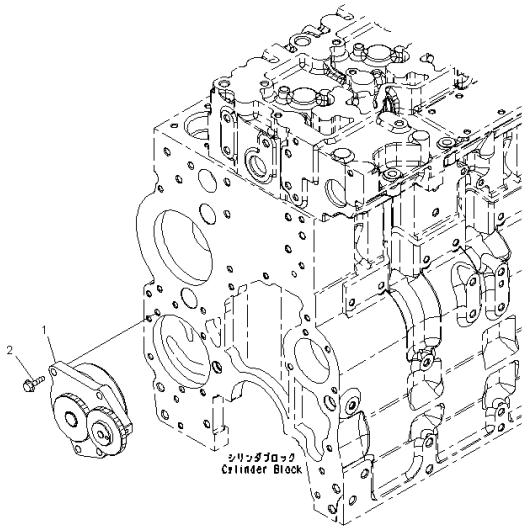

Index	Code	Part Number	Description	Qty	Serial Number
1		6745-51-1110	Pump Assembly	1	26858351-
2		6735-51-1120	Bolt	4	26858351-

https://truckmanualshub.com/

FIG. ALF00-001001 Engine Oil Filter

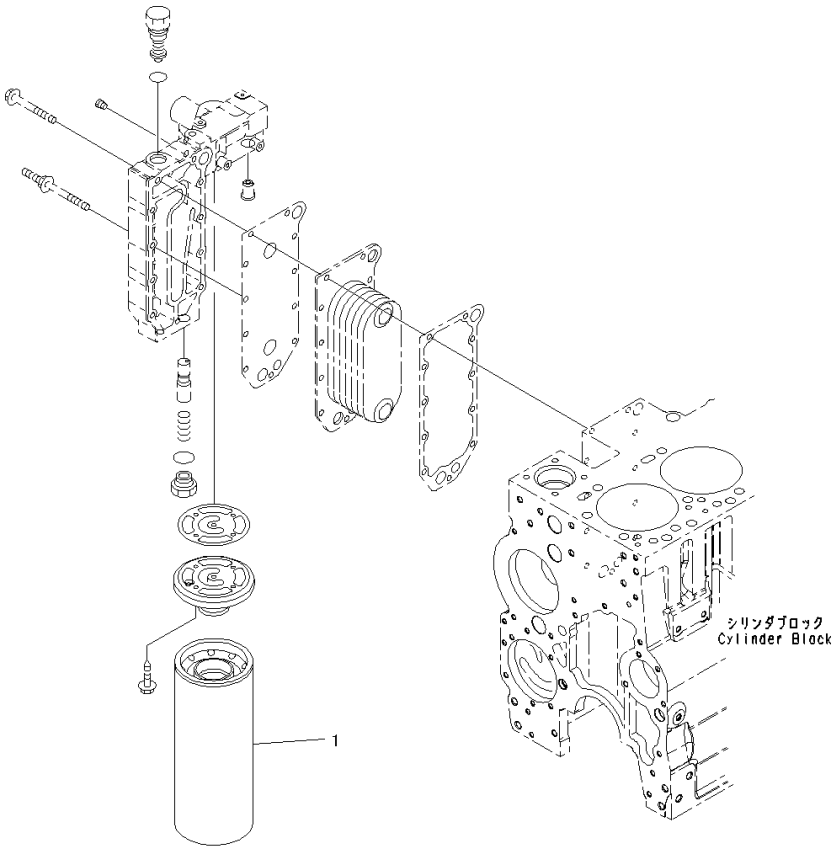

Index	Code	Part Number	Description	Qty	Serial Number
1		6742-01-4540	Cartridge	1	26858351-

https://truckmanualshub.com/

FIG. ALC00-001001 Engine Oil Cooler

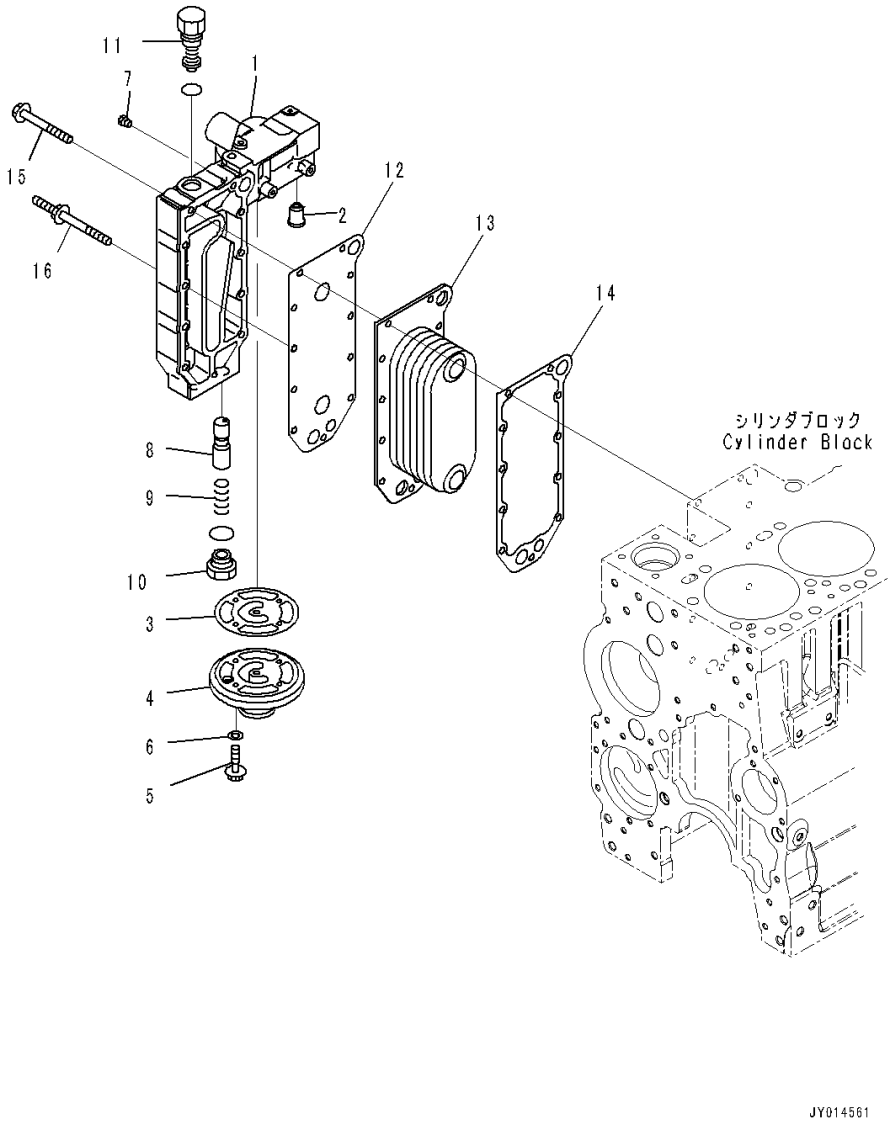

Index	Code	Part Number	Description	Qty	Serial Number
1		6743-61-2112	Cover	1	26858351-
2		6731-61-2151	Valve	1	26858351-
3		6742-01-2492	Gasket	1	26858351-
4		6742-01-2500	Head	1	26858351-
5		01437-00825	Bolt	4	26858507-
6		01641-20812	Washer	4	26858507-
7		6732-11-1930	Plug	2	26858351-
8		6742-01-5202	Plunger	1	26858351-
9		6743-61-2150	Spring	1	26858351-
10		6742-01-4220	Plug	1	26858351-
11		6742-01-5117	Valve	1	26858351-
12		6743-51-4430	Gasket	1	26858351-
13		6743-61-2210	Core	1	26858351-
14		6742-01-1080	Gasket	1	26858351-
15		6742-01-2441	Bolt	9	26858351-
16		6741-61-6110	Screw	2	26858351-

https://truckmanualshub.com/

https://truckmanualshub.com/

https://truckmanualshub.com/

ENGINE FUEL SYSTEM

FIG. AFP20-001001 Fuel Supply Pump Support

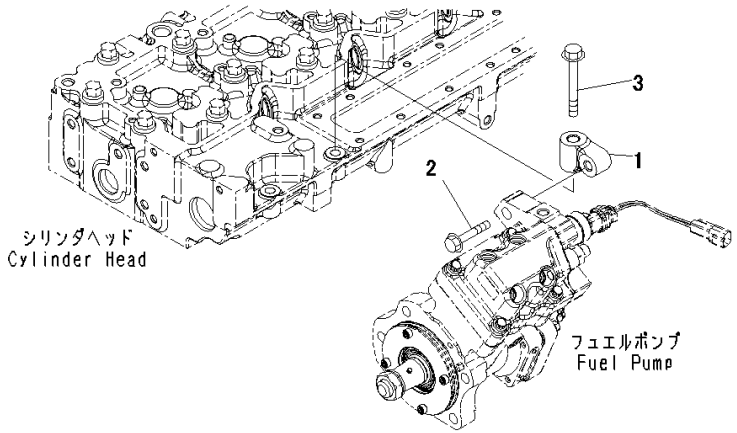

Index	Code	Part Number	Description	Qty	Serial Number
1		6745-71-1210	Support	1	26858351-
2		6742-01-3780	Bolt	1	26858351-
3		6732-61-4120	Bolt	1	26858351-

https://truckmanualshub.com/

FIG. A4019-001001 Fuel Injection Pump, Inner Parts

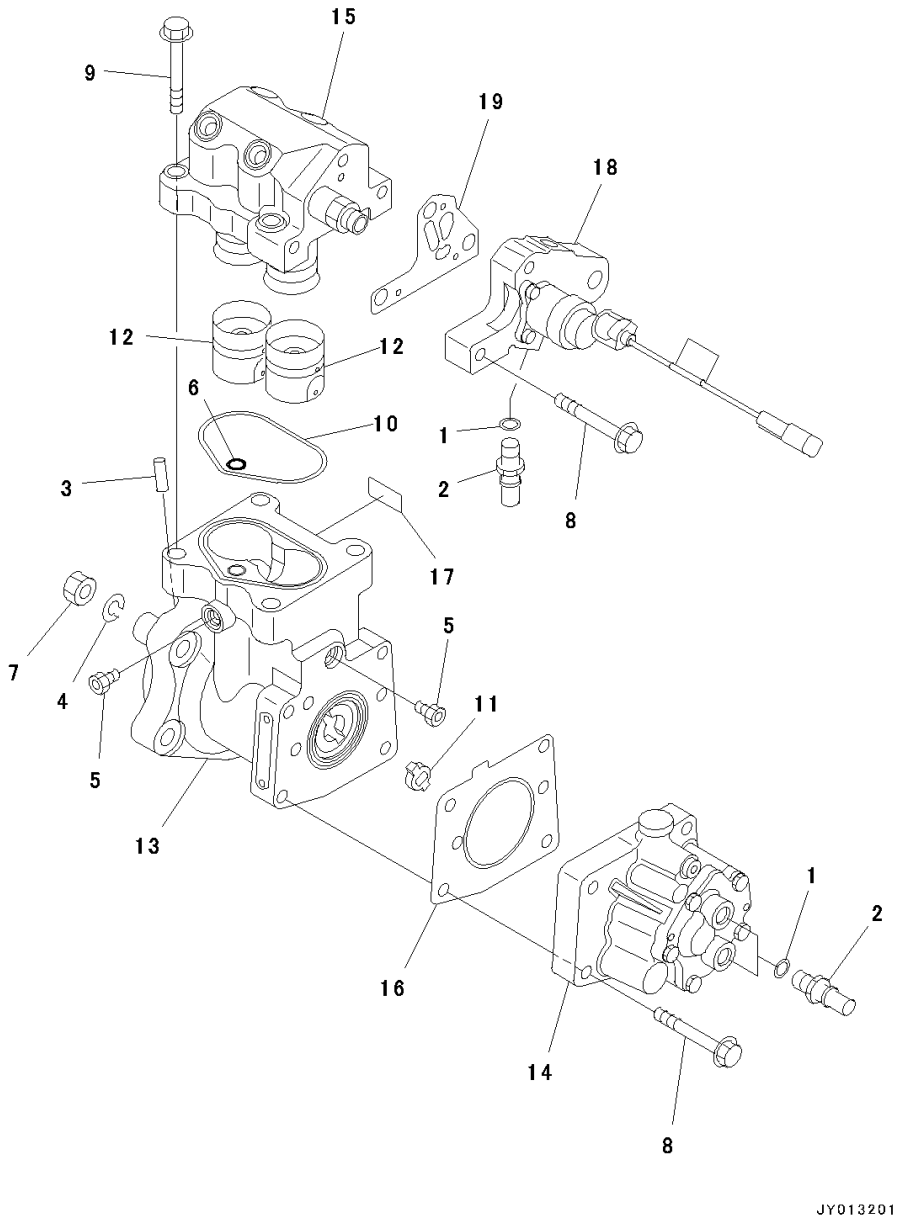

Index	Code	Part Number	Description	Qty	Serial Number
1		6745-71-1130	Washer	3	26858351-
2		6745-71-6130	Connector	3	26858351-
		6745-71-1170	Pump Assembly	1	26858351-
3		6744-71-1020	• Pin, Dowel	1	26858351-
4		6744-71-1040	• Washer, Spring	1	26858351-
5		6732-21-1960	• Plug Assembly	2	26858351-
6		6560-81-4530	• O-ring	1	26858351-
7		6744-71-1250	• Nut	1	26858351-
8		6732-61-3170	• Bolt	7	26858351-
9		6745-71-1220	• Bolt	4	26858351-
10		6745-71-1230	• Seal	1	26858351-
11	C1		• Hub	1	26858351-
12	C1		• Tappet	2	26858351-
13	C1		• Body	1	26858351-
14		6745-71-1180	• Pump, Fuel	1	26858351-
15		6745-71-1240	• Head	1	26858351-
16		6745-71-1250	• Gasket	1	26858351-
17	C1		• Tag	1	26858351-
18	C1		• Adapter	1	26858351-
19		6745-71-1260	• Gasket	1	26858351-

https://truckmanualshub.com/

FIG. A4019-001002 Fuel Injection Pump, Mounting

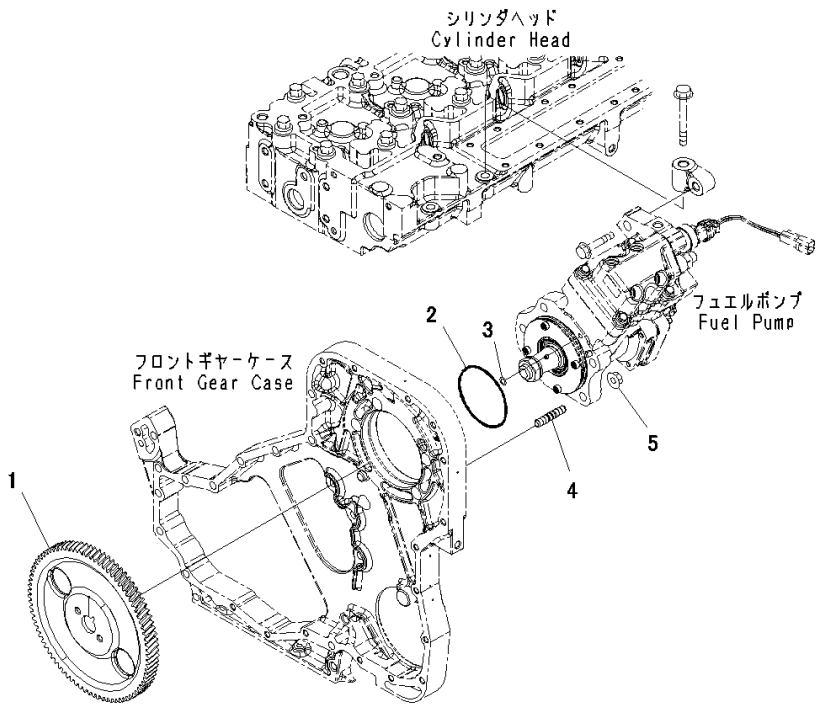

Index	Code	Part Number	Description	Qty	Serial Number
1		6745-71-3210	Gear	1	26858351-
2		6741-61-2120	O-ring	1	26858351-
3		6742-01-5507	Seal	1	26858351-
4		6734-71-5270	Stud	4	26858351-
5		6736-81-6170	Nut	4	26858351-

https://truckmanualshub.com/

FIG. A4219-001001 Fuel Injector

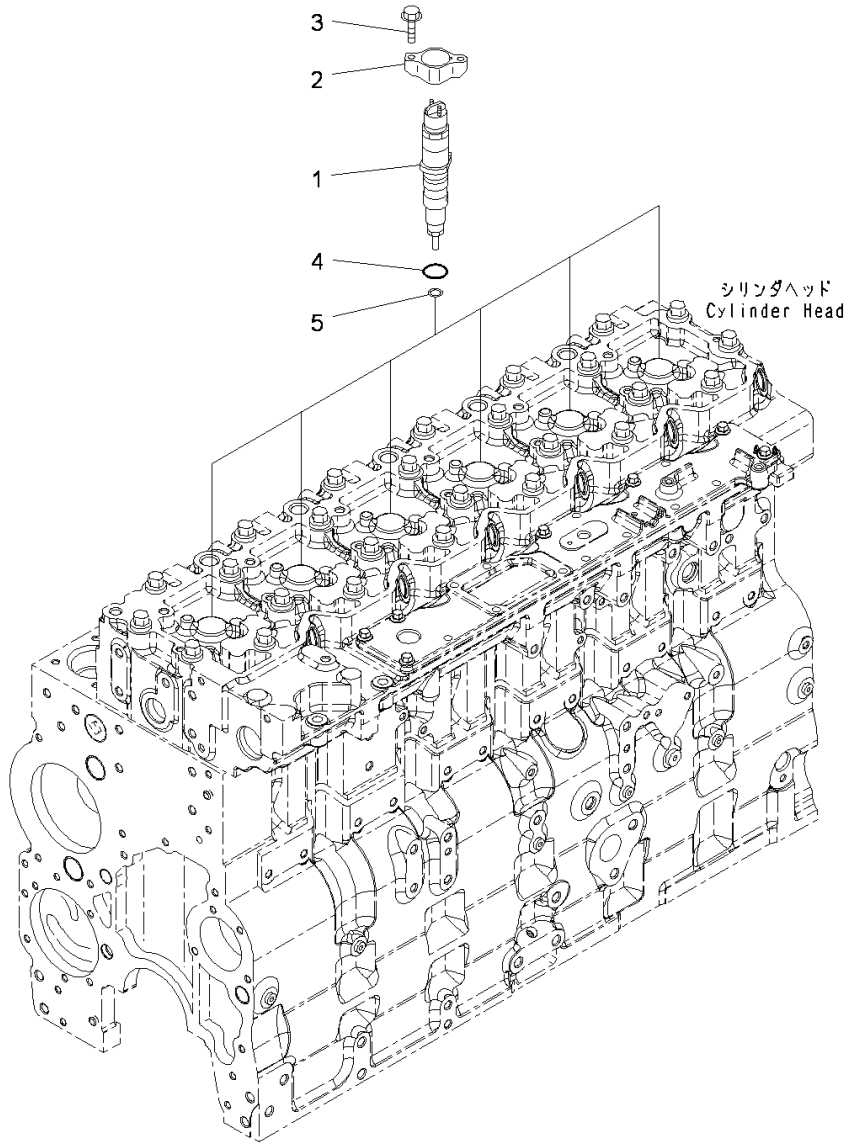

Index	Code	Part Number	Description	Qty	Serial Number
1		6745-11-3102	Injector	6	26858351-
2		6745-11-3110	Clamp	6	26858351-
3		6745-11-3150	Bolt	12	26858351-
4		6754-11-3120	O-ring	1	26858351-
5		6743-11-3230	Gasket	1	26858351-

https://truckmanualshub.com/

FIG. APP50-001001 Fuel Injection Piping

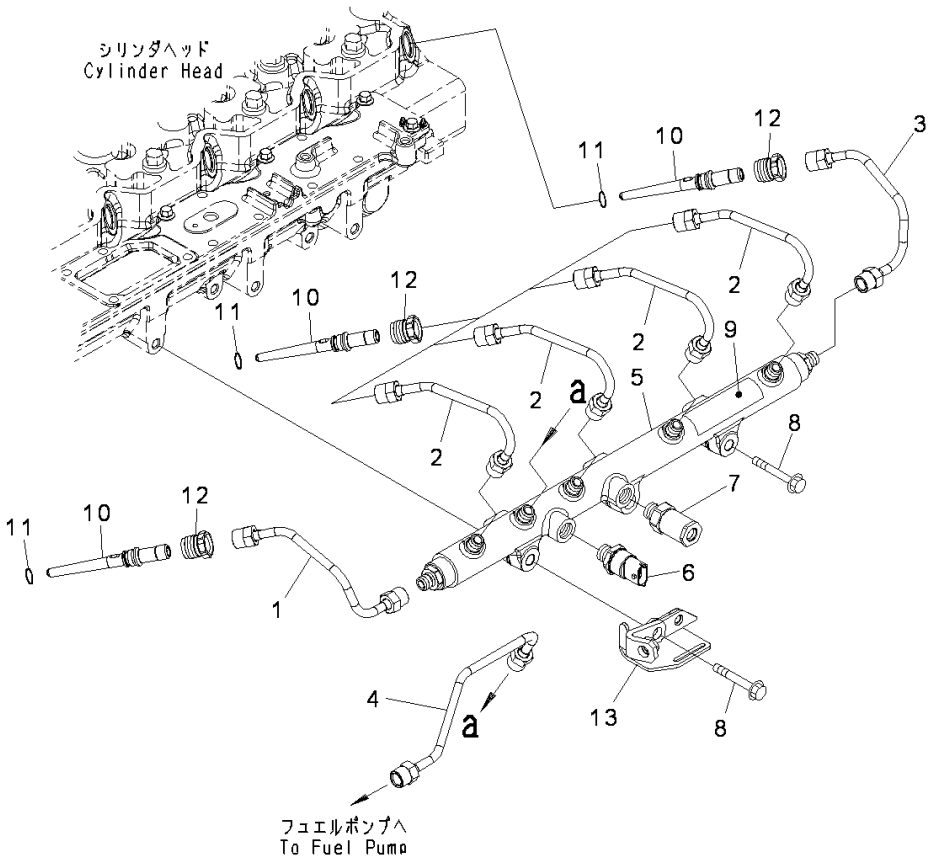

Index	Code	Part Number	Description	Qty	Serial Number
1		6745-71-4110	Tube, Fuel Supply, No.1	1	26858351-
2		6745-71-4120	Tube, Fuel Supply, No.2	4	26858351-
3		6745-71-4140	Tube, Fuel Supply, No.3	1	26858351-
4		6745-71-4150	Tube, Fuel Supply, No.4	1	26858351-
5		6745-71-4310	Manifold Assembly	1	26858351-
6		6745-71-4320	• Sensor, Pressure	1	26858351-
7		6745-71-4330	• Valve, Relief	1	26858351-
8		6732-61-4120	Bolt	3	26858351-
9		6754-71-1991	Decal	2	26858351-
		6745-71-5541	Connector Assembly	6	26860150-
	A2	6745-71-5540	Connector Assembly	6	26858351-26860149
10	C1		• Connector	1	26860150-
	C1		• Connector	1	26858351-26860149
11		6745-71-5550	• O-ring	1	26858351-
12		6754-71-5540	Retainer	6	26858351-
13		6745-81-9380	Brace	1	26858351-

https://truckmanualshub.com/

FIG. AFT00-001001 Fuel Piping

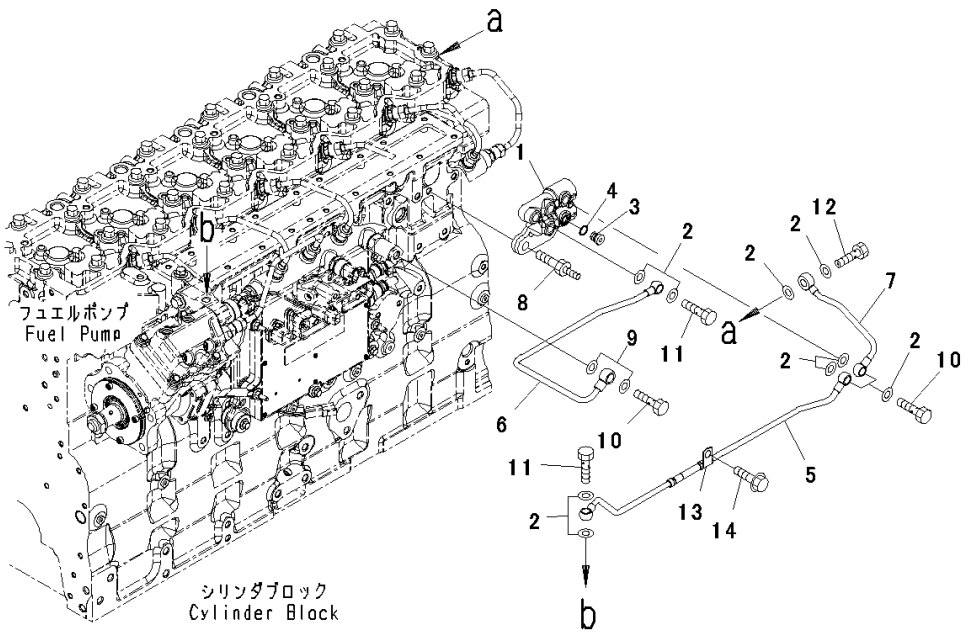

Index	Code	Part Number	Description	Qty	Serial Number
1		6745-71-5610	Connector	1	26858351-
2		6745-71-1130	Washer	9	26858351-
		6732-21-1960	Plug Assembly	1	26858351-
3		6215-81-9510	• Plug	1	26858351-
4		6215-81-9710	• O-ring	1	26858351-
5		6745-71-5440	Tube	1	26858351-
6		6745-71-5460	Tube	1	26858351-
7		6745-71-5470	Tube	1	26858351-
8		6745-81-9580	Bolt	2	26858351-
9		6731-74-5910	Washer	3	26858351-
10		6732-71-5620	Connector	1	26858351-
11		6732-71-6510	Bolt	4	26858351-
12		6754-71-5430	Valve, Check	1	26858351-
13		6745-71-5450	Clip	1	26858351-
14		6732-61-3140	Bolt	1	26858351-

https://truckmanualshub.com/

FIG. A4230-001001 Fuel Return Fitting

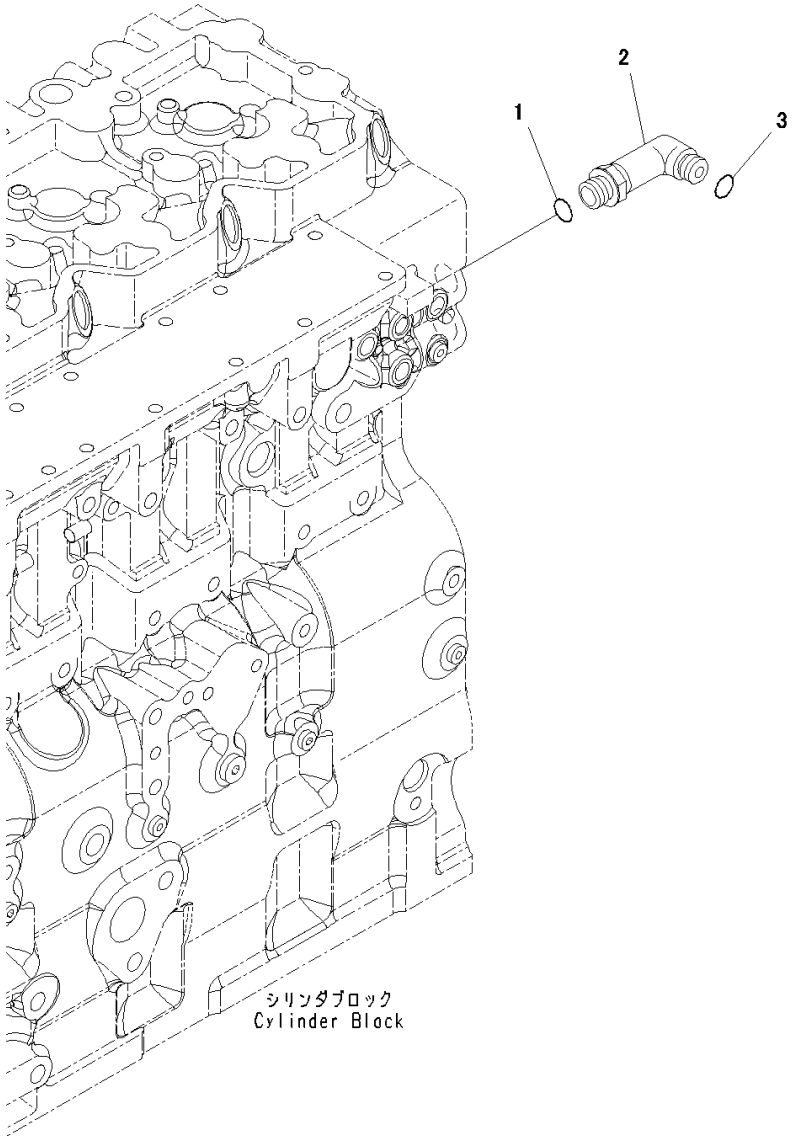

Index	Code	Part Number	Description	Qty	Serial Number
1		6735-21-4160	O-ring	1	26858351-
2		14X-04-51321	Elbow	1	26858351-
3		02896-11009	O-ring	1	26858351-

https://truckmanualshub.com/

FIG. AFF20-001001 Fuel Filter Plumbing

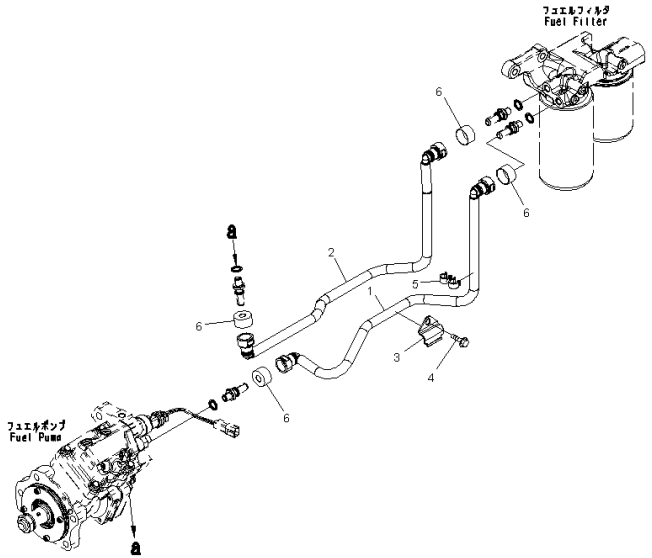

Index	Code	Part Number	Description	Qty	Serial Number
1		6745-71-5110	Tube	1	26858351-
2		6745-71-5120	Tube	1	26858351-
3		6745-71-5210	Brace	1	26858351-
4		6736-21-5310	Bolt	1	26858351-
5		6745-71-5220	Clamp	1	26858351-
6		6745-71-5160	Cover	4	26858351-

https://truckmanualshub.com/

FIG. A4119-002001 Fuel Filter Cartridge, Service Only

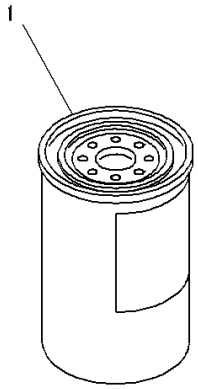

00060578

Index	Code	Part Number	Description	Qty	Serial Number
1		600-319-3750	Cartridge	1	26858933-

https://truckmanualshub.com/

FIG. AFF10-003001 Fuel Filter

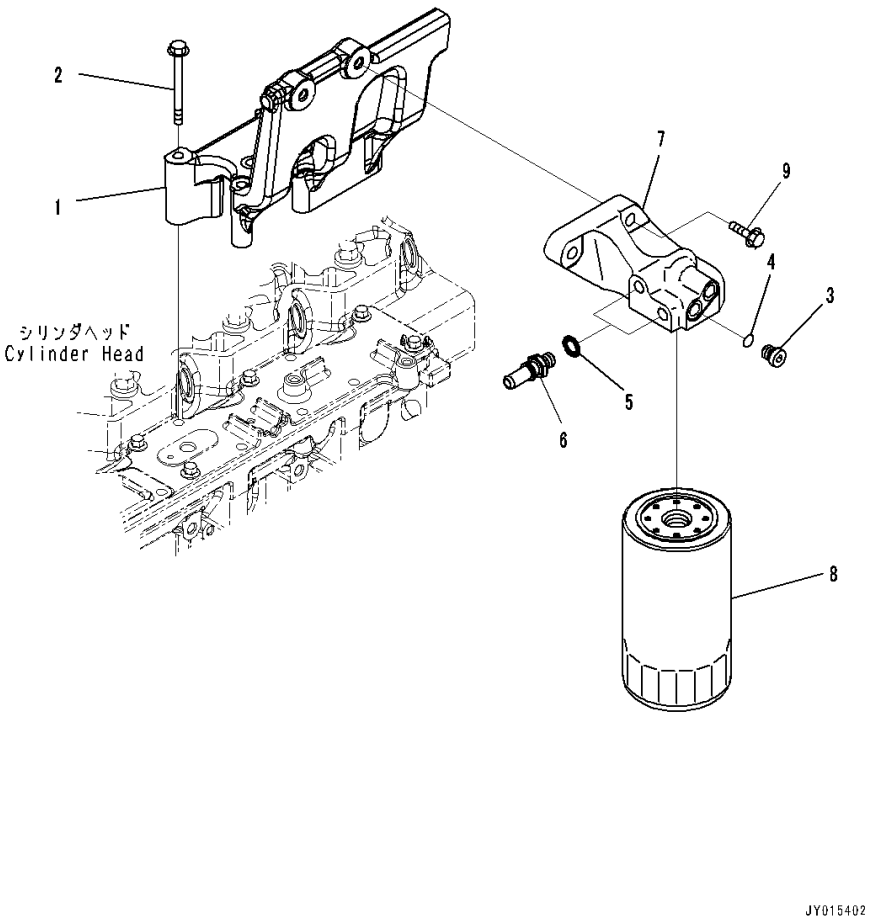

Index	Code	Part Number	Description	Qty	Serial Number
1		6745-71-6240	Support	1	26858906-
2		6732-11-4150	Bolt	5	26858906-
		6732-21-1960	Plug Assembly	2	26858906-
3		6215-81-9510	• Plug	1	26858906-
4		6215-81-9710	• O-ring	1	26858906-
5		6745-71-1130	Washer	2	26858906-
6		6745-71-6130	Connector	2	26858906-
7		6745-71-6190	Head	1	26858906-
8	C1		Filter	1	26858906-
9		6732-22-3110	Bolt	2	26858906-

https://truckmanualshub.com/

FIG. B9999-503001 Pre Filter

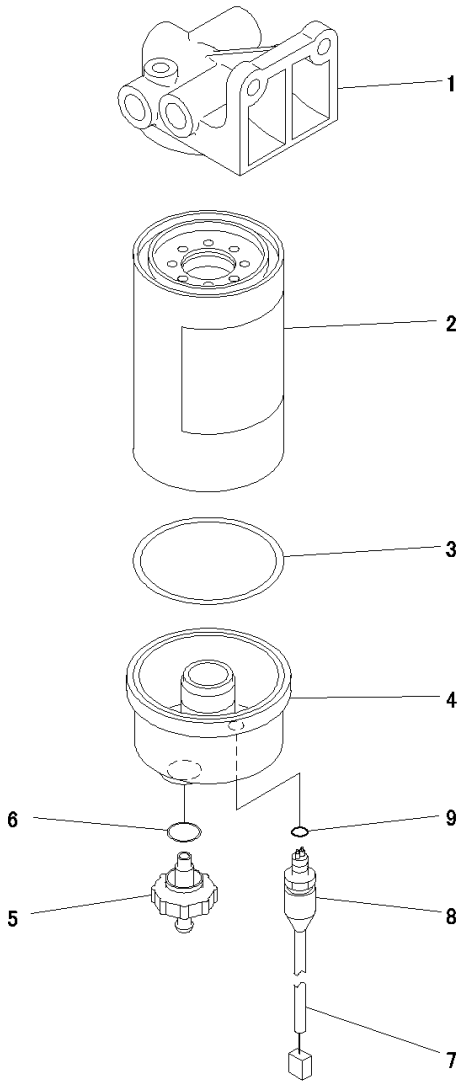

JY013216

Index	Code	Part Number	Description	Qty	Serial Number
		6745-71-7203	Filter Assembly	1	26858351-
1		6745-71-7211	• Head	1	26858351-
		600-319-3602	• Filter Assembly	1	26858351-
		600-319-3610	• • Cartridge Assembly	1	26858351-
2	C1		• • • Cartridge	1	26858351-
3		600-311-3630	• • • Seal	1	26858351-
4		600-311-3640	• • Bowl	1	26858351-
		600-311-3660	• • Valve Assembly	1	26858351-
5	C1		• • • Valve	1	26858351-
6		600-311-3670	• • • Seal	1	26858351-
		600-311-3722	• • Sensor	1	26858351-
7	C1		• • • Tube	1	26858351-
8	C1		• • • Sensor	1	26858351-
9		600-311-3690	• • • O-ring	1	26858351-

https://truckmanualshub.com/

FIG. AFS20-001001 Fuel System Accessory

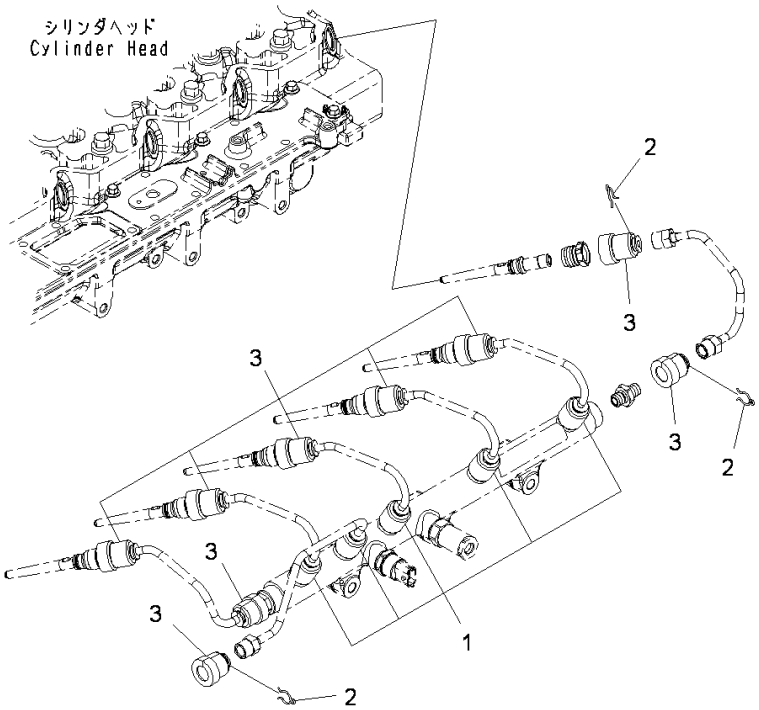

Index	Code	Part Number	Description	Qty	Serial Number
1		6754-71-9710	Cover	9	26858351-
2		6217-71-5770	Clamp	14	26858351-
3		6745-71-9710	Cover	5	26858351-

https://truckmanualshub.com/

FIG. AFS00-001001 Fuel Transfer Pump

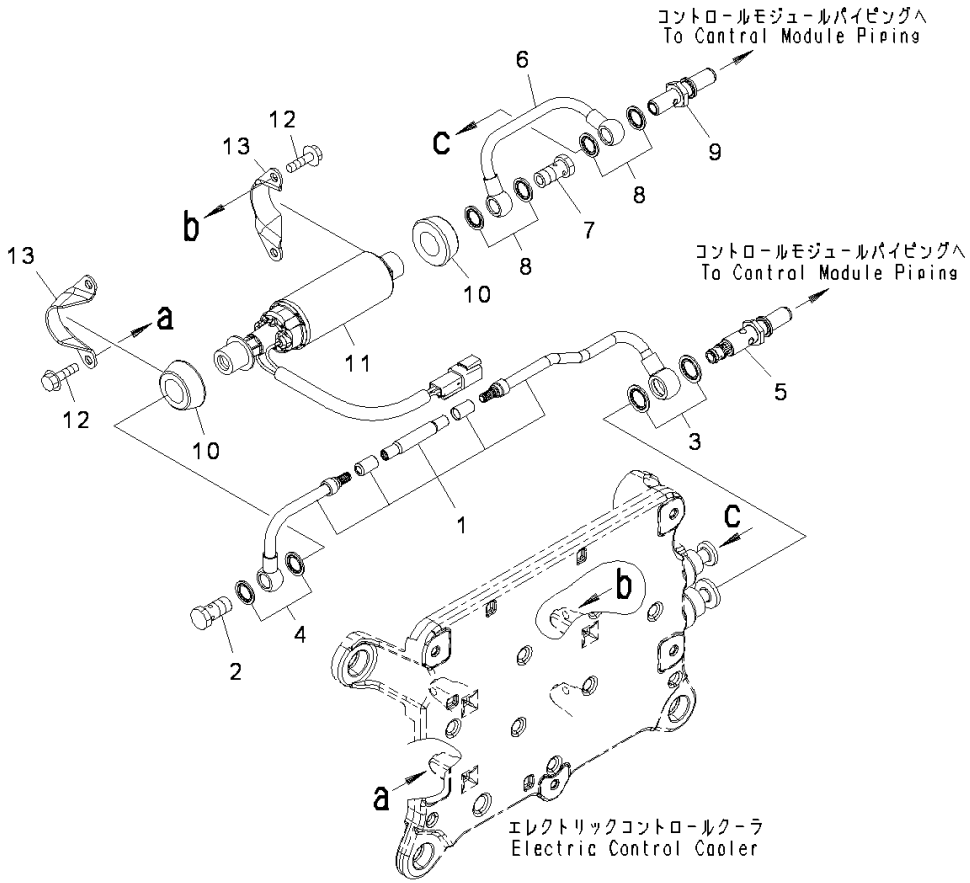

Index	Code	Part Number	Description	Qty	Serial Number
1		6745-71-5311	Tube	1	26858351-
2		6732-71-6510	Bolt	1	26858351-
3		6745-71-5860	Seal, Washer	2	26858351-
4		6745-71-1130	Washer	2	26858351-
5		6745-71-5391	Valve, Check	1	26858351-
6		6745-71-5410	Tube	1	26858351-
7		6732-71-6510	Bolt	1	26858351-
8		6745-71-1130	Washer	4	26858351-
9		6745-71-5430	Connector	1	26858351-
		6745-71-1820	Pump Assembly, Fuel	1	26858351-
10		6745-71-1830	• Isolator	2	26858351-
11		6745-71-1840	• Pump, Fuel	1	26858351-
12		6732-21-4180	Bolt	4	26858351-
13		6745-71-1860	Bracket	2	26858351-

https://truckmanualshub.com/

FIG. A4110-001001 Fuel Inlet Fitting

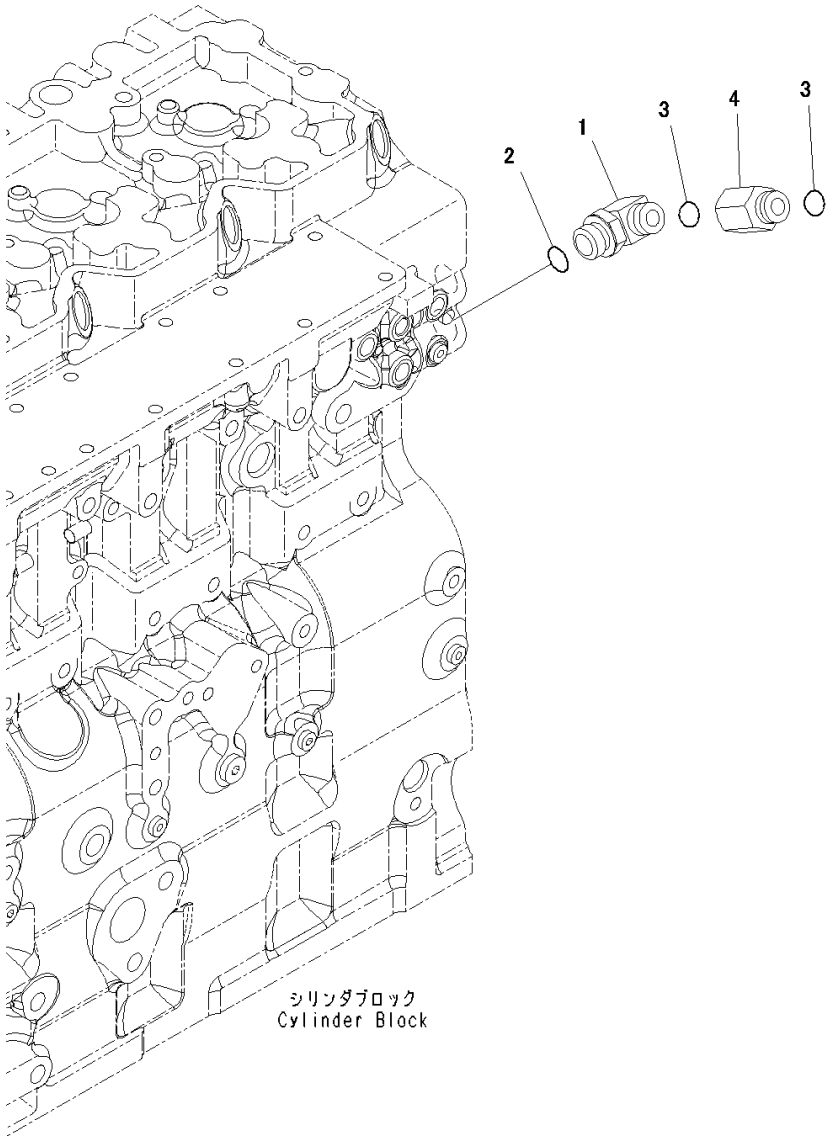

Index	Code	Part Number	Description	Qty	Serial Number
1		14X-04-51311	Elbow	1	26858351-
2		6216-74-6220	O-ring	1	26858351-
3		02896-11012	O-ring	2	26858351-
4		14X-04-51340	Joint	1	26858351-

https://truckmanualshub.com/

https://truckmanualshub.com/

https://truckmanualshub.com/

ENGINE COOLING SYSTEM

FIG. AFA20-002001 Cooling Fan Drive Mounts, With Hardened Pulley

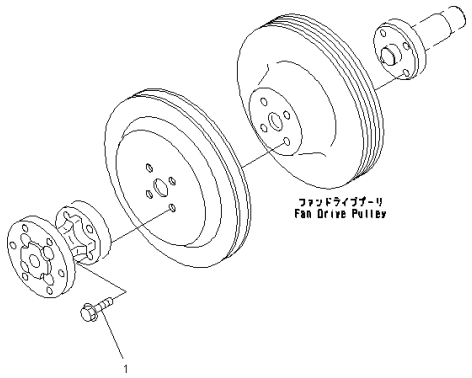

Index	Code	Part Number	Description	Qty	Serial Number
1		6735-71-3220	Bolt	4	26858499-

https://truckmanualshub.com/

FIG. AFA20-001001 Cooling Fan Drive Mounts

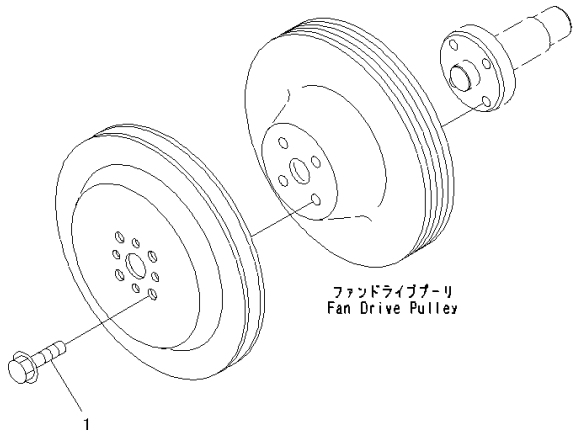

Index	Code	Part Number	Description	Qty	Serial Number
1		6732-61-3140	Bolt	4	26858351-

https://truckmanualshub.com/

FIG. AFA10-001001 Cooling Fan Drive Pulley

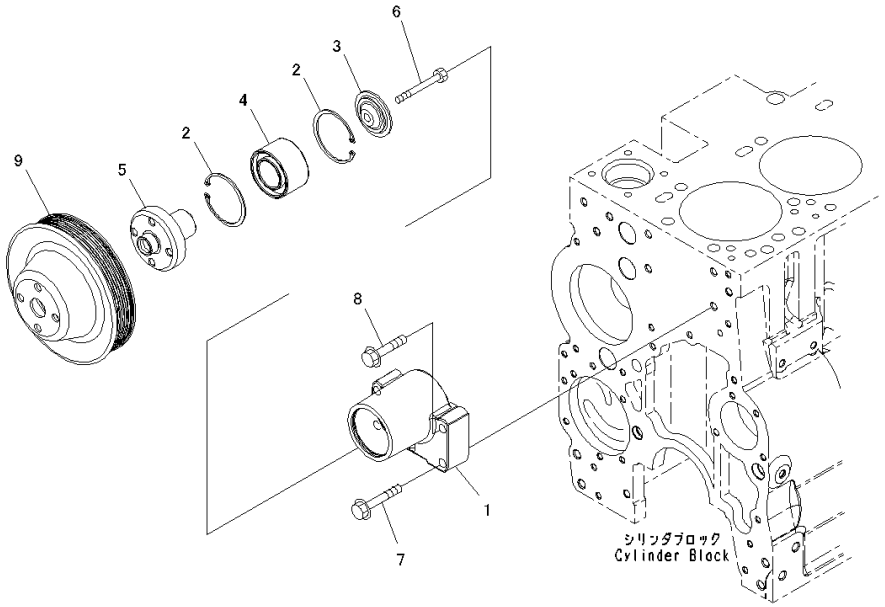

Index	Code	Part Number	Description	Qty	Serial Number
		6732-62-3410	Support Assembly	1	26858351-
1		6732-62-3470	• Support	1	26858351-
2		6732-61-3450	• Ring, Snap	2	26858351-
3		6732-61-3430	• Retainer	1	26858351-
4		6732-61-3420	• Bearing, Ball	1	26858351-
5		6732-61-3410	• Hub	1	26858351-
6		6732-61-3440	• Bolt	1	26858351-
7		01435-01055	Bolt	3	26858351-
8		01435-01045	Bolt	1	26858351-
9		6742-01-5472	Pulley	1	26858351-

https://truckmanualshub.com/

FIG. APA00-002001 Cooling Fan Drive Pulley, With Hardened Pulley

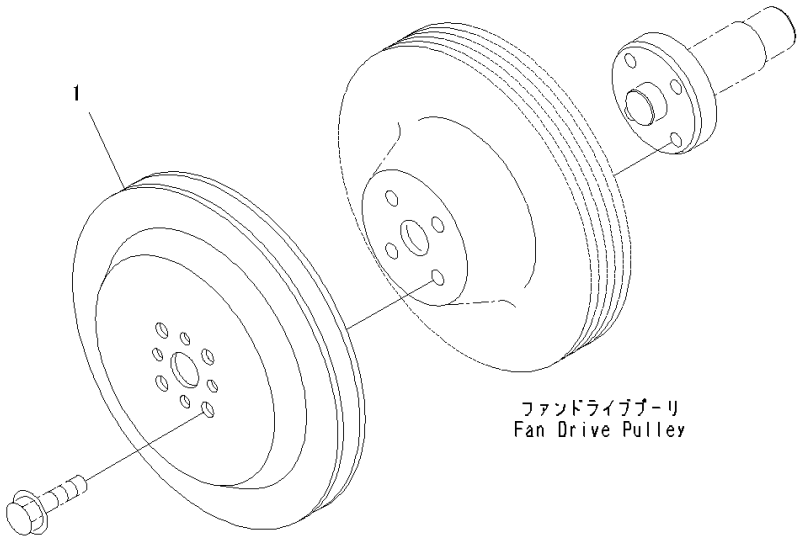

Index	Code	Part Number	Description	Qty	Serial Number
1		6745-61-1120	Pulley	1	26858499-

https://truckmanualshub.com/

FIG. AWP20-001001 Cooling Fan Belt Tensioner

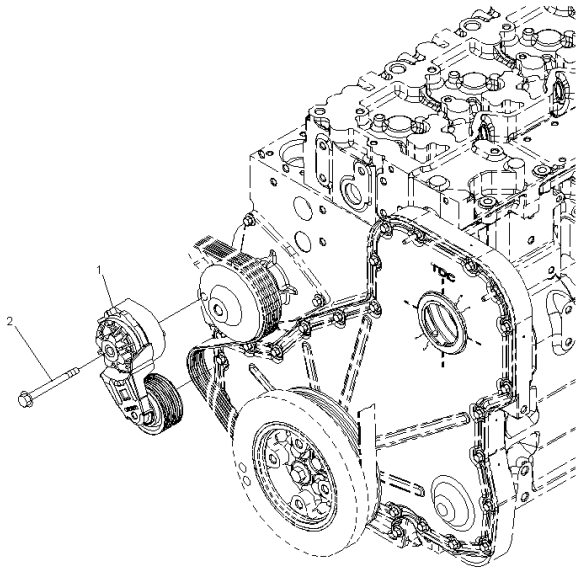

Index	Code	Part Number	Description	Qty	Serial Number
1		6754-61-4111	Tensioner, Belt	1	26858484-
2		6732-61-3260	Bolt	1	26858351-

https://truckmanualshub.com/

FIG. A5019-001001 Water Pump

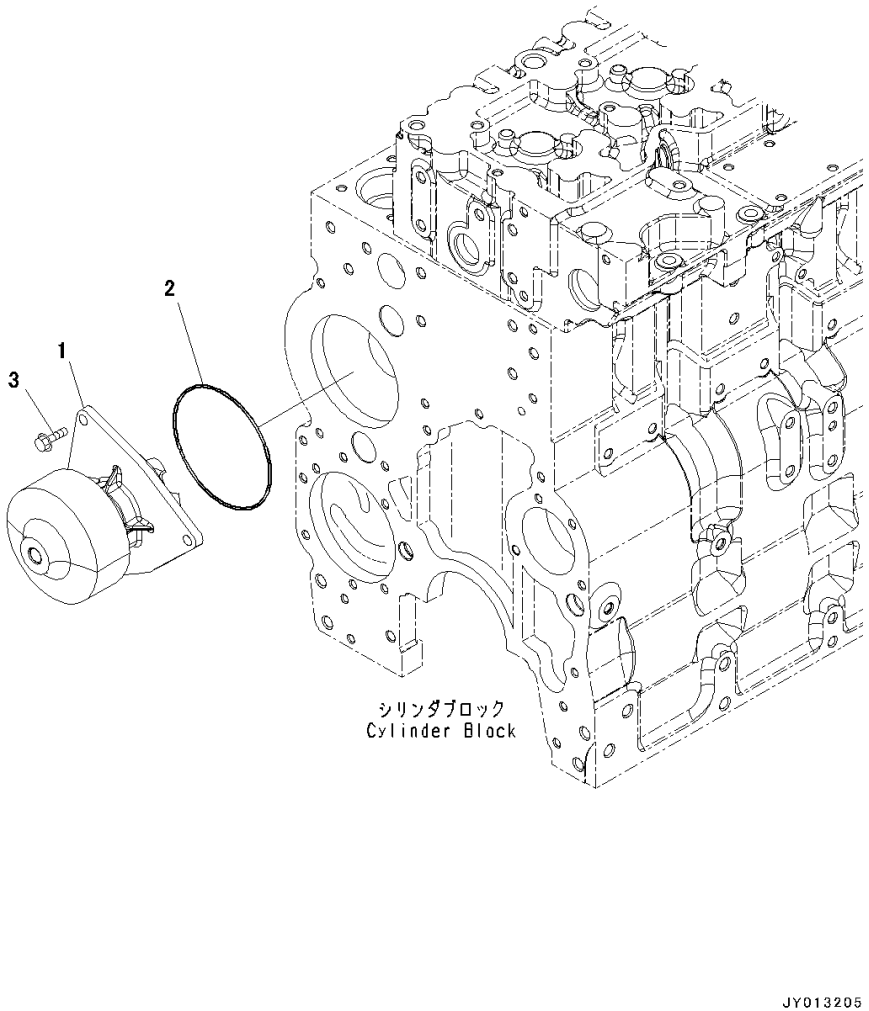

Index	Code	Part Number	Description	Qty	Serial Number
		6743-61-1531	Water Pump Assembly	1	26858351-
1		6743-61-1501	• Pump	1	26858351-
2		6741-61-1520	• Seal	1	26858351-
3		01435-00825	Bolt	3	26858351-

https://truckmanualshub.com/

FIG. AWP10-001001 Water Pump Drive Belt, For 60Amp. Alternator

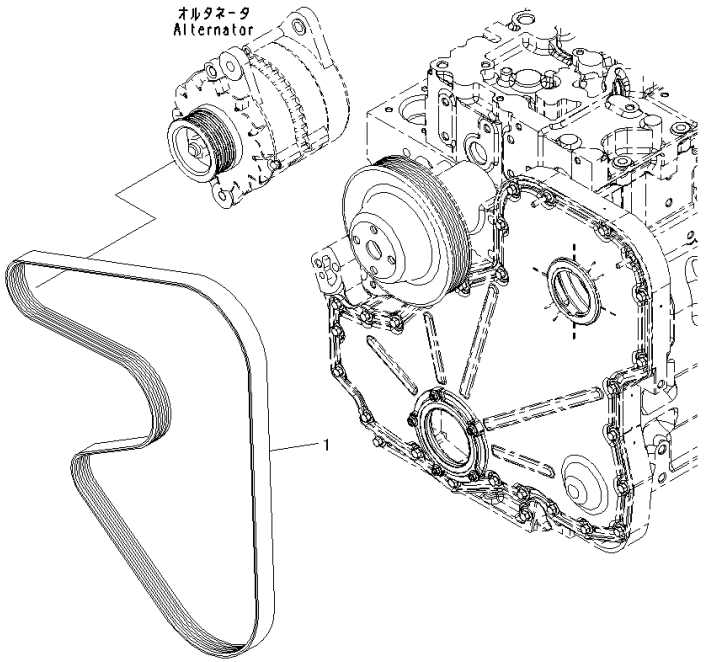

Index	Code	Part Number	Description	Qty	Serial Number
1		6741-61-1621	Belt	1	26858351-

https://truckmanualshub.com/

FIG. AWP10-002001 Water Pump Drive Belt, For 90Amp. Alternator

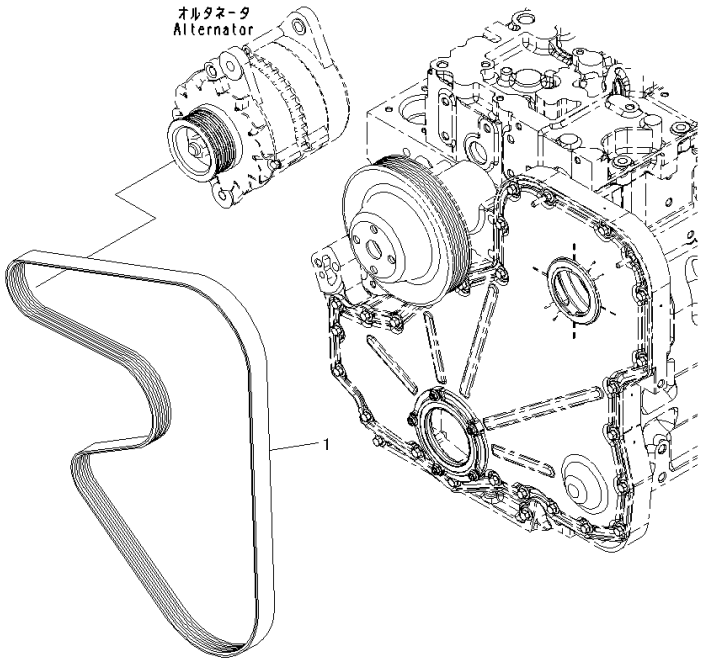

Index	Code	Part Number	Description	Qty	Serial Number
1		6743-61-1411	Belt	1	26858351-

https://truckmanualshub.com/

FIG. AWO00-001001 Water Outlet Connector

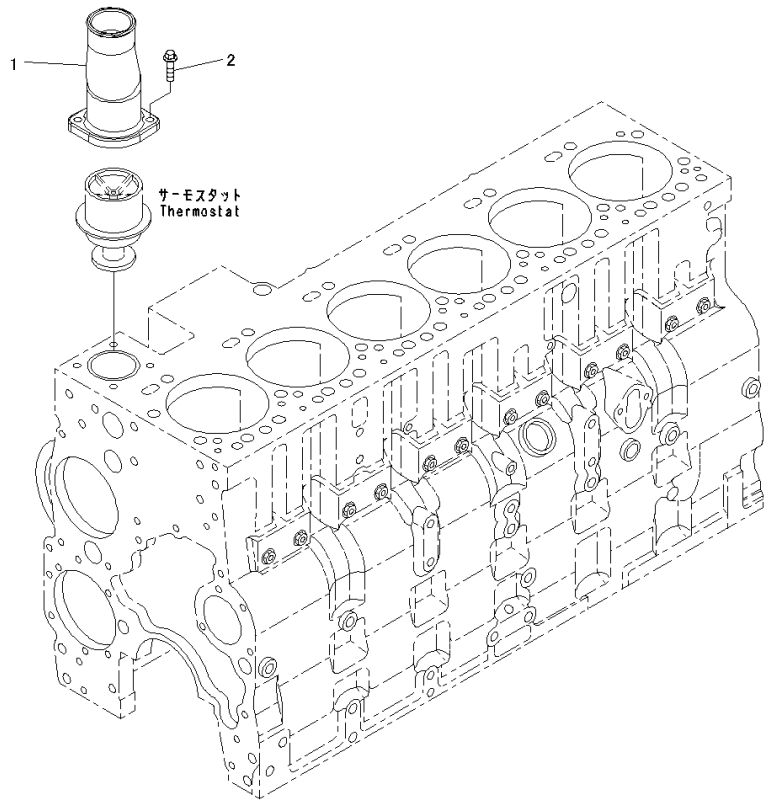

Index	Code	Part Number	Description	Qty	Serial Number
1		6745-61-6210	Connector	1	26858351-
2		6732-21-5160	Bolt	2	26858351-

https://truckmanualshub.com/

FIG. AWI10-001001 Water Inlet Connector

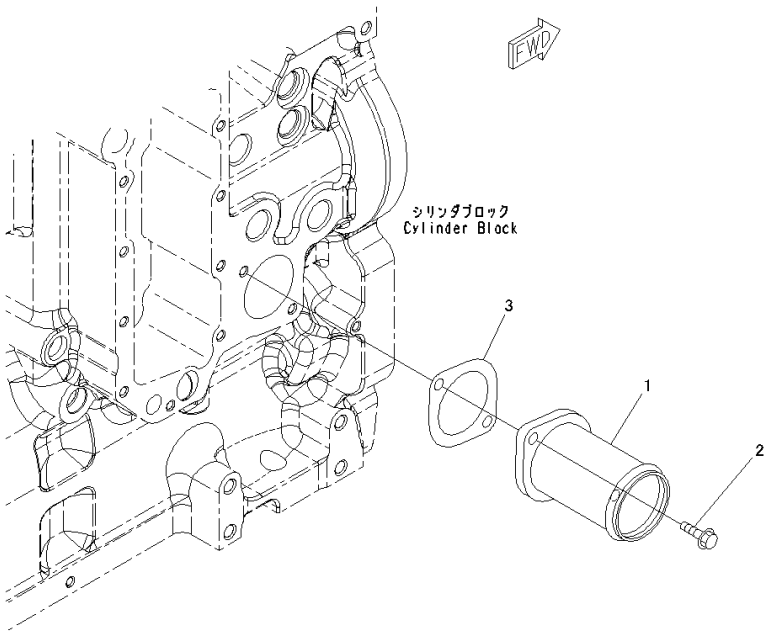

Index	Code	Part Number	Description	Qty	Serial Number
1		6745-61-6110	Connector	1	26858351-
2		6732-71-3220	Bolt	2	26858351-
3		6741-61-6130	Gasket	1	26858351-

https://truckmanualshub.com/

FIG. AEC00-001001 Thermostat

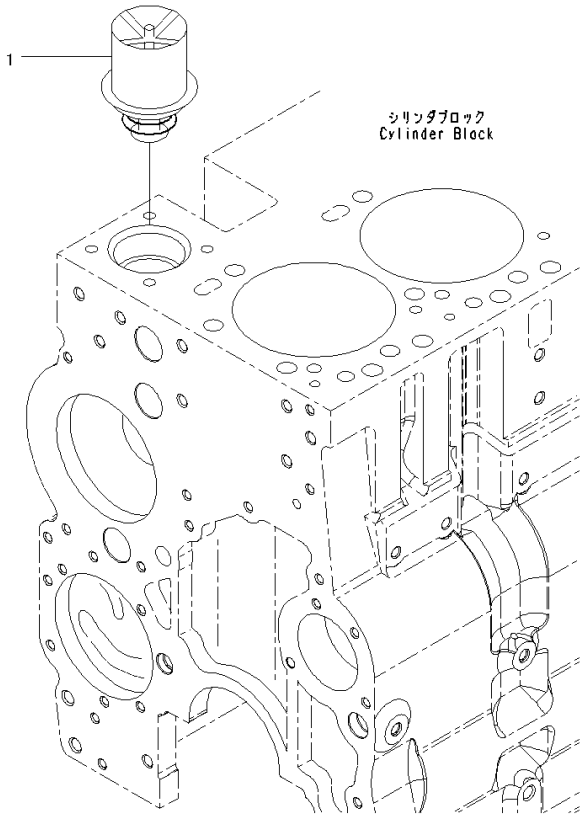

Index	Code	Part Number	Description	Qty	Serial Number
1		6745-61-1110	Thermostat	1	26858351-

https://truckmanualshub.com/

FIG. ATK00-001001 Plug, Torque Converter Cooling

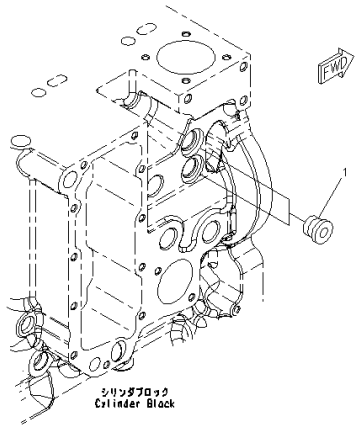

Index	Code	Part Number	Description	Qty	Serial Number
1		6216-14-6820	Plug Assembly	2	26858351-

https://truckmanualshub.com/

FIG. AWF00-001001 Corrosion Piping

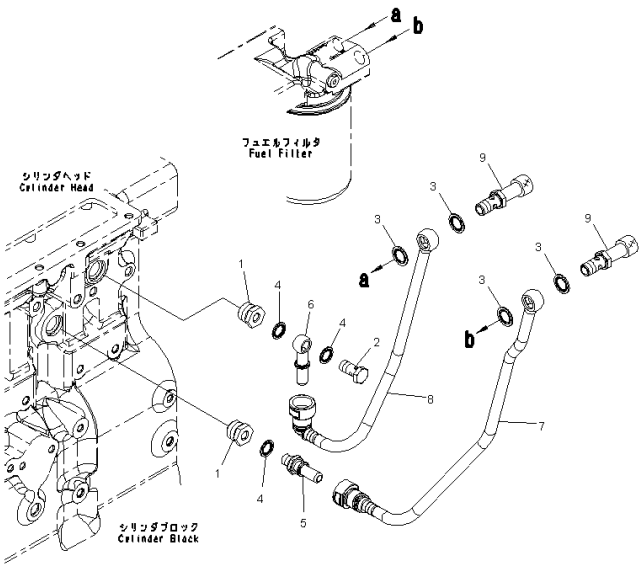

Index	Code	Part Number	Description	Qty	Serial Number
1		6745-61-8110	Union	2	26858351-
2		6732-71-6510	Bolt	1	26858351-
3		6731-74-5910	Washer	4	26858351-
4		6745-71-1130	Washer	3	26858351-
5		6745-71-6130	Connector	1	26858351-
6		6745-61-8120	Connector	1	26858351-
7		6745-61-8130	Tube	1	26858351-
8		6745-61-8140	Tube	1	26858351-
9		6745-61-8151	Valve	2	26858351-

https://truckmanualshub.com/

https://truckmanualshub.com/

ENGINE ELECTRICAL SYSTEM

FIG. ADA00-001001 Damper

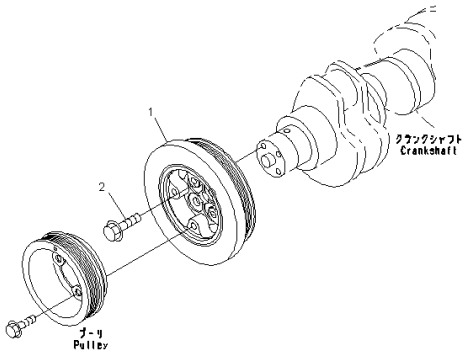

Index	Code	Part Number	Description	Qty	Serial Number
1		6742-01-5289	Damper	1	26858351-
2		6742-01-1890	Bolt	4	26858351-

https://truckmanualshub.com/

FIG. AEH20-001001 Alternator Mounts

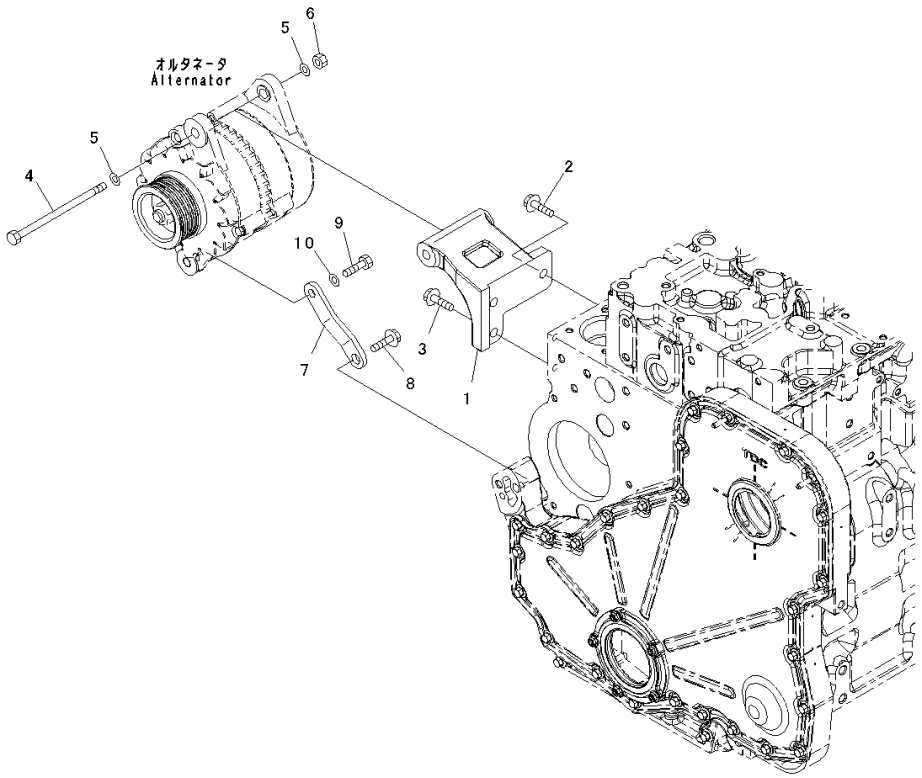

Index	Code	Part Number	Description	Qty	Serial Number
1		6741-81-6520	Bracket	1	26858351-
2		6735-61-3810	Bolt	2	26858351-
3		6735-71-3220	Bolt	1	26858351-
4		6207-81-6980	Bolt	1	26858351-
5		01643-31232	Washer	2	26858351-
6		01580-11210	Nut	1	26858351-
7		6741-81-6510	Brace	1	26858351-
8		01435-01020	Bolt	1	26858351-
9		01050-31230	Bolt	1	26858351-
10		01643-31232	Washer	1	26858351-

https://truckmanualshub.com/

FIG. AEE00-001001 Alternator, 60Amp.

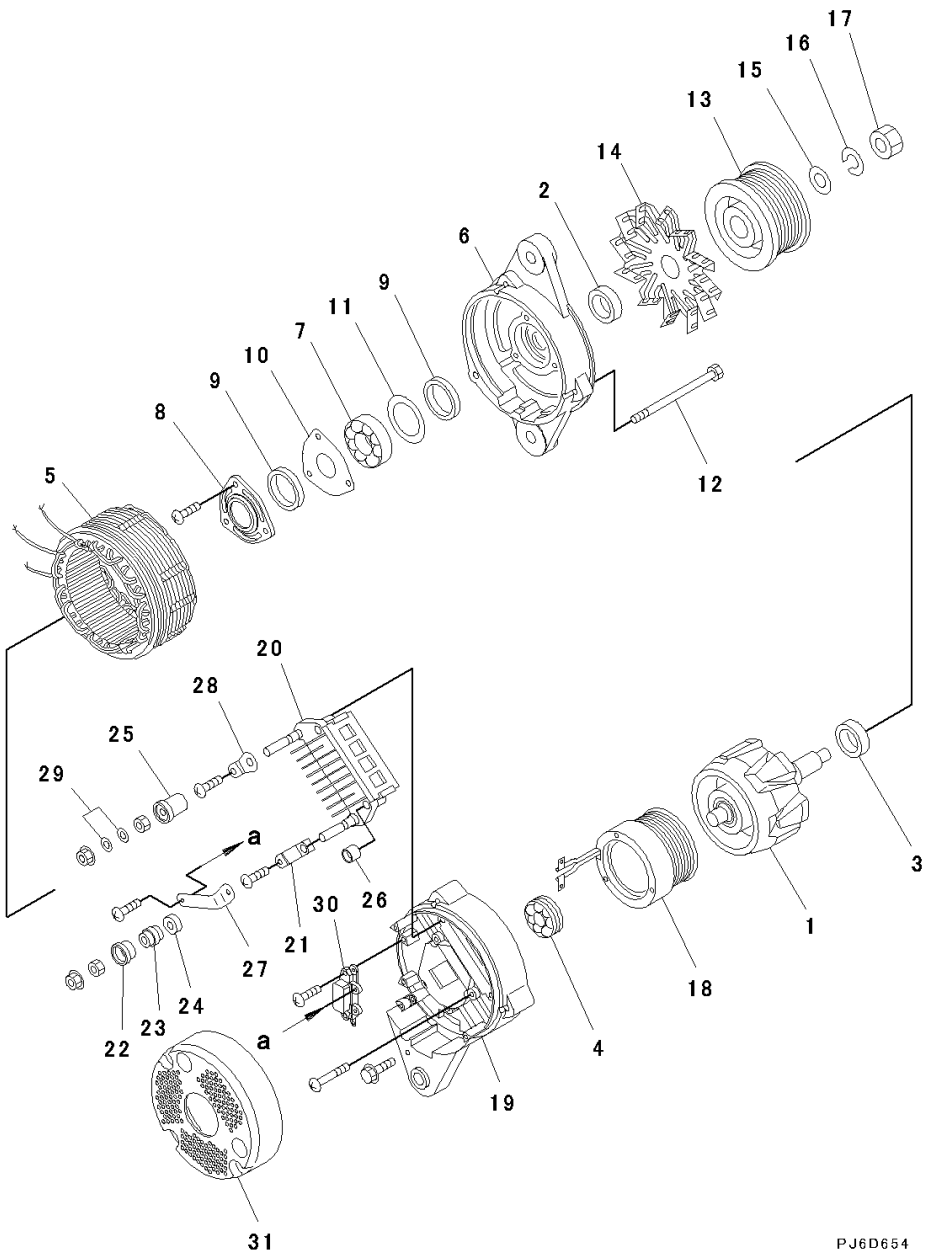

Index	Code	Part Number	Description	Qty	Serial Number
		600-861-6110	Alternator, 60Amp.	1	26858351-
1		KD0-35100-0300	• Rotor Assembly	1	26858351-
2		KD1-33923-0790	• Collar	1	26858351-
3		KD1-35923-0160	• Collar	1	26858351-
4		KD0-09201-0980	• Bearing, Ball	1	26858351-
5		KD0-35200-0460	• Stator Assembly	1	26858351-
6		KD0-35300-0350	• Bracket Assembly	1	26858351-
7		KD0-09201-1140	• • Bearing, Ball	1	26858351-
8		KD0-35926-0070	• • Retainer	1	26858351-
9		KD0-35951-0060	• • Packing	2	26858351-
10		KD0-35926-0090	• • Retainer	1	26858351-
11		KD1-33926-0730	• • Retainer	1	26858351-
12		KD0-0275-06802	• Bolt	3	26858351-
13		KD0-35411-0640	• Pulley	1	26858351-
14		KD0-35421-0240	• Fan	1	26858351-
15		KD1-0330-16012	• Washer	1	26858351-
16		KD1-0335-16002	• Washer, Spring	1	26858351-
17		KD0-0280-16022	• Nut	1	26858351-
18		KD0-35120-0290	• Coil, Field	1	26858351-
		KD0-35700-0950	• Bracket Assembly	1	26858351-
19		KD0-35710-1150	• • Bracket	1	26858351-
20		KD0-35730-0700	• • Rectifier Assembly	1	26858351-
21		KD0-09170-2501	• • Condenser	1	26858351-
22		KD0-35943-0150	• • Bushing, Insulate	1	26858351-
23		KD0-35923-0130	• • Collar	1	26858351-
24		KD0-35943-0160	• • Bushing, Insulate	1	26858351-
25		KD0-35943-0140	• • Bushing, Insulate	1	26858351-
26		KD0-35943-0170	• • Bushing, Insulate	2	26858351-
27		KD0-35784-0210	• • Bar, Connect	1	26858351-
28		KD0-35784-0290	• • Bar, Plate	1	26858351-
29		KD0-09057-0220	• • Washer	2	26858351-
30		KD7-35719-0211	• • Regulator Assembly	1	26858351-
31		KD0-35761-0250	• Cover	1	26858351-

https://truckmanualshub.com/

FIG. AEE00-002001 Alternator, 90Amp.

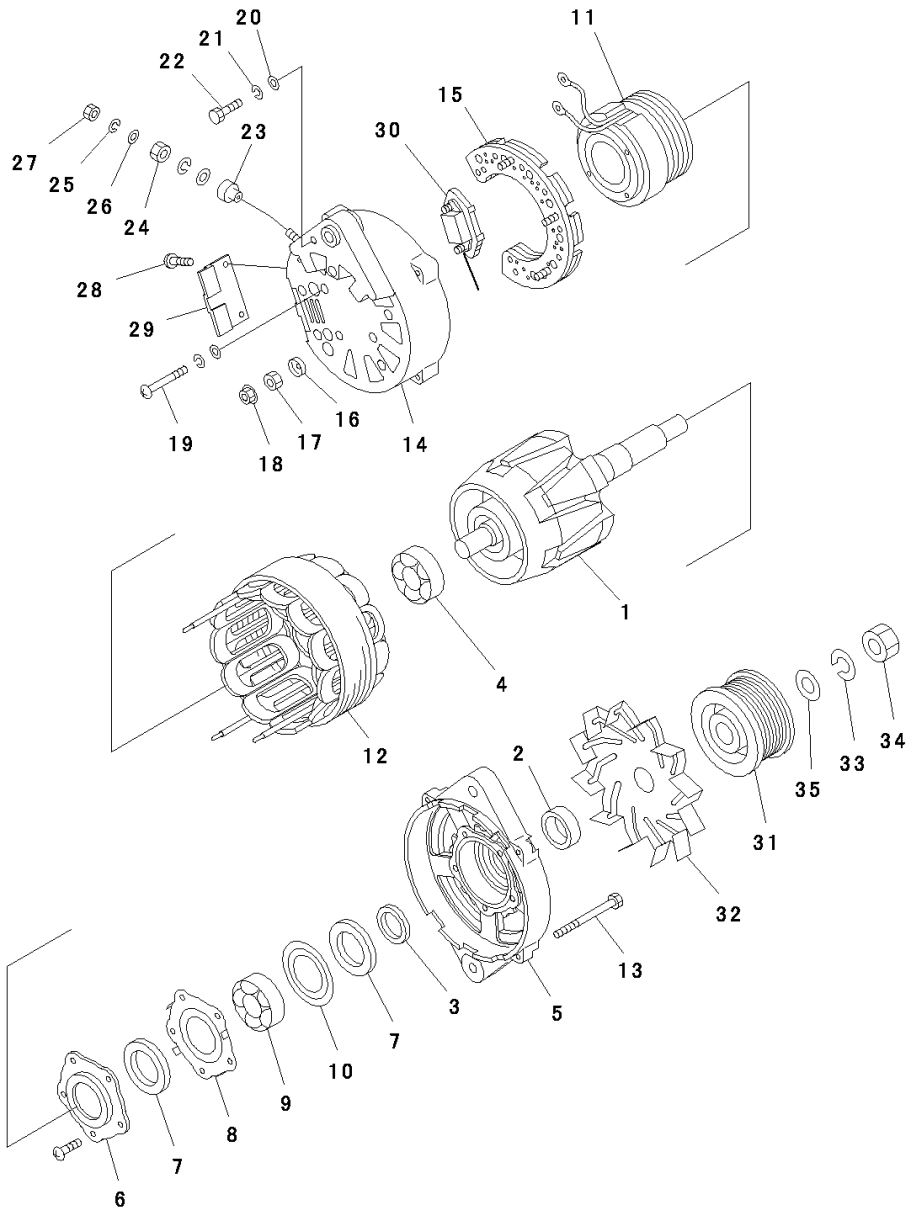

Index	Code	Part Number	Description	Qty	Serial Number
		600-861-9120	Alternator Assembly, 90Amp.	1	26858351-
1		KD0-35100-0310	• Rotor Assembly	1	26858351-
2		KD1-33923-0890	• Collar	1	26858351-
3		KD1-35923-0030	• Collar	1	26858351-
4		KD0-09201-0770	• Bearing, Ball	1	26858351-
5		KD0-35300-0200	• Bracket Assembly	1	26858351-
6		KD0-35926-0080	• Retainer	1	26858351-
7		KD0-35951-0080	• Packing	2	26858351-
8		KD1-33926-0660	• Retainer	1	26858351-
9		KD0-09201-0760	• Bearing, Ball	1	26858351-
10		KD1-33926-0790	• Retainer	1	26858351-
11		KD0-35120-0250	• Coil Assembly, Field	1	26858351-
12		KD0-35200-0320	• Stator Assembly	1	26858351-
13		KD0-0083-08802	• Bolt	4	26858351-
		KD0-35700-0970	• Bracket Assembly	1	26858351-
14		KD0-35710-1190	• • Bracket	1	26858351-
15		KD0-35730-0162	• • Rectifier Assembly	1	26858351-
16		KD0-35943-0210	• • Bushing	1	26858351-
17		KD0-33902-0090	• • Nut	1	26858351-
18		KD0-33902-0080	• • Nut	6	26858351-
19		KD1-0020-06452	• • Screw	4	26858351-
20		KD1-0330-06012	• • Washer, Prain	5	26858351-
21		KD1-0335-06002	• • Washer, Spring	5	26858351-
22		KD0-0080-06142	• • Bolt	1	26858351-
23		KD0-35943-0100	• • Bushing	1	26858351-
24		KD0-33902-0100	• • Nut	1	26858351-
25		KD1-0335-08002	• • Washer, Spring	2	26858351-
26		KD1-0331-08020	• • Washer	2	26858351-
27		KD0-0291-08010	• • Nut	1	26858351-
28		KD0-0055-05122	• • Screw	2	26858351-
29		KD0-35761-0190	• • Cover	1	26858351-
30		KD7-35719-0181	• • Regulator Assembly	1	26858351-
31		KD0-35411-0650	• Pulley	1	26858351-
32		KD0-35421-0190	• Fan	1	26858351-
33		KD1-0335-20002	• Washer, Spring	1	26858351-
34		KD0-0290-20022	• Nut	1	26858351-
35		KD1-35921-0010	• Washer	1	26858351-

https://truckmanualshub.com/

FIG. A6010-001001 Alternator Cover, For 60Amp. Alternator

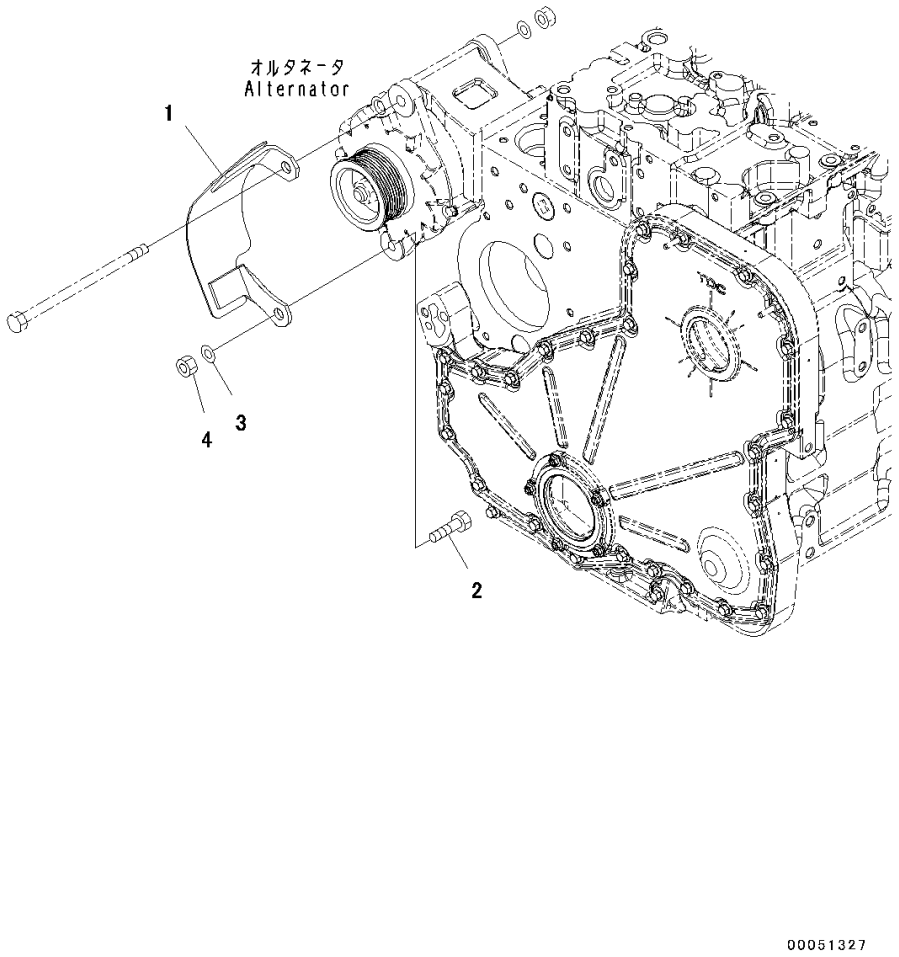

Index	Code	Part Number	Description	Qty	Serial Number
1		6745-81-6120	Cover	1	26858351-
2		6135-85-8190	Bolt	1	26858351-
3		01643-31232	Washer	1	26858351-
4		01582-11210	Nut	1	26858351-

https://truckmanualshub.com/

FIG. A6010-002001 Alternator Cover, For 90Amp. Alternator

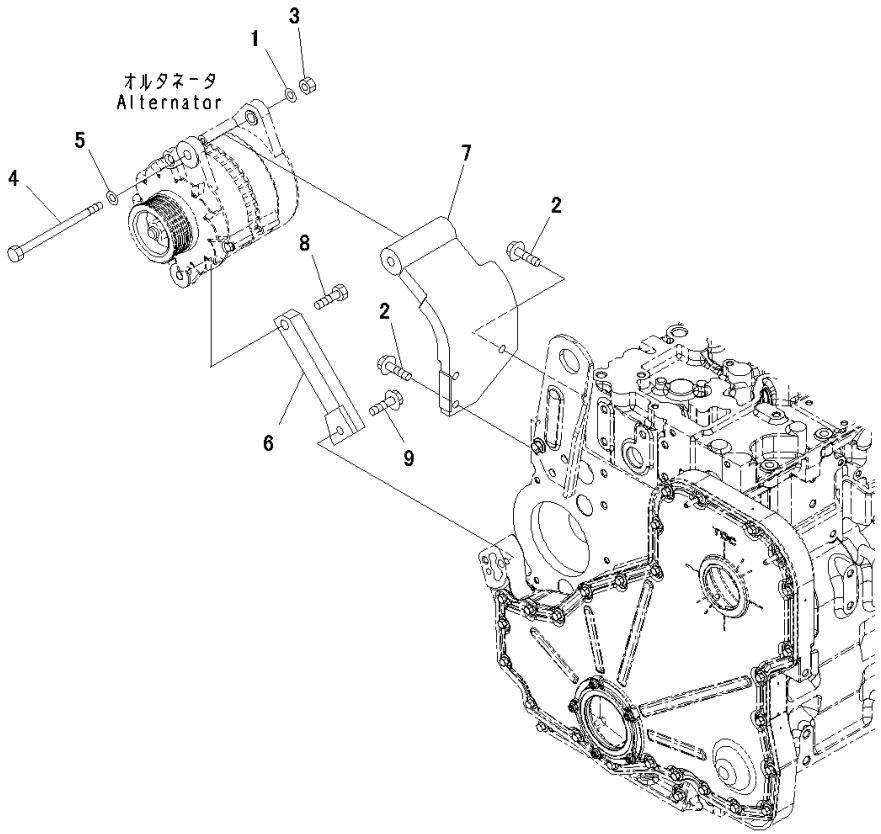

Index	Code	Part Number	Description	Qty	Serial Number
1		01643-31232	Washer	1	26858351-
2		6216-74-6190	Bolt	3	26858351-
3		01582-11210	Nut	1	26858351-
4		6732-81-6840	Bolt	1	26858351-
5		6732-81-6880	Washer	1	26858351-
6		6745-81-8150	Bracket	1	26858351-
7		6745-81-8140	Bracket	1	26858351-
8		6135-85-8190	Bolt	1	26858351-
9		6745-61-4230	Bolt	1	26858351-

https://truckmanualshub.com/

FIG. ASM00-001001 Starter Motor Mounts

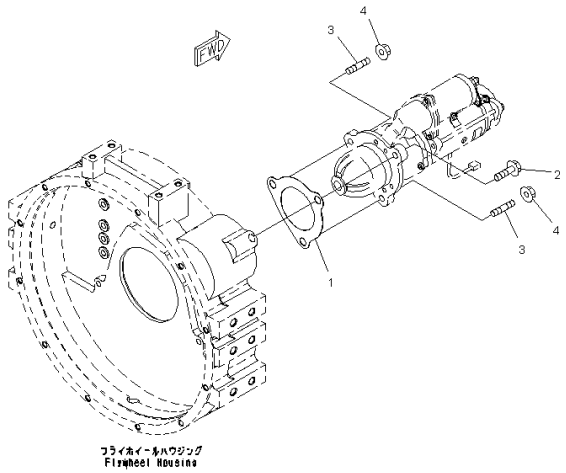

Index	Code	Part Number	Description	Qty	Serial Number
1		6221-81-6810	Gasket	1	26858351-
2		01435-01240	Bolt	1	26858351-
3		6743-81-6310	Stud	2	26858351-
4		01584-01210	Nut	2	26858351-

https://truckmanualshub.com/

FIG. AST00-001001 Starter Motor, 7.5KW

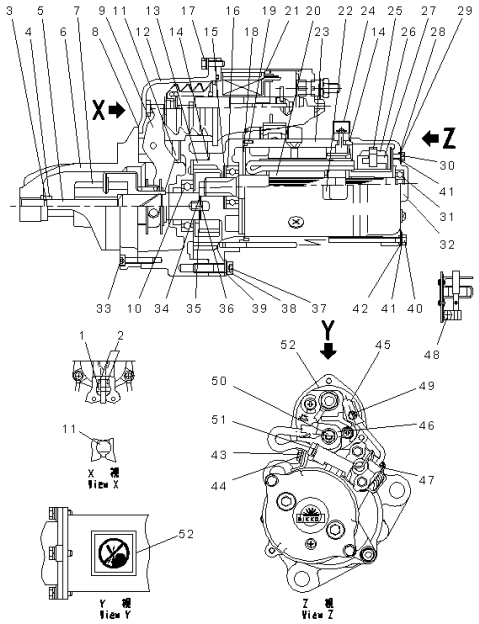

Index	Code	Part Number	Description	Qty	Serial Number
		600-863-5711	Starting Motor Assembly, 7.5Kw	1	26858351-
1		KD0-23904-0070	• Pin	1	26858351-
2		KD0-23927-0071	• Holder	2	26858351-
3		KD1-23914-0020	• Ring	1	26858351-
4		KD1-23181-0020	• Stopper	1	26858351-
5		KD1-23111-0160	• Shaft	1	26858351-
6		KD0-23310-1730	• Bracket	1	26858351-
7		KD0-23500-0970	• Clutch Assembly	1	26858351-
8		KD0-23951-0301	• Packing	1	26858351-
9		KD0-23320-0220	• Lever Assembly	1	26858351-
10		KD1-0454-60067	• Bearing, Ball	1	26858351-
11		KD0-23951-0331	• Packing	1	26858351-
12		KD0-23600-0460	• Bracket Assembly	1	26858351-
13		KD0-23611-0690	• Bracket	1	26858351-
14		KD1-09211-0980	• O-ring	2	26858351-
15		KD0-23921-0230	• Washer	1	26858351-
16		KD1-0454-62047	• Bearing, Ball	1	26858351-
17		KD0-0274-06202	• Bolt	3	26858351-
18		KD1-23951-0020	• Packing	1	26858351-
19		KD1-0400-20100	• Pin	1	26858351-
20		KD0-23100-0251	• Armature Assembly	1	26858351-
21		KD0-47100-4800	• Switch Assembly, Magnetic	1	26858351-
22		KD0-09271-3620	• Name Plate	1	26858351-
23		KD0-23200-0331	• Yoke Assembly	1	26858351-
24		KD0-47761-2691	• Cover	1	26858351-
25		KD1-23913-0040	• Spring	4	26858351-
26		KD0-23740-0250	• Brush Assembly	4	26858351-
27		KD0-23750-0250	• Holder Assembly, Brush	1	26858351-
28		KD1-0505-00601	• O-ring	2	26858351-
29		KD1-47921-0790	• Washer	2	26858351-
30		KD0-09001-4580	• Bolt	2	26858351-
31		KD1-0454-62007	• Bearing, Ball	1	26858351-
32		KD0-23700-0130	• Bracket Assembly	1	26858351-
33		KD1-0240-06305	• Bolt	6	26858351-
34		KD1-23921-0130	• Washer	1	26858351-
35		KD1-23921-0140	• Washer	1	26858351-
36		KD1-23941-0040	• Washer, Insulate	1	26858351-
37		KD1-0240-08405	• Bolt	3	26858351-
38		KD1-0335-08002	• Washer, Spring	3	26858351-
39		KD1-0330-08022	• Washer	3	26858351-

https://truckmanualshub.com/

FIG. AST00-001001 Starter Motor, 7.5KW

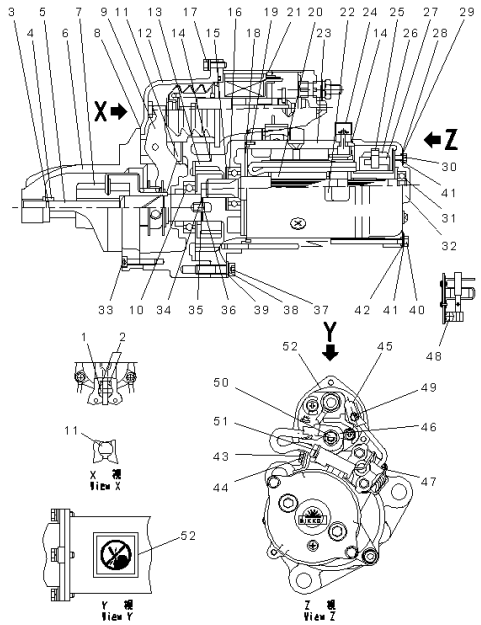

Index	Code	Part Number	Description	Qty	Serial Number
40		KD0-23901-0170	• Bolt	2	26858351-
41		KD1-0335-06002	• Washer, Spring	4	26858351-
42		KD1-0330-06012	• Washer, Prain	2	26858351-
43		KD0-0270-06402	• Bolt	1	26858351-
44		KD1-47927-1250	• Holder	1	26858351-
45		KD0-47761-2671	• Cover	1	26858351-
46		KD0-47761-2681	• Cover	1	26858351-
47		KD0-25000-8332	• Switch Assembly	1	26858351-
48		KD0-0055-05082	• Screw	4	26858351-
49		KD0-09006-0660	• Nut	1	26858351-
50		KD0-09006-0670	• Nut	1	26858351-
51		KD1-09257-0050	• Band	1	26858351-
52		KD0-09275-1430	• Plate, Caution	1	26858351-

https://truckmanualshub.com/

FIG. AST00-002001 Starter Motor, 11KW

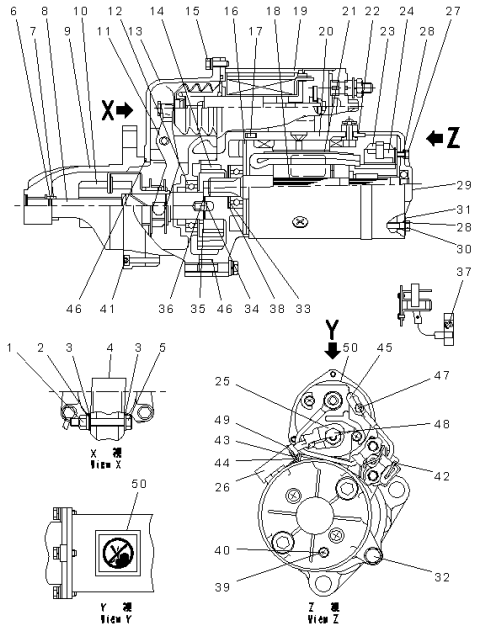

Index	Code	Part Number	Description	Qty	Serial Number
		600-863-8112	Starting Motor Assembly, 11Kw	1	26858351-
1		KD1-09279-0090	• Nut	1	26858351-
2		KD1-0335-08002	• Washer, Spring	4	26858351-
3		KD1-0330-08022	• Washer	5	26858351-
4		KD1-0345-08001	• Washer, Seal	2	26858351-
5		KD0-23303-0020	• Pin	1	26858351-
6		KD1-23914-0020	• Ring	1	26858351-
7		KD1-23181-0020	• Stopper	1	26858351-
8		KD0-23120-0180	• Shaft Assembly	1	26858351-
9		KD0-23310-1740	• Bracket Assembly	1	26858351-
10		KD1-23500-0970	• Clutch Assembly	1	26858351-
11		KD1-23320-0290	• Lever Assembly	1	26858351-
12		KD0-09201-0850	• Bearing, Ball	1	26858351-
13		KD0-23600-0410	• Bracket Assembly	1	26858351-
14		KD0-23611-1101	• Bracket	1	26858351-
15		KD0-0274-06202	• Bolt	3	26858351-
16		KD1-23951-0051	• Packing	1	26858351-
17		KD1-0400-30100	• Pin	1	26858351-
18		KD0-23100-0430	• Armature Assembly	1	26858351-
19		KD0-47100-4651	• Switch Assembly	1	26858351-
20		KD0-23200-0671	• Yoke Assembly	1	26858351-
21		KD0-09271-3620	• Name Plate	1	26858351-
22		KD1-09211-1120	• O-ring	1	26858351-
23		KD0-23740-0351	• Brush Assembly	2	26858351-
24		KD0-23750-0490	• Holder Assembly	1	26858351-
25		KD0-47761-2681	• Cover	1	26858351-
26		KD0-47761-2691	• Cover	1	26858351-
27		KD0-09011-3140	• Screw	2	26858351-
28		KD1-09211-0081	• O-ring	4	26858351-
29		KD0-23710-0221	• Bracket	1	26858351-
30		KD0-09001-4380	• Bolt	2	26858351-
31		KD1-47921-0790	• Washer	2	26858351-
32		KD0-0276-08402	• Bolt	3	26858351-
33		KD0-09057-0110	• Washer	1	26858351-
34		KD1-23941-0040	• Washer, Insulate	1	26858351-
35		KD1-23921-0140	• Washer	1	26858351-
36		KD1-23921-0130	• Washer	1	26858351-
37		KD0-0055-05082	• Screw	2	26858351-
38		KD0-09057-0190	• Washer	1	26858351-
39		KD0-0020-05062	• Screw	1	26858351-

https://truckmanualshub.com/

FIG. AST00-002001 Starter Motor, 11KW

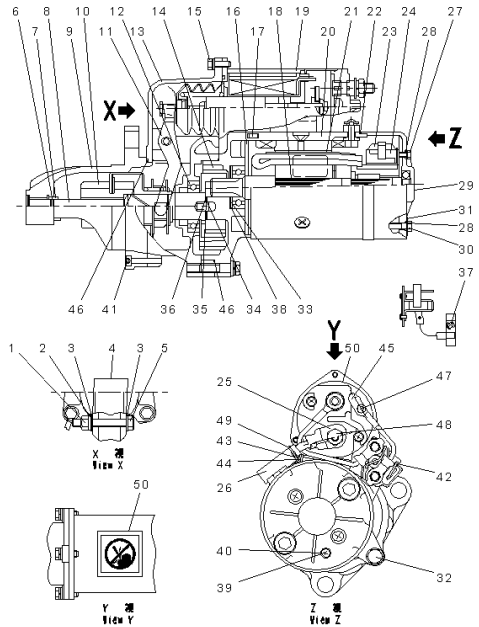

Index	Code	Part Number	Description	Qty	Serial Number
40		KD1-0345-05001	• Washer, Seal	1	26858351-
41		KD1-0240-06305	• Bolt	6	26858351-
42		KD0-25000-8521	• Switch Assembly	1	26858351-
43		KD0-0270-06602	• Bolt	1	26858351-
44		KD0-47927-1390	• Holder	1	26858351-
45		KD0-47761-2671	• Cover	1	26858351-
46		KD1-09211-0981	• O-ring	2	26858351-
47		KD0-09006-0660	• Nut	1	26858351-
48		KD0-09006-0670	• Nut	1	26858351-
49		KD1-09257-0050	• Band	1	26858351-
50		KD0-09275-1430	• Plate, Caution	1	26858351-

https://truckmanualshub.com/

FIG. AWR00-001001 Electric Wiring

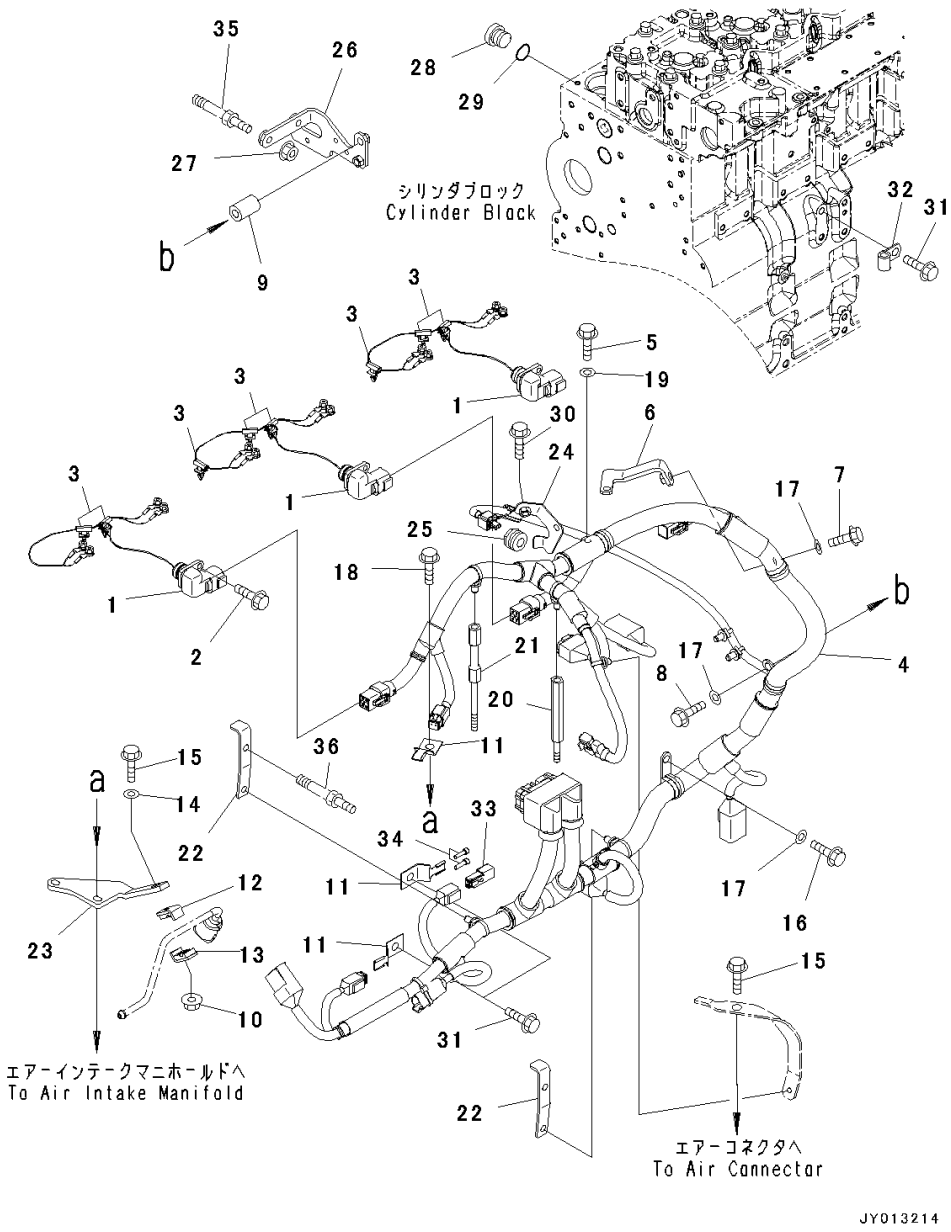

Index	Code	Part Number	Description	Qty	Serial Number
1		6745-81-9240	Wiring Harness	3	26858351-
2		6732-21-4180	Bolt	3	26858351-
3		6745-81-9390	Clip	8	26858351-
4		6745-81-9230	Wiring Harness	1	26858351-
5		6742-01-3770	Bolt	1	26858351-
6		6745-81-9710	Bracket	1	26858351-
7		6732-71-3220	Bolt	1	26858351-
8		6736-21-3210	Bolt	1	26858351-
9		6144-11-5630	Spacer	1	26858351-
10		01584-00605	Nut	1	26858351-
11		08193-20010	Clip	3	26858351-
12		6155-71-5810	Clamp	1	26858351-
13		6155-71-5820	Clamp	1	26858351-
14		01643-30623	Washer	1	26858351-
15		6745-81-9430	Bolt	1	26858351-
16		6732-21-3120	Bolt	1	26858351-
17		01640-20816	Washer	3	26858351-
18		6732-61-6140	Bolt	2	26858351-
19		01640-20716	Washer	1	26858351-
20		6745-81-9720	Spacer	1	26858351-
21		6745-81-9730	Spacer	1	26858351-
22		6745-81-9740	Bracket	2	26858351-
23		6745-81-9750	Brace	1	26858351-
24		6745-81-9810	Bracket	1	26858351-
25		6745-81-9770	Bushing	1	26858351-
26		6745-81-9790	Brace	1	26858351-
27		6732-71-3210	Nut	2	26858351-
		6735-21-1910	Plug Assembly	1	26858351-
28		6735-21-1920	• Plug	1	26858351-
29		6735-21-1930	• O-ring	1	26858351-
30		6216-74-6180	Bolt	1	26858351-
31		6216-54-7320	Bolt	3	26858351-
32		04434-51010	Clip	1	26858351-
33		08192-12100	Connector Assembly	1	26858351-
34		08191-00770	Plug, Connector	2	26858351-
35		(6745-81-9580)	Bolt(Refer to Page 101)		-
36		(6745-81-9560)	Bolt(Refer to Page 140)		-

https://truckmanualshub.com/

FIG. A4719-001001 Electric Controller

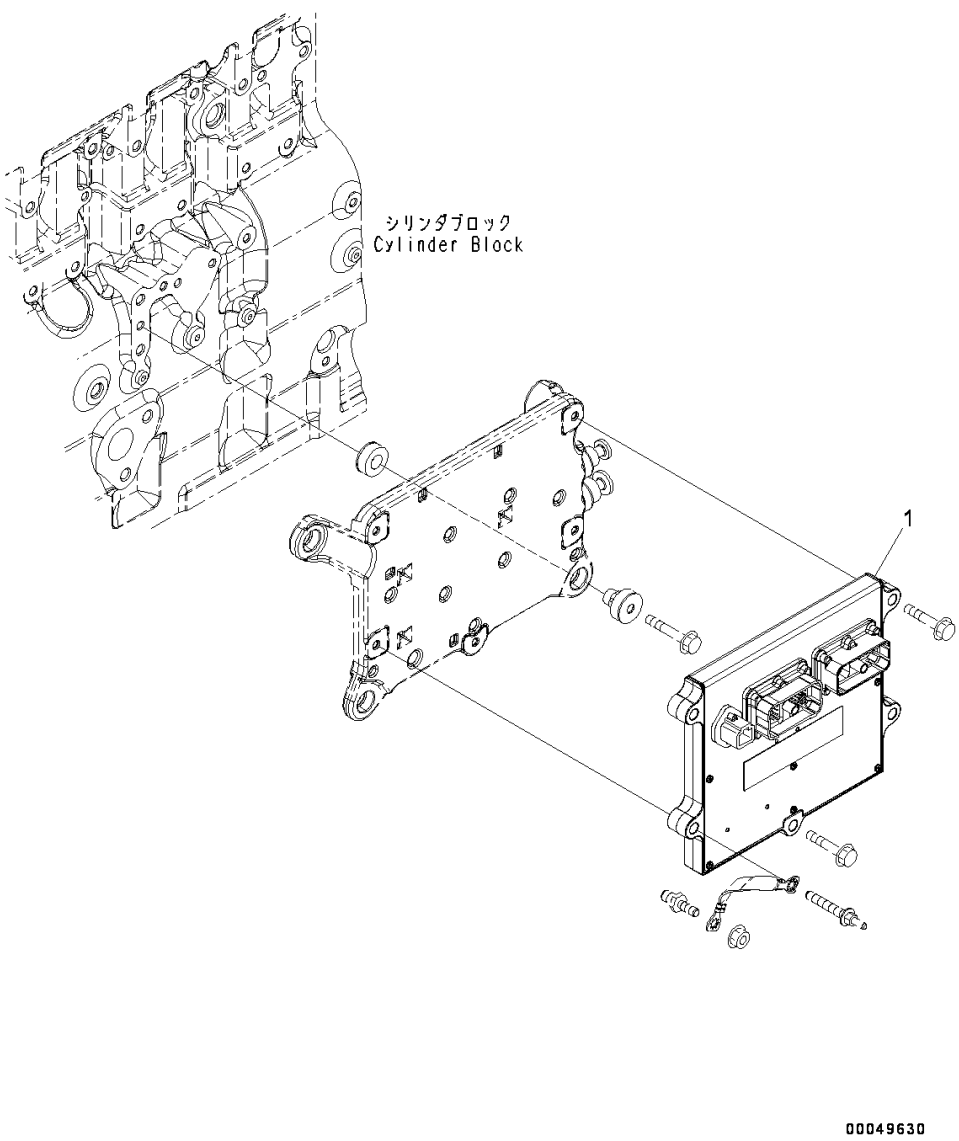

Index	Code	Part Number	Description	Qty	Serial Number
1		600-468-1600	Controller Assembly	1	26858351-

https://truckmanualshub.com/

FIG. APH10-001001 Electric Controller Piping

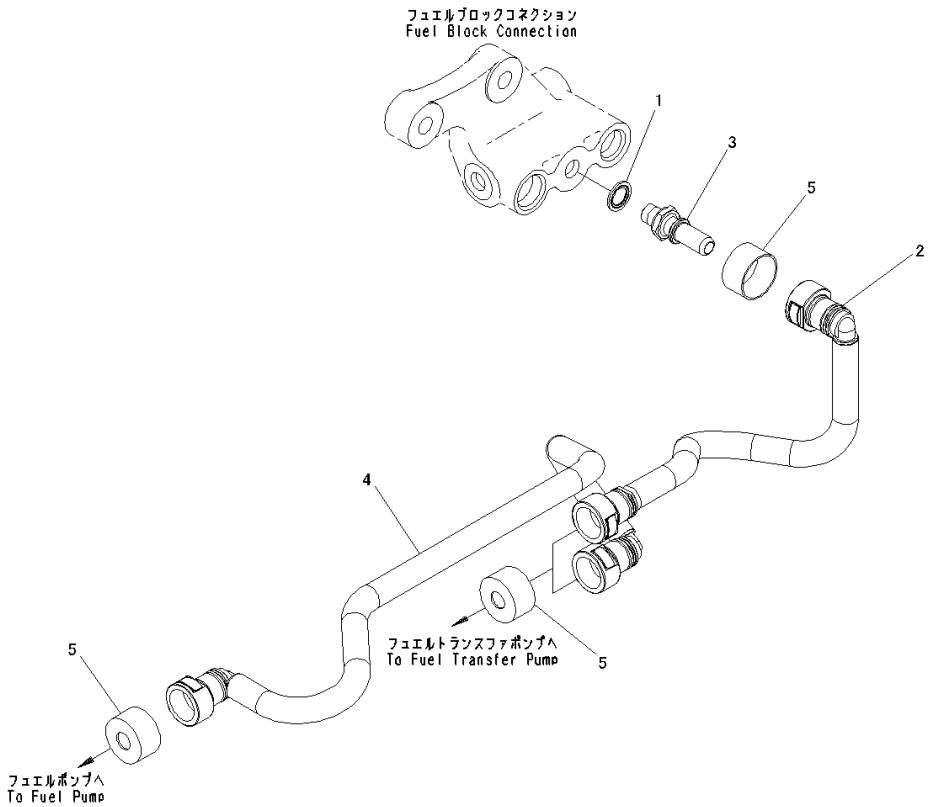

Index	Code	Part Number	Description	Qty	Serial Number
1		6745-71-1130	Washer	1	26858351-
2		6745-71-5690	Tube	1	26858351-
3		6745-71-6130	Connector	1	26858351-
4		6745-71-5230	Tube	1	26858351-
5		6745-71-5160	Cover	4	26858351-

https://truckmanualshub.com/

FIG. APH00-001001 Electric Controller Mounts

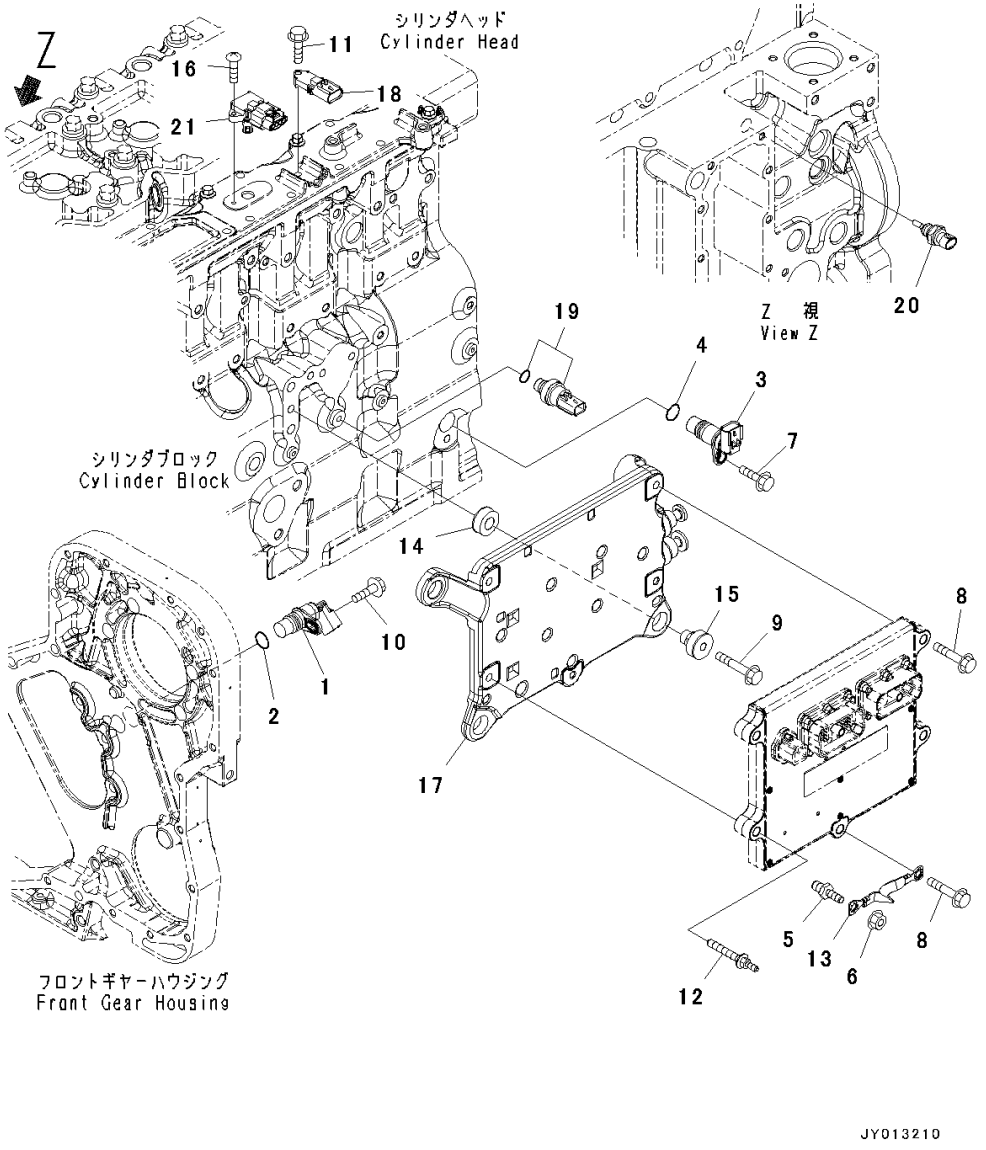

Index	Code	Part Number	Description	Qty	Serial Number
		6271-81-9201	Sensor Assembly	1	26858972-
		6271-81-9200	Sensor Assembly	1	26858351-26858971
1		6754-81-9410	• Sensor Assembly	1	26858351-26858971
2		6271-81-9220	• O-ring	1	26858351-
		6261-81-2902	Sensor Assembly, Speed, Revolution	1	26859429-
	A2	6261-81-2901	Sensor Assembly, Speed, Revolution	1	26858351-26859428
3		6261-81-2911	• Sensor	1	26858351-26858428
4		6271-81-9220	• O-ring	1	26858351-
5		6745-81-9440	Bolt	1	26858351-
6		6732-71-3210	Nut	1	26858351-
7		6732-71-3220	Bolt	1	26858351-
8		6732-61-3110	Bolt	2	26858351-
9		6735-61-2120	Bolt	4	26858351-
10		6732-21-4180	Bolt	1	26858351-
11		6734-71-5520	Bolt	1	26858351-
12		6745-81-9560	Bolt	3	26858351-
13		6754-81-9170	Wire	1	26858351-
14		6754-81-9110	Isolator	4	26858351-
15		6754-81-9130	Isolator	4	26858351-
16		6754-81-9180	Screw	1	26858351-
17		6745-81-9511	Cooler, Electric Control	1	26858351-
18		6261-81-1900	Sensor	1	26858351-
19		6744-81-4010	Switch	1	26858351-
20		6261-81-6901	Sensor Assembly	1	26858351-
21		6754-81-2701	Sensor	1	26858351-

https://truckmanualshub.com/

https://truckmanualshub.com/

ENGINE ACCESSORIES AND OTHERS

FIG. AVC00-001001 Cover

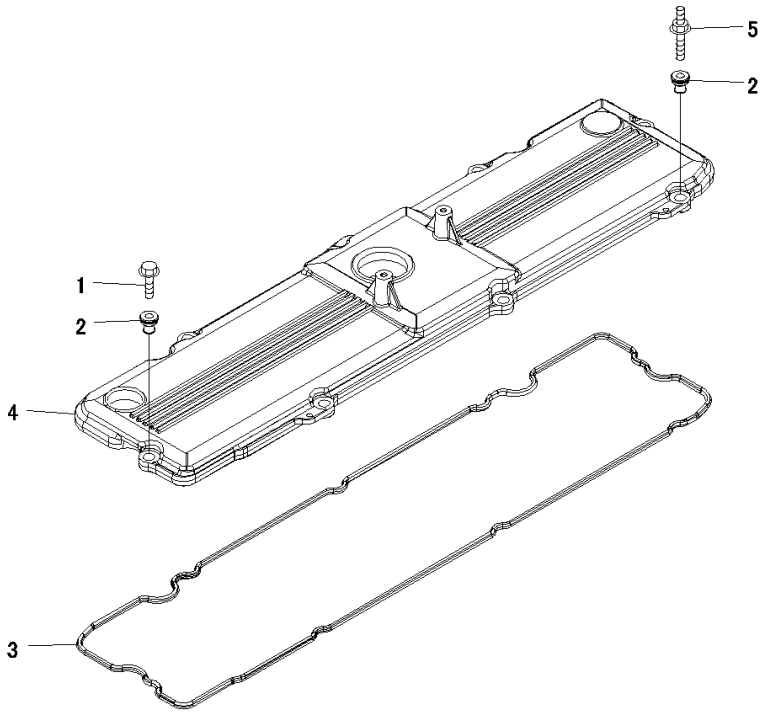

JY013213

Index	Code	Part Number	Description	Qty	Serial Number
1		6732-61-6140	Bolt	7	26858351-
2		6745-11-8160	Isolator	8	26858351-
		6745-11-8310	Cover	1	26858351-
3		6745-11-8810	• Gasket	1	26858351-
4		6745-11-8320	• Cover	1	26858351-
5		6745-11-8170	Screw	1	26858351-

https://truckmanualshub.com/

https://truckmanualshub.com/

ENGINE AUXILIARY PARTS AND TOOL

FIG. B9999-501001 Spare Parts, For 60Amp. Alternator

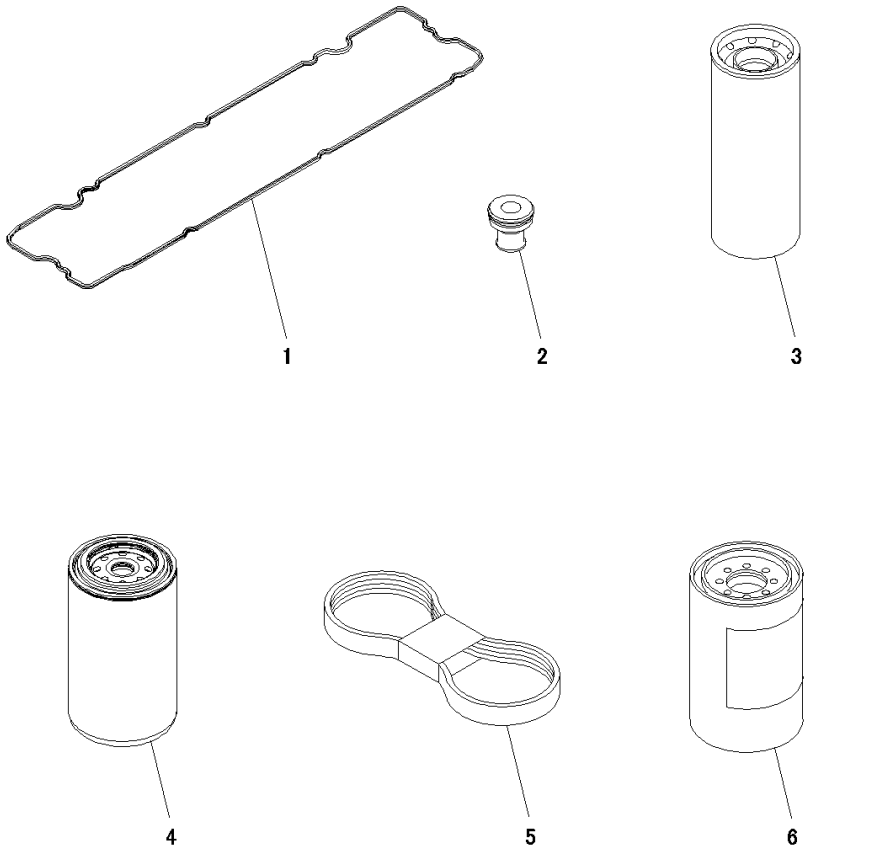

Index	Code	Part Number	Description	Qty	Serial Number
1		6745-11-8810	Gasket	1	26858351-
2		6745-11-8160	Isolator	8	26858351-
3		6742-01-4540	Cartridge	1	26858351-
4		6754-79-6140	Cartridge	1	26858351-
5		6741-61-1621	Belt	1	26858351-
6		600-319-3610	Cartridge Assembly	1	26858351-

https://truckmanualshub.com/

FIG. B9999-502001 Spare Parts, For 90Amp. Alternator

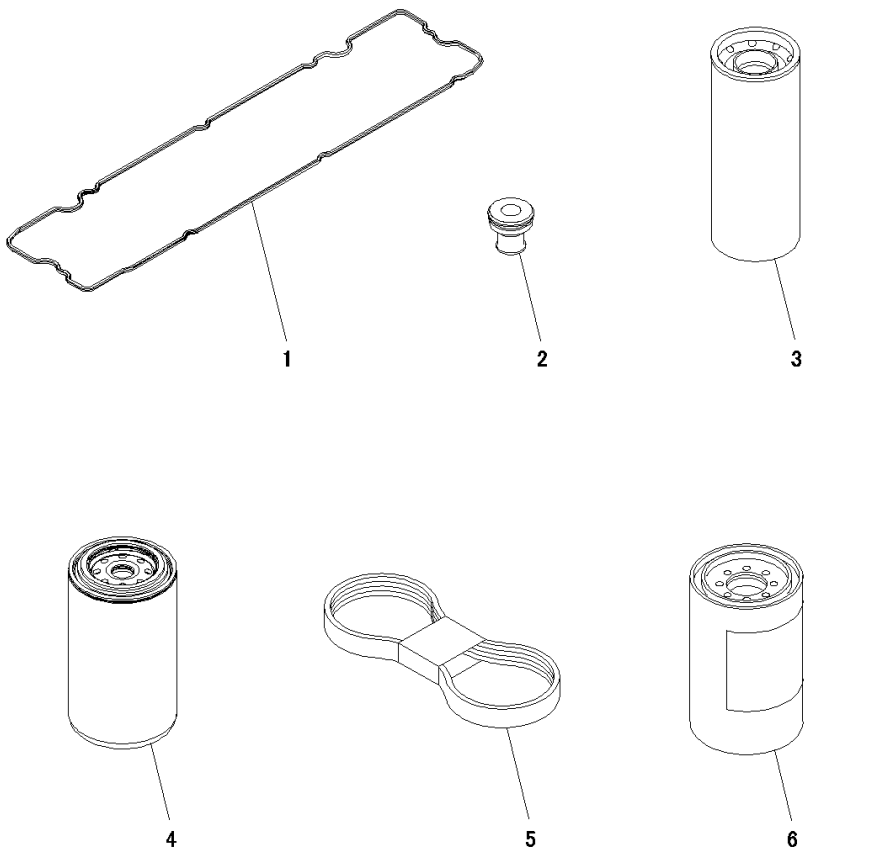

Index	Code	Part Number	Description	Qty	Serial Number
1		6745-11-8810	Gasket	1	26858351-
2		6745-11-8160	Isolator	8	26858351-
3		6742-01-4540	Cartridge	1	26858351-
4		6754-79-6140	Cartridge	1	26858351-
5		6743-61-1411	Belt	1	26858351-
6		600-319-3610	Cartridge Assembly	1	26858351-

https://truckmanualshub.com/

https://truckmanualshub.com/

https://truckmanualshub.com/

ENGINE MARKS AND PLATES

FIG. AAP00-001001 Caution Plates, EU Exhaust Emissions 3rd Regulations

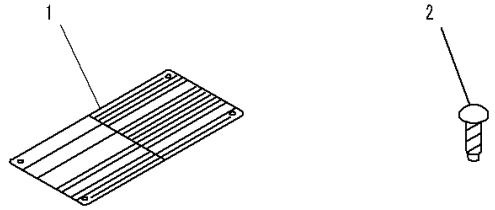

00019143

Index	Code	Part Number	Description	Qty	Serial Number
1		6734-81-2560	Name Plate	1	26858351-
2		04418-02550	Screw	2	26858351-

https://truckmanualshub.com/

FIG. A9810-001001 Caution Plates

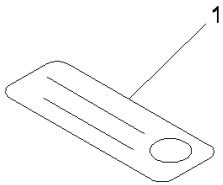

00059246

Index	Code	Part Number	Description	Qty	Serial Number
1		600-021-2060	Decal	1	26858351-

https://truckmanualshub.com/

FIG. A9810-003001 Caution Plates, For EU Safety Regulation

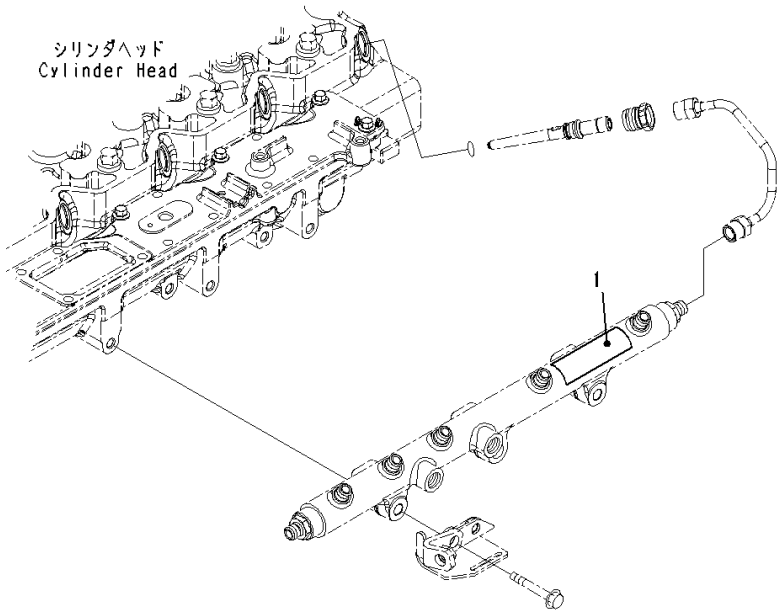

Index	Code	Part Number	Description	Qty	Serial Number
1		6271-81-2980	Plate, Caution	1	26858720-

https://truckmanualshub.com/

https://truckmanualshub.com/

FIELD REPAIR SERVICE PARTS

FIG. A8110-001001 Repair Service Parts

Index	Code	Part Number	Description	Qty	Serial Number
		1295465H92	Seal Assembly	1	26858351-
1		6741-39-1220	• Tool	1	26858351-
2		6741-39-1110	• Seal	1	26858351-
3		6741-39-1120	• Sleeve	1	26858351-
4		6741-39-1130	• Shield	1	26858351-
		6736-39-1140	Sleeve	1	26858351-
5		6736-39-1150	• Sleeve	1	26858351-
6		6736-39-1160	• Sleeve	1	26858351-
		6742-01-5199	Main Metal Assembly	1	26858351-
7	C1		• Metal	7	26858351-
8	C1		• Metal	6	26858351-
9	C1		• Metal	1	26858351-
		6742-01-5233	Main Metal Assembly, Undersized, 0.25mm	1	26858351-
10	C1		• Metal	7	26858351-
11	C1		• Metal	6	26858351-
12	C1		• Metal	1	26858351-
		6742-01-5240	Main Metal Assembly, Undersized, 0.50mm	1	26858351-
13	C1		• Metal	7	26858351-
14	C1		• Metal	6	26858351-
15	C1		• Metal	1	26858351-
		6742-01-5287	Main Metal Assembly, Undersized, 0.75mm	1	26858351-
16	C1		• Metal	7	26858351-
17	C1		• Metal	6	26858351-
18	C1		• Metal	1	26858351-
		6742-01-5288	Main Metal Assembly, Undersized, 1.00mm	1	26858351-
19	C1		• Metal	7	26858351-
20	C1		• Metal	6	26858351-
21	C1		• Metal	1	26858351-
22		6745-41-4220	Insert	12	26858351-
		6745-39-1100	Metal Assembly, Undersized, 0.25mm	6	26858351-
23	C1		• Metal	1	26858351-
24	C1		• Metal	1	26858351-
		6745-39-1200	Metal Assembly	6	26858351-
25	C1		• Metal	1	26858351-
26	C1		• Metal	1	26858351-
		6745-39-1300	Metal Assembly, Undersized, 0.75mm	6	26858351-
27	C1		• Metal	1	26858351-
28	C1		• Metal	1	26858351-
		6745-39-1400	Metal Assembly, Undersized, 1.00mm	6	26858351-
29	C1		• Metal	1	26858351-
30	C1		• Metal	1	26858351-

https://truckmanualshub.com/

https://truckmanualshub.com/

ENGINE RELATED PARTS

FIG. A1470-501001 Air Cleaner, With Pre-cleaner, Cap

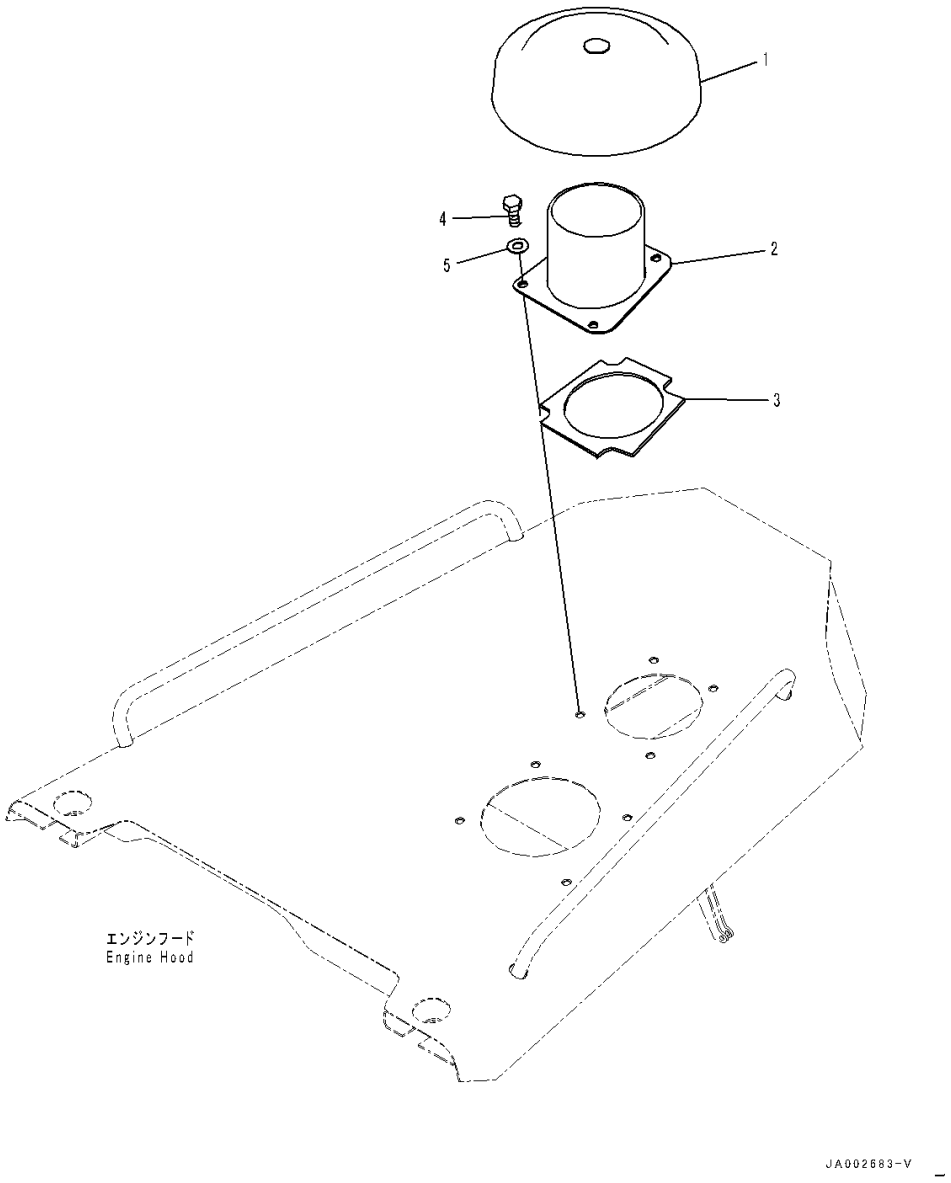

Index	Code	Part Number	Description	Qty	Serial Number
1		566-02-42200	Cap Assembly	1	80001-
2		14X-01-51521	Pipe	1	80001-
3		14X-01-51570	• Seal	1	80001-
4		01010-71225	Bolt	4	80001-
5		01643-11232	Washer	4	80001-

https://truckmanualshub.com/

FIG. A1470-501002 Air Cleaner, Air Cleaner

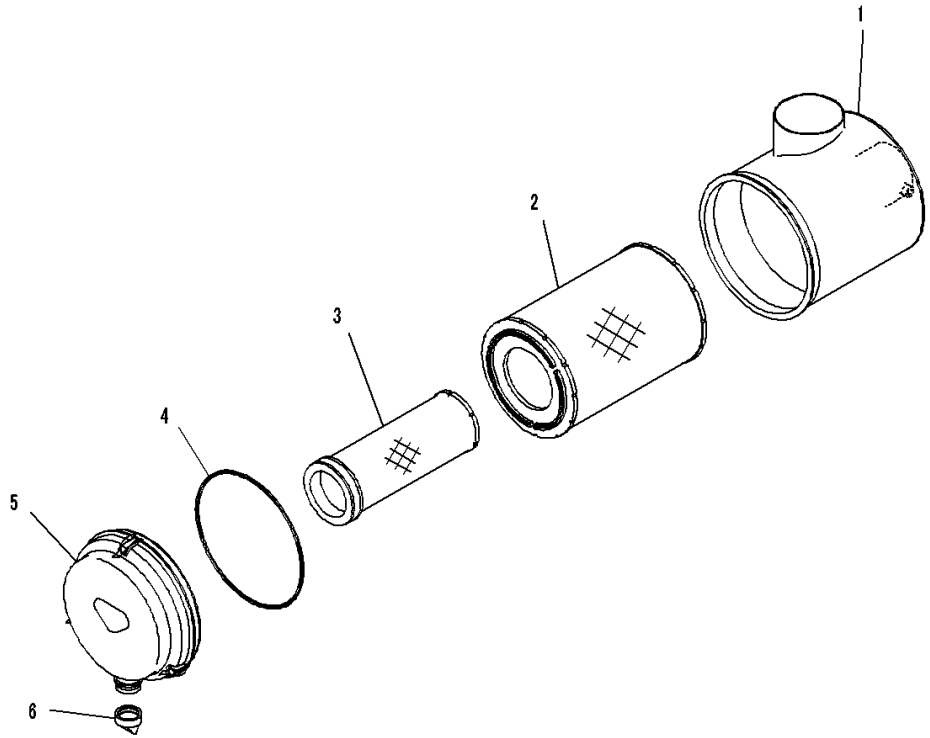

Index	Code	Part Number	Description	Qty	Serial Number
		Note: This list covers following specifications.			
		With Pre-cleaner			
		With Air Intake Rain Cap			
		6155-81-7100	Air Cleaner	1	80001-
1		6155-81-7110	• Body	1	80001-
		600-185-5100	• Element Assembly	1	80001-
2		600-185-5110	• • Element,Outer	1	80001-
3	C1		• • Element,Inner	1	80001-
4		600-184-1570	• • O-ring	1	80001-
5		600-184-1510	• Cover Assembly	1	80001-
6		600-184-1350	• Valve, Vaquator	1	80001-

https://truckmanualshub.com/

FIG. A1470-501003 Air Cleaner, Mounting

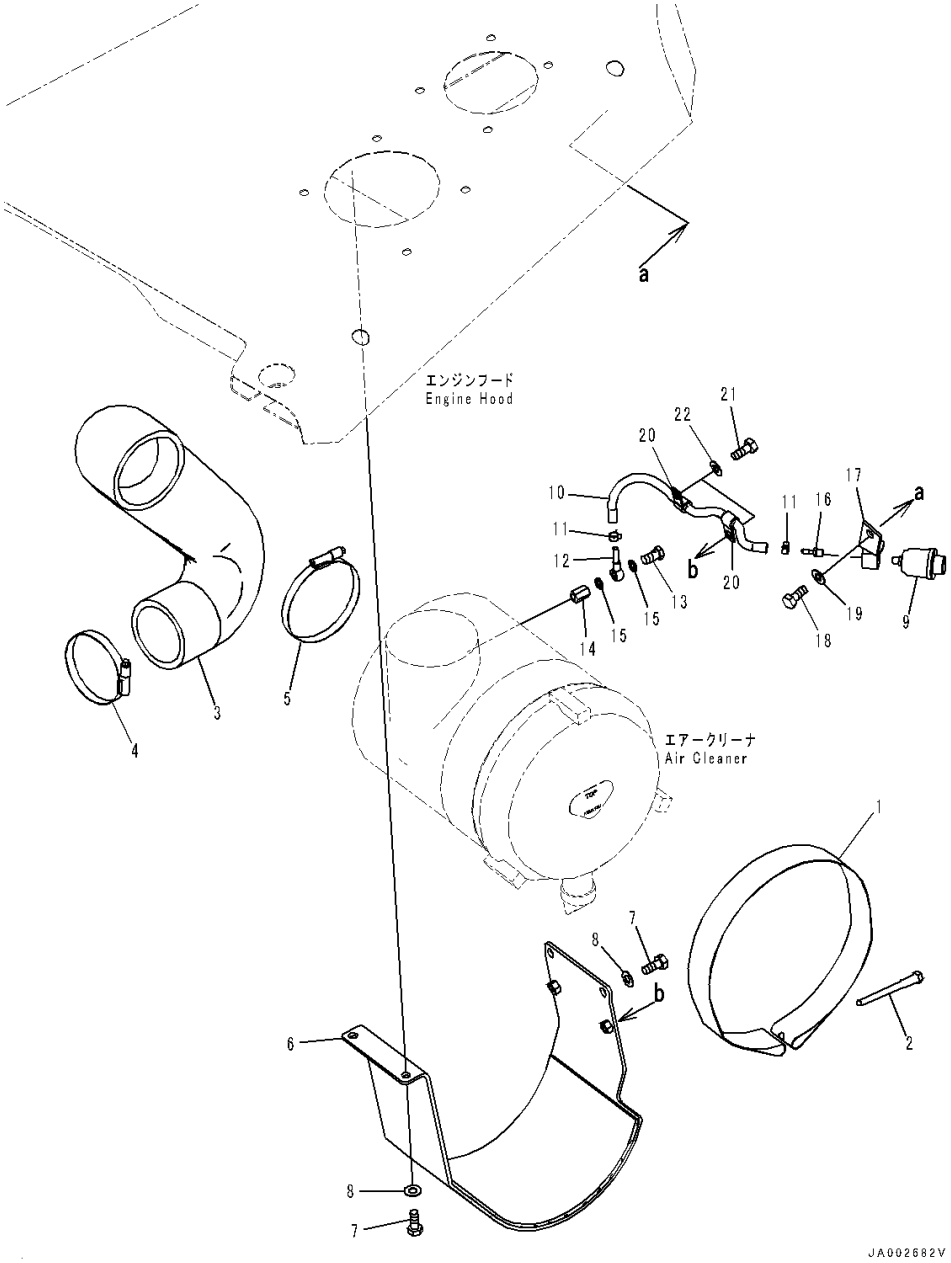

Index	Code	Part Number	Description	Qty	Serial Number
		Note: This list covers following specifications.			
		With Pre-cleaner			
		With Air Intake Rain Cap			
1		6155-11-4840	Band	1	80001-
2		14X-01-51630	Bolt	1	80001-
3		14X-01-51561	Hose	1	80001-
4		07299-00120	Clamp	1	80001-
5		07299-00145	Clamp	1	80001-
6		14X-01-51551	Bracket	1	80001-
7		01010-81225	Bolt	4	80001-
8		01643-31232	Washer	4	80001-
9		08672-01000	Indicator, Dust	1	80001-
10		6156-81-7930	Hose	1	80001-
11		07285-00125	Clip	2	80001-
12		6206-71-1770	Joint	1	80001-
13		07206-30710	Bolt, Joint	1	80001-
14		6156-81-8990	Nipple	1	80001-
15		07005-01012	Gasket	2	80001-
16		6131-81-8820	Nipple	1	80001-
17		14X-01-51641	Block	1	80141-
18		01010-81225	Bolt	1	80001-
19		01643-31232	Washer	1	80001-
20		04434-51412	Clip	2	80001-
21		01010-81225	Bolt	2	80001-
22		01643-31232	Washer	2	80001-

https://truckmanualshub.com/

FIG. A1470-502001 Air Cleaner, With Air Intake Rain Cap, Pre-Cleaner

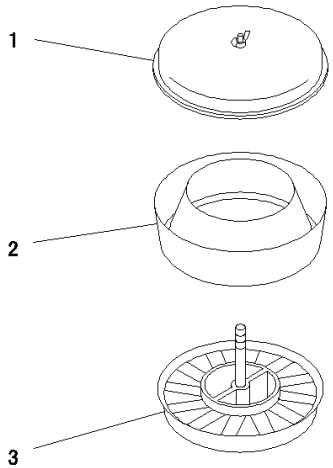

00000923

Index	Code	Part Number	Description	Qty	Serial Number
		6685-81-7503	Pre-cleaner	1	80001-
1		6685-81-7550	• Cover	1	80001-
2		6685-81-7540	• Body	1	80001-
3		6685-81-7513	• Sleeve	1	80001-

https://truckmanualshub.com/

FIG. A1470-502002 Air Cleaner, With Air Intake Rain Cap, Mounting (1/2)

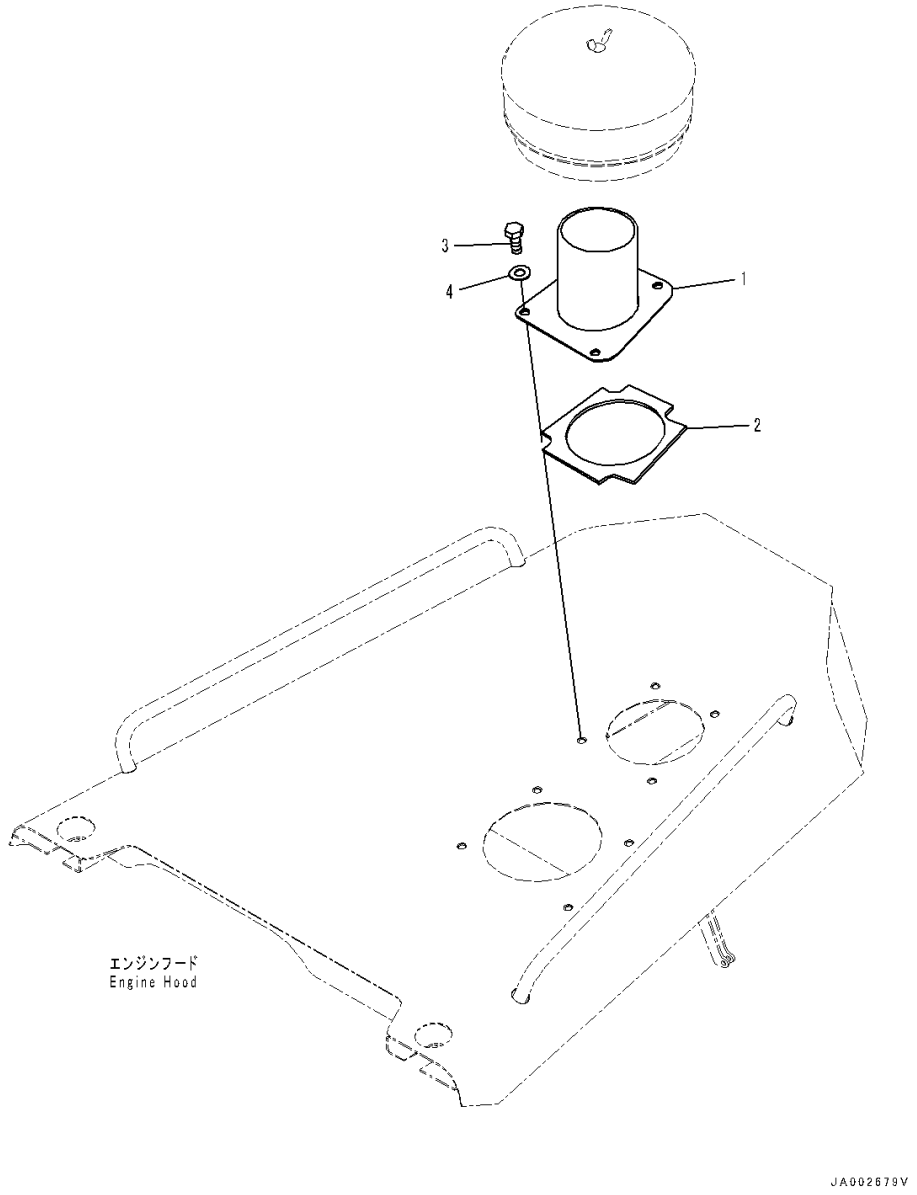

Index	Code	Part Number	Description	Qty	Serial Number
1		14X-01-51540	Pipe	1	80001-
2		14X-01-51570	• Seal	1	80001-
3		01010-71225	Bolt	4	80001-
4		01643-11232	Washer	4	80001-

https://truckmanualshub.com/

FIG. A1610-501001 Exhaust Pipe

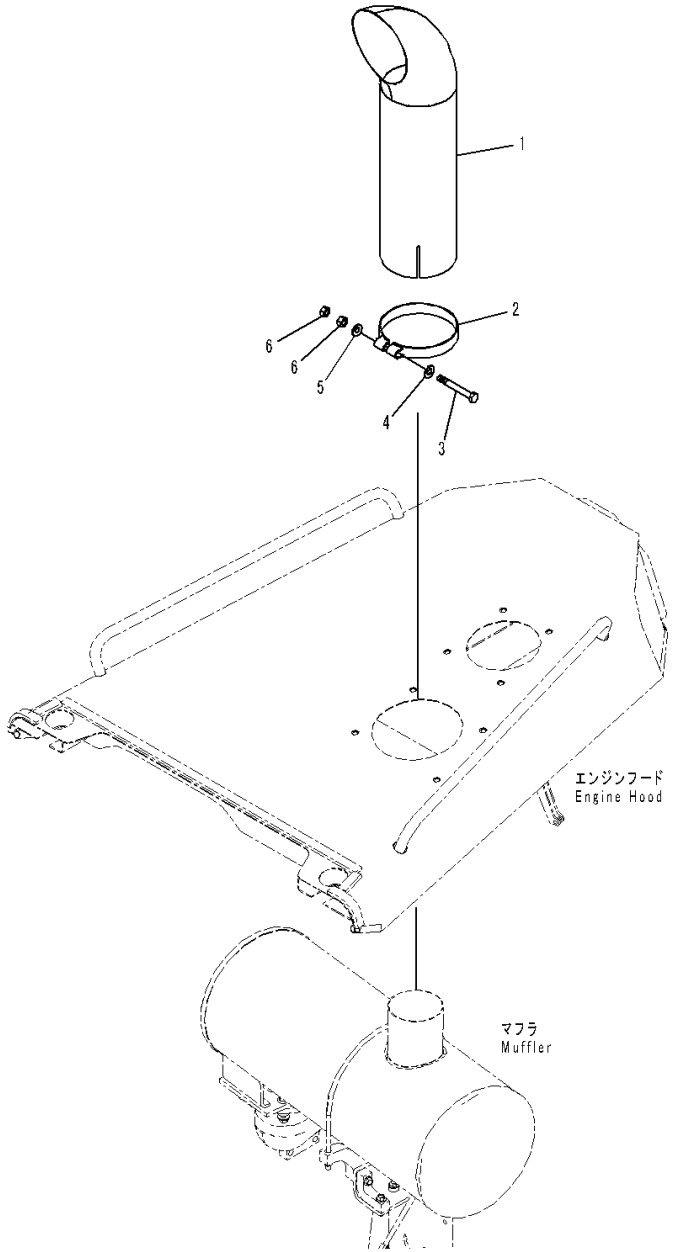

Index	Code	Part Number	Description	Qty	Serial Number
1		14X-01-51650	Pipe	1	80001-
2		14X-01-51660	Clamp	1	80001-
3		01010-71285	Bolt	1	80001-
4		01643-11232	Washer	1	80001-
5		01640-31223	Washer, Flat	1	80001-
6		01580-31210	Nut	2	80001-

https://truckmanualshub.com/

FIG. A6910-501001 Guard

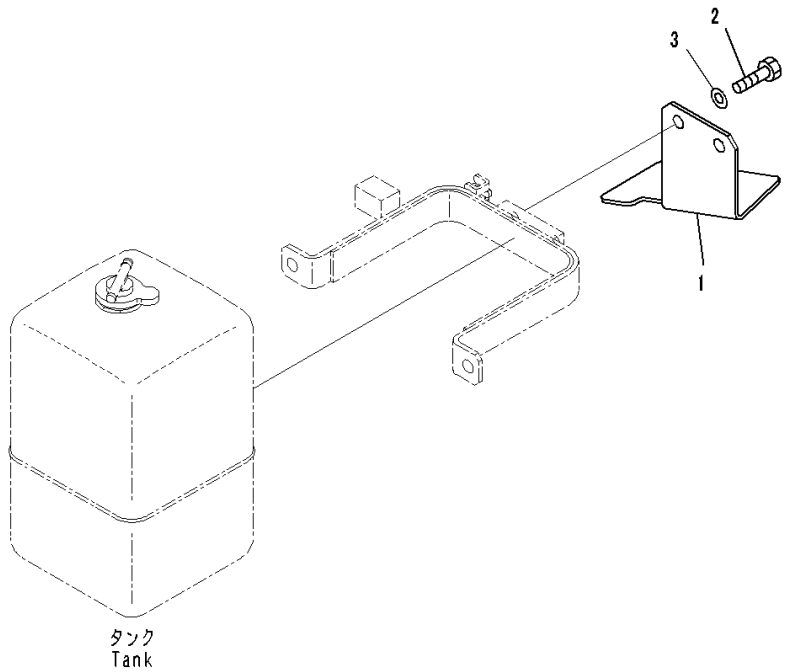

Index	Code	Part Number	Description	Qty	Serial Number
1		14X-03-51730	Cover	1	80001-
2		01010-81020	Bolt	2	80001-
3		01643-31032	Washer	2	80001-

https://truckmanualshub.com/

FIG. A9020-503001 Spare Parts, For 60Amp. Alternator

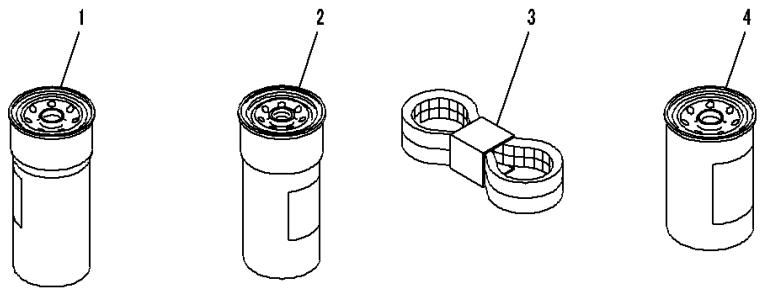

Index	Code	Part Number	Description	Qty	Serial Number
1		6742-01-4540	Cartridge	1	80087-
2		600-319-3750	Cartridge	1	80087-
3		6741-61-1621	Belt	1	80087-
4		600-319-3610	Cartridge Assembly	1	80087-

https://truckmanualshub.com/

FIG. A9020-504001 Spare Parts, For 90Amp. Alternator

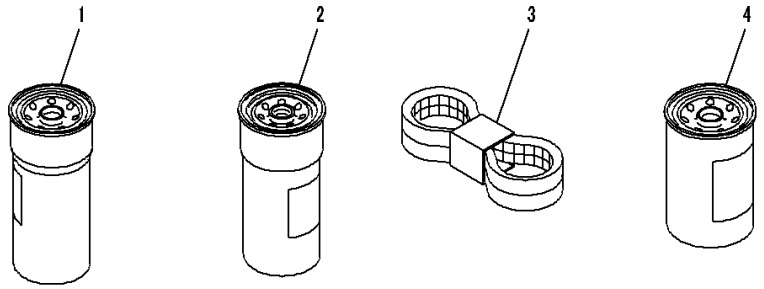

Index	Code	Part Number	Description	Qty	Serial Number
1		6742-01-4540	Cartridge	1	80087-
2		600-319-3750	Cartridge	1	80087-
3		6743-61-1411	Belt	1	80087-
4		600-319-3610	Cartridge Assembly	1	80087-

https://truckmanualshub.com/

FIG. B0100-001001 Engine Mounts

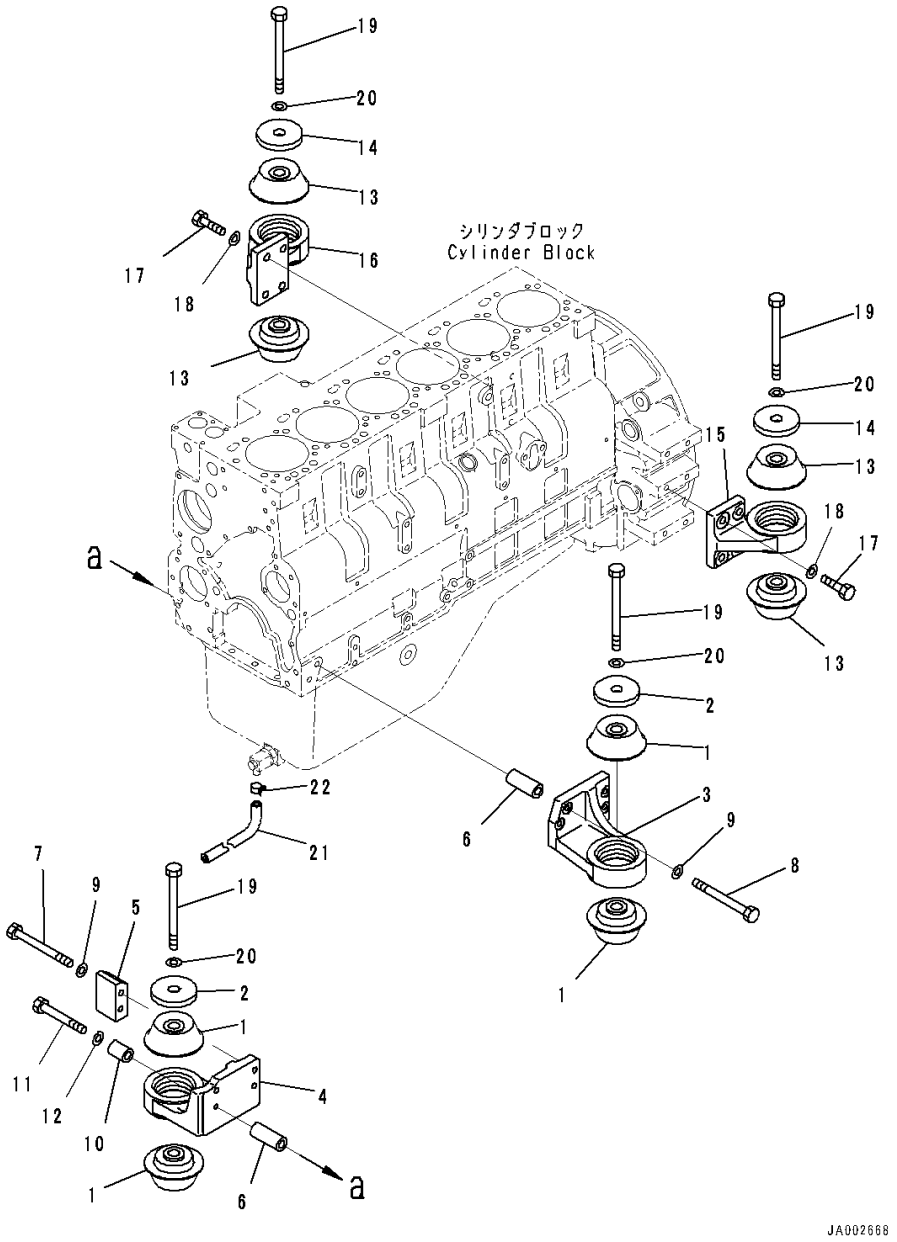

Index	Code	Part Number	Description	Qty	Serial Number
1		207-01-35140	Cushion	4	80001-
2		14X-01-35150	Washer	2	80001-
3		14X-01-51111	Bracket,LHS	1	80001-
4		14X-01-51121	Bracket,RHS	1	80001-
5		14X-01-35171	Spacer	1	80001-
6		14X-01-35180	Spacer	4	80001-
7		01011-81205	Bolt	2	80001-
8		14X-01-51150	Bolt	4	80001-
9		01643-31232	Washer	6	80001-
10		205-03-71331	Collar	2	80001-
11		01010-81290	Bolt	2	80001-
12		01643-31232	Washer	2	80001-
13		207-01-35140	Cushion	4	80001-
14		14X-01-35150	Washer	2	80001-
15		14X-01-51131	Bracket,LHS	1	80001-
16		14X-01-51141	Bracket,RHS	1	80001-
17		01010-81650	Bolt	8	80001-
18		01643-31645	Washer	8	80001-
19		01011-82480	Bolt	4	80001-
20		01643-32460	Washer	4	80001-
21		07270-21530	Tube	1	80001-
22		07285-00180	Clip	1	80001-

https://truckmanualshub.com/

FIG. B0500-001001 Engine Wiring Harness, Earth

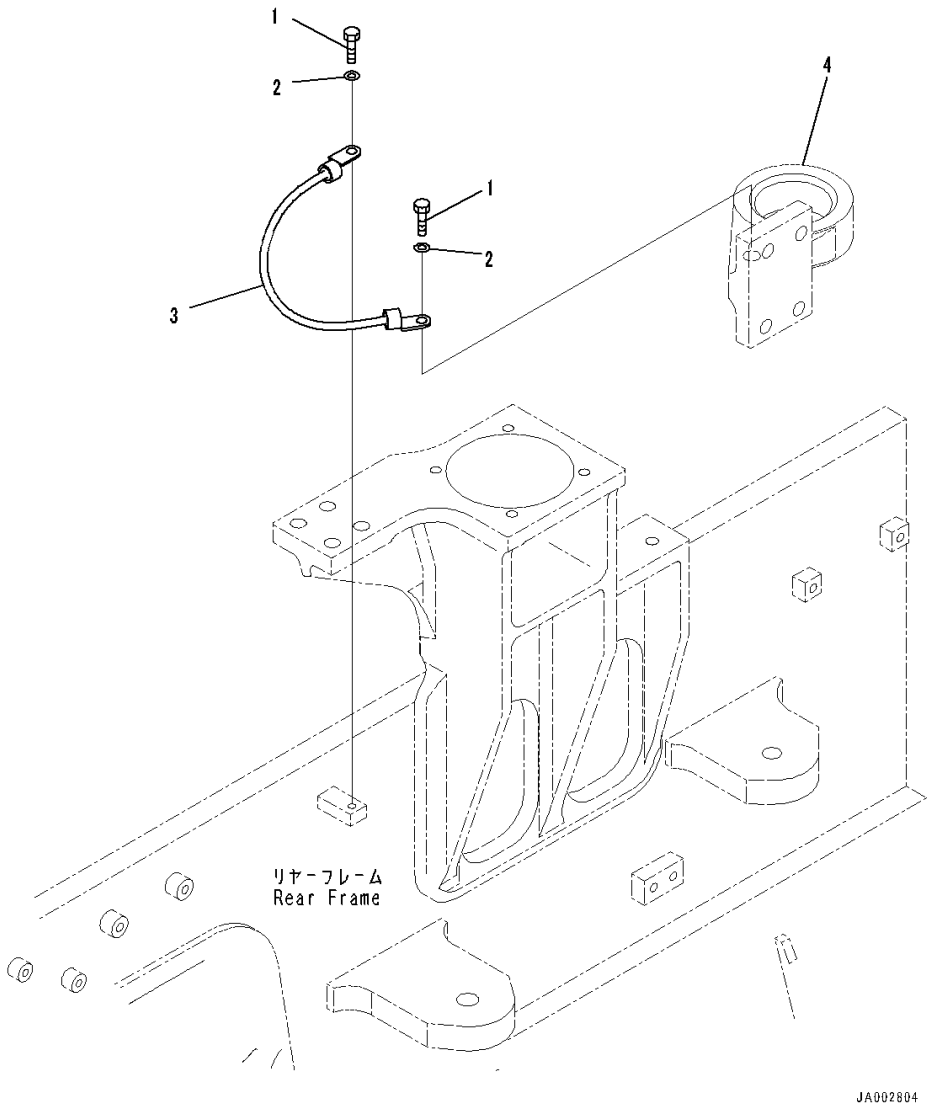

Index	Code	Part Number	Description	Qty	Serial Number
1		01010-81020	Bolt	2	80001-
2		01643-31032	Washer	2	80001-
3		08028-FD040	Cable, Ground	1	80001-
4		(14X-01-51141)	Bracket(Refer to Page 163)		-

https://truckmanualshub.com/

FIG. B0500-001002 Engine Wiring Harness, Wiring Harness (1/3)

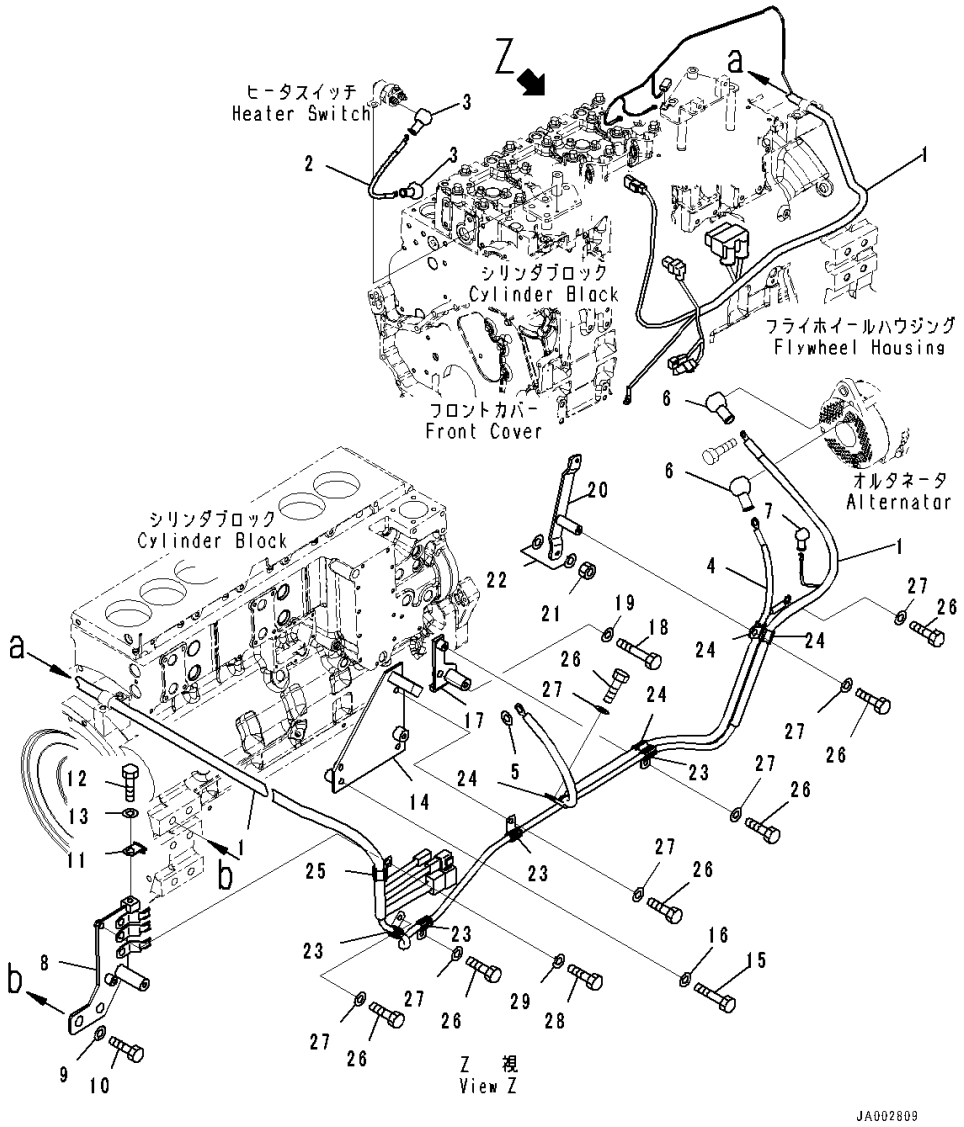

Index	Code	Part Number	Description	Qty	Serial Number
1		14X-06-51221	Wiring Harness	1	80001-
		21J-06-13661	• Diode	2	80001-
2		14X-06-35221	Cable	1	80001-
3		08038-02027	Cap	2	80001-
4		14X-06-51730	Cable	1	80001-
5		01643-31032	Washer	1	80001-
6		08038-02027	Cap	2	80001-
7		08038-00519	Cap	1	80001-
8		14X-06-51641	Bracket	1	80001-
9		01643-31645	Washer	2	80001-
10		01010-81625	Bolt	2	80001-
11		600-051-2060	Clip	1	80001-
12		01010-81020	Bolt	1	80001-
13		01643-31032	Washer	1	80001-
14		14X-06-35471	Bracket	1	80001-
15		01010-80845	Bolt	2	80001-
16		01643-30823	Washer	2	80001-
17		14X-06-52270	Bracket	1	80001-
18		01010-80825	Bolt	1	80001-
19		01643-30823	Washer	1	80001-
20		14X-06-35491	Bracket	1	80001-
21		01580-10605	Nut	2	80001-
22		01640-20610	Washer	4	80001-
23		600-051-1100	Clip	4	80001-
24		600-051-2140	Clip	4	80001-
25		600-051-2180	Clip	1	80001-
26		01010-80816	Bolt	7	80001-
27		01643-30823	Washer	7	80001-
28		01010-80820	Bolt	1	80001-
29		01643-30823	Washer	1	80001-

https://truckmanualshub.com/

FIG. B0500-001003 Engine Wiring Harness, Wiring Harness (2/3)

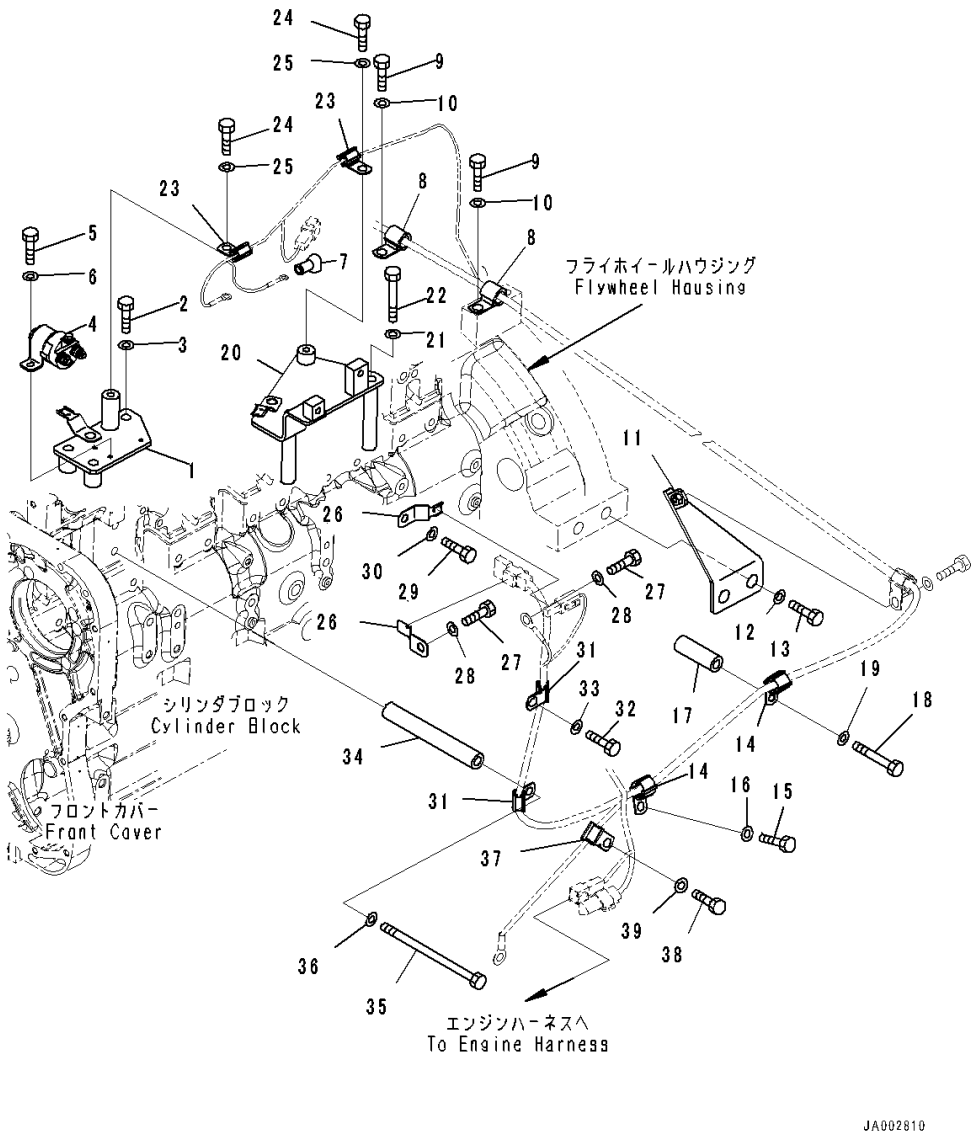

Index	Code	Part Number	Description	Qty	Serial Number
1		14X-06-51671	Bracket	1	80001-
2		01010-81050	Bolt	3	80001-
3		01643-31032	Washer	3	80001-
4		600-815-2170	Switch, Heater	1	80001-
5		01010-80612	Bolt	3	80001-
6		01643-30623	Washer	3	80001-
7		08038-00519	Cap	1	80001-
8		600-051-3160	Clip	2	80001-
9		01010-81220	Bolt	2	80001-
10		01643-31232	Washer	2	80001-
11		14X-06-52130	Bracket	1	80001-
12		01643-31645	Washer	2	80001-
13		01010-81625	Bolt	2	80001-
14		600-051-2180	Clip	2	80001-
15		01010-80820	Bolt	1	80001-
16		01643-30823	Washer	1	80001-
17		561-43-43390	Spacer	1	80001-
18		01010-80880	Bolt	1	80001-
19		01643-30823	Washer	1	80001-
20		14X-06-51661	Bracket	1	80001-
21		01643-31032	Washer	2	80001-
22		01011-81020	Bolt	2	80001-
23		600-051-2100	Clip	2	80001-
24		01010-81020	Bolt	2	80001-
25		01643-31032	Washer	2	80001-
26		08193-20010	Clip	2	80001-
27		01010-81016	Bolt	2	80001-
28		01643-31032	Washer	2	80001-
29		01010-81025	Bolt	1	80001-
30		01643-31032	Washer	1	80001-
31		600-051-2100	Clip	2	80001-
32		01010-81020	Bolt	1	80001-
33		01643-31032	Washer	1	80001-
34		56B-15-15910	Spacer	1	80001-
35		01011-81080	Bolt	1	80001-
36		01643-31032	Washer	1	80001-
37		600-051-2140	Clip	1	80001-
38		01010-80820	Bolt	1	80001-
39		01643-30823	Washer	1	80001-

https://truckmanualshub.com/

FIG. B0500-001004 Engine Wiring Harness, Wiring Harness (3/3)

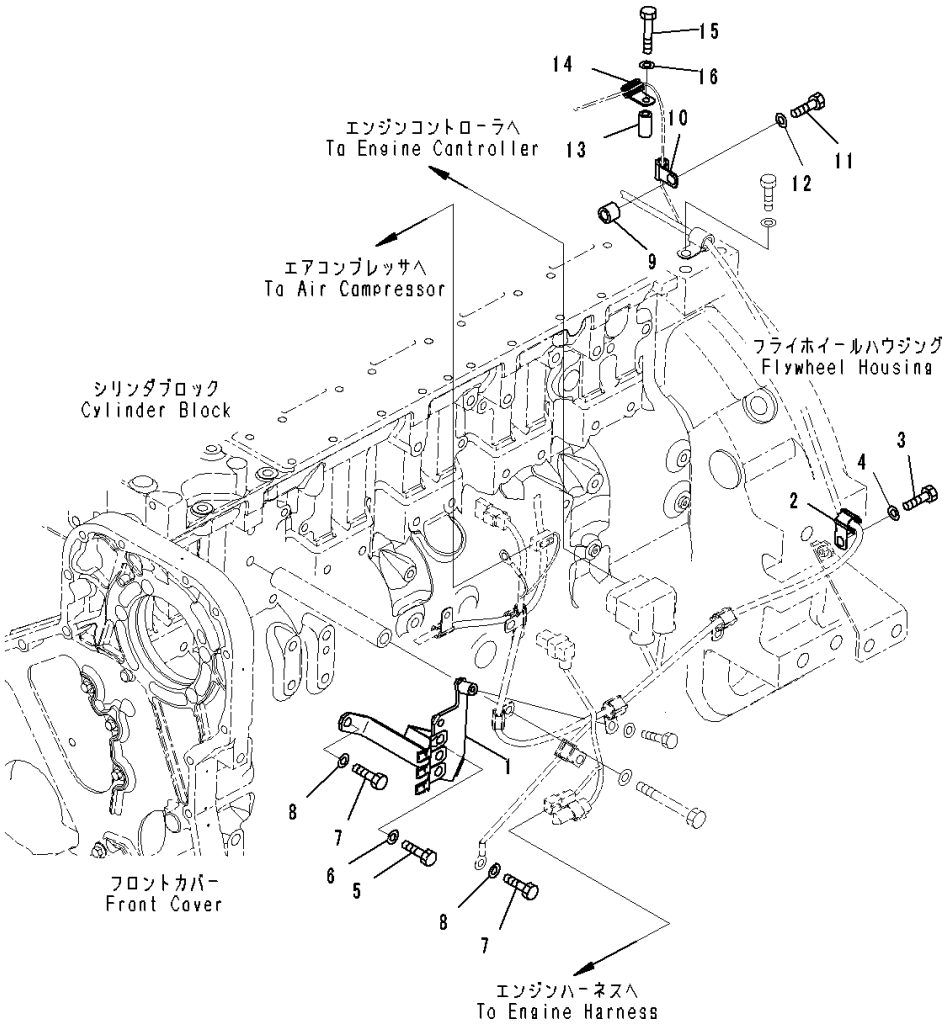

Index	Code	Part Number	Description	Qty	Serial Number
1		14X-06-51651	Bracket	1	80001-
2		600-051-2180	Clip	1	80001-
3		01010-80820	Bolt	1	80001-
4		01643-30823	Washer	1	80001-
5		01010-81220	Bolt	1	80001-
6		01643-31232	Washer	1	80001-
7		01010-81020	Bolt	2	80001-
8		01643-31032	Washer	2	80001-
9		22M-60-22130	Collar	1	80001-
10		600-051-3100	Clip	1	80001-
11		01010-81245	Bolt	1	80001-
12		01643-31232	Washer	1	80001-
13		207-62-32890	Collar	1	80001-
14		600-051-1100	Clip	1	80001-
15		01010-80645	Bolt	1	80001-
16		01643-30623	Washer	1	80001-

https://truckmanualshub.com/

FIG. B0600-001001 Damper

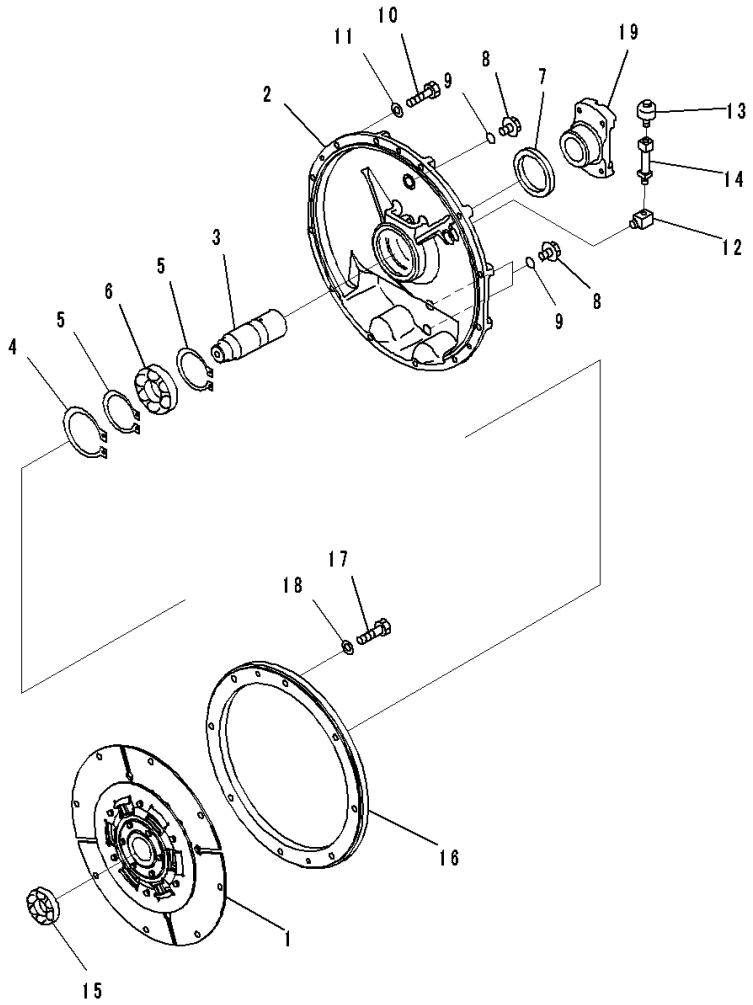

Index	Code	Part Number	Description	Qty	Serial Number
1		14X-12-11102	Damper Disc Assembly	1	80070-
2		14X-12-11210	Cover	1	80001-
3		14X-12-11411	Shaft	1	80001-
4		04065-01104	Ring, Snap	1	80001-
5		04064-06020	Ring, Snap	2	80001-
6		06300-06212	Bearing	1	80001-
7		07012-50085	Seal, Oil	1	80001-
8		07044-12412	Plug	3	80001-
9		07002-32434	O-ring	3	80001-
10		01010-81250	Bolt	12	80001-
11		01643-31232	Washer	12	80001-
12		568-15-11610	Elbow	1	80001-
13		07030-10252	Breather	1	80001-
14		135-12-31230	Tube	1	80001-
15		06340-06208	Bearing	1	80001-
16		14X-12-51110	Weight	1	80001-
17		01010-81235	Bolt	8	80001-
18		01643-31232	Washer	8	80001-
19		14Z-12-31310	Coupling	1	80001-

https://truckmanualshub.com/

https://truckmanualshub.com/

COOLING SYSTEM

FIG. C0100-001001 Radiator, Radiator Core and Aftercooler

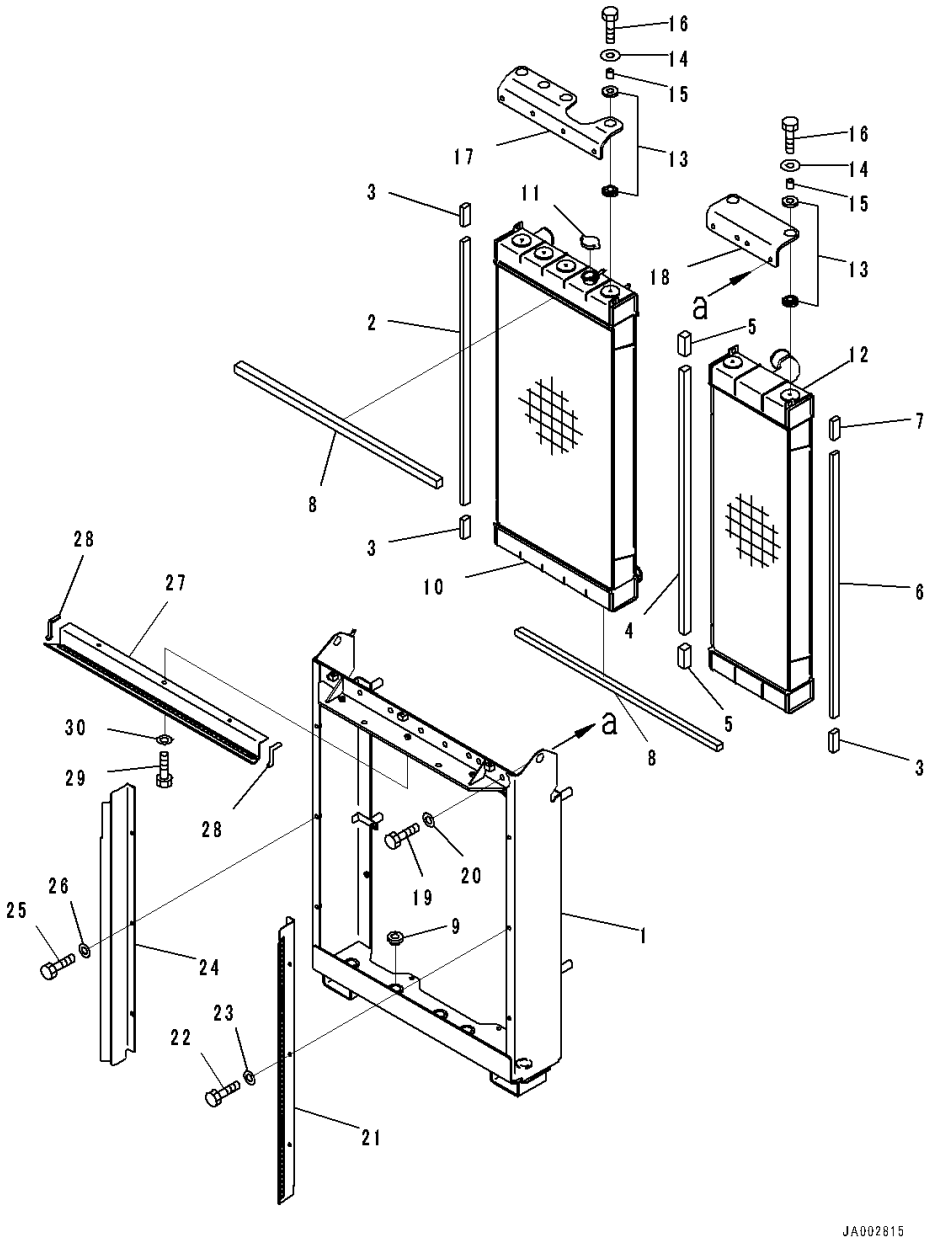

Index	Code	Part Number	Description	Qty	Serial Number
1		14X-03-51131	Frame	1	80001-
2		14X-03-51510	Seal,Bonded	1	80001-
3		14X-03-51520	Seal,Bonded	3	80001-
4		14X-03-51530	Seal,Bonded	1	80001-
5		14X-03-51540	Seal,Bonded	2	80001-
6		14X-03-51650	Seal,Bonded	1	80001-
7		14X-03-51660	Seal,Bonded	1	80001-
8		14X-03-51590	Seal,Bonded	2	80001-
9		20Y-03-41580	Cushion	5	80001-
10		14X-03-51111	Radiator Core Assembly	1	80001-
11		20U-03-21540	Cap	1	80001-
12		14X-03-51121	Aftercooler Assembly	1	80001-
13		14X-03-51621	Cushion	12	80001-
14		14X-03-51770	Washer	6	80001-
15		14X-03-51640	Spacer	6	80001-
16		01010-81045	Bolt	6	80001-
17		14X-03-51740	Bracket	1	80001-
18		14X-03-51750	Bracket	1	80001-
19		01010-81235	Bolt	8	80001-
20		01643-31232	Washer	8	80001-
21		14X-03-51411	Baffle	1	80001-
22		01010-81025	Bolt	3	80001-
23		01643-31032	Washer	3	80001-
24		14X-03-51421	Baffle	1	80001-
25		01010-81025	Bolt	3	80001-
26		01643-31032	Washer	3	80001-
27		14X-03-51431	Baffle	1	80001-
28		14X-03-51570	• Seal	2	80001-
29		01010-81025	Bolt	3	80001-
30		01643-31032	Washer	3	80001-

https://truckmanualshub.com/

FIG. C0100-001002 Radiator, Frame

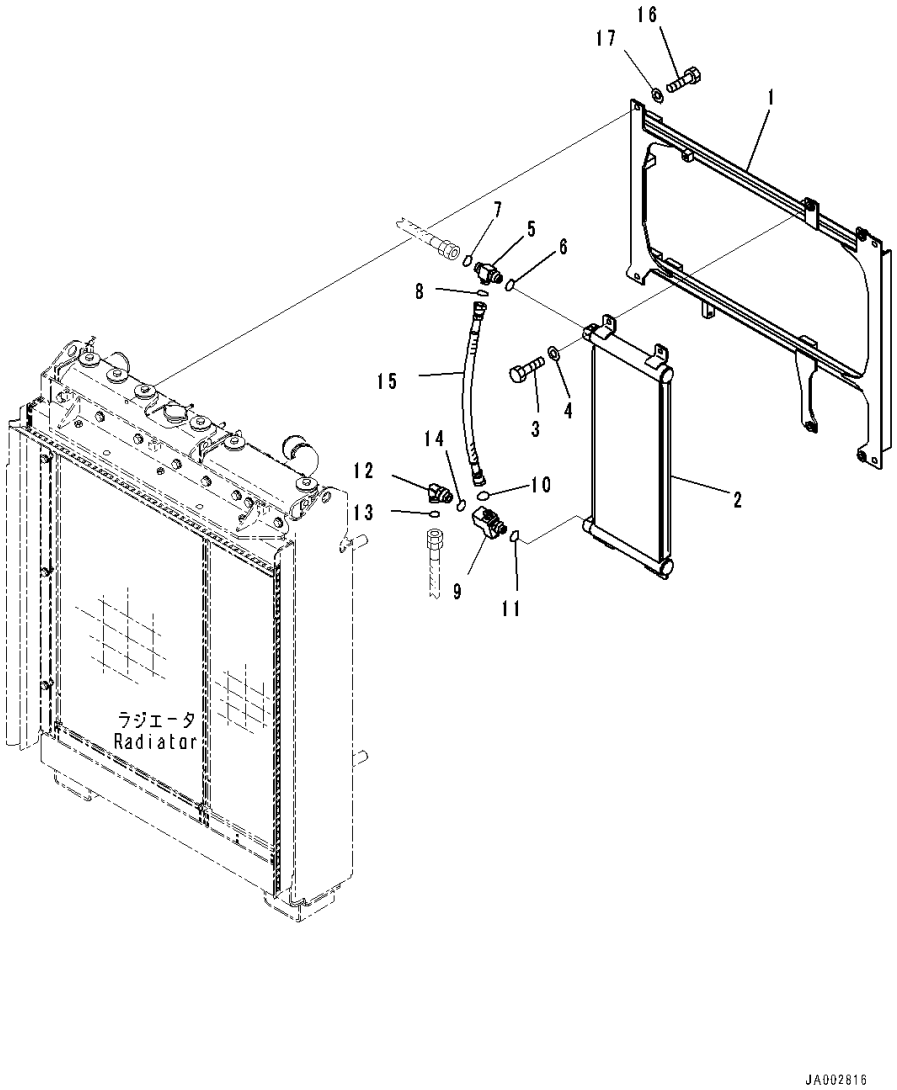

Index	Code	Part Number	Description	Qty	Serial Number
1		14X-03-51171	Frame	1	80001-
2		14X-03-51161	Oil Cooler	1	80001-
3		01010-81030	Bolt	4	80001-
4		01643-31032	Washer	4	80001-
5		14X-62-35531	Tee	1	80001-
6		07002-12034	O-ring	1	80001-
7		02896-11015	O-ring	1	80001-
8		02896-11012	O-ring	1	80001-
9		134-62-72600	Block Assembly	1	80001-
10		02896-11012	O-ring	1	80001-
11		07002-12034	O-ring	1	80001-
12		02782-10522	Elbow	1	80001-
13		02896-11015	O-ring	1	80001-
14		07002-12434	O-ring	1	80001-
15		02762-004A5	Hose, Face Seal Type	1	80001-
16		01010-81230	Bolt	4	80001-
17		01643-31232	Washer	4	80001-

https://truckmanualshub.com/

FIG. C0100-001003 Radiator, Piping

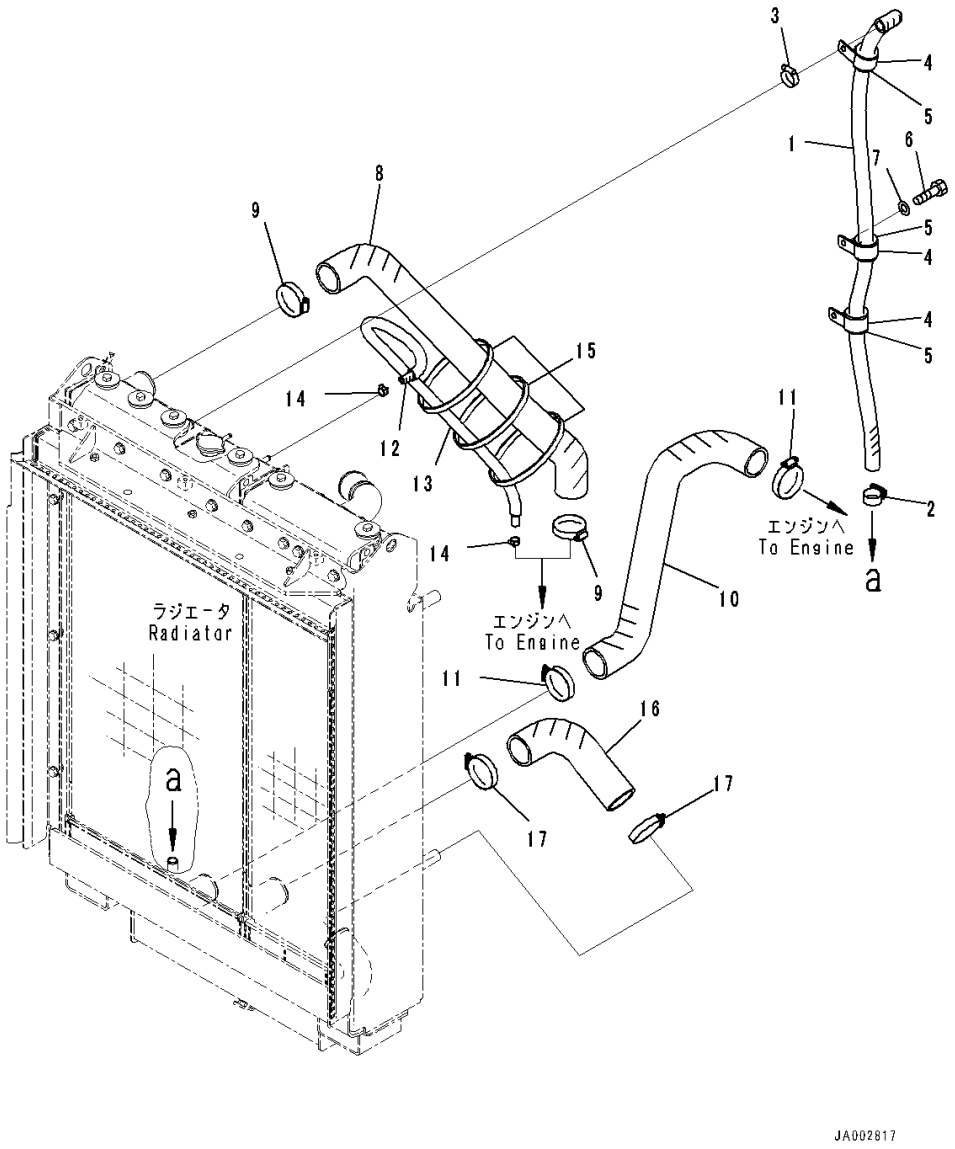

Index	Code	Part Number	Description	Qty	Serial Number
1		14X-03-51190	Hose	1	80001-
2		07289-00035	Clamp	1	80001-
3		07281-00359	Clamp	1	80001-
4		23T-62-12160	Clip	3	80001-
5		07095-00630	Cushion	3	80001-
6		01010-81020	Bolt	3	80001-
7		01643-31032	Washer	3	80001-
8		14X-03-51211	Hose	1	80001-
9		07289-00070	Clamp	2	80001-
10		14X-03-51231	Hose	1	80001-
11		07289-00070	Clamp	2	80001-
12		14X-03-51260	Hose Assembly	1	80001-
13		08017-81910	• Conduit	1	80001-
14		11Y-09-11140	Clip	2	80001-
15		134-03-61410	Band	3	80001-
16		14X-03-51220	Hose	1	80001-
17		07289-00070	Clamp	2	80001-

https://truckmanualshub.com/

FIG. C0100-001004 Radiator, Oil Cooler

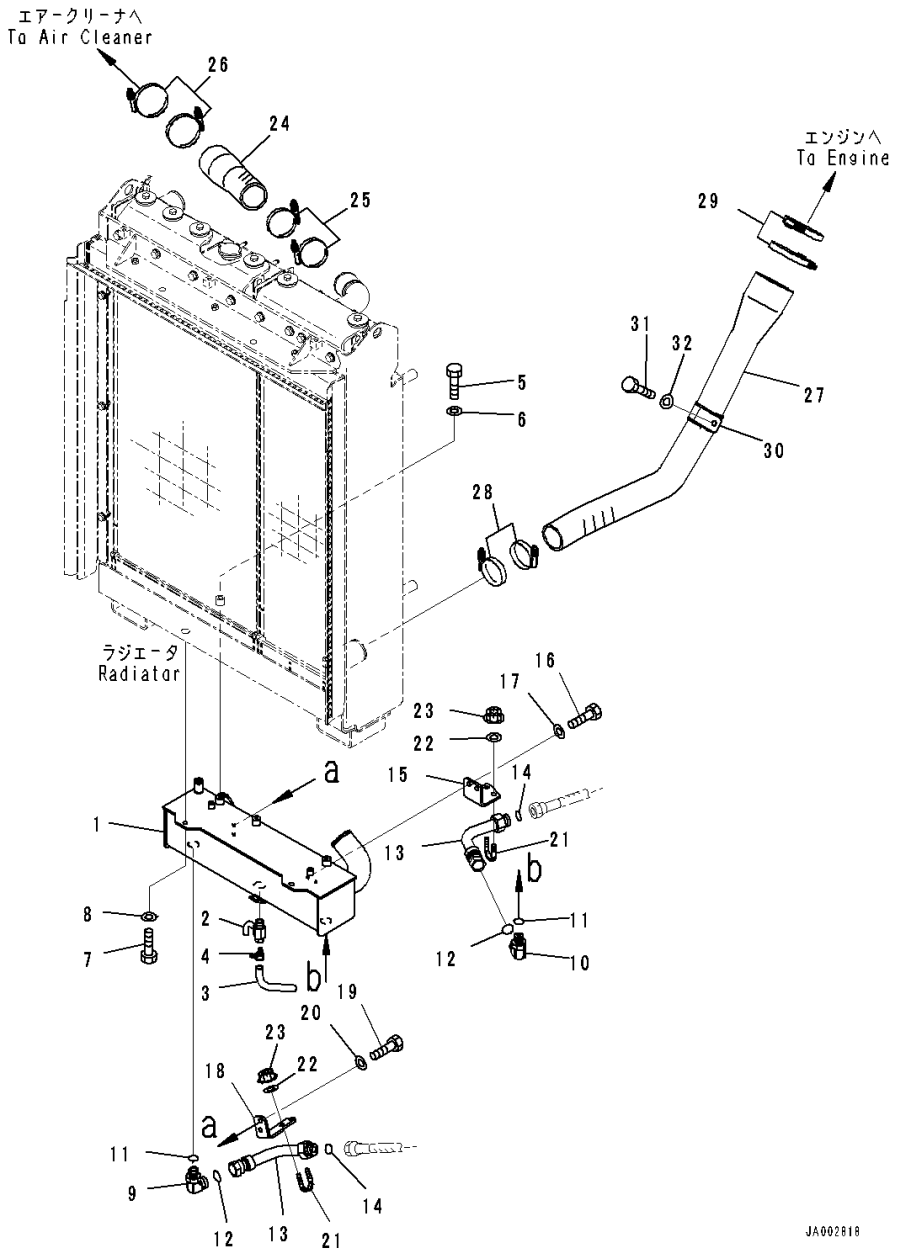

Index	Code	Part Number	Description	Qty	Serial Number
1		14X-03-51141	Oil Cooler, Power Line	1	80001-
2		07730-40004	Valve, Coolant Drain	1	80001-
3		07270-01520	Tube	1	80001-
4		07280-01920	Clamp, Hose	1	80001-
5		01010-81045	Bolt	2	80001-
6		01643-31032	Washer	2	80001-
7		01010-81025	Bolt	2	80001-
8		01643-31032	Washer	2	80001-
9		02782-10628	Elbow	1	80001-
10		14X-49-51880	Elbow	1	80001-
11		07002-12434	O-ring	2	80001-
12		02896-61018	O-ring	2	80001-
13		14X-49-52141	Tube	2	80001-
14		02896-61018	O-ring	2	80001-
15		14X-49-52151	Plate	1	80001-
16		01010-81020	Bolt	2	80001-
17		01643-31032	Washer	2	80001-
18		14X-49-52161	Plate	1	80001-
19		01010-81020	Bolt	2	80001-
20		01643-31032	Washer	2	80001-
21		07283-32738	Clip, Pipe	2	80001-
22		01643-31032	Washer	4	80001-
23		01597-01009	Nut	4	80001-
24		14X-01-51620	Hose	1	80001-
25		07299-00080	Clamp	2	80001-
26		07299-00095	Clamp, Hose	2	80001-
27		14X-03-51251	Hose	1	80001-
28		07299-00080	Clamp	2	80001-
29		07299-00120	Clamp	2	80001-
30		14X-01-35650	Clip	1	80001-
31		01010-81230	Bolt	1	80001-
32		01643-31232	Washer	1	80001-

https://truckmanualshub.com/

FIG. C0100-001005 Radiator, Cooling Fan Motor (1/2)

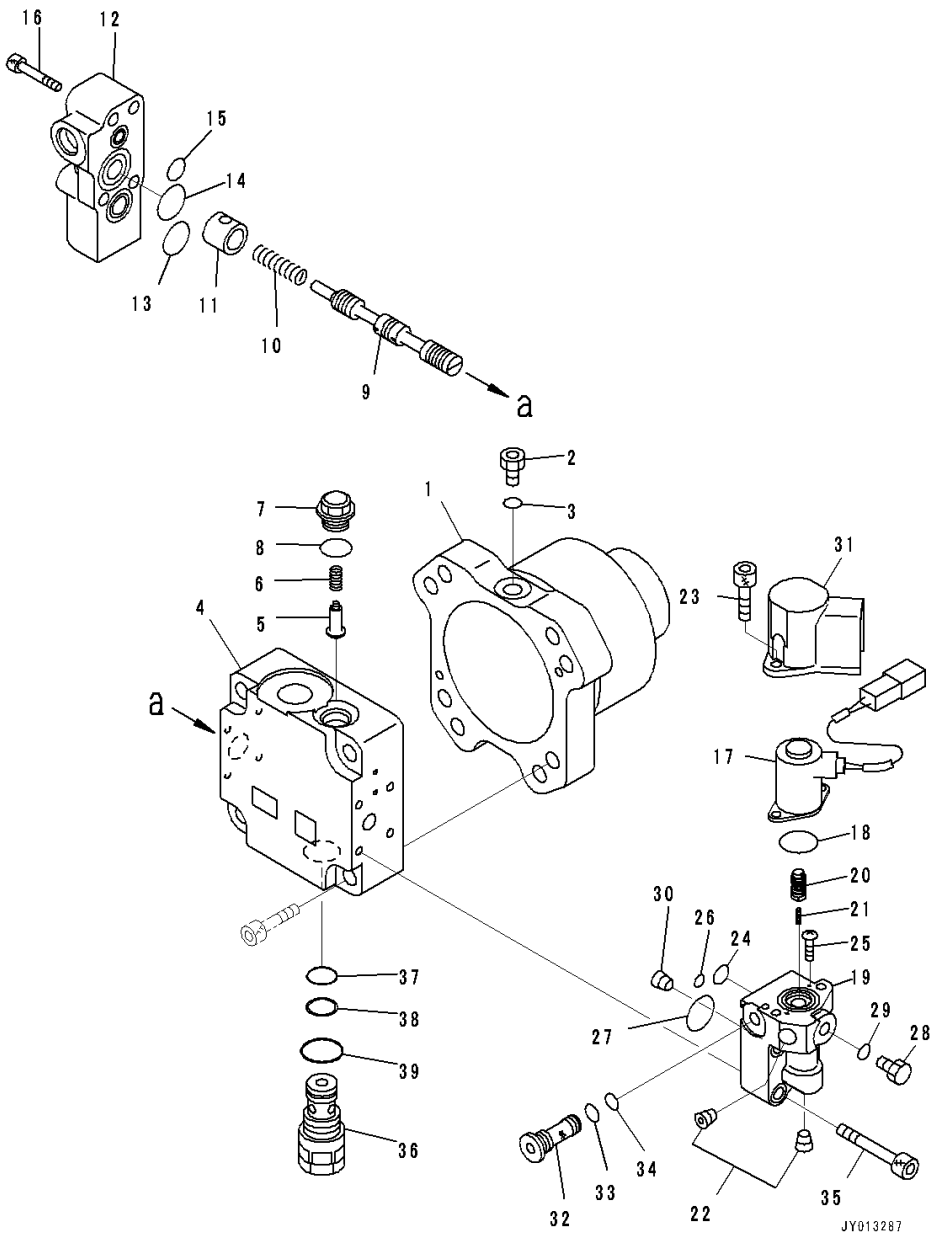

Index	Code	Part Number	Description	Qty	Serial Number
		708-7S-00352	Motor Assembly	1	80001-
1	C2	708-7S-11740	• Case	1	80001-
2		07040-11007	• Plug	1	80001-
3		07002-21023	• O-ring	1	80001-
	C2	708-7S-01241	• Cover Subassembly	1	80001-
4	C1		• • Cover, End	1	80001-
5	C2	708-7R-11210	• • Valve	1	80001-
6	C2	722-10-91130	• • Spring	1	80001-
7	C2	709-32-12861	• • Plug	1	80001-
8		07002-21823	• • O-ring	1	80001-
9	C1		• • Spool	1	80001-
10	C2	708-7S-18120	• • Spring	1	80001-
11	C2	708-7S-18310	• • Spacer	1	80001-
12	C2	708-7S-18320	• • Cover	1	80001-
13		07000-E2020	• • O-ring	1	80001-
14		07000-E2025	• • O-ring	1	80001-
15		07000-E2012	• • O-ring	1	80001-
16		01252-60845	• • Bolt	4	80001-
	C2	708-7S-01151	• • Valve Assembly, Pilot	1	80001-
17	C2	702-21-56241	• • • Solenoid	1	80001-
18	C2	700-80-61260	• • • O-ring	1	80001-
19	C1		• • • Case	1	80001-
20	C1		• • • Spool	1	80001-
21	C2	702-21-56220	• • • Spring	1	80001-
22	C2	708-21-12541	• • • Plug	2	80001-
23		01252-60616	• • • Bolt	2	80001-
24	C2	708-2L-25490	• • • O-ring	1	80001-
25	C2	702-21-54180	• • • Screw	2	80001-
26		07000-11008	• • • O-ring	1	80001-
27	C2	723-11-18430	• • • O-ring	1	80001-
28		07040-11007	• • • Plug	1	80001-
29		07002-11023	• • • O-ring	1	80001-
30		708-2L-29460	• • • Orifice	1	80001-
31	C2	708-1S-18180	• • • Cover	1	80001-
32	C2	708-7R-18230	• • • Filter	1	80001-
33	C2	07002-11423	• • • O-ring	1	80001-
34	C2	07000-11009	• • • O-ring	1	80001-
35		01252-60835	• • Bolt	4	80001-
36		708-7T-02271	• • Valve Assembly	1	80001-
37		07000-F2016	• • • O-ring	1	80001-

https://truckmanualshub.com/

FIG. C0100-001005 Radiator, Cooling Fan Motor (1/2)

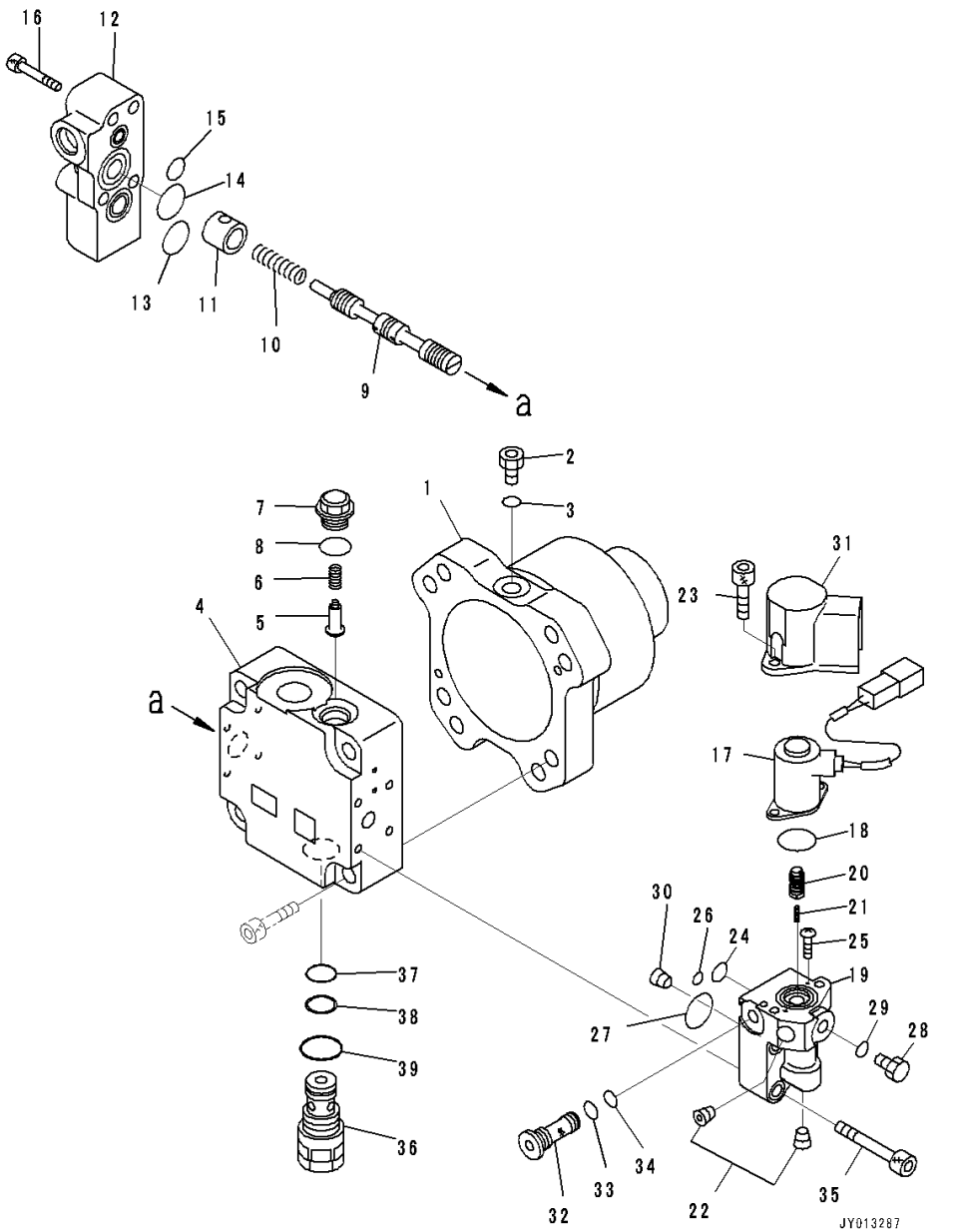

Index	Code	Part Number	Description	Qty	Serial Number
38		07001-02016	• • • Ring, Back-up	1	80001-
39		07002-12434	• • • O-ring	1	80001-

https://truckmanualshub.com/

FIG. C0100-001006 Radiator, Cooling Fan Motor (2/2)

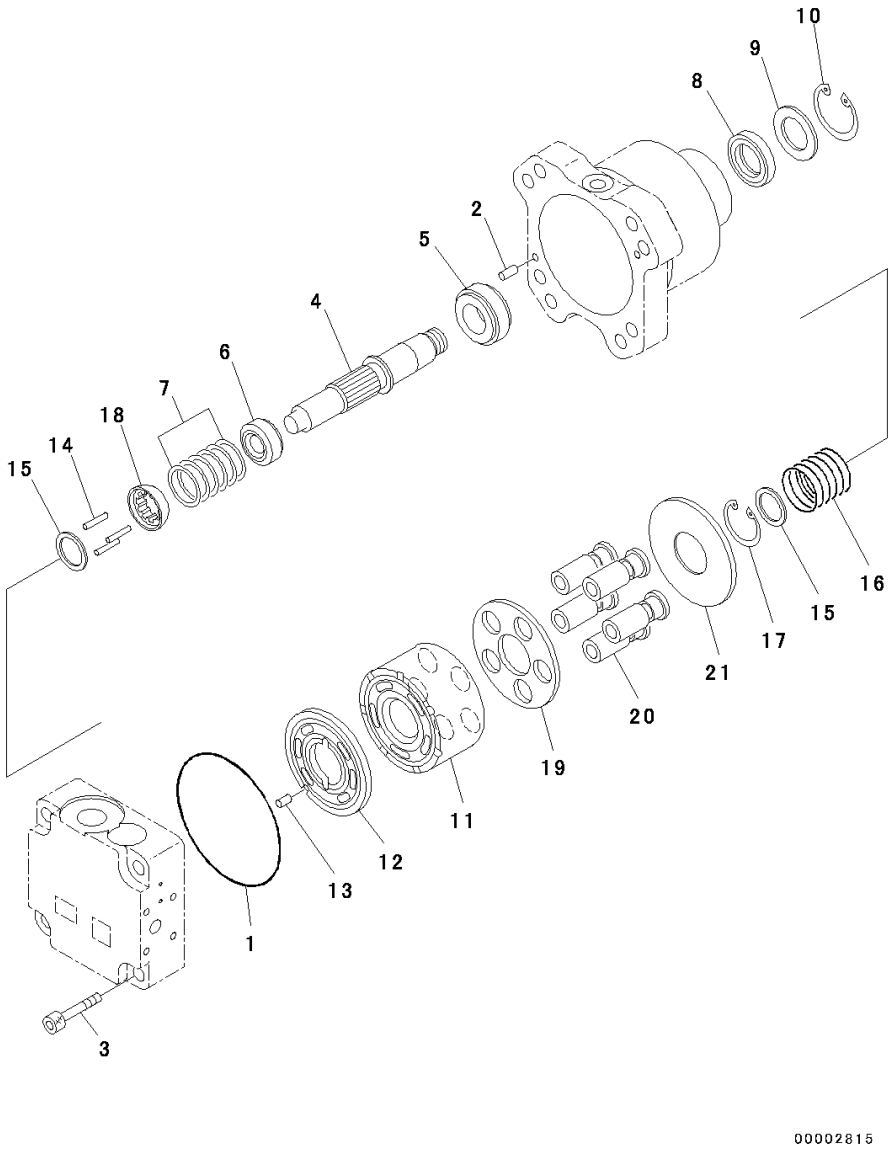

Index	Code	Part Number	Description	Qty	Serial Number
		708-7S-00352	Motor Assembly	1	80001-
1		07000-E2110	• O-ring	1	80001-
2		04020-00616	• Pin, Dowel	2	80001-
3		01252-61255	• Bolt, Hexagon Socket Head	4	80001-
4	C2	708-7S-12330	• Shaft	1	80001-
5	C2	708-7S-12140	• Bearing	1	80001-
6	C2	708-7S-12220	• Bearing	1	80001-
7	C2	708-7S-05110	• Shim Kit	1	80001-
	C1		• • Shim, T=0.85mm	1	80001-
	C1		• • Shim, T=1.05mm	1	80001-
	C1		• • Shim, T=1.25mm	1	80001-
	C1		• • Shim, T=0.75mm	1	80001-
	C1		• • Shim, T=0.95mm	1	80001-
	C1		• • Shim, T=1.15mm	1	80001-
8	C2	708-7T-12330	• Seal, Oil	1	80001-
9	C2	708-1S-11890	• Spacer	1	80001-
10		04065-04518	• Ring, Snap	1	80001-
11	C2	708-7S-13120	• Block	1	80001-
12	C2	708-7S-13250	• Plate, Valve	1	80001-
13	C2	720-68-19610	• Pin	1	80001-
14	C2	708-2L-23360	• Pin	3	80001-
15	C2	708-7S-13530	• Spacer	2	80001-
16	C2	708-7S-13560	• Spring	1	80001-
17		04065-03212	• Ring	1	80001-
18	C2	708-7S-13550	• Guide, Retainer	1	80001-
19	C2	708-7S-13360	• Retainer, Shoe	1	80001-
20	C2	708-7S-13350	• Piston Subassembly	5	80001-
21	C2	708-7S-13420	• Plate, Thrust	1	80001-

https://truckmanualshub.com/

FIG. C0100-001007 Radiator, Motor Mounting

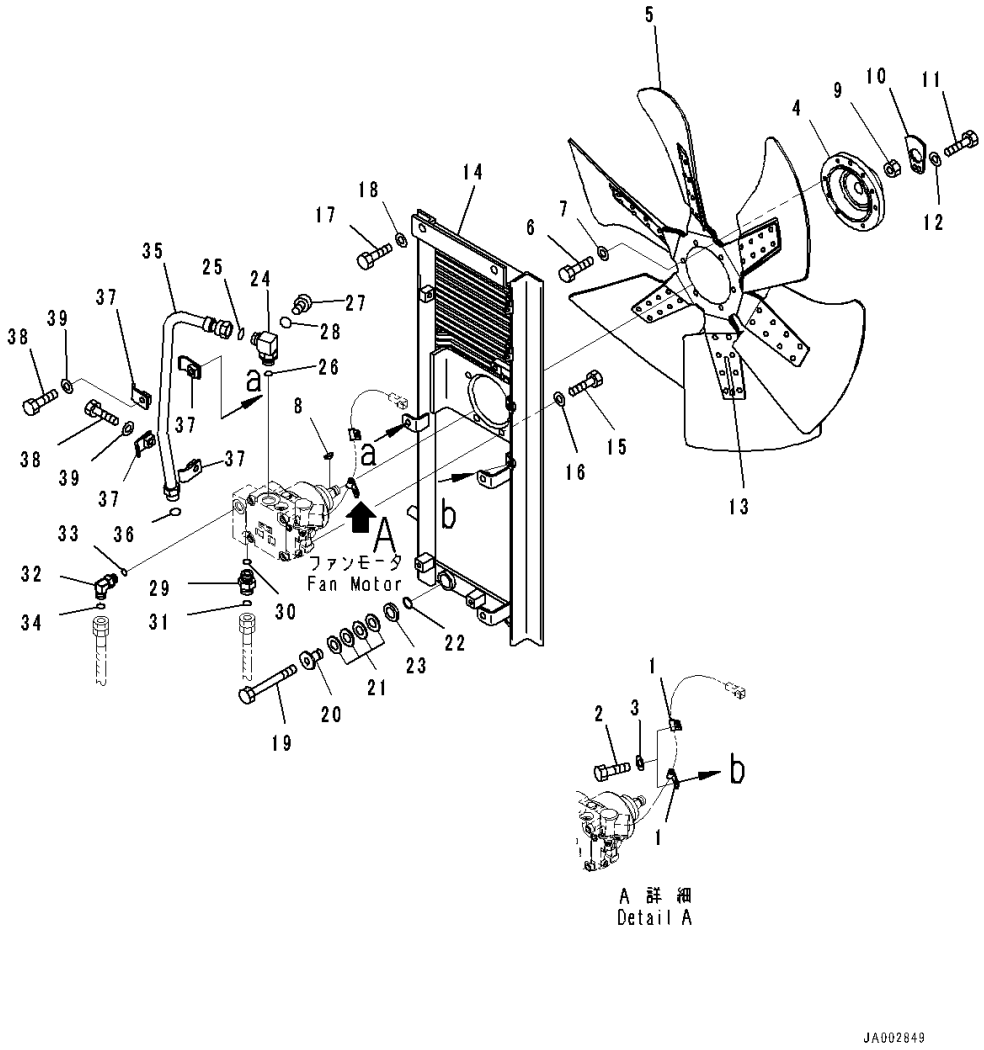

Index	Code	Part Number	Description	Qty	Serial Number
1		04434-50610	Clip	2	80001-
2		01010-81020	Bolt	2	80001-
3		01643-31032	Washer	2	80001-
4		154-03-72261	Boss	1	80001-
5		600-645-7850	Fan	1	80001-
6		01010-81030	Bolt	6	80001-
7		01643-31032	Washer	6	80001-
8		04010-00722	Key	1	80001-
9		01583-12012	Nut	1	80001-
10		154-03-72270	Lock	1	80001-
11		01010-81020	Bolt	1	80001-
12		01643-31032	Washer	1	80001-
13		799-203-8500	Tape	1	80001-
14		14X-03-51311	Bracket	1	80001-
15		01010-81235	Bolt	4	80001-
16		01643-31232	Washer	4	80001-
17		01010-81225	Bolt	2	80001-
18		01643-31232	Washer	2	80001-
19		01010-81265	Bolt	2	80001-
		154-03-00050	Spring Assembly	2	80001-
20		154-03-13180	• Spacer	1	80001-
21		175-54-27350	• Spring	4	80001-
22		175-54-28770	• Ring	1	80001-
23		01643-32060	• Washer	1	80001-
24		421-09-31110	Elbow	1	80001-
25		02896-11015	O-ring	1	80001-
26		07002-12434	O-ring	1	80001-
27		07040-11007	Plug	1	80001-
28		07002-11023	O-ring	1	80001-
29		02781-00522	Union	1	80001-
30		07002-12434	O-ring	1	80001-
31		02896-11015	O-ring	1	80001-
32		02782-10420	Elbow	1	80001-
33		07002-11823	O-ring	1	80001-
34		02896-11012	O-ring	1	80001-
35		14X-03-51320	Tube	1	80001-
36		02896-11015	O-ring	1	80001-
37		14X-62-32540	Clamp	4	80001-
38		01010-81050	Bolt	2	80001-
39		01643-31032	Washer	2	80001-

https://truckmanualshub.com/

FIG. C0100-001008 Radiator, Baffle

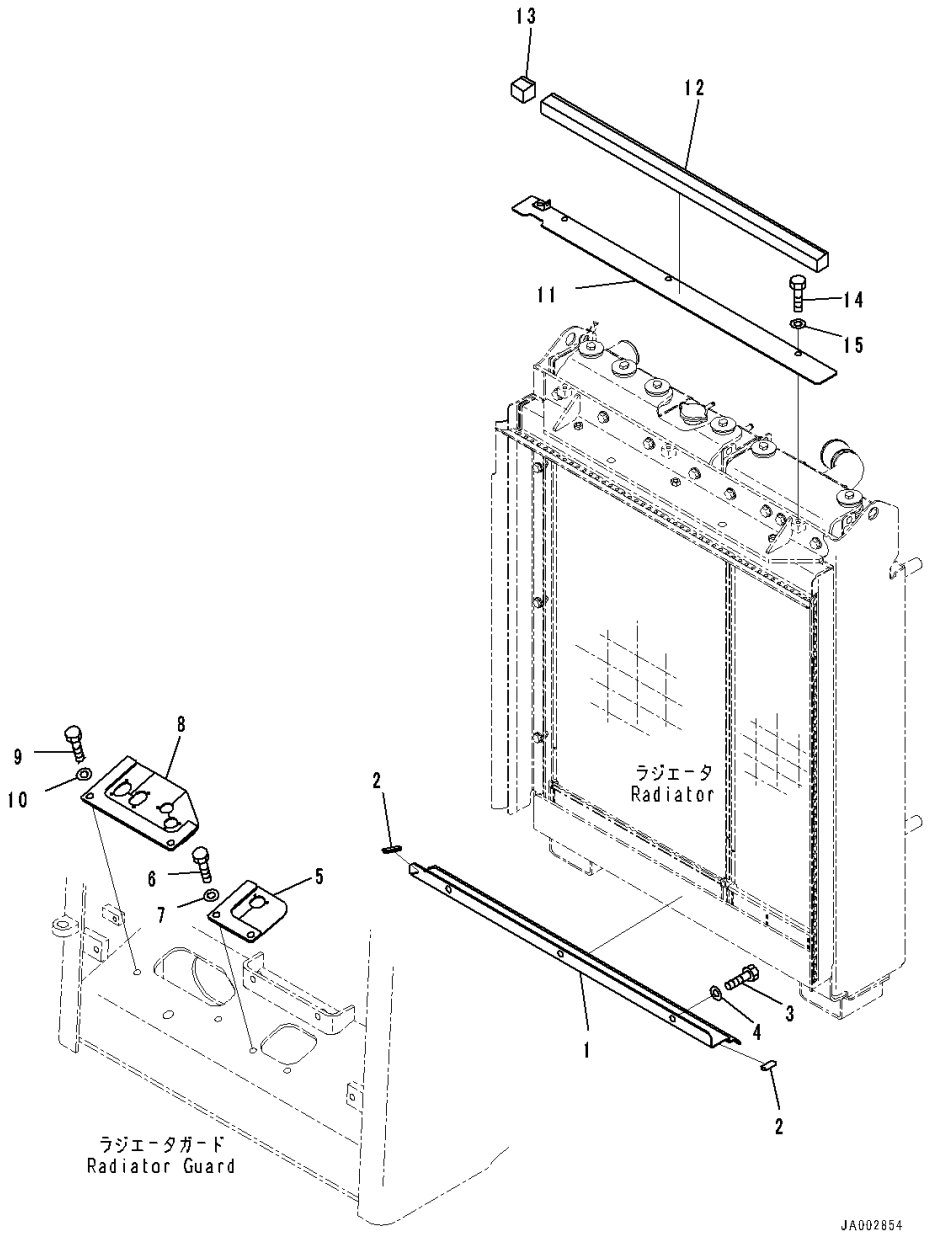

Index	Code	Part Number	Description	Qty	Serial Number
1		14X-03-51441	Baffle	1	80001-
2		14X-03-51580	• Seal	2	80001-
3		01010-81230	Bolt	3	80001-
4		01643-31232	Washer	3	80001-
5		14X-03-51451	Cover	1	80001-
6		01010-81230	Bolt	2	80001-
7		01643-31232	Washer	2	80001-
8		14X-03-51461	Cover	1	80001-
9		01010-81230	Bolt	2	80001-
10		01643-31232	Washer	2	80001-
11		14X-03-51491	Seal	1	80001-
12		14X-03-51551	• Seal,Bonded	1	80001-
13		14X-03-51561	• Seal,Bonded	1	80001-
14		01010-81025	Bolt	3	80001-
15		01643-31032	Washer	3	80001-

https://truckmanualshub.com/

FIG. C0100-001009 Radiator, Mounting

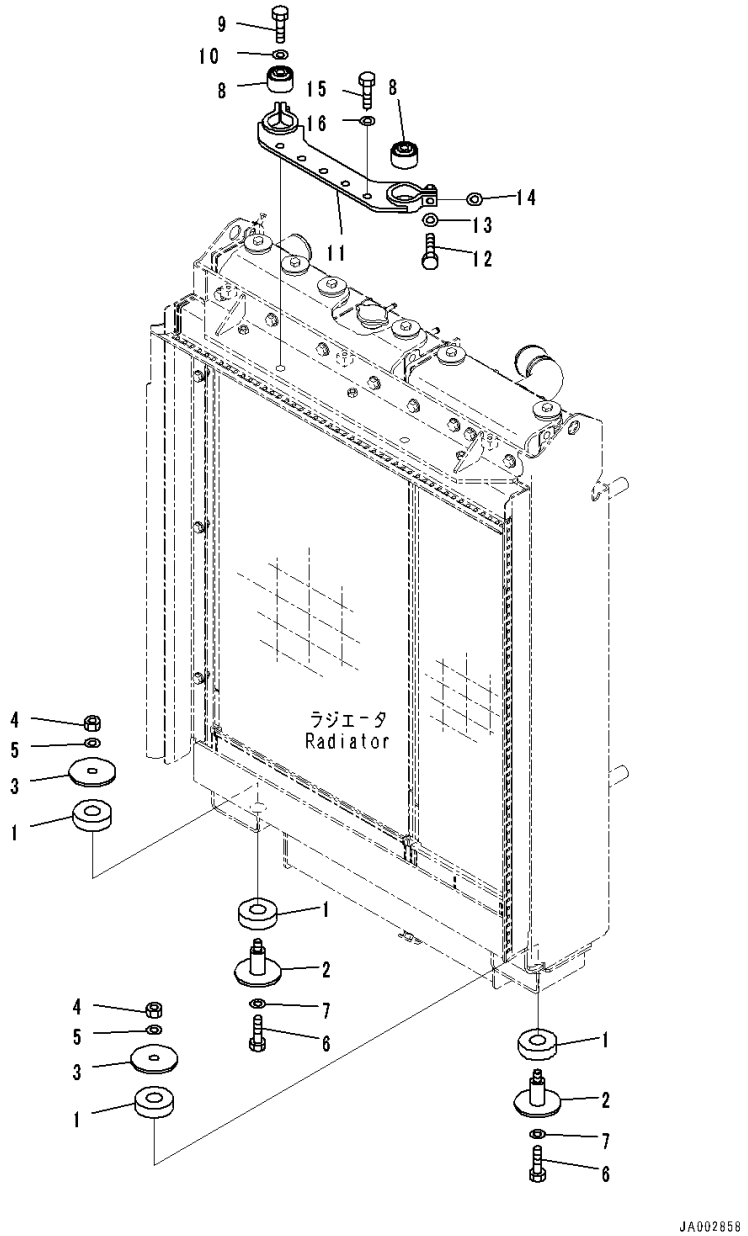

Index	Code	Part Number	Description	Qty	Serial Number
1		205-54-71680	Cushion	4	80001-
2		14X-03-51610	Boss	2	80001-
3		566-95-91410	Plate	2	80001-
4		01580-11411	Nut	2	80001-
5		01643-31445	Washer	2	80001-
6		01010-81435	Bolt	2	80001-
7		01643-31445	Washer	2	80001-
8		135-03-12110	Damper	2	80001-
9		01010-81465	Bolt	2	80001-
10		01643-31445	Washer	2	80001-
11		14X-03-51180	Bracket	1	80001-
12		01010-81040	Bolt	2	80001-
13		01643-31032	Washer	2	80001-
14		01643-31032	Washer	2	80001-
15		01010-81235	Bolt	5	80001-
16		01643-31232	Washer	5	80001-

https://truckmanualshub.com/

FIG. C0100-001010 Radiator, Window Washer Tank

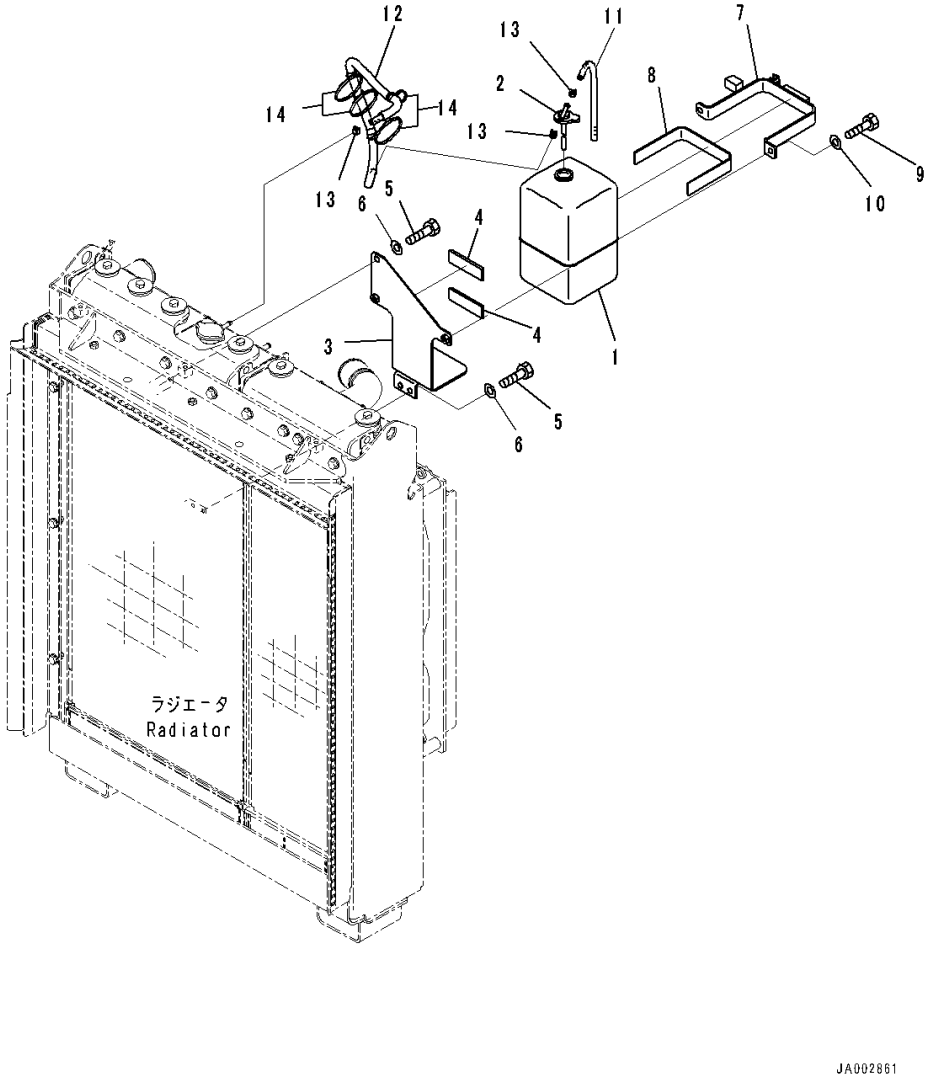

Index	Code	Part Number	Description	Qty	Serial Number
1		17A-03-14111	Tank	1	80001-
2		17A-03-14120	• Cap	1	80001-
3		14X-03-51361	Bracket	1	80001-
4		14X-03-51780	• Sheet	2	80021-
5		01010-81020	Bolt	3	80001-
6		01643-31032	Washer	3	80001-
7		14X-03-51371	Band	1	80001-
8		14X-03-35760	• Sheet,Bonded	1	80001-
9		01010-81020	Bolt	2	80001-
10		01643-31032	Washer	2	80001-
11		206-03-43331	Hose	1	80001-
12		14X-03-51270	Hose	1	80001-
13		07285-00110	Clip, Hose	3	80001-
14		134-03-61410	Band	4	80001-

https://truckmanualshub.com/

FIG. C0100-001011 Radiator, Fan Net

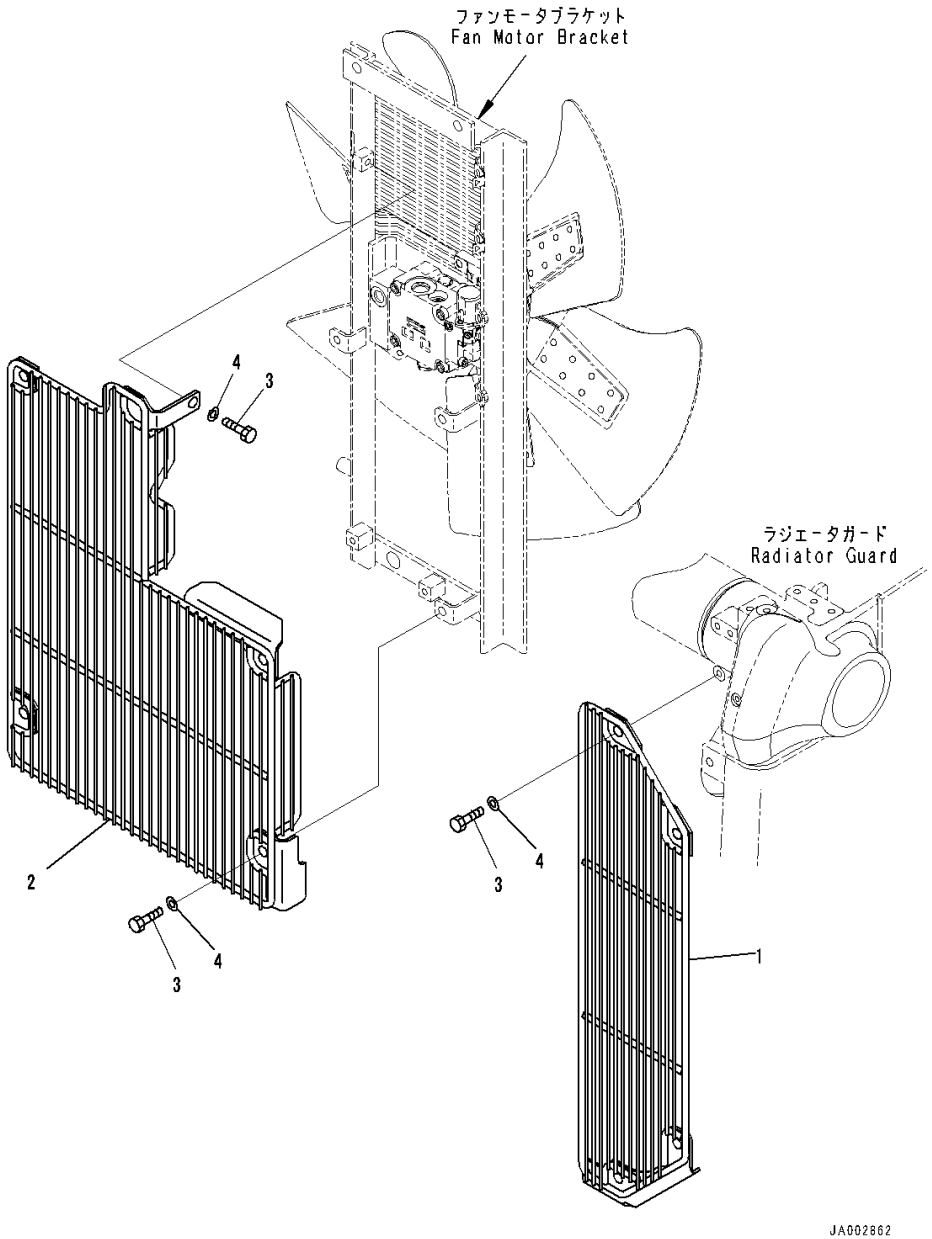

Index	Code	Part Number	Description	Qty	Serial Number
1		14X-03-51341	Net,LHS	1	80001-
2		14X-03-51351	Neck,RHS	1	80001-
3		01010-81225	Bolt	9	80001-
4		01643-31232	Washer	9	80001-

https://truckmanualshub.com/

https://truckmanualshub.com/

https://truckmanualshub.com/

FUEL SYSTEM

FIG. D0100-001001 Fuel Tank

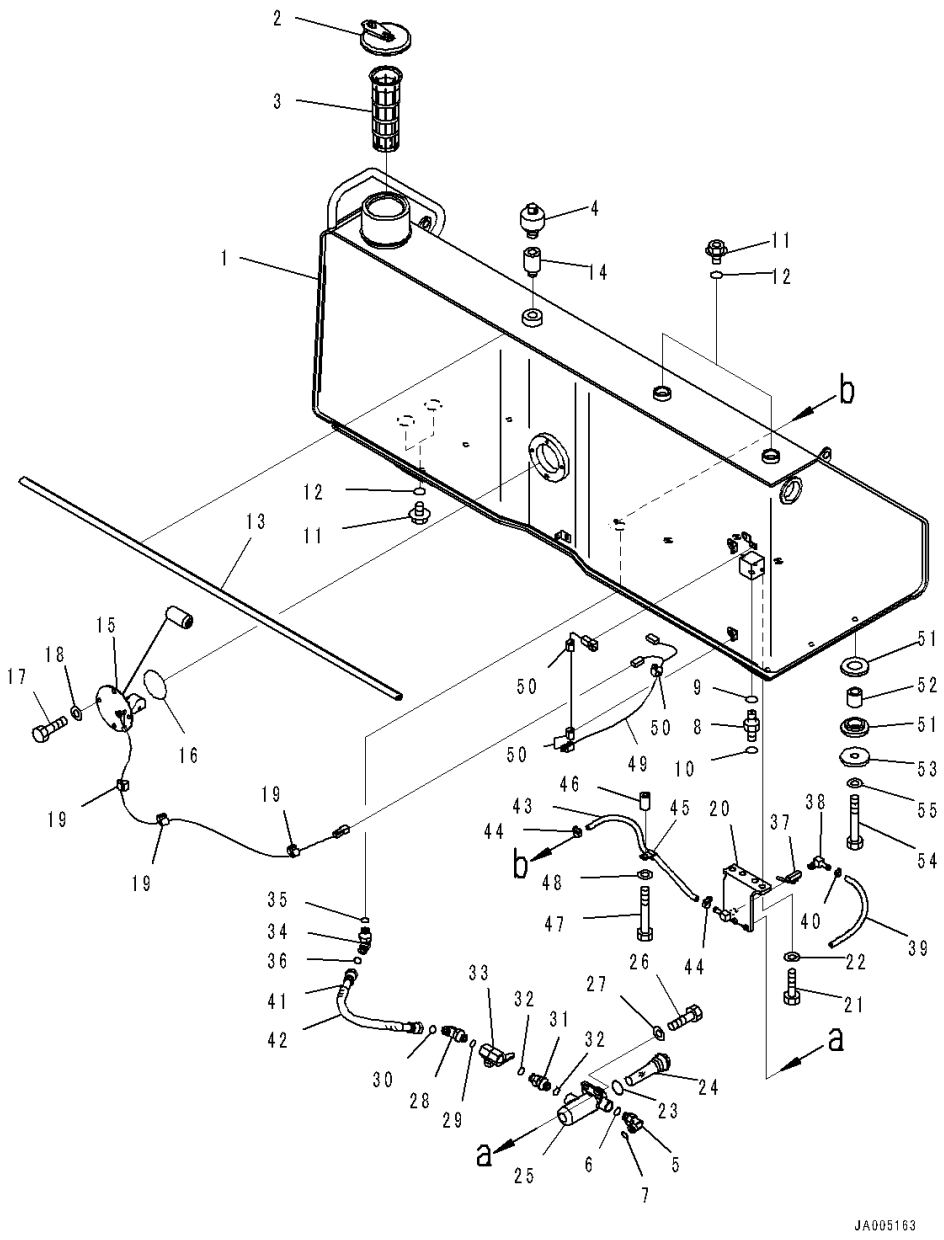

Index	Code	Part Number	Description	Qty	Serial Number
1		14X-04-51111	Tank, FUEL	1	80001-
2		17A-04-41411	Cap	1	80001-
3		07056-18422	Strainer	1	80001-
4		22U-60-21520	Breather	1	80001-
5		02782-10422	Elbow	1	80001-
6		07002-12034	O-ring	1	80001-
7		02896-11012	O-ring	1	80001-
8		02781-00315	Union	1	80001-
9		07002-12034	O-ring	1	80001-
10		02896-11009	O-ring	1	80001-
11		07040-13016	Plug	4	80007-
12		07002-13034	O-ring	4	80001-
13		14X-04-51420	Seal	1	80001-
14		14X-04-51490	Adapter	1	80072-
15		14X-06-51490	Sensor, FUEL	1	80001-
16		07000-12085	O-ring	1	80001-
17		01010-81020	Bolt	4	80001-
18		01643-31032	Washer	4	80001-
19		08211-00720	Clip	3	80001-
20		14X-04-51131	Bracket	1	80001-
21		01010-81230	Bolt	4	80001-
22		01643-31232	Washer	4	80001-
		17A-04-41190	Filter Assembly	1	80001-
23		07002-14234	• O-ring	1	80001-
24		07058-00010	• Element Assembly	1	80001-
25		14X-04-21660	• Case	1	80001-
26		01010-80825	Bolt	2	80001-
27		01643-30823	Washer	2	80001-
28		02782-10422	Elbow	1	80001-
29		07002-12034	O-ring	1	80001-
30		02896-11012	O-ring	1	80001-
31		17A-04-41331	Connector	1	80001-
32		07002-12034	O-ring	2	80001-
33		14X-04-21620	Valve	1	80001-
34		02782-10422	Elbow	1	80001-
35		07002-12034	O-ring	1	80001-
36		02896-11012	O-ring	1	80001-
37		07700-40240	Valve	1	80001-
38		205-04-62130	Elbow	1	80001-
39		07270-01025	Tube	1	80001-

https://truckmanualshub.com/

FIG. D0100-001001 Fuel Tank

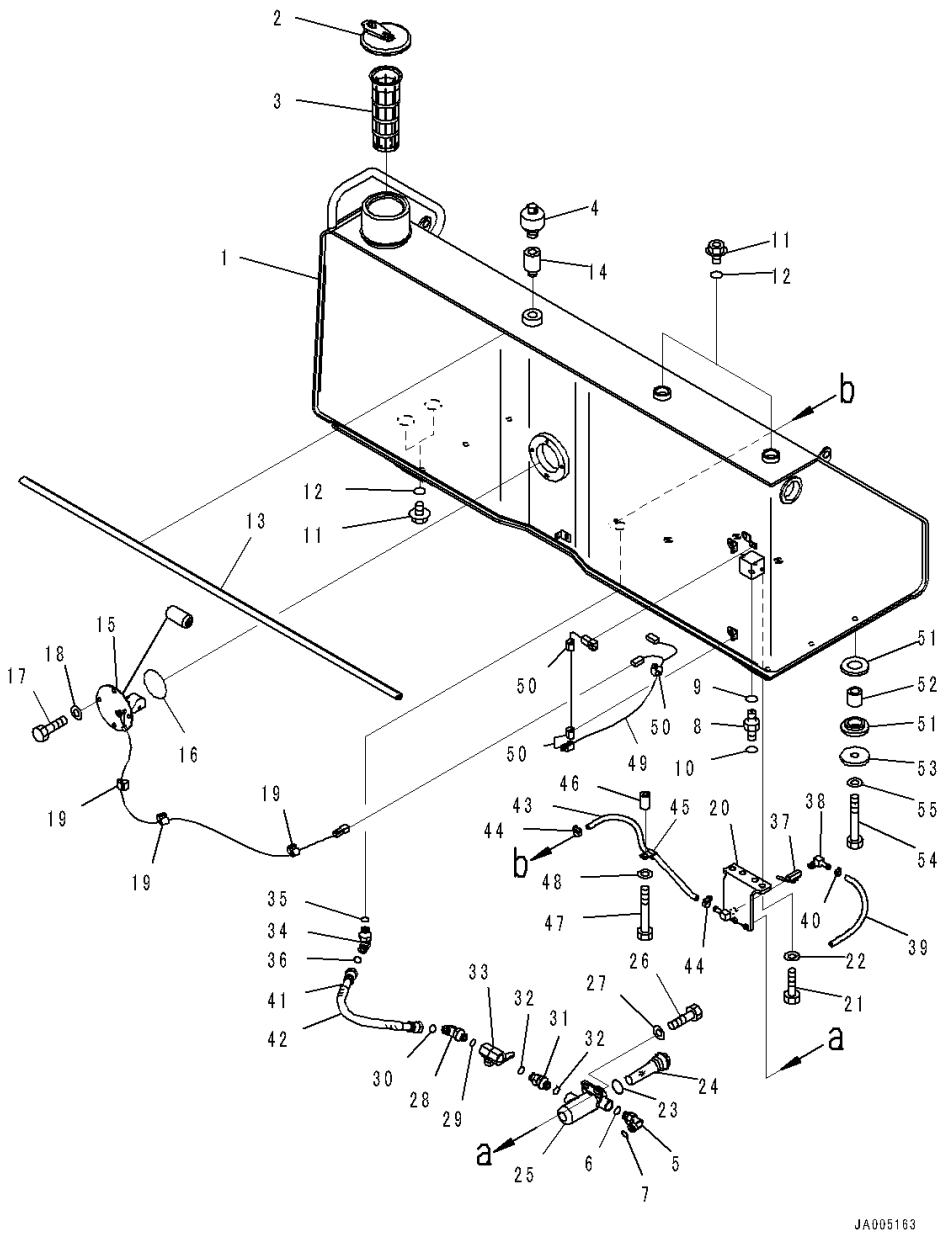

Index	Code	Part Number	Description	Qty	Serial Number
40		07285-00115	Clip	1	80001-
41		02762-00405	Hose, Face Seal Type	1	80001-
42		08017-31903	Conduit	1	80001-
43		07270-21050	Tube	1	80001-
44		07281-00167	Clamp	2	80001-
45		04434-51310	Clip	1	80001-
46		205-03-71330	Collar	1	80001-
47		01010-81055	Bolt	1	80001-
48		01643-31032	Washer	1	80001-
49		14X-06-51230	Wiring Harness	1	80001-
50		08211-00720	Clip	4	80001-
51		195-54-42550	Cushion	12	80001-
52		14X-04-51330	Boss	6	80001-
53		17A-04-11191	Plate	6	80001-
54		14X-04-51170	Bolt	6	80001-
55		01643-31645	Washer	6	80001-

https://truckmanualshub.com/

FIG. D0100-002001 Fuel Tank, With Refuel Pump

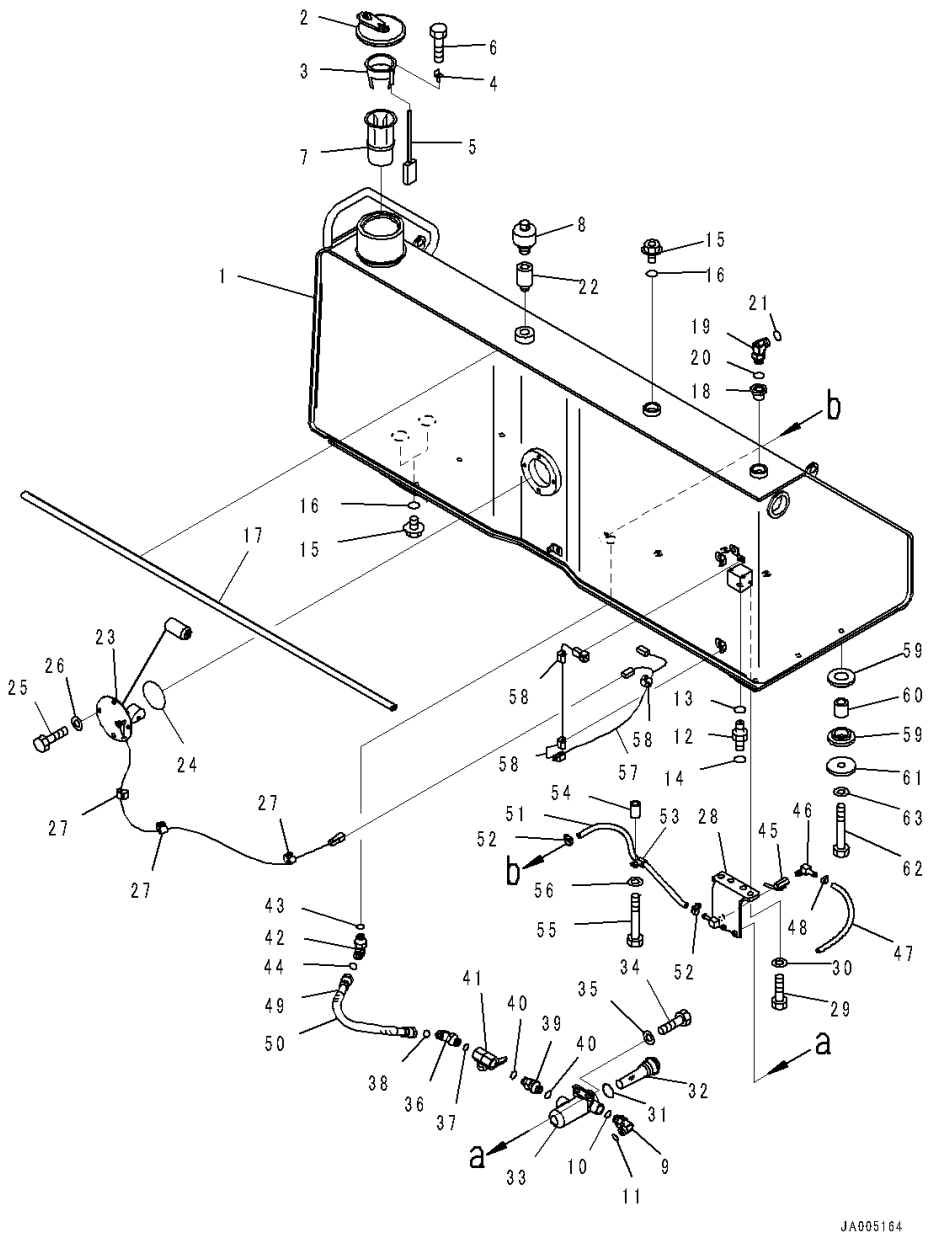

Index	Code	Part Number	Description	Qty	Serial Number
1		14X-04-51112	Tank Assembly, Fuel	1	80059-
2		17A-04-41411	Cap	1	80059-
		22U-04-21241	Strainer Assembly	1	80059-
		22U-04-21200	• Float Assembly	1	80059-
3	C1		• • Guide	1	80059-
4		20Y-04-21580	• • Cap	1	80059-
5		22U-04-21220	• • Float	1	80059-
6	C1		• • Screw	1	80059-
7		07056-18425	• Strainer	1	80059-
8		22U-60-21520	Breather	1	80059-
9		02782-10422	Elbow	1	80059-
10		07002-12034	O-ring	1	80059-
11		02896-11012	O-ring	1	80059-
12		02781-00315	Union	1	80059-
13		07002-12034	O-ring	1	80059-
14		02896-11009	O-ring	1	80059-
15		07040-13016	Plug	3	80059-
16		07002-13034	O-ring	4	80059-
17		14X-04-51420	Seal	1	80059-
18		14X-04-51431	Sleeve	1	80059-
19		02782-10522	Elbow	1	80059-
20		07002-12434	O-ring	1	80059-
21		02896-11015	O-ring	1	80059-
22		14X-04-51490	Adapter	1	80072-
23		14X-06-51490	Sensor, FUEL	1	80059-
24		07000-12085	O-ring	1	80059-
25		01010-81020	Bolt	4	80059-
26		01643-31032	Washer	4	80059-
27		08211-00720	Clip	3	80059-
28		14X-04-51131	Bracket	1	80059-
29		01010-81230	Bolt	4	80059-
30		01643-31232	Washer	4	80059-
		17A-04-41190	Filter Assembly	1	80059-
31		07002-14234	• O-ring	1	80059-
32		07058-00010	• Element Assembly	1	80059-
33		14X-04-21660	• Case	1	80059-
34		01010-80825	Bolt	2	80059-
35		01643-30823	Washer	2	80059-
36		02782-10422	Elbow	1	80059-
37		07002-12034	O-ring	1	80059-

https://truckmanualshub.com/

FIG. D0100-002001 Fuel Tank, With Refuel Pump

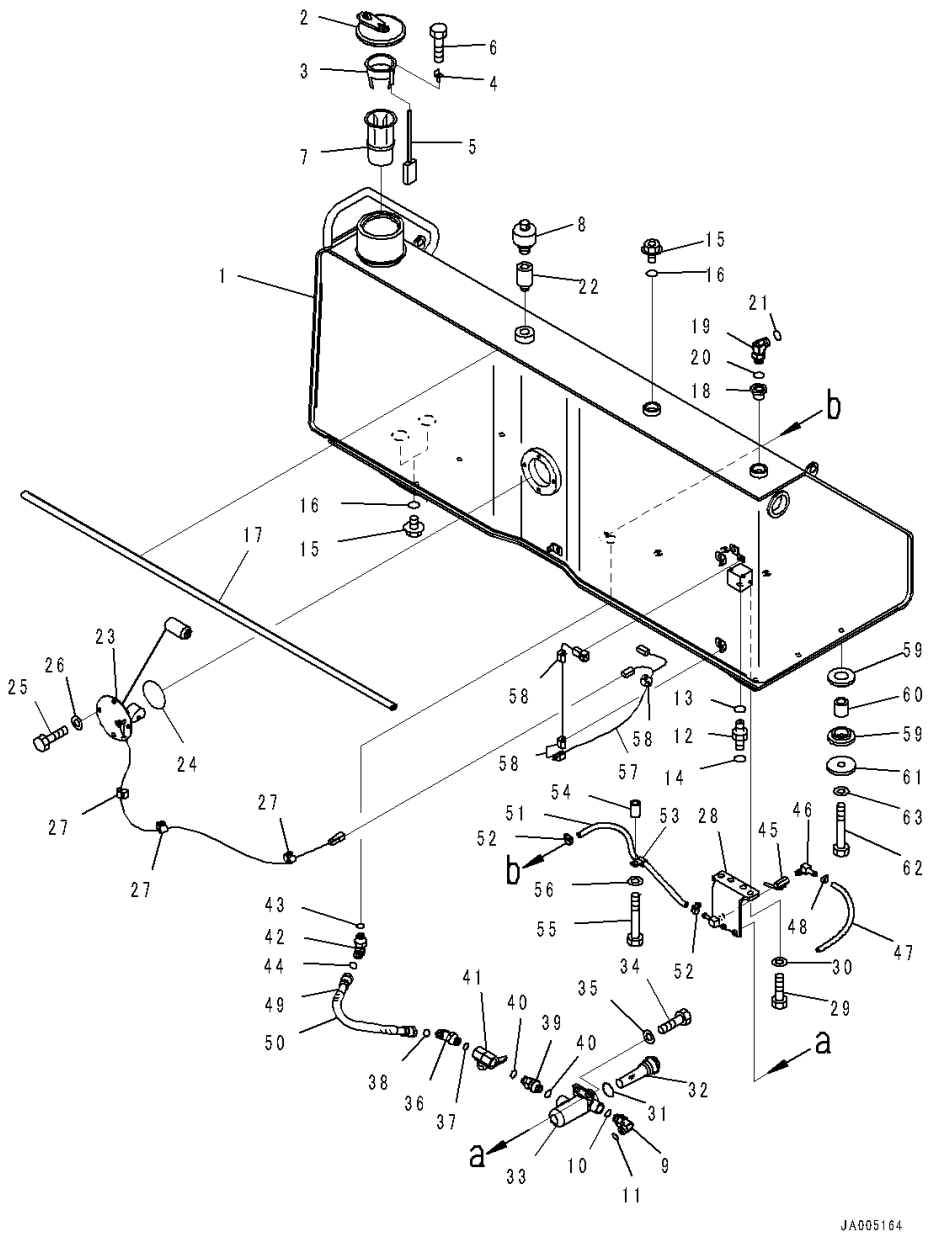

Index	Code	Part Number	Description	Qty	Serial Number
38		02896-11012	O-ring	1	80059-
39		17A-04-41331	Connector	1	80059-
40		07002-12034	O-ring	2	80059-
41		14X-04-21620	Valve	1	80059-
42		02782-10422	Elbow	1	80059-
43		07002-12034	O-ring	1	80059-
44		02896-11012	O-ring	1	80059-
45		07700-40240	Valve	1	80059-
46		205-04-62130	Elbow	1	80059-
47		07270-01025	Tube	1	80059-
48		07285-00115	Clip	1	80059-
49		02762-00405	Hose, Face Seal Type	1	80059-
50		08017-31903	Conduit	1	80059-
51		07270-21050	Tube	1	80059-
52		07281-00167	Clamp	2	80059-
53		04434-51310	Clip	1	80059-
54		205-03-71330	Collar	1	80059-
55		01010-81055	Bolt	1	80059-
56		01643-31032	Washer	1	80059-
57		14X-06-51230	Wiring Harness	1	80059-
58		08211-00720	Clip	4	80059-
59		195-54-42550	Cushion	12	80059-
60		14X-04-51330	Boss	6	80059-
61		17A-04-11191	Plate	6	80059-
62		14X-04-51170	Bolt	6	80059-
63		01643-31645	Washer	6	80059-

https://truckmanualshub.com/

FIG. D0200-001001 Fuel Supply Piping, Piping

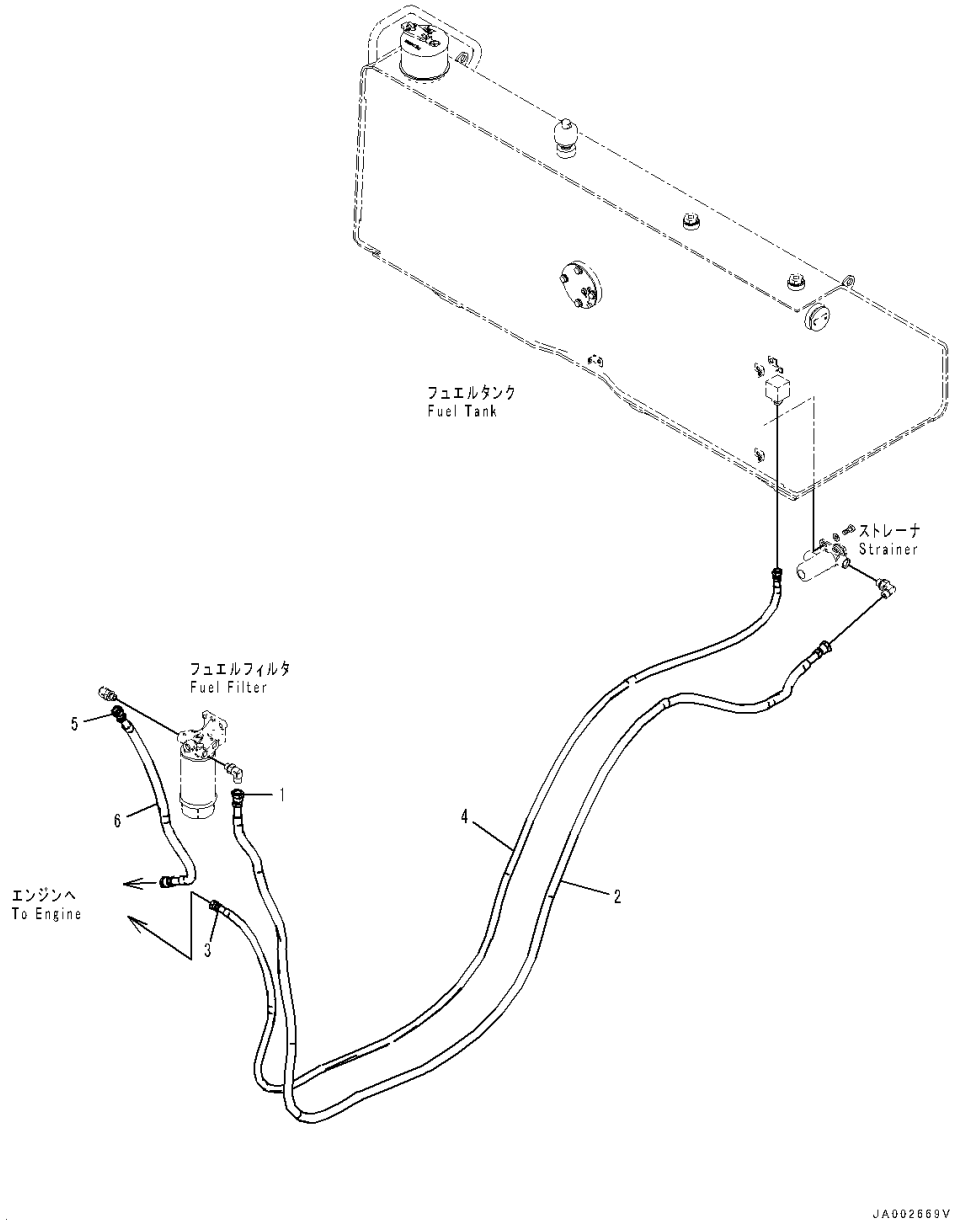

Index	Code	Part Number	Description	Qty	Serial Number
		14X-04-51231	Hose Assembly	1	80001-
1		14X-04-51240	• Hose Assembly	1	80001-
2		08017-31935	• • Conduit	1	80001-
3		14X-04-51251	• Hose Assembly	1	80001-
4		08017-31529	• • Conduit	1	80001-
5		14X-04-51281	Hose Assembly	1	80001-
6		08017-31906	• Conduit	1	80001-

https://truckmanualshub.com/

FIG. D0200-001002 Fuel Supply Piping, Pre Filter Bracket

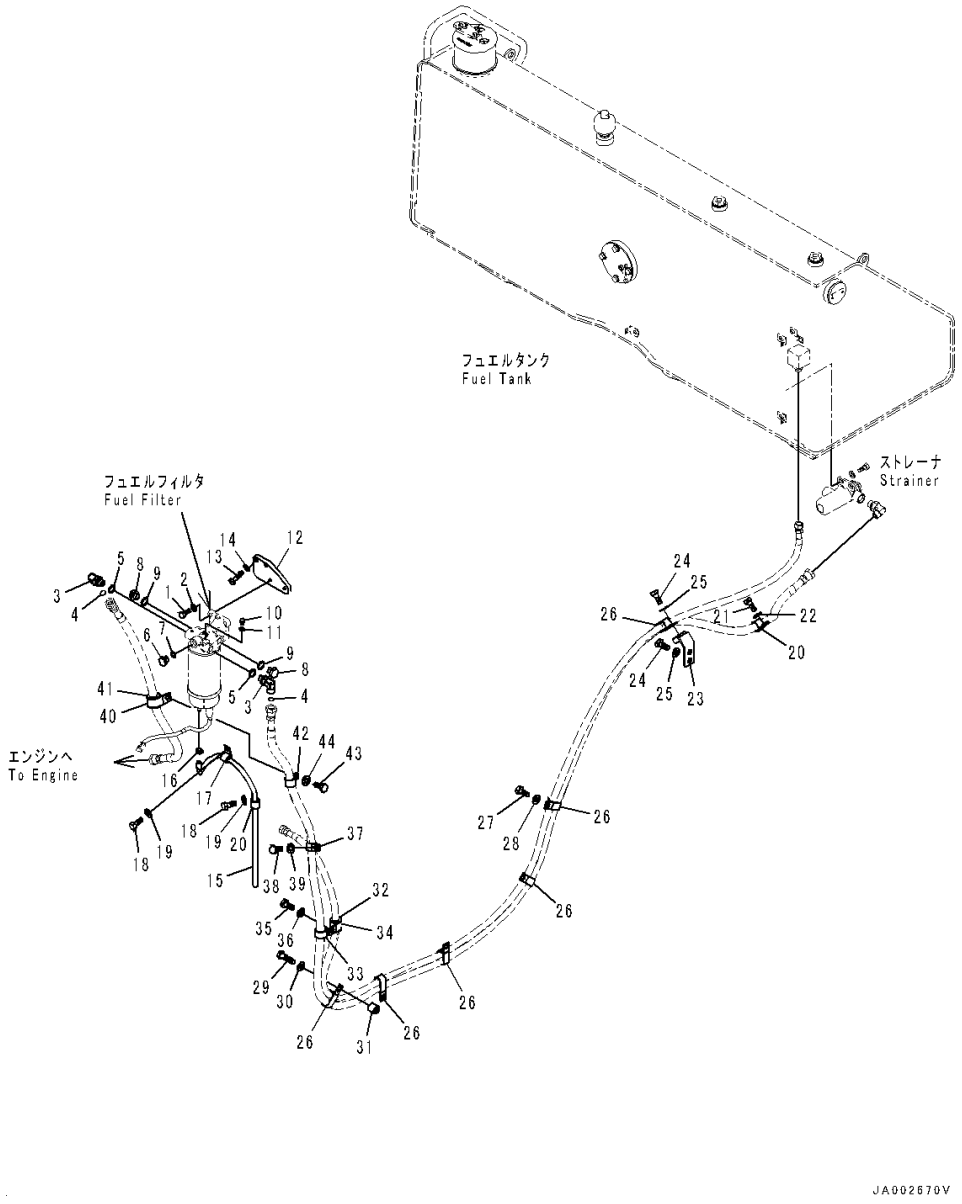

Index	Code	Part Number	Description	Qty	Serial Number
1		01010-81030	Bolt	2	80001-
2		01643-31032	Washer	2	80001-
3		02782-10420	Elbow	2	80001-
4		02896-11012	O-ring	2	80001-
5		07002-11823	O-ring	2	80001-
6		07040-11612	Plug	1	80001-
7		07002-11623	O-ring	1	80001-
8		07040-11812	Plug	2	80001-
9		07002-11823	O-ring	2	80001-
10		07040-10807	Plug	1	80001-
11		07002-10823	O-ring	1	80001-
12		14X-04-51221	Plate	1	80001-
13		01010-81035	Bolt	2	80001-
14		01643-31032	Washer	2	80001-
15		07286-00875	Hose	1	80001-
16		07285-00125	Clip	1	80001-
17		04434-51712	Clip	2	80001-
18		01010-81220	Bolt	2	80001-
19		01643-31232	Washer	2	80001-
20		04434-52312	Clip	1	80001-
21		01010-81220	Bolt	1	80001-
22		01643-31232	Washer	1	80001-
23		14X-04-51211	Bracket	1	80001-
24		01010-81225	Bolt	3	80001-
25		01643-31232	Washer	3	80001-
26		04435-52112	Clip	6	80001-
27		01010-81220	Bolt	4	80001-
28		01643-31232	Washer	4	80001-
29		01010-81245	Bolt	1	80001-
30		01643-31232	Washer	1	80001-
31		6144-81-6580	Spacer	1	80001-
32		07095-20419	Cushion	1	80001-
33		04434-52312	Clip	1	80001-
34		04434-52712	Clip	1	80007-
35		01010-81225	Bolt	1	80001-
36		01643-31232	Washer	1	80001-
37		04434-52312	Clip	1	80001-
38		01010-81225	Bolt	1	80001-
39		01643-31232	Washer	1	80001-
40		04434-53412	Clip	1	80001-

https://truckmanualshub.com/

FIG. D0200-001002 Fuel Supply Piping, Pre Filter Bracket

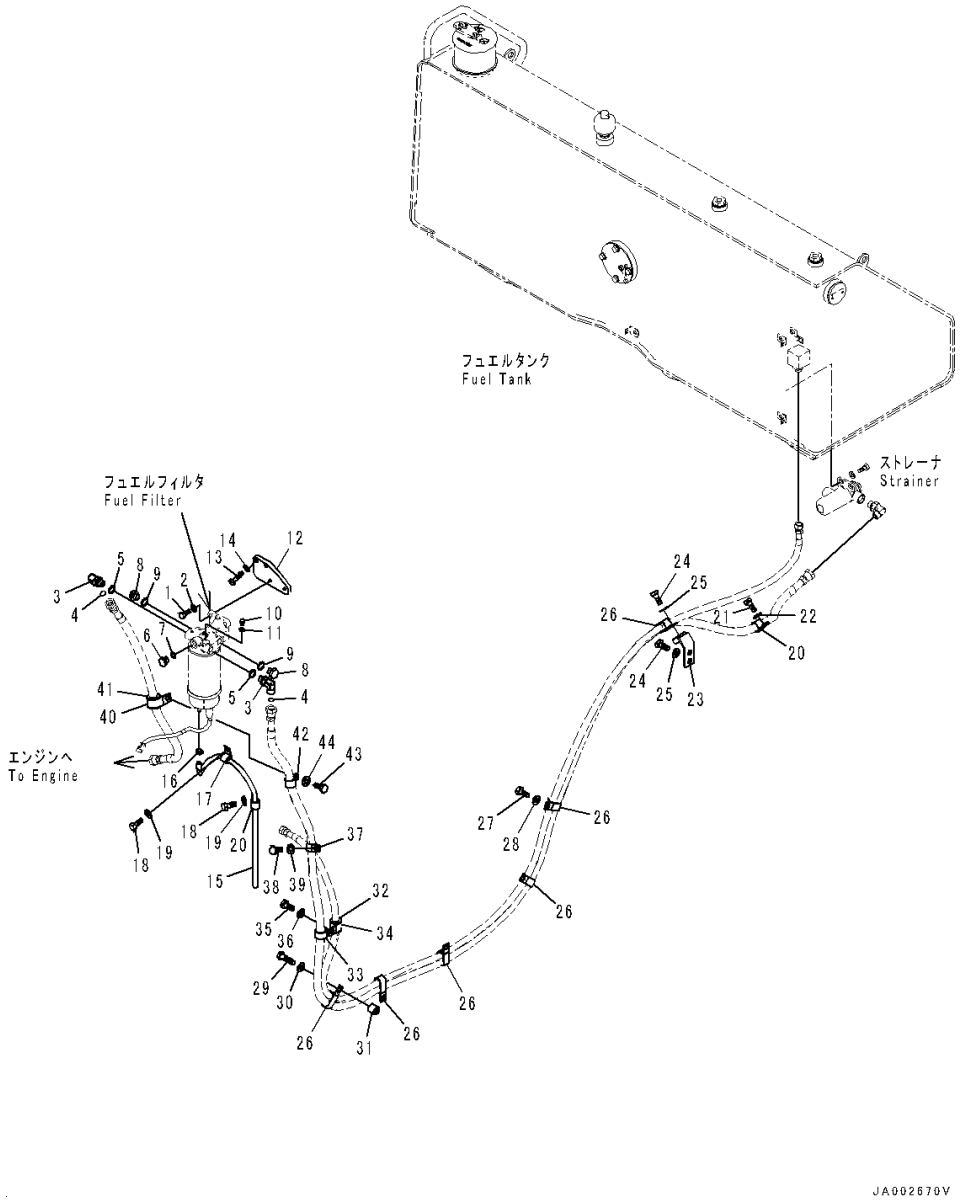

Index	Code	Part Number	Description	Qty	Serial Number
41		07095-20523	Cushion	1	80001-
42		04434-52312	Clip	1	80001-
43		01010-81225	Bolt	1	80001-
44		01643-31232	Washer	1	80001-

https://truckmanualshub.com/

https://truckmanualshub.com/

ELECTRICAL SYSTEM

FIG. E0100-001001 Battery, Large Capacity

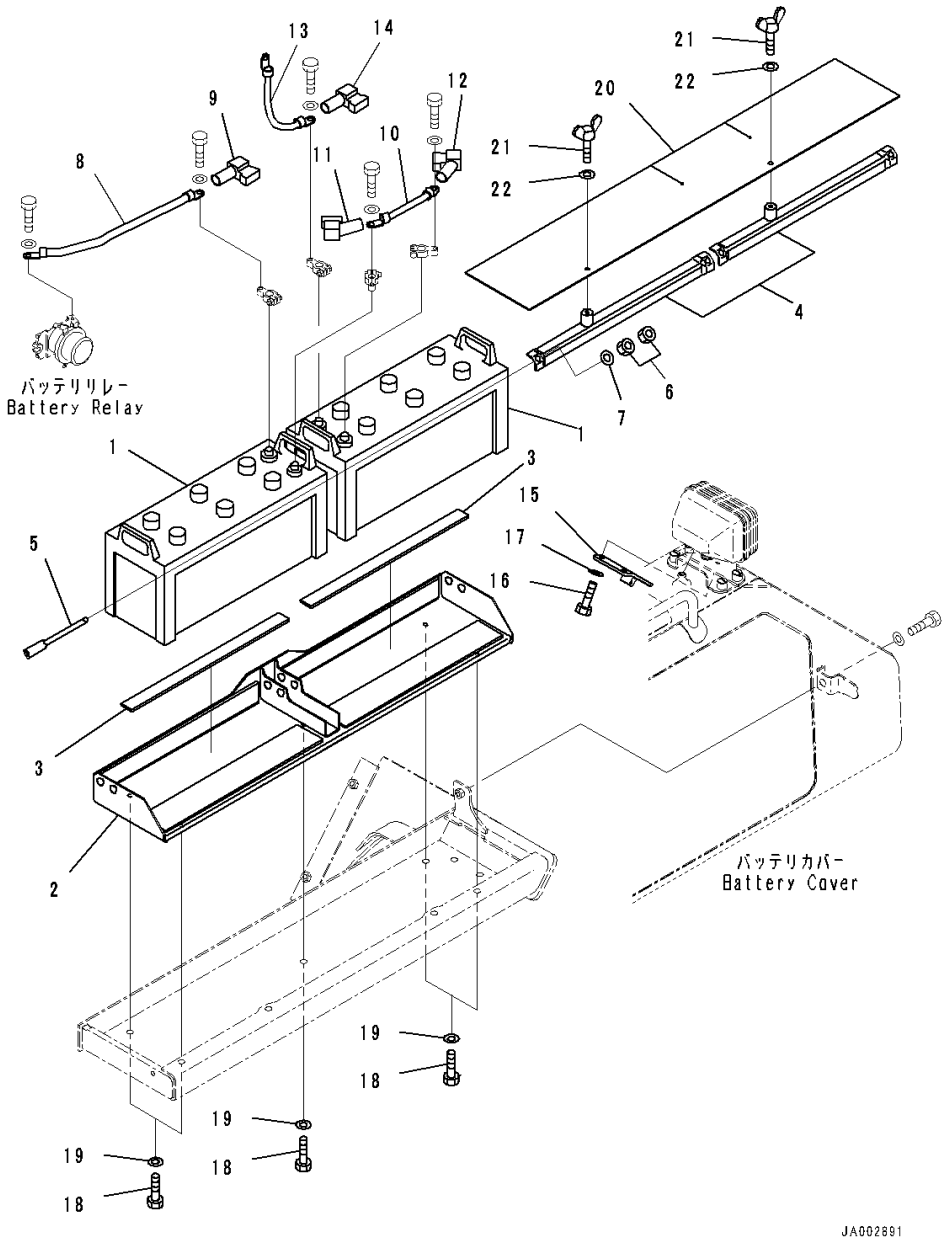

Index	Code	Part Number	Description	Qty	Serial Number
1		08000-32215	Battery, Wet, 145F51	2	80001-
		08000-00000	• Terminal, (+)	1	80001-
		08000-00001	• Terminal, (-)	1	80001-
2		14X-06-52111	Bracket	1	80001-
3		08007-23549	• Cushion, Battery	2	80001-
4		14X-06-52121	Holder	2	80001-
5		08006-40255	Rod	4	80001-
6		01580-11008	Nut	8	80001-
7		01643-31032	Washer	4	80001-
8		08028-GD045	Cable, Ground	1	80001-
9		14X-06-12280	Cover	1	80001-
10		08028-64020	Cable, Ground	1	80001-
11		14X-06-12280	Cover	1	80001-
12		21J-06-11570	Cover	1	80001-
13		08028-ED030	Cable, Ground	1	80001-
14		14X-06-12260	Cover	1	80001-
15		14X-06-52890	Bracket	1	80001-
16		01010-81025	Bolt	2	80001-
17		01643-31032	Washer	2	80001-
18		01010-81225	Bolt	5	80001-
19		01643-31232	Washer	5	80001-
20		14X-06-52470	Sheet	1	80001-
21		01434-00820	Bolt, Wing	2	80001-
22		113-43-23230	Washer	2	80001-

https://truckmanualshub.com/

FIG. E0100-003001 Battery, For EU Noise Reguration

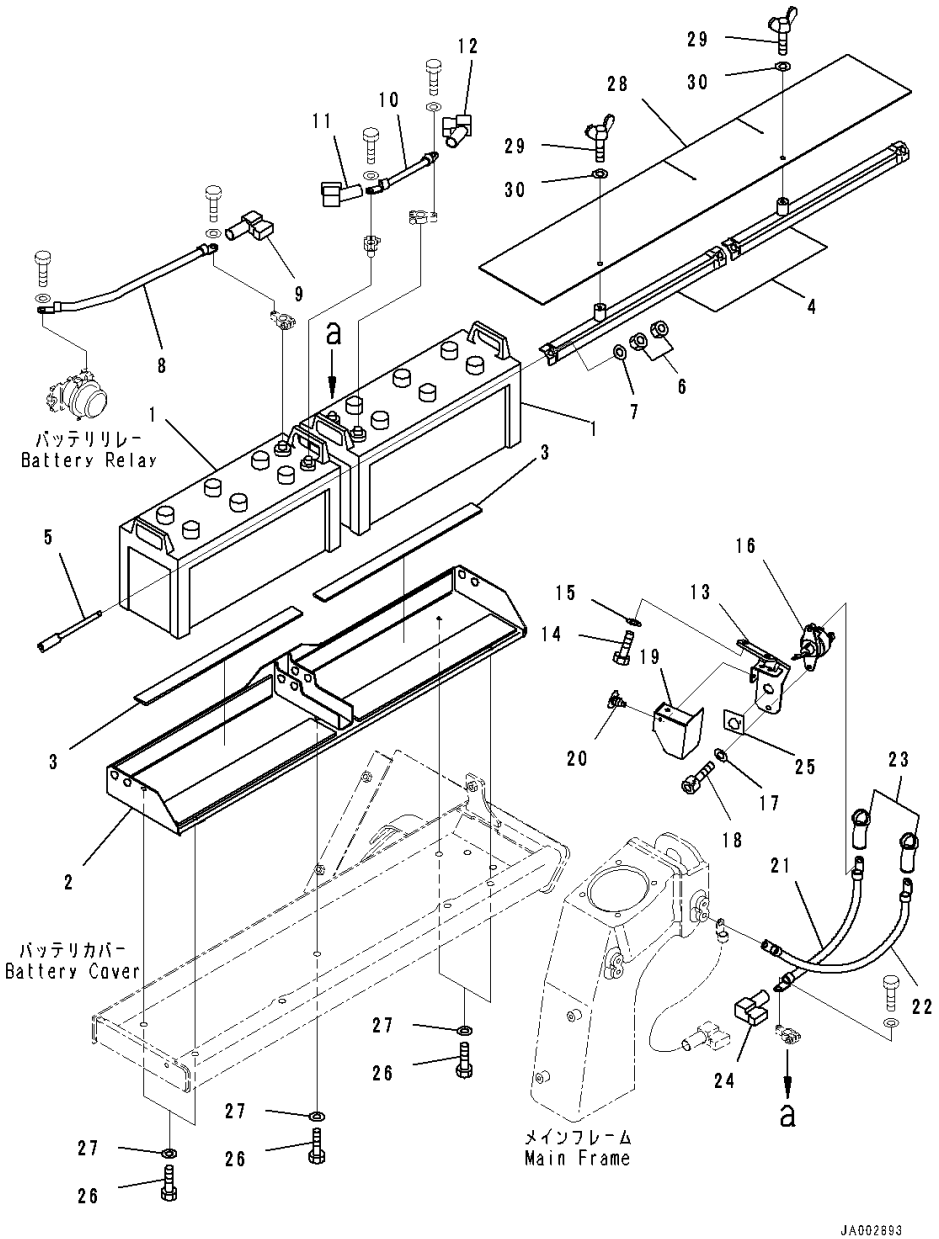

Index	Code	Part Number	Description	Qty	Serial Number
1		08000-32215	Battery, Wet, 145F51	2	80001-
		08000-00000	• Terminal, (+)	1	80001-
		08000-00001	• Terminal, (-)	1	80001-
2		14X-06-52111	Bracket	1	80001-
3		08007-23549	• Cushion, Battery	2	80001-
4		14X-06-52121	Holder	2	80001-
5		08006-40255	Rod	4	80001-
6		01580-11008	Nut	8	80001-
7		01643-31032	Washer	4	80001-
8		08028-GD045	Cable, Ground	1	80001-
9		14X-06-12280	Cover	1	80001-
10		08028-64020	Cable, Ground	1	80001-
11		14X-06-12280	Cover	1	80001-
12		21J-06-11570	Cover	1	80001-
13		14X-06-52811	Bracket	1	80001-
14		01010-81025	Bolt	2	80001-
15		01643-31032	Washer	2	80001-
16		08068-00001	Switch, Battery	1	80001-
17		01643-30823	Washer	2	80001-
18		01252-70825	Bolt	2	80001-
19		14X-06-52840	Cover	1	80001-
20		20T-54-74510	Cap	2	80001-
21		08028-ED040	Cable, Ground	1	80001-
22		14X-06-52830	Cable	1	80001-
23		08038-00035	Cap, Terminal	2	80001-
24		14X-06-12270	Cover	1	80001-
25		09697-00001	Plate, Battery Disconnect Switch	1	80001-
26		01010-81225	Bolt	5	80001-
27		01643-31232	Washer	5	80001-
28		14X-06-52470	Sheet	1	80001-
29		01434-00820	Bolt, Wing	2	80001-
30		113-43-23230	Washer	2	80001-

https://truckmanualshub.com/

FIG. E0100-004001 Battery, Large Capacity, For EU Noise Reguration

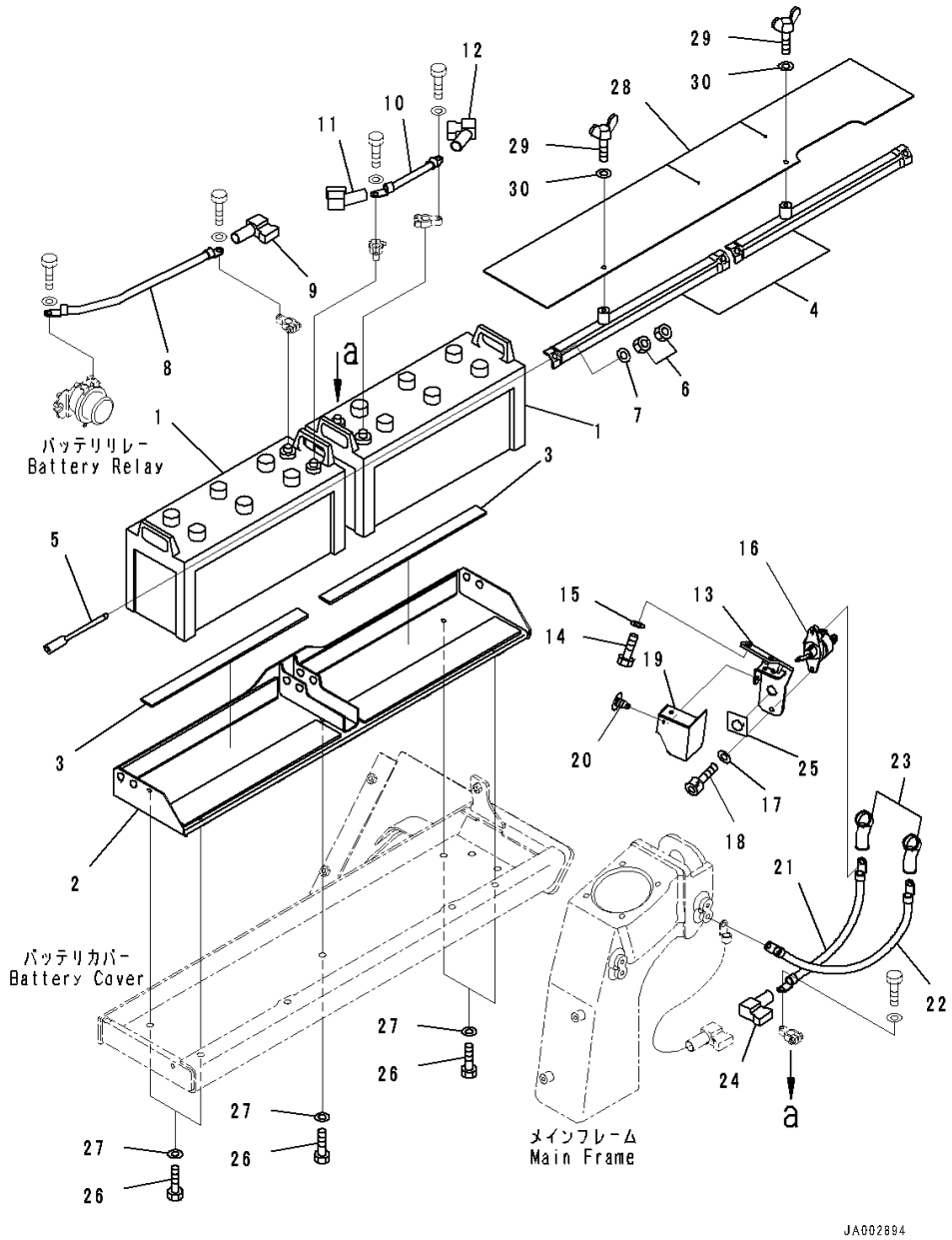

Index	Code	Part Number	Description	Qty	Serial Number
1		08000-3222Z	Battery, Wet, 195G51	2	80001-
		08000-00000	• Terminal, (+)	1	80001-
		08000-00001	• Terminal, (-)	1	80001-
2		14X-06-52111	Bracket	1	80001-
3		08007-23549	• Cushion, Battery	2	80001-
4		14X-06-52121	Holder	2	80001-
5		08006-40255	Rod	4	80001-
6		01580-11008	Nut	8	80001-
7		01643-31032	Washer	4	80001-
8		08028-GD045	Cable, Ground	1	80001-
9		14X-06-12280	Cover	1	80001-
10		08028-64020	Cable, Ground	1	80001-
11		14X-06-12280	Cover	1	80001-
12		21J-06-11570	Cover	1	80001-
13		14X-06-52811	Bracket	1	80001-
14		01010-81025	Bolt	2	80001-
15		01643-31032	Washer	2	80001-
16		08068-00001	Switch, Battery	1	80001-
17		01643-30823	Washer	2	80001-
18		01252-70825	Bolt	2	80001-
19		14X-06-52840	Cover	1	80001-
20		20T-54-74510	Cap	2	80001-
21		08028-ED040	Cable, Ground	1	80001-
22		14X-06-52830	Cable	1	80001-
23		08038-00035	Cap, Terminal	2	80001-
24		14X-06-12270	Cover	1	80001-
25		09697-00001	Plate, Battery Disconnect Switch	1	80001-
26		01010-81225	Bolt	5	80001-
27		01643-31232	Washer	5	80001-
28		14X-06-52480	Sheet	1	80001-
29		01434-00820	Bolt, Wing	2	80001-
30		113-43-23230	Washer	2	80001-

https://truckmanualshub.com/

FIG. E0100-002001 Battery

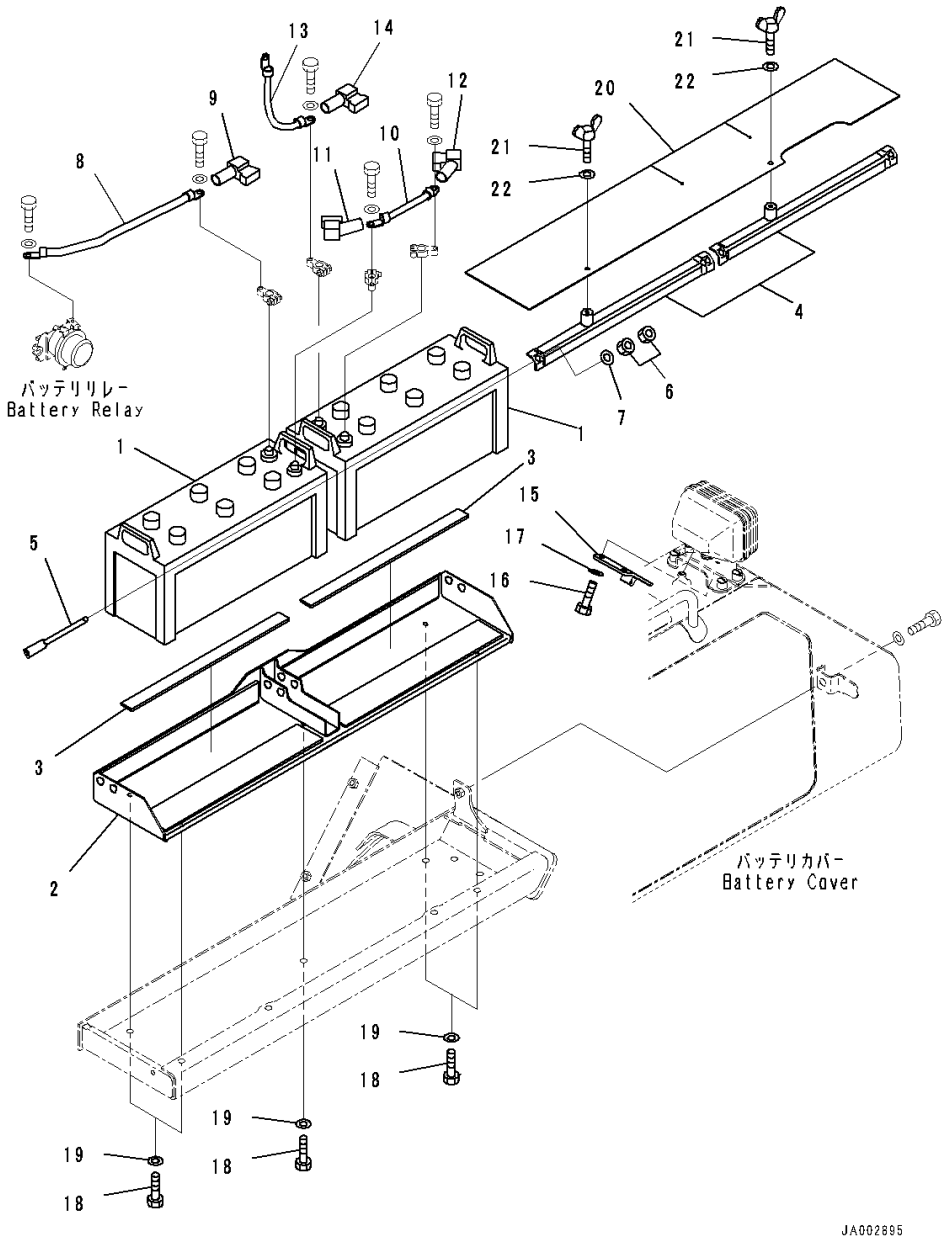

Index	Code	Part Number	Description	Qty	Serial Number
1		08000-3222Z	Battery, Wet, 195G51	2	80001-
		08000-00000	• Terminal, (+)	1	80001-
		08000-00001	• Terminal, (-)	1	80001-
2		14X-06-52111	Bracket	1	80001-
3		08007-23549	• Cushion, Battery	2	80001-
4		14X-06-52121	Holder	2	80001-
5		08006-40255	Rod	4	80001-
6		01580-11008	Nut	8	80001-
7		01643-31032	Washer	4	80001-
8		08028-GD045	Cable, Ground	1	80001-
9		14X-06-12280	Cover	1	80001-
10		08028-64020	Cable, Ground	1	80001-
11		14X-06-12280	Cover	1	80001-
12		21J-06-11570	Cover	1	80001-
13		08028-ED030	Cable, Ground	1	80001-
14		14X-06-12260	Cover	1	80001-
15		14X-06-52890	Bracket	1	80001-
16		01010-81025	Bolt	2	80001-
17		01643-31032	Washer	2	80001-
18		01010-81225	Bolt	5	80001-
19		01643-31232	Washer	5	80001-
20		14X-06-52480	Sheet	1	80001-
21		01434-00820	Bolt, Wing	2	80001-
22		113-43-23230	Washer	2	80001-

https://truckmanualshub.com/

FIG. E0100-005001 Battery, With Refuel Pump

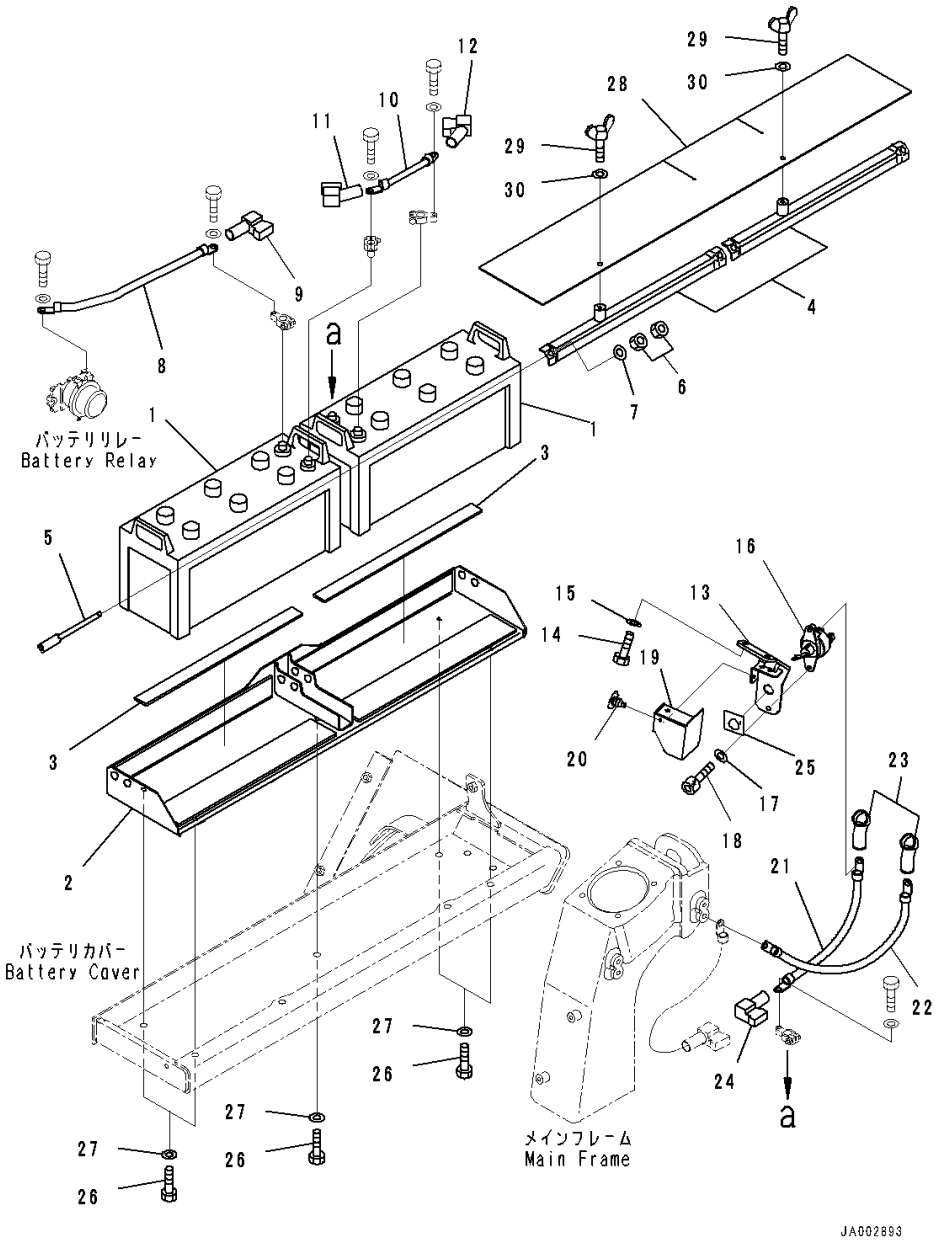

Index	Code	Part Number	Description	Qty	Serial Number
1		08000-32215	Battery, Wet, 145F51	2	80059-
2		08000-32215	• Battery, Wet, 145F51	1	80059-
		08000-00000	• Terminal, (+)	1	80059-
		08000-00001	• Terminal, (-)	1	80059-
3		14X-06-52111	Bracket	1	80059-
4		14X-06-52121	Holder	2	80059-
5		08006-40255	Rod	4	80059-
6		01580-11008	Nut	8	80059-
7		01643-31032	Washer	4	80059-
8		08028-GD045	Cable, Ground	1	80059-
9		14X-06-12280	Cover	1	80059-
10		08028-64020	Cable, Ground	1	80059-
11		14X-06-12280	Cover	1	80059-
12		21J-06-11570	Cover	1	80059-
13		14X-06-52960	Bracket	1	80059-
14		01010-81025	Bolt	2	80059-
15		01643-31032	Washer	2	80059-
16		08068-00001	Switch, Battery	1	80059-
17		01643-30823	Washer	2	80059-
18		01252-70825	Bolt	2	80059-
19		14X-06-52840	Cover	1	80059-
20		20T-54-74510	Cap	2	80059-
21		08028-ED040	Cable, Ground	1	80059-
22		14X-06-52830	Cable	1	80059-
23		08038-00035	Cap, Terminal	2	80059-
24		14X-06-12270	Cover	1	80059-
25		09697-00001	Plate, Battery Disconnect Switch	1	80059-
26		01010-81225	Bolt	5	80059-
27		01643-31232	Washer	5	80059-
28		14X-06-52470	Sheet	1	80059-
29		01434-00820	Bolt, Wing	2	80059-
30		113-43-23230	Washer	2	80059-

https://truckmanualshub.com/

FIG. E0100-006001 Battery, With Refuel Pump, For Large Capacity Battery

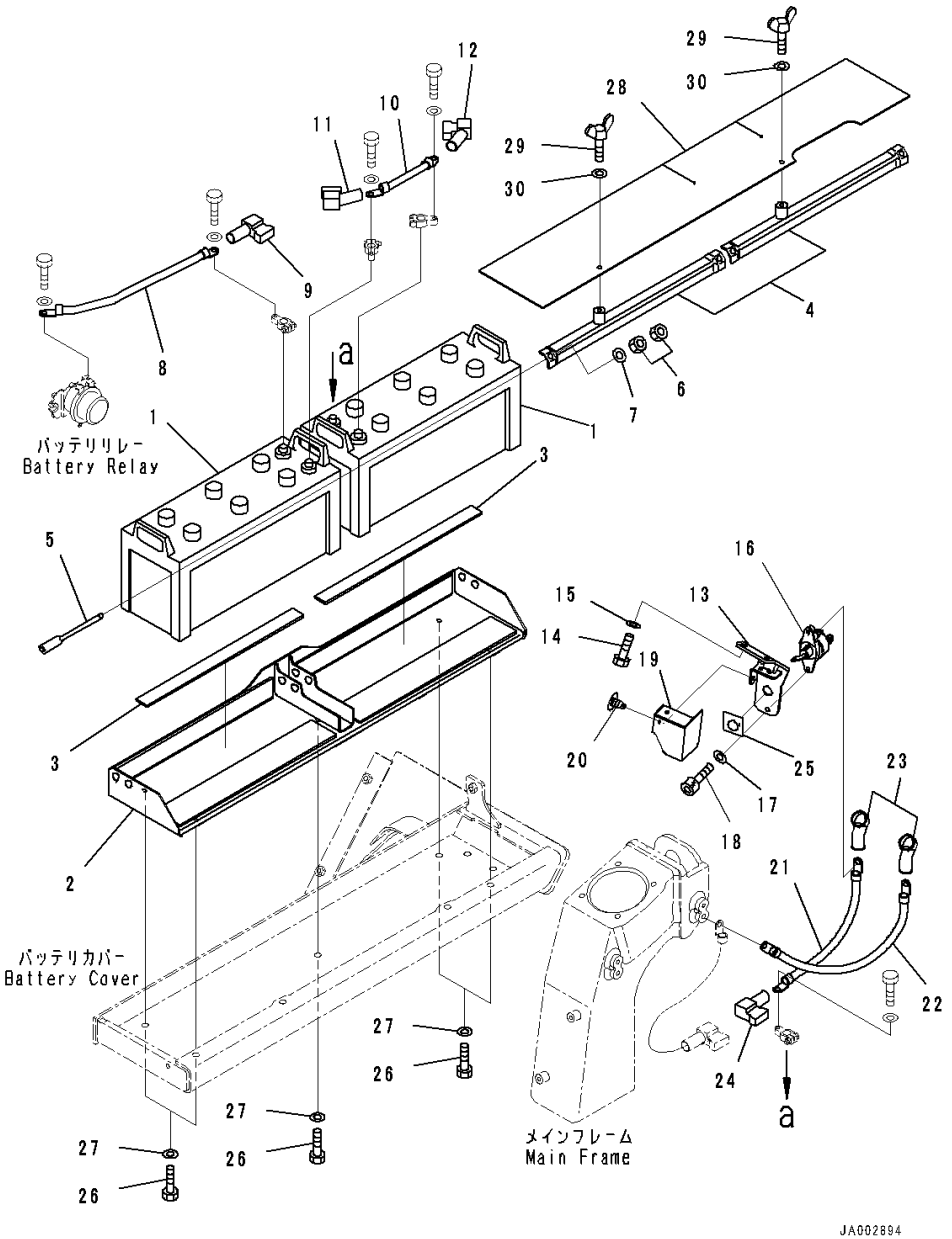

Index	Code	Part Number	Description	Qty	Serial Number
1		08000-3222Z	Battery, Wet, 195G51	2	80059-
2		08000-3222Z	• Battery, Wet, 195G51	1	80059-
		08000-00000	• Terminal, (+)	1	80059-
		08000-00001	• Terminal, (-)	1	80059-
3		14X-06-52111	Bracket	1	80059-
4		14X-06-52121	Holder	2	80059-
5		08006-40255	Rod	4	80059-
6		01580-11008	Nut	8	80059-
7		01643-31032	Washer	4	80059-
8		08028-GD045	Cable, Ground	1	80059-
9		14X-06-12280	Cover	1	80059-
10		08028-64020	Cable, Ground	1	80059-
11		14X-06-12280	Cover	1	80059-
12		21J-06-11570	Cover	1	80059-
13		14X-06-52960	Bracket	1	80059-
14		01010-81025	Bolt	2	80059-
15		01643-31032	Washer	2	80059-
16		08068-00001	Switch, Battery	1	80059-
17		01643-30823	Washer	2	80059-
18		01252-70825	Bolt	2	80059-
19		14X-06-52840	Cover	1	80059-
20		20T-54-74510	Cap	2	80059-
21		08028-ED040	Cable, Ground	1	80059-
22		14X-06-52830	Cable	1	80059-
23		08038-00035	Cap, Terminal	2	80059-
24		14X-06-12270	Cover	1	80059-
25		09697-00001	Plate, Battery Disconnect Switch	1	80059-
26		01010-81225	Bolt	5	80059-
27		01643-31232	Washer	5	80059-
28		14X-06-52480	Sheet	1	80059-
29		01434-00820	Bolt, Wing	2	80059-
30		113-43-23230	Washer	2	80059-

https://truckmanualshub.com/

FIG. E0200-001001 Electric Wiring, Wiring Harness (1/2)

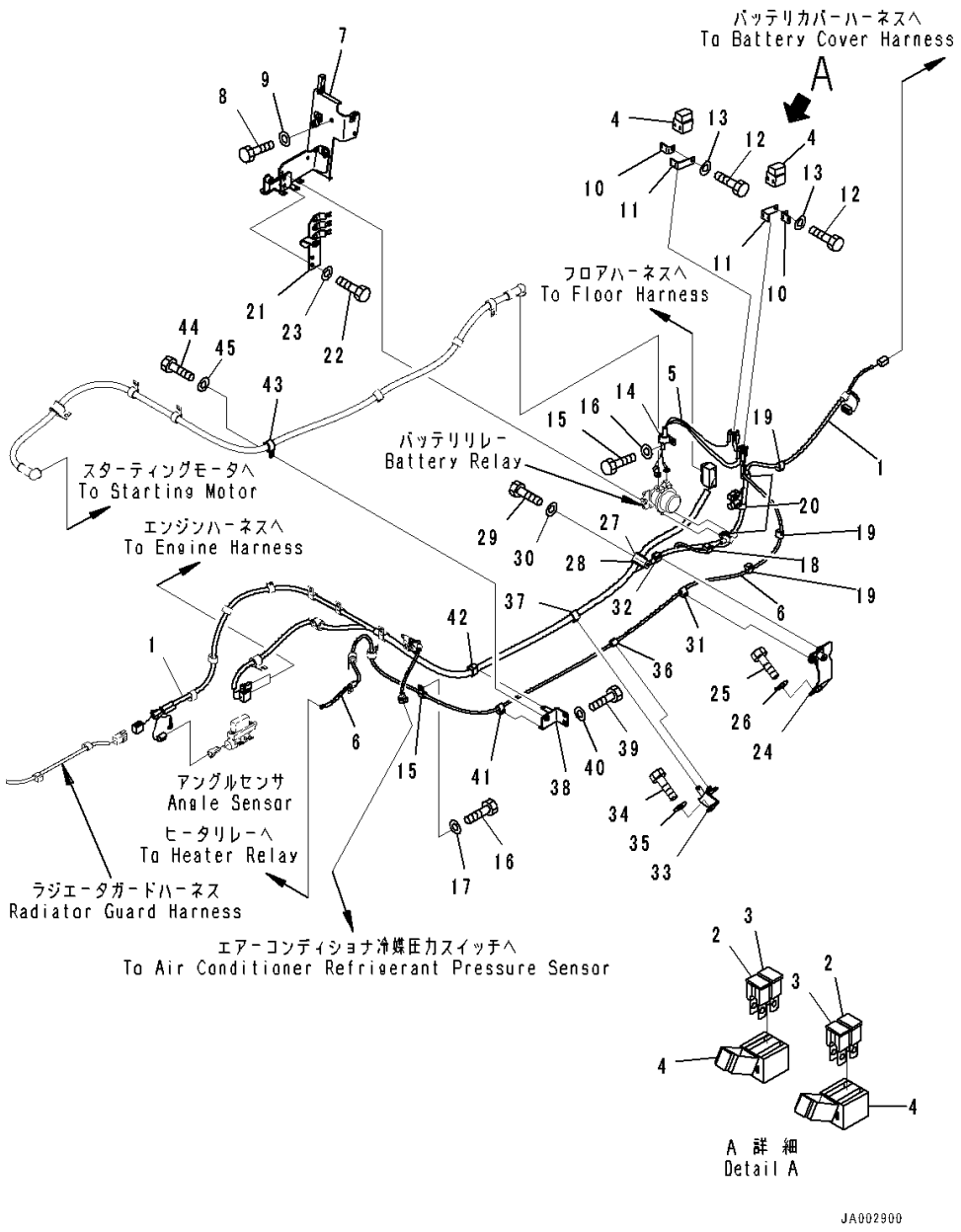

Index	Code	Part Number	Description	Qty	Serial Number
1		14X-06-51212	Wiring Harness	1	80001-
2		14X-06-51610	• Fuse, 50Amp.	2	80001-
3		421-06-22830	• Fuse, 120Amp.	2	80001-
4		421-06-22880	• Holder	2	80001-
5		14X-06-51261	Wiring Harness	1	80001-
6		14X-06-51291	Cable	1	80001-
7		14X-06-51561	Bracket	1	80001-
8		01010-81020	Bolt	2	80001-
9		01643-31032	Washer	2	80001-
10		421-06-22910	Bracket	2	80001-
11		421-06-22920	Bracket	2	80001-
12		01010-80820	Bolt	2	80001-
13		01643-30823	Washer	2	80001-
14		04434-52310	Clip	1	80001-
15		04434-51410	Clip	1	80001-
16		01010-81020	Bolt	2	80001-
17		01643-31032	Washer	2	80001-
18		08211-00720	Clip	1	80001-
19		08211-01020	Clip	3	80001-
20		08211-01320	Clip	3	80001-
21		14X-06-51571	Bracket	1	80001-
22		01010-81020	Bolt	2	80001-
23		01643-31032	Washer	2	80001-
24		14X-06-51581	Bracket	1	80001-
25		01010-81020	Bolt	2	80001-
26		01643-31032	Washer	2	80001-
27		04434-53211	Clip	1	80001-
28		07095-20523	Cushion	1	80001-
29		01010-81020	Bolt	1	80001-
30		01643-31032	Washer	1	80001-
31		08211-01020	Clip	1	80001-
32		08211-01320	Clip	1	80001-
33		14X-06-51591	Bracket	1	80001-
34		01010-81020	Bolt	2	80001-
35		01643-31032	Washer	2	80001-
36		08211-01020	Clip	1	80001-
37		08211-01920	Clip	1	80001-
38		14X-06-51621	Bracket	1	80001-
39		01010-81020	Bolt	2	80001-
40		01643-31032	Washer	2	80001-

https://truckmanualshub.com/

FIG. E0200-001001 Electric Wiring, Wiring Harness (1/2)

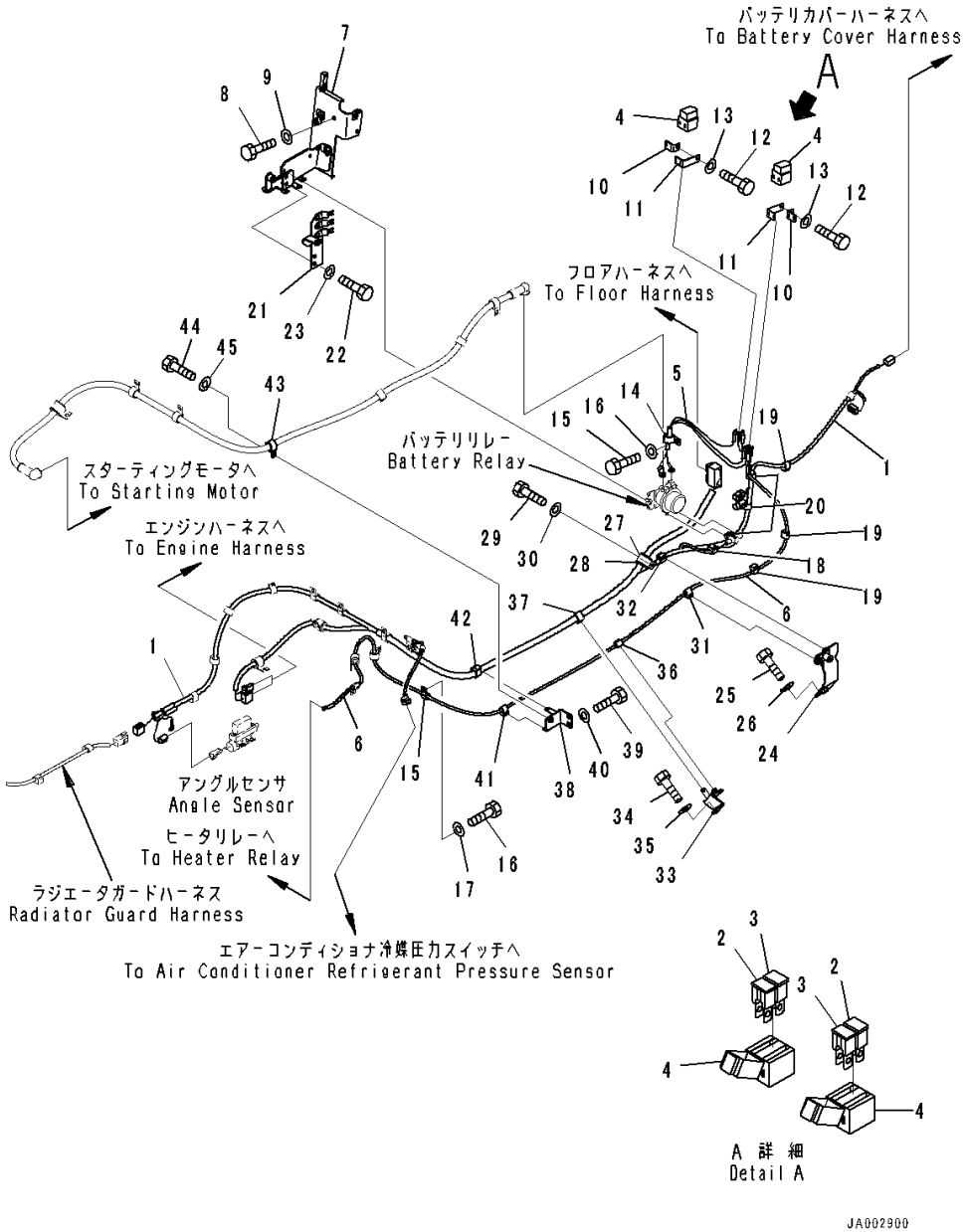

Index	Code	Part Number	Description	Qty	Serial Number
41		08211-01020	Clip	1	80001-
42		08211-01920	Clip	1	80001-
43		04434-52310	Clip	1	80001-
44		01010-81020	Bolt	1	80001-
45		01643-31032	Washer	1	80001-

https://truckmanualshub.com/

FIG. E0200-001002 Electric Wiring, Bracket

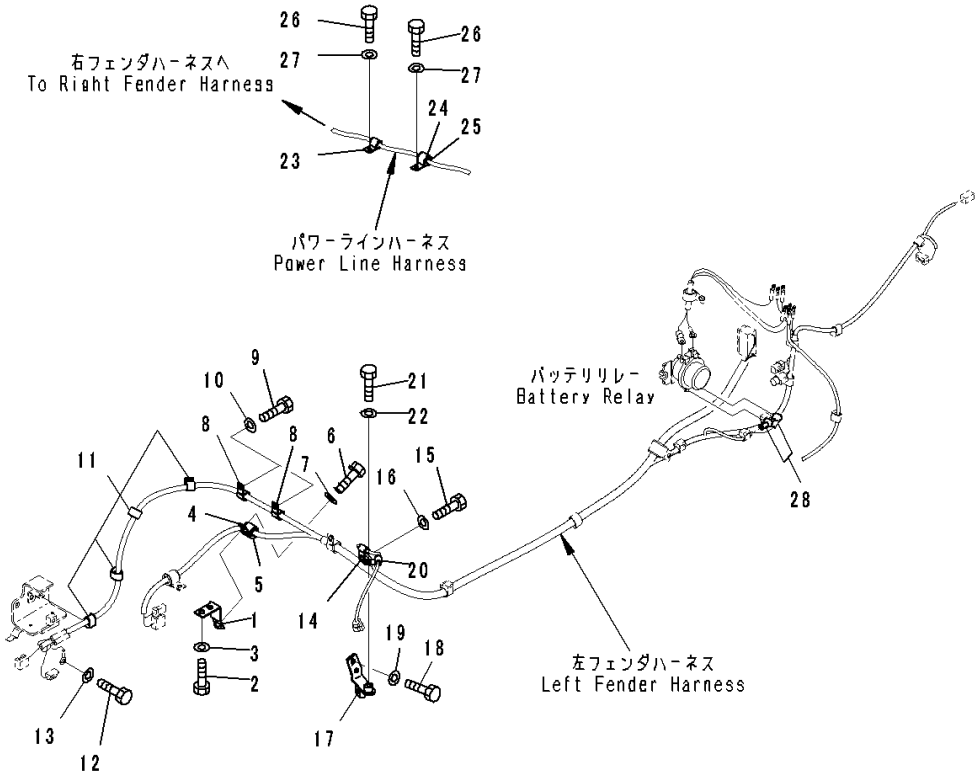

Index	Code	Part Number	Description	Qty	Serial Number
1		14X-06-51791	Bracket	1	80001-
2		01010-81225	Bolt	2	80001-
3		01643-31232	Washer	2	80001-
4		04434-52511	Clip	1	80001-
5		07095-20318	Cushion	1	80001-
6		01010-81020	Bolt	1	80001-
7		01643-31032	Washer	1	80001-
8		04434-51710	Clip	2	80001-
9		01010-81025	Bolt	2	80001-
10		01643-31032	Washer	2	80001-
11		08211-01320	Clip	4	80001-
12		01010-81020	Bolt	1	80001-
13		01643-31032	Washer	1	80001-
14		04434-51010	Clip	1	80001-
15		01010-81030	Bolt	1	80001-
16		01643-31032	Washer	1	80001-
17		14X-06-51771	Bracket	1	80001-
18		01010-81020	Bolt	2	80001-
19		01643-31032	Washer	2	80001-
20		04434-51010	Clip	1	80001-
21		01010-81020	Bolt	1	80001-
22		01643-31032	Washer	1	80001-
23		04434-51410	Clip	1	80001-
24		04434-52110	Clip	1	80001-
25		07095-20314	Cushion	1	80001-
26		01010-81020	Bolt	2	80001-
27		01643-31032	Washer	2	80001-
28		08038-00519	Cap	2	80001-

https://truckmanualshub.com/

FIG. E0200-001003 Electric Wiring, Holder

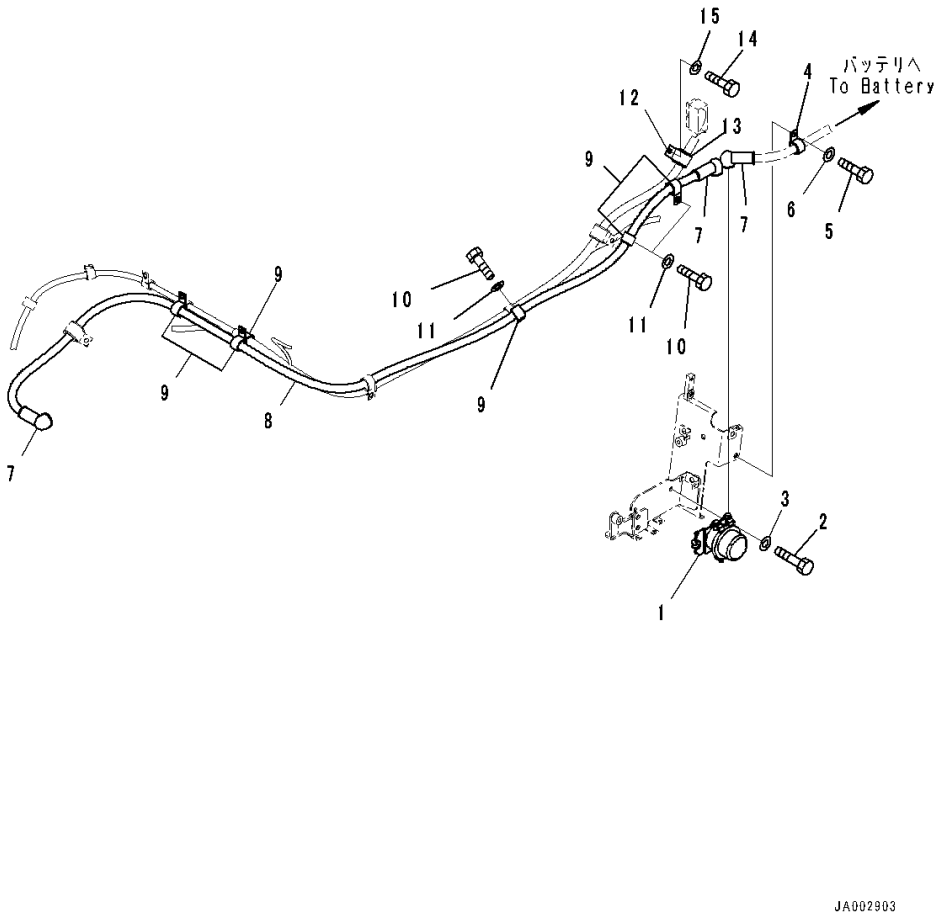

Index	Code	Part Number	Description	Qty	Serial Number
1		08088-30000	Switch	1	80001-
2		01010-80830	Bolt	2	80001-
3		01643-30823	Washer	2	80001-
4		04434-52310	Clip	1	80001-
5		01010-81020	Bolt	2	80001-
6		01643-31032	Washer	2	80001-
7		08038-00035	Cap, Terminal	3	80001-
8		14X-06-51281	Cable	1	80001-
9		04434-52310	Clip	6	80001-
10		01010-81020	Bolt	4	80001-
11		01643-31032	Washer	4	80001-
12		04434-53211	Clip	1	80001-
13		07095-20523	Cushion	1	80001-
14		01010-81020	Bolt	1	80001-
15		01643-31032	Washer	1	80001-

https://truckmanualshub.com/

FIG. E0200-001004 Electric Wiring, Mounting

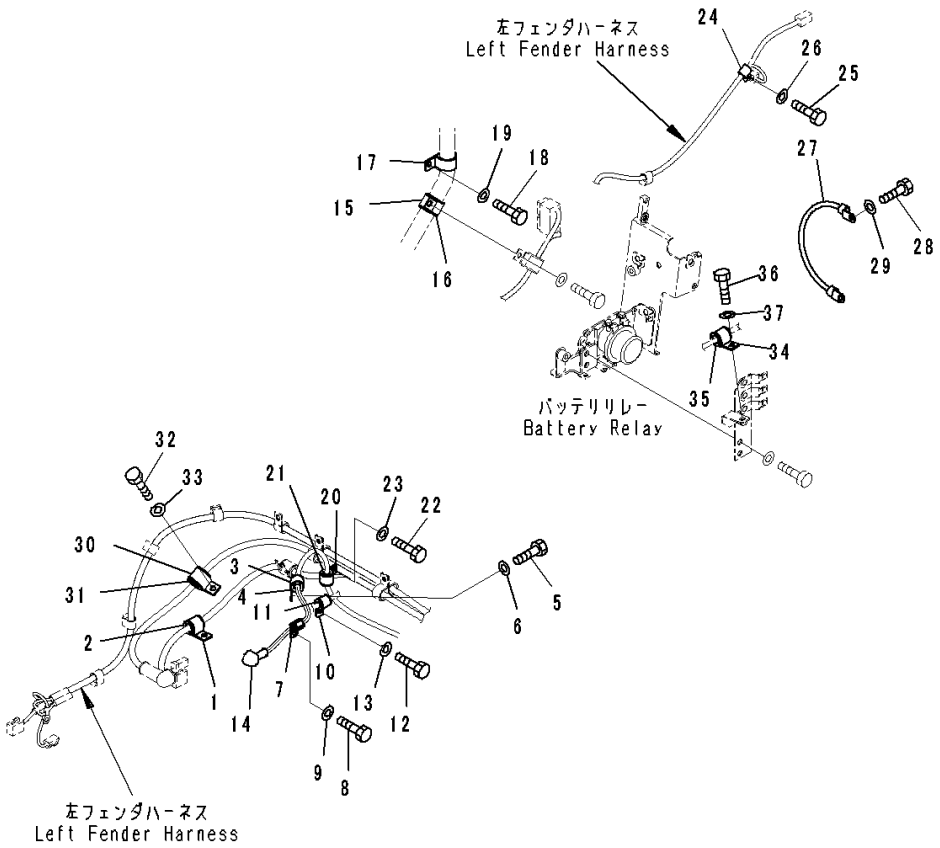

Index	Code	Part Number	Description	Qty	Serial Number
1		04434-52511	Clip	1	80001-
2		07095-20318	Cushion	1	80001-
3		04434-52110	Clip	1	80001-
4		07095-20314	Cushion	1	80001-
5		01010-81020	Bolt	1	80001-
6		01643-31032	Washer	1	80001-
7		600-051-2140	Clip	1	80001-
8		01010-81020	Bolt	1	80001-
9		01643-31032	Washer	1	80001-
10		04434-51610	Clip	1	80001-
11		07095-20211	Cushion	1	80001-
12		01010-81020	Bolt	1	80001-
13		01643-31032	Washer	1	80001-
14		08038-02027	Cap	1	80001-
15		155-61-15350	Clip	1	80001-
16		22M-62-13660	Cushion	1	80001-
17		04434-53411	Clip	1	80001-
18		01010-81020	Bolt	1	80001-
19		01643-31032	Washer	1	80001-
20		04434-52110	Clip	1	80001-
21		07095-20314	Cushion	1	80001-
22		01010-81020	Bolt	1	80001-
23		01643-31032	Washer	1	80001-
24		04434-51410	Clip	1	80001-
25		01010-81020	Bolt	1	80001-
26		01643-31032	Washer	1	80001-
27		08028-ED040	Cable, Ground	1	80001-
28		01010-81020	Bolt	2	80001-
29		01643-31032	Washer	2	80001-
30		04434-53211	Clip	1	80001-
31		07095-20523	Cushion	1	80001-
32		01010-81025	Bolt	1	80001-
33		01643-31032	Washer	1	80001-
34		04434-52511	Clip	1	80001-
35		07095-20318	Cushion	1	80001-
36		01010-81020	Bolt	1	80001-
37		01643-31032	Washer	1	80001-

https://truckmanualshub.com/

FIG. E0200-001005 Electric Wiring, Wiring Harness (2/2)

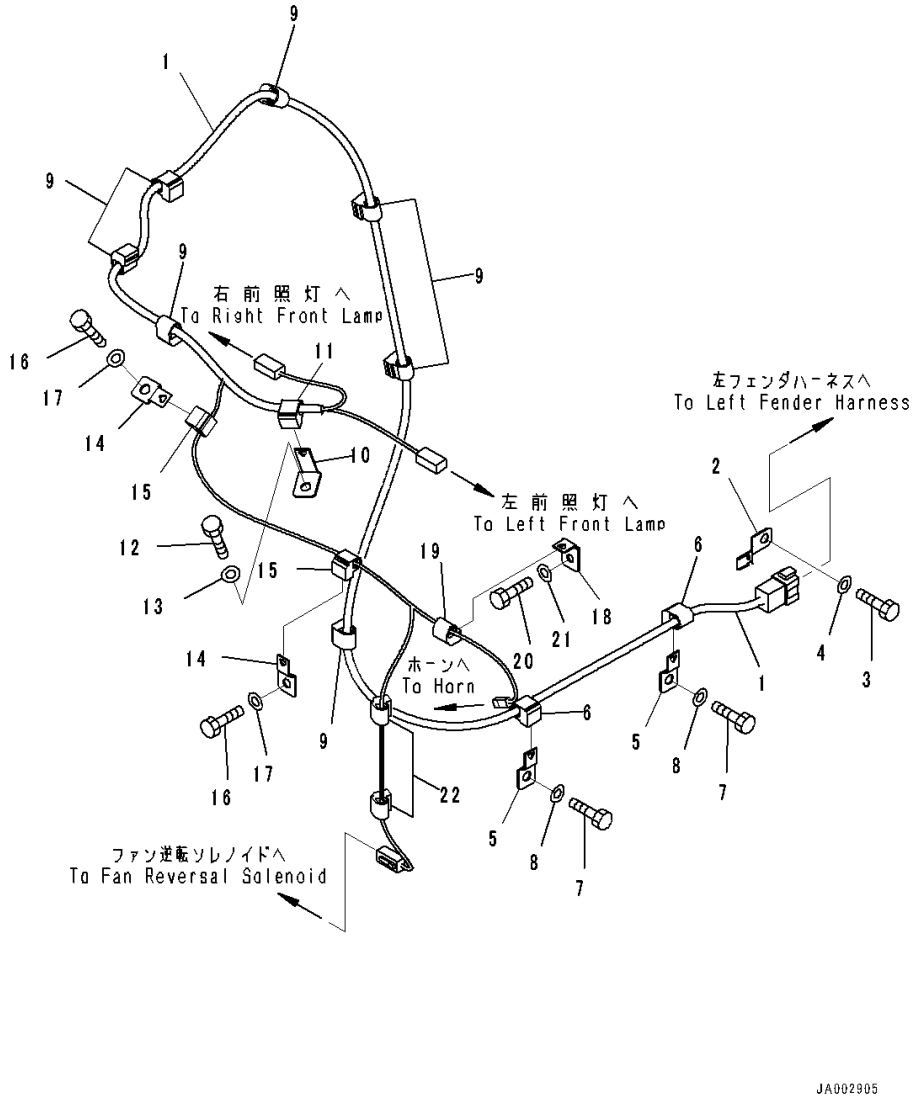

Index	Code	Part Number	Description	Qty	Serial Number
1		14X-06-51241	Wiring Harness	1	80001-
2		08193-30010	Clip	1	80001-
3		01010-81020	Bolt	1	80001-
4		01643-31032	Washer	1	80001-
5		08057-00810	Clip	2	80001-
6		08211-01020	Clip	2	80001-
7		01010-81020	Bolt	2	80001-
8		01643-31032	Washer	2	80001-
9		08211-01020	Clip	7	80001-
10		08057-14010	Clip	1	80001-
11		08211-01020	Clip	1	80001-
12		01010-81020	Bolt	1	80001-
13		01643-31032	Washer	1	80001-
14		08057-00810	Clip	2	80001-
15		08211-00720	Clip	2	80001-
16		01010-81020	Bolt	2	80001-
17		01643-31032	Washer	2	80001-
18		08057-12008	Clip	1	80001-
19		08211-00720	Clip	1	80001-
20		01010-80820	Bolt	1	80001-
21		01643-30823	Washer	1	80001-
22		08211-00720	Clip	2	80001-

https://truckmanualshub.com/

FIG. E0200-001006 Electric Wiring, Sensor

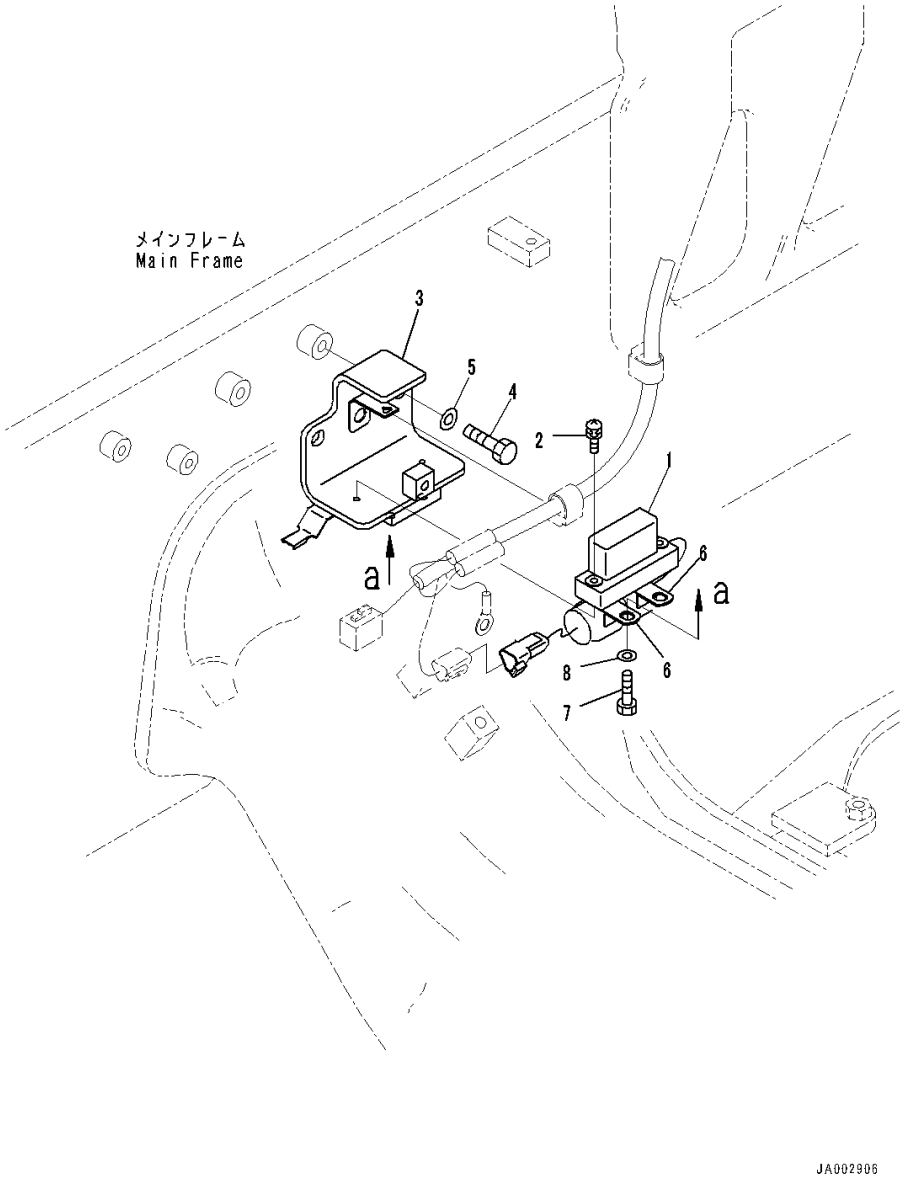

Index	Code	Part Number	Description	Qty	Serial Number
1		7861-93-5390	Sensor, Angle	1	80001-
2		01023-60630	Screw	2	80001-
3		14X-06-51681	Bracket	1	80001-
4		01010-81225	Bolt	2	80001-
5		01643-31232	Washer	2	80001-
6		600-051-2300	Clip	2	80001-
7		01010-81020	Bolt	2	80001-
8		01643-31032	Washer	2	80001-

https://truckmanualshub.com/

FIG. E0200-002001 Electric Wiring, For ROPS Canopy, Wiring Harness (1/2)

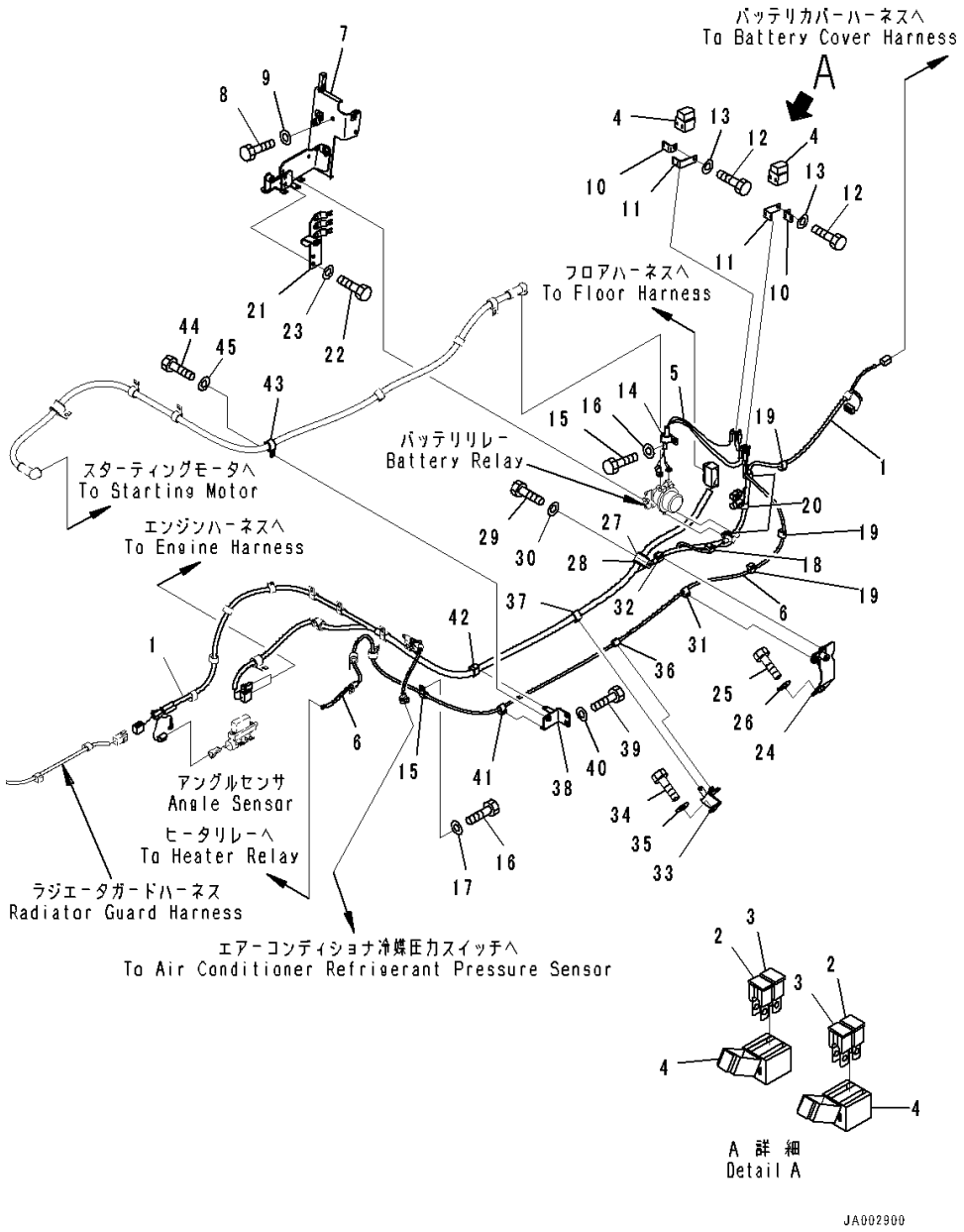

Index	Code	Part Number	Description	Qty	Serial Number
1		14X-06-54110	Wiring Harness	1	80001-
2		14X-06-51610	• Fuse, 50Amp.	1	80001-
3		421-06-22830	• Fuse, 120Amp.	2	80001-
4		421-06-22880	• Holder	2	80001-
5		14X-06-51261	Wiring Harness	1	80001-
6		14X-06-51291	Cable	1	80001-
7		14X-06-51561	Bracket	1	80001-
8		01010-81020	Bolt	2	80001-
9		01643-31032	Washer	2	80001-
10		421-06-22910	Bracket	2	80001-
11		421-06-22920	Bracket	2	80001-
12		01010-80820	Bolt	2	80001-
13		01643-30823	Washer	2	80001-
14		04434-52310	Clip	1	80001-
15		04434-51410	Clip	1	80001-
16		01010-81020	Bolt	2	80001-
17		01643-31032	Washer	2	80001-
18		08211-00720	Clip	1	80001-
19		08211-01020	Clip	3	80001-
20		08211-01320	Clip	3	80001-
21		14X-06-51571	Bracket	1	80001-
22		01010-81020	Bolt	2	80001-
23		01643-31032	Washer	2	80001-
24		14X-06-51581	Bracket	1	80001-
25		01010-81020	Bolt	2	80001-
26		01643-31032	Washer	2	80001-
27		04434-53211	Clip	1	80001-
28		07095-20523	Cushion	1	80001-
29		01010-81020	Bolt	1	80001-
30		01643-31032	Washer	1	80001-
31		08211-01020	Clip	1	80001-
32		08211-01320	Clip	1	80001-
33		14X-06-51591	Bracket	1	80001-
34		01010-81020	Bolt	2	80001-
35		01643-31032	Washer	2	80001-
36		08211-01020	Clip	1	80001-
37		08211-01920	Clip	1	80001-
38		14X-06-51621	Bracket	1	80001-
39		01010-81020	Bolt	2	80001-
40		01643-31032	Washer	2	80001-

https://truckmanualshub.com/

FIG. E0200-002001 Electric Wiring, For ROPS Canopy, Wiring Harness (1/2)

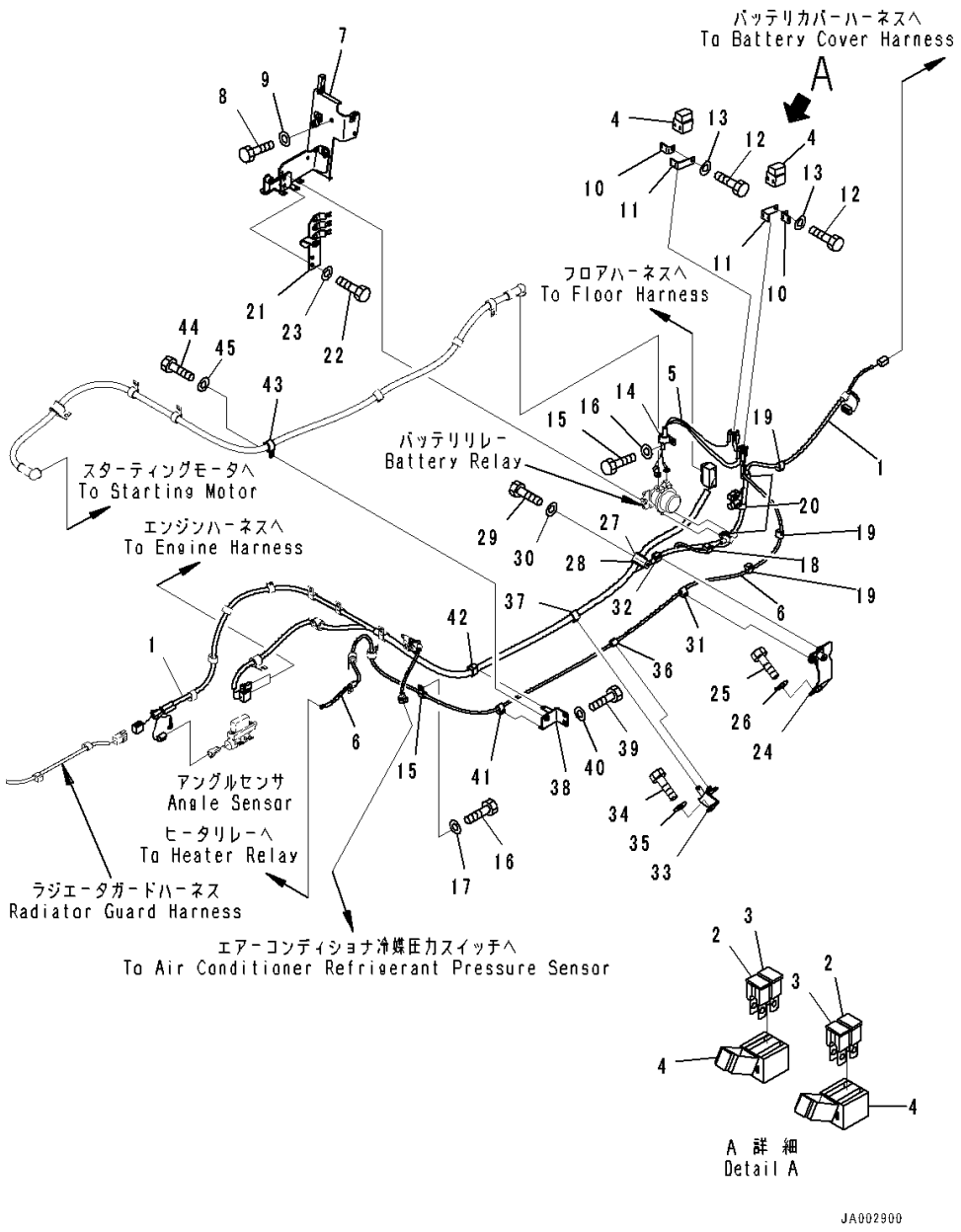

Index	Code	Part Number	Description	Qty	Serial Number
41		08211-01020	Clip	1	80001-
42		08211-01920	Clip	1	80001-
43		04434-52310	Clip	1	80001-
44		01010-81020	Bolt	1	80001-
45		01643-31032	Washer	1	80001-

https://truckmanualshub.com/

FIG. E0200-002002 Electric Wiring, For ROPS Canopy, Bracket

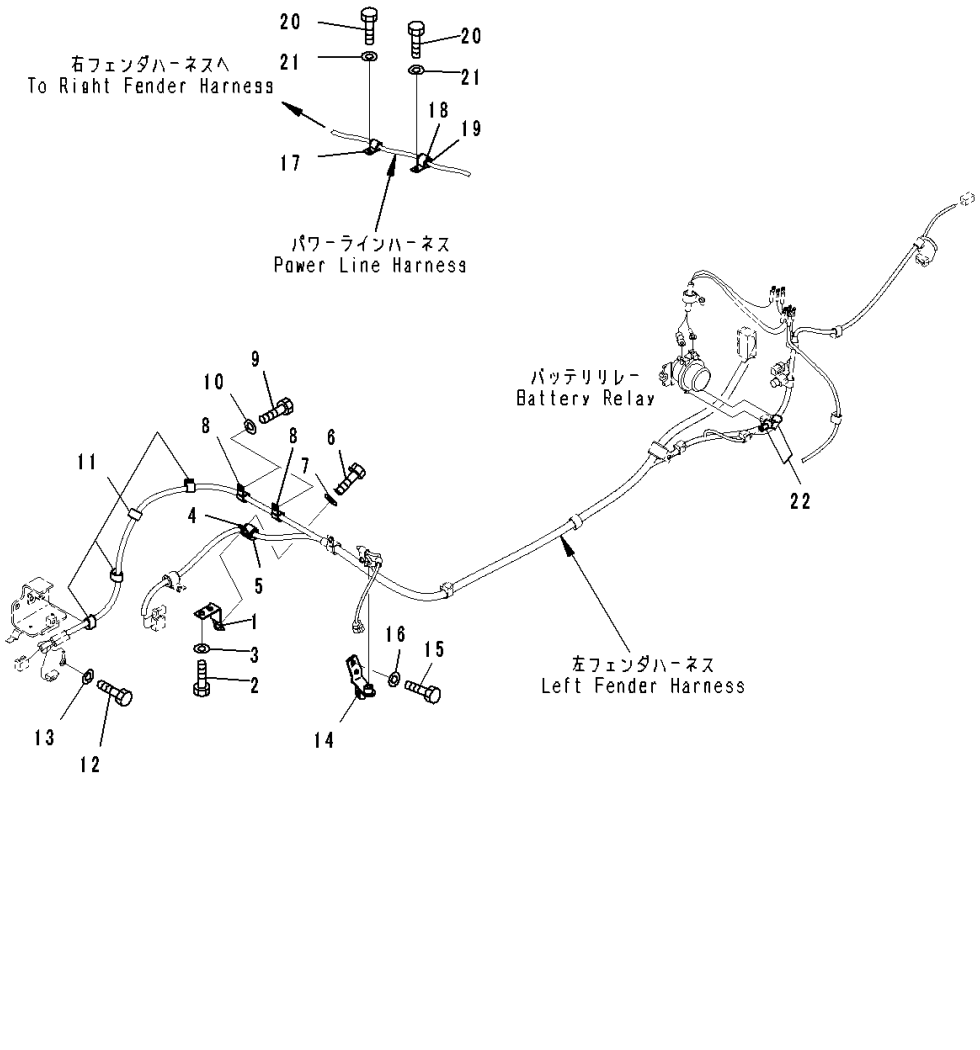

Index	Code	Part Number	Description	Qty	Serial Number
1		14X-06-51791	Bracket	1	80001-
2		01010-81225	Bolt	2	80001-
3		01643-31232	Washer	2	80001-
4		04434-52511	Clip	1	80001-
5		07095-20318	Cushion	1	80001-
6		01010-81020	Bolt	1	80001-
7		01643-31032	Washer	1	80001-
8		04434-51710	Clip	2	80001-
9		01010-81025	Bolt	2	80001-
10		01643-31032	Washer	2	80001-
11		08211-01320	Clip	4	80001-
12		01010-81020	Bolt	1	80001-
13		01643-31032	Washer	1	80001-
14		14X-06-51771	Bracket	1	80001-
15		01010-81020	Bolt	2	80001-
16		01643-31032	Washer	2	80001-
17		04434-51410	Clip	1	80001-
18		04434-52110	Clip	1	80001-
19		07095-20314	Cushion	1	80001-
20		01010-81020	Bolt	2	80001-
21		01643-31032	Washer	2	80001-
22		08038-00519	Cap	2	80001-

https://truckmanualshub.com/

FIG. E0200-002003 Electric Wiring, Holder

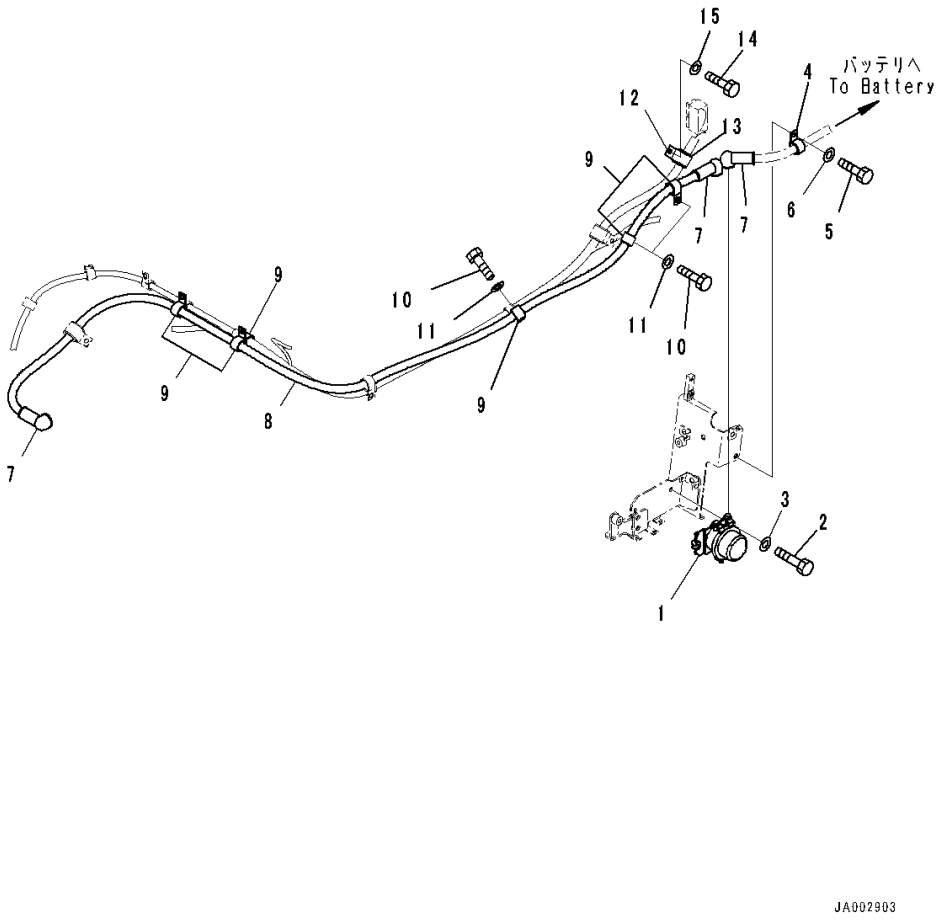

Index	Code	Part Number	Description	Qty	Serial Number
		Note: This list covers following specifications.			
		For ROPS Canopy			
		With Refuel Pump			
1		08088-30000	Switch	1	80001-
2		01010-80830	Bolt	2	80001-
3		01643-30823	Washer	2	80001-
4		04434-52310	Clip	1	80001-
5		01010-81020	Bolt	2	80001-
6		01643-31032	Washer	2	80001-
7		08038-00035	Cap, Terminal	3	80001-
8		14X-06-51281	Cable	1	80001-
9		04434-52310	Clip	6	80001-
10		01010-81020	Bolt	4	80001-
11		01643-31032	Washer	4	80001-
12		04434-53211	Clip	1	80001-
13		07095-20523	Cushion	1	80001-
14		01010-81020	Bolt	1	80001-
15		01643-31032	Washer	1	80001-

https://truckmanualshub.com/

FIG. E0200-002004 Electric Wiring, Mounting

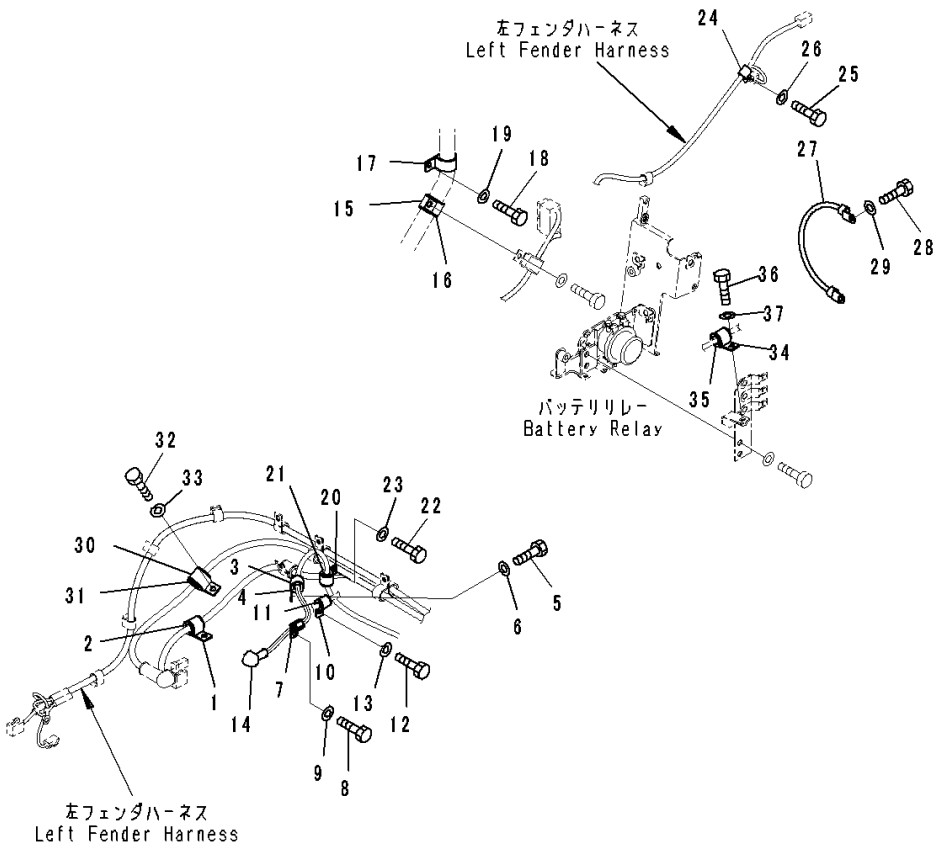

Index	Code	Part Number	Description	Qty	Serial Number
		Note: This list covers following specifications.			
		For ROPS Canopy			
		With Refuel Pump			
1		04434-52511	Clip	1	80001-
2		07095-20318	Cushion	1	80001-
3		04434-52110	Clip	1	80001-
4		07095-20314	Cushion	1	80001-
5		01010-81020	Bolt	1	80001-
6		01643-31032	Washer	1	80001-
7		600-051-2140	Clip	1	80001-
8		01010-81020	Bolt	1	80001-
9		01643-31032	Washer	1	80001-
10		04434-51610	Clip	1	80001-
11		07095-20211	Cushion	1	80001-
12		01010-81020	Bolt	1	80001-
13		01643-31032	Washer	1	80001-
14		08038-02027	Cap	1	80001-
15		155-61-15350	Clip	1	80001-
16		22M-62-13660	Cushion	1	80001-
17		04434-53411	Clip	1	80001-
18		01010-81020	Bolt	1	80001-
19		01643-31032	Washer	1	80001-
20		04434-52110	Clip	1	80001-
21		07095-20314	Cushion	1	80001-
22		01010-81020	Bolt	1	80001-
23		01643-31032	Washer	1	80001-
24		04434-51410	Clip	1	80001-
25		01010-81020	Bolt	1	80001-
26		01643-31032	Washer	1	80001-
27		08028-ED040	Cable, Ground	1	80001-
28		01010-81020	Bolt	2	80001-
29		01643-31032	Washer	2	80001-
30		04434-53211	Clip	1	80001-
31		07095-20523	Cushion	1	80001-
32		01010-81025	Bolt	1	80001-
33		01643-31032	Washer	1	80001-
34		04434-52511	Clip	1	80001-
35		07095-20318	Cushion	1	80001-
36		01010-81020	Bolt	1	80001-
37		01643-31032	Washer	1	80001-

https://truckmanualshub.com/

FIG. E0200-002005 Electric Wiring, Wiring Harness (2/2)

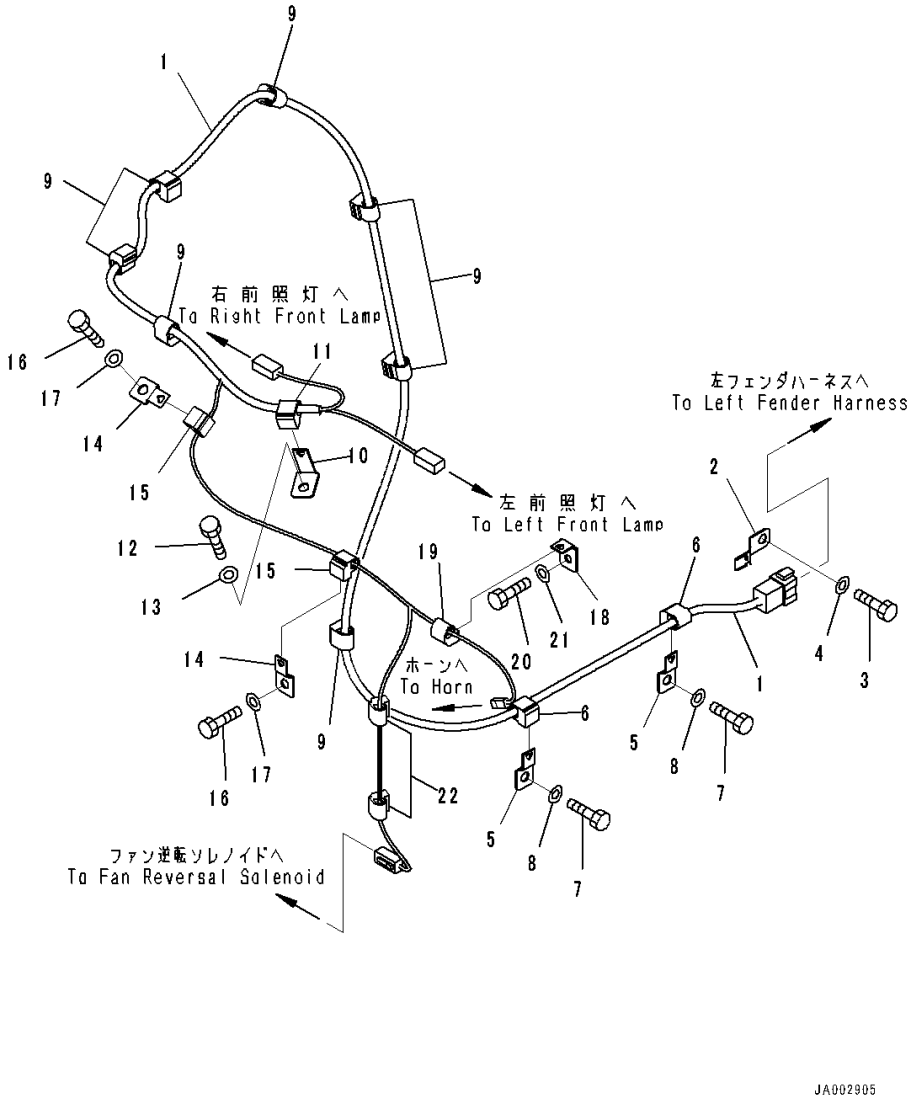

Index	Code	Part Number	Description	Qty	Serial Number
		Note: This list covers following specifications.			
		For ROPS Canopy			
		With Refuel Pump			
1		14X-06-51241	Wiring Harness	1	80001-
2		08193-30010	Clip	1	80001-
3		01010-81020	Bolt	1	80001-
4		01643-31032	Washer	1	80001-
5		08057-00810	Clip	2	80001-
6		08211-01020	Clip	2	80001-
7		01010-81020	Bolt	2	80001-
8		01643-31032	Washer	2	80001-
9		08211-01020	Clip	7	80001-
10		08057-14010	Clip	1	80001-
11		08211-01020	Clip	1	80001-
12		01010-81020	Bolt	1	80001-
13		01643-31032	Washer	1	80001-
14		08057-00810	Clip	2	80001-
15		08211-00720	Clip	2	80001-
16		01010-81020	Bolt	2	80001-
17		01643-31032	Washer	2	80001-
18		08057-12008	Clip	1	80001-
19		08211-00720	Clip	1	80001-
20		01010-80820	Bolt	1	80001-
21		01643-30823	Washer	1	80001-
22		08211-00720	Clip	2	80001-

https://truckmanualshub.com/

FIG. E0200-002006 Electric Wiring, Sensor

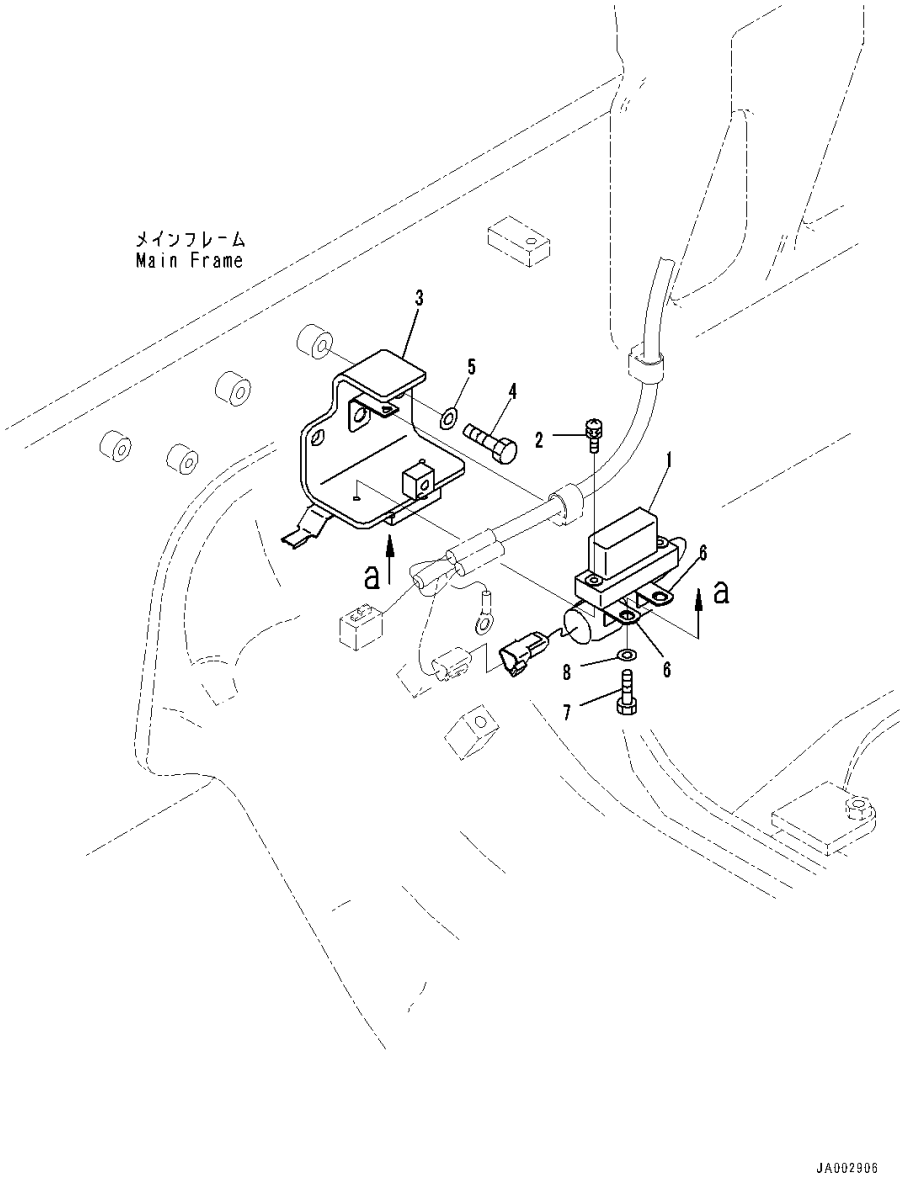

Index	Code	Part Number	Description	Qty	Serial Number
		Note: This list covers following specifications.			
		For ROPS Canopy			
		With Refuel Pump			
1		7861-93-5390	Sensor, Angle	1	80001-
2		01023-60630	Screw	2	80001-
3		14X-06-51681	Bracket	1	80001-
4		01010-81225	Bolt	2	80001-
5		01643-31232	Washer	2	80001-
6		600-051-2300	Clip	2	80001-
7		01010-81020	Bolt	2	80001-
8		01643-31032	Washer	2	80001-

https://truckmanualshub.com/

FIG. E0200-003001 Electric Wiring, With Refuel Pump, Wiring Harness (1/2)

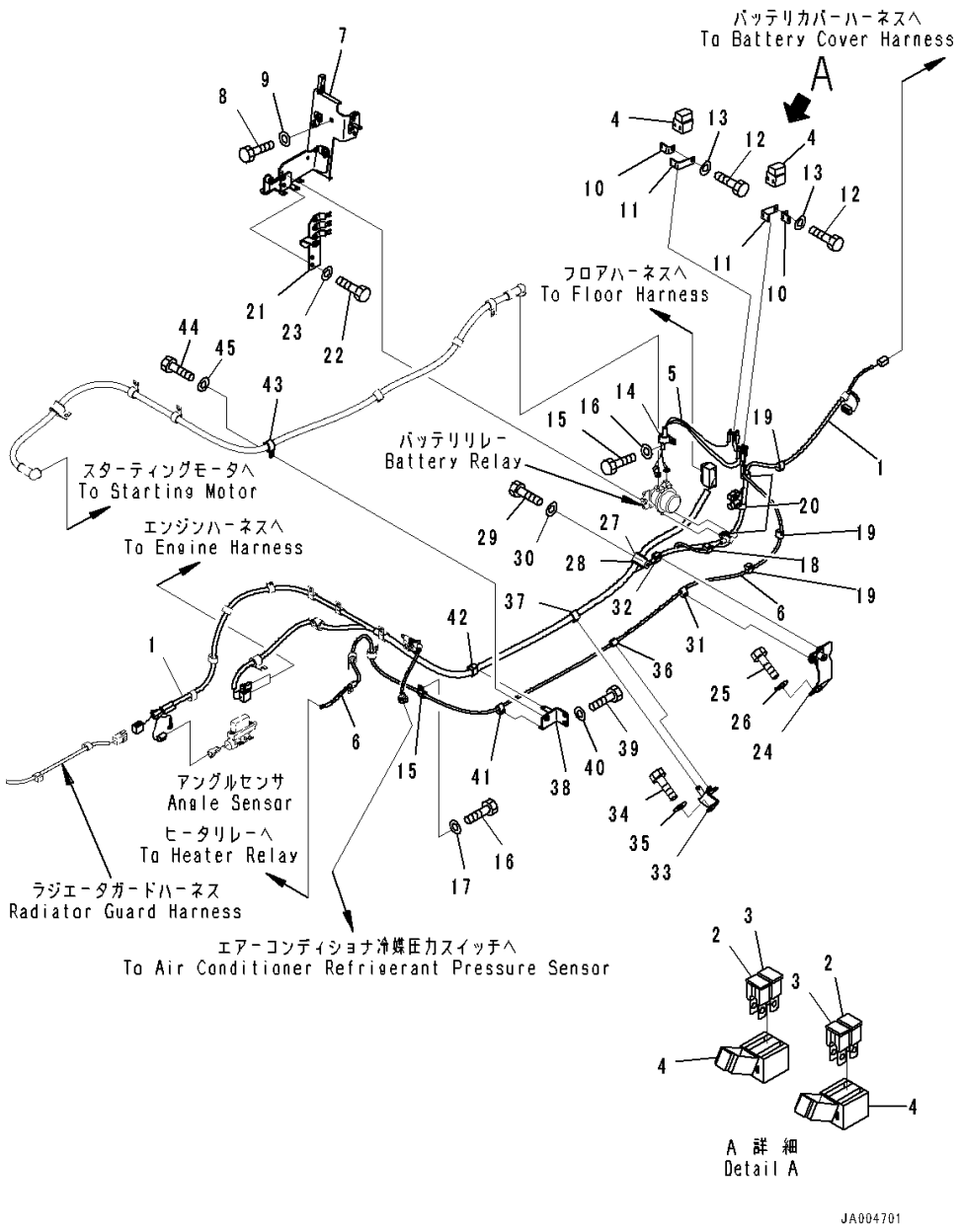

Index	Code	Part Number	Description	Qty	Serial Number
1		14X-06-51212	Wiring Harness	1	80001-
2		14X-06-51610	• Fuse, 50Amp.	2	80001-
3		421-06-22830	• Fuse, 120Amp.	2	80001-
4		421-06-22880	• Holder	2	80001-
5		14X-06-51261	Wiring Harness	1	80001-
6		14X-06-51291	Cable	1	80001-
7		14X-06-52950	Bracket	1	80001-
8		01010-81020	Bolt	2	80001-
9		01643-31032	Washer	2	80001-
10		421-06-22910	Bracket	2	80001-
11		421-06-22920	Bracket	2	80001-
12		01010-80820	Bolt	2	80001-
13		01643-30823	Washer	2	80001-
14		04434-52310	Clip	1	80001-
15		04434-51410	Clip	1	80001-
16		01010-81020	Bolt	2	80001-
17		01643-31032	Washer	2	80001-
18		08211-00720	Clip	1	80001-
19		08211-01020	Clip	3	80001-
20		08211-01320	Clip	3	80001-
21		14X-06-51571	Bracket	1	80001-
22		01010-81020	Bolt	2	80001-
23		01643-31032	Washer	2	80001-
24		14X-06-51581	Bracket	1	80001-
25		01010-81020	Bolt	2	80001-
26		01643-31032	Washer	2	80001-
27		04434-53211	Clip	1	80001-
28		07095-20523	Cushion	1	80001-
29		01010-81020	Bolt	1	80001-
30		01643-31032	Washer	1	80001-
31		08211-01020	Clip	1	80001-
32		08211-01320	Clip	1	80001-
33		14X-06-51591	Bracket	1	80001-
34		01010-81020	Bolt	2	80001-
35		01643-31032	Washer	2	80001-
36		08211-01020	Clip	1	80001-
37		08211-01920	Clip	1	80001-
38		14X-06-51621	Bracket	1	80001-
39		01010-81020	Bolt	2	80001-
40		01643-31032	Washer	2	80001-

https://truckmanualshub.com/

FIG. E0200-003001 Electric Wiring, With Refuel Pump, Wiring Harness (1/2)

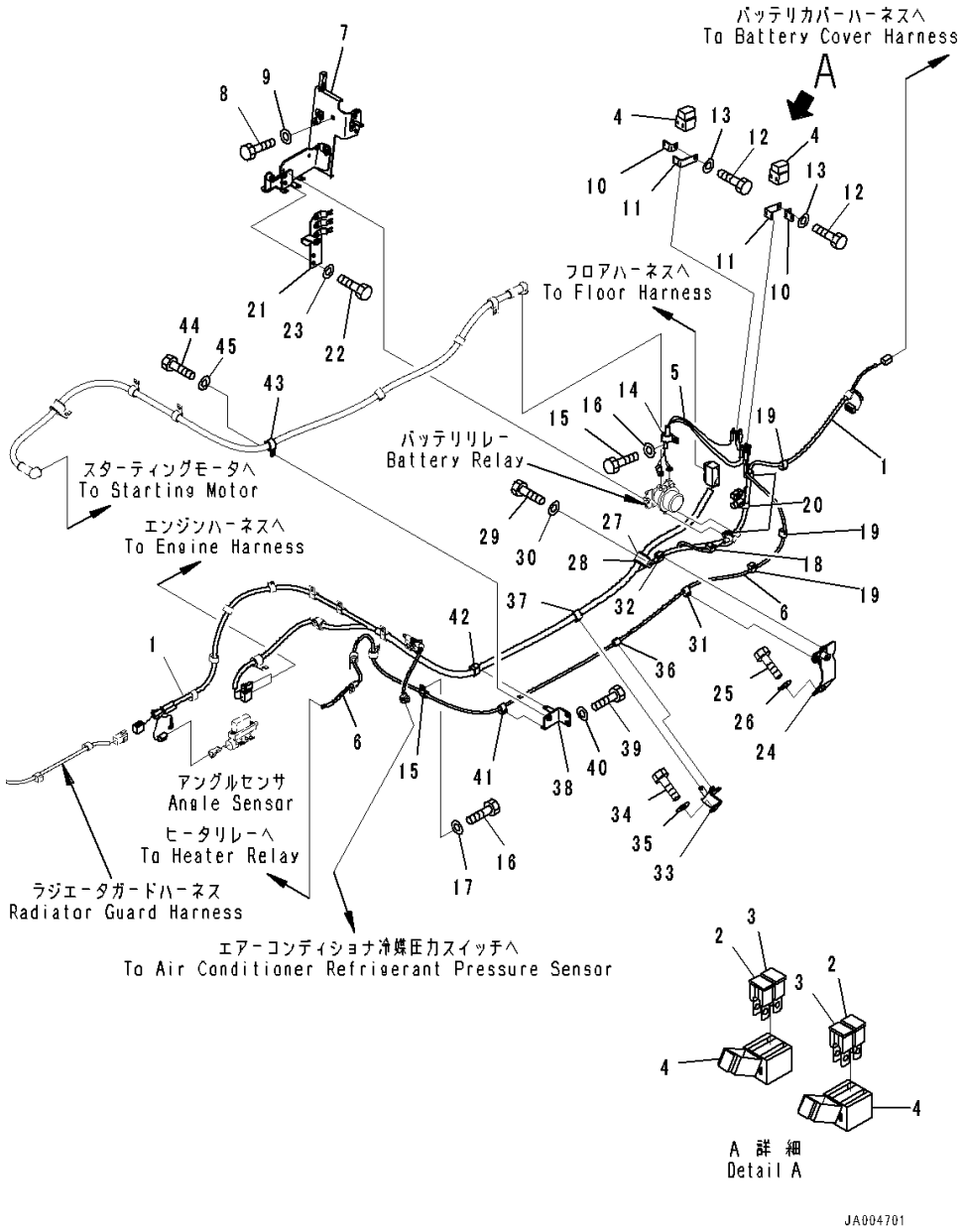

Index	Code	Part Number	Description	Qty	Serial Number
41		08211-01020	Clip	1	80001-
42		08211-01920	Clip	1	80001-
43		04434-52310	Clip	1	80001-
44		01010-81020	Bolt	1	80001-
45		01643-31032	Washer	1	80001-

https://truckmanualshub.com/

FIG. E0200-003002 Electric Wiring, With Refuel Pump, Bracket

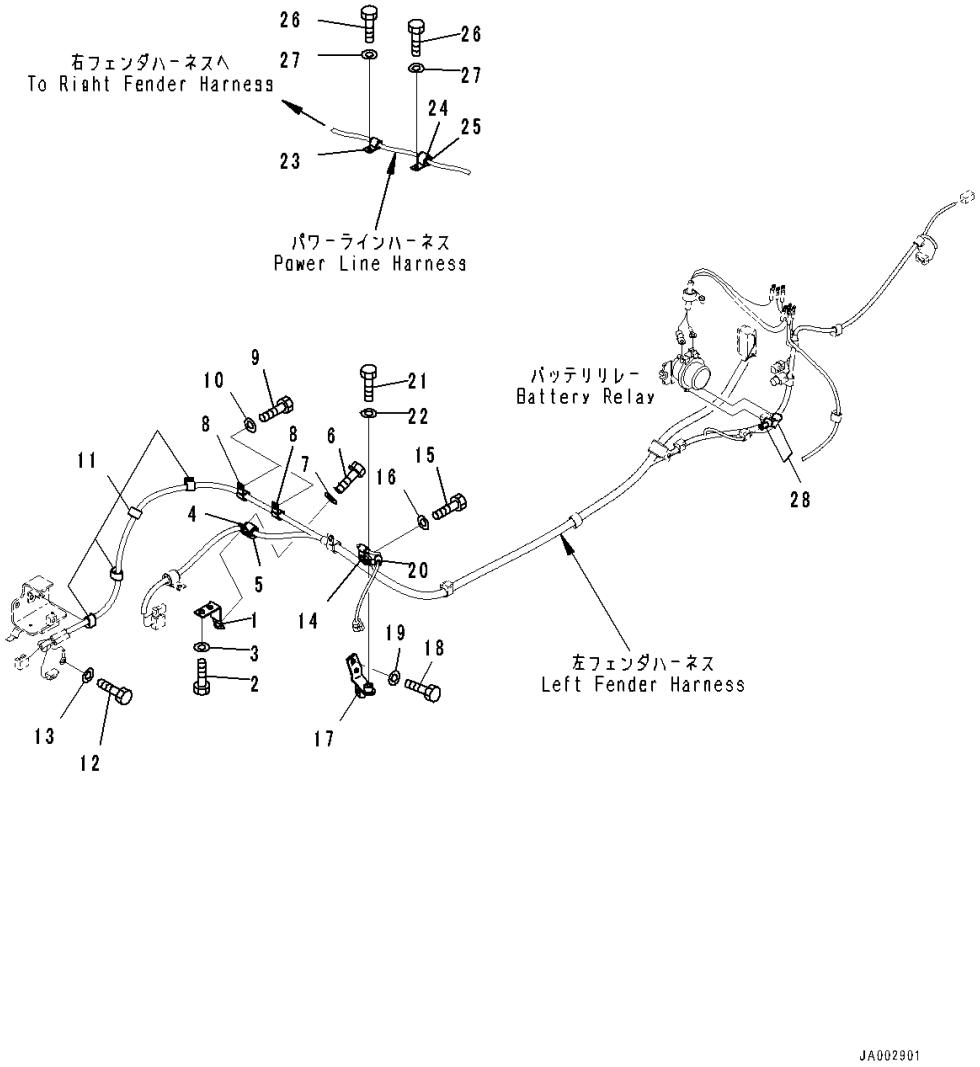

Index	Code	Part Number	Description	Qty	Serial Number
1		14X-06-51791	Bracket	1	80001-
2		01010-81225	Bolt	2	80001-
3		01643-31232	Washer	2	80001-
4		04434-52511	Clip	1	80001-
5		07095-20318	Cushion	1	80001-
6		01010-81020	Bolt	1	80001-
7		01643-31032	Washer	1	80001-
8		04434-51710	Clip	2	80001-
9		01010-81025	Bolt	2	80001-
10		01643-31032	Washer	2	80001-
11		08211-01320	Clip	4	80001-
12		01010-81020	Bolt	1	80001-
13		01643-31032	Washer	1	80001-
14		04434-51010	Clip	1	80001-
15		01010-81030	Bolt	1	80001-
16		01643-31032	Washer	1	80001-
17		14X-06-51771	Bracket	1	80001-
18		01010-81020	Bolt	2	80001-
19		01643-31032	Washer	2	80001-
20		04434-51010	Clip	1	80001-
21		01010-81020	Bolt	1	80001-
22		01643-31032	Washer	1	80001-
23		04434-51410	Clip	1	80001-
24		04434-52110	Clip	1	80001-
25		07095-20314	Cushion	1	80001-
26		01010-81020	Bolt	2	80001-
27		01643-31032	Washer	2	80001-
28		08038-00519	Cap	2	80001-

https://truckmanualshub.com/

FIG. E0201-002001 Beacon Lamp, For ROPS Canopy

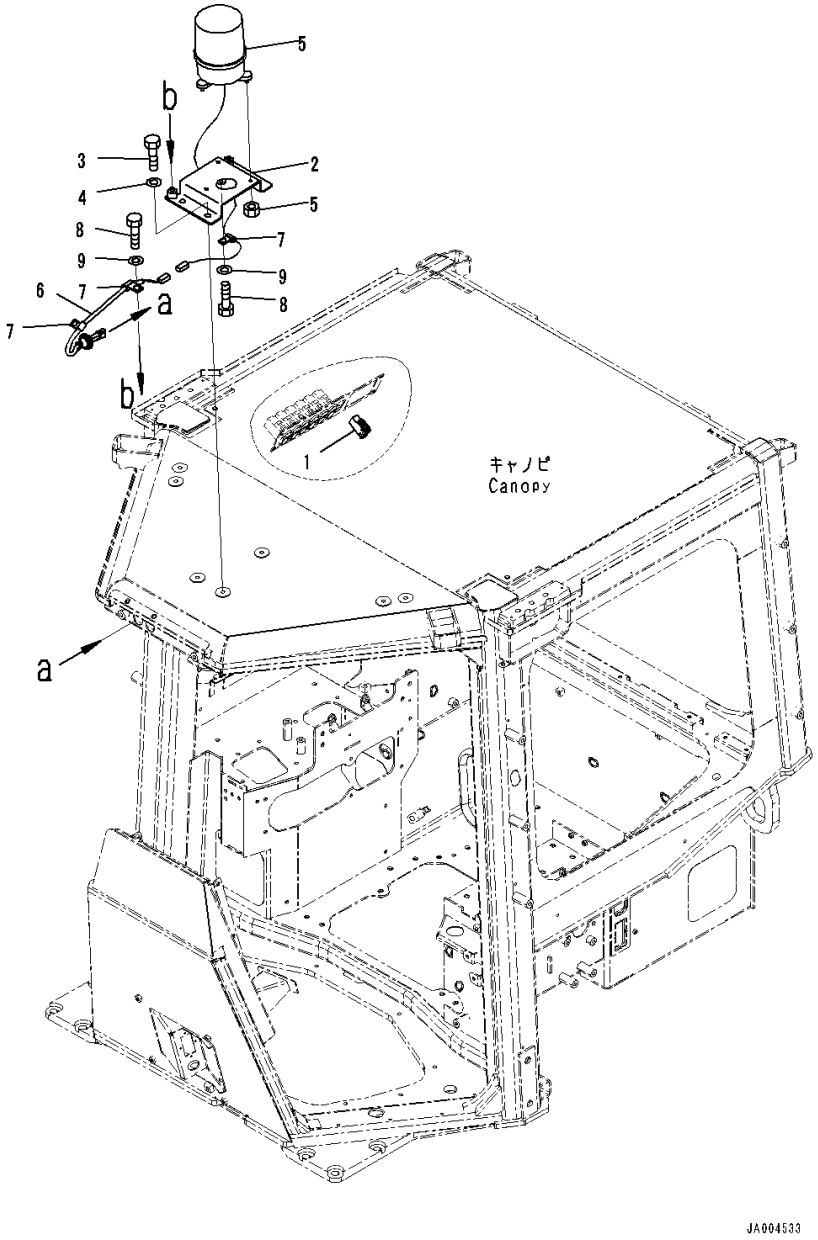

Index	Code	Part Number	Description	Qty	Serial Number
1		14X-06-53560	Switch	1	80054-
2		14X-06-51551	Bracket	1	80054-
3		01010-81220	Bolt	3	80054-
4		01643-31232	Washer	3	80054-
5		14X-06-33380	Beacon Lamp	1	80054-
6		14X-06-52151	Wiring Harness	1	80054-
7		04434-51012	Clip	3	80054-
8		01010-81220	Bolt	3	80054-
9		01643-31232	Washer	3	80054-

https://truckmanualshub.com/

FIG. E0201-001001 Beacon Lamp

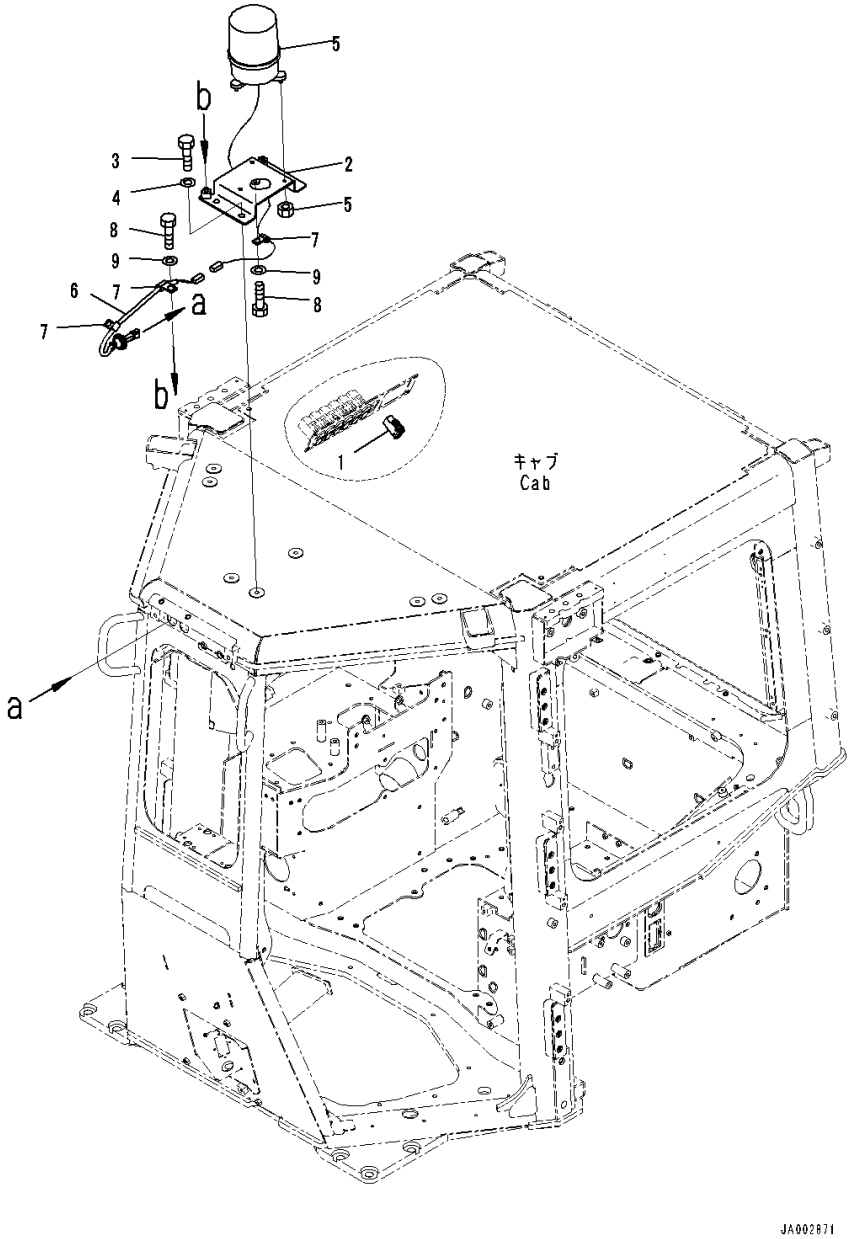

Index	Code	Part Number	Description	Qty	Serial Number
1		17A-06-42240	Switch	1	80001-
2		14X-06-51551	Bracket	1	80001-
3		01010-81220	Bolt	3	80001-
4		01643-31232	Washer	3	80001-
5		14X-06-33380	Beacon Lamp	1	80001-
		08103-02460	• Bulb, 35watt	1	80001-
6		14X-06-52151	Wiring Harness	1	80001-
7		04434-51012	Clip	3	80001-
8		01010-81220	Bolt	3	80001-
9		01643-31232	Washer	3	80001-

https://truckmanualshub.com/

FIG. E0300-001001 Front Working Lamp

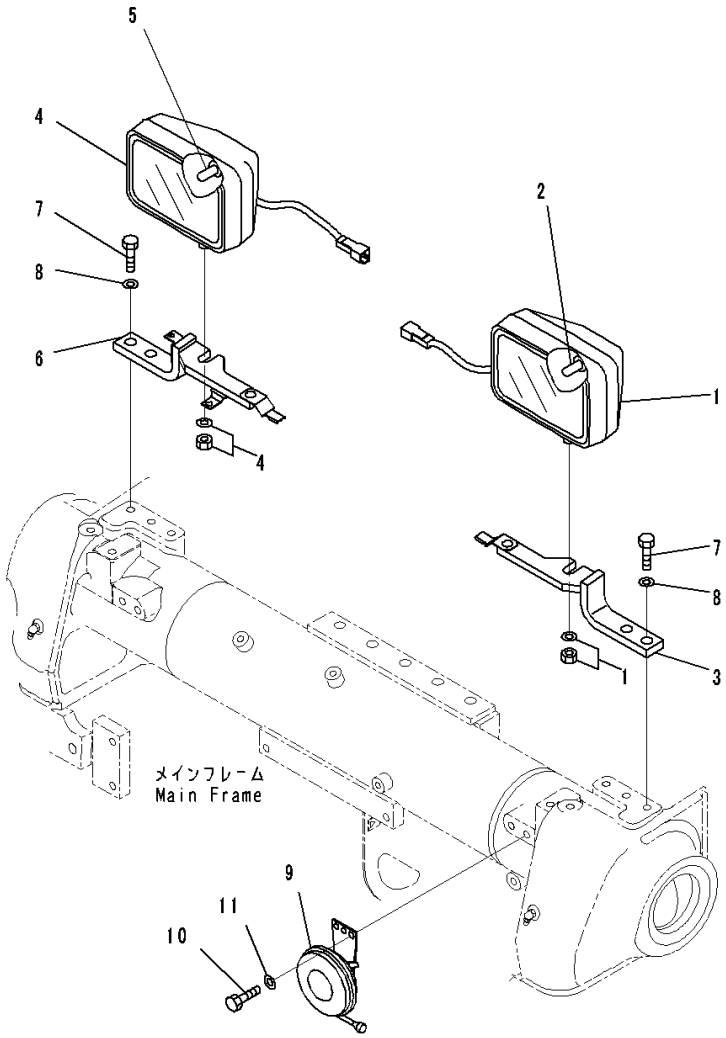

Index	Code	Part Number	Description	Qty	Serial Number
1		22B-06-11690	Lamp Assembly, Working,LHS	1	80001-
2		421-06-23330	• Bulb, 70watt	1	80001-
3		14X-06-51451	Bracket,LHS	1	80001-
4		22B-06-11690	Lamp Assembly, Working,RHS	1	80001-
5		421-06-23330	• Bulb, 70watt	1	80001-
6		14X-06-51461	Bracket,RHS	1	80001-
7		01010-81235	Bolt	4	80001-
8		01643-31232	Washer	4	80001-
9		19M-06-18220	Horn	1	80001-
10		01010-80816	Bolt	2	80001-
11		01643-30823	Washer	2	80001-

https://truckmanualshub.com/

FIG. E0310-001001 Front Working Lamp and Rear side Working Lamp

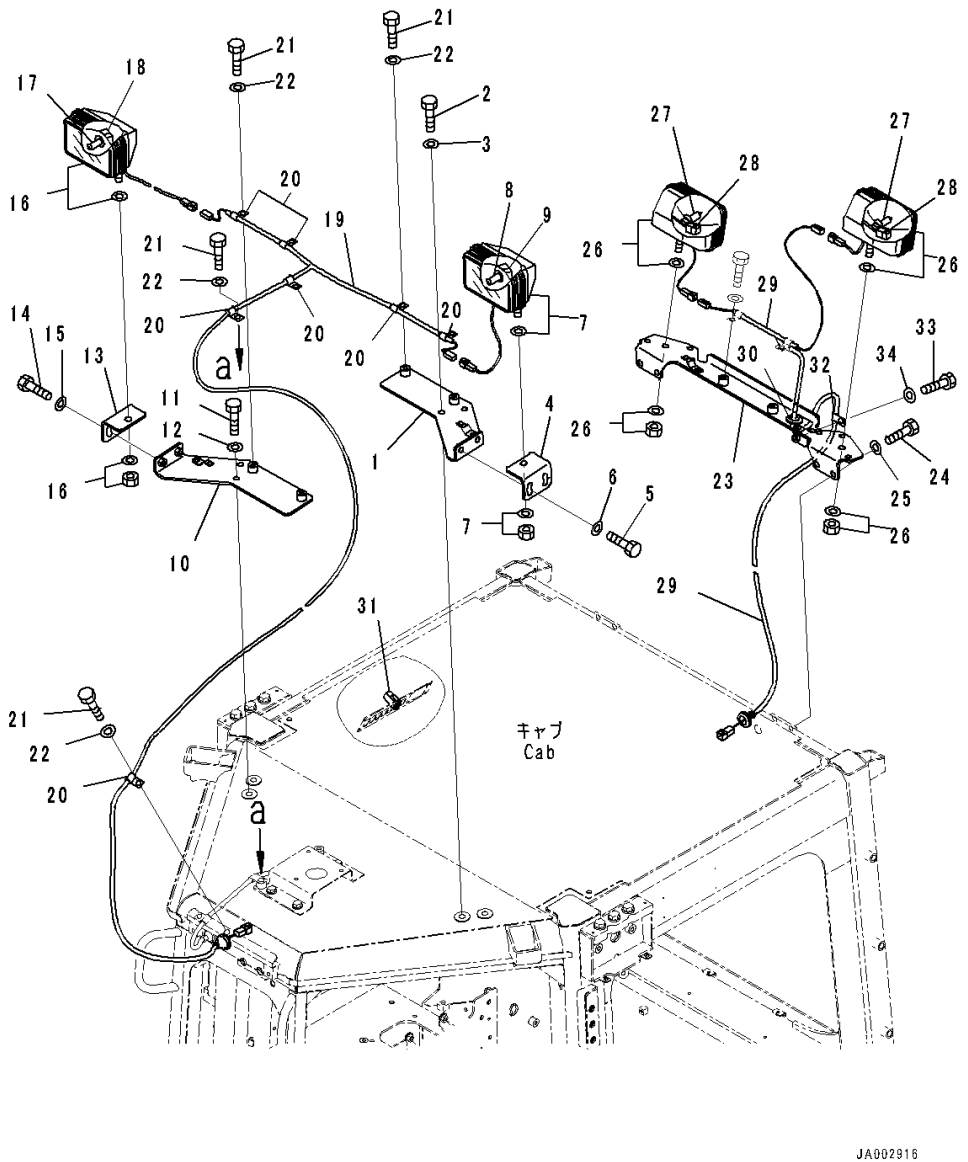

Index	Code	Part Number	Description	Qty	Serial Number
1		14X-Y79-1511	Plate	1	80001-
2		01010-81230	Bolt	2	80001-
3		01643-31232	Washer	2	80001-
4		14X-Y79-1521	Plate	1	80001-
5		01010-81230	Bolt	2	80001-
6		01643-31232	Washer	2	80001-
7		17A-06-17931	Lamp Assembly, Working	1	80001-
8		17A-06-17970	• Bulb, 70watt	1	80001-
9		17A-06-17980	• Sleeve	1	80001-
10		14X-Y79-1531	Plate	1	80001-
11		01010-81230	Bolt	2	80001-
12		01643-31232	Washer	2	80001-
13		14X-Y79-1521	Plate	1	80001-
14		01010-81230	Bolt	2	80001-
15		01643-31232	Washer	2	80001-
16		17A-06-17931	Lamp Assembly, Working	1	80001-
17		17A-06-17970	• Bulb, 70watt	1	80001-
18		17A-06-17980	• Sleeve	1	80001-
19		14X-06-51981	Wiring Harness	1	80001-
20		04434-51012	Clip	4	80001-
21		01010-81220	Bolt	2	80001-
22		01643-31232	Washer	2	80001-
23		14X-06-51881	Bracket	1	80001-
24		01010-81225	Bolt	4	80001-
25		01643-31232	Washer	4	80001-
26		17A-06-17931	Lamp Assembly, Working	2	80001-
27		17A-06-17970	• Bulb, 70watt	1	80001-
28		17A-06-17980	• Sleeve	1	80001-
29		14X-06-51991	Wiring Harness	1	80001-
30		205-977-7310	Grommet	1	80001-
31		17A-06-42230	Switch, Additional Light	1	80001-
32		04434-51012	Clip	1	80001-
33		01010-81220	Bolt	1	80001-
34		01643-31232	Washer	1	80001-

https://truckmanualshub.com/

FIG. E0310-002001 Additional Working Lamp, With Additional Front Working Lamp

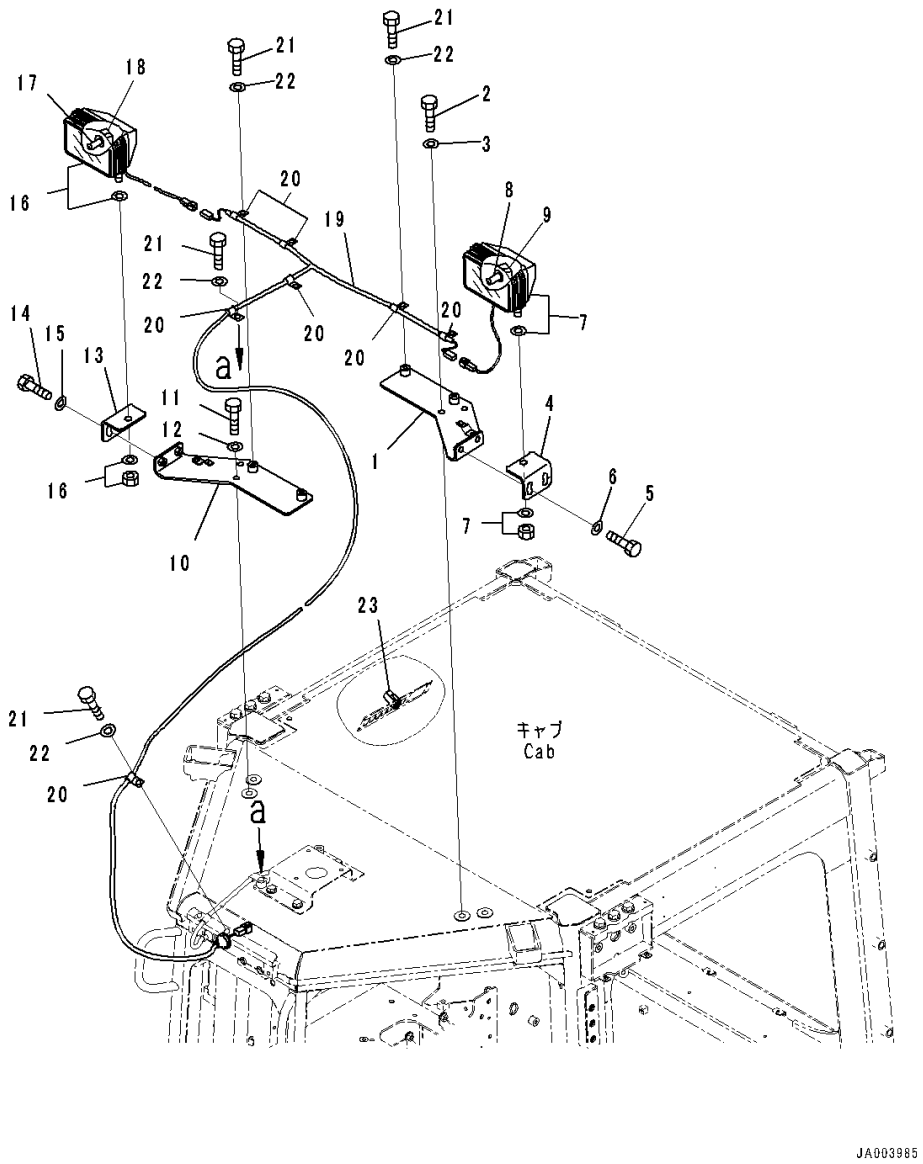

Index	Code	Part Number	Description	Qty	Serial Number
1		14X-Y79-1511	Plate	1	80001-
2		01010-81230	Bolt	2	80001-
3		01643-31232	Washer	2	80001-
4		14X-Y79-1521	Plate	1	80001-
5		01010-81230	Bolt	2	80001-
6		01643-31232	Washer	2	80001-
7		17A-06-17931	Lamp Assembly, Working	1	80001-
8		17A-06-17970	• Bulb, 70watt	1	80001-
9		17A-06-17980	• Sleeve	1	80001-
10		14X-Y79-1531	Plate	1	80001-
11		01010-81230	Bolt	2	80001-
12		01643-31232	Washer	2	80001-
13		14X-Y79-1521	Plate	1	80001-
14		01010-81230	Bolt	2	80001-
15		01643-31232	Washer	2	80001-
16		17A-06-17931	Lamp Assembly, Working	1	80001-
17		17A-06-17970	• Bulb, 70watt	1	80001-
18		17A-06-17980	• Sleeve	1	80001-
19		14X-06-51981	Wiring Harness	1	80001-
20		04434-51012	Clip	7	80001-
21		01010-81220	Bolt	7	80001-
22		01643-31232	Washer	7	80001-
23		17A-06-42230	Switch	1	80001-

https://truckmanualshub.com/

FIG. E0310-003001 Additional Rear side Working Lamp, With Additional Rear Working Lamp

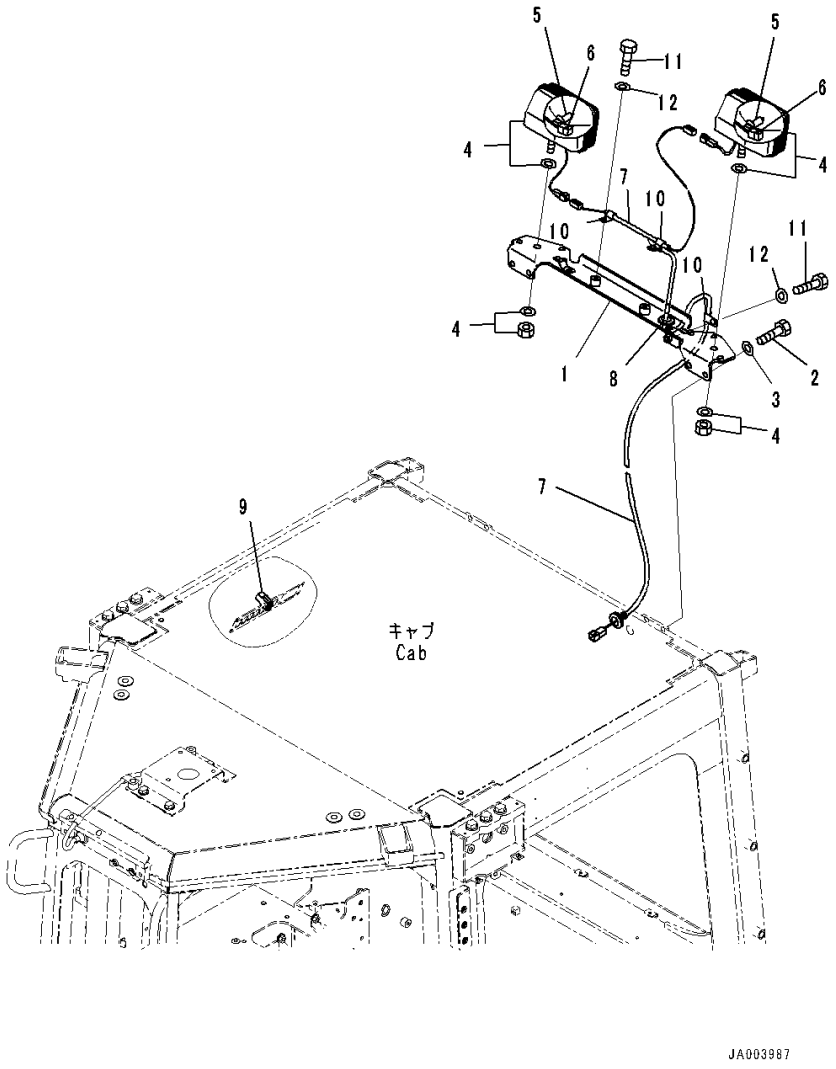

Index	Code	Part Number	Description	Qty	Serial Number
1		14X-06-51881	Bracket	1	80001-
2		01010-81225	Bolt	4	80001-
3		01643-31232	Washer	4	80001-
4		17A-06-17931	Lamp Assembly, Working	2	80001-
5		17A-06-17970	• Bulb, 70watt	1	80001-
6		17A-06-17980	• Sleeve	1	80001-
7		14X-06-51991	Wiring Harness	1	80001-
8		205-977-7310	Grommet	1	80001-
9		17A-06-42230	Switch	1	80001-
10		04434-51012	Clip	4	80001-
11		01010-81225	Bolt	3	80001-
12		01643-31232	Washer	3	80001-

https://truckmanualshub.com/

FIG. E0310-006001 Additional Rear side Working Lamp, With Additional Rear Working Lamp, For ROPS Canopy

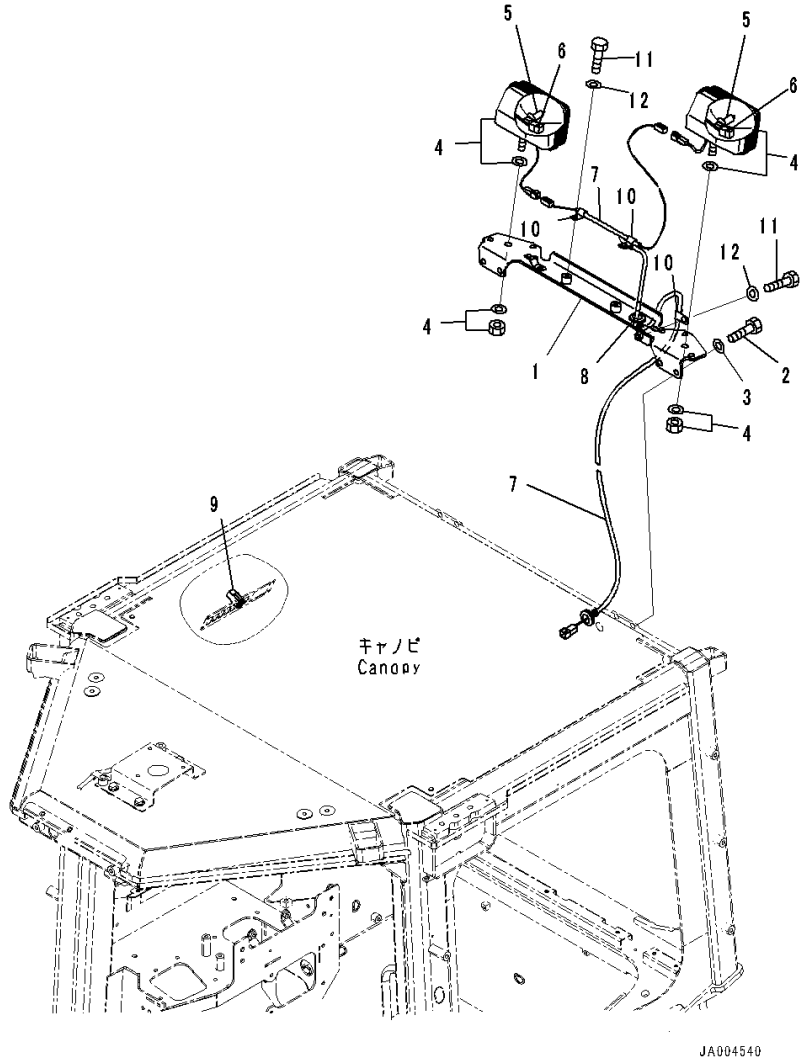

Index	Code	Part Number	Description	Qty	Serial Number
1		14X-06-51881	Bracket	1	80054-
2		01010-81225	Bolt	4	80054-
3		01643-31232	Washer	4	80054-
4		17A-06-17931	Lamp Assembly, Working	2	80054-
5		17A-06-17970	• Bulb, 70watt	1	80054-
6		17A-06-17980	• Sleeve	1	80054-
7		14X-06-51991	Wiring Harness	1	80054-
8		205-977-7310	Grommet	1	80054-
9		14X-06-53550	Switch	1	80054-
10		04434-51012	Clip	4	80054-
11		01010-81225	Bolt	3	80054-
12		01643-31232	Washer	3	80054-

https://truckmanualshub.com/

FIG. E0310-004001 Front Working Lamp and Rear side Working Lamp, For ROPS Canopy

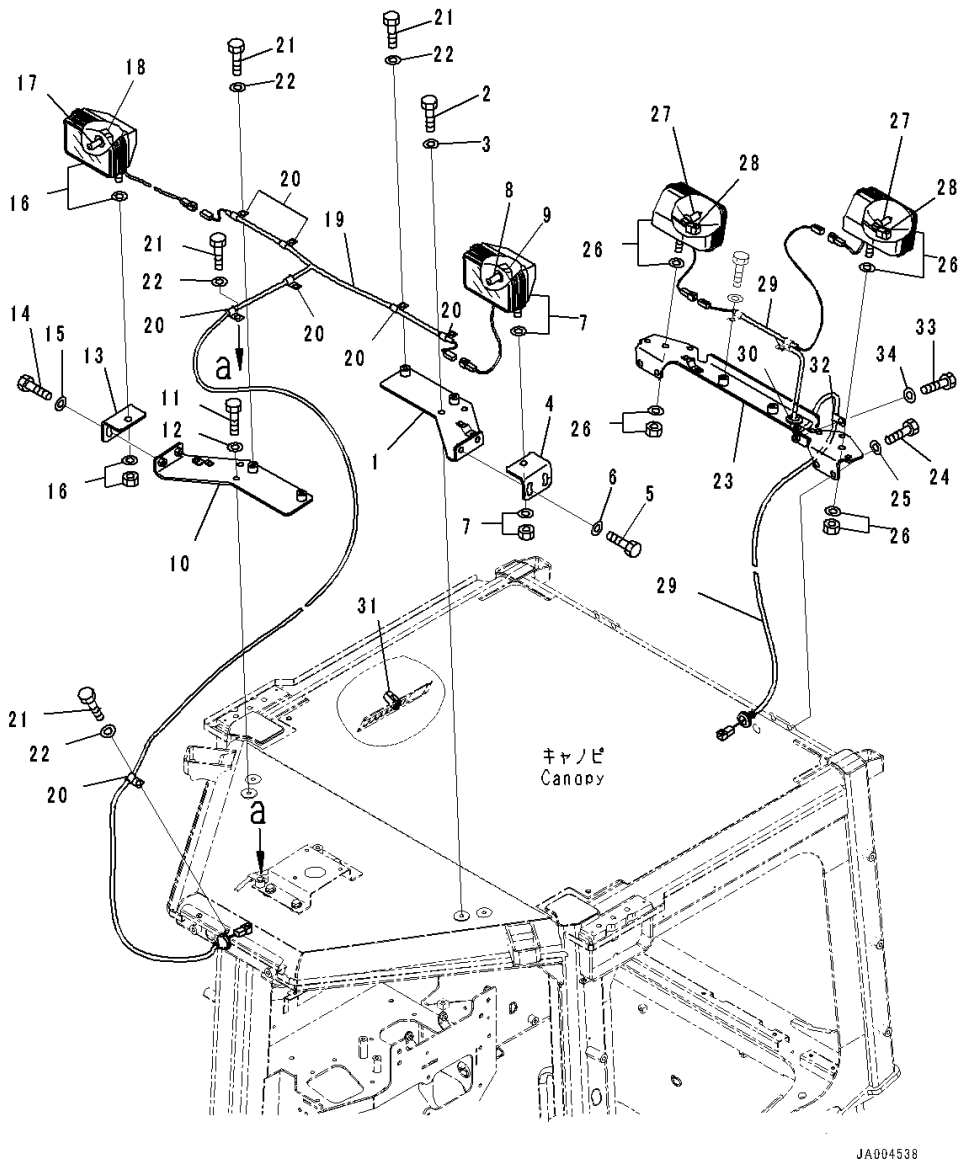

Index	Code	Part Number	Description	Qty	Serial Number
1		14X-Y79-1511	Plate	1	80054-
2		01010-81230	Bolt	2	80054-
3		01643-31232	Washer	2	80054-
4		14X-Y79-1521	Plate	1	80054-
5		01010-81230	Bolt	2	80054-
6		01643-31232	Washer	2	80054-
7		17A-06-17931	Lamp Assembly, Working	1	80054-
8		17A-06-17970	• Bulb, 70watt	1	80054-
9		17A-06-17980	• Sleeve	1	80054-
10		14X-Y79-1531	Plate	1	80054-
11		01010-81230	Bolt	2	80054-
12		01643-31232	Washer	2	80054-
13		14X-Y79-1521	Plate	1	80054-
14		01010-81230	Bolt	2	80054-
15		01643-31232	Washer	2	80054-
16		17A-06-17931	Lamp Assembly, Working	1	80054-
17		17A-06-17970	• Bulb, 70watt	1	80054-
18		17A-06-17980	• Sleeve	1	80054-
19		14X-06-51981	Wiring Harness	1	80054-
20		04434-51012	Clip	7	80054-
21		01010-81220	Bolt	7	80054-
22		01643-31232	Washer	7	80054-
23		14X-06-51881	Bracket	1	80054-
24		01010-81225	Bolt	4	80054-
25		01643-31232	Washer	4	80054-
26		17A-06-17931	Lamp Assembly, Working	2	80054-
27		17A-06-17970	• Bulb, 70watt	1	80054-
28		17A-06-17980	• Sleeve	1	80054-
29		14X-06-51991	Wiring Harness	1	80054-
30		205-977-7310	Grommet	1	80054-
31		14X-06-53550	Switch	1	80054-
32		04434-51012	Clip	4	80054-
33		01010-81225	Bolt	3	80054-
34		01643-31232	Washer	3	80054-

https://truckmanualshub.com/

FIG. E0310-005001 Front Working Lamp and Rear side Working Lamp, With Additional Front Working Lamp, For ROPS Canopy

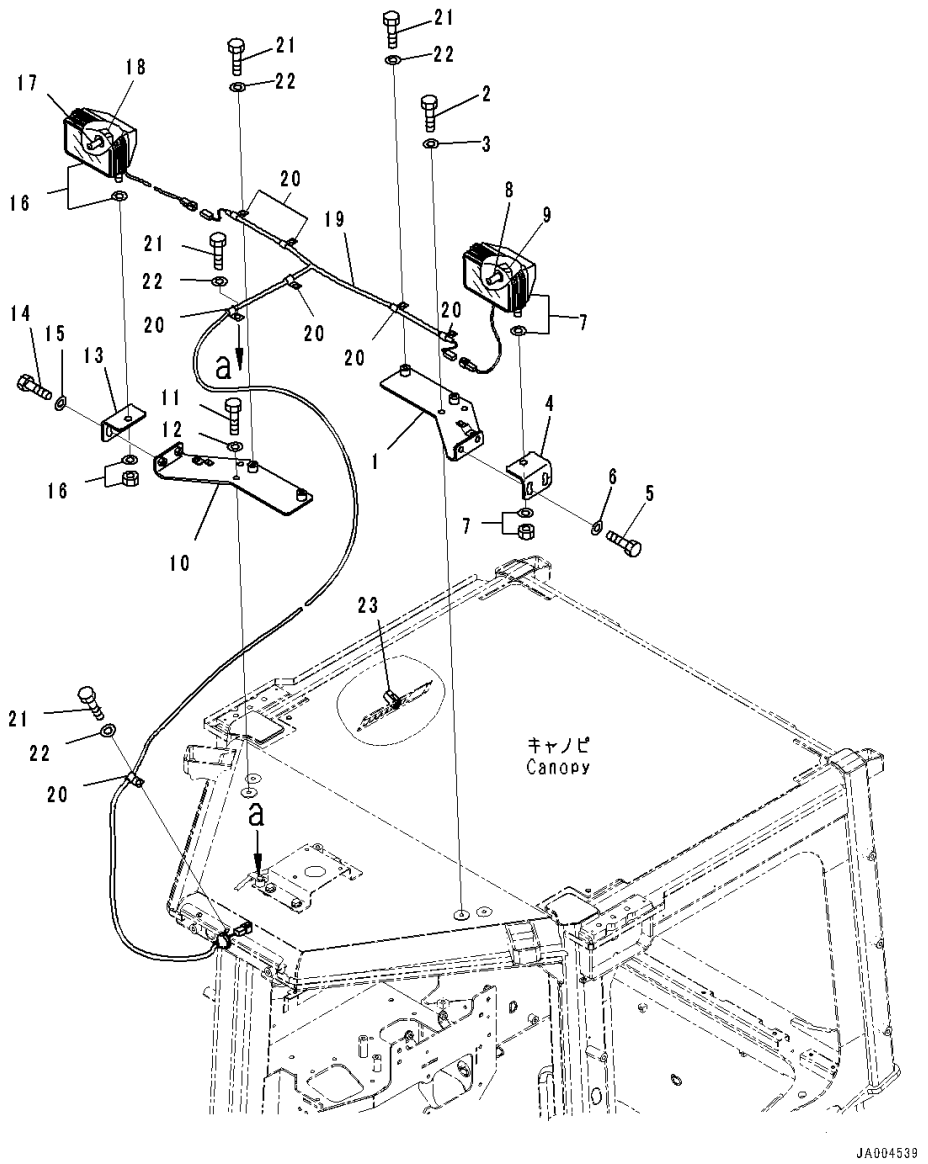

Index	Code	Part Number	Description	Qty	Serial Number
1		14X-Y79-1511	Plate	1	80054-
2		01010-81230	Bolt	2	80054-
3		01643-31232	Washer	2	80054-
4		14X-Y79-1521	Plate	1	80054-
5		01010-81230	Bolt	2	80054-
6		01643-31232	Washer	2	80054-
7		17A-06-17931	Lamp Assembly, Working	1	80054-
8		17A-06-17970	• Bulb, 70watt	1	80054-
9		17A-06-17980	• Sleeve	1	80054-
10		14X-Y79-1531	Plate	1	80054-
11		01010-81230	Bolt	2	80054-
12		01643-31232	Washer	2	80054-
13		14X-Y79-1521	Plate	1	80054-
14		01010-81230	Bolt	2	80054-
15		01643-31232	Washer	2	80054-
16		17A-06-17931	Lamp Assembly, Working	1	80054-
17		17A-06-17970	• Bulb, 70watt	1	80054-
18		17A-06-17980	• Sleeve	1	80054-
19		14X-06-51981	Wiring Harness	1	80054-
20		04434-51012	Clip	7	80054-
21		01010-81220	Bolt	7	80054-
22		01643-31232	Washer	7	80054-
23		14X-06-53550	Switch	1	80054-

https://truckmanualshub.com/

FIG. E0420-001001 Back-up Alarm, For Cab Configuration

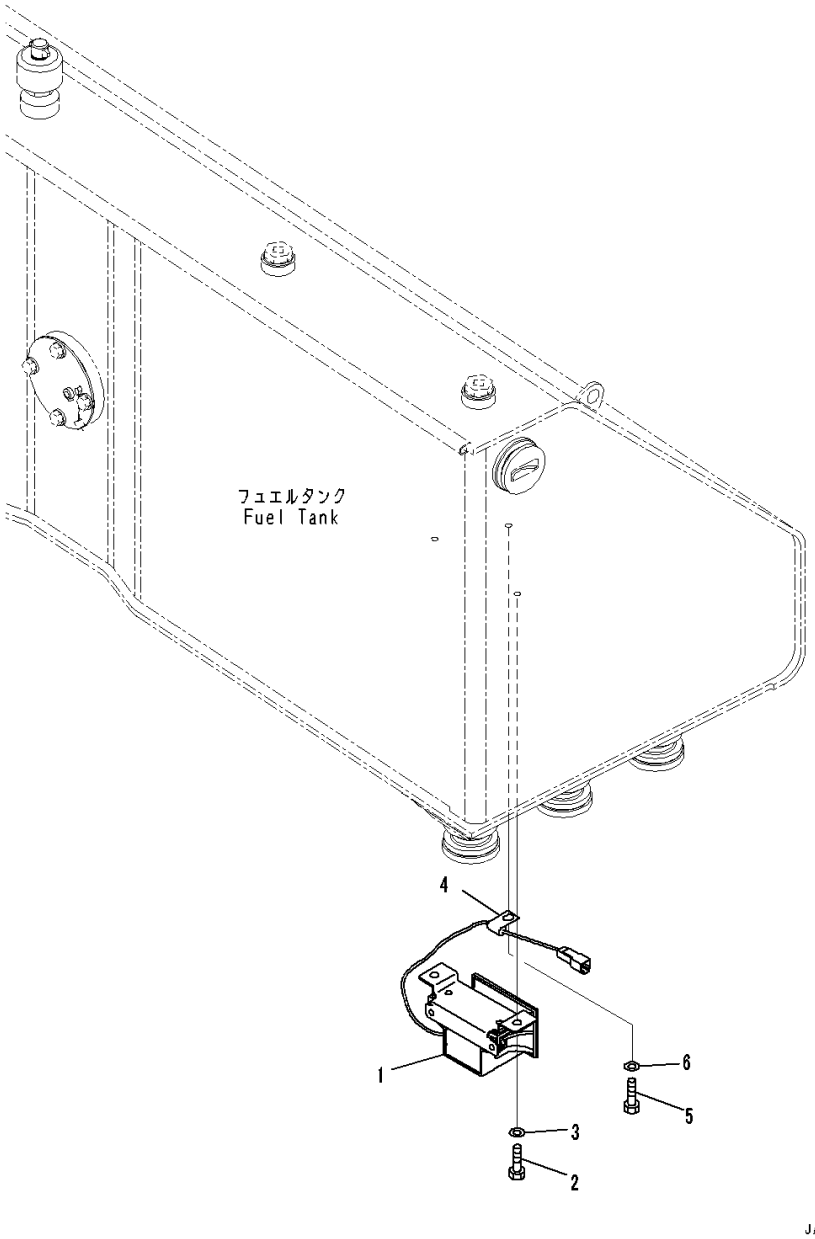

Index	Code	Part Number	Description	Qty	Serial Number
1		20Y-06-41812	Alarm, Back-up	1	80001-
2		01010-81020	Bolt	2	80001-
3		01643-31032	Washer	2	80001-
4		04434-50610	Clip	1	80001-
5		01010-81020	Bolt	1	80001-
6		01643-31032	Washer	1	80001-

https://truckmanualshub.com/

https://truckmanualshub.com/

POWER TRANSMITTING SYSTEM

FIG. F2200-001001 Universal Joint

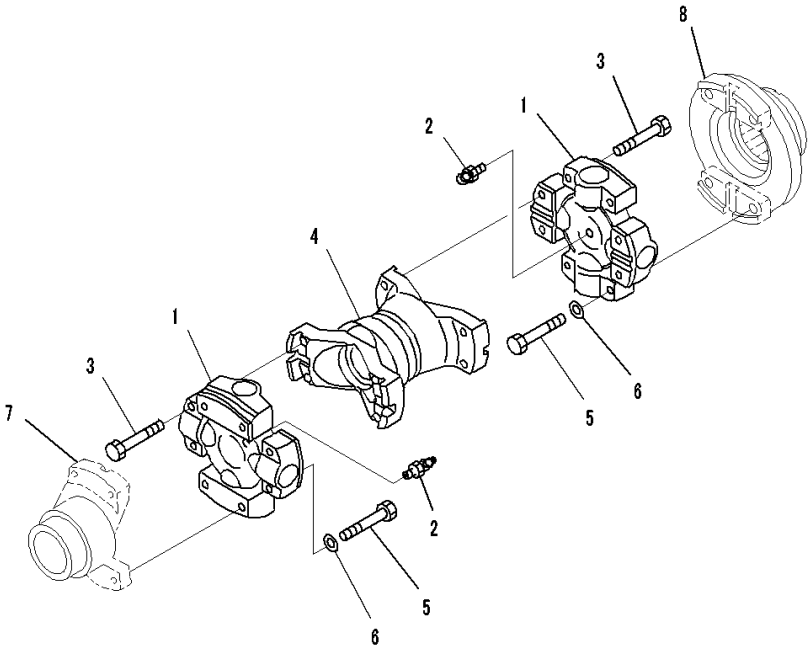

JA002693

Index	Code	Part Number	Description	Qty	Serial Number
		421-20-34511	Shaft Assembly	1	80001-
1		421-20-33621	• Spider Assembly	2	80001-
2		423-20-32631	• • Fitting	1	80001-
3		421-20-12690	• Bolt	8	80001-
4		421-20-34650	• Yoke	1	80001-
5		01010-81265	Bolt	8	80001-
6		01643-51232	Washer	8	80001-
7		(14Z-12-31310)	Coupling(Refer to Page 168)		-
8		(711-53-11370)	Bearing(Refer to Page 253)		-

https://truckmanualshub.com/

FIG. F2300-001001 Power Train, Bevel Gear and Shaft

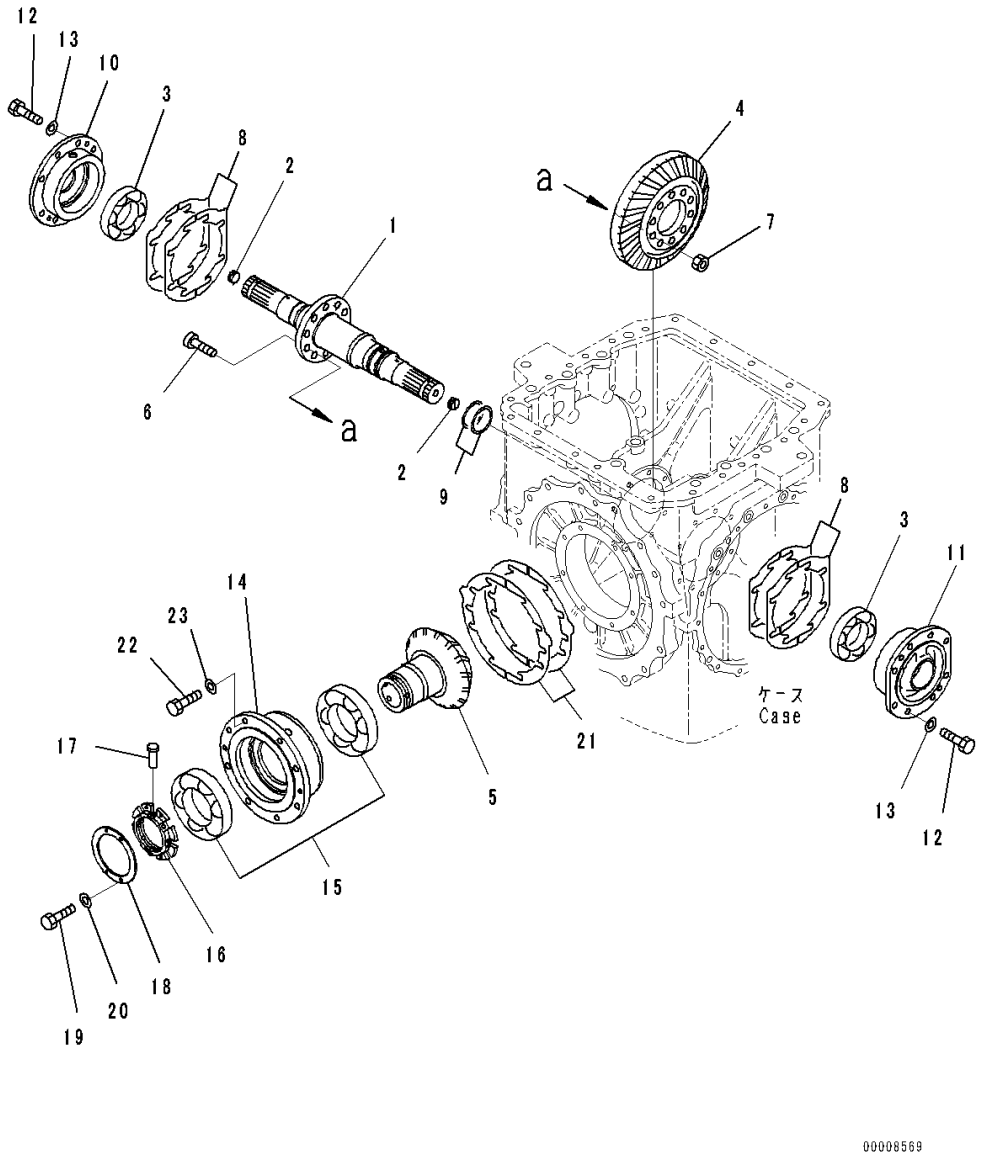

Index	Code	Part Number	Description	Qty	Serial Number
		Note: This list covers following specifications.			
		Without Power Angle Power Tilt Dozer			
		With Power Angle Power Tilt Dozer			
		14X-22-50000	Power Train Assembly	1	80001-
		14X-22-51000	• Steering Assembly	1	80001-
1		14Y-22-51121	• • Shaft	1	80001-
2		17M-22-45471	• • Orifice	2	80001-
3		06302-32213	• • Bearing	2	80001-
		14Y-22-55800	• • Gear Assembly	1	80001-
4	C1		• • • Gear, Bevel	1	80001-
5	C1		• • • Pinion	1	80001-
6		01084-01650	• • Bolt	10	80001-
7		01582-11613	• • Nut	10	80001-
8		14Y-22-21170	• • Shim, T=0.3mm	8	80001-
		14Y-22-21180	• • Shim, T=0.2mm	8	80001-
		14Y-22-21190	• • Shim, T=0.5mm	4	80001-
9		07018-10653	• • Ring	2	80001-
10		14Y-22-51130	• • Cage	1	80001-
11		14Y-22-21161	• • Cage	1	80001-
12		01010-81240	• • Bolt	16	80001-
13		01643-31232	• • Washer	16	80001-
14		154-22-65820	• • Cage	1	80001-
15		14Y-22-25880	• • Bearing	1	80001-
16		154-22-65890	• • Nut	1	80001-
17		154-22-65860	• • Pin	1	80001-
18		154-22-62220	• • Plate	1	80001-
19		01010-80612	• • Bolt	4	80001-
20		01643-30623	• • Washer	4	80001-
21		14Y-22-25830	• • Shim, T=0.2mm	6	80001-
		14Y-22-25840	• • Shim, T=0.3mm	4	80001-
		14Y-22-25850	• • Shim, T=0.4mm	2	80001-
22		01010-81240	• • Bolt	8	80001-
23		01643-31232	• • Washer	8	80001-

https://truckmanualshub.com/

FIG. F2300-001002 Power Train, Brake

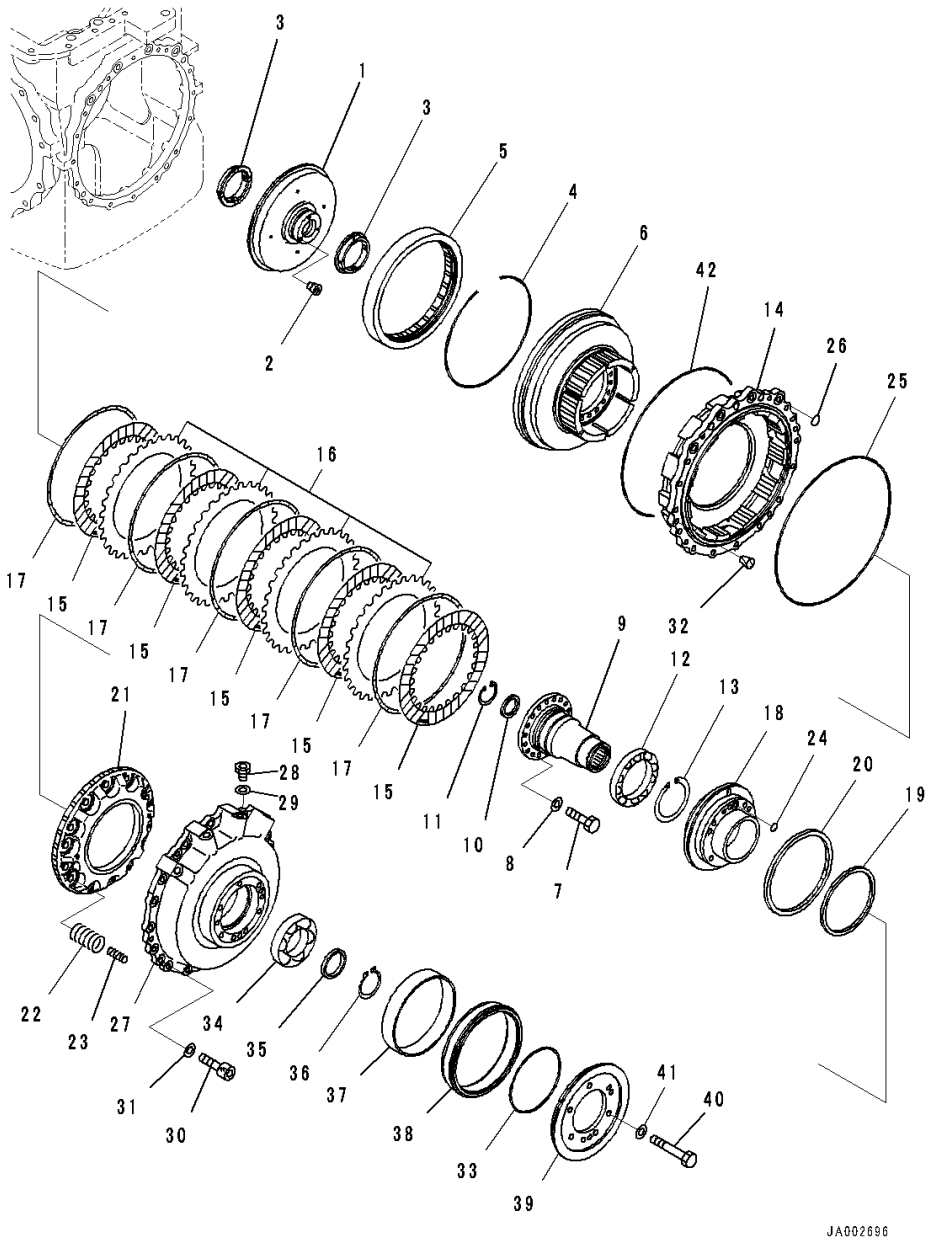

Index	Code	Part Number	Description	Qty	Serial Number
		Note: This list covers following specifications.			
		Without Power Angle Power Tilt Dozer			
		With Power Angle Power Tilt Dozer			
		14X-22-50000	Power Train Assembly	1	80001-
		14X-22-51000	• Steering Assembly	1	80001-
1		14Y-22-22290	• • Gear	2	80001-
2		02720-40104	• • Plug	6	80001-
3		14Y-22-22370	• • Bushing	4	80001-
4		14Y-22-22340	• • Ring, Snap	2	80001-
5		14Y-22-22161	• • Gear	2	80001-
6		14Y-22-23121	• • Hub	2	80001-
7		01010-81030	• • Bolt	40	80001-
8		01643-31032	• • Washer	40	80001-
9		14Y-22-24111	• • Hub	2	80001-
10		14Y-22-24190	• • Spacer	2	80001-
11		04065-05820	• • Ring, Snap	2	80001-
12		06030-06921	• • Bearing	2	80001-
13		04070-00105	• • Ring, Snap	2	80001-
14		14Y-22-23110	• • Drum	2	80001-
15		14Y-22-23140	• • Disc	10	80001-
16		14Y-22-23150	• • Plate	8	80001-
17		14Y-22-23160	• • Spring	10	80001-
18		14Y-22-24130	• • Cage	2	80001-
19		232-15-19270	• • Seal Ring, (Kit : K01)	2	80001-
20		14Y-22-23310	• • Seal Ring, (Kit : K01)	2	80001-
21		14Y-22-23130	• • Piston	2	80001-
22		14Y-22-23170	• • Spring	28	80001-
23		14Y-22-23180	• • Spring	28	80001-
24		07000-72018	• • O-ring, (Kit : K01)	2	80001-
25		07000-75365	• • O-ring, (Kit : K01)	2	80001-
26		07000-73022	• • O-ring, (Kit : K01)	8	80001-
27		14Y-22-55120	• • Cover	2	80001-
28		723-11-15110	• • Plug	8	80001-
29		07002-61623	• • O-ring, (Kit : K01)	8	80001-
30		01252-71250	• • Bolt	8	80001-
31		01643-31232	• • Washer	8	80001-
32		07049-01215	• • Plug	4	80001-
33		07000-75180	• • O-ring, (Kit : K01)	2	80001-
34		06030-06215	• • Bearing	2	80001-
35		17A-15-22191	• • Spacer	2	80001-

https://truckmanualshub.com/

FIG. F2300-001002 Power Train, Brake

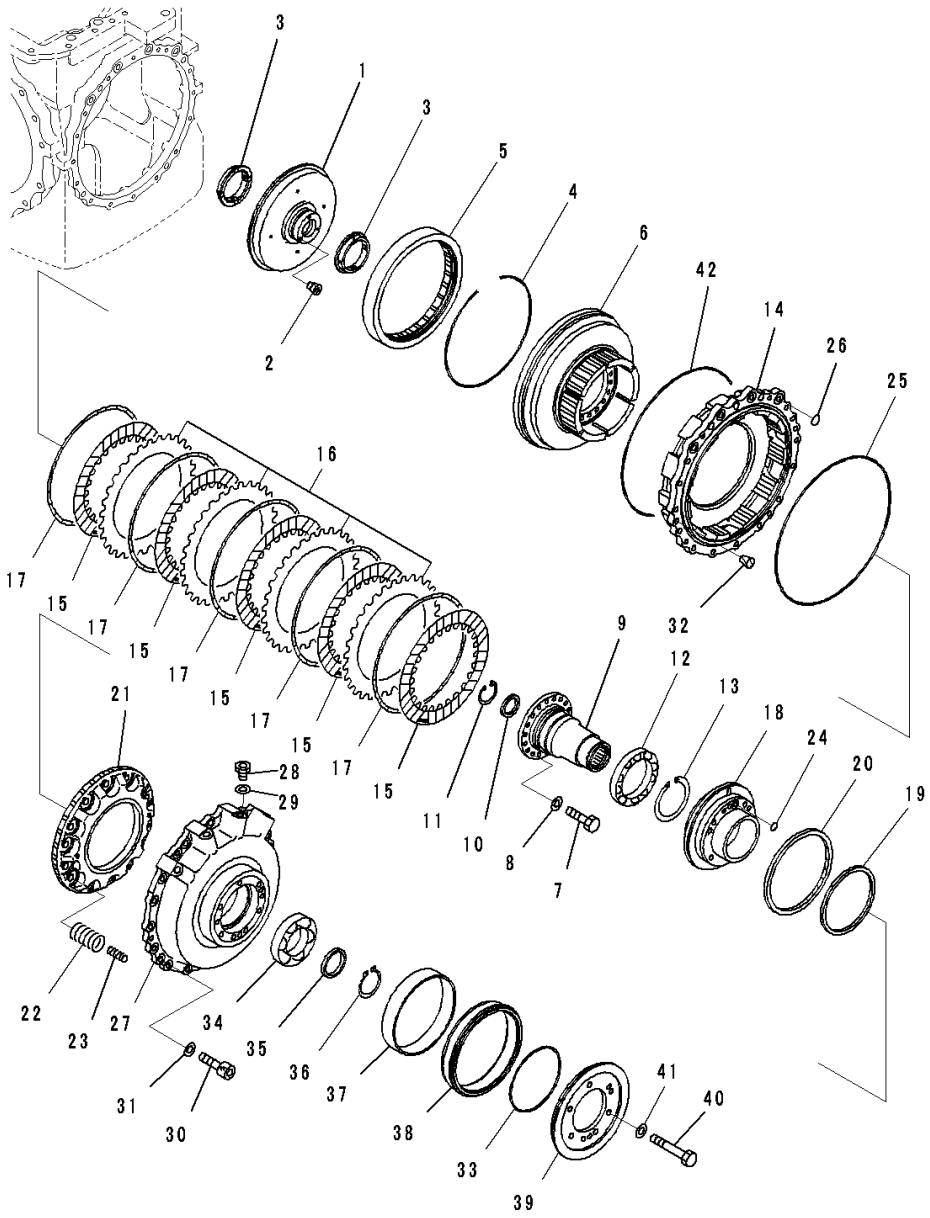

Index	Code	Part Number	Description	Qty	Serial Number
36		04064-07525	• • Ring, Snap	2	80001-
37		14X-21-13130	• • Bushing	2	80001-
38		14X-21-13240	• • Collar	2	80001-
39		14Y-21-23150	• • Flange	2	80001-
40		01011-81205	• • Bolt	12	80001-
41		01643-31232	• • Washer	12	80001-
42		07000-75365	• • O-ring, (Kit : K01)	2	80001-

https://truckmanualshub.com/

FIG. F2300-001003 Power Train, Carrier

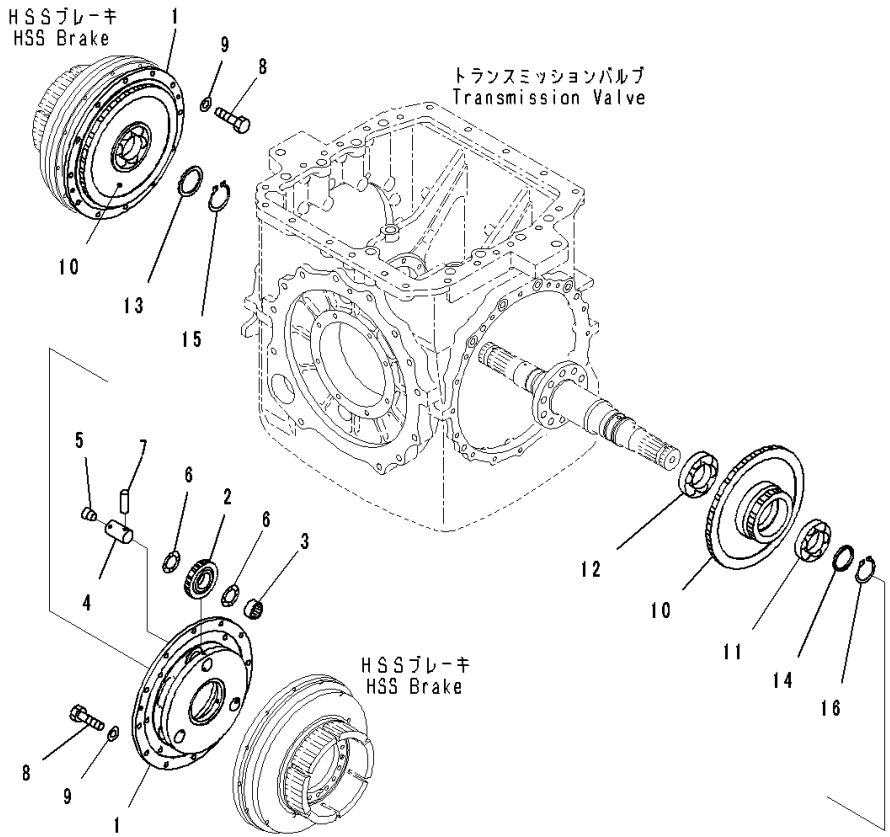

Index	Code	Part Number	Description	Qty	Serial Number
		Note: This list covers following specifications.			
		Without Power Angle Power Tilt Dozer			
		With Power Angle Power Tilt Dozer			
		14X-22-50000	Power Train Assembly	1	80001-
		14X-22-51000	• Steering Assembly	1	80001-
1		14Y-22-22110	• • Carrier	2	80001-
2		14Y-22-22150	• • Gear	6	80001-
3		14Y-22-22380	• • Bearing	6	80001-
4		154-22-22280	• • Shaft	6	80001-
5		07043-70108	• • Plug	6	80001-
6		154-15-12550	• • Washer, Thrust	12	80001-
7		14Y-22-22360	• • Pin	6	80001-
8		01010-81030	• • Bolt	24	80001-
9		01643-31032	• • Washer	24	80001-
10		14Y-22-22221	• • Gear	2	80001-
11		06340-06210	• • Bearing	2	80001-
12		06340-06211	• • Bearing	2	80001-
13		145-13-21730	• • Spacer	1	80001-
14		714-12-12930	• • Spacer	2	80001-
15		04064-05520	• • Ring, Snap	1	80001-
16		04064-05020	• • Ring, Snap	2	80001-

https://truckmanualshub.com/

FIG. F2300-001004 Power Train, Steering Case (1/2)

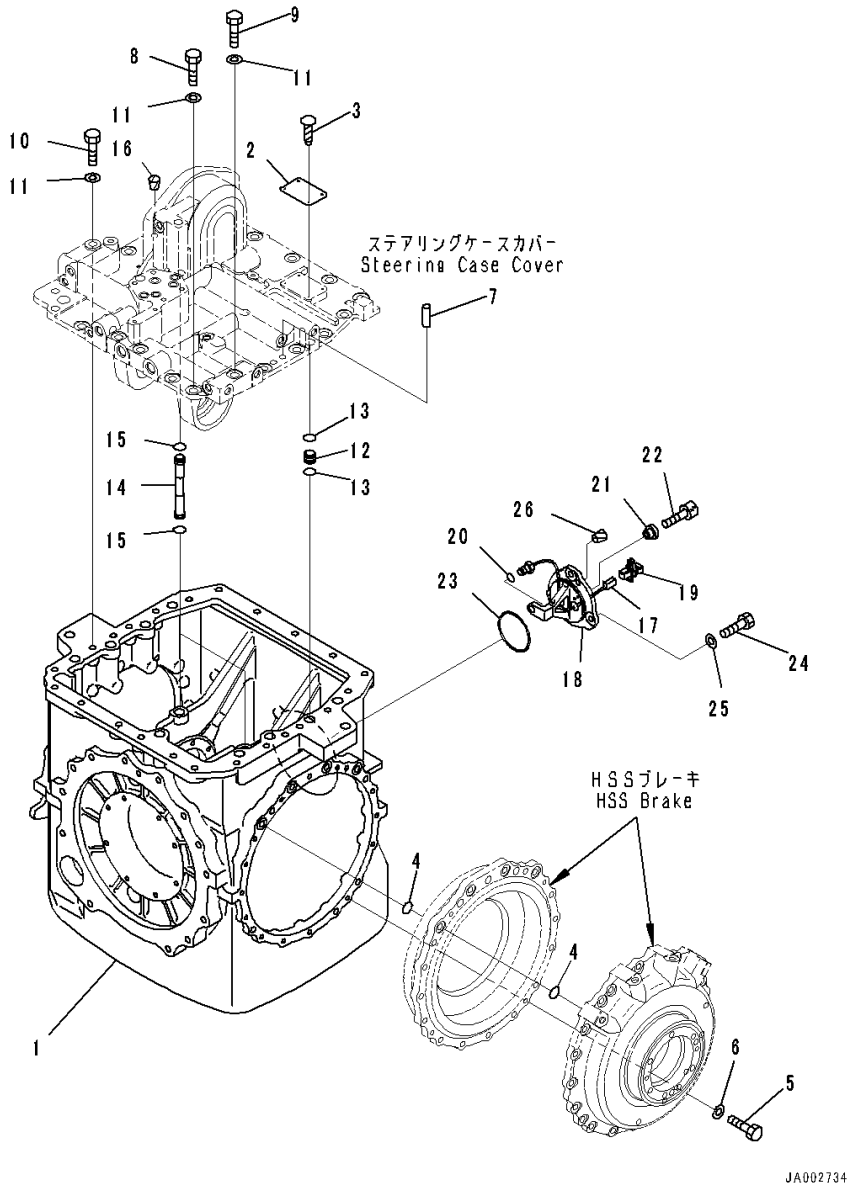

Index	Code	Part Number	Description	Qty	Serial Number
		Note: This list covers following specifications.			
		Without Power Angle Power Tilt Dozer			
		With Power Angle Power Tilt Dozer			
		14X-22-50000	Power Train Assembly	1	80001-
		14X-22-51000	• Steering Assembly	1	80001-
1		14Y-22-55110	• • Case	1	80001-
2	C2	09604-05080	• • Plate	1	80001-
3		04418-13060	• • Screw	4	80001-
4		07000-73022	• • O-ring, (Kit : K01)	8	80001-
5		01010-81255	• • Bolt	32	80001-
6		01643-31232	• • Washer	32	80001-
7		04020-01434	• • Pin, Dowel	2	80001-
8		01010-61645	• • Bolt	15	80001-
9		01010-61670	• • Bolt	3	80001-
10		01011-61615	• • Bolt	1	80001-
11		01643-31645	• • Washer	19	80001-
12		14X-22-16170	• • Sleeve	5	80001-
13		07000-72018	• • O-ring, (Kit : K01)	10	80001-
14		14Y-22-26180	• • Tube	2	80001-
15		07000-72018	• • O-ring, (Kit : K01)	4	80001-
16		07049-01620	• • Plug	2	80001-
17		14Y-22-55510	• • Sensor	1	80001-
18		14Y-22-55522	• • Bracket	1	80001-
19		14Y-22-37440	• • Connector	1	80001-
20		14Y-22-37470	• • O-ring, (Kit : K01)	1	80001-
21		14Y-22-37420	• • Collar	1	80001-
22		01252-70520	• • Bolt	1	80001-
23		07000-72095	• • O-ring, (Kit : K01)	1	80001-
24		01010-81230	• • Bolt	3	80001-
25		01643-31232	• • Washer	3	80001-
26		07049-01215	• • Plug	2	80001-

https://truckmanualshub.com/

FIG. F2300-001005 Power Train, Steering Case (2/2)

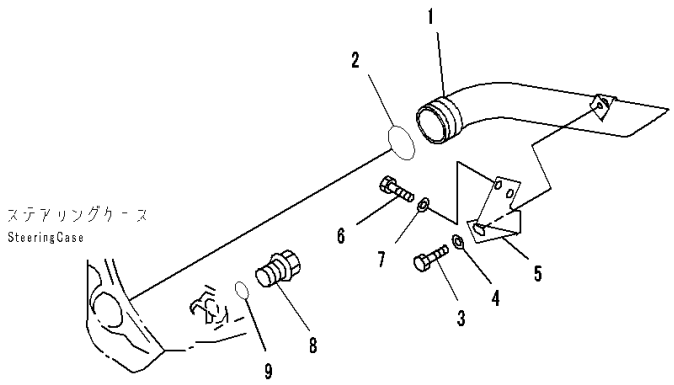

PJ0B953

Index	Code	Part Number	Description	Qty	Serial Number
		Note: This list covers following specifications.			
		Without Power Angle Power Tilt Dozer			
		With Power Angle Power Tilt Dozer			
		14X-22-50000	Power Train Assembly	1	80001-
		14X-22-51000	• Steering Assembly	1	80001-
1		14Y-49-21110	• • Tube	1	80001-
2		07000-72065	• • O-ring, (Kit : K01)	1	80001-
3		01010-81225	• • Bolt	1	80001-
4		01643-31232	• • Washer	1	80001-
5		14Y-49-21120	• • Plate	1	80001-
6		01010-81225	• • Bolt	2	80001-
7		01643-31232	• • Washer	2	80001-
8		6150-23-5620	• • Plug	1	80001-
9		07002-23634	• • O-ring, (Kit : K01)	1	80001-

https://truckmanualshub.com/

FIG. F2300-001006 Power Train, Steering Case Cover and Steering Valve Control Lever

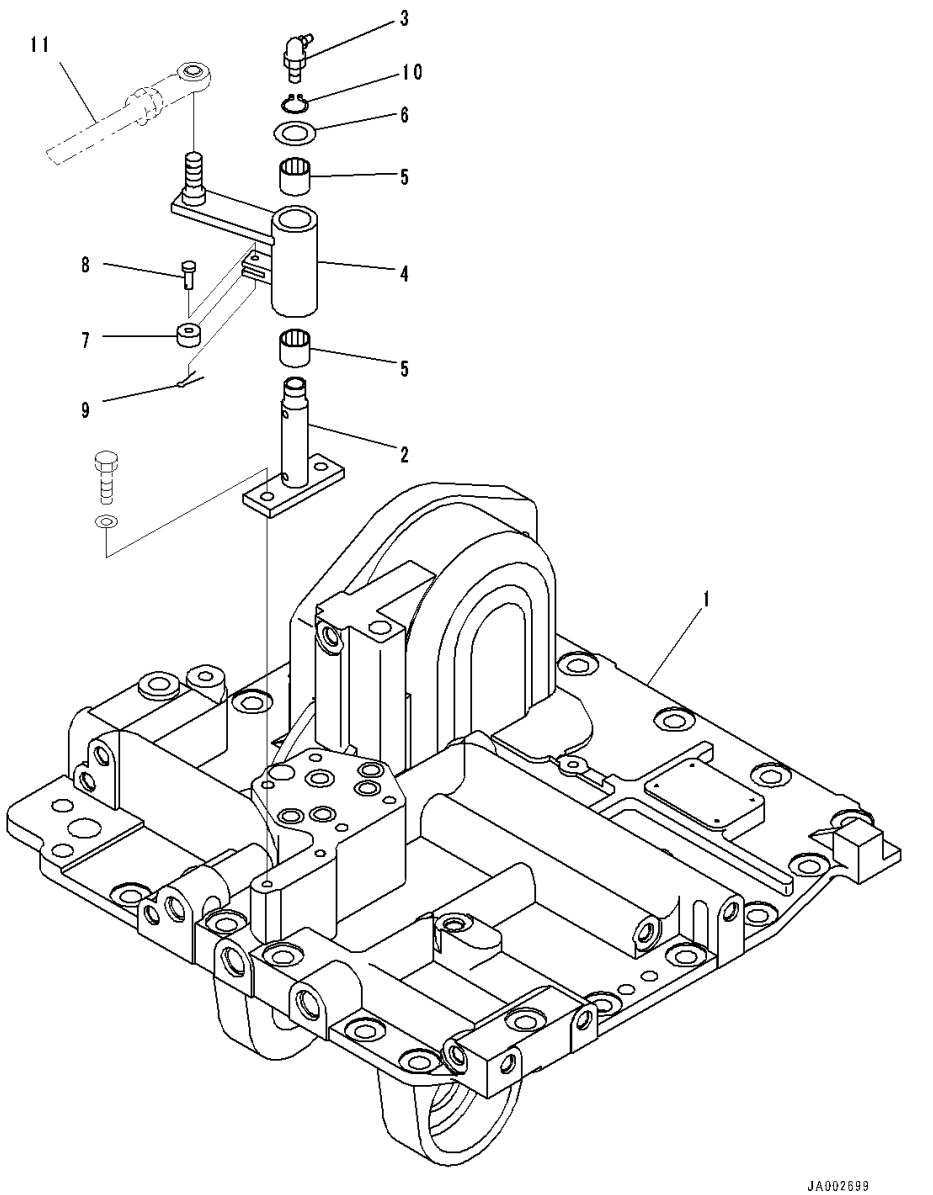

Index	Code	Part Number	Description	Qty	Serial Number
		Note: This list covers following specifications.			
		Without Power Angle Power Tilt Dozer			
		With Power Angle Power Tilt Dozer			
		14X-22-50000	Power Train Assembly	1	80001-
		14X-22-51000	• Steering Assembly	1	80001-
1		14Y-22-55142	• • Cover	1	80001-
2		14Z-43-12421	• • Shaft	1	80001-
3		07020-00900	• • Fitting, Grease	1	80001-
4		14Z-43-12411	• • Lever	1	80001-
5		06124-02020	• • Bearing	2	80001-
6		01643-31845	• • Washer	1	80001-
7		103-43-21380	• • Roller	1	80001-
8		103-43-21390	• • Pin	1	80001-
9		04050-11610	• • Pin, Cotter	1	80001-
10		04064-01812	• • Ring, Snap, for Shaft Side	1	80001-
11		(04250-81474)	End(Refer to Page 289)		-

https://truckmanualshub.com/

FIG. F2300-001007 Power Train, Steering Valve

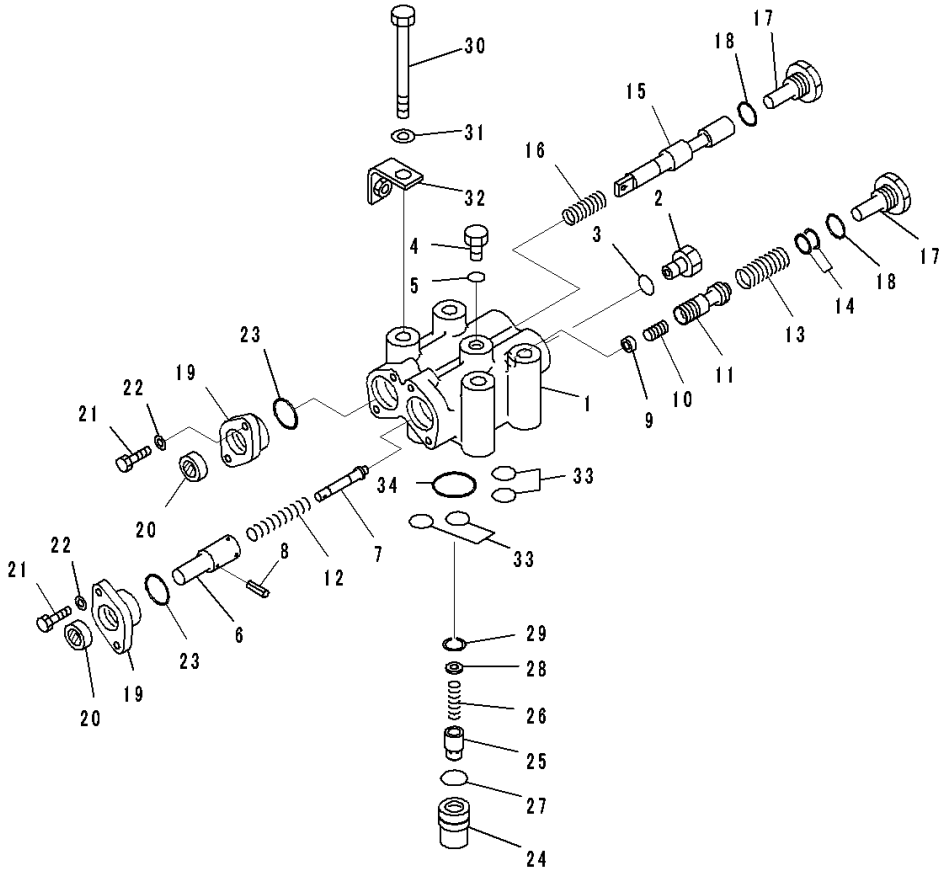

Index	Code	Part Number	Description	Qty	Serial Number
		Note: This list covers following specifications.			
		Without Power Angle Power Tilt Dozer			
		With Power Angle Power Tilt Dozer			
		14X-22-50000	Power Train Assembly	1	80001-
		14X-22-51000	• Steering Assembly	1	80001-
		14Y-22-52100	• • Valve Assembly	1	80001-
1	C1		• • • Body	1	80001-
2		723-11-15110	• • • Plug	1	80001-
3		07002-61623	• • • O-ring, (Kit : K02)	1	80001-
4		07040-11812	• • • Plug	1	80001-
5		07002-61823	• • • O-ring, (Kit : K02)	1	80001-
6		14Z-40-11320	• • • Guide	1	80001-
7		14Z-40-11330	• • • Shaft	1	80001-
8		04025-00316	• • • Pin, Spring	1	80001-
9		14Z-40-11340	• • • Guide	1	80001-
10		195-40-31540	• • • Piston	1	80001-
11	C1		• • • Valve	1	80001-
12		14Z-40-11380	• • • Spring	1	80001-
13		14Z-40-11371	• • • Spring	1	80001-
14		14Z-40-11350	• • • Shim, T=0.05mm	5	80001-
15	C1		• • • Spool	1	80001-
16		565-62-11270	• • • Spring	1	80001-
17		14Z-40-11360	• • • Plug	2	80001-
18		07002-32434	• • • O-ring, (Kit : K02)	2	80001-
19		14Z-40-11220	• • • Cover	2	80001-
20		113-15-29110	• • • Seal, Oil, (Kit : K02)	2	80001-
21		01010-80620	• • • Bolt	4	80001-
22		01643-30623	• • • Washer	4	80001-
23		07002-33034	• • • O-ring, (Kit : K02)	2	80001-
		14Z-40-12101	• • Valve Assembly	1	80001-
24		14Z-40-12210	• • • Body	1	80001-
25		07750-01623	• • • Valve	1	80001-
26		07750-01628	• • • Spring	1	80001-
27		07000-72021	• • • O-ring	1	80001-
28		14Z-22-15220	• • • Spacer	1	80001-
29		04065-01610	• • • Ring, Snap	1	80001-
30		01010-81295	• • Bolt	4	80001-
31		01643-31232	• • Washer	4	80001-
32		8288-43-1120	• • Bracket	1	80001-
33		07000-72018	• • O-ring, (Kit : K01)	4	80001-

https://truckmanualshub.com/

FIG. F2300-001007 Power Train, Steering Valve

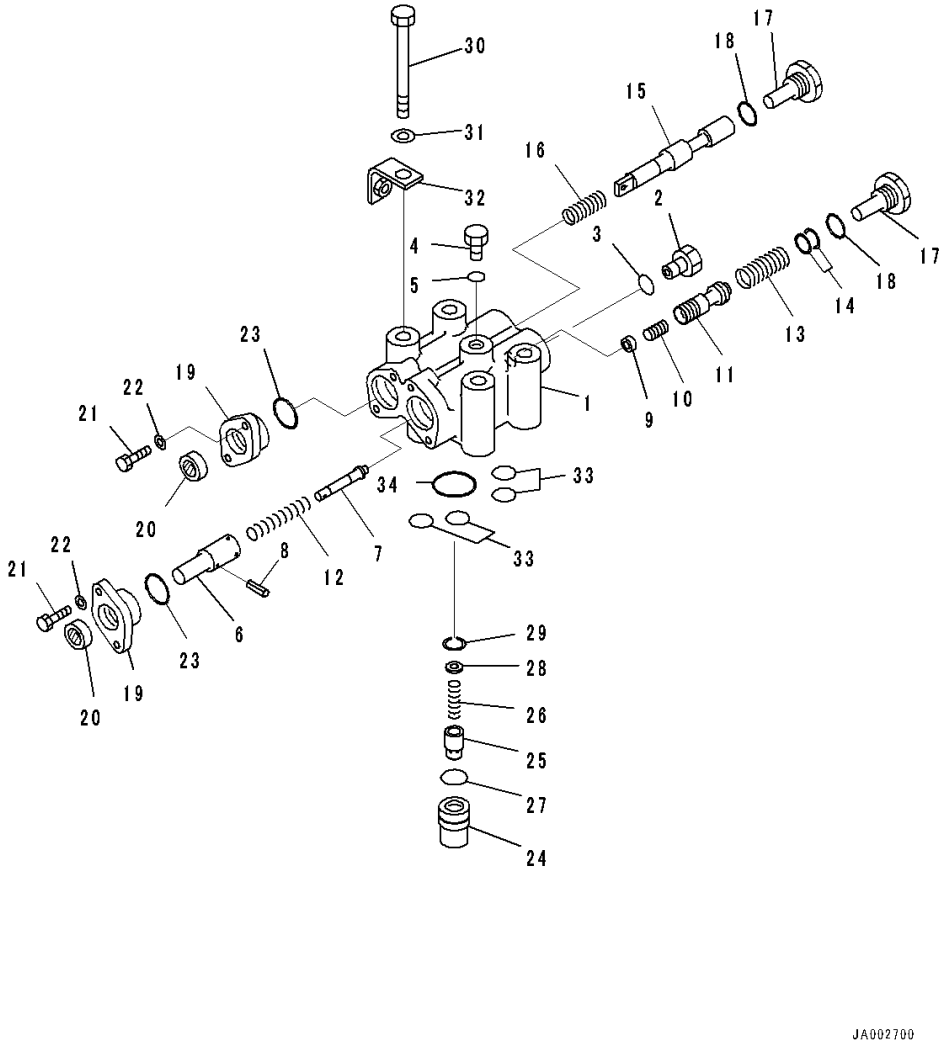

Index	Code	Part Number	Description	Qty	Serial Number
34		07000-73032	• • O-ring, (Kit : K01)	1	80001-

https://truckmanualshub.com/

FIG. F2300-001008 Power Train, H.S.S. Gear

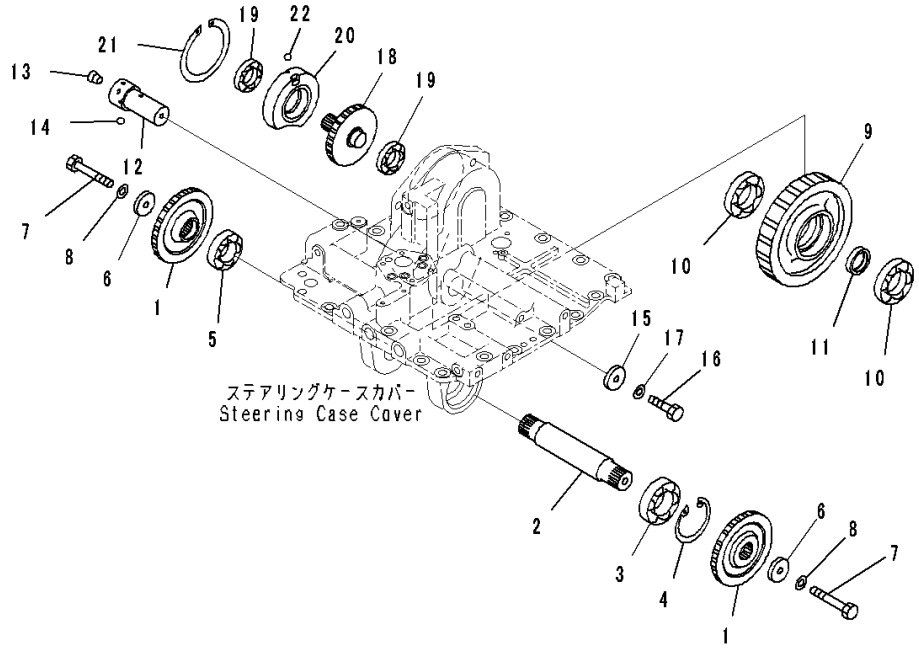

Index	Code	Part Number	Description	Qty	Serial Number
		Note: This list covers following specifications.			
		Without Power Angle Power Tilt Dozer			
		With Power Angle Power Tilt Dozer			
		14X-22-50000	Power Train Assembly	1	80001-
		14X-22-51000	• Steering Assembly	1	80001-
1		14Y-22-22311	• • Gear	2	80001-
2		14Y-22-54260	• • Shaft	1	80001-
3		06030-06309	• • Bearing	1	80001-
4		04065-01030	• • Ring	1	80001-
5		134-22-79320	• • Bearing	1	80001-
6		23E-15-13350	• • Holder	2	80001-
7		01010-81280	• • Bolt	2	80001-
8		01643-31232	• • Washer	2	80001-
9		14Y-22-22321	• • Gear	1	80001-
10		06030-06309	• • Bearing	2	80001-
11		14Y-22-22170	• • Collar	1	80001-
12		14Y-22-22231	• • Shaft	1	80001-
13		07043-70108	• • Plug	1	80001-
14		04260-00635	• • Ball, Steel	1	80001-
15		23E-15-13350	• • Holder	1	80001-
16		01010-81230	• • Bolt	1	80001-
17		01643-31232	• • Washer	1	80001-
18		14Y-22-22330	• • Gear	1	80001-
19		06340-06207	• • Bearing	2	80001-
20		14Y-22-22181	• • Cage	1	80001-
21		04071-00140	• • Ring, Snap	1	80001-
22		04260-00635	• • Ball, Steel	1	80001-

https://truckmanualshub.com/

FIG. F2300-001009 Power Train, Steering Case Cover Related Parts

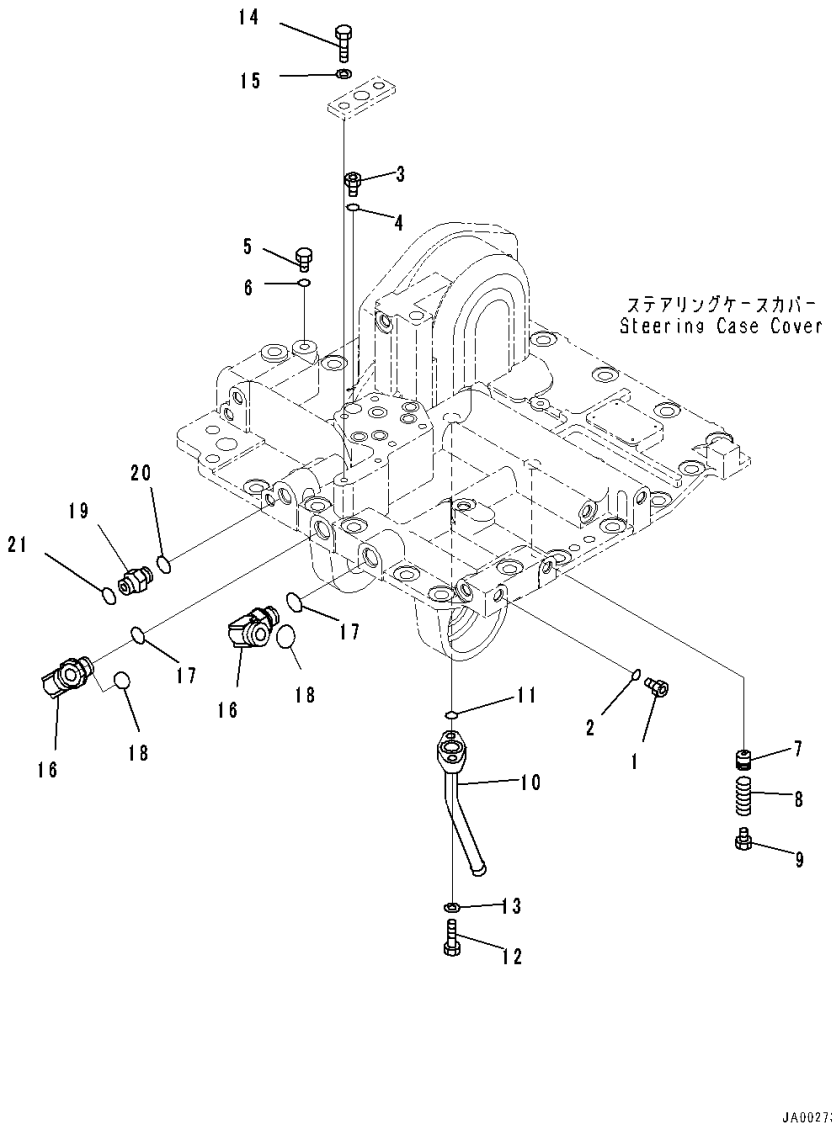

Index	Code	Part Number	Description	Qty	Serial Number
		Note: This list covers following specifications.			
		Without Power Angle Power Tilt Dozer			
		With Power Angle Power Tilt Dozer			
		14X-22-50000	Power Train Assembly	1	80001-
		14X-22-51000	• Steering Assembly	1	80001-
1		723-11-15110	• • Plug	16	80001-
2		07002-61623	• • O-ring, (Kit : K01)	16	80001-
3		134-22-66140	• • Sleeve	1	80001-
4		07000-72018	• • O-ring, (Kit : K01)	1	80001-
5		708-8E-16150	• • Plug	1	80001-
6		07002-61023	• • O-ring	1	80001-
7		23A-15-15490	• • Valve	1	80001-
8		702-16-52420	• • Spring	1	80001-
9		07040-12012	• • Plug	1	80001-
10		14Y-22-56240	• • Tube	1	80001-
11		07000-73022	• • O-ring, (Kit : K01)	1	80001-
12		01010-81035	• • Bolt	2	80001-
13		01643-31032	• • Washer	2	80001-
14		01010-81025	• • Bolt	2	80001-
15		01643-31032	• • Washer	2	80001-
16		02782-10628	• • Elbow	2	80001-
17		07002-62434	• • O-ring, (Kit : K01)	2	80001-
18		02896-61018	• • O-ring, (Kit : K01)	2	80001-
19		02781-00422	• • Union	1	80001-
20		07002-62034	• • O-ring, (Kit : K01)	1	80001-
21		02896-61012	• • O-ring, (Kit : K01)	1	80001-

https://truckmanualshub.com/

FIG. F2300-001010 Power Train, 1st Housing

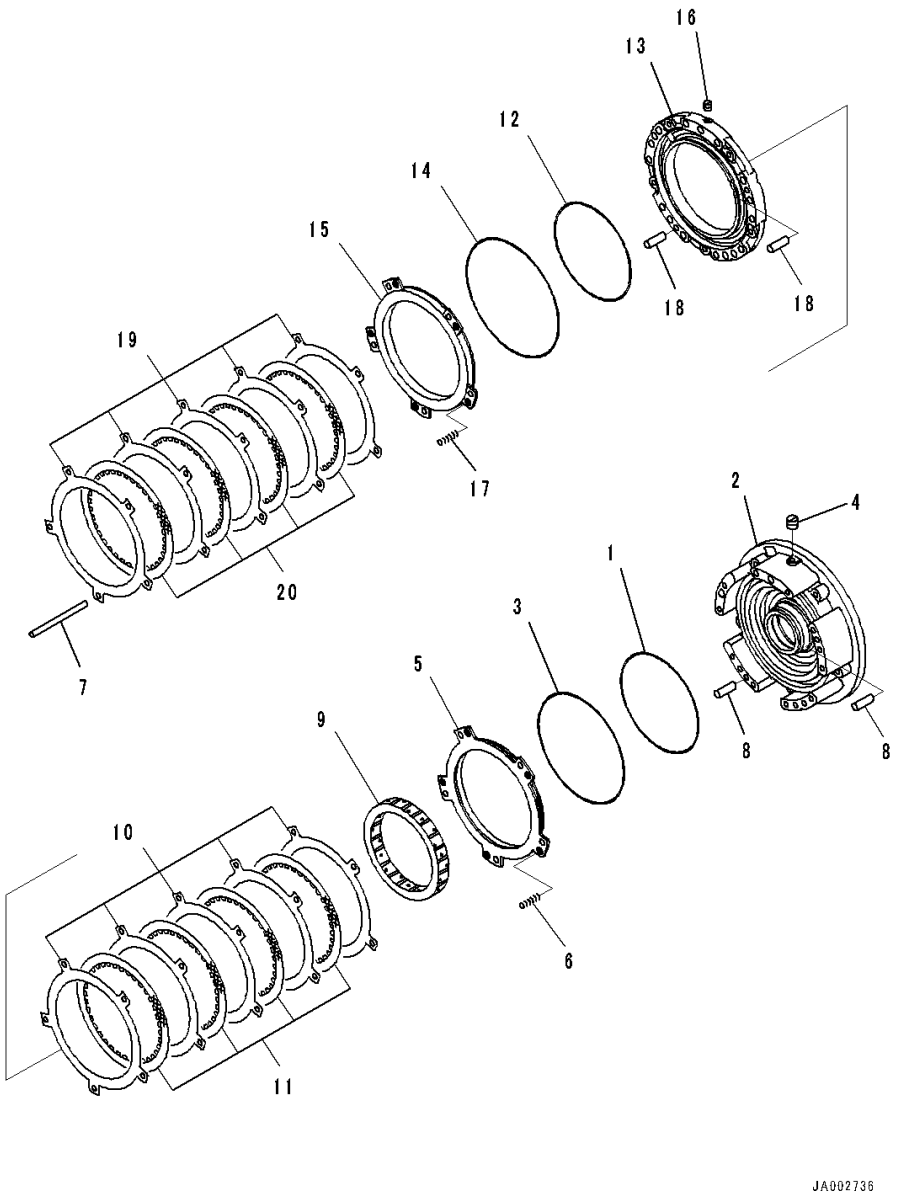

Index	Code	Part Number	Description	Qty	Serial Number
		Note: This list covers following specifications.			
		Without Power Angle Power Tilt Dozer			
		With Power Angle Power Tilt Dozer			
		14X-22-50000	Power Train Assembly	1	80001-
		14X-15-51000	• Transmission Assembly	1	80001-
1		103-15-12820	• • Seal Ring, (Kit : K03)	1	80001-
2		14X-15-51130	• • Housing	1	80001-
3		124-15-41920	• • Seal Ring, (Kit : K03)	1	80001-
4		568-15-11380	• • Plug	1	80001-
5		14X-15-52710	• • Piston	1	80001-
6		145-14-12790	• • Spring, L=59mm	5	80001-
7		103-15-12880	• • Pin	5	80001-
8		04020-01228	• • Pin, Dowel	2	80001-
9		14X-15-52660	• • Gear, Ring	1	80001-
10		14X-15-22780	• • Plate	5	80001-
11		14X-15-22710	• • Disc	4	80001-
12		124-15-41910	• • Seal Ring, (Kit : K03)	1	80001-
13		14X-15-51140	• • Housing	1	80001-
14		569-15-12860	• • Seal Ring, (Kit : K03)	1	80001-
15		14X-15-22750	• • Piston	1	80001-
16		145-14-11320	• • Plug	1	80001-
17		145-14-12790	• • Spring, L=59mm	5	80001-
18		04020-01228	• • Pin, Dowel	2	80001-
19		14X-15-22780	• • Plate	5	80001-
20		14X-15-22710	• • Disc	4	80001-

https://truckmanualshub.com/

FIG. F2300-001011 Power Train, 2nd, 3rd, Forward and Reverse Housing

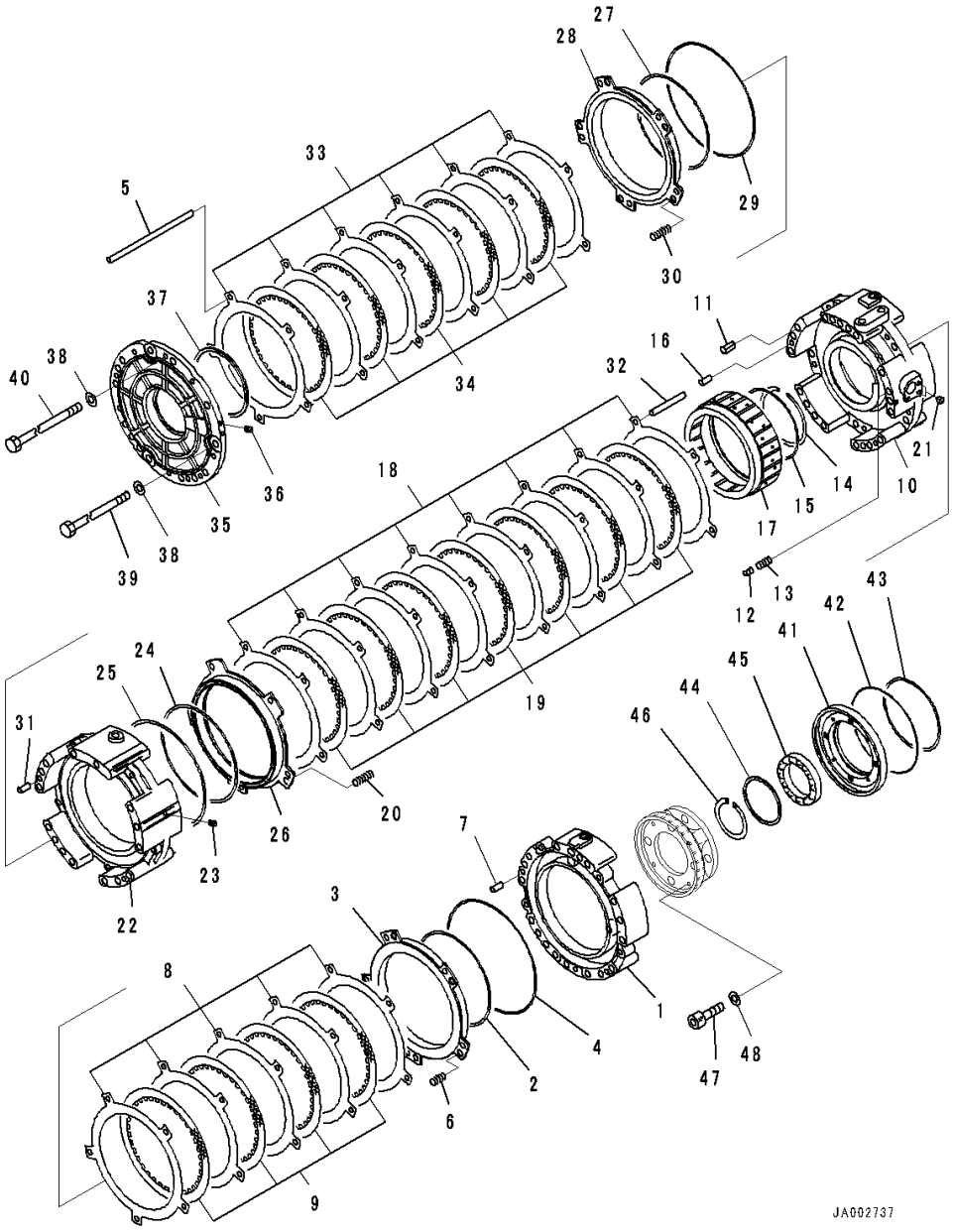

Index	Code	Part Number	Description	Qty	Serial Number
		Note: This list covers following specifications.			
		Without Power Angle Power Tilt Dozer			
		With Power Angle Power Tilt Dozer			
		14X-22-50000	Power Train Assembly	1	80001-
		14X-15-51000	• Transmission Assembly	1	80001-
1		14X-15-51150	• • Housing	1	80001-
2		124-15-41910	• • Seal Ring, (Kit : K03)	1	80001-
3		14X-15-22750	• • Piston	1	80001-
4		569-15-12860	• • Seal Ring, (Kit : K03)	1	80001-
5		103-15-12880	• • Pin	5	80001-
6		145-14-12790	• • Spring, L=59mm	5	80001-
7		04020-01228	• • Pin, Dowel	2	80001-
8		14X-15-22780	• • Plate	5	80001-
9		14X-15-22710	• • Disc	4	80001-
10		14X-15-51160	• • Housing	1	80001-
11		569-15-41310	• • Sleeve	14	80001-
12		287-15-15360	• • Piston	1	80001-
13		700-80-51390	• • Spring	1	80001-
14		04071-00145	• • Ring, Snap, for Hole Side	1	80001-
15		14X-15-29220	• • Seal Ring, (Kit : K03)	1	80001-
16		04020-01228	• • Pin, Dowel	2	80001-
17		14X-15-52630	• • Gear, Ring	1	80001-
18		14X-15-22780	• • Plate	8	80001-
19		14X-15-22710	• • Disc	7	80001-
20		145-14-12780	• • Spring	5	80001-
21		175-15-11230	• • Plug	2	80001-
22		14X-15-51170	• • Housing	1	80001-
23		145-14-11320	• • Plug	1	80001-
24		103-15-12820	• • Seal Ring, (Kit : K03)	1	80001-
25		124-15-41920	• • Seal Ring, (Kit : K03)	1	80001-
26		14X-15-22740	• • Piston	1	80001-
27		124-15-41910	• • Seal Ring, (Kit : K03)	1	80001-
28		14X-15-22770	• • Piston	1	80001-
29		113-15-12870	• • Ring, (Kit : K03)	1	80001-
30		14X-15-12910	• • Spring	5	80001-
31		04020-01228	• • Pin, Dowel	2	80001-
32		103-15-12890	• • Pin	5	80001-
33		14X-15-22780	• • Plate	6	80001-
34		14X-15-22710	• • Disc	5	80001-
35		14X-15-51181	• • Housing	1	80001-

https://truckmanualshub.com/

FIG. F2300-001011 Power Train, 2nd, 3rd, Forward and Reverse Housing

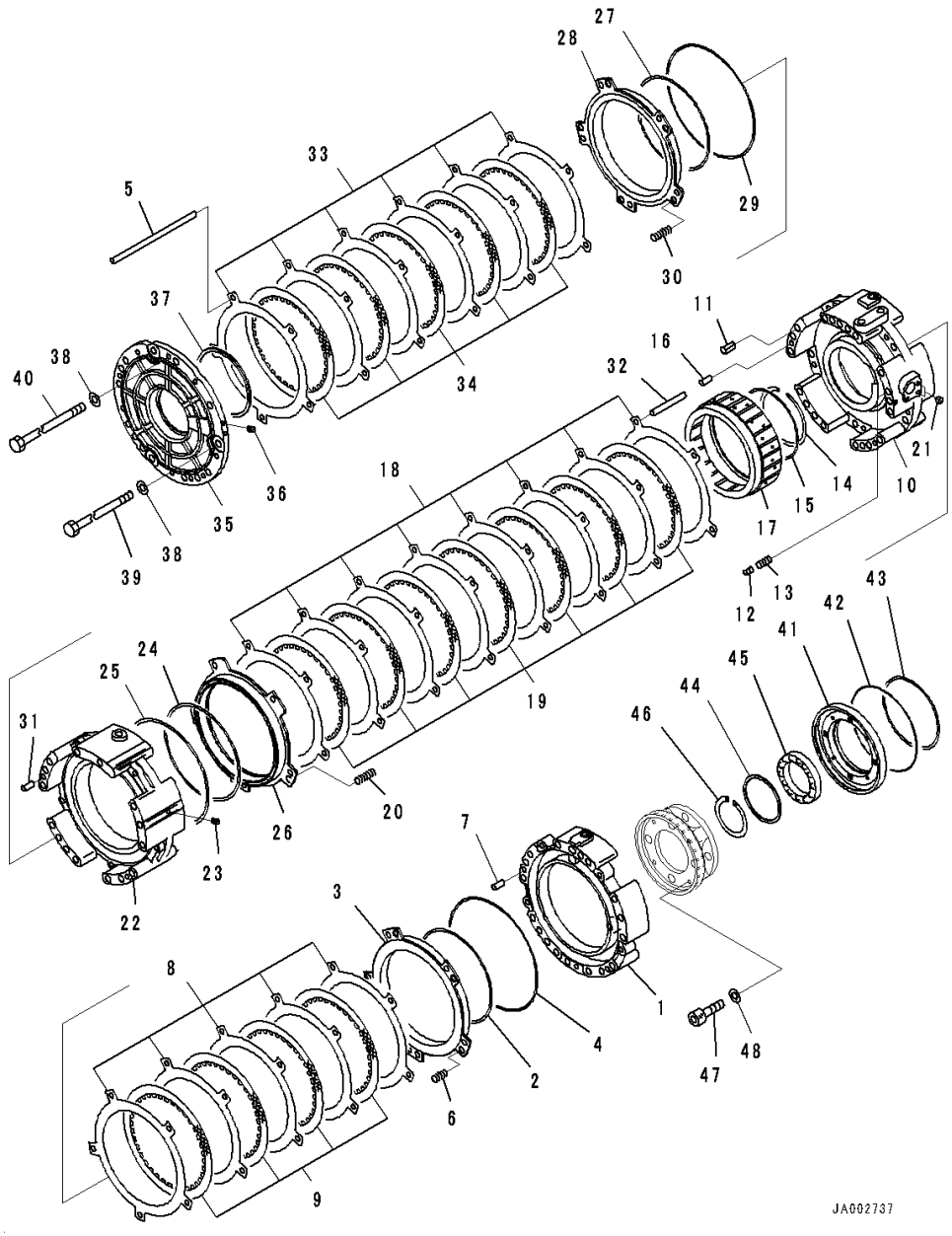

Index	Code	Part Number	Description	Qty	Serial Number
36		145-14-11320	• • Plug	2	80001-
37		14X-15-29230	• • Seal Ring, (Kit : K03)	1	80001-
38		145-14-11571	• • Washer	14	80001-
39		144-15-21191	• • Bolt	3	80001-
40		232-15-11240	• • Bolt	11	80001-
41		14X-15-52370	• • Cover	1	80001-
42		14X-15-19210	• • Seal Ring, (Kit : K03)	1	80001-
43		07018-11805	• • Seal Ring	1	80001-
44		14X-15-52170	• • Spacer	1	80001-
45		06330-06822	• • Bearing	1	80001-
46		04070-00105	• • Ring, Snap	1	80001-
47		01252-70860	• • Bolt, Hexagon Socket Head	4	80001-
48		01643-50823	• • Washer	4	80001-

https://truckmanualshub.com/

FIG. F2300-001012 Power Train, Transmission Carrier (1/2)

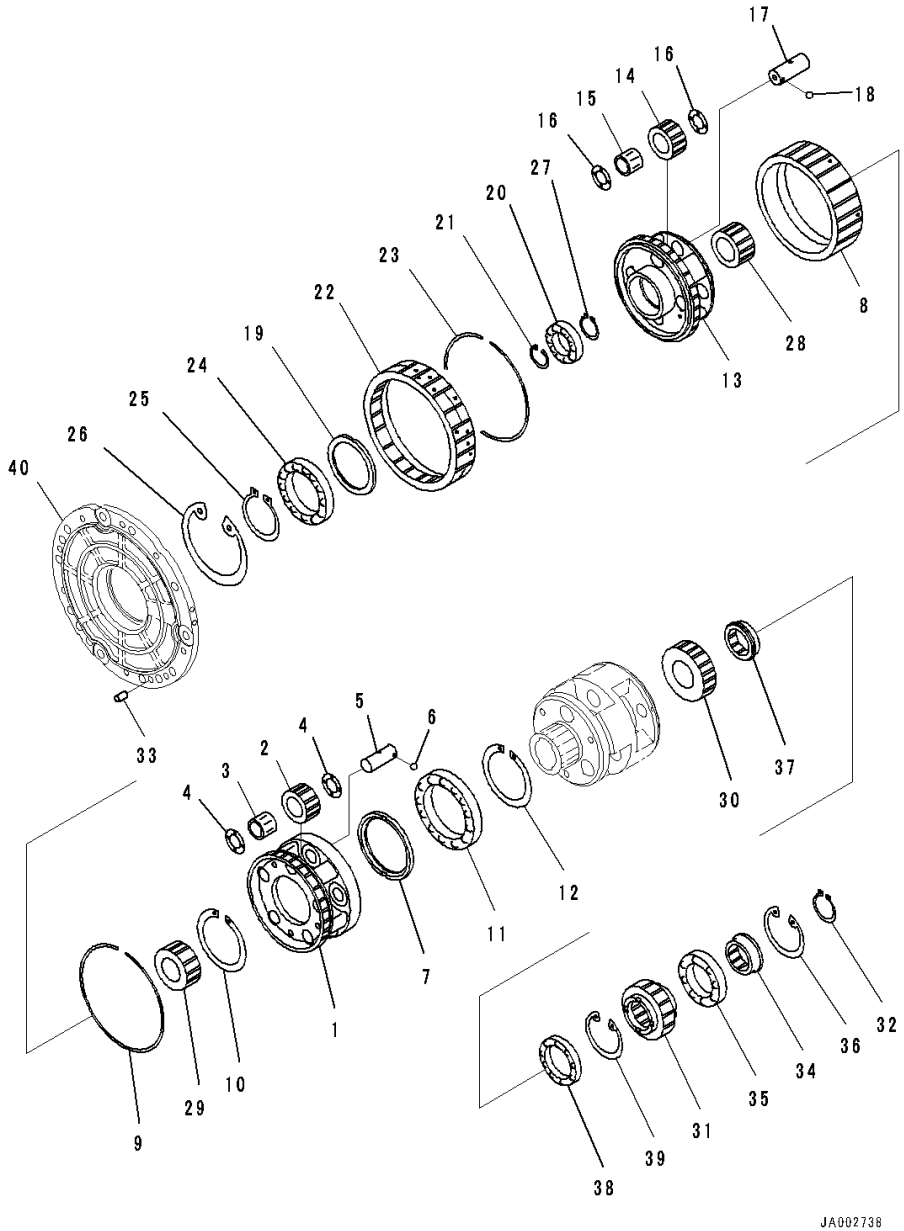

Index	Code	Part Number	Description	Qty	Serial Number
		Note: This list covers following specifications.			
		Without Power Angle Power Tilt Dozer			
		With Power Angle Power Tilt Dozer			
		14X-22-50000	Power Train Assembly	1	80001-
		14X-15-51000	• Transmission Assembly	1	80001-
1		14X-15-52320	• • Carrier	1	80001-
2		14X-15-52420	• • Gear	5	80001-
3		14X-15-59410	• • Bearing	5	80001-
4		712-85-12560	• • Washer, Thrust	10	80001-
5		14X-15-52520	• • Shaft	5	80001-
6		04260-00635	• • Ball, Steel	5	80001-
7		14X-15-52151	• • Spacer	1	80001-
8		14X-15-52620	• • Gear, Ring	1	80001-
9		14X-15-29530	• • Ring, Snap	1	80001-
10		14X-15-29510	• • Ring, Snap	1	80001-
11		06300-06921	• • Bearing	1	80001-
12		04070-00105	• • Ring, Snap	1	80001-
13		14X-15-52311	• • Carrier	1	80001-
14		56E-15-17261	• • Gear	4	80001-
15		56E-15-19360	• • Bearing, Needle	4	80001-
16		425-15-19440	• • Washer	8	80001-
17		14X-15-52510	• • Shaft	4	80001-
18		04260-00635	• • Ball, Steel	4	80001-
19		423-15-12810	• • Spacer	1	80001-
20		14X-15-29610	• • Bearing	1	80001-
21		04065-07525	• • Ring, Snap, for Hole Side	1	80001-
22		14X-15-52610	• • Gear, Ring	1	80001-
23		14X-15-29520	• • Ring, Snap	1	80001-
24		06330-06918	• • Bearing	1	80001-
25		04064-09030	• • Ring, Snap	1	80001-
26		04065-01254	• • Ring, Snap	1	80001-
27		04064-04518	• • Ring, Snap	5	80001-
28		14X-15-52211	• • Gear	1	80001-
29		14X-15-52220	• • Gear	1	80001-
30		14X-15-52240	• • Gear	1	80001-
31		14X-15-52250	• • Gear	1	80001-
32		14X-15-29540	• • Ring	2	80001-
33		04020-01228	• • Pin, Dowel	2	80001-
34		14X-15-52140	• • Spacer	1	80001-
35		14X-15-59310	• • Bearing	1	80001-

https://truckmanualshub.com/

FIG. F2300-001012 Power Train, Transmission Carrier (1/2)

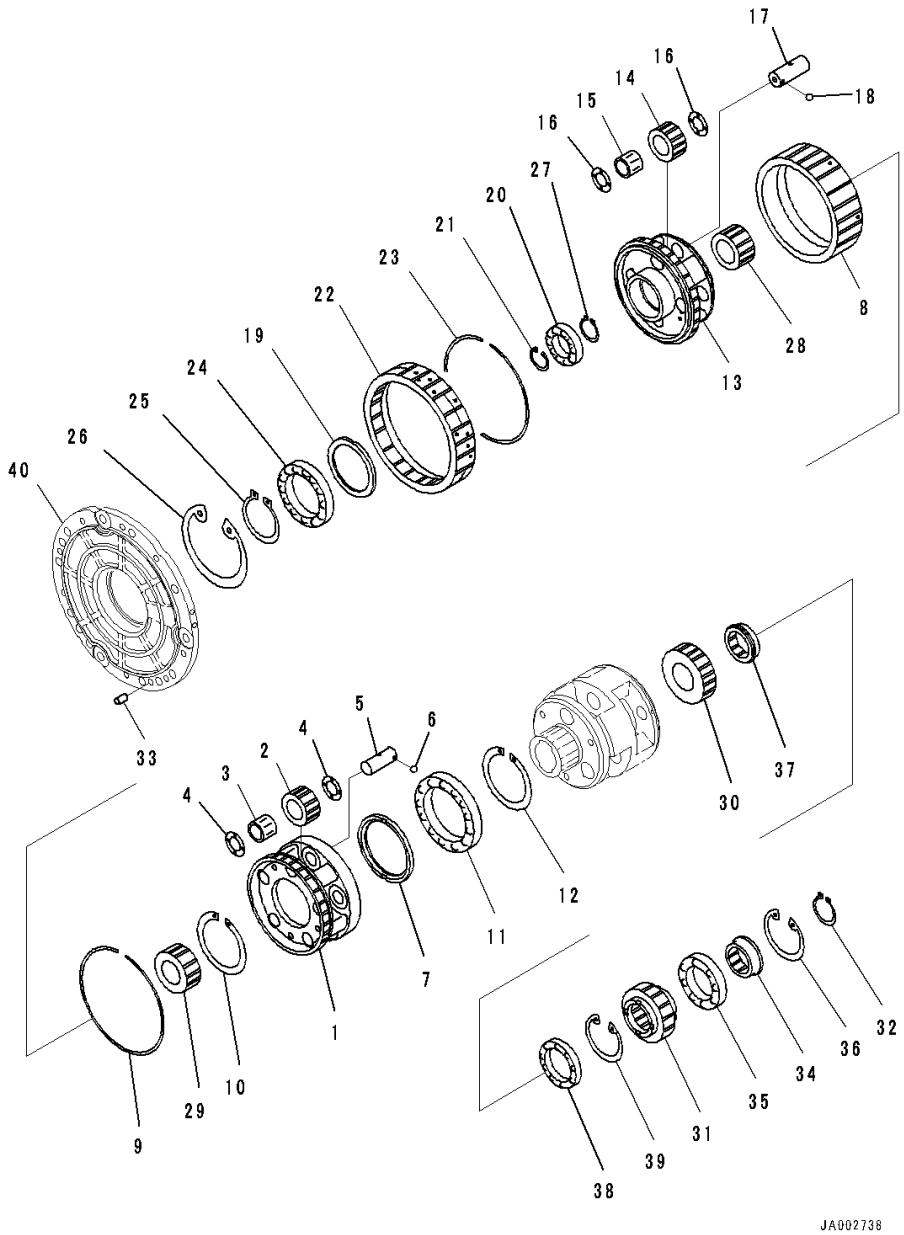

Index	Code	Part Number	Description	Qty	Serial Number
36		04065-01030	• • Ring	1	80001-
37		14X-15-52160	• • Spacer	1	80001-
38		14X-15-59330	• • Bearing	1	80001-
39		04065-09030	• • Ring, Snap	1	80001-
40		(14X-15-51181)	Housing(Refer to Page 239)		-

https://truckmanualshub.com/

FIG. F2300-001013 Power Train, Transmission Carrier (2/2)

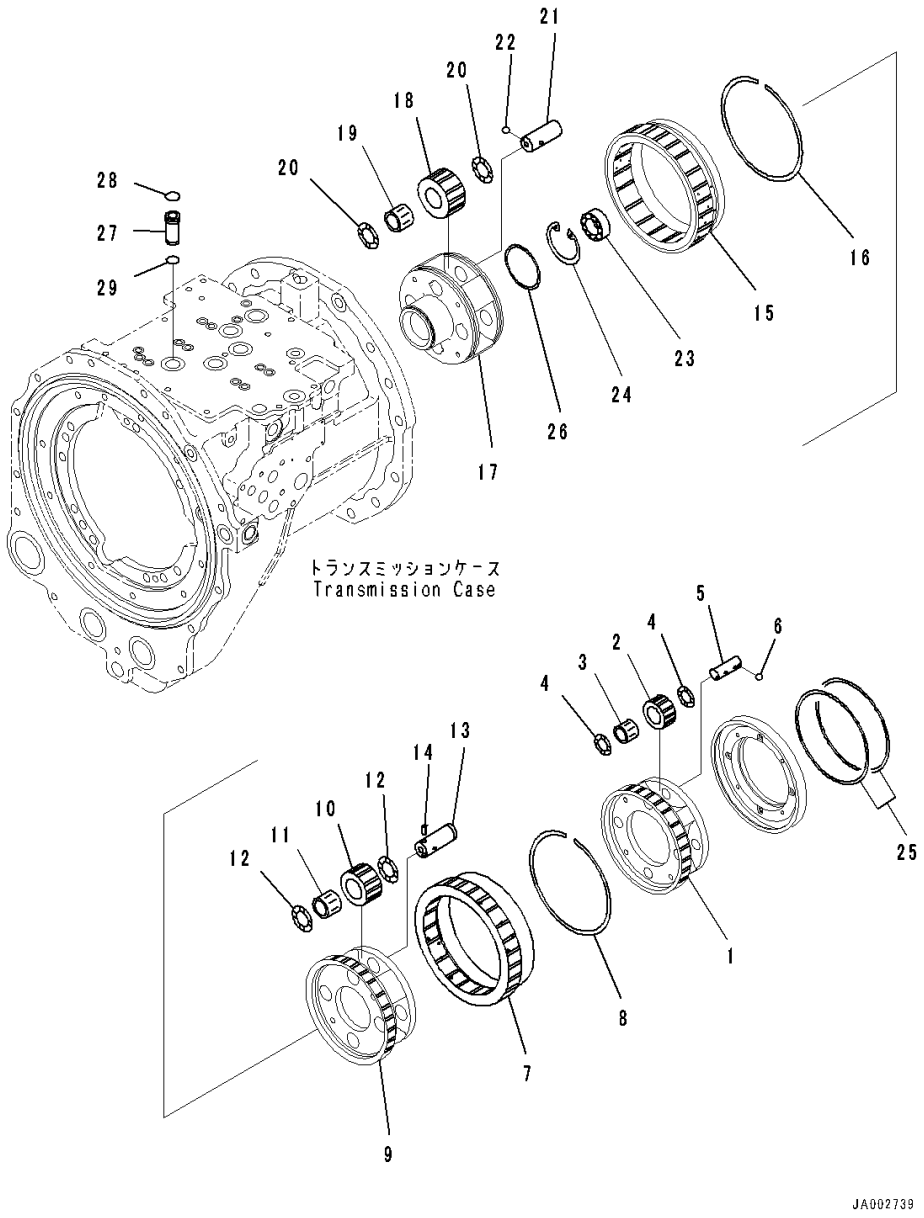

Index	Code	Part Number	Description	Qty	Serial Number
		Note: This list covers following specifications.			
		Without Power Angle Power Tilt Dozer			
		With Power Angle Power Tilt Dozer			
		14X-22-50000	Power Train Assembly	1	80001-
		14X-15-51000	• Transmission Assembly	1	80001-
1		14X-15-52350	• • Carrier	1	80001-
2		423-15-12441	• • Gear	4	80001-
3		14X-15-29410	• • Bearing	4	80001-
4		14X-15-52560	• • Washer, Thrust	8	80001-
5		14X-15-52550	• • Shaft	4	80001-
6		04260-00635	• • Ball, Steel	4	80001-
7		14X-15-52650	• • Gear, Ring	1	80001-
8		14X-15-29520	• • Ring, Snap	1	80001-
9		14X-15-52340	• • Carrier	1	80001-
10		14X-15-22421	• • Gear	4	80001-
11		14X-15-29440	• • Bearing	4	80001-
12		425-15-19440	• • Washer	8	80001-
13		425-15-32520	• • Shaft	4	80001-
14		14X-15-12960	• • Pin	4	80001-
15		14X-15-52640	• • Gear, Ring	1	80001-
16		14X-15-29520	• • Ring, Snap	1	80001-
17		14X-15-52330	• • Carrier	1	80001-
18		14X-15-52430	• • Gear	4	80001-
19		56E-15-19360	• • Bearing, Needle	4	80001-
20		425-15-19440	• • Washer	8	80001-
21		14X-15-52510	• • Shaft	4	80001-
22		04260-00635	• • Ball, Steel	4	80001-
23		14X-15-59320	• • Bearing	1	80001-
24		04065-05220	• • Ring, Snap	1	80001-
25		07018-11805	• • Seal Ring	2	80001-
26		07018-10854	• • Seal Ring	1	80001-
27		14X-15-55520	• • Sleeve	5	80001-
28		07000-72021	• • O-ring, (Kit : K03)	5	80001-
29		07000-72018	• • O-ring, (Kit : K03)	5	80001-

https://truckmanualshub.com/

FIG. F2300-001014 Power Train, Transmission Case

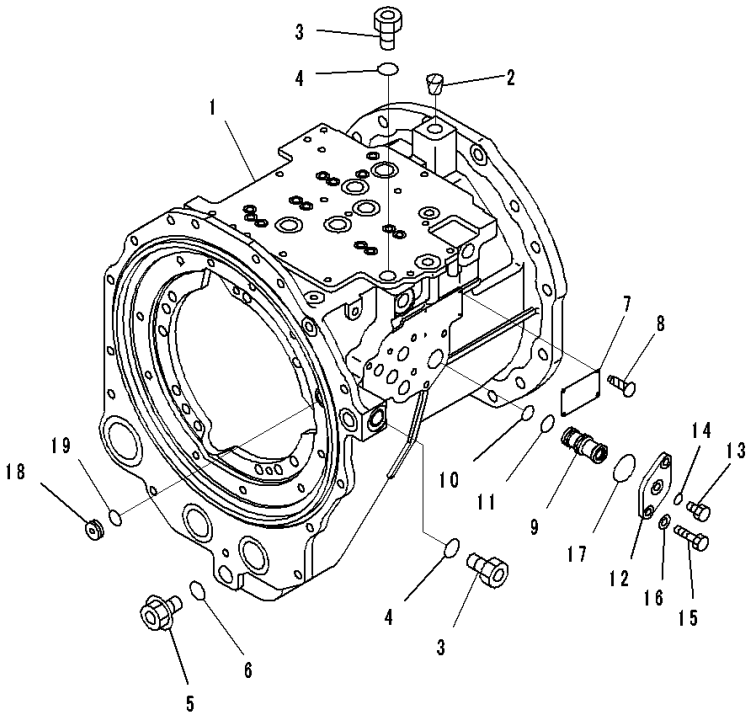

Index	Code	Part Number	Description	Qty	Serial Number
		Note: This list covers following specifications.			
		Without Power Angle Power Tilt Dozer			
		With Power Angle Power Tilt Dozer			
		14X-22-50000	Power Train Assembly	1	80001-
		14X-15-51000	• Transmission Assembly	1	80001-
1		14X-15-51111	• • Case	1	80001-
2		07049-02430	• • Plug	1	80001-
3		07040-12412	• • Plug	2	80001-
4		07002-62434	• • O-ring, (Kit : K03)	2	80001-
5		07044-12412	• • Plug	1	80001-
6		07002-12434	• • O-ring, (Kit : K03)	1	80001-
7	C2	09608-05080	• • Plate, Name (Limited Supply)	1	80001-
8		04418-13060	• • Screw	4	80001-
9		14X-15-56130	• • Sleeve	1	80001-
10		07000-73022	• • O-ring, (Kit : K03)	1	80001-
11		07000-73025	• • O-ring, (Kit : K03)	1	80001-
12		14X-15-56140	• • Flange	1	80001-
13		07040-11007	• • Plug	1	80001-
14		07002-61023	• • O-ring, (Kit : K03)	1	80001-
15		01010-81025	• • Bolt	2	80001-
16		01643-31032	• • Washer	2	80001-
17		07000-73045	• • O-ring, (Kit : K03)	1	80001-
18		23B-15-11370	• • Stopper	1	80001-
19		07000-73022	• • O-ring, (Kit : K03)	1	80001-

https://truckmanualshub.com/

FIG. F2300-001015 Power Train, Input and Output Shaft

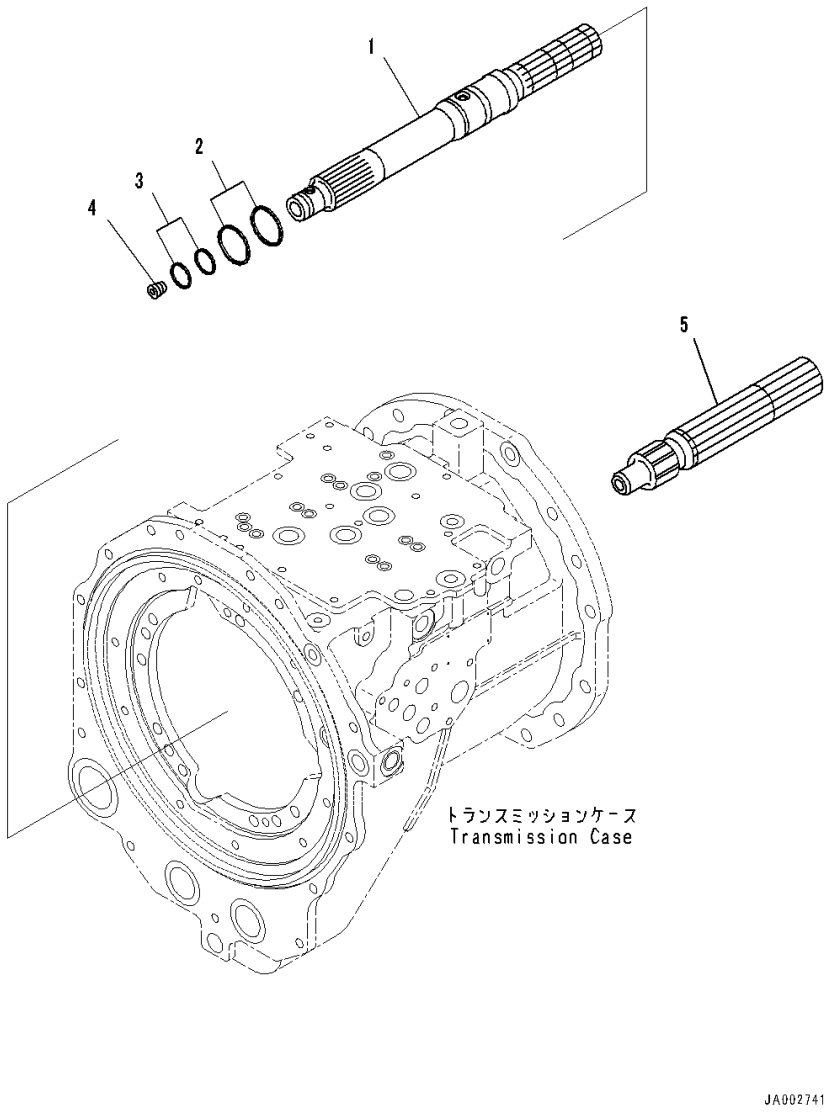

Index	Code	Part Number	Description	Qty	Serial Number
		Note: This list covers following specifications.			
		Without Power Angle Power Tilt Dozer			
		With Power Angle Power Tilt Dozer			
		14X-22-50000	Power Train Assembly	1	80001-
		14X-15-51000	• Transmission Assembly	1	80001-
1		14X-15-52111	• • Shaft	1	80001-
2		714-12-39230	• • Seal Ring, (Kit : K03)	2	80001-
3		714-21-19810	• • Seal Ring, (Kit : K03)	2	80001-
4		07043-70312	• • Plug	1	80001-
5		14X-15-52120	• • Shaft	1	80001-

https://truckmanualshub.com/

FIG. F2300-001016 Power Train, Transmission E.C.M.V. Valve

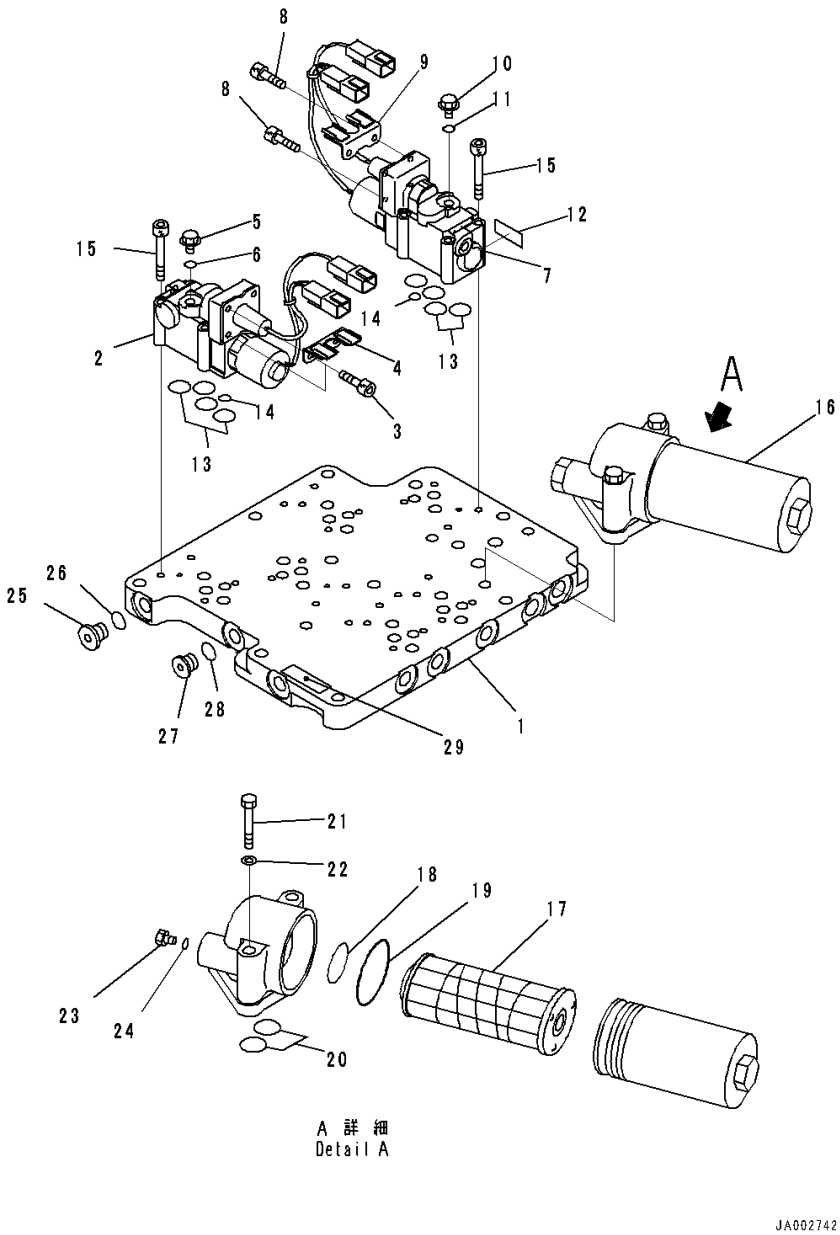

Index	Code	Part Number	Description	Qty	Serial Number
		Note: This list covers following specifications.			
		Without Power Angle Power Tilt Dozer			
		With Power Angle Power Tilt Dozer			
		14X-22-50000	Power Train Assembly	1	80001-
		14X-15-51000	• Transmission Assembly	1	80001-
		14X-15-55500	• • Valve Assembly	1	80001-
1		14X-15-55511	• • • Seat, Valve	1	80001-
2		14X-15-55600	• • • ECMV Assembly	1	80001-
3		01252-60510	• • • • Bolt	4	80001-
4		714-23-15690	• • • • Bracket	1	80001-
5		708-8E-16150	• • • • Plug	1	80001-
6		07002-61023	• • • • O-ring, (Kit : K04)	1	80001-
7		714-07-45500	• • • ECMV Group	5	80001-
8		01252-60510	• • • • Bolt	4	80001-
9		714-23-15690	• • • • Bracket	1	80001-
10		708-8E-16150	• • • • Plug	1	80001-
11		07002-61023	• • • • O-ring, (Kit : K04)	1	80001-
12	C2	700-11-31940	• • • • Plate, Name (Limited Supply)	1	80001-
13		07000-72015	• • • O-ring, (Kit : K04)	24	80001-
14		07000-71007	• • • O-ring, (Kit : K04)	6	80001-
15		01252-70650	• • • Bolt	24	80001-
16		569-15-51721	• • • Filter Assembly	1	80001-
17		569-15-51732	• • • • Element Assembly	1	80001-
18		07000-A3024	• • • • • O-ring	1	80001-
19		07000-A2060	• • • • O-ring, (Kit : K04)	1	80001-
20		07000-73022	• • • O-ring, (Kit : K04)	2	80001-
21		01010-81085	• • • Bolt	2	80001-
22		01643-31032	• • • Washer	2	80001-
23		07040-11812	• • • Plug	1	80001-
24		07002-61823	• • • O-ring, (Kit : K04)	1	80001-
25		702-21-55620	• • • Plug	5	80001-
26		07002-61423	• • • O-ring, (Kit : K04)	5	80001-
27		708-7R-11220	• • • Plug	7	80001-
28		07002-61223	• • • O-ring, (Kit : K04)	7	80001-
29	C2	700-11-31980	• • • Plate, Name (Limited Supply)	1	80001-

https://truckmanualshub.com/

FIG. F2300-001017 Power Train, Transmission E.C.M.V. Valve Mounts

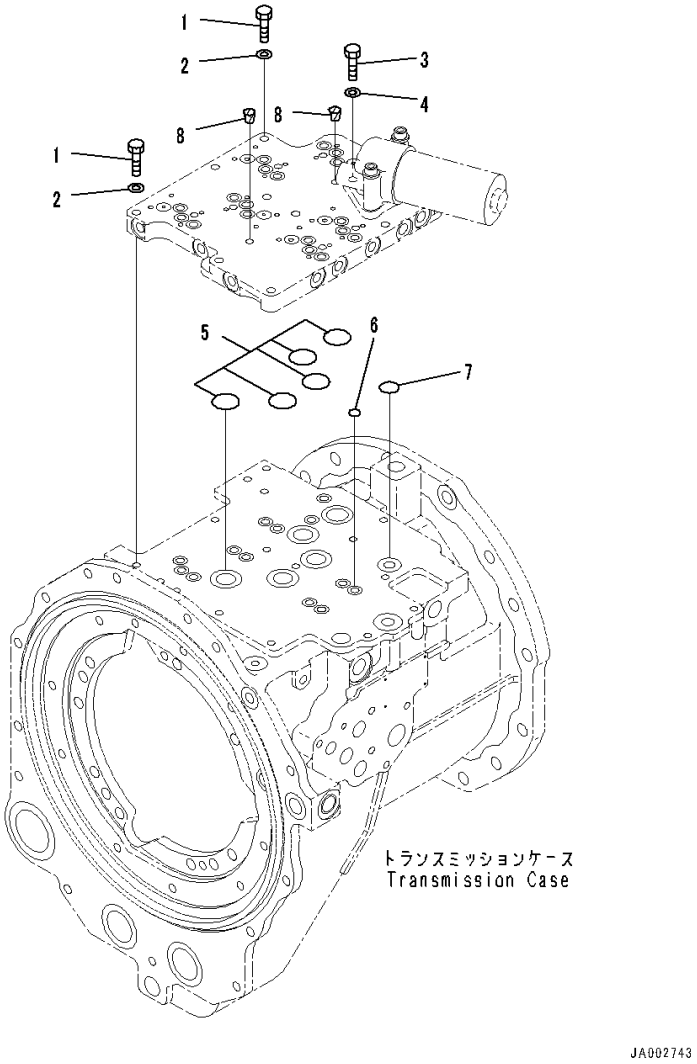

Index	Code	Part Number	Description	Qty	Serial Number
		Note: This list covers following specifications.			
		Without Power Angle Power Tilt Dozer			
		With Power Angle Power Tilt Dozer			
		14X-22-50000	Power Train Assembly	1	80001-
		14X-15-51000	• Transmission Assembly	1	80001-
1		01010-81045	• • Bolt	2	80001-
2		01643-31032	• • Washer	2	80001-
3		01010-81055	• • Bolt	1	80001-
4		01643-31032	• • Washer	1	80001-
5		07000-73035	• • O-ring, (Kit : K03)	5	80001-
6		07000-72015	• • O-ring, (Kit : K03)	13	80001-
7		07000-73025	• • O-ring, (Kit : K03)	1	80001-
8		07049-01012	• • Plug	2	80001-

https://truckmanualshub.com/

FIG. F2300-001018 Power Train, Relief Valve

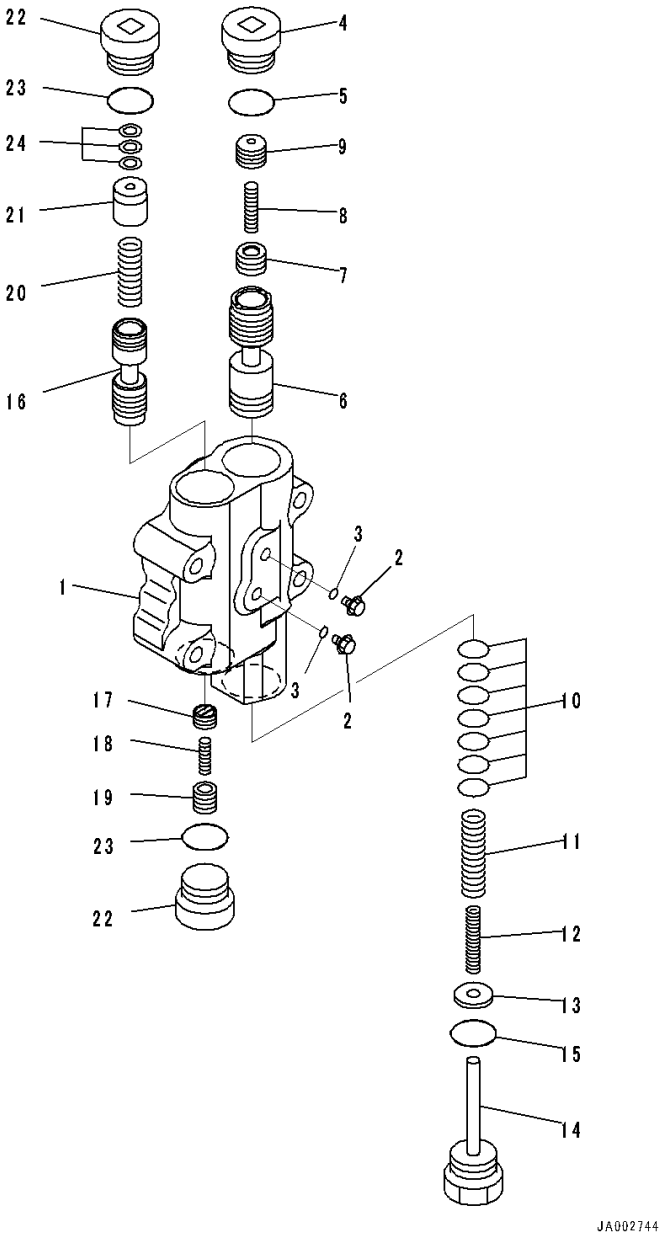

Index	Code	Part Number	Description	Qty	Serial Number
		Note: This list covers following specifications.			
		Without Power Angle Power Tilt Dozer			
		With Power Angle Power Tilt Dozer			
		14X-22-50000	Power Train Assembly	1	80001-
		14X-15-51000	• Transmission Assembly	1	80001-
		426-15-46001	• • Valve Assembly	1	80001-
1	C1		• • • Valve Body	1	80001-
2		708-8E-16150	• • • Plug	2	80001-
3		07002-61023	• • • O-ring, (Kit : K05)	2	80001-
4		14X-15-15850	• • • Plug	1	80001-
5		07002-63034	• • • O-ring, (Kit : K05)	1	80001-
6	C1		• • • Valve	1	80001-
7		426-15-15490	• • • Valve	1	80001-
8		562-15-16110	• • • Spring	1	80001-
9		426-15-15480	• • • Valve	1	80001-
10		56B-15-16660	• • • Shim, T=0.50mm	7	80001-
11		41E-15-16251	• • • Spring, L=128mm	1	80001-
12		426-15-16261	• • • Spring, L=108.0mm	1	80001-
13		22W-43-17330	• • • Washer	1	80001-
14		426-15-15810	• • • Plug	1	80001-
15		07002-63034	• • • O-ring, (Kit : K05)	1	80001-
16	C1		• • • Spool	1	80001-
17		104-15-25490	• • • Valve	1	80001-
18		125-15-15290	• • • Spring	1	80001-
19		104-15-25480	• • • Valve	1	80001-
20		14X-15-16210	• • • Spring	1	80001-
21		12H-15-14140	• • • Guide	1	80001-
22		14X-15-15850	• • • Plug	2	80001-
23		07002-63034	• • • O-ring, (Kit : K05)	2	80001-
24		175-15-56470	• • • Shim, T=0.50mm	3	80001-

https://truckmanualshub.com/

FIG. F2300-001019 Power Train, Relief Valve Mounting

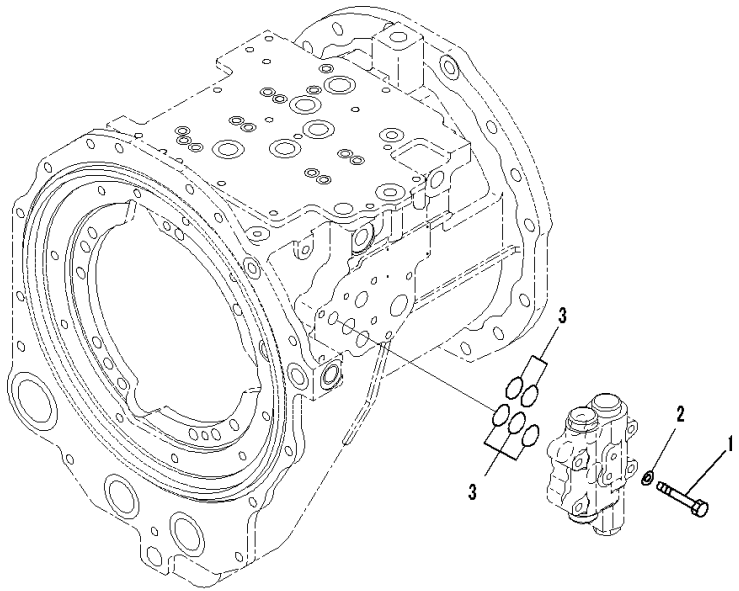

トランスミッションケース
Transmission Case

JA002748

Index	Code	Part Number	Description	Qty	Serial Number
		Note: This list covers following specifications.			
		Without Power Angle Power Tilt Dozer			
		With Power Angle Power Tilt Dozer			
		14X-22-50000	Power Train Assembly	1	80001-
		14X-15-51000	• Transmission Assembly	1	80001-
1		01010-81065	• • Bolt	4	80001-
2		01643-31032	• • Washer	4	80001-
3		07000-73030	• • O-ring, (Kit : K05)	5	80001-

https://truckmanualshub.com/

FIG. F2300-001020 Power Train, Block

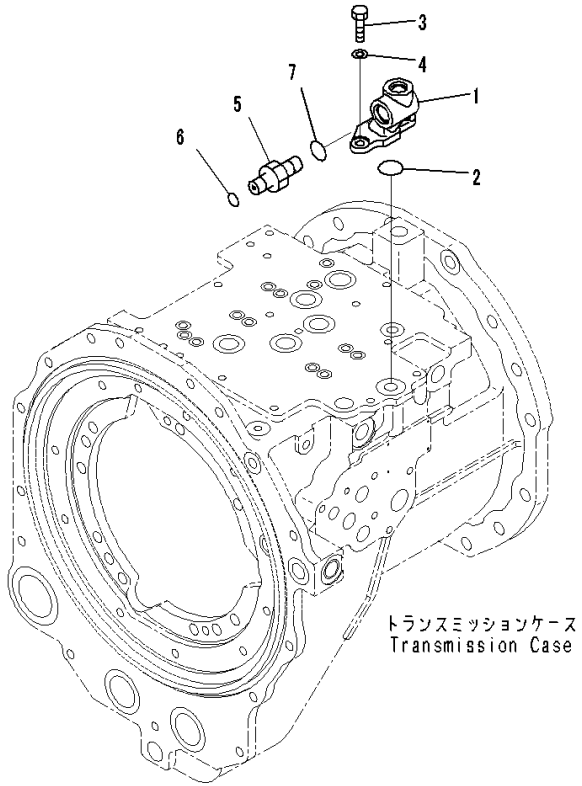

JA002751

Index	Code	Part Number	Description	Qty	Serial Number
		Note: This list covers following specifications.			
		Without Power Angle Power Tilt Dozer			
		With Power Angle Power Tilt Dozer			
		14X-22-50000	Power Train Assembly	1	80001-
		14X-15-51000	• Transmission Assembly	1	80001-
1		14X-15-56121	• • Block	1	80001-
2		07000-73032	• • O-ring, (Kit : K03)	1	80001-
3		01010-81030	• • Bolt	2	80001-
4		01643-31032	• • Washer	2	80001-
5		02781-00628	• • Union	1	80001-
6		02896-61018	• • O-ring, (Kit : K03)	1	80001-
7		07002-62434	• • O-ring, (Kit : K03)	1	80001-

https://truckmanualshub.com/

FIG. F2300-001021 Power Train, Pump and Turbine

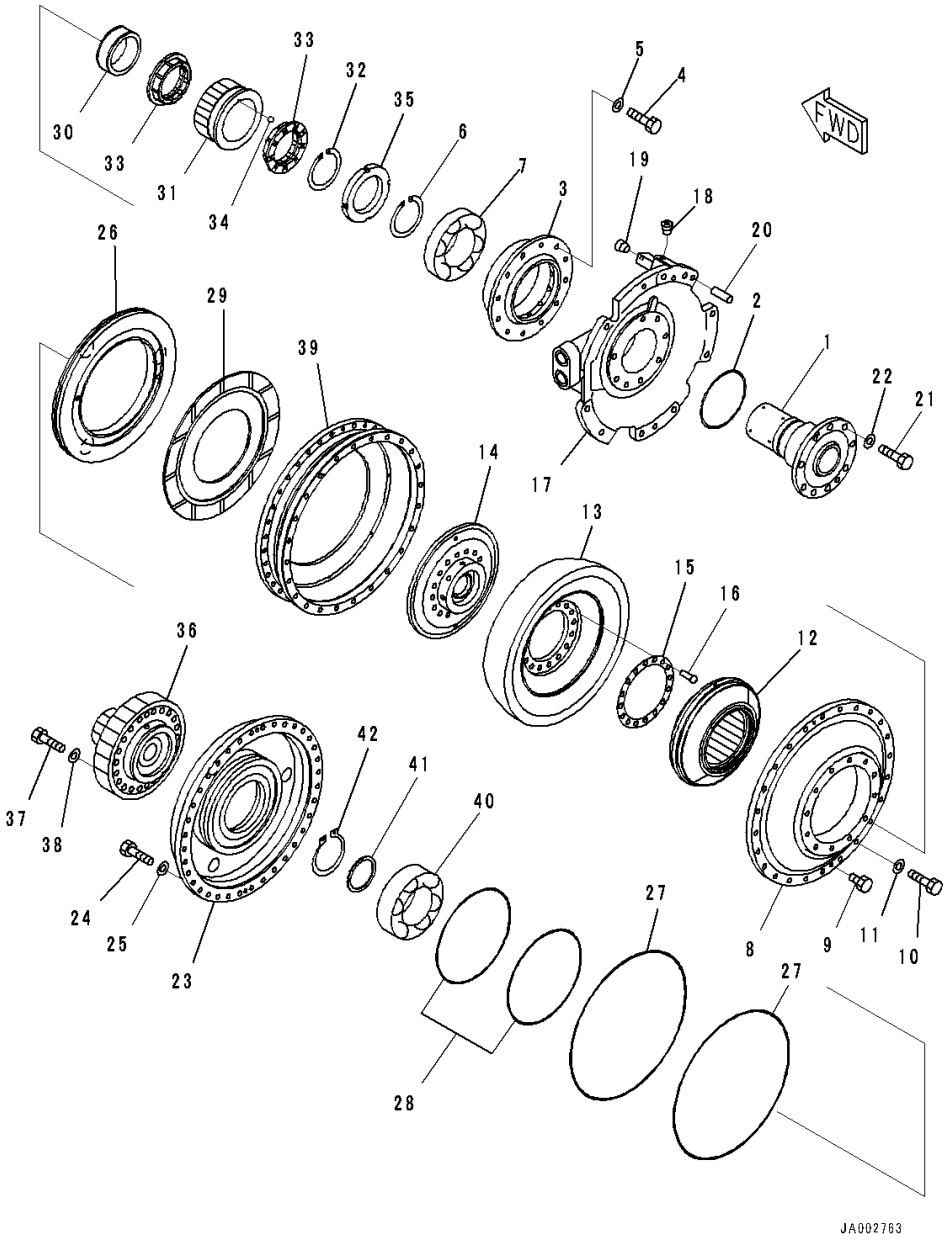

Index	Code	Part Number	Description	Qty	Serial Number
		Note: This list covers following specifications.			
			Without Power Angle Power Tilt Dozer		
			With Power Angle Power Tilt Dozer		
		14X-22-50000	Power Train Assembly	1	80001-
		14X-13-51000	• Torque Converter Assembly	1	80001-
1		14X-13-52620	• • Shaft	1	80001-
2		426-13-42710	• • Seal Ring, (Kit : K06)	1	80001-
3		14X-13-51240	• • Retainer	1	80001-
4		01010-81035	• • Bolt	12	80001-
5		01643-31032	• • Washer	12	80001-
6		04071-00160	• • Ring, Snap, for Hole Side	1	80001-
7		568-13-13351	• • Bearing	1	80001-
8		14X-13-51120	• • Pump	1	80001-
9		07040-10807	• • Plug	2	80001-
10		01010-81035	• • Bolt	24	80001-
11		01643-31032	• • Washer	24	80001-
12		14X-13-52210	• • Stator	1	80001-
		14X-13-51610	• • Turbine	1	80001-
13	C1		• • • Turbine	1	80001-
14	C1		• • • Boss	1	80001-
15	C1		• • • Plate	1	80001-
16	C1		• • • Rivet	16	80001-
17		14X-13-54411	• • Housing	1	80001-
18		07043-70312	• • Plug	1	80001-
19		07043-70211	• • Plug	1	80001-
20		04020-01228	• • Pin, Dowel	1	80001-
21		01010-81240	• • Bolt	8	80001-
22		01643-31232	• • Washer	8	80001-
23		14X-13-57111	• • Housing	1	80001-
24		01010-81035	• • Bolt	36	80001-
25		01643-31032	• • Washer	36	80001-
26		14X-13-57210	• • Piston	1	80001-
27		582-15-19240	• • Seal Ring, (Kit : K06)	2	80001-
28		567-15-12830	• • Ring, (Kit : K06)	2	80001-
29		582-15-12811	• • Disc	1	80001-
30		14X-13-52260	• • Free Wheel	1	80001-
31		14X-13-52220	• • Race,Outer	1	80001-
32		04071-00145	• • Ring, Snap, for Hole Side	1	80001-
33		425-13-32140	• • Bushing	2	80001-
34		04260-00635	• • Ball, Steel	2	80001-

https://truckmanualshub.com/

FIG. F2300-001021 Power Train, Pump and Turbine

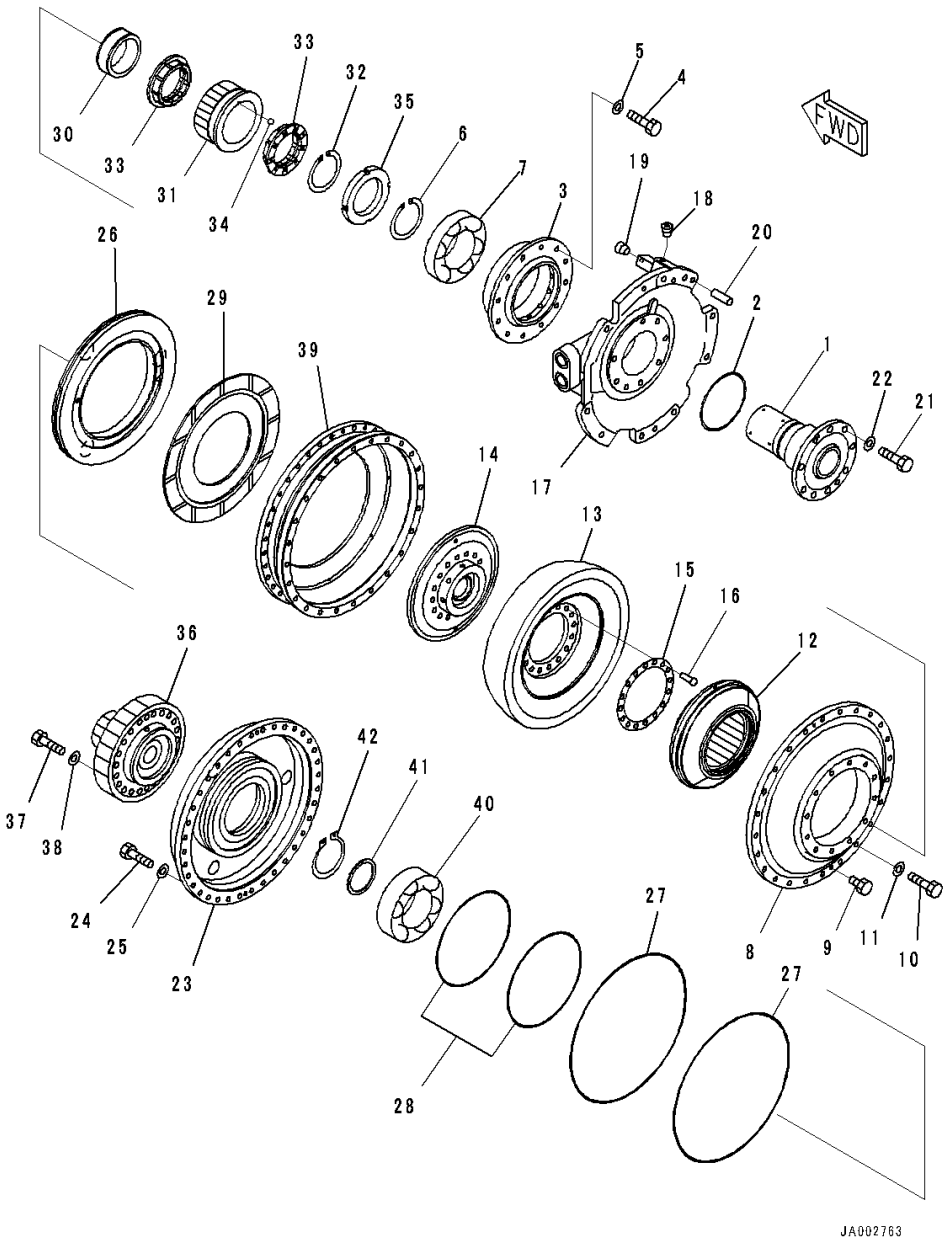

Index	Code	Part Number	Description	Qty	Serial Number
35		23W-13-12680	• • Nut	1	80001-
36		14X-13-51351	• • Shaft	1	80001-
37		01010-81270	• • Bolt	20	80001-
38		01643-31232	• • Washer	20	80001-
39		14X-13-51212	• • Case	1	80001-
40		06043-06214	• • Bearing	1	80001-
41		711-47-11770	• • Plate	1	80001-
42		04064-07025	• • Ring	1	80001-

https://truckmanualshub.com/

FIG. F2300-001022 Power Train, Torque Converter Case

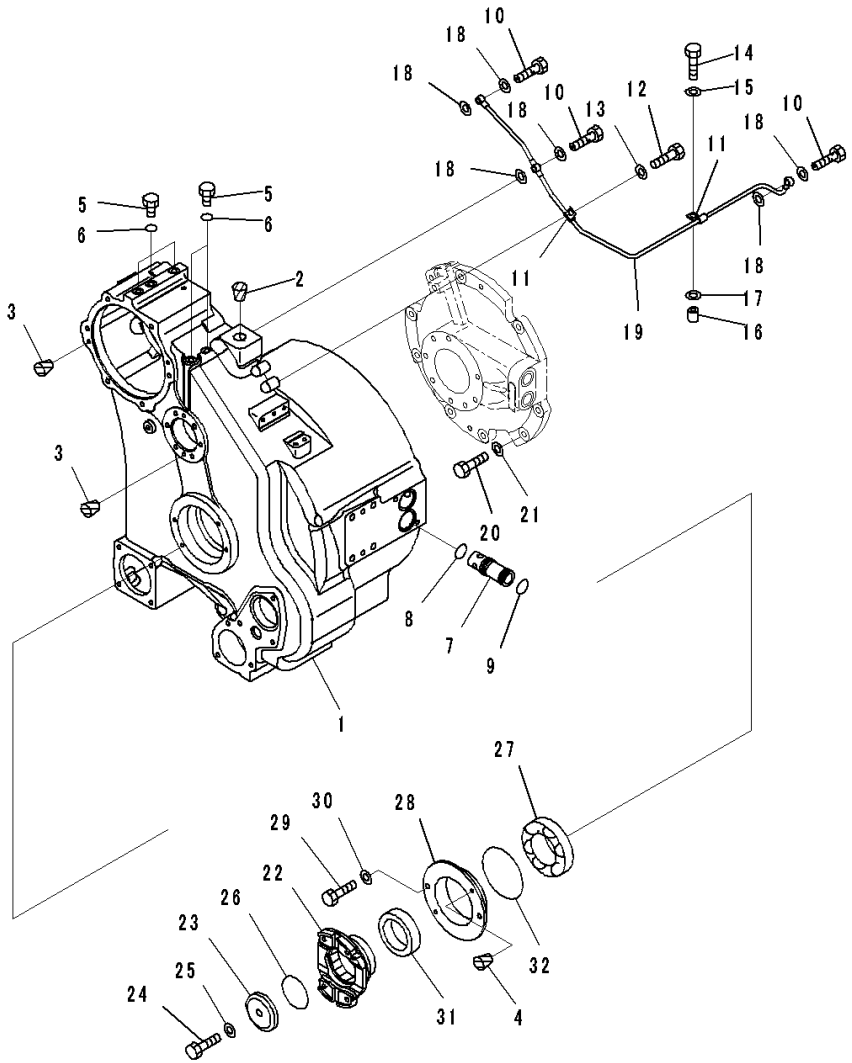

Index	Code	Part Number	Description	Qty	Serial Number
		Note: This list covers following specifications.			
		Without Power Angle Power Tilt Dozer			
		With Power Angle Power Tilt Dozer			
		14X-22-50000	Power Train Assembly	1	80001-
		14X-13-51000	• Torque Converter Assembly	1	80001-
1		14X-13-53111	• • Case	1	80001-
2		07049-03038	• • Plug	1	80001-
3		07049-01215	• • Plug	4	80001-
4		07049-01012	• • Plug	2	80001-
5		07040-11007	• • Plug	5	80001-
6		07002-61023	• • O-ring, (Kit : K06)	5	80001-
7		14X-13-12550	• • Sleeve	2	80001-
8		07000-73030	• • O-ring, (Kit : K06)	2	80001-
9		07000-73032	• • O-ring, (Kit : K06)	2	80001-
10		07206-30812	• • Bolt, Joint	3	80001-
11		04434-50810	• • Clip	2	80001-
12		01010-81025	• • Bolt	1	80001-
13		01643-31032	• • Washer	1	80001-
14		01010-81050	• • Bolt	1	80001-
15		01643-31032	• • Washer	1	80001-
16		144-874-7470	• • Boss	1	80001-
17		01643-31032	• • Washer	1	80001-
18		07005-01212	• • Seal, Washer, (Kit : K06)	6	80001-
19		14X-13-53260	• • Tube	1	80001-
20		01010-81240	• • Bolt	9	80001-
21		01643-31232	• • Washer	9	80001-
22		14X-13-51360	• • Coupling	1	80001-
23		56D-15-29841	• • Holder	1	80001-
24		01050-61670	• • Bolt	1	80001-
25		01643-31645	• • Washer	1	80001-
26		07000-75065	• • O-ring, (Kit : K06)	1	80001-
27		711-53-11370	• • Bearing	1	80001-
28		14X-13-53350	• • Retainer	1	80001-
29		01010-81025	• • Bolt	2	80001-
30		01643-31032	• • Washer	2	80001-
31		07012-50095	• • Seal, Oil, (Kit : K06)	1	80001-
32		07000-72130	• • O-ring, (Kit : K06)	1	80001-

https://truckmanualshub.com/

FIG. F2300-001023 Power Train, Scavenging Pump Mounts

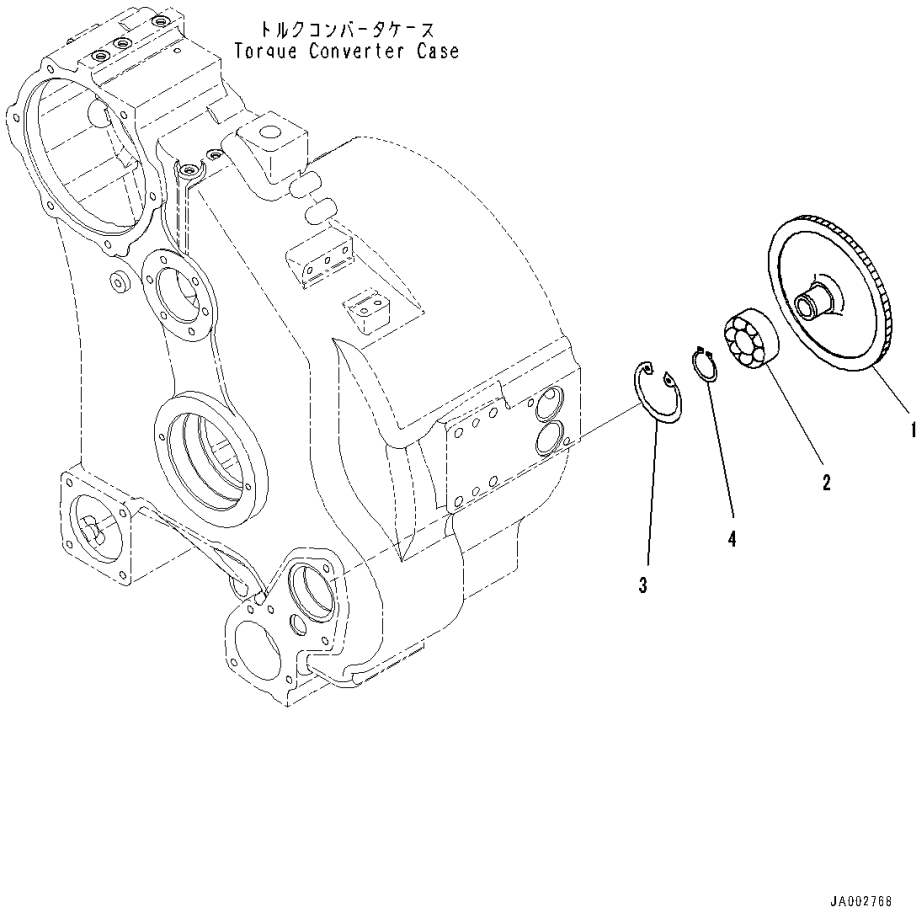

Index	Code	Part Number	Description	Qty	Serial Number
		Note: This list covers following specifications.			
		Without Power Angle Power Tilt Dozer			
		With Power Angle Power Tilt Dozer			
		14X-22-50000	Power Train Assembly	1	80001-
		14X-13-51000	• Torque Converter Assembly	1	80001-
1		14X-13-54330	• • Gear	1	80001-
2		17A-13-24490	• • Bearing	1	80001-
3		04065-07225	• • Ring, Snap	1	80001-
4		04064-03515	• • Ring	1	80001-

https://truckmanualshub.com/

FIG. F2300-001024 Power Train, Power takeoff Gear

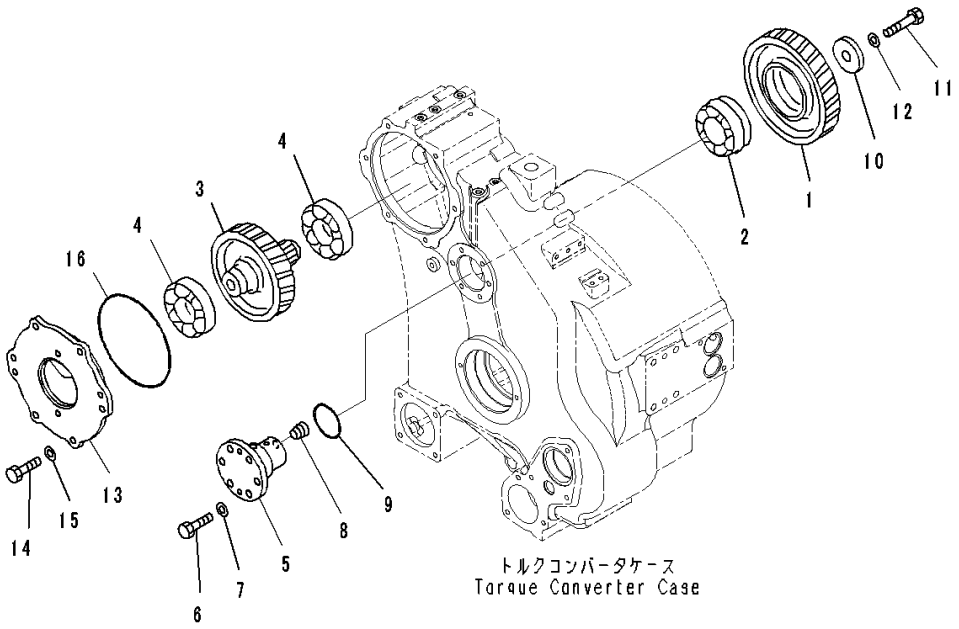

Index	Code	Part Number	Description	Qty	Serial Number
		Note: This list covers following specifications.			
		Without Power Angle Power Tilt Dozer			
		With Power Angle Power Tilt Dozer			
		14X-22-50000	Power Train Assembly	1	80001-
		14X-13-51000	• Torque Converter Assembly	1	80001-
1		14X-13-14220	• • Gear	1	80001-
2		711-49-14230	• • Bearing	1	80001-
3		14X-13-54320	• • Gear	1	80001-
4		06340-06311	• • Bearing	2	80001-
5		14X-13-14241	• • Shaft	1	80001-
6		01010-81235	• • Bolt	6	80001-
7		01643-31232	• • Washer	6	80001-
8		07043-70211	• • Plug	1	80001-
9		07000-72070	• • O-ring, (Kit : K06)	1	80001-
10		144-10-12180	• • Holder	1	80001-
11		01010-61460	• • Bolt	1	80001-
12		01643-31445	• • Washer	1	80001-
13		14X-13-54341	• • Cover	1	80001-
14		01010-81235	• • Bolt	4	80001-
15		01643-31232	• • Washer	4	80001-
16		07000-75210	• • O-ring, (Kit : K06)	1	80001-

https://truckmanualshub.com/

FIG. F2300-001025 Power Train, Strainer

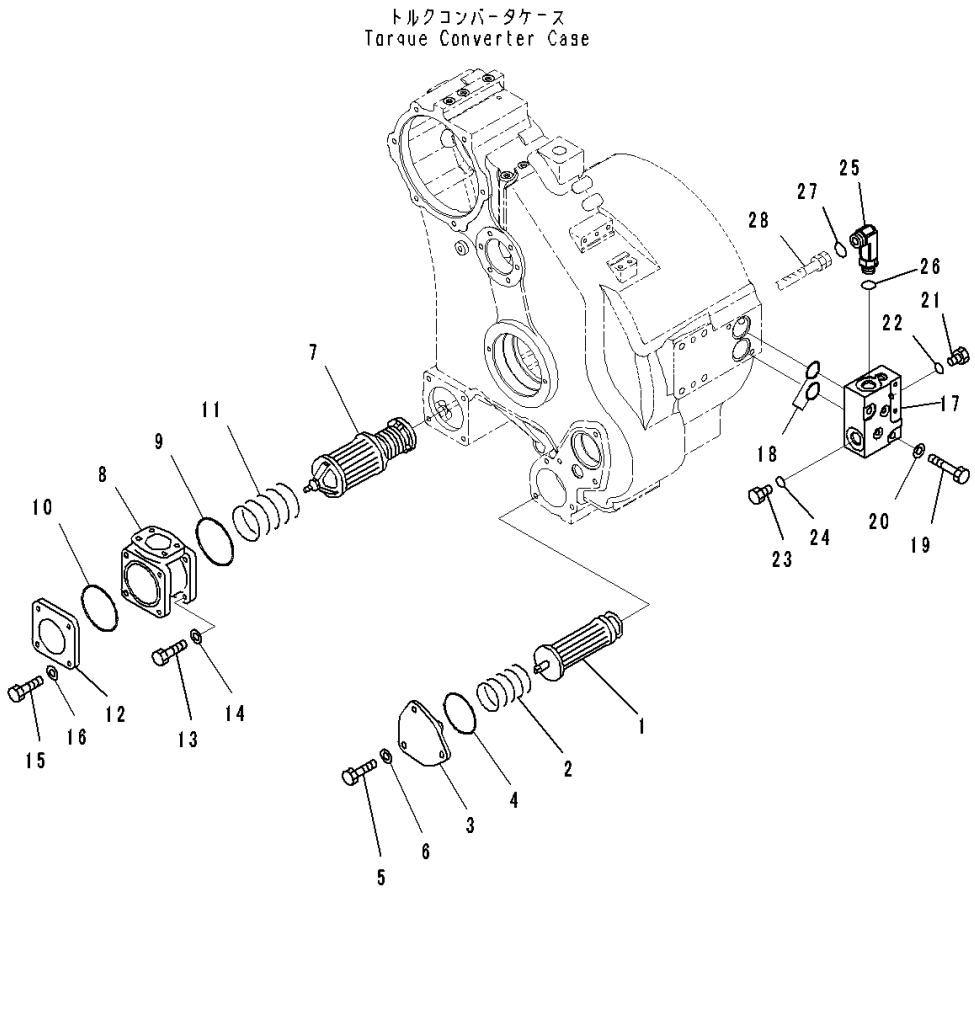

Index	Code	Part Number	Description	Qty	Serial Number
		Note: This list covers following specifications.			
		Without Power Angle Power Tilt Dozer			
		With Power Angle Power Tilt Dozer			
		14X-22-50000	Power Train Assembly	1	80001-
		14X-13-51000	• Torque Converter Assembly	1	80001-
1		14X-10-11712	• • Strainer	1	80001-
2		14X-49-12411	• • Spring	1	80001-
3		14X-10-11721	• • Cover	1	80001-
4		07000-72090	• • O-ring, (Kit : K06)	1	80001-
5		01010-81235	• • Bolt	3	80001-
6		01643-31232	• • Washer	3	80001-
7		14X-49-12310	• • Magnet Assembly	1	80001-
8		14X-49-12330	• • Head	1	80001-
9		07000-72110	• • O-ring, (Kit : K06)	1	80001-
10		07000-72100	• • O-ring, (Kit : K06)	1	80001-
11		14X-49-12320	• • Spring	1	80001-
12		14X-49-12340	• • Cover	1	80001-
13		01010-81235	• • Bolt	4	80001-
14		01643-31232	• • Washer	4	80001-
15		01010-81235	• • Bolt	4	80001-
16		01643-31232	• • Washer	4	80001-
17		14X-49-51512	• • Block	1	80001-
18		07000-73045	• • O-ring, (Kit : K06)	2	80001-
19		01010-81275	• • Bolt	2	80001-
20		01643-31232	• • Washer	2	80001-
21		07040-11007	• • Plug	2	80001-
22		07002-61023	• • O-ring, (Kit : K06)	2	80001-
23		07040-12412	• • Plug	1	80001-
24		07002-62434	• • O-ring, (Kit : K06)	1	80001-
25		02782-10630	• • Elbow	1	80001-
26		07002-62434	• • O-ring, (Kit : K06)	1	80001-
27		02896-61018	• • O-ring, (Kit : K06)	1	80001-
28		(14X-49-52111)	Hose(Refer to Page 285)		-

https://truckmanualshub.com/

FIG. F2300-001026 Power Train, Mounting (1/2)

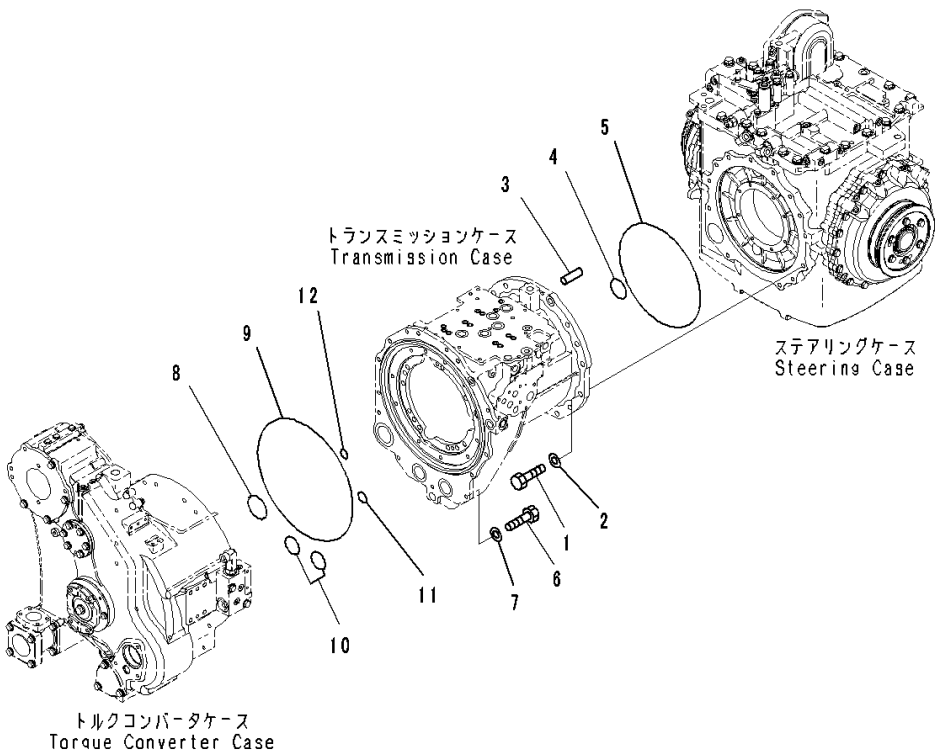

Index	Code	Part Number	Description	Qty	Serial Number
		Note: This list covers following specifications.			
		Without Power Angle Power Tilt Dozer			
		With Power Angle Power Tilt Dozer			
		14X-22-50000	Power Train Assembly	1	80001-
1		01010-61650	• Bolt	13	80001-
2		01643-31645	• Washer	13	80001-
3		04020-01228	• Pin, Dowel	1	80001-
4		07000-72075	• O-ring	1	80001-
5		07000-75375	• O-ring	1	80001-
6		01010-81235	• Bolt	14	80001-
7		01643-31232	• Washer	14	80001-
8		07000-72075	• O-ring	1	80001-
9		07000-75460	• O-ring	1	80001-
10		07000-72055	• O-ring	2	80001-
11		07000-73032	• O-ring	1	80001-
12		07000-73025	• O-ring	1	80001-

https://truckmanualshub.com/

FIG. F2300-001027 Power Train, Gear Pump, SAL (2) 45+ 45 (1/2)

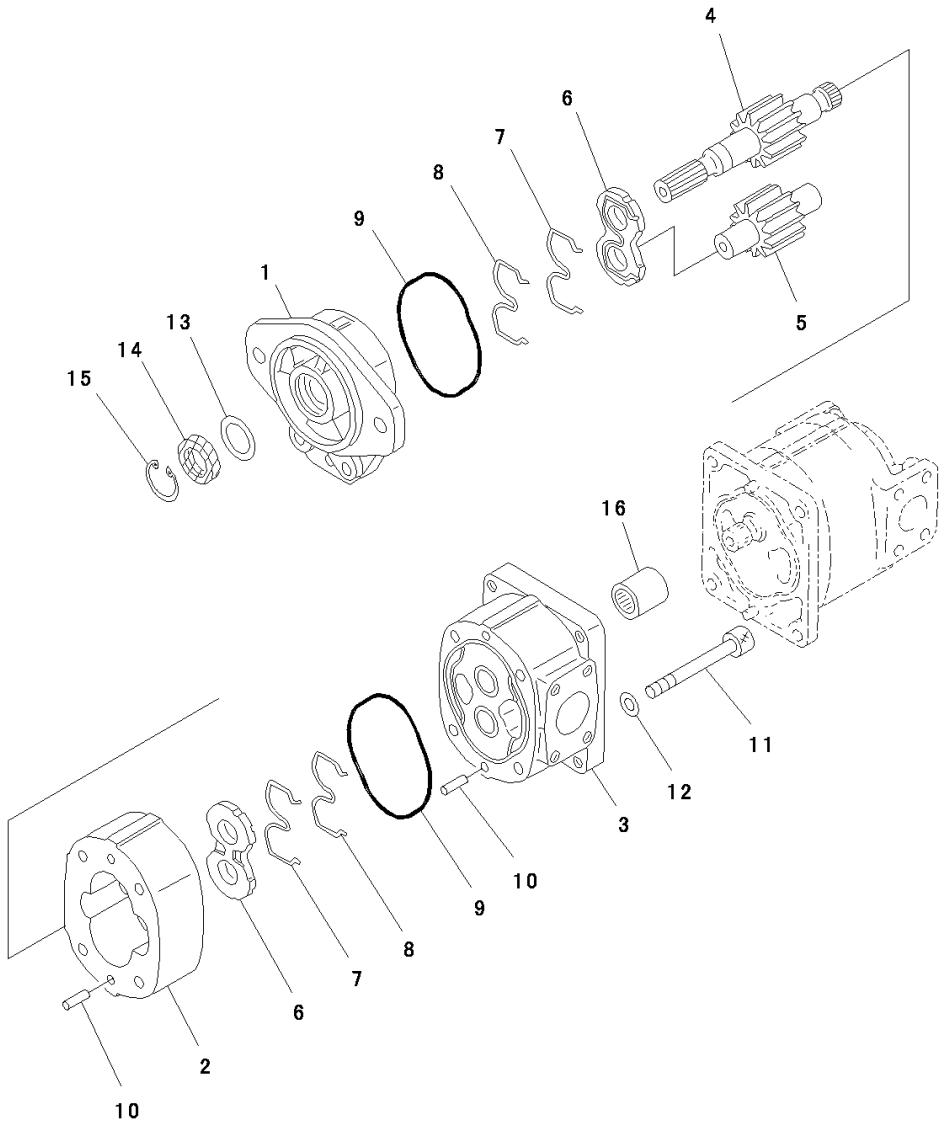

Index	Code	Part Number	Description	Qty	Serial Number
		Note: This list covers following specifications.			
		Without Power Angle Power Tilt Dozer			
		With Power Angle Power Tilt Dozer			
		14X-22-50000	Power Train Assembly	1	80001-
		705-51-20830	• Pump Assembly	1	80001-
		705-11-33240	• • Pump Assembly, SAL (2) 45	1	80001-
1	C2	705-17-02011	• • • Bracket Assembly	1	80001-
	C2	705-17-02353	• • • • Bushing	2	80001-
2	C2	705-17-33012	• • • Case	1	80001-
3	C2	705-17-02221	• • • Carrier Assembly	1	80001-
	C2	705-17-02353	• • • • Bushing	2	80001-
4	C2	705-17-33430	• • • Gear, Drive	1	80001-
5	C2	705-17-33512	• • • Gear, Driven	1	80001-
6	C2	705-17-02612	• • • Plate	2	80001-
7	C2	705-17-02430	• • • Ring, Back-up	2	80001-
8	C2	705-17-02460	• • • Seal Ring	2	80001-
9	C2	705-17-02360	• • • O-ring	2	80001-
10	C2	04020-01024	• • • Pin, Dowel	4	80001-
11	C2	01253-61210	• • • Bolt, Hexagon Socket Head	4	80001-
12	C2	01643-51232	• • • Washer	1	80001-
13		705-17-02870	• • • Plate	1	80001-
14		705-17-02830	• • • Seal, Oil	1	80001-
15		04065-04018	• • • Ring, Snap	1	80001-
16		705-17-02330	• • • Coupling Assembly	1	80001-

https://truckmanualshub.com/

FIG. F2300-001028 Power Train, Gear Pump, SAL (2) 45+ 45 (2/2)

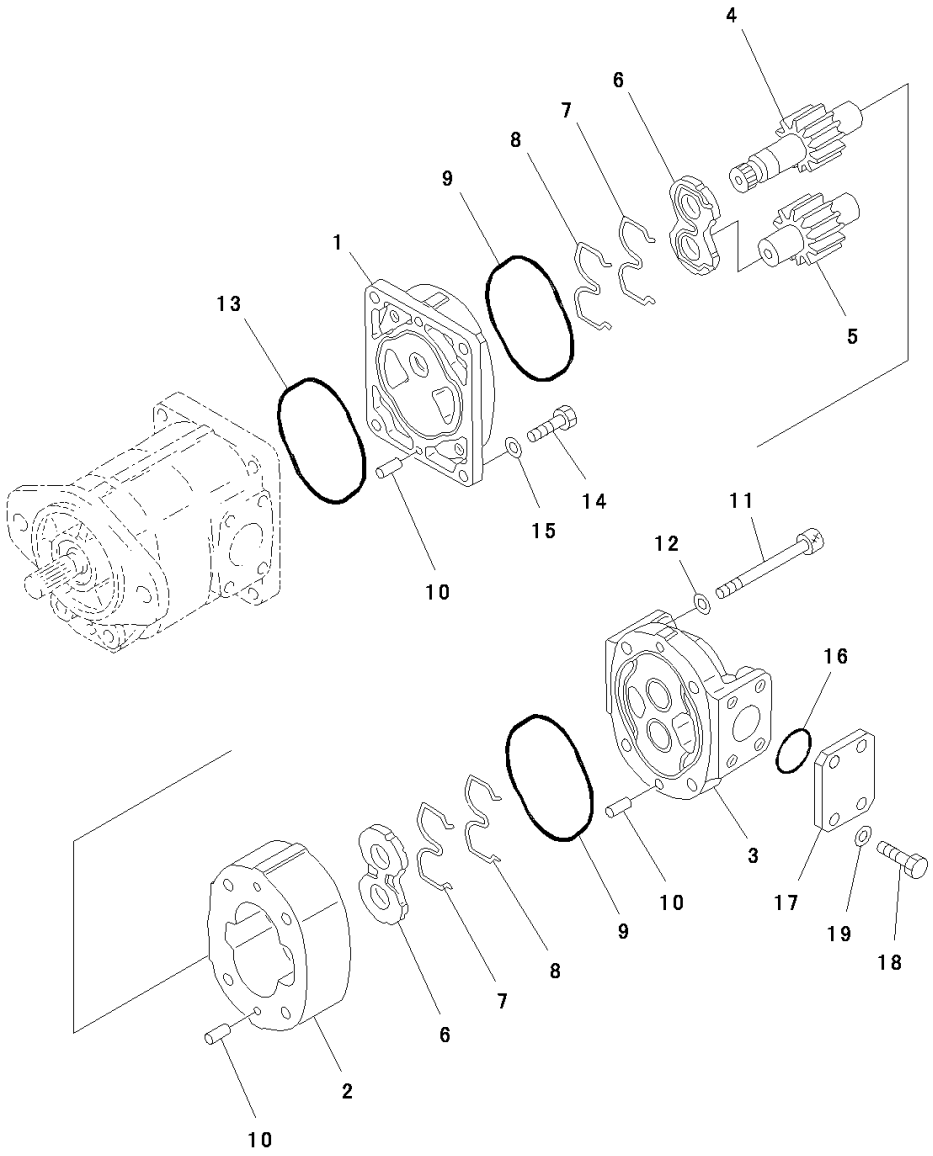

Index	Code	Part Number	Description	Qty	Serial Number
		Note: This list covers following specifications.			
		Without Power Angle Power Tilt Dozer			
		With Power Angle Power Tilt Dozer			
		14X-22-50000	Power Train Assembly	1	80001-
		705-51-20830	• Pump Assembly	1	80001-
		705-11-33540	• • Pump Assembly, SAL (2) 45	1	80001-
1	C2	705-17-02510	• • • Bracket Assembly	1	80001-
	C2	705-17-02353	• • • • Bushing	2	80001-
2	C2	705-17-33012	• • • Case	1	80001-
3	C2	705-17-02122	• • • Cover Assembly	1	80001-
	C2	705-17-02353	• • • • Bushing	2	80001-
4	C2	705-17-33450	• • • Gear, Drive	1	80001-
5	C2	705-17-33512	• • • Gear, Driven	1	80001-
6	C2	705-17-02612	• • • Plate	2	80001-
7	C2	705-17-02430	• • • Ring, Back-up	2	80001-
8	C2	705-17-02460	• • • Seal Ring	2	80001-
9	C2	705-17-02360	• • • O-ring	2	80001-
10	C2	04020-01024	• • • Pin, Dowel	6	80001-
11	C2	01253-61200	• • • Bolt	4	80001-
12	C2	01643-51232	• • • Washer	4	80001-
13	C2	705-17-02420	• • • O-ring	1	80001-
14	C2	01252-61035	• • • Bolt	4	80001-
15	C2	01643-51032	• • • Washer	4	80001-
16	C2	07000-03038	• • • O-ring	1	80001-
17		705-17-02881	• • • Plate	1	80001-
18		01010-81025	• • • Bolt	4	80001-
19		01643-51032	• • • Washer	4	80001-

https://truckmanualshub.com/

FIG. F2300-001029 Power Train, Power Train to Hydrostatic Tank Piping (1/2)

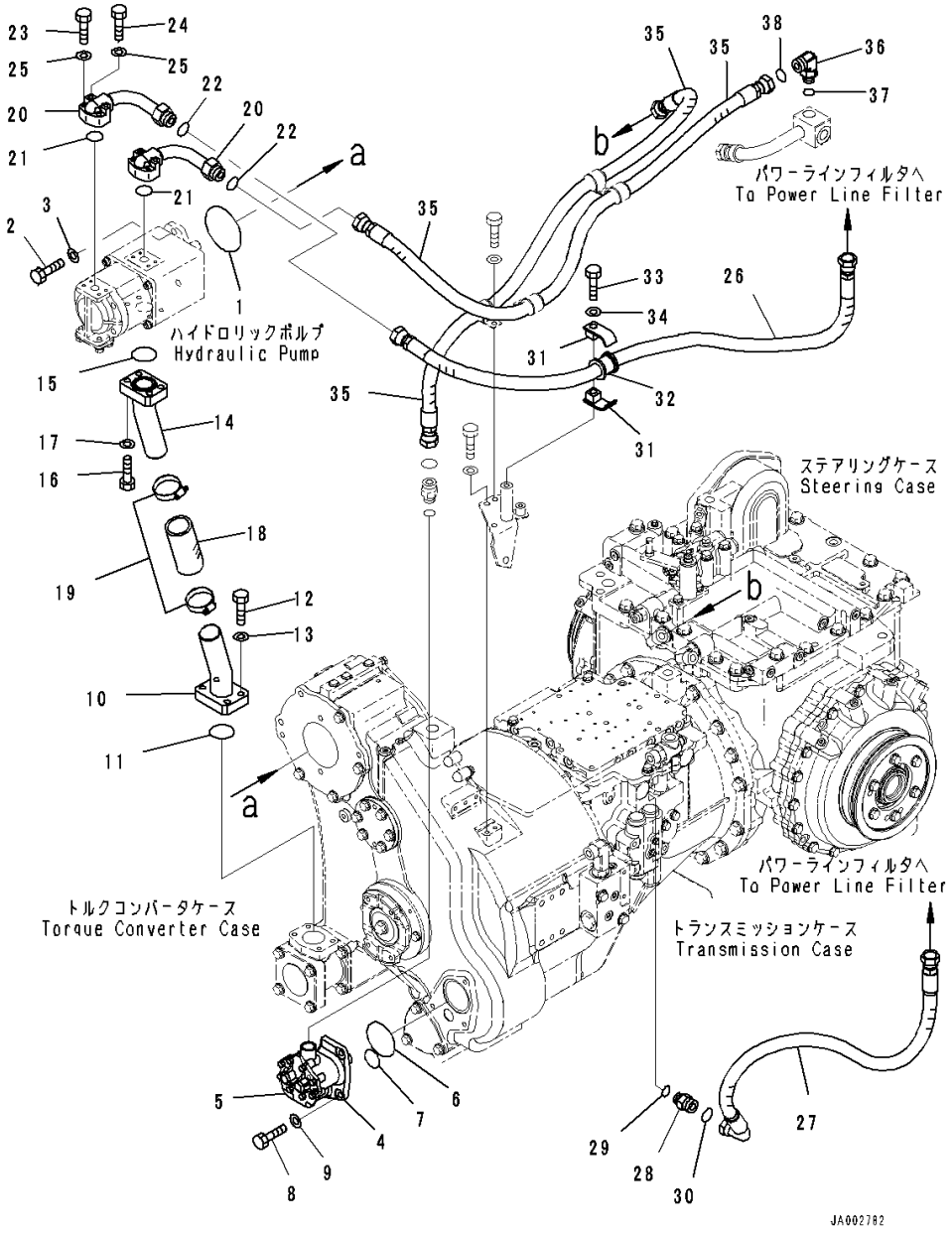

Index	Code	Part Number	Description	Qty	Serial Number
		Note: This list covers following specifications.			
		Without Power Angle Power Tilt Dozer			
		With Power Angle Power Tilt Dozer			
		14X-22-50000	Power Train Assembly	1	80001-
1		07000-72105	• O-ring	1	80001-
2		01010-81235	• Bolt	2	80001-
3		01643-31232	• Washer	2	80001-
4		14X-49-51601	• Pump Assembly	1	80001-
5		14X-49-51611	• • Cover	1	80001-
6		07000-72080	• O-ring	1	80001-
7		07000-73038	• O-ring	1	80001-
8		01010-81235	• Bolt	3	80001-
9		01643-31232	• Washer	3	80001-
10		14X-49-51110	• Tube	1	80001-
11		07000-72060	• O-ring	1	80001-
12		01010-81245	• Bolt	4	80001-
13		01643-51232	• Washer	4	80001-
14		14X-49-51120	• Tube	1	80001-
15		07000-73048	• O-ring	1	80001-
16		01010-81245	• Bolt	4	80001-
17		01643-51232	• Washer	4	80001-
18		07260-24713	• Hose	1	80001-
19		07289-00055	• Clamp	2	80001-
20		14X-49-51130	• Tube	2	80001-
21		07000-73030	• O-ring	2	80001-
22		02896-61018	• O-ring	2	80001-
23		01010-80845	• Bolt	4	80001-
24		01010-80855	• Bolt	4	80001-
25		01643-50823	• Washer	8	80001-
26		14X-49-51171	• Hose	1	80001-
27		14X-49-51330	• Hose	1	80001-
28		02781-00628	• Union	1	80001-
29		07002-62434	• O-ring	1	80001-
30		02896-61018	• O-ring	1	80001-
31		07094-10620	• Clamp	2	80001-
32		07095-00628	• Cushion	1	80001-
33		01010-81265	• Bolt	1	80001-
34		01643-31232	• Washer	1	80001-
35		14X-49-51161	• Hose	2	80001-
36		02781-00628	• Union	1	80001-

https://truckmanualshub.com/

FIG. F2300-001029 Power Train, Power Train to Hydrostatic Tank Piping (1/2)

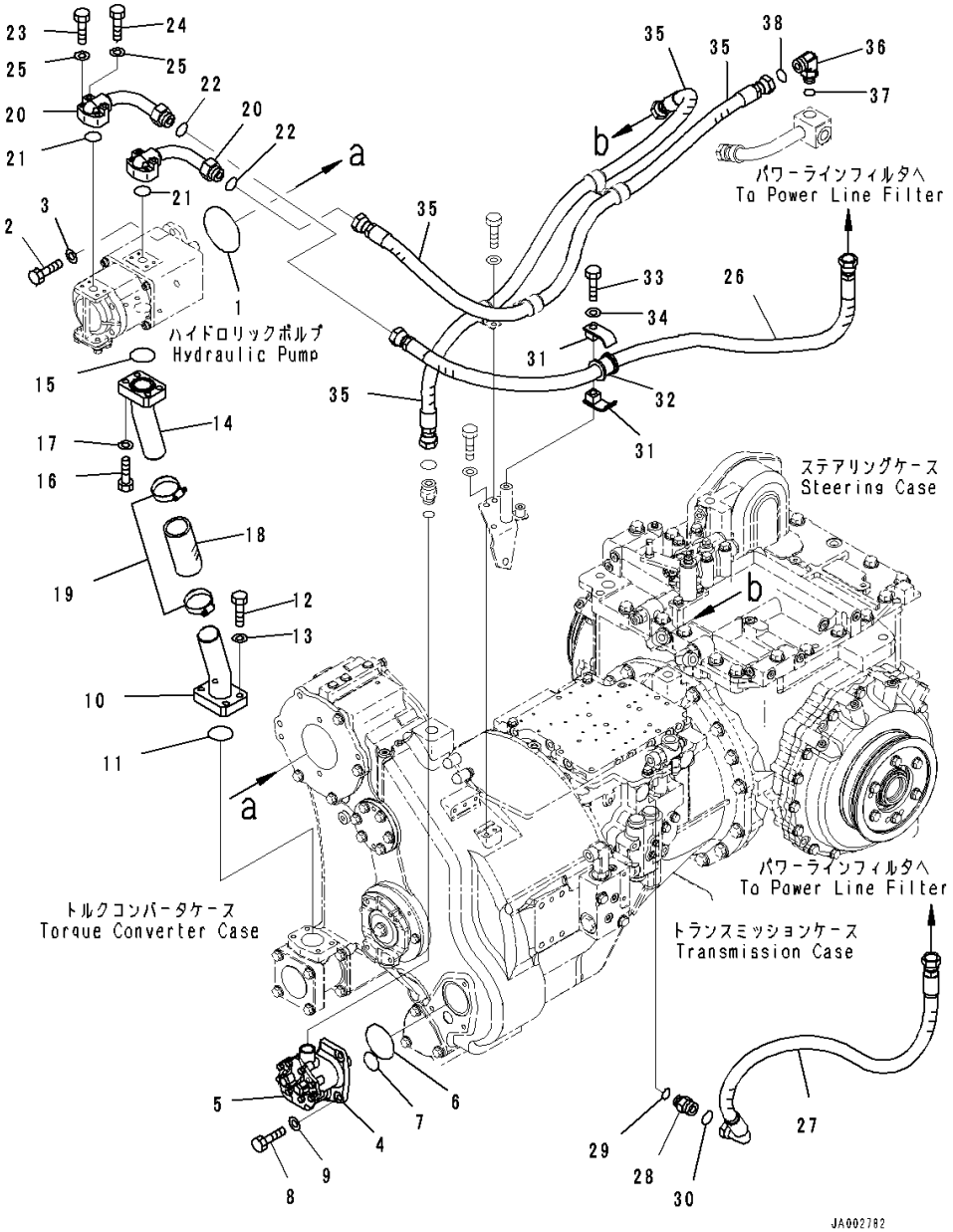

Index	Code	Part Number	Description	Qty	Serial Number
37		07002-62434	• O-ring	1	80001-
38		02896-61018	• O-ring	1	80001-

https://truckmanualshub.com/

FIG. F2300-001030 Power Train, Power Train to Hydrostatic Tank Piping (2/2)

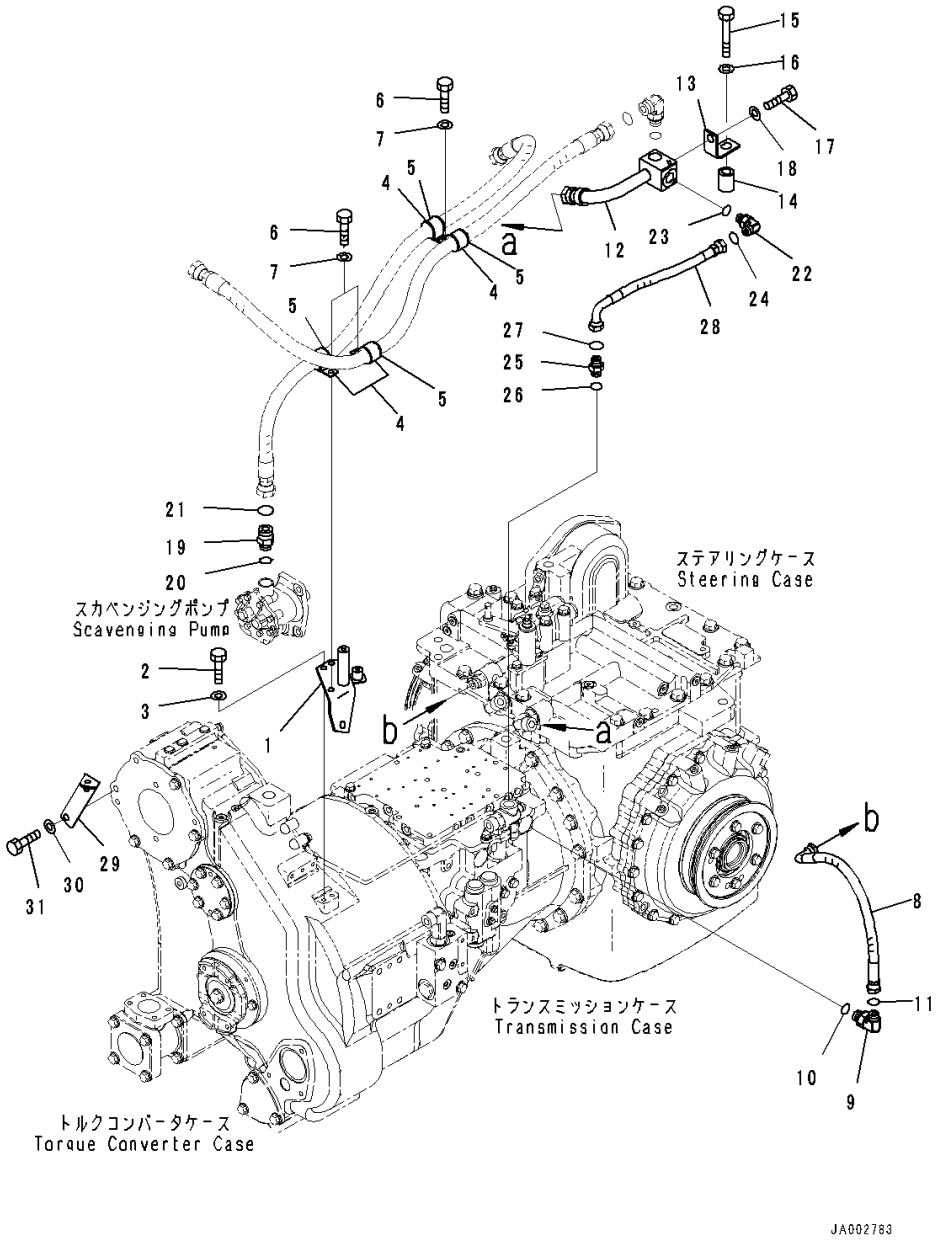

Index	Code	Part Number	Description	Qty	Serial Number
		Note: This list covers following specifications.			
		Without Power Angle Power Tilt Dozer			
		With Power Angle Power Tilt Dozer			
		14X-22-50000	Power Train Assembly	1	80001-
1		14X-49-51141	• Bracket	1	80001-
2		01010-81025	• Bolt	2	80001-
3		01643-31032	• Washer	2	80001-
4		04434-53411	• Clip	4	80001-
5		07095-20625	• Cushion	4	80001-
6		01010-81020	• Bolt	3	80001-
7		01643-31032	• Washer	3	80001-
8		02754-00405	• Hose, Face Seal Type	1	80001-
9		02782-10425	• Elbow	1	80001-
10		07002-62034	• O-ring	1	80001-
11		02896-61012	• O-ring	1	80001-
12		14Y-22-58110	• Tube	1	80001-
13		14Y-22-58140	• Bracket	1	80001-
14		23B-04-31580	• Spacer	1	80001-
15		01010-61690	• Bolt	1	80001-
16		01643-31645	• Washer	1	80001-
17		01010-81225	• Bolt	1	80001-
18		01643-31232	• Washer	1	80001-
19		02782-10628	• Elbow	1	80001-
20		07002-62434	• O-ring	1	80001-
21		02896-61018	• O-ring	1	80001-
22		02781-00422	• Union	1	80001-
23		07002-62034	• O-ring	1	80001-
24		02896-61012	• O-ring	1	80001-
25		02782-10422	• Elbow	1	80001-
26		07002-62034	• O-ring	1	80001-
27		02896-61012	• O-ring	1	80001-
28		02763-004A3	• Hose, Face Seal Type	1	80001-
29		14X-62-52491	• Bracket	1	80001-
30		01010-81235	• Bolt	2	80001-
31		01643-31232	• Washer	2	80001-

https://truckmanualshub.com/

FIG. F2300-001031 Power Train, Oil Filler

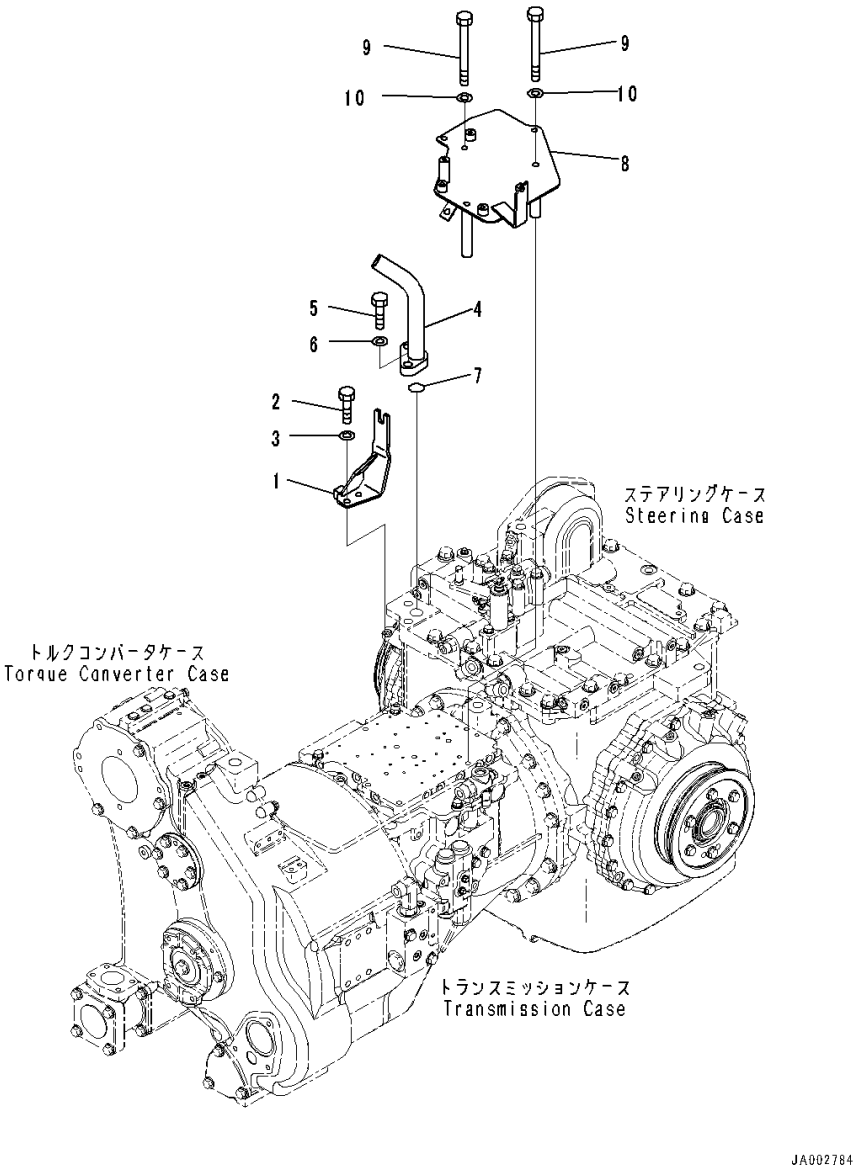

Index	Code	Part Number	Description	Qty	Serial Number
		Note: This list covers following specifications.			
		Without Power Angle Power Tilt Dozer			
		With Power Angle Power Tilt Dozer			
		14X-22-50000	Power Train Assembly	1	80001-
1		14X-43-51111	• Bracket	1	80001-
2		01010-81025	• Bolt	2	80001-
3		01643-31032	• Washer	2	80001-
4		14X-49-51151	• Filler	1	80001-
5		01010-81660	• Bolt	2	80001-
6		01643-31645	• Washer	2	80001-
7		07000-73035	• O-ring	1	80001-
8		14X-49-51311	• Cover	1	80001-
9		01011-81080	• Bolt	4	80001-
10		01643-31032	• Washer	4	80001-

https://truckmanualshub.com/

FIG. F2300-001032 Power Train, Wiring Harness

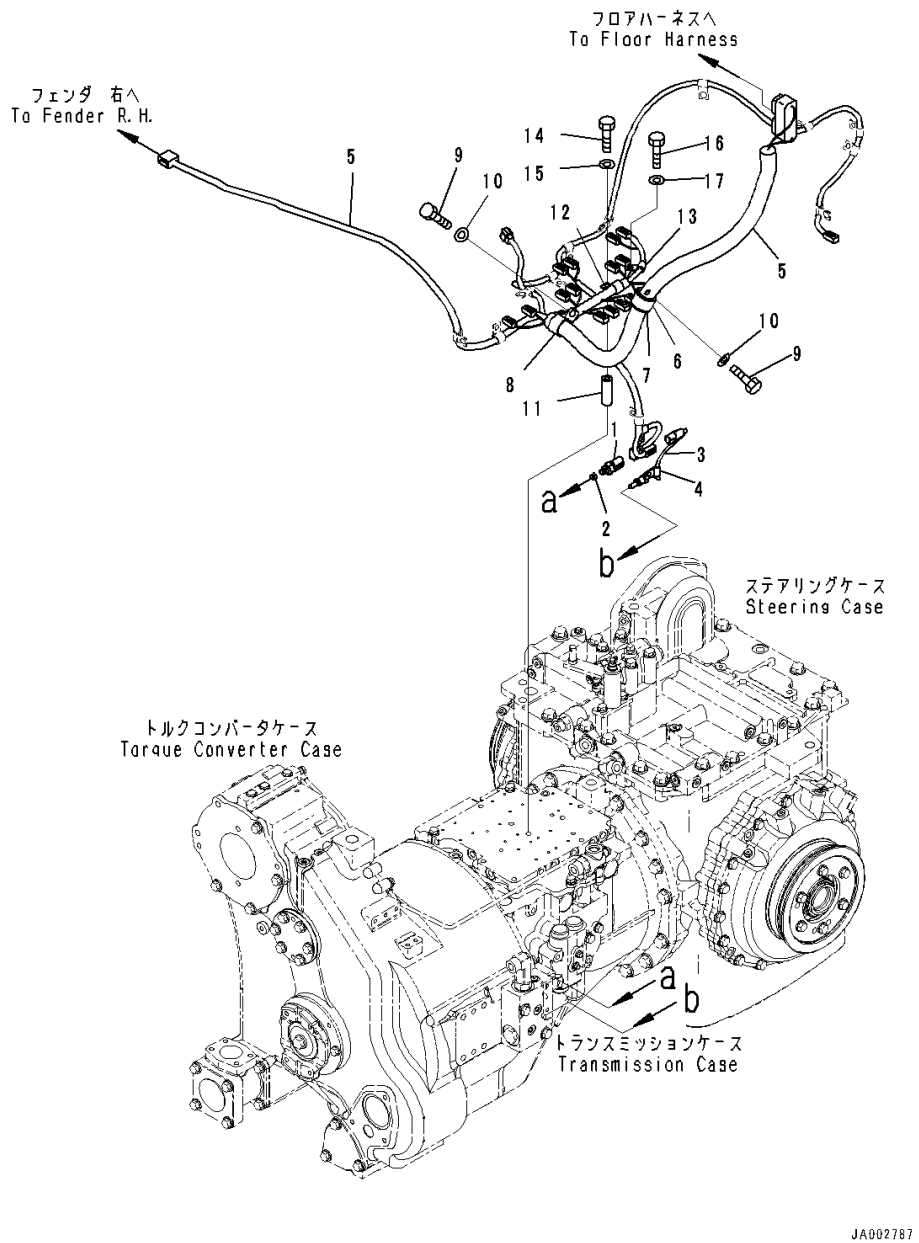

Index	Code	Part Number	Description	Qty	Serial Number
		Note: This list covers following specifications.			
		Without Power Angle Power Tilt Dozer			
		With Power Angle Power Tilt Dozer			
		14X-22-50000	Power Train Assembly	1	80001-
1		7861-93-1850	• Sensor	1	80001-
2		14X-49-51520	• Orifice	1	80001-
3		7861-93-3320	• Sensor	1	80001-
4		04434-50610	• Clip	1	80001-
5		14X-06-51111	• Wiring Harness	1	80001-
6		155-61-15350	• Clip	1	80001-
7		22M-62-13660	• Cushion	1	80001-
8		281-01-13180	• Clip	1	80001-
9		01010-81020	• Bolt	2	80001-
10		01643-31032	• Washer	2	80001-
11		561-43-43390	• Spacer	3	80001-
12		04434-51910	• Clip	2	80001-
13		04434-51010	• Clip	1	80001-
14		01011-81010	• Bolt	2	80001-
15		01643-31032	• Washer	2	80001-
16		01010-81085	• Bolt	1	80001-
17		01643-31032	• Washer	1	80001-

https://truckmanualshub.com/

FIG. F2300-001033 Power Train, Wiring Harness Clamp

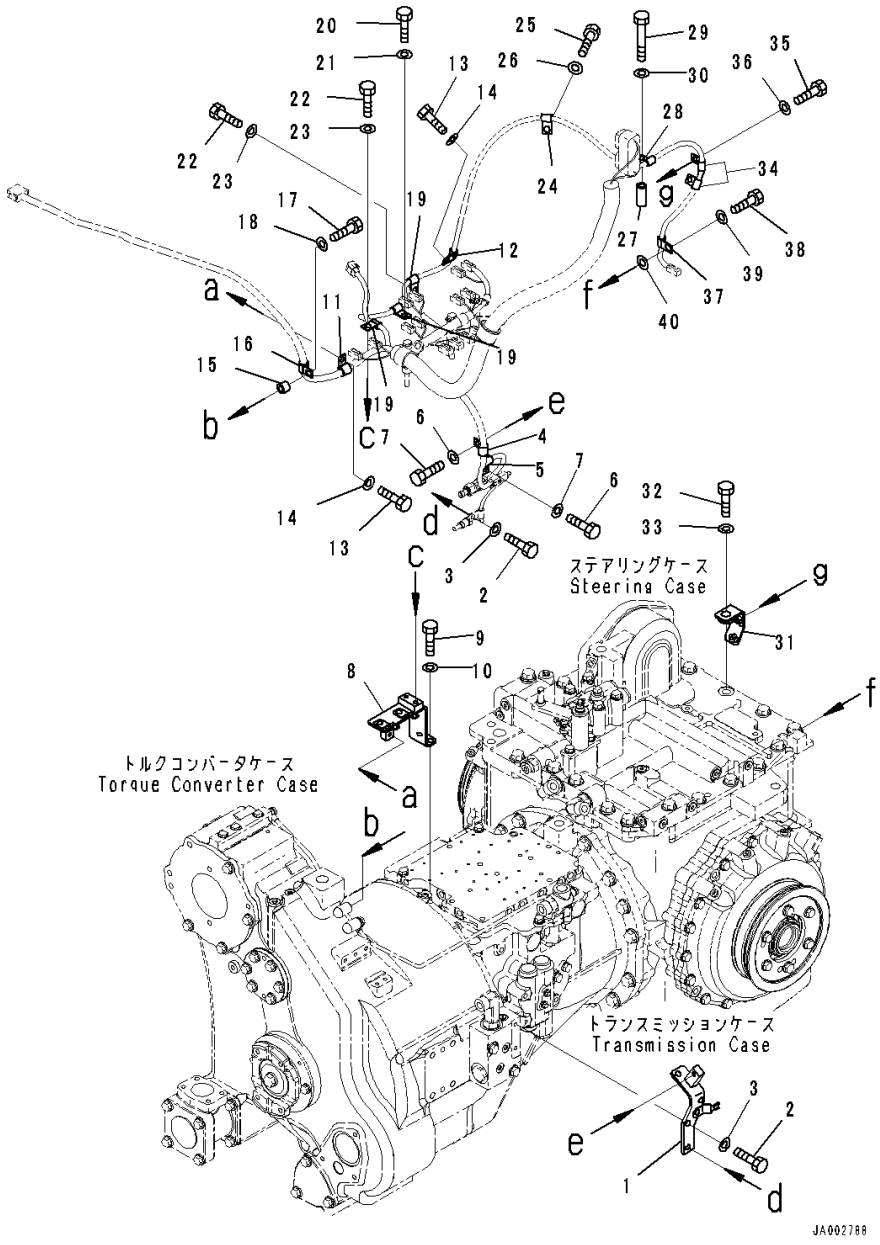

Index	Code	Part Number	Description	Qty	Serial Number
		Note: This list covers following specifications.			
		Without Power Angle Power Tilt Dozer			
		With Power Angle Power Tilt Dozer			
		14X-22-50000	Power Train Assembly	1	80001-
1		14X-06-51311	• Bracket	1	80001-
2		01010-81030	• Bolt	2	80001-
3		01643-31032	• Washer	2	80001-
4		04434-51410	• Clip	1	80001-
5		04434-51010	• Clip	1	80001-
6		01010-81020	• Bolt	2	80001-
7		01643-31032	• Washer	2	80001-
8		14X-06-51321	• Bracket	1	80001-
9		01010-81025	• Bolt	2	80001-
10		01643-31032	• Washer	2	80001-
11		04434-51410	• Clip	1	80001-
12		04434-51010	• Clip	1	80001-
13		01010-81020	• Bolt	2	80001-
14		01643-31032	• Washer	2	80001-
15		22M-60-22130	• Collar	1	80001-
16		04434-51410	• Clip	1	80001-
17		01010-81035	• Bolt	1	80001-
18		01643-31032	• Washer	1	80001-
19		04434-51010	• Clip	3	80001-
20		01010-81045	• Bolt	1	80001-
21		01643-31032	• Washer	1	80001-
22		01010-81020	• Bolt	2	80001-
23		01643-31032	• Washer	2	80001-
24		04434-51012	• Clip	1	80001-
25		01010-81220	• Bolt	1	80001-
26		01643-31232	• Washer	1	80001-
27		14X-54-26640	• Collar	1	80001-
28		04434-51010	• Clip	1	80001-
29		01010-81070	• Bolt	1	80001-
30		01643-31032	• Washer	1	80001-
31		14X-06-51341	• Bracket	1	80001-
32		01010-61660	• Bolt	1	80001-
33		01643-31645	• Washer	1	80001-
34		04434-51010	• Clip	2	80001-
35		01010-81020	• Bolt	2	80001-
36		01643-31032	• Washer	2	80001-

https://truckmanualshub.com/

FIG. F2300-001033 Power Train, Wiring Harness Clamp

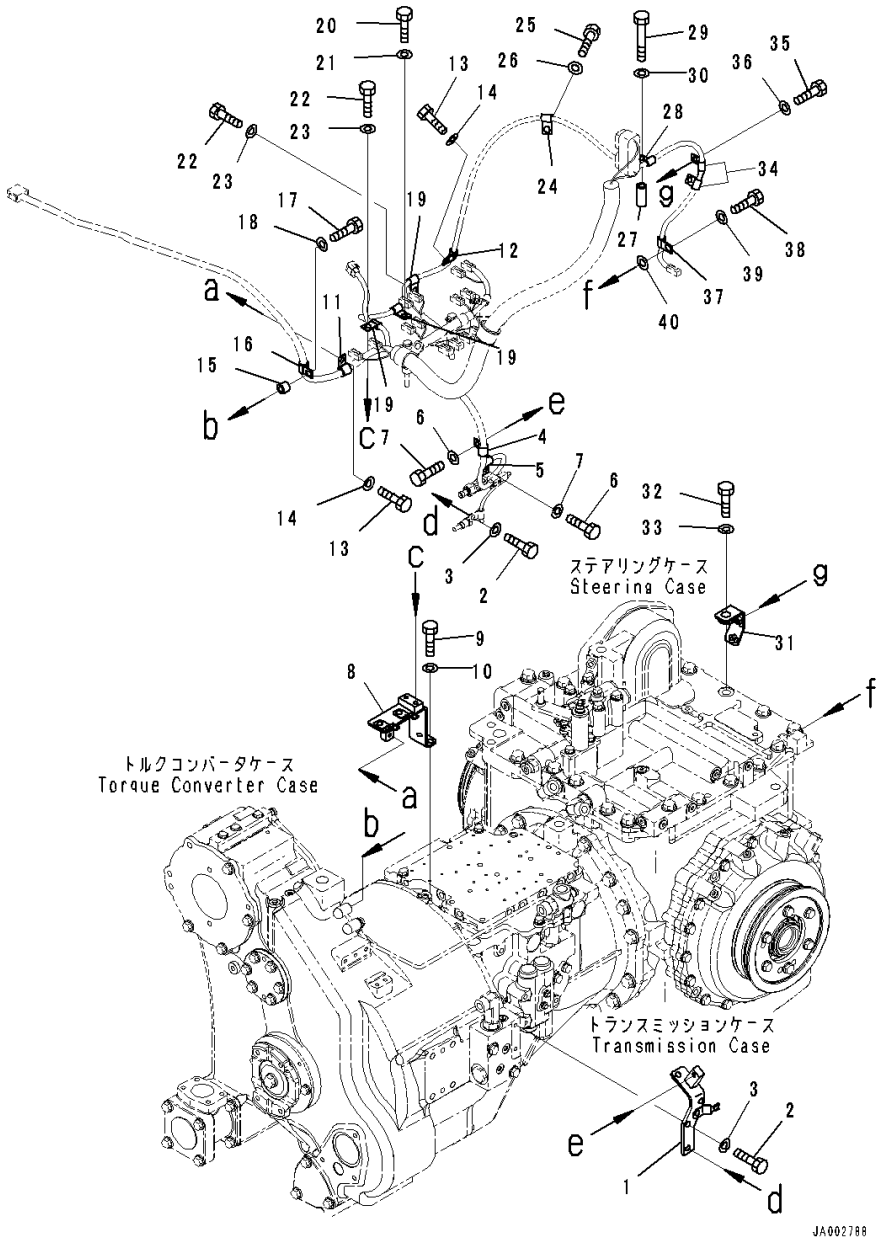

Index	Code	Part Number	Description	Qty	Serial Number
37		04434-51012	• Clip	1	80001-
38		01010-81235	• Bolt	1	80001-
39		01643-31232	• Washer	1	80001-
40		01643-31232	• Washer	1	80001-

https://truckmanualshub.com/

FIG. F2300-001034 Power Train, Piping

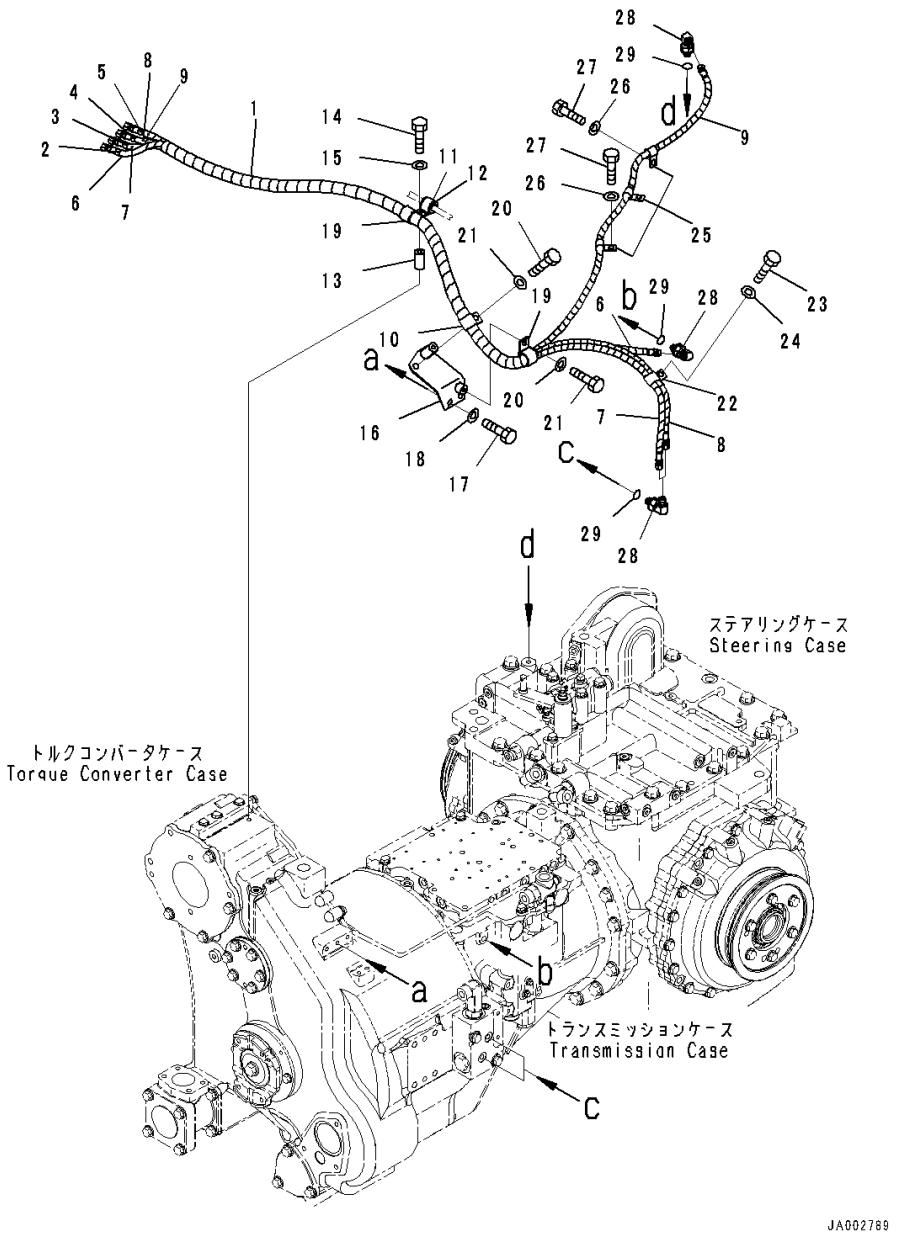

Index	Code	Part Number	Description	Qty	Serial Number
		Note: This list covers following specifications.			
		Without Power Angle Power Tilt Dozer			
		With Power Angle Power Tilt Dozer			
		14X-22-50000	Power Train Assembly	1	80001-
1		14X-49-51211	• Hose Assembly	1	80001-
2		203-62-57940	• • Mark, 4	2	80001-
3		203-62-57930	• • Mark, 3	2	80001-
4		203-62-57920	• • Mark, 2	2	80001-
5		203-62-57910	• • Mark, 1	2	80001-
6		14X-49-51251	• • Hose	1	80001-
7		14X-49-51241	• • Hose	1	80001-
8		14X-49-51231	• • Hose	1	80001-
9		14X-49-51221	• • Hose	1	80001-
10		04434-52511	• Clip	1	80001-
11		04434-52110	• Clip	1	80001-
12		07095-20314	• Cushion	1	80001-
13		22D-62-12440	• Spacer	1	80001-
14		01010-81060	• Bolt	1	80001-
15		01643-31032	• Washer	1	80001-
16		14X-62-52471	• Bracket	1	80001-
17		01010-81025	• Bolt	2	80001-
18		01643-31032	• Washer	2	80001-
19		04434-52511	• Clip	2	80001-
20		01010-81020	• Bolt	2	80001-
21		01643-31032	• Washer	2	80001-
22		04435-51210	• Clip	1	80001-
23		01010-81020	• Bolt	1	80001-
24		01643-31032	• Washer	1	80001-
25		04434-51210	• Clip	3	80001-
26		01010-81020	• Bolt	3	80001-
27		01643-31032	• Washer	3	80001-
28		124-62-61531	• Elbow	4	80001-
29		07002-11023	• O-ring	4	80001-

https://truckmanualshub.com/

FIG. F2300-001035 Power Train, Mounting (2/2)

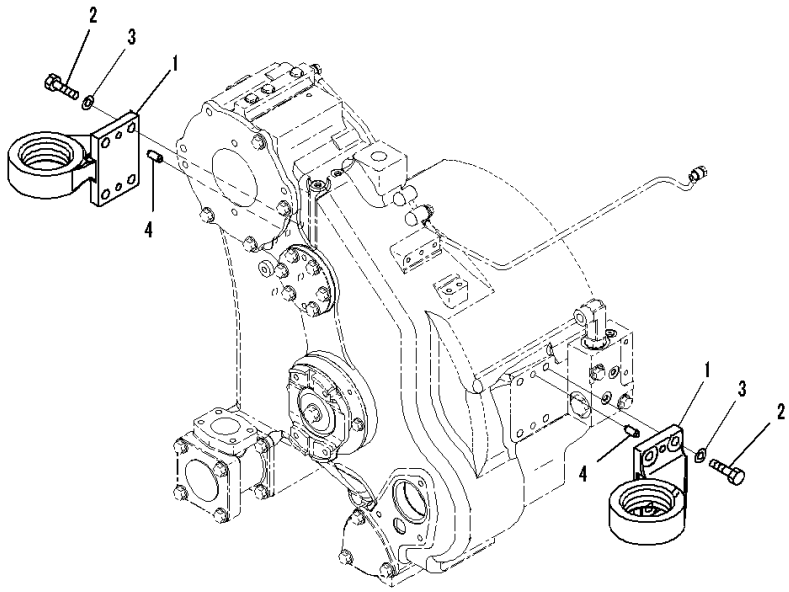

トルクコンバータケース
Torque Converter Case

JA002790

Index	Code	Part Number	Description	Qty	Serial Number
		Note: This list covers following specifications.			
		Without Power Angle Power Tilt Dozer			
		With Power Angle Power Tilt Dozer			
		14X-22-50000	Power Train Assembly	1	80001-
1		14X-22-51111	• Bracket	2	80001-
2		01010-81650	• Bolt	8	80001-
3		01643-31645	• Washer	8	80001-
4		04020-01228	• Pin, Dowel	4	80001-

https://truckmanualshub.com/

FIG. F2300-001036 Power Train, Without Power Angle Power Tilt Dozer, Final Drive, Torque Shaft

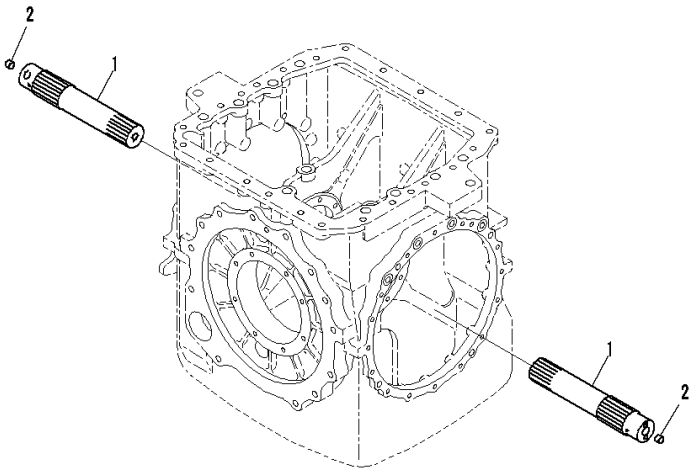

PW08951

Index	Code	Part Number	Description	Qty	Serial Number
1		14Y-22-54120	Shaft	2	80001-
2		14Y-22-14160	Button	2	80001-

https://truckmanualshub.com/

FIG. F2300-002036 Power Train, With Power Angle Power Tilt Dozer, Final Drive, Torque Shaft

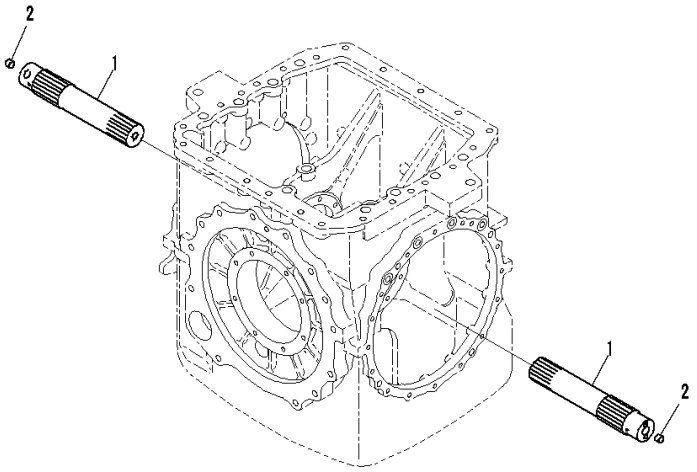

Index	Code	Part Number	Description	Qty	Serial Number
1		14Y-22-54130	Shaft	2	80001-
2		14Y-22-14160	Button	2	80001-

https://truckmanualshub.com/

FIG. F2380-001001 Final Drive, Pinion and Gear, LHS

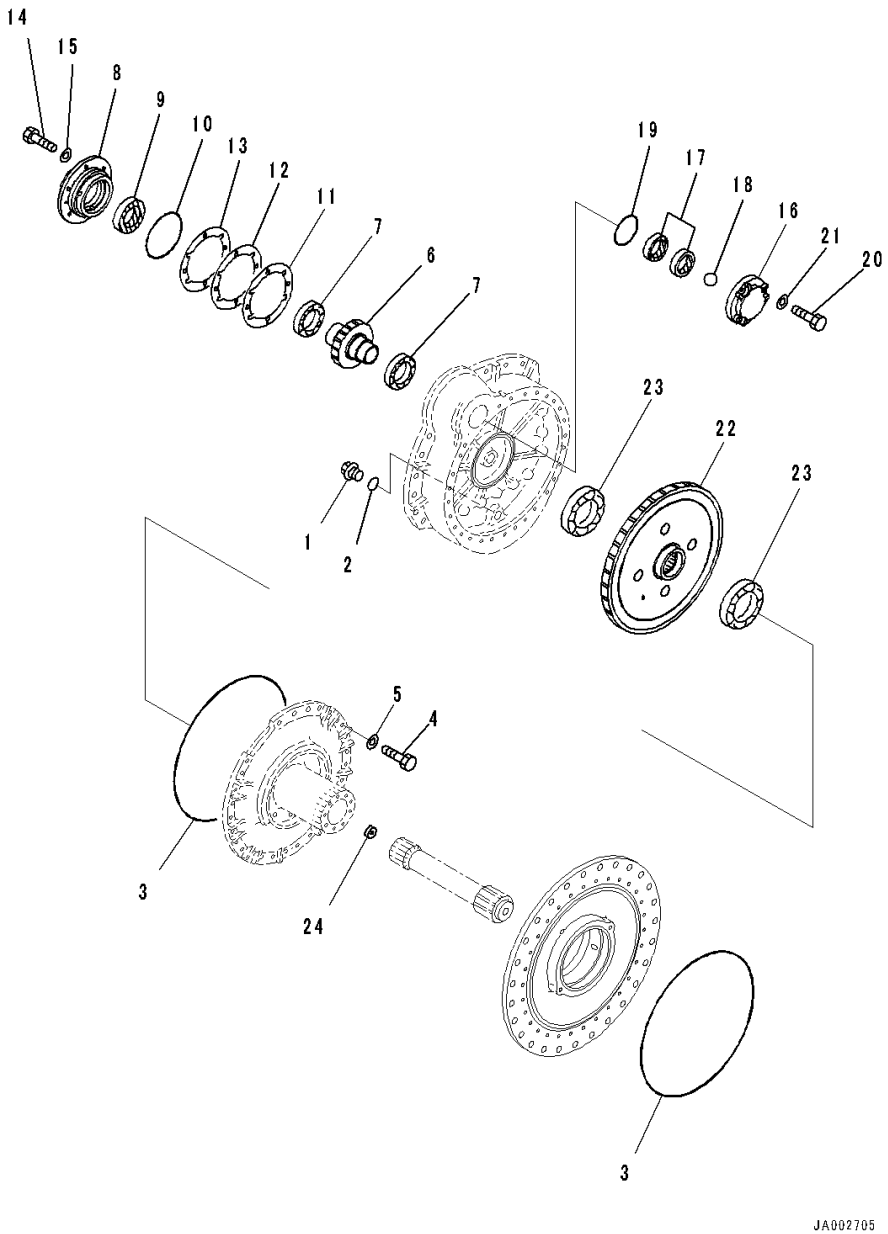

Index	Code	Part Number	Description	Qty	Serial Number
		Note: This list covers following specifications.			
		Segmented, For Machine With Power Angle Power Tilt Dozer			
		Segmented, With Rotary Type Rubber Shoe, For Machine With Power Angle Power Tilt Dozer			
		Segmented, With Power Angle Power Tilt Dozer			
		Segmented, With Power Angle Power Tilt Dozer, With Rotary Type Rubber Shoe			
		14Y-27-00310	Final Drive Assembly ..... Segmented, For Machine With Power Angle Power Tilt Dozer	1	80001-
		14Y-27-00410	Final Drive Assembly ..... Segmented, With Rotary Type Rubber Shoe, For Machine With Power Angle Power Tilt Dozer	1	80001-
		14Y-27-00410	Final Drive Assembly ..... Segmented, With Power Angle Power Tilt Dozer	1	80001-
		14Y-27-00310	Final Drive Assembly ..... Segmented, With Power Angle Power Tilt Dozer, With Rotary Type Rubber Shoe	1	80001-
1		07044-13620	• Plug	1	80001-
2		07002-03634	• O-ring	1	80001-
3		14X-27-11170	• O-ring	2	80001-
4		01010-81645	• Bolt	28	80001-
5		01643-31645	• Washer	28	80001-
6		14X-27-31210	• Pinion	1	80001-
7		14X-27-11231	• Bearing	2	80001-
8		14X-27-11220	• Cage	1	80001-
9		07013-10080	• Seal, Oil	1	80001-
10		07000-05165	• O-ring	1	80001-
		14X-27-05010	• Shim Kit	1	80001-
11	C1		• Shim, T=0.2mm	6	80001-
12	C1		• Shim, T=0.3mm	4	80001-
13	C1		• Shim, T=1.0mm	2	80001-
14		01010-81235	• Bolt	6	80001-
15		01643-31232	• Washer	6	80001-
16		14X-27-11243	• Cover	1	80001-
17		209-03-12270	• Seal, Oil	2	80001-

https://truckmanualshub.com/

FIG. F2380-001001 Final Drive, Pinion and Gear, LHS

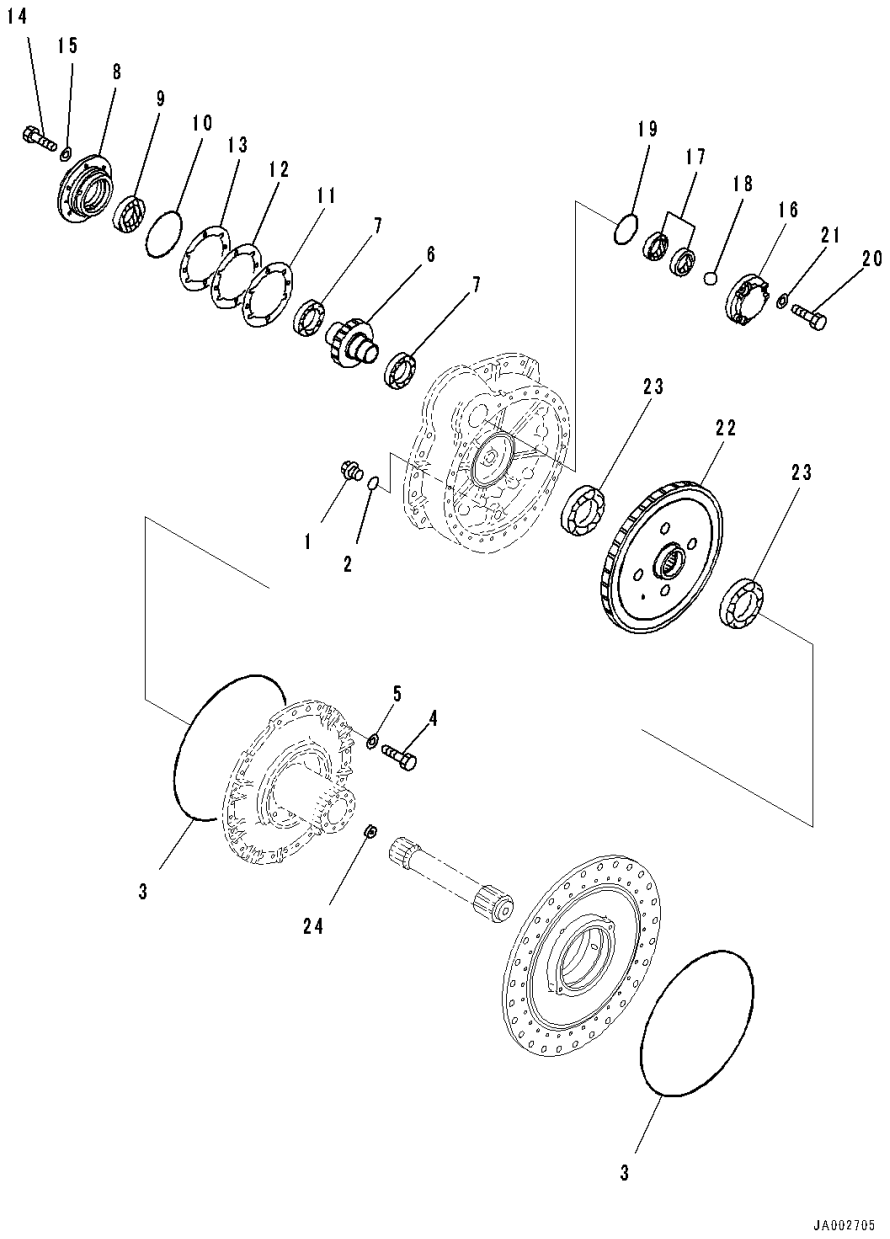

Index	Code	Part Number	Description	Qty	Serial Number
18		04260-01905	• Ball	1	80001-
19		07000-02110	• O-ring	1	80001-
20		01010-81245	• Bolt	3	80001-
21		01643-31232	• Washer	3	80001-
22		14X-27-11312	• Gear	1	80001-
23		06040-06024	• Bearing	2	80001-
24		14X-27-11420	• Collar	1	80001-

https://truckmanualshub.com/

FIG. F2380-001002 Final Drive, Carrier, LHS

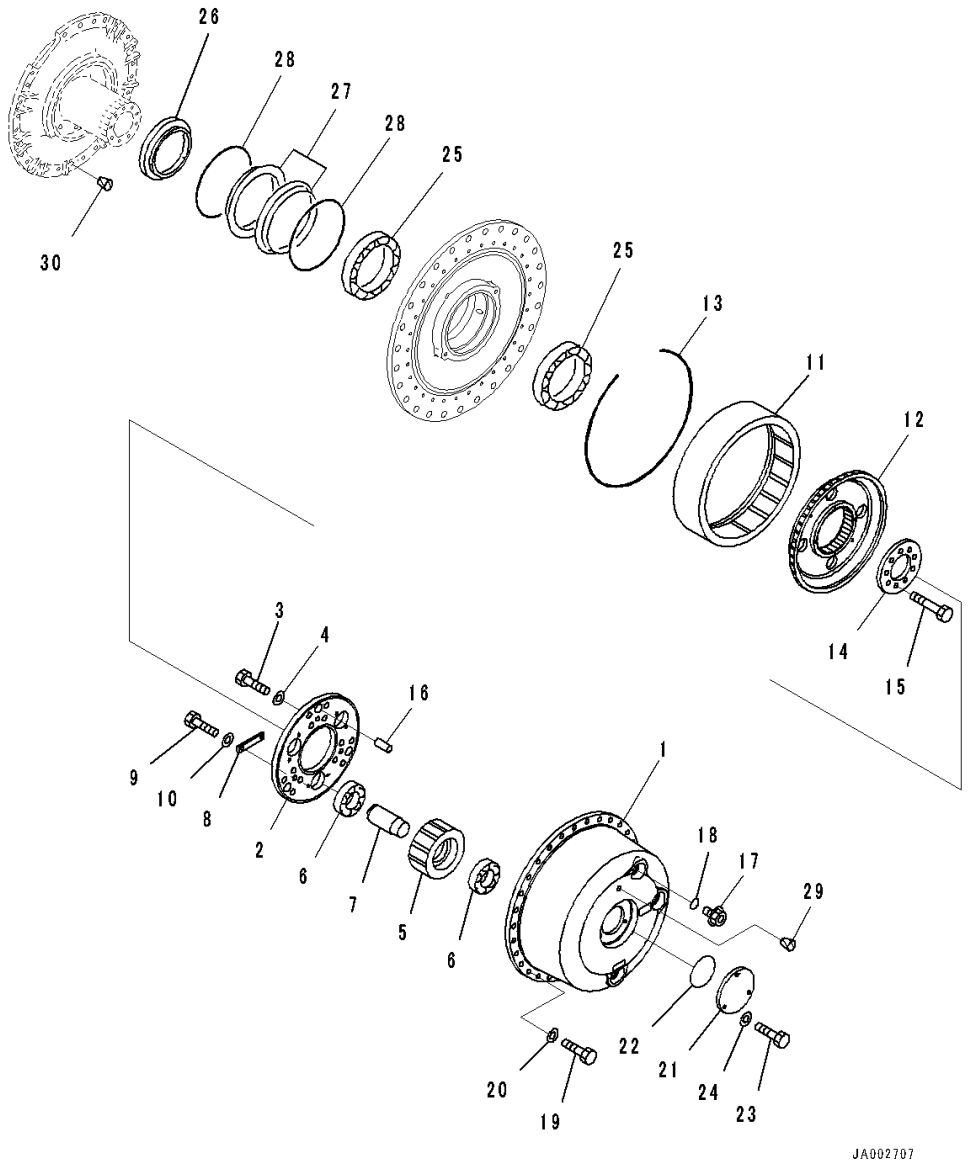

Index	Code	Part Number	Description	Qty	Serial Number
		Note: This list covers following specifications.			
			Segmented, For Machine With Power Angle Power Tilt Dozer		
			Segmented, With Rotary Type Rubber Shoe, For Machine With Power Angle Power Tilt Dozer		
			Segmented, With Power Angle Power Tilt Dozer		
			Segmented, With Power Angle Power Tilt Dozer, With Rotary Type Rubber Shoe		
		14Y-27-00310	Final Drive Assembly ..... Segmented, For Machine With Power Angle Power Tilt Dozer	1	80001-
		14Y-27-00410	Final Drive Assembly ..... Segmented, With Rotary Type Rubber Shoe, For Machine With Power Angle Power Tilt Dozer	1	80001-
		14Y-27-00410	Final Drive Assembly ..... Segmented, With Power Angle Power Tilt Dozer	1	80001-
		14Y-27-00310	Final Drive Assembly ..... Segmented, With Power Angle Power Tilt Dozer, With Rotary Type Rubber Shoe	1	80001-
		14X-27-11502	• Carrier Assembly	1	80001-
1		14X-27-11512	• • Carrier	1	80001-
2		14X-27-11552	• • Plate	1	80001-
3		01010-82055	• • Bolt	6	80001-
4		01643-32060	• • Washer	6	80001-
5		14X-27-11522	• Gear	3	80001-
6		14X-27-11531	• Bearing	6	80001-
7		14X-27-11542	• Shaft	3	80001-
8		14X-27-11560	• Lock	3	80001-
9		01010-81235	• Bolt	6	80001-
10		01643-31232	• Washer	6	80001-
11		14X-27-11612	• Gear	1	80001-
12		14X-27-11622	• Hub	1	80001-
13		14X-27-11640	• Ring, Snap	1	80001-
14		14X-27-11633	• Holder	1	80001-
15		01011-61600	• Bolt	9	80001-
16		195-27-11140	• Pin, Dowel	3	80001-
17		07041-13612	• Plug	3	80001-

https://truckmanualshub.com/

FIG. F2380-001002 Final Drive, Carrier, LHS

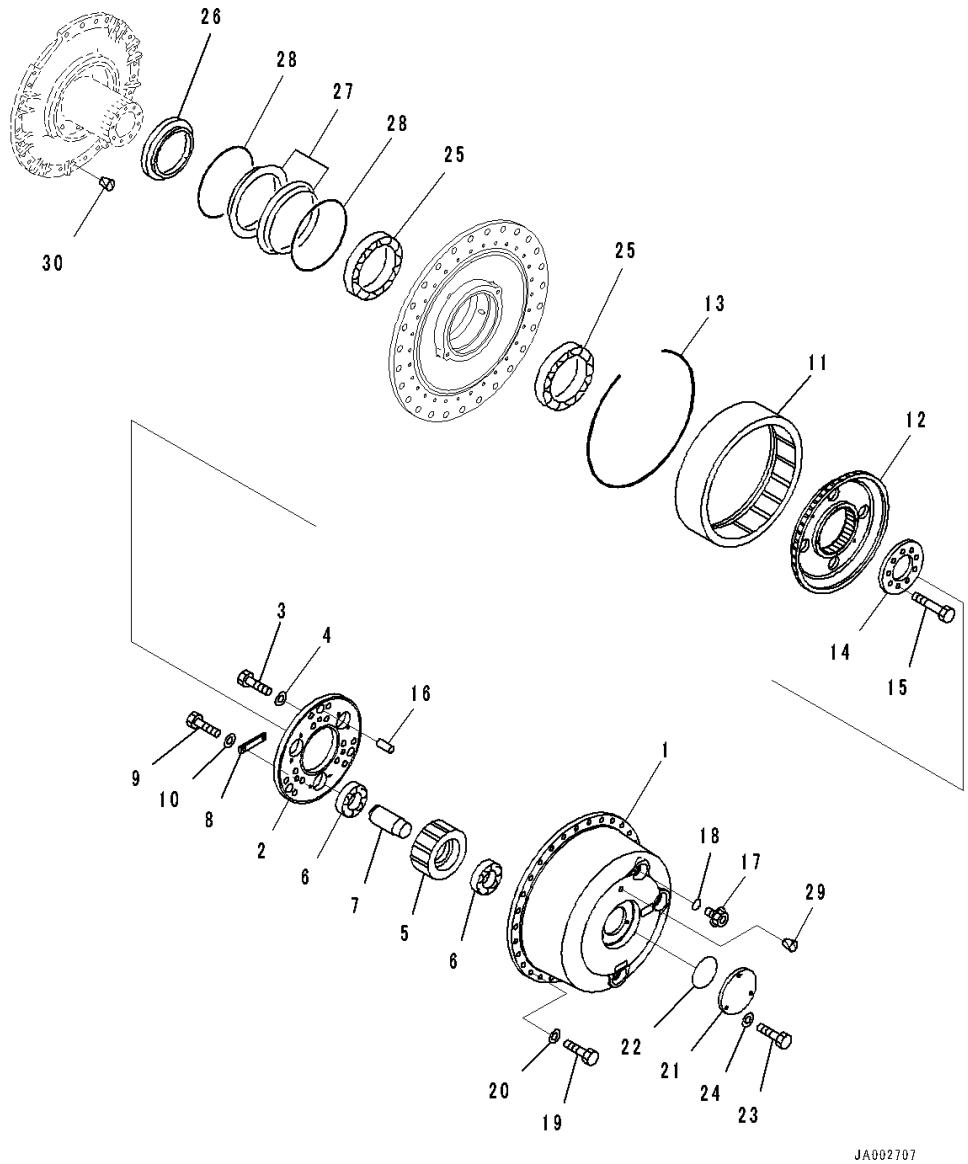

Index	Code	Part Number	Description	Qty	Serial Number
18		07002-03634	• O-ring	3	80001-
19		01010-81645	• Bolt	30	80001-
20		01643-31645	• Washer	30	80001-
21		14X-27-11431	• Cover	1	80001-
22		07000-02115	• O-ring	1	80001-
23		01010-81235	• Bolt	3	80001-
24		01643-31232	• Washer	3	80001-
25		14X-27-11721	• Bearing	2	80001-
26		14X-27-11751	• Collar	1	80001-
		14X-27-00101	• Floating Seal Assembly	1	80001-
27	C1		• • Seal	2	80001-
28	C1		• • O-ring	2	80001-
29		07049-02025	• Plug	1	80001-
30		07049-01620	• Plug	1	80001-

https://truckmanualshub.com/

FIG. F2380-001003 Final Drive, Sprocket Hub, LHS

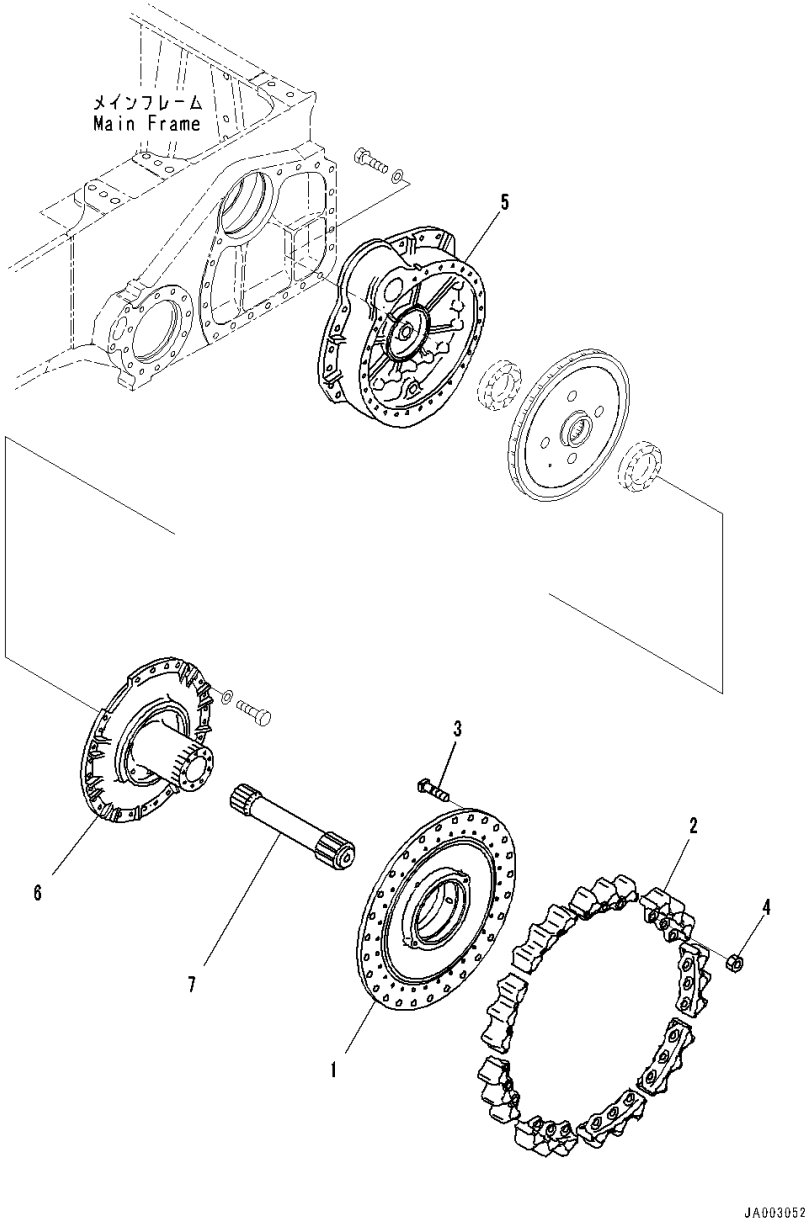

Index	Code	Part Number	Description	Qty	Serial Number
		Note: This list covers following specifications. Segmented, For Machine With Power Angle Power Tilt Dozer Segmented, With Power Angle Power Tilt Dozer, With Rotary Type Rubber Shoe			
		14Y-27-00310	Final Drive Assembly	1	80001-
1		14X-27-31710	• Hub	1	80001-
2		14X-27-15112	• Teeth	9	80001-
3		154-27-12320	• Bolt	27	80001-
4		01803-02228	• Nut	27	80001-
5		14X-27-31110	• Case	1	80001-
6		14Y-27-31150	• Cover	1	80001-
7		14Y-27-11412	• Pinion	1	80001-

https://truckmanualshub.com/

FIG. F2380-001004 Final Drive, Pinion and Gear, RHS

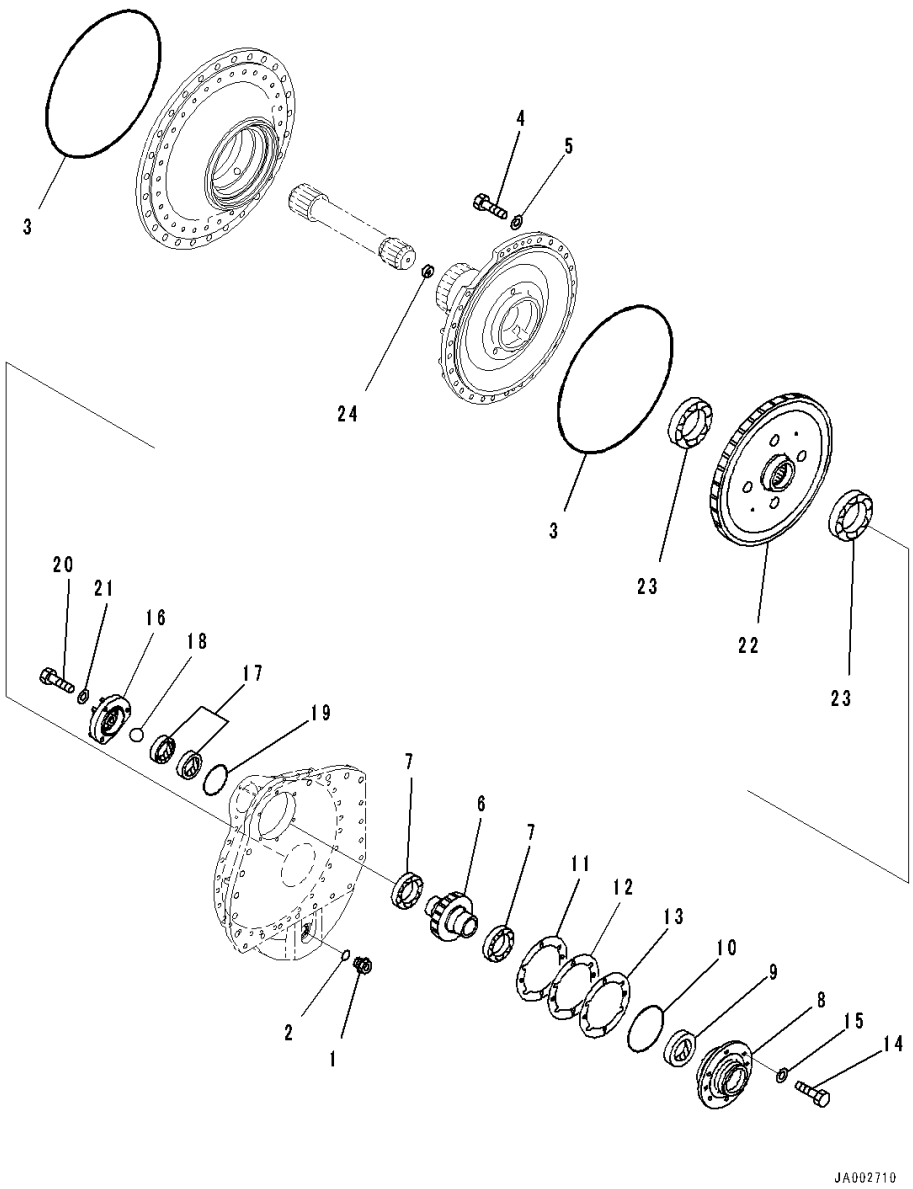

Index	Code	Part Number	Description	Qty	Serial Number
		Note: This list covers following specifications.			
		Segmented, For Machine With Power Angle Power Tilt Dozer			
		Segmented, With Rotary Type Rubber Shoe, For Machine With Power Angle Power Tilt Dozer			
		Segmented, With Power Angle Power Tilt Dozer			
		Segmented, With Power Angle Power Tilt Dozer, With Rotary Type Rubber Shoe			
		14Y-27-00320	Final Drive Assembly ..... Segmented, For Machine With Power Angle Power Tilt Dozer	1	80001-
		14Y-27-00420	Final Drive Assembly ..... Segmented, With Rotary Type Rubber Shoe, For Machine With Power Angle Power Tilt Dozer	1	80001-
		14Y-27-00420	Final Drive Assembly ..... Segmented, With Power Angle Power Tilt Dozer	1	80001-
		14Y-27-00320	Final Drive Assembly ..... Segmented, With Power Angle Power Tilt Dozer, With Rotary Type Rubber Shoe	1	80001-
1		07044-13620	• Plug	1	80001-
2		07002-03634	• O-ring	1	80001-
3		14X-27-11170	• O-ring	2	80001-
4		01010-81645	• Bolt	28	80001-
5		01643-31645	• Washer	28	80001-
6		14X-27-31210	• Pinion	1	80001-
7		14X-27-11231	• Bearing	2	80001-
8		14X-27-11220	• Cage	1	80001-
9		07013-10080	• Seal, Oil	1	80001-
10		07000-05165	• O-ring	1	80001-
		14X-27-05010	• Shim Kit	1	80001-
11	C1		• Shim, T=0.2mm	6	80001-
12	C1		• Shim, T=0.3mm	4	80001-
13	C1		• Shim, T=1.0mm	2	80001-
14		01010-81235	• Bolt	6	80001-
15		01643-31232	• Washer	6	80001-
16		14X-27-11243	• Cover	1	80001-
17		209-03-12270	• Seal, Oil	2	80001-

https://truckmanualshub.com/

FIG. F2380-001004 Final Drive, Pinion and Gear, RHS

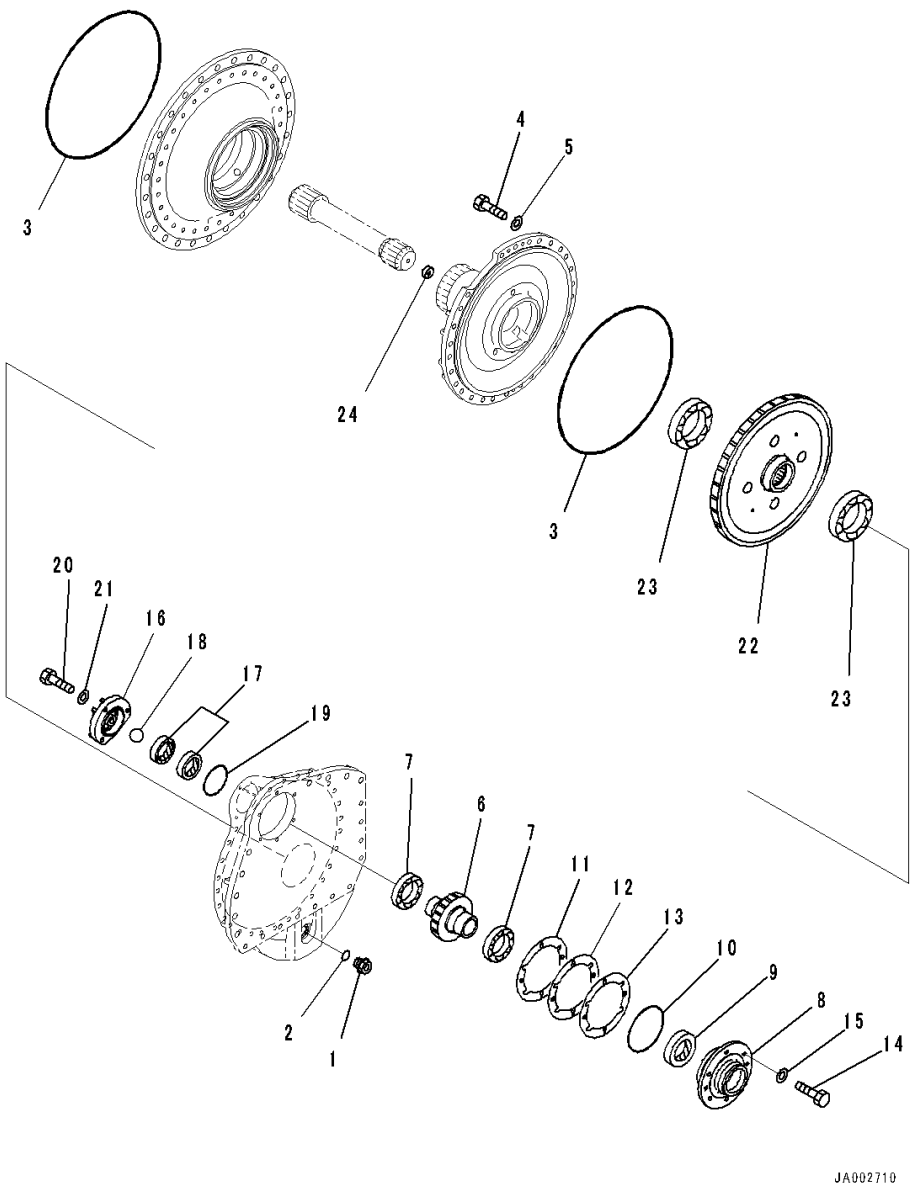

Index	Code	Part Number	Description	Qty	Serial Number
18		04260-01905	• Ball	1	80001-
19		07000-02110	• O-ring	1	80001-
20		01010-81245	• Bolt	3	80001-
21		01643-31232	• Washer	3	80001-
22		14X-27-11312	• Gear	1	80001-
23		06040-06024	• Bearing	2	80001-
24		14X-27-11420	• Collar	1	80001-

https://truckmanualshub.com/

FIG. F2380-001005 Final Drive, Carrier, RHS

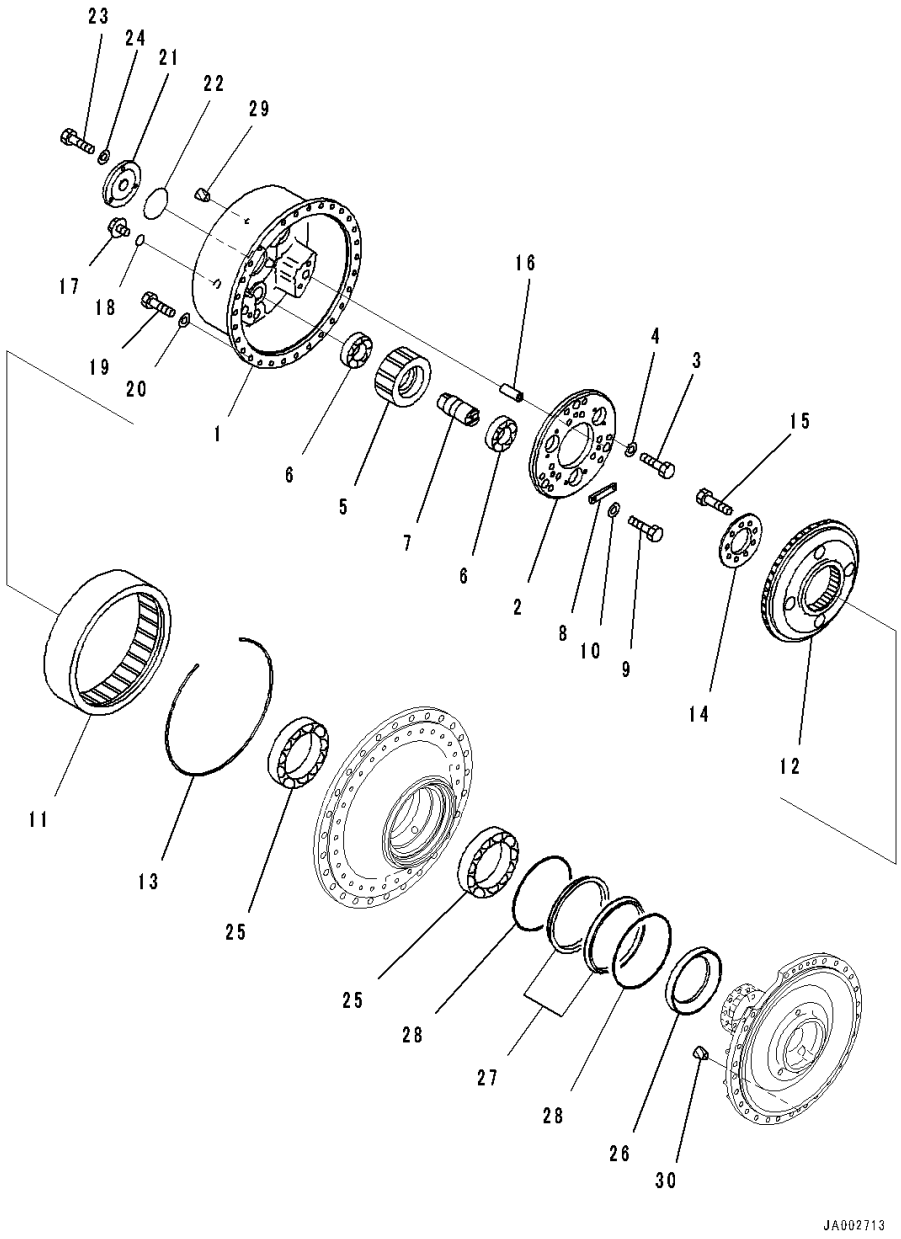

Index	Code	Part Number	Description	Qty	Serial Number
		Note: This list covers following specifications. Segmented, For Machine With Power Angle Power Tilt Dozer Segmented, With Rotary Type Rubber Shoe, For Machine With Power Angle Power Tilt Dozer Segmented, With Power Angle Power Tilt Dozer Segmented, With Power Angle Power Tilt Dozer, With Rotary Type Rubber Shoe			
		14Y-27-00320	Final Drive Assembly ..... Segmented, For Machine With Power Angle Power Tilt Dozer	1	80001-
		14Y-27-00420	Final Drive Assembly ..... Segmented, With Rotary Type Rubber Shoe, For Machine With Power Angle Power Tilt Dozer	1	80001-
		14Y-27-00420	Final Drive Assembly ..... Segmented, With Power Angle Power Tilt Dozer	1	80001-
		14Y-27-00320	Final Drive Assembly ..... Segmented, With Power Angle Power Tilt Dozer, With Rotary Type Rubber Shoe	1	80001-
		14X-27-11502	• Carrier Assembly	1	80001-
1		14X-27-11512	• • Carrier	1	80001-
2		14X-27-11552	• • Plate	1	80001-
3		01010-82055	• • Bolt	6	80001-
4		01643-32060	• • Washer	6	80001-
5		14X-27-11522	• Gear	3	80001-
6		14X-27-11531	• Bearing	6	80001-
7		14X-27-11542	• Shaft	3	80001-
8		14X-27-11560	• Lock	3	80001-
9		01010-81235	• Bolt	6	80001-
10		01643-31232	• Washer	6	80001-
11		14X-27-11612	• Gear	1	80001-
12		14X-27-11622	• Hub	1	80001-
13		14X-27-11640	• Ring, Snap	1	80001-
14		14X-27-11633	• Holder	1	80001-
15		01011-61600	• Bolt	9	80001-
16		195-27-11140	• Pin, Dowel	3	80001-
17		07041-13612	• Plug	3	80001-

https://truckmanualshub.com/

FIG. F2380-001005 Final Drive, Carrier, RHS

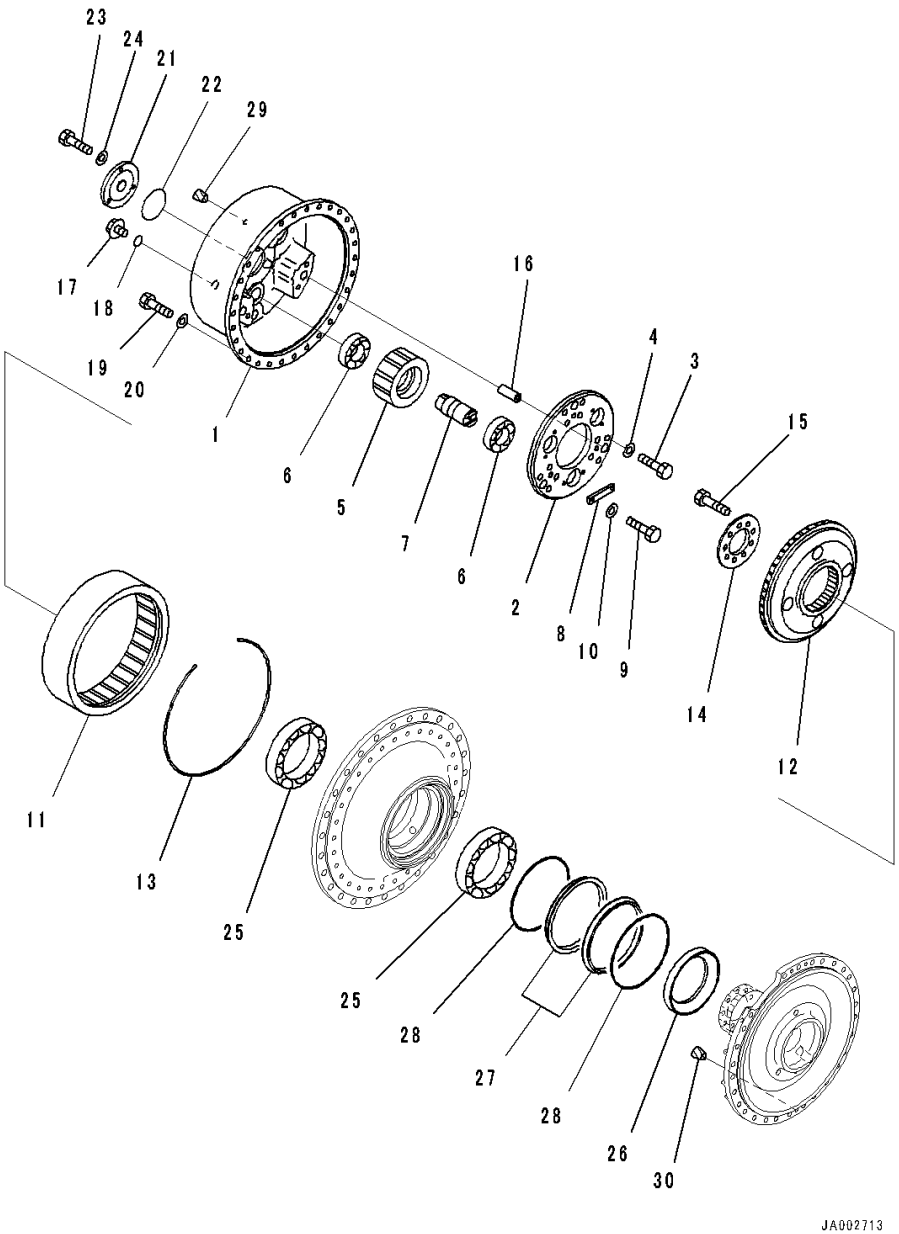

Index	Code	Part Number	Description	Qty	Serial Number
18		07002-03634	• O-ring	3	80001-
19		01010-81645	• Bolt	30	80001-
20		01643-31645	• Washer	30	80001-
21		14X-27-11431	• Cover	1	80001-
22		07000-02115	• O-ring	1	80001-
23		01010-81235	• Bolt	3	80001-
24		01643-31232	• Washer	3	80001-
25		14X-27-11721	• Bearing	2	80001-
26		14X-27-11751	• Collar	1	80001-
		14X-27-00101	• Floating Seal Assembly	1	80001-
27	C1		• • Seal	2	80001-
28	C1		• • O-ring	2	80001-
29		07049-02025	• Plug	1	80001-
30		07049-01620	• Plug	1	80001-

https://truckmanualshub.com/

FIG. F2380-001006 Final Drive, Sprocket Hub, RHS

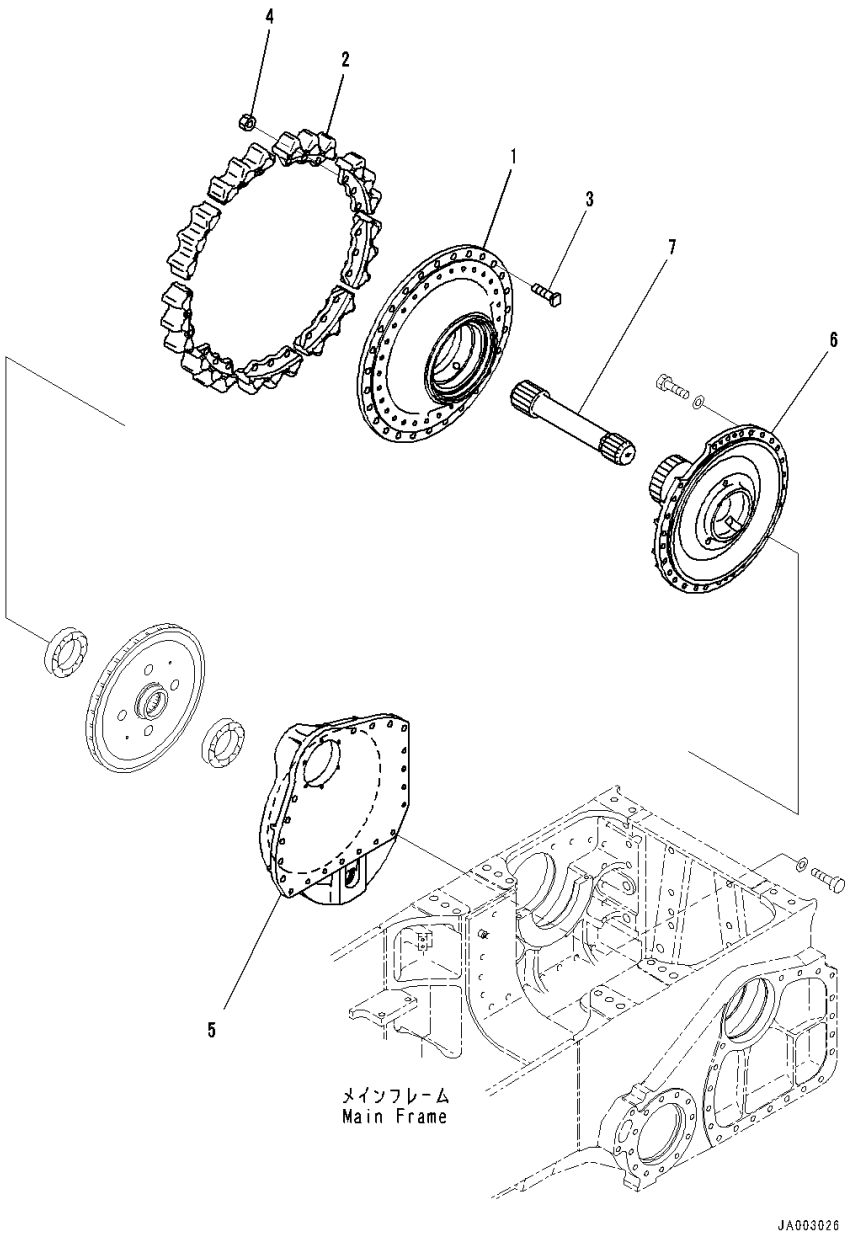

Index	Code	Part Number	Description	Qty	Serial Number
		Note: This list covers following specifications. Segmented, For Machine With Power Angle Power Tilt Dozer Segmented, With Power Angle Power Tilt Dozer, With Rotary Type Rubber Shoe			
		14Y-27-00320	Final Drive Assembly	1	80001-
1		14X-27-31710	• Hub	1	80001-
2		14X-27-15112	• Teeth	9	80001-
3		154-27-12320	• Bolt	27	80001-
4		01803-02228	• Nut	27	80001-
5		14X-27-31120	• Case	1	80001-
6		14Y-27-31160	• Cover	1	80001-
7		14Y-27-11412	• Pinion	1	80001-

https://truckmanualshub.com/

FIG. F2380-001007 Final Drive, Mounting

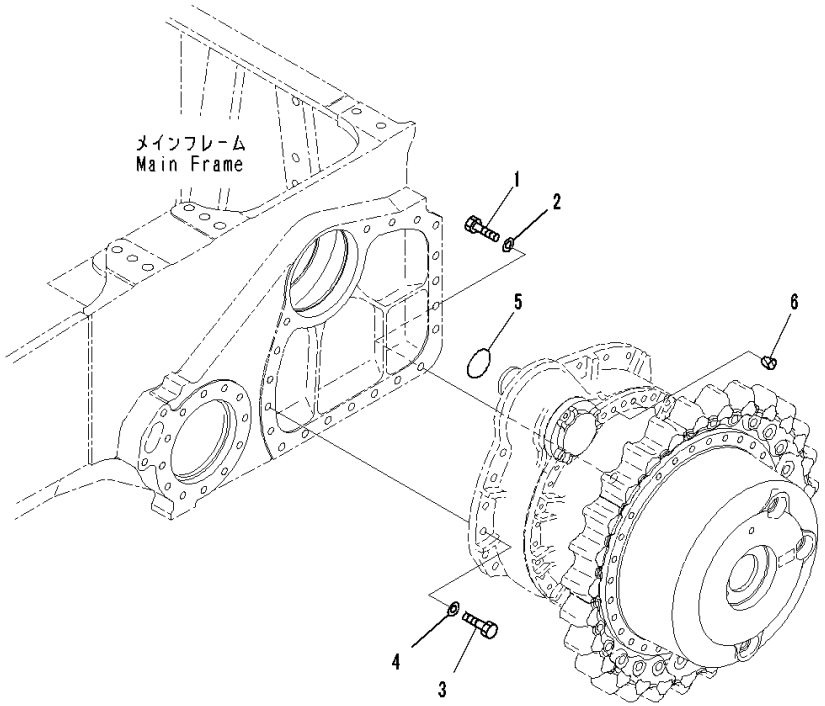

Index	Code	Part Number	Description	Qty	Serial Number
		Note: This list covers following specifications. Segmented, For Machine With Power Angle Power Tilt Dozer Segmented, With Rotary Type Rubber Shoe, For Machine With Power Angle Power Tilt Dozer			
1		01010-82070	Bolt	22	80001-
2		01643-32060	Washer	22	80001-
3		01010-82055	Bolt	18	80001-
4		01643-32060	Washer	18	80001-
5		07000-05105	O-ring	2	80001-
6		07049-01620	Plug	4	80001-

https://truckmanualshub.com/

FIG. F2380-003003 Final Drive, Sprocket Hub, LHS

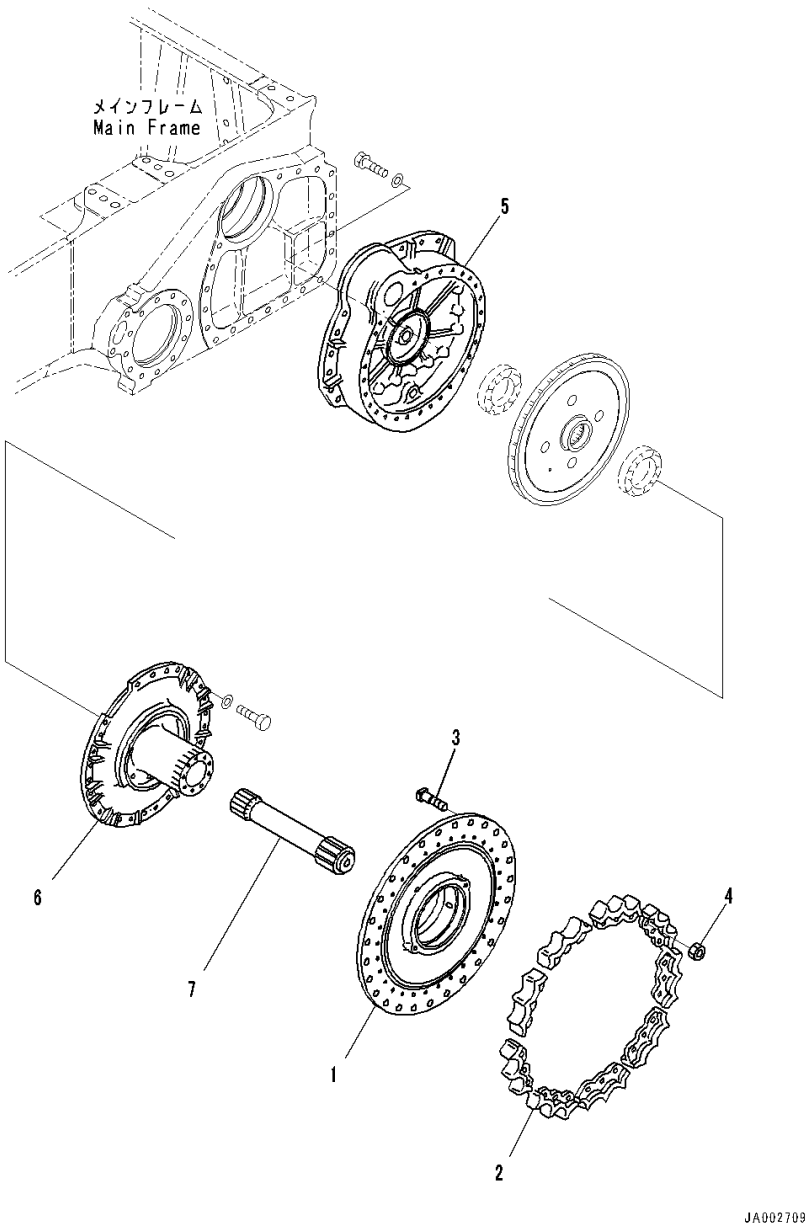

Index	Code	Part Number	Description	Qty	Serial Number
		Note: This list covers following specifications.			
		Segmented, With Rotary Type Rubber Shoe, For Machine With Power Angle Power Tilt Dozer			
		Segmented, With Power Angle Power Tilt Dozer			
		14Y-27-00410	Final Drive Assembly	1	80001-
1		14X-27-31710	• Hub	1	80001-
2		14X-27-15211	• Teeth	9	80001-
3		154-27-12320	• Bolt	27	80001-
4		01803-02228	• Nut	27	80001-
5		14X-27-31110	• Case	1	80001-
6		14Y-27-31150	• Cover	1	80001-
7		14Y-27-11412	• Pinion	1	80001-

https://truckmanualshub.com/

FIG. F2380-003006 Final Drive, Sprocket Hub, RHS

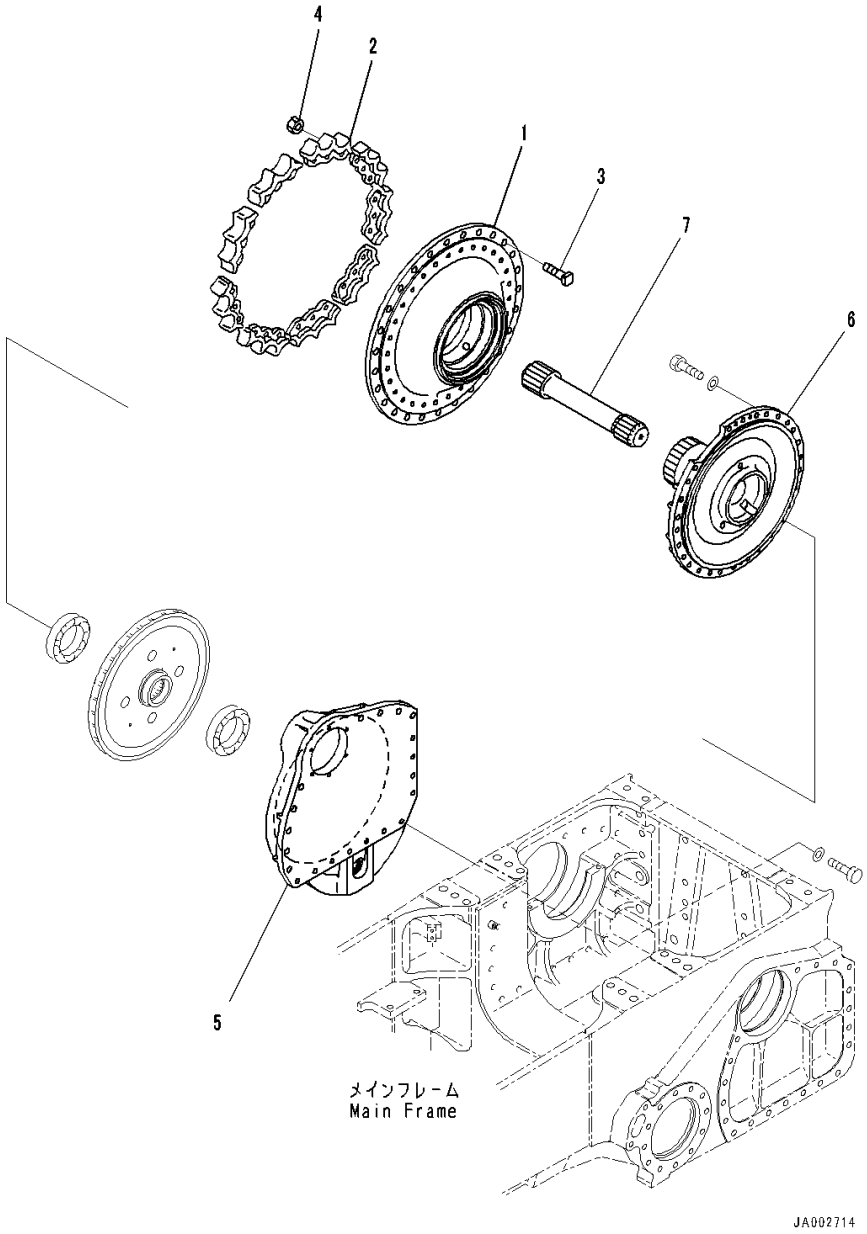

Index	Code	Part Number	Description	Qty	Serial Number
		Note: This list covers following specifications.			
		Segmented, With Rotary Type Rubber Shoe, For Machine With Power Angle Power Tilt Dozer			
		Segmented, With Power Angle Power Tilt Dozer			
		14Y-27-00420	Final Drive Assembly	1	80001-
1		14X-27-31710	• Hub	1	80001-
2		14X-27-15211	• Teeth	9	80001-
3		154-27-12320	• Bolt	27	80001-
4		01803-02228	• Nut	27	80001-
5		14X-27-31120	• Case	1	80001-
6		14Y-27-31160	• Cover	1	80001-
7		14Y-27-11412	• Pinion	1	80001-

https://truckmanualshub.com/

FIG. F2380-005007 Final Drive, Mounting

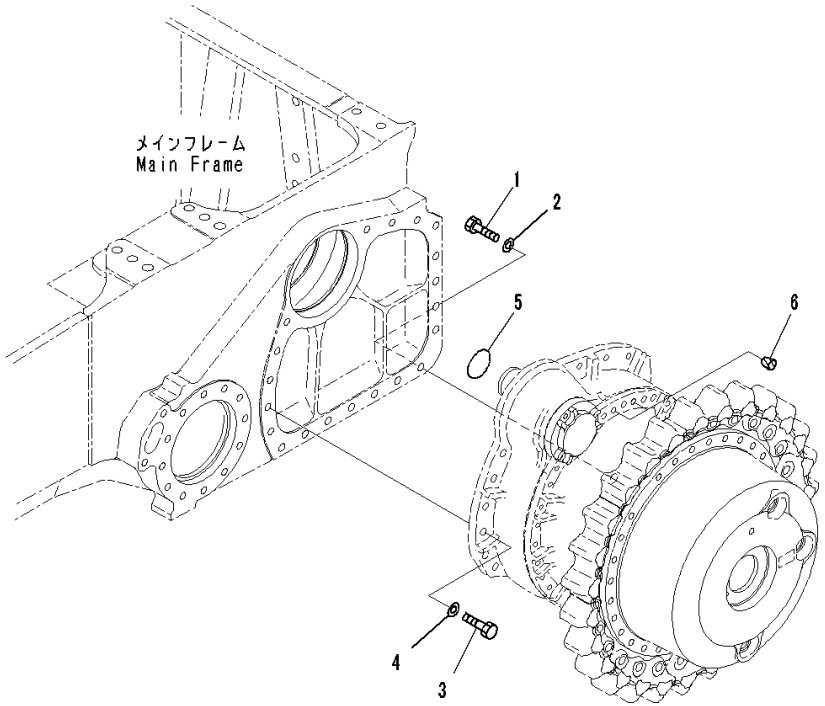

Index	Code	Part Number	Description	Qty	Serial Number
		Note: This list covers following specifications. Segmented, With Power Angle Power Tilt Dozer Segmented, With Power Angle Power Tilt Dozer, With Rotary Type Rubber Shoe			
1		01011-82060	Bolt	22	80001-
2		01643-32060	Washer	22	80001-
3		14X-27-52230	Bolt	18	80001-
4		01643-32060	Washer	18	80001-
5		07000-05105	O-ring	2	80001-
6		07049-01620	Plug	4	80001-

https://truckmanualshub.com/

FIG. F2730-001001 Power Train Piping, Piping

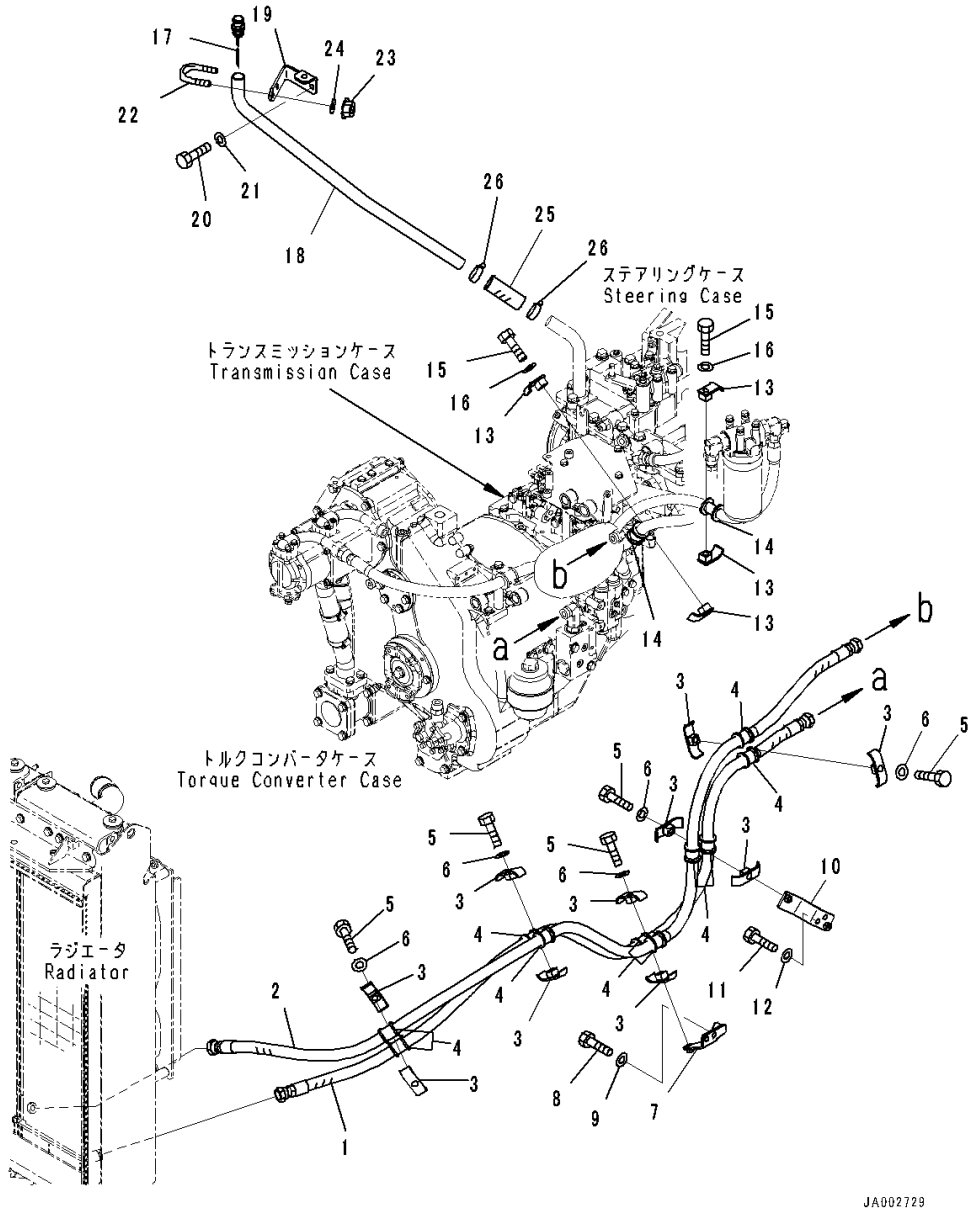

Index	Code	Part Number	Description	Qty	Serial Number
		Note: This list covers following specifications.			
		Without Power Angle Power Tilt Dozer			
		For Machine With Power Angle Power Tilt Dozer			
1		14X-49-52111	Hose	1	80001-
2		14X-49-52121	Hose	1	80001-
3		22P-62-13550	Clamp	10	80001-
4		07095-00526	Cushion	10	80001-
5		01010-81270	Bolt	5	80001-
6		01643-31232	Washer	5	80001-
7		14X-49-52170	Bracket	1	80001-
8		01010-81225	Bolt	2	80001-
9		01643-31232	Washer	2	80001-
10		14X-49-52180	Bracket	1	80001-
11		01010-81225	Bolt	2	80001-
12		01643-31232	Washer	2	80001-
13		07094-10620	Clamp	4	80001-
14		07095-00628	Cushion	2	80001-
15		01010-81270	Bolt	2	80001-
16		01643-31232	Washer	2	80001-
17		14X-49-51261	Gauge	1	80001-
18		14X-49-52211	Filler	1	80001-
19		14X-54-53321	Bracket	1	80001-
20		01010-81225	Bolt	2	80001-
21		01643-31232	Washer	2	80001-
22		07283-33442	Clip	1	80001-
23		01597-01009	Nut	2	80001-
24		01643-31032	Washer	2	80001-
25		07260-23211	Hose	1	80001-
26		07289-00045	Clamp, Hose	2	80001-

https://truckmanualshub.com/

FIG. F2730-001002 Power Train Piping, Bracket

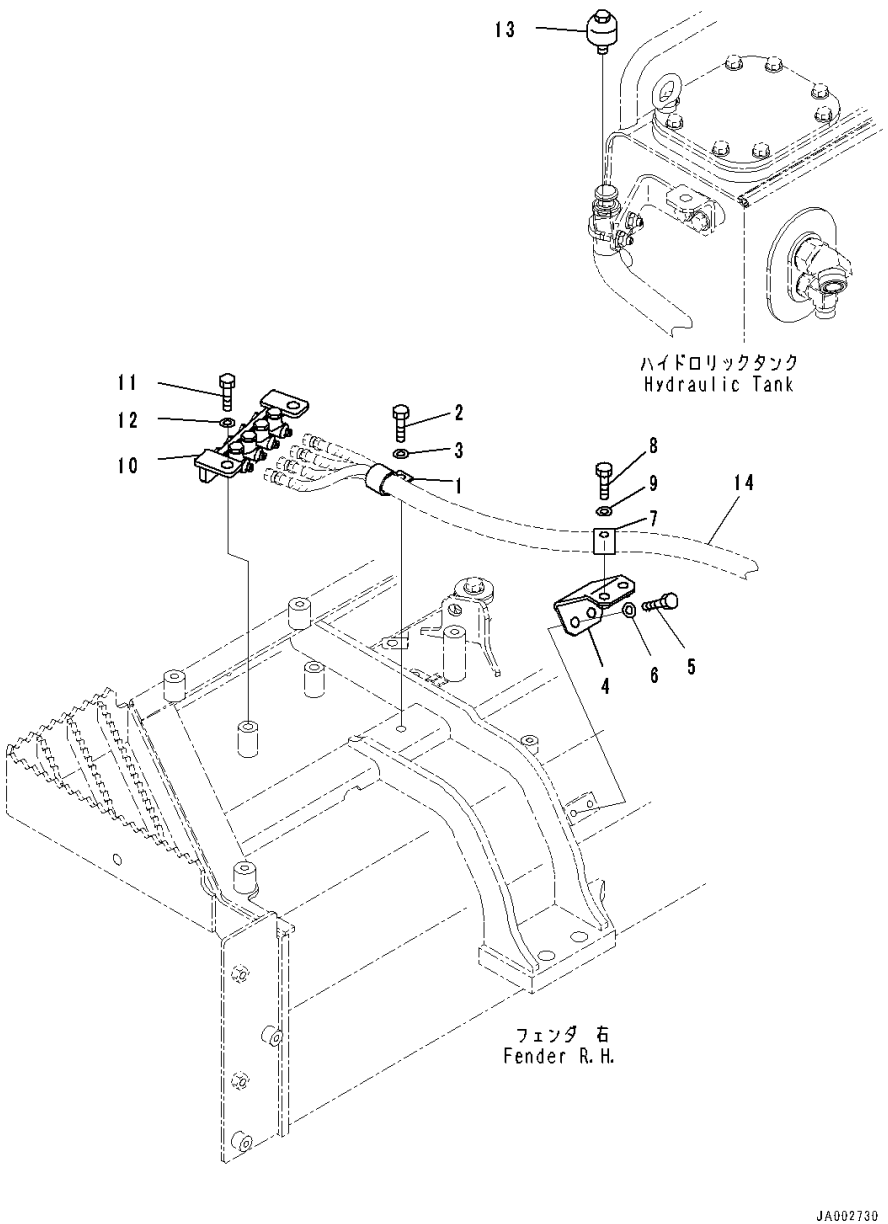

Index	Code	Part Number	Description	Qty	Serial Number
		Note: This list covers following specifications.			
		Without Power Angle Power Tilt Dozer			
		For Machine With Power Angle Power Tilt Dozer			
1		04434-52711	Clip	1	80001-
2		01010-81020	Bolt	1	80001-
3		01643-31032	Washer	1	80001-
4		14X-49-51320	Bracket	1	80001-
5		01010-81020	Bolt	2	80001-
6		01643-31032	Washer	2	80001-
7		04434-52511	Clip	1	80001-
8		01010-81020	Bolt	1	80001-
9		01643-31032	Washer	1	80001-
10		14X-49-51271	Joint Assembly	1	80001-
11		01010-81225	Bolt	2	80001-
12		01643-31232	Washer	2	80001-
13		07030-00252	Breather	1	80001-
14		(14X-49-51211)	Hose Assembly(Refer to Page 267)		-

https://truckmanualshub.com/

FIG. F2730-001003 Power Train Piping, Without Power Angle Power Tilt Dozer, Mounting

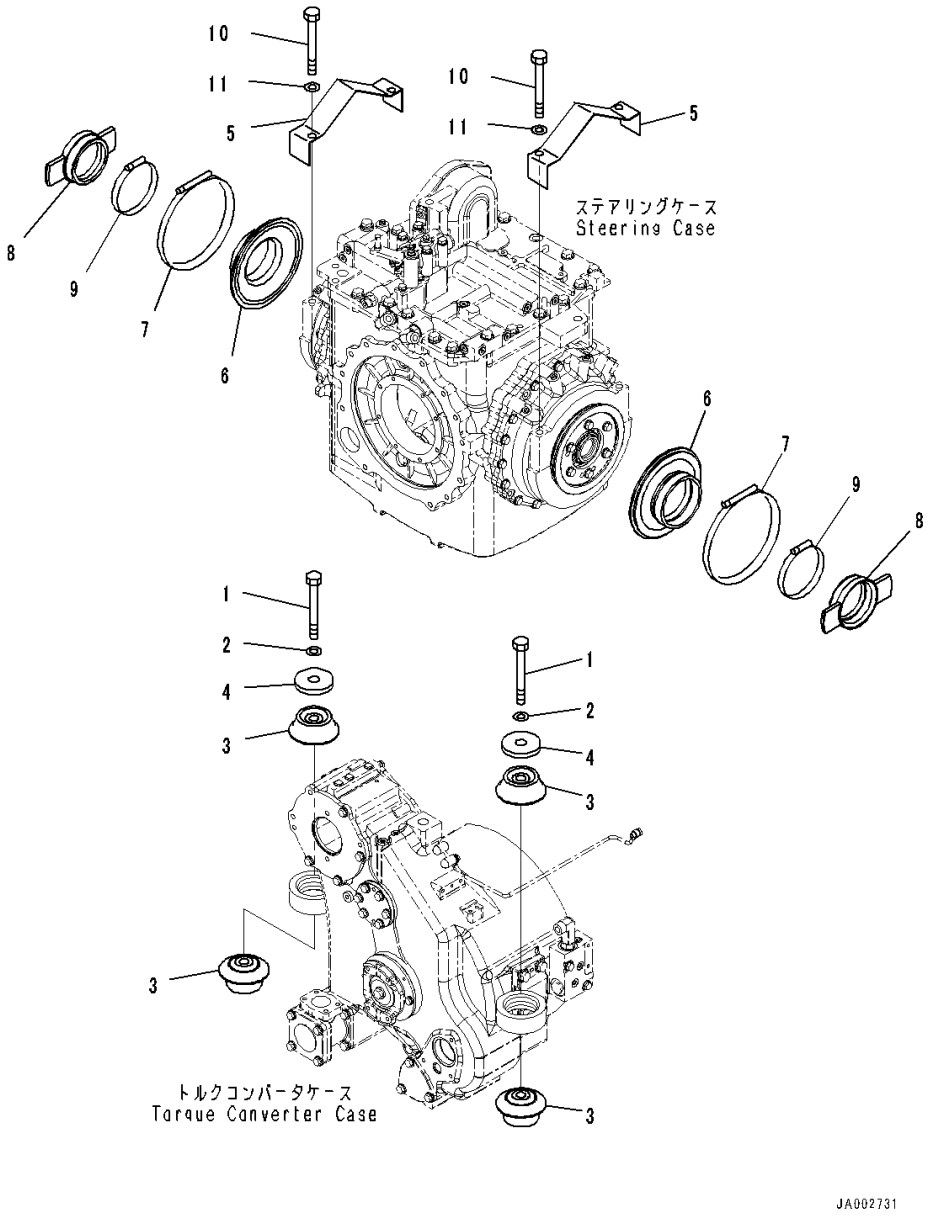

Index	Code	Part Number	Description	Qty	Serial Number
1		01011-82480	Bolt	2	80001-
2		01643-32460	Washer	2	80001-
3		207-01-35140	Cushion	4	80001-
4		14X-01-35150	Washer	2	80001-
5		14X-21-51380	Cover	2	80001-
6		14Y-21-13160	Seal	2	80001-
7		14Y-21-13210	Coupling	2	80001-
8		14Y-21-13171	Cage	2	80001-
9		14Y-21-13190	Clamp	2	80001-
10		01011-81640	Bolt	4	80001-
11		01643-31645	Washer	4	80001-

https://truckmanualshub.com/

FIG. F2730-002003 Power Train Piping, For Machine With Power Angle Power Tilt Dozer, Mounting

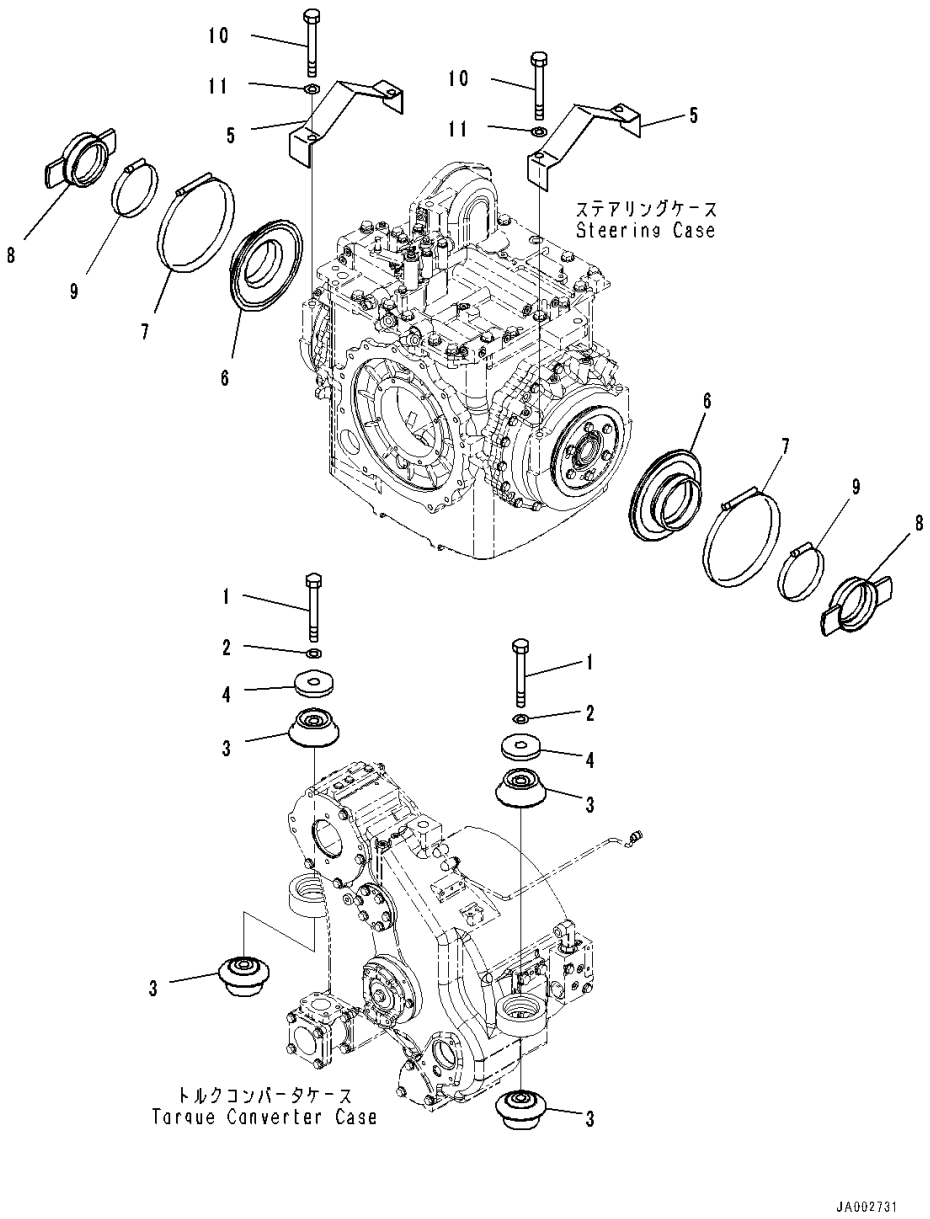

Index	Code	Part Number	Description	Qty	Serial Number
1		01011-82480	Bolt	2	80001-
2		01643-32460	Washer	2	80001-
3		207-01-35140	Cushion	4	80001-
4		14X-01-35150	Washer	2	80001-
5		14X-21-51380	Cover	2	80001-
6		14Y-21-13160	Seal	2	80001-
7		14Y-21-13210	Coupling	2	80001-
8		14X-21-53170	Cage	2	80001-
9		14Y-21-13190	Clamp	2	80001-
10		01011-81640	Bolt	4	80001-
11		01643-31645	Washer	4	80001-

https://truckmanualshub.com/

FIG. F2820-001001 Steering Control Related Parts, Rod

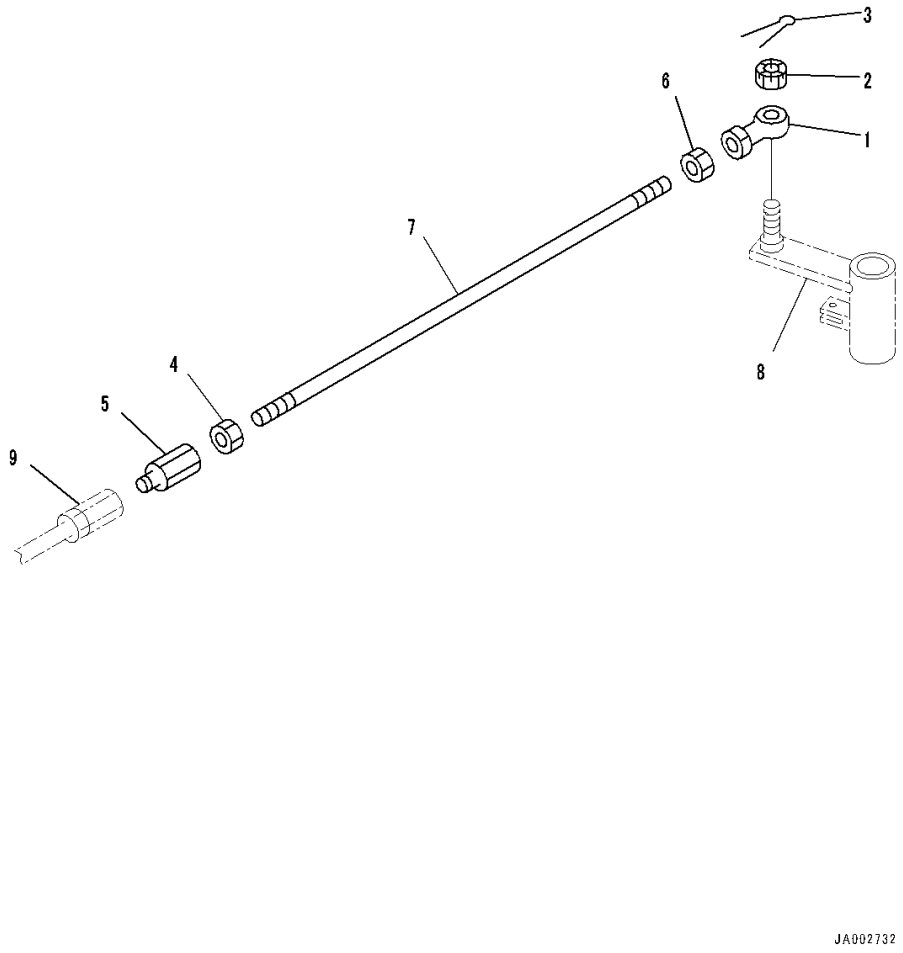

Index	Code	Part Number	Description	Qty	Serial Number
1		04250-81474	End	1	80001-
2		01593-31411	Nut	1	80001-
3		04050-13022	Pin, Cotter	1	80001-
4		01582-11411	Nut	1	80001-
5		17A-43-24170	Joint	1	80001-
6		01582-11411	Nut	1	80001-
7		04245-41487	Rod	1	80001-
8		(14Z-43-12411)	Lever(Refer to Page 233)		-
		(14Z-43-12411)	Lever(Refer to Page 233)		-
9		(17A-43-24160)	Joint(Refer to Page 420)		-
		(17A-43-24160)	Joint(Refer to Page 420)		-

https://truckmanualshub.com/

FIG. F2820-001002 Steering Control Related Parts, Parking Brake Control Cable

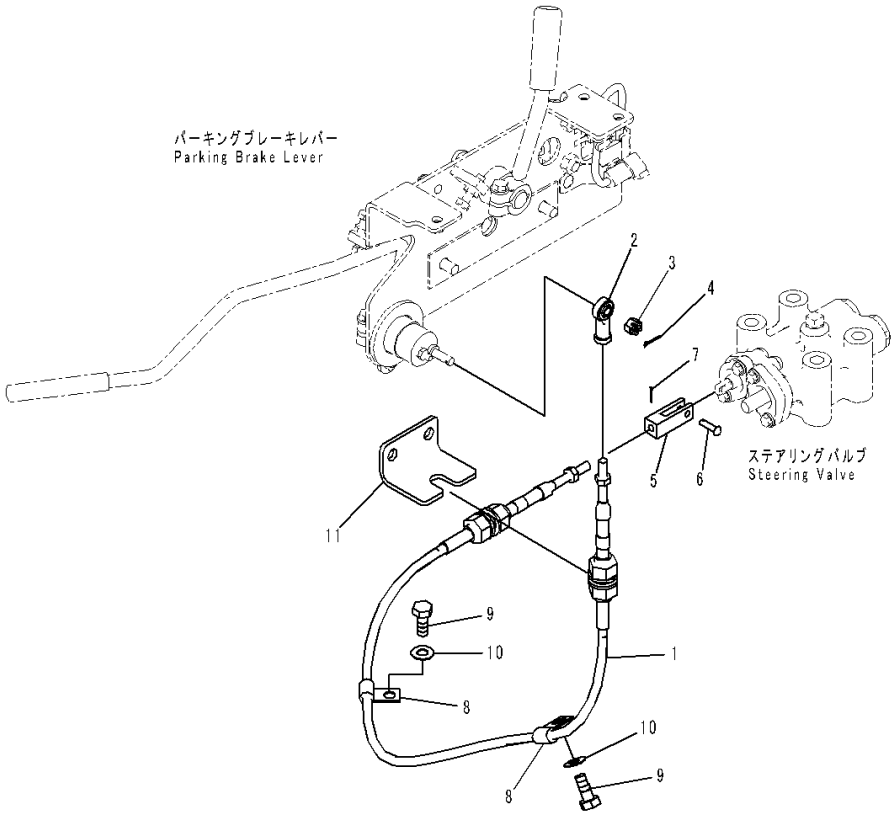

Index	Code	Part Number	Description	Qty	Serial Number
1		14X-43-51120	Cable	1	80001-
2		04250-80847	Rod End	1	80001-
3		01590-30809	Nut	1	80001-
4		04050-12015	Pin, Cotter	1	80001-
5		21K-43-11350	Yoke	1	80001-
6		04205-10622	Pin	1	80001-
7		04050-11612	Pin, Cotter	1	80001-
8		04434-50810	Clip	2	80001-
9		01010-81020	Bolt	2	80001-
10		01643-31032	Washer	2	80001-
11		(14X-43-51461)	Bracket(Refer to Page 415)		-
		(14X-43-51461)	Bracket(Refer to Page 415)		-

https://truckmanualshub.com/

https://truckmanualshub.com/

HYDRAULIC SYSTEM

FIG. H0110-001001 Hydraulic Oil Tank

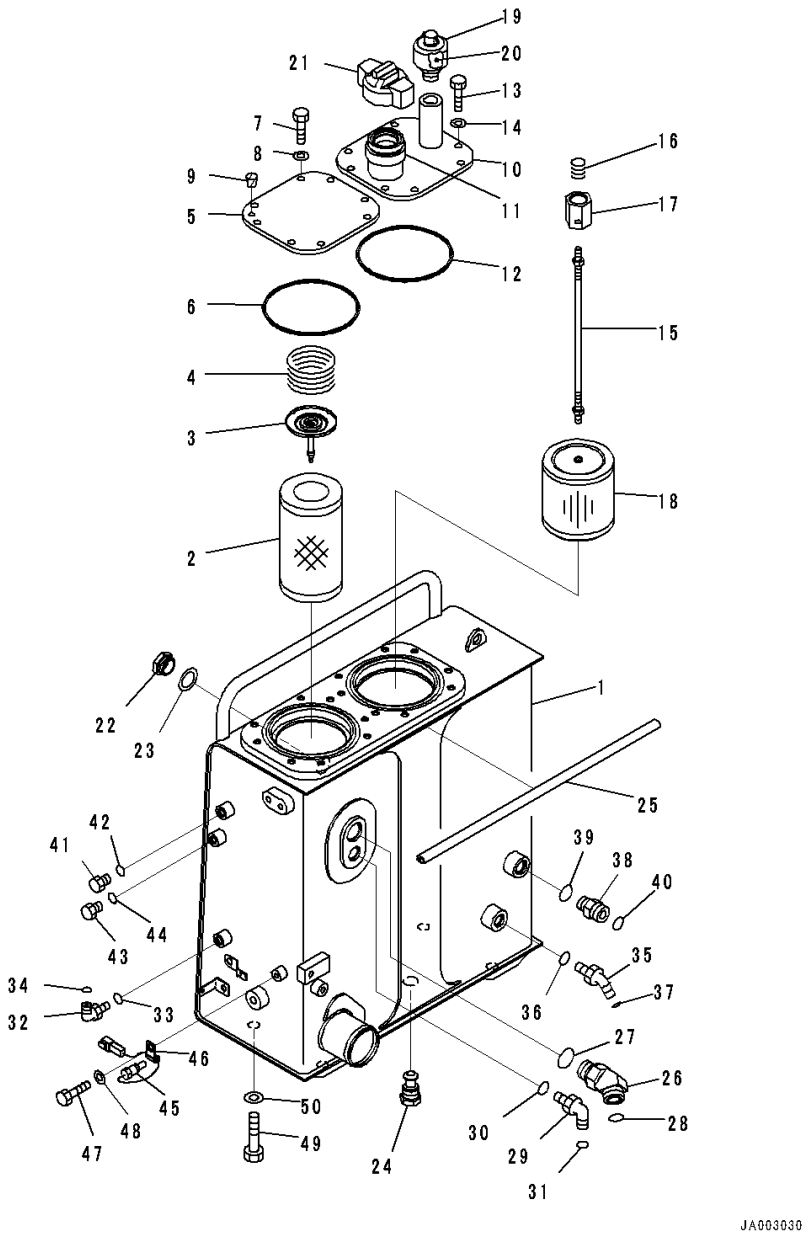

Index	Code	Part Number	Description	Qty	Serial Number
1		14X-60-51112	Tank	1	80001-
2		14X-60-31150	Element	1	80001-
3		21W-60-41170	Valve Assembly	1	80001-
4		198-49-11460	Spring	1	80001-
5		14X-60-51131	Plate	1	80001-
6		07000-15160	O-ring	1	80001-
7		01010-81025	Bolt	8	80001-
8		01643-31032	Washer	8	80001-
9		07049-01215	Plug	1	80001-
10		14X-60-51141	Cover	1	80001-
11		07055-30062	• Filler	1	80001-
12		07000-15160	O-ring	1	80001-
13		01010-81025	Bolt	8	80001-
14		01643-31032	Washer	8	80001-
		14X-60-51151	Strainer Assembly	1	80001-
15		14X-60-51161	• Rod Assembly	1	80001-
16		12R-60-11230	• • Spring	1	80001-
17		20Y-60-21320	• • Holder	1	80001-
18		22B-60-11160	• Strainer	1	80001-
19		195-60-51550	Breather	1	80001-
20		421-60-35170	• Element	1	80001-
21		07051-00005	Gasket	1	80001-
22		20N-60-11143	Gauge	1	80001-
23		20N-60-11181	• Gasket	1	80001-
24		14X-60-51171	Plug	1	80001-
25		14X-60-51230	Seal	1	80001-
26		14X-62-52951	Elbow	1	80001-
27		07002-13334	O-ring	1	80001-
28		207-62-64740	O-ring	1	80001-
29		02782-10522	Elbow	1	80001-
30		07002-12434	O-ring	1	80001-
31		02896-11015	O-ring	1	80001-
32		02782-10311	Elbow	1	80001-
33		07002-11423	O-ring	1	80001-
34		02896-11009	O-ring	1	80001-
35		02783-10422	Elbow	1	80001-
36		07002-12034	O-ring	1	80001-
37		02896-11012	O-ring	1	80001-
38		11Y-62-12210	Nipple	1	80001-
39		07002-12434	O-ring	1	80001-

https://truckmanualshub.com/

FIG. H0110-001001 Hydraulic Oil Tank

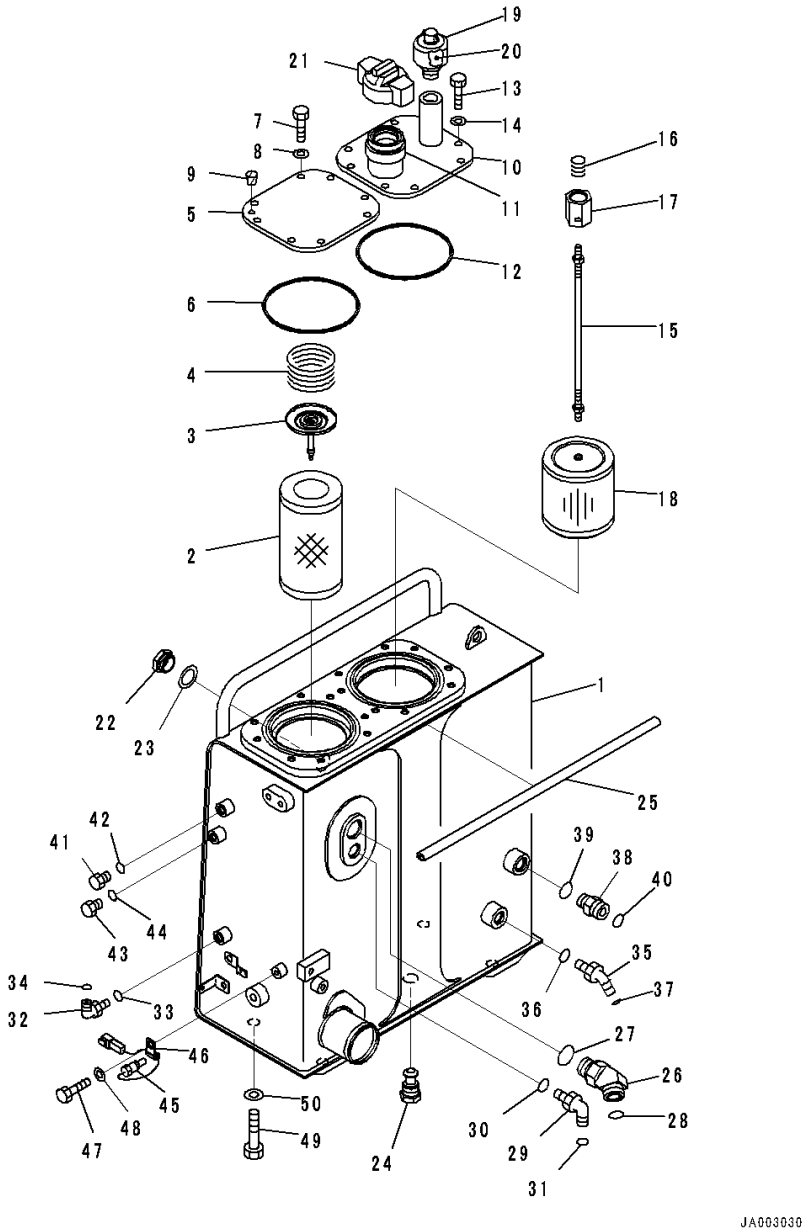

Index	Code	Part Number	Description	Qty	Serial Number
40		02896-11018	O-ring	1	80001-
41		07040-11409	Plug	1	80001-
42		07002-11423	O-ring	1	80001-
43		07040-11409	Plug	1	80001-
44		07002-11423	O-ring	1	80001-
45		7861-93-3320	Sensor	1	80001-
46		04434-50610	Clip	1	80001-
47		01010-81020	Bolt	1	80001-
48		01643-31032	Washer	1	80001-
49		14X-04-51170	Bolt	4	80001-
50		01643-31645	Washer	4	80001-

https://truckmanualshub.com/

FIG. H0110-002001 Hydraulic Oil Tank, For Machine With Rear Actuator

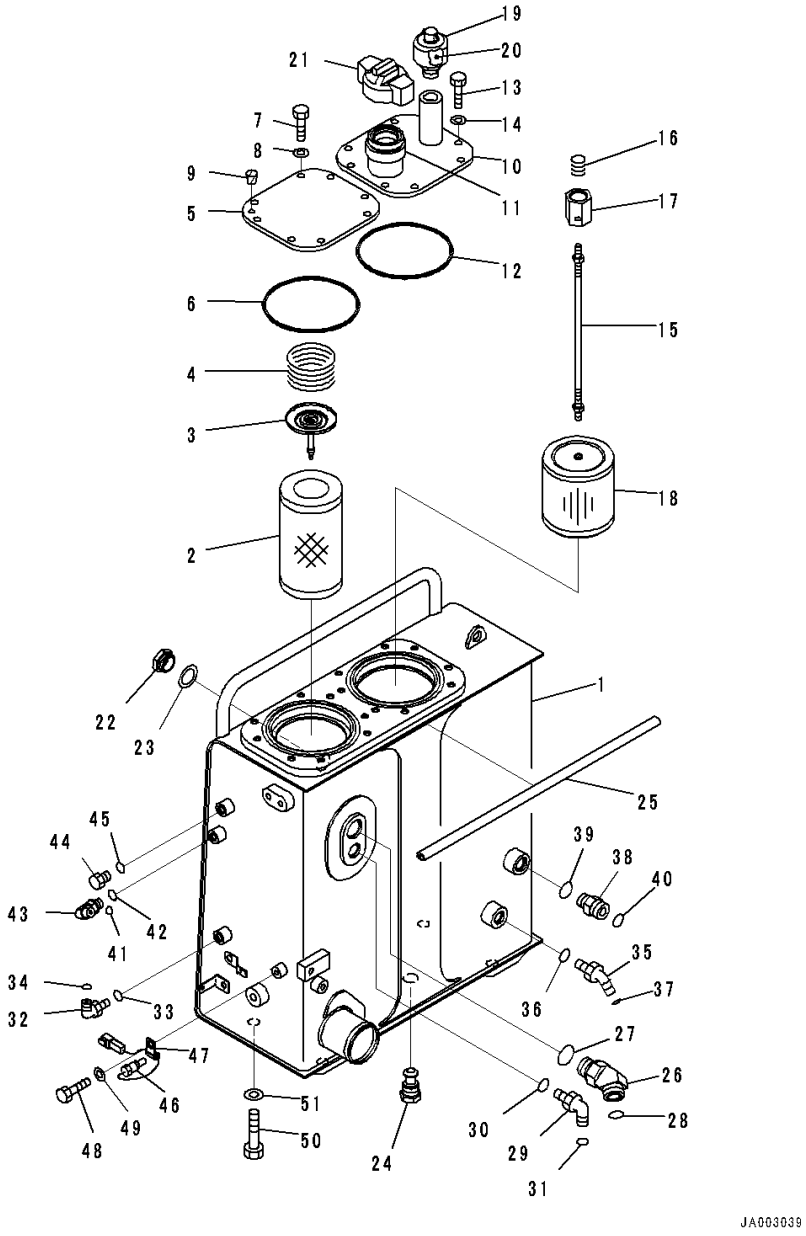

Index	Code	Part Number	Description	Qty	Serial Number
1		14X-60-51112	Tank	1	80001-
2		14X-60-31150	Element	1	80001-
3		21W-60-41170	Valve Assembly	1	80001-
4		198-49-11460	Spring	1	80001-
5		14X-60-51131	Plate	1	80001-
6		07000-15160	O-ring	1	80001-
7		01010-81025	Bolt	8	80001-
8		01643-31032	Washer	8	80001-
9		07049-01215	Plug	1	80001-
10		14X-60-51141	Cover	1	80001-
11		07055-30062	• Filler	1	80001-
12		07000-15160	O-ring	1	80001-
13		01010-81025	Bolt	8	80001-
14		01643-31032	Washer	8	80001-
		14X-60-51151	Strainer Assembly	1	80001-
15		14X-60-51161	• Rod Assembly	1	80001-
16		12R-60-11230	• • Spring	1	80001-
17		20Y-60-21320	• • Holder	1	80001-
18		22B-60-11160	• Strainer	1	80001-
19		195-60-51550	Breather	1	80001-
20		421-60-35170	• Element	1	80001-
21		07051-00005	Gasket	1	80001-
22		20N-60-11143	Gauge	1	80001-
23		20N-60-11181	• Gasket	1	80001-
24		14X-60-51171	Plug	1	80001-
25		14X-60-51230	Seal	1	80001-
26		14X-62-52951	Elbow	1	80001-
27		07002-13334	O-ring	1	80001-
28		207-62-64740	O-ring	1	80001-
29		02782-10522	Elbow	1	80001-
30		07002-12434	O-ring	1	80001-
31		02896-11015	O-ring	1	80001-
32		02782-10311	Elbow	1	80001-
33		07002-11423	O-ring	1	80001-
34		02896-11009	O-ring	1	80001-
35		02783-10422	Elbow	1	80001-
36		07002-12034	O-ring	1	80001-
37		02896-11012	O-ring	1	80001-
38		11Y-62-12210	Nipple	1	80001-
39		07002-12434	O-ring	1	80001-

https://truckmanualshub.com/

FIG. H0110-002001 Hydraulic Oil Tank, For Machine With Rear Actuator

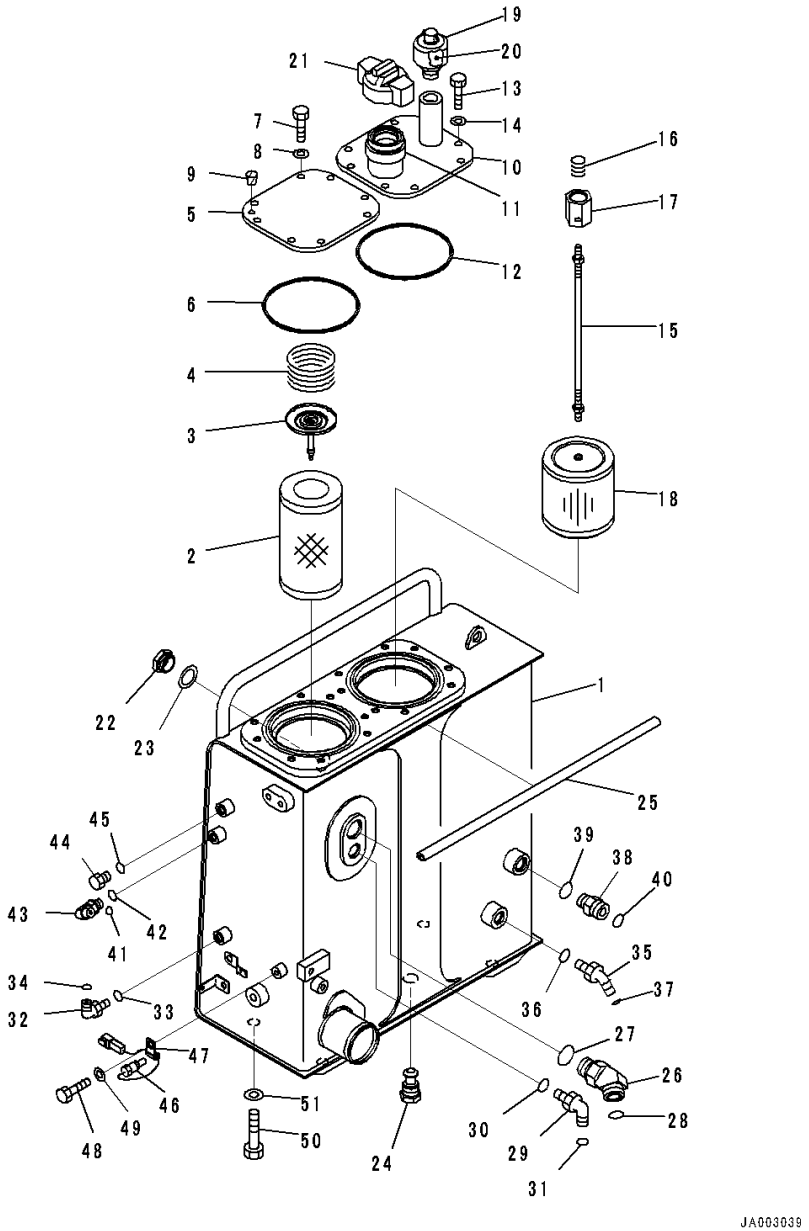

Index	Code	Part Number	Description	Qty	Serial Number
40		02896-11018	O-ring	1	80001-
41		02782-10210	Elbow	1	80001-
42		07002-11423	O-ring	1	80001-
43		02896-11008	O-ring	1	80001-
44		07040-11409	Plug	1	80001-
45		07002-11423	O-ring	1	80001-
46		7861-93-3320	Sensor	1	80001-
47		04434-50610	Clip	1	80001-
48		01010-81020	Bolt	1	80001-
49		01643-31032	Washer	1	80001-
50		14X-04-51170	Bolt	4	80001-
51		01643-31645	Washer	4	80001-

https://truckmanualshub.com/

FIG. H0210-001001 Hydraulic Oil Pump and Motor, Inner Parts (1/7)

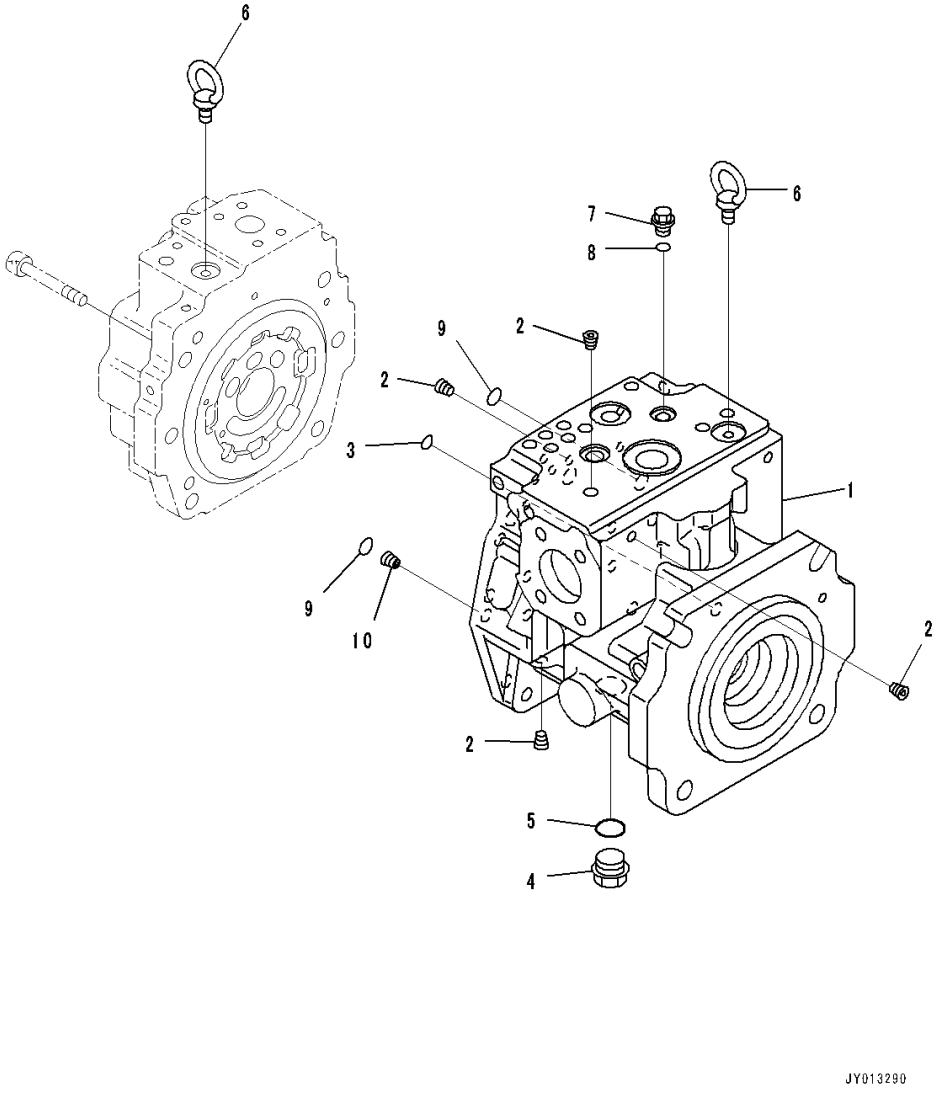

Index	Code	Part Number	Description	Qty	Serial Number
		708-1L-00680	Pump Subassembly	1	80001-
		708-1L-01680	• Pump Subassembly	1	80001-
	C1		• • Case Assembly,Front	1	80001-
1	C1		• • • Case,Front	1	80001-
2	C1		• • • Plug	26	80001-
3	C1		• • O-ring	1	80001-
4		07044-12412	• • Plug	1	80001-
5		07002-62434	• • O-ring	1	80001-
6		04530-11018	• • Bolt, Eye	1	80001-
7		708-8E-16150	• • Plug	2	80001-
8		07002-61023	• • O-ring	2	80001-
9	C1		• • O-ring	3	80001-
10	C1		• • Orifice	1	80001-

https://truckmanualshub.com/

FIG. H0210-001002 Hydraulic Oil Pump and Motor, Inner Parts (2/7)

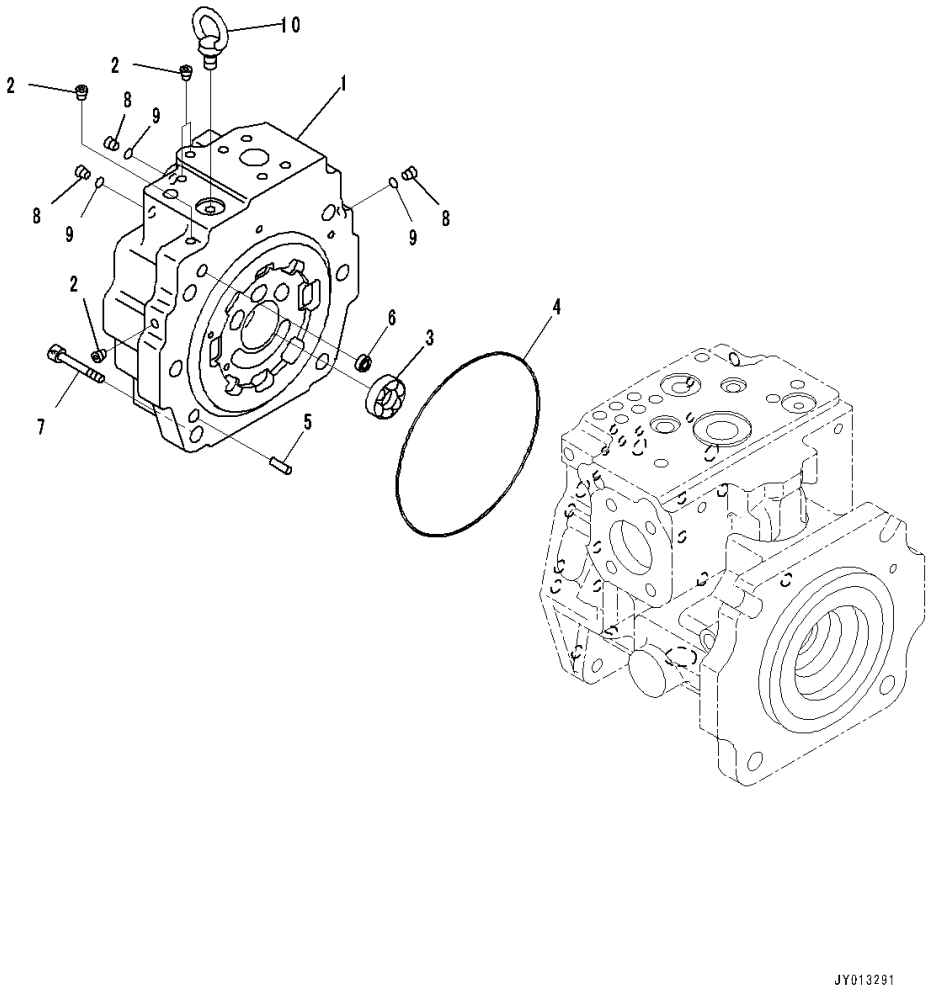

Index	Code	Part Number	Description	Qty	Serial Number
		708-1L-00680	Pump Subassembly	1	80001-
		708-1L-01680	• Pump Subassembly	1	80001-
	C1		• • Cap Assembly, End	1	80001-
1	C1		• • • Cap, End	1	80001-
2	C1		• • • Plug	4	80001-
3	C1		• • Bearing	1	80001-
4	C1		• • O-ring	1	80001-
5	C1		• • Pin, Dowel	1	80001-
6	C1		• • Filter	1	80001-
7	C1		• • Bolt	6	80001-
8		708-8E-16150	• • Plug	3	80001-
9		07002-61023	• • O-ring	3	80001-
10		04530-11018	• • Bolt, Eye	1	80001-

https://truckmanualshub.com/

FIG. H0210-001003 Hydraulic Oil Pump and Motor, Inner Parts (3/7)

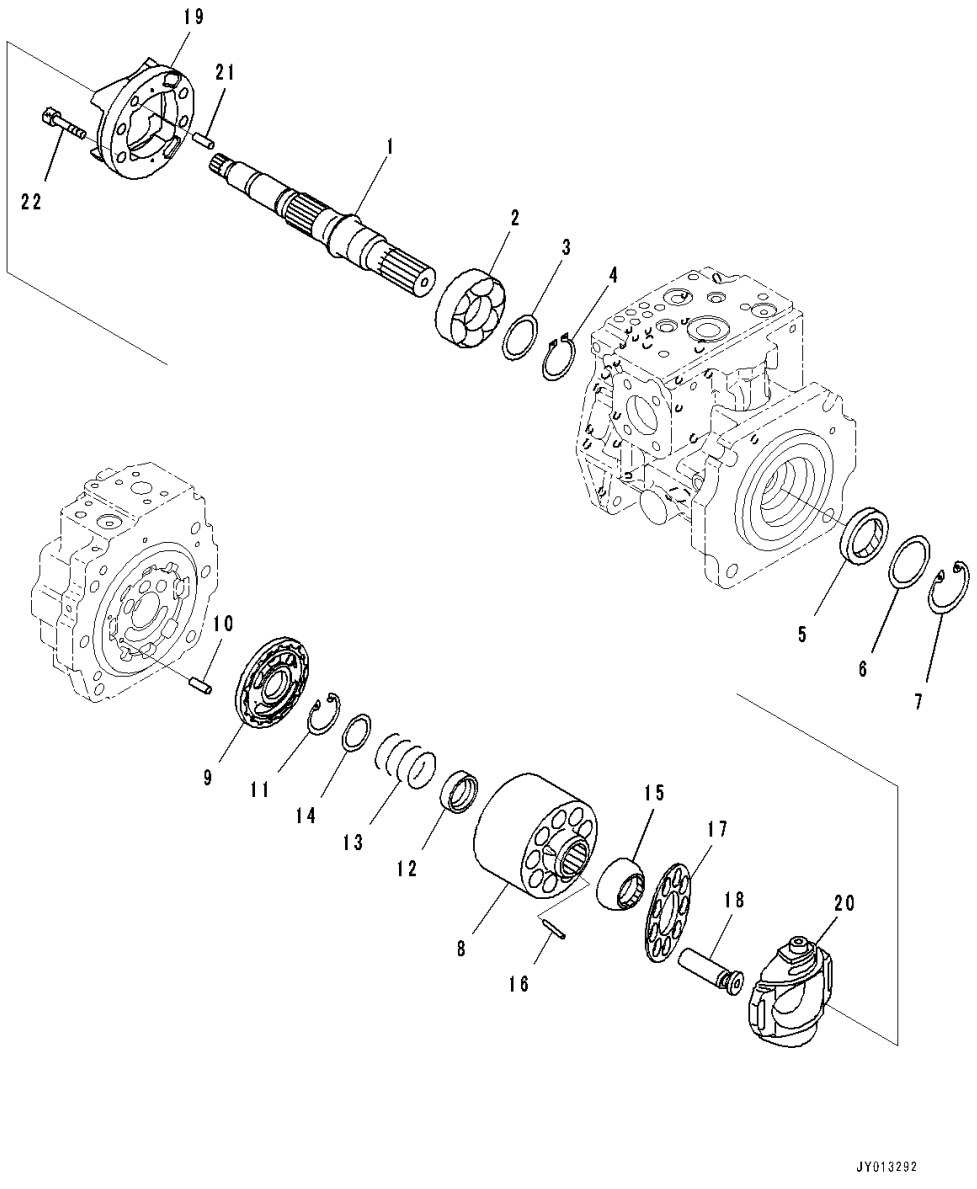

Index	Code	Part Number	Description	Qty	Serial Number
		708-1L-00680	Pump Subassembly	1	80001-
		708-1L-01680	• Pump Subassembly	1	80001-
1	C1		• • Shaft	1	80001-
2	C1		• • Bearing	1	80001-
3	C1		• • Washer Kit	1	80001-
	C1		• • • Washer, T=3.1mm	1	80001-
	C1		• • • Washer, T=3.0mm	1	80001-
	C1		• • • Washer, T=2.9mm	1	80001-
	C1		• • • Washer, T=2.8mm	1	80001-
4	C1		• • Ring, Snap	1	80001-
5		708-25-52861	• • Seal, Oil	1	80001-
6		708-2L-22160	• • Spacer	1	80001-
7		04065-06825	• • Ring, Snap	1	80001-
	C1		• • Block Assembly	1	80001-
8	C1		• • • Block, Cylinder	1	80001-
9	C1		• • • Plate	1	80001-
10	C1		• • Pin	1	80001-
11	C1		• • Ring, Snap	1	80001-
12	C1		• • Seat	1	80001-
13	C1		• • Spring	1	80001-
14	C1		• • Seat	1	80001-
15	C1		• • Guide	1	80001-
16	C1		• • Pin	3	80001-
17	C1		• • Retainer	1	80001-
18	C1		• • Piston Subassembly	9	80001-
	C1		• • Cradle Assembly	1	80001-
19	C1		• • • Cradle	1	80001-
20	C1		• • • Cam	1	80001-
21	C1		• • Pin, Dowel	1	80001-
22	C1		• • Bolt	4	80001-

https://truckmanualshub.com/

FIG. H0210-001004 Hydraulic Oil Pump and Motor, Inner Parts (4/7)

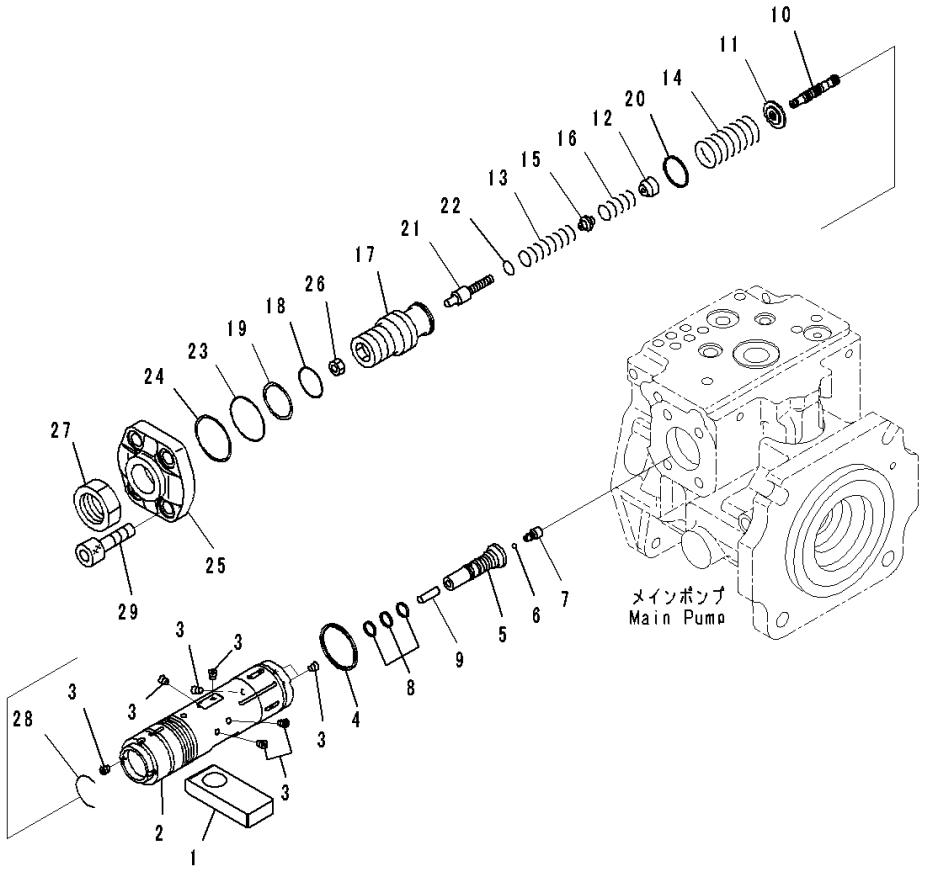

Index	Code	Part Number	Description	Qty	Serial Number
		708-1L-00680	Pump Subassembly	1	80001-
		708-1L-01680	• Pump Subassembly	1	80001-
1	C1		•• Slider	1	80001-
	C1		•• Valve Assembly, Pc	1	80001-
	C1		••• Piston Assembly, Servo	1	80001-
2	C1		•••• Piston, Servo	1	80001-
3	C1		•••• Screw	7	80001-
4	C1		••• Seal	1	80001-
5	C1		••• Plug	1	80001-
6	C1		••• Ball	1	80001-
7	C1		••• Plug	1	80001-
8	C1		••• Seal	3	80001-
9	C1		••• Pin	1	80001-
10	C1		••• Spool	1	80001-
11	C1		••• Retainer	1	80001-
12	C1		••• Seat	1	80001-
13	C1		••• Spring	1	80001-
14	C1		••• Spring	1	80001-
15	C1		••• Seat	1	80001-
16	C1		••• Spring	1	80001-
17	C1		••• Screw	1	80001-
18	C1		••• O-ring	1	80001-
19	C1		••• Ring, Back-up	1	80001-
20	C1		••• Seal	1	80001-
21	C1		••• Plug	1	80001-
22	C1		••• O-ring	1	80001-
23	C1		••• O-ring	1	80001-
24	C1		••• Ring	1	80001-
25	C1		••• Cover	1	80001-
26	C1		••• Nut	1	80001-
27	C1		••• Nut	1	80001-
28	C1		••• Ring	1	80001-
29	C1		•• Bolt, Hexagon Socket Head	4	80001-

https://truckmanualshub.com/

FIG. H0210-001005 Hydraulic Oil Pump and Motor, Inner Parts (5/7)

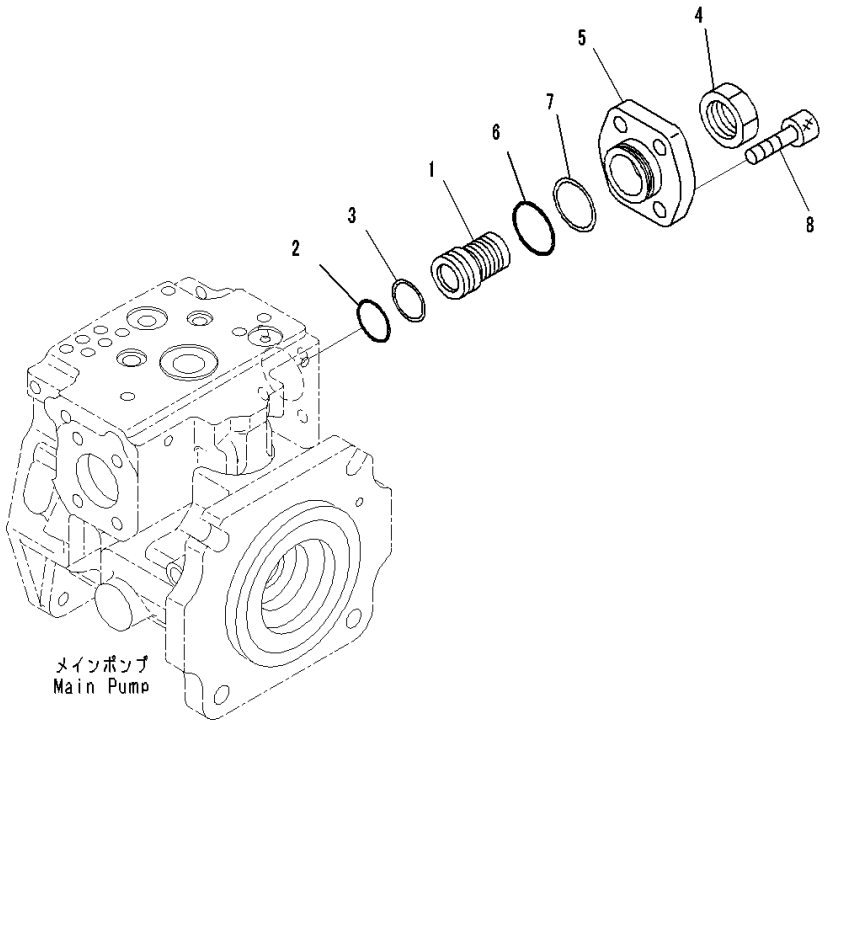

Index	Code	Part Number	Description	Qty	Serial Number
		708-1L-00680	Pump Subassembly	1	80001-
		708-1L-01680	• Pump Subassembly	1	80001-
	C1		• • Cover Assembly	1	80001-
1	C1		• • • Screw	1	80001-
2	C1		• • • O-ring	1	80001-
3	C1		• • • Ring, Back-up	1	80001-
4	C1		• • • Nut	1	80001-
5	C1		• • • Cover	1	80001-
6	C1		• • • O-ring	1	80001-
7	C1		• • • Ring	1	80001-
8	C1		• • Bolt, Hexagon Socket Head	4	80001-

https://truckmanualshub.com/

FIG. H0210-001006 Hydraulic Oil Pump and Motor, Inner Parts (6/7)

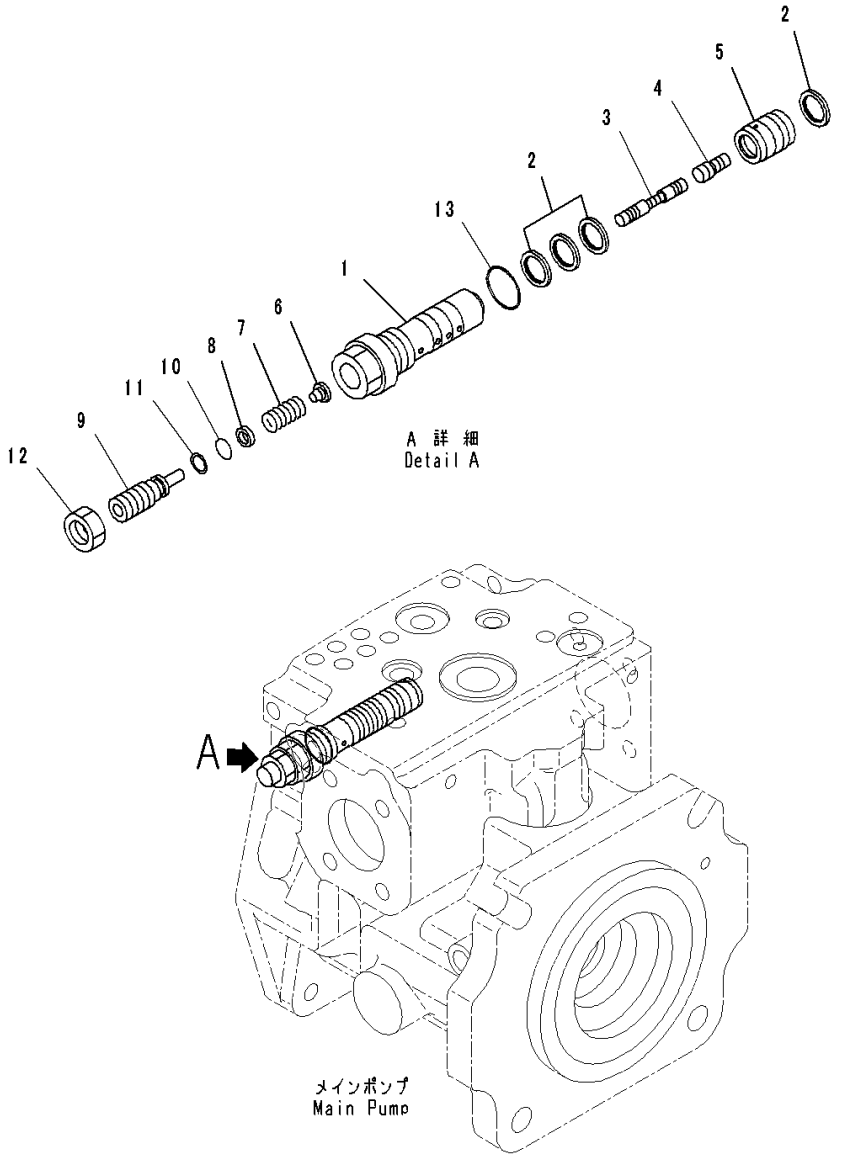

Index	Code	Part Number	Description	Qty	Serial Number
		708-1L-00680	Pump Subassembly	1	80001-
		708-2H-03620	• Valve Assembly, Ls	1	80001-
1	C1		• • Sleeve	1	80001-
2	C1		• • Seal	4	80001-
3	C1		• • Spool	1	80001-
4	C1		• • Piston	1	80001-
5	C1		• • Sleeve	1	80001-
6	C1		• • Seat	1	80001-
7	C1		• • Spring	1	80001-
8	C1		• • Seat	1	80001-
9	C1		• • Plug	1	80001-
10	C1		• • O-ring	1	80001-
11	C1		• • Ring, Back-up	1	80001-
12	C1		• • Nut	1	80001-
13	C1		• • O-ring	1	80001-

https://truckmanualshub.com/

FIG. H0210-001007 Hydraulic Oil Pump and Motor, Inner Parts (7/7)

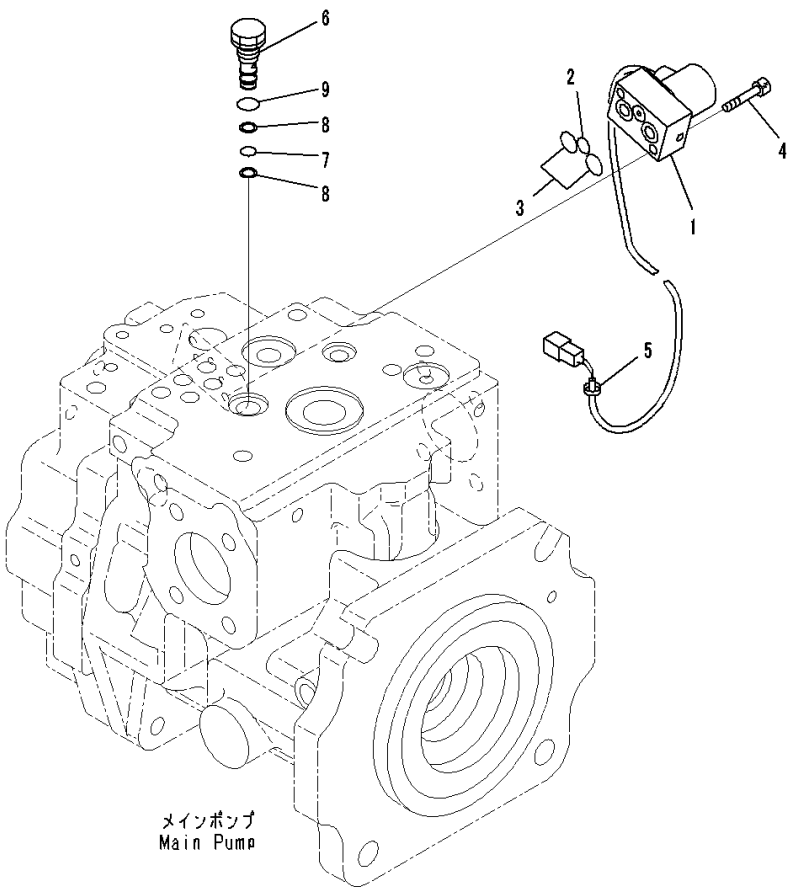

Index	Code	Part Number	Description	Qty	Serial Number
		708-1L-00680	Pump Subassembly	1	80001-
1	C1		• Valve, Pilot	1	80001-
2	C1		• • O-ring	1	80001-
3	C1		• • O-ring	2	80001-
4	C1		• Bolt	2	80001-
5	C1		• Band, White	1	80001-
6	C1		• Plug	1	80001-
7	C1		• O-ring	1	80001-
8	C1		• Ring	2	80001-
9	C1		• O-ring	1	80001-

https://truckmanualshub.com/

FIG. H0210-001008 Hydraulic Oil Pump and Motor, Pump Mounting (1/2)

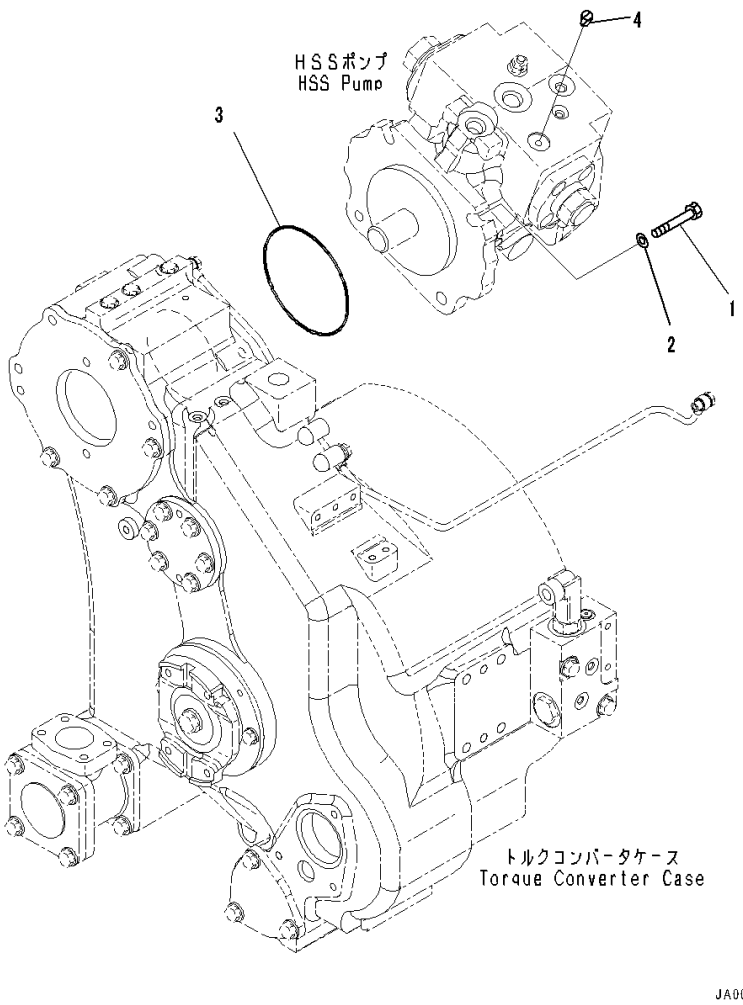

Index	Code	Part Number	Description	Qty	Serial Number
1		01010-81650	Bolt	4	80001-
2		01643-31645	Washer	4	80001-
3		07000-15160	O-ring	1	80001-
4		07049-01012	Plug	2	80007-

https://truckmanualshub.com/

FIG. H0210-001009 Hydraulic Oil Pump and Motor, HSS Motor (1/2)

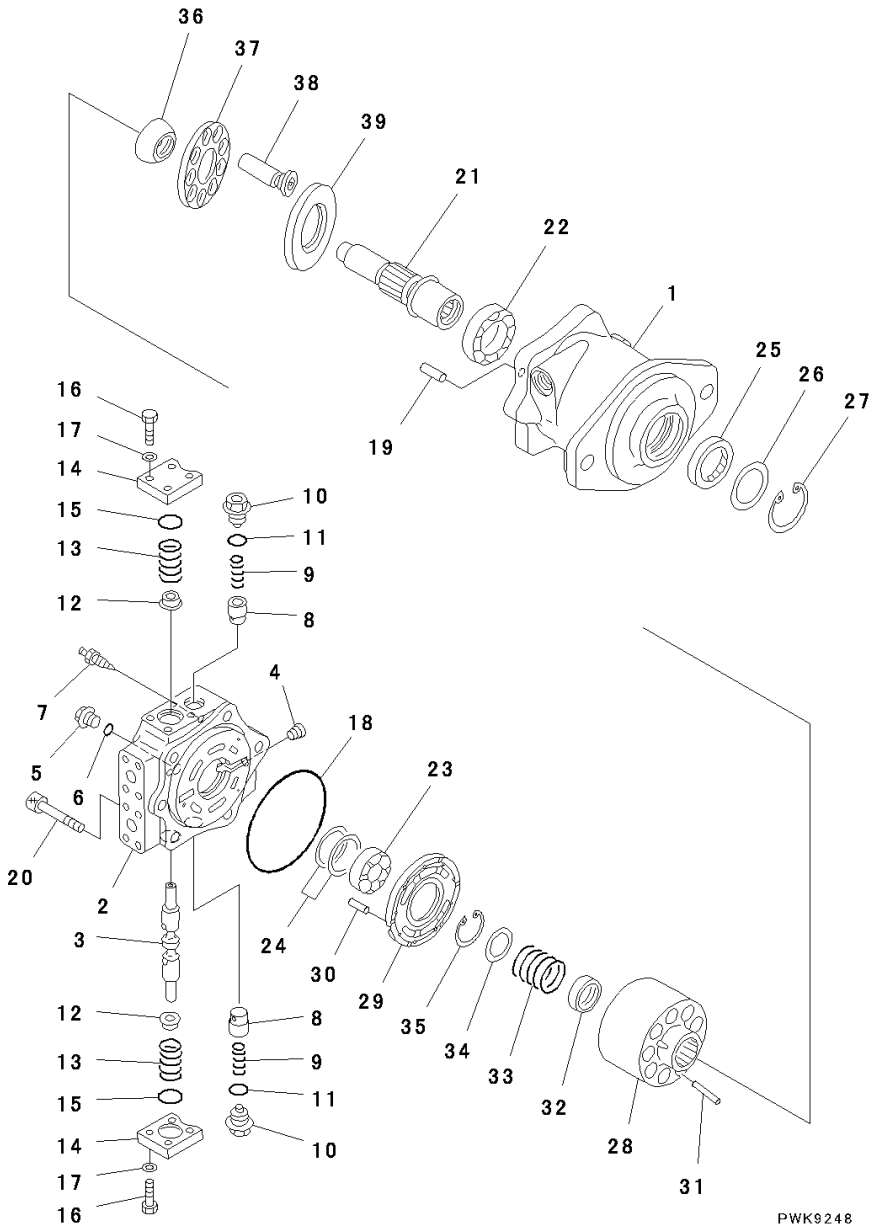

Index	Code	Part Number	Description	Qty	Serial Number
		708-7L-00070	Motor Assembly	1	80001-
1		708-7L-11130	• Case, Motor	1	80001-
	C2	708-7L-04180	• Cover Subassembly, End	1	80001-
2		708-7L-11514	• • Cover, End	1	80001-
3	C1		• • Spool	1	80001-
4		708-21-12541	• • Plug	1	80001-
5		708-8K-16280	• Plug	3	80001-
6		07002-11623	• O-ring	3	80001-
7		20B-27-11210	• Bleeder	1	80001-
8		706-73-72420	• Valve	2	80001-
9		708-7L-16510	• Spring	2	80001-
10		708-8F-16170	• Plug	2	80001-
11		07002-12434	• O-ring	2	80001-
12		708-7L-16211	• Retainer	2	80001-
13		708-7L-16220	• Spring	2	80001-
14		708-7L-16311	• Cover	2	80001-
15		07000-13035	• O-ring	2	80001-
16		01010-81035	• Bolt	8	80001-
17		01643-51032	• Washer	8	80001-
18		07000-12145	• O-ring	1	80001-
19		04020-01228	• Pin, Dowel	1	80001-
20		01252-61480	• Bolt	6	80001-
21		708-7L-12111	• Shaft	1	80001-
22		708-8F-12151	• Bearing	1	80001-
23		708-7L-12140	• Bearing	1	80001-
24		708-7L-05010	• Spacer Kit	1	80001-
		708-7L-12220	• • Spacer, T=1.5mm	1	80001-
		708-7L-12230	• • Spacer, T=1.6mm	1	80001-
		708-7L-12240	• • Spacer, T=1.7mm	1	80001-
		708-7L-12250	• • Spacer, T=1.8mm	1	80001-
		708-7L-12260	• • Spacer, T=1.9mm	1	80001-
		708-7L-12270	• • Spacer, T=2.0mm	1	80001-
25		706-7G-11291	• Seal, Oil	1	80001-
26		708-8F-12230	• Spacer, T=3.2mm	1	80001-
27		04065-07225	• Ring, Snap	1	80001-
28		708-7L-13111	• Cylinder Block	1	80001-
29	C2	708-7L-13220	• Plate, Valve	1	80001-
30		720-68-19610	• Pin	1	80001-
31		708-2L-23360	• Pin	3	80001-
32		708-2L-23131	• Seat	1	80001-

https://truckmanualshub.com/

FIG. H0210-001009 Hydraulic Oil Pump and Motor, HSS Motor (1/2)

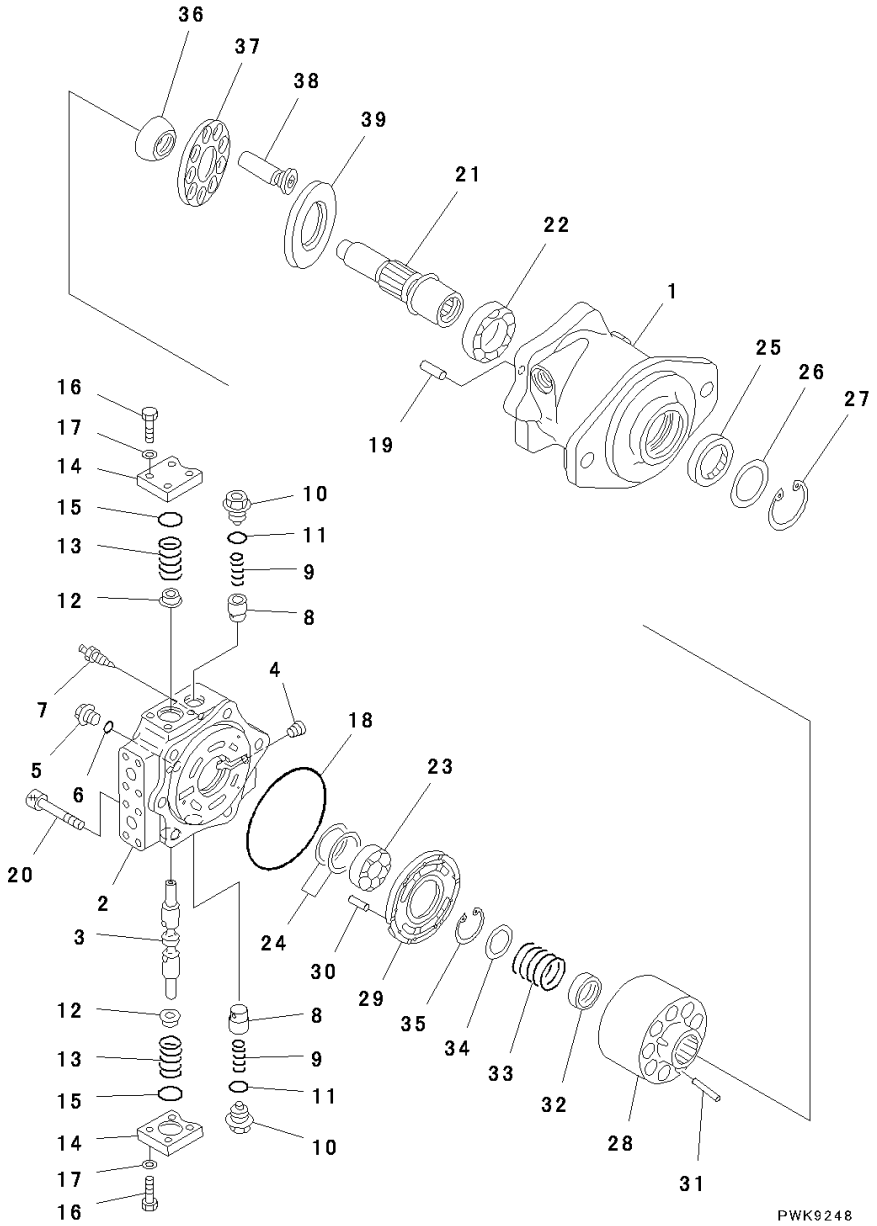

Index	Code	Part Number	Description	Qty	Serial Number
33	C2	708-7L-13160	• Spring	1	80001-
34		708-7L-13140	• Seat	1	80001-
35		04065-04818	• Ring, Snap	1	80001-
36		708-2L-23351	• Guide	1	80001-
37		708-2L-33350	• Retainer	1	80001-
38		708-8F-33310	• Piston Subassembly	9	80001-
39	C2	708-7L-13410	• Plate, Thrust	1	80001-

https://truckmanualshub.com/

FIG. H0210-001010 Hydraulic Oil Pump and Motor, HSS Motor (2/2)

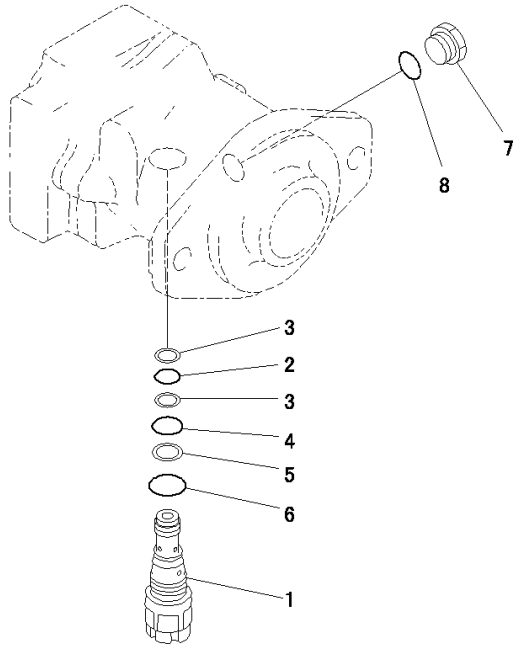

00001785

Index	Code	Part Number	Description	Qty	Serial Number
		708-7L-00070	Motor Assembly	1	80001-
1		702-75-03102	• Valve Assembly, Relief	1	80001-
2		07000-22018	• • O-ring	1	80001-
3		07001-02018	• • Ring, Back-up	2	80001-
4		07000-12021	• • O-ring	1	80001-
5		07001-02021	• • Ring	1	80001-
6		07002-13034	• • O-ring	1	80001-
7		07040-12012	• Plug	1	80001-
8		07002-12034	• O-ring	1	80001-

https://truckmanualshub.com/

FIG. H0210-001011 Hydraulic Oil Pump and Motor, Motor Mounting

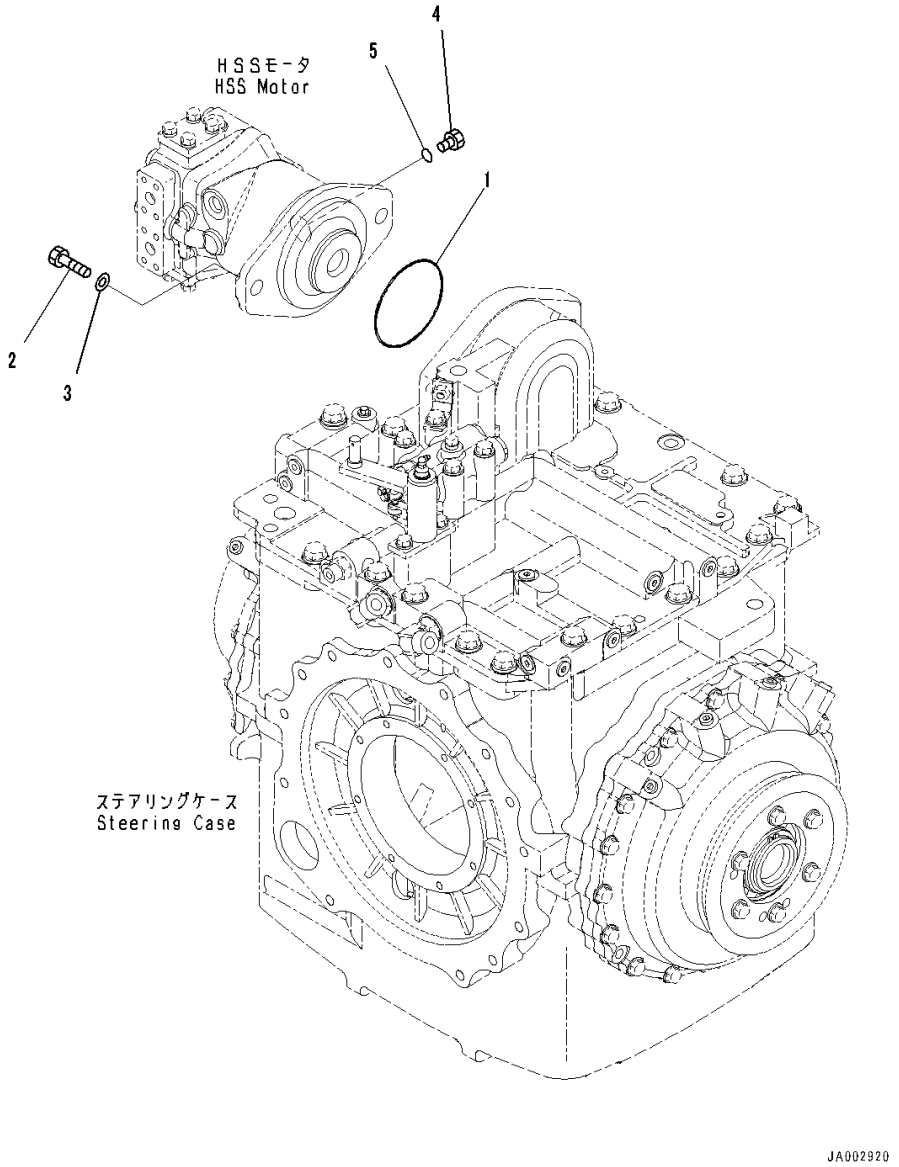

Index	Code	Part Number	Description	Qty	Serial Number
1		07000-15160	O-ring	1	80001-
2		01010-82055	Bolt	2	80001-
3		01643-32060	Washer	2	80001-
4		07040-12012	Plug	1	80001-
5		07002-12034	O-ring	1	80001-

https://truckmanualshub.com/

FIG. H0210-001012 Hydraulic Oil Pump and Motor, Cooling Fan Pump (1/5)

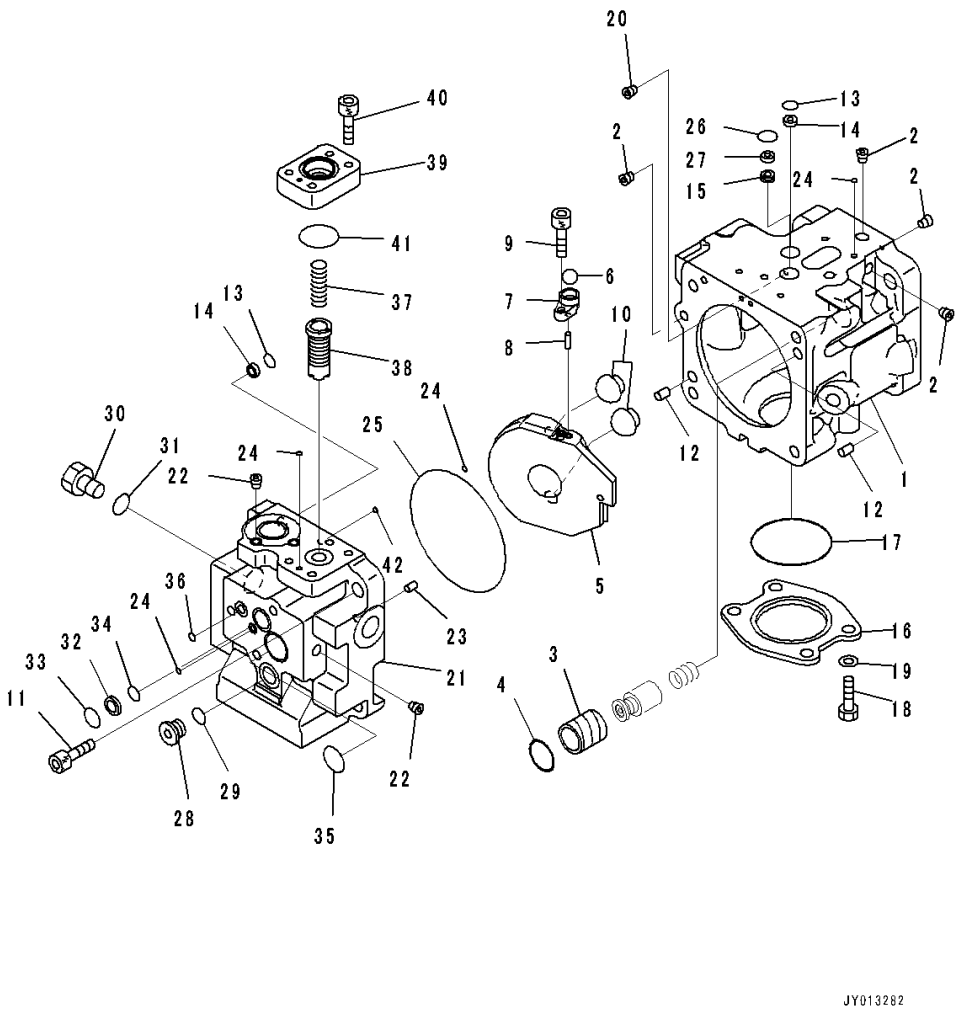

Index	Code	Part Number	Description	Qty	Serial Number
		708-1S-00290	Pump Assembly	1	80001-
	C1		• Pump Subassembly	1	80001-
		708-1S-04330	• • Case Subassembly	1	80001-
1	C1		• • • Case, Pump	1	80001-
2	C1		• • • Plug	8	80001-
3	C1		• • • Sleeve	1	80001-
4	C1		• • • Ring	1	80001-
5	C1		• • Cam	1	80001-
6	C1		• • Ball	1	80001-
7	C1		• • Spacer	1	80001-
8	C1		• • Pin	2	80001-
9	C1		• • Bolt	1	80001-
10	C1		• • Ball	2	80001-
11	C1		• • Bolt	4	80001-
12	C1		• • Pin, Dowel	2	80001-
13	C1		• • O-ring	2	80001-
14	C1		• • Filter	2	80001-
15	C1		• • Orifice	1	80001-
16		708-1S-19920	• • Plate	1	80001-
17		07000-12065	• • O-ring	1	80001-
18		01010-81025	• • Bolt	4	80001-
19		01643-31032	• • Washer	4	80001-
20	C1		• • Orifice	1	80001-
	C1		• • Cap Subassembly	1	80001-
21	C1		• • • Cap, End	1	80001-
22	C1		• • • Plug	5	80001-
23	C1		• • Pin	1	80001-
24	C1		• • O-ring	3	80001-
25	C1		• • O-ring	1	80001-
26	C1		• • O-ring	1	80001-
27	C1		• • Filter	1	80001-
28		723-56-31630	• • Plug	1	80001-
29		07002-11623	• • O-ring	1	80001-
30		07040-12012	• • Plug	1	80001-
31		07002-12034	• • O-ring	1	80001-
32		702-21-53120	• • Filter	1	80001-
33		702-21-55520	• • O-ring	1	80001-
34		702-21-55420	• • O-ring	1	80001-
35		702-21-55440	• • O-ring	1	80001-
36		07000-12010	• • O-ring	1	80001-

https://truckmanualshub.com/

FIG. H0210-001012 Hydraulic Oil Pump and Motor, Cooling Fan Pump (1/5)

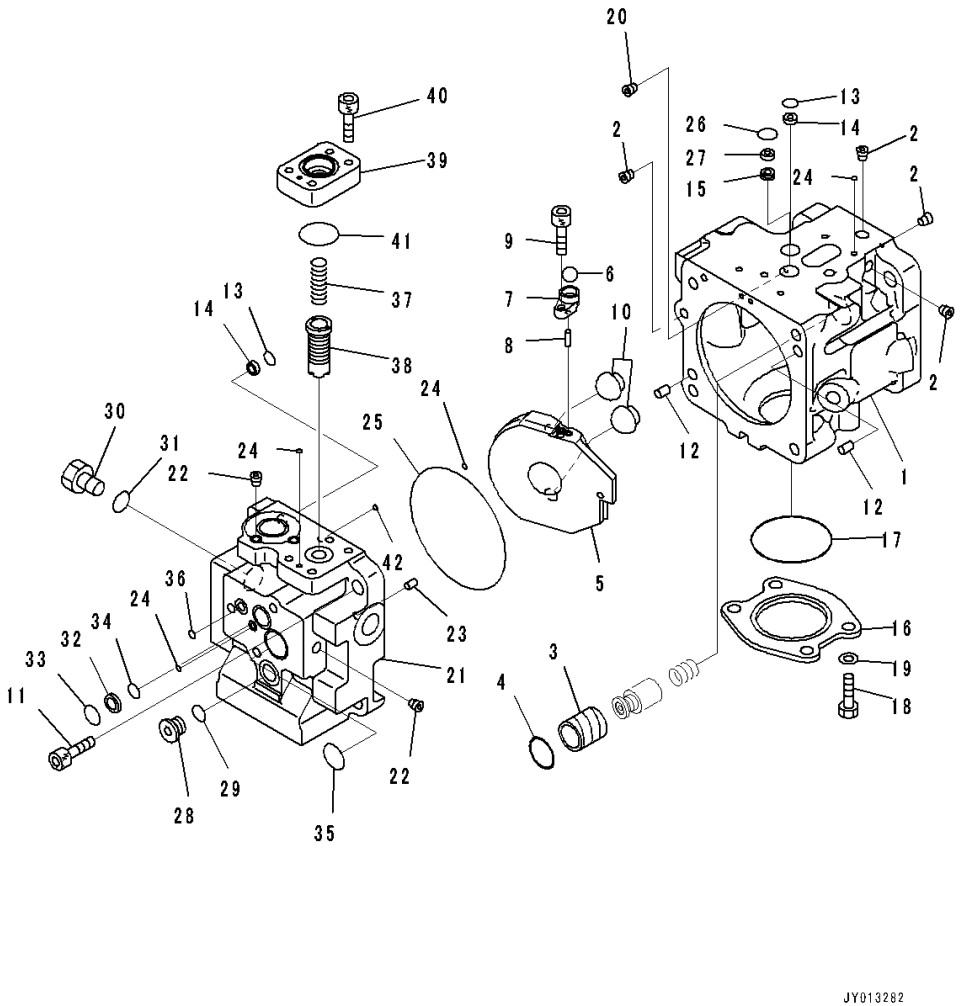

Index	Code	Part Number	Description	Qty	Serial Number
37	C1		• • Spring	1	80001-
38		723-56-31980	• • Valve	1	80001-
39		708-1S-17110	• • Cover	1	80001-
40		01252-60825	• • Bolt	4	80001-
41		07000-12030	• • O-ring	1	80001-
42		07000-11006	• • O-ring	1	80001-

https://truckmanualshub.com/

FIG. H0210-001013 Hydraulic Oil Pump and Motor, Cooling Fan Pump (2/5)

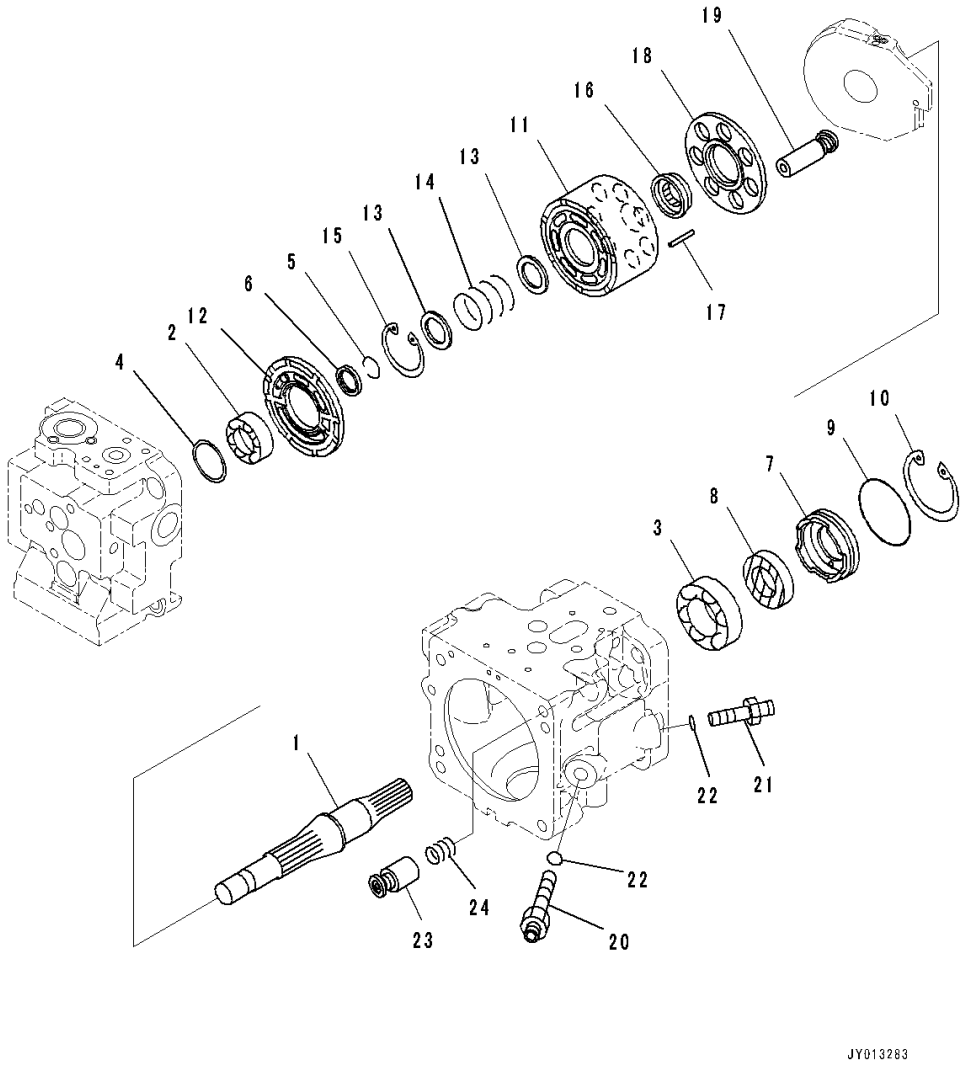

Index	Code	Part Number	Description	Qty	Serial Number
		708-1S-00290	Pump Assembly	1	80001-
	C1		• Pump Subassembly	1	80001-
1	C1		• • Shaft	1	80001-
2	C1		• • Bearing	1	80001-
3	C1		• • Bearing	1	80001-
4	C1		• • Spacer Kit	1	80001-
	C1		• • • Spacer, T=1.6mm	1	80001-
	C1		• • • Spacer, T=1.7mm	1	80001-
	C1		• • • Spacer, T=1.8mm	1	80001-
	C1		• • • Spacer, T=1.9mm	1	80001-
	C1		• • • Spacer, T=2.0mm	1	80001-
	C1		• • • Spacer, T=2.1mm	1	80001-
	C1		• • • Spacer, T=2.2mm	1	80001-
5	C1		• • Ring, Wear	1	80001-
6		708-1S-12330	• • Retainer	1	80001-
7		708-1S-12340	• • Case	1	80001-
8		708-21-12970	• • Seal, Oil	1	80001-
9		708-1S-12350	• • O-ring	1	80001-
10		04065-06220	• • Ring, Snap	1	80001-
11	C1		• • Block, Cylinder	1	80001-
12	C1		• • Plate, Valve	1	80001-
13	C1		• • Washer	2	80001-
14	C1		• • Spring	1	80001-
15	C1		• • Ring, Snap	1	80001-
16	C1		• • Guide	1	80001-
17	C1		• • Pin	3	80001-
18	C1		• • Retainer	1	80001-
19	C1		• • Piston Subassembly	7	80001-
20	C1		• • Plug	1	80001-
21	C1		• • Plug	1	80001-
22	C1		• • O-ring	2	80001-
23	C1		• • Piston Subassembly	1	80001-
24	C1		• • Spring	1	80001-

https://truckmanualshub.com/

FIG. H0210-001014 Hydraulic Oil Pump and Motor, Cooling Fan Pump (3/5)

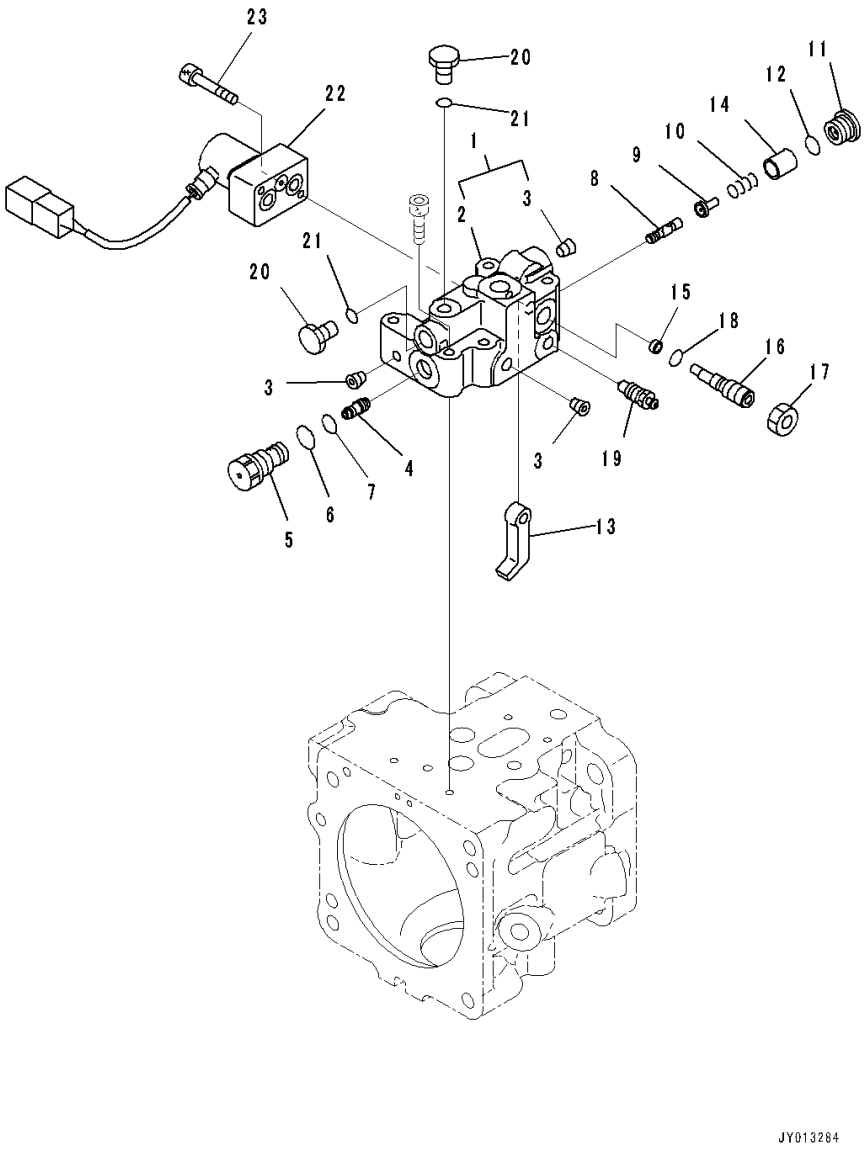

Index	Code	Part Number	Description	Qty	Serial Number
		708-1S-00290	Pump Assembly	1	80001-
	C1		• Pump Subassembly	1	80001-
		708-1S-03390	• • Valve Assembly	1	80001-
1		708-1S-04360	• • • Body Subassembly	1	80001-
2	C1		• • • • Body	1	80001-
3	C1		• • • • Plug	3	80001-
4	C1		• • • Piston	1	80001-
5	C1		• • • Sleeve	1	80001-
6		07002-21623	• • • O-ring	1	80001-
7		07000-B1010	• • • O-ring	1	80001-
8	C1		• • • Spool	1	80001-
9	C1		• • • Seat	1	80001-
10	C1		• • • Spring	1	80001-
11		723-56-31630	• • • Plug	1	80001-
12		07002-21623	• • • O-ring	1	80001-
13	C1		• • • Lever	1	80001-
14	C1		• • • Retainer	1	80001-
15	C1		• • • Spacer	1	80001-
16	C1		• • • Plug	1	80001-
17	C1		• • • Nut	1	80001-
18	C1		• • • O-ring	1	80001-
19		20B-27-11210	• • • Bleeder	1	80001-
20		07040-11007	• • • Plug	3	80001-
21		07002-21023	• • • O-ring	3	80001-
22	C2	702-21-57700	• • • Valve, Pilot	1	80001-
23		01252-60635	• • • Bolt	2	80001-

https://truckmanualshub.com/

FIG. H0210-001015 Hydraulic Oil Pump and Motor, Cooling Fan Pump (4/5)

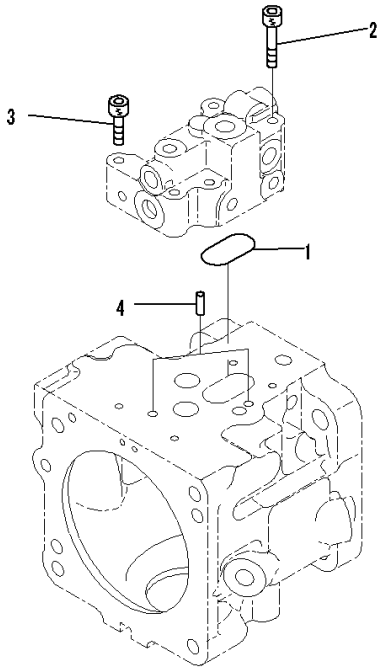

JY013285

Index	Code	Part Number	Description	Qty	Serial Number
		708-1S-00290	Pump Assembly	1	80001-
	C1		• Pump Subassembly	1	80001-
1		07000-13040	• • O-ring	1	80001-
2		01252-60650	• • Bolt	1	80001-
3		01252-60635	• • Bolt	3	80001-
4		04020-00616	• • Pin, Dowel	2	80001-

https://truckmanualshub.com/

FIG. H0210-001016 Hydraulic Oil Pump and Motor, Cooling Fan Pump (5/5)

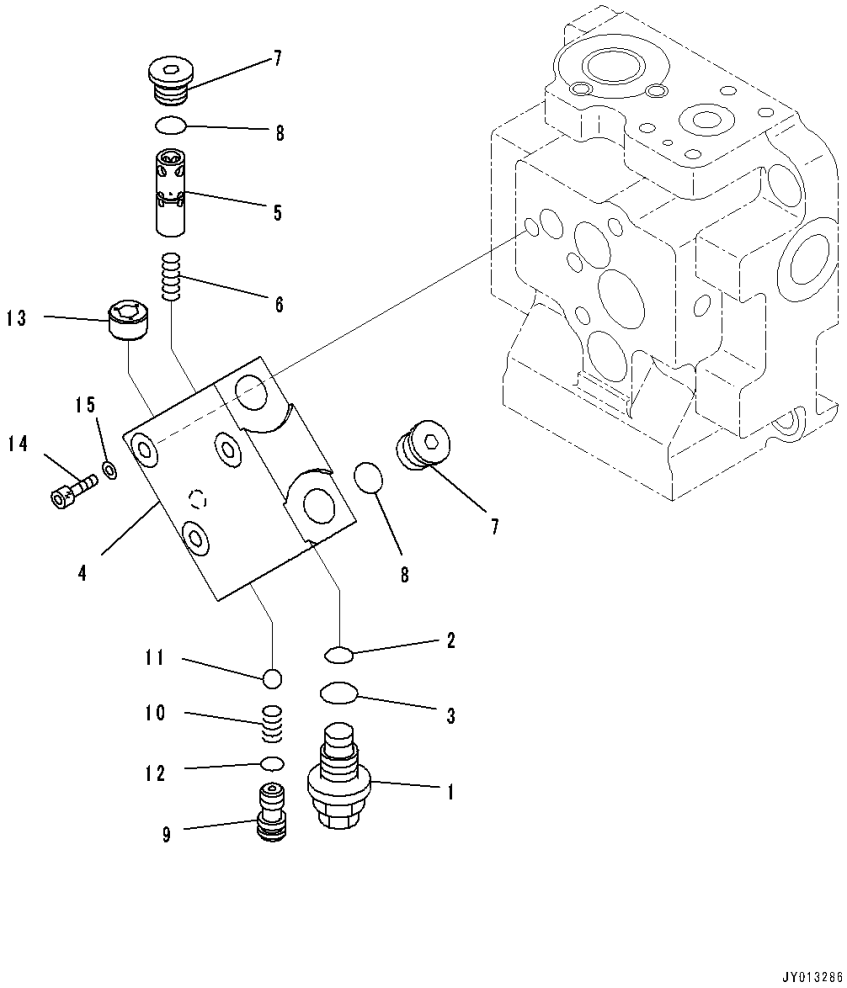

Index	Code	Part Number	Description	Qty	Serial Number
		708-1S-00290	Pump Assembly	1	80001-
	C1		• Valve Assembly	1	80001-
1		723-60-27200	• • Valve Assembly, Relief	1	80001-
2	C1		• • • O-ring	1	80001-
3	C1		• • • O-ring	1	80001-
4	C1		• • Block	1	80001-
5	C1		• • Spool	1	80001-
6	C1		• • Spring	1	80001-
7		702-21-55620	• • Plug	2	80001-
8		07002-11423	• • O-ring	2	80001-
9	C1		• • Seat	1	80001-
10	C1		• • Spring	1	80001-
11	C1		• • Ball	1	80001-
12	C1		• • O-ring	1	80001-
13		708-21-12541	• • Plug	2	80001-
14		01252-61040	• Bolt	3	80001-
15		01643-51032	• Washer	3	80001-

https://truckmanualshub.com/

FIG. H0210-001017 Hydraulic Oil Pump and Motor, Pump Mounting (2/2)

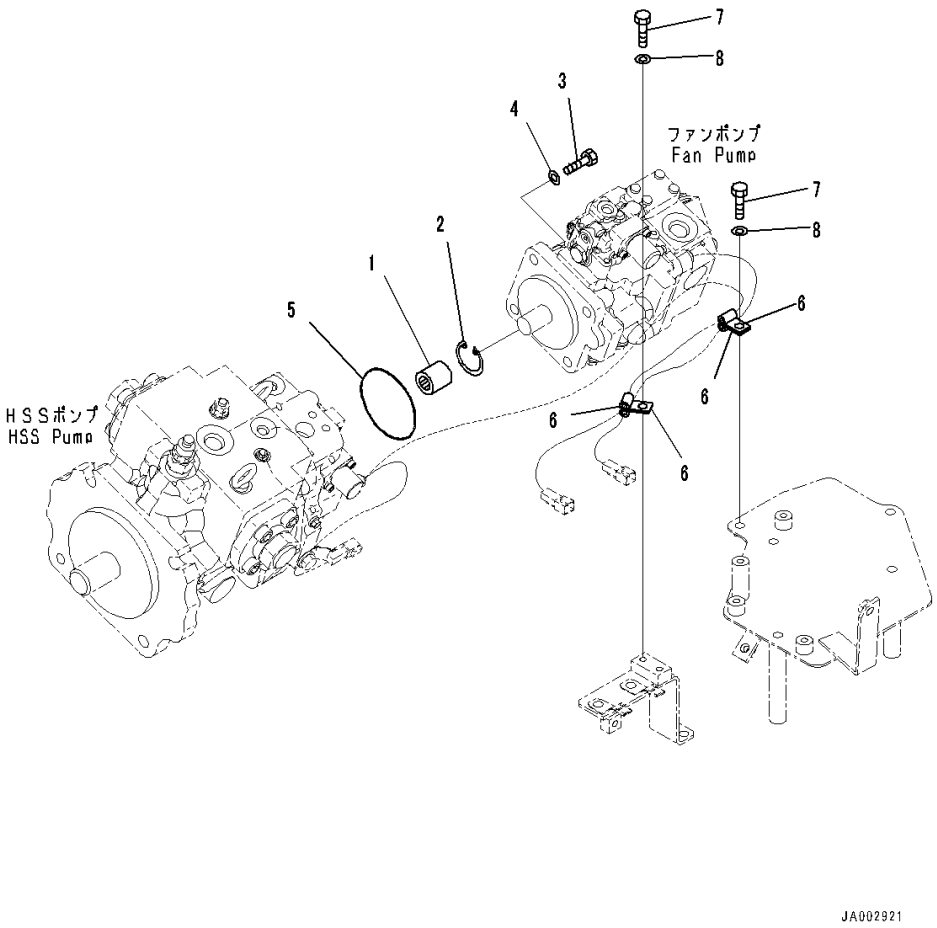

Index	Code	Part Number	Description	Qty	Serial Number
1		705-29-03310	Coupling Assembly	1	80001-
2		04065-02012	• Ring, Snap	1	80001-
3		01010-81240	Bolt	4	80001-
4		01643-31232	Washer	4	80001-
5		07000-12110	O-ring	1	80001-
6		04434-50610	Clip	4	80001-
7		01010-81020	Bolt	2	80001-
8		01643-31032	Washer	2	80001-

https://truckmanualshub.com/

FIG. H0310-001001 Hydraulic Oil Pump Piping, Suction and Delivery Piping

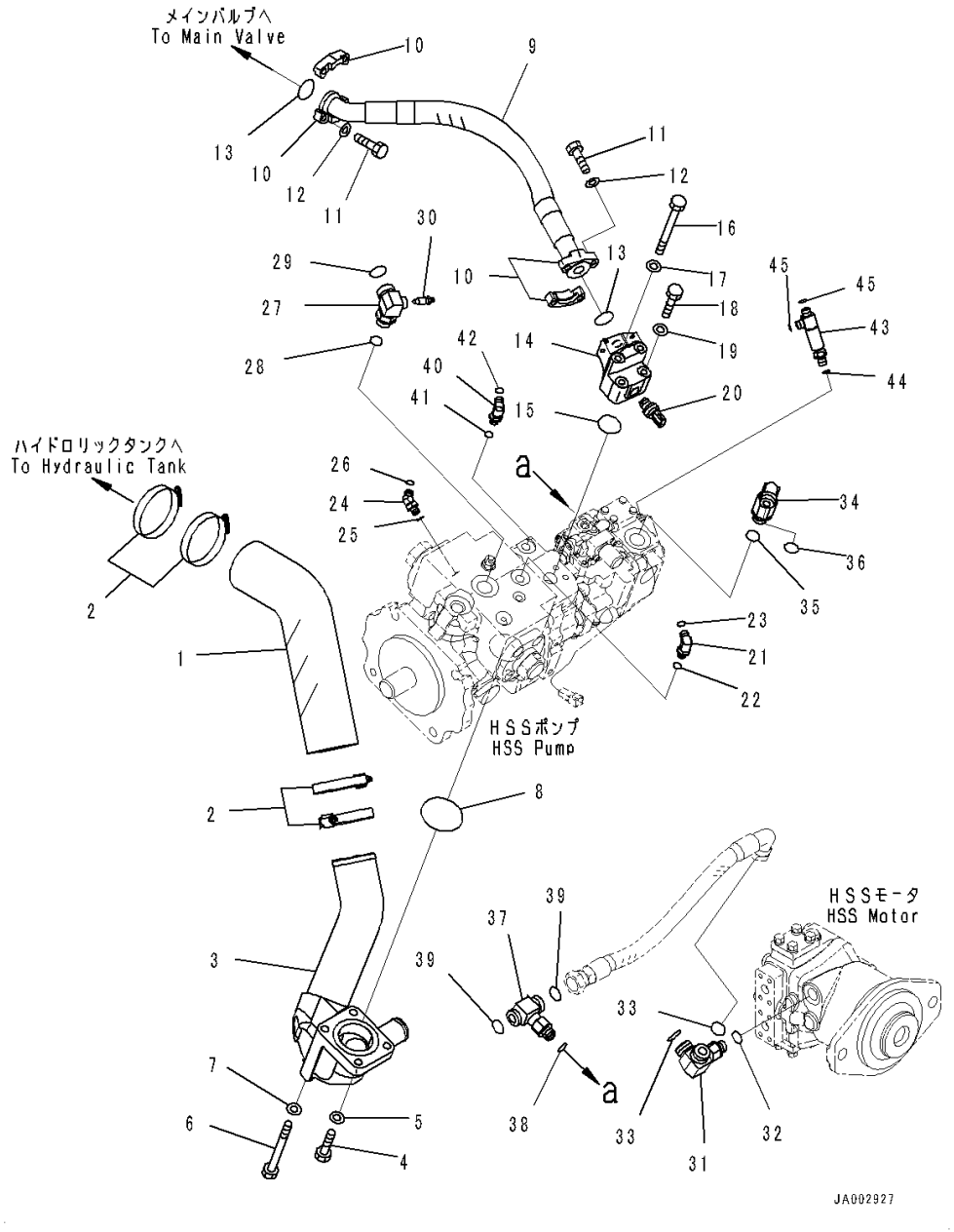

Index	Code	Part Number	Description	Qty	Serial Number
1		14X-62-52351	Hose	1	80001-
2		07289-00095	Clamp	4	80001-
3		14X-62-52361	Tube	1	80001-
4		01010-81245	Bolt	2	80001-
5		01643-31232	Washer	2	80001-
6		01011-81250	Bolt	2	80001-
7		01643-31232	Washer	2	80001-
8		07000-12075	O-ring	1	80001-
9		14X-62-52371	Hose	1	80001-
10		07371-31049	Flange, Split	4	80001-
11		07372-21035	Bolt	8	80001-
12		01643-51032	Washer	8	80001-
13		07000-13032	O-ring	2	80001-
14		14X-62-52380	Block	1	80001-
15		07000-13035	O-ring	1	80001-
16		01011-81005	Bolt	2	80001-
17		01643-31032	Washer	2	80001-
18		01010-81065	Bolt	2	80001-
19		01643-31032	Washer	2	80001-
20		7861-93-1812	Sensor, Pressure	1	80161-
21		02782-10210	Elbow	1	80001-
22		07002-11423	O-ring	1	80001-
23		02896-11008	O-ring	1	80001-
24		203-62-13520	Elbow	1	80001-
25		07002-11423	O-ring	1	80001-
26		02896-11008	O-ring	1	80001-
27		14X-62-52431	Elbow	1	80001-
28		07002-62434	O-ring	1	80001-
29		02896-61018	O-ring	1	80001-
30		20B-27-11210	Bleeder	1	80001-
31		14X-62-52761	Tee	1	80001-
32		07002-62034	O-ring	1	80001-
33		02896-61018	O-ring	2	80001-
34		14X-62-52921	Elbow	1	80001-
35		07002-12434	O-ring	1	80001-
36		02896-11015	O-ring	1	80001-
37		14X-62-52571	Tee	1	80001-
38		07002-62034	O-ring	1	80001-
39		02896-61018	O-ring	2	80001-
40		02782-10210	Elbow	1	80001-

https://truckmanualshub.com/

FIG. H0310-001001 Hydraulic Oil Pump Piping, Suction and Delivery Piping

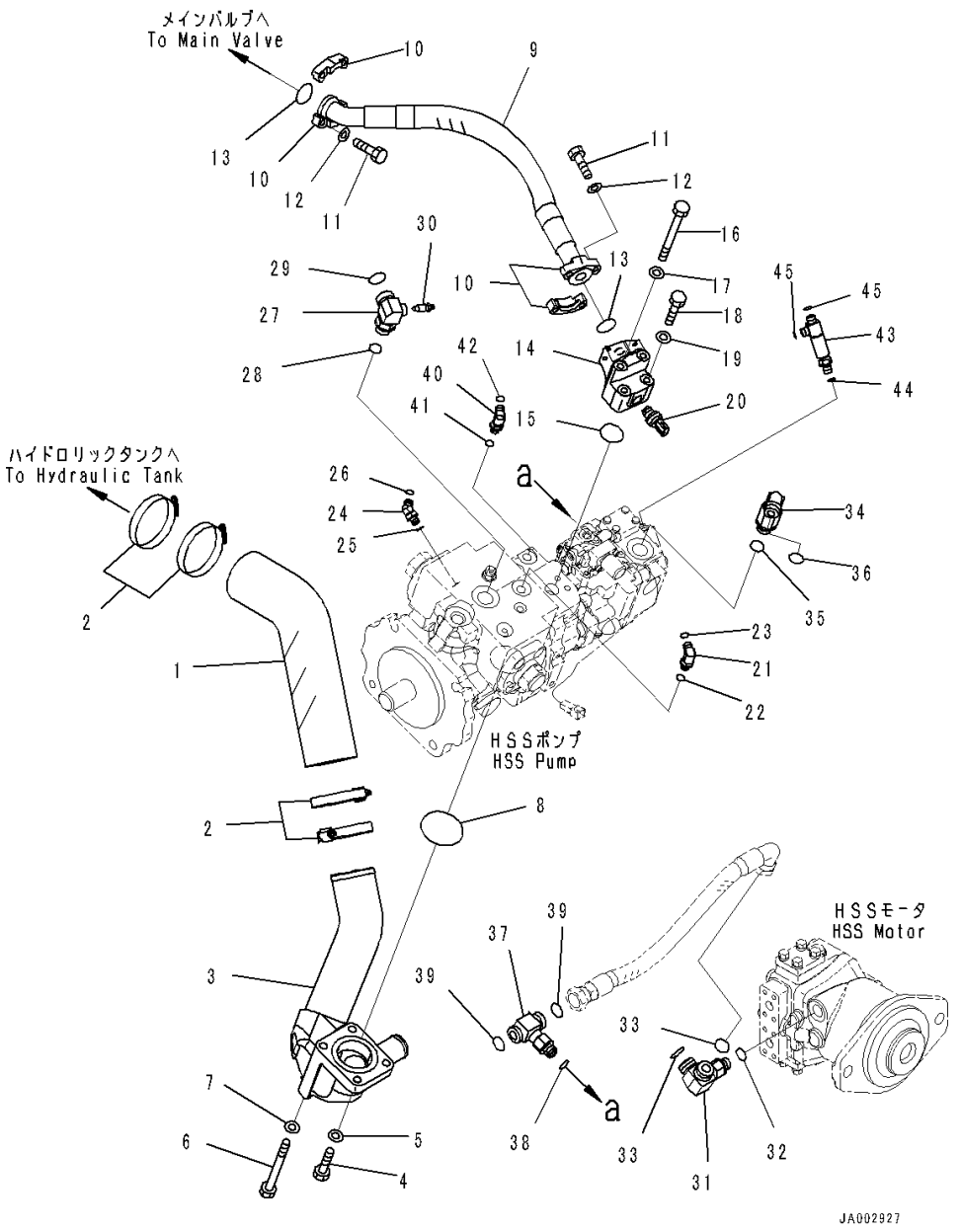

Index	Code	Part Number	Description	Qty	Serial Number
41		07002-11423	O-ring	1	80001-
42		02896-11008	O-ring	1	80001-
43		14X-62-54710	Tee	1	80001-
44		07002-11423	O-ring	1	80001-
45		02896-11008	O-ring	2	80001-

https://truckmanualshub.com/

FIG. H0310-001002 Hydraulic Oil Pump Piping, HSS Motor Piping

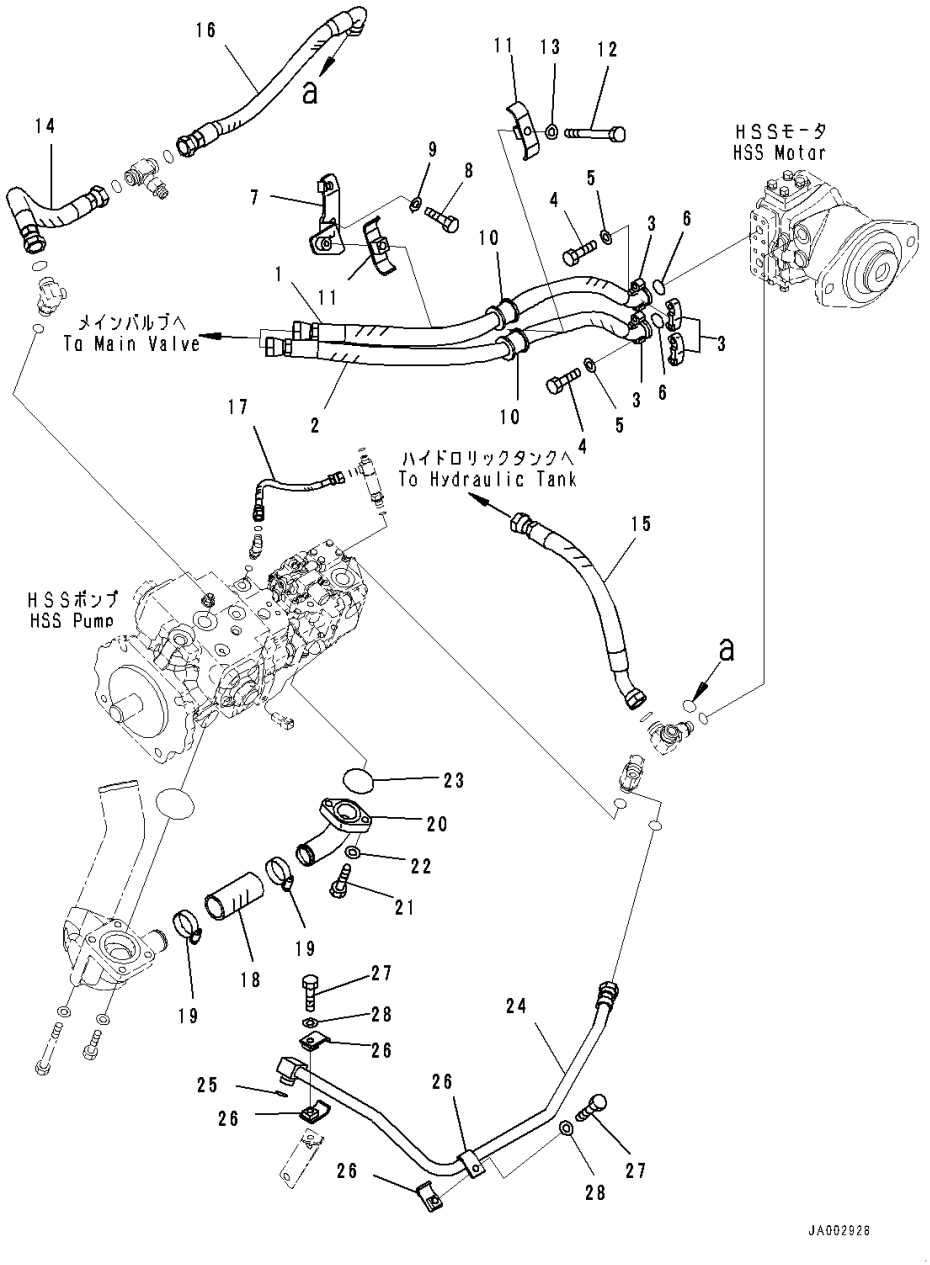

Index	Code	Part Number	Description	Qty	Serial Number
1		14X-62-52410	Hose	1	80001-
2		14X-62-52421	Hose	1	80001-
3		07371-30640	Flange, Split	4	80001-
4		07372-21035	Bolt	8	80001-
5		01643-51032	Washer	8	80001-
6		07000-B3025	O-ring	2	80001-
7		14X-62-52552	Bracket	1	80001-
8		01010-81225	Bolt	2	80001-
9		01643-31232	Washer	2	80001-
10		07095-00628	Cushion	2	80001-
11		07094-30620	Clamp	2	80001-
12		01010-81270	Bolt	1	80001-
13		01643-31232	Washer	1	80001-
14		14X-62-52441	Hose	1	80001-
15		14X-62-52451	Hose	1	80001-
16		14X-62-52511	Hose	1	80001-
17		02762-00203	Hose, Face Seal Type	1	80001-
18		07260-24111	Hose	1	80001-
19		07289-00055	Clamp	2	80001-
20		14X-62-54690	Tube	1	80001-
21		01010-81240	Bolt	2	80001-
22		01643-31232	Washer	2	80001-
23		07000-13045	O-ring	1	80001-
24		14X-62-52480	Tube	1	80001-
25		02896-11015	O-ring	1	80001-
26		14X-62-32540	Clamp	4	80001-
27		01010-81050	Bolt	2	80001-
28		01643-31032	Washer	2	80001-

https://truckmanualshub.com/

FIG. H0310-001003 Hydraulic Oil Pump Piping, Fan Motor Related Parts

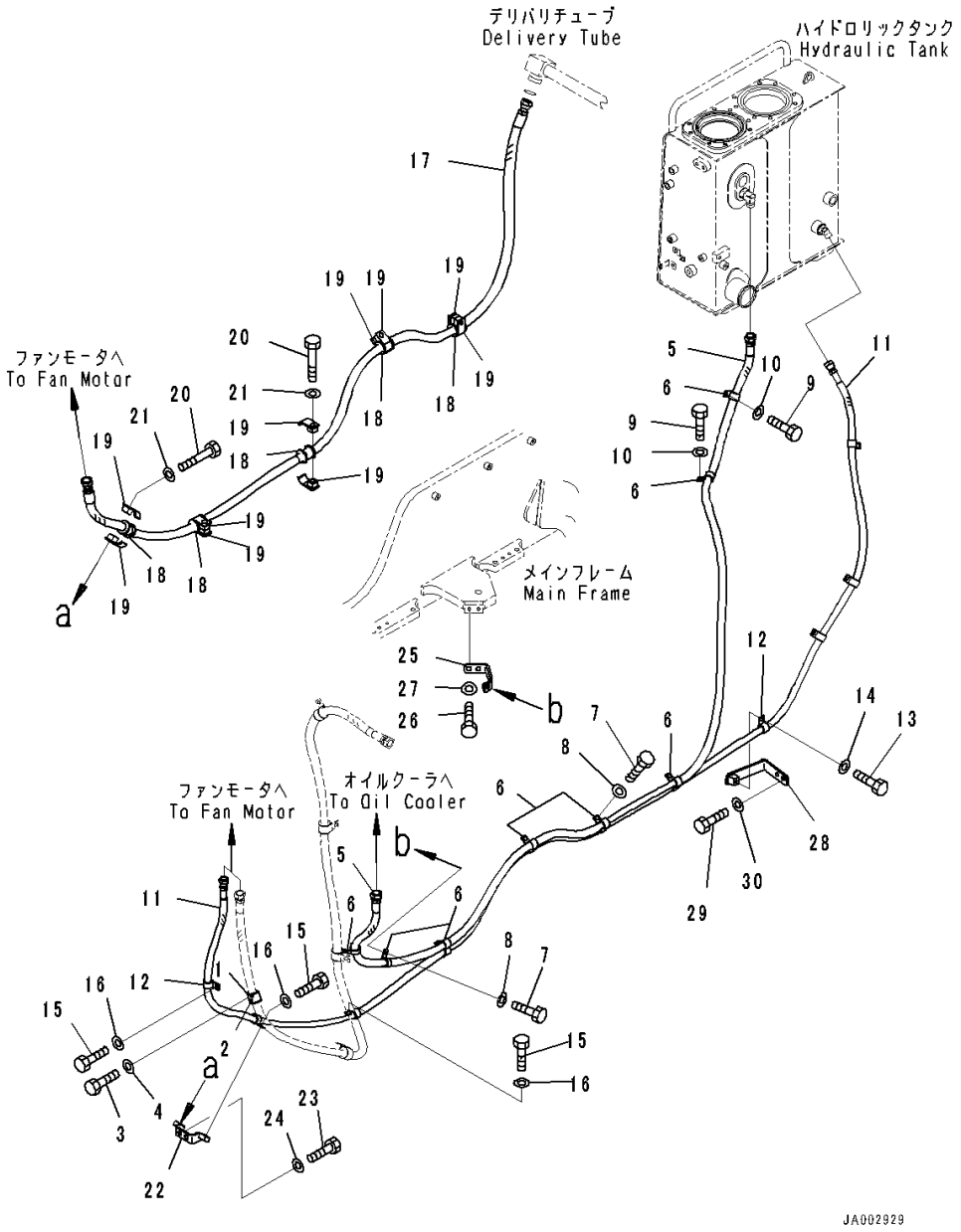

Index	Code	Part Number	Description	Qty	Serial Number
1		07095-20522	Cushion	1	80001-
2		04434-53212	Clip	1	80001-
3		01010-81230	Bolt	1	80001-
4		01643-31232	Washer	1	80001-
5		14X-62-51331	Hose Assembly	1	80001-
6		04434-52312	Clip	8	80001-
7		01010-81230	Bolt	6	80001-
8		01643-31232	Washer	6	80001-
9		01010-81220	Bolt	2	80001-
10		01643-31232	Washer	2	80001-
11		14X-62-51341	Hose Assembly	1	80001-
12		04434-51912	Clip	11	80007-
13		01010-81225	Bolt	4	80001-
14		01643-31232	Washer	4	80001-
15		01010-81230	Bolt	3	80001-
16		01643-31232	Washer	3	80001-
17		14X-62-51311	Hose Assembly	1	80001-
18		07095-00525	Cushion	5	80001-
19		22P-62-13520	Clamp	10	80001-
20		01010-81270	Bolt	5	80001-
21		01643-31232	Washer	5	80001-
22		14X-62-51351	Bracket	1	80001-
23		01010-81230	Bolt	2	80001-
24		01643-31232	Washer	2	80001-
25		14X-62-51241	Bracket	1	80001-
26		01010-81225	Bolt	2	80001-
27		01643-31232	Washer	2	80001-
28		14X-62-54731	Bracket	1	80001-
29		01010-81225	Bolt	2	80001-
30		01643-31232	Washer	2	80001-

https://truckmanualshub.com/

FIG. H0310-001004 Hydraulic Oil Pump Piping, Fan Motor Piping

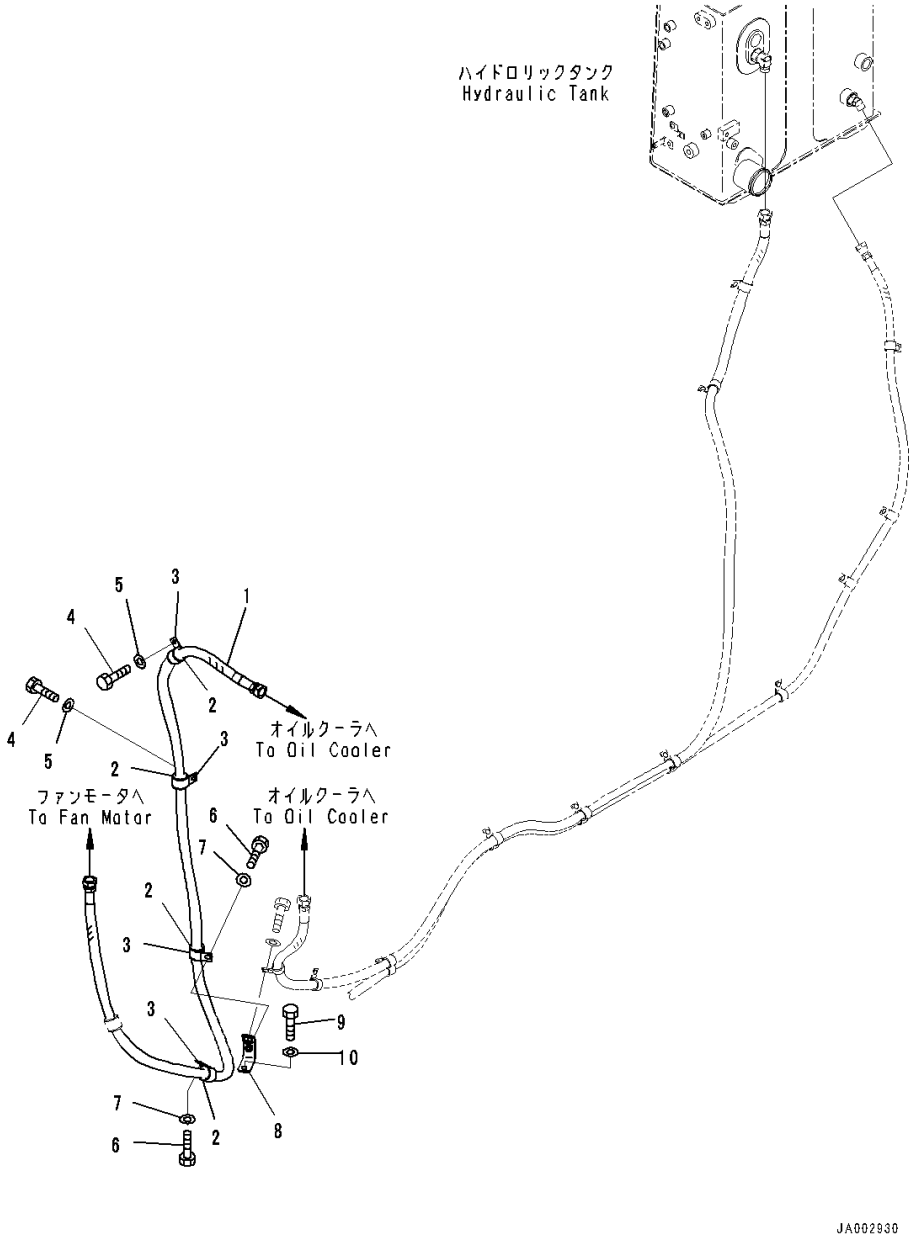

Index	Code	Part Number	Description	Qty	Serial Number
1		14X-62-51321	Hose Assembly	1	80001-
2		07095-20522	Cushion	4	80001-
3		04434-53211	Clip	4	80001-
4		01010-81020	Bolt	2	80001-
5		01643-31032	Washer	2	80001-
6		01010-81025	Bolt	2	80001-
7		01643-31032	Washer	2	80001-
8		14X-62-51360	Bracket	1	80001-
9		01010-81025	Bolt	1	80001-
10		01643-31032	Washer	1	80001-

https://truckmanualshub.com/

FIG. H2210-001001 Dozer Blade Lift Piping, Piping (1/2)

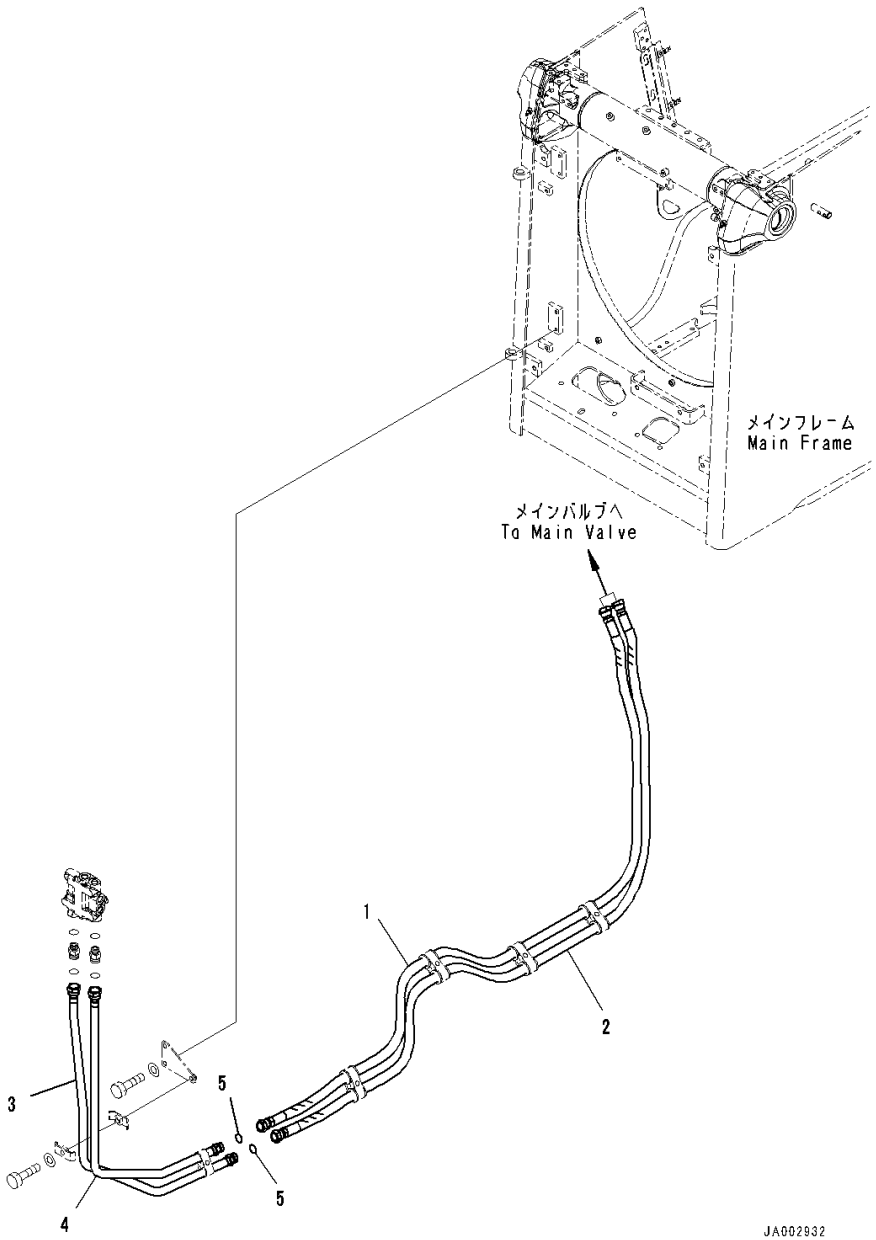

Index	Code	Part Number	Description	Qty	Serial Number
		Note: This list covers following specifications.			
		For Machine With Power Angle Power Tilt Dozer			
		Without Power Angle Power Tilt Dozer			
1		14X-62-53661	Hose Assembly	1	80001-
2		14X-62-53671	Hose Assembly	1	80001-
3		14X-62-51111	Tube	1	80001-
4		14X-62-51121	Tube	1	80001-
5		02896-11018	O-ring	2	80001-

https://truckmanualshub.com/

FIG. H2210-001002 Dozer Blade Lift Piping, Valve

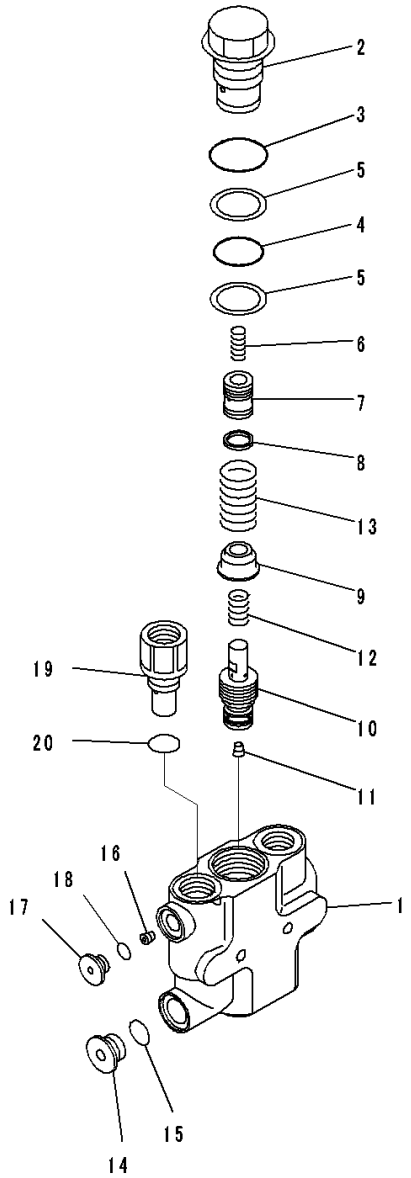

JY013288

Index	Code	Part Number	Description	Qty	Serial Number
		Note: This list covers following specifications.			
		For Machine With Power Angle Power Tilt Dozer			
		Without Power Angle Power Tilt Dozer			
		702-21-11700	Valve Assembly	1	80001-
1		702-21-81130	• Body	1	80001-
2		702-21-81540	• Plug	1	80001-
3		07002-14234	• O-ring	1	80001-
4		07000-13032	• O-ring	1	80001-
5		702-21-81610	• Ring	2	80001-
6		723-36-41930	• Spring	1	80001-
7		702-21-81550	• Piston	1	80001-
8		702-21-35130	• Seal	1	80001-
9		702-21-81560	• Retainer	1	80001-
10		702-21-81330	• Valve	1	80001-
11		02720-10104	• Plug, Tapered	1	80001-
12		702-21-81570	• Spring	1	80001-
13		702-21-81580	• Spring	1	80001-
14		720-2M-11550	• Plug	1	80001-
15		07002-12034	• O-ring	1	80001-
16		702-21-81620	• Orifice	1	80001-
17		702-21-55620	• Plug	1	80001-
18		07002-11423	• O-ring	1	80001-
19		702-21-81630	• Plug	1	80001-
20		07000-13024	• O-ring	1	80001-

https://truckmanualshub.com/

FIG. H2210-001003 Dozer Blade Lift Piping, Piping (2/2)

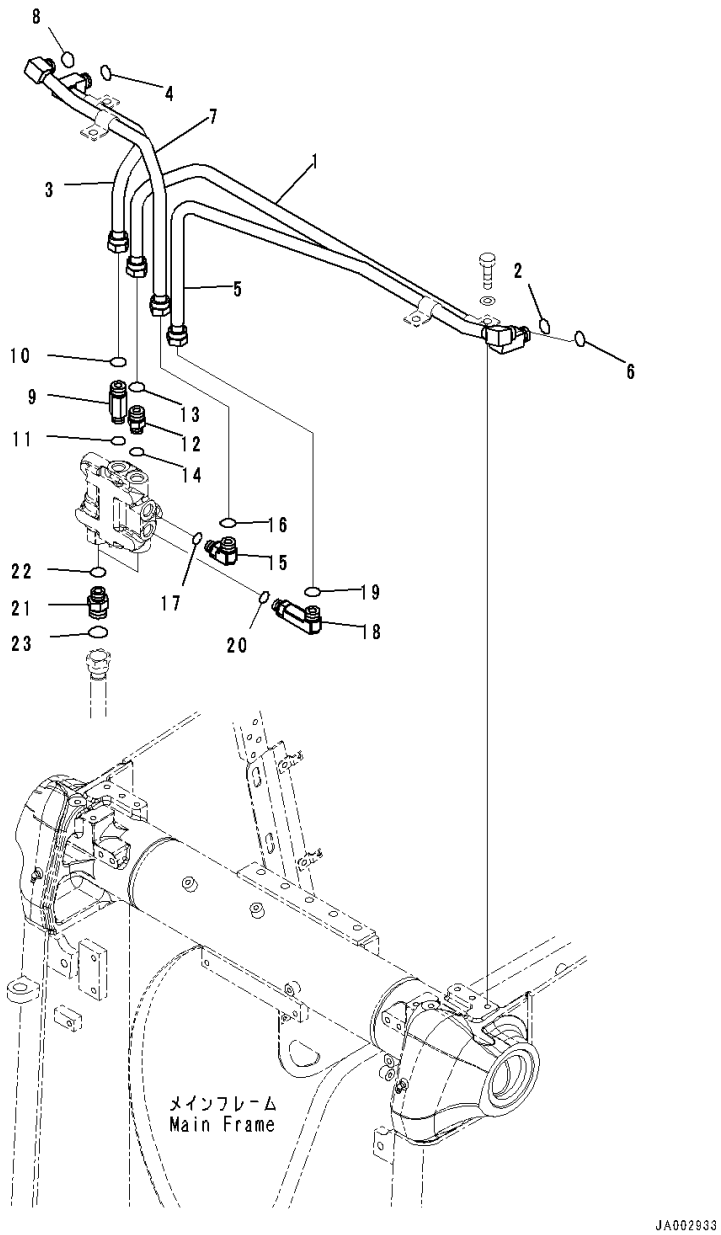

Index	Code	Part Number	Description	Qty	Serial Number
		Note: This list covers following specifications.			
		For Machine With Power Angle Power Tilt Dozer			
		Without Power Angle Power Tilt Dozer			
1		14X-62-51131	Tube	1	80001-
2		02896-11015	O-ring	1	80001-
3		14X-62-51151	Tube	1	80001-
4		02896-11015	O-ring	1	80001-
5		14X-62-51141	Tube	1	80001-
6		02896-11015	O-ring	1	80001-
7		14X-62-51161	Tube	1	80001-
8		02896-11015	O-ring	1	80001-
9		21W-62-43121	Nipple	1	80001-
10		02896-11015	O-ring	1	80001-
11		07002-12034	O-ring	1	80001-
12		02781-00516	Union	1	80001-
13		02896-11015	O-ring	1	80001-
14		07002-12034	O-ring	1	80001-
15		02782-10516	Elbow	1	80001-
16		02896-11015	O-ring	1	80001-
17		07002-12034	O-ring	1	80001-
18		02782-10520	Elbow	1	80001-
19		02896-11015	O-ring	1	80001-
20		07002-12034	O-ring	1	80001-
21		02781-00628	Union	2	80001-
22		02896-11018	O-ring	2	80001-
23		07002-12434	O-ring	2	80001-

https://truckmanualshub.com/

FIG. H2210-001004 Dozer Blade Lift Piping, Clamp

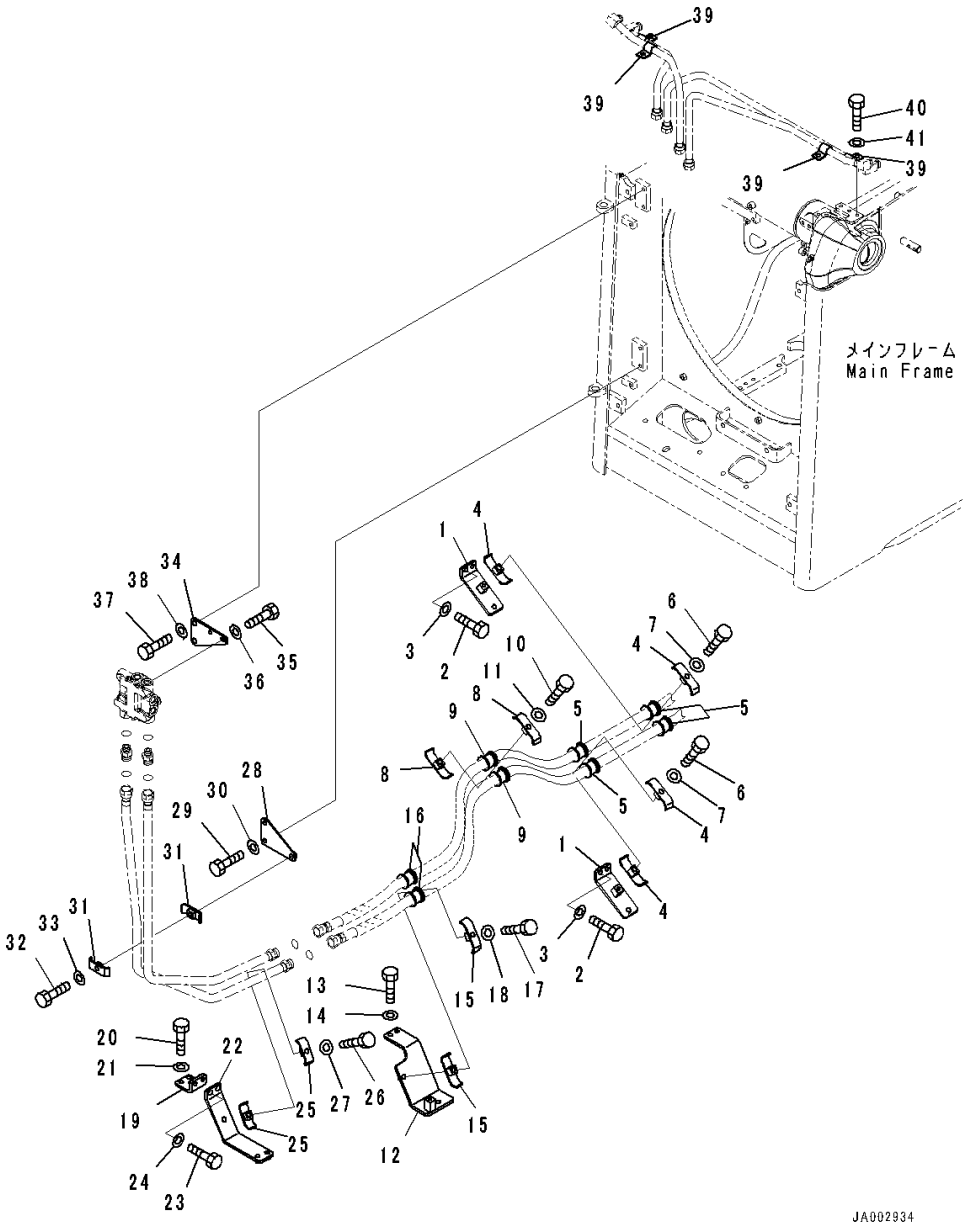

Index	Code	Part Number	Description	Qty	Serial Number
		Note: This list covers following specifications.			
		For Machine With Power Angle Power Tilt Dozer			
		Without Power Angle Power Tilt Dozer			
1		14X-62-52621	Bracket	2	80001-
2		01010-81230	Bolt	4	80001-
3		01643-31232	Washer	4	80001-
4		07094-30620	Clamp	4	80001-
5		07095-00628	Cushion	4	80001-
6		01010-81270	Bolt	2	80001-
7		01643-31232	Washer	2	80001-
8		07094-30620	Clamp	2	80001-
9		07095-00628	Cushion	2	80001-
10		01010-81270	Bolt	1	80001-
11		01643-31232	Washer	1	80001-
12		14X-62-52611	Bracket	1	80001-
13		01010-81230	Bolt	2	80001-
14		01643-31232	Washer	2	80001-
15		07094-30620	Clamp	2	80001-
16		07095-00628	Cushion	2	80001-
17		01010-81280	Bolt	1	80001-
18		01643-31232	Washer	1	80001-
19		14X-62-51271	Bracket	1	80001-
20		01010-81230	Bolt	2	80001-
21		01643-31232	Washer	2	80001-
22		14X-62-51171	Bracket	1	80001-
23		01010-81235	Bolt	2	80001-
24		01643-31232	Washer	2	80001-
25		14X-62-51230	Clamp	2	80001-
26		01010-81260	Bolt	1	80001-
27		01643-31232	Washer	1	80001-
28		14X-62-51191	Bracket	1	80001-
29		01010-81225	Bolt	2	80001-
30		01643-31232	Washer	2	80001-
31		14X-62-51230	Clamp	2	80001-
32		01010-81260	Bolt	1	80001-
33		01643-31232	Washer	1	80001-
34		14X-62-51221	Bracket	1	80001-
35		01010-81225	Bolt	2	80001-
36		01643-31232	Washer	2	80001-
37		01010-81225	Bolt	2	80001-

https://truckmanualshub.com/

FIG. H2210-001004 Dozer Blade Lift Piping, Clamp

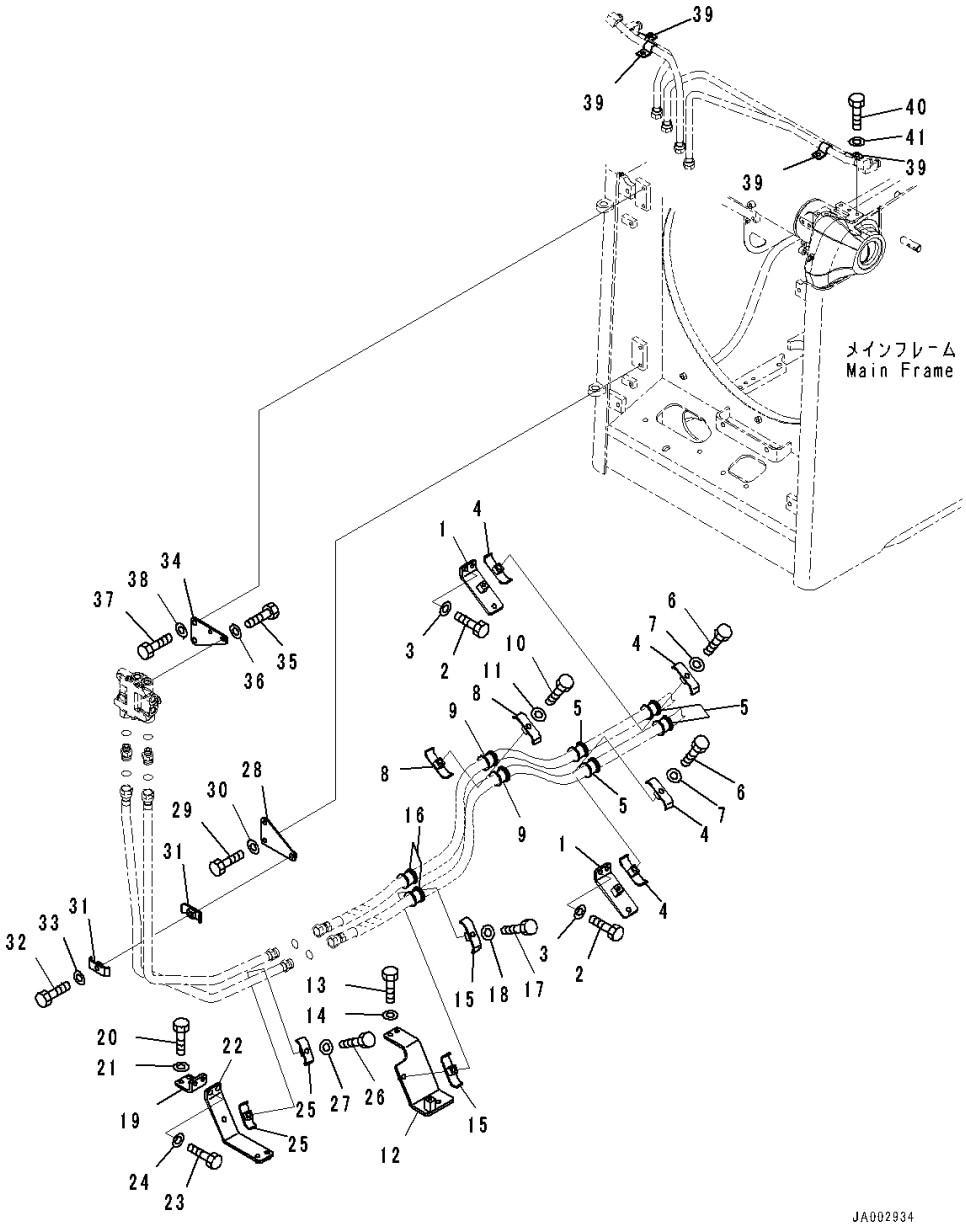

Index	Code	Part Number	Description	Qty	Serial Number
38		01643-31232	Washer	2	80001-
39		10E-60-16330	Clip	4	80001-
40		01010-81225	Bolt	4	80001-
41		01643-31232	Washer	4	80001-

https://truckmanualshub.com/

FIG. H2210-001005 Dozer Blade Lift Piping, For Machine With Power Angle Power Tilt Dozer, Lift Cylinder Piping

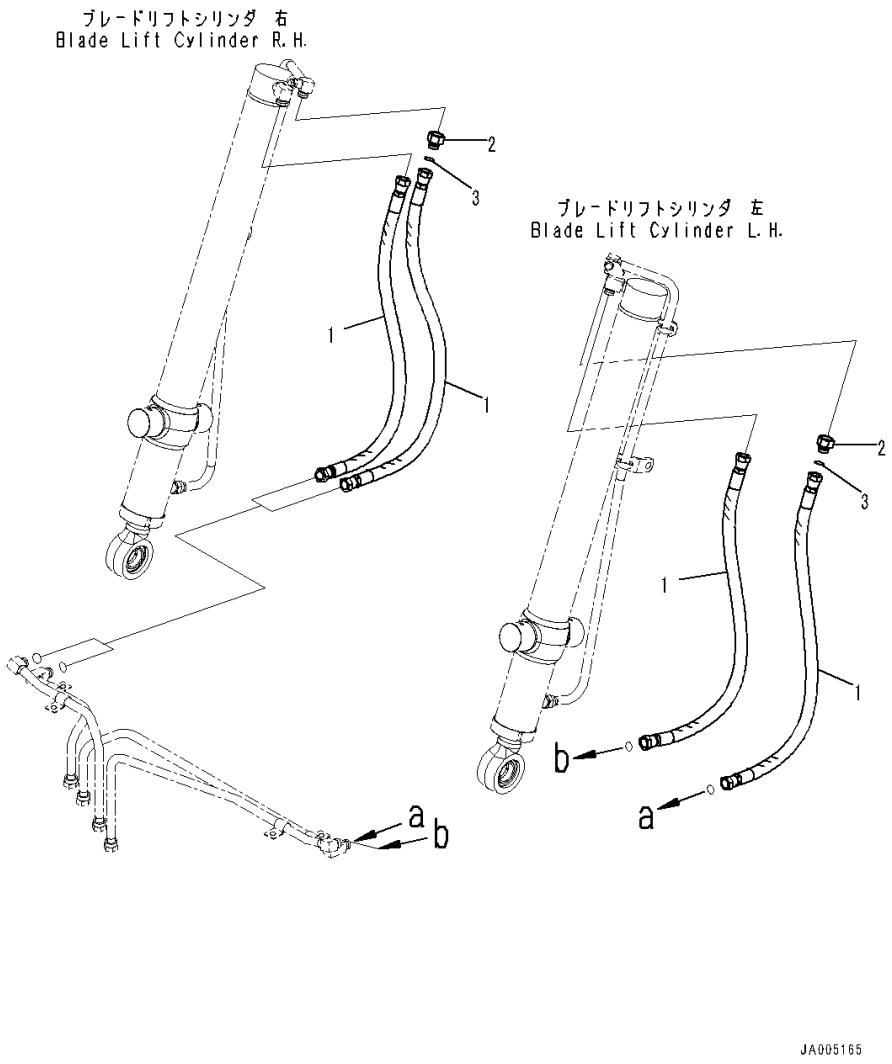

Index	Code	Part Number	Description	Qty	Serial Number
1		14X-62-53510	Hose	4	80001-
2		14X-62-52870	Nipple	2	80090-
3		02896-11015	O-ring	2	80090-

https://truckmanualshub.com/

FIG. H2210-002005 Dozer Blade Lift Piping, Without Power Angle Power Tilt Dozer, Lift Cylinder Piping

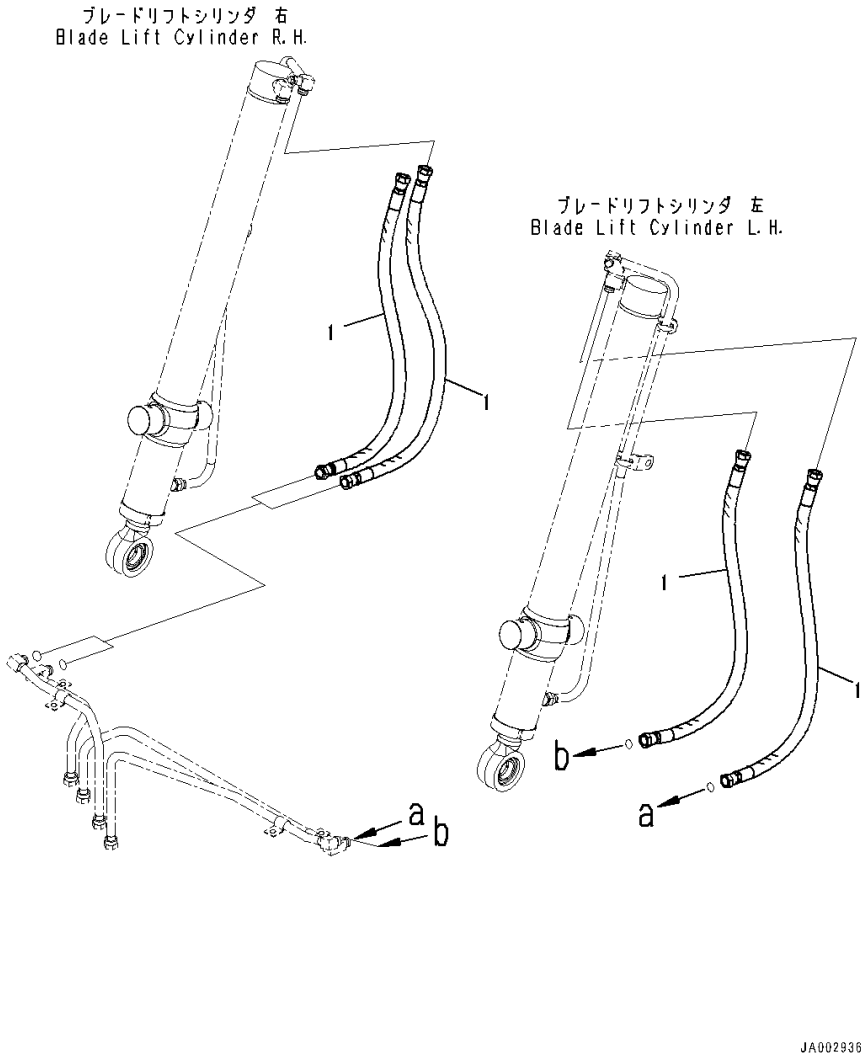

Index	Code	Part Number	Description	Qty	Serial Number
1		02756-00506	Hose, Face Seal Type	4	80001-

https://truckmanualshub.com/

FIG. H2210-003001 Dozer Blade Lift Piping, Piping (1/2)

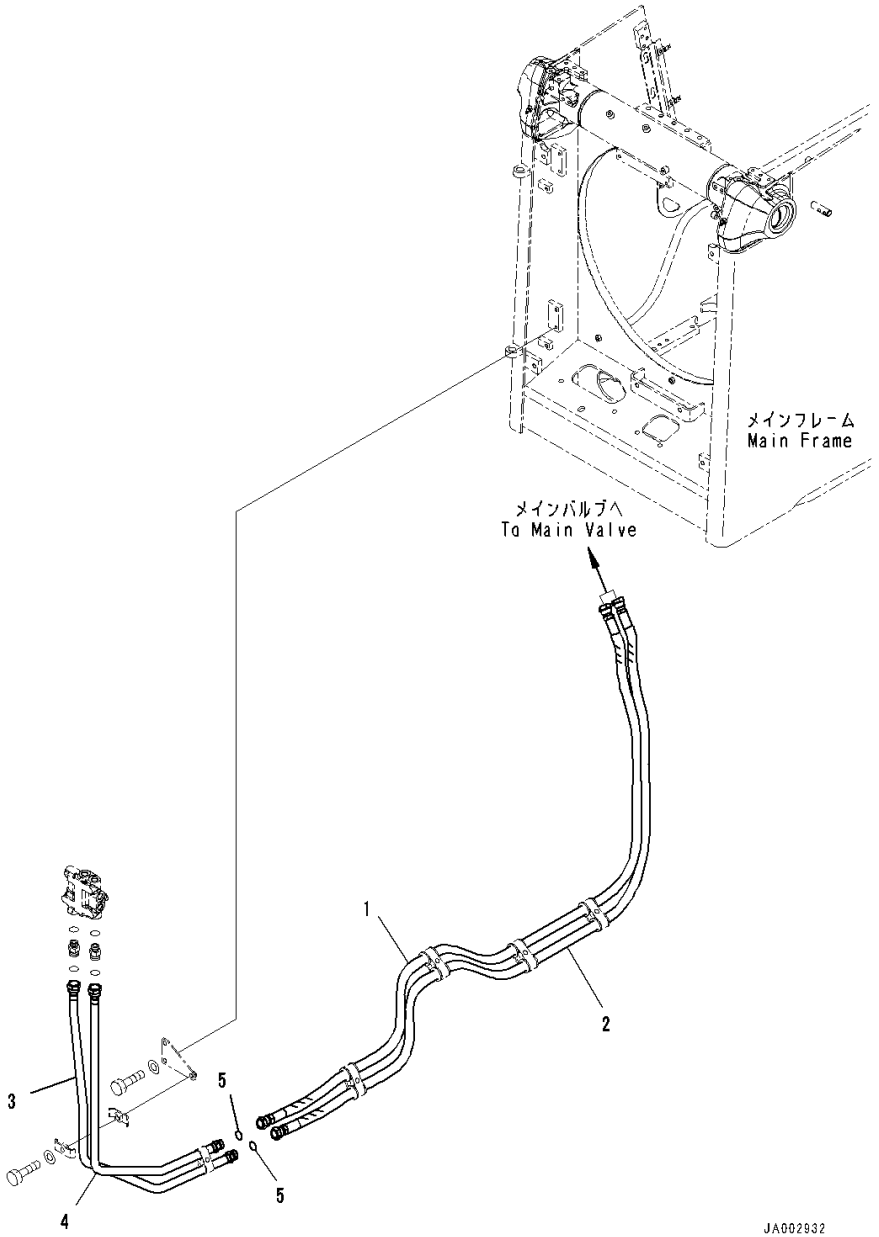

Index	Code	Part Number	Description	Qty	Serial Number
		Note: This list covers following specifications. With Blade Cylinder Wired Hose Power Angle Power Tilt Dozer, Inside Frame, With Blade Cylinder Wired Hose			
1		14X-62-53661	Hose Assembly	1	80020-
2		14X-62-53671	Hose Assembly	1	80020-
3		14X-62-51111	Tube	1	80020-
4		14X-62-51121	Tube	1	80020-
5		02896-11018	O-ring	2	80020-

https://truckmanualshub.com/

FIG. H2210-003002 Dozer Blade Lift Piping, Valve

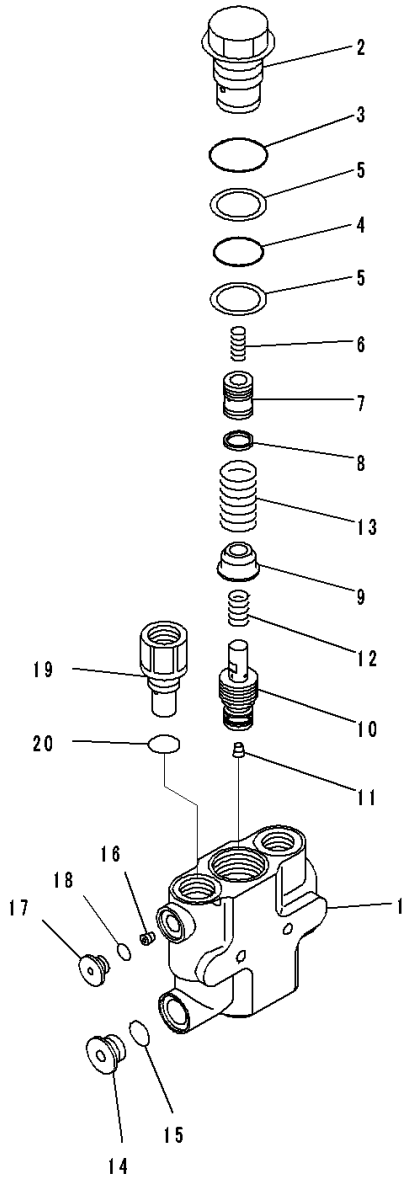

JY013288

Index	Code	Part Number	Description	Qty	Serial Number
		Note: This list covers following specifications. With Blade Cylinder Wired Hose Power Angle Power Tilt Dozer, Inside Frame, With Blade Cylinder Wired Hose			
		702-21-11700	Valve Assembly	1	80020-
1		702-21-81130	• Body	1	80020-
2		702-21-81540	• Plug	1	80020-
3		07002-14234	• O-ring	1	80020-
4		07000-13032	• O-ring	1	80020-
5		702-21-81610	• Ring	2	80020-
6		723-36-41930	• Spring	1	80020-
7		702-21-81550	• Piston	1	80020-
8		702-21-35130	• Seal	1	80020-
9		702-21-81560	• Retainer	1	80020-
10		702-21-81330	• Valve	1	80020-
11		02720-10104	• Plug, Tapered	1	80020-
12		702-21-81570	• Spring	1	80020-
13		702-21-81580	• Spring	1	80020-
14		720-2M-11550	• Plug	1	80020-
15		07002-12034	• O-ring	1	80020-
16		702-21-81620	• Orifice	1	80020-
17		702-21-55620	• Plug	1	80020-
18		07002-11423	• O-ring	1	80020-
19		702-21-81630	• Plug	1	80020-
20		07000-13024	• O-ring	1	80020-

https://truckmanualshub.com/

FIG. H2210-003003 Dozer Blade Lift Piping, Piping (2/2)

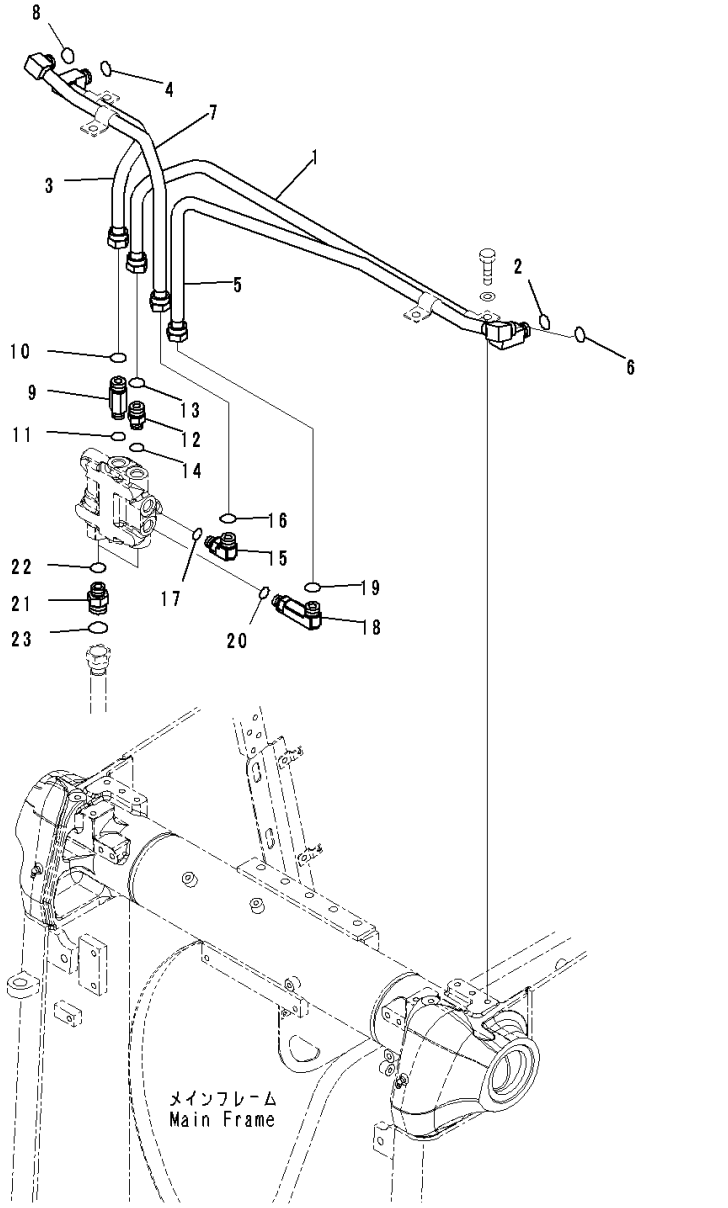

Index	Code	Part Number	Description	Qty	Serial Number
		Note: This list covers following specifications. With Blade Cylinder Wired Hose Power Angle Power Tilt Dozer, Inside Frame, With Blade Cylinder Wired Hose			
1		14X-62-51131	Tube	1	80020-
2		02896-11015	O-ring	1	80020-
3		14X-62-51151	Tube	1	80020-
4		02896-11015	O-ring	1	80020-
5		14X-62-51141	Tube	1	80020-
6		02896-11015	O-ring	1	80020-
7		14X-62-51161	Tube	1	80020-
8		02896-11015	O-ring	1	80020-
9		21W-62-43121	Nipple	1	80020-
10		02896-11015	O-ring	1	80020-
11		07002-12034	O-ring	1	80020-
12		02781-00516	Union	1	80020-
13		02896-11015	O-ring	1	80020-
14		07002-12034	O-ring	1	80020-
15		02782-10516	Elbow	1	80020-
16		02896-11015	O-ring	1	80020-
17		07002-12034	O-ring	1	80020-
18		02782-10520	Elbow	1	80020-
19		02896-11015	O-ring	1	80020-
20		07002-12034	O-ring	1	80020-
21		02781-00628	Union	2	80020-
22		02896-11018	O-ring	2	80020-
23		07002-12434	O-ring	2	80020-

https://truckmanualshub.com/

FIG. H2210-003004 Dozer Blade Lift Piping, Clamp

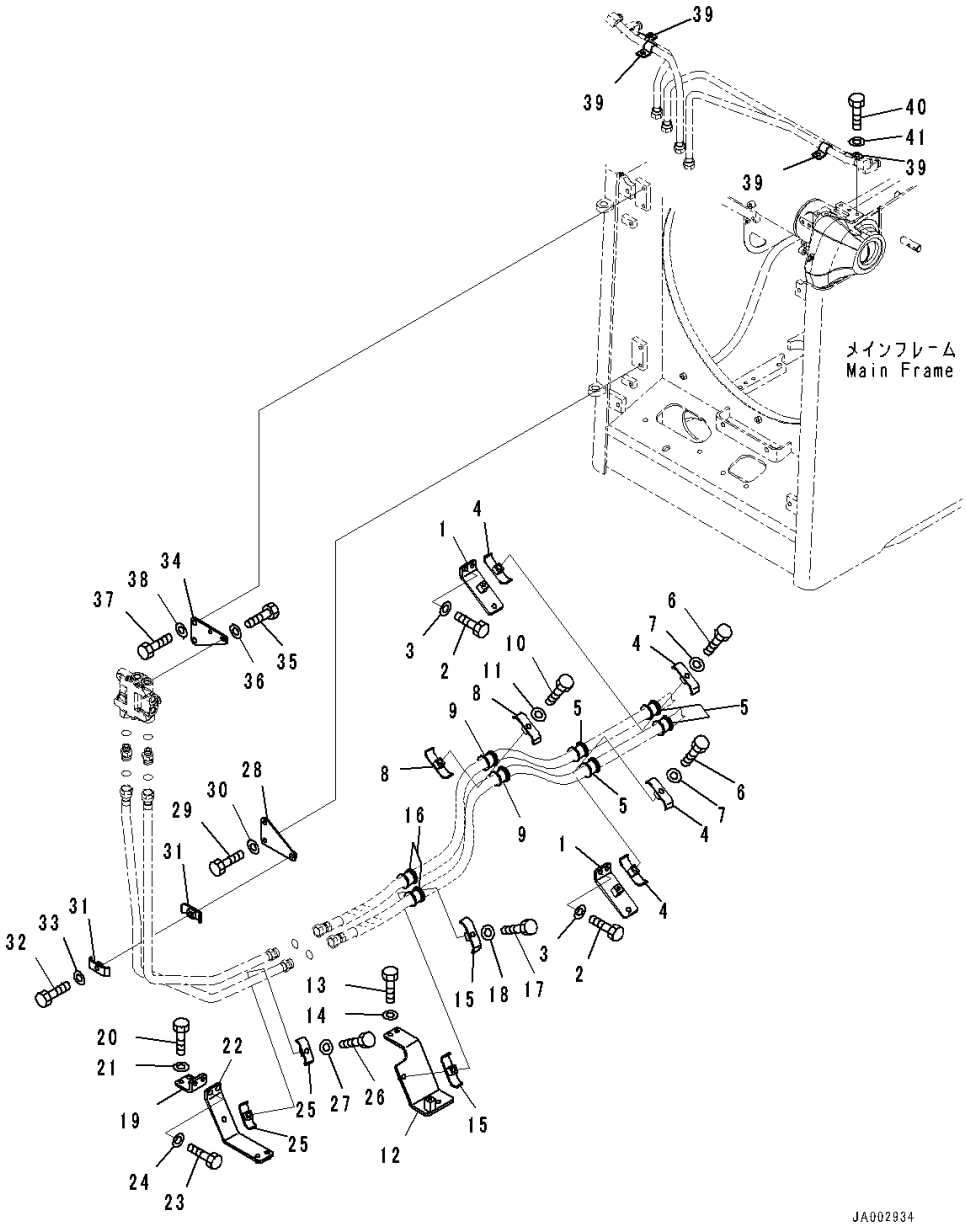

Index	Code	Part Number	Description	Qty	Serial Number
		Note: This list covers following specifications.			
		With Blade Cylinder Wired Hose			
		Power Angle Power Tilt Dozer, Inside Frame, With Blade Cylinder Wired Hose			
1		14X-62-52621	Bracket	2	80020-
2		01010-81230	Bolt	4	80020-
3		01643-31232	Washer	4	80020-
4		07094-30620	Clamp	4	80020-
5		07095-00628	Cushion	4	80020-
6		01010-81270	Bolt	2	80020-
7		01643-31232	Washer	2	80020-
8		07094-30620	Clamp	2	80020-
9		07095-00628	Cushion	2	80020-
10		01010-81270	Bolt	1	80020-
11		01643-31232	Washer	1	80020-
12		14X-62-52611	Bracket	1	80020-
13		01010-81230	Bolt	2	80020-
14		01643-31232	Washer	2	80020-
15		07094-30620	Clamp	2	80020-
16		07095-00628	Cushion	2	80020-
17		01010-81280	Bolt	1	80020-
18		01643-31232	Washer	1	80020-
19		14X-62-51271	Bracket	1	80020-
20		01010-81230	Bolt	2	80020-
21		01643-31232	Washer	2	80020-
22		14X-62-51171	Bracket	1	80020-
23		01010-81235	Bolt	2	80020-
24		01643-31232	Washer	2	80020-
25		14X-62-51230	Clamp	2	80020-
26		01010-81260	Bolt	1	80020-
27		01643-31232	Washer	1	80020-
28		14X-62-51191	Bracket	1	80020-
29		01010-81225	Bolt	2	80020-
30		01643-31232	Washer	2	80020-
31		14X-62-51230	Clamp	2	80020-
32		01010-81260	Bolt	1	80020-
33		01643-31232	Washer	1	80020-
34		14X-62-51221	Bracket	1	80020-
35		01010-81225	Bolt	2	80020-
36		01643-31232	Washer	2	80020-

https://truckmanualshub.com/

FIG. H2210-003004 Dozer Blade Lift Piping, Clamp

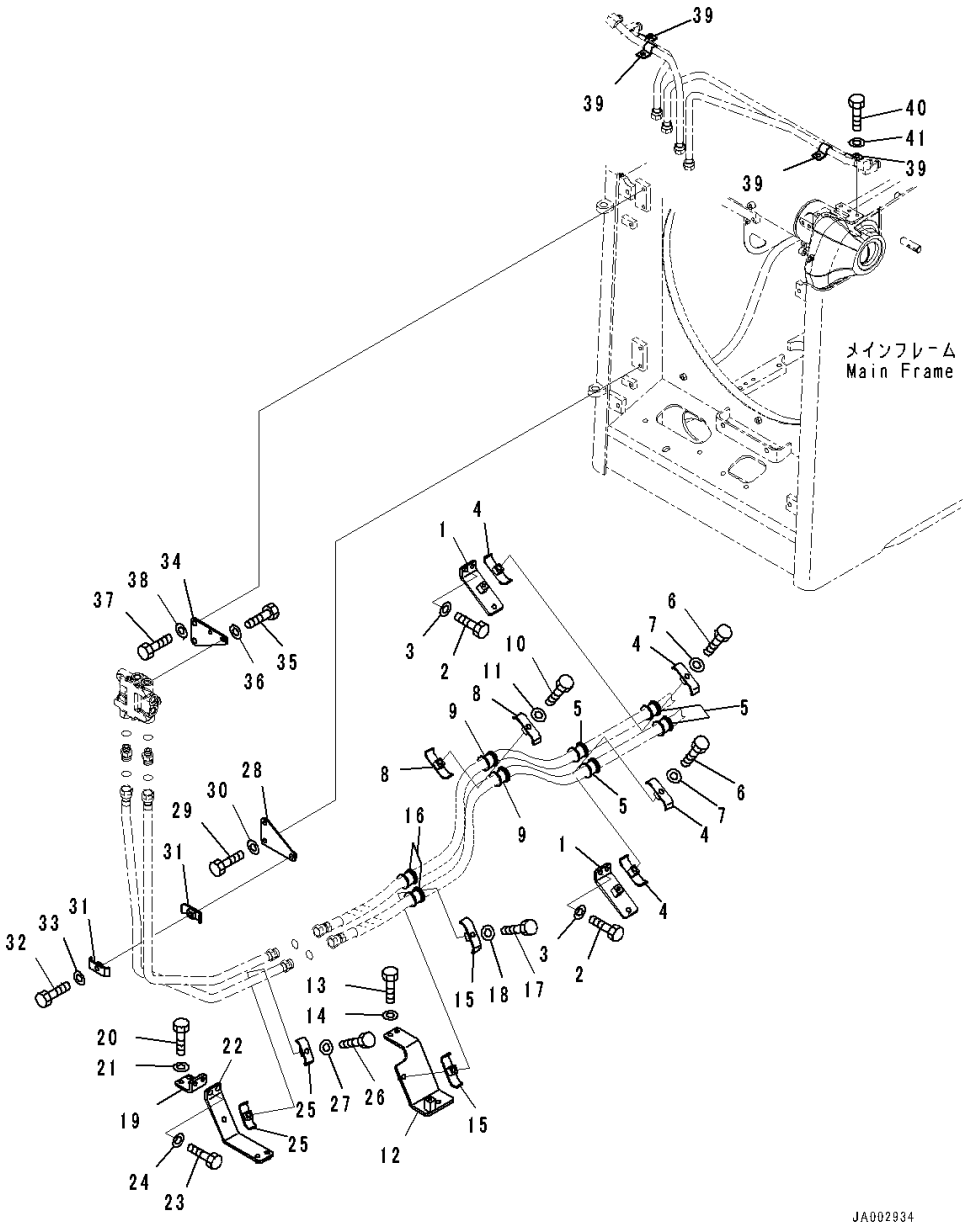

Index	Code	Part Number	Description	Qty	Serial Number
37		01010-81225	Bolt	2	80020-
38		01643-31232	Washer	2	80020-
39		10E-60-16330	Clip	4	80020-
40		01010-81225	Bolt	4	80020-
41		01643-31232	Washer	4	80020-

https://truckmanualshub.com/

FIG. H2210-003005 Dozer Blade Lift Piping, With Blade Cylinder Wired Hose, Lift Cylinder Piping

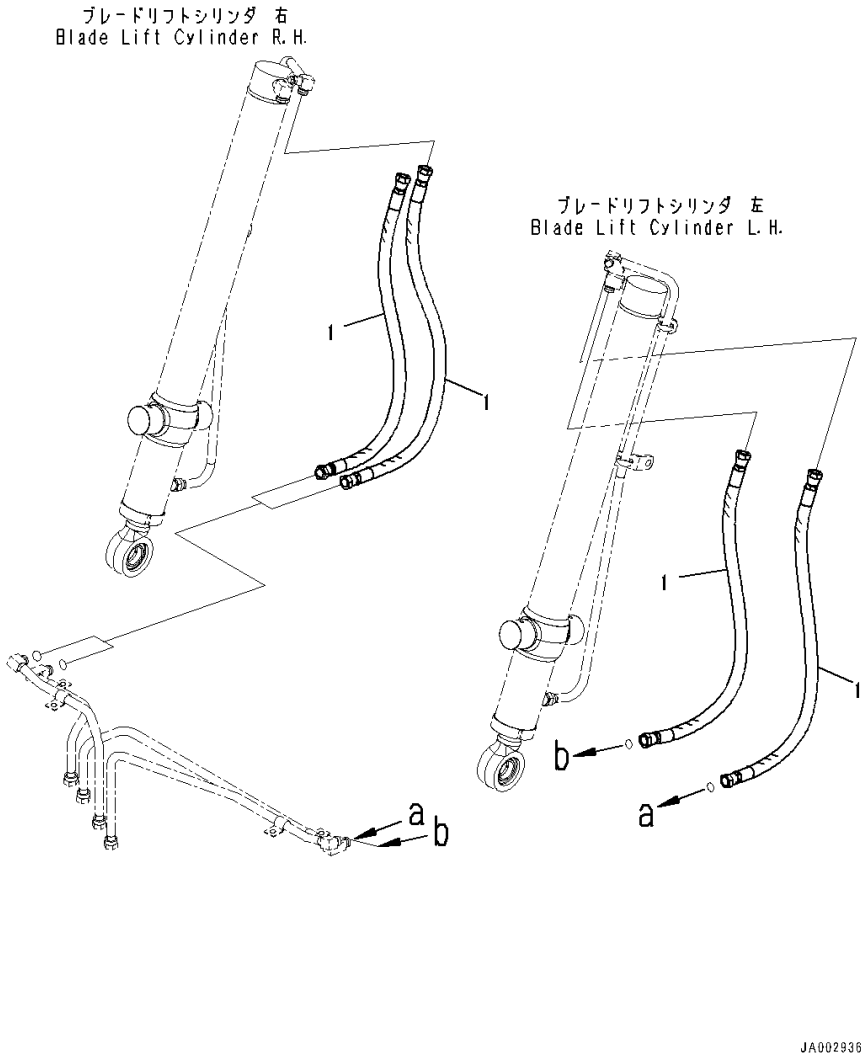

Index	Code	Part Number	Description	Qty	Serial Number
1		14X-62-54370	Hose	4	80020-

https://truckmanualshub.com/

FIG. H2210-004005 Dozer Blade Lift Piping, Power Angle Power Tilt Dozer, Inside Frame, With Blade Cylinder Wired Hose, Lift Cylinder Piping

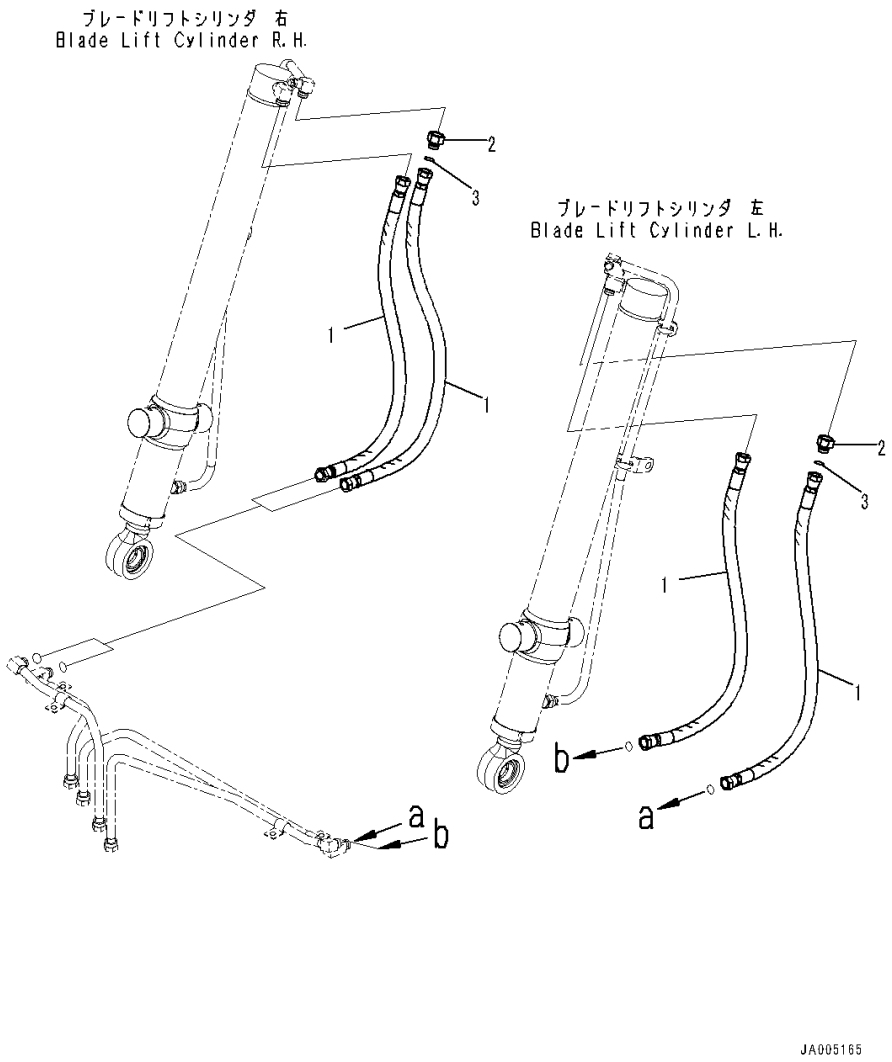

Index	Code	Part Number	Description	Qty	Serial Number
1		14X-62-55290	Hose	4	80020-
2		14X-62-52870	Nipple	2	80090-
3		02896-11015	O-ring	2	80090-

https://truckmanualshub.com/

FIG. H2220-001001 Dozer Blade Tilt Piping, With Power Angle Power Tilt Dozer

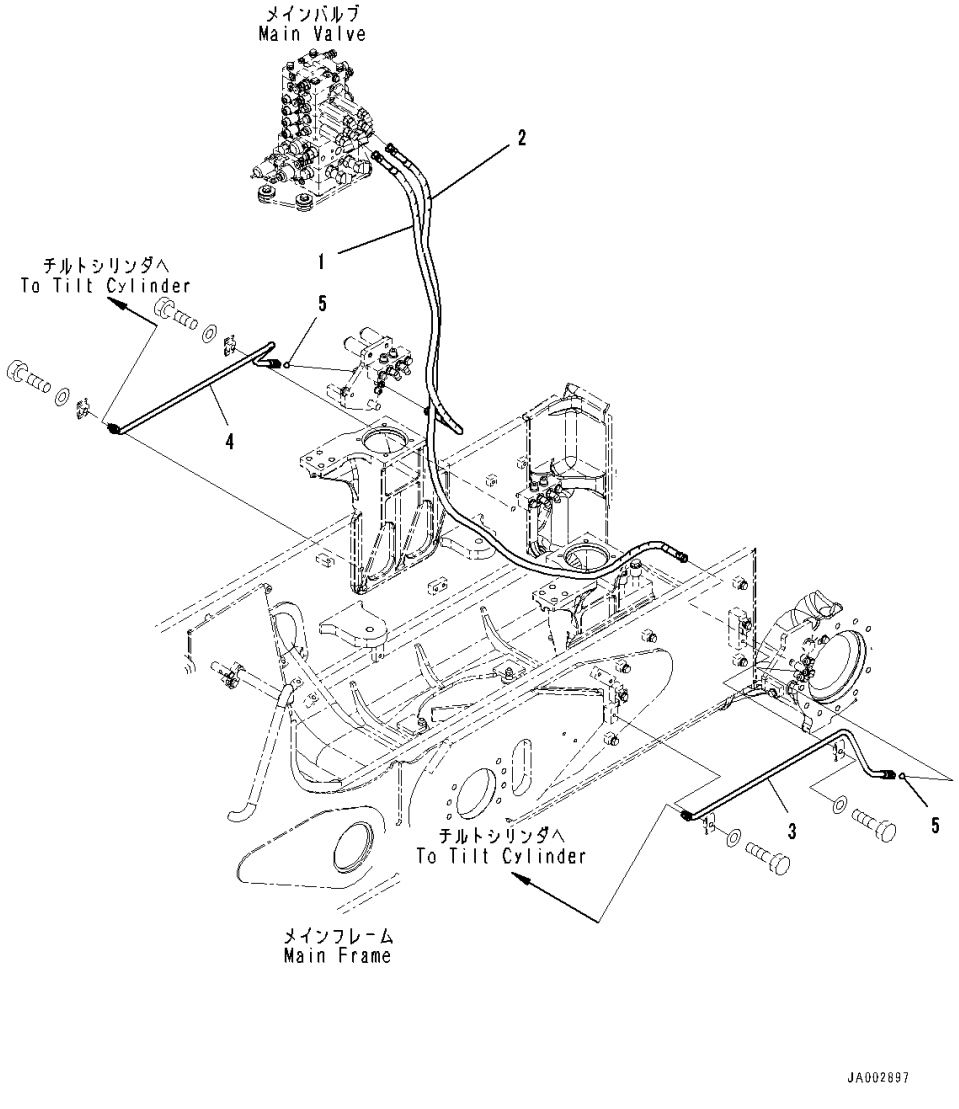

Index	Code	Part Number	Description	Qty	Serial Number
1		14X-62-51621	Hose Assembly	1	80001-
2		14X-62-51631	Hose Assembly	1	80001-
3		14X-62-51722	Tube,LHS	1	80001-
4		14X-62-51752	Tube,RHS	1	80001-
5		02896-11009	O-ring	2	80001-

https://truckmanualshub.com/

FIG. H2220-001002 Dozer Blade Tilt Piping, With Power Angle Power Tilt Dozer, Clamp

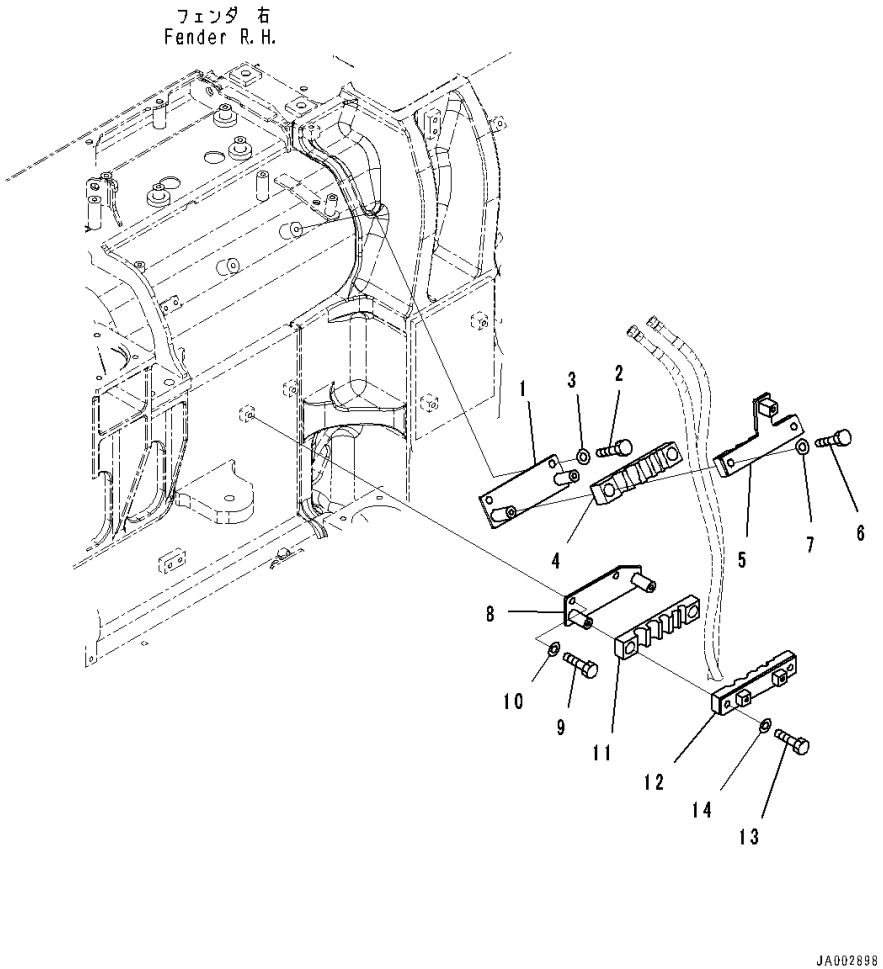

Index	Code	Part Number	Description	Qty	Serial Number
1		14X-62-52881	Plate	1	80001-
2		01010-81225	Bolt	2	80001-
3		01643-31232	Washer	2	80001-
4		14X-62-54741	Rubber	1	80001-
5		14X-62-52631	Clamp	1	80001-
6		01010-81230	Bolt	2	80001-
7		01643-31232	Washer	2	80001-
8		14X-62-52890	Plate	1	80001-
9		01010-81225	Bolt	2	80001-
10		01643-31232	Washer	2	80001-
11		14X-62-52911	Rubber	1	80001-
12		14X-62-51510	Bracket	1	80001-
13		01010-81230	Bolt	2	80001-
14		01643-31232	Washer	2	80001-

https://truckmanualshub.com/

FIG. H2220-002001 Dozer Blade Tilt Piping

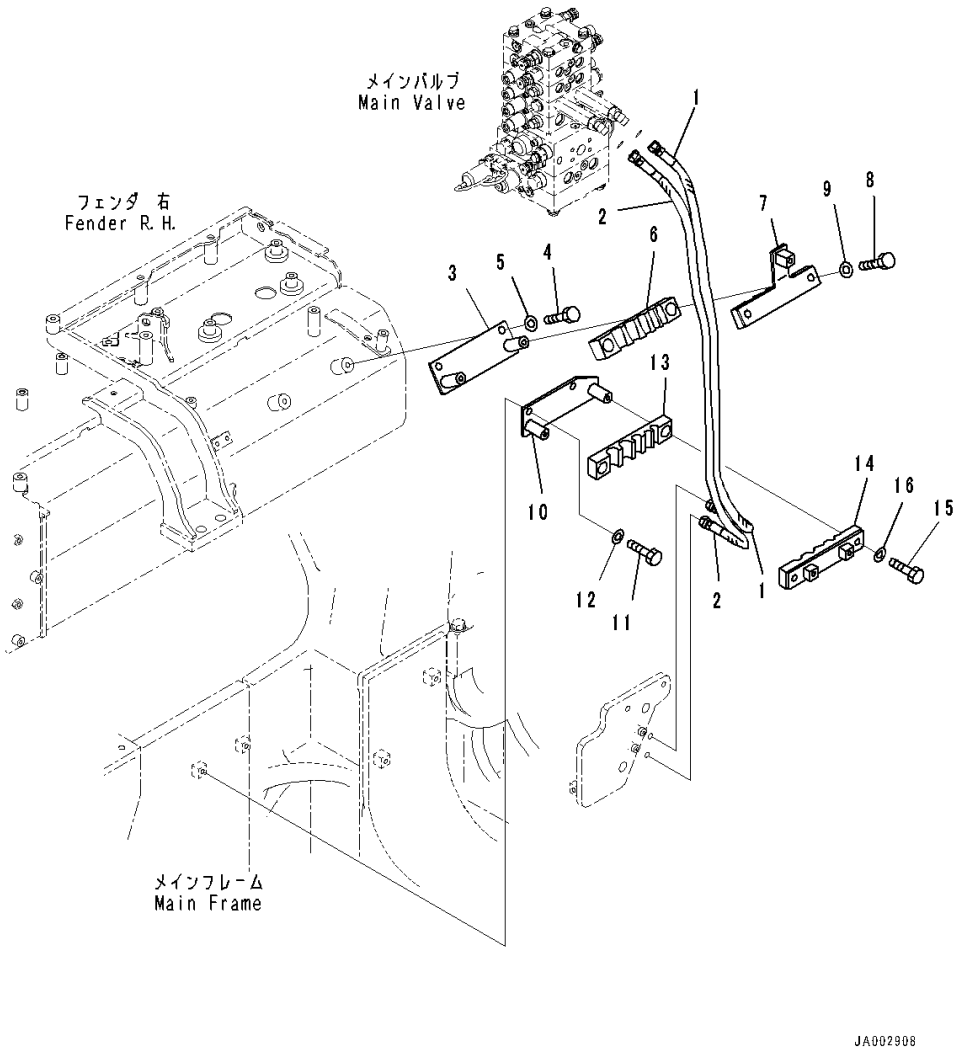

Index	Code	Part Number	Description	Qty	Serial Number
1		14X-62-51961	Hose Assembly	1	80001-
2		14X-62-51941	Hose Assembly	1	80001-
3		14X-62-52881	Plate	1	80001-
4		01010-81225	Bolt	2	80001-
5		01643-31232	Washer	2	80001-
6		14X-62-54741	Rubber	1	80001-
7		14X-62-52631	Clamp	1	80001-
8		01010-81230	Bolt	2	80001-
9		01643-31232	Washer	2	80001-
10		14X-62-52890	Plate	1	80001-
11		01010-81225	Bolt	2	80001-
12		01643-31232	Washer	2	80001-
13		14X-62-52911	Rubber	1	80001-
14		14X-62-51510	Bracket	1	80001-
15		01010-81230	Bolt	2	80001-
16		01643-31232	Washer	2	80001-

https://truckmanualshub.com/

FIG. H2220-002002 Dozer Blade Tilt Piping, Track Frame Cover

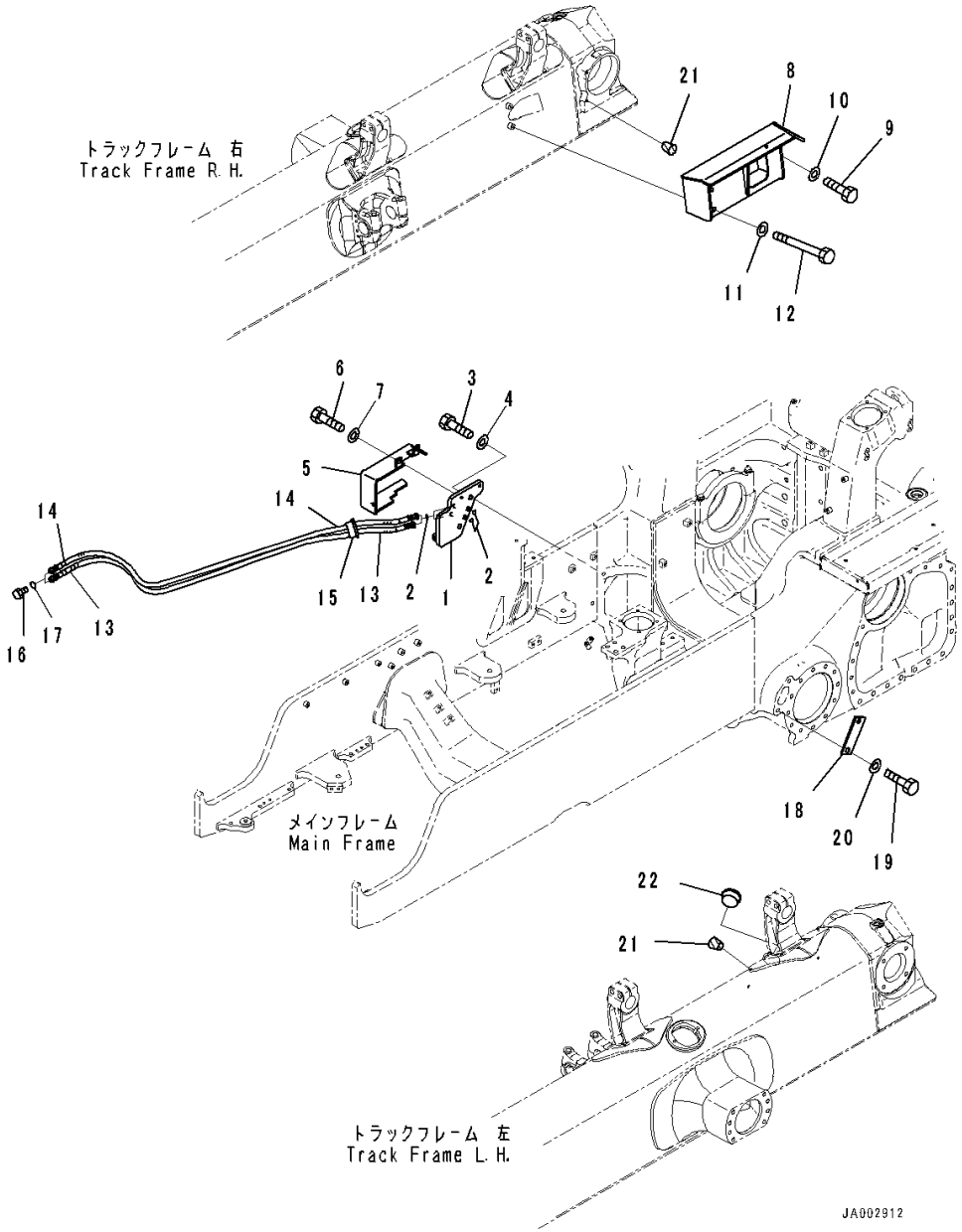

Index	Code	Part Number	Description	Qty	Serial Number
1		14X-62-51971	Bracket	1	80001-
2		02896-11009	O-ring	4	80001-
3		01010-82055	Bolt	2	80001-
4		01643-32060	Washer	2	80001-
5		14X-62-51980	Cover	1	80001-
6		01010-81235	Bolt	3	80001-
7		01643-31232	Washer	3	80001-
8		14X-62-52231	Cover	1	80001-
9		01010-81235	Bolt	1	80001-
10		01643-31232	Washer	1	80001-
11		01643-31232	Washer	2	80001-
12		01011-81250	Bolt	2	80001-
13		14X-62-52211	Hose Assembly	1	80001-
		21U-62-34760	• Band, Red	2	80001-
		14X-62-54990	• Cover	1	80001-
		14X-62-52220	• Hose	1	80001-
		08024-11920	• Tape, Vinyl, Red	1	80001-
14		14X-62-53581	Hose Assembly	1	80001-
		21U-62-34770	• Band, White	2	80001-
		14X-62-54990	• Cover	1	80001-
		14X-62-52220	• Hose	1	80001-
		08024-21920	• Tape, White	1	80001-
15		14X-62-53840	Rubber	1	80001-
16		07376-70315	Plug	2	80001-
17		02896-11009	O-ring	2	80001-
18		14X-62-11460	Plate	1	80001-
19		01010-82040	Bolt	2	80001-
20		01643-32060	Washer	2	80001-
21		07049-01215	Plug	5	80001-
22		14X-62-54880	Rubber	1	80001-

https://truckmanualshub.com/

FIG. H2220-004001 Dozer Blade Tilt Piping, With Power Tilt Pitch Dozer, Hose

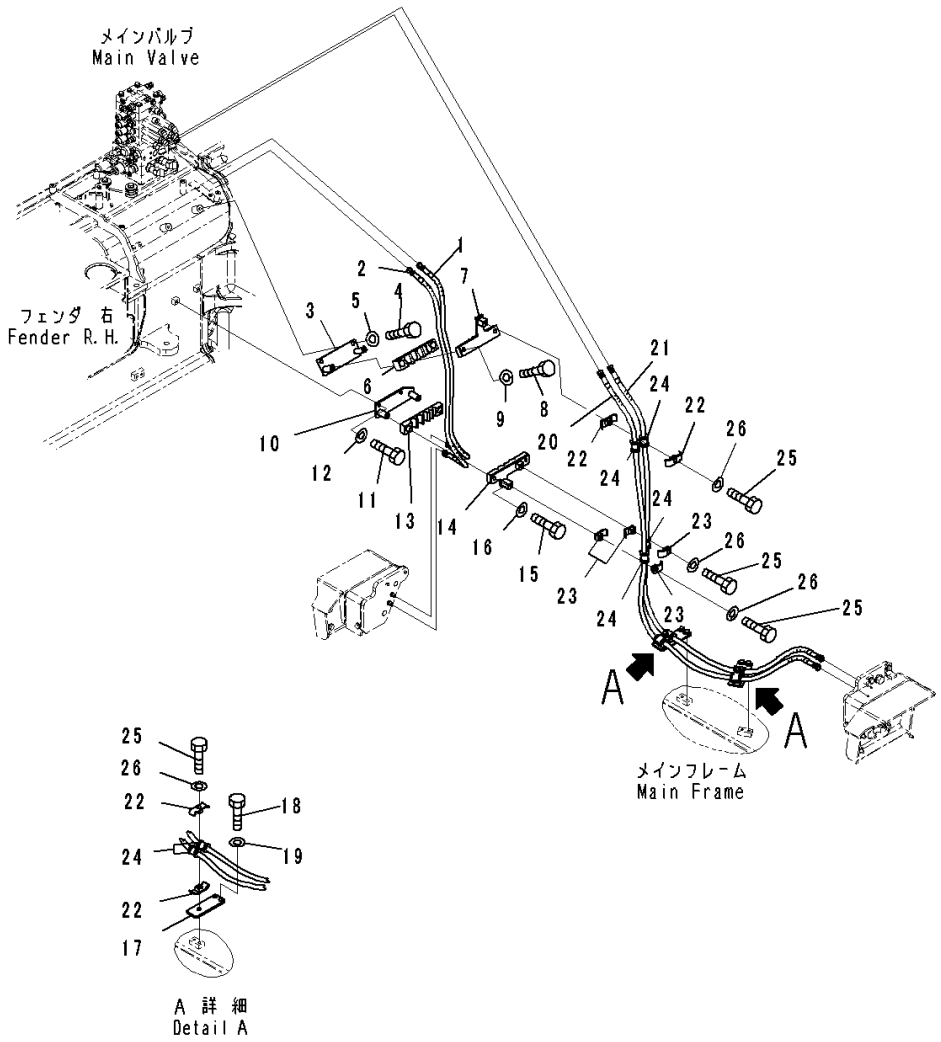

Index	Code	Part Number	Description	Qty	Serial Number
1		14X-62-51961	Hose Assembly	1	80001-
2		14X-62-51941	Hose Assembly	1	80001-
3		14X-62-52881	Plate	1	80001-
4		01010-81225	Bolt	2	80001-
5		01643-31232	Washer	2	80001-
6		14X-62-54741	Rubber	1	80001-
7		14X-62-52631	Clamp	1	80001-
8		01010-81230	Bolt	2	80001-
9		01643-31232	Washer	2	80001-
10		14X-62-52890	Plate	1	80001-
11		01010-81225	Bolt	2	80001-
12		01643-31232	Washer	2	80001-
13		14X-62-52911	Rubber	1	80001-
14		14X-62-52810	Clamp	1	80001-
15		01010-81230	Bolt	2	80001-
16		01643-31232	Washer	2	80001-
17		14X-62-54580	Bracket	2	80001-
18		01010-81225	Bolt	4	80001-
19		01643-31232	Washer	4	80001-
20		14X-62-54781	Hose Assembly	1	80001-
21		14X-62-54791	Hose Assembly	1	80001-
22		22P-62-13540	Clamp	6	80001-
23		22P-62-13510	Clamp	4	80001-
24		07095-00317	Cushion	8	80001-
25		01010-81260	Bolt	5	80001-
26		01643-31232	Washer	5	80001-

https://truckmanualshub.com/

FIG. H2220-004002 Dozer Blade Tilt Piping, With Power Tilt Pitch Dozer, Track Frame Cover

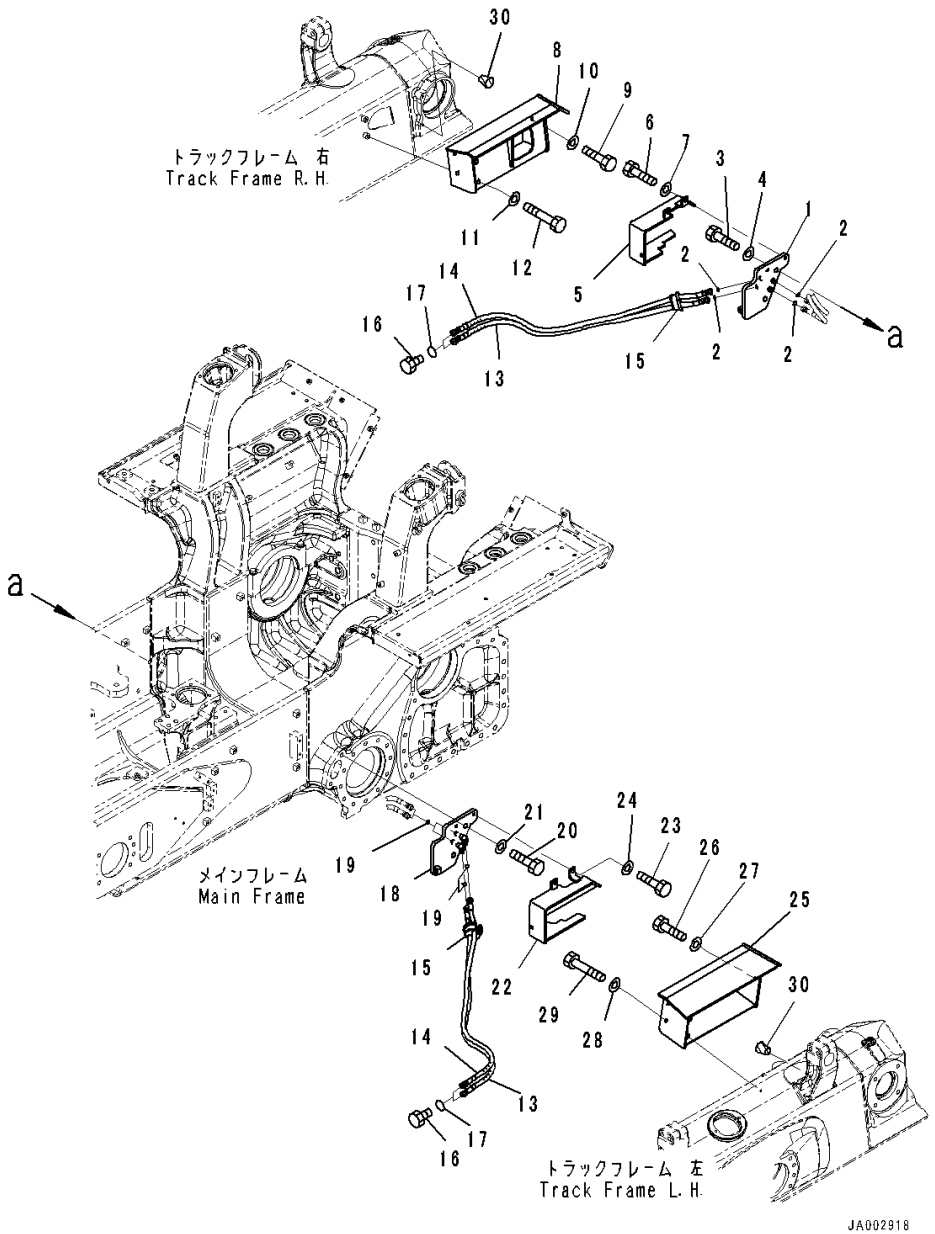

Index	Code	Part Number	Description	Qty	Serial Number
1		14X-62-51971	Bracket	1	80001-
2		02896-11009	O-ring	4	80001-
3		01010-82055	Bolt	2	80001-
4		01643-32060	Washer	2	80001-
5		14X-62-51980	Cover	1	80001-
6		01010-81235	Bolt	3	80001-
7		01643-31232	Washer	3	80001-
8		14X-62-52231	Cover	1	80001-
9		01010-81235	Bolt	1	80001-
10		01643-31232	Washer	1	80001-
11		01643-31232	Washer	2	80001-
12		01011-81250	Bolt	2	80001-
13		14X-62-52211	Hose Assembly	2	80001-
		21U-62-34760	• Band, Red	2	80001-
		14X-62-54990	• Cover	1	80001-
		14X-62-52220	• Hose	1	80001-
		08024-11920	• Tape, Vinyl, Red	1	80001-
14		14X-62-53581	Hose Assembly	2	80001-
		21U-62-34770	• Band, White	2	80001-
		14X-62-54990	• Cover	1	80001-
		14X-62-52220	• Hose	1	80001-
		08024-21920	• Tape, White	1	80001-
15		14X-62-53840	Rubber	2	80001-
16		07376-70315	Plug	4	80001-
17		02896-11009	O-ring	4	80001-
18		14X-62-54551	Bracket	1	80001-
19		02896-11009	O-ring	4	80001-
20		01010-82055	Bolt	2	80001-
21		01643-32060	Washer	2	80001-
22		14X-62-54560	Cover	1	80001-
23		01010-81235	Bolt	3	80001-
24		01643-31232	Washer	3	80001-
25		14X-62-52731	Cover,LHS	1	80001-
26		01010-81235	Bolt	1	80001-
27		01643-31232	Washer	1	80001-
28		01643-31232	Washer	2	80001-
29		01011-81250	Bolt	2	80001-
30		07049-01215	Plug	2	80001-

https://truckmanualshub.com/

FIG. H2230-001001 Dozer Blade Angle Piping

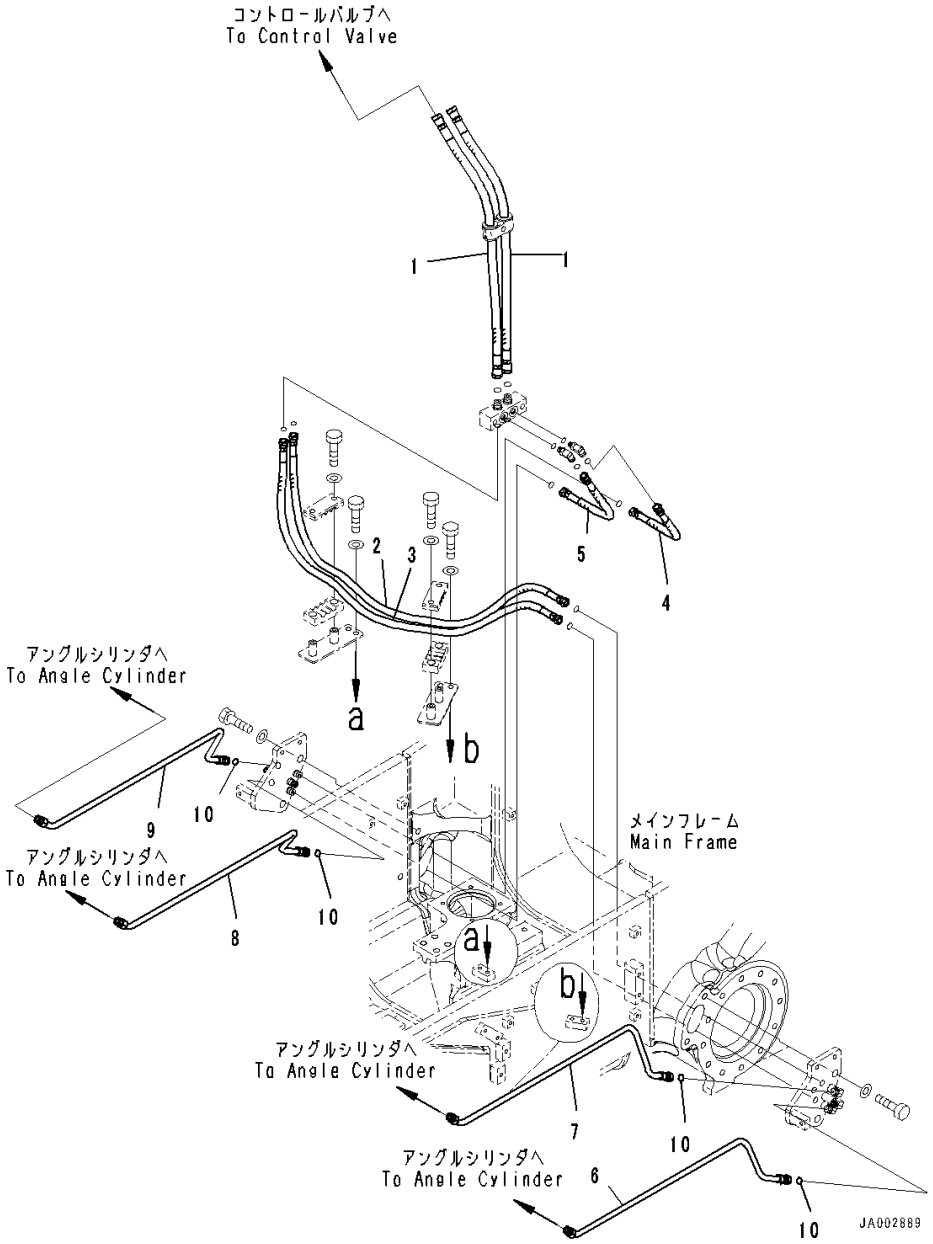

Index	Code	Part Number	Description	Qty	Serial Number
1		14X-62-51551	Hose Assembly	2	80001-
2		14X-62-51571	Hose Assembly	1	80001-
3		14X-62-51281	Hose Assembly	1	80001-
4		14X-62-51581	Hose Assembly	1	80001-
5		14X-62-51481	Hose Assembly	1	80001-
6		14X-62-51732	Tube,LHS	1	80001-
7		14X-62-51742	Tube,LHS	1	80001-
8		14X-62-51762	Tube,RHS	1	80001-
9		14X-62-51772	Tube,RHS	1	80001-
10		02896-11012	O-ring	4	80001-

https://truckmanualshub.com/

FIG. H2230-001002 Dozer Blade Angle Piping, Clamp

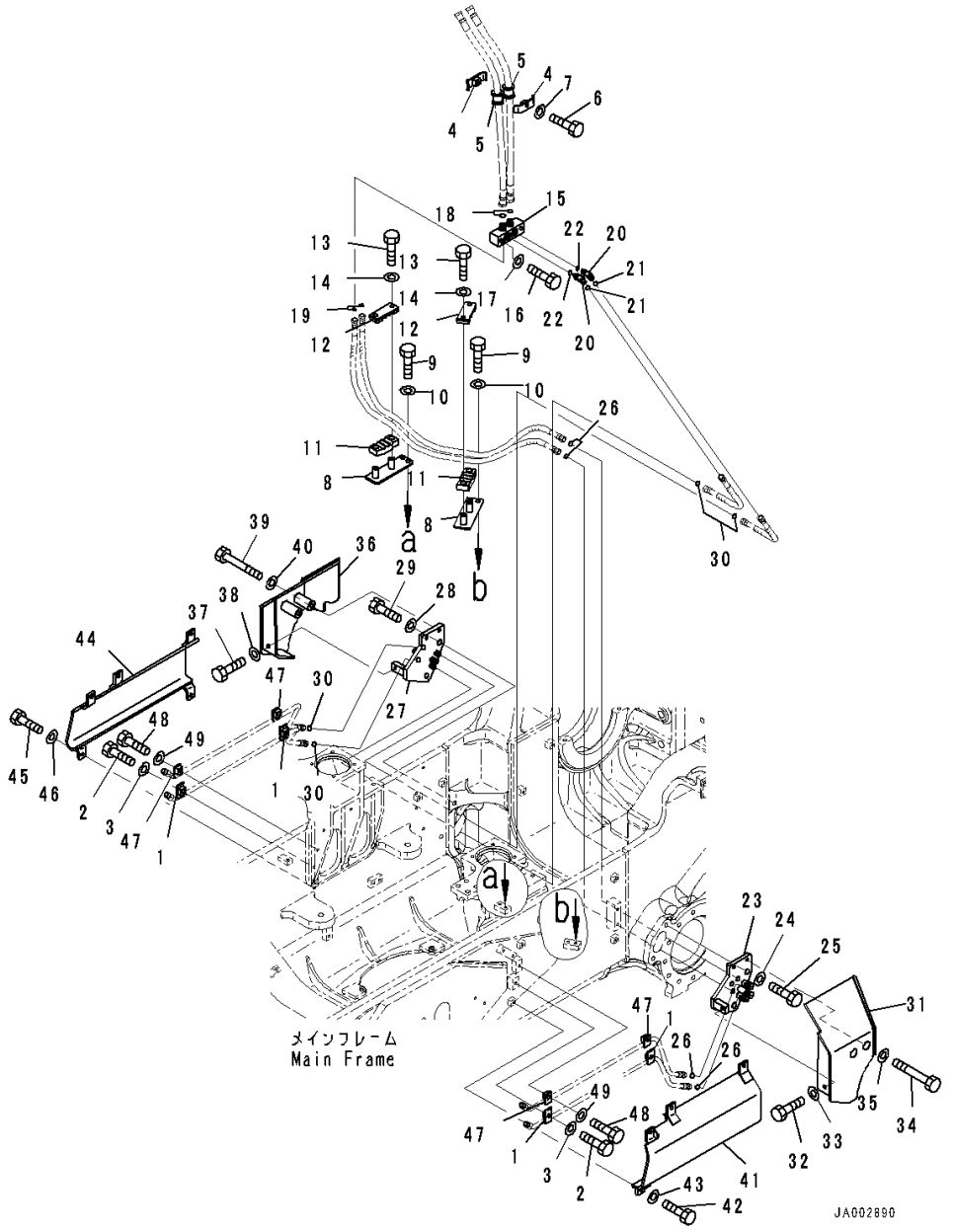

Index	Code	Part Number	Description	Qty	Serial Number
1		14X-62-51780	Clamp	4	80001-
2		01010-81235	Bolt	4	80001-
3		01643-31232	Washer	4	80001-
4		07094-30417	Clamp	2	80001-
5		07095-00420	Cushion	2	80001-
6		01010-81265	Bolt	1	80001-
7		01643-31232	Washer	1	80001-
8		14X-62-51491	Bracket	2	80001-
9		01010-81225	Bolt	4	80001-
10		01643-31232	Washer	4	80001-
11		14X-62-51530	Cushion	2	80001-
12		14X-62-51520	Bracket	2	80001-
13		01010-81225	Bolt	4	80001-
14		01643-31232	Washer	4	80001-
15		14X-62-51541	Block	1	80001-
16		01010-81265	Bolt	2	80001-
17		01643-31232	Washer	2	80001-
18		02896-11012	O-ring	2	80001-
19		02896-11009	O-ring	2	80001-
20		02782-10311	Elbow	2	80001-
21		02896-11009	O-ring	2	80001-
22		07002-11423	O-ring	2	80001-
23		14X-62-51651	Bracket,LHS	1	80001-
24		01643-32060	Washer	2	80001-
25		01010-82055	Bolt	2	80001-
26		02896-11009	O-ring	6	80001-
27		14X-62-51661	Bracket,RHS	1	80001-
28		01643-32060	Washer	2	80001-
29		01010-82055	Bolt	2	80001-
30		02896-11009	O-ring	6	80001-
31		14X-62-51670	Cover,LHS	1	80001-
32		01010-81230	Bolt	1	80001-
33		01643-31232	Washer	1	80001-
34		01010-81295	Bolt	2	80001-
35		01643-31232	Washer	2	80001-
36		14X-62-51680	Cover,RHS	1	80001-
37		01010-81230	Bolt	1	80001-
38		01643-31232	Washer	1	80001-
39		01010-81295	Bolt	2	80001-
40		01643-31232	Washer	2	80001-

https://truckmanualshub.com/

FIG. H2230-001002 Dozer Blade Angle Piping, Clamp

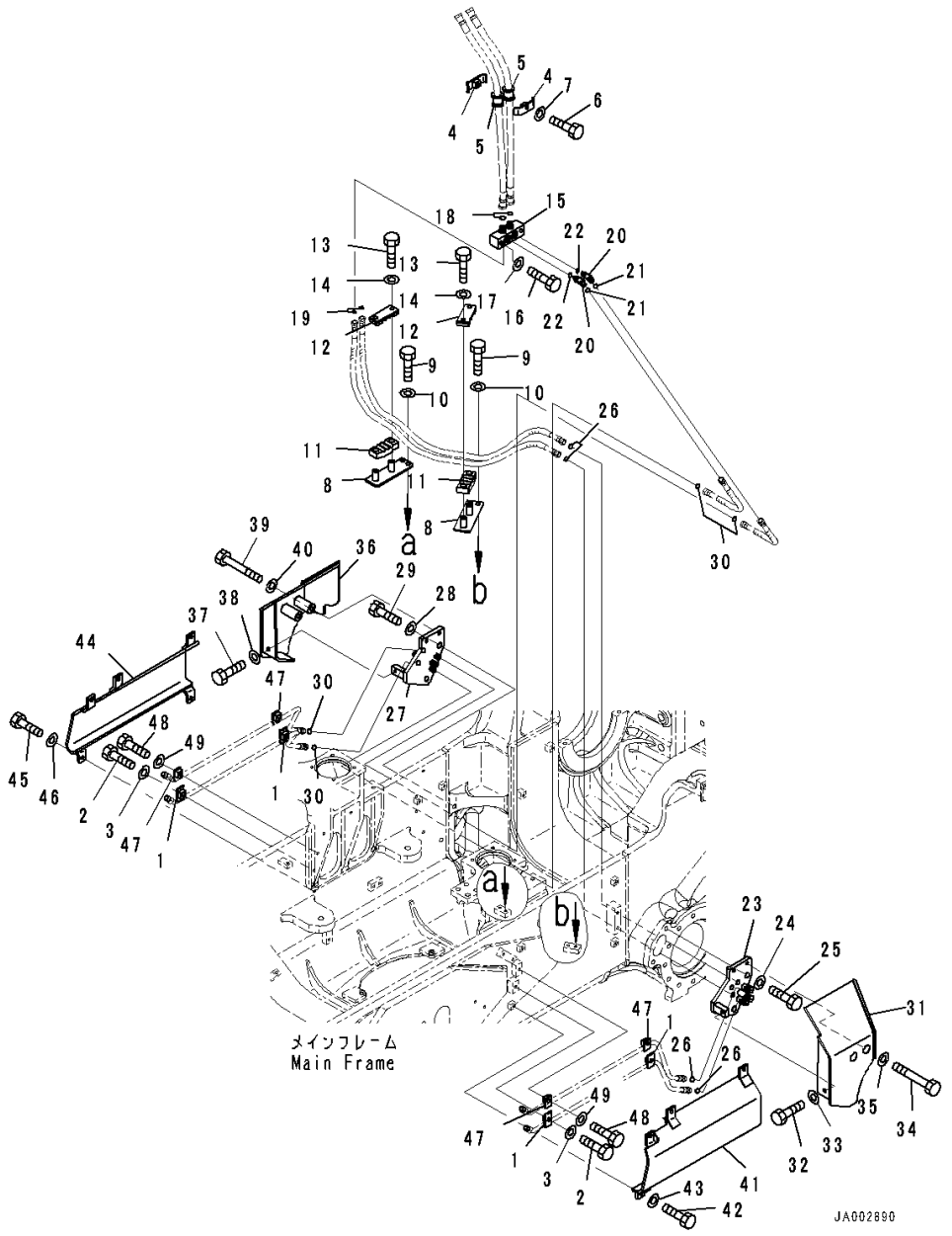

Index	Code	Part Number	Description	Qty	Serial Number
41		14X-62-53640	Cover,LHS	1	80001-
42		01010-81230	Bolt	5	80001-
43		01643-31232	Washer	5	80001-
44		14X-62-53650	Cover,RHS	1	80001-
45		01010-81230	Bolt	5	80001-
46		01643-31232	Washer	5	80001-
47		14X-62-51790	Clamp	4	80001-
48		01010-81235	Bolt	4	80001-
49		01643-31232	Washer	4	80001-

https://truckmanualshub.com/

FIG. H2250-001001 Rear Hydraulic Piping

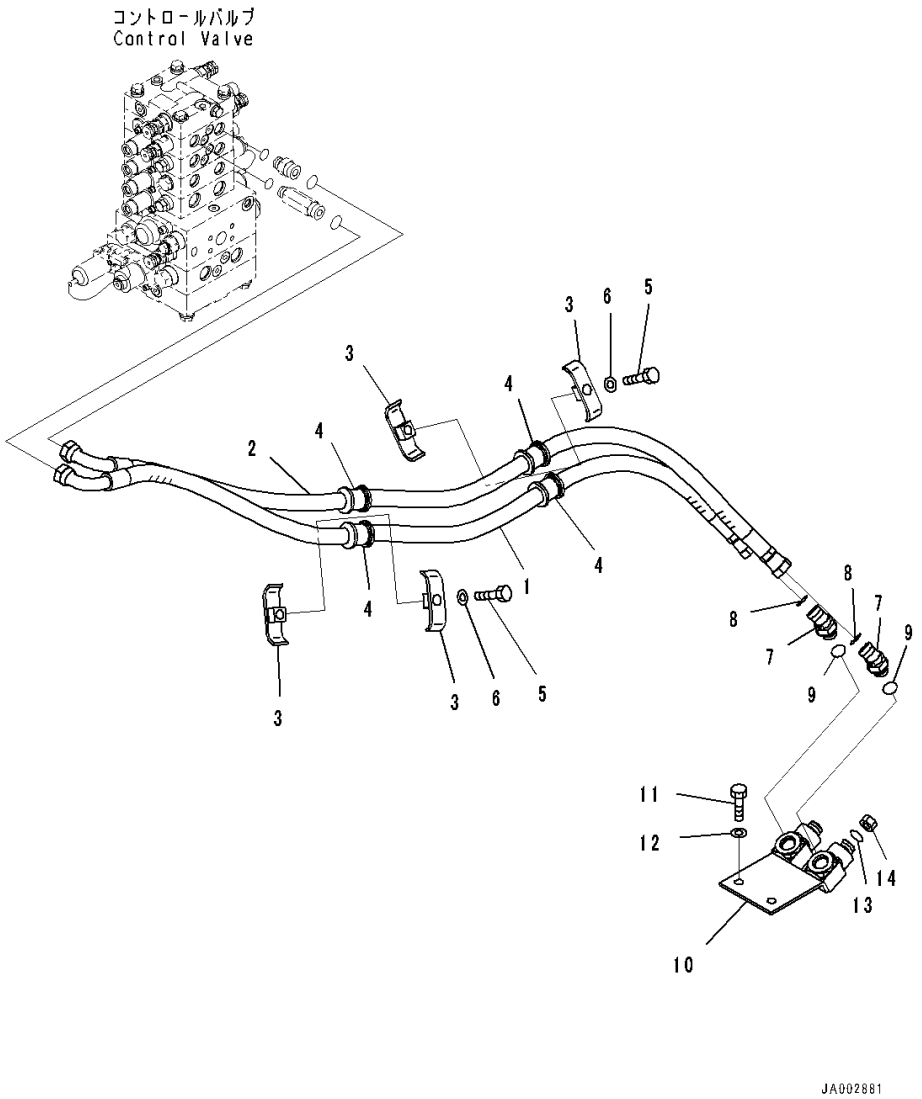

Index	Code	Part Number	Description	Qty	Serial Number
1		14X-78-51181	Hose Assembly	1	80001-
2		14X-78-51191	Hose Assembly	1	80001-
3		22P-62-13550	Clamp	4	80001-
4		07095-00526	Cushion	4	80001-
5		01010-81270	Bolt	2	80001-
6		01643-31232	Washer	2	80001-
7		02783-10522	Elbow	2	80001-
8		02896-11015	O-ring	2	80001-
9		07002-12434	O-ring	2	80001-
10		14X-78-51171	Block	1	80001-
11		01010-81230	Bolt	2	80001-
12		01643-31232	Washer	2	80001-
13		02896-11015	O-ring	2	80001-
14		02789-00522	Plug, Face Seal Type	2	80001-

https://truckmanualshub.com/

https://truckmanualshub.com/

https://truckmanualshub.com/

FRAME AND ITS RELATED PARTS

FIG. J2100-001001 Main Frame

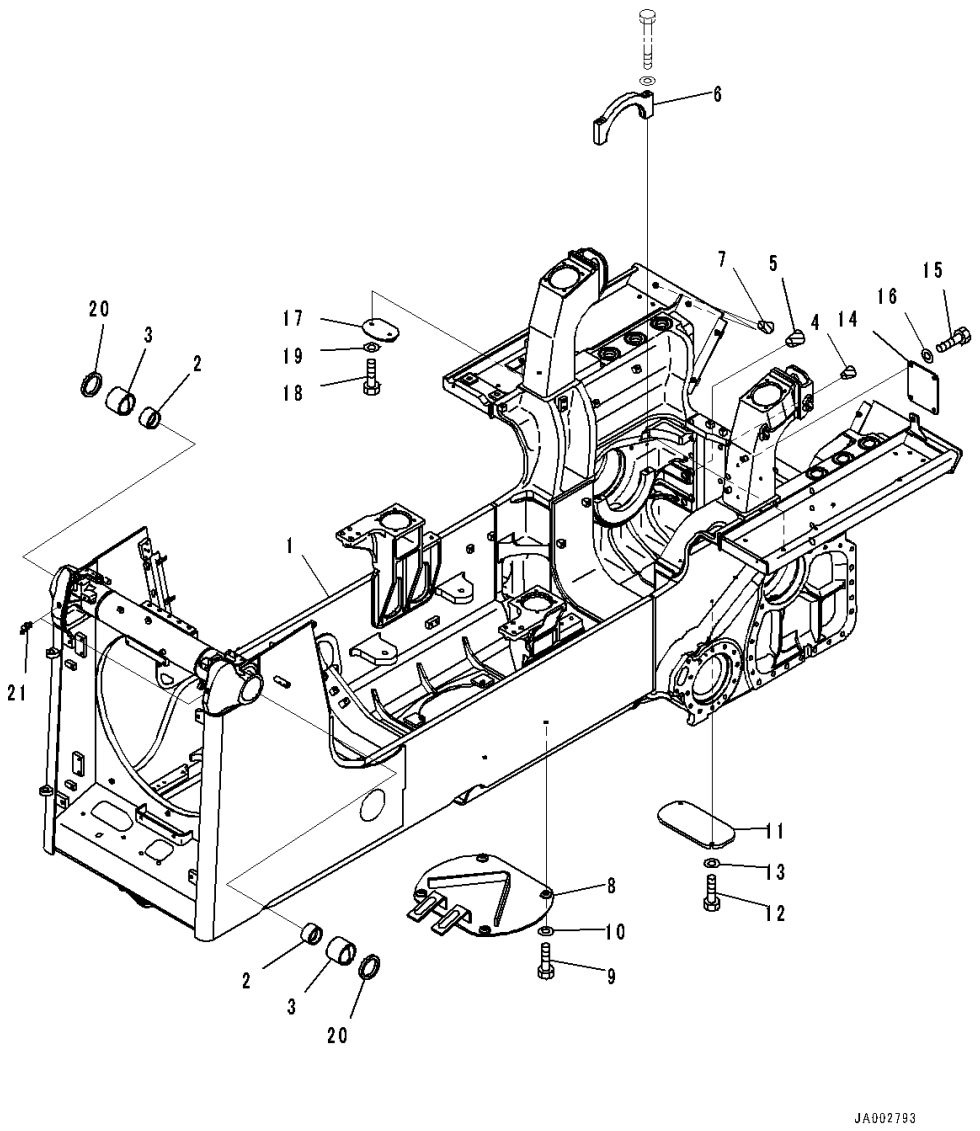

Index	Code	Part Number	Description	Qty	Serial Number
1		14X-21-51101	Frame Assembly	1	80001-
2		144-70-15171	• Bushing	2	80001-
3		14X-21-51450	• Bushing	2	80001-
4		07049-02430	Plug	24	80001-
5		07049-03342	Plug, Cork	6	80001-
6		154-21-71420	Cap	2	80001-
7		07049-01215	Plug	2	80001-
8		14X-21-51341	Cover	1	80001-
9		01010-81235	Bolt	4	80001-
10		01643-31232	Washer	4	80001-
11		14X-21-51371	Cover	1	80001-
12		01010-81225	Bolt	2	80001-
13		01643-31232	Washer	2	80001-
14		14X-21-51350	Cover	1	80001-80016
15		01010-81225	Bolt	4	80001-80016
16		01643-31232	Washer	4	80001-80016
17		14X-21-51361	Cover	1	80001-
18		01010-81230	Bolt	2	80001-
19		01643-31232	Washer	2	80001-
20		130-09-12370	Seal	2	80001-
21		07020-00675	Fitting, Grease	2	80001-

https://truckmanualshub.com/

FIG. J2100-002001 Main Frame, With Power Angle Power Tilt Dozer, Inside Frame

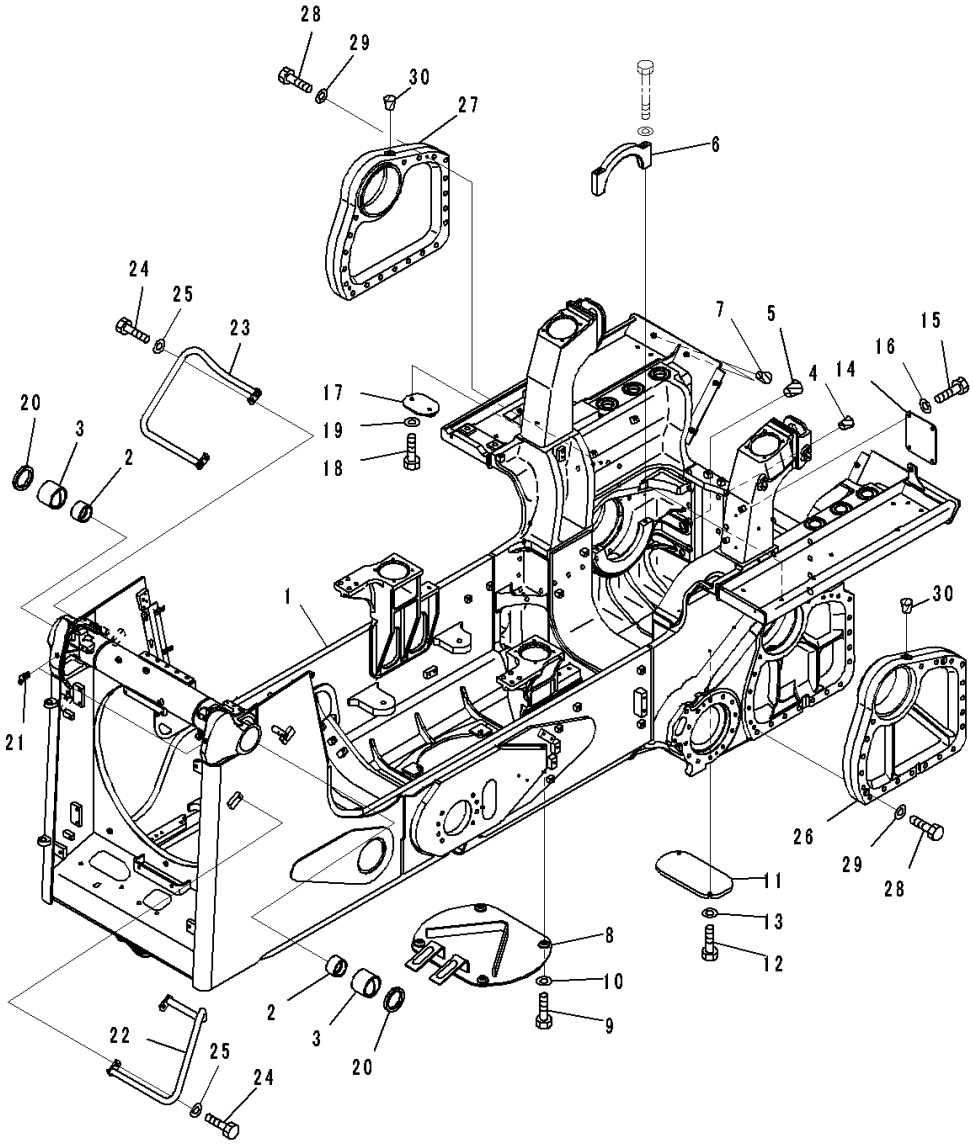

Index	Code	Part Number	Description	Qty	Serial Number
1		14X-21-52200	Frame Assembly	1	80001-
2		144-70-15171	• Bushing	2	80001-
3		14X-21-51450	• Bushing	2	80059-
4		07049-02430	Plug	24	80001-
5		07049-03342	Plug, Cork	6	80001-
6		154-21-71420	Cap	2	80001-
7		07049-01215	Plug	2	80001-
8		14X-21-51341	Cover	1	80001-
9		01010-81235	Bolt	4	80001-
10		01643-31232	Washer	4	80001-
11		14X-21-51371	Cover	1	80001-
12		01010-81225	Bolt	2	80001-
13		01643-31232	Washer	2	80001-
14		14X-21-51350	Cover	1	80001-80016
15		01010-81225	Bolt	4	80001-80016
16		01643-31232	Washer	4	80001-80016
17		14X-21-51361	Cover	1	80001-
18		01010-81230	Bolt	2	80001-
19		01643-31232	Washer	2	80001-
20		130-09-12370	Seal	2	80001-
21		07020-00675	Fitting, Grease	2	80001-
22		14X-54-55130	Handle	1	80001-
23		14X-54-55140	Handle	1	80001-
24		01010-81230	Bolt	4	80001-
25		01643-31232	Washer	4	80001-
26		14X-27-52211	Spacer,LHS	1	80001-
27		14X-27-52221	Spacer,RHS	1	80001-
28		01010-81295	Bolt	4	80001-
29		01643-31232	Washer	4	80001-
30		07049-01215	Plug	2	80013-

https://truckmanualshub.com/

FIG. J2100-003001 Main Frame, With Refuel Pump

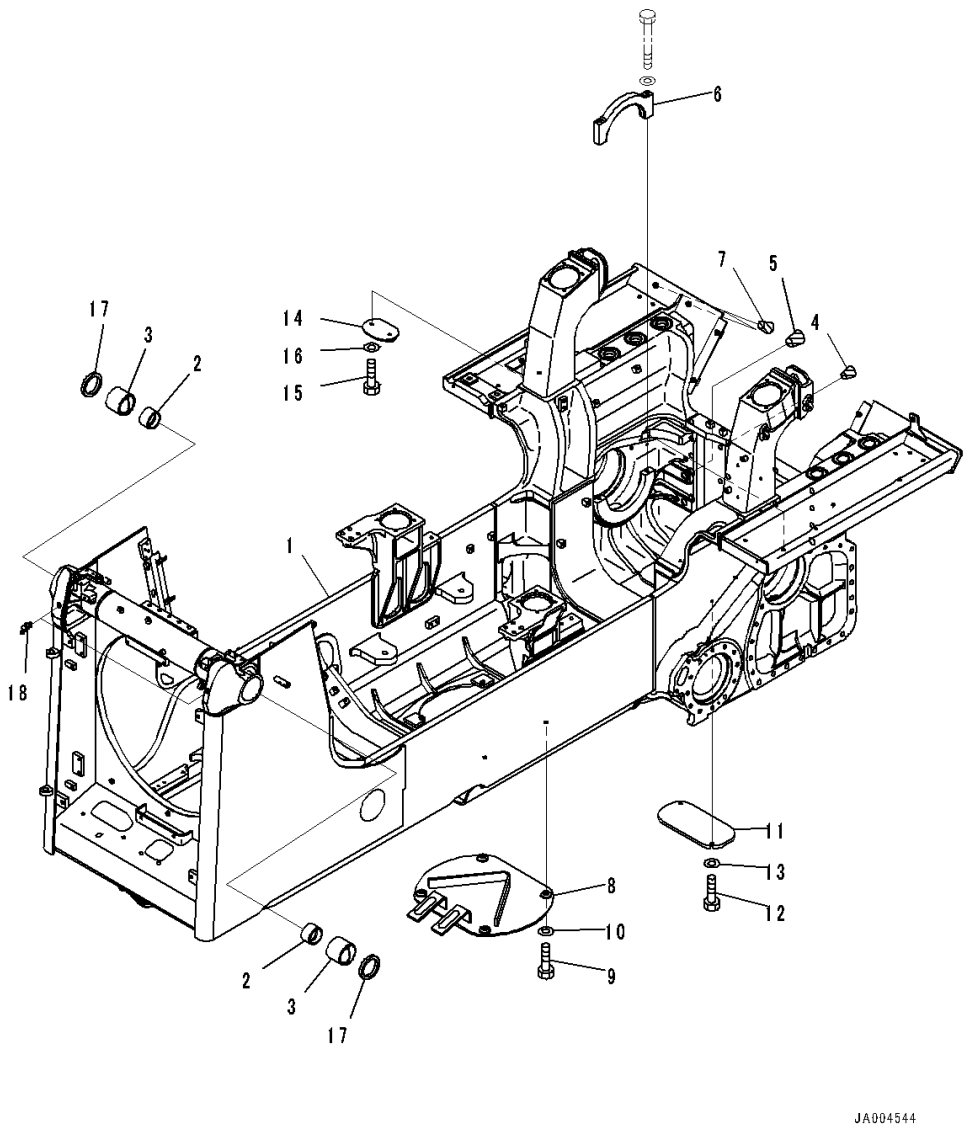

Index	Code	Part Number	Description	Qty	Serial Number
1		14X-21-51700	Frame Assembly	1	80001-
2		144-70-15171	• Bushing	2	80001-
3		14X-21-51450	• Bushing	2	80001-
4		07049-02430	Plug	24	80001-
5		07049-03342	Plug, Cork	6	80001-
6		154-21-71420	Cap	2	80001-
7		07049-01215	Plug	2	80001-
8		14X-21-51341	Cover	1	80001-
9		01010-81235	Bolt	4	80001-
10		01643-31232	Washer	4	80001-
11		14X-21-51371	Cover	1	80001-
12		01010-81225	Bolt	2	80001-
13		01643-31232	Washer	2	80001-
14		14X-21-51361	Cover	1	80001-
15		01010-81230	Bolt	2	80001-
16		01643-31232	Washer	2	80001-
17		130-09-12370	Seal	2	80001-
18		07020-00675	Fitting, Grease	2	80001-

https://truckmanualshub.com/

FIG. J2100-004001 Main Frame, With Power Angle Power Tilt Dozer, Inside Frame, Refuel Pump

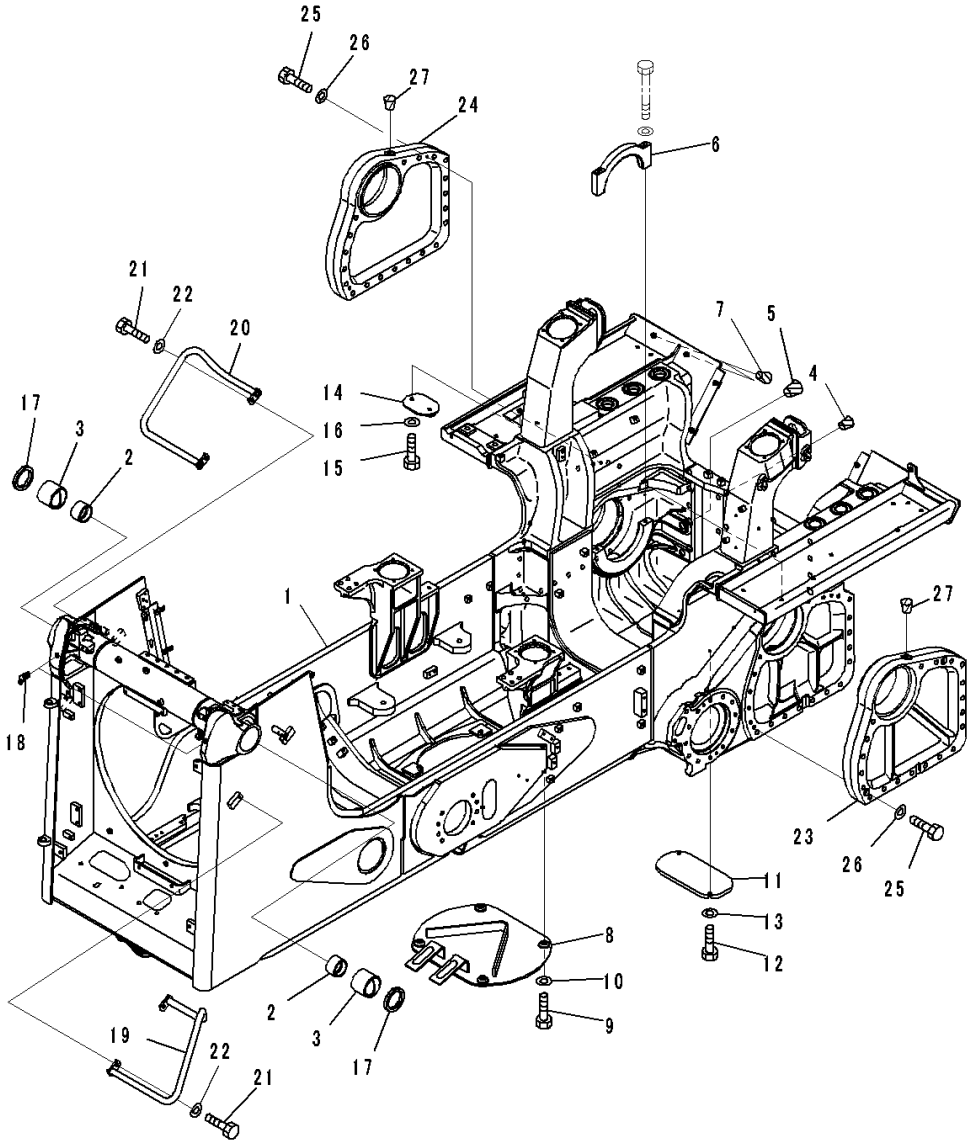

Index	Code	Part Number	Description	Qty	Serial Number
1		14X-21-52400	Frame Assembly	1	80001-
2		144-70-15171	• Bushing	2	80001-
3		14X-21-51450	• Bushing	2	80001-
4		07049-02430	Plug	24	80001-
5		07049-03342	Plug, Cork	6	80001-
6		154-21-71420	Cap	2	80001-
7		07049-01215	Plug	2	80001-
8		14X-21-51341	Cover	1	80001-
9		01010-81235	Bolt	4	80001-
10		01643-31232	Washer	4	80001-
11		14X-21-51371	Cover	1	80001-
12		01010-81225	Bolt	2	80001-
13		01643-31232	Washer	2	80001-
14		14X-21-51361	Cover	1	80001-
15		01010-81230	Bolt	2	80001-
16		01643-31232	Washer	2	80001-
17		130-09-12370	Seal	2	80001-
18		07020-00675	Fitting, Grease	2	80001-
19		14X-54-55130	Handle	1	80001-
20		14X-54-55140	Handle	1	80001-
21		01010-81230	Bolt	4	80001-
22		01643-31232	Washer	4	80001-
23		14X-27-52211	Spacer	1	80001-
24		14X-27-52221	Spacer	1	80001-
25		01010-81295	Bolt	4	80001-
26		01643-31232	Washer	4	80001-
27		07049-01215	Plug	2	80001-

https://truckmanualshub.com/

FIG. J2700-001001 Equalizer Bar And Pivot Shaft, With Power Angle Power Tilt Dozer

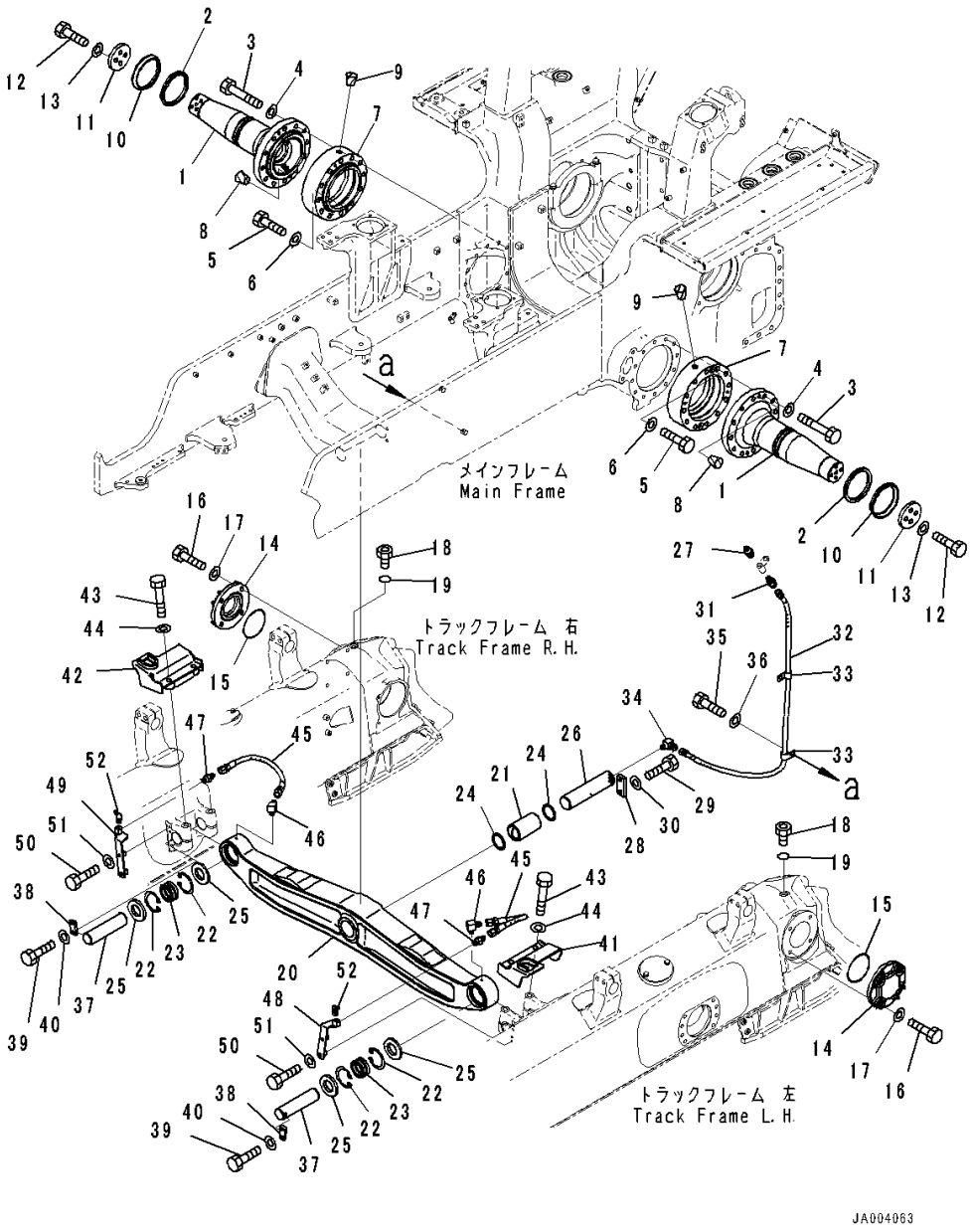

Index	Code	Part Number	Description	Qty	Serial Number
		14Y-30-00210	Pivot Shaft Assembly	2	80001-
1		14Y-30-17111	• Shaft	1	80001-
2		14Y-30-18160	Ring	2	80001-
3		14X-30-51660	Bolt	24	80001-
4		01643-32060	Washer	24	80001-
5		01010-81295	Bolt	4	80001-
6		01643-31232	Washer	4	80001-
7		14X-30-51191	Spacer	2	80001-
8		07049-02025	Plug	4	80001-
9		07049-01012	Plug	2	80014-
10		14Y-30-18150	Seal	2	80001-
11		14Y-30-18121	Spacer	2	80001-
12		01010-82055	Bolt	8	80001-
13		01643-32060	Washer	8	80001-
14		14Y-30-18111	Cover	2	80001-
15		07000-02145	O-ring	2	80001-
16		01010-82055	Bolt	8	80001-
17		01643-32060	Washer	8	80001-
18		07040-12414	Plug	2	80001-
19		07002-02434	O-ring	2	80001-
		14X-50-00111	Equalizer Bar Assembly	1	80001-
20		14X-50-51111	• Equalizer Bar	1	80001-
21		14Y-50-11250	• Bushing	1	80001-
22		04065-09030	• Ring, Snap	4	80001-
23		14Y-50-11460	• Bushing	2	80001-
24		130-09-12911	Seal, DUST	2	80001-
25		14Y-50-11323	Seal	4	80001-
26		14Y-50-11240	Pin	1	80001-
27		07020-00000	Fitting, Grease	1	80001-
28		14Y-50-11390	Lock	1	80001-
29		01010-81640	Bolt	2	80001-
30		01643-31645	Washer	2	80001-
31		208-06-11220	Nipple	1	80001-
32		14X-50-51290	Hose Assembly	1	80001-
33		04434-51312	Clip	2	80001-
34		203-62-42920	Elbow	1	80001-
35		01010-81220	Bolt	1	80001-
36		01643-31232	Washer	1	80001-
37		14X-50-51530	Pin	2	80001-
38		04082-00312	Lock	2	80001-

https://truckmanualshub.com/

FIG. J2700-001001 Equalizer Bar And Pivot Shaft, With Power Angle Power Tilt Dozer

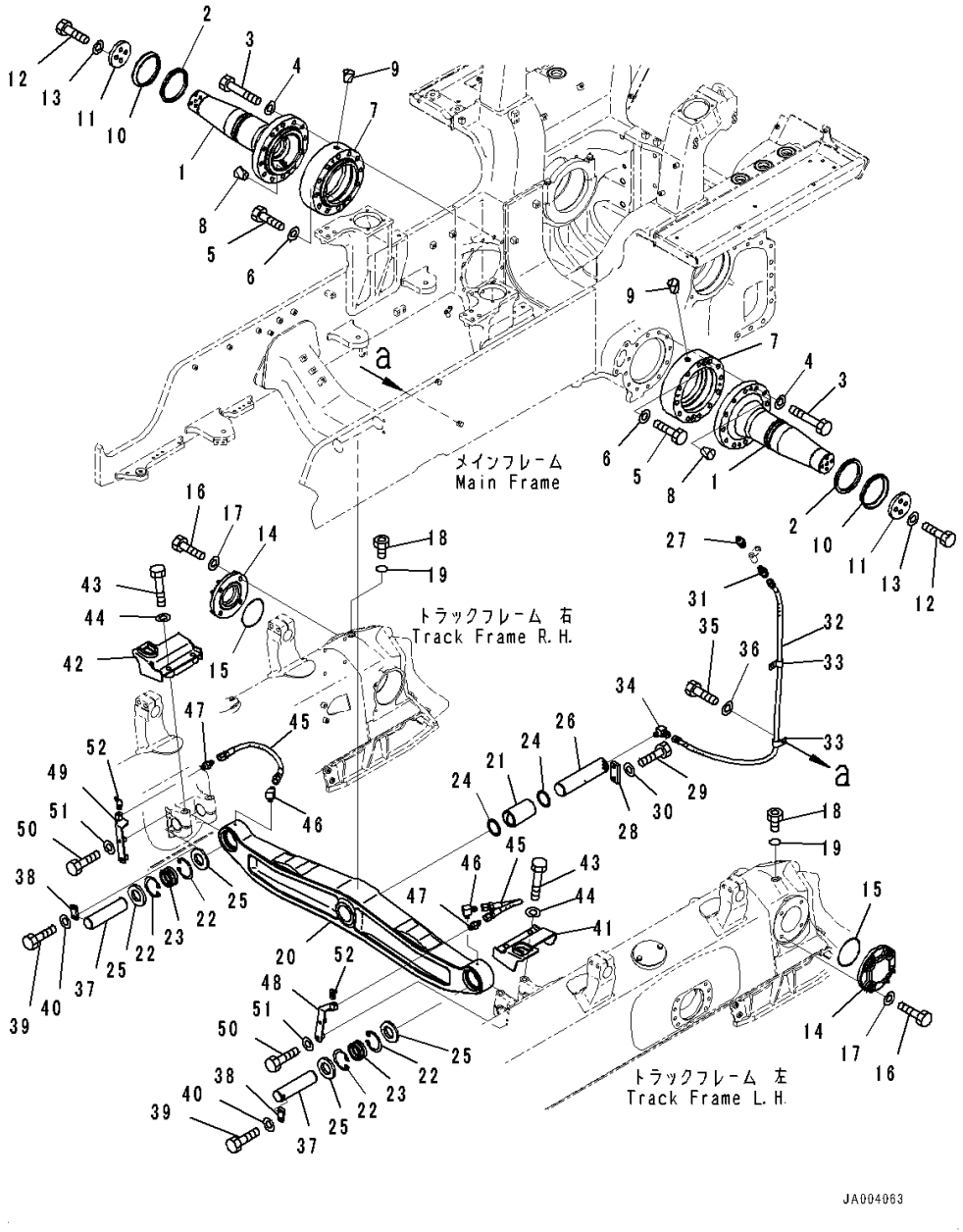

Index	Code	Part Number	Description	Qty	Serial Number
39		01010-81230	Bolt	4	80001-
40		01643-31232	Washer	4	80001-
41		14X-50-51241	Cover	1	80001-
42		14X-50-51251	Cover	1	80001-
43		01011-82055	Bolt	4	80001-
44		01643-32060	Washer	4	80001-
45		14X-50-51181	Hose	2	80001-
46		202-62-21430	Elbow	2	80001-
47		203-62-21740	Nipple	2	80001-
48		14X-50-51121	Bracket	1	80001-
49		14X-50-51131	Bracket	1	80001-
50		01010-81255	Bolt	4	80001-
51		01643-31232	Washer	4	80001-
52		07020-00675	Fitting, Grease	2	80001-

https://truckmanualshub.com/

FIG. J2700-002001 Equalizer Bar And Pivot Shaft

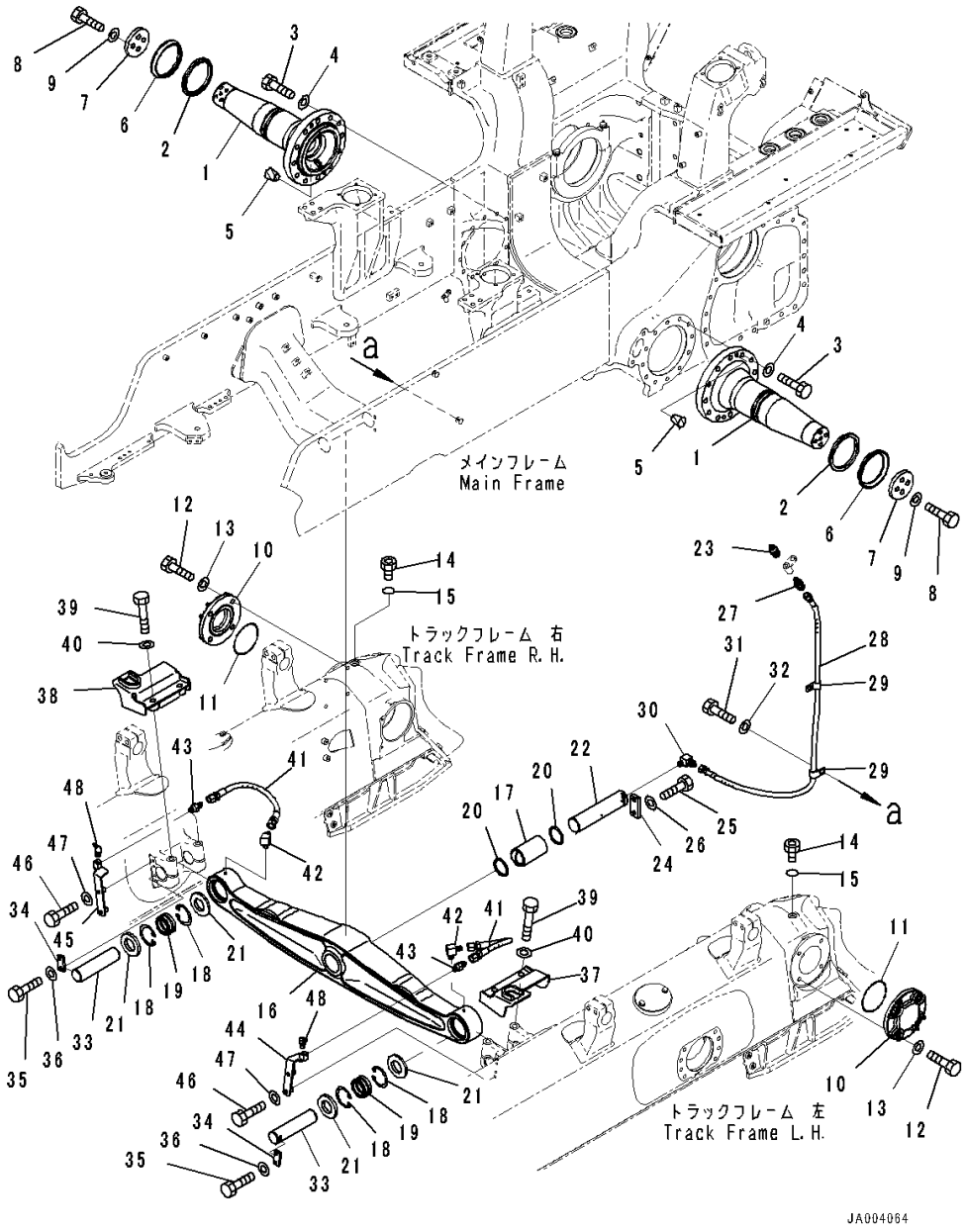

Index	Code	Part Number	Description	Qty	Serial Number
		14Y-30-00210	Pivot Shaft Assembly	2	80001-
1		14Y-30-17111	• Shaft	1	80001-
2		14Y-30-18160	Ring	2	80001-
3		01010-82075	Bolt	24	80001-
4		01643-32060	Washer	24	80001-
5		07049-02025	Plug	4	80001-
6		14Y-30-18150	Seal	2	80001-
7		14Y-30-18121	Spacer	2	80001-
8		01010-82055	Bolt	8	80001-
9		01643-32060	Washer	8	80001-
10		14Y-30-18111	Cover	2	80001-
11		07000-02145	O-ring	2	80001-
12		01010-82055	Bolt	8	80001-
13		01643-32060	Washer	8	80001-
14		07040-12414	Plug	2	80001-
15		07002-02434	O-ring	2	80001-
		14Y-50-00012	Equalizer Bar Assembly	1	80001-
16		14Y-50-11110	• Equalizer Bar	1	80001-
17		14Y-50-11250	• Bushing	1	80001-
18		04065-09030	• Ring, Snap	4	80001-
19		14Y-50-11460	• Bushing	2	80001-
20		130-09-12911	Seal, DUST	2	80001-
21		14Y-50-11323	Seal	4	80001-
22		14Y-50-11240	Pin	1	80001-
23		07020-00000	Fitting, Grease	1	80001-
24		14Y-50-11390	Lock	1	80001-
25		01010-81640	Bolt	2	80001-
26		01643-31645	Washer	2	80001-
27		208-06-11220	Nipple	1	80001-
28		14X-50-51290	Hose Assembly	1	80001-
29		04434-51312	Clip	2	80001-
30		203-62-42920	Elbow	1	80001-
31		01010-81220	Bolt	1	80001-
32		01643-31232	Washer	1	80001-
33		14X-50-51530	Pin	2	80001-
34		04082-00312	Lock	2	80001-
35		01010-81230	Bolt	4	80001-
36		01643-31232	Washer	4	80001-
37		14X-50-51241	Cover,LHS	1	80001-
38		14X-50-51251	Cover,RHS	1	80001-

https://truckmanualshub.com/

FIG. J2700-002001 Equalizer Bar And Pivot Shaft

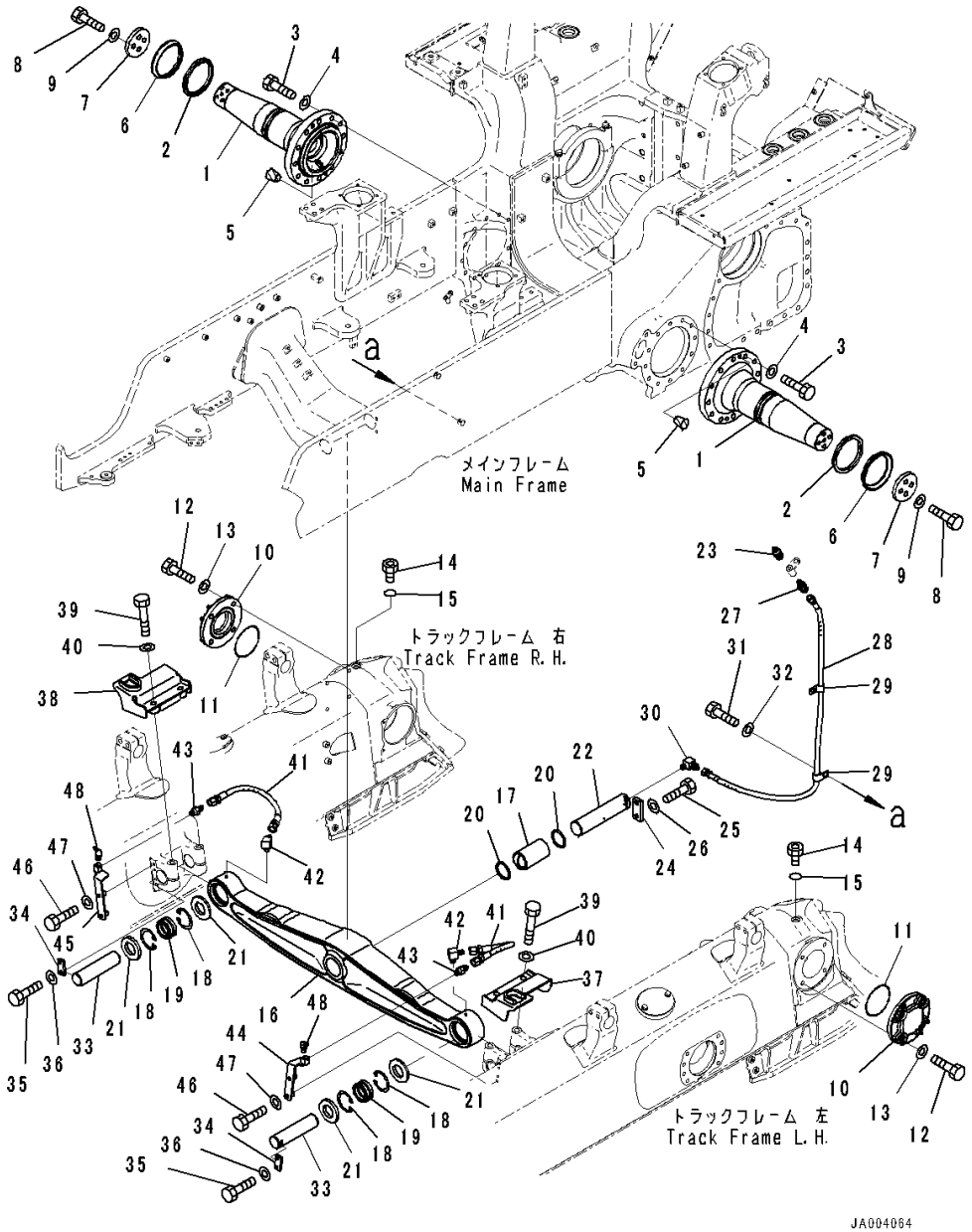

Index	Code	Part Number	Description	Qty	Serial Number
39		01011-82055	Bolt	4	80001-
40		01643-32060	Washer	4	80001-
41		14X-50-51181	Hose	2	80001-
42		202-62-21430	Elbow	2	80001-
43		203-62-21740	Nipple	2	80001-
44		14X-50-51121	Bracket	1	80001-
45		14X-50-51131	Bracket	1	80001-
46		01010-81255	Bolt	4	80001-
47		01643-31232	Washer	4	80001-
48		07020-00675	Fitting, Grease	2	80001-

https://truckmanualshub.com/

https://truckmanualshub.com/

https://truckmanualshub.com/

OPERATOR'S COMPARTMENT AND CONTROL SYSTEM

FIG. K0110-001001 Operator's Seat, Suspension Type, Fabric Type, Reclining Type

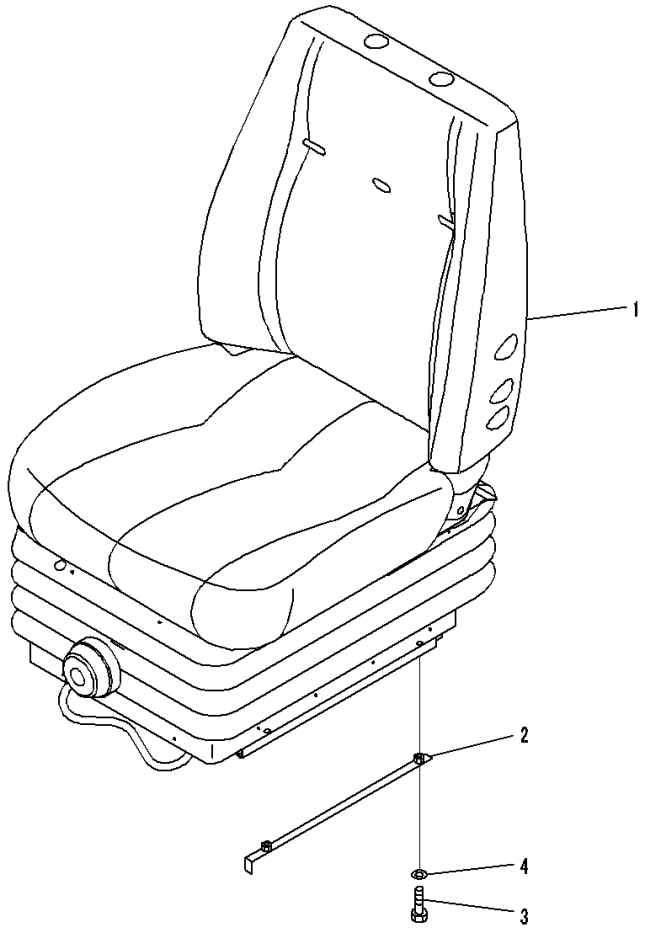

JA002992

Index	Code	Part Number	Description	Qty	Serial Number
1		14X-57-51710	Seat Assembly	1	80001-
2		134-57-61150	Bracket	2	80001-
3		01010-80820	Bolt	4	80001-
4		01643-30823	Washer	4	80001-

https://truckmanualshub.com/

FIG. K0110-009001 Operator's Seat, Air Suspension Type, Fabric Type, Operator's Seat Turn Type

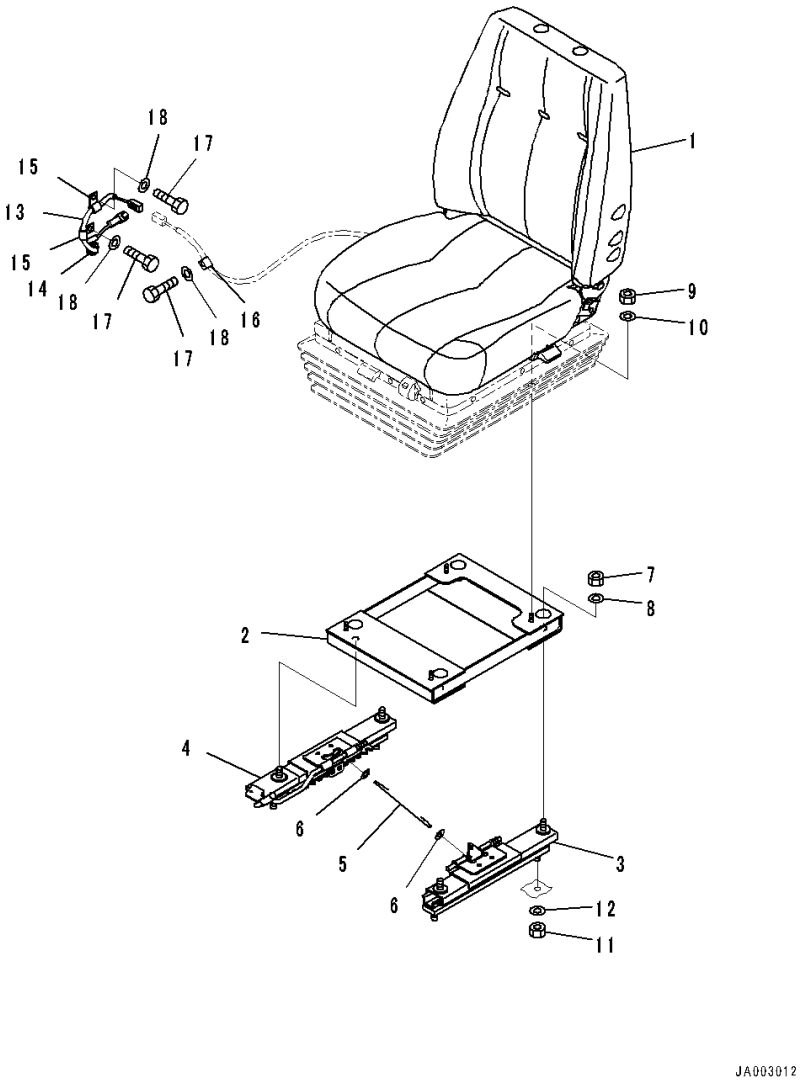

Index	Code	Part Number	Description	Qty	Serial Number
1		14X-57-51411	Seat Assembly	1	80001-
		14X-57-51110	Adjuster Assembly	1	80001-
2		14X-57-51140	• Bracket	1	80001-
3		14X-57-51120	• Adjuster,LHS	1	80001-
4		14X-57-51130	• Adjuster,RHS	1	80001-
5		17A-57-23270	• Wire	1	80001-
6		01640-20816	• Washer	2	80001-
7		01582-11210	• Nut	4	80001-
8		01643-51232	• Washer	4	80001-
9		01580-10806	Nut	4	80001-
10		01643-50823	Washer	4	80001-
11		01582-11210	Nut	4	80001-
12		01643-31232	Washer	4	80001-
13		17A-57-41150	Wiring Harness	1	80001-
14		08037-01610	• Grommet	1	80001-
15		04434-51010	Clip	2	80001-
16		04434-50810	Clip	1	80001-
17		01010-D1020	Bolt	3	80001-
18		01643-71032	Washer	3	80001-

https://truckmanualshub.com/

FIG. K0110-004001 Operator's Seat, Suspension Type, Reclining Type, Hi-Back Type Operator's Seat, Fabric Type

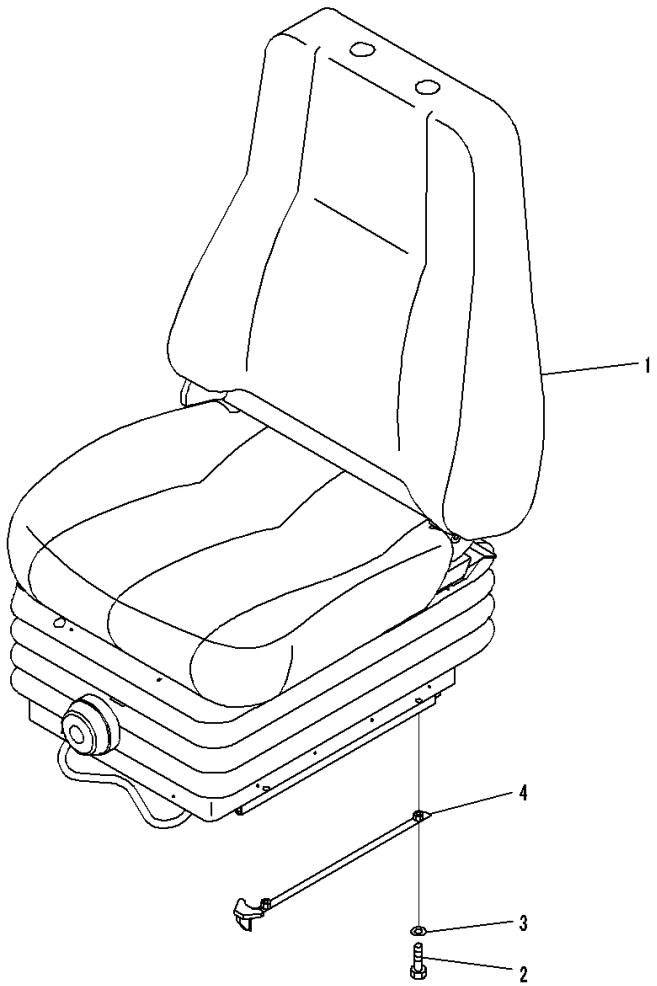

Index	Code	Part Number	Description	Qty	Serial Number
1		14X-57-51910	Seat Assembly	1	80001-
2		01010-80820	Bolt	4	80001-
3		01643-30823	Washer	4	80001-
4		134-57-61170	Bracket	2	80001-

https://truckmanualshub.com/

FIG. K0110-005001A Operator's Seat, Suspension Type, Fabric Type, Reclining Type, Hi-Back Type Operator's Seat, Operator's Seat Turn Type, With Headrest

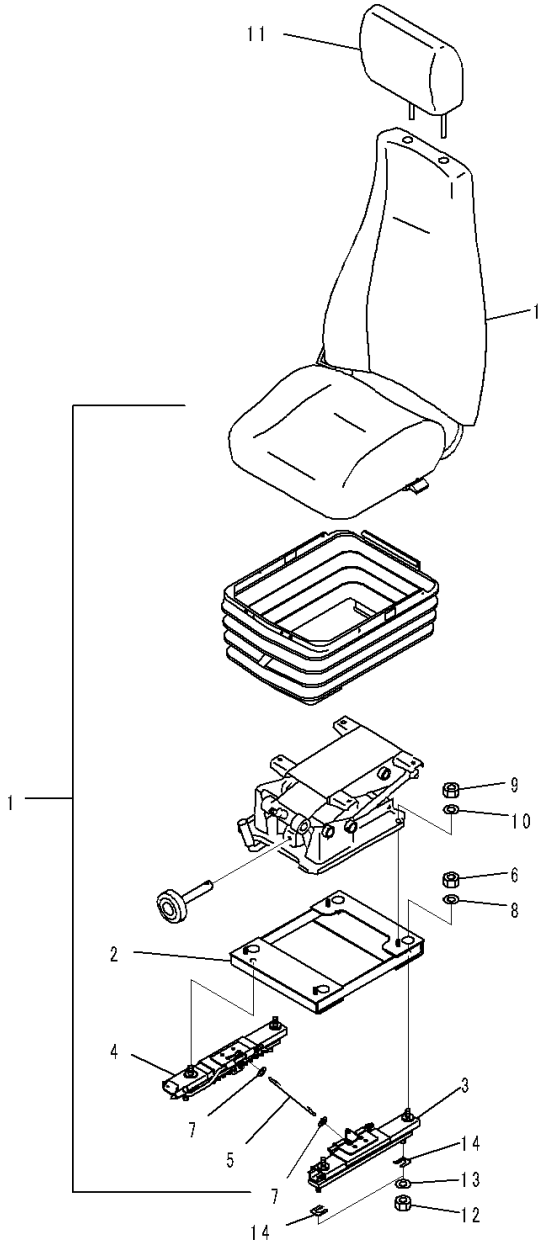

Index	Code	Part Number	Description	Qty	Serial Number
1		14X-57-51511	Seat Assembly	1	80065-
		14X-57-51200	Adjuster Assembly	1	80065-
2		14X-57-51140	• Bracket	1	80065-
3		14X-57-51220	• Adjuster	1	80065-
4		14X-57-51230	• Adjuster	1	80065-
5		17A-57-23270	• Wire	1	80065-
6		01582-11210	• Nut	4	80065-
7		01640-20816	• Washer	2	80065-
8		01643-51232	• Washer	4	80065-
9		01580-10806	Nut	4	80065-
10		01643-50823	Washer	4	80065-
11		17A-57-23520	Head Assembly	1	80065-
12		01582-11210	Nut	4	80065-
13		01643-31232	Washer	4	80065-
14		14X-57-51150	Plate	2	80065-

https://truckmanualshub.com/

FIG. K0110-006001 Operator's Seat, Suspension Type, Reclining Type, Hi-Back Type Operator's Seat

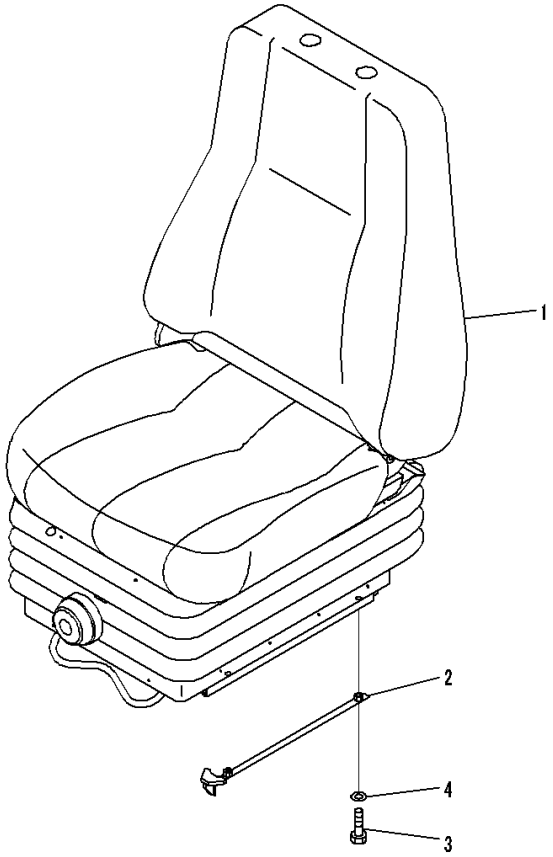

JA002997

Index	Code	Part Number	Description	Qty	Serial Number
1		14X-57-52110	Seat Assembly	1	80001-
2		134-57-61170	Bracket	2	80001-
3		01010-80820	Bolt	4	80001-
4		01643-30823	Washer	4	80001-

https://truckmanualshub.com/

FIG. K0110-008001 Operator's Seat, Suspension Type, Operator's Seat Turn Type, Reclining Type

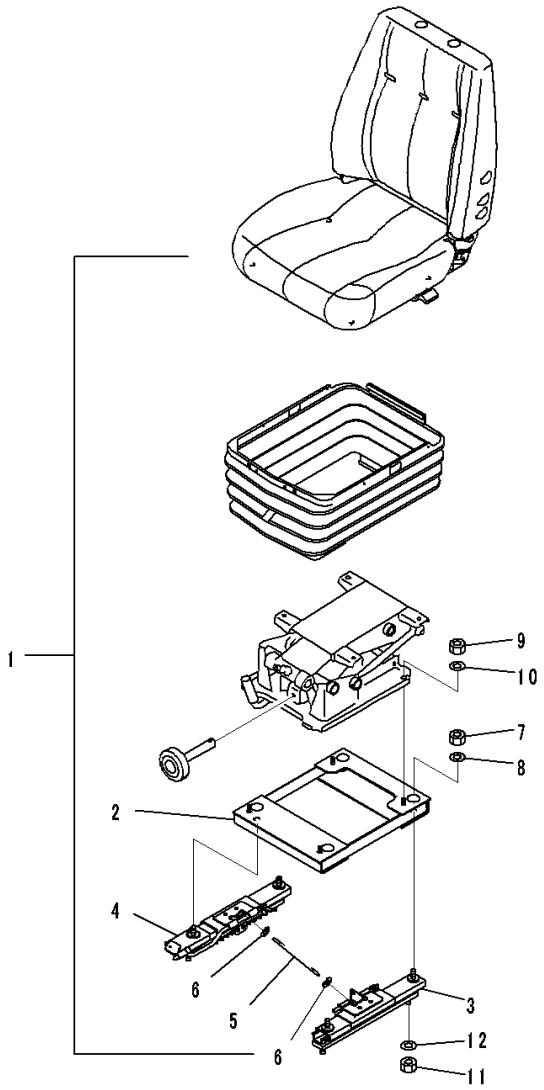

Index	Code	Part Number	Description	Qty	Serial Number
1		14X-57-51311	Seat Assembly	1	80001-
		14X-57-51110	Adjuster Assembly	1	80001-
2		14X-57-51140	• Bracket	1	80001-
3		14X-57-51120	• Adjuster,LHS	1	80001-
4		14X-57-51130	• Adjuster,RHS	1	80001-
5		17A-57-23270	• Wire	1	80001-
6		01640-20816	• Washer	2	80001-
7		01582-11210	• Nut	4	80001-
8		01643-51232	• Washer	4	80001-
9		01580-10806	Nut	4	80001-
10		01643-50823	Washer	4	80001-
11		01582-11210	Nut	4	80001-
12		01643-31232	Washer	4	80001-

https://truckmanualshub.com/

FIG. K0110-007001 Operator's Seat, Suspension Type, Fabric Type, Operator's Seat Turn Type, Reclining Type

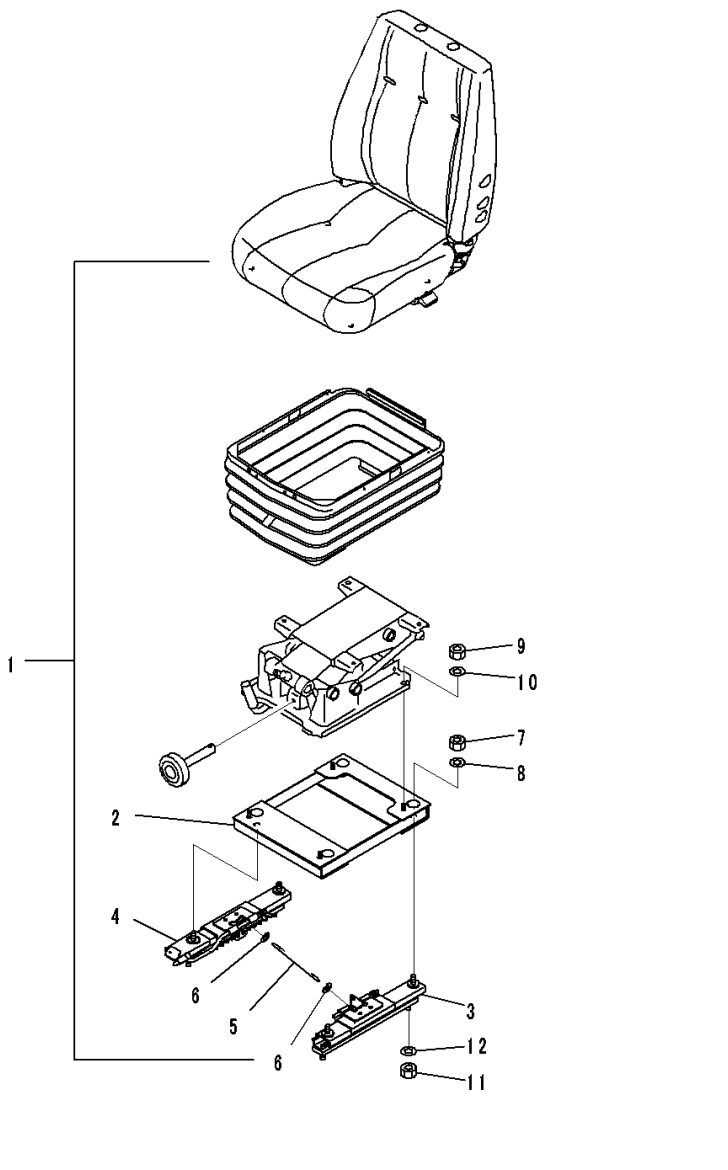

Index	Code	Part Number	Description	Qty	Serial Number
1		14X-57-51211	Seat Assembly	1	80001-
		14X-57-51110	Adjuster Assembly	1	80001-
2		14X-57-51140	• Bracket	1	80001-
3		14X-57-51120	• Adjuster,LHS	1	80001-
4		14X-57-51130	• Adjuster,RHS	1	80001-
5		17A-57-23270	• Wire	1	80001-
6		01640-20816	• Washer	2	80001-
7		01582-11210	• Nut	4	80001-
8		01643-51232	• Washer	4	80001-
9		01580-10806	Nut	4	80001-
10		01643-50823	Washer	4	80001-
11		01582-11210	Nut	4	80001-
12		01643-31232	Washer	4	80001-

https://truckmanualshub.com/

FIG. K0110-003001 Operator's Seat, Suspension Type, Reclining Type

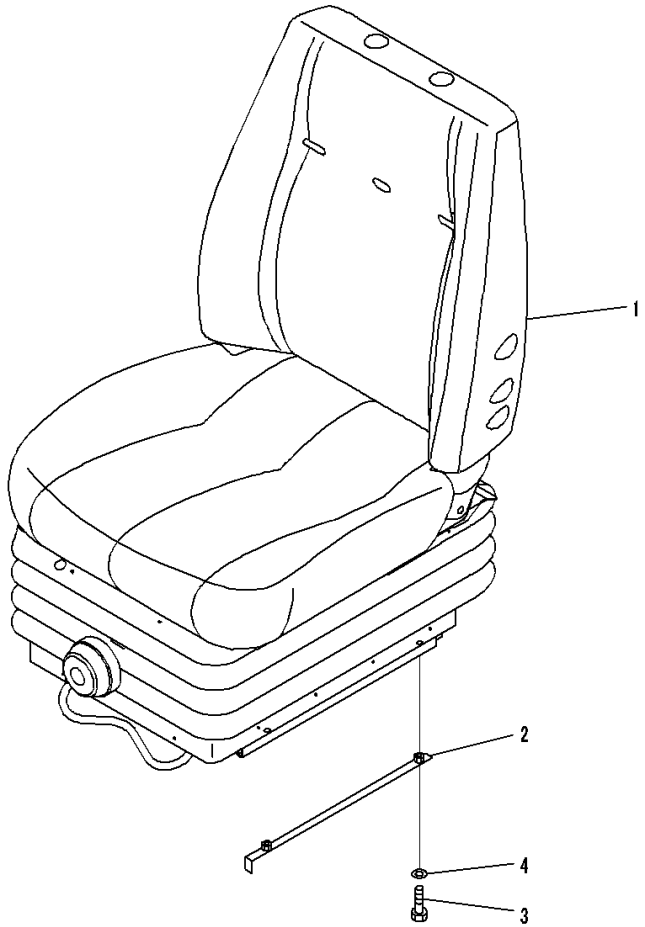

JA002992

Index	Code	Part Number	Description	Qty	Serial Number
1		14X-57-51810	Seat Assembly	1	80001-
2		134-57-61150	Bracket	2	80001-
3		01010-80820	Bolt	4	80001-
4		01643-30823	Washer	4	80001-

https://truckmanualshub.com/

FIG. K0110-002001 Operator's Seat, Suspension Type, Fabric Type, Reclining Type, Operator's Seat Turn Type

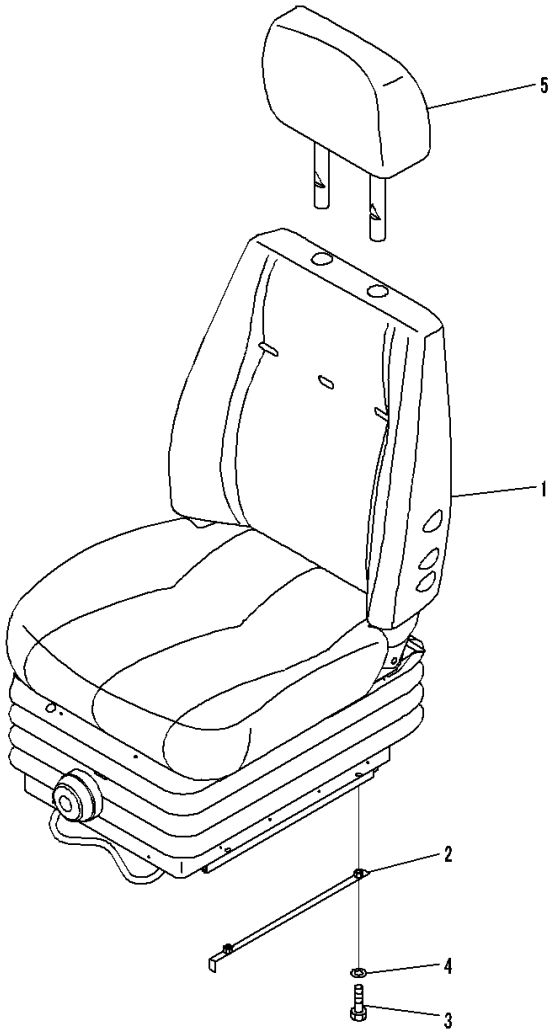

JA002994

Index	Code	Part Number	Description	Qty	Serial Number
1		14X-57-51710	Seat Assembly	1	80001-
2		134-57-61150	Bracket	2	80001-
3		01010-80820	Bolt	4	80001-
4		01643-30823	Washer	4	80001-
5		17A-57-21170	Head Assembly	1	80001-

https://truckmanualshub.com/

FIG. K0110-010001 Operator's Seat, Suspension Type, Hi-Back Type Operator's Seat, Fabric Type, Turn And Reclining Type

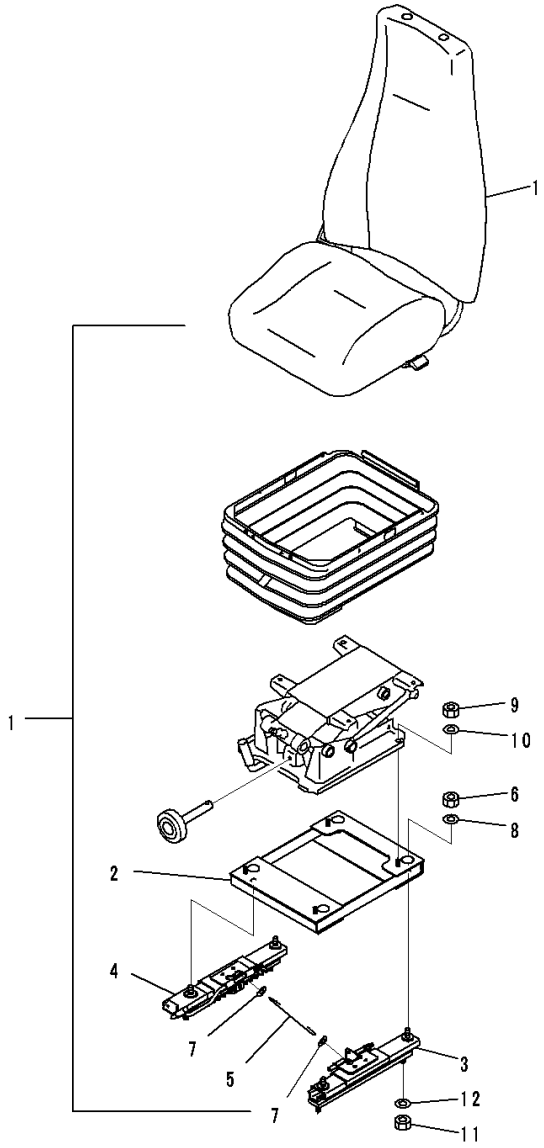

Index	Code	Part Number	Description	Qty	Serial Number
1		14X-57-51511	Seat Assembly	1	80008-
		14X-57-51200	Adjuster Assembly	1	80008-
2		14X-57-51140	• Bracket	1	80008-
3		14X-57-51220	• Adjuster,LHS	1	80008-
4		14X-57-51230	• Adjuster,RHS	1	80008-
5		17A-57-23270	• Wire	1	80008-
6		01582-11210	• Nut	4	80008-
7		01640-20816	• Washer	2	80008-
8		01643-51232	• Washer	4	80008-
9		01580-10806	Nut	4	80008-
10		01643-50823	Washer	4	80008-
11		01582-11210	Nut	4	80008-
12		01643-31232	Washer	4	80008-

https://truckmanualshub.com/

FIG. K0110-011001 Operator's Seat, Air Suspension Type, Hi-Back Type Operator's Seat, With Headrest, Turn And Reclining Type

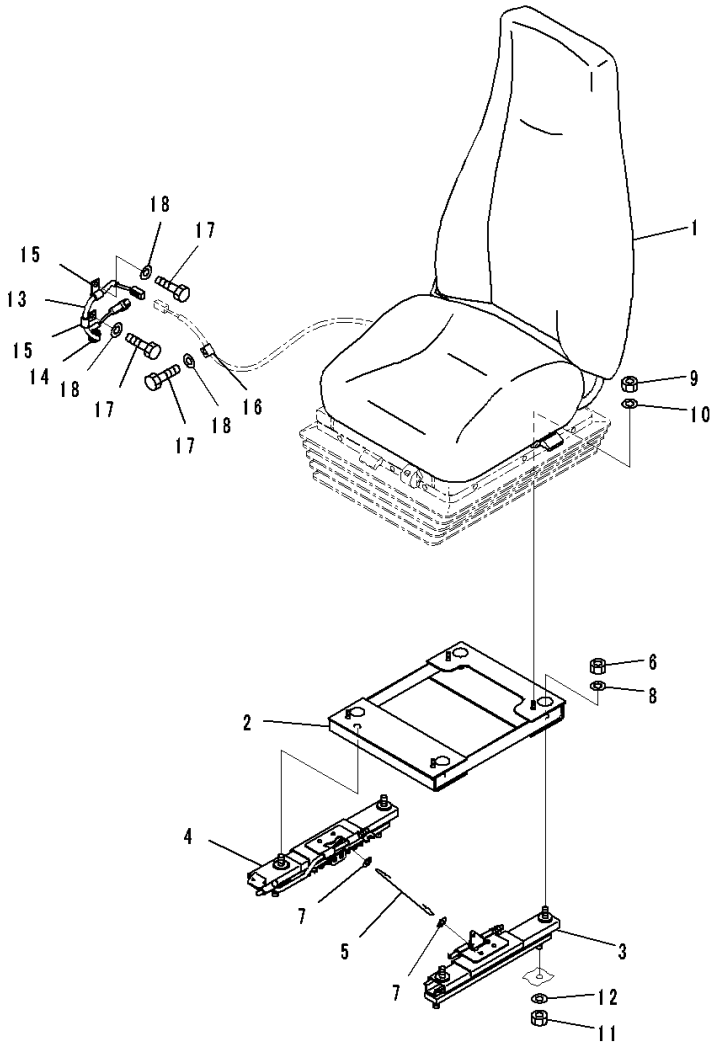

Index	Code	Part Number	Description	Qty	Serial Number
1		14X-57-52210	Seat Assembly	1	80008-
		14X-57-51200	Adjuster Assembly	1	80008-
2		14X-57-51140	• Bracket	1	80008-
3		14X-57-51220	• Adjuster,LHS	1	80008-
4		14X-57-51230	• Adjuster,RHS	1	80008-
5		17A-57-23270	• Wire	1	80008-
6		01582-11210	• Nut	4	80008-
7		01640-20816	• Washer	2	80008-
8		01643-51232	• Washer	4	80008-
9		01580-10806	Nut	4	80008-
10		01643-50823	Washer	4	80008-
11		01582-11210	Nut	4	80008-
12		01643-31232	Washer	4	80008-
13		17A-57-41150	Wiring Harness	1	80008-
14		08037-01610	• Grommet	1	80008-
15		04434-51010	Clip	2	80008-
16		04434-50810	Clip	1	80008-
17		01010-D1020	Bolt	3	80008-
18		01643-71032	Washer	3	80008-

https://truckmanualshub.com/

FIG. K0110-012001 Operator's Seat, Suspension Type, Fabric, Turn Type, Reclining, Headrest

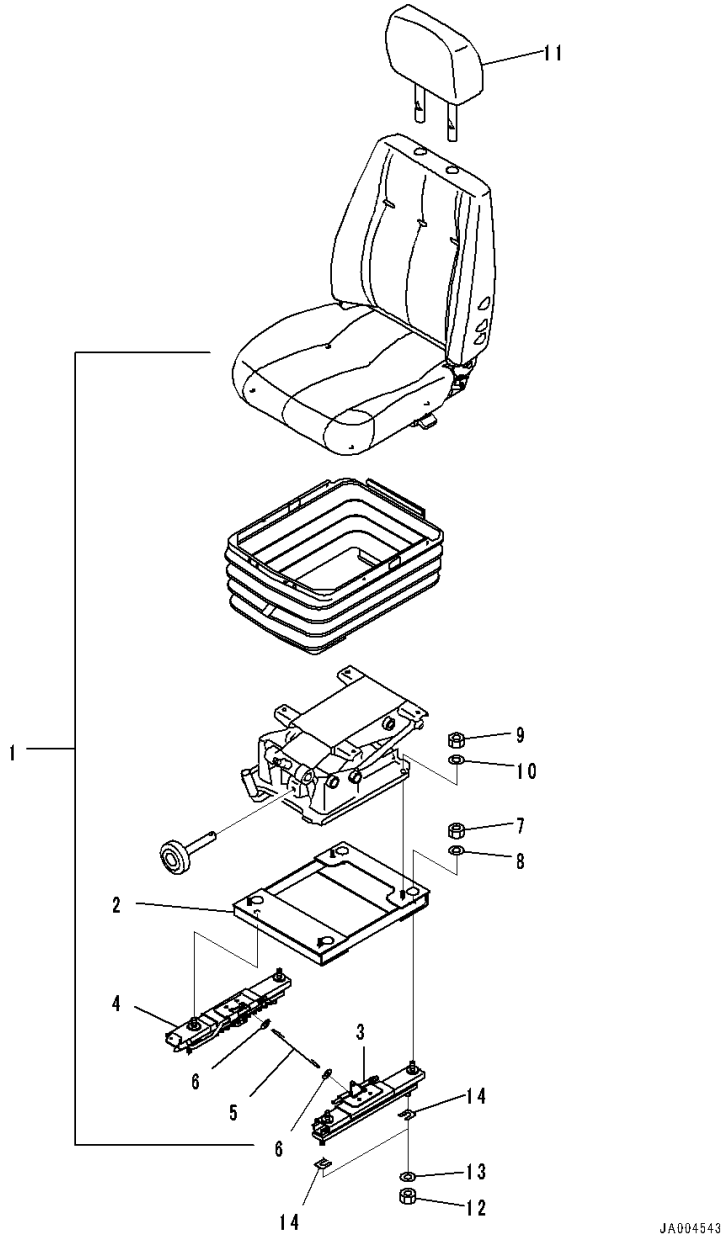

Index	Code	Part Number	Description	Qty	Serial Number
1		14X-57-51211	Seat Assembly	1	80062-
		14X-57-51110	Adjuster Assembly	1	80062-
2		14X-57-51140	• Bracket	1	80062-
3		14X-57-51120	• Adjuster,LHS	1	80062-
4		14X-57-51130	• Adjuster,RHS	1	80062-
5		17A-57-23270	• Wire	1	80062-
6		01640-20816	• Washer	2	80062-
7		01582-11210	• Nut	4	80062-
8		01643-51232	• Washer	4	80062-
9		01580-10806	Nut	4	80062-
10		01643-50823	Washer	4	80062-
11		17A-57-21170	Head Assembly	1	80062-
12		01582-11210	Nut	4	80062-
13		01643-31232	Washer	4	80062-
14		14X-57-51150	Plate	2	80062-

https://truckmanualshub.com/

FIG. K0110-013001 Operator's Seat, Provision For Air Suspension Type, Fabric, Turn Type, Headrest, KAB

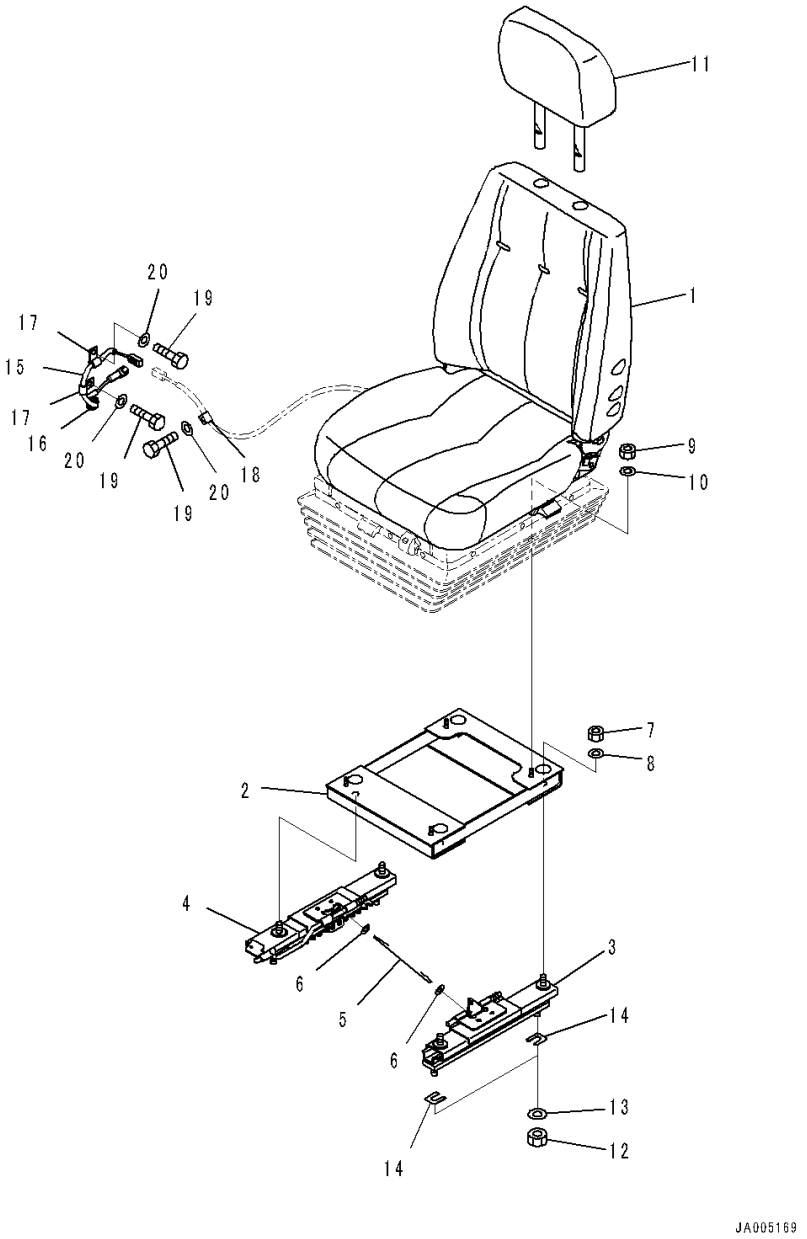

Index	Code	Part Number	Description	Qty	Serial Number
1		14X-57-51411	Seat Assembly	1	80001-
		14X-57-51110	Adjuster Assembly	1	80001-
2		14X-57-51140	• Bracket	1	80001-
3		14X-57-51120	• Adjuster	1	80001-
4		14X-57-51130	• Adjuster	1	80001-
5		17A-57-23270	• Wire	1	80001-
6		01640-20816	• Washer	2	80001-
7		01582-11210	• Nut	4	80001-
8		01643-51232	• Washer	4	80001-
9		01580-10806	Nut	4	80001-
10		01643-50823	Washer	4	80001-
11		17A-57-21170	Head Assembly	1	80001-
12		01582-11210	Nut	4	80001-
13		01643-31232	Washer	4	80001-
14		14X-57-51150	Plate	2	80001-
15		17A-57-41150	Wiring Harness	1	80001-
16		08037-01610	• Grommet	1	80001-
17		04434-51010	Clip	2	80001-
18		04434-50810	Clip	1	80001-
19		01010-D1020	Bolt	3	80001-
20		01643-71032	Washer	3	80001-

https://truckmanualshub.com/

FIG. K0160-001001 Seat Belt, Suspension Type, With Belt Retractor

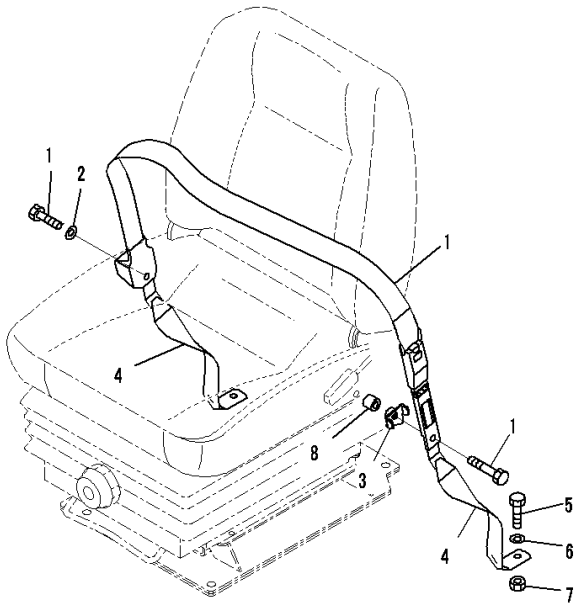

00061639

Index	Code	Part Number	Description	Qty	Serial Number
1		12Y-57-11213	Seat Belt Assembly	1	80221-
2		01643-51232	• Washer	1	80001-
3		12Y-57-11220	• Bracket	1	80001-
4		09409-20000	Belt, Tether	2	80001-
5		09409-00001	• Bolt	2	80001-
6		09409-00002	• Washer	2	80001-
7		09409-00003	• Nut	2	80001-
8		104-890-5610	Collar	1	80001-

https://truckmanualshub.com/

FIG. K0210-002001 ROPS Cab, Cab Body

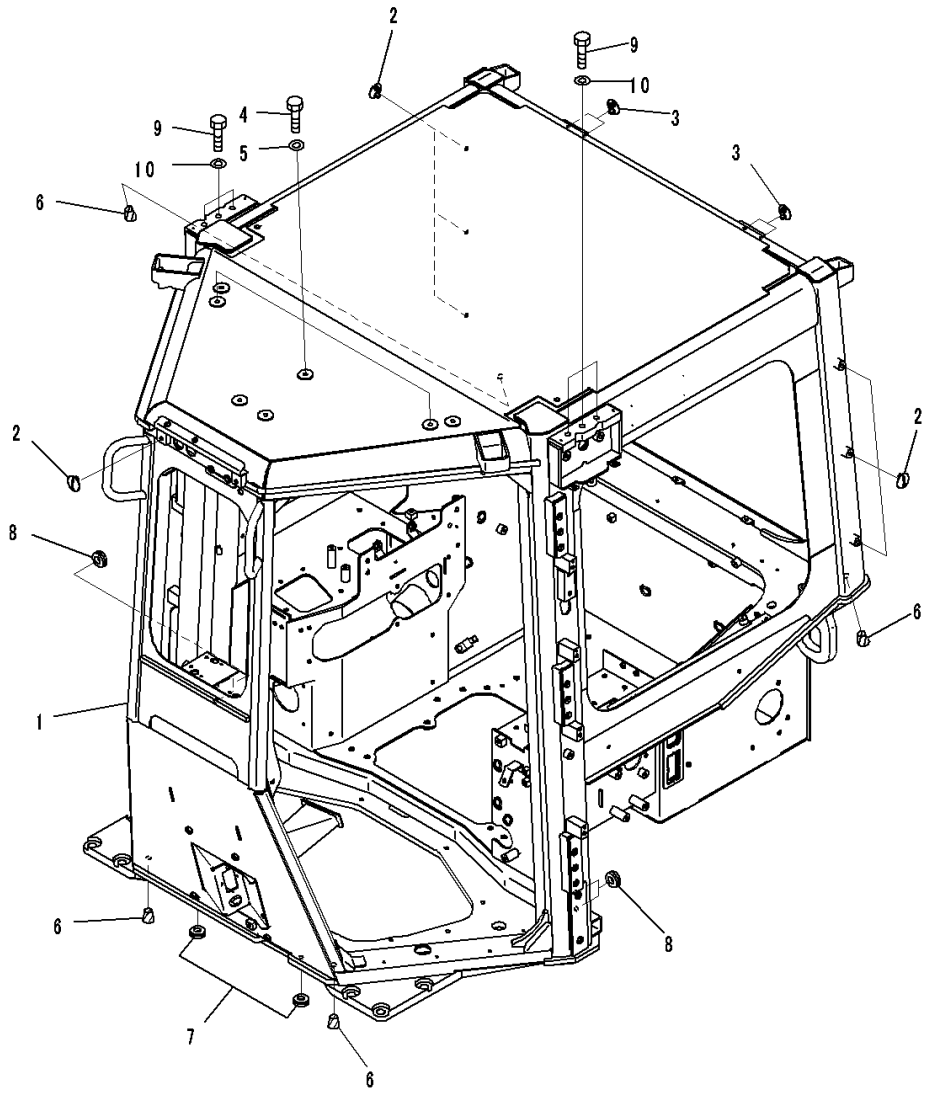

Index	Code	Part Number	Description	Qty	Serial Number
		Note: This list covers following specifications.			
		With AM-FM Stereo Radio For North America, TH300 Type KOMTRAX			
		For EU Noise Reguration, Provision For Radio Installation, TH300 Type KOMTRAX			
		For EU Noise Reguration, With AM/FM Radio For Asia and EU, TH300 Type KOMTRAX			
		Provision For Radio Installation, TH300 Type KOMTRAX			
		With Rear View Monitoring System, With AM-FM Stereo Radio For North America, TH300 Type KOMTRAX			
		With Rear View Monitoring System, Provision For Radio Installation, TH300 Type KOMTRAX			
		EU Regulation Guard Level 2, With Rear View Monitoring System, With AM-FM Stereo Radio With Cassette For Europe And Asia, TH300 Type KOMTRAX			
		EU Regulation Guard Level 2, With Rear View Monitoring System, Provision For Radio Installation, TH300 Type KOMTRAX			
1		14X-Y79-1113	Cab Assembly	1	80065-
2		20Y-53-11380	Cap	6	80001-
3		20Y-53-11390	Cap	4	80001-
4		01010-81220	Bolt	9	80009-
5		01643-31232	Washer	9	80009-
6		07049-01620	Plug	4	80001-
7		09415-00706	Cap	2	80001-
8		09415-01008	Cap	4	80001-
9		01010-81625	Bolt	6	80001-
10		01643-71645	Washer	6	80001-

https://truckmanualshub.com/

FIG. K0210-002002 ROPS Cab, Door and Latch, LHS

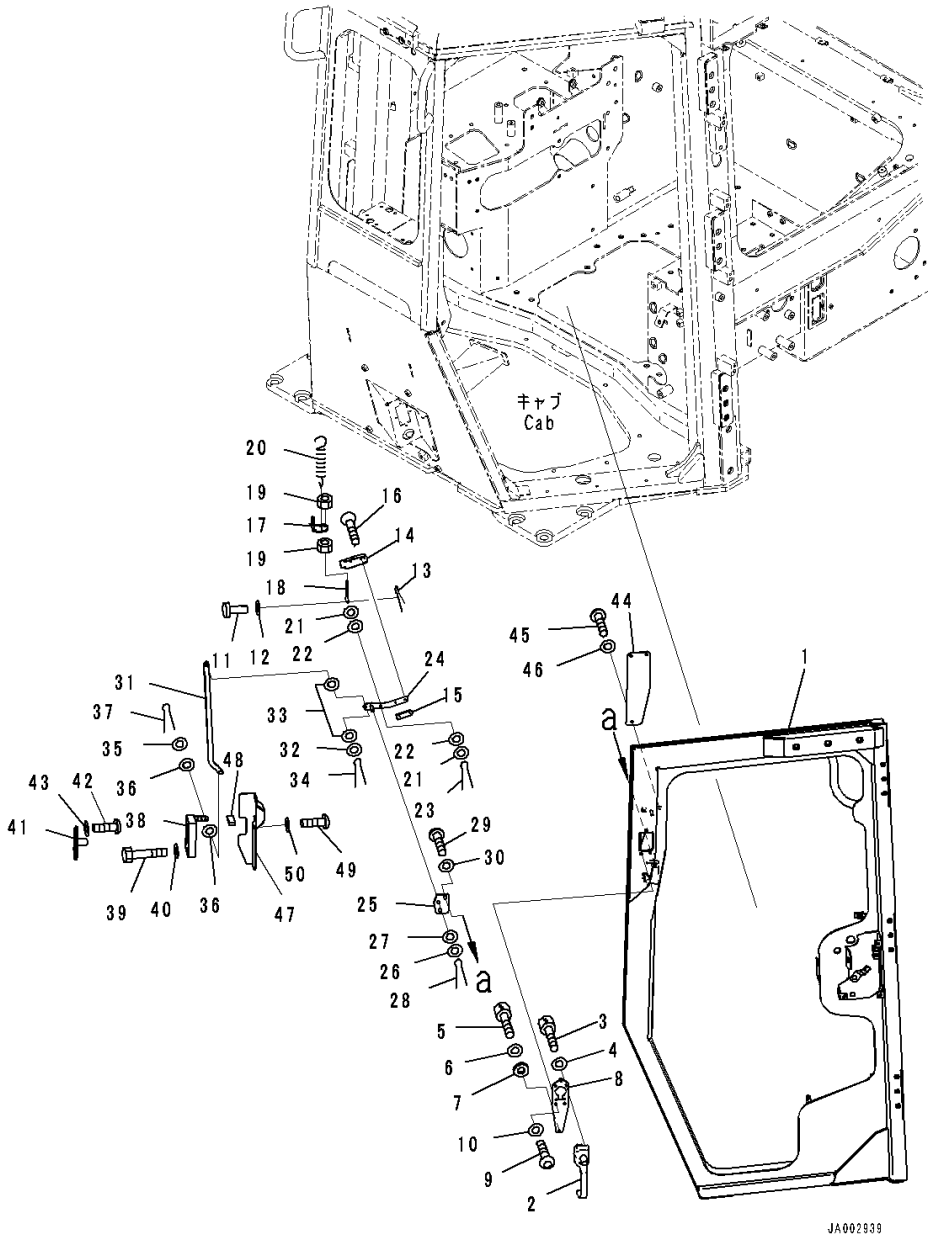

Index	Code	Part Number	Description	Qty	Serial Number
		Note: This list covers following specifications. With AM-FM Stereo Radio For North America, TH300 Type KOMTRAX For EU Noise Reguration, Provision For Radio Installation, TH300 Type KOMTRAX For EU Noise Reguration, With AM/FM Radio For Asia and EU, TH300 Type KOMTRAX Provision For Radio Installation, TH300 Type KOMTRAX With Rear View Monitoring System, With AM-FM Stereo Radio With Cassette, TH300 Type KOMTRAX With AM/FM Radio For Asia and EU, TH300 Type KOMTRAX			
1		14X-Y79-3111	Door Assembly	1	80001-
2		198-Z11-3710	Handle Assembly	1	80001-
3		01252-70520	Bolt	4	80001-
4		01640-20508	Washer	4	80001-
5		01252-70525	Bolt, Hexagon Socket Head	1	80001-
6		01640-20508	Washer	1	80001-
7		14X-Y79-3130	Spacer	1	80001-
8		12Y-978-3210	Plate	1	80001-
9		01245-00620	Screw	3	80001-
10		01643-70623	Washer	3	80001-
11		04205-10622	Pin	1	80001-
12		01643-70623	Washer	4	80001-
13		04050-11612	Pin, Cotter	1	80001-
14		12Y-978-3281	Knob	1	80001-
15		12Y-978-3290	Plate	1	80001-
16		01023-70412	Screw	2	80001-
17		14X-Y79-3220	Plate	1	80001-
18		14X-Y79-3360	Rod	1	80001-
19		01580-00605	Nut	2	80001-
20		176-06-42170	Spring	1	80001-
21		01643-70623	Washer	2	80001-
22		12Y-978-3310	Rubber	2	80001-
23		04050-11612	Pin, Cotter	1	80001-
24		14X-Y79-3651	Plate	1	80001-
25		12Y-978-3261	Plate	1	80001-
26		01643-70823	Washer	1	80001-
27		12Y-978-3360	Rubber	1	80001-
28		04050-12012	Pin, Cotter	1	80001-

https://truckmanualshub.com/

FIG. K0210-002002 ROPS Cab, Door and Latch, LHS

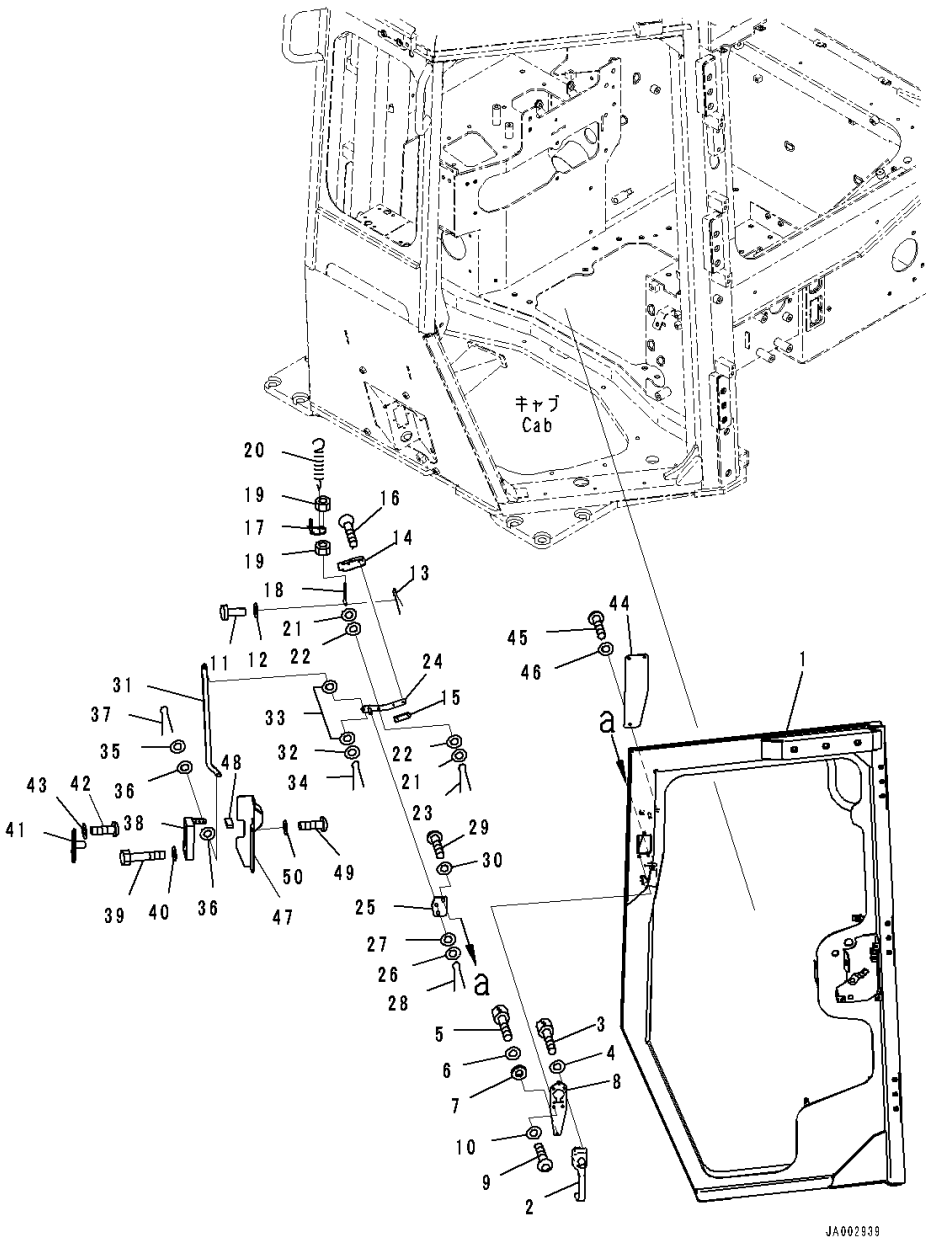

Index	Code	Part Number	Description	Qty	Serial Number
29		01245-00620	Screw	2	80001-
30		01643-70623	Washer	2	80001-
31		17A-979-3320	Plate	1	80001-
32		01640-20610	Washer	1	80001-
33		12Y-978-3310	Rubber	2	80001-
34		04050-11612	Pin, Cotter	1	80001-
35		01643-70623	Washer	1	80001-
36		12Y-978-3310	Rubber	2	80001-
37		04050-11612	Pin, Cotter	1	80001-
38		195-Z11-4520	Lock	1	80001-
39		01010-D0635	Bolt	4	80001-
40		01643-70623	Washer	4	80001-
41		12Y-978-3480	Striker	1	80001-
42		01245-00825	Screw	4	80001-
43		01643-70823	Washer	4	80001-
44		14X-Y79-3310	Plate	1	80001-
45		01245-00620	Screw	3	80001-
46		01643-70623	Washer	3	80001-
47		14X-Y79-3321	Cover	1	80001-
48		17A-979-3811	• Sheet,Bonded	1	80001-
49		01245-00620	Screw	2	80001-
50		01643-70623	Washer	2	80001-

https://truckmanualshub.com/

FIG. K0210-002003 ROPS Cab, Door Dumper, Window and Wiper LHS

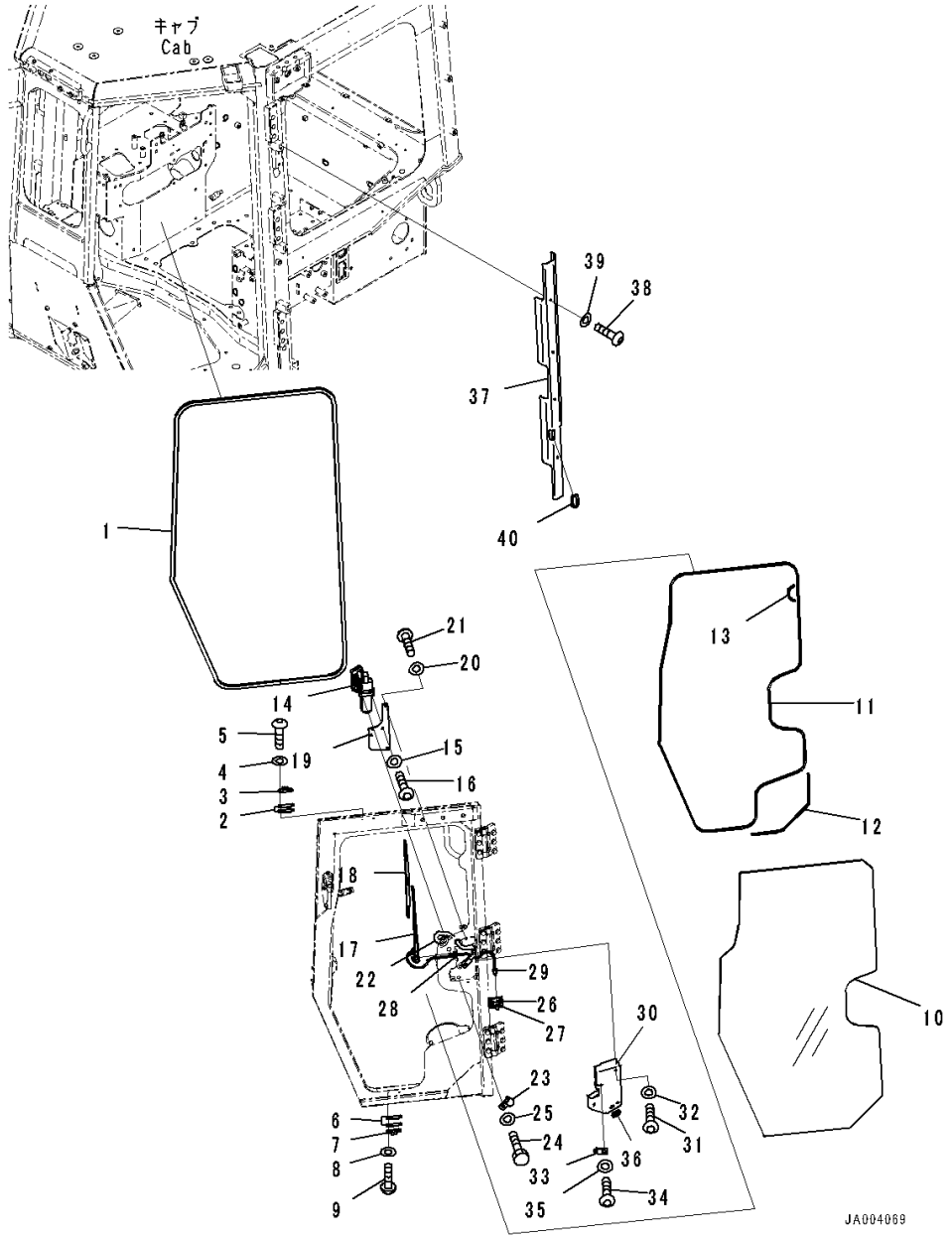

Index	Code	Part Number	Description	Qty	Serial Number
		Note: This list covers following specifications. With AM-FM Stereo Radio For North America, TH300 Type KOMTRAX For EU Noise Reguration, Provision For Radio Installation, TH300 Type KOMTRAX For EU Noise Reguration, With AM/FM Radio For Asia and EU, TH300 Type KOMTRAX Provision For Radio Installation, TH300 Type KOMTRAX With Rear View Monitoring System, With AM-FM Stereo Radio With Cassette, TH300 Type KOMTRAX With AM/FM Radio For Asia and EU, TH300 Type KOMTRAX			
1		12Y-978-3370	Seal	1	80001-
2		14X-911-1761	Shim, T=1.2mm	2	80001-
3		14X-911-1690	Damper	1	80001-
4		01643-70623	Washer	2	80001-
5		01245-00620	Screw	2	80001-
6		14X-911-1761	Shim, T=1.2mm	2	80001-
7		14X-911-1690	Damper	1	80001-
8		01643-70623	Washer	2	80001-
9		01245-00620	Screw	2	80001-
10		14X-Y79-1361	Glass	1	80001-
11		14X-Y79-1380	Seal,Bonded	1	80001-
12		14X-Y79-1390	Seal,Bonded	1	80001-
13		14X-Y79-1410	Seal,Bonded	1	80001-
14		12Y-978-2431	Wiper Motor	1	80001-
15		01643-70623	Washer	2	80001-
16		01245-00616	Screw, Hexagon Socket Head	2	80001-
17		12Y-978-2490	Arm, Wiper	1	80001-
18		17A-Z11-2581	Wiper Blade	1	80001-
19		14X-Y79-3280	Plate	1	80001-
20		01643-70823	Washer	3	80001-
21		01245-00820	Screw	3	80001-
22		14X-06-51181	Wiring Harness	1	80001-
23		04434-51710	Clip	1	80001-
24		01010-81020	Bolt	1	80001-
25		01643-31032	Washer	1	80001-
26		20U-54-46520	Hook, Sticker Type	1	80001-
27		08034-20519	Band	1	80001-
28		17A-Z11-2660	Cap	1	80001-

https://truckmanualshub.com/

FIG. K0210-002003 ROPS Cab, Door Dumper, Window and Wiper LHS

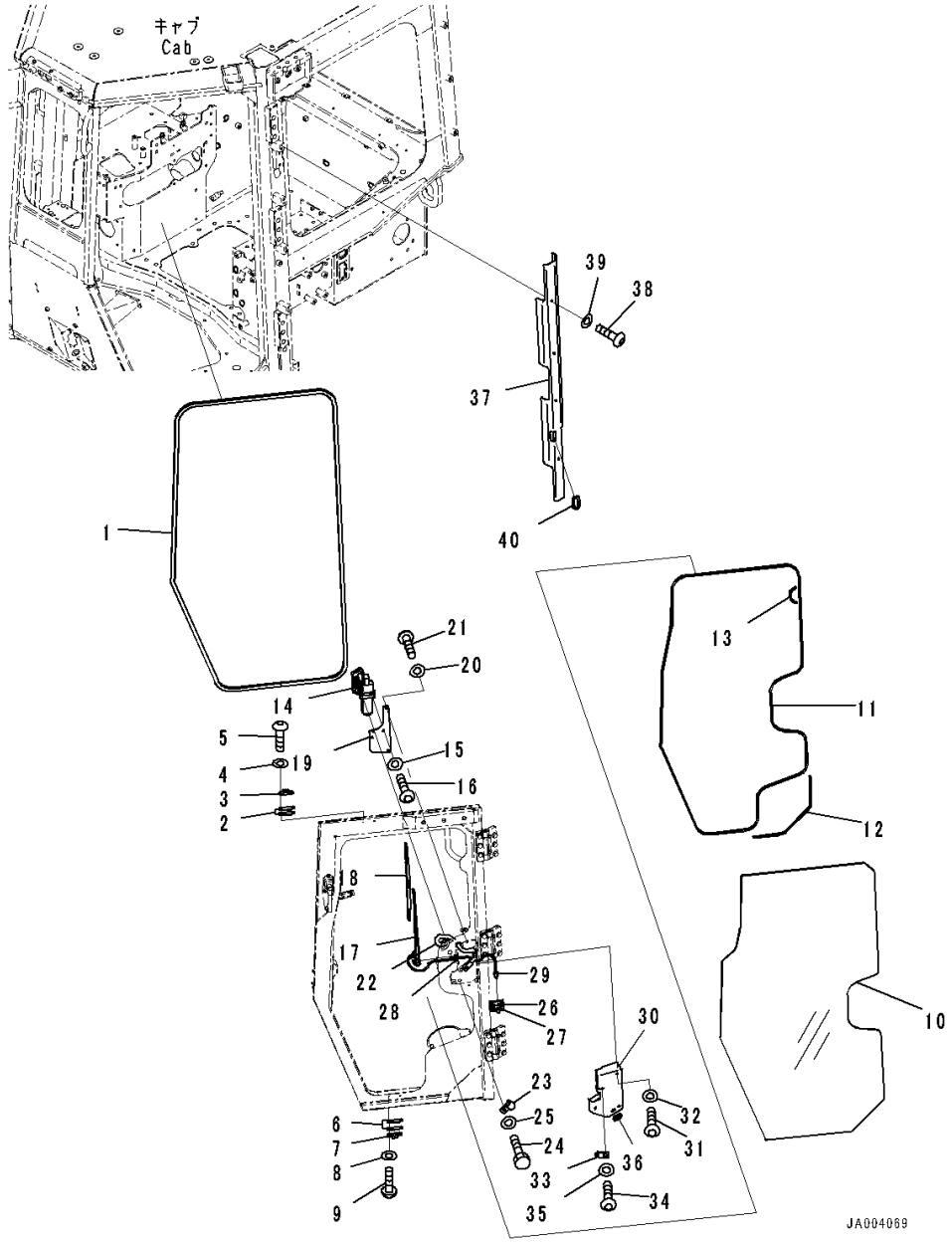

Index	Code	Part Number	Description	Qty	Serial Number
29		17A-Z11-4610	Valve	1	80001-
30		14X-Y79-3472	Cover	1	80005-
31		01245-00620	Screw	3	80001-
32		01643-70623	Washer	3	80001-
33		14X-Y79-3770	Bracket	1	80005-
34		01245-00620	Screw	1	80005-
35		01643-70623	Washer	1	80005-
36		08037-02512	Grommet	1	80001-
37		14X-Y79-3451	Cover	1	80001-
38		01245-00816	Screw	4	80001-
39		01643-70823	Washer	4	80001-
40		14X-Y79-3631	Seal	1	80001-

https://truckmanualshub.com/

FIG. K0210-002004 ROPS Cab, Door Cover, LHS

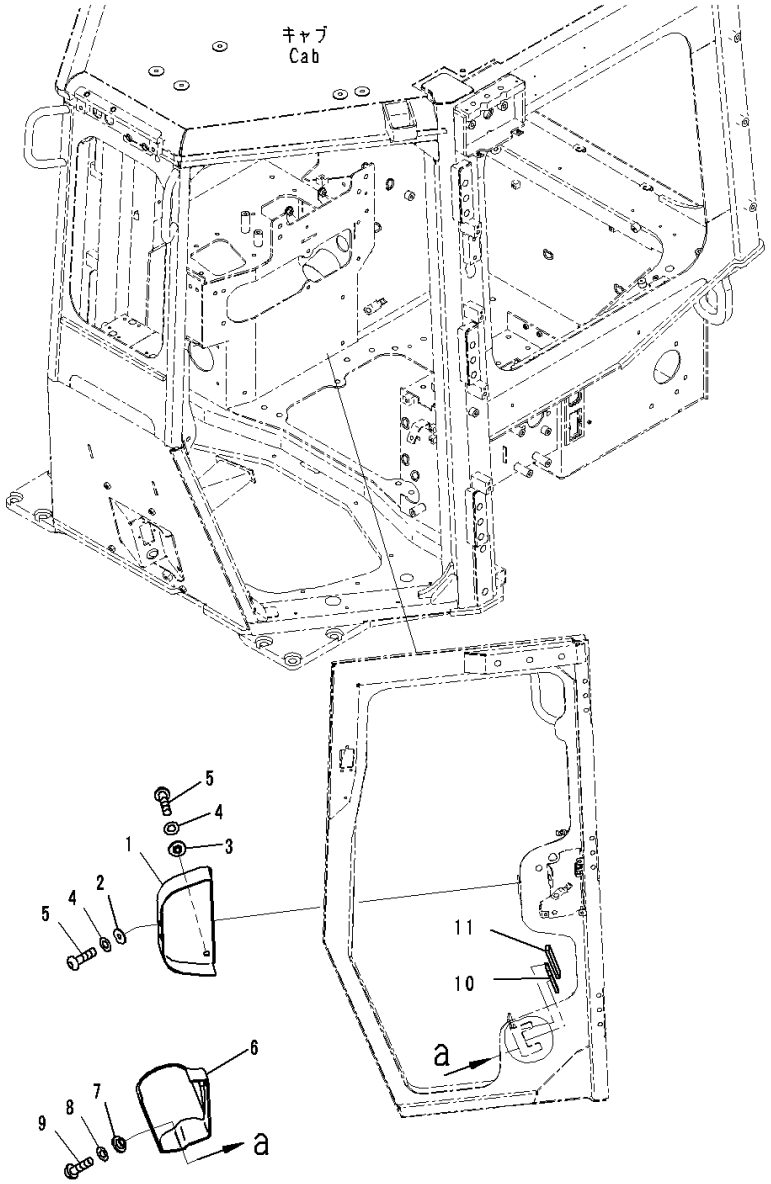

Index	Code	Part Number	Description	Qty	Serial Number
		Note: This list covers following specifications. With AM-FM Stereo Radio For North America, TH300 Type KOMTRAX For EU Noise Reguration, Provision For Radio Installation, TH300 Type KOMTRAX For EU Noise Reguration, With AM/FM Radio For Asia and EU, TH300 Type KOMTRAX Provision For Radio Installation, TH300 Type KOMTRAX With Rear View Monitoring System, With AM-FM Stereo Radio With Cassette, TH300 Type KOMTRAX With AM/FM Radio For Asia and EU, TH300 Type KOMTRAX			
1		14X-Y79-3270	Cover	1	80001-
2		12Y-978-2660	Collar	2	80001-
3		17A-979-1620	Collar	2	80001-
4		01643-70623	Washer	4	80001-
5		01245-00616	Screw, Hexagon Socket Head	4	80001-
6		14X-Y79-3241	Cover	1	80001-
7		12Y-978-2660	Collar	3	80001-
8		01643-70623	Washer	3	80001-
9		01245-00620	Screw	3	80001-
10		14X-Y79-3261	Rubber,Bonded	1	80001-
11		14X-Y79-3350	Rubber,Bonded	1	80001-

https://truckmanualshub.com/

FIG. K0210-002005 ROPS Cab, Door and Latch, RHS

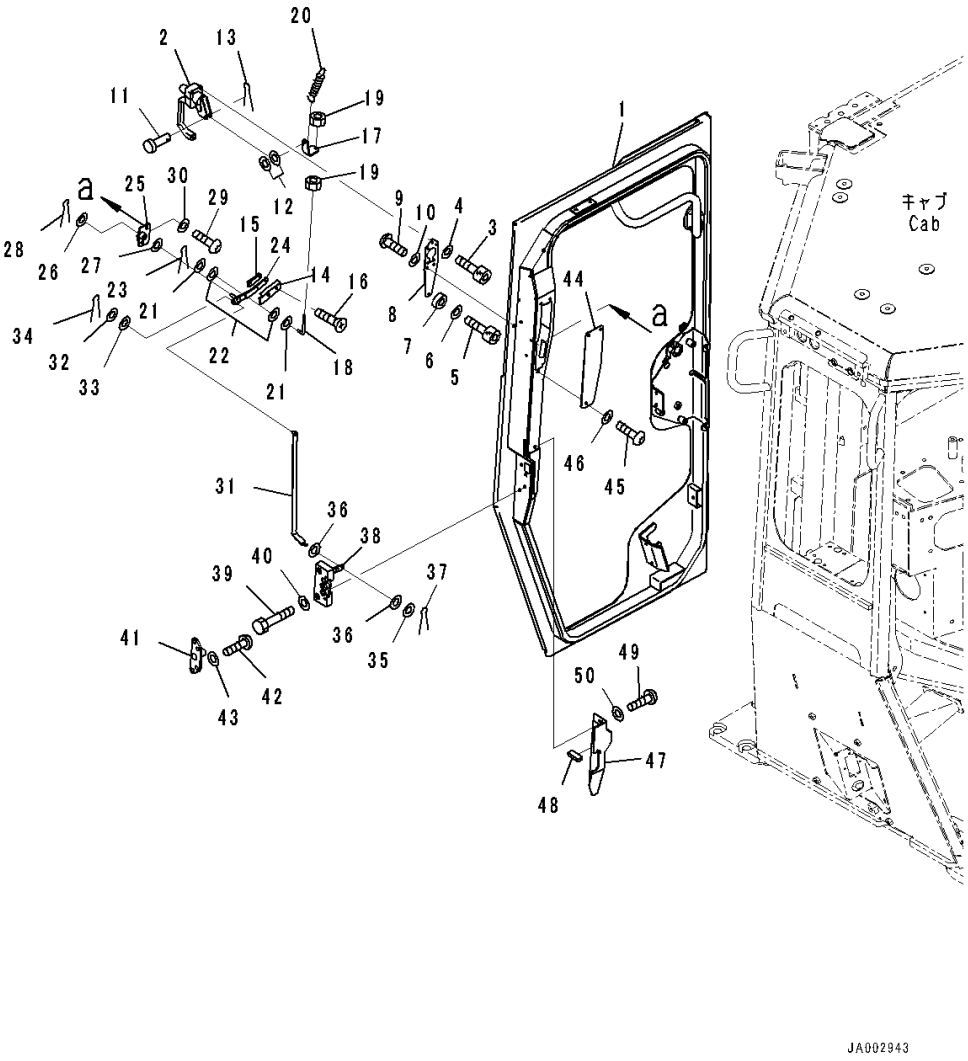

Index	Code	Part Number	Description	Qty	Serial Number
		Note: This list covers following specifications.			
		With AM-FM Stereo Radio For North America, TH300 Type KOMTRAX			
		For EU Noise Reguration, Provision For Radio Installation, TH300 Type KOMTRAX			
		For EU Noise Reguration, With AM/FM Radio For Asia and EU, TH300 Type KOMTRAX			
		Provision For Radio Installation, TH300 Type KOMTRAX			
		With Rear View Monitoring System, With AM-FM Stereo Radio With Cassette, TH300 Type KOMTRAX			
		With AM/FM Radio For Asia and EU, TH300 Type KOMTRAX			
1		14X-Y79-3121	Door Assembly	1	80001-
2		198-Z11-3710	Handle Assembly	1	80001-
3		01252-70520	Bolt	4	80001-
4		01640-20508	Washer	4	80001-
5		01252-70525	Bolt, Hexagon Socket Head	1	80001-
6		01640-20508	Washer	1	80001-
7		14X-Y79-3130	Spacer	1	80001-
8		12Y-978-3210	Plate	1	80001-
9		01245-00620	Screw	3	80001-
10		01643-70623	Washer	3	80001-
11		04205-10622	Pin	1	80001-
12		01643-70623	Washer	4	80001-
13		04050-11612	Pin, Cotter	1	80001-
14		12Y-978-3281	Knob	1	80001-
15		12Y-978-3290	Plate	1	80001-
16		01023-70412	Screw	2	80001-
17		14X-Y79-3230	Plate	1	80001-
18		14X-Y79-3360	Rod	1	80001-
19		01580-00605	Nut	2	80001-
20		176-06-42170	Spring	1	80001-
21		01643-70623	Washer	2	80001-
22		12Y-978-3310	Rubber	2	80001-
23		04050-11612	Pin, Cotter	1	80001-
24		14X-Y79-3661	Plate	1	80001-
25		12Y-978-3271	Plate	1	80001-
26		01643-70823	Washer	1	80001-
27		12Y-978-3360	Rubber	1	80001-
28		04050-12012	Pin, Cotter	1	80001-

https://truckmanualshub.com/

FIG. K0210-002005 ROPS Cab, Door and Latch, RHS

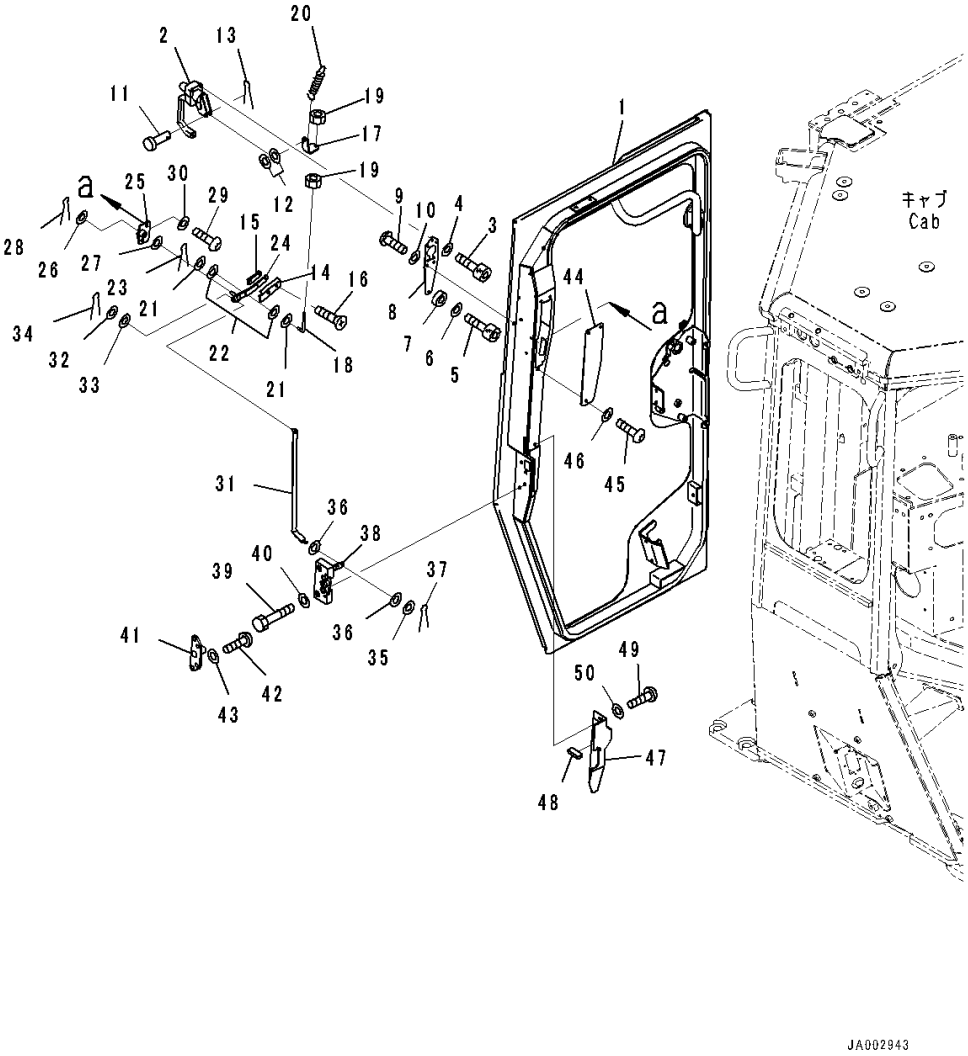

Index	Code	Part Number	Description	Qty	Serial Number
29		01245-00620	Screw	2	80001-
30		01643-70623	Washer	2	80001-
31		17A-979-3330	Plate	1	80001-
32		01640-20610	Washer	1	80001-
33		12Y-978-3310	Rubber	2	80001-
34		04050-11612	Pin, Cotter	1	80001-
35		01643-70623	Washer	1	80001-
36		12Y-978-3310	Rubber	2	80001-
37		04050-11612	Pin, Cotter	1	80001-
38		195-Z11-4510	Lock	1	80001-
39		01010-D0635	Bolt	4	80001-
40		01643-70623	Washer	4	80001-
41		12Y-978-3480	Striker	1	80001-
42		01245-00825	Screw	4	80001-
43		01643-70823	Washer	4	80001-
44		14X-Y79-3310	Plate	1	80001-
45		01245-00620	Screw	3	80001-
46		01643-70623	Washer	3	80001-
47		14X-Y79-3331	Cover	1	80001-
48		17A-979-3811	• Sheet	1	80001-
49		01245-00620	Screw	2	80001-
50		01643-70623	Washer	2	80001-

https://truckmanualshub.com/

FIG. K0210-002006 ROPS Cab, Door Dumper, Window and Wiper, RHS

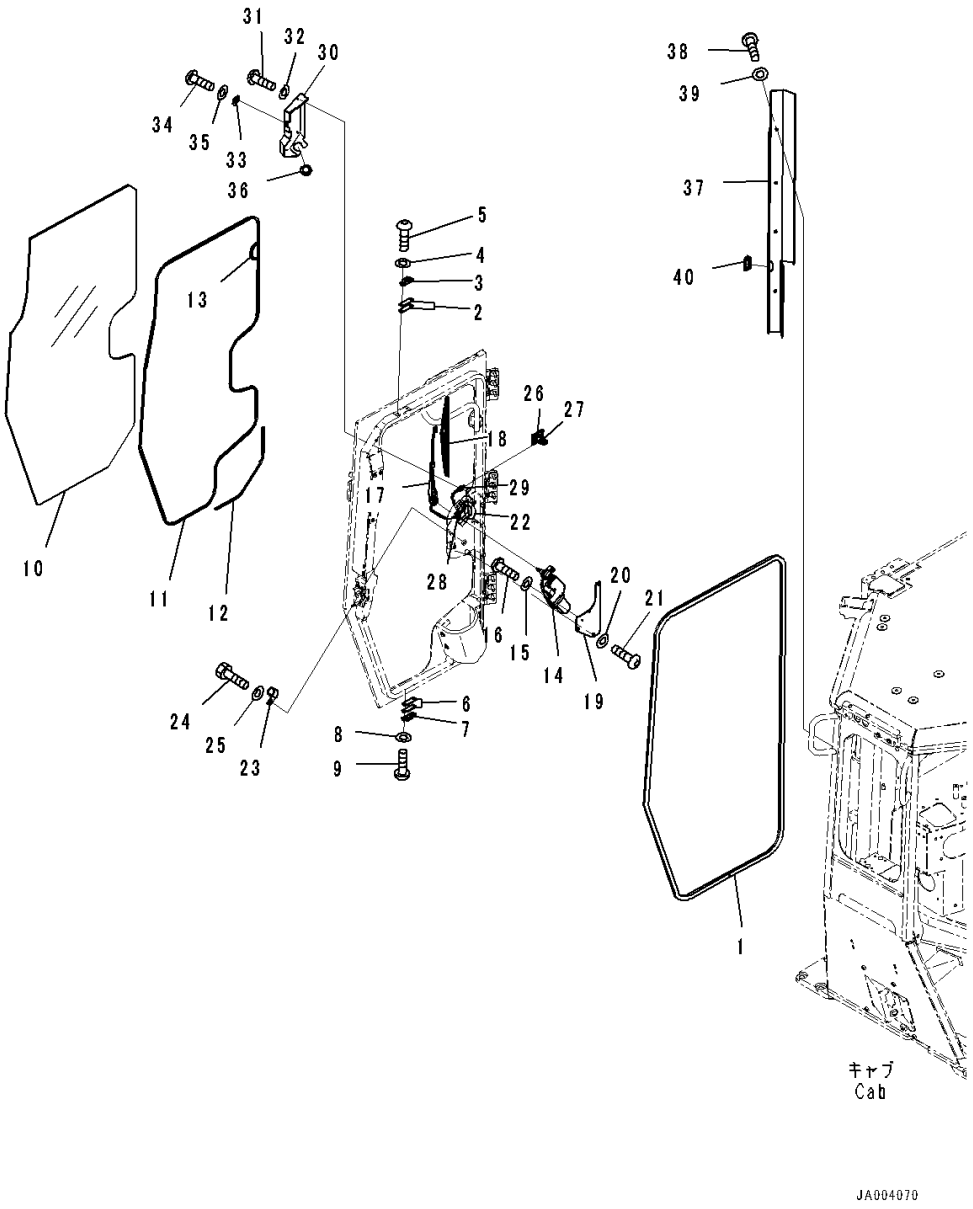

Index	Code	Part Number	Description	Qty	Serial Number
		Note: This list covers following specifications.			
		With AM-FM Stereo Radio For North America, TH300 Type KOMTRAX			
		For EU Noise Reguration, Provision For Radio Installation, TH300 Type KOMTRAX			
		For EU Noise Reguration, With AM/FM Radio For Asia and EU, TH300 Type KOMTRAX			
		Provision For Radio Installation, TH300 Type KOMTRAX			
		With Rear View Monitoring System, With AM-FM Stereo Radio With Cassette, TH300 Type KOMTRAX			
		With AM/FM Radio For Asia and EU, TH300 Type KOMTRAX			
1		12Y-978-3370	Seal	1	80001-
2		14X-911-1761	Shim, T=1.2mm	2	80001-
3		14X-911-1690	Damper	1	80001-
4		01643-70623	Washer	2	80001-
5		01245-00620	Screw	2	80001-
6		14X-911-1761	Shim, T=1.2mm	2	80001-
7		14X-911-1690	Damper	1	80001-
8		01643-70623	Washer	2	80001-
9		01245-00620	Screw	2	80001-
10		14X-Y79-1371	Glass	1	80001-
11		14X-Y79-1380	Seal	1	80001-
12		14X-Y79-1390	Seal	1	80001-
13		14X-Y79-1410	Seal	1	80001-
14		12Y-978-2441	Wiper Motor	1	80001-
15		01643-70623	Washer	2	80001-
16		01245-00616	Screw, Hexagon Socket Head	2	80001-
17		12Y-978-2490	Arm, Wiper	1	80001-
18		17A-Z11-2581	Wiper Blade	1	80001-
19		14X-Y79-3290	Plate	1	80001-
20		01643-70823	Washer	3	80001-
21		01245-00820	Screw	3	80001-
22		14X-06-51181	Wiring Harness	1	80001-
23		04434-51710	Clip	1	80001-
24		01010-81020	Bolt	1	80001-
25		01643-31032	Washer	1	80001-
26		20U-54-46520	Hook, Sticker Type	1	80001-
27		08034-20519	Band	1	80001-
28		17A-Z11-2660	Cap	1	80001-

https://truckmanualshub.com/

FIG. K0210-002006 ROPS Cab, Door Dumper, Window and Wiper, RHS

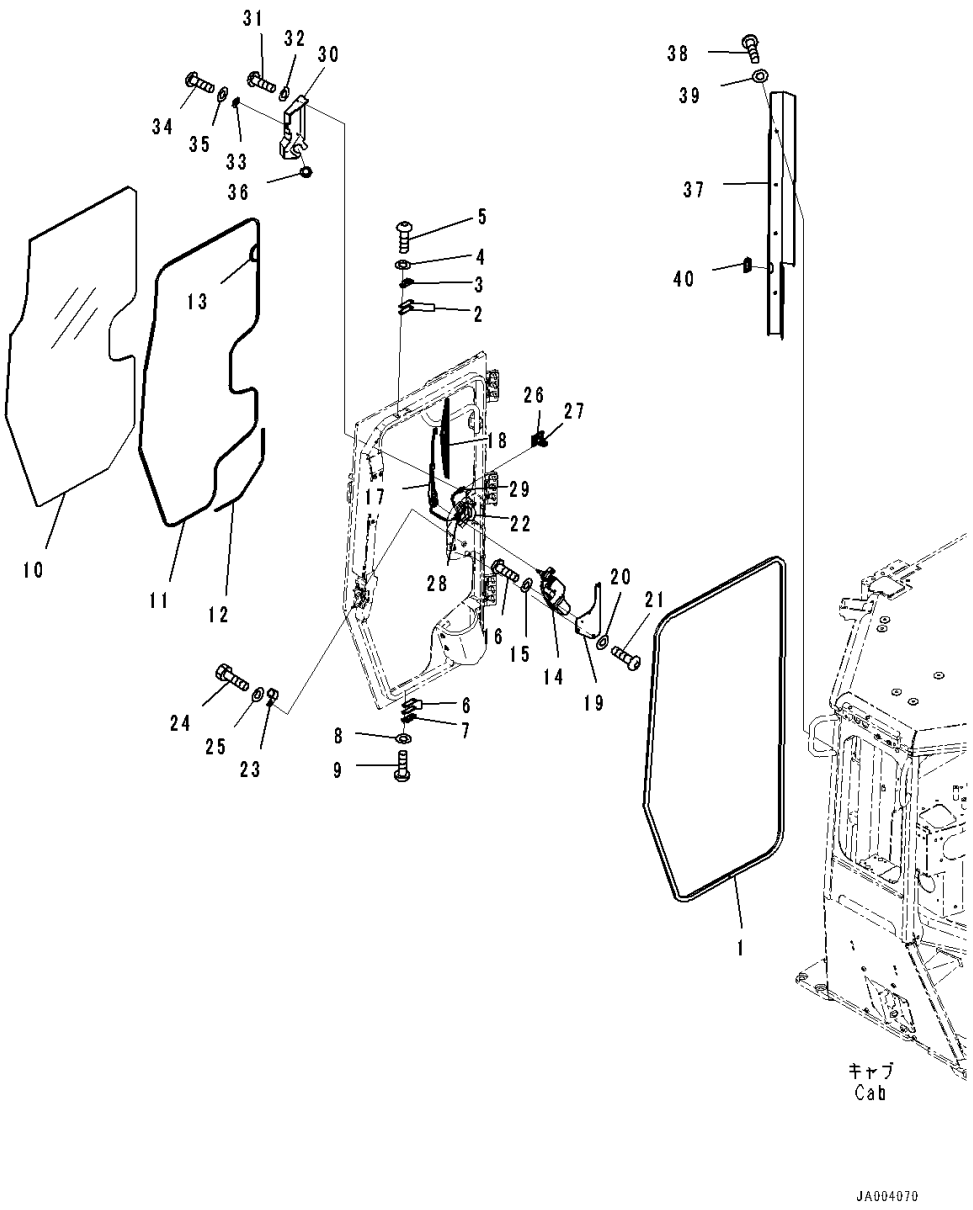

Index	Code	Part Number	Description	Qty	Serial Number
29		17A-Z11-4610	Valve	1	80001-
30		14X-Y79-3482	Cover	1	80005-
31		01245-00620	Screw	3	80001-
32		01643-70623	Washer	3	80001-
33		14X-Y79-3780	Bracket	1	80005-
34		01245-00620	Screw	1	80005-
35		01643-70623	Washer	1	80005-
36		08037-02512	Grommet	1	80001-
37		14X-Y79-3461	Cover	1	80001-
38		01245-00816	Screw	4	80001-
39		01643-70823	Washer	4	80001-
40		14X-Y79-3631	Seal	1	80001-

https://truckmanualshub.com/

FIG. K0210-002007 ROPS Cab, Door Cover, RHS

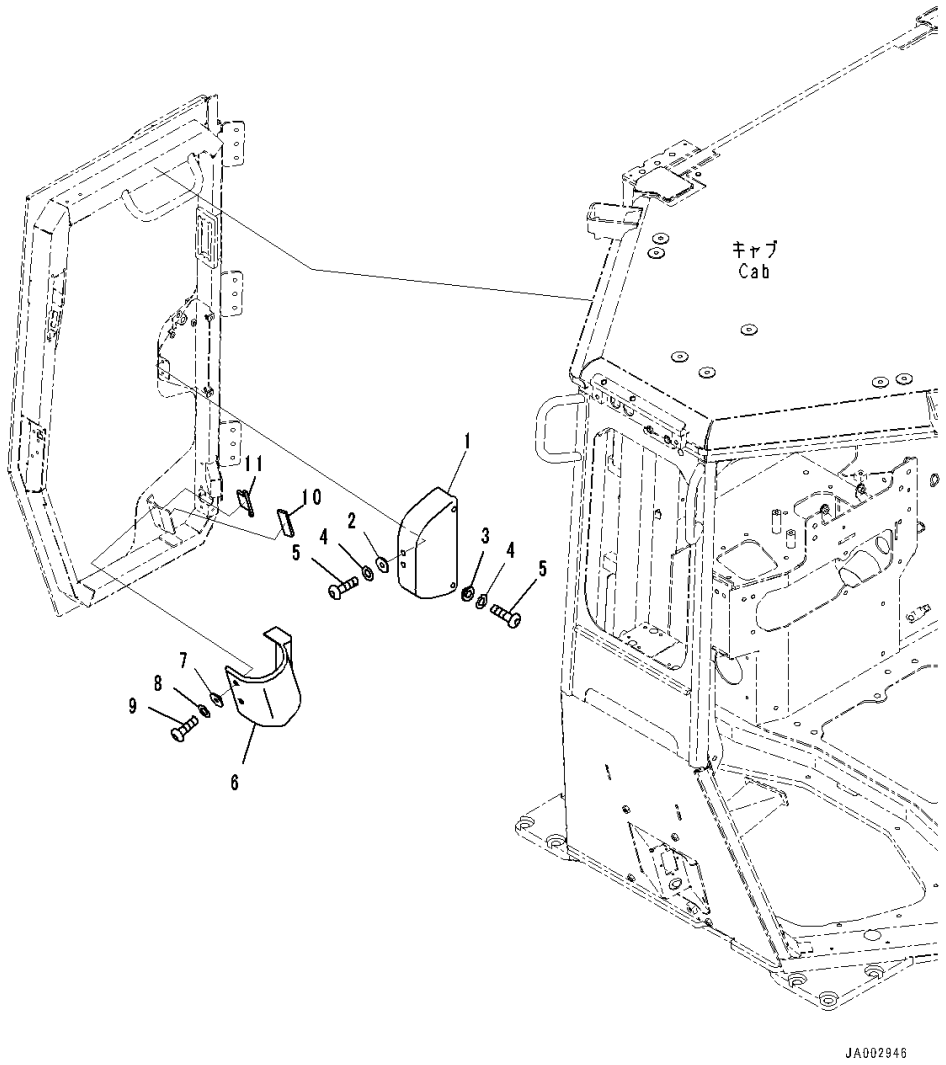

Index	Code	Part Number	Description	Qty	Serial Number
		Note: This list covers following specifications. With AM-FM Stereo Radio For North America, TH300 Type KOMTRAX For EU Noise Reguration, Provision For Radio Installation, TH300 Type KOMTRAX For EU Noise Reguration, With AM/FM Radio For Asia and EU, TH300 Type KOMTRAX Provision For Radio Installation, TH300 Type KOMTRAX With Rear View Monitoring System, With AM-FM Stereo Radio With Cassette, TH300 Type KOMTRAX With AM/FM Radio For Asia and EU, TH300 Type KOMTRAX			
1		14X-Y79-3270	Cover	1	80001-
2		12Y-978-2660	Collar	2	80001-
3		17A-979-1620	Collar	2	80001-
4		01643-70623	Washer	4	80001-
5		01245-00616	Screw, Hexagon Socket Head	4	80001-
6		14X-Y79-3251	Cover	1	80001-
7		12Y-978-2660	Collar	3	80001-
8		01643-70623	Washer	3	80001-
9		01245-00620	Screw	3	80001-
10		14X-Y79-3261	Rubber	1	80001-
11		14X-Y79-3350	Rubber	1	80001-

https://truckmanualshub.com/

FIG. K0210-002008 ROPS Cab, Door Hinge

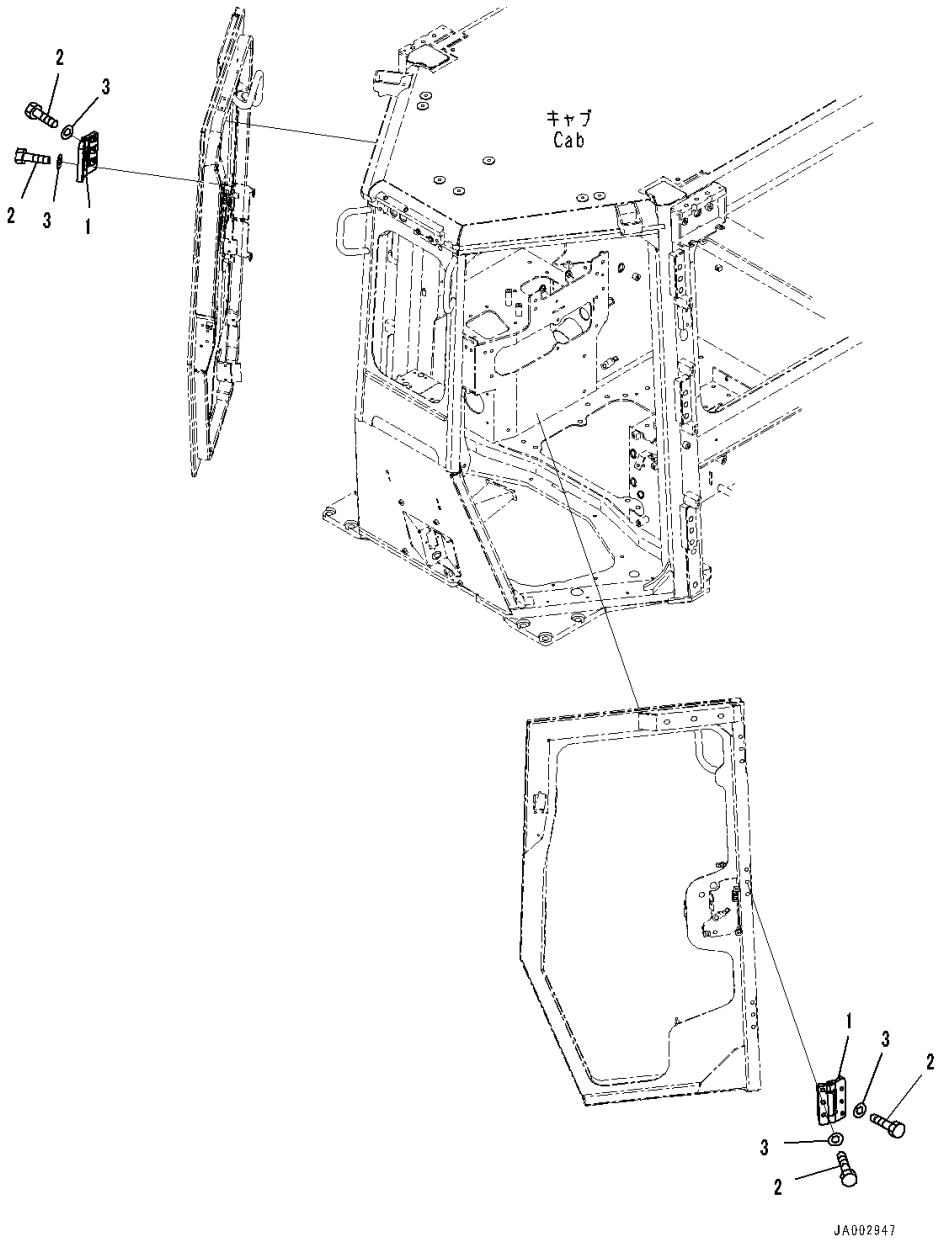

Index	Code	Part Number	Description	Qty	Serial Number
		Note: This list covers following specifications. With AM-FM Stereo Radio For North America, TH300 Type KOMTRAX For EU Noise Reguration, Provision For Radio Installation, TH300 Type KOMTRAX For EU Noise Reguration, With AM/FM Radio For Asia and EU, TH300 Type KOMTRAX Provision For Radio Installation, TH300 Type KOMTRAX With Rear View Monitoring System, With AM-FM Stereo Radio With Cassette, TH300 Type KOMTRAX With AM/FM Radio For Asia and EU, TH300 Type KOMTRAX			
1		14X-Y79-3671	Hinge	6	80001-
2		01010-D1040	Bolt	36	80001-
3		01643-71032	Washer	36	80001-

https://truckmanualshub.com/

FIG. K0210-002009 ROPS Cab, Door Open Lock (1/2)

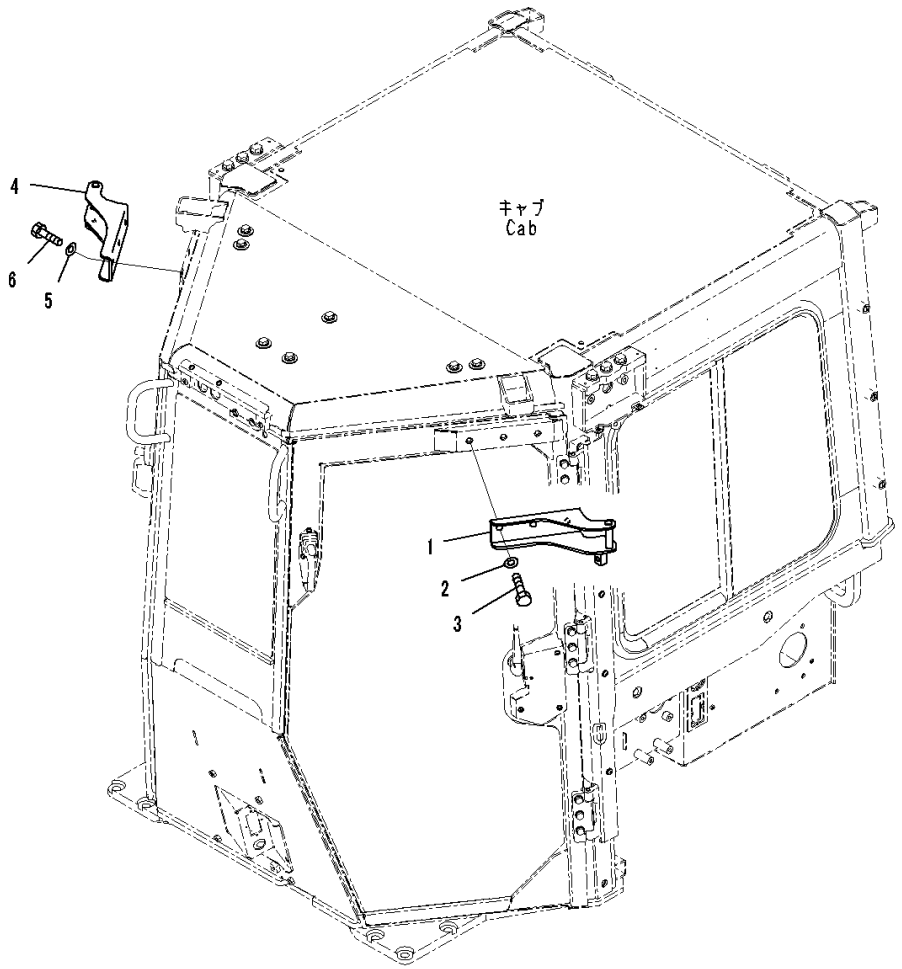

Index	Code	Part Number	Description	Qty	Serial Number
		Note: This list covers following specifications. With AM-FM Stereo Radio For North America, TH300 Type KOMTRAX For EU Noise Reguration, Provision For Radio Installation, TH300 Type KOMTRAX For EU Noise Reguration, With AM/FM Radio For Asia and EU, TH300 Type KOMTRAX Provision For Radio Installation, TH300 Type KOMTRAX With Rear View Monitoring System, With AM-FM Stereo Radio With Cassette, TH300 Type KOMTRAX With AM/FM Radio For Asia and EU, TH300 Type KOMTRAX			
1		14X-Y79-3411	Striker	1	80001-
2		01643-71232	Washer	3	80001-
3		01010-D1230	Bolt	3	80001-
4		14X-Y79-3421	Striker	1	80001-
5		01643-71232	Washer	3	80001-
6		01010-D1230	Bolt	3	80001-

https://truckmanualshub.com/

FIG. K0210-002010 ROPS Cab, Door Open Lock, LHS

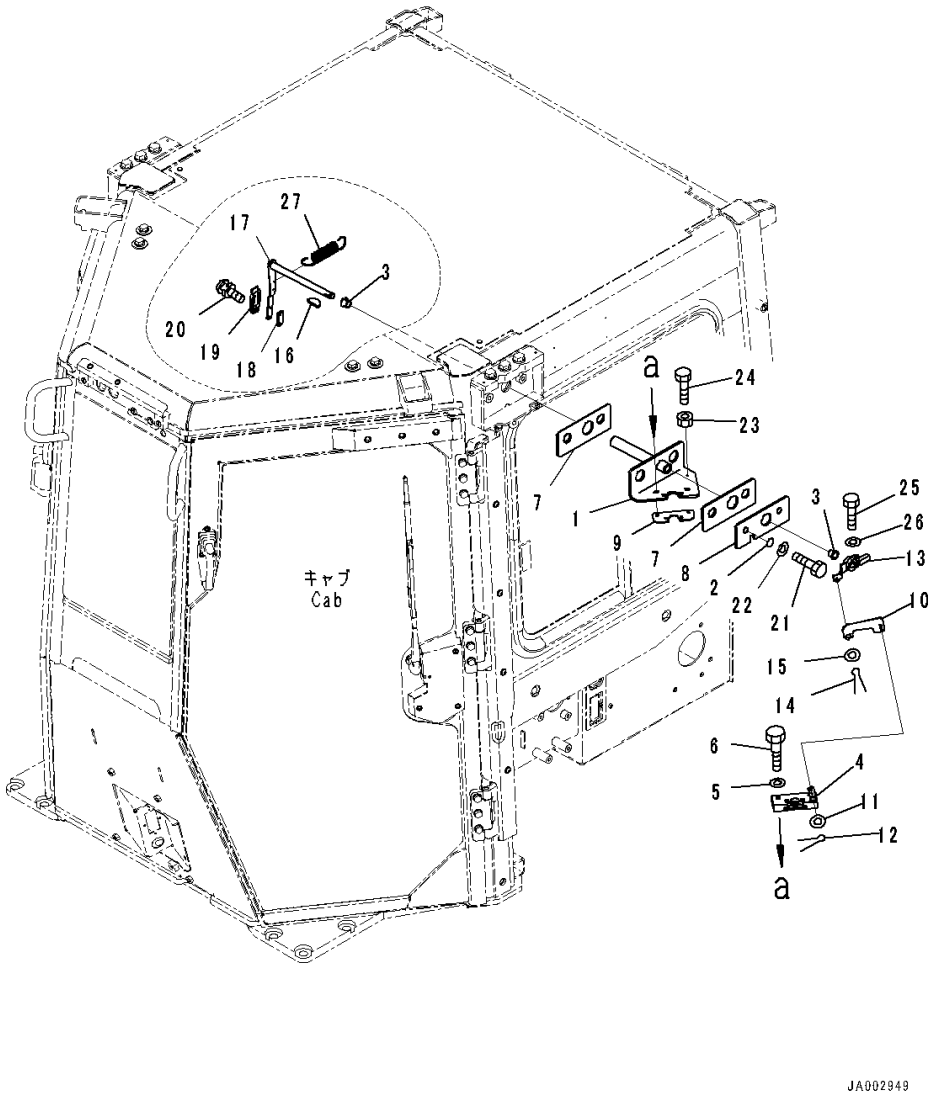

Index	Code	Part Number	Description	Qty	Serial Number
		Note: This list covers following specifications. With AM-FM Stereo Radio For North America, TH300 Type KOMTRAX For EU Noise Reguration, Provision For Radio Installation, TH300 Type KOMTRAX For EU Noise Reguration, With AM/FM Radio For Asia and EU, TH300 Type KOMTRAX Provision For Radio Installation, TH300 Type KOMTRAX With Rear View Monitoring System, With AM-FM Stereo Radio With Cassette, TH300 Type KOMTRAX With AM/FM Radio For Asia and EU, TH300 Type KOMTRAX			
1		14X-Y79-3511	Bracket	1	80001-
2		07000-13025	O-ring	2	80001-
3		17A-Z11-1810	Bushing	2	80001-
4		195-Z11-4520	Lock	1	80001-
5		01643-30823	Washer	4	80001-
6		14X-Y79-3681	Bolt	4	80001-
7		14X-Y79-3531	Rubber	2	80001-
8		14X-Y79-3551	Plate	1	80001-
9		14X-Y79-3760	Plate	1	80001-
10		17A-979-3561	Plate	1	80001-
11		01640-20610	Washer	1	80001-
12		04050-11612	Pin, Cotter	1	80001-
13		14X-Y79-3581	Lever	1	80001-
14		04050-11612	Pin, Cotter	1	80001-
15		01640-20610	Washer	1	80001-
16		04010-00516	Key	1	80001-
17		14X-Y79-3611	Lever	1	80001-
18		12Y-978-3290	Plate	1	80001-
19		12Y-978-3281	Knob	1	80001-
20		01023-70412	Screw	2	80001-
21		01010-81225	Bolt	2	80001-
22		01643-31232	Washer	2	80001-
23		01580-10605	Nut	1	80001-
24		01010-80625	Bolt	1	80001-
25		01010-80825	Bolt	1	80001-
26		01643-30823	Washer	1	80001-
27		176-06-42170	Spring	1	80001-

https://truckmanualshub.com/

FIG. K0210-002011 ROPS Cab, Door Open Lock, RHS

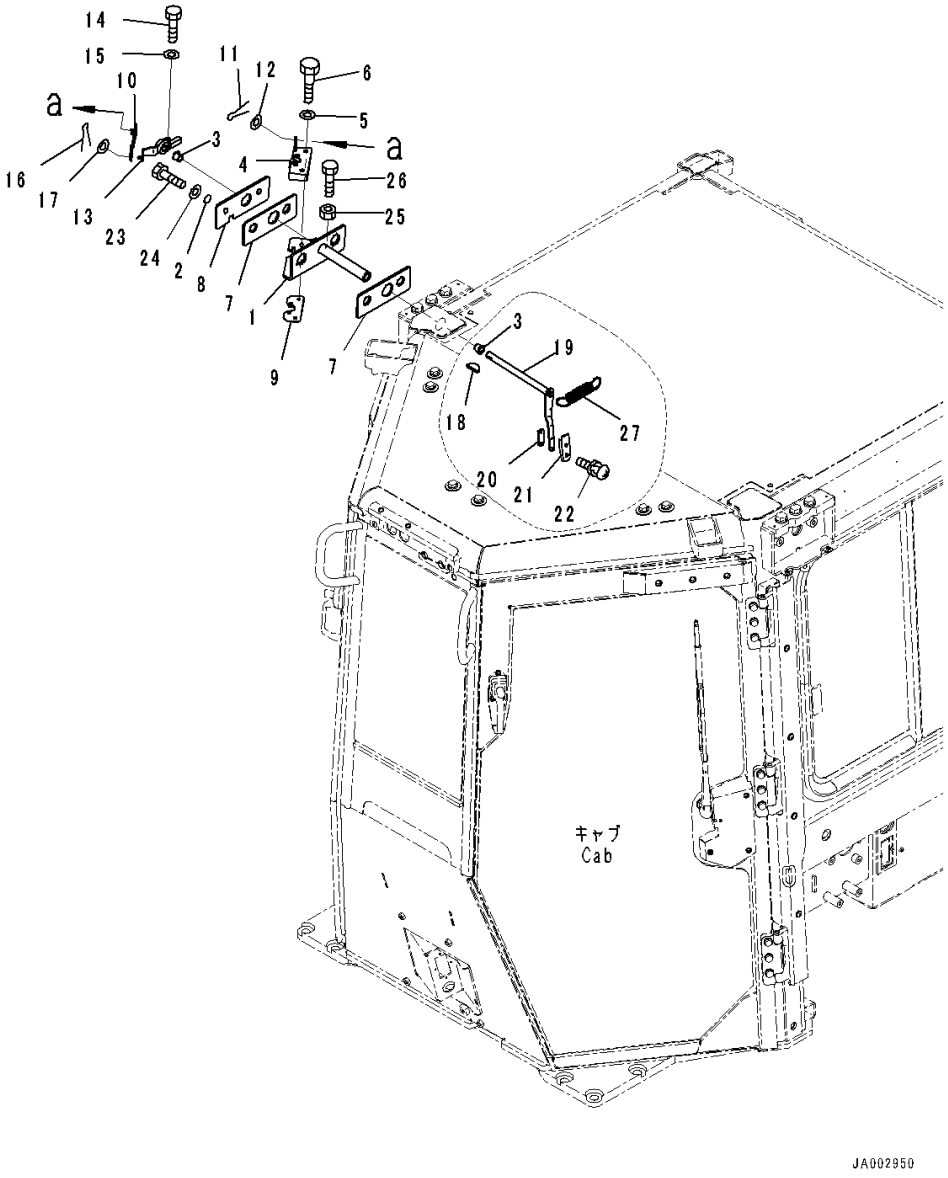

Index	Code	Part Number	Description	Qty	Serial Number
		Note: This list covers following specifications. With AM-FM Stereo Radio For North America, TH300 Type KOMTRAX For EU Noise Reguration, Provision For Radio Installation, TH300 Type KOMTRAX For EU Noise Reguration, With AM/FM Radio For Asia and EU, TH300 Type KOMTRAX Provision For Radio Installation, TH300 Type KOMTRAX With Rear View Monitoring System, With AM-FM Stereo Radio With Cassette, TH300 Type KOMTRAX With AM/FM Radio For Asia and EU, TH300 Type KOMTRAX			
1		14X-Y79-3521	Bracket	1	80001-
2		07000-13025	O-ring	2	80001-
3		17A-Z11-1810	Bushing	2	80001-
4		195-Z11-4510	Lock	1	80001-
5		01643-30823	Washer	4	80001-
6		14X-Y79-3681	Bolt	4	80001-
7		14X-Y79-3531	Rubber	2	80001-
8		14X-Y79-3551	Plate	1	80001-
9		14X-Y79-3760	Plate	1	80001-
10		17A-979-3571	Plate	1	80001-
11		01640-20610	Washer	1	80001-
12		04050-11612	Pin, Cotter	1	80001-
13		14X-Y79-3591	Lever	1	80001-
14		01010-80825	Bolt	1	80001-
15		01643-30823	Washer	1	80001-
16		04050-11612	Pin, Cotter	1	80001-
17		01640-20610	Washer	1	80001-
18		04010-00516	Key	1	80001-
19		14X-Y79-3621	Lever	1	80001-
20		12Y-978-3290	Plate	1	80001-
21		12Y-978-3281	Knob	1	80001-
22		01023-70412	Screw	2	80001-
23		01010-81225	Bolt	2	80001-
24		01643-31232	Washer	2	80001-
25		01580-10605	Nut	1	80001-
26		01010-80625	Bolt	1	80001-
27		176-06-42170	Spring	1	80001-

https://truckmanualshub.com/

FIG. K0210-002012 ROPS Cab, Door Open Lock (2/2)

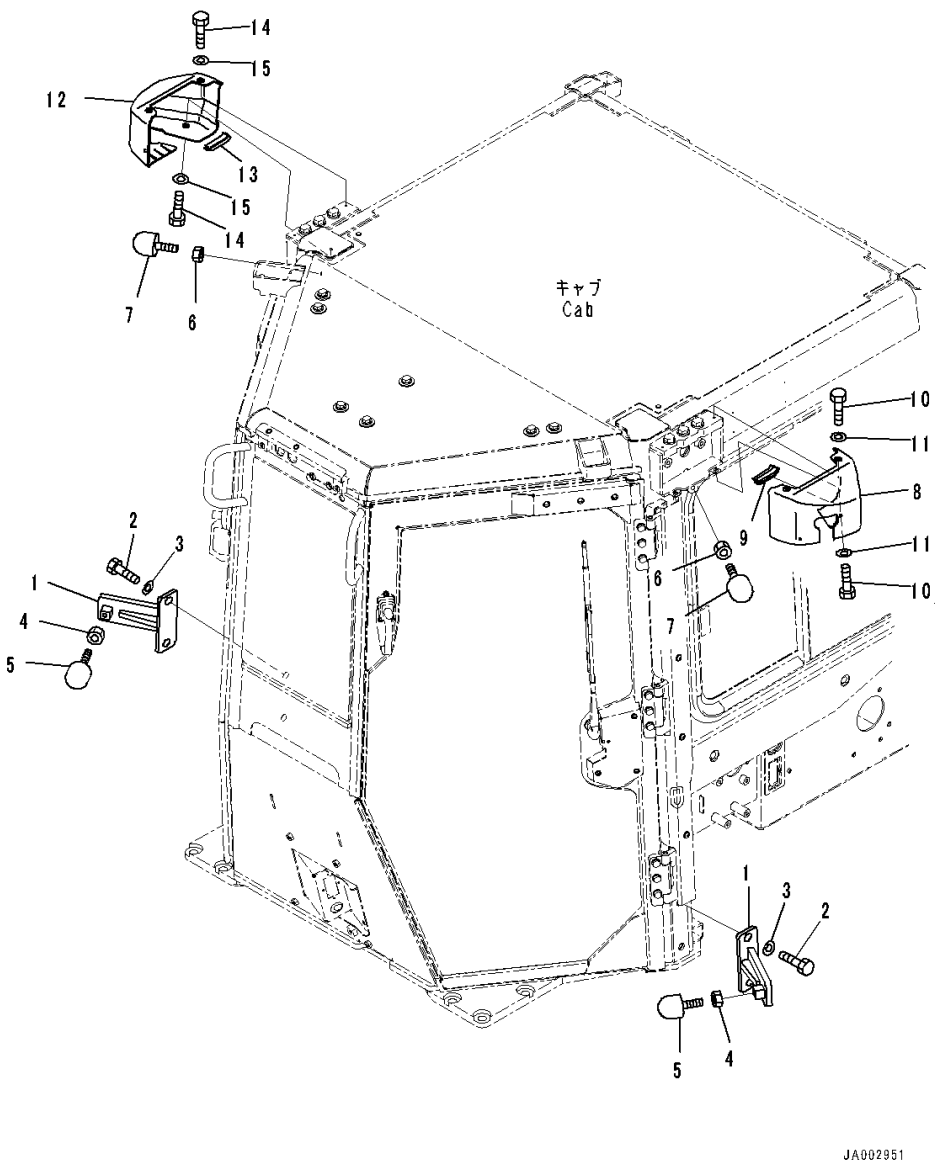

Index	Code	Part Number	Description	Qty	Serial Number
		Note: This list covers following specifications. With AM-FM Stereo Radio For North America, TH300 Type KOMTRAX For EU Noise Reguration, Provision For Radio Installation, TH300 Type KOMTRAX For EU Noise Reguration, With AM/FM Radio For Asia and EU, TH300 Type KOMTRAX Provision For Radio Installation, TH300 Type KOMTRAX With Rear View Monitoring System, With AM-FM Stereo Radio With Cassette, TH300 Type KOMTRAX With AM/FM Radio For Asia and EU, TH300 Type KOMTRAX			
1		14X-Y79-3491	Bracket	2	80001-
2		198-54-42260	Bolt	4	80001-
3		01643-71645	Washer	4	80001-
4		01580-11210	Nut	2	80001-
5		17A-Z11-3592	Stopper	2	80001-
6		01580-11210	Nut	2	80001-
7		17A-Z11-3592	Stopper	2	80001-
8		14X-Y79-3431	Cover	1	80001-
9		14X-Y79-2290	• Trim	1	80001-
10		01010-80616	Bolt	4	80001-
11		01643-30623	Washer	4	80001-
12		14X-Y79-3441	Cover	1	80001-
13		14X-Y79-2290	• Trim	1	80001-
14		01010-80616	Bolt	4	80001-
15		01643-30623	Washer	4	80001-

https://truckmanualshub.com/

FIG. K0210-002013 ROPS Cab, Glass Windows, Front and Rear

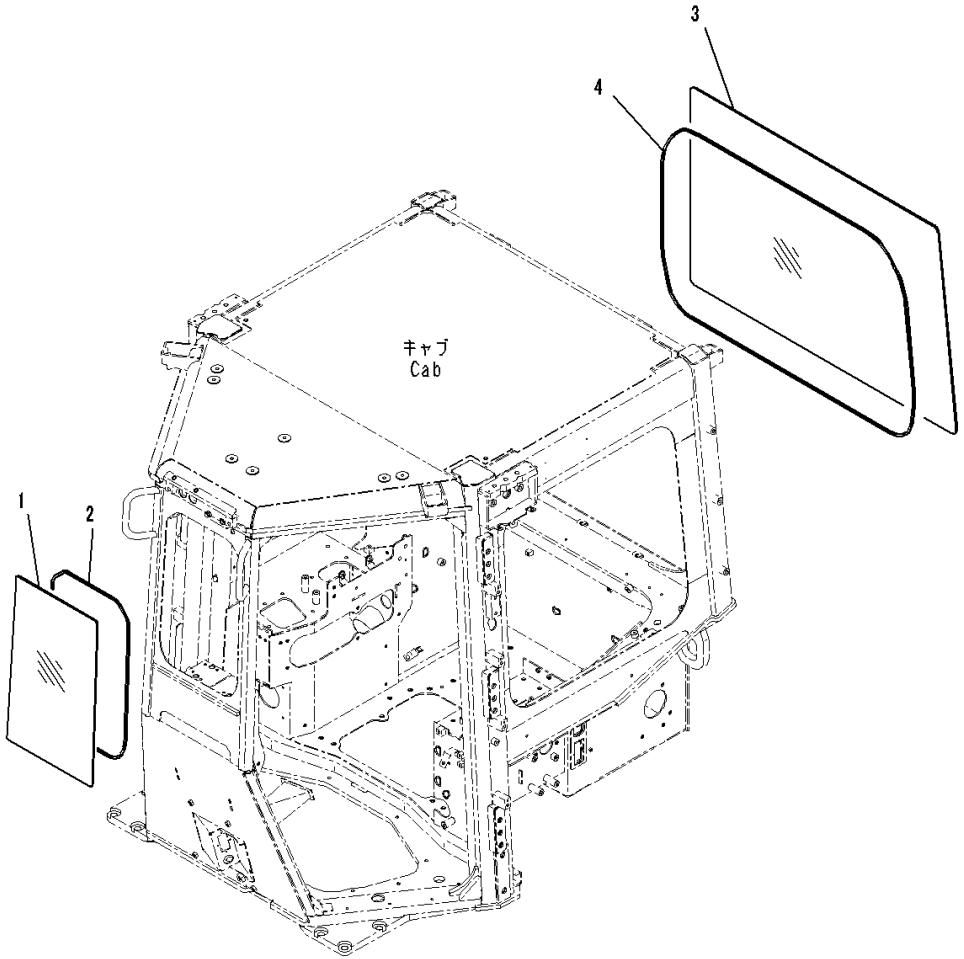

Index	Code	Part Number	Description	Qty	Serial Number
		Note: This list covers following specifications. With AM-FM Stereo Radio For North America, TH300 Type KOMTRAX For EU Noise Reguration, Provision For Radio Installation, TH300 Type KOMTRAX For EU Noise Reguration, With AM/FM Radio For Asia and EU, TH300 Type KOMTRAX Provision For Radio Installation, TH300 Type KOMTRAX With Rear View Monitoring System, With AM-FM Stereo Radio With Cassette, TH300 Type KOMTRAX With AM/FM Radio For Asia and EU, TH300 Type KOMTRAX			
1		14X-Y79-1311	Glass	1	80001-
2		14X-Y79-1321	Seal,Bonded	1	80001-
3		14X-Y79-1331	Glass	1	80001-
4		14X-Y79-1340	Seal,Bonded	1	80001-

https://truckmanualshub.com/

FIG. K0210-002014 ROPS Cab, Sash type Glass Windows, LHS

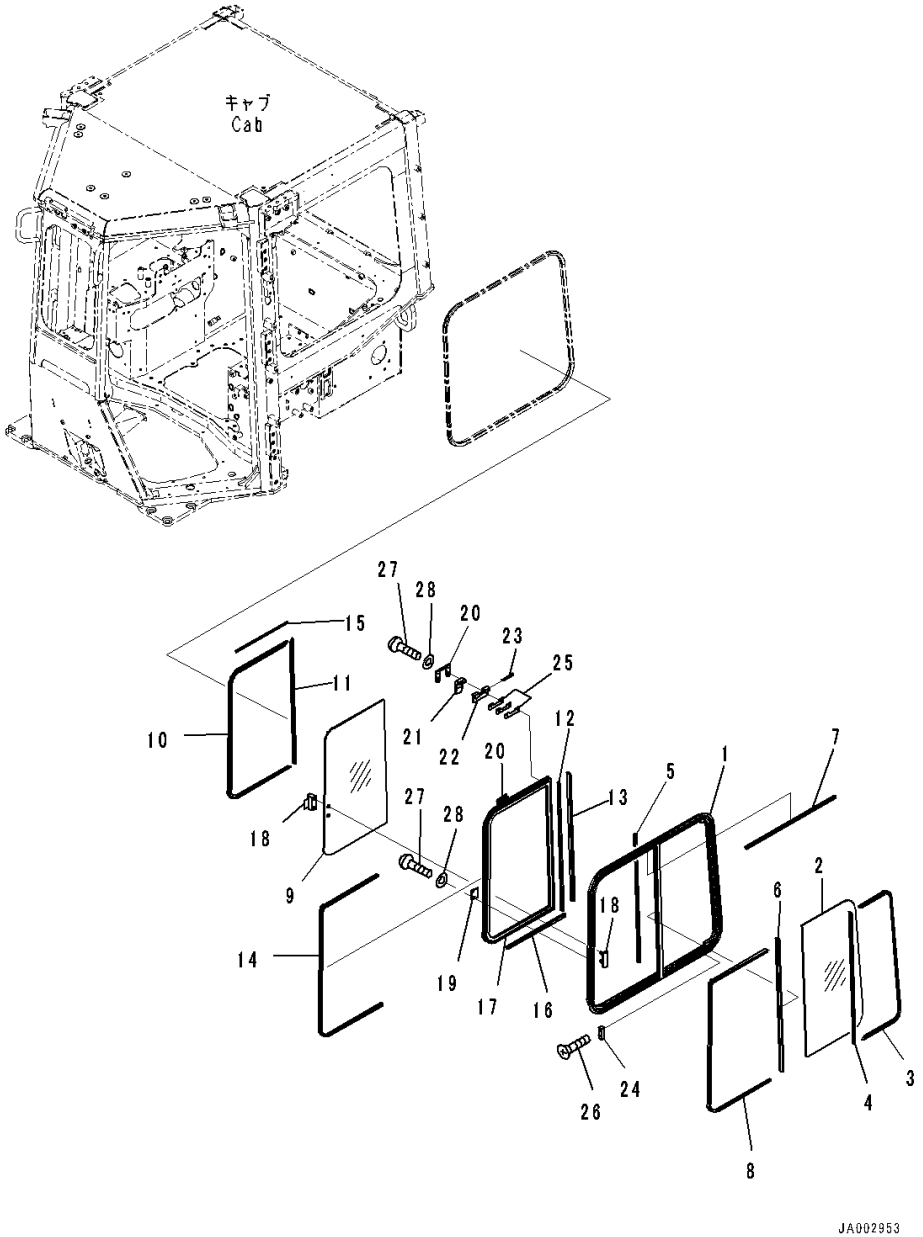

Index	Code	Part Number	Description	Qty	Serial Number
		Note: This list covers following specifications. With AM-FM Stereo Radio For North America, TH300 Type KOMTRAX For EU Noise Reguration, Provision For Radio Installation, TH300 Type KOMTRAX For EU Noise Reguration, With AM/FM Radio For Asia and EU, TH300 Type KOMTRAX Provision For Radio Installation, TH300 Type KOMTRAX With Rear View Monitoring System, With AM-FM Stereo Radio With Cassette, TH300 Type KOMTRAX With AM/FM Radio For Asia and EU, TH300 Type KOMTRAX			
		14X-Y79-1400	Sash Assembly	1	80001-
		12Y-978-1410	• Sash Assembly	1	80001-
1		12Y-978-1420	• • Frame	1	80001-
2		12Y-978-1450	• • Glass	1	80001-
3		12Y-978-1460	• • Seal	1	80001-
4		12Y-978-1470	• • Seal	1	80001-
5		12Y-978-1480	• • Seal,Bonded	1	80001-
6		12Y-978-1490	• • Seal	1	80001-
7		12Y-978-1550	• • Seal,Bonded	1	80001-
8		12Y-978-1640	• Seal	1	80001-
		14X-Y79-1430	• Sash Assembly	1	80001-
9		12Y-978-1560	• • Glass	1	80001-
10		12Y-978-1570	• • Seal	1	80001-
11		12Y-978-1580	• • Seal	1	80001-
12		12Y-978-1590	• • Seal,Bonded	1	80001-
13		12Y-978-1610	• • Seal	1	80001-
14		12Y-978-1620	• • Run Channel	1	80001-
15		12Y-978-1630	• • Seal,Bonded	1	80001-
16		12Y-978-1650	• • Seal	1	80001-
17		14X-Y79-1440	• • Frame	1	80001-
18		17A-Z11-1610	• Lock Assembly	1	80001-
19		17A-Z11-1620	• Striker	1	80001-
20		17A-Z11-1660	• Plate	2	80001-
		195-Z11-1371	• Lock Assembly	2	80001-
21		195-Z11-3630	• • Lever	1	80001-
22		195-Z11-3640	• • Plate	1	80001-
23		195-Z11-3860	• • Pin, Spring	1	80001-
24		195-Z11-1381	• Stopper	1	80001-

https://truckmanualshub.com/

FIG. K0210-002014 ROPS Cab, Sash type Glass Windows, LHS

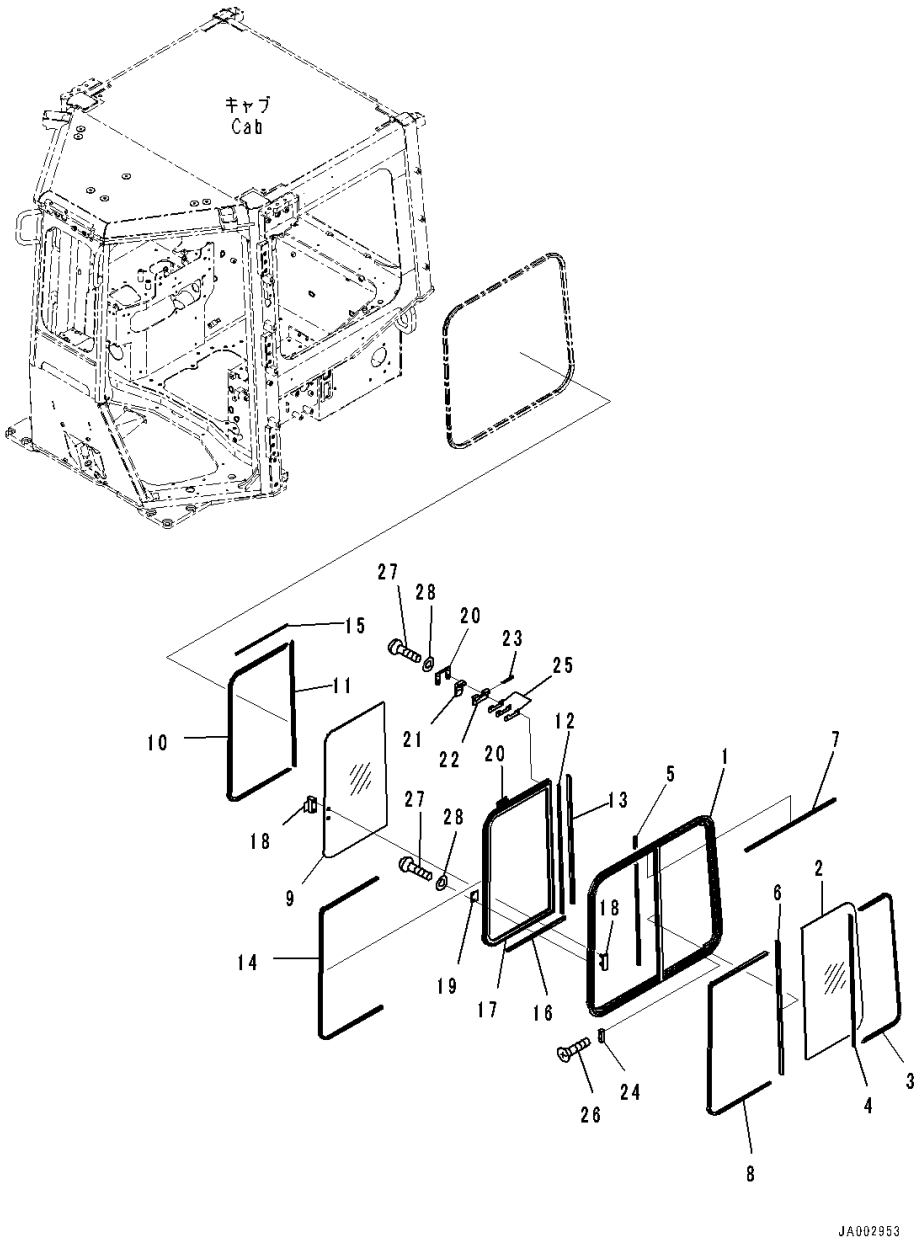

Index	Code	Part Number	Description	Qty	Serial Number
25		195-Z11-3670	• Shim, T=0.5mm	6	80001-
26		01224-70316	• Screw	2	80001-
27		01252-80514	• Bolt	6	80001-
28		01641-50508	• Washer, Flat	6	80001-

https://truckmanualshub.com/

FIG. K0210-002015 ROPS Cab, Sash type Glass Windows, RHS

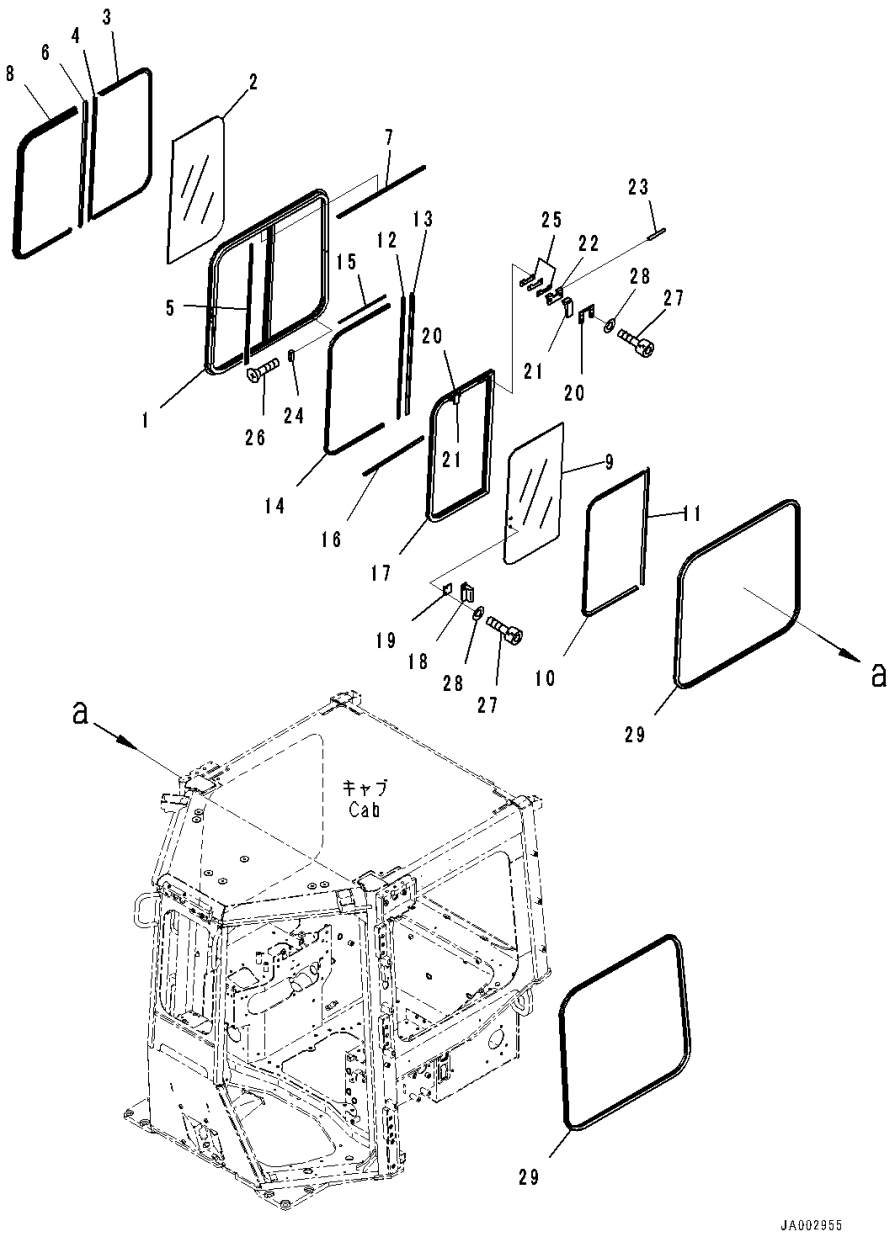

Index	Code	Part Number	Description	Qty	Serial Number
		Note: This list covers following specifications. With AM-FM Stereo Radio For North America, TH300 Type KOMTRAX For EU Noise Reguration, Provision For Radio Installation, TH300 Type KOMTRAX For EU Noise Reguration, With AM/FM Radio For Asia and EU, TH300 Type KOMTRAX Provision For Radio Installation, TH300 Type KOMTRAX With Rear View Monitoring System, With AM-FM Stereo Radio With Cassette, TH300 Type KOMTRAX With AM/FM Radio For Asia and EU, TH300 Type KOMTRAX			
		14X-Y79-1500	Sash Assembly	1	80001-
		12Y-978-1510	• Sash Assembly	1	80001-
1		12Y-978-1520	• • Frame	1	80001-
2		12Y-978-1450	• • Glass	1	80001-
3		12Y-978-1460	• • Seal	1	80001-
4		12Y-978-1470	• • Seal	1	80001-
5		12Y-978-1480	• • Seal,Bonded	1	80001-
6		12Y-978-1490	• • Seal	1	80001-
7		12Y-978-1550	• • Seal,Bonded	1	80001-
8		12Y-978-1640	• Seal	1	80001-
		14X-Y79-1450	• Sash Assembly	1	80001-
9		12Y-978-1560	• • Glass	1	80001-
10		12Y-978-1570	• • Seal	1	80001-
11		12Y-978-1580	• • Seal	1	80001-
12		12Y-978-1590	• • Seal,Bonded	1	80001-
13		12Y-978-1610	• • Seal	1	80001-
14		12Y-978-1620	• • Run Channel	1	80001-
15		12Y-978-1630	• • Seal,Bonded	1	80001-
16		12Y-978-1650	• • Seal	1	80001-
17		14X-Y79-1460	• • Frame	1	80001-
18		17A-Z11-1610	• Lock Assembly	1	80001-
19		17A-Z11-1620	• Striker	1	80001-
20		17A-Z11-1660	• Plate	2	80001-
		195-Z11-1371	• Lock Assembly	2	80001-
21		195-Z11-3630	• • Lever	1	80001-
22		195-Z11-3640	• • Plate	1	80001-
23		195-Z11-3860	• • Pin, Spring	1	80001-
24		195-Z11-1381	• Stopper	1	80001-

https://truckmanualshub.com/

FIG. K0210-002015 ROPS Cab, Sash type Glass Windows, RHS

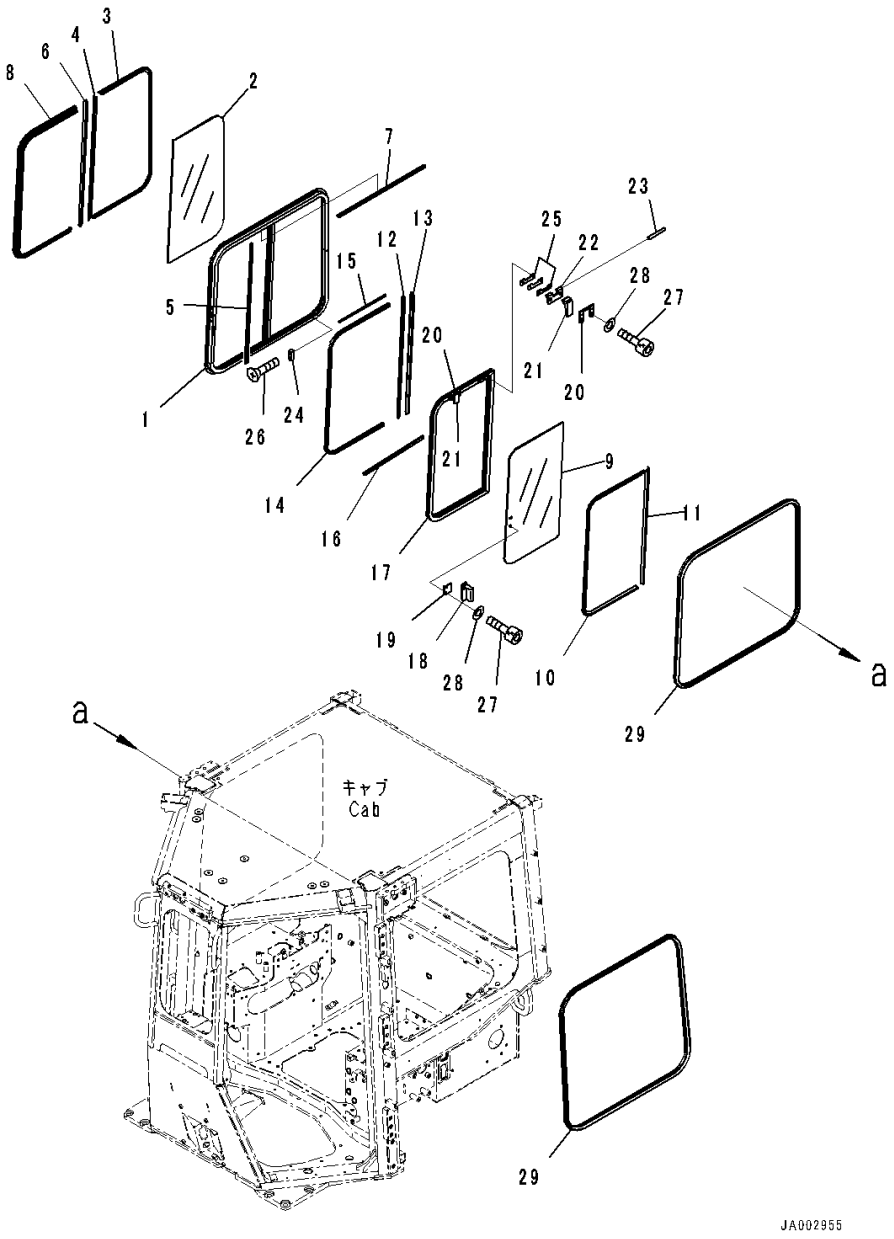

Index	Code	Part Number	Description	Qty	Serial Number
25		195-Z11-3670	• Shim, T=0.5mm	6	80001-
26		01224-70316	• Screw	2	80001-
27		01252-80514	• Bolt	6	80001-
28		01641-50508	• Washer, Flat	6	80001-
29		12Y-978-1390	Weather Strip	2	80001-

https://truckmanualshub.com/

FIG. K0210-002016 ROPS Cab, Wiper and Room Lamp

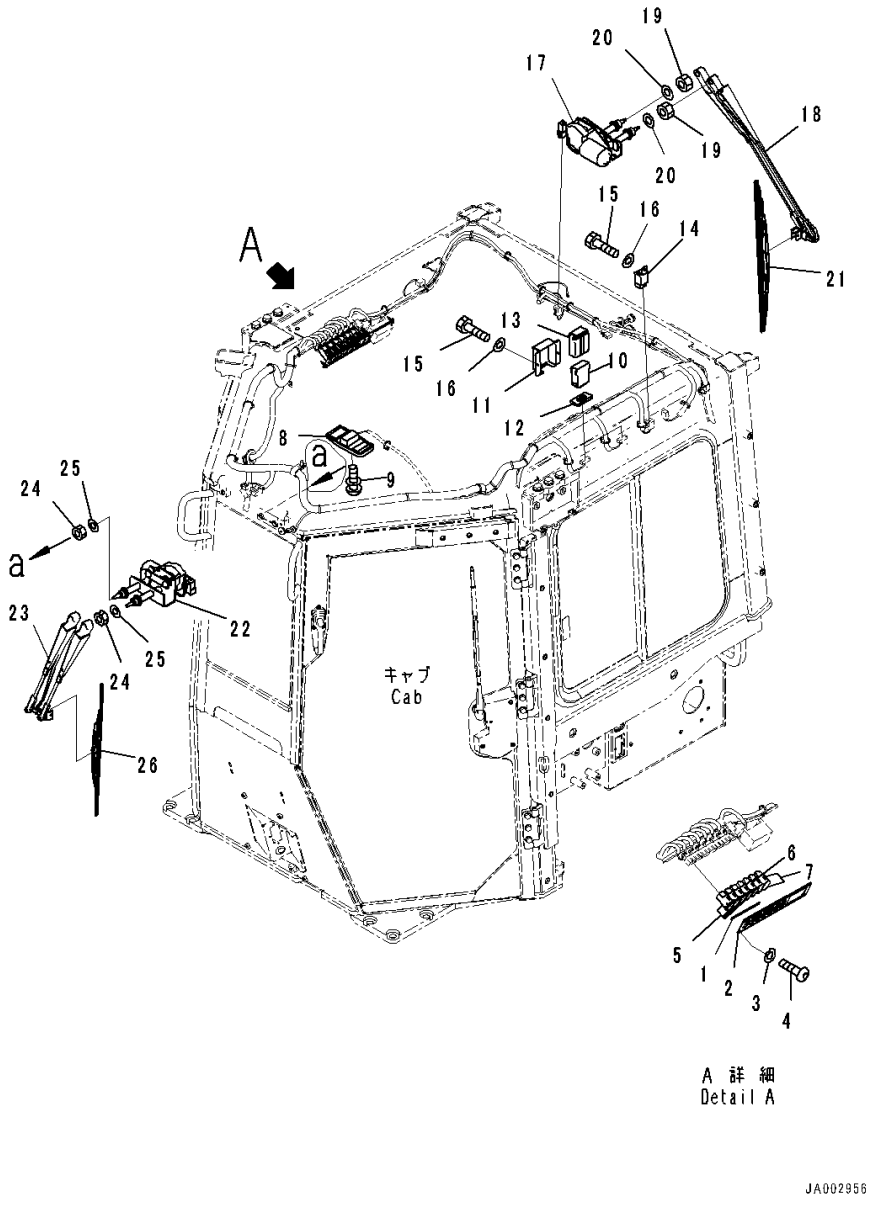

Index	Code	Part Number	Description	Qty	Serial Number
		Note: This list covers following specifications. With AM-FM Stereo Radio For North America, TH300 Type KOMTRAX For EU Noise Reguration, Provision For Radio Installation, TH300 Type KOMTRAX For EU Noise Reguration, With AM/FM Radio For Asia and EU, TH300 Type KOMTRAX Provision For Radio Installation, TH300 Type KOMTRAX With Rear View Monitoring System, With AM-FM Stereo Radio With Cassette, TH300 Type KOMTRAX With AM/FM Radio For Asia and EU, TH300 Type KOMTRAX			
1		14X-Y79-2250	Panel	1	80001-
2		17A-979-3140	Cover	1	80001-
3		01643-70623	Washer	4	80001-
4		01245-00620	Screw	4	80001-
5		17A-06-42210	Switch	4	80001-
6		17A-06-42220	Switch	1	80001-
7		20Y-06-42190	Cover	2	80001-
8		421-06-26210	Lamp Assembly, Working	1	80001-
9		01023-10520	Screw	2	80001-
10		14X-06-51710	Relay	2	80001-
11		14X-06-52631	Bracket	2	80001-
12		14X-06-52740	Sheet	2	80001-
13		14X-06-52661	Sheet	2	80001-
14		198-911-9240	Relay Assembly	1	80001-
15		01010-80616	Bolt	5	80001-
16		01643-70623	Washer	5	80001-
17		17A-979-2850	Wiper Motor	1	80001-
18		416-925-3941	Arm, Wiper	1	80005-
19		01580-10806	Nut	2	80001-
20		01640-20816	Washer	2	80001-
21		17A-979-2870	Wiper Blade	1	80001-
22		14X-Y79-1570	Wiper Motor	1	80001-
23		14X-Y79-1580	Arm, Wiper	1	80001-
24		01580-10806	Nut	2	80001-
25		01640-20816	Washer	2	80001-
26		17A-979-1420	Wiper Blade	1	80001-

https://truckmanualshub.com/

FIG. K0210-002017 ROPS Cab, With AM-FM Stereo Radio For North America, TH300 Type KOMTRAX, Radio

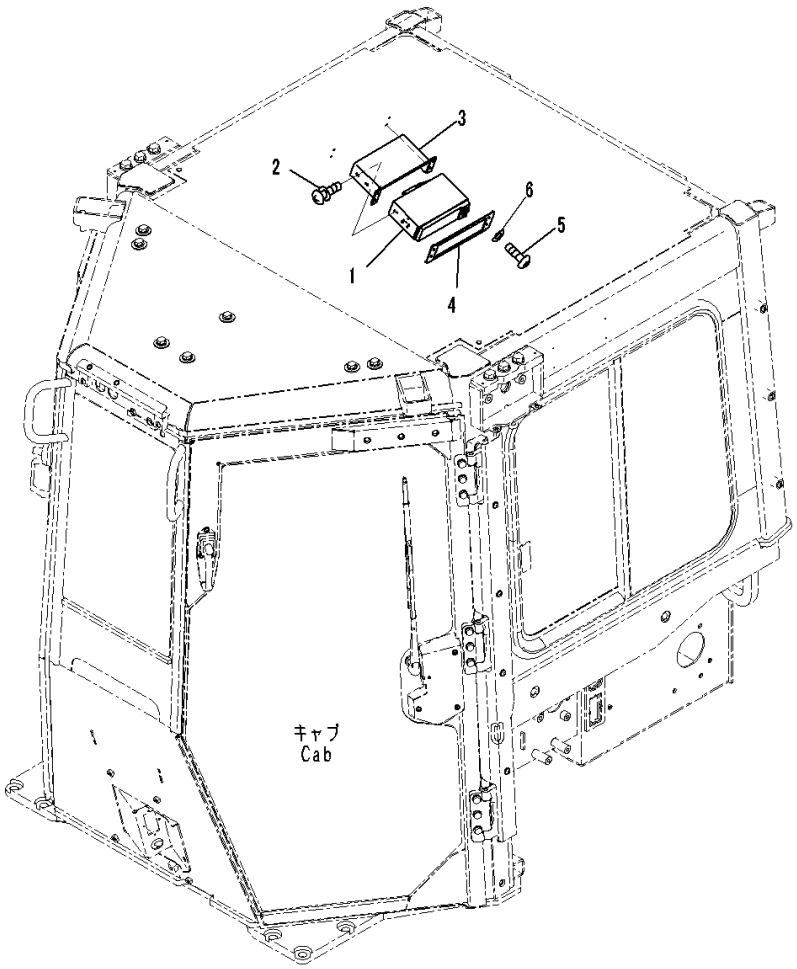

Index	Code	Part Number	Description	Qty	Serial Number
1		207-06-71723	Radio	1	80017-
2		01023-20510	Screw	4	80001-
3		14X-Y79-1590	Bracket	1	80001-
4		12Y-978-2280	Plate	1	80001-
5		01245-00620	Screw	4	80001-
6		01643-70623	Washer	4	80001-

https://truckmanualshub.com/

FIG. K0210-002018 ROPS Cab, Rubber Antenna

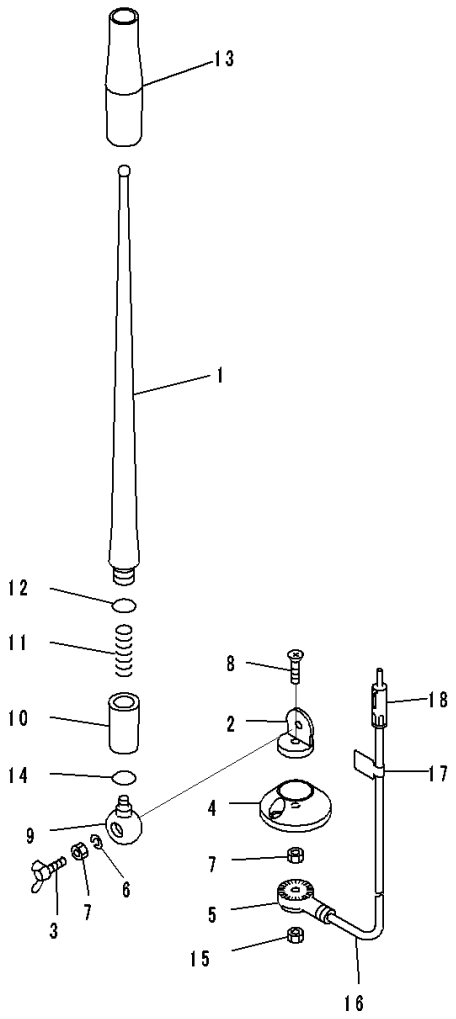

00084650

Index	Code	Part Number	Description	Qty	Serial Number
		Note: This list covers following specifications. With AM-FM Stereo Radio For North America, TH300 Type KOMTRAX For EU Noise Reguration, Provision For Radio Installation, TH300 Type KOMTRAX For EU Noise Reguration, With AM/FM Radio For Asia and EU, TH300 Type KOMTRAX Provision For Radio Installation, TH300 Type KOMTRAX With Rear View Monitoring System, With AM-FM Stereo Radio With Cassette, TH300 Type KOMTRAX With AM/FM Radio For Asia and EU, TH300 Type KOMTRAX			
		20Y-06-41990	Antenna	1	80001-
1		RFU419B-418-A	• Rod	1	80001-
2	C1		• Holder	1	80001-
3		RFU419B-418-D	• Bolt, Wing	1	80001-
4		RFU419B-418-E	• Base	1	80001-
5	C1		• Holder	1	80001-
6		RFU419B-418-B	• Washer, Spring	1	80001-
7		RFU419B-418-C	• Nut	2	80001-
8	C1		• Screw	1	80001-
9	C1		• Holder	1	80001-
10	C1		• Holder Assembly	1	80001-
11	C1		• Spring	1	80001-
12	C1		• O-ring	1	80001-
13	C1		• Tube	1	80001-
14	C1		• O-ring	1	80001-
15		REU419B-418-C	• Nut	1	80001-
16		RFU419B-418-F	• Cable	1	80001-
17	C1		• Plate	1	80001-
18	C1		• Plug	1	80001-

https://truckmanualshub.com/

FIG. K0210-002019 ROPS Cab, Rubber Antenna Mounting

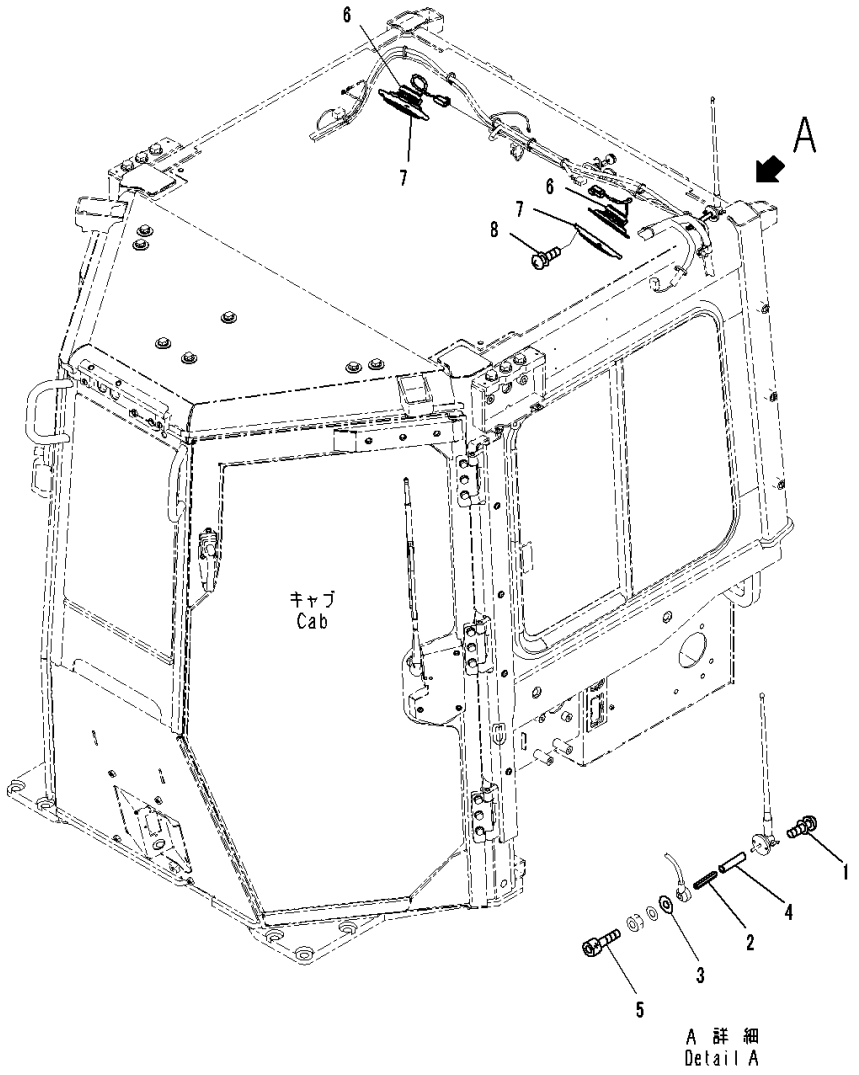

Index	Code	Part Number	Description	Qty	Serial Number
		Note: This list covers following specifications. With AM-FM Stereo Radio For North America, TH300 Type KOMTRAX For EU Noise Reguration, Provision For Radio Installation, TH300 Type KOMTRAX For EU Noise Reguration, With AM/FM Radio For Asia and EU, TH300 Type KOMTRAX Provision For Radio Installation, TH300 Type KOMTRAX With Rear View Monitoring System, With AM-FM Stereo Radio With Cassette, TH300 Type KOMTRAX With AM/FM Radio For Asia and EU, TH300 Type KOMTRAX			
1		01023-20416	Screw	2	80001-
2		14X-06-51370	Bar	1	80001-
3		01643-70623	Washer	1	80001-
4		08023-10006	Tube	1	80001-
5		01252-70530	Bolt, Hexagon Socket Head	1	80001-
6		20Y-06-42180	Speaker	2	80001-
7		20Y-53-12221	Cover	2	80001-
8		01023-20425	Screw	8	80001-

https://truckmanualshub.com/

FIG. K0210-002020 ROPS Cab, Roof Cover (1/2)

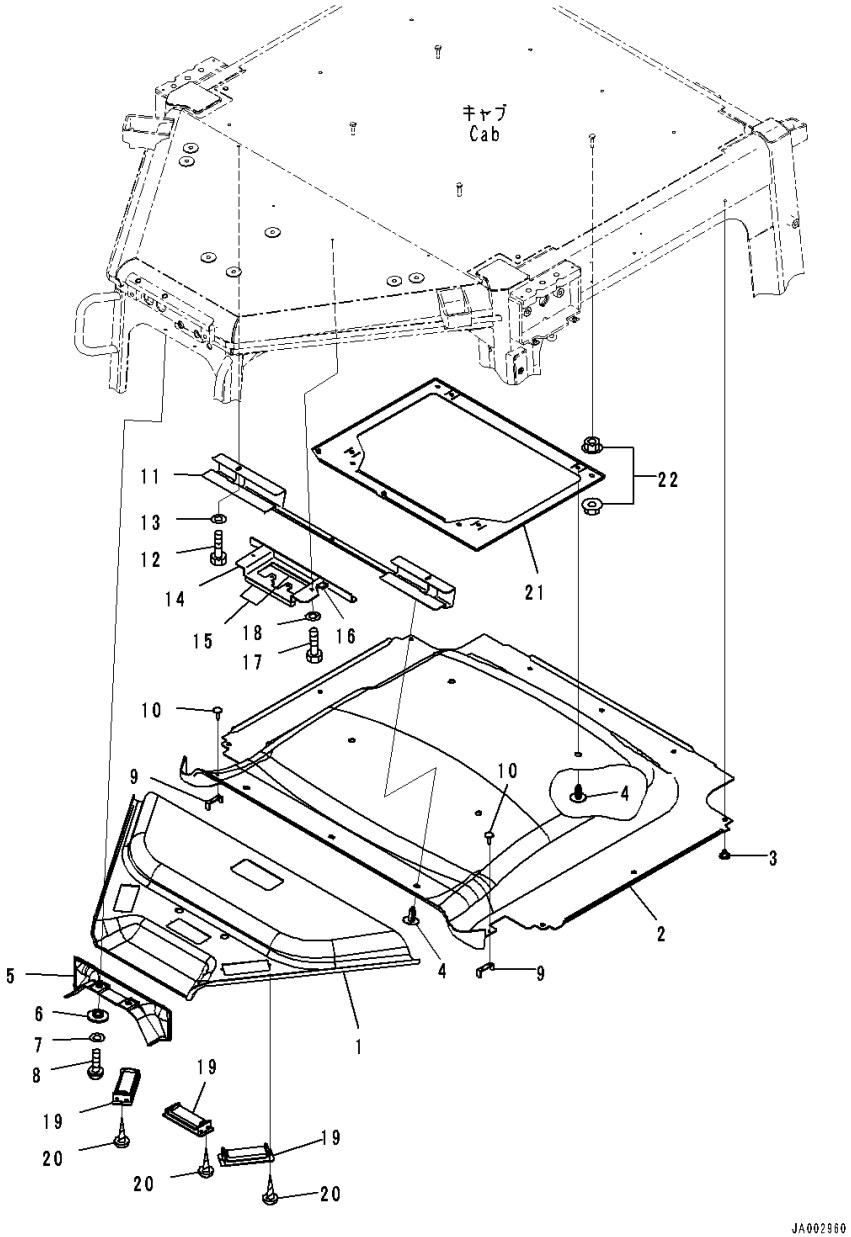

Index	Code	Part Number	Description	Qty	Serial Number
		Note: This list covers following specifications. With AM-FM Stereo Radio For North America, TH300 Type KOMTRAX For EU Noise Reguration, Provision For Radio Installation, TH300 Type KOMTRAX For EU Noise Reguration, With AM/FM Radio For Asia and EU, TH300 Type KOMTRAX Provision For Radio Installation, TH300 Type KOMTRAX With Rear View Monitoring System, With AM-FM Stereo Radio With Cassette, TH300 Type KOMTRAX With AM/FM Radio For Asia and EU, TH300 Type KOMTRAX			
1		14X-Y79-2621	Cover	1	80001-
2		14X-Y79-2611	Cover	1	80001-
3		20Y-54-18690	Rivet	9	80001-
4		198-Z11-6370	Clip	7	80001-
5		14X-Y79-2631	Cover	1	80001-
6		17A-979-1620	Collar	2	80001-
7		01643-70623	Washer	2	80001-
8		01245-00620	Screw	2	80001-
9		14X-Y79-2350	Plate	2	80001-
10		14X-Y79-2650	Clip	4	80001-
11		14X-Y79-2141	Bracket	1	80001-
12		01010-80616	Bolt	2	80001-
13		01643-30623	Washer	2	80001-
14		14X-Y79-2161	Bracket	1	80001-
15		17A-979-1760	• Sheet,Bonded	2	80001-
16		208-53-11M80	• Ring	1	80001-
17		01010-80616	Bolt	2	80001-
18		01643-30623	Washer	2	80001-
19		17A-Z11-7161	Louver	3	80001-
20		01370-40414	Screw	6	80001-
21		14X-Y79-1291	Bracket	1	80001-
22		01584-00806	Nut	8	80001-

https://truckmanualshub.com/

FIG. K0210-002021 ROPS Cab, Roof Cover (2/2)

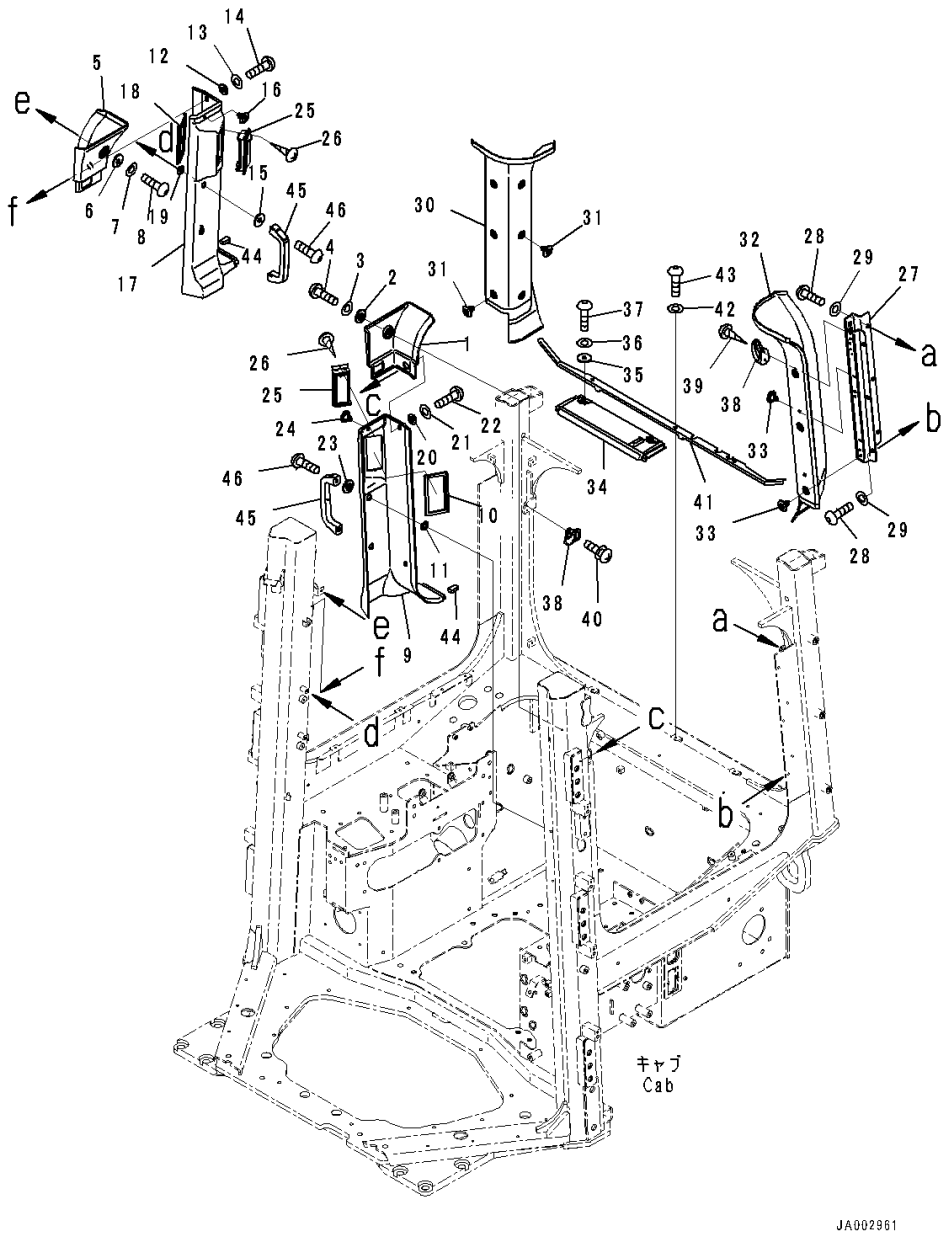

Index	Code	Part Number	Description	Qty	Serial Number
		Note: This list covers following specifications.			
		With AM-FM Stereo Radio For North America, TH300 Type KOMTRAX			
		For EU Noise Reguration, Provision For Radio Installation, TH300 Type KOMTRAX			
		For EU Noise Reguration, With AM/FM Radio For Asia and EU, TH300 Type KOMTRAX			
		Provision For Radio Installation, TH300 Type KOMTRAX			
		With Rear View Monitoring System, With AM-FM Stereo Radio With Cassette, TH300 Type KOMTRAX			
		With AM/FM Radio For Asia and EU, TH300 Type KOMTRAX			
1		14X-Y79-2261	Cover Assembly	1	80001-
2		17A-979-1620	Collar	1	80001-
3		01643-70623	Washer	1	80001-
4		01245-00620	Screw	1	80001-
5		14X-Y79-2271	Cover Assembly	1	80001-
6		17A-979-1620	Collar	1	80001-
7		01643-70623	Washer	1	80001-
8		01245-00620	Screw	1	80001-
9		14X-Y79-2101	Cover Assembly	1	80001-
10		17A-979-1930	• Seal,Bonded	1	80001-
11		17A-979-3890	• Plate,Bonded	2	80001-
12		17A-979-1620	Collar	2	80001-
13		01643-70623	Washer	2	80001-
14		01245-00620	Screw	2	80001-
15		17A-979-1611	Collar	2	80001-
16		20Y-54-18690	Rivet	1	80001-
17		14X-Y79-2201	Cover Assembly	1	80001-
18		17A-979-1930	• Seal,Bonded	1	80001-
19		17A-979-3890	• Plate,Bonded	2	80001-
20		17A-979-1620	Collar	2	80001-
21		01643-70623	Washer	2	80001-
22		01245-00620	Screw	2	80001-
23		17A-979-1611	Collar	2	80001-
24		20Y-54-18690	Rivet	1	80001-
25		17A-Z11-7161	Louver	2	80001-
26		01370-30412	Screw	4	80001-
27		14X-Y79-2131	Bracket	1	80001-
28		01245-00820	Screw	6	80001-

https://truckmanualshub.com/

FIG. K0210-002021 ROPS Cab, Roof Cover (2/2)

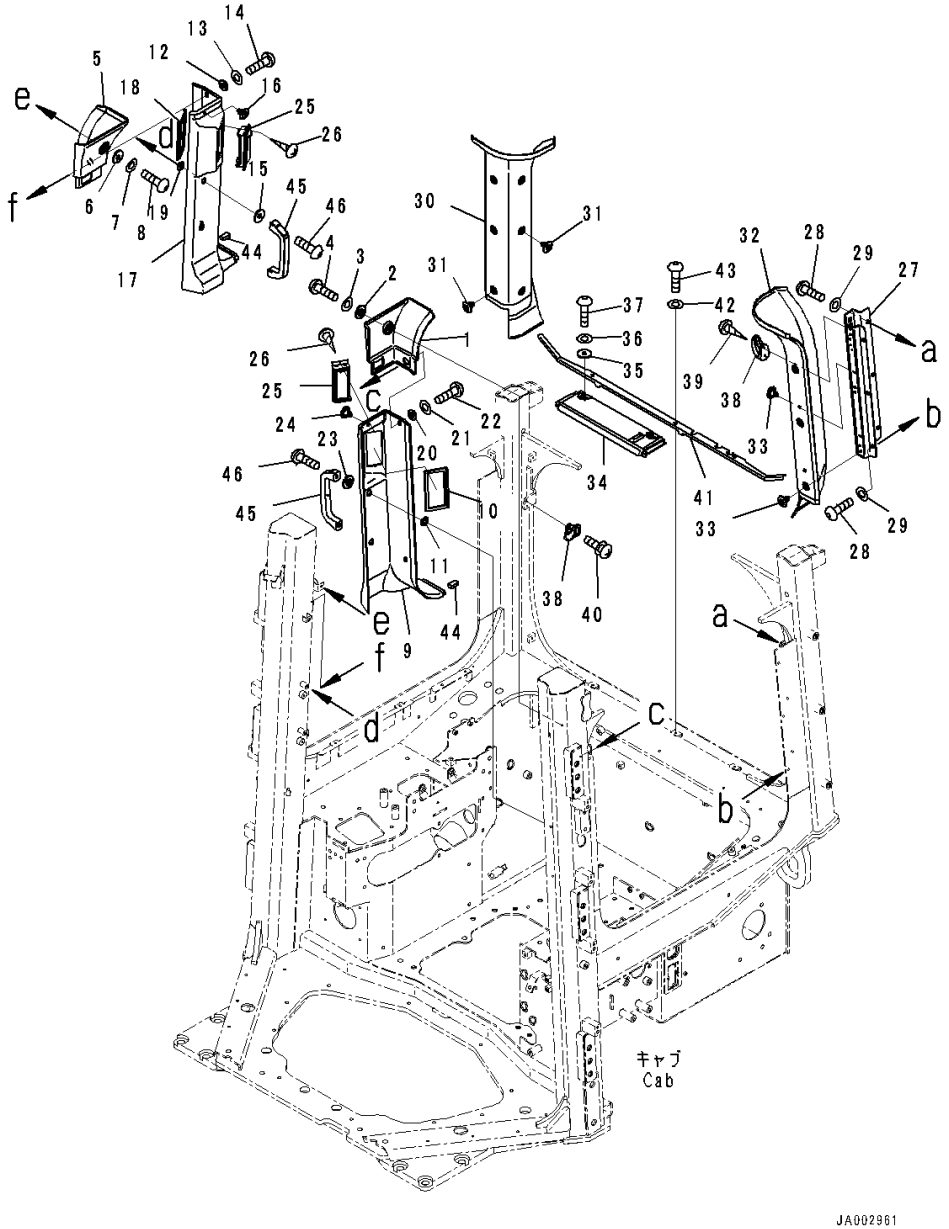

Index	Code	Part Number	Description	Qty	Serial Number
29		01643-70823	Washer	6	80001-
30		14X-Y79-2211	Cover	1	80001-
31		20Y-54-18690	Rivet	6	80001-
32		14X-Y79-2221	Cover	1	80001-
33		20Y-54-18690	Rivet	5	80001-
34		14X-Y79-2380	Cover	1	80001-
35		12Y-978-2660	Collar	2	80001-
36		01643-70623	Washer	2	80001-
37		01245-00620	Screw	2	80001-
38		17A-Z11-2940	Hook	2	80001-
39		01370-40412	Screw	2	80001-
40		01023-70412	Screw	2	80001-
41		14X-Y79-2641	Cover	1	80001-
42		01643-70623	Washer	3	80001-
43		01245-00616	Screw, Hexagon Socket Head	3	80065-
44		14X-Y79-2190	Seal,Bonded	2	80001-
45		361-54-21150	Handle	2	80001-
46		01245-00825	Screw	4	80001-

https://truckmanualshub.com/

FIG. K0210-002022 ROPS Cab, Rearview Mirror

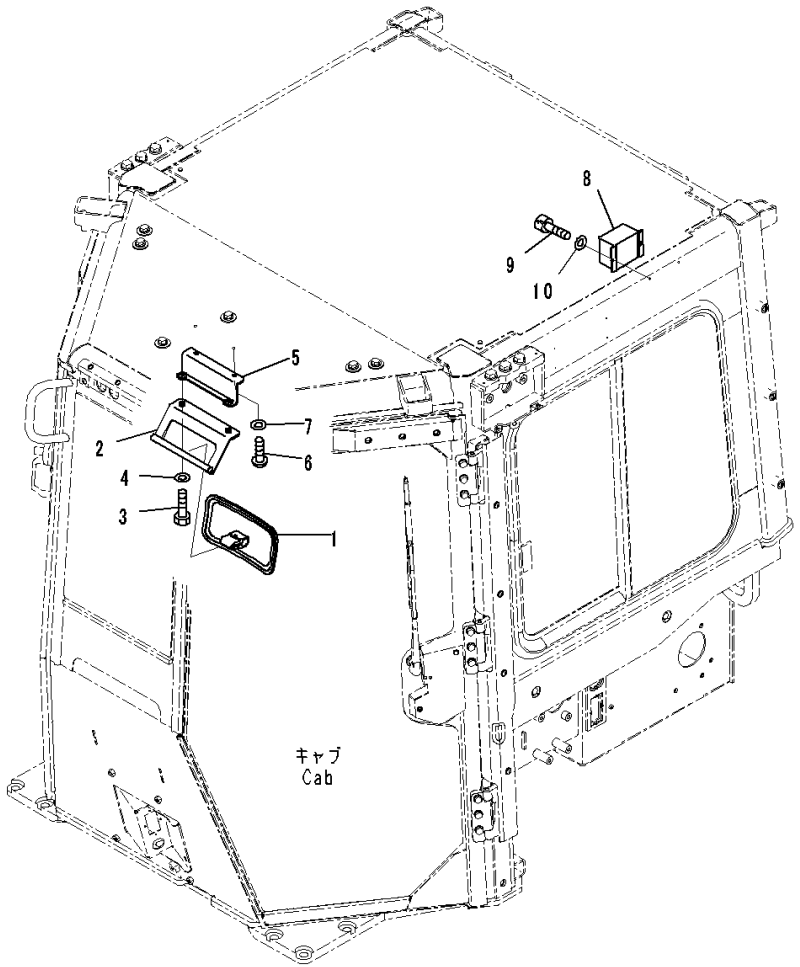

Index	Code	Part Number	Description	Qty	Serial Number
		Note: This list covers following specifications. With AM-FM Stereo Radio For North America, TH300 Type KOMTRAX For EU Noise Reguration, Provision For Radio Installation, TH300 Type KOMTRAX For EU Noise Reguration, With AM/FM Radio For Asia and EU, TH300 Type KOMTRAX Provision For Radio Installation, TH300 Type KOMTRAX With Rear View Monitoring System, With AM-FM Stereo Radio With Cassette, TH300 Type KOMTRAX With AM/FM Radio For Asia and EU, TH300 Type KOMTRAX			
1		195-Z11-2180	Mirror	1	80001-
2		14X-Y79-2171	Bracket	1	80001-
3		01245-00825	Screw	2	80001-
4		01643-70823	Washer	2	80001-
5		14X-Y79-2151	Bracket	1	80001-
6		01010-D0816	Bolt	2	80001-
7		01643-70823	Washer	2	80001-
8		12Y-06-11650	Converter	1	80001-
9		01252-80514	Bolt	2	80001-
10		01641-50508	Washer, Flat	2	80001-

https://truckmanualshub.com/

FIG. K0210-002023 ROPS Cab, Outside Cover

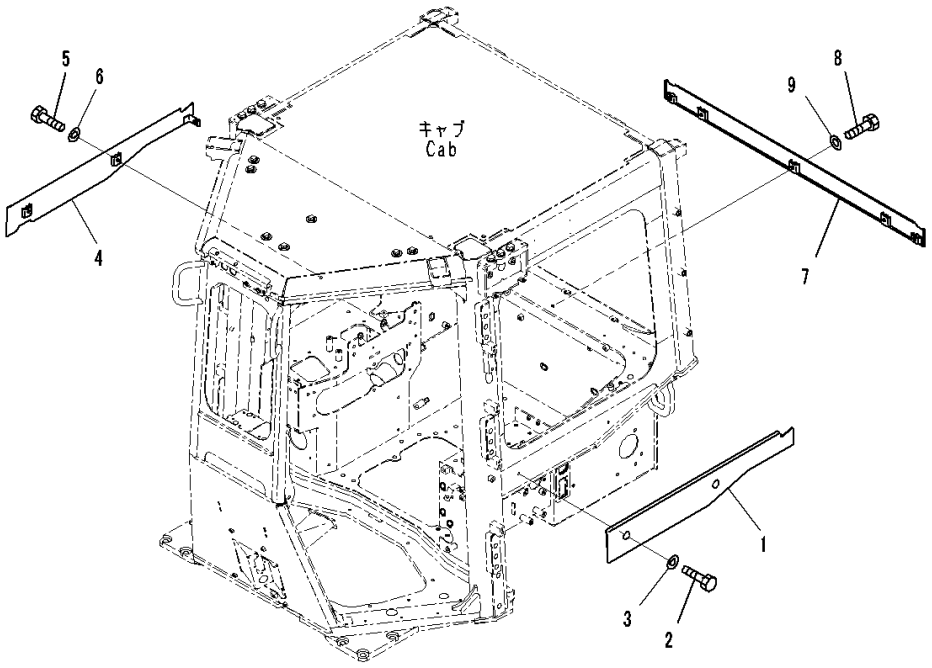

Index	Code	Part Number	Description	Qty	Serial Number
		Note: This list covers following specifications. With AM-FM Stereo Radio For North America, TH300 Type KOMTRAX For EU Noise Reguration, Provision For Radio Installation, TH300 Type KOMTRAX For EU Noise Reguration, With AM/FM Radio For Asia and EU, TH300 Type KOMTRAX Provision For Radio Installation, TH300 Type KOMTRAX With Rear View Monitoring System, With AM-FM Stereo Radio With Cassette, TH300 Type KOMTRAX With AM/FM Radio For Asia and EU, TH300 Type KOMTRAX			
1		14X-Y79-1541	Plate	1	80001-
2		01010-81020	Bolt	2	80001-
3		01643-31032	Washer	2	80001-
4		14X-Y79-1551	Plate	1	80001-
5		01010-81020	Bolt	2	80001-
6		01643-31032	Washer	2	80001-
7		14X-Y79-1561	Plate	1	80001-
8		01010-81020	Bolt	5	80001-
9		01643-31032	Washer	5	80001-

https://truckmanualshub.com/

FIG. K0210-002024 ROPS Cab, Air Conditioner Unit

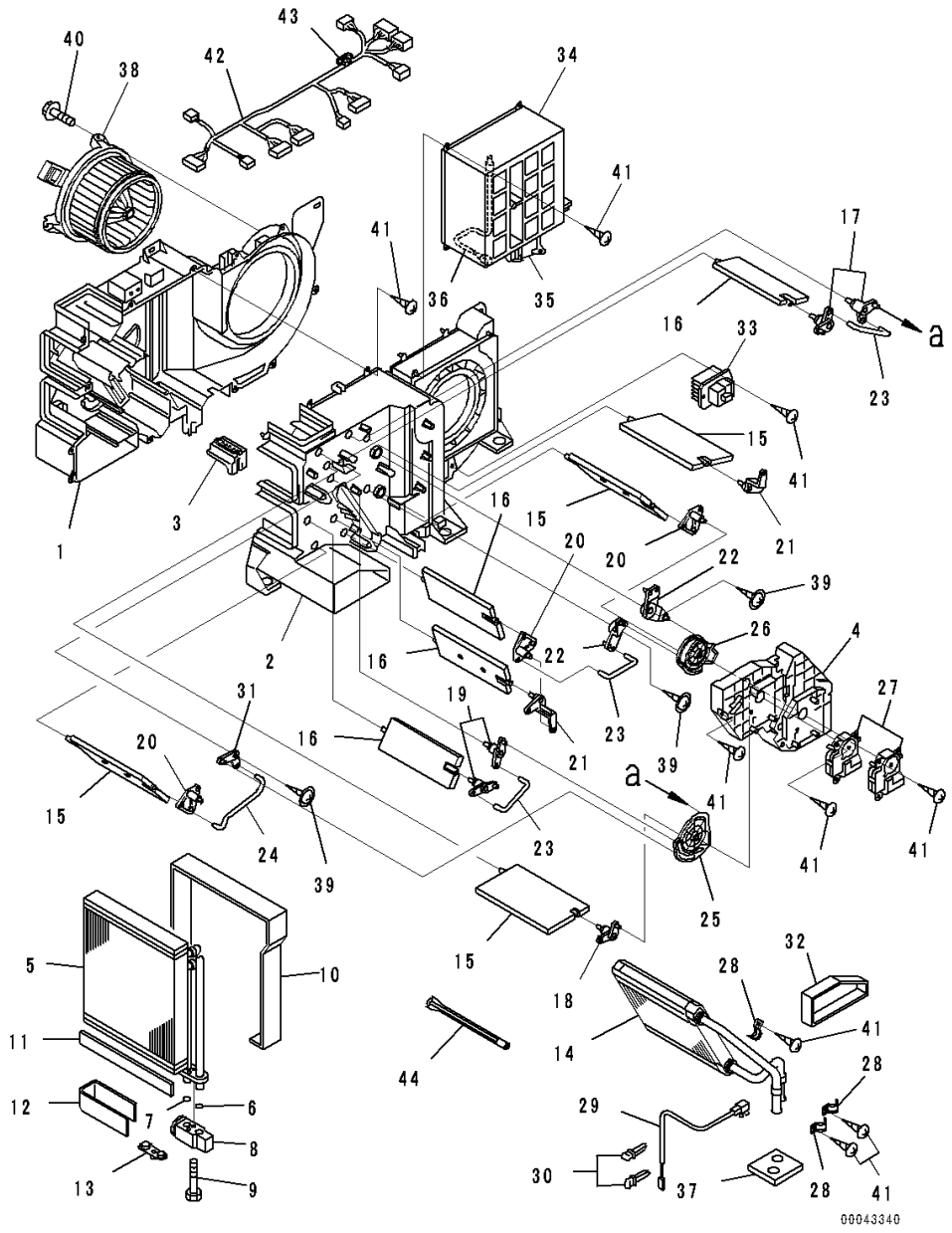

Index	Code	Part Number	Description	Qty	Serial Number
		Note: This list covers following specifications. With AM-FM Stereo Radio For North America, TH300 Type KOMTRAX For EU Noise Reguration, Provision For Radio Installation, TH300 Type KOMTRAX For EU Noise Reguration, With AM/FM Radio For Asia and EU, TH300 Type KOMTRAX Provision For Radio Installation, TH300 Type KOMTRAX With Rear View Monitoring System, With AM-FM Stereo Radio With Cassette, TH300 Type KOMTRAX With AM/FM Radio For Asia and EU, TH300 Type KOMTRAX			
		20Y-810-1211	Air Conditioner Assembly	1	80001-
1		ND245450-5831	• Case, Cooling	1	80001-
2		ND245450-5840	• Case, Cooling	1	80001-
3		ND116576-3810	• Plate	1	80001-
4		ND116576-3820	• Plate	1	80001-
		ND446010-3132	• Evaporator	1	80001-
5		ND446600-0991	• • Evaporator Assembly	1	80001-
6		ND949142-0020	• • O-ring	1	80001-
7		ND949142-0030	• • O-ring	1	80001-
8		ND447500-2750	• • Valve	1	80001-
9		ND949046-3100	• • Bolt	2	80001-
10		ND146657-8841	• • Packing	1	80001-
11		ND146657-9811	• • Packing	3	80001-
12		ND146657-8850	• • Packing	1	80001-
13		ND445021-3941	• • Plug	1	80001-
14		ND116140-0050	• Core Subassembly, Heater	1	80001-
15		ND116660-7570	• Door Assembly	4	80001-
16		ND116650-6850	• Door Assembly	4	80001-
17		ND116780-2481	• Lever Subassembly, Link	2	80001-
18		ND116780-2491	• Lever Subassembly, Link	1	80001-
19		ND116780-2501	• Lever Subassembly, Link	2	80001-
20		ND116780-2510	• Lever Subassembly, Link	3	80001-
21		ND116781-3000	• Lever	2	80001-
22		ND116780-3130	• Lever Subassembly, Link	2	80001-
23		ND116662-7670	• Shaft	3	80001-
24		ND116662-7681	• Shaft	1	80001-
25		ND116576-3852	• Plate	1	80001-
26		ND116576-3862	• Plate	1	80001-

https://truckmanualshub.com/

FIG. K0210-002024 ROPS Cab, Air Conditioner Unit

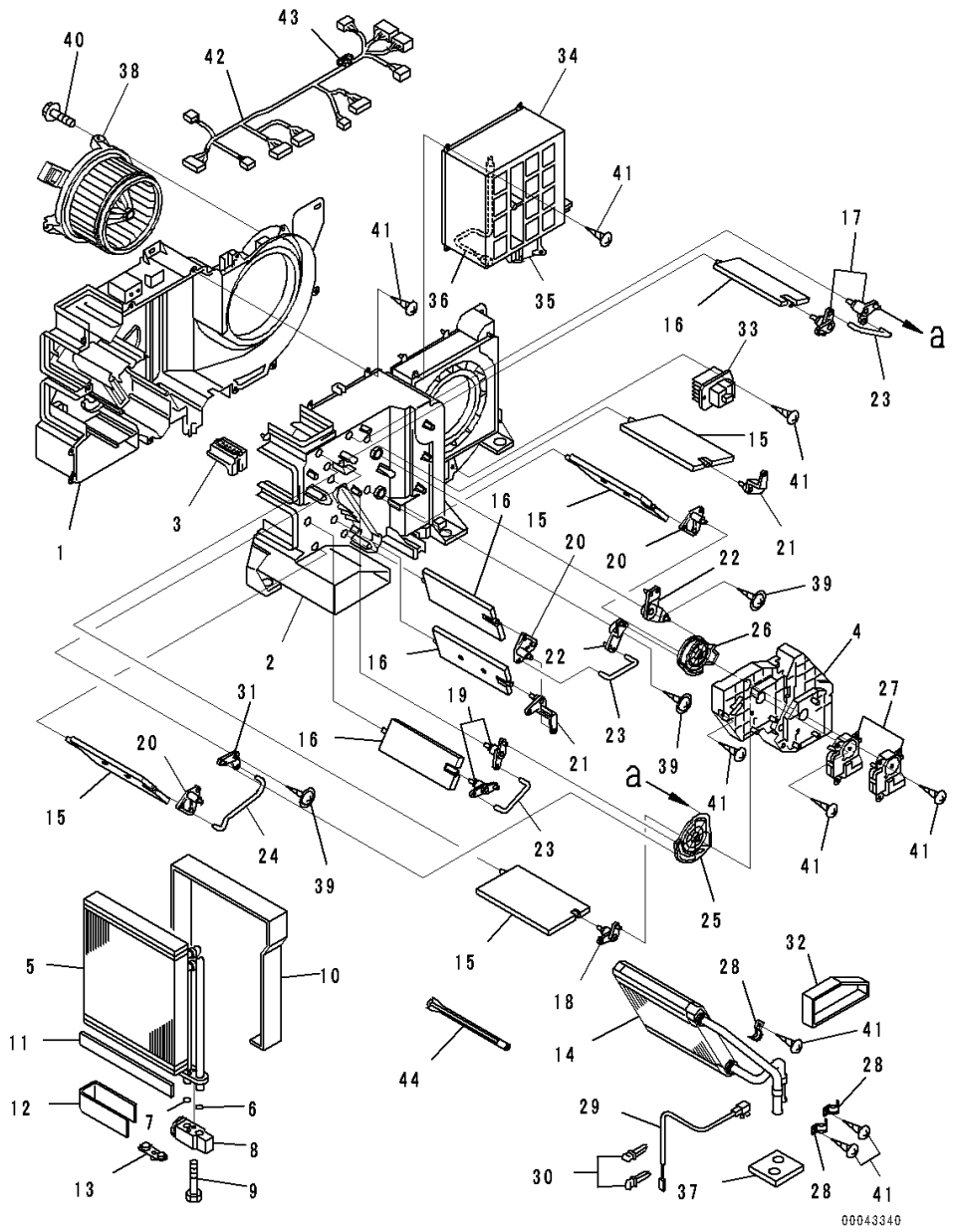

Index	Code	Part Number	Description	Qty	Serial Number
27		ND063800-0300	• Servo Motor Assembly	1	80001-
28		ND017231-0700	• Clamp	3	80001-
29		ND077500-5890	• Thermistor Assembly	1	80001-
30		ND246790-2060	• Clamp	2	80001-
31		ND116780-3920	• Lever Subassembly, Link	1	80001-
32		ND146667-0440	• Packing	1	80001-
33		ND077800-0750	• Transistor	1	80001-
34		ND146340-0560	• Box Assembly	1	80001-
35		ND063600-4580	• • Servo Motor Assembly	1	80001-
36		ND077500-5650	• • Thermistor Assembly	1	80001-
37		ND146657-8860	• Packing	1	80001-
38		ND116340-7350	• Motor Assembly, Fan	1	80001-
39		ND949008-0460	• Screw, Tapping	3	80001-
40		ND949008-0330	• Screw, Tapping	3	80001-
41		ND949001-1730	• Screw, Tapping	32	80001-
42		ND246470-4311	• Wiring Harness Assembly	1	80001-
43		ND93950-05003	• • Fuse	1	80001-
44		ND116662-8320	• Shaft	1	80001-

https://truckmanualshub.com/

FIG. K0210-002025 ROPS Cab, Air Conditioner Unit Mounting

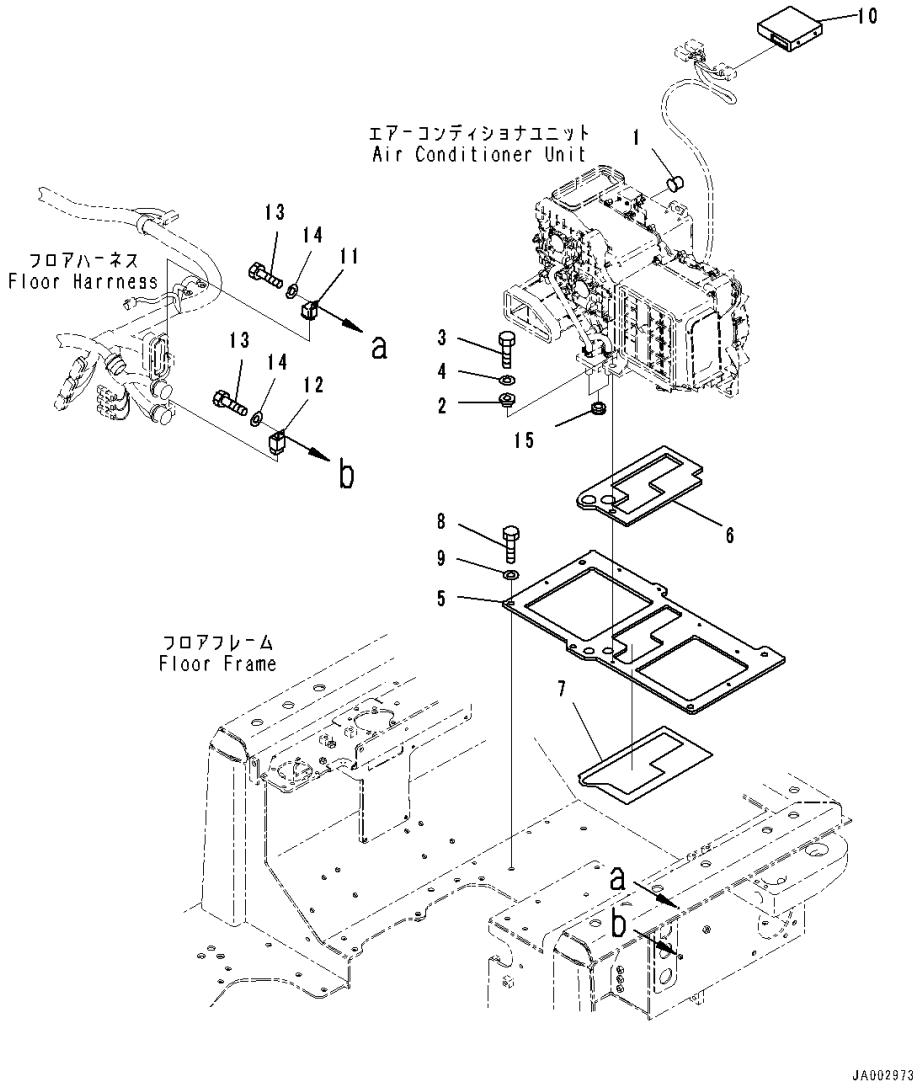

Index	Code	Part Number	Description	Qty	Serial Number
		Note: This list covers following specifications. With AM-FM Stereo Radio For North America, TH300 Type KOMTRAX For EU Noise Reguration, Provision For Radio Installation, TH300 Type KOMTRAX For EU Noise Reguration, With AM/FM Radio For Asia and EU, TH300 Type KOMTRAX Provision For Radio Installation, TH300 Type KOMTRAX With Rear View Monitoring System, With AM-FM Stereo Radio With Cassette, TH300 Type KOMTRAX With AM/FM Radio For Asia and EU, TH300 Type KOMTRAX			
1		17A-979-3131	Cap	1	80001-
2		208-979-7540	Collar	7	80001-
3		01010-D0825	Bolt	7	80001-
4		01643-70823	Washer	7	80001-
5		14X-Y11-2181	Plate	1	80001-
6		14X-Y11-2211	• Sheet,Bonded	1	80001-
7		17A-979-2330	• Sheet,Bonded	1	80001-
8		01010-81230	Bolt	4	80001-
9		01643-31232	Washer	4	80001-
10		17A-979-3180	Controller	1	80001-
11		20Y-979-6771	Relay	1	80001-
12		421-07-31270	Relay	1	80001-
13		01010-80616	Bolt	2	80001-
14		01643-30623	Washer	2	80001-
15		112-06-12150	Grommet	2	80001-

https://truckmanualshub.com/

FIG. K0210-002026 ROPS Cab, Air Conditioner Duct (1/3)

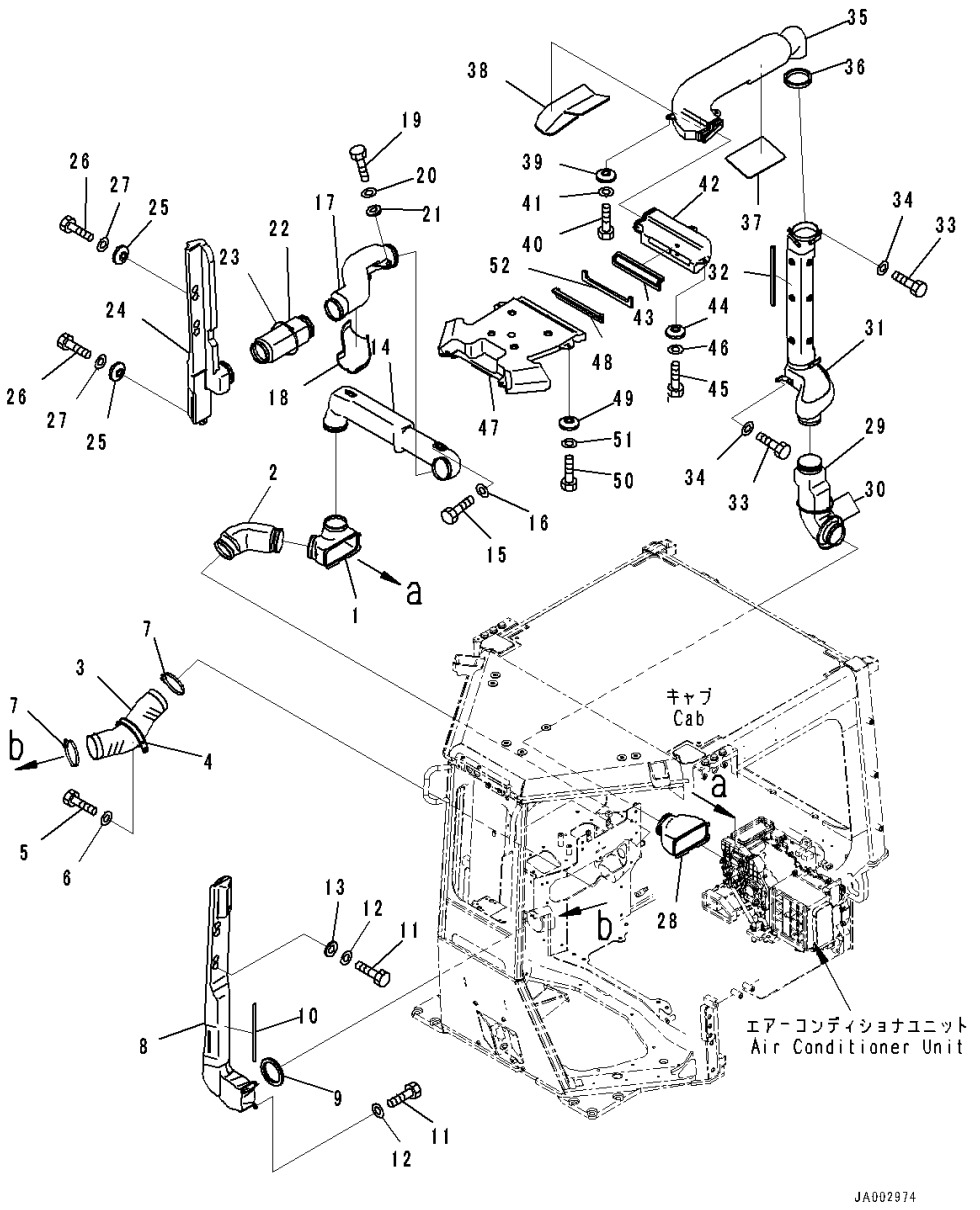

Index	Code	Part Number	Description	Qty	Serial Number
		Note: This list covers following specifications. With AM-FM Stereo Radio For North America, TH300 Type KOMTRAX For EU Noise Reguration, Provision For Radio Installation, TH300 Type KOMTRAX For EU Noise Reguration, With AM/FM Radio For Asia and EU, TH300 Type KOMTRAX Provision For Radio Installation, TH300 Type KOMTRAX With Rear View Monitoring System, With AM-FM Stereo Radio With Cassette, TH300 Type KOMTRAX With AM/FM Radio For Asia and EU, TH300 Type KOMTRAX			
1		14X-Y11-1110	Duct	1	80001-
2		20Y-53-13361	Duct	1	80001-
3		14X-Y11-1241	Hose	1	80001-
4		198-911-7750	Clip	1	80001-
5		01010-81020	Bolt	1	80001-
6		01643-31032	Washer	1	80001-
7		14X-911-7670	Clamp	2	80001-
8		14X-Y11-1151	Duct	1	80001-
9		14X-Y11-1250	• Seal,Bonded	1	80001-
10		14X-Y11-1930	• Seal,Bonded	1	80001-
11		01010-80616	Bolt	5	80001-
12		01643-30623	Washer	5	80001-
13		20Y-53-12310	Collar	2	80001-
14		14X-Y11-1121	Duct	1	80001-
15		01010-80616	Bolt	2	80001-
16		01643-30623	Washer	2	80001-
17		14X-Y11-1131	Duct	1	80001-
18		14X-Y11-2260	• Sheet,Bonded	1	80001-
19		01010-80616	Bolt	3	80001-
20		01643-30623	Washer	3	80001-
21		20Y-53-12310	Collar	1	80001-
22		20Y-53-13361	Duct	1	80001-
23		08034-20876	Band	1	80001-
24		14X-Y11-1141	Duct	1	80001-
25		20Y-53-12310	Collar	2	80001-
26		01010-80616	Bolt	3	80001-
27		01643-30623	Washer	3	80001-
28		14X-Y11-1160	Duct	1	80001-

https://truckmanualshub.com/

FIG. K0210-002026 ROPS Cab, Air Conditioner Duct (1/3)

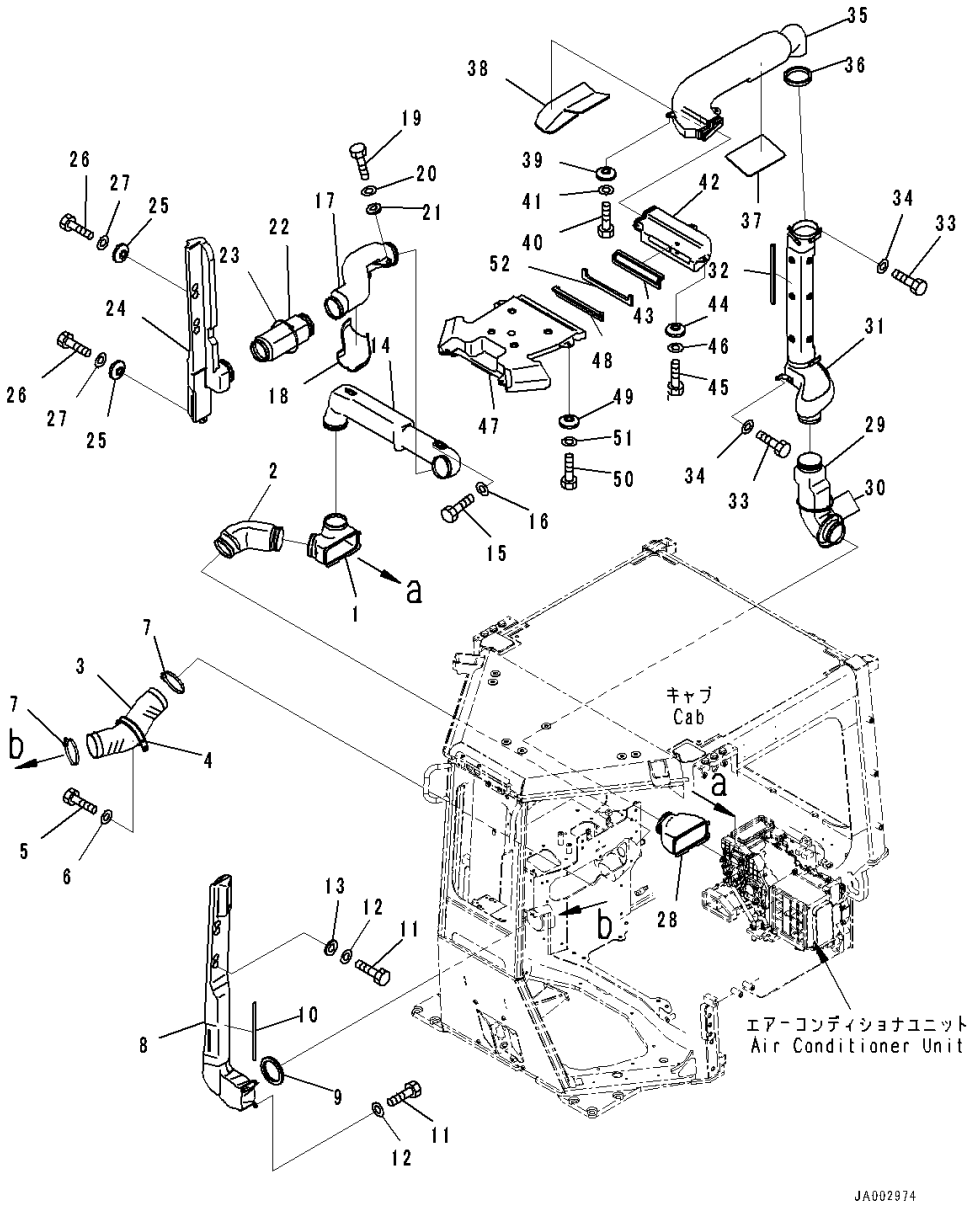

Index	Code	Part Number	Description	Qty	Serial Number
29		208-53-12220	Duct	1	80001-
30		08034-20876	Band	2	80001-
31		14X-Y11-1171	Duct	1	80001-
32		14X-Y11-1940	• Seal,Bonded	1	80001-
33		01010-80616	Bolt	4	80001-
34		01643-30623	Washer	4	80001-
35		14X-Y11-1181	Duct	1	80001-
36		14X-Y11-1280	• Seal,Bonded	1	80001-
37		14X-Y79-2230	• Sheet,Bonded	1	80001-
38		14X-Y79-2241	• Sheet,Bonded	1	80001-
39		20Y-53-12310	Collar	3	80001-
40		01010-80616	Bolt	3	80001-
41		01643-30623	Washer	3	80001-
42		14X-Y11-1191	Duct	1	80001-
43		14X-Y11-1260	• Seal,Bonded	1	80001-
44		20Y-53-12310	Collar	3	80001-
45		01010-80616	Bolt	3	80001-
46		01643-30623	Washer	3	80001-
47		14X-Y11-1211	Duct	1	80001-
48		14X-Y11-1260	• Seal,Bonded	1	80001-
49		20Y-53-12310	Collar	4	80001-
50		01010-80616	Bolt	4	80001-
51		01643-30623	Washer	4	80001-
52		14X-Y79-2310	Sheet,Bonded	1	80001-

https://truckmanualshub.com/

FIG. K0210-002027 ROPS Cab, Air Conditioner Piping

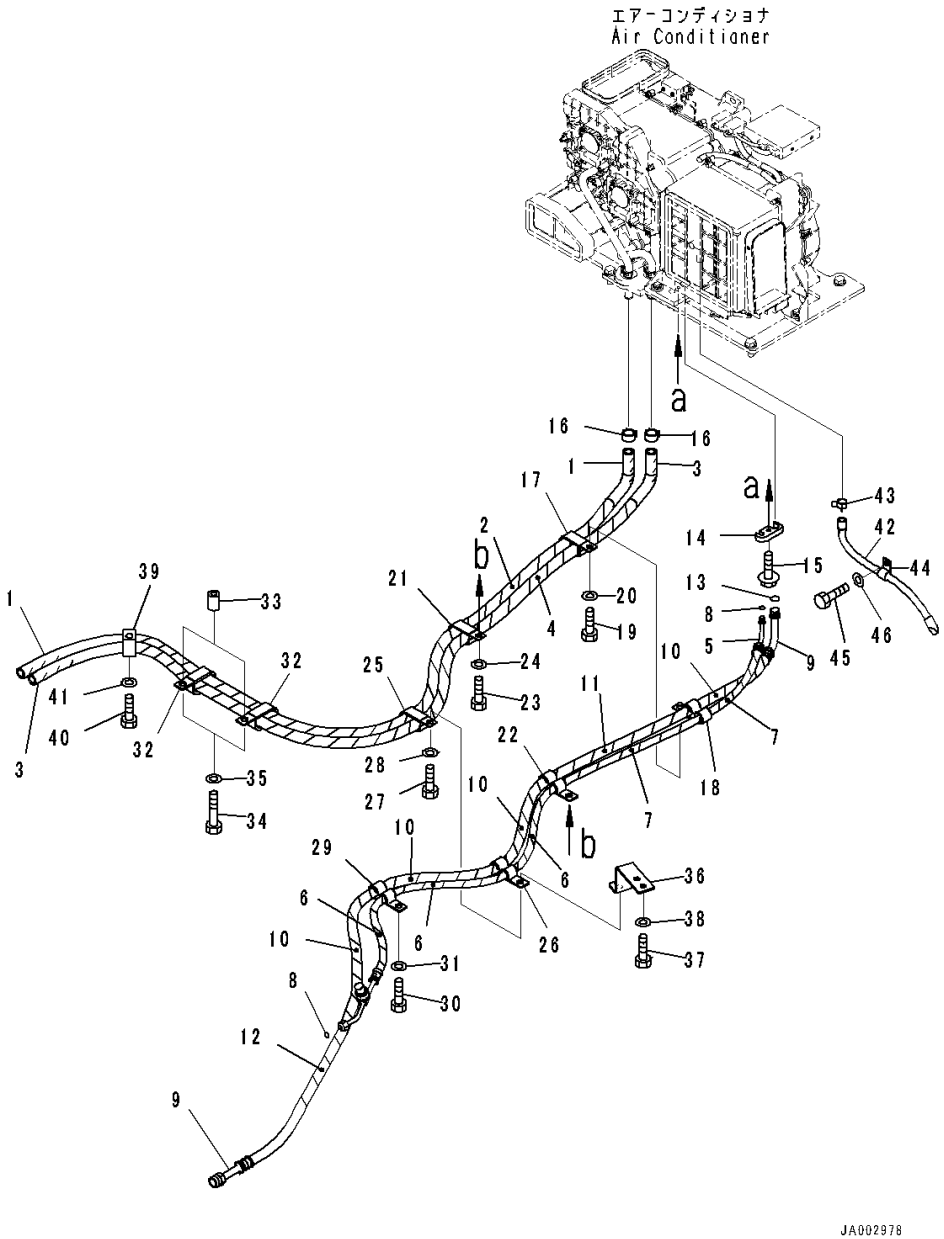

Index	Code	Part Number	Description	Qty	Serial Number
		Note: This list covers following specifications. With AM-FM Stereo Radio For North America, TH300 Type KOMTRAX For EU Noise Reguration, Provision For Radio Installation, TH300 Type KOMTRAX For EU Noise Reguration, With AM/FM Radio For Asia and EU, TH300 Type KOMTRAX Provision For Radio Installation, TH300 Type KOMTRAX With Rear View Monitoring System, With AM-FM Stereo Radio With Cassette, TH300 Type KOMTRAX With AM/FM Radio For Asia and EU, TH300 Type KOMTRAX			
1		14X-Y11-1871	Hose	1	80001-
2		08017-C2518	• Conduit	1	80001-
3		14X-Y11-1881	Hose	1	80001-
4		08017-C2519	• Conduit	1	80001-
5		14X-Y11-1891	Hose Assembly	1	80001-
6		08017-C1502	• Conduit	3	80001-
7		08017-C1503	• Conduit	2	80001-
		418-07-21210	• Switch, Pressure	1	80001-
		ND949142-0040	• • O-ring	1	80001-
8		20Y-979-3150	• O-ring	2	80001-
9		14X-Y11-1911	Hose Assembly	1	80001-
10		08017-C2202	• Conduit	4	80001-
11		08017-C2203	• Conduit	1	80001-
12		08017-C2204	• Conduit	1	80001-
13		20Y-979-3130	• O-ring	1	80001-
14		208-979-7650	Connector	1	80001-
15		01435-00620	Bolt	1	80001-
16		09479-02400	Clamp	2	80001-
17		582-35-11170	Clip	1	80001-
18		195-Z11-7250	Clip	1	80001-
19		01010-81025	Bolt	1	80001-
20		01643-31032	Washer	1	80001-
21		582-35-11170	Clip	1	80001-
22		17A-911-4421	Clip	1	80001-
23		01010-81025	Bolt	1	80001-
24		01643-31032	Washer	1	80001-
25		582-35-11170	Clip	1	80001-
26		17A-911-4421	Clip	1	80001-

https://truckmanualshub.com/

FIG. K0210-002027 ROPS Cab, Air Conditioner Piping

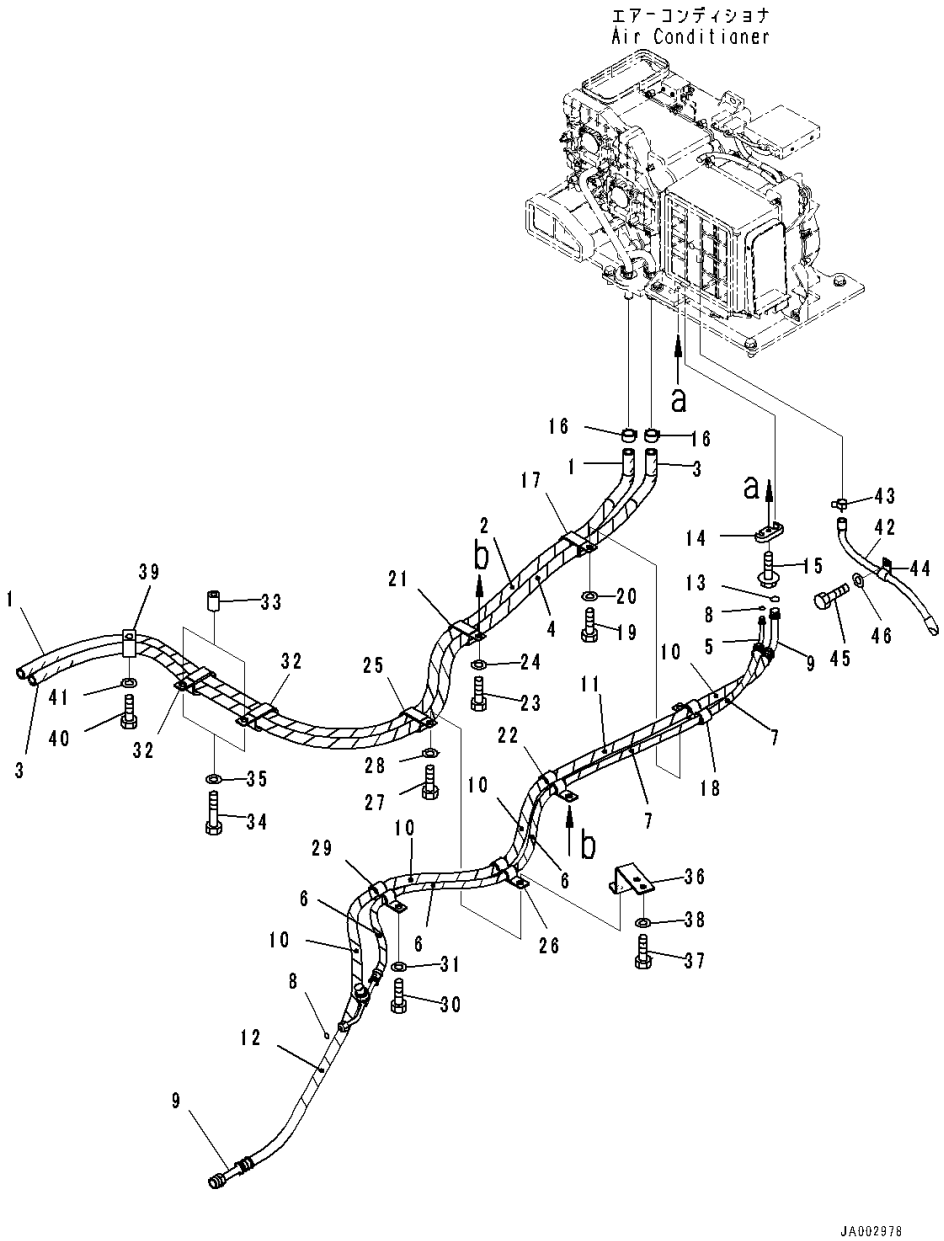

Index	Code	Part Number	Description	Qty	Serial Number
27		01010-81025	Bolt	1	80001-
28		01643-31032	Washer	1	80001-
29		195-Z11-7250	Clip	1	80007-
30		01010-81025	Bolt	1	80001-
31		01643-31032	Washer	1	80001-
32		22M-977-1140	Clip	2	80001-
33		20Y-03-11220	Collar	2	80001-
34		01010-81060	Bolt	2	80001-
35		01643-31032	Washer	2	80001-
36		14X-Y11-1790	Bracket	1	80001-
37		01010-81025	Bolt	2	80001-
38		01643-31032	Washer	2	80001-
39		22M-977-1140	Clip	1	80001-
40		01010-81025	Bolt	1	80001-
41		01643-31032	Washer	1	80001-
42		20Y-979-6281	Hose	1	80001-
43		07285-00155	Clip	1	80001-
44		04434-51410	Clip	1	80001-
45		01010-D0825	Bolt	1	80001-
46		01643-70823	Washer	1	80001-

https://truckmanualshub.com/

FIG. K0210-002028 ROPS Cab, Air Conditioner Duct (2/3)

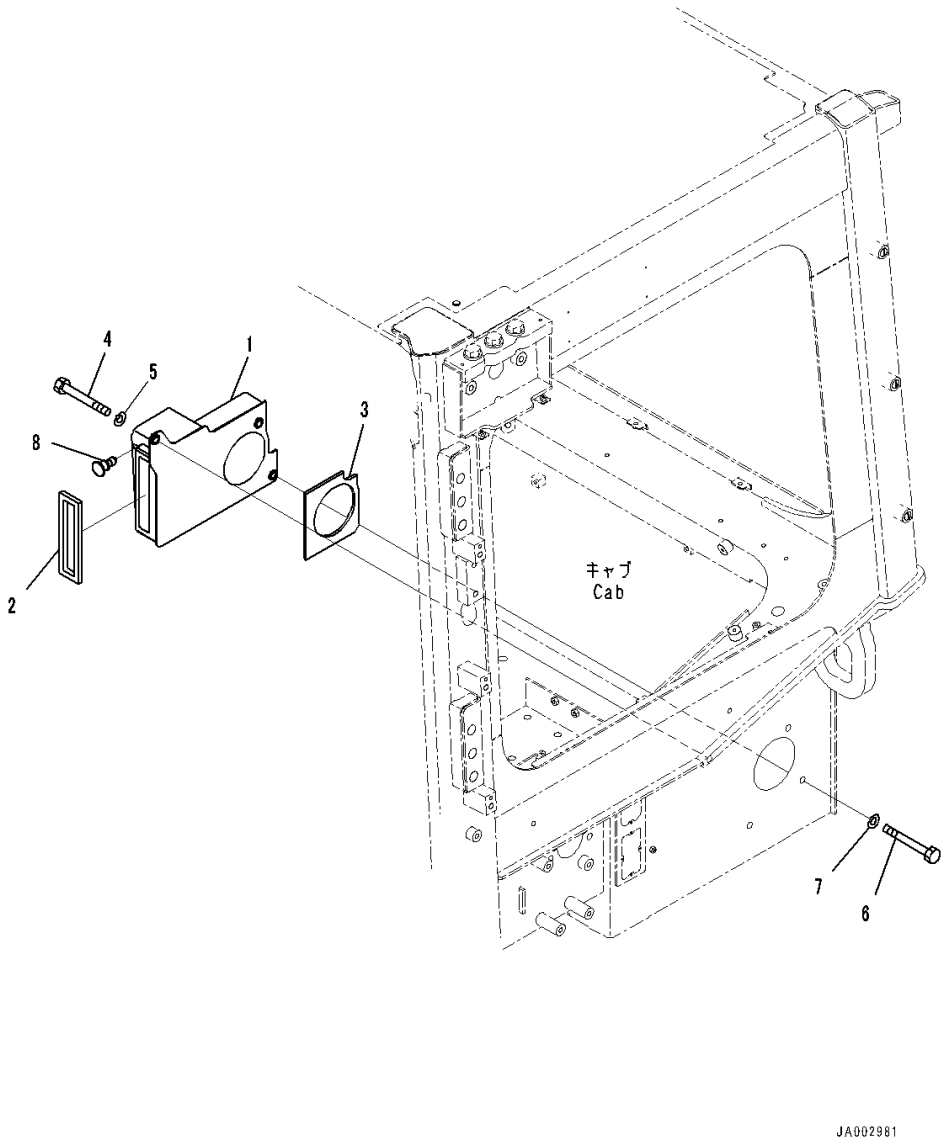

Index	Code	Part Number	Description	Qty	Serial Number
		Note: This list covers following specifications. With AM-FM Stereo Radio For North America, TH300 Type KOMTRAX For EU Noise Reguration, Provision For Radio Installation, TH300 Type KOMTRAX For EU Noise Reguration, With AM/FM Radio For Asia and EU, TH300 Type KOMTRAX Provision For Radio Installation, TH300 Type KOMTRAX With Rear View Monitoring System, With AM-FM Stereo Radio With Cassette, TH300 Type KOMTRAX With AM/FM Radio For Asia and EU, TH300 Type KOMTRAX			
1		14X-Y11-1222	Duct	1	80001-
2		14X-Y11-1471	• Seal,Bonded	1	80001-
3		14X-Y11-1490	• Sheet,Bonded	1	80001-
4		01010-81020	Bolt	1	80001-
5		01643-31032	Washer	1	80001-
6		01010-81030	Bolt	1	80001-
7		01643-31032	Washer	1	80001-
8		208-53-12680	Clip	1	80001-

https://truckmanualshub.com/

FIG. K0210-002029 ROPS Cab, Air Conditioner Duct (3/3)

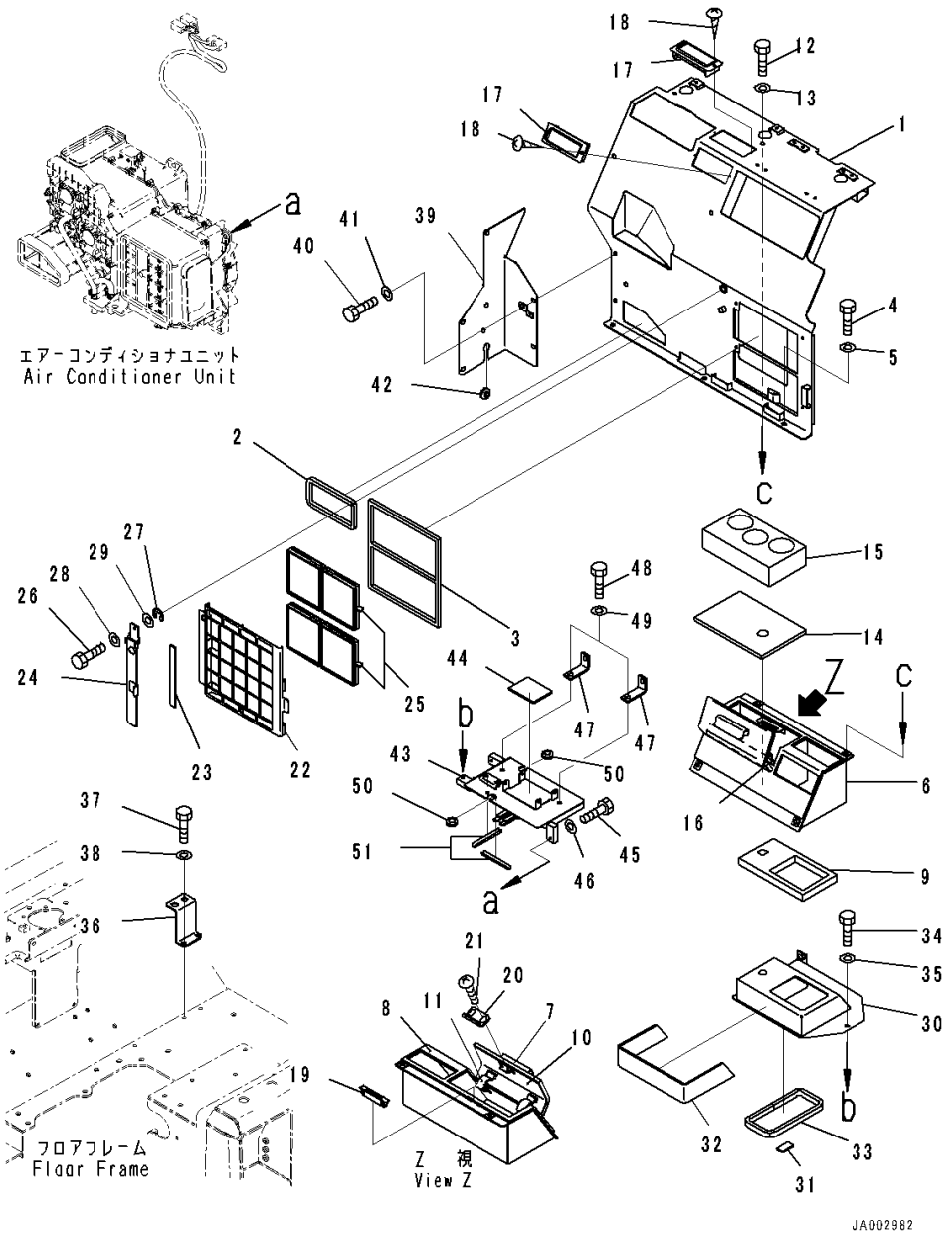

Index	Code	Part Number	Description	Qty	Serial Number
		Note: This list covers following specifications.			
		With AM-FM Stereo Radio For North America, TH300 Type KOMTRAX			
		For EU Noise Reguration, Provision For Radio Installation, TH300 Type KOMTRAX			
		For EU Noise Reguration, With AM/FM Radio For Asia and EU, TH300 Type KOMTRAX			
		Provision For Radio Installation, TH300 Type KOMTRAX			
		With Rear View Monitoring System, With AM-FM Stereo Radio For North America, TH300 Type KOMTRAX			
		With Rear View Monitoring System, Provision For Radio Installation, TH300 Type KOMTRAX			
		EU Regulation Guard Level 2, With Rear View Monitoring System, With AM-FM Stereo Radio With Cassette For Europe And Asia, TH300 Type KOMTRAX			
		EU Regulation Guard Level 2, With Rear View Monitoring System, Provision For Radio Installation, TH300 Type KOMTRAX			
1		14X-Y11-1442	Cover	1	80065-
2		17A-979-2251	• Seal,Bonded	1	80001-
3		17A-979-2430	• Seal,Bonded	1	80001-
4		01010-D0825	Bolt	6	80001-
5		01643-70823	Washer	6	80001-
6		14X-Y11-1511	Duct	1	80001-
7		14X-Y11-1521	• Plate	1	80001-
8		14X-Y11-1531	• Sheet,Bonded	1	80001-
9		14X-Y11-1540	• Sheet,Bonded	1	80001-
10		14X-Y11-1590	• Sheet,Bonded	1	80001-
11		17A-979-2390	• Hinge,Welded	2	80001-
12		01010-D0825	Bolt	4	80001-
13		01643-70823	Washer	4	80001-
14		14X-Y11-1561	Cushion	1	80001-
15		14X-Y11-1550	Cushion	1	80001-
16		14X-Y11-1611	Plate,Bonded	1	80001-
17		17A-Z11-7161	Louver	2	80001-
18		01370-10310	Screw	4	80001-
19		20Y-979-6630	Catcher	1	80001-
20		17A-54-46961	Plate	1	80001-
21		01023-10508	Screw	2	80001-
22		17A-979-2422	Cover	1	80001-

https://truckmanualshub.com/

FIG. K0210-002029 ROPS Cab, Air Conditioner Duct (3/3)

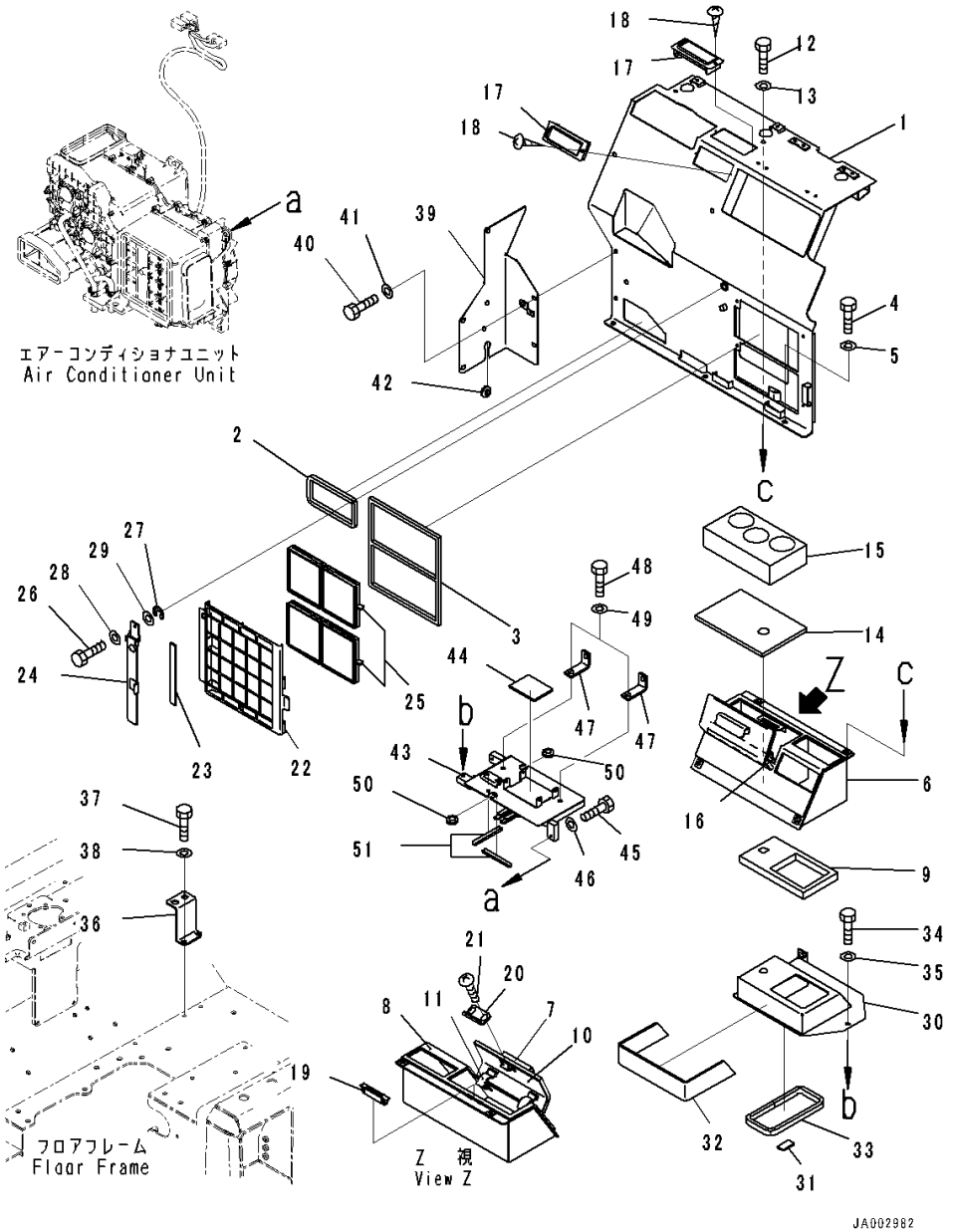

Index	Code	Part Number	Description	Qty	Serial Number
23		17A-43-42340	• Seal,Bonded	1	80001-
24		14X-54-56151	Bracket	1	80001-
25		20Y-979-6261	Filter	2	80001-
26		01232-10616	Screw, Knurled Head	1	80001-
27		195-54-78790	Ring, Snap	1	80001-
28		01643-70623	Washer	1	80001-
29		01640-20610	Washer	1	80001-
30		14X-Y11-1451	Duct	1	80001-
31		14X-Y11-1620	• Seal,Bonded	1	80001-
32		14X-Y11-2250	• Sheet,Bonded	1	80001-
33		17A-979-2141	• Seal,Bonded	1	80001-
34		01010-D0825	Bolt	2	80001-
35		01643-70823	Washer	2	80001-
36		14X-Y11-1291	Bracket	1	80001-
37		01010-D0825	Bolt	2	80001-
38		01643-70823	Washer	2	80001-
39		14X-54-56431	Cover	1	80001-
40		01010-80825	Bolt	5	80001-
41		01643-30823	Washer	5	80001-
42		09415-01610	Cap	1	80001-
43		14X-Y11-1461	Bracket	1	80001-
44		17A-979-2360	• Seal,Bonded	1	80001-
45		01010-D0825	Bolt	2	80001-
46		01643-70823	Washer	2	80001-
47		14X-Y11-1570	Bracket	2	80001-
48		01010-D0825	Bolt	4	80001-
49		01643-70823	Washer	4	80001-
50		08037-01610	Grommet	2	80001-
51		14X-Y11-1990	Trim	2	80001-

https://truckmanualshub.com/

FIG. K0210-002030 ROPS Cab, Console Box

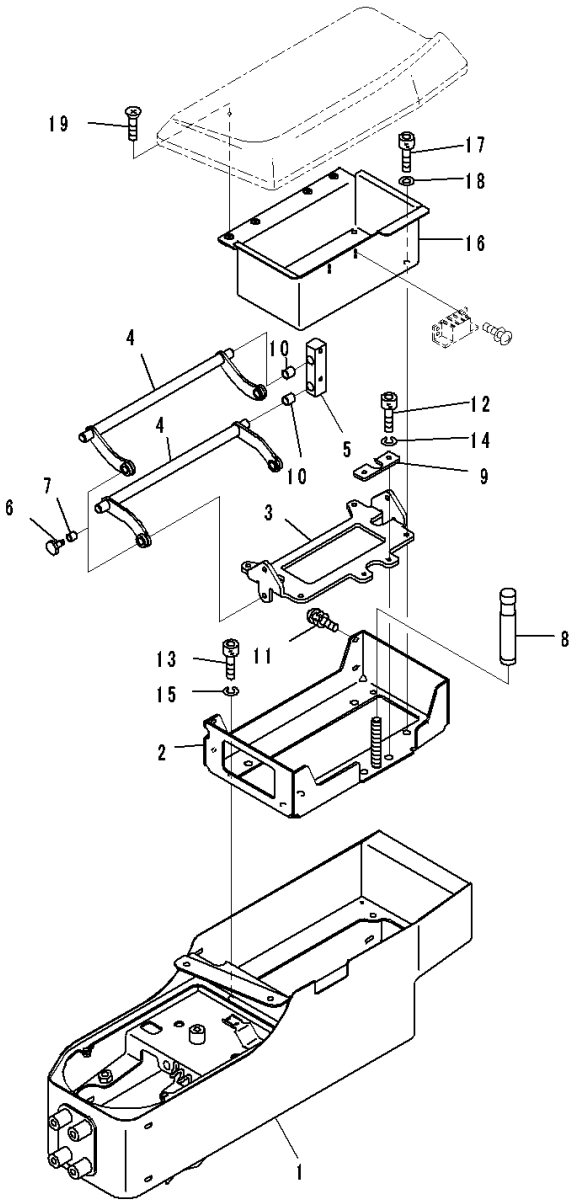

Index	Code	Part Number	Description	Qty	Serial Number
		Note: This list covers following specifications. With AM-FM Stereo Radio For North America, TH300 Type KOMTRAX For EU Noise Reguration, Provision For Radio Installation, TH300 Type KOMTRAX For EU Noise Reguration, With AM/FM Radio For Asia and EU, TH300 Type KOMTRAX Provision For Radio Installation, TH300 Type KOMTRAX With Rear View Monitoring System, With AM-FM Stereo Radio With Cassette, TH300 Type KOMTRAX With AM/FM Radio For Asia and EU, TH300 Type KOMTRAX			
1		14X-43-51211	Box, Console	1	80001-
		14X-43-51501	Bracket Assembly	1	80001-
2	C1		• Bracket	1	80001-
3		19M-43-33720	• Bracket	1	80001-
4		19M-43-33730	• Arm	2	80001-
5		19M-43-33740	• Block	2	80001-
6		19M-43-33750	• Pin	4	80001-
7		19M-43-33760	• Bushing	4	80001-
8		19M-43-33770	• Knob	1	80001-
9		19M-43-33780	• Plate	1	80001-
10		19M-43-34330	• Bushing	4	80001-
11		01023-60516	• Screw	4	80001-
12		01252-80410	• Bolt, Hexagon Socket Head	2	80001-
13		01252-80510	• Bolt	4	80001-
14		01601-20410	• Washer	2	80001-
15		01601-20512	• Washer	4	80001-
16		14X-43-51691	Bracket	1	80001-
17		01252-80510	Bolt	4	80001-
18		01601-50513	Washer, Spring	4	80001-
19		01224-70408	Screw, Philips Head	4	80001-

https://truckmanualshub.com/

FIG. K0210-002031 ROPS Cab, Travel Control Lever (1/2)

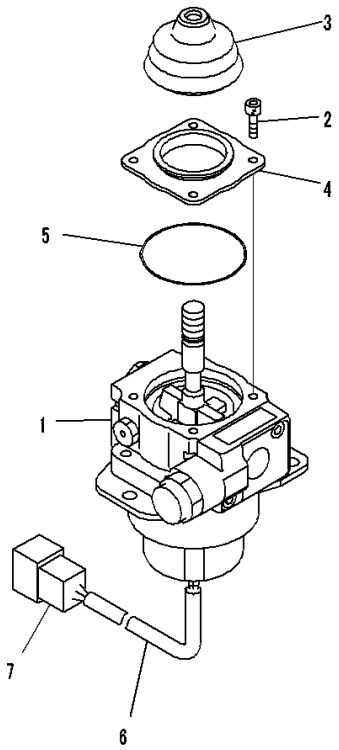

JY013289

Index	Code	Part Number	Description	Qty	Serial Number
		Note: This list covers following specifications. With AM-FM Stereo Radio For North America, TH300 Type KOMTRAX For EU Noise Reguration, Provision For Radio Installation, TH300 Type KOMTRAX For EU Noise Reguration, With AM/FM Radio For Asia and EU, TH300 Type KOMTRAX Provision For Radio Installation, TH300 Type KOMTRAX With Rear View Monitoring System, With AM-FM Stereo Radio With Cassette, TH300 Type KOMTRAX With AM/FM Radio For Asia and EU, TH300 Type KOMTRAX			
1		702-16-02290	Lever Assembly	1	80001-
2		01252-60512	• Bolt	4	80001-
3		702-16-59330	• Boot	1	80001-
4		702-16-62730	• Cover	1	80001-
5		702-16-62740	• O-ring	1	80001-
6		702-16-61270	• Tube	1	80001-
7		08192-28812	• Connector	1	80001-

https://truckmanualshub.com/

FIG. K0210-002032 ROPS Cab, Travel Control Lever (2/2)

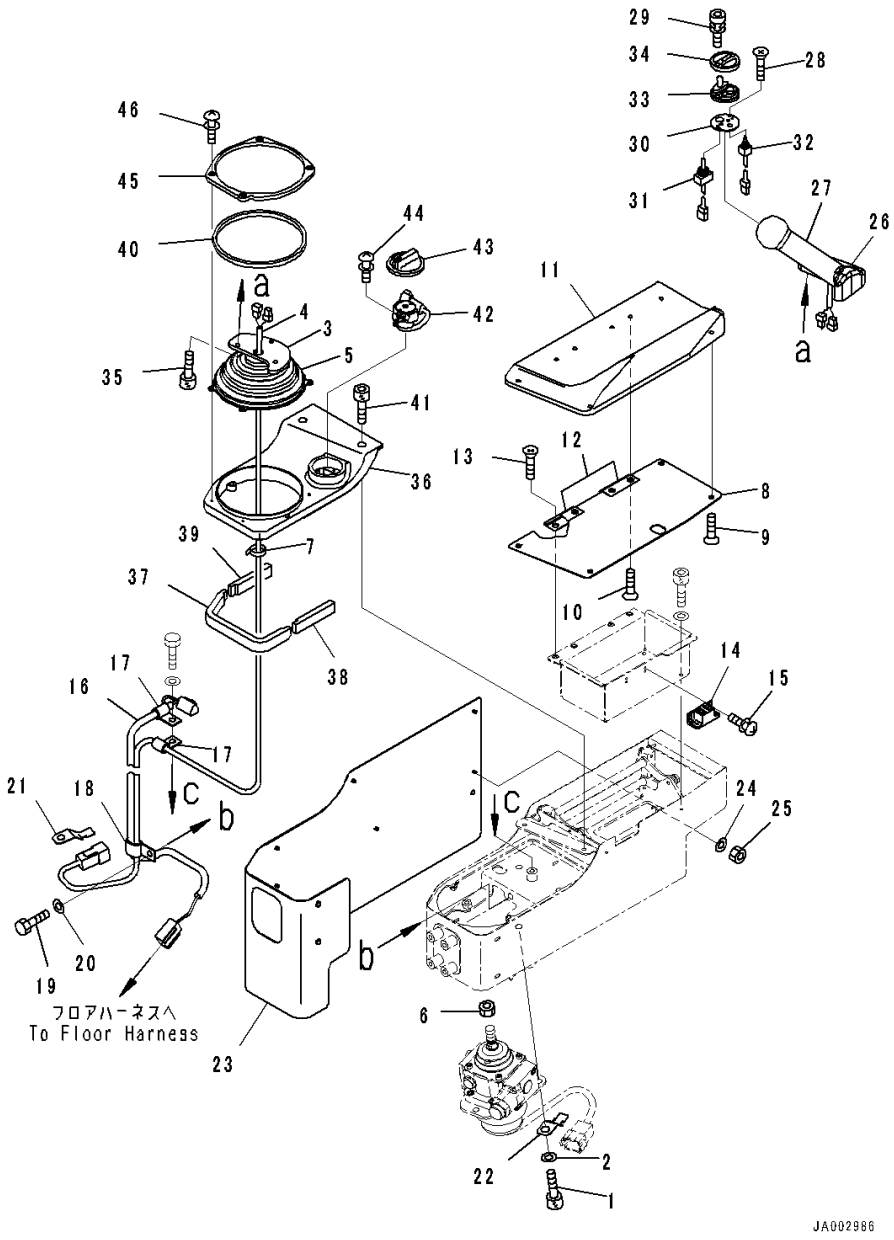

Index	Code	Part Number	Description	Qty	Serial Number
		Note: This list covers following specifications.			
		With AM-FM Stereo Radio For North America, TH300 Type KOMTRAX			
		For EU Noise Reguration, Provision For Radio Installation, TH300 Type KOMTRAX			
		For EU Noise Reguration, With AM/FM Radio For Asia and EU, TH300 Type KOMTRAX			
		Provision For Radio Installation, TH300 Type KOMTRAX			
		With Rear View Monitoring System, With AM-FM Stereo Radio With Cassette, TH300 Type KOMTRAX			
		With AM/FM Radio For Asia and EU, TH300 Type KOMTRAX			
1		01252-70825	Bolt	3	80001-
2		01643-30823	Washer	3	80001-
		14X-06-31311	Wiring Harness	1	80001-
3		154-43-73531	• Bracket	1	80001-
4		154-43-73560	• Wiring Harness	1	80001-
5		14X-43-34331	• Boot	1	80001-
6		20T-43-71190	Nut	1	80001-
7		08034-20519	Band	2	80001-
8		14X-43-52110	Pad	1	80001-
9		01224-70408	• Screw, Philips Head	4	80001-
10		01224-70410	• Screw, Philips Head	4	80001-
11		19M-43-33630	• Pad	1	80001-
		19M-43-33630	• • Pad	1	80001-
		19M-43-33630	• • Pad	1	80001-
		19M-43-33630	• • Pad	1	80001-
		19M-43-33630	• • Pad	10	80001-
12		19M-43-33660	• Hinge	2	80001-
13		01224-70408	Screw, Philips Head	4	80001-
14		154-43-73651	Magnet	1	80001-
15		01023-10308	Screw	4	80001-
16		14X-06-51151	Wiring Harness	1	80001-
17		04434-51008	Clip	2	80001-
18		04435-51008	Clip	1	80001-
19		01010-80816	Bolt	2	80001-
20		01643-30823	Washer	2	80001-
21		08193-20010	Clip	1	80001-
22		08193-31012	Clip	1	80001-
23		14X-43-51221	Pad	1	80001-

https://truckmanualshub.com/

FIG. K0210-002032 ROPS Cab, Travel Control Lever (2/2)

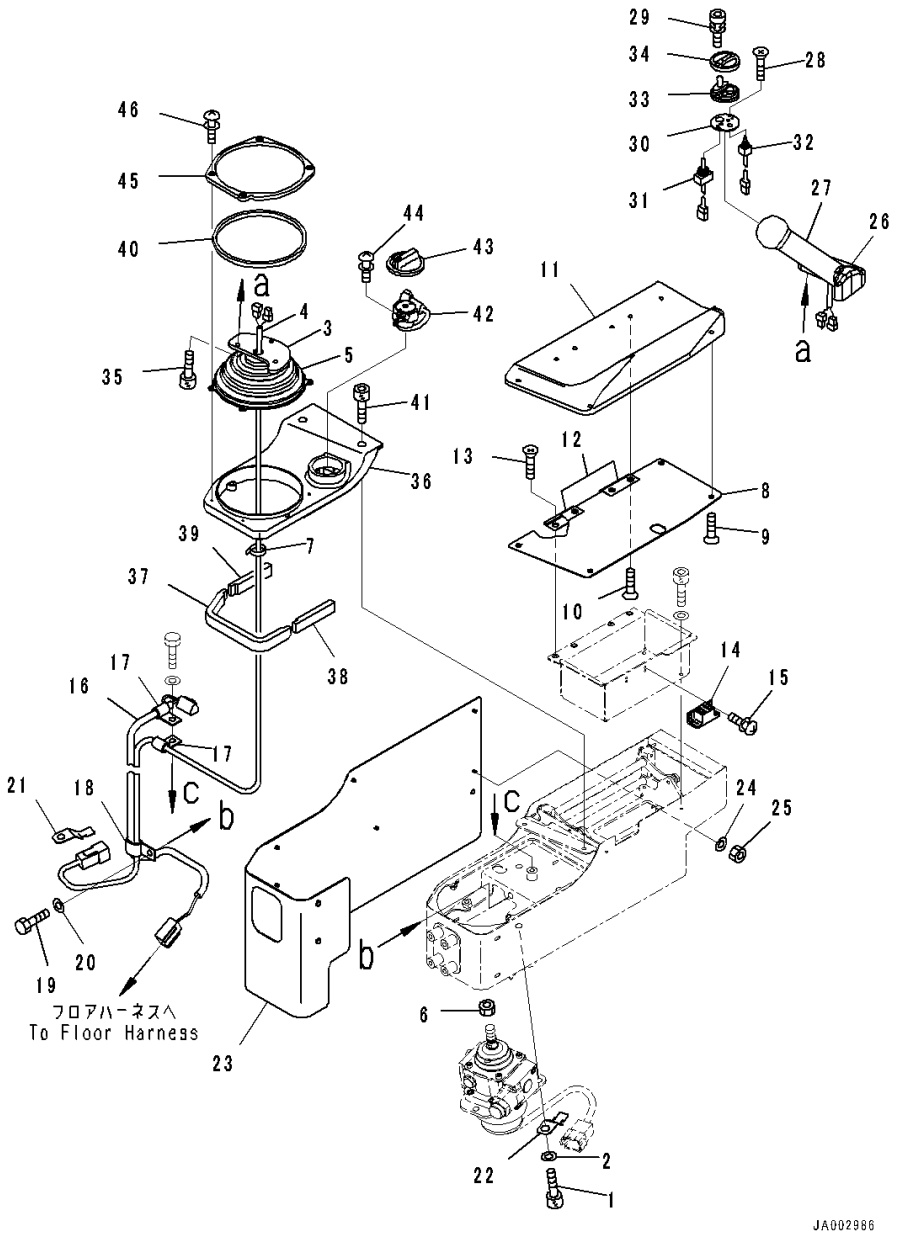

Index	Code	Part Number	Description	Qty	Serial Number
24		01640-20408	Washer, Flat	8	80001-
25		01580-20403	Nut	8	80001-
		19M-43-33110	Knob Assembly	1	80001-
26	C1		• Knob Assembly	1	80001-
27	C1		• Knob Assembly	1	80001-
28	C1		• Knob Assembly	2	80001-
29		19M-09-11510	• Bolt	2	80001-
		19M-43-33140	• Switch Assembly	1	80001-
30		19M-43-33170	• • Plate	1	80001-
31		19M-43-33460	• • Switch	1	80001-
32		19M-43-33470	• • Switch	1	80001-
33		19M-43-33150	• Rubber	1	80001-
34		19M-43-33160	• Cover	1	80001-
35		01252-80514	Bolt	3	80001-
36		14X-43-51960	Finisher Assembly	1	80001-
37		14X-54-38310	• Sheet,Bonded	1	80001-
38		14X-54-38320	• Sheet,Bonded	1	80001-
39		14X-54-38330	• Sheet,Bonded	1	80001-
40		14X-54-38350	• Sheet,Bonded	1	80001-
41		01252-70520	Bolt	4	80001-
42		14X-06-31501	Dial	1	80001-
43		7825-30-1441	• Knob	1	80001-
44		01023-60410	Screw	2	80001-
45		14X-43-51980	Cover	1	80001-
46		01023-70414	Screw	4	80001-

https://truckmanualshub.com/

FIG. K0210-002033 ROPS Cab, Console Slider

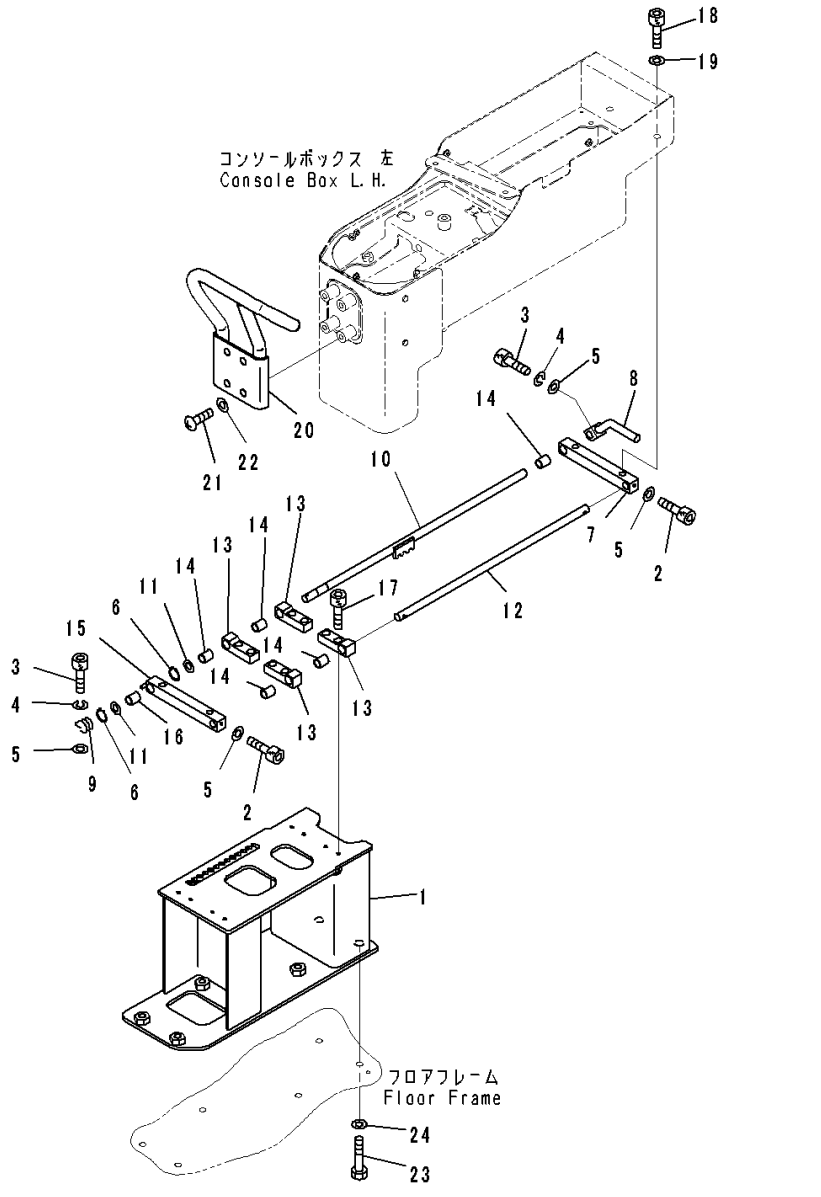

Index	Code	Part Number	Description	Qty	Serial Number
		Note: This list covers following specifications. With AM-FM Stereo Radio For North America, TH300 Type KOMTRAX For EU Noise Reguration, Provision For Radio Installation, TH300 Type KOMTRAX For EU Noise Reguration, With AM/FM Radio For Asia and EU, TH300 Type KOMTRAX Provision For Radio Installation, TH300 Type KOMTRAX With Rear View Monitoring System, With AM-FM Stereo Radio With Cassette, TH300 Type KOMTRAX With AM/FM Radio For Asia and EU, TH300 Type KOMTRAX			
1		14X-43-51252	Bracket	1	80001-
		14X-43-51402	Slider Assembly	1	80001-
2		01252-80412	• Bolt	2	80001-
3		01252-80414	• Bolt	2	80001-
4		01601-20411	• Washer	2	80001-
5		01640-20408	• Washer, Flat	4	80001-
6		04064-01010	• Ring, Snap	2	80001-
7		14X-43-51661	• Guide	1	80001-
8		14X-43-51681	• Lever	1	80001-
9		154-43-73670	• Spring	1	80001-
10		154-43-73680	• Shaft	1	80001-
11		19M-09-34110	• Washer	2	80001-
12		19M-43-34120	• Shaft	1	80001-
13		19M-43-34141	• Guide	4	80001-
14		19M-43-34150	• Bushing	5	80001-
15		19M-43-34182	• Guide	1	80001-
16		19M-43-34190	• Bushing	1	80001-
17		01252-80516	Bolt	8	80001-
18		01252-70816	Bolt	4	80001-
19		01643-30823	Washer	4	80001-
20		14X-54-36631	Handle	1	80001-
21		01245-00820	Screw	4	80001-
22		01643-70823	Washer	4	80001-
23		01010-81030	Bolt	6	80001-
24		01643-31032	Washer	6	80001-

https://truckmanualshub.com/

FIG. K0210-002034 ROPS Cab, Parking Brake Lever

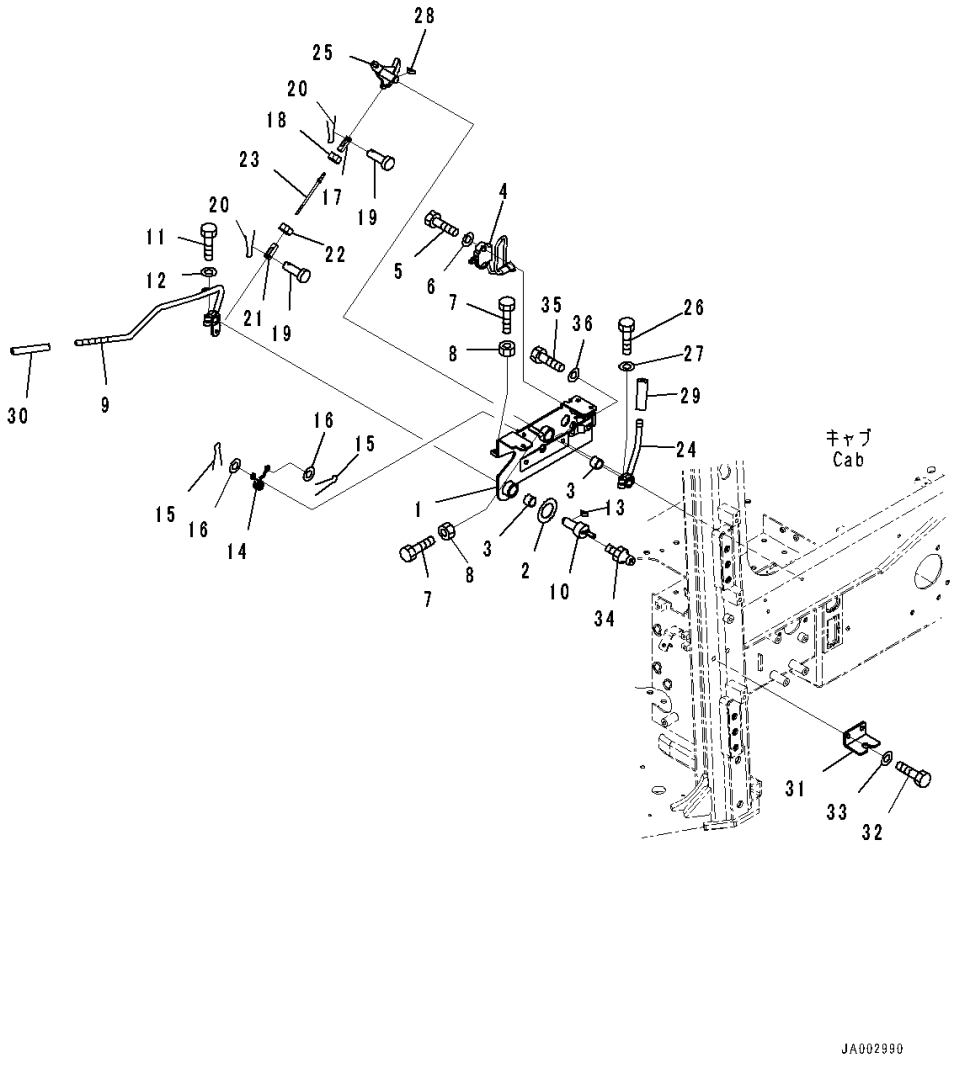

Index	Code	Part Number	Description	Qty	Serial Number
		Note: This list covers following specifications. With AM-FM Stereo Radio For North America, TH300 Type KOMTRAX For EU Noise Reguration, Provision For Radio Installation, TH300 Type KOMTRAX For EU Noise Reguration, With AM/FM Radio For Asia and EU, TH300 Type KOMTRAX Provision For Radio Installation, TH300 Type KOMTRAX With Rear View Monitoring System, With AM-FM Stereo Radio With Cassette, TH300 Type KOMTRAX With AM/FM Radio For Asia and EU, TH300 Type KOMTRAX			
1		14X-43-51412	Bracket	1	80001-
2		14X-43-51470	• Sheet,Bonded	1	80001-
3		06124-02020	Bearing	2	80001-
4		11Y-06-22150	Switch	1	80001-
5		01010-81035	Bolt	2	80001-
6		01643-31032	Washer	2	80001-
7		01016-50830	Bolt	2	80001-
8		01580-10806	Nut	2	80001-
9		14X-43-51421	Lever	1	80001-
10		14X-43-51431	Lever	1	80001-
11		01010-80830	Bolt	1	80001-
12		01643-30823	Washer	1	80001-
13		04010-00516	Key	1	80001-
14		14X-43-51840	Spring	1	80001-
15		04050-11612	Pin, Cotter	2	80001-
16		01640-20610	Washer	2	80001-
17		04221-20634	Yoke	1	80001-
18		01508-40603	Nut, Left-handed	1	80001-
19		04205-10618	Pin	2	80001-
20		04050-11612	Pin, Cotter	2	80001-
21		04211-20634	Yoke	1	80001-
22		01580-10605	Nut	1	80001-
23		04248-30613	Rod	1	80001-
24		14X-43-51741	Lever	1	80001-
25		14X-43-51451	Lever	1	80001-
26		01010-80830	Bolt	1	80001-
27		01643-30823	Washer	1	80001-
28		04010-00516	Key	1	80001-

https://truckmanualshub.com/

FIG. K0210-002034 ROPS Cab, Parking Brake Lever

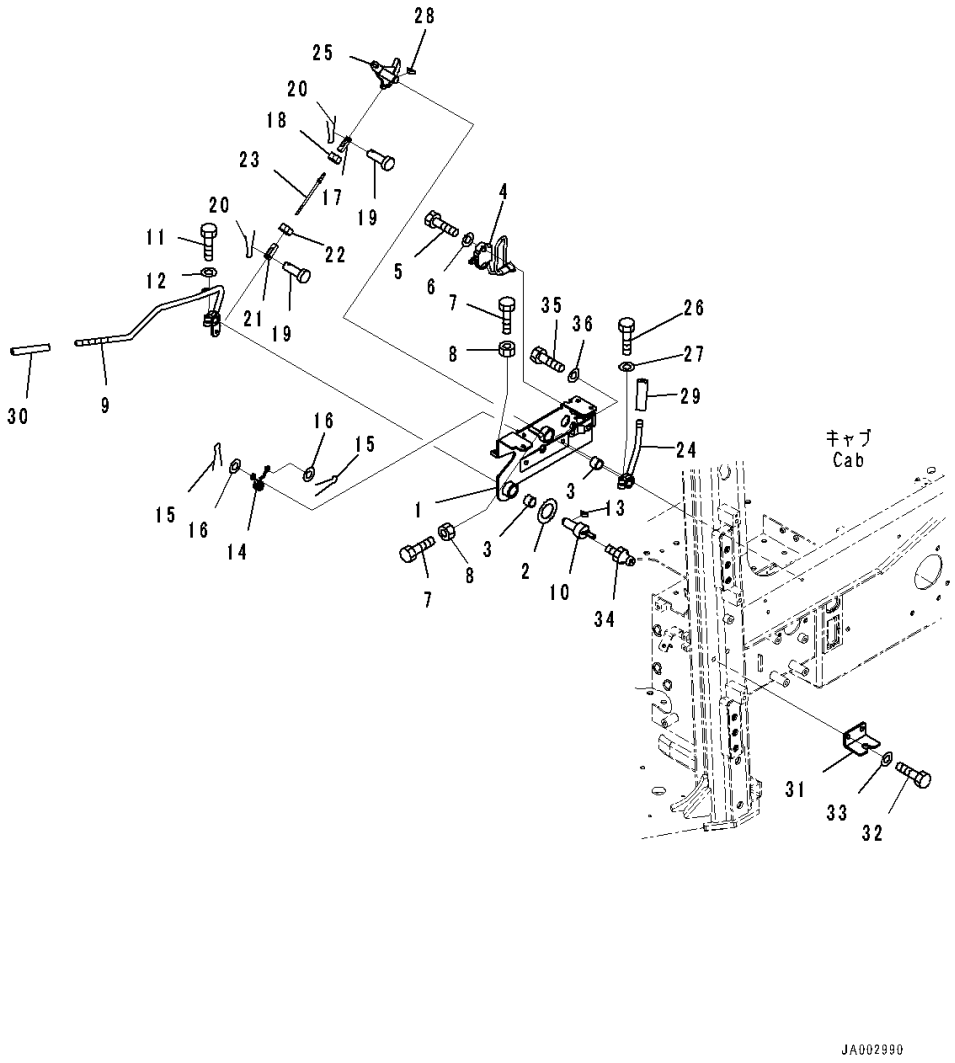

Index	Code	Part Number	Description	Qty	Serial Number
29		22M-43-21470	Knob	1	80001-
30		417-43-28270	Cap	1	80001-
31		14X-43-51461	Bracket	1	80001-
32		01010-81025	Bolt	2	80001-
33		01643-31032	Washer	2	80001-
34		07020-00000	Fitting, Grease	1	80001-
35		01010-81025	Bolt	2	80001-
36		01643-31032	Washer	2	80001-

https://truckmanualshub.com/

FIG. K0210-002035 ROPS Cab, Work Equipment Lock Lever

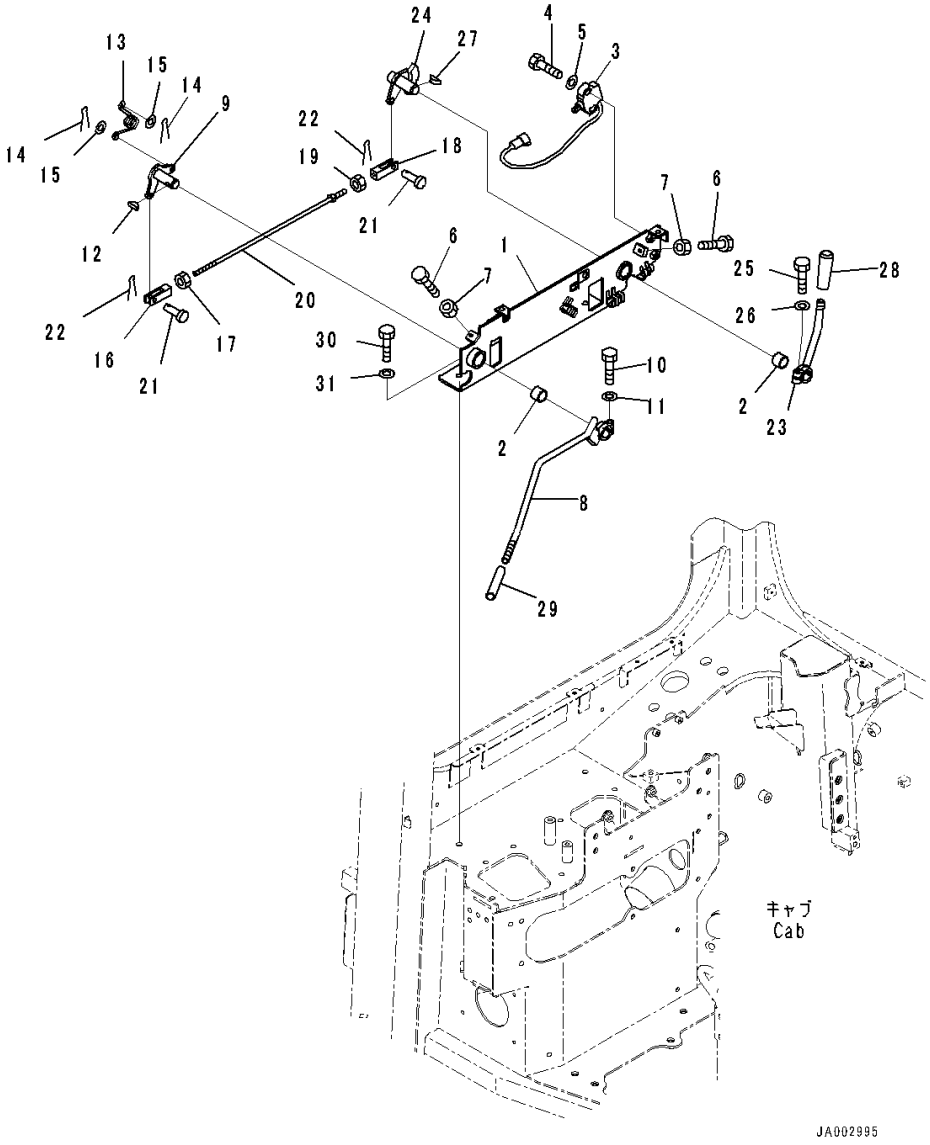

Index	Code	Part Number	Description	Qty	Serial Number
		Note: This list covers following specifications. With AM-FM Stereo Radio For North America, TH300 Type KOMTRAX For EU Noise Reguration, Provision For Radio Installation, TH300 Type KOMTRAX For EU Noise Reguration, With AM/FM Radio For Asia and EU, TH300 Type KOMTRAX Provision For Radio Installation, TH300 Type KOMTRAX With Rear View Monitoring System, With AM-FM Stereo Radio With Cassette, TH300 Type KOMTRAX With AM/FM Radio For Asia and EU, TH300 Type KOMTRAX			
1		14X-43-51711	Bracket	1	80001-
2		06124-02020	Bearing	2	80001-
3		11Y-06-22150	Switch	1	80001-
4		01010-81035	Bolt	2	80001-
5		01643-31032	Washer	2	80001-
6		01016-50830	Bolt	2	80001-
7		01580-10806	Nut	2	80001-
8		14X-43-51721	Lever	1	80001-
9		14X-43-51731	Lever	1	80001-
10		01010-80830	Bolt	1	80001-
11		01643-30823	Washer	1	80001-
12		04010-00516	Key	1	80001-
13		14X-43-51840	Spring	1	80001-
14		04050-11612	Pin, Cotter	2	80001-
15		01640-20610	Washer	2	80001-
16		04221-20844	York, Left-handed Thread	1	80001-
17		01508-40805	Nut	1	80001-
18		04211-20844	Yoke	1	80001-
19		01580-10806	Nut	1	80001-
20		04248-30838	Rod	1	80001-
21		04205-10822	Pin	2	80001-
22		04050-12015	Pin, Cotter	2	80001-
23		14X-43-51791	Lever	1	80001-
24		14X-43-51751	Lever	1	80001-
25		01010-80830	Bolt	1	80001-
26		01643-30823	Washer	1	80001-
27		04010-00516	Key	1	80001-
28		22M-43-21470	Knob	1	80001-

https://truckmanualshub.com/

FIG. K0210-002035 ROPS Cab, Work Equipment Lock Lever

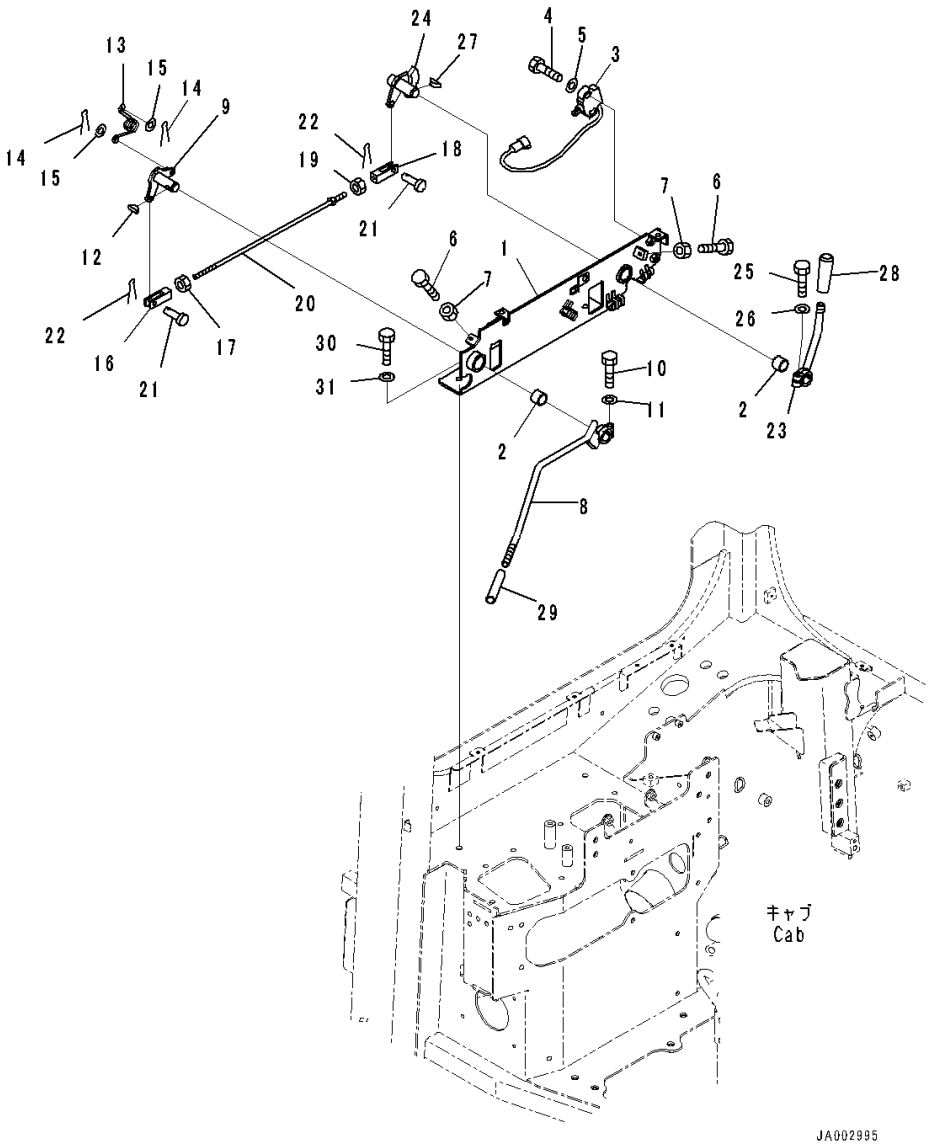

Index	Code	Part Number	Description	Qty	Serial Number
29		417-43-28270	Cap	1	80001-
30		01010-81025	Bolt	2	80001-
31		01643-31032	Washer	2	80001-

https://truckmanualshub.com/

FIG. K0210-002036A ROPS Cab, Floor Frame Inside Cover

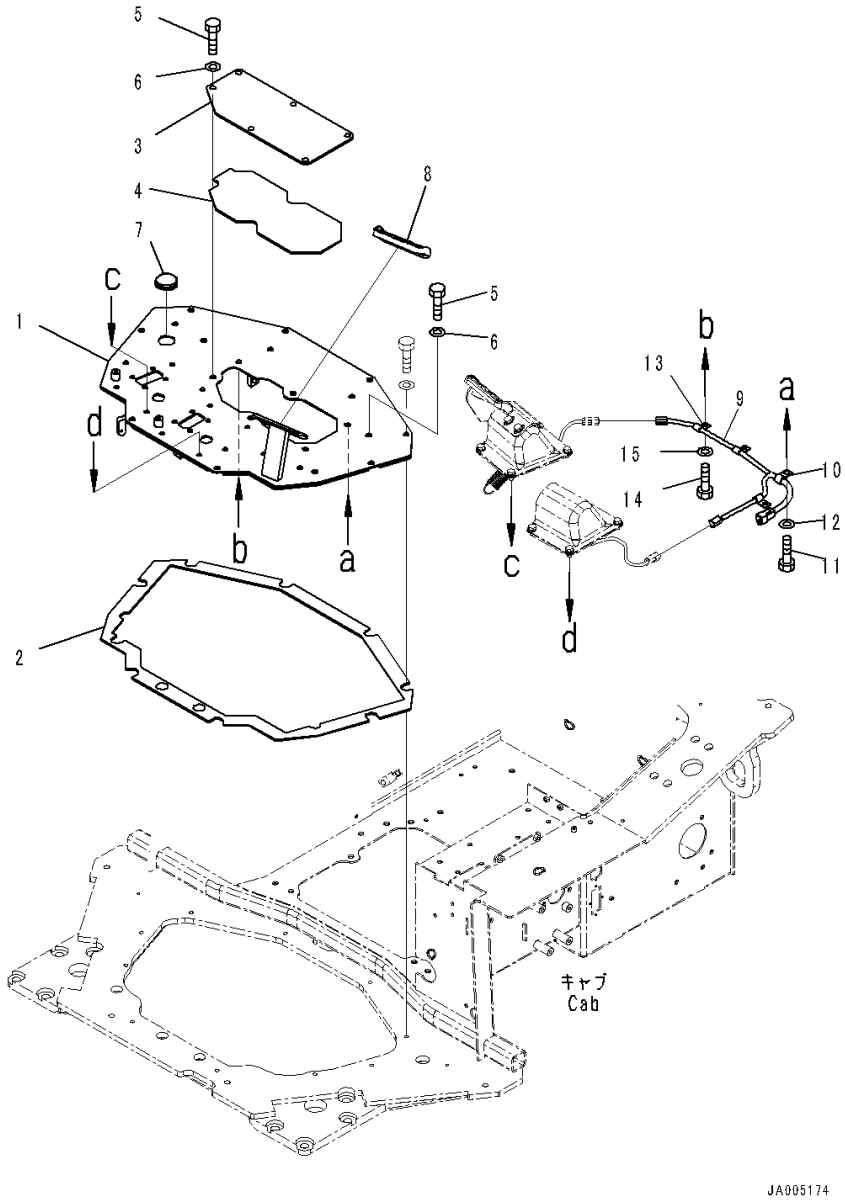

Index	Code	Part Number	Description	Qty	Serial Number
		Note: This list covers following specifications. With AM-FM Stereo Radio For North America, TH300 Type KOMTRAX For EU Noise Reguration, Provision For Radio Installation, TH300 Type KOMTRAX For EU Noise Reguration, With AM/FM Radio For Asia and EU, TH300 Type KOMTRAX Provision For Radio Installation, TH300 Type KOMTRAX With Rear View Monitoring System, With AM-FM Stereo Radio For North America, TH300 Type KOMTRAX With Rear View Monitoring System, Provision For Radio Installation, TH300 Type KOMTRAX EU Regulation Guard Level 2, With Rear View Monitoring System, With AM-FM Stereo Radio With Cassette For Europe And Asia, TH300 Type KOMTRAX EU Regulation Guard Level 2, With Rear View Monitoring System, Provision For Radio Installation, TH300 Type KOMTRAX			
1		14X-43-51612	Floor	1	80065-
2		14X-43-51850	• Sheet,Bonded	1	80001-
3		14X-43-51541	Cover	1	80001-
4		14X-43-51860	• Sheet,Bonded	1	80001-
5		01010-81225	Bolt	14	80065-
6		01643-31232	Washer	14	80065-
7		09415-03614	Cap	1	80001-
8		14X-43-13760	Cap	1	80001-
9		14X-06-51140	Wiring Harness	1	80001-
10		04434-51410	Clip	1	80001-
11		01010-81020	Bolt	1	80001-
12		01643-31032	Washer	1	80001-
13		04434-51010	Clip	3	80001-
14		01010-81020	Bolt	3	80001-
15		01643-31032	Washer	3	80001-

https://truckmanualshub.com/

FIG. K0210-002037 ROPS Cab, Brake Pedal

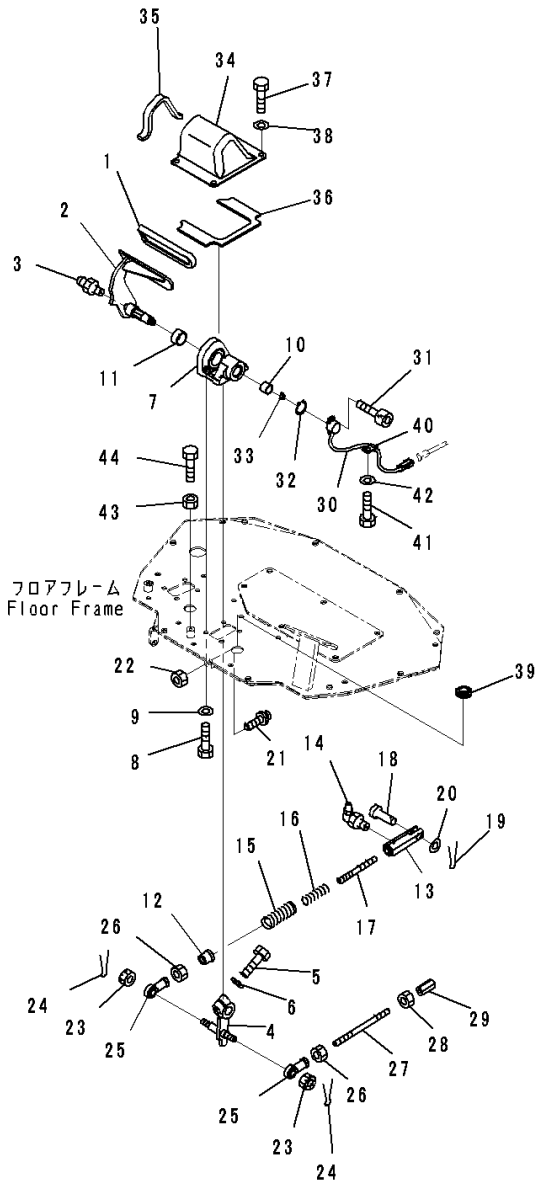

Index	Code	Part Number	Description	Qty	Serial Number
		Note: This list covers following specifications. With AM-FM Stereo Radio For North America, TH300 Type KOMTRAX For EU Noise Reguration, Provision For Radio Installation, TH300 Type KOMTRAX For EU Noise Reguration, With AM/FM Radio For Asia and EU, TH300 Type KOMTRAX Provision For Radio Installation, TH300 Type KOMTRAX With Rear View Monitoring System, With AM-FM Stereo Radio With Cassette, TH300 Type KOMTRAX With AM/FM Radio For Asia and EU, TH300 Type KOMTRAX			
1		14X-43-12110	Pedal Cap	1	80001-
2		14X-43-51511	Pedal	1	80001-
3		07020-00000	Fitting, Grease	1	80001-
4		14X-43-51551	Lever	1	80001-
5		01010-81245	Bolt	1	80001-
6		01643-31232	Washer	1	80001-
7		14X-43-51571	Bracket	1	80001-
8		01010-81020	Bolt	4	80001-
9		01643-31032	Washer	4	80001-
10		06124-02020	Bearing	1	80001-
11		06124-03020	Bearing	1	80001-
12		134-43-72490	Guide	1	80001-
13		14X-43-32210	Yoke	1	80001-
14		07020-00900	Fitting, Grease	1	80001-
15		14X-43-51590	Spring	1	80001-
16		14X-43-32220	Spring	1	80001-
17		14X-43-32230	Rod	1	80001-
18		04205-11442	Pin	1	80001-
19		04050-13022	Pin, Cotter	1	80001-
20		01641-21423	Washer, Flat	1	80001-
21		09311-41237	Bumper, Pedal	1	80001-
22		01580-11210	Nut	1	80001-
23		01593-31411	Nut	2	80001-
24		04050-13022	Pin, Cotter	2	80001-
25		04250-81474	End	2	80001-
26		01582-11411	Nut	2	80001-
27		14X-43-12410	Rod	1	80001-
28		01508-41408	Nut	1	80001-

https://truckmanualshub.com/

FIG. K0210-002037 ROPS Cab, Brake Pedal

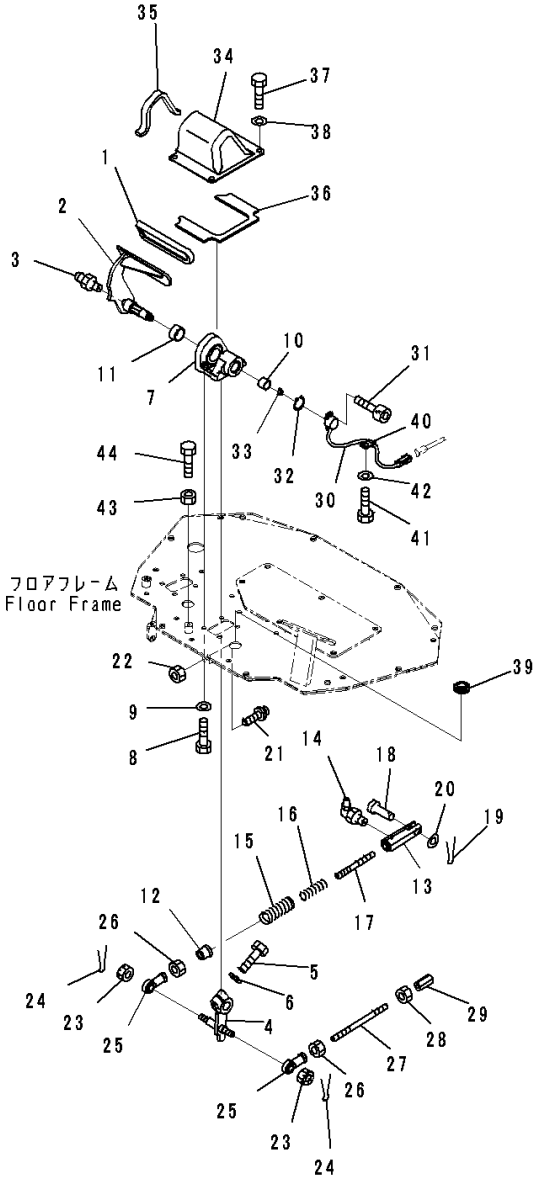

Index	Code	Part Number	Description	Qty	Serial Number
29		17A-43-24160	Joint	1	80001-
30		17A-06-41981	Sensor	1	80001-
31		01252-70414	Bolt	2	80001-
32		04064-01610	Ring, Snap	1	80001-
33		142-43-13180	Spring	1	80001-
34		14X-43-51631	Cover	1	80001-
35		14X-43-51651	• Sheet,Bonded	1	80001-
36		14X-43-51870	• Sheet,Bonded	1	80001-
37		01010-81020	Bolt	4	80001-
38		01643-31032	Washer	4	80001-
39		08037-02512	Grommet	1	80001-
40		04434-50810	Clip	1	80001-
41		01010-81020	Bolt	1	80001-
42		01643-31032	Washer	1	80001-
43		01580-11008	Nut	1	80001-
44		01016-51030	Bolt	1	80001-

https://truckmanualshub.com/

FIG. K0210-002038 ROPS Cab, Decelerator Pedal

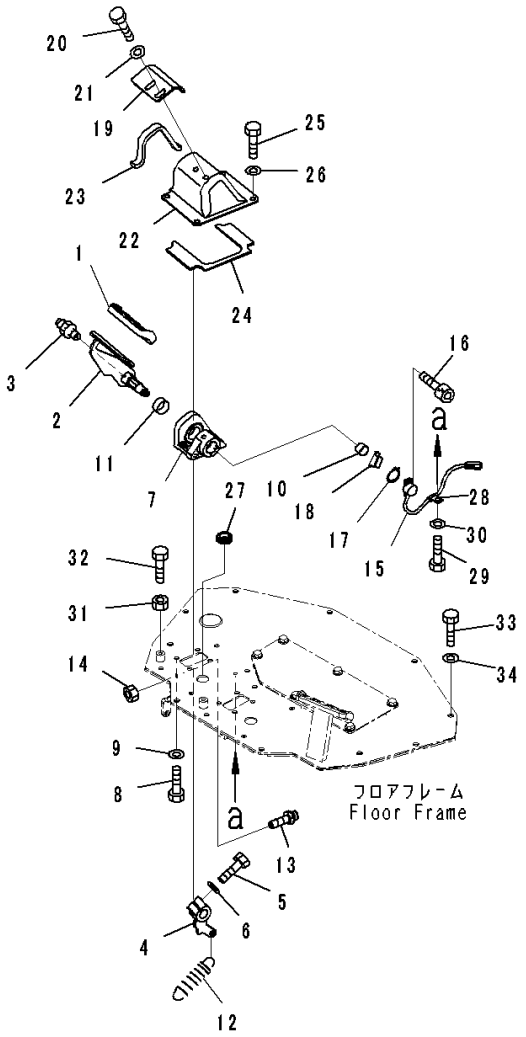

JA003000

Index	Code	Part Number	Description	Qty	Serial Number
		Note: This list covers following specifications. With AM-FM Stereo Radio For North America, TH300 Type KOMTRAX For EU Noise Reguration, Provision For Radio Installation, TH300 Type KOMTRAX For EU Noise Reguration, With AM/FM Radio For Asia and EU, TH300 Type KOMTRAX Provision For Radio Installation, TH300 Type KOMTRAX With Rear View Monitoring System, With AM-FM Stereo Radio With Cassette, TH300 Type KOMTRAX With AM/FM Radio For Asia and EU, TH300 Type KOMTRAX			
1		14X-43-13760	Cap	1	80001-
2		14X-43-51521	Pedal	1	80001-
3		07020-00000	Fitting, Grease	1	80001-
4		14X-43-51561	Lever	1	80001-
5		01010-81245	Bolt	1	80001-
6		01643-31232	Washer	1	80001-
7		14X-43-51571	Bracket	1	80001-
8		01010-81020	Bolt	4	80001-
9		01643-31032	Washer	4	80001-
10		06124-02020	Bearing	1	80001-
11		06124-03020	Bearing	1	80001-
12		14X-43-51581	Spring	1	80001-
13		09311-41237	Bumper, Pedal	1	80001-
14		01580-11210	Nut	1	80001-
15		17A-06-41981	Sensor	1	80001-
16		01252-70414	Bolt	2	80001-
17		04064-01610	Ring, Snap	1	80001-
18		142-43-13180	Spring	1	80001-
19		14X-43-51810	Bracket	1	80001-
20		01010-D1020	Bolt	2	80001-
21		01643-71032	Washer	2	80001-
22		14X-43-51821	Cover	1	80001-
23		14X-43-51651	• Sheet,Bonded	1	80001-
24		14X-43-51870	• Sheet,Bonded	1	80001-
25		01010-81020	Bolt	4	80001-
26		01643-31032	Washer	4	80001-
27		08037-02512	Grommet	1	80001-
28		04434-50810	Clip	1	80001-

https://truckmanualshub.com/

FIG. K0210-002038 ROPS Cab, Decelerator Pedal

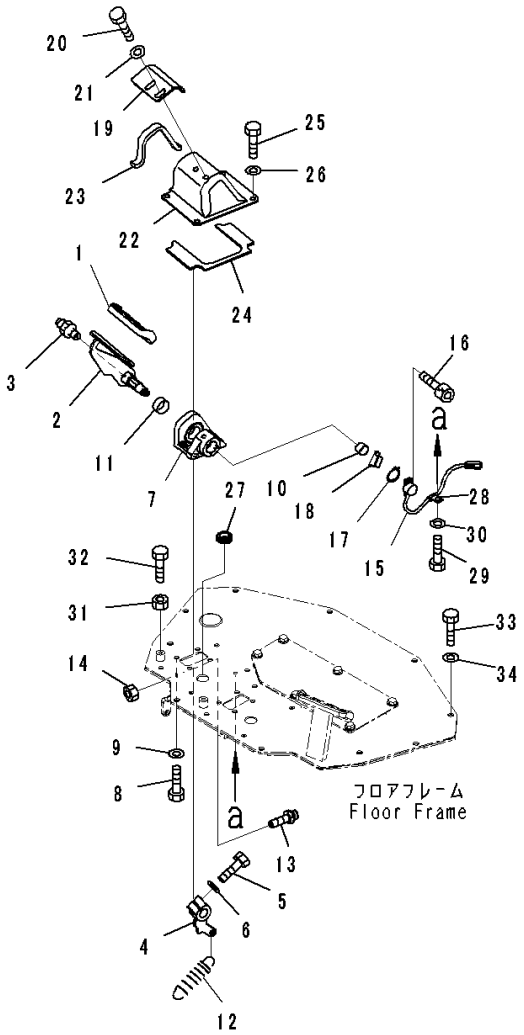

JA003000

Index	Code	Part Number	Description	Qty	Serial Number
29		01010-81020	Bolt	1	80001-
30		01643-31032	Washer	1	80001-
31		01580-11008	Nut	1	80001-
32		01016-51030	Bolt	1	80001-
33		01010-81225	Bolt	10	80001-
34		01643-31232	Washer	10	80001-

https://truckmanualshub.com/

FIG. K0210-002039 ROPS Cab, Controller and Relay

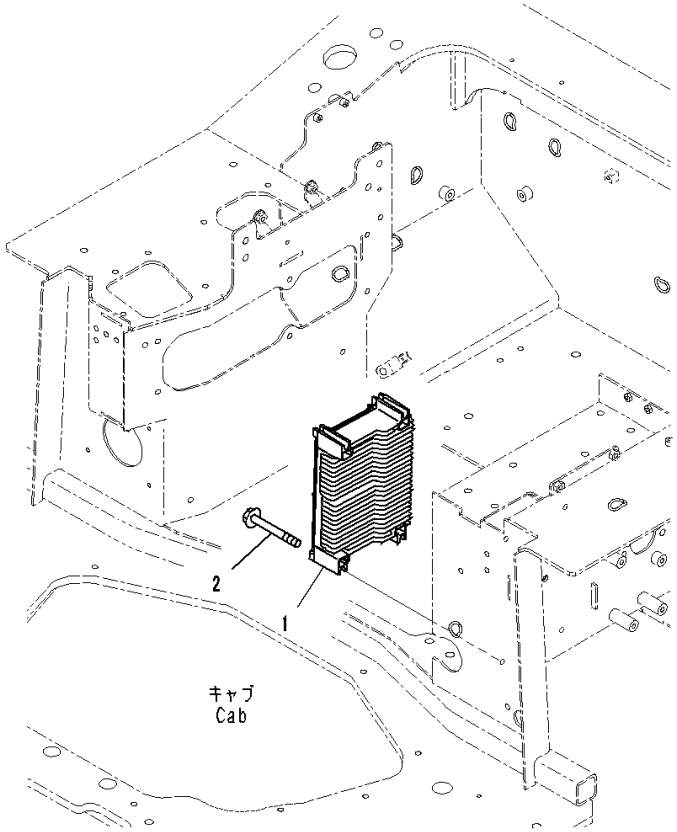

Index	Code	Part Number	Description	Qty	Serial Number
		Note: This list covers following specifications. With AM-FM Stereo Radio For North America, TH300 Type KOMTRAX For EU Noise Reguration, Provision For Radio Installation, TH300 Type KOMTRAX For EU Noise Reguration, With AM/FM Radio For Asia and EU, TH300 Type KOMTRAX Provision For Radio Installation, TH300 Type KOMTRAX			
1		7830-74-4000	Controller	1	80007-
2		01435-00885	Bolt	4	80001-

https://truckmanualshub.com/

FIG. K0210-002040 ROPS Cab, Floor, Harness (1/3)

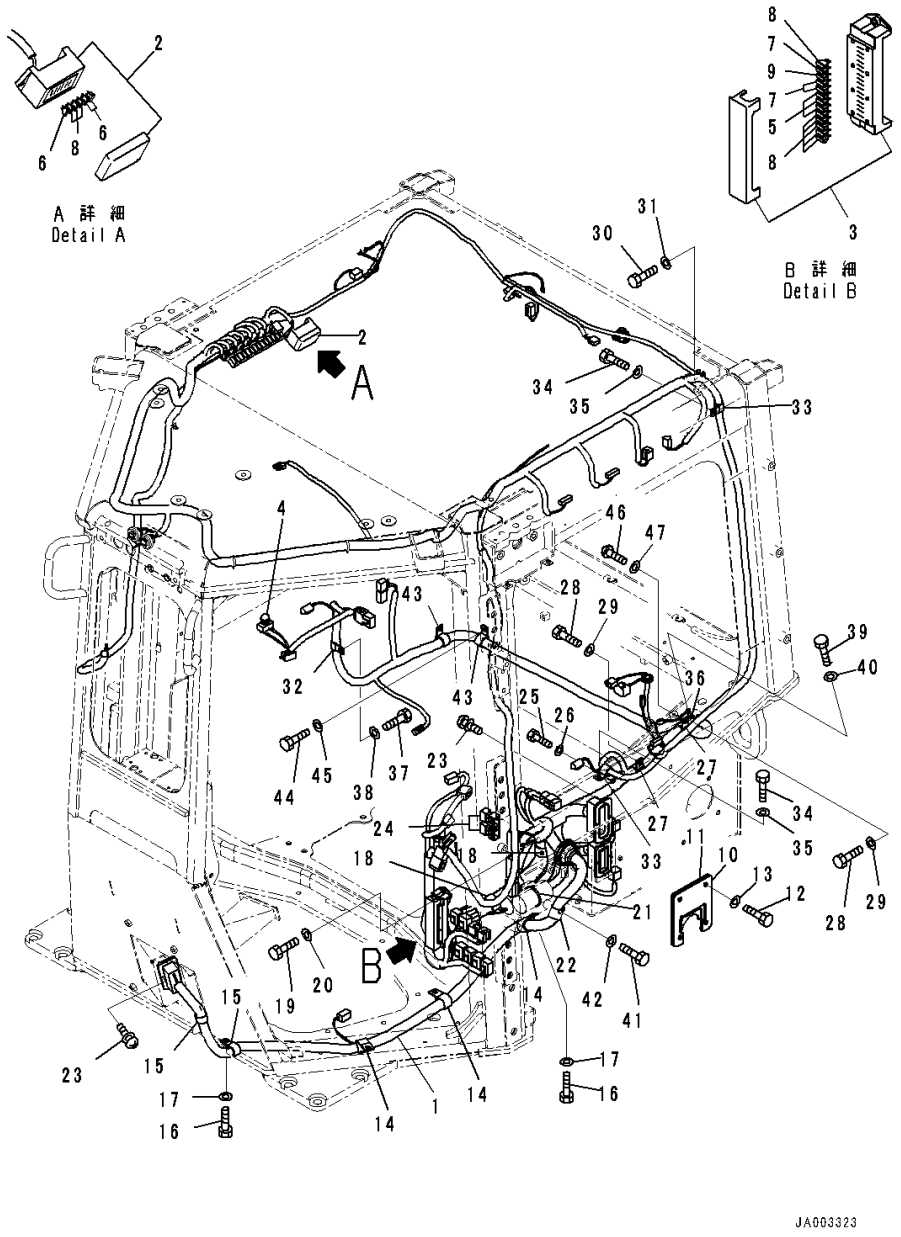

Index	Code	Part Number	Description	Qty	Serial Number
		Note: This list covers following specifications. With AM-FM Stereo Radio For North America, TH300 Type KOMTRAX For EU Noise Reguration, Provision For Radio Installation, TH300 Type KOMTRAX For EU Noise Reguration, With AM/FM Radio For Asia and EU, TH300 Type KOMTRAX Provision For Radio Installation, TH300 Type KOMTRAX With Rear View Monitoring System, With AM-FM Stereo Radio For North America, TH300 Type KOMTRAX With Rear View Monitoring System, Provision For Radio Installation, TH300 Type KOMTRAX EU Regulation Guard Level 2, With Rear View Monitoring System, With AM-FM Stereo Radio With Cassette For Europe And Asia, TH300 Type KOMTRAX EU Regulation Guard Level 2, With Rear View Monitoring System, Provision For Radio Installation, TH300 Type KOMTRAX			
1		14X-06-51124	Wiring Harness	1	80065-
2		08044-00600	• Box Assembly, Fuse	1	80001-
3		08044-01500	• Box, Fuse	1	80001-
4		08064-10000	• Switch, Horn	1	80001-
5		08041-00500	• Fuse, 5Amp.	4	80001-
6		08041-01000	• Fuse, 10Amp.	4	80007-
7		08041-01500	• Fuse, 15Amp.	4	80001-
8		08041-02000	• Fuse, 20Amp.	11	80007-
9		08041-03000	• Fuse, 30Amp.	2	80001-
10		14X-06-51351	Bracket	1	80001-
11		14X-06-51431	• Sheet	1	80001-
12		01010-81025	Bolt	4	80001-
13		01643-31032	Washer	4	80001-
14		04434-52711	Clip	3	80001-
15		04434-52310	Clip	2	80001-
16		01010-81020	Bolt	5	80001-
17		01643-31032	Washer	5	80001-
18		208-06-19170	Clip	2	80001-
19		01010-81020	Bolt	2	80001-
20		01643-31032	Washer	2	80001-
21		08034-20519	Band	39	80001-
22		04434-52711	Clip	1	80001-

https://truckmanualshub.com/

FIG. K0210-002040 ROPS Cab, Floor, Harness (1/3)

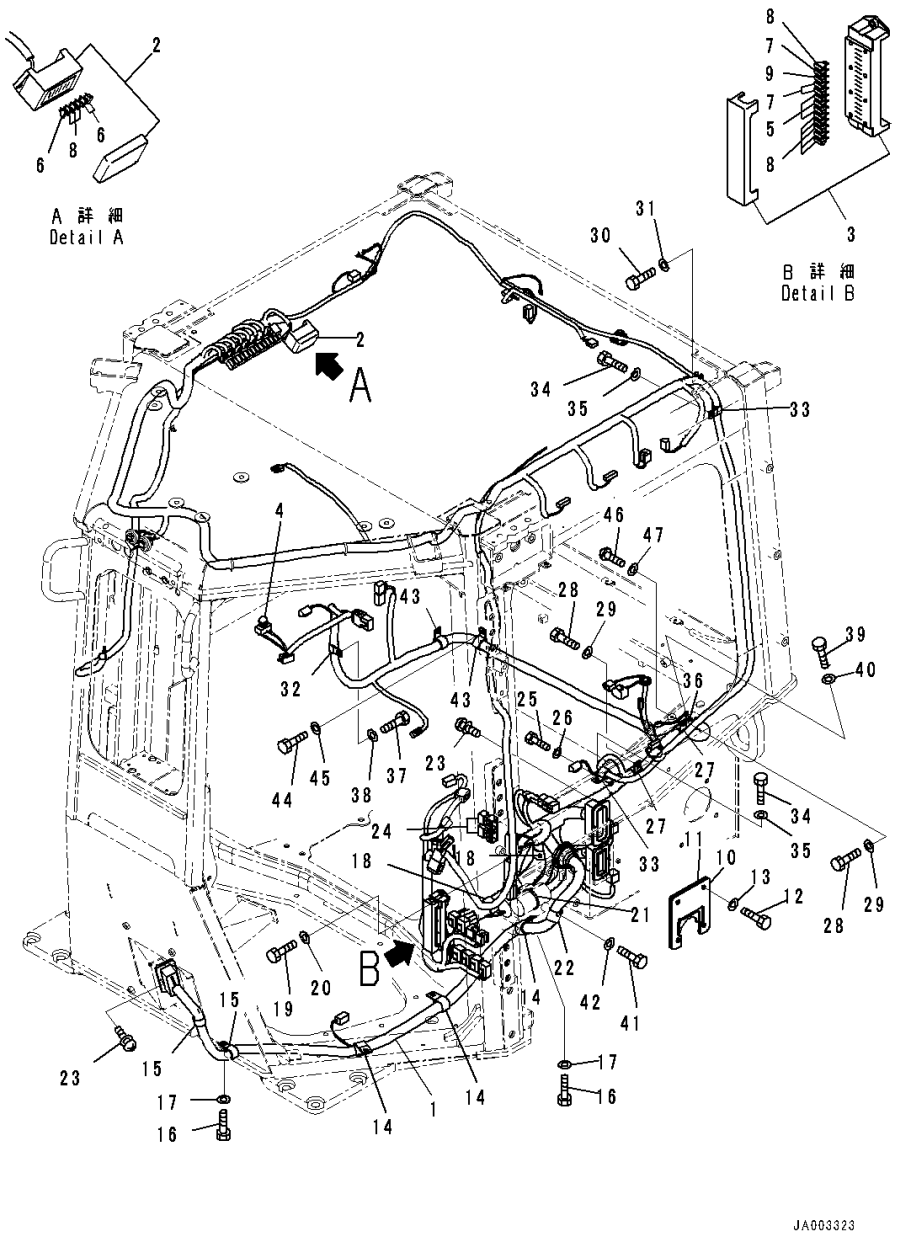

Index	Code	Part Number	Description	Qty	Serial Number
23		01023-10416	Screw	12	80001-
24		8233-06-3350	Diode	2	80001-
25		01010-81020	Bolt	2	80001-
26		01643-31032	Washer	2	80001-
27		04434-52310	Clip	3	80001-
28		01010-81020	Bolt	3	80001-
29		01643-31032	Washer	3	80001-
30		01010-80616	Bolt	1	80001-
31		01643-30623	Washer	1	80001-
32		04434-51910	Clip	1	80001-
33		04434-51710	Clip	2	80001-
34		01010-81020	Bolt	2	80001-
35		01643-31032	Washer	2	80001-
36		04434-52310	Clip	2	80001-
37		01010-81020	Bolt	3	80001-
38		01643-31032	Washer	3	80001-
39		01010-80612	Bolt	1	80001-
40		01643-30623	Washer	1	80001-
41		01010-81025	Bolt	1	80001-
42		01643-31032	Washer	1	80001-
43		04434-52310	Clip	2	80001-
44		01010-81020	Bolt	2	80001-
45		01643-31032	Washer	2	80001-
46		01245-01020	Screw	1	80001-
47		01643-71032	Washer	1	80001-

https://truckmanualshub.com/

FIG. K0210-002041 ROPS Cab, Floor, Harness (2/3)

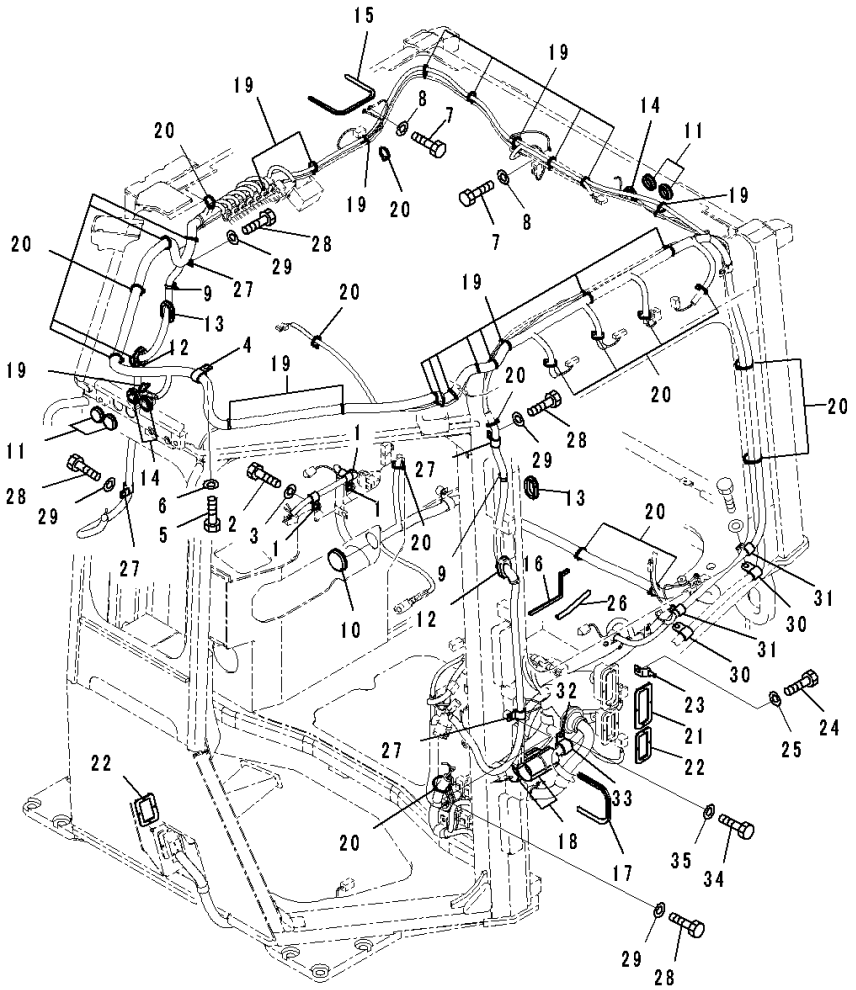

Index	Code	Part Number	Description	Qty	Serial Number
		Note: This list covers following specifications. With AM-FM Stereo Radio For North America, TH300 Type KOMTRAX For EU Noise Reguration, Provision For Radio Installation, TH300 Type KOMTRAX For EU Noise Reguration, With AM/FM Radio For Asia and EU, TH300 Type KOMTRAX Provision For Radio Installation, TH300 Type KOMTRAX With Rear View Monitoring System, With AM-FM Stereo Radio With Cassette, TH300 Type KOMTRAX With AM/FM Radio For Asia and EU, TH300 Type KOMTRAX			
1		04434-51310	Clip	3	80001-
2		01010-81020	Bolt	3	80001-
3		01643-31032	Washer	3	80001-
4		04434-52310	Clip	1	80001-
5		01010-81020	Bolt	1	80001-
6		01643-31032	Washer	1	80001-
7		01010-80616	Bolt	3	80001-
8		01643-30623	Washer	3	80001-
9		08059-00413	Clip	2	80001-
10		09415-03614	Cap	1	80001-
11		09415-02512	Cap	4	80001-
12		14X-Y79-3341	Grommet	2	80001-
13		120-06-24110	Grommet	2	80001-
14		14X-06-52461	Cap	3	80001-
15		14X-Y79-2280	Seal	1	80001-
16		12Y-978-2192	Seal	1	80001-
17		14X-06-52171	Trim	1	80001-
18		14X-06-52160	Sheet	2	80001-
19		08034-40521	Band	17	80001-
20		08034-20519	Band	20	80001-
21		14X-06-52750	Gasket	1	80001-
22		14X-06-52760	Gasket	2	80001-
23		08053-00910	Clip	1	80001-
24		01010-81020	Bolt	1	80001-
25		01643-31032	Washer	1	80001-
26		423-06-42420	Finisher	1	80001-
27		04434-51710	Clip	4	80001-
28		01010-81020	Bolt	4	80001-

https://truckmanualshub.com/

FIG. K0210-002041 ROPS Cab, Floor, Harness (2/3)

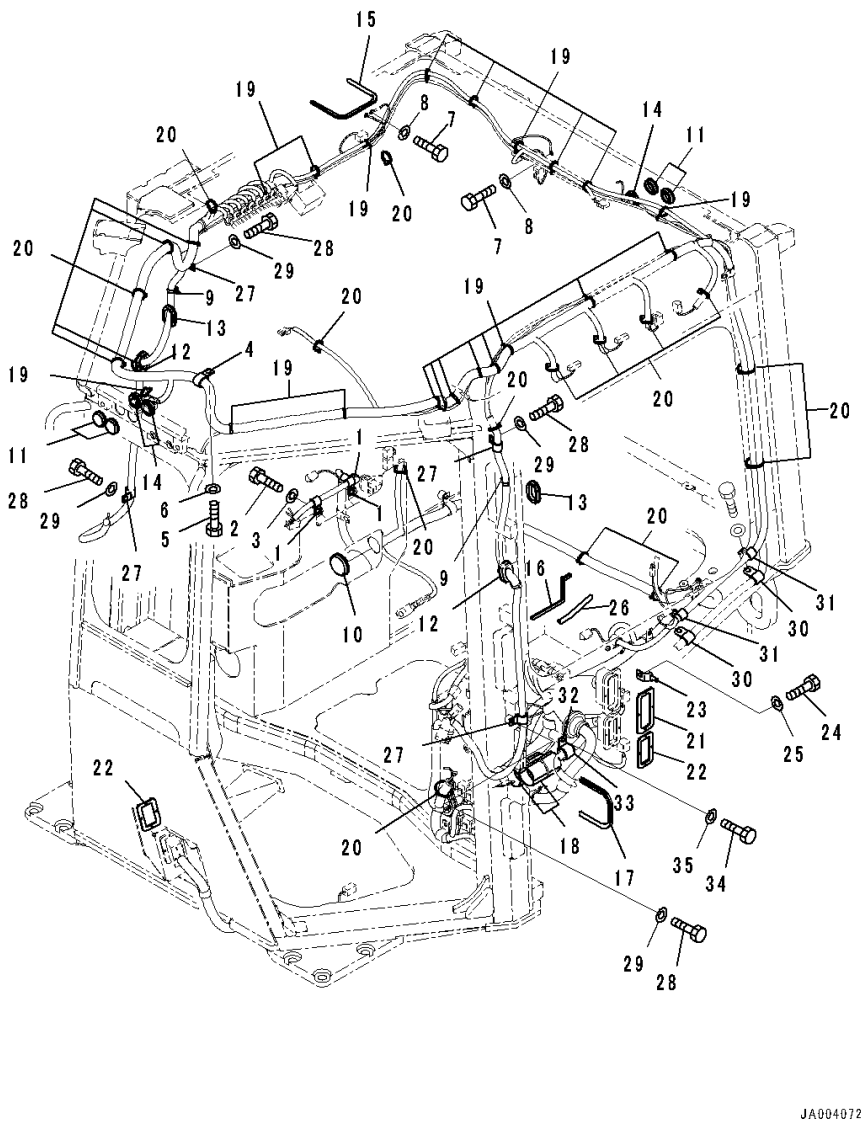

Index	Code	Part Number	Description	Qty	Serial Number
29		01643-31032	Washer	4	80001-
30		04434-51910	Clip	2	80001-
31		04434-51710	Clip	2	80001-
32		04434-52511	Clip	1	80007-
33		07095-20318	Cushion	1	80007-
34		01010-81020	Bolt	1	80007-
35		01643-31032	Washer	1	80007-

https://truckmanualshub.com/

FIG. K0210-002042 ROPS Cab, Floor, Harness (3/3)

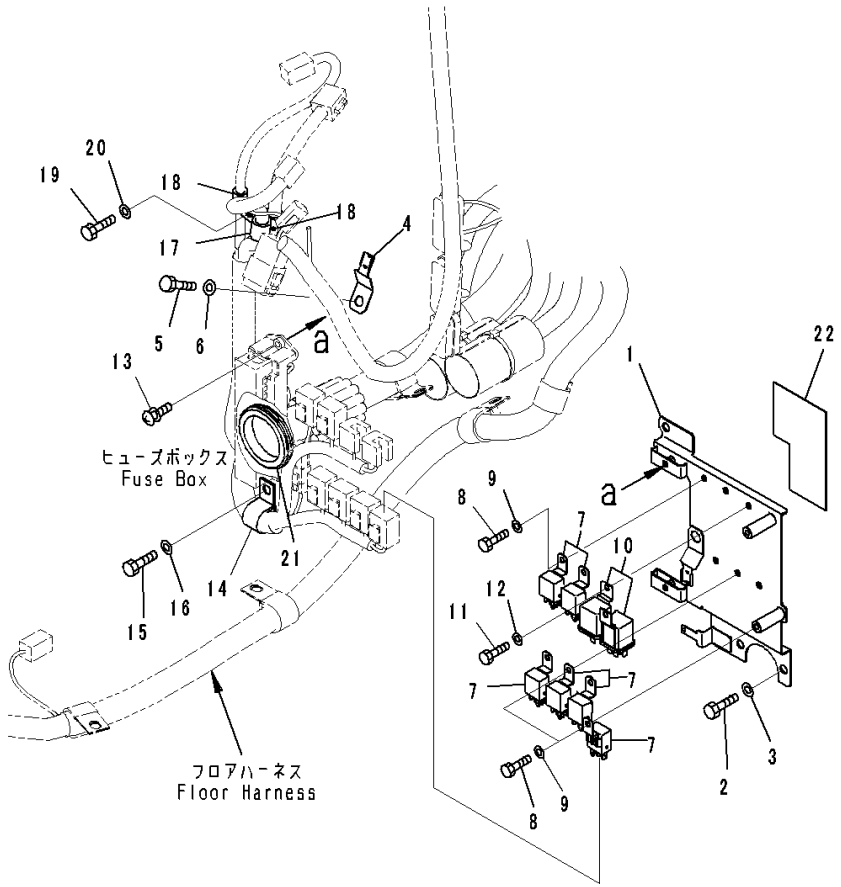

Index	Code	Part Number	Description	Qty	Serial Number
		Note: This list covers following specifications. With AM-FM Stereo Radio For North America, TH300 Type KOMTRAX For EU Noise Reguration, Provision For Radio Installation, TH300 Type KOMTRAX For EU Noise Reguration, With AM/FM Radio For Asia and EU, TH300 Type KOMTRAX Provision For Radio Installation, TH300 Type KOMTRAX With Rear View Monitoring System, With AM-FM Stereo Radio With Cassette, TH300 Type KOMTRAX With AM/FM Radio For Asia and EU, TH300 Type KOMTRAX			
1		14X-06-51361	Bracket	1	80001-
2		01010-80820	Bolt	3	80001-
3		01643-30823	Washer	3	80001-
4		08193-20010	Clip	1	80001-
5		01010-80820	Bolt	1	80001-
6		01643-30823	Washer	1	80001-
7		7861-74-5100	Relay	6	80001-
8		01010-80616	Bolt	6	80001-
9		01643-30623	Washer	6	80001-
10		569-06-61960	Relay	2	80001-
11		01010-80616	Bolt	2	80001-
12		01643-30623	Washer	2	80001-
13		01023-10620	Screw	2	80001-
14		04434-52310	Clip	1	80001-
15		01010-81020	Bolt	1	80001-
16		01643-31032	Washer	1	80001-
17		04434-51010	Clip	1	80001-
18		04434-51410	Clip	2	80001-
19		01010-81020	Bolt	1	80001-
20		01643-31032	Washer	1	80001-
21		14X-06-51750	Grommet	1	80001-
22		14X-06-52290	Sheet,Bonded	1	80001-

https://truckmanualshub.com/

FIG. K0210-002043 ROPS Cab, Window Washer Piping

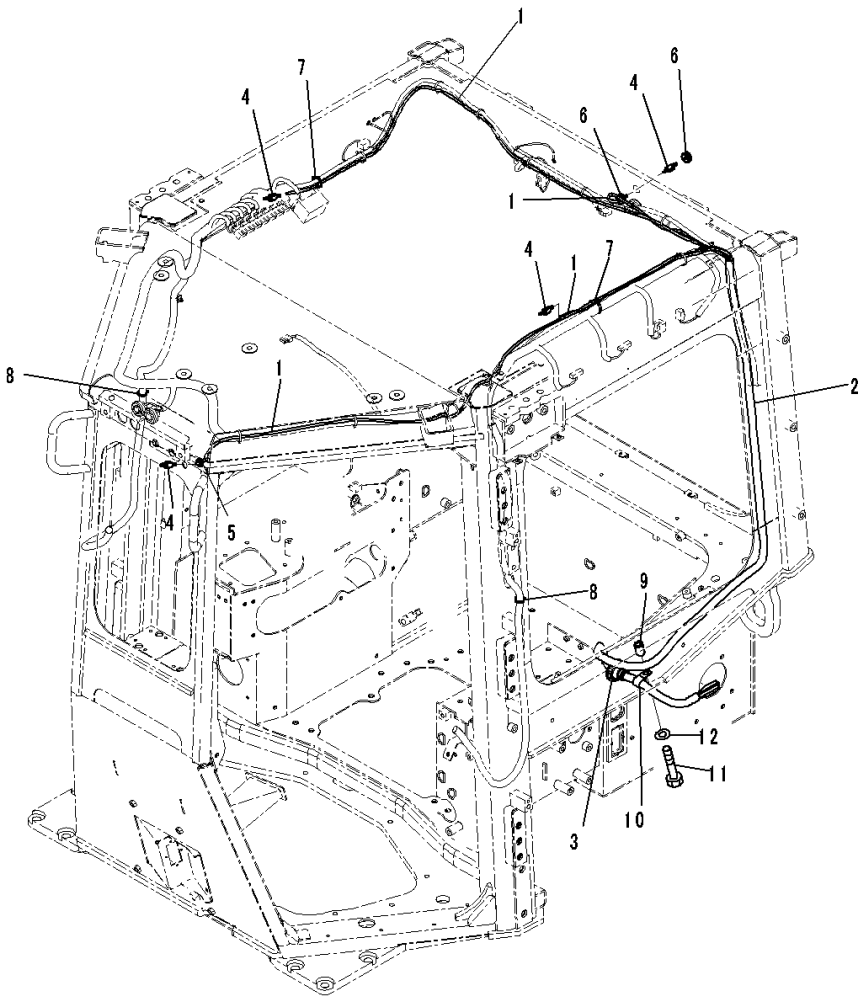

Index	Code	Part Number	Description	Qty	Serial Number
		Note: This list covers following specifications. With AM-FM Stereo Radio For North America, TH300 Type KOMTRAX For EU Noise Reguration, Provision For Radio Installation, TH300 Type KOMTRAX For EU Noise Reguration, With AM/FM Radio For Asia and EU, TH300 Type KOMTRAX Provision For Radio Installation, TH300 Type KOMTRAX With Rear View Monitoring System, With AM-FM Stereo Radio With Cassette, TH300 Type KOMTRAX With AM/FM Radio For Asia and EU, TH300 Type KOMTRAX			
1		14X-Y79-1611	Hose Assembly	1	80001-
2		08017-A1520	• Conduit	1	80001-
3		08037-12536	• Grommet	1	80001-
4		17A-Z11-4610	• Valve	4	80001-
5		08037-01008	Grommet	1	80001-
6		14X-06-51520	Grommet	2	80001-
7		08034-40521	Band	2	80001-
8		08034-20519	Band	1	80001-
9		23B-06-61810	Spacer	1	80001-
10		04434-51910	Clip	1	80001-
11		01010-81050	Bolt	1	80001-
12		01643-31032	Washer	1	80001-

https://truckmanualshub.com/

FIG. K0210-002044 ROPS Cab, Dashboard Cover (1/2)

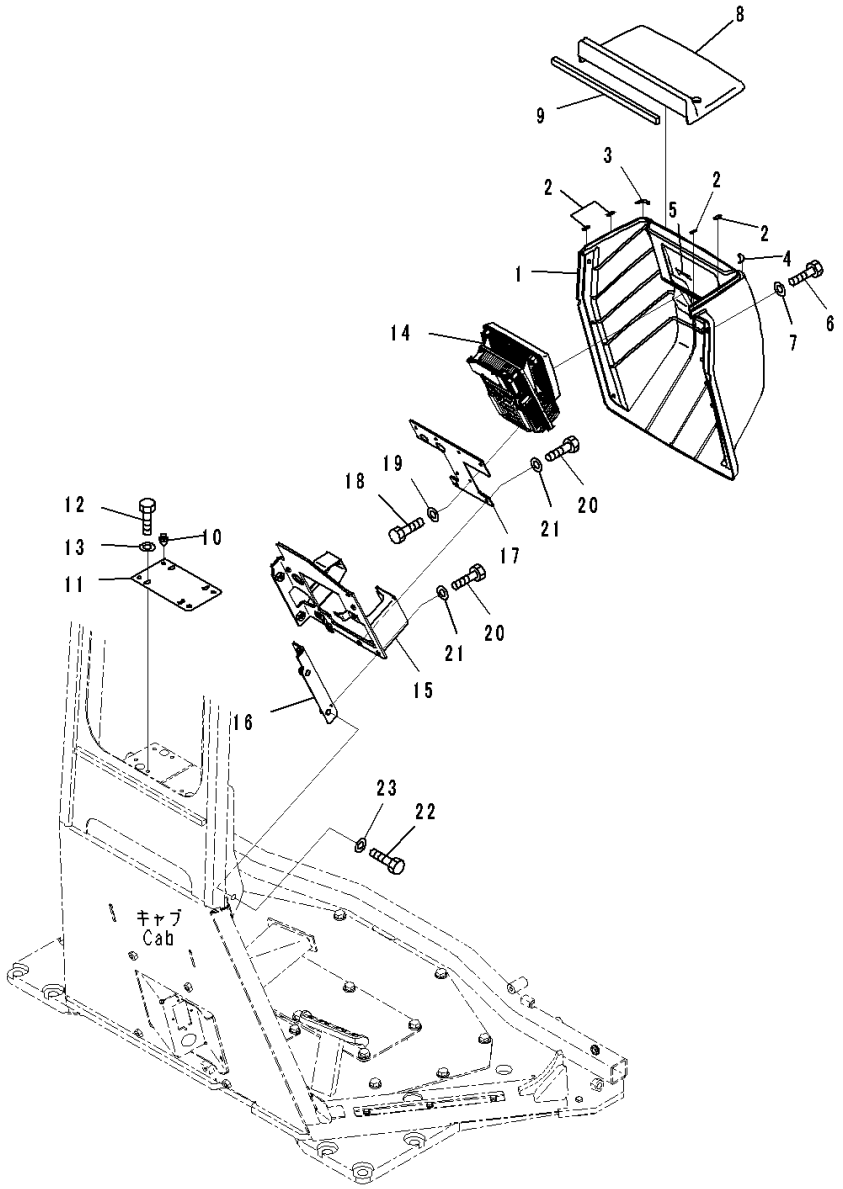

Index	Code	Part Number	Description	Qty	Serial Number
		Note: This list covers following specifications.			
		With AM-FM Stereo Radio For North America, TH300 Type KOMTRAX			
		For EU Noise Reguration, Provision For Radio Installation, TH300 Type KOMTRAX			
		For EU Noise Reguration, With AM/FM Radio For Asia and EU, TH300 Type KOMTRAX			
		Provision For Radio Installation, TH300 Type KOMTRAX			
1		14X-54-56812	Cover	1	80017-
2		14X-54-56941	• Sheet, Bonded	4	80017-
3		14X-54-56951	• Sheet, Bonded	1	80017-
4		14X-54-56961	• Sheet, Bonded	1	80017-
5		14X-54-56970	• Seal,Bonded	1	80001-
6		01010-D0820	Bolt	6	80001-
7		01643-70823	Washer	6	80001-
8		14X-54-56821	Cover	1	80001-
9		14X-54-56921	• Seal,Bonded	1	80001-
10		22U-54-25340	Clip	4	80001-
11		14X-54-56751	Plate	1	80001-
12		01010-80616	Bolt	4	80001-
13		01643-30623	Washer	4	80001-
14		7831-69-5002	Monitor	1	80221-
15		14X-54-56721	Bracket	1	80001-
16		14X-54-56731	Plate	1	80001-
17		14X-54-56741	Plate	1	80001-
18		01010-80616	Bolt	4	80001-
19		01643-30623	Washer	4	80001-
20		01010-80620	Bolt	6	80001-
21		01643-30623	Washer	6	80001-
22		01010-81025	Bolt	4	80001-
23		01643-31032	Washer	4	80001-

https://truckmanualshub.com/

FIG. K0210-002045 ROPS Cab, Floor, Switch

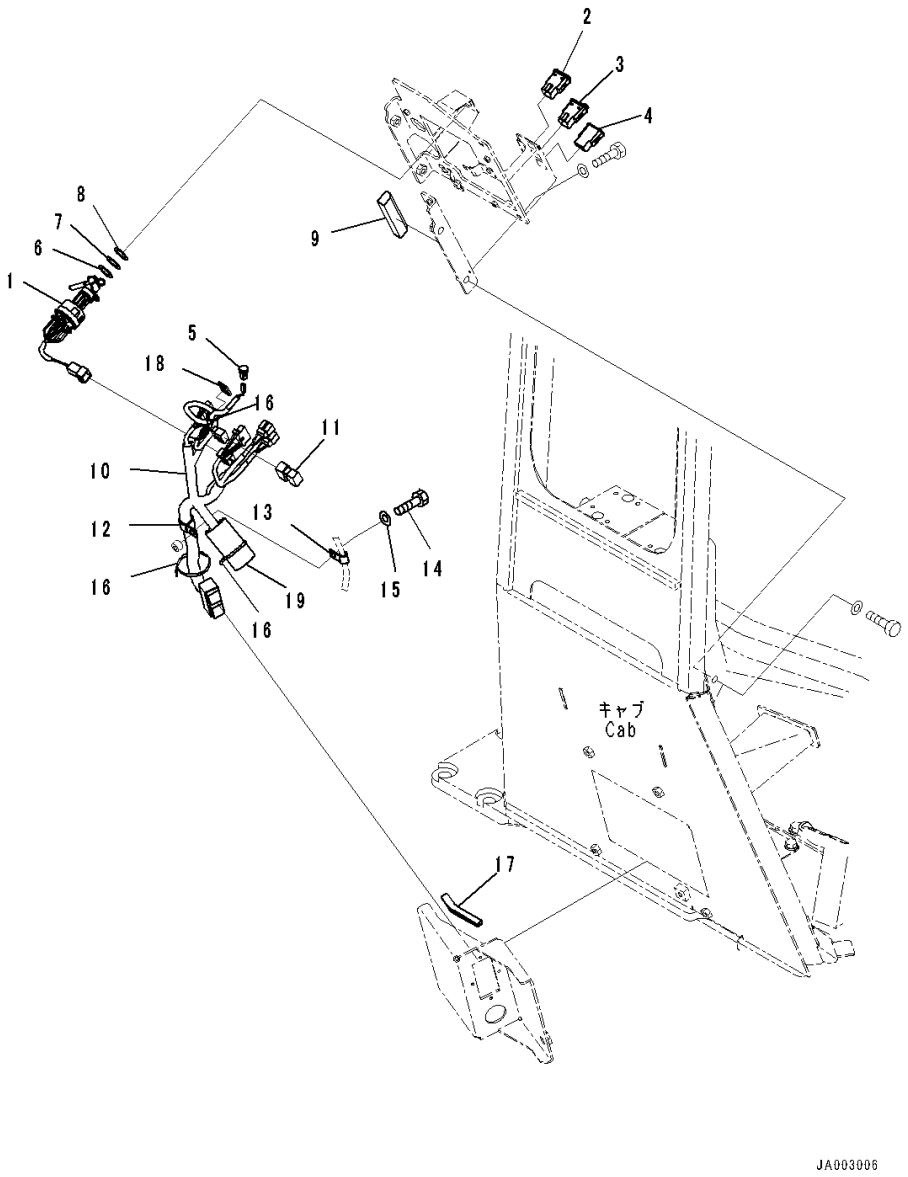

Index	Code	Part Number	Description	Qty	Serial Number
		Note: This list covers following specifications.			
		With AM-FM Stereo Radio For North America, TH300 Type KOMTRAX			
		Provision For Radio Installation, TH300 Type KOMTRAX			
		With Rear View Monitoring System, With AM-FM Stereo Radio With Cassette, TH300 Type KOMTRAX			
		With AM/FM Radio For Asia and EU, TH300 Type KOMTRAX			
1		14X-06-52191	Switch, Key	1	80001-
2		17A-06-42250	Switch, Light, Front	1	80001-
3		17A-06-42260	Switch, Light, Rear	1	80001-
4		20Y-06-42190	Cover	1	80001-
5		20Y-979-6161	Sensor	1	80001-
6		23S-15-45860	Shim, T=0.5mm	2	80001-
7		20Y-43-41750	Washer	2	80001-
8		20Y-43-41790	Washer	2	80001-
9		14X-54-56770	Seal,Bonded	1	80001-
10		14X-06-51132	Wiring Harness	1	80001-
11		8233-06-3350	Diode	1	80001-
12		04434-52310	Clip	1	80001-
13		04434-51010	Clip	1	80001-
14		01010-81020	Bolt	1	80001-
15		01643-31032	Washer	1	80001-
16		08034-20519	Band	3	80001-
17		14X-54-56160	Seal	1	80001-
18		20U-54-46520	Hook, Sticker Type	1	80001-
19		14X-06-52160	Sheet,Bonded	1	80001-

https://truckmanualshub.com/

FIG. K0210-002046 ROPS Cab, Foot Rest

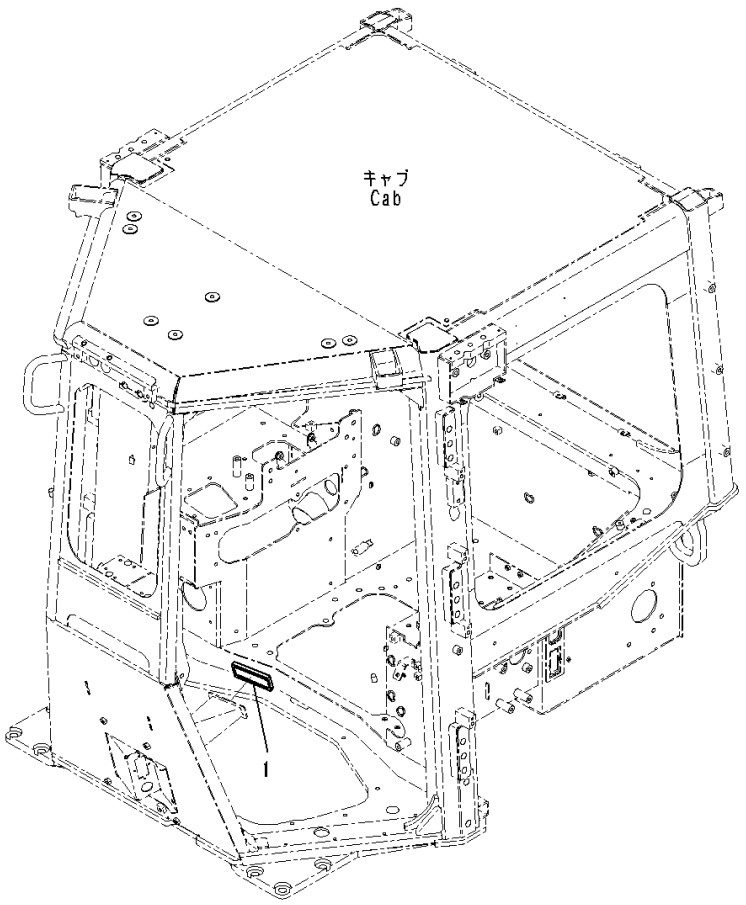

JA003007

Index	Code	Part Number	Description	Qty	Serial Number
		Note: This list covers following specifications. With AM-FM Stereo Radio For North America, TH300 Type KOMTRAX For EU Noise Reguration, Provision For Radio Installation, TH300 Type KOMTRAX For EU Noise Reguration, With AM/FM Radio For Asia and EU, TH300 Type KOMTRAX Provision For Radio Installation, TH300 Type KOMTRAX With Rear View Monitoring System, With AM-FM Stereo Radio With Cassette, TH300 Type KOMTRAX With AM/FM Radio For Asia and EU, TH300 Type KOMTRAX			
1		203-43-56450	Cap,Bonded	2	80001-

https://truckmanualshub.com/

FIG. K0210-002047 ROPS Cab, Dashboard Cover (2/2)

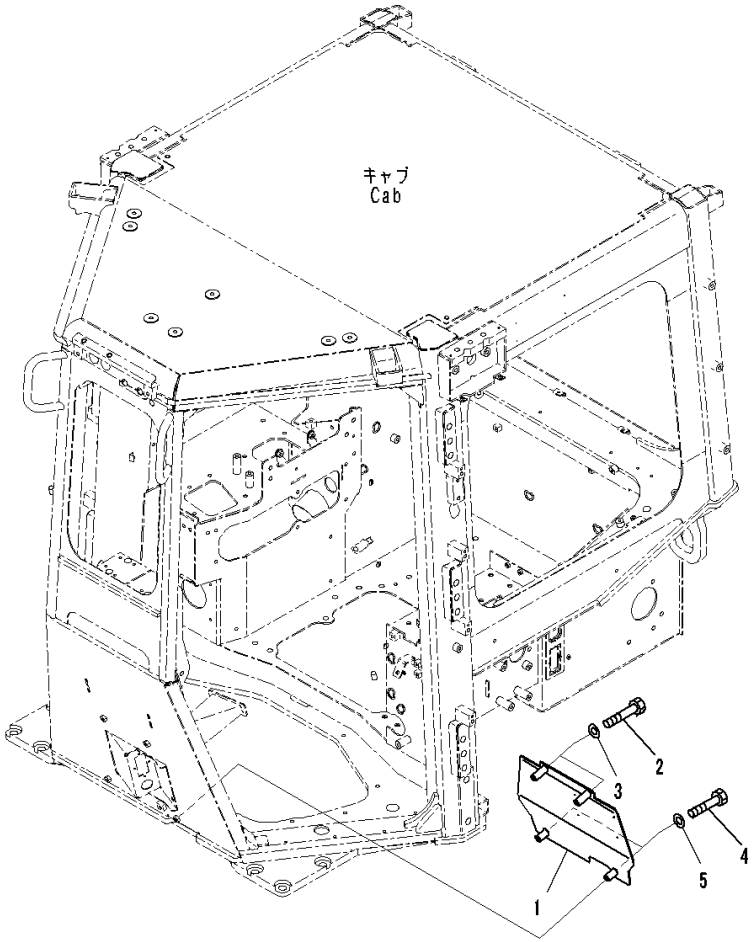

Index	Code	Part Number	Description	Qty	Serial Number
		Note: This list covers following specifications. With AM-FM Stereo Radio For North America, TH300 Type KOMTRAX For EU Noise Reguration, Provision For Radio Installation, TH300 Type KOMTRAX For EU Noise Reguration, With AM/FM Radio For Asia and EU, TH300 Type KOMTRAX Provision For Radio Installation, TH300 Type KOMTRAX With Rear View Monitoring System, With AM-FM Stereo Radio With Cassette, TH300 Type KOMTRAX With AM/FM Radio For Asia and EU, TH300 Type KOMTRAX			
1		14X-54-56711	Plate	1	80001-
2		01010-D1070	Bolt	2	80001-
3		01643-71032	Washer	2	80001-
4		01010-D1055	Bolt	2	80001-
5		01643-71032	Washer	2	80001-

https://truckmanualshub.com/

FIG. K0210-002048 ROPS Cab, Floor Cover

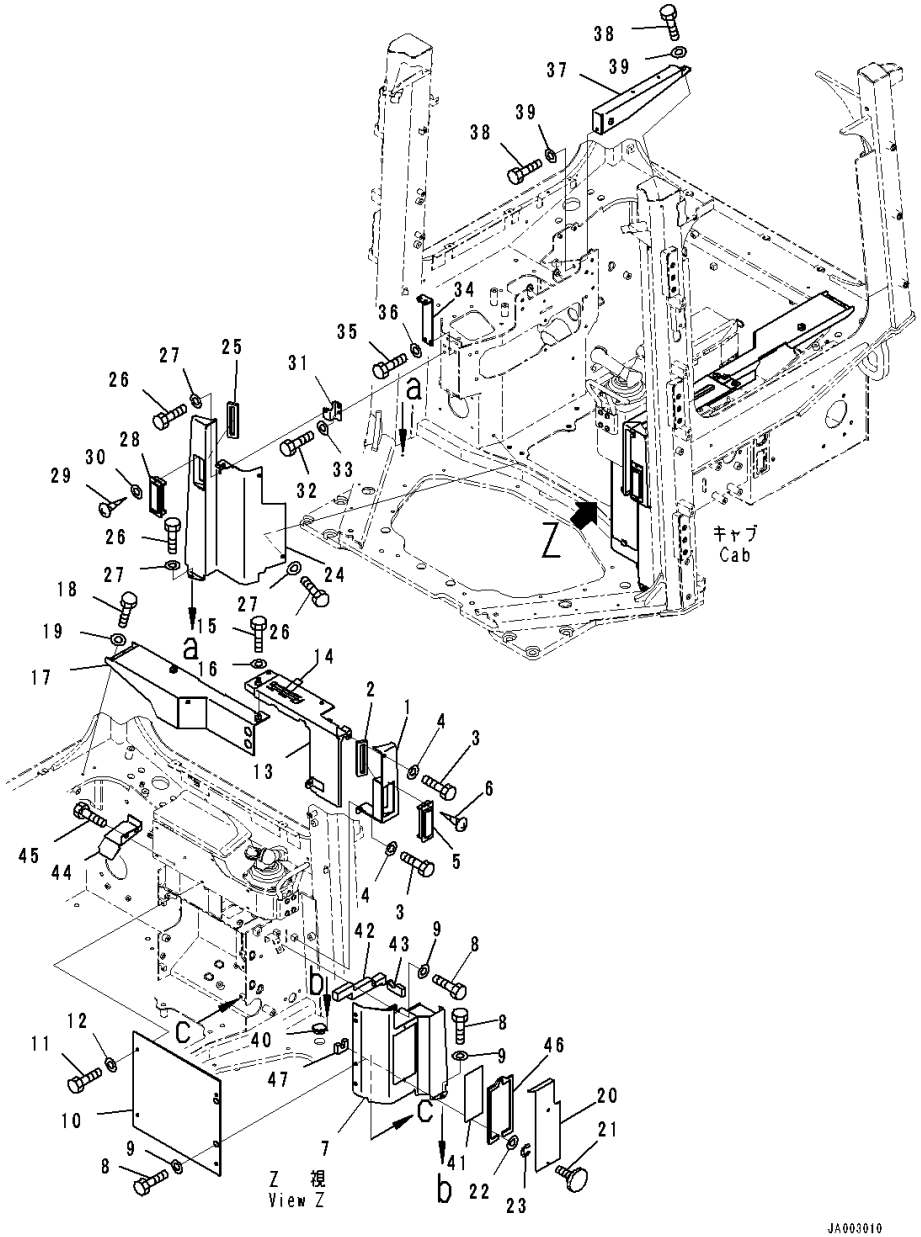

Index	Code	Part Number	Description	Qty	Serial Number
		Note: This list covers following specifications.			
		With AM-FM Stereo Radio For North America, TH300 Type KOMTRAX			
		For EU Noise Reguration, Provision For Radio Installation, TH300 Type KOMTRAX			
		For EU Noise Reguration, With AM/FM Radio For Asia and EU, TH300 Type KOMTRAX			
		Provision For Radio Installation, TH300 Type KOMTRAX			
1		14X-54-56291	Cover	1	80001-
2		14X-54-56491	• Sheet,Bonded	1	80001-
3		01010-D0825	Bolt	2	80001-
4		01643-70823	Washer	2	80001-
5		17A-Z11-7161	Louver	1	80001-
6		01370-10310	Screw	2	80001-
7		14X-54-56352	Cover	1	80001-
8		01010-D0825	Bolt	4	80001-
9		01643-70823	Washer	4	80001-
10		14X-54-56372	Cover	1	80017-
11		01010-D0825	Bolt	4	80001-
12		01643-70823	Washer	4	80001-
13		14X-54-56381	Cover	1	80001-
14		14X-43-48110	• Awning,Bonded	2	80001-
15		01010-D0825	Bolt	2	80001-
16		01643-70823	Washer	2	80001-
17		14X-54-56443	Cover	1	80065-
18		01010-D0825	Bolt	3	80001-
19		01643-70823	Washer	3	80001-
20		14X-54-56481	Plate	1	80001-
21		01232-10616	Screw, Knurled Head	2	80001-
22		01643-70623	Washer	2	80001-
23		195-54-78790	Ring, Snap	2	80001-
24		14X-54-56361	Cover	1	80001-
25		14X-54-56491	• Sheet,Bonded	1	80001-
26		01010-D0825	Bolt	5	80001-
27		01643-70823	Washer	5	80001-
28		17A-Z11-7161	Louver	1	80001-
29		01370-10310	Screw	2	80001-
30		01643-70623	Washer	2	80001-
31		14X-54-56451	Bracket	1	80001-
32		01010-D0825	Bolt	2	80001-

https://truckmanualshub.com/

FIG. K0210-002048 ROPS Cab, Floor Cover

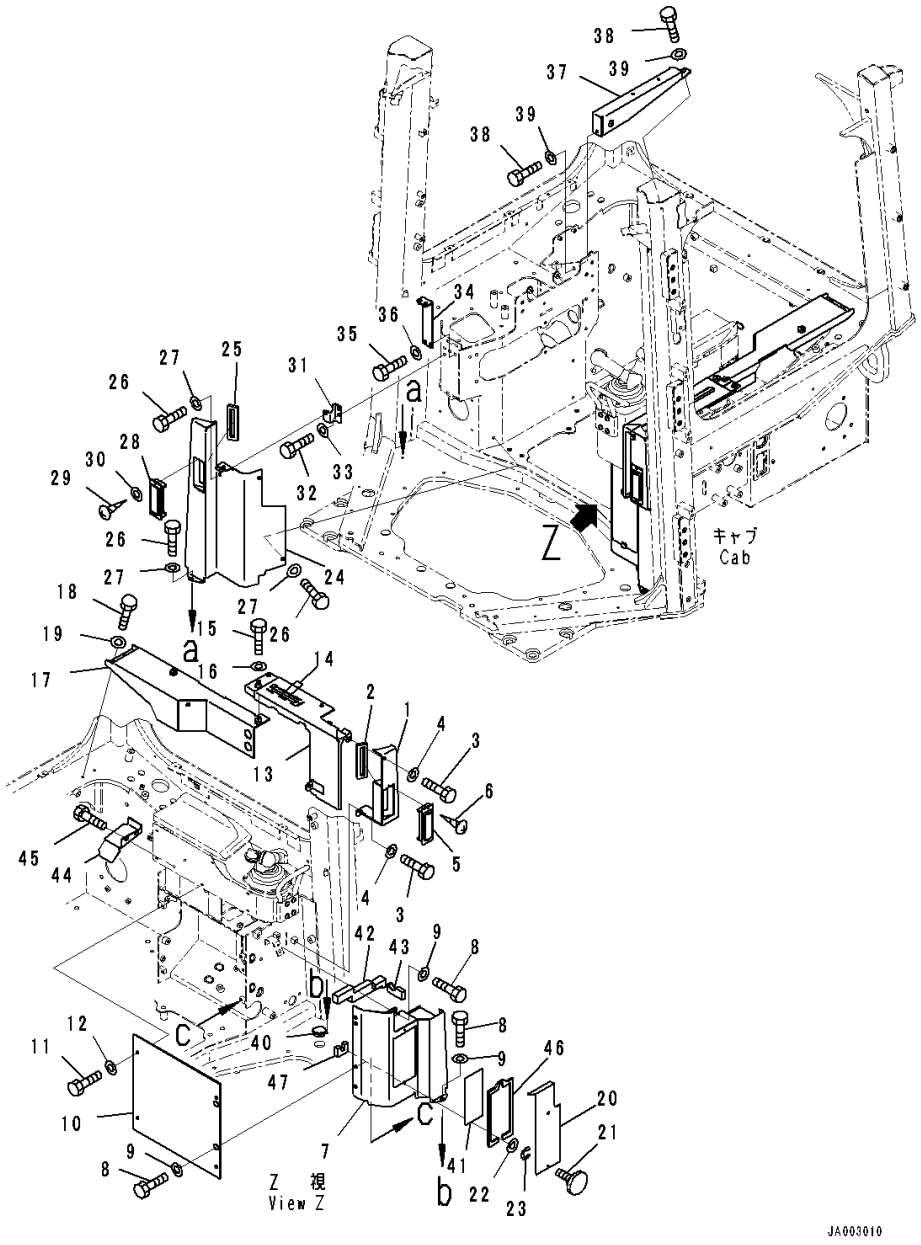

Index	Code	Part Number	Description	Qty	Serial Number
33		01643-70823	Washer	2	80001-
34		14X-54-56411	Bracket	1	80001-
35		01010-D0825	Bolt	2	80001-
36		01643-70823	Washer	2	80001-
37		14X-54-56471	Bracket	1	80001-
38		01010-D0825	Bolt	2	80001-
39		01643-70823	Washer	2	80001-
40		22U-54-25581	Grommet	1	80001-
41		14X-98-51161	Plate	1	80001-80064
42		14X-54-56240	Seal,Bonded	1	80001-
43		14X-54-56260	Seal,Bonded	1	80001-
44		14X-54-56270	Cover	1	80001-
45		01010-D0825	Bolt	2	80001-
46		14X-54-56760	Seal,Bonded	1	80001-
47		14X-54-56981	Seal,Bonded	1	80001-

https://truckmanualshub.com/

FIG. K0210-002049 ROPS Cab, KOMTRAX Controller

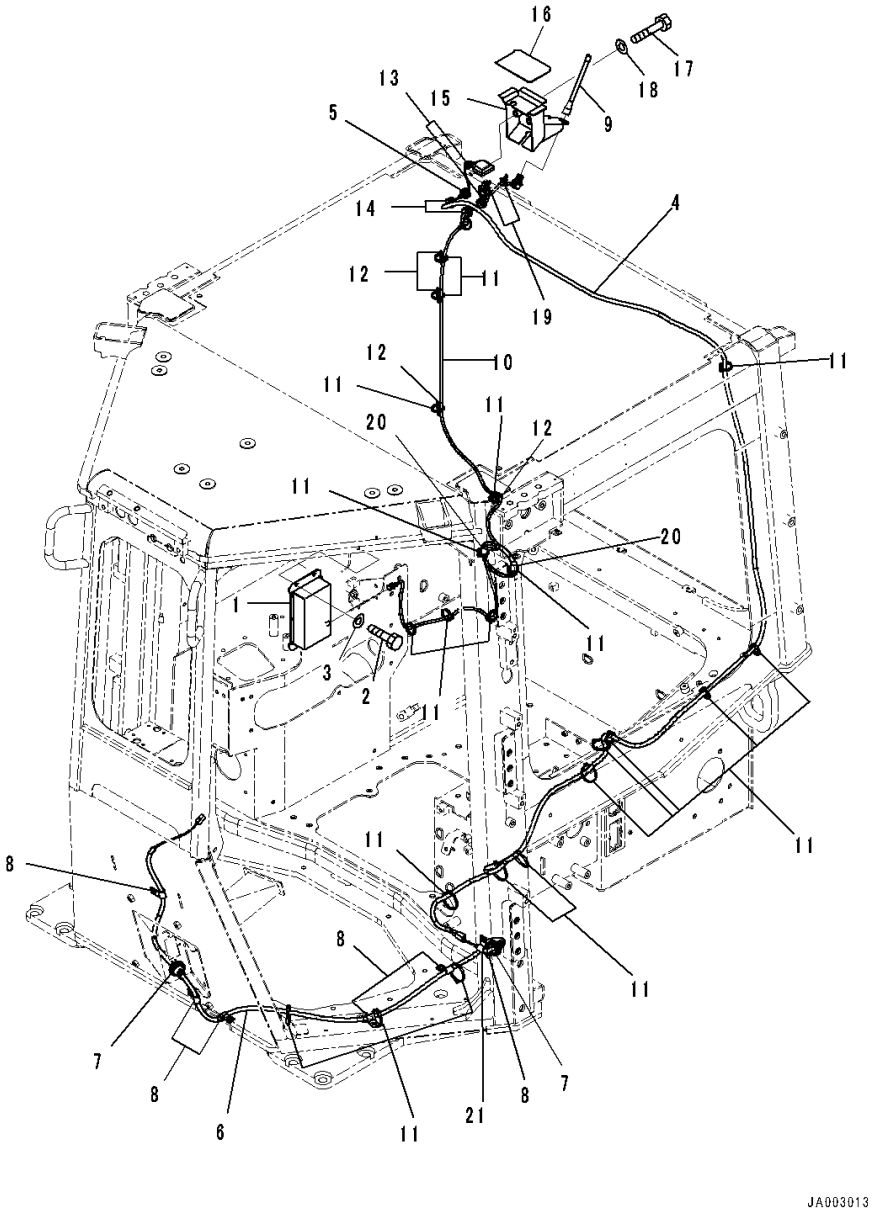

Index	Code	Part Number	Description	Qty	Serial Number
		Note: This list covers following specifications. With AM-FM Stereo Radio For North America, TH300 Type KOMTRAX For EU Noise Reguration, Provision For Radio Installation, TH300 Type KOMTRAX For EU Noise Reguration, With AM/FM Radio For Asia and EU, TH300 Type KOMTRAX Provision For Radio Installation, TH300 Type KOMTRAX With Rear View Monitoring System, With AM-FM Stereo Radio With Cassette, TH300 Type KOMTRAX With AM/FM Radio For Asia and EU, TH300 Type KOMTRAX			
1		7826-23-3011	Controller	1	80001-
2		01010-80616	Bolt	4	80001-
3		01643-30623	Washer	4	80001-
4		14X-06-51162	Cable Assembly	1	80258-
		14X-06-51161	Cable Assembly	1	80001-80257
5		14X-06-51530	Grommet	1	80001-
6		14X-06-51171	Cable Assembly	1	80001-
7		08037-11025	Grommet	2	80001-
8		04434-51010	Clip	6	80001-
9		8A13-10-2100	Antenna	1	80001-
10		14X-06-51190	Cable Assembly	1	80001-
11		08034-20519	Band	22	80001-
12		20U-54-46520	Hook, Sticker Type	3	80001-
13		175-06-81610	Grommet	2	80001-
14		14X-06-51520	Grommet	2	80001-
15		14X-06-51831	Bracket	1	80001-
16		14X-06-51840	Plate	1	80001-
17		01010-80850	Bolt	2	80001-
18		01643-30823	Washer	2	80001-
19		08059-00413	Clip	2	80001-
20		22B-54-28990	Sheet,Bonded	2	80001-
21		04434-51010	Clip	1	80001-

https://truckmanualshub.com/

FIG. K0210-002050 ROPS Cab, Decal

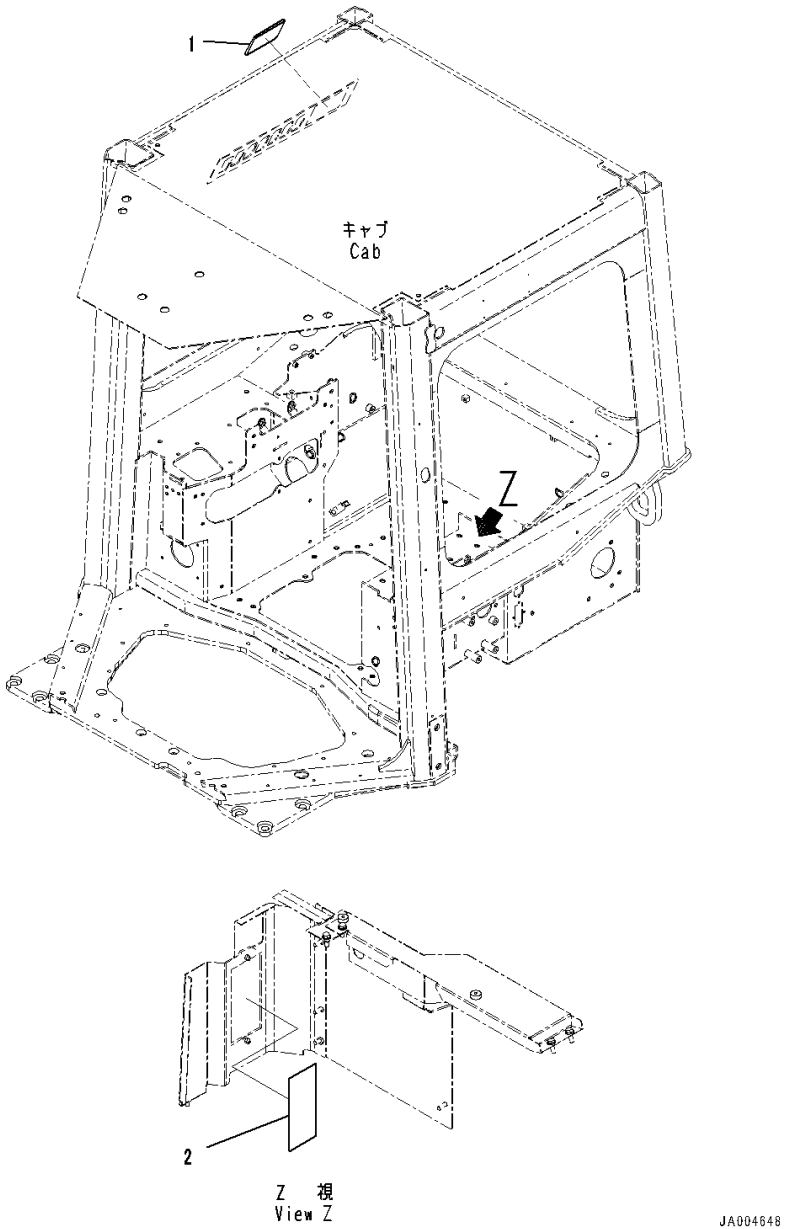

Index	Code	Part Number	Description	Qty	Serial Number
		Note: This list covers following specifications. With AM-FM Stereo Radio For North America, TH300 Type KOMTRAX Provision For Radio Installation, TH300 Type KOMTRAX With Rear View Monitoring System, With AM-FM Stereo Radio For North America, TH300 Type KOMTRAX With Rear View Monitoring System, Provision For Radio Installation, TH300 Type KOMTRAX			
1		14X-98-51120	Plate	1	80065-
2		14X-98-51161	Plate	1	80065-

https://truckmanualshub.com/

FIG. K0210-002051A ROPS Cab, Related Parts

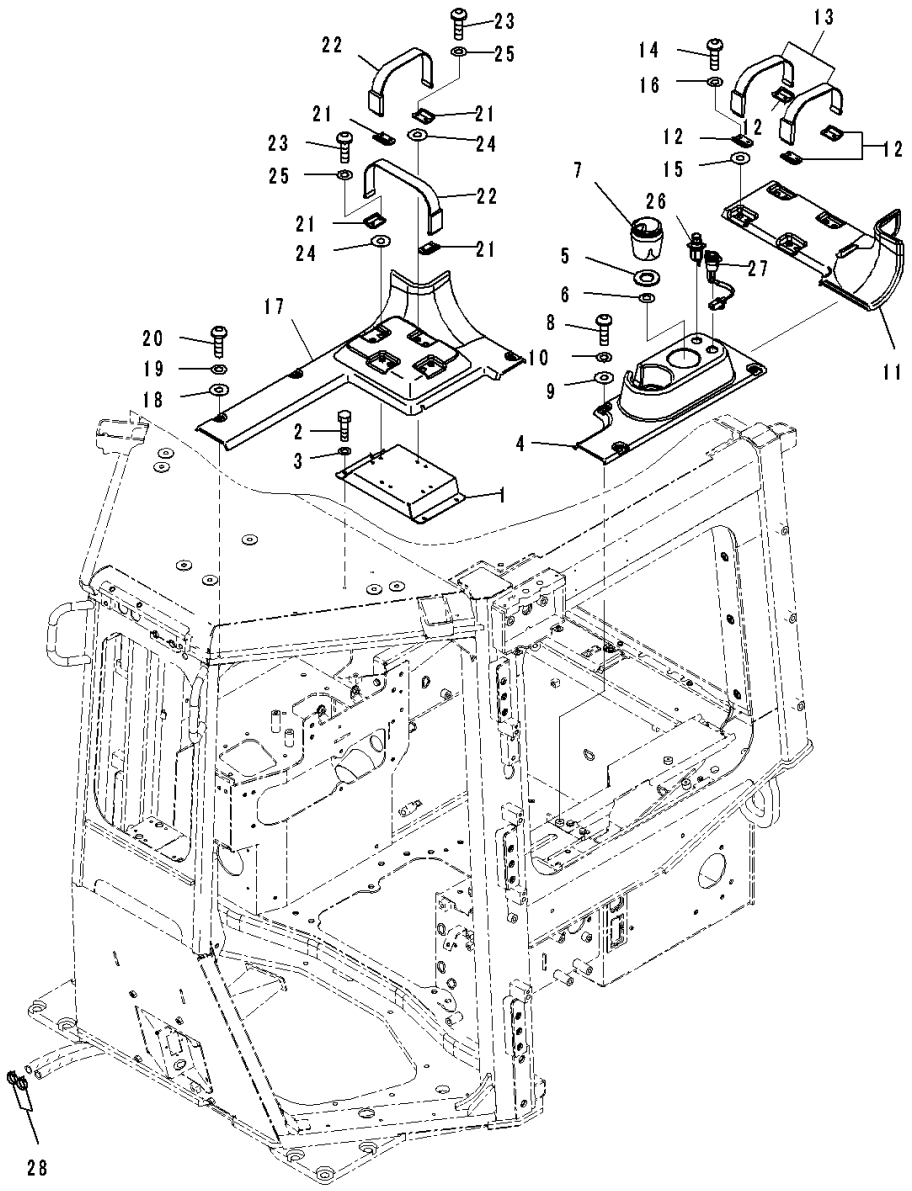

Index	Code	Part Number	Description	Qty	Serial Number
		Note: This list covers following specifications. With AM-FM Stereo Radio For North America, TH300 Type KOMTRAX For EU Noise Reguration, Provision For Radio Installation, TH300 Type KOMTRAX For EU Noise Reguration, With AM/FM Radio For Asia and EU, TH300 Type KOMTRAX Provision For Radio Installation, TH300 Type KOMTRAX With Rear View Monitoring System, With AM-FM Stereo Radio With Cassette, TH300 Type KOMTRAX With AM/FM Radio For Asia and EU, TH300 Type KOMTRAX			
1		14X-54-56421	Bracket	1	80001-
2		01010-80616	Bolt	4	80001-
3		01643-30623	Washer	4	80001-
4		14X-Y79-2181	Cover	1	80017-
5		20Y-43-41970	Sheet	3	80017-
6		14X-Y79-2361	Sheet	2	80017-
7		20Y-43-41491	Ashtray	1	80017-
8		01245-00625	Screw	4	80001-
9		12Y-978-2660	Collar	4	80001-
10		01643-70623	Washer	4	80001-
11		14X-Y79-2320	Cover	1	80001-
12		14X-Y79-1241	Plate	4	80001-
13		423-54-42790	Band	2	80001-
14		01245-00625	Screw	8	80001-
15		12Y-978-2660	Collar	8	80001-
16		01643-70623	Washer	8	80001-
17		14X-Y79-2330	Cover	1	80001-
18		12Y-978-2660	Collar	3	80001-
19		01643-70623	Washer	3	80001-
20		01245-00625	Screw	3	80001-
21		14X-Y79-1241	Plate	4	80001-
22		423-54-42790	Band	2	80001-
23		01245-00625	Screw	8	80001-
24		12Y-978-2660	Collar	8	80001-
25		01643-70623	Washer	8	80001-
26		20Y-06-23472	Cigarette Lighter	1	80001-
27		14X-06-52491	Socket Assembly	1	80001-
28		09479-02400	Clamp	2	80001-

https://truckmanualshub.com/

FIG. K0210-005017 ROPS Cab, Cover

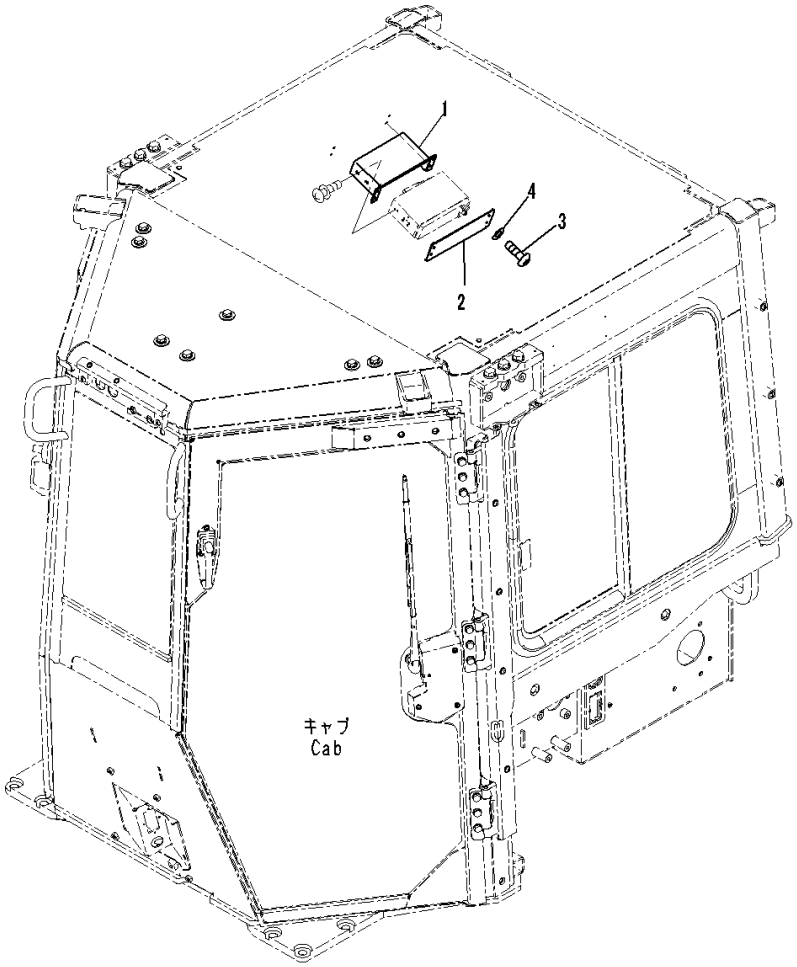

Index	Code	Part Number	Description	Qty	Serial Number
		Note: This list covers following specifications. For EU Noise Reguration, Provision For Radio Installation, TH300 Type KOMTRAX Provision For Radio Installation, TH300 Type KOMTRAX			
1		14X-Y79-1590	Bracket	1	80001-
2		17A-Z11-2240	Plate	1	80001-
3		01245-00620	Screw	4	80001-
4		01643-70623	Washer	4	80001-

https://truckmanualshub.com/

FIG. K0210-005045 ROPS Cab, Floor, Switch

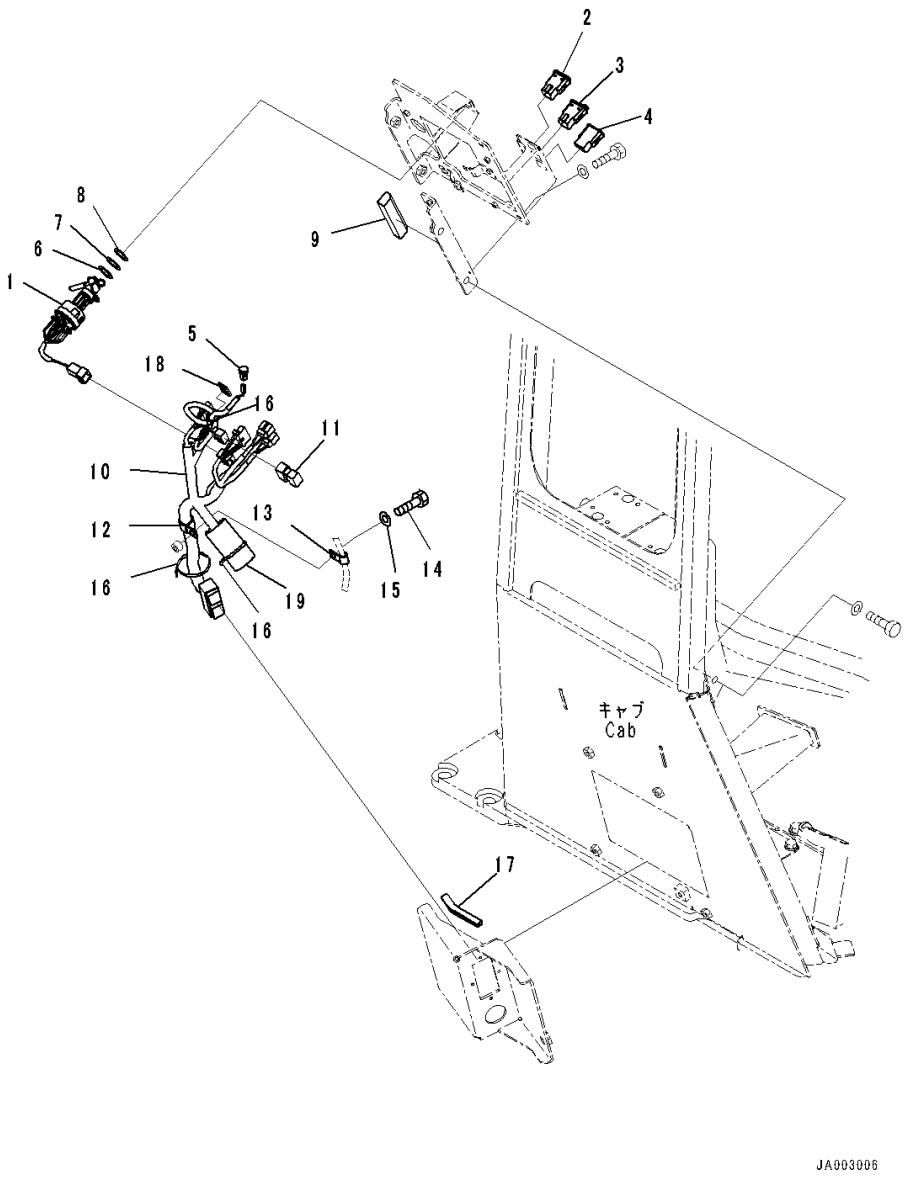

Index	Code	Part Number	Description	Qty	Serial Number
		Note: This list covers following specifications. For EU Noise Reguration, Provision For Radio Installation, TH300 Type KOMTRAX For EU Noise Reguration, With AM/FM Radio For Asia and EU, TH300 Type KOMTRAX			
1		14X-06-51691	Switch, Key	1	80001-
2		17A-06-42250	Switch, Light, Front	1	80001-
3		17A-06-42260	Switch, Light, Rear	1	80001-
4		20Y-06-42190	Cover	1	80001-
5		20Y-979-6161	Sensor	1	80001-
6		23S-15-45860	Shim, T=0.5mm	2	80001-
7		20Y-43-41750	Washer	2	80001-
8		20Y-43-41790	Washer	2	80001-
9		14X-54-56770	Seal,Bonded	1	80001-
10		14X-06-51132	Wiring Harness	1	80001-
11		8233-06-3350	Diode	1	80001-
12		04434-52310	Clip	1	80001-
13		04434-51010	Clip	1	80001-
14		01010-81020	Bolt	1	80001-
15		01643-31032	Washer	1	80001-
16		08034-20519	Band	3	80001-
17		14X-54-56160	Seal	1	80001-
18		20U-54-46520	Hook, Sticker Type	1	80001-
19		14X-06-52160	Sheet,Bonded	1	80001-

https://truckmanualshub.com/

FIG. K0210-005050 ROPS Cab, Decal

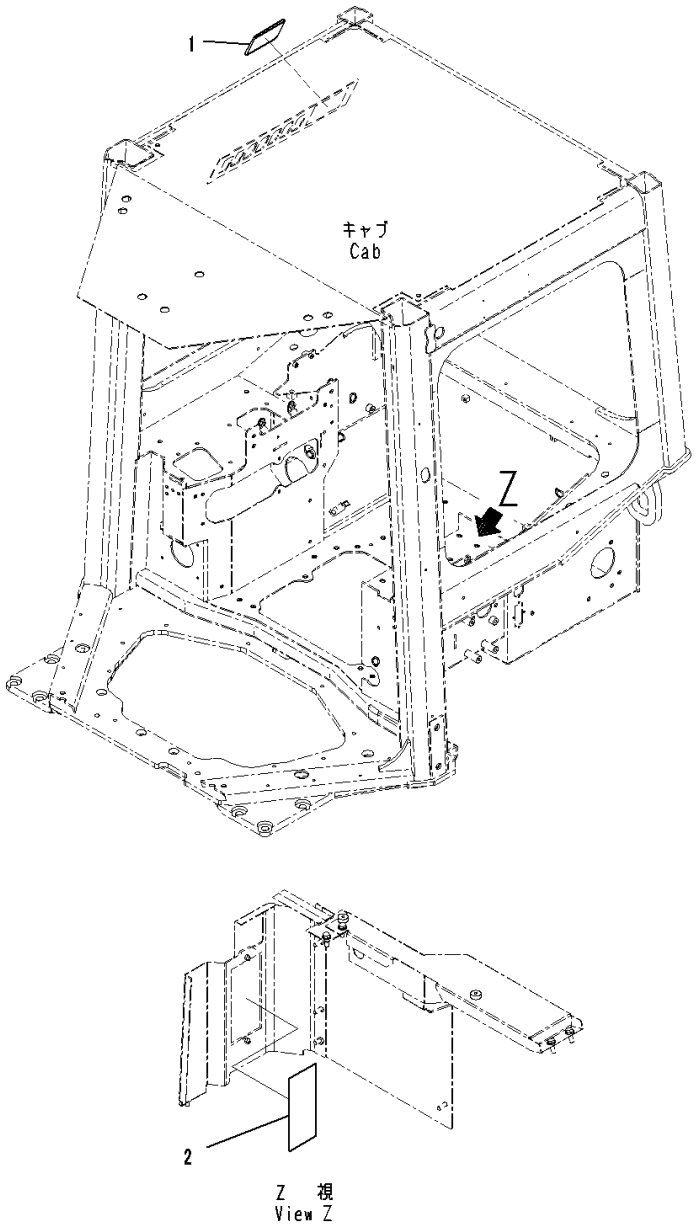

Index	Code	Part Number	Description	Qty	Serial Number
		Note: This list covers following specifications. For EU Noise Reguration, Provision For Radio Installation, TH300 Type KOMTRAX For EU Noise Reguration, With AM/FM Radio For Asia and EU, TH300 Type KOMTRAX EU Regulation Guard Level 2, With Rear View Monitoring System, With AM-FM Stereo Radio With Cassette For Europe And Asia, TH300 Type KOMTRAX EU Regulation Guard Level 2, With Rear View Monitoring System, Provision For Radio Installation, TH300 Type KOMTRAX			
1		14X-98-51260	Plate	1	80065-
2		14X-98-51270	Plate	1	80065-

https://truckmanualshub.com/

FIG. K0210-004017 ROPS Cab, For EU Noise Reguration, With AM/FM Radio For Asia and EU, TH300 Type KOMTRAX, Radio

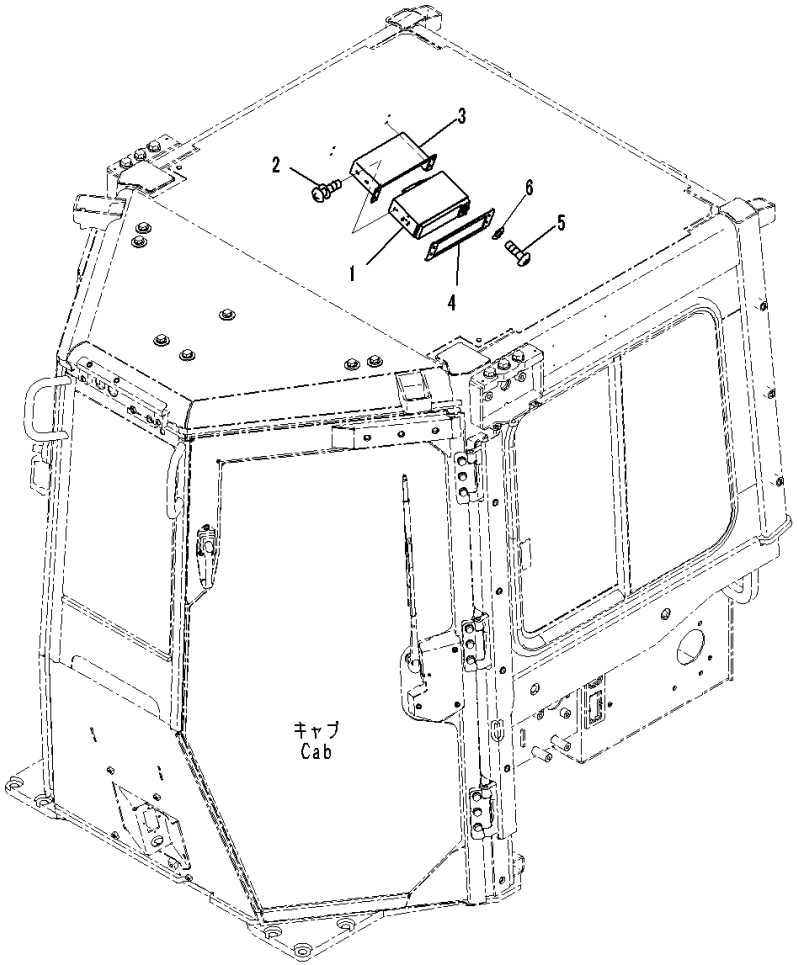

Index	Code	Part Number	Description	Qty	Serial Number
1		207-06-71734	Radio	1	80017-
2		01023-20510	Screw	4	80001-
3		14X-Y79-1590	Bracket	1	80001-
4		12Y-978-2280	Plate	1	80001-
5		01245-00620	Screw	4	80001-
6		01643-70623	Washer	4	80001-

https://truckmanualshub.com/

FIG. K0210-007002 ROPS Cab, Door and Latch, LHS

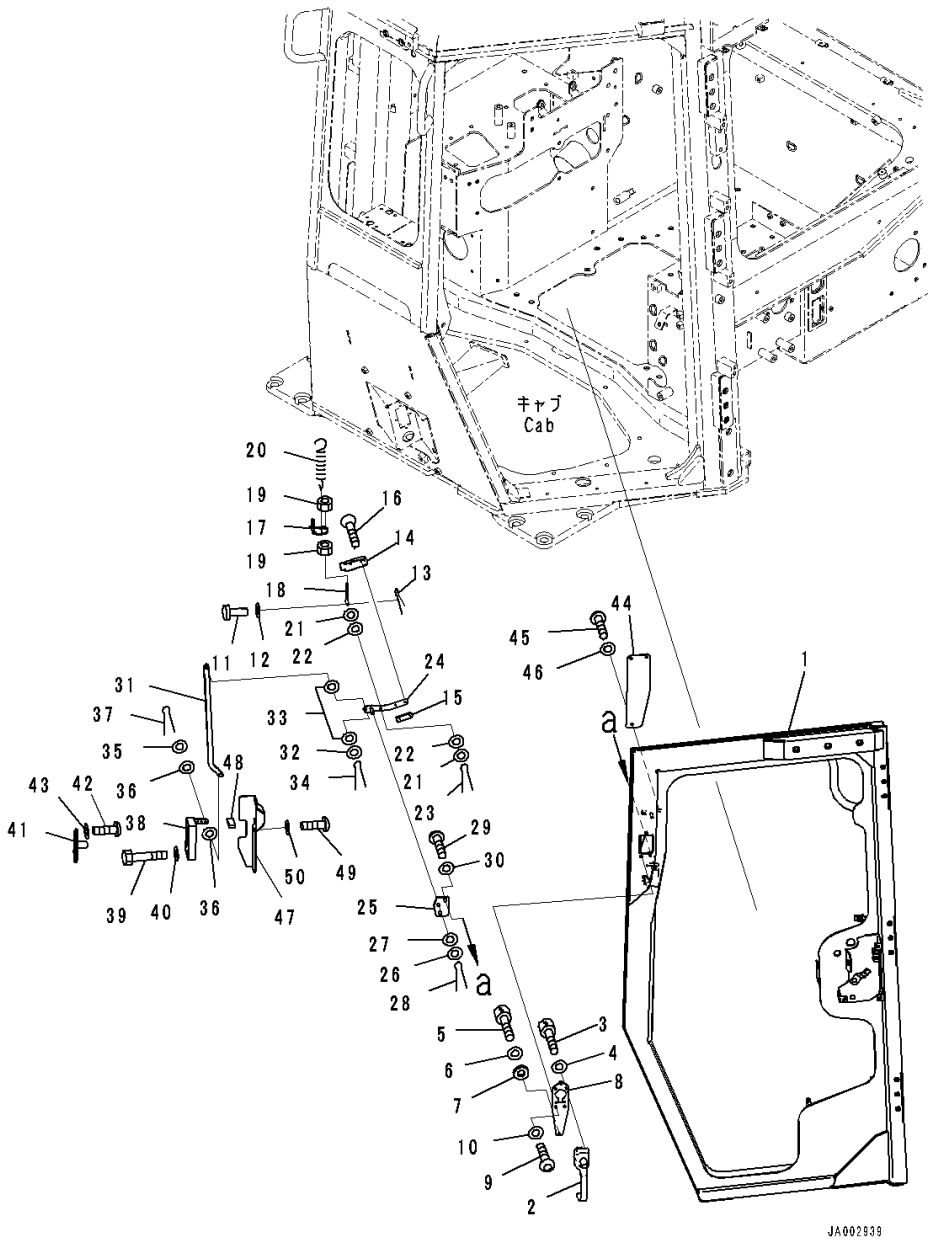

Index	Code	Part Number	Description	Qty	Serial Number
		Note: This list covers following specifications. With Rear View Monitoring System, With AM-FM Stereo Radio For North America, TH300 Type KOMTRAX With Rear View Monitoring System, Provision For Radio Installation, TH300 Type KOMTRAX EU Regulation Guard Level 2, With Rear View Monitoring System, With AM-FM Stereo Radio With Cassette For Europe And Asia, TH300 Type KOMTRAX EU Regulation Guard Level 2, With Rear View Monitoring System, Provision For Radio Installation, TH300 Type KOMTRAX			
1		14X-Y79-3111	Door Assembly	1	80052-
2		198-Z11-3710	Handle Assembly	1	80052-
3		01252-70520	Bolt	4	80052-
4		01640-20508	Washer	4	80052-
5		01252-70525	Bolt, Hexagon Socket Head	1	80052-
6		01640-20508	Washer	1	80052-
7		14X-Y79-3130	Spacer	1	80052-
8		12Y-978-3210	Plate	1	80052-
9		01245-00620	Screw	3	80052-
10		01643-70623	Washer	3	80052-
11		04205-10622	Pin	1	80052-
12		01643-70623	Washer	4	80052-
13		04050-11612	Pin, Cotter	1	80052-
14		12Y-978-3281	Knob	1	80052-
15		12Y-978-3290	Plate	1	80052-
16		01023-70412	Screw	2	80052-
17		14X-Y79-3220	Plate	1	80052-
18		14X-Y79-3360	Rod	1	80052-
19		01580-00605	Nut	2	80052-
20		176-06-42170	Spring	1	80052-
21		01643-70623	Washer	2	80052-
22		12Y-978-3310	Rubber	2	80052-
23		04050-11612	Pin, Cotter	1	80052-
24		14X-Y79-3651	Plate	1	80052-
25		12Y-978-3261	Plate	1	80052-
26		01643-70823	Washer	1	80052-
27		12Y-978-3360	Rubber	1	80052-
28		04050-12012	Pin, Cotter	1	80052-
29		01245-00620	Screw	2	80052-

https://truckmanualshub.com/

FIG. K0210-007002 ROPS Cab, Door and Latch, LHS

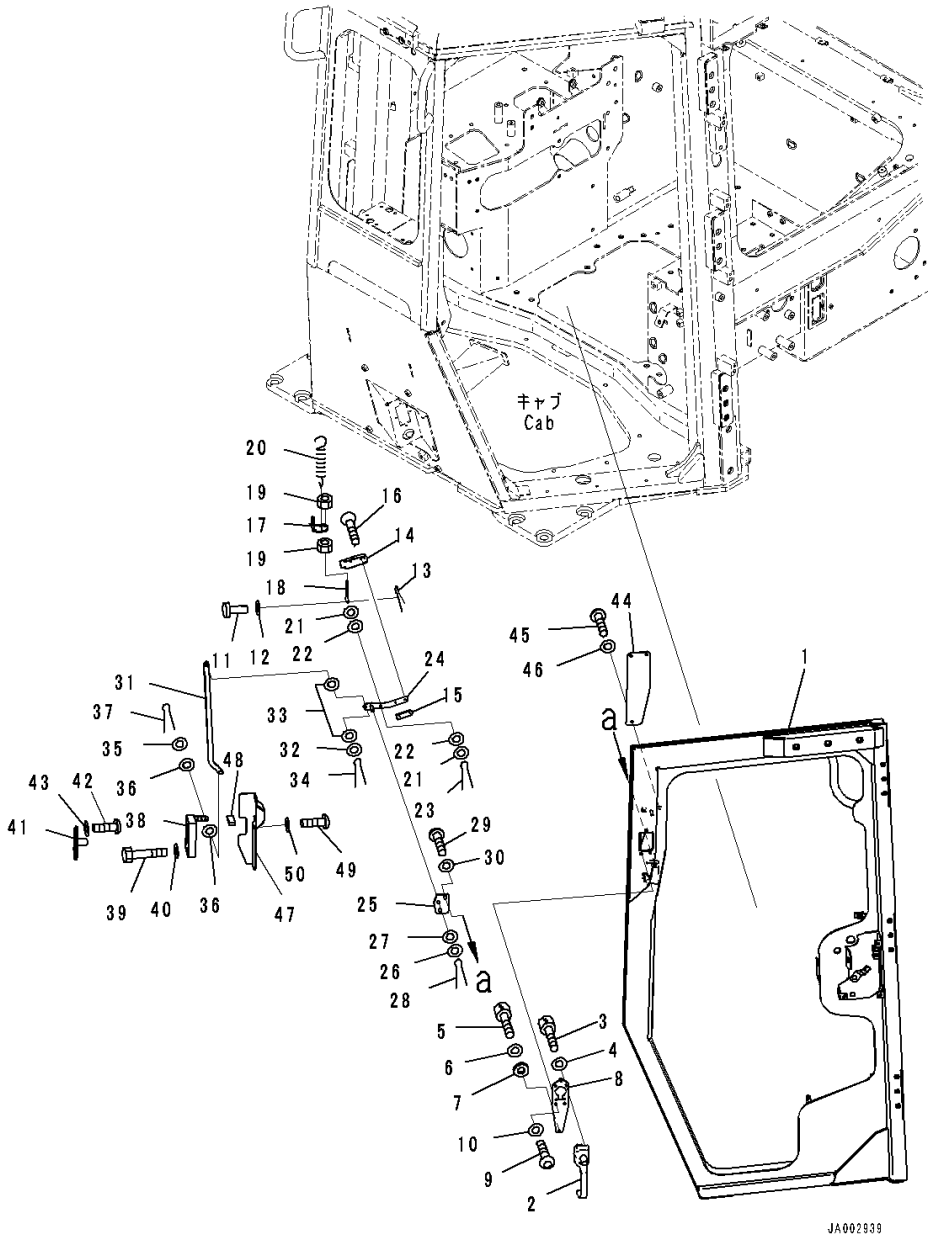

Index	Code	Part Number	Description	Qty	Serial Number
30		01643-70623	Washer	2	80052-
31		17A-979-3320	Plate	1	80052-
32		01640-20610	Washer	1	80052-
33		12Y-978-3310	Rubber	2	80052-
34		04050-11612	Pin, Cotter	1	80052-
35		01643-70623	Washer	1	80052-
36		12Y-978-3310	Rubber	2	80052-
37		04050-11612	Pin, Cotter	1	80052-
38		195-Z11-4520	Lock	1	80052-
39		01010-D0635	Bolt	4	80052-
40		01643-70623	Washer	4	80052-
41		12Y-978-3480	Striker	1	80052-
42		01245-00825	Screw	4	80052-
43		01643-70823	Washer	4	80052-
44		14X-Y79-3310	Plate	1	80052-
45		01245-00620	Screw	3	80052-
46		01643-70623	Washer	3	80052-
47		14X-Y79-3321	Cover	1	80052-
48		17A-979-3811	• Sheet,Bonded	1	80052-
49		01245-00620	Screw	2	80052-
50		01643-70623	Washer	2	80052-

https://truckmanualshub.com/

FIG. K0210-007003 ROPS Cab, Door Dumper, Window and Wiper LHS

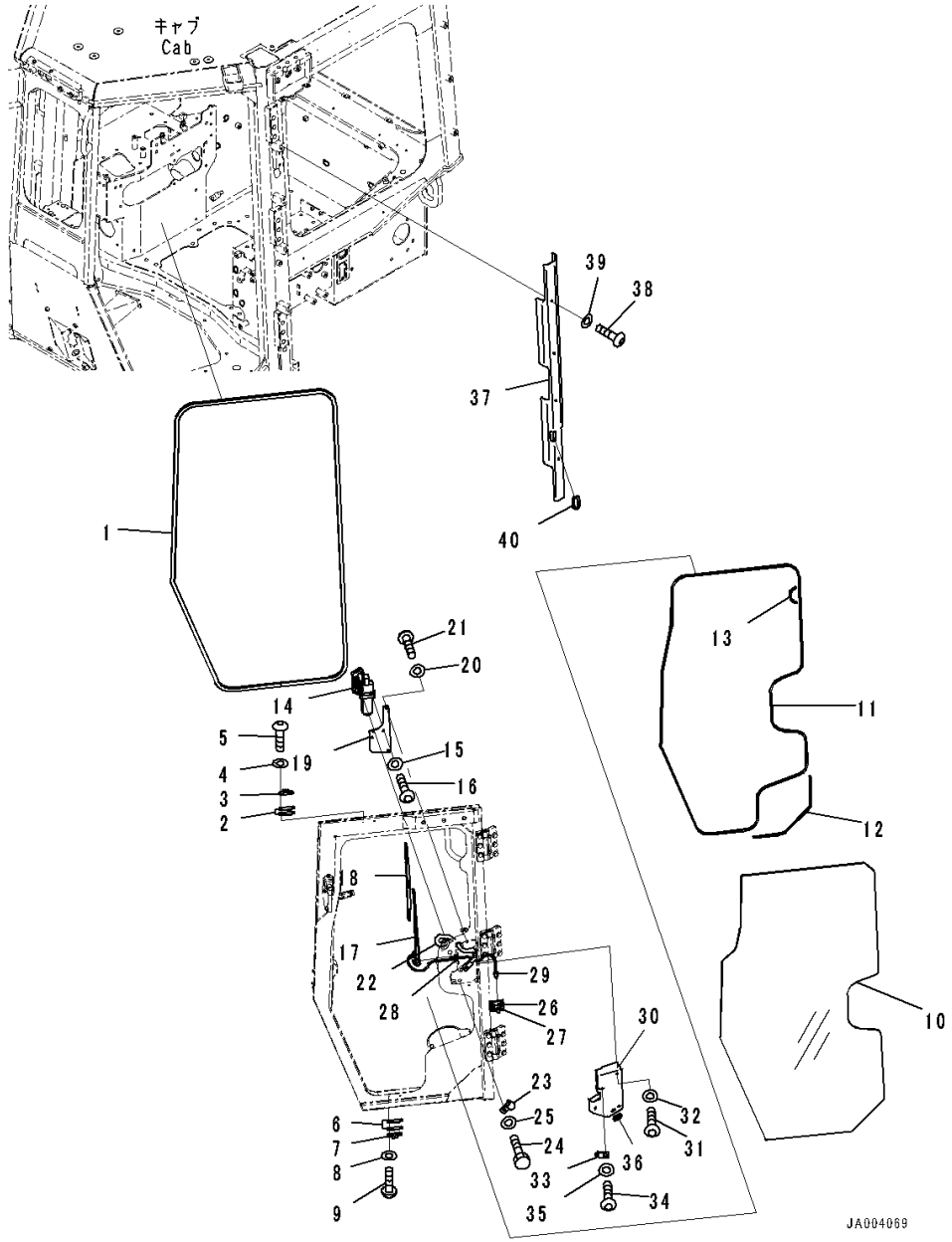

Index	Code	Part Number	Description	Qty	Serial Number
		Note: This list covers following specifications. With Rear View Monitoring System, With AM-FM Stereo Radio For North America, TH300 Type KOMTRAX With Rear View Monitoring System, Provision For Radio Installation, TH300 Type KOMTRAX EU Regulation Guard Level 2, With Rear View Monitoring System, With AM-FM Stereo Radio With Cassette For Europe And Asia, TH300 Type KOMTRAX EU Regulation Guard Level 2, With Rear View Monitoring System, Provision For Radio Installation, TH300 Type KOMTRAX			
1		12Y-978-3370	Seal	1	80052-
2		14X-911-1761	Shim, T=1.2mm	2	80052-
3		14X-911-1690	Damper	1	80052-
4		01643-70623	Washer	2	80052-
5		01245-00620	Screw	2	80052-
6		14X-911-1761	Shim, T=1.2mm	2	80052-
7		14X-911-1690	Damper	1	80052-
8		01643-70623	Washer	2	80052-
9		01245-00620	Screw	2	80052-
10		14X-Y79-1361	Glass	1	80052-
11		14X-Y79-1380	Seal,Bonded	1	80052-
12		14X-Y79-1390	Seal,Bonded	1	80052-
13		14X-Y79-1410	Seal,Bonded	1	80052-
14		12Y-978-2431	Wiper Motor	1	80052-
15		01643-70623	Washer	2	80052-
16		01245-00616	Screw, Hexagon Socket Head	2	80052-
17		12Y-978-2490	Arm, Wiper	1	80052-
18		17A-Z11-2581	Wiper Blade	1	80052-
19		14X-Y79-3280	Plate	1	80052-
20		01643-70823	Washer	3	80052-
21		01245-00820	Screw	3	80052-
22		14X-06-51181	Wiring Harness	1	80052-
23		04434-51710	Clip	1	80052-
24		01010-81020	Bolt	1	80052-
25		01643-31032	Washer	1	80052-
26		20U-54-46520	Hook, Sticker Type	1	80052-
27		08034-20519	Band	1	80052-
28		17A-Z11-2660	Cap	1	80052-
29		17A-Z11-4610	Valve	1	80052-

https://truckmanualshub.com/

FIG. K0210-007003 ROPS Cab, Door Dumper, Window and Wiper LHS

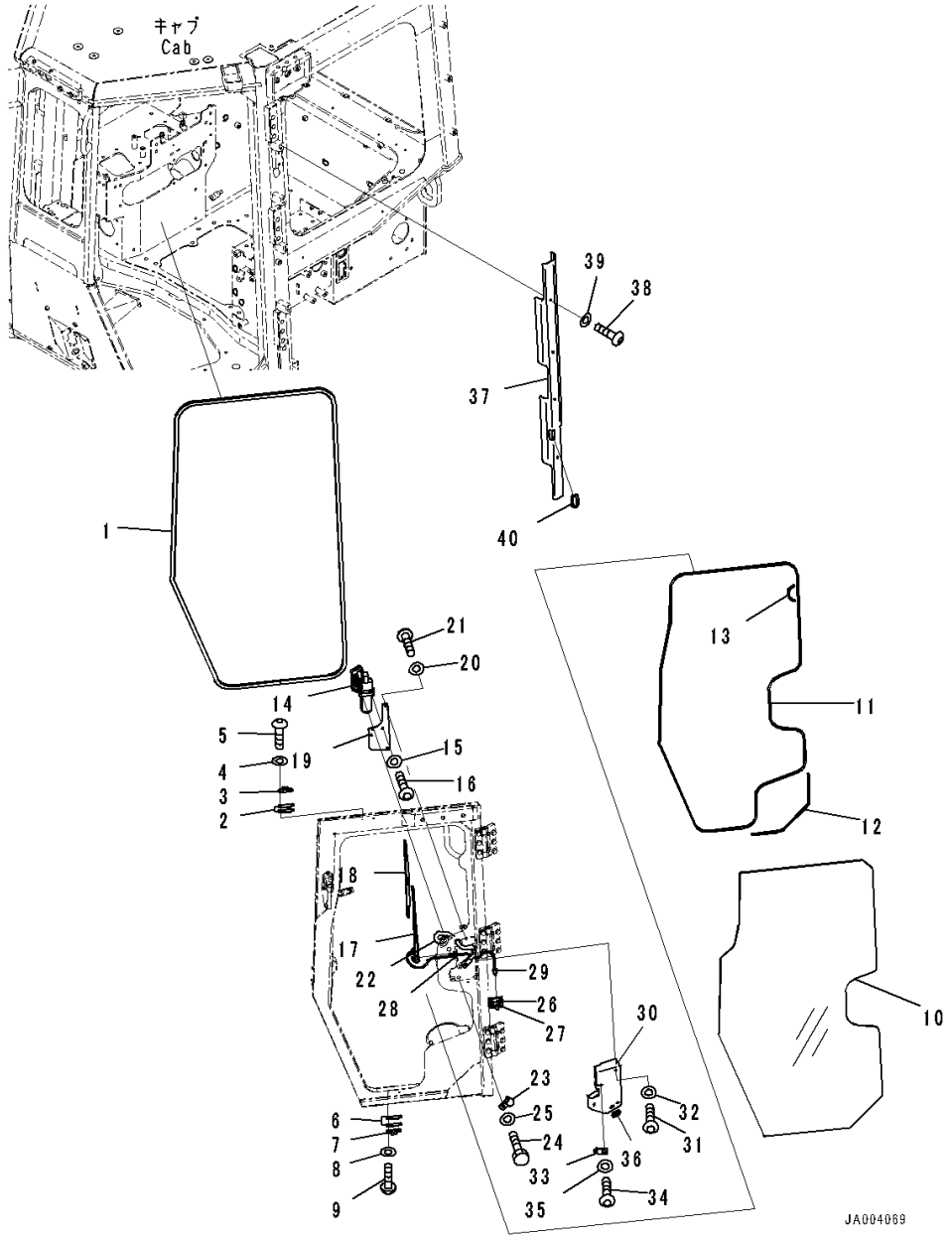

Index	Code	Part Number	Description	Qty	Serial Number
30		14X-Y79-3472	Cover	1	80052-
31		01245-00620	Screw	3	80052-
32		01643-70623	Washer	3	80052-
33		14X-Y79-3770	Bracket	1	80052-
34		01245-00620	Screw	1	80052-
35		01643-70623	Washer	1	80052-
36		08037-02512	Grommet	1	80052-
37		14X-Y79-3451	Cover	1	80052-
38		01245-00816	Screw	4	80052-
39		01643-70823	Washer	4	80052-
40		14X-Y79-3631	Seal	1	80052-

https://truckmanualshub.com/

FIG. K0210-007004 ROPS Cab, Door Cover, LHS

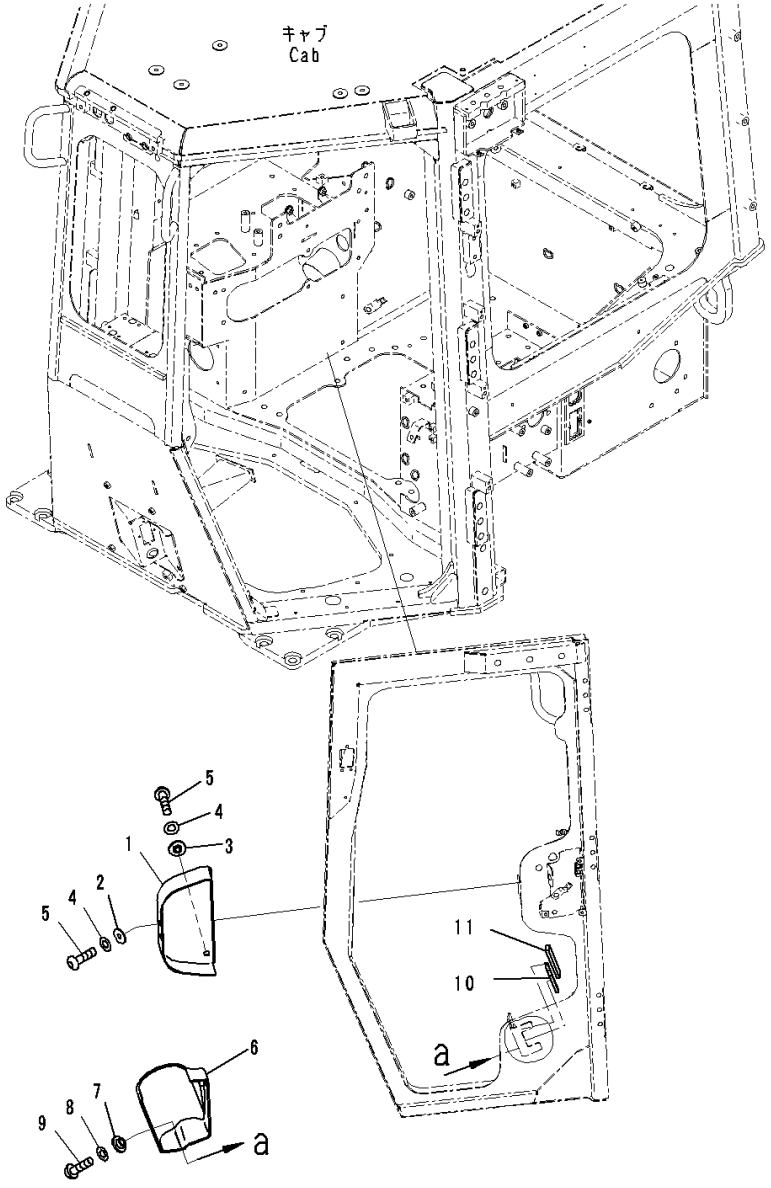

Index	Code	Part Number	Description	Qty	Serial Number
		Note: This list covers following specifications. With Rear View Monitoring System, With AM-FM Stereo Radio For North America, TH300 Type KOMTRAX With Rear View Monitoring System, Provision For Radio Installation, TH300 Type KOMTRAX EU Regulation Guard Level 2, With Rear View Monitoring System, With AM-FM Stereo Radio With Cassette For Europe And Asia, TH300 Type KOMTRAX EU Regulation Guard Level 2, With Rear View Monitoring System, Provision For Radio Installation, TH300 Type KOMTRAX			
1		14X-Y79-3270	Cover	1	80052-
2		12Y-978-2660	Collar	2	80052-
3		17A-979-1620	Collar	2	80052-
4		01643-70623	Washer	4	80052-
5		01245-00616	Screw, Hexagon Socket Head	4	80052-
6		14X-Y79-3241	Cover	1	80052-
7		12Y-978-2660	Collar	3	80052-
8		01643-70623	Washer	3	80052-
9		01245-00620	Screw	3	80052-
10		14X-Y79-3261	Rubber,Bonded	1	80052-
11		14X-Y79-3350	Rubber,Bonded	1	80052-

https://truckmanualshub.com/

FIG. K0210-007005 ROPS Cab, Door and Latch, RHS

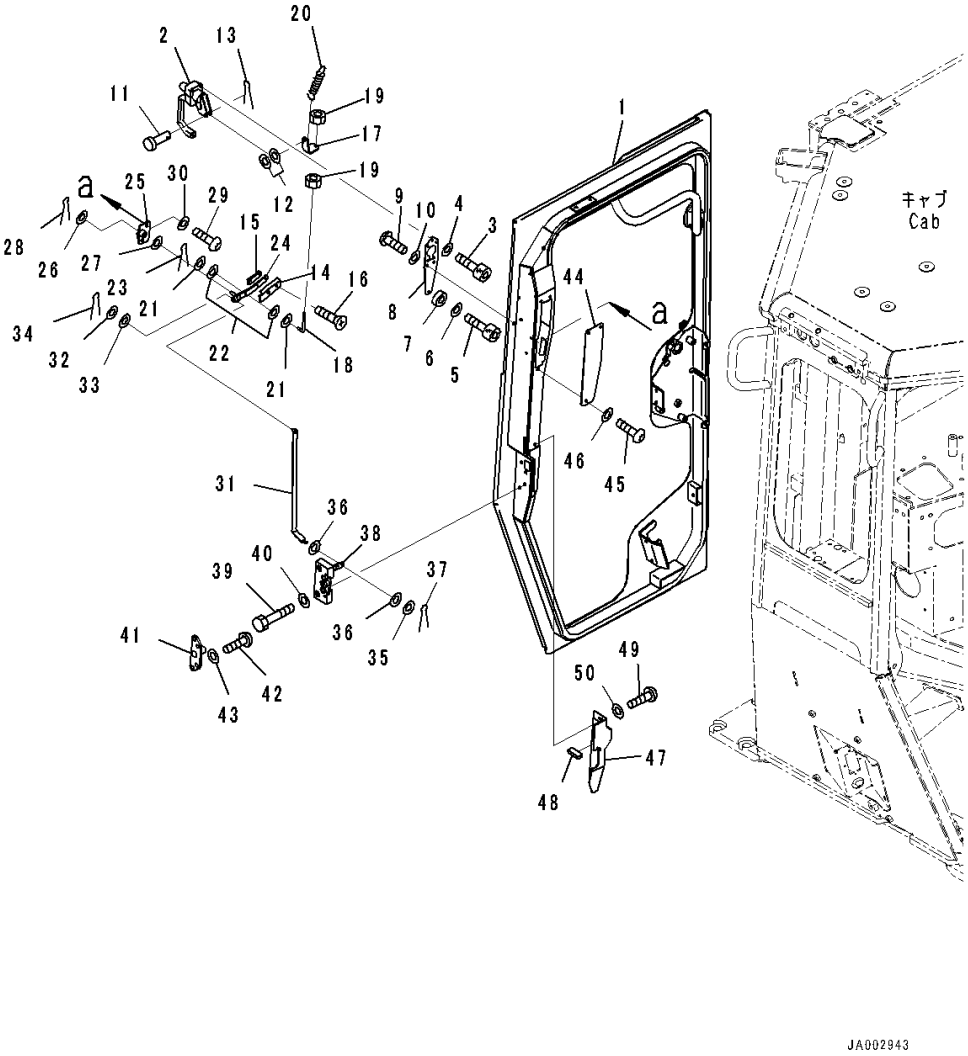

Index	Code	Part Number	Description	Qty	Serial Number
		Note: This list covers following specifications. With Rear View Monitoring System, With AM-FM Stereo Radio For North America, TH300 Type KOMTRAX With Rear View Monitoring System, Provision For Radio Installation, TH300 Type KOMTRAX EU Regulation Guard Level 2, With Rear View Monitoring System, With AM-FM Stereo Radio With Cassette For Europe And Asia, TH300 Type KOMTRAX EU Regulation Guard Level 2, With Rear View Monitoring System, Provision For Radio Installation, TH300 Type KOMTRAX			
1		14X-Y79-3121	Door Assembly	1	80052-
2		198-Z11-3710	Handle Assembly	1	80052-
3		01252-70520	Bolt	4	80052-
4		01640-20508	Washer	4	80052-
5		01252-70525	Bolt, Hexagon Socket Head	1	80052-
6		01640-20508	Washer	1	80052-
7		14X-Y79-3130	Spacer	1	80052-
8		12Y-978-3210	Plate	1	80052-
9		01245-00620	Screw	3	80052-
10		01643-70623	Washer	3	80052-
11		04205-10622	Pin	1	80052-
12		01643-70623	Washer	4	80052-
13		04050-11612	Pin, Cotter	1	80052-
14		12Y-978-3281	Knob	1	80052-
15		12Y-978-3290	Plate	1	80052-
16		01023-70412	Screw	2	80052-
17		14X-Y79-3230	Plate	1	80052-
18		14X-Y79-3360	Rod	1	80052-
19		01580-00605	Nut	2	80052-
20		176-06-42170	Spring	1	80052-
21		01643-70623	Washer	2	80052-
22		12Y-978-3310	Rubber	2	80052-
23		04050-11612	Pin, Cotter	1	80052-
24		14X-Y79-3661	Plate	1	80052-
25		12Y-978-3271	Plate	1	80052-
26		01643-70823	Washer	1	80052-
27		12Y-978-3360	Rubber	1	80052-
28		04050-12012	Pin, Cotter	1	80052-
29		01245-00620	Screw	2	80052-

https://truckmanualshub.com/

FIG. K0210-007005 ROPS Cab, Door and Latch, RHS

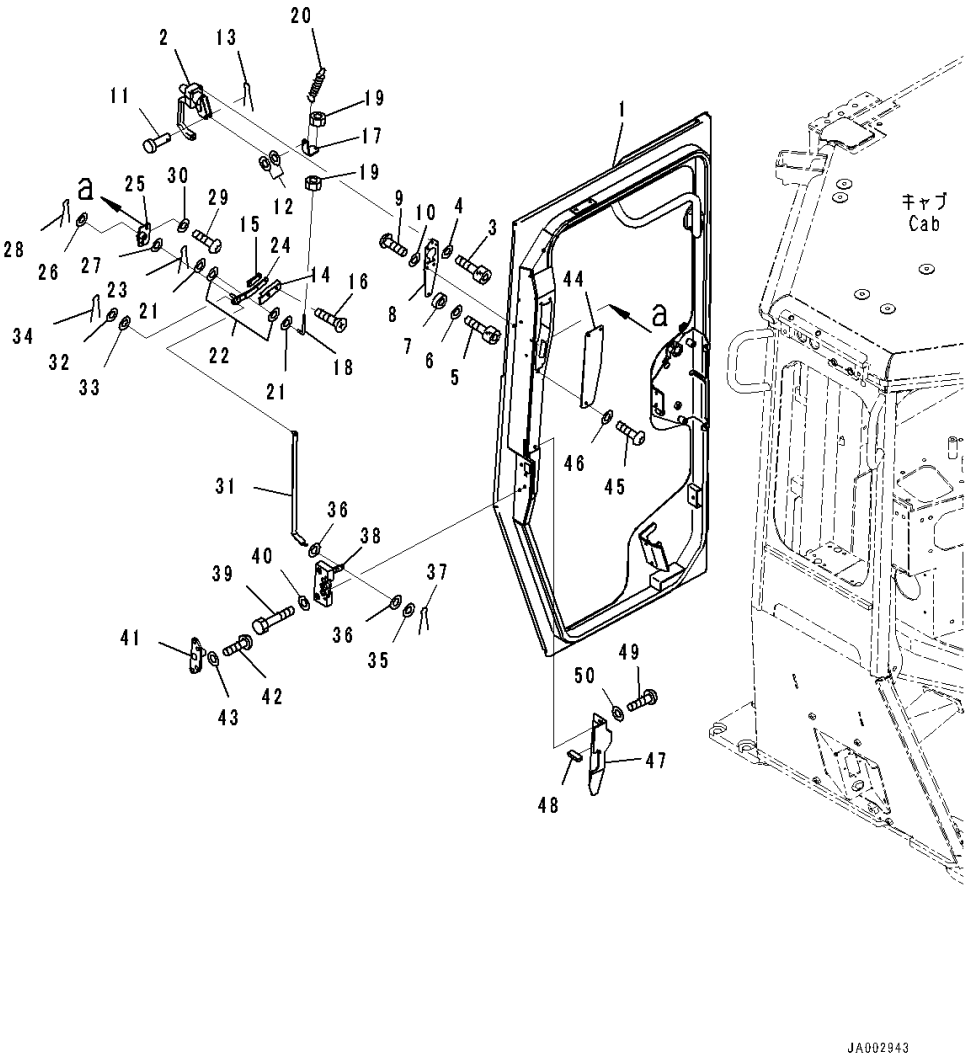

Index	Code	Part Number	Description	Qty	Serial Number
30		01643-70623	Washer	2	80052-
31		17A-979-3330	Plate	1	80052-
32		01640-20610	Washer	1	80052-
33		12Y-978-3310	Rubber	2	80052-
34		04050-11612	Pin, Cotter	1	80052-
35		01643-70623	Washer	1	80052-
36		12Y-978-3310	Rubber	2	80052-
37		04050-11612	Pin, Cotter	1	80052-
38		195-Z11-4510	Lock	1	80052-
39		01010-D0635	Bolt	4	80052-
40		01643-70623	Washer	4	80052-
41		12Y-978-3480	Striker	1	80052-
42		01245-00825	Screw	4	80052-
43		01643-70823	Washer	4	80052-
44		14X-Y79-3310	Plate	1	80052-
45		01245-00620	Screw	3	80052-
46		01643-70623	Washer	3	80052-
47		14X-Y79-3331	Cover	1	80052-
48		17A-979-3811	• Sheet	1	80052-
49		01245-00620	Screw	2	80052-
50		01643-70623	Washer	2	80052-

https://truckmanualshub.com/

FIG. K0210-007006 ROPS Cab, Door Dumper, Window and Wiper, RHS

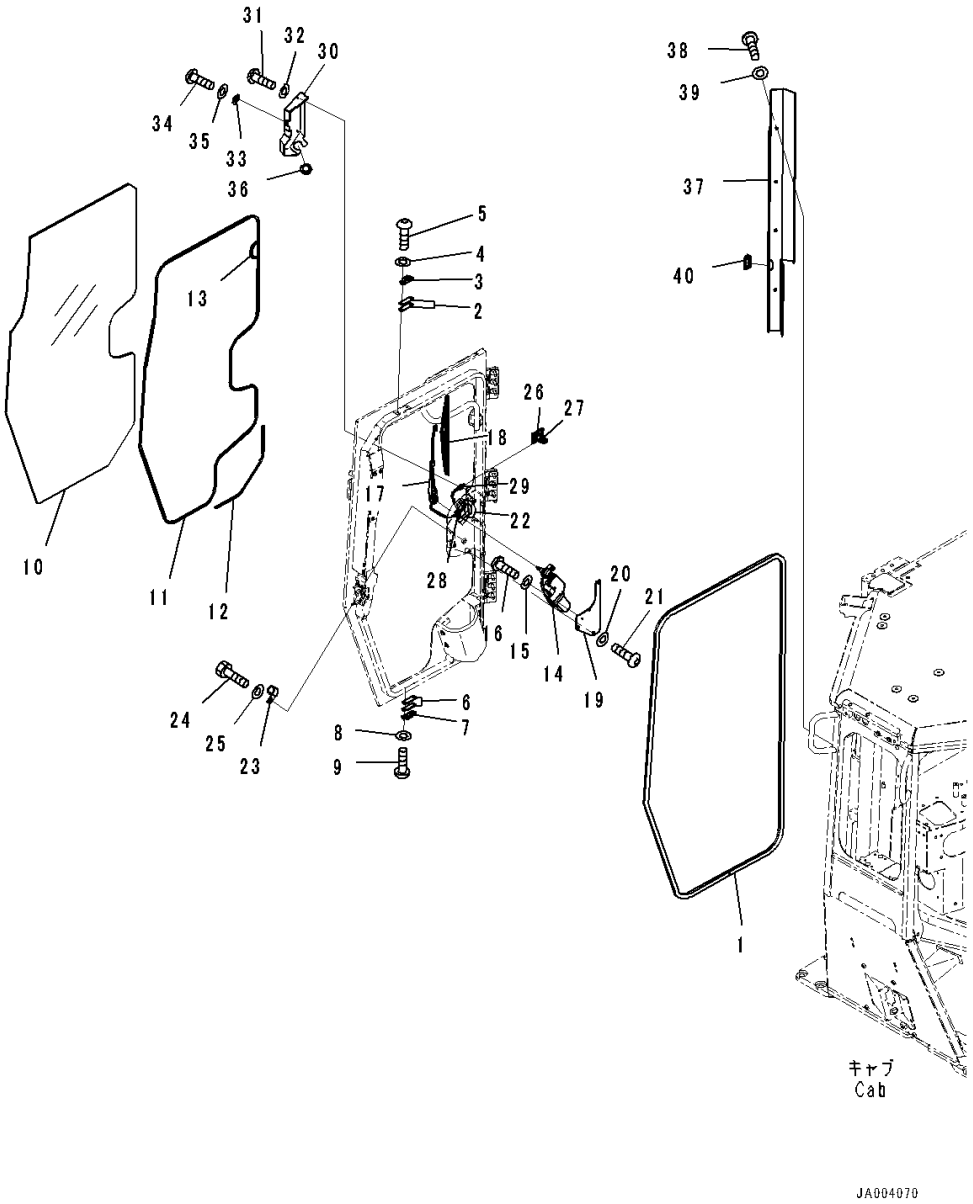

Index	Code	Part Number	Description	Qty	Serial Number
		Note: This list covers following specifications. With Rear View Monitoring System, With AM-FM Stereo Radio For North America, TH300 Type KOMTRAX With Rear View Monitoring System, Provision For Radio Installation, TH300 Type KOMTRAX EU Regulation Guard Level 2, With Rear View Monitoring System, With AM-FM Stereo Radio With Cassette For Europe And Asia, TH300 Type KOMTRAX EU Regulation Guard Level 2, With Rear View Monitoring System, Provision For Radio Installation, TH300 Type KOMTRAX			
1		12Y-978-3370	Seal	1	80052-
2		14X-911-1761	Shim, T=1.2mm	2	80052-
3		14X-911-1690	Damper	1	80052-
4		01643-70623	Washer	2	80052-
5		01245-00620	Screw	2	80052-
6		14X-911-1761	Shim, T=1.2mm	2	80052-
7		14X-911-1690	Damper	1	80052-
8		01643-70623	Washer	2	80052-
9		01245-00620	Screw	2	80052-
10		14X-Y79-1371	Glass	1	80052-
11		14X-Y79-1380	Seal	1	80052-
12		14X-Y79-1390	Seal	1	80052-
13		14X-Y79-1410	Seal	1	80052-
14		12Y-978-2441	Wiper Motor	1	80052-
15		01643-70623	Washer	2	80052-
16		01245-00616	Screw, Hexagon Socket Head	2	80052-
17		12Y-978-2490	Arm, Wiper	1	80052-
18		17A-Z11-2581	Wiper Blade	1	80052-
19		14X-Y79-3290	Plate	1	80052-
20		01643-70823	Washer	3	80052-
21		01245-00820	Screw	3	80052-
22		14X-06-51181	Wiring Harness	1	80052-
23		04434-51710	Clip	1	80052-
24		01010-81020	Bolt	1	80052-
25		01643-31032	Washer	1	80052-
26		20U-54-46520	Hook, Sticker Type	1	80052-
27		08034-20519	Band	1	80052-
28		17A-Z11-2660	Cap	1	80052-
29		17A-Z11-4610	Valve	1	80052-

https://truckmanualshub.com/

FIG. K0210-007006 ROPS Cab, Door Dumper, Window and Wiper, RHS

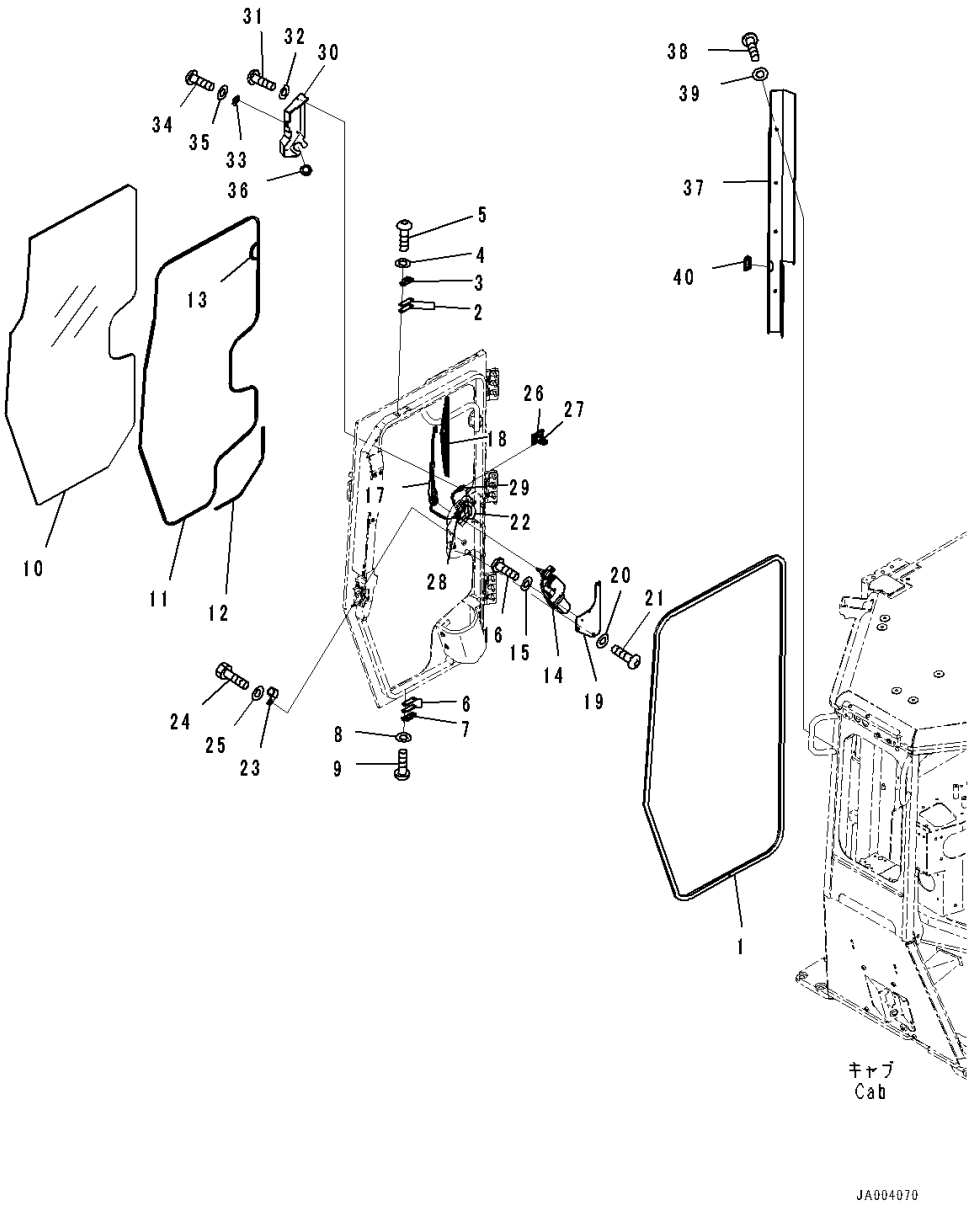

Index	Code	Part Number	Description	Qty	Serial Number
30		14X-Y79-3482	Cover	1	80052-
31		01245-00620	Screw	3	80052-
32		01643-70623	Washer	3	80052-
33		14X-Y79-3780	Bracket	1	80052-
34		01245-00620	Screw	1	80052-
35		01643-70623	Washer	1	80052-
36		08037-02512	Grommet	1	80052-
37		14X-Y79-3461	Cover	1	80052-
38		01245-00816	Screw	4	80052-
39		01643-70823	Washer	4	80052-
40		14X-Y79-3631	Seal	1	80052-

https://truckmanualshub.com/

FIG. K0210-007007 ROPS Cab, Door Cover, RHS

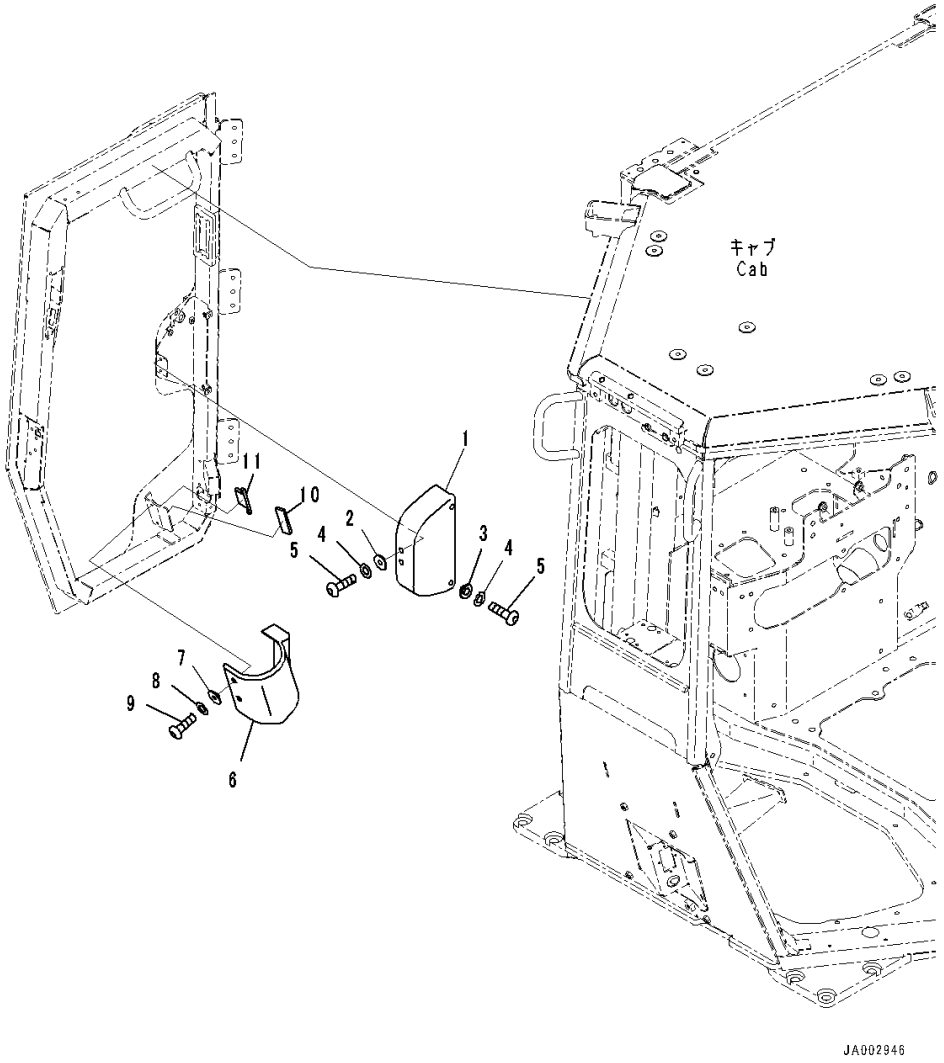

Index	Code	Part Number	Description	Qty	Serial Number
		Note: This list covers following specifications. With Rear View Monitoring System, With AM-FM Stereo Radio For North America, TH300 Type KOMTRAX With Rear View Monitoring System, Provision For Radio Installation, TH300 Type KOMTRAX EU Regulation Guard Level 2, With Rear View Monitoring System, With AM-FM Stereo Radio With Cassette For Europe And Asia, TH300 Type KOMTRAX EU Regulation Guard Level 2, With Rear View Monitoring System, Provision For Radio Installation, TH300 Type KOMTRAX			
1		14X-Y79-3270	Cover	1	80052-
2		12Y-978-2660	Collar	2	80052-
3		17A-979-1620	Collar	2	80052-
4		01643-70623	Washer	4	80052-
5		01245-00616	Screw, Hexagon Socket Head	4	80052-
6		14X-Y79-3251	Cover	1	80052-
7		12Y-978-2660	Collar	3	80052-
8		01643-70623	Washer	3	80052-
9		01245-00620	Screw	3	80052-
10		14X-Y79-3261	Rubber	1	80052-
11		14X-Y79-3350	Rubber	1	80052-

https://truckmanualshub.com/

FIG. K0210-007008 ROPS Cab, Door Hinge

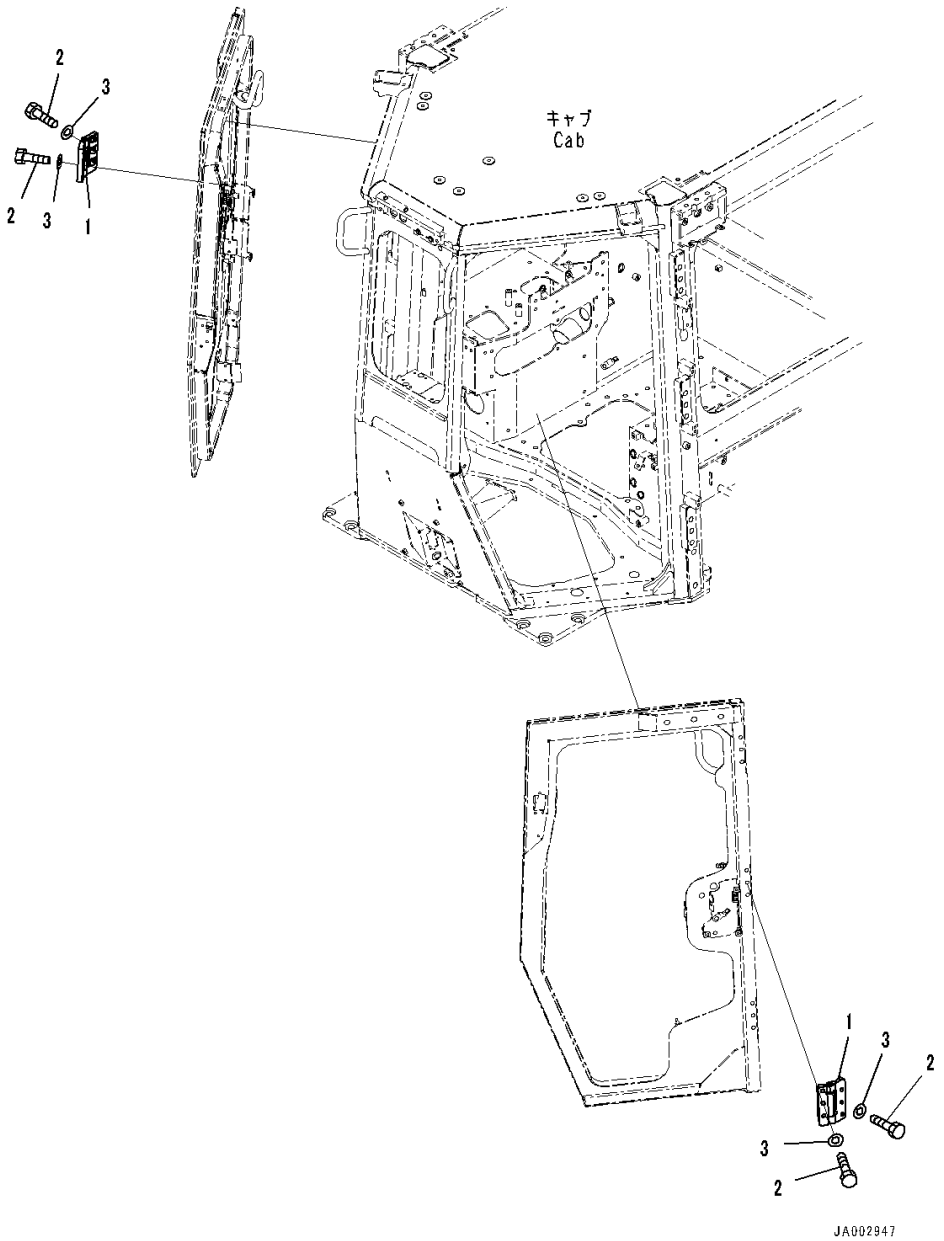

Index	Code	Part Number	Description	Qty	Serial Number
		Note: This list covers following specifications. With Rear View Monitoring System, With AM-FM Stereo Radio For North America, TH300 Type KOMTRAX With Rear View Monitoring System, Provision For Radio Installation, TH300 Type KOMTRAX EU Regulation Guard Level 2, With Rear View Monitoring System, With AM-FM Stereo Radio With Cassette For Europe And Asia, TH300 Type KOMTRAX EU Regulation Guard Level 2, With Rear View Monitoring System, Provision For Radio Installation, TH300 Type KOMTRAX			
1		14X-Y79-3671	Hinge	6	80052-
2		01010-D1040	Bolt	36	80052-
3		01643-71032	Washer	36	80052-

https://truckmanualshub.com/

FIG. K0210-007009 ROPS Cab, Door Open Lock (1/2)

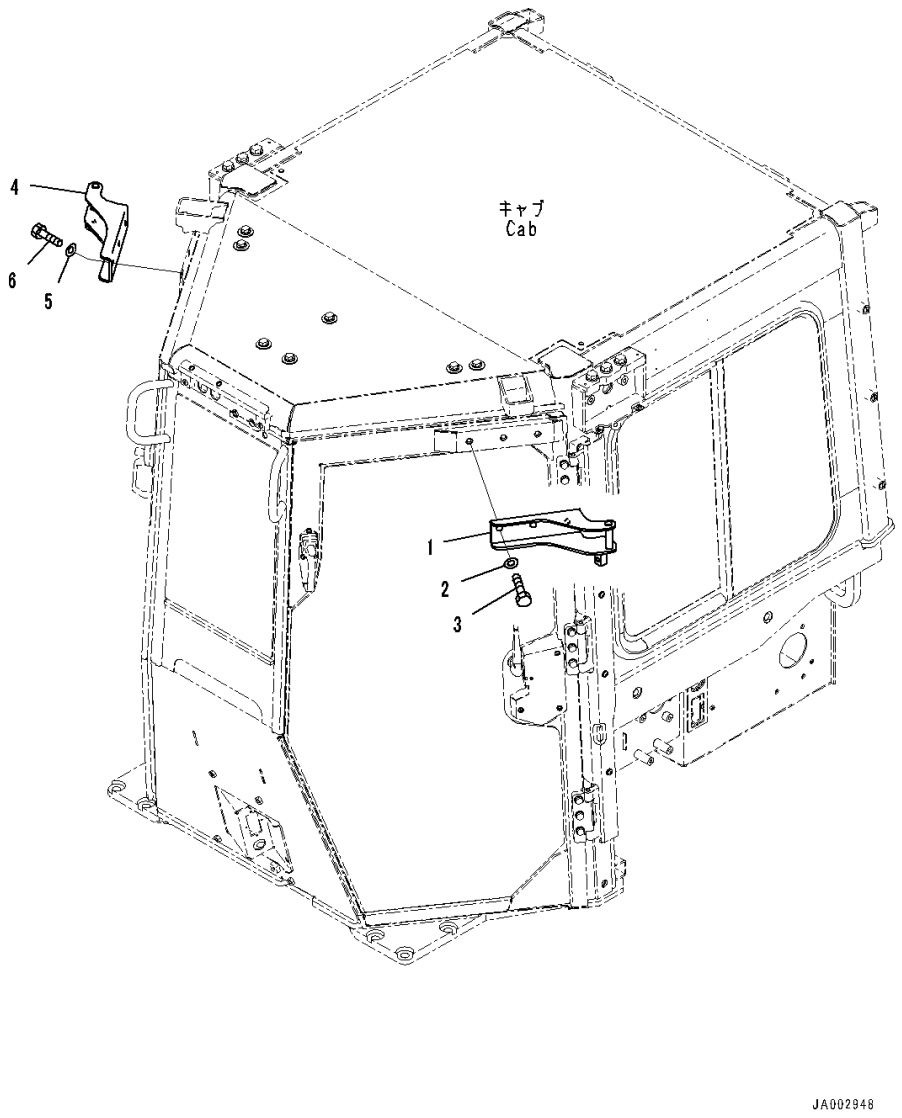

Index	Code	Part Number	Description	Qty	Serial Number
		Note: This list covers following specifications. With Rear View Monitoring System, With AM-FM Stereo Radio For North America, TH300 Type KOMTRAX With Rear View Monitoring System, Provision For Radio Installation, TH300 Type KOMTRAX EU Regulation Guard Level 2, With Rear View Monitoring System, With AM-FM Stereo Radio With Cassette For Europe And Asia, TH300 Type KOMTRAX EU Regulation Guard Level 2, With Rear View Monitoring System, Provision For Radio Installation, TH300 Type KOMTRAX			
1		14X-Y79-3411	Striker	1	80052-
2		01643-71232	Washer	3	80052-
3		01010-D1230	Bolt	3	80052-
4		14X-Y79-3421	Striker	1	80052-
5		01643-71232	Washer	3	80052-
6		01010-D1230	Bolt	3	80052-

https://truckmanualshub.com/

FIG. K0210-007010 ROPS Cab, Door Open Lock, LHS

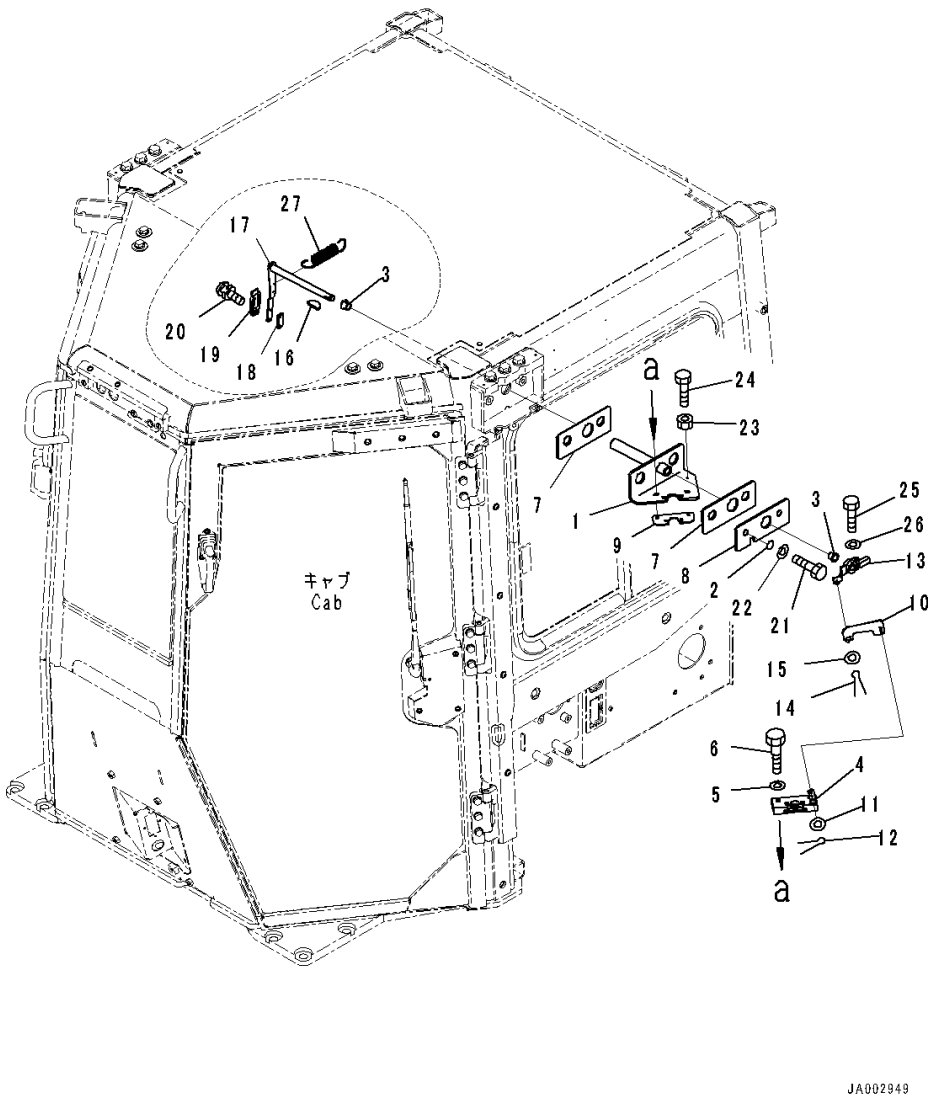

Index	Code	Part Number	Description	Qty	Serial Number
		Note: This list covers following specifications. With Rear View Monitoring System, With AM-FM Stereo Radio For North America, TH300 Type KOMTRAX With Rear View Monitoring System, Provision For Radio Installation, TH300 Type KOMTRAX EU Regulation Guard Level 2, With Rear View Monitoring System, With AM-FM Stereo Radio With Cassette For Europe And Asia, TH300 Type KOMTRAX EU Regulation Guard Level 2, With Rear View Monitoring System, Provision For Radio Installation, TH300 Type KOMTRAX			
1		14X-Y79-3511	Bracket	1	80052-
2		07000-13025	O-ring	2	80052-
3		17A-Z11-1810	Bushing	2	80052-
4		195-Z11-4520	Lock	1	80052-
5		01643-30823	Washer	4	80052-
6		14X-Y79-3681	Bolt	4	80052-
7		14X-Y79-3531	Rubber	2	80052-
8		14X-Y79-3551	Plate	1	80052-
9		14X-Y79-3760	Plate	1	80052-
10		17A-979-3561	Plate	1	80052-
11		01640-20610	Washer	1	80052-
12		04050-11612	Pin, Cotter	1	80052-
13		14X-Y79-3581	Lever	1	80052-
14		04050-11612	Pin, Cotter	1	80052-
15		01640-20610	Washer	1	80052-
16		04010-00516	Key	1	80052-
17		14X-Y79-3611	Lever	1	80052-
18		12Y-978-3290	Plate	1	80052-
19		12Y-978-3281	Knob	1	80052-
20		01023-70412	Screw	2	80052-
21		01010-81225	Bolt	2	80052-
22		01643-31232	Washer	2	80052-
23		01580-10605	Nut	1	80052-
24		01010-80625	Bolt	1	80052-
25		01010-80825	Bolt	1	80052-
26		01643-30823	Washer	1	80052-
27		176-06-42170	Spring	1	80052-

https://truckmanualshub.com/

FIG. K0210-007011 ROPS Cab, Door Open Lock, RHS

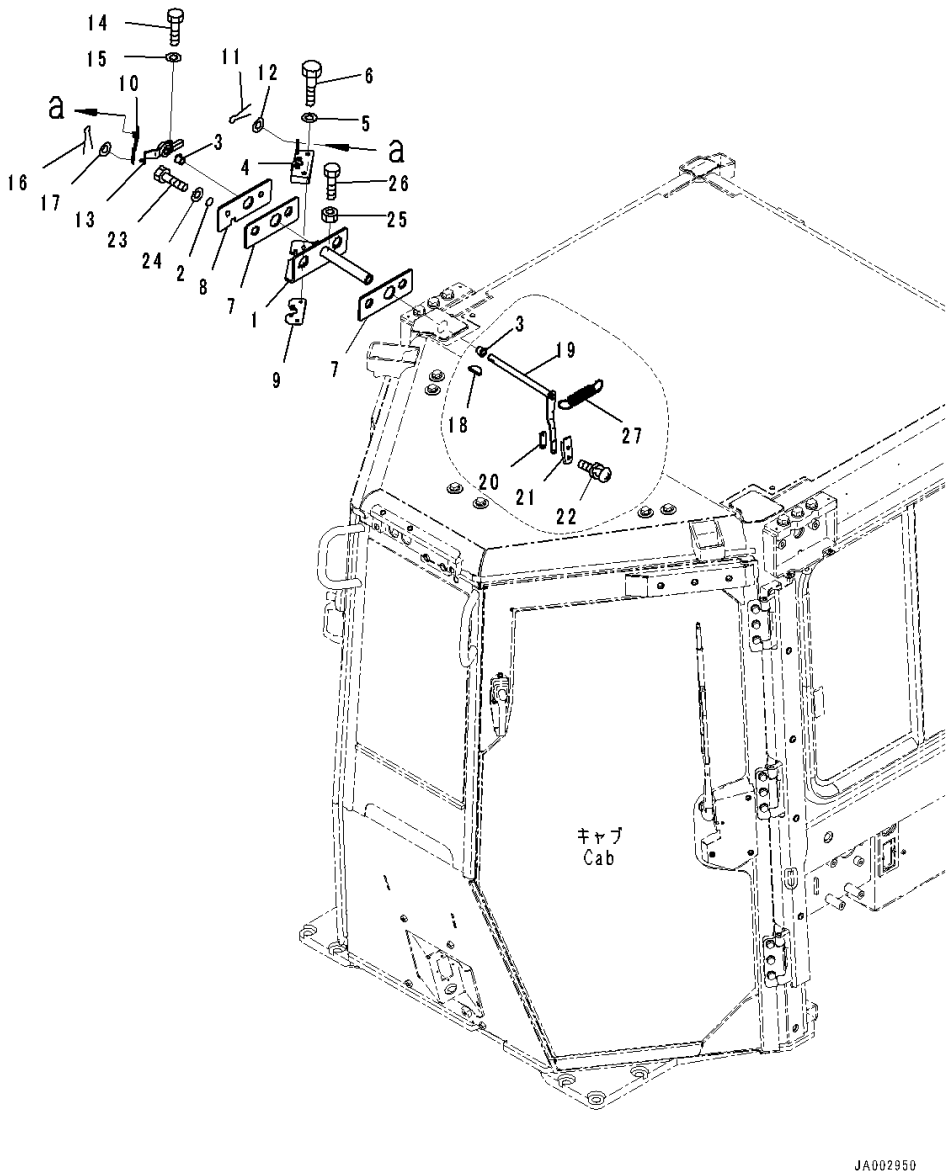

Index	Code	Part Number	Description	Qty	Serial Number
		Note: This list covers following specifications. With Rear View Monitoring System, With AM-FM Stereo Radio For North America, TH300 Type KOMTRAX With Rear View Monitoring System, Provision For Radio Installation, TH300 Type KOMTRAX EU Regulation Guard Level 2, With Rear View Monitoring System, With AM-FM Stereo Radio With Cassette For Europe And Asia, TH300 Type KOMTRAX EU Regulation Guard Level 2, With Rear View Monitoring System, Provision For Radio Installation, TH300 Type KOMTRAX			
1		14X-Y79-3521	Bracket	1	80052-
2		07000-13025	O-ring	2	80052-
3		17A-Z11-1810	Bushing	2	80052-
4		195-Z11-4510	Lock	1	80052-
5		01643-30823	Washer	4	80052-
6		14X-Y79-3681	Bolt	4	80052-
7		14X-Y79-3531	Rubber	2	80052-
8		14X-Y79-3551	Plate	1	80052-
9		14X-Y79-3760	Plate	1	80052-
10		17A-979-3571	Plate	1	80052-
11		01640-20610	Washer	1	80052-
12		04050-11612	Pin, Cotter	1	80052-
13		14X-Y79-3591	Lever	1	80052-
14		01010-80825	Bolt	1	80052-
15		01643-30823	Washer	1	80052-
16		04050-11612	Pin, Cotter	1	80052-
17		01640-20610	Washer	1	80052-
18		04010-00516	Key	1	80052-
19		14X-Y79-3621	Lever	1	80052-
20		12Y-978-3290	Plate	1	80052-
21		12Y-978-3281	Knob	1	80052-
22		01023-70412	Screw	2	80052-
23		01010-81225	Bolt	2	80052-
24		01643-31232	Washer	2	80052-
25		01580-10605	Nut	1	80052-
26		01010-80625	Bolt	1	80052-
27		176-06-42170	Spring	1	80052-

https://truckmanualshub.com/

FIG. K0210-007012 ROPS Cab, Door Open Lock (2/2)

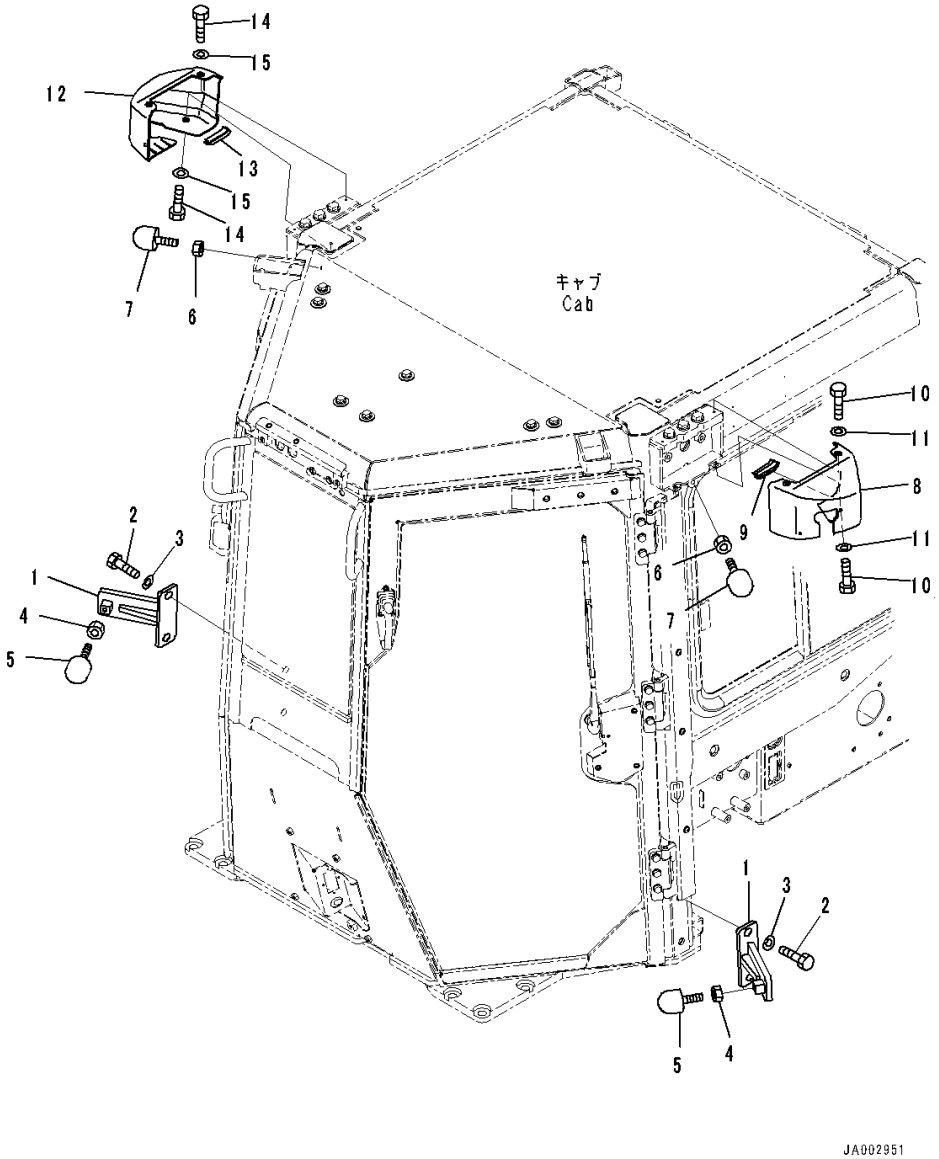

Index	Code	Part Number	Description	Qty	Serial Number
		Note: This list covers following specifications. With Rear View Monitoring System, With AM-FM Stereo Radio For North America, TH300 Type KOMTRAX With Rear View Monitoring System, Provision For Radio Installation, TH300 Type KOMTRAX EU Regulation Guard Level 2, With Rear View Monitoring System, With AM-FM Stereo Radio With Cassette For Europe And Asia, TH300 Type KOMTRAX EU Regulation Guard Level 2, With Rear View Monitoring System, Provision For Radio Installation, TH300 Type KOMTRAX			
1		14X-Y79-3491	Bracket	2	80052-
2		198-54-42260	Bolt	4	80052-
3		01643-71645	Washer	4	80052-
4		01580-11210	Nut	2	80052-
5		17A-Z11-3592	Stopper	2	80052-
6		01580-11210	Nut	2	80052-
7		17A-Z11-3592	Stopper	2	80052-
8		14X-Y79-3431	Cover	1	80052-
9		14X-Y79-2290	• Trim	1	80052-
10		01010-80616	Bolt	4	80052-
11		01643-30623	Washer	4	80052-
12		14X-Y79-3441	Cover	1	80052-
13		14X-Y79-2290	• Trim	1	80052-
14		01010-80616	Bolt	4	80052-
15		01643-30623	Washer	4	80052-

https://truckmanualshub.com/

FIG. K0210-007013 ROPS Cab, Glass Windows, Front and Rear

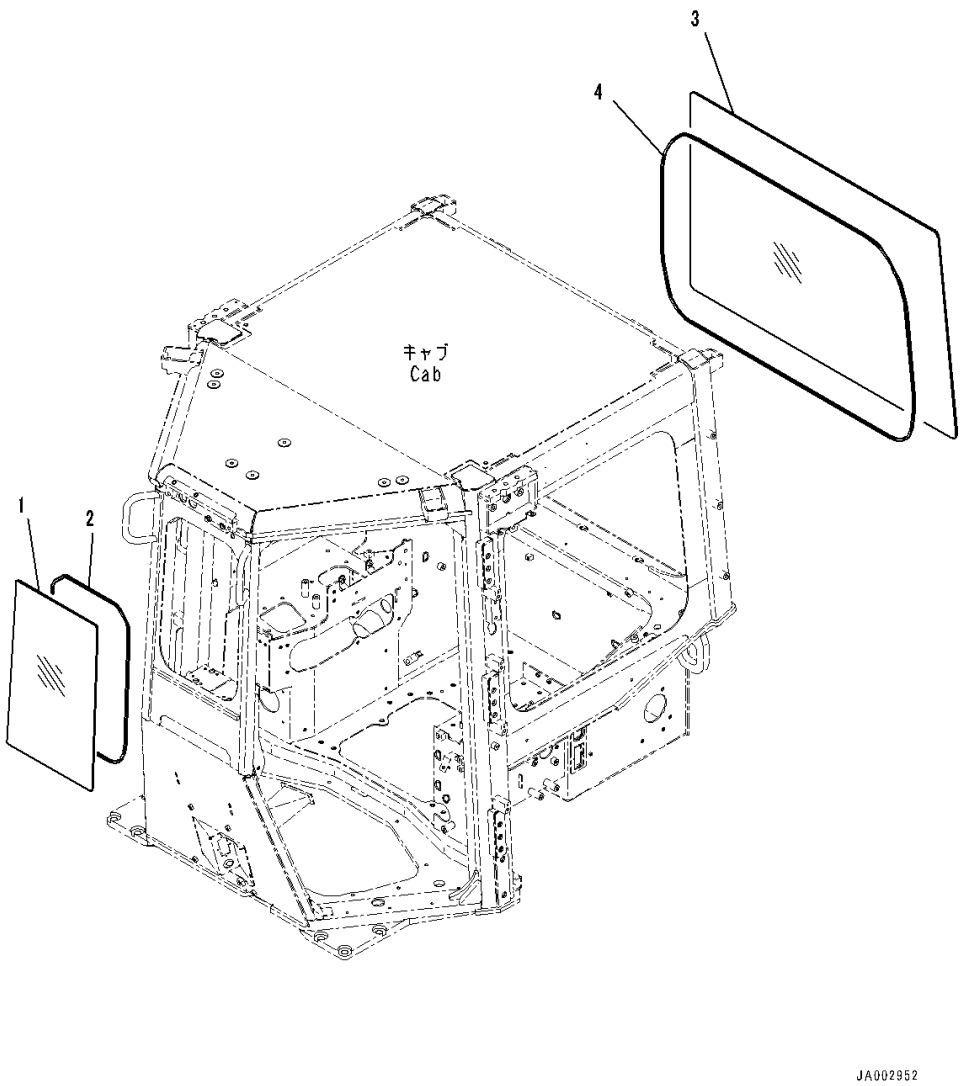

Index	Code	Part Number	Description	Qty	Serial Number
		Note: This list covers following specifications. With Rear View Monitoring System, With AM-FM Stereo Radio For North America, TH300 Type KOMTRAX With Rear View Monitoring System, Provision For Radio Installation, TH300 Type KOMTRAX EU Regulation Guard Level 2, With Rear View Monitoring System, With AM-FM Stereo Radio With Cassette For Europe And Asia, TH300 Type KOMTRAX EU Regulation Guard Level 2, With Rear View Monitoring System, Provision For Radio Installation, TH300 Type KOMTRAX			
1		14X-Y79-1311	Glass	1	80052-
2		14X-Y79-1321	Seal,Bonded	1	80052-
3		14X-Y79-1331	Glass	1	80052-
4		14X-Y79-1340	Seal,Bonded	1	80052-

https://truckmanualshub.com/

FIG. K0210-007014 ROPS Cab, Sash type Glass Windows, LHS

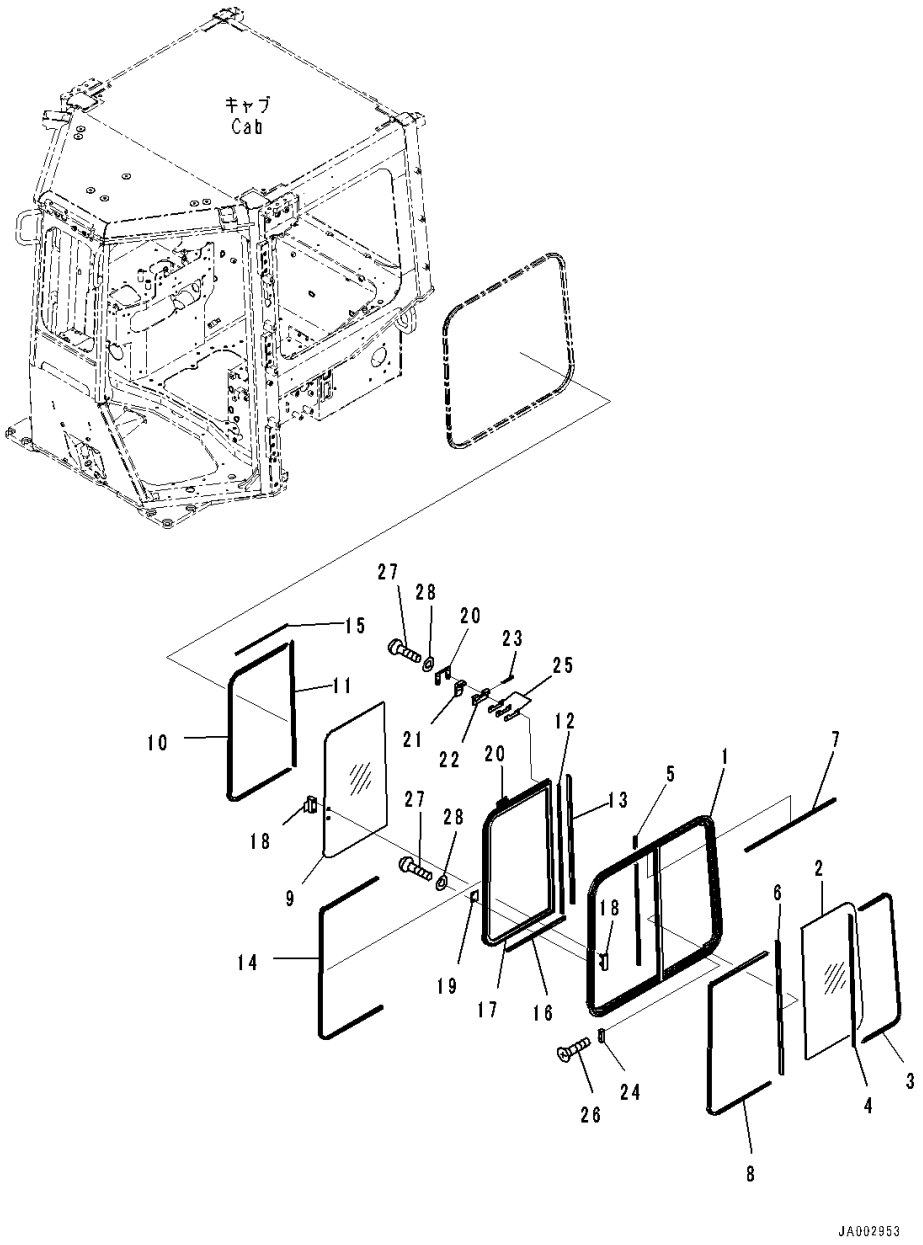

Index	Code	Part Number	Description	Qty	Serial Number
		Note: This list covers following specifications. With Rear View Monitoring System, With AM-FM Stereo Radio For North America, TH300 Type KOMTRAX With Rear View Monitoring System, Provision For Radio Installation, TH300 Type KOMTRAX EU Regulation Guard Level 2, With Rear View Monitoring System, With AM-FM Stereo Radio With Cassette For Europe And Asia, TH300 Type KOMTRAX EU Regulation Guard Level 2, With Rear View Monitoring System, Provision For Radio Installation, TH300 Type KOMTRAX			
		14X-Y79-1400	Sash Assembly	1	80052-
		12Y-978-1410	• Sash Assembly	1	80052-
1		12Y-978-1420	• • Frame	1	80052-
2		12Y-978-1450	• • Glass	1	80052-
3		12Y-978-1460	• • Seal	1	80052-
4		12Y-978-1470	• • Seal	1	80052-
5		12Y-978-1480	• • Seal,Bonded	1	80052-
6		12Y-978-1490	• • Seal	1	80052-
7		12Y-978-1550	• • Seal,Bonded	1	80052-
8		12Y-978-1640	• Seal	1	80052-
		14X-Y79-1430	• Sash Assembly	1	80052-
9		12Y-978-1560	• • Glass	1	80052-
10		12Y-978-1570	• • Seal	1	80052-
11		12Y-978-1580	• • Seal	1	80052-
12		12Y-978-1590	• • Seal,Bonded	1	80052-
13		12Y-978-1610	• • Seal	1	80052-
14		12Y-978-1620	• • Run Channel	1	80052-
15		12Y-978-1630	• • Seal,Bonded	1	80052-
16		12Y-978-1650	• • Seal	1	80052-
17		14X-Y79-1440	• • Frame	1	80052-
18		17A-Z11-1610	• Lock Assembly	1	80052-
19		17A-Z11-1620	• Striker	1	80052-
20		17A-Z11-1660	• Plate	2	80052-
		195-Z11-1371	• Lock Assembly	2	80052-
21		195-Z11-3630	• • Lever	1	80052-
22		195-Z11-3640	• • Plate	1	80052-
23		195-Z11-3860	• • Pin, Spring	1	80052-
24		195-Z11-1381	• Stopper	1	80052-
25		195-Z11-3670	• Shim, T=0.5mm	6	80052-

https://truckmanualshub.com/

FIG. K0210-007014 ROPS Cab, Sash type Glass Windows, LHS

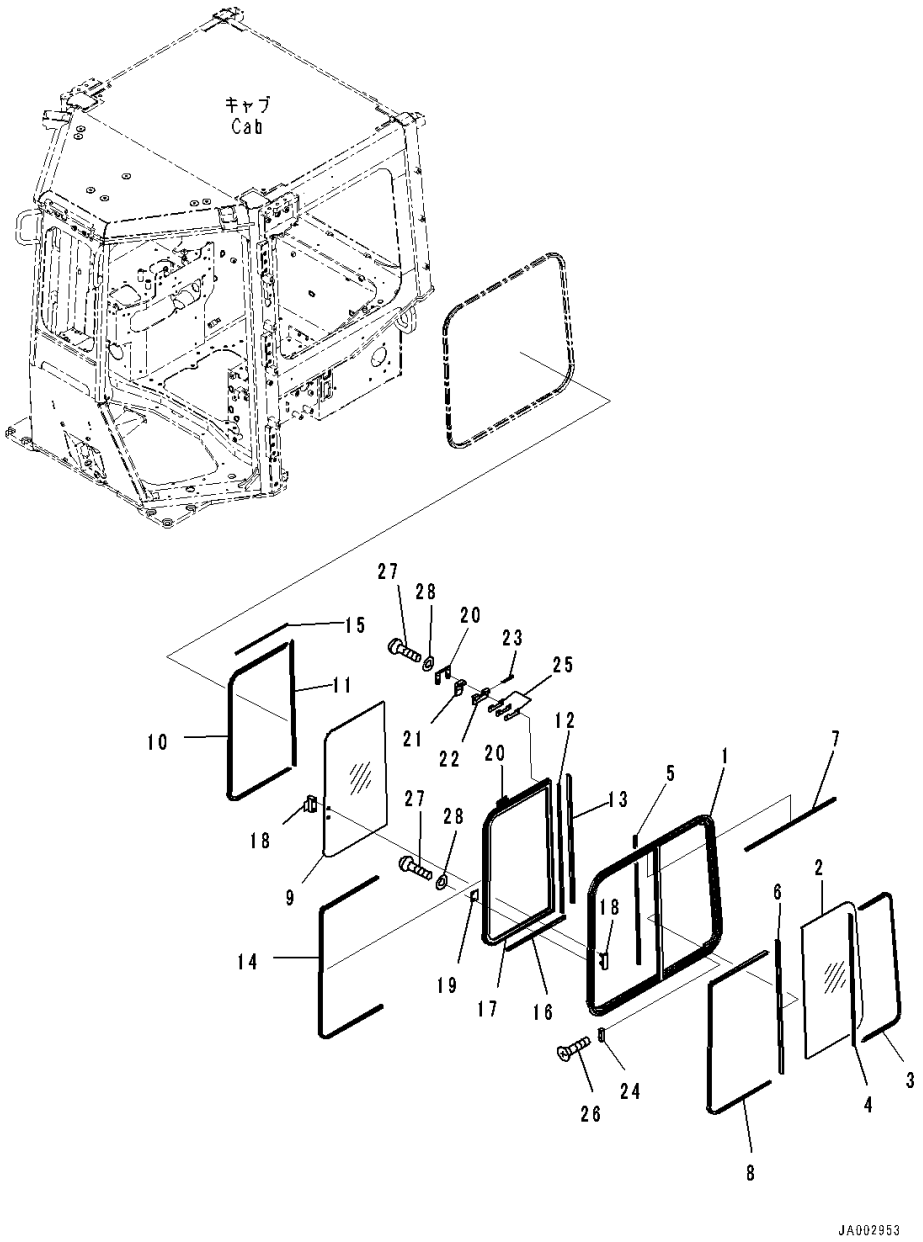

Index	Code	Part Number	Description	Qty	Serial Number
26		01224-70316	• Screw	2	80052-
27		01252-80514	• Bolt	6	80052-
28		01641-50508	• Washer, Flat	6	80052-

https://truckmanualshub.com/

FIG. K0210-007015 ROPS Cab, Sash type Glass Windows, RHS

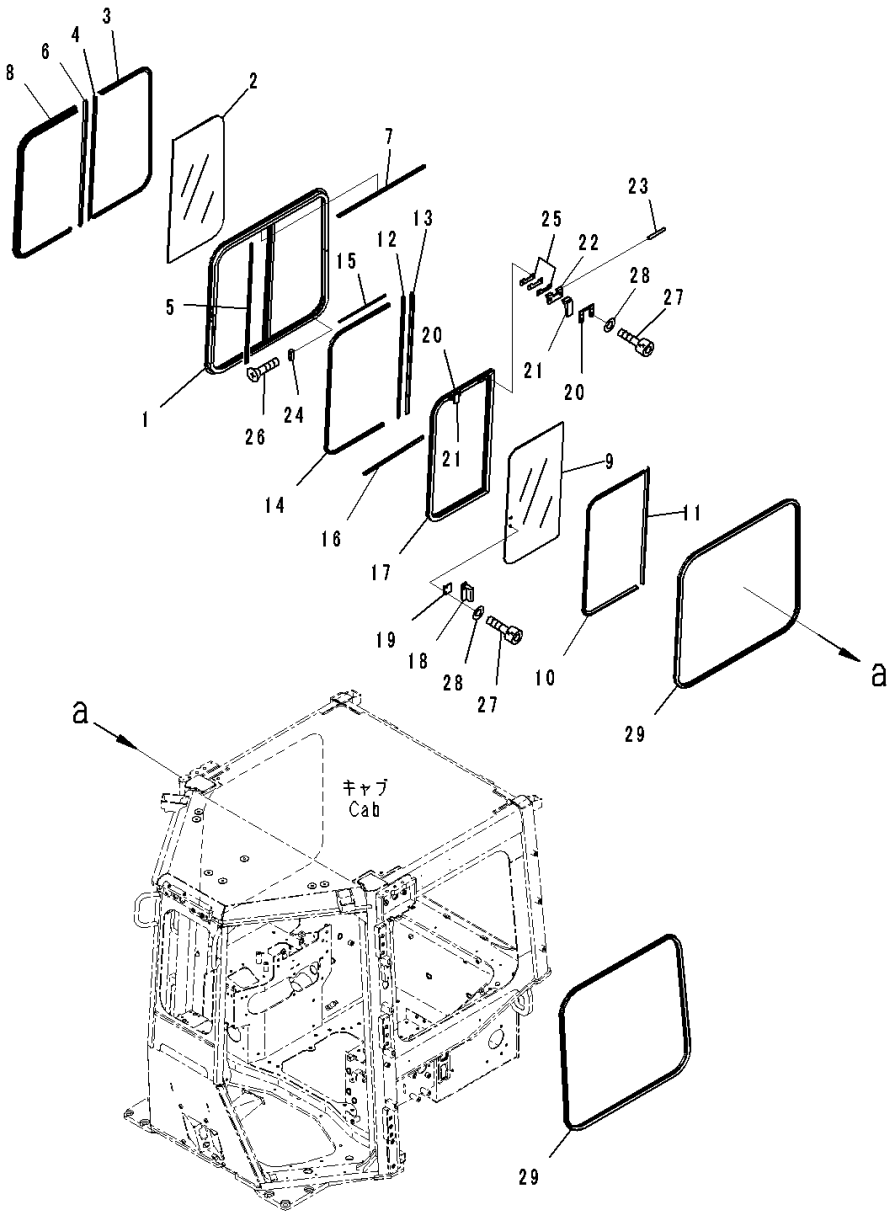

Index	Code	Part Number	Description	Qty	Serial Number
		Note: This list covers following specifications. With Rear View Monitoring System, With AM-FM Stereo Radio For North America, TH300 Type KOMTRAX With Rear View Monitoring System, Provision For Radio Installation, TH300 Type KOMTRAX EU Regulation Guard Level 2, With Rear View Monitoring System, With AM-FM Stereo Radio With Cassette For Europe And Asia, TH300 Type KOMTRAX EU Regulation Guard Level 2, With Rear View Monitoring System, Provision For Radio Installation, TH300 Type KOMTRAX			
		14X-Y79-1500	Sash Assembly	1	80052-
		12Y-978-1510	• Sash Assembly	1	80052-
1		12Y-978-1520	• • Frame	1	80052-
2		12Y-978-1450	• • Glass	1	80052-
3		12Y-978-1460	• • Seal	1	80052-
4		12Y-978-1470	• • Seal	1	80052-
5		12Y-978-1480	• • Seal,Bonded	1	80052-
6		12Y-978-1490	• • Seal	1	80052-
7		12Y-978-1550	• • Seal,Bonded	1	80052-
8		12Y-978-1640	• Seal	1	80052-
		14X-Y79-1450	• Sash Assembly	1	80052-
9		12Y-978-1560	• • Glass	1	80052-
10		12Y-978-1570	• • Seal	1	80052-
11		12Y-978-1580	• • Seal	1	80052-
12		12Y-978-1590	• • Seal,Bonded	1	80052-
13		12Y-978-1610	• • Seal	1	80052-
14		12Y-978-1620	• • Run Channel	1	80052-
15		12Y-978-1630	• • Seal,Bonded	1	80052-
16		12Y-978-1650	• • Seal	1	80052-
17		14X-Y79-1460	• • Frame	1	80052-
18		17A-Z11-1610	• Lock Assembly	1	80052-
19		17A-Z11-1620	• Striker	1	80052-
20		17A-Z11-1660	• Plate	2	80052-
		195-Z11-1371	• Lock Assembly	2	80052-
21		195-Z11-3630	• • Lever	1	80052-
22		195-Z11-3640	• • Plate	1	80052-
23		195-Z11-3860	• • Pin, Spring	1	80052-
24		195-Z11-1381	• Stopper	1	80052-
25		195-Z11-3670	• Shim, T=0.5mm	6	80052-

https://truckmanualshub.com/

FIG. K0210-007015 ROPS Cab, Sash type Glass Windows, RHS

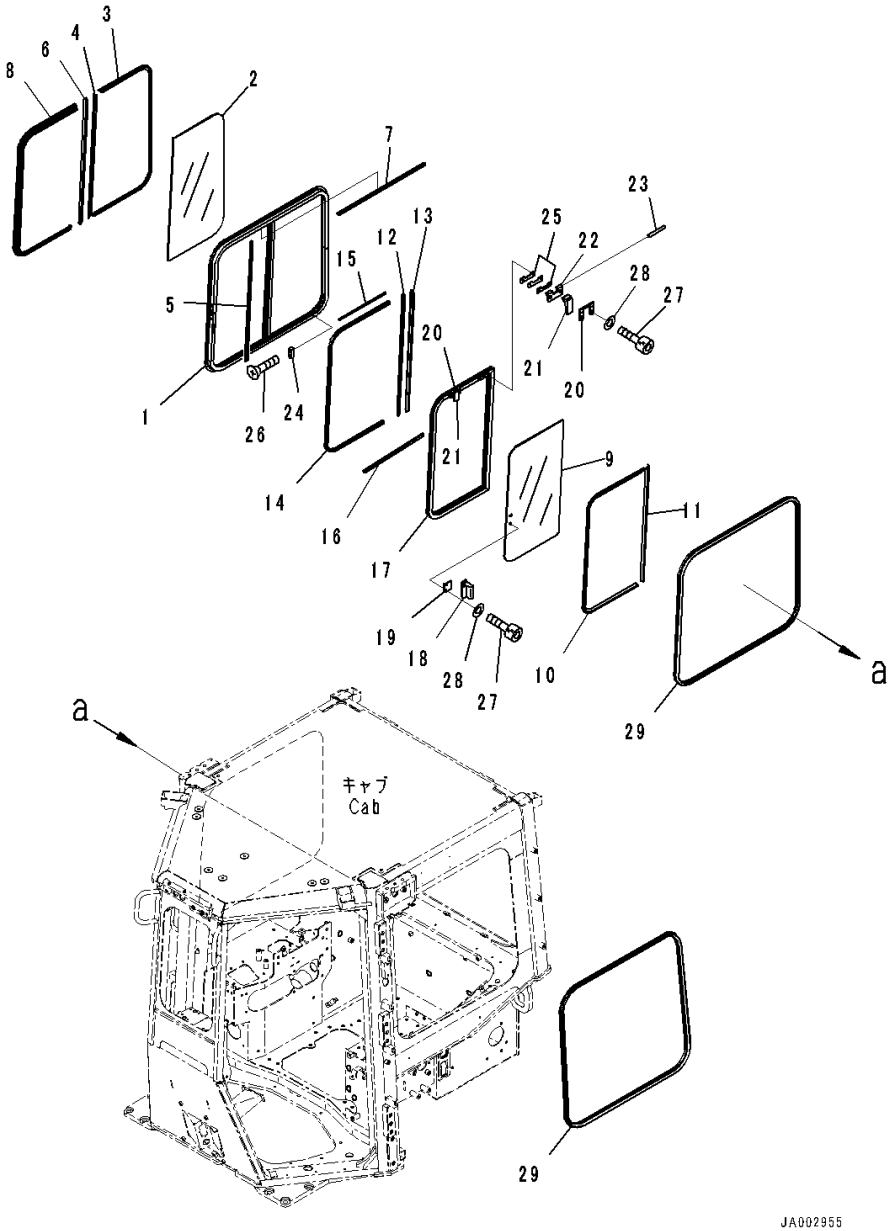

Index	Code	Part Number	Description	Qty	Serial Number
26		01224-70316	• Screw	2	80052-
27		01252-80514	• Bolt	6	80052-
28		01641-50508	• Washer, Flat	6	80052-
29		12Y-978-1390	Weather Strip	2	80052-

https://truckmanualshub.com/

FIG. K0210-007016 ROPS Cab, Wiper and Room Lamp

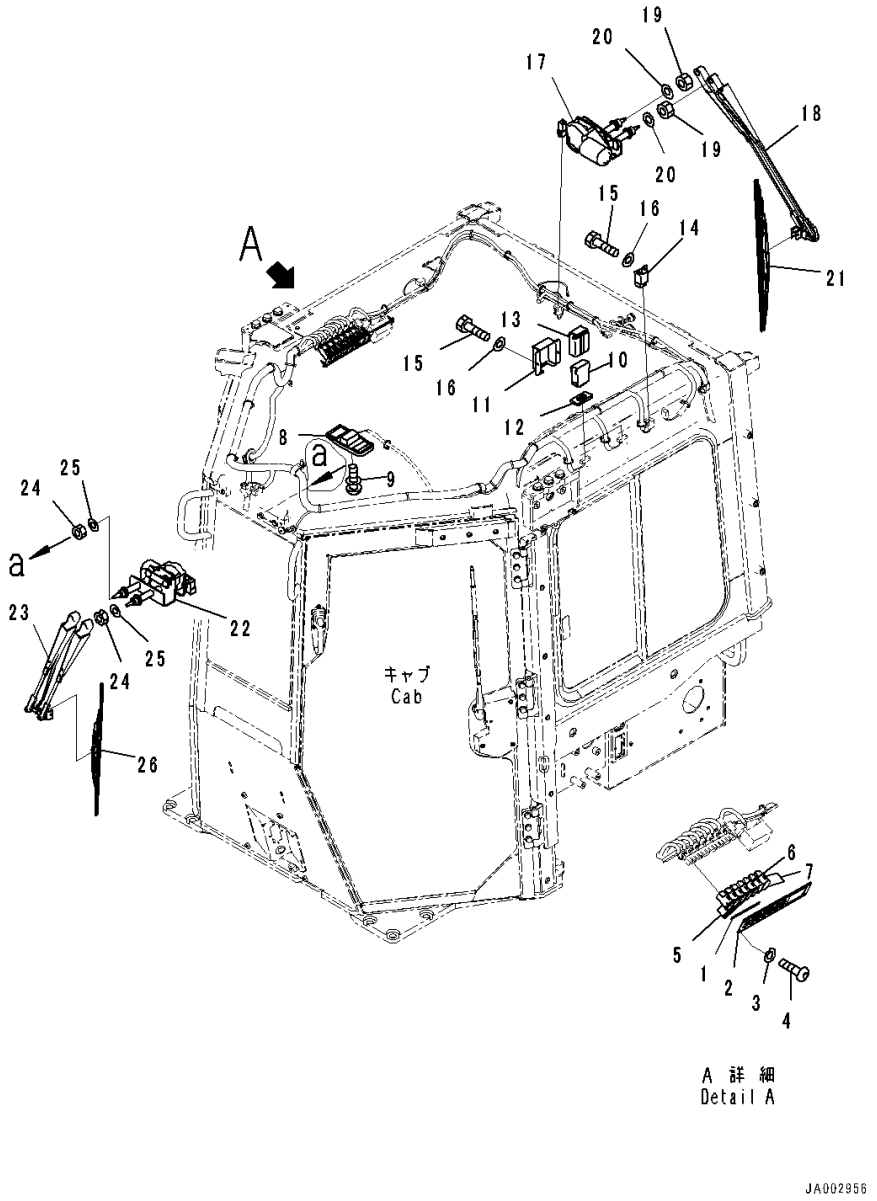

Index	Code	Part Number	Description	Qty	Serial Number
		Note: This list covers following specifications. With Rear View Monitoring System, With AM-FM Stereo Radio For North America, TH300 Type KOMTRAX With Rear View Monitoring System, Provision For Radio Installation, TH300 Type KOMTRAX EU Regulation Guard Level 2, With Rear View Monitoring System, With AM-FM Stereo Radio With Cassette For Europe And Asia, TH300 Type KOMTRAX EU Regulation Guard Level 2, With Rear View Monitoring System, Provision For Radio Installation, TH300 Type KOMTRAX			
1		14X-Y79-2250	Panel	1	80052-
2		17A-979-3140	Cover	1	80052-
3		01643-70623	Washer	4	80052-
4		01245-00620	Screw	4	80052-
5		17A-06-42210	Switch	4	80052-
6		17A-06-42220	Switch	1	80052-
7		20Y-06-42190	Cover	2	80052-
8		421-06-26210	Lamp Assembly, Working	1	80052-
9		01023-10520	Screw	2	80052-
10		14X-06-51710	Relay	2	80052-
11		14X-06-52631	Bracket	2	80052-
12		14X-06-52740	Sheet	2	80052-
13		14X-06-52661	Sheet	2	80052-
14		198-911-9240	Relay Assembly	1	80052-
15		01010-80616	Bolt	5	80052-
16		01643-70623	Washer	5	80052-
17		17A-979-2850	Wiper Motor	1	80052-
18		416-925-3941	Arm, Wiper	1	80052-
19		01580-10806	Nut	2	80052-
20		01640-20816	Washer	2	80052-
21		17A-979-2870	Wiper Blade	1	80052-
22		14X-Y79-1570	Wiper Motor	1	80052-
23		14X-Y79-1580	Arm, Wiper	1	80052-
24		01580-10806	Nut	2	80052-
25		01640-20816	Washer	2	80052-
26		17A-979-1420	Wiper Blade	1	80052-

https://truckmanualshub.com/

FIG. K0210-007017 ROPS Cab, With Rear View Monitoring System, With AM-FM Stereo Radio For North America, TH300 Type KOMTRAX, Radio

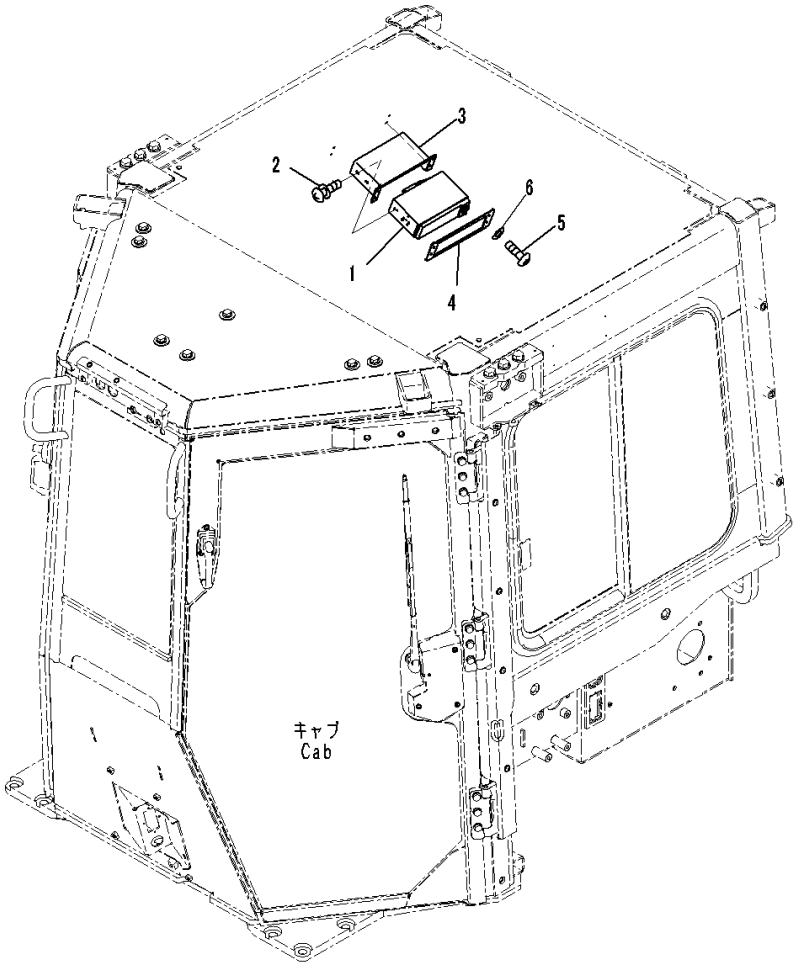

Index	Code	Part Number	Description	Qty	Serial Number
1		207-06-71723	Radio	1	80052-
2		01023-20510	Screw	4	80052-
3		14X-Y79-1590	Bracket	1	80052-
4		12Y-978-2280	Plate	1	80052-
5		01245-00620	Screw	4	80052-
6		01643-70623	Washer	4	80052-

https://truckmanualshub.com/

FIG. K0210-007018 ROPS Cab, Rubber Antenna

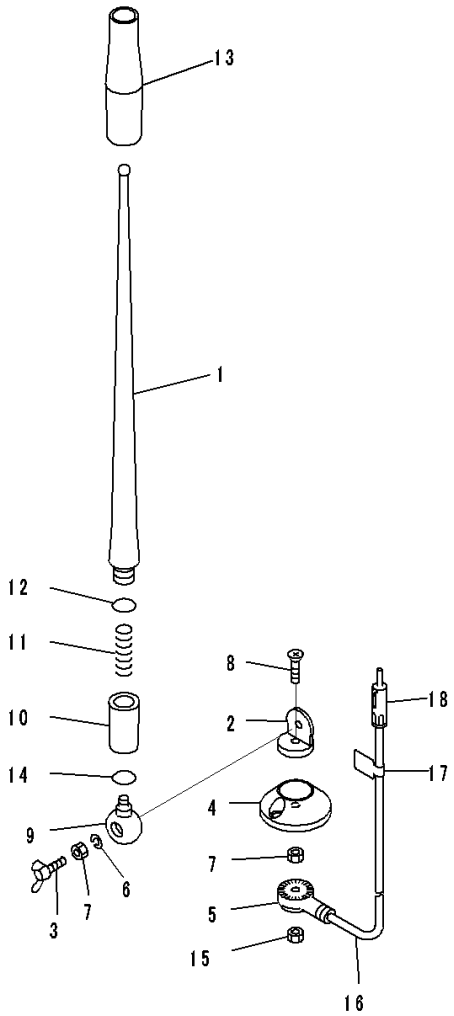

Index	Code	Part Number	Description	Qty	Serial Number
		Note: This list covers following specifications. With Rear View Monitoring System, With AM-FM Stereo Radio For North America, TH300 Type KOMTRAX With Rear View Monitoring System, Provision For Radio Installation, TH300 Type KOMTRAX EU Regulation Guard Level 2, With Rear View Monitoring System, With AM-FM Stereo Radio With Cassette For Europe And Asia, TH300 Type KOMTRAX EU Regulation Guard Level 2, With Rear View Monitoring System, Provision For Radio Installation, TH300 Type KOMTRAX			
		20Y-06-41990	Antenna	1	80052-
1		RFU419B-418-A	• Rod	1	80052-
2	C1		• Holder	1	80052-
3		RFU419B-418-D	• Bolt, Wing	1	80052-
4		RFU419B-418-E	• Base	1	80052-
5	C1		• Holder	1	80052-
6		RFU419B-418-B	• Washer, Spring	1	80052-
7		RFU419B-418-C	• Nut	2	80052-
8	C1		• Screw	1	80052-
9	C1		• Holder	1	80052-
10	C1		• Holder Assembly	1	80052-
11	C1		• Spring	1	80052-
12	C1		• O-ring	1	80052-
13	C1		• Tube	1	80052-
14	C1		• O-ring	1	80052-
15		REU419B-418-C	• Nut	1	80052-
16		RFU419B-418-F	• Cable	1	80052-
17	C1		• Plate	1	80052-
18	C1		• Plug	1	80052-

https://truckmanualshub.com/

FIG. K0210-007019 ROPS Cab, Rubber Antenna Mounting

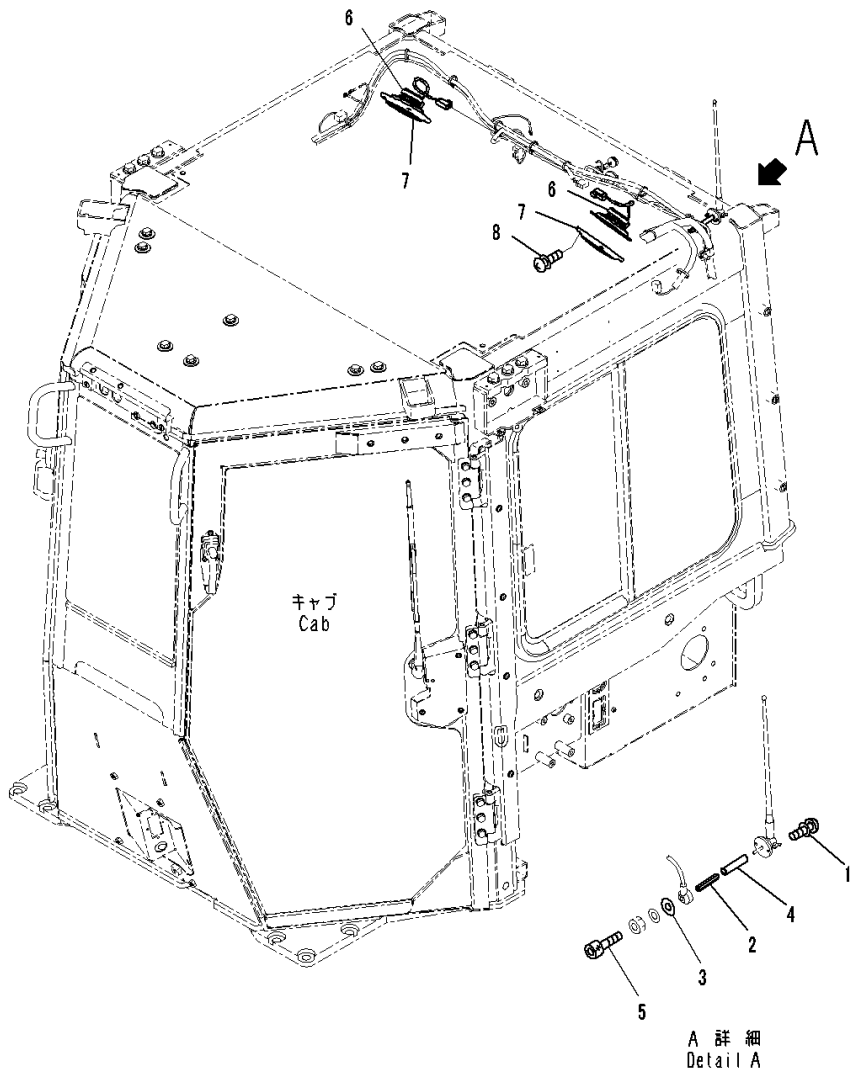

Index	Code	Part Number	Description	Qty	Serial Number
		Note: This list covers following specifications. With Rear View Monitoring System, With AM-FM Stereo Radio For North America, TH300 Type KOMTRAX With Rear View Monitoring System, Provision For Radio Installation, TH300 Type KOMTRAX EU Regulation Guard Level 2, With Rear View Monitoring System, With AM-FM Stereo Radio With Cassette For Europe And Asia, TH300 Type KOMTRAX EU Regulation Guard Level 2, With Rear View Monitoring System, Provision For Radio Installation, TH300 Type KOMTRAX			
1		01023-20416	Screw	2	80052-
2		14X-06-51370	Bar	1	80052-
3		01643-70623	Washer	1	80052-
4		08023-10006	Tube	1	80052-
5		01252-70530	Bolt, Hexagon Socket Head	1	80052-
6		20Y-06-42180	Speaker	2	80052-
7		20Y-53-12221	Cover	2	80052-
8		01023-20425	Screw	8	80052-

https://truckmanualshub.com/

FIG. K0210-007020 ROPS Cab, Roof Cover (1/2)

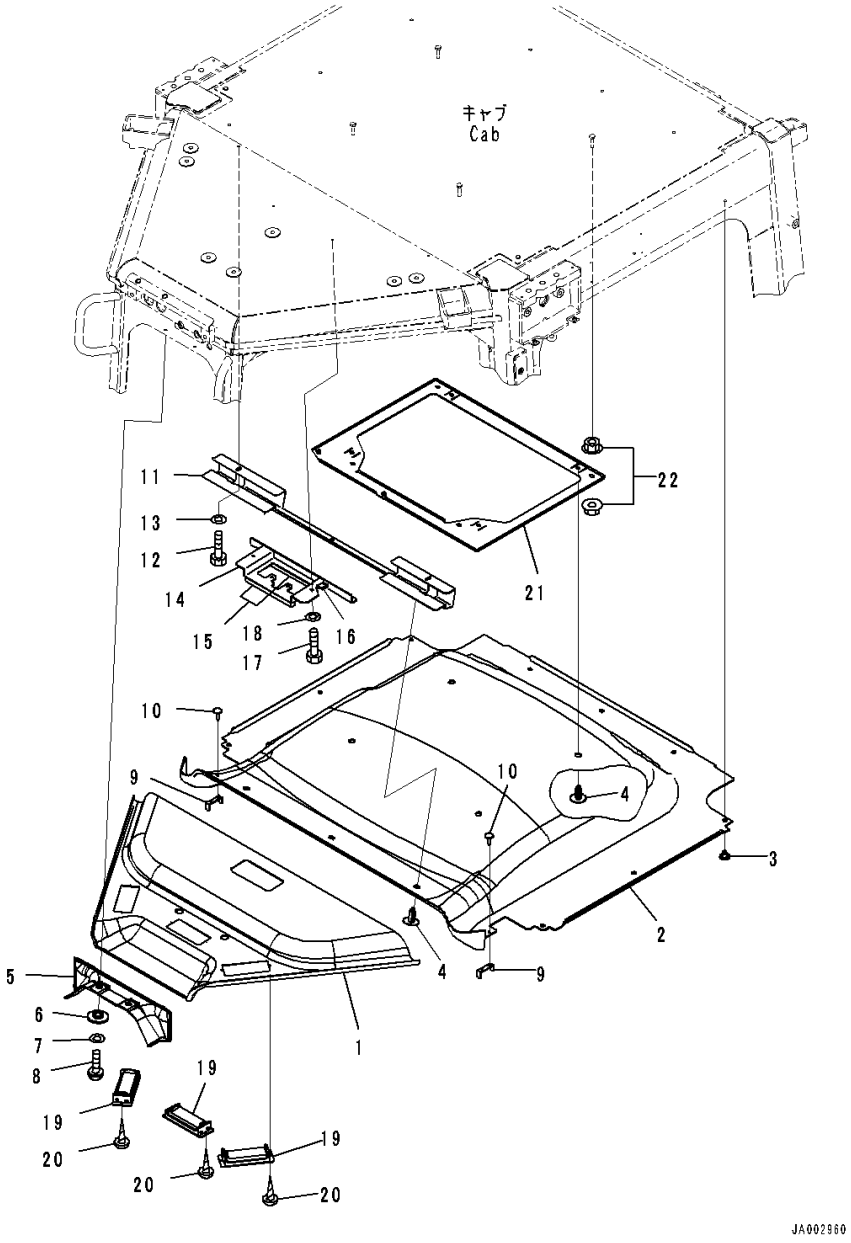

Index	Code	Part Number	Description	Qty	Serial Number
		Note: This list covers following specifications. With Rear View Monitoring System, With AM-FM Stereo Radio For North America, TH300 Type KOMTRAX With Rear View Monitoring System, Provision For Radio Installation, TH300 Type KOMTRAX EU Regulation Guard Level 2, With Rear View Monitoring System, With AM-FM Stereo Radio With Cassette For Europe And Asia, TH300 Type KOMTRAX EU Regulation Guard Level 2, With Rear View Monitoring System, Provision For Radio Installation, TH300 Type KOMTRAX			
1		14X-Y79-2621	Cover	1	80052-
2		14X-Y79-2611	Cover	1	80052-
3		20Y-54-18690	Rivet	9	80052-
4		198-Z11-6370	Clip	7	80052-
5		14X-Y79-2631	Cover	1	80052-
6		17A-979-1620	Collar	2	80052-
7		01643-70623	Washer	2	80052-
8		01245-00620	Screw	2	80052-
9		14X-Y79-2350	Plate	2	80052-
10		14X-Y79-2650	Clip	4	80052-
11		14X-Y79-2141	Bracket	1	80052-
12		01010-80616	Bolt	2	80052-
13		01643-30623	Washer	2	80052-
14		14X-Y79-2161	Bracket	1	80052-
15		17A-979-1760	• Sheet,Bonded	2	80052-
16		208-53-11M80	• Ring	1	80052-
17		01010-80616	Bolt	2	80052-
18		01643-30623	Washer	2	80052-
19		17A-Z11-7161	Louver	3	80052-
20		01370-40414	Screw	6	80052-
21		14X-Y79-1291	Bracket	1	80052-
22		01584-00806	Nut	8	80052-

https://truckmanualshub.com/

FIG. K0210-007021 ROPS Cab, Roof Cover (2/2)

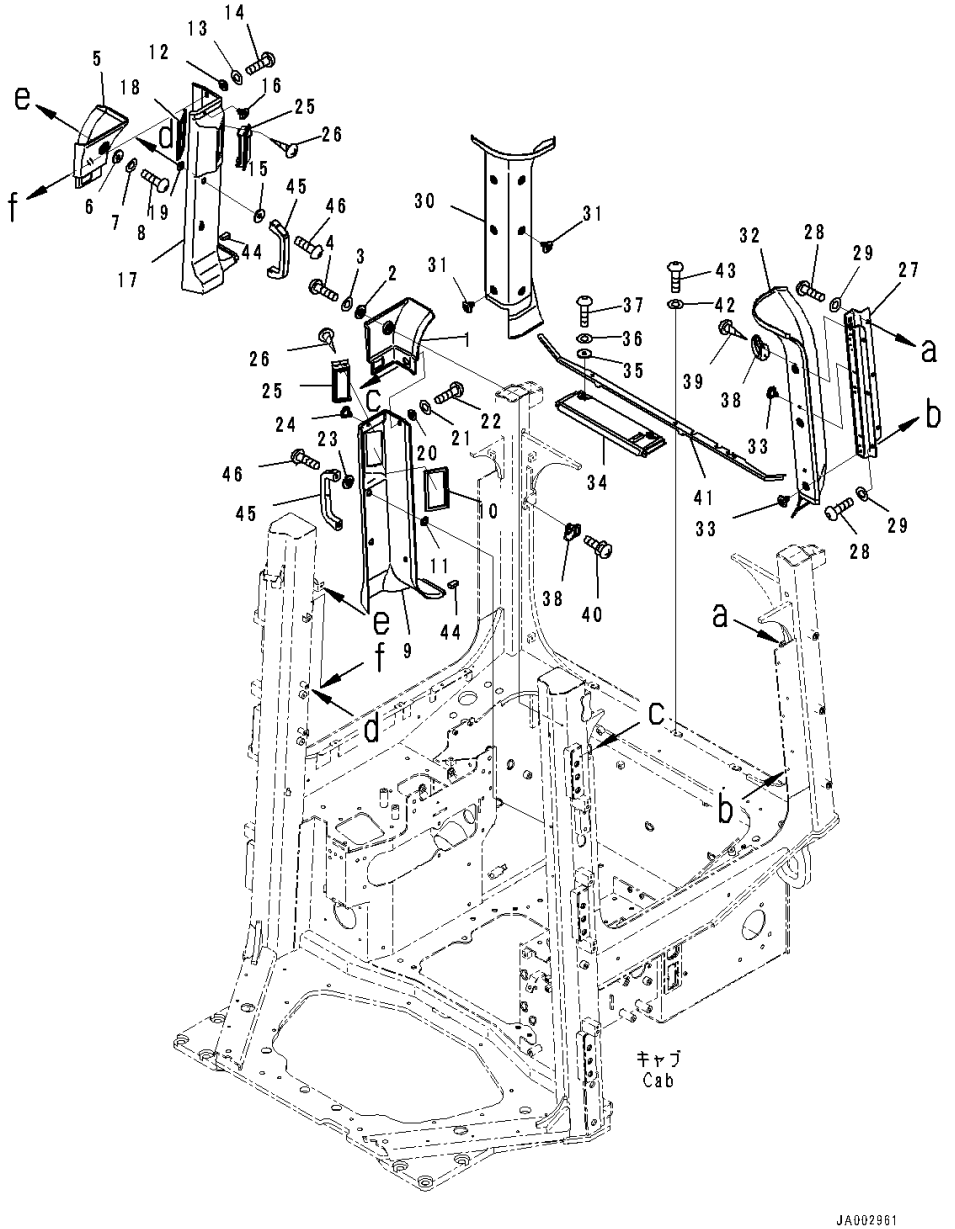

Index	Code	Part Number	Description	Qty	Serial Number
		Note: This list covers following specifications. With Rear View Monitoring System, With AM-FM Stereo Radio For North America, TH300 Type KOMTRAX With Rear View Monitoring System, Provision For Radio Installation, TH300 Type KOMTRAX EU Regulation Guard Level 2, With Rear View Monitoring System, With AM-FM Stereo Radio With Cassette For Europe And Asia, TH300 Type KOMTRAX EU Regulation Guard Level 2, With Rear View Monitoring System, Provision For Radio Installation, TH300 Type KOMTRAX			
1		14X-Y79-2261	Cover Assembly	1	80052-
2		17A-979-1620	Collar	1	80052-
3		01643-70623	Washer	1	80052-
4		01245-00620	Screw	1	80052-
5		14X-Y79-2271	Cover Assembly	1	80052-
6		17A-979-1620	Collar	1	80052-
7		01643-70623	Washer	1	80052-
8		01245-00620	Screw	1	80052-
9		14X-Y79-2101	Cover Assembly	1	80052-
10		17A-979-1930	• Seal,Bonded	1	80052-
11		17A-979-3890	• Plate,Bonded	2	80052-
12		17A-979-1620	Collar	2	80052-
13		01643-70623	Washer	2	80052-
14		01245-00620	Screw	2	80052-
15		17A-979-1611	Collar	2	80052-
16		20Y-54-18690	Rivet	1	80052-
17		14X-Y79-2201	Cover Assembly	1	80052-
18		17A-979-1930	• Seal,Bonded	1	80052-
19		17A-979-3890	• Plate,Bonded	2	80052-
20		17A-979-1620	Collar	2	80052-
21		01643-70623	Washer	2	80052-
22		01245-00620	Screw	2	80052-
23		17A-979-1611	Collar	2	80052-
24		20Y-54-18690	Rivet	1	80052-
25		17A-Z11-7161	Louver	2	80052-
26		01370-30412	Screw	4	80052-
27		14X-Y79-2131	Bracket	1	80052-
28		01245-00820	Screw	6	80052-
29		01643-70823	Washer	6	80052-

https://truckmanualshub.com/

FIG. K0210-007021 ROPS Cab, Roof Cover (2/2)

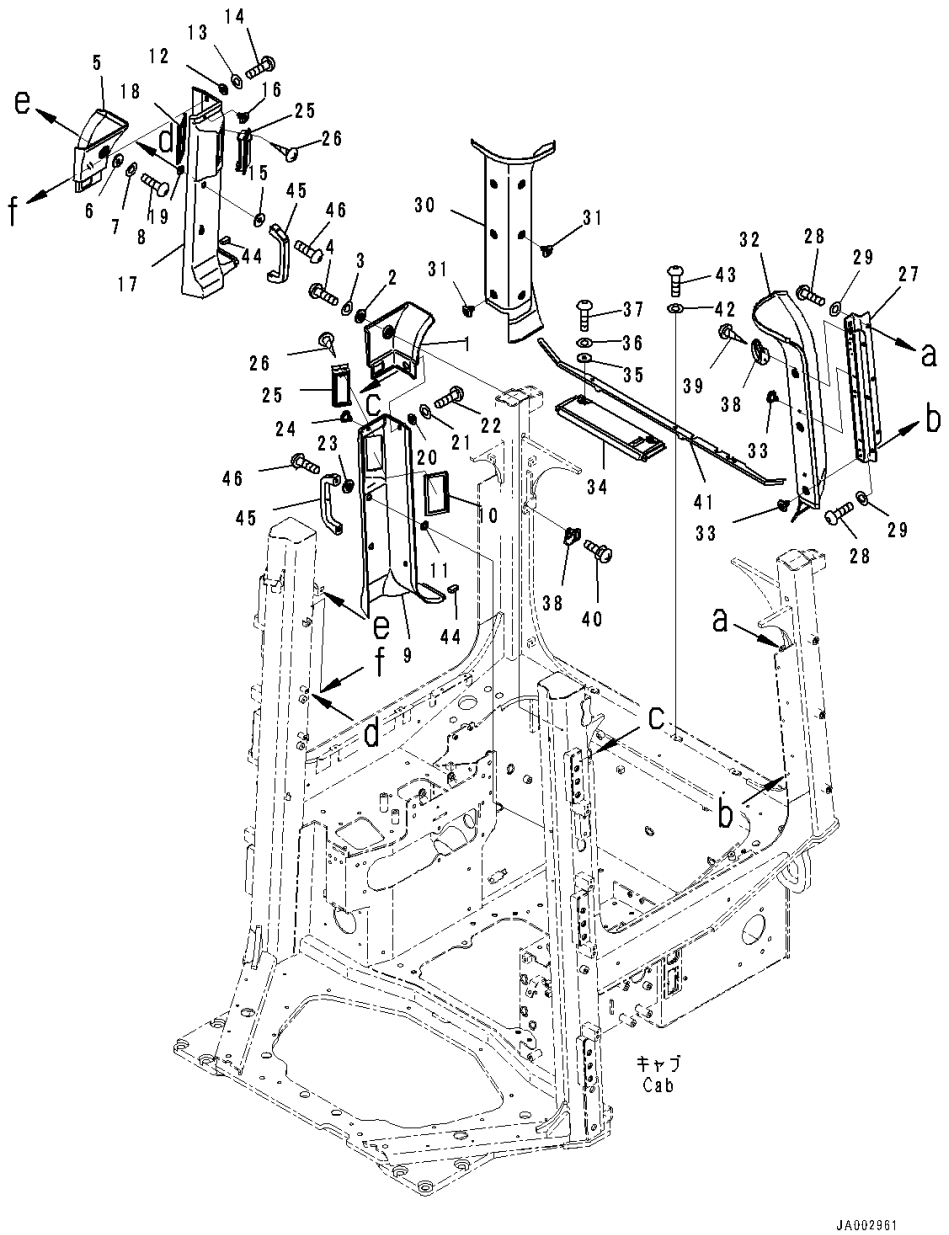

Index	Code	Part Number	Description	Qty	Serial Number
30		14X-Y79-2211	Cover	1	80052-
31		20Y-54-18690	Rivet	6	80052-
32		14X-Y79-2221	Cover	1	80052-
33		20Y-54-18690	Rivet	5	80052-
34		14X-Y79-2380	Cover	1	80052-
35		12Y-978-2660	Collar	2	80052-
36		01643-70623	Washer	2	80052-
37		01245-00620	Screw	2	80052-
38		17A-Z11-2940	Hook	2	80052-
39		01370-40412	Screw	2	80052-
40		01023-70412	Screw	2	80052-
41		14X-Y79-2641	Cover	1	80052-
42		01643-70623	Washer	3	80052-
43		01245-00616	Screw, Hexagon Socket Head	3	80065-
44		14X-Y79-2190	Seal,Bonded	2	80052-
45		361-54-21150	Handle	2	80052-
46		01245-00825	Screw	4	80052-

https://truckmanualshub.com/

FIG. K0210-007022 ROPS Cab, Rearview Mirror

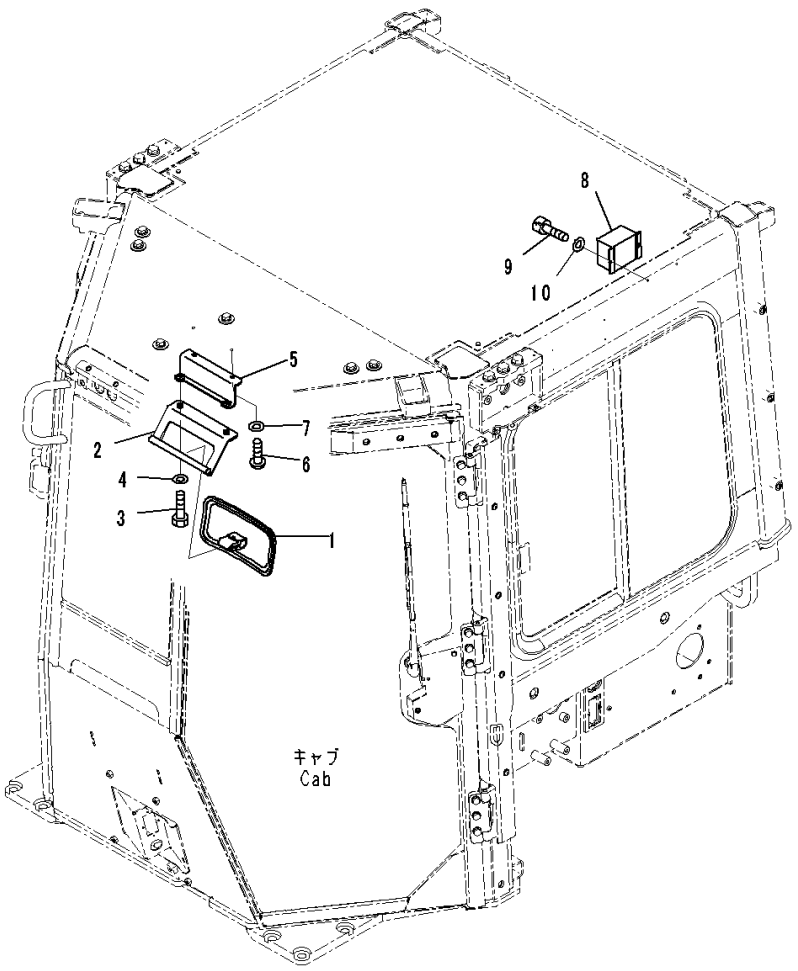

Index	Code	Part Number	Description	Qty	Serial Number
		Note: This list covers following specifications. With Rear View Monitoring System, With AM-FM Stereo Radio For North America, TH300 Type KOMTRAX With Rear View Monitoring System, Provision For Radio Installation, TH300 Type KOMTRAX EU Regulation Guard Level 2, With Rear View Monitoring System, With AM-FM Stereo Radio With Cassette For Europe And Asia, TH300 Type KOMTRAX EU Regulation Guard Level 2, With Rear View Monitoring System, Provision For Radio Installation, TH300 Type KOMTRAX			
1		195-Z11-2180	Mirror	1	80052-
2		14X-Y79-2171	Bracket	1	80052-
3		01245-00825	Screw	2	80052-
4		01643-70823	Washer	2	80052-
5		14X-Y79-2151	Bracket	1	80052-
6		01010-D0816	Bolt	2	80052-
7		01643-70823	Washer	2	80052-
8		12Y-06-11650	Converter	1	80052-
9		01252-80514	Bolt	2	80052-
10		01641-50508	Washer, Flat	2	80052-

https://truckmanualshub.com/

FIG. K0210-007023 ROPS Cab, Outside Cover

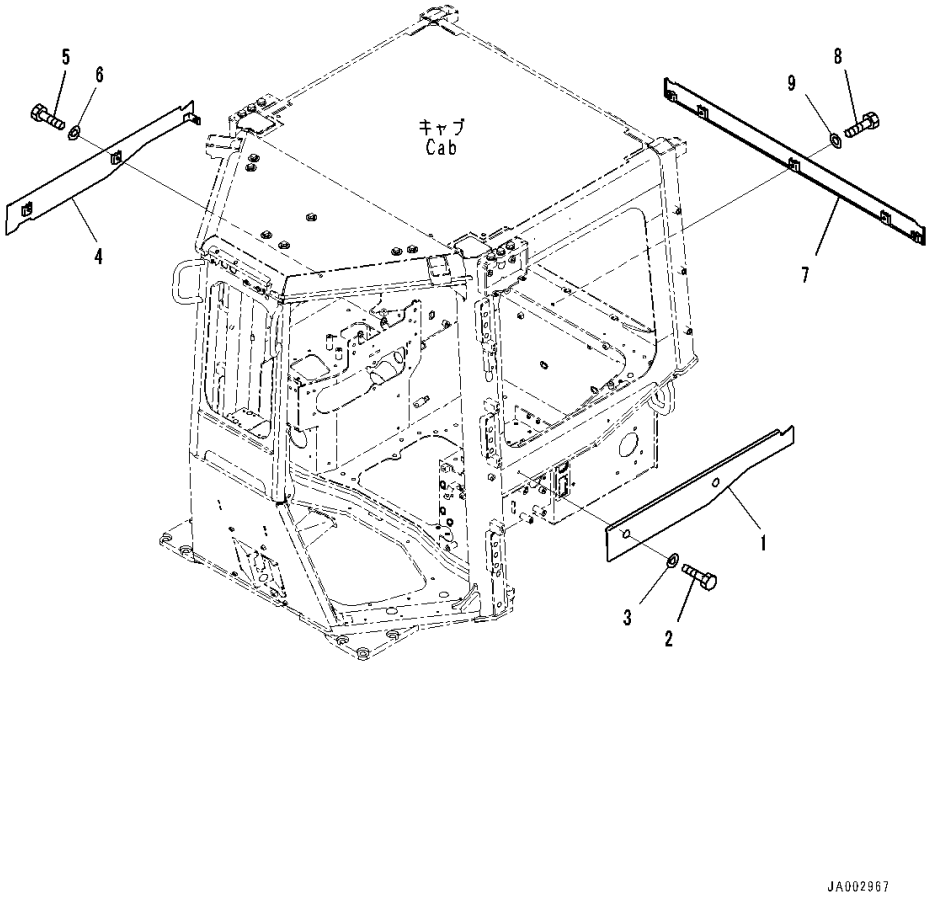

Index	Code	Part Number	Description	Qty	Serial Number
		Note: This list covers following specifications. With Rear View Monitoring System, With AM-FM Stereo Radio For North America, TH300 Type KOMTRAX With Rear View Monitoring System, Provision For Radio Installation, TH300 Type KOMTRAX EU Regulation Guard Level 2, With Rear View Monitoring System, With AM-FM Stereo Radio With Cassette For Europe And Asia, TH300 Type KOMTRAX EU Regulation Guard Level 2, With Rear View Monitoring System, Provision For Radio Installation, TH300 Type KOMTRAX			
1		14X-Y79-1541	Plate	1	80052-
2		01010-81020	Bolt	2	80052-
3		01643-31032	Washer	2	80052-
4		14X-Y79-1551	Plate	1	80052-
5		01010-81020	Bolt	2	80052-
6		01643-31032	Washer	2	80052-
7		14X-Y79-1561	Plate	1	80052-
8		01010-81020	Bolt	5	80052-
9		01643-31032	Washer	5	80052-

https://truckmanualshub.com/

FIG. K0210-007024 ROPS Cab, Air Conditioner Unit

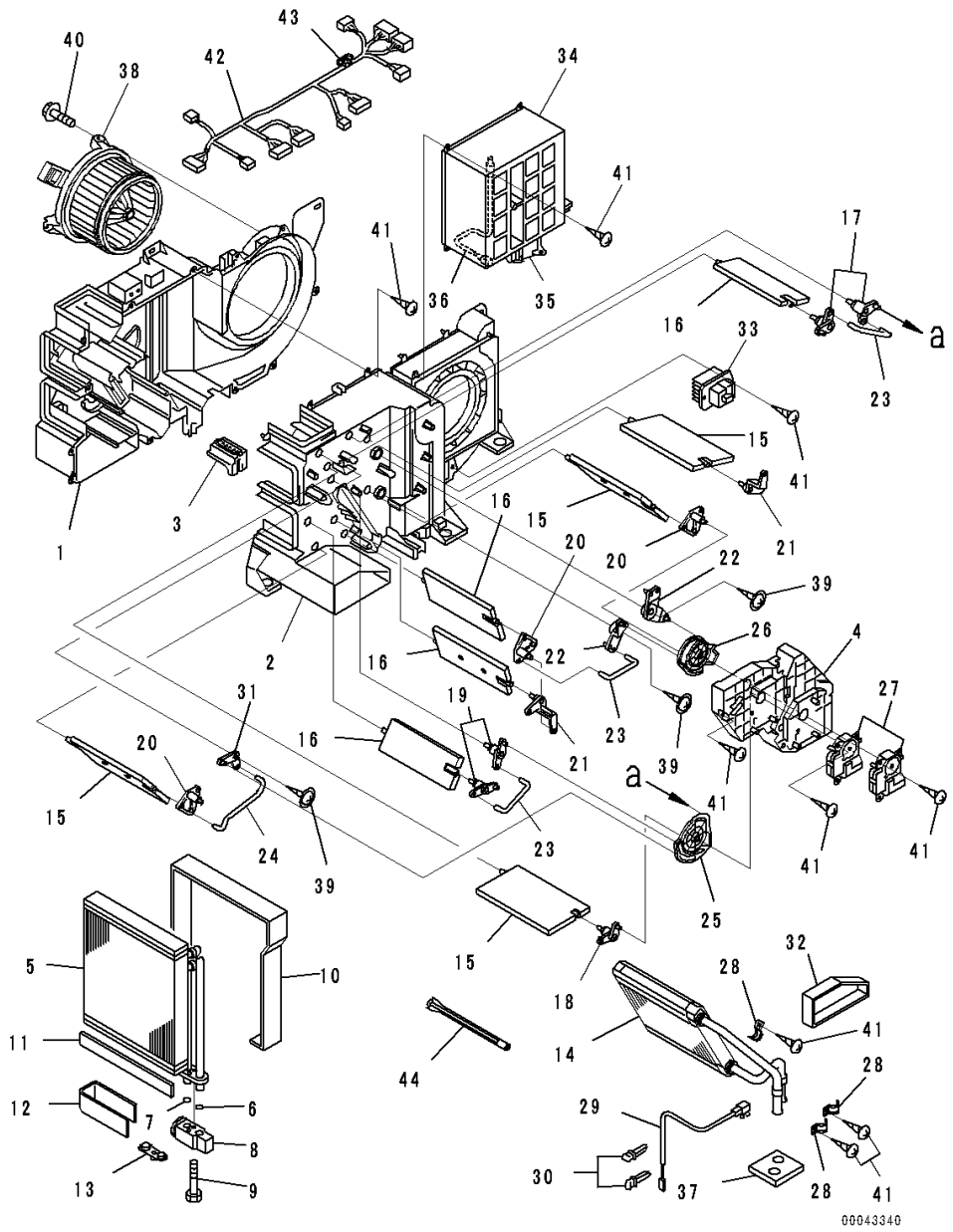

Index	Code	Part Number	Description	Qty	Serial Number
		Note: This list covers following specifications. With Rear View Monitoring System, With AM-FM Stereo Radio For North America, TH300 Type KOMTRAX With Rear View Monitoring System, Provision For Radio Installation, TH300 Type KOMTRAX EU Regulation Guard Level 2, With Rear View Monitoring System, With AM-FM Stereo Radio With Cassette For Europe And Asia, TH300 Type KOMTRAX EU Regulation Guard Level 2, With Rear View Monitoring System, Provision For Radio Installation, TH300 Type KOMTRAX			
		20Y-810-1211	Air Conditioner Assembly	1	80052-
1		ND245450-5831	• Case, Cooling	1	80052-
2		ND245450-5840	• Case, Cooling	1	80052-
3		ND116576-3810	• Plate	1	80052-
4		ND116576-3820	• Plate	1	80052-
		ND446010-3132	• Evaporator	1	80052-
5		ND446600-0991	• • Evaporator Assembly	1	80052-
6		ND949142-0020	• • O-ring	1	80052-
7		ND949142-0030	• • O-ring	1	80052-
8		ND447500-2750	• • Valve	1	80052-
9		ND949046-3100	• • Bolt	2	80052-
10		ND146657-8841	• • Packing	1	80052-
11		ND146657-9811	• • Packing	3	80052-
12		ND146657-8850	• • Packing	1	80052-
13		ND445021-3941	• • Plug	1	80052-
14		ND116140-0050	• Core Subassembly, Heater	1	80052-
15		ND116660-7570	• Door Assembly	4	80052-
16		ND116650-6850	• Door Assembly	4	80052-
17		ND116780-2481	• Lever Subassembly, Link	2	80052-
18		ND116780-2491	• Lever Subassembly, Link	1	80052-
19		ND116780-2501	• Lever Subassembly, Link	2	80052-
20		ND116780-2510	• Lever Subassembly, Link	3	80052-
21		ND116781-3000	• Lever	2	80052-
22		ND116780-3130	• Lever Subassembly, Link	2	80052-
23		ND116662-7670	• Shaft	3	80052-
24		ND116662-7681	• Shaft	1	80052-
25		ND116576-3852	• Plate	1	80052-
26		ND116576-3862	• Plate	1	80052-
27		ND063800-0300	• Servo Motor Assembly	1	80052-

https://truckmanualshub.com/

FIG. K0210-007024 ROPS Cab, Air Conditioner Unit

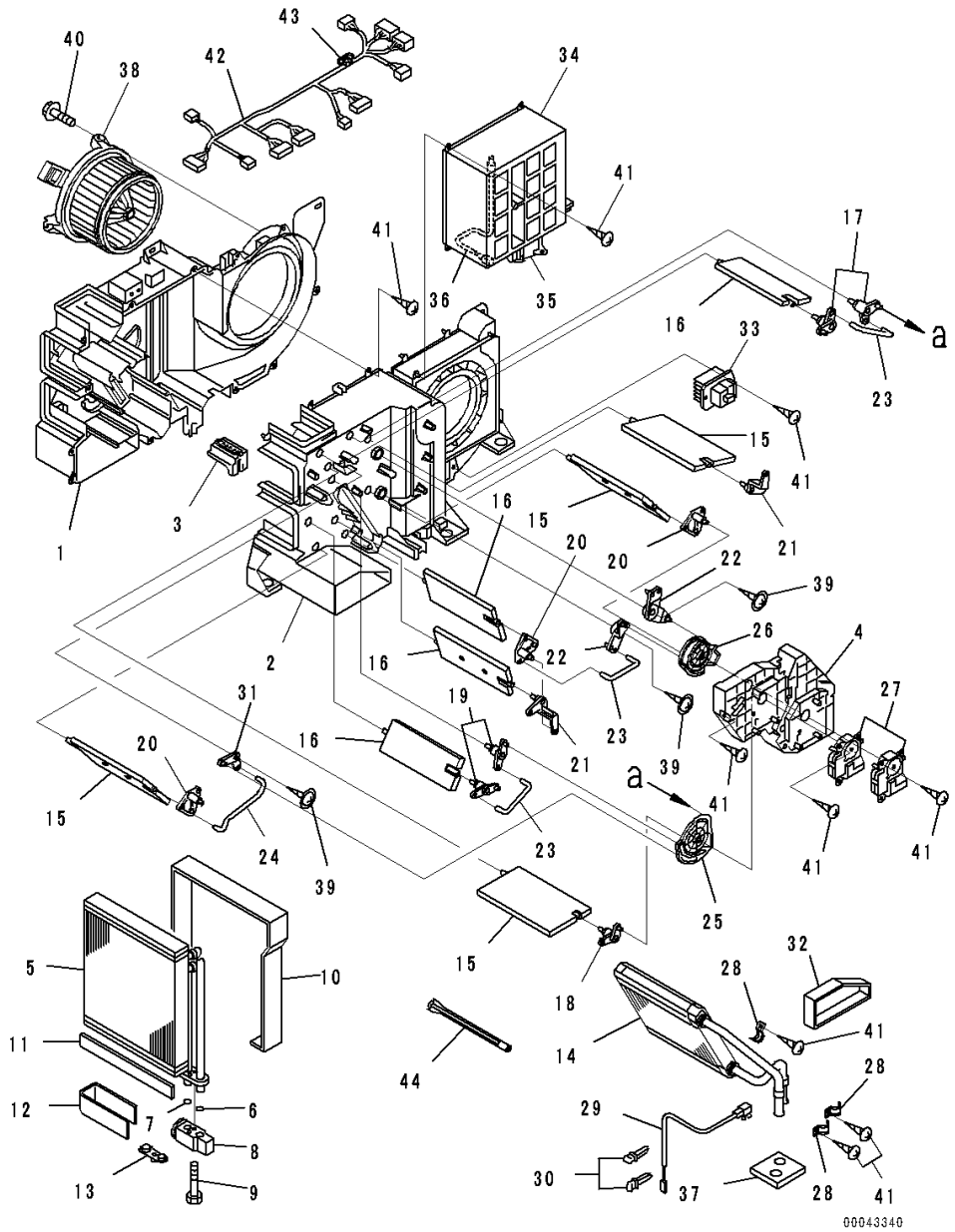

Index	Code	Part Number	Description	Qty	Serial Number
28		ND017231-0700	• Clamp	3	80052-
29		ND077500-5890	• Thermistor Assembly	1	80052-
30		ND246790-2060	• Clamp	2	80052-
31		ND116780-3920	• Lever Subassembly, Link	1	80052-
32		ND146667-0440	• Packing	1	80052-
33		ND077800-0750	• Transistor	1	80052-
34		ND146340-0560	• Box Assembly	1	80052-
35		ND063600-4580	• • Servo Motor Assembly	1	80052-
36		ND077500-5650	• • Thermistor Assembly	1	80052-
37		ND146657-8860	• Packing	1	80052-
38		ND116340-7350	• Motor Assembly, Fan	1	80052-
39		ND949008-0460	• Screw, Tapping	3	80052-
40		ND949008-0330	• Screw, Tapping	3	80052-
41		ND949001-1730	• Screw, Tapping	32	80052-
42		ND246470-4311	• Wiring Harness Assembly	1	80052-
43		ND93950-05003	• • Fuse	1	80052-
44		ND116662-8320	• Shaft	1	80052-

https://truckmanualshub.com/

FIG. K0210-007025 ROPS Cab, Air Conditioner Unit Mounting

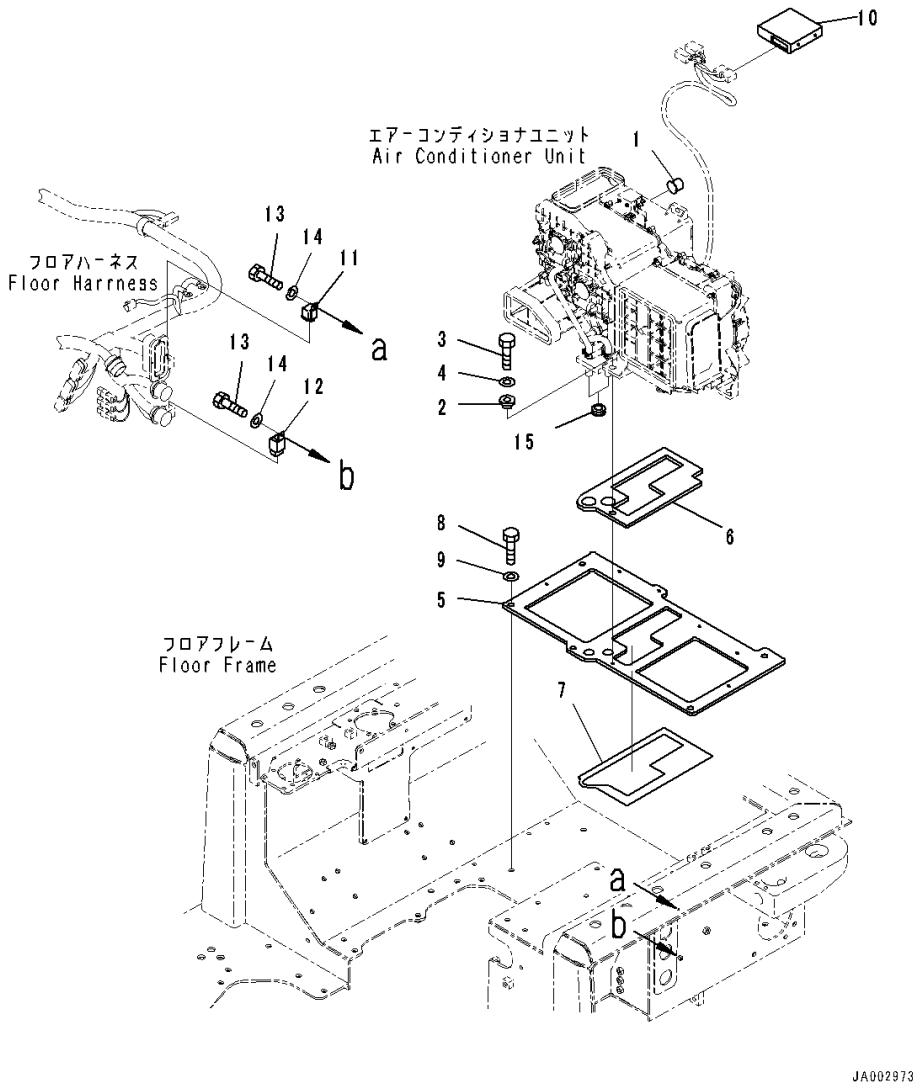

Index	Code	Part Number	Description	Qty	Serial Number
		Note: This list covers following specifications. With Rear View Monitoring System, With AM-FM Stereo Radio For North America, TH300 Type KOMTRAX With Rear View Monitoring System, Provision For Radio Installation, TH300 Type KOMTRAX EU Regulation Guard Level 2, With Rear View Monitoring System, With AM-FM Stereo Radio With Cassette For Europe And Asia, TH300 Type KOMTRAX EU Regulation Guard Level 2, With Rear View Monitoring System, Provision For Radio Installation, TH300 Type KOMTRAX			
1		17A-979-3131	Cap	1	80052-
2		208-979-7540	Collar	7	80052-
3		01010-D0825	Bolt	7	80052-
4		01643-70823	Washer	7	80052-
5		14X-Y11-2181	Plate	1	80052-
6		14X-Y11-2211	• Sheet,Bonded	1	80052-
7		17A-979-2330	• Sheet,Bonded	1	80052-
8		01010-81230	Bolt	4	80052-
9		01643-31232	Washer	4	80052-
10		17A-979-3180	Controller	1	80052-
11		20Y-979-6771	Relay	1	80052-
12		421-07-31270	Relay	1	80052-
13		01010-80616	Bolt	2	80052-
14		01643-30623	Washer	2	80052-
15		112-06-12150	Grommet	2	80052-

https://truckmanualshub.com/

FIG. K0210-007026 ROPS Cab, Air Conditioner Duct (1/3)

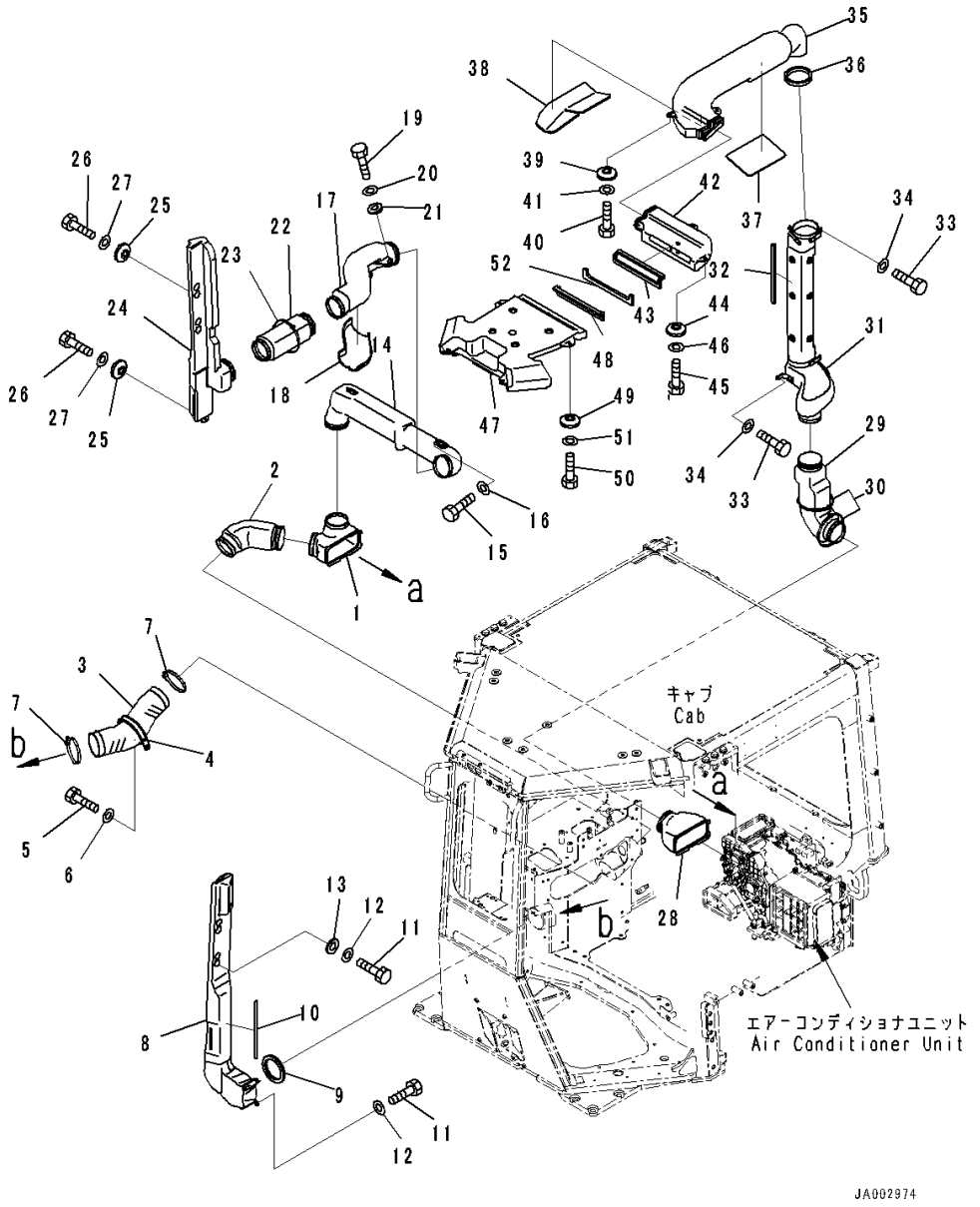

Index	Code	Part Number	Description	Qty	Serial Number
		Note: This list covers following specifications. With Rear View Monitoring System, With AM-FM Stereo Radio For North America, TH300 Type KOMTRAX With Rear View Monitoring System, Provision For Radio Installation, TH300 Type KOMTRAX EU Regulation Guard Level 2, With Rear View Monitoring System, With AM-FM Stereo Radio With Cassette For Europe And Asia, TH300 Type KOMTRAX EU Regulation Guard Level 2, With Rear View Monitoring System, Provision For Radio Installation, TH300 Type KOMTRAX			
1		14X-Y11-1110	Duct	1	80052-
2		20Y-53-13361	Duct	1	80052-
3		14X-Y11-1241	Hose	1	80052-
4		198-911-7750	Clip	1	80052-
5		01010-81020	Bolt	1	80052-
6		01643-31032	Washer	1	80052-
7		14X-911-7670	Clamp	2	80052-
8		14X-Y11-1151	Duct	1	80052-
9		14X-Y11-1250	• Seal,Bonded	1	80052-
10		14X-Y11-1930	• Seal,Bonded	1	80052-
11		01010-80616	Bolt	5	80052-
12		01643-30623	Washer	5	80052-
13		20Y-53-12310	Collar	2	80052-
14		14X-Y11-1121	Duct	1	80052-
15		01010-80616	Bolt	2	80052-
16		01643-30623	Washer	2	80052-
17		14X-Y11-1131	Duct	1	80052-
18		14X-Y11-2260	• Sheet,Bonded	1	80052-
19		01010-80616	Bolt	3	80052-
20		01643-30623	Washer	3	80052-
21		20Y-53-12310	Collar	1	80052-
22		20Y-53-13361	Duct	1	80052-
23		08034-20876	Band	1	80052-
24		14X-Y11-1141	Duct	1	80052-
25		20Y-53-12310	Collar	2	80052-
26		01010-80616	Bolt	3	80052-
27		01643-30623	Washer	3	80052-
28		14X-Y11-1160	Duct	1	80052-
29		208-53-12220	Duct	1	80052-

https://truckmanualshub.com/

FIG. K0210-007026 ROPS Cab, Air Conditioner Duct (1/3)

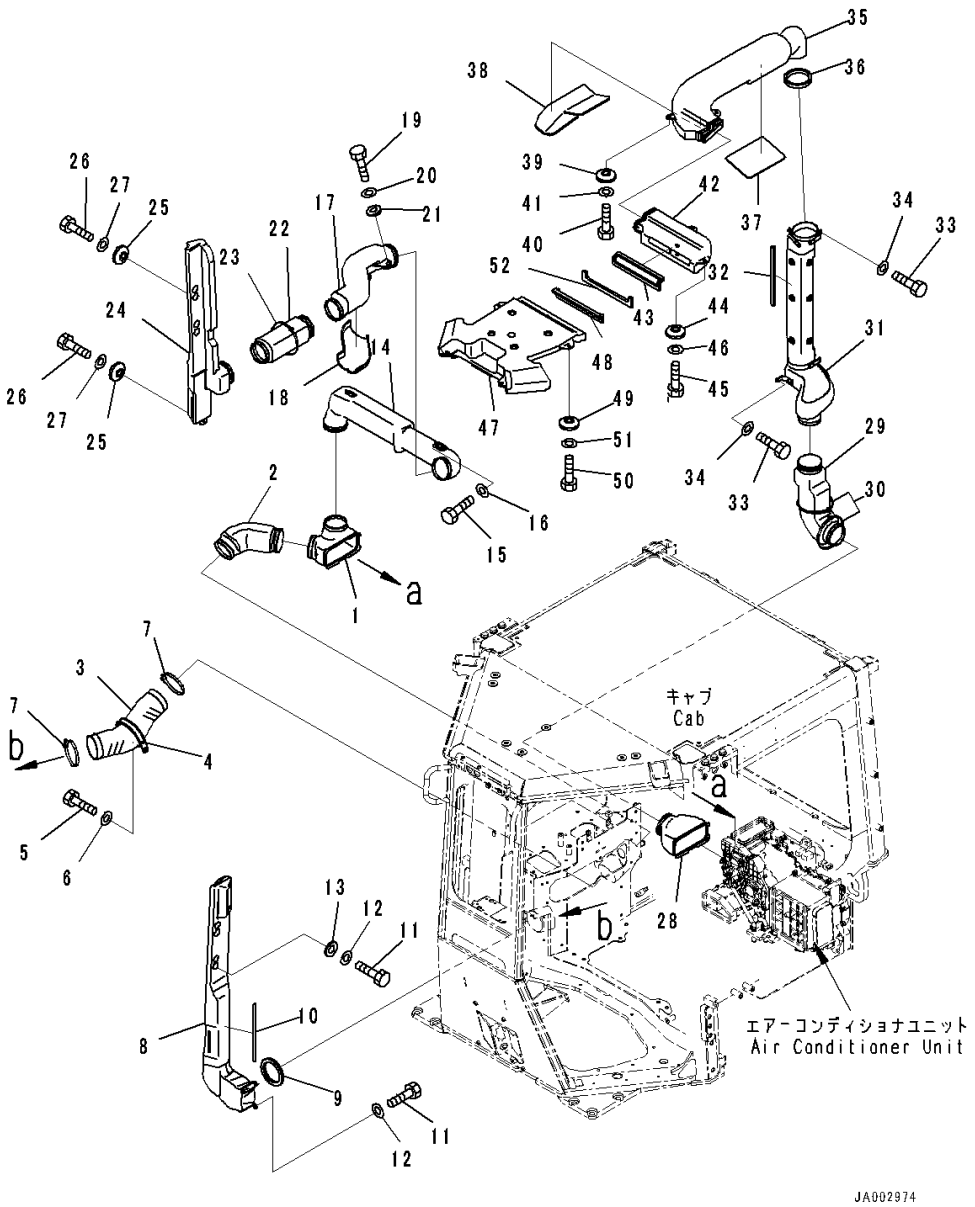

Index	Code	Part Number	Description	Qty	Serial Number
30		08034-20876	Band	2	80052-
31		14X-Y11-1171	Duct	1	80052-
32		14X-Y11-1940	• Seal,Bonded	1	80052-
33		01010-80616	Bolt	4	80052-
34		01643-30623	Washer	4	80052-
35		14X-Y11-1181	Duct	1	80052-
36		14X-Y11-1280	• Seal,Bonded	1	80052-
37		14X-Y79-2230	• Sheet,Bonded	1	80052-
38		14X-Y79-2241	• Sheet,Bonded	1	80052-
39		20Y-53-12310	Collar	3	80052-
40		01010-80616	Bolt	3	80052-
41		01643-30623	Washer	3	80052-
42		14X-Y11-1191	Duct	1	80052-
43		14X-Y11-1260	• Seal,Bonded	1	80052-
44		20Y-53-12310	Collar	3	80052-
45		01010-80616	Bolt	3	80052-
46		01643-30623	Washer	3	80052-
47		14X-Y11-1211	Duct	1	80052-
48		14X-Y11-1260	• Seal,Bonded	1	80052-
49		20Y-53-12310	Collar	4	80052-
50		01010-80616	Bolt	4	80052-
51		01643-30623	Washer	4	80052-
52		14X-Y79-2310	Sheet,Bonded	1	80052-

https://truckmanualshub.com/

FIG. K0210-007027 ROPS Cab, Air Conditioner Piping

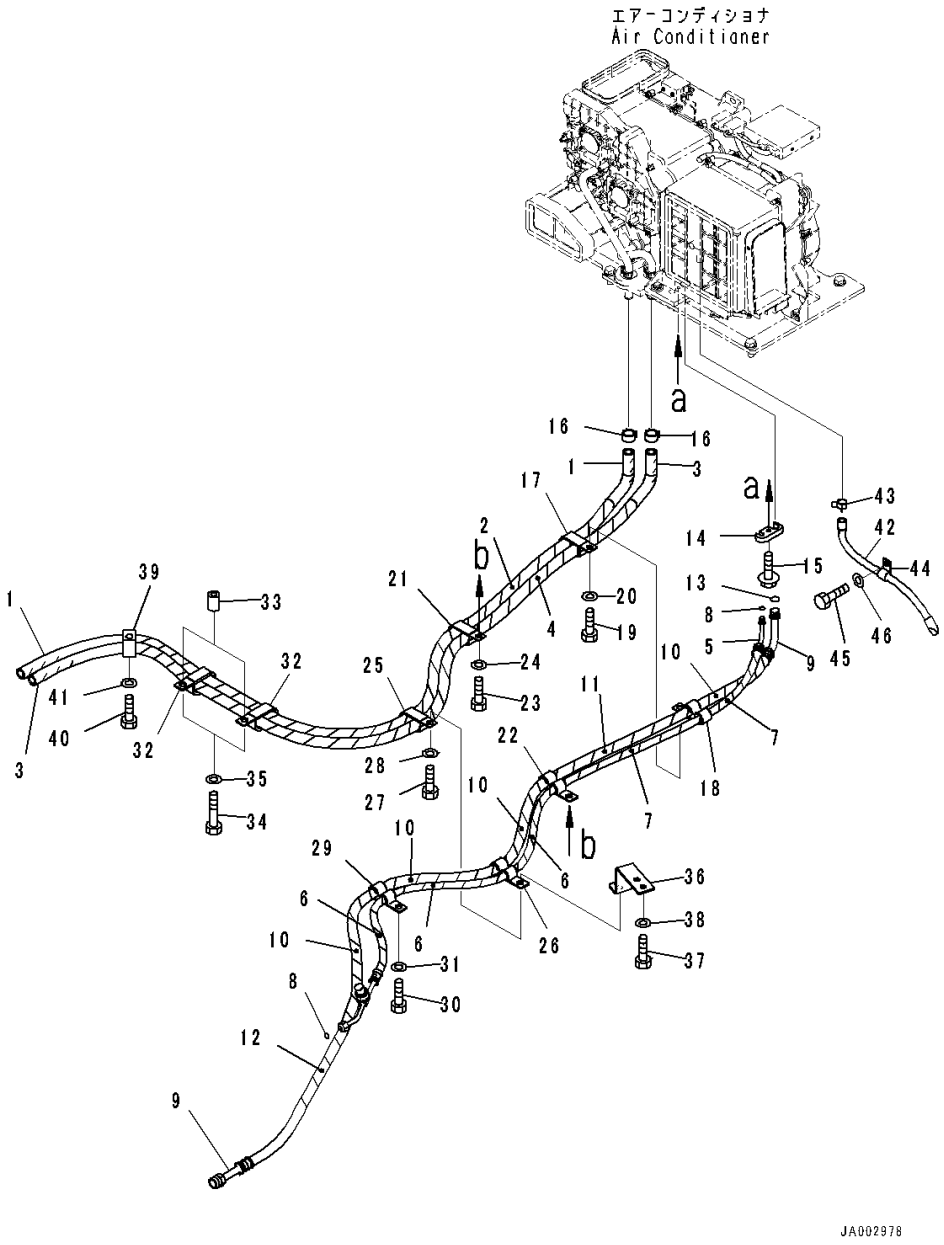

Index	Code	Part Number	Description	Qty	Serial Number
		Note: This list covers following specifications. With Rear View Monitoring System, With AM-FM Stereo Radio For North America, TH300 Type KOMTRAX With Rear View Monitoring System, Provision For Radio Installation, TH300 Type KOMTRAX EU Regulation Guard Level 2, With Rear View Monitoring System, With AM-FM Stereo Radio With Cassette For Europe And Asia, TH300 Type KOMTRAX EU Regulation Guard Level 2, With Rear View Monitoring System, Provision For Radio Installation, TH300 Type KOMTRAX			
1		14X-Y11-1871	Hose	1	80052-
2		08017-C2518	• Conduit	1	80052-
3		14X-Y11-1881	Hose	1	80052-
4		08017-C2519	• Conduit	1	80052-
5		14X-Y11-1891	Hose Assembly	1	80052-
6		08017-C1502	• Conduit	3	80052-
7		08017-C1503	• Conduit	2	80052-
8		20Y-979-3150	• O-ring	2	80052-
9		14X-Y11-1911	Hose Assembly	1	80052-
10		08017-C2202	• Conduit	4	80052-
11		08017-C2203	• Conduit	1	80052-
12		08017-C2204	• Conduit	1	80052-
13		20Y-979-3130	• O-ring	1	80052-
14		208-979-7650	Connector	1	80052-
15		01435-00620	Bolt	1	80052-
16		09479-02400	Clamp	2	80052-
17		582-35-11170	Clip	1	80052-
18		195-Z11-7250	Clip	1	80052-
19		01010-81025	Bolt	1	80052-
20		01643-31032	Washer	1	80052-
21		582-35-11170	Clip	1	80052-
22		17A-911-4421	Clip	1	80052-
23		01010-81025	Bolt	1	80052-
24		01643-31032	Washer	1	80052-
25		582-35-11170	Clip	1	80052-
26		17A-911-4421	Clip	1	80052-
27		01010-81025	Bolt	1	80052-
28		01643-31032	Washer	1	80052-
29		195-Z11-7250	Clip	1	80052-

https://truckmanualshub.com/

FIG. K0210-007027 ROPS Cab, Air Conditioner Piping

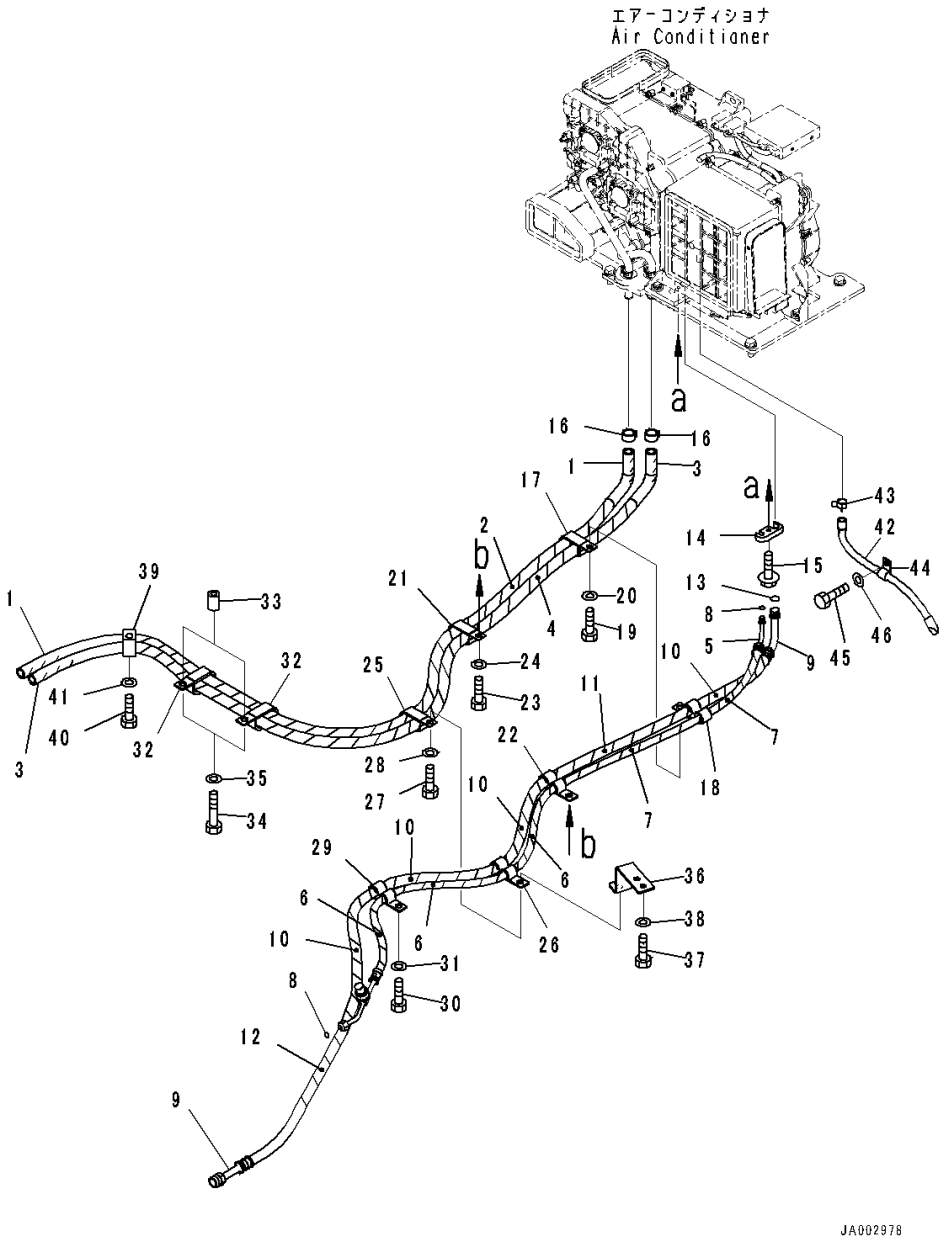

Index	Code	Part Number	Description	Qty	Serial Number
30		01010-81025	Bolt	1	80052-
31		01643-31032	Washer	1	80052-
32		22M-977-1140	Clip	2	80052-
33		20Y-03-11220	Collar	2	80052-
34		01010-81060	Bolt	2	80052-
35		01643-31032	Washer	2	80052-
36		14X-Y11-1790	Bracket	1	80052-
37		01010-81025	Bolt	2	80052-
38		01643-31032	Washer	2	80052-
39		22M-977-1140	Clip	1	80052-
40		01010-81025	Bolt	1	80052-
41		01643-31032	Washer	1	80052-
42		20Y-979-6281	Hose	1	80052-
43		07285-00155	Clip	1	80052-
44		04434-51410	Clip	1	80052-
45		01010-D0825	Bolt	1	80052-
46		01643-70823	Washer	1	80052-

https://truckmanualshub.com/

FIG. K0210-007028 ROPS Cab, Air Conditioner Duct (2/3)

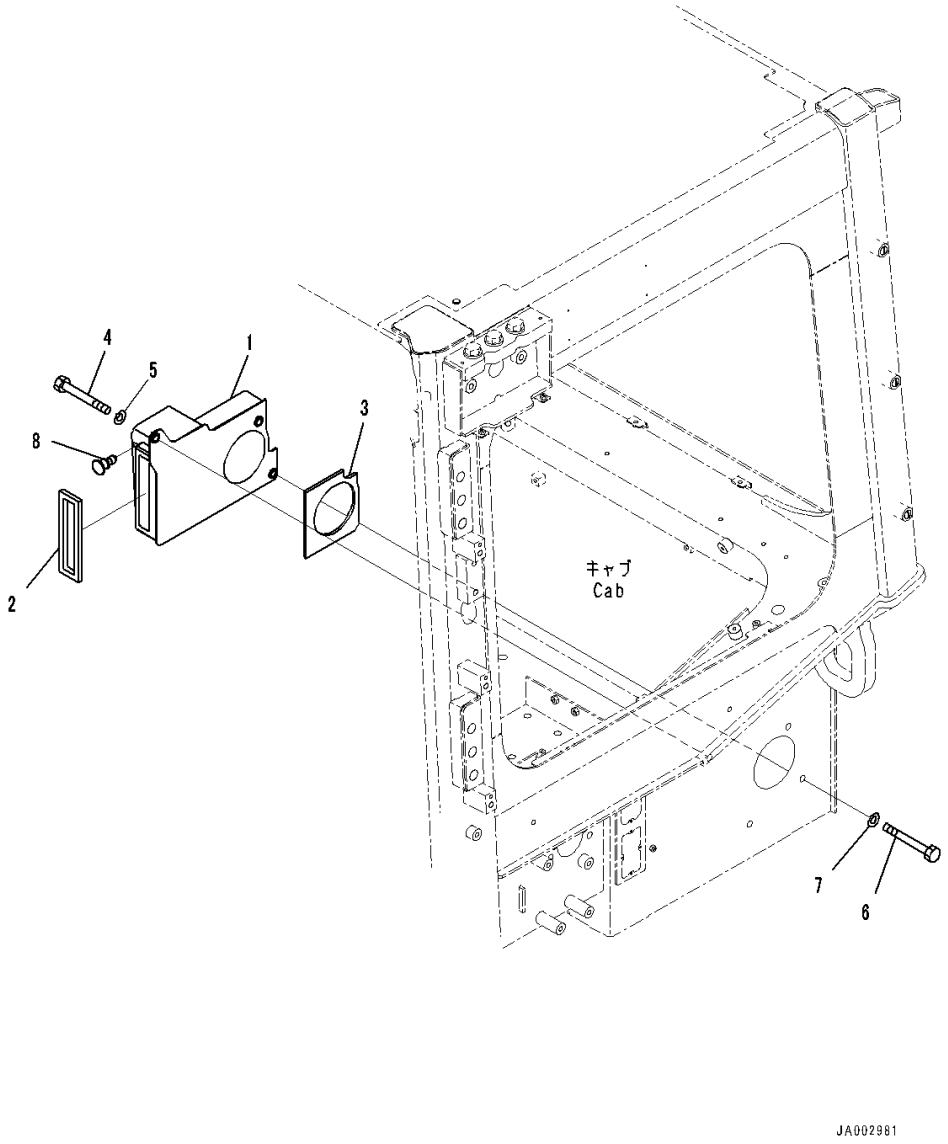

Index	Code	Part Number	Description	Qty	Serial Number
		Note: This list covers following specifications. With Rear View Monitoring System, With AM-FM Stereo Radio For North America, TH300 Type KOMTRAX With Rear View Monitoring System, Provision For Radio Installation, TH300 Type KOMTRAX EU Regulation Guard Level 2, With Rear View Monitoring System, With AM-FM Stereo Radio With Cassette For Europe And Asia, TH300 Type KOMTRAX EU Regulation Guard Level 2, With Rear View Monitoring System, Provision For Radio Installation, TH300 Type KOMTRAX			
1		14X-Y11-1222	Duct	1	80052-
2		14X-Y11-1471	• Seal,Bonded	1	80052-
3		14X-Y11-1490	• Sheet,Bonded	1	80052-
4		01010-81020	Bolt	1	80052-
5		01643-31032	Washer	1	80052-
6		01010-81030	Bolt	1	80052-
7		01643-31032	Washer	1	80052-
8		208-53-12680	Clip	1	80052-

https://truckmanualshub.com/

FIG. K0210-007030 ROPS Cab, Console Box

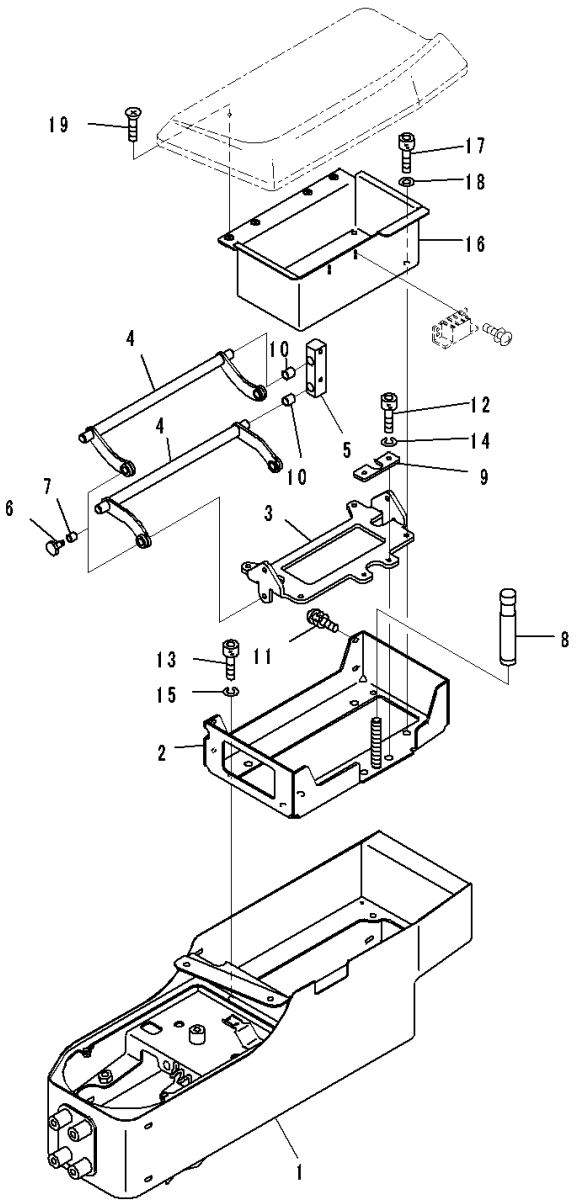

JA002984

Index	Code	Part Number	Description	Qty	Serial Number
		Note: This list covers following specifications. With Rear View Monitoring System, With AM-FM Stereo Radio For North America, TH300 Type KOMTRAX With Rear View Monitoring System, Provision For Radio Installation, TH300 Type KOMTRAX EU Regulation Guard Level 2, With Rear View Monitoring System, With AM-FM Stereo Radio With Cassette For Europe And Asia, TH300 Type KOMTRAX EU Regulation Guard Level 2, With Rear View Monitoring System, Provision For Radio Installation, TH300 Type KOMTRAX			
1		14X-43-51211	Box, Console	1	80052-
		14X-43-51501	Bracket Assembly	1	80052-
2	C1		• Bracket	1	80052-
3		19M-43-33720	• Bracket	1	80052-
4		19M-43-33730	• Arm	2	80052-
5		19M-43-33740	• Block	2	80052-
6		19M-43-33750	• Pin	4	80052-
7		19M-43-33760	• Bushing	4	80052-
8		19M-43-33770	• Knob	1	80052-
9		19M-43-33780	• Plate	1	80052-
10		19M-43-34330	• Bushing	4	80052-
11		01023-60516	• Screw	4	80052-
12		01252-80410	• Bolt, Hexagon Socket Head	2	80052-
13		01252-80510	• Bolt	4	80052-
14		01601-20410	• Washer	2	80052-
15		01601-20512	• Washer	4	80052-
16		14X-43-51691	Bracket	1	80052-
17		01252-80510	Bolt	4	80052-
18		01601-50513	Washer, Spring	4	80052-
19		01224-70408	Screw, Philips Head	4	80052-

https://truckmanualshub.com/

FIG. K0210-007031 ROPS Cab, Travel Control Lever (1/2)

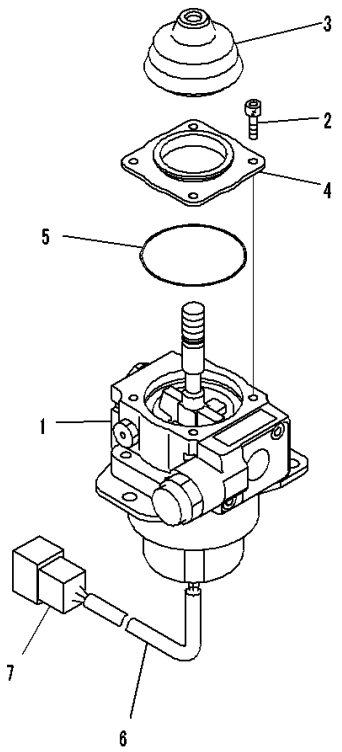

JY013289

Index	Code	Part Number	Description	Qty	Serial Number
		Note: This list covers following specifications. With Rear View Monitoring System, With AM-FM Stereo Radio For North America, TH300 Type KOMTRAX With Rear View Monitoring System, Provision For Radio Installation, TH300 Type KOMTRAX EU Regulation Guard Level 2, With Rear View Monitoring System, With AM-FM Stereo Radio With Cassette For Europe And Asia, TH300 Type KOMTRAX EU Regulation Guard Level 2, With Rear View Monitoring System, Provision For Radio Installation, TH300 Type KOMTRAX			
1		702-16-02290	Lever Assembly	1	80052-
2		01252-60512	• Bolt	4	80052-
3		702-16-59330	• Boot	1	80052-
4		702-16-62730	• Cover	1	80052-
5		702-16-62740	• O-ring	1	80052-
6		702-16-61270	• Tube	1	80052-
7		08192-28812	• Connector	1	80052-

https://truckmanualshub.com/

FIG. K0210-007032 ROPS Cab, Travel Control Lever (2/2)

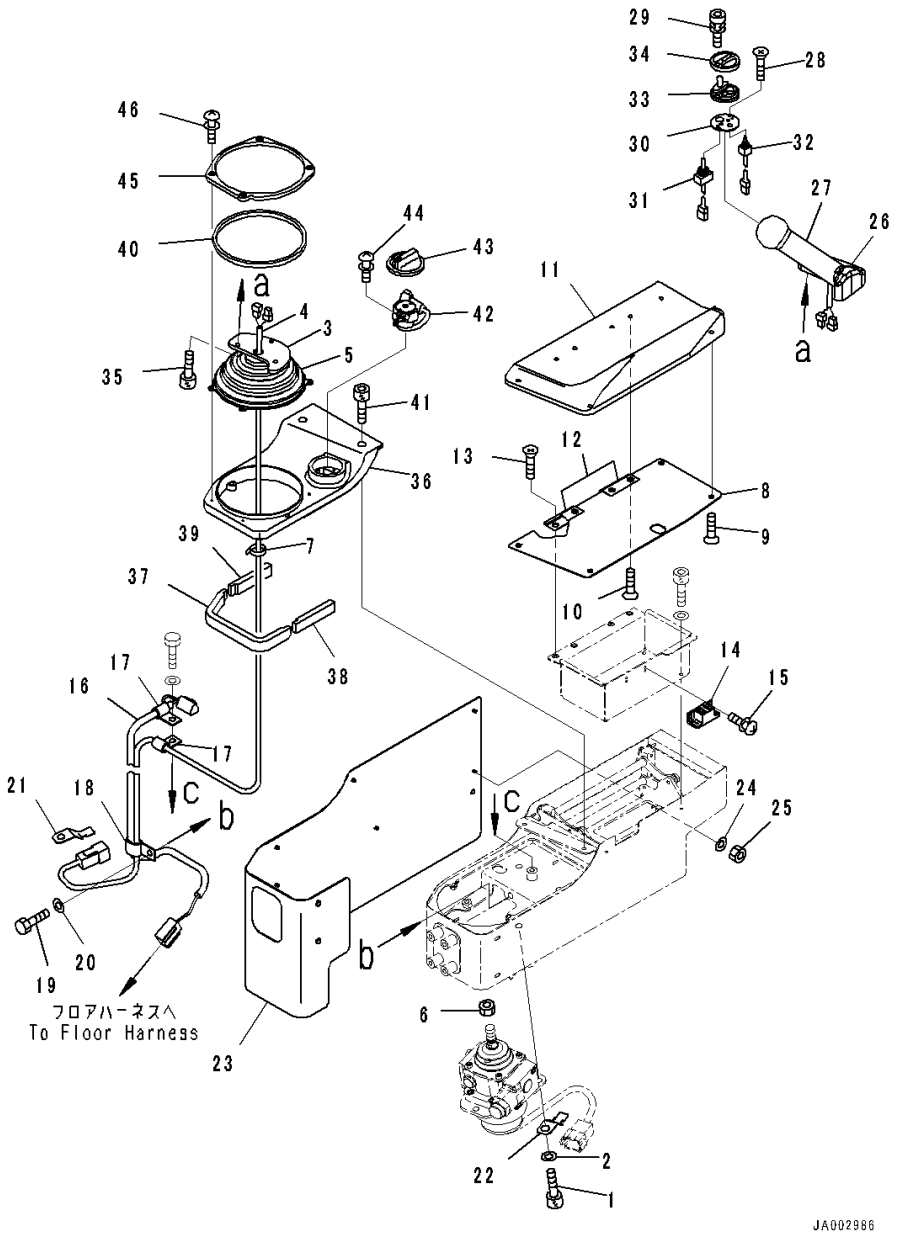

Index	Code	Part Number	Description	Qty	Serial Number
		Note: This list covers following specifications. With Rear View Monitoring System, With AM-FM Stereo Radio For North America, TH300 Type KOMTRAX With Rear View Monitoring System, Provision For Radio Installation, TH300 Type KOMTRAX EU Regulation Guard Level 2, With Rear View Monitoring System, With AM-FM Stereo Radio With Cassette For Europe And Asia, TH300 Type KOMTRAX EU Regulation Guard Level 2, With Rear View Monitoring System, Provision For Radio Installation, TH300 Type KOMTRAX			
1		01252-70825	Bolt	3	80052-
2		01643-30823	Washer	3	80052-
		14X-06-31311	Wiring Harness	1	80052-
3		154-43-73531	• Bracket	1	80052-
4		154-43-73560	• Wiring Harness	1	80052-
5		14X-43-34331	• Boot	1	80052-
6		20T-43-71190	Nut	1	80052-
7		08034-20519	Band	2	80052-
8		14X-43-52110	Pad	1	80052-
9		01224-70408	• Screw, Philips Head	4	80052-
10		01224-70410	• Screw, Philips Head	4	80052-
11		19M-43-33630	• Pad	1	80052-
		19M-43-33630	• • Pad	1	80052-
		19M-43-33630	• • Pad	1	80052-
		19M-43-33630	• • Pad	1	80052-
		19M-43-33630	• • Pad	10	80052-
12		19M-43-33660	• Hinge	2	80052-
13		01224-70408	Screw, Philips Head	4	80052-
14		154-43-73651	Magnet	1	80052-
15		01023-10308	Screw	4	80052-
16		14X-06-51151	Wiring Harness	1	80052-
17		04434-51008	Clip	2	80052-
18		04435-51008	Clip	1	80052-
19		01010-80816	Bolt	2	80052-
20		01643-30823	Washer	2	80052-
21		08193-20010	Clip	1	80052-
22		08193-31012	Clip	1	80052-
23		14X-43-51221	Pad	1	80052-
24		01640-20408	Washer, Flat	8	80052-

https://truckmanualshub.com/

FIG. K0210-007032 ROPS Cab, Travel Control Lever (2/2)

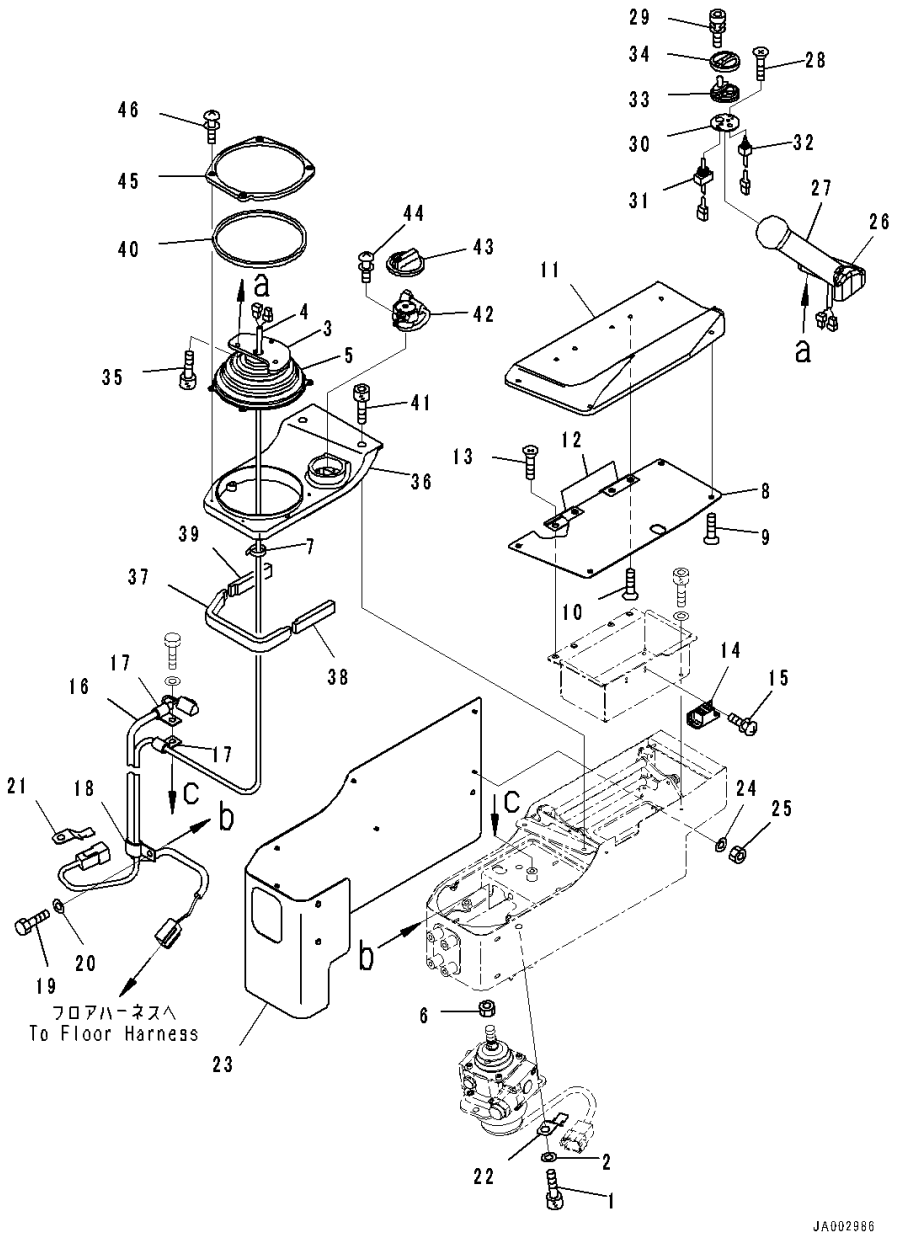

Index	Code	Part Number	Description	Qty	Serial Number
25		01580-20403	Nut	8	80052-
		19M-43-33110	Knob Assembly	1	80052-
26	C1		• Knob Assembly	1	80052-
27	C1		• Knob Assembly	1	80052-
28	C1		• Knob Assembly	2	80052-
29		19M-09-11510	• Bolt	2	80052-
		19M-43-33140	• Switch Assembly	1	80052-
30		19M-43-33170	• • Plate	1	80052-
31		19M-43-33460	• • Switch	1	80052-
32		19M-43-33470	• • Switch	1	80052-
33		19M-43-33150	• Rubber	1	80052-
34		19M-43-33160	• Cover	1	80052-
35		01252-80514	Bolt	3	80052-
36		14X-43-51960	Finisher Assembly	1	80052-
37		14X-54-38310	• Sheet,Bonded	1	80052-
38		14X-54-38320	• Sheet,Bonded	1	80052-
39		14X-54-38330	• Sheet,Bonded	1	80052-
40		14X-54-38350	• Sheet,Bonded	1	80052-
41		01252-70520	Bolt	4	80052-
42		14X-06-31501	Dial	1	80052-
43		7825-30-1441	• Knob	1	80052-
44		01023-60410	Screw	2	80052-
45		14X-43-51980	Cover	1	80052-
46		01023-70414	Screw	4	80052-

https://truckmanualshub.com/

FIG. K0210-007033 ROPS Cab, Console Slider

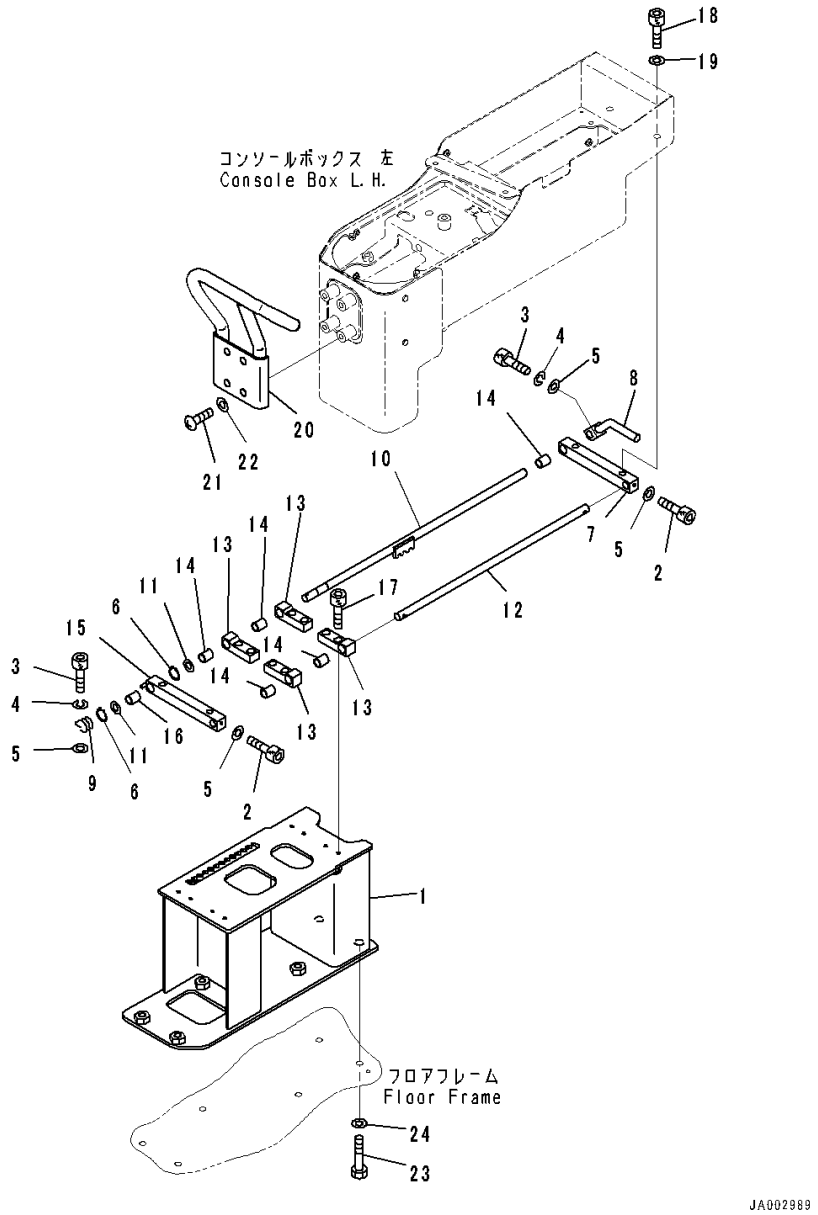

Index	Code	Part Number	Description	Qty	Serial Number
		Note: This list covers following specifications. With Rear View Monitoring System, With AM-FM Stereo Radio For North America, TH300 Type KOMTRAX With Rear View Monitoring System, Provision For Radio Installation, TH300 Type KOMTRAX EU Regulation Guard Level 2, With Rear View Monitoring System, With AM-FM Stereo Radio With Cassette For Europe And Asia, TH300 Type KOMTRAX EU Regulation Guard Level 2, With Rear View Monitoring System, Provision For Radio Installation, TH300 Type KOMTRAX			
1		14X-43-51252	Bracket	1	80052-
		14X-43-51402	Slider Assembly	1	80052-
2		01252-80412	• Bolt	2	80052-
3		01252-80414	• Bolt	2	80052-
4		01601-20411	• Washer	2	80052-
5		01640-20408	• Washer, Flat	4	80052-
6		04064-01010	• Ring, Snap	2	80052-
7		14X-43-51661	• Guide	1	80052-
8		14X-43-51681	• Lever	1	80052-
9		154-43-73670	• Spring	1	80052-
10		154-43-73680	• Shaft	1	80052-
11		19M-09-34110	• Washer	2	80052-
12		19M-43-34120	• Shaft	1	80052-
13		19M-43-34141	• Guide	4	80052-
14		19M-43-34150	• Bushing	5	80052-
15		19M-43-34182	• Guide	1	80052-
16		19M-43-34190	• Bushing	1	80052-
17		01252-80516	Bolt	8	80052-
18		01252-70816	Bolt	4	80052-
19		01643-30823	Washer	4	80052-
20		14X-54-36631	Handle	1	80052-
21		01245-00820	Screw	4	80052-
22		01643-70823	Washer	4	80052-
23		01010-81030	Bolt	6	80052-
24		01643-31032	Washer	6	80052-

https://truckmanualshub.com/

FIG. K0210-007034 ROPS Cab, Parking Brake Lever

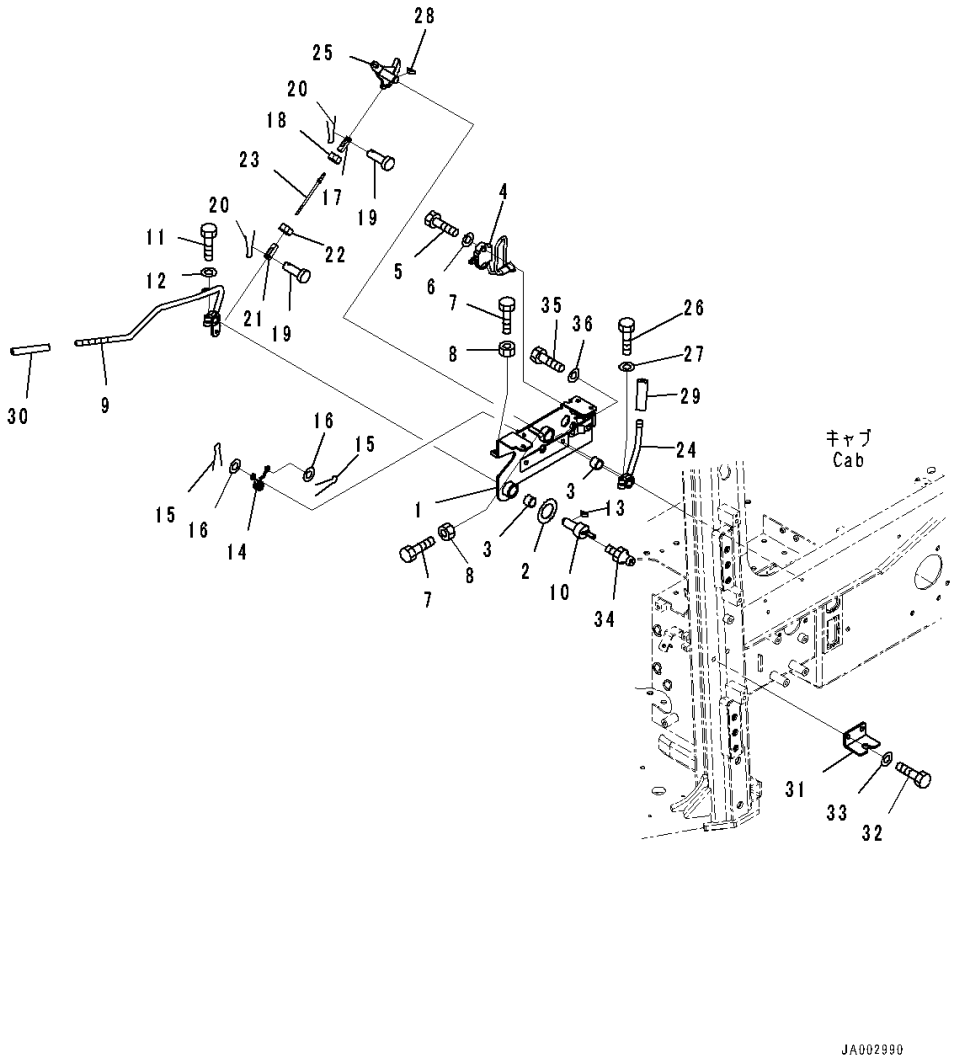

Index	Code	Part Number	Description	Qty	Serial Number
		Note: This list covers following specifications. With Rear View Monitoring System, With AM-FM Stereo Radio For North America, TH300 Type KOMTRAX With Rear View Monitoring System, Provision For Radio Installation, TH300 Type KOMTRAX EU Regulation Guard Level 2, With Rear View Monitoring System, With AM-FM Stereo Radio With Cassette For Europe And Asia, TH300 Type KOMTRAX EU Regulation Guard Level 2, With Rear View Monitoring System, Provision For Radio Installation, TH300 Type KOMTRAX			
1		14X-43-51412	Bracket	1	80052-
2		14X-43-51470	• Sheet,Bonded	1	80052-
3		06124-02020	Bearing	2	80052-
4		11Y-06-22150	Switch	1	80052-
5		01010-81035	Bolt	2	80052-
6		01643-31032	Washer	2	80052-
7		01016-50830	Bolt	2	80052-
8		01580-10806	Nut	2	80052-
9		14X-43-51421	Lever	1	80052-
10		14X-43-51431	Lever	1	80052-
11		01010-80830	Bolt	1	80052-
12		01643-30823	Washer	1	80052-
13		04010-00516	Key	1	80052-
14		14X-43-51840	Spring	1	80052-
15		04050-11612	Pin, Cotter	2	80052-
16		01640-20610	Washer	2	80052-
17		04221-20634	Yoke	1	80052-
18		01508-40603	Nut, Left-handed	1	80052-
19		04205-10618	Pin	2	80052-
20		04050-11612	Pin, Cotter	2	80052-
21		04211-20634	Yoke	1	80052-
22		01580-10605	Nut	1	80052-
23		04248-30613	Rod	1	80052-
24		14X-43-51741	Lever	1	80052-
25		14X-43-51451	Lever	1	80052-
26		01010-80830	Bolt	1	80052-
27		01643-30823	Washer	1	80052-
28		04010-00516	Key	1	80052-
29		22M-43-21470	Knob	1	80052-

https://truckmanualshub.com/

FIG. K0210-007034 ROPS Cab, Parking Brake Lever

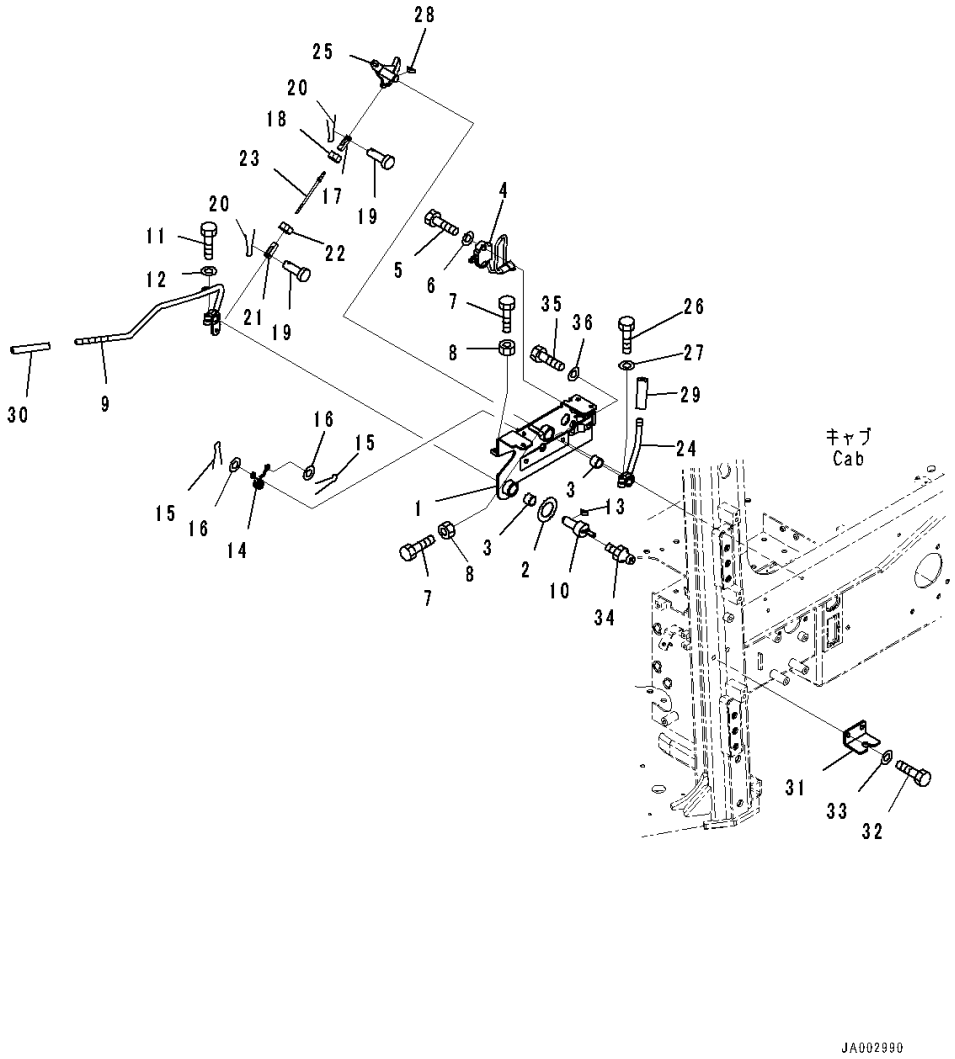

Index	Code	Part Number	Description	Qty	Serial Number
30		417-43-28270	Cap	1	80052-
31		14X-43-51461	Bracket	1	80052-
32		01010-81025	Bolt	2	80052-
33		01643-31032	Washer	2	80052-
34		07020-00000	Fitting, Grease	1	80052-
35		01010-81025	Bolt	2	80052-
36		01643-31032	Washer	2	80052-

https://truckmanualshub.com/

FIG. K0210-007035 ROPS Cab, Work Equipment Lock Lever

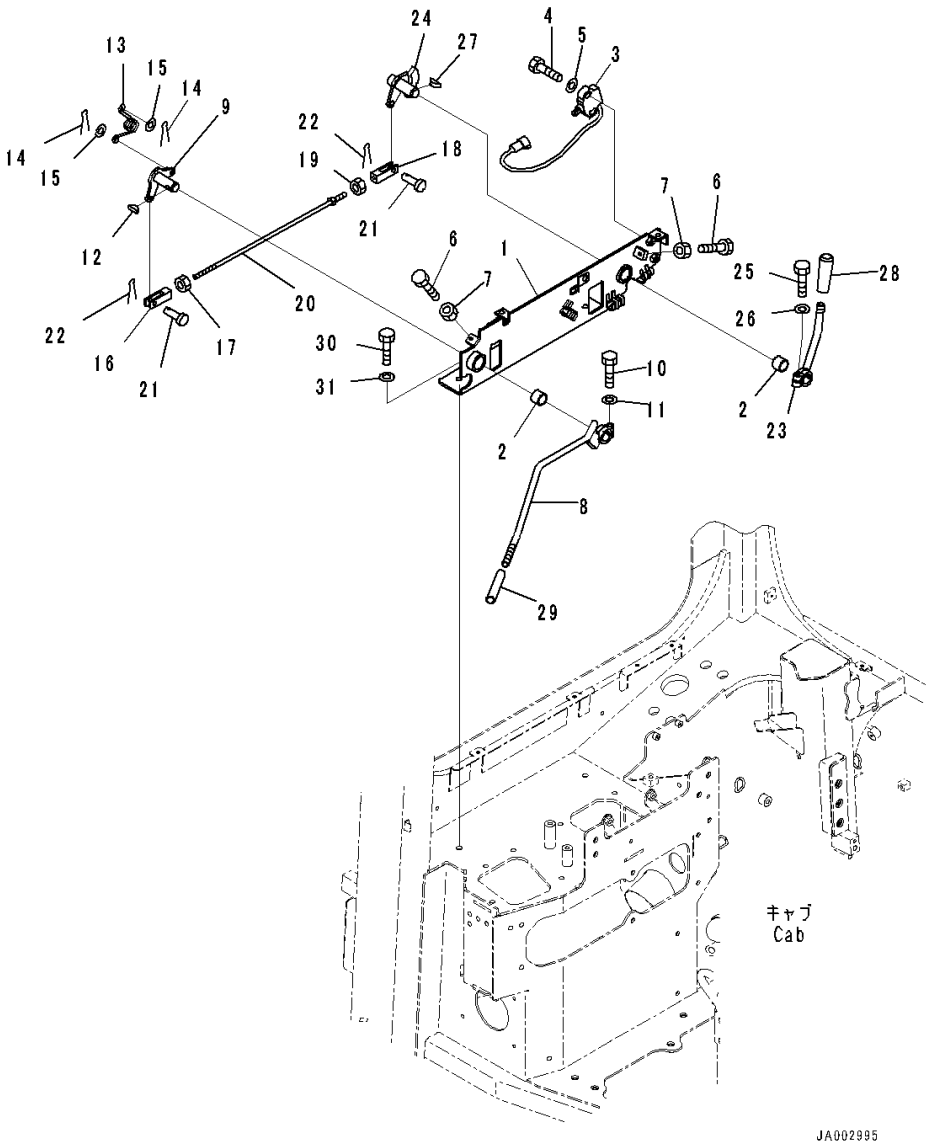

Index	Code	Part Number	Description	Qty	Serial Number
		Note: This list covers following specifications. With Rear View Monitoring System, With AM-FM Stereo Radio For North America, TH300 Type KOMTRAX With Rear View Monitoring System, Provision For Radio Installation, TH300 Type KOMTRAX EU Regulation Guard Level 2, With Rear View Monitoring System, With AM-FM Stereo Radio With Cassette For Europe And Asia, TH300 Type KOMTRAX EU Regulation Guard Level 2, With Rear View Monitoring System, Provision For Radio Installation, TH300 Type KOMTRAX			
1		14X-43-51711	Bracket	1	80052-
2		06124-02020	Bearing	2	80052-
3		11Y-06-22150	Switch	1	80052-
4		01010-81035	Bolt	2	80052-
5		01643-31032	Washer	2	80052-
6		01016-50830	Bolt	2	80052-
7		01580-10806	Nut	2	80052-
8		14X-43-51721	Lever	1	80052-
9		14X-43-51731	Lever	1	80052-
10		01010-80830	Bolt	1	80052-
11		01643-30823	Washer	1	80052-
12		04010-00516	Key	1	80052-
13		14X-43-51840	Spring	1	80052-
14		04050-11612	Pin, Cotter	2	80052-
15		01640-20610	Washer	2	80052-
16		04221-20844	York, Left-handed Thread	1	80052-
17		01508-40805	Nut	1	80052-
18		04211-20844	Yoke	1	80052-
19		01580-10806	Nut	1	80052-
20		04248-30838	Rod	1	80052-
21		04205-10822	Pin	2	80052-
22		04050-12015	Pin, Cotter	2	80052-
23		14X-43-51791	Lever	1	80052-
24		14X-43-51751	Lever	1	80052-
25		01010-80830	Bolt	1	80052-
26		01643-30823	Washer	1	80052-
27		04010-00516	Key	1	80052-
28		22M-43-21470	Knob	1	80052-
29		417-43-28270	Cap	1	80052-

https://truckmanualshub.com/

FIG. K0210-007035 ROPS Cab, Work Equipment Lock Lever

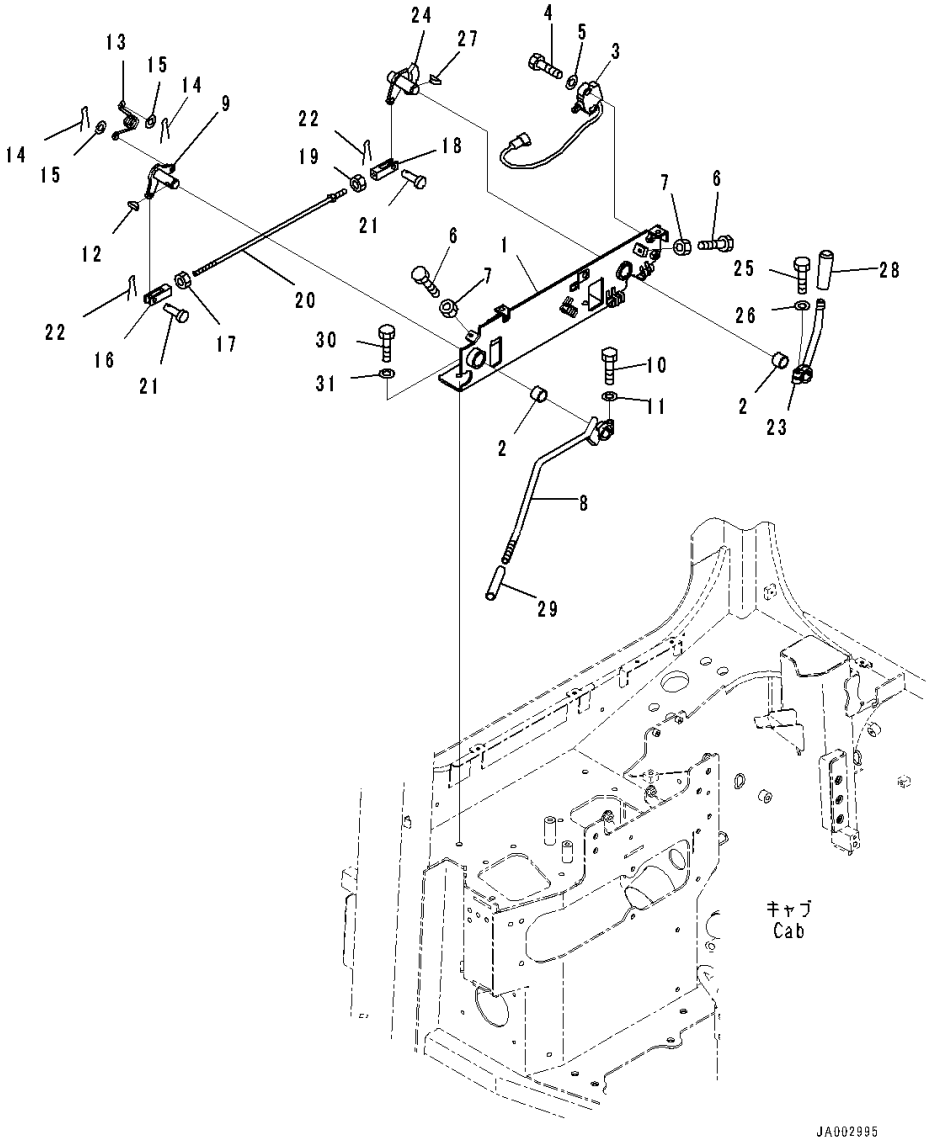

Index	Code	Part Number	Description	Qty	Serial Number
30		01010-81025	Bolt	2	80052-
31		01643-31032	Washer	2	80052-

https://truckmanualshub.com/

FIG. K0210-007037 ROPS Cab, Brake Pedal

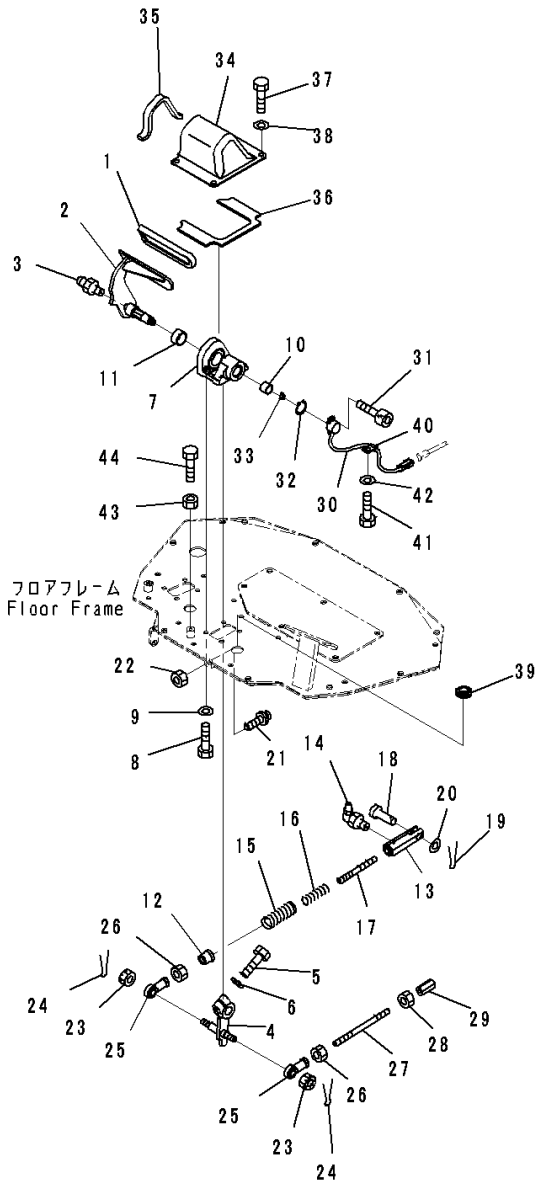

Index	Code	Part Number	Description	Qty	Serial Number
		Note: This list covers following specifications. With Rear View Monitoring System, With AM-FM Stereo Radio For North America, TH300 Type KOMTRAX With Rear View Monitoring System, Provision For Radio Installation, TH300 Type KOMTRAX EU Regulation Guard Level 2, With Rear View Monitoring System, With AM-FM Stereo Radio With Cassette For Europe And Asia, TH300 Type KOMTRAX EU Regulation Guard Level 2, With Rear View Monitoring System, Provision For Radio Installation, TH300 Type KOMTRAX			
1		14X-43-12110	Pedal Cap	1	80052-
2		14X-43-51511	Pedal	1	80052-
3		07020-00000	Fitting, Grease	1	80052-
4		14X-43-51551	Lever	1	80052-
5		01010-81245	Bolt	1	80052-
6		01643-31232	Washer	1	80052-
7		14X-43-51571	Bracket	1	80052-
8		01010-81020	Bolt	4	80052-
9		01643-31032	Washer	4	80052-
10		06124-02020	Bearing	1	80052-
11		06124-03020	Bearing	1	80052-
12		134-43-72490	Guide	1	80052-
13		14X-43-32210	Yoke	1	80052-
14		07020-00900	Fitting, Grease	1	80052-
15		14X-43-51590	Spring	1	80052-
16		14X-43-32220	Spring	1	80052-
17		14X-43-32230	Rod	1	80052-
18		04205-11442	Pin	1	80052-
19		04050-13022	Pin, Cotter	1	80052-
20		01641-21423	Washer, Flat	1	80052-
21		09311-41237	Bumper, Pedal	1	80052-
22		01580-11210	Nut	1	80052-
23		01593-31411	Nut	2	80052-
24		04050-13022	Pin, Cotter	2	80052-
25		04250-81474	End	2	80052-
26		01582-11411	Nut	2	80052-
27		14X-43-12410	Rod	1	80052-
28		01508-41408	Nut	1	80052-
29		17A-43-24160	Joint	1	80052-

https://truckmanualshub.com/

FIG. K0210-007037 ROPS Cab, Brake Pedal

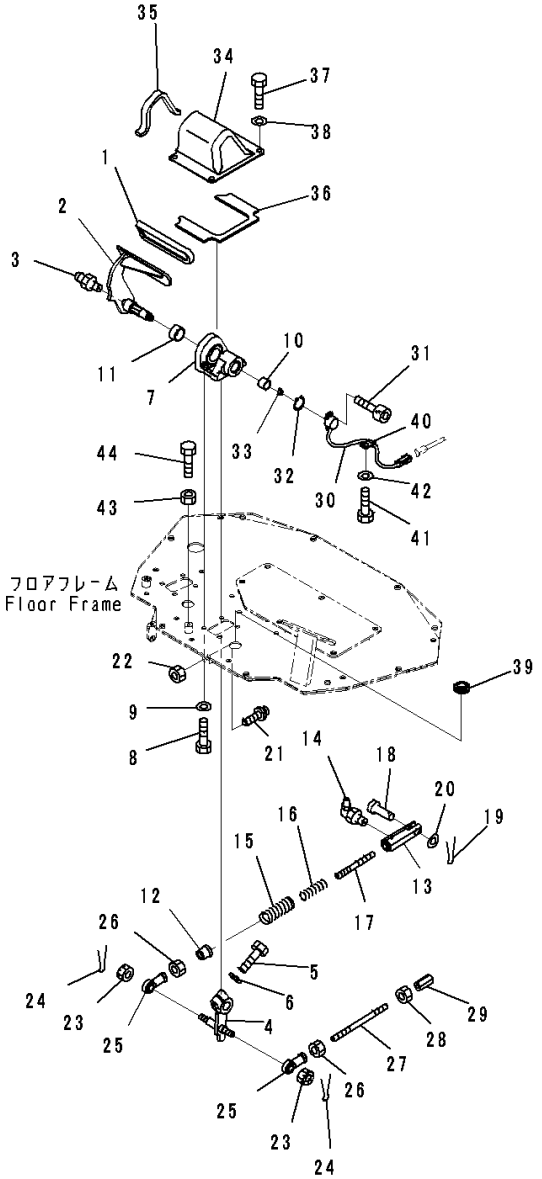

Index	Code	Part Number	Description	Qty	Serial Number
30		17A-06-41981	Sensor	1	80052-
31		01252-70414	Bolt	2	80052-
32		04064-01610	Ring, Snap	1	80052-
33		142-43-13180	Spring	1	80052-
34		14X-43-51631	Cover	1	80052-
35		14X-43-51651	• Sheet,Bonded	1	80052-
36		14X-43-51870	• Sheet,Bonded	1	80052-
37		01010-81020	Bolt	4	80052-
38		01643-31032	Washer	4	80052-
39		08037-02512	Grommet	1	80052-
40		04434-50810	Clip	1	80052-
41		01010-81020	Bolt	1	80052-
42		01643-31032	Washer	1	80052-
43		01580-11008	Nut	1	80052-
44		01016-51030	Bolt	1	80052-

https://truckmanualshub.com/

FIG. K0210-007038 ROPS Cab, Decelerator Pedal

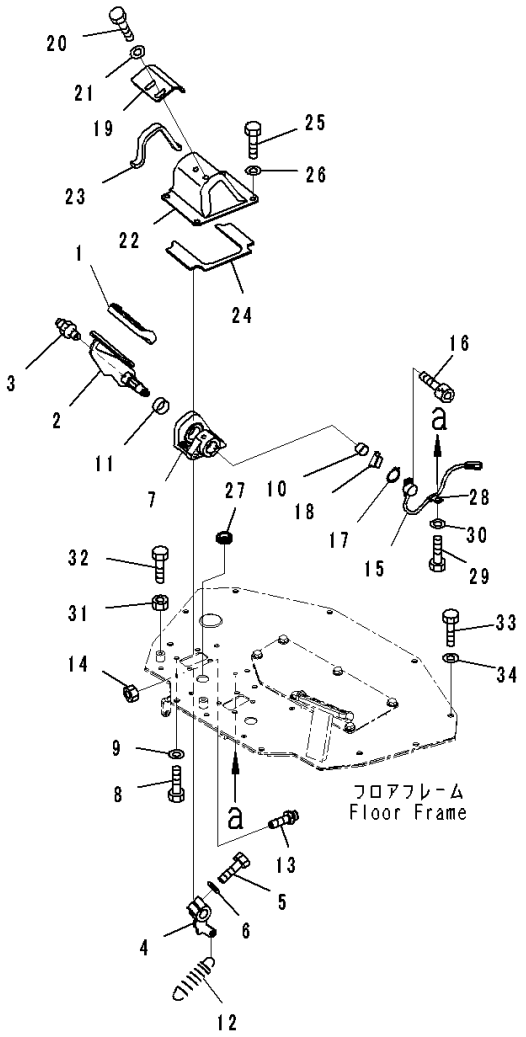

Index	Code	Part Number	Description	Qty	Serial Number
		Note: This list covers following specifications. With Rear View Monitoring System, With AM-FM Stereo Radio For North America, TH300 Type KOMTRAX With Rear View Monitoring System, Provision For Radio Installation, TH300 Type KOMTRAX EU Regulation Guard Level 2, With Rear View Monitoring System, With AM-FM Stereo Radio With Cassette For Europe And Asia, TH300 Type KOMTRAX EU Regulation Guard Level 2, With Rear View Monitoring System, Provision For Radio Installation, TH300 Type KOMTRAX			
1		14X-43-13760	Cap	1	80052-
2		14X-43-51521	Pedal	1	80052-
3		07020-00000	Fitting, Grease	1	80052-
4		14X-43-51561	Lever	1	80052-
5		01010-81245	Bolt	1	80052-
6		01643-31232	Washer	1	80052-
7		14X-43-51571	Bracket	1	80052-
8		01010-81020	Bolt	4	80052-
9		01643-31032	Washer	4	80052-
10		06124-02020	Bearing	1	80052-
11		06124-03020	Bearing	1	80052-
12		14X-43-51581	Spring	1	80052-
13		09311-41237	Bumper, Pedal	1	80052-
14		01580-11210	Nut	1	80052-
15		17A-06-41981	Sensor	1	80052-
16		01252-70414	Bolt	2	80052-
17		04064-01610	Ring, Snap	1	80052-
18		142-43-13180	Spring	1	80052-
19		14X-43-51810	Bracket	1	80052-
20		01010-D1020	Bolt	2	80052-
21		01643-71032	Washer	2	80052-
22		14X-43-51821	Cover	1	80052-
23		14X-43-51651	• Sheet,Bonded	1	80052-
24		14X-43-51870	• Sheet,Bonded	1	80052-
25		01010-81020	Bolt	4	80052-
26		01643-31032	Washer	4	80052-
27		08037-02512	Grommet	1	80052-
28		04434-50810	Clip	1	80052-
29		01010-81020	Bolt	1	80052-

https://truckmanualshub.com/

FIG. K0210-007038 ROPS Cab, Decelerator Pedal

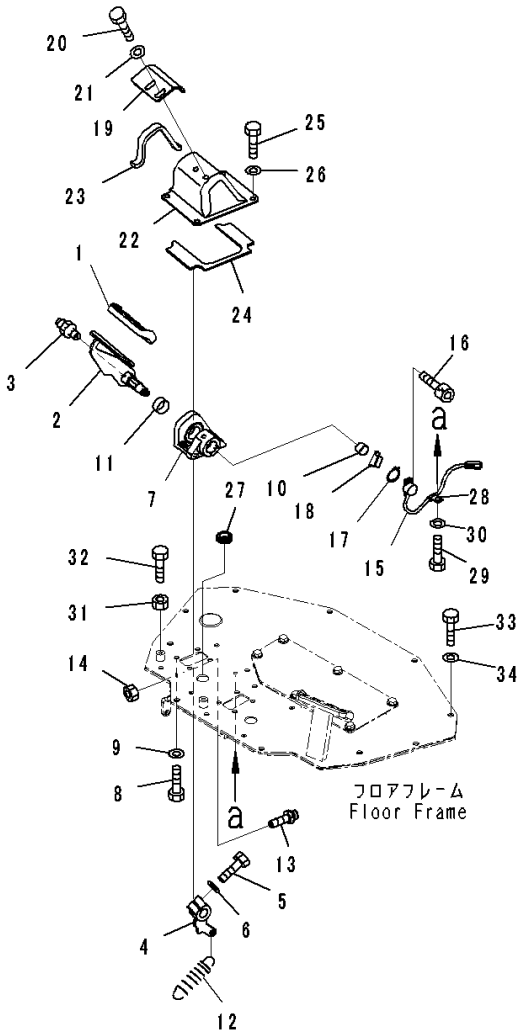

JA003000

Index	Code	Part Number	Description	Qty	Serial Number
30		01643-31032	Washer	1	80052-
31		01580-11008	Nut	1	80052-
32		01016-51030	Bolt	1	80052-
33		01010-81225	Bolt	10	80052-
34		01643-31232	Washer	10	80052-

https://truckmanualshub.com/

FIG. K0210-007039 ROPS Cab, Controller and Relay

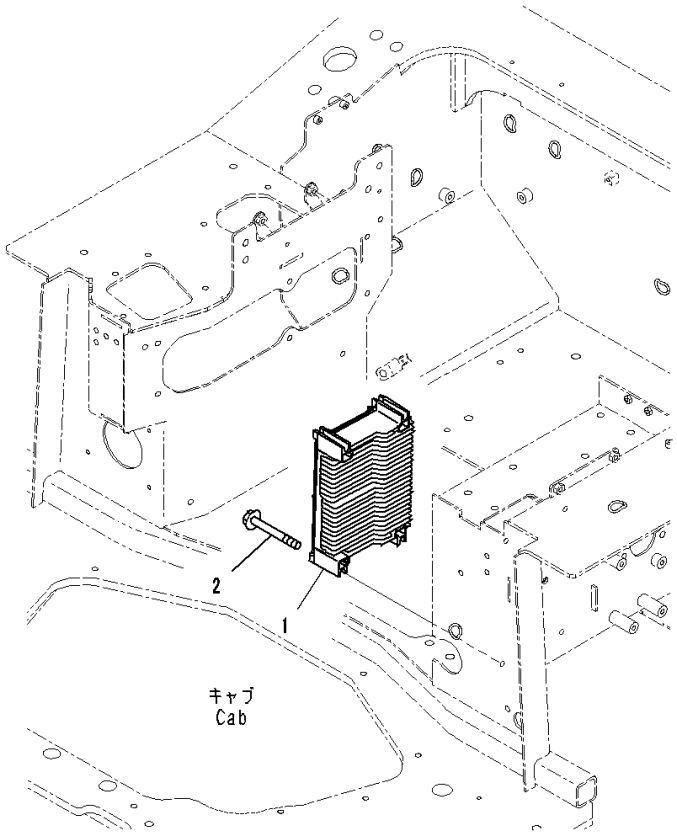

JA003001

Index	Code	Part Number	Description	Qty	Serial Number
		Note: This list covers following specifications. With Rear View Monitoring System, With AM-FM Stereo Radio For North America, TH300 Type KOMTRAX With Rear View Monitoring System, Provision For Radio Installation, TH300 Type KOMTRAX EU Regulation Guard Level 2, With Rear View Monitoring System, With AM-FM Stereo Radio With Cassette For Europe And Asia, TH300 Type KOMTRAX EU Regulation Guard Level 2, With Rear View Monitoring System, Provision For Radio Installation, TH300 Type KOMTRAX			
1		7830-74-4000	Controller	1	80052-
2		01435-00885	Bolt	4	80052-

https://truckmanualshub.com/

FIG. K0210-007041 ROPS Cab, Floor, Harness (2/3)

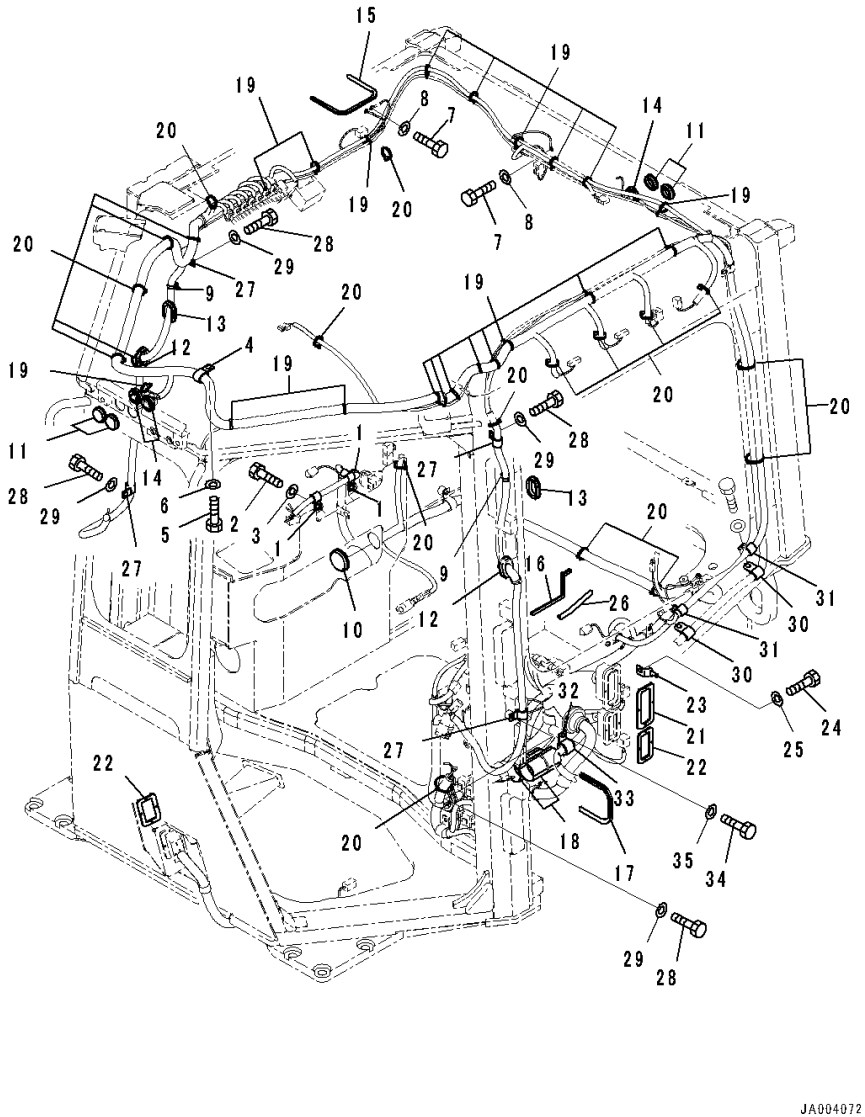

Index	Code	Part Number	Description	Qty	Serial Number
		Note: This list covers following specifications. With Rear View Monitoring System, With AM-FM Stereo Radio For North America, TH300 Type KOMTRAX With Rear View Monitoring System, Provision For Radio Installation, TH300 Type KOMTRAX EU Regulation Guard Level 2, With Rear View Monitoring System, With AM-FM Stereo Radio With Cassette For Europe And Asia, TH300 Type KOMTRAX EU Regulation Guard Level 2, With Rear View Monitoring System, Provision For Radio Installation, TH300 Type KOMTRAX			
1		04434-51310	Clip	3	80052-
2		01010-81020	Bolt	3	80052-
3		01643-31032	Washer	3	80052-
4		04434-52310	Clip	1	80052-
5		01010-81020	Bolt	1	80052-
6		01643-31032	Washer	1	80052-
7		01010-80616	Bolt	3	80052-
8		01643-30623	Washer	3	80052-
9		08059-00413	Clip	2	80052-
10		09415-03614	Cap	1	80052-
11		09415-02512	Cap	4	80052-
12		14X-Y79-3341	Grommet	2	80052-
13		120-06-24110	Grommet	2	80052-
14		14X-06-52461	Cap	3	80052-
15		14X-Y79-2280	Seal	1	80052-
16		12Y-978-2192	Seal	1	80052-
17		14X-06-52171	Trim	1	80052-
18		14X-06-52160	Sheet	2	80052-
19		08034-40521	Band	17	80052-
20		08034-20519	Band	20	80052-
21		14X-06-52750	Gasket	1	80052-
22		14X-06-52760	Gasket	2	80052-
23		08053-00910	Clip	1	80052-
24		01010-81020	Bolt	1	80052-
25		01643-31032	Washer	1	80052-
26		423-06-42420	Finisher	1	80052-
27		04434-51710	Clip	4	80052-
28		01010-81020	Bolt	4	80052-
29		01643-31032	Washer	4	80052-

https://truckmanualshub.com/

FIG. K0210-007041 ROPS Cab, Floor, Harness (2/3)

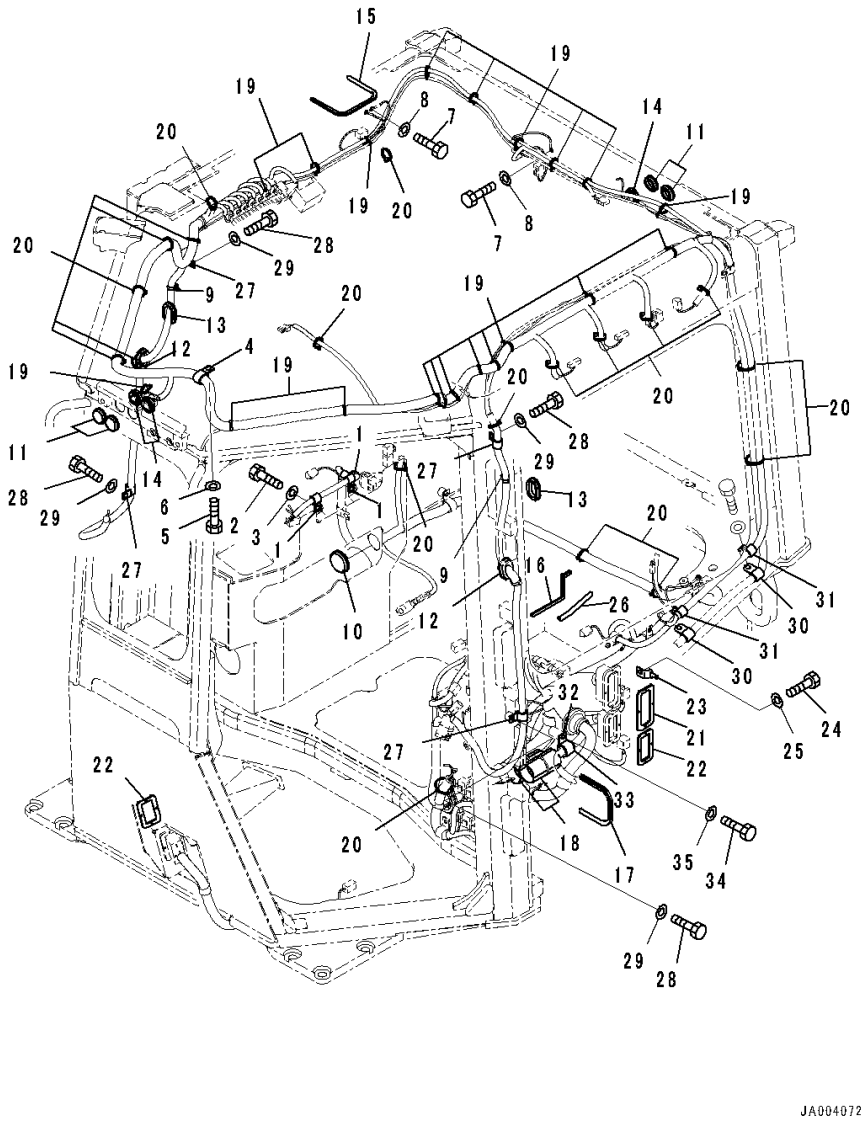

Index	Code	Part Number	Description	Qty	Serial Number
30		04434-51910	Clip	2	80052-
31		04434-51710	Clip	2	80052-
32		04434-52511	Clip	1	80052-
33		07095-20318	Cushion	1	80052-
34		01010-81020	Bolt	1	80052-
35		01643-31032	Washer	1	80052-

https://truckmanualshub.com/

FIG. K0210-007042 ROPS Cab, Floor, Harness (3/3)

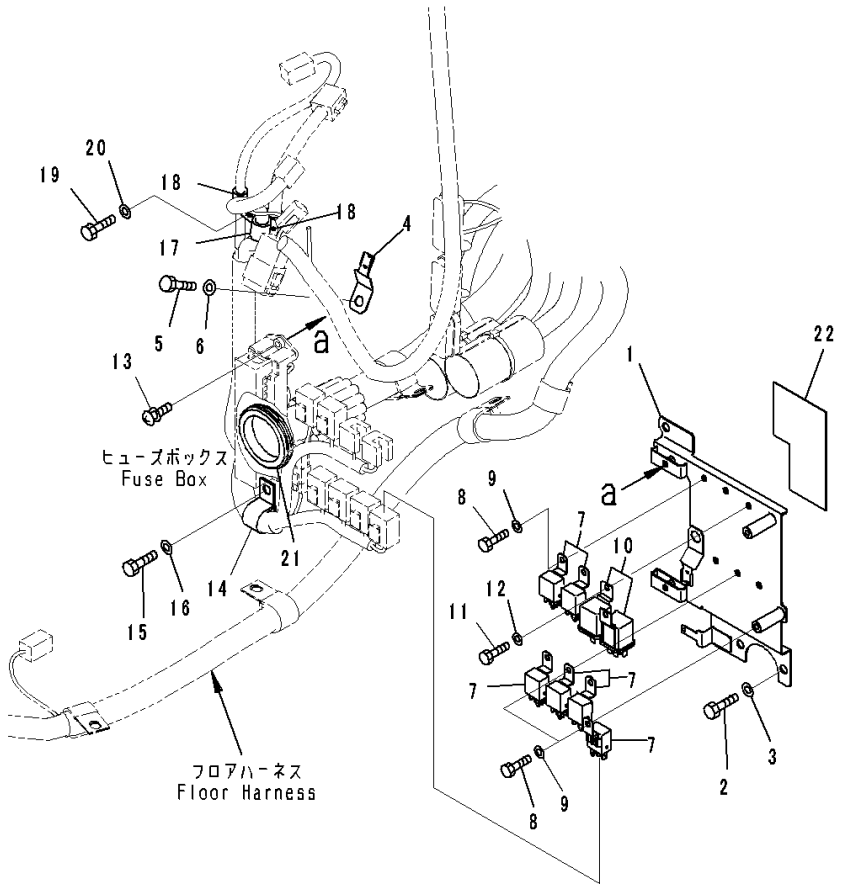

Index	Code	Part Number	Description	Qty	Serial Number
		Note: This list covers following specifications. With Rear View Monitoring System, With AM-FM Stereo Radio For North America, TH300 Type KOMTRAX With Rear View Monitoring System, Provision For Radio Installation, TH300 Type KOMTRAX EU Regulation Guard Level 2, With Rear View Monitoring System, With AM-FM Stereo Radio With Cassette For Europe And Asia, TH300 Type KOMTRAX EU Regulation Guard Level 2, With Rear View Monitoring System, Provision For Radio Installation, TH300 Type KOMTRAX			
1		14X-06-51361	Bracket	1	80052-
2		01010-80820	Bolt	3	80052-
3		01643-30823	Washer	3	80052-
4		08193-20010	Clip	1	80052-
5		01010-80820	Bolt	1	80052-
6		01643-30823	Washer	1	80052-
7		7861-74-5100	Relay	6	80052-
8		01010-80616	Bolt	6	80052-
9		01643-30623	Washer	6	80052-
10		569-06-61960	Relay	2	80052-
11		01010-80616	Bolt	2	80052-
12		01643-30623	Washer	2	80052-
13		01023-10620	Screw	2	80052-
14		04434-52310	Clip	1	80052-
15		01010-81020	Bolt	1	80052-
16		01643-31032	Washer	1	80052-
17		04434-51010	Clip	1	80052-
18		04434-51410	Clip	2	80052-
19		01010-81020	Bolt	1	80052-
20		01643-31032	Washer	1	80052-
21		14X-06-51750	Grommet	1	80052-
22		14X-06-52290	Sheet,Bonded	1	80052-

https://truckmanualshub.com/

FIG. K0210-007043 ROPS Cab, Window Washer Piping

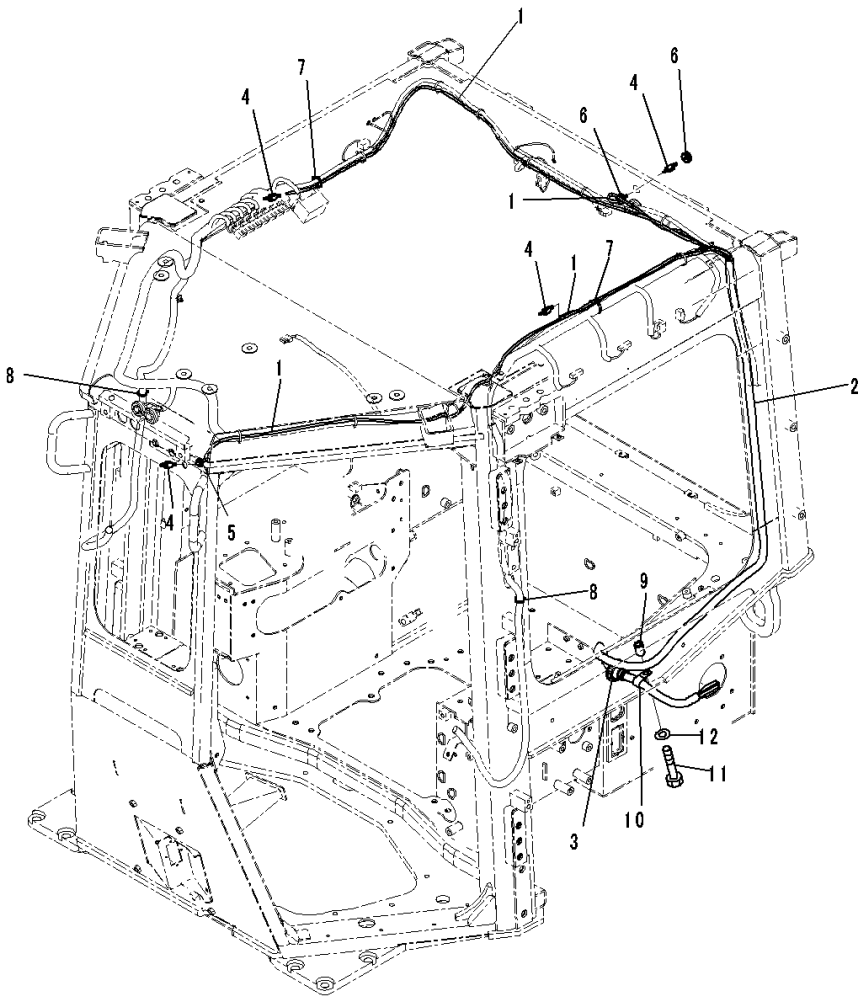

Index	Code	Part Number	Description	Qty	Serial Number
		Note: This list covers following specifications. With Rear View Monitoring System, With AM-FM Stereo Radio For North America, TH300 Type KOMTRAX With Rear View Monitoring System, Provision For Radio Installation, TH300 Type KOMTRAX EU Regulation Guard Level 2, With Rear View Monitoring System, With AM-FM Stereo Radio With Cassette For Europe And Asia, TH300 Type KOMTRAX EU Regulation Guard Level 2, With Rear View Monitoring System, Provision For Radio Installation, TH300 Type KOMTRAX			
1		14X-Y79-1611	Hose Assembly	1	80052-
2		08017-A1520	• Conduit	1	80052-
3		08037-12536	• Grommet	1	80052-
4		17A-Z11-4610	• Valve	4	80052-
5		08037-01008	Grommet	1	80052-
6		14X-06-51520	Grommet	2	80052-
7		08034-40521	Band	2	80052-
8		08034-20519	Band	1	80052-
9		23B-06-61810	Spacer	1	80052-
10		04434-51910	Clip	1	80052-
11		01010-81050	Bolt	1	80052-
12		01643-31032	Washer	1	80052-

https://truckmanualshub.com/

FIG. K0210-007044 ROPS Cab, Dashboard Cover (1/2)

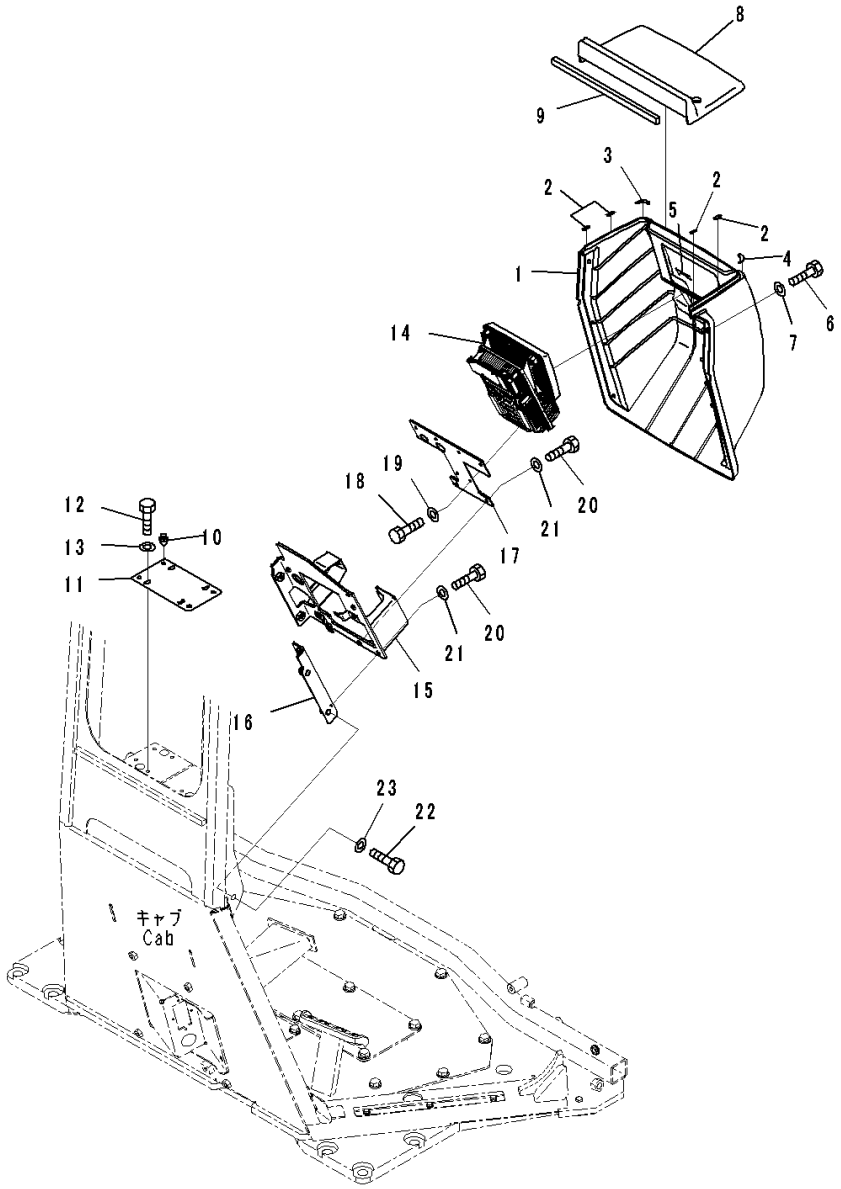

Index	Code	Part Number	Description	Qty	Serial Number
		Note: This list covers following specifications. With Rear View Monitoring System, With AM-FM Stereo Radio For North America, TH300 Type KOMTRAX With Rear View Monitoring System, Provision For Radio Installation, TH300 Type KOMTRAX EU Regulation Guard Level 2, With Rear View Monitoring System, With AM-FM Stereo Radio With Cassette For Europe And Asia, TH300 Type KOMTRAX EU Regulation Guard Level 2, With Rear View Monitoring System, Provision For Radio Installation, TH300 Type KOMTRAX			
1		14X-54-56812	Cover	1	80052-
2		14X-54-56941	• Sheet, Bonded	4	80052-
3		14X-54-56951	• Sheet, Bonded	1	80052-
4		14X-54-56961	• Sheet, Bonded	1	80052-
5		14X-54-56970	• Seal,Bonded	1	80052-
6		01010-D0820	Bolt	6	80052-
7		01643-70823	Washer	6	80052-
8		14X-54-56821	Cover	1	80052-
9		14X-54-56921	• Seal,Bonded	1	80052-
10		22U-54-25340	Clip	4	80052-
11		14X-54-56751	Plate	1	80052-
12		01010-80616	Bolt	4	80052-
13		01643-30623	Washer	4	80052-
14		7831-69-5002	Monitor	1	80221-
15		14X-54-56721	Bracket	1	80052-
16		14X-54-56731	Plate	1	80052-
17		14X-54-56741	Plate	1	80052-
18		01010-80616	Bolt	4	80052-
19		01643-30623	Washer	4	80052-
20		01010-80620	Bolt	6	80052-
21		01643-30623	Washer	6	80052-
22		01010-81025	Bolt	4	80052-
23		01643-31032	Washer	4	80052-

https://truckmanualshub.com/

FIG. K0210-007045 ROPS Cab, Floor, Switch

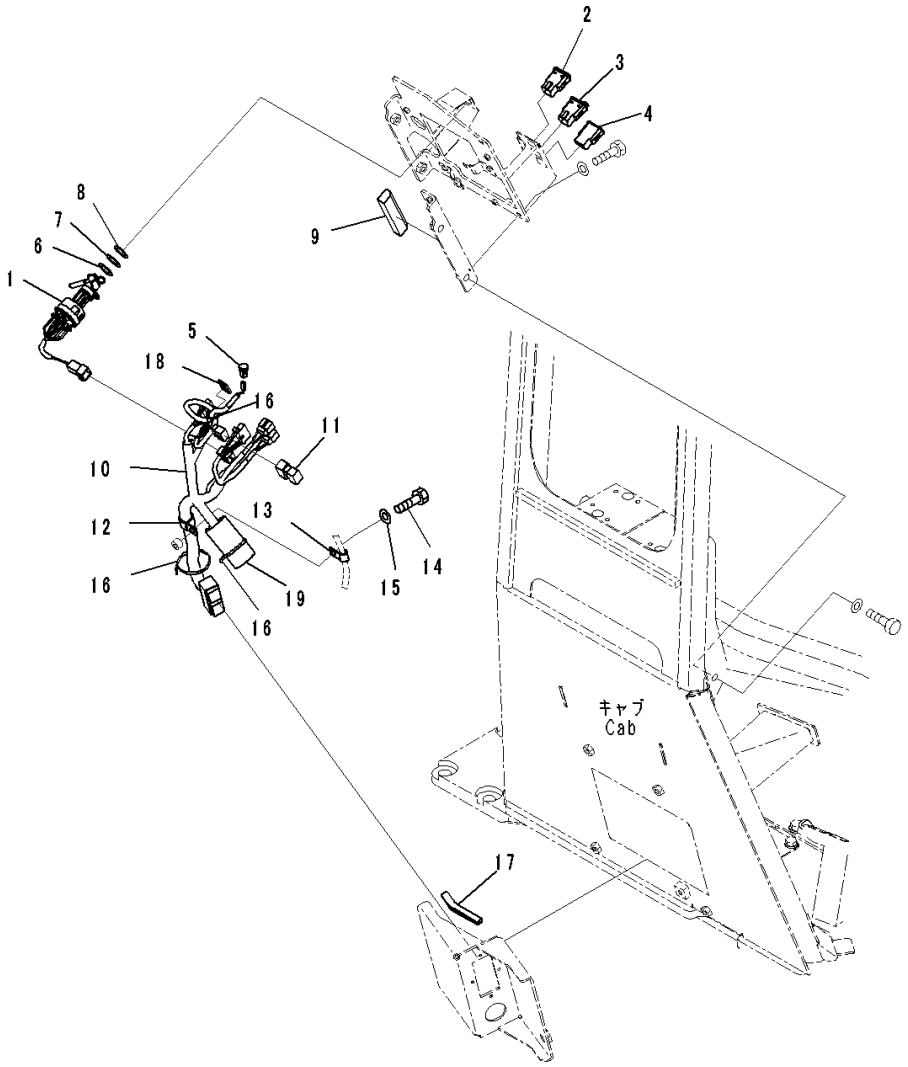

Index	Code	Part Number	Description	Qty	Serial Number
		Note: This list covers following specifications. With Rear View Monitoring System, With AM-FM Stereo Radio For North America, TH300 Type KOMTRAX With Rear View Monitoring System, Provision For Radio Installation, TH300 Type KOMTRAX			
1		14X-06-52191	Switch, Key	1	80052-
2		17A-06-42250	Switch, Light, Front	1	80052-
3		17A-06-42260	Switch, Light, Rear	1	80052-
4		20Y-06-42190	Cover	1	80052-
5		20Y-979-6161	Sensor	1	80052-
6		23S-15-45860	Shim, T=0.5mm	2	80052-
7		20Y-43-41750	Washer	2	80052-
8		20Y-43-41790	Washer	2	80052-
9		14X-54-56770	Seal,Bonded	1	80052-
10		14X-06-51132	Wiring Harness	1	80052-
11		8233-06-3350	Diode	1	80052-
12		04434-52310	Clip	1	80052-
13		04434-51010	Clip	1	80052-
14		01010-81020	Bolt	1	80052-
15		01643-31032	Washer	1	80052-
16		08034-20519	Band	3	80052-
17		14X-54-56160	Seal	1	80052-
18		20U-54-46520	Hook, Sticker Type	1	80052-
19		14X-06-52160	Sheet,Bonded	1	80052-

https://truckmanualshub.com/

FIG. K0210-007046 ROPS Cab, Foot Rest

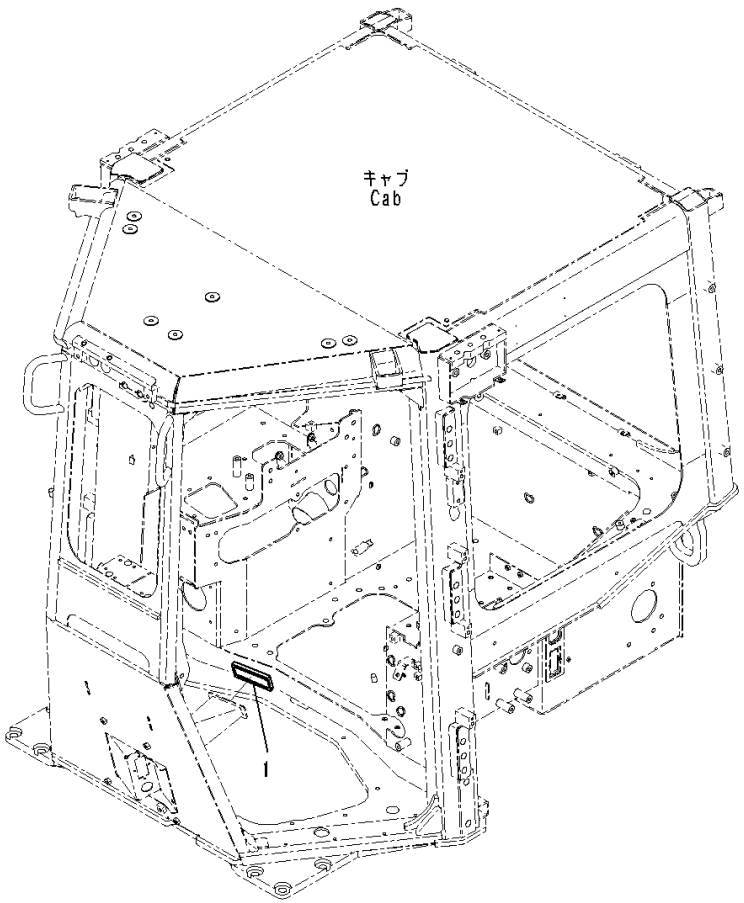

JA003007

Index	Code	Part Number	Description	Qty	Serial Number
		Note: This list covers following specifications. With Rear View Monitoring System, With AM-FM Stereo Radio For North America, TH300 Type KOMTRAX With Rear View Monitoring System, Provision For Radio Installation, TH300 Type KOMTRAX EU Regulation Guard Level 2, With Rear View Monitoring System, With AM-FM Stereo Radio With Cassette For Europe And Asia, TH300 Type KOMTRAX EU Regulation Guard Level 2, With Rear View Monitoring System, Provision For Radio Installation, TH300 Type KOMTRAX			
1		203-43-56450	Cap,Bonded	2	80052-

https://truckmanualshub.com/

FIG. K0210-007047 ROPS Cab, Dashboard Cover (2/2)

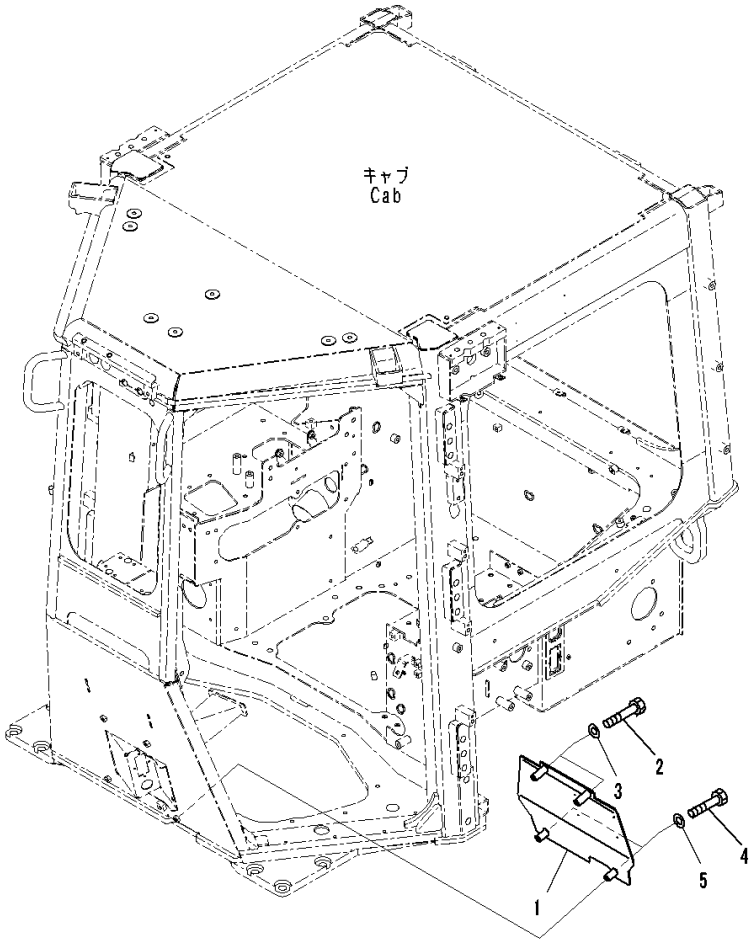

Index	Code	Part Number	Description	Qty	Serial Number
		Note: This list covers following specifications. With Rear View Monitoring System, With AM-FM Stereo Radio For North America, TH300 Type KOMTRAX With Rear View Monitoring System, Provision For Radio Installation, TH300 Type KOMTRAX EU Regulation Guard Level 2, With Rear View Monitoring System, With AM-FM Stereo Radio With Cassette For Europe And Asia, TH300 Type KOMTRAX EU Regulation Guard Level 2, With Rear View Monitoring System, Provision For Radio Installation, TH300 Type KOMTRAX			
1		14X-54-56711	Plate	1	80052-
2		01010-D1070	Bolt	2	80052-
3		01643-71032	Washer	2	80052-
4		01010-D1055	Bolt	2	80052-
5		01643-71032	Washer	2	80052-

https://truckmanualshub.com/

FIG. K0210-007048 ROPS Cab, Floor Cover

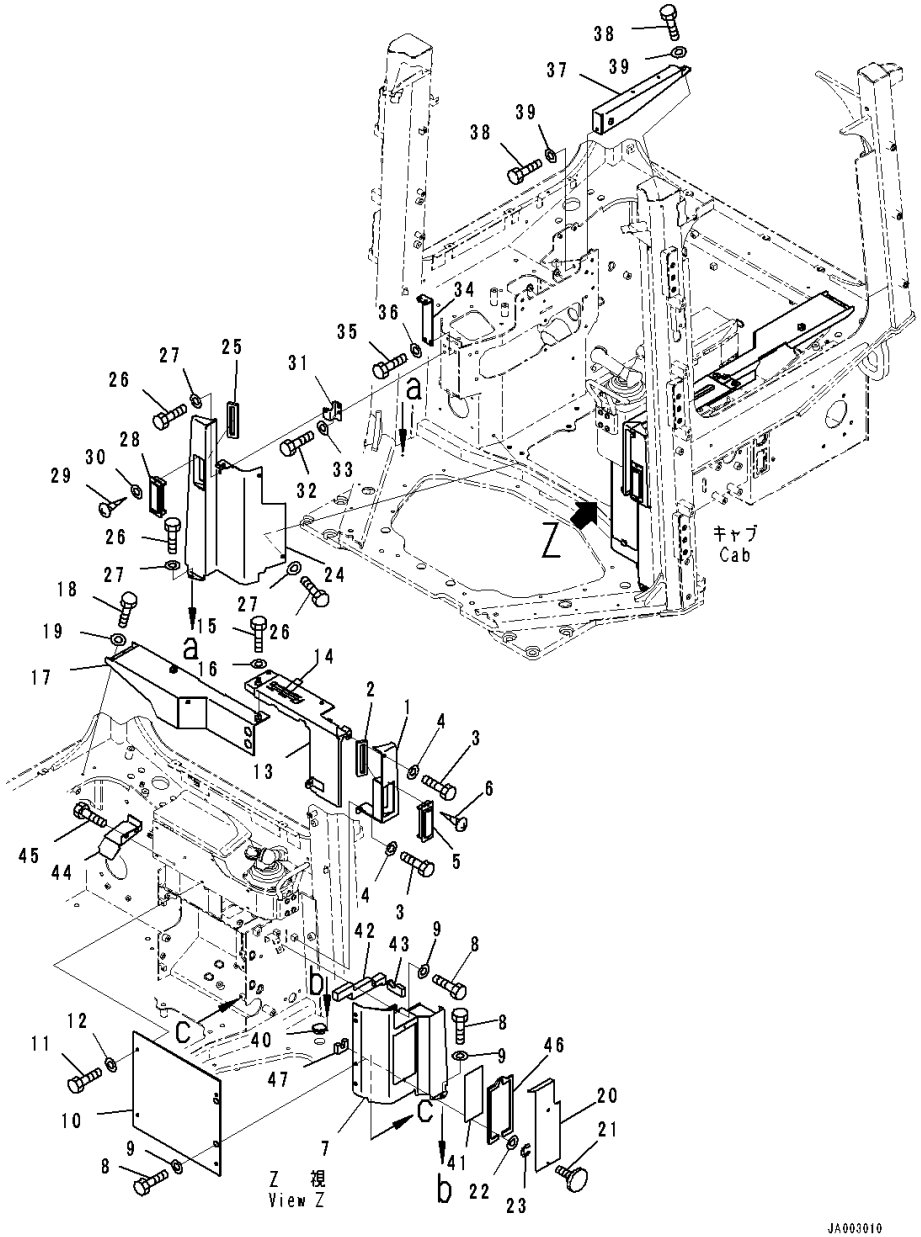

Index	Code	Part Number	Description	Qty	Serial Number
		Note: This list covers following specifications. With Rear View Monitoring System, With AM-FM Stereo Radio For North America, TH300 Type KOMTRAX With Rear View Monitoring System, Provision For Radio Installation, TH300 Type KOMTRAX EU Regulation Guard Level 2, With Rear View Monitoring System, With AM-FM Stereo Radio With Cassette For Europe And Asia, TH300 Type KOMTRAX EU Regulation Guard Level 2, With Rear View Monitoring System, Provision For Radio Installation, TH300 Type KOMTRAX			
1		14X-54-56291	Cover	1	80052-
2		14X-54-56491	• Sheet,Bonded	1	80052-
3		01010-D0825	Bolt	2	80052-
4		01643-70823	Washer	2	80052-
5		17A-Z11-7161	Louver	1	80052-
6		01370-10310	Screw	2	80052-
7		14X-54-56352	Cover	1	80052-
8		01010-D0825	Bolt	4	80052-
9		01643-70823	Washer	4	80052-
10		14X-54-56372	Cover	1	80052-
11		01010-D0825	Bolt	4	80052-
12		01643-70823	Washer	4	80052-
13		14X-54-56381	Cover	1	80052-
14		14X-43-48110	• Awning,Bonded	2	80052-
15		01010-D0825	Bolt	2	80052-
16		01643-70823	Washer	2	80052-
17		14X-54-56443	Cover	1	80065-
18		01010-D0825	Bolt	3	80052-
19		01643-70823	Washer	3	80052-
20		14X-54-56481	Plate	1	80052-
21		01232-10616	Screw, Knurled Head	2	80052-
22		01643-70623	Washer	2	80052-
23		195-54-78790	Ring, Snap	2	80052-
24		14X-54-56361	Cover	1	80052-
25		14X-54-56491	• Sheet,Bonded	1	80052-
26		01010-D0825	Bolt	5	80052-
27		01643-70823	Washer	5	80052-
28		17A-Z11-7161	Louver	1	80052-
29		01370-10310	Screw	2	80052-

https://truckmanualshub.com/

FIG. K0210-007048 ROPS Cab, Floor Cover

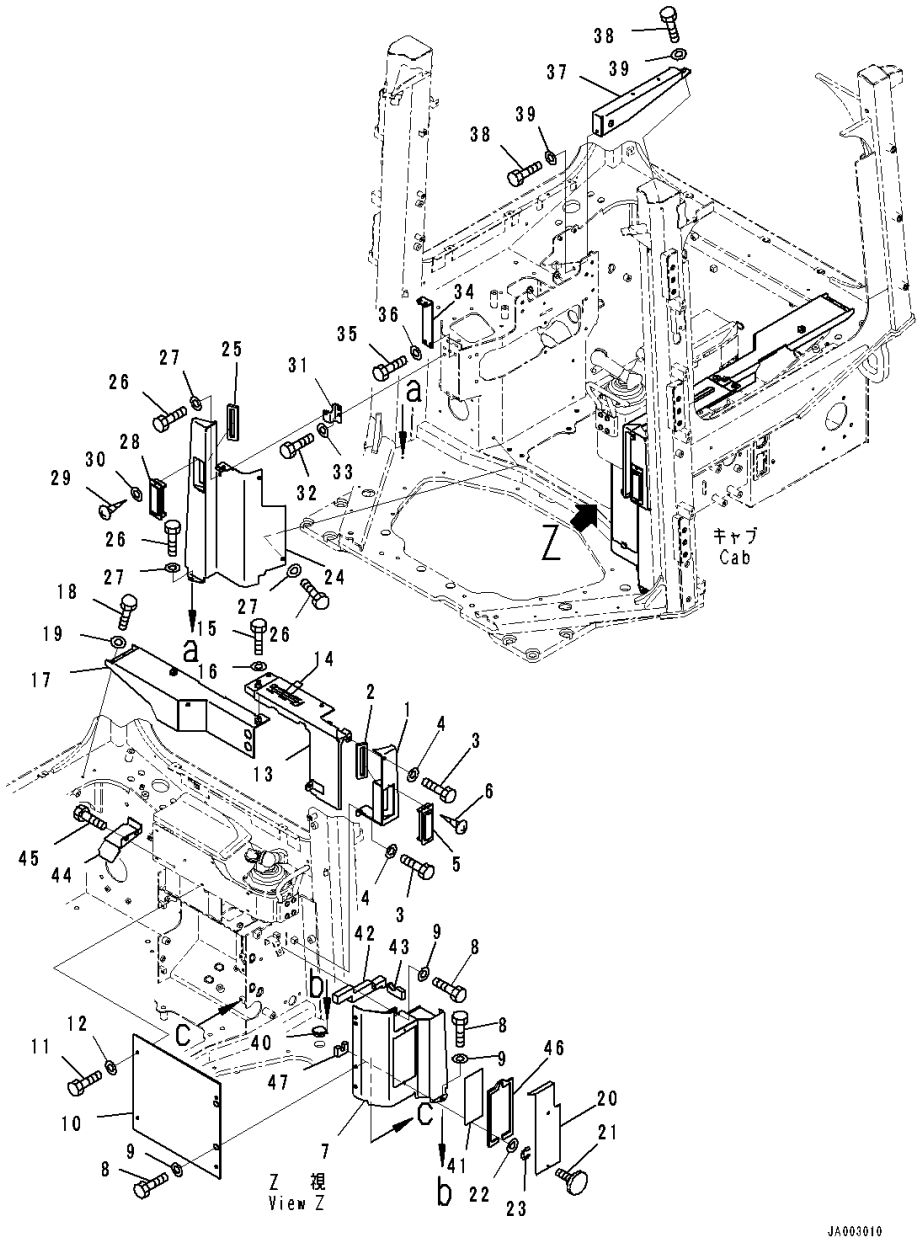

Index	Code	Part Number	Description	Qty	Serial Number
30		01643-70623	Washer	2	80052-
31		14X-54-56451	Bracket	1	80052-
32		01010-D0825	Bolt	2	80052-
33		01643-70823	Washer	2	80052-
34		14X-54-56411	Bracket	1	80052-
35		01010-D0825	Bolt	2	80052-
36		01643-70823	Washer	2	80052-
37		14X-54-56471	Bracket	1	80052-
38		01010-D0825	Bolt	2	80052-
39		01643-70823	Washer	2	80052-
40		22U-54-25581	Grommet	1	80052-
41		14X-98-51161	Plate	1	80052-80064
42		14X-54-56240	Seal,Bonded	1	80052-
43		14X-54-56260	Seal,Bonded	1	80052-
44		14X-54-56270	Cover	1	80052-
45		01010-D0825	Bolt	2	80052-
46		14X-54-56760	Seal,Bonded	1	80052-
47		14X-54-56981	Seal,Bonded	1	80052-

https://truckmanualshub.com/

FIG. K0210-007049 ROPS Cab, KOMTRAX Controller

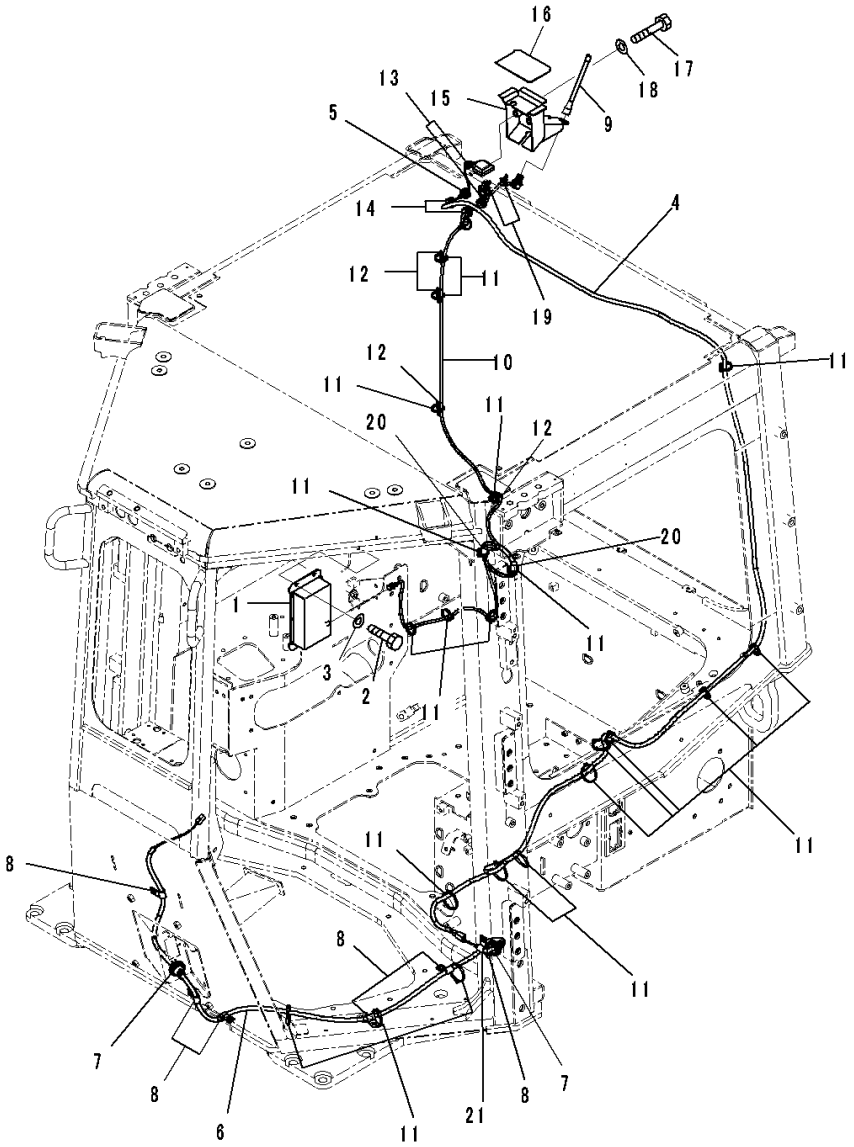

Index	Code	Part Number	Description	Qty	Serial Number
		Note: This list covers following specifications. With Rear View Monitoring System, With AM-FM Stereo Radio For North America, TH300 Type KOMTRAX With Rear View Monitoring System, Provision For Radio Installation, TH300 Type KOMTRAX EU Regulation Guard Level 2, With Rear View Monitoring System, With AM-FM Stereo Radio With Cassette For Europe And Asia, TH300 Type KOMTRAX EU Regulation Guard Level 2, With Rear View Monitoring System, Provision For Radio Installation, TH300 Type KOMTRAX			
1		7826-23-3011	Controller	1	80052-
2		01010-80616	Bolt	4	80052-
3		01643-30623	Washer	4	80052-
4		14X-06-51162	Cable Assembly	1	80258-
		14X-06-51161	Cable Assembly	1	80052-80257
5		14X-06-51530	Grommet	1	80052-
6		14X-06-51171	Cable Assembly	1	80052-
7		08037-11025	Grommet	2	80052-
8		04434-51010	Clip	6	80052-
9		8A13-10-2100	Antenna	1	80052-
10		14X-06-51190	Cable Assembly	1	80052-
11		08034-20519	Band	22	80052-
12		20U-54-46520	Hook, Sticker Type	3	80052-
13		175-06-81610	Grommet	2	80052-
14		14X-06-51520	Grommet	2	80052-
15		14X-06-51831	Bracket	1	80052-
16		14X-06-51840	Plate	1	80052-
17		01010-80850	Bolt	2	80052-
18		01643-30823	Washer	2	80052-
19		08059-00413	Clip	2	80052-
20		22B-54-28990	Sheet,Bonded	2	80052-
21		04434-51010	Clip	1	80052-

https://truckmanualshub.com/

FIG. K0210-007050 ROPS Cab, Wiring Harness

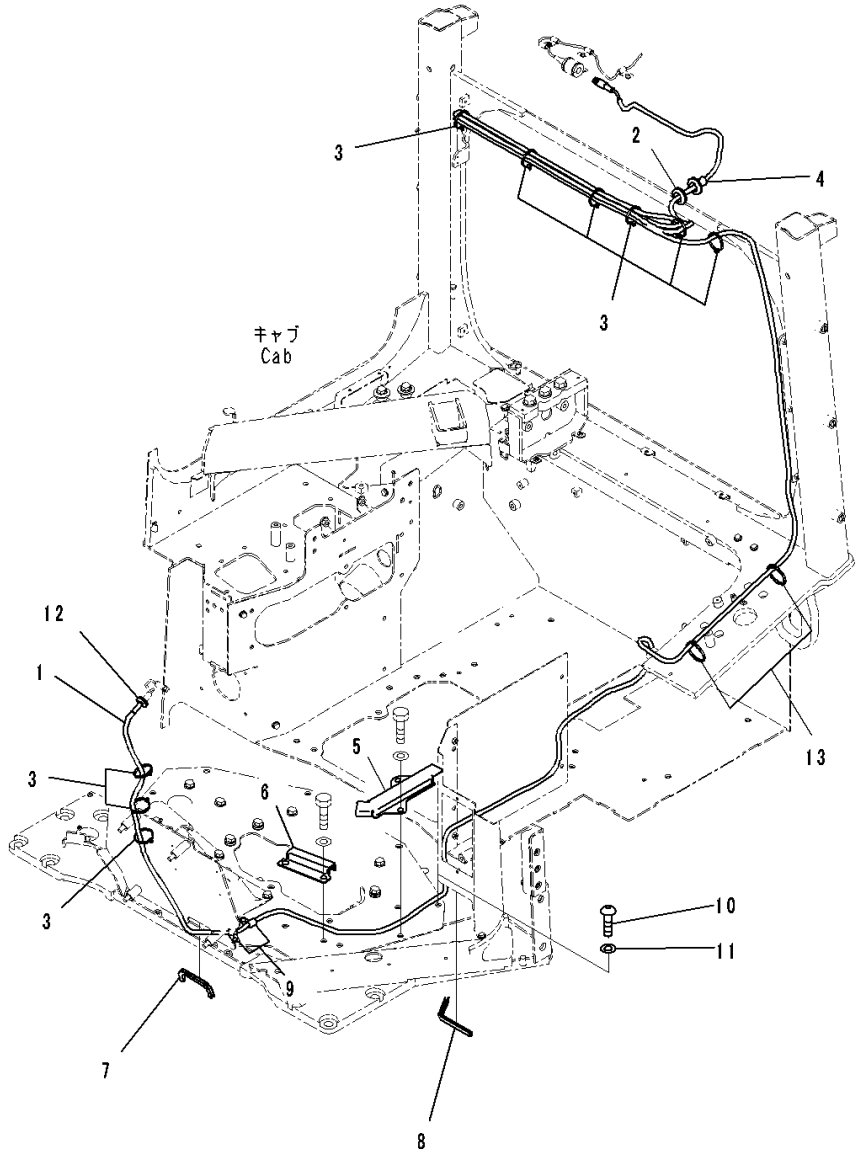

Index	Code	Part Number	Description	Qty	Serial Number
		Note: This list covers following specifications. With Rear View Monitoring System, With AM-FM Stereo Radio For North America, TH300 Type KOMTRAX With Rear View Monitoring System, Provision For Radio Installation, TH300 Type KOMTRAX EU Regulation Guard Level 2, With Rear View Monitoring System, With AM-FM Stereo Radio With Cassette For Europe And Asia, TH300 Type KOMTRAX EU Regulation Guard Level 2, With Rear View Monitoring System, Provision For Radio Installation, TH300 Type KOMTRAX			
1		7835-33-8100	Cable Assembly	1	80059-
2		08037-02512	Grommet	1	80059-
3		08034-20519	Band	9	80059-
4		08037-11425	Grommet	1	80059-
5		14X-06-53160	Cover	1	80059-
6		14X-06-53170	Plate	1	80059-
7		418-54-42380	Finisher	1	80059-
8		417-923-3980	Finisher	1	80059-
9		04434-51012	Clip	2	80059-
10		01245-01225	Screw, Hexagon Socket Head	1	80059-
11		01643-71232	Washer	1	80059-
12		08037-01610	Grommet	1	80059-
13		08034-20519	Band	4	80059-

https://truckmanualshub.com/

FIG. K0210-007052 ROPS Cab, Related Parts

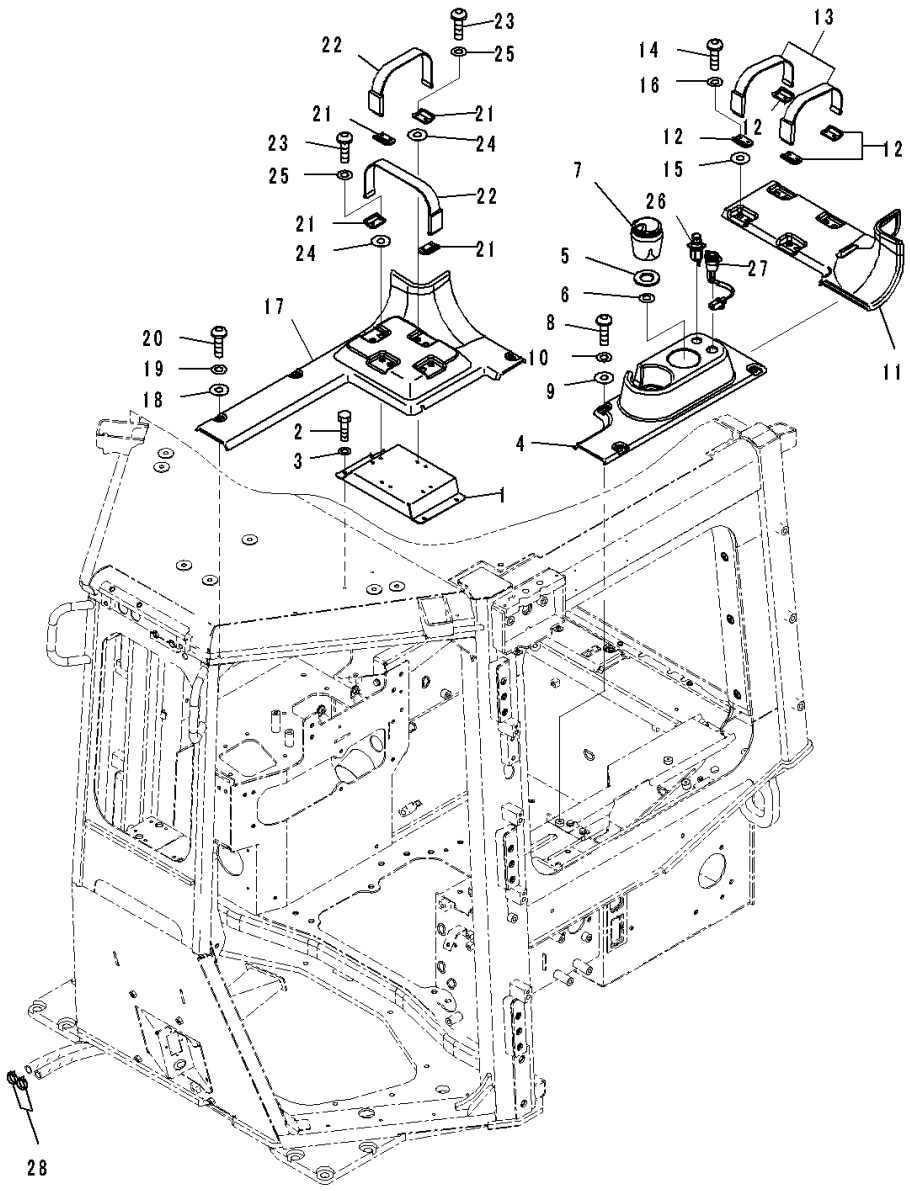

Index	Code	Part Number	Description	Qty	Serial Number
		Note: This list covers following specifications. With Rear View Monitoring System, With AM-FM Stereo Radio For North America, TH300 Type KOMTRAX With Rear View Monitoring System, Provision For Radio Installation, TH300 Type KOMTRAX EU Regulation Guard Level 2, With Rear View Monitoring System, With AM-FM Stereo Radio With Cassette For Europe And Asia, TH300 Type KOMTRAX EU Regulation Guard Level 2, With Rear View Monitoring System, Provision For Radio Installation, TH300 Type KOMTRAX			
1		14X-54-56421	Bracket	1	80052-
2		01010-80616	Bolt	4	80052-
3		01643-30623	Washer	4	80052-
4		14X-Y79-2181	Cover	1	80052-
5		20Y-43-41970	Sheet	3	80052-
6		14X-Y79-2361	Sheet	2	80052-
7		20Y-43-41491	Ashtray	1	80052-
8		01245-00625	Screw	4	80052-
9		12Y-978-2660	Collar	4	80052-
10		01643-70623	Washer	4	80052-
11		14X-Y79-2320	Cover	1	80052-
12		14X-Y79-1241	Plate	4	80052-
13		423-54-42790	Band	2	80052-
14		01245-00625	Screw	8	80052-
15		12Y-978-2660	Collar	8	80052-
16		01643-70623	Washer	8	80052-
17		14X-Y79-2330	Cover	1	80052-
18		12Y-978-2660	Collar	3	80052-
19		01643-70623	Washer	3	80052-
20		01245-00625	Screw	3	80052-
21		14X-Y79-1241	Plate	4	80052-
22		423-54-42790	Band	2	80052-
23		01245-00625	Screw	8	80052-
24		12Y-978-2660	Collar	8	80052-
25		01643-70623	Washer	8	80052-
26		20Y-06-23472	Cigarette Lighter	1	80052-
27		14X-06-52491	Socket Assembly	1	80052-
28		09479-02400	Clamp	2	80052-

https://truckmanualshub.com/

FIG. K0210-007053 ROPS Cab, Rear Camera

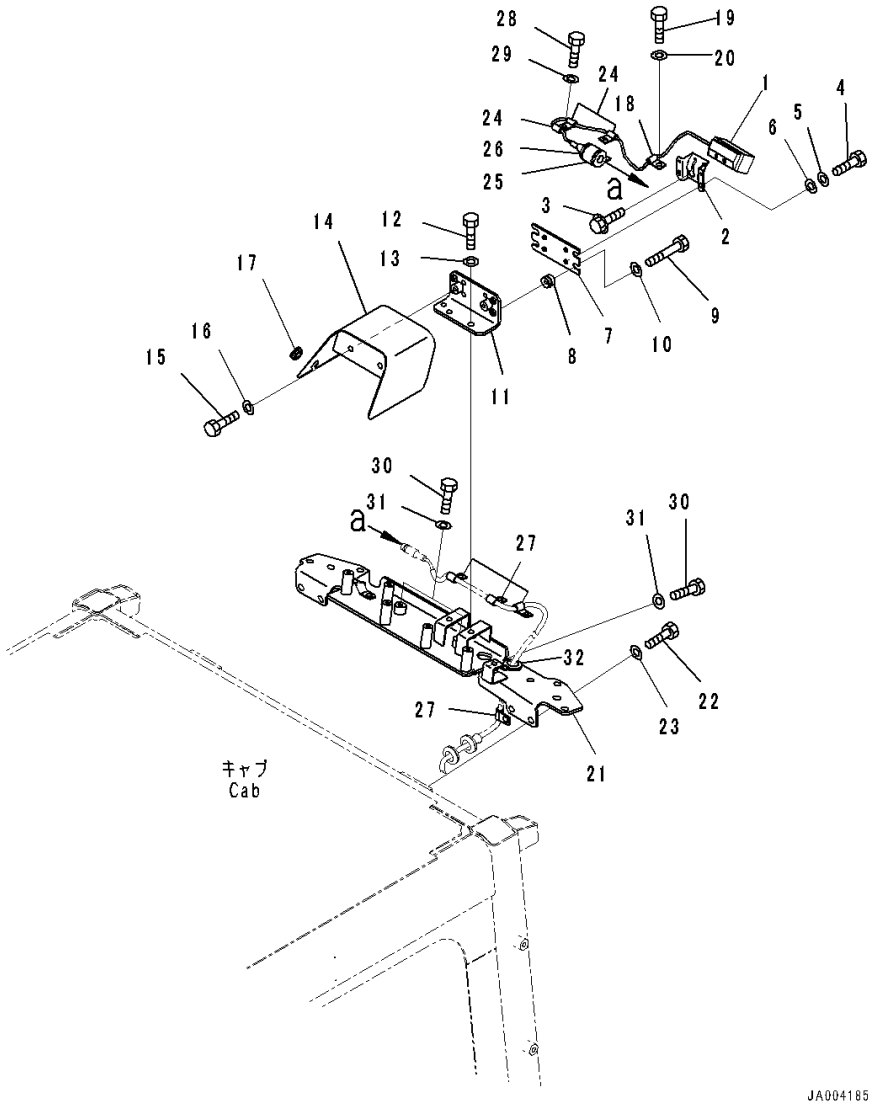

Index	Code	Part Number	Description	Qty	Serial Number
		Note: This list covers following specifications. With Rear View Monitoring System, With AM-FM Stereo Radio For North America, TH300 Type KOMTRAX With Rear View Monitoring System, Provision For Radio Installation, TH300 Type KOMTRAX EU Regulation Guard Level 2, With Rear View Monitoring System, With AM-FM Stereo Radio With Cassette For Europe And Asia, TH300 Type KOMTRAX EU Regulation Guard Level 2, With Rear View Monitoring System, Provision For Radio Installation, TH300 Type KOMTRAX			
		7835-33-1001	Camera Assembly	1	80059-
1		7835-33-1100	• Camera	1	80059-
2		7835-33-1201	• Bracket	1	80059-
		7835-33-1300	• Bolt	1	80059-
3		7835-33-1310	• • Bolt	2	80059-
4		7835-33-1320	• • Bolt	4	80059-
5		7835-33-1330	• • Washer	4	80059-
6		7835-33-1340	• • Washer	4	80059-
7		20Y-06-41670	Bracket	1	80059-
8		20Y-810-1240	Cushion	4	80059-
9		01010-D0835	Bolt	4	80059-
10		01643-70823	Washer	4	80059-
11		14X-06-53390	Bracket	1	80059-
12		01010-D1025	Bolt	2	80059-
13		01643-71032	Washer	2	80059-
14		14X-06-53221	Cover	1	80059-
15		01010-D1020	Bolt	2	80059-
16		01643-71032	Washer	2	80059-
17		201-54-13210	Grommet	1	80059-
18		04434-50610	Clip	1	80059-
19		01010-D1025	Bolt	1	80059-
20		01643-71032	Washer	1	80059-
21		14X-06-52390	Bracket	1	80059-
22		01010-81225	Bolt	4	80059-
23		01643-31232	Washer	4	80059-
24		04434-50610	Clip	3	80059-
25		04434-53211	Clip	1	80059-
26		07095-00317	Cushion	1	80059-
27		04434-51010	Clip	4	80059-

https://truckmanualshub.com/

FIG. K0210-007053 ROPS Cab, Rear Camera

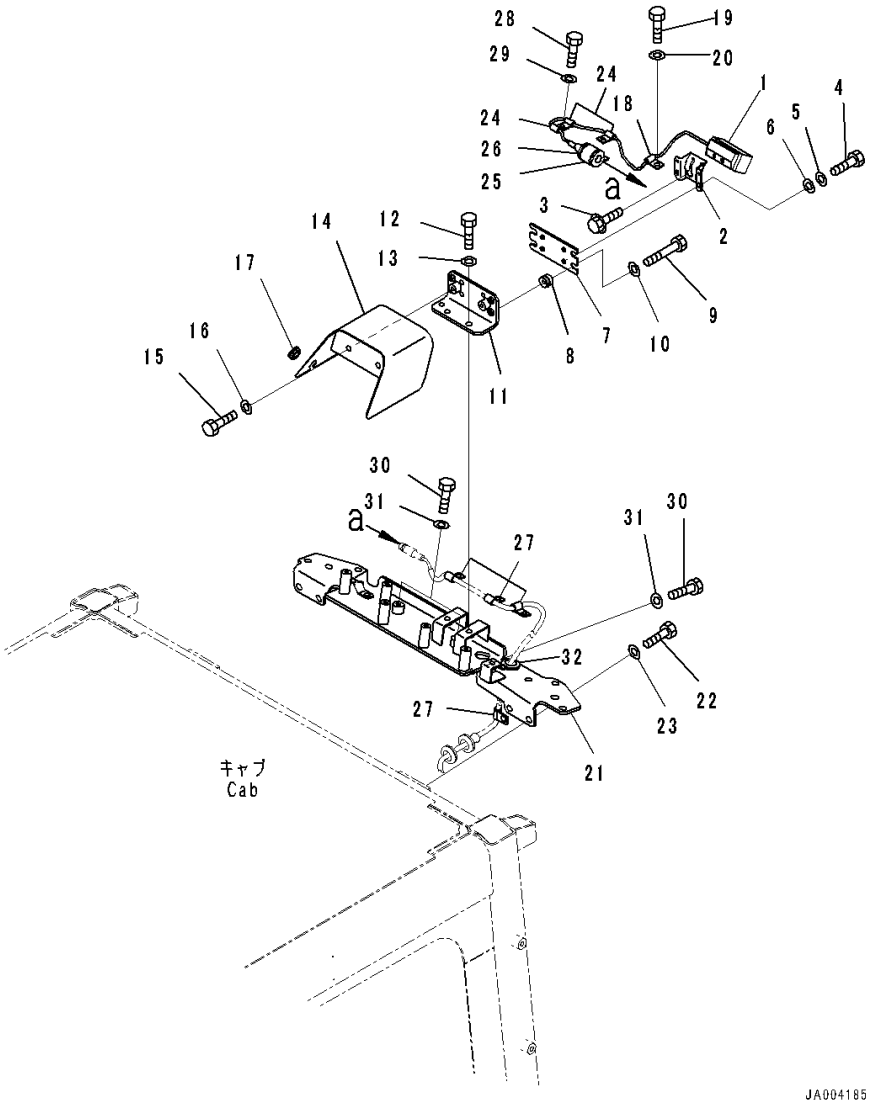

Index	Code	Part Number	Description	Qty	Serial Number
28		01010-81020	Bolt	7	80059-
29		01643-31032	Washer	7	80059-
30		01010-81220	Bolt	3	80059-
31		01643-31232	Washer	3	80059-
32		205-977-7310	Grommet	1	80059-

https://truckmanualshub.com/

FIG. K0210-008017 ROPS Cab, Cover

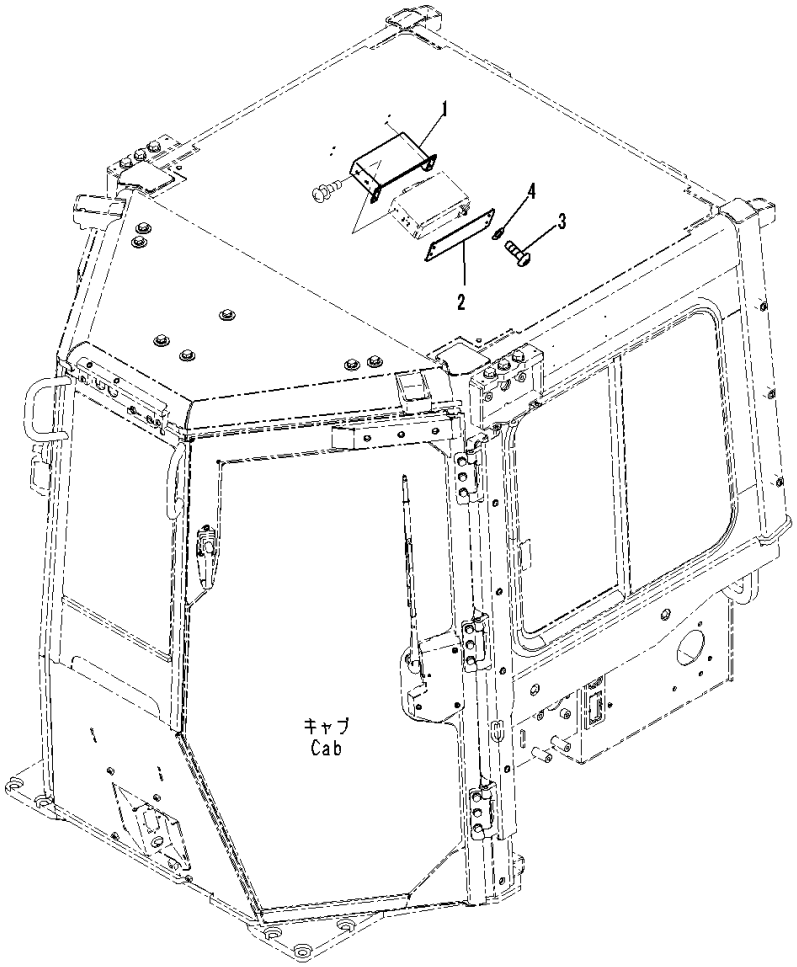

Index	Code	Part Number	Description	Qty	Serial Number
		Note: This list covers following specifications. With Rear View Monitoring System, Provision For Radio Installation, TH300 Type KOMTRAX EU Regulation Guard Level 2, With Rear View Monitoring System, Provision For Radio Installation, TH300 Type KOMTRAX			
1		14X-Y79-1590	Bracket	1	80052-
2		17A-Z11-2240	Plate	1	80052-
3		01245-00620	Screw	4	80052-
4		01643-70623	Washer	4	80052-

https://truckmanualshub.com/

FIG. K0210-009017 ROPS Cab, EU Regulation Guard Level 2, With Rear View Monitoring System, With AM-FM Stereo Radio With Cassette For Europe And Asia, TH300 Type KOMTRAX, Radio

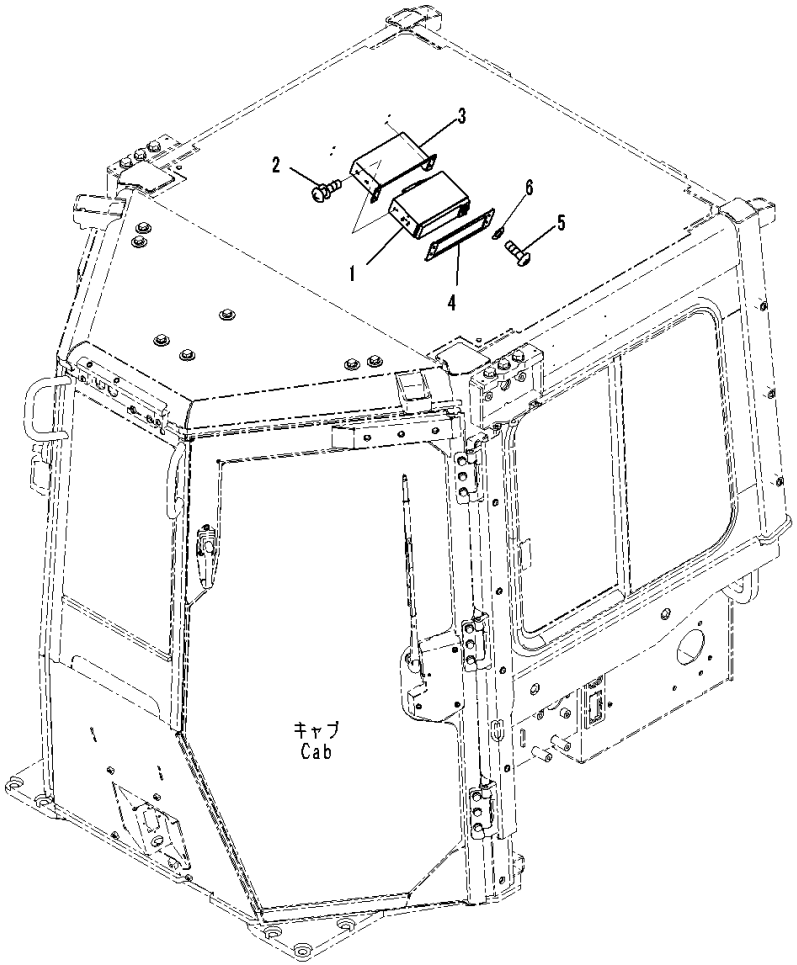

Index	Code	Part Number	Description	Qty	Serial Number
1		207-06-71734	Radio	1	80052-
2		01023-20510	Screw	4	80052-
3		14X-Y79-1590	Bracket	1	80052-
4		12Y-978-2280	Plate	1	80052-
5		01245-00620	Screw	4	80052-
6		01643-70623	Washer	4	80052-

https://truckmanualshub.com/

FIG. K0210-009045 ROPS Cab, Floor, Switch

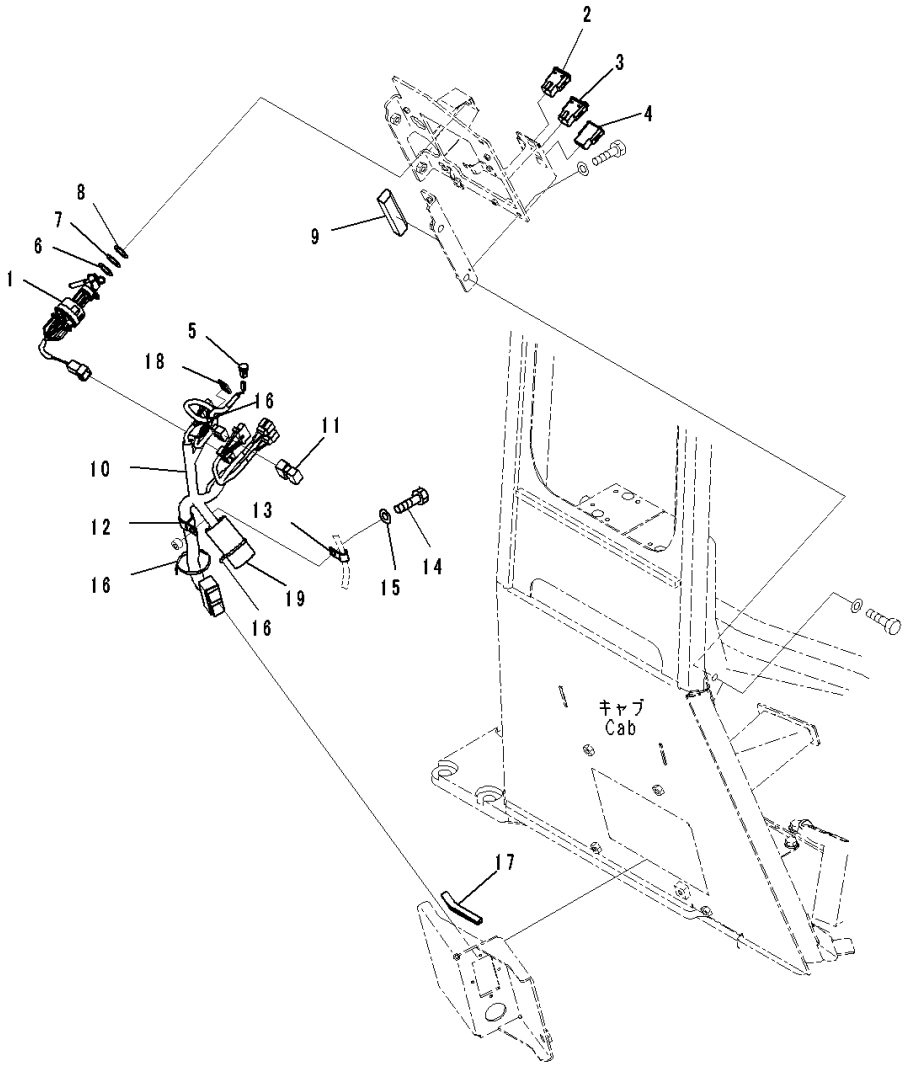

Index	Code	Part Number	Description	Qty	Serial Number
		Note: This list covers following specifications. EU Regulation Guard Level 2, With Rear View Monitoring System, With AM-FM Stereo Radio With Cassette For Europe And Asia, TH300 Type KOMTRAX EU Regulation Guard Level 2, With Rear View Monitoring System, Provision For Radio Installation, TH300 Type KOMTRAX			
1		14X-06-51691	Switch, Key	1	80052-
2		17A-06-42250	Switch, Light, Front	1	80052-
3		17A-06-42260	Switch, Light, Rear	1	80052-
4		20Y-06-42190	Cover	1	80052-
5		20Y-979-6161	Sensor	1	80052-
6		23S-15-45860	Shim, T=0.5mm	2	80052-
7		20Y-43-41750	Washer	2	80052-
8		20Y-43-41790	Washer	2	80052-
9		14X-54-56770	Seal,Bonded	1	80052-
10		14X-06-51132	Wiring Harness	1	80052-
11		8233-06-3350	Diode	1	80052-
12		04434-52310	Clip	1	80052-
13		04434-51010	Clip	1	80052-
14		01010-81020	Bolt	1	80052-
15		01643-31032	Washer	1	80052-
16		08034-20519	Band	3	80052-
17		14X-54-56160	Seal	1	80052-
18		20U-54-46520	Hook, Sticker Type	1	80052-
19		14X-06-52160	Sheet,Bonded	1	80052-

https://truckmanualshub.com/

FIG. K0210-012001 ROPS Cab, Cab Body

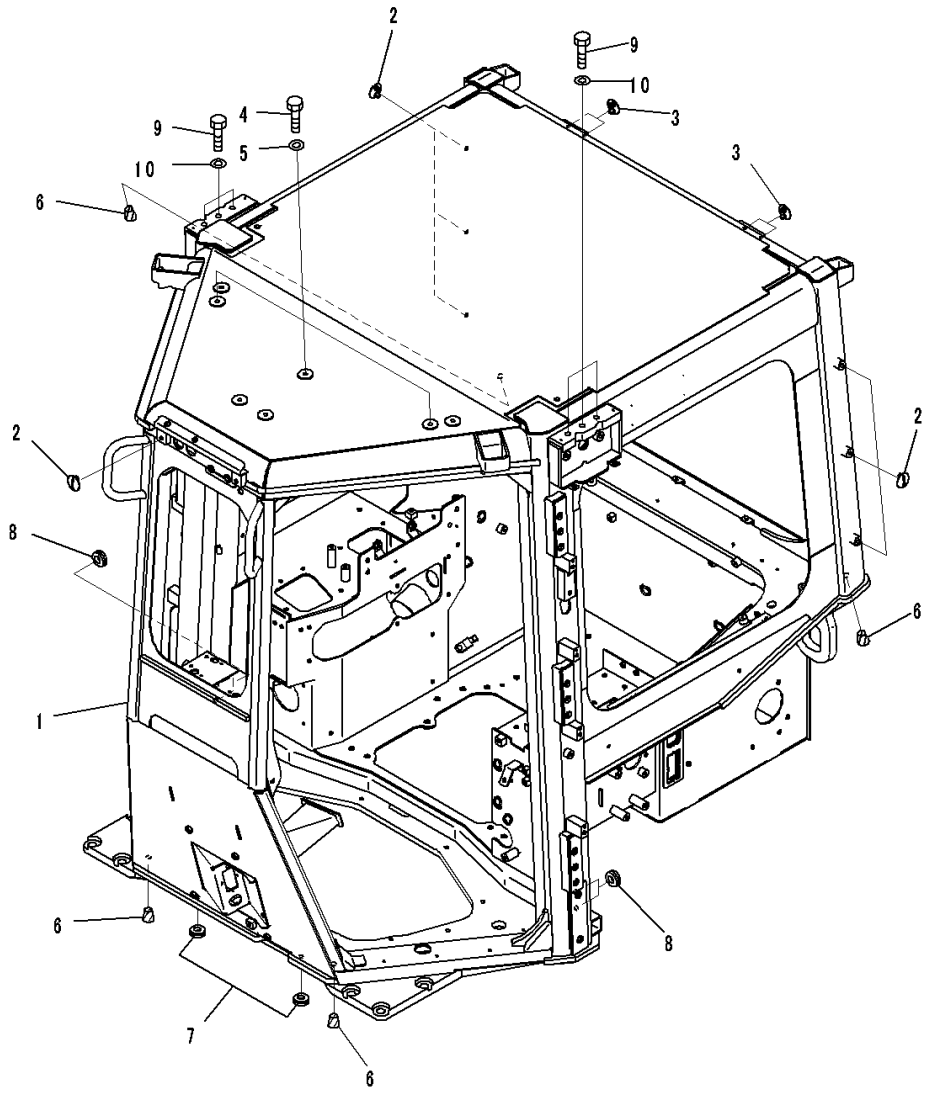

Index	Code	Part Number	Description	Qty	Serial Number
		Note: This list covers following specifications. With Rear View Monitoring System, With AM-FM Stereo Radio With Cassette, TH300 Type KOMTRAX With AM/FM Radio For Asia and EU, TH300 Type KOMTRAX			
1		14X-Y79-1113	Cab Assembly	1	80001-
2		20Y-53-11380	Cap	6	80001-
3		20Y-53-11390	Cap	4	80001-
4		01010-81220	Bolt	9	80001-
5		01643-31232	Washer	9	80001-
6		07049-01620	Plug	4	80001-
7		09415-00706	Cap	2	80001-
8		09415-01008	Cap	4	80001-
9		01010-81625	Bolt	6	80001-
10		01643-71645	Washer	6	80001-

https://truckmanualshub.com/

FIG. K0210-012017 ROPS Cab, Radio

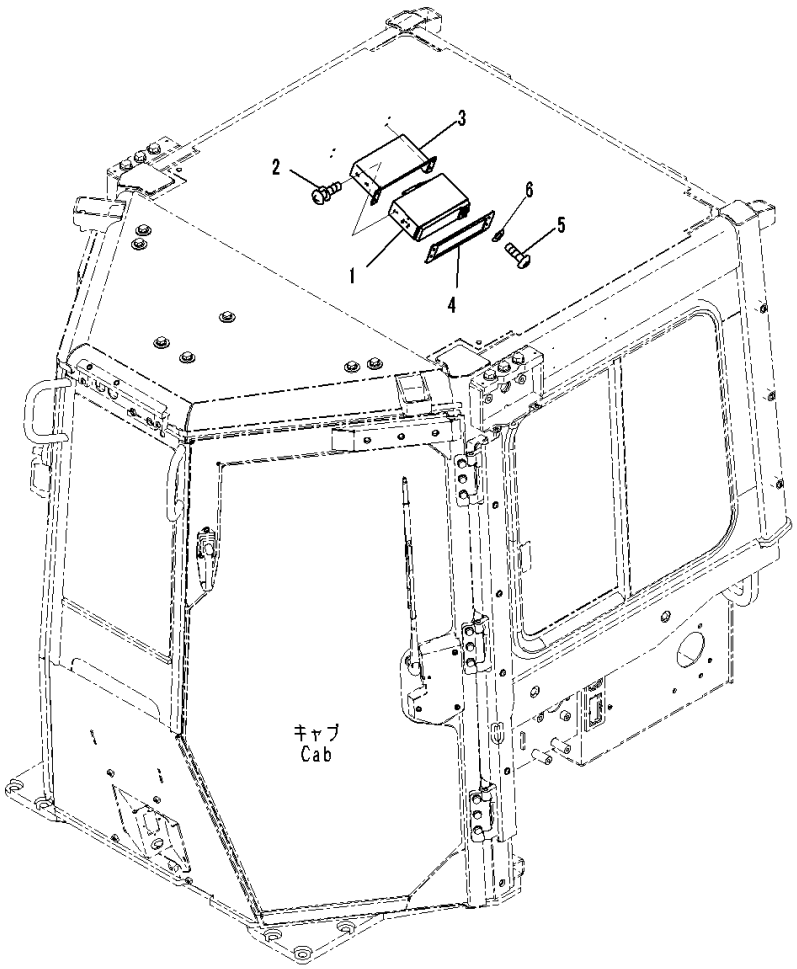

JA002957

Index	Code	Part Number	Description	Qty	Serial Number
		Note: This list covers following specifications. With Rear View Monitoring System, With AM-FM Stereo Radio With Cassette, TH300 Type KOMTRAX With AM/FM Radio For Asia and EU, TH300 Type KOMTRAX			
1		207-06-71734	Radio	1	80001-
2		01023-20510	Screw	4	80001-
3		14X-Y79-1590	Bracket	1	80001-
4		12Y-978-2280	Plate	1	80001-
5		01245-00620	Screw	4	80001-
6		01643-70623	Washer	4	80001-

https://truckmanualshub.com/

FIG. K0210-012029 ROPS Cab, Air Conditioner Duct (3/3)

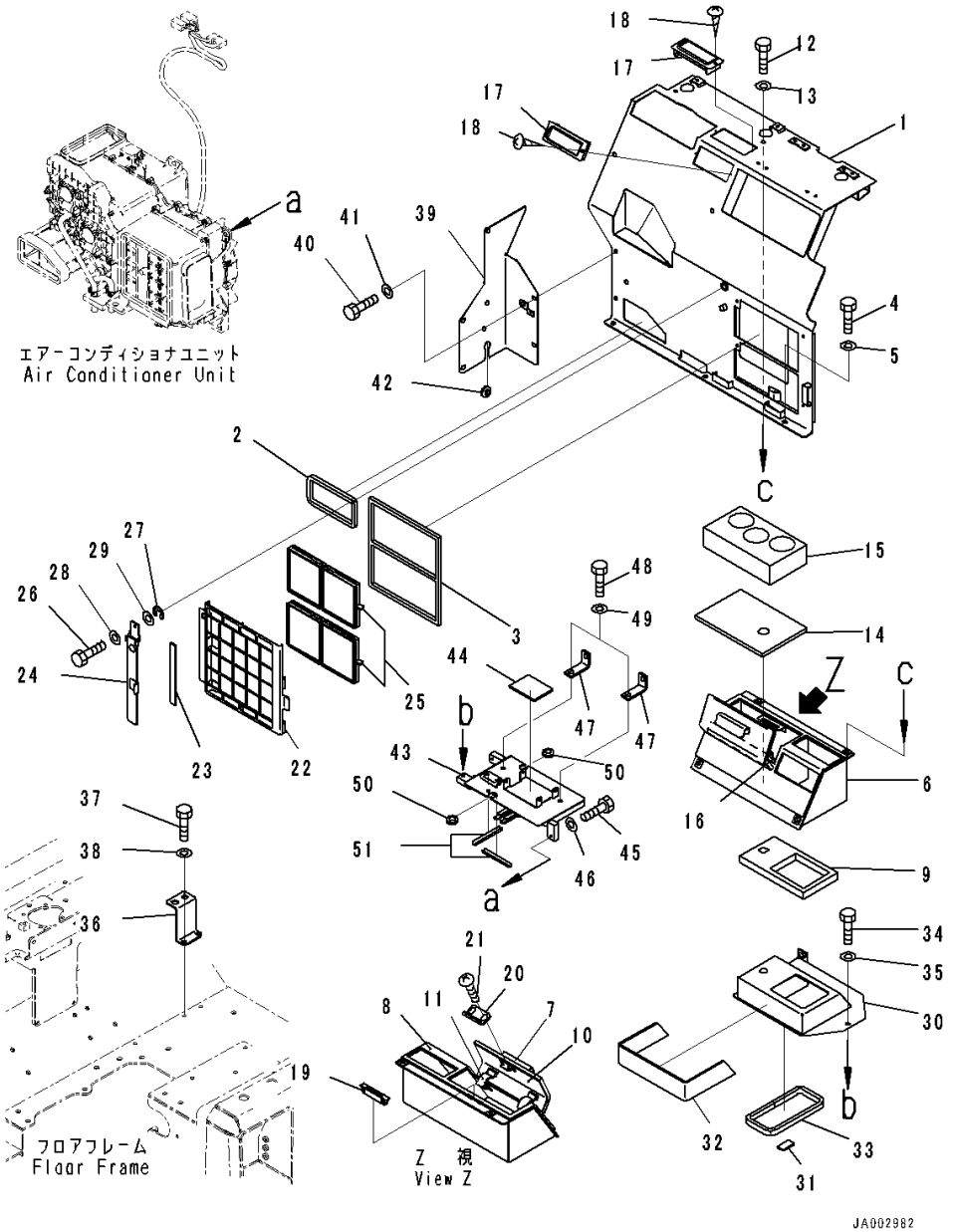

Index	Code	Part Number	Description	Qty	Serial Number
		Note: This list covers following specifications. With Rear View Monitoring System, With AM-FM Stereo Radio With Cassette, TH300 Type KOMTRAX With AM/FM Radio For Asia and EU, TH300 Type KOMTRAX			
1		14X-Y11-1442	Cover	1	80001-
2		17A-979-2251	• Seal,Bonded	1	80001-
3		17A-979-2430	• Seal,Bonded	1	80001-
4		01010-D0825	Bolt	6	80001-
5		01643-70823	Washer	6	80001-
6		14X-Y11-1511	Duct	1	80001-
7		14X-Y11-1521	• Plate	1	80001-
8		14X-Y11-1531	• Sheet,Bonded	1	80001-
9		14X-Y11-1540	• Sheet,Bonded	1	80001-
10		14X-Y11-1590	• Sheet,Bonded	1	80001-
11		17A-979-2390	• Hinge,Welded	2	80001-
12		01010-D0825	Bolt	4	80001-
13		01643-70823	Washer	4	80001-
14		14X-Y11-1561	Cushion	1	80001-
15		14X-Y11-1550	Cushion	1	80001-
16		14X-Y11-1611	Plate,Bonded	1	80001-
17		17A-Z11-7161	Louver	2	80001-
18		01370-10310	Screw	4	80001-
19		20Y-979-6630	Catcher	1	80001-
20		17A-54-46961	Plate	1	80001-
21		01023-10508	Screw	2	80001-
22		17A-979-2422	Cover	1	80001-
23		17A-43-42340	• Seal,Bonded	1	80001-
24		14X-54-56151	Bracket	1	80001-
25		20Y-979-6261	Filter	2	80001-
26		01232-10616	Screw, Knurled Head	1	80001-
27		195-54-78790	Ring, Snap	1	80001-
28		01643-70623	Washer	1	80001-
29		01640-20610	Washer	1	80001-
30		14X-Y11-1451	Duct	1	80001-
31		14X-Y11-1620	• Seal,Bonded	1	80001-
32		14X-Y11-2250	• Sheet,Bonded	1	80001-
33		17A-979-2141	• Seal,Bonded	1	80001-
34		01010-D0825	Bolt	2	80001-
35		01643-70823	Washer	2	80001-

https://truckmanualshub.com/

FIG. K0210-012029 ROPS Cab, Air Conditioner Duct (3/3)

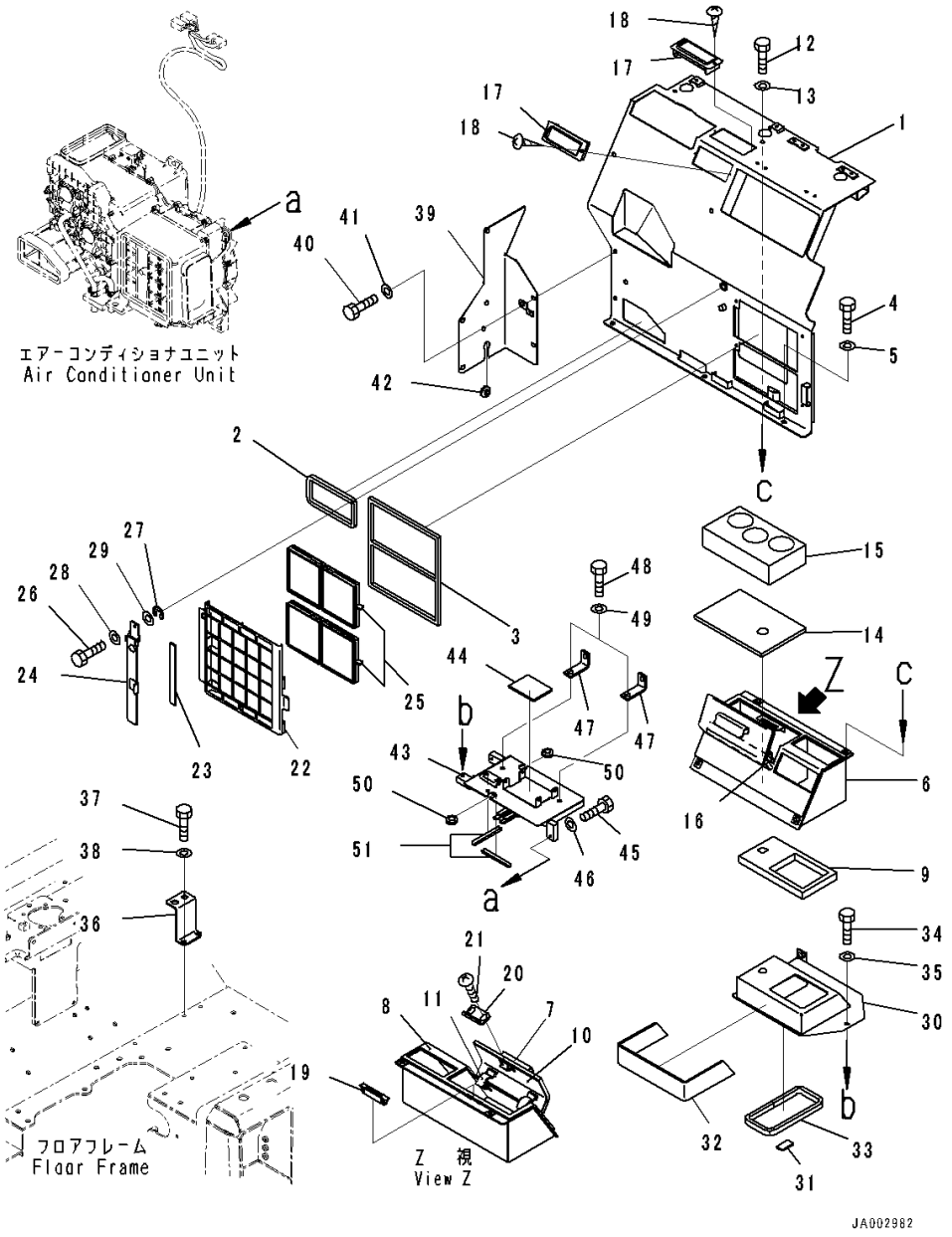

Index	Code	Part Number	Description	Qty	Serial Number
36		14X-Y11-1291	Bracket	1	80001-
37		01010-D0825	Bolt	2	80001-
38		01643-70823	Washer	2	80001-
39		14X-54-56431	Cover	1	80001-
40		01010-80825	Bolt	5	80001-
41		01643-30823	Washer	5	80001-
42		09415-01610	Cap	1	80001-
43		14X-Y11-1461	Bracket	1	80001-
44		17A-979-2360	• Seal,Bonded	1	80001-
45		01010-D0825	Bolt	2	80001-
46		01643-70823	Washer	2	80001-
47		14X-Y11-1570	Bracket	2	80001-
48		01010-D0825	Bolt	4	80001-
49		01643-70823	Washer	4	80001-
50		08037-01610	Grommet	2	80001-
51		14X-Y11-1990	Trim	2	80001-

https://truckmanualshub.com/

FIG. K0210-012036 ROPS Cab, Floor Frame Inside Cover

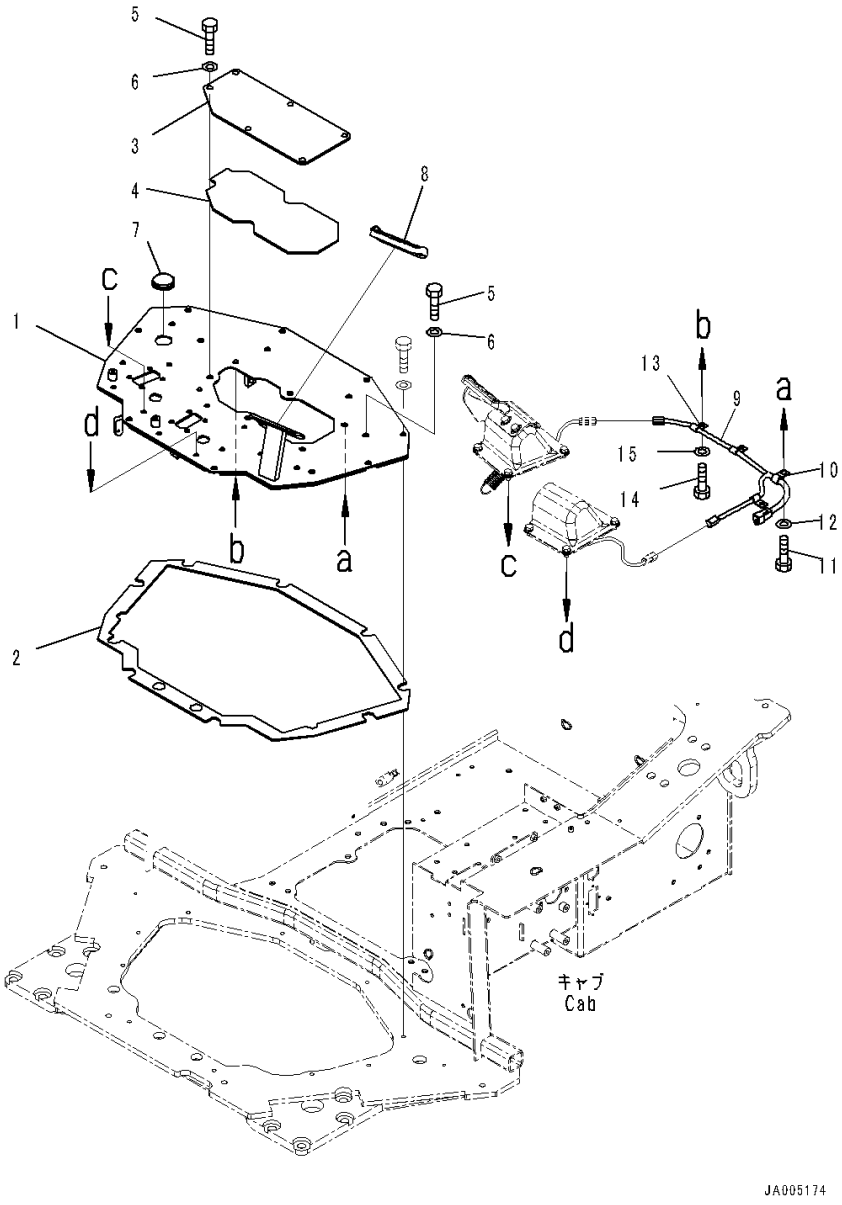

Index	Code	Part Number	Description	Qty	Serial Number
		Note: This list covers following specifications. With Rear View Monitoring System, With AM-FM Stereo Radio With Cassette, TH300 Type KOMTRAX With AM/FM Radio For Asia and EU, TH300 Type KOMTRAX			
1		14X-43-51612	Floor	1	80001-
2		14X-43-51850	• Sheet,Bonded	1	80001-
3		14X-43-51541	Cover	1	80001-
4		14X-43-51860	• Sheet,Bonded	1	80001-
5		01010-81225	Bolt	14	80001-
6		01643-31232	Washer	14	80001-
7		09415-03614	Cap	1	80001-
8		14X-43-13760	Cap	1	80001-
9		14X-06-51140	Wiring Harness	1	80001-
10		04434-51410	Clip	1	80001-
11		01010-81020	Bolt	1	80001-
12		01643-31032	Washer	1	80001-
13		04434-51010	Clip	3	80001-
14		01010-81020	Bolt	3	80001-
15		01643-31032	Washer	3	80001-

https://truckmanualshub.com/

FIG. K0210-012039 ROPS Cab, Controller and Relay

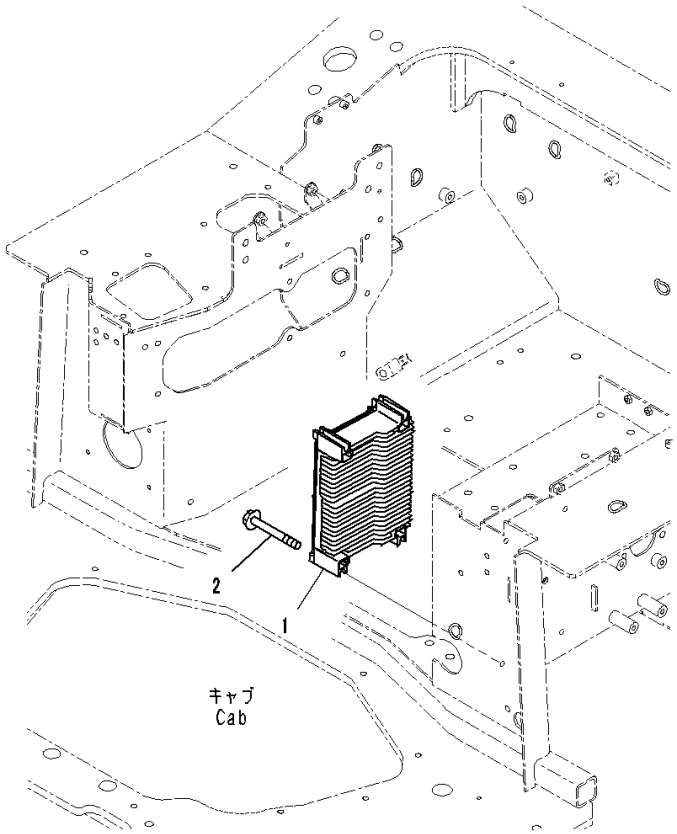

Index	Code	Part Number	Description	Qty	Serial Number
		Note: This list covers following specifications. With Rear View Monitoring System, With AM-FM Stereo Radio With Cassette, TH300 Type KOMTRAX With AM/FM Radio For Asia and EU, TH300 Type KOMTRAX			
1		7830-74-4000	Controller	1	80001-
2		01435-00885	Bolt	4	80001-

https://truckmanualshub.com/

FIG. K0210-012040 ROPS Cab, Floor, Harness (1/3)

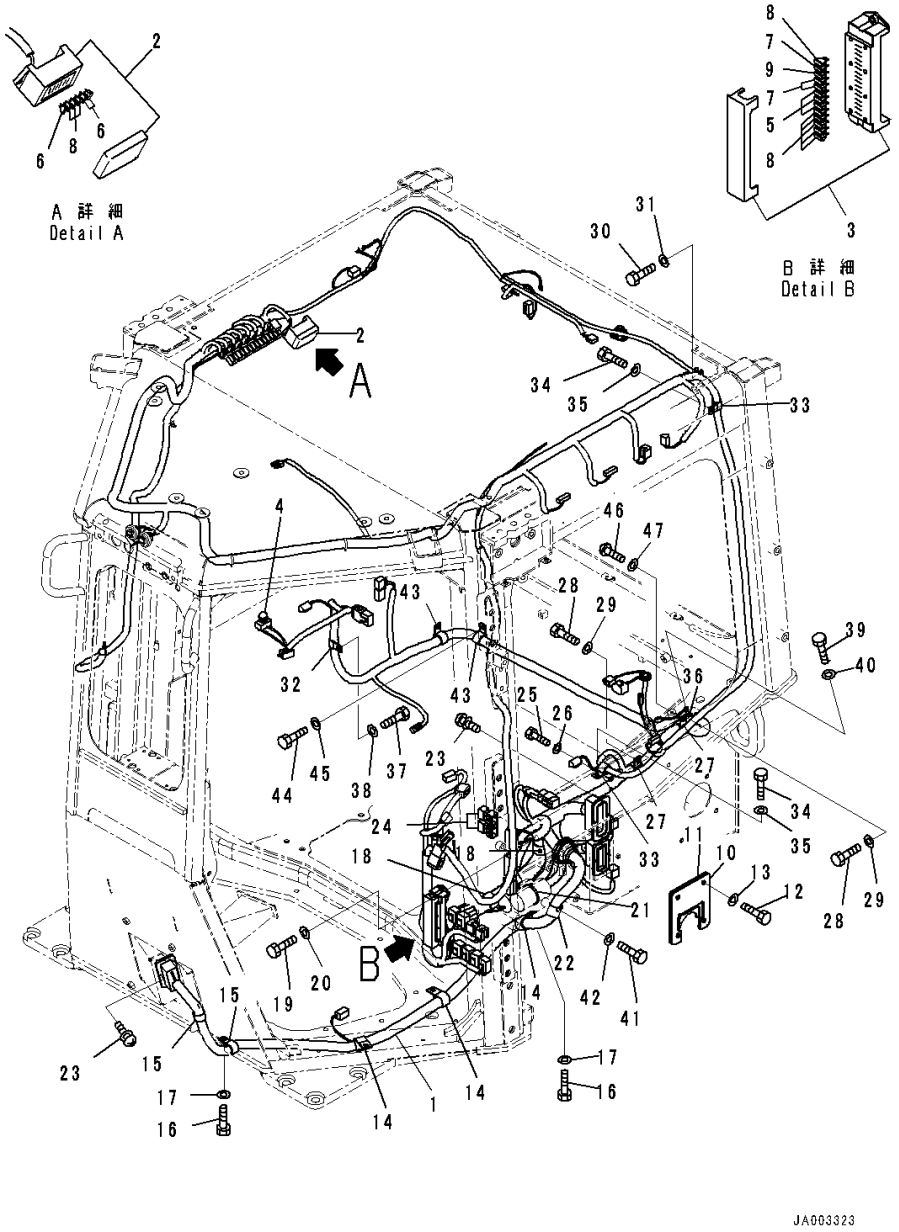

Index	Code	Part Number	Description	Qty	Serial Number
		Note: This list covers following specifications. With Rear View Monitoring System, With AM-FM Stereo Radio With Cassette, TH300 Type KOMTRAX With AM/FM Radio For Asia and EU, TH300 Type KOMTRAX			
1		14X-06-51124	Wiring Harness	1	80001-
2		08044-00600	• Box Assembly, Fuse	1	80001-
3		08044-01500	• Box, Fuse	1	80001-
4		08064-10000	• Switch, Horn	1	80001-
5		08041-00500	• Fuse, 5Amp.	4	80001-
6		08041-01000	• Fuse, 10Amp.	4	80001-
7		08041-01500	• Fuse, 15Amp.	4	80001-
8		08041-02000	• Fuse, 20Amp.	11	80001-
9		08041-03000	• Fuse, 30Amp.	2	80001-
10		14X-06-51351	Bracket	1	80001-
11		14X-06-51431	• Sheet	1	80001-
12		01010-81025	Bolt	4	80001-
13		01643-31032	Washer	4	80001-
14		04434-52711	Clip	3	80001-
15		04434-52310	Clip	2	80001-
16		01010-81020	Bolt	5	80001-
17		01643-31032	Washer	5	80001-
18		208-06-19170	Clip	2	80001-
19		01010-81020	Bolt	2	80001-
20		01643-31032	Washer	2	80001-
21		08034-20519	Band	39	80001-
22		04434-52711	Clip	1	80001-
23		01023-10416	Screw	12	80001-
24		8233-06-3350	Diode	2	80001-
25		01010-81020	Bolt	2	80001-
26		01643-31032	Washer	2	80001-
27		04434-52310	Clip	3	80001-
28		01010-81020	Bolt	3	80001-
29		01643-31032	Washer	3	80001-
30		01010-80616	Bolt	1	80001-
31		01643-30623	Washer	1	80001-
32		04434-51910	Clip	1	80001-
33		04434-51710	Clip	2	80001-
34		01010-81020	Bolt	2	80001-
35		01643-31032	Washer	2	80001-

https://truckmanualshub.com/

FIG. K0210-012040 ROPS Cab, Floor, Harness (1/3)

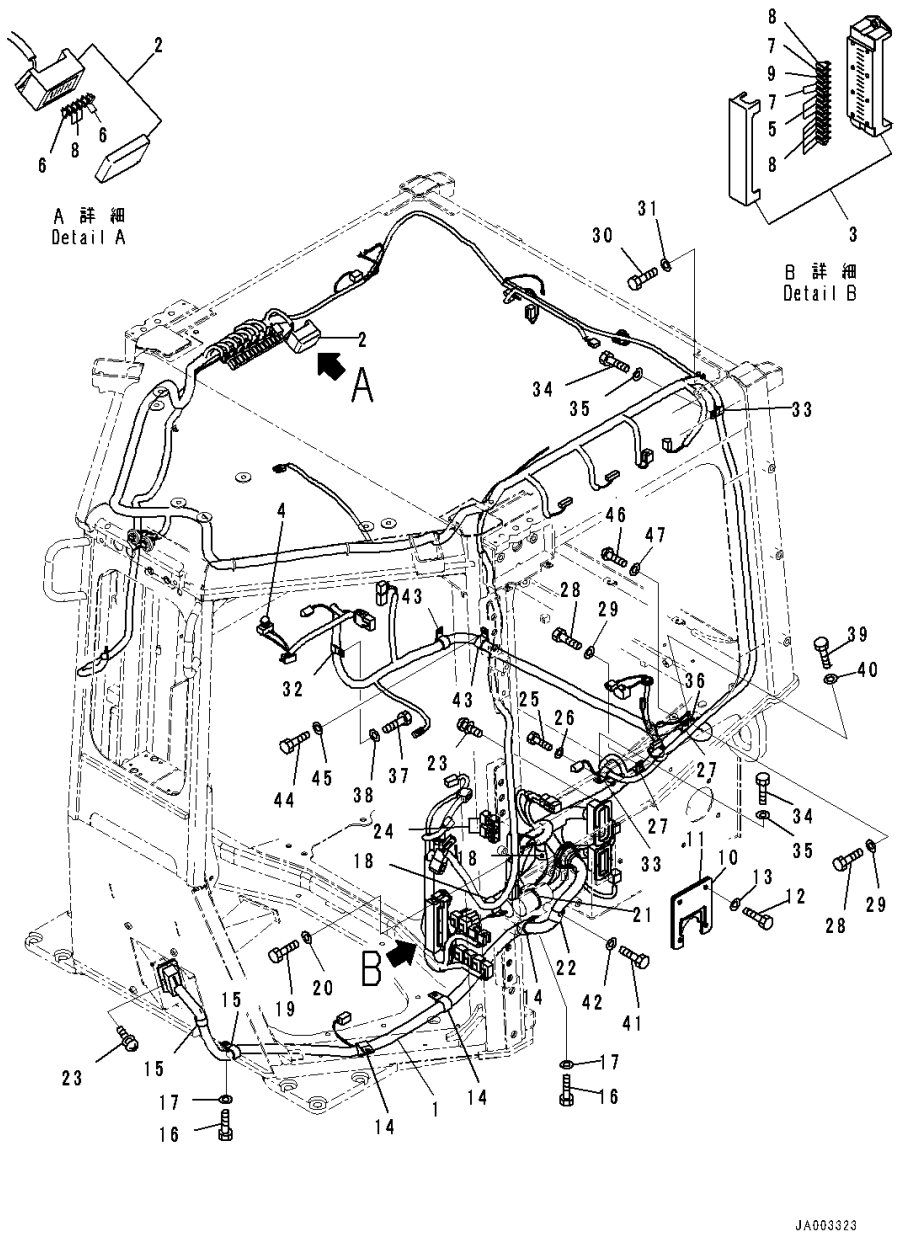

Index	Code	Part Number	Description	Qty	Serial Number
36		04434-52310	Clip	2	80001-
37		01010-81020	Bolt	3	80001-
38		01643-31032	Washer	3	80001-
39		01010-80612	Bolt	1	80001-
40		01643-30623	Washer	1	80001-
41		01010-81025	Bolt	1	80001-
42		01643-31032	Washer	1	80001-
43		04434-52310	Clip	2	80001-
44		01010-81020	Bolt	2	80001-
45		01643-31032	Washer	2	80001-
46		01245-01020	Screw	1	80001-
47		01643-71032	Washer	1	80001-

https://truckmanualshub.com/

FIG. K0210-012044 ROPS Cab, Dashboard Cover (1/2)

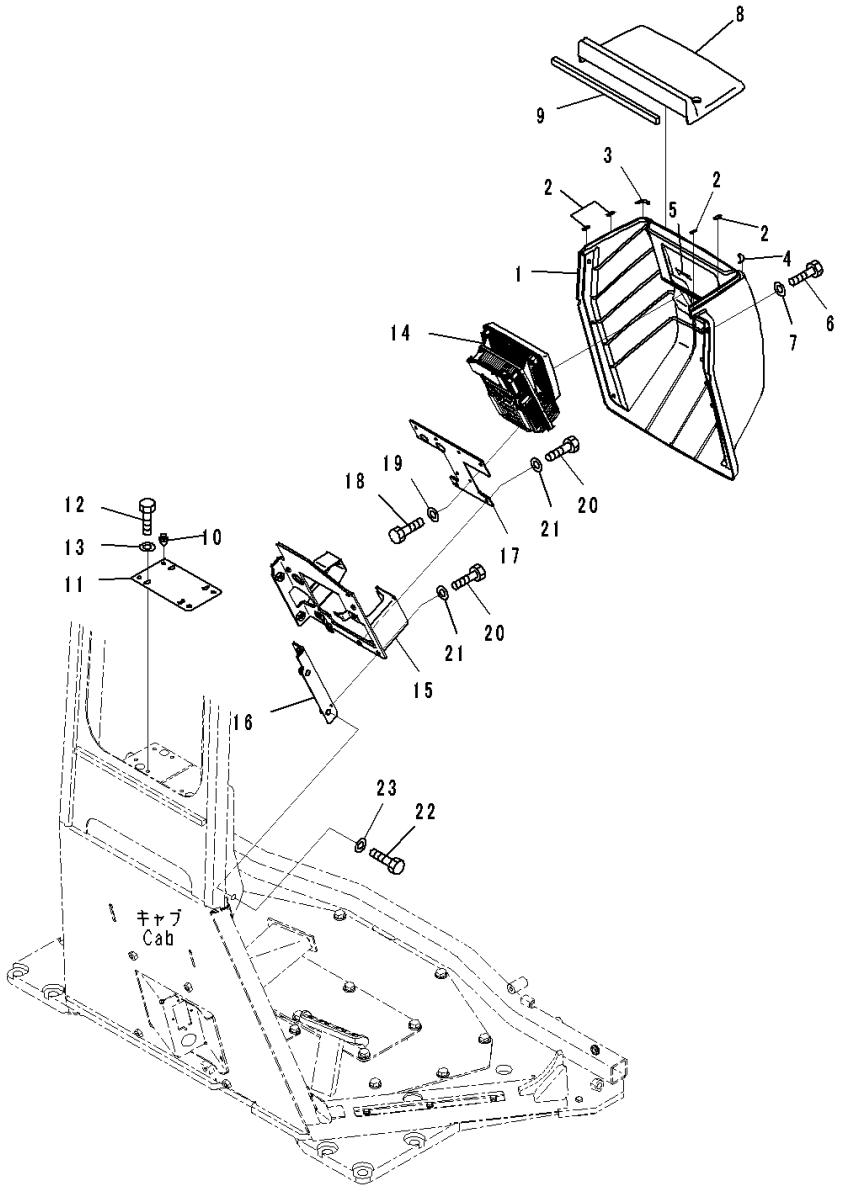

Index	Code	Part Number	Description	Qty	Serial Number
		Note: This list covers following specifications. With Rear View Monitoring System, With AM-FM Stereo Radio With Cassette, TH300 Type KOMTRAX With AM/FM Radio For Asia and EU, TH300 Type KOMTRAX			
1		14X-54-56812	Cover	1	80001-
2		14X-54-56941	• Sheet, Bonded	4	80001-
3		14X-54-56951	• Sheet, Bonded	1	80001-
4		14X-54-56961	• Sheet, Bonded	1	80001-
5		14X-54-56970	• Seal,Bonded	1	80001-
6		01010-D0820	Bolt	6	80001-
7		01643-70823	Washer	6	80001-
8		14X-54-56821	Cover	1	80001-
9		14X-54-56921	• Seal,Bonded	1	80001-
10		22U-54-25340	Clip	4	80001-
11		14X-54-56751	Plate	1	80001-
12		01010-80616	Bolt	4	80001-
13		01643-30623	Washer	4	80001-
14		7831-69-5002	Monitor	1	80221-
15		14X-54-56721	Bracket	1	80001-
16		14X-54-56731	Plate	1	80001-
17		14X-54-56741	Plate	1	80001-
18		01010-80616	Bolt	4	80001-
19		01643-30623	Washer	4	80001-
20		01010-80620	Bolt	6	80001-
21		01643-30623	Washer	6	80001-
22		01010-81025	Bolt	4	80001-
23		01643-31032	Washer	4	80001-

https://truckmanualshub.com/

FIG. K0210-012048 ROPS Cab, Floor Cover

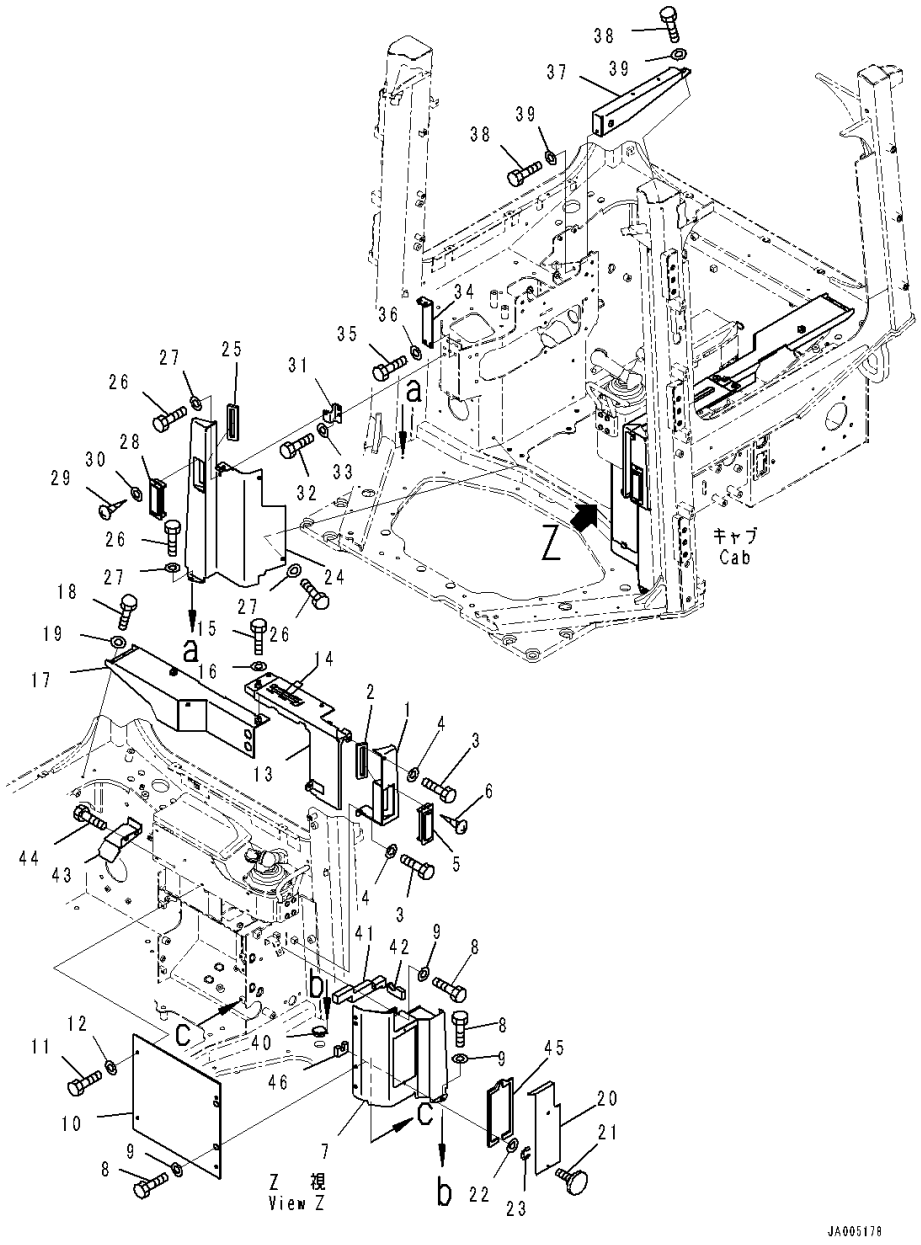

Index	Code	Part Number	Description	Qty	Serial Number
		Note: This list covers following specifications. With Rear View Monitoring System, With AM-FM Stereo Radio With Cassette, TH300 Type KOMTRAX With AM/FM Radio For Asia and EU, TH300 Type KOMTRAX			
1		14X-54-56291	Cover	1	80001-
2		14X-54-56491	• Sheet,Bonded	1	80001-
3		01010-D0825	Bolt	2	80001-
4		01643-70823	Washer	2	80001-
5		17A-Z11-7161	Louver	1	80001-
6		01370-10310	Screw	2	80001-
7		14X-54-56352	Cover	1	80001-
8		01010-D0825	Bolt	4	80001-
9		01643-70823	Washer	4	80001-
10		14X-54-56372	Cover	1	80001-
11		01010-D0825	Bolt	4	80001-
12		01643-70823	Washer	4	80001-
13		14X-54-56381	Cover	1	80001-
14		14X-43-48110	• Awning,Bonded	2	80001-
15		01010-D0825	Bolt	2	80001-
16		01643-70823	Washer	2	80001-
17		14X-54-56443	Cover	1	80001-
18		01010-D0825	Bolt	3	80001-
19		01643-70823	Washer	3	80001-
20		14X-54-56481	Plate	1	80001-
21		01232-10616	Screw, Knurled Head	2	80001-
22		01643-70623	Washer	2	80001-
23		195-54-78790	Ring, Snap	2	80001-
24		14X-54-56361	Cover	1	80001-
25		14X-54-56491	• Sheet,Bonded	1	80001-
26		01010-D0825	Bolt	5	80001-
27		01643-70823	Washer	5	80001-
28		17A-Z11-7161	Louver	1	80001-
29		01370-10310	Screw	2	80001-
30		01643-70623	Washer	2	80001-
31		14X-54-56451	Bracket	1	80001-
32		01010-D0825	Bolt	2	80001-
33		01643-70823	Washer	2	80001-
34		14X-54-56411	Bracket	1	80001-
35		01010-D0825	Bolt	2	80001-

https://truckmanualshub.com/

FIG. K0210-012048 ROPS Cab, Floor Cover

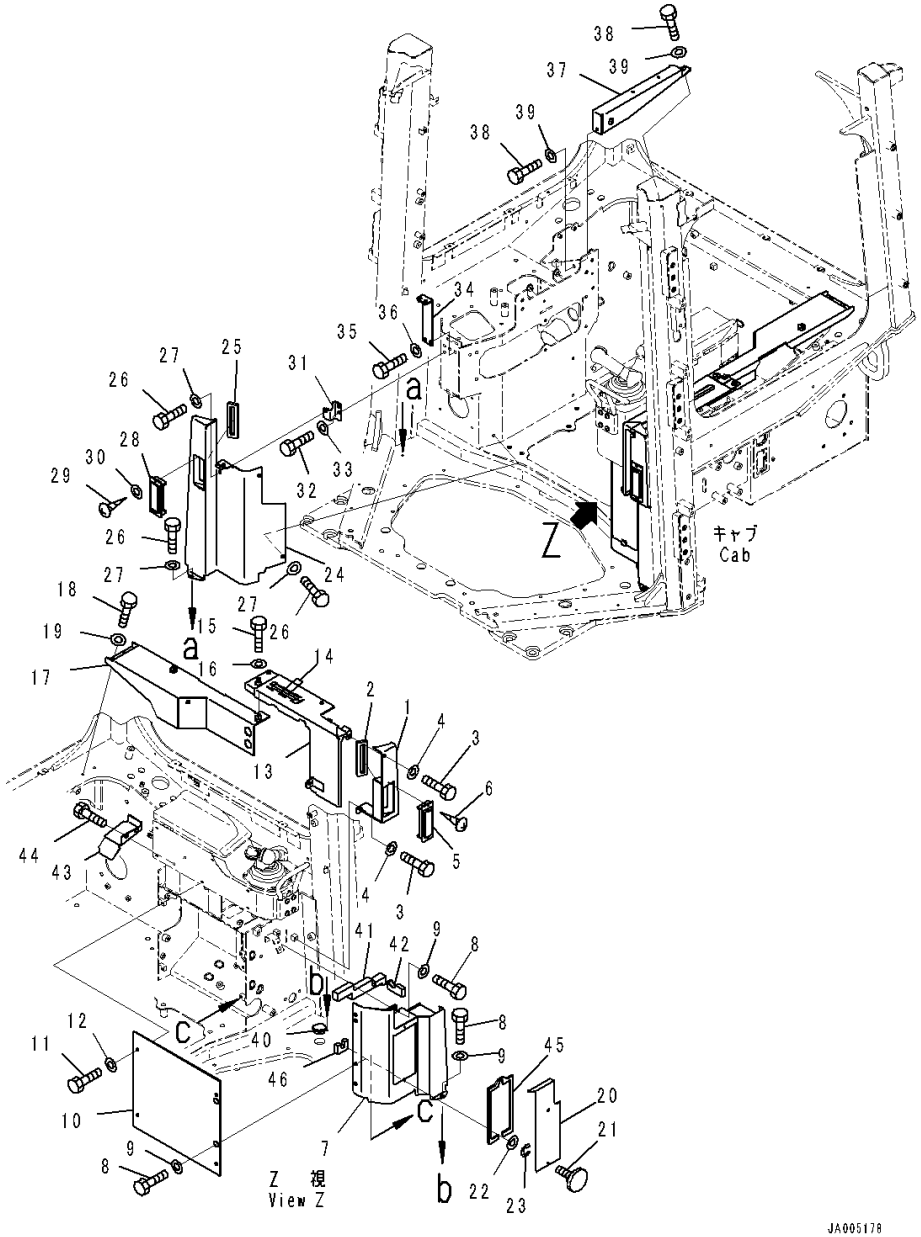

Index	Code	Part Number	Description	Qty	Serial Number
36		01643-70823	Washer	2	80001-
37		14X-54-56471	Bracket	1	80001-
38		01010-D0825	Bolt	2	80001-
39		01643-70823	Washer	2	80001-
40		22U-54-25581	Grommet	1	80001-
41		14X-54-56240	Seal,Bonded	1	80001-
42		14X-54-56260	Seal,Bonded	1	80001-
43		14X-54-56270	Cover	1	80001-
44		01010-D0825	Bolt	2	80001-
45		14X-54-56760	Seal,Bonded	1	80001-
46		14X-54-56981	Seal,Bonded	1	80001-

https://truckmanualshub.com/

FIG. K0210-012050 ROPS Cab, With Rear View Monitoring System, With AM-FM Stereo Radio With Cassette, TH300 Type KOMTRAX, Wiring Harness

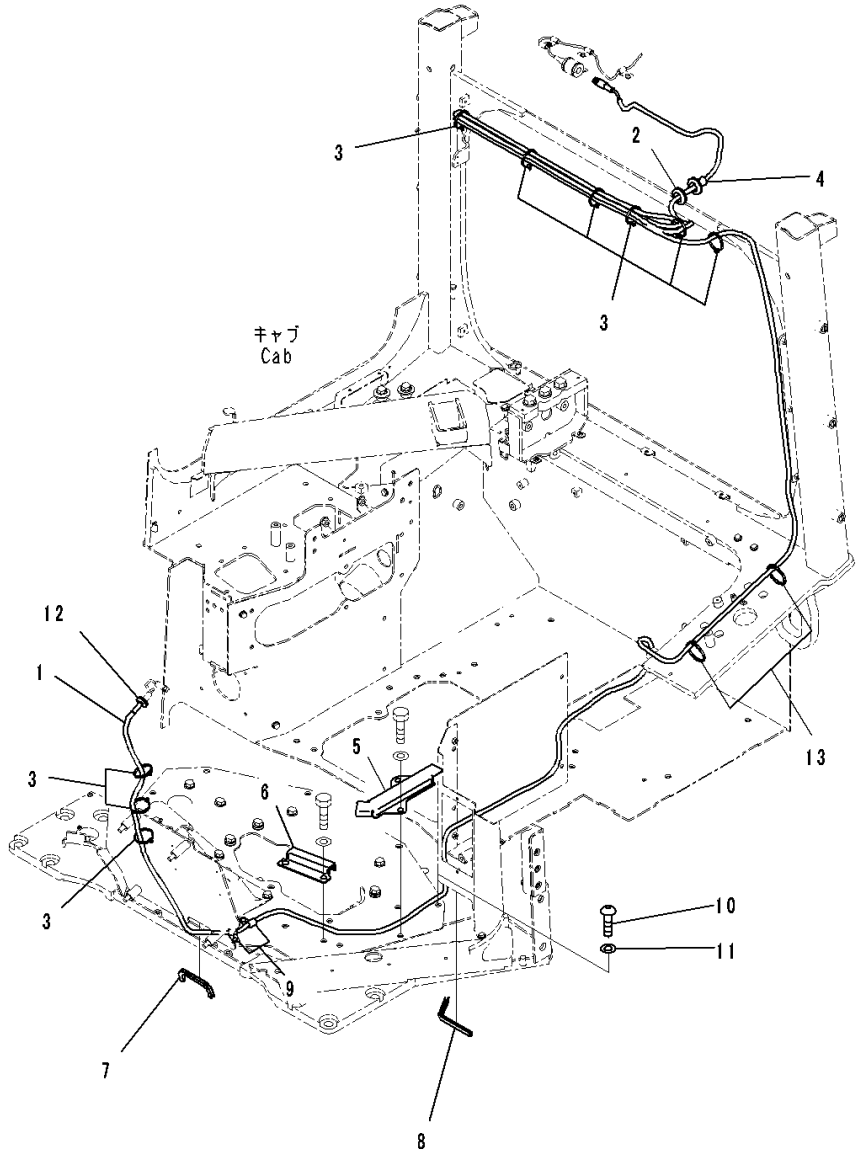

Index	Code	Part Number	Description	Qty	Serial Number
1		7835-33-8100	Cable Assembly	1	80001-
2		08037-02512	Grommet	1	80001-
3		08034-20519	Band	9	80001-
4		08037-11425	Grommet	1	80001-
5		14X-06-53160	Cover	1	80001-
6		14X-06-53170	Plate	1	80001-
7		418-54-42380	Finisher	1	80001-
8		417-923-3980	Finisher	1	80001-
9		04434-51012	Clip	2	80001-
10		01245-01225	Screw, Hexagon Socket Head	1	80001-
11		01643-71232	Washer	1	80001-
12		08037-01610	Grommet	1	80001-
13		08034-20519	Band	4	80001-

https://truckmanualshub.com/

FIG. K0210-012051 ROPS Cab, Decal

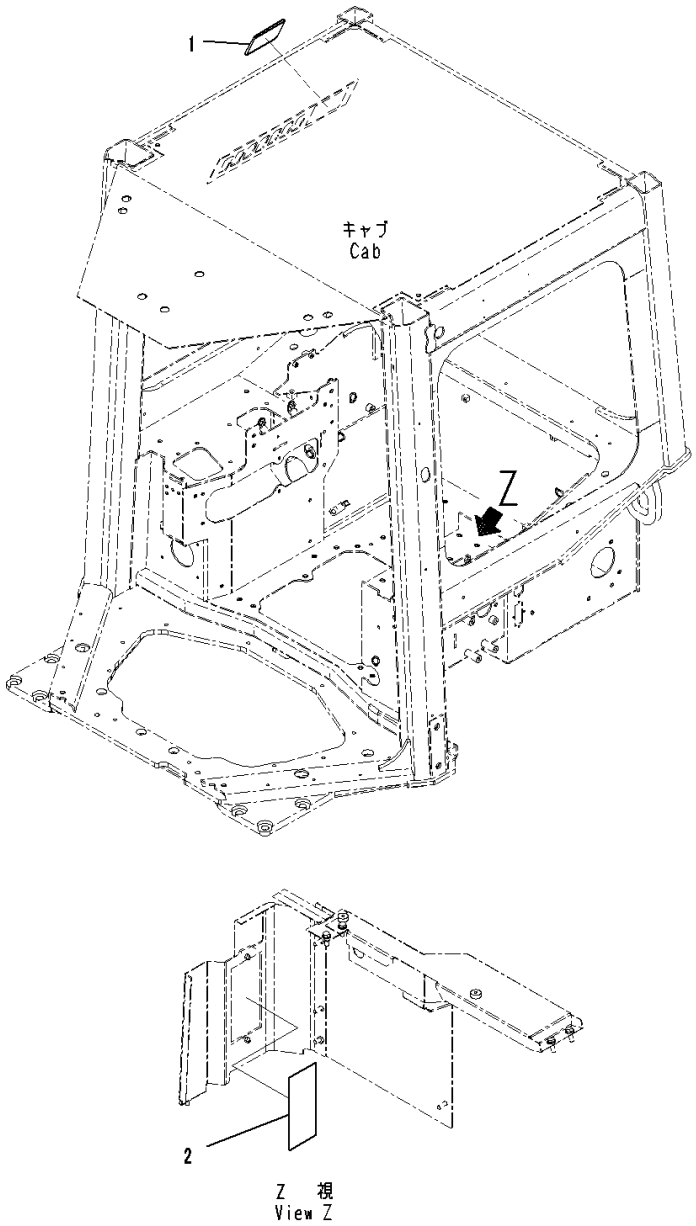

Index	Code	Part Number	Description	Qty	Serial Number
		Note: This list covers following specifications. With Rear View Monitoring System, With AM-FM Stereo Radio With Cassette, TH300 Type KOMTRAX With AM/FM Radio For Asia and EU, TH300 Type KOMTRAX			
1		14X-98-51120	Plate	1	80001-
2		14X-98-51161	Plate	1	80001-

https://truckmanualshub.com/

FIG. K0210-012053 ROPS Cab, With Rear View Monitoring System, With AM-FM Stereo Radio With Cassette, TH300 Type KOMTRAX, Rear Camera

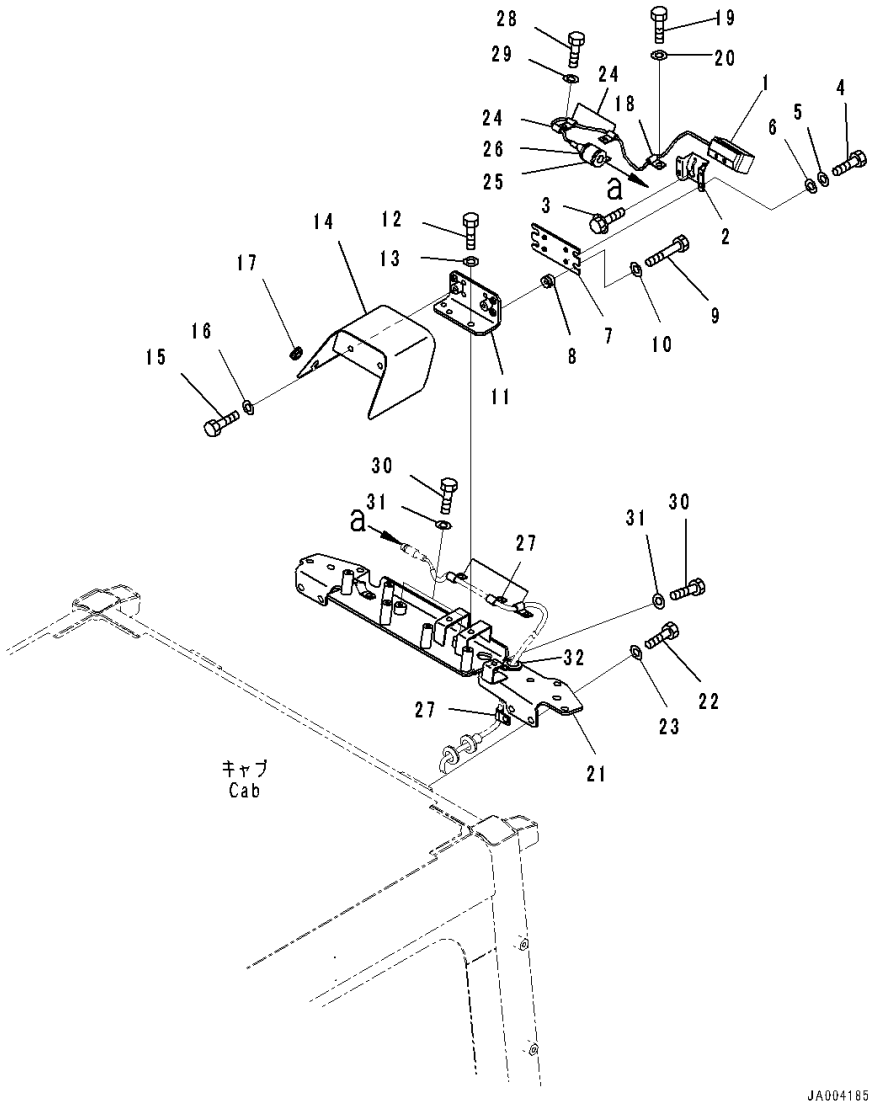

Index	Code	Part Number	Description	Qty	Serial Number
		7835-33-1001	Camera Assembly	1	80001-
1		7835-33-1100	• Camera	1	80001-
2		7835-33-1201	• Bracket	1	80001-
		7835-33-1300	• Bolt	1	80001-
3		7835-33-1310	• • Bolt	2	80001-
4		7835-33-1320	• • Bolt	4	80001-
5		7835-33-1330	• • Washer	4	80001-
6		7835-33-1340	• • Washer	4	80001-
7		20Y-06-41670	Bracket	1	80001-
8		20Y-810-1240	Cushion	4	80001-
9		01010-D0835	Bolt	4	80001-
10		01643-70823	Washer	4	80001-
11		14X-06-53390	Bracket	1	80001-
12		01010-D1025	Bolt	2	80001-
13		01643-71032	Washer	2	80001-
14		14X-06-53221	Cover	1	80001-
15		01010-D1020	Bolt	2	80001-
16		01643-71032	Washer	2	80001-
17		201-54-13210	Grommet	1	80001-
18		04434-50610	Clip	1	80001-
19		01010-D1025	Bolt	1	80001-
20		01643-71032	Washer	1	80001-
21		14X-06-52390	Bracket	1	80001-
22		01010-81225	Bolt	4	80001-
23		01643-31232	Washer	4	80001-
24		04434-50610	Clip	3	80001-
25		04434-53211	Clip	1	80001-
26		07095-00317	Cushion	1	80001-
27		04434-51010	Clip	4	80001-
28		01010-81020	Bolt	7	80001-
29		01643-31032	Washer	7	80001-
30		01010-81220	Bolt	3	80001-
31		01643-31232	Washer	3	80001-
32		205-977-7310	Grommet	1	80001-

https://truckmanualshub.com/

FIG. K0310-001001 Floor Mat

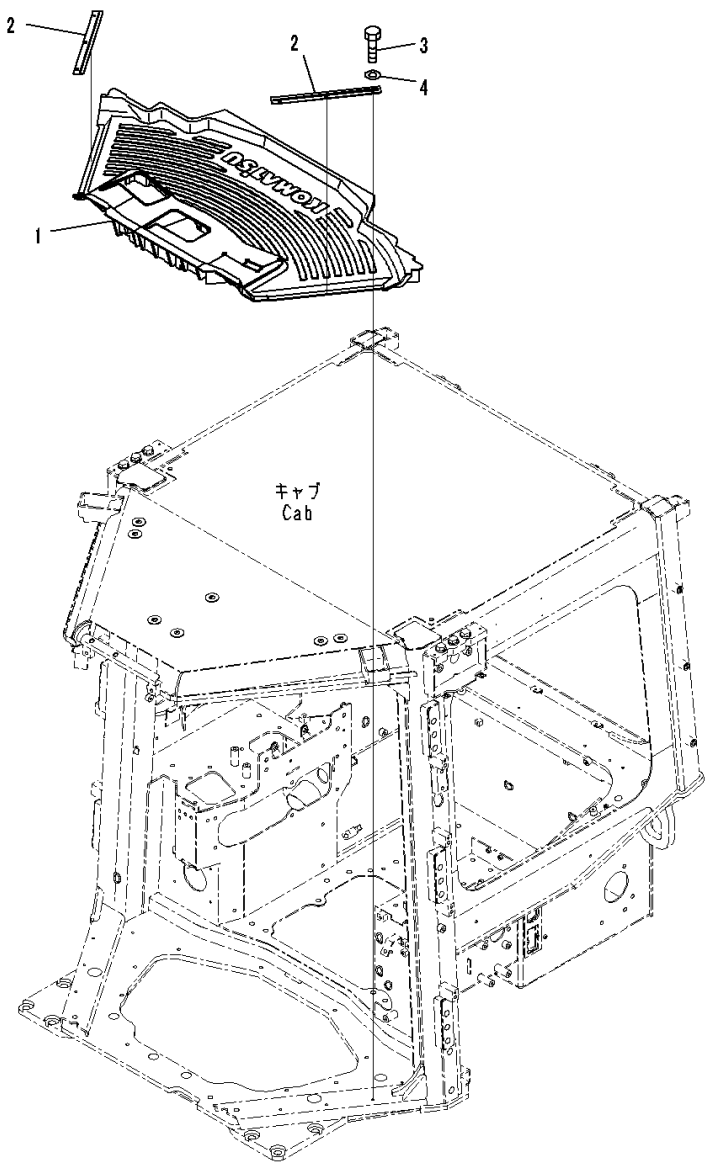

Index	Code	Part Number	Description	Qty	Serial Number
1		14X-54-56891	Mat	1	80001-
2		12Y-978-2890	Plate	2	80001-
3		01010-D0620	Bolt	6	80001-
4		01643-70623	Washer	6	80001-

https://truckmanualshub.com/

FIG. K0410-002001 ROPS Canopy, Canopy

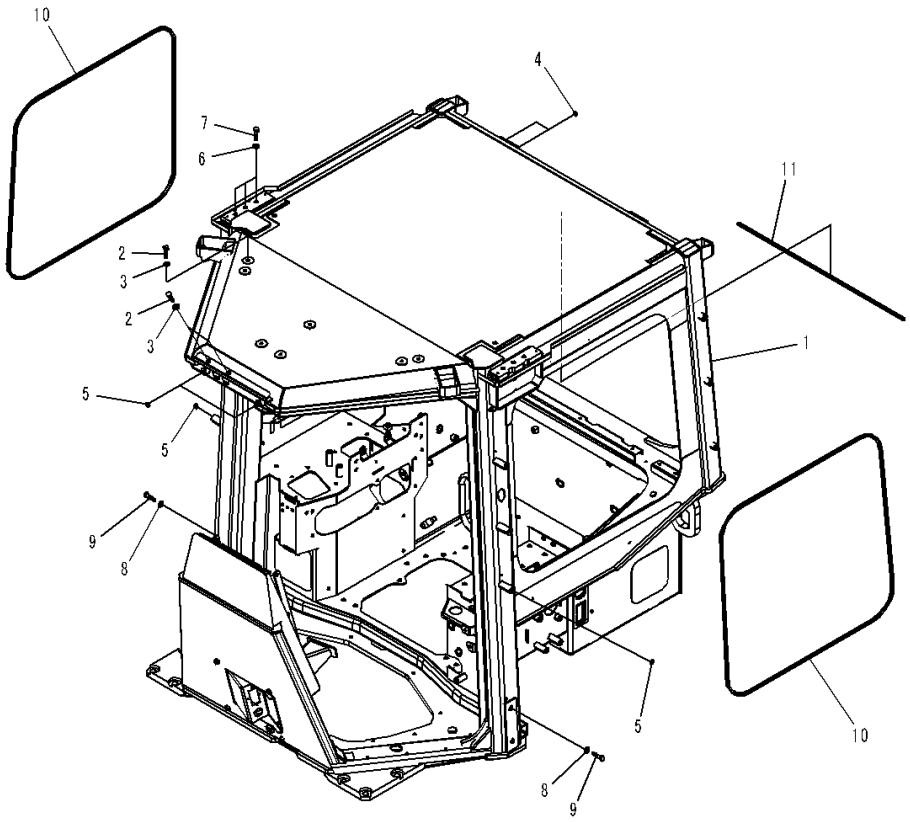

Index	Code	Part Number	Description	Qty	Serial Number
1		14X-Y79-4111	Frame	1	80054-
2		01010-81220	Bolt	9	80054-
3		01643-31232	Washer	9	80054-
4		20Y-53-11390	Cap	4	80054-
5		20Y-53-11380	Cap	14	80054-
6		01643-31645	Washer	6	80054-
7		01010-81625	Bolt	6	80054-
8		01643-71645	Washer	4	80054-
9		01010-D1625	Bolt	4	80054-
10		14X-Y79-4351	Trim	2	80054-
11		14X-Y79-4340	Trim	1	80054-

https://truckmanualshub.com/

FIG. K0410-002002 ROPS Canopy, Roof Cover

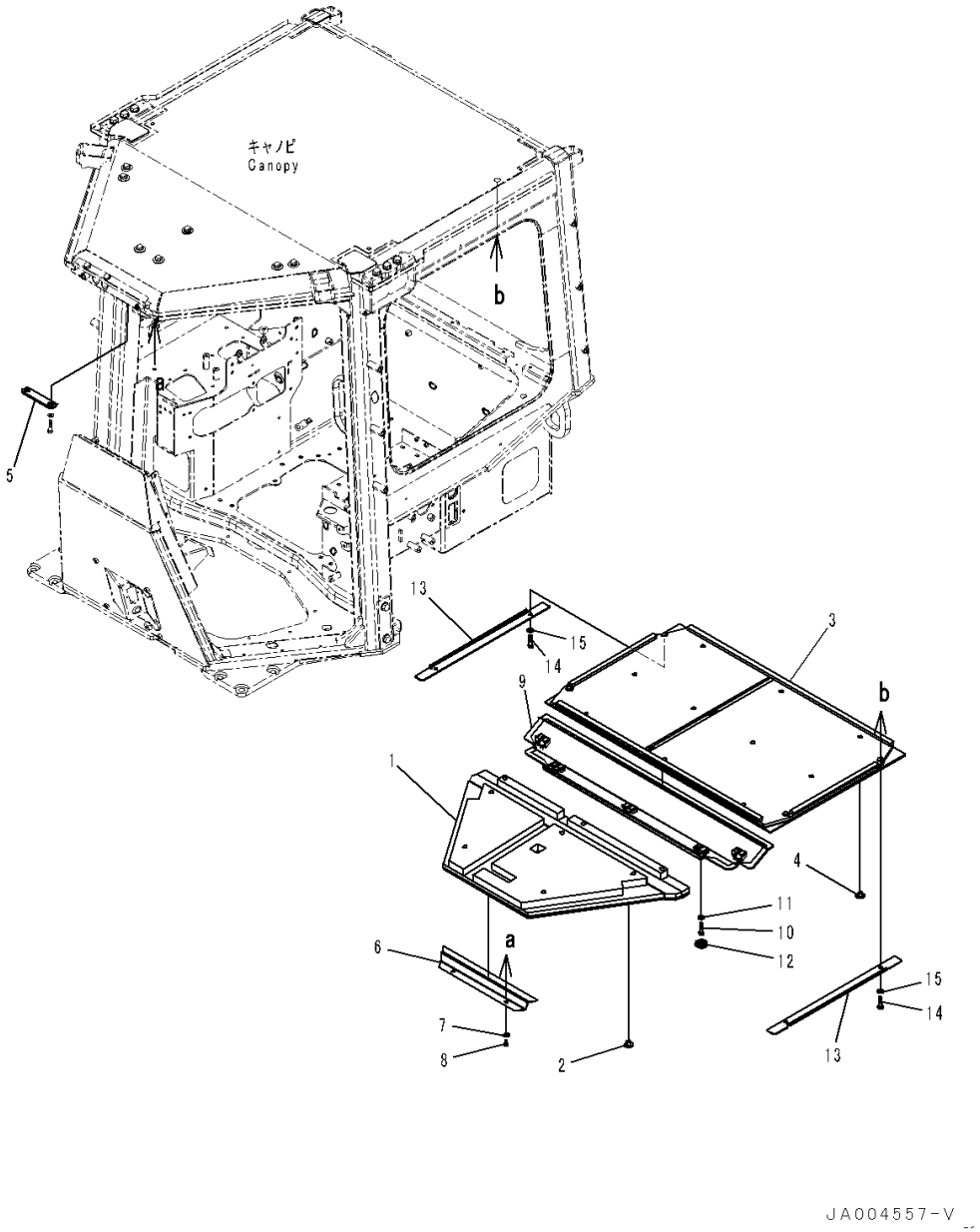

Index	Code	Part Number	Description	Qty	Serial Number
1		14X-Y79-4611	Roof Lining	1	80054-
2		14X-978-1660	Button	8	80054-
3		14X-Y79-4621	Roof Lining	1	80054-
4		14X-978-1660	Button	10	80054-
5		12Y-978-4670	Sheet	1	80054-
6		14X-54-58280	Plate	1	80054-
7		01643-70823	Washer	2	80054-
8		01245-00816	Screw	2	80054-
9		14X-54-58781	Cover	1	80054-
10		01010-D0825	Bolt	5	80054-
11		01643-70823	Washer	5	80054-
12		09415-02512	Cap	5	80054-
13		14X-54-58790	Cover	2	80054-
14		01010-D0825	Bolt	4	80054-
15		01643-70823	Washer	4	80054-

https://truckmanualshub.com/

FIG. K0410-002003 ROPS Canopy, Rearview Mirror

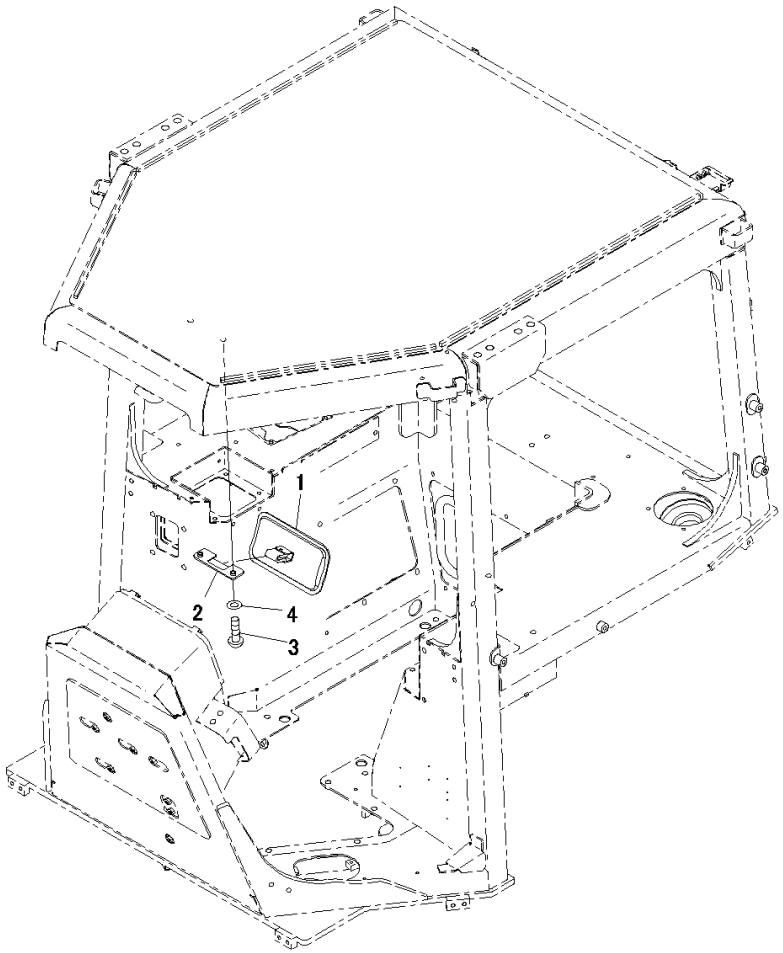

JA000298

Index	Code	Part Number	Description	Qty	Serial Number
1		195-Z11-2180	Mirror	1	80054-
2		12Y-978-2220	Bracket	1	80054-
3		01245-00825	Screw	2	80054-
4		01643-70823	Washer	2	80054-

https://truckmanualshub.com/

FIG. K0410-002004 ROPS Canopy, Cover

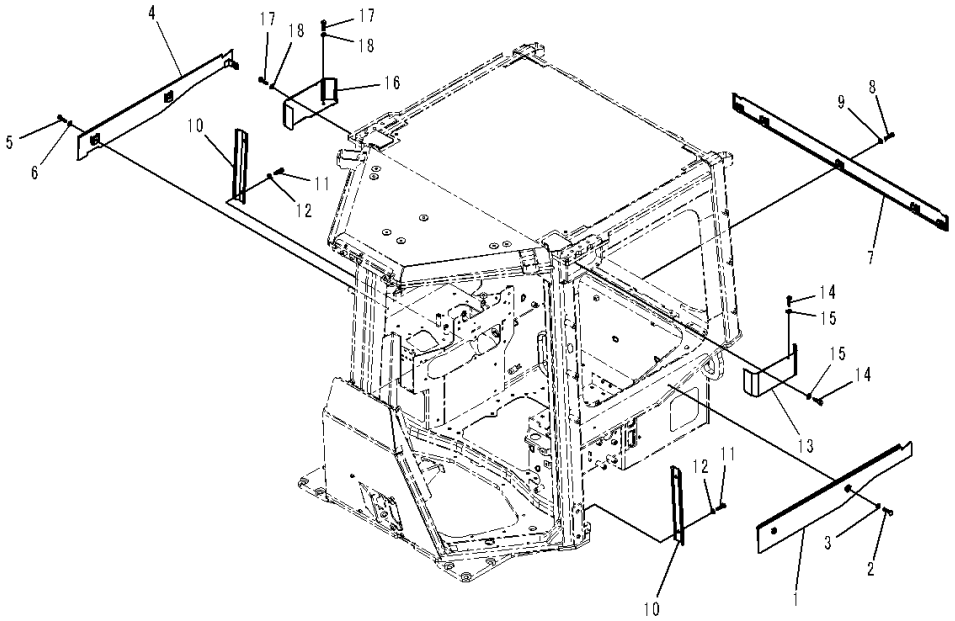

Index	Code	Part Number	Description	Qty	Serial Number
1		14X-Y79-1541	Plate	1	80054-
2		01010-81020	Bolt	2	80054-
3		01643-31032	Washer	2	80054-
4		14X-Y79-1551	Plate	1	80054-
5		01010-81020	Bolt	2	80054-
6		01643-31032	Washer	2	80054-
7		14X-Y79-1561	Plate	1	80054-
8		01010-81020	Bolt	5	80054-
9		01643-31032	Washer	5	80054-
10		14X-54-58290	Cover	2	80054-
11		01010-81020	Bolt	4	80054-
12		01643-31032	Washer	4	80054-
13		14X-54-58950	Cover,LHS	1	80054-
14		01010-80616	Bolt	4	80054-
15		01643-30623	Washer	4	80054-
16		14X-54-58960	Cover,RHS	1	80054-
17		01010-80616	Bolt	4	80054-
18		01643-30623	Washer	4	80054-

https://truckmanualshub.com/

FIG. K0410-002005 ROPS Canopy, Console Box

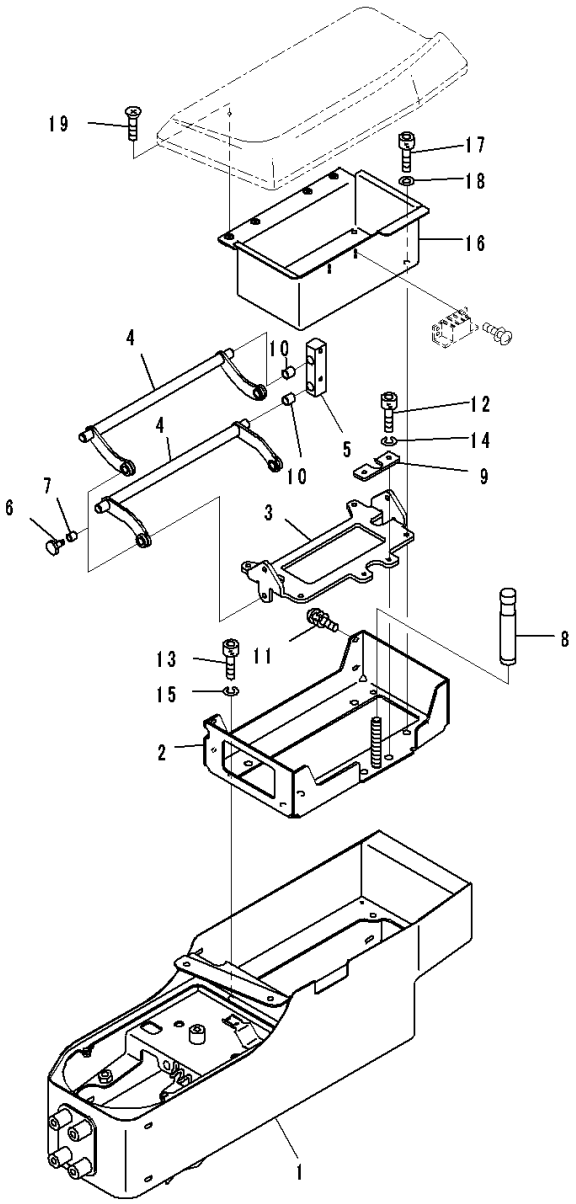

Index	Code	Part Number	Description	Qty	Serial Number
1		14X-43-51211	Box, Console	1	80054-
		14X-43-51501	Bracket Assembly	1	80054-
2	C1		• Bracket	1	80054-
3		19M-43-33720	• Bracket	1	80054-
4		19M-43-33730	• Arm	2	80054-
5		19M-43-33740	• Block	2	80054-
6		19M-43-33750	• Pin	4	80054-
7		19M-43-33760	• Bushing	4	80054-
8		19M-43-33770	• Knob	1	80054-
9		19M-43-33780	• Plate	1	80054-
10		19M-43-34330	• Bushing	4	80054-
11		01023-60516	• Screw	4	80054-
12		01252-80410	• Bolt, Hexagon Socket Head	2	80054-
13		01252-80510	• Bolt	4	80054-
14		01601-20410	• Washer	2	80054-
15		01601-20512	• Washer	4	80054-
16		14X-43-51691	Bracket	1	80054-
17		01252-80510	Bolt	4	80054-
18		01601-50513	Washer, Spring	4	80054-
19		01224-70408	Screw, Philips Head	4	80054-

https://truckmanualshub.com/

FIG. K0410-002006 ROPS Canopy, Travel Control Lever (1/2)

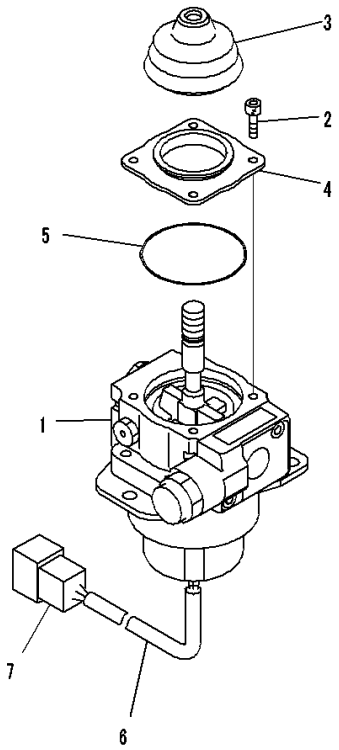

JY013289

Index	Code	Part Number	Description	Qty	Serial Number
1		702-16-02290	Lever Assembly	1	80054-
2		01252-60512	• Bolt	4	80054-
3		702-16-59330	• Boot	1	80054-
4		702-16-62730	• Cover	1	80054-
5		702-16-62740	• O-ring	1	80054-
6		702-16-61270	• Tube	1	80054-
7		08192-28812	• Connector	1	80054-

https://truckmanualshub.com/

FIG. K0410-002007 ROPS Canopy, Travel Control Lever (2/2)

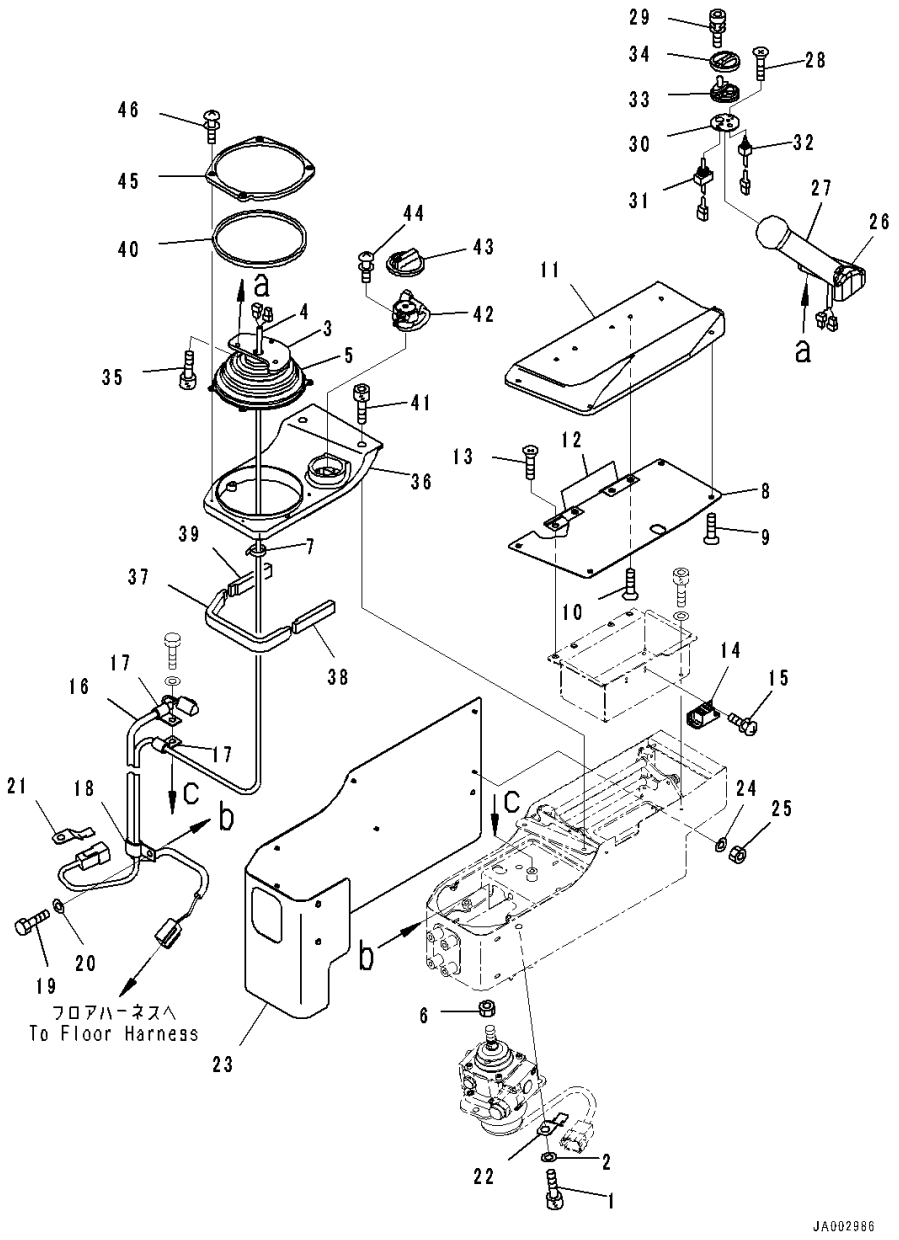

Index	Code	Part Number	Description	Qty	Serial Number
1		01252-70825	Bolt	3	80054-
2		01643-30823	Washer	3	80054-
		14X-06-31311	Wiring Harness	1	80054-
3		154-43-73531	• Bracket	1	80054-
4		154-43-73560	• Wiring Harness	1	80054-
5		14X-43-34331	• Boot	1	80054-
6		20T-43-71190	Nut	1	80054-
7		08034-20519	Band	2	80054-
8		14X-43-52110	Pad	1	80054-
9		01224-70408	• Screw, Philips Head	4	80054-
10		01224-70410	• Screw, Philips Head	4	80054-
11		19M-43-33630	• Pad	1	80054-
12		19M-43-33660	• Hinge	2	80054-
13		01224-70408	Screw, Philips Head	4	80054-
14		154-43-73651	Magnet	1	80054-
15		01023-10308	Screw	4	80054-
16		14X-06-51151	Wiring Harness	1	80054-
17		04434-51008	Clip	2	80054-
18		04435-51008	Clip	1	80054-
19		01010-80816	Bolt	2	80054-
20		01643-30823	Washer	2	80054-
21		08193-20010	Clip	1	80054-
22		08193-31012	Clip	1	80054-
23		14X-43-51221	Pad	1	80054-
24		01640-20408	Washer, Flat	8	80054-
25		01580-20403	Nut	8	80054-
		19M-43-33110	Knob Assembly	1	80054-
26	C1		• Knob Assembly	1	80054-
27	C1		• Knob Assembly	1	80054-
28	C1		• Knob Assembly	2	80054-
29		19M-09-11510	• Bolt	2	80054-
		19M-43-33140	• Switch Assembly	1	80054-
30		19M-43-33170	• • Plate	1	80054-
31		19M-43-33460	• • Switch	1	80054-
32		19M-43-33470	• • Switch	1	80054-
33		19M-43-33150	• Rubber	1	80054-
34		19M-43-33160	• Cover	1	80054-
35		01252-80514	Bolt	3	80054-
36		14X-43-51960	Finisher Assembly	1	80054-
37		14X-54-38310	• Sheet,Bonded	1	80054-

https://truckmanualshub.com/

FIG. K0410-002007 ROPS Canopy, Travel Control Lever (2/2)

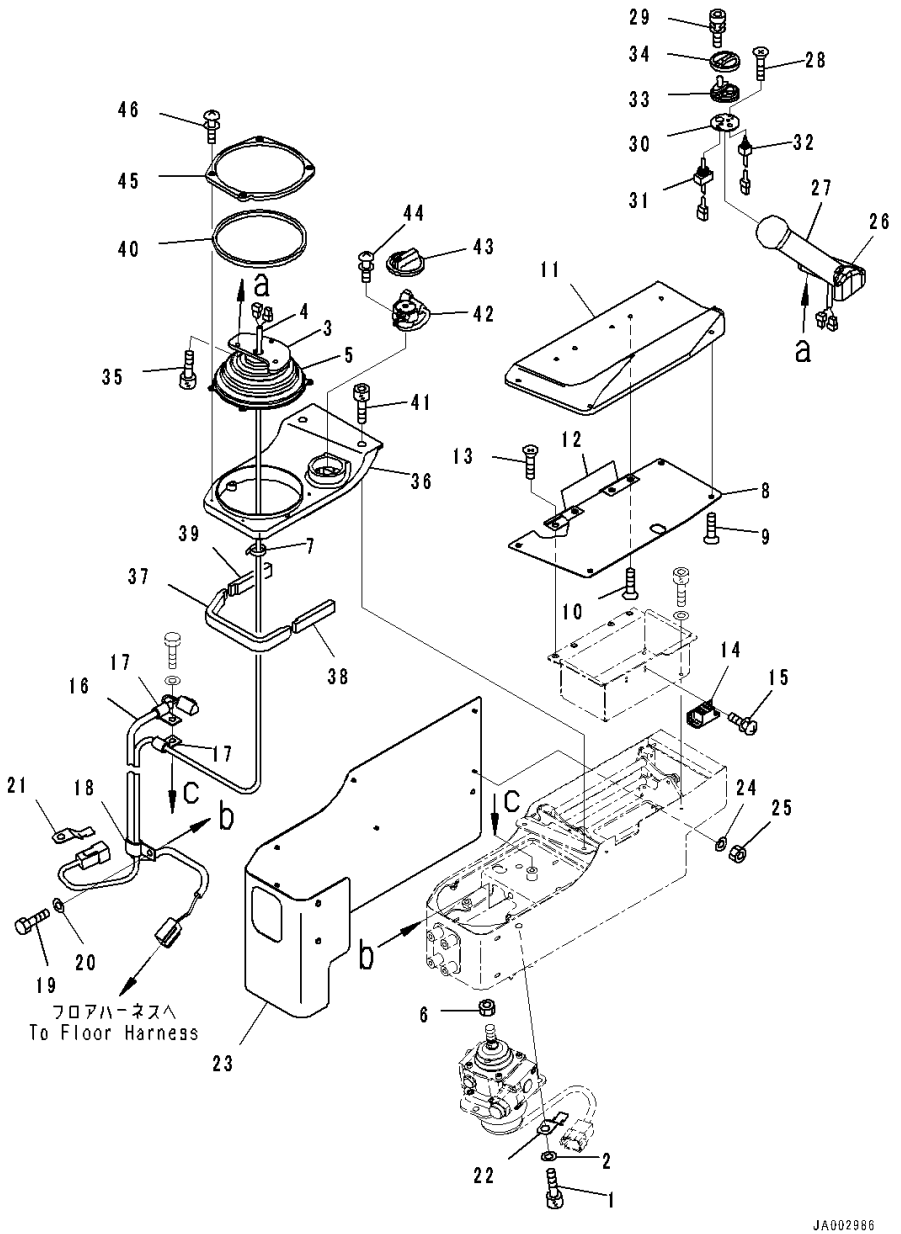

Index	Code	Part Number	Description	Qty	Serial Number
38		14X-54-38320	• Sheet,Bonded	1	80054-
39		14X-54-38330	• Sheet,Bonded	1	80054-
40		14X-54-38350	• Sheet,Bonded	1	80054-
41		01252-70520	Bolt	4	80054-
42		14X-06-31501	Dial	1	80054-
43		7825-30-1441	• Knob	1	80054-
44		01023-60410	Screw	2	80054-
45		14X-43-51980	Cover	1	80054-
46		01023-70414	Screw	4	80054-

https://truckmanualshub.com/

FIG. K0410-002008 ROPS Canopy, Console Slider

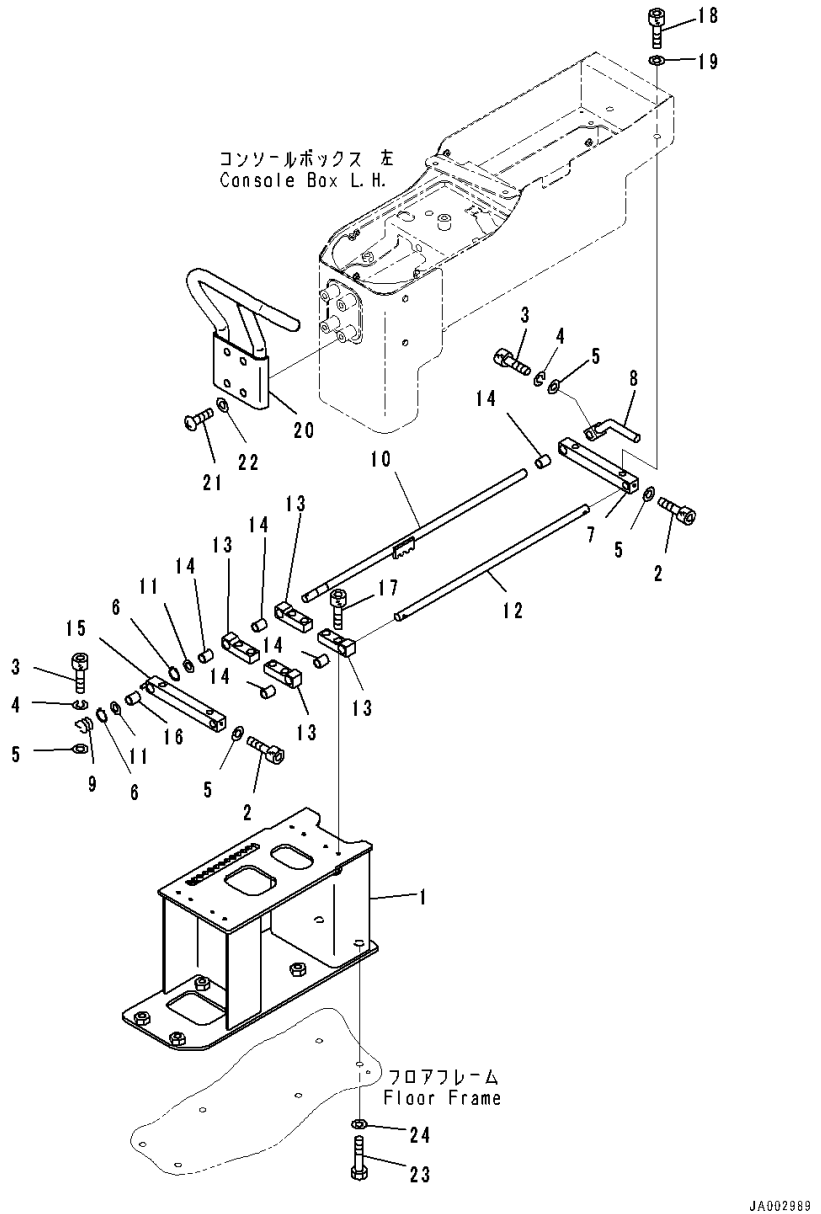

Index	Code	Part Number	Description	Qty	Serial Number
1		14X-43-51252	Bracket	1	80054-
		14X-43-51402	Slider Assembly	1	80054-
2		01252-80412	• Bolt	2	80054-
3		01252-80414	• Bolt	2	80054-
4		01601-20411	• Washer	2	80054-
5		01640-20408	• Washer, Flat	4	80054-
6		04064-01010	• Ring, Snap	2	80054-
7		14X-43-51661	• Guide	1	80054-
8		14X-43-51681	• Lever	1	80054-
9		154-43-73670	• Spring	1	80054-
10		154-43-73680	• Shaft	1	80054-
11		19M-09-34110	• Washer	2	80054-
12		19M-43-34120	• Shaft	1	80054-
13		19M-43-34141	• Guide	4	80054-
14		19M-43-34150	• Bushing	5	80054-
15		19M-43-34182	• Guide	1	80054-
16		19M-43-34190	• Bushing	1	80054-
17		01252-80516	Bolt	8	80054-
18		01252-70816	Bolt	4	80054-
19		01643-30823	Washer	4	80054-
20		14X-54-36631	Handle	1	80054-
21		01245-00820	Screw	4	80054-
22		01643-70823	Washer	4	80054-
23		01010-81030	Bolt	6	80054-
24		01643-31032	Washer	6	80054-

https://truckmanualshub.com/

FIG. K0410-002009 ROPS Canopy, Parking Brake Lever

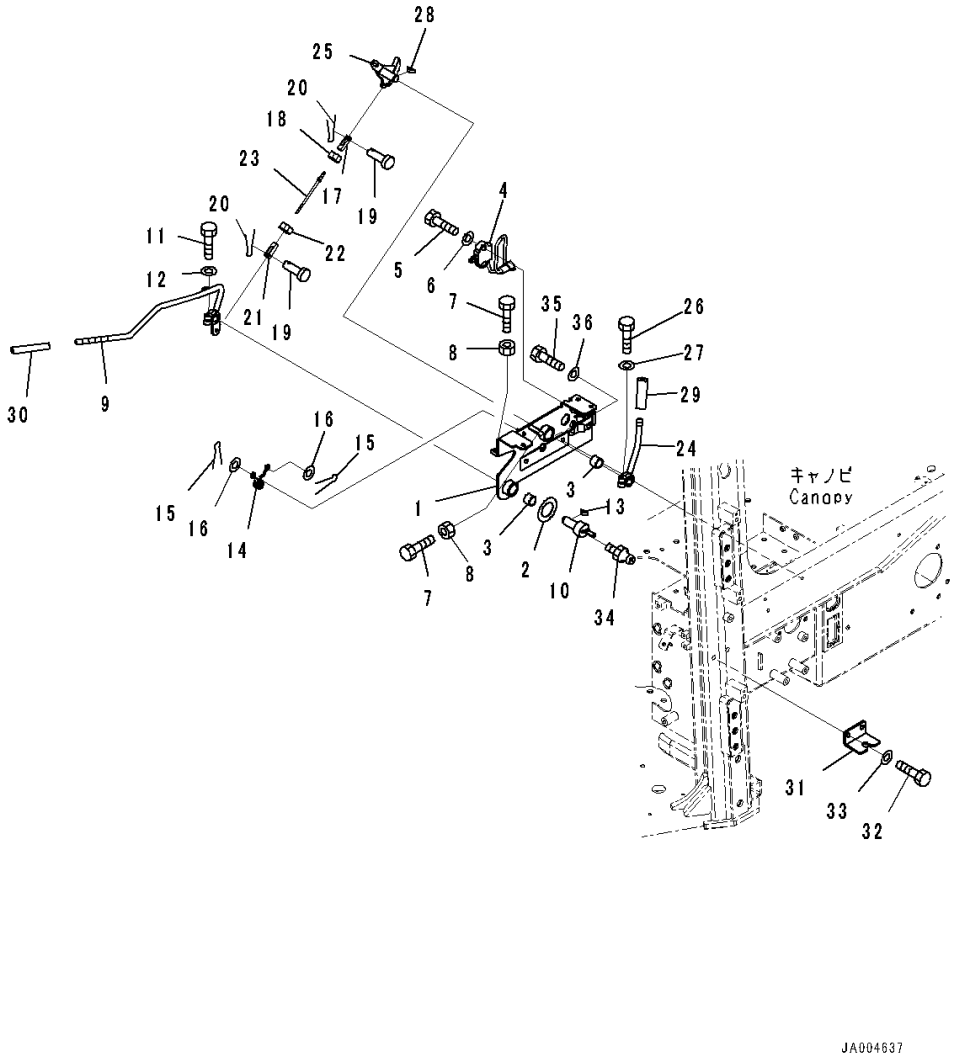

Index	Code	Part Number	Description	Qty	Serial Number
1		14X-43-51412	Bracket	1	80054-
2		14X-43-51470	• Sheet,Bonded	1	80054-
3		06124-02020	Bearing	2	80054-
4		11Y-06-22150	Switch	1	80054-
5		01010-81035	Bolt	2	80054-
6		01643-31032	Washer	2	80054-
7		01016-50830	Bolt	2	80054-
8		01580-10806	Nut	2	80054-
9		14X-43-51421	Lever	1	80054-
10		14X-43-51431	Lever	1	80054-
11		01010-80830	Bolt	1	80054-
12		01643-30823	Washer	1	80054-
13		04010-00516	Key	1	80054-
14		14X-43-51840	Spring	1	80054-
15		04050-11612	Pin, Cotter	2	80054-
16		01640-20610	Washer	2	80054-
17		04221-20634	Yoke	1	80054-
18		01508-40603	Nut, Left-handed	1	80054-
19		04205-10618	Pin	2	80054-
20		04050-11612	Pin, Cotter	2	80054-
21		04211-20634	Yoke	1	80054-
22		01580-10605	Nut	1	80054-
23		04248-30613	Rod	1	80054-
24		14X-43-51741	Lever	1	80054-
25		14X-43-51451	Lever	1	80054-
26		01010-80830	Bolt	1	80054-
27		01643-30823	Washer	1	80054-
28		04010-00516	Key	1	80054-
29		22M-43-21470	Knob	1	80054-
30		417-43-28270	Cap	1	80054-
31		14X-43-51461	Bracket	1	80054-
32		01010-81025	Bolt	2	80054-
33		01643-31032	Washer	2	80054-
34		07020-00000	Fitting, Grease	1	80054-
35		01010-81025	Bolt	2	80054-
36		01643-31032	Washer	2	80054-

https://truckmanualshub.com/

FIG. K0410-002010 ROPS Canopy, Work Equipment Lock Lever

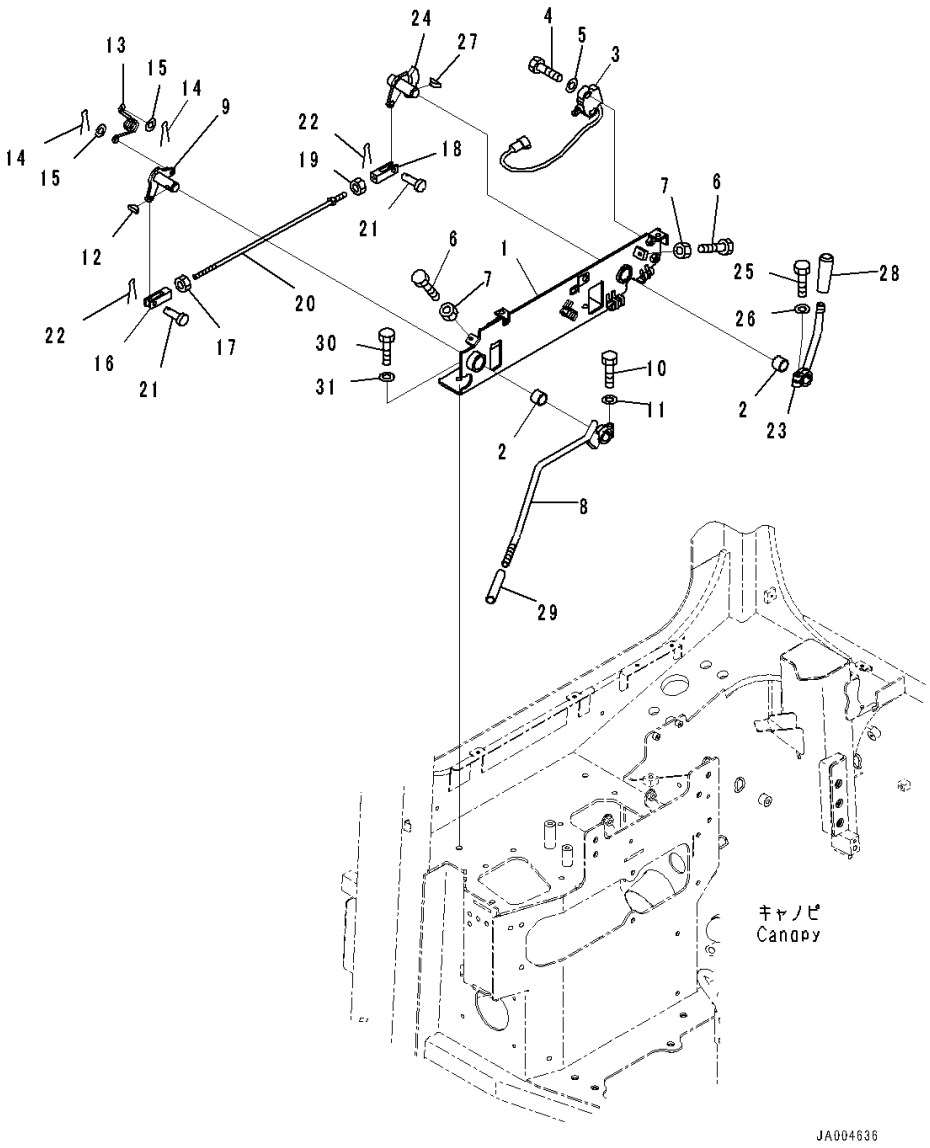

Index	Code	Part Number	Description	Qty	Serial Number
1		14X-43-51711	Bracket	1	80054-
2		06124-02020	Bearing	2	80054-
3		11Y-06-22150	Switch	1	80054-
4		01010-81035	Bolt	2	80054-
5		01643-31032	Washer	2	80054-
6		01016-50830	Bolt	2	80054-
7		01580-10806	Nut	2	80054-
8		14X-43-51721	Lever	1	80054-
9		14X-43-51731	Lever	1	80054-
10		01010-80830	Bolt	1	80054-
11		01643-30823	Washer	1	80054-
12		04010-00516	Key	1	80054-
13		14X-43-51840	Spring	1	80054-
14		04050-11612	Pin, Cotter	2	80054-
15		01640-20610	Washer	2	80054-
16		04221-20844	York, Left-handed Thread	1	80054-
17		01508-40805	Nut	1	80054-
18		04211-20844	Yoke	1	80054-
19		01580-10806	Nut	1	80054-
20		04248-30838	Rod	1	80054-
21		04205-10822	Pin	2	80054-
22		04050-12015	Pin, Cotter	2	80054-
23		14X-43-51791	Lever	1	80054-
24		14X-43-51751	Lever	1	80054-
25		01010-80830	Bolt	1	80054-
26		01643-30823	Washer	1	80054-
27		04010-00516	Key	1	80054-
28		22M-43-21470	Knob	1	80054-
29		417-43-28270	Cap	1	80054-
30		01010-81025	Bolt	2	80054-
31		01643-31032	Washer	2	80054-

https://truckmanualshub.com/

FIG. K0410-002011 ROPS Canopy, Floor Frame Inside Cover

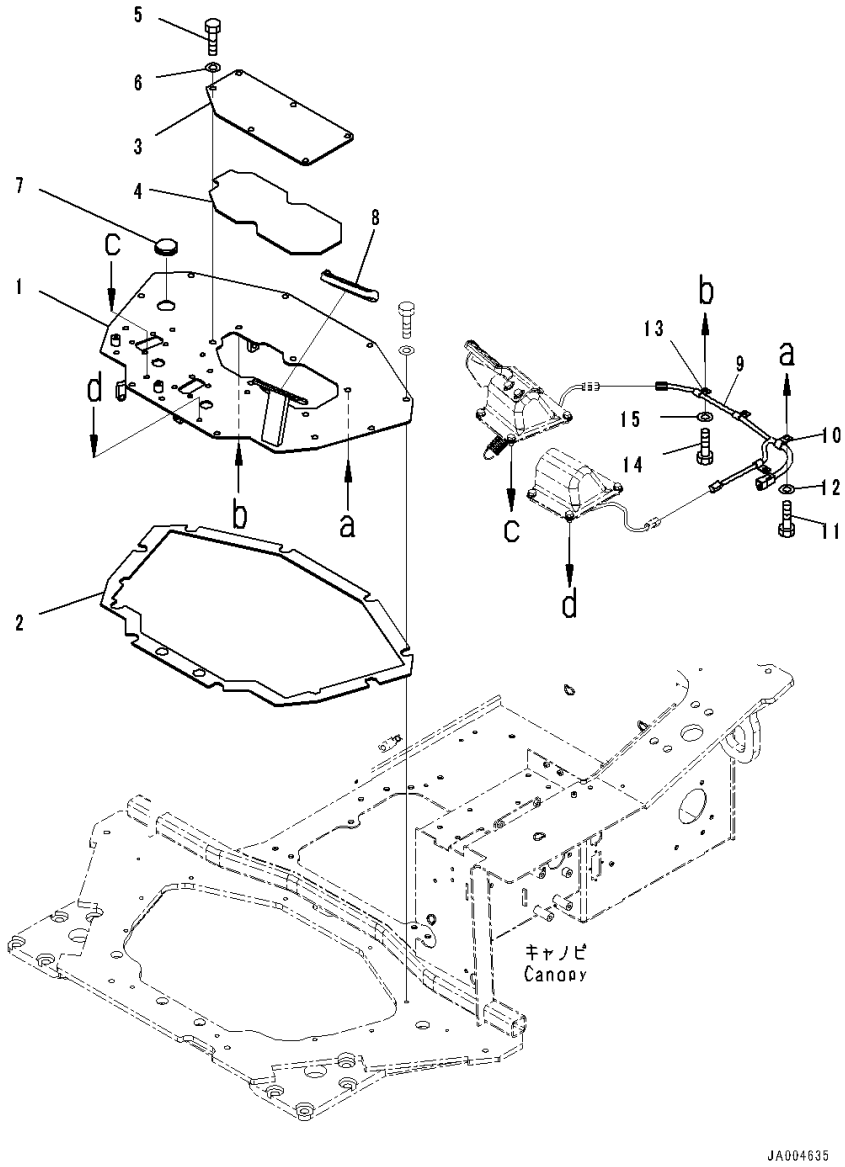

Index	Code	Part Number	Description	Qty	Serial Number
1		14X-43-51612	Floor	1	80054-
2		14X-43-51850	• Sheet	1	80054-
3		14X-43-51541	Cover	1	80054-
4		14X-43-51860	• Sheet,Bonded	1	80054-
5		01010-81225	Bolt	14	80054-
6		01643-31232	Washer	14	80054-
7		09415-03614	Cap	1	80054-
8		14X-43-13760	Cap	1	80054-
9		14X-06-51140	Wiring Harness	1	80054-
10		04434-51410	Clip	1	80054-
11		01010-81020	Bolt	1	80054-
12		01643-31032	Washer	1	80054-
13		04434-51010	Clip	3	80054-
14		01010-81020	Bolt	3	80054-
15		01643-31032	Washer	3	80054-

https://truckmanualshub.com/

FIG. K0410-002012 ROPS Canopy, Brake Pedal

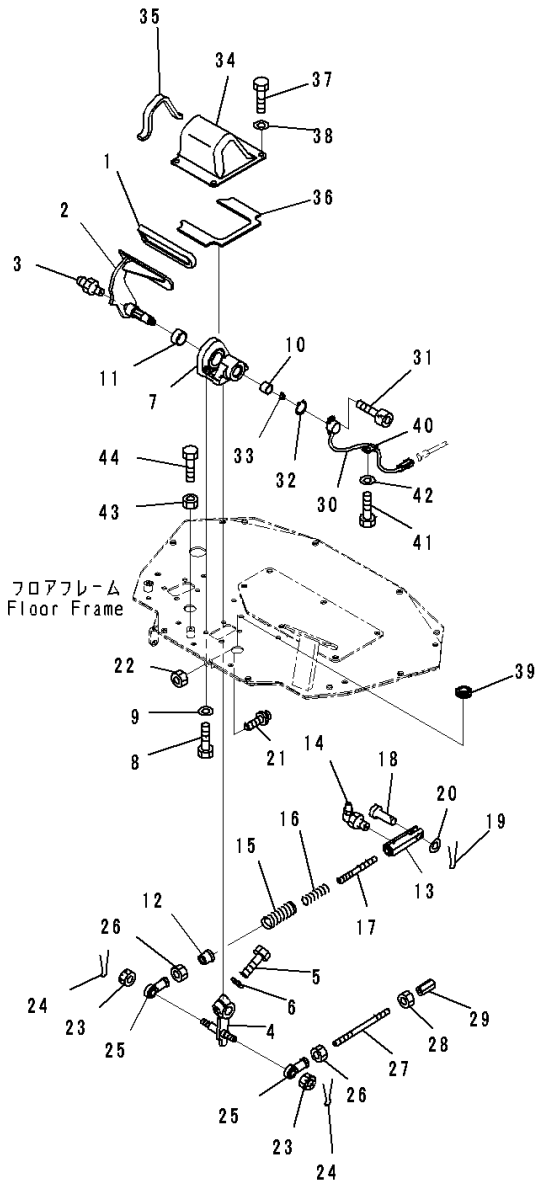

Index	Code	Part Number	Description	Qty	Serial Number
1		14X-43-12110	Pedal Cap	1	80054-
2		14X-43-51511	Pedal	1	80054-
3		07020-00000	Fitting, Grease	1	80054-
4		14X-43-51551	Lever	1	80054-
5		01010-81245	Bolt	1	80054-
6		01643-31232	Washer	1	80054-
7		14X-43-51571	Bracket	1	80054-
8		01010-81020	Bolt	4	80054-
9		01643-31032	Washer	4	80054-
10		06124-02020	Bearing	1	80054-
11		06124-03020	Bearing	1	80054-
12		134-43-72490	Guide	1	80054-
13		14X-43-32210	Yoke	1	80054-
14		07020-00900	Fitting, Grease	1	80054-
15		14X-43-51590	Spring	1	80054-
16		14X-43-32220	Spring	1	80054-
17		14X-43-32230	Rod	1	80054-
18		04205-11442	Pin	1	80054-
19		04050-13022	Pin, Cotter	1	80054-
20		01641-21423	Washer, Flat	1	80054-
21		09311-41237	Bumper, Pedal	1	80054-
22		01580-11210	Nut	1	80054-
23		01593-31411	Nut	2	80054-
24		04050-13022	Pin, Cotter	2	80054-
25		04250-81474	End	2	80054-
26		01582-11411	Nut	2	80054-
27		14X-43-12410	Rod	1	80054-
28		01508-41408	Nut	1	80054-
29		17A-43-24160	Joint	1	80054-
30		17A-06-41981	Sensor	1	80054-
31		01252-70414	Bolt	2	80054-
32		04064-01610	Ring, Snap	1	80054-
33		142-43-13180	Spring	1	80054-
34		14X-43-51631	Cover	1	80054-
35		14X-43-51651	• Sheet,Bonded	1	80054-
36		14X-43-51870	• Sheet,Bonded	1	80054-
37		01010-81020	Bolt	4	80054-
38		01643-31032	Washer	4	80054-
39		08037-02512	Grommet	1	80054-
40		04434-50810	Clip	1	80054-

https://truckmanualshub.com/

FIG. K0410-002012 ROPS Canopy, Brake Pedal

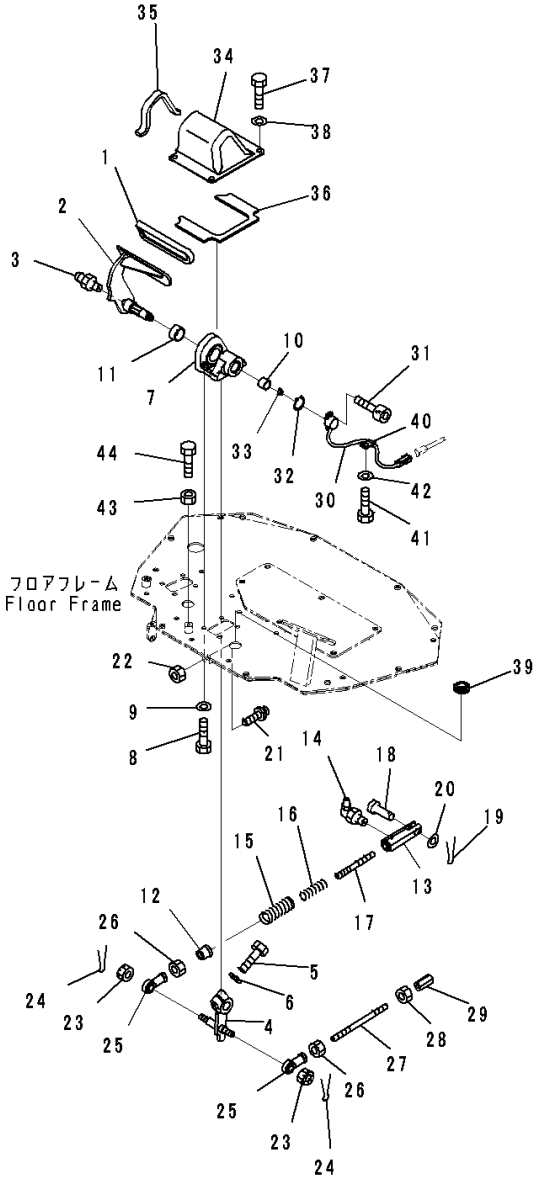

JA002999

Index	Code	Part Number	Description	Qty	Serial Number
41		01010-81020	Bolt	1	80054-
42		01643-31032	Washer	1	80054-
43		01580-11008	Nut	1	80054-
44		01016-51030	Bolt	1	80054-

https://truckmanualshub.com/

FIG. K0410-002013 ROPS Canopy, Decelerator Pedal

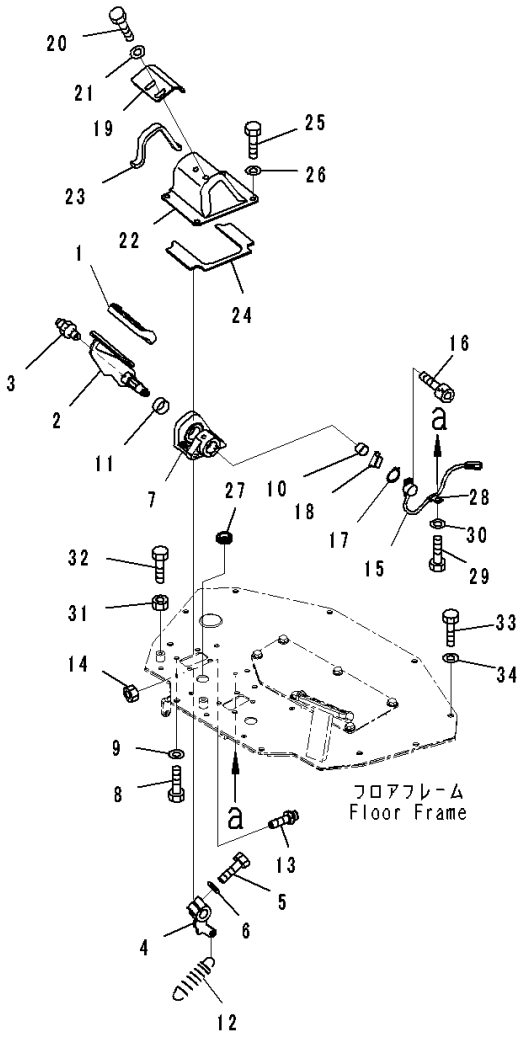

Index	Code	Part Number	Description	Qty	Serial Number
1		14X-43-13760	Cap	1	80054-
2		14X-43-51521	Pedal	1	80054-
3		07020-00000	Fitting, Grease	1	80054-
4		14X-43-51561	Lever	1	80054-
5		01010-81245	Bolt	1	80054-
6		01643-31232	Washer	1	80054-
7		14X-43-51571	Bracket	1	80054-
8		01010-81020	Bolt	4	80054-
9		01643-31032	Washer	4	80054-
10		06124-02020	Bearing	1	80054-
11		06124-03020	Bearing	1	80054-
12		14X-43-51581	Spring	1	80054-
13		09311-41237	Bumper, Pedal	1	80054-
14		01580-11210	Nut	1	80054-
15		17A-06-41981	Sensor	1	80054-
16		01252-70414	Bolt	2	80054-
17		04064-01610	Ring, Snap	1	80054-
18		142-43-13180	Spring	1	80054-
19		14X-43-51810	Bracket	1	80054-
20		01010-D1020	Bolt	2	80054-
21		01643-71032	Washer	2	80054-
22		14X-43-51821	Cover	1	80054-
23		14X-43-51651	• Sheet,Bonded	1	80054-
24		14X-43-51870	• Sheet,Bonded	1	80054-
25		01010-81020	Bolt	4	80054-
26		01643-31032	Washer	4	80054-
27		08037-02512	Grommet	1	80054-
28		04434-50810	Clip	1	80054-
29		01010-81020	Bolt	1	80054-
30		01643-31032	Washer	1	80054-
31		01580-11008	Nut	1	80054-
32		01016-51030	Bolt	1	80054-
33		01010-81225	Bolt	10	80054-
34		01643-31232	Washer	10	80054-

https://truckmanualshub.com/

FIG. K0410-002014 ROPS Canopy, Controller and Relay

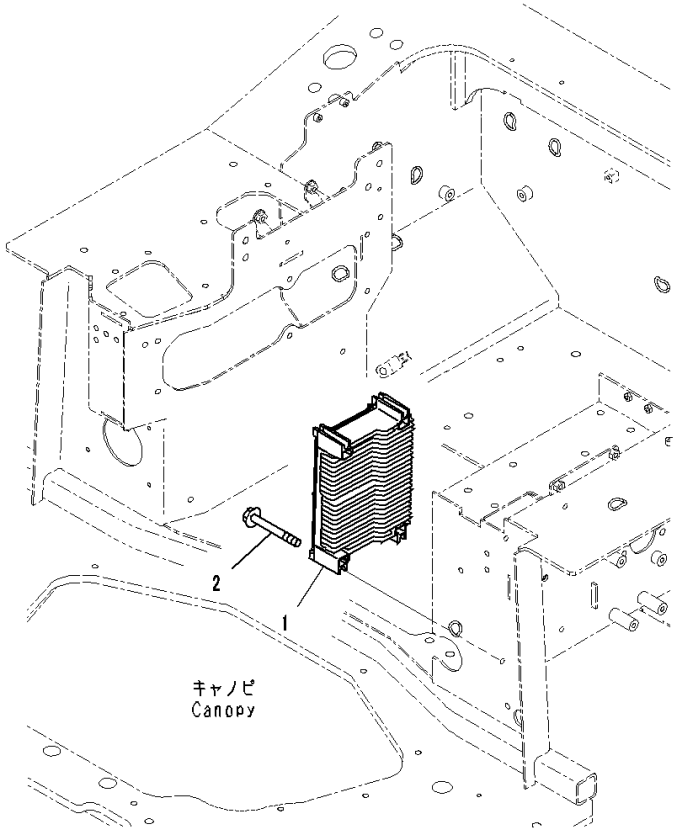

JA004634

Index	Code	Part Number	Description	Qty	Serial Number
1		7830-74-4000	Controller	1	80054-
2		01435-00885	Bolt	4	80054-

https://truckmanualshub.com/

FIG. K0410-002015 ROPS Canopy, Floor, Harness (1/3)

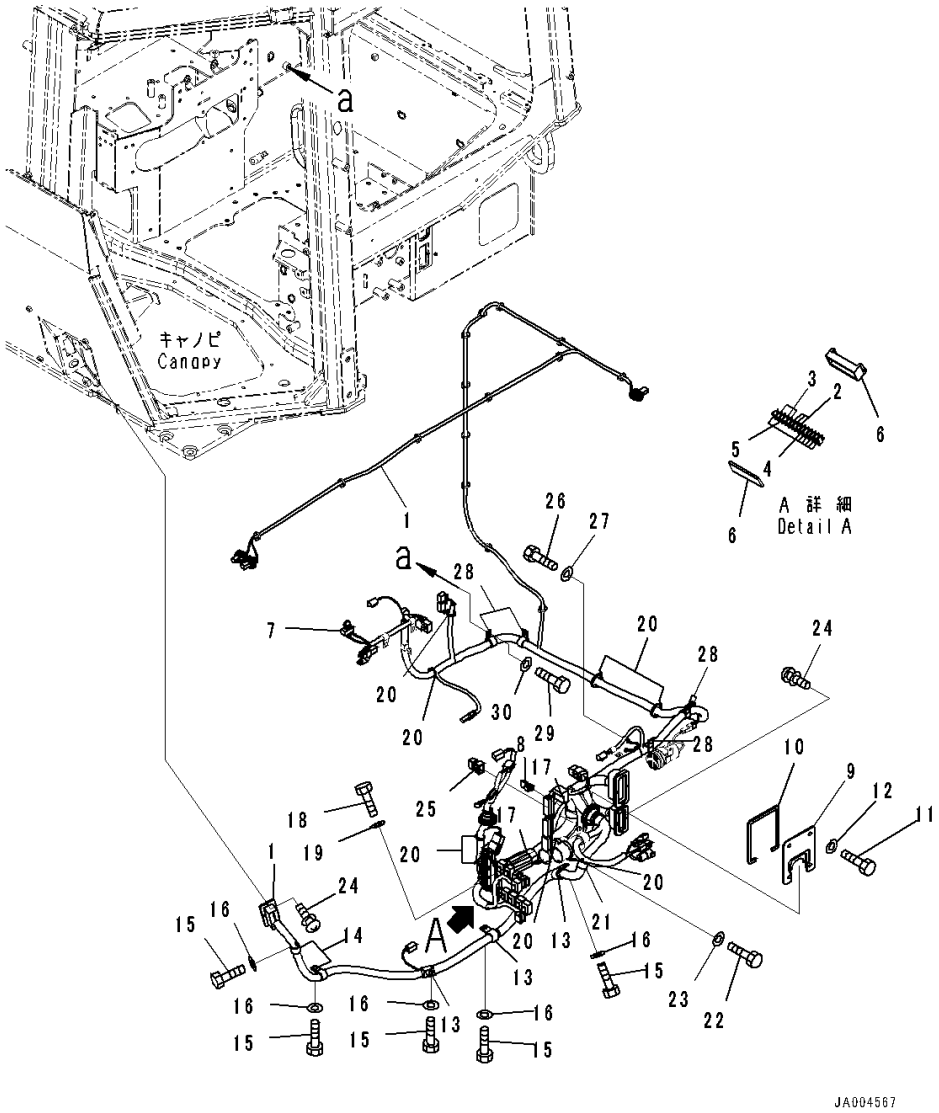

Index	Code	Part Number	Description	Qty	Serial Number
1		14X-06-52311	Wiring Harness	1	80054-
2		08041-00500	• Fuse, 5Amp.	4	80054-
3		08041-01500	• Fuse, 15Amp.	4	80054-
4		08041-02000	• Fuse, 20Amp.	8	80054-
5		08041-03000	• Fuse, 30Amp.	2	80054-
6		08044-01500	• Box, Fuse	1	80054-
7		134-06-72200	• Switch Assembly	1	80054-
8		21J-06-13661	• Diode	1	80054-
9		14X-06-51351	Bracket	1	80054-
10		14X-06-51431	• Sheet	1	80054-
11		01010-81025	Bolt	4	80054-
12		01643-31032	Washer	4	80054-
13		04434-52711	Clip	3	80054-
14		04434-52310	Clip	2	80054-
15		01010-81020	Bolt	5	80054-
16		01643-31032	Washer	5	80054-
17		208-06-19170	Clip	2	80054-
18		01010-81020	Bolt	2	80054-
19		01643-31032	Washer	2	80054-
20		08034-20519	Band	8	80054-
21		04434-52711	Clip	1	80054-
22		01010-81020	Bolt	1	80054-
23		01643-31032	Washer	1	80054-
24		01023-10420	Screw	12	80054-
25		8233-06-3350	Diode	1	80054-
26		01010-81020	Bolt	2	80054-
27		01643-31032	Washer	2	80054-
28		04434-52310	Clip	5	80054-
29		01010-81020	Bolt	5	80054-
30		01643-31032	Washer	5	80054-

https://truckmanualshub.com/

FIG. K0410-002016 ROPS Canopy, Floor, Harness (2/3)

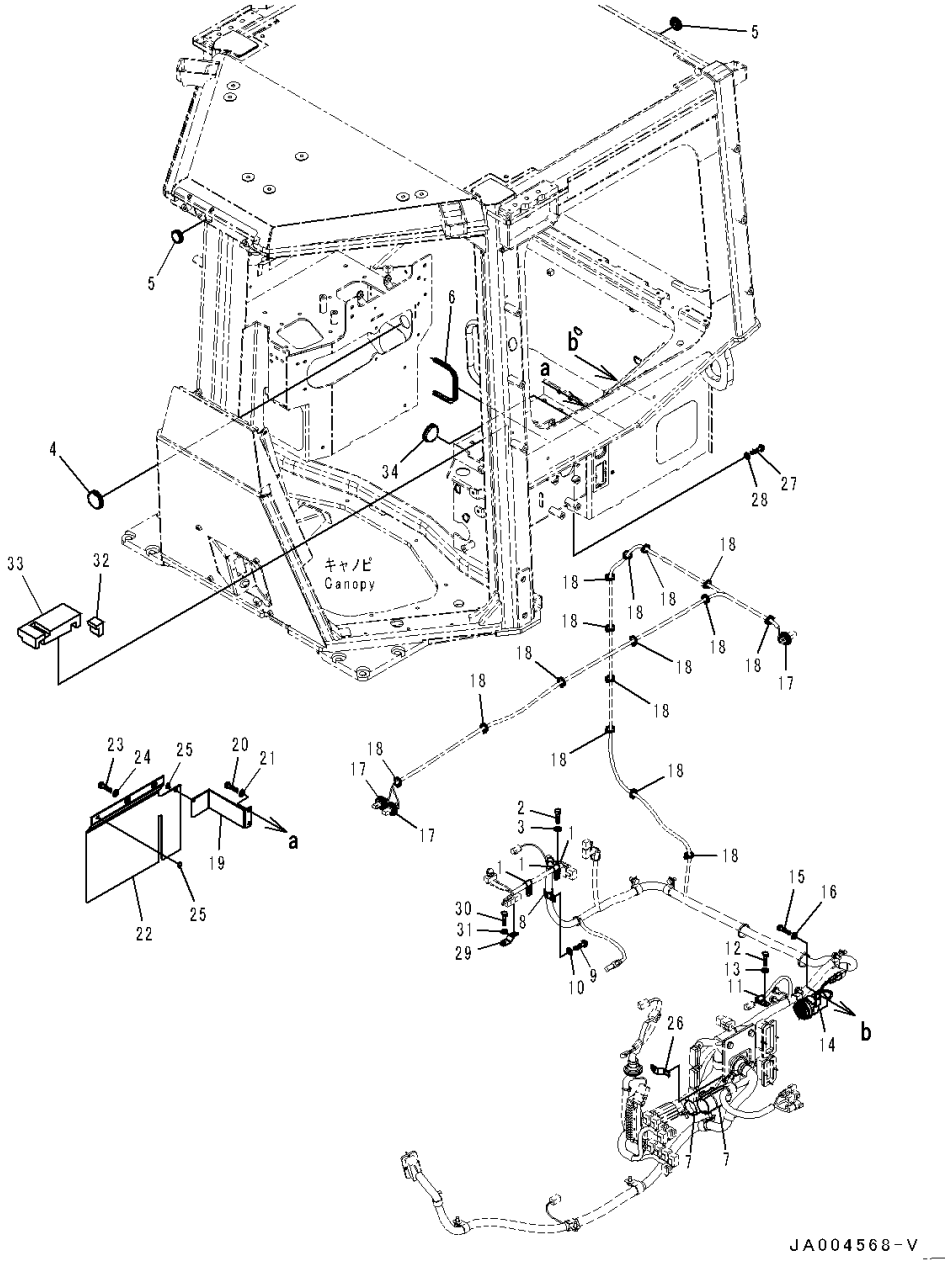

Index	Code	Part Number	Description	Qty	Serial Number
1		04434-51310	Clip	3	80054-
2		01010-81020	Bolt	3	80054-
3		01643-31032	Washer	3	80054-
4		09415-03614	Cap	1	80054-
5		09415-02512	Cap	4	80054-
6		14X-06-52171	Trim	1	80054-
7		14X-06-52160	Sheet	2	80054-
8		04434-51910	Clip	1	80054-
9		01010-81020	Bolt	1	80054-
10		01643-31032	Washer	1	80054-
11		04434-51010	Clip	1	80054-
12		01010-81020	Bolt	1	80054-
13		01643-31032	Washer	1	80054-
14		17A-06-43210	Buzzer	1	80054-
15		01010-80616	Bolt	2	80054-
16		01643-30623	Washer	2	80054-
17		14X-06-52461	Cap	3	80054-
18		08034-20519	Band	15	80054-
19		14X-54-58890	Plate	1	80054-
20		01010-80816	Bolt	2	80054-
21		01643-30823	Washer	2	80054-
22		14X-54-58880	Cover	1	80054-
23		01010-D0825	Bolt	2	80054-
24		01643-70823	Washer	2	80054-
25		421-09-21210	Button	2	80054-
26		08053-00910	Clip	1	80054-
27		01010-81020	Bolt	1	80054-
28		01643-31032	Washer	1	80054-
29		08193-20010	Clip	1	80054-
30		01010-81020	Bolt	1	80054-
31		01643-31032	Washer	1	80054-
32		14X-54-58760	Sheet	1	80054-
33		14X-54-58770	Sheet	1	80054-
34		09415-03614	Cap	1	80054-

https://truckmanualshub.com/

FIG. K0410-002017 ROPS Canopy, Floor, Harness (3/3)

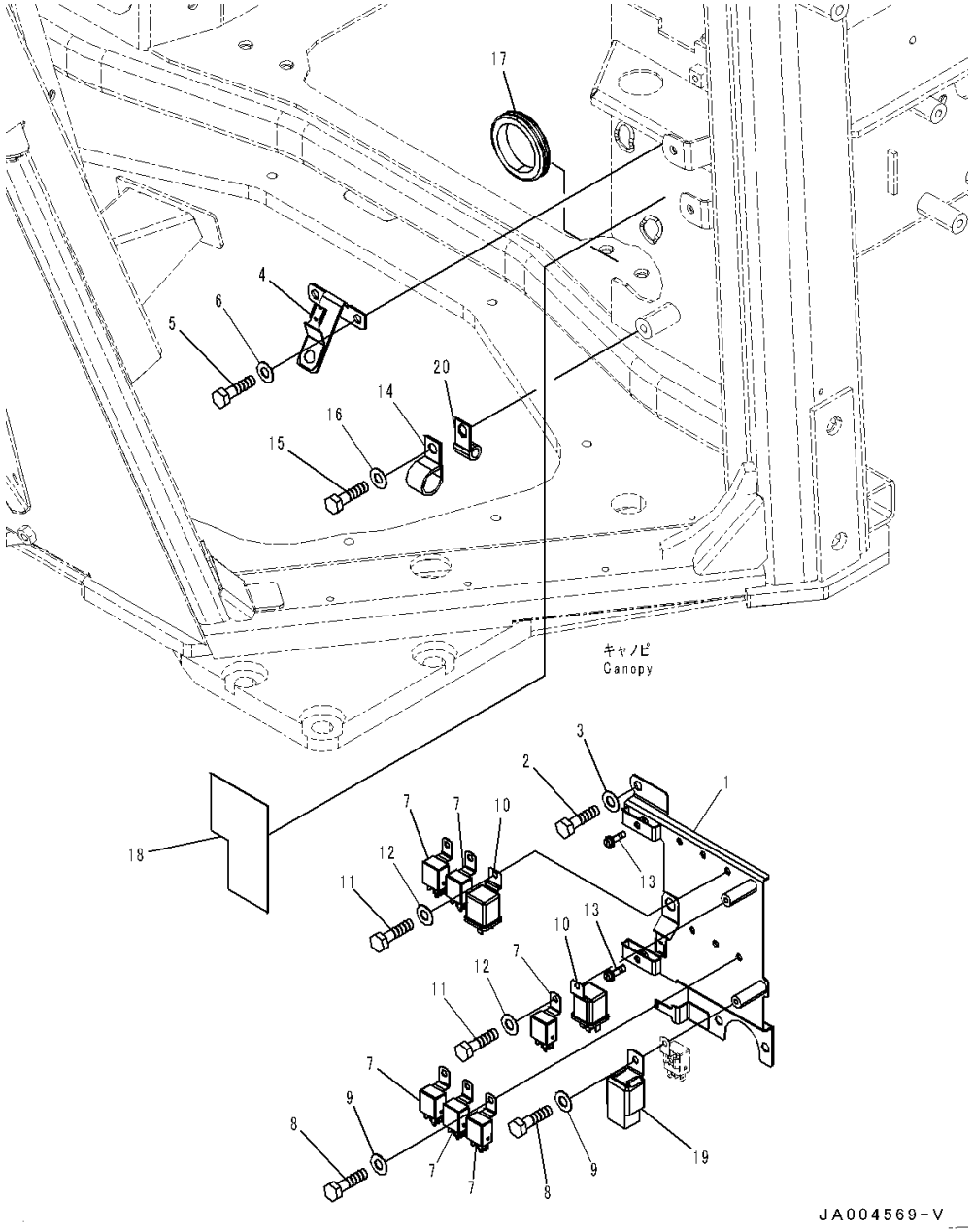

Index	Code	Part Number	Description	Qty	Serial Number
1		14X-06-51361	Bracket	1	80054-
2		01010-80820	Bolt	3	80054-
3		01643-30823	Washer	3	80054-
4		14X-06-51441	Bracket	1	80054-
5		01010-80816	Bolt	2	80054-
6		01643-30823	Washer	2	80054-
7		7861-74-5100	Relay	6	80054-
8		01010-80616	Bolt	6	80054-
9		01643-30623	Washer	6	80054-
10		569-06-61960	Relay	2	80054-
11		01010-80616	Bolt	2	80054-
12		01643-30623	Washer	2	80054-
13		01023-10620	Screw	2	80054-
14		04434-52310	Clip	1	80054-
15		01010-81020	Bolt	1	80054-
16		01643-31032	Washer	1	80054-
17		14X-06-51750	Grommet	1	80054-
18		14X-06-52290	Sheet,Bonded	1	80054-
19		198-911-9240	Relay Assembly	1	80054-
20		7861-74-5100	Relay	1	80054-

https://truckmanualshub.com/

FIG. K0410-002018 ROPS Canopy, Dashboard Cover

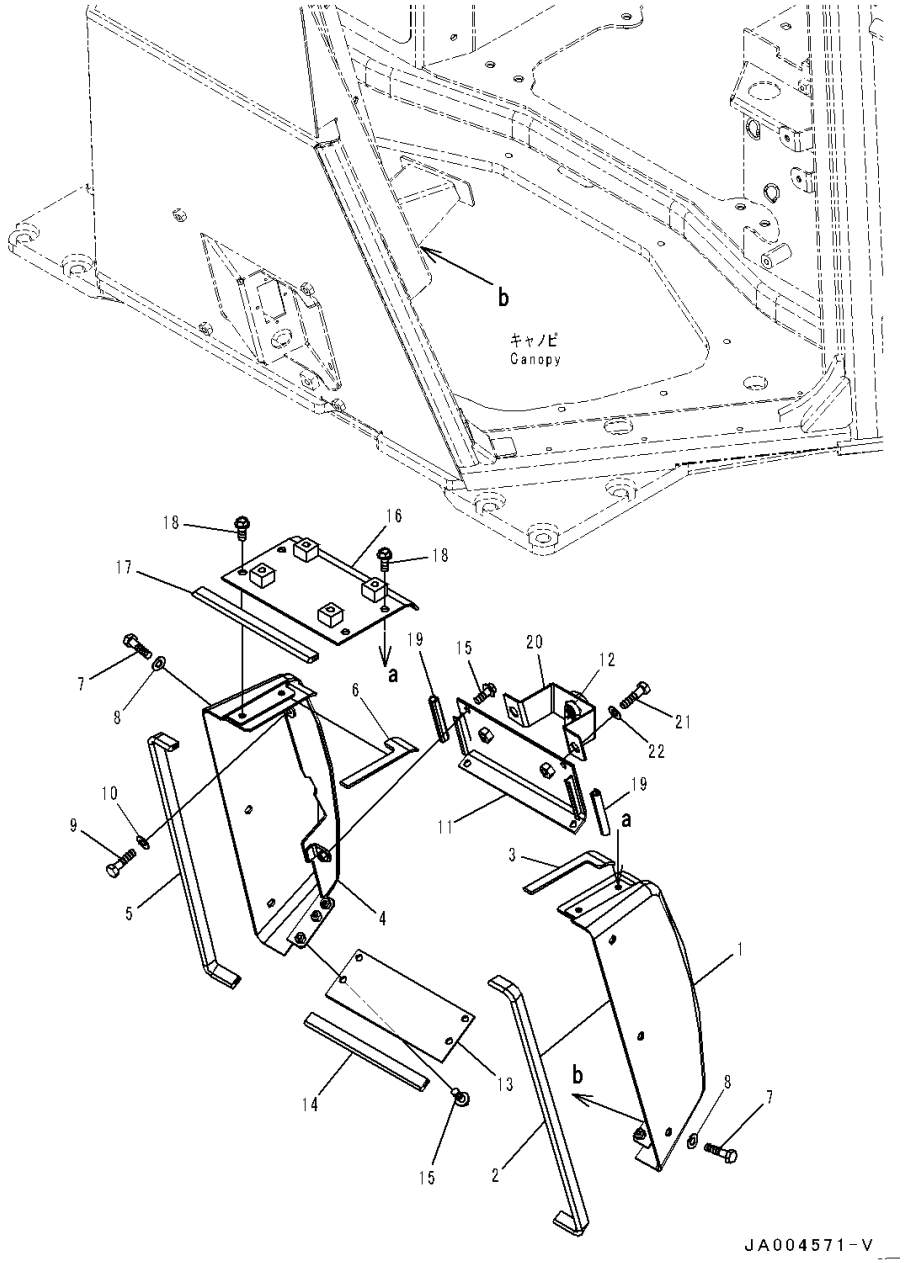

Index	Code	Part Number	Description	Qty	Serial Number
1		14X-54-58111	Cover,LHS	1	80054-
2		14X-54-58170	• Seal	1	80054-
3		14X-54-58930	• Sheet	1	80054-
4		14X-54-58121	Cover,RHS	1	80054-
5		14X-54-58170	• Seal	1	80054-
6		14X-54-58940	• Sheet	1	80054-
7		01010-D1025	Bolt	6	80054-
8		01643-71032	Washer	6	80054-
9		01010-80816	Bolt	2	80054-
10		01643-30823	Washer	2	80054-
11		14X-54-58860	Cover	1	80054-
12		205-60-71220	Lock Assembly	1	80054-
13		14X-54-58150	Cover	1	80054-
14		17A-54-48560	• Seal	1	80054-
15		01435-40820	Bolt	8	80054-
16		14X-54-58130	Cover	1	80054-
17		17A-54-48560	• Seal	1	80054-
18		01435-40820	Bolt	4	80054-
19		17A-54-46771	Sheet	2	80054-
20		14X-54-58870	Bracket	1	80054-
21		01010-D1225	Bolt	2	80054-
22		01643-71232	Washer	2	80054-

https://truckmanualshub.com/

FIG. K0410-002019 ROPS Canopy, Monitor

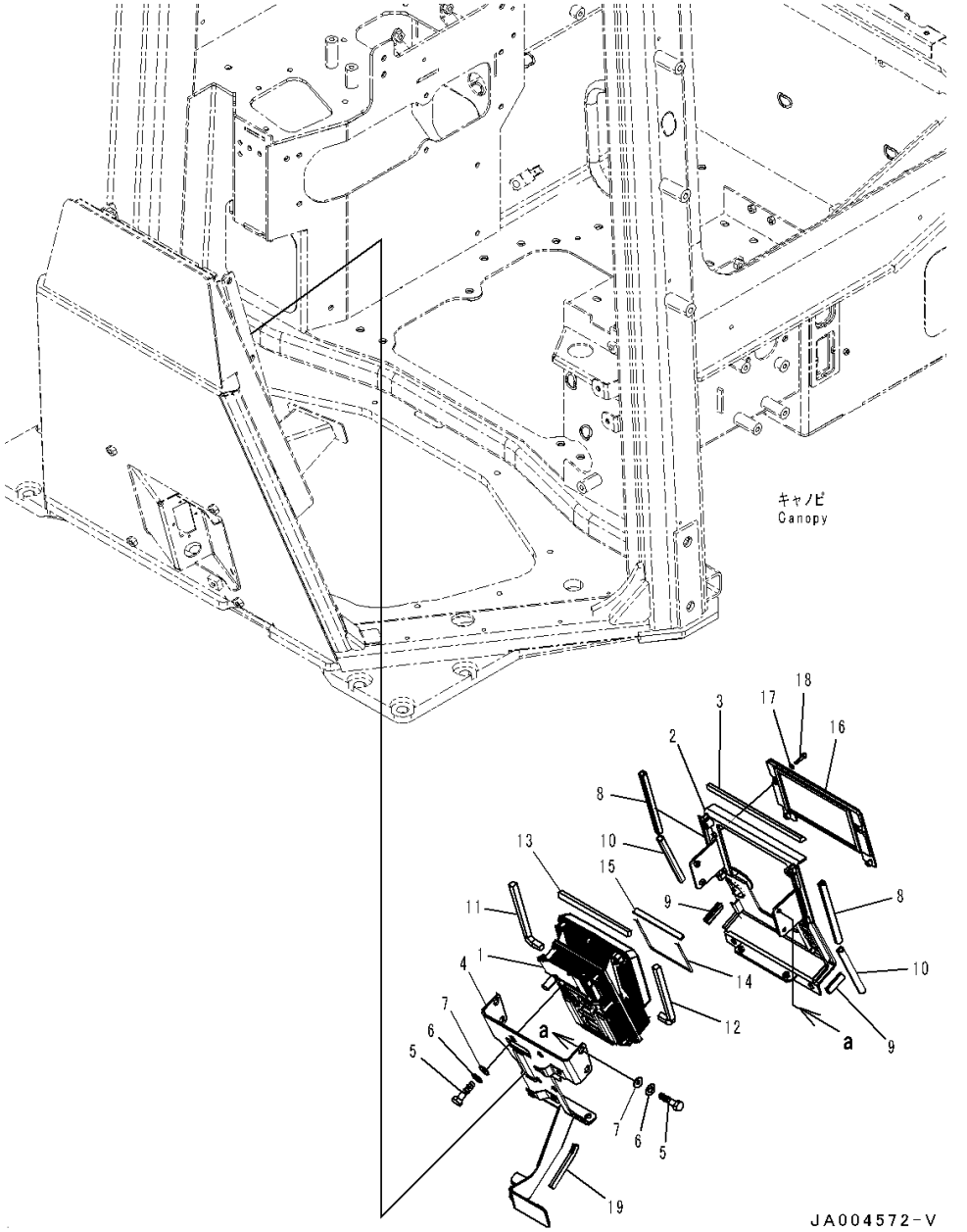

Index	Code	Part Number	Description	Qty	Serial Number
1		7831-69-5022	Monitor	1	80144-
2		14X-54-58140	Cover	1	80054-
3		17A-54-48580	• Seal	1	80054-
4		14X-54-58161	Bracket	1	80054-
5		01010-80616	Bolt	10	80054-
6		01643-30623	Washer	10	80054-
7		17A-Z11-2813	Plate	10	80054-
8		14X-54-58190	Seal	2	80054-
9		17A-54-46761	Seal	2	80054-
10		14X-54-58210	Seal	2	80054-
11		14X-54-58241	Sheet	1	80054-
12		14X-54-58340	Sheet	1	80054-
13		17A-54-46820	Seal	1	80054-
14		14X-54-58250	Sheet	1	80054-
15		14X-54-58260	Sheet	1	80054-
16		14X-54-58231	Cover	1	80054-
17		01641-50508	Washer, Flat	4	80054-
18		01252-80520	Bolt, Hexagon Socket Head	4	80054-
19		423-944-4720	Finisher	1	80054-

https://truckmanualshub.com/

FIG. K0410-002020 ROPS Canopy, Floor, Switch

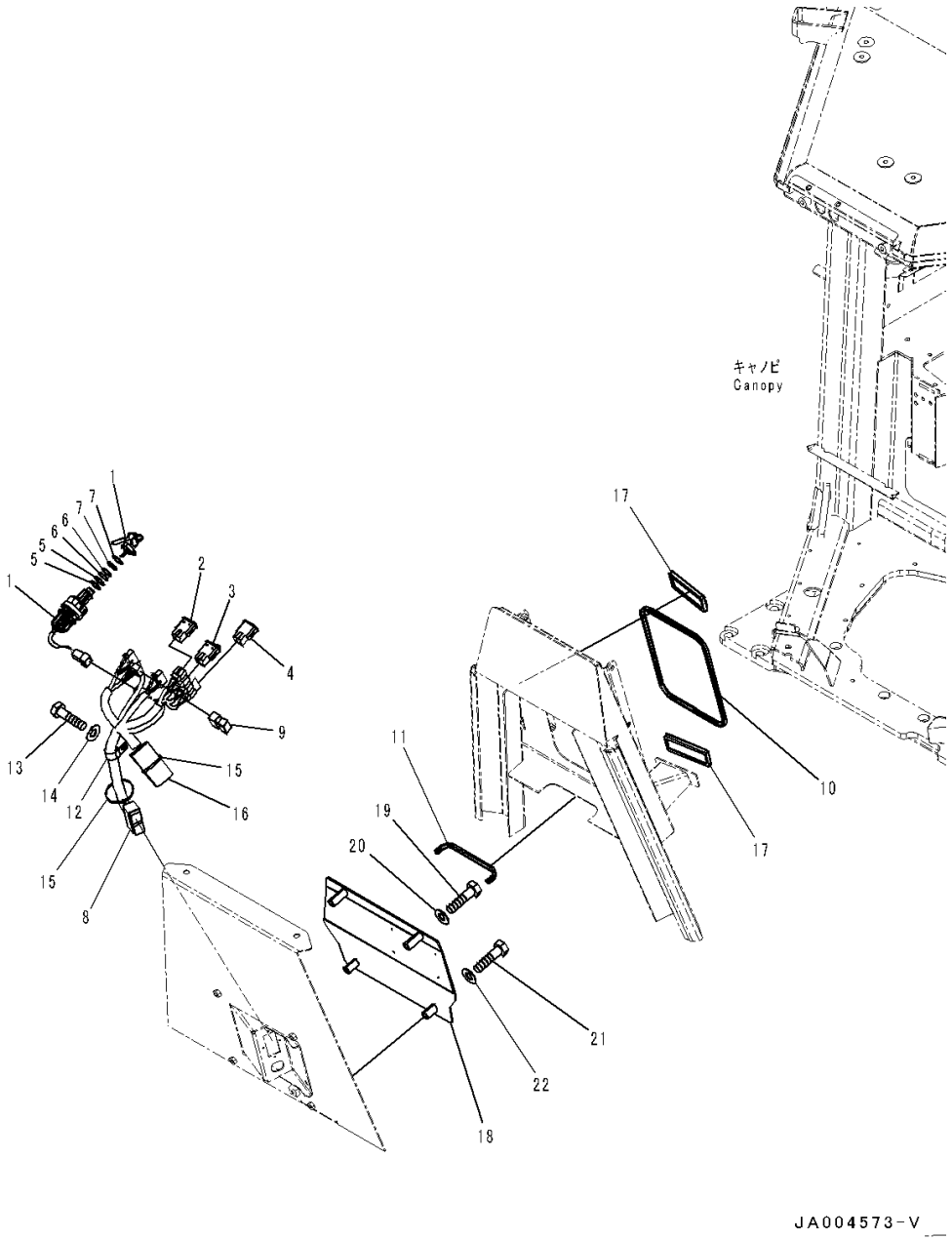

Index	Code	Part Number	Description	Qty	Serial Number
1		14X-06-52191	Switch, Key	1	80054-
2		17A-06-42250	Switch, Light, Front	1	80054-
3		17A-06-42260	Switch, Light, Rear	1	80054-
4		20Y-06-42190	Cover	2	80054-
5		23S-15-45860	Shim, T=0.5mm	2	80054-
6		20Y-43-41750	Washer	2	80054-
7		20Y-43-41790	Washer	2	80054-
8		14X-06-52340	Wiring Harness	1	80054-
9		8233-06-3350	Diode	1	80054-
10		14X-Y79-4310	Trim	1	80054-
11		14X-Y79-4320	Trim	1	80054-
12		04434-52310	Clip	1	80054-
13		01010-81020	Bolt	1	80054-
14		01643-31032	Washer	1	80054-
15		08034-20519	Band	2	80054-
16		14X-06-52160	Sheet,Bonded	1	80054-
17		203-43-56450	Cap	2	80054-
18		14X-54-58221	Plate	1	80054-
19		01010-D1070	Bolt	2	80054-
20		01643-71032	Washer	2	80054-
21		01010-D1055	Bolt	2	80054-
22		01643-71032	Washer	2	80054-

https://truckmanualshub.com/

FIG. K0410-002021 ROPS Canopy, Protector

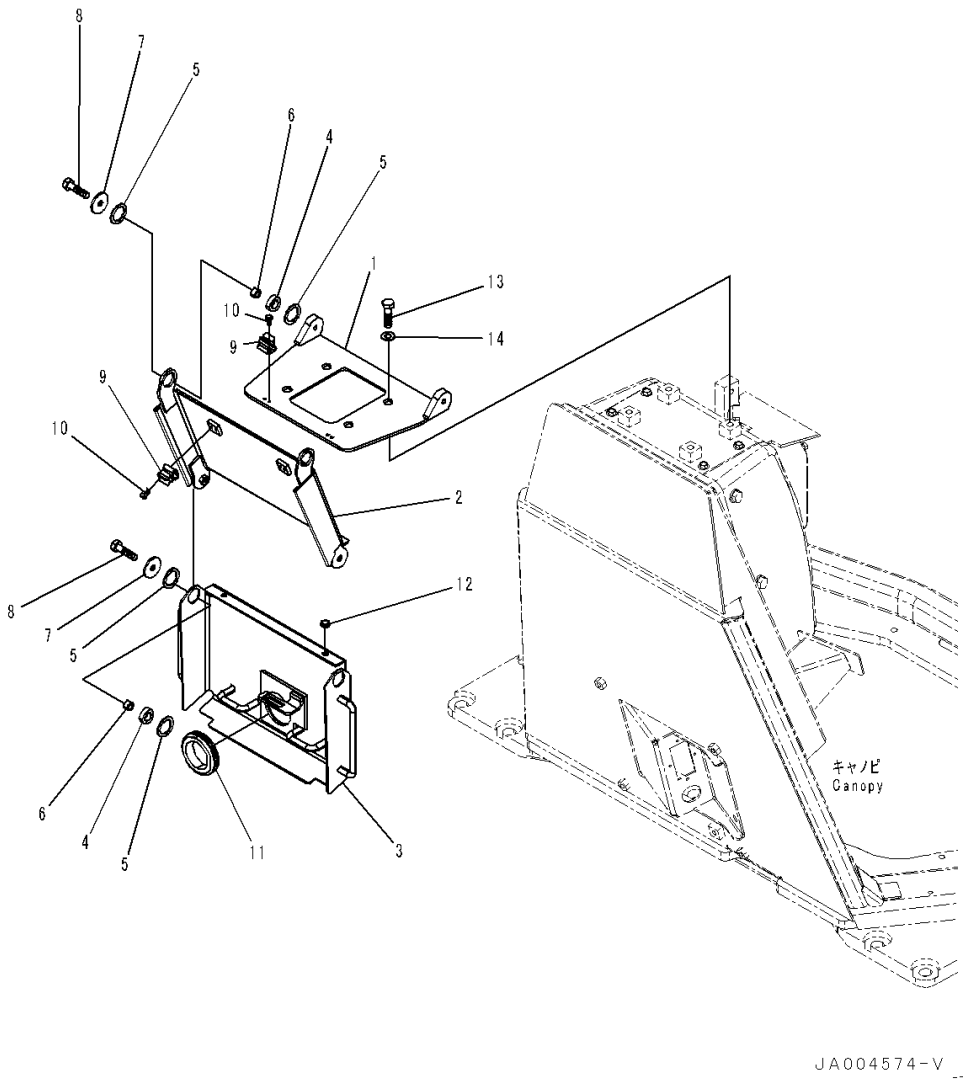

Index	Code	Part Number	Description	Qty	Serial Number
1		14X-54-58410	Cover	1	80054-
2		14X-54-58910	Cover	1	80054-
3		14X-54-58921	Cover	1	80054-
4		134-54-69130	Collar	4	80054-
5		134-54-69140	Collar	10	80054-
6		134-54-69190	Collar	4	80054-
7		154-54-22830	Washer	4	80054-
8		01010-D0825	Bolt	4	80054-
9		20R-54-11460	Spring	4	80054-
10		01220-70406	Screw, Philips Head	8	80054-
11		08037-05016	Grommet	1	80054-
12		09415-00506	Cap	2	80054-
13		01010-D1225	Bolt	4	80054-
14		01643-71232	Washer	4	80054-

https://truckmanualshub.com/

FIG. K0410-002022 ROPS Canopy, Floor Cover

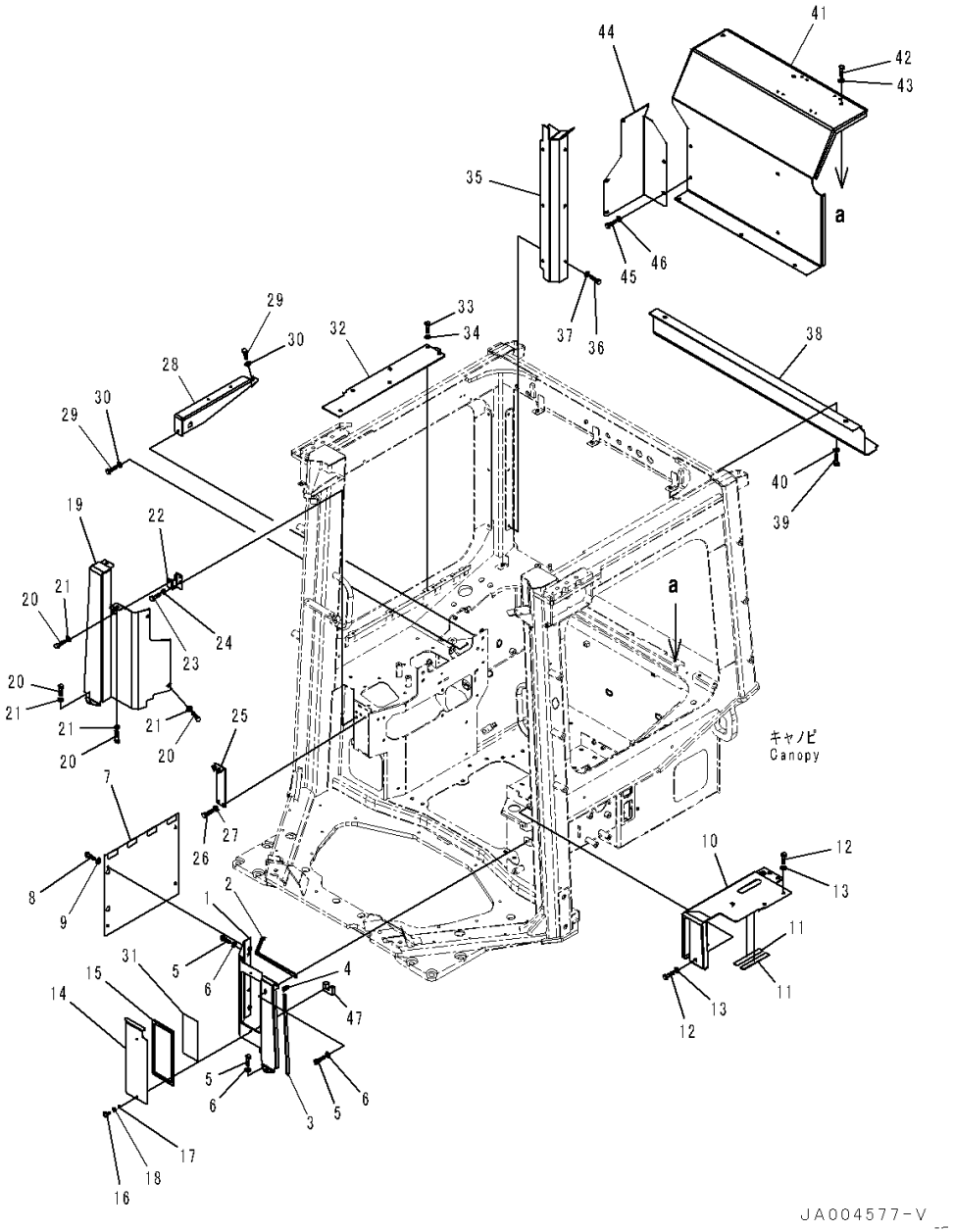

Index	Code	Part Number	Description	Qty	Serial Number
1		14X-54-58541	Cover	1	80054-
2		14X-54-58551	• Seal	1	80054-
3		14X-54-58561	• Seal	1	80054-
4		14X-54-58720	• Seal	1	80054-
5		01010-D0825	Bolt	4	80054-
6		01643-70823	Washer	4	80054-
7		14X-54-56372	Cover	1	80054-
8		01010-D0825	Bolt	2	80054-
9		01643-70823	Washer	2	80054-
10		14X-54-58511	Cover	1	80054-
11		14X-43-48110	• Awning,Bonded	2	80054-
12		01010-D0825	Bolt	5	80054-
13		01643-70823	Washer	5	80054-
14		14X-54-58520	Plate	1	80054-
15		14X-54-58530	• Seal	1	80054-
16		01232-10616	Screw, Knurled Head	2	80054-
17		195-54-78790	Ring, Snap	2	80054-
18		01643-70623	Washer	2	80054-
19		14X-54-58590	Cover	1	80054-
20		01010-D0825	Bolt	5	80054-
21		01643-70823	Washer	5	80054-
22		14X-54-56451	Bracket	1	80054-
23		01010-D0825	Bolt	2	80054-
24		01643-70823	Washer	2	80054-
25		14X-54-56411	Bracket	1	80054-
26		01010-D0825	Bolt	2	80054-
27		01643-70823	Washer	2	80054-
28		14X-54-56471	Bracket	1	80054-
29		01010-D0825	Bolt	2	80054-
30		01643-70823	Washer	2	80054-
31		14X-98-51170	Plate, Fuse Box	1	80054-
32		14X-54-58611	Cover	1	80054-
33		01010-D0825	Bolt	6	80054-
34		01643-70823	Washer	6	80054-
35		14X-54-58631	Cover	1	80054-
36		01010-D0825	Bolt	6	80054-
37		01643-70823	Washer	6	80054-
38		14X-54-58641	Cover	1	80054-
39		01010-D0825	Bolt	5	80054-
40		01643-70823	Washer	5	80054-

https://truckmanualshub.com/

FIG. K0410-002022 ROPS Canopy, Floor Cover

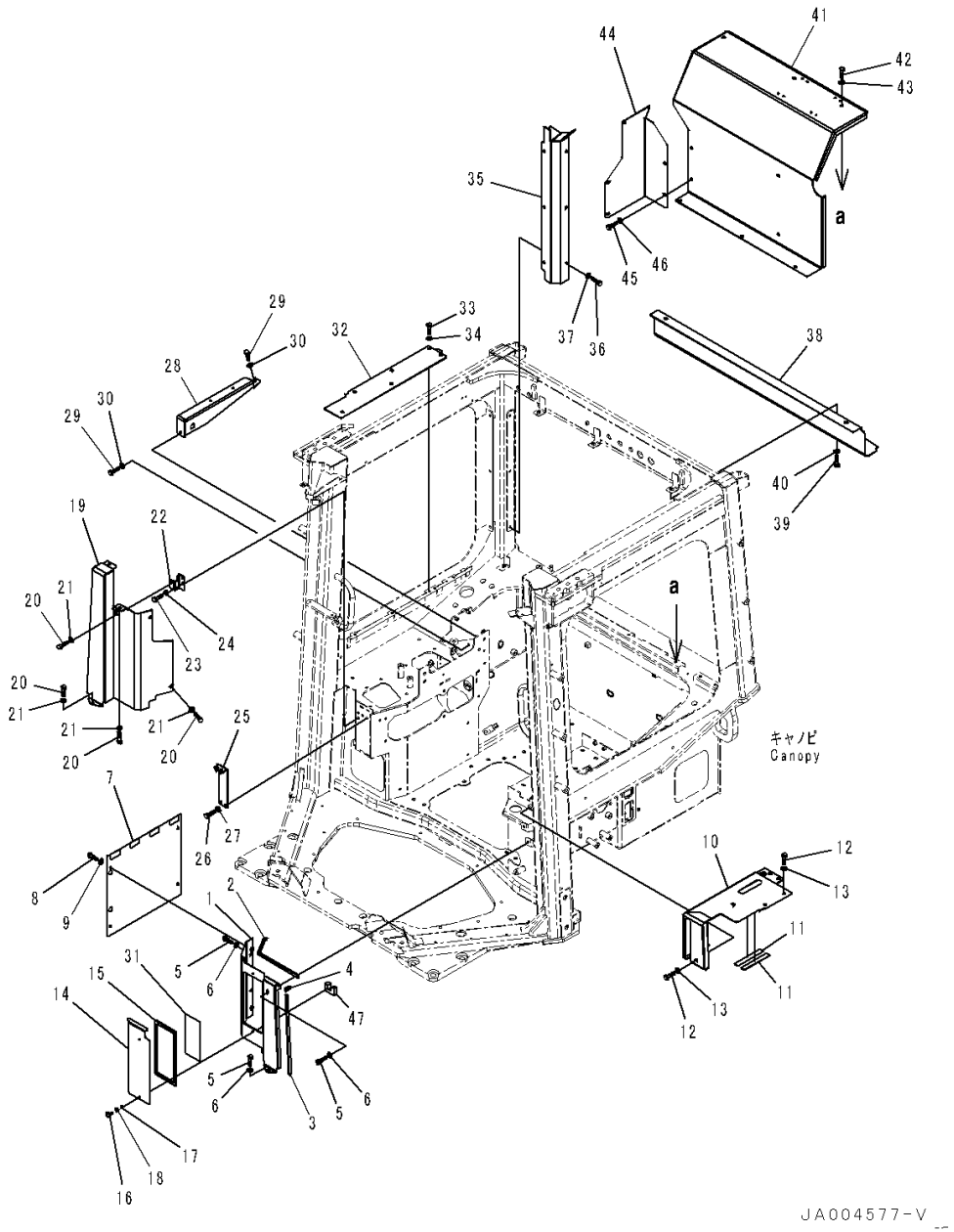

Index	Code	Part Number	Description	Qty	Serial Number
41		14X-54-58650	Cover	1	80054-
42		01010-D0825	Bolt	6	80054-
43		01643-70823	Washer	6	80054-
44		14X-54-58660	Cover	1	80054-
45		01010-D0825	Bolt	5	80054-
46		01643-70823	Washer	5	80054-
47		14X-54-56981	Seal,Bonded	1	80054-

https://truckmanualshub.com/

FIG. K0410-002023 ROPS Canopy, KOMTRAX Controller

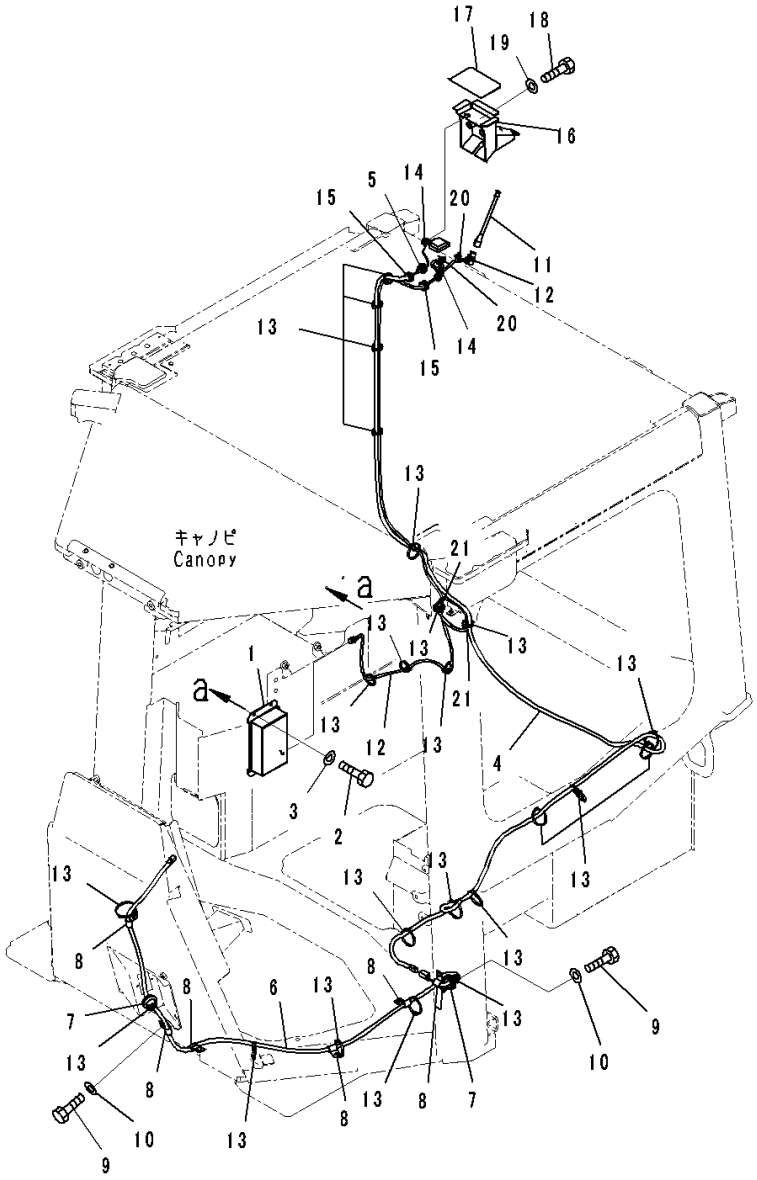

Index	Code	Part Number	Description	Qty	Serial Number
1		7826-23-3011	Controller	1	80054-
2		01010-80616	Bolt	4	80054-
3		01643-30623	Washer	4	80054-
4		14X-06-51162	Cable Assembly	1	80258-
		14X-06-51161	Cable Assembly	1	80054-80257
5		14X-06-51530	Grommet	1	80054-
6		14X-06-51171	Cable Assembly	1	80054-
7		08037-11025	Grommet	2	80054-
8		04434-51010	Clip	7	80054-
9		01010-81020	Bolt	2	80054-
10		01643-31032	Washer	2	80054-
11		8A13-10-2100	Antenna	1	80054-
12		14X-06-51190	Cable Assembly	1	80054-
13		08034-20519	Band	23	80054-
14		175-06-81610	Grommet	2	80054-
15		14X-06-51520	Grommet	2	80054-
16		14X-06-51831	Bracket	1	80054-
17		14X-06-51840	Plate	1	80054-
18		01010-80850	Bolt	2	80054-
19		01643-30823	Washer	2	80054-
20		08059-00413	Clip	2	80054-
21		22B-54-28990	Sheet,Bonded	2	80054-

https://truckmanualshub.com/

FIG. K0410-002024 ROPS Canopy, Related Parts

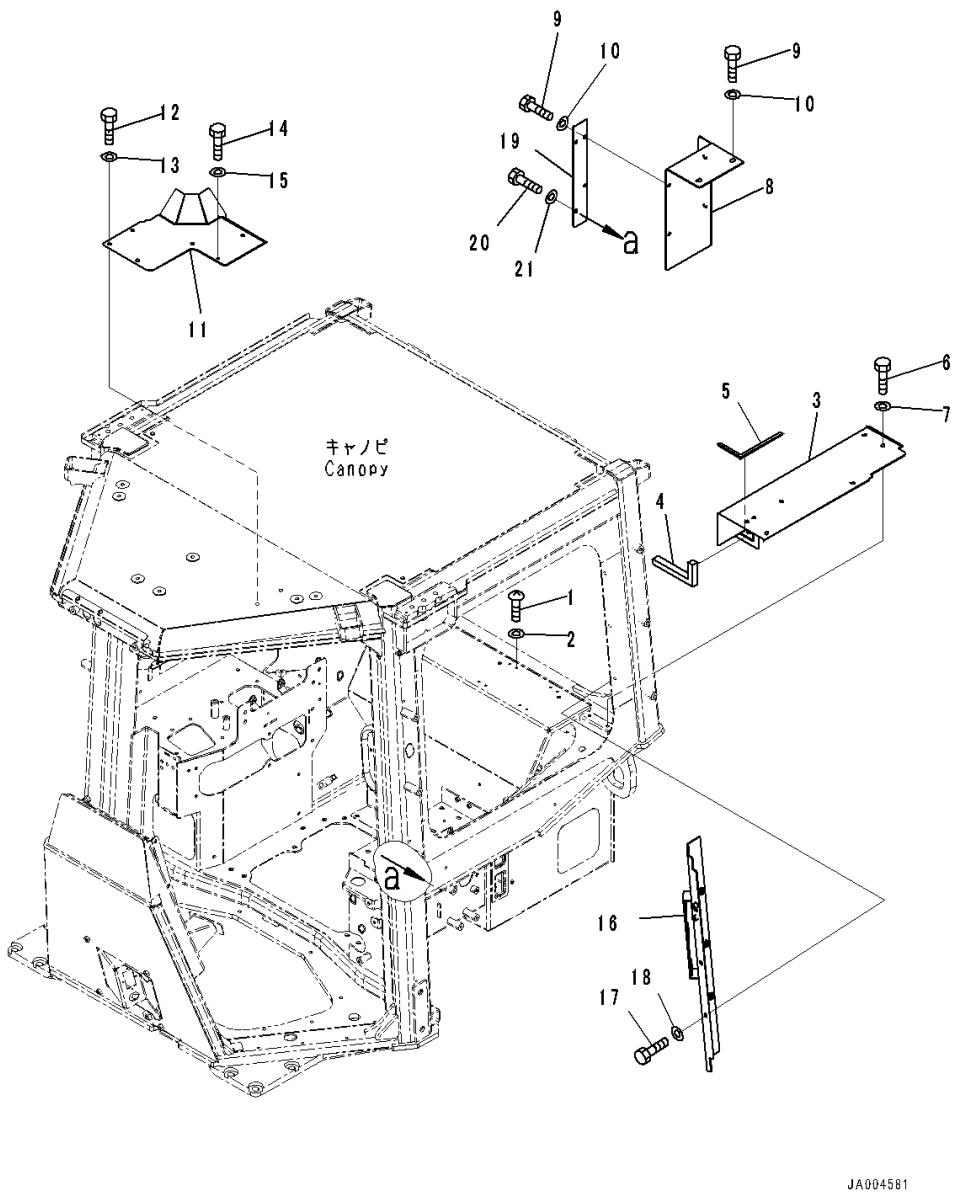

Index	Code	Part Number	Description	Qty	Serial Number
1		01245-00620	Screw	8	80054-
2		01643-70623	Washer	8	80054-
3		14X-54-58571	Plate	1	80054-
4		14X-54-58740	• Sheet	1	80054-
5		14X-54-58750	• Sheet	1	80054-
6		01010-D0825	Bolt	7	80054-
7		01643-70823	Washer	7	80054-
8		14X-54-58581	Plate	1	80054-
9		01010-D0825	Bolt	6	80054-
10		01643-70823	Washer	6	80054-
11		14X-54-58621	Plate	1	80054-
12		01010-D0825	Bolt	5	80054-
13		01643-70823	Washer	5	80054-
14		01010-D0620	Bolt	1	80054-
15		01643-70623	Washer	1	80054-
16		14X-54-58710	Bracket	1	80054-
17		01010-D0825	Bolt	6	80054-
18		01643-70823	Washer	6	80054-
19		14X-54-58730	Plate	1	80054-
20		01010-D0825	Bolt	2	80054-
21		01643-70823	Washer	2	80054-

https://truckmanualshub.com/

FIG. K0710-001001 Air Conditioner Unit, Air Conditioner Condenser Unit

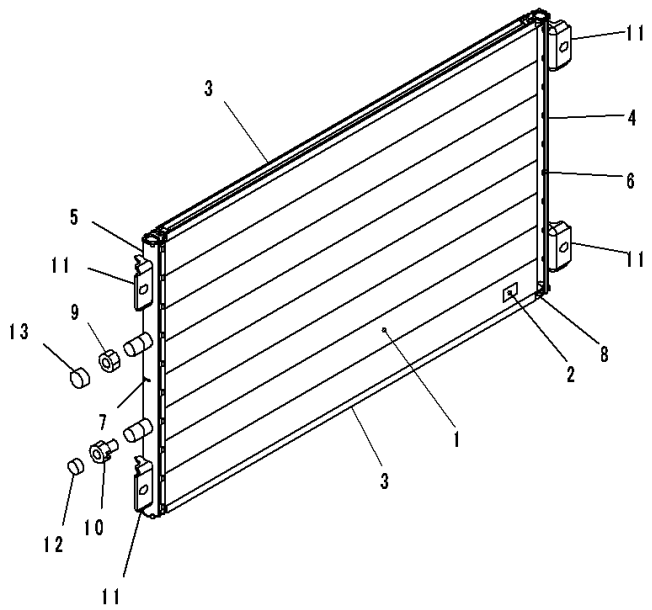

00071634

Index	Code	Part Number	Description	Qty	Serial Number
		20Y-979-6131	Condenser Assembly	1	80001-
1		ND7930-591100	• Tube	36	80001-
2		ND7922-571450	• Fin	37	80001-
3		ND047761-2760	• Plate	2	80001-
4		ND047762-0540	• Tank	1	80001-
5		ND047762-3000	• Tank	1	80001-
6		ND7935-163610	• Plate	2	80001-
7		ND047764-0021	• Plate	1	80001-
8		ND047765-0020	• Cap	4	80001-
9		ND445013-0811	• Union	1	80001-
10		ND445013-0521	• Union	1	80001-
11		ND047782-3720	• Bracket	4	80001-
12		ND445021-0060	• Plug	1	80001-
13		ND445021-0070	• Plug	1	80001-

https://truckmanualshub.com/

FIG. K0710-001002 Air Conditioner Unit, Air Conditioner Condenser Unit Mounting

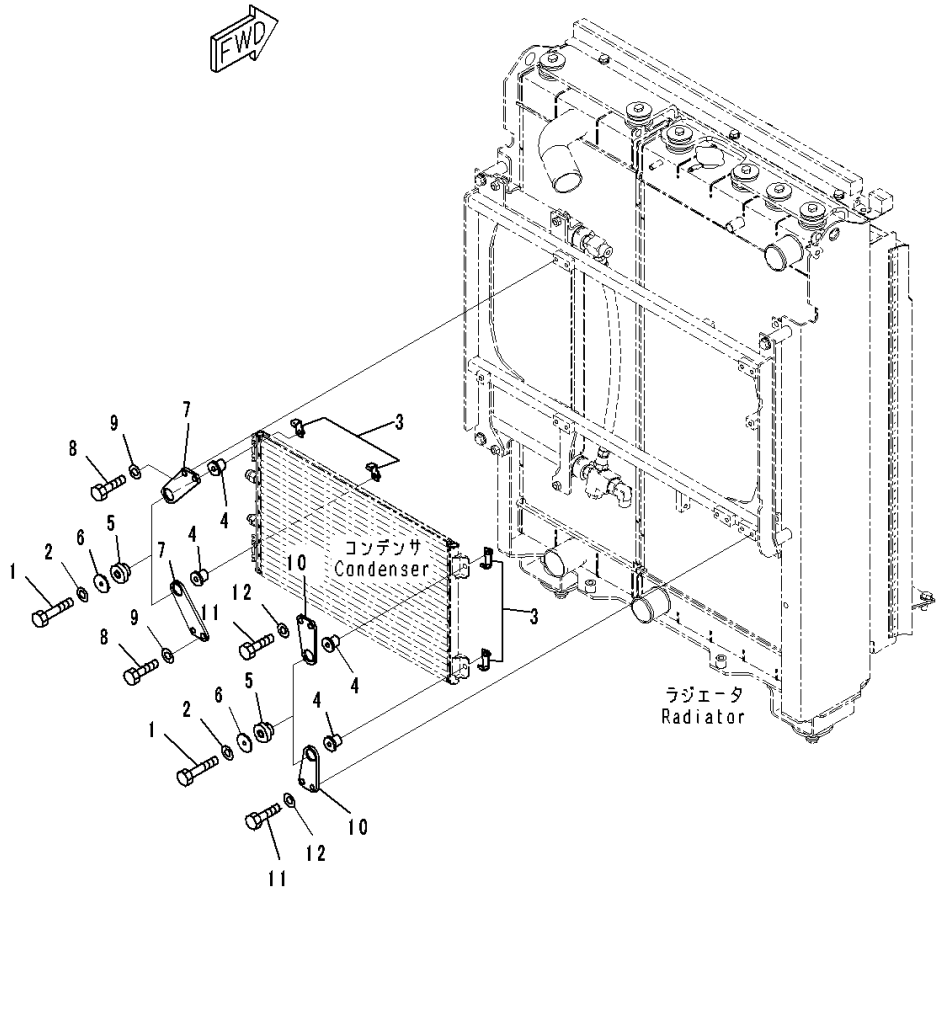

Index	Code	Part Number	Description	Qty	Serial Number
1		01010-80865	Bolt	4	80001-
2		01643-30823	Washer	4	80001-
3		134-03-73750	Bracket	4	80001-
4		14X-03-35570	Collar	4	80001-
5		195-03-41380	Cushion	4	80001-
6		154-911-8140	Collar	4	80001-
7		14X-Y11-1760	Plate	2	80001-
8		01010-81020	Bolt	4	80001-
9		01643-31032	Washer	4	80001-
10		14X-Y11-1920	Plate	2	80001-
11		01010-81020	Bolt	4	80001-
12		01643-31032	Washer	4	80001-

https://truckmanualshub.com/

FIG. K0710-001003 Air Conditioner Unit, Piping (1/2)

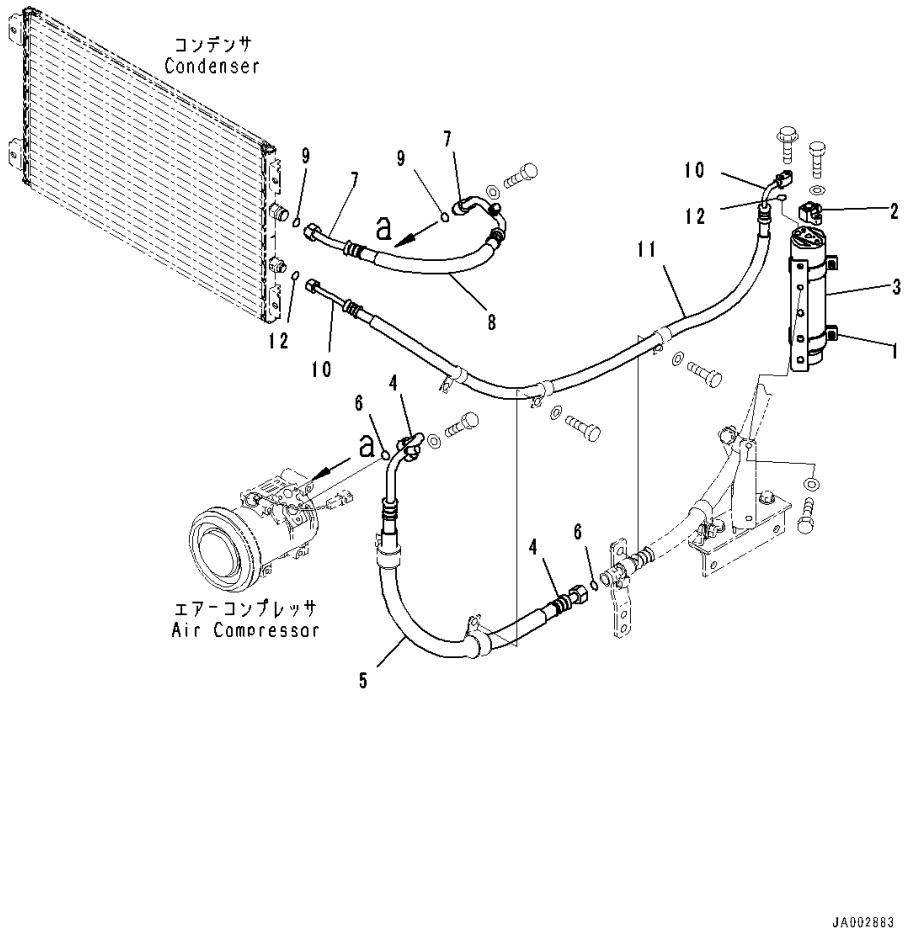

Index	Code	Part Number	Description	Qty	Serial Number
1		120-X11-1510	Holder	1	80001-
2		17A-911-1671	Joint	1	80001-
3		20Y-979-3120	Tank	1	80001-
4		14X-Y11-1351	Hose Assembly	1	80001-
5		08017-32206	• Conduit	1	80001-
6		20Y-979-3130	• O-ring	2	80001-
7		14X-Y11-1361	Hose Assembly	1	80001-
8		08017-31903	• Conduit	1	80001-
9		20Y-979-3140	• O-ring	2	80001-
10		14X-Y11-1371	Hose Assembly	1	80001-
11		08017-31511	• Conduit	1	80001-
12		20Y-979-3150	• O-ring	2	80001-

https://truckmanualshub.com/

FIG. K0710-001004 Air Conditioner Unit, Compressor

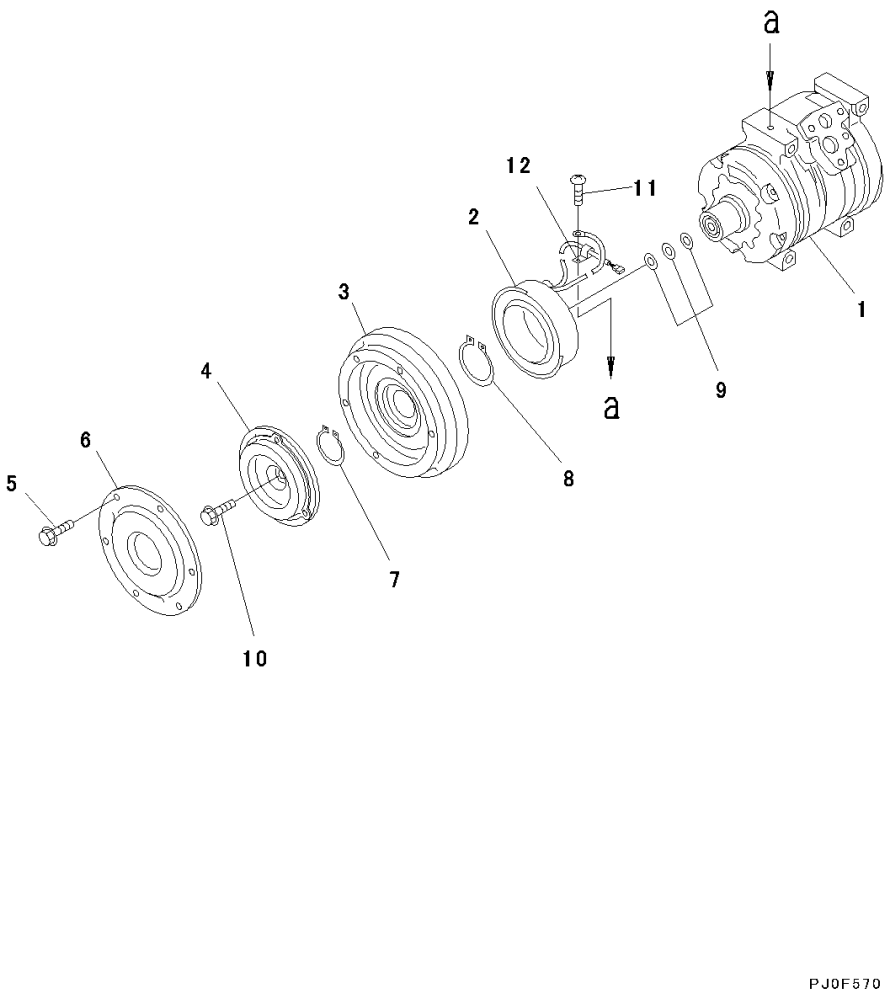

Index	Code	Part Number	Description	Qty	Serial Number
		17A-911-4810	Compressor Assembly	1	80001-
1		ND447220-4781	• Compressor Assembly	1	80001-
		ND247300-5320	• Clutch Assembly, Magnetic	1	80001-
2		ND147310-0110	• • Stator	1	80001-
3		ND147350-1640	• • Rotor	1	80001-
4		ND047410-1570	• • Hub	10	80001-
		ND047410-1580	• • Hub	10	80001-
5		ND949047-2950	• • Bolt and Washer	6	80001-
6		ND047372-0660	• • Dust Cover	1	80001-
7		ND949070-1360	• Ring, Snap	1	80001-
8		ND949070-0640	• Ring, Snap	1	80001-
9		ND949013-7480	• Washer, T=0.1mm	1	80001-
		ND949013-7500	• Washer, T=0.3mm	1	80001-
		ND949013-7510	• Washer, T=0.5mm	1	80001-
10		ND949048-0430	• Bolt	1	80001-
11		ND913100-5081	• Screw	1	80001-
12		ND146691-4470	• Clamp	1	80001-

https://truckmanualshub.com/

FIG. K0710-001005 Air Conditioner Unit, Duct

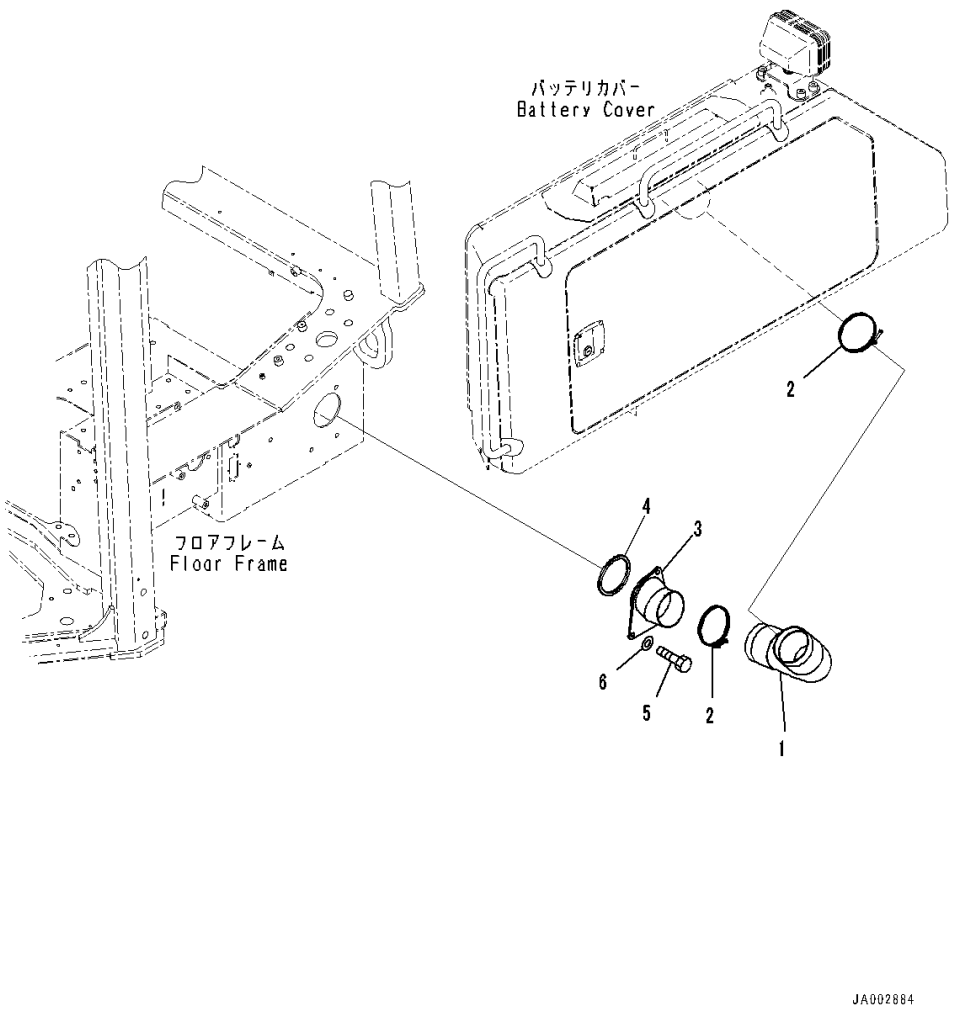

Index	Code	Part Number	Description	Qty	Serial Number
1		09485-01005	Hose, Air	1	80001-
2		14X-911-7670	Clamp	2	80001-
3		14X-Y11-1231	Duct	1	80001-
4		14X-Y11-1580	• Seal,Bonded	1	80001-
5		01010-81030	Bolt	3	80001-
6		01643-31032	Washer	3	80001-

https://truckmanualshub.com/

FIG. K0710-001006 Air Conditioner Unit, Piping (2/2)

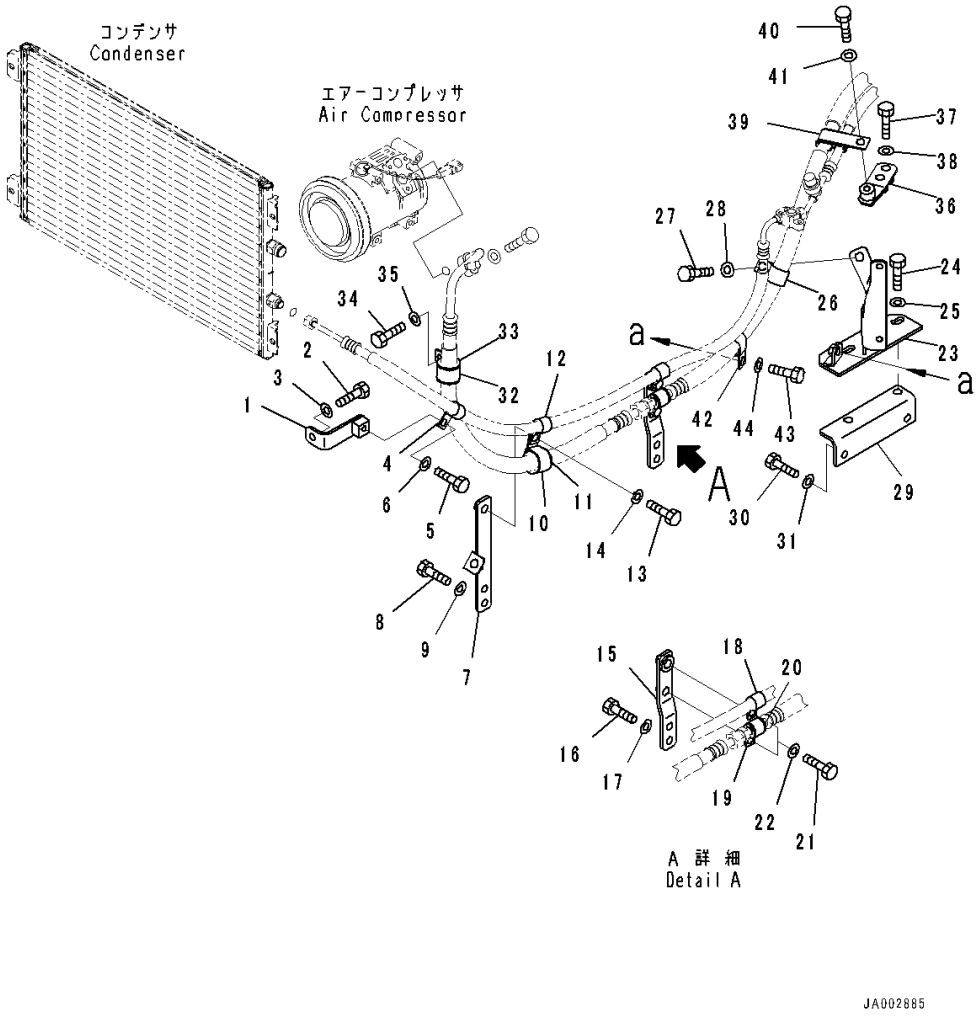

Index	Code	Part Number	Description	Qty	Serial Number
1		14X-Y11-1981	Bracket	1	80001-
2		01010-81020	Bolt	1	80001-
3		01643-31032	Washer	1	80001-
4		04434-51912	Clip	1	80001-
5		01010-81225	Bolt	1	80001-
6		01643-31232	Washer	1	80001-
7		14X-Y11-1661	Plate	1	80001-
8		01010-81225	Bolt	2	80001-
9		01643-31232	Washer	2	80001-
10		04434-53412	Clip	1	80001-
11		07095-20625	Cushion	1	80001-
12		04434-51912	Clip	1	80001-
13		01010-81225	Bolt	1	80001-
14		01643-31232	Washer	1	80001-
15		14X-Y11-1671	Bracket	1	80001-
16		01010-81225	Bolt	2	80001-
17		01643-31232	Washer	2	80001-
18		04434-51912	Clip	1	80001-
19		04434-52112	Clip	1	80001-
20		07095-20314	Cushion	1	80001-
21		01010-81225	Bolt	2	80001-
22		01643-31232	Washer	2	80001-
23		14X-Y11-1691	Bracket	1	80001-
24		01010-81225	Bolt	2	80001-
25		01643-31232	Washer	2	80001-
26		04434-52712	Clip	1	80001-
27		01010-81225	Bolt	1	80001-
28		01643-31232	Washer	1	80001-
29		14X-Y11-1681	Bracket	1	80001-
30		01010-81225	Bolt	2	80001-
31		01643-31232	Washer	2	80001-
32		04434-53411	Clip	1	80001-
33		07095-20625	Cushion	1	80001-
34		01010-81020	Bolt	1	80001-
35		01643-31032	Washer	1	80001-
36		14X-Y11-2150	Bracket	1	80001-
37		01010-81245	Bolt	2	80001-
38		01643-31232	Washer	2	80001-
39		17A-911-4421	Clip	1	80001-
40		01010-81220	Bolt	1	80001-

https://truckmanualshub.com/

FIG. K0710-001006 Air Conditioner Unit, Piping (2/2)

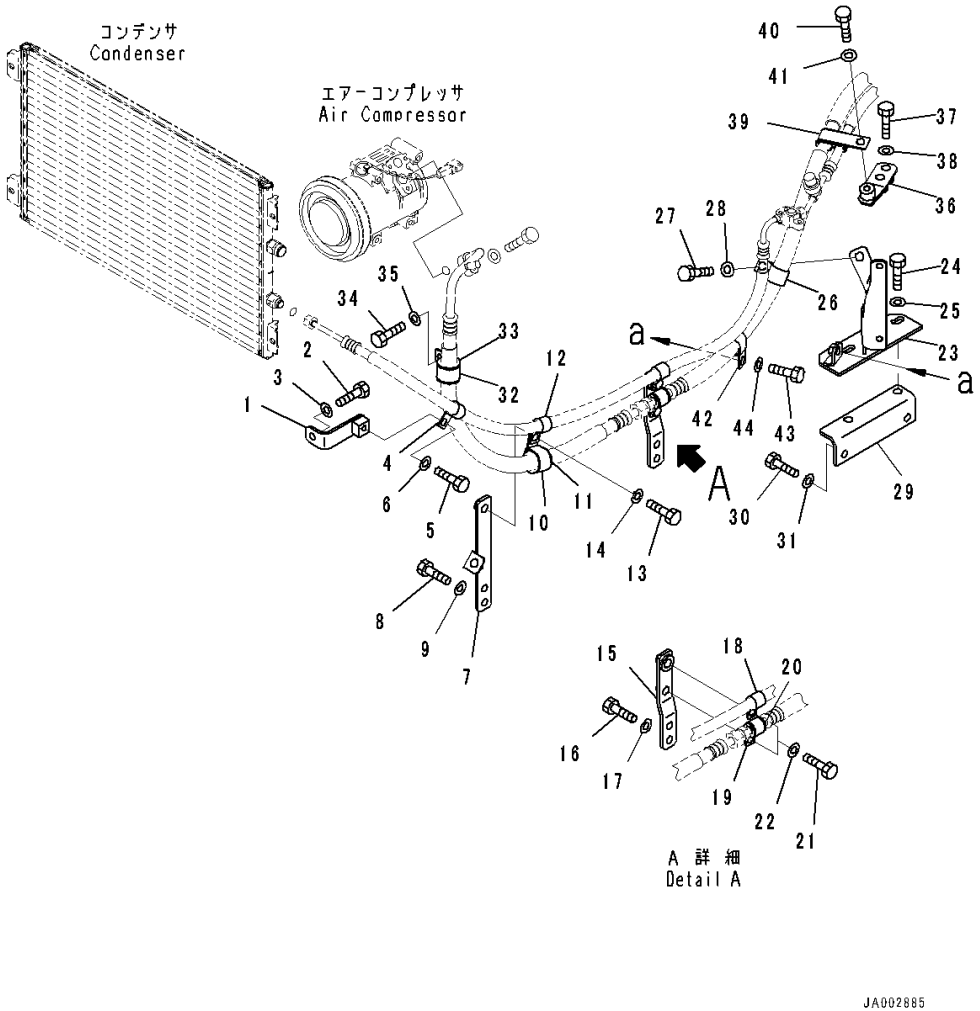

Index	Code	Part Number	Description	Qty	Serial Number
41		01643-31232	Washer	1	80001-
42		04434-52712	Clip	1	80001-
43		01010-81225	Bolt	1	80001-
44		01643-31232	Washer	1	80001-

https://truckmanualshub.com/

FIG. K0710-001007 Air Conditioner Unit, Air Conditioner Unit Mounting

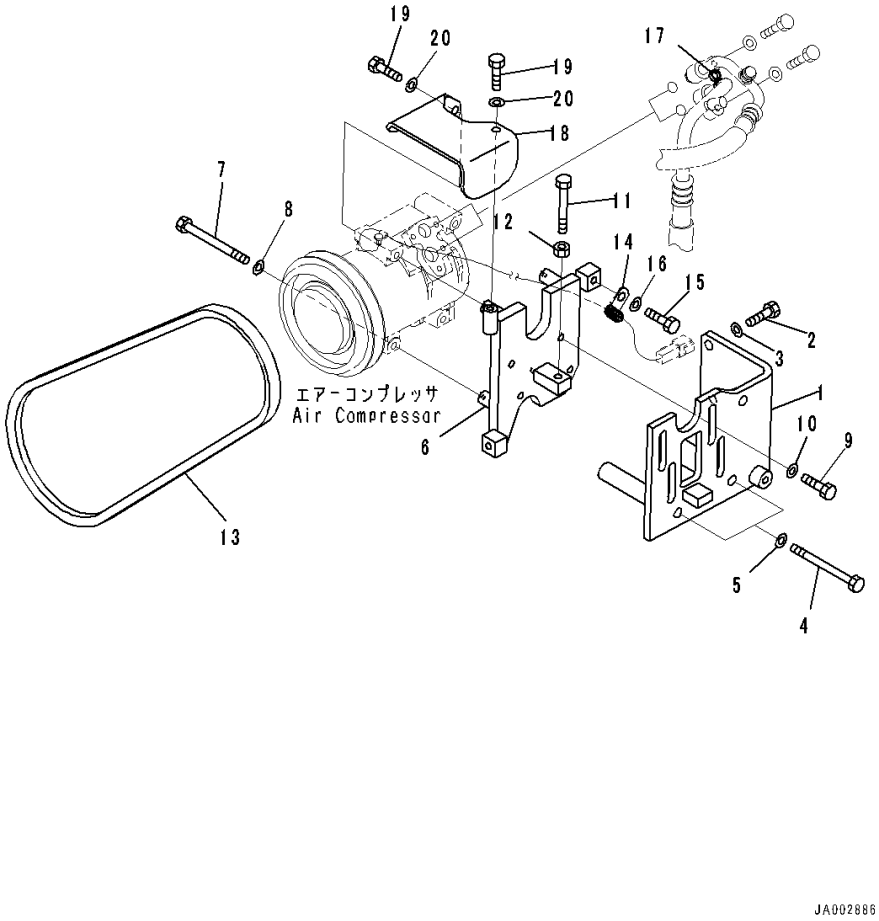

Index	Code	Part Number	Description	Qty	Serial Number
1		14X-Z11-9221	Bracket	1	80001-
2		01010-81030	Bolt	2	80001-
3		01643-31032	Washer	2	80001-
4		01011-81040	Bolt	2	80001-
5		01643-31032	Washer	2	80001-
6		14X-Y11-1410	Bracket	1	80001-
7		01010-80880	Bolt	4	80001-
8		01643-30823	Washer	4	80001-
9		01010-81025	Bolt	4	80001-
10		01643-31032	Washer	4	80001-
11		01016-51090	Bolt	1	80001-
12		01580-11008	Nut	1	80001-
13		04120-21748	V-belt	1	80001-
14		600-051-2050	Clip	1	80001-
15		01010-81020	Bolt	1	80001-
16		01643-31032	Washer	1	80001-
17		08034-40521	Band	1	80001-
18		14X-911-8534	Cover	1	80065-
19		01010-80820	Bolt	2	80001-
20		01643-30823	Washer	2	80001-

https://truckmanualshub.com/

FIG. K0710-001008 Air Conditioner Unit, Heater Unit Mounting

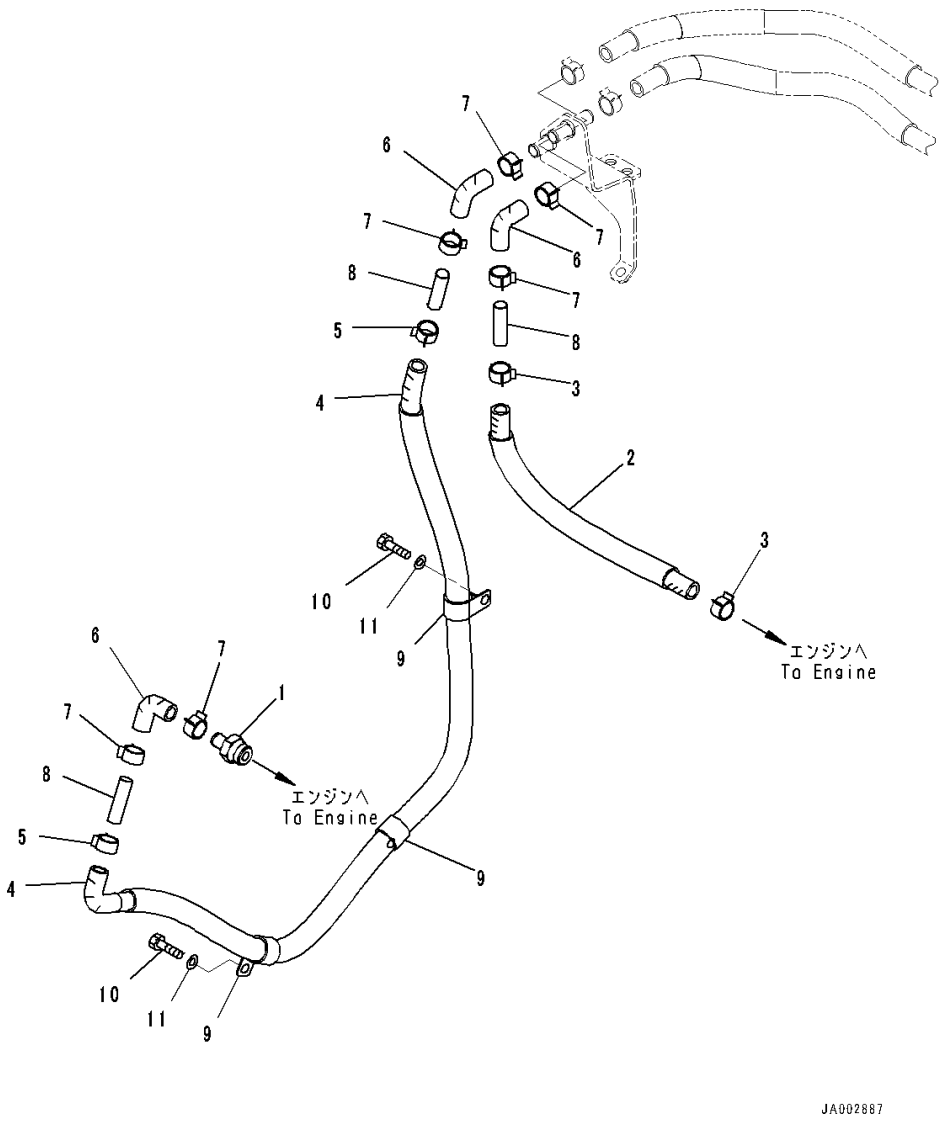

Index	Code	Part Number	Description	Qty	Serial Number
1		14X-Z11-9670	Nipple	1	80001-
2		14X-Y11-1421	Hose	1	80001-
3		09479-02400	Clamp	2	80001-
4		14X-Y11-1431	Hose	1	80001-
5		09479-02400	Clamp	2	80001-
6		567-07-15210	Hose	3	80001-
7		09479-02400	Clamp	6	80001-
8		09484-00560	Connector	3	80001-
9		08036-93014	Clip	3	80001-
10		01010-81020	Bolt	3	80001-
11		01643-31032	Washer	3	80001-

https://truckmanualshub.com/

FIG. K0710-001009 Air Conditioner Unit, Bolt

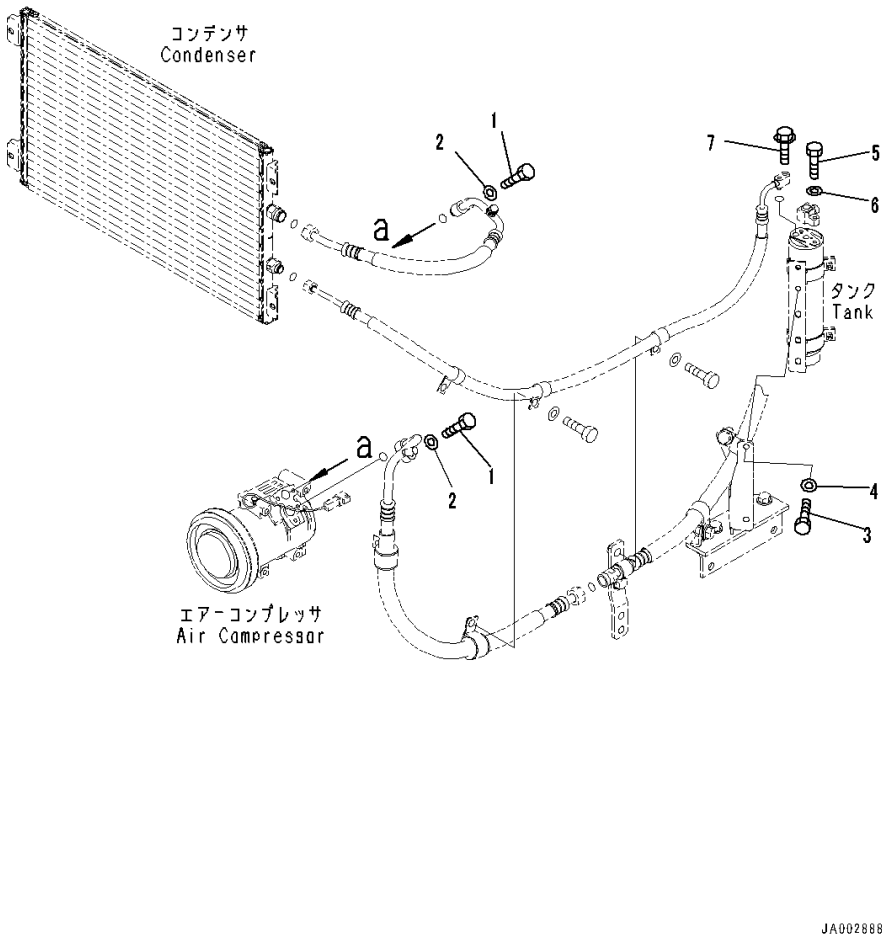

Index	Code	Part Number	Description	Qty	Serial Number
1		01010-80630	Bolt	2	80001-
2		01641-20608	Washer	2	80001-
3		01010-80820	Bolt	2	80001-
4		01643-30823	Washer	2	80001-
5		01010-80625	Bolt	1	80001-
6		01643-30623	Washer	1	80001-
7		01435-00625	Bolt	1	80001-

https://truckmanualshub.com/

FIG. K0710-002001 Air Conditioner Unit, With Hardened Pulley, Air Conditioner Condenser Unit

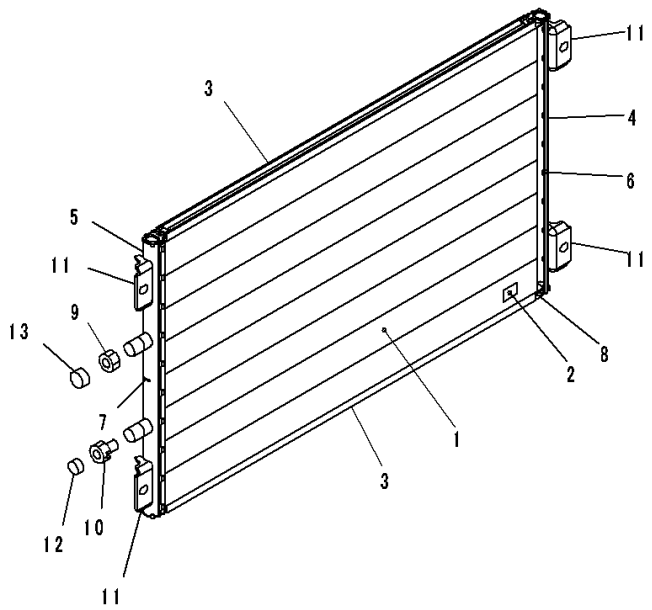

00071634

Index	Code	Part Number	Description	Qty	Serial Number
		20Y-979-6131	Condenser Assembly	1	80001-
1		ND7930-591100	• Tube	36	80001-
2		ND7922-571450	• Fin	37	80001-
3		ND047761-2760	• Plate	2	80001-
4		ND047762-0540	• Tank	1	80001-
5		ND047762-3000	• Tank	1	80001-
6		ND7935-163610	• Plate	2	80001-
7		ND047764-0021	• Plate	1	80001-
8		ND047765-0020	• Cap	4	80001-
9		ND445013-0811	• Union	1	80001-
10		ND445013-0521	• Union	1	80001-
11		ND047782-3720	• Bracket	4	80001-
12		ND445021-0060	• Plug	1	80001-
13		ND445021-0070	• Plug	1	80001-

https://truckmanualshub.com/

FIG. K0710-002002 Air Conditioner Unit, With Hardened Pulley, Air Conditioner Condenser Unit Mounting

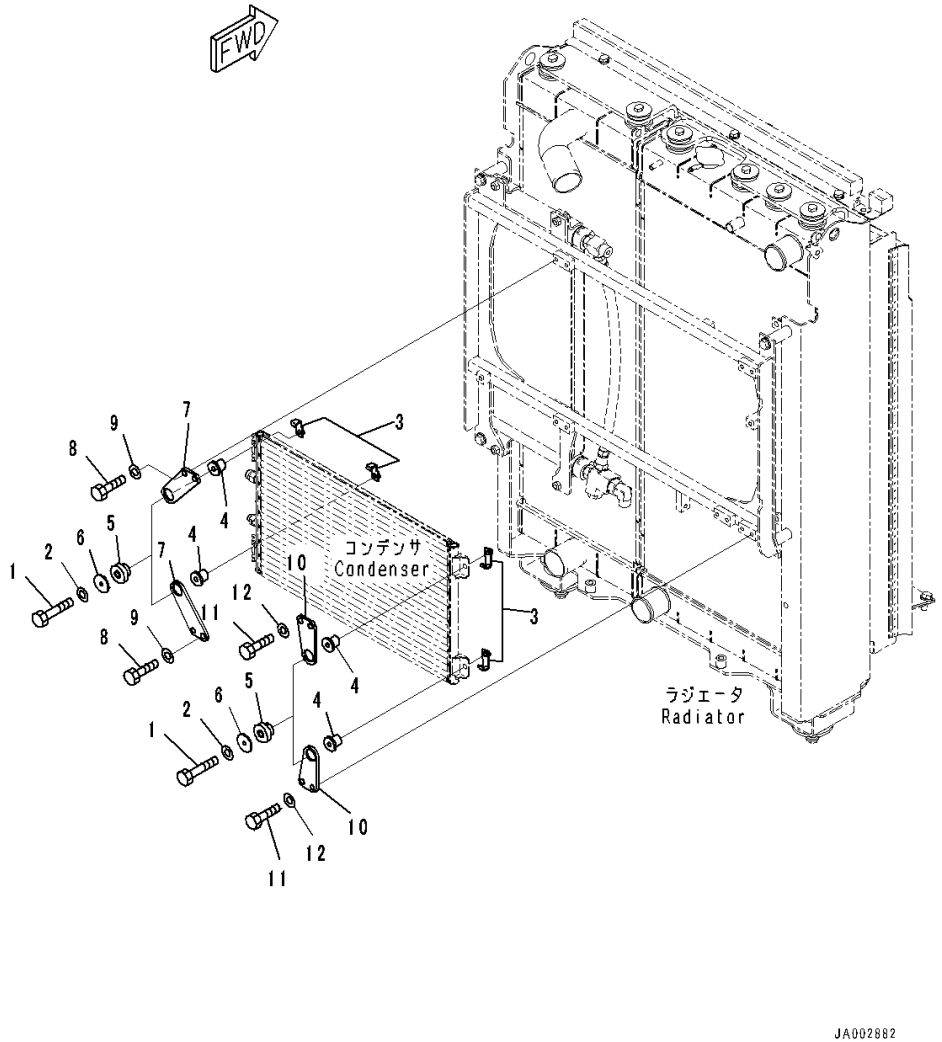

Index	Code	Part Number	Description	Qty	Serial Number
1		01010-80865	Bolt	4	80001-
2		01643-30823	Washer	4	80001-
3		134-03-73750	Bracket	4	80001-
4		14X-03-35570	Collar	4	80001-
5		195-03-41380	Cushion	4	80001-
6		154-911-8140	Collar	4	80001-
7		14X-Y11-1760	Plate	2	80001-
8		01010-81020	Bolt	4	80001-
9		01643-31032	Washer	4	80001-
10		14X-Y11-1920	Plate	2	80001-
11		01010-81020	Bolt	4	80001-
12		01643-31032	Washer	4	80001-

https://truckmanualshub.com/

FIG. K0710-002003 Air Conditioner Unit, With Hardened Pulley, Piping (1/2)

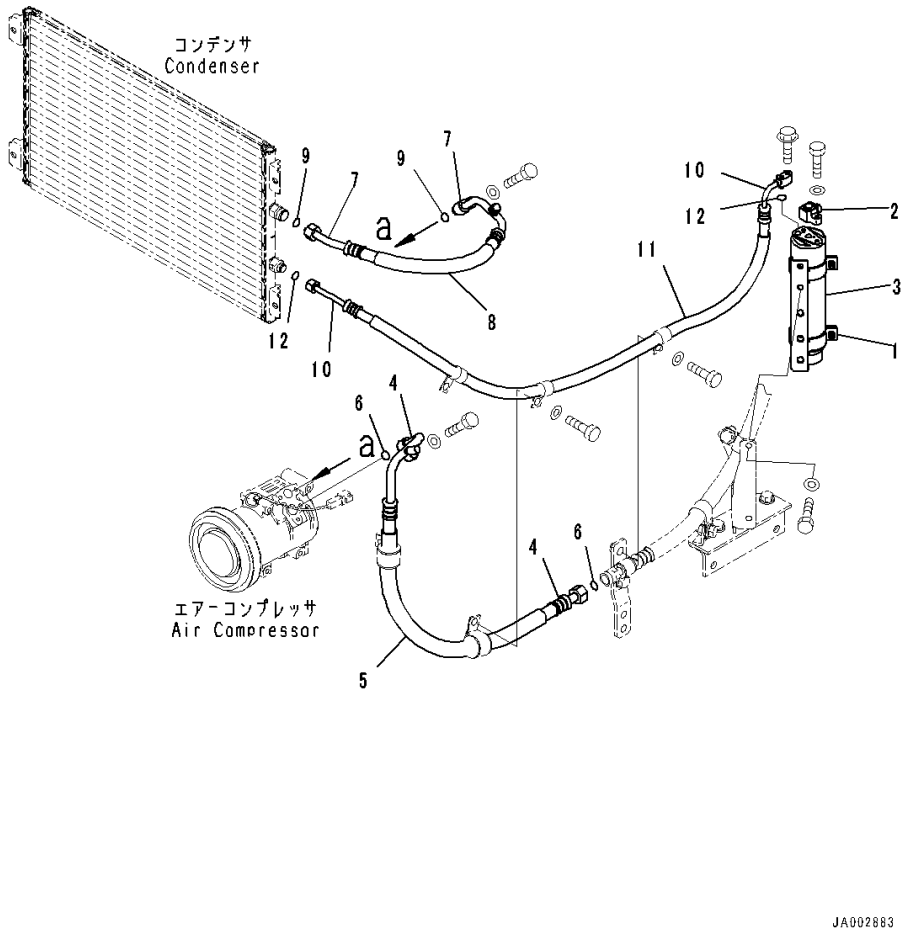

Index	Code	Part Number	Description	Qty	Serial Number
1		120-X11-1510	Holder	1	80001-
2		17A-911-1671	Joint	1	80001-
3		20Y-979-3120	Tank	1	80001-
4		14X-Y11-1351	Hose Assembly	1	80001-
5		08017-32206	• Conduit	1	80001-
6		20Y-979-3130	• O-ring	2	80001-
7		14X-Y11-1361	Hose Assembly	1	80001-
8		08017-31903	• Conduit	1	80001-
9		20Y-979-3140	• O-ring	2	80001-
10		14X-Y11-1371	Hose Assembly	1	80001-
11		08017-31511	• Conduit	1	80001-
12		20Y-979-3150	• O-ring	2	80001-

https://truckmanualshub.com/

FIG. K0710-002004 Air Conditioner Unit, With Hardened Pulley, Compressor

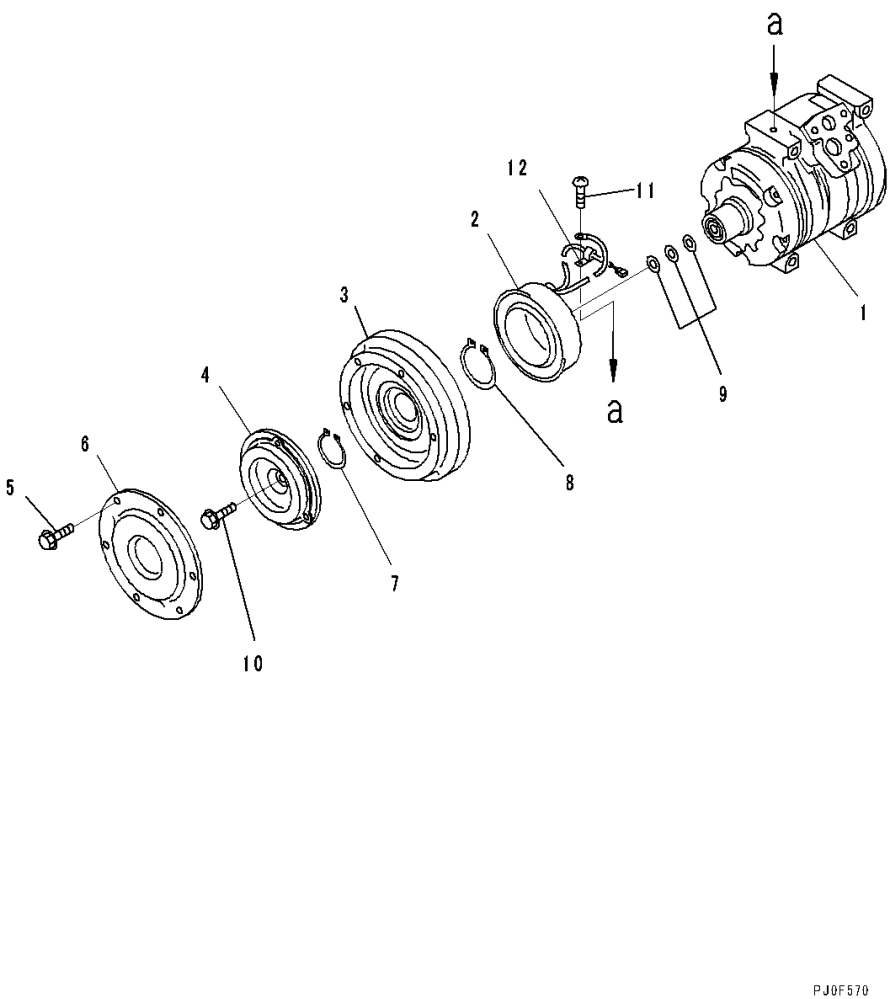

Index	Code	Part Number	Description	Qty	Serial Number
		154-911-7842	Compressor Assembly	1	80001-
1		ND447220-4781	• Compressor Assembly	1	80001-
		ND247300-4152	• Clutch Assembly, Magnetic	1	80001-
2		ND147310-1750	• • Stator	1	80001-
3		ND147350-1640	• • Rotor	1	80001-
4		ND047410-1570	• • Hub	10	80001-
		ND047410-1580	• • Hub	10	80001-
5		ND949047-2950	• • Bolt and Washer	6	80001-
6		ND047372-0660	• • Dust Cover	1	80001-
7		ND949070-1360	• Ring, Snap	1	80001-
8		ND949070-0640	• Ring, Snap	1	80001-
9		ND949013-7480	• Washer, T=0.1mm	1	80001-
		ND949013-7500	• Washer, T=0.3mm	1	80001-
		ND949013-7510	• Washer, T=0.5mm	1	80001-
10		ND949048-0430	• Bolt	1	80001-
11		ND91310-05081	• Screw	1	80001-
12		ND146691-4470	• Clamp	1	80001-

https://truckmanualshub.com/

FIG. K0710-002005 Air Conditioner Unit, With Hardened Pulley, Duct

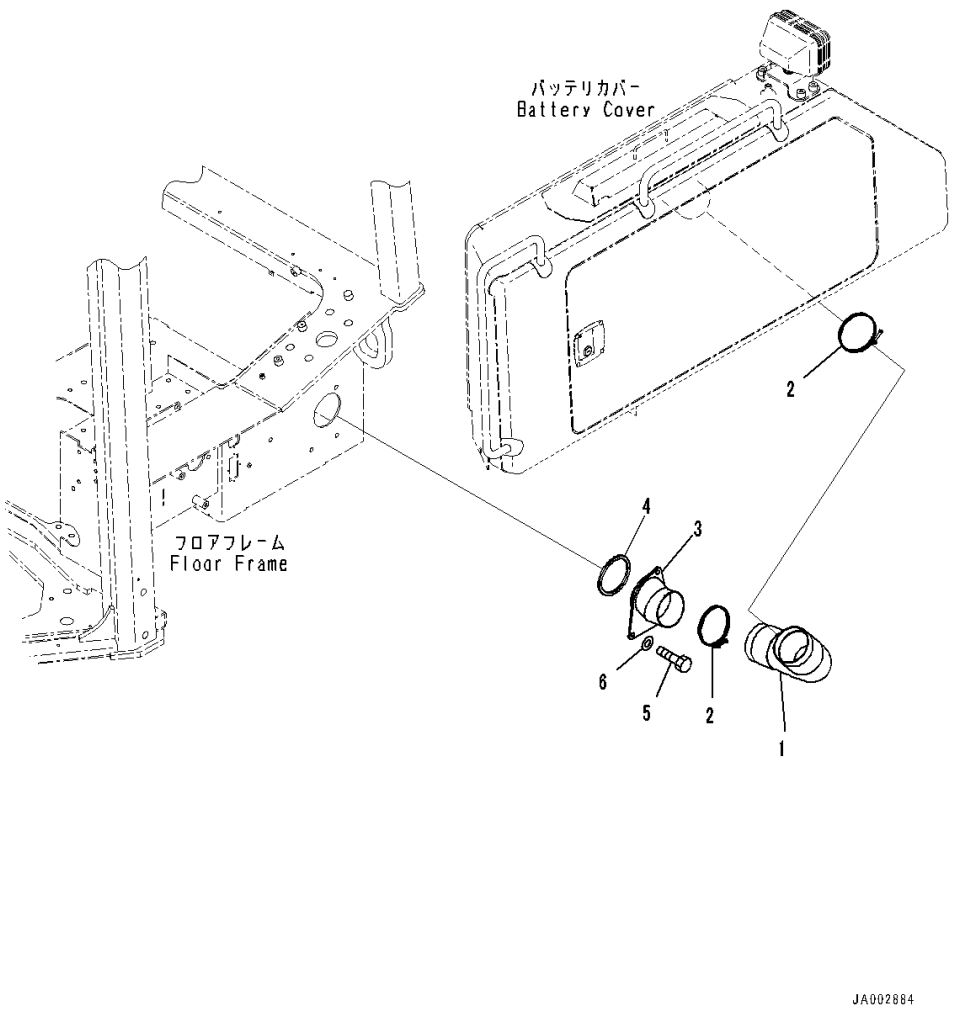

Index	Code	Part Number	Description	Qty	Serial Number
1		09485-01005	Hose, Air	1	80001-
2		14X-911-7670	Clamp	2	80001-
3		14X-Y11-1231	Duct	1	80001-
4		14X-Y11-1580	• Seal,Bonded	1	80001-
5		01010-81030	Bolt	3	80001-
6		01643-31032	Washer	3	80001-

https://truckmanualshub.com/

FIG. K0710-002006 Air Conditioner Unit, With Hardened Pulley, Piping (2/2)

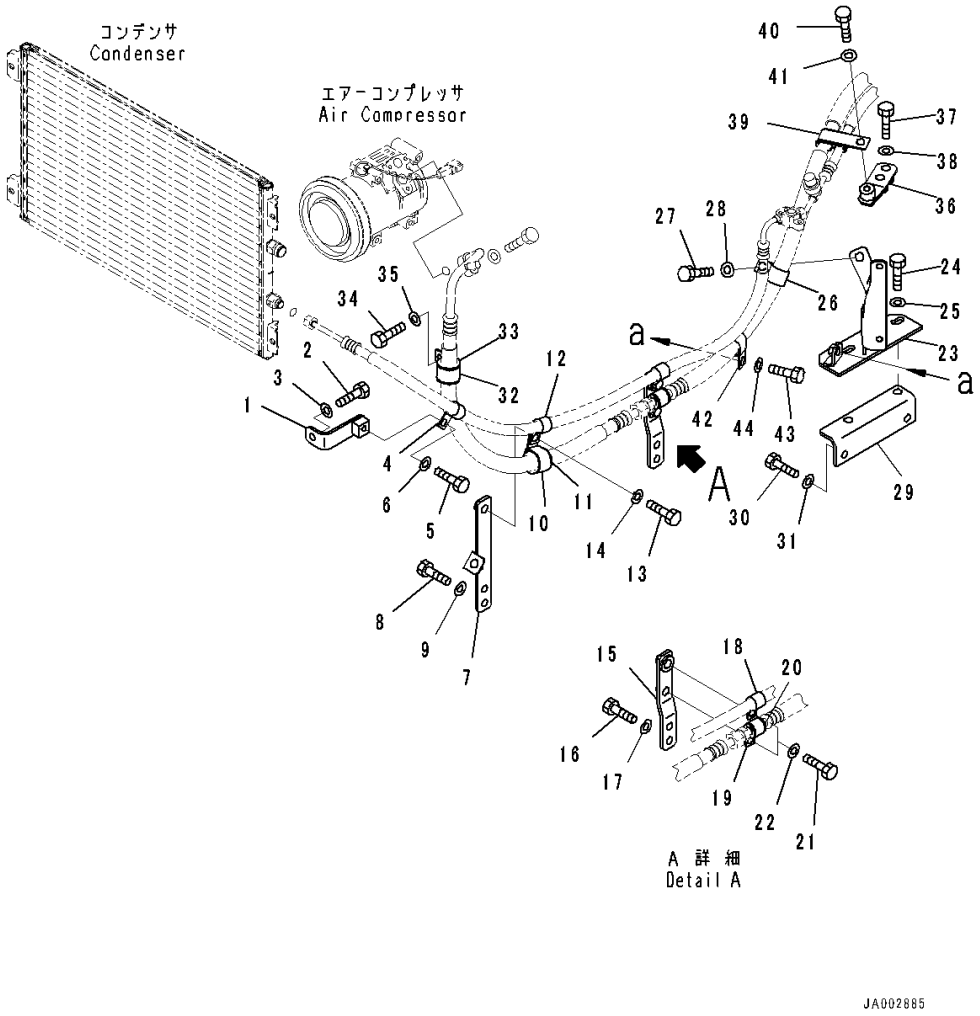

Index	Code	Part Number	Description	Qty	Serial Number
1		14X-Y11-1981	Bracket	1	80001-
2		01010-81020	Bolt	1	80001-
3		01643-31032	Washer	1	80001-
4		04434-51912	Clip	1	80001-
5		01010-81225	Bolt	1	80001-
6		01643-31232	Washer	1	80001-
7		14X-Y11-1661	Plate	1	80001-
8		01010-81225	Bolt	2	80001-
9		01643-31232	Washer	2	80001-
10		04434-53412	Clip	1	80001-
11		07095-20625	Cushion	1	80001-
12		04434-51912	Clip	1	80001-
13		01010-81225	Bolt	1	80001-
14		01643-31232	Washer	1	80001-
15		14X-Y11-1671	Bracket	1	80001-
16		01010-81225	Bolt	2	80001-
17		01643-31232	Washer	2	80001-
18		04434-51912	Clip	1	80001-
19		04434-52112	Clip	1	80001-
20		07095-20314	Cushion	1	80001-
21		01010-81225	Bolt	2	80001-
22		01643-31232	Washer	2	80001-
23		14X-Y11-1691	Bracket	1	80001-
24		01010-81225	Bolt	2	80001-
25		01643-31232	Washer	2	80001-
26		04434-52712	Clip	1	80001-
27		01010-81225	Bolt	1	80001-
28		01643-31232	Washer	1	80001-
29		14X-Y11-1681	Bracket	1	80001-
30		01010-81225	Bolt	2	80001-
31		01643-31232	Washer	2	80001-
32		04434-53411	Clip	1	80001-
33		07095-20625	Cushion	1	80001-
34		01010-81020	Bolt	1	80001-
35		01643-31032	Washer	1	80001-
36		14X-Y11-2150	Bracket	1	80001-
37		01010-81245	Bolt	2	80001-
38		01643-31232	Washer	2	80001-
39		17A-911-4421	Clip	1	80001-
40		01010-81220	Bolt	1	80001-

https://truckmanualshub.com/

FIG. K0710-002006 Air Conditioner Unit, With Hardened Pulley, Piping (2/2)

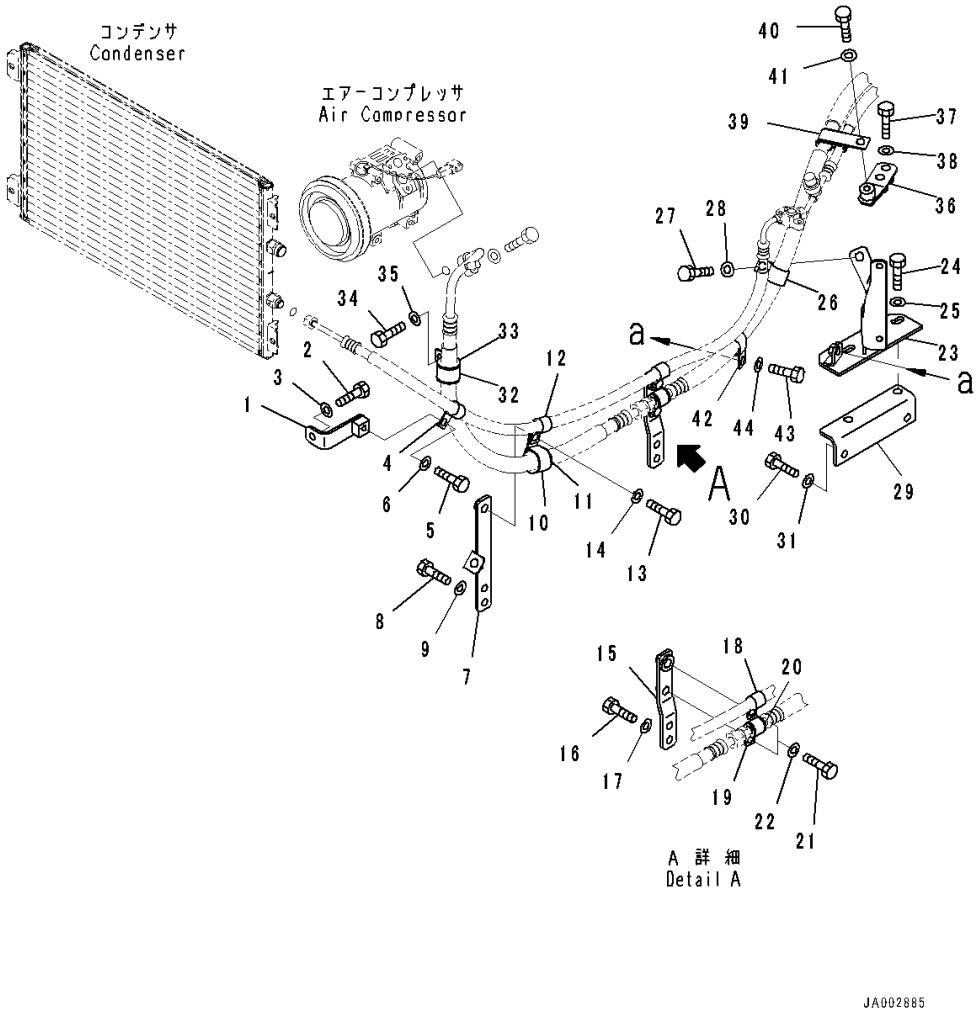

Index	Code	Part Number	Description	Qty	Serial Number
41		01643-31232	Washer	1	80001-
42		04434-52712	Clip	1	80001-
43		01010-81225	Bolt	1	80001-
44		01643-31232	Washer	1	80001-

https://truckmanualshub.com/

FIG. K0710-002007 Air Conditioner Unit, With Hardened Pulley, Air Conditioner Unit Mounting

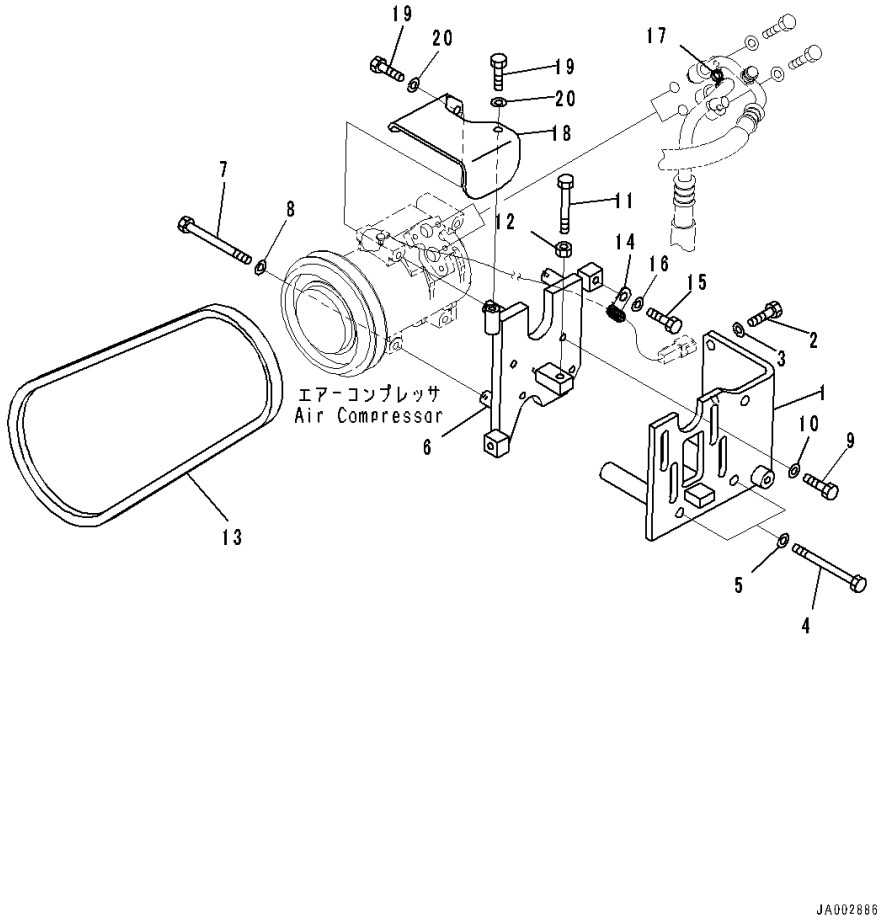

Index	Code	Part Number	Description	Qty	Serial Number
1		14X-Z11-9221	Bracket	1	80001-
2		01010-81030	Bolt	2	80001-
3		01643-31032	Washer	2	80001-
4		01011-81040	Bolt	2	80001-
5		01643-31032	Washer	2	80001-
6		14X-Y11-1410	Bracket	1	80001-
7		01010-80880	Bolt	4	80001-
8		01643-30823	Washer	4	80001-
9		01010-81025	Bolt	4	80001-
10		01643-31032	Washer	4	80001-
11		01016-51090	Bolt	1	80001-
12		01580-11008	Nut	1	80001-
13		04120-21748	V-belt	1	80001-
14		600-051-2050	Clip	1	80001-
15		01010-81020	Bolt	1	80001-
16		01643-31032	Washer	1	80001-
17		08034-40521	Band	1	80001-
18		14X-911-8534	Cover	1	80065-
19		01010-80820	Bolt	2	80001-
20		01643-30823	Washer	2	80001-

https://truckmanualshub.com/

FIG. K0710-002008 Air Conditioner Unit, With Hardened Pulley, Heater Unit Mounting

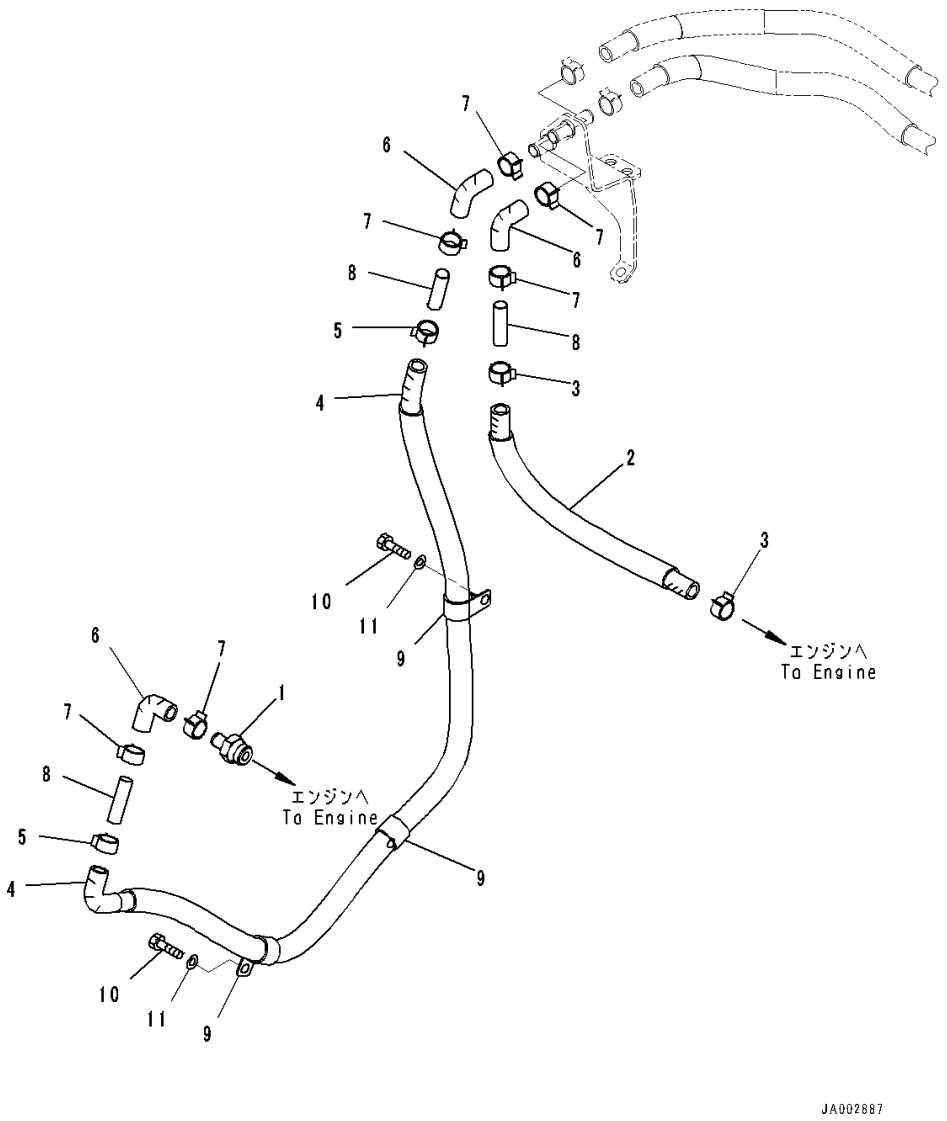

Index	Code	Part Number	Description	Qty	Serial Number
1		14X-Z11-9670	Nipple	1	80001-
2		14X-Y11-1421	Hose	1	80001-
3		09479-02400	Clamp	2	80001-
4		14X-Y11-1431	Hose	1	80001-
5		09479-02400	Clamp	2	80001-
6		567-07-15210	Hose	3	80001-
7		09479-02400	Clamp	6	80001-
8		09484-00560	Connector	3	80001-
9		08036-93014	Clip	3	80001-
10		01010-81020	Bolt	3	80001-
11		01643-31032	Washer	3	80001-

https://truckmanualshub.com/

FIG. K0710-002009 Air Conditioner Unit, With Hardened Pulley, Bolt

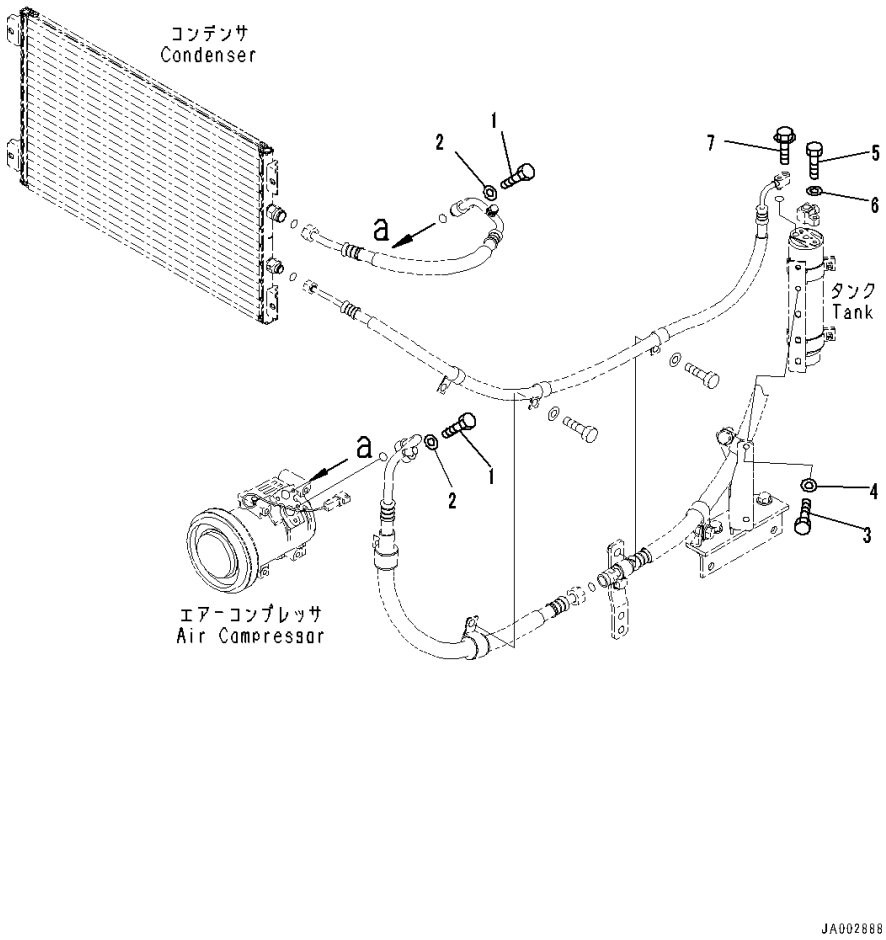

Index	Code	Part Number	Description	Qty	Serial Number
1		01010-80630	Bolt	2	80001-
2		01641-20608	Washer	2	80001-
3		01010-80820	Bolt	2	80001-
4		01643-30823	Washer	2	80001-
5		01010-80625	Bolt	1	80001-
6		01643-30623	Washer	1	80001-
7		01435-00625	Bolt	1	80001-

https://truckmanualshub.com/

FIG. K0710-003001 Parts For Less Air Conditioner, Without Air Conditioner

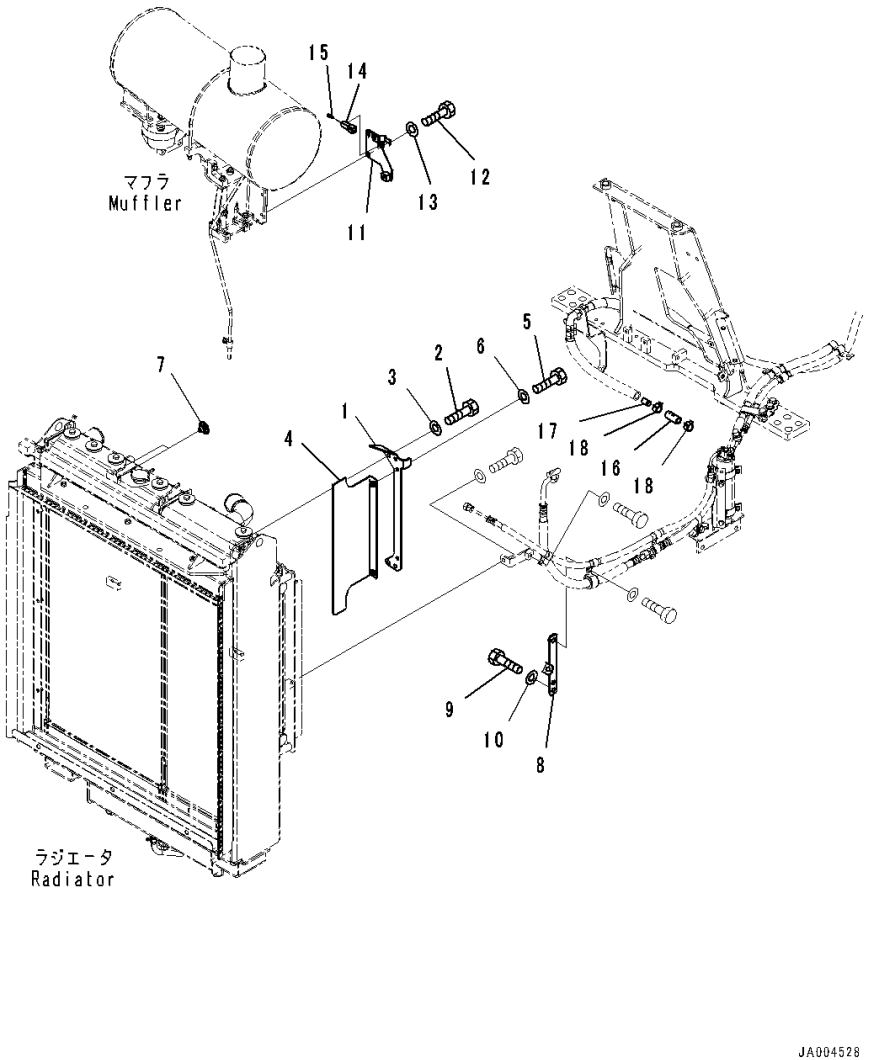

Index	Code	Part Number	Description	Qty	Serial Number
1		14X-03-51670	Plate	1	80054-
2		01010-81020	Bolt	4	80054-
3		01643-31032	Washer	4	80054-
4		14X-03-51680	Baffle	1	80054-
5		01010-81020	Bolt	2	80054-
6		01643-31032	Washer	2	80054-
7		426-56-21990	Plug	4	80054-
8		14X-Y11-1661	Plate	1	80054-
9		01010-81225	Bolt	2	80054-
10		01643-31232	Washer	2	80054-
11		14X-06-52881	Bracket	1	80054-
12		01010-81020	Bolt	2	80054-
13		01643-31032	Washer	2	80054-
14		08192-22100	Connector Body	1	80054-
15		08191-00770	Plug, Connector	2	80054-
16		195-979-4841	Hose	1	80054-
17		144-Z79-2840	Plug	1	80054-
18		09479-02400	Clamp	2	80054-

https://truckmanualshub.com/

FIG. K0830-001001 Fire Extinguisher, English

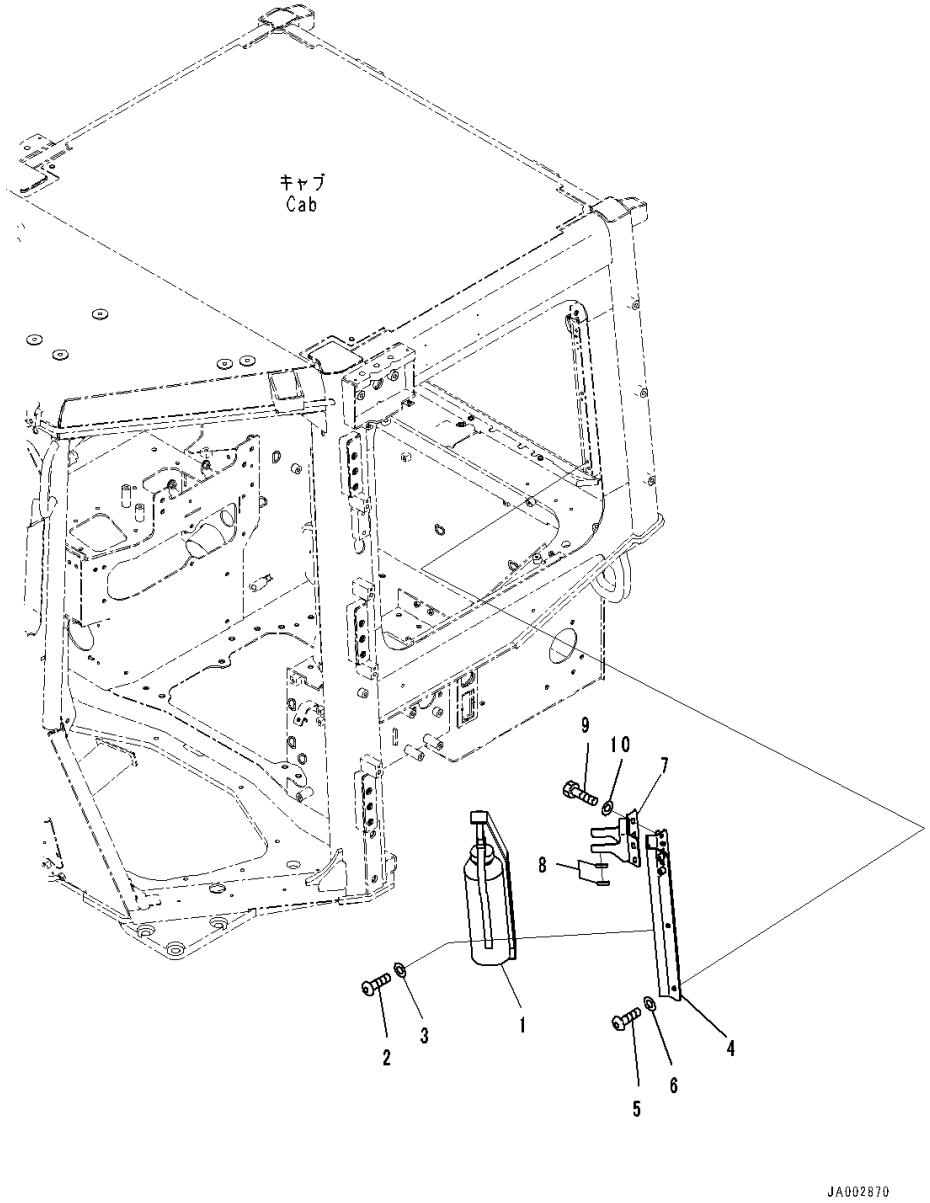

Index	Code	Part Number	Description	Qty	Serial Number
1		09495-40010	Fire Extinguisher, English	1	80001-
2		01245-00620	Screw	6	80001-
3		01643-70623	Washer	6	80001-
4		14X-Y79-3711	Bracket	1	80001-
5		01245-00630	Screw, Hexagon Socket Head	6	80001-
6		01643-70623	Washer	6	80001-
7		14X-Y79-3731	Bracket	1	80001-
8		14X-Y79-3721	• Trim	2	80001-
9		01010-D0816	Bolt	4	80001-
10		01643-70823	Washer	4	80001-

https://truckmanualshub.com/

FIG. K0830-004001 Fire Extinguisher, For ROPS Canopy

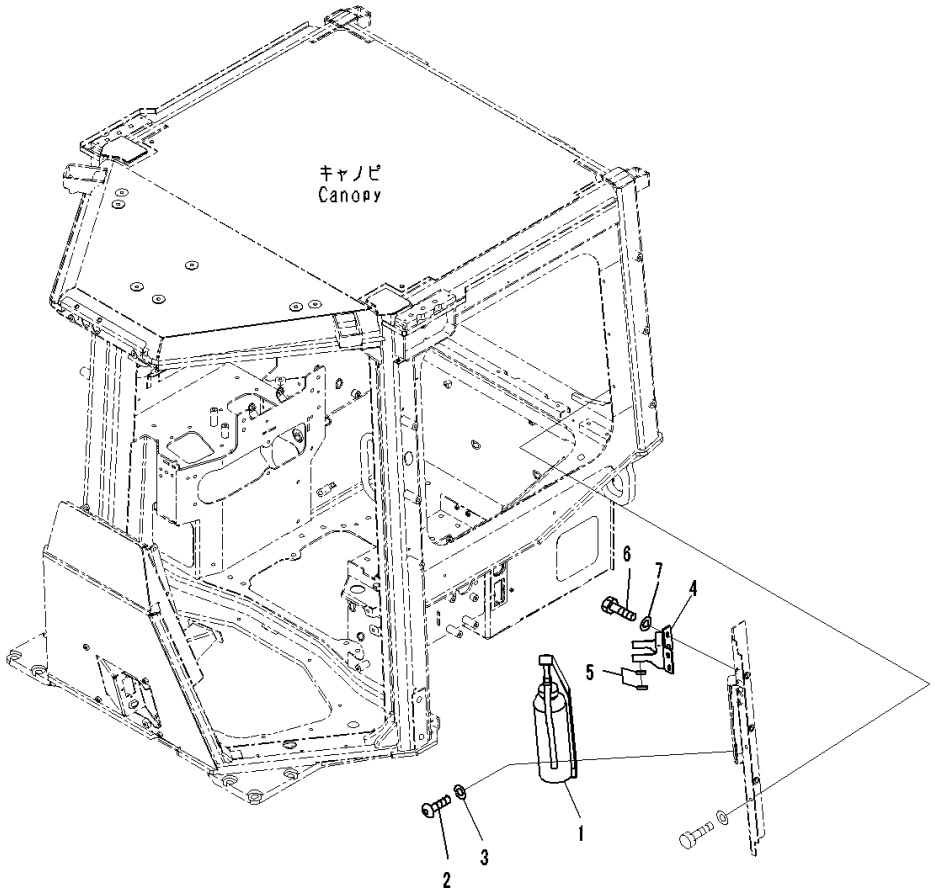

Index	Code	Part Number	Description	Qty	Serial Number
1		09495-40010	Fire Extinguisher, English	1	80054-
2		01245-00620	Screw	6	80054-
3		01643-70623	Washer	6	80054-
4		14X-Y79-3731	Bracket	1	80054-
5		14X-Y79-3721	• Trim	2	80054-
6		01010-D0816	Bolt	4	80054-
7		01643-70823	Washer	4	80054-

https://truckmanualshub.com/

FIG. K0860-002001 Cup Holder

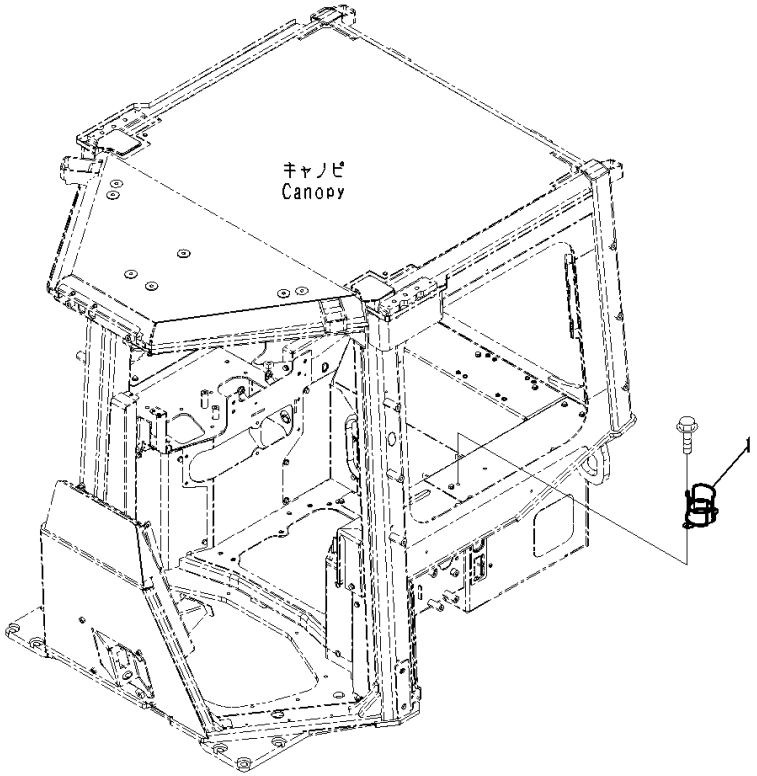

Index	Code	Part Number	Description	Qty	Serial Number
1		14X-911-6180	Bracket	1	80054-

https://truckmanualshub.com/

FIG. K0890-002001 Lunch Box Holder

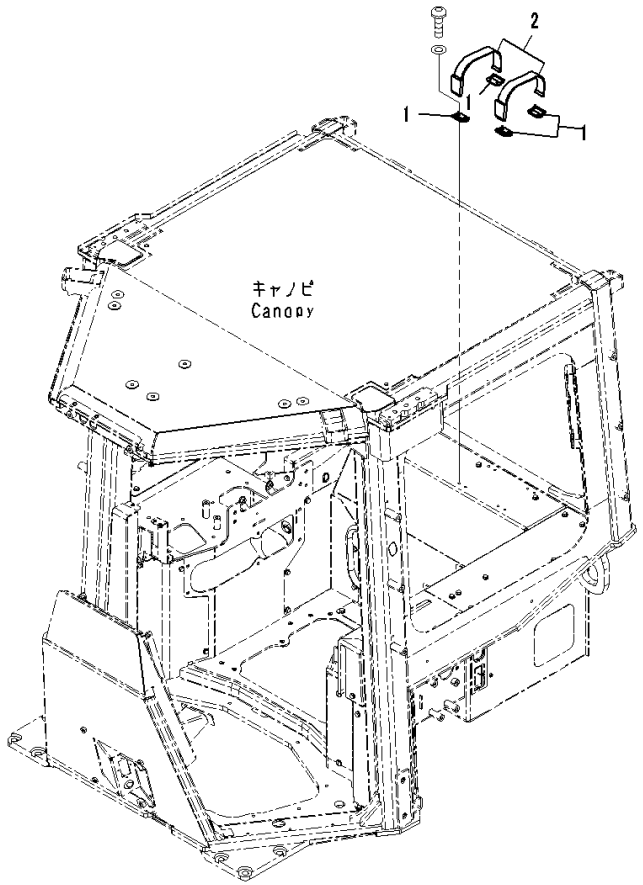

Index	Code	Part Number	Description	Qty	Serial Number
1		14X-Y79-1241	Plate	4	80054-
2		423-54-42790	Band	2	80054-

https://truckmanualshub.com/

FIG. K2110-001001 Dozer Control, For Machine Without Rear Actuator, Armrest

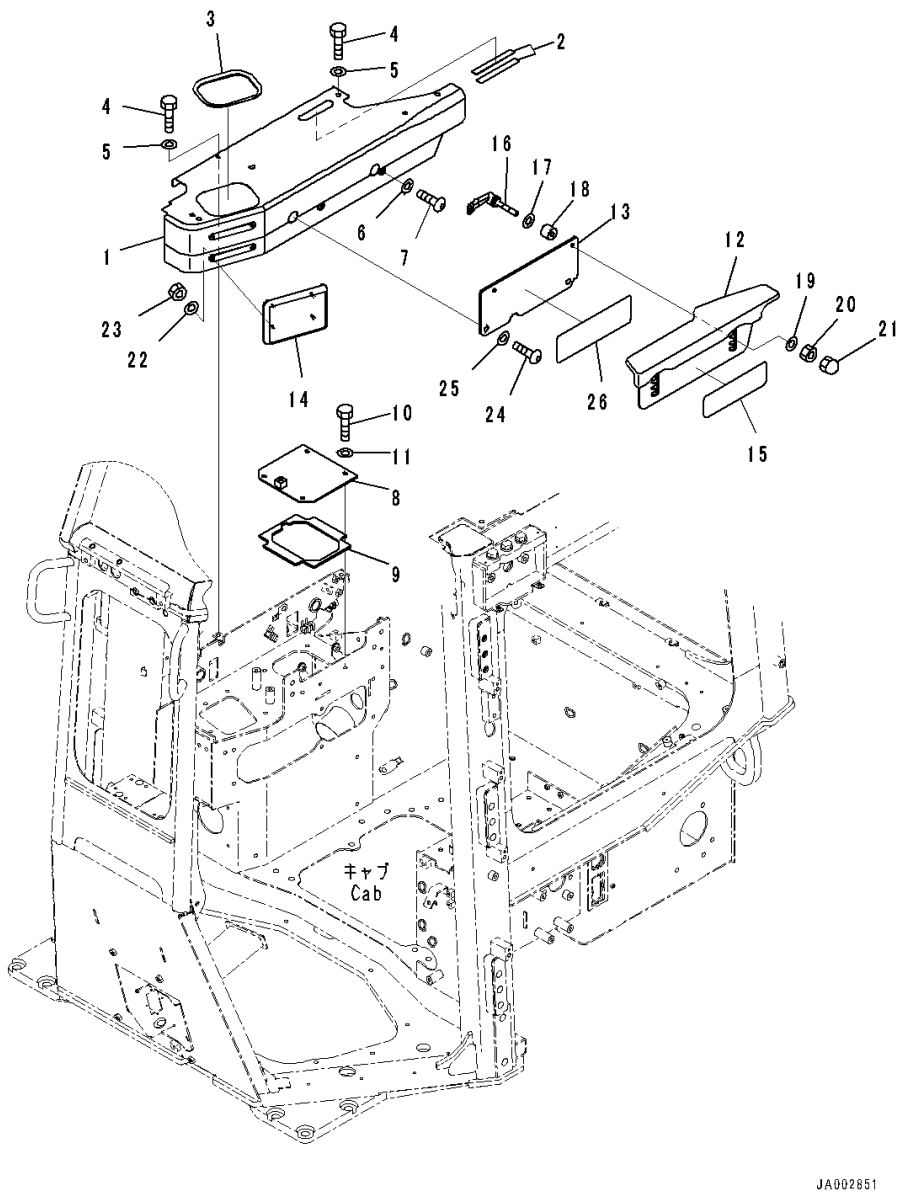

Index	Code	Part Number	Description	Qty	Serial Number
1		14X-54-56631	Cover	1	80001-
2		14X-43-48110	• Awning	2	80001-
3		14X-54-16490	• Plate	1	80001-
4		01010-D0825	Bolt	4	80001-
5		01643-70823	Washer	4	80001-
6		01643-70623	Washer	2	80001-
7		01245-00620	Screw	2	80001-
8		14X-54-56661	Cover	1	80001-
9		14X-54-56670	• Seal,Bonded	1	80001-
10		01010-D0825	Bolt	4	80001-
11		01643-70823	Washer	4	80001-
12		14X-54-56531	Armrest Assembly	1	80001-
13		14X-54-56542	Plate	1	80017-
14		14X-54-56910	Pad	1	80001-
15		14X-54-56591	Plate,Bonded	1	80001-
16		423-43-38170	Lever	2	80001-
17		418-54-35450	Washer	2	80001-
18		17A-43-46380	Spacer	2	80001-
19		418-54-35450	Washer	2	80001-
20		195-43-43370	Nut	2	80001-
21		01546-10812	Nut	2	80001-
22		01643-30623	Washer	4	80001-
23		01580-00605	Nut	4	80001-
24		01245-01030	Screw	2	80001-
25		01643-71032	Washer	2	80001-
26		134-54-66190	Plate	1	80001-

https://truckmanualshub.com/

FIG. K2110-001002 Dozer Control, Lever

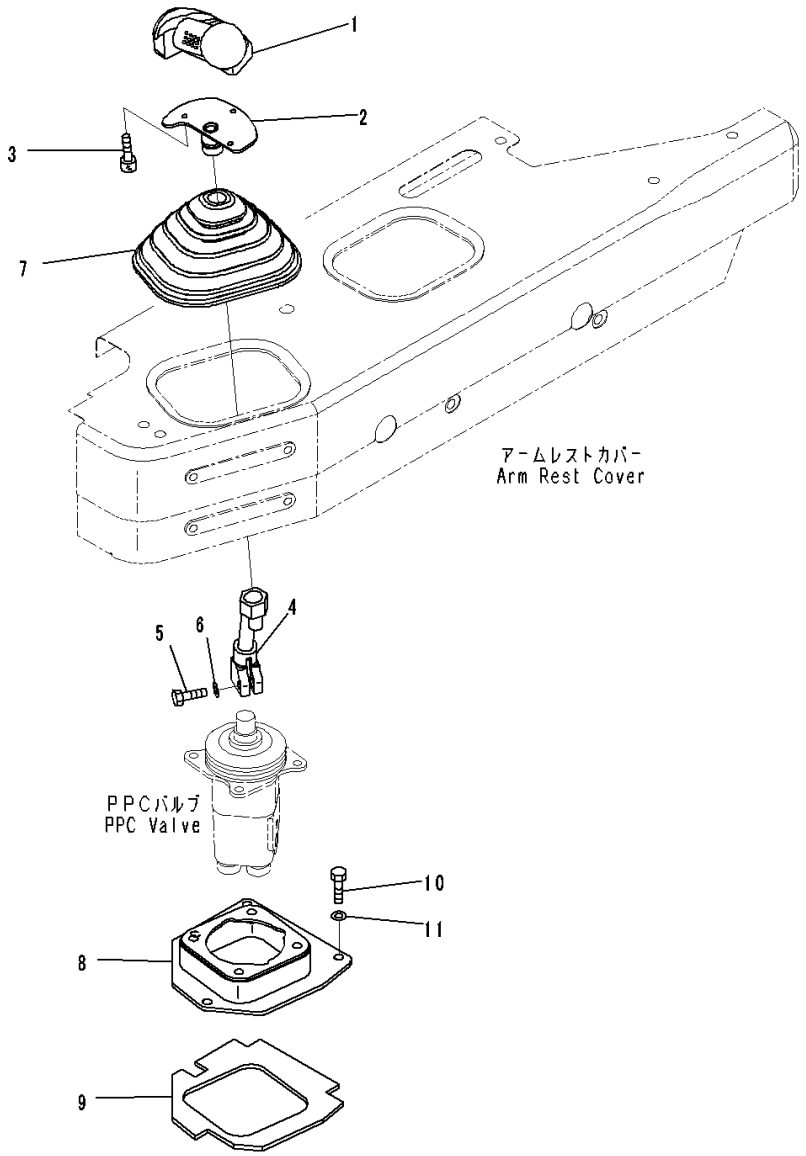

Index	Code	Part Number	Description	Qty	Serial Number
		Note: This list covers following specifications.			
		For Machine Without Rear Actuator			
		For Machine With Rear Actuator			
		For Machine Without Rear Actuator, ROPS Canopy			
		For Machine With Rear Actuator, ROPS Canopy			
1		195-43-64411	Knob Assembly	1	80001-
2		19M-43-38220	Bracket	1	80001-
3		01252-80510	Bolt	3	80001-
4		14X-43-34310	Lever	1	80001-
5		07372-21030	Bolt	1	80001-
6		01640-21016	Washer	1	80001-
7		11Y-43-11181	Boot	1	80001-
8		14X-43-51350	Bracket	1	80001-
9		14X-43-51370	• Seal,Bonded	1	80001-
10		01010-80830	Bolt	4	80001-
11		01643-30823	Washer	4	80001-

https://truckmanualshub.com/

FIG. K2110-001003 Dozer Control, PPC Valve for Blade

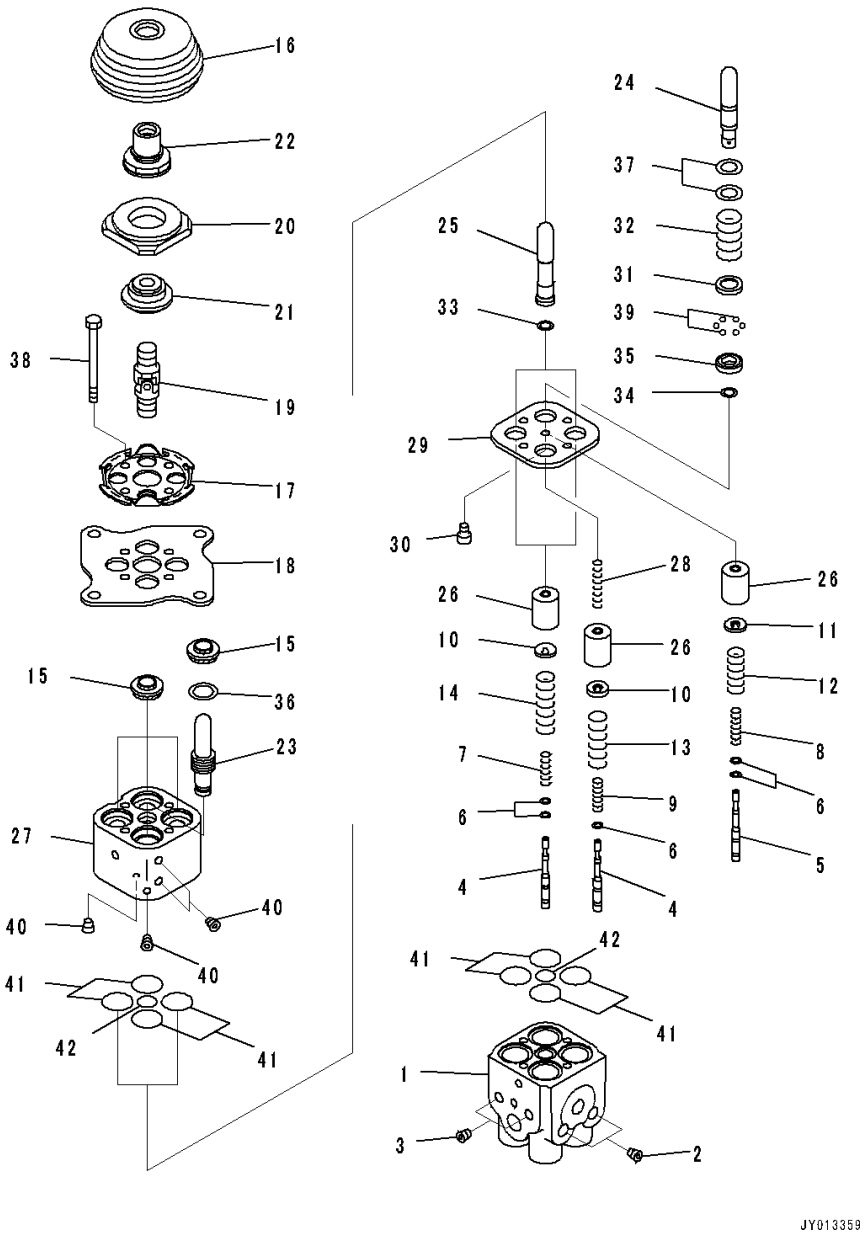

Index	Code	Part Number	Description	Qty	Serial Number
		Note: This list covers following specifications.			
		For Machine Without Rear Actuator			
		With Power Tilt Pitch Dozer, For Machine With Rear Actuator			
		For Machine With Rear Actuator			
		With Power Tilt Pitch Dozer			
		With Power Tilt Pitch Dozer, ROPS Canopy			
		With Power Tilt Pitch Dozer, For Machine With Rear Actuator, ROPS Canopy			
		For Machine Without Rear Actuator, ROPS Canopy			
		For Machine With Rear Actuator, ROPS Canopy			
		702-16-06270	Valve, Pilot	1	80001-
1	C1		• Body	1	80001-
2	C1		• Plug	2	80001-
3	C1		• Plug	2	80001-
4	C1		• Valve	3	80001-
5	C1		• Valve	1	80001-
6	C1		• Shim, T=0.30mm	4	80001-
	C1		• Shim, T=0.20mm	5	80001-
7	C1		• Spring	2	80001-
8	C1		• Spring	1	80001-
9	C1		• Spring	1	80001-
10	C1		• Retainer	3	80001-
11	C1		• Retainer	3	80001-
12	C1		• Spring	1	80001-
13	C1		• Spring	1	80001-
14	C1		• Spring	2	80001-
15		702-16-71150	• Seal	4	80001-
16		702-16-71280	• Boot	1	80001-
17	C1		• Plate	1	80001-
18	C1		• Plate	1	80001-
19		702-16-51240	• Universal Joint	1	80001-
20	C1		• Disc	1	80001-
21	C1		• Nut	1	80001-
22	C1		• Nut	1	80001-
23	C1		• Piston	1	80001-
24	C1		• Piston	1	80001-
25	C1		• Piston	2	80001-
26	C1		• Piston	4	80001-
27	C1		• Body	1	80001-

https://truckmanualshub.com/

FIG. K2110-001003 Dozer Control, PPC Valve for Blade

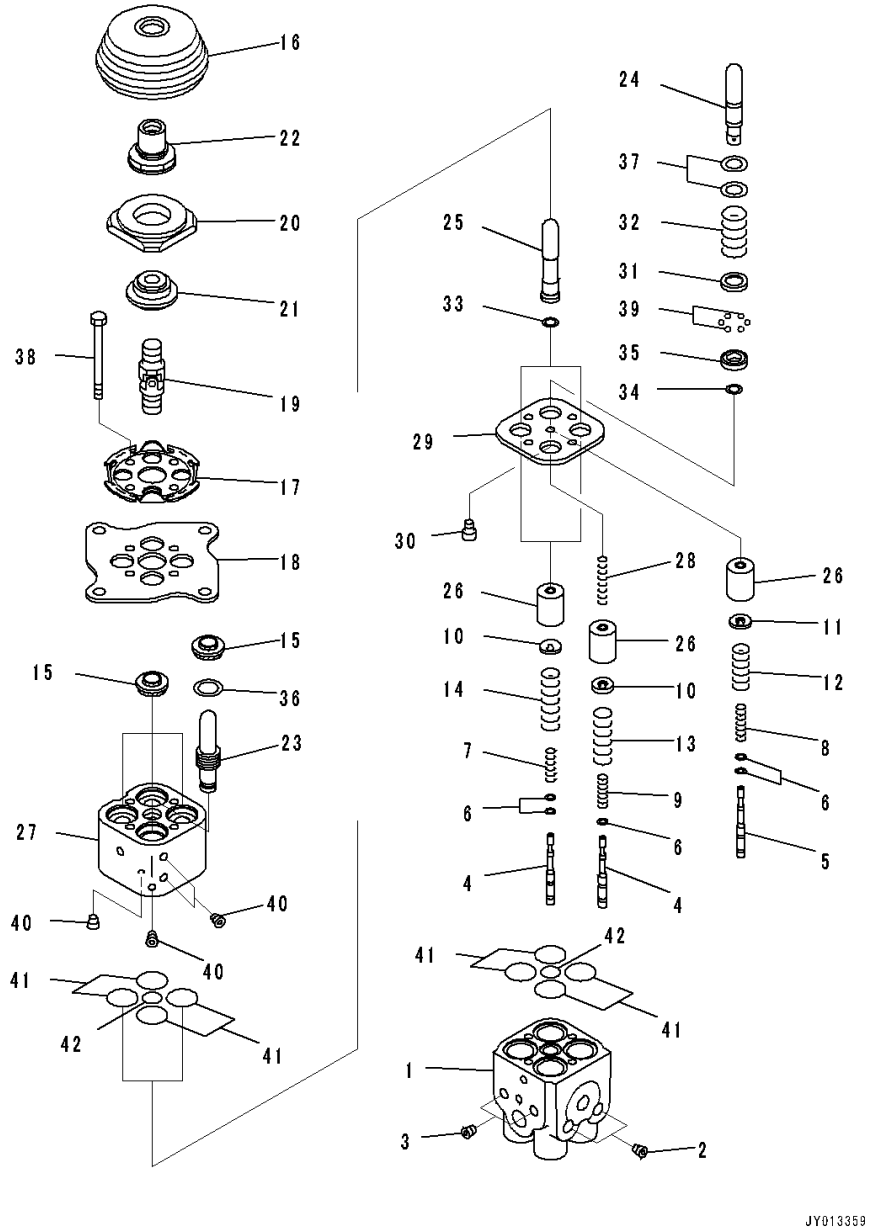

Index	Code	Part Number	Description	Qty	Serial Number
28	C1		• Spring	1	80001-
29	C1		• Plate	1	80001-
30	C1		• Orifice	1	80001-
31	C1		• Collar	1	80001-
32	C1		• Spring	1	80001-
33	C1		• Shim	2	80001-
34	C1		• Shim	1	80001-
	C1		• Shim	1	80001-
	C1		• Shim	1	80001-
35	C1		• Retainer	1	80001-
36		702-16-72810	• Seat	1	80001-
37	C1		• Spacer	4	80001-
38		01010-80670	• Bolt	4	80001-
39	C1		• Ball	13	80001-
40	C1		• Screw	4	80001-
41	C1		• O-ring	8	80001-
42	C1		• O-ring	2	80001-

https://truckmanualshub.com/

FIG. K2110-001004 Dozer Control, Hose

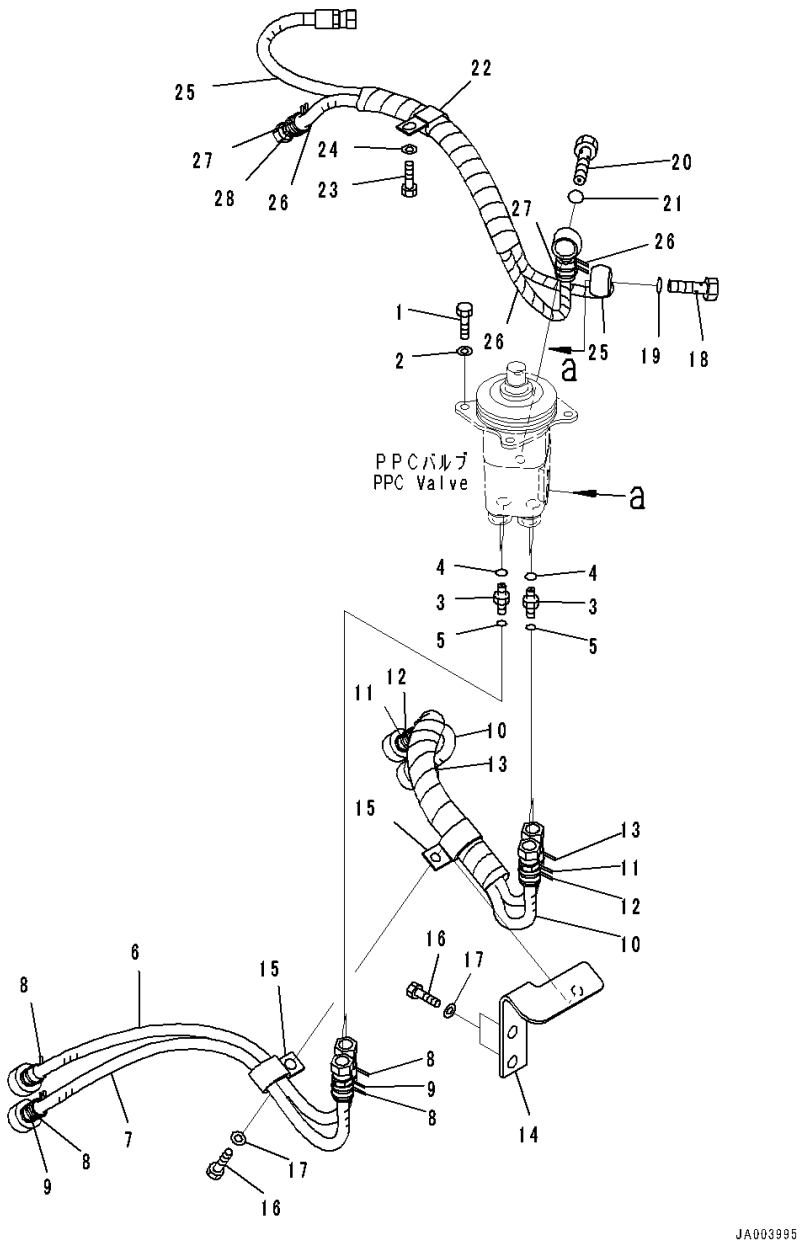

Index	Code	Part Number	Description	Qty	Serial Number
		Note: This list covers following specifications.			
		For Machine Without Rear Actuator			
		For Machine Without Rear Actuator, ROPS Canopy			
		For Machine With Rear Actuator, ROPS Canopy			
1		01010-80820	Bolt	4	80001-
2		01643-30823	Washer	4	80001-
3		02781-0021D	Union	4	80001-
4		07002-11423	O-ring	4	80001-
5		02896-11008	O-ring	4	80001-
		14X-62-53101	Hose Assembly	1	80001-
6		14X-62-53950	• Hose	1	80001-
7		14X-62-54820	• Hose	1	80001-
8		206-62-87990	• Band, Orange	4	80001-
9		20Y-62-22850	• Band, Green	2	80001-
		14X-62-54810	Hose Assembly	1	80001-
10		14X-62-54760	• Hose	2	80001-
11		20Y-62-22820	• Band, Blue	2	80001-
12		20Y-62-22830	• Band, White	2	80001-
13		20Y-62-22850	• Band, Green	2	80001-
14		14X-62-54511	Bracket	1	80001-
15		04435-51410	Clip	2	80001-
16		01010-81020	Bolt	3	80001-
17		01643-31032	Washer	3	80001-
18		702-16-53240	Plug	1	80001-
19		07000-12018	O-ring	1	80017-
20		203-62-57730	Bolt, Eye	1	80001-
21		07000-12018	O-ring	1	80017-
22		04435-51410	Clip	1	80001-
23		01010-81020	Bolt	1	80001-
24		01643-31032	Washer	1	80001-
		14X-62-53151	Hose Assembly	1	80001-
25		14X-62-53351	• Hose	1	80001-
26		14X-62-53361	• Hose	1	80001-
27		20Y-62-22790	• Band, Red	2	80001-
28		20Y-62-22860	• Band, Brown	2	80001-

https://truckmanualshub.com/

FIG. K2110-005001 Dozer Control, Armrest

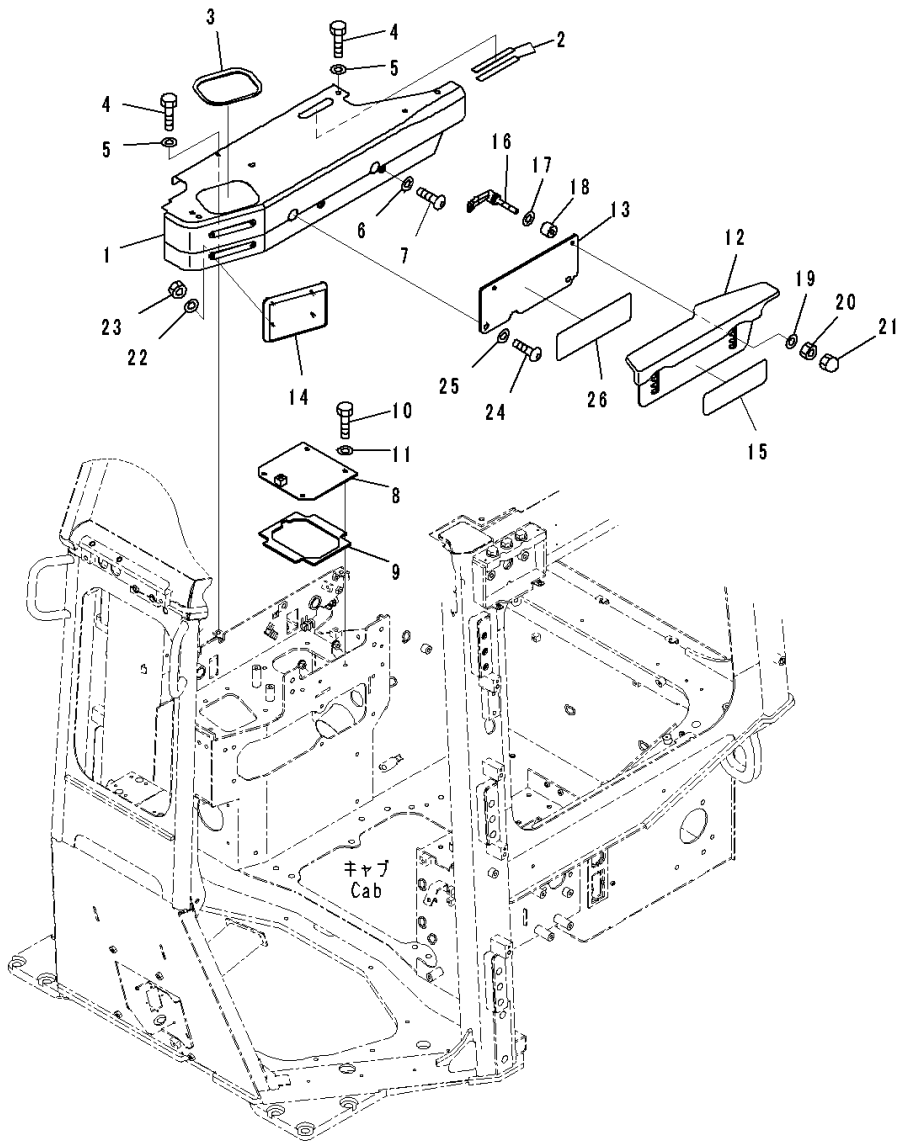

Index	Code	Part Number	Description	Qty	Serial Number
		Note: This list covers following specifications.			
		With Power Angle Power Tilt Dozer			
		With Power Tilt Pitch Dozer			
1		14X-54-56631	Cover	1	80001-
2		14X-43-48110	• Awning	2	80001-
3		14X-54-16490	• Plate	1	80001-
4		01010-D0825	Bolt	4	80001-
5		01643-70823	Washer	4	80001-
6		01643-70623	Washer	2	80001-
7		01245-00620	Screw	2	80001-
8		14X-54-56661	Cover	1	80001-
9		14X-54-56670	• Seal,Bonded	1	80001-
10		01010-D0825	Bolt	4	80001-
11		01643-70823	Washer	4	80001-
12		14X-54-56531	Armrest Assembly	1	80001-
13		14X-54-56541	Plate	1	80001-
14		14X-54-56910	Pad	1	80001-
15		14X-54-56591	Plate,Bonded	1	80001-
16		423-43-38170	Lever	2	80001-
17		418-54-35450	Washer	2	80001-
18		17A-43-46380	Spacer	2	80001-
19		418-54-35450	Washer	2	80001-
20		195-43-43370	Nut	2	80001-
21		01546-10812	Nut	2	80001-
22		01643-30623	Washer	4	80001-
23		01580-00605	Nut	4	80001-
24		01245-01030	Screw	2	80001-
25		01643-71032	Washer	2	80001-
26		134-54-66190	Plate	1	80001-

https://truckmanualshub.com/

FIG. K2110-005002 Dozer Control, Lever

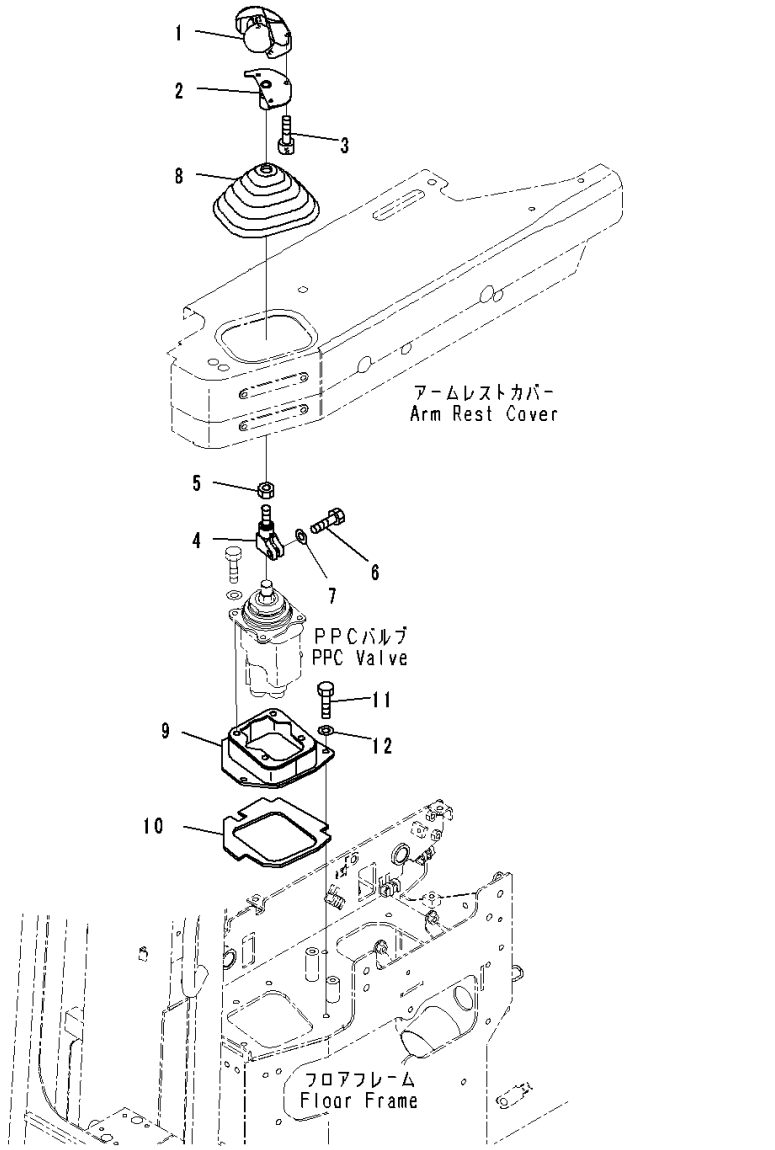

Index	Code	Part Number	Description	Qty	Serial Number
		Note: This list covers following specifications.			
		With Power Angle Power Tilt Dozer			
		With Power Angle Power Tilt Dozer, For Machine With Rear Actuator			
		With Power Angle Power Tilt Dozer, For Machine With Rear Actuator, ROPS Canopy			
		With Power Angle Power Tilt Dozer, ROPS Canopy			
1		195-43-64411	Knob Assembly	1	80001-
2		14X-43-51340	Bracket	1	80001-
3		01252-80510	Bolt	3	80001-
4		11Y-43-12710	Lever	1	80001-
5		20T-43-71190	Nut	1	80001-
6		07372-21030	Bolt	1	80001-
7		01640-21016	Washer	1	80001-
8		11Y-43-11181	Boot	1	80001-
9		14X-43-51311	Bracket	1	80001-
10		14X-43-51330	• Seal,Bonded	1	80001-
11		01010-80830	Bolt	4	80001-
12		01643-30823	Washer	4	80001-

https://truckmanualshub.com/

FIG. K2110-005003 Dozer Control, PPC Valve for PAT (1/2)

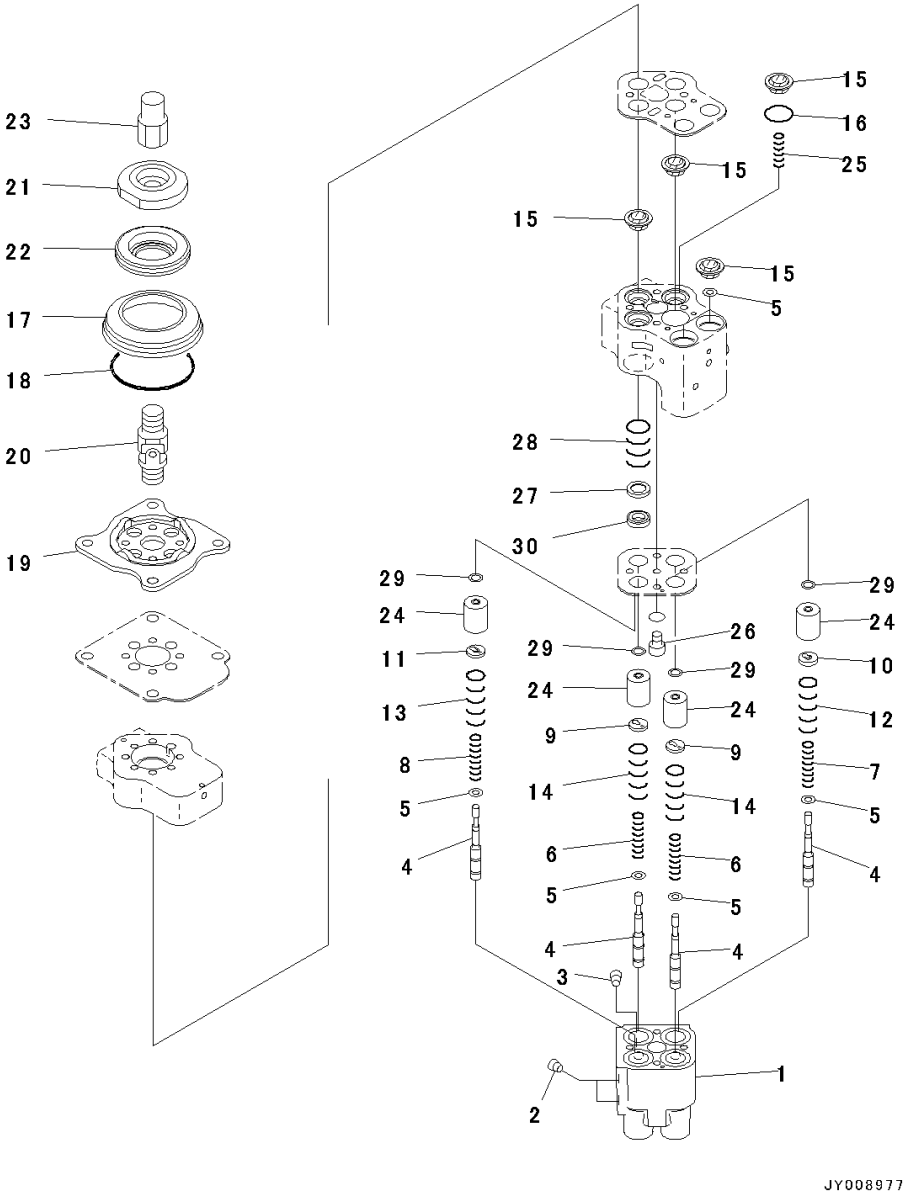

Index	Code	Part Number	Description	Qty	Serial Number
		Note: This list covers following specifications.			
		With Power Angle Power Tilt Dozer			
		With Power Angle Power Tilt Dozer, For Machine With Rear Actuator			
		With Power Angle Power Tilt Dozer, For Machine With Rear Actuator, ROPS Canopy			
		With Power Angle Power Tilt Dozer, ROPS Canopy			
		702-16-06280	Valve, PPC	1	80001-
1	C1		• Valve Body	1	80001-
2	C1		• Plug	2	80001-
3	C1		• Plug	2	80001-
4	C1		• Valve	4	80001-
5	C1		• Shim, T=0.30mm	6	80001-
6	C1		• Spring	2	80001-
7	C1		• Spring	1	80001-
8	C1		• Spring	1	80001-
9	C1		• Retainer	2	80001-
10	C1		• Retainer	1	80001-
11	C1		• Retainer	1	80001-
12	C1		• Spring	1	80001-
13	C1		• Spring	1	80001-
14	C1		• Spring	2	80001-
15	C1		• Seal	6	80001-
16	C1		• O-ring	3	80001-
17		702-16-58820	• Boot	1	80001-
18		07000-12070	• O-ring	1	80001-
19	C1		• Plate	1	80001-
20		702-16-51240	• Universal Joint	1	80001-
21	C1		• Plug	1	80001-
22	C1		• Disc	1	80001-
23		702-16-59670	• Cap	1	80001-
24	C1		• Piston	4	80001-
25	C1		• Spring	1	80001-
26	C1		• Orifice	1	80001-
27	C1		• Collar	1	80001-
28	C1		• Spring	1	80001-
29	C1		• Shim	4	80001-
30	C1		• Retainer	1	80001-

https://truckmanualshub.com/

FIG. K2110-005004 Dozer Control, PPC Valve for PAT (2/2)

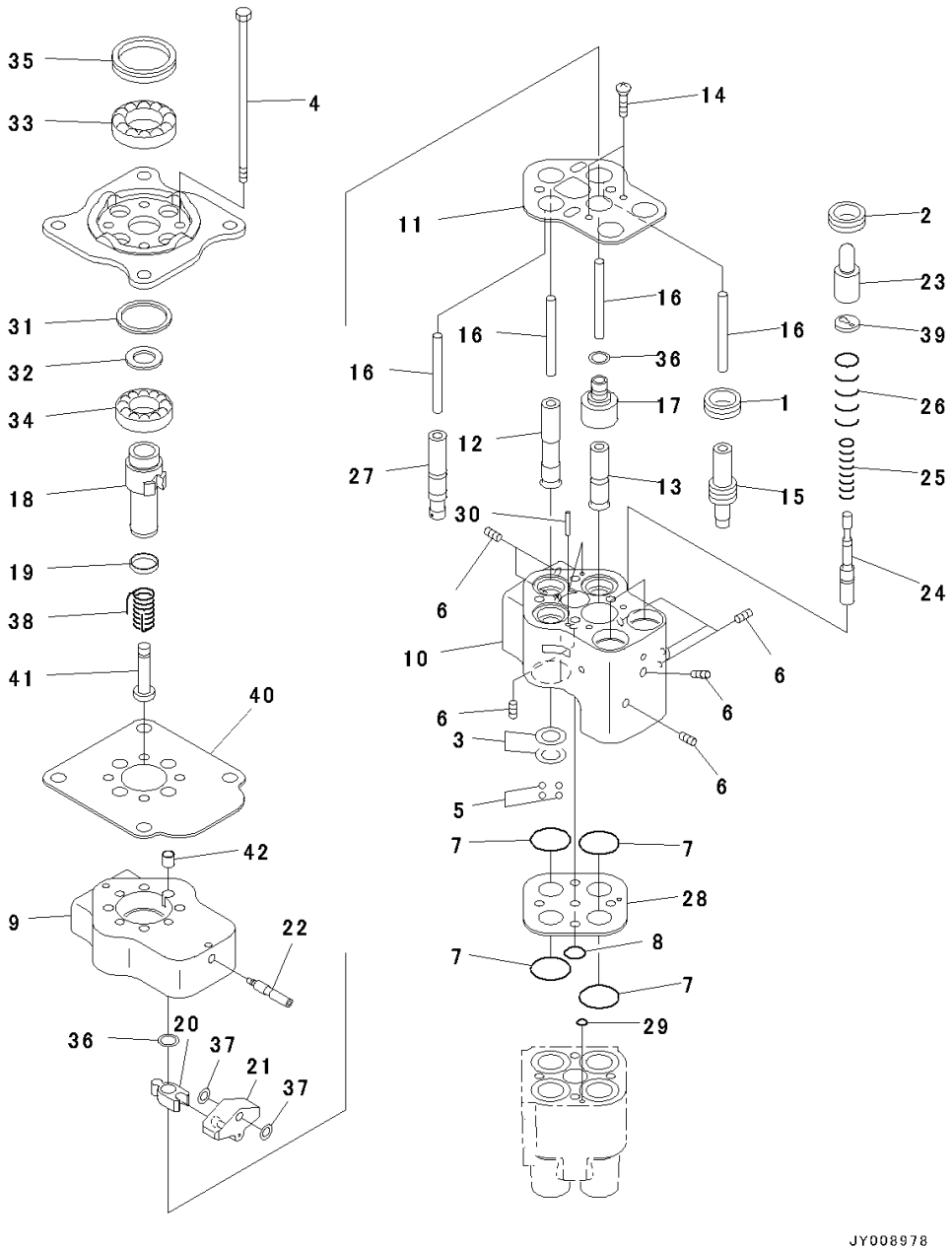

Index	Code	Part Number	Description	Qty	Serial Number
		Note: This list covers following specifications.			
		With Power Angle Power Tilt Dozer			
		With Power Angle Power Tilt Dozer, For Machine With Rear Actuator			
		With Power Angle Power Tilt Dozer, For Machine With Rear Actuator, ROPS Canopy			
		With Power Angle Power Tilt Dozer, ROPS Canopy			
		702-16-06280	Valve, PPC	1	80001-
1	C1		• Collar	1	80001-
2	C1		• Collar	2	80001-
3	C1		• Spacer	4	80001-
4	C1		• Bolt	4	80001-
5	C1		• Ball	13	80001-
6	C1		• Screw	8	80001-
7	C1		• O-ring	8	80001-
8	C1		• O-ring	2	80001-
9	C1		• Block	1	80001-
10	C1		• Block	1	80001-
11	C1		• Plate	1	80001-
12	C1		• Rod	1	80001-
13	C1		• Rod	1	80001-
14	C1		• Bolt, Hexagon Socket Head	2	80001-
15	C1		• Piston	1	80001-
16	C1		• Rod	4	80001-
17	C1		• Sleeve	1	80001-
18	C1		• Shaft	1	80001-
19	C1		• Bushing	1	80001-
20	C1		• Lever	1	80001-
21	C1		• Lever	1	80001-
22	C1		• Shaft	1	80001-
23	C1		• Piston	2	80001-
24	C1		• Spool	2	80001-
25	C1		• Spring	2	80001-
26	C1		• Spring	2	80001-
27	C1		• Piston	1	80001-
28	C1		• Plate	1	80001-
29	C1		• O-ring	2	80001-
30	C1		• Pin	2	80001-
31	C1		• Washer	1	80001-
32	C1		• Washer	1	80001-

https://truckmanualshub.com/

FIG. K2110-005004 Dozer Control, PPC Valve for PAT (2/2)

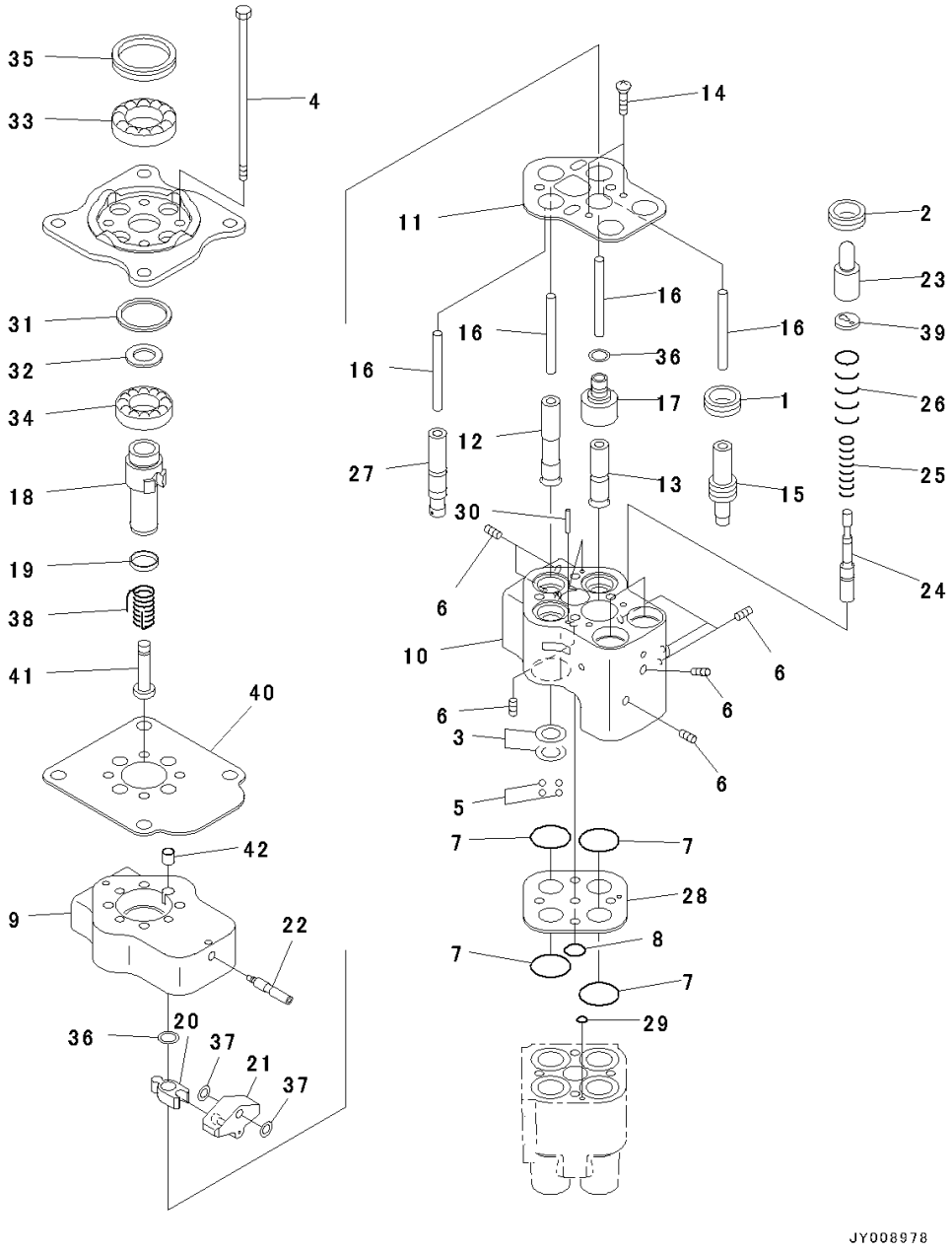

Index	Code	Part Number	Description	Qty	Serial Number
33	C1		• Bearing	1	80001-
34	C1		• Bearing	1	80001-
35	C1		• Seal	1	80001-
36	C1		• Shim	2	80001-
37	C1		• Shim	2	80001-
38	C1		• Spring	1	80001-
39	C1		• Retainer	2	80001-
40	C1		• Plate	1	80001-
41	C1		• Boss	1	80001-
42	C1		• Bushing	1	80001-

https://truckmanualshub.com/

FIG. K2110-005005 Dozer Control, Hose

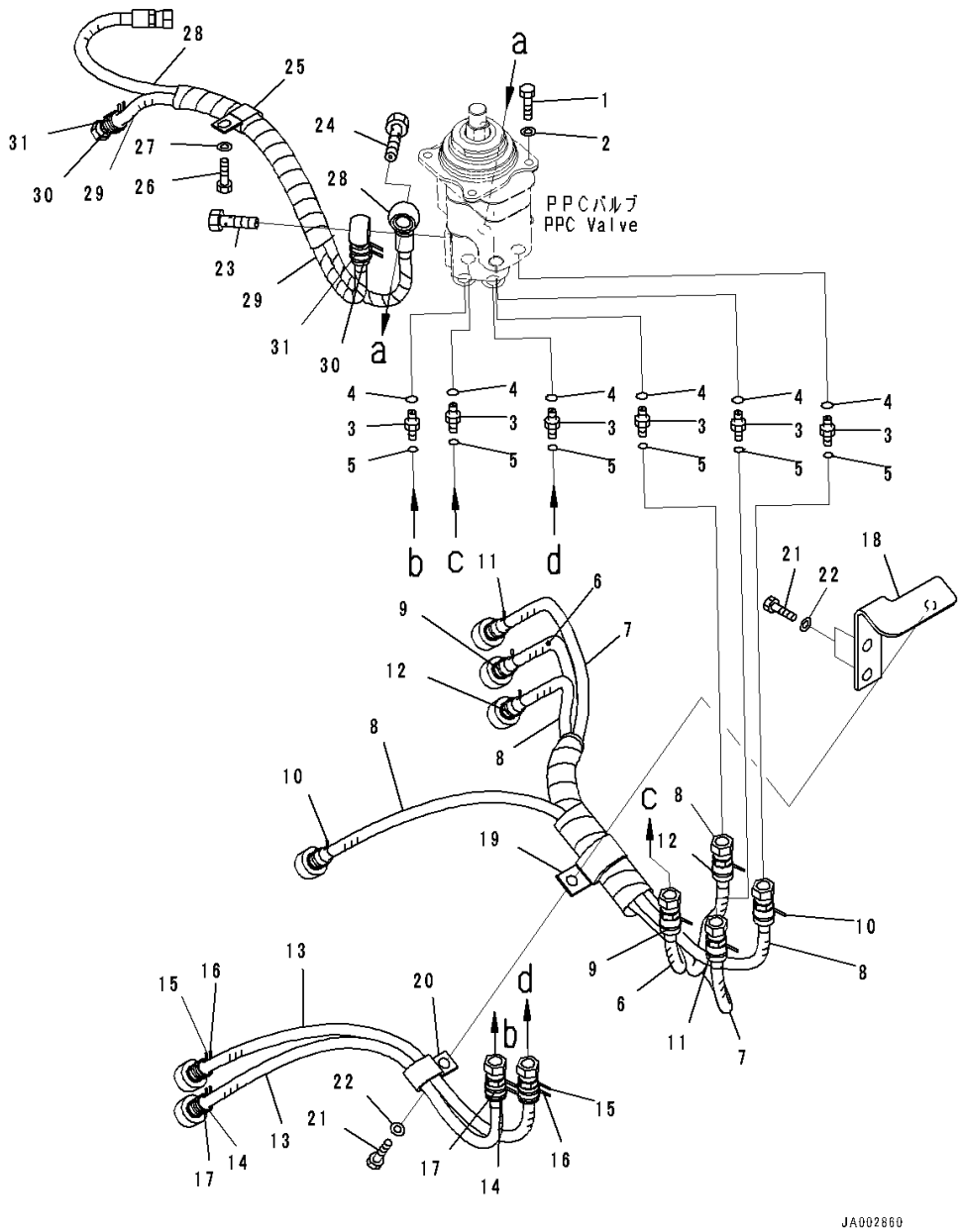

Index	Code	Part Number	Description	Qty	Serial Number
		Note: This list covers following specifications.			
		With Power Angle Power Tilt Dozer			
		With Power Angle Power Tilt Dozer, For Machine With Rear Actuator			
1		01010-80820	Bolt	4	80001-
2		01643-30823	Washer	4	80001-
3		02781-0021D	Union	6	80001-
4		07002-11423	O-ring	6	80001-
5		02896-11008	O-ring	6	80001-
		14X-62-53201	Hose Assembly	1	80001-
6		14X-62-53411	• Hose	1	80001-
7		14X-62-53691	• Hose	1	80001-
8		14X-62-54760	• Hose	2	80001-
9		206-62-87990	• Band, Orange	2	80001-
10		20Y-62-22820	• Band, Blue	2	80001-
11		20Y-62-22830	• Band, White	2	80001-
12		20Y-62-22850	• Band, Green	2	80001-
		14X-62-54831	Hose Assembly	1	80001-
13		14X-62-54820	• Hose	2	80001-
14		206-62-87990	• Band, Orange	2	80001-
15		20Y-62-22820	• Band, Blue	2	80001-
16		20Y-62-22830	• Band, White	2	80001-
17		20Y-62-22850	• Band, Green	2	80001-
18		14X-62-54511	Bracket	1	80001-
19		04435-51410	Clip	1	80001-
20		04434-52712	Clip	1	80009-
21		01010-81020	Bolt	3	80001-
22		01643-31032	Washer	3	80001-
23		702-16-53240	Plug	1	80001-
24		203-62-57730	Bolt, Eye	1	80001-
25		04435-51410	Clip	1	80001-
26		01010-81020	Bolt	1	80001-
27		01643-31032	Washer	1	80001-
		14X-62-53151	Hose Assembly	1	80001-
28		14X-62-53351	• Hose	1	80001-
29		14X-62-53361	• Hose	1	80001-
30		20Y-62-22790	• Band, Red	2	80001-
31		20Y-62-22860	• Band, Brown	2	80001-

https://truckmanualshub.com/

FIG. K2110-006001 Dozer Control, Armrest

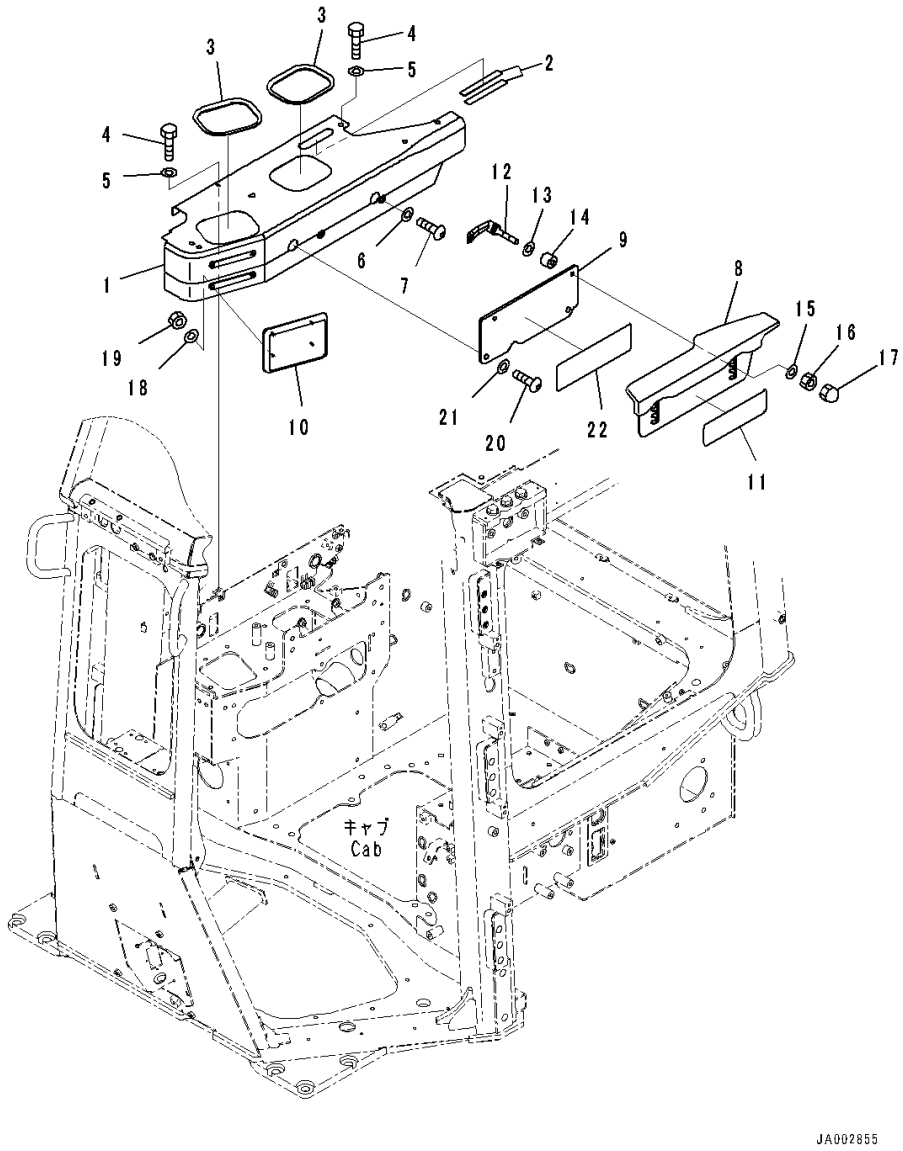

Index	Code	Part Number	Description	Qty	Serial Number
		Note: This list covers following specifications.			
		With Power Angle Power Tilt Dozer, For Machine With Rear Actuator			
		With Power Tilt Pitch Dozer, For Machine With Rear Actuator			
		For Machine With Rear Actuator			
1		14X-54-56391	Cover	1	80001-
2		14X-43-48110	• Awning	2	80001-
3		14X-54-16490	• Plate	2	80001-
4		01010-D0825	Bolt	4	80001-
5		01643-70823	Washer	4	80001-
6		01643-70623	Washer	2	80001-
7		01245-00620	Screw	2	80001-
8		14X-54-56531	Armrest Assembly	1	80001-
9		14X-54-56541	Plate	1	80001-
10		14X-54-56910	Pad	1	80001-
11		14X-54-56591	Plate,Bonded	1	80001-
12		423-43-38170	Lever	2	80001-
13		418-54-35450	Washer	2	80001-
14		17A-43-46380	Spacer	2	80001-
15		418-54-35450	Washer	2	80001-
16		195-43-43370	Nut	2	80001-
17		01546-10812	Nut	2	80001-
18		01643-30623	Washer	4	80001-
19		01580-00605	Nut	4	80001-
20		01245-01030	Screw	2	80001-
21		01643-71032	Washer	2	80001-
22		134-54-66190	Plate	1	80001-

https://truckmanualshub.com/

FIG. K2110-006006 Dozer Control, PPC Valve for Ripper

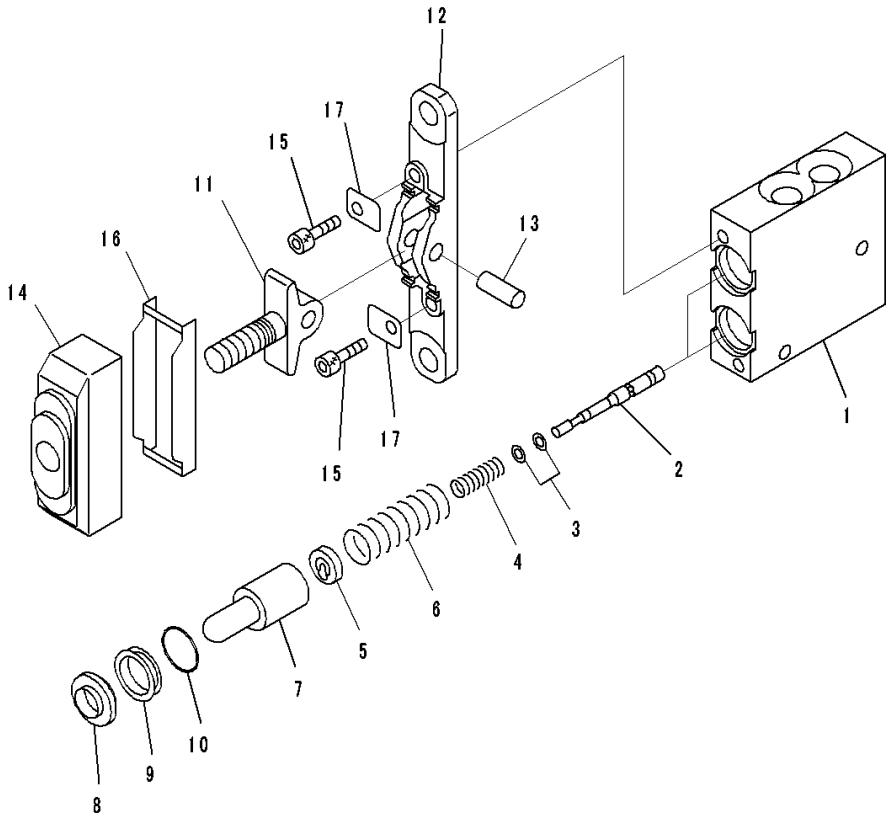

Index	Code	Part Number	Description	Qty	Serial Number
		Note: This list covers following specifications.			
		With Power Angle Power Tilt Dozer, For Machine With Rear Actuator			
		With Power Tilt Pitch Dozer, For Machine With Rear Actuator			
		For Machine With Rear Actuator			
		With Power Angle Power Tilt Dozer, For Machine With Rear Actuator, ROPS Canopy			
		With Power Tilt Pitch Dozer, For Machine With Rear Actuator, ROPS Canopy			
		For Machine With Rear Actuator, ROPS Canopy			
		702-16-01230	Valve, Pilot	1	80001-
1		702-16-54540	• Body	1	80001-
2		702-16-53120	• Valve	2	80001-
3		702-16-51140	• Shim, T=0.30mm	2	80001-
		702-16-54670	• Shim, T=0.20mm	4	80001-
4		702-16-54550	• Spring	2	80001-
5		702-16-54571	• Retainer	2	80001-
6		702-16-54560	• Spring	2	80001-
7		702-16-53170	• Piston	2	80001-
8		702-16-51270	• Seal	2	80001-
9		702-16-54580	• Collar	2	80001-
10		702-16-54590	• O-ring	2	80001-
11		702-16-54610	• Lever	1	80001-
12		702-16-54620	• Plate	1	80001-
13		702-16-54630	• Shaft	1	80001-
14		702-16-54641	• Boot	1	80001-
15		01252-30625	• Bolt	2	80001-
16		702-16-54660	• Plate	1	80001-
17		702-16-54650	• Plate	2	80001-

https://truckmanualshub.com/

FIG. K2110-006007 Dozer Control, With Power Angle Power Tilt Dozer, For Machine With Rear Actuator, Attachment Lever

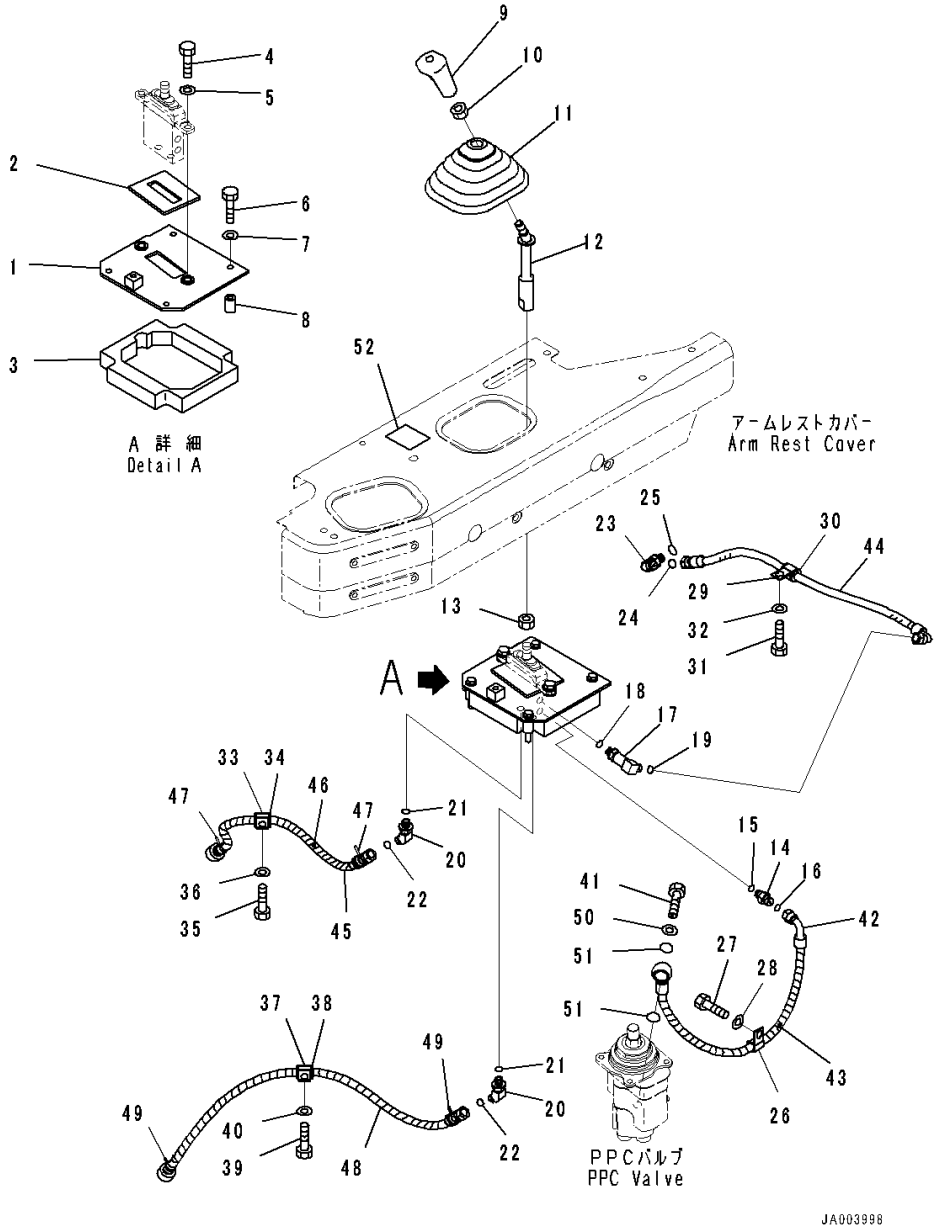

Index	Code	Part Number	Description	Qty	Serial Number
1		14X-78-51112	Bracket	1	80001-
2		14X-78-11490	• Seal,Bonded	1	80001-
3		14X-78-51131	• Seal,Bonded	1	80001-
4		01010-81030	Bolt	2	80001-
5		01643-31032	Washer	2	80001-
6		01010-80855	Bolt	4	80001-
7		01643-30823	Washer	4	80001-
8		14X-78-51141	Spacer	4	80001-
9		17A-43-42240	Knob	1	80001-
10		20T-43-71190	Nut	1	80001-
11		11Y-43-11181	Boot	1	80001-
12		14X-78-51291	Lever	1	80001-
13		01583-11408	Nut	1	80001-
14		21W-62-44510	Nipple	1	80001-
15		07002-11423	O-ring	1	80001-
16		02896-11008	O-ring	1	80001-
17		21W-62-43990	Elbow	1	80001-
18		07002-11423	O-ring	1	80001-
19		02896-11008	O-ring	1	80001-
20		21W-62-42660	Elbow	2	80001-
21		07002-11423	O-ring	2	80001-
22		02896-11008	O-ring	2	80001-
23		02782-10210	Elbow	1	80001-80008
24		07002-11423	O-ring	1	80001-80008
25		02896-11008	O-ring	1	80001-80008
26		04434-51410	Clip	1	80001-
27		01010-81020	Bolt	1	80001-
28		01643-31032	Washer	1	80001-
29		04434-51710	Clip	1	80001-
30		07095-20211	Cushion	1	80001-
31		01010-81020	Bolt	1	80001-
32		01643-31032	Washer	1	80001-
33		04434-51810	Clip	1	80001-
34		07095-20213	Cushion	1	80001-
35		01010-81020	Bolt	1	80001-
36		01643-31032	Washer	1	80001-
37		04434-51810	Clip	1	80001-
38		07095-20213	Cushion	1	80001-
39		01010-81020	Bolt	1	80001-

https://truckmanualshub.com/

FIG. K2110-006007 Dozer Control, With Power Angle Power Tilt Dozer, For Machine With Rear Actuator, Attachment Lever

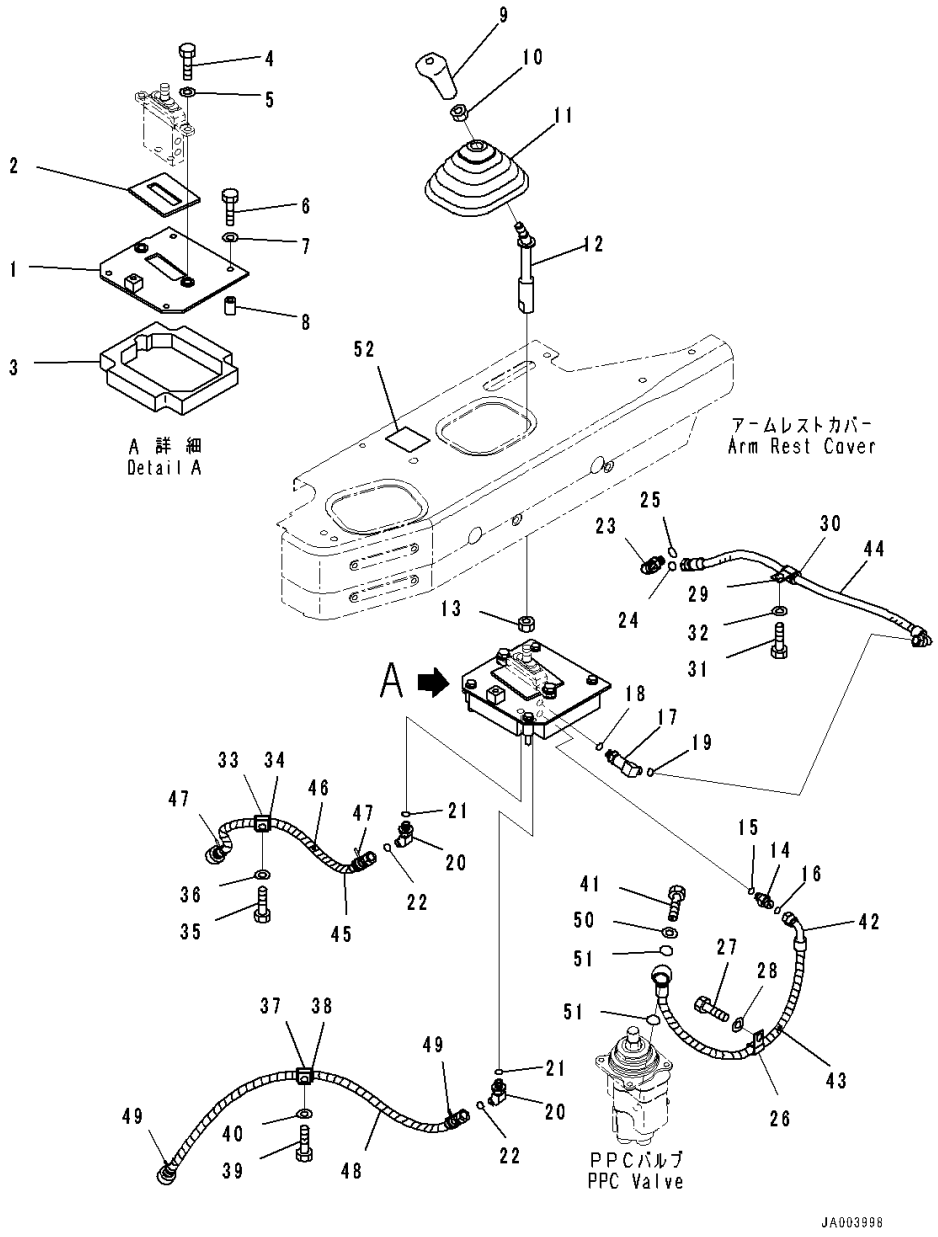

Index	Code	Part Number	Description	Qty	Serial Number
40		01643-31032	Washer	1	80001-
41		14X-78-51410	Bolt, Eye	1	80001-
42		14X-78-51450	Hose Assembly	1	80001-
43		08210-00605	• Tube, Spiral	1	80001-
44		02761-00206	Hose, Face Seal Type	1	80001-
45		14X-78-51431	Hose Assembly	1	80001-
46		08210-00604	• Tube, Spiral	1	80001-
47		20Y-62-22860	• Band, Brown	2	80001-
48		14X-78-51421	Hose Assembly	1	80001-
49		20Y-62-22790	• Band, Red	2	80001-
50		287-15-15710	Shim, T=0.5mm	1	80001-
51		07000-12018	O-ring	2	80017-
52		14X-78-11180	Plate, Operating	1	80005-

https://truckmanualshub.com/

FIG. K2110-004002 Dozer Control, Lever

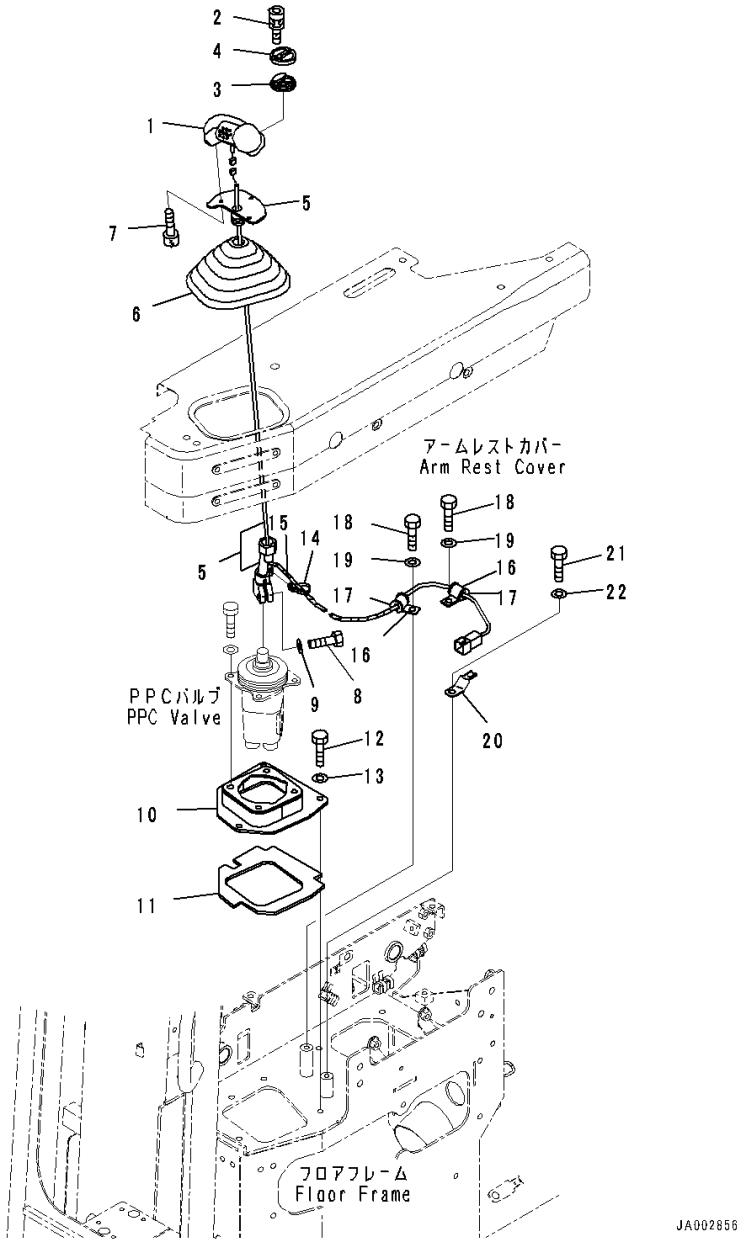

Index	Code	Part Number	Description	Qty	Serial Number
		Note: This list covers following specifications. With Power Tilt Pitch Dozer, For Machine With Rear Actuator With Power Tilt Pitch Dozer With Power Tilt Pitch Dozer, ROPS Canopy With Power Tilt Pitch Dozer, For Machine With Rear Actuator, ROPS Canopy			
1		14X-43-51911	Knob Assembly	1	80001-
2		19M-09-11510	• Bolt	2	80001-
3		17A-43-42430	• Rubber	1	80001-
4		14X-43-51921	• Cover	1	80001-
5		14X-43-51901	Lever Assembly	1	80001-
6		11Y-43-11181	• Boot	1	80001-
7		01252-80510	Bolt	3	80001-
8		07372-21030	Bolt	1	80001-
9		01640-21016	Washer	1	80001-
10		14X-43-51350	Bracket	1	80001-
11		14X-43-51370	• Seal,Bonded	1	80001-
12		01010-80830	Bolt	4	80001-
13		01643-30823	Washer	4	80001-
14		20Y-06-23940	Band	1	80001-
15		08210-00604	Tube, Spiral	1	80001-
16		04434-51410	Clip	2	80001-
17		14X-06-52780	Cushion	2	80001-
18		01010-81020	Bolt	2	80001-
19		01643-31032	Washer	2	80001-
20		08193-20010	Clip	1	80001-
21		01010-81020	Bolt	1	80001-
22		01643-31032	Washer	1	80001-

https://truckmanualshub.com/

FIG. K2110-004004 Dozer Control, With Power Tilt Pitch Dozer, For Machine With Rear Actuator, Hose

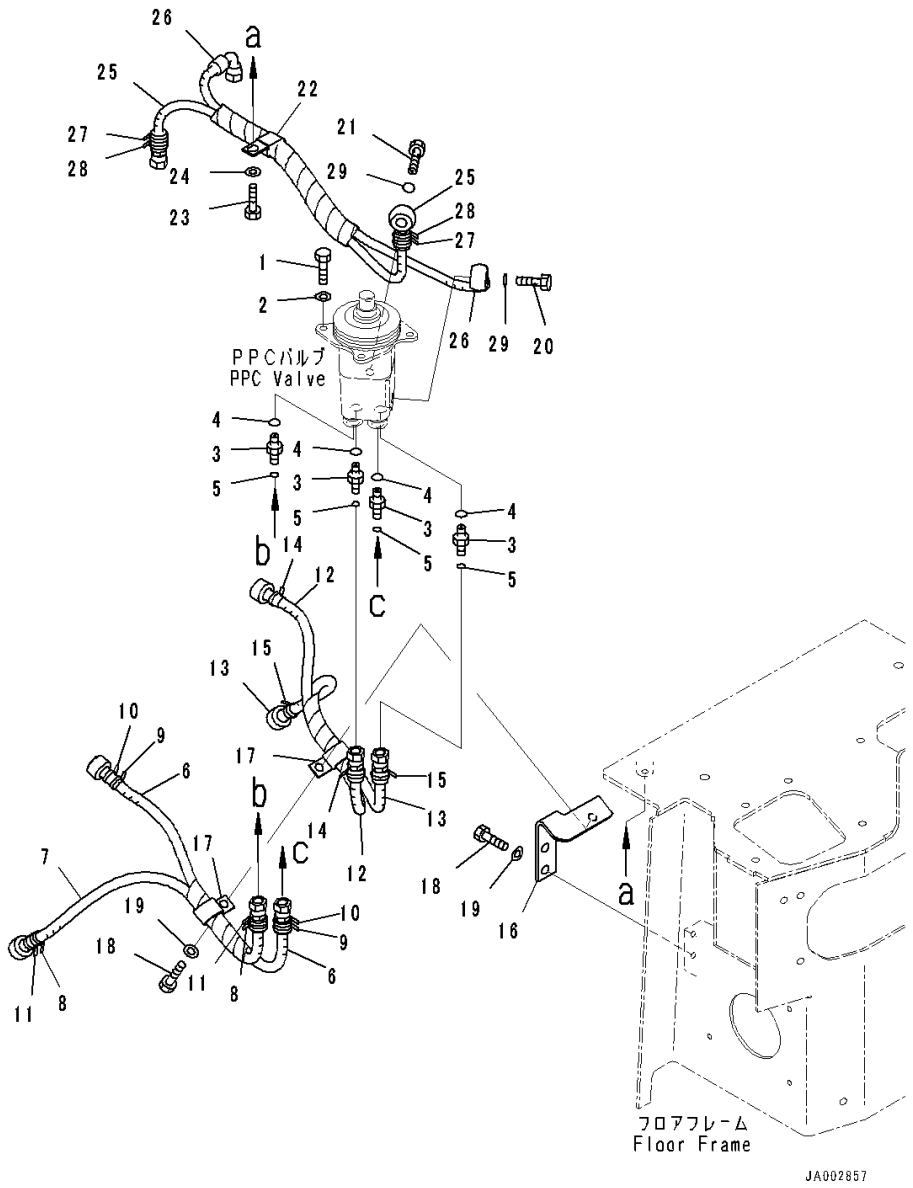

Index	Code	Part Number	Description	Qty	Serial Number
1		01010-80820	Bolt	4	80001-
2		01643-30823	Washer	4	80001-
3		02781-0021D	Union	4	80001-
4		07002-11423	O-ring	4	80001-
5		02896-11008	O-ring	4	80001-
		14X-62-54131	Hose Assembly	1	80001-
6		14X-62-53950	• Hose	1	80001-
7		21K-62-72250	• Hose	1	80001-
8		206-62-87990	• Band, Orange	2	80001-
9		20Y-62-22820	• Band, Blue	2	80001-
10		20Y-62-22830	• Band, White	2	80001-
11		20Y-62-22850	• Band, Green	2	80001-
		14X-62-54171	Hose Assembly	1	80001-
12		14X-62-53950	• Hose	1	80001-
13		14X-62-54760	• Hose	1	80001-
14		206-62-87990	• Band, Orange	2	80001-
15		20Y-62-22850	• Band, Green	2	80001-
16		14X-62-54511	Bracket	1	80001-
17		04435-51410	Clip	2	80001-
18		01010-81020	Bolt	3	80001-
19		01643-31032	Washer	3	80001-
20		702-16-53240	Plug	1	80001-
21		203-62-57730	Bolt, Eye	1	80001-
22		04435-51410	Clip	1	80001-
23		01010-81020	Bolt	1	80001-
24		01643-31032	Washer	1	80001-
		14X-62-54141	Hose Assembly	1	80001-
25		14X-62-53751	• Hose	1	80001-
26		14X-62-54860	• Hose	1	80001-
27		20Y-62-22790	• Band, Red	2	80001-
28		20Y-62-22860	• Band, Brown	2	80001-
29		07000-12018	O-ring	2	80001-

https://truckmanualshub.com/

FIG. K2110-004006 Dozer Control, Attachment Lever

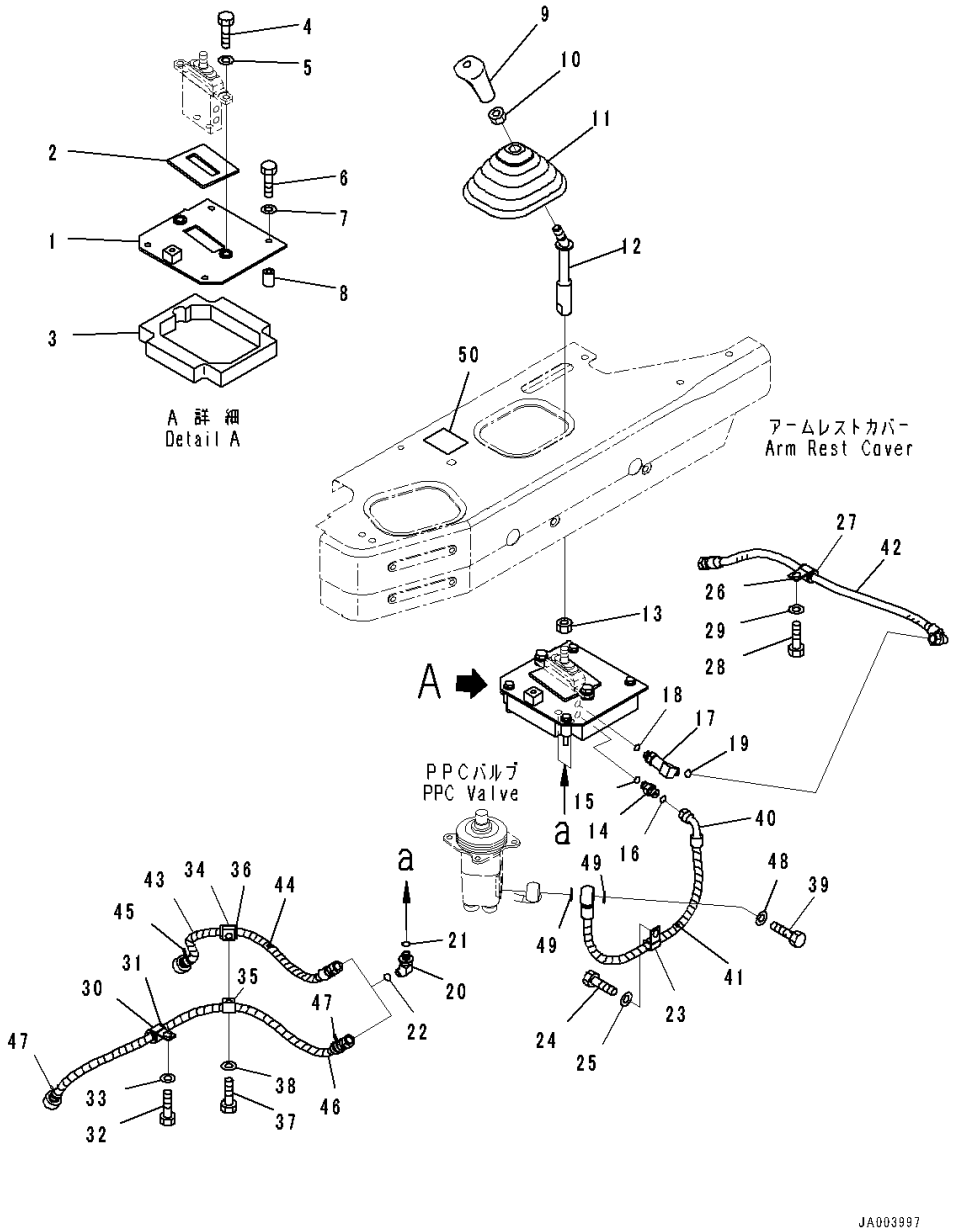

Index	Code	Part Number	Description	Qty	Serial Number
		Note: This list covers following specifications. With Power Tilt Pitch Dozer, For Machine With Rear Actuator With Power Tilt Pitch Dozer, For Machine With Rear Actuator, ROPS Canopy			
1		14X-78-51112	Bracket	1	80001-
2		14X-78-11490	• Seal,Bonded	1	80001-
3		14X-78-51131	• Seal,Bonded	1	80001-
4		01010-81030	Bolt	2	80001-
5		01643-31032	Washer	2	80001-
6		01010-80855	Bolt	4	80001-
7		01643-30823	Washer	4	80001-
8		14X-78-51141	Spacer	4	80001-
9		17A-43-42240	Knob	1	80001-
10		20T-43-71190	Nut	1	80001-
11		11Y-43-11181	Boot	1	80001-
12		14X-78-51291	Lever	1	80001-
13		01583-11408	Nut	1	80001-
14		21W-62-44510	Nipple	1	80001-
15		07002-11423	O-ring	1	80001-
16		02896-11008	O-ring	1	80001-
17		21W-62-43990	Elbow	1	80001-
18		07002-11423	O-ring	1	80001-
19		02896-11008	O-ring	1	80001-
20		21W-62-42660	Elbow	2	80001-
21		07002-11423	O-ring	2	80001-
22		02896-11008	O-ring	2	80001-
23		04434-51410	Clip	1	80001-
24		01010-81020	Bolt	1	80001-
25		01643-31032	Washer	1	80001-
26		04434-51710	Clip	1	80001-
27		07095-20211	Cushion	1	80001-
28		01010-81020	Bolt	1	80001-
29		01643-31032	Washer	1	80001-
30		04434-51810	Clip	1	80001-
31		07095-20213	Cushion	1	80001-
32		01010-81020	Bolt	1	80001-
33		01643-31032	Washer	1	80001-
34		04434-51810	Clip	1	80001-
35		04434-51210	Clip	1	80017-

https://truckmanualshub.com/

FIG. K2110-004006 Dozer Control, Attachment Lever

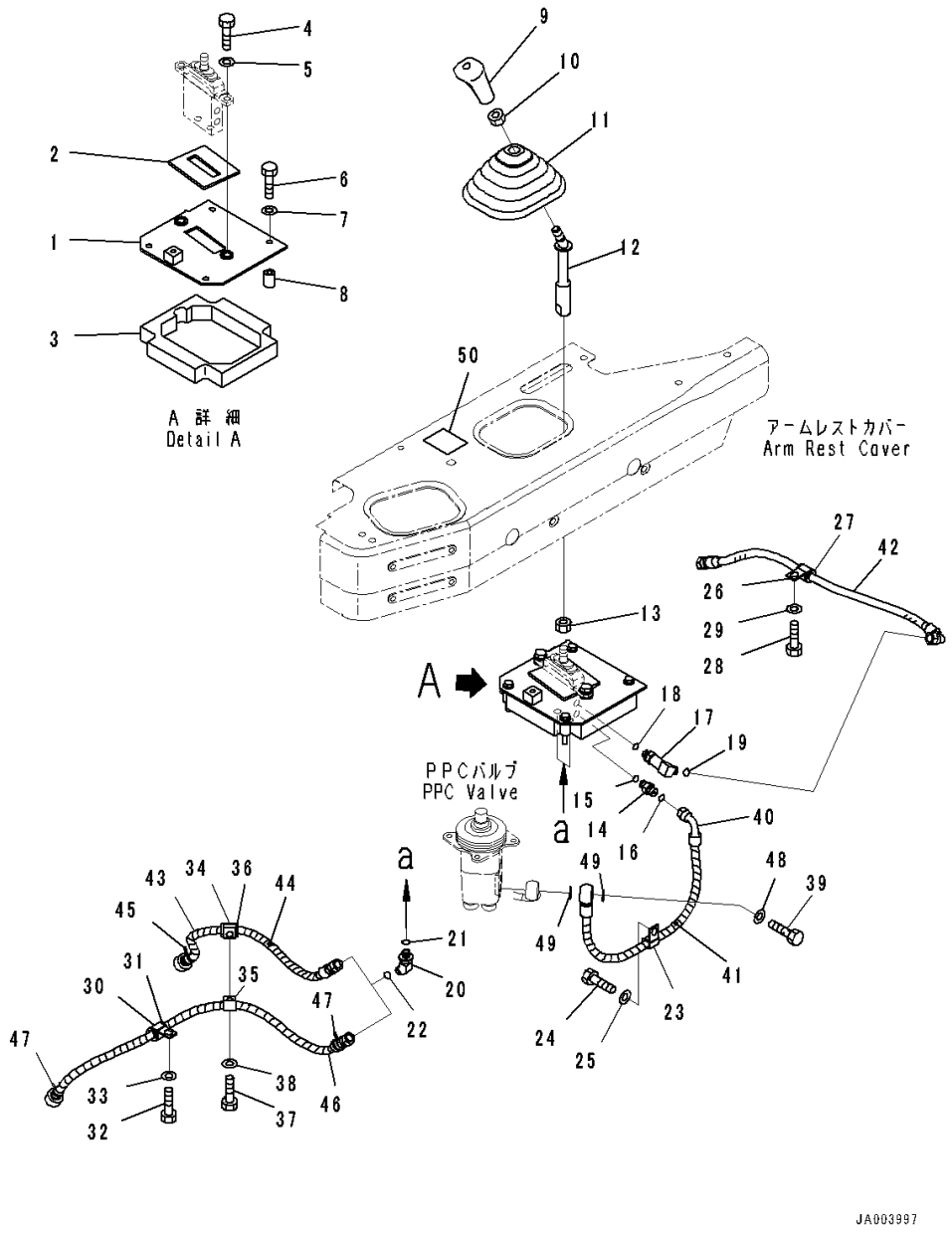

Index	Code	Part Number	Description	Qty	Serial Number
36		07095-20213	Cushion	1	80001-
37		01010-81020	Bolt	1	80001-
38		01643-31032	Washer	1	80001-
39		14X-78-51410	Bolt, Eye	1	80001-
40		14X-78-51281	Hose Assembly	1	80001-
41		08210-00605	• Tube, Spiral	1	80001-
42		02761-00206	Hose, Face Seal Type	1	80001-
43		14X-78-51431	Hose Assembly	1	80001-
44		08210-00604	• Tube, Spiral	1	80001-
45		20Y-62-22860	• Band, Brown	2	80001-
46		14X-78-51421	Hose Assembly	1	80001-
47		20Y-62-22790	• Band, Red	2	80001-
48		287-15-15710	Shim, T=0.5mm	1	80001-
49		07000-12018	O-ring	2	80017-
50		14X-78-11180	Plate, Operating	1	80005-

https://truckmanualshub.com/

FIG. K2110-002004 Dozer Control, For Machine With Rear Actuator, Hose

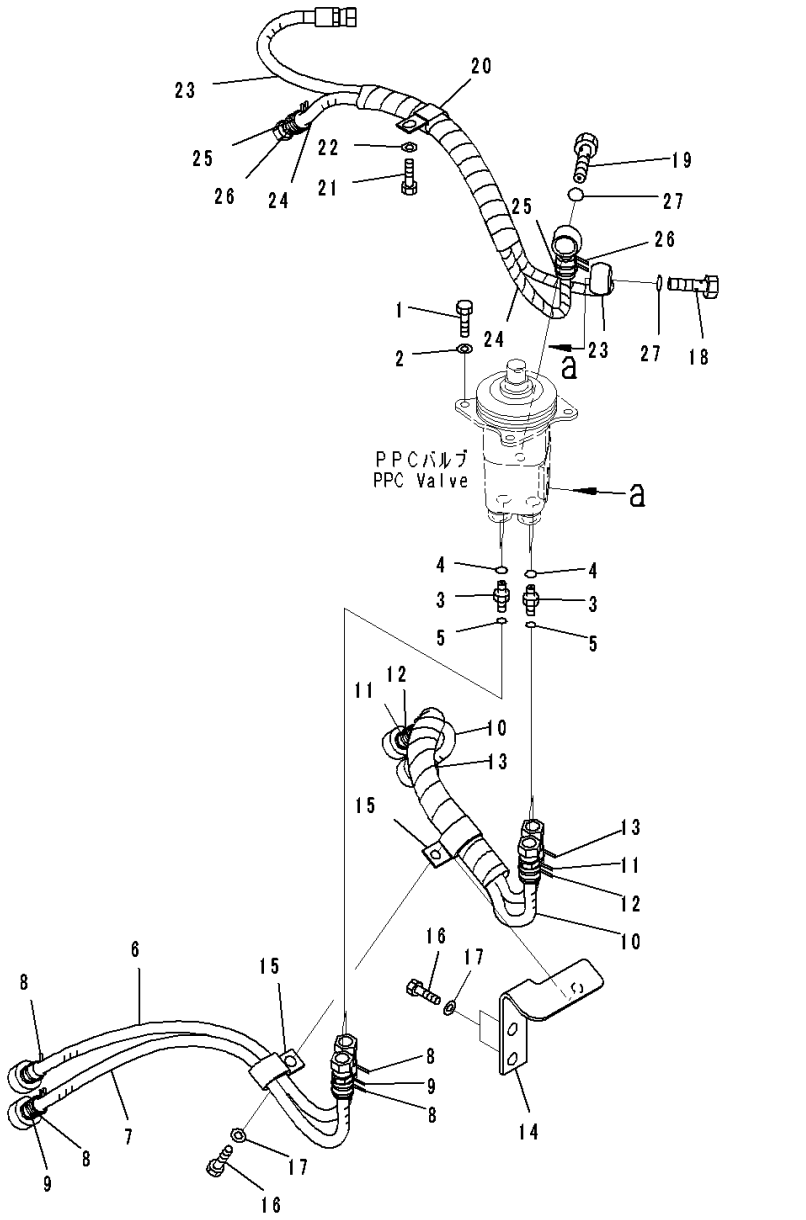

Index	Code	Part Number	Description	Qty	Serial Number
1		01010-80820	Bolt	4	80001-
2		01643-30823	Washer	4	80001-
3		02781-0021D	Union	4	80001-
4		07002-11423	O-ring	4	80001-
5		02896-11008	O-ring	4	80001-
		14X-62-53101	Hose Assembly	1	80001-
6		14X-62-53950	• Hose	1	80001-
7		14X-62-54820	• Hose	1	80001-
8		206-62-87990	• Band, Orange	4	80001-
9		20Y-62-22850	• Band, Green	2	80001-
		14X-62-54810	Hose Assembly	1	80001-
10		14X-62-54760	• Hose	2	80001-
11		20Y-62-22820	• Band, Blue	2	80001-
12		20Y-62-22830	• Band, White	2	80001-
13		20Y-62-22850	• Band, Green	2	80001-
14		14X-62-54511	Bracket	1	80001-
15		04435-51410	Clip	2	80001-
16		01010-81020	Bolt	3	80001-
17		01643-31032	Washer	3	80001-
18		702-16-53240	Plug	1	80001-
19		203-62-57730	Bolt, Eye	1	80001-
20		04435-51410	Clip	1	80001-
21		01010-81020	Bolt	1	80001-
22		01643-31032	Washer	1	80001-
		14X-62-53151	Hose Assembly	1	80001-
23		14X-62-53351	• Hose	1	80001-
24		14X-62-53361	• Hose	1	80001-
25		20Y-62-22790	• Band, Red	2	80001-
26		20Y-62-22860	• Band, Brown	2	80001-
27		07000-12018	O-ring	2	80001-

https://truckmanualshub.com/

FIG. K2110-002006 Dozer Control, Attachment Lever

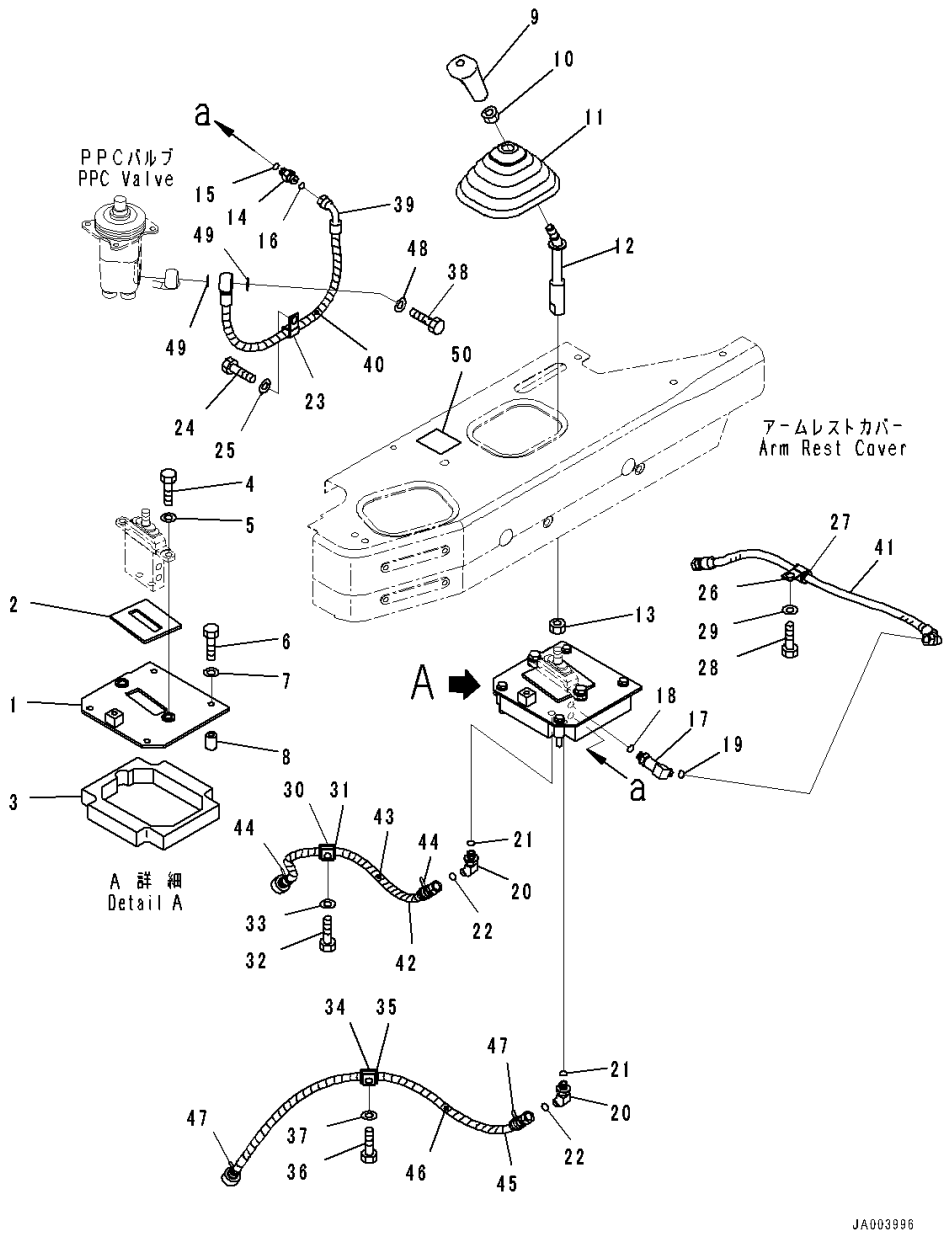

Index	Code	Part Number	Description	Qty	Serial Number
		Note: This list covers following specifications.			
		For Machine With Rear Actuator			
		For Machine With Rear Actuator, ROPS Canopy			
1		14X-78-51112	Bracket	1	80001-
2		14X-78-11490	• Seal,Bonded	1	80001-
3		14X-78-51131	• Seal,Bonded	1	80001-
4		01010-81030	Bolt	2	80001-
5		01643-31032	Washer	2	80001-
6		01010-80855	Bolt	4	80001-
7		01643-30823	Washer	4	80001-
8		14X-78-51141	Spacer	4	80001-
9		17A-43-42240	Knob	1	80001-
10		20T-43-71190	Nut	1	80001-
11		11Y-43-11181	Boot	1	80001-
12		14X-78-51291	Lever	1	80001-
13		01583-11408	Nut	1	80001-
14		21W-62-44510	Nipple	1	80001-
15		07002-11423	O-ring	1	80001-
16		02896-11008	O-ring	1	80001-
17		21W-62-43990	Elbow	1	80001-
18		07002-11423	O-ring	1	80001-
19		02896-11008	O-ring	1	80001-
20		21W-62-42660	Elbow	2	80001-
21		07002-11423	O-ring	2	80001-
22		02896-11008	O-ring	2	80001-
23		04434-51410	Clip	1	80001-
24		01010-81020	Bolt	1	80001-
25		01643-31032	Washer	1	80001-
26		04434-51710	Clip	1	80001-
27		07095-20211	Cushion	1	80001-
28		01010-81020	Bolt	1	80001-
29		01643-31032	Washer	1	80001-
30		04434-51810	Clip	1	80001-
31		07095-20213	Cushion	1	80001-
32		01010-81020	Bolt	1	80001-
33		01643-31032	Washer	1	80001-
34		04434-51810	Clip	1	80001-
35		07095-20213	Cushion	1	80001-
36		01010-81020	Bolt	1	80001-
37		01643-31032	Washer	1	80001-

https://truckmanualshub.com/

FIG. K2110-002006 Dozer Control, Attachment Lever

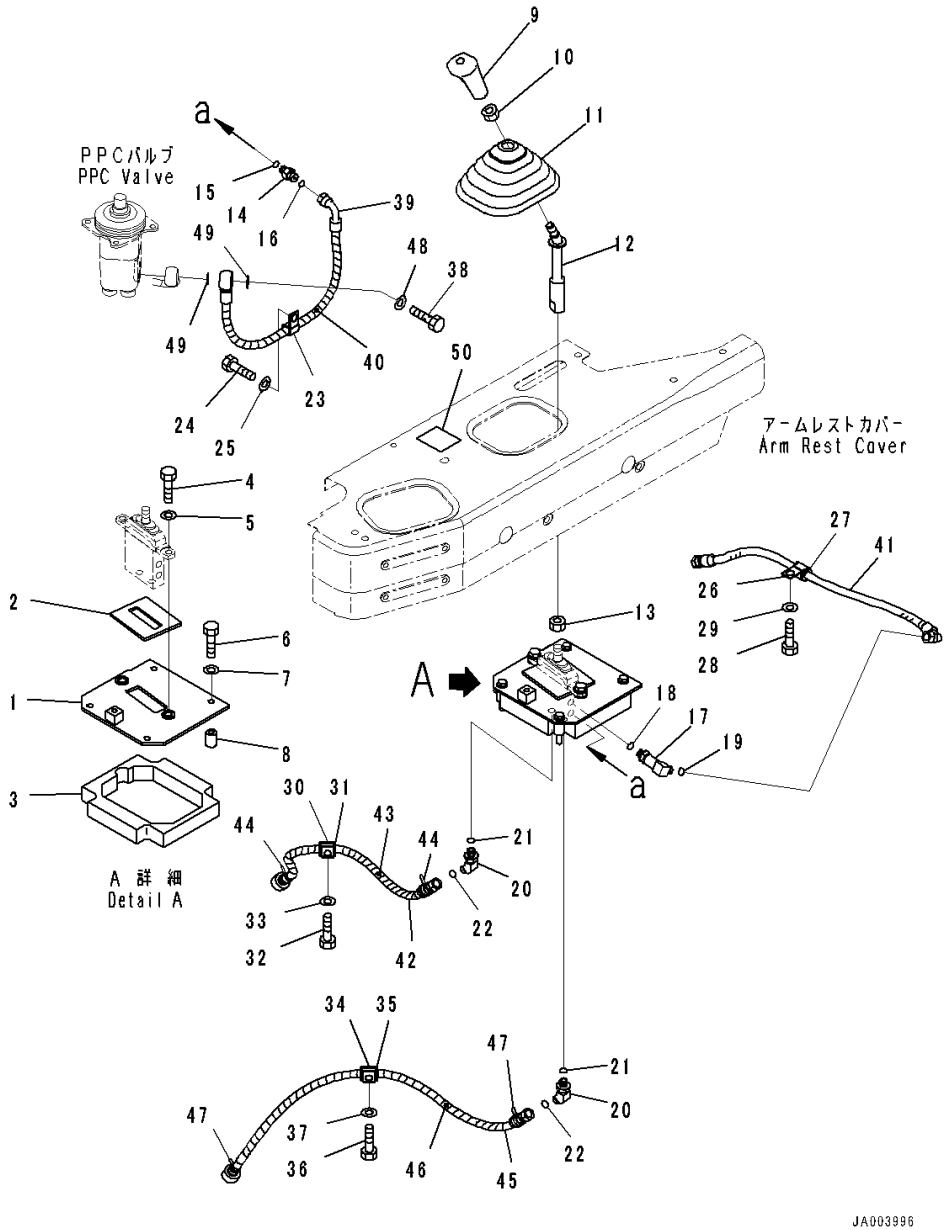

Index	Code	Part Number	Description	Qty	Serial Number
38		14X-78-51410	Bolt, Eye	1	80001-
39		14X-78-51281	Hose Assembly	1	80001-
40		08210-00605	• Tube, Spiral	1	80001-
41		02761-00206	Hose, Face Seal Type	1	80001-
42		14X-62-53820	Hose	1	80001-
43		08210-00605	• Tube, Spiral	1	80001-
44		20Y-62-22860	• Band, Brown	2	80001-
45		14X-62-53830	Hose	1	80001-
46		08210-00607	• Tube, Spiral	1	80001-
47		20Y-62-22790	• Band, Red	2	80001-
48		287-15-15710	Shim, T=0.5mm	1	80001-
49		07000-12018	O-ring	2	80017-
50		14X-78-11180	Plate, Operating	1	80005-

https://truckmanualshub.com/

FIG. K2110-003004 Dozer Control, Hose

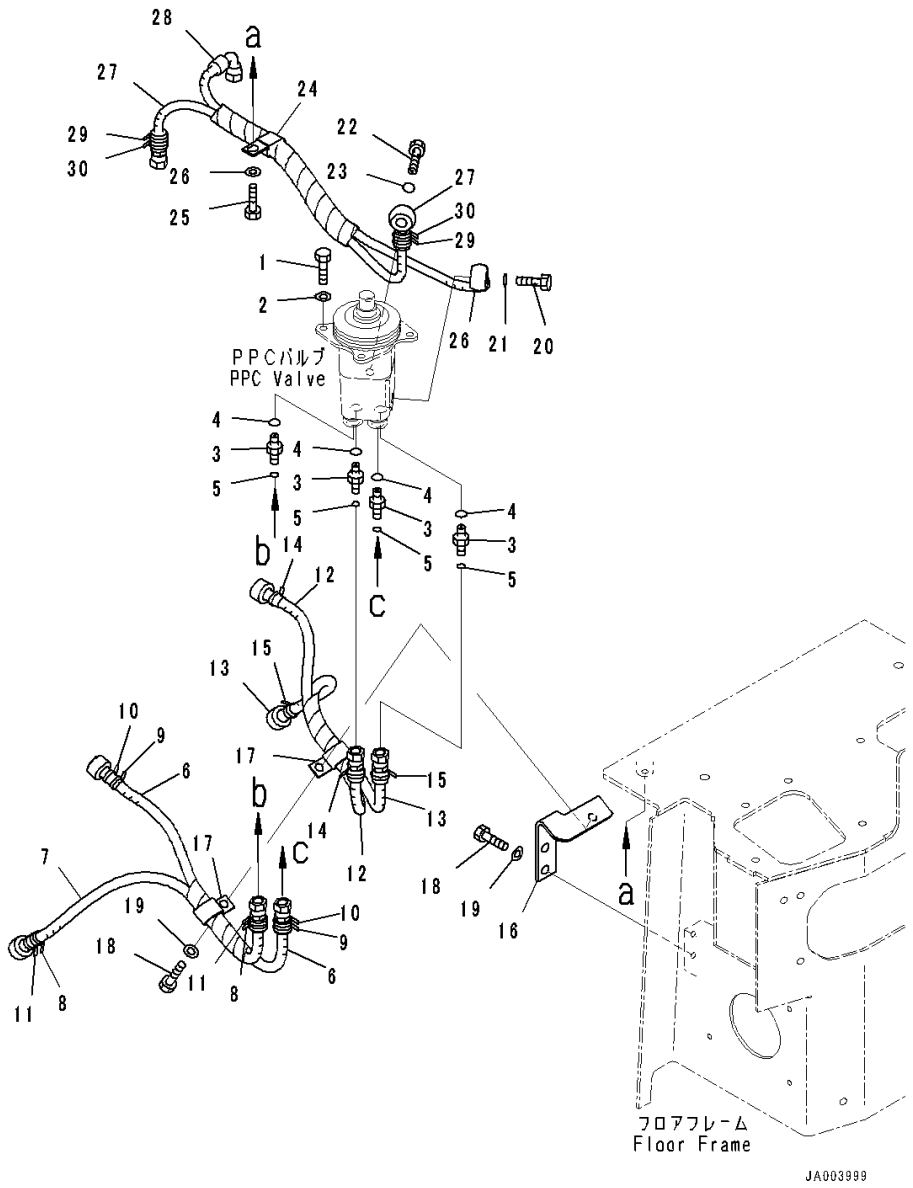

Index	Code	Part Number	Description	Qty	Serial Number
		Note: This list covers following specifications.			
		With Power Tilt Pitch Dozer			
		With Power Tilt Pitch Dozer, ROPS Canopy			
		With Power Tilt Pitch Dozer, For Machine With Rear Actuator, ROPS Canopy			
1		01010-80820	Bolt	4	80001-
2		01643-30823	Washer	4	80001-
3		02781-0021D	Union	4	80001-
4		07002-11423	O-ring	4	80001-
5		02896-11008	O-ring	4	80001-
		14X-62-54131	Hose Assembly	1	80001-
6		14X-62-53950	• Hose	1	80001-
7		21K-62-72250	• Hose	1	80001-
8		206-62-87990	• Band, Orange	2	80001-
9		20Y-62-22820	• Band, Blue	2	80001-
10		20Y-62-22830	• Band, White	2	80001-
11		20Y-62-22850	• Band, Green	2	80001-
		14X-62-54171	Hose Assembly	1	80001-
12		14X-62-53950	• Hose	1	80001-
13		14X-62-54760	• Hose	1	80001-
14		206-62-87990	• Band, Orange	2	80001-
15		20Y-62-22850	• Band, Green	2	80001-
16		14X-62-54511	Bracket	1	80001-
17		04435-51410	Clip	2	80001-
18		01010-81020	Bolt	3	80001-
19		01643-31032	Washer	3	80001-
20		702-16-53240	Plug	1	80001-
21		07000-12018	O-ring	1	80017-
22		203-62-57730	Bolt, Eye	1	80001-
23		07000-12018	O-ring	1	80017-
24		04435-51410	Clip	1	80001-
25		01010-81020	Bolt	1	80001-
26		01643-31032	Washer	1	80001-
		14X-62-54141	Hose Assembly	1	80001-
27		14X-62-53751	• Hose	1	80001-
28		14X-62-54860	• Hose	1	80001-
29		20Y-62-22790	• Band, Red	2	80001-
30		20Y-62-22860	• Band, Brown	2	80001-

https://truckmanualshub.com/

FIG. K2110-012001 Dozer Control, Armrest

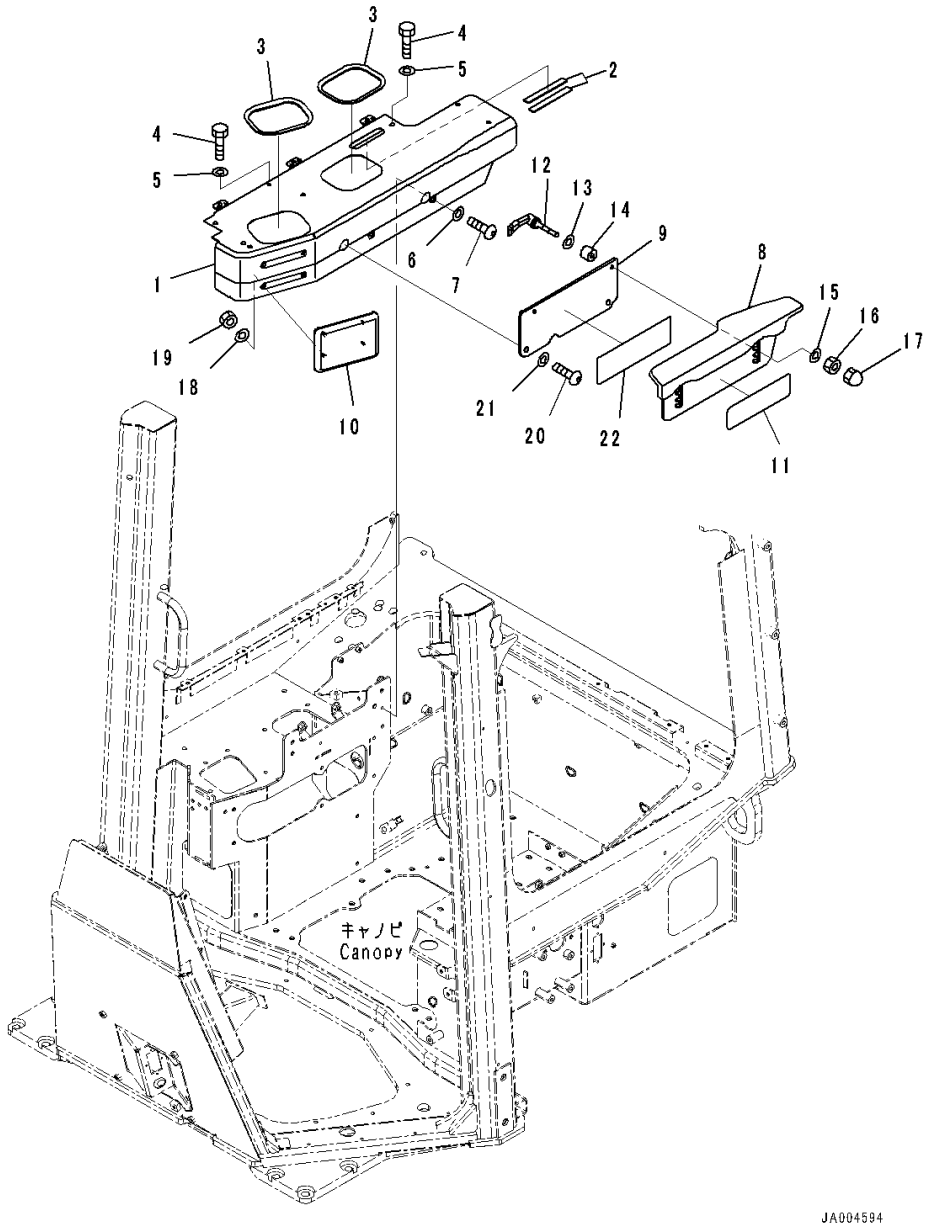

Index	Code	Part Number	Description	Qty	Serial Number
		Note: This list covers following specifications.			
		With Power Angle Power Tilt Dozer, For Machine With Rear Actuator, ROPS Canopy			
		With Power Tilt Pitch Dozer, For Machine With Rear Actuator, ROPS Canopy			
		For Machine With Rear Actuator, ROPS Canopy			
1		14X-54-58671	Cover	1	80001-
2		14X-43-48110	• Awning	2	80001-
3		14X-54-16490	• Plate	2	80001-
4		01010-D0825	Bolt	4	80001-
5		01643-70823	Washer	4	80001-
6		01643-70623	Washer	2	80001-
7		01245-00620	Screw	2	80001-
8		14X-54-56531	Armrest Assembly	1	80001-
9		14X-54-56542	Plate	1	80001-
10		14X-54-56910	Pad	1	80001-
11		14X-54-56591	Plate,Bonded	1	80001-
12		423-43-38170	Lever	2	80001-
13		418-54-35450	Washer	2	80001-
14		17A-43-46380	Spacer	2	80001-
15		418-54-35450	Washer	2	80001-
16		195-43-43370	Nut	2	80001-
17		01546-10812	Nut	2	80001-
18		01643-30623	Washer	4	80001-
19		01580-00605	Nut	4	80001-
20		01245-01030	Screw	2	80001-
21		01643-71032	Washer	2	80001-
22		134-54-66190	Plate	1	80001-

https://truckmanualshub.com/

FIG. K2110-012005 Dozer Control, Hose

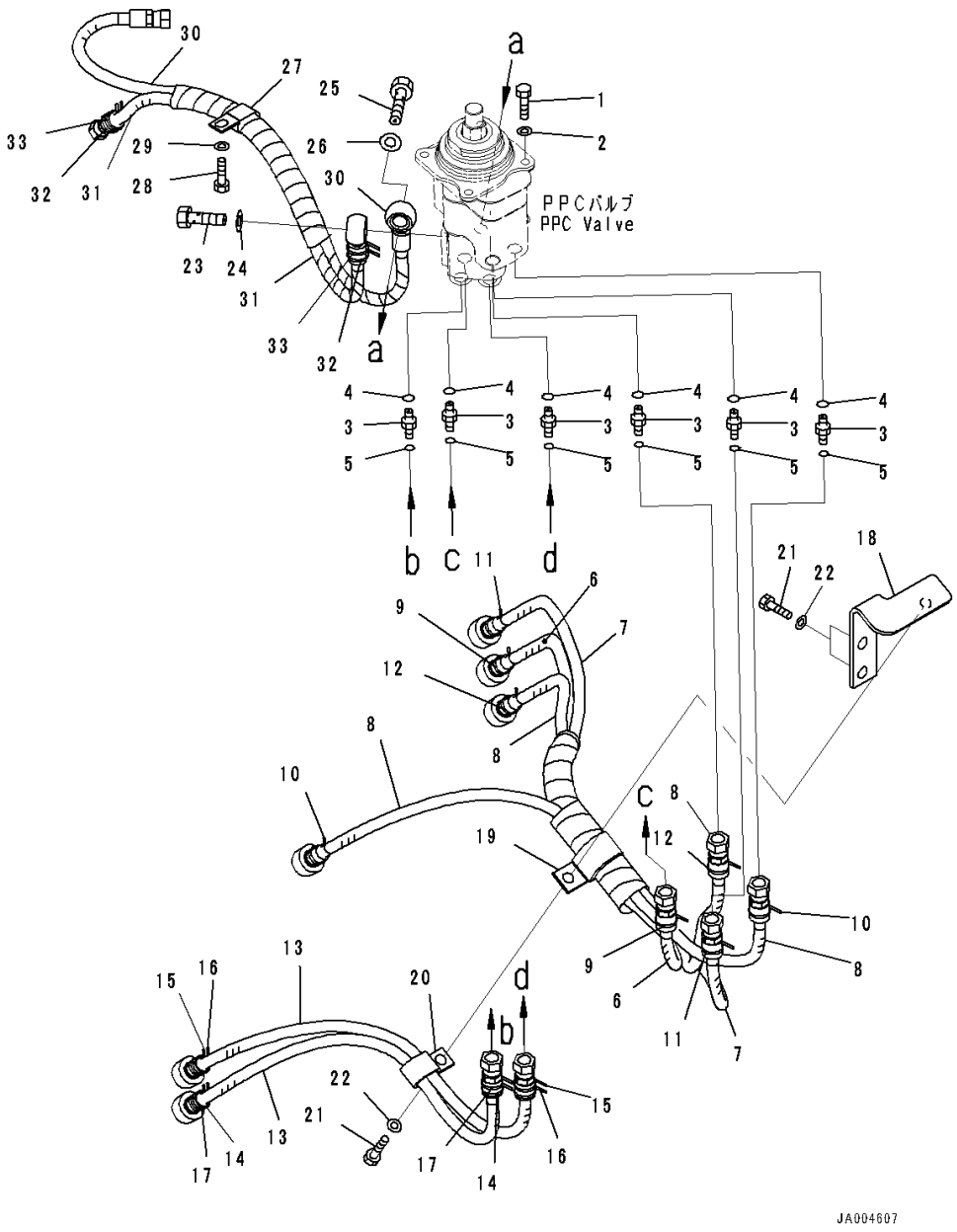

Index	Code	Part Number	Description	Qty	Serial Number
		Note: This list covers following specifications.			
		With Power Angle Power Tilt Dozer, For Machine With Rear Actuator, ROPS Canopy			
		With Power Angle Power Tilt Dozer, ROPS Canopy			
1		01010-80820	Bolt	4	80001-
2		01643-30823	Washer	4	80001-
3		02781-0021D	Union	6	80001-
4		07002-11423	O-ring	6	80001-
5		02896-11008	O-ring	6	80001-
		14X-62-53201	Hose Assembly	1	80001-
6		14X-62-53411	• Hose	1	80001-
7		14X-62-53691	• Hose	1	80001-
8		14X-62-54760	• Hose	2	80001-
9		206-62-87990	• Band, Orange	2	80001-
10		20Y-62-22820	• Band, Blue	2	80001-
11		20Y-62-22830	• Band, White	2	80001-
12		20Y-62-22850	• Band, Green	2	80001-
		14X-62-54831	Hose Assembly	1	80001-
13		14X-62-54820	• Hose	2	80001-
14		206-62-87990	• Band, Orange	2	80001-
15		20Y-62-22820	• Band, Blue	2	80001-
16		20Y-62-22830	• Band, White	2	80001-
17		20Y-62-22850	• Band, Green	2	80001-
18		14X-62-54511	Bracket	1	80001-
19		04435-51410	Clip	1	80001-
20		04434-52712	Clip	1	80001-
21		01010-81020	Bolt	3	80001-
22		01643-31032	Washer	3	80001-
23		702-16-53240	Plug	1	80001-
24		07000-12018	O-ring	1	80001-
25		203-62-57730	Bolt, Eye	1	80001-
26		07000-12018	O-ring	1	80001-
27		04435-51410	Clip	1	80001-
28		01010-81020	Bolt	1	80001-
29		01643-31032	Washer	1	80001-
		14X-62-53151	Hose Assembly	1	80001-
30		14X-62-53351	• Hose	1	80001-
31		14X-62-53361	• Hose	1	80001-
32		20Y-62-22790	• Band, Red	2	80001-
33		20Y-62-22860	• Band, Brown	2	80001-

https://truckmanualshub.com/

FIG. K2110-012007 Dozer Control, With Power Angle Power Tilt Dozer, For Machine With Rear Actuator, ROPS Canopy, Attachment Lever

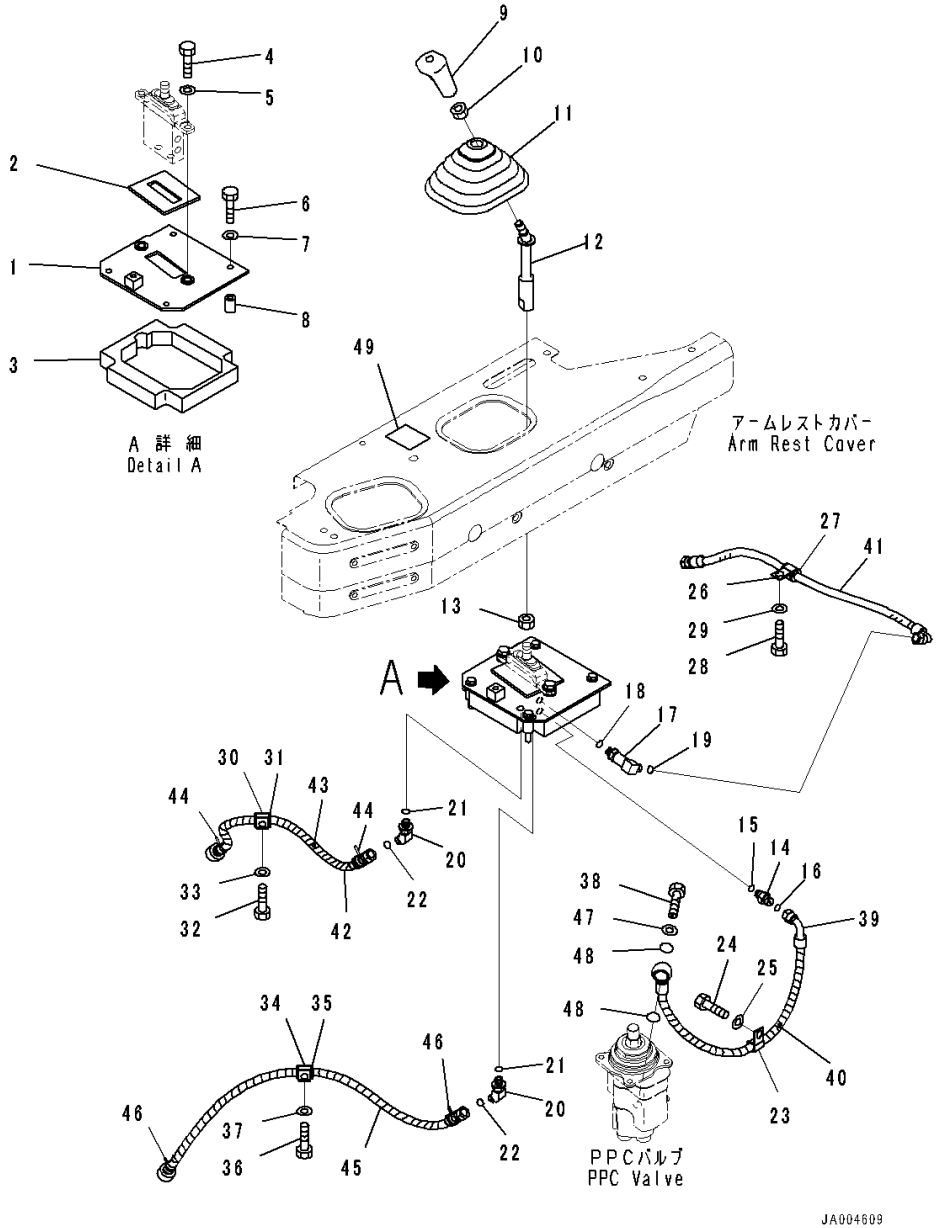

Index	Code	Part Number	Description	Qty	Serial Number
1		14X-78-51112	Bracket	1	80001-
2		14X-78-11490	• Seal,Bonded	1	80001-
3		14X-78-51131	• Seal,Bonded	1	80001-
4		01010-81030	Bolt	2	80001-
5		01643-31032	Washer	2	80001-
6		01010-80855	Bolt	4	80001-
7		01643-30823	Washer	4	80001-
8		14X-78-51141	Spacer	4	80001-
9		17A-43-42240	Knob	1	80001-
10		20T-43-71190	Nut	1	80001-
11		11Y-43-11181	Boot	1	80001-
12		14X-78-51291	Lever	1	80001-
13		01583-11408	Nut	1	80001-
14		21W-62-44510	Nipple	1	80001-
15		07002-11423	O-ring	1	80001-
16		02896-11008	O-ring	1	80001-
17		21W-62-43990	Elbow	1	80001-
18		07002-11423	O-ring	1	80001-
19		02896-11008	O-ring	1	80001-
20		21W-62-42660	Elbow	2	80001-
21		07002-11423	O-ring	2	80001-
22		02896-11008	O-ring	2	80001-
23		04434-51410	Clip	1	80001-
24		01010-81020	Bolt	1	80001-
25		01643-31032	Washer	1	80001-
26		04434-51710	Clip	1	80001-
27		07095-20211	Cushion	1	80001-
28		01010-81020	Bolt	1	80001-
29		01643-31032	Washer	1	80001-
30		04434-51810	Clip	1	80001-
31		07095-20213	Cushion	1	80001-
32		01010-81020	Bolt	1	80001-
33		01643-31032	Washer	1	80001-
34		04434-51810	Clip	1	80001-
35		07095-20213	Cushion	1	80001-
36		01010-81020	Bolt	1	80001-
37		01643-31032	Washer	1	80001-
38		14X-78-51410	Bolt, Eye	1	80001-
39		14X-78-51450	Hose Assembly	1	80001-

https://truckmanualshub.com/

FIG. K2110-012007 Dozer Control, With Power Angle Power Tilt Dozer, For Machine With Rear Actuator, ROPS Canopy, Attachment Lever

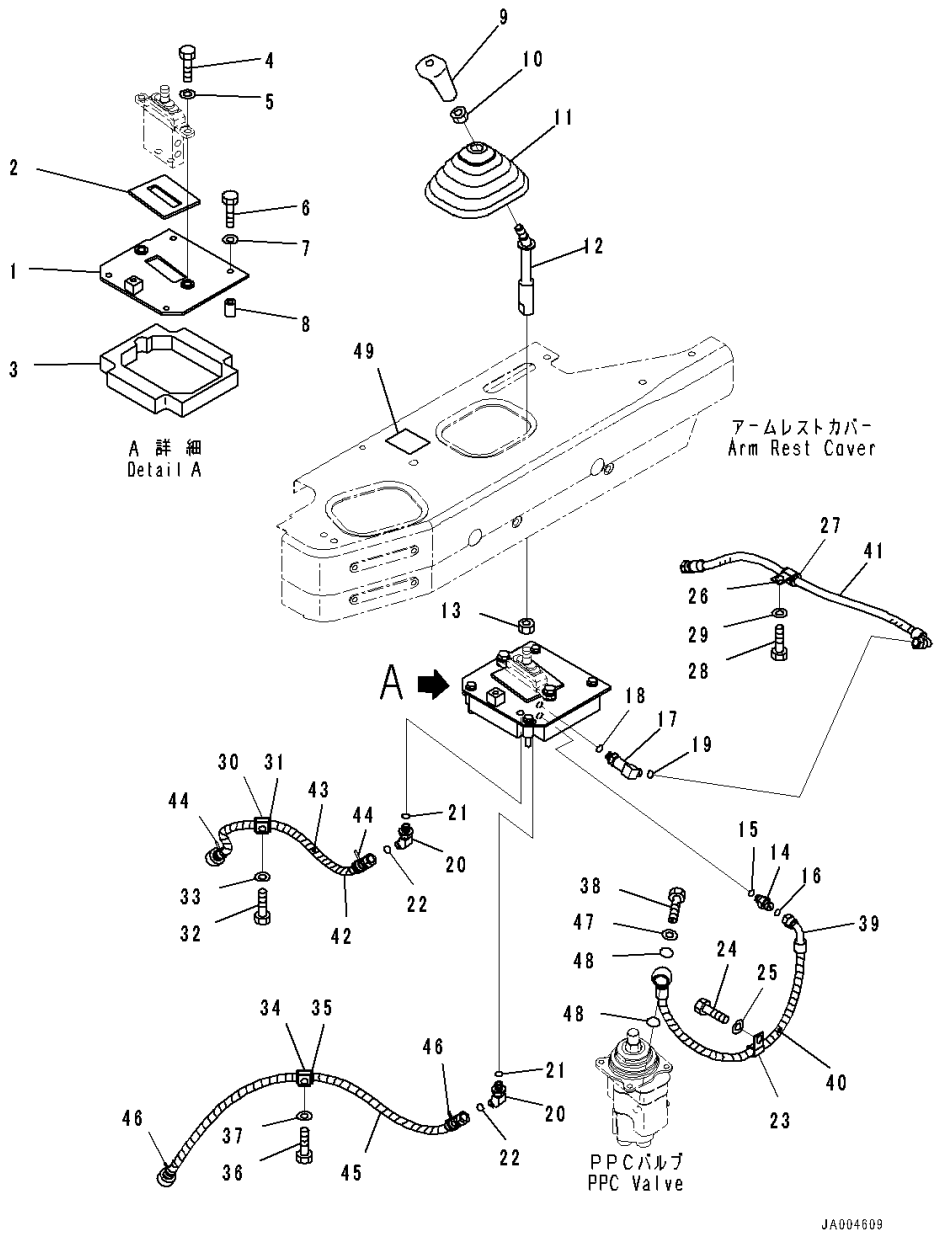

Index	Code	Part Number	Description	Qty	Serial Number
40		08210-00605	• Tube, Spiral	1	80001-
41		02761-00206	Hose, Face Seal Type	1	80001-
42		14X-78-51431	Hose Assembly	1	80001-
43		08210-00604	• Tube, Spiral	1	80001-
44		20Y-62-22860	• Band, Brown	2	80001-
45		14X-78-51421	Hose Assembly	1	80001-
46		20Y-62-22790	• Band, Red	2	80001-
47		287-15-15710	Shim, T=0.5mm	1	80001-
48		07000-12018	O-ring	2	80001-
49		14X-78-11180	Plate, Operating	1	80001-

https://truckmanualshub.com/

FIG. K2110-011001 Dozer Control, Armrest

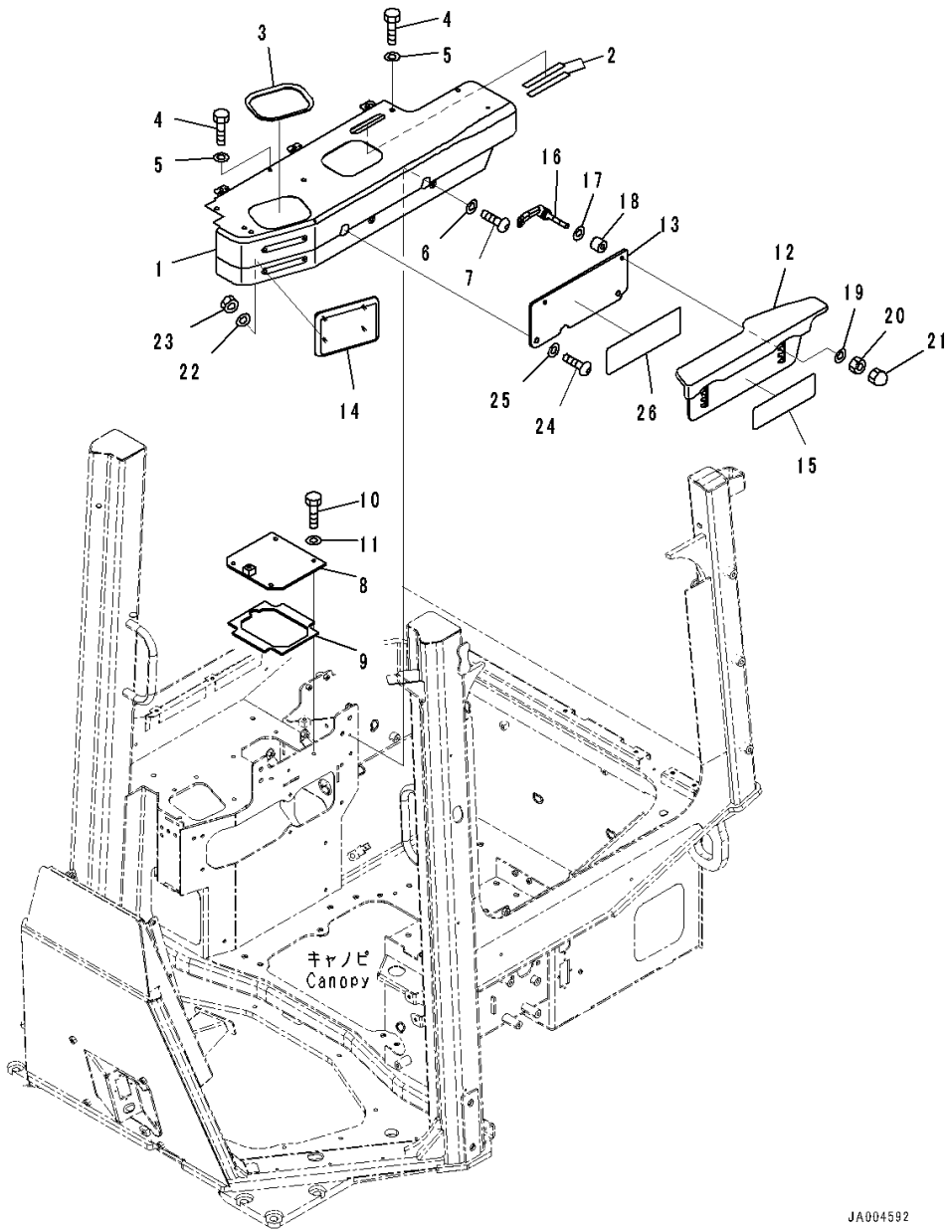

Index	Code	Part Number	Description	Qty	Serial Number
		Note: This list covers following specifications.			
			With Power Angle Power Tilt Dozer, ROPS Canopy		
			With Power Tilt Pitch Dozer, ROPS Canopy		
			For Machine Without Rear Actuator, ROPS Canopy		
1		14X-54-58360	Cover	1	80001-
2		14X-43-48110	• Awning	2	80001-
3		14X-54-16490	• Plate	1	80001-
4		01010-D0825	Bolt	4	80001-
5		01643-70823	Washer	4	80001-
6		01643-70623	Washer	2	80001-
7		01245-00620	Screw	2	80001-
8		14X-54-56661	Cover	1	80001-
9		14X-54-56670	• Seal,Bonded	1	80001-
10		01010-D0825	Bolt	4	80001-
11		01643-70823	Washer	4	80001-
12		14X-54-56531	Armrest Assembly	1	80001-
13		14X-54-56542	Plate	1	80001-
14		14X-54-56910	Pad	1	80001-
15		14X-54-56591	Plate,Bonded	1	80001-
16		423-43-38170	Lever	2	80001-
17		418-54-35450	Washer	2	80001-
18		17A-43-46380	Spacer	2	80001-
19		418-54-35450	Washer	2	80001-
20		195-43-43370	Nut	2	80001-
21		01546-10812	Nut	2	80001-
22		01643-30623	Washer	4	80001-
23		01580-00605	Nut	4	80001-
24		01245-01030	Screw	2	80001-
25		01643-71032	Washer	2	80001-
26		134-54-66190	Plate	1	80001-

https://truckmanualshub.com/

FIG. K2120-001001 Floor Frame Mounts

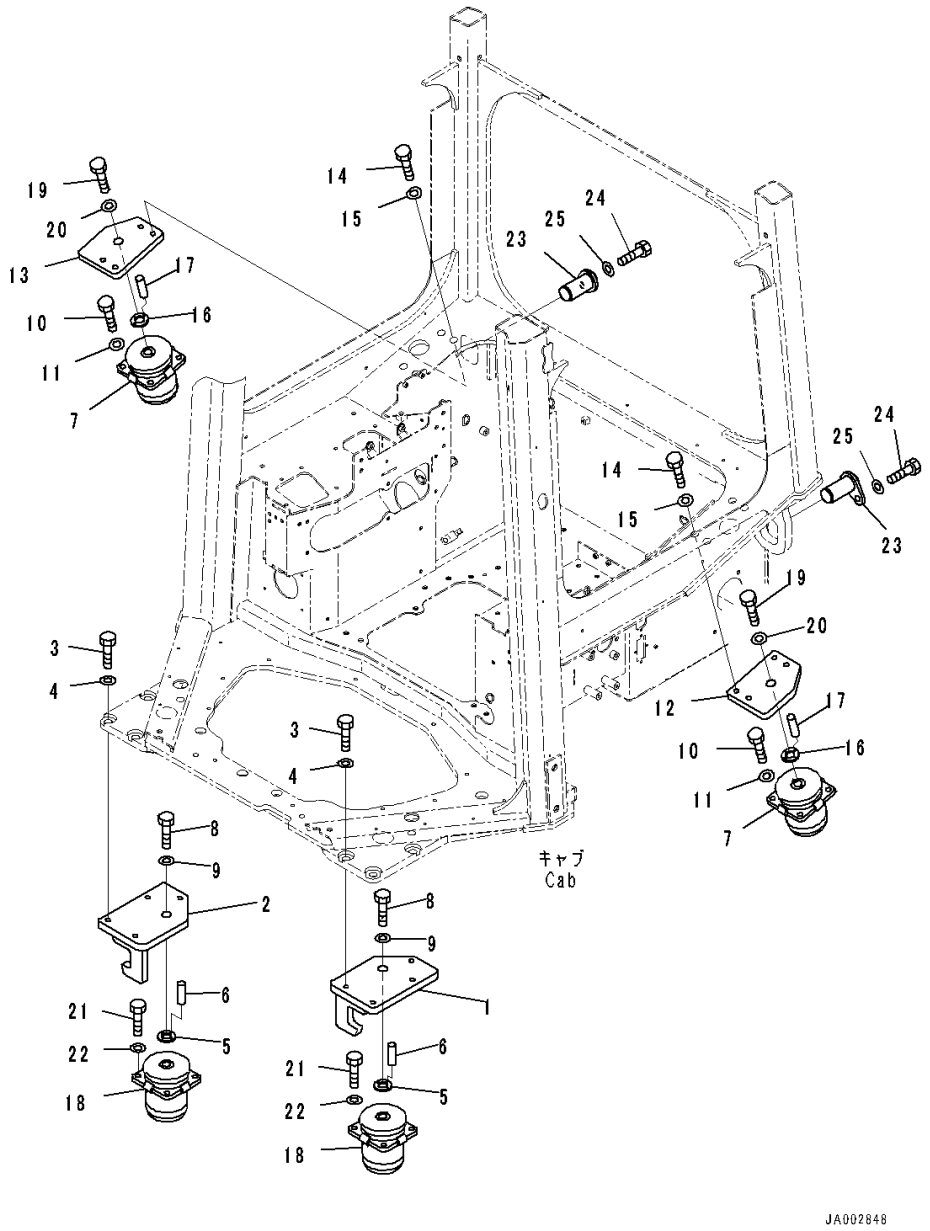

Index	Code	Part Number	Description	Qty	Serial Number
1		14X-54-56111	Bracket	1	80001-
2		14X-54-56121	Bracket	1	80001-
3		198-54-42260	Bolt	8	80001-
4		14X-54-56780	Washer	8	80001-
5		17A-54-46440	Plate	2	80001-
6		04020-00616	Pin, Dowel	4	80001-
7		14X-54-56191	Cushion	2	80001-
8		01010-82460	Bolt	2	80001-
9		01643-32460	Washer	2	80001-
10		01010-81440	Bolt	8	80001-
11		01643-31445	Washer	8	80001-
12		14X-54-56131	Plate	1	80001-
13		14X-54-56141	Plate	1	80001-
14		198-54-42260	Bolt	8	80001-
15		14X-54-56780	Washer	8	80001-
16		17A-54-46440	Plate	2	80001-
17		04020-00616	Pin, Dowel	4	80001-
18		14X-54-56191	Cushion	2	80001-
19		01010-82460	Bolt	2	80001-
20		01643-32460	Washer	2	80001-
21		01010-81440	Bolt	8	80001-
22		01643-31445	Washer	8	80001-
23		14X-54-56213	Pin	2	80001-
24		01010-81230	Bolt	2	80001-
25		01643-31232	Washer	2	80001-

https://truckmanualshub.com/

FIG. K2130-001001 Floor Frame Cover, Operator's Seat Turn Type

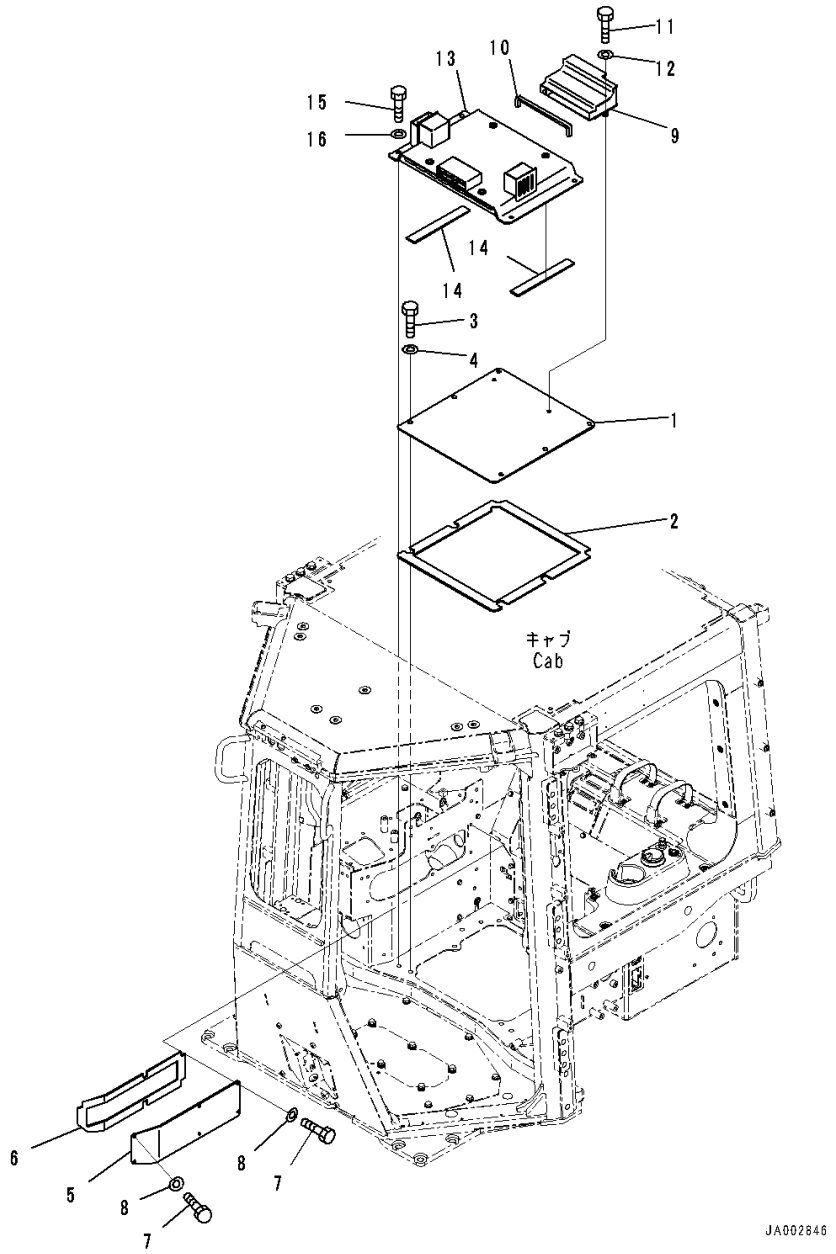

Index	Code	Part Number	Description	Qty	Serial Number
1		14X-54-56321	Cover	1	80001-
2		14X-54-56620	• Sheet,Bonded	1	80001-
3		01010-81230	Bolt	6	80001-
4		01643-31232	Washer	6	80001-
5		14X-54-56341	Cover	1	80001-
6		14X-54-56460	• Seal,Bonded	1	80001-
7		01010-D0825	Bolt	6	80001-
8		01643-70823	Washer	6	80001-
9		14X-54-56230	Duct	1	80001-
10		17A-57-41131	• Seal,Bonded	1	80001-
11		01010-D0825	Bolt	2	80001-
12		01643-70823	Washer	2	80001-
13		14X-54-56511	Bracket	1	80001-
14		17A-57-41170	• Sheet,Bonded	2	80001-
15		01010-D1230	Bolt	4	80001-
16		01643-71232	Washer	4	80001-

https://truckmanualshub.com/

FIG. K2130-002001 Floor Frame Cover

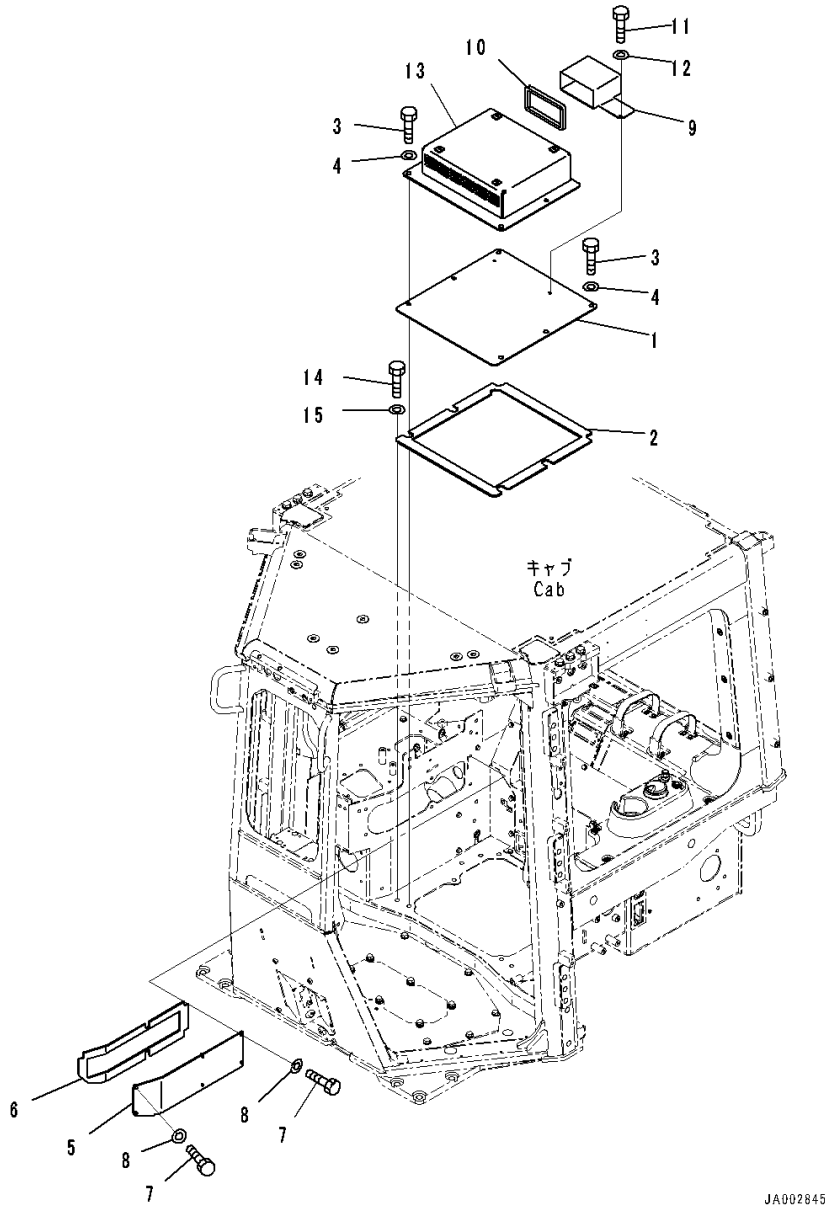

Index	Code	Part Number	Description	Qty	Serial Number
1		14X-54-56321	Cover	1	80001-
2		14X-54-56620	• Sheet,Bonded	1	80001-
3		01010-81230	Bolt	6	80001-
4		01643-31232	Washer	6	80001-
5		14X-54-56341	Cover	1	80001-
6		14X-54-56460	• Seal,Bonded	1	80001-
7		01010-D0825	Bolt	6	80001-
8		01643-70823	Washer	6	80001-
9		14X-54-56571	Duct	1	80001-
10		14X-54-56640	• Sheet,Bonded	1	80001-
11		01010-D0825	Bolt	2	80001-
12		01643-70823	Washer	2	80001-
13		14X-54-56561	Bracket	1	80001-
14		01010-D1220	Bolt	4	80001-
15		01643-71232	Washer	4	80001-

https://truckmanualshub.com/

FIG. K2910-001001 Windshield Washer Tank

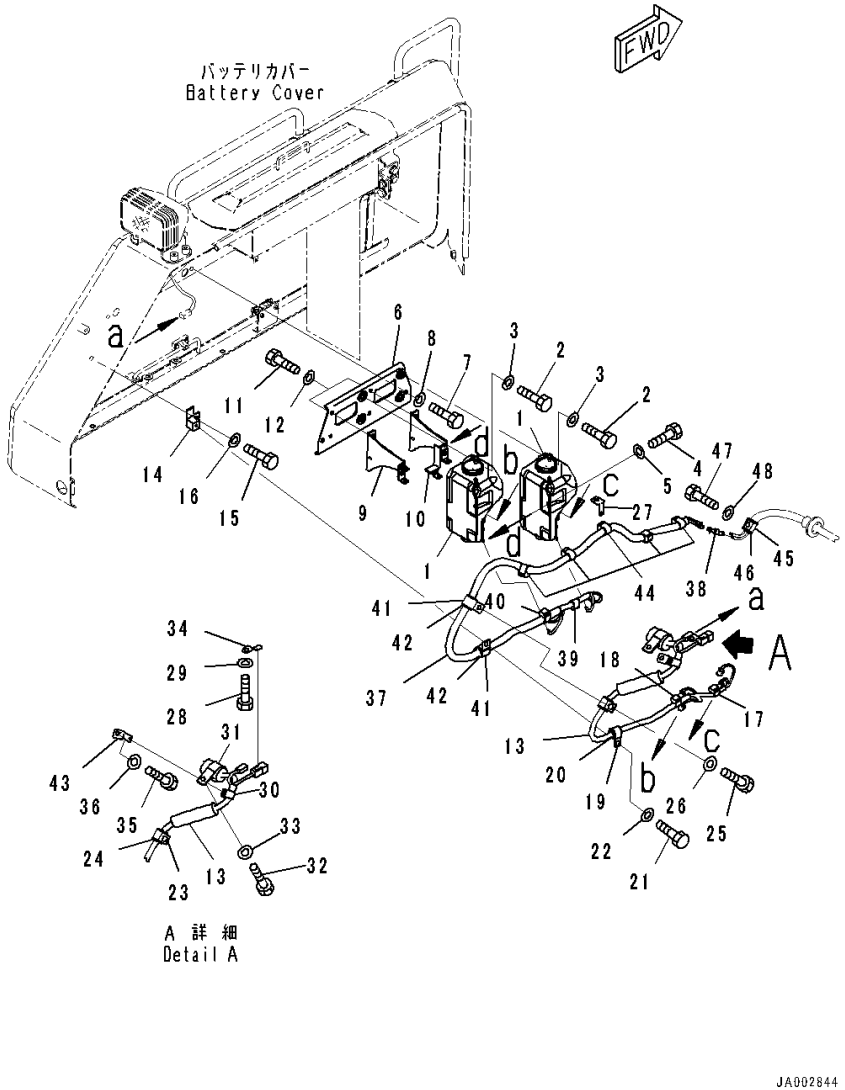

Index	Code	Part Number	Description	Qty	Serial Number
1		14X-Y11-2110	Tank Assembly	2	80001-
2		01010-80825	Bolt	4	80001-
3		01643-30823	Washer	4	80001-
4		01010-80616	Bolt	2	80001-
5		01643-30623	Washer	2	80001-
6		14X-Y11-2121	Bracket	1	80001-
7		01010-81016	Bolt	2	80001-
8		01643-31032	Washer	2	80001-
9		14X-Y11-2160	Bracket	1	80001-
10		14X-Y11-2170	Bracket	1	80001-
11		01010-80816	Bolt	4	80001-
12		01643-30823	Washer	4	80001-
13		14X-06-51783	Wiring Harness	1	80001-
14		14X-Y11-1731	Bracket	1	80001-
15		01010-81025	Bolt	1	80001-
16		01643-31032	Washer	1	80001-
17		08211-00720	Clip	1	80001-
18		08211-01020	Clip	1	80001-
19		04434-52112	Clip	1	80001-
20		07095-20213	Cushion	1	80001-
21		01010-81020	Bolt	1	80001-
22		01643-31032	Washer	1	80001-
23		04434-52112	Clip	1	80007-
24		07095-20213	Cushion	1	80007-
25		01010-81020	Bolt	1	80001-
26		01643-31032	Washer	1	80001-
27		08057-14010	Clip	1	80001-
28		01010-81020	Bolt	1	80001-
29		01643-31032	Washer	1	80001-
30		08211-01320	Clip	1	80001-
31		23S-62-25850	Clip	1	80001-
32		01010-81020	Bolt	1	80001-
33		01643-31032	Washer	1	80001-
34		08193-21012	Clip	1	80001-
35		01010-81020	Bolt	1	80001-
36		01643-31032	Washer	1	80001-
37		14X-Y11-2140	Hose Assembly	1	80001-
38		22L-54-22990	• Joint	4	80001-
39		08211-01020	Clip	1	80001-
40		08211-01520	Clip	1	80001-

https://truckmanualshub.com/

FIG. K2910-001001 Windshield Washer Tank

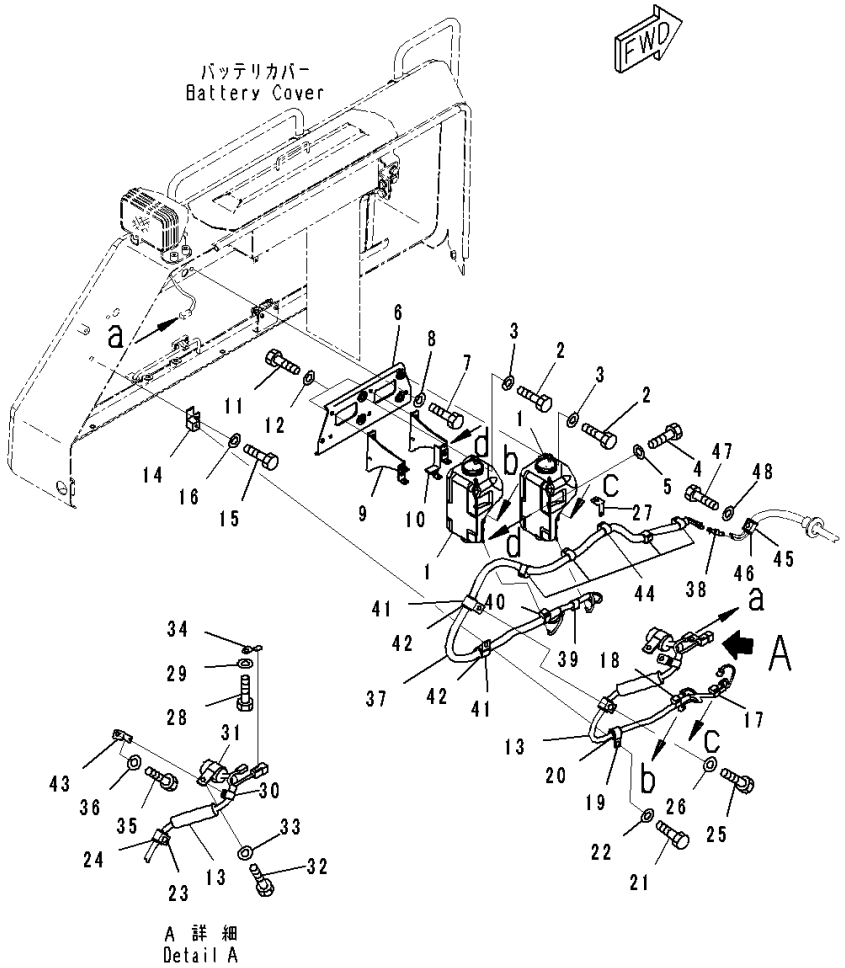

Index	Code	Part Number	Description	Qty	Serial Number
41		04434-52511	Clip	2	80001-
42		07095-20318	Cushion	2	80001-
43		08057-14010	Clip	1	80001-
44		08211-01520	Clip	5	80001-
45		04434-52512	Clip	1	80001-
46		07095-20318	Cushion	1	80001-
47		01010-81225	Bolt	1	80001-
48		01643-31232	Washer	1	80001-

https://truckmanualshub.com/

FIG. K2910-002001 Electric Harness, For ROPS Canopy

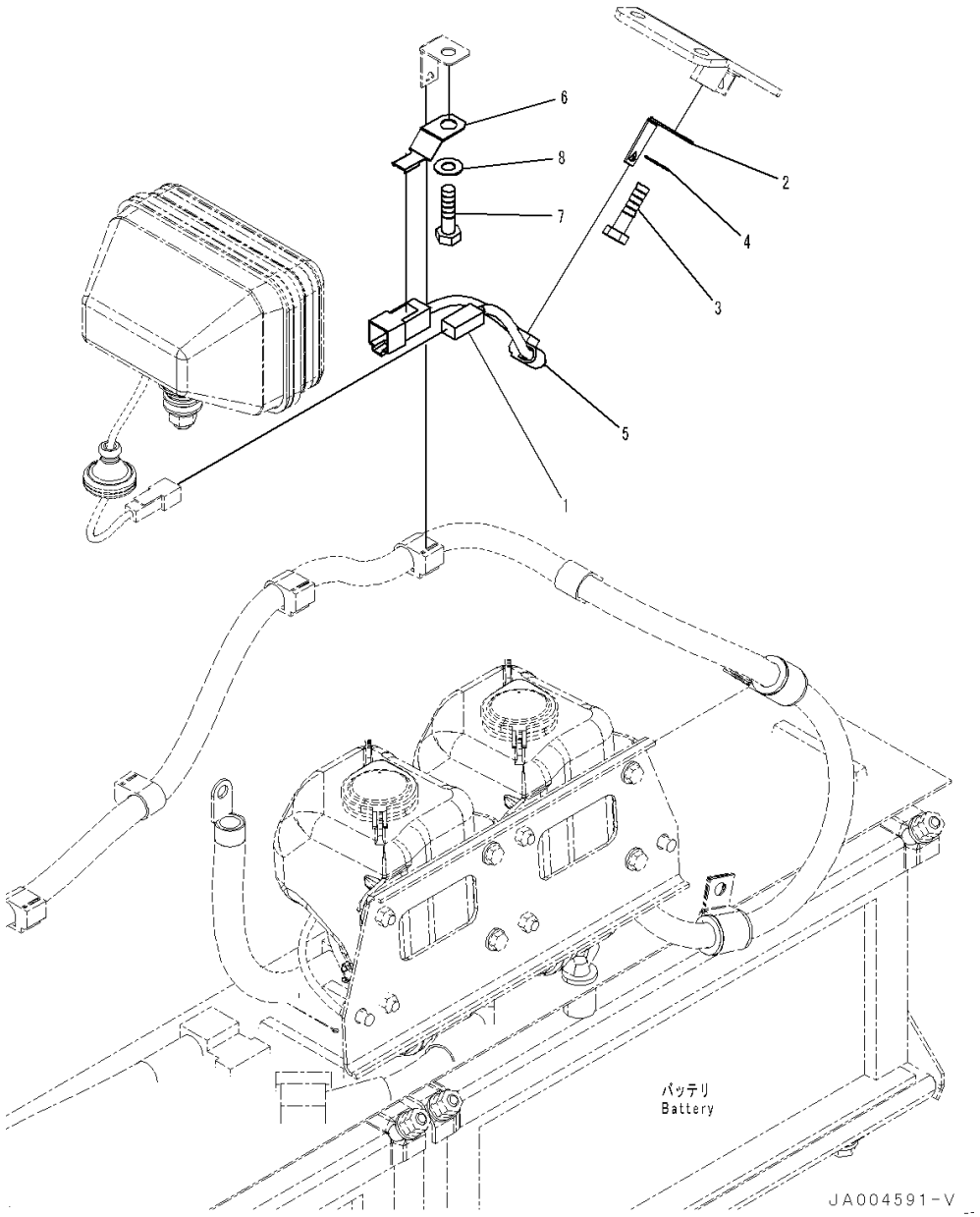

Index	Code	Part Number	Description	Qty	Serial Number
1		14X-06-51481	Wiring Harness	1	80054-
2		08057-14010	Clip	1	80054-
3		01010-81020	Bolt	1	80054-
4		01643-31032	Washer	1	80054-
5		08211-00720	Clip	1	80054-
6		08193-21012	Clip	1	80054-
7		01010-81020	Bolt	1	80054-
8		01643-31032	Washer	1	80054-

https://truckmanualshub.com/

https://truckmanualshub.com/

https://truckmanualshub.com/

GUARDS AND COVERS

FIG. M2111-001001 Dozer Blade Lift Cylinder Support

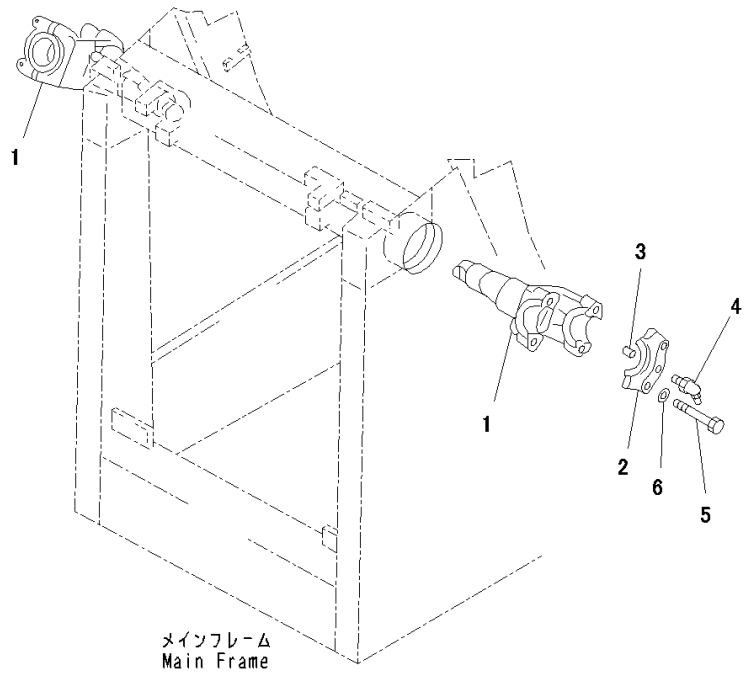

Index	Code	Part Number	Description	Qty	Serial Number
		14X-71-00030	Yoke Assembly	1	80001-
1		14X-71-53110	• Yoke	2	80001-
2		14Y-71-13320	• Cap	4	80001-
3		144-70-15251	• Pin, Dowel	4	80001-
4		07020-00675	• Fitting, Grease	4	80001-
5		01010-81670	Bolt	8	80001-
6		01643-31645	Washer	8	80001-

https://truckmanualshub.com/

FIG. M2120-001001 Radiator Mask, Hinged, Strengthened

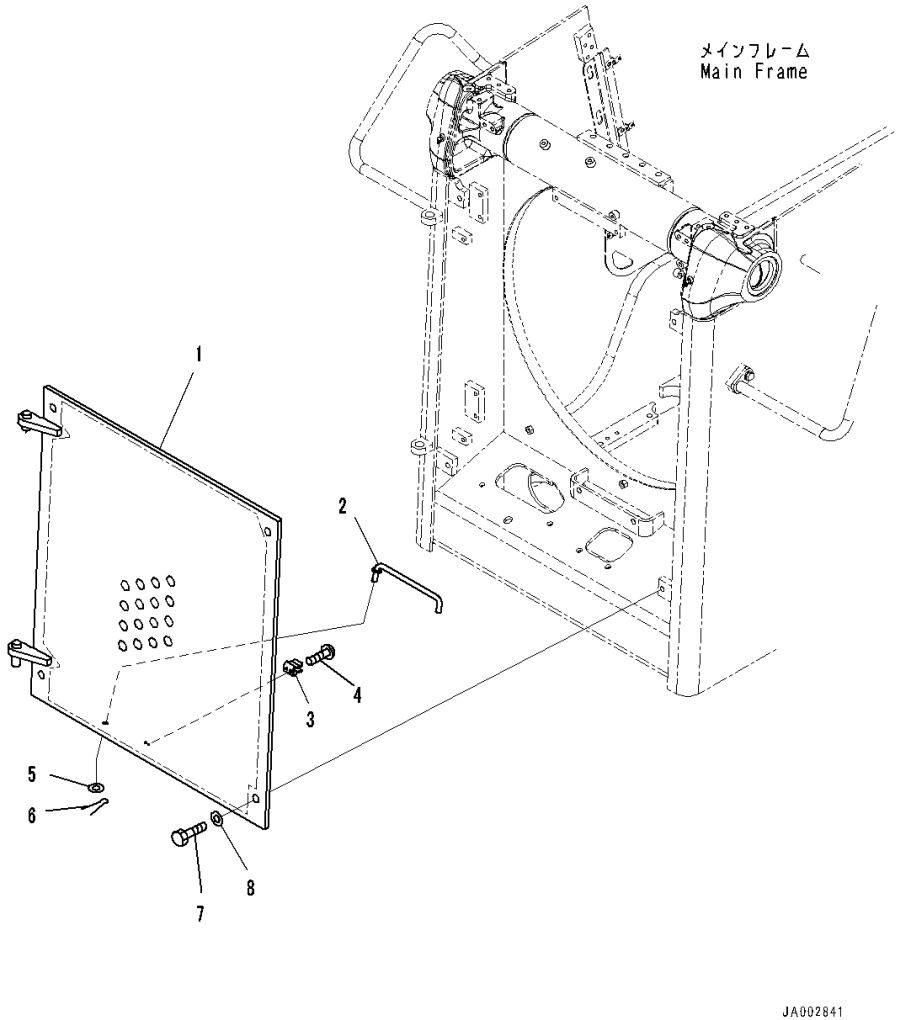

Index	Code	Part Number	Description	Qty	Serial Number
1		14X-54-51111	Mask	1	80001-
2		14X-54-51130	Bar	1	80001-
3		20R-54-11460	Spring	1	80001-
4		01023-10510	Screw	2	80001-
5		01643-31232	Washer	1	80001-
6		04050-14025	Pin, Cotter	1	80001-
7		01010-81640	Bolt	4	80001-
8		01643-31645	Washer	4	80001-

https://truckmanualshub.com/

FIG. M2120-002001 Radiator Mask, Hinged

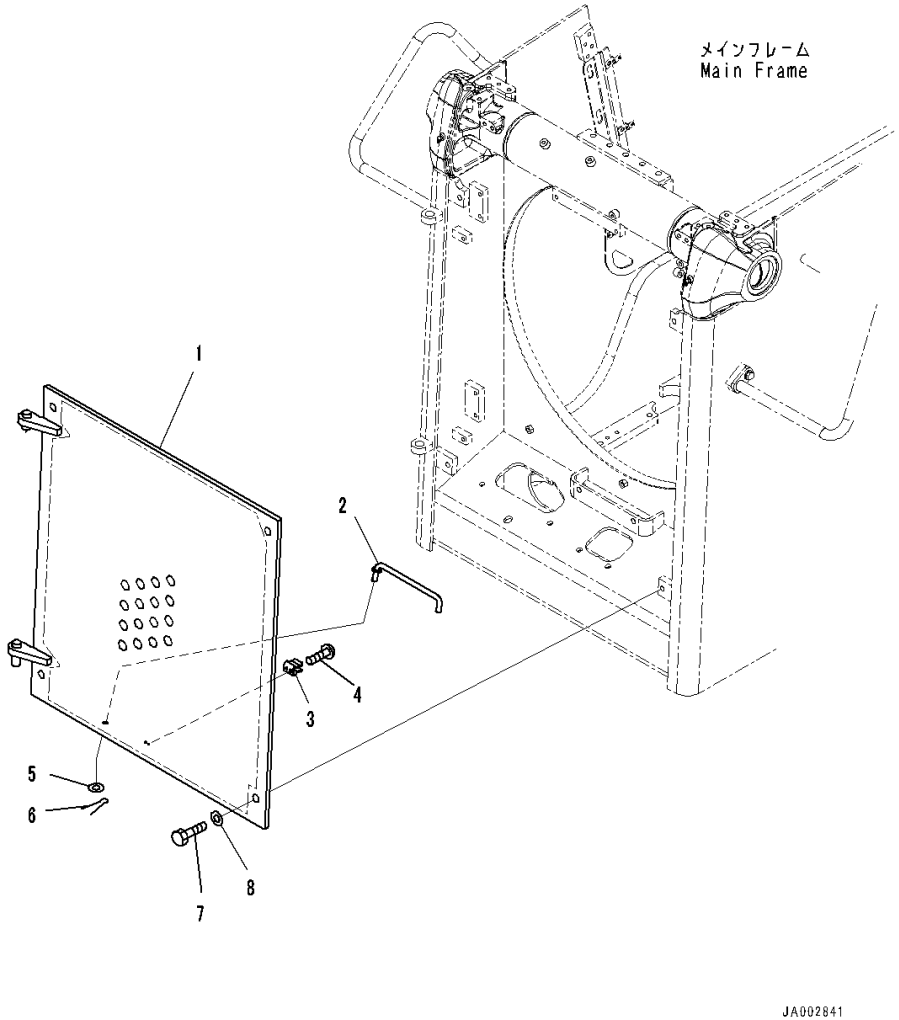

Index	Code	Part Number	Description	Qty	Serial Number
1		14X-54-51121	Mask	1	80001-
2		14X-54-51130	Bar	1	80001-
3		20R-54-11460	Spring	1	80001-
4		01023-10510	Screw	2	80001-
5		01643-31232	Washer	1	80001-
6		04050-14025	Pin, Cotter	1	80001-
7		01010-81640	Bolt	4	80001-
8		01643-31645	Washer	4	80001-

https://truckmanualshub.com/

FIG. M2140-001001 Front Guard Group, For Engine Hood And Sides, Hood

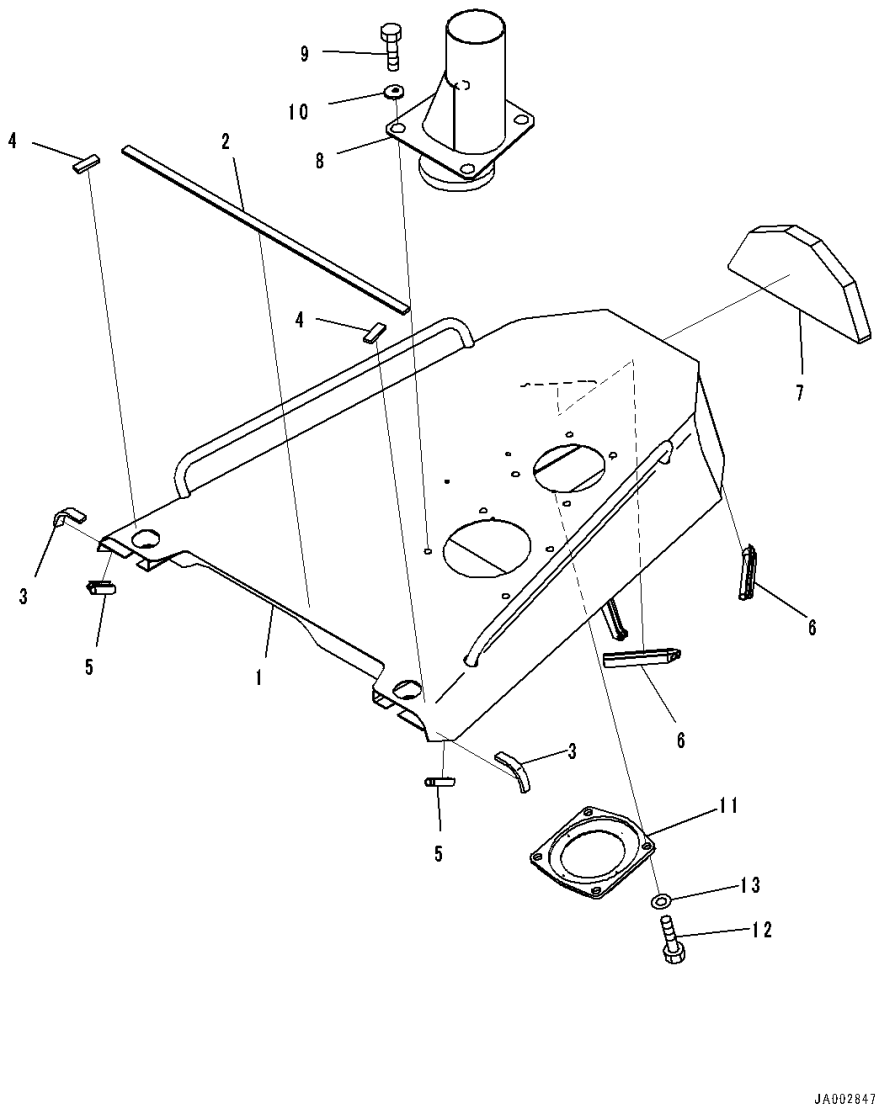

Index	Code	Part Number	Description	Qty	Serial Number
1		14X-54-52101	Hood Assembly	1	80070-
2		14X-54-52161	• Sheet,Bonded	1	80001-
3		14X-54-52171	• Sheet,Bonded	2	80001-
4		14X-54-52570	• Sheet,Bonded	2	80001-
5		14X-54-52470	• Seal,Bonded	2	80001-
6		14X-54-52550	• Seal,Bonded	2	80001-
7		14X-54-52561	• Seal,Bonded	1	80001-
8		14X-01-51511	Pipe	1	80001-
9		01010-71230	Bolt	4	80001-
10		14X-54-32820	Washer	4	80001-
11		14X-01-51530	Cover	1	80001-
12		01010-81020	Bolt	4	80001-
13		01643-31032	Washer	4	80001-

https://truckmanualshub.com/

FIG. M2140-001002 Front Guard Group, For Engine Hood And Sides, Hood Side Cover

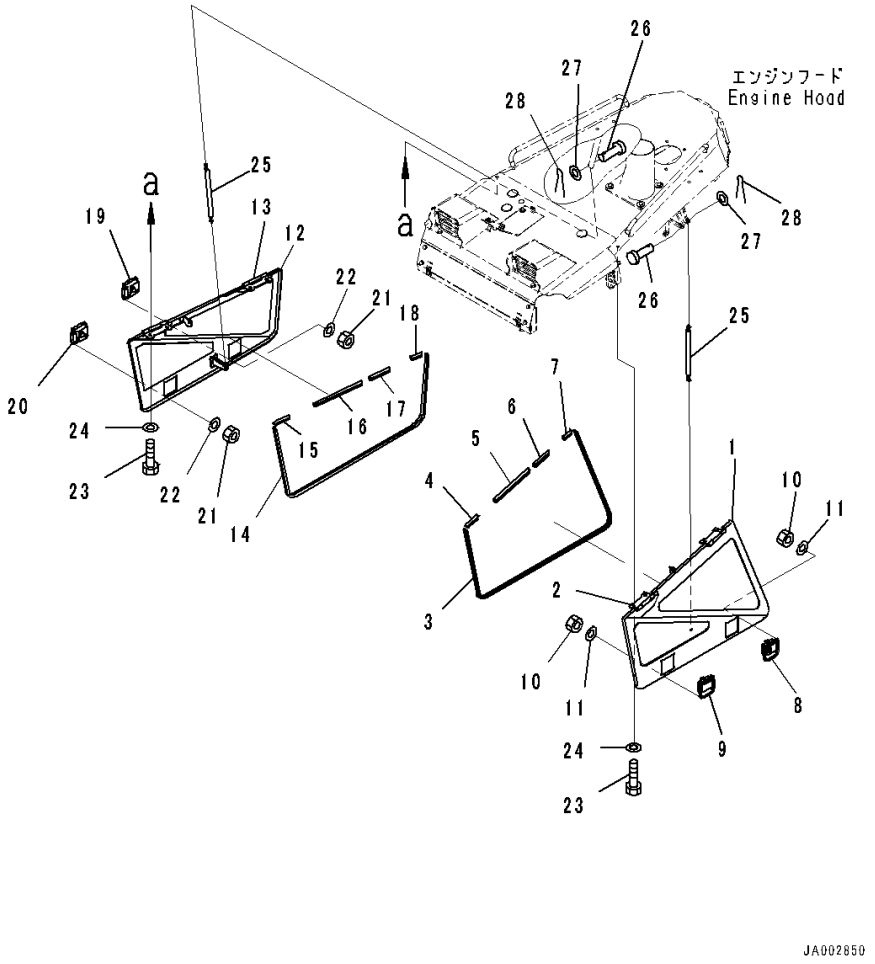

Index	Code	Part Number	Description	Qty	Serial Number
1		14X-54-52211	Side Cover Assembly,LHS	1	80001-
2		14X-54-52931	• Hinge,Welded	2	80001-
3		14X-54-52251	• Seal,Bonded	1	80001-
4		14X-54-52440	• Seal,Bonded	1	80001-
5		14X-54-52450	• Seal,Bonded	1	80001-
6		14X-54-52460	• Seal,Bonded	1	80001-
7		14X-54-52470	• Seal,Bonded	1	80001-
8		14X-54-54310	• Lock	1	80020-
9		14X-54-54320	• Lock	1	80020-
10		01580-10605	• Nut	8	80001-
11		01643-10623	• Washer	8	80001-
12		14X-54-52221	Side Cover Assembly,RHS	1	80001-
13		14X-54-52931	• Hinge,Welded	2	80001-
14		14X-54-52251	• Seal,Bonded	1	80001-
15		14X-54-52440	• Seal,Bonded	1	80001-
16		14X-54-52450	• Seal,Bonded	1	80001-
17		14X-54-52460	• Seal,Bonded	1	80001-
18		14X-54-52470	• Seal,Bonded	1	80001-
19		14X-54-54310	• Lock	1	80020-
20		14X-54-54320	• Lock	1	80020-
21		01580-10605	• Nut	8	80001-
22		01643-10623	• Washer	8	80001-
23		01010-81225	Bolt	8	80001-
24		01643-31232	Washer	8	80001-
25		14X-54-52390	Dumper	2	80001-
26		04205-10828	Pin	4	80001-
27		01641-20812	Washer	4	80001-
28		04050-12015	Pin, Cotter	4	80001-

https://truckmanualshub.com/

FIG. M2140-001003 Front Guard Group, Hood Support, Front Side

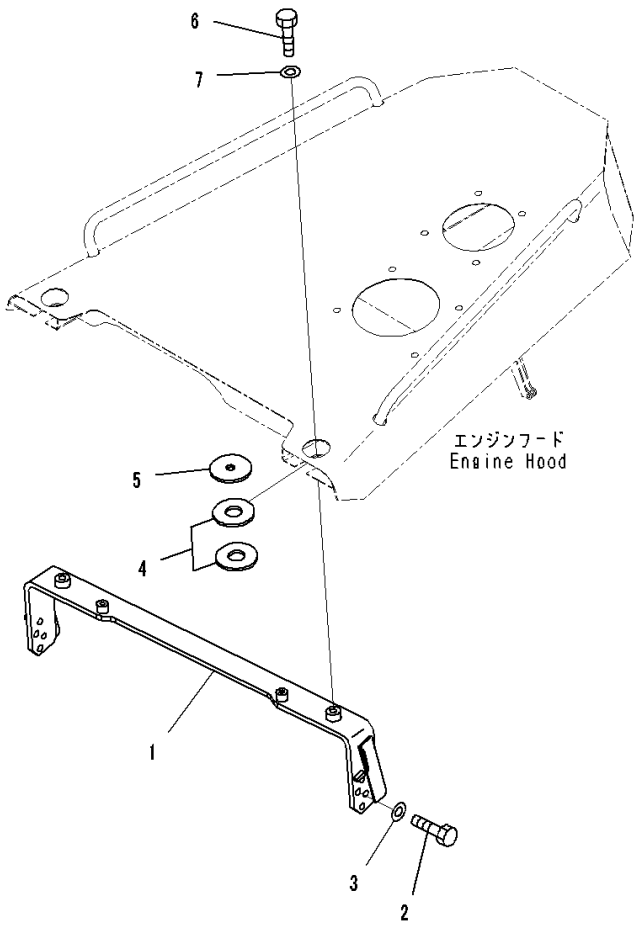

Index	Code	Part Number	Description	Qty	Serial Number
		Note: This list covers following specifications.			
		For Engine Hood And Sides			
		For Engine Hood And Sides, For EU Noise Reguration			
1		14X-54-52122	Bracket	1	80070-
2		01010-81230	Bolt	8	80001-
3		01643-31232	Washer	8	80001-
4		195-54-46180	Plate	4	80001-
5		6930-21-4120	Plate	2	80001-
6		01010-81640	Bolt	2	80001-
7		01643-31645	Washer	2	80001-

https://truckmanualshub.com/

FIG. M2140-001004 Front Guard Group, Radiator Cover

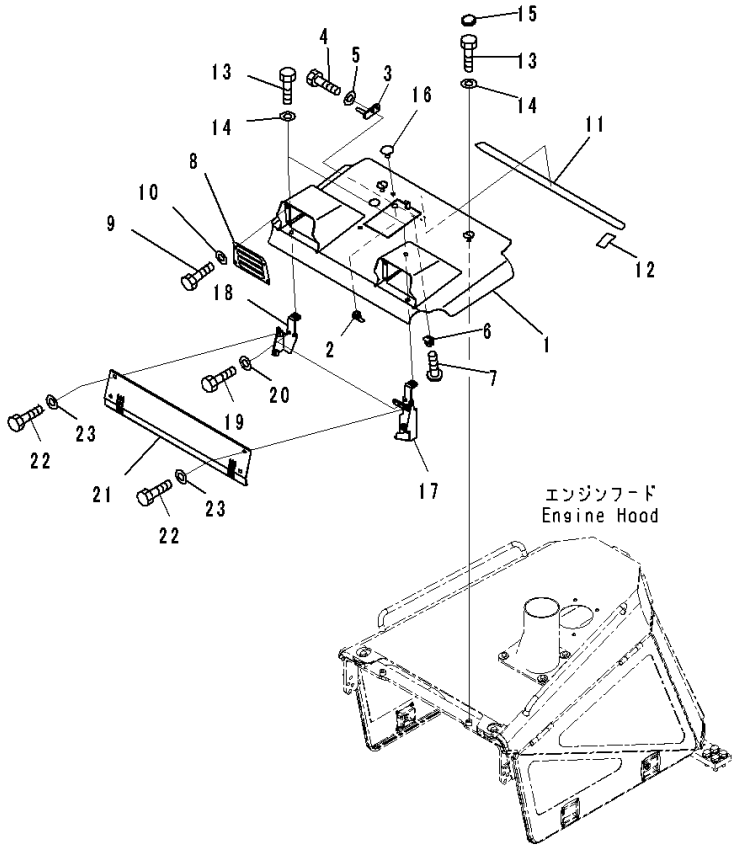

Index	Code	Part Number	Description	Qty	Serial Number
		Note: This list covers following specifications.			
		For Engine Hood And Sides			
		For Engine Hood And Sides, For EU Noise Reguration			
		14X-54-51211	Cover Assembly	1	80070-
1		14X-54-51222	• Cover	1	80070-
2		205-60-71220	• Lock Assembly	1	80001-
3		22B-54-12291	• Bracket	1	80001-
4		01010-80820	• Bolt	2	80001-
5		01643-30823	• Washer	2	80001-
6		22B-46-24180	• Spring	1	80001-
7		01023-10406	• Screw	2	80009-
8		14X-54-51230	• Cover	2	80001-
9		01010-D0820	• Bolt	8	80001-
10		01643-70823	• Washer	8	80001-
11		14X-54-53670	• Plate	1	80001-
12		14X-54-53680	• Plate	2	80001-
13		01010-81225	Bolt	4	80001-
14		01643-31232	Washer	4	80001-
15		14X-54-32310	Cap	3	80001-
16		416-54-21710	Plug	3	80001-
17		14X-54-51251	Bracket	1	80001-
18		14X-54-51261	Bracket	1	80001-
19		01010-81225	Bolt	4	80001-
20		01643-31232	Washer	4	80001-
21		14X-54-51241	Plate	1	80001-
22		01010-D1020	Bolt	4	80001-
23		01643-71032	Washer	4	80001-

https://truckmanualshub.com/

FIG. M2140-001005 Front Guard Group, Hood Mounting

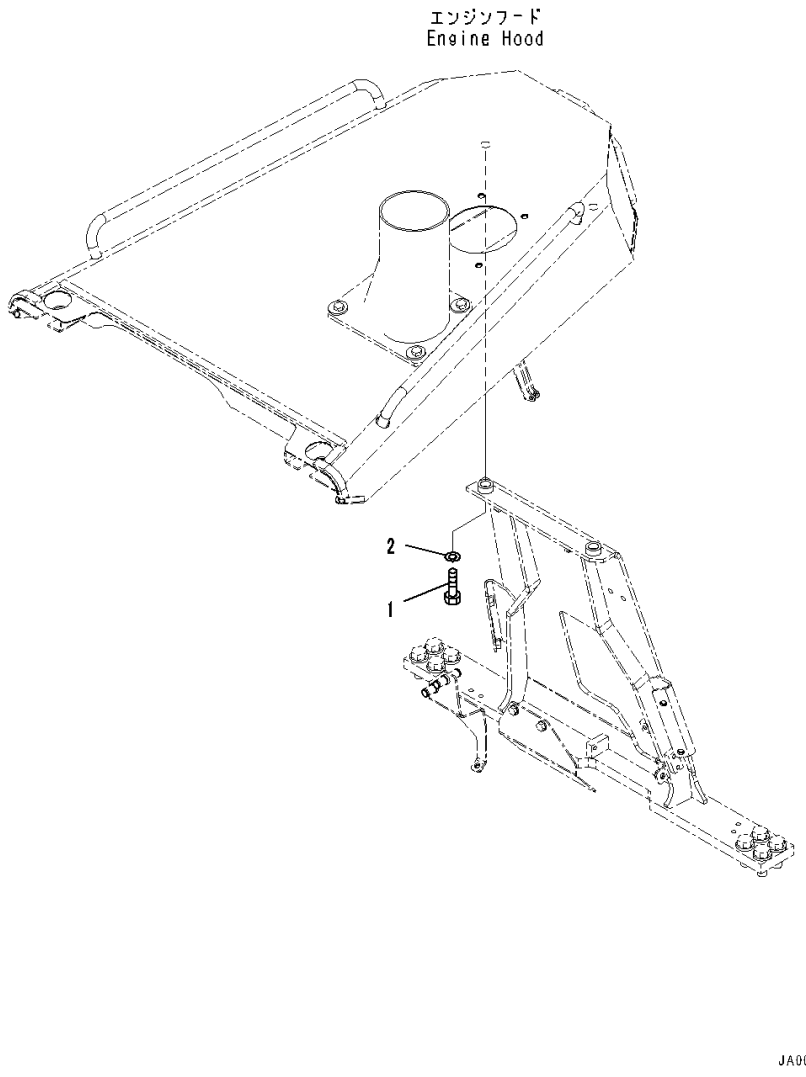

Index	Code	Part Number	Description	Qty	Serial Number
		Note: This list covers following specifications.			
		For Engine Hood And Sides			
		For Engine Hood And Sides, For EU Noise Reguration			
1		01010-81650	Bolt	2	80001-
2		01643-31645	Washer	2	80001-

https://truckmanualshub.com/

FIG. M2140-001006 Front Guard Group, Hood Support, Rear Side

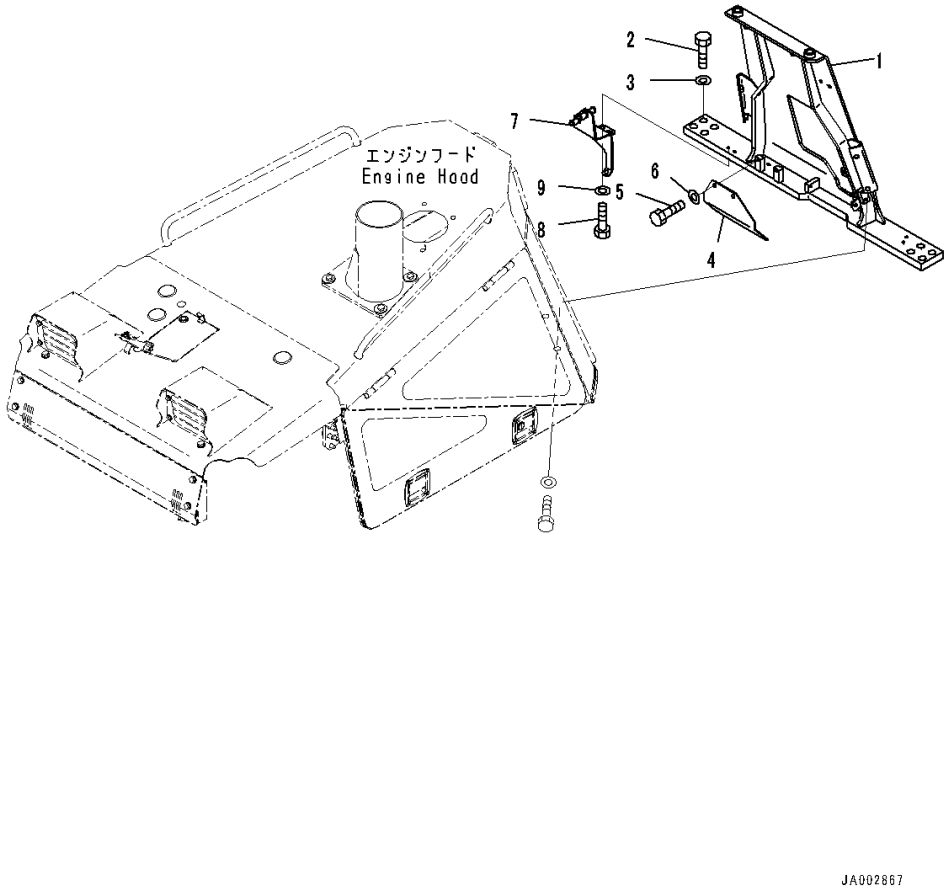

Index	Code	Part Number	Description	Qty	Serial Number
		Note: This list covers following specifications.			
		For Engine Hood And Sides			
		For Engine Hood And Sides, For EU Noise Reguration			
1		14X-54-52511	Bracket	1	80001-
2		01010-82055	Bolt	8	80001-
3		01643-32060	Washer	8	80001-
4		14X-54-52610	Plate	1	80001-
5		01010-81016	Bolt	2	80001-
6		01643-31032	Washer	2	80001-
7		14X-Y11-1971	Bracket	1	80001-
8		01010-81230	Bolt	2	80001-
9		01643-31232	Washer	2	80001-

https://truckmanualshub.com/

FIG. M2140-001007 Front Guard Group, Hood Side Cover Lock

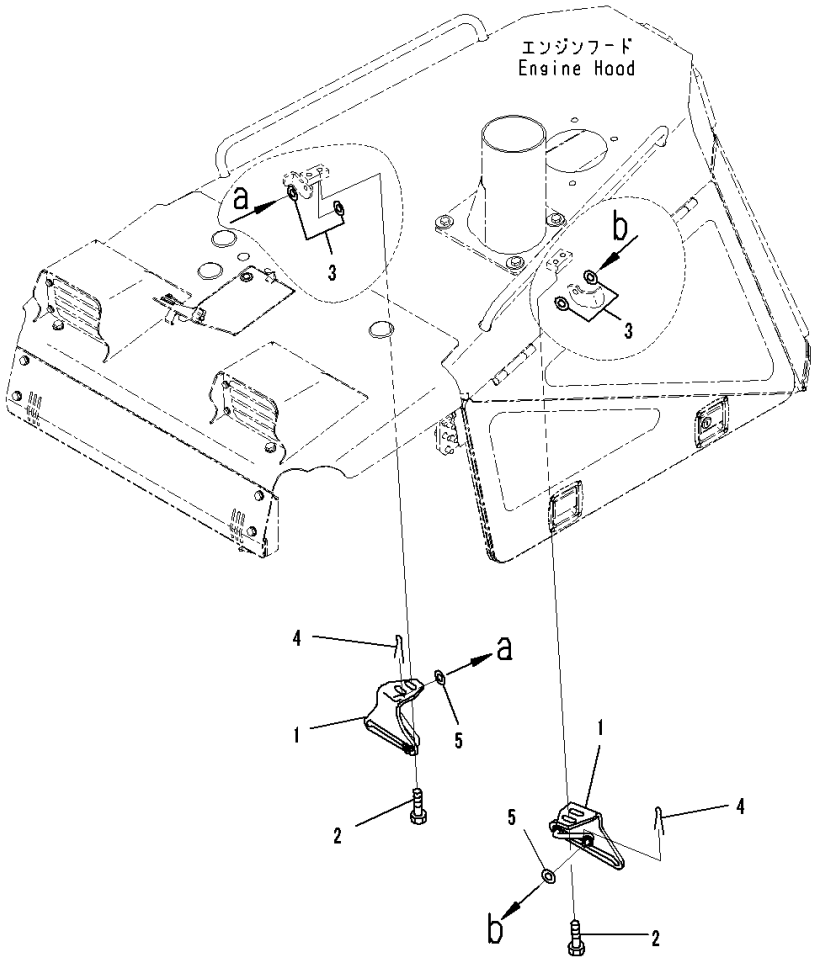

Index	Code	Part Number	Description	Qty	Serial Number
		Note: This list covers following specifications.			
		For Engine Hood And Sides			
		For Engine Hood And Sides, For EU Noise Reguration			
1		14X-54-52151	Bracket	2	80001-
2		01010-81230	Bolt	4	80001-
3		01643-31232	Washer	4	80001-
4		04050-13020	Pin, Cotter	2	80001-
5		01643-31232	Washer	2	80007-

https://truckmanualshub.com/

FIG. M2140-001008 Front Guard Group, Hood Support Rear Side Cover

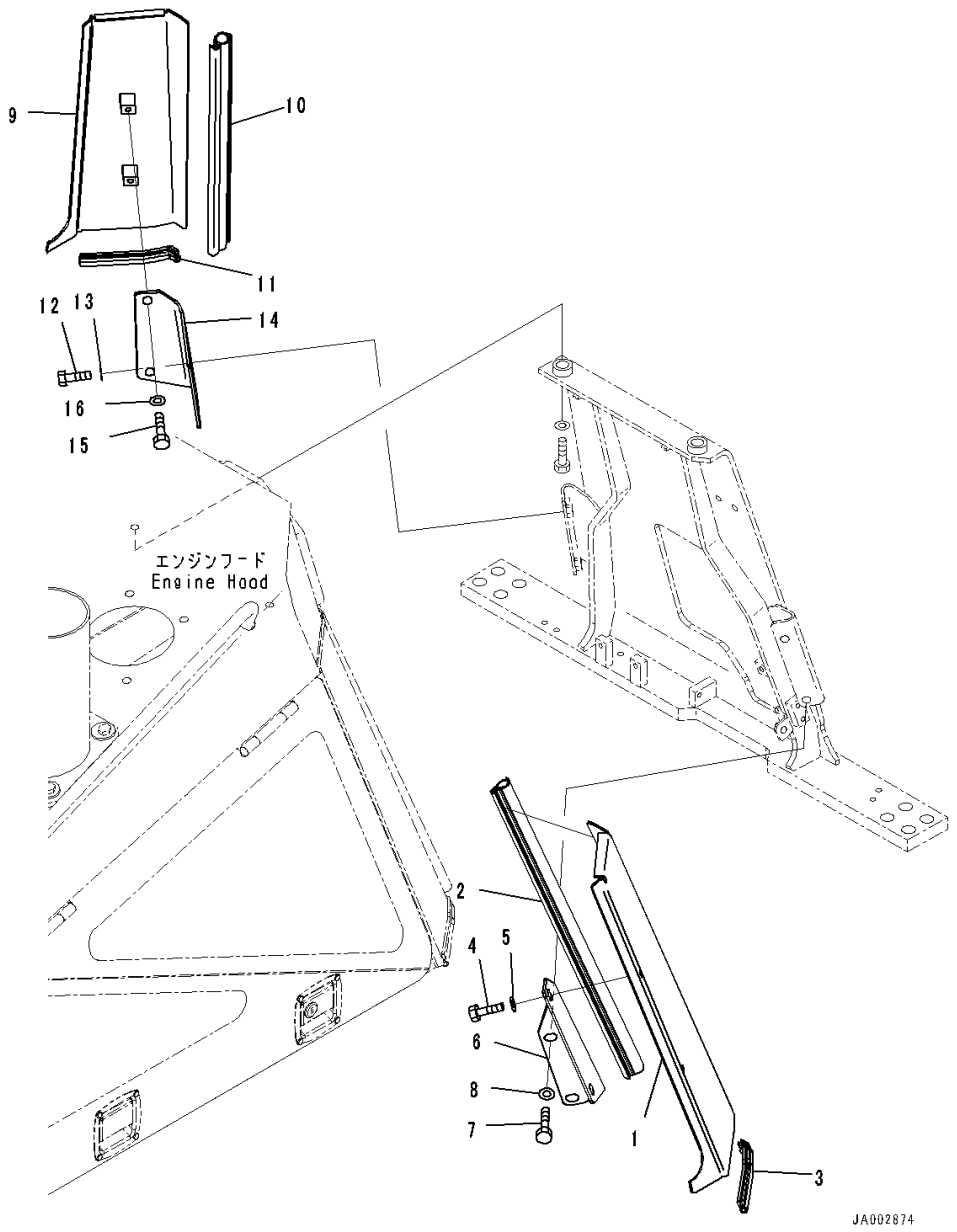

Index	Code	Part Number	Description	Qty	Serial Number
		Note: This list covers following specifications.			
		For Engine Hood And Sides			
		For Engine Hood And Sides, For EU Noise Reguration			
1		14X-54-52371	Cover Assembly,LHS	1	80001-
2		14X-54-52351	• Seal,Bonded	1	80001-
3		14X-54-52540	• Seal,Bonded	1	80001-
4		01010-81225	Bolt	2	80001-
5		01643-31232	Washer	2	80001-
6		14X-54-52331	Bracket	1	80001-
7		01010-81225	Bolt	2	80001-
8		01643-31232	Washer	2	80001-
9		14X-54-52381	Cover Assembly,RHS	1	80001-
10		14X-54-52351	• Seal,Bonded	1	80001-
11		14X-54-52540	• Seal,Bonded	1	80001-
12		01010-81225	Bolt	2	80001-
13		01643-31232	Washer	2	80001-
14		14X-54-52341	Bracket	1	80001-
15		01010-81225	Bolt	2	80001-
16		01643-31232	Washer	2	80001-

https://truckmanualshub.com/

FIG. M2140-001009 Front Guard Group, Tool Box

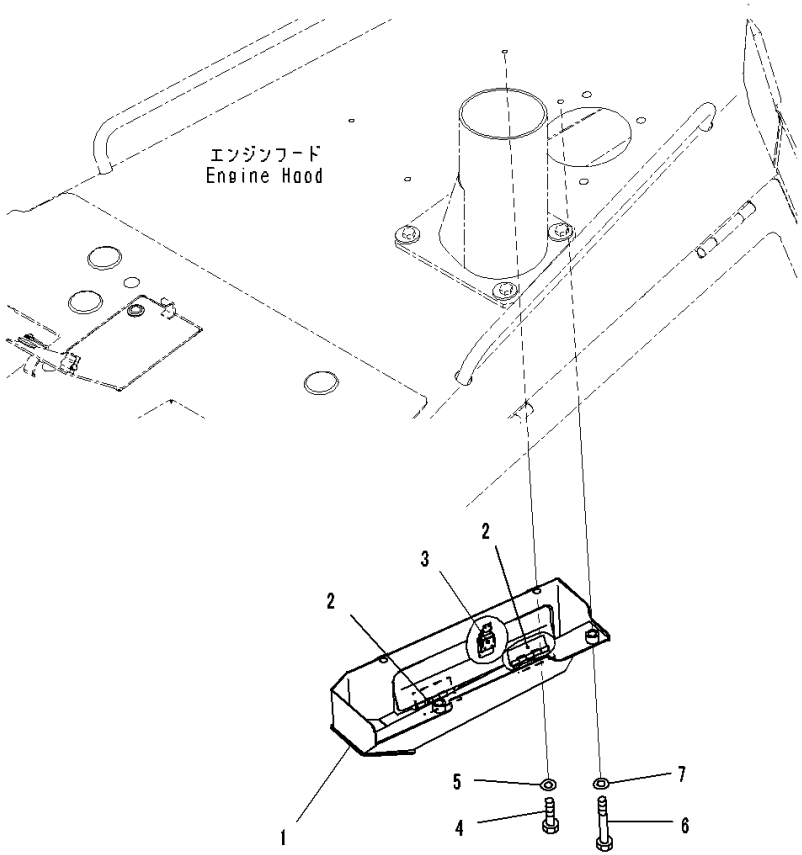

Index	Code	Part Number	Description	Qty	Serial Number
		Note: This list covers following specifications.			
		For Engine Hood And Sides			
		For Engine Hood And Sides, For EU Noise Reguration			
1		14X-54-52191	Bracket	1	80001-
2		09455-13016	• Hinge,Welded	2	80001-
3		23F-54-15570	• Catcher,Welded	1	80001-
4		01010-81020	Bolt	2	80001-
5		01643-31032	Washer	2	80001-
6		01010-81035	Bolt	2	80001-
7		01643-31032	Washer	2	80001-

https://truckmanualshub.com/

FIG. M2140-002001 Front Guard Group, For Engine Hood And Sides, For EU Noise Reguration, Hood

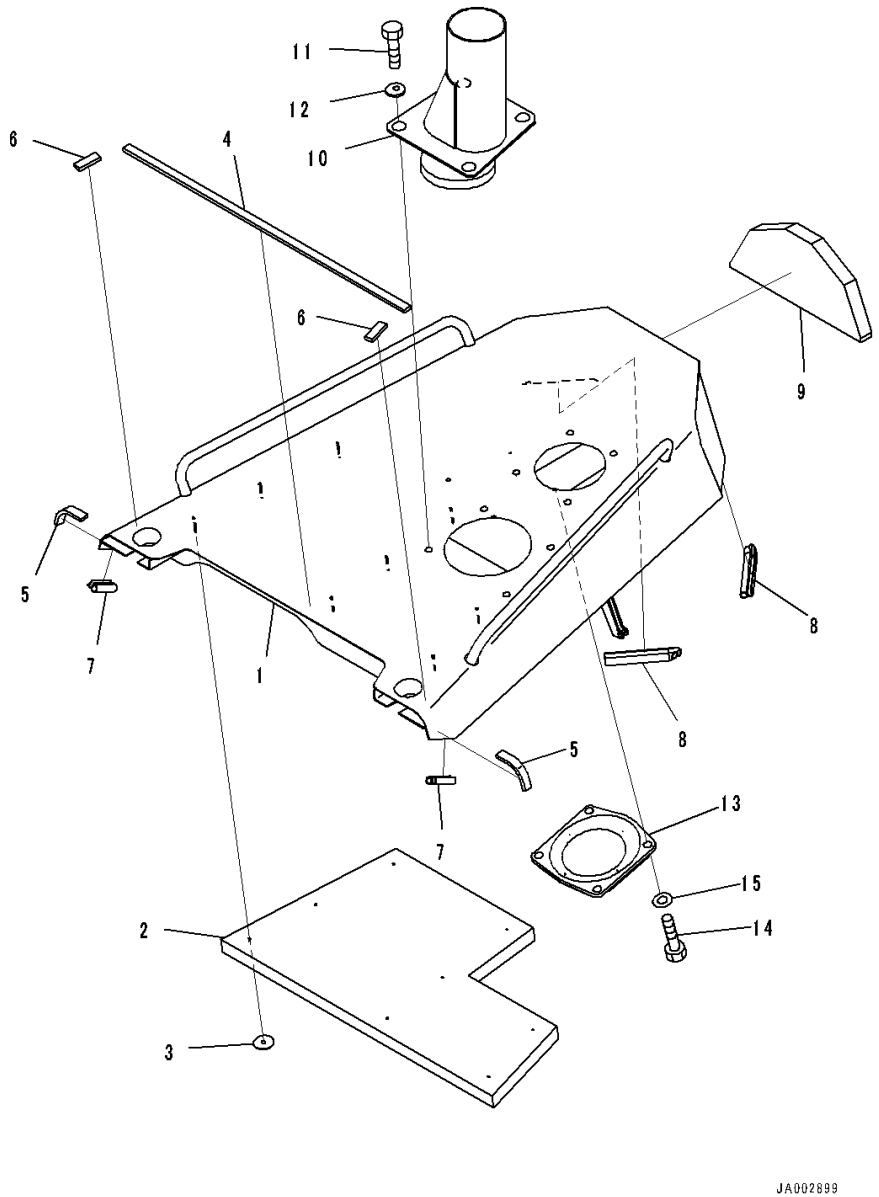

Index	Code	Part Number	Description	Qty	Serial Number
1		14X-A62-5112	Hood Assembly	1	80070-
2		14X-A62-5560	• Sheet	1	80001-
3		124-A62-1920	• Cap	8	80020-
4		14X-54-52161	• Sheet,Bonded	1	80001-
5		14X-54-52171	• Sheet,Bonded	2	80001-
6		14X-54-52570	• Sheet,Bonded	2	80001-
7		14X-54-52470	• Seal,Bonded	2	80001-
8		14X-54-52550	• Seal,Bonded	2	80001-
9		14X-54-52561	• Seal,Bonded	1	80001-
10		14X-01-51511	Pipe	1	80001-
11		01010-71230	Bolt	4	80001-
12		14X-54-32820	Washer	4	80001-
13		14X-01-51530	Cover	1	80001-
14		01010-81020	Bolt	4	80001-
15		01643-31032	Washer	4	80001-

https://truckmanualshub.com/

FIG. M2140-002002 Front Guard Group, For Engine Hood And Sides, For EU Noise Reguration

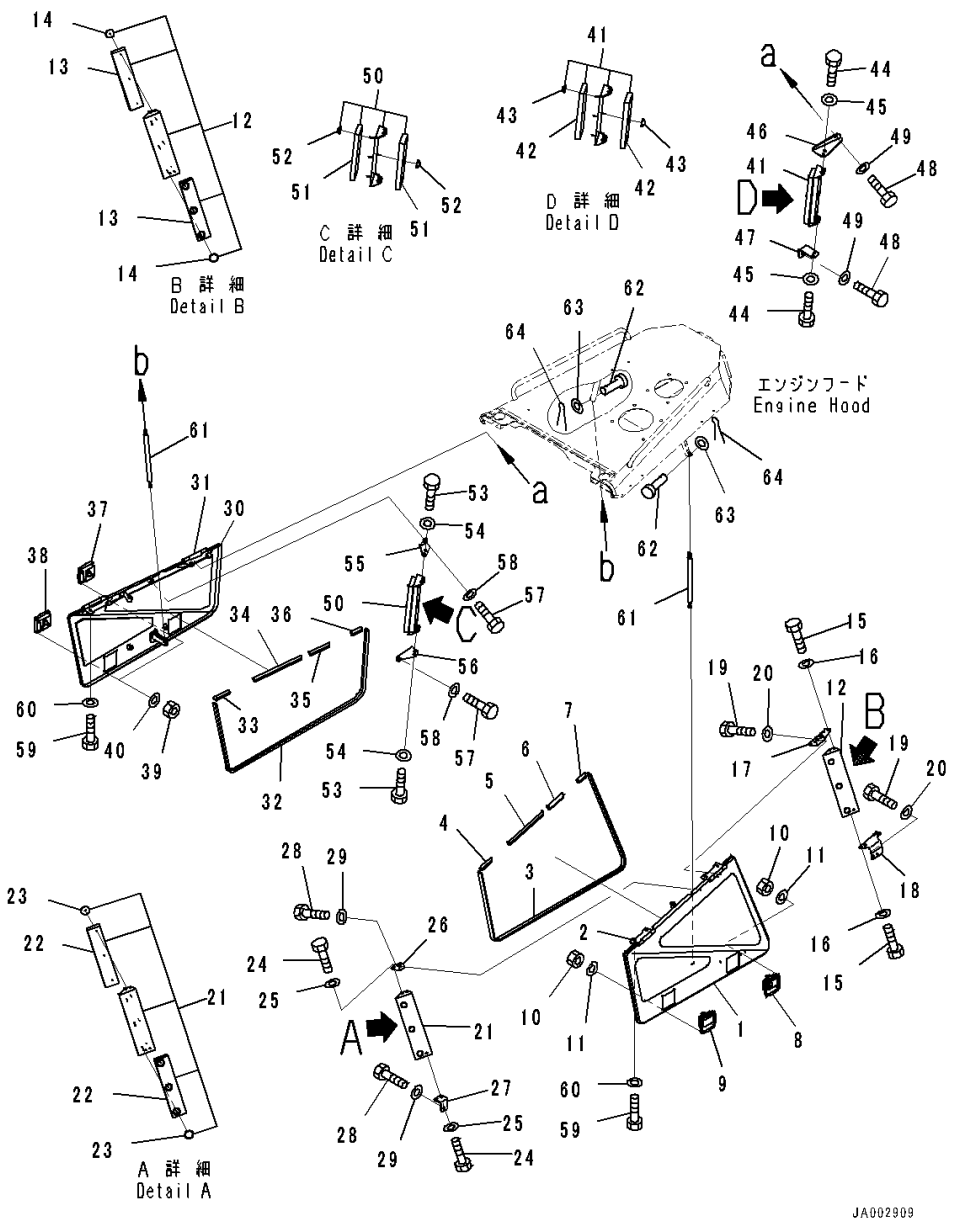

Index	Code	Part Number	Description	Qty	Serial Number
1		14X-A62-5211	Side Cover Assembly,LHS	1	80001-
2		14X-54-52931	• Hinge	2	80001-
3		14X-54-52251	• Seal	1	80001-
4		14X-54-52440	• Seal	1	80001-
5		14X-54-52450	• Seal	1	80001-
6		14X-54-52460	• Seal	1	80001-
7		14X-54-52470	• Seal	1	80001-
8		14X-54-54310	• Lock	1	80020-
9		14X-54-54320	• Lock	1	80020-
10		01580-10605	• Nut	8	80001-
11		01643-10623	• Washer	8	80001-
12		14X-A62-5611	Plate Assembly	2	80001-
13		14X-A62-5630	• Sheet,Bonded	2	80001-
14		124-A62-1920	• Cap	6	80001-
15		01010-81020	Bolt	8	80001-
16		01643-31032	Washer	8	80001-
17		14X-A62-5651	Plate	1	80001-
18		14X-A62-5661	Plate	1	80001-
19		01010-81020	Bolt	4	80001-
20		01643-31032	Washer	4	80001-
21		14X-A62-5611	Plate Assembly	1	80001-
22		14X-A62-5630	• Sheet,Bonded	2	80001-
23		124-A62-1920	• Cap	6	80001-
24		01010-81020	Bolt	4	80001-
25		01643-31032	Washer	4	80001-
26		14X-A62-5671	Plate	1	80001-
27		14X-A62-5681	Plate	1	80001-
28		01010-81020	Bolt	2	80001-
29		01643-31032	Washer	2	80001-
30		14X-A62-5231	Side Cover Assembly,RHS	1	80001-
31		14X-54-52931	• Hinge	2	80001-
32		14X-54-52251	• Seal	1	80001-
33		14X-54-52440	• Seal	1	80001-
34		14X-54-52450	• Seal	1	80001-
35		14X-54-52460	• Seal	1	80001-
36		14X-54-52470	• Seal	1	80001-
37		14X-54-54310	• Lock	1	80020-
38		14X-54-54320	• Lock	1	80020-
39		01580-10605	• Nut	8	80001-
40		01643-10623	• Washer	8	80001-

https://truckmanualshub.com/

FIG. M2140-002002 Front Guard Group, For Engine Hood And Sides, For EU Noise Reguration

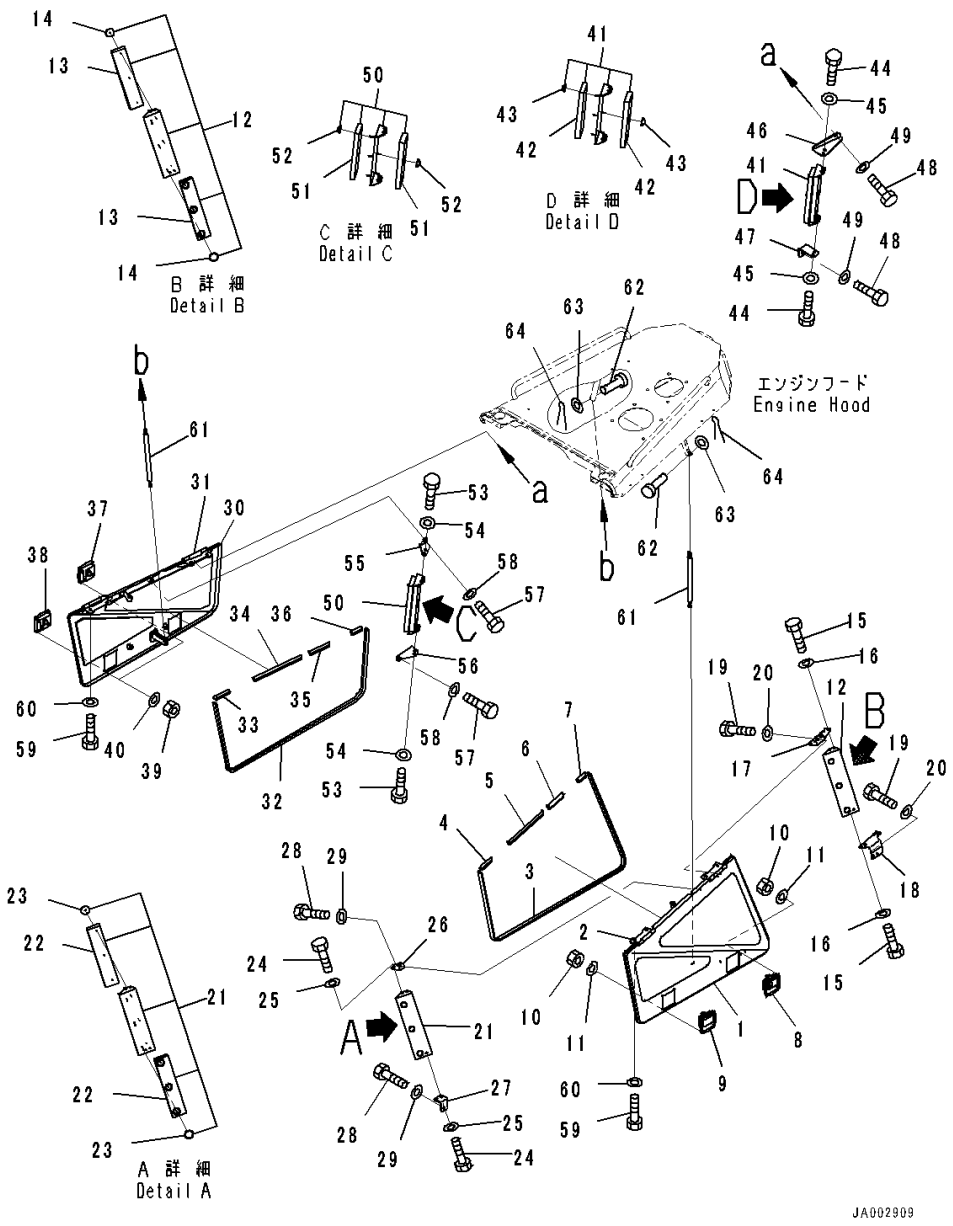

Index	Code	Part Number	Description	Qty	Serial Number
41		14X-A62-5611	Plate Assembly	1	80001-
42		14X-A62-5630	• Sheet,Bonded	2	80001-
43		124-A62-1920	• Cap	6	80001-
44		01010-81020	Bolt	4	80001-
45		01643-31032	Washer	4	80001-
46		14X-A62-5730	Plate	1	80001-
47		14X-A62-5711	Plate	1	80001-
48		01010-81020	Bolt	2	80001-
49		01643-31032	Washer	2	80001-
50		14X-A62-5611	Plate Assembly	1	80001-
51		14X-A62-5630	• Sheet,Bonded	2	80001-
52		124-A62-1920	• Cap	6	80001-
53		01010-81020	Bolt	4	80001-
54		01643-31032	Washer	4	80001-
55		14X-A62-5691	Plate	1	80001-
56		14X-A62-5720	Plate	1	80001-
57		01010-81020	Bolt	2	80001-
58		01643-31032	Washer	2	80001-
59		01010-81225	Bolt	8	80001-
60		01643-31232	Washer	8	80001-
61		14X-54-52390	Dumper	2	80001-
62		04205-10828	Pin	4	80001-
63		01641-20812	Washer	4	80001-
64		04050-12015	Pin, Cotter	4	80001-

https://truckmanualshub.com/

FIG. M2142-001001 Engine Side Cover, For Engine Hood And Sides

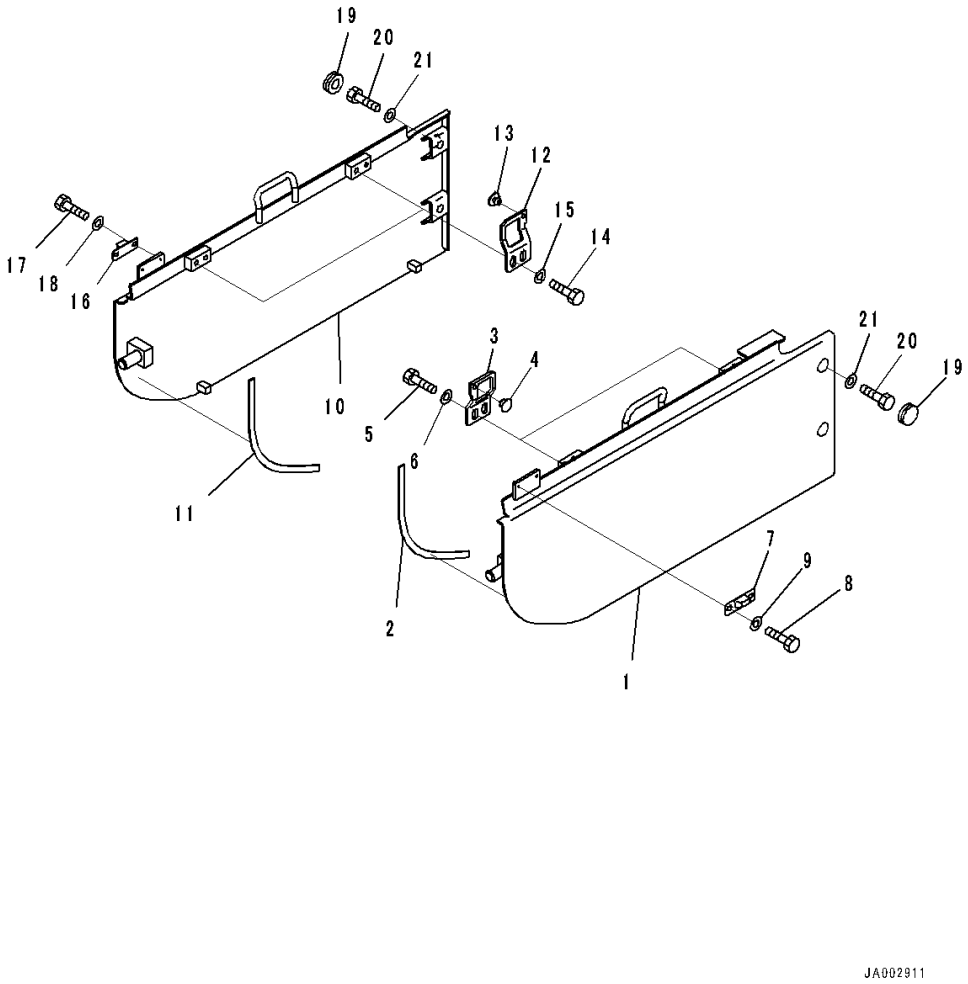

Index	Code	Part Number	Description	Qty	Serial Number
1		14X-54-52411	Cover,LHS	1	80001-
2		14X-54-52430	• Cushion,Bonded	1	80001-
3		14X-54-53830	Plate	2	80001-
4		14X-54-12960	Stopper	2	80001-
5		01010-81225	Bolt	4	80001-
6		01643-31232	Washer	4	80001-
7		205-54-53550	Dovetail	1	80001-
8		01010-80612	Bolt	2	80001-
9		01643-30623	Washer	2	80001-
10		14X-54-52421	Cover,RHS	1	80001-
11		14X-54-52430	• Cushion,Bonded	1	80001-
12		14X-54-53830	Plate	2	80001-
13		14X-54-12960	Stopper	2	80001-
14		01010-81225	Bolt	4	80001-
15		01643-31232	Washer	4	80001-
16		205-54-53550	Dovetail	1	80001-
17		01010-80612	Bolt	2	80001-
18		01643-30623	Washer	2	80001-
19		11Y-54-13630	Cap	4	80001-
20		01010-81230	Bolt	4	80001-
21		01643-31232	Washer	4	80001-

https://truckmanualshub.com/

FIG. M2142-002001 Engine Side Cover, For Engine Hood And Sides, For EU Noise Reguration

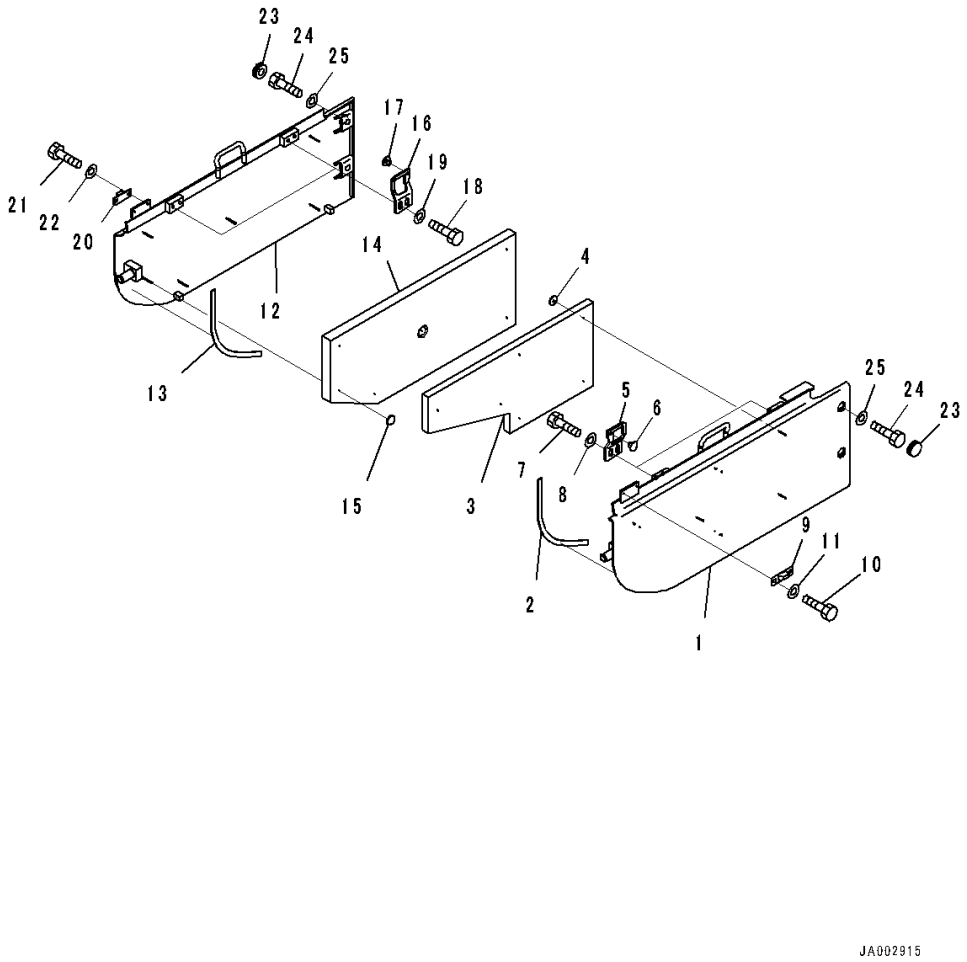

Index	Code	Part Number	Description	Qty	Serial Number
1		14X-A62-5311	Cover Assembly,LHS	1	80001-
2		14X-54-52430	• Cushion	1	80001-
3		14X-A62-5521	• Sheet,Bonded	1	80001-
4		124-A62-1920	• Cap	6	80001-
5		14X-54-53830	Plate	2	80001-
6		14X-54-12960	Stopper	2	80001-
7		01010-81225	Bolt	4	80001-
8		01643-31232	Washer	4	80001-
9		205-54-53550	Dovetail	1	80001-
10		01010-80612	Bolt	2	80001-
11		01643-30623	Washer	2	80001-
12		14X-A62-5331	Cover Assembly,RHS	1	80001-
13		14X-54-52430	• Cushion	1	80001-
14		14X-A62-5551	• Sheet,Bonded	1	80001-
15		124-A62-1920	• Cap	6	80001-
16		14X-54-53830	Plate	2	80001-
17		14X-54-12960	Stopper	2	80001-
18		01010-81225	Bolt	4	80001-
19		01643-31232	Washer	4	80001-
20		205-54-53550	Dovetail	1	80001-
21		01010-80612	Bolt	2	80001-
22		01643-30623	Washer	2	80001-
23		11Y-54-13630	Cap	4	80001-
24		01010-81230	Bolt	4	80001-
25		01643-31232	Washer	4	80001-

https://truckmanualshub.com/

FIG. M2210-001001 Fender Group, Fender

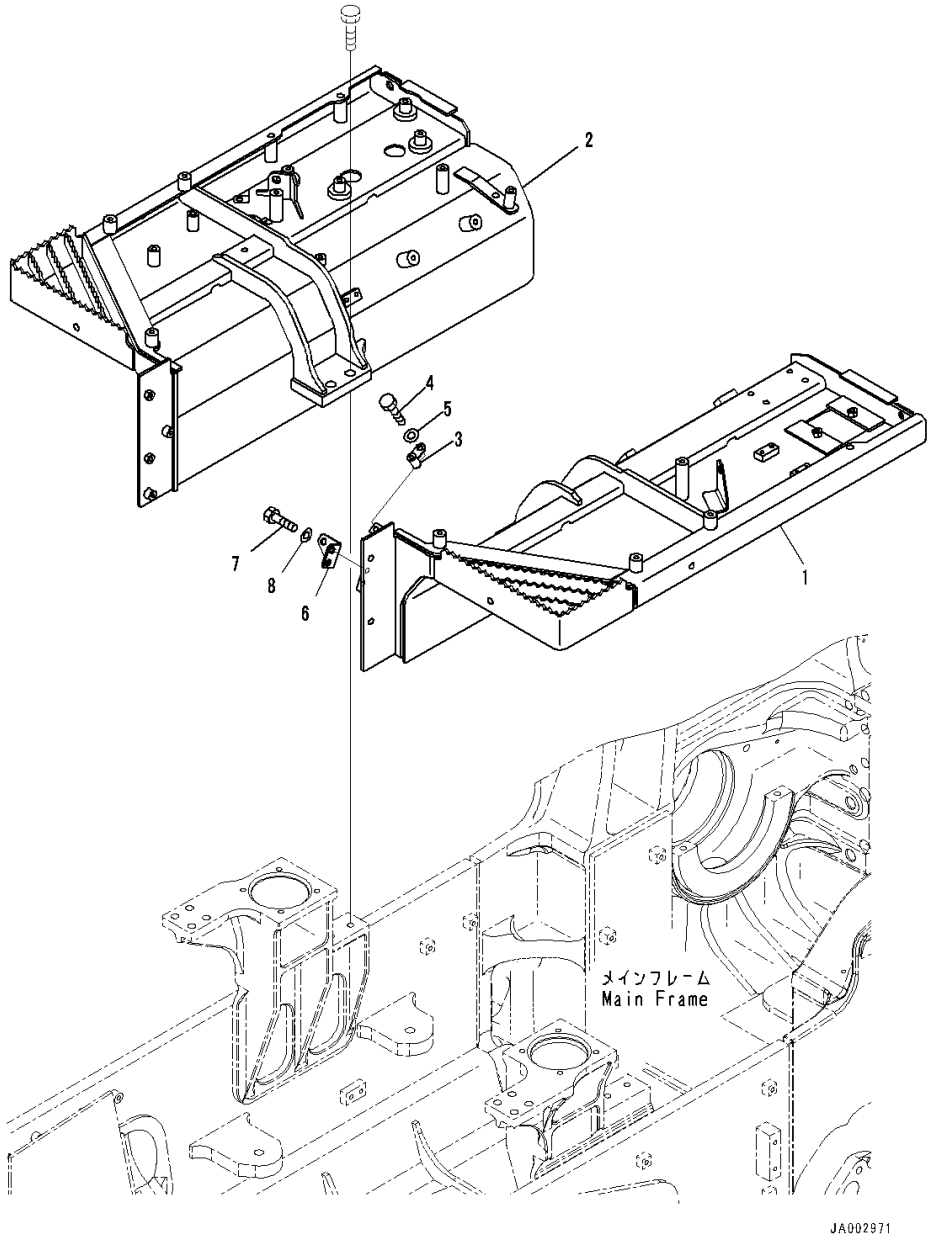

Index	Code	Part Number	Description	Qty	Serial Number
		Note: This list covers following specifications. For Machine With 3-spool Valve Hydraulics For Machine With 5-spool Valve Hydraulics, With Power Angle Power Tilt Dozer For Machine With 5-spool Valve Hydraulics, With Power Angle Power Tilt Dozer, For Machine With Ripper For Machine With 5-spool Valve Hydraulics, With Power Tilt Pitch Dozer, For Machine With Ripper For Machine With 5-spool Valve Hydraulics, With Power Tilt Pitch Dozer For Machine With 4-spool Valve Hydraulics, For Machine With Ripper			
1		14X-54-53112	Fender	1	80005-
2		14X-54-53122	Fender	1	80005-
3		14X-50-35140	Bracket	1	80001-
4		01010-81225	Bolt	1	80001-
5		01643-31232	Washer	1	80001-
6		14X-04-51350	Bracket	1	80001-
7		01010-81225	Bolt	2	80001-
8		01643-31232	Washer	2	80001-

https://truckmanualshub.com/

FIG. M2210-001002 Fender Group, For Machine With 3-spool Valve Hydraulics, Inner Parts (1/10)

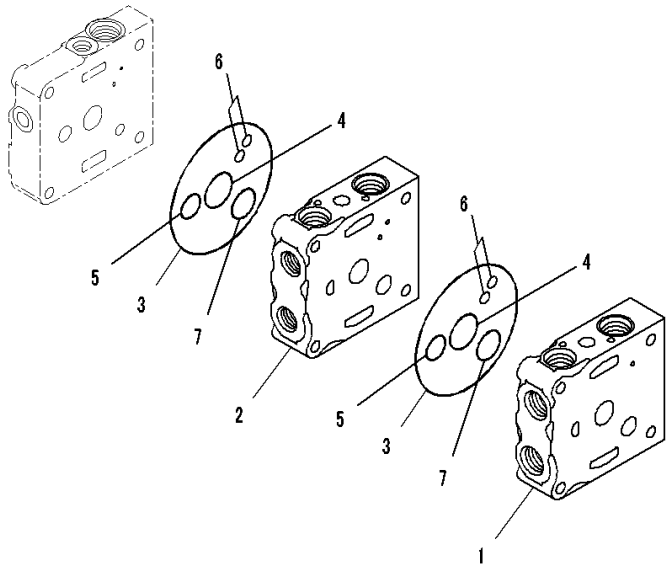

Index	Code	Part Number	Description	Qty	Serial Number
		723-23-10700	Valve, Control	1	80001-
	C1		• Body Group	1	80001-
1		723-26-21250	• • Valve Body	1	80001-
2		723-26-21360	• • Valve Body	1	80001-
3		07000-12120	• • O-ring	2	80001-
4		723-26-15830	• • O-ring	2	80001-
5		07000-12020	• • O-ring	2	80001-
6		07000-11008	• • O-ring	4	80001-
7		723-26-15840	• • O-ring	2	80001-

https://truckmanualshub.com/

FIG. M2210-001003 Fender Group, For Machine With 3-spool Valve Hydraulics, Inner Parts (2/10)

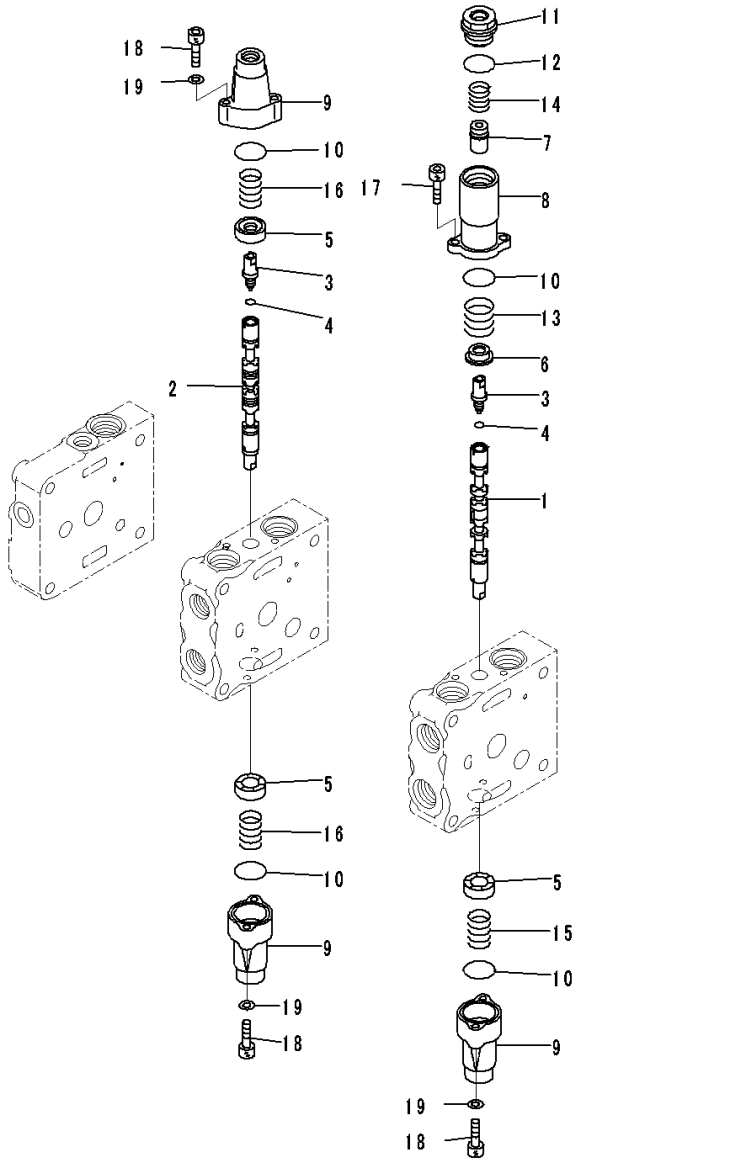

JY013361

Index	Code	Part Number	Description	Qty	Serial Number
		723-23-10700	Valve, Control	1	80001-
	C1		• Body Group	1	80001-
1		723-26-22830	• • Spool	1	80001-
2		723-26-22840	• • Spool	1	80001-
3		723-26-15130	• • Plug	2	80001-
4		07002-10823	• • O-ring	2	80001-
5		723-26-15121	• • Retainer	3	80001-
6		723-26-16770	• • Retainer	1	80001-
7		723-26-16780	• • Retainer	1	80001-
8		723-26-16760	• • Case	1	80001-
9		723-26-15110	• • Case	3	80001-
10		575-41-17420	• • O-ring	4	80001-
11		723-26-16790	• • Plug	1	80001-
12		07002-12434	• • O-ring	1	80001-
13		723-26-14560	• • Spring	1	80001-
14		723-26-14570	• • Spring	1	80001-
15		709-26-11450	• • Spring	1	80001-
16		723-26-14580	• • Spring	2	80001-
17		01252-60616	• • Bolt	2	80001-
18		01252-60630	• • Bolt, Hexagon Socket Head	6	80001-
19		01641-20608	• • Washer	6	80001-

https://truckmanualshub.com/

FIG. M2210-001004 Fender Group, For Machine With 3-spool Valve Hydraulics, Inner Parts (3/10)

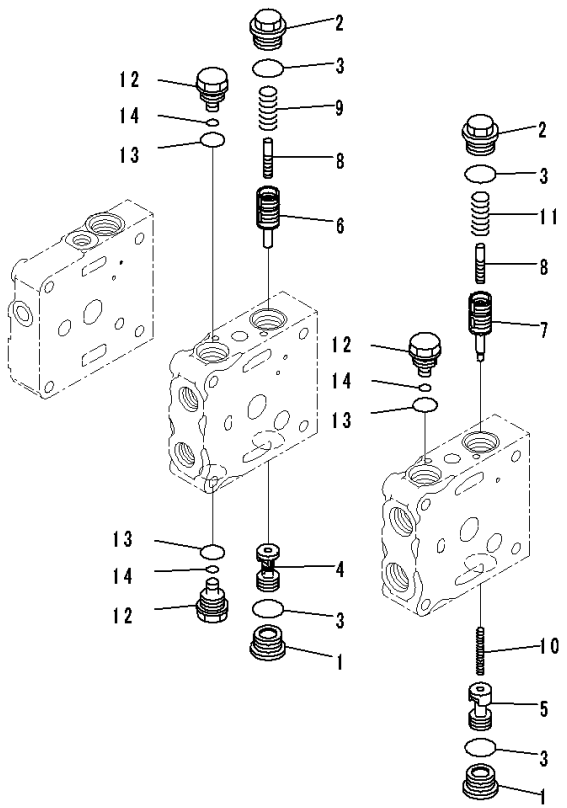

JY013362

Index	Code	Part Number	Description	Qty	Serial Number
		723-23-10700	Valve, Control	1	80001-
	C1		• Body Group	1	80001-
1		723-26-15230	• • Plug	2	80001-
2		723-26-15370	• • Plug	2	80001-
3		07002-12434	• • O-ring	4	80001-
4		723-26-41160	• • Valve	1	80001-
5		723-26-41210	• • Valve	1	80001-
6		723-26-51240	• • Valve	1	80001-
7		723-26-51510	• • Valve	1	80001-
8		723-26-51250	• • Piston	2	80001-
9		723-26-14230	• • Spring	1	80001-
10		723-26-14220	• • Spring	1	80001-
11		723-26-14240	• • Spring	1	80001-
12		723-26-15310	• • Plug	3	80001-
13		07002-12034	• • O-ring	3	80001-
14		07000-11007	• • O-ring	3	80001-

https://truckmanualshub.com/

FIG. M2210-001005 Fender Group, For Machine With 3-spool Valve Hydraulics, Inner Parts (4/10)

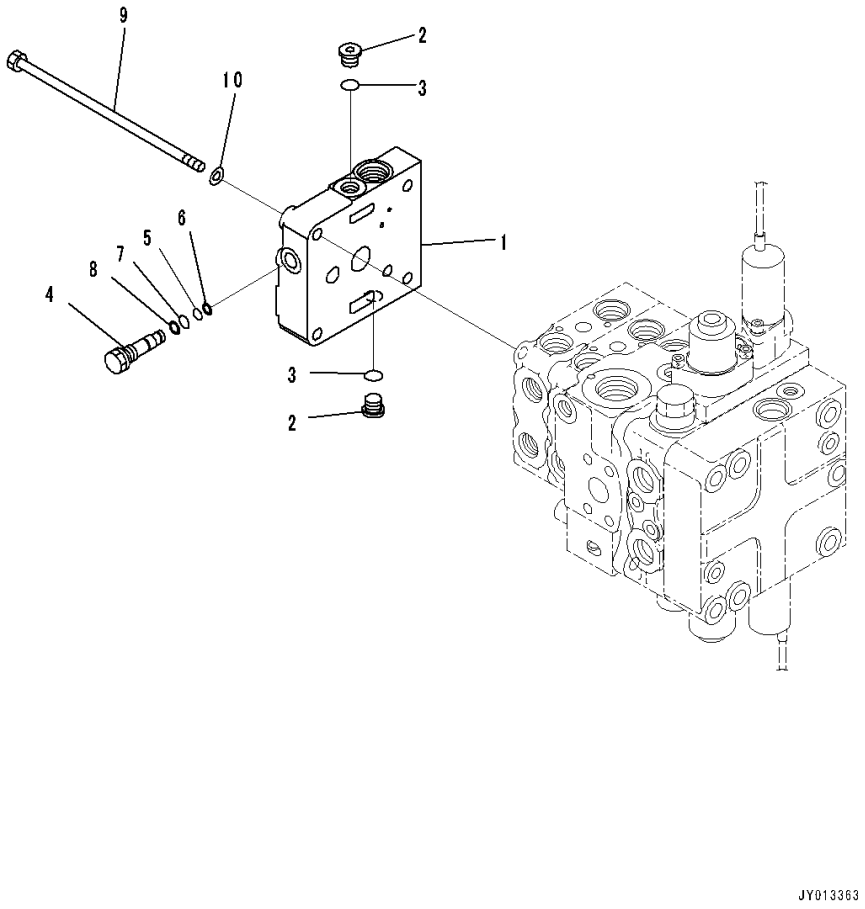

Index	Code	Part Number	Description	Qty	Serial Number
		723-23-10700	Valve, Control	1	80001-
1		723-26-21750	• Cover	1	80001-
2		702-21-55620	• Plug	2	80001-
3		07002-11423	• O-ring	2	80001-
4		723-26-15190	• Plug	1	80001-
5		07000-11007	• O-ring	1	80001-
6		07001-01007	• Ring, Back-up	1	80001-
7		07000-11009	• O-ring	1	80001-
8		07001-01009	• Ring, Back-up	1	80001-
9		01011-61035	• Bolt	4	80001-
10		01643-31032	• Washer	4	80001-

https://truckmanualshub.com/

FIG. M2210-001006 Fender Group, For Machine With 3-spool Valve Hydraulics, Inner Parts (5/10)

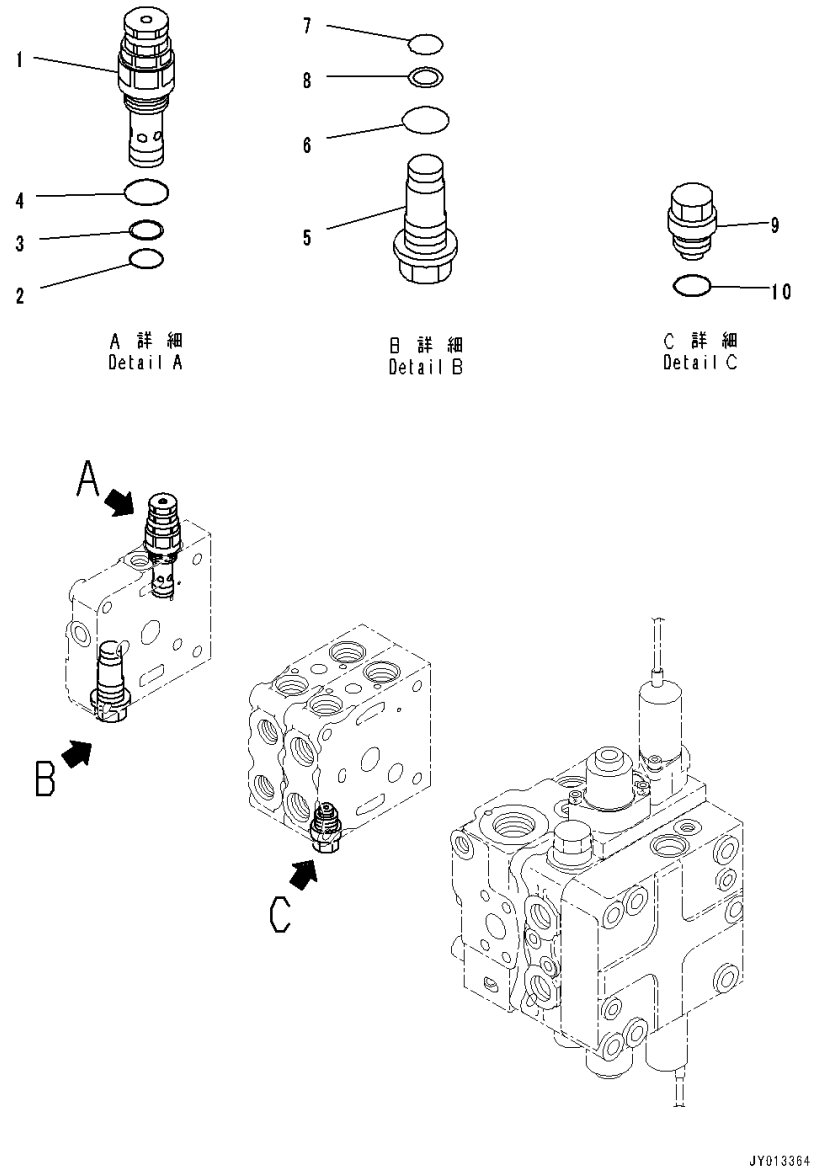

Index	Code	Part Number	Description	Qty	Serial Number
		723-23-10700	Valve, Control	1	80001-
1		723-20-66500	• Valve, Relief	1	80001-
2		700-22-11410	• • O-ring	1	80001-
3		700-80-64220	• • Ring	1	80001-
4		07002-12434	• • O-ring	1	80001-
5		723-46-15240	• Plug	1	80001-
6		07002-12434	• O-ring	1	80001-
7		700-22-11410	• O-ring	1	80001-
8		700-80-64220	• Ring	1	80001-
9		723-20-80100	• Valve Assembly, Suction	1	80001-
10		07002-12034	• • O-ring	1	80001-

https://truckmanualshub.com/

FIG. M2210-001007 Fender Group, For Machine With 3-spool Valve Hydraulics, Inner Parts (6/10)

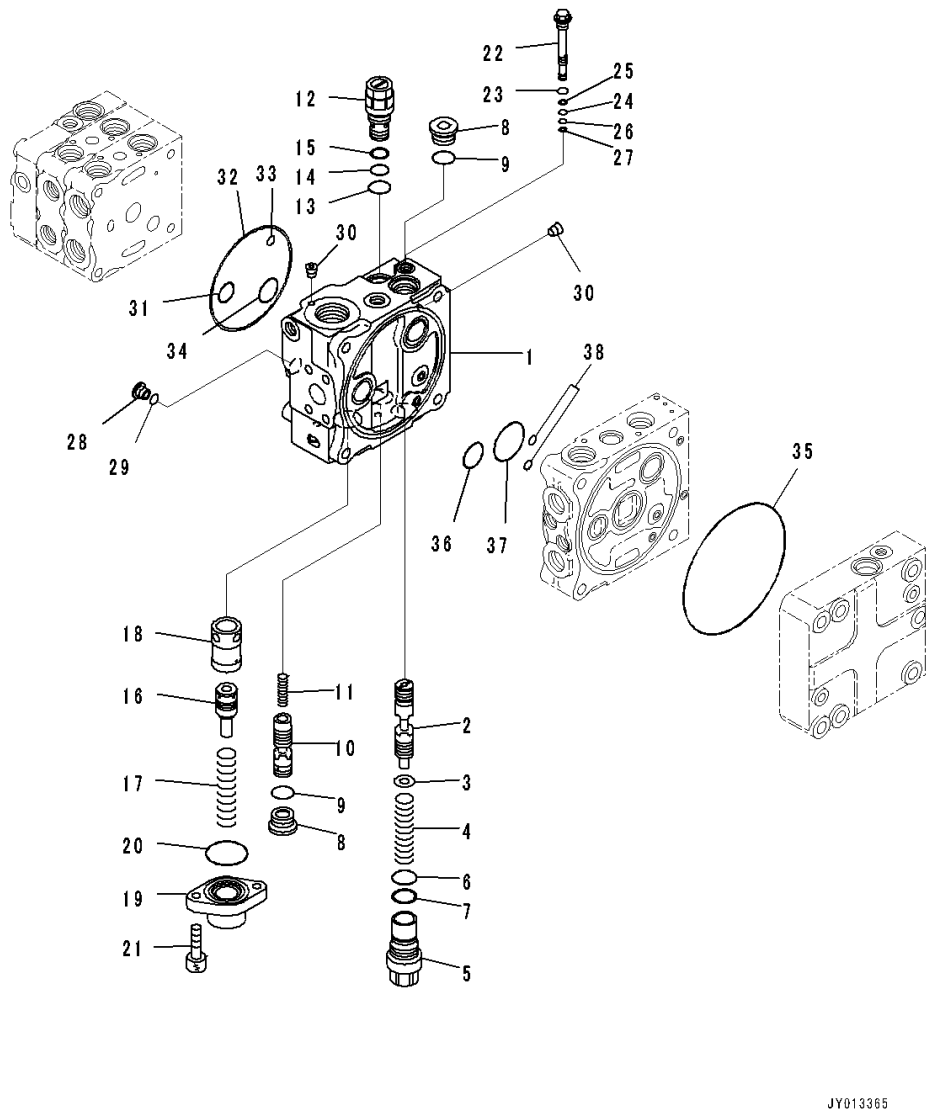

Index	Code	Part Number	Description	Qty	Serial Number
		723-23-10700	Valve, Control	1	80001-
		723-50-02800	• Block Subassembly	1	80001-
1		723-26-21160	• • Block	1	80001-
2		723-26-22850	• • Spool	1	80001-
3		723-26-15860	• • Washer	1	80001-
4		723-26-14590	• • Spring	1	80001-
5		723-26-15850	• • Plug	1	80001-
6		700-80-61260	• • O-ring	1	80001-
7		700-80-61430	• • Ring	1	80001-
8		723-26-15230	• • Plug	2	80001-
9		07002-12434	• • O-ring	2	80001-
10		723-26-22860	• • Spool	1	80001-
11		723-26-14470	• • Spring	1	80001-
12		723-60-21900	• • Valve, Relief	1	80001-
13		07002-12434	• • • O-ring	1	80001-
14		07000-12016	• • • O-ring	1	80001-
15		07001-02016	• • • Ring, Back-up	1	80001-
16		723-36-15230	• • Piston	1	80001-
17		723-36-15340	• • Spring	1	80001-
18		723-36-15210	• • Sleeve	1	80001-
19		723-36-15250	• • Case	1	80001-
20		07000-13042	• • O-ring	1	80001-
21		01252-60820	• • Bolt	2	80001-
22	C1		• • Valve Assembly	1	80001-
23		07002-11223	• • • O-ring	1	80001-
24		07000-11007	• • • O-ring	1	80001-
25		07001-01007	• • • Ring, Back-up	1	80001-
26		07000-11005	• • • O-ring	1	80001-
27		07001-01005	• • • Ring, Back-up	1	80001-
28		723-26-15220	• • Plug	1	80001-
29		07002-11223	• • O-ring	1	80001-
30		708-21-12541	• • Plug	5	80001-
31		07000-12020	• • O-ring	1	80001-
32		07000-12120	• • O-ring	1	80001-
33		07000-11008	• • O-ring	1	80001-
34		723-26-15840	• • O-ring	1	80001-
35		144-14-54610	• • O-ring	1	80001-
36		723-56-31730	• • O-ring	1	80001-
37		702-75-11520	• • O-ring	1	80001-
38		07000-11008	• • O-ring	2	80001-

https://truckmanualshub.com/

FIG. M2210-001008 Fender Group, For Machine With 3-spool Valve Hydraulics, Inner Parts (7/10)

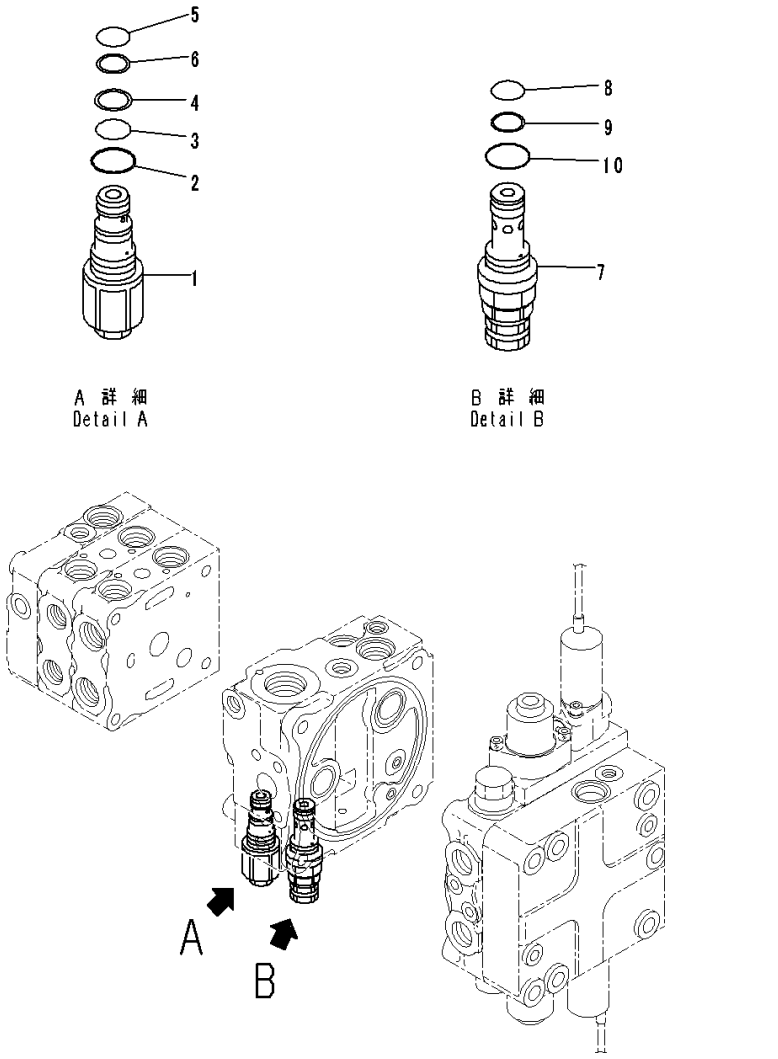

Index	Code	Part Number	Description	Qty	Serial Number
		723-23-10700	Valve, Control	1	80001-
1		723-20-70600	• Valve Assembly	1	80001-
2		07002-12434	• • O-ring	1	80001-
3		07000-12016	• • O-ring	1	80001-
4		07001-02016	• • Ring, Back-up	1	80001-
5		07000-12014	• • O-ring	1	80001-
6		07001-02014	• • Ring, Back-up	1	80001-
7		723-20-63100	• Valve, Relief	1	80001-
8		700-22-11410	• • O-ring	1	80001-
9		700-80-64220	• • Ring	1	80001-
10		07002-12034	• • O-ring	1	80001-

https://truckmanualshub.com/

FIG. M2210-001009 Fender Group, For Machine With 3-spool Valve Hydraulics, Inner Parts (8/10)

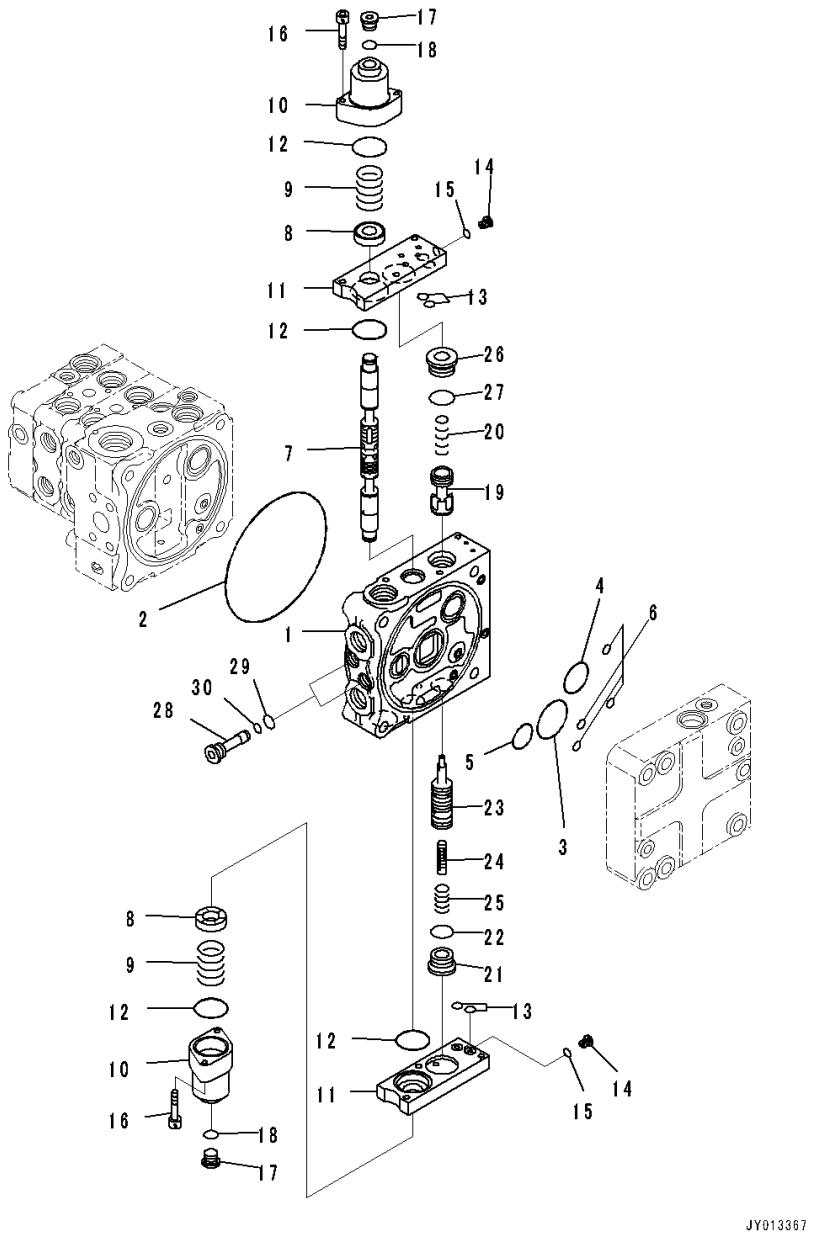

Index	Code	Part Number	Description	Qty	Serial Number
		723-23-10700	Valve, Control	1	80001-
		723-51-06500	• Valve Assembly	1	80001-
1	C1		• • Valve Body	1	80001-
2		144-14-54610	• • O-ring	1	80001-
3		723-56-31720	• • O-ring	1	80001-
4		723-56-31730	• • O-ring	1	80001-
5		702-75-11520	• • O-ring	1	80001-
6		07000-11008	• • O-ring	4	80001-
7		723-56-22170	• • Spool	1	80001-
8		723-56-31211	• • Retainer	2	80001-
9		723-36-14120	• • Spring	2	80001-
10		723-56-31510	• • Case	2	80001-
11		723-56-32820	• • Plate	2	80001-
12		702-21-55450	• • O-ring	4	80001-
13		07000-11009	• • O-ring	4	80001-
14		723-11-27280	• • Plug	2	80001-
15		07002-10823	• • O-ring	2	80001-
16		01252-60650	• • Bolt	4	80001-
17		702-21-55620	• • Plug	2	80001-
18		07002-11423	• • O-ring	2	80001-
19		723-56-42150	• • Valve	1	80001-
20		723-56-41710	• • Spring	1	80001-
21		723-26-15230	• • Plug	1	80001-
22		07002-12434	• • O-ring	1	80001-
23		723-56-42330	• • Valve	1	80001-
24		723-56-41590	• • Piston	1	80001-
25		723-56-41730	• • Spring	1	80001-
26		723-56-41970	• • Plug	1	80001-
27		07000-13024	• • O-ring	1	80001-
28		723-56-31640	• • Plug	2	80001-
29		07002-11623	• • O-ring	2	80001-
30		07000-11008	• • O-ring	2	80001-

https://truckmanualshub.com/

FIG. M2210-001010 Fender Group, For Machine With 3-spool Valve Hydraulics, Inner Parts (9/10)

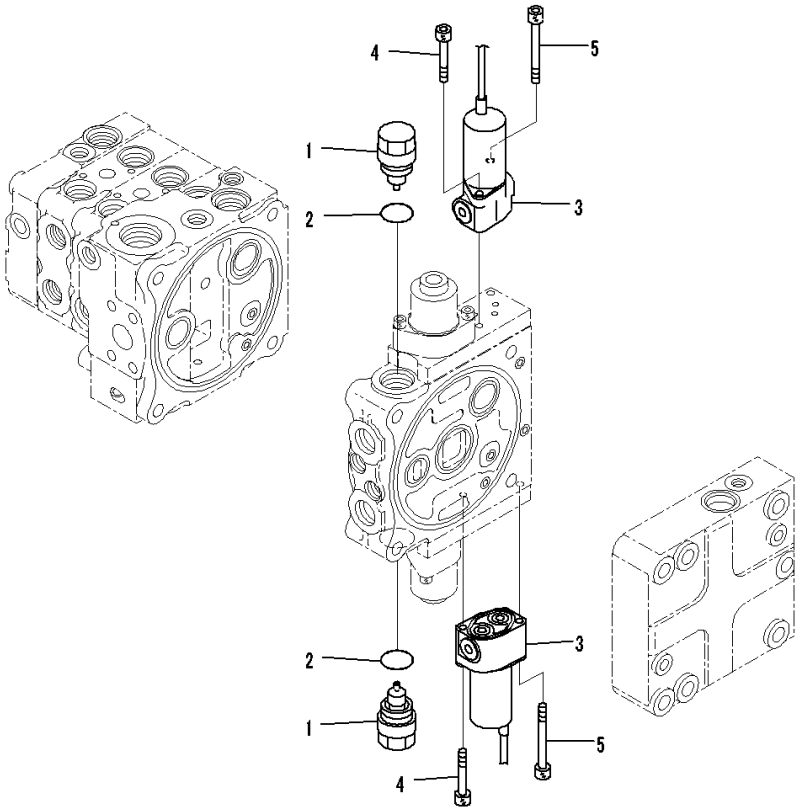

Index	Code	Part Number	Description	Qty	Serial Number
		723-23-10700	Valve, Control	1	80001-
		723-51-06500	• Valve Assembly	1	80001-
		723-40-85100	• • Valve Assembly, Suction	2	80001-
1		723-40-85110	• • • Sleeve	1	80001-
2		709-25-11390	• • • O-ring	1	80001-
3		702-21-07610	• • Valve, Solenoid	2	80001-
4		01252-60645	• • Bolt, Hexagon Socket Head	2	80001-
5		702-16-55270	• • Bolt	2	80001-

https://truckmanualshub.com/

FIG. M2210-001011 Fender Group, For Machine With 3-spool Valve Hydraulics, Inner Parts (10/10)

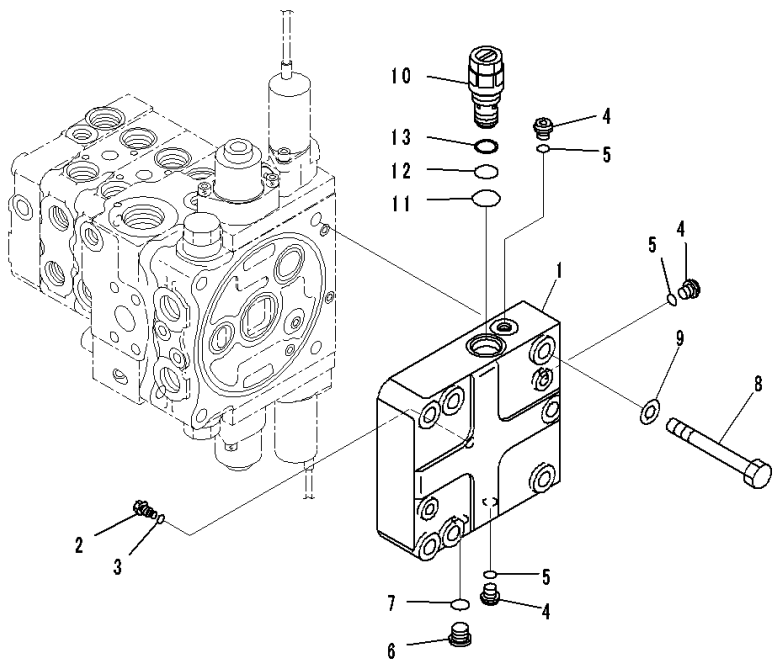

Index	Code	Part Number	Description	Qty	Serial Number
		723-23-10700	Valve, Control	1	80001-
1		723-56-12210	• Cover	1	80001-
2		723-56-33940	• Plug	1	80001-
3		07002-10823	• O-ring	1	80001-
4		708-8E-16160	• Plug	3	80001-
5		07002-11023	• O-ring	3	80001-
6		702-21-55620	• Plug	1	80001-
7		07002-11423	• O-ring	1	80001-
8		01011-81225	• Bolt	4	80001-
9		01643-31232	• Washer	4	80001-
10		723-60-21102	• Valve, Relief	1	80001-
11		07002-02434	• • O-ring	1	80001-
12		07000-12016	• • O-ring	1	80001-
13		07001-02016	• • Ring, Back-up	1	80001-

https://truckmanualshub.com/

FIG. M2210-001012 Fender Group, Control Valve Mounting

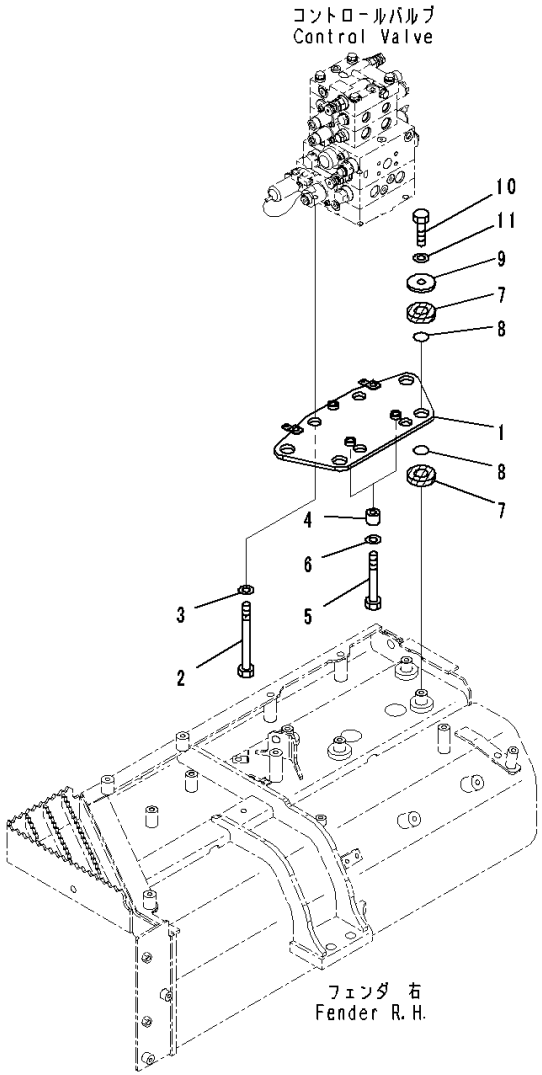

JA002925

Index	Code	Part Number	Description	Qty	Serial Number
		Note: This list covers following specifications. For Machine With 3-spool Valve Hydraulics For Machine With 5-spool Valve Hydraulics, With Power Angle Power Tilt Dozer For Machine With 5-spool Valve Hydraulics, With Power Angle Power Tilt Dozer, For Machine With Ripper For Machine With 5-spool Valve Hydraulics, With Power Tilt Pitch Dozer, For Machine With Ripper For Machine With 5-spool Valve Hydraulics, With Power Tilt Pitch Dozer For Machine With 4-spool Valve Hydraulics, For Machine With Ripper			
1		14X-60-51211	Plate	1	80001-
2		01010-81240	Bolt	1	80001-
3		01643-31232	Washer	1	80001-
4		566-01-12350	Boss	2	80001-
5		21K-01-72150	Bolt	2	80001-
6		01643-31232	Washer	2	80001-
7		14X-60-12120	Cushion	8	80001-
8		07000-13025	O-ring	8	80001-
9		566-35-42430	Plate	4	80001-
10		01010-81225	Bolt	4	80001-
11		01643-31232	Washer	4	80001-

https://truckmanualshub.com/

FIG. M2210-001013 Fender Group, For Machine With 3-spool Valve Hydraulics, Hydraulic Piping

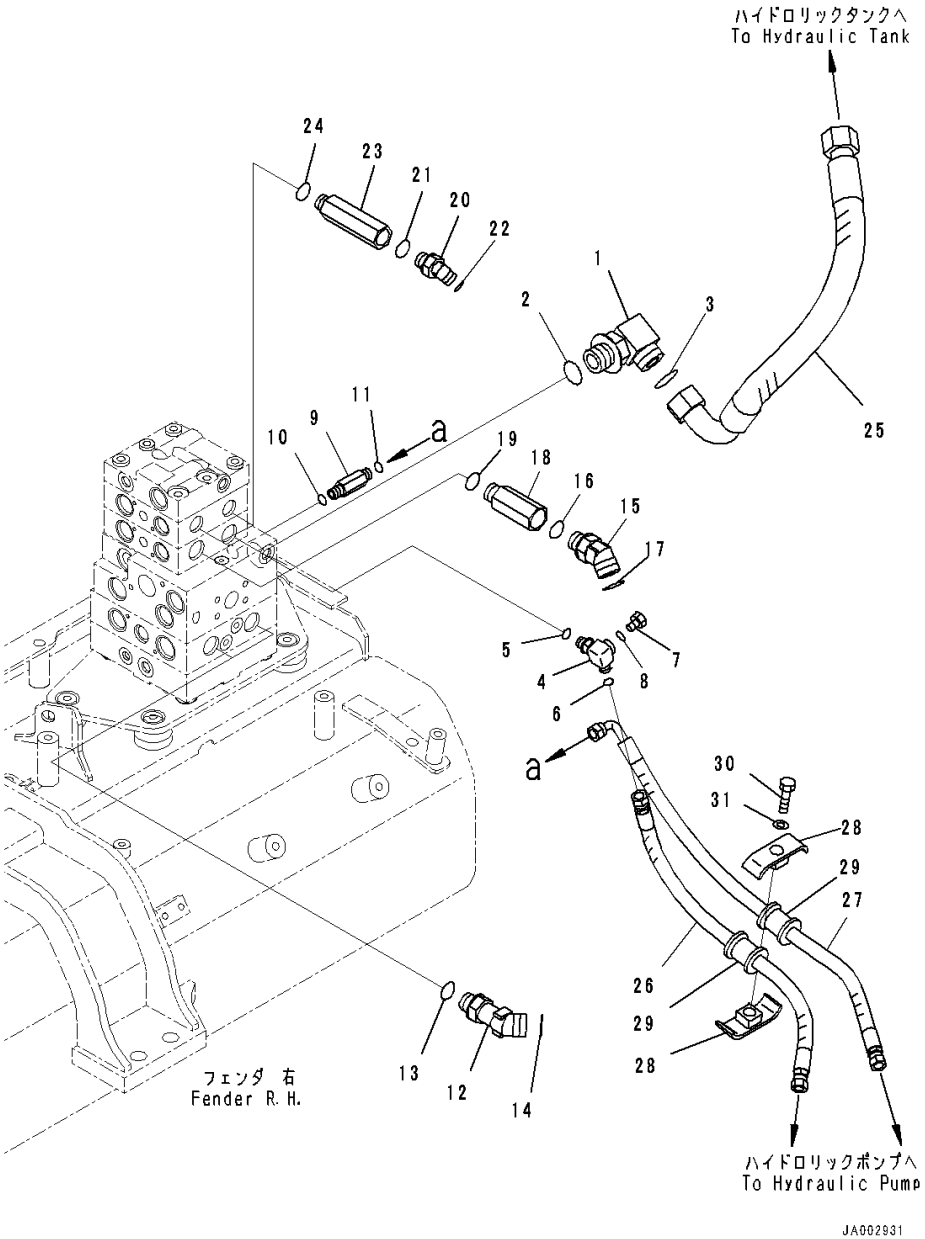

Index	Code	Part Number	Description	Qty	Serial Number
1		21W-62-42640	Elbow	1	80001-
2		07002-13334	O-ring	1	80001-
3		207-62-64740	O-ring	1	80001-
4		14X-62-54870	Tee	1	80001-
5		07002-11423	O-ring	1	80001-
6		02896-11008	O-ring	1	80001-
7		07040-11007	Plug	1	80001-
8		07002-11023	O-ring	1	80001-
9		11Y-62-12230	Union	1	80001-
10		07002-11423	O-ring	1	80001-
11		02896-11008	O-ring	1	80001-
12		11Y-62-36160	Elbow	2	80001-
13		07002-62434	O-ring	2	80001-
14		02896-61018	O-ring	2	80001-
15		02783-10628	Elbow	2	80001-
16		07002-12434	O-ring	2	80001-
17		02896-11018	O-ring	2	80001-
18		20T-62-81790	Joint	2	80001-
19		07002-12434	O-ring	2	80001-
20		02783-10315	Elbow	2	80001-
21		07002-12034	O-ring	2	80001-
22		02896-11009	O-ring	2	80001-
23		14X-62-52931	Joint	2	80001-
24		07002-12034	O-ring	2	80001-
25		14X-62-52940	Hose	1	80001-
26		14X-62-52391	Hose	1	80001-
27		14X-62-52541	Hose	1	80001-
28		22P-62-13540	Clamp	2	80001-
29		07095-00314	Cushion	2	80001-
30		01010-81260	Bolt	1	80001-
31		01643-31232	Washer	1	80001-

https://truckmanualshub.com/

FIG. M2210-001014 Fender Group, For Machine With 3-spool Valve Hydraulics, PPC Lock Solenoid Valve With Accumulator

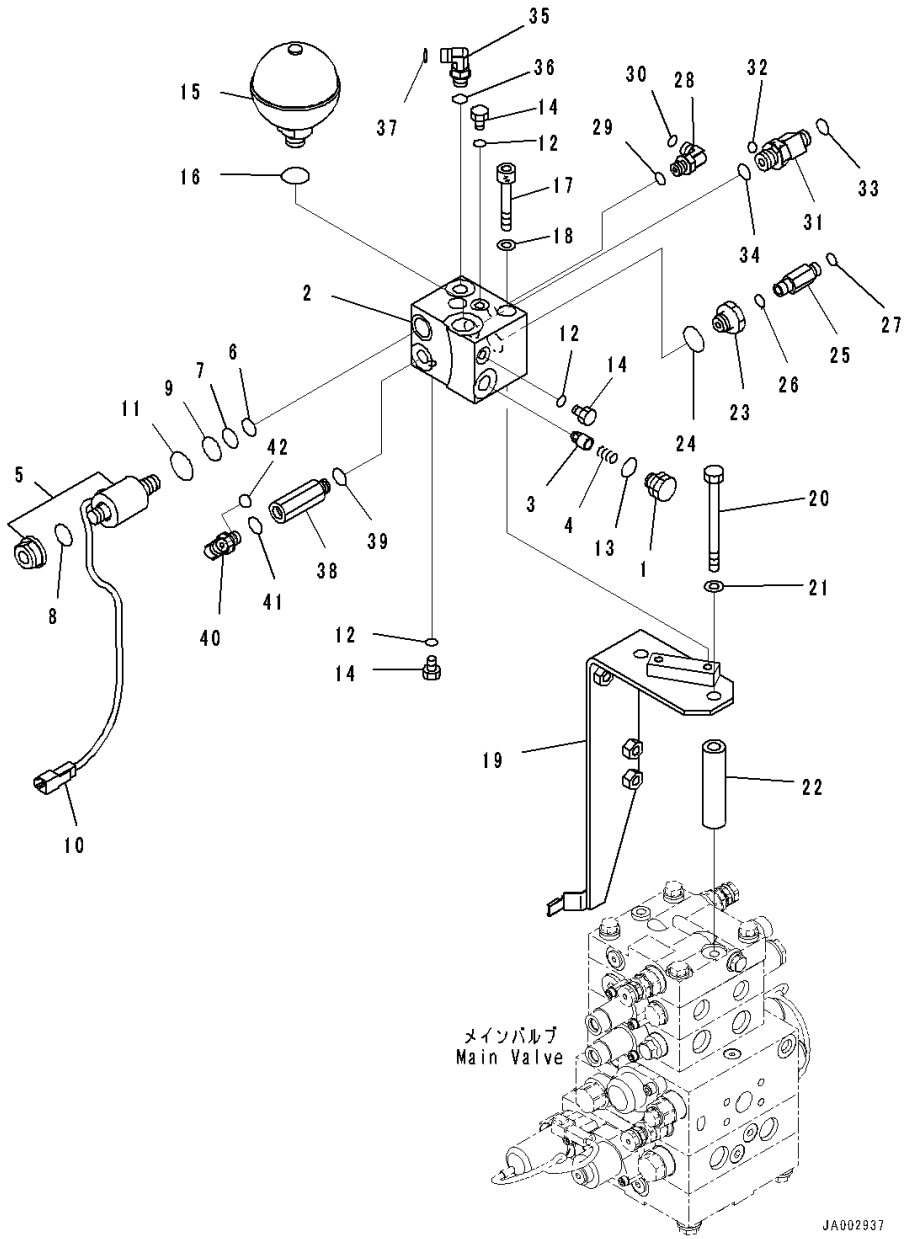

Index	Code	Part Number	Description	Qty	Serial Number
		14X-62-53551	Block Assembly	1	80001-
1		103-49-14280	• Plug	1	80001-
2		14X-62-53561	• Block	1	80001-
3		205-60-51390	• Poppet	1	80001-
4		722-12-12063	• Spring	1	80001-
5		11Y-60-11530	• Valve, Solenoid	1	80001-
6		07000-02012	• • O-ring	1	80001-
7		07000-02014	• • O-ring	1	80001-
8		07000-12016	• • O-ring	1	80001-
9		07000-02018	• • O-ring	1	80001-
10		08192-22830	• • Connector	1	80001-
11		203-60-62190	• • O-ring	1	80001-
12		07002-10823	• O-ring	3	80001-
13		07002-11623	• O-ring	1	80001-
14		07040-10807	• Plug	3	80001-
15		22U-60-21330	Accumulator	1	80001-
16		07002-12034	O-ring	1	80001-
17		01252-A1085	Bolt, Hexagon Socket Head	2	80001-
18		01643-51032	Washer	2	80001-
19		14X-62-52960	Bracket	1	80001-
20		01011-81230	Bolt	2	80001-
21		01643-31232	Washer	2	80001-
22		14X-62-52981	Spacer	2	80001-
23		20Y-62-21940	Filter Assembly	1	80001-
24		07002-12034	O-ring	1	80001-
25		20U-62-41890	Nipple	1	80001-
26		07002-11423	O-ring	1	80001-
27		02896-11008	O-ring	1	80001-
28		02782-10210	Elbow	1	80001-
29		07002-11423	O-ring	1	80001-
30		02896-11008	O-ring	1	80001-
31		20K-62-33690	Tee	1	80001-
32		02896-11008	• O-ring	1	80001-
33		02896-11009	• O-ring	1	80001-
34		07002-12034	O-ring	1	80001-
35		02782-10210	Elbow	1	80001-
36		07002-11423	O-ring	1	80001-
37		02896-11008	O-ring	1	80001-
38		207-62-62460	Adapter	1	80001-

https://truckmanualshub.com/

FIG. M2210-001014 Fender Group, For Machine With 3-spool Valve Hydraulics, PPC Lock Solenoid Valve With Accumulator

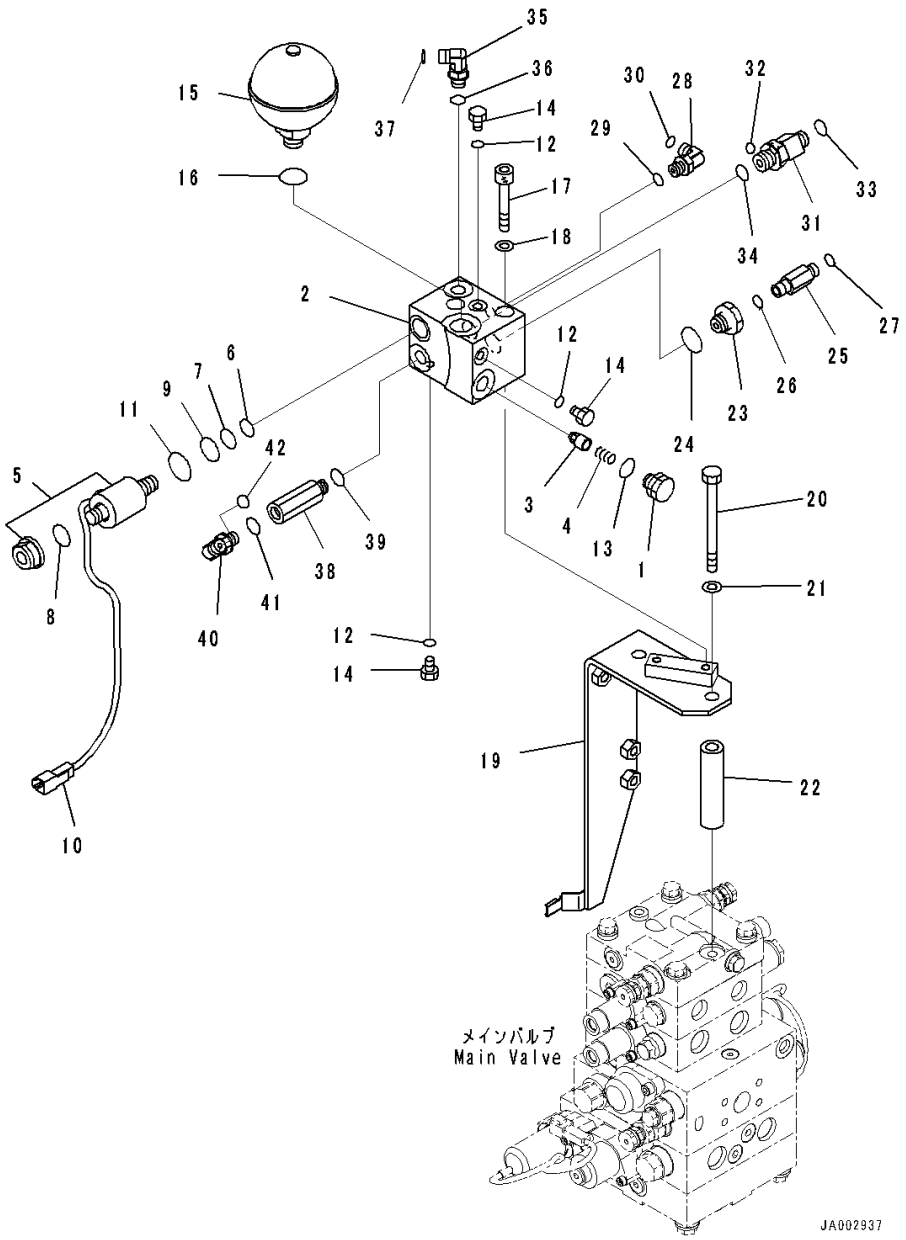

Index	Code	Part Number	Description	Qty	Serial Number
39		07002-11423	O-ring	1	80001-
40		02782-10210	Elbow	1	80001-
41		07002-11423	O-ring	1	80001-
42		02896-11008	O-ring	1	80001-

https://truckmanualshub.com/

FIG. M2210-001015 Fender Group, For Machine With 3-spool Valve Hydraulics, Control Valve Steering Piping

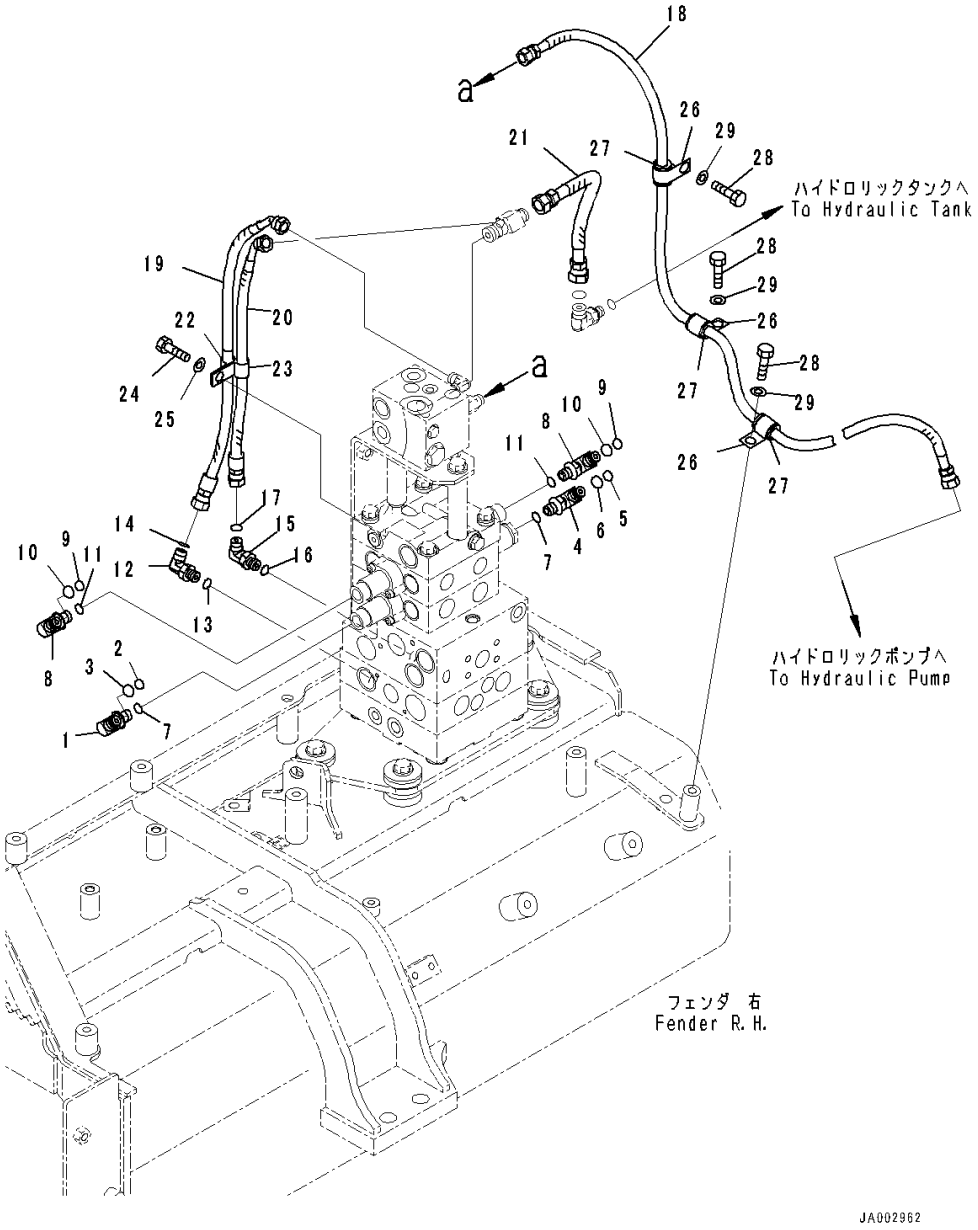

Index	Code	Part Number	Description	Qty	Serial Number
1		14X-62-53531	Elbow	1	80001-
2		201-60-11390	• O-ring	1	80001-
3		20Y-62-19560	• O-ring	1	80001-
4		14X-62-54960	Elbow	1	80001-
5		201-60-11390	• O-ring	1	80001-
6		20Y-62-19560	• O-ring	1	80001-
7		07002-11423	O-ring	2	80001-
8		14X-62-53541	Elbow	2	80001-
9		201-60-11390	• O-ring	1	80001-
10		20Y-62-19560	• O-ring	1	80001-
11		07002-11423	O-ring	2	80001-
12		02782-10210	Elbow	1	80001-
13		07002-11423	O-ring	1	80001-
14		02896-11008	O-ring	1	80001-
15		02782-10210	Elbow	1	80001-
16		07002-11423	O-ring	1	80001-
17		02896-11008	O-ring	1	80001-
18		14X-62-52521	Hose	1	80001-
19		02764-00205	Hose, Face Seal Type	1	80001-
20		02764-00204	Hose, Face Seal Type	1	80001-
21		02762-00303	Hose, Face Seal Type	1	80001-
22		04434-51212	Clip	1	80001-
23		21T-72-23260	Clip	1	80001-
24		01010-81225	Bolt	1	80001-
25		01643-31232	Washer	1	80001-
26		04434-51712	Clip	3	80001-
27		07095-20211	Cushion	3	80001-
28		01010-81220	Bolt	3	80001-
29		01643-31232	Washer	3	80001-

https://truckmanualshub.com/

FIG. M2210-001016 Fender Group, Control Valve Wiring Harness

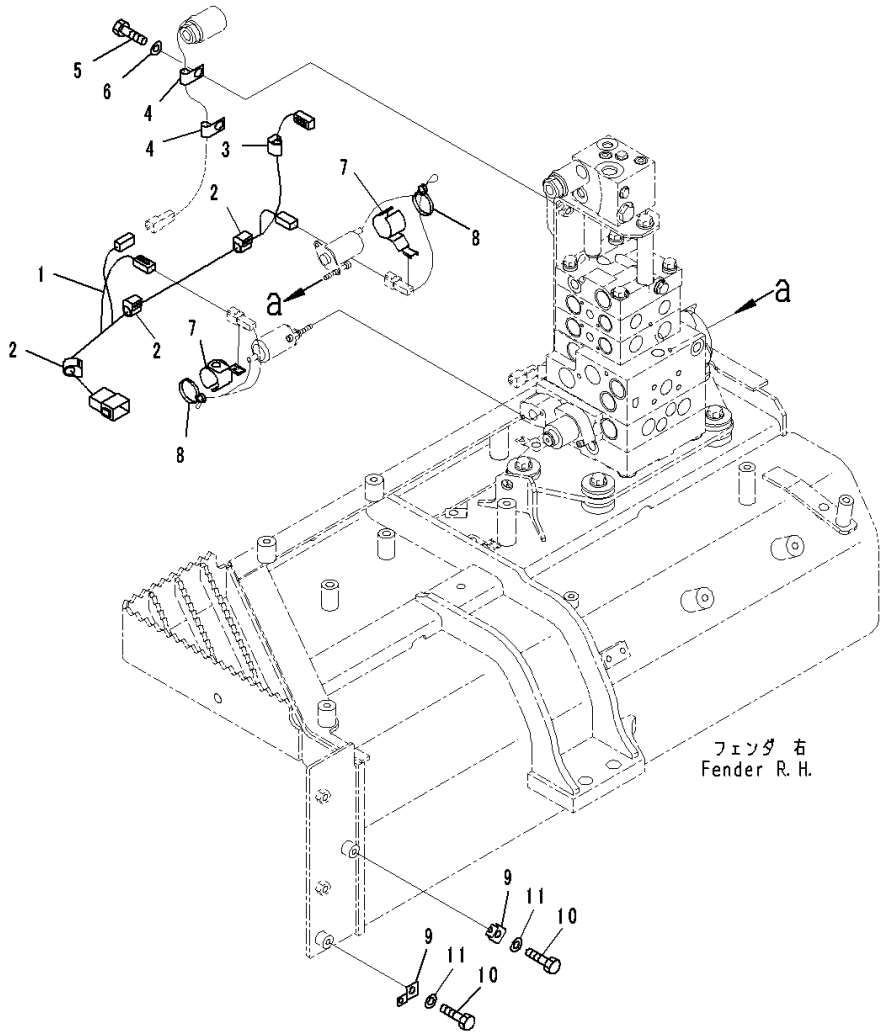

Index	Code	Part Number	Description	Qty	Serial Number
		Note: This list covers following specifications. For Machine With 3-spool Valve Hydraulics For Machine With 5-spool Valve Hydraulics, With Power Angle Power Tilt Dozer For Machine With 5-spool Valve Hydraulics, With Power Angle Power Tilt Dozer, For Machine With Ripper For Machine With 4-spool Valve Hydraulics, For Machine With Ripper			
1		14X-06-51271	Wiring Harness	1	80001-
2		08211-01020	Clip	3	80001-
3		08211-00720	Clip	1	80001-
4		04434-50612	Clip	2	80001-
5		01010-81225	Bolt	2	80001-
6		01643-31232	Washer	2	80001-
7		21W-60-41310	Clip	2	80001-
8		08034-40521	Band	2	80001-
9		08057-00810	Clip	2	80001-
10		01010-81020	Bolt	2	80001-
11		01643-31032	Washer	2	80001-

https://truckmanualshub.com/

FIG. M2210-001017 Fender Group, Filter

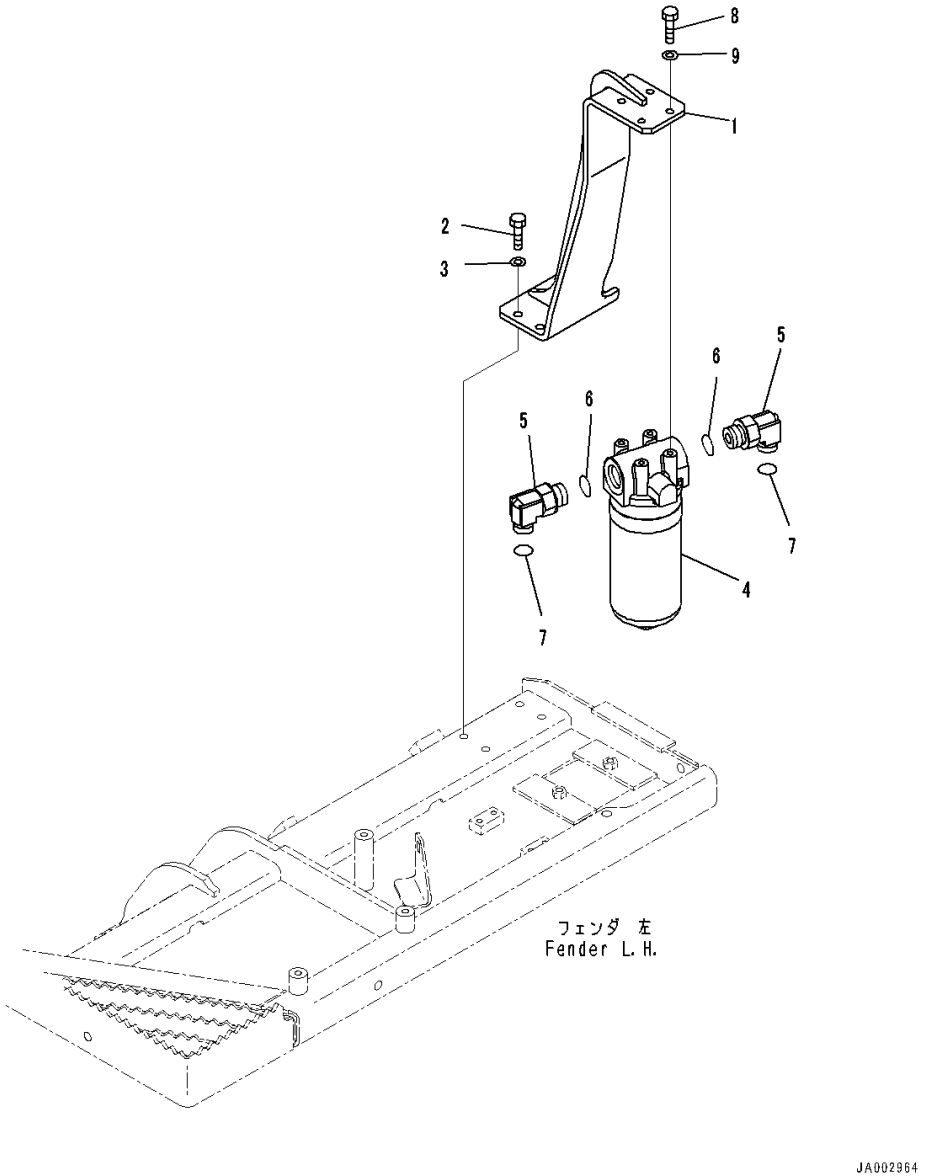

Index	Code	Part Number	Description	Qty	Serial Number
		Note: This list covers following specifications.			
		For Machine With 3-spool Valve Hydraulics			
		For Machine With 5-spool Valve Hydraulics, With Power Angle Power Tilt Dozer			
		For Machine With 5-spool Valve Hydraulics, With Power Angle Power Tilt Dozer, For Machine With Ripper			
		For Machine With 5-spool Valve Hydraulics, With Power Tilt Pitch Dozer, For Machine With Ripper			
		For Machine With 5-spool Valve Hydraulics, With Power Tilt Pitch Dozer			
		For Machine With 4-spool Valve Hydraulics, For Machine With Ripper			
1		14X-49-52231	Bracket	1	80001-
2		01010-81030	Bolt	4	80001-
3		01643-31032	Washer	4	80001-
4		714-07-28703	Filter Assembly	1	80001-
		714-07-28713	• Cartridge	1	80001-
5		02782-10632	Elbow	2	80001-
6		07002-23334	O-ring	2	80001-
7		02896-21018	O-ring	2	80001-
8		01010-81030	Bolt	4	80001-
9		01643-31032	Washer	4	80001-

https://truckmanualshub.com/

FIG. M2210-001018 Fender Group, Handrail

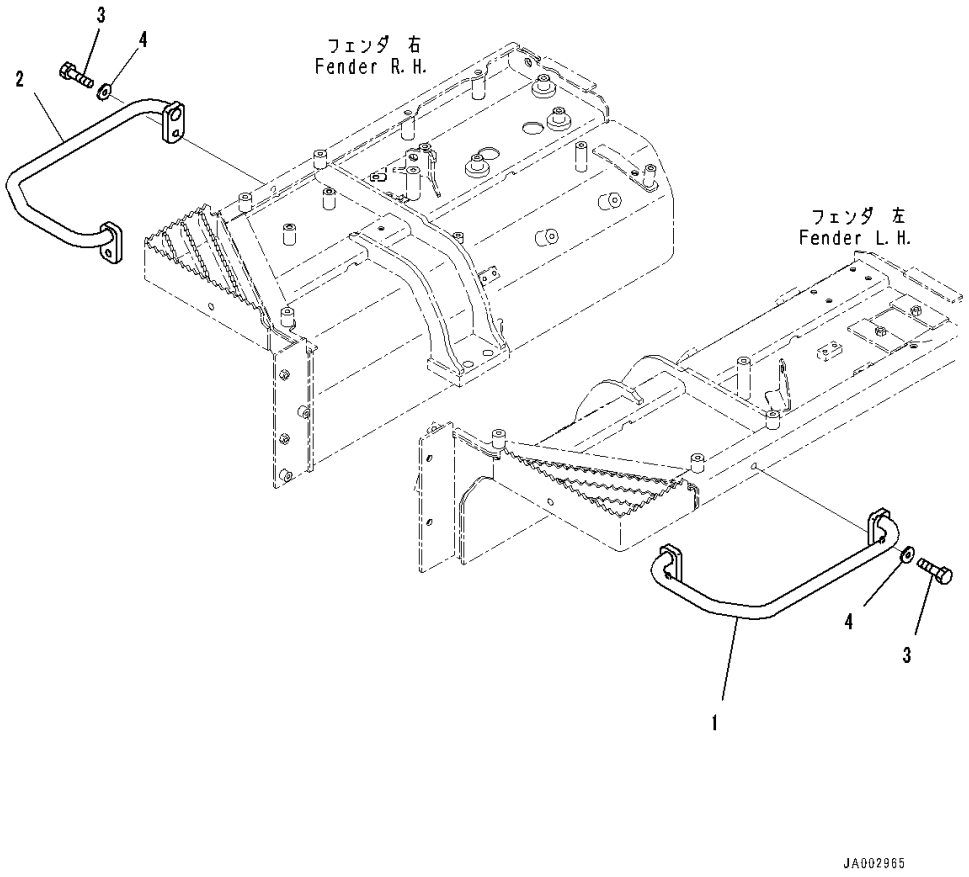

Index	Code	Part Number	Description	Qty	Serial Number
		Note: This list covers following specifications. For Machine With 3-spool Valve Hydraulics For Machine With 5-spool Valve Hydraulics, With Power Tilt Pitch Dozer, For Machine With Ripper For Machine With 5-spool Valve Hydraulics, With Power Tilt Pitch Dozer For Machine With 4-spool Valve Hydraulics, For Machine With Ripper			
1		14X-54-53451	Handle,LHS	1	80001-
2		14X-54-53540	Handle,RHS	1	80001-
3		01010-81240	Bolt	4	80001-
4		175-54-34170	Washer	4	80001-

https://truckmanualshub.com/

FIG. M2210-001019 Fender Group, Grease Pump Holder

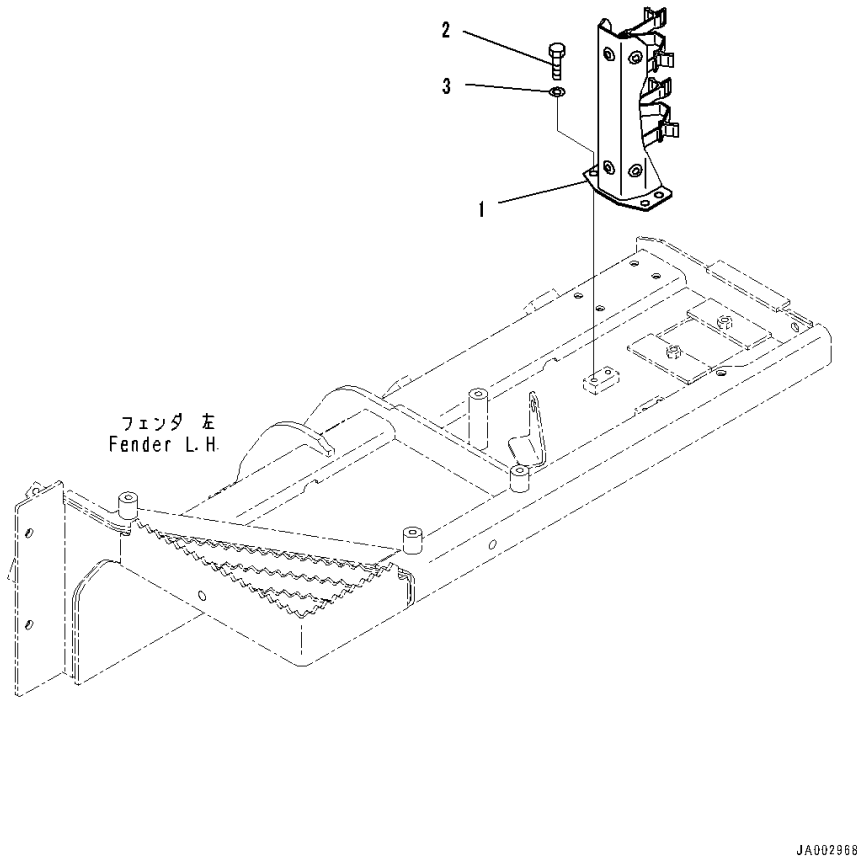

Index	Code	Part Number	Description	Qty	Serial Number
		Note: This list covers following specifications.			
		For Machine With 3-spool Valve Hydraulics			
		For Machine With 5-spool Valve Hydraulics, With Power Angle Power Tilt Dozer			
		For Machine With 5-spool Valve Hydraulics, With Power Angle Power Tilt Dozer, For Machine With Ripper			
		For Machine With 5-spool Valve Hydraulics, With Power Tilt Pitch Dozer, For Machine With Ripper			
		For Machine With 5-spool Valve Hydraulics, With Power Tilt Pitch Dozer			
		For Machine With 4-spool Valve Hydraulics, For Machine With Ripper			
1		14X-54-53191	Bracket	1	80001-
2		01010-81020	Bolt	4	80001-
3		01643-31032	Washer	4	80001-

https://truckmanualshub.com/

FIG. M2210-001020 Fender Group, Mounting

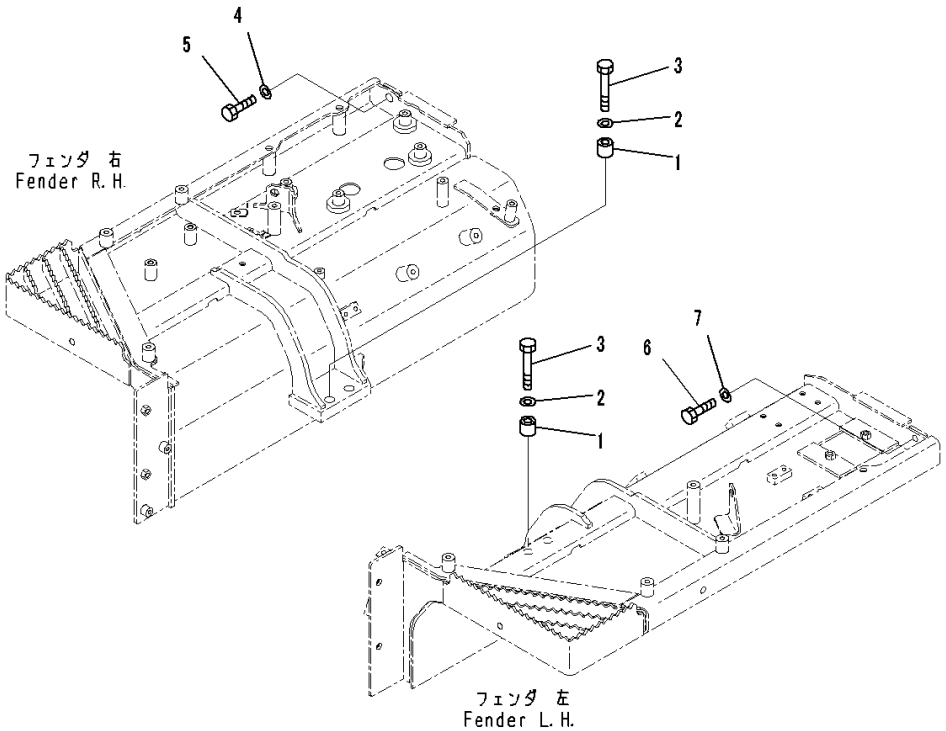

Index	Code	Part Number	Description	Qty	Serial Number
		Note: This list covers following specifications. For Machine With 3-spool Valve Hydraulics For Machine With 5-spool Valve Hydraulics, With Power Angle Power Tilt Dozer For Machine With 5-spool Valve Hydraulics, With Power Angle Power Tilt Dozer, For Machine With Ripper For Machine With 5-spool Valve Hydraulics, With Power Tilt Pitch Dozer, For Machine With Ripper For Machine With 5-spool Valve Hydraulics, With Power Tilt Pitch Dozer For Machine With 4-spool Valve Hydraulics, For Machine With Ripper			
1		120-54-42450	Spacer	4	80001-
2		01643-31645	Washer	4	80001-
3		01010-81680	Bolt	4	80001-
4		01643-31645	Washer	1	80001-
5		01010-81635	Bolt	1	80001-
6		01010-81235	Bolt	1	80001-
7		01643-31232	Washer	1	80001-

https://truckmanualshub.com/

FIG. M2210-001021 Fender Group, Under Cover

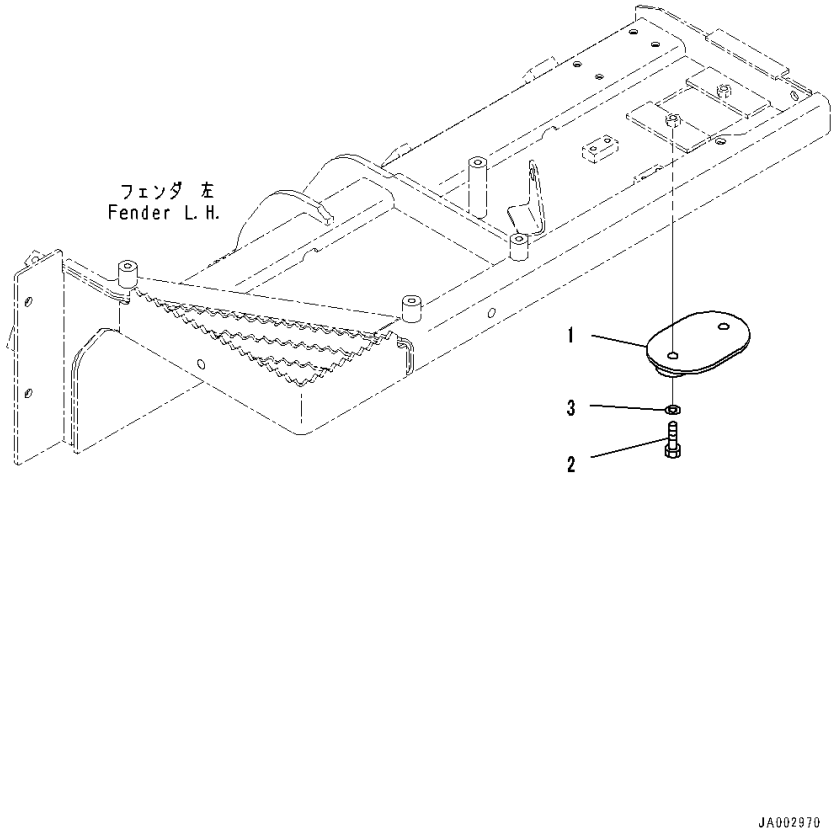

Index	Code	Part Number	Description	Qty	Serial Number
		Note: This list covers following specifications. For Machine With 3-spool Valve Hydraulics For Machine With 5-spool Valve Hydraulics, With Power Angle Power Tilt Dozer For Machine With 5-spool Valve Hydraulics, With Power Angle Power Tilt Dozer, For Machine With Ripper For Machine With 5-spool Valve Hydraulics, With Power Tilt Pitch Dozer, For Machine With Ripper For Machine With 5-spool Valve Hydraulics, With Power Tilt Pitch Dozer For Machine With 4-spool Valve Hydraulics, For Machine With Ripper			
1		14X-21-51361	Cover	1	80001-
2		01010-81230	Bolt	2	80001-
3		01643-31232	Washer	2	80001-

https://truckmanualshub.com/

FIG. M2210-003002 Fender Group, Inner Parts (1/12)

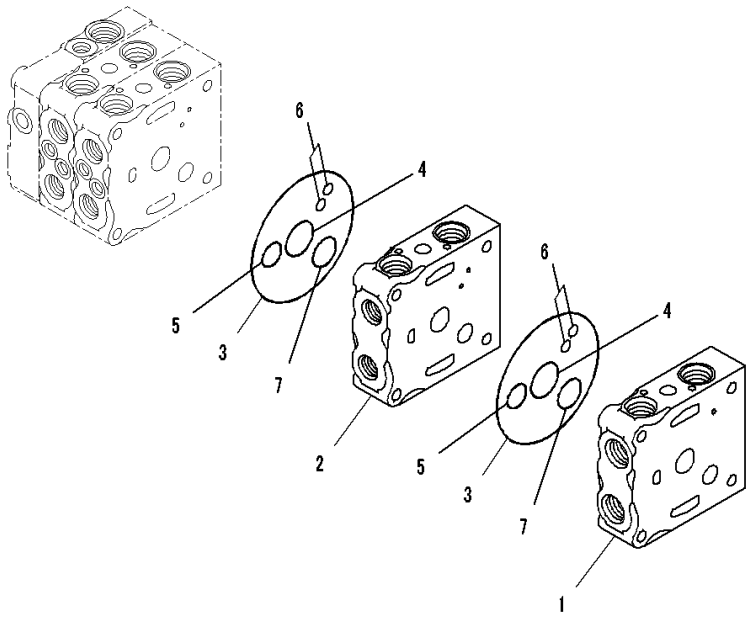

Index	Code	Part Number	Description	Qty	Serial Number
		Note: This list covers following specifications.			
		For Machine With 5-spool Valve Hydraulics, With Power Angle Power Tilt Dozer			
		For Machine With 5-spool Valve Hydraulics, With Power Angle Power Tilt Dozer, For Machine With Ripper			
		723-25-11100	Valve, Control	1	80001-
	C1		• Body Group	1	80001-
1		723-26-21250	• • Valve Body	1	80001-
2		723-26-21360	• • Valve Body	1	80001-
3		07000-12120	• • O-ring	2	80001-
4		723-26-15830	• • O-ring	2	80001-
5		07000-12020	• • O-ring	2	80001-
6		07000-11008	• • O-ring	4	80001-
7		723-26-15840	• • O-ring	2	80001-

https://truckmanualshub.com/

FIG. M2210-003003 Fender Group, Inner Parts (2/12)

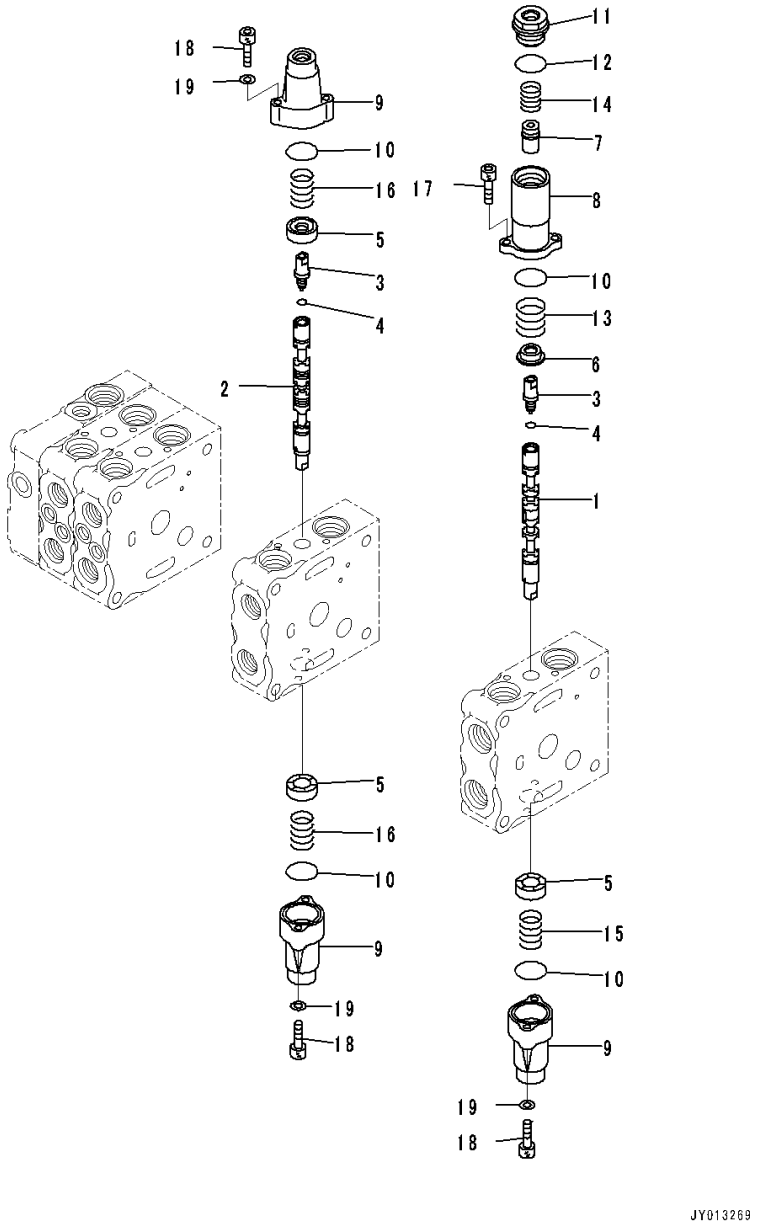

Index	Code	Part Number	Description	Qty	Serial Number
		Note: This list covers following specifications.			
		For Machine With 5-spool Valve Hydraulics, With Power Angle Power Tilt Dozer			
		For Machine With 5-spool Valve Hydraulics, With Power Angle Power Tilt Dozer, For Machine With Ripper			
		723-25-11100	Valve, Control	1	80001-
	C1		• Body Group	1	80001-
1		723-26-22830	• • Spool	1	80001-
2		723-26-22840	• • Spool	1	80001-
3		723-26-15130	• • Plug	2	80001-
4		07002-10823	• • O-ring	2	80001-
5		723-26-15121	• • Retainer	3	80001-
6		723-26-16770	• • Retainer	1	80001-
7		723-26-16780	• • Retainer	1	80001-
8		723-26-16760	• • Case	1	80001-
9		723-26-15110	• • Case	3	80001-
10		575-41-17420	• • O-ring	4	80001-
11		723-26-16790	• • Plug	1	80001-
12		07002-12434	• • O-ring	1	80001-
13		723-26-14660	• • Spring	1	80001-
14		723-26-14670	• • Spring	1	80001-
15		709-26-11450	• • Spring	1	80001-
16		723-26-14580	• • Spring	2	80001-
17		01252-60616	• • Bolt	2	80001-
18		01252-60630	• • Bolt, Hexagon Socket Head	6	80001-
19		01641-20608	• • Washer	6	80001-

https://truckmanualshub.com/

FIG. M2210-003004 Fender Group, Inner Parts (3/12)

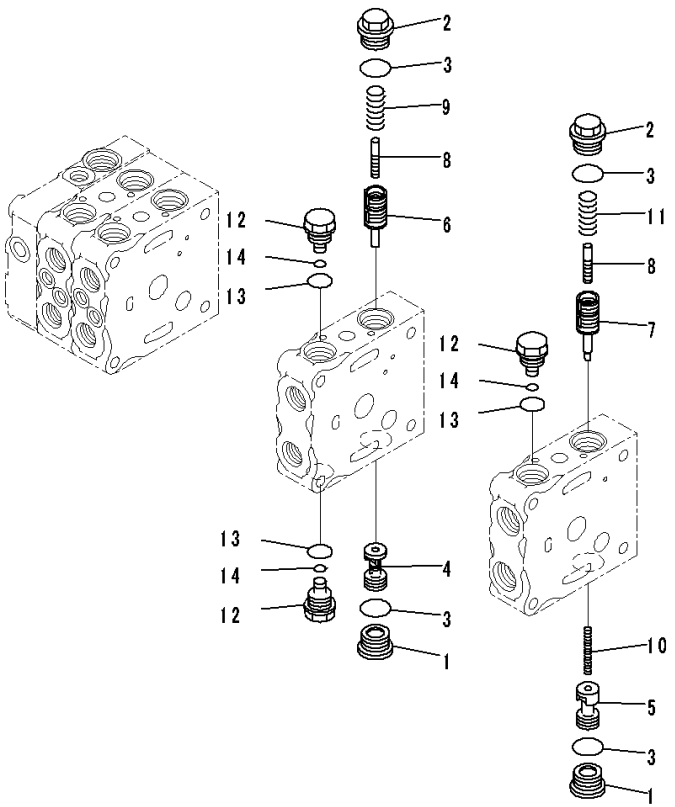

Index	Code	Part Number	Description	Qty	Serial Number
		Note: This list covers following specifications.			
		For Machine With 5-spool Valve Hydraulics, With Power Angle Power Tilt Dozer			
		For Machine With 5-spool Valve Hydraulics, With Power Angle Power Tilt Dozer, For Machine With Ripper			
		723-25-11100	Valve, Control	1	80001-
	C1		• Body Group	1	80001-
1		723-26-15230	• • Plug	2	80001-
2		723-26-15370	• • Plug	2	80001-
3		07002-12434	• • O-ring	4	80001-
4		723-26-41160	• • Valve	1	80001-
5		723-26-41210	• • Valve	1	80001-
6		723-26-51240	• • Valve	1	80001-
7		723-26-51510	• • Valve	1	80001-
8		723-26-51250	• • Piston	2	80001-
9		723-26-14230	• • Spring	1	80001-
10		723-26-14220	• • Spring	1	80001-
11		723-26-14240	• • Spring	1	80001-
12		723-26-15310	• • Plug	3	80001-
13		07002-12034	• • O-ring	3	80001-
14		07000-11007	• • O-ring	3	80001-

https://truckmanualshub.com/

FIG. M2210-003005 Fender Group, Inner Parts (4/12)

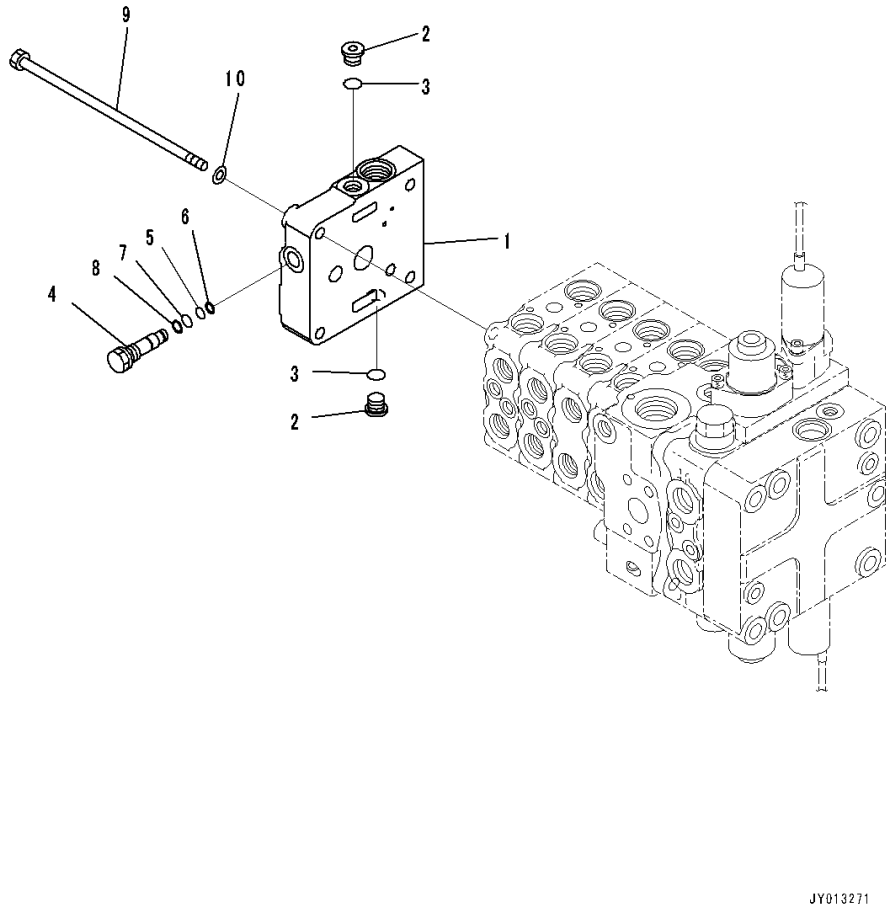

Index	Code	Part Number	Description	Qty	Serial Number
		Note: This list covers following specifications. For Machine With 5-spool Valve Hydraulics, With Power Angle Power Tilt Dozer For Machine With 5-spool Valve Hydraulics, With Power Angle Power Tilt Dozer, For Machine With Ripper			
		723-25-11100	Valve, Control	1	80001-
1		723-26-21750	• Cover	1	80001-
2		702-21-55620	• Plug	2	80001-
3		07002-11423	• O-ring	2	80001-
4		723-26-15190	• Plug	1	80001-
5		07000-11007	• O-ring	1	80001-
6		07001-01007	• Ring, Back-up	1	80001-
7		07000-11009	• O-ring	1	80001-
8		07001-01009	• Ring, Back-up	1	80001-
9		700-85-11111	• Bolt	4	80001-
10		01643-31032	• Washer	4	80001-

https://truckmanualshub.com/

FIG. M2210-003006 Fender Group, Inner Parts (5/12)

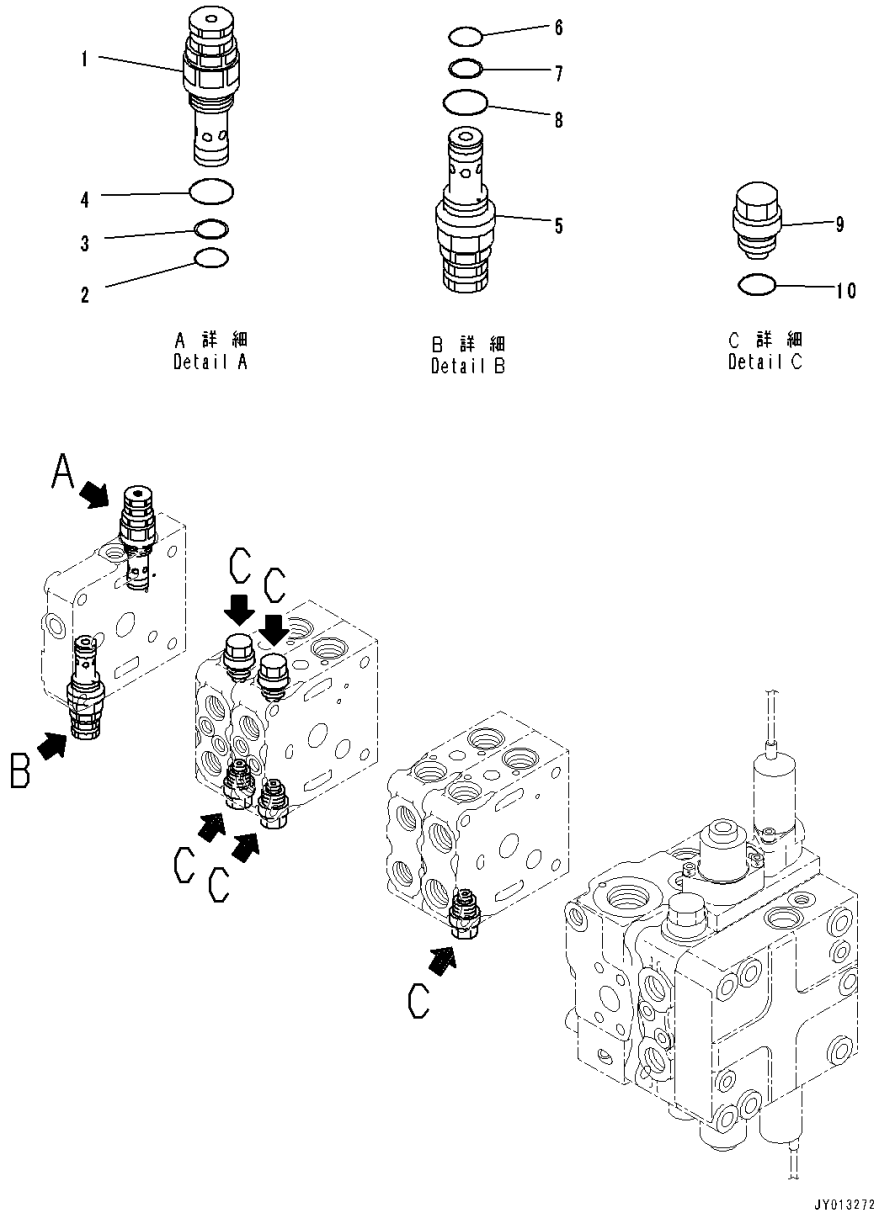

Index	Code	Part Number	Description	Qty	Serial Number
		Note: This list covers following specifications. For Machine With 5-spool Valve Hydraulics, With Power Angle Power Tilt Dozer For Machine With 5-spool Valve Hydraulics, With Power Angle Power Tilt Dozer, For Machine With Ripper			
		723-25-11100	Valve, Control	1	80001-
1		723-20-66500	• Valve, Relief	1	80001-
2		700-22-11410	• • O-ring	1	80001-
3		700-80-64220	• • Ring	1	80001-
4		07002-12434	• • O-ring	1	80001-
5		723-20-66600	• Valve, Relief	1	80001-
6		700-22-11410	• • O-ring	1	80001-
7		700-80-64220	• • Ring	1	80001-
8		07002-12434	• • O-ring	1	80001-
9		723-20-80100	• Valve Assembly, Suction	1	80001-
10		07002-12034	• • O-ring	1	80001-

https://truckmanualshub.com/

FIG. M2210-003007 Fender Group, Inner Parts (6/12)

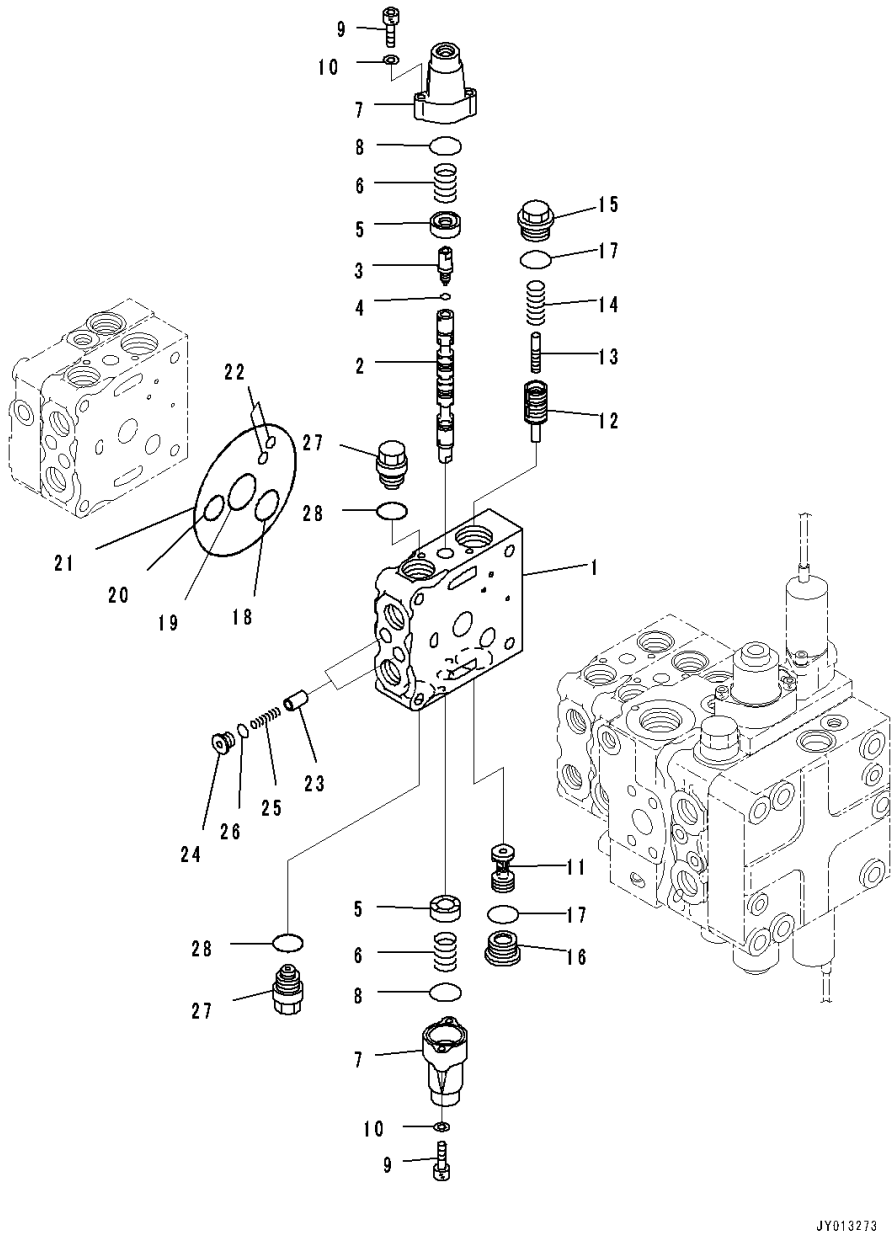

Index	Code	Part Number	Description	Qty	Serial Number
		Note: This list covers following specifications.			
		For Machine With 5-spool Valve Hydraulics, With Power Angle Power Tilt Dozer			
		For Machine With 5-spool Valve Hydraulics, With Power Angle Power Tilt Dozer, For Machine With Ripper			
		723-25-11100	Valve, Control	1	80001-
		723-21-08200	• Valve Subassembly	1	80001-
1		723-26-21420	• • Valve Body	1	80001-
2		723-26-22270	• • Spool	1	80001-
3		723-26-15130	• • Plug	1	80001-
4		07002-10823	• • O-ring	1	80001-
5		723-26-15121	• • Retainer	2	80001-
6		723-26-14680	• • Spring	2	80001-
7		723-26-15110	• • Case	2	80001-
8		575-41-17420	• • O-ring	2	80001-
9		01252-60630	• • Bolt, Hexagon Socket Head	4	80001-
10		01641-20608	• • Washer	4	80001-
11		723-26-41160	• • Valve	1	80001-
12		723-26-51610	• • Valve	1	80001-
13		723-26-51250	• • Piston	1	80001-
14		723-26-14230	• • Spring	1	80001-
15		723-26-15370	• • Plug	1	80001-
16		723-26-15230	• • Plug	1	80001-
17		07002-12434	• • O-ring	2	80001-
18		723-26-15840	• • O-ring	1	80001-
19		723-26-15830	• • O-ring	1	80001-
20		07000-12020	• • O-ring	1	80001-
21		07000-12120	• • O-ring	1	80001-
22		07000-11008	• • O-ring	2	80001-
23		723-26-15210	• • Valve	2	80001-
24		723-26-15220	• • Plug	2	80001-
25		723-26-14150	• • Spring	2	80001-
26		07002-11223	• • O-ring	2	80001-
27		723-20-80100	• • Valve Assembly, Suction	2	80001-
28		07002-12034	• • • O-ring	1	80001-

https://truckmanualshub.com/

FIG. M2210-003008 Fender Group, Inner Parts (7/12)

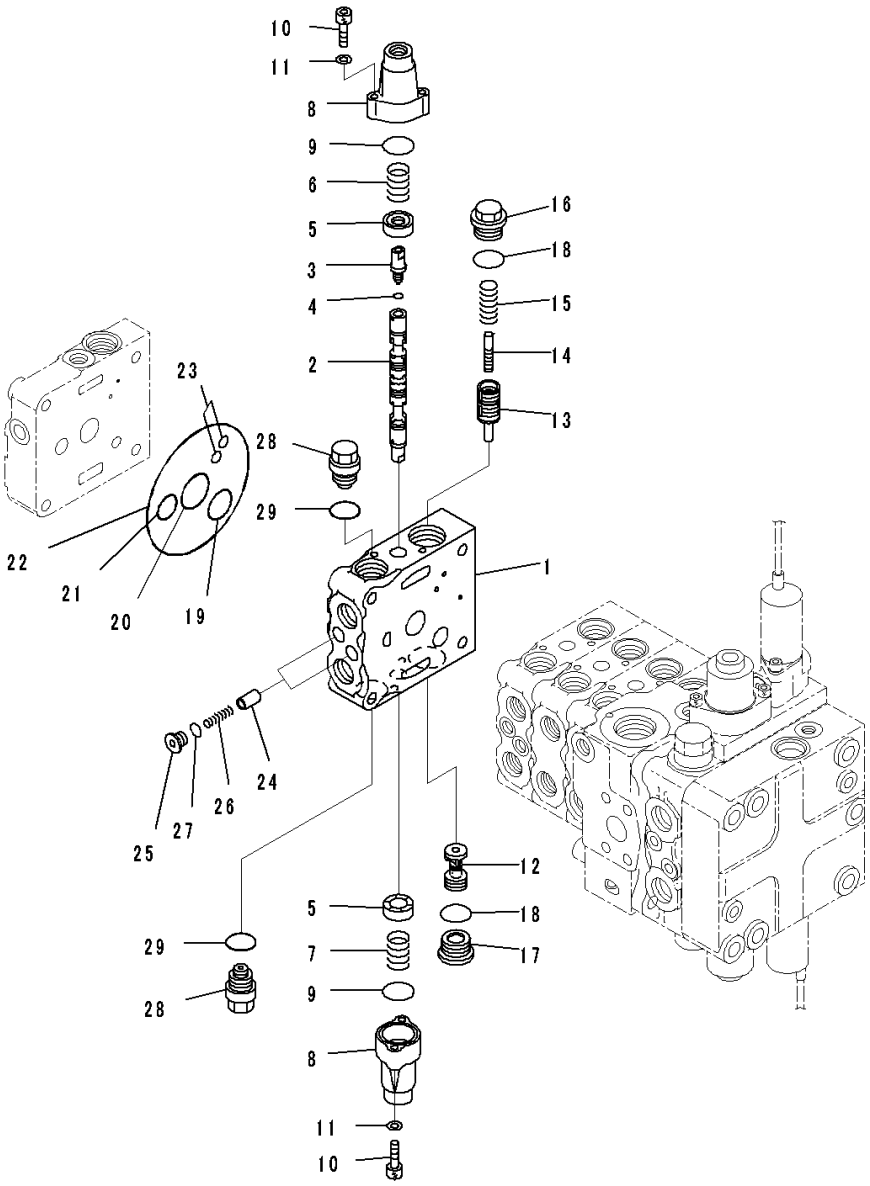

Index	Code	Part Number	Description	Qty	Serial Number
		Note: This list covers following specifications. For Machine With 5-spool Valve Hydraulics, With Power Angle Power Tilt Dozer For Machine With 5-spool Valve Hydraulics, With Power Angle Power Tilt Dozer, For Machine With Ripper			
		723-25-11100	Valve, Control	1	80001-
		723-21-08300	• Valve Subassembly	1	80001-
1		723-26-21420	• • Valve Body	1	80001-
2		723-26-22270	• • Spool	1	80001-
3		723-26-15130	• • Plug	1	80001-
4		07002-10823	• • O-ring	1	80001-
5		723-26-15121	• • Retainer	2	80001-
6		723-26-14580	• • Spring	1	80001-
7		709-26-11450	• • Spring	1	80001-
8		723-26-15110	• • Case	2	80001-
9		575-41-17420	• • O-ring	2	80001-
10		01252-60630	• • Bolt, Hexagon Socket Head	4	80001-
11		01641-20608	• • Washer	4	80001-
12		723-26-41160	• • Valve	1	80001-
13		723-26-51610	• • Valve	1	80001-
14		723-26-51250	• • Piston	1	80001-
15		723-26-14230	• • Spring	1	80001-
16		723-26-15370	• • Plug	1	80001-
17		723-26-15230	• • Plug	1	80001-
18		07002-12434	• • O-ring	2	80001-
19		723-26-15840	• • O-ring	1	80001-
20		723-26-15830	• • O-ring	1	80001-
21		07000-12020	• • O-ring	1	80001-
22		07000-12120	• • O-ring	1	80001-
23		07000-11008	• • O-ring	2	80001-
24		723-26-15210	• • Valve	2	80001-
25		723-26-15220	• • Plug	2	80001-
26		723-26-14150	• • Spring	2	80001-
27		07002-11223	• • O-ring	2	80001-
28		723-20-80100	• • Valve Assembly, Suction	2	80001-
29		07002-12034	• • • O-ring	1	80001-

https://truckmanualshub.com/

FIG. M2210-003009 Fender Group, Inner Parts (8/12)

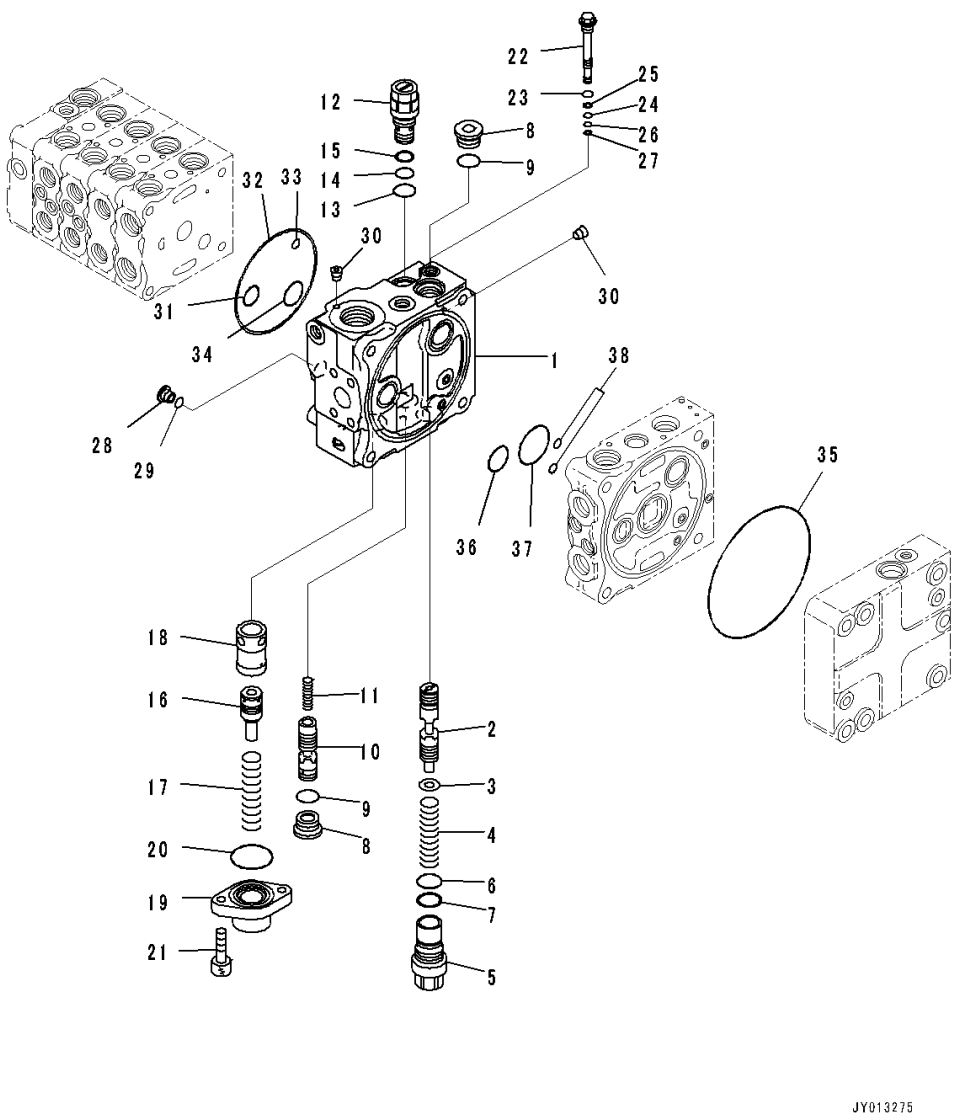

Index	Code	Part Number	Description	Qty	Serial Number
		Note: This list covers following specifications.			
		For Machine With 5-spool Valve Hydraulics, With Power Angle Power Tilt Dozer			
		For Machine With 5-spool Valve Hydraulics, With Power Angle Power Tilt Dozer, For Machine With Ripper			
		723-25-11100	Valve, Control	1	80001-
	C1		• Block Subassembly	1	80001-
1		723-26-21160	• • Block	1	80001-
2		723-26-22850	• • Spool	1	80001-
3		723-26-15860	• • Washer	1	80001-
4		723-26-14590	• • Spring	1	80001-
5		723-26-15850	• • Plug	1	80001-
6		700-80-61260	• • O-ring	1	80001-
7		700-80-61430	• • Ring	1	80001-
8		723-26-15230	• • Plug	2	80001-
9		07002-12434	• • O-ring	2	80001-
10		723-26-22860	• • Spool	1	80001-
11		723-26-14470	• • Spring	1	80001-
12		723-60-21900	• • Valve, Relief	1	80001-
13		07002-12434	• • • O-ring	1	80001-
14		07000-12016	• • • O-ring	1	80001-
15		07001-02016	• • • Ring, Back-up	1	80001-
16		723-36-15230	• • Piston	1	80001-
17		723-36-15340	• • Spring	1	80001-
18		723-36-15210	• • Sleeve	1	80001-
19		723-36-15250	• • Case	1	80001-
20		07000-13042	• • O-ring	1	80001-
21		01252-60820	• • Bolt	2	80001-
22	C1		• • Valve Assembly	1	80001-
23		07002-11223	• • • O-ring	1	80001-
24		07000-11007	• • • O-ring	1	80001-
25		07001-01007	• • • Ring, Back-up	1	80001-
26		07000-11005	• • • O-ring	1	80001-
27		07001-01005	• • • Ring, Back-up	1	80001-
28		723-26-15220	• • Plug	1	80001-
29		07002-11223	• • O-ring	1	80001-
30		708-21-12541	• • Plug	5	80001-
31		07000-12020	• • O-ring	1	80001-
32		07000-12120	• • O-ring	1	80001-
33		07000-11008	• • O-ring	1	80001-

https://truckmanualshub.com/

FIG. M2210-003009 Fender Group, Inner Parts (8/12)

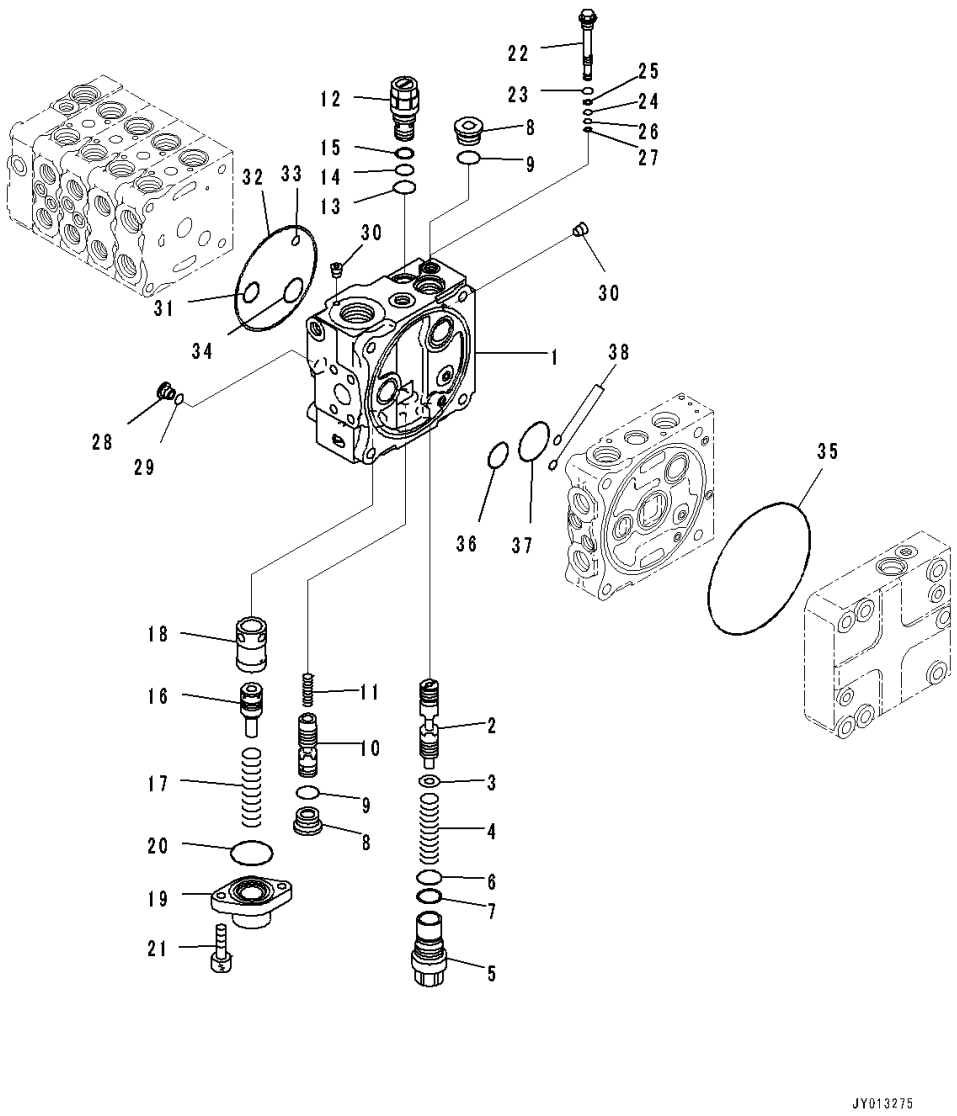

Index	Code	Part Number	Description	Qty	Serial Number
34		723-26-15840	• • O-ring	1	80001-
35		144-14-54610	• • O-ring	1	80001-
36		723-56-31730	• • O-ring	1	80001-
37		702-75-11520	• • O-ring	1	80001-
38		07000-11008	• • O-ring	2	80001-

https://truckmanualshub.com/

FIG. M2210-003010 Fender Group, Inner Parts (9/12)

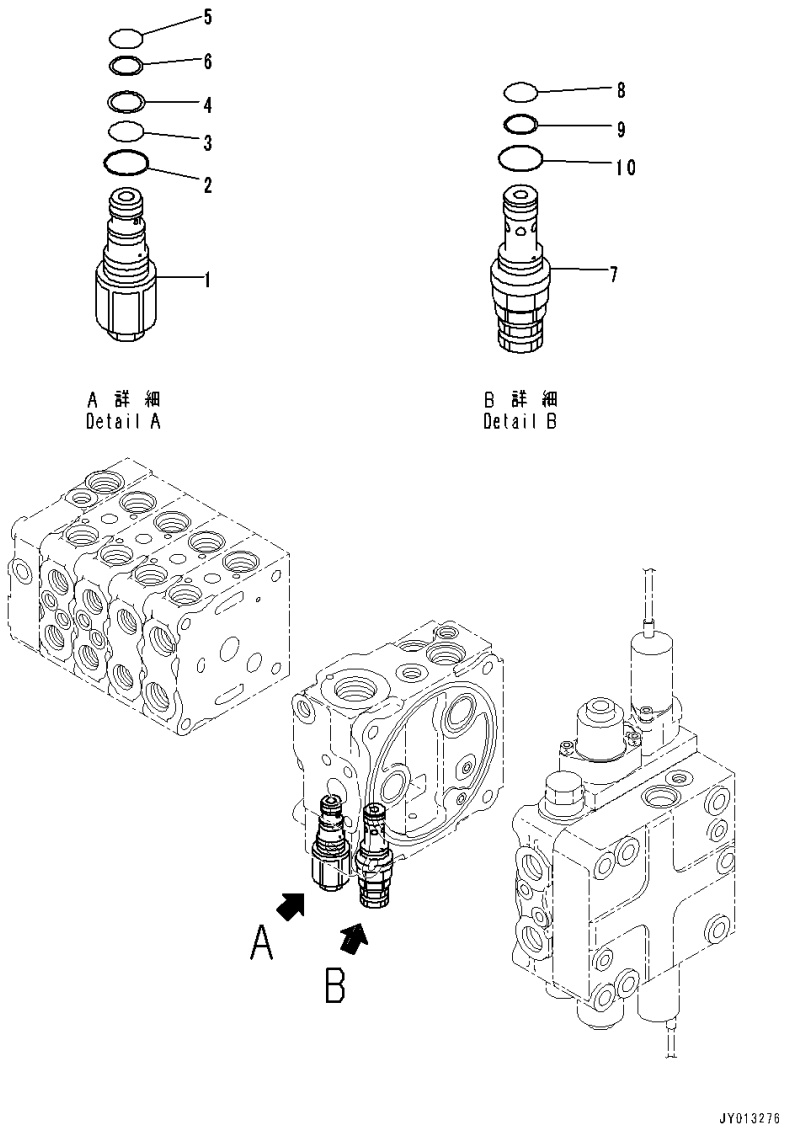

Index	Code	Part Number	Description	Qty	Serial Number
		Note: This list covers following specifications.			
		For Machine With 5-spool Valve Hydraulics, With Power Angle Power Tilt Dozer			
		For Machine With 5-spool Valve Hydraulics, With Power Angle Power Tilt Dozer, For Machine With Ripper			
		723-25-11100	Valve, Control	1	80001-
1		723-20-70600	• Valve Assembly	1	80001-
2		07002-12434	• • O-ring	1	80001-
3		07000-12016	• • O-ring	1	80001-
4		07001-02016	• • Ring, Back-up	1	80001-
5		07000-12014	• • O-ring	1	80001-
6		07001-02014	• • Ring, Back-up	1	80001-
7		723-20-63100	• Valve, Relief	1	80001-
8		700-22-11410	• • O-ring	1	80001-
9		700-80-64220	• • Ring	1	80001-
10		07002-12034	• • O-ring	1	80001-

https://truckmanualshub.com/

FIG. M2210-003011 Fender Group, Inner Parts (10/12)

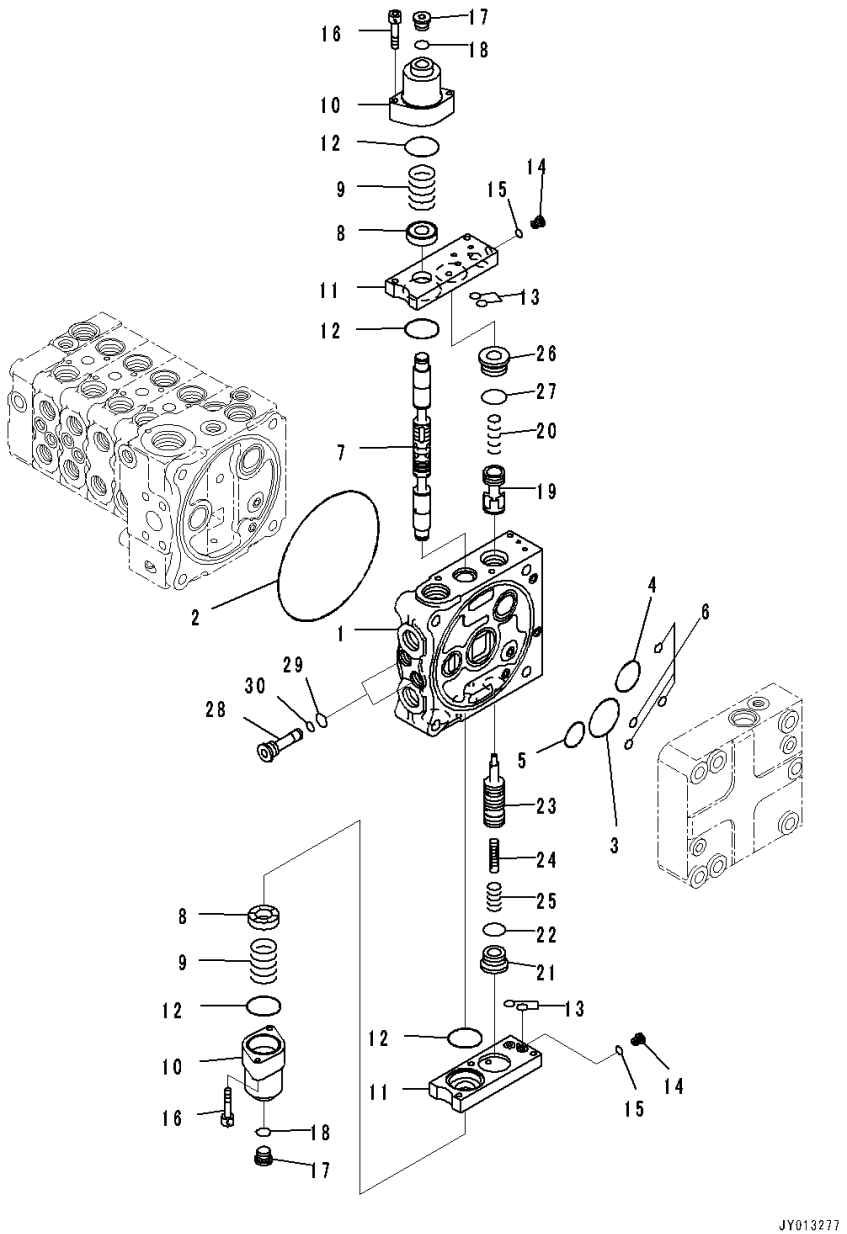

Index	Code	Part Number	Description	Qty	Serial Number
		Note: This list covers following specifications. For Machine With 5-spool Valve Hydraulics, With Power Angle Power Tilt Dozer For Machine With 5-spool Valve Hydraulics, With Power Angle Power Tilt Dozer, For Machine With Ripper			
		723-25-11100	Valve, Control	1	80001-
		723-51-06500	• Valve Assembly	1	80001-
1	C1		• • Valve Body	1	80001-
2		144-14-54610	• • O-ring	1	80001-
3		723-56-31720	• • O-ring	1	80001-
4		723-56-31730	• • O-ring	1	80001-
5		702-75-11520	• • O-ring	1	80001-
6		07000-11008	• • O-ring	4	80001-
7		723-56-22170	• • Spool	1	80001-
8		723-56-31211	• • Retainer	2	80001-
9		723-36-14120	• • Spring	2	80001-
10		723-56-31510	• • Case	2	80001-
11		723-56-32820	• • Plate	2	80001-
12		702-21-55450	• • O-ring	4	80001-
13		07000-11009	• • O-ring	4	80001-
14		723-11-27280	• • Plug	2	80001-
15		07002-10823	• • O-ring	2	80001-
16		01252-60650	• • Bolt	4	80001-
17		702-21-55620	• • Plug	2	80001-
18		07002-11423	• • O-ring	2	80001-
19		723-56-42150	• • Valve	1	80001-
20		723-56-41710	• • Spring	1	80001-
21		723-26-15230	• • Plug	1	80001-
22		07002-12434	• • O-ring	1	80001-
23		723-56-42330	• • Valve	1	80001-
24		723-56-41590	• • Piston	1	80001-
25		723-56-41730	• • Spring	1	80001-
26		723-56-41970	• • Plug	1	80001-
27		07000-13024	• • O-ring	1	80001-
28		723-56-31640	• • Plug	2	80001-
29		07002-11623	• • O-ring	2	80001-
30		07000-11008	• • O-ring	2	80001-

https://truckmanualshub.com/

FIG. M2210-003012 Fender Group, Inner Parts (11/12)

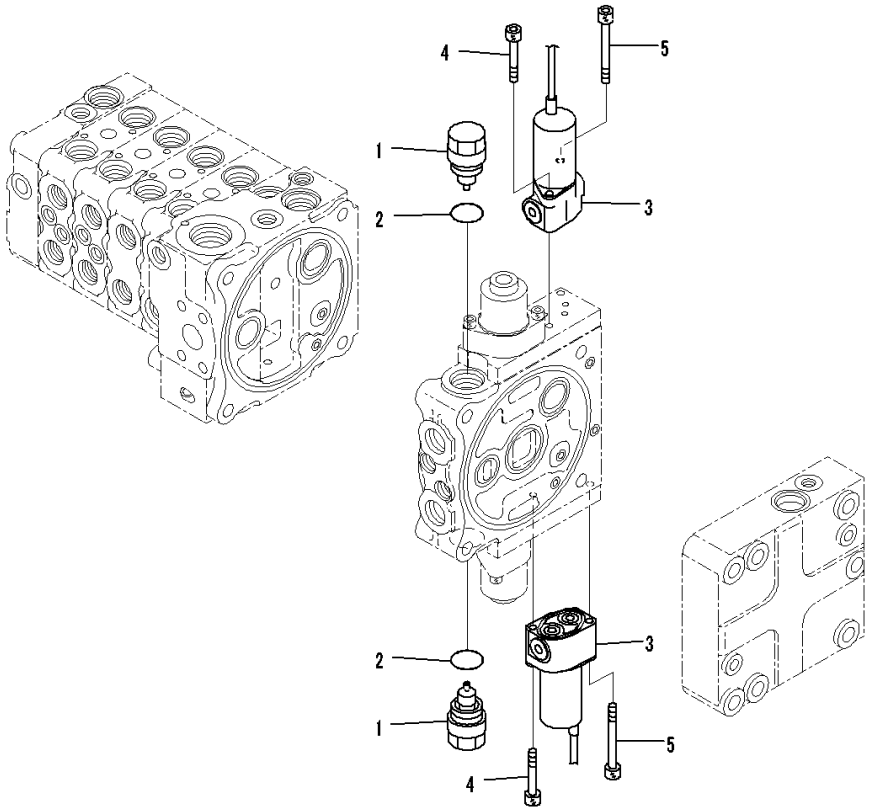

Index	Code	Part Number	Description	Qty	Serial Number
		Note: This list covers following specifications. For Machine With 5-spool Valve Hydraulics, With Power Angle Power Tilt Dozer For Machine With 5-spool Valve Hydraulics, With Power Angle Power Tilt Dozer, For Machine With Ripper			
		723-25-11100	Valve, Control	1	80001-
		723-51-06500	• Valve Assembly	1	80001-
		723-40-85100	• • Valve Assembly, Suction	2	80001-
1		723-40-85110	• • • Sleeve	1	80001-
2		709-25-11390	• • • O-ring	1	80001-
3		702-21-07610	• • Valve, Solenoid	2	80001-
4		01252-60645	• • Bolt, Hexagon Socket Head	2	80001-
5		702-16-55270	• • Bolt	2	80001-

https://truckmanualshub.com/

FIG. M2210-003013 Fender Group, Inner Parts (12/12)

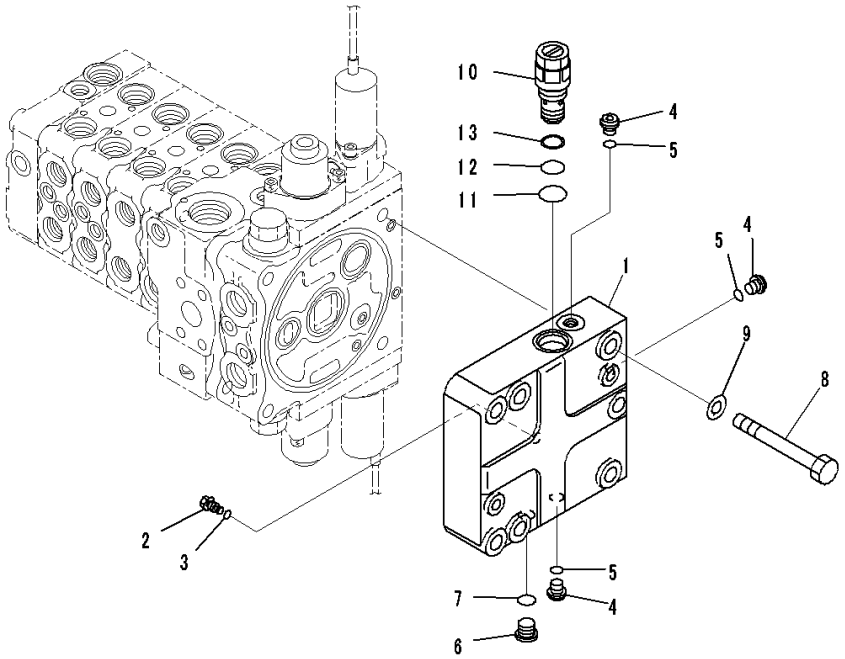

Index	Code	Part Number	Description	Qty	Serial Number
		Note: This list covers following specifications.			
		For Machine With 5-spool Valve Hydraulics, With Power Angle Power Tilt Dozer			
		For Machine With 5-spool Valve Hydraulics, With Power Angle Power Tilt Dozer, For Machine With Ripper			
		723-25-11100	Valve, Control	1	80001-
1		723-56-12210	• Cover	1	80001-
2		723-56-33940	• Plug	1	80001-
3		07002-10823	• O-ring	1	80001-
4		708-8E-16160	• Plug	3	80001-
5		07002-11023	• O-ring	3	80001-
6		702-21-55620	• Plug	1	80001-
7		07002-11423	• O-ring	1	80001-
8		01011-81225	• Bolt	4	80001-
9		01643-31232	• Washer	4	80001-
10		723-60-21102	• Valve, Relief	1	80001-
11		07002-02434	• • O-ring	1	80001-
12		07000-12016	• • O-ring	1	80001-
13		07001-02016	• • Ring, Back-up	1	80001-

https://truckmanualshub.com/

FIG. M2210-003015 Fender Group, For Machine With 5-spool Valve Hydraulics, With Power Angle Power Tilt Dozer, Hydraulic Piping

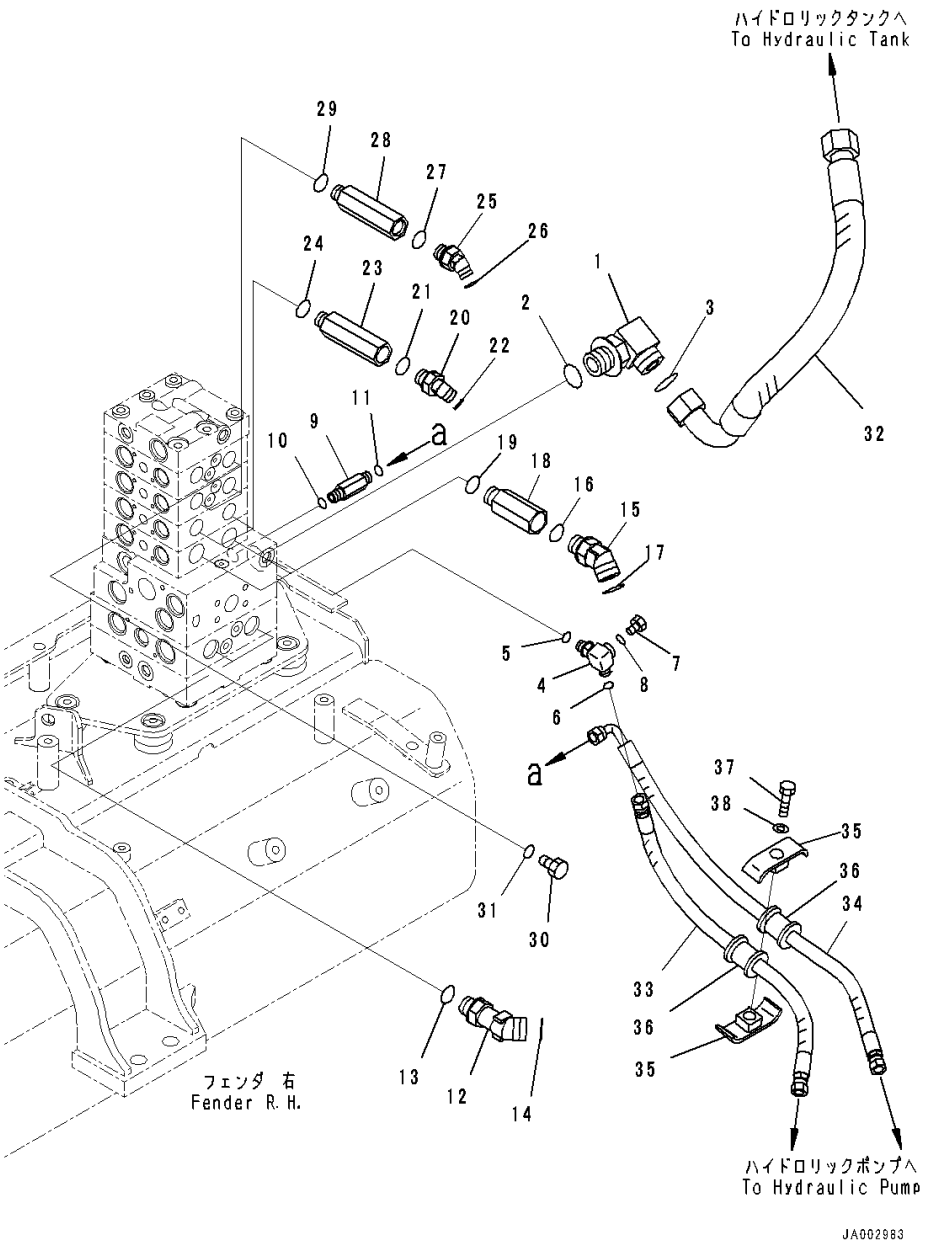

Index	Code	Part Number	Description	Qty	Serial Number
1		21W-62-42640	Elbow	1	80001-
2		07002-13334	O-ring	1	80001-
3		207-62-64740	O-ring	1	80001-
4		14X-62-54870	Tee	1	80001-
5		07002-11423	O-ring	1	80001-
6		02896-11008	O-ring	1	80001-
7		07040-11007	Plug	1	80001-
8		07002-11023	O-ring	1	80001-
9		11Y-62-12230	Union	1	80001-
10		07002-11423	O-ring	1	80001-
11		02896-11008	O-ring	1	80001-
12		11Y-62-36160	Elbow	2	80001-
13		07002-62434	O-ring	2	80001-
14		02896-61018	O-ring	2	80001-
15		02783-10628	Elbow	2	80001-
16		07002-12434	O-ring	2	80001-
17		02896-11018	O-ring	2	80001-
18		20T-62-81790	Joint	2	80001-
19		07002-12434	O-ring	2	80001-
20		02783-10315	Elbow	2	80001-
21		07002-12034	O-ring	2	80001-
22		02896-11009	O-ring	2	80001-
23		14X-62-52931	Joint	2	80001-
24		07002-12034	O-ring	2	80001-
25		02783-10422	Elbow	2	80001-
26		07002-12034	O-ring	2	80001-
27		02896-11012	O-ring	2	80001-
28		14X-62-52931	Joint	2	80001-
29		07002-12034	O-ring	2	80001-
30		07040-12012	Plug	2	80001-
31		07002-12034	O-ring	2	80001-
32		14X-62-52940	Hose	1	80001-
33		14X-62-52391	Hose	1	80001-
34		14X-62-52541	Hose	1	80001-
35		22P-62-13540	Clamp	2	80001-
36		07095-00314	Cushion	2	80001-
37		01010-81260	Bolt	1	80001-
38		01643-31232	Washer	1	80001-

https://truckmanualshub.com/

FIG. M2210-003016 Fender Group, PPC Lock Solenoid Valve With Accumulator

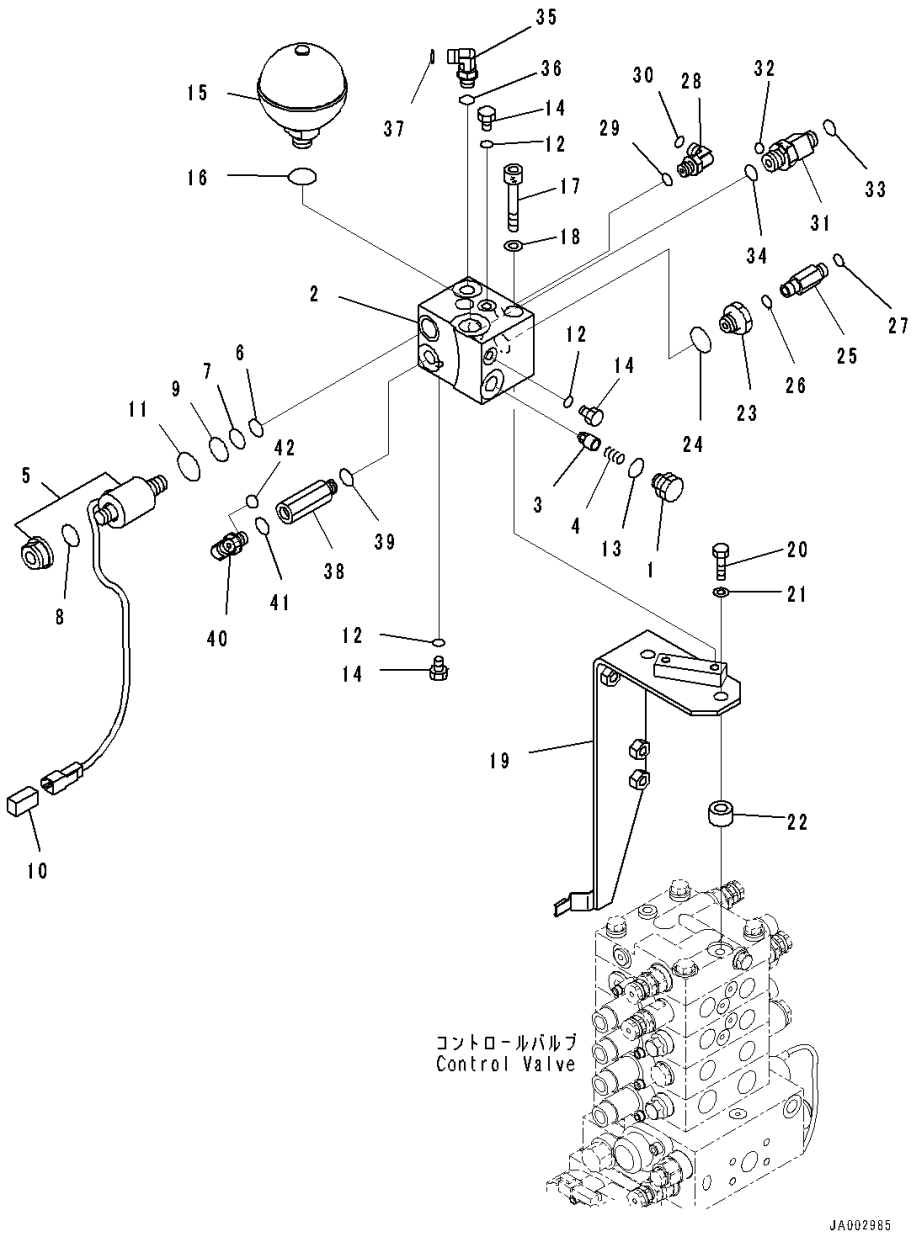

Index	Code	Part Number	Description	Qty	Serial Number
		Note: This list covers following specifications.			
		For Machine With 5-spool Valve Hydraulics, With Power Angle Power Tilt Dozer			
		For Machine With 5-spool Valve Hydraulics, With Power Angle Power Tilt Dozer, For Machine With Ripper			
		14X-62-53551	Block Assembly	1	80001-
1		103-49-14280	• Plug	1	80001-
2		14X-62-53561	• Block	1	80001-
3		205-60-51390	• Poppet	1	80001-
4		722-12-12063	• Spring	1	80001-
5		11Y-60-11530	• Valve, Solenoid	1	80001-
6		07000-02012	• • O-ring	1	80001-
7		07000-02014	• • O-ring	1	80001-
8		07000-12016	• • O-ring	1	80001-
9		07000-02018	• • O-ring	1	80001-
10		08192-22830	• • Connector	1	80001-
11		203-60-62190	• • O-ring	1	80001-
12		07002-10823	• O-ring	3	80001-
13		07002-11623	• O-ring	1	80001-
14		07040-10807	• Plug	3	80001-
15		22U-60-21330	Accumulator	1	80001-
16		07002-12034	O-ring	1	80001-
17		01252-A1085	Bolt, Hexagon Socket Head	2	80001-
18		01643-51032	Washer	2	80001-
19		14X-62-52960	Bracket	1	80001-
20		01010-81245	Bolt	2	80001-
21		01643-31232	Washer	2	80001-
22		14X-62-52971	Spacer	2	80001-
23		20Y-62-21940	Filter Assembly	1	80001-
24		07002-12034	O-ring	1	80001-
25		20U-62-41890	Nipple	1	80001-
26		07002-11423	O-ring	1	80001-
27		02896-11008	O-ring	1	80001-
28		02782-10210	Elbow	1	80001-
29		07002-11423	O-ring	1	80001-
30		02896-11008	O-ring	1	80001-
31		20K-62-33690	Tee	1	80001-
32		02896-11008	• O-ring	1	80001-
33		02896-11009	• O-ring	1	80001-
34		07002-12034	O-ring	1	80001-

https://truckmanualshub.com/

FIG. M2210-003016 Fender Group, PPC Lock Solenoid Valve With Accumulator

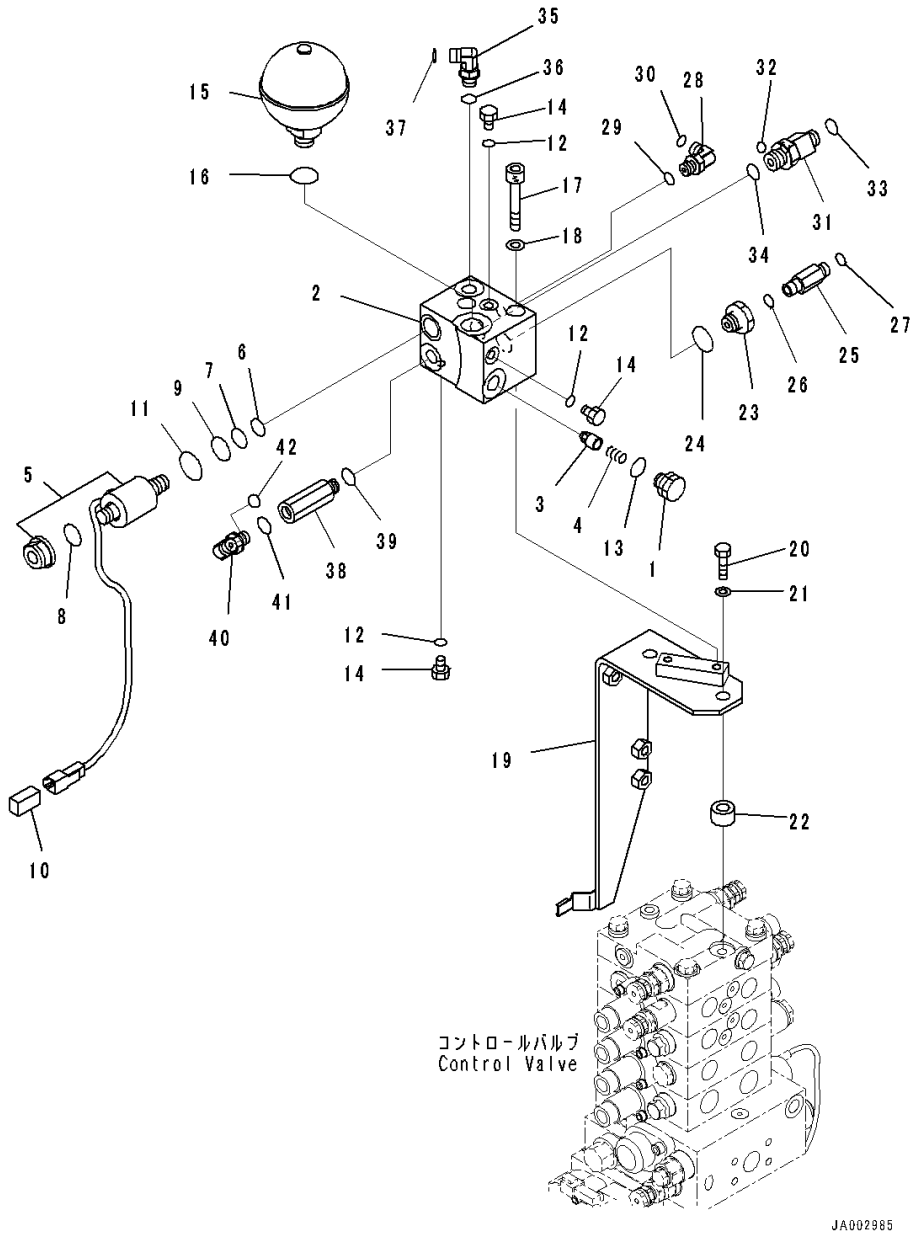

Index	Code	Part Number	Description	Qty	Serial Number
35		02782-10210	Elbow	1	80001-
36		07002-11423	O-ring	1	80001-
37		02896-11008	O-ring	1	80001-
38		207-62-62460	Adapter	1	80001-
39		07002-11423	O-ring	1	80001-
40		02782-10210	Elbow	1	80001-
41		07002-11423	O-ring	1	80001-
42		02896-11008	O-ring	1	80001-

https://truckmanualshub.com/

FIG. M2210-003017A Fender Group, For Machine With 5-spool Valve Hydraulics, With Power Angle Power Tilt Dozer, Control Valve Steering Piping

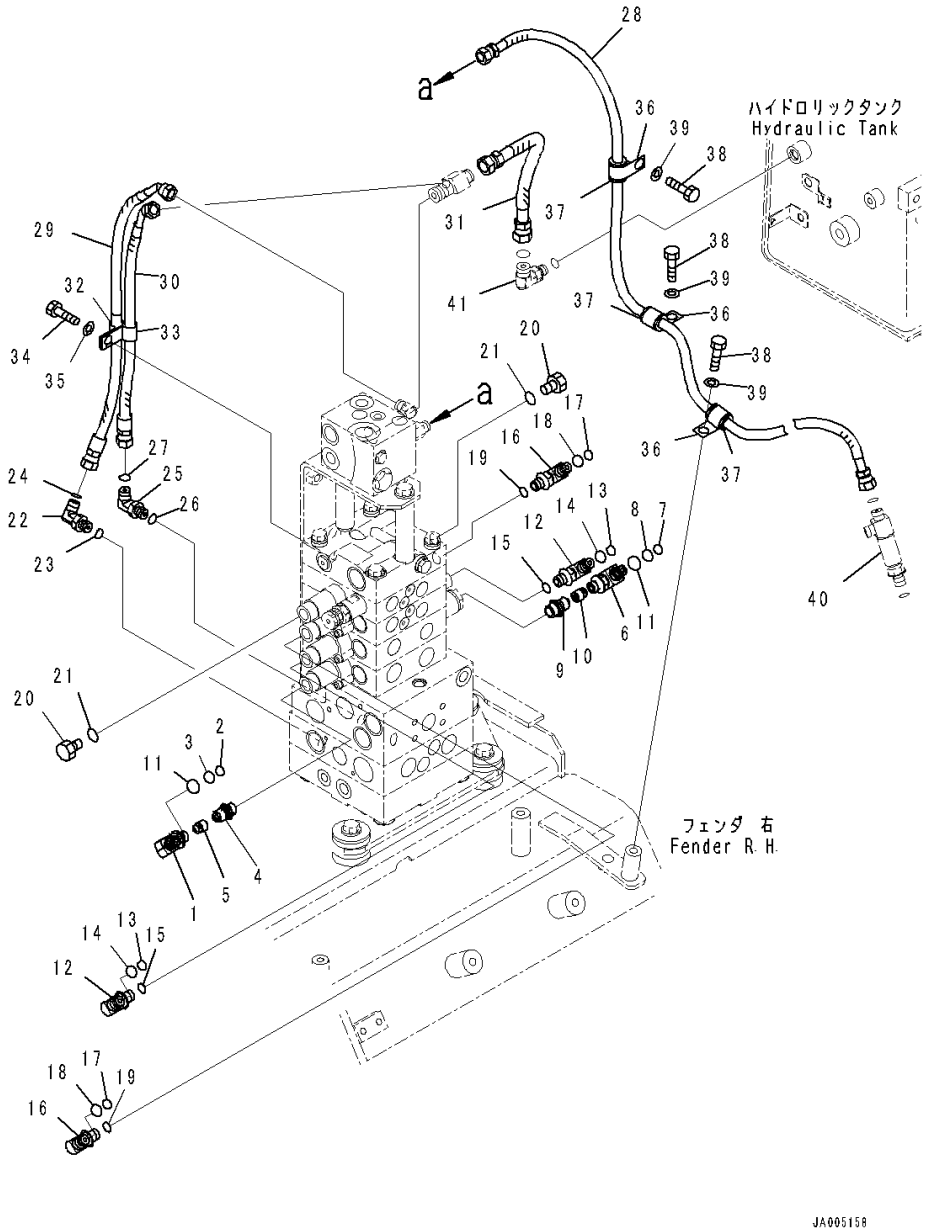

Index	Code	Part Number	Description	Qty	Serial Number
		14X-62-55560	Valve Assembly	1	80090-
1		14X-62-54940	• Elbow	1	80090-
2		201-60-11390	• • O-ring	1	80090-
3		20Y-62-19560	• • O-ring	1	80090-
4		21W-62-44740	• Plug	1	80090-
5		21W-973-3420	• Poppet	1	80090-
		14X-62-55560	Valve Assembly	1	80090-
6		14X-62-54940	• Elbow	1	80001-
7		201-60-11390	• • O-ring	1	80001-
8		20Y-62-19560	• • O-ring	1	80001-
9		21W-62-44740	• Plug	1	80001-
10		21W-973-3420	• Poppet	1	80090-
11		07002-11423	O-ring	2	80001-
12		14X-62-53541	Elbow	2	80001-
13		201-60-11390	• O-ring	1	80001-
14		20Y-62-19560	• O-ring	1	80001-
15		07002-11423	O-ring	2	80001-
16		14X-62-54950	Elbow	2	80001-
17		201-60-11390	• O-ring	1	80001-
18		20Y-62-19560	• O-ring	1	80001-
19		07002-11423	O-ring	2	80001-
20		07040-11409	Plug	2	80001-
21		07002-11423	O-ring	2	80001-
22		02782-10210	Elbow	1	80001-
23		07002-11423	O-ring	1	80001-
24		02896-11008	O-ring	1	80001-
25		02782-10210	Elbow	1	80001-
26		07002-11423	O-ring	1	80001-
27		02896-11008	O-ring	1	80001-
28		14X-62-52521	Hose	1	80001-
29		02764-00205	Hose, Face Seal Type	1	80001-
30		02764-00204	Hose, Face Seal Type	1	80001-
31		02762-00303	Hose, Face Seal Type	1	80001-
32		04434-51212	Clip	1	80001-
33		21T-72-23260	Clip	1	80001-
34		01010-81225	Bolt	1	80001-
35		01643-31232	Washer	1	80001-
36		04434-51712	Clip	3	80001-
37		07095-20211	Cushion	3	80001-

https://truckmanualshub.com/

FIG. M2210-003017A Fender Group, For Machine With 5-spool Valve Hydraulics, With Power Angle Power Tilt Dozer, Control Valve Steering Piping

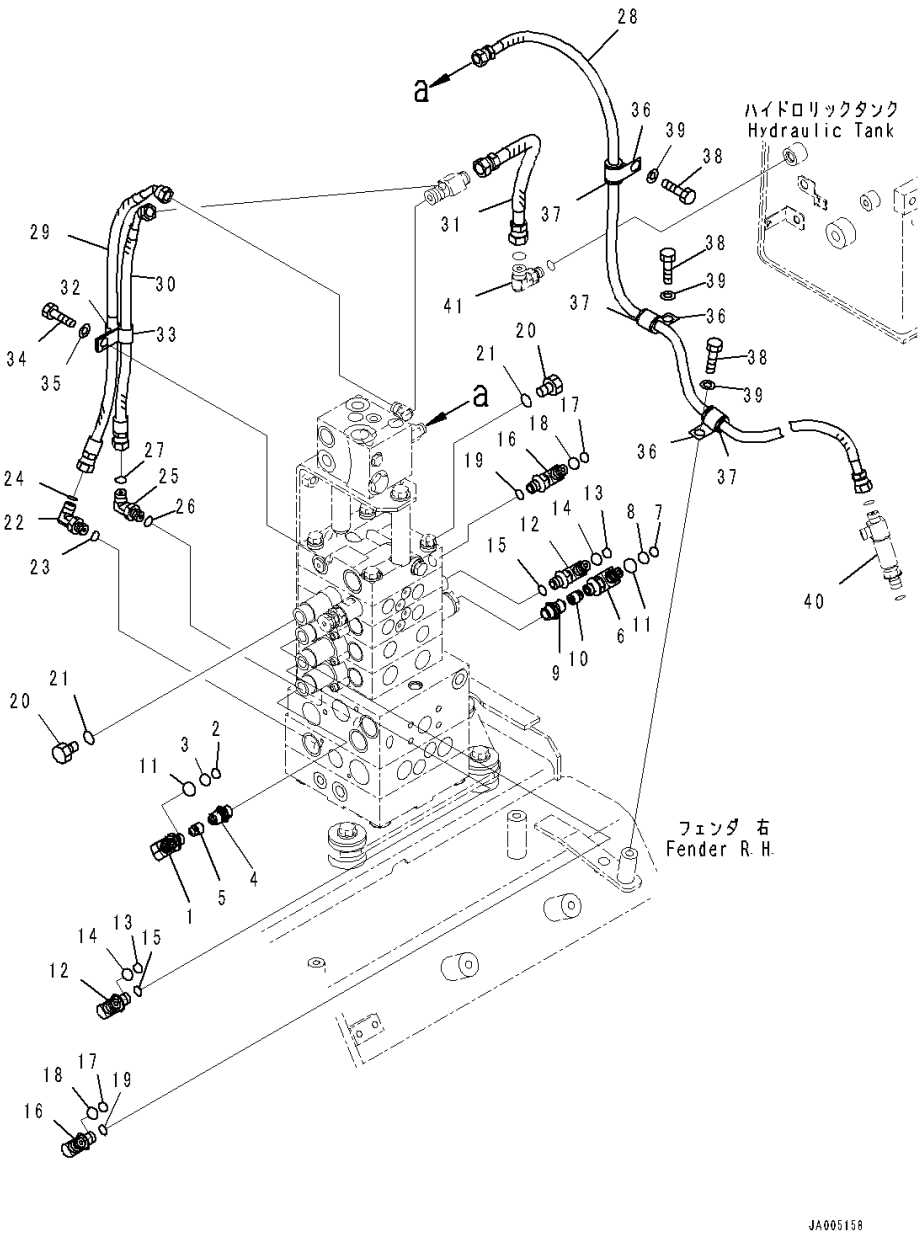

Index	Code	Part Number	Description	Qty	Serial Number
38		01010-81220	Bolt	3	80001-
39		01643-31232	Washer	3	80001-
40		(14X-62-54710)	Tee(Refer to Page 315)		-
41		(02782-10311)	Elbow(Refer to Page 292)		-
		(02782-10311)	Elbow(Refer to Page 294)		-

https://truckmanualshub.com/

FIG. M2210-003020 Fender Group, Handrail

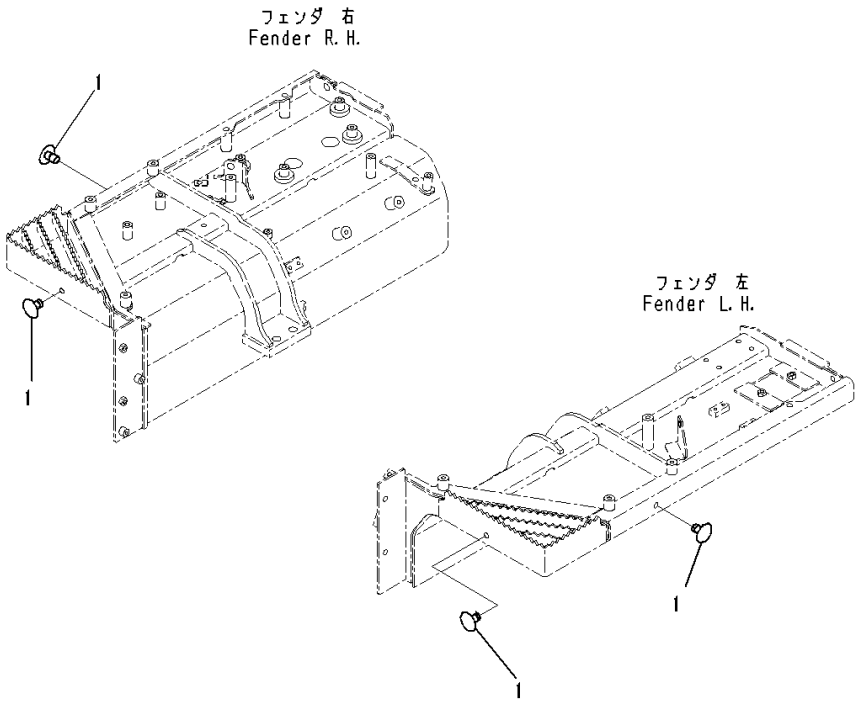

Index	Code	Part Number	Description	Qty	Serial Number
		Note: This list covers following specifications. For Machine With 5-spool Valve Hydraulics, With Power Angle Power Tilt Dozer For Machine With 5-spool Valve Hydraulics, With Power Angle Power Tilt Dozer, For Machine With Ripper			
1		416-54-21710	Plug	4	80001-

https://truckmanualshub.com/

FIG. M2210-006015 Fender Group, For Machine With 5-spool Valve Hydraulics, With Power Angle Power Tilt Dozer, For Machine With Ripper, Hydraulic Piping

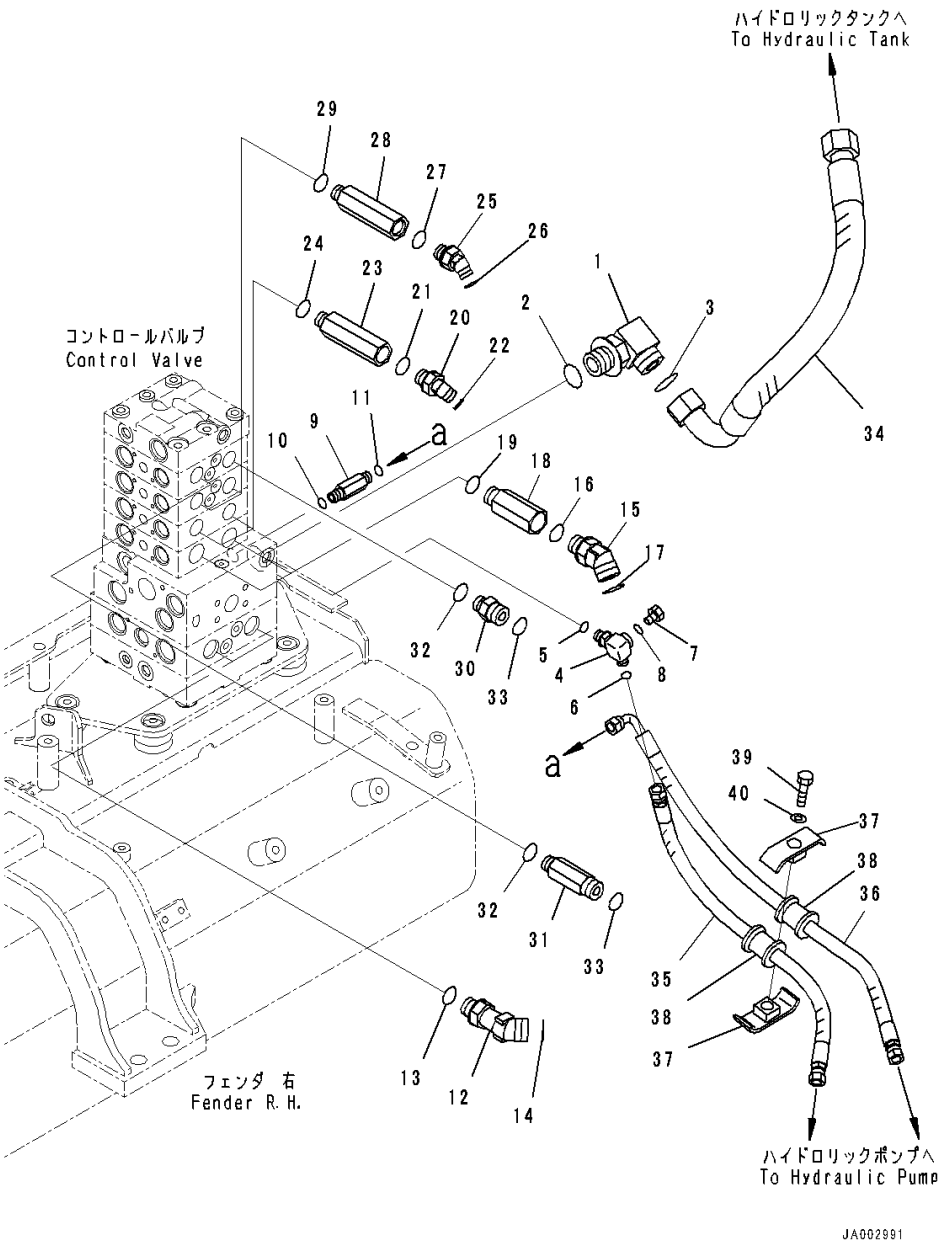

Index	Code	Part Number	Description	Qty	Serial Number
1		21W-62-42640	Elbow	1	80001-
2		07002-13334	O-ring	1	80001-
3		207-62-64740	O-ring	1	80001-
4		14X-62-54870	Tee	1	80001-
5		07002-11423	O-ring	1	80001-
6		02896-11008	O-ring	1	80001-
7		07040-11007	Plug	1	80001-
8		07002-11023	O-ring	1	80001-
9		11Y-62-12230	Union	1	80001-
10		07002-11423	O-ring	1	80001-
11		02896-11008	O-ring	1	80001-
12		11Y-62-36160	Elbow	2	80001-
13		07002-62434	O-ring	2	80001-
14		02896-61018	O-ring	2	80001-
15		02783-10628	Elbow	2	80001-
16		07002-12434	O-ring	2	80001-
17		02896-11018	O-ring	2	80001-
18		20T-62-81790	Joint	2	80001-
19		07002-12434	O-ring	2	80001-
20		02783-10315	Elbow	2	80001-
21		07002-12034	O-ring	2	80001-
22		02896-11009	O-ring	2	80001-
23		14X-62-52931	Joint	2	80001-
24		07002-12034	O-ring	2	80001-
25		02783-10422	Elbow	2	80001-
26		07002-12034	O-ring	2	80001-
27		02896-11012	O-ring	2	80001-
28		14X-62-52931	Joint	2	80001-
29		07002-12034	O-ring	2	80001-
30		02781-00516	Union	1	80001-
31		14X-62-52991	Nipple	1	80001-
32		07002-12034	O-ring	2	80001-
33		02896-11015	O-ring	2	80001-
34		14X-62-52940	Hose	1	80001-
35		14X-62-52391	Hose	1	80001-
36		14X-62-52541	Hose	1	80001-
37		22P-62-13540	Clamp	2	80001-
38		07095-00314	Cushion	2	80001-
39		01010-81260	Bolt	1	80001-

https://truckmanualshub.com/

FIG. M2210-006015 Fender Group, For Machine With 5-spool Valve Hydraulics, With Power Angle Power Tilt Dozer, For Machine With Ripper, Hydraulic Piping

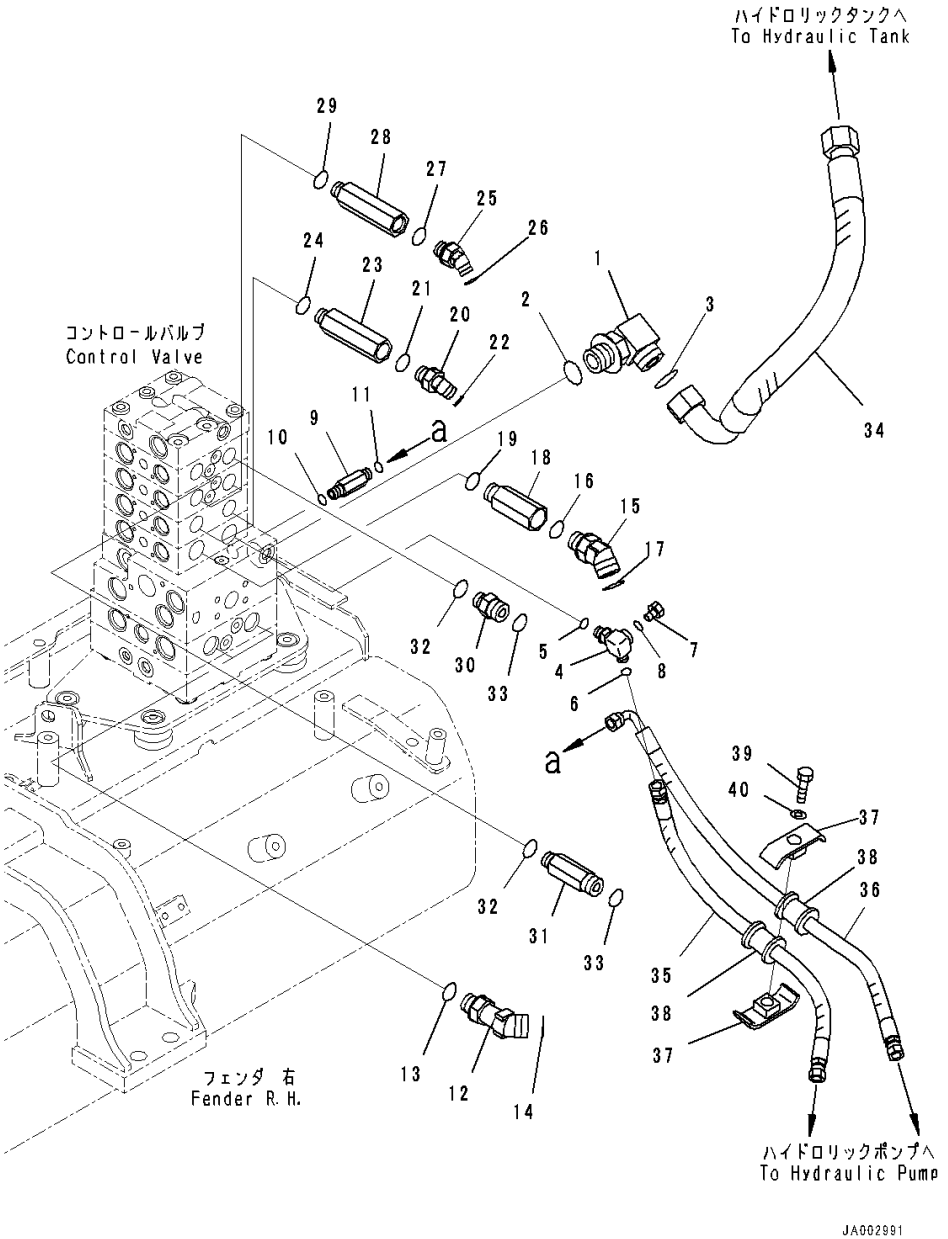

Index	Code	Part Number	Description	Qty	Serial Number
40		01643-31232	Washer	1	80001-

https://truckmanualshub.com/

FIG. M2210-006017A Fender Group, For Machine With 5-spool Valve Hydraulics, With Power Angle Power Tilt Dozer, For Machine With Ripper, Control Valve Steering Piping

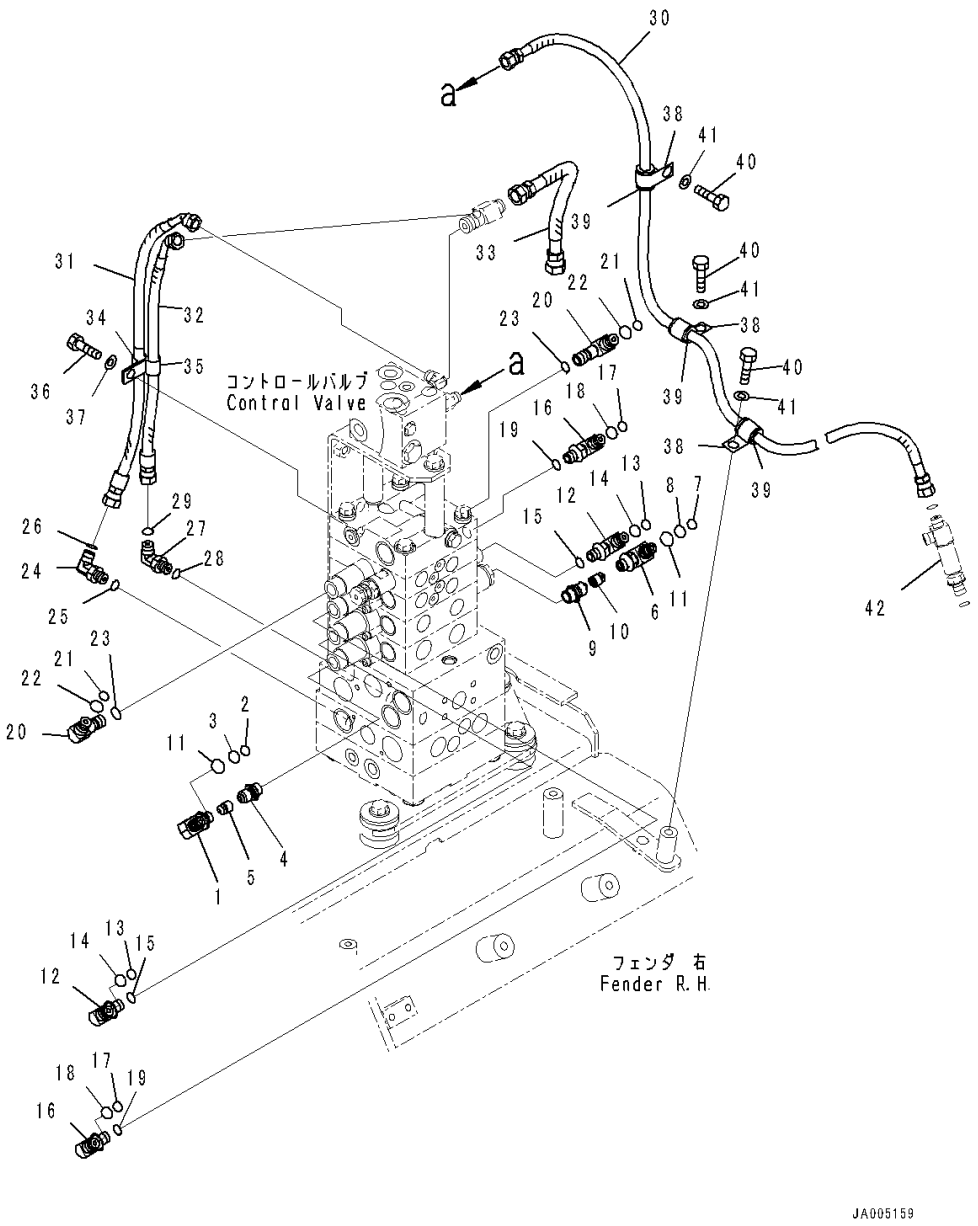

Index	Code	Part Number	Description	Qty	Serial Number
		14X-62-55560	Valve Assembly	1	80084-
1		14X-62-54940	• Elbow	1	80084-
2		201-60-11390	• • O-ring	1	80084-
3		20Y-62-19560	• • O-ring	1	80084-
4		21W-62-44740	• Plug	1	80084-
5		21W-973-3420	• Poppet	1	80084-
		14X-62-55560	Valve Assembly	1	80084-
6		14X-62-54940	• Elbow	1	80001-
7		201-60-11390	• • O-ring	1	80001-
8		20Y-62-19560	• • O-ring	1	80001-
9		21W-62-44740	• Plug	1	80001-
10		21W-973-3420	• Poppet	1	80084-
11		07002-11423	O-ring	2	80001-
12		14X-62-53541	Elbow	2	80001-
13		201-60-11390	• O-ring	1	80001-
14		20Y-62-19560	• O-ring	1	80001-
15		07002-11423	O-ring	2	80001-
16		14X-62-54950	Elbow	2	80001-
17		201-60-11390	• O-ring	1	80001-
18		20Y-62-19560	• O-ring	1	80001-
19		07002-11423	O-ring	2	80001-
20		14X-62-53541	Elbow	2	80001-
21		201-60-11390	• O-ring	1	80001-
22		20Y-62-19560	• O-ring	1	80001-
23		07002-11423	O-ring	2	80001-
24		02782-10210	Elbow	1	80001-
25		07002-11423	O-ring	1	80001-
26		02896-11008	O-ring	1	80001-
27		02782-10210	Elbow	1	80001-
28		07002-11423	O-ring	1	80001-
29		02896-11008	O-ring	1	80001-
30		14X-62-52521	Hose	1	80001-
31		02764-00205	Hose, Face Seal Type	1	80001-
32		02764-00204	Hose, Face Seal Type	1	80001-
33		02762-00303	Hose, Face Seal Type	1	80001-
34		04434-51212	Clip	1	80001-
35		21T-72-23260	Clip	1	80001-
36		01010-81225	Bolt	1	80001-

https://truckmanualshub.com/

FIG. M2210-006017A Fender Group, For Machine With 5-spool Valve Hydraulics, With Power Angle Power Tilt Dozer, For Machine With Ripper, Control Valve Steering Piping

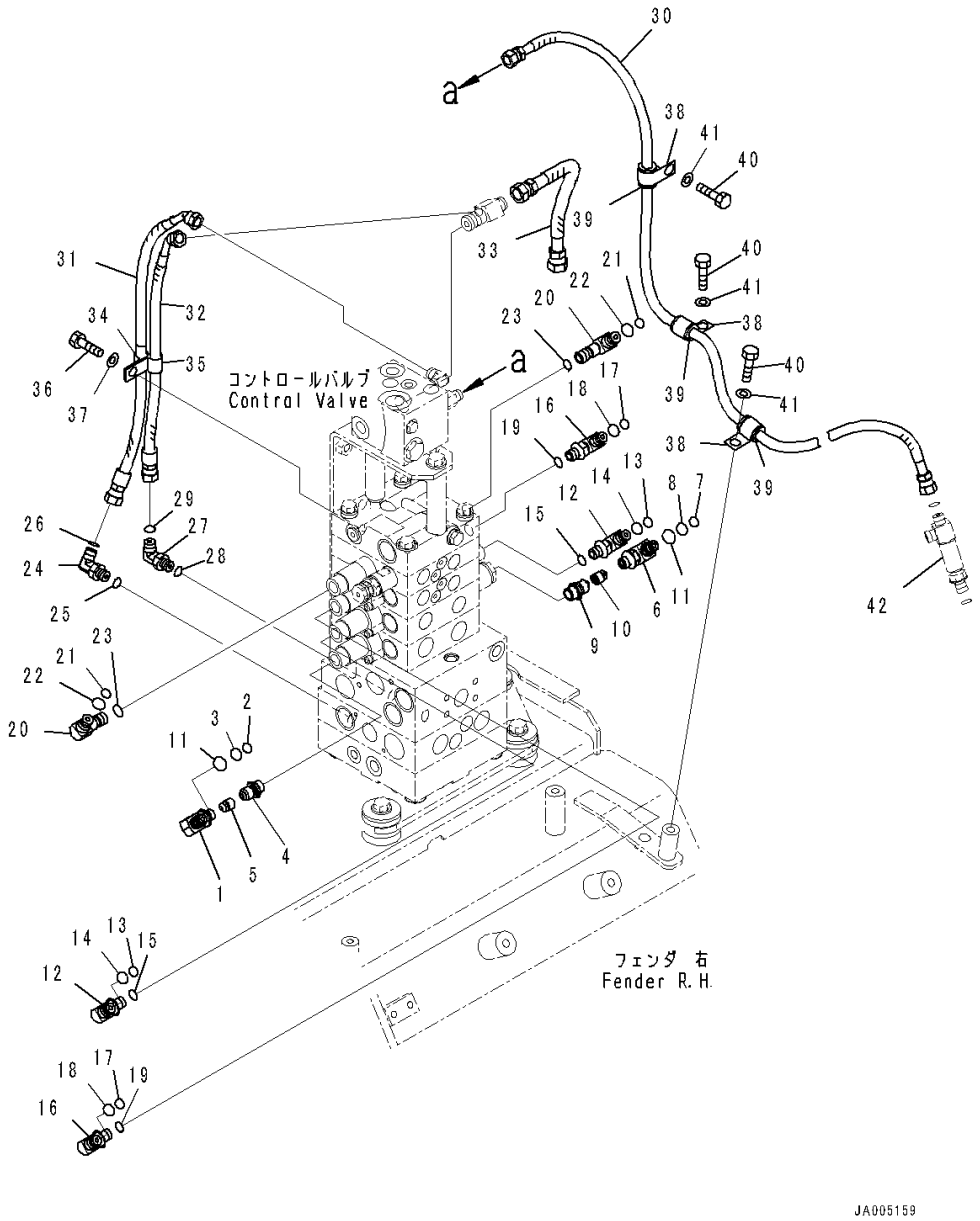

Index	Code	Part Number	Description	Qty	Serial Number
37		01643-31232	Washer	1	80001-
38		04434-51712	Clip	3	80001-
39		07095-20211	Cushion	3	80001-
40		01010-81220	Bolt	3	80001-
41		01643-31232	Washer	3	80001-
42		(14X-62-54710)	Tee(Refer to Page 315)		-

https://truckmanualshub.com/

FIG. M2210-005002 Fender Group, Inner Parts (1/12)

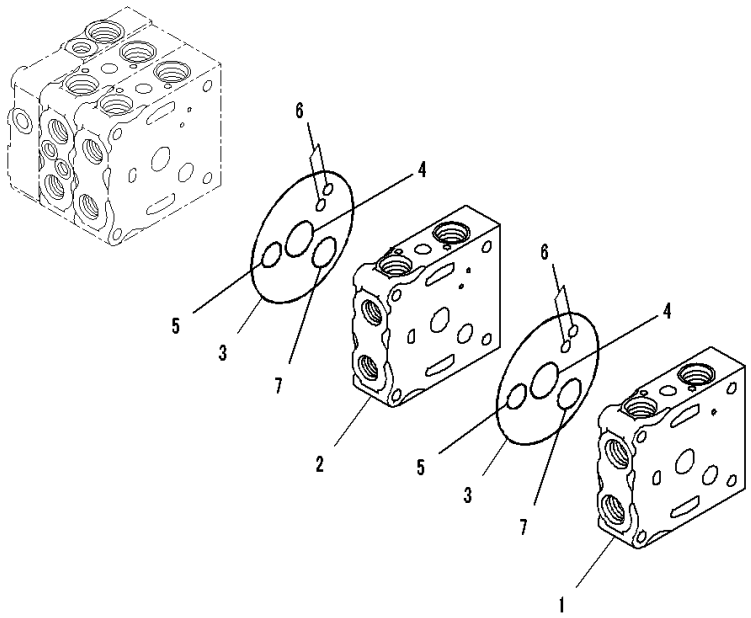

JY013381

Index	Code	Part Number	Description	Qty	Serial Number
		Note: This list covers following specifications. For Machine With 5-spool Valve Hydraulics, With Power Tilt Pitch Dozer, For Machine With Ripper For Machine With 5-spool Valve Hydraulics, With Power Tilt Pitch Dozer			
		723-25-10900	Valve, Control	1	80001-
	C1		• Body Group	1	80001-
1		723-26-21250	• • Valve Body	1	80001-
2		723-26-21360	• • Valve Body	1	80001-
3		07000-12120	• • O-ring	2	80001-
4		723-26-15830	• • O-ring	2	80001-
5		07000-12020	• • O-ring	2	80001-
6		07000-11008	• • O-ring	4	80001-
7		723-26-15840	• • O-ring	2	80001-

https://truckmanualshub.com/

FIG. M2210-005003 Fender Group, Inner Parts (2/12)

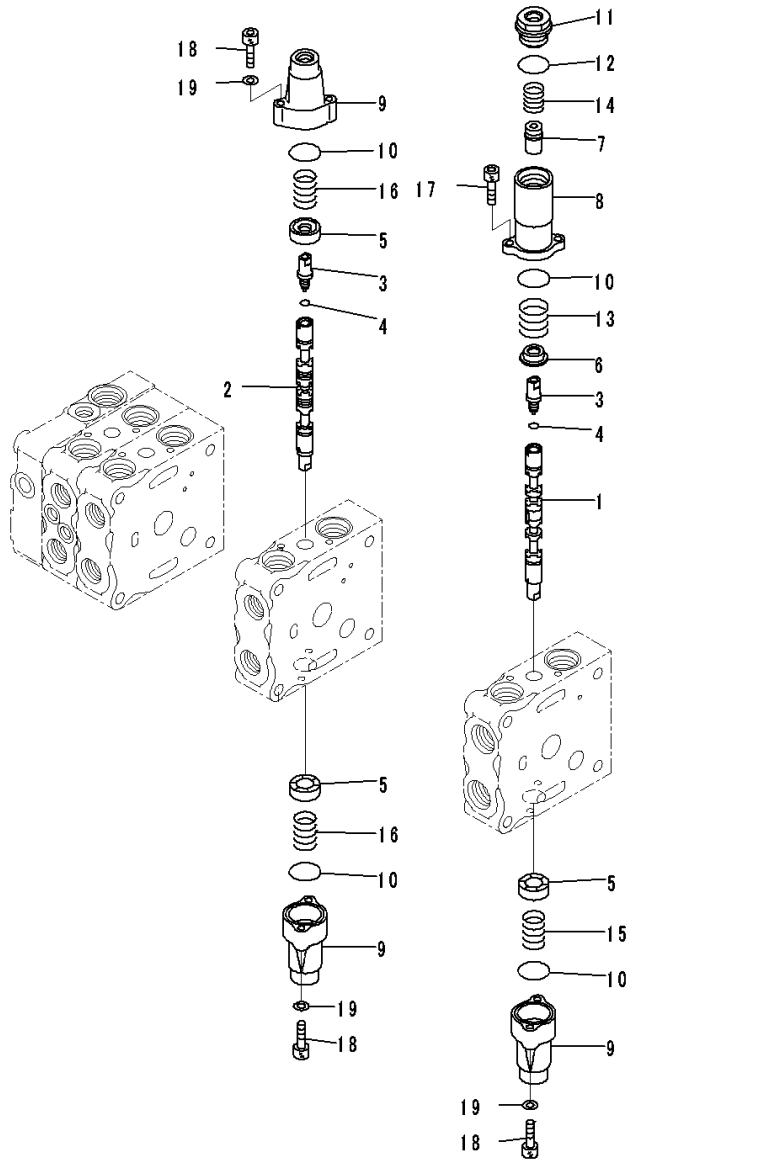

Index	Code	Part Number	Description	Qty	Serial Number
		Note: This list covers following specifications. For Machine With 5-spool Valve Hydraulics, With Power Tilt Pitch Dozer, For Machine With Ripper For Machine With 5-spool Valve Hydraulics, With Power Tilt Pitch Dozer			
		723-25-10900	Valve, Control	1	80001-
	C1		• Body Group	1	80001-
1		723-26-22830	• • Spool	1	80001-
2		723-26-22840	• • Spool	1	80001-
3		723-26-15130	• • Plug	2	80001-
4		07002-10823	• • O-ring	2	80001-
5		723-26-15121	• • Retainer	3	80001-
6		723-26-16770	• • Retainer	1	80001-
7		723-26-16780	• • Retainer	1	80001-
8		723-26-16760	• • Case	1	80001-
9		723-26-15110	• • Case	3	80001-
10		575-41-17420	• • O-ring	4	80001-
11		723-26-16790	• • Plug	1	80001-
12		07002-12434	• • O-ring	1	80001-
13		723-26-14560	• • Spring	1	80001-
14		723-26-14570	• • Spring	1	80001-
15		709-26-11450	• • Spring	1	80001-
16		723-26-14580	• • Spring	2	80001-
17		01252-60616	• • Bolt	2	80001-
18		01252-60630	• • Bolt, Hexagon Socket Head	6	80001-
19		01641-20608	• • Washer	6	80001-

https://truckmanualshub.com/

FIG. M2210-005004 Fender Group, Inner Parts (3/12)

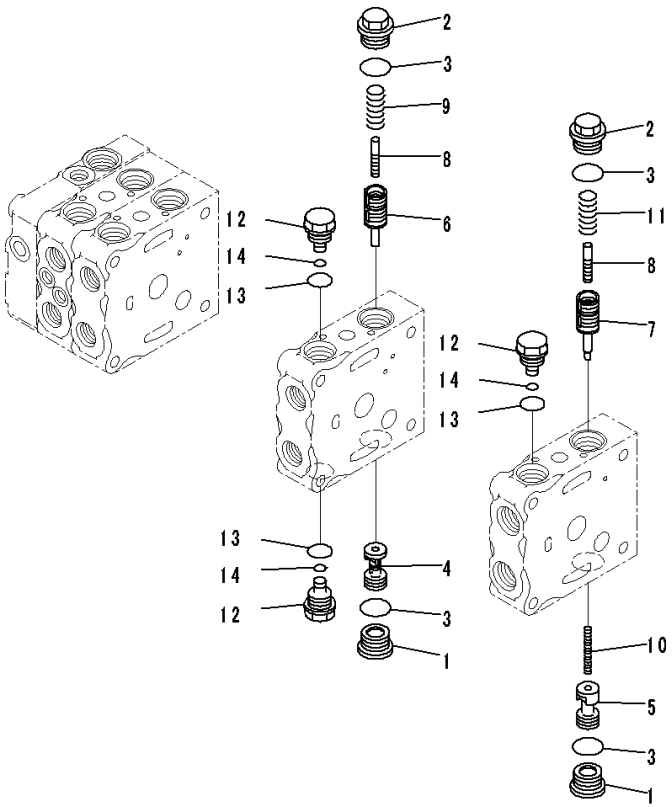

Index	Code	Part Number	Description	Qty	Serial Number
		Note: This list covers following specifications. For Machine With 5-spool Valve Hydraulics, With Power Tilt Pitch Dozer, For Machine With Ripper For Machine With 5-spool Valve Hydraulics, With Power Tilt Pitch Dozer			
		723-25-10900	Valve, Control	1	80001-
	C1		• Body Group	1	80001-
1		723-26-15230	• • Plug	2	80001-
2		723-26-15370	• • Plug	2	80001-
3		07002-12434	• • O-ring	4	80001-
4		723-26-41160	• • Valve	1	80001-
5		723-26-41210	• • Valve	1	80001-
6		723-26-51240	• • Valve	1	80001-
7		723-26-51510	• • Valve	1	80001-
8		723-26-51250	• • Piston	2	80001-
9		723-26-14230	• • Spring	1	80001-
10		723-26-14220	• • Spring	1	80001-
11		723-26-14240	• • Spring	1	80001-
12		723-26-15310	• • Plug	3	80001-
13		07002-12034	• • O-ring	3	80001-
14		07000-11007	• • O-ring	3	80001-

https://truckmanualshub.com/

FIG. M2210-005005 Fender Group, Inner Parts (4/12)

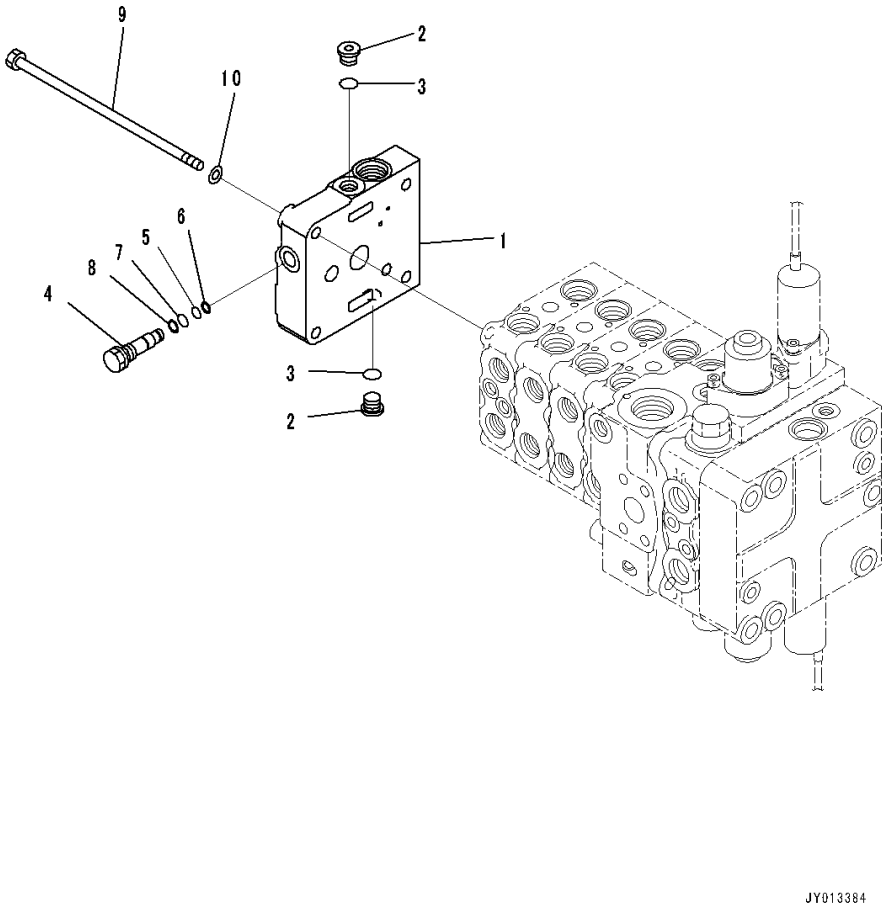

Index	Code	Part Number	Description	Qty	Serial Number
		Note: This list covers following specifications. For Machine With 5-spool Valve Hydraulics, With Power Tilt Pitch Dozer, For Machine With Ripper For Machine With 5-spool Valve Hydraulics, With Power Tilt Pitch Dozer			
		723-25-10900	Valve, Control	1	80001-
1		723-26-21750	• Cover	1	80001-
2		702-21-55620	• Plug	2	80001-
3		07002-11423	• O-ring	2	80001-
4		723-26-15190	• Plug	1	80001-
5		07000-11007	• O-ring	1	80001-
6		07001-01007	• Ring, Back-up	1	80001-
7		07000-11009	• O-ring	1	80001-
8		07001-01009	• Ring, Back-up	1	80001-
9		700-85-11111	• Bolt	4	80001-
10		01643-31032	• Washer	4	80001-

https://truckmanualshub.com/

FIG. M2210-005006 Fender Group, Inner Parts (5/12)

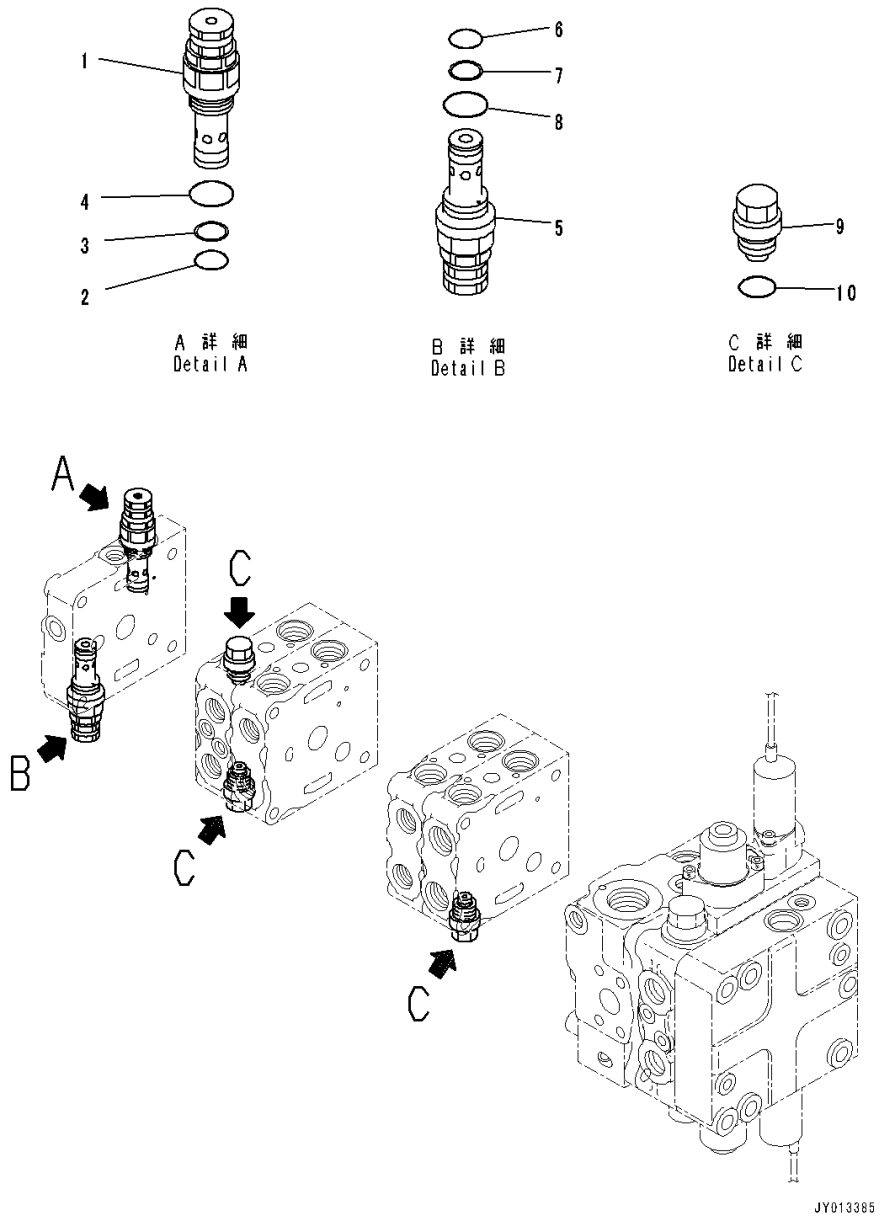

Index	Code	Part Number	Description	Qty	Serial Number
		Note: This list covers following specifications. For Machine With 5-spool Valve Hydraulics, With Power Tilt Pitch Dozer, For Machine With Ripper For Machine With 5-spool Valve Hydraulics, With Power Tilt Pitch Dozer			
		723-25-10900	Valve, Control	1	80001-
1		723-20-66500	• Valve, Relief	1	80001-
2		700-22-11410	• • O-ring	1	80001-
3		700-80-64220	• • Ring	1	80001-
4		07002-12434	• • O-ring	1	80001-
5		723-20-66600	• Valve, Relief	1	80001-
6		700-22-11410	• • O-ring	1	80001-
7		700-80-64220	• • Ring	1	80001-
8		07002-12434	• • O-ring	1	80001-
9		723-20-80100	• Valve Assembly, Suction	1	80001-
10		07002-12034	• • O-ring	1	80001-

https://truckmanualshub.com/

FIG. M2210-005007 Fender Group, Inner Parts (6/12)

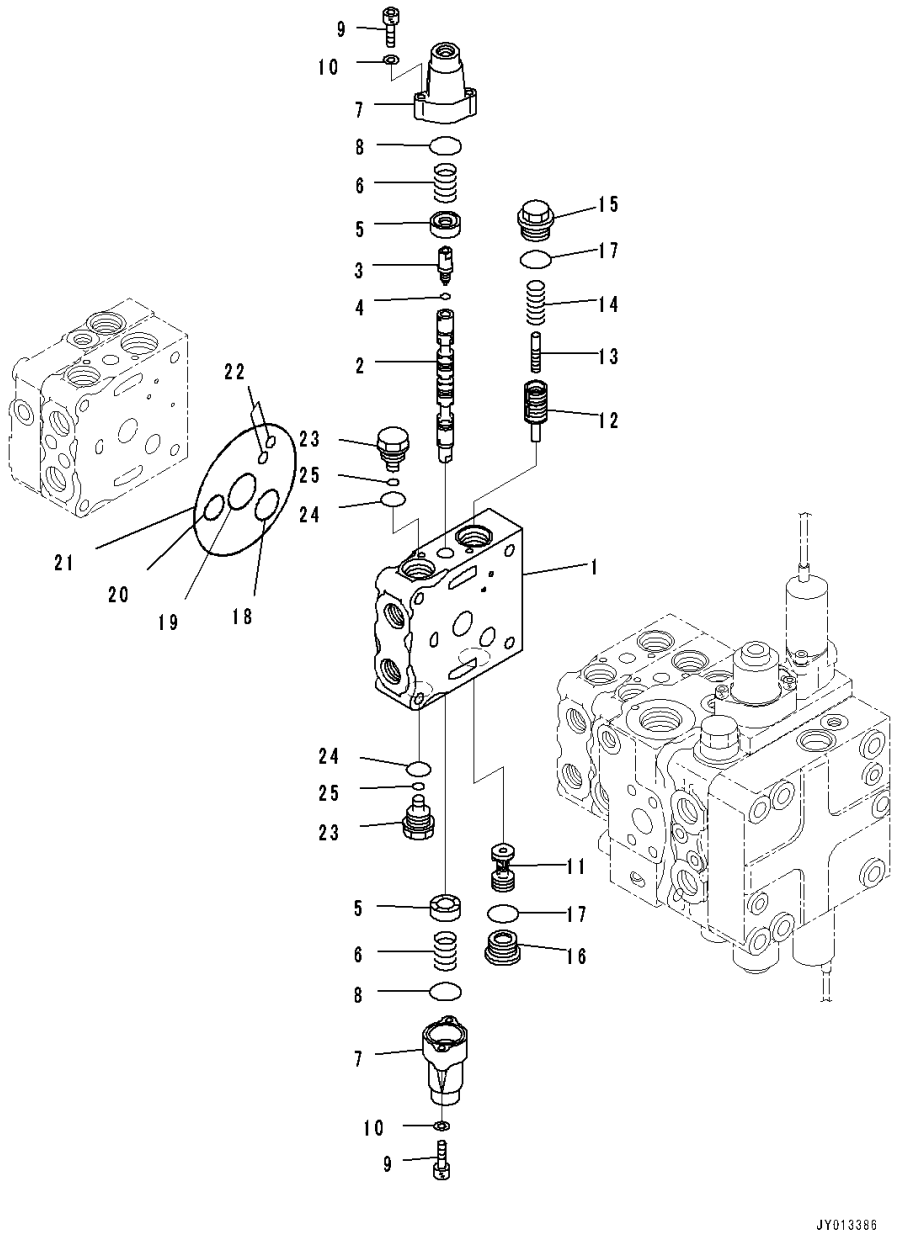

Index	Code	Part Number	Description	Qty	Serial Number
		Note: This list covers following specifications. For Machine With 5-spool Valve Hydraulics, With Power Tilt Pitch Dozer, For Machine With Ripper For Machine With 5-spool Valve Hydraulics, With Power Tilt Pitch Dozer			
		723-25-10900	Valve, Control	1	80001-
		723-21-08400	• Valve Subassembly	1	80001-
1		723-26-21360	• • Valve Body	1	80001-
2		723-26-22840	• • Spool	1	80001-
3		723-26-15130	• • Plug	1	80001-
4		07002-10823	• • O-ring	1	80001-
5		723-26-15121	• • Retainer	2	80001-
6		723-26-14580	• • Spring	2	80001-
7		723-26-15110	• • Case	2	80001-
8		575-41-17420	• • O-ring	2	80001-
9		01252-60630	• • Bolt, Hexagon Socket Head	4	80001-
10		01641-20608	• • Washer	4	80001-
11		723-26-41160	• • Valve	1	80001-
12		723-26-51240	• • Valve	1	80001-
13		723-26-51250	• • Piston	1	80001-
14		723-26-14230	• • Spring	1	80001-
15		723-26-15370	• • Plug	1	80001-
16		723-26-15230	• • Plug	1	80001-
17		07002-12434	• • O-ring	2	80001-
18		723-26-15840	• • O-ring	1	80001-
19		723-26-15830	• • O-ring	1	80001-
20		07000-12020	• • O-ring	1	80001-
21		07000-12120	• • O-ring	1	80001-
22		07000-11008	• • O-ring	2	80001-
23		723-26-15310	• • Plug	2	80001-
24		07002-12034	• • O-ring	2	80001-
25		07000-11007	• • O-ring	2	80001-

https://truckmanualshub.com/

FIG. M2210-005008 Fender Group, Inner Parts (7/12)

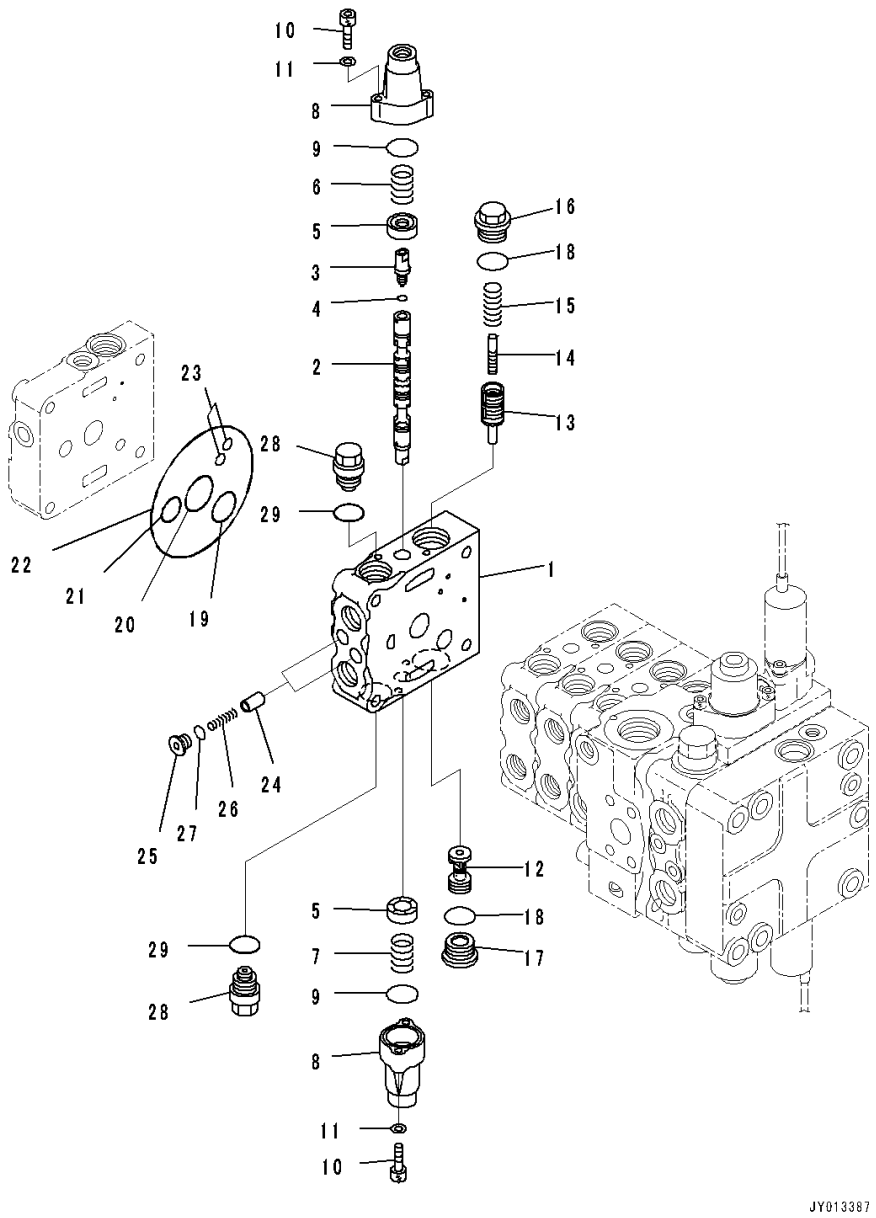

Index	Code	Part Number	Description	Qty	Serial Number
		Note: This list covers following specifications. For Machine With 5-spool Valve Hydraulics, With Power Tilt Pitch Dozer, For Machine With Ripper For Machine With 5-spool Valve Hydraulics, With Power Tilt Pitch Dozer			
		723-25-10900	Valve, Control	1	80001-
		723-21-08300	• Valve Subassembly	1	80001-
1		723-26-21420	• • Valve Body	1	80001-
2		723-26-22270	• • Spool	1	80001-
3		723-26-15130	• • Plug	1	80001-
4		07002-10823	• • O-ring	1	80001-
5		723-26-15121	• • Retainer	2	80001-
6		723-26-14580	• • Spring	1	80001-
7		709-26-11450	• • Spring	1	80001-
8		723-26-15110	• • Case	2	80001-
9		575-41-17420	• • O-ring	2	80001-
10		01252-60630	• • Bolt, Hexagon Socket Head	4	80001-
11		01641-20608	• • Washer	4	80001-
12		723-26-41160	• • Valve	1	80001-
13		723-26-51610	• • Valve	1	80001-
14		723-26-51250	• • Piston	1	80001-
15		723-26-14230	• • Spring	1	80001-
16		723-26-15370	• • Plug	1	80001-
17		723-26-15230	• • Plug	1	80001-
18		07002-12434	• • O-ring	2	80001-
19		723-26-15840	• • O-ring	1	80001-
20		723-26-15830	• • O-ring	1	80001-
21		07000-12020	• • O-ring	1	80001-
22		07000-12120	• • O-ring	1	80001-
23		07000-11008	• • O-ring	2	80001-
24		723-26-15210	• • Valve	2	80001-
25		723-26-15220	• • Plug	2	80001-
26		723-26-14150	• • Spring	2	80001-
27		07002-11223	• • O-ring	2	80001-
28		723-20-80100	• • Valve Assembly, Suction	2	80001-
29		07002-12034	• • • O-ring	1	80001-

https://truckmanualshub.com/

FIG. M2210-005009 Fender Group, Inner Parts (8/12)

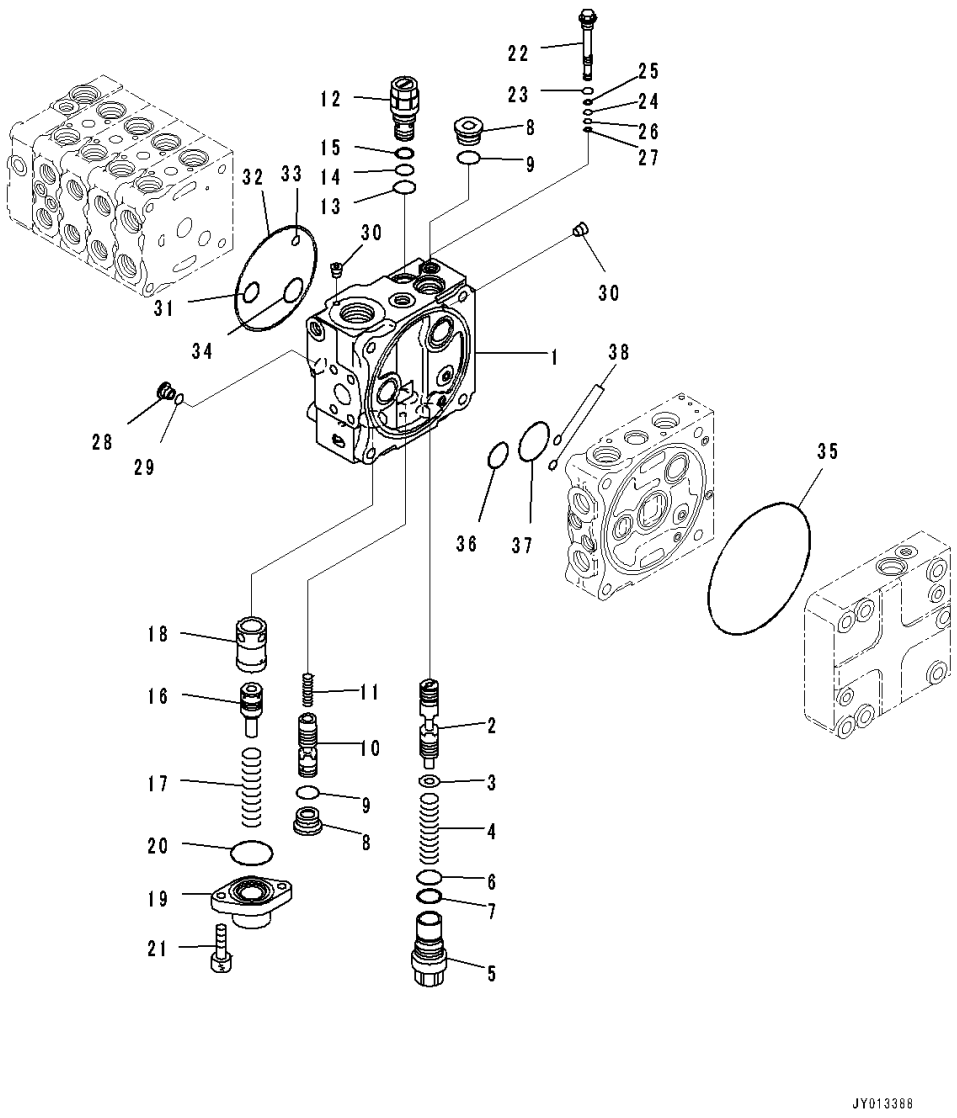

Index	Code	Part Number	Description	Qty	Serial Number
		Note: This list covers following specifications.			
		For Machine With 5-spool Valve Hydraulics, With Power Tilt Pitch Dozer, For Machine With Ripper			
		For Machine With 5-spool Valve Hydraulics, With Power Tilt Pitch Dozer			
		723-25-10900	Valve, Control	1	80001-
	C1		• Block Subassembly	1	80001-
1		723-26-21160	• • Block	1	80001-
2		723-26-22850	• • Spool	1	80001-
3		723-26-15860	• • Washer	1	80001-
4		723-26-14590	• • Spring	1	80001-
5		723-26-15850	• • Plug	1	80001-
6		700-80-61260	• • O-ring	1	80001-
7		700-80-61430	• • Ring	1	80001-
8		723-26-15230	• • Plug	2	80001-
9		07002-12434	• • O-ring	2	80001-
10		723-26-22860	• • Spool	1	80001-
11		723-26-14470	• • Spring	1	80001-
12		723-60-21900	• • Valve, Relief	1	80001-
13		07002-12434	• • • O-ring	1	80001-
14		07000-12016	• • • O-ring	1	80001-
15		07001-02016	• • • Ring, Back-up	1	80001-
16		723-36-15230	• • Piston	1	80001-
17		723-36-15340	• • Spring	1	80001-
18		723-36-15210	• • Sleeve	1	80001-
19		723-36-15250	• • Case	1	80001-
20		07000-13042	• • O-ring	1	80001-
21		01252-60820	• • Bolt	2	80001-
22	C1		• • Valve Assembly	1	80001-
23		07002-11223	• • • O-ring	1	80001-
24		07000-11007	• • • O-ring	1	80001-
25		07001-01007	• • • Ring, Back-up	1	80001-
26		07000-11005	• • • O-ring	1	80001-
27		07001-01005	• • • Ring, Back-up	1	80001-
28		723-26-15220	• • Plug	1	80001-
29		07002-11223	• • O-ring	1	80001-
30		708-21-12541	• • Plug	5	80001-
31		07000-12020	• • O-ring	1	80001-
32		07000-12120	• • O-ring	1	80001-
33		07000-11008	• • O-ring	1	80001-

https://truckmanualshub.com/

FIG. M2210-005009 Fender Group, Inner Parts (8/12)

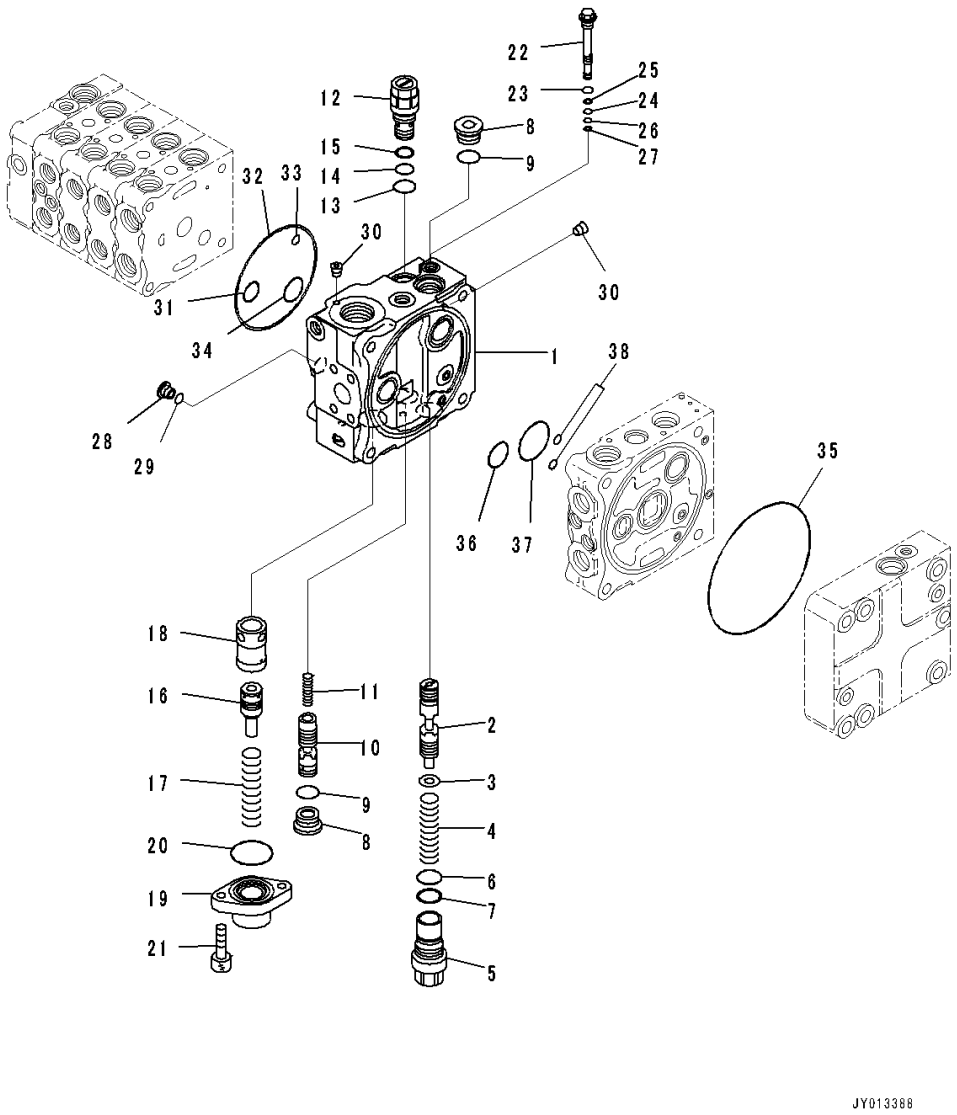

Index	Code	Part Number	Description	Qty	Serial Number
34		723-26-15840	• • O-ring	1	80001-
35		144-14-54610	• • O-ring	1	80001-
36		723-56-31730	• • O-ring	1	80001-
37		702-75-11520	• • O-ring	1	80001-
38		07000-11008	• • O-ring	2	80001-

https://truckmanualshub.com/

FIG. M2210-005010 Fender Group, Inner Parts (9/12)

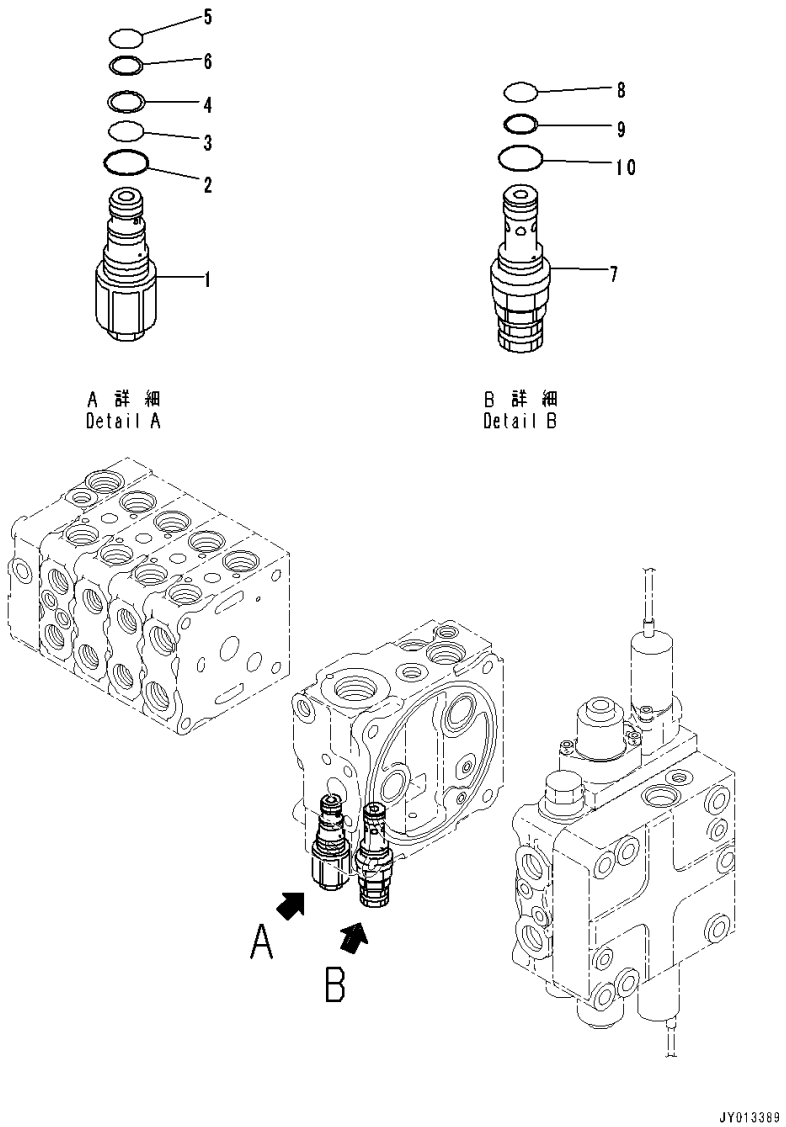

Index	Code	Part Number	Description	Qty	Serial Number
		Note: This list covers following specifications.			
		For Machine With 5-spool Valve Hydraulics, With Power Tilt Pitch Dozer, For Machine With Ripper			
		For Machine With 5-spool Valve Hydraulics, With Power Tilt Pitch Dozer			
		723-25-10900	Valve, Control	1	80001-
1		723-20-70600	• Valve Assembly	1	80001-
2		07002-12434	• • O-ring	1	80001-
3		07000-12016	• • O-ring	1	80001-
4		07001-02016	• • Ring, Back-up	1	80001-
5		07000-12014	• • O-ring	1	80001-
6		07001-02014	• • Ring, Back-up	1	80001-
7		723-20-63100	• Valve, Relief	1	80001-
8		700-22-11410	• • O-ring	1	80001-
9		700-80-64220	• • Ring	1	80001-
10		07002-12034	• • O-ring	1	80001-

https://truckmanualshub.com/

FIG. M2210-005011 Fender Group, Inner Parts (10/12)

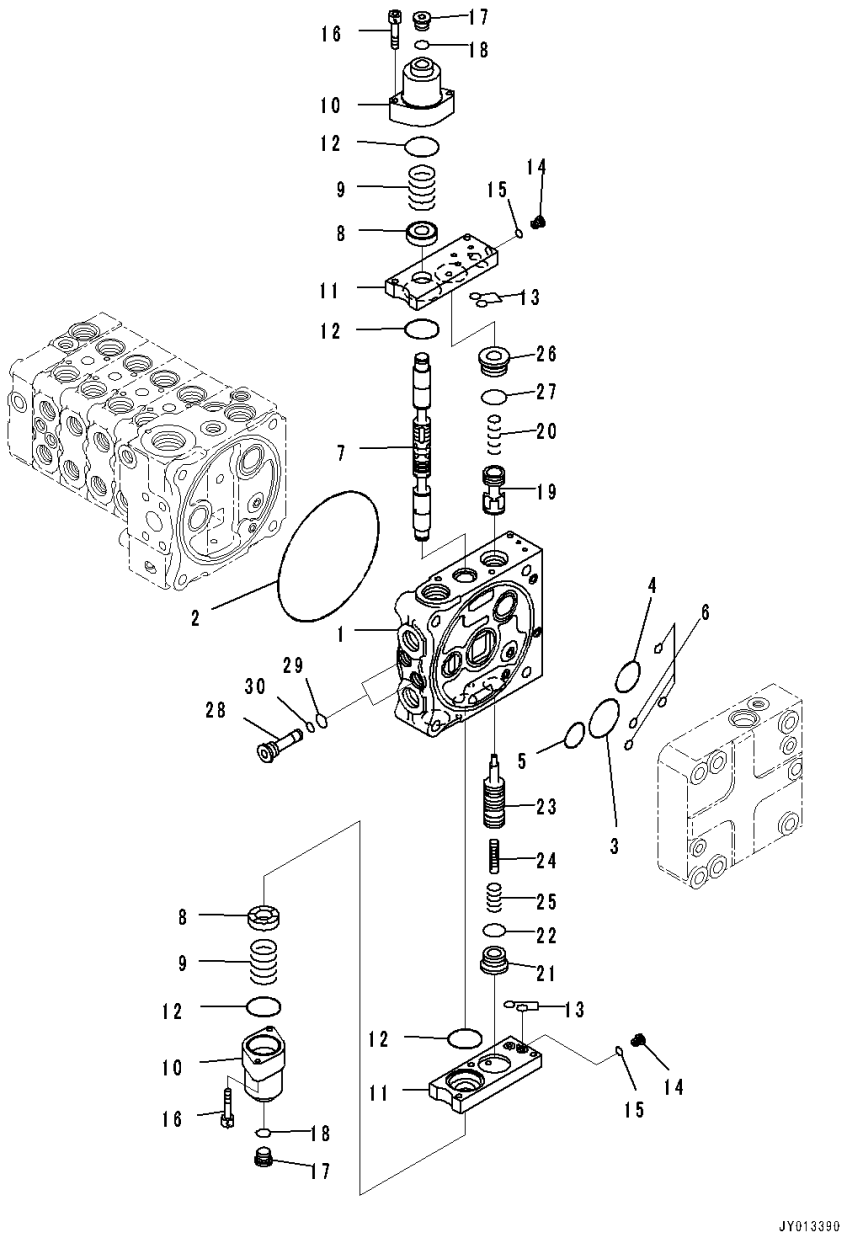

Index	Code	Part Number	Description	Qty	Serial Number
		Note: This list covers following specifications. For Machine With 5-spool Valve Hydraulics, With Power Tilt Pitch Dozer, For Machine With Ripper For Machine With 5-spool Valve Hydraulics, With Power Tilt Pitch Dozer			
		723-25-10900	Valve, Control	1	80001-
		723-51-06500	• Valve Assembly	1	80001-
1	C1		• • Valve Body	1	80001-
2		144-14-54610	• • O-ring	1	80001-
3		723-56-31720	• • O-ring	1	80001-
4		723-56-31730	• • O-ring	1	80001-
5		702-75-11520	• • O-ring	1	80001-
6		07000-11008	• • O-ring	4	80001-
7		723-56-22170	• • Spool	1	80001-
8		723-56-31211	• • Retainer	2	80001-
9		723-36-14120	• • Spring	2	80001-
10		723-56-31510	• • Case	2	80001-
11		723-56-32820	• • Plate	2	80001-
12		702-21-55450	• • O-ring	4	80001-
13		07000-11009	• • O-ring	4	80001-
14		723-11-27280	• • Plug	2	80001-
15		07002-10823	• • O-ring	2	80001-
16		01252-60650	• • Bolt	4	80001-
17		702-21-55620	• • Plug	2	80001-
18		07002-11423	• • O-ring	2	80001-
19		723-56-42150	• • Valve	1	80001-
20		723-56-41710	• • Spring	1	80001-
21		723-26-15230	• • Plug	1	80001-
22		07002-12434	• • O-ring	1	80001-
23		723-56-42330	• • Valve	1	80001-
24		723-56-41590	• • Piston	1	80001-
25		723-56-41730	• • Spring	1	80001-
26		723-56-41970	• • Plug	1	80001-
27		07000-13024	• • O-ring	1	80001-
28		723-56-31640	• • Plug	2	80001-
29		07002-11623	• • O-ring	2	80001-
30		07000-11008	• • O-ring	2	80001-

https://truckmanualshub.com/

FIG. M2210-005012 Fender Group, Inner Parts (11/12)

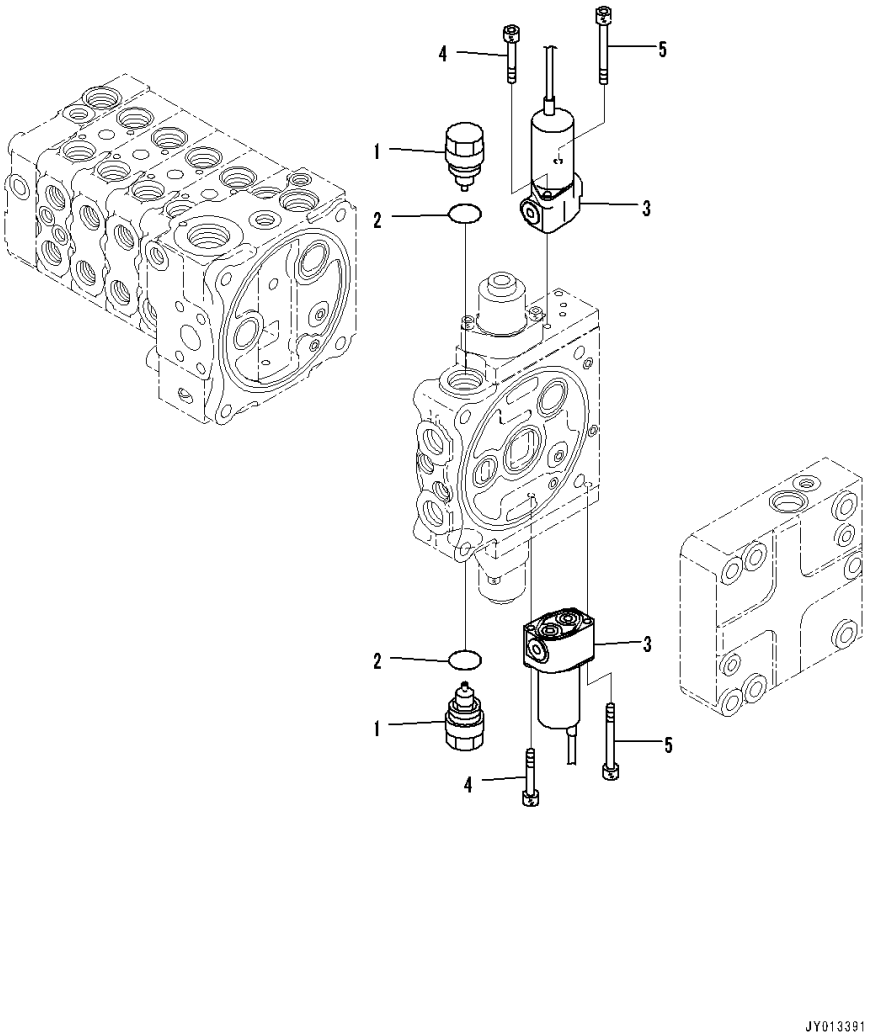

Index	Code	Part Number	Description	Qty	Serial Number
		Note: This list covers following specifications. For Machine With 5-spool Valve Hydraulics, With Power Tilt Pitch Dozer, For Machine With Ripper For Machine With 5-spool Valve Hydraulics, With Power Tilt Pitch Dozer			
		723-25-10900	Valve, Control	1	80001-
		723-51-06500	• Valve Assembly	1	80001-
		723-40-85100	• • Valve Assembly, Suction	2	80001-
1		723-40-85110	• • • Sleeve	1	80001-
2		709-25-11390	• • • O-ring	1	80001-
3		702-21-07610	• • Valve, Solenoid	2	80001-
4		01252-60645	• • Bolt, Hexagon Socket Head	2	80001-
5		702-16-55270	• • Bolt	2	80001-

https://truckmanualshub.com/

FIG. M2210-005013 Fender Group, Inner Parts (12/12)

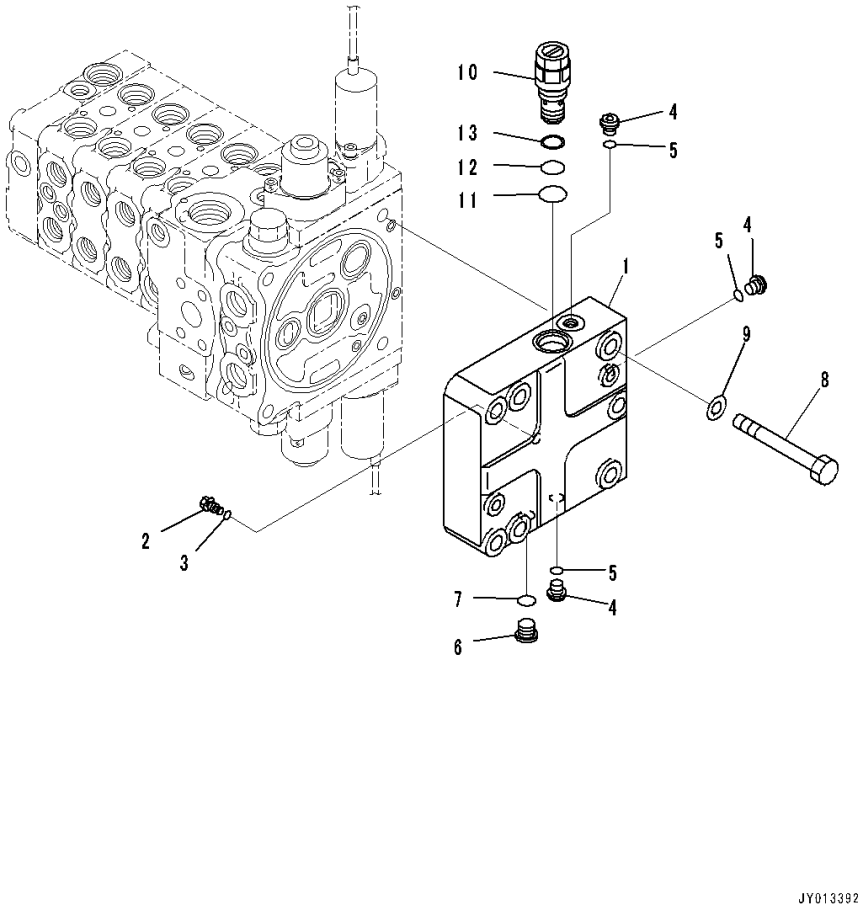

Index	Code	Part Number	Description	Qty	Serial Number
		Note: This list covers following specifications. For Machine With 5-spool Valve Hydraulics, With Power Tilt Pitch Dozer, For Machine With Ripper For Machine With 5-spool Valve Hydraulics, With Power Tilt Pitch Dozer			
		723-25-10900	Valve, Control	1	80001-
1		723-56-12210	• Cover	1	80001-
2		723-56-33940	• Plug	1	80001-
3		07002-10823	• O-ring	1	80001-
4		708-8E-16160	• Plug	3	80001-
5		07002-11023	• O-ring	3	80001-
6		702-21-55620	• Plug	1	80001-
7		07002-11423	• O-ring	1	80001-
8		01011-81225	• Bolt	4	80001-
9		01643-31232	• Washer	4	80001-
10		723-60-21102	• Valve, Relief	1	80001-
11		07002-02434	• • O-ring	1	80001-
12		07000-12016	• • O-ring	1	80001-
13		07001-02016	• • Ring, Back-up	1	80001-

https://truckmanualshub.com/

FIG. M2210-005015 Fender Group, For Machine With 5-spool Valve Hydraulics, With Power Tilt Pitch Dozer, For Machine With Ripper, Hydraulic Piping

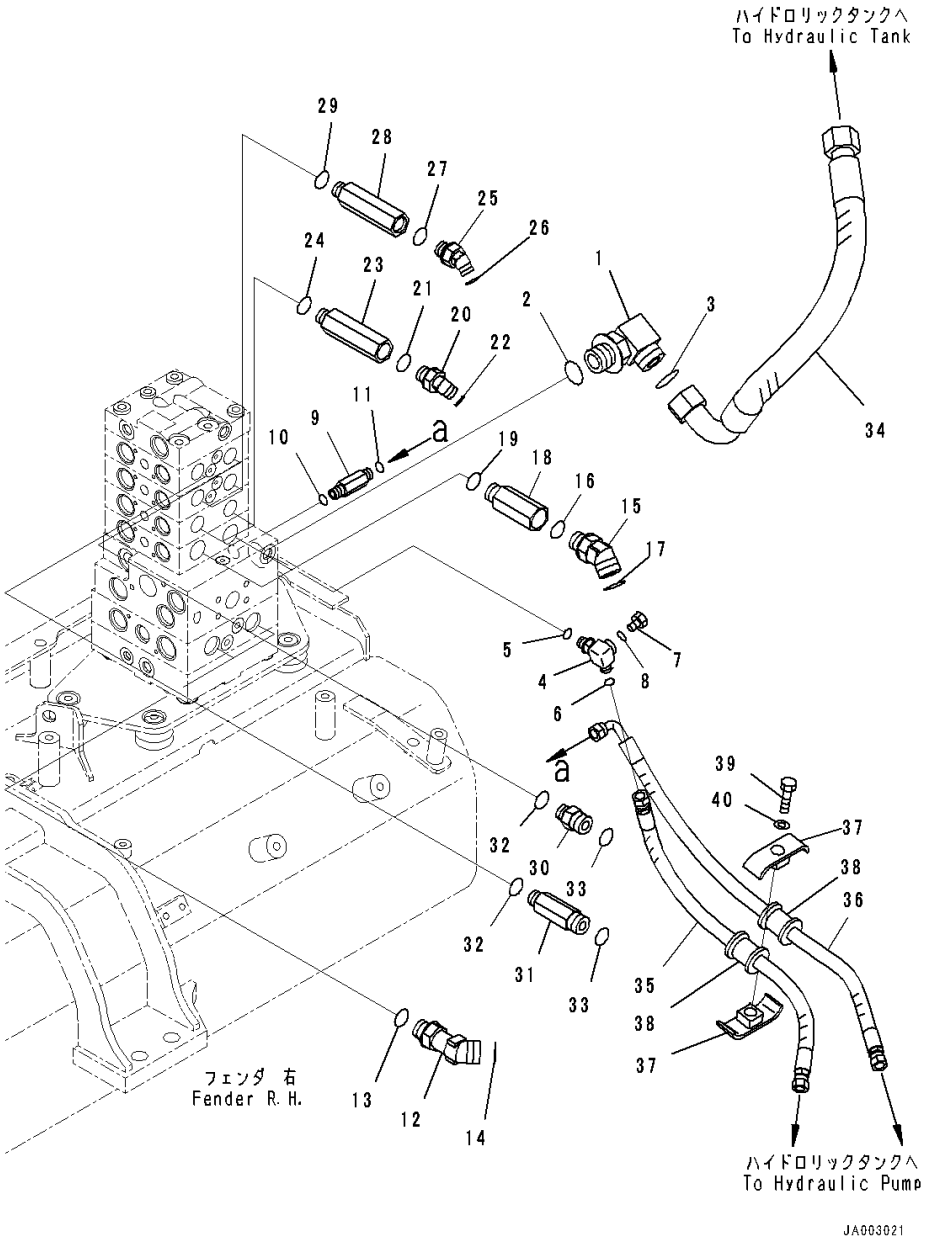

Index	Code	Part Number	Description	Qty	Serial Number
1		21W-62-42640	Elbow	1	80001-
2		07002-13334	O-ring	1	80001-
3		207-62-64740	O-ring	1	80001-
4		14X-62-54870	Tee	1	80001-
5		07002-11423	O-ring	1	80001-
6		02896-11008	O-ring	1	80001-
7		07040-11007	Plug	1	80001-
8		07002-11023	O-ring	1	80001-
9		11Y-62-12230	Union	1	80001-
10		07002-11423	O-ring	1	80001-
11		02896-11008	O-ring	1	80001-
12		11Y-62-36160	Elbow	2	80001-
13		07002-62434	O-ring	2	80001-
14		02896-61018	O-ring	2	80001-
15		02783-10628	Elbow	2	80001-
16		07002-12434	O-ring	2	80001-
17		02896-11018	O-ring	2	80001-
18		20T-62-81790	Joint	2	80001-
19		07002-12434	O-ring	2	80001-
20		02783-10315	Elbow	2	80001-
21		07002-12034	O-ring	2	80001-
22		02896-11009	O-ring	2	80001-
23		14X-62-52931	Joint	2	80001-
24		07002-12034	O-ring	2	80001-
25		02783-10315	Elbow	2	80001-
26		07002-12034	O-ring	2	80001-
27		02896-11009	O-ring	2	80001-
28		14X-62-52931	Joint	2	80001-
29		07002-12034	O-ring	2	80001-
30		02781-00516	Union	1	80001-
31		14X-62-52991	Nipple	1	80001-
32		07002-12034	O-ring	2	80001-
33		02896-11015	O-ring	2	80001-
34		14X-62-52940	Hose	1	80001-
35		14X-62-52391	Hose	1	80001-
36		14X-62-52541	Hose	1	80001-
37		22P-62-13540	Clamp	2	80001-
38		07095-00314	Cushion	2	80001-
39		01010-81260	Bolt	1	80001-

https://truckmanualshub.com/

FIG. M2210-005015 Fender Group, For Machine With 5-spool Valve Hydraulics, With Power Tilt Pitch Dozer, For Machine With Ripper, Hydraulic Piping

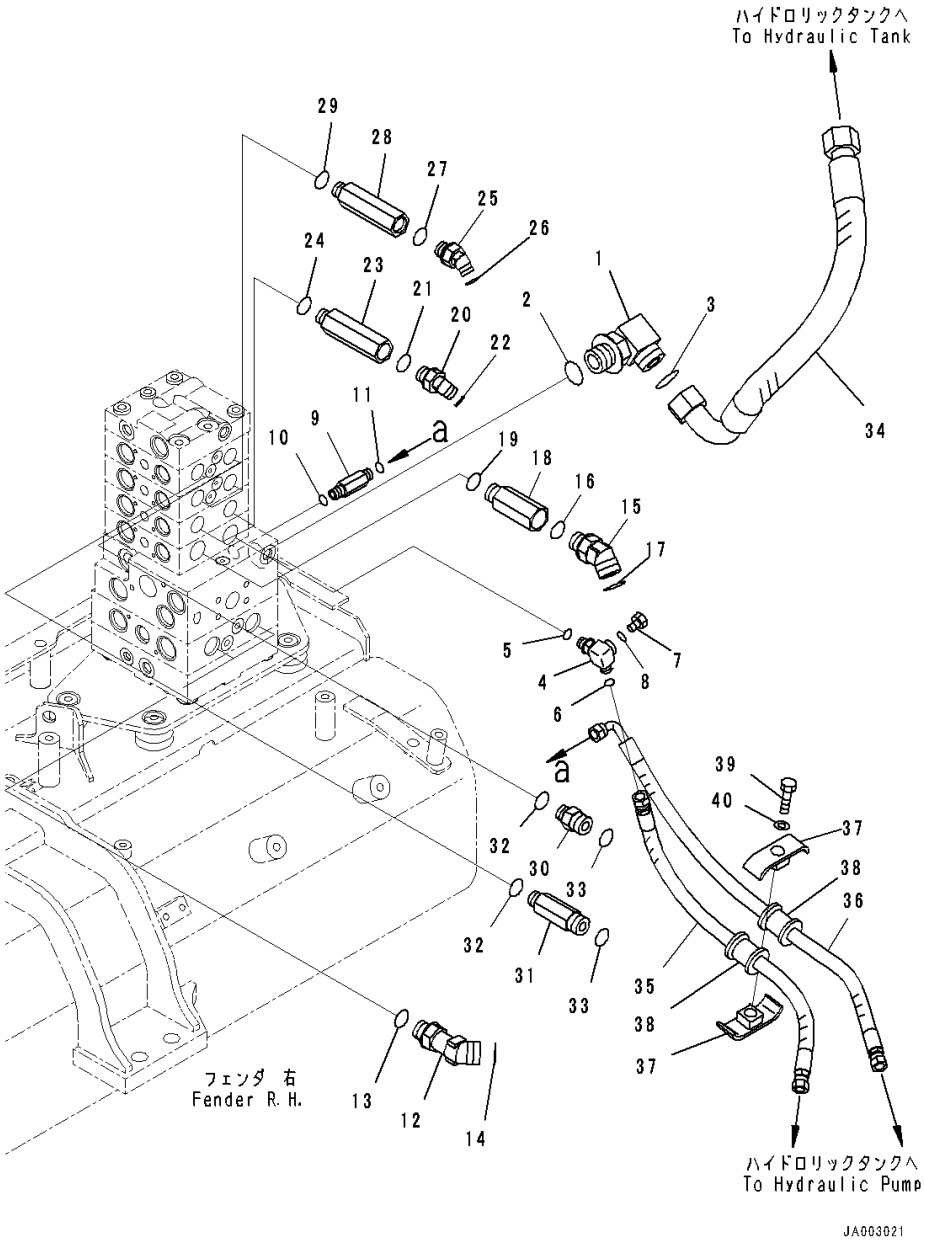

Index	Code	Part Number	Description	Qty	Serial Number
40		01643-31232	Washer	1	80001-

https://truckmanualshub.com/

FIG. M2210-005016 Fender Group, PPC Lock Solenoid Valve With Accumulator

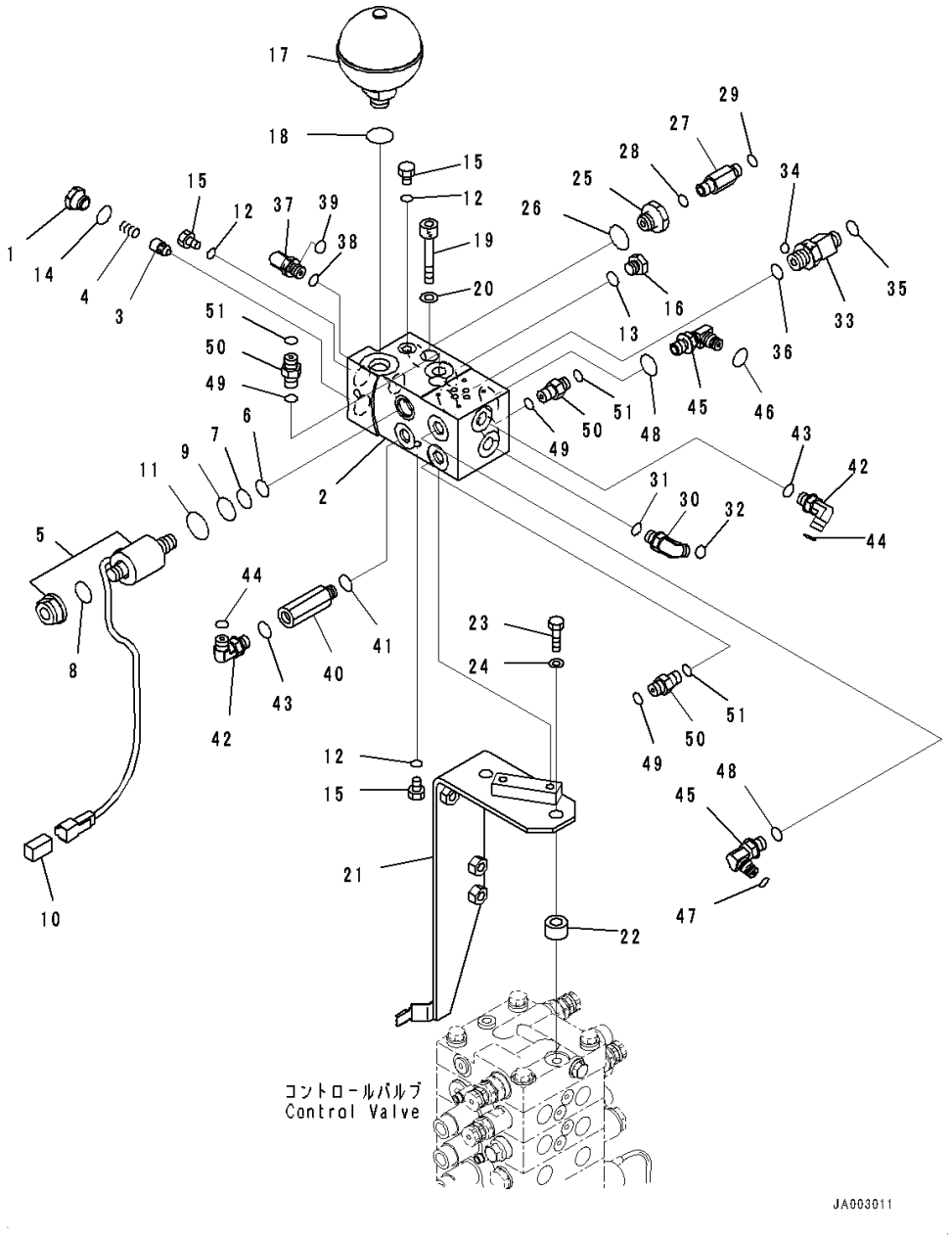

Index	Code	Part Number	Description	Qty	Serial Number
		Note: This list covers following specifications.			
		For Machine With 5-spool Valve Hydraulics, With Power Tilt Pitch Dozer, For Machine With Ripper			
		For Machine With 5-spool Valve Hydraulics, With Power Tilt Pitch Dozer			
		14X-62-54521	Block Assembly	1	80001-
1		103-49-14280	• Plug	1	80001-
2		14X-62-54531	• Block	1	80001-
3		205-60-51390	• Poppet	1	80001-
4		722-12-12063	• Spring	1	80001-
5		11Y-60-11530	• Valve, Solenoid	1	80001-
6		07000-02012	• • O-ring	1	80001-
7		07000-02014	• • O-ring	1	80001-
8		07000-12016	• • O-ring	1	80001-
9		07000-02018	• • O-ring	1	80001-
10		08192-22830	• • Connector	1	80001-
11		203-60-62190	• • O-ring	1	80001-
12		07002-10823	• O-ring	4	80001-
13		07002-11423	• O-ring	1	80001-
14		07002-11623	• O-ring	1	80001-
15		07040-10807	• Plug	4	80001-
16		07040-11409	• Plug	1	80001-
17		22U-60-21330	Accumulator	1	80001-
18		07002-12034	O-ring	1	80001-
19		01252-A1085	Bolt, Hexagon Socket Head	2	80001-
20		01643-51032	Washer	2	80001-
21		14X-62-54540	Bracket	1	80001-
22		14X-62-52971	Spacer	2	80001-
23		01010-81245	Bolt	2	80001-
24		01643-31232	Washer	2	80001-
25		20Y-62-21940	Filter Assembly	1	80001-
26		07002-12034	O-ring	1	80001-
27		20U-62-41890	Nipple	1	80001-
28		07002-11423	O-ring	1	80001-
29		02896-11008	O-ring	1	80001-
30		02782-10210	Elbow	1	80001-
31		07002-11423	O-ring	1	80001-
32		02896-11008	O-ring	1	80001-
33		20K-62-33690	Tee	1	80001-
34		02896-11008	• O-ring	1	80001-

https://truckmanualshub.com/

FIG. M2210-005016 Fender Group, PPC Lock Solenoid Valve With Accumulator

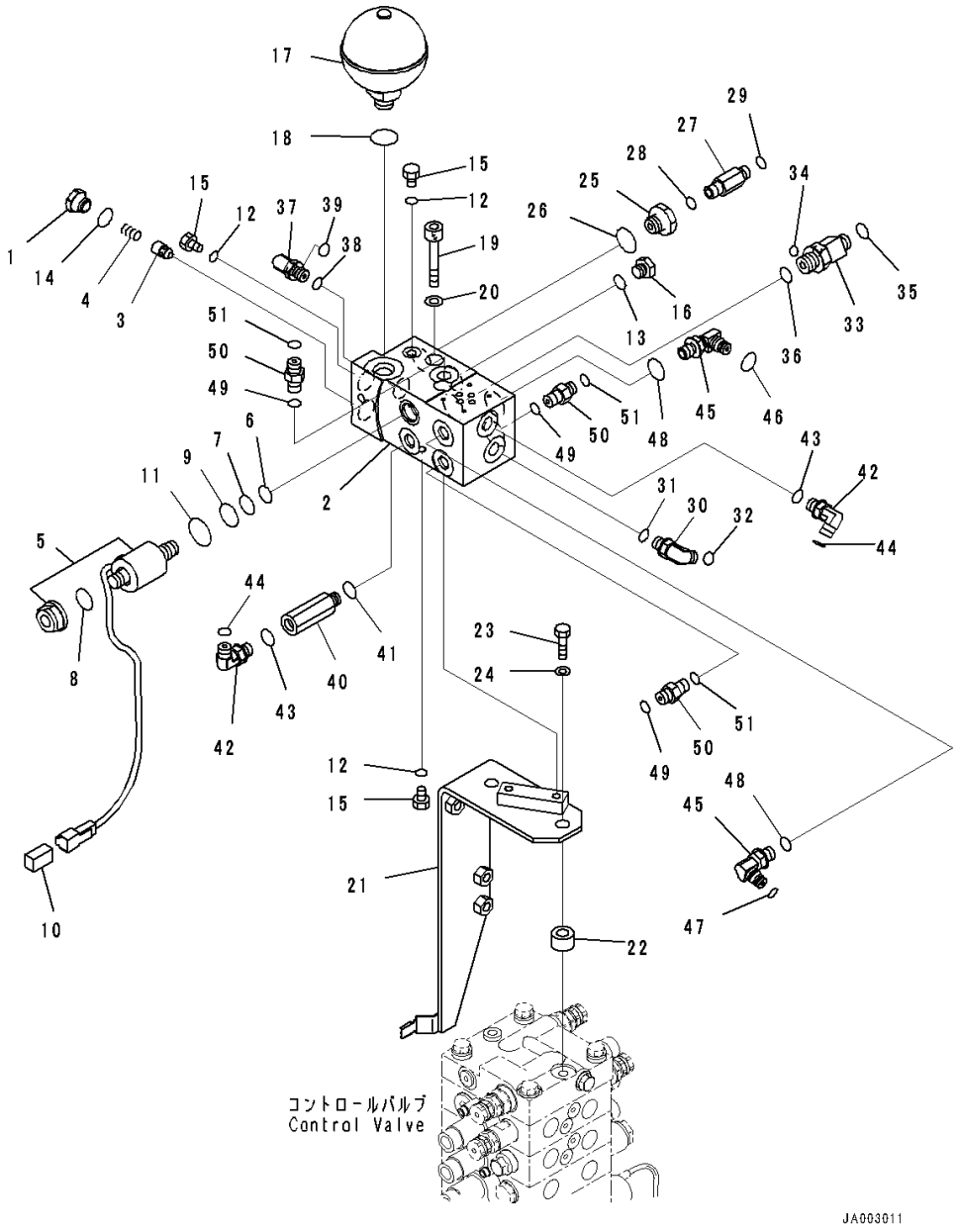

Index	Code	Part Number	Description	Qty	Serial Number
35		02896-11009	• O-ring	1	80001-
36		07002-12034	O-ring	1	80001-
37		02782-10210	Elbow	1	80001-
38		07002-11423	O-ring	1	80001-
39		02896-11008	O-ring	1	80001-
40		207-62-62460	Adapter	1	80001-
41		07002-11423	O-ring	1	80001-
42		02782-10210	Elbow	2	80001-
43		07002-11423	O-ring	2	80001-
44		02896-11008	O-ring	2	80001-
45		14X-62-53541	Elbow	2	80001-
46		201-60-11390	• O-ring	1	80001-
47		20Y-62-19560	• O-ring	1	80001-
48		07002-11423	O-ring	2	80001-
49		02896-11008	O-ring	3	80001-
50		02781-0021D	Union	3	80001-
51		07002-11423	O-ring	3	80001-

https://truckmanualshub.com/

FIG. M2210-005017 Fender Group, For Machine With 5-spool Valve Hydraulics, With Power Tilt Pitch Dozer, For Machine With Ripper, Control Valve Steering Piping

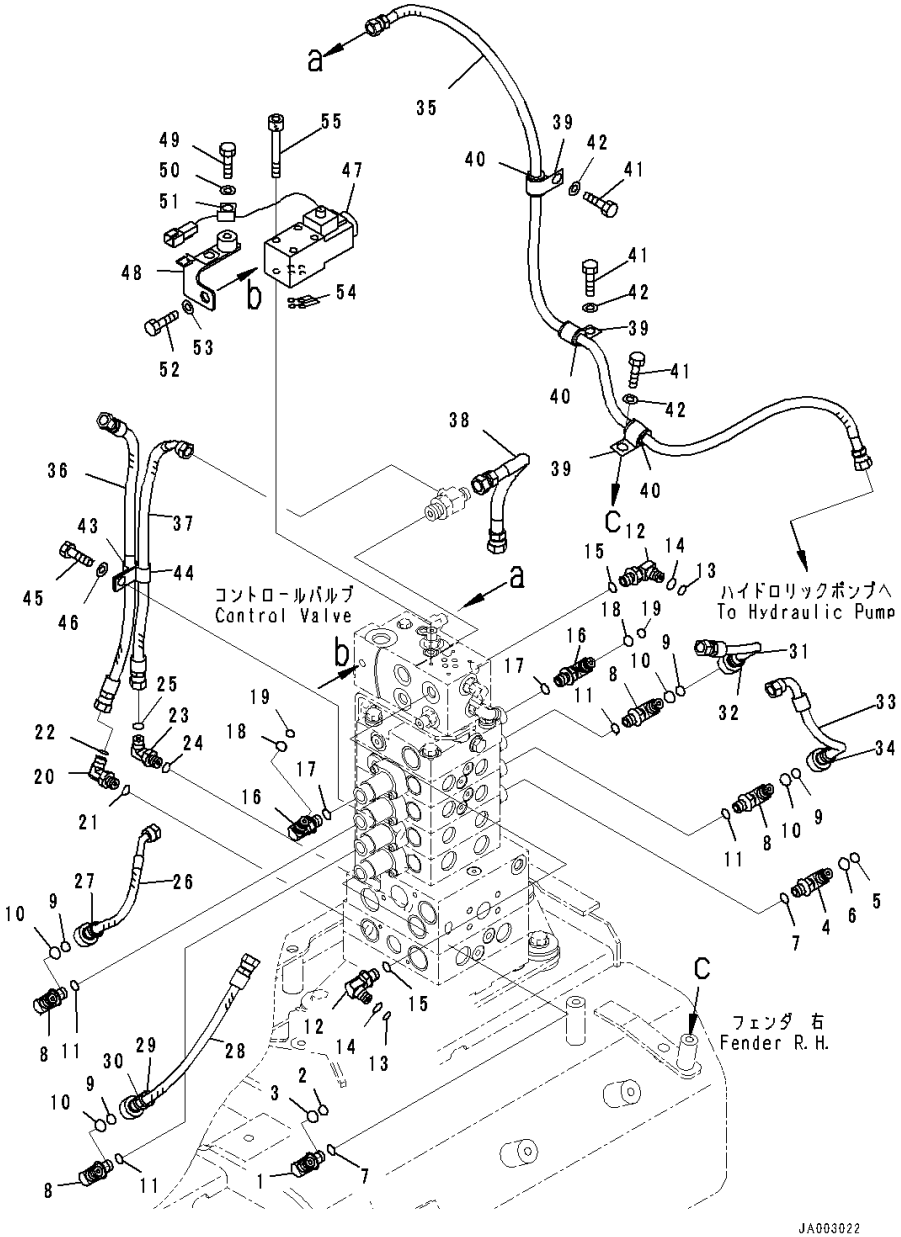

Index	Code	Part Number	Description	Qty	Serial Number
1		14X-62-53531	Elbow	1	80001-
2		201-60-11390	• O-ring	1	80001-
3		20Y-62-19560	• O-ring	1	80001-
4		14X-62-54960	Elbow	1	80001-
5		201-60-11390	• O-ring	1	80001-
6		20Y-62-19560	• O-ring	1	80001-
7		07002-11423	O-ring	2	80001-
8		14X-62-53541	Elbow	2	80001-
9		201-60-11390	• O-ring	1	80001-
10		20Y-62-19560	• O-ring	1	80001-
11		07002-11423	O-ring	2	80001-
12		14X-62-53541	Elbow	2	80001-
13		201-60-11390	• O-ring	1	80001-
14		20Y-62-19560	• O-ring	1	80001-
15		07002-11423	O-ring	2	80001-
16		14X-62-53541	Elbow	2	80001-
17		201-60-11390	• O-ring	1	80001-
18		20Y-62-19560	• O-ring	1	80001-
19		07002-11423	O-ring	2	80001-
20		02782-10210	Elbow	1	80001-
21		07002-11423	O-ring	1	80001-
22		02896-11008	O-ring	1	80001-
23		02782-10210	Elbow	1	80001-
24		07002-11423	O-ring	1	80001-
25		02896-11008	O-ring	1	80001-
26		14X-62-54110	Hose Assembly	1	80001-
27		20Y-62-22820	• Band, Blue	1	80001-
28		14X-62-54121	Hose Assembly	1	80001-
29		20Y-62-22820	• Band, Blue	2	80001-
30		20Y-62-22830	• Band, White	2	80001-
31		14X-62-54150	Hose Assembly	1	80001-
32		20Y-62-22830	• Band, White	2	80001-
33		14X-62-54160	Hose Assembly	1	80001-
34		206-62-87990	• Band, Orange	2	80001-
35		14X-62-54750	Hose	1	80001-
36		02762-002A4	Hose	1	80001-
37		02764-002A4	Hose, Face Seal Type	1	80001-
38		02762-00303	Hose, Face Seal Type	1	80001-

https://truckmanualshub.com/

FIG. M2210-005017 Fender Group, For Machine With 5-spool Valve Hydraulics, With Power Tilt Pitch Dozer, For Machine With Ripper, Control Valve Steering Piping

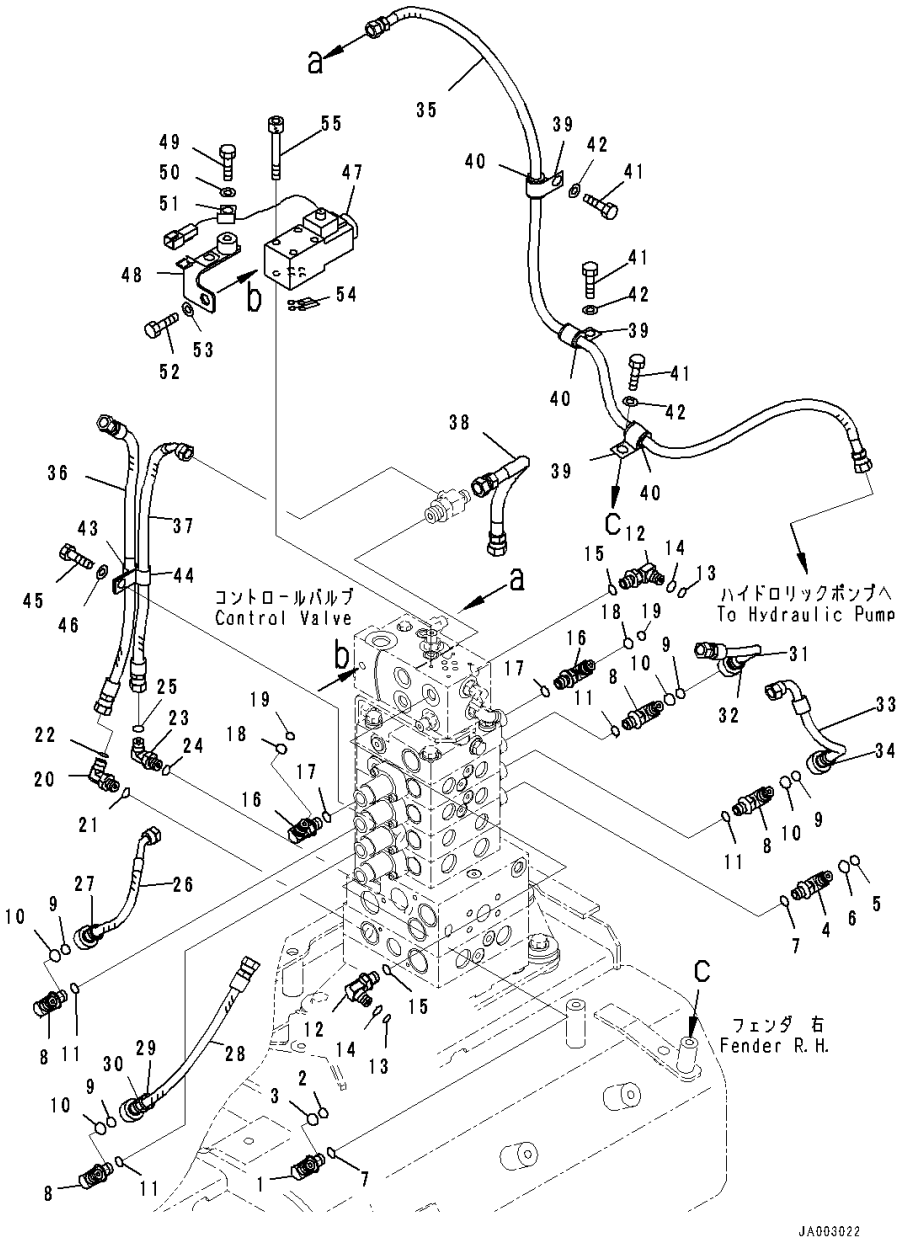

Index	Code	Part Number	Description	Qty	Serial Number
39		04434-51712	Clip	3	80001-
40		07095-20211	Cushion	3	80001-
41		01010-81220	Bolt	3	80001-
42		01643-31232	Washer	3	80001-
43		21T-72-23260	Clip	1	80001-
44		04434-51212	Clip	1	80001-
45		01010-81225	Bolt	1	80001-
46		01643-31232	Washer	1	80001-
47		14X-06-51821	Valve	1	80001-
48		14X-62-54681	Bracket	1	80001-
49		01010-81220	Bolt	1	80001-
50		01643-31232	Washer	1	80001-
51		04434-50612	Clip	1	80001-
52		01010-81220	Bolt	1	80001-
53		01643-31232	Washer	1	80001-
54		07000-11009	O-ring	4	80001-
55		01252-70545	Bolt, Hexagon Socket Head	4	80001-

https://truckmanualshub.com/

FIG. M2210-005018 Fender Group, Control Valve Wiring Harness

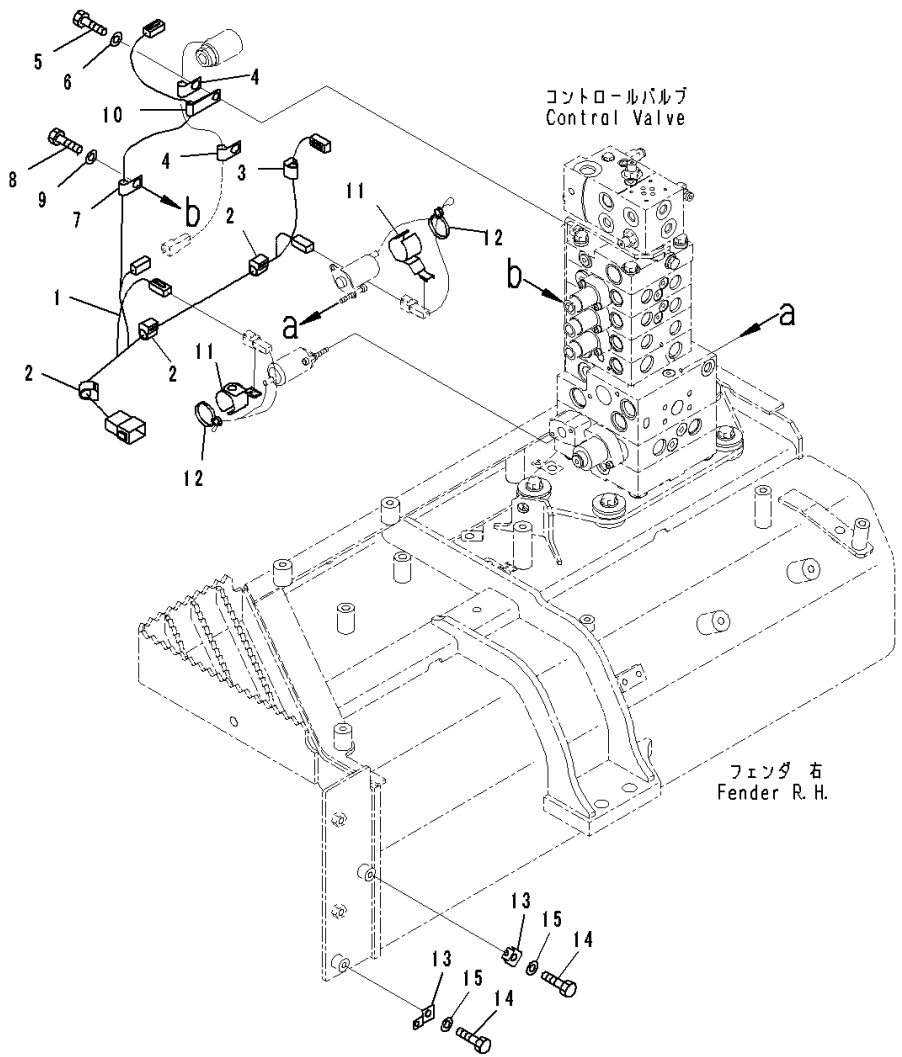

Index	Code	Part Number	Description	Qty	Serial Number
		Note: This list covers following specifications. For Machine With 5-spool Valve Hydraulics, With Power Tilt Pitch Dozer, For Machine With Ripper For Machine With 5-spool Valve Hydraulics, With Power Tilt Pitch Dozer			
1		14X-06-51811	Wiring Harness	1	80001-
2		08211-01020	Clip	3	80001-
3		08211-00720	Clip	1	80001-
4		04434-50612	Clip	2	80001-
5		01010-81225	Bolt	2	80001-
6		01643-31232	Washer	2	80001-
7		04434-50812	Clip	1	80001-
8		01010-81225	Bolt	1	80001-
9		01643-31232	Washer	1	80001-
10		515-35-13930	Clip	1	80001-
11		21W-60-41310	Clip	2	80001-
12		08034-40521	Band	2	80001-
13		08057-00810	Clip	2	80001-
14		01010-81020	Bolt	2	80001-
15		01643-31032	Washer	2	80001-

https://truckmanualshub.com/

FIG. M2210-004015 Fender Group, For Machine With 5-spool Valve Hydraulics, With Power Tilt Pitch Dozer, Hydraulic Piping

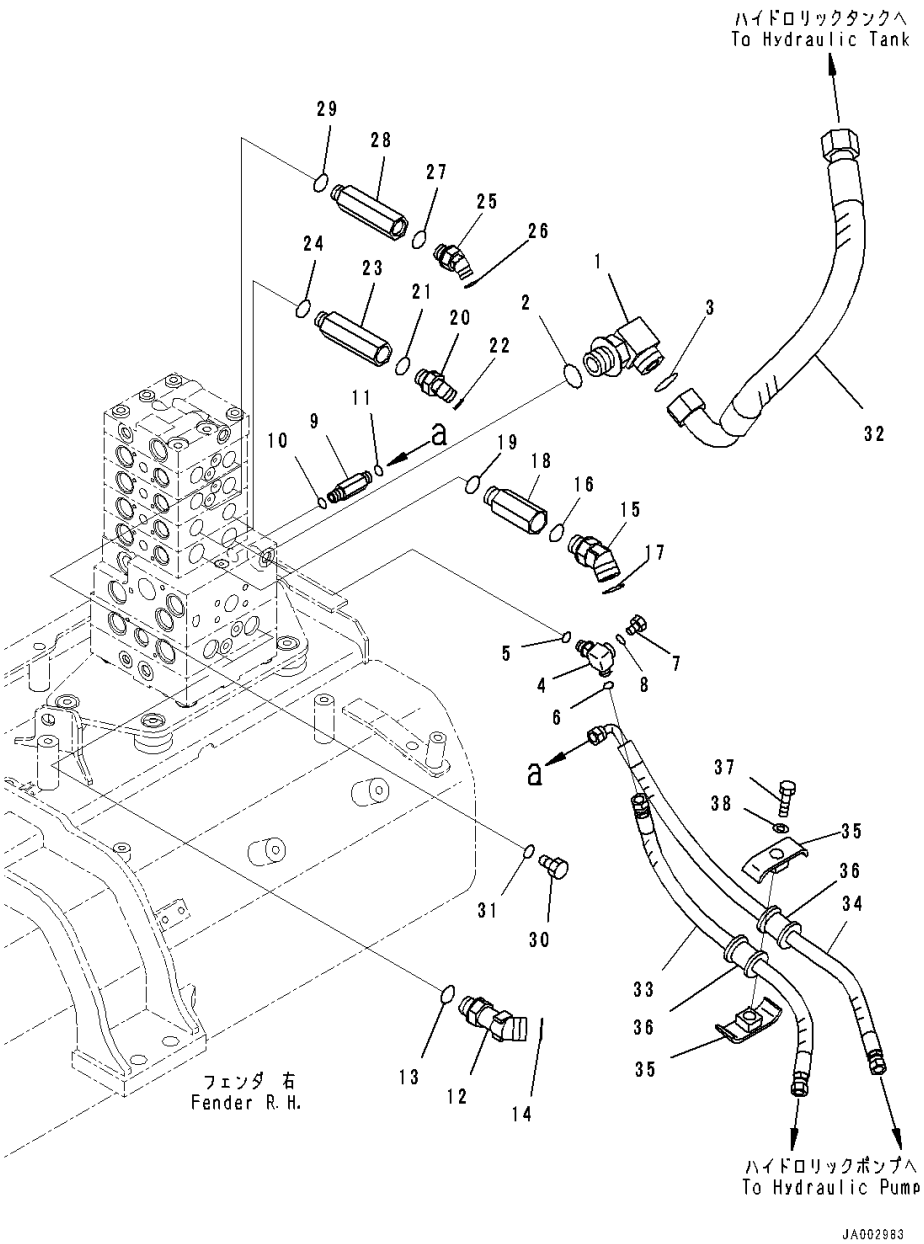

Index	Code	Part Number	Description	Qty	Serial Number
1		21W-62-42640	Elbow	1	80001-
2		07002-13334	O-ring	1	80001-
3		207-62-64740	O-ring	1	80001-
4		14X-62-54870	Tee	1	80001-
5		07002-11423	O-ring	1	80001-
6		02896-11008	O-ring	1	80001-
7		07040-11007	Plug	1	80001-
8		07002-11023	O-ring	1	80001-
9		11Y-62-12230	Union	1	80001-
10		07002-11423	O-ring	1	80001-
11		02896-11008	O-ring	1	80001-
12		11Y-62-36160	Elbow	2	80001-
13		07002-62434	O-ring	2	80001-
14		02896-61018	O-ring	2	80001-
15		02783-10628	Elbow	2	80001-
16		07002-12434	O-ring	2	80001-
17		02896-11018	O-ring	2	80001-
18		20T-62-81790	Joint	2	80001-
19		07002-12434	O-ring	2	80001-
20		02783-10315	Elbow	2	80001-
21		07002-12034	O-ring	2	80001-
22		02896-11009	O-ring	2	80001-
23		14X-62-52931	Joint	2	80001-
24		07002-12034	O-ring	2	80001-
25		02783-10315	Elbow	2	80001-
26		07002-12034	O-ring	2	80001-
27		02896-11009	O-ring	2	80001-
28		14X-62-52931	Joint	2	80001-
29		07002-12034	O-ring	2	80001-
30		07040-12012	Plug	2	80001-
31		07002-12034	O-ring	2	80001-
32		14X-62-52940	Hose	1	80001-
33		14X-62-52391	Hose	1	80001-
34		14X-62-52541	Hose	1	80001-
35		22P-62-13540	Clamp	2	80001-
36		07095-00314	Cushion	2	80001-
37		01010-81260	Bolt	1	80001-
38		01643-31232	Washer	1	80001-

https://truckmanualshub.com/

FIG. M2210-004017 Fender Group, For Machine With 5-spool Valve Hydraulics, With Power Tilt Pitch Dozer, Control Valve Steering Piping

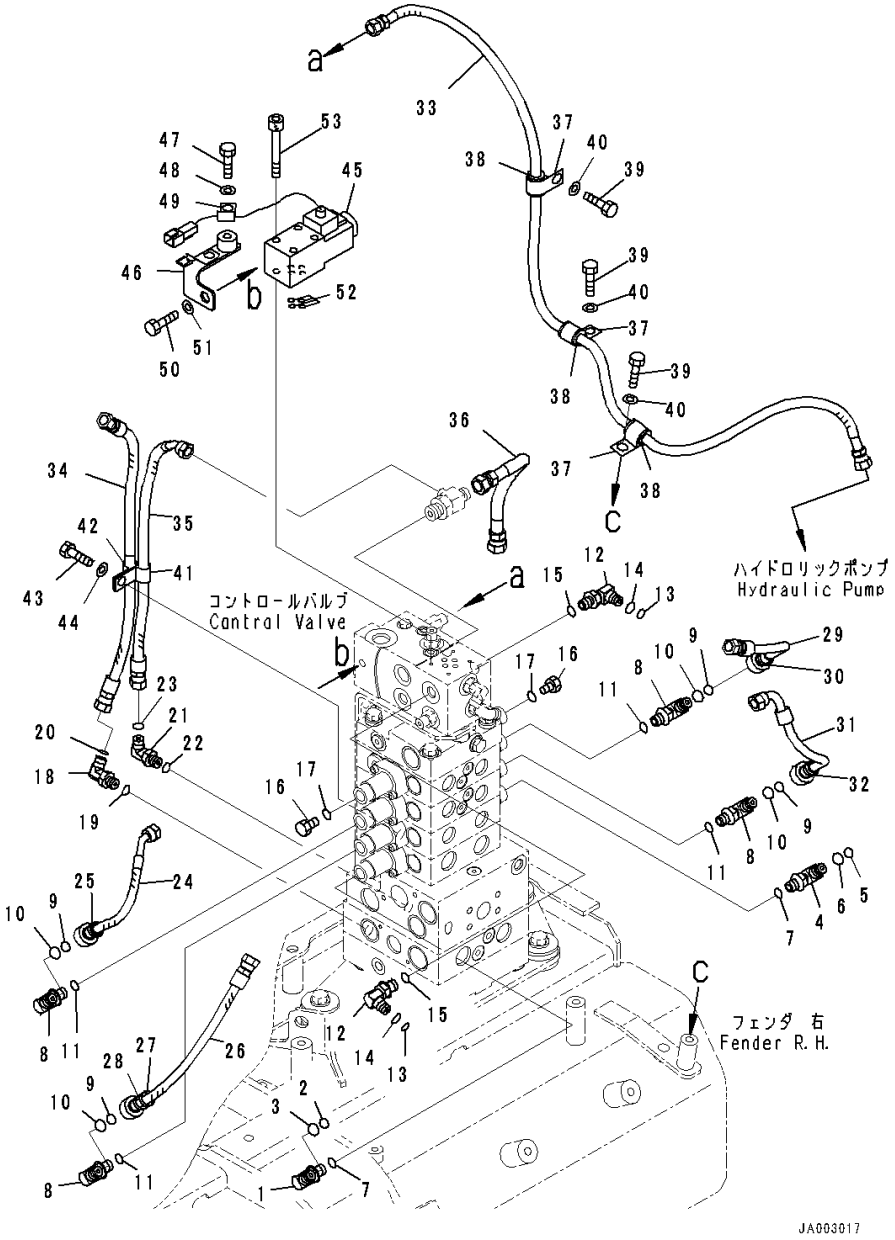

Index	Code	Part Number	Description	Qty	Serial Number
1		14X-62-53531	Elbow	1	80001-
2		201-60-11390	• O-ring	1	80001-
3		20Y-62-19560	• O-ring	1	80001-
4		14X-62-54960	Elbow	1	80001-
5		201-60-11390	• O-ring	1	80001-
6		20Y-62-19560	• O-ring	1	80001-
7		07002-11423	O-ring	2	80001-
8		14X-62-53541	Elbow	2	80001-
9		201-60-11390	• O-ring	1	80001-
10		20Y-62-19560	• O-ring	1	80001-
11		07002-11423	O-ring	2	80001-
12		14X-62-53541	Elbow	2	80001-
13		201-60-11390	• O-ring	1	80001-
14		20Y-62-19560	• O-ring	1	80001-
15		07002-11423	O-ring	2	80001-
16		07040-11409	Plug	2	80001-
17		07002-11423	O-ring	2	80001-
18		02782-10210	Elbow	1	80001-
19		07002-11423	O-ring	1	80001-
20		02896-11008	O-ring	1	80001-
21		02782-10210	Elbow	1	80001-
22		07002-11423	O-ring	1	80001-
23		02896-11008	O-ring	1	80001-
24		14X-62-54110	Hose Assembly	1	80001-
25		20Y-62-22820	• Band, Blue	1	80001-
26		14X-62-54121	Hose Assembly	1	80001-
27		20Y-62-22820	• Band, Blue	2	80001-
28		20Y-62-22830	• Band, White	2	80001-
29		14X-62-54150	Hose Assembly	1	80001-
30		20Y-62-22830	• Band, White	2	80001-
31		14X-62-54160	Hose Assembly	1	80001-
32		206-62-87990	• Band, Orange	2	80001-
33		14X-62-54750	Hose	1	80001-
34		02762-002A4	Hose	1	80001-
35		02764-002A4	Hose, Face Seal Type	1	80001-
36		02762-00303	Hose, Face Seal Type	1	80001-
37		04434-51712	Clip	3	80001-
38		07095-20211	Cushion	3	80001-
39		01010-81220	Bolt	3	80001-

https://truckmanualshub.com/

FIG. M2210-004017 Fender Group, For Machine With 5-spool Valve Hydraulics, With Power Tilt Pitch Dozer, Control Valve Steering Piping

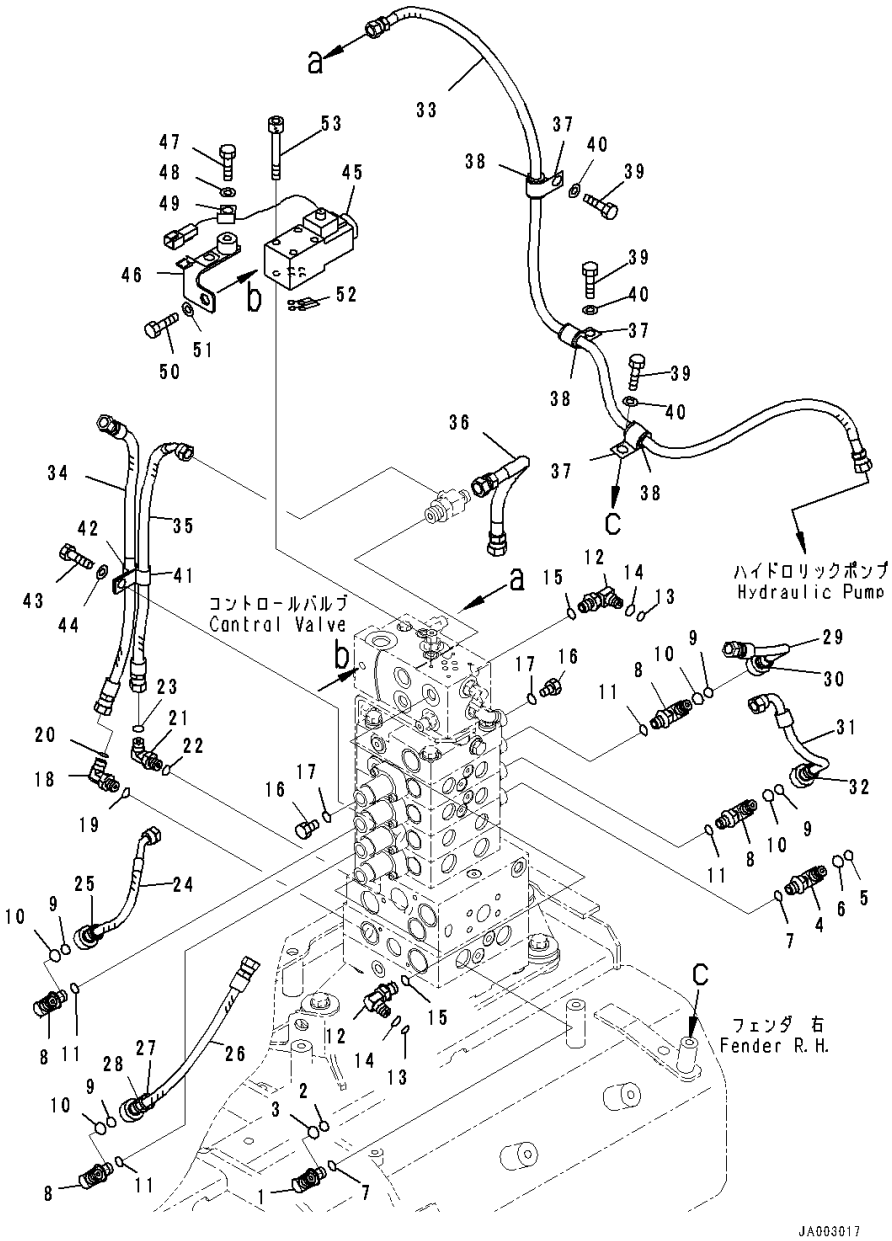

Index	Code	Part Number	Description	Qty	Serial Number
40		01643-31232	Washer	3	80001-
41		21T-72-23260	Clip	1	80001-
42		04434-51212	Clip	1	80001-
43		01010-81225	Bolt	1	80001-
44		01643-31232	Washer	1	80001-
45		14X-06-51821	Valve	1	80001-
46		14X-62-54681	Bracket	1	80001-
47		01010-81220	Bolt	1	80001-
48		01643-31232	Washer	1	80001-
49		04434-50612	Clip	1	80001-
50		01010-81220	Bolt	1	80001-
51		01643-31232	Washer	1	80001-
52		07000-11009	O-ring	4	80001-
53		01252-70545	Bolt, Hexagon Socket Head	4	80001-

https://truckmanualshub.com/

FIG. M2210-002002 Fender Group, For Machine With 4-spool Valve Hydraulics, For Machine With Ripper, Inner Parts (1/11)

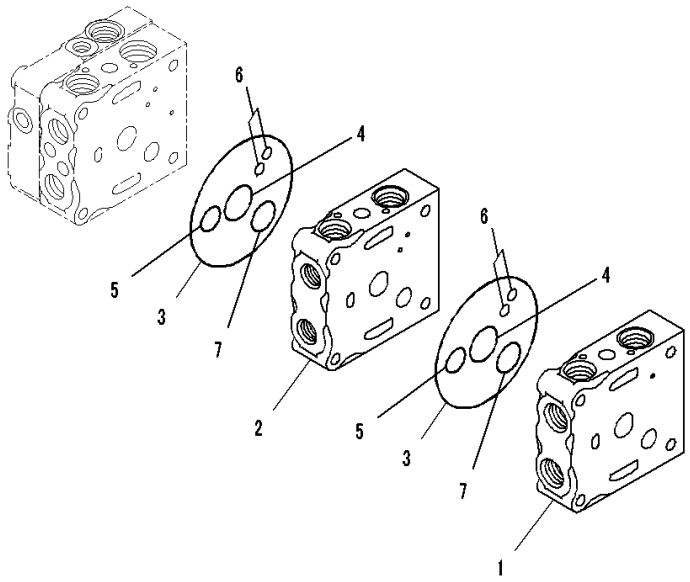

JY013370

Index	Code	Part Number	Description	Qty	Serial Number
		723-24-11500	Valve, Control	1	80001-
	C1		• Body Group	1	80001-
1		723-26-21250	• • Valve Body	1	80001-
2		723-26-21360	• • Valve Body	1	80001-
3		07000-12120	• • O-ring	2	80001-
4		723-26-15830	• • O-ring	2	80001-
5		07000-12020	• • O-ring	2	80001-
6		07000-11008	• • O-ring	4	80001-
7		723-26-15840	• • O-ring	2	80001-

https://truckmanualshub.com/

FIG. M2210-002003 Fender Group, For Machine With 4-spool Valve Hydraulics, For Machine With Ripper, Inner Parts (2/11)

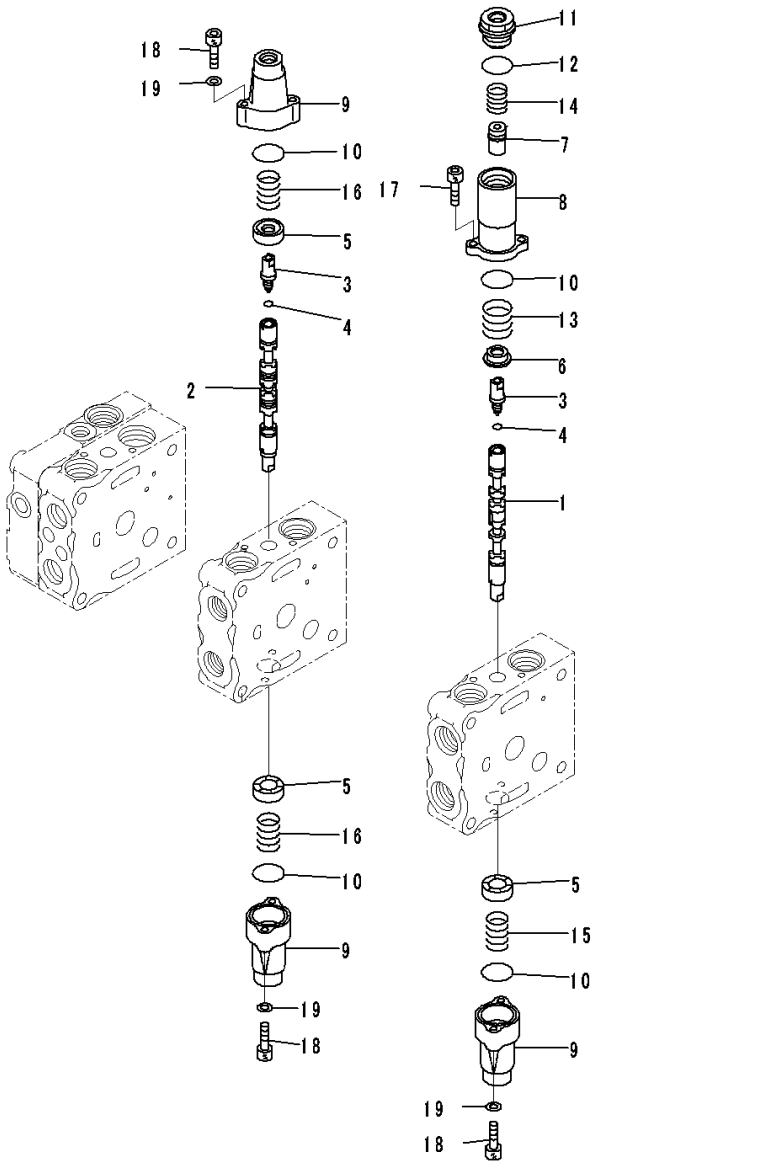

Index	Code	Part Number	Description	Qty	Serial Number
		723-24-11500	Valve, Control	1	80001-
	C1		• Body Group	1	80001-
1		723-26-22830	• • Spool	1	80001-
2		723-26-22840	• • Spool	1	80001-
3		723-26-15130	• • Plug	2	80001-
4		07002-10823	• • O-ring	2	80001-
5		723-26-15121	• • Retainer	3	80001-
6		723-26-16770	• • Retainer	1	80001-
7		723-26-16780	• • Retainer	1	80001-
8		723-26-16760	• • Case	1	80001-
9		723-26-15110	• • Case	3	80001-
10		575-41-17420	• • O-ring	4	80001-
11		723-26-16790	• • Plug	1	80001-
12		07002-12434	• • O-ring	1	80001-
13		723-26-14560	• • Spring	1	80001-
14		723-26-14570	• • Spring	1	80001-
15		709-26-11450	• • Spring	1	80001-
16		723-26-14580	• • Spring	2	80001-
17		01252-60616	• • Bolt	2	80001-
18		01252-60630	• • Bolt, Hexagon Socket Head	6	80001-
19		01641-20608	• • Washer	6	80001-

https://truckmanualshub.com/

FIG. M2210-002004 Fender Group, For Machine With 4-spool Valve Hydraulics, For Machine With Ripper, Inner Parts (3/11)

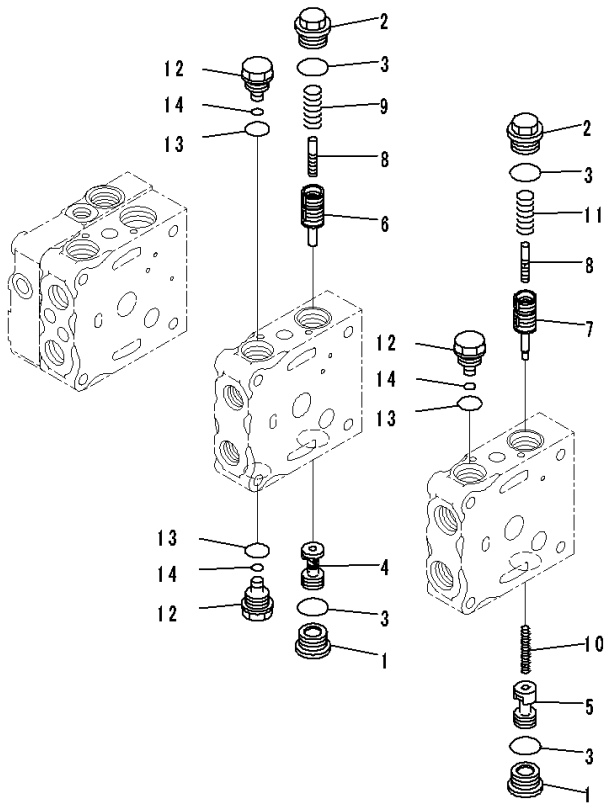

Index	Code	Part Number	Description	Qty	Serial Number
		723-24-11500	Valve, Control	1	80001-
	C1		• Body Group	1	80001-
1		723-26-15230	• • Plug	2	80001-
2		723-26-15370	• • Plug	2	80001-
3		07002-12434	• • O-ring	4	80001-
4		723-26-41160	• • Valve	1	80001-
5		723-26-41210	• • Valve	1	80001-
6		723-26-51240	• • Valve	1	80001-
7		723-26-51510	• • Valve	1	80001-
8		723-26-51250	• • Piston	2	80001-
9		723-26-14230	• • Spring	1	80001-
10		723-26-14220	• • Spring	1	80001-
11		723-26-14240	• • Spring	1	80001-
12		723-26-15310	• • Plug	3	80001-
13		07002-12034	• • O-ring	3	80001-
14		07000-11007	• • O-ring	3	80001-

https://truckmanualshub.com/

FIG. M2210-002005 Fender Group, For Machine With 4-spool Valve Hydraulics, For Machine With Ripper, Inner Parts (4/11)

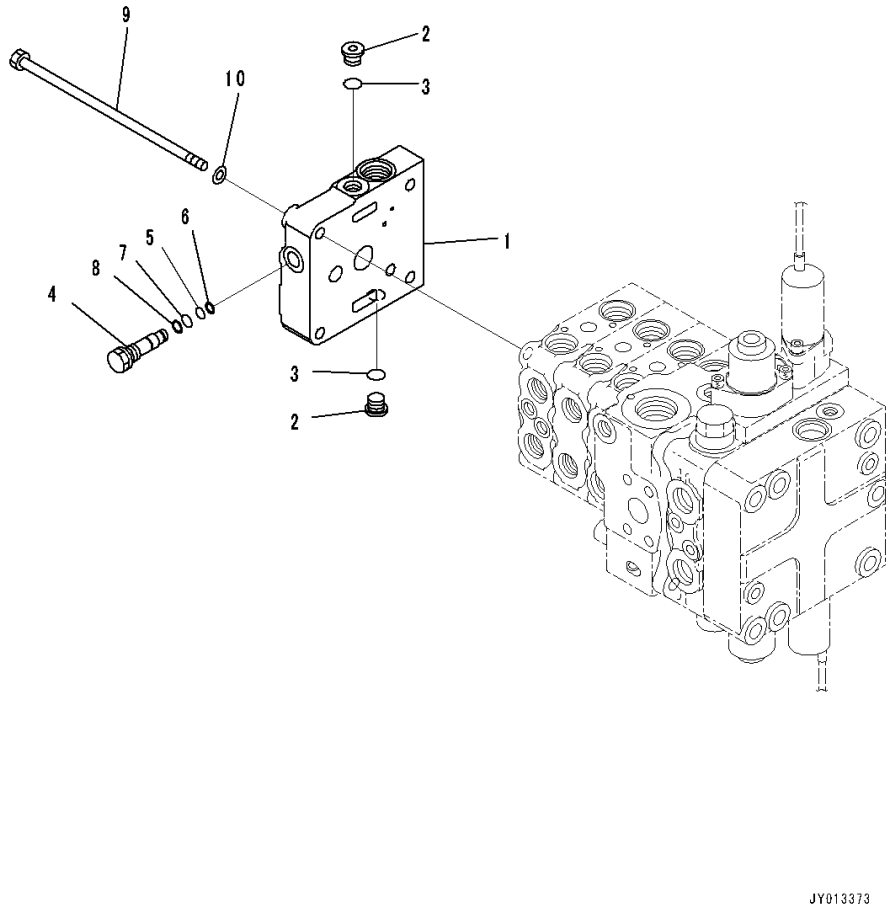

Index	Code	Part Number	Description	Qty	Serial Number
		723-24-11500	Valve, Control	1	80001-
1	C1		• Cover	1	80001-
2		702-21-55620	• Plug	2	80001-
3		07002-11423	• O-ring	2	80001-
4		723-26-15190	• Plug	1	80001-
5		07000-11007	• O-ring	1	80001-
6		07001-01007	• Ring, Back-up	1	80001-
7		07000-11009	• O-ring	1	80001-
8		07001-01009	• Ring, Back-up	1	80001-
9		700-25-11120	• Bolt	4	80001-
10		01643-31032	• Washer	4	80001-

https://truckmanualshub.com/

FIG. M2210-002006 Fender Group, For Machine With 4-spool Valve Hydraulics, For Machine With Ripper, Inner Parts (5/11)

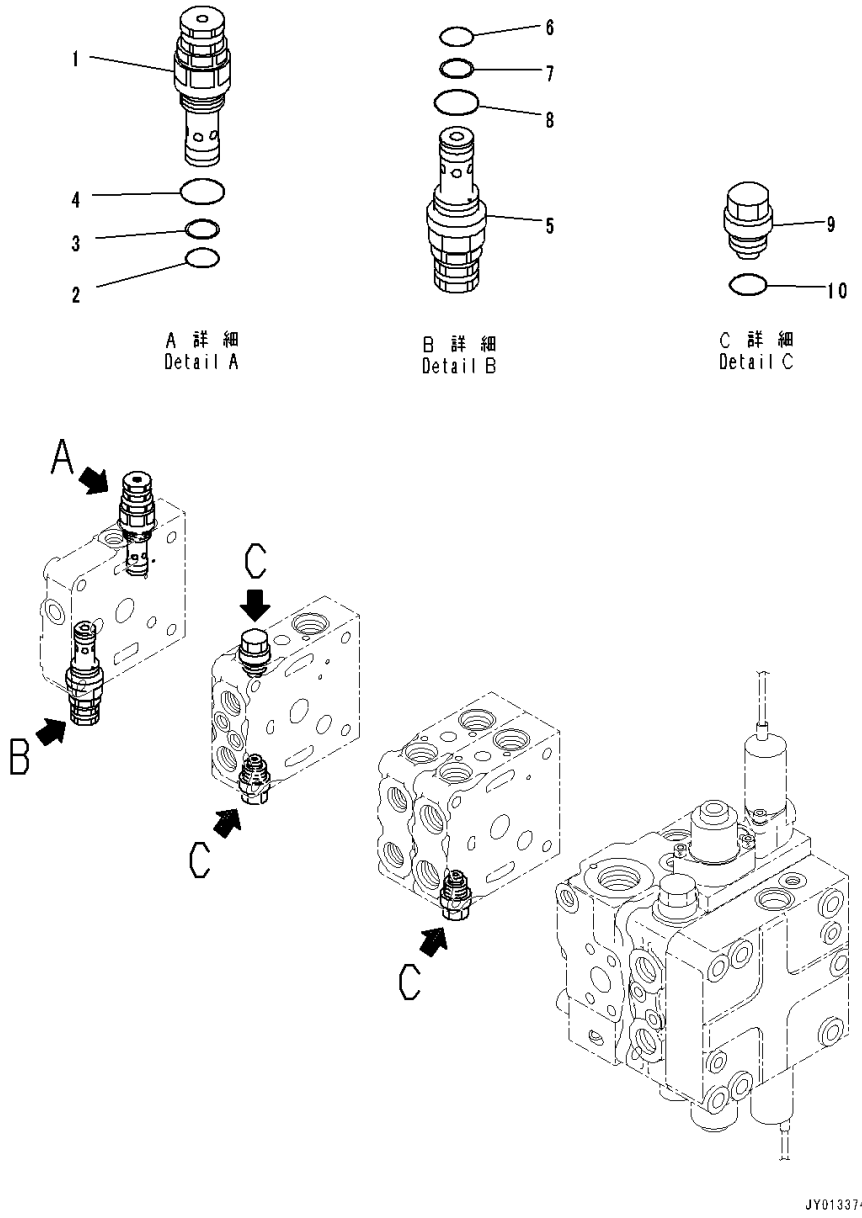

Index	Code	Part Number	Description	Qty	Serial Number
		723-24-11500	Valve, Control	1	80001-
1		723-20-66500	• Valve, Relief	1	80001-
2		700-22-11410	• • O-ring	1	80001-
3		700-80-64220	• • Ring	1	80001-
4		07002-12434	• • O-ring	1	80001-
5		723-20-66600	• Valve, Relief	1	80001-
6		700-22-11410	• • O-ring	1	80001-
7		700-80-64220	• • Ring	1	80001-
8		07002-12434	• • O-ring	1	80001-
9		723-20-80100	• Valve Assembly, Suction	1	80001-
10		07002-12034	• • O-ring	1	80001-

https://truckmanualshub.com/

FIG. M2210-002007 Fender Group, For Machine With 4-spool Valve Hydraulics, For Machine With Ripper, Inner Parts (6/11)

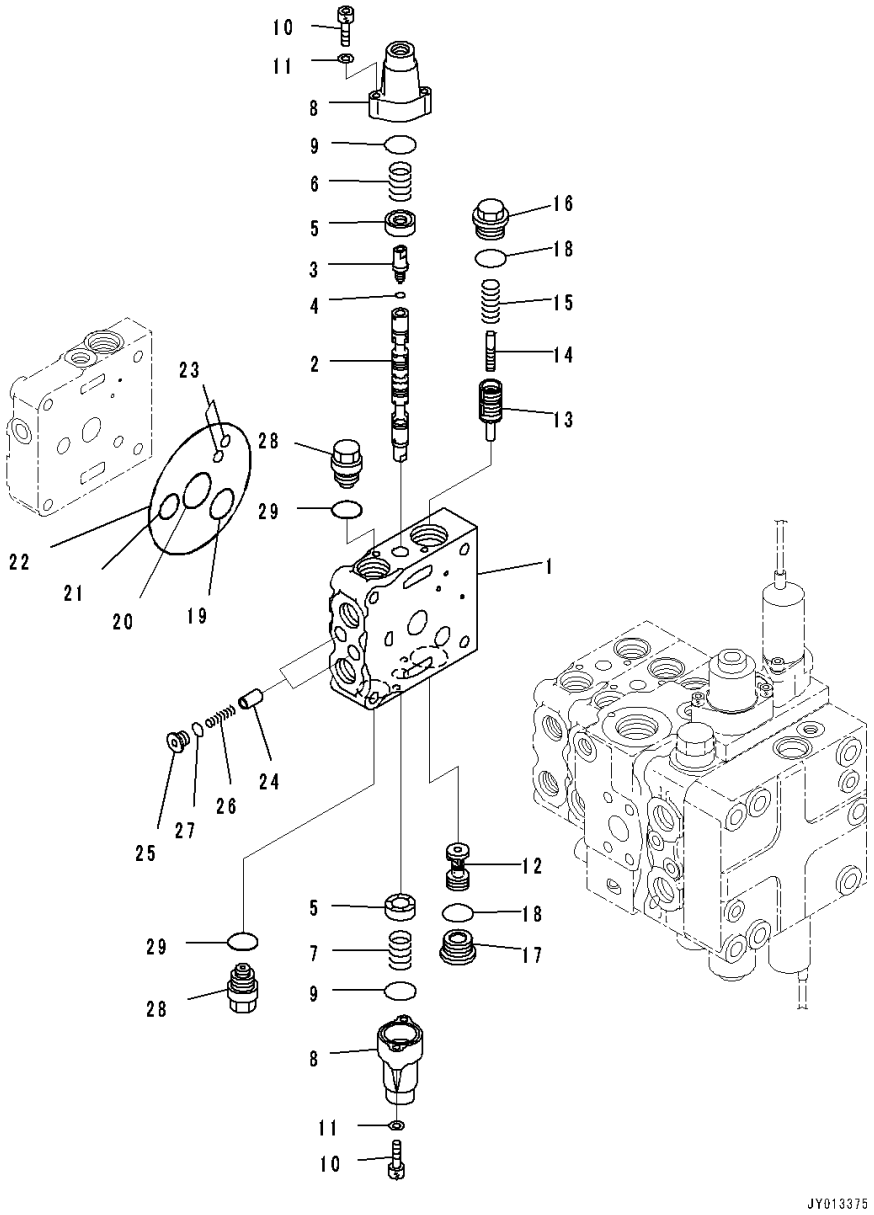

Index	Code	Part Number	Description	Qty	Serial Number
		723-24-11500	Valve, Control	1	80001-
		723-21-08300	• Valve Subassembly	1	80001-
1		723-26-21420	• • Valve Body	1	80001-
2		723-26-22270	• • Spool	1	80001-
3		723-26-15130	• • Plug	1	80001-
4		07002-10823	• • O-ring	1	80001-
5		723-26-15121	• • Retainer	2	80001-
6		723-26-14580	• • Spring	1	80001-
7		709-26-11450	• • Spring	1	80001-
8		723-26-15110	• • Case	2	80001-
9		575-41-17420	• • O-ring	2	80001-
10		01252-60630	• • Bolt, Hexagon Socket Head	4	80001-
11		01641-20608	• • Washer	4	80001-
12		723-26-41160	• • Valve	1	80001-
13		723-26-51610	• • Valve	1	80001-
14		723-26-51250	• • Piston	1	80001-
15		723-26-14230	• • Spring	1	80001-
16		723-26-15370	• • Plug	1	80001-
17		723-26-15230	• • Plug	1	80001-
18		07002-12434	• • O-ring	2	80001-
19		723-26-15840	• • O-ring	1	80001-
20		723-26-15830	• • O-ring	1	80001-
21		07000-12020	• • O-ring	1	80001-
22		07000-12120	• • O-ring	1	80001-
23		07000-11008	• • O-ring	2	80001-
24		723-26-15210	• • Valve	2	80001-
25		723-26-15220	• • Plug	2	80001-
26		723-26-14150	• • Spring	2	80001-
27		07002-11223	• • O-ring	2	80001-
28		723-20-80100	• • Valve Assembly, Suction	2	80001-
29		07002-12034	• • • O-ring	1	80001-

https://truckmanualshub.com/

FIG. M2210-002008 Fender Group, For Machine With 4-spool Valve Hydraulics, For Machine With Ripper, Inner Parts (7/11)

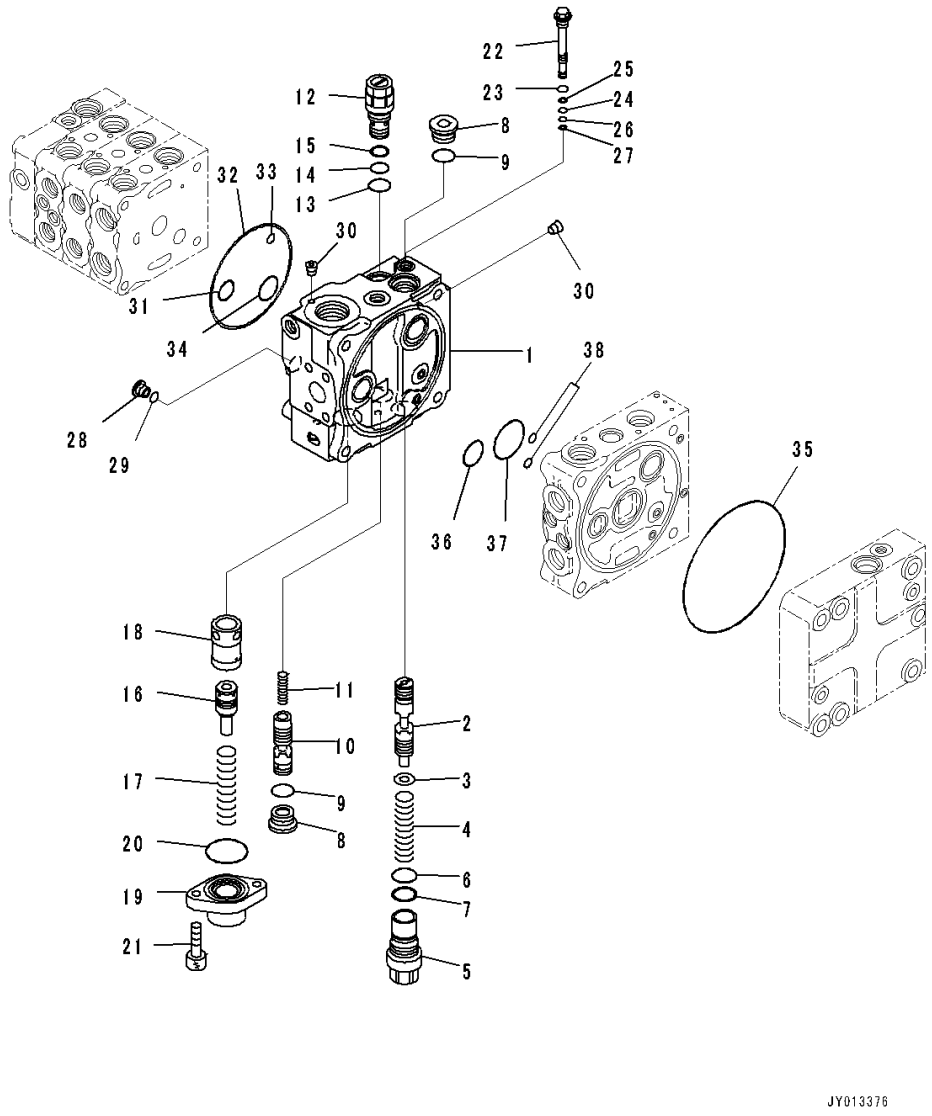

Index	Code	Part Number	Description	Qty	Serial Number
		723-24-11500	Valve, Control	1	80001-
	C1		• Block Subassembly	1	80001-
1		723-26-21160	• • Block	1	80001-
2		723-26-22850	• • Spool	1	80001-
3		723-26-15860	• • Washer	1	80001-
4		723-26-14590	• • Spring	1	80001-
5		723-26-15850	• • Plug	1	80001-
6		700-80-61260	• • O-ring	1	80001-
7		700-80-61430	• • Ring	1	80001-
8		723-26-15230	• • Plug	2	80001-
9		07002-12434	• • O-ring	2	80001-
10		723-26-22860	• • Spool	1	80001-
11		723-26-14470	• • Spring	1	80001-
12		723-60-21900	• • Valve, Relief	1	80001-
13		07002-12434	• • • O-ring	1	80001-
14		07000-12016	• • • O-ring	1	80001-
15		07001-02016	• • • Ring, Back-up	1	80001-
16		723-36-15230	• • Piston	1	80001-
17		723-36-15340	• • Spring	1	80001-
18		723-36-15210	• • Sleeve	1	80001-
19		723-36-15250	• • Case	1	80001-
20		07000-13042	• • O-ring	1	80001-
21		01252-60820	• • Bolt	2	80001-
22	C1		• • Valve Assembly	1	80001-
23		07002-11223	• • • O-ring	1	80001-
24		07000-11007	• • • O-ring	1	80001-
25		07001-01007	• • • Ring, Back-up	1	80001-
26		07000-11005	• • • O-ring	1	80001-
27		07001-01005	• • • Ring, Back-up	1	80001-
28		723-26-15220	• • Plug	1	80001-
29		07002-11223	• • O-ring	1	80001-
30		708-21-12541	• • Plug	5	80001-
31		07000-12020	• • O-ring	1	80001-
32		07000-12120	• • O-ring	1	80001-
33		07000-11008	• • O-ring	1	80001-
34		723-26-15840	• • O-ring	1	80001-
35		144-14-54610	• • O-ring	1	80001-
36		723-56-31730	• • O-ring	1	80001-
37		702-75-11520	• • O-ring	1	80001-

https://truckmanualshub.com/

FIG. M2210-002008 Fender Group, For Machine With 4-spool Valve Hydraulics, For Machine With Ripper, Inner Parts (7/11)

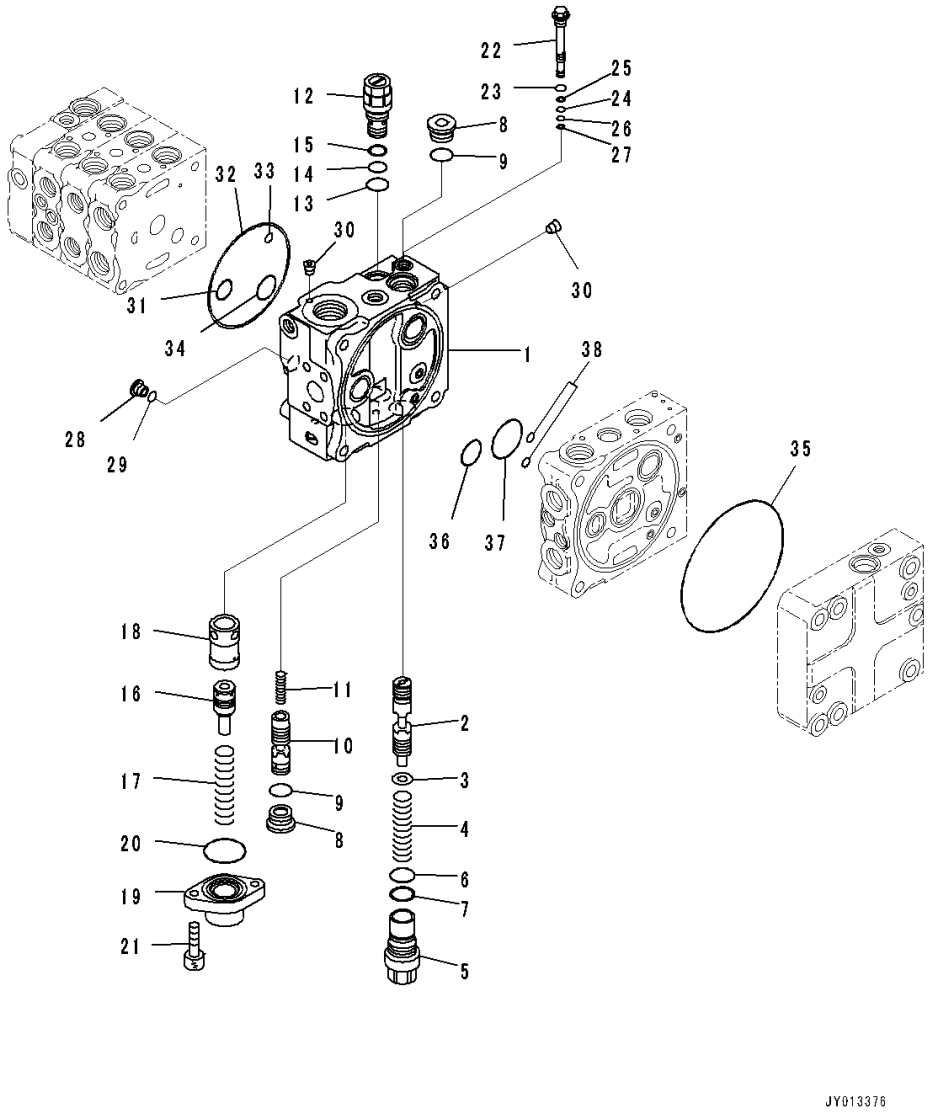

Index	Code	Part Number	Description	Qty	Serial Number
38		07000-11008	• • O-ring	2	80001-

https://truckmanualshub.com/

FIG. M2210-002009 Fender Group, For Machine With 4-spool Valve Hydraulics, For Machine With Ripper, Inner Parts (8/11)

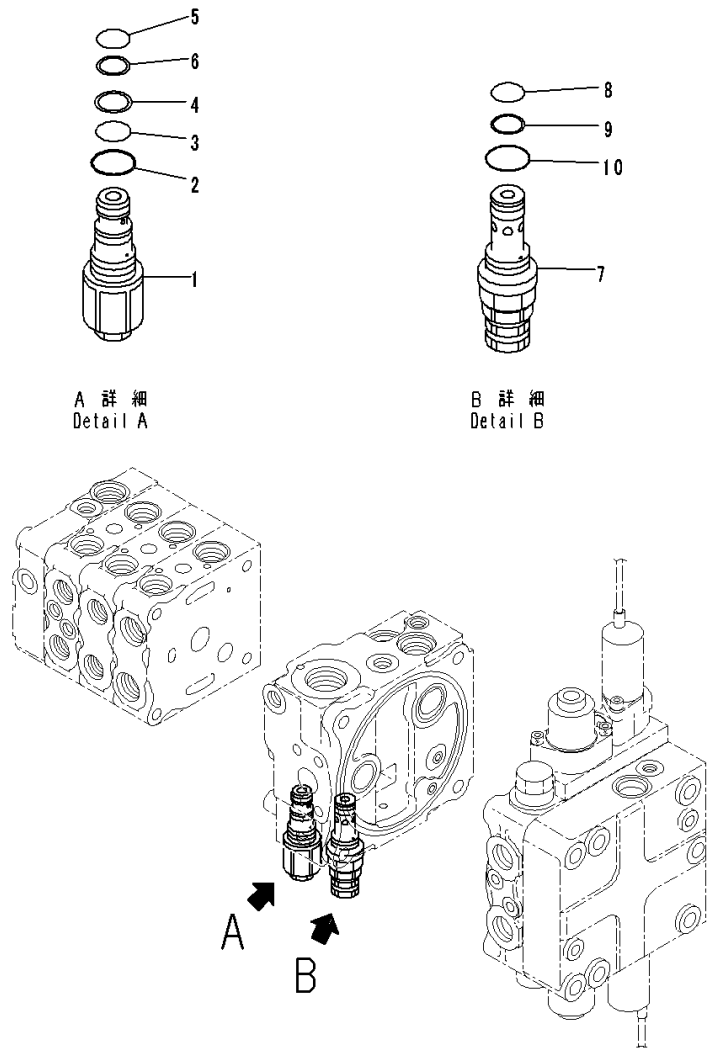

Index	Code	Part Number	Description	Qty	Serial Number
		723-24-11500	Valve, Control	1	80001-
1		723-20-70600	• Valve Assembly	1	80001-
2		07002-12434	• • O-ring	1	80001-
3		07000-12016	• • O-ring	1	80001-
4		07001-02016	• • Ring, Back-up	1	80001-
5		07000-12014	• • O-ring	1	80001-
6		07001-02014	• • Ring, Back-up	1	80001-
7		723-20-63100	• Valve, Relief	1	80001-
8		700-22-11410	• • O-ring	1	80001-
9		700-80-64220	• • Ring	1	80001-
10		07002-12034	• • O-ring	1	80001-

https://truckmanualshub.com/

FIG. M2210-002010 Fender Group, For Machine With 4-spool Valve Hydraulics, For Machine With Ripper, Inner Parts (9/11)

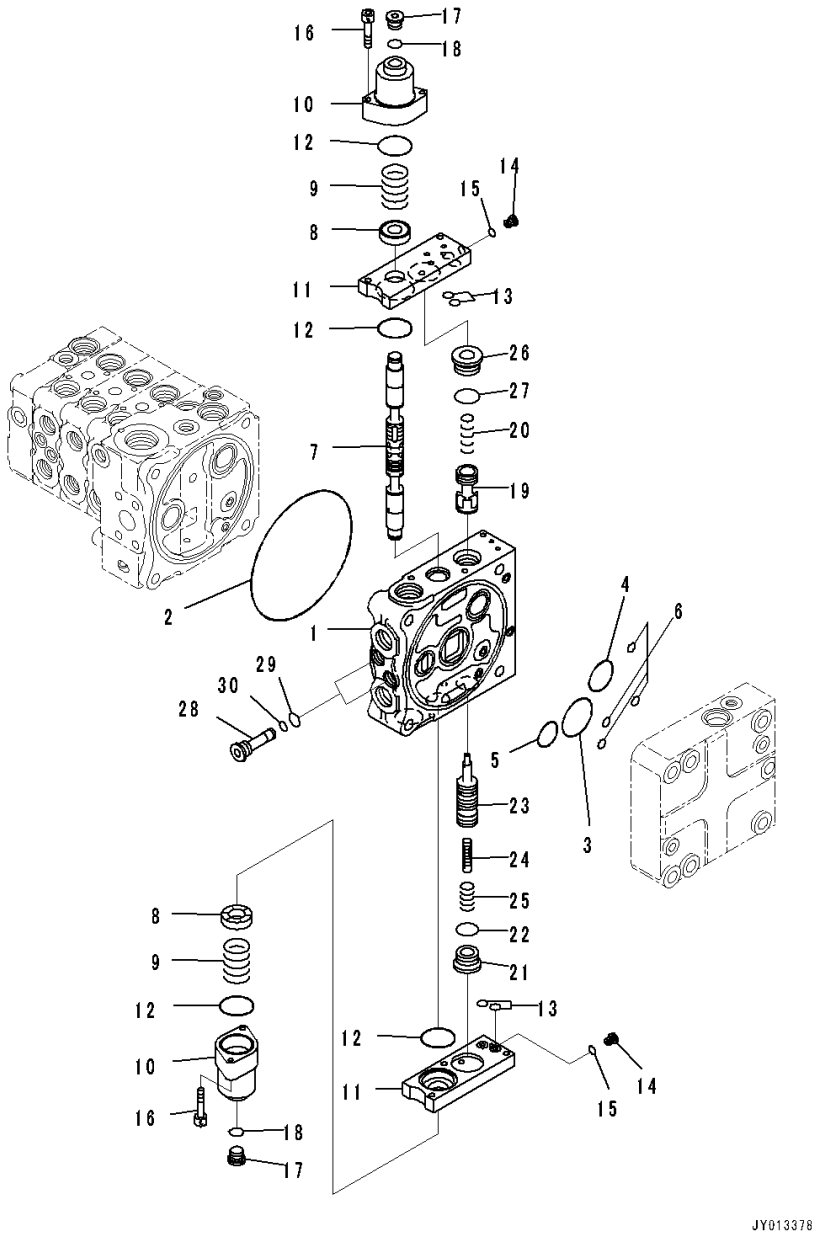

Index	Code	Part Number	Description	Qty	Serial Number
		723-24-11500	Valve, Control	1	80001-
		723-51-06500	• Valve Assembly	1	80001-
1	C1		• • Valve Body	1	80001-
2		144-14-54610	• • O-ring	1	80001-
3		723-56-31720	• • O-ring	1	80001-
4		723-56-31730	• • O-ring	1	80001-
5		702-75-11520	• • O-ring	1	80001-
6		07000-11008	• • O-ring	4	80001-
7		723-56-22170	• • Spool	1	80001-
8		723-56-31211	• • Retainer	2	80001-
9		723-36-14120	• • Spring	2	80001-
10		723-56-31510	• • Case	2	80001-
11		723-56-32820	• • Plate	2	80001-
12		702-21-55450	• • O-ring	4	80001-
13		07000-11009	• • O-ring	4	80001-
14		723-11-27280	• • Plug	2	80001-
15		07002-10823	• • O-ring	2	80001-
16		01252-60650	• • Bolt	4	80001-
17		702-21-55620	• • Plug	2	80001-
18		07002-11423	• • O-ring	2	80001-
19		723-56-42150	• • Valve	1	80001-
20		723-56-41710	• • Spring	1	80001-
21		723-26-15230	• • Plug	1	80001-
22		07002-12434	• • O-ring	1	80001-
23		723-56-42330	• • Valve	1	80001-
24		723-56-41590	• • Piston	1	80001-
25		723-56-41730	• • Spring	1	80001-
26		723-56-41970	• • Plug	1	80001-
27		07000-13024	• • O-ring	1	80001-
28		723-56-31640	• • Plug	2	80001-
29		07002-11623	• • O-ring	2	80001-
30		07000-11008	• • O-ring	2	80001-

https://truckmanualshub.com/

FIG. M2210-002011 Fender Group, For Machine With 4-spool Valve Hydraulics, For Machine With Ripper, Inner Parts (10/11)

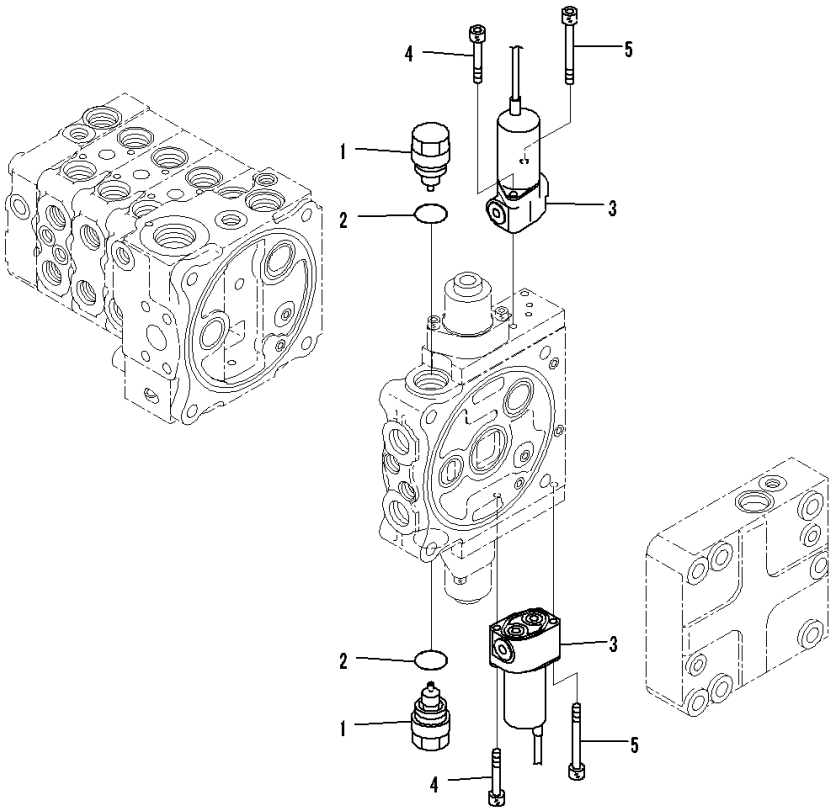

Index	Code	Part Number	Description	Qty	Serial Number
		723-24-11500	Valve, Control	1	80001-
		723-51-06500	• Valve Assembly	1	80001-
		723-40-85100	• • Valve Assembly, Suction	2	80001-
1		723-40-85110	• • • Sleeve	1	80001-
2		709-25-11390	• • • O-ring	1	80001-
3		702-21-07610	• • Valve, Solenoid	2	80001-
4		01252-60645	• • Bolt, Hexagon Socket Head	2	80001-
5		702-16-55270	• • Bolt	2	80001-

https://truckmanualshub.com/

FIG. M2210-002012 Fender Group, For Machine With 4-spool Valve Hydraulics, For Machine With Ripper, Inner Parts (11/11)

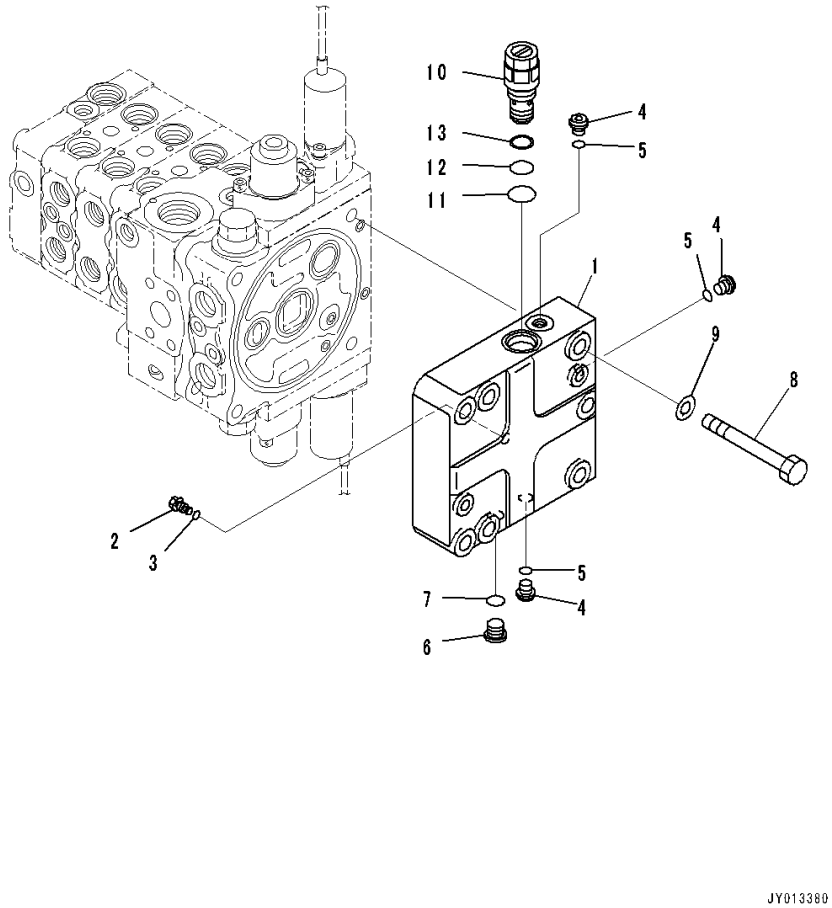

Index	Code	Part Number	Description	Qty	Serial Number
		723-24-11500	Valve, Control	1	80001-
1		723-56-12210	• Cover	1	80001-
2		723-56-33940	• Plug	1	80001-
3		07002-10823	• O-ring	1	80001-
4		708-8E-16160	• Plug	3	80001-
5		07002-11023	• O-ring	3	80001-
6		702-21-55620	• Plug	1	80001-
7		07002-11423	• O-ring	1	80001-
8		01011-81225	• Bolt	4	80001-
9		01643-31232	• Washer	4	80001-
10		723-60-21102	• Valve, Relief	1	80001-
11		07002-02434	• • O-ring	1	80001-
12		07000-12016	• • O-ring	1	80001-
13		07001-02016	• • Ring, Back-up	1	80001-

https://truckmanualshub.com/

FIG. M2210-002014 Fender Group, For Machine With 4-spool Valve Hydraulics, For Machine With Ripper, Hydraulic Piping

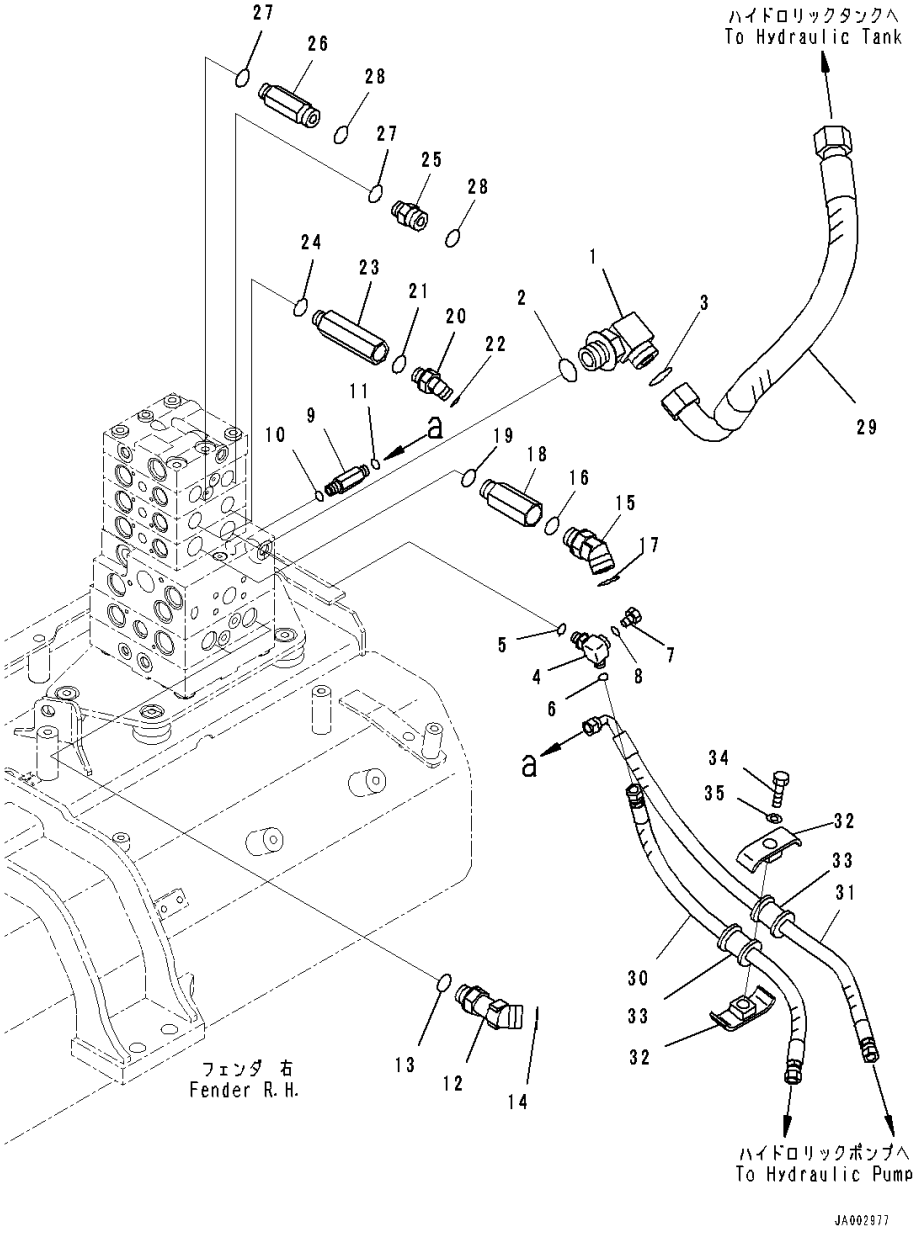

Index	Code	Part Number	Description	Qty	Serial Number
1		21W-62-42640	Elbow	1	80001-
2		07002-13334	O-ring	1	80001-
3		207-62-64740	O-ring	1	80001-
4		14X-62-54870	Tee	1	80001-
5		07002-11423	O-ring	1	80001-
6		02896-11008	O-ring	1	80001-
7		07040-11007	Plug	1	80001-
8		07002-11023	O-ring	1	80001-
9		11Y-62-12230	Union	1	80001-
10		07002-11423	O-ring	1	80001-
11		02896-11008	O-ring	1	80001-
12		11Y-62-36160	Elbow	2	80001-
13		07002-62434	O-ring	2	80001-
14		02896-61018	O-ring	2	80001-
15		02783-10628	Elbow	2	80001-
16		07002-12434	O-ring	2	80001-
17		02896-11018	O-ring	2	80001-
18		20T-62-81790	Joint	2	80001-
19		07002-12434	O-ring	2	80001-
20		02783-10315	Elbow	2	80001-
21		07002-12034	O-ring	2	80001-
22		02896-11009	O-ring	2	80001-
23		14X-62-52931	Joint	2	80001-
24		07002-12034	O-ring	2	80001-
25		02781-00516	Union	1	80001-
26		14X-62-52991	Nipple	1	80001-
27		07002-12034	O-ring	2	80001-
28		02896-11015	O-ring	2	80001-
29		14X-62-52940	Hose	1	80001-
30		14X-62-52391	Hose	1	80001-
31		14X-62-52541	Hose	1	80001-
32		22P-62-13540	Clamp	2	80001-
33		07095-00314	Cushion	2	80001-
34		01010-81260	Bolt	1	80001-
35		01643-31232	Washer	1	80001-

https://truckmanualshub.com/

FIG. M2210-002015 Fender Group, For Machine With 4-spool Valve Hydraulics, For Machine With Ripper, PPC Lock Solenoid Valve With Accumulator

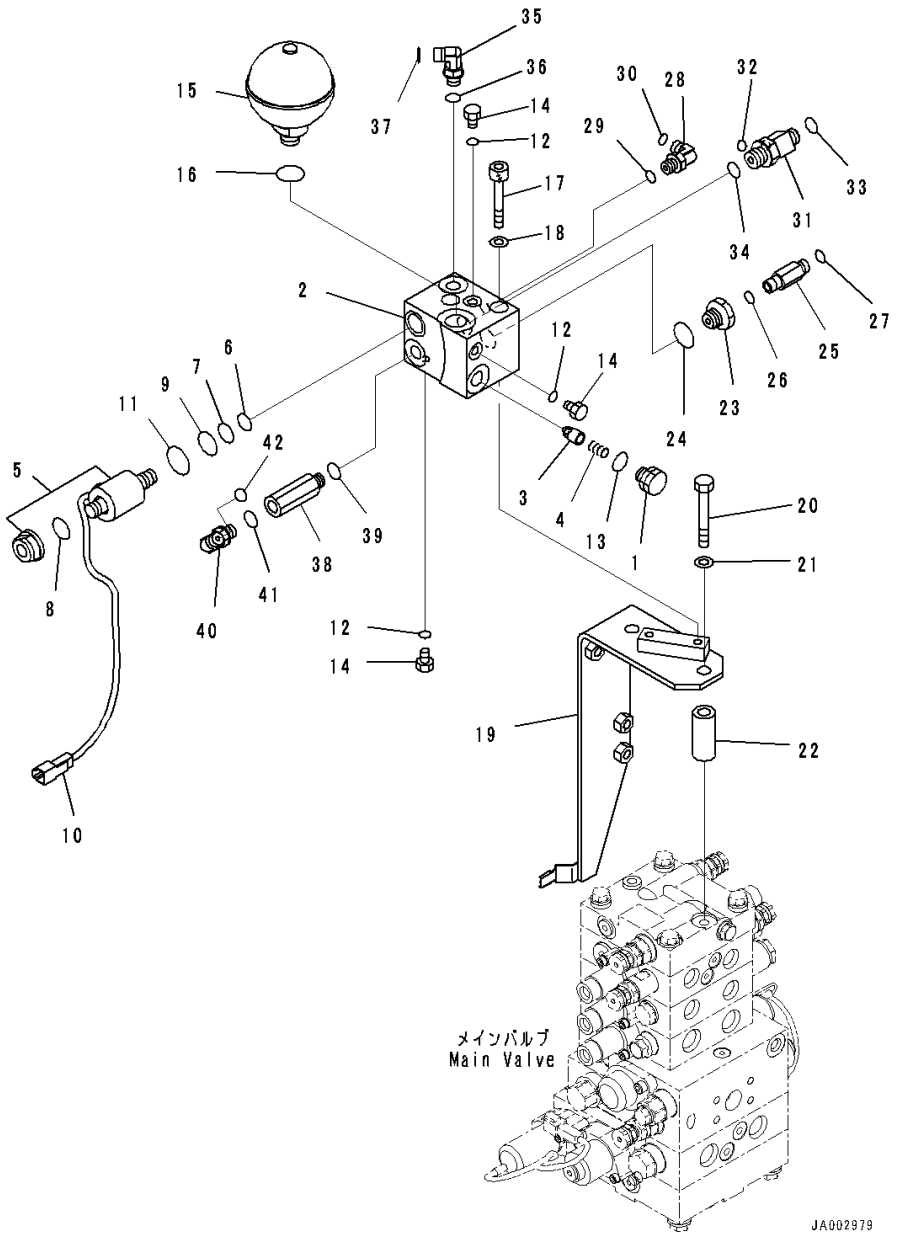

Index	Code	Part Number	Description	Qty	Serial Number
		14X-62-53551	Block Assembly	1	80001-
1		103-49-14280	• Plug	1	80001-
2		14X-62-53561	• Block	1	80001-
3		205-60-51390	• Poppet	1	80001-
4		722-12-12063	• Spring	1	80001-
5		11Y-60-11530	• Valve, Solenoid	1	80001-
6		07000-02012	• • O-ring	1	80001-
7		07000-02014	• • O-ring	1	80001-
8		07000-12016	• • O-ring	1	80001-
9		07000-02018	• • O-ring	1	80001-
10		08192-22830	• • Connector	1	80001-
11		203-60-62190	• • O-ring	1	80001-
12		07002-10823	• O-ring	3	80001-
13		07002-11623	• O-ring	1	80001-
14		07040-10807	• Plug	3	80001-
15		22U-60-21330	Accumulator	1	80001-
16		07002-12034	O-ring	1	80001-
17		01252-A1085	Bolt, Hexagon Socket Head	2	80001-
18		01643-51032	Washer	2	80001-
19		14X-62-52960	Bracket	1	80001-
20		01010-81285	Bolt	2	80001-
21		01643-31232	Washer	2	80001-
22		203-62-44510	Spacer	2	80001-
23		20Y-62-21940	Filter Assembly	1	80001-
24		07002-12034	O-ring	1	80001-
25		20U-62-41890	Nipple	1	80001-
26		07002-11423	O-ring	1	80001-
27		02896-11008	O-ring	1	80001-
28		02782-10210	Elbow	1	80001-
29		07002-11423	O-ring	1	80001-
30		02896-11008	O-ring	1	80001-
31		20K-62-33690	Tee	1	80001-
32		02896-11008	• O-ring	1	80001-
33		02896-11009	• O-ring	1	80001-
34		07002-12034	O-ring	1	80001-
35		02782-10210	Elbow	1	80001-
36		07002-11423	O-ring	1	80001-
37		02896-11008	O-ring	1	80001-
38		207-62-62460	Adapter	1	80001-

https://truckmanualshub.com/

FIG. M2210-002015 Fender Group, For Machine With 4-spool Valve Hydraulics, For Machine With Ripper, PPC Lock Solenoid Valve With Accumulator

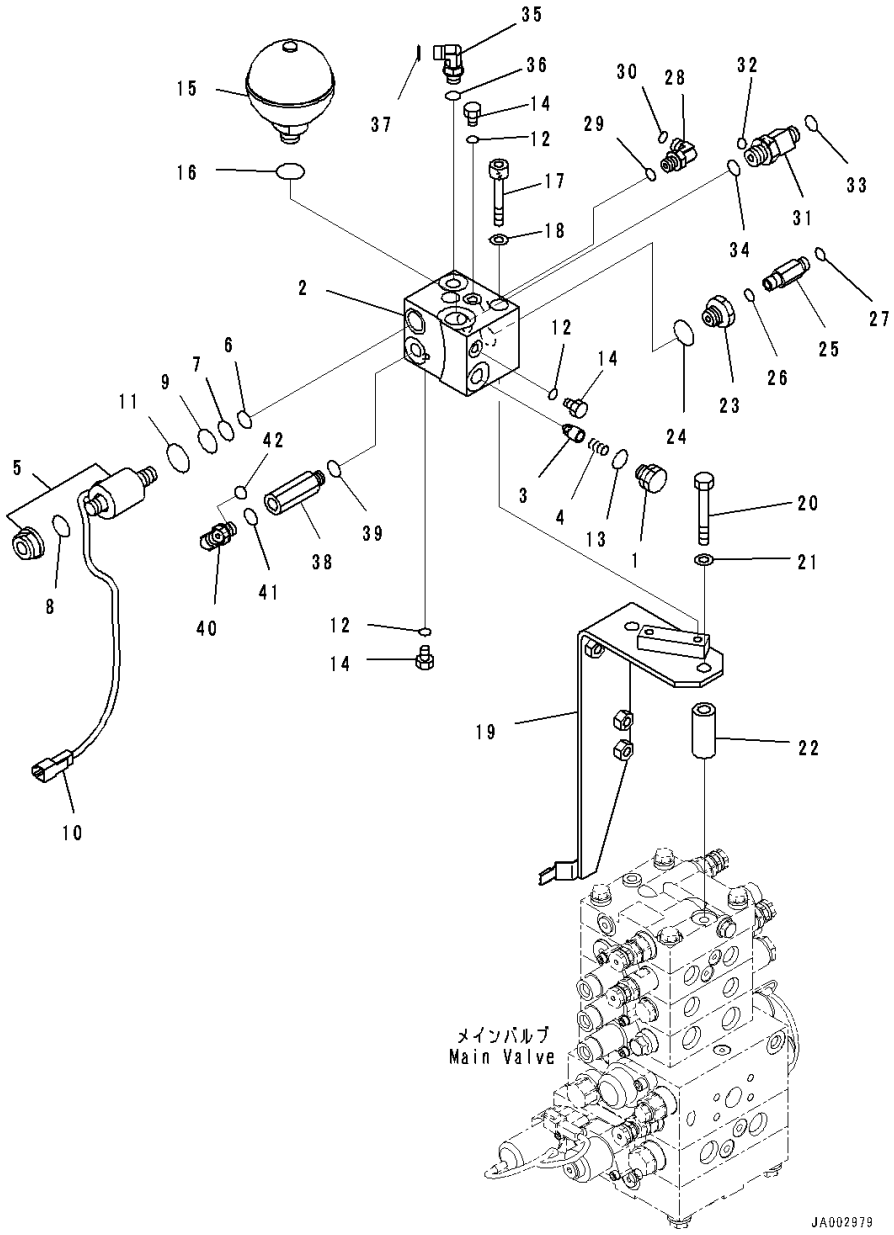

Index	Code	Part Number	Description	Qty	Serial Number
39		07002-11423	O-ring	1	80001-
40		02782-10210	Elbow	1	80001-
41		07002-11423	O-ring	1	80001-
42		02896-11008	O-ring	1	80001-

https://truckmanualshub.com/

FIG. M2210-002016 Fender Group, For Machine With 4-spool Valve Hydraulics, For Machine With Ripper, Control Valve Steering Piping

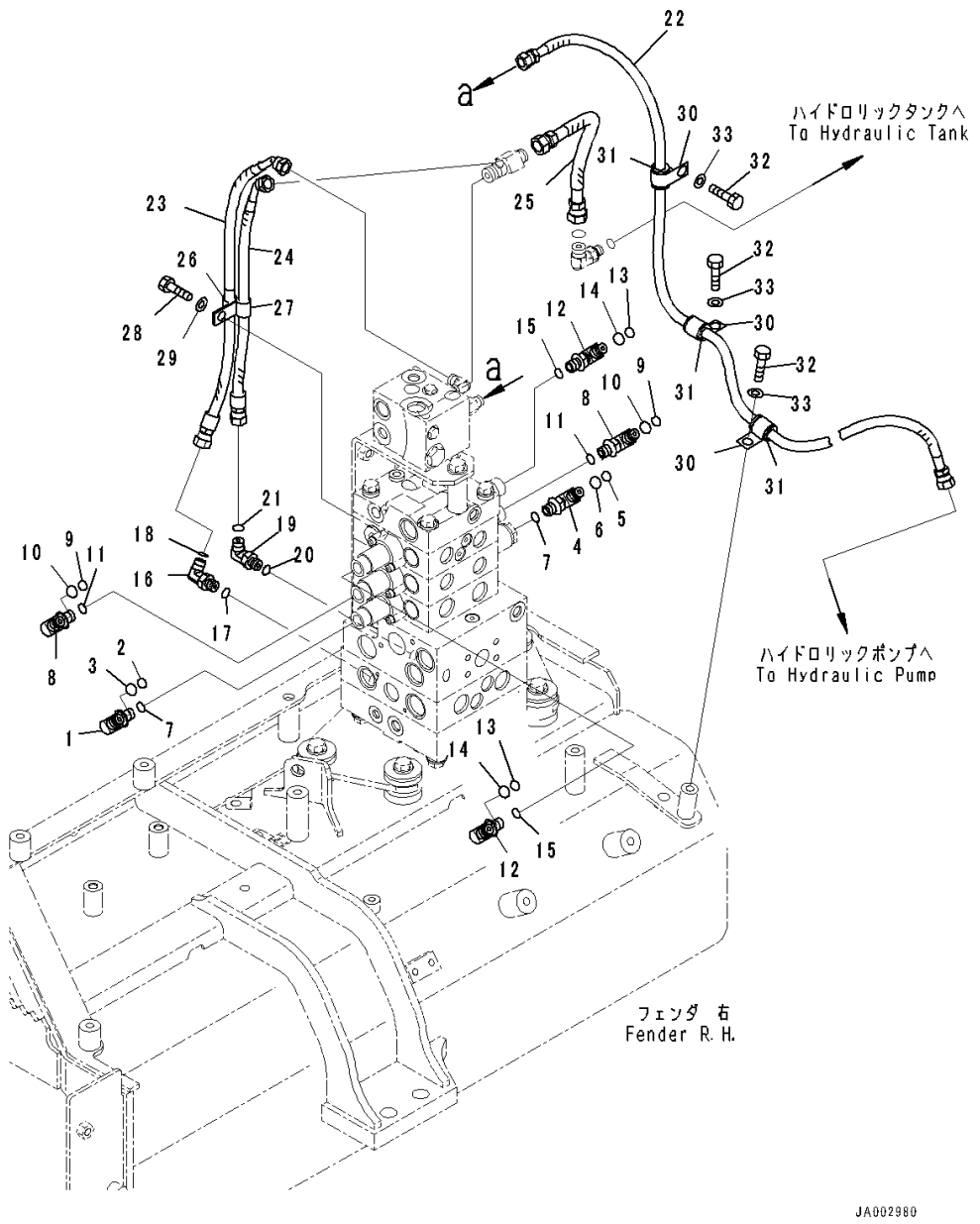

Index	Code	Part Number	Description	Qty	Serial Number
1		14X-62-53531	Elbow	1	80001-
2		201-60-11390	• O-ring	1	80001-
3		20Y-62-19560	• O-ring	1	80001-
4		14X-62-54960	Elbow	1	80001-
5		201-60-11390	• O-ring	1	80001-
6		20Y-62-19560	• O-ring	1	80001-
7		07002-11423	O-ring	2	80001-
8		14X-62-53541	Elbow	2	80001-
9		201-60-11390	• O-ring	1	80001-
10		20Y-62-19560	• O-ring	1	80001-
11		07002-11423	O-ring	2	80001-
12		14X-62-53541	Elbow	2	80001-
13		201-60-11390	• O-ring	1	80001-
14		20Y-62-19560	• O-ring	1	80001-
15		07002-11423	O-ring	2	80001-
16		02782-10210	Elbow	1	80001-
17		07002-11423	O-ring	1	80001-
18		02896-11008	O-ring	1	80001-
19		02782-10210	Elbow	1	80001-
20		07002-11423	O-ring	1	80001-
21		02896-11008	O-ring	1	80001-
22		14X-62-52521	Hose	1	80001-
23		02764-00205	Hose, Face Seal Type	1	80001-
24		02764-00204	Hose, Face Seal Type	1	80001-
25		02762-00303	Hose, Face Seal Type	1	80001-
26		04434-51212	Clip	1	80001-
27		21T-72-23260	Clip	1	80001-
28		01010-81225	Bolt	1	80001-
29		01643-31232	Washer	1	80001-
30		04434-51712	Clip	3	80001-
31		07095-20211	Cushion	3	80001-
32		01010-81220	Bolt	3	80001-
33		01643-31232	Washer	3	80001-

https://truckmanualshub.com/

FIG. M2211-001001 Fender Cover, Battery Box Cover

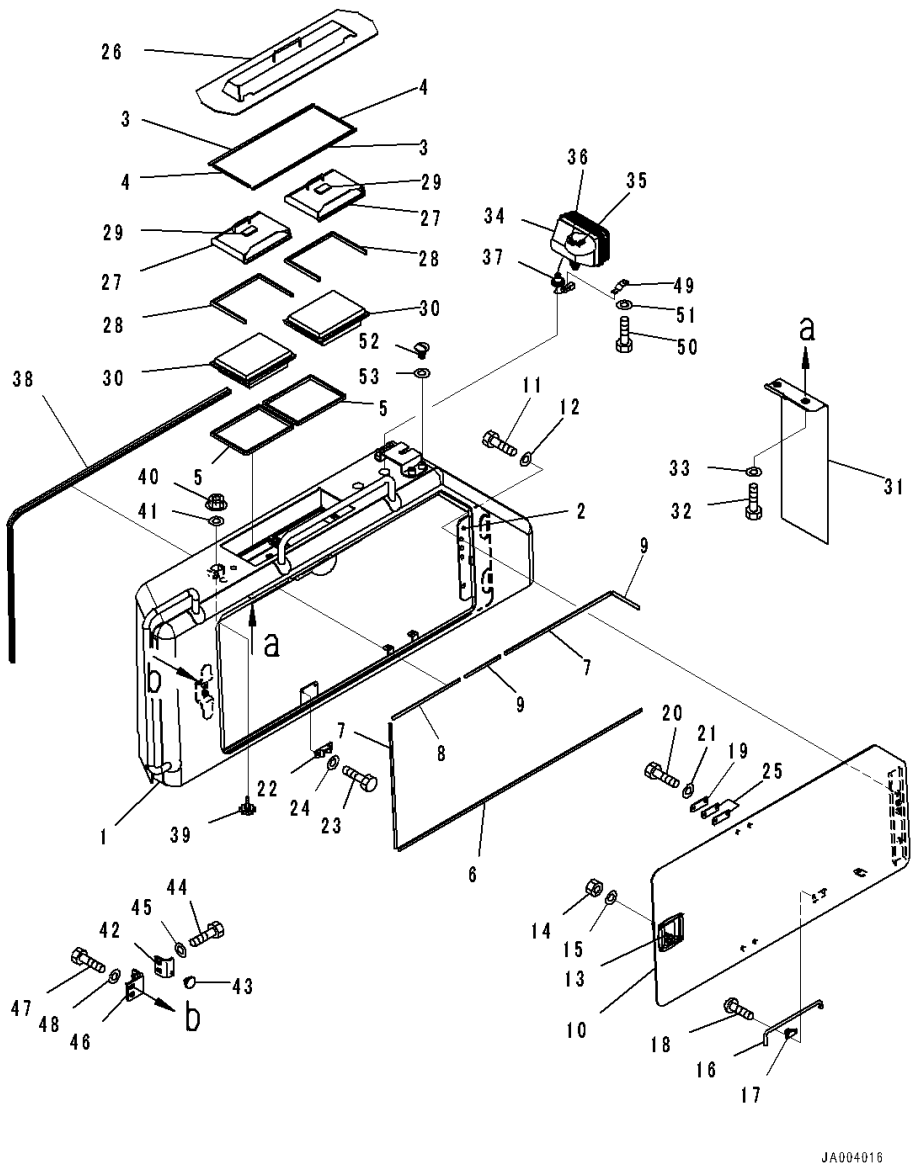

Index	Code	Part Number	Description	Qty	Serial Number
1		14X-54-53212	Cover	1	80005-
2		14X-54-53341	• Hinge	1	80001-
3		14X-54-53560	• Sheet,Bonded	2	80001-
4		14X-54-53570	• Sheet,Bonded	2	80001-
5		14X-54-53580	• Seal,Bonded	2	80001-
6		14X-54-53710	• Sheet,Bonded	1	80001-
7		14X-54-53720	• Sheet,Bonded	2	80001-
8		14X-54-53730	• Sheet,Bonded	1	80001-
9		14X-54-53740	• Sheet,Bonded	2	80001-
10		14X-54-53222	Cover	1	80005-
11		01010-81020	Bolt	3	80001-
12		01643-31032	Washer	3	80001-
13		14X-54-54310	Lock	1	80005-
14		01580-10605	Nut	4	80001-
15		01643-30623	Washer	4	80001-
16		20Y-54-29232	Bar	1	80001-
17		198-54-19150	Spring	1	80005-
18		01023-10608	Screw	2	80001-
19		205-54-53550	Dovetail	2	80001-
20		01010-80612	Bolt	4	80001-
21		01643-30623	Washer	4	80001-
22		205-54-51970	Dovetail	2	80001-
23		01010-80616	Bolt	4	80001-
24		01643-30623	Washer	4	80001-
25		14X-54-53860	Shim	4	80001-
26		14X-Y11-1822	Cover	1	80001-
27		14X-Y11-2270	Cover Assembly	2	80001-
28		134-X11-1630	• Seal	1	80001-
29		14X-911-8520	• Seal	1	80001-
30		17M-911-3530	Element	2	80001-
31		14X-54-53281	Plate	1	80001-
32		01010-81020	Bolt	2	80001-
33		01643-31032	Washer	2	80001-
		14X-06-52730	Lamp Assembly, Working	1	80001-
34		17A-06-17931	• Lamp Assembly, Working	1	80001-
35		17A-06-17970	• • Bulb, 70watt	1	80001-
36		17A-06-17980	• • Sleeve	1	80001-
37		144-43-81620	• Grommet	1	80001-
38		195-54-68760	Knob	2	80001-
39		01594-01008	Nut	2	80001-

https://truckmanualshub.com/

FIG. M2211-001001 Fender Cover, Battery Box Cover

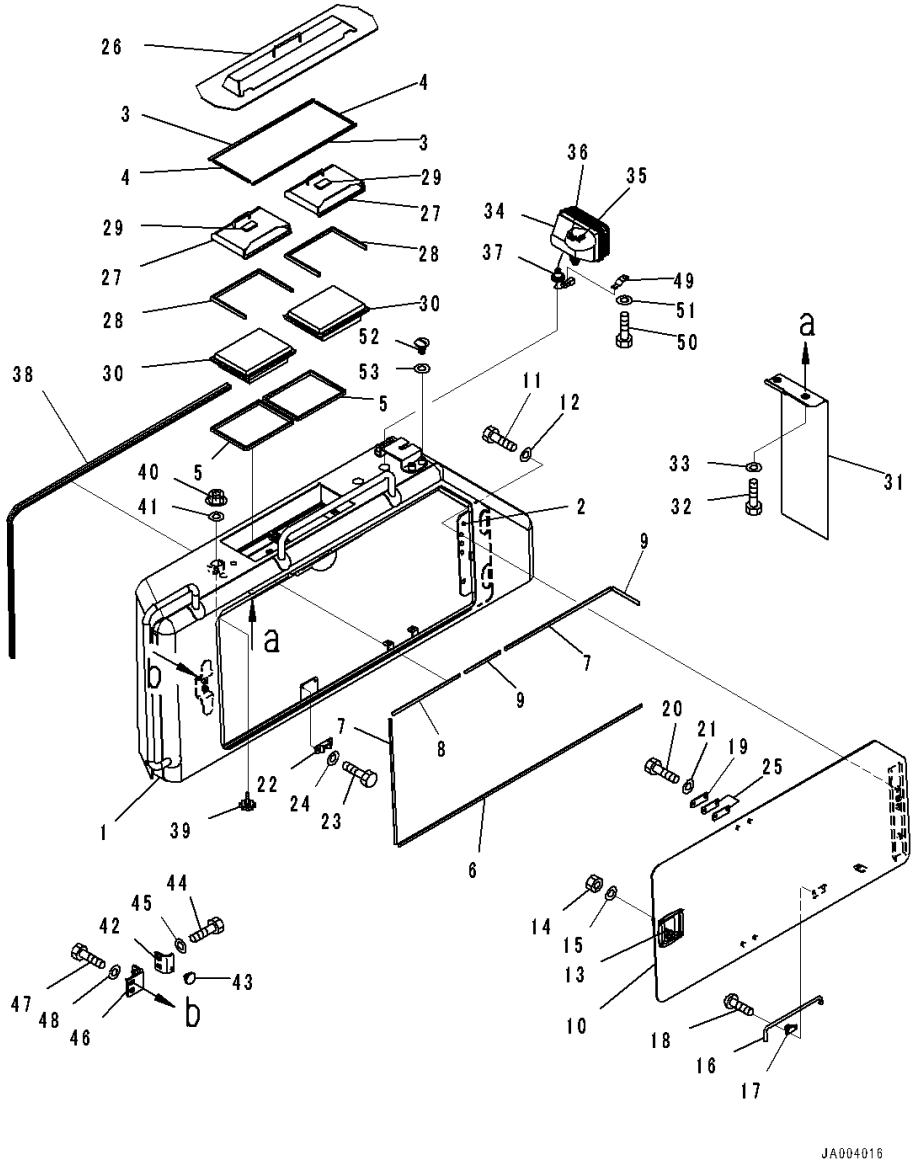

Index	Code	Part Number	Description	Qty	Serial Number
40		01640-21016	Washer	2	80001-
41		14X-54-53840	Plate	1	80001-
42		14X-54-12960	Stopper	1	80001-
43		01010-81230	Bolt	2	80001-
44		01643-31232	Washer	2	80001-
45		14X-54-53850	Plate	1	80001-
46		01010-81230	Bolt	2	80001-
47		01643-31232	Washer	2	80001-
48		08193-21012	Clip	1	80001-
49		01010-81020	Bolt	1	80001-
50		01643-31032	Washer	1	80001-
51		14X-54-53380	Cap	4	80005-
52		01643-31032	Washer	4	80005-

https://truckmanualshub.com/

FIG. M2211-001002 Fender Cover, Valve Cover

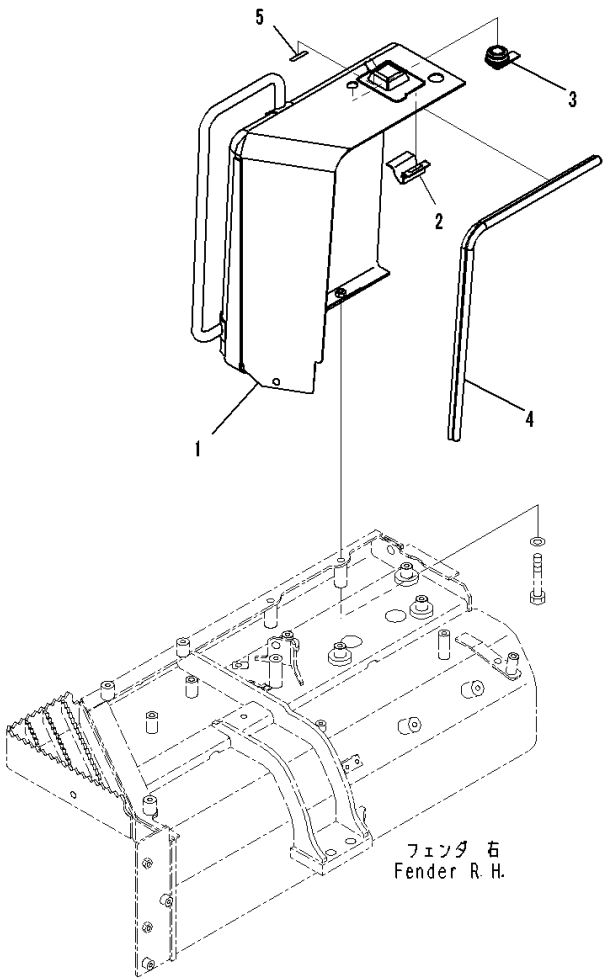

JA004017

Index	Code	Part Number	Description	Qty	Serial Number
1		14X-54-53301	Cover Assembly,RHS	1	80007-
2		14X-54-53360	• Hinge	1	80001-
3		205-60-71220	• Lock Assembly	1	80001-
4		14X-54-53770	• Seal	1	80001-
5		14X-54-53390	• Plate	1	80007-

https://truckmanualshub.com/

FIG. M2211-001003 Fender Cover, Step

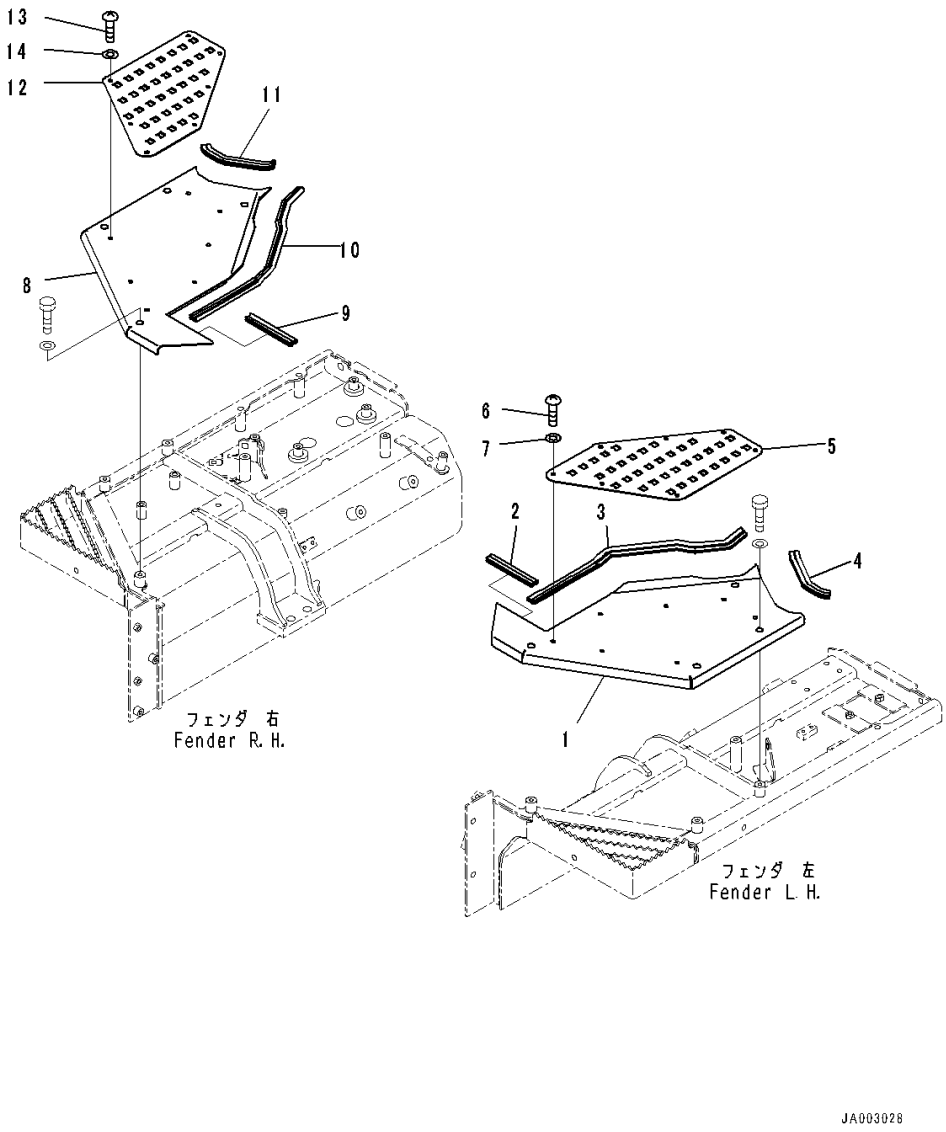

Index	Code	Part Number	Description	Qty	Serial Number
1		14X-54-53400	Cover Assembly,LHS	1	80001-
2		14X-54-53470	• Seal	1	80001-
3		14X-54-53480	• Seal	1	80001-
4		14X-54-53490	• Seal	1	80001-
5		14X-54-53420	Plate	1	80001-
6		01245-00816	Screw	7	80001-
7		01643-70823	Washer	7	80001-
8		14X-54-53500	Cover Assembly,RHS	1	80001-
9		14X-54-53470	• Seal	1	80001-
10		14X-54-53480	• Seal	1	80001-
11		14X-54-53490	• Seal	1	80001-
12		14X-54-53440	Plate	1	80001-
13		01245-00816	Screw	7	80001-
14		01643-70823	Washer	7	80001-

https://truckmanualshub.com/

FIG. M2211-001004 Fender Cover, Mounting

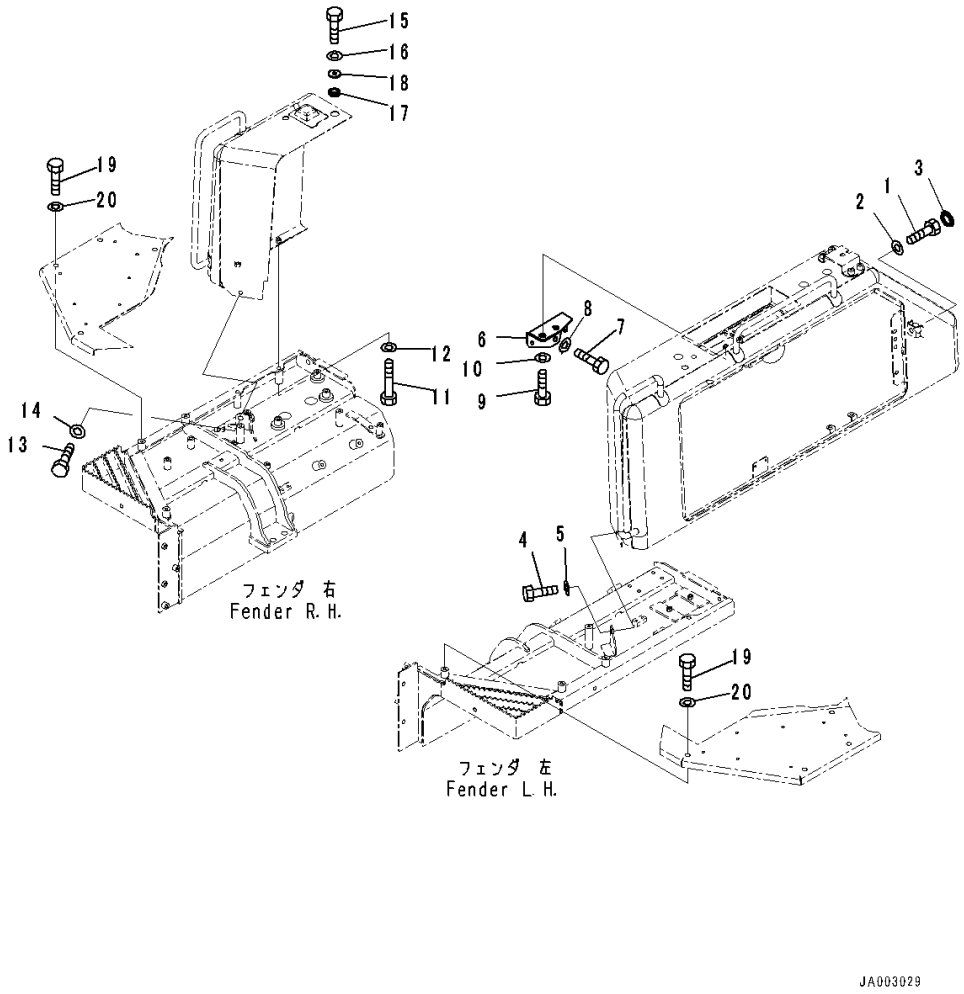

Index	Code	Part Number	Description	Qty	Serial Number
1		01010-81235	Bolt	4	80001-
2		01643-31232	Washer	4	80001-
3		195-54-42981	Cap	1	80001-
4		01010-81225	Bolt	1	80001-
5		01643-31232	Washer	1	80001-
6		14X-54-53261	Bracket	1	80001-
7		01010-81225	Bolt	2	80001-
8		01643-31232	Washer	2	80001-
9		01010-81225	Bolt	2	80001-
10		175-54-34170	Washer	2	80001-
11		01010-81295	Bolt	2	80001-
12		01643-31232	Washer	2	80001-
13		01010-81225	Bolt	1	80001-
14		01643-31232	Washer	1	80001-
15		01010-81235	Bolt	1	80001-
16		01643-31232	Washer	1	80001-
17		175-03-42140	Rubber	1	80001-
18		415-46-11370	Spacer	1	80001-
19		01010-81225	Bolt	8	80001-
20		175-54-34170	Washer	8	80001-

https://truckmanualshub.com/

FIG. M2211-002001 Fender Cover, With Handrail, Operator's Seat, ROPS Canopy, Battery Box Cover

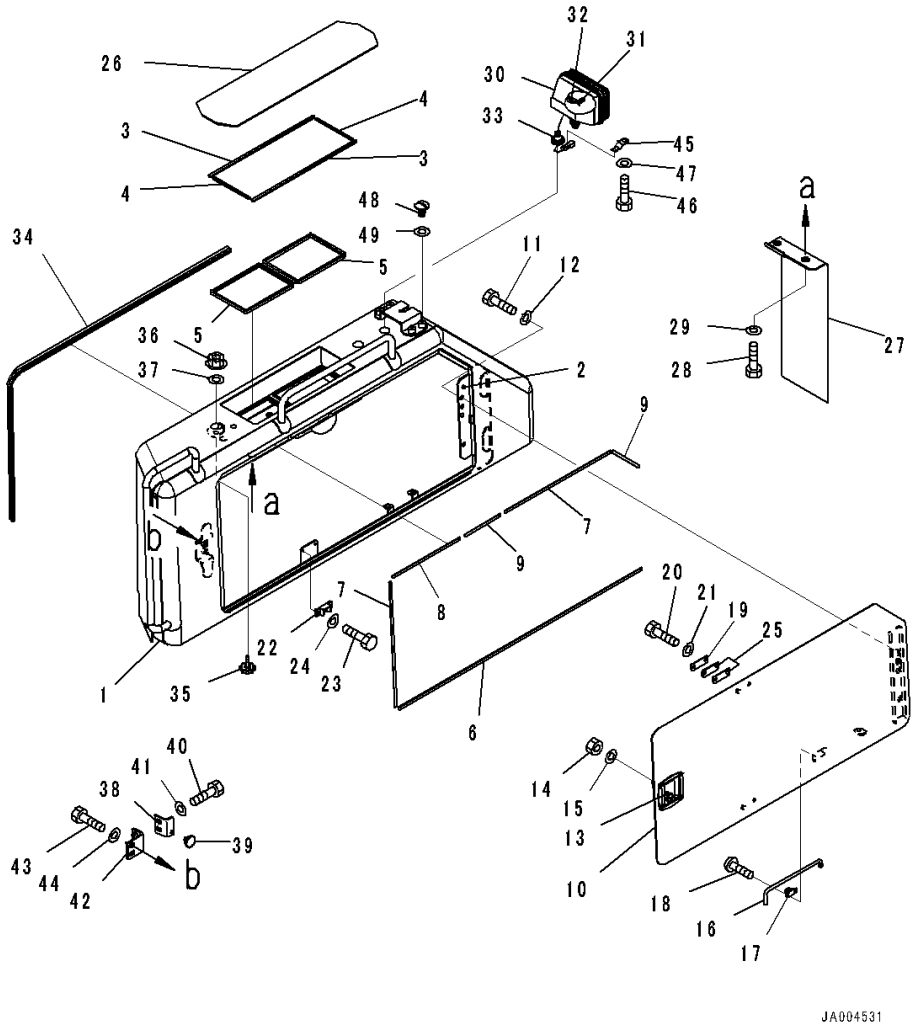

Index	Code	Part Number	Description	Qty	Serial Number
1		14X-54-53212	Cover	1	80001-
2		14X-54-53341	• Hinge	1	80001-
3		14X-54-53560	• Sheet,Bonded	2	80001-
4		14X-54-53570	• Sheet,Bonded	2	80001-
5		14X-54-53580	• Seal,Bonded	2	80001-
6		14X-54-53710	• Sheet,Bonded	1	80001-
7		14X-54-53720	• Sheet,Bonded	2	80001-
8		14X-54-53730	• Sheet,Bonded	1	80001-
9		14X-54-53740	• Sheet,Bonded	2	80001-
10		14X-54-53222	Cover	1	80001-
11		01010-81020	Bolt	4	80001-
12		01643-31032	Washer	4	80001-
13		14X-54-54310	Lock	1	80001-
14		01580-10605	Nut	4	80001-
15		01643-30623	Washer	4	80001-
16		20Y-54-29232	Bar	1	80001-
17		198-54-19150	Spring	1	80001-
18		01023-10608	Screw	2	80001-
19		205-54-53550	Dovetail	2	80001-
20		01010-80612	Bolt	4	80001-
21		01643-30623	Washer	4	80001-
22		205-54-51970	Dovetail	2	80001-
23		01010-80616	Bolt	4	80001-
24		01643-30623	Washer	4	80001-
25		14X-54-53860	Shim	4	80001-
26		14X-Y11-2241	Cover	1	80001-
27		14X-54-53281	Plate	1	80001-
28		01010-81020	Bolt	2	80001-
29		01643-31032	Washer	2	80001-
		14X-06-52730	Lamp Assembly, Working	1	80001-
30		17A-06-17931	• Lamp Assembly, Working	1	80001-
31		17A-06-17970	• • Bulb, 70watt	1	80001-
32		17A-06-17980	• • Sleeve	1	80001-
33		144-43-81620	• Grommet	1	80001-
34		14X-54-53760	Seal	1	80001-
35		195-54-68760	Knob	2	80001-
36		01594-01008	Nut	2	80001-
37		01640-21016	Washer	2	80001-
38		14X-54-53840	Plate	1	80001-
39		14X-54-12960	Stopper	1	80001-

https://truckmanualshub.com/

FIG. M2211-002001 Fender Cover, With Handrail, Operator's Seat, ROPS Canopy, Battery Box Cover

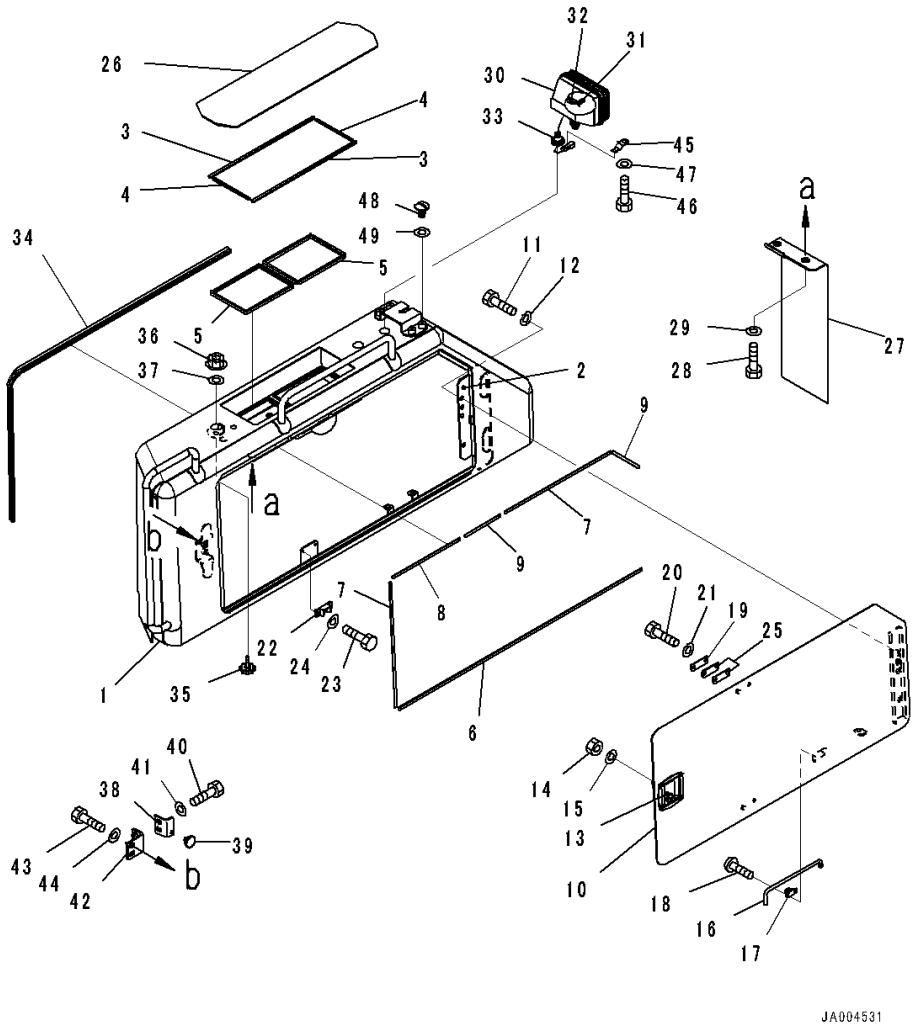

Index	Code	Part Number	Description	Qty	Serial Number
40		01010-81230	Bolt	2	80001-
41		01643-31232	Washer	2	80001-
42		14X-54-53850	Plate	1	80001-
43		01010-81230	Bolt	2	80001-
44		01643-31232	Washer	2	80001-
45		08193-21012	Clip	1	80001-
46		01010-81020	Bolt	1	80001-
47		01643-31032	Washer	1	80001-
48		14X-54-53380	Cap	4	80001-
49		01643-31032	Washer	4	80001-

https://truckmanualshub.com/

FIG. M2211-002002 Fender Cover, Valve Cover

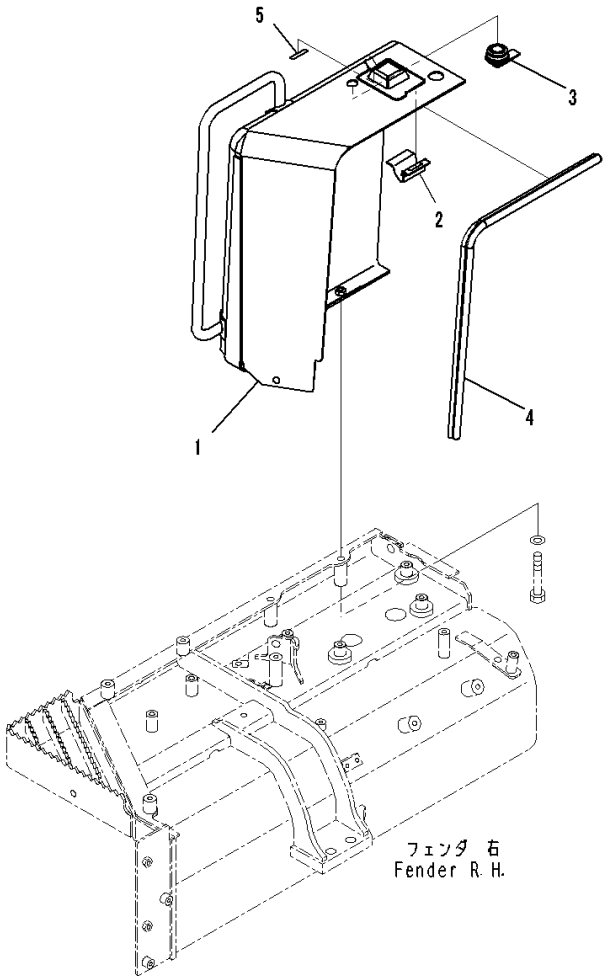

JA004017

Index	Code	Part Number	Description	Qty	Serial Number
		Note: This list covers following specifications.			
		With Handrail, Operator's Seat, ROPS Canopy			
		With Handrail, Operator's Seat, Refuel Pump			
1		14X-54-53301	Cover Assembly,RHS	1	80001-
2		14X-54-53360	• Hinge	1	80001-
3		205-60-71220	• Lock Assembly	1	80001-
4		14X-54-53770	• Seal	1	80001-
5		14X-54-53390	• Plate	1	80001-

https://truckmanualshub.com/

FIG. M2211-002003 Fender Cover, Step

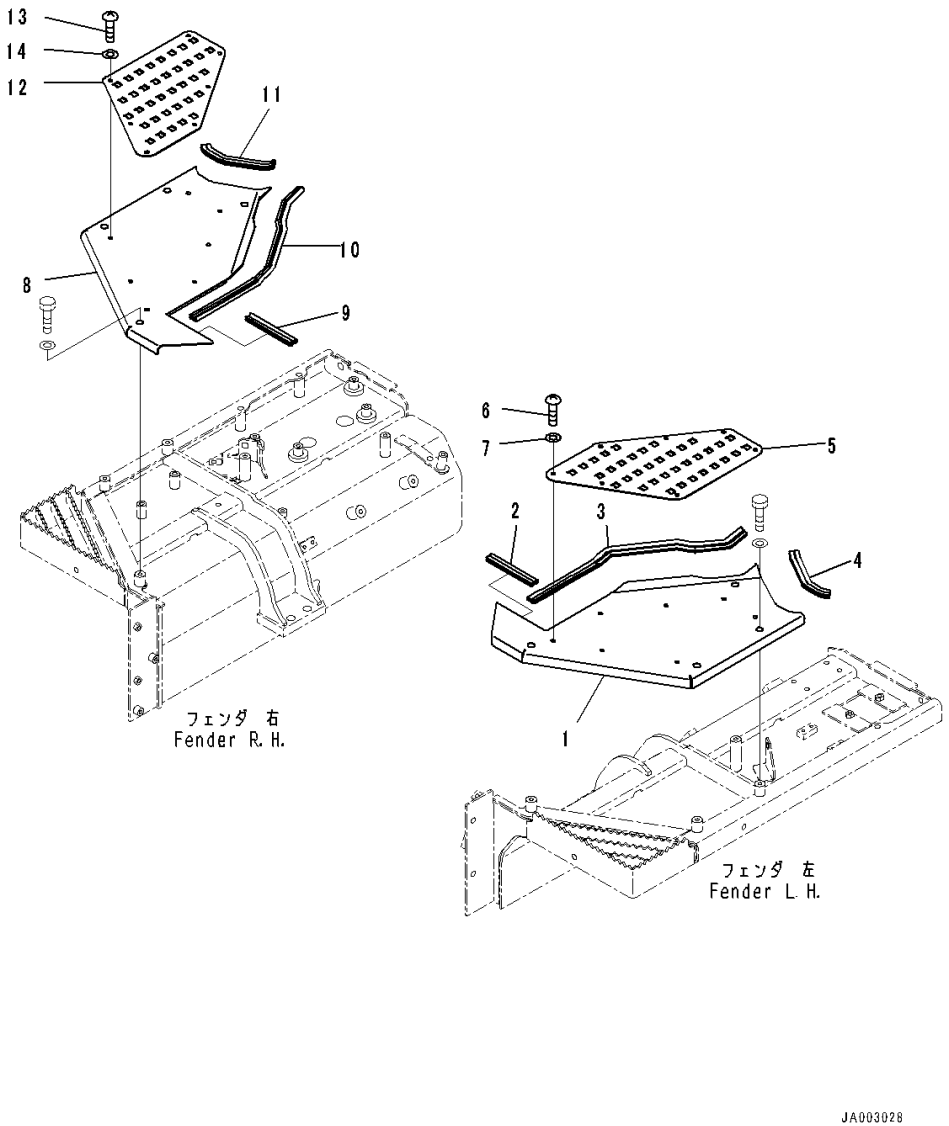

Index	Code	Part Number	Description	Qty	Serial Number
		Note: This list covers following specifications.			
		With Handrail, Operator's Seat, ROPS Canopy			
		With Handrail, Operator's Seat, Refuel Pump			
1		14X-54-53400	Cover Assembly,LHS	1	80001-
2		14X-54-53470	• Seal	1	80001-
3		14X-54-53480	• Seal	1	80001-
4		14X-54-53490	• Seal	1	80001-
5		14X-54-53420	Plate	1	80001-
6		01245-00816	Screw	7	80001-
7		01643-70823	Washer	7	80001-
8		14X-54-53500	Cover Assembly,RHS	1	80001-
9		14X-54-53470	• Seal	1	80001-
10		14X-54-53480	• Seal	1	80001-
11		14X-54-53490	• Seal	1	80001-
12		14X-54-53440	Plate	1	80001-
13		01245-00816	Screw	7	80001-
14		01643-70823	Washer	7	80001-

https://truckmanualshub.com/

FIG. M2211-002004 Fender Cover, Mounting

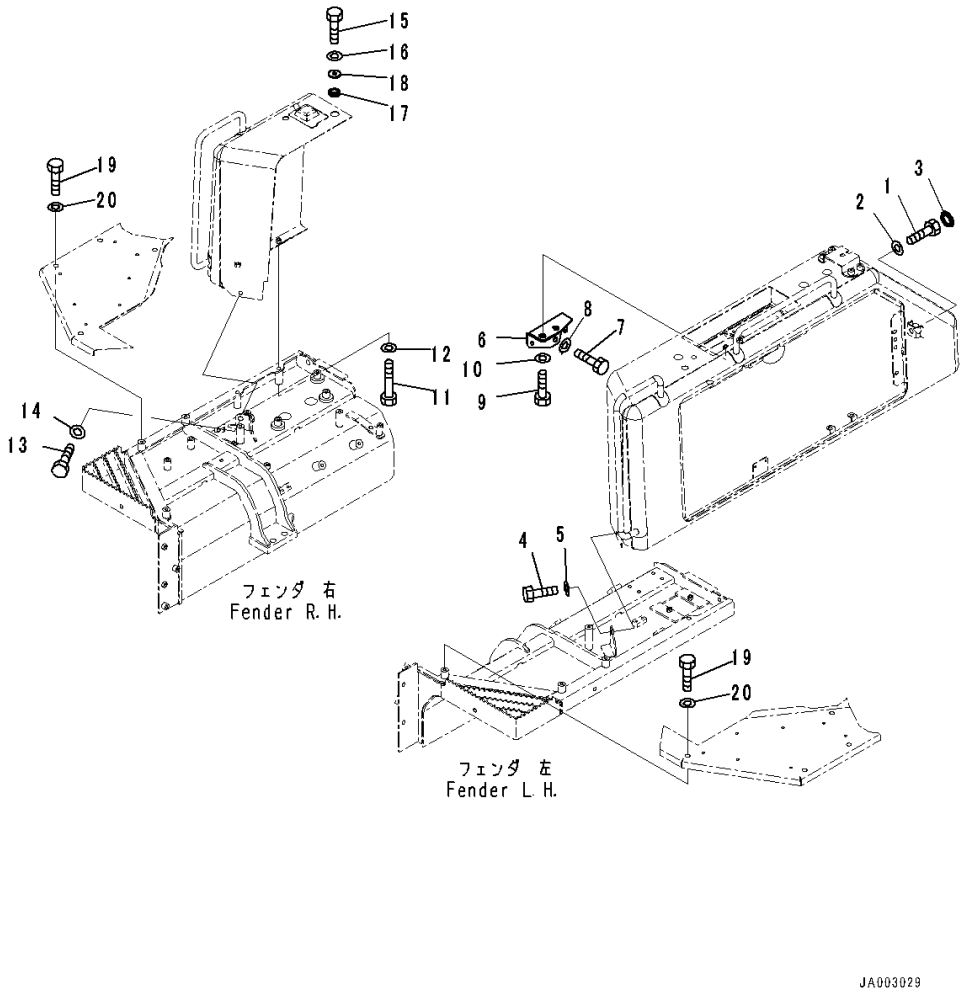

Index	Code	Part Number	Description	Qty	Serial Number
		Note: This list covers following specifications.			
		With Handrail, Operator's Seat, ROPS Canopy			
		With Handrail, Operator's Seat, Refuel Pump			
1		01010-81235	Bolt	4	80001-
2		01643-31232	Washer	4	80001-
3		195-54-42981	Cap	1	80001-
4		01010-81225	Bolt	1	80001-
5		01643-31232	Washer	1	80001-
6		14X-54-53261	Bracket	1	80001-
7		01010-81225	Bolt	2	80001-
8		01643-31232	Washer	2	80001-
9		01010-81225	Bolt	2	80001-
10		175-54-34170	Washer	2	80001-
11		01010-81295	Bolt	2	80001-
12		01643-31232	Washer	2	80001-
13		01010-81225	Bolt	1	80001-
14		01643-31232	Washer	1	80001-
15		01010-81235	Bolt	1	80001-
16		01643-31232	Washer	1	80001-
17		175-03-42140	Rubber	1	80001-
18		415-46-11370	Spacer	1	80001-
19		01010-81225	Bolt	8	80001-
20		175-54-34170	Washer	8	80001-80060

https://truckmanualshub.com/

FIG. M2211-003001 Fender Cover, With Handrail, Operator's Seat, Refuel Pump, Battery Box Cover

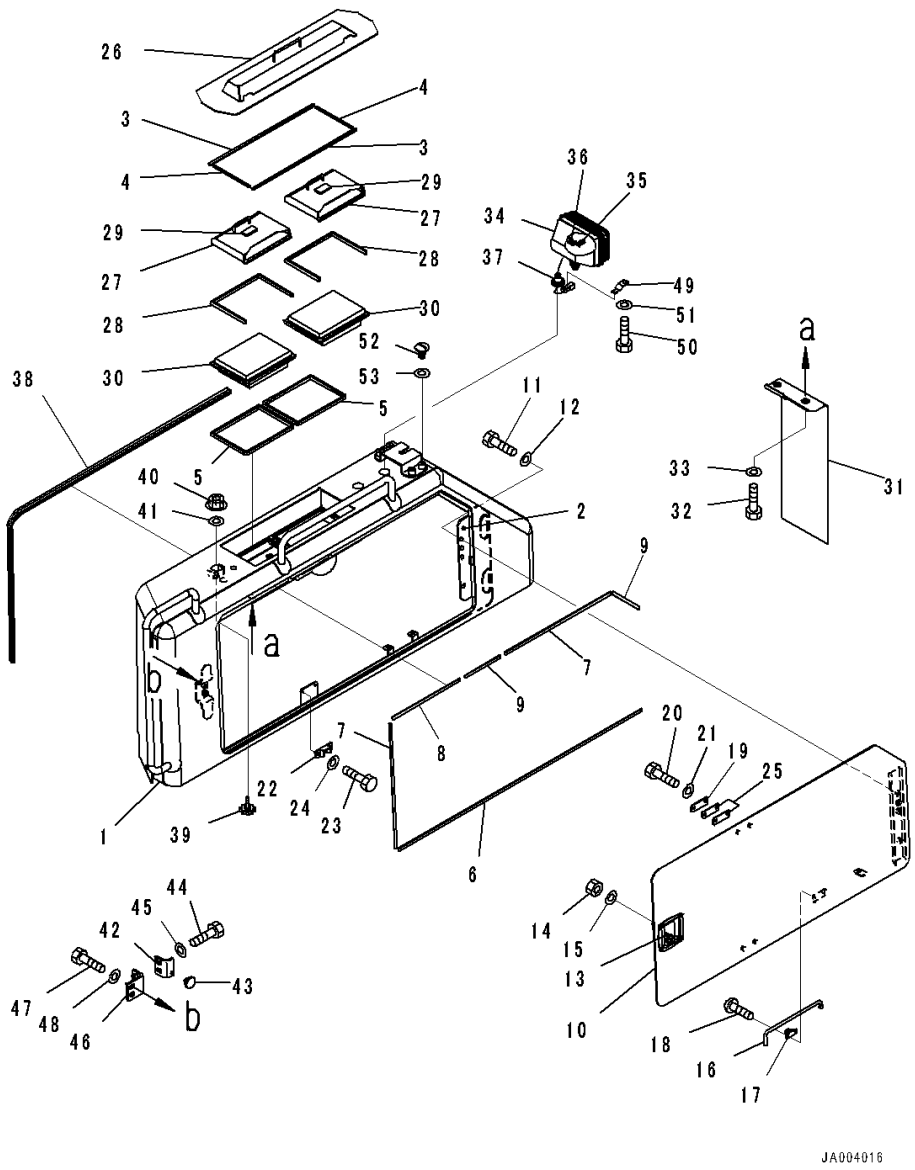

Index	Code	Part Number	Description	Qty	Serial Number
1		14X-54-53960	Cover,LHS	1	80001-
2		14X-54-53341	• Hinge	1	80001-
3		14X-54-53560	• Sheet	2	80001-
4		14X-54-53570	• Sheet	2	80001-
5		14X-54-53580	• Seal	2	80001-
6		14X-54-53710	• Sheet	1	80001-
7		14X-54-53720	• Sheet	2	80001-
8		14X-54-53730	• Sheet	1	80001-
9		14X-54-53740	• Sheet	2	80001-
10		14X-54-53222	Cover	1	80001-
11		01010-81020	Bolt	3	80001-
12		01643-31032	Washer	3	80001-
13		14X-54-54310	Lock	1	80001-
14		01580-10605	Nut	4	80001-
15		01643-30623	Washer	4	80001-
16		20Y-54-29232	Bar	1	80001-
17		198-54-19150	Spring	1	80001-
18		01023-10608	Screw	2	80001-
19		205-54-53550	Dovetail	2	80001-
20		01010-80612	Bolt	4	80001-
21		01643-30623	Washer	4	80001-
22		205-54-51970	Dovetail	2	80001-
23		01010-80616	Bolt	4	80001-
24		01643-30623	Washer	4	80001-
25		14X-54-53860	Shim	4	80001-
26		14X-Y11-1822	Cover	1	80001-
27		14X-Y11-2270	Cover Assembly	2	80001-
28		134-X11-1630	• Seal	1	80001-
29		14X-911-8520	• Seal	1	80001-
30		17M-911-3530	Element	2	80001-
31		14X-54-53281	Plate	1	80001-
32		01010-81020	Bolt	2	80001-
33		01643-31032	Washer	2	80001-
		14X-06-52730	Lamp Assembly, Working	1	80001-
34		17A-06-17931	• Lamp Assembly, Working	1	80001-
35		17A-06-17970	• • Bulb, 70watt	1	80001-
36		17A-06-17980	• • Sleeve	1	80001-
37		144-43-81620	• Grommet	1	80001-
38		14X-54-53760	Seal	1	80001-
39		195-54-68760	Knob	2	80001-

https://truckmanualshub.com/

FIG. M2211-003001 Fender Cover, With Handrail, Operator's Seat, Refuel Pump, Battery Box Cover

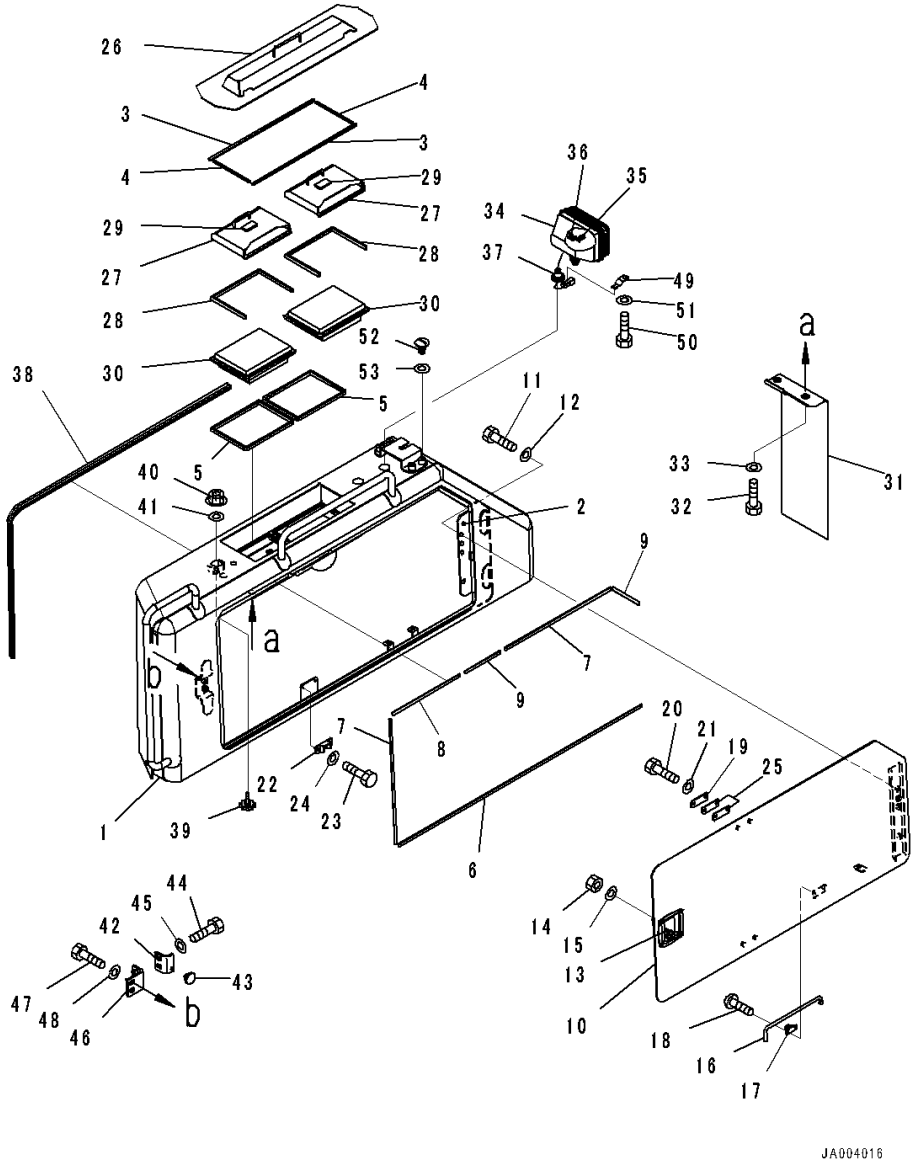

Index	Code	Part Number	Description	Qty	Serial Number
40		01594-01008	Nut	2	80001-
41		01640-21016	Washer	2	80001-
42		14X-54-53840	Plate	1	80001-
43		14X-54-12960	Stopper	1	80001-
44		01010-81230	Bolt	2	80001-
45		01643-31232	Washer	2	80001-
46		14X-54-53850	Plate	1	80001-
47		01010-81230	Bolt	2	80001-
48		01643-31232	Washer	2	80001-
49		08193-21012	Clip	1	80001-
50		01010-81020	Bolt	1	80001-
51		01643-31032	Washer	1	80001-
52		14X-54-53380	Cap	4	80001-
53		01643-31032	Washer	4	80001-

https://truckmanualshub.com/

FIG. M2214-001001 Shovel Holder

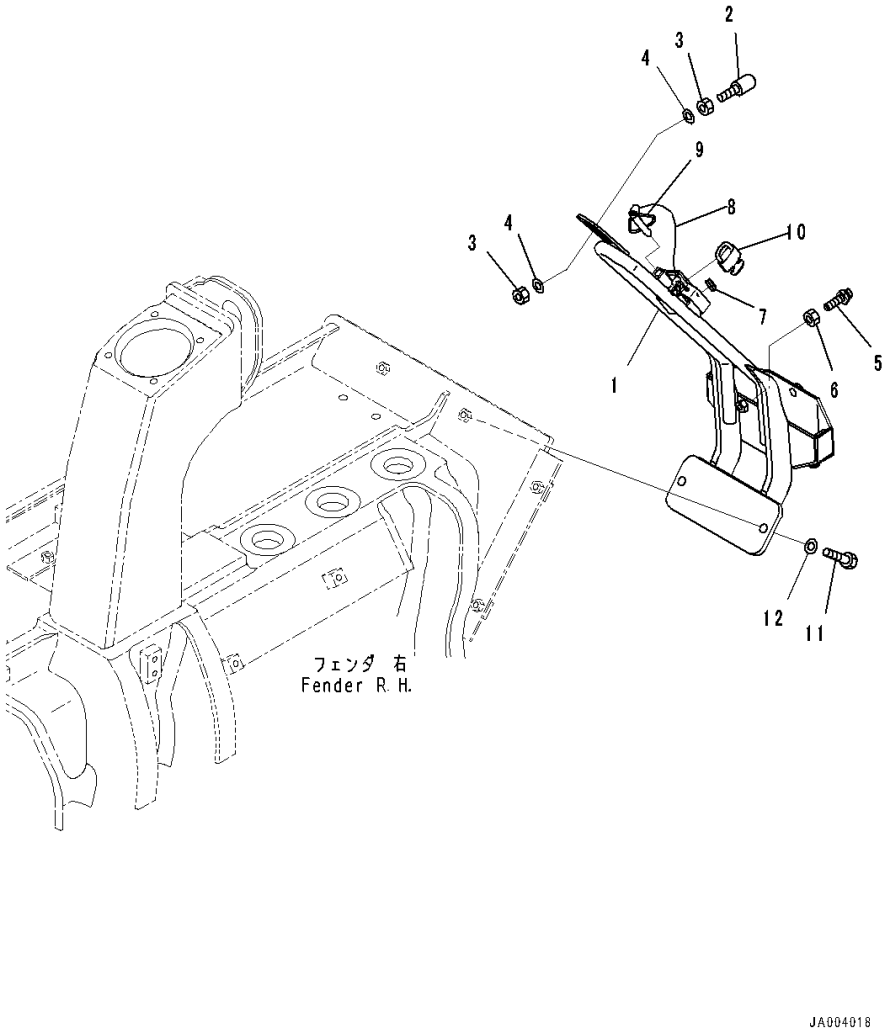

Index	Code	Part Number	Description	Qty	Serial Number
1		14X-54-53611	Holder	1	80001-
2		09453-00002	Stopper	1	80001-
3		01580-11210	Nut	2	80001-
4		01643-31232	Washer	2	80001-
5		09311-41237	Bumper, Pedal	3	80001-
6		01580-11210	Nut	3	80020-
7		09415-00506	Cap	1	80001-
8		14X-54-12750	Holder	1	80001-
9		14X-54-12770	Holder	1	80001-
10		09460-00000	Lock	1	80001-
11		01010-81240	Bolt	2	80001-
12		01643-31232	Washer	2	80001-

https://truckmanualshub.com/

FIG. M2240-001001 Rear Cover, Strengthened

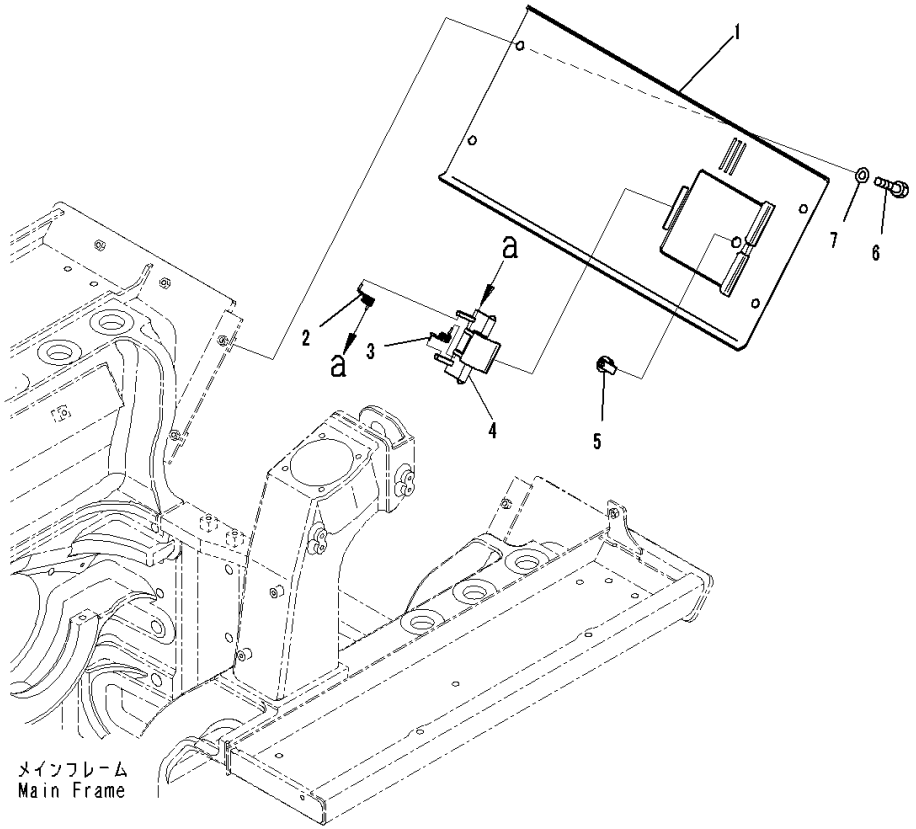

Index	Code	Part Number	Description	Qty	Serial Number
1		14X-54-53511	Cover	1	80001-
2		09467-00002	• Spring	1	80001-
3		09467-00006	• Spring	1	80001-
4		14X-54-53530	• Bracket	1	80001-
5		205-60-71220	• Lock Assembly	1	80001-
6		01010-81235	Bolt	4	80001-
7		01643-31232	Washer	4	80001-

https://truckmanualshub.com/

FIG. M2240-002001 Rear Cover, Strengthened, For Machine With Ripper

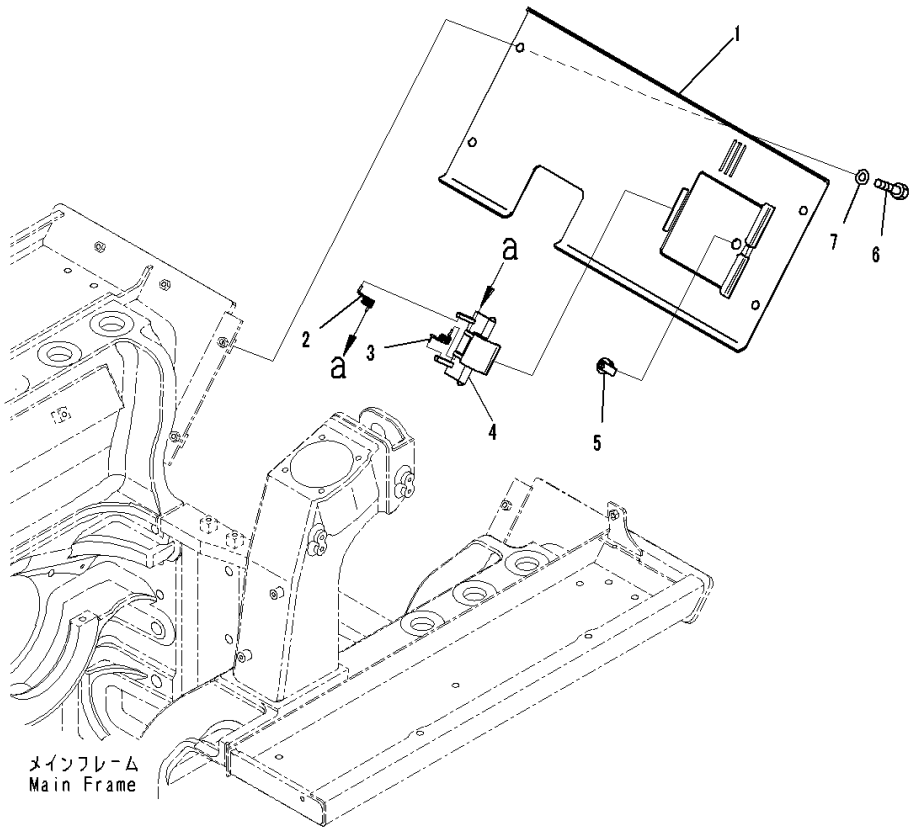

Index	Code	Part Number	Description	Qty	Serial Number
1		14X-54-53521	Cover	1	80001-
2		09467-00002	• Spring	1	80001-
3		09467-00006	• Spring	1	80001-
4		14X-54-53530	• Bracket	1	80001-
5		205-60-71220	• Lock Assembly	1	80001-
6		01010-81235	Bolt	4	80001-
7		01643-31232	Washer	4	80001-

https://truckmanualshub.com/

FIG. M2810-001001 Under Guard, Strengthened

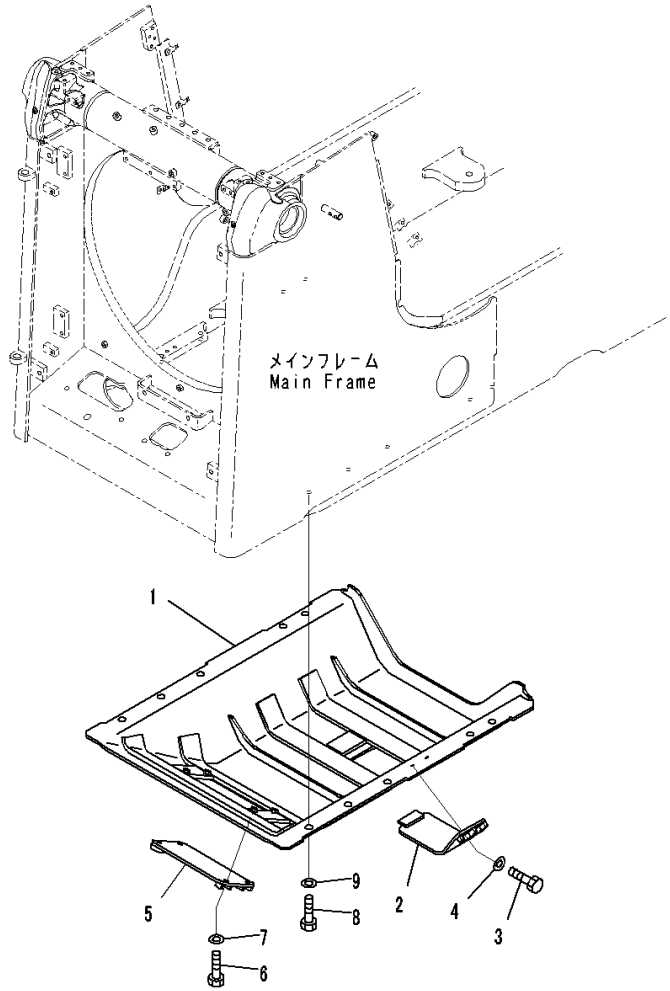

Index	Code	Part Number	Description	Qty	Serial Number
1		14X-54-54111	Cover	1	80001-
2		14X-54-54121	Cover	1	80001-
3		01010-81235	Bolt	2	80001-
4		01643-31232	Washer	2	80001-
5		14X-54-54131	Cover	1	80001-
6		01010-81235	Bolt	4	80001-
7		01643-31232	Washer	4	80001-
8		01010-81635	Bolt	10	80001-
9		01643-31645	Washer	10	80001-

https://truckmanualshub.com/

FIG. M2810-004001 Under Guard, Hinged, For EU Noise Reguration

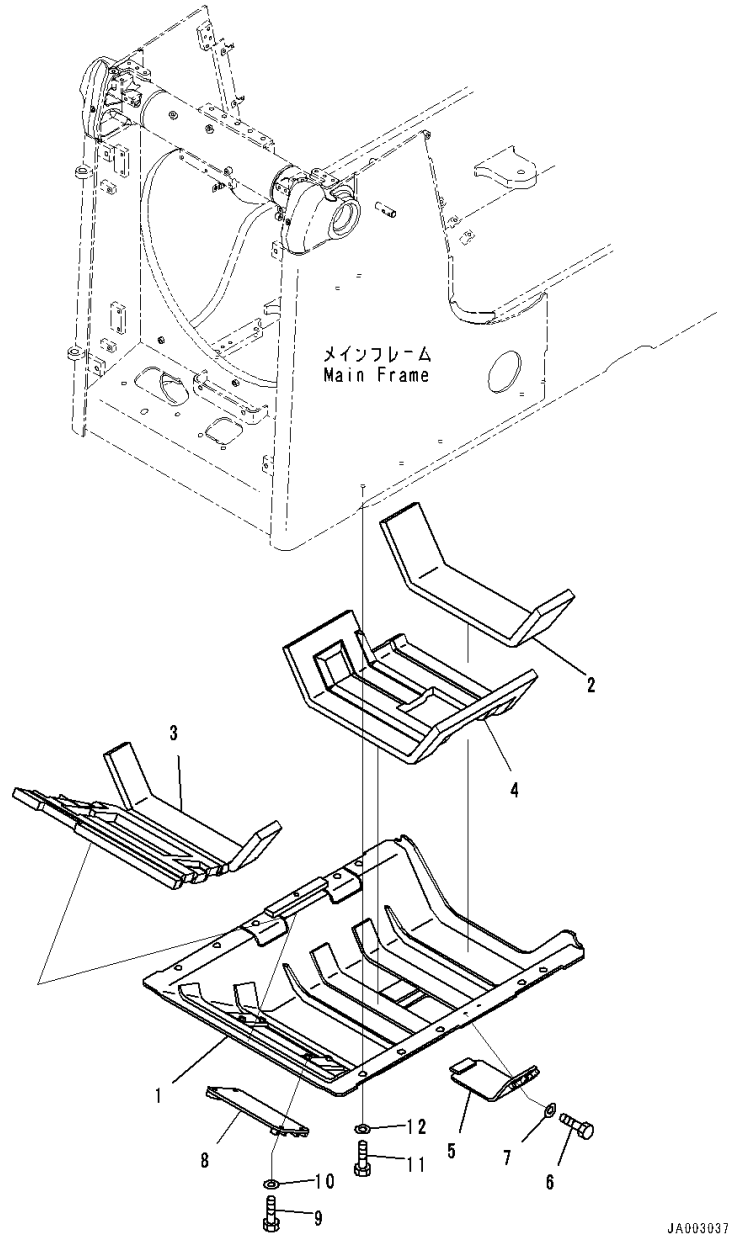

Index	Code	Part Number	Description	Qty	Serial Number
1		14X-A62-5511	Guard	1	80001-
2		14X-A62-5440	• Sheet,Bonded	1	80001-
3		14X-A62-5581	• Sheet,Bonded	1	80001-
4		14X-A62-5590	• Sheet,Bonded	1	80001-
5		14X-54-54121	Cover	1	80001-
6		01010-81235	Bolt	2	80001-
7		01643-31232	Washer	2	80001-
8		14X-54-54131	Cover	1	80001-
9		01010-81235	Bolt	4	80001-
10		01643-31232	Washer	4	80001-
11		01010-81635	Bolt	11	80001-
12		01643-31645	Washer	11	80001-

https://truckmanualshub.com/

FIG. M2810-002001 Under Guard, Hinged

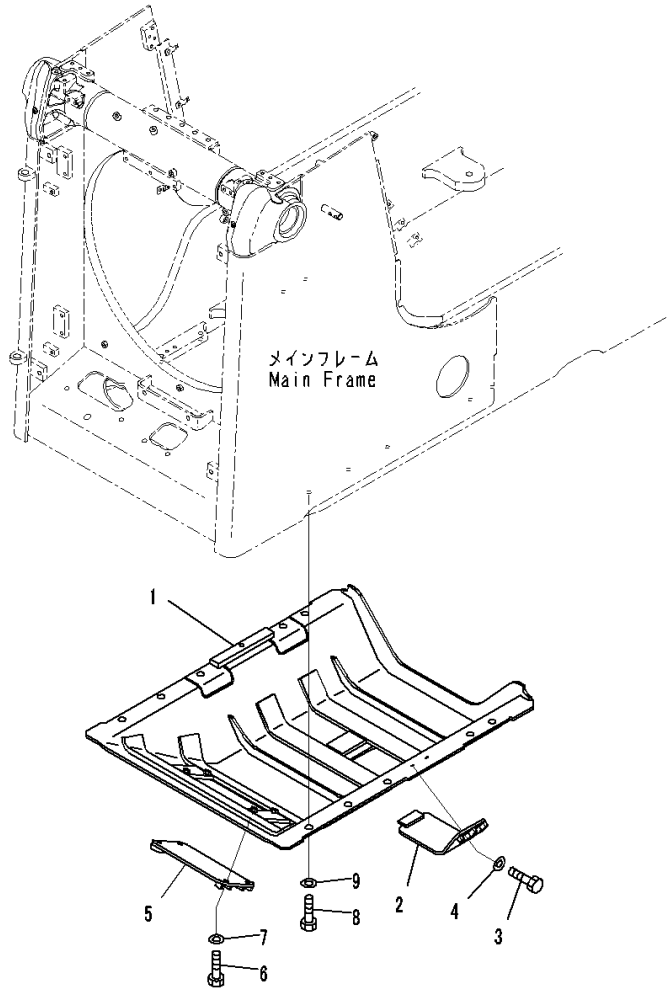

Index	Code	Part Number	Description	Qty	Serial Number
1		14X-54-54211	Guard	1	80001-
2		14X-54-54121	Cover	1	80001-
3		01010-81235	Bolt	2	80001-
4		01643-31232	Washer	2	80001-
5		14X-54-54131	Cover	1	80001-
6		01010-81235	Bolt	4	80001-
7		01643-31232	Washer	4	80001-
8		01010-81635	Bolt	11	80001-
9		01643-31645	Washer	11	80001-

https://truckmanualshub.com/

FIG. M2810-003001 Under Guard, Strengthened, For EU Noise Reguration

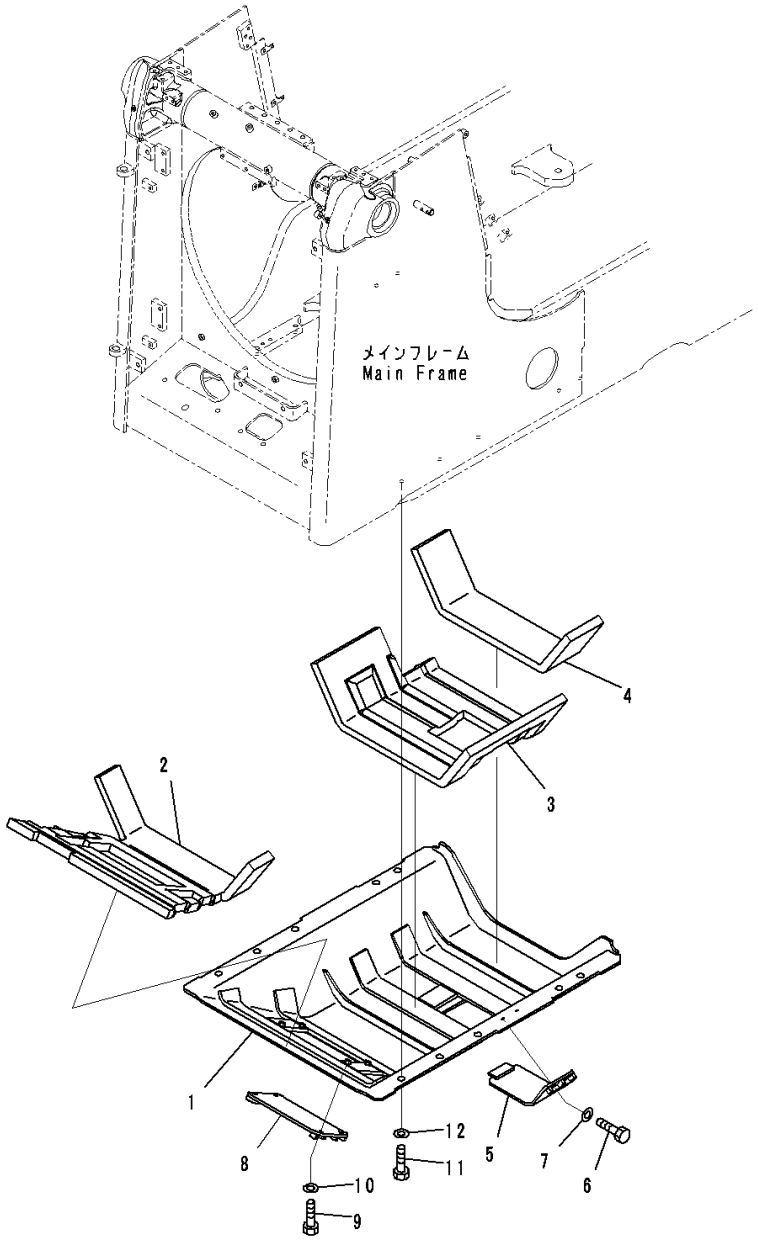

Index	Code	Part Number	Description	Qty	Serial Number
1		14X-A62-5410	Guard	1	80001-
2		14X-A62-5420	• Sheet,Bonded	1	80001-
3		14X-A62-5430	• Sheet,Bonded	1	80001-
4		14X-A62-5440	• Sheet,Bonded	1	80001-
5		14X-54-54121	Cover	1	80001-
6		01010-81235	Bolt	2	80001-
7		01643-31232	Washer	2	80001-
8		14X-54-54131	Cover	1	80001-
9		01010-81235	Bolt	4	80001-
10		01643-31232	Washer	4	80001-
11		01010-81635	Bolt	10	80001-
12		01643-31645	Washer	10	80001-

https://truckmanualshub.com/

FIG. M2811-001001 Front Pull Hook

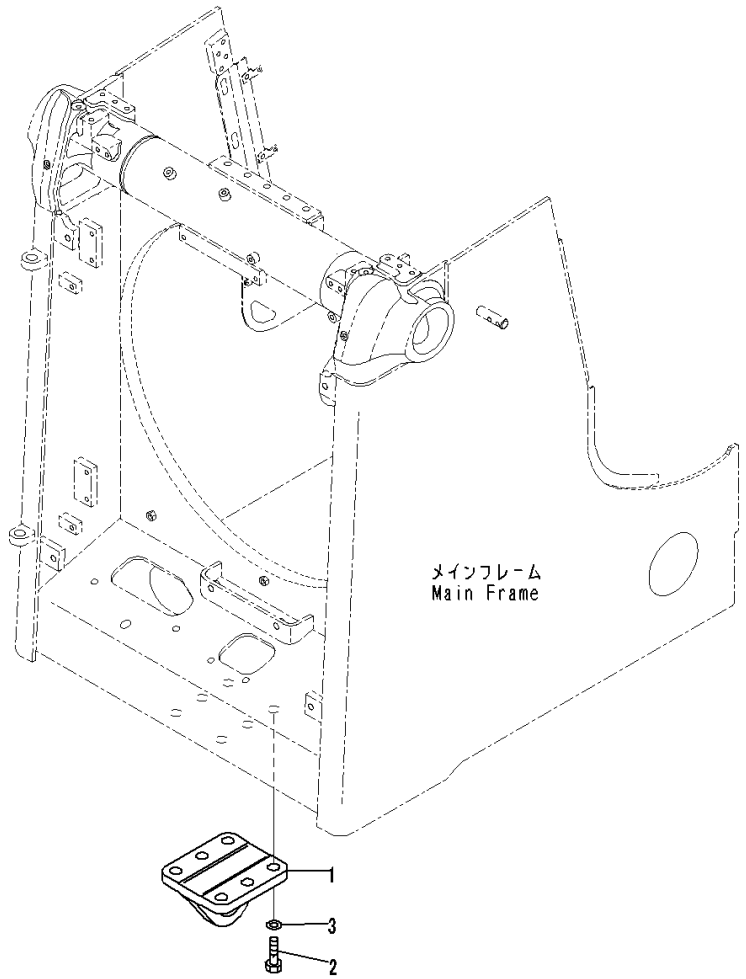

Index	Code	Part Number	Description	Qty	Serial Number
1		14X-958-1510	Hook	1	80001-
2		01010-82460	Bolt	6	80001-
3		01643-32460	Washer	6	80001-

https://truckmanualshub.com/

https://truckmanualshub.com/

UNDERCARRIAGE

FIG. R0110-001001 Front Idler

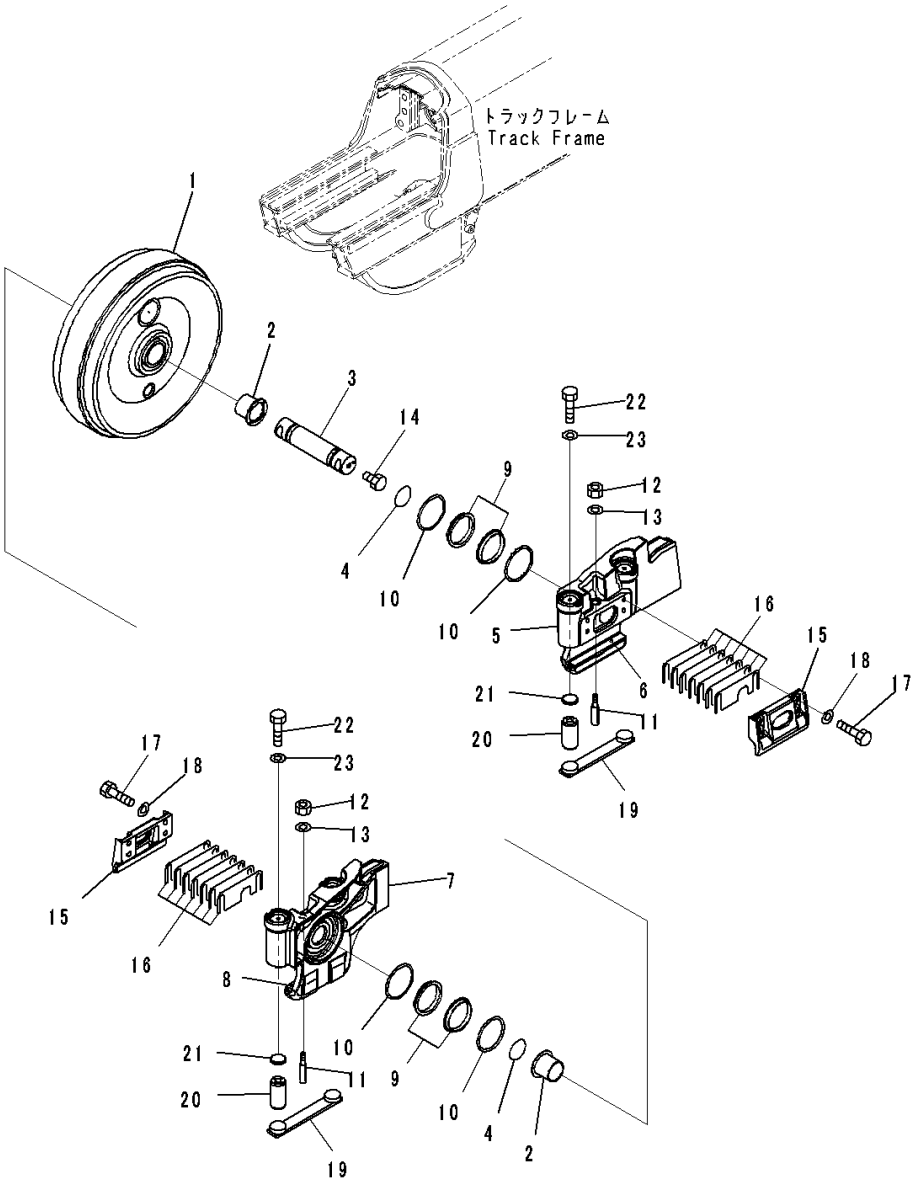

Index	Code	Part Number	Description	Qty	Serial Number
		14X-30-00431	Idler Assembly	2	80001-
1		14X-30-12115	• Idler	1	80001-
2		14X-30-12181	• Bushing	2	80001-
3		14X-30-12164	• Shaft	1	80001-
4		427-15-15910	• O-ring	2	80001-
5		14X-30-51511	• Support,LHS	1	80001-
6		14X-30-12232	• • Plate,Welded	1	80001-
7		14X-30-51521	• Support,RHS	1	80001-
8		14X-30-12232	• • Plate,Welded	1	80001-
		205-30-00220	• Floating Seal Assembly	2	80001-
9	C1		• • Seal	2	80001-
10		205-30-66561	• • O-ring	2	80183-
11		130-30-13170	• Bolt	2	80001-
12		01582-11613	• Nut	2	80001-
13		01643-31645	• Washer	2	80001-
14		07052-31217	• Plug	1	80001-
15		14X-30-51420	Cover	4	80001-
16		14X-30-12252	Shim, T=1.0mm	28	80001-
17		01010-81645	Bolt	16	80001-
18		01643-31645	Washer	16	80001-
19		14X-30-51470	Plate Assembly	4	80001-
20		155-30-13230	Spring	8	80001-
21		195-30-17960	Plate	8	80001-
22		01016-51245	Bolt	8	80001-
23		01643-31232	Washer	8	80001-

https://truckmanualshub.com/

FIG. R0120-001001 Idler Cushion

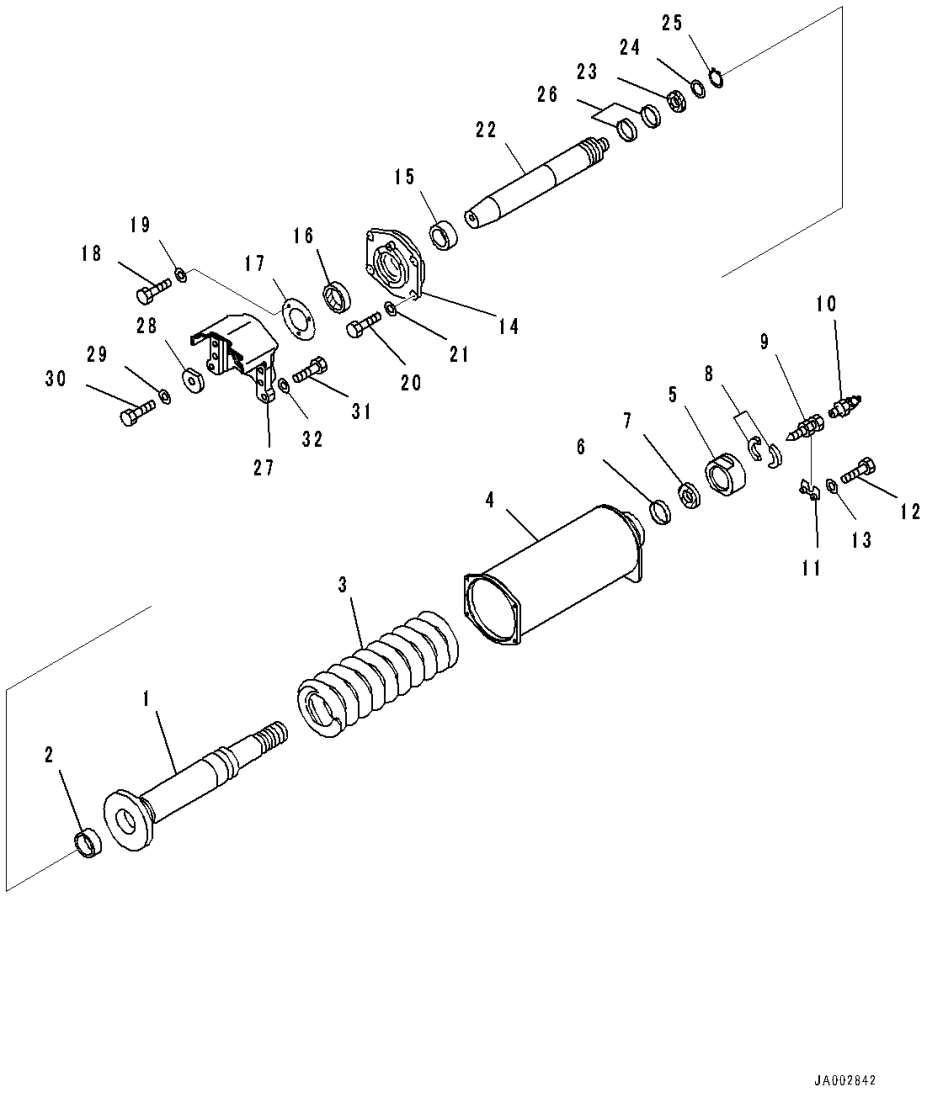

Index	Code	Part Number	Description	Qty	Serial Number
1		14X-30-51531	Cylinder	2	80001-
2		07177-09040	Bushing	2	80001-
3		14X-30-51561	Spring	2	80001-
4		14X-30-51551	Cab	2	80001-
5		14X-30-51580	Nut	2	80001-
6		07177-09040	Bushing	2	80001-
7		207-30-54160	Seal	2	80001-
8		154-30-73170	Spacer	4	80001-
9		203-30-42260	Valve	2	80001-
10		07020-00900	Fitting, Grease	2	80001-
11		14X-30-33170	Plate	2	80001-
12		01010-80830	Bolt	4	80001-
13		01643-30823	Washer	4	80001-
14		14X-30-13164	Holder	2	80001-
15		07177-09040	Bushing	2	80001-
16		207-30-54160	Seal	2	80001-
17		135-30-14620	Cover	2	80001-
18		01010-81020	Bolt	6	80001-
19		01643-31032	Washer	6	80001-
20		01010-81235	Bolt	8	80001-
21		01643-31232	Washer	8	80001-
22		14X-30-51490	Piston	2	80001-
23		150-30-13442	Packing	2	80001-
24		150-30-13480	Ring	2	80001-
25		150-30-13460	Ring	2	80001-
26		150-30-13430	Ring	4	80001-
27		14X-30-51380	Yoke	2	80001-
28		195-30-14151	Washer	2	80001-
29		01643-32460	Washer	2	80001-
30		01010-82460	Bolt	2	80001-
31		01010-82070	Bolt	12	80001-
32		01643-32060	Washer	12	80001-

https://truckmanualshub.com/

FIG. R0200-002001 Track Roller, Plus Type, For Long Track, (1/3)

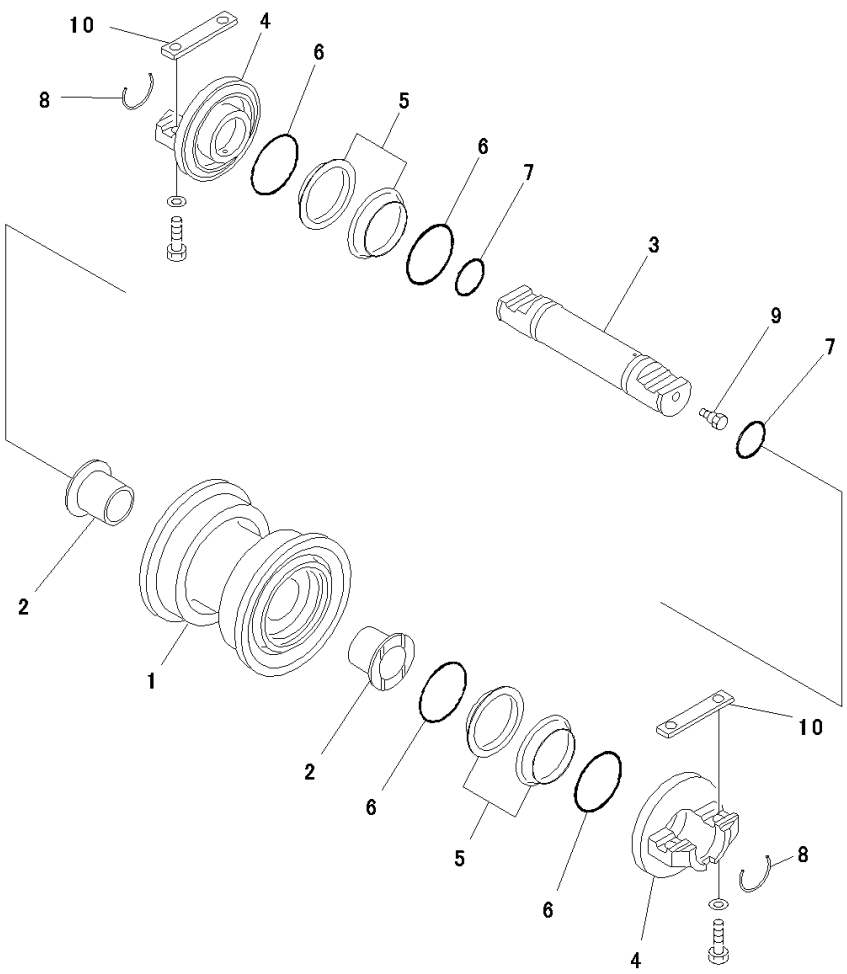

Index	Code	Part Number	Description	Qty	Serial Number
		14X-30-01050	Roller Assembly, Track	12	80009-
1		14X-30-14410	• Roller	1	80009-
2		14X-30-13340	• Bushing	2	80009-
3		14X-30-14152	• Shaft	1	80009-
4		14X-30-14331	• Collar	2	80009-
		205-30-00220	• Floating Seal Assembly	2	80009-
5	C1		• • Seal	2	80009-
6		205-30-66561	• • O-ring	2	80183-
7		427-15-15910	• O-ring	2	80009-
8		14X-30-14161	• Lock	2	80009-
9		07052-31217	• Plug	1	80009-
10		14X-30-14170	Key	24	80009-

https://truckmanualshub.com/

FIG. R0200-002002 Track Roller, Plus Type, For Long Track, (2/3)

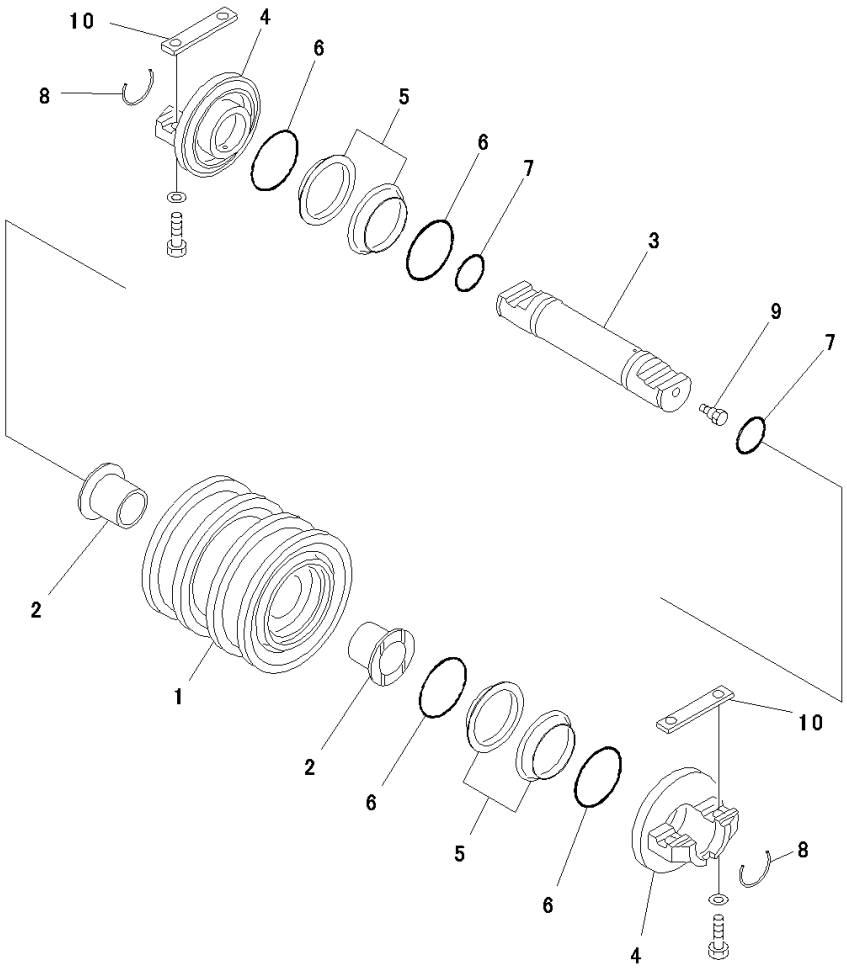

Index	Code	Part Number	Description	Qty	Serial Number
		14X-30-01060	Roller Assembly, Track	4	80009-
1		14X-30-14420	• Roller	1	80009-
2		14X-30-13340	• Bushing	2	80009-
3		14X-30-14152	• Shaft	1	80009-
4		14X-30-14331	• Collar	2	80009-
		205-30-00220	• Floating Seal Assembly	2	80009-
5	C1		• • Seal	2	80009-
6		205-30-66561	• • O-ring	2	80183-
7		427-15-15910	• O-ring	2	80009-
8		14X-30-14161	• Lock	2	80009-
9		07052-31217	• Plug	1	80009-
10		14X-30-14170	Key	8	80009-

https://truckmanualshub.com/

FIG. R0200-002003 Track Roller, Plus Type, For Long Track, (3/3)

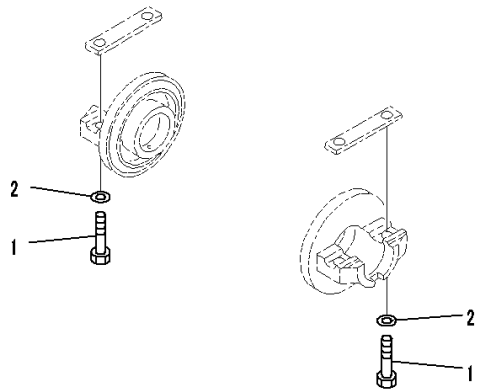

00035937

Index	Code	Part Number	Description	Qty	Serial Number
1		01010-81865	Bolt	64	80009-
2		01643-31845	Washer	64	80009-

https://truckmanualshub.com/

FIG. R0200-003001 Track Roller, (1/3)

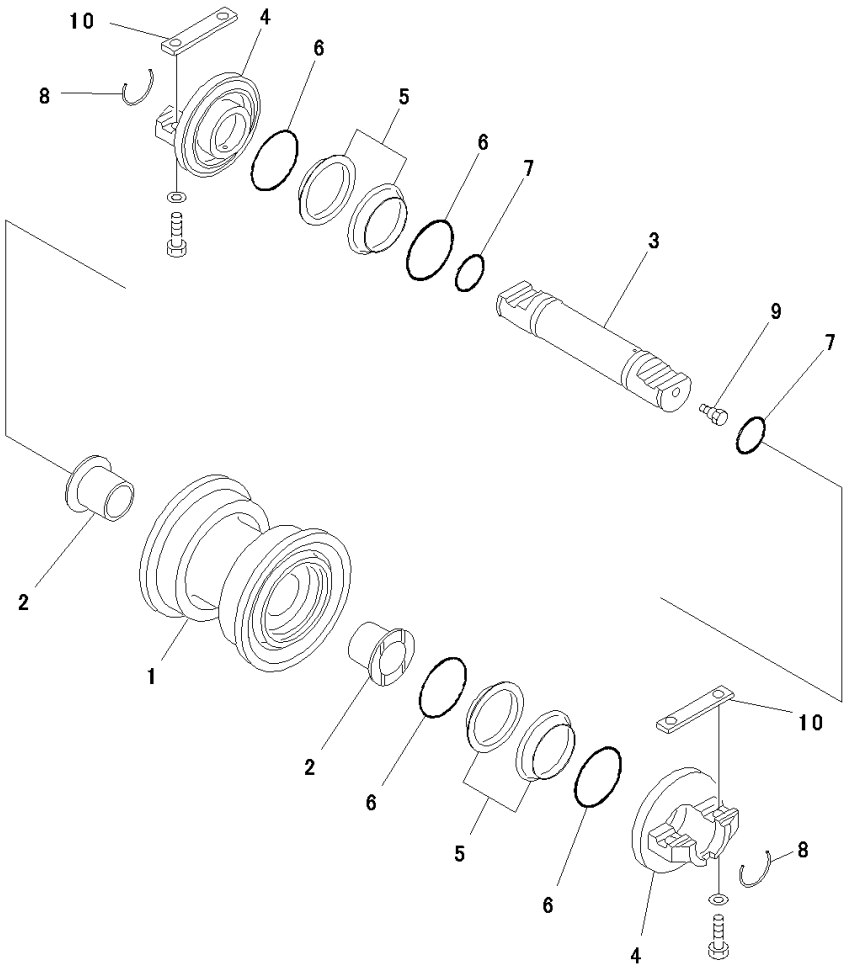

Index	Code	Part Number	Description	Qty	Serial Number
		14X-30-00127	Track Roller Assembly	12	80012-
1		14X-30-14311	• Roller, Track, Single Flanged	1	80012-
2		14X-30-13340	• Bushing	2	80012-
3		14X-30-14152	• Shaft	1	80012-
4		14X-30-14331	• Collar	2	80012-
		205-30-00220	• Floating Seal Assembly	2	80012-
5	C1		• • Seal	2	80012-
6	C1		• • O-ring	2	80012-
7		427-15-15910	• O-ring	2	80012-
8		14X-30-14161	• Lock	2	80012-
9		07052-31217	• Plug	1	80012-
10		14X-30-14170	Key	24	80012-

https://truckmanualshub.com/

FIG. R0200-003002 Track Roller, (2/3)

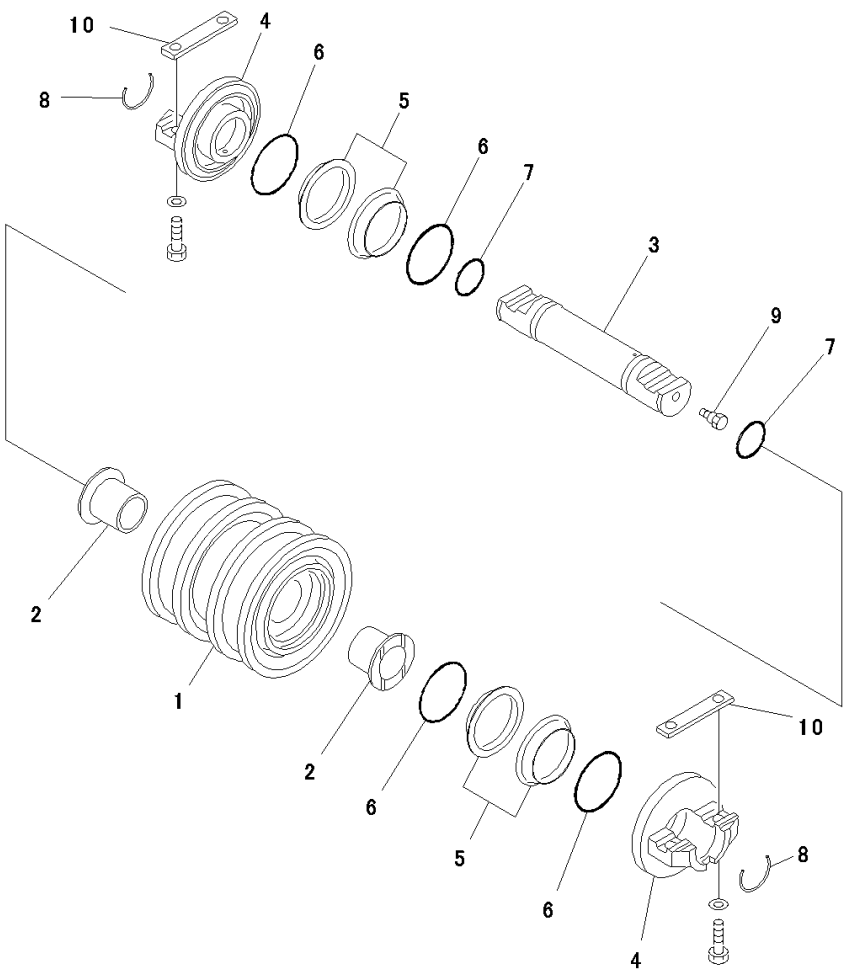

Index	Code	Part Number	Description	Qty	Serial Number
		14X-30-00136	Track Roller Assembly	4	80012-
1		14X-30-14321	• Roller, Track, Double Flanged	1	80012-
2		14X-30-13340	• Bushing	2	80012-
3		14X-30-14152	• Shaft	1	80012-
4		14X-30-14331	• Collar	2	80012-
		205-30-00220	• Floating Seal Assembly	2	80012-
5	C1		• • Seal	2	80012-
6	C1		• • O-ring	2	80012-
7		427-15-15910	• O-ring	2	80012-
8		14X-30-14161	• Lock	2	80012-
9		07052-31217	• Plug	1	80012-
10		14X-30-14170	Key	8	80012-

https://truckmanualshub.com/

FIG. R0200-003003 Track Roller, (3/3)

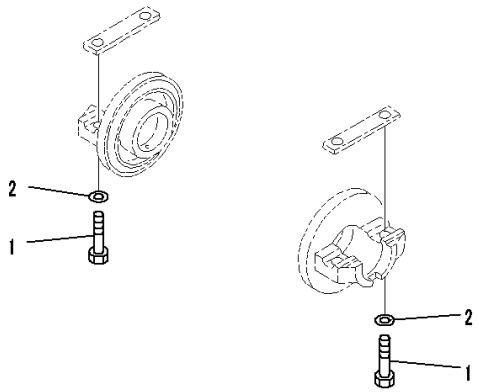

00035937

Index	Code	Part Number	Description	Qty	Serial Number
1		01010-81865	Bolt	64	80012-
2		01643-31845	Washer	64	80012-

https://truckmanualshub.com/

FIG. R0300-001001 Carrier Roller, Plus Type

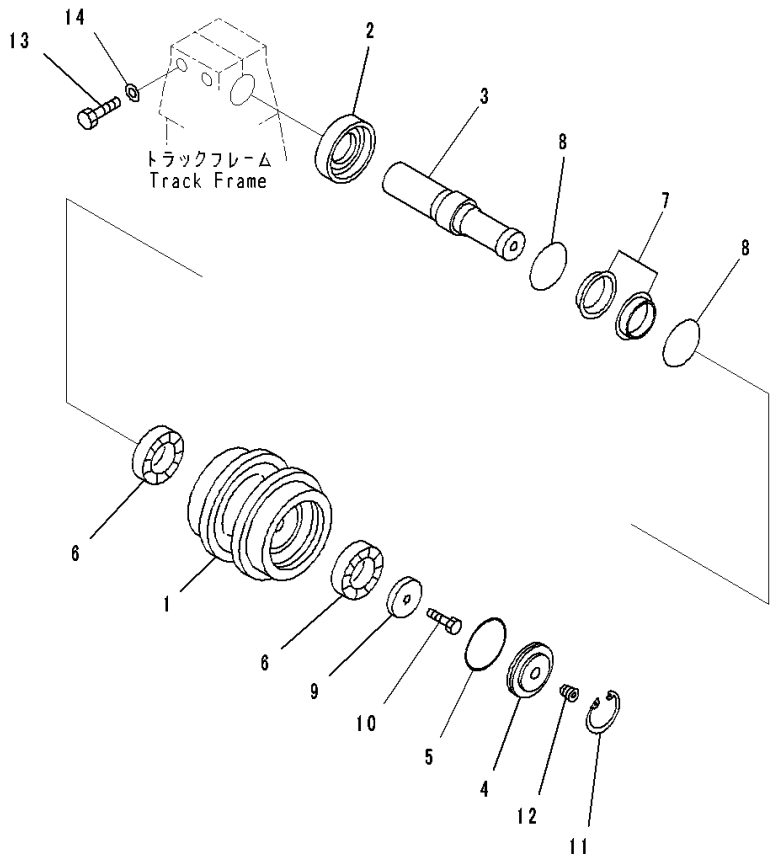

Index	Code	Part Number	Description	Qty	Serial Number
		14X-30-01041	Carrier Assembly	4	80001-
1		14X-30-15310	• Roller	1	80001-
2		14X-30-15140	• Ring	1	80001-
3		14X-30-15222	• Shaft	1	80001-
4		14X-30-15131	• Cover	1	80001-
5		07000-12105	• O-ring	1	80001-
6		14X-30-15240	• Bearing	2	80001-
		141-30-00616	• Floating Seal Assembly	1	80001-
7	C1		• • Seal	2	80001-
8	C1		• • O-ring	2	80001-
9		14X-30-15251	• Holder	1	80001-
10		01010-81630	• Bolt	1	80020-
11		04065-01154	• Ring	1	80001-
12		20Y-30-16330	• Plug	1	80001-
13		01010-82085	Bolt	8	80001-
14		01643-32060	Washer	8	80001-

https://truckmanualshub.com/

FIG. R0300-002001 Carrier Roller

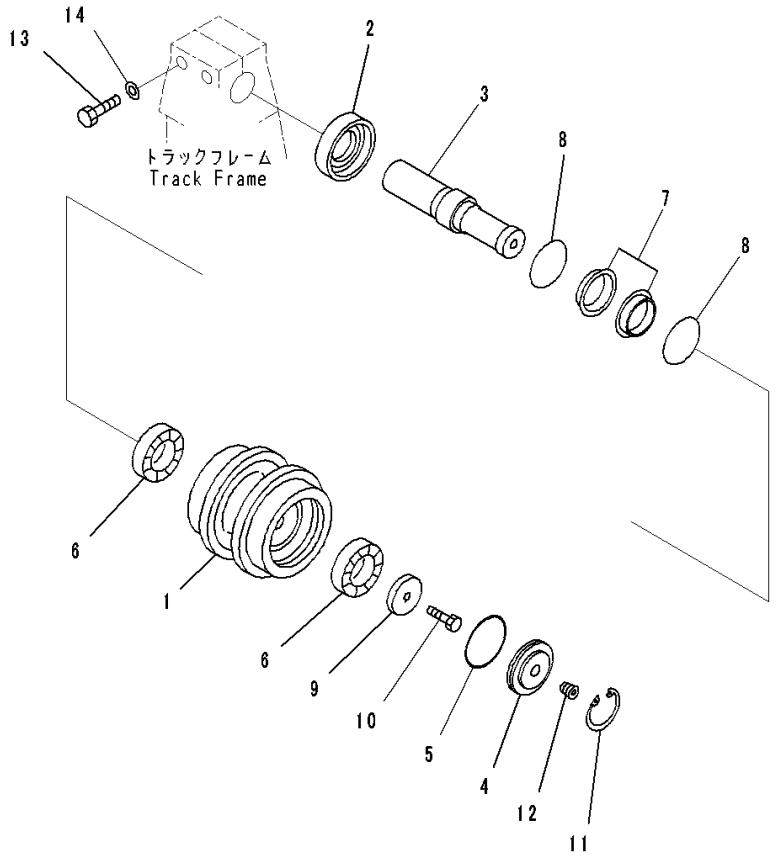

Index	Code	Part Number	Description	Qty	Serial Number
		14X-30-00143	Carrier Assembly	4	80001-
1		14X-30-15212	• Roller	1	80001-
2		14X-30-15140	• Ring	1	80001-
3		14X-30-15222	• Shaft	1	80001-
4		14X-30-15131	• Cover	1	80001-
5		07000-12105	• O-ring	1	80001-
6		14X-30-15240	• Bearing	2	80001-
		141-30-00616	• Floating Seal Assembly	1	80001-
7	C1		• • Seal	2	80001-
8	C1		• • O-ring	2	80001-
9		14X-30-15251	• Holder	1	80001-
10		01010-81630	• Bolt	1	80020-
11		04065-01154	• Ring	1	80001-
12		20Y-30-16330	• Plug	1	80001-
13		01010-82085	Bolt	8	80001-
14		01643-32060	Washer	8	80001-

https://truckmanualshub.com/

FIG. R0500-007001 Track Link Assembly, Heavy Duty, Supply Parts

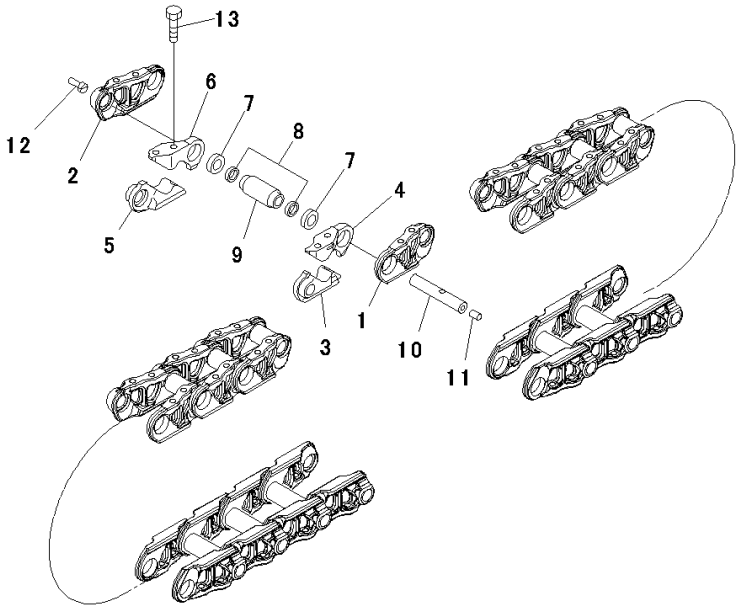

JH002832

Index	Code	Part Number	Description	Qty	Serial Number
		14X-32-00260	Track Link Assembly	1	80001-
1		14X-32-52120	• Link,LHS	88	80001-
2		14X-32-52130	• Link,RHS	88	80001-
		14X-32-08010	• Link Kit, Master,LHS	2	80001-
3	C1		• • Link, Master	1	80001-
4	C1		• • Link, Master	1	80001-
		14X-32-08020	• Link Kit, Master,RHS	2	80001-
5	C1		• • Link, Master	1	80001-
6	C1		• • Link, Master	1	80001-
7		14X-32-12200	• Seal Assembly	180	80001-
8		144-32-21191	• Spacer	180	80001-
9		14X-32-11140	• Bushing	90	80001-
10		14X-32-13150	• Pin	90	80001-
11		07059-11830	• Plug, Large	90	80001-
12		07059-20721	• Plug, Small	90	80001-
13		14X-32-11350	• Bolt, Master Track Shoe	8	80001-

https://truckmanualshub.com/

FIG. R0500-008001 Track Link Assembly, Swamp Shoe, Heavy Duty, Supply Parts

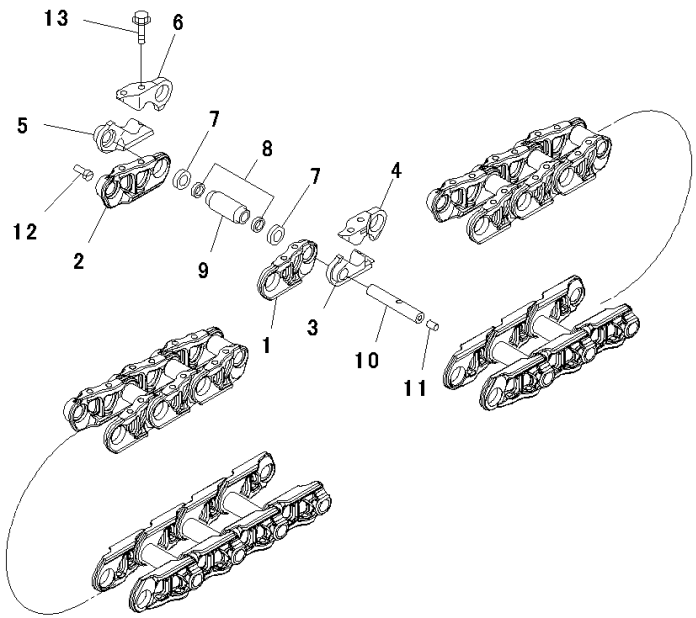

JH002841

Index	Code	Part Number	Description	Qty	Serial Number
		14X-32-00270	Track Link Assembly	1	80001-
1		14X-32-52120	• Link,LHS	88	80001-
2		14X-32-52130	• Link,RHS	88	80001-
		14X-32-08010	• Link Kit, Master,LHS	2	80001-
3	C1		• • Link, Master	1	80001-
4	C1		• • Link, Master	1	80001-
		14X-32-08020	• Link Kit, Master,RHS	2	80001-
5	C1		• • Link, Master	1	80001-
6	C1		• • Link, Master	1	80001-
7		14X-32-12200	• Seal Assembly	180	80001-
8		144-32-21191	• Spacer	180	80001-
9		14X-32-11140	• Bushing	90	80001-
10		14X-32-13150	• Pin	90	80001-
11		07059-11830	• Plug, Large	90	80001-
12		07059-20721	• Plug, Small	90	80001-
13		154-32-41412	• Bolt, Master Track Shoe	8	80001-

https://truckmanualshub.com/

FIG. R0500-001001 Track Shoe Assembly, Provision For Single Grouser Shoe, 915mm Width, Sealed And Lubricated Links, Plus Type

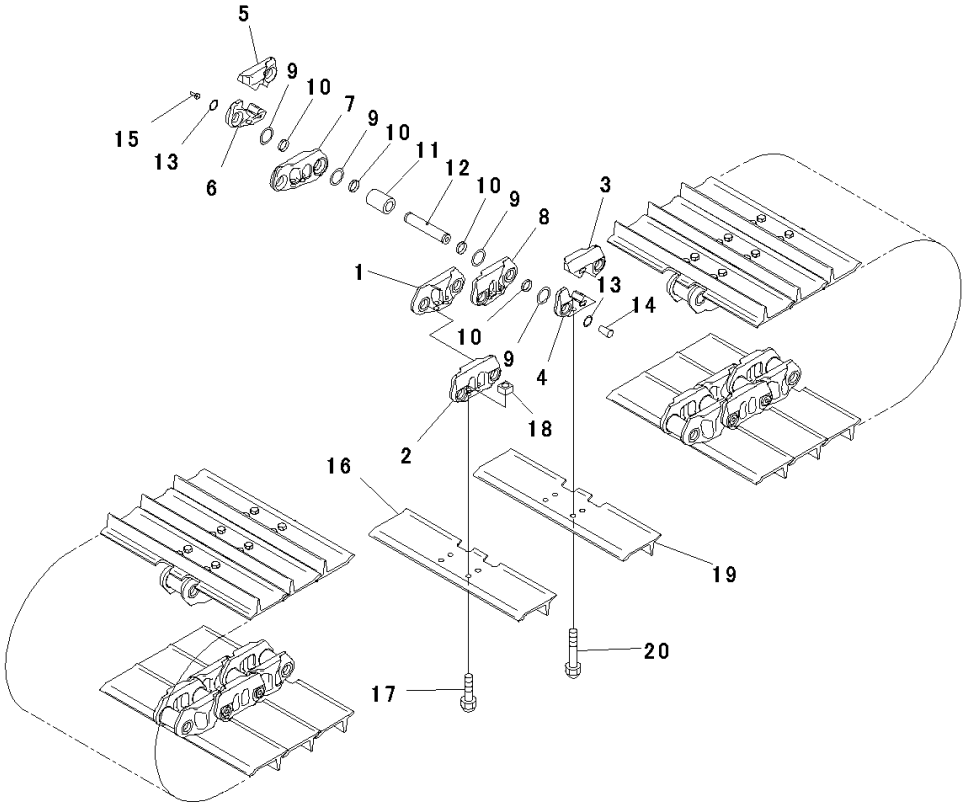

Index	Code	Part Number	Description	Qty	Serial Number
		14Y-32-03000	Track Shoe Assembly	1	80001-
1		14X-32-15610	• Link,Inner	88	80001-
2		14X-32-15630	• Link,Outer	84	80001-
		14X-32-08210	• Link Kit, Master,LHS	2	80001-
3	C1		• • Link, Master	1	80001-
4	C1		• • Link, Master	1	80001-
		14X-32-08220	• Link Kit, Master,RHS	2	80001-
5	C1		• • Link, Master	1	80001-
6	C1		• • Link, Master	1	80001-
7		14X-32-15500	• Link,RHS	2	80001-
8		14X-32-15510	• Link,LHS	2	80001-
9		14X-32-15700	• Seal Assembly	360	80001-
10		14X-32-15680	• Spacer	360	80001-
11		14X-32-15640	• Bushing	90	80001-
12		14X-32-15650	• Pin	90	80001-
13		14X-32-15730	• Ring	180	80001-
14		07059-11830	• Plug, Large	90	80001-
15		07059-20721	• Plug, Small	90	80001-
16		14Y-32-15340	• Shoe	88	80001-
17		207-32-71620	• Bolt, (Kit : K07)	352	80001-
18		154-32-71220	• Nut, (Kit : K07)	352	80001-
19		14Y-32-15340	• Shoe	2	80001-
20		14X-32-15310	• Bolt, Master Track Shoe	8	80001-

https://truckmanualshub.com/

FIG. R0500-002001 Track Link Assembly, Supply Parts, Plus Type

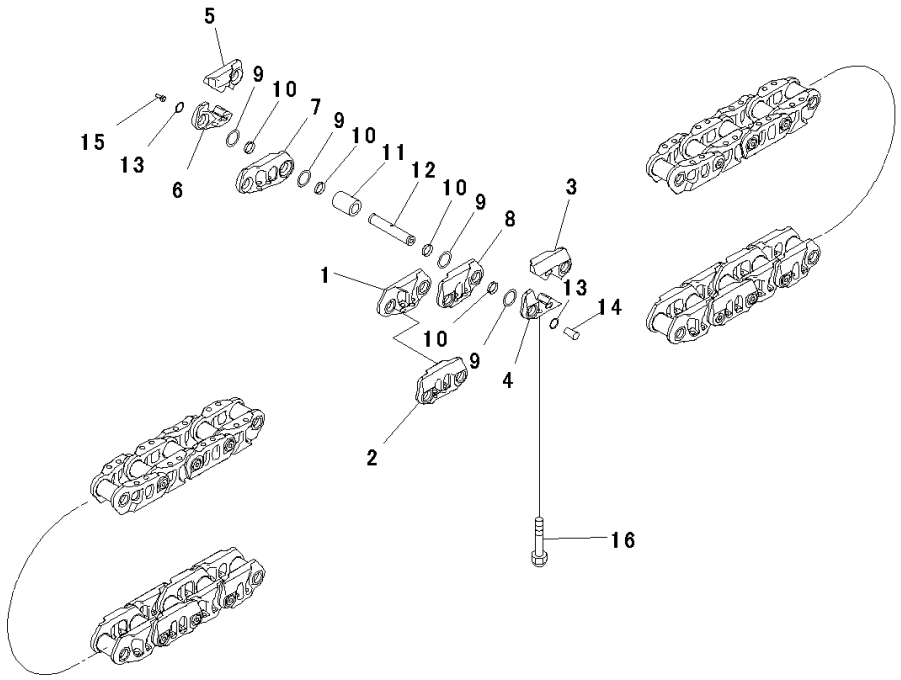

Index	Code	Part Number	Description	Qty	Serial Number
		14Y-32-00300	Track Link Assembly	1	80001-
1		14X-32-15610	• Link,Inner	44	80001-
2		14X-32-15630	• Link,Outer	42	80001-
		14X-32-08210	• Link Kit, Master,LHS	1	80001-
3	C1		• • Link, Master	1	80001-
4	C1		• • Link, Master	1	80001-
		14X-32-08220	• Link Kit, Master,RHS	1	80001-
5	C1		• • Link, Master	1	80001-
6	C1		• • Link, Master	1	80001-
7		14X-32-15500	• Link,RHS	1	80001-
8		14X-32-15510	• Link,LHS	1	80001-
9		14X-32-15700	• Seal Assembly	180	80001-
10		14X-32-15680	• Spacer	180	80001-
11		14X-32-15640	• Bushing	45	80001-
12		14X-32-15650	• Pin	45	80001-
13		14X-32-15730	• Ring	90	80001-
14		07059-11830	• Plug, Large	45	80001-
15		07059-20721	• Plug, Small	45	80001-
16		14X-32-15310	• Bolt, Master Track Shoe	8	80001-

https://truckmanualshub.com/

FIG. R0500-003001 Track Shoe Assembly, Provision For Single Grouser Shoe, 760mm Width, Sealed And Lubricated Links, Plus Type

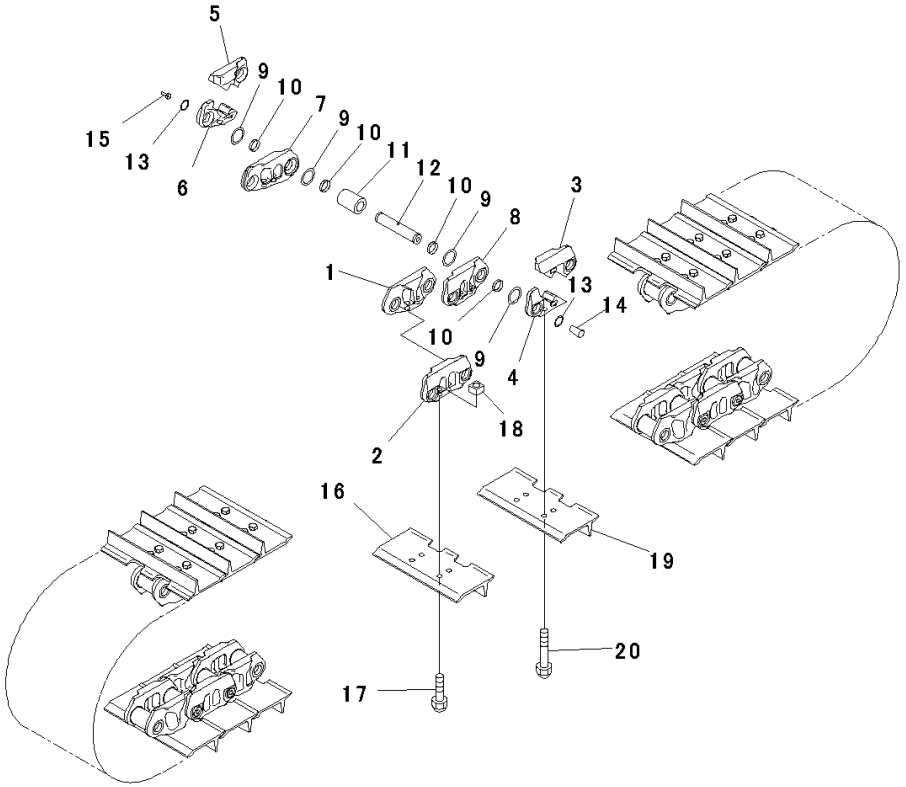

Index	Code	Part Number	Description	Qty	Serial Number
		14X-32-03330	Track Shoe Assembly	1	80001-
1		14X-32-15610	• Link,Inner	88	80001-
2		14X-32-15630	• Link,Outer	84	80001-
		14X-32-08210	• Link Kit, Master,LHS	2	80001-
3	C1		• • Link, Master	1	80001-
4	C1		• • Link, Master	1	80001-
		14X-32-08220	• Link Kit, Master,RHS	2	80001-
5	C1		• • Link, Master	1	80001-
6	C1		• • Link, Master	1	80001-
7		14X-32-15500	• Link,RHS	2	80001-
8		14X-32-15510	• Link,LHS	2	80001-
9		14X-32-15700	• Seal Assembly	360	80001-
10		14X-32-15680	• Spacer	360	80001-
11		14X-32-15640	• Bushing	90	80001-
12		14X-32-15650	• Pin	90	80001-
13		14X-32-15730	• Ring	180	80001-
14		07059-11830	• Plug, Large	90	80001-
15		07059-20721	• Plug, Small	90	80001-
16		14X-32-15380	• Shoe	88	80001-
17		207-32-71620	• Bolt, (Kit : K07)	352	80001-
18		154-32-71220	• Nut, (Kit : K07)	352	80001-
19		14X-32-15380	• Shoe	2	80001-
20		14X-32-15310	• Bolt, Master Track Shoe	8	80001-

https://truckmanualshub.com/

FIG. R0500-004001 Track Shoe Assembly, Single Grouser, 760mm Width, Heavy Duty

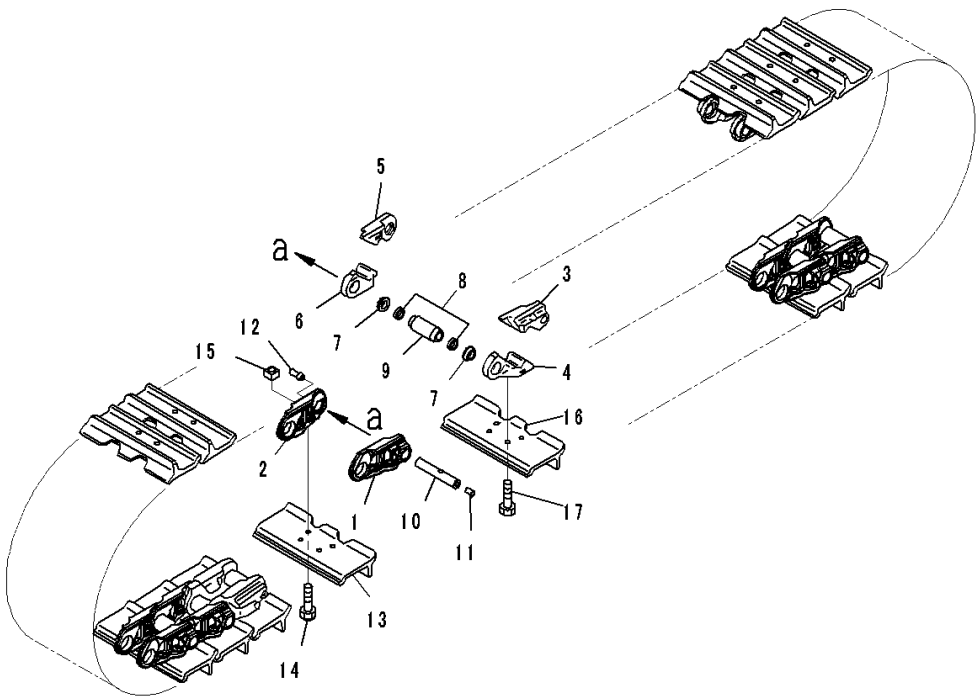

Index	Code	Part Number	Description	Qty	Serial Number
		14X-32-02830	Track Shoe Assembly	1	80001-
1		14X-32-52120	• Link,LHS	88	80001-
2		14X-32-52130	• Link,RHS	88	80001-
		14X-32-08010	• Link Kit, Master,LHS	2	80001-
3	C1		• • Link, Master	1	80001-
4	C1		• • Link, Master	1	80001-
		14X-32-08020	• Link Kit, Master,RHS	2	80001-
5	C1		• • Link, Master	1	80001-
6	C1		• • Link, Master	1	80001-
7		14X-32-12200	• Seal Assembly	180	80001-
8		144-32-21191	• Spacer	180	80001-
9		14X-32-11140	• Bushing	90	80001-
10		14X-32-13150	• Pin	90	80001-
11		07059-11830	• Plug, Large	90	80001-
12		07059-20721	• Plug, Small	90	80001-
13		14X-32-51120	• Shoe	88	80001-
14		154-32-21323	• Bolt, (Kit : K08)	352	80001-
15		134-32-61221	• Nut, (Kit : K08)	352	80001-
16		14X-32-51120	• Shoe	2	80001-
17		14X-32-11350	• Bolt, Master Track Shoe	8	80001-

https://truckmanualshub.com/

FIG. R0500-005001 Track Shoe Assembly, Single Grouser, 915mm Width, Heavy Duty

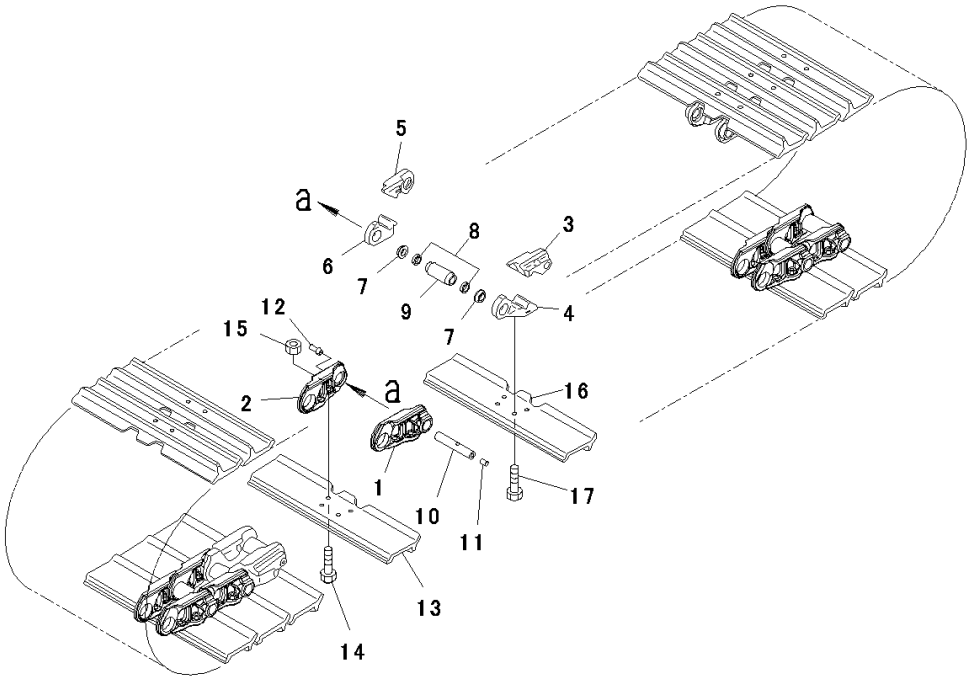

JH002837

Index	Code	Part Number	Description	Qty	Serial Number
		14X-32-02840	Track Shoe Assembly	1	80001-
1		14X-32-52120	• Link,LHS	88	80001-
2		14X-32-52130	• Link,RHS	88	80001-
		14X-32-08010	• Link Kit, Master,LHS	2	80001-
3	C1		• • Link, Master	1	80001-
4	C1		• • Link, Master	1	80001-
		14X-32-08020	• Link Kit, Master,RHS	2	80001-
5	C1		• • Link, Master	1	80001-
6	C1		• • Link, Master	1	80001-
7		14X-32-12200	• Seal Assembly	180	80001-
8		144-32-21191	• Spacer	180	80001-
9		14X-32-11140	• Bushing	90	80001-
10		14X-32-13150	• Pin	90	80001-
11		07059-11830	• Plug, Large	90	80001-
12		07059-20721	• Plug, Small	90	80001-
13		14Y-32-11360	• Shoe	88	80001-
14		154-32-21323	• Bolt, (Kit : K08)	352	80001-
15		134-32-61221	• Nut, (Kit : K08)	352	80001-
16		14Y-32-11360	• Shoe	2	80001-
17		14X-32-11350	• Bolt, Master Track Shoe	8	80001-

https://truckmanualshub.com/

FIG. R0500-006001 Track Shoe Assembly, Swamp Shoe, 940mm Width, Heavy Duty

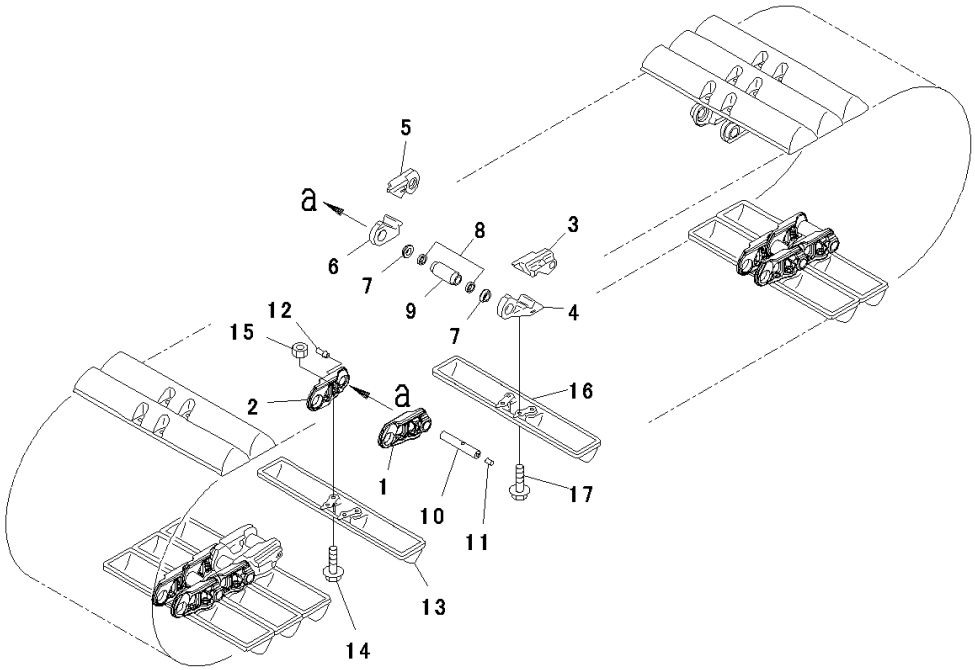

JH002838

Index	Code	Part Number	Description	Qty	Serial Number
		14X-32-02850	Track Shoe Assembly	1	80001-
1		14X-32-52120	• Link,LHS	88	80001-
2		14X-32-52130	• Link,RHS	88	80001-
		14X-32-08010	• Link Kit, Master,LHS	2	80001-
3	C1		• • Link, Master	1	80001-
4	C1		• • Link, Master	1	80001-
		14X-32-08020	• Link Kit, Master,RHS	2	80001-
5	C1		• • Link, Master	1	80001-
6	C1		• • Link, Master	1	80001-
7		14X-32-12200	• Seal Assembly	180	80001-
8		144-32-21191	• Spacer	180	80001-
9		14X-32-11140	• Bushing	90	80001-
10		14X-32-13150	• Pin	90	80001-
11		07059-11830	• Plug, Large	90	80001-
12		07059-20721	• Plug, Small	90	80001-
13		14X-32-51110	• Shoe	88	80001-
14		13G-32-61210	• Bolt, (Kit : K09)	352	80001-
15		134-32-61221	• Nut, (Kit : K09)	352	80001-
16		14X-32-51110	• Shoe	2	80001-
17		154-32-41412	• Bolt, Master Track Shoe	8	80001-

https://truckmanualshub.com/

FIG. R2100-001001 Track Frame

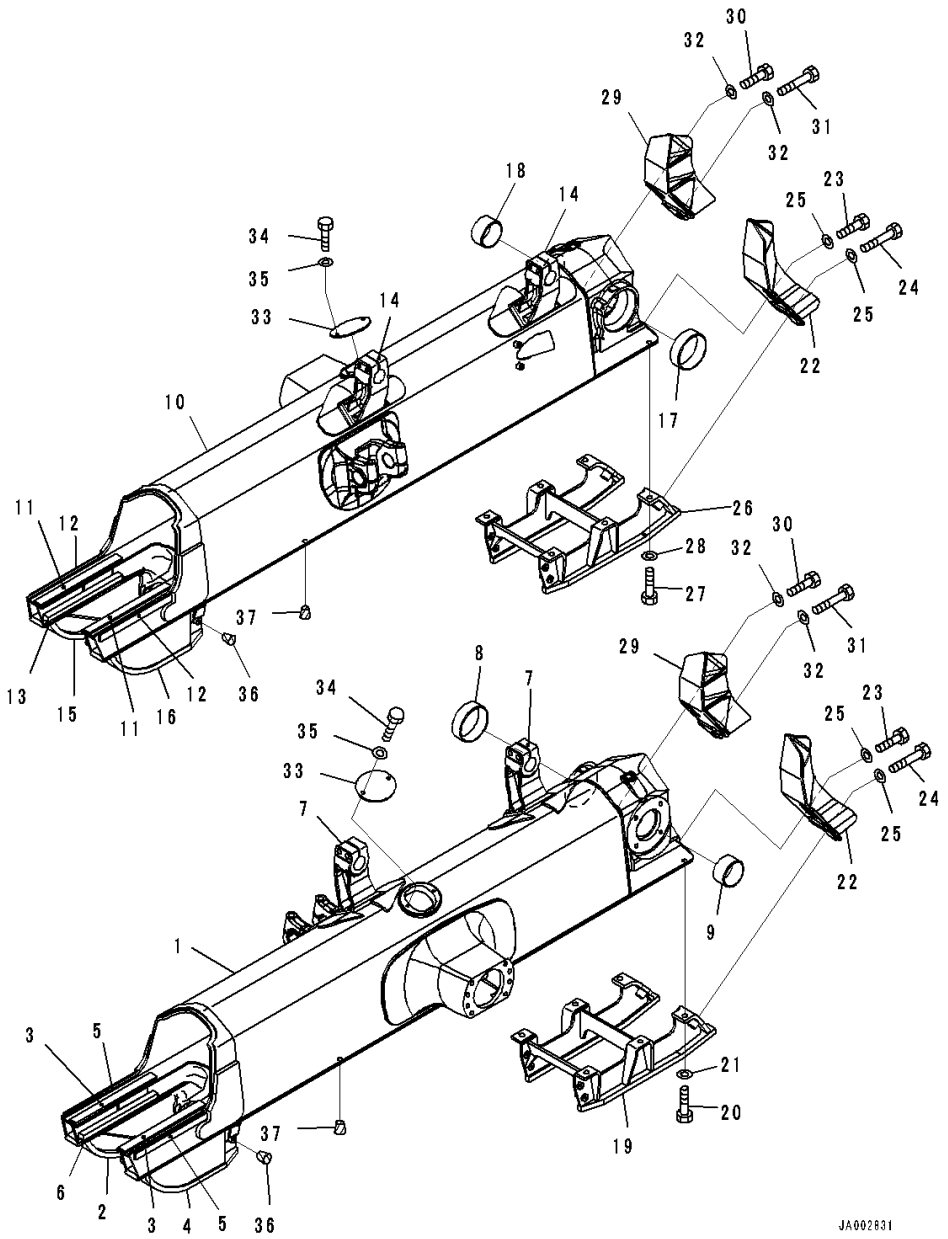

Index	Code	Part Number	Description	Qty	Serial Number
1		14X-30-51131	Frame,LHS	1	80001-
2		14X-30-51331	• Guard,Welded	1	80001-
3		14X-30-51C71	• Plate,Welded	2	80001-
4		14X-30-51341	• Guard,Welded	1	80001-
5		14X-30-11D52	• Plate,Welded	2	80001-
6		14X-30-11D52	• Plate,Welded	2	80001-
7		14X-30-51650	• Bracket,Welded	2	80001-
8		14Y-30-18130	Bushing	1	80001-
9		14Y-30-18140	Bushing	1	80001-
10		14X-30-51141	Frame,RHS	1	80001-
11		14X-30-51C71	• Plate,Welded	2	80001-
12		14X-30-11D52	• Plate,Welded	2	80001-
13		14X-30-11D52	• Plate,Welded	2	80001-
14		14X-30-51650	• Bracket,Welded	2	80001-
15		14X-30-51331	• Guard,Welded	1	80001-
16		14X-30-51341	• Guard,Welded	1	80001-
17		14Y-30-18130	Bushing	1	80001-
18		14Y-30-18140	Bushing	1	80001-
19		14X-30-51440	Guard	1	80001-
20		01010-81845	Bolt	6	80001-
21		01643-31845	Washer	6	80001-
22		14X-30-51390	Bracket	2	80001-
23		01010-81850	Bolt	4	80001-
24		01010-81865	Bolt	4	80001-
25		01643-31845	Washer	8	80001-
26		14X-30-51440	Guard	1	80001-
27		01010-81845	Bolt	6	80001-
28		01643-31845	Washer	6	80001-
29		14X-30-51410	Bracket	2	80001-
30		01010-81850	Bolt	4	80001-
31		01010-81865	Bolt	4	80001-
32		01643-31845	Washer	8	80001-
33		14Y-30-11277	Cover	2	80001-
34		01010-81225	Bolt	4	80001-
35		01643-31232	Washer	4	80001-
36		07049-01215	Plug	16	80001-
37		07049-01822	Plug	12	80001-

https://truckmanualshub.com/

FIG. R2100-002001 Track Frame, With Power Angle Power Tilt Dozer

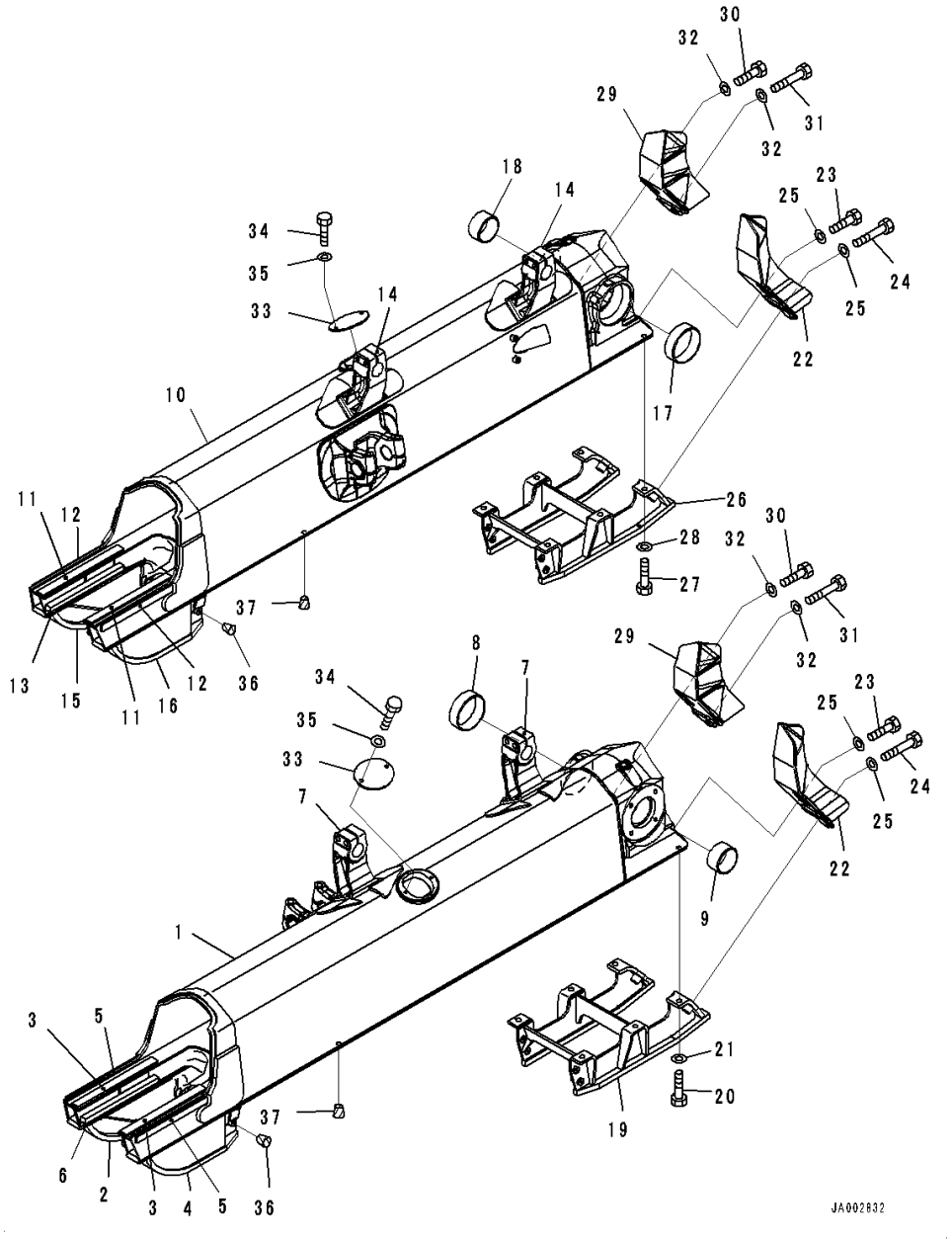

Index	Code	Part Number	Description	Qty	Serial Number
1		14X-30-51231	Frame,LHS	1	80001-
2		14X-30-51331	• Guard,Welded	1	80001-
3		14X-30-51C71	• Plate,Welded	2	80001-
4		14X-30-51341	• Guard,Welded	1	80001-
5		14X-30-11D52	• Plate,Welded	2	80001-
6		14X-30-11D52	• Plate,Welded	2	80001-
7		14X-30-51650	• Bracket	2	80001-
8		14Y-30-18130	Bushing	1	80001-
9		14Y-30-18140	Bushing	1	80001-
10		14X-30-51241	Frame,RHS	1	80001-
11		14X-30-51C71	• Plate,Welded	2	80001-
12		14X-30-11D52	• Plate,Welded	2	80001-
13		14X-30-11D52	• Plate,Welded	2	80001-
14		14X-30-51650	• Bracket,Welded	2	80001-
15		14X-30-51331	• Guard,Welded	1	80001-
16		14X-30-51341	• Guard,Welded	1	80001-
17		14Y-30-18130	Bushing	1	80001-
18		14Y-30-18140	Bushing	1	80001-
19		14X-30-51440	Guard	1	80001-
20		01010-81845	Bolt	6	80001-
21		01643-31845	Washer	6	80001-
22		14X-30-51390	Bracket	2	80001-
23		01010-81850	Bolt	4	80001-
24		01010-81865	Bolt	4	80001-
25		01643-31845	Washer	8	80001-
26		14X-30-51440	Guard	1	80001-
27		01010-81845	Bolt	6	80001-
28		01643-31845	Washer	6	80001-
29		14X-30-51410	Bracket	2	80001-
30		01010-81850	Bolt	4	80001-
31		01010-81865	Bolt	4	80001-
32		01643-31845	Washer	8	80001-
33		14Y-30-11277	Cover	2	80001-
34		01010-81225	Bolt	4	80001-
35		01643-31232	Washer	4	80001-
36		07049-01215	Plug	16	80001-
37		07049-01822	Plug	12	80001-

https://truckmanualshub.com/

FIG. R2100-004001 Track Frame, With Power Angle Power Tilt Dozer, Plus Type

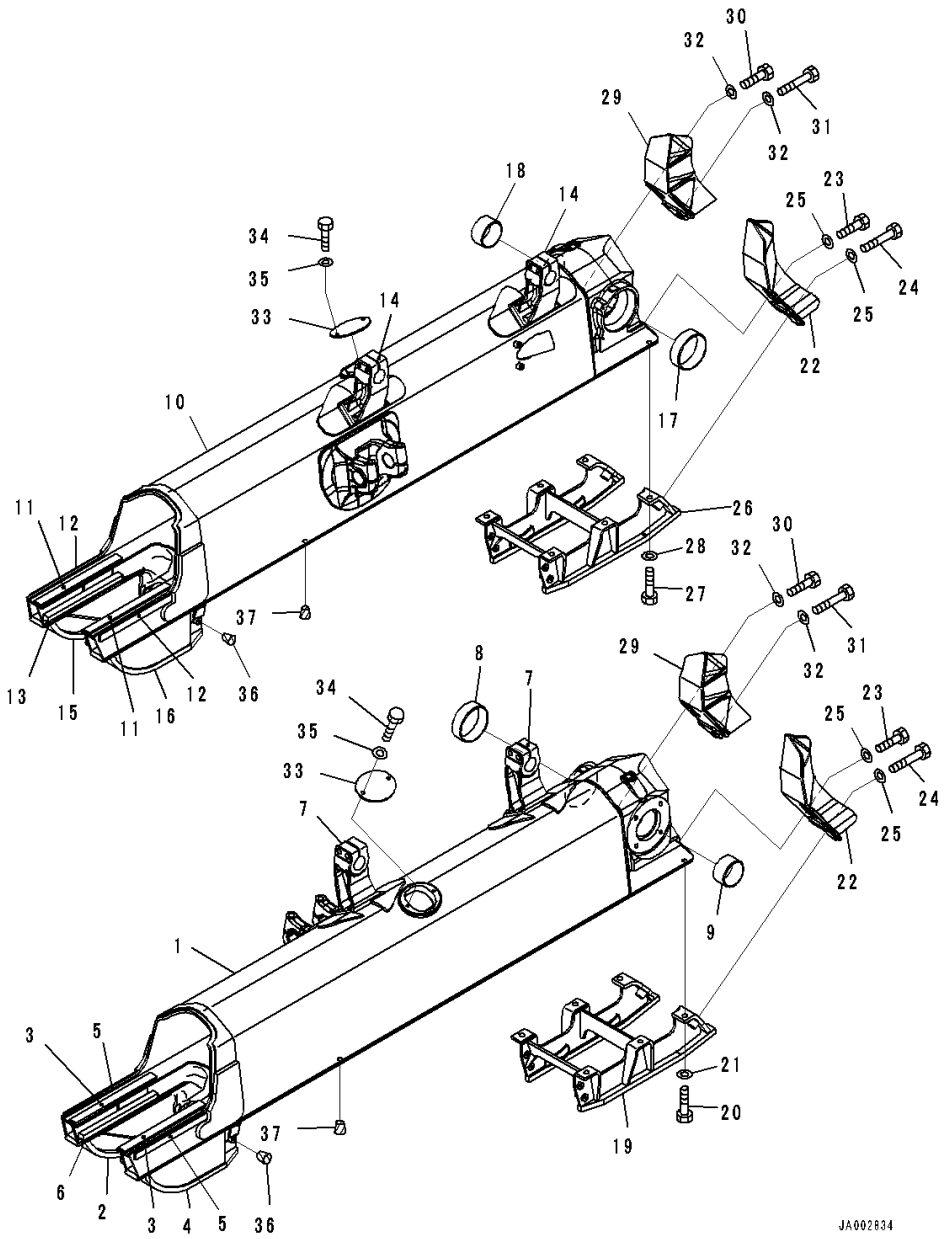

Index	Code	Part Number	Description	Qty	Serial Number
1		14X-30-51231	Frame,LHS	1	80001-
2		14X-30-51331	• Guard,Welded	1	80001-
3		14X-30-51C71	• Plate,Welded	2	80001-
4		14X-30-51341	• Guard,Welded	1	80001-
5		14X-30-11D52	• Plate,Welded	2	80001-
6		14X-30-11D52	• Plate,Welded	2	80001-
7		14X-30-51650	• Bracket,Welded	2	80001-
8		14Y-30-18130	Bushing	1	80001-
9		14Y-30-18140	Bushing	1	80001-
10		14X-30-51241	Frame,RHS	1	80001-
11		14X-30-51C71	• Plate,Welded	2	80001-
12		14X-30-11D52	• Plate,Welded	2	80001-
13		14X-30-11D52	• Plate,Welded	2	80001-
14		14X-30-51650	• Bracket,Welded	2	80001-
15		14X-30-51331	• Guard,Welded	1	80001-
16		14X-30-51341	• Guard,Welded	1	80001-
17		14Y-30-18130	Bushing	1	80001-
18		14Y-30-18140	Bushing	1	80001-
19		14Y-30-27130	Guard	1	80001-
20		01010-81845	Bolt	6	80001-
21		01643-31845	Washer	6	80001-
22		14X-30-51390	Bracket	2	80001-
23		01010-81850	Bolt	4	80001-
24		01010-81865	Bolt	4	80001-
25		01643-31845	Washer	8	80001-
26		14Y-30-27130	Guard	1	80001-
27		01010-81845	Bolt	6	80001-
28		01643-31845	Washer	6	80001-
29		14X-30-51410	Bracket	2	80001-
30		01010-81850	Bolt	4	80001-
31		01010-81865	Bolt	4	80001-
32		01643-31845	Washer	8	80001-
33		14Y-30-11277	Cover	2	80001-
34		01010-81225	Bolt	4	80001-
35		01643-31232	Washer	4	80001-
36		07049-01215	Plug	16	80001-
37		07049-01822	Plug	12	80001-

https://truckmanualshub.com/

FIG. R2100-003001 Track Frame, Plus Type

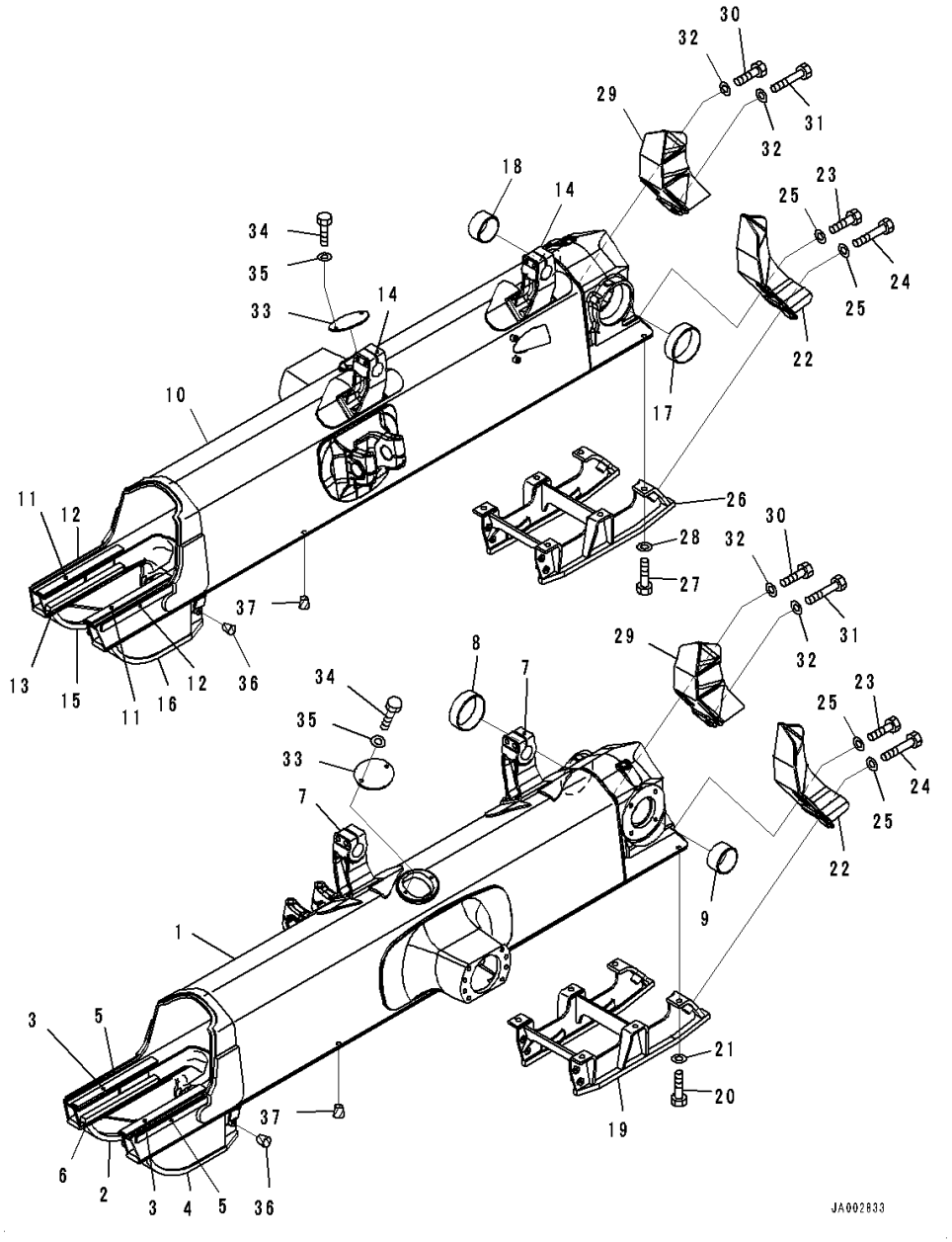

Index	Code	Part Number	Description	Qty	Serial Number
1		14X-30-51131	Frame,LHS	1	80001-
2		14X-30-51331	• Guard,Welded	1	80001-
3		14X-30-51C71	• Plate,Welded	2	80001-
4		14X-30-51341	• Guard,Welded	1	80001-
5		14X-30-11D52	• Plate,Welded	2	80001-
6		14X-30-11D52	• Plate,Welded	2	80001-
7		14X-30-51650	• Bracket	2	80001-
8		14Y-30-18130	Bushing	1	80001-
9		14Y-30-18140	Bushing	1	80001-
10		14X-30-51141	Frame,RHS	1	80001-
11		14X-30-51C71	• Plate,Welded	2	80001-
12		14X-30-11D52	• Plate,Welded	2	80001-
13		14X-30-11D52	• Plate,Welded	2	80001-
14		14X-30-51650	• Bracket	2	80001-
15		14X-30-51331	• Guard,Welded	1	80001-
16		14X-30-51341	• Guard,Welded	1	80001-
17		14Y-30-18130	Bushing	1	80001-
18		14Y-30-18140	Bushing	1	80001-
19		14Y-30-27130	Guard	1	80001-
20		01010-81845	Bolt	6	80001-
21		01643-31845	Washer	6	80001-
22		14X-30-51390	Bracket	2	80001-
23		01010-81850	Bolt	4	80001-
24		01010-81865	Bolt	4	80001-
25		01643-31845	Washer	8	80001-
26		14Y-30-27130	Guard	1	80001-
27		01010-81845	Bolt	6	80001-
28		01643-31845	Washer	6	80001-
29		14X-30-51410	Bracket	2	80001-
30		01010-81850	Bolt	4	80001-
31		01010-81865	Bolt	4	80001-
32		01643-31845	Washer	8	80001-
33		14Y-30-11277	Cover	2	80001-
34		01010-81225	Bolt	4	80001-
35		01643-31232	Washer	4	80001-
36		07049-01215	Plug	16	80001-
37		07049-01822	Plug	12	80001-

https://truckmanualshub.com/

FIG. R2200-001001 Track Roller Guard

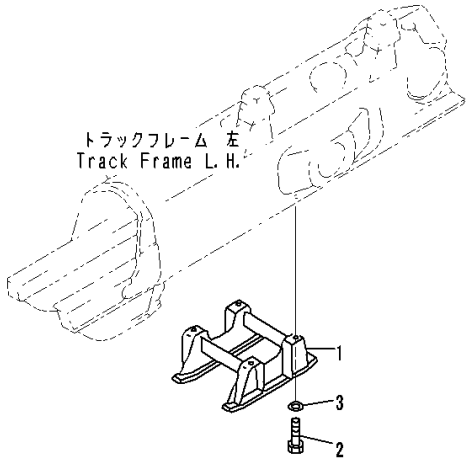

PWA6429

Index	Code	Part Number	Description	Qty	Serial Number
1		14Y-30-26140	Guard	2	80001-
2		01010-81845	Bolt	8	80001-
3		01643-31845	Washer	8	80001-

https://truckmanualshub.com/

FIG. R2200-002001 Track Roller Guard, Plus Type

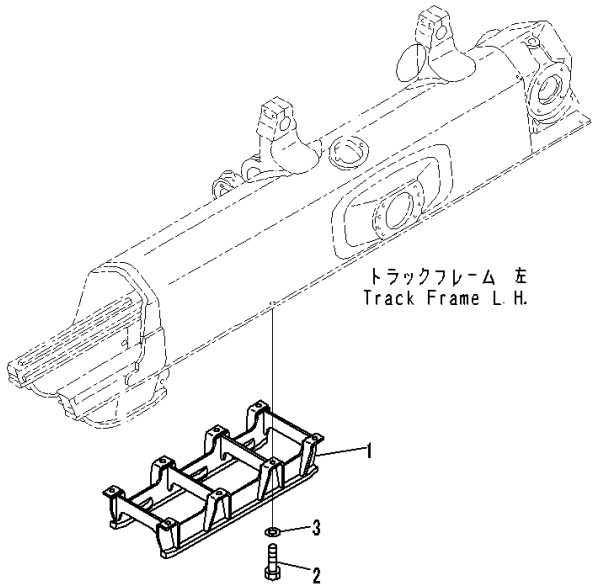

00083091

Index	Code	Part Number	Description	Qty	Serial Number
1		14Y-30-27140	Guard	2	80001-
2		01010-81845	Bolt	16	80001-
3		01643-31845	Washer	16	80001-

https://truckmanualshub.com/

FIG. R2200-003001 Track Roller Guard, Full Roller Guard

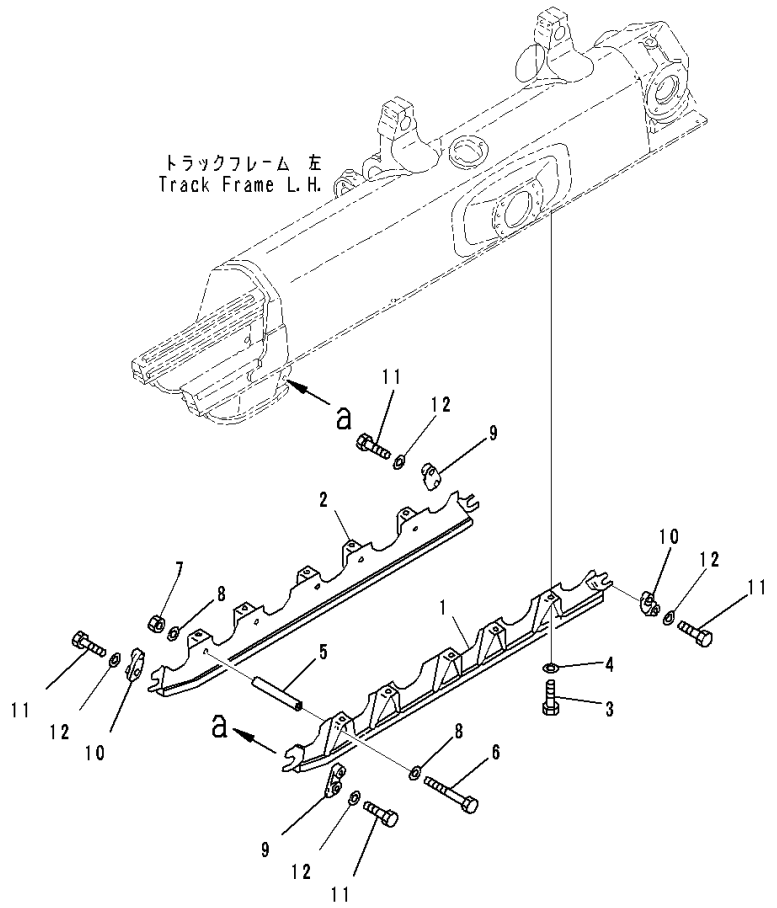

Index	Code	Part Number	Description	Qty	Serial Number
1		14X-30-51621	Guard,LHS	2	80001-
2		14X-30-51631	Guard,RHS	2	80001-
3		01010-81840	Bolt	20	80001-
4		01643-31845	Washer	20	80001-
5		14X-30-26230	Collar	10	80001-
6		09205-18325	Bolt	10	80001-
7		01580-11815	Nut	10	80001-
8		01643-31845	Washer	20	80001-
9		130-30-12170	Plate	4	80001-
10		130-30-12180	Plate	4	80001-
11		01010-81230	Bolt	16	80001-
12		01643-31232	Washer	16	80001-

https://truckmanualshub.com/

FIG. R2200-004001 Track Roller Guard, Full Roller Guard, Plus Type

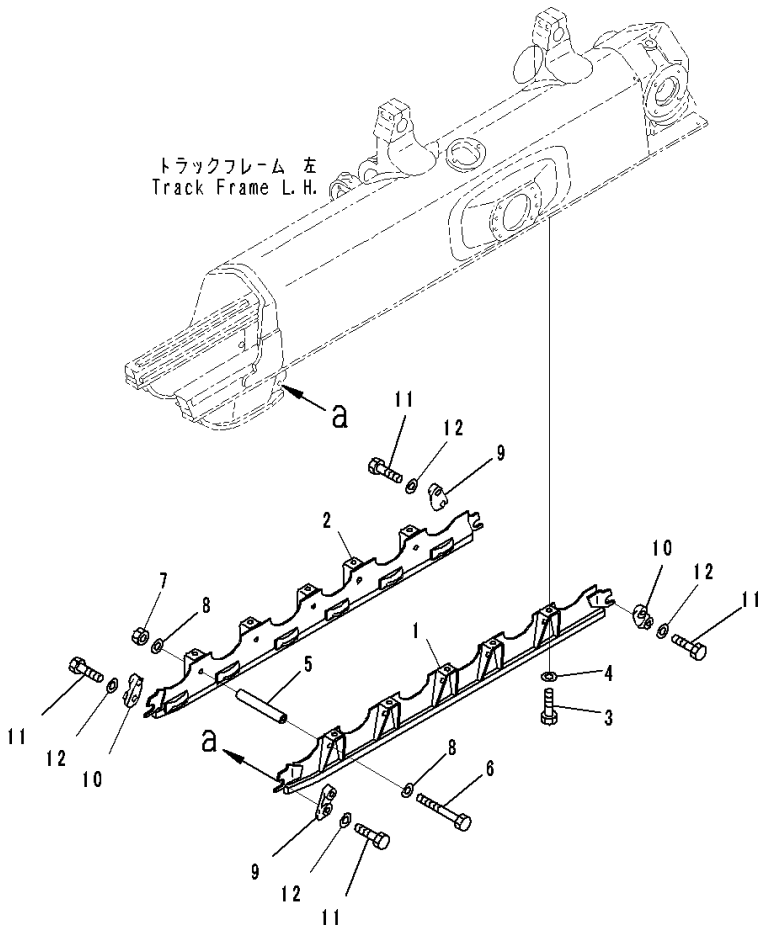

Index	Code	Part Number	Description	Qty	Serial Number
1		14X-30-51710	Guard,LHS	2	80001-
2		14X-30-51720	Guard,RHS	2	80001-
3		01010-81840	Bolt	20	80001-
4		01643-31845	Washer	20	80001-
5		14X-30-27230	Collar	10	80001-
6		09205-18330	Bolt	10	80001-
7		01580-11815	Nut	10	80001-
8		01643-31845	Washer	20	80001-
9		130-30-12170	Plate	4	80001-
10		130-30-12180	Plate	4	80001-
11		01010-81230	Bolt	16	80001-
12		01643-31232	Washer	16	80001-

https://truckmanualshub.com/

https://truckmanualshub.com/

https://truckmanualshub.com/

WORK EQUIPMENT

FIG. T2110-001001 Dozer Frame

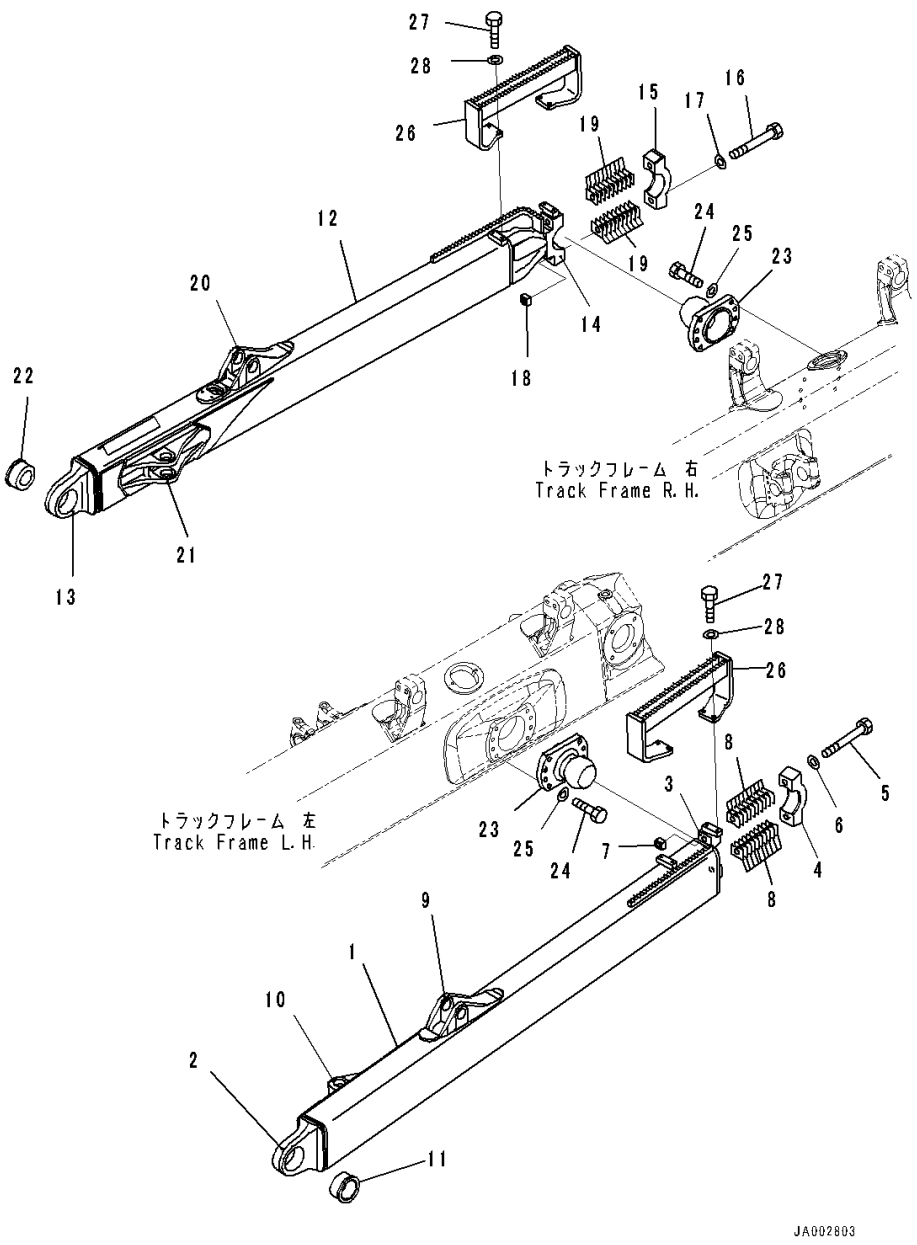

Index	Code	Part Number	Description	Qty	Serial Number
1		14X-71-53310	Frame,LHS	1	80001-
2		14Y-71-12131	• Joint,Welded	1	80001-
		14Y-71-00081	• Pivot Assembly	1	80001-
3	C1		• • Bearing	1	80001-
4		14Y-71-22150	• • Cap	1	80001-
5		01011-82465	• • Bolt	2	80001-
6		01643-32460	• • Washer	2	80001-
7		130-70-13241	• • Nut	2	80001-
8		14Y-71-22280	• • Shim, T=1.0mm	20	80001-
9		14Y-71-12170	• Bracket,Welded	1	80001-
10		14Y-71-13181	• Bracket,Welded	1	80001-
11		14X-71-12230	Bearing	1	80001-
12		14X-71-53320	Frame,RHS	1	80001-
13		14Y-71-12131	• Joint,Welded	1	80001-
14	C1		• Bearing	1	80001-
15	C1		• Cap	1	80001-
16	C1		• Bolt	2	80001-
17	C1		• Washer	2	80001-
18	C1		• Nut	2	80001-
19	C1		• Shim, T=1.0mm	20	80001-
20		14Y-71-12170	• Bracket	1	80001-
21		14Y-71-13181	• Bracket	1	80001-
22		14X-71-12230	Bearing	1	80001-
23		14Z-71-33212	Trunnion	2	80001-
24		01010-82065	Bolt	16	80001-
25		01643-32060	Washer	16	80001-
26		14X-71-53340	Step	2	80001-
27		01010-81240	Bolt	8	80001-
28		01643-31232	Washer	8	80001-

https://truckmanualshub.com/

FIG. T2110-002001 Dozer Frame, With Power Angle Power Tilt Dozer

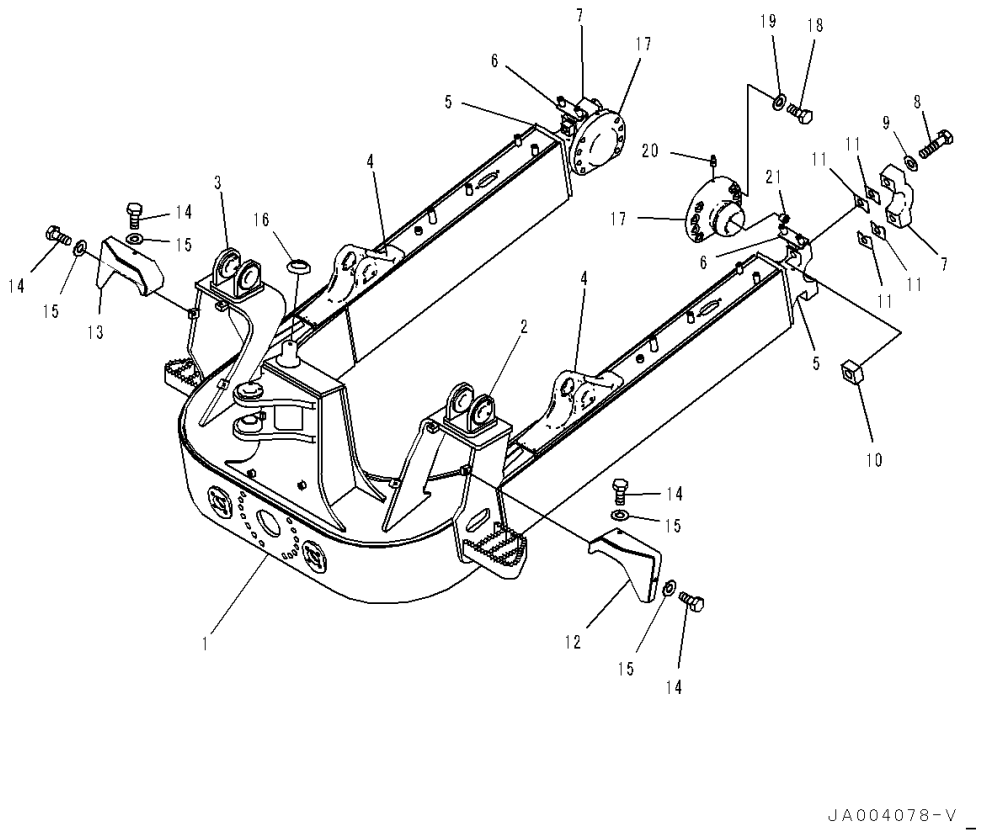

Index	Code	Part Number	Description	Qty	Serial Number
1		14X-72-51201	Frame Assembly	1	80001-
2		14X-72-51251	• Bracket,LHS,Welded	1	80001-
3		14X-72-51261	• Bracket,RHS,Welded	1	80001-
4		14X-72-51271	• Bracket,Welded	2	80001-
5		14X-72-51281	• Bearing,Welded	2	80001-
6		14X-72-51241	• Bracket,Welded	2	80001-
7	C1		• Cap	2	80001-
8	C1		• Bolt	4	80001-
9	C1		• Washer	4	80001-
10	C1		• Nut	4	80001-
11	C1		• Shim	40	80001-
12		14X-72-51731	Cover,LHS	1	80001-
13		14X-72-51741	Cover,RHS	1	80001-
14		01010-81225	Bolt	6	80001-
15		01643-31232	Washer	6	80001-
16		14X-72-51390	Spacer	1	80001-
17		14X-72-51421	Trunnion	2	80001-
18		01010-82065	Bolt	16	80009-
19		01643-32060	Washer	16	80009-
20		07020-00000	Fitting, Grease	2	80001-
21		07043-70108	Plug	2	80001-

https://truckmanualshub.com/

FIG. T2110-003001 Dozer Frame, With Power Tilt Pitch Dozer

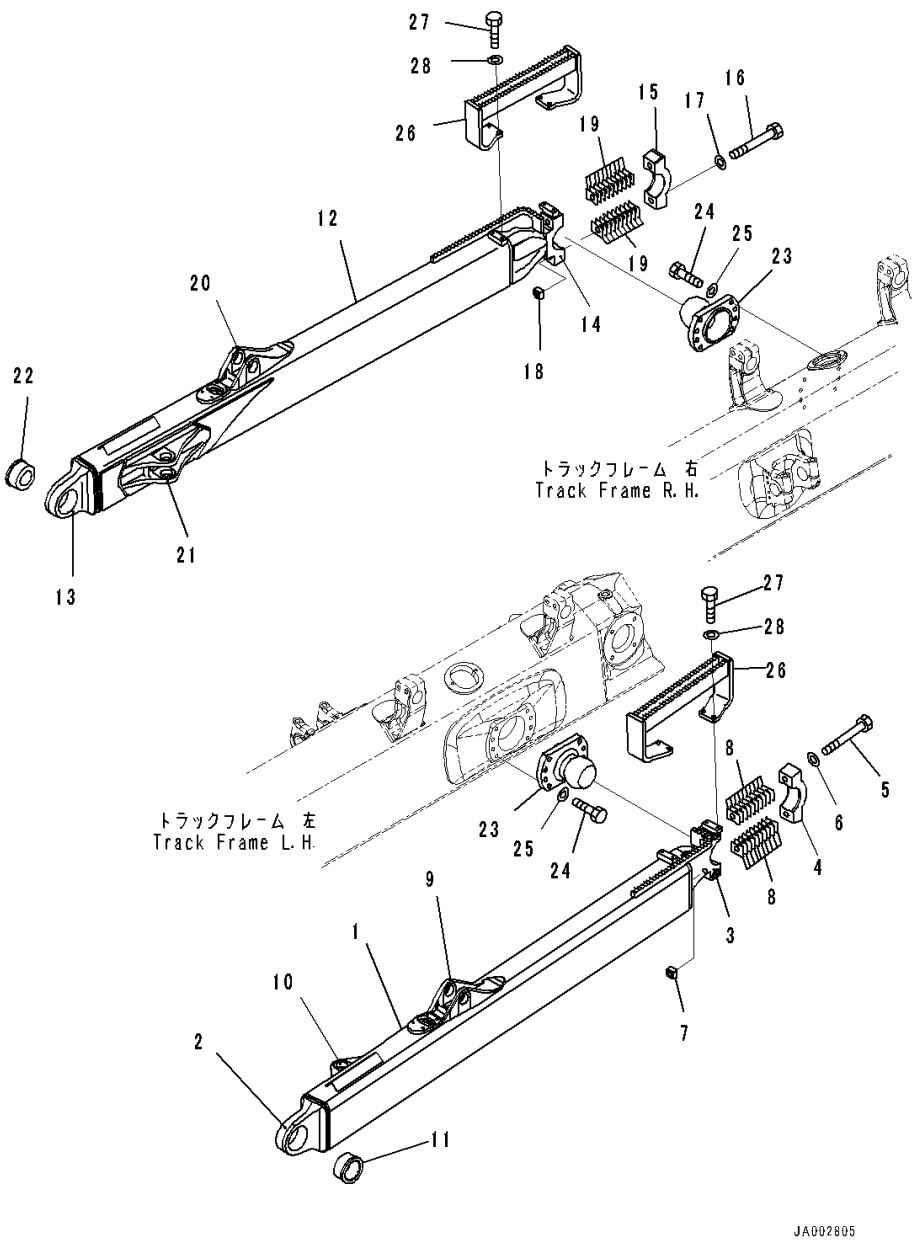

Index	Code	Part Number	Description	Qty	Serial Number
1		14X-71-53610	Frame,LHS	1	80001-
2		14Y-71-12131	• Joint,Welded	1	80001-
3	C1		• Bearing	1	80001-
4	C1		• Cap	1	80001-
5	C1		• Bolt	2	80001-
6	C1		• Washer	2	80001-
7	C1		• Nut	2	80001-
8	C1		• Shim, T=1.0mm	20	80001-
9		14Y-71-12170	• Bracket,Welded	1	80001-
10		14Y-71-13181	• Bracket,Welded	1	80001-
11		14X-71-12230	Bearing	1	80001-
12		14X-71-53320	Frame,RHS	1	80001-
13		14Y-71-12131	• Joint,Welded	1	80001-
14	C1		• Bearing	1	80001-
15	C1		• Cap	1	80001-
16	C1		• Bolt	2	80001-
17	C1		• Washer	2	80001-
18	C1		• Nut	2	80001-
19	C1		• Shim, T=1.0mm	20	80001-
20		14Y-71-12170	• Bracket,Welded	1	80001-
21		14Y-71-13181	• Bracket,Welded	1	80001-
22		14X-71-12230	Bearing	1	80001-
23		14Z-71-33212	Trunnion	2	80001-
24		01010-82065	Bolt	16	80001-
25		01643-32060	Washer	16	80001-
26		14X-71-53340	Step	2	80001-
27		01010-81240	Bolt	8	80001-
28		01643-31232	Washer	8	80001-

https://truckmanualshub.com/

FIG. T2115-001001 Dozer Arm And Brace

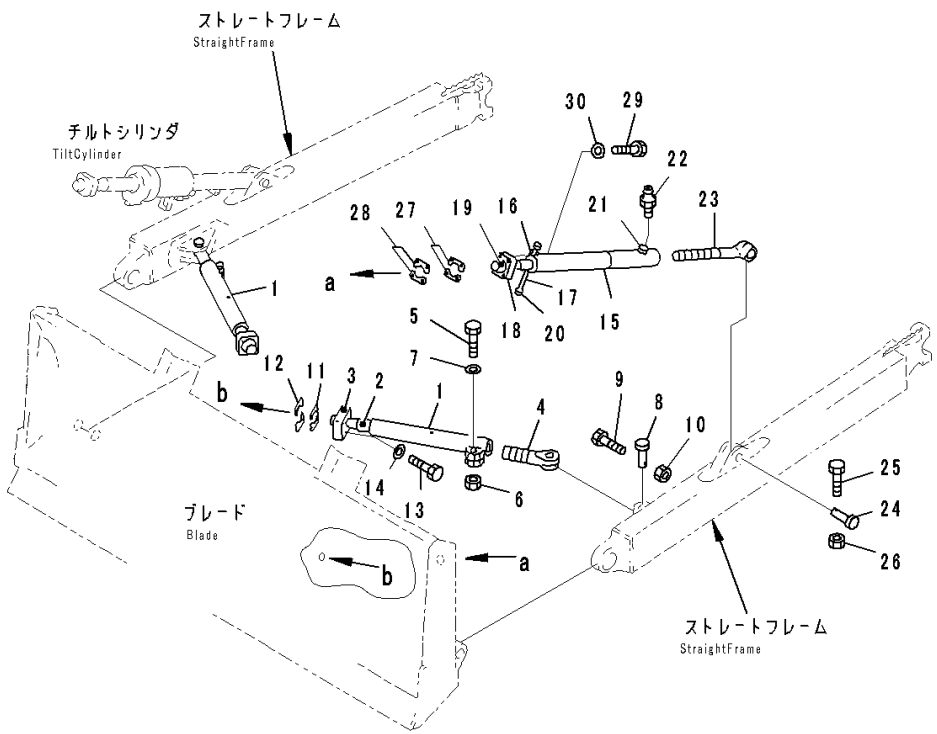

Index	Code	Part Number	Description	Qty	Serial Number
1		14Y-71-13110	Brace	2	80001-
2		14Y-71-13120	• Shaft,Welded	1	80001-
3		144-817-2420	• Retainer	1	80001-
4		144-817-2570	Joint	2	80001-
5		01011-82025	Bolt	2	80001-
6		01580-12016	Nut	2	80001-
7		01643-32060	Washer	2	80001-
8		13F-Z27-5610	Pin	2	80001-
9		01010-81265	Bolt	2	80001-
10		01598-01214	Nut	2	80001-
		144-817-0670	Shim Kit	2	80001-
11	C1		• Shim, T=1.0mm	12	80001-
12	C1		• Shim, T=0.5mm	4	80001-
13		01010-82075	Bolt	8	80001-
14		01643-32060	Washer	8	80001-
15		14X-71-13111	Brace	1	80001-
16		14X-71-11E20	• Plate,Welded	1	80001-
17		144-817-2280	• Rod	1	80001-
18		144-817-2420	• Retainer	1	80001-
19		14Y-71-13120	• Shaft,Welded	1	80001-
20		19N-911-1250	• Spacer,Welded	1	80001-
21		01099-03417	• Protector,Welded	1	80001-
22		07020-00000	Fitting, Grease	1	80001-
23		144-920-2122	Joint	1	80001-
24		13F-Z27-5610	Pin	2	80001-
25		01010-81265	Bolt	2	80001-
26		01598-01214	Nut	2	80001-
		144-817-0670	Shim Kit	2	80001-
27	C1		• Shim, T=1.0mm	12	80001-
28	C1		• Shim, T=0.5mm	4	80001-
29		01010-82075	Bolt	8	80001-
30		01643-32060	Washer	8	80001-

https://truckmanualshub.com/

FIG. T2115-002001 Dozer Arm And Brace, With Power Tilt Pitch Dozer

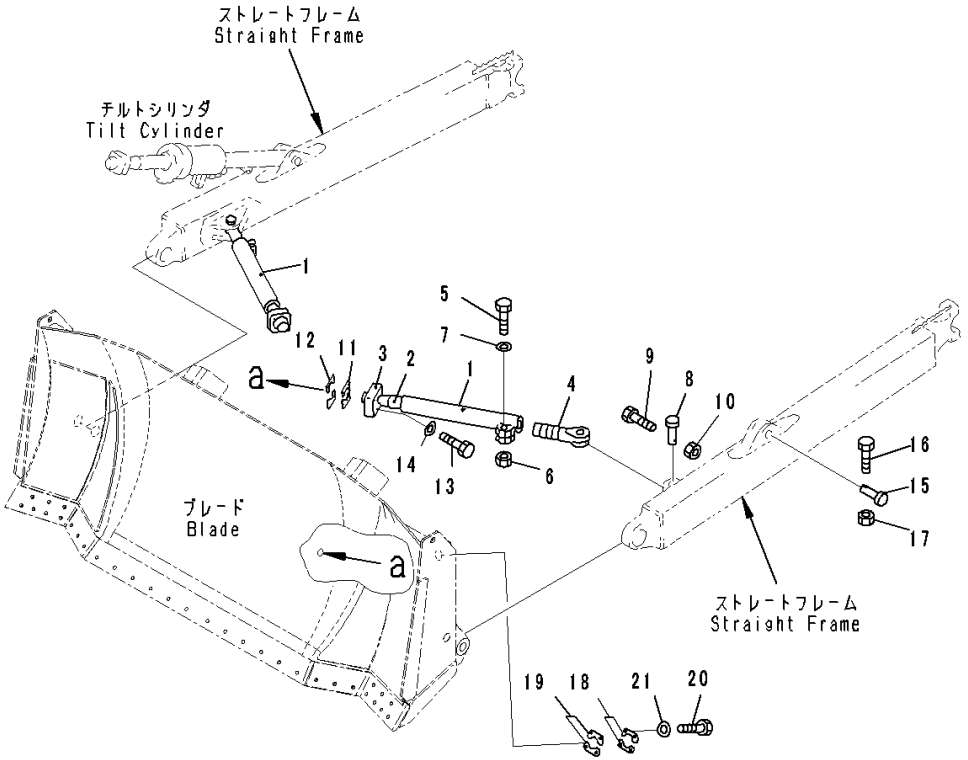

Index	Code	Part Number	Description	Qty	Serial Number
1		14Y-71-13110	Brace	2	80001-
2		14Y-71-13120	• Shaft,Welded	1	80001-
3		144-817-2420	• Retainer	1	80001-
4		144-817-2570	Joint	2	80001-
5		01011-82025	Bolt	2	80001-
6		01580-12016	Nut	2	80001-
7		01643-32060	Washer	2	80001-
8		13F-Z27-5610	Pin	2	80001-
9		01010-81265	Bolt	2	80001-
10		01598-01214	Nut	2	80001-
		144-817-0670	Shim Kit	2	80001-
11	C1		• Shim, T=1.0mm	12	80001-
12	C1		• Shim, T=0.5mm	4	80001-
13		01010-82075	Bolt	8	80001-
14		01643-32060	Washer	8	80001-
15		13F-Z27-5610	Pin	2	80001-
16		01010-81265	Bolt	2	80001-
17		01598-01214	Nut	2	80001-
		144-817-0670	Shim Kit	2	80001-
18	C1		• Shim, T=1.0mm	12	80001-
19	C1		• Shim, T=0.5mm	4	80001-
20		01010-82075	Bolt	8	80001-
21		01643-32060	Washer	8	80001-

https://truckmanualshub.com/

FIG. T2115-003001 Dozer Arm And Brace, With Power Angle Power Tilt Dozer

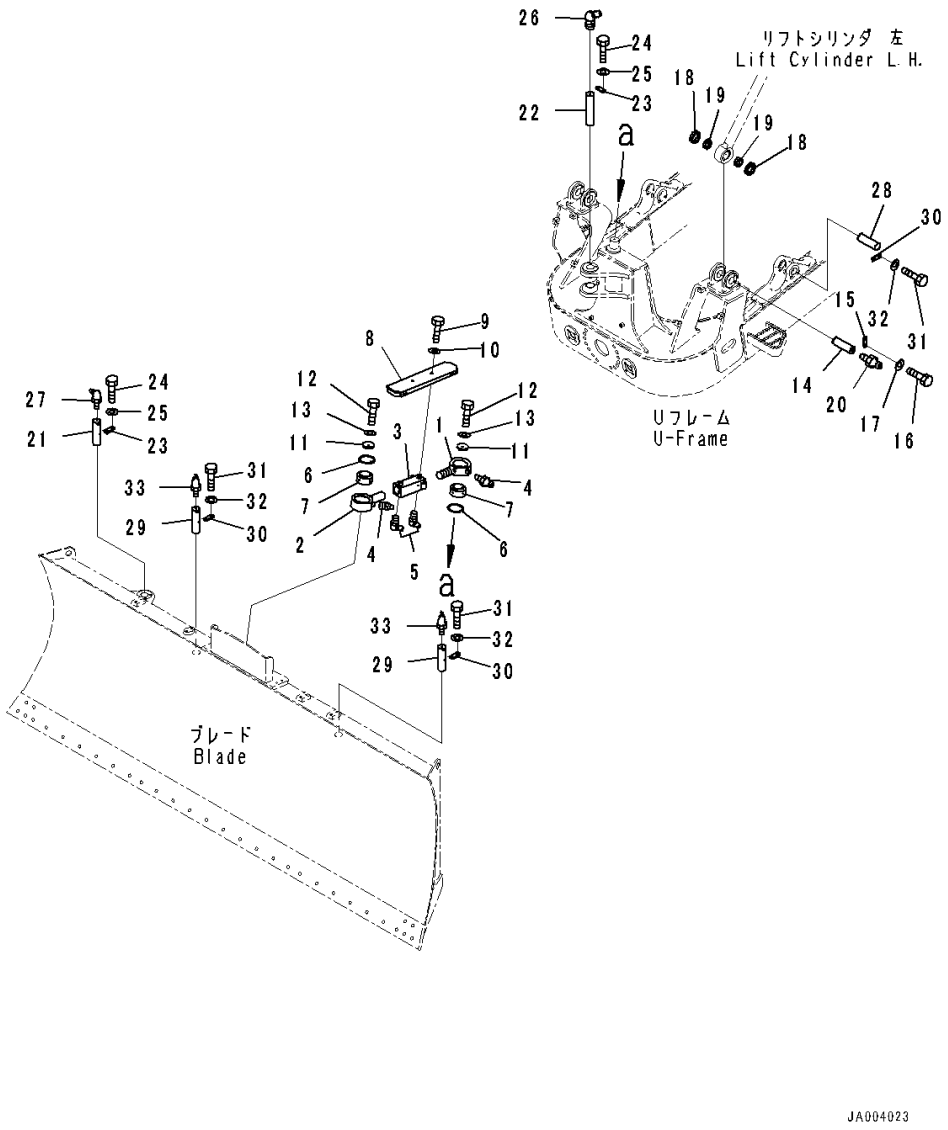

Index	Code	Part Number	Description	Qty	Serial Number
1		14X-72-51311	Rod	1	80001-
2		14X-72-51372	Rod	1	80001-
3		14X-72-51352	Bar	1	80001-
4		07020-00000	Fitting, Grease	2	80001-
5		07020-00900	Fitting, Grease	2	80001-
6		04065-01030	Ring	2	80001-
7		707-46-06020	Bushing	2	80001-
8		14X-72-51331	Cover	1	80001-
9		01010-81230	Bolt	2	80001-
10		01643-31232	Washer	2	80001-
11		14X-72-51341	Washer	2	80001-
12		01010-81225	Bolt	2	80001-
13		01643-31232	Washer	2	80001-
14		09241-50160	Pin	2	80001-
15		04082-00212	Lock	2	80001-
16		01010-81225	Bolt	4	80001-
17		01643-31232	Washer	4	80001-
18		14X-72-51290	Cushion	4	80001-
19		14X-72-51360	Spacer	4	80001-
20		07020-00000	Fitting, Grease	2	80001-
21		14X-72-51161	Pin	1	80001-
22		14X-72-51172	Pin	1	80001-
23		04082-00212	Lock	2	80001-
24		01010-81225	Bolt	4	80001-
25		01643-31232	Washer	4	80001-
26		07020-00675	Fitting, Grease	1	80001-
27		07020-00900	Fitting, Grease	1	80001-
28		20S-70-82230	Pin	2	80001-
29		14X-72-51161	Pin	2	80001-
30		04082-00212	Lock	4	80001-
31		01010-81225	Bolt	8	80001-
32		01643-31232	Washer	8	80001-
33		07020-00675	Fitting, Grease	2	80001-

https://truckmanualshub.com/

FIG. T2120-001001 Dozer Blade

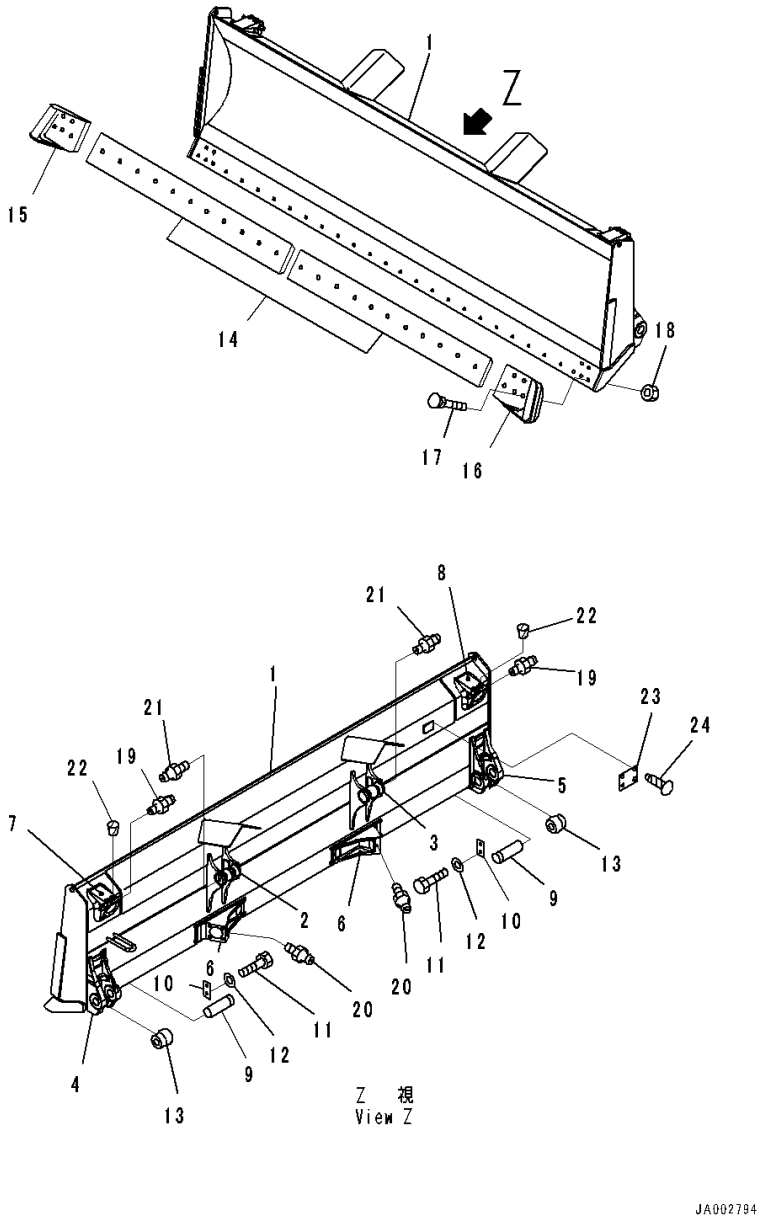

Index	Code	Part Number	Description	Qty	Serial Number
1		14X-71-51102	Blade	1	80093-
2		14X-952-5170	• Bracket,LHS,Welded	1	80001-
3		14X-952-5370	• Bracket,RHS,Welded	1	80001-
4		14X-71-51122	• Bracket,LHS,Welded	1	80001-
5		14X-71-51132	• Bracket,RHS,Welded	1	80001-
6		14X-71-51151	• Bracket,Welded	1	80001-
7		14X-71-51161	• Bracket,LHS,Welded	1	80001-
8		14X-71-51171	• Bracket,RHS,Welded	1	80001-
9		144-817-1260	Shaft	2	80001-
10		144-920-1780	Lock	2	80001-
11		01010-81635	Bolt	4	80001-
12		01643-31645	Washer	4	80001-
13		14X-71-12240	Cap	2	80001-
14		14Y-71-11210	Cutting Edge	2	80001-
15		14Y-71-11340	End Bit,RHS	1	80001-
16		14Y-71-11330	End Bit,LHS	1	80001-
17		02090-11270	Bolt	32	80001-
18		02290-11219	Nut	32	80001-
19		07020-00000	Fitting, Grease	2	80001-
20		07020-00000	Fitting, Grease	2	80001-
21		07020-00000	Fitting, Grease	2	80001-
22		07049-01215	Plug	4	80001-
23	C2	09601-50000	Plate, Name (Limited Supply), EU Regulation	1	80001-
24		04418-13060	Screw	4	80001-

https://truckmanualshub.com/

FIG. T2120-002001 Dozer Blade, With Power Angle Power Tilt Dozer

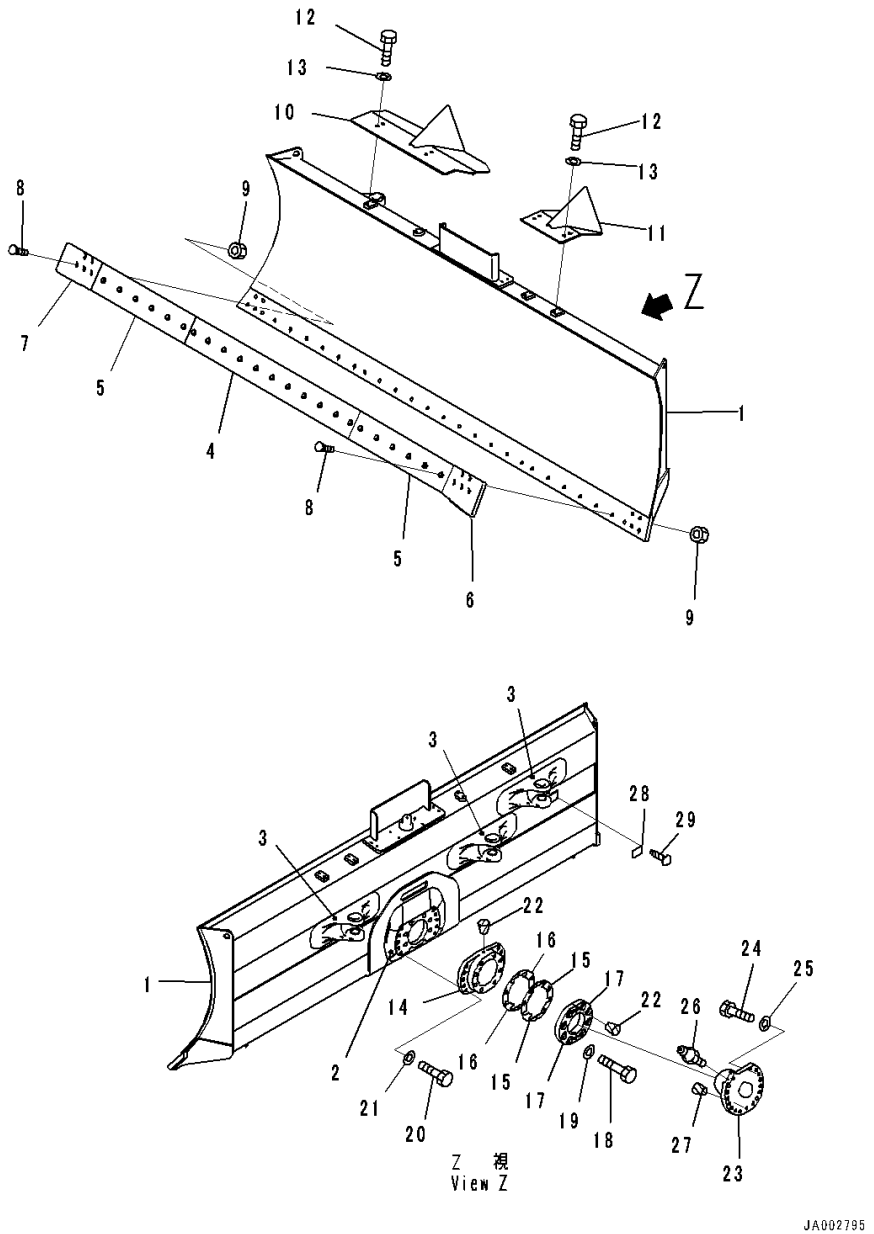

Index	Code	Part Number	Description	Qty	Serial Number
1		14X-72-51502	Blade Assembly	1	80001-
2		14X-72-51120	• Plate,Welded	1	80001-
3		14X-72-51131	• Bracket,Welded	3	80001-
4		14X-72-51610	Cutting Edge	1	80001-
5		13G-72-61420	Cutting Edge	2	80001-
6		14Y-71-11330	End Bit,LHS	1	80001-
7		14Y-71-11340	End Bit,RHS	1	80001-
8		02090-11270	Bolt	33	80001-
9		02290-11219	Nut	33	80001-
10		14X-72-51192	Cover	1	80001-
11		14X-72-51382	Cover	1	80001-
12		01010-81230	Bolt	8	80001-
13		01643-31232	Washer	8	80001-
14		134-72-62442	Bearing	1	80001-
15		134-72-72450	Shim, T=0.5mm	4	80001-
16		134-72-72460	Shim, T=1.0mm	14	80001-
17		134-72-71151	Cap	2	80001-
18		209-09-51210	Bolt	8	80001-
19		01643-32460	Washer	8	80001-
20		01010-82060	Bolt	10	80001-
21		01643-32060	Washer	10	80001-
22		07049-01215	Plug	6	80001-
23		134-72-62474	Trunnion	1	80001-
24		01010-82075	Bolt	14	80001-
25		01643-32060	Washer	14	80001-
26		07020-00000	Fitting, Grease	1	80001-
27		07049-02228	Plug, Cork	3	80001-
28	C2	09601-50000	Plate, Name (Limited Supply), EU Regulation	1	80001-
29		04418-13060	Screw	4	80001-

https://truckmanualshub.com/

FIG. T2120-003001A Dozer Blade, With 3000mm, Power Angle Power Tilt Blade

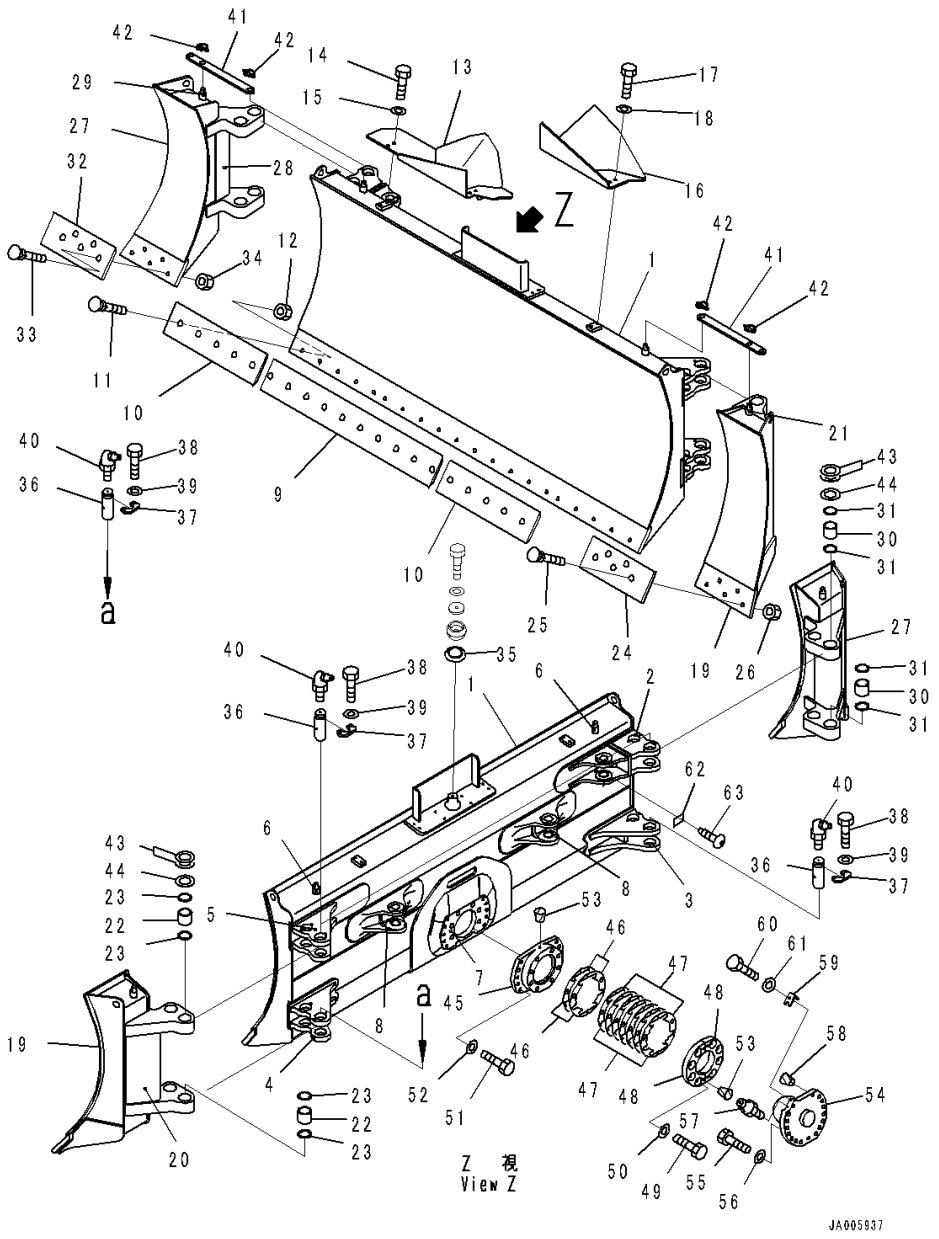

Index	Code	Part Number	Description	Qty	Serial Number
1		14X-72-54101	Blade Assembly	1	80001-
2		14X-72-54131	• Bracket,Welded	1	80001-
3		14X-72-54141	• Bracket,Welded	1	80001-
4		14X-72-54151	• Bracket,Welded	1	80001-
5		14X-72-54161	• Bracket,Welded	1	80001-
6		14X-72-54D20	• Pin,Welded	2	80001-
7		14X-72-51120	• Plate,Welded	1	80001-
8		14X-72-51131	• Bracket,Welded	2	80001-
9		13G-72-61410	Cutting Edge	1	80001-
10		13G-72-63250	Cutting Edge	2	80001-
11		02090-11270	Bolt	20	80001-
12		02290-11219	Nut	20	80001-
13		14X-72-51192	Cover	1	80001-
14		01010-81230	Bolt	4	80001-
15		01643-31232	Washer	4	80001-
16		14X-72-51382	Cover	1	80001-
17		01010-81230	Bolt	4	80001-
18		01643-31232	Washer	4	80001-
19		14X-72-54301	Blade	1	80001-
20		14X-72-54340	• Bracket,Welded	1	80001-
21		14X-72-54D20	• Pin,Welded	1	80001-
22		14X-72-54430	Bushing	4	80001-
23		07145-00065	Seal, Dust	8	80001-
24		14X-72-54351	End Bit	1	80001-
25		02090-11270	Bolt	5	80001-
26		02290-11219	Nut	5	80001-
27		14X-72-54201	Blade	1	80001-
28		14X-72-54241	• Bracket,Welded	1	80001-
29		14X-72-54D20	• Pin,Welded	1	80001-
30		14X-72-54430	Bushing	4	80001-
31		07145-00065	Seal, Dust	8	80001-
32		14X-72-54251	End Bit	1	80001-
33		02090-11270	Bolt	5	80001-
34		02290-11219	Nut	5	80001-
35		14X-72-51390	Spacer	1	80232-
36		14X-72-54420	Pin	8	80001-
37		14X-72-54410	Plate	8	80001-
38		01010-81235	Bolt	16	80001-
39		01643-31232	Washer	16	80001-
40		07020-00675	Fitting, Grease	8	80001-

https://truckmanualshub.com/

FIG. T2120-003001A Dozer Blade, With 3000mm, Power Angle Power Tilt Blade

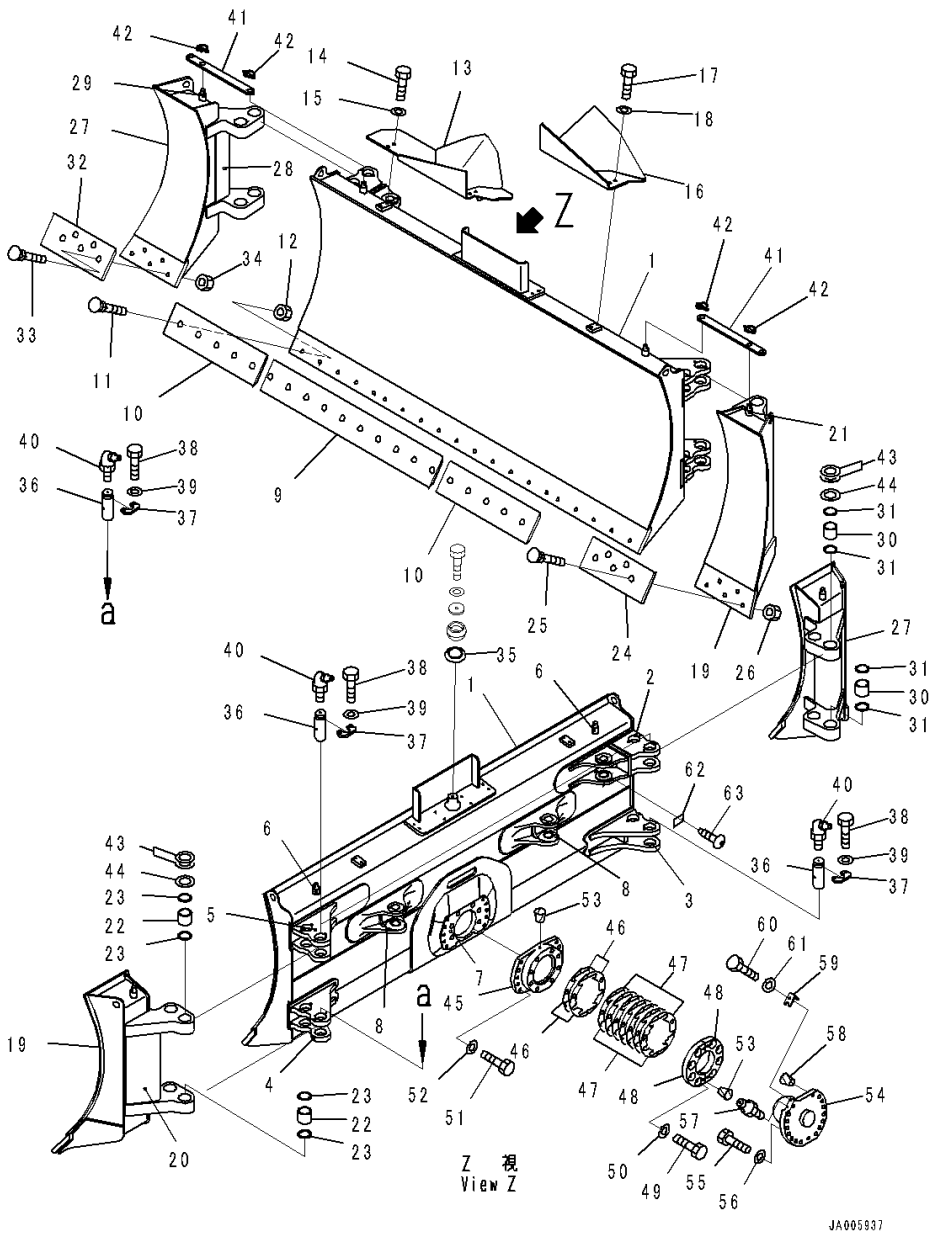

Index	Code	Part Number	Description	Qty	Serial Number
41		14X-72-54170	Plate	2	80001-
42		421-46-12740	Pin, Linch	4	80001-
43		21Y-70-14710	Spacer, T=1.0mm	8	80001-
44		21Y-70-14850	Spacer, T=0.20mm	4	80001-
45		134-72-62442	Bearing	1	80001-
46		134-72-72450	Shim, T=0.5mm	4	80001-
47		134-72-72460	Shim, T=1.0mm	14	80001-
48		134-72-71151	Cap	2	80001-
49		209-09-51210	Bolt	8	80001-
50		01643-32460	Washer	8	80001-
51		01010-82060	Bolt	10	80001-
52		01643-32060	Washer	10	80001-
53		07049-01215	Plug	6	80001-
54		134-72-62474	Trunnion	1	80001-
55		01010-82075	Bolt	14	80001-
56		01643-32060	Washer	14	80001-
57		07020-00000	Fitting, Grease	1	80001-
58		07049-02228	Plug, Cork	3	80001-
59		14X-72-51530	Bracket	1	80001-
60		01010-81045	Bolt	1	80001-
61		01643-31032	Washer	1	80001-
62	C2	09601-50000	Plate, Name (Limited Supply), EU Regulation	1	80001-
63		04418-13060	Screw	4	80001-

https://truckmanualshub.com/

FIG. T2140-001001 Dozer Blade Lift Cylinder, Inner Parts, LHS

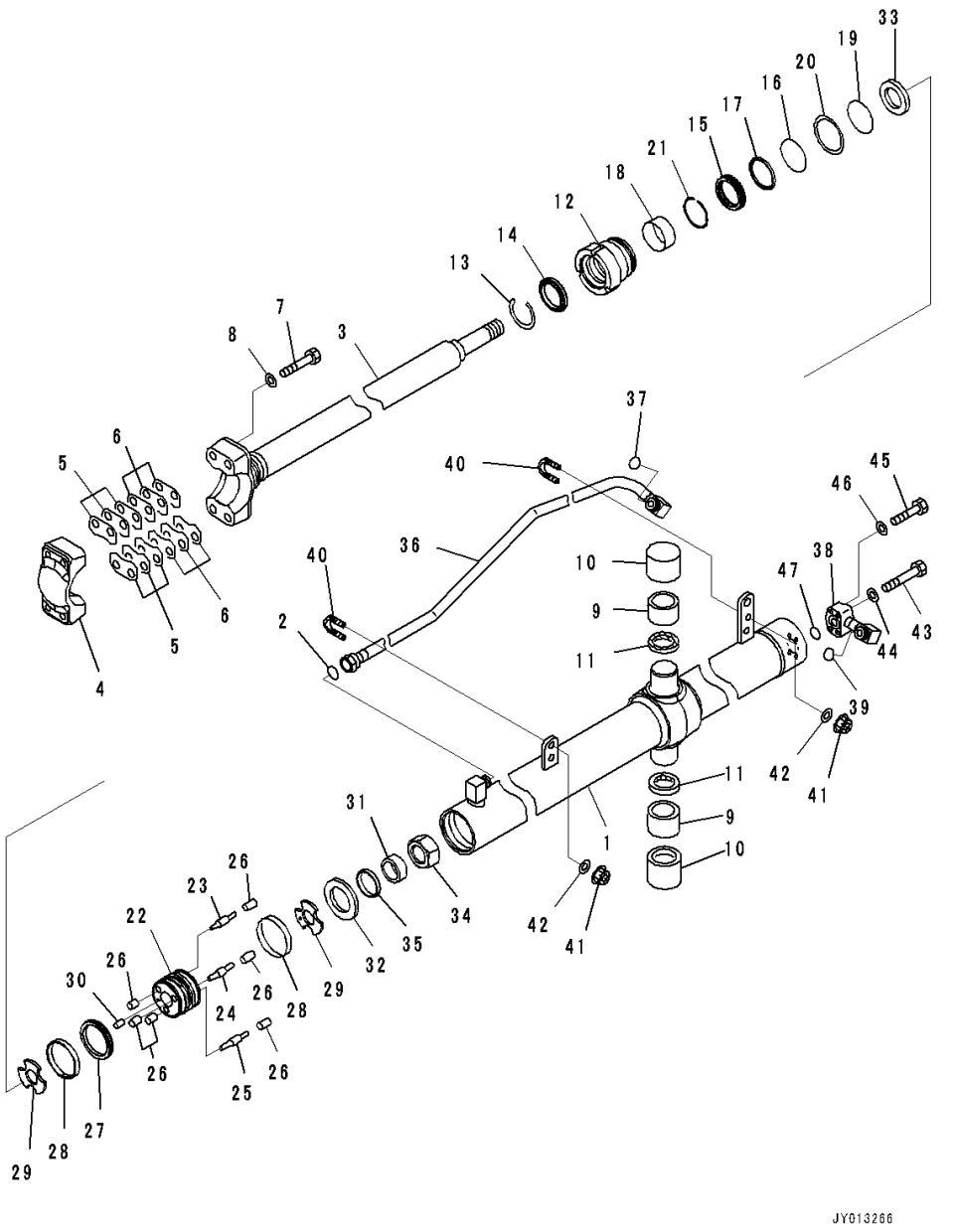

Index	Code	Part Number	Description	Qty	Serial Number
		707-02-00950	Cylinder Assembly	1	80001-
1		707-12-85030	• Cylinder	1	80001-
2		02896-11015	• O-ring, (Kit : K10)	1	80001-
3		707-60-60040	• Rod	1	80001-
4		707-66-60140	• Cap	1	80001-
5		707-88-11290	• Shim, T=1.0mm	6	80001-
6		707-88-11300	• Shim	6	80001-
7		01011-81600	• Bolt	4	80001-
8		01643-51645	• Washer	4	80001-
9		144-60-15450	• Bushing	2	80001-
10		144-60-15431	• Bushing	2	80001-
11		07145-00055	• Seal, Dust, (Kit : K10)	2	80001-
12		707-29-85320	• Head, Cylinder	1	80001-
13		07179-12074	• Ring, Snap	1	80001-
14		707-56-60740	• Seal, Dust, (Kit : K10)	1	80001-
15		707-51-60030	• Packing, Rod, (Kit : K10)	1	80001-
16		07000-12085	• O-ring, (Kit : K10)	1	80001-
17		707-51-60650	• Ring, Buffer, (Kit : K10)	1	80001-
18		707-52-90351	• Bushing	1	80001-
19		07000-12080	• O-ring, (Kit : K10)	1	80001-
20		707-35-52770	• Ring, Back-up, (Kit : K10)	1	80001-
21		707-75-60110	• Ring, Snap	1	80001-
		707-91-90040	• Piston Assembly	1	80001-
22		707-37-85010	• • Piston	1	80001-
23	C1		• • Valve, Piston	1	80001-
24	C1		• • Valve, Piston	1	80001-
25	C1		• • Valve, Piston	1	80001-
26	C1		• • Seat, Valve	6	80001-
27		707-44-85150	• Ring, Piston, (Kit : K10)	1	80001-
28		707-39-85120	• Ring, Wear, (Kit : K10)	2	80001-
29		707-40-85020	• Retainer	2	80001-
30		130-63-12761	• Pin	2	80001-
31		707-88-38850	• Collar	1	80001-
32		707-69-85020	• Slider	1	80001-
33		707-69-85010	• Slider	1	80001-
34		707-67-33040	• Nut	1	80001-
35		707-52-90230	• Bushing	1	80001-
36		707-86-55810	Tube	1	80001-
37		02896-11015	O-ring, (Kit : K10)	1	80001-
38		707-86-55820	Tube	1	80001-

https://truckmanualshub.com/

FIG. T2140-001001 Dozer Blade Lift Cylinder, Inner Parts, LHS

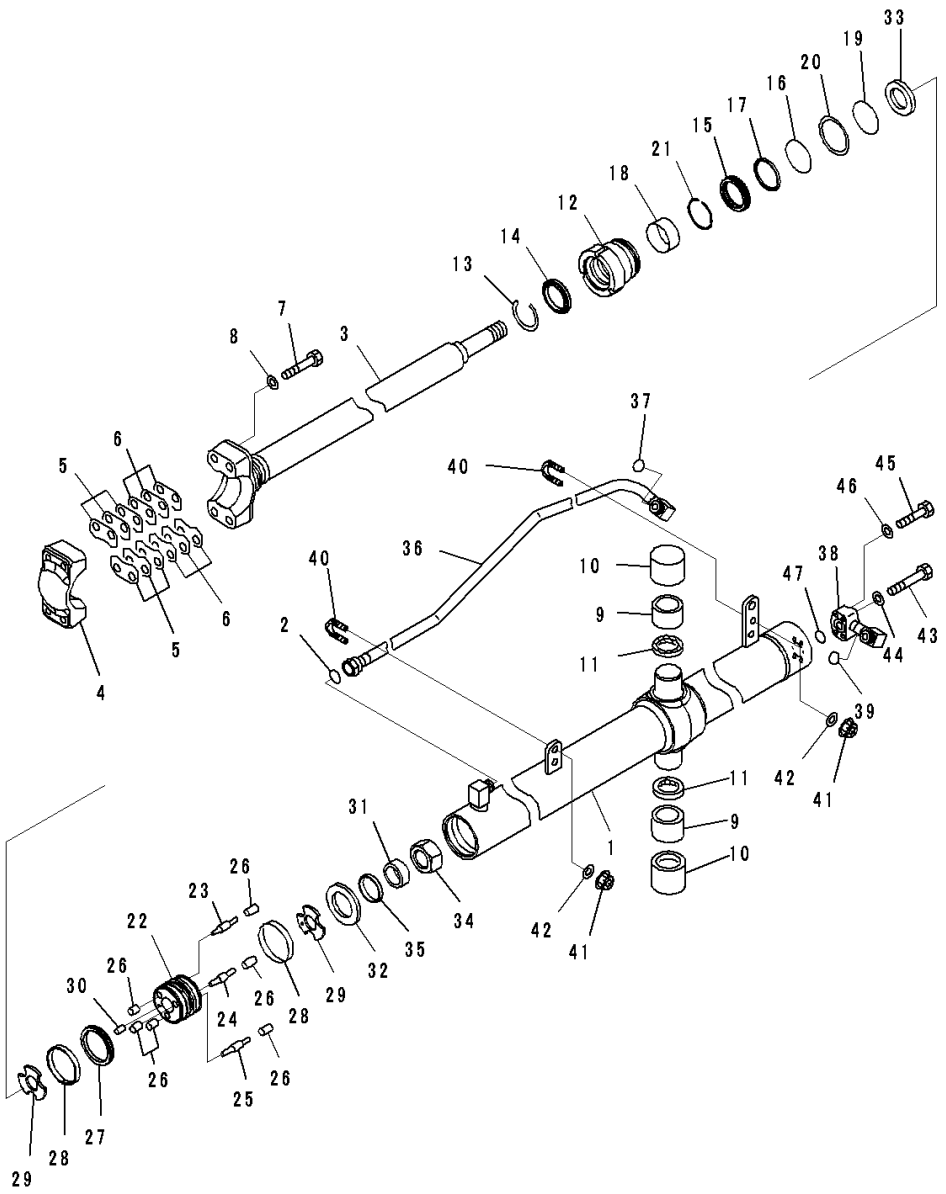

Index	Code	Part Number	Description	Qty	Serial Number
39		02896-11015	O-ring, (Kit : K10)	1	80001-
40		07283-32236	Clip, Pipe	2	80001-
41		01597-01009	Nut	4	80001-
42		01643-31032	Washer	4	80001-
43		01010-80845	Bolt	2	80001-
44		01643-30823	Washer	2	80001-
45		01010-80840	Bolt	2	80001-
46		01643-30823	Washer	2	80001-
47		07000-13025	O-ring, (Kit : K10)	1	80001-

https://truckmanualshub.com/

FIG. T2140-001002 Dozer Blade Lift Cylinder, Inner Parts, Reduction Gear

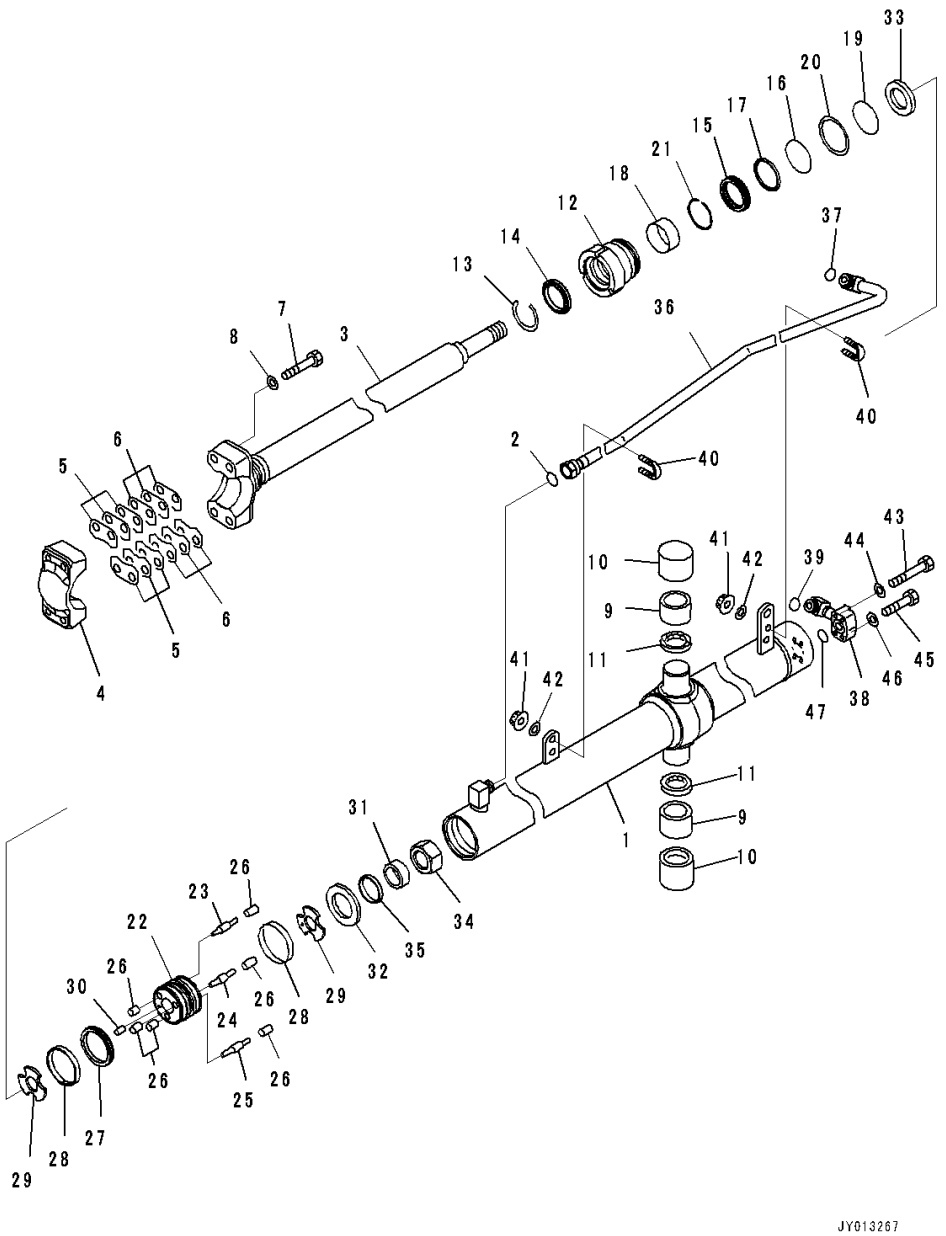

Index	Code	Part Number	Description	Qty	Serial Number
		707-02-00960	Cylinder Assembly	1	80001-
1		707-12-85040	• Cylinder	1	80001-
2		02896-11015	• O-ring, (Kit : K10)	1	80001-
3		707-60-60040	• Rod	1	80001-
4		707-66-60140	• Cap	1	80001-
5		707-88-11290	• Shim, T=1.0mm	6	80001-
6		707-88-11300	• Shim	6	80001-
7		01011-81600	• Bolt	4	80001-
8		01643-51645	• Washer	4	80001-
9		144-60-15450	• Bushing	2	80001-
10		144-60-15431	• Bushing	2	80001-
11		07145-00055	• Seal, Dust, (Kit : K10)	2	80001-
12		707-29-85320	• Head, Cylinder	1	80001-
13		07179-12074	• Ring, Snap	1	80001-
14		707-56-60740	• Seal, Dust, (Kit : K10)	1	80001-
15		707-51-60030	• Packing, Rod, (Kit : K10)	1	80001-
16		07000-12085	• O-ring, (Kit : K10)	1	80001-
17		707-51-60650	• Ring, Buffer, (Kit : K10)	1	80001-
18		707-52-90351	• Bushing	1	80001-
19		07000-12080	• O-ring, (Kit : K10)	1	80001-
20		707-35-52770	• Ring, Back-up, (Kit : K10)	1	80001-
21		707-75-60110	• Ring, Snap	1	80001-
		707-91-90040	• Piston Assembly	1	80001-
22		707-37-85010	• • Piston	1	80001-
23	C1		• • Valve, Piston	1	80001-
24	C1		• • Valve, Piston	1	80001-
25	C1		• • Valve, Piston	1	80001-
26	C1		• • Seat, Valve	6	80001-
27		707-44-85150	• Ring, Piston, (Kit : K10)	1	80001-
28		707-39-85120	• Ring, Wear, (Kit : K10)	2	80001-
29		707-40-85020	• Retainer	2	80001-
30		130-63-12761	• Pin	2	80001-
31		707-88-38850	• Collar	1	80001-
32		707-69-85020	• Slider	1	80001-
33		707-69-85010	• Slider	1	80001-
34		707-67-33040	• Nut	1	80001-
35		707-52-90230	• Bushing	1	80001-
36		707-86-55830	Tube	1	80001-
37		02896-11015	O-ring, (Kit : K10)	1	80001-
38		707-86-55840	Tube	1	80001-

https://truckmanualshub.com/

FIG. T2140-001002 Dozer Blade Lift Cylinder, Inner Parts, Reduction Gear

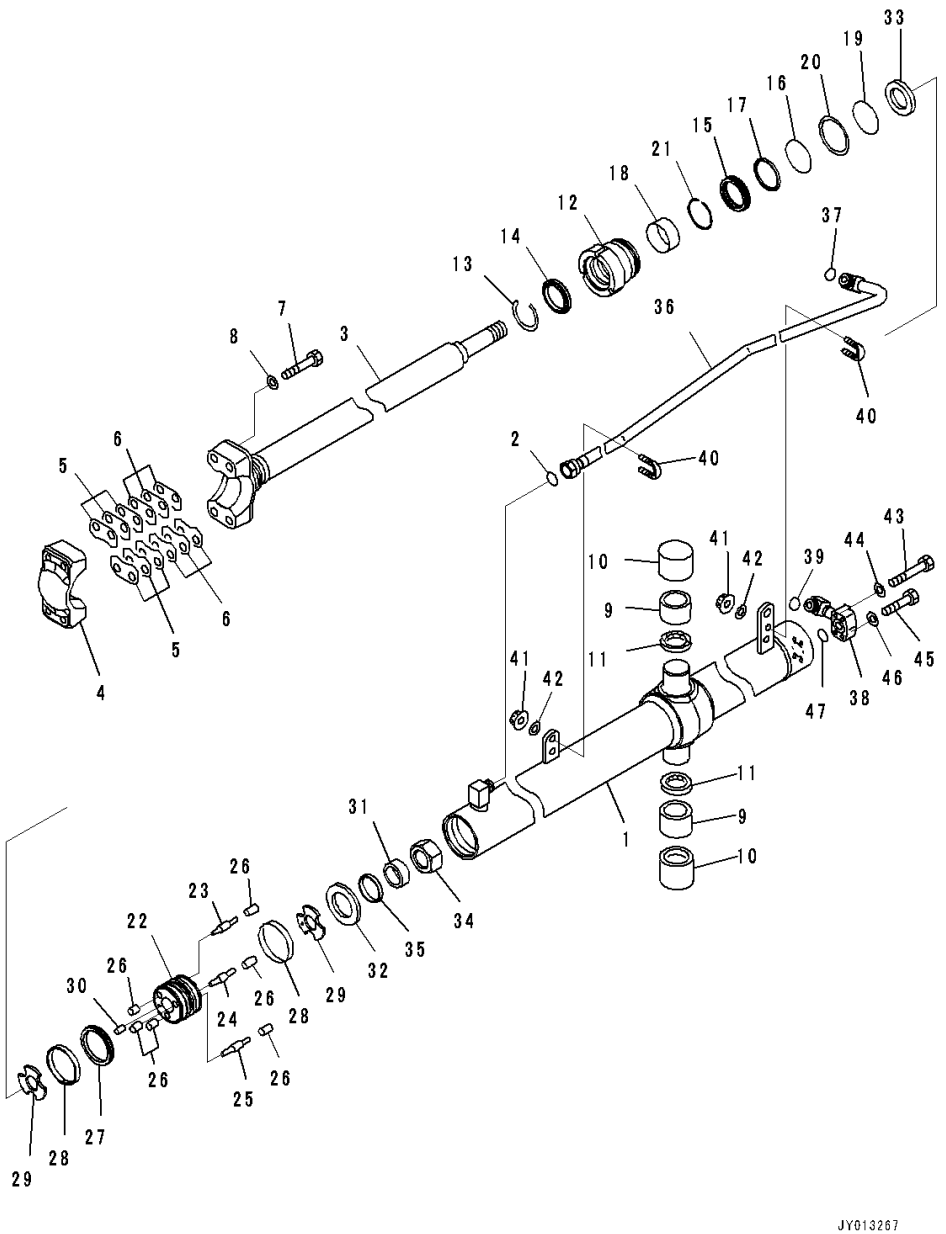

Index	Code	Part Number	Description	Qty	Serial Number
39		02896-11015	O-ring, (Kit : K10)	1	80001-
40		07283-32236	Clip, Pipe	2	80001-
41		01597-01009	Nut	4	80001-
42		01643-31032	Washer	4	80001-
43		01010-80845	Bolt	2	80001-
44		01643-30823	Washer	2	80001-
45		01010-80840	Bolt	2	80001-
46		01643-30823	Washer	2	80001-
47		07000-13025	O-ring, (Kit : K10)	1	80001-

https://truckmanualshub.com/

FIG. T2140-001003 Dozer Blade Lift Cylinder

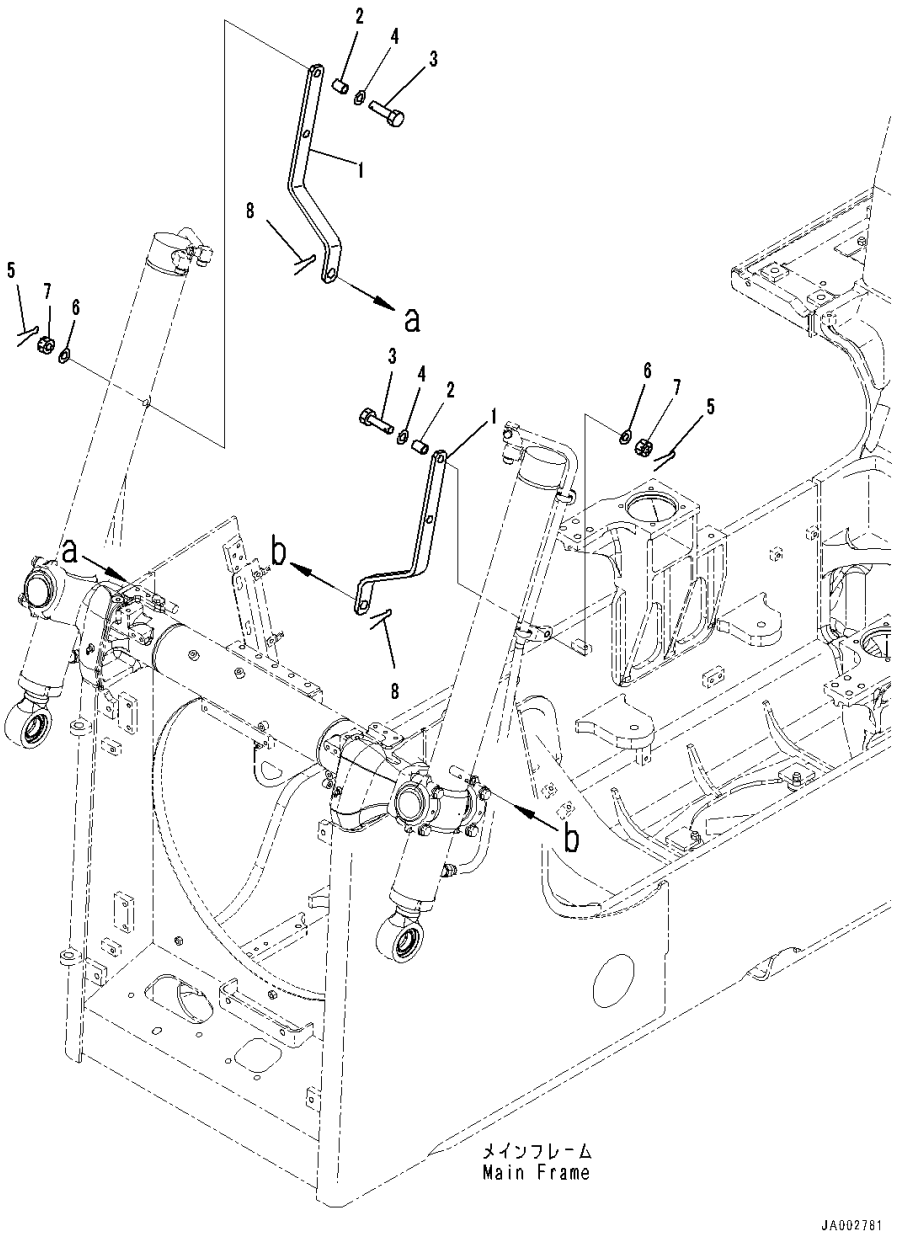

Index	Code	Part Number	Description	Qty	Serial Number
1		14X-54-51280	Plate	2	80001-
2		423-825-1720	Spacer	2	80001-
3		01012-81250	Bolt	2	80001-
4		01643-31232	Washer	2	80001-
5		04050-13022	Pin, Cotter	2	80001-
6		01643-31232	Washer	2	80001-
7		01590-31215	Nut, Slotted	2	80001-
8		04050-18080	Pin, Cotter	4	80001-

https://truckmanualshub.com/

FIG. T2140-002001 Dozer Blade Lift Cylinder, With Power Angle Power Tilt Dozer, Inner Parts, LHS

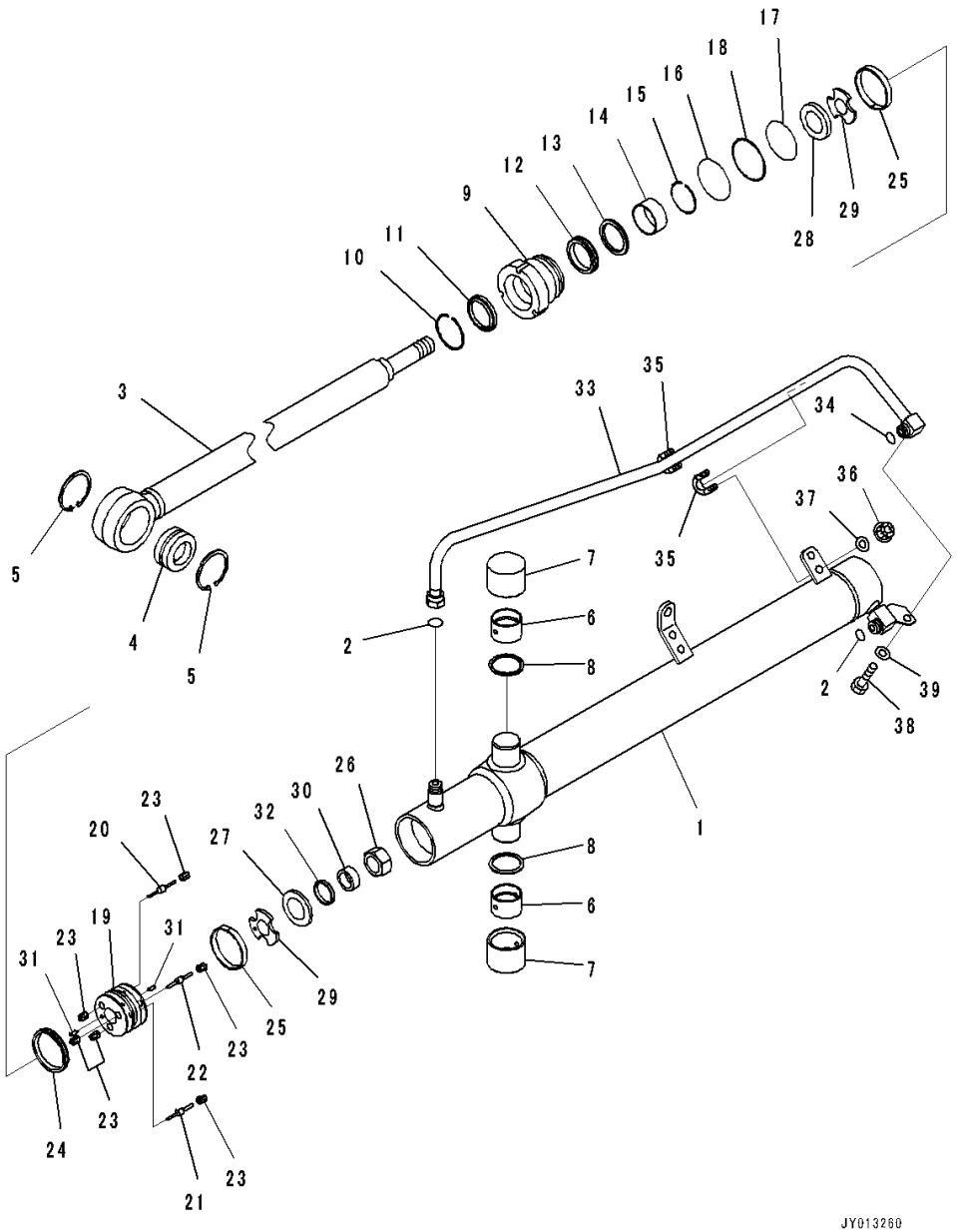

Index	Code	Part Number	Description	Qty	Serial Number
		707-02-00970	Cylinder Assembly	1	80001-
1		707-12-90280	• Cylinder	1	80001-
2		02896-11015	• O-ring, (Kit : K11)	2	80001-
3		721-58-60780	• Rod, Piston	1	80001-
4		707-46-50020	• Bushing	1	80001-
5		04065-08025	• Ring, Snap	2	80001-
6		144-60-15450	• Bushing	2	80001-
7		144-60-15431	• Bushing	2	80001-
8		07145-00055	• Seal, Dust, (Kit : K11)	2	80001-
9		707-29-10A40	• Head	1	80001-
10		07179-12074	• Ring, Snap	1	80001-
11		707-56-60740	• Seal, Dust, (Kit : K11)	1	80001-
12		707-51-60030	• Packing, Rod, (Kit : K11)	1	80001-
13		707-51-60650	• Ring, Buffer, (Kit : K11)	1	80001-
14		707-52-90351	• Bushing	1	80001-
15		707-75-60110	• Ring, Snap	1	80001-
16		07000-12090	• O-ring, (Kit : K11)	1	80001-
17		07000-12085	• O-ring, (Kit : K11)	1	80001-
18		07146-02086	• Ring, Back-up, (Kit : K11)	1	80001-
		707-91-90050	• Piston Assembly	1	80001-
19		707-37-90150	• • Piston	1	80001-
20	C1		• • Valve, Piston	1	80001-
21	C1		• • Valve, Piston	1	80001-
22	C1		• • Valve, Piston	1	80001-
23	C1		• • Seat, Valve	6	80001-
24		707-44-90150	• Ring, Piston, (Kit : K11)	1	80001-
25		07156-00912	• Ring, Wear, (Kit : K11)	2	80001-
26		707-67-33040	• Nut	1	80001-
27		707-69-85020	• Slider	1	80001-
28		707-69-85010	• Slider	1	80001-
29		707-40-85020	• Retainer	2	80001-
30		707-88-38850	• Collar	1	80001-
31		130-63-12761	• Pin	2	80001-
32		707-52-90230	• Bushing	1	80001-
33		707-86-55850	Tube	1	80001-
34		02896-11015	O-ring, (Kit : K11)	1	80001-
35		07283-32236	Clip, Pipe	2	80001-
36		01597-01009	Nut	4	80001-
37		01643-31032	Washer	4	80001-
38		01010-81020	Bolt	1	80001-

https://truckmanualshub.com/

FIG. T2140-002001 Dozer Blade Lift Cylinder, With Power Angle Power Tilt Dozer, Inner Parts, LHS

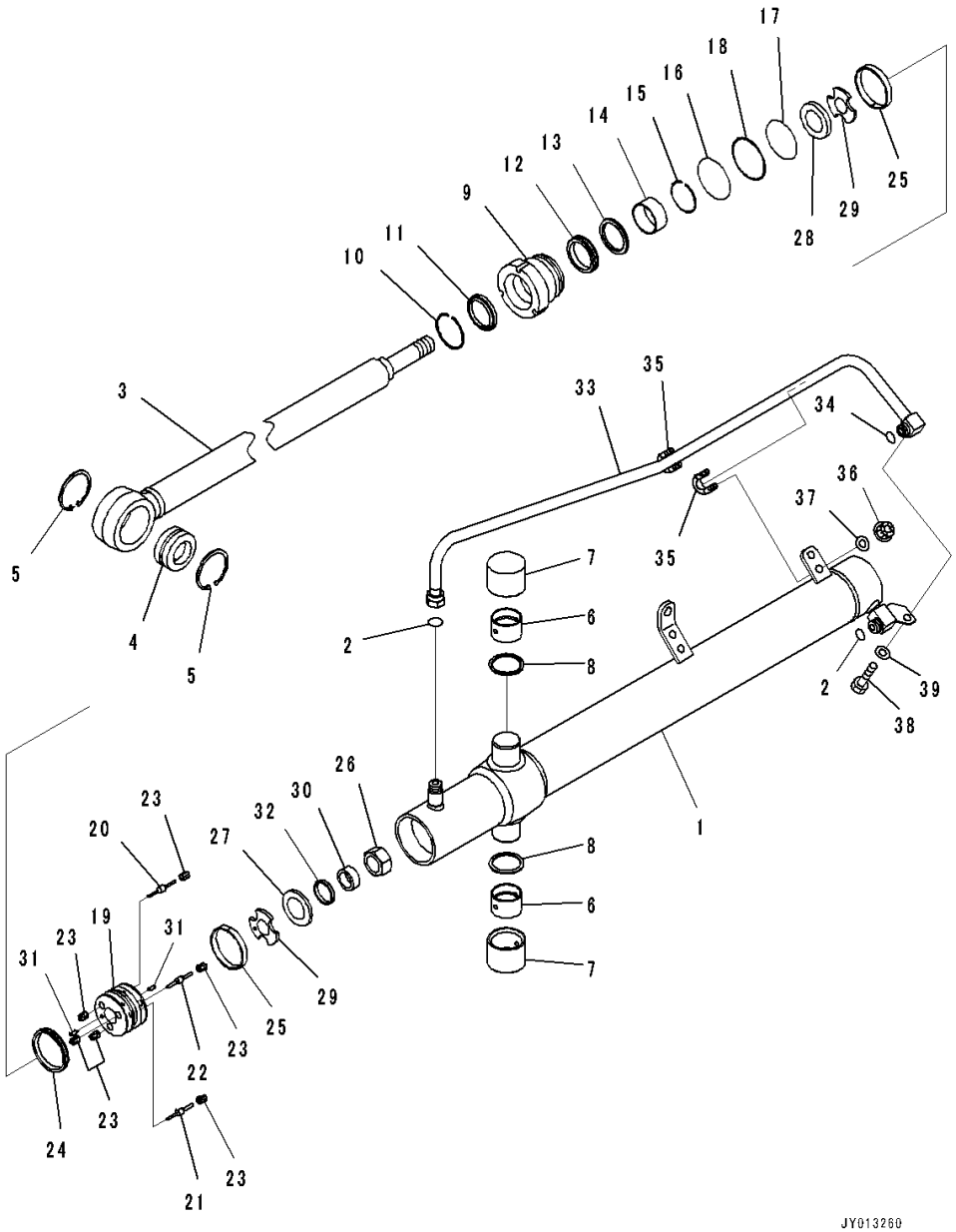

Index	Code	Part Number	Description	Qty	Serial Number
39		01643-31032	Washer	1	80001-

https://truckmanualshub.com/

FIG. T2140-002002 Dozer Blade Lift Cylinder, With Power Angle Power Tilt Dozer, Inner Parts, Reduction Gear

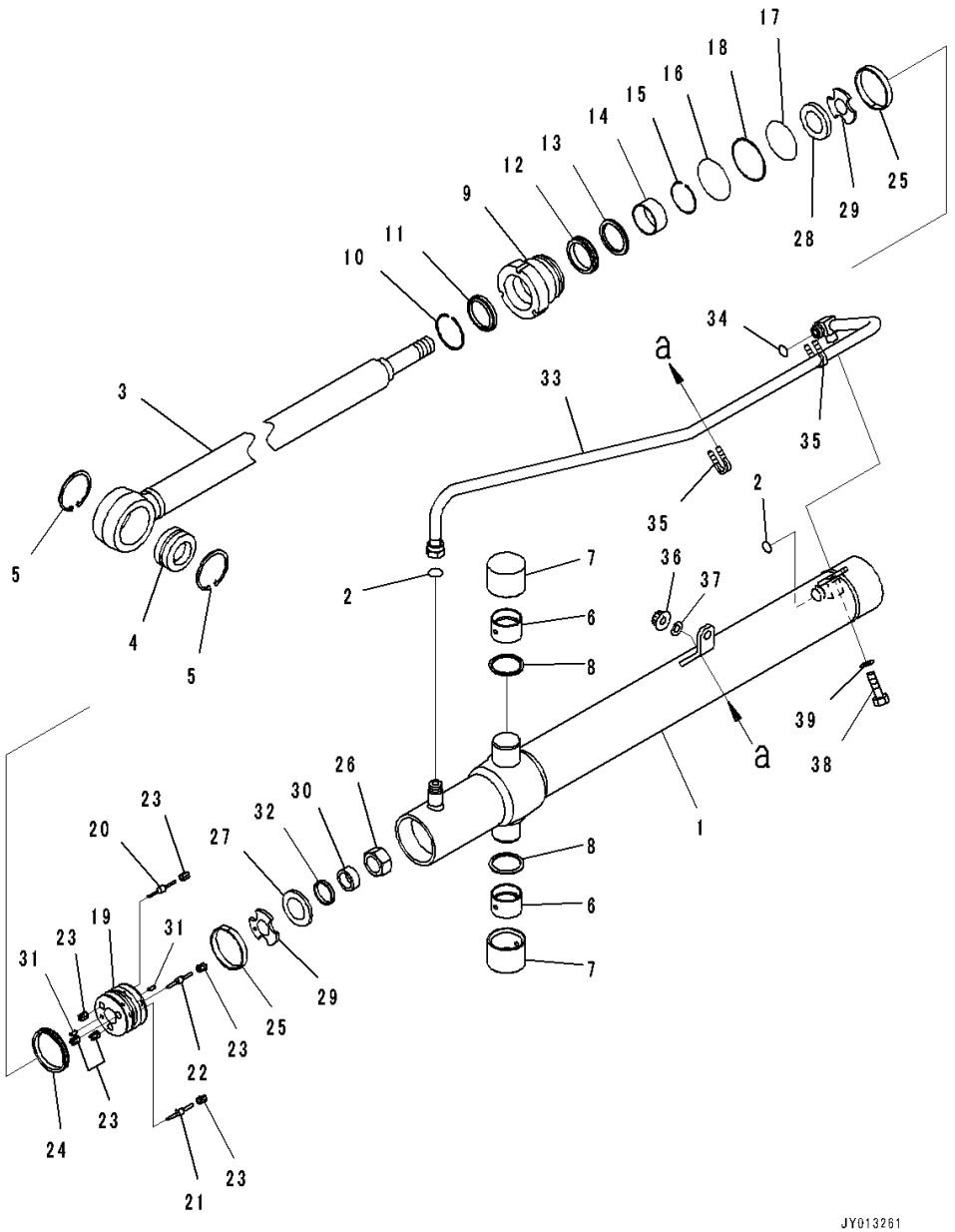

Index	Code	Part Number	Description	Qty	Serial Number
		707-02-00980	Cylinder Assembly	1	80001-
1		707-12-90290	• Cylinder	1	80001-
2		02896-11015	• O-ring, (Kit : K11)	2	80001-
3		721-58-60780	• Rod, Piston	1	80001-
4		707-46-50020	• Bushing	1	80001-
5		04065-08025	• Ring, Snap	2	80001-
6		144-60-15450	• Bushing	2	80001-
7		144-60-15431	• Bushing	2	80001-
8		07145-00055	• Seal, Dust, (Kit : K11)	2	80001-
9		707-29-10A40	• Head	1	80001-
10		07179-12074	• Ring, Snap	1	80001-
11		707-56-60740	• Seal, Dust, (Kit : K11)	1	80001-
12		707-51-60030	• Packing, Rod, (Kit : K11)	1	80001-
13		707-51-60650	• Ring, Buffer, (Kit : K11)	1	80001-
14		707-52-90351	• Bushing	1	80001-
15		707-75-60110	• Ring, Snap	1	80001-
16		07000-12090	• O-ring, (Kit : K11)	1	80001-
17		07000-12085	• O-ring, (Kit : K11)	1	80001-
18		07146-02086	• Ring, Back-up, (Kit : K11)	1	80001-
		707-91-90050	• Piston Assembly	1	80001-
19		707-37-90150	• • Piston	1	80001-
20	C1		• • Valve, Piston	1	80001-
21	C1		• • Valve, Piston	1	80001-
22	C1		• • Valve, Piston	1	80001-
23	C1		• • Seat, Valve	6	80001-
24		707-44-90150	• Ring, Piston, (Kit : K11)	1	80001-
25		07156-00912	• Ring, Wear, (Kit : K11)	2	80001-
26		707-67-33040	• Nut	1	80001-
27		707-69-85020	• Slider	1	80001-
28		707-69-85010	• Slider	1	80001-
29		707-40-85020	• Retainer	2	80001-
30		707-88-38850	• Collar	1	80001-
31		130-63-12761	• Pin	2	80001-
32		707-52-90230	• Bushing	1	80001-
33		707-86-55860	Tube	1	80001-
34		02896-11015	O-ring, (Kit : K11)	1	80001-
35		07283-32236	Clip, Pipe	2	80001-
36		01597-01009	Nut	4	80001-
37		01643-31032	Washer	4	80001-
38		01010-81020	Bolt	1	80001-

https://truckmanualshub.com/

FIG. T2140-002002 Dozer Blade Lift Cylinder, With Power Angle Power Tilt Dozer, Inner Parts, Reduction Gear

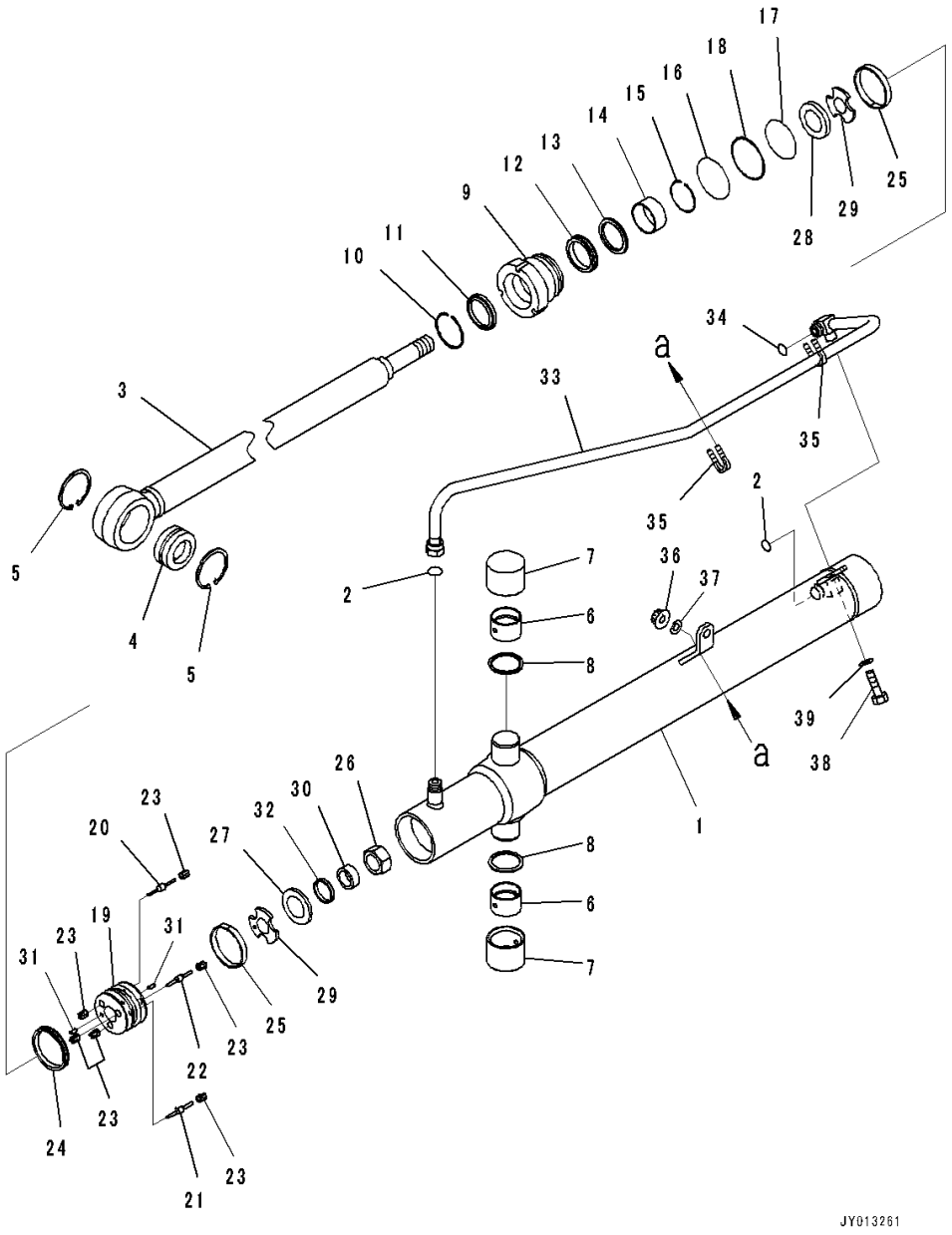

Index	Code	Part Number	Description	Qty	Serial Number
39		01643-31032	Washer	1	80001-

https://truckmanualshub.com/

FIG. T2140-002003 Dozer Blade Lift Cylinder, With Power Angle Power Tilt Dozer

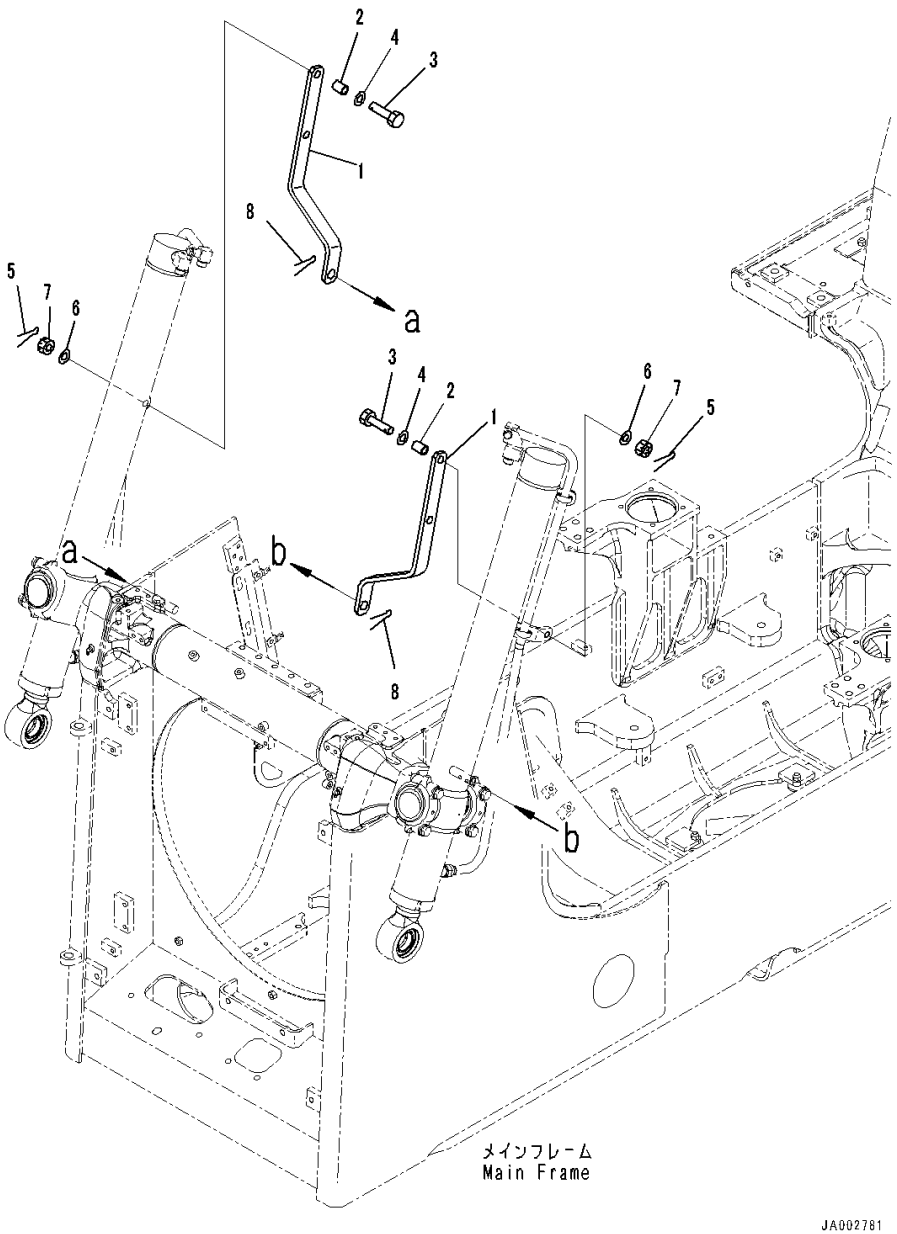

Index	Code	Part Number	Description	Qty	Serial Number
1		14X-54-51291	Plate	2	80009-
2		423-825-1720	Spacer	2	80001-
3		01012-81250	Bolt	2	80001-
4		01643-31232	Washer	2	80001-
5		04050-13022	Pin, Cotter	2	80001-
6		01643-31232	Washer	2	80001-
7		01590-31215	Nut, Slotted	2	80001-
8		04050-18080	Pin, Cotter	4	80001-

https://truckmanualshub.com/

FIG. T2150-001001 Dozer Blade Tilt Cylinder, Inner Parts

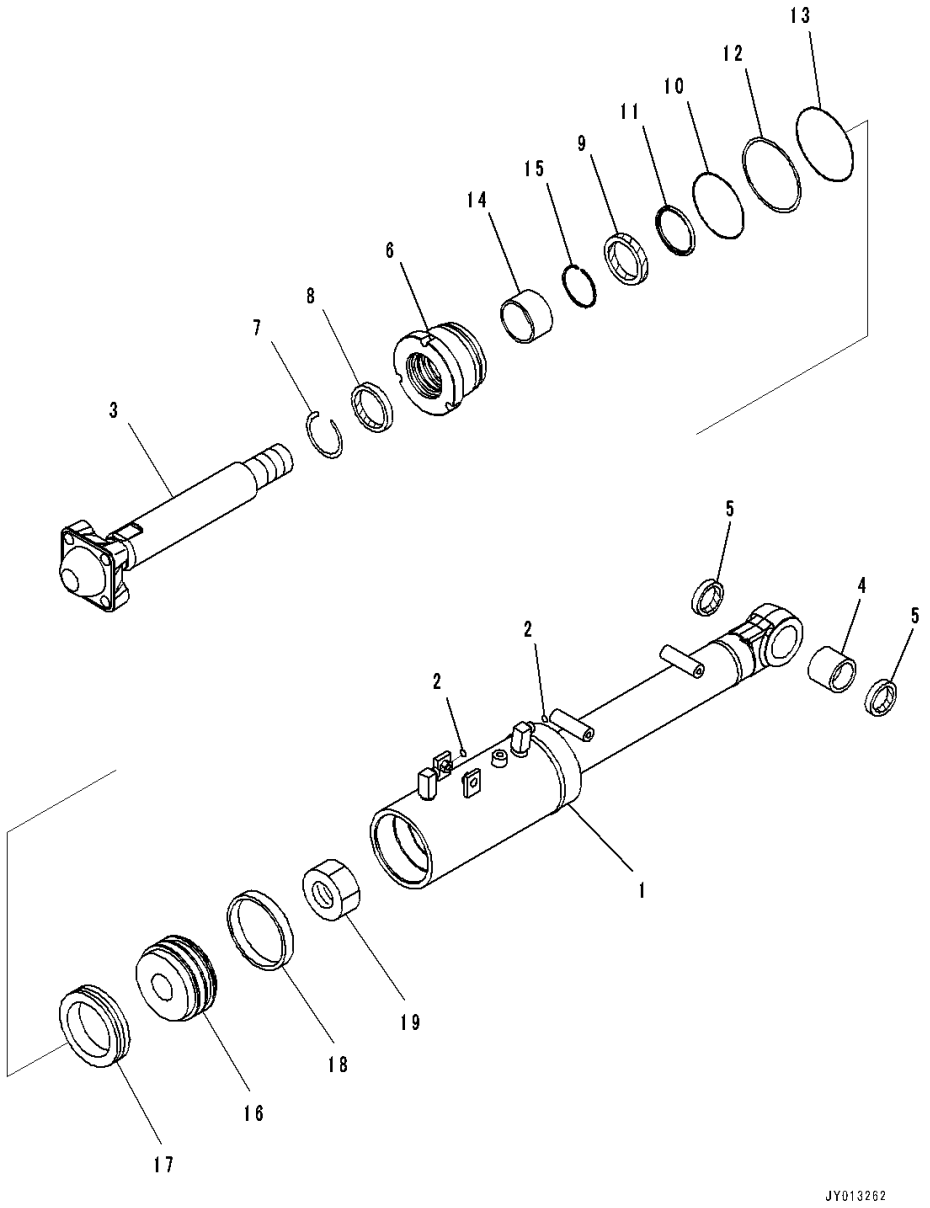

Index	Code	Part Number	Description	Qty	Serial Number
		707-04-00270	Cylinder Assembly	1	80001-
1		707-11-12A70	• Cylinder	1	80001-
2		02896-11009	• O-ring, (Kit : K12)	2	80001-
3		707-60-70110	• Rod	1	80001-
4		07143-10505	• Bushing	1	80001-
5		07145-00050	• Seal, Dust, (Kit : K12)	2	80001-
6		707-29-12660	• Head	1	80001-
7		07179-12084	• Ring, Snap	1	80001-
8		707-56-70740	• Seal, Dust, (Kit : K12)	1	80001-
9		707-51-70030	• Packing, Rod, (Kit : K12)	1	80001-
10		07000-12125	• O-ring, (Kit : K12)	1	80001-
11		707-51-70650	• Ring, Buffer, (Kit : K12)	1	80001-
12		707-35-91510	• Ring, Back-up, (Kit : K12)	1	80001-
13		07000-12120	• O-ring, (Kit : K12)	1	80001-
14		707-52-90451	• Bushing	1	80001-
15		707-75-70110	• Ring, Snap	1	80001-
16		707-36-12840	• Piston	1	80001-
17		707-44-12250	• Ring, Piston, (Kit : K12)	1	80001-
18		707-39-12520	• Ring, Wear, (Kit : K12)	1	80001-
19		707-67-52030	• Nut	1	80001-

https://truckmanualshub.com/

FIG. T2150-002001 Dozer Blade Tilt Cylinder, With Power Angle Power Tilt Dozer, Inner Parts

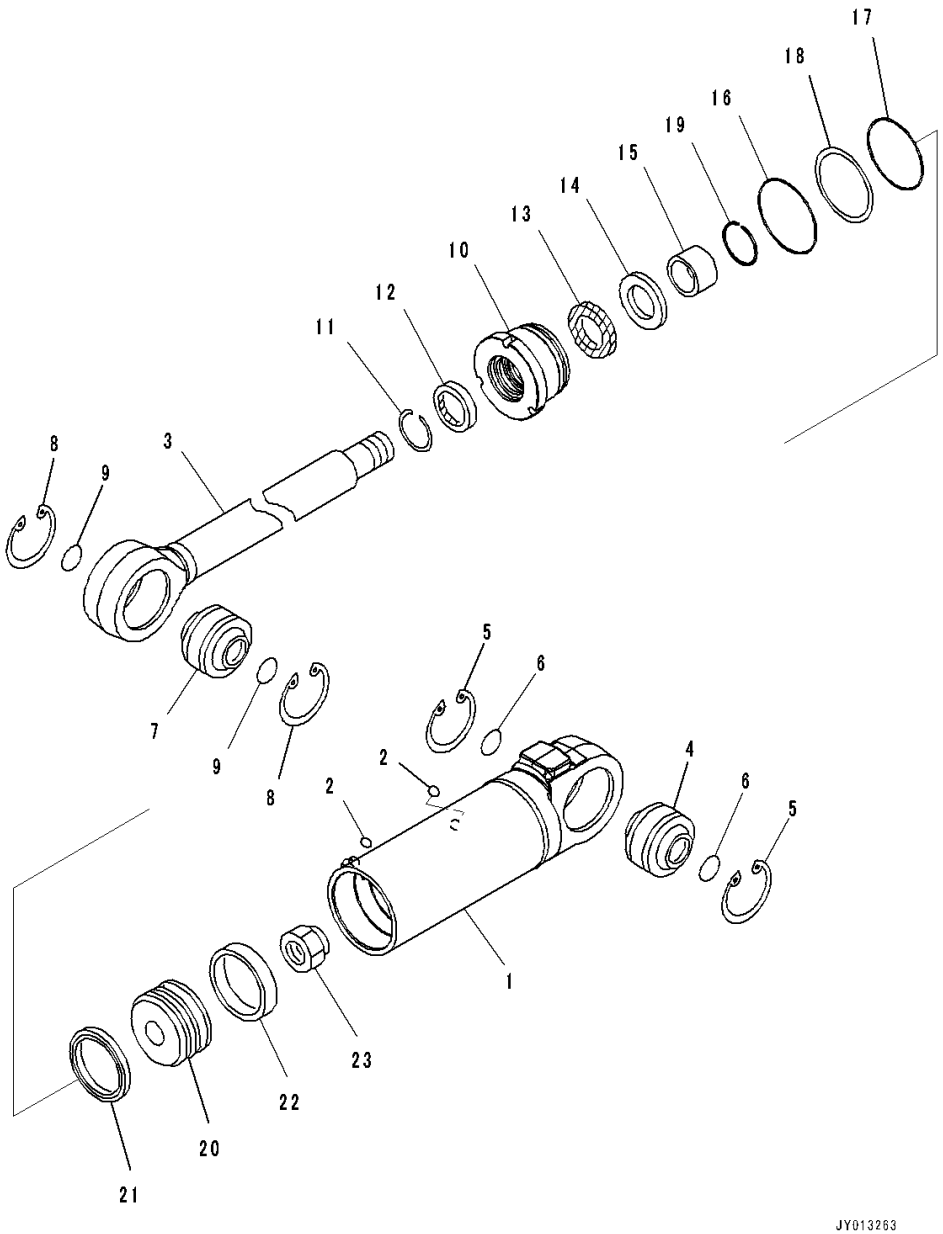

Index	Code	Part Number	Description	Qty	Serial Number
		707-00-0H990	Cylinder Assembly	1	80001-
1		707-11-13860	• Cylinder	1	80001-
2		02896-11009	• O-ring, (Kit : K13)	2	80001-
3		707-58-70A10	• Rod	1	80001-
4		707-46-05040	• Bushing	1	80001-
5		04065-01104	• Ring, Snap	2	80001-
6		07000-13050	• O-ring, (Kit : K13)	2	80001-
7		07137-05008	• Bushing	1	80001-
8		04065-01104	• Ring, Snap	2	80001-
9		07000-13050	• O-ring, (Kit : K13)	2	80001-
10		707-29-13280	• Head	1	80001-
11		07179-12084	• Ring, Snap	1	80001-
12		707-56-70740	• Seal, Dust, (Kit : K13)	1	80001-
13		707-51-70030	• Packing, Rod, (Kit : K13)	1	80001-
14		707-51-70650	• Ring, Buffer, (Kit : K13)	1	80001-
15		707-52-90461	• Bushing	1	80001-
16		07000-12130	• O-ring, (Kit : K13)	1	80001-
17		07000-12125	• O-ring, (Kit : K13)	1	80001-
18		07146-02126	• Ring, Back-up, (Kit : K13)	1	80001-
19		707-75-70110	• Ring, Snap	1	80001-
20		707-36-13240	• Piston	1	80001-
21		707-44-13150	• Ring, Piston, (Kit : K13)	1	80001-
22		07156-01315	• Ring, Wear, (Kit : K13)	1	80001-
23		707-67-52030	• Nut	1	80001-

https://truckmanualshub.com/

FIG. T2151-001001 Dozer Frame Related Parts, Inner Parts

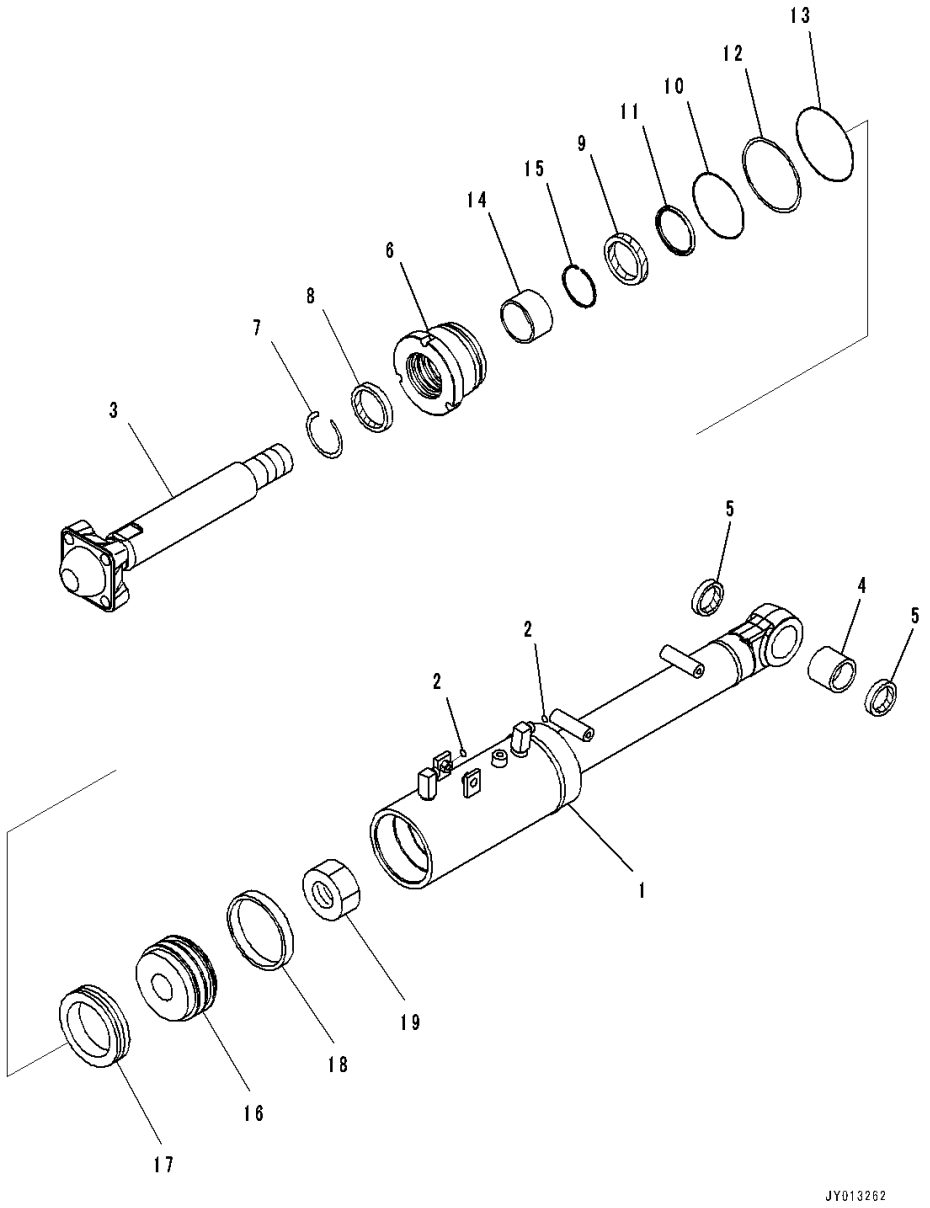

Index	Code	Part Number	Description	Qty	Serial Number
		707-04-00270	Cylinder Assembly	1	80001-
1		707-11-12A70	• Cylinder	1	80001-
2		02896-11009	• O-ring, (Kit : K12)	2	80001-
3		707-60-70110	• Rod	1	80001-
4		07143-10505	• Bushing	1	80001-
5		07145-00050	• Seal, Dust, (Kit : K12)	2	80001-
6		707-29-12660	• Head	1	80001-
7		07179-12084	• Ring, Snap	1	80001-
8		707-56-70740	• Seal, Dust, (Kit : K12)	1	80001-
9		707-51-70030	• Packing, Rod, (Kit : K12)	1	80001-
10		07000-12125	• O-ring, (Kit : K12)	1	80001-
11		707-51-70650	• Ring, Buffer, (Kit : K12)	1	80001-
12		707-35-91510	• Ring, Back-up, (Kit : K12)	1	80001-
13		07000-12120	• O-ring, (Kit : K12)	1	80001-
14		707-52-90451	• Bushing	1	80001-
15		707-75-70110	• Ring, Snap	1	80001-
16		707-36-12840	• Piston	1	80001-
17		707-44-12250	• Ring, Piston, (Kit : K12)	1	80001-
18		707-39-12520	• Ring, Wear, (Kit : K12)	1	80001-
19		707-67-52030	• Nut	1	80001-

https://truckmanualshub.com/

FIG. T2153-001001 Dozer Blade Angle Cylinder, With Power Angle Power Tilt Dozer, Inner Parts

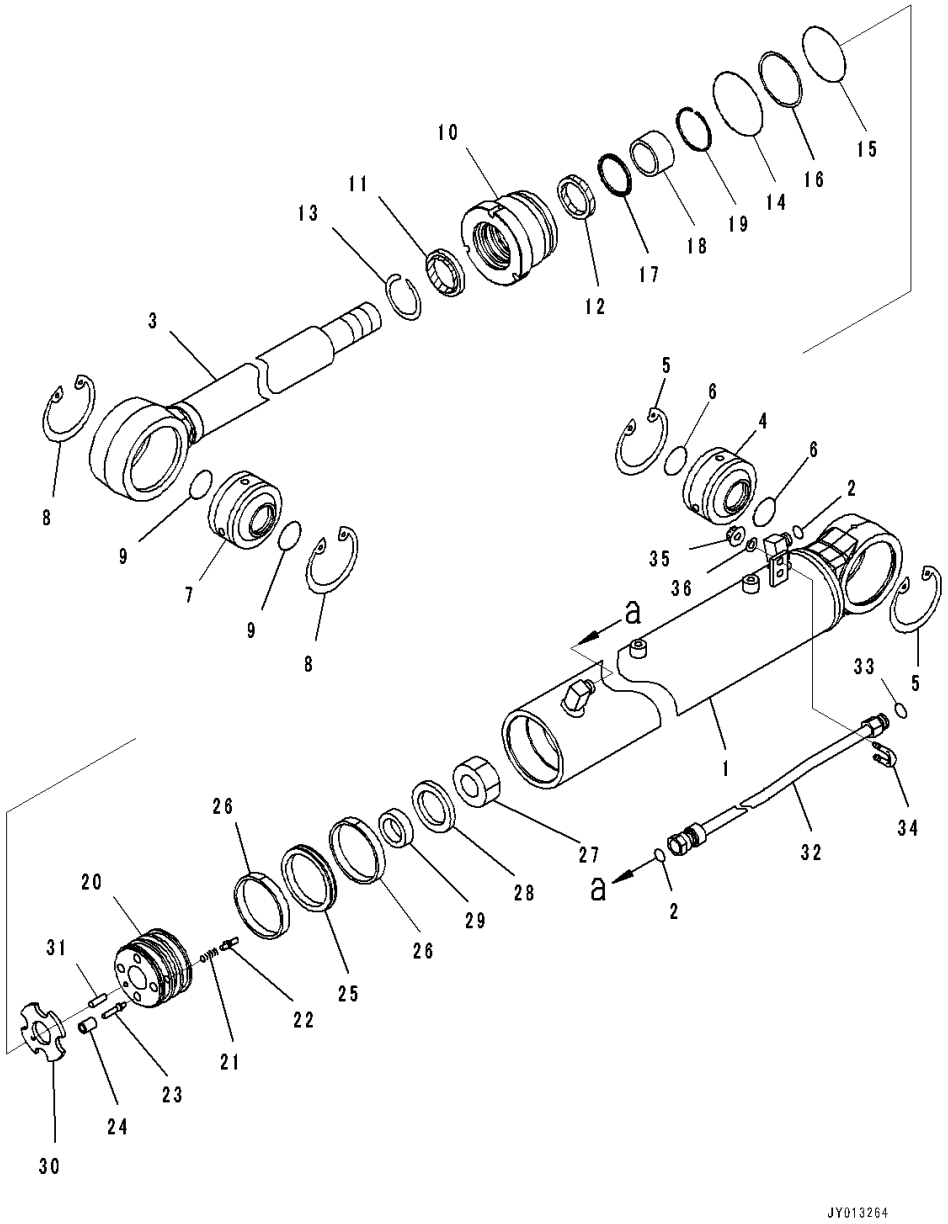

Index	Code	Part Number	Description	Qty	Serial Number
		707-00-0J361	Cylinder Assembly	2	80001-
1		707-11-11F61	• Cylinder	1	80001-
2		02896-11012	• O-ring, (Kit : K14)	2	80001-
3		707-58-65901	• Rod	1	80001-
4		707-46-05040	• Bushing	1	80001-
5		04065-01104	• Ring, Snap	2	80001-
6		07000-13050	• O-ring, (Kit : K14)	2	80001-
7		07137-05008	• Bushing	1	80001-
8		04065-01104	• Ring, Snap	2	80001-
9		07000-13050	• O-ring, (Kit : K14)	2	80001-
10		707-29-11A00	• Head	1	80001-
11		707-56-65740	• Seal, Dust, (Kit : K14)	1	80001-
12		707-51-65030	• Packing, Rod, (Kit : K14)	1	80001-
13		07179-12079	• Ring, Snap	1	80001-
14		07000-12110	• O-ring, (Kit : K14)	1	80001-
15		07000-12105	• O-ring, (Kit : K14)	1	80001-
16		07146-02106	• Ring, Back-up, (Kit : K14)	1	80001-
17		707-51-65650	• Ring, Buffer, (Kit : K14)	1	80001-
18		707-52-90401	• Bushing	1	80001-
19		707-75-65110	• Ring, Snap	1	80001-
		707-91-91111	• Piston	1	80001-
20		707-37-11111	• • Piston	1	80001-
21		707-80-16020	• • Spring	4	80001-
22	C1		• • Valve	4	80001-
23	C1		• • Valve	4	80001-
24	C1		• • Seat	4	80001-
25		707-44-11150	• Ring, Piston, (Kit : K14)	1	80001-
26		07156-01112	• Ring, Wear, (Kit : K14)	2	80001-
27		707-67-48020	• Nut	1	80001-
28		707-69-11011	• Slider	1	80001-
29		707-81-45251	• Collar	1	80001-
30		707-40-11321	• Retainer	1	80001-
31		130-63-12761	• Pin	1	80001-
32		707-86-01070	Tube	2	80001-
33		02896-11012	O-ring, (Kit : K14)	2	80001-
34		07283-31529	Clip, Pipe	2	80001-
35		01596-00807	Nut	4	80001-
36		01643-30823	Washer	4	80001-

https://truckmanualshub.com/

FIG. T2160-001001 Dozer Blade Tilt Cylinder Piping

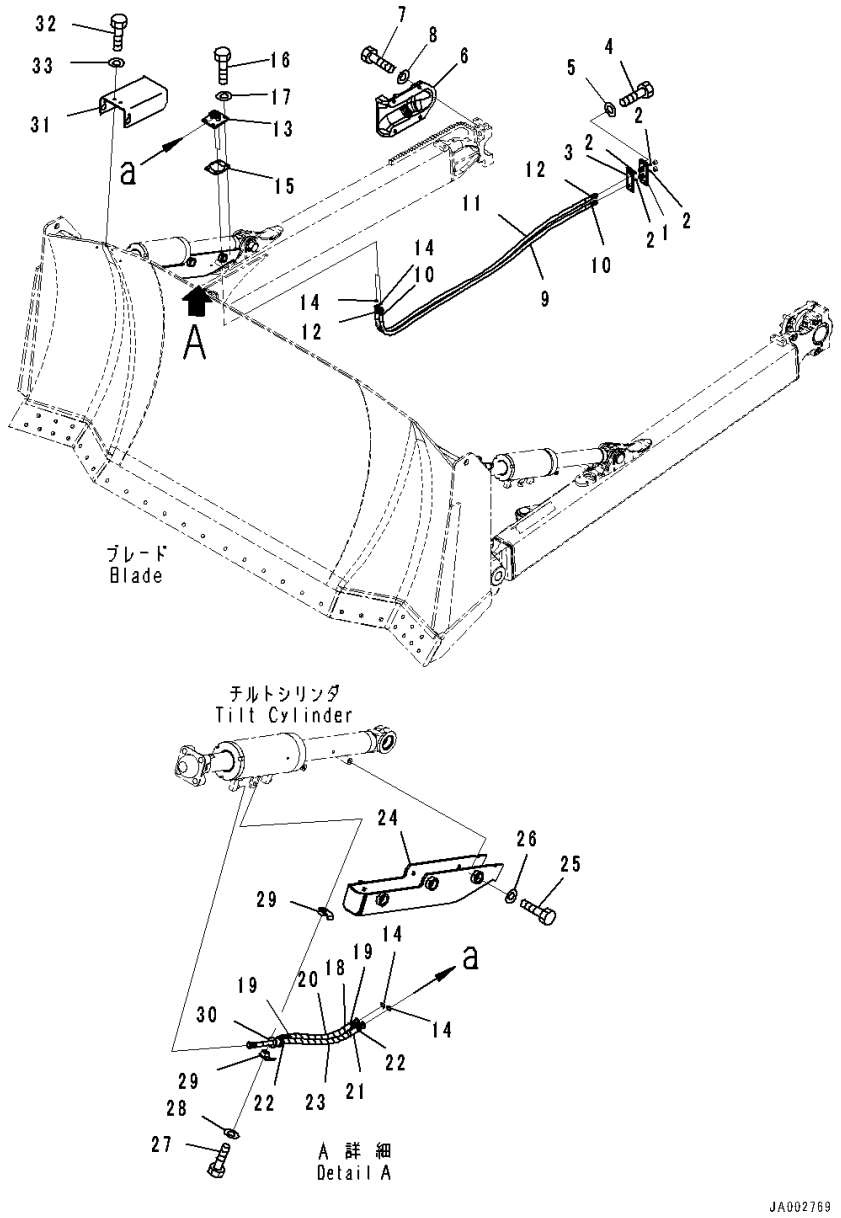

Index	Code	Part Number	Description	Qty	Serial Number
1		14X-62-52291	Bracket	1	80001-
2		02896-11009	O-ring	4	80001-
3		14Y-62-11420	Gasket	1	80001-
4		01010-81225	Bolt	4	80001-
5		01643-31232	Washer	4	80001-
6		14Y-71-12160	Cover	1	80001-
7		01010-81630	Bolt	4	80001-
8		01643-31645	Washer	4	80001-
9		14X-62-53611	Hose	1	80001-
10		21U-62-34760	• Band, Red	2	80001-
11		14X-62-53621	Hose	1	80001-
12		21U-62-34770	• Band, White	2	80001-
13		14Y-62-31431	Bracket	1	80001-
14		02896-11009	O-ring	4	80001-
15		14Y-62-11440	Gasket	1	80001-
16		01010-81225	Bolt	4	80001-
17		01643-31232	Washer	4	80001-
18		14X-62-52161	Hose Assembly	1	80001-
19		21U-62-34770	• Band, White	2	80001-
20		14X-62-54980	• Cover	1	80001-
21		14X-62-52171	Hose Assembly	1	80001-
22		21U-62-34760	• Band, Red	2	80001-
23		14X-62-54980	• Cover	1	80001-
24		14X-62-52182	Cover	1	80005-
25		01010-81230	Bolt	6	80001-
26		01643-31232	Washer	6	80001-
27		01010-81255	Bolt	1	80001-
28		01643-31232	Washer	1	80001-
29		22P-62-13510	Clamp	2	80001-
30		07095-00317	Cushion	1	80001-
31		14X-62-52771	Plate	1	80001-
32		01010-81225	Bolt	4	80001-
33		01643-31232	Washer	4	80001-

https://truckmanualshub.com/

FIG. T2160-004001 Dozer Blade Tilt Cylinder Piping, With Power Tilt Pitch Dozer

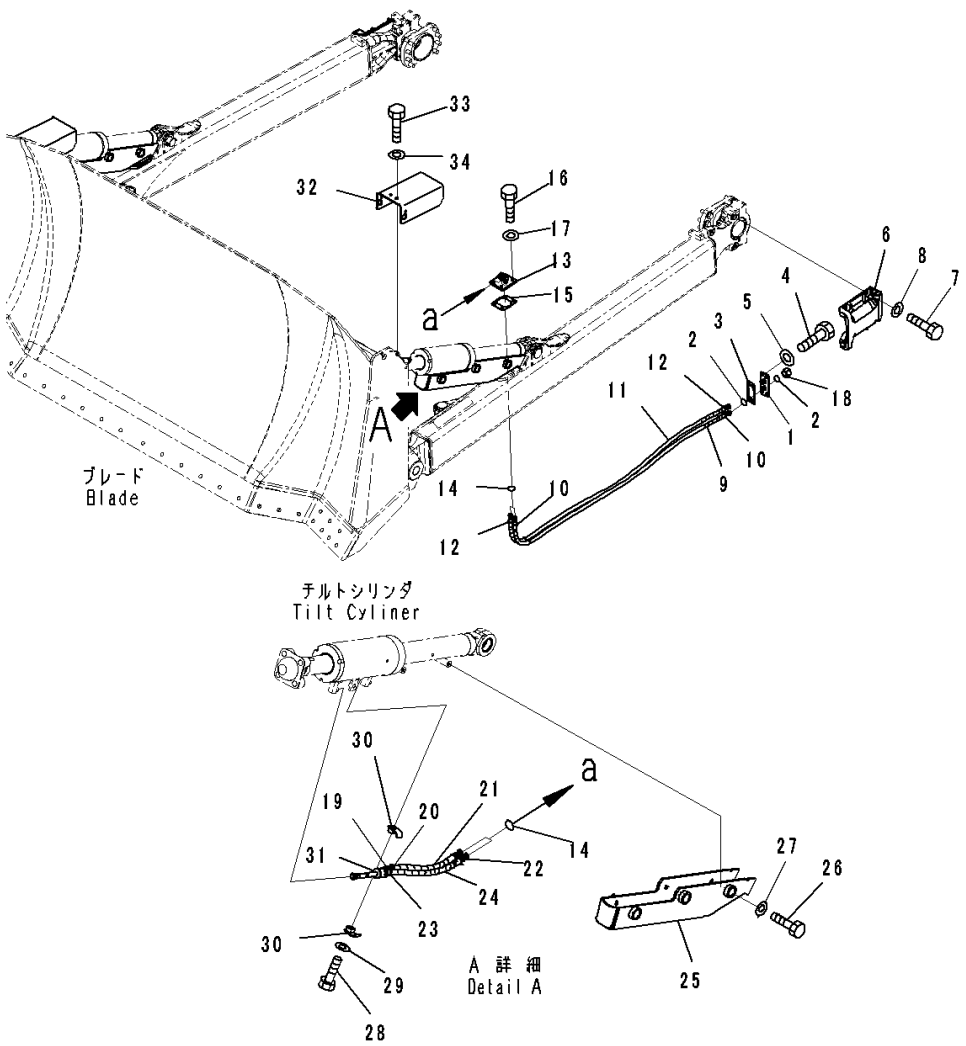

Index	Code	Part Number	Description	Qty	Serial Number
1		14X-62-52291	Bracket	2	80001-
2		02896-11009	O-ring	8	80001-
3		14Y-62-11420	Gasket	2	80001-
4		01010-81225	Bolt	8	80001-
5		01643-31232	Washer	8	80001-
6		14Y-71-12160	Cover	2	80001-
7		01010-81630	Bolt	8	80001-
8		01643-31645	Washer	8	80001-
9		14X-62-53611	Hose	2	80001-
10		21U-62-34760	• Band, Red	2	80001-
11		14X-62-53621	Hose	2	80001-
12		21U-62-34770	• Band, White	2	80001-
13		14Y-62-31431	Bracket	2	80001-
14		02896-11009	O-ring	8	80001-
15		14Y-62-11440	Gasket	2	80001-
16		01010-81225	Bolt	8	80001-
17		01643-31232	Washer	8	80001-
18		02789-00315	Plug	4	80001-
19		14X-62-52161	Hose Assembly	2	80001-
20		21U-62-34770	• Band, White	2	80001-
21		14X-62-54980	• Cover	1	80001-
22		14X-62-52171	Hose Assembly	2	80001-
23		21U-62-34760	• Band, Red	2	80001-
24		14X-62-54980	• Cover	1	80001-
25		14X-62-52182	Cover	2	80005-
26		01010-81230	Bolt	12	80001-
27		01643-31232	Washer	12	80001-
28		01010-81255	Bolt	2	80001-
29		01643-31232	Washer	2	80001-
30		22P-62-13510	Clamp	4	80001-
31		07095-00317	Cushion	2	80001-
32		14X-62-52771	Plate	2	80001-
33		01010-81225	Bolt	8	80001-
34		01643-31232	Washer	8	80001-

https://truckmanualshub.com/

FIG. T2160-002001 Dozer Blade Tilt Cylinder Piping, With Power Angle Power Tilt Dozer, (1/2)

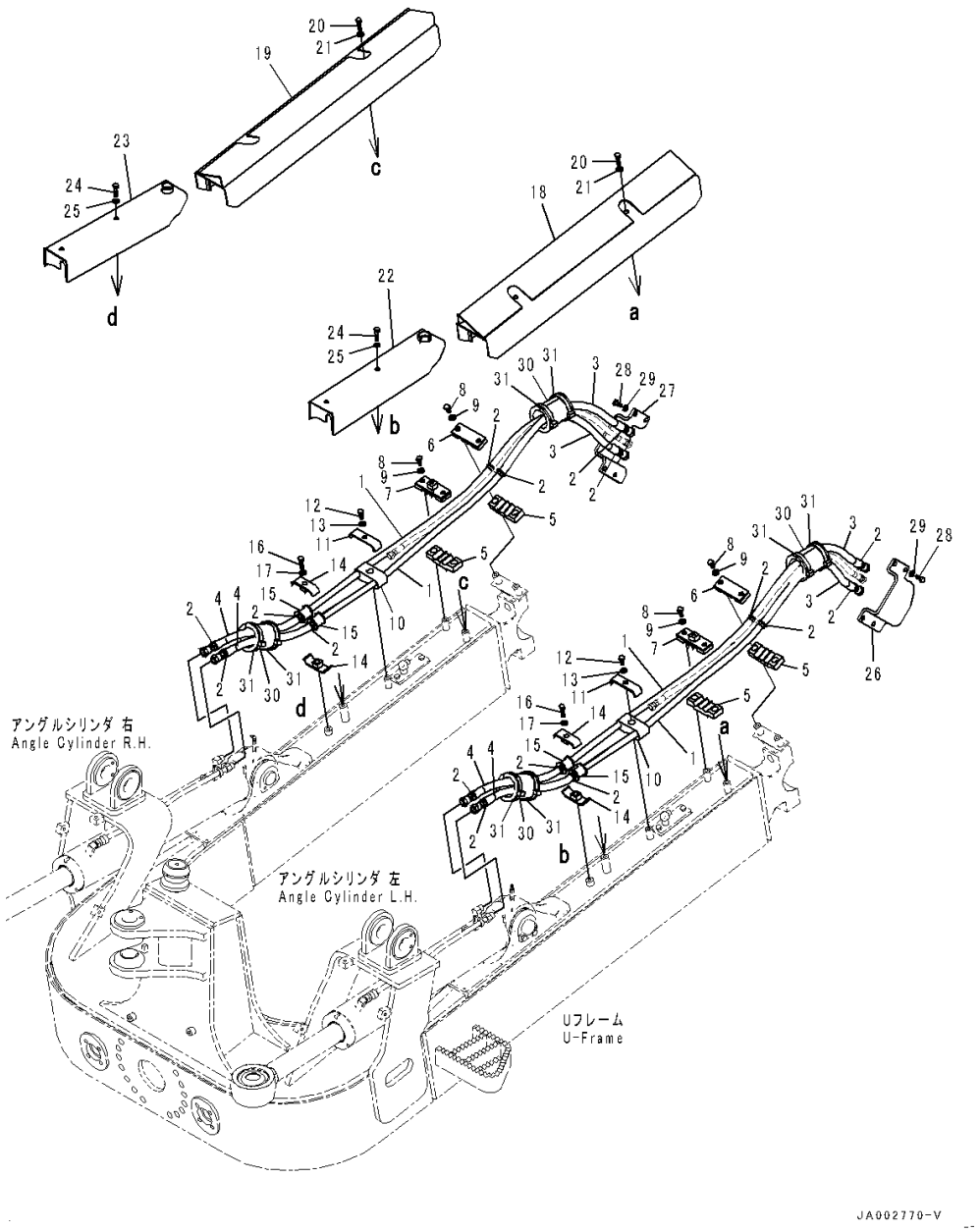

Index	Code	Part Number	Description	Qty	Serial Number
1		14X-62-52741	Hose Assembly	4	80001-
2		08034-20414	• Band	4	80001-
3		14X-62-52710	• Cover	1	80001-
4		14X-62-52690	• Cover	1	80001-
5		14X-62-54850	Cushion	4	80001-
6		14X-62-54840	Clamp	2	80001-
7		14X-62-51871	Clamp	2	80001-
8		01010-81225	Bolt	8	80001-
9		01643-31232	Washer	8	80001-
10		14X-62-51891	Cushion	2	80001-
11		14X-62-51880	Plate	2	80001-
12		01010-81220	Bolt	2	80001-
13		01643-31232	Washer	2	80001-
14		07094-30417	Clamp	4	80001-
15		07095-1042B	Cushion	4	80001-
16		01010-81260	Bolt	2	80001-
17		01643-31232	Washer	2	80001-
18		14X-62-51922	Cover,LHS	1	80001-
19		14X-62-54920	Cover,RHS	1	80001-
20		01010-81265	Bolt	4	80001-
21		01643-31232	Washer	4	80001-
22		14X-62-51912	Cover,LHS	1	80001-
23		14X-62-54910	Cover,RHS	1	80001-
24		01010-81260	Bolt	4	80001-
25		01643-31232	Washer	4	80001-
26		14X-62-51932	Bracket,LHS	1	80001-
27		14X-62-52821	Bracket,RHS	1	80001-
28		01010-81230	Bolt	8	80001-
29		01643-31232	Washer	8	80001-
30		07095-01245	Cushion	4	80001-
31		08034-20876	Band	8	80001-

https://truckmanualshub.com/

FIG. T2160-002002 Dozer Blade Tilt Cylinder Piping, With Power Angle Power Tilt Dozer, (2/2)

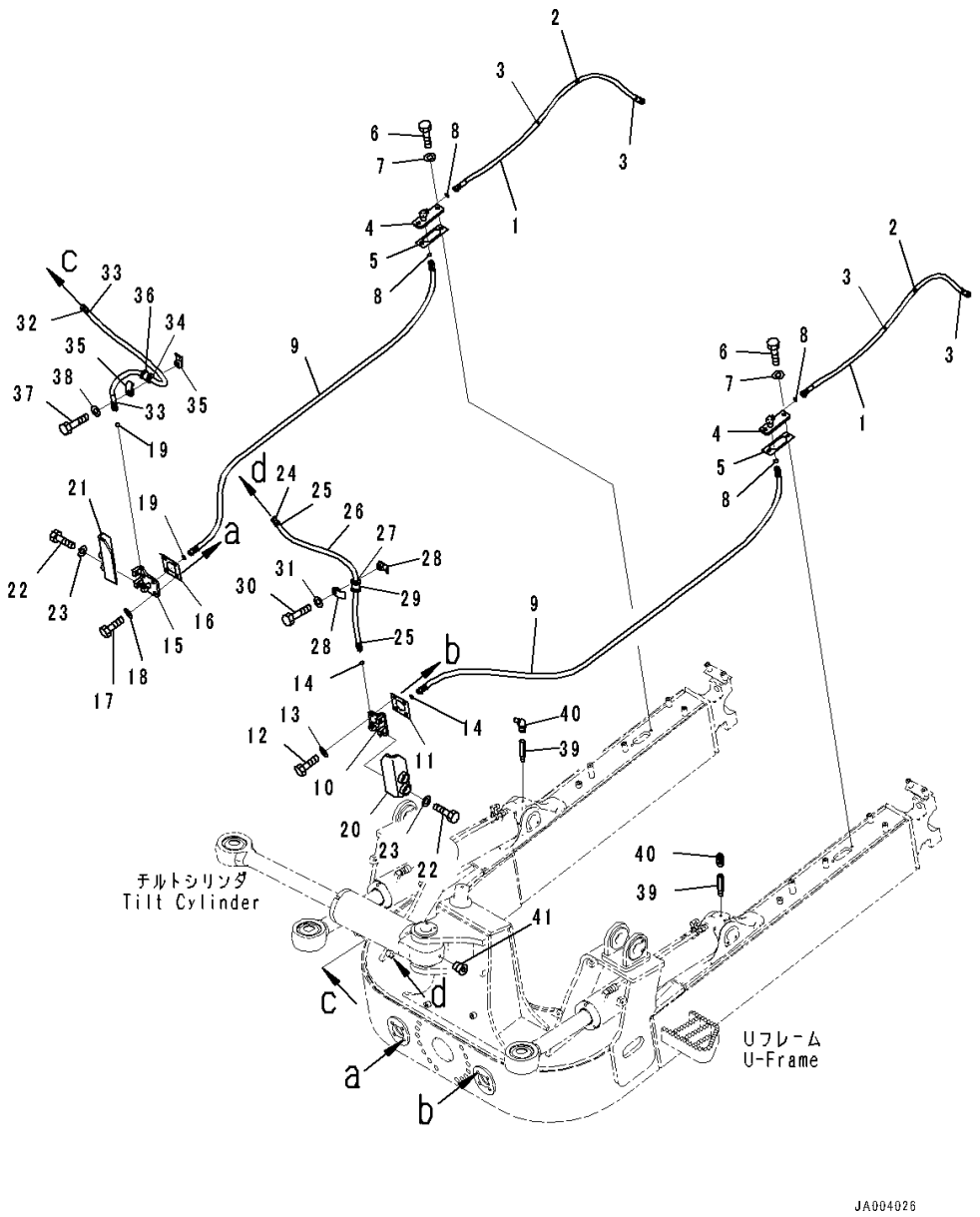

Index	Code	Part Number	Description	Qty	Serial Number
1		14X-62-51561	Hose Assembly	2	80001-
2		08034-20414	• Band	2	80001-
3		14X-62-52680	• Cover	1	80001-
4		14X-62-51860	Bracket	2	80001-
5		14X-62-52790	Gasket	2	80001-
6		01010-81225	Bolt	4	80001-
7		01643-31232	Washer	4	80001-
8		02896-11009	O-ring	4	80001-
9		14X-62-51591	Hose	2	80001-
10		14X-62-51842	Bracket	1	80001-
11		14X-62-52781	Gasket	1	80001-
12		01010-81245	Bolt	4	80009-
13		01643-31232	Washer	4	80001-
14		02896-11009	O-ring	2	80001-
15		14X-62-51852	Bracket	1	80001-
16		14X-62-52781	Gasket	1	80001-
17		01010-81245	Bolt	4	80009-
18		01643-31232	Washer	4	80001-
19		02896-11009	O-ring	2	80001-
20		14X-62-51832	Bracket	1	80001-
21		14X-62-53861	Bracket	1	80001-
22		01010-81635	Bolt	4	80001-
23		01643-31645	Washer	4	80001-
24		14X-62-51611	Hose	1	80001-
25		21U-62-34770	• Band, White	2	80001-
26		14X-62-52651	• Cover	1	80001-
27		08024-21920	• Tape, White	1	80001-
28		22P-62-13510	Clamp	2	80001-
29		07095-00318	Cushion	1	80001-
30		01010-81255	Bolt	1	80001-
31		01643-31232	Washer	1	80001-
32		14X-62-51811	Hose	1	80001-
33		21U-62-34760	• Band, Red	2	80001-
34		08024-11920	• Tape, Vinyl, Red	1	80001-
35		22P-62-13510	Clamp	2	80001-
36		07095-00318	Cushion	1	80001-
37		01010-81255	Bolt	1	80001-
38		01643-31232	Washer	1	80001-
39		14X-62-52321	Nipple	2	80001-
40		07020-00675	Fitting, Grease	2	80001-

https://truckmanualshub.com/

FIG. T2160-002002 Dozer Blade Tilt Cylinder Piping, With Power Angle Power Tilt Dozer, (2/2)

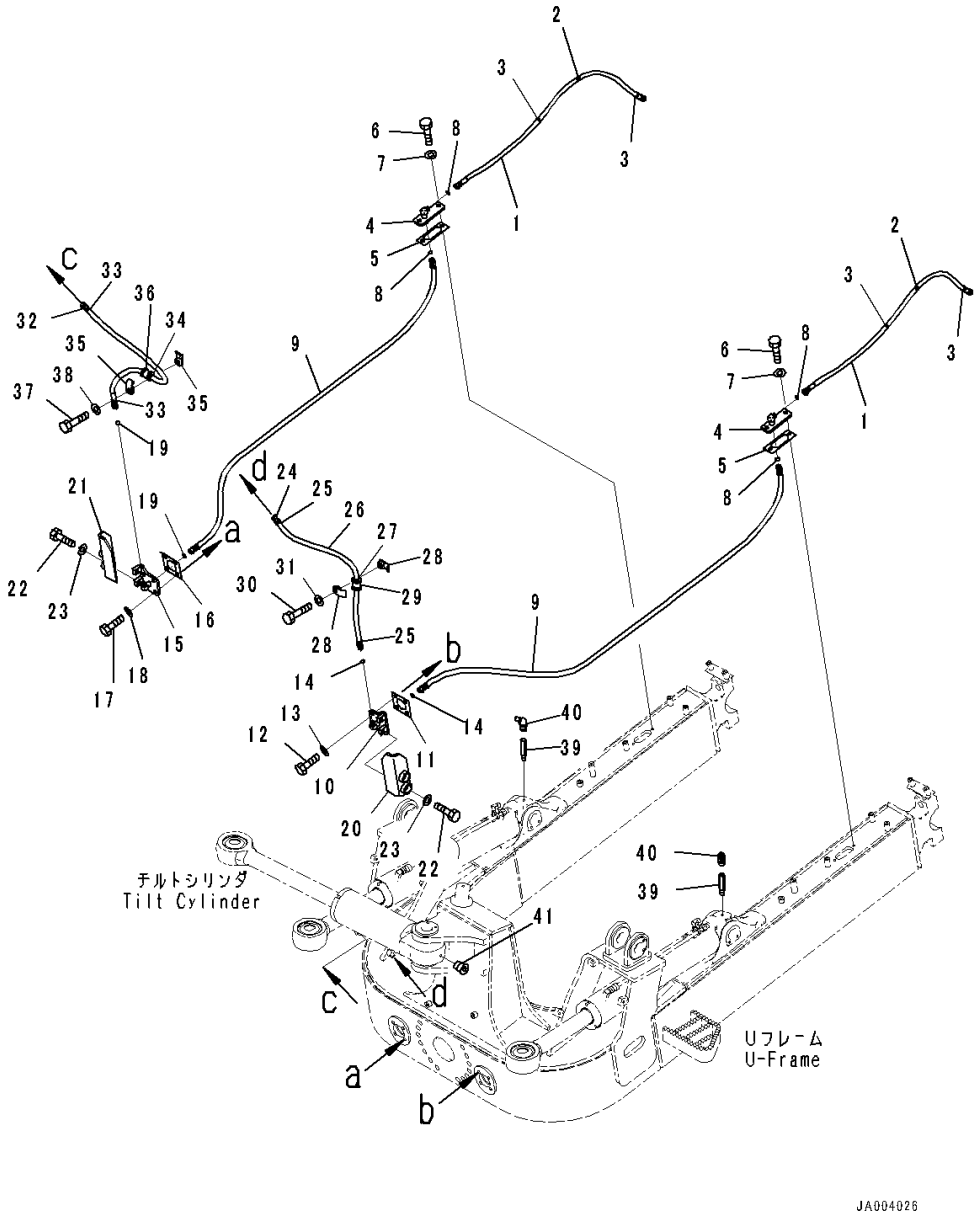

Index	Code	Part Number	Description	Qty	Serial Number
41		07043-70108	Plug	1	80001-

https://truckmanualshub.com/

FIG. T2810-001001 Drawbar, Rigid Type

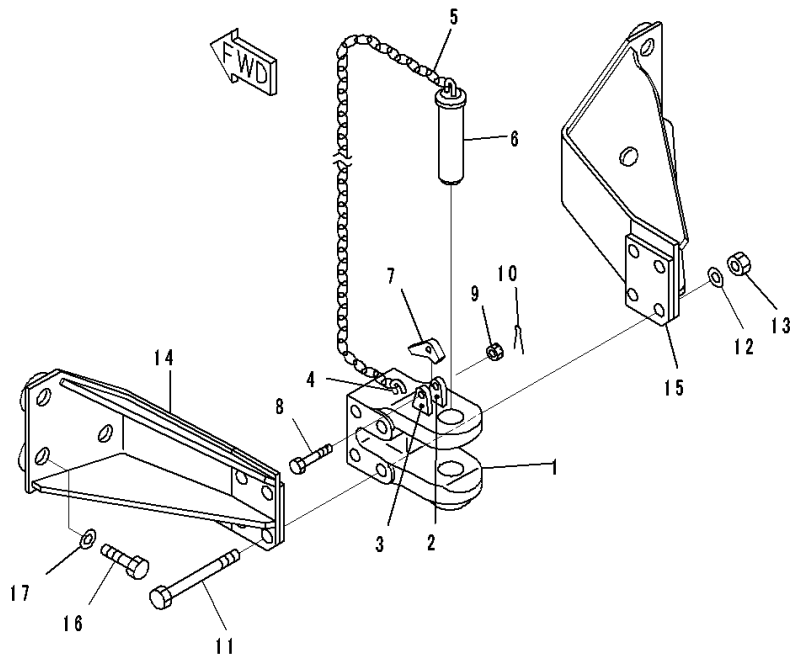

Index	Code	Part Number	Description	Qty	Serial Number
1		144-69-11120	Drawbar Assembly	1	80001-
2		131-69-11120	• Plate	1	80001-
3		131-69-11130	• Plate	1	80001-
4		09245-50060	• Hook	1	80001-
5		09245-24830	• Chain	1	80001-
6		09247-45180	• Pin, Drawbar	1	80001-
7		09249-00016	Latch	1	80001-
8		01052-51260	Bolt	1	80001-
9		01592-11215	Nut, Slotted	1	80001-
10		04050-13022	Pin, Cotter	1	80001-
11		144-69-11161	Bolt	4	80001-
12		01643-32460	Washer	4	80001-
13		01582-12419	Nut	4	80001-
14		14X-69-11110	Bracket	1	80001-
15		14X-69-11120	Bracket	1	80001-
16		01010-83375	Bolt	6	80001-
17		01643-33380	Washer	6	80001-

https://truckmanualshub.com/

FIG. T2810-003001 Drawbar

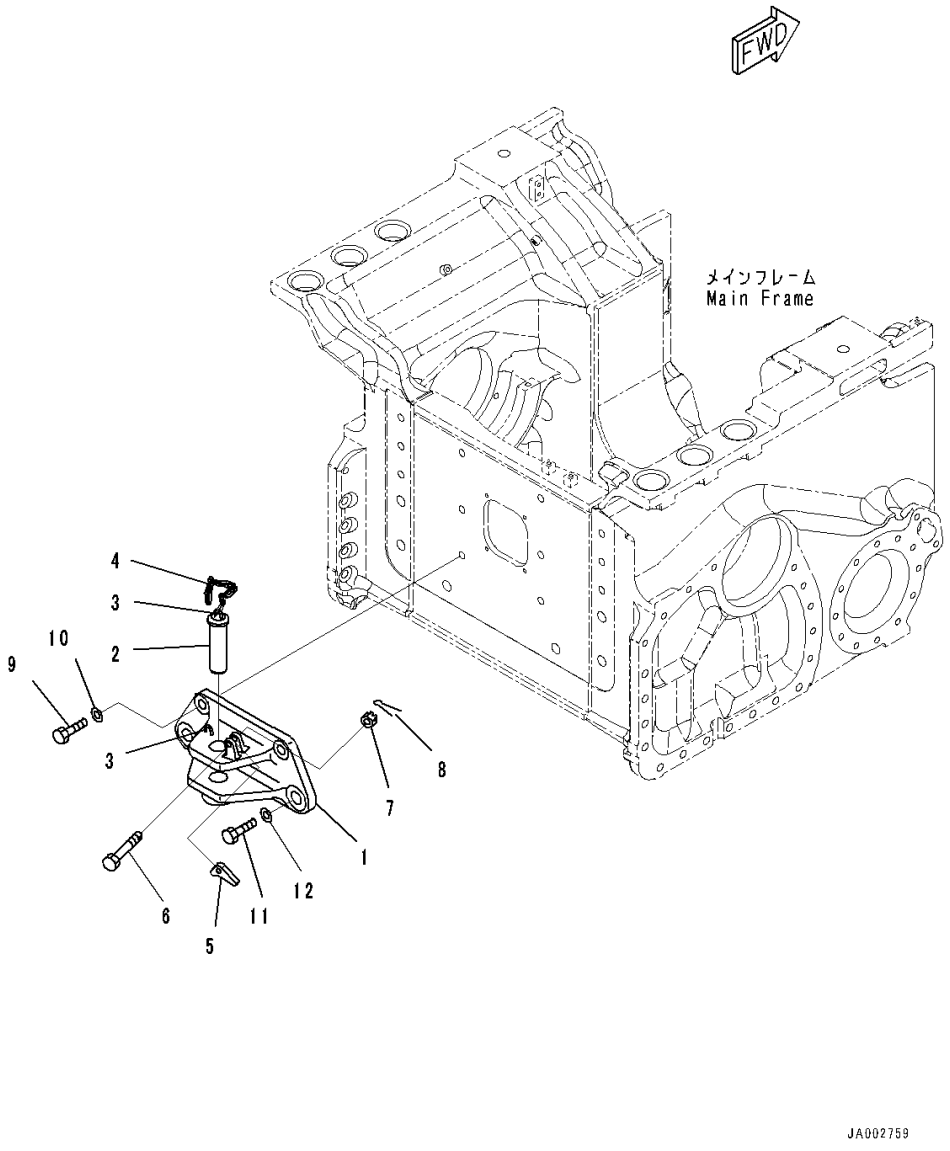

Index	Code	Part Number	Description	Qty	Serial Number
1		14X-69-51101	Bracket	1	80001-
2		130-69-11190	• Pin	1	80001-
3		09245-50060	• Hook	2	80001-
4		09245-04830	• Chain	1	80001-
5		09249-00016	Latch	1	80001-
6		01052-81265	Bolt	1	80001-
7		01592-31215	Nut, Slotted	1	80001-
8		04050-13025	Pin, Cotter	1	80001-
9		01010-82465	Bolt	2	80001-
10		01643-32460	Washer	2	80001-
11		01010-83380	Bolt	2	80001-
12		01643-33380	Washer	2	80001-

https://truckmanualshub.com/

FIG. T2810-004001 Drawbar, For EU Noise Reguration

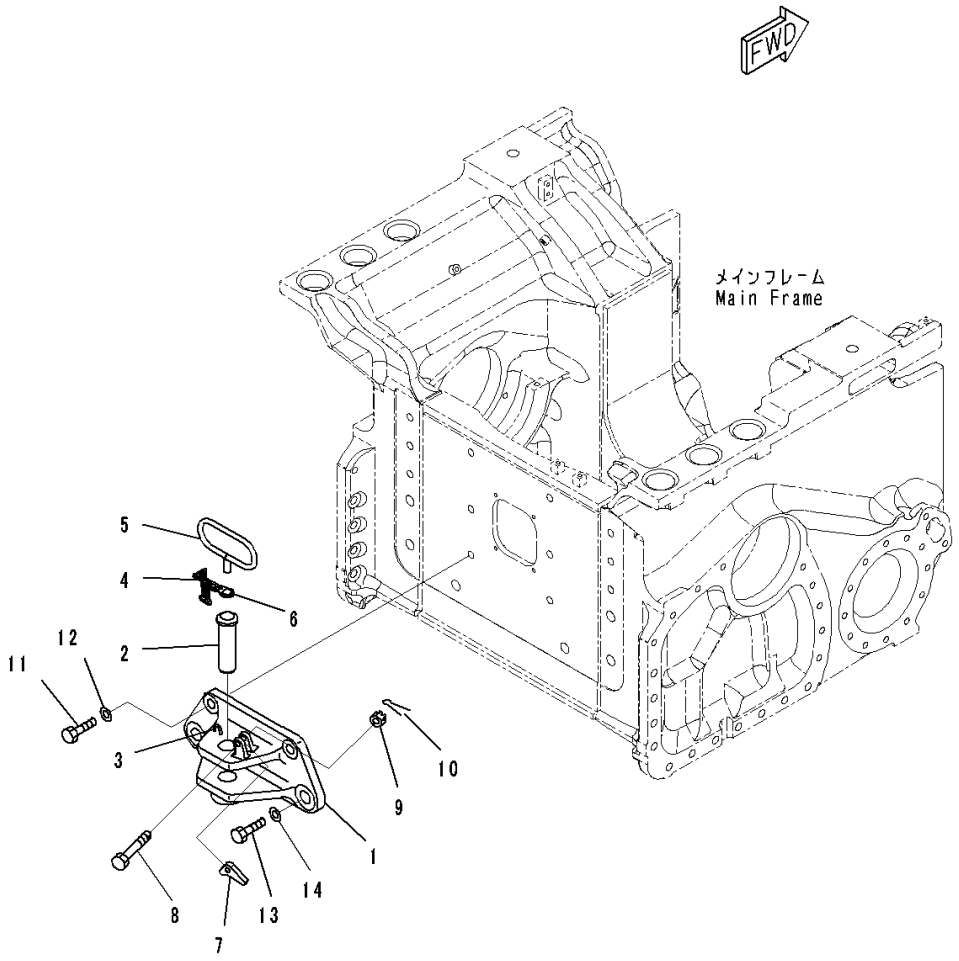

Index	Code	Part Number	Description	Qty	Serial Number
1		14X-69-51200	Bracket	1	80001-
2		130-69-11190	• Pin	1	80001-
3		09245-50060	• Hook	1	80001-
4		09245-04830	• Chain	1	80001-
5		144-69-11210	• Handle	1	80001-
6		144-69-11230	• Plate	1	80001-
7		09249-00016	Latch	1	80001-
8		01052-81265	Bolt	1	80001-
9		01592-31215	Nut, Slotted	1	80001-
10		04050-13025	Pin, Cotter	1	80001-
11		01010-82465	Bolt	2	80001-
12		01643-32460	Washer	2	80001-
13		01010-83380	Bolt	2	80001-
14		01643-33380	Washer	2	80001-

https://truckmanualshub.com/

FIG. T2810-005001 Drawbar, Rigid Type, For EU Noise Reguration

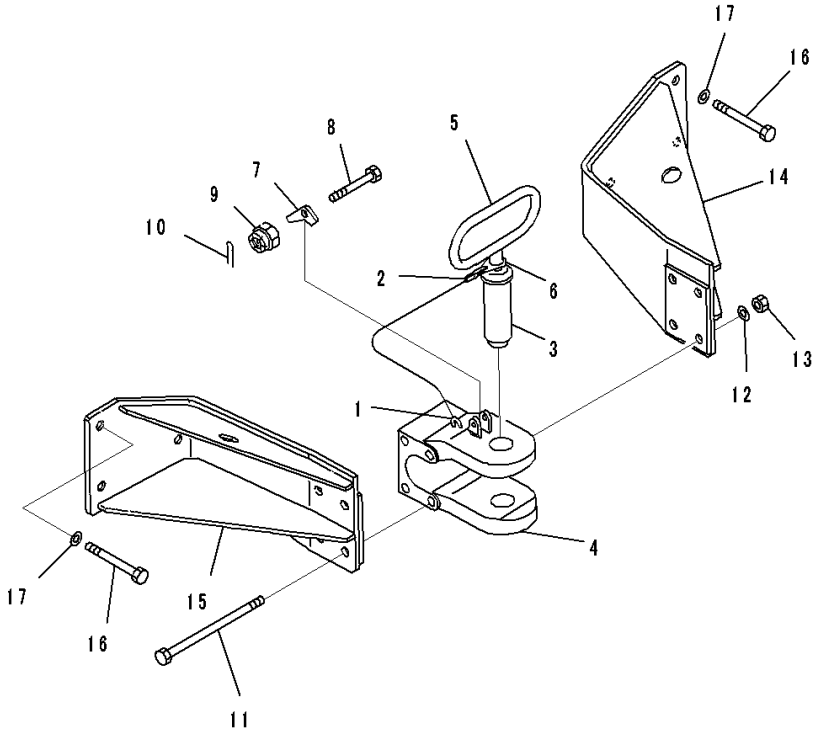

Index	Code	Part Number	Description	Qty	Serial Number
		144-69-11170	Drawbar Assembly	1	80001-
1		09245-50060	• Hook	1	80001-
2		09245-04830	• Chain	1	80001-
3		09247-45180	• Pin, Drawbar	1	80001-
4		144-69-11130	• Drawbar	1	80001-
5		144-69-11210	• Handle	1	80001-
6		144-69-11230	• Plate	1	80001-
7		09249-00016	Latch	1	80001-
8		01052-51260	Bolt	1	80001-
9		01592-11215	Nut, Slotted	1	80001-
10		04050-13022	Pin, Cotter	1	80001-
11		144-69-11161	Bolt	4	80001-
12		01643-32460	Washer	4	80001-
13		01582-12419	Nut	4	80001-
14		14X-69-11110	Bracket	1	80001-
15		14X-69-11120	Bracket	1	80001-
16		01010-83375	Bolt	6	80001-
17		01643-33380	Washer	6	80001-

https://truckmanualshub.com/

FIG. T2810-002001 Drawbar, Rigid Type, With Scraper

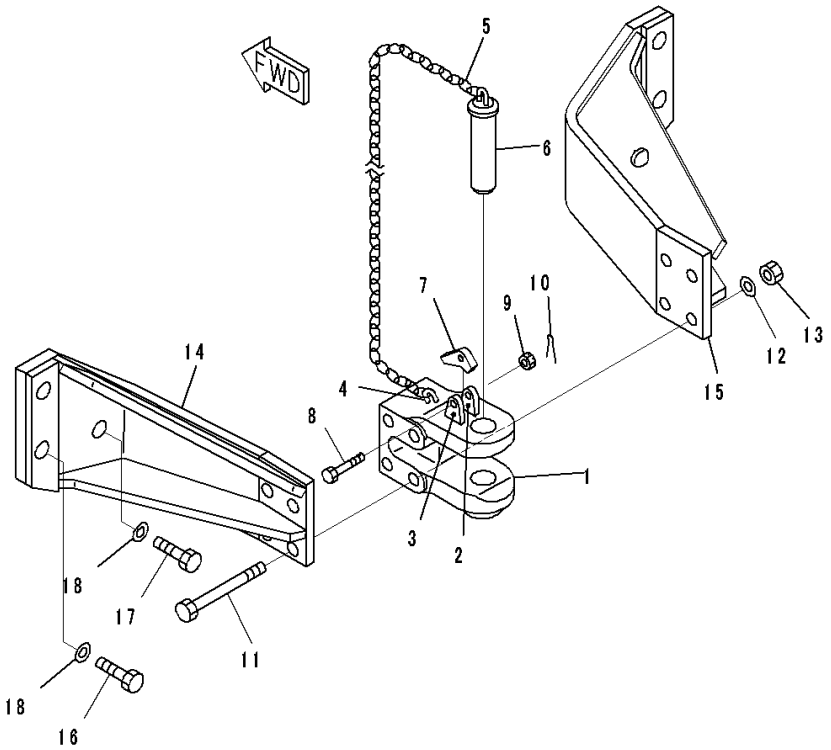

Index	Code	Part Number	Description	Qty	Serial Number
1		144-69-11120	Drawbar Assembly	1	80001-
2		131-69-11120	• Plate	1	80001-
3		131-69-11130	• Plate	1	80001-
4		09245-50060	• Hook	1	80001-
5		09245-24830	• Chain	1	80001-
6		09247-45180	• Pin, Drawbar	1	80001-
7		09249-00016	Latch	1	80001-
8		01052-51260	Bolt	1	80001-
9		01592-11215	Nut, Slotted	1	80001-
10		04050-13022	Pin, Cotter	1	80001-
11		144-69-11161	Bolt	4	80001-
12		01643-32460	Washer	4	80001-
13		01582-12419	Nut	4	80001-
14		14X-69-11210	Bracket	1	80001-
15		14X-69-11220	Bracket	1	80001-
16		01010-83390	Bolt	4	80001-
17		01010-83375	Bolt	2	80001-
18		01643-33380	Washer	6	80001-

https://truckmanualshub.com/

FIG. T2810-006001 Drawbar, With Additional Counter Weight

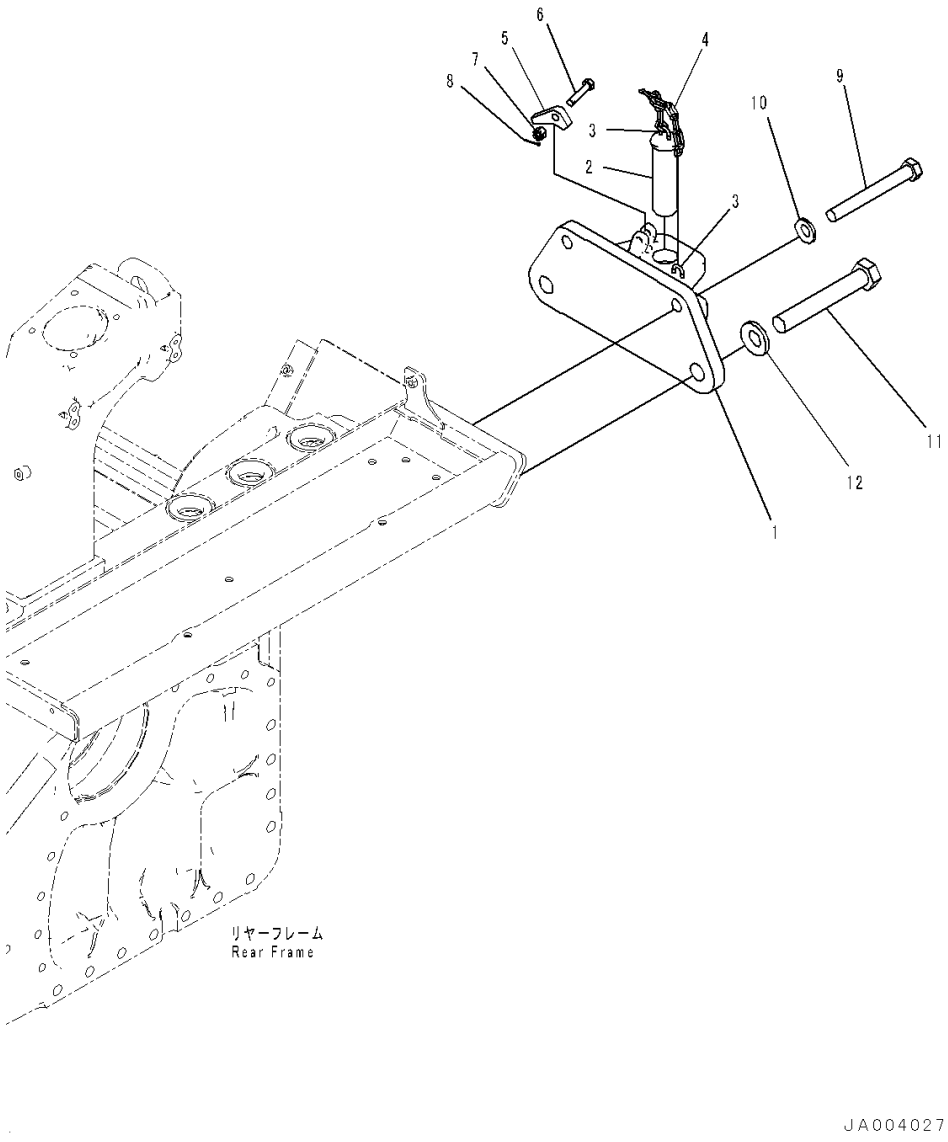

Index	Code	Part Number	Description	Qty	Serial Number
1		14X-69-51101	Bracket	1	80005-
2		130-69-11190	• Pin	1	80005-
3		09245-50060	• Hook	2	80005-
4		09245-04830	• Chain	1	80005-
5		09249-00016	Latch	1	80005-
6		01052-81265	Bolt	1	80005-
7		01592-31215	Nut, Slotted	1	80005-
8		04050-13025	Pin, Cotter	1	80005-
9		145-Z23-4130	Bolt	2	80005-
10		01643-32460	Washer	2	80005-
11		150-74-11140	Bolt	2	80005-
12		01643-33380	Washer	2	80005-

https://truckmanualshub.com/

FIG. T2810-007001 Drawbar, With Additional Counter Weight, EU Regulation Guard Level 2

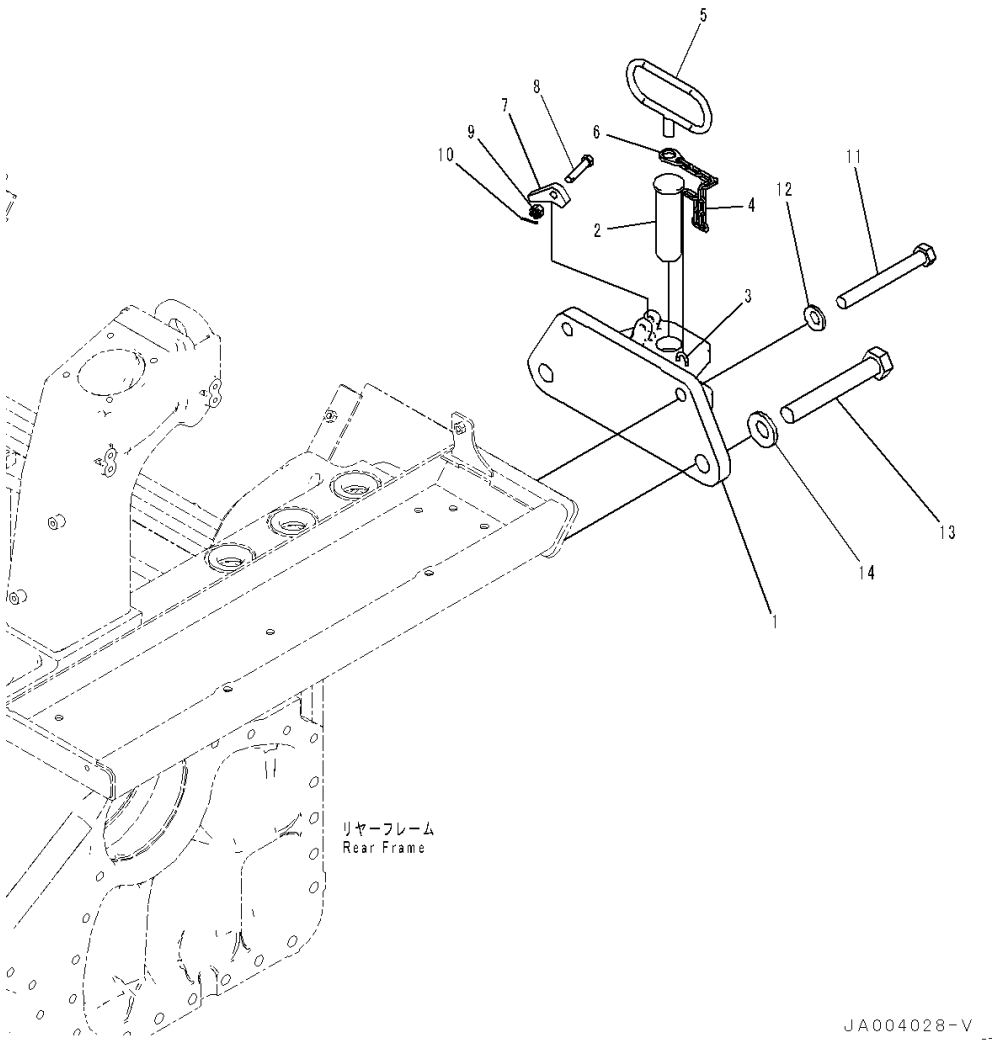

Index	Code	Part Number	Description	Qty	Serial Number
1		14X-69-51200	Bracket	1	80012-
2		130-69-11190	• Pin	1	80012-
3		09245-50060	• Hook	1	80012-
4		09245-04830	• Chain	1	80012-
5		144-69-11210	• Handle	1	80012-
6		144-69-11230	• Plate	1	80012-
7		09249-00016	Latch	1	80012-
8		01052-81265	Bolt	1	80012-
9		01592-31215	Nut, Slotted	1	80012-
10		04050-13025	Pin, Cotter	1	80012-
11		145-Z23-4130	Bolt	2	80012-
12		01643-32460	Washer	2	80012-
13		150-74-11140	Bolt	2	80012-
14		01643-33380	Washer	2	80012-

https://truckmanualshub.com/

FIG. T2810-008001 Drawbar, For EU Safety Regulation

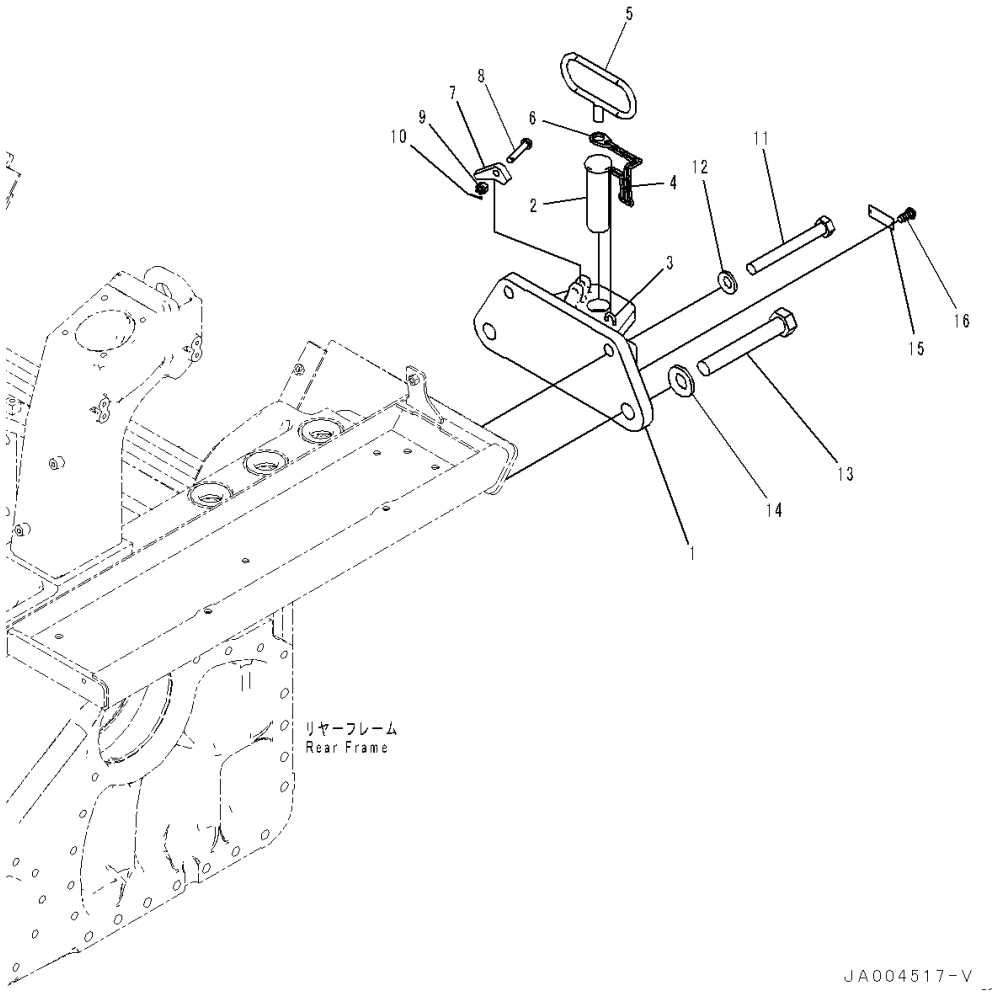

Index	Code	Part Number	Description	Qty	Serial Number
1		14X-69-51201	Bracket	1	80062-
2		130-69-11190	• Pin	1	80062-
3		09245-50060	• Hook	1	80062-
4		09245-04830	• Chain	1	80062-
5		144-69-11210	• Handle	1	80062-
6		144-69-11230	• Plate	1	80062-
7		09249-00016	Latch	1	80062-
8		01052-81265	Bolt	1	80062-
9		01592-31215	Nut, Slotted	1	80062-
10		04050-13025	Pin, Cotter	1	80062-
11		01010-82465	Bolt	2	80062-
12		01643-32460	Washer	2	80062-
13		01010-83380	Bolt	2	80062-
14		01643-33380	Washer	2	80062-
15		09823-00001	Plate, Maximum Drawbar Pull and Vertical Load	1	80062-
16		04418-13060	Screw	2	80062-

https://truckmanualshub.com/

FIG. T2810-009001 Drawbar, With Additional Counter Weight, For EU Safety Regulation

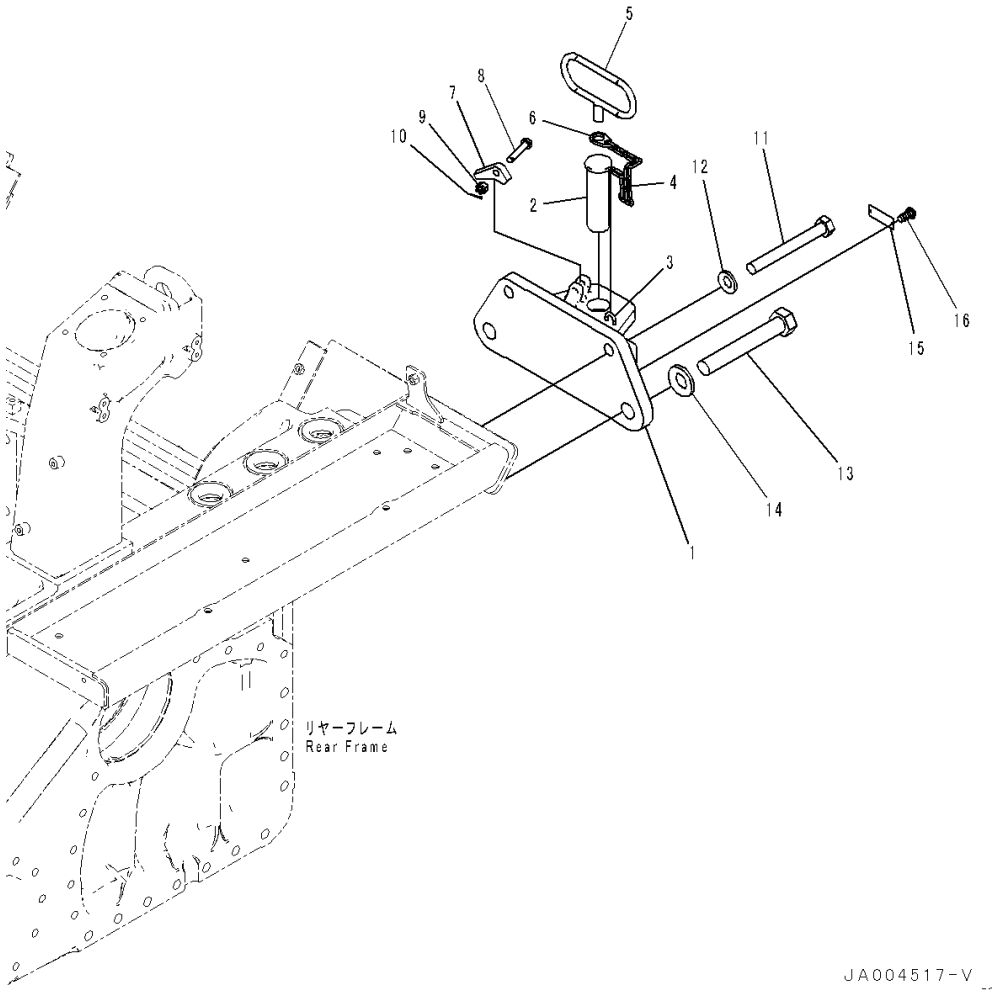

Index	Code	Part Number	Description	Qty	Serial Number
1		14X-69-51201	Bracket	1	80062-
2		130-69-11190	• Pin	1	80062-
3		09245-50060	• Hook	1	80062-
4		09245-04830	• Chain	1	80062-
5		144-69-11210	• Handle	1	80062-
6		144-69-11230	• Plate	1	80062-
7		09249-00016	Latch	1	80062-
8		01052-81265	Bolt	1	80062-
9		01592-31215	Nut, Slotted	1	80062-
10		04050-13025	Pin, Cotter	1	80062-
11		145-Z23-4130	Bolt	2	80062-
12		01643-32460	Washer	2	80062-
13		150-74-11140	Bolt	2	80062-
14		01643-33380	Washer	2	80062-
15		09823-00001	Plate, Maximum Drawbar Pull and Vertical Load	1	80062-
16		04418-13060	Screw	2	80062-

https://truckmanualshub.com/

FIG. T2810-010001 Drawbar, Rigid Type, For EU Safety Regulation

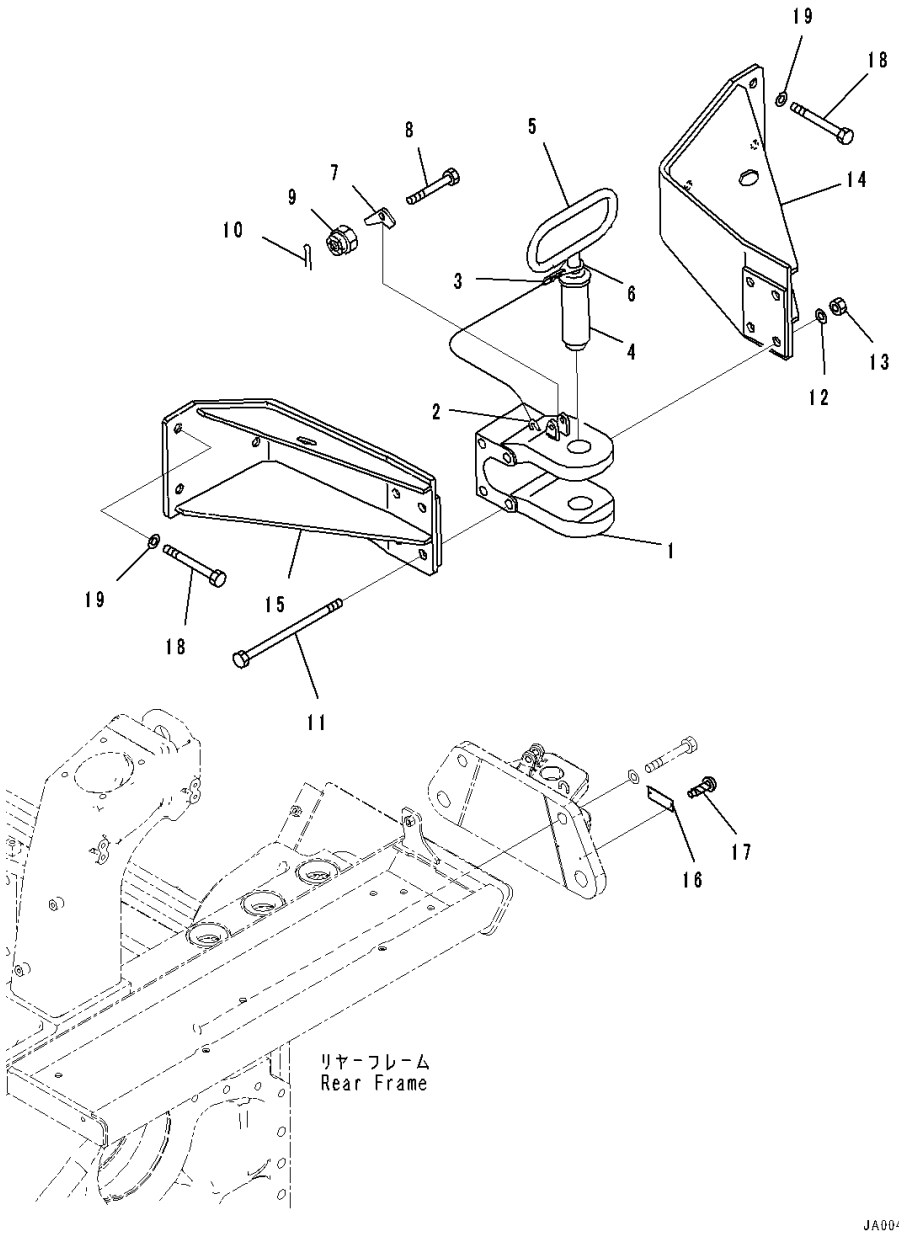

Index	Code	Part Number	Description	Qty	Serial Number
1		134-69-13140	Drawbar Assembly	1	80062-
2		09245-50060	• Hook	1	80062-
3		09245-04830	• Chain	1	80062-
4		09247-45180	• Pin, Drawbar	1	80062-
5		144-69-11210	• Handle	1	80062-
6		144-69-11230	• Plate	1	80062-
7		09249-00016	Latch	1	80062-
8		01052-51260	Bolt	1	80062-
9		01592-11215	Nut, Slotted	1	80062-
10		04050-13022	Pin, Cotter	1	80062-
11		144-69-11161	Bolt	4	80062-
12		01643-32460	Washer	4	80062-
13		01582-12419	Nut	4	80062-
14		14X-69-11110	Bracket	1	80062-
15		14X-69-11120	Bracket	1	80062-
16		09823-00001	Plate, Maximum Drawbar Pull and Vertical Load	1	80062-
17		04418-13060	Screw	2	80062-
18		01010-83375	Bolt	6	80062-
19		01643-33380	Washer	6	80062-

https://truckmanualshub.com/

FIG. T2820-001001 Counterweight

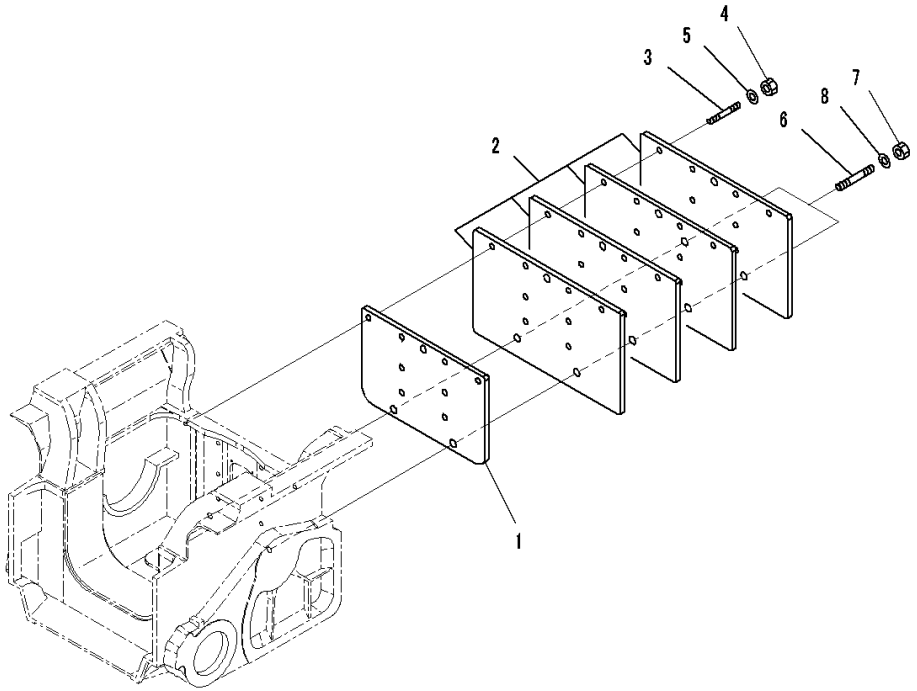

カウンタウェイト
Counter Weight

JA002758

Index	Code	Part Number	Description	Qty	Serial Number
1		14X-69-51121	Weight	1	80001-
2		14X-69-51131	Weight	4	80001-
3		145-Z23-4120	Stud	8	80001-
4		01580-12419	Nut	8	80001-
5		01643-32460	Washer	8	80001-
6		145-Z23-4140	Stud	2	80001-
7		01580-13326	Nut	2	80001-
8		01643-33380	Washer	2	80001-

https://truckmanualshub.com/

FIG. T2820-002001 Counterweight

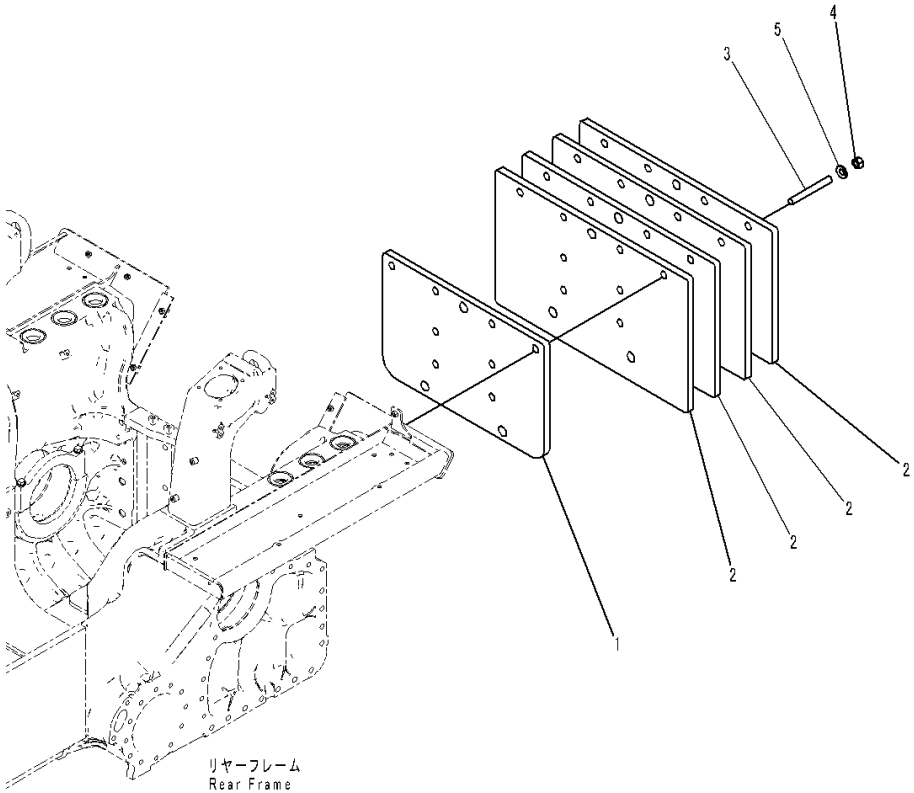

Index	Code	Part Number	Description	Qty	Serial Number
1		14X-69-51121	Weight	1	80009-
2		14X-69-51131	Weight	4	80009-
3		145-Z23-4120	Stud	6	80009-
4		01580-12419	Nut	6	80009-
5		01643-32460	Washer	6	80009-

https://truckmanualshub.com/

https://truckmanualshub.com/

MARKS AND PLATES

FIG. U0100-001001 Marks And Plates, English, For North America, Text Type

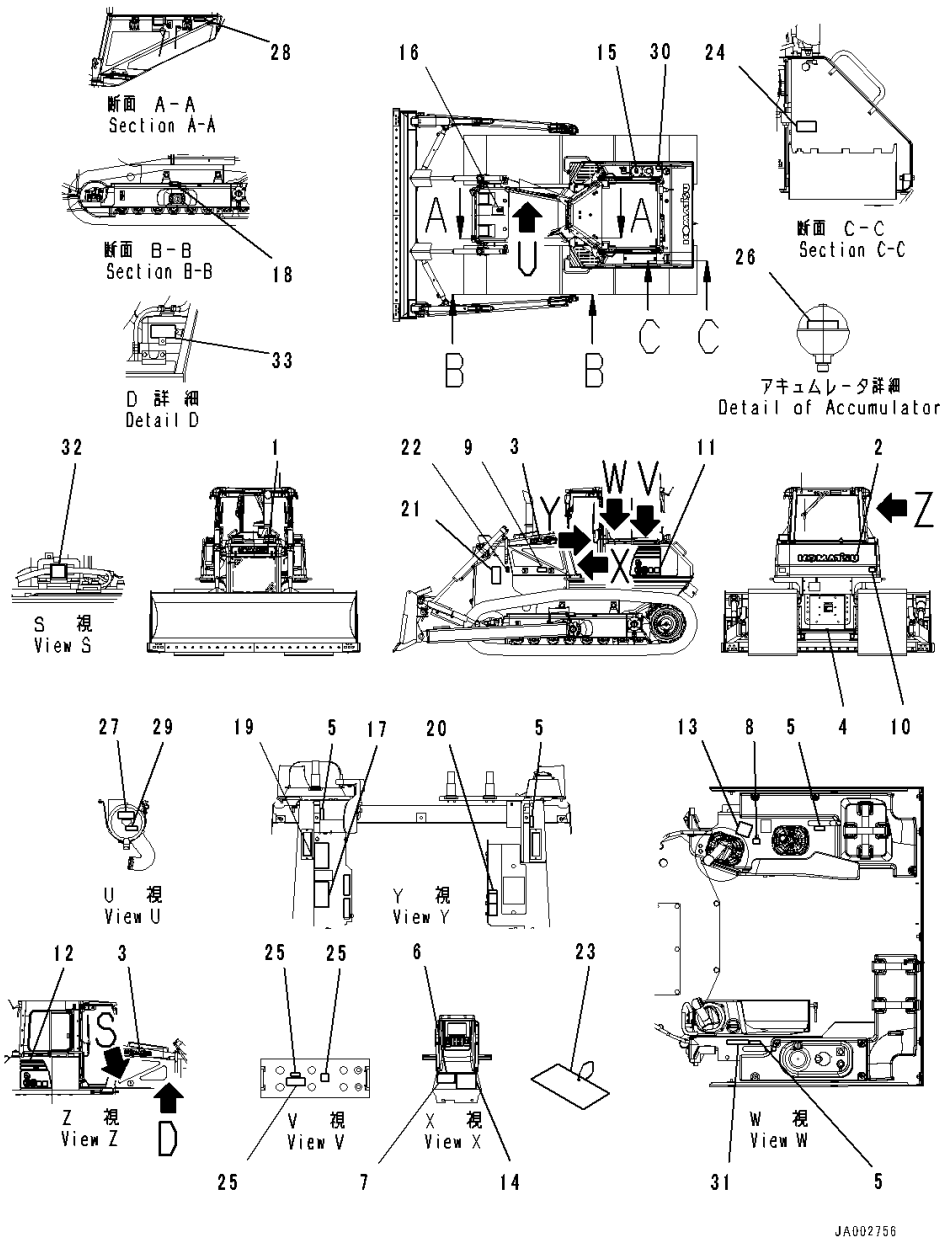

Index	Code	Part Number	Description	Qty	Serial Number
1		09690-F0560	Plate, Mark,Front	1	80001-
2		09690-P1120	Plate, Mark,Rear	1	80001-
3		09690-F0500	Decal, Komatsu Logo,Side	2	80001-
4		09690-M0063	Mark, Komatsu Logo, Anti-Restamp	1	80001-
5		14X-98-11170	Plate, Operating, Lock	4	80001-
6	C2	09602-10001	Plate, Name (Limited Supply), Aluminum Plate	1	80001-
7		04418-13060	Screw	4	80001-
8		17A-98-11180	Plate, Horn	1	80001-
9		20Y-00-41530	Plate, Symbol, Ecot3	1	80001-
10		14X-98-35181	Plate, Reflector, Rear Reflecter	2	80001-
11		14X-98-51131	Decal, Machine Model, LHS,LHS	1	80001-
12		14X-98-51231	Decal, Machine Model, RHS,RHS	1	80001-
13		14X-98-11250	Plate, Work Equipment For PT	1	80001-
14		14X-98-51211	Oil Chart	1	80001-
15		09653-03001	Plate, Warning, High Temperature, Operating Oil Tank	1	80001-
16		09668-03001	Plate, Warning, Hot Water, Radiator	1	80001-
17		09654-33001	Plate, Warning, Before Leaving Seat, After Operating	1	80001-
18		09657-03003	Plate, Warning, Track Adjustment, Adjustment Of Track Tension	2	80001-
19		09651-03001	Plate, Warning, Read Manual Before Operating, Before Operating	1	80001-
20		09802-13000	Plate, Warning, Back-up, Safety Confirm Of Rear	1	80001-
21		09812-13000	Plate, Danger, Keep a Safe Distance, Danger Keep Away	2	80001-
22		09667-03001	Plate, Caution, Rotating Object, While Engine Is Running,Don't Open Cover	2	80001-
23		09963-03001	Tag, Danger, Do Not Operate, Check And Equipment	1	80001-
24		09808-03000	Plate, Warning, Battery Cables, Battery Cables	1	80001-
25		09664-30011	Plate, Warning, Battery Cables, Battery Maker And Its Address	2	80001-
26		09659-53000	Plate, Warning, Explosive Hazard, Accumlator	1	80001-
27		21W-98-41720	Plate, Air Cleaner, Air Cleaner Replance	1	80001-
28		6217-71-6470	Plate, Fuel Filter Replance	1	80001-

https://truckmanualshub.com/

FIG. U0100-001001 Marks And Plates, English, For North America, Text Type

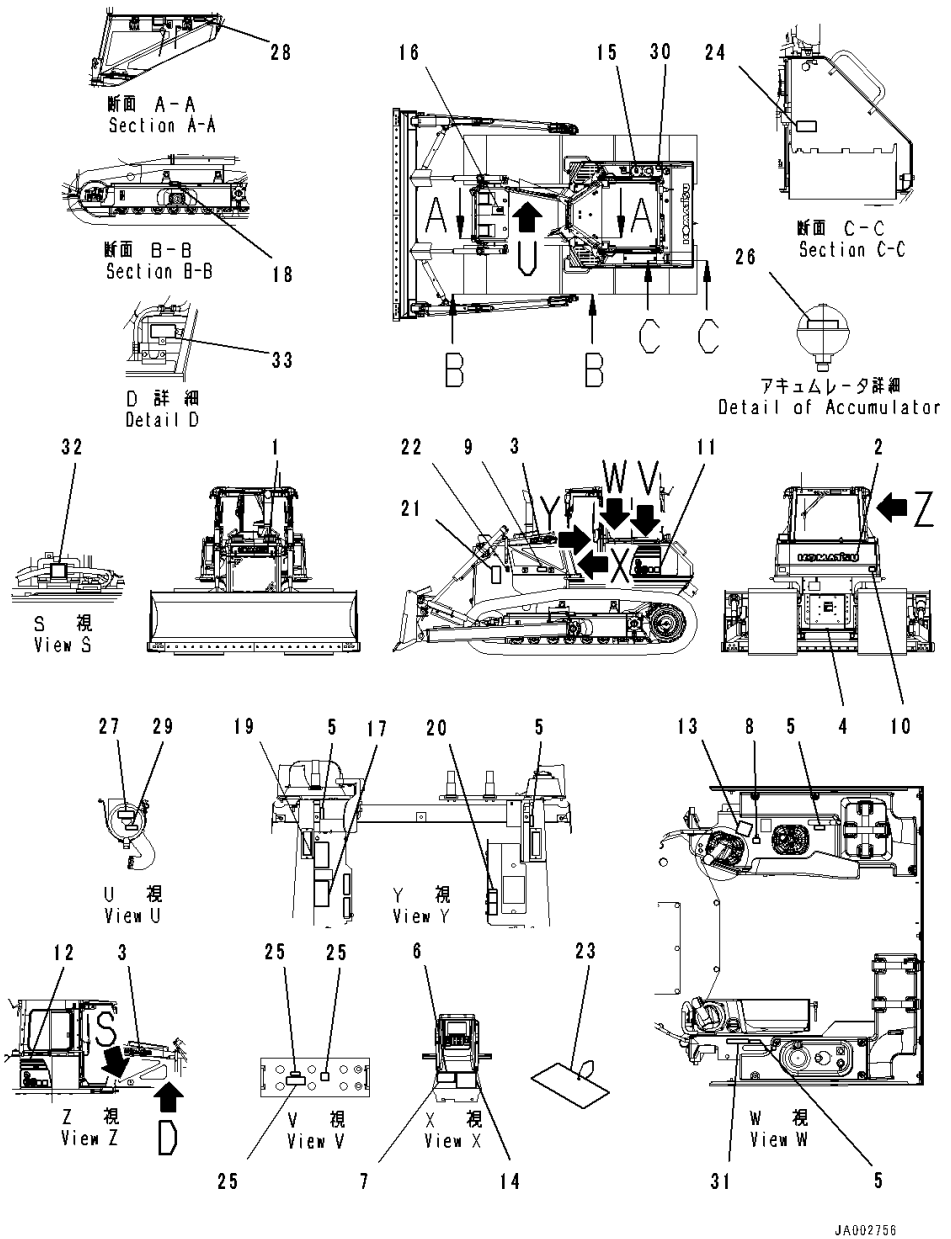

Index	Code	Part Number	Description	Qty	Serial Number
29		14X-98-35120	Plate, Pre Filter Cation	1	80001-
30		09652-31221	Plate, Caution, Diesel Fuel	1	80001-
31		09649-03012	Plate, Engine Stop, Engine Stop	1	80001-
32		09842-A0481	Plate, Caution, No Jump Start, Jumpstart Ban	1	80001-
33		09642-13000	Plate, Service Instruction, Engine Coolant AF-NAC, Specift Coolant	1	80001-

https://truckmanualshub.com/

FIG. U0100-003001 Marks And Plates, English, With Power Angle Power Tilt Dozer, Text Type

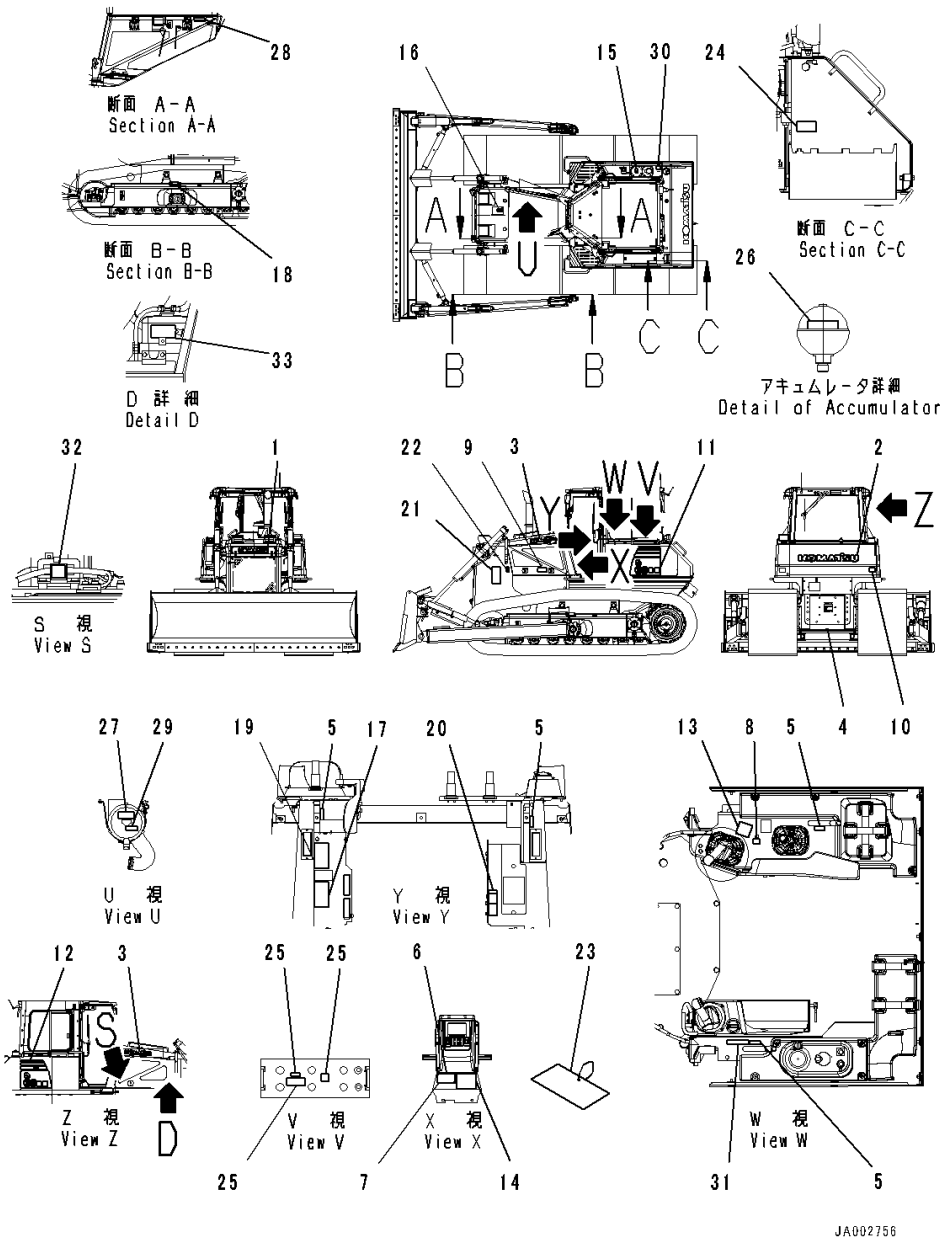

Index	Code	Part Number	Description	Qty	Serial Number
1		09690-F0560	Plate, Mark,Front	1	80001-
2		09690-P1120	Plate, Mark,Rear	1	80001-
3		09690-F0500	Decal, Komatsu Logo,Side	2	80001-
4		09690-M0063	Mark, Komatsu Logo, Anti-Restamp	1	80001-
5		14X-98-11170	Plate, Operating, Lock	4	80001-
6	C2	09602-10001	Plate, Name (Limited Supply), Aluminum Plate	1	80001-
7		04418-13060	Screw	4	80001-
8		17A-98-11180	Plate, Horn	1	80001-
9		20Y-00-41530	Plate, Symbol, Ecot3	1	80001-
10		14X-98-35181	Plate, Reflector, Rear Reflecter	2	80001-
11		14X-98-51131	Decal, Machine Model, LHS,LHS	1	80001-
12		14X-98-51231	Decal, Machine Model, RHS,RHS	1	80001-
13		124-98-51140	Plate, Work Equipment For PAT	1	80001-
14		14X-98-51221	Oil Chart, For PAT	1	80001-
15		09653-03001	Plate, Warning, High Temperature, Operating Oil Tank	1	80001-
16		09668-03001	Plate, Warning, Hot Water, Radiator	1	80001-
17		09654-33001	Plate, Warning, Before Leaving Seat, After Operating	1	80001-
18		09657-03003	Plate, Warning, Track Adjustment, Adjustment Of Track Tension	2	80001-
19		09651-03001	Plate, Warning, Read Manual Before Operating, Before Operating	1	80001-
20		09802-13000	Plate, Warning, Back-up, Safety Confirm Of Rear	1	80001-
21		09812-13000	Plate, Danger, Keep a Safe Distance, Danger Keep Away	2	80001-
22		09667-03001	Plate, Caution, Rotating Object, While Engine Is Running,Don't Open Cover	2	80001-
23		09963-03001	Tag, Danger, Do Not Operate, Check And Equipment	1	80001-
24		09808-03000	Plate, Warning, Battery Cables, Battery Cables	1	80001-
25		09664-30011	Plate, Warning, Battery Cables, Battery Maker And Its Address	2	80001-
26		09659-53000	Plate, Warning, Explosive Hazard, Accumlator	1	80001-
27		21W-98-41720	Plate, Air Cleaner, Air Cleaner Replance	1	80001-
28		6217-71-6470	Plate, Fuel Filter Replance	1	80001-

https://truckmanualshub.com/

FIG. U0100-003001 Marks And Plates, English, With Power Angle Power Tilt Dozer, Text Type

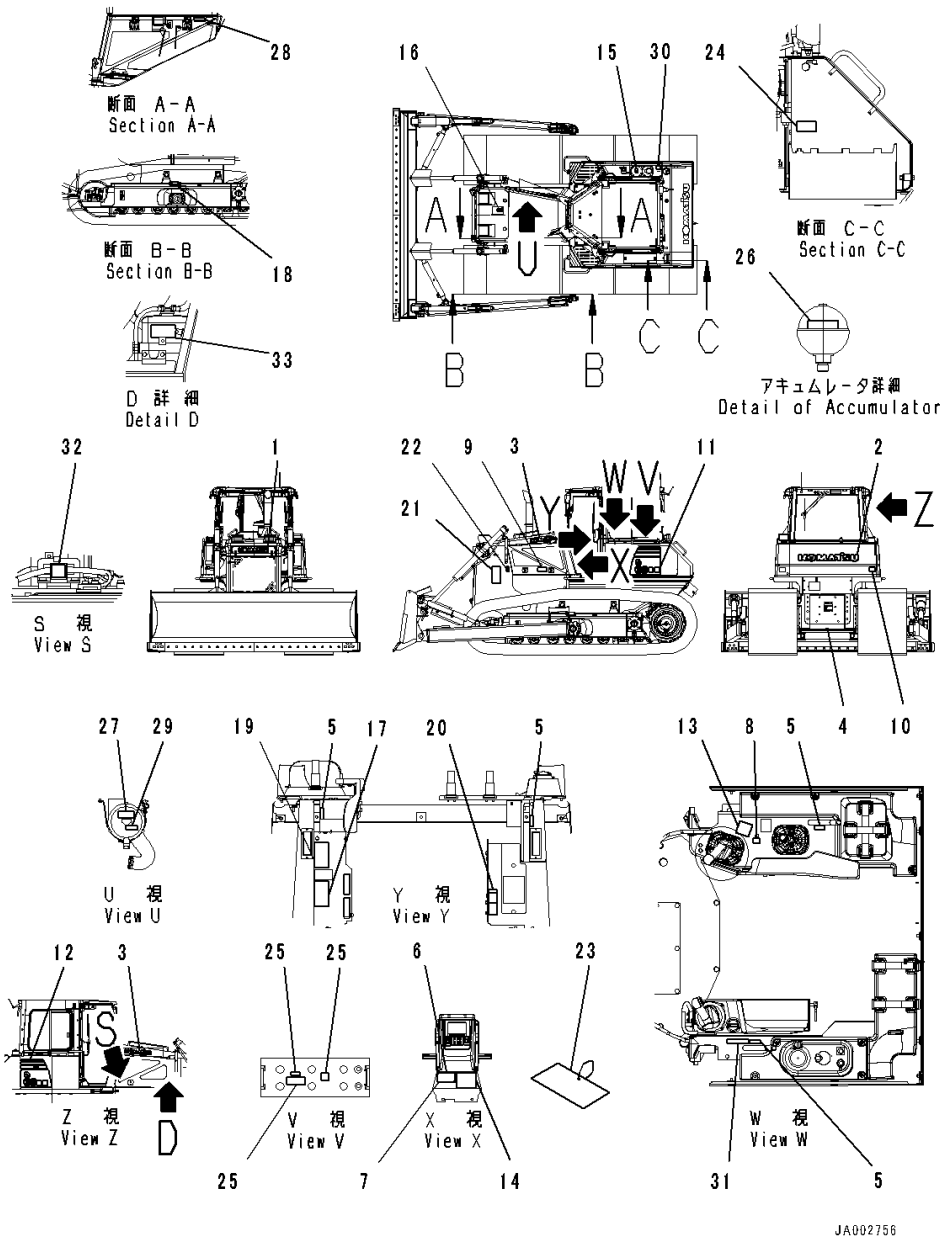

Index	Code	Part Number	Description	Qty	Serial Number
29		14X-98-35120	Plate, Pre Filter Cation	1	80001-
30		09652-31221	Plate, Caution, Diesel Fuel	1	80001-
31		09649-03012	Plate, Engine Stop, Engine Stop	1	80001-
32		09842-A0481	Plate, Caution, No Jump Start, Jumpstart Ban	1	80001-
33		09642-13000	Plate, Service Instruction, Engine Coolant AF-NAC, Specift Coolant	1	80001-

https://truckmanualshub.com/

FIG. U0100-002001 Marks And Plates, English, For EU Noise Reguration

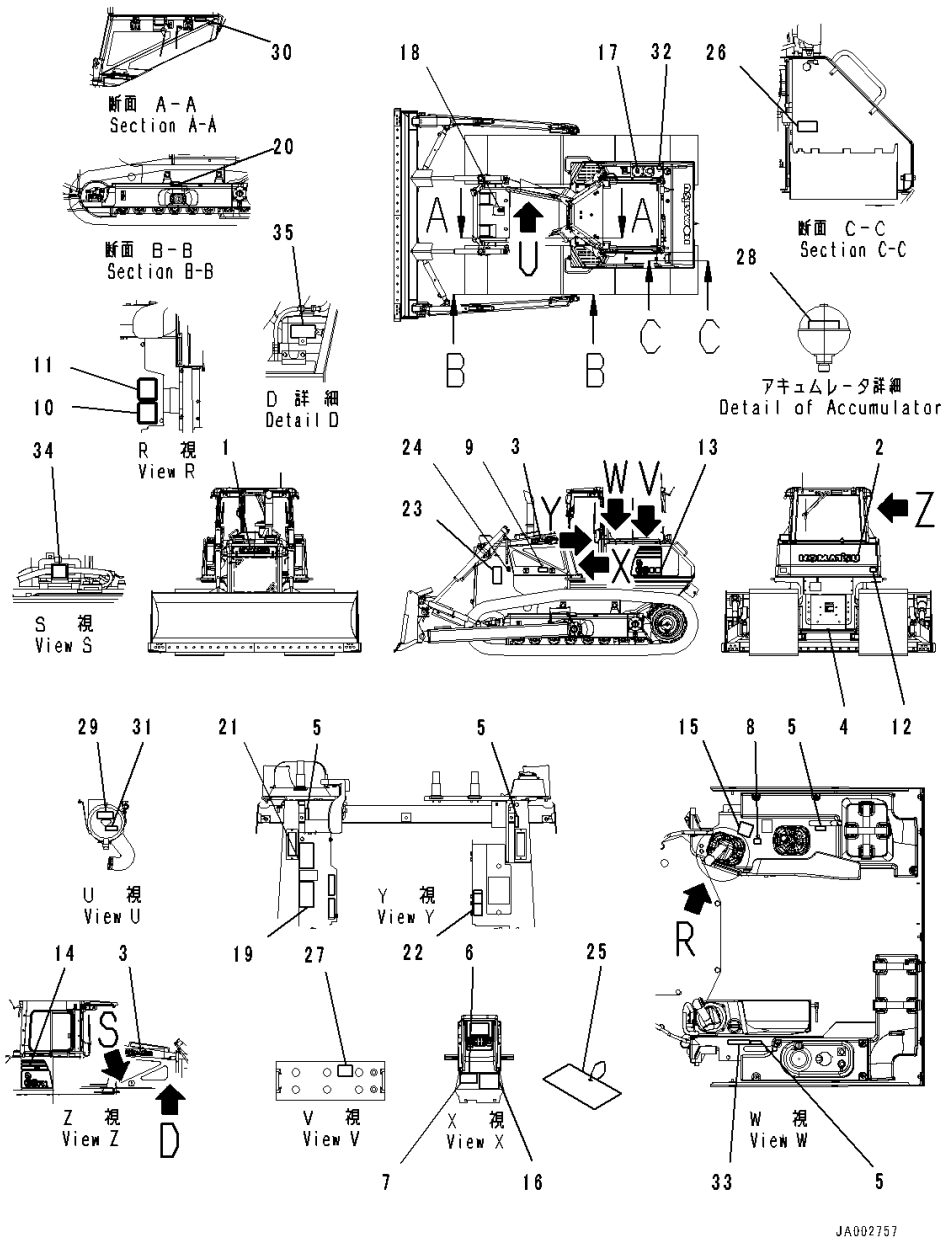

Index	Code	Part Number	Description	Qty	Serial Number
1		09690-F0560	Plate, Mark,Front	1	80001-
2		09690-P1120	Plate, Mark,Rear	1	80001-
3		09690-F0500	Decal, Komatsu Logo,Side	2	80001-
4		09690-M0063	Mark, Komatsu Logo, Anti-Restamp	1	80001-
5		14X-98-11170	Plate, Operating, Lock	4	80001-
6	C2	09602-00001	Plate, Name (Limited Supply), Aluminum Plate	1	80001-
7		04418-13060	Screw	4	80001-
8		17A-98-11180	Plate, Horn	1	80001-
9		20Y-00-41530	Plate, Symbol, Ecot3	1	80001-
10		09696-50078	Plate, EU Ope Ear Noise, EU Ope Ear Noise	1	80001-
11		09696-40108	Plate, EU Around Noise	1	80001-
12		14X-98-35181	Plate, Reflector, Rear Reflecter	2	80001-
13		14X-98-51131	Decal, Machine Model, LHS,LHS	1	80001-
14		14X-98-51231	Decal, Machine Model, RHS,RHS	1	80001-
15		14X-98-11250	Plate, Work Equipment For PT	1	80001-
16		14X-98-51211	Oil Chart	1	80001-
17		09653-A0481	Plate, Warning, High Temperature, Operating Oil Tank	1	80001-
18		09653-A0481	Plate, Warning, High Temperature, Radiator	1	80001-
19		09654-B0641	Plate, Warning, Before Leaving Seat, After Operating	1	80001-
20		09657-A0881	Plate, Adjustment Of Track Tension	2	80001-
21		09651-A0641	Plate, Warning, Read Manual Before Operating, Before Operating	1	80001-
22		09802-13000	Plate, Warning, Back-up, Safety Confirm Of Rear	1	80001-
23		09806-B1683	Plate, Danger Keep Away	2	80001-
24		09667-A0481	Plate, Caution, Rotating Object, While Engine Is Running,Don't Open Cover	2	80001-
25		09963-A1640	Tag, Danger, Do Not Operate, Check And Equipment	1	80001-
26		09808-A0881	Plate, Warning, Battery Cables, Battery Cables	1	80001-
27		09664-60000	Decal, Danger, Battery, Battery Maker And Its Address	2	80001-
28		09659-A057B	Plate, Warning, Explosive Hazard, Accumlator	1	80001-

https://truckmanualshub.com/

FIG. U0100-002001 Marks And Plates, English, For EU Noise Reguration

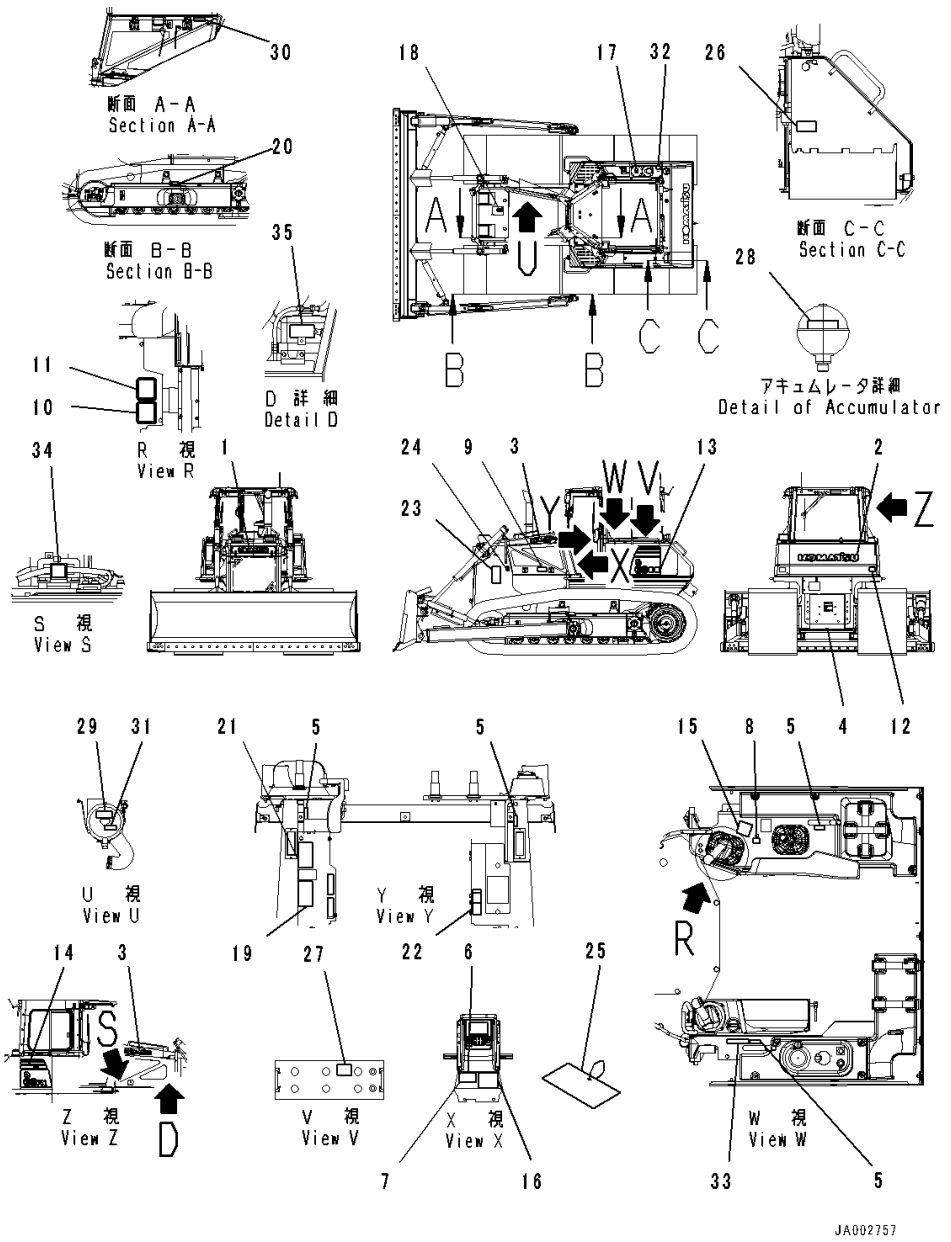

Index	Code	Part Number	Description	Qty	Serial Number
29		21W-98-41720	Plate, Air Cleaner, Air Cleaner Replance .	1	80001-
30		6217-71-6470	Plate, Fuel Filter Replance	1	80001-
31		14X-98-35120	Plate, Pre Filter Cation	1	80001-
32		09669-0000E	Plate, Symbol, Fuel Filler, Fuel Direction .	1	80001-
33		09649-03012	Plate, Engine Stop, Engine Stop	1	80001-
34		09842-A0481	Plate, Caution, No Jump Start, Jumpstart Ban	1	80001-
35		09642-13000	Plate, Service Instruction, Engine Coolant AF-NAC, Specift Coolant	1	80001-

https://truckmanualshub.com/

FIG. U0100-007001 Marks And Plates, English

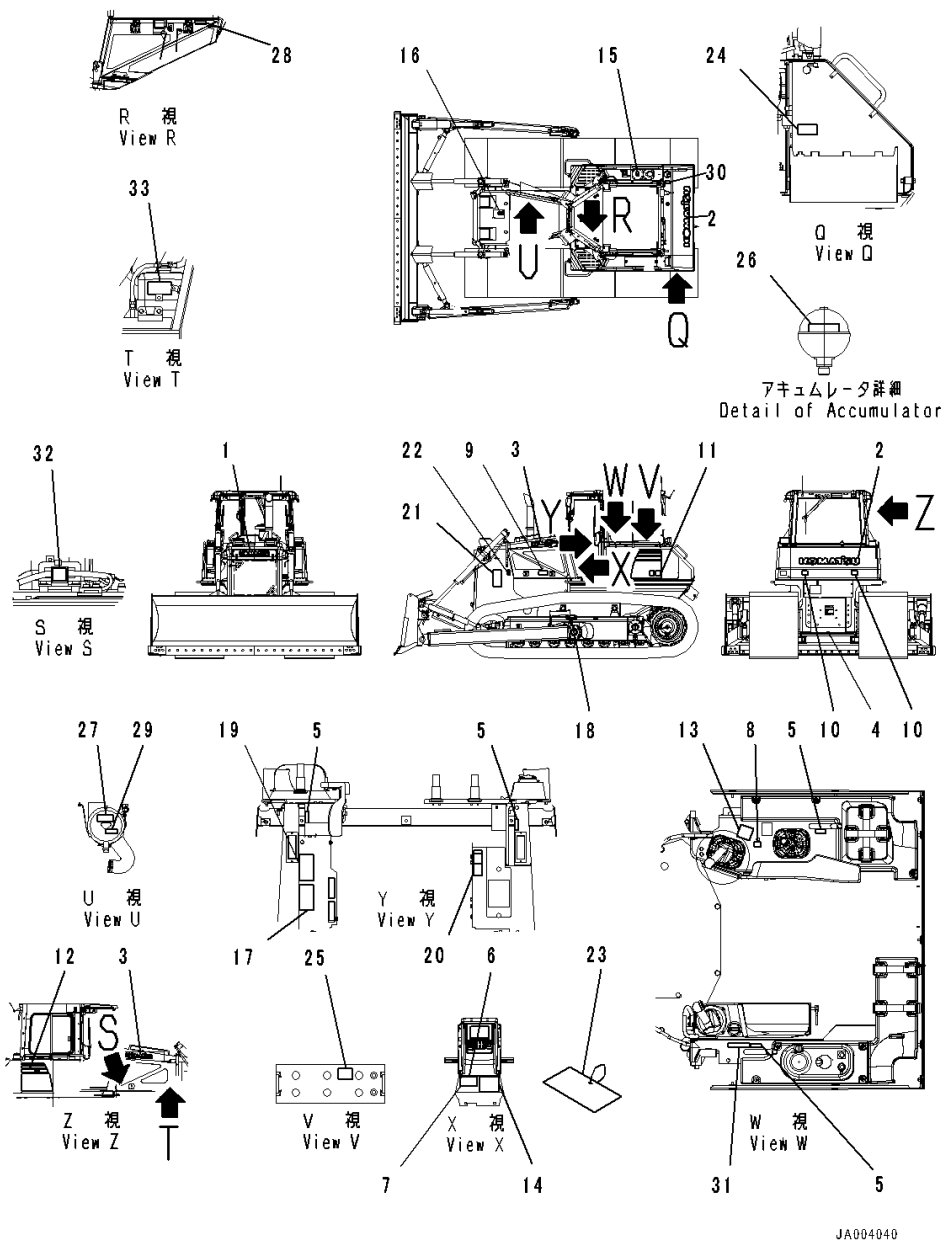

Index	Code	Part Number	Description	Qty	Serial Number
1		09690-F0560	Plate, Mark,Front	1	80005-
2		09690-P1120	Plate, Mark,Rear	1	80005-
3		09690-F0500	Decal, Komatsu Logo,Side	2	80005-
4		09690-M0063	Mark, Komatsu Logo, Anti-Restamp	1	80005-
5		14X-98-11170	Plate, Operating, Lock	4	80005-
6	C2	09602-10001	Plate, Name (Limited Supply)	1	80005-
7		04418-13060	Screw	4	80005-
8		17A-98-11180	Plate, Horn	1	80005-
9		20Y-00-41530	Plate, Symbol, Ecot3	1	80005-
10		14X-98-35181	Plate, Reflector, Rear Reflecter	2	80005-
11		14X-98-51131	Decal, Machine Model, LHS,LHS	1	80005-
12		14X-98-51231	Decal, Machine Model, RHS,RHS	1	80005-
13		14X-98-11250	Plate, Work Equipment	1	80005-
14		14X-98-51211	Oil Chart	1	80005-
15		09653-A0481	Plate, Warning, High Temperature, Operating Oil Tank	1	80005-
16		09653-A0481	Plate, Warning, High Temperature, Radiator	1	80005-
17		09654-B0641	Plate, Warning, Before Leaving Seat	1	80005-
18		09657-A0881	Plate	2	80005-
19		09651-A0641	Plate, Warning, Read Manual Before Operating	1	80005-
20		09802-13000	Plate, Warning, Back-up, Safety Confirm Of Rear	1	80005-
21		09806-B1683	Plate	2	80005-
22		09667-A0481	Plate, Caution, Rotating Object, While Engine Is Running. Don't Open Cover	2	80005-
23		09963-A1640	Tag, Danger, Do Not Operate	1	80005-
24		09808-A0881	Plate, Warning, Battery Cables	1	80005-
25		09664-70001	Decal, Danger, Battery	2	80005-
26		09659-A057B	Plate, Warning, Explosive Hazard	1	80005-
27		21W-98-41720	Plate, Air Cleaner, Air Cleaner Replace	1	80005-
28		6217-71-6470	Plate, Fuel Filter Replace	1	80005-
29		14X-98-35120	Plate, Pre Filter Caution	1	80005-
30		09669-0000E	Plate, Symbol, Fuel Filler	1	80005-
31		09649-03012	Plate, Engine Stop	1	80005-
32		09842-A0481	Plate, Caution, No Jump Start	1	80005-
33		09642-13000	Plate, Service Instruction, Engine Coolant AF-NAC	1	80005-

https://truckmanualshub.com/

FIG. U0100-008001 Marks And Plates, English, Text Type

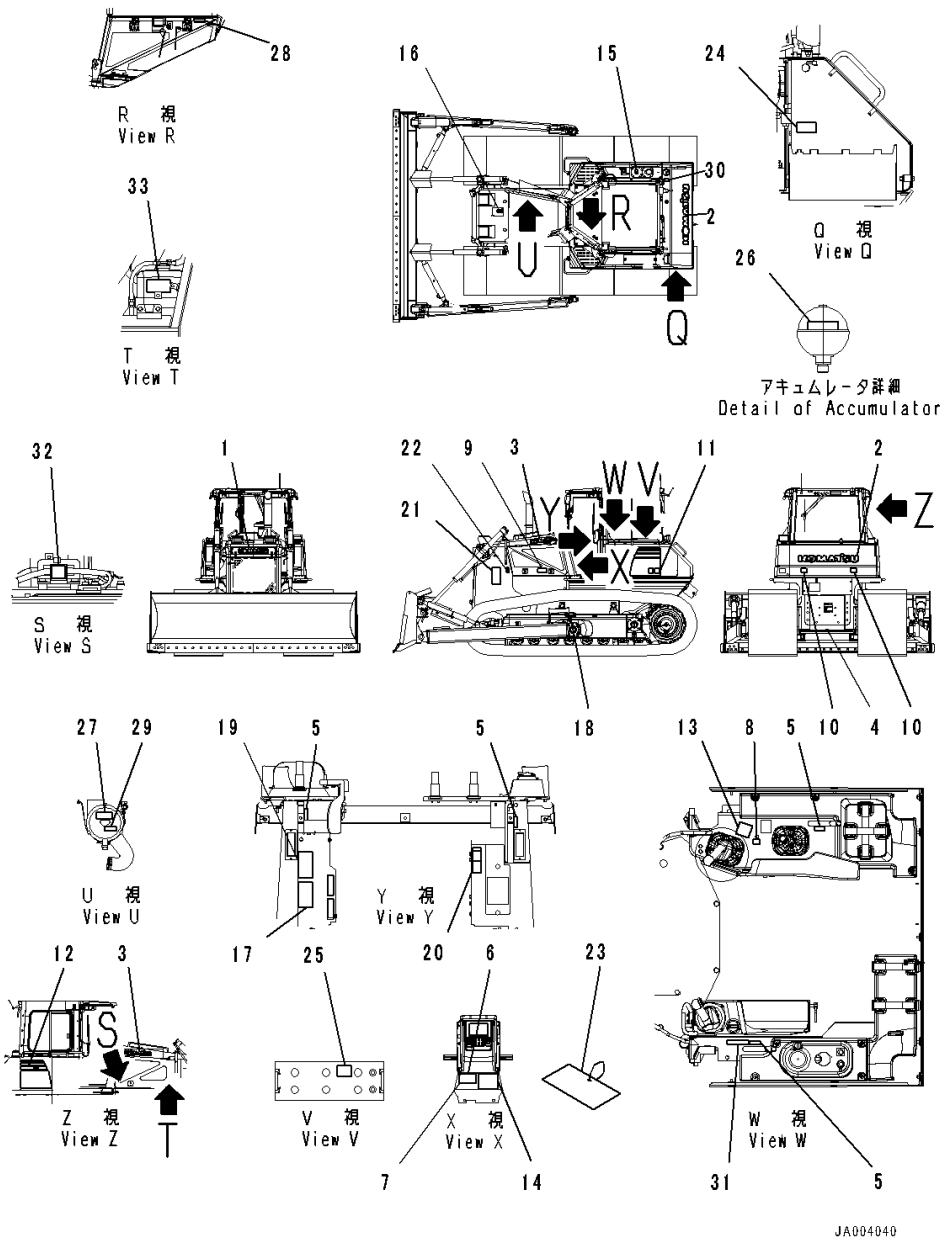

Index	Code	Part Number	Description	Qty	Serial Number
1		09690-F0560	Plate, Mark,Front	1	80005-
2		09690-P1120	Plate, Mark,Rear	1	80005-
3		09690-F0500	Decal, Komatsu Logo,Side	2	80005-
4		09690-M0063	Mark, Komatsu Logo, Anti-Restamp	1	80005-
5		14X-98-11170	Plate, Operating, Lock	4	80005-
6	C2	09602-10001	Plate, Name (Limited Supply)	1	80005-
7		04418-13060	Screw	4	80005-
8		17A-98-11180	Plate, Horn	1	80005-
9		20Y-00-41530	Plate, Symbol, Ecot3	1	80005-
10		14X-98-35181	Plate, Reflector, Rear Reflecter	2	80005-
11		14X-98-51131	Decal, Machine Model, LHS,LHS	1	80005-
12		14X-98-51231	Decal, Machine Model, RHS,RHS	1	80005-
13		14X-98-11250	Plate, Work Equipment	1	80005-
14		14X-98-51211	Oil Chart	1	80005-
15		09653-03001	Plate, Warning, High Temperature, Operaiting Oil Tank	1	80005-
16		09668-03001	Plate, Warning, Hot Water, Radiator	1	80005-
17		09654-33001	Plate, Warning, Before Leaving Seat	1	80005-
18		09657-03003	Plate, Warning, Track Adjustment	2	80005-
19		09651-03001	Plate, Warning, Read Manual Before Operating	1	80005-
20		09802-13000	Plate, Warning, Back-up, Safety Confirm Of Rear	1	80005-
21		09812-13000	Plate, Danger, Keep a Safe Distance, Danger Keep Away	2	80005-
22		09667-03001	Plate, Caution, Rotating Object, While Engine Is Running. Don't Open Cover	2	80005-
23		09963-03001	Tag, Danger, Do Not Operate	1	80005-
24		09808-03000	Plate, Warning, Battery Cables	1	80005-
25		09664-40011	Decal, Danger, Battery	2	80005-
26		09659-53000	Plate, Warning, Explosive Hazard	1	80005-
27		21W-98-41720	Plate, Air Cleaner, Air Cleaner Replace	1	80005-
28		6217-71-6470	Plate, Fuel Filter Replace	1	80005-
29		14X-98-35120	Plate, Pre Filter Caution	1	80005-
30		09652-31221	Plate, Caution, Diesel Fuel	1	80005-
31		09649-03012	Plate, Engine Stop	1	80005-
32		09842-A0481	Plate, Caution, No Jump Start	1	80005-
33		09642-13000	Plate, Service Instruction, Engine Coolant AF-NAC	1	80005-

https://truckmanualshub.com/

FIG. U0100-009001 Marks And Plates, Spanish, Text Type

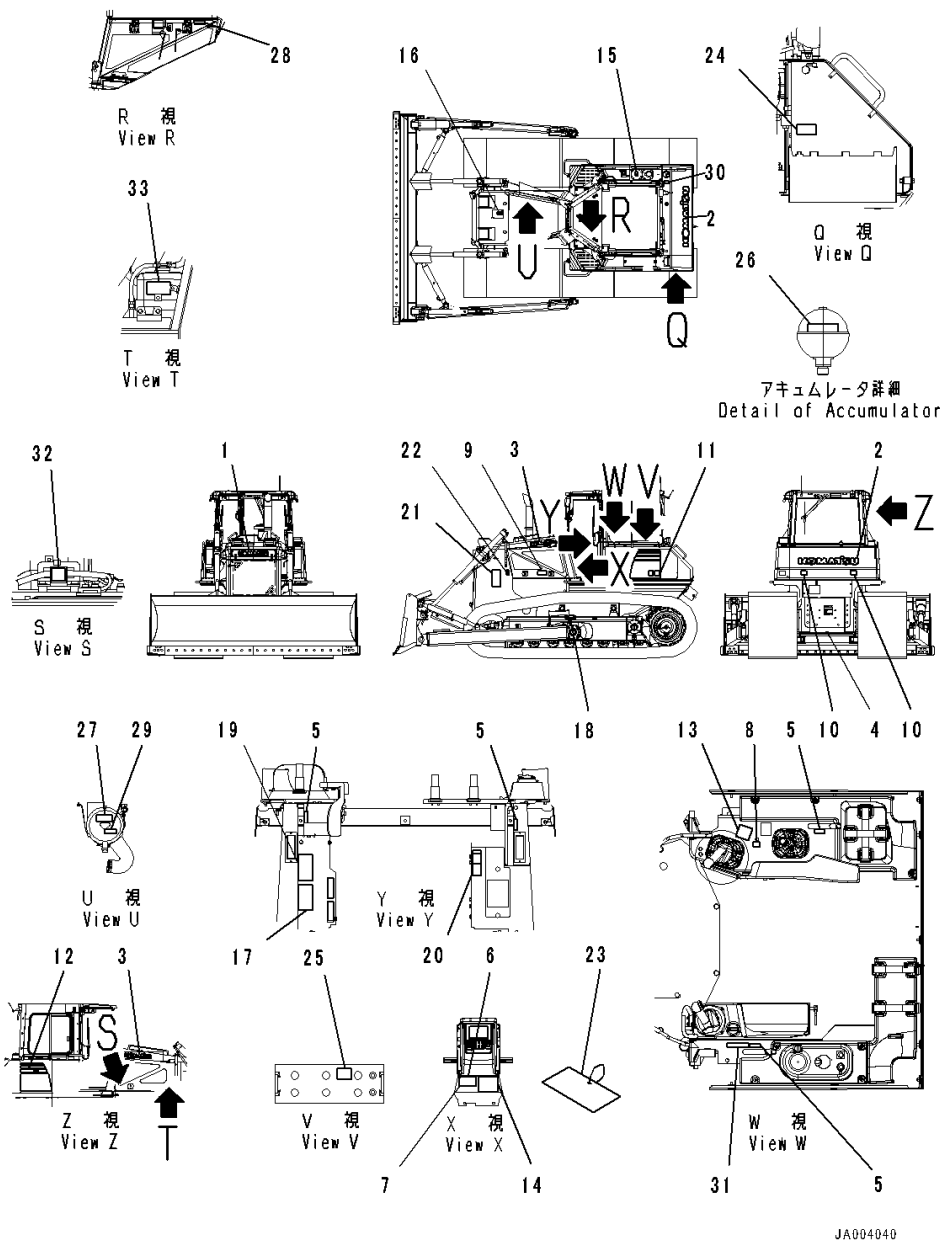

Index	Code	Part Number	Description	Qty	Serial Number
1		09690-F0560	Plate, Mark,Front	1	80005-
2		09690-P1120	Plate, Mark,Rear	1	80005-
3		09690-F0500	Decal, Komatsu Logo,Side	2	80005-
4		09690-M0063	Mark, Komatsu Logo, Anti-Restamp	1	80005-
5		14X-98-11170	Plate, Operating, Lock	4	80005-
6	C2	09602-10001	Plate, Name (Limited Supply)	1	80005-
7		04418-13060	Screw	4	80005-
8		17A-98-11180	Plate, Horn	1	80005-
9		20Y-00-41530	Plate, Symbol, Ecot3	1	80005-
10		14X-98-35181	Plate, Reflector, Rear Reflecter	2	80005-
11		14X-98-51131	Decal, Machine Model, LHS,LHS	1	80005-
12		14X-98-51231	Decal, Machine Model, RHS,RHS	1	80005-
13		14X-98-11250	Plate, Work Equipment	1	80005-
14		14X-98-51211	Oil Chart	1	80005-
15		09653-01001	Plate, Warning, High Temperature, Operating Oil Tank	1	80005-
16		09668-01001	Plate, Warning, Hot Water, Radiator	1	80005-
17		09654-31001	Plate, After Operating	1	80005-
18		09657-01004	Plate, Adustment Of Track Tension	2	80005-
19		09651-01001	Plate, Warning, Read Manual Before Operating, Before Operating	1	80005-
20		09802-11000	Plate, Safety Confirm Of Rear	1	80005-
21		09812-11000	Plate, Danger, Keep a Safe Distance, Danger Keep Away	2	80005-
22		09667-01001	Plate, Caution, Rotating Object, While Engine Is Running. Don't Open Cover	2	80005-
23		09963-01001	Tag, Danger, Do Not Operate	1	80005-
24		09808-01000	Plate, Warning, Battery Cables	1	80005-
25		09664-40111	Decal, Danger, Battery	2	80005-
26		09659-51000	Plate, Warning, Explosive Hazard	1	80005-
27		21W-98-41940	Plate, Air Cleaner Replace	1	80005-
28		6217-71-6510	Plate, Fuel Filter Replace	1	80005-
29		14X-98-35130	Plate, Pre Filter Caution	1	80005-
30		09669-0000E	Plate, Symbol, Fuel Filler	1	80005-
31		09649-01012	Plate, Engine Stop, Engine Stop	1	80005-
32		09842-A0481	Plate, Caution, No Jump Start	1	80005-
33		09642-11000	Plate, Service Instruction, Engine Coolant AF-NAC, Specify Coolant	1	80005-

https://truckmanualshub.com/

FIG. U0100-010001 Marks And Plates, Spanish

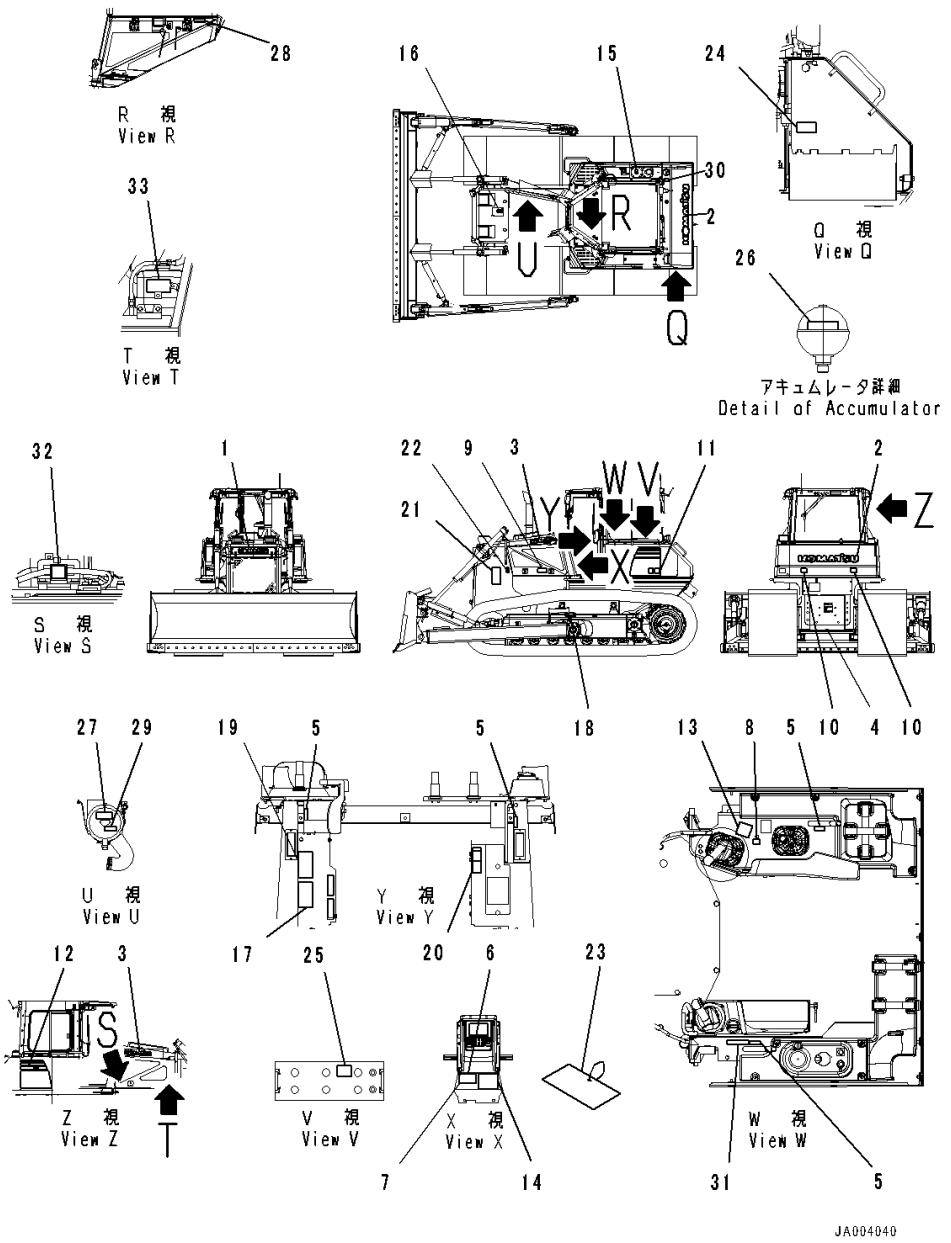

Index	Code	Part Number	Description	Qty	Serial Number
1		09690-F0560	Plate, Mark,Front	1	80005-
2		09690-P1120	Plate, Mark,Rear	1	80005-
3		09690-F0500	Decal, Komatsu Logo,Side	2	80005-
4		09690-M0063	Mark, Komatsu Logo, Anti-Restamp	1	80005-
5		14X-98-11170	Plate, Operating	4	80005-
6	C2	09602-10001	Plate, Name (Limited Supply)	1	80005-
7		04418-13060	Screw	4	80005-
8		17A-98-11180	Plate	1	80005-
9		20Y-00-41530	Plate, Symbol, Ecot3	1	80005-
10		14X-98-35181	Plate, Reflector, Rear Reflecter	2	80005-
11		14X-98-51131	Decal, Machine Model, LHS,LHS	1	80005-
12		14X-98-51231	Decal, Machine Model, RHS,RHS	1	80005-
13		14X-98-11250	Plate, Work Equipment	1	80005-
14		14X-98-51211	Oil Chart	1	80005-
15		09653-A0481	Plate, Warning, High Temperature, Operating Oil Tank	1	80005-
16		09653-A0481	Plate, Warning, High Temperature, Radiator	1	80005-
17		09654-B0641	Plate, Warning, Before Leaving Seat	1	80005-
18		09657-A0881	Plate	2	80005-
19		09651-A0641	Plate, Warning, Read Manual Before Operating	1	80005-
20		09802-11000	Plate, Safety Confirm Of Rear	1	80005-
21		09806-B1683	Plate	2	80005-
22		09667-A0481	Plate, Caution, Rotating Object, While Engine Is Runnin. Don't Open Cover	2	80005-
23		09963-A1640	Tag, Danger, Do Not Operate	1	80005-
24		09808-A0881	Plate, Warning, Battery Cables	1	80005-
25		09664-70001	Decal, Danger, Battery	2	80005-
26		09659-A057B	Plate, Warning, Explosive Hazard	1	80005-
27		21W-98-41940	Plate, Air Cleaner Replace	1	80005-
28		6217-71-6510	Plate, Fuel Filter Replace	1	80005-
29		14X-98-35130	Plate, Pre Filter Caution	1	80005-
30		09669-0000E	Plate, Symbol, Fuel Filler	1	80005-
31		09649-01012	Plate, Engine Stop, Engine Stop	1	80005-
32		09842-A0481	Plate, Caution, No Jump Start	1	80005-
33		09642-11000	Plate, Service Instruction, Engine Coolant AF-NAC, Specify Coolant	1	80005-

https://truckmanualshub.com/

FIG. U0100-011001 Marks And Plates, French

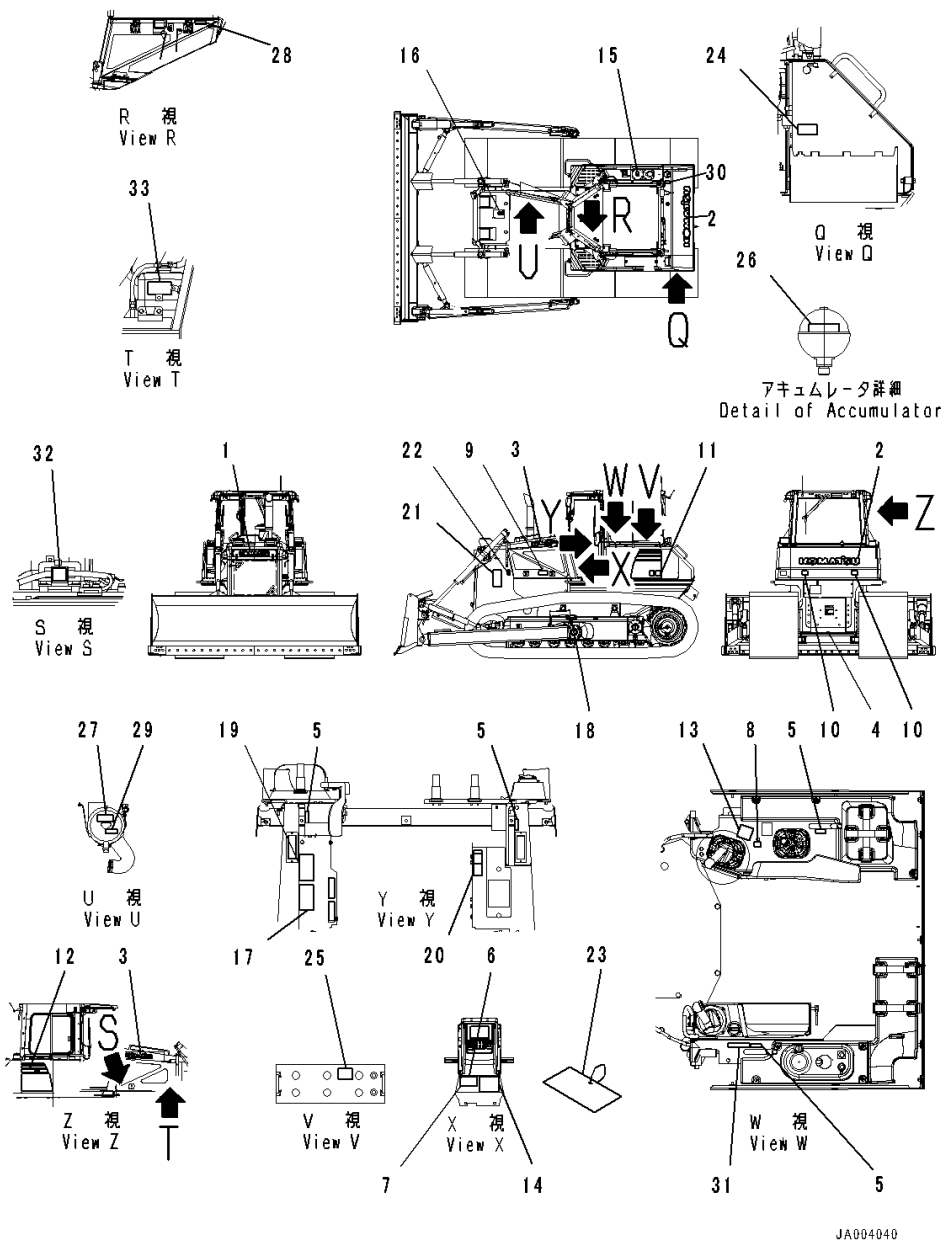

Index	Code	Part Number	Description	Qty	Serial Number
1		09690-F0560	Plate, Mark,Front	1	80005-
2		09690-P1120	Plate, Mark,Rear	1	80005-
3		09690-F0500	Decal, Komatsu Logo,Side	2	80005-
4		09690-M0063	Mark, Komatsu Logo, Anti-Restamp	1	80005-
5		14X-98-11170	Plate, Operating, Lock	4	80005-
6	C2	09602-10001	Plate, Name (Limited Supply)	1	80005-
7		04418-13060	Screw	4	80005-
8		17A-98-11180	Plate, Horn	1	80005-
9		20Y-00-41530	Plate, Symbol, Ecot3	1	80005-
10		14X-98-35181	Plate, Reflector, Rear Reflecter	2	80005-
11		14X-98-51131	Decal, Machine Model, LHS,LHS	1	80005-
12		14X-98-51231	Decal, Machine Model, RHS,RHS	1	80005-
13		14X-98-11250	Plate, Work Equipment	1	80005-
14		14X-98-51211	Oil Chart	1	80005-
15		09653-A0481	Plate, Warning, High Temperature, Operating Oil Tank	1	80005-
16		09653-A0481	Plate, Warning, High Temperature, Radiator	1	80005-
17		09654-B0641	Plate, Warning, Before Leaving Seat	1	80005-
18		09657-A0881	Plate	2	80005-
19		09651-A0641	Plate, Warning, Read Manual Before Operating	1	80005-
20		09802-15000	Plate	1	80005-
21		09806-B1683	Plate	2	80005-
22		09667-A0481	Plate, Caution, Rotating Object, While Engine Is Running. Don't Open Cover	2	80005-
23		09963-A1640	Tag, Danger, Do Not Operate	1	80005-
24		09808-A0881	Plate, Warning, Battery Cables	1	80005-
25		09664-70001	Decal, Danger, Battery	2	80005-
26		09659-A057B	Plate, Warning, Explosive Hazard	1	80005-
27		14X-98-35320	Plate, Air Cleaner Replace	1	80005-
28		6217-71-6490	Plate, Caution, Fuel Filter, Fuel Filter Replace	1	80005-
29		14X-98-35150	Plate, Pre Filter Caution	1	80005-
30		09669-0000E	Plate, Symbol, Fuel Filler	1	80005-
31		09649-05012	Plate	1	80005-
32		09842-A0481	Plate, Caution, No Jump Start	1	80005-
33		09642-15000	Plate	1	80005-

https://truckmanualshub.com/

FIG. U0100-012001 Marks And Plates, Germany

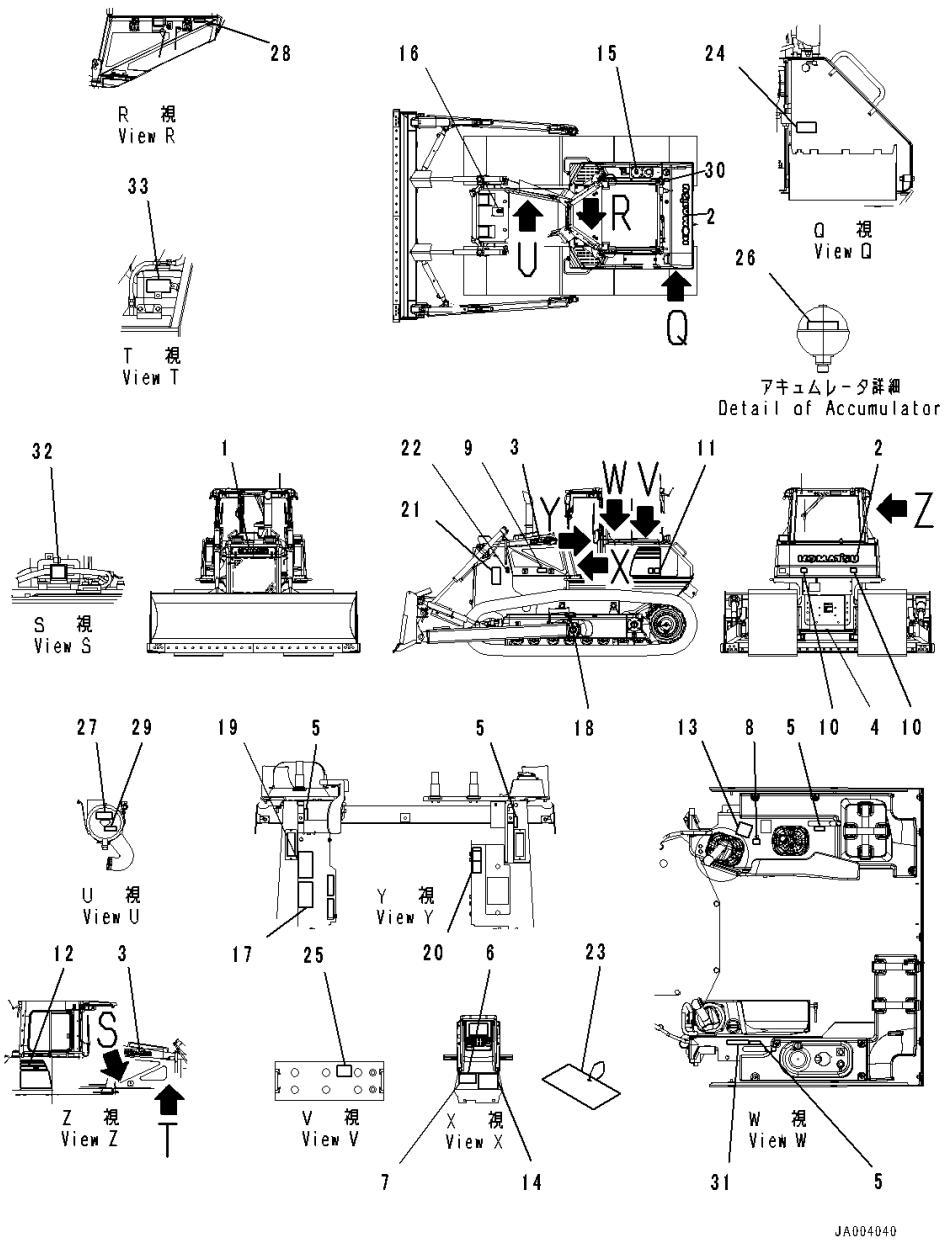

Index	Code	Part Number	Description	Qty	Serial Number
1		09690-F0560	Plate, Mark,Front	1	80005-
2		09690-P1120	Plate, Mark,Rear	1	80005-
3		09690-F0500	Decal, Komatsu Logo,Side	2	80005-
4		09690-M0063	Mark, Komatsu Logo, Anti-Restamp	1	80005-
5		14X-98-11170	Plate, Operating, Lock	4	80005-
6	C2	09602-10001	Plate, Name (Limited Supply)	1	80005-
7		04418-13060	Screw	4	80005-
8		17A-98-11180	Plate, Horn	1	80005-
9		20Y-00-41530	Plate, Symbol, Ecot3	1	80005-
10		14X-98-35181	Plate, Reflector, Rear Reflecter	2	80005-
11		14X-98-51131	Decal, Machine Model, LHS,LHS	1	80005-
12		14X-98-51231	Decal, Machine Model, RHS,RHS	1	80005-
13		14X-98-11250	Plate, Work Equipment	1	80005-
14		14X-98-51211	Oil Chart	1	80005-
15		09653-A0481	Plate, Warning, High Temperature, Operating Oil Tank	1	80005-
16		09653-A0481	Plate, Warning, High Temperature, Radiator	1	80005-
17		09654-B0641	Plate, Warning, Before Leaving Seat	1	80005-
18		09657-A0881	Plate	2	80005-
19		09651-A0641	Plate, Warning, Read Manual Before Operating	1	80005-
20		09802-12000	Plate	1	80005-
21		09806-B1683	Plate	2	80005-
22		09667-A0481	Plate, Caution, Rotating Object, While Engine Is Running. Don't Open Cover	2	80005-
23		09963-A1640	Tag, Danger, Do Not Operate	1	80005-
24		09808-A0881	Plate, Warning, Battery Cables	1	80005-
25		09664-70001	Decal, Danger, Battery	2	80005-
26		09659-A057B	Plate, Warning, Explosive Hazard	1	80005-
27		14X-98-35310	Plate, Air Cleaner Replace	1	80005-
28		6217-71-6480	Plate, Fuel Filter Replace	1	80005-
29		14X-98-35140	Plate, Pre Filter Caution	1	80005-
30		09669-0000E	Plate, Symbol, Fuel Filler	1	80005-
31		09649-02012	Plate	1	80005-
32		09842-A0481	Plate, Caution, No Jump Start	1	80005-
33		09642-12000	Plate, Coolant	1	80005-

https://truckmanualshub.com/

FIG. U0100-013001 Marks And Plates, Turkish

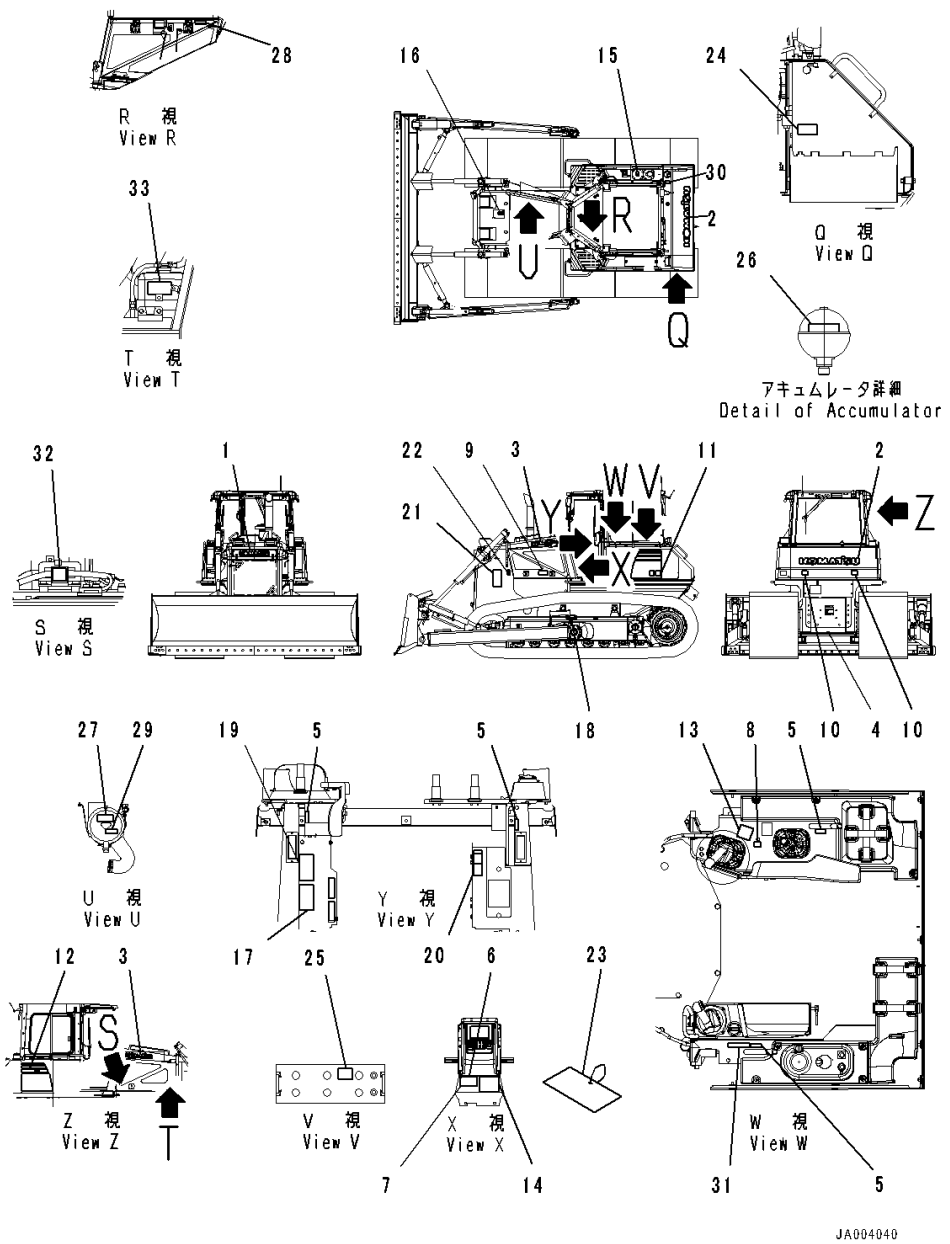

Index	Code	Part Number	Description	Qty	Serial Number
1		09690-F0560	Plate, Mark,Front	1	80005-
2		09690-P1120	Plate, Mark,Rear	1	80005-
3		09690-F0500	Decal, Komatsu Logo,Side	2	80005-
4		09690-M0063	Mark, Komatsu Logo, Anti-Restamp	1	80005-
5		14X-98-11170	Plate, Operating, Lock	4	80005-
6	C2	09602-10001	Plate, Name (Limited Supply)	1	80005-
7		04418-13060	Screw	4	80005-
8		17A-98-11180	Plate	1	80005-
9		20Y-00-41530	Plate, Symbol, Ecot3, Horn	1	80005-
10		14X-98-35181	Plate, Reflector, Rear Reflecter	2	80005-
11		14X-98-51131	Decal, Machine Model, LHS,LHS	1	80005-
12		14X-98-51231	Decal, Machine Model, RHS,RHS	1	80005-
13		14X-98-11250	Plate, Work Equipment	1	80005-
14		14X-98-51211	Oil Chart	1	80005-
15		09653-A0481	Plate, Warning, High Temperature, Operating Oil Tank	1	80005-
16		09653-A0481	Plate, Warning, High Temperature, Radiator	1	80005-
17		09654-B0641	Plate, Warning, Before Leaving Seat	1	80005-
18		09657-A0881	Plate	2	80005-
19		09651-A0641	Plate, Warning, Read Manual Before Operating	1	80005-
20		17M-98-41320	Plate, Before Operating	1	80005-
21		09806-B1683	Plate	2	80005-
22		09667-A0481	Plate, Caution, Rotating Object, While Engine Is Running. Don't Open Cover	2	80005-
23		09963-A1640	Tag, Danger, Do Not Operate	1	80005-
24		09808-A0881	Plate, Warning, Battery Cables	1	80005-
25		09664-70001	Decal, Danger, Battery	2	80005-
26		09659-A057B	Plate, Warning, Explosive Hazard	1	80005-
27		17A-98-21720	Plate, Air Cleaner Replace	1	80005-
28		6217-71-6680	Plate, Fuel Filter Replace	1	80005-
29		14X-98-35170	Plate, Pre Filter Caution	1	80005-
30		09669-0000E	Plate, Symbol, Fuel Filler	1	80005-
31		17A-98-23510	Plate, Engine Stop	1	80005-
32		09842-A0481	Plate, Caution, No Jump Start	1	80005-
33		09642-11100	Plate	1	80005-

https://truckmanualshub.com/

FIG. U0100-014001 Marks And Plates, French, Text Type

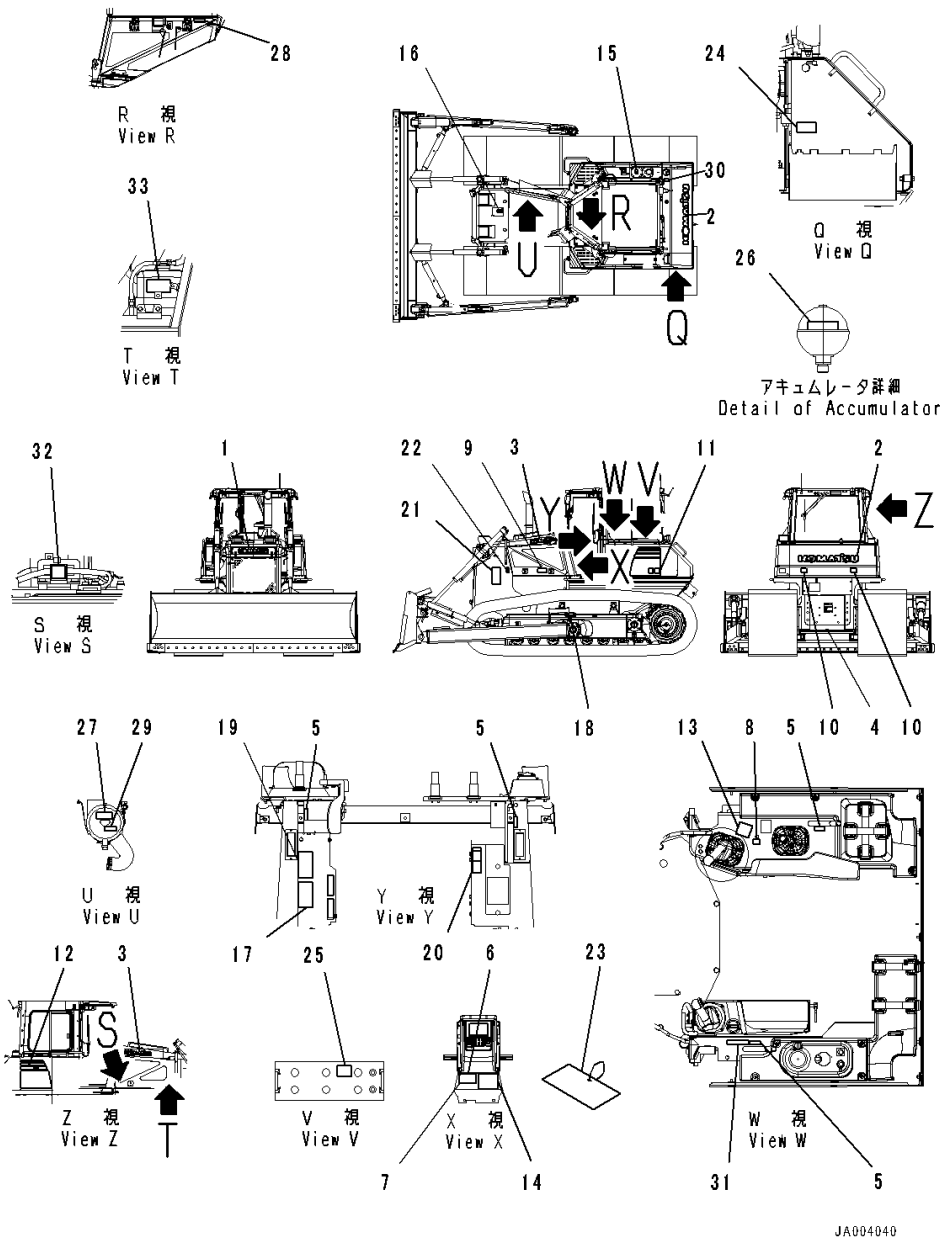

Index	Code	Part Number	Description	Qty	Serial Number
1		09690-F0560	Plate, Mark,LHS	1	80005-
2		09690-P1120	Plate, Mark,RHS	1	80005-
3		09690-F0500	Decal, Komatsu Logo,Side	2	80005-
4		09690-M0063	Mark, Komatsu Logo, Anti-Restamp	1	80005-
5		14X-98-11170	Plate, Operating, Lock	4	80005-
6	C2	09602-10001	Plate, Name (Limited Supply)	1	80005-
7		04418-13060	Screw	4	80005-
8		17A-98-11180	Plate, Horn	1	80005-
9		20Y-00-41530	Plate, Symbol, Ecot3	1	80005-
10		14X-98-35181	Plate, Reflector, Rear Reflecter	2	80005-
11		14X-98-51131	Decal, Machine Model, LHS,LHS	1	80005-
12		14X-98-51231	Decal, Machine Model, RHS,RHS	1	80005-
13		14X-98-11250	Plate, Work Equipment	1	80005-
14		14X-98-51211	Oil Chart	1	80005-
15		09653-05001	Decal, Warning, High Temperature	1	80005-
16		09668-05001	Decal, Warning, Hot Water	1	80005-
17		09654-35001	Decal, Warning, Before Leaving Seat	1	80005-
18		09657-05003	Decal, Warning, Track Adjustment	2	80005-
19		09651-05001	Plate, Before Operating	1	80005-
20		09802-15000	Plate	1	80005-
21		09812-15000	Decal, Danger, Keep a Safe Distance	2	80005-
22		09667-05001	Plate, Caution, Rotating Object	2	80005-
23		09963-05001	Tag, Danger, Do Not Operate	1	80005-
24		09808-05000	Decal, Warning, Battery Cables	1	80005-
25		09664-20011	Decal, Danger, Battery	2	80005-
26		09659-55000	Decal, Warning, Explosive Hazard	1	80005-
27		14X-98-35320	Plate, Air Cleaner Replace	1	80005-
28		6217-71-6490	Plate, Caution, Fuel Filter, Fuel Filter Replace	1	80005-
29		14X-98-35150	Plate, Pre Filter Caution	1	80005-
30		09652-51221	Decal, Caution, Fuel Tank Drain	1	80005-
31		09649-05012	Plate	1	80005-
32		09842-A0481	Plate, Caution, No Jump Start	1	80005-
33		09642-15000	Plate	1	80005-

https://truckmanualshub.com/

FIG. U0100-015001 Marks And Plates, Spanish, EU Regulation Guard Level 2

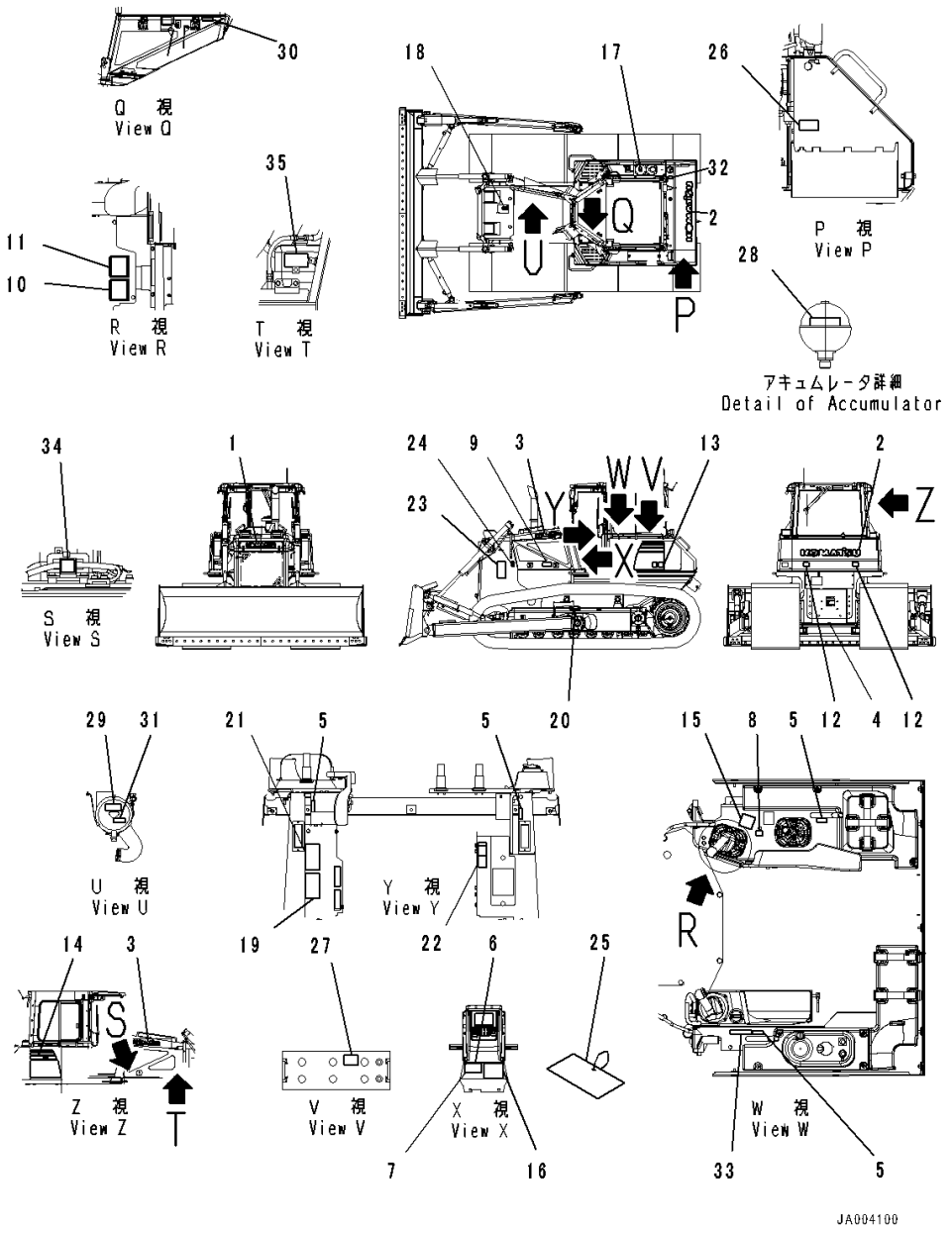

Index	Code	Part Number	Description	Qty	Serial Number
1		09690-F0560	Plate, Mark,Front	1	80005-
2		09690-P1120	Plate, Mark,Rear	1	80005-
3		09690-F0500	Decal, Komatsu Logo,Side	2	80005-
4		09690-M0063	Mark, Komatsu Logo, Anti-Restamp	1	80005-
5		14X-98-11170	Plate, Operating, Lock	4	80005-
6	C2	09602-00001	Plate, Name (Limited Supply)	1	80005-
7		04418-13060	Screw	4	80005-
8		17A-98-11180	Plate, Horn	1	80005-
9		20Y-00-41530	Plate, Symbol, Ecot3	1	80005-
10		09696-50078	Plate, EU Ope Ear Noise	1	80005-
11		09696-40108	Plate	1	80005-
12		14X-98-35181	Plate, Reflector, Rear Reflecter	2	80005-
13		14X-98-51131	Decal, Machine Model, LHS,LHS	1	80005-
14		14X-98-51231	Decal, Machine Model, RHS,RHS	1	80005-
15		14X-98-11250	Plate, Work Equipment	1	80005-
16		14X-98-51211	Oil Chart	1	80005-
17		09653-A0481	Plate, Warning, High Temperature, Operating Oil Tank	1	80005-
18		09653-A0481	Plate, Warning, High Temperature, Radiator	1	80005-
19		09654-B0641	Plate, Warning, Before Leaving Seat	1	80005-
20		09657-A0881	Plate	2	80005-
21		09651-A0641	Plate, Warning, Read Manual Before Operating	1	80005-
22		09802-11000	Plate, Safety Confirm Of Rear	1	80005-
23		09806-B1683	Plate	2	80005-
24		09667-A0481	Plate, Caution, Rotating Object, While Engine Is Running. Don't Open Cover	2	80005-
25		09963-A1640	Tag, Danger, Do Not Operate	1	80005-
26		09808-A0881	Plate, Warning, Battery Cables	1	80005-
27		09664-60000	Decal, Danger, Battery	2	80005-
28		09659-A057B	Plate, Warning, Explosive Hazard	1	80005-
29		21W-98-41940	Plate, Air Cleaner Replace	1	80005-
30		6217-71-6510	Plate, Fuel Filter Replace	1	80005-
31		14X-98-35130	Plate, Pre Filter Caution	1	80005-
32		09669-0000E	Plate, Symbol, Fuel Filler	1	80005-
33		09649-01012	Plate, Engine Stop, Engine Stop	1	80005-
34		09842-A0481	Plate, Caution, No Jump Start	1	80005-
35		09642-11000	Plate, Service Instruction, Engine Coolant AF-NAC, Specify Coolant	1	80005-

https://truckmanualshub.com/

FIG. U0100-016001 Marks And Plates, French, EU Regulation Guard Level 2

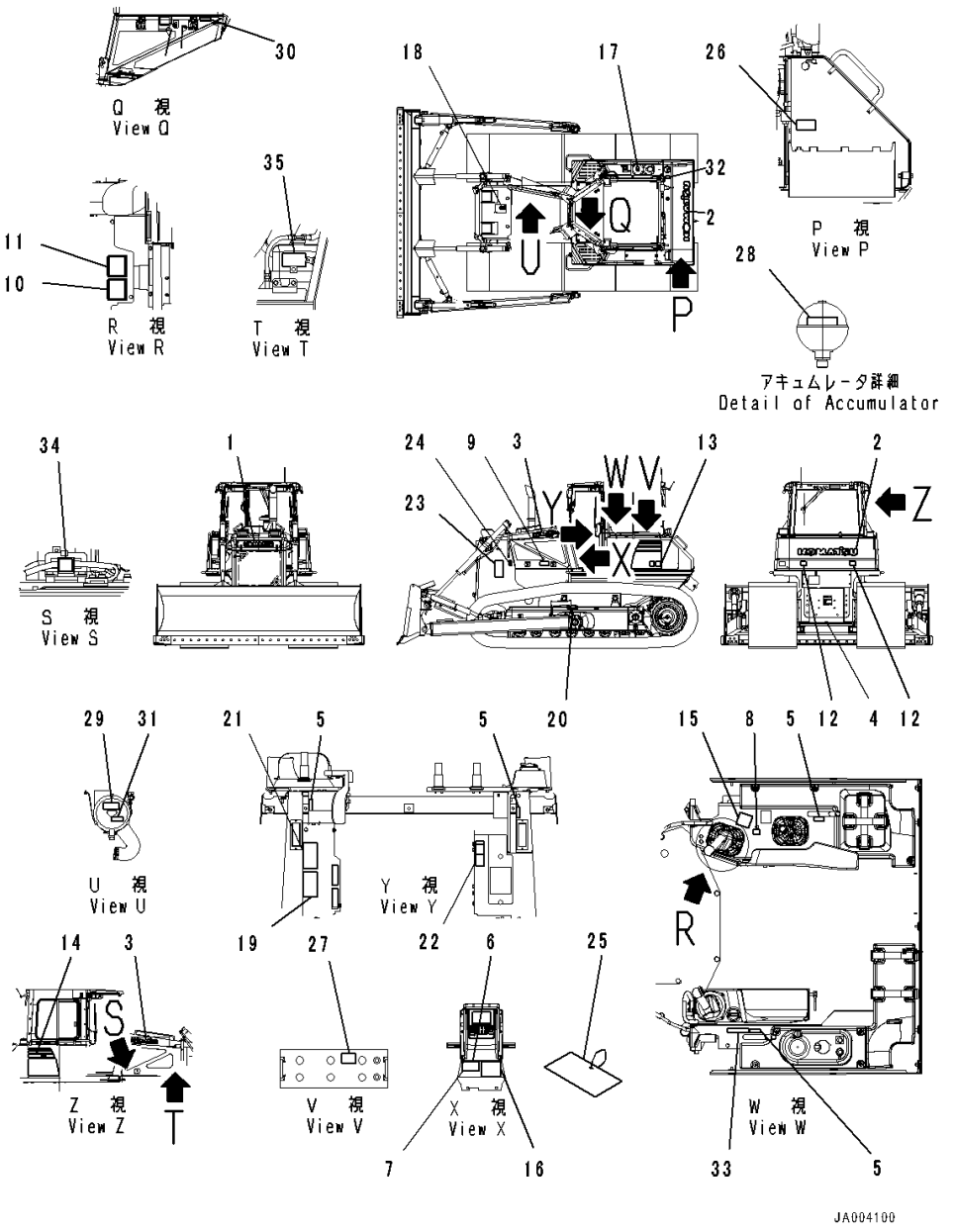

Index	Code	Part Number	Description	Qty	Serial Number
1		09690-F0560	Plate, Mark,Front	1	80005-
2		09690-P1120	Plate, Mark,Rear	1	80005-
3		09690-F0500	Decal, Komatsu Logo,Side	2	80005-
4		09690-M0063	Mark, Komatsu Logo, Anti-Restamp	1	80005-
5		14X-98-11170	Plate, Operating, Lock	4	80005-
6	C2	09602-00001	Plate, Name (Limited Supply)	1	80005-
7		04418-13060	Screw	4	80005-
8		17A-98-11180	Plate, Horn	1	80005-
9		20Y-00-41530	Plate, Symbol, Ecot3	1	80005-
10		09696-50078	Plate, EU Ope Ear Noise	1	80005-
11		09696-40108	Plate	1	80005-
12		14X-98-35181	Plate, Reflector, Rear Reflecter	2	80005-
13		14X-98-51131	Decal, Machine Model, LHS,LHS	1	80005-
14		14X-98-51231	Decal, Machine Model, RHS,RHS	1	80005-
15		14X-98-11250	Plate, Work Equipment	1	80005-
16		14X-98-51211	Oil Chart	1	80005-
17		09653-A0481	Plate, Warning, High Temperature, Operating Oil Tank	1	80005-
18		09653-A0481	Plate, Warning, High Temperature, Radiator	1	80005-
19		09654-B0641	Plate, Warning, Before Leaving Seat	1	80005-
20		09657-A0881	Plate	2	80005-
21		09651-A0641	Plate, Warning, Read Manual Before Operating	1	80005-
22		09802-15000	Plate	1	80005-
23		09806-B1683	Plate	2	80005-
24		09667-A0481	Plate, Caution, Rotating Object, While Engine Is Running. Don't Open Cover	2	80005-
25		09963-A1640	Tag, Danger, Do Not Operate	1	80005-
26		09808-A0881	Plate, Warning, Battery Cables	1	80005-
27		09664-60000	Decal, Danger, Battery	2	80005-
28		09659-A057B	Plate, Warning, Explosive Hazard	1	80005-
29		14X-98-35320	Plate, Air Cleaner Replace	1	80005-
30		6217-71-6490	Plate, Caution, Fuel Filter, Fuel Filter Replace	1	80005-
31		14X-98-35150	Plate, Pre Filter Caution	1	80005-
32		09669-0000E	Plate, Symbol, Fuel Filler	1	80005-
33		09649-05012	Plate	1	80005-
34		09842-A0481	Plate, Caution, No Jump Start	1	80005-
35		09642-15000	Plate	1	80005-

https://truckmanualshub.com/

FIG. U0100-017001 Marks And Plates, Germany, EU Regulation Guard Level 2

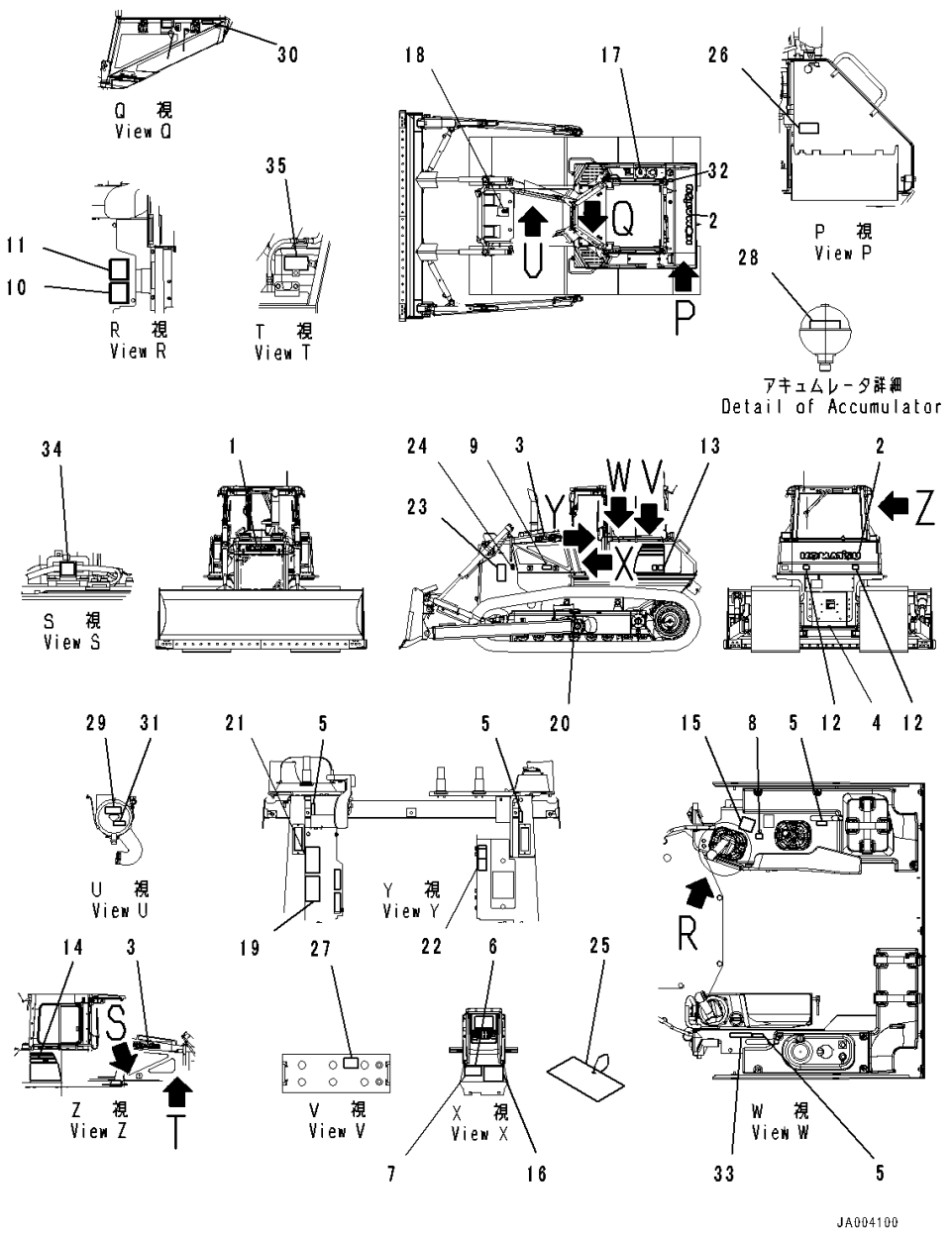

Index	Code	Part Number	Description	Qty	Serial Number
1		09690-F0560	Plate, Mark,Front	1	80005-
2		09690-P1120	Plate, Mark,Rear	1	80005-
3		09690-F0500	Decal, Komatsu Logo,Side	2	80005-
4		09690-M0063	Mark, Komatsu Logo, Anti-Restamp	1	80005-
5		14X-98-11170	Plate, Operating, Lock	4	80005-
6	C2	09602-00001	Plate, Name (Limited Supply)	1	80005-
7		04418-13060	Screw	4	80005-
8		17A-98-11180	Plate, Horn	1	80005-
9		20Y-00-41530	Plate, Symbol, Ecot3	1	80005-
10		09696-50078	Plate, EU Ope Ear Noise	1	80005-
11		09696-40108	Plate	1	80005-
12		14X-98-35181	Plate, Reflector, Rear Reflecter	2	80005-
13		14X-98-51131	Decal, Machine Model, LHS,LHS	1	80005-
14		14X-98-51231	Decal, Machine Model, RHS,RHS	1	80005-
15		14X-98-11250	Plate, Work Equipment	1	80005-
16		14X-98-51211	Oil Chart	1	80005-
17		09653-A0481	Plate, Warning, High Temperature, Operating Oil Tank	1	80005-
18		09653-A0481	Plate, Warning, High Temperature, Radiator	1	80005-
19		09654-B0641	Plate, Warning, Before Leaving Seat	1	80005-
20		09657-A0881	Plate	2	80005-
21		09651-A0641	Plate, Warning, Read Manual Before Operating	1	80005-
22		09802-12000	Plate	1	80005-
23		09806-B1683	Plate	2	80005-
24		09667-A0481	Plate, Caution, Rotating Object, While Engine Is Running. Don't Open Replace ..	2	80005-
25		09963-A1640	Tag, Danger, Do Not Operate	1	80005-
26		09808-A0881	Plate, Warning, Battery Cables	1	80005-
27		09664-60000	Decal, Danger, Battery	2	80005-
28		09659-A057B	Plate, Warning, Explosive Hazard	1	80005-
29		14X-98-35310	Plate, Air Cleaner Replace	1	80005-
30		6217-71-6480	Plate, Fuel Filter Replace	1	80005-
31		14X-98-35140	Plate, Pre Filter Caution	1	80005-
32		09669-0000E	Plate, Symbol, Fuel Filler	1	80005-
33		09649-02012	Plate	1	80005-
34		09842-A0481	Plate, Caution, No Jump Start	1	80005-
35		09642-12000	Plate, Coolant	1	80005-

https://truckmanualshub.com/

FIG. U0100-018001 Marks And Plates, Italian, EU Regulation Guard Level 2

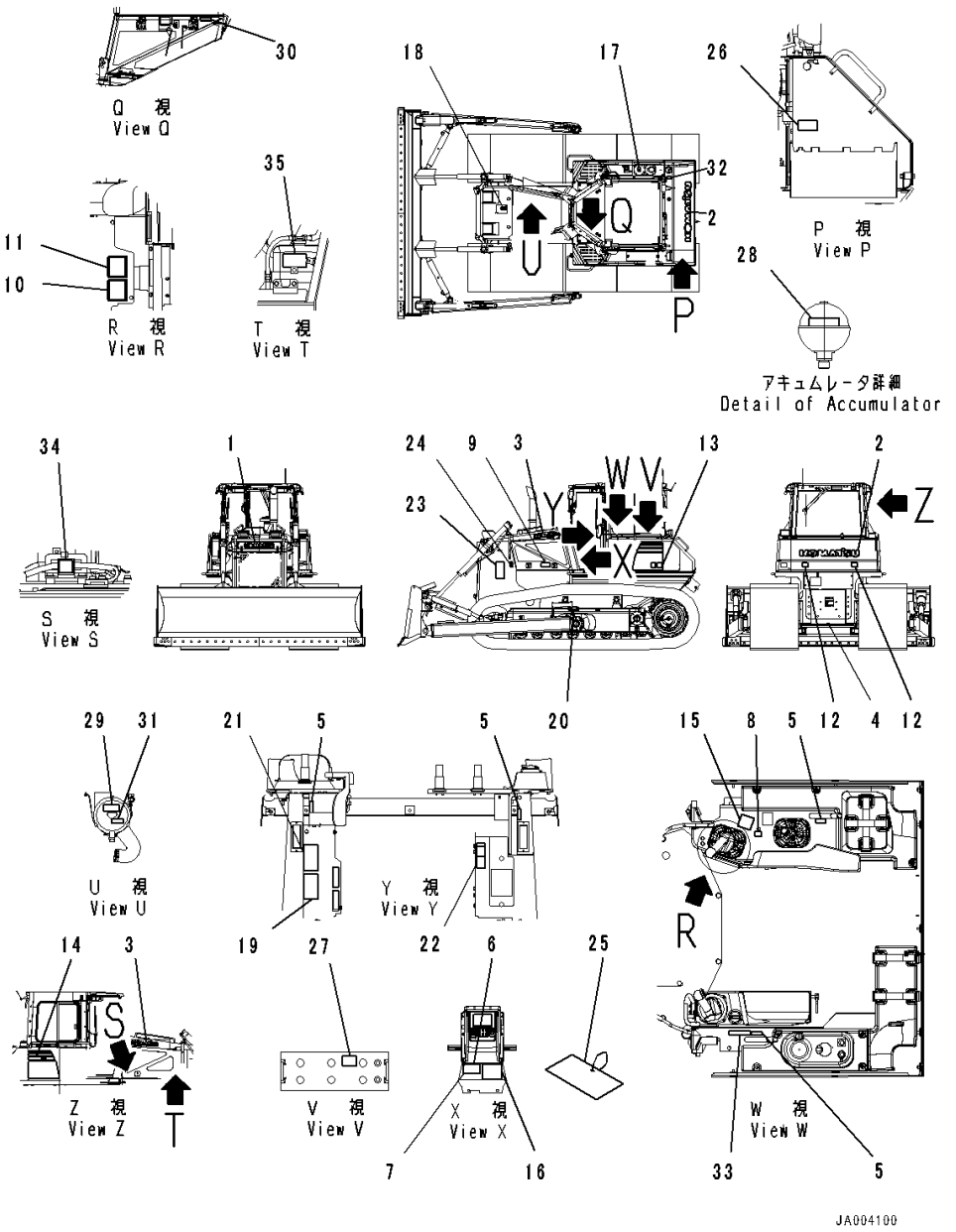

Index	Code	Part Number	Description	Qty	Serial Number
1		09690-F0560	Plate, Mark,Front	1	80005-
2		09690-P1120	Plate, Mark,Rear	1	80005-
3		09690-F0500	Decal, Komatsu Logo,Side	2	80005-
4		09690-M0063	Mark, Komatsu Logo, Anti-Restamp	1	80005-
5		14X-98-11170	Plate, Operating, Lock	4	80005-
6	C2	09602-00001	Plate, Name (Limited Supply)	1	80005-
7		04418-13060	Screw	4	80005-
8		17A-98-11180	Plate, Horn	1	80005-
9		20Y-00-41530	Plate, Symbol, Ecot3	1	80005-
10		09696-50078	Plate, EU Ope Ear Noise	1	80005-
11		09696-40108	Plate	1	80005-
12		14X-98-35181	Plate, Reflector, Rear Reflecter	2	80005-
13		14X-98-51131	Decal, Machine Model, LHS,LHS	1	80005-
14		14X-98-51231	Decal, Machine Model, RHS,RHS	1	80005-
15		14X-98-11250	Plate, Work Equipment	1	80005-
16		14X-98-51211	Oil Chart	1	80005-
17		09653-A0481	Plate, Warning, High Temperature, Operating Oil Tank	1	80005-
18		09653-A0481	Plate, Warning, High Temperature, Radiator	1	80005-
19		09654-B0641	Plate, Warning, Before Leaving Seat	1	80005-
20		09657-A0881	Plate	2	80005-
21		09651-A0641	Plate, Warning, Read Manual Before Operating	1	80005-
22		09802-16000	Plate	1	80005-
23		09806-B1683	Plate	2	80005-
24		09667-A0481	Plate, Caution, Rotating Object, While Engine Is Running. Don't Open Cover	2	80005-
25		09963-A1640	Tag, Danger, Do Not Operate	1	80005-
26		09808-A0881	Plate, Warning, Battery Cables	1	80005-
27		09664-60000	Decal, Danger, Battery	2	80005-
28		09659-A057B	Plate, Warning, Explosive Hazard	1	80005-
29		14X-98-35420	Plate, Air Cleaner Replace	1	80005-
30		6217-71-6550	Plate	1	80005-
31		14X-98-35250	Plate, Pre Filter Replace	1	80005-
32		09669-0000E	Plate, Symbol, Fuel Filler	1	80005-
33		09649-06012	Plate, Engine Stop	1	80005-
34		09842-A0481	Plate, Caution, No Jump Start	1	80005-
35		09642-16000	Plate, Specify Coolant	1	80005-

https://truckmanualshub.com/

FIG. U0100-019001 Marks And Plates, Portuguese, EU Regulation Guard Level 2

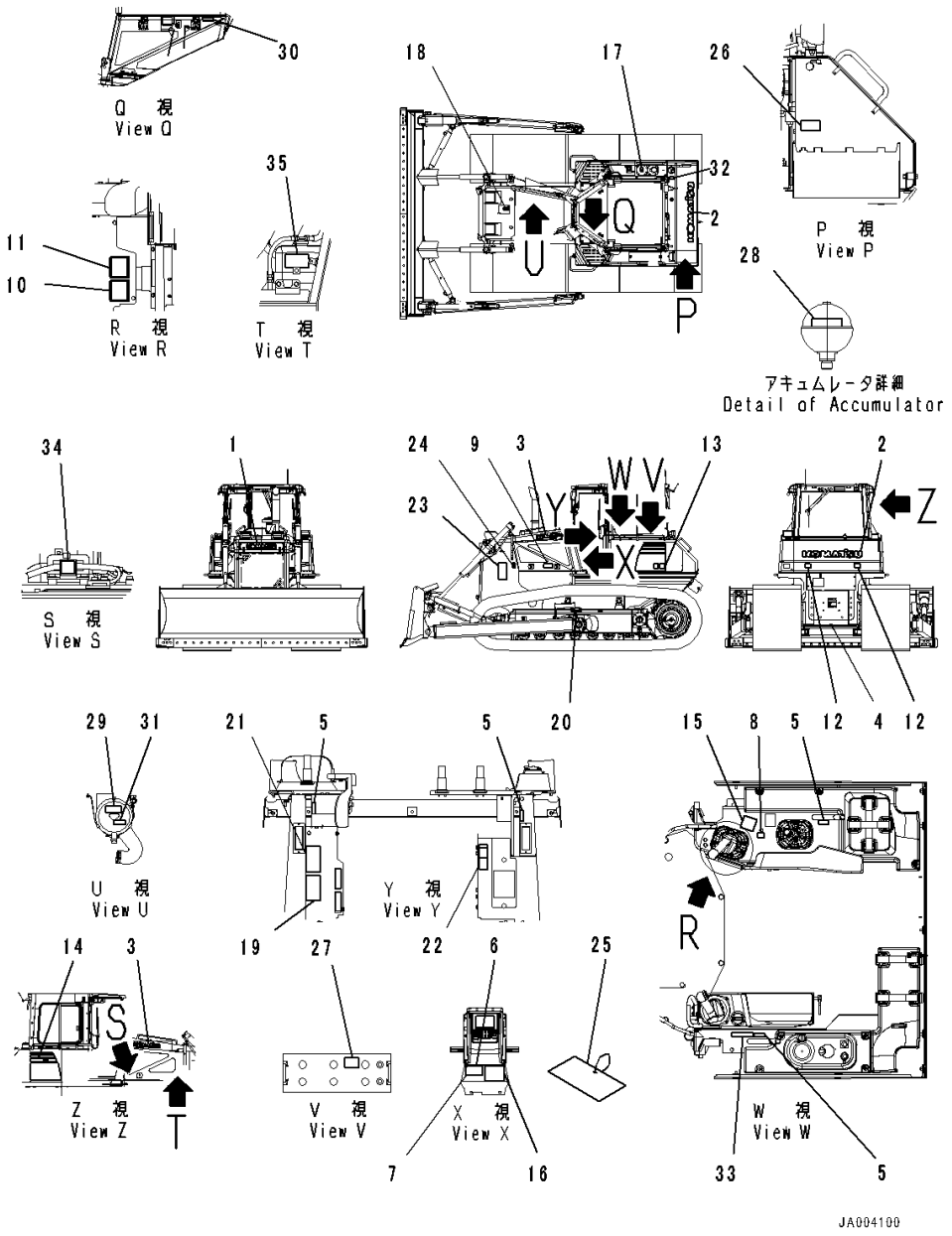

Index	Code	Part Number	Description	Qty	Serial Number
1		09690-F0560	Plate, Mark,Front	1	80005-
2		09690-P1120	Plate, Mark,Rear	1	80005-
3		09690-F0500	Decal, Komatsu Logo,Side	2	80005-
4		09690-M0063	Mark, Komatsu Logo, Anti-Restamp	1	80005-
5		14X-98-11170	Plate, Operating, Lock	4	80005-
6	C2	09602-00001	Plate, Name (Limited Supply)	1	80005-
7		04418-13060	Screw	4	80005-
8		17A-98-11180	Plate, Horn	1	80005-
9		20Y-00-41530	Plate, Symbol, Ecot3	1	80005-
10		09696-50078	Plate, EU Ope Ear Noise	1	80005-
11		09696-40108	Plate	1	80005-
12		14X-98-35181	Plate, Reflector, Rear Reflecter	2	80005-
13		14X-98-51131	Decal, Machine Model, LHS,LHS	1	80005-
14		14X-98-51231	Decal, Machine Model, RHS,RHS	1	80005-
15		14X-98-11250	Plate, Work Equipment	1	80005-
16		14X-98-51211	Oil Chart	1	80005-
17		09653-A0481	Plate, Warning, High Temperature, Operating Oil Tank	1	80005-
18		09653-A0481	Plate, Warning, High Temperature, Radiator	1	80005-
19		09654-B0641	Plate, Warning, Before Leaving Seat	1	80005-
20		09657-A0881	Plate	2	80005-
21		09651-A0641	Plate, Warning, Read Manual Before Operating	1	80005-
22		09802-17000	Plate, Safety Confirm Of Rear	1	80005-
23		09806-B1683	Plate	2	80005-
24		09667-A0481	Plate, Caution, Rotating Object, While Engine Is Running. Don't Open Cover	2	80005-
25		09963-A1640	Tag, Danger, Do Not Operate	1	80005-
26		09808-A0881	Plate, Warning, Battery Cables	1	80005-
27		09664-60000	Decal, Danger, Battery	2	80005-
28		09659-A057B	Plate, Warning, Explosive Hazard	1	80005-
29		14X-98-35330	Plate, Air Cleaner Replace	1	80005-
30		6217-71-6610	Plate, Fuel Filter Replace	1	80005-
31		14X-98-35160	Plate, Pre Filter Caution	1	80005-
32		09669-0000E	Plate, Symbol, Fuel Filler	1	80005-
33		09649-07012	Plate, Service Instruction	1	80005-
34		09842-A0481	Plate, Caution, No Jump Start	1	80005-
35		09642-17000	Plate, Specify Coolant	1	80005-

https://truckmanualshub.com/

FIG. U0100-021001 Marks And Plates, English, With Power Tilt Pitch Dozer

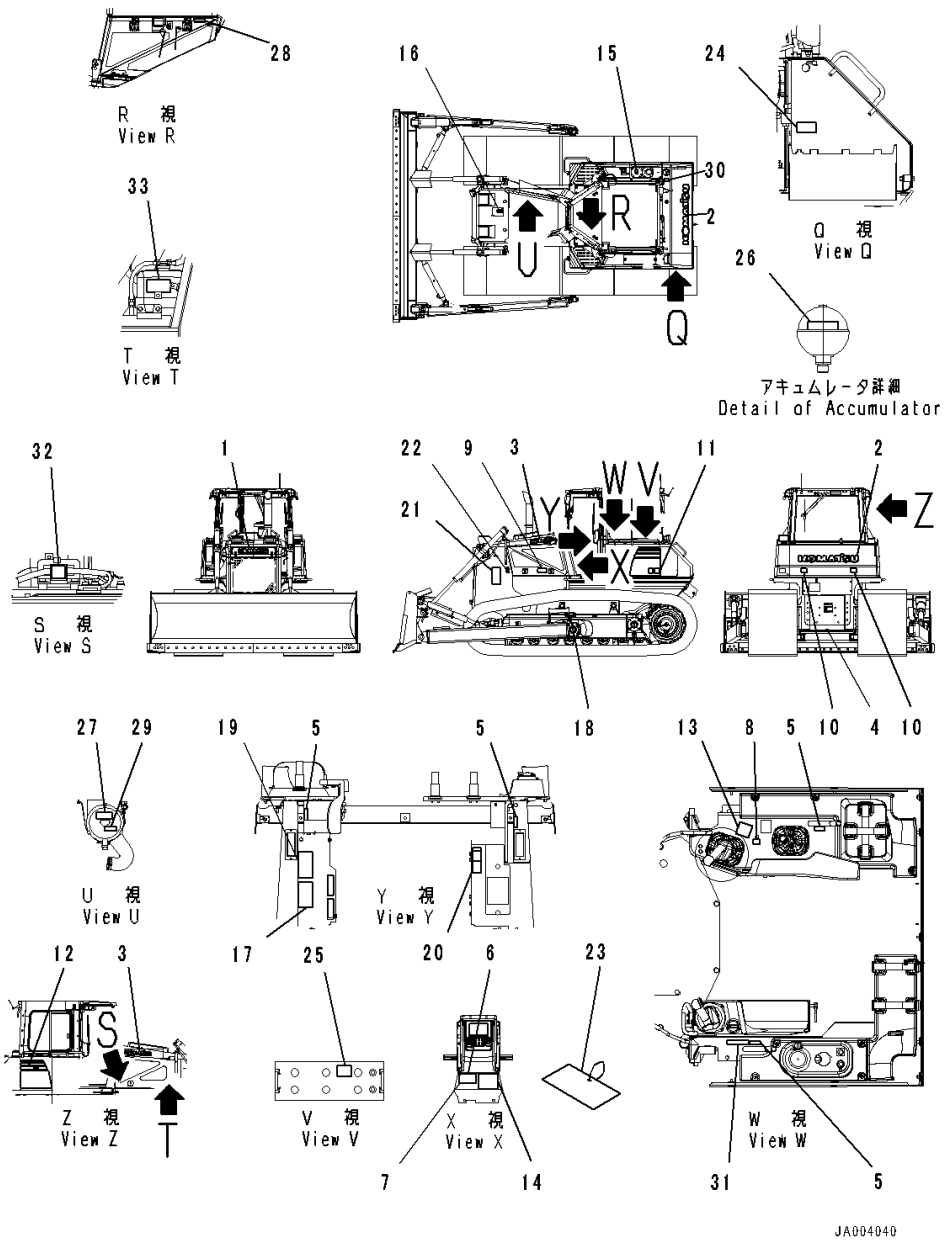

Index	Code	Part Number	Description	Qty	Serial Number
1		09690-F0560	Plate, Mark,Front	1	80005-
2		09690-P1120	Plate, Mark,Rear	1	80005-
3		09690-F0500	Decal, Komatsu Logo,Side	2	80005-
4		09690-M0063	Mark, Komatsu Logo, Anti-Restamp	1	80005-
5		14X-98-11170	Plate, Operating, Lock	4	80005-
6	C2	09602-10001	Plate, Name (Limited Supply)	1	80005-
7		04418-13060	Screw	4	80005-
8		17A-98-11180	Plate, Horn	1	80005-
9		20Y-00-41530	Plate, Symbol, Ecot3	1	80005-
10		14X-98-35181	Plate, Reflector, Rear Reflecter	2	80005-
11		14X-98-51131	Decal, Machine Model, LHS,LHS	1	80005-
12		14X-98-51231	Decal, Machine Model, RHS,RHS	1	80005-
13		14X-98-11270	Plate, Work Equipment	1	80005-
14		14X-98-51211	Oil Chart	1	80005-
15		09653-A0481	Plate, Warning, High Temperature, Operating Oil Tank	1	80005-
16		09653-A0481	Plate, Warning, High Temperature, Radiator	1	80005-
17		09654-B0641	Plate, Warning, Before Leaving Seat	1	80005-
18		09657-A0881	Plate	2	80005-
19		09651-A0641	Plate, Warning, Read Manual Before Operating	1	80005-
20		09802-13000	Plate, Warning, Back-up, Safety Confirm Of Rear	1	80005-
21		09806-B1683	Plate	2	80005-
22		09667-A0481	Plate, Caution, Rotating Object, While Engine Is Running. Don't Open Cover	2	80005-
23		09963-A1640	Tag, Danger, Do Not Operate	1	80005-
24		09808-A0881	Plate, Warning, Battery Cables	1	80005-
25		09664-70001	Decal, Danger, Battery	2	80005-
26		09659-A057B	Plate, Warning, Explosive Hazard	1	80005-
27		21W-98-41720	Plate, Air Cleaner, Air Cleaner Replace	1	80005-
28		6217-71-6470	Plate, Fuel Filter Replace	1	80005-
29		14X-98-35120	Plate, Pre Filter Caution	1	80005-
30		09669-0000E	Plate, Symbol, Fuel Filler	1	80005-
31		09649-03012	Plate, Engine Stop	1	80005-
32		09842-A0481	Plate, Caution, No Jump Start	1	80005-
33		09642-13000	Plate, Service Instruction, Engine Coolant AF-NAC	1	80005-

https://truckmanualshub.com/

FIG. U0100-022001 Marks And Plates, English, Text Type, With Power Tilt Pitch Dozer, For North America

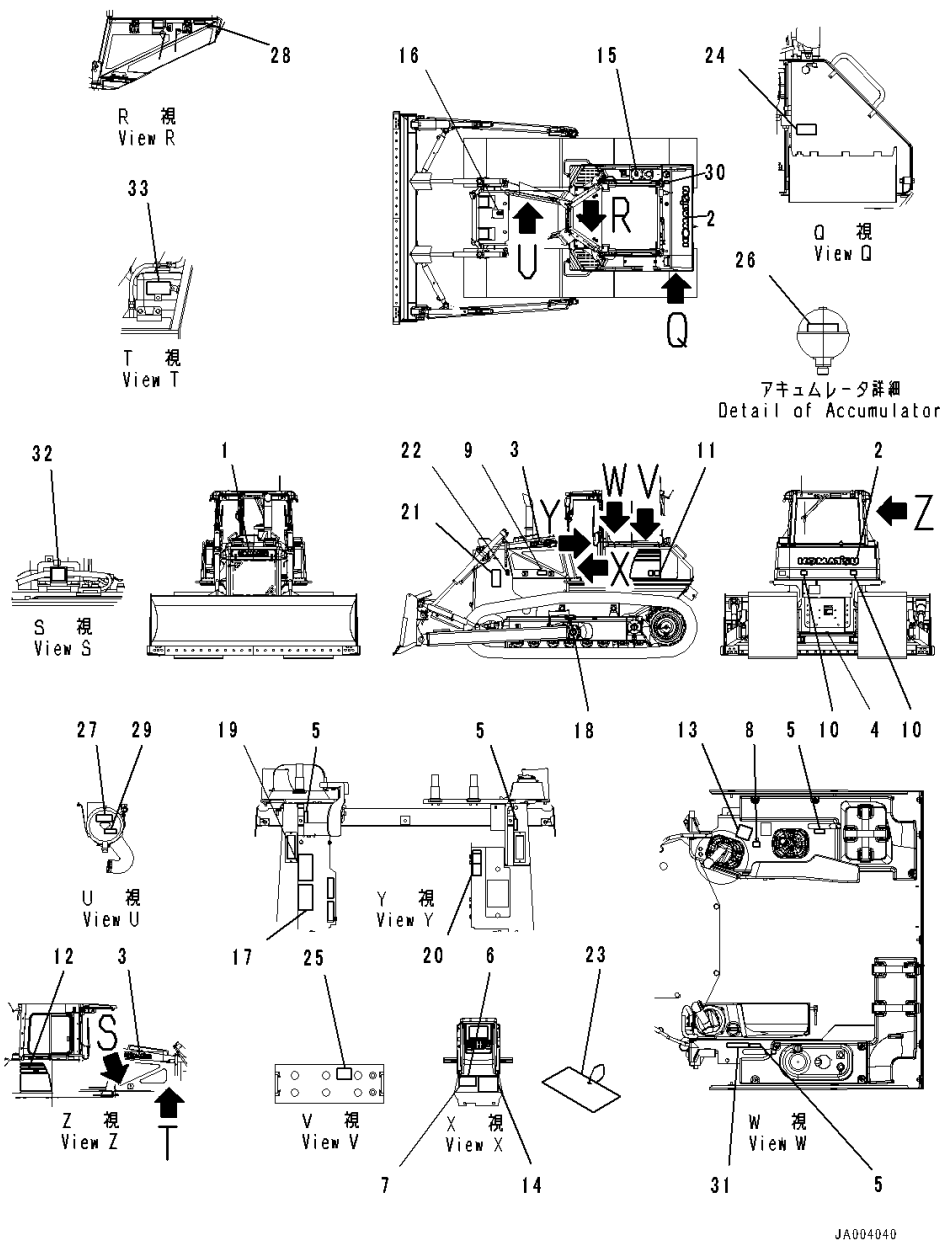

Index	Code	Part Number	Description	Qty	Serial Number
1		09690-F0560	Plate, Mark,Front	1	80005-
2		09690-P1120	Plate, Mark,Rear	1	80005-
3		09690-F0500	Decal, Komatsu Logo,Side	2	80005-
4		09690-M0063	Mark, Komatsu Logo, Anti-Restamp	1	80005-
5		14X-98-11170	Plate, Operating, Lock	4	80005-
6	C2	09602-10001	Plate, Name (Limited Supply)	1	80005-
7		04418-13060	Screw	4	80005-
8		17A-98-11180	Plate, Horn	1	80005-
9		20Y-00-41530	Plate, Symbol, Ecot3	1	80005-
10		14X-98-35181	Plate, Reflector, Rear Reflecter	2	80005-
11		14X-98-51131	Decal, Machine Model, LHS,LHS	1	80005-
12		14X-98-51231	Decal, Machine Model, RHS,RHS	1	80005-
13		14X-98-11270	Plate, Work Equipment	1	80005-
14		14X-98-51211	Oil Chart	1	80005-
15		09653-03001	Plate, Warning, High Temperature, Operating Oil Tank	1	80005-
16		09668-03001	Plate, Warning, Hot Water, Radiator	1	80005-
17		09654-33001	Plate, Warning, Before Leaving Seat	1	80005-
18		09657-03003	Plate, Warning, Track Adjustment	2	80005-
19		09651-03001	Plate, Warning, Read Manual Before Operating	1	80005-
20		09802-13000	Plate, Warning, Back-up, Safety Confirm Of Rear	1	80005-
21		09812-13000	Plate, Danger, Keep a Safe Distance, Danger Keep Away	2	80005-
22		09667-03001	Plate, Caution, Rotating Object, While Engine Is Running. Don't Open Cover	2	80005-
23		09963-03001	Tag, Danger, Do Not Operate	1	80005-
24		09808-03000	Plate, Warning, Battery Cables	1	80005-
25		09664-30011	Plate, Warning, Battery Cables	2	80005-
26		09659-53000	Plate, Warning, Explosive Hazard	1	80005-
27		21W-98-41720	Plate, Air Cleaner, Air Cleaner Replace	1	80005-
28		6217-71-6470	Plate, Fuel Filter Replace	1	80005-
29		14X-98-35120	Plate, Pre Filter Caution	1	80005-
30		09652-31221	Plate, Caution, Diesel Fuel	1	80005-
31		09649-03012	Plate, Engine Stop	1	80005-
32		09842-A0481	Plate, Caution, No Jump Start	1	80005-
33		09642-13000	Plate, Service Instruction, Engine Coolant AF-NAC	1	80005-

https://truckmanualshub.com/

FIG. U0100-023001 Marks And Plates, English, Text Type, With Power Tilt Pitch Dozer

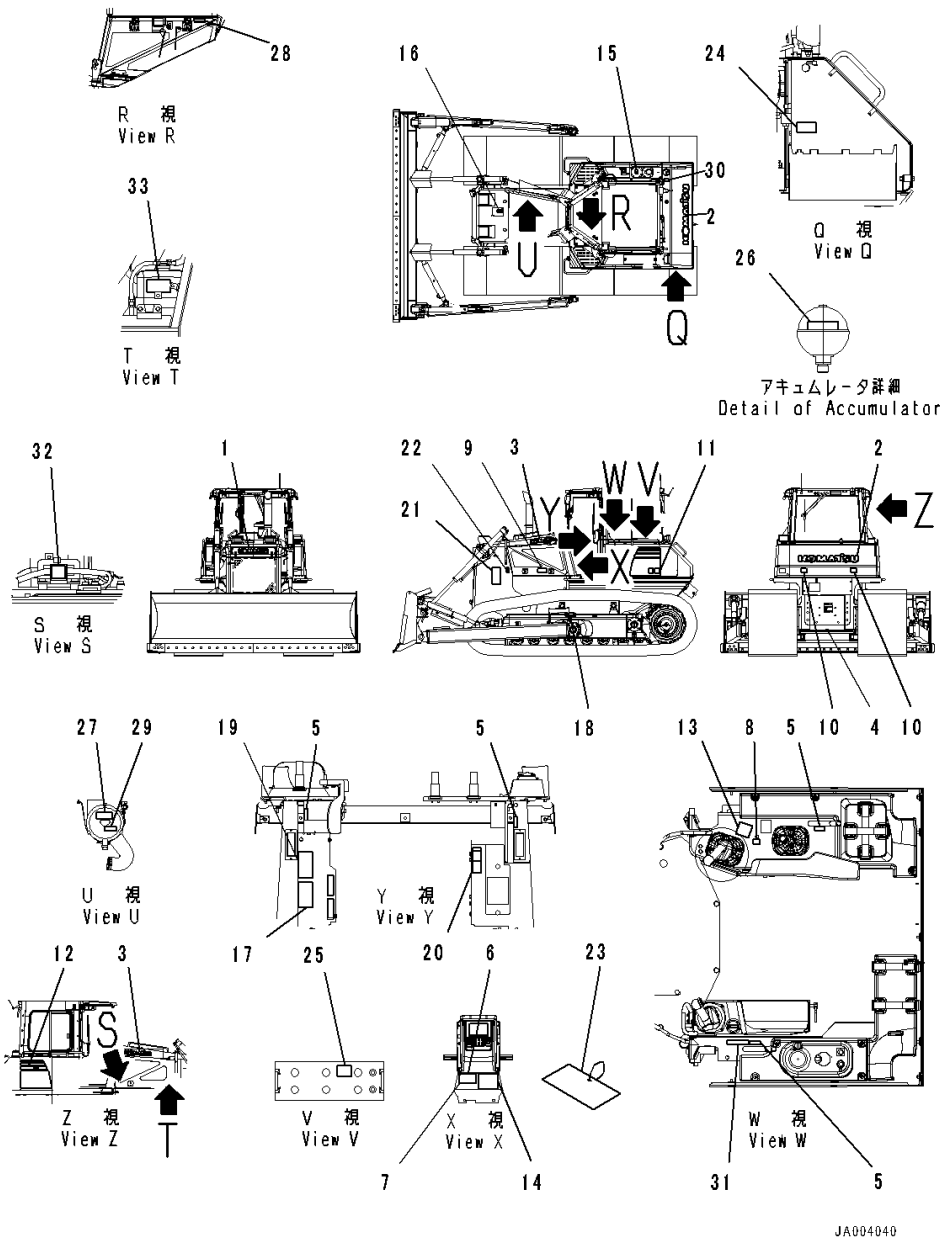

Index	Code	Part Number	Description	Qty	Serial Number
1		09690-F0560	Plate, Mark,Front	1	80005-
2		09690-P1120	Plate, Mark,Rear	1	80005-
3		09690-F0500	Decal, Komatsu Logo,Side	2	80005-
4		09690-M0063	Mark, Komatsu Logo, Anti-Restamp	1	80005-
5		14X-98-11170	Plate, Operating, Lock	4	80005-
6	C2	09602-10001	Plate, Name (Limited Supply)	1	80005-
7		04418-13060	Screw	4	80005-
8		17A-98-11180	Plate, Horn	1	80005-
9		20Y-00-41530	Plate, Symbol, Ecot3	1	80005-
10		14X-98-35181	Plate, Reflector, Rear Reflecter	2	80005-
11		14X-98-51131	Decal, Machine Model, LHS,LHS	1	80005-
12		14X-98-51231	Decal, Machine Model, RHS,RHS	1	80005-
13		14X-98-11270	Plate, Work Equipment	1	80005-
14		14X-98-51211	Oil Chart	1	80005-
15		09653-03001	Plate, Warning, High Temperature, Operating Oil Tank	1	80005-
16		09668-03001	Plate, Warning, Hot Water, Radiator	1	80005-
17		09654-33001	Plate, Warning, Before Leaving Seat	1	80005-
18		09657-03003	Plate, Warning, Track Adjustment	2	80005-
19		09651-03001	Plate, Warning, Read Manual Before Operating	1	80005-
20		09802-13000	Plate, Warning, Back-up, Safety Confirm Of Rear	1	80005-
21		09812-13000	Plate, Danger, Keep a Safe Distance, Danger Keep Away	2	80005-
22		09667-03001	Plate, Caution, Rotating Object, While Engine Is Running. Don't Open Cover	2	80005-
23		09963-03001	Tag, Danger, Do Not Operate	1	80005-
24		09808-03000	Plate, Warning, Battery Cables	1	80005-
25		09664-40011	Decal, Danger, Battery	2	80005-
26		09659-53000	Plate, Warning, Explosive Hazard	1	80005-
27		21W-98-41720	Plate, Air Cleaner, Air Cleaner Replace	1	80005-
28		6217-71-6470	Plate, Fuel Filter Replace	1	80005-
29		14X-98-35120	Plate, Pre Filter Caution	1	80005-
30		09652-31221	Plate, Caution, Diesel Fuel	1	80005-
31		09649-03012	Plate, Engine Stop	1	80005-
32		09842-A0481	Plate, Caution, No Jump Start	1	80005-
33		09642-13000	Plate, Service Instruction, Engine Coolant AF-NAC	1	80005-

https://truckmanualshub.com/

FIG. U0100-024001 Marks And Plates, Spanish, Text Type, With Power Tilt Pitch Dozer

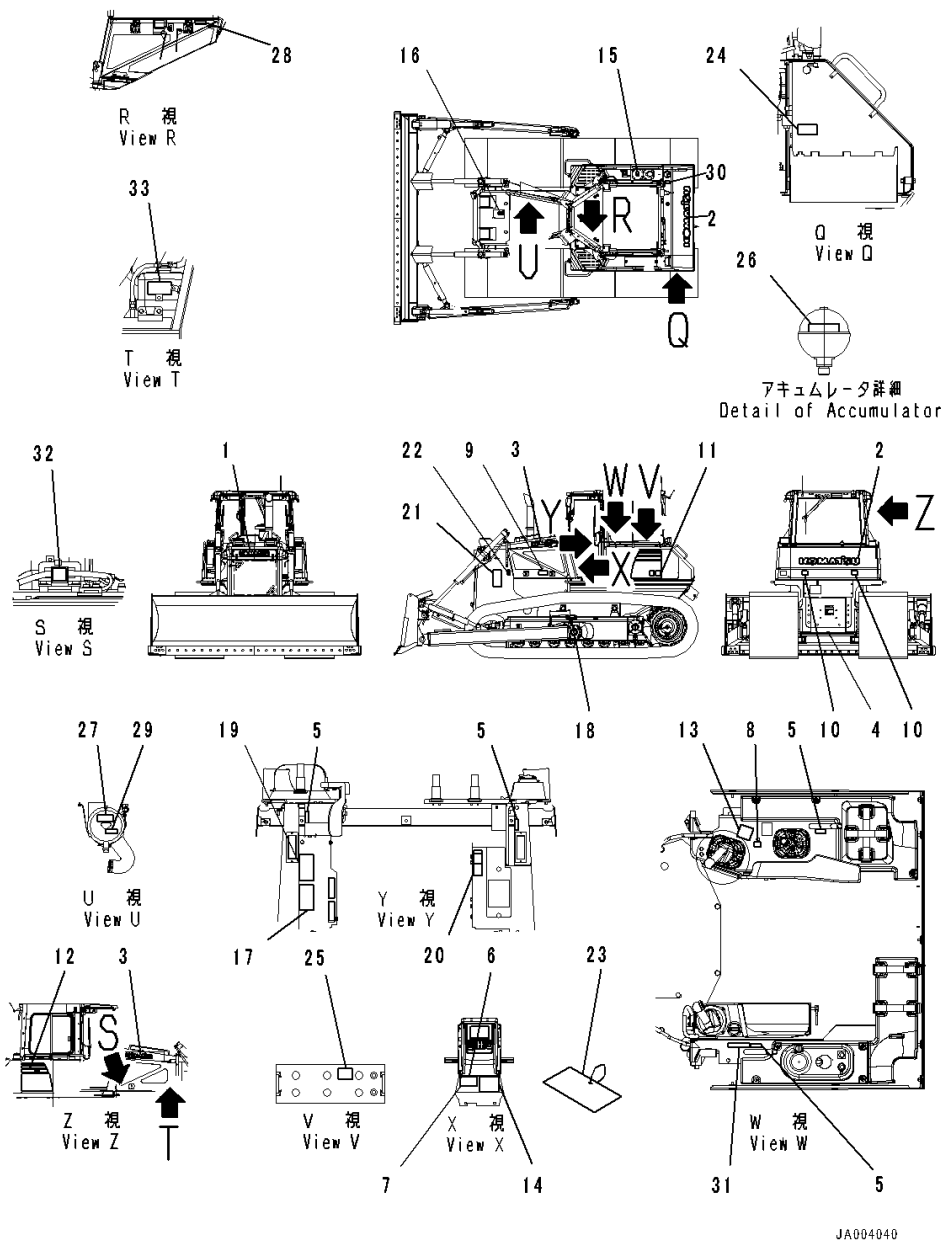

Index	Code	Part Number	Description	Qty	Serial Number
1		09690-F0560	Plate, Mark,Front	1	80005-
2		09690-P1120	Plate, Mark,Rear	1	80005-
3		09690-F0500	Decal, Komatsu Logo,Side	2	80005-
4		09690-M0063	Mark, Komatsu Logo, Anti-Restamp	1	80005-
5		14X-98-11170	Plate, Operating, Lock	4	80005-
6	C2	09602-10001	Plate, Name (Limited Supply)	1	80005-
7		04418-13060	Screw	4	80005-
8		17A-98-11180	Plate, Horn	1	80005-
9		20Y-00-41530	Plate, Symbol, Ecot3	1	80005-
10		14X-98-35181	Plate, Reflector, Rear Reflecter	2	80005-
11		14X-98-51131	Decal, Machine Model, LHS,LHS	1	80005-
12		14X-98-51231	Decal, Machine Model, RHS,RHS	1	80005-
13		14X-98-11270	Plate, Work Equipment	1	80005-
14		14X-98-51211	Oil Chart	1	80005-
15		09653-01001	Plate, Warning, High Temperature, Operating Oil Tank	1	80005-
16		09668-01001	Plate, Warning, Hot Water, Radiator	1	80005-
17		09654-31001	Plate, After Operating	1	80005-
18		09657-01004	Plate, Adjustment Of Track Tension	2	80005-
19		09651-01001	Plate, Warning, Read Manual Before Operating, Before Operating	1	80005-
20		09802-11000	Plate, Safety Confirm Of Rear	1	80005-
21		09812-11000	Plate, Danger, Keep a Safe Distance, Danger Keep Away	2	80005-
22		09667-01001	Plate, Caution, Rotating Object, While Engine Is Running. Don't Open Cover	2	80005-
23		09963-01001	Tag, Danger, Do Not Operate	1	80005-
24		09808-01000	Plate, Warning, Battery Cables	1	80005-
25		09664-40111	Decal, Danger, Battery	2	80005-
26		09659-51000	Plate, Warning, Explosive Hazard	1	80005-
27		21W-98-41940	Plate, Air Cleaner Replace	1	80005-
28		6217-71-6510	Plate, Fuel Filter Replace	1	80005-
29		14X-98-35130	Plate, Pre Filter Caution	1	80005-
30		09669-0000E	Plate, Symbol, Fuel Filler	1	80005-
31		09649-01012	Plate, Engine Stop, Engine Stop	1	80005-
32		09842-A0481	Plate, Caution, No Jump Start	1	80005-
33		09642-11000	Plate, Service Instruction, Engine Coolant AF-NAC, Specify Coolant	1	80005-

https://truckmanualshub.com/

FIG. U0100-025001 Marks And Plates, Spanish, With Power Tilt Pitch Dozer

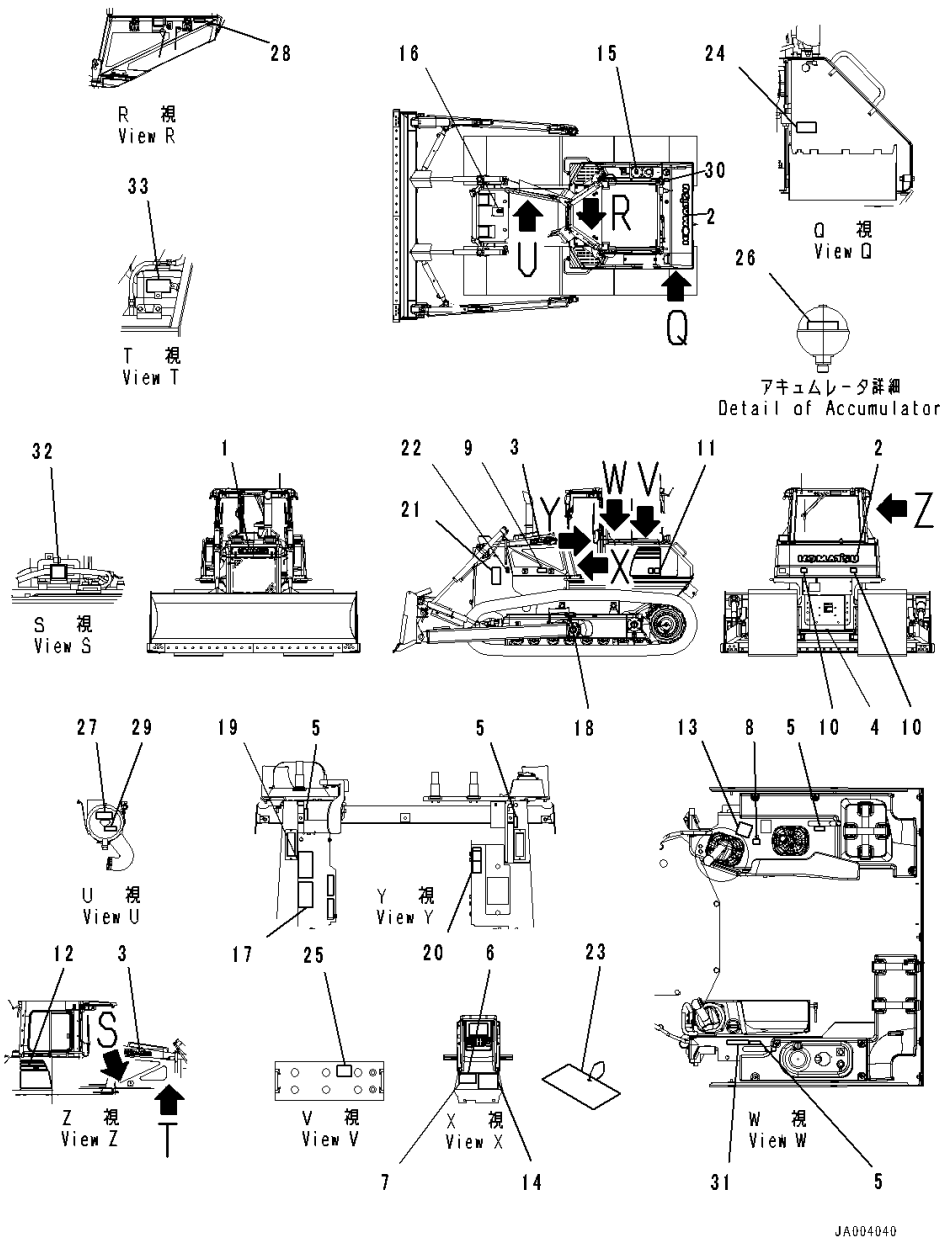

Index	Code	Part Number	Description	Qty	Serial Number
1		09690-F0560	Plate, Mark,Front	1	80005-
2		09690-P1120	Plate, Mark,Rear	1	80005-
3		09690-F0500	Decal, Komatsu Logo,Side	2	80005-
4		09690-M0063	Mark, Komatsu Logo, Anti-Restamp	1	80005-
5		14X-98-11170	Plate, Operating, Lock	4	80005-
6	C2	09602-10001	Plate, Name (Limited Supply)	1	80005-
7		04418-13060	Screw	4	80005-
8		17A-98-11180	Plate, Horn	1	80005-
9		20Y-00-41530	Plate, Symbol, Ecot3	1	80005-
10		14X-98-35181	Plate, Reflector, Rear Reflecter	2	80005-
11		14X-98-51131	Decal, Machine Model, LHS,LHS	1	80005-
12		14X-98-51231	Decal, Machine Model, RHS,RHS	1	80005-
13		14X-98-11270	Plate, Work Equipment	1	80005-
14		14X-98-51211	Oil Chart	1	80005-
15		09653-A0481	Plate, Warning, High Temperature, Operating Oil Tank	1	80005-
16		09653-A0481	Plate, Warning, High Temperature, Radiator	1	80005-
17		09654-B0641	Plate, Warning, Before Leaving Seat	1	80005-
18		09657-A0881	Plate	2	80005-
19		09651-A0641	Plate, Warning, Read Manual Before Operating	1	80005-
20		09802-11000	Plate, Safety Confirm Of Rear	1	80005-
21		09806-B1683	Plate	2	80005-
22		09667-A0481	Plate, Caution, Rotating Object, While Engine Is Runnin. Don't Open Cover	2	80005-
23		09963-A1640	Tag, Danger, Do Not Operate	1	80005-
24		09808-A0881	Plate, Warning, Battery Cables	1	80005-
25		09664-70001	Decal, Danger, Battery	2	80005-
26		09659-A057B	Plate, Warning, Explosive Hazard	1	80005-
27		21W-98-41940	Plate, Air Cleaner Replace	1	80005-
28		6217-71-6510	Plate, Fuel Caution Replace	1	80005-
29		14X-98-35130	Plate, Pre Filter Replace	1	80005-
30		09669-0000E	Plate, Symbol, Fuel Filler	1	80005-
31		09649-01012	Plate, Engine Stop, Engine Stop	1	80005-
32		09842-A0481	Plate, Caution, No Jump Start	1	80005-
33		09642-11000	Plate, Service Instruction, Engine Coolant AF-NAC, Specify Coolant	1	80005-

https://truckmanualshub.com/

FIG. U0100-026001 Marks And Plates, French, With Power Tilt Pitch Dozer

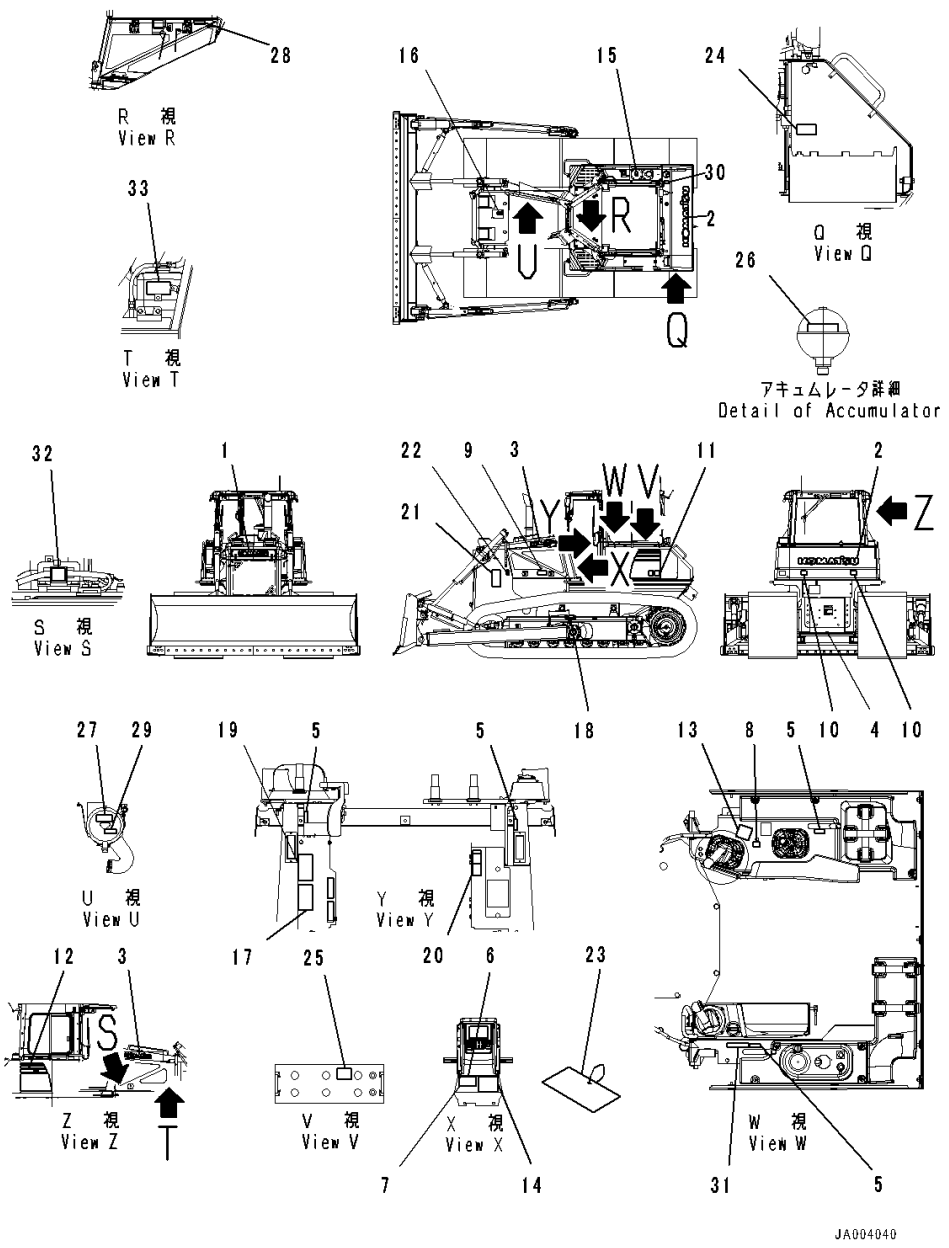

Index	Code	Part Number	Description	Qty	Serial Number
1		09690-F0560	Plate, Mark,Front	1	80005-
2		09690-P1120	Plate, Mark,Rear	1	80005-
3		09690-F0500	Decal, Komatsu Logo	2	80005-
4		09690-M0063	Mark, Komatsu Logo, Anti-Restamp	1	80005-
5		14X-98-11170	Plate, Operating, Lock	4	80005-
6	C2	09602-10001	Plate, Name (Limited Supply)	1	80005-
7		04418-13060	Screw	4	80005-
8		17A-98-11180	Plate, Horn	1	80005-
9		20Y-00-41530	Plate, Symbol, Ecot3	1	80005-
10		14X-98-35181	Plate, Reflector, Rear Reflecter	2	80005-
11		14X-98-51131	Decal, Machine Model, LHS,LHS	1	80005-
12		14X-98-51231	Decal, Machine Model, RHS,RHS	1	80005-
13		14X-98-11270	Plate, Work Equipment	1	80005-
14		14X-98-51211	Oil Chart	1	80005-
15		09653-A0481	Plate, Warning, High Temperature, Operating Oil Tank	1	80005-
16		09653-A0481	Plate, Warning, High Temperature, Radiator	1	80005-
17		09654-B0641	Plate, Warning, Before Leaving Seat	1	80005-
18		09657-A0881	Plate	2	80005-
19		09651-A0641	Plate, Warning, Read Manual Before Operating	1	80005-
20		09802-15000	Plate	1	80005-
21		09806-B1683	Plate	2	80005-
22		09667-A0481	Plate, Caution, Rotating Object, While Engine Is Running. Don't Open Cover	2	80005-
23		09963-A1640	Tag, Danger, Do Not Operate	1	80005-
24		09808-A0881	Plate, Warning, Battery Cables	1	80005-
25		09664-70001	Decal, Danger, Battery	2	80005-
26		09659-A057B	Plate, Warning, Explosive Hazard	1	80005-
27		14X-98-35320	Plate, Air Cleaner Replace	1	80005-
28		6217-71-6490	Plate, Caution, Fuel Filter, Fuel Filter Replace	1	80005-
29		14X-98-35150	Plate, Pre Filter Caution	1	80005-
30		09669-0000E	Plate, Symbol, Fuel Filler	1	80005-
31		09649-05012	Plate	1	80005-
32		09842-A0481	Plate, Caution, No Jump Start	1	80005-
33		09642-15000	Plate	1	80005-

https://truckmanualshub.com/

FIG. U0100-027001 Marks And Plates, Germany, With Power Tilt Pitch Dozer

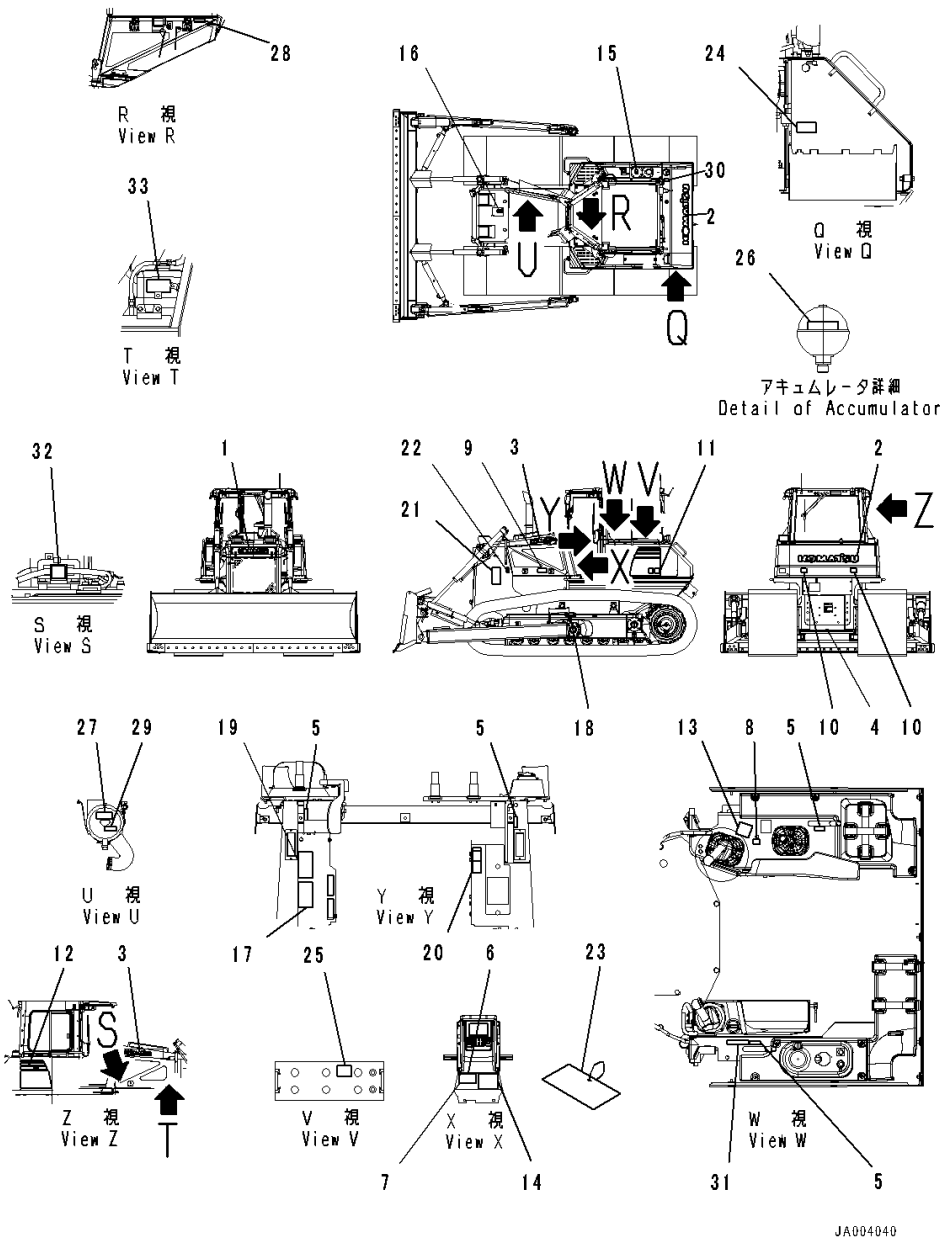

Index	Code	Part Number	Description	Qty	Serial Number
1		09690-F0560	Plate, Mark,Front	1	80005-
2		09690-P1120	Plate, Mark,Rear	1	80005-
3		09690-F0500	Decal, Komatsu Logo	2	80005-
4		09690-M0063	Mark, Komatsu Logo, Anti-Restamp	1	80005-
5		14X-98-11170	Plate, Operating, Lock	4	80005-
6	C2	09602-10001	Plate, Name (Limited Supply)	1	80005-
7		04418-13060	Screw	4	80005-
8		17A-98-11180	Plate, Horn	1	80005-
9		20Y-00-41530	Plate, Symbol, Ecot3	1	80005-
10		14X-98-35181	Plate, Reflector, Rear Reflecter	2	80005-
11		14X-98-51131	Decal, Machine Model, LHS,LHS	1	80005-
12		14X-98-51231	Decal, Machine Model, RHS,RHS	1	80005-
13		14X-98-11270	Plate, Work Equipment	1	80005-
14		14X-98-51211	Oil Chart	1	80005-
15		09653-A0481	Plate, Warning, High Temperature, Operating Oil Tank	1	80005-
16		09653-A0481	Plate, Warning, High Temperature, Radiator	1	80005-
17		09654-B0641	Plate, Warning, Before Leaving Seat	1	80005-
18		09657-A0881	Plate	2	80005-
19		09651-A0641	Plate, Warning, Read Manual Before Operating	1	80005-
20		09802-12000	Plate	1	80005-
21		09806-B1683	Plate	2	80005-
22		09667-A0481	Plate, Caution, Rotating Object, While Engine Is Running. Don't Open Cover	2	80005-
23		09963-A1640	Tag, Danger, Do Not Operate	1	80005-
24		09808-A0881	Plate, Warning, Battery Cables	1	80005-
25		09664-70001	Decal, Danger, Battery	2	80005-
26		09659-A057B	Plate, Warning, Explosive Hazard	1	80005-
27		14X-98-35310	Plate, Air Cleaner Replace	1	80005-
28		6217-71-6480	Plate, Fuel Filter Replace	1	80005-
29		14X-98-35140	Plate, Pre Filter Caution	1	80005-
30		09669-0000E	Plate, Symbol, Fuel Filler	1	80005-
31		09649-02012	Plate	1	80005-
32		09842-A0481	Plate, Caution, No Jump Start	1	80005-
33		09642-12000	Plate, Coolant	1	80005-

https://truckmanualshub.com/

FIG. U0100-028001 Marks And Plates, Turkish, With Power Tilt Pitch Dozer

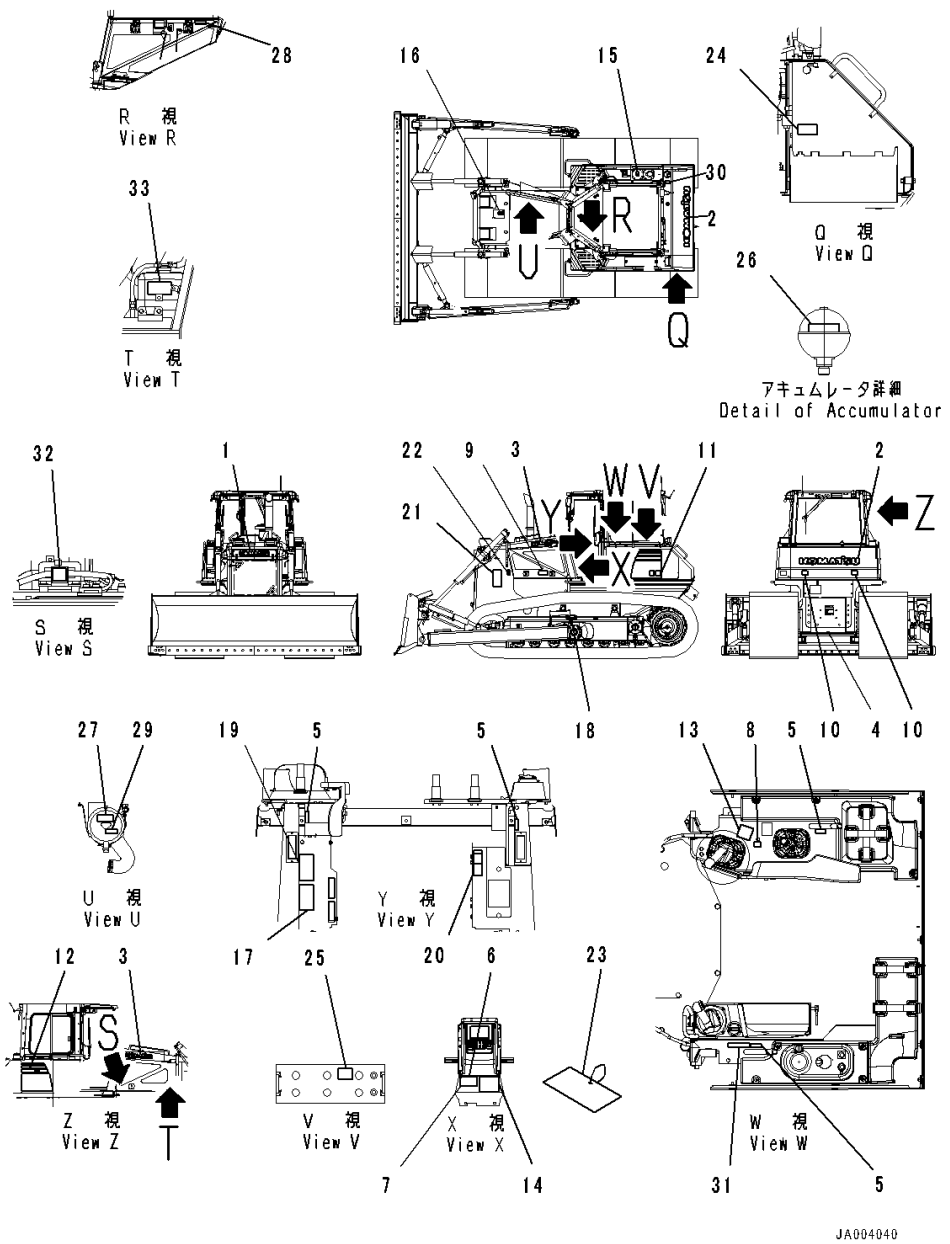

Index	Code	Part Number	Description	Qty	Serial Number
1		09690-F0560	Plate, Mark,Front	1	80005-
2		09690-P1120	Plate, Mark,Rear	1	80005-
3		09690-F0500	Decal, Komatsu Logo,Side	2	80005-
4		09690-M0063	Mark, Komatsu Logo	1	80005-
5		14X-98-11170	Plate, Operating, Lock	4	80005-
6	C2	09602-10001	Plate, Name (Limited Supply)	1	80005-
7		04418-13060	Screw	4	80005-
8		17A-98-11180	Plate, Horn	1	80005-
9		20Y-00-41530	Plate, Symbol, Ecot3	1	80005-
10		14X-98-35181	Plate, Reflector, Rear Reflecter	2	80005-
11		14X-98-51131	Decal, Machine Model, LHS,LHS	1	80005-
12		14X-98-51231	Decal, Machine Model, RHS,RHS	1	80005-
13		14X-98-11270	Plate, Work Equipment	1	80005-
14		14X-98-51211	Oil Chart	1	80005-
15		09653-A0481	Plate, Warning, High Temperature, Operating Oil Tank	1	80005-
16		09653-A0481	Plate, Warning, High Temperature, Radiator	1	80005-
17		09654-B0641	Plate, Warning, Before Leaving Seat	1	80005-
18		09657-A0881	Plate	2	80005-
19		09651-A0641	Plate, Warning, Read Manual Before Operating	1	80005-
20		17M-98-41320	Plate, Before Oparating	1	80005-
21		09806-B1683	Plate	2	80005-
22		09667-A0481	Plate, Caution, Rotating Object, While Engine Is Running. Don't Open Cover	2	80005-
23		09963-A1640	Tag, Danger, Do Not Operate	1	80005-
24		09808-A0881	Plate, Warning, Battery Cables	1	80005-
25		09664-70001	Decal, Danger, Battery	2	80005-
26		09659-A057B	Plate, Warning, Explosive Hazard	1	80005-
27		17A-98-21720	Plate, Air Cleaner Replace	1	80005-
28		6217-71-6680	Plate, Fuel Filter Replace	1	80005-
29		14X-98-35170	Plate, Pre Filter Caution	1	80005-
30		09669-0000E	Plate, Symbol, Fuel Filler	1	80005-
31		17A-98-23510	Plate, Engine Stop	1	80005-
32		09842-A0481	Plate, Caution, No Jump Start	1	80005-
33		09642-11100	Plate	1	80005-

https://truckmanualshub.com/

FIG. U0100-029001 Marks And Plates, French, Text Type, With Power Tilt Pitch Dozer

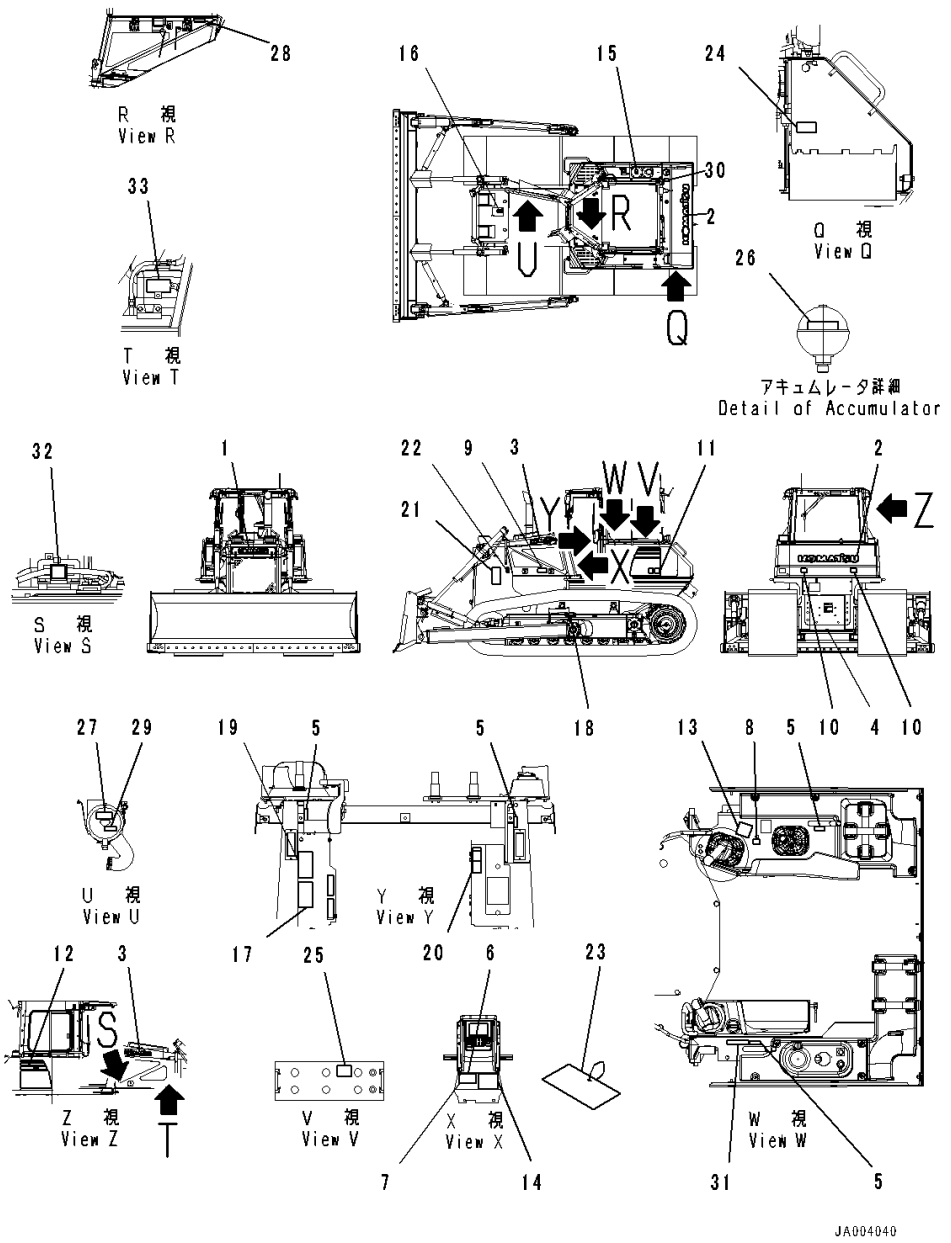

Index	Code	Part Number	Description	Qty	Serial Number
1		09690-F0560	Plate, Mark,Front	1	80005-
2		09690-P1120	Plate, Mark,Rear	1	80005-
3		09690-F0500	Decal, Komatsu Logo,Side	2	80005-
4		09690-M0063	Mark, Komatsu Logo, Anti-Restamp	1	80005-
5		14X-98-11170	Plate, Operating, Lock	4	80005-
6	C2	09602-10001	Plate, Name (Limited Supply)	1	80005-
7		04418-13060	Screw	4	80005-
8		17A-98-11180	Plate, Horn	1	80005-
9		20Y-00-41530	Plate, Symbol, Ecot3	1	80005-
10		14X-98-35181	Plate, Reflector, Rear Reflecter	2	80005-
11		14X-98-51131	Decal, Machine Model, LHS,LHS	1	80005-
12		14X-98-51231	Decal, Machine Model, RHS,RHS	1	80005-
13		14X-98-11270	Plate, Work Equipment	1	80005-
14		14X-98-51211	Oil Chart	1	80005-
15		09653-05001	Decal, Warning, High Temperature	1	80005-
16		09668-05001	Decal, Warning, Hot Water	1	80005-
17		09654-35001	Decal, Warning, Before Leaving Seat	1	80005-
18		09657-05003	Decal, Warning, Track Adjustment	2	80005-
19		09651-05001	Plate, Before Operating	1	80005-
20		09802-15000	Plate	1	80005-
21		09812-15000	Decal, Danger, Keep a Safe Distance	2	80005-
22		09667-05001	Plate, Caution, Rotating Object	2	80005-
23		09963-05001	Tag, Danger, Do Not Operate	1	80005-
24		09808-05000	Decal, Warning, Battery Cables	1	80005-
25		09664-20011	Decal, Danger, Battery	2	80005-
26		09659-55000	Decal, Warning, Explosive Hazard	1	80005-
27		14X-98-35320	Plate, Air Cleaner Replace	1	80005-
28		6217-71-6490	Plate, Caution, Fuel Filter, Fuel Filter Replace	1	80005-
29		14X-98-35150	Plate, Pre Filter Caution	1	80005-
30		09652-51221	Decal, Caution, Fuel Tank Drain	1	80005-
31		09649-05012	Plate	1	80005-
32		09842-A0481	Plate, Caution, No Jump Start	1	80005-
33		09642-15000	Plate	1	80005-

https://truckmanualshub.com/

FIG. U0100-030001 Marks And Plates, English, EU Regulation Guard Level 2, With Power Tilt Pitch Dozer

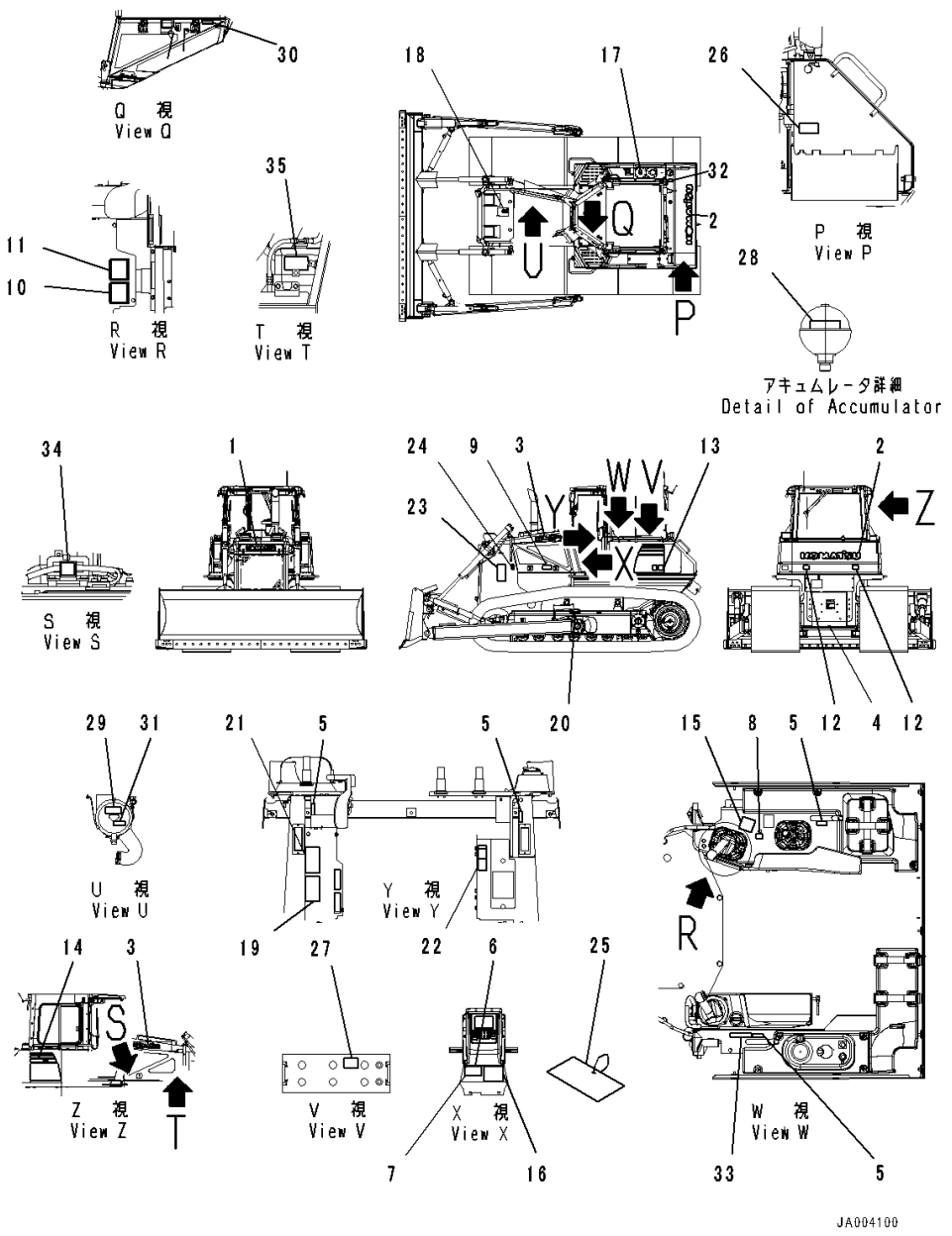

Index	Code	Part Number	Description	Qty	Serial Number
1		09690-F0560	Plate, Mark,Front	1	80005-
2		09690-P1120	Plate, Mark,Rear	1	80005-
3		09690-F0500	Decal, Komatsu Logo,Side	2	80005-
4		09690-M0063	Mark, Komatsu Logo, Anti-Restamp	1	80005-
5		14X-98-11170	Plate, Operating, Lock	4	80005-
6	C2	09602-00001	Plate, Name (Limited Supply)	1	80005-
7		04418-13060	Screw	4	80005-
8		17A-98-11180	Plate, Horn	1	80005-
9		20Y-00-41530	Plate, Symbol, Ecot3	1	80005-
10		09696-50078	Plate, EU Ope Ear Noise	1	80005-
11		09696-40108	Plate	1	80005-
12		14X-98-35181	Plate, Reflector, Rear Reflecter	2	80005-
13		14X-98-51131	Decal, Machine Model, LHS,LHS	1	80005-
14		14X-98-51231	Decal, Machine Model, RHS,RHS	1	80005-
15		14X-98-11270	Plate, Work Equipment	1	80005-
16		14X-98-51211	Oil Chart	1	80005-
17		09653-A0481	Plate, Warning, High Temperature, Operating Oil Tank	1	80005-
18		09653-A0481	Plate, Warning, High Temperature, Radiator	1	80005-
19		09654-B0641	Plate, Warning, Before Leaving Seat	1	80005-
20		09657-A0881	Plate	2	80005-
21		09651-A0641	Plate, Warning, Read Manual Before Operating	1	80005-
22		09802-13000	Plate, Warning, Back-up, Safety Confirm Of Rear	1	80005-
23		09806-B1683	Plate	2	80005-
24		09667-A0481	Plate, Caution, Rotating Object, While Engine Is Running. Don't Open Cover	2	80005-
25		09963-A1640	Tag, Danger, Do Not Operate	1	80005-
26		09808-A0881	Plate, Warning, Battery Cables	1	80005-
27		09664-60000	Decal, Danger, Battery	2	80005-
28		09659-A057B	Plate, Warning, Explosive Hazard	1	80005-
29		21W-98-41720	Plate, Air Cleaner, Air Cleaner Replace	1	80005-
30		6217-71-6470	Plate, Fuel Filter Replace	1	80005-
31		14X-98-35120	Plate, Pre FIlter Caution	1	80005-
32		09669-0000E	Plate, Symbol, Fuel Filler	1	80005-
33		09649-03012	Plate, Engine Stop	1	80005-
34		09842-A0481	Plate, Caution, No Jump Start	1	80005-

https://truckmanualshub.com/

FIG. U0100-030001 Marks And Plates, English, EU Regulation Guard Level 2, With Power Tilt Pitch Dozer

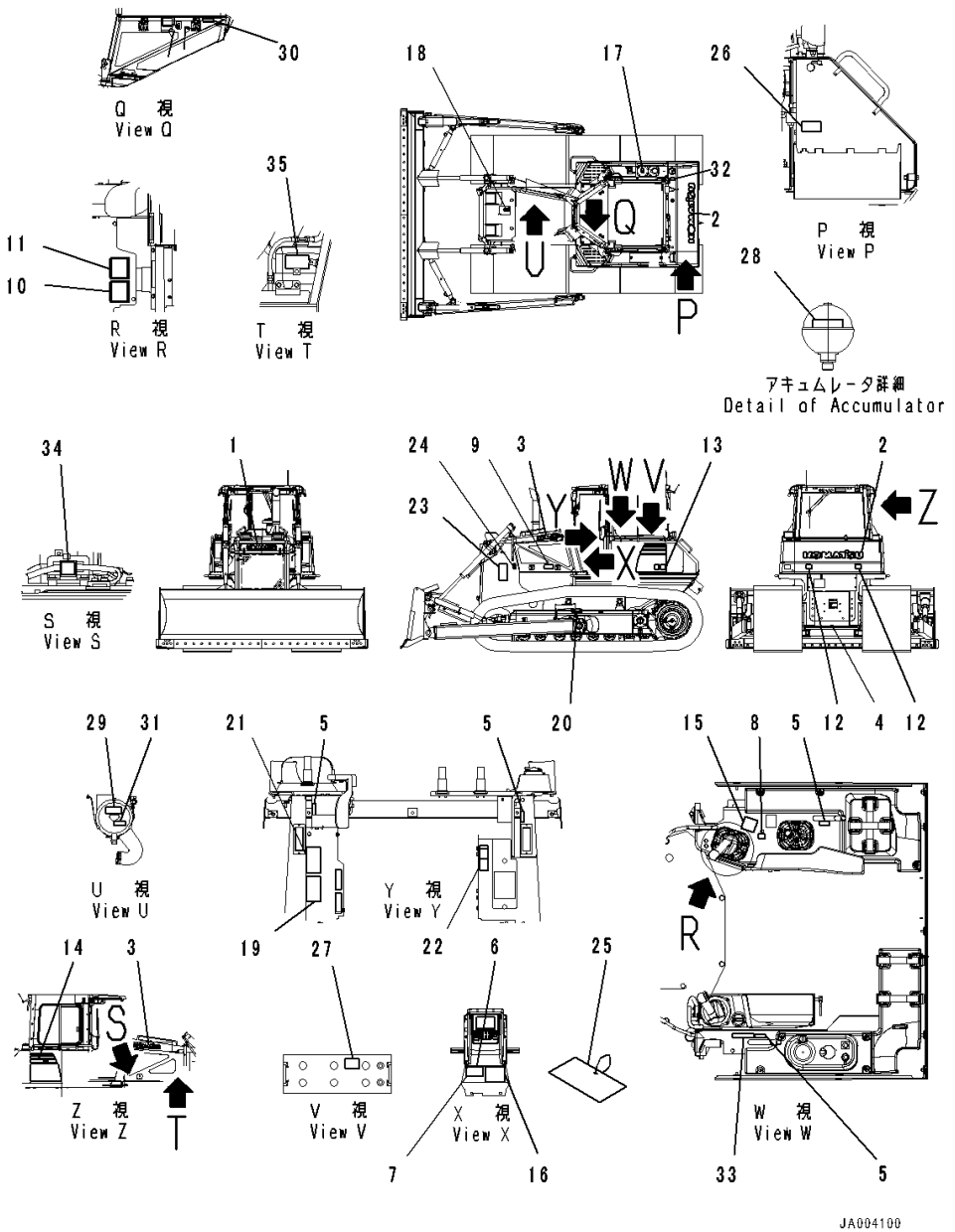

Index	Code	Part Number	Description	Qty	Serial Number
35		09642-13000	Plate, Service Instruction, Engine Coolant AF-NAC	1	80005-

https://truckmanualshub.com/

FIG. U0100-031001 Marks And Plates, Spanish, EU Regulation Guard Level 2, With Power Tilt Pitch Dozer

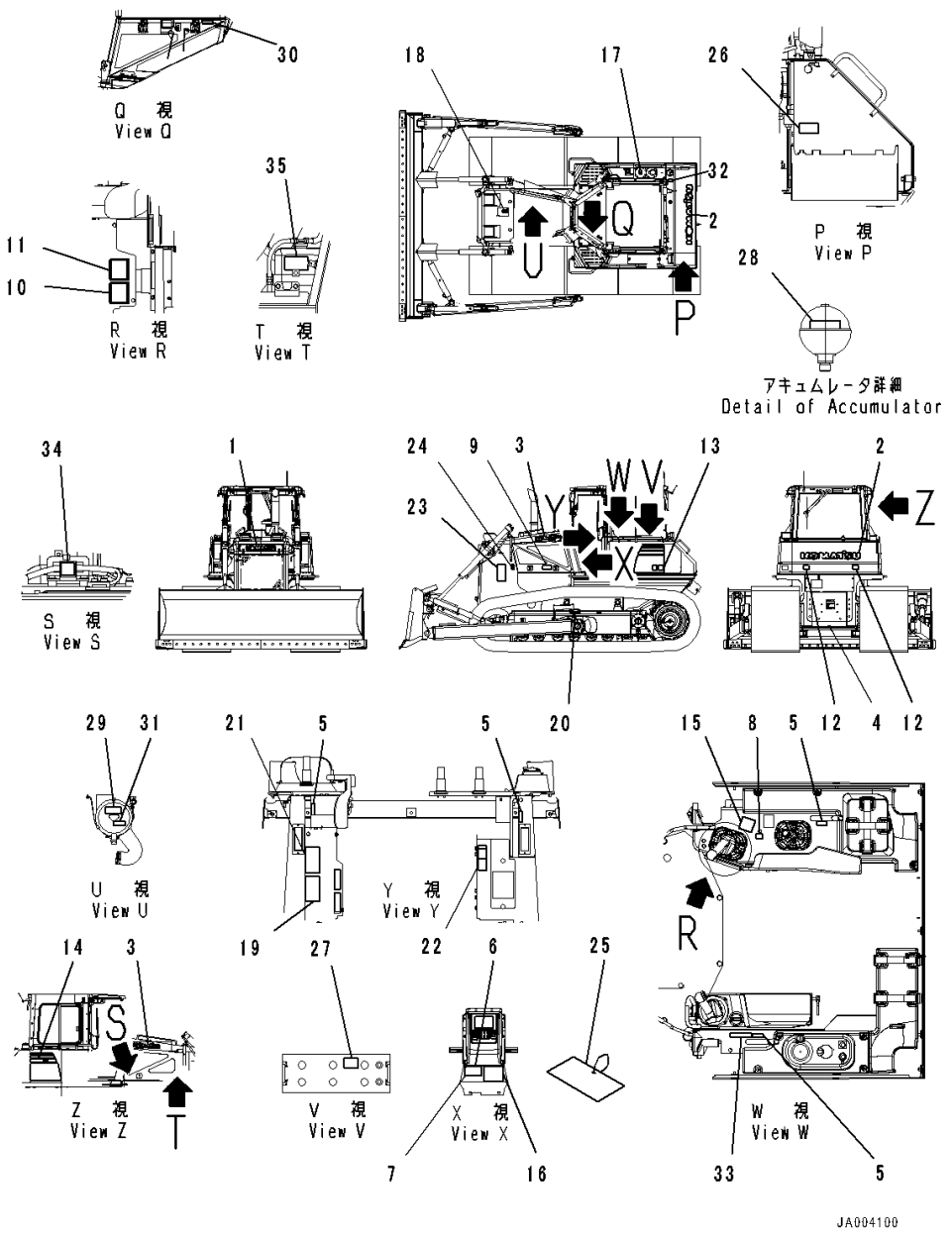

Index	Code	Part Number	Description	Qty	Serial Number
1		09690-F0560	Plate, Mark,Front	1	80005-
2		09690-P1120	Plate, Mark,Rear	1	80005-
3		09690-F0500	Decal, Komatsu Logo,Side	2	80005-
4		09690-M0063	Mark, Komatsu Logo, Anti-Restamp	1	80005-
5		14X-98-11170	Plate, Operating, Lock	4	80005-
6	C2	09602-00001	Plate, Name (Limited Supply)	1	80005-
7		04418-13060	Screw	4	80005-
8		17A-98-11180	Plate, Horn	1	80005-
9		20Y-00-41530	Plate, Symbol, Ecot3	1	80005-
10		09696-50078	Plate, EU Ope Ear Noise	1	80005-
11		09696-40108	Plate	1	80005-
12		14X-98-35181	Plate, Reflector, Rear Reflecter	2	80005-
13		14X-98-51131	Decal, Machine Model, LHS	1	80005-
14		14X-98-51231	Decal, Machine Model, RHS	1	80005-
15		14X-98-11270	Plate, Work Equipment	1	80005-
16		14X-98-51211	Oil Chart	1	80005-
17		09653-A0481	Plate, Warning, High Temperature, Operating Oil tank	1	80005-
18		09653-A0481	Plate, Warning, High Temperature, Radiator	1	80005-
19		09654-B0641	Plate, Warning, Before Leaving Seat	1	80005-
20		09657-A0881	Plate	2	80005-
21		09651-A0641	Plate, Warning, Read Manual Before Operating	1	80005-
22		09802-11000	Plate, Safety Confirm Of Rear	1	80005-
23		09806-B1683	Plate	2	80005-
24		09667-A0481	Plate, Caution, Rotating Object, While Engine Is Running. Don't Open Cover	2	80005-
25		09963-A1640	Tag, Danger, Do Not Operate	1	80005-
26		09808-A0881	Plate, Warning, Battery Cables	1	80005-
27		09664-60000	Decal, Danger, Battery	2	80005-
28		09659-A057B	Plate, Warning, Explosive Hazard	1	80005-
29		21W-98-41940	Plate, Air Cleaner Replace	1	80005-
30		6217-71-6510	Plate, Fuel Filter Replace	1	80005-
31		14X-98-35130	Plate, Pre Filter Caution	1	80005-
32		09669-0000E	Plate, Symbol, Fuel Filler	1	80005-
33		09649-01012	Plate, Engine Stop, Engine Stop	1	80005-
34		09842-A0481	Plate, Caution, No Jump Start	1	80005-
35		09642-11000	Plate, Service Instruction, Engine Coolant AF-NAC, Specify Coolant	1	80005-

https://truckmanualshub.com/

FIG. U0100-032001 Marks And Plates, French, EU Regulation Guard Level 2, With Power Tilt Pitch Dozer

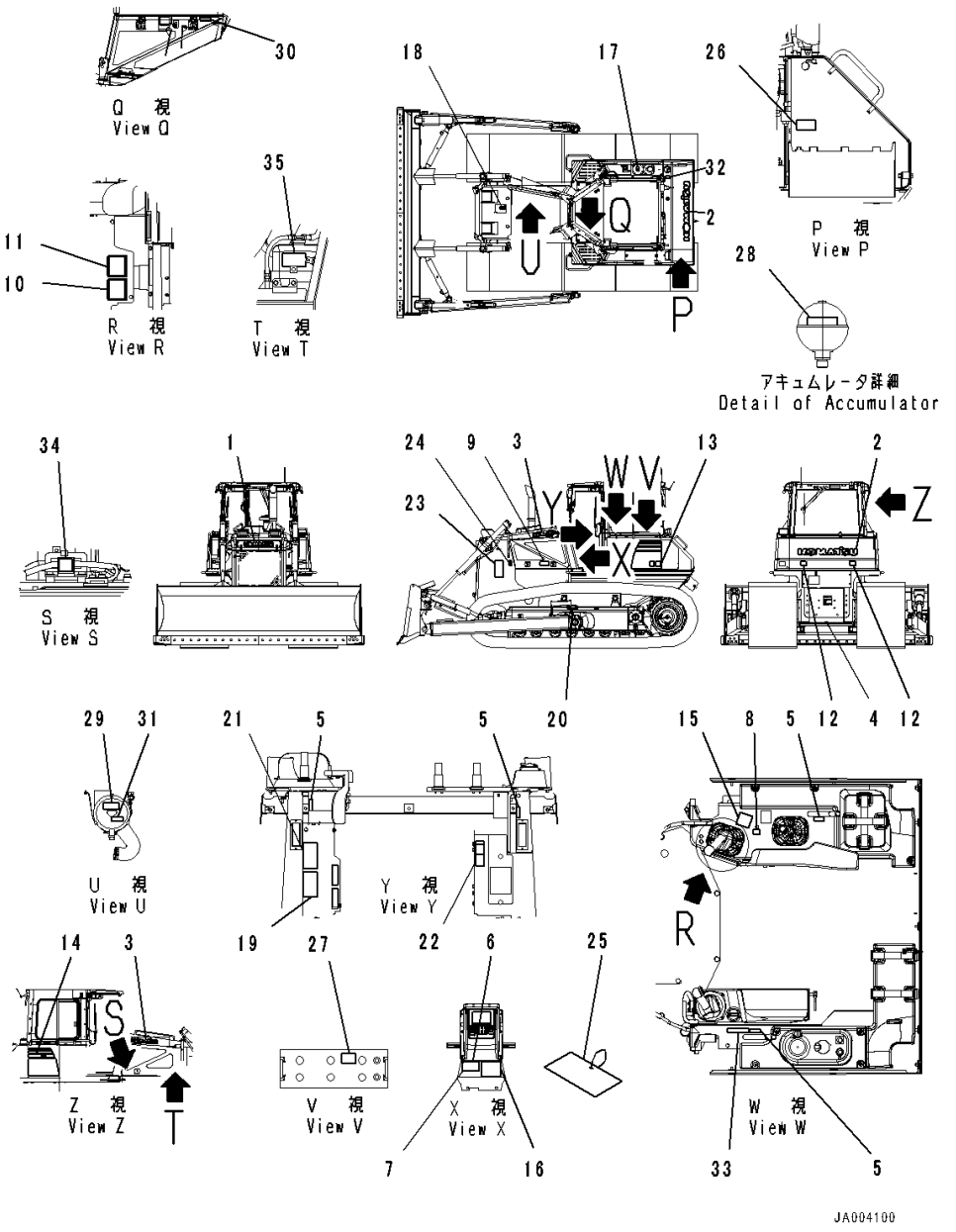

Index	Code	Part Number	Description	Qty	Serial Number
1		09690-F0560	Plate, Mark,Front	1	80005-
2		09690-P1120	Plate, Mark,Rear	1	80005-
3		09690-F0500	Decal, Komatsu Logo,Side	2	80005-
4		09690-M0063	Mark, Komatsu Logo, Anti-Restamp	1	80005-
5		14X-98-11170	Plate, Operating, Lock	4	80005-
6	C2	09602-00001	Plate, Name (Limited Supply)	1	80005-
7		04418-13060	Screw	4	80005-
8		17A-98-11180	Plate, Horn	1	80005-
9		20Y-00-41530	Plate, Symbol, Ecot3	1	80005-
10		09696-50078	Plate, EU Ope Ear Noise	1	80005-
11		09696-40108	Plate	1	80005-
12		14X-98-35181	Plate, Reflector, Rear Reflecter	2	80005-
13		14X-98-51131	Decal, Machine Model, LHS,LHS	1	80005-
14		14X-98-51231	Decal, Machine Model, RHS,RHS	1	80005-
15		14X-98-11270	Plate, Work Equioment	1	80005-
16		14X-98-51211	Oil Chart	1	80005-
17		09653-A0481	Plate, Warning, High Temperature, Operating Oil Tank	1	80005-
18		09653-A0481	Plate, Warning, High Temperature, Radiator	1	80005-
19		09654-B0641	Plate, Warning, Before Leaving Seat	1	80005-
20		09657-A0881	Plate	2	80005-
21		09651-A0641	Plate, Warning, Read Manual Before Operating	1	80005-
22		09802-15000	Plate	1	80005-
23		09806-B1683	Plate	2	80005-
24		09667-A0481	Plate, Caution, Rotating Object, While Engine Is Running. Don't Open Cover	2	80005-
25		09963-A1640	Tag, Danger, Do Not Operate	1	80005-
26		09808-A0881	Plate, Warning, Battery Cables	1	80005-
27		09664-60000	Decal, Danger, Battery	2	80005-
28		09659-A057B	Plate, Warning, Explosive Hazard	1	80005-
29		14X-98-35320	Plate, Air Cleaner Replace	1	80005-
30		6217-71-6490	Plate, Caution, Fuel Filter, Fuel Filter Replace	1	80005-
31		14X-98-35150	Plate, Pre Filter Caution	1	80005-
32		09669-0000E	Plate, Symbol, Fuel Filler	1	80005-
33		09649-05012	Plate	1	80005-
34		09842-A0481	Plate, Caution, No Jump Start	1	80005-
35		09642-15000	Plate	1	80005-

https://truckmanualshub.com/

FIG. U0100-033001 Marks And Plates, Germany, EU Regulation Guard Level 2, With Power Tilt Pitch Dozer

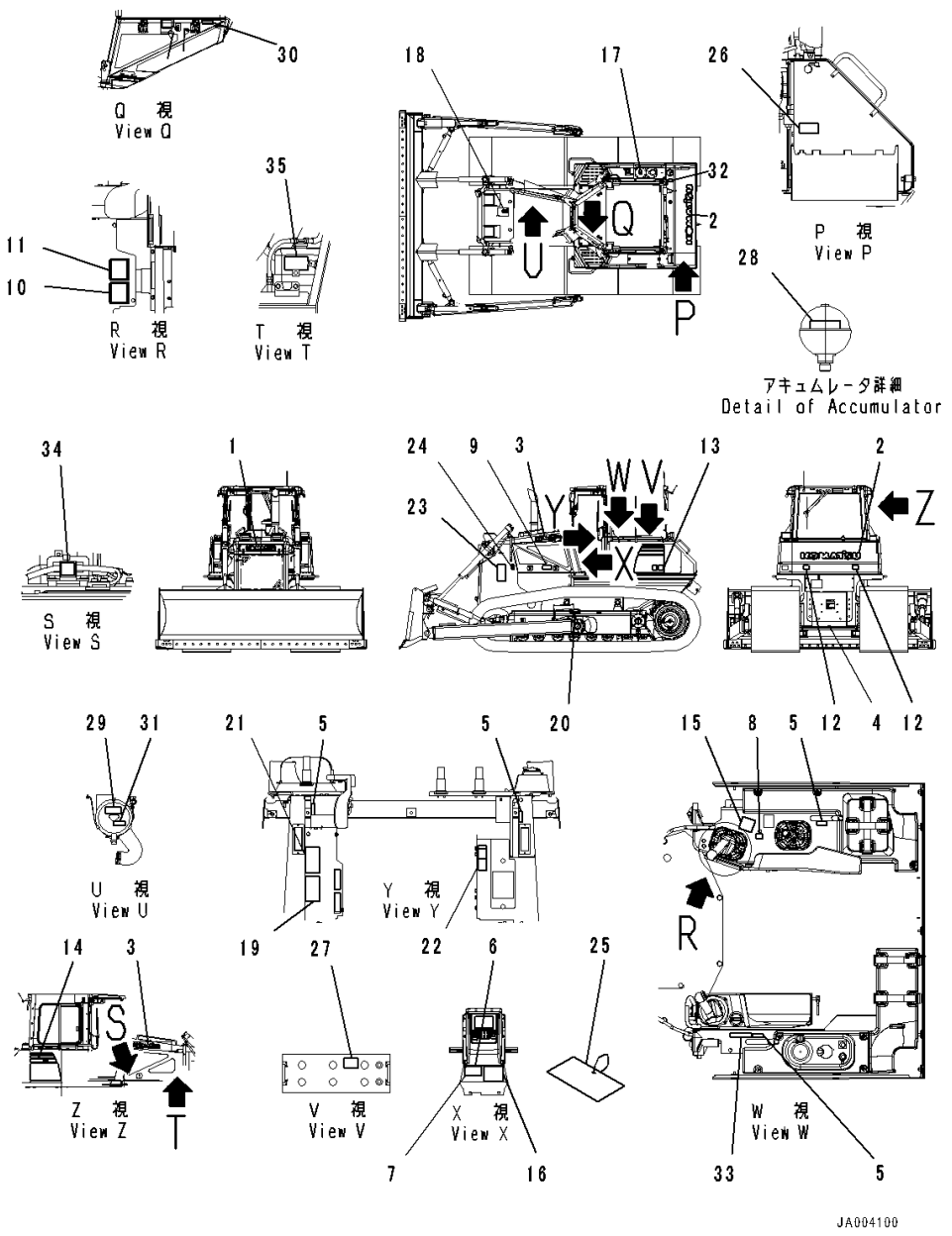

Index	Code	Part Number	Description	Qty	Serial Number
1		09690-F0560	Plate, Mark,Front	1	80005-
2		09690-P1120	Plate, Mark,Rear	1	80005-
3		09690-F0500	Decal, Komatsu Logo,Side	2	80005-
4		09690-M0063	Mark, Komatsu Logo, Anti-Restamp	1	80005-
5		14X-98-11170	Plate, Operating, Lock	4	80005-
6	C2	09602-00001	Plate, Name (Limited Supply)	1	80005-
7		04418-13060	Screw	4	80005-
8		17A-98-11180	Plate, Horn	1	80005-
9		20Y-00-41530	Plate, Symbol, Ecot3	1	80005-
10		09696-50078	Plate, EU Ope Ear Noise	1	80005-
11		09696-40108	Plate	1	80005-
12		14X-98-35181	Plate, Reflector, Rear Reflacter	2	80005-
13		14X-98-51131	Decal, Machine Model, LHS,LHS	1	80005-
14		14X-98-51231	Decal, Machine Model, RHS,RHS	1	80005-
15		14X-98-11270	Plate, Work Equipment	1	80005-
16		14X-98-51211	Oil Chart	1	80005-
17		09653-A0481	Plate, Warning, High Temperature, Operating Oil Tank	1	80005-
18		09653-A0481	Plate, Warning, High Temperature, Radiator	1	80005-
19		09654-B0641	Plate, Warning, Before Leaving Seat	1	80005-
20		09657-A0881	Plate	2	80005-
21		09651-A0641	Plate, Warning, Read Manual Before Operating	1	80005-
22		09802-12000	Plate	1	80005-
23		09806-B1683	Plate	2	80005-
24		09667-A0481	Plate, Caution, Rotating Object, While Engine Is Running. Don't Open Cover	2	80005-
25		09963-A1640	Tag, Danger, Do Not Operate	1	80005-
26		09808-A0881	Plate, Warning, Battery Cables	1	80005-
27		09664-60000	Decal, Danger, Battery	2	80005-
28		09659-A057B	Plate, Warning, Explosive Hazard	1	80005-
29		14X-98-35310	Plate, Air Cleaner Replace	1	80005-
30		6217-71-6480	Plate, Fuel Filter Replace	1	80005-
31		14X-98-35140	Plate, Pre Filter Caution	1	80005-
32		09669-0000E	Plate, Symbol, Fuel Filler	1	80005-
33		09649-02012	Plate	1	80005-
34		09842-A0481	Plate, Caution, No Jump Start	1	80005-
35		09642-12000	Plate, Coolant	1	80005-

https://truckmanualshub.com/

FIG. U0100-034001 Marks And Plates, Italian, EU Regulation Guard Level 2, With Power Tilt Pitch Dozer

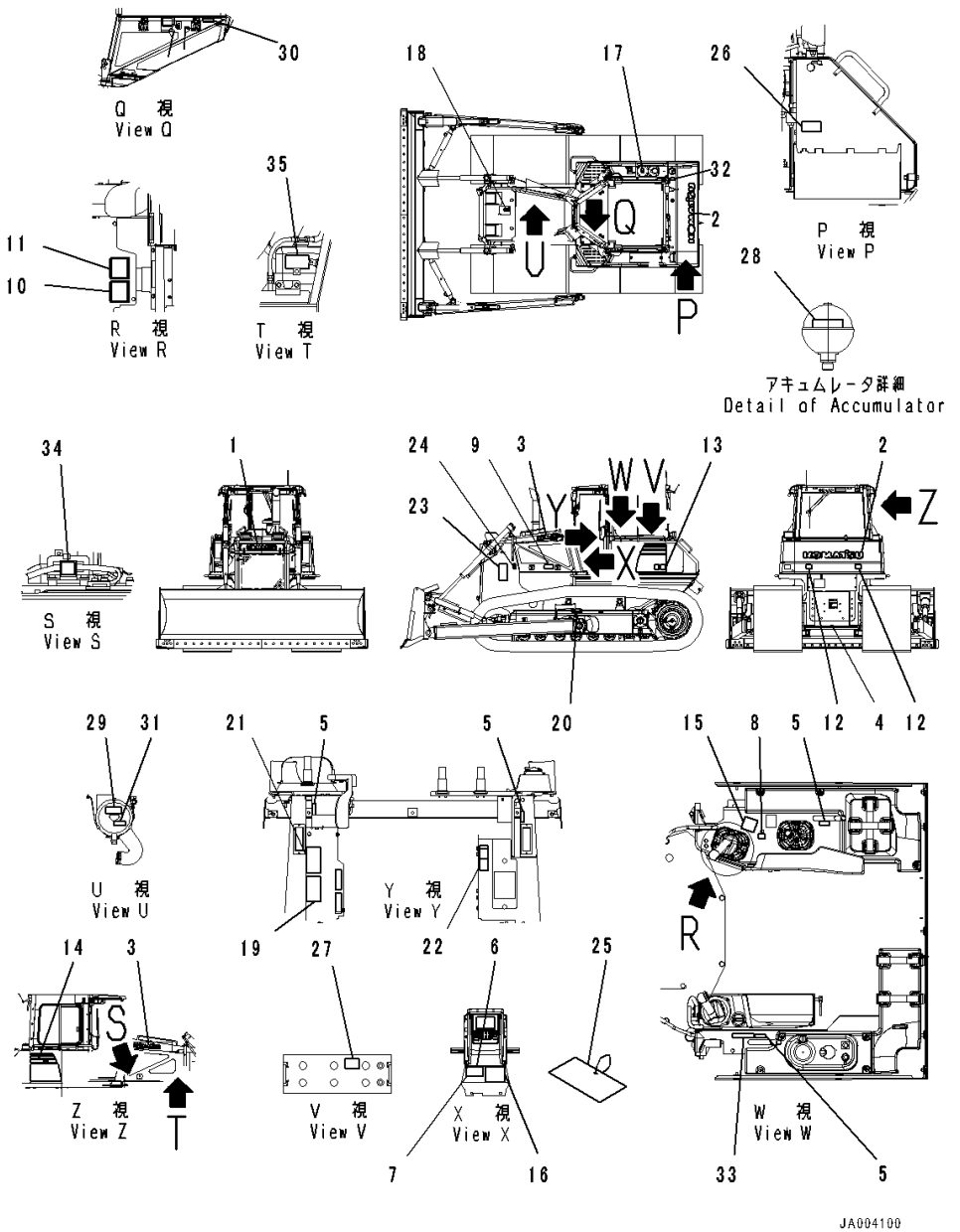

Index	Code	Part Number	Description	Qty	Serial Number
1		09690-F0560	Plate, Mark,Front	1	80005-
2		09690-P1120	Plate, Mark,Rear	1	80005-
3		09690-F0500	Decal, Komatsu Logo,Side	2	80005-
4		09690-M0063	Mark, Komatsu Logo, Anti-Restamp	1	80005-
5		14X-98-11170	Plate, Operating, Lock	4	80005-
6	C2	09602-00001	Plate, Name (Limited Supply)	1	80005-
7		04418-13060	Screw	4	80005-
8		17A-98-11180	Plate, Horn	1	80005-
9		20Y-00-41530	Plate, Symbol, Ecot3	1	80005-
10		09696-50078	Plate, EU Ope Ear Noise	1	80005-
11		09696-40108	Plate	1	80005-
12		14X-98-35181	Plate, Reflector, Raer Reflecter	2	80005-
13		14X-98-51131	Decal, Machine Model, LHS,LHS	1	80005-
14		14X-98-51231	Decal, Machine Model, RHS,RHS	1	80005-
15		14X-98-11270	Plate, Work Equipment	1	80005-
16		14X-98-51211	Oil Chart	1	80005-
17		09653-A0481	Plate, Warning, High Temperature, Operating Oil Tank	1	80005-
18		09653-A0481	Plate, Warning, High Temperature, Radiator	1	80005-
19		09654-B0641	Plate, Warning, Before Leaving Seat	1	80005-
20		09657-A0881	Plate	2	80005-
21		09651-A0641	Plate, Warning, Read Manual Before Operating	1	80005-
22		09802-16000	Plate	1	80005-
23		09806-B1683	Plate	2	80005-
24		09667-A0481	Plate, Caution, Rotating Object, While Engine Is Running. Don't Open Cover	2	80005-
25		09963-A1640	Tag, Danger, Do Not Operate	1	80005-
26		09808-A0881	Plate, Warning, Battery Cables	1	80005-
27		09664-60000	Decal, Danger, Battery	2	80005-
28		09659-A057B	Plate, Warning, Explosive Hazard	1	80005-
29		14X-98-35420	Plate, Air Cleaner Replace	1	80005-
30		6217-71-6550	Plate	1	80005-
31		14X-98-35250	Plate, Pre Filter Replace	1	80005-
32		09669-0000E	Plate, Symbol, Fuel Filler	1	80005-
33		09649-06012	Plate, Engine Stop	1	80005-
34		09842-A0481	Plate, Caution, No Jump Start	1	80005-
35		09642-16000	Plate, Specify Coolant	1	80005-

https://truckmanualshub.com/

FIG. U0100-035001 Marks And Plates, Portuguese, EU Regulation Guard Level 2, With Power Tilt Pitch Dozer

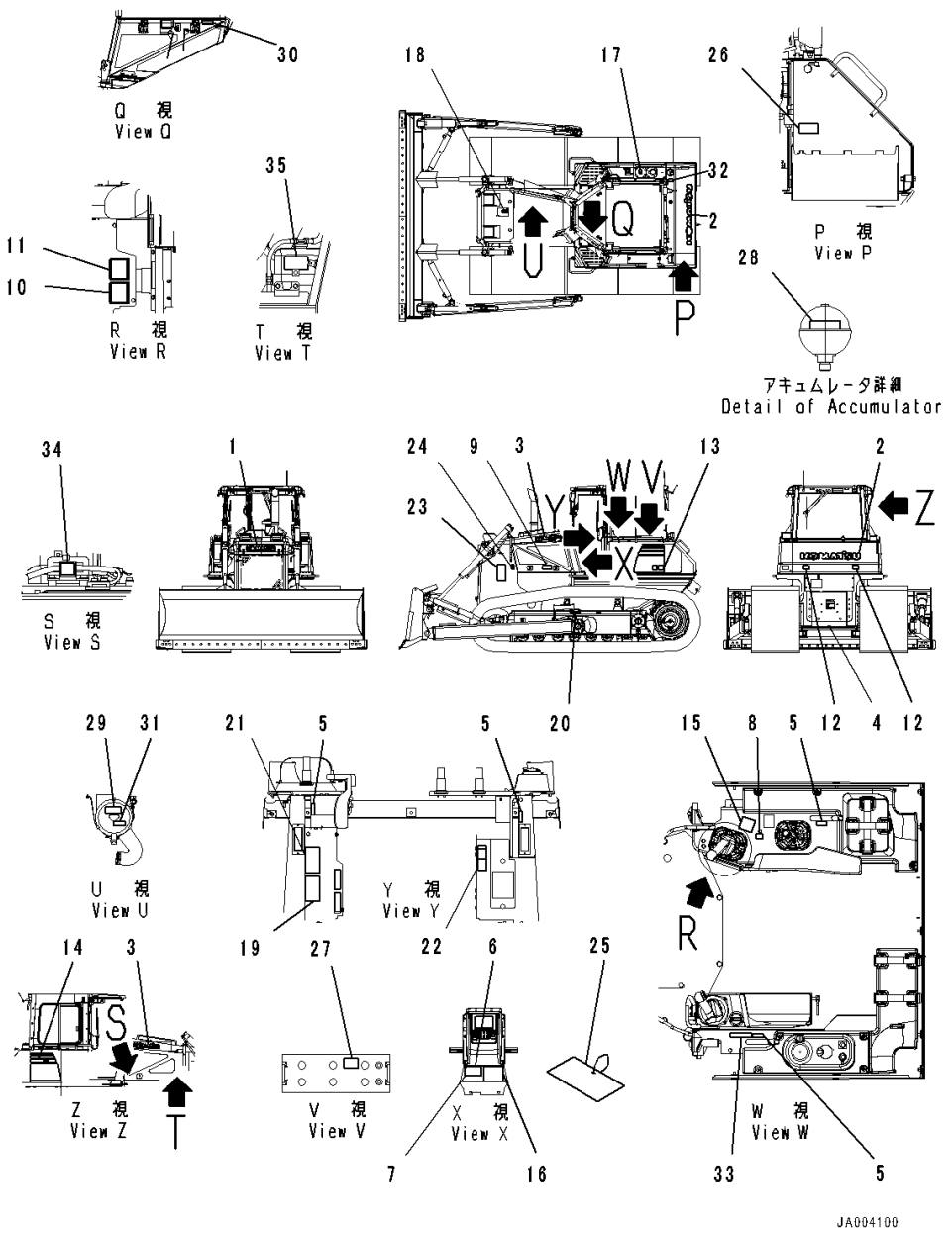

Index	Code	Part Number	Description	Qty	Serial Number
1		09690-F0560	Plate, Mark,Front	1	80005-
2		09690-P1120	Plate, Mark,Rear	1	80005-
3		09690-F0500	Decal, Komatsu Logo,Side	2	80005-
4		09690-M0063	Mark, Komatsu Logo, Anti-Restamp	1	80005-
5		14X-98-11170	Plate, Operating, Lock	4	80005-
6	C2	09602-00001	Plate, Name (Limited Supply)	1	80005-
7		04418-13060	Screw	4	80005-
8		17A-98-11180	Plate, Horn	1	80005-
9		20Y-00-41530	Plate, Symbol, Ecot3	1	80005-
10		09696-50078	Plate, EU Ope Ear Noise	1	80005-
11		09696-40108	Plate	1	80005-
12		14X-98-35181	Plate, Reflector, Rear Reflecter	2	80005-
13		14X-98-51131	Decal, Machine Model, LHS,LHS	1	80005-
14		14X-98-51231	Decal, Machine Model, RHS,RHS	1	80005-
15		14X-98-11270	Plate, Work Equipment	1	80005-
16		14X-98-51211	Oil Chart	1	80005-
17		09653-A0481	Plate, Warning, High Temperature, Operating Oil Tank	1	80005-
18		09653-A0481	Plate, Warning, High Temperature, Radiator	1	80005-
19		09654-B0641	Plate, Warning, Before Leaving Seat	1	80005-
20		09657-A0881	Plate	2	80005-
21		09651-A0641	Plate, Warning, Read Manual Before Operating	1	80005-
22		09802-17000	Plate, Safety Confirm Of Rear	1	80005-
23		09806-B1683	Plate	2	80005-
24		09667-A0481	Plate, Caution, Rotating Object, While Engine Is Running. Don't Open Cover	2	80005-
25		09963-A1640	Tag, Danger, Do Not Operate	1	80005-
26		09808-A0881	Plate, Warning, Battery Cables	1	80005-
27		09664-60000	Decal, Danger, Battery	2	80005-
28		09659-A057B	Plate, Warning, Explosive Hazard	1	80005-
29		14X-98-35330	Plate, Air Cleaner Replace	1	80005-
30		6217-71-6610	Plate, Fuel Filter Replace	1	80005-
31		14X-98-35160	Plate, Pre Filter Caution	1	80005-
32		09669-0000E	Plate, Symbol, Fuel Filler	1	80005-
33		09649-07012	Plate, Service Instruction	1	80005-
34		09842-A0481	Plate, Caution, No Jump Start	1	80005-
35		09642-17000	Plate, Specify Coolant	1	80005-

https://truckmanualshub.com/

FIG. U0100-037001 Marks And Plates, English, With Power Angle Power Tilt Dozer

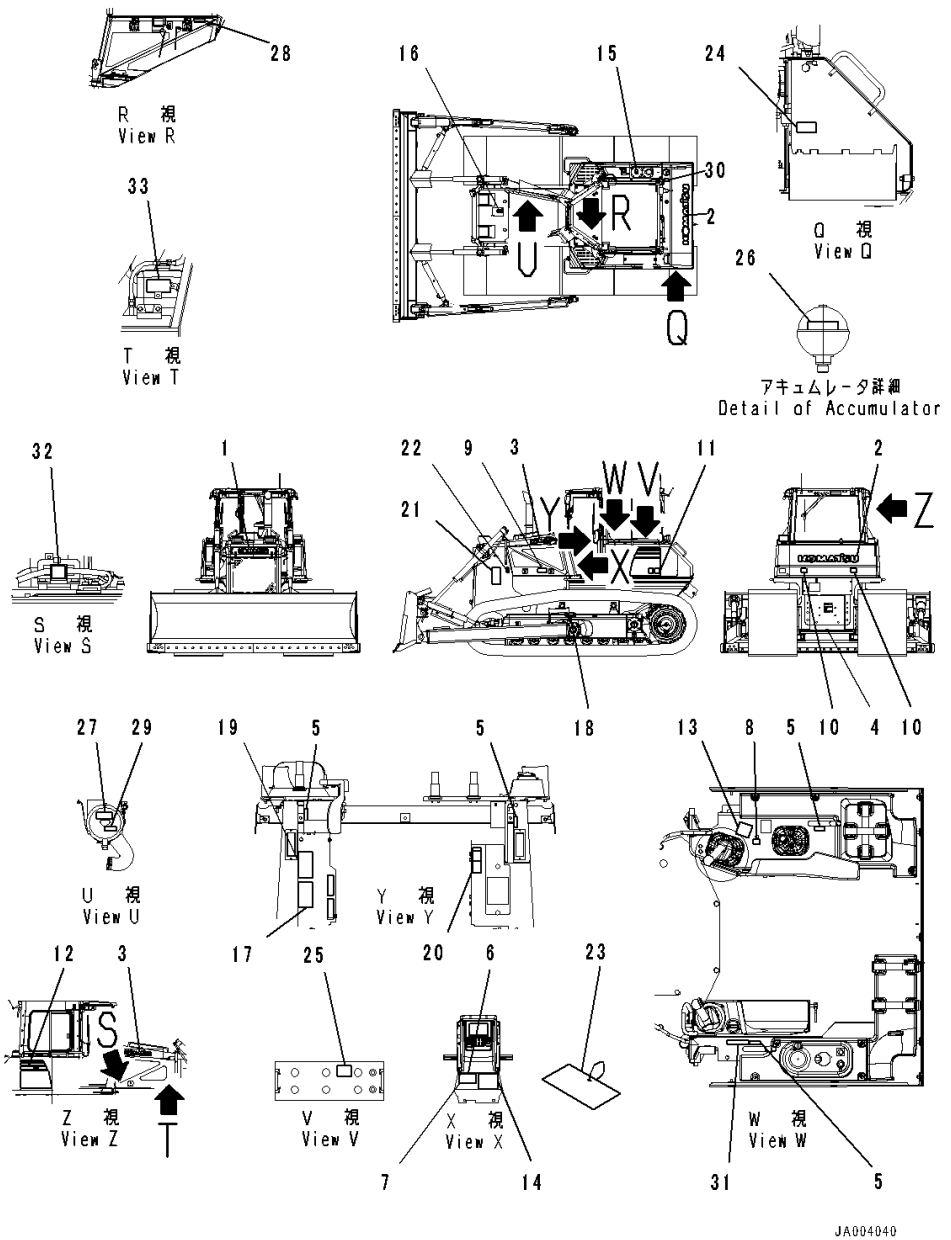

Index	Code	Part Number	Description	Qty	Serial Number
1		09690-F0560	Plate, Mark,Front	1	80005-
2		09690-P1120	Plate, Mark,Rear	1	80005-
3		09690-F0500	Decal, Komatsu Logo	2	80005-
4		09690-M0063	Mark, Komatsu Logo, Anti-Restamp	1	80005-
5		14X-98-11170	Plate, Operating, Lock	4	80005-
6	C2	09602-10001	Plate, Name (Limited Supply)	1	80005-
7		04418-13060	Screw	4	80005-
8		17A-98-11180	Plate, Horn	1	80005-
9		20Y-00-41530	Plate, Symbol, Ecot3	1	80005-
10		14X-98-35181	Plate, Reflector, Rear Reflecter	2	80005-
11		14X-98-51131	Decal, Machine Model, LHS,LHS	1	80005-
12		14X-98-51231	Decal, Machine Model, RHS,RHS	1	80005-
13		124-98-51140	Plate, Work Equipment	1	80005-
14		14X-98-51221	Oil Chart	1	80005-
15		09653-A0481	Plate, Warning, High Temperature, Operating Oil Tank	1	80005-
16		09653-A0481	Plate, Warning, High Temperature, Radiator	1	80005-
17		09654-B0641	Plate, Warning, Before Leaving Seat	1	80005-
18		09657-A0881	Plate	2	80005-
19		09651-A0641	Plate, Warning, Read Manual Before Operating	1	80005-
20		09802-13000	Plate, Warning, Back-up, Before Operating	1	80005-
21		09806-B1683	Plate	2	80005-
22		09667-A0481	Plate, Caution, Rotating Object, While Engine Is Running. Don't Open Cover	2	80005-
23		09963-A1640	Tag, Danger, Do Not Operate	1	80005-
24		09808-A0881	Plate, Warning, Battery Cables	1	80005-
25		09664-70001	Decal, Danger, Battery	2	80005-
26		09659-A057B	Plate, Warning, Explosive Hazard	1	80005-
27		21W-98-41720	Plate, Air Cleaner, Air Cleaner Replace	1	80005-
28		6217-71-6470	Plate, Fuel Filter Replace	1	80005-
29		14X-98-35120	Plate, Pre Filter Caution	1	80005-
30		09669-0000E	Plate, Symbol, Fuel Filler	1	80005-
31		09649-03012	Plate, Engine Stop	1	80005-
32		09842-A0481	Plate, Caution, No Jump Start	1	80005-
33		09642-13000	Plate, Service Instruction, Engine Coolant AF-NAC	1	80005-

https://truckmanualshub.com/

FIG. U0100-038001 Marks And Plates, English, Text Type, With Power Angle Power Tilt Dozer

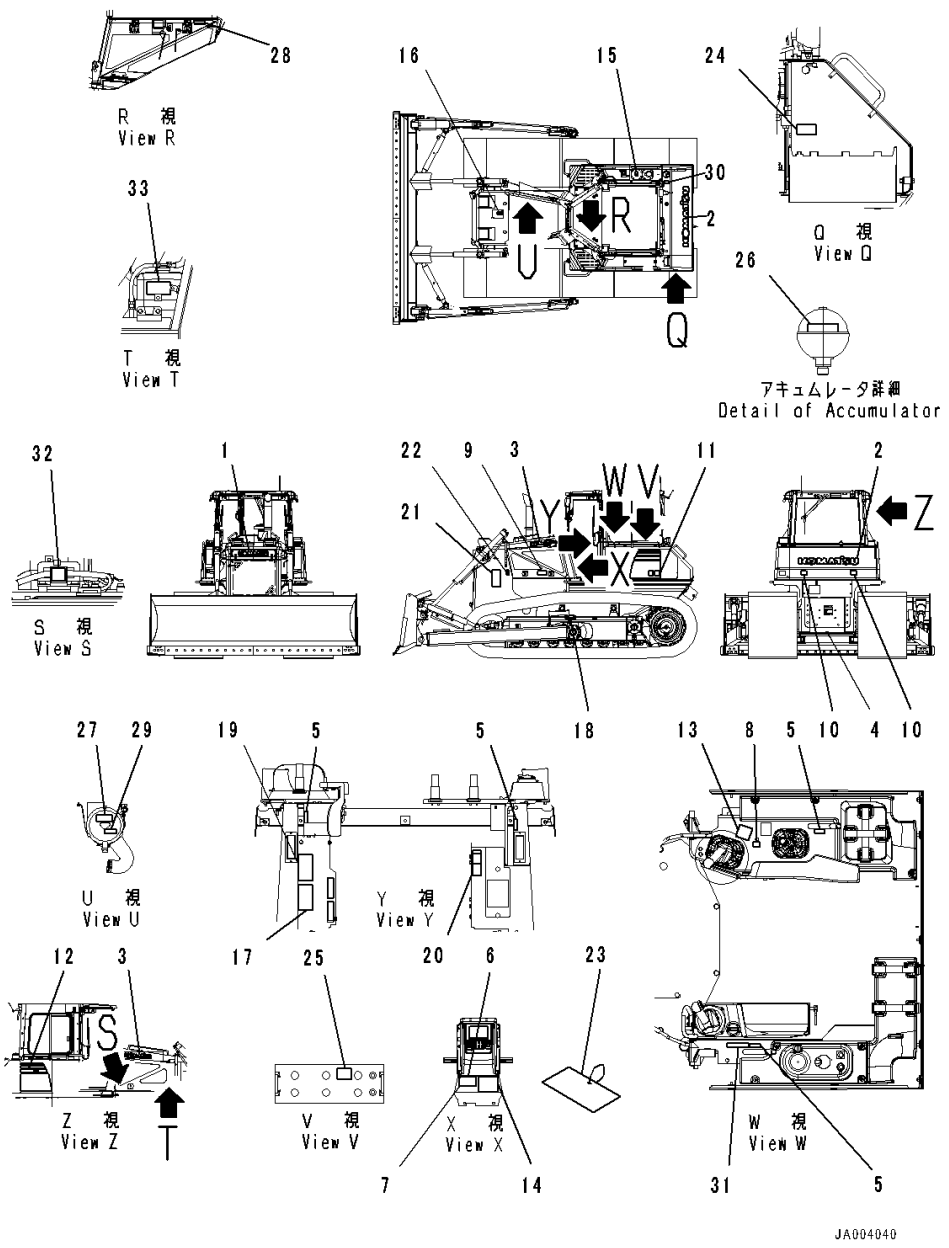

Index	Code	Part Number	Description	Qty	Serial Number
1		09690-F0560	Plate, Mark,Front	1	80005-
2		09690-P1120	Plate, Mark,Rear	1	80005-
3		09690-F0500	Decal, Komatsu Logo,Side	2	80005-
4		09690-M0063	Mark, Komatsu Logo, Anti-Restamp	1	80005-
5		14X-98-11170	Plate, Operating, Lock	4	80005-
6	C2	09602-10001	Plate, Name (Limited Supply)	1	80005-
7		04418-13060	Screw	4	80005-
8		17A-98-11180	Plate, Horn	1	80005-
9		20Y-00-41530	Plate, Symbol, Ecot3	1	80005-
10		14X-98-35181	Plate, Reflector, Rear Reflecter	2	80005-
11		14X-98-51131	Decal, Machine Model, LHS,LHS	1	80005-
12		14X-98-51231	Decal, Machine Model, RHS,RHS	1	80005-
13		124-98-51140	Plate, Work Equipment	1	80005-
14		14X-98-51221	Oil Chart	1	80005-
15		09653-03001	Plate, Warning, High Temperature, Operating Oil Tank	1	80005-
16		09668-03001	Plate, Warning, Hot Water, Radiator	1	80005-
17		09654-33001	Plate, Warning, Before Leaving Seat	1	80005-
18		09657-03003	Plate, Warning, Track Adjustment	2	80005-
19		09651-03001	Plate, Warning, Read Manual Before Operating	1	80005-
20		09802-13000	Plate, Warning, Back-up, Before Operating	1	80005-
21		09812-13000	Plate, Danger, Keep a Safe Distance	2	80005-
22		09667-03001	Plate, Caution, Rotating Object, While Engine Is Running. Don't Open Cover	2	80005-
23		09963-03001	Tag, Danger, Do Not Operate	1	80005-
24		09808-03000	Plate, Warning, Battery Cables	1	80005-
25		09664-40011	Decal, Danger, Battery	2	80005-
26		09659-53000	Plate, Warning, Explosive Hazard	1	80005-
27		21W-98-41720	Plate, Air Cleaner, Air Cleaner Replace	1	80005-
28		6217-71-6470	Plate, Fuel Filter Replace	1	80005-
29		14X-98-35120	Plate, Pre Filter Caution	1	80005-
30		09652-31221	Plate, Caution, Diesel Fuel	1	80005-
31		09649-03012	Plate, Engine Stop	1	80005-
32		09842-A0481	Plate, Caution, No Jump Start	1	80005-
33		09642-13000	Plate, Service Instruction, Engine Coolant AF-NAC	1	80005-

https://truckmanualshub.com/

FIG. U0100-039001 Marks And Plates, English, Text Type, For North America, With Power Angle Power Tilt Dozer

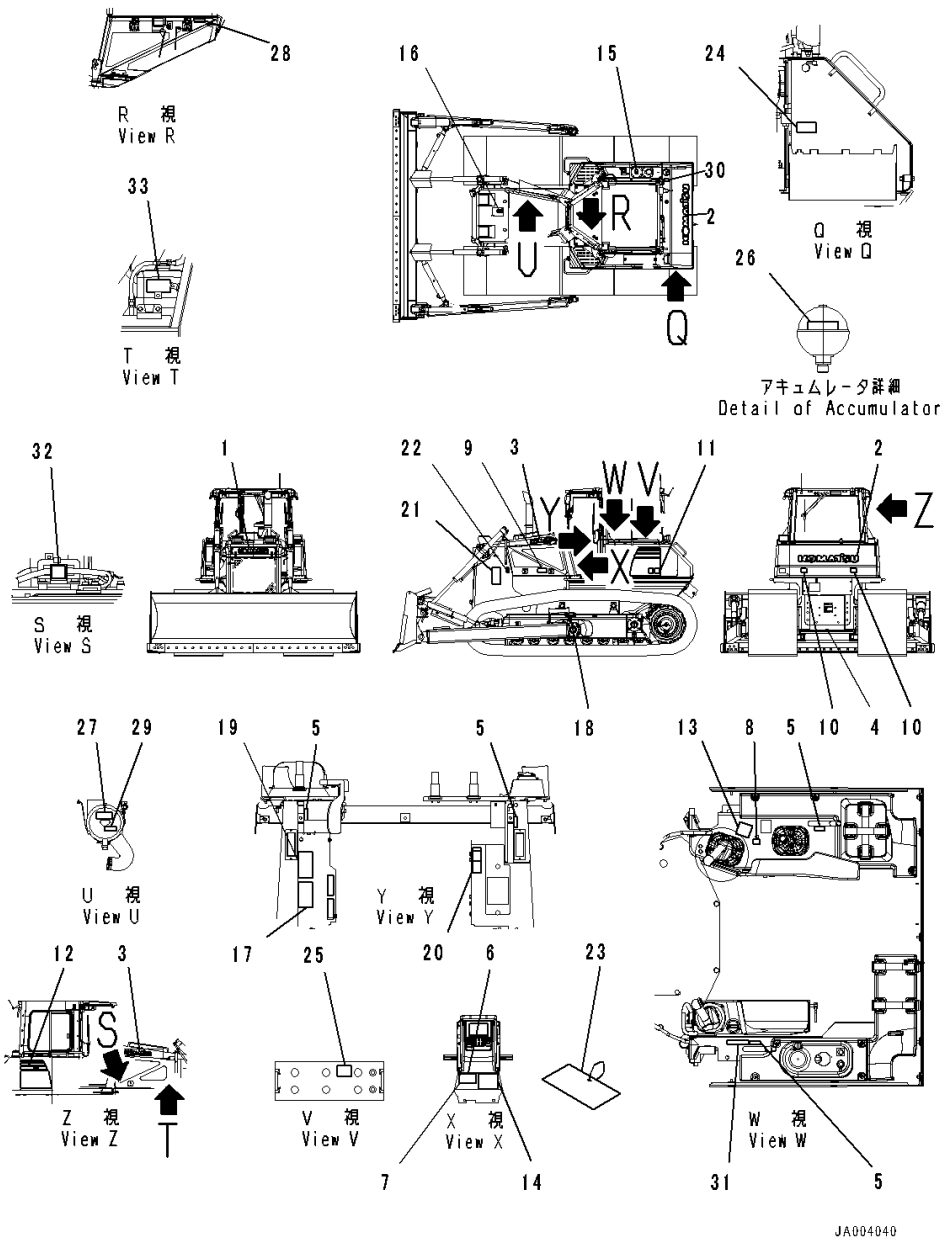

Index	Code	Part Number	Description	Qty	Serial Number
1		09690-F0560	Plate, Mark,Front	1	80005-
2		09690-P1120	Plate, Mark,Rear	1	80005-
3		09690-F0500	Decal, Komatsu Logo,Side	2	80005-
4		09690-M0063	Mark, Komatsu Logo, Anti-Restamp	1	80005-
5		14X-98-11170	Plate, Operating, Lock	4	80005-
6	C2	09602-10001	Plate, Name (Limited Supply)	1	80005-
7		04418-13060	Screw	4	80005-
8		17A-98-11180	Plate, Horn	1	80005-
9		20Y-00-41530	Plate, Symbol, Ecot3	1	80005-
10		14X-98-35181	Plate, Reflector, Rear Reflecter	2	80005-
11		14X-98-51131	Decal, Machine Model, LHS,LHS	1	80005-
12		14X-98-51231	Decal, Machine Model, RHS,RHS	1	80005-
13		124-98-51140	Plate, Work Equipment	1	80005-
14		14X-98-51221	Oil Chart	1	80005-
15		09653-01001	Plate, Warning, High Temperature, Operating Oil Tank	1	80005-
16		09668-01001	Plate, Warning, Hot Water, Radiator	1	80005-
17		09654-31001	Plate, After Operating	1	80005-
18		09657-01004	Plate, Adjustment Of Track Tension	2	80005-
19		09651-01001	Plate, Warning, Read Manual Before Operating, Before Operating	1	80005-
20		09802-11000	Plate, Safety Confirm Of Rear	1	80005-
21		09812-11000	Plate, Danger, Keep a Safe Distance, Danger Keep Away	2	80005-
22		09667-01001	Plate, Caution, Rotating Object, While Engine Is Running. Don't Open Cover	2	80005-
23		09963-01001	Tag, Danger, Do Not Operate	1	80005-
24		09808-01000	Plate, Warning, Battery Cables	1	80005-
25		09664-40111	Decal, Danger, Battery	2	80005-
26		09659-51000	Plate, Warning, Explosive Hazard	1	80005-
27		21W-98-41940	Plate, Air Cleaner Replace	1	80005-
28		6217-71-6510	Plate, Fuel Filter Replace	1	80005-
29		14X-98-35130	Plate, Pre Filter Caution	1	80005-
30		09669-0000E	Plate, Symbol, Fuel Filler	1	80005-
31		09649-01012	Plate, Engine Stop, Engine Stop	1	80005-
32		09842-A0481	Plate, Caution, No Jump Start	1	80005-
33		09642-11000	Plate, Service Instruction, Engine Coolant AF-NAC, Specify Coolant	1	80005-

https://truckmanualshub.com/

FIG. U0100-040001 Marks And Plates, Spanish, With Power Angle Power Tilt Dozer

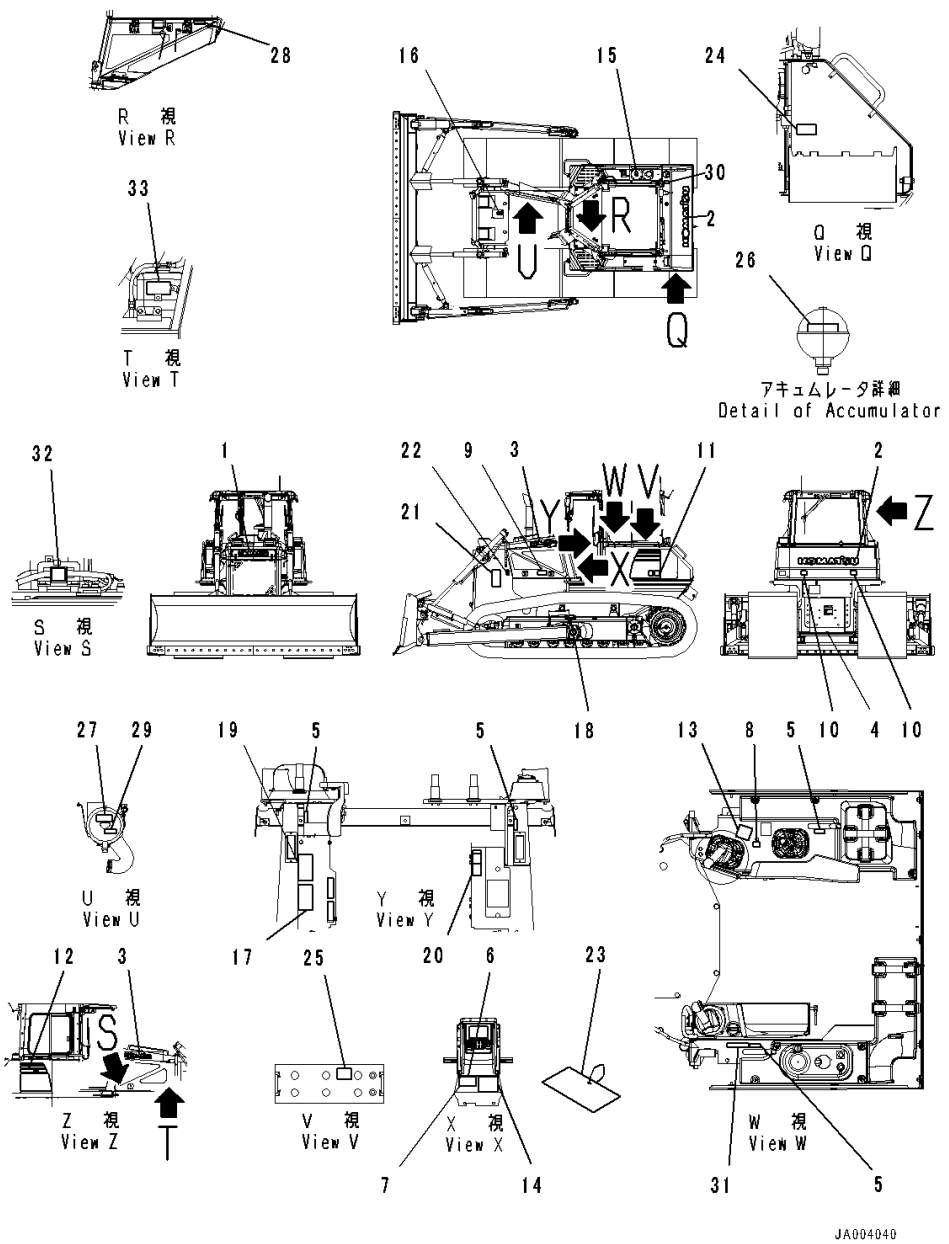

Index	Code	Part Number	Description	Qty	Serial Number
1		09690-F0560	Plate, Mark,Front	1	80005-
2		09690-P1120	Plate, Mark,Rear	1	80005-
3		09690-F0500	Decal, Komatsu Logo,Side	2	80005-
4		09690-M0063	Mark, Komatsu Logo, Anti-Restamp	1	80005-
5		14X-98-11170	Plate, Operating, Lock	4	80005-
6	C2	09602-10001	Plate, Name (Limited Supply)	1	80005-
7		04418-13060	Screw	4	80005-
8		17A-98-11180	Plate, Horn	1	80005-
9		20Y-00-41530	Plate, Symbol, Ecot3	1	80005-
10		14X-98-35181	Plate, Reflector, Raer Reflecter	2	80005-
11		14X-98-51131	Decal, Machine Model, LHS,LHS	1	80005-
12		14X-98-51231	Decal, Machine Model, RHS,RHS	1	80005-
13		124-98-51140	Plate, Work Equipment	1	80005-
14		14X-98-51221	Oil Chart	1	80005-
15		09653-A0481	Plate, Warning, High Temperature, Operating Oil Tank	1	80005-
16		09653-A0481	Plate, Warning, High Temperature, Radiator	1	80005-
17		09654-B0641	Plate, Warning, Before Leaving Seat	1	80005-
18		09657-A0881	Plate	2	80005-
19		09651-A0641	Plate, Warning, Read Manual Before Operating	1	80005-
20		09802-11000	Plate, Safety Confirm Of Rear	1	80005-
21		09806-B1683	Plate	2	80005-
22		09667-A0481	Plate, Caution, Rotating Object, While Engine Is Running. Don't Open Cover	2	80005-
23		09963-A1640	Tag, Danger, Do Not Operate	1	80005-
24		09808-A0881	Plate, Warning, Battery Cables	1	80005-
25		09664-70001	Decal, Danger, Battery	2	80005-
26		09659-A057B	Plate, Warning, Explosive Hazard	1	80005-
27		21W-98-41940	Plate, Air Cleaner Replace	1	80005-
28		6217-71-6510	Plate, Fuel Filter Replace	1	80005-
29		14X-98-35130	Plate, Pre Filter Caution	1	80005-
30		09669-0000E	Plate, Symbol, Fuel Filler	1	80005-
31		09649-01012	Plate, Engine Stop, Engine Stop	1	80005-
32		09842-A0481	Plate, Caution, No Jump Start	1	80005-
33		09642-11000	Plate, Service Instruction, Engine Coolant AF-NAC, Safety Coolant	1	80005-

https://truckmanualshub.com/

FIG. U0100-041001 Marks And Plates, French, With Power Angle Power Tilt Dozer

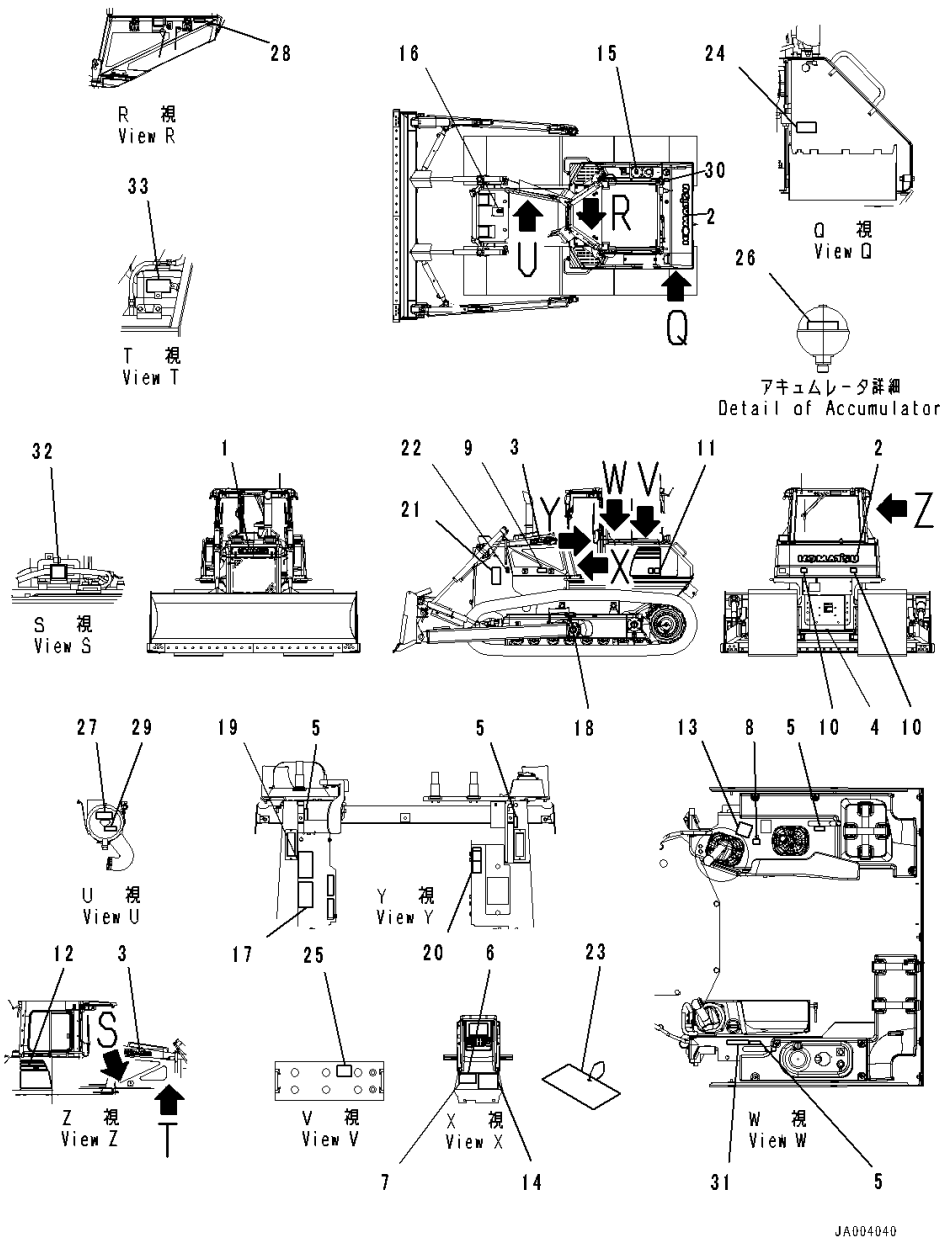

Index	Code	Part Number	Description	Qty	Serial Number
1		09690-F0560	Plate, Mark,Front	1	80005-
2		09690-P1120	Plate, Mark,Rear	1	80005-
3		09690-F0500	Decal, Komatsu Logo,Side	2	80005-
4		09690-M0063	Mark, Komatsu Logo, Anti-Restamp	1	80005-
5		14X-98-11170	Plate, Operating, Lock	4	80005-
6	C2	09602-10001	Plate, Name (Limited Supply)	1	80005-
7		04418-13060	Screw	4	80005-
8		17A-98-11180	Plate, Horn	1	80005-
9		20Y-00-41530	Plate, Symbol, Ecot3	1	80005-
10		14X-98-35181	Plate, Reflector, Rear Reflecter	2	80005-
11		14X-98-51131	Decal, Machine Model, LHS,LHS	1	80005-
12		14X-98-51231	Decal, Machine Model, RHS,RHS	1	80005-
13		124-98-51140	Plate, Work Equipment	1	80005-
14		14X-98-51221	Oil Chart	1	80005-
15		09653-A0481	Plate, Warning, High Temperature, Operating Oil Tank	1	80005-
16		09653-A0481	Plate, Warning, High Temperature, Radiator	1	80005-
17		09654-B0641	Plate, Warning, Before Leaving Seat	1	80005-
18		09657-A0881	Plate	2	80005-
19		09651-A0641	Plate, Warning, Read Manual Before Operating	1	80005-
20		09802-15000	Plate	1	80005-
21		09806-B1683	Plate	2	80005-
22		09667-A0481	Plate, Caution, Rotating Object, While Engine Is Running. Don't Open Cover	2	80005-
23		09963-A1640	Tag, Danger, Do Not Operate	1	80005-
24		09808-A0881	Plate, Warning, Battery Cables	1	80005-
25		09664-70001	Decal, Danger, Battery	2	80005-
26		09659-A057B	Plate, Warning, Explosive Hazard	1	80005-
27		14X-98-35320	Plate, Air Cleaner Replace	1	80005-
28		6217-71-6490	Plate, Caution, Fuel Filter, Fuel Filter Replace	1	80005-
29		14X-98-35150	Plate, Pre Filter Caution	1	80005-
30		09669-0000E	Plate, Symbol, Fuel Filler	1	80005-
31		09649-05012	Plate	1	80005-
32		09842-A0481	Plate, Caution, No Jump Start	1	80005-
33		09642-15000	Plate	1	80005-

https://truckmanualshub.com/

FIG. U0100-042001 Marks And Plates, Germany, With Power Angle Power Tilt Dozer

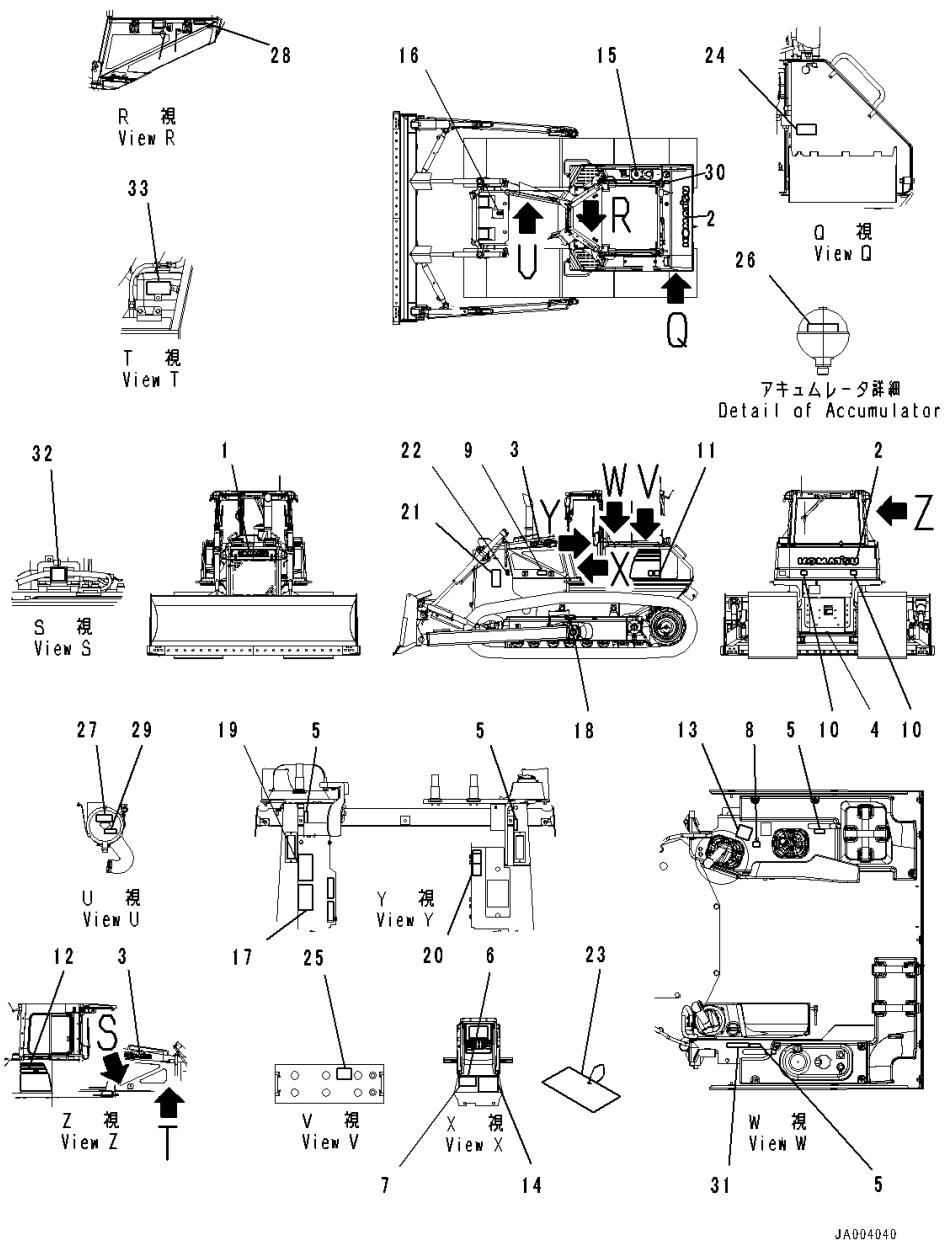

Index	Code	Part Number	Description	Qty	Serial Number
1		09690-F0560	Plate, Mark,Front	1	80005-
2		09690-P1120	Plate, Mark,Rear	1	80005-
3		09690-F0500	Decal, Komatsu Logo,Side	2	80005-
4		09690-M0063	Mark, Komatsu Logo, Anti-Restamp	1	80005-
5		14X-98-11170	Plate, Operating, Lock	4	80005-
6	C2	09602-10001	Plate, Name (Limited Supply)	1	80005-
7		04418-13060	Screw	4	80005-
8		17A-98-11180	Plate, Horn	1	80005-
9		20Y-00-41530	Plate, Symbol, Ecot3	1	80005-
10		14X-98-35181	Plate, Reflector, Rear Reflecter	2	80005-
11		14X-98-51131	Decal, Machine Model, LHS,LHS	1	80005-
12		14X-98-51231	Decal, Machine Model, RHS,RHS	1	80005-
13		124-98-51140	Plate, Work Equipment	1	80005-
14		14X-98-51221	Oil Chart	1	80005-
15		09653-A0481	Plate, Warning, High Temperature, Operating Oil Tank	1	80005-
16		09653-A0481	Plate, Warning, High Temperature, Radiator	1	80005-
17		09654-B0641	Plate, Warning, Before Leaving Seat	1	80005-
18		09657-A0881	Plate	2	80005-
19		09651-A0641	Plate, Warning, Read Manual Before Operating	1	80005-
20		09802-12000	Plate	1	80005-
21		09806-B1683	Plate	2	80005-
22		09667-A0481	Plate, Caution, Rotating Object, While Engine Is Running. Don't Open Cover	2	80005-
23		09963-A1640	Tag, Danger, Do Not Operate	1	80005-
24		09808-A0881	Plate, Warning, Battery Cables	1	80005-
25		09664-70001	Decal, Danger, Battery	2	80005-
26		09659-A057B	Plate, Warning, Explosive Hazard	1	80005-
27		14X-98-35310	Plate, Air Cleaner Replace	1	80005-
28		6217-71-6480	Plate, Fuel Filter Replace	1	80005-
29		14X-98-35140	Plate, Pre Filter Caution	1	80005-
30		09669-0000E	Plate, Symbol, Fuel Filler	1	80005-
31		09649-02012	Plate	1	80005-
32		09842-A0481	Plate, Caution, No Jump Start	1	80005-
33		09642-12000	Plate, Coolant	1	80005-

https://truckmanualshub.com/

FIG. U0100-043001 Marks And Plates, Turkish, With Power Angle Power Tilt Dozer

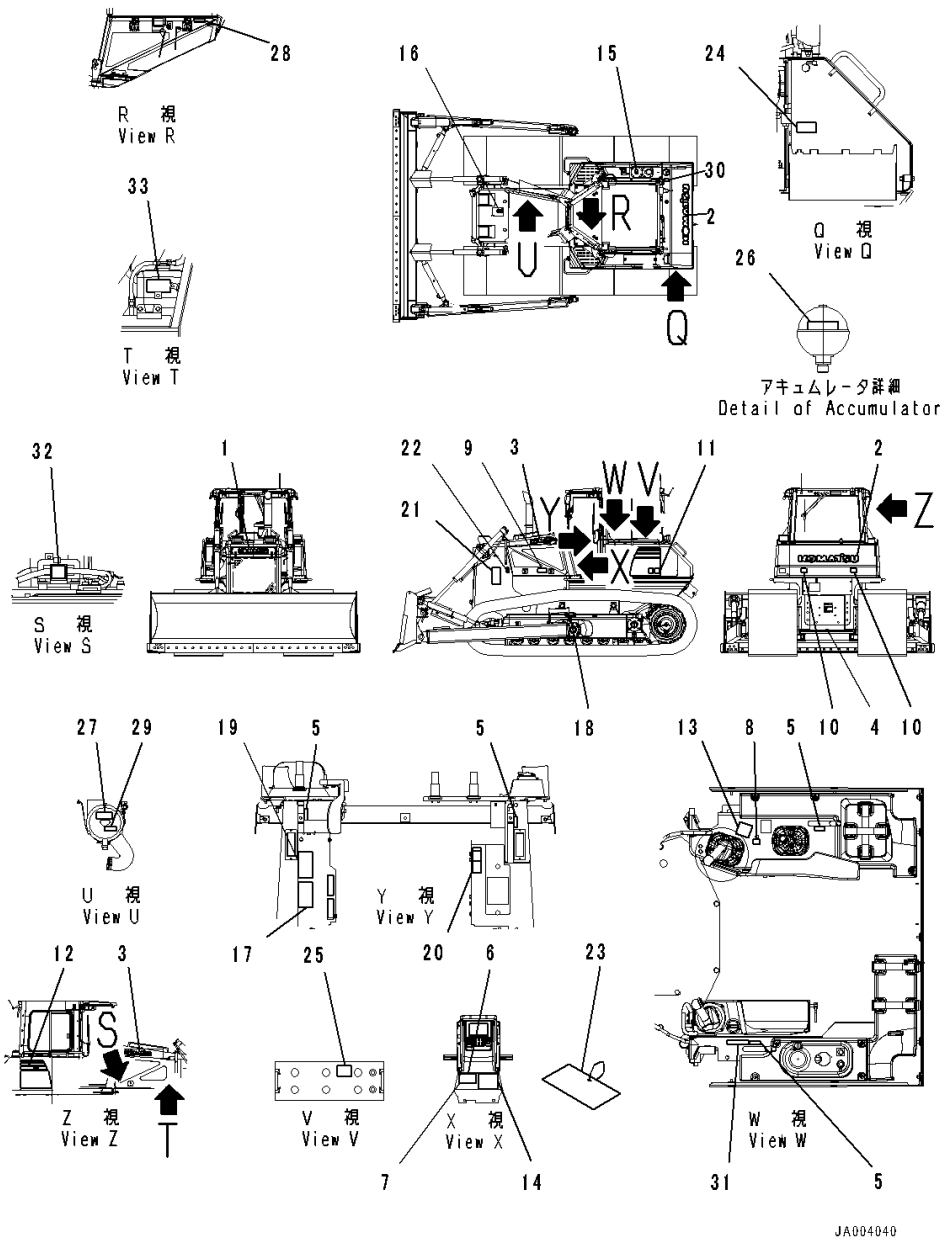

Index	Code	Part Number	Description	Qty	Serial Number
1		09690-F0560	Plate, Mark,Front	1	80005-
2		09690-P1120	Plate, Mark,Rear	1	80005-
3		09690-F0500	Decal, Komatsu Logo,Side	2	80005-
4		09690-M0063	Mark, Komatsu Logo, Anti-Restamp	1	80005-
5		14X-98-11170	Plate, Operating, Lock	4	80005-
6	C2	09602-10001	Plate, Name (Limited Supply)	1	80005-
7		04418-13060	Screw	4	80005-
8		17A-98-11180	Plate, Horn	1	80005-
9		20Y-00-41530	Plate, Symbol, Ecot3	1	80005-
10		14X-98-35181	Plate, Reflector, Rear Reflecter	2	80005-
11		14X-98-51131	Decal, Machine Model, LHS,LHS	1	80005-
12		14X-98-51231	Decal, Machine Model, RHS,RHS	1	80005-
13		124-98-51140	Plate, Work Equipment	1	80005-
14		14X-98-51221	Oil Chart	1	80005-
15		09653-A0481	Plate, Warning, High Temperature, Operating Oil Tank	1	80005-
16		09653-A0481	Plate, Warning, High Temperature, Radiator	1	80005-
17		09654-B0641	Plate, Warning, Before Leaving Seat	1	80005-
18		09657-A0881	Plate	2	80005-
19		09651-A0641	Plate, Warning, Read Manual Before Operating	1	80005-
20		17M-98-41320	Plate, Safety Confirm Of Rear	1	80005-
21		09806-B1683	Plate	2	80005-
22		09667-A0481	Plate, Caution, Rotating Object, While Engine Is Running. Don't Open Cover	2	80005-
23		09963-A1640	Tag, Danger, Do Not Operate	1	80005-
24		09808-A0881	Plate, Warning, Battery Cables	1	80005-
25		09664-70001	Decal, Danger, Battery	2	80005-
26		09659-A057B	Plate, Warning, Explosive Hazard	1	80005-
27		17A-98-21720	Plate, Air Cleaner Replace	1	80005-
28		6217-71-6680	Plate, Fuel Filter Replace	1	80005-
29		14X-98-35170	Plate, Pre Filter Caution	1	80005-
30		09669-0000E	Plate, Symbol, Fuel Filler	1	80005-
31		17A-98-23510	Plate, Engine Stop	1	80005-
32		09842-A0481	Plate, Caution, No Jump Start	1	80005-
33		09642-11100	Plate	1	80005-

https://truckmanualshub.com/

FIG. U0100-044001 Marks And Plates, French, Text Type, With Power Angle Power Tilt Dozer

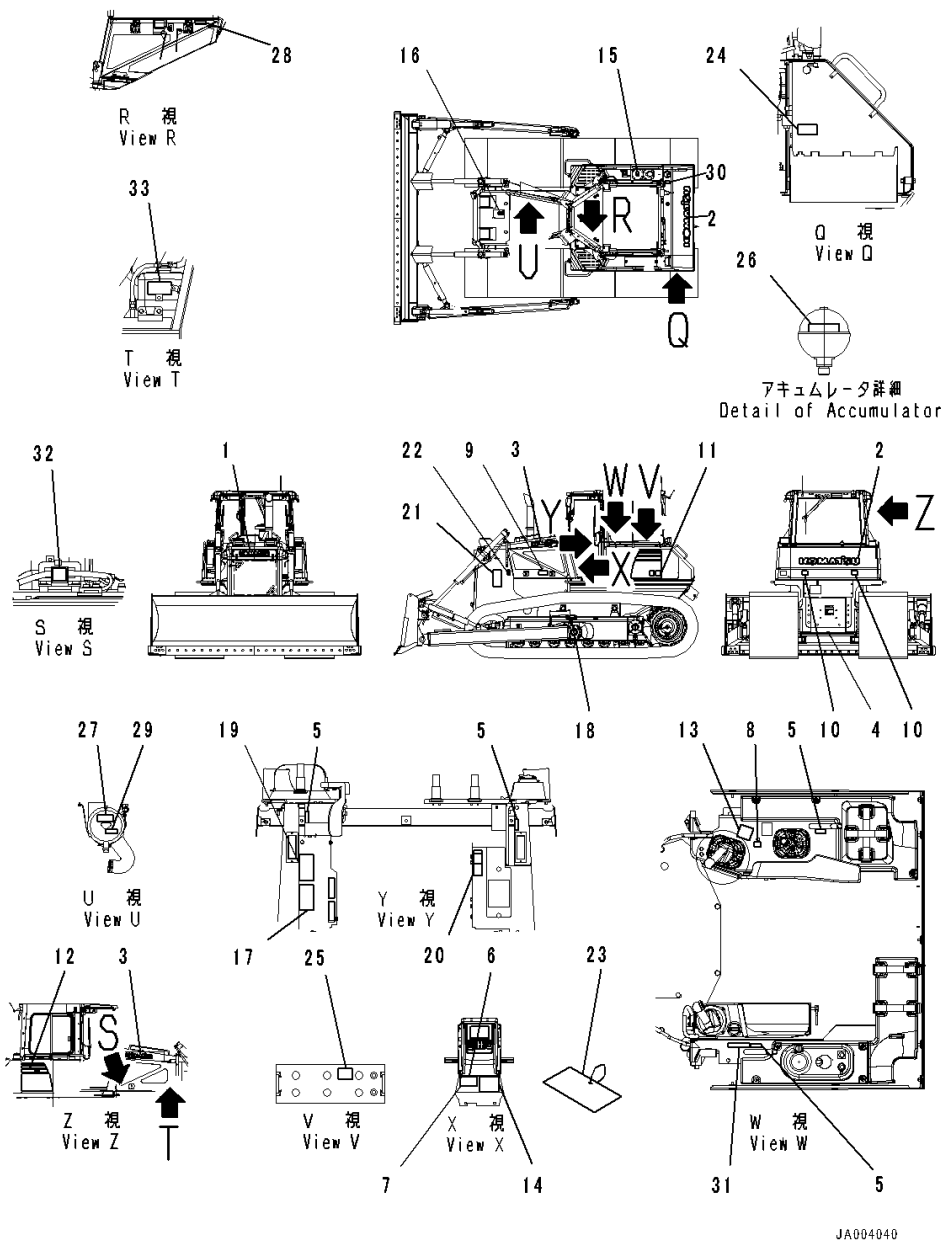

Index	Code	Part Number	Description	Qty	Serial Number
1		09690-F0560	Plate, Mark,Front	1	80005-
2		09690-P1120	Plate, Mark,Rear	1	80005-
3		09690-F0500	Decal, Komatsu Logo,Side	2	80005-
4		09690-M0063	Mark, Komatsu Logo, Anti-Restamp	1	80005-
5		14X-98-11170	Plate, Operating, Lock	4	80005-
6	C2	09602-10001	Plate, Name (Limited Supply)	1	80005-
7		04418-13060	Screw	4	80005-
8		17A-98-11180	Plate, Horn	1	80005-
9		20Y-00-41530	Plate, Symbol, Ecot3	1	80005-
10		14X-98-35181	Plate, Reflector, Rear Restamp	2	80005-
11		14X-98-51131	Decal, Machine Model, LHS,LHS	1	80005-
12		14X-98-51231	Decal, Machine Model, RHS,RHS	1	80005-
13		124-98-51140	Plate, Work Equipment	1	80005-
14		14X-98-51221	Oil Chart	1	80005-
15		09653-05001	Decal, Warning, High Temperature	1	80005-
16		09668-05001	Decal, Warning, Hot Water	1	80005-
17		09654-35001	Decal, Warning, Before Leaving Seat	1	80005-
18		09657-05003	Decal, Warning, Track Adjustment	2	80005-
19		09651-05001	Plate, Before Operating	1	80005-
20		09802-15000	Plate	1	80005-
21		09812-15000	Decal, Danger, Keep a Safe Distance	2	80005-
22		09667-05001	Plate, Caution, Rotating Object	2	80005-
23		09963-05001	Tag, Danger, Do Not Operate	1	80005-
24		09808-05000	Decal, Warning, Battery Cables	1	80005-
25		09664-20011	Decal, Danger, Battery	2	80005-
26		09659-55000	Decal, Warning, Explosive Hazard	1	80005-
27		14X-98-35320	Plate, Air Cleaner Replace	1	80005-
28		6217-71-6490	Plate, Caution, Fuel Filter, Fuel Filter Replace	1	80005-
29		14X-98-35150	Plate, Pre Filter Caution	1	80005-
30		09652-51221	Decal, Caution, Fuel Tank Drain	1	80005-
31		09649-05012	Plate	1	80005-
32		09842-A0481	Plate, Caution, No Jump Start	1	80005-
33		09642-15000	Plate	1	80005-

https://truckmanualshub.com/

FIG. U0100-045001 Marks And Plates, English, EU Regulation Guard Level 2, With Power Angle Power Tilt Dozer

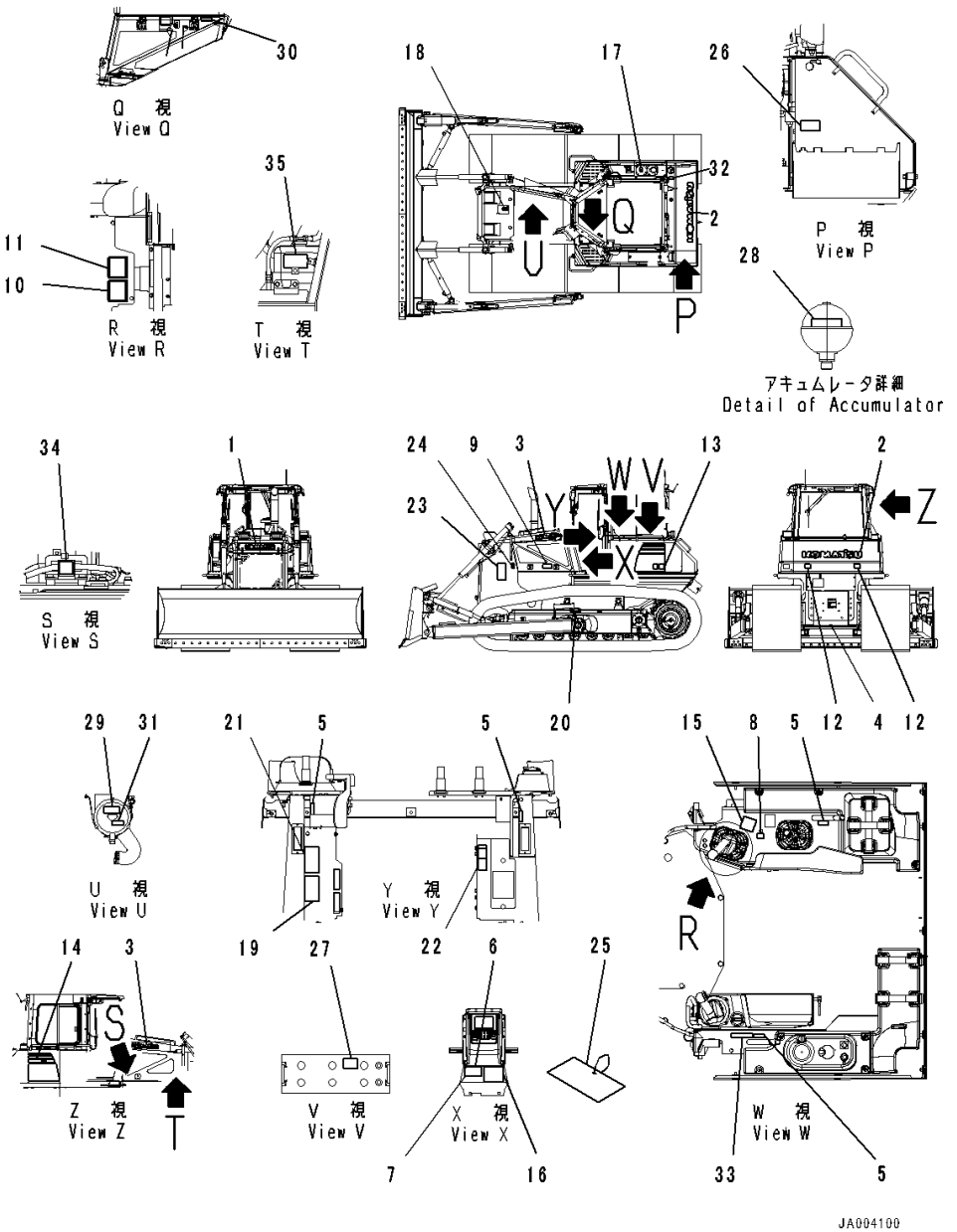

Index	Code	Part Number	Description	Qty	Serial Number
1		09690-F0560	Plate, Mark,Front,Rear	1	80005-
2		09690-P1120	Plate, Mark,Side	1	80005-
3		09690-F0500	Decal, Komatsu Logo	2	80005-
4		09690-M0063	Mark, Komatsu Logo, Anti-Restamp	1	80005-
5		14X-98-11170	Plate, Operating, Lock	4	80005-
6	C2	09602-00001	Plate, Name (Limited Supply)	1	80005-
7		04418-13060	Screw	4	80005-
8		17A-98-11180	Plate, Horn	1	80005-
9		20Y-00-41530	Plate, Symbol, Ecot3	1	80005-
10		09696-50078	Plate, EU Ope Ear Noise	1	80005-
11		09696-40108	Plate	1	80005-
12		14X-98-35181	Plate, Reflector, Rear Reflecter	2	80005-
13		14X-98-51131	Decal, Machine Model, LHS,LHS	1	80005-
14		14X-98-51231	Decal, Machine Model, RHS,RHS	1	80005-
15		124-98-51140	Plate, Work Equipment	1	80005-
16		14X-98-51221	Oil Chart	1	80005-
17		09653-A0481	Plate, Warning, High Temperature, Operating Oil Tank	1	80005-
18		09653-A0481	Plate, Warning, High Temperature, Radiator	1	80005-
19		09654-B0641	Plate, Warning, Before Leaving Seat	1	80005-
20		09657-A0881	Plate	2	80005-
21		09651-A0641	Plate, Warning, Read Manual Before Operating	1	80005-
22		09802-13000	Plate, Warning, Back-up, Safety Confirm Of Rear	1	80005-
23		09806-B1683	Plate	2	80005-
24		09667-A0481	Plate, Caution, Rotating Object, While Engine Is Running. Don't Open Cover	2	80005-
25		09963-A1640	Tag, Danger, Do Not Operate	1	80005-
26		09808-A0881	Plate, Warning, Battery Cables	1	80005-
27		09664-60000	Decal, Danger, Battery	2	80005-
28		09659-A057B	Plate, Warning, Explosive Hazard	1	80005-
29		21W-98-41720	Plate, Air Cleaner, Air Cleaner Replace	1	80005-
30		6217-71-6470	Plate, Fuel Filter Replace	1	80005-
31		14X-98-35120	Plate, Pre Filter Cution	1	80005-
32		09669-0000E	Plate, Symbol, Fuel Filler	1	80005-
33		09649-03012	Plate, Engine Stop	1	80005-
34		09842-A0481	Plate, Caution, No Jump Start	1	80005-

https://truckmanualshub.com/

FIG. U0100-045001 Marks And Plates, English, EU Regulation Guard Level 2, With Power Angle Power Tilt Dozer

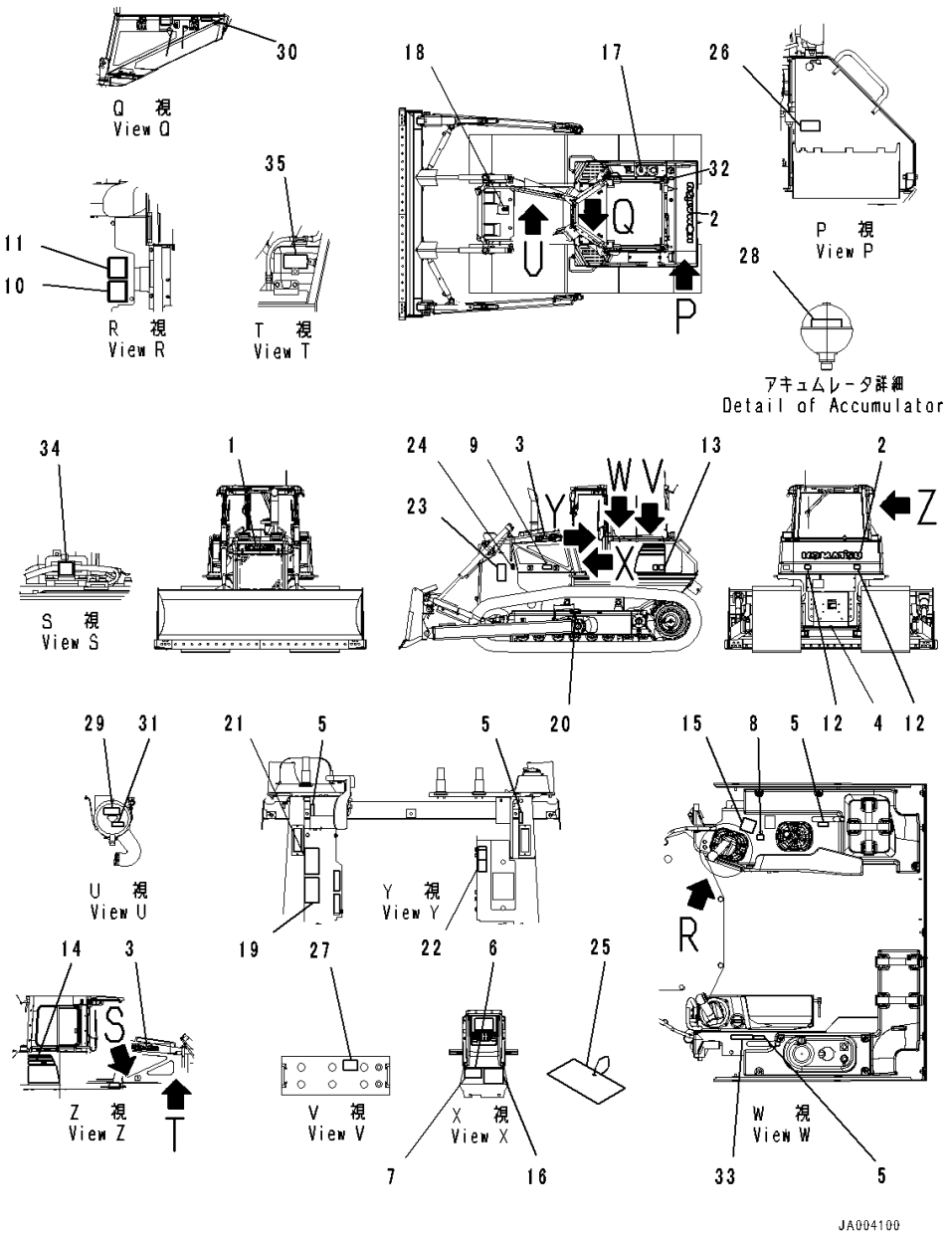

Index	Code	Part Number	Description	Qty	Serial Number
35		09642-13000	Plate, Service Instruction, Engine Coolant AF-NAC	1	80005-

https://truckmanualshub.com/

FIG. U0100-046001 Marks And Plates, Spanish, EU Regulation Guard Level 2, With Power Angle Power Tilt Dozer

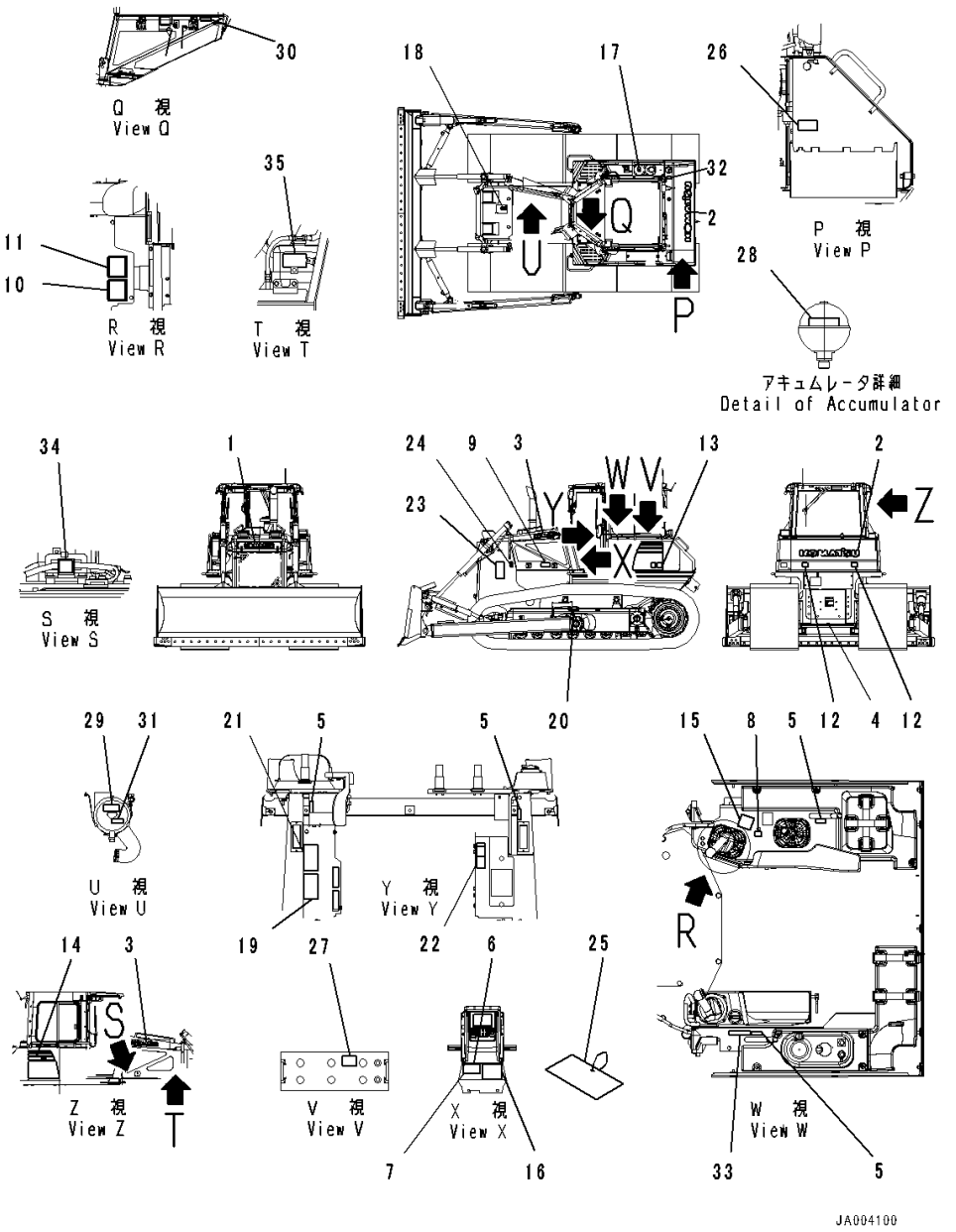

Index	Code	Part Number	Description	Qty	Serial Number
1		09690-F0560	Plate, Mark,Front	1	80005-
2		09690-P1120	Plate, Mark,Rear	1	80005-
3		09690-F0500	Decal, Komatsu Logo,Side	2	80005-
4		09690-M0063	Mark, Komatsu Logo, Anti-Restamp	1	80005-
5		14X-98-11170	Plate, Operating, Lock	4	80005-
6	C2	09602-00001	Plate, Name (Limited Supply)	1	80005-
7		04418-13060	Screw	4	80005-
8		17A-98-11180	Plate, Horn	1	80005-
9		20Y-00-41530	Plate, Symbol, Ecot3	1	80005-
10		09696-50078	Plate, EU Ope Ear Noise	1	80005-
11		09696-40108	Plate	1	80005-
12		14X-98-35181	Plate, Reflector, Rear Reflecter	2	80005-
13		14X-98-51131	Decal, Machine Model, LHS,LHS	1	80005-
14		14X-98-51231	Decal, Machine Model, RHS,RHS	1	80005-
15		124-98-51140	Plate, Work Equipment	1	80005-
16		14X-98-51221	Oil Chart	1	80005-
17		09653-A0481	Plate, Warning, High Temperature, Operating Oil Tank	1	80005-
18		09653-A0481	Plate, Warning, High Temperature, Radiator	1	80005-
19		09654-B0641	Plate, Warning, Before Leaving Seat	1	80005-
20		09657-A0881	Plate	2	80005-
21		09651-A0641	Plate, Warning, Read Manual Before Operating	1	80005-
22		09802-11000	Plate, Safety Confirm Of Rear	1	80005-
23		09806-B1683	Plate	2	80005-
24		09667-A0481	Plate, Caution, Rotating Object, While Engine Is Runnin. Don't Open Rear	2	80005-
25		09963-A1640	Tag, Danger, Do Not Operate	1	80005-
26		09808-A0881	Plate, Warning, Battery Cables	1	80005-
27		09664-60000	Decal, Danger, Battery	2	80005-
28		09659-A057B	Plate, Warning, Explosive Hazard	1	80005-
29		21W-98-41940	Plate, Air Cleaner Repalce	1	80005-
30		6217-71-6510	Plate, Fuel Filter Replace	1	80005-
31		14X-98-35130	Plate, Pre Filter Caution	1	80005-
32		09669-0000E	Plate, Symbol, Fuel Filler	1	80005-
33		09649-01012	Plate, Engine Stop, Engine Stop	1	80005-
34		09842-A0481	Plate, Caution, No Jump Start	1	80005-
35		09642-11000	Plate, Service Instruction, Engine Coolant AF-NAC, Spacify Coolant	1	80005-

https://truckmanualshub.com/

FIG. U0100-047001 Marks And Plates, French, EU Regulation Guard Level 2, With Power Angle Power Tilt Dozer

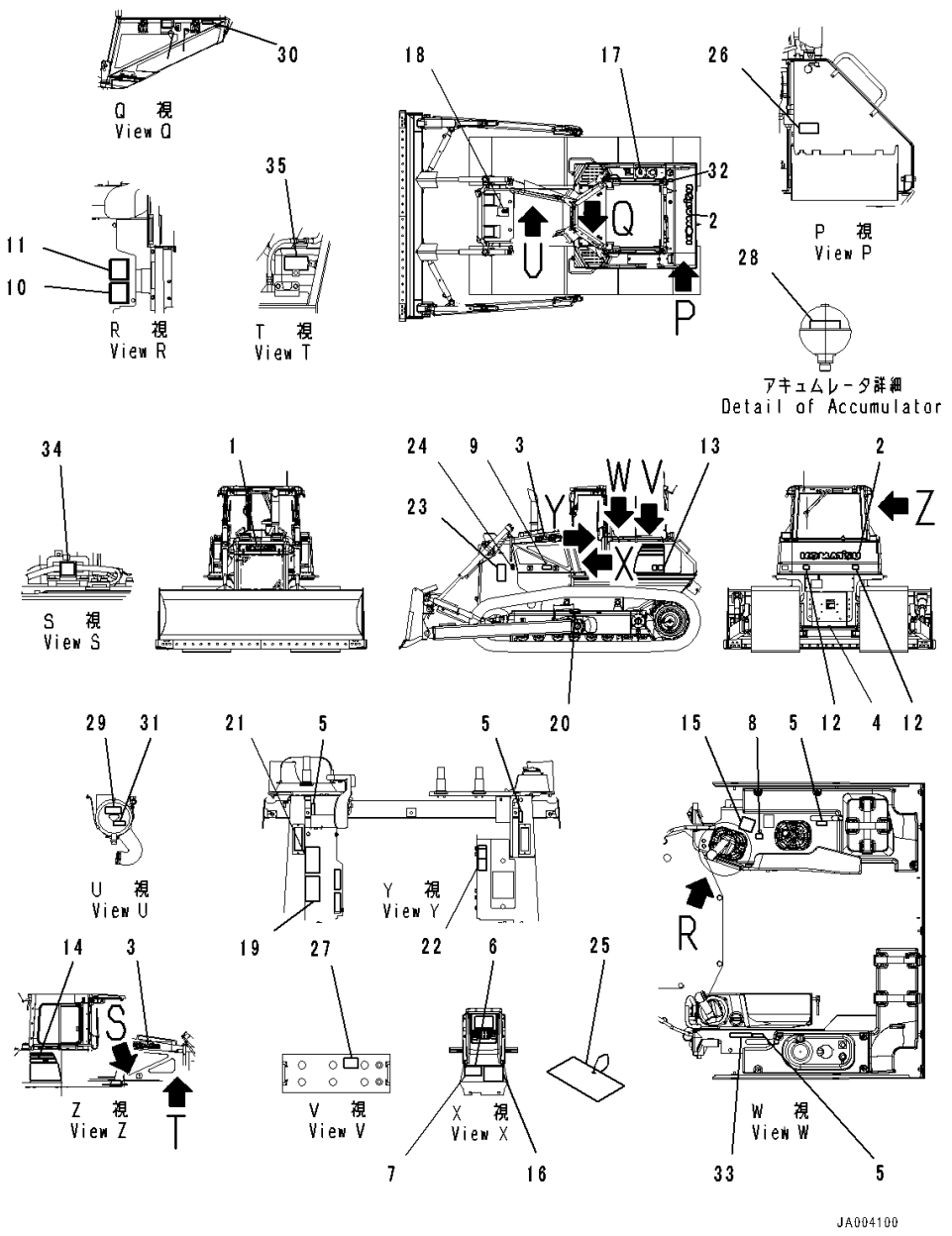

Index	Code	Part Number	Description	Qty	Serial Number
1		09690-F0560	Plate, Mark,Front	1	80005-
2		09690-P1120	Plate, Mark,Rear	1	80005-
3		09690-F0500	Decal, Komatsu Logo,Side	2	80005-
4		09690-M0063	Mark, Komatsu Logo, Anti-Restamp	1	80005-
5		14X-98-11170	Plate, Operating, Lock	4	80005-
6		09602-00001	Plate, Name (Limited Supply)	1	80005-
7		04418-13060	Screw	4	80005-
8		17A-98-11180	Plate, Horn	1	80005-
9		20Y-00-41530	Plate, Symbol, Ecot3	1	80005-
10		09696-50078	Plate, EU Ope Ear Noise	1	80005-
11		09696-40108	Plate	1	80005-
12		14X-98-35181	Plate, Reflector, Rear Reflecter	2	80005-
13		14X-98-51131	Decal, Machine Model, LHS,LHS	1	80005-
14		14X-98-51231	Decal, Machine Model, RHS,RHS	1	80005-
15		124-98-51140	Plate, Work Equipment	1	80005-
16		14X-98-51221	Oil Chart	1	80005-
17		09653-A0481	Plate, Warning, High Temperature, Operating Oil Tank	1	80005-
18		09653-A0481	Plate, Warning, High Temperature, Radiator	1	80005-
19		09654-B0641	Plate, Warning, Before Leaving Seat	1	80005-
20		09657-A0881	Plate	2	80005-
21		09651-A0641	Plate, Warning, Read Manual Before Operating	1	80005-
22		09802-15000	Plate	1	80005-
23		09806-B1683	Plate	2	80005-
24		09667-A0481	Plate, Caution, Rotating Object, While Engine Is Running. Don't Open Cover	2	80005-
25		09963-A1640	Tag, Danger, Do Not Operate	1	80005-
26		09808-A0881	Plate, Warning, Battery Cables	1	80005-
27		09664-60000	Decal, Danger, Battery	2	80005-
28		09659-A057B	Plate, Warning, Explosive Hazard	1	80005-
29		14X-98-35320	Plate, Air Cleaner Repace	1	80005-
30		6217-71-6490	Plate, Caution, Fuel Filter, Fuel Fiilter Replace	1	80005-
31		14X-98-35150	Plate, Pre FIlter Caution	1	80005-
32		09669-0000E	Plate, Symbol, Fuel Filler	1	80005-
33		09649-05012	Plate	1	80005-
34		09842-A0481	Plate, Caution, No Jump Start	1	80005-
35		09642-15000	Plate	1	80005-

https://truckmanualshub.com/

FIG. U0100-048001 Marks And Plates, Germany, EU Regulation Guard Level 2, With Power Angle Power Tilt Dozer

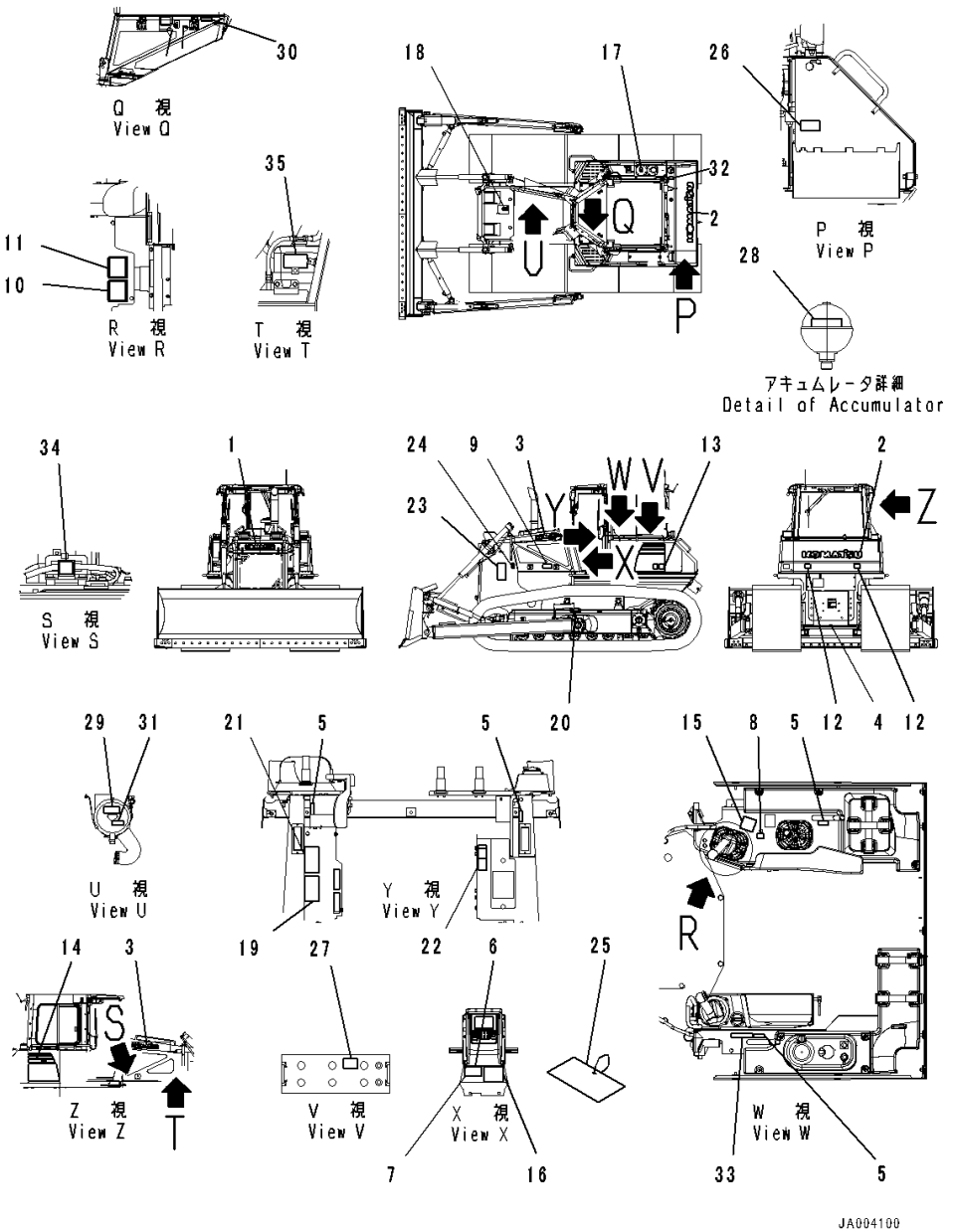

Index	Code	Part Number	Description	Qty	Serial Number
1		09690-F0560	Plate, Mark,Front	1	80005-
2		09690-P1120	Plate, Mark,Rear	1	80005-
3		09690-F0500	Decal, Komatsu Logo,Side	2	80005-
4		09690-M0063	Mark, Komatsu Logo, Anti-Restamp	1	80005-
5		14X-98-11170	Plate, Operating, Lock	4	80005-
6		09602-00001	Plate, Name (Limited Supply)	1	80005-
7		04418-13060	Screw	4	80005-
8		17A-98-11180	Plate, Horn	1	80005-
9		20Y-00-41530	Plate, Symbol, Ecot3	1	80005-
10		09696-50078	Plate, EU Ope Ear Noise	1	80005-
11		09696-40108	Plate	1	80005-
12		14X-98-35181	Plate, Reflector, Rear Reflecter	2	80005-
13		14X-98-51131	Decal, Machine Model, LHS,LHS	1	80005-
14		14X-98-51231	Decal, Machine Model, RHS,RHS	1	80005-
15		124-98-51140	Plate, Work Euipment	1	80005-
16		14X-98-51221	Oil Chart	1	80005-
17		09653-A0481	Plate, Warning, High Temperature, Operating Oil Tank	1	80005-
18		09653-A0481	Plate, Warning, High Temperature, Radiator	1	80005-
19		09654-B0641	Plate, Warning, Before Leaving Seat	1	80005-
20		09657-A0881	Plate	2	80005-
21		09651-A0641	Plate, Warning, Read Manual Before Operating	1	80005-
22		09802-12000	Plate	1	80005-
23		09806-B1683	Plate	2	80005-
24		09667-A0481	Plate, Caution, Rotating Object, While Engine Is Running. Don't Open Cover	2	80005-
25		09963-A1640	Tag, Danger, Do Not Operate	1	80005-
26		09808-A0881	Plate, Warning, Battery Cables	1	80005-
27		09664-60000	Decal, Danger, Battery	2	80005-
28		09659-A057B	Plate, Warning, Explosive Hazard	1	80005-
29		14X-98-35310	Plate, Air Cleaner Replace	1	80005-
30		6217-71-6480	Plate, Fuel FIlter Replace	1	80005-
31		14X-98-35140	Plate, Pre FIlter Caution	1	80005-
32		09669-0000E	Plate, Symbol, Fuel Filler	1	80005-
33		09649-02012	Plate	1	80005-
34		09842-A0481	Plate, Caution, No Jump Start	1	80005-
35		09642-12000	Plate, Coolant	1	80005-

https://truckmanualshub.com/

FIG. U0100-049001 Marks And Plates, Italian, EU Regulation Guard Level 2, With Power Angle Power Tilt Dozer

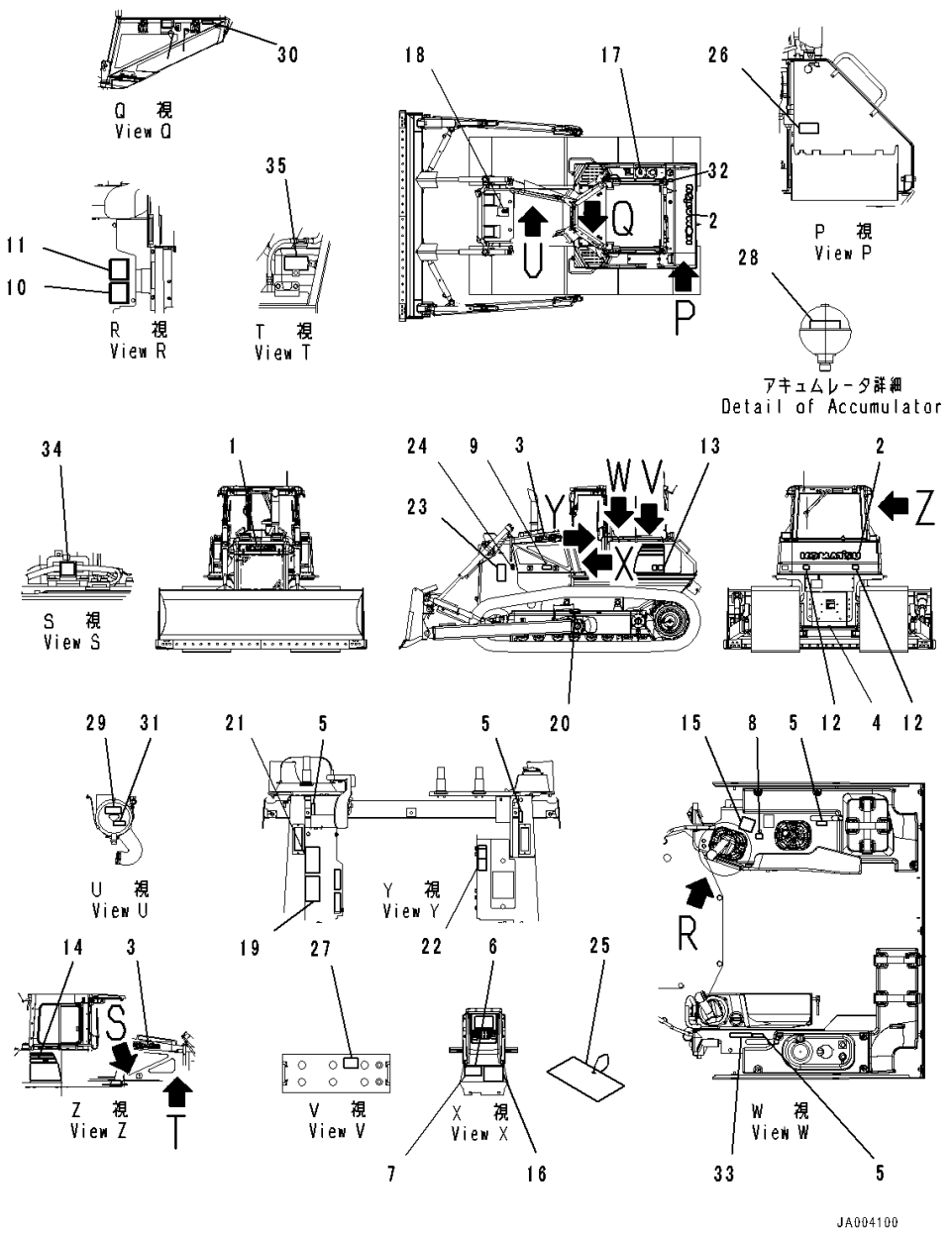

Index	Code	Part Number	Description	Qty	Serial Number
1		09690-F0560	Plate, Mark,Front	1	80005-
2		09690-P1120	Plate, Mark,Rear	1	80005-
3		09690-F0500	Decal, Komatsu Logo,Side	2	80005-
4		09690-M0063	Mark, Komatsu Logo, Anti-Restamp	1	80005-
5		14X-98-11170	Plate, Operating, Lock	4	80005-
6		09602-00001	Plate, Name (Limited Supply)	1	80005-
7		04418-13060	Screw	4	80005-
8		17A-98-11180	Plate, Horn	1	80005-
9		20Y-00-41530	Plate, Symbol, Ecot3	1	80005-
10		09696-50078	Plate, EU Ope Ear Noise	1	80005-
11		09696-40108	Plate	1	80005-
12		14X-98-35181	Plate, Reflector, Rear Reflecter	2	80005-
13		14X-98-51131	Decal, Machine Model, LHS,LHS	1	80005-
14		14X-98-51231	Decal, Machine Model, RHS,RHS	1	80005-
15		124-98-51140	Plate, Work Equipment	1	80005-
16		14X-98-51221	Oil Chart	1	80005-
17		09653-A0481	Plate, Warning, High Temperature, Operating Oil Tank	1	80005-
18		09653-A0481	Plate, Warning, High Temperature, Radiator	1	80005-
19		09654-B0641	Plate, Warning, Before Leaving Seat	1	80005-
20		09657-A0881	Plate	2	80005-
21		09651-A0641	Plate, Warning, Read Manual Before Operating	1	80005-
22		09802-16000	Plate	1	80005-
23		09806-B1683	Plate	2	80005-
24		09667-A0481	Plate, Caution, Rotating Object, While Engine Is Running. Don't Open Cover	2	80005-
25		09963-A1640	Tag, Danger, Do Not Operate	1	80005-
26		09808-A0881	Plate, Warning, Battery Cables	1	80005-
27		09664-60000	Decal, Danger, Battery	2	80005-
28		09659-A057B	Plate, Warning, Explosive Hazard	1	80005-
29		14X-98-35420	Plate, Air Cleaner Replace	1	80005-
30		6217-71-6550	Plate	1	80005-
31		14X-98-35250	Plate, Pre Filter Replace	1	80005-
32		09669-0000E	Plate, Symbol, Fuel Filler	1	80005-
33		09649-06012	Plate, Engine Stop	1	80005-
34		09842-A0481	Plate, Caution, No Jump Start	1	80005-
35		09642-16000	Plate, Specify Coolant	1	80005-

https://truckmanualshub.com/

FIG. U0100-050001 Marks And Plates, Portuguese, EU Regulation Guard Level 2, For 3000mm, Power Angle Power Tilt Blade, Power Angle Power Tilt Dozer, Inside Frame

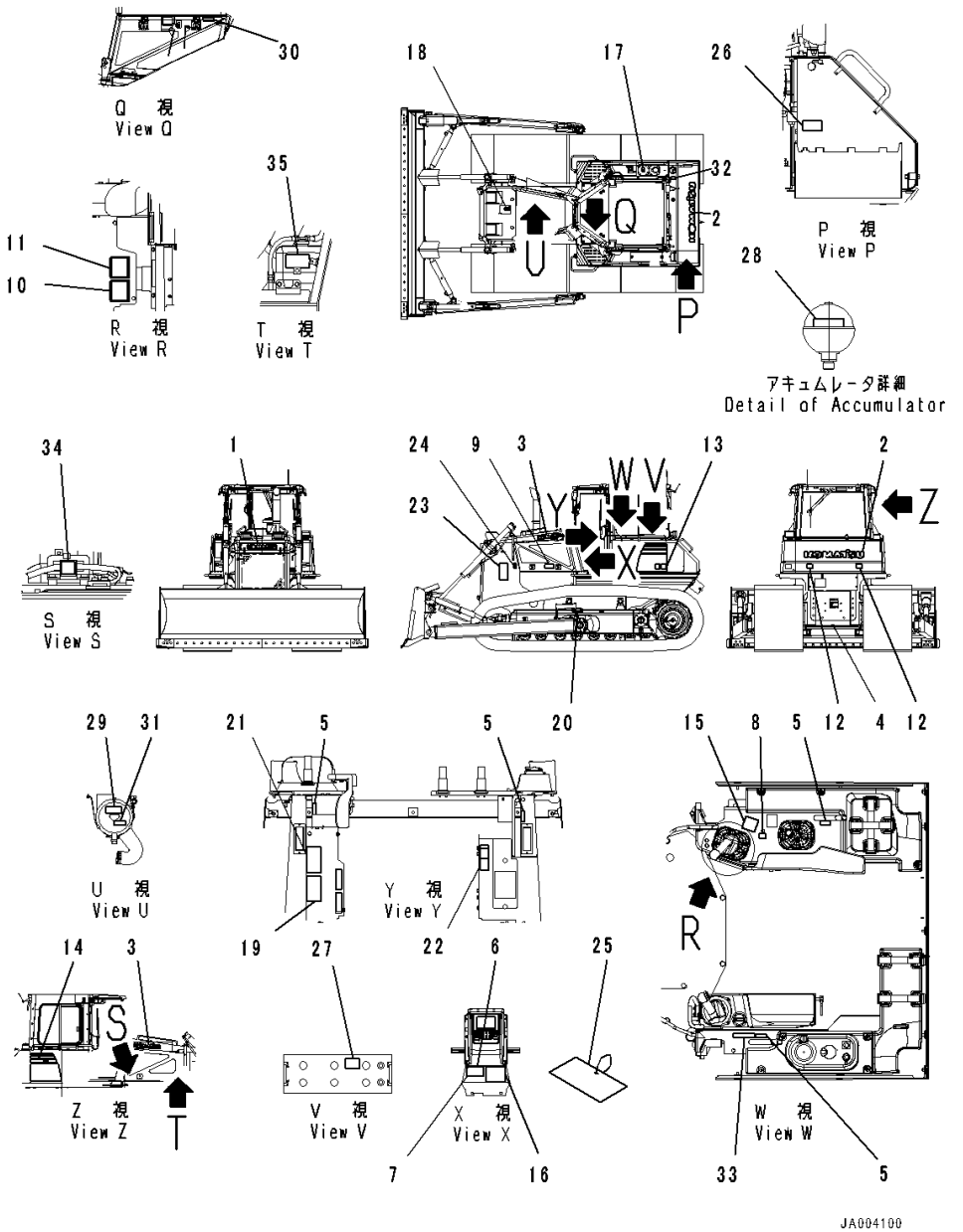

Index	Code	Part Number	Description	Qty	Serial Number
1		09690-F0560	Plate, Mark,Front	1	80005-
2		09690-P1120	Plate, Mark,Rear	1	80005-
3		09690-F0500	Decal, Komatsu Logo,Side	2	80005-
4		09690-M0063	Mark, Komatsu Logo, Anti-Restamp	1	80005-
5		14X-98-11170	Plate, Operating, Lock	4	80005-
6		09602-00001	Plate, Name (Limited Supply)	1	80005-
7		04418-13060	Screw	4	80005-
8		17A-98-11180	Plate, Horn	1	80005-
9		20Y-00-41530	Plate, Symbol, Ecot3	1	80005-
10		09696-50078	Plate, EU Ope Ear Noise	1	80005-
11		09696-40108	Plate	1	80005-
12		14X-98-35181	Plate, Reflector, Rear Reflecter	2	80005-
13		14X-98-51131	Decal, Machine Model, LHS,LHS	1	80005-
14		14X-98-51231	Decal, Machine Model, RHS,RHS	1	80005-
15		124-98-51140	Plate, Work Equipment	1	80005-
16		14X-98-51221	Oil Chart	1	80005-
17		09653-A0481	Plate, Warning, High Temperature, Operatimg Oil Tank	1	80005-
18		09653-A0481	Plate, Warning, High Temperature, Radiator	1	80005-
19		09654-B0641	Plate, Warning, Before Leaving Seat	1	80005-
20		09657-A0881	Plate	2	80005-
21		09651-A0641	Plate, Warning, Read Manual Before Operating	1	80005-
22		09802-17000	Plate, Safety Confirm Of Rear	1	80005-
23		09806-B1683	Plate	2	80005-
24		09667-A0481	Plate, Caution, Rotating Object, While Engine Is Running. Don't Open Cover	2	80005-
25		09963-A1640	Tag, Danger, Do Not Operate	1	80005-
26		09808-A0881	Plate, Warning, Battery Cables	1	80005-
27		09664-60000	Decal, Danger, Battery	2	80005-
28		09659-A057B	Plate, Warning, Explosive Hazard	1	80005-
29		14X-98-35330	Plate, Air Cleaner Replace	1	80005-
30		6217-71-6610	Plate, Fuel Filter Replace	1	80005-
31		14X-98-35160	Plate, Pre Filter Cautipn	1	80005-
32		09669-0000E	Plate, Symbol, Fuel Filler	1	80005-
33		09649-07012	Plate, Service Instruction	1	80005-
34		09842-A0481	Plate, Caution, No Jump Start	1	80005-

https://truckmanualshub.com/

FIG. U0100-050001 Marks And Plates, Portuguese, EU Regulation Guard Level 2, For 3000mm, Power Angle Power Tilt Blade, Power Angle Power Tilt Dozer, Inside Frame

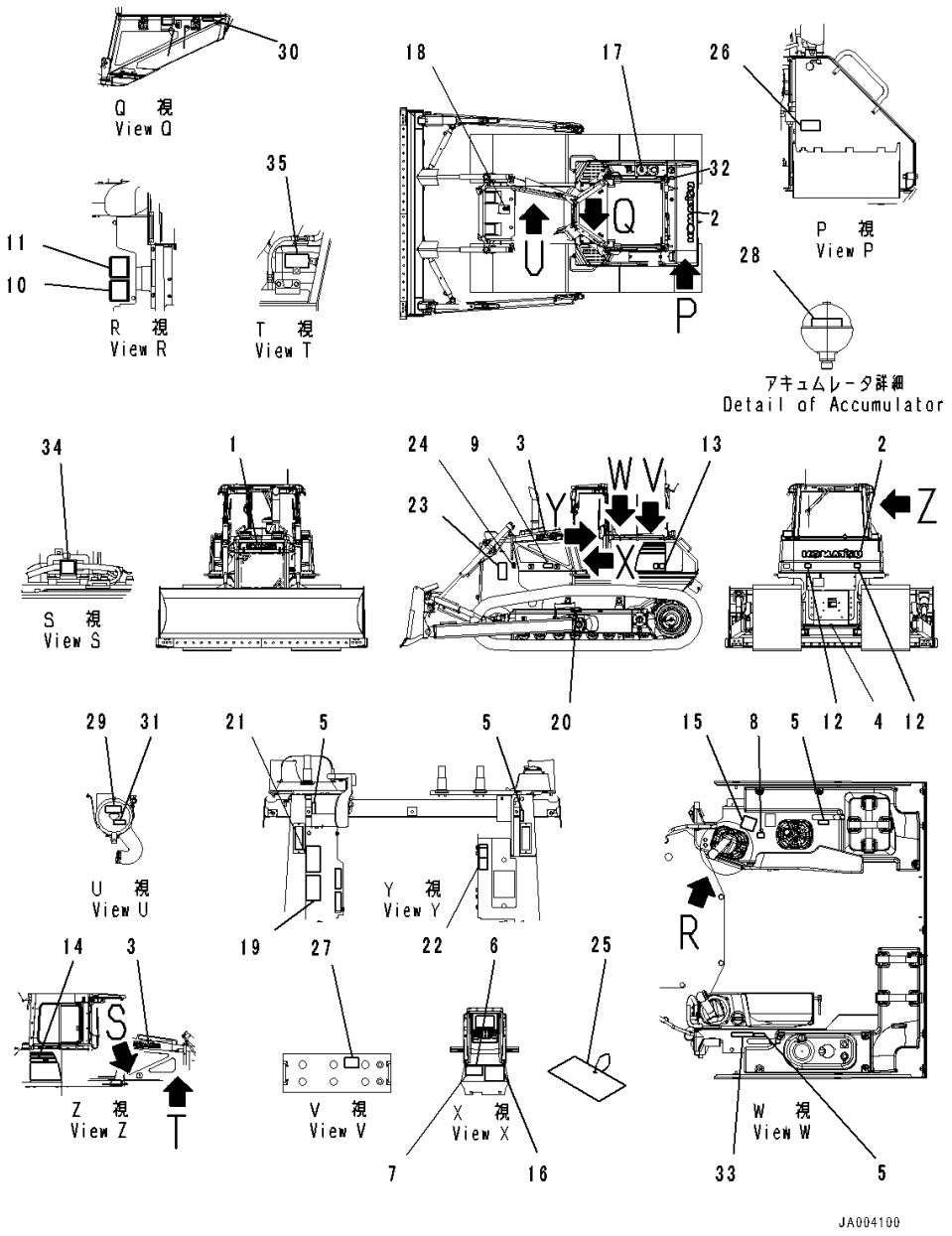

Index	Code	Part Number	Description	Qty	Serial Number
35		09642-17000	Plate, Specify Coolant	1	80005-

https://truckmanualshub.com/

FIG. U0100-052001 Marks And Plates, Italian

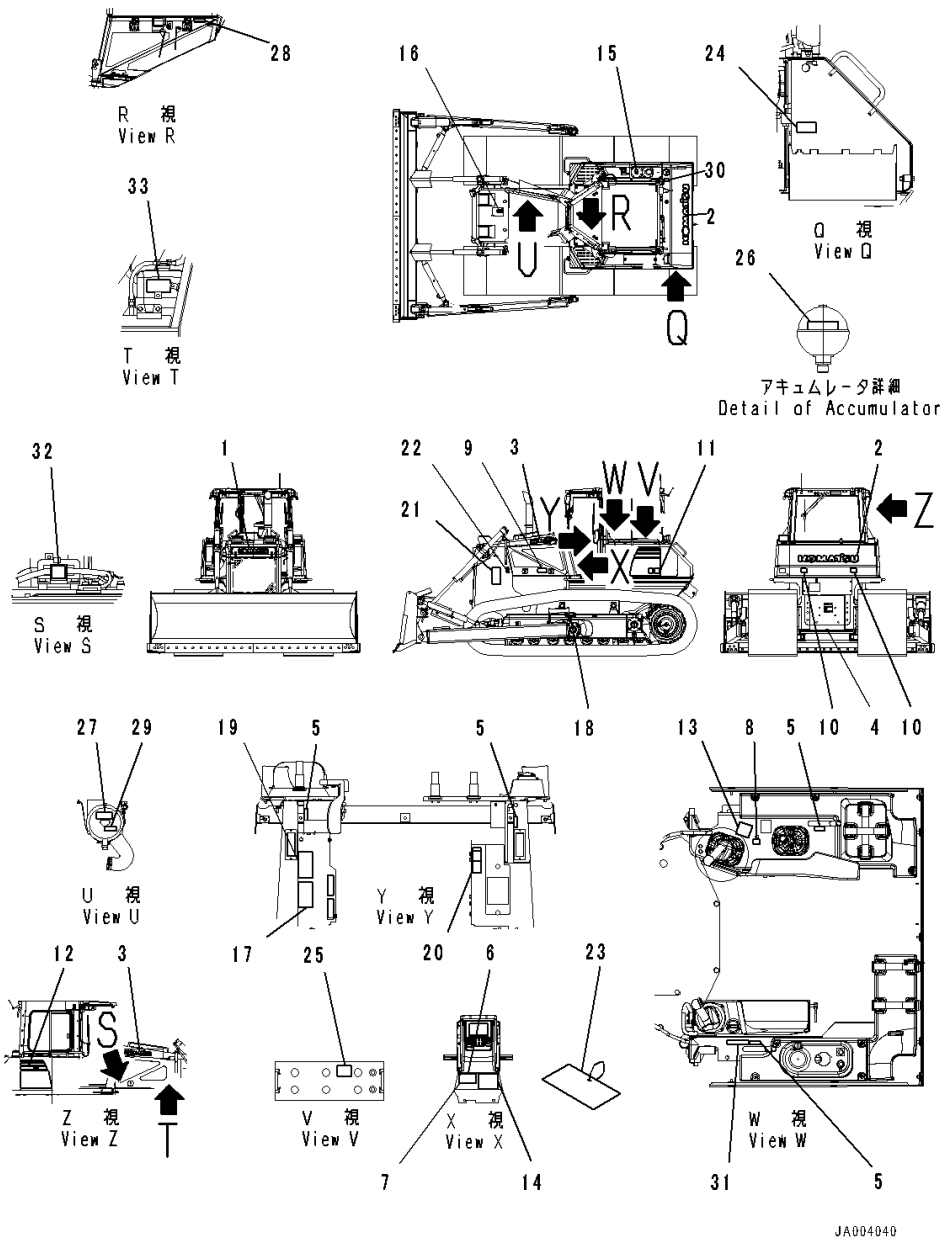

Index	Code	Part Number	Description	Qty	Serial Number
1		09690-F0560	Plate, Mark,Front	1	80005-
2		09690-P1120	Plate, Mark,Rear	1	80005-
3		09690-F0500	Decal, Komatsu Logo,Side	2	80005-
4		09690-M0063	Mark, Komatsu Logo, Anti-Restamp	1	80005-
5		14X-98-11170	Plate, Operating, Lock	4	80005-
6		09602-10001	Plate, Name (Limited Supply)	1	80005-
7		04418-13060	Screw	4	80005-
8		17A-98-11180	Plate, Horn	1	80005-
9		20Y-00-41530	Plate, Symbol, Ecot3	1	80005-
10		14X-98-35181	Plate, Reflector, Rear Reflecter	2	80005-
11		14X-98-51131	Decal, Machine Model, LHS,LHS	1	80005-
12		14X-98-51231	Decal, Machine Model, RHS,RHS	1	80005-
13		14X-98-11250	Plate, Work Equipment	1	80005-
14		14X-98-51211	Oil Chart	1	80005-
15		09653-A0481	Plate, Warning, High Temperature, Operating Oil Tank	1	80005-
16		09653-A0481	Plate, Warning, High Temperature, Radiator	1	80005-
17		09654-B0641	Plate, Warning, Before Leaving Seat	1	80005-
18		09657-A0881	Plate	2	80005-
19		09651-A0641	Plate, Warning, Read Manual Before Operating	1	80005-
20		09802-16000	Plate	1	80005-
21		09806-B1683	Plate	2	80005-
22		09667-A0481	Plate, Caution, Rotating Object, Wile Engine Is Running. Don't Open Cover	2	80005-
23		09963-A1640	Tag, Danger, Do Not Operate	1	80005-
24		09808-A0881	Plate, Warning, Battery Cables	1	80005-
25		09664-70001	Decal, Danger, Battery	2	80005-
26		09659-A057B	Plate, Warning, Explosive Hazard	1	80005-
27		14X-98-35420	Plate, Air Cleaner Replace	1	80005-
28		6217-71-6550	Plate	1	80005-
29		14X-98-35250	Plate, Pre Filter Replace	1	80005-
30		09669-0000E	Plate, Symbol, Fuel Filler	1	80005-
31		09649-06012	Plate, Engine Stop	1	80005-
32		09842-A0481	Plate, Caution, No Jump Start	1	80005-
33		09642-16000	Plate, Specify Coolant	1	80005-

https://truckmanualshub.com/

FIG. U0100-053001 Marks And Plates, Italian, With Power Tilt Pitch Dozer

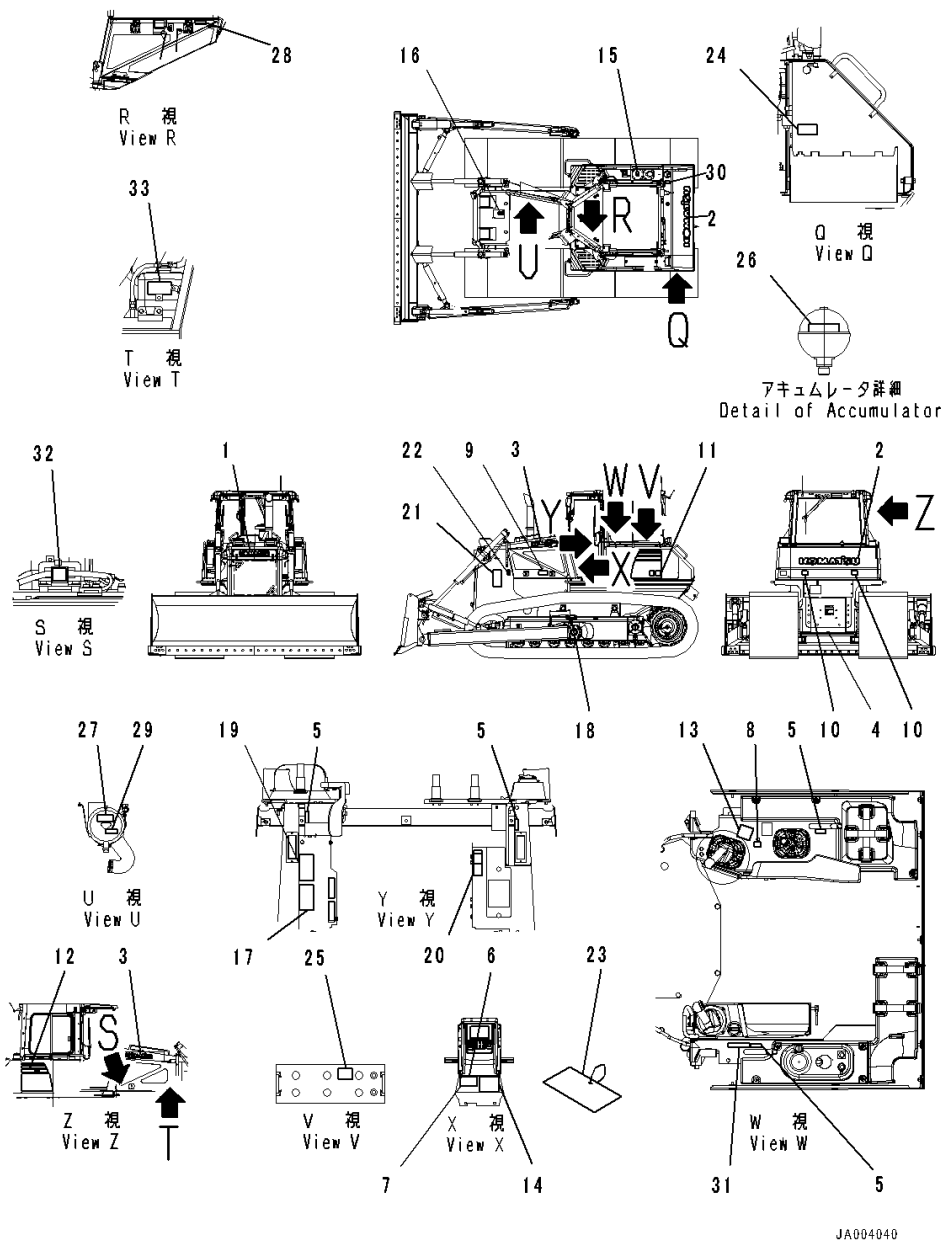

Index	Code	Part Number	Description	Qty	Serial Number
1		09690-F0560	Plate, Mark,Front	1	80005-
2		09690-P1120	Plate, Mark,Rear	1	80005-
3		09690-F0500	Decal, Komatsu Logo,Side	2	80005-
4		09690-M0063	Mark, Komatsu Logo, Anti-Restamp	1	80005-
5		14X-98-11170	Plate, Operating, Lock	4	80005-
6		09602-10001	Plate, Name (Limited Supply)	1	80005-
7		04418-13060	Screw	4	80005-
8		17A-98-11180	Plate, Horn	1	80005-
9		20Y-00-41530	Plate, Symbol, Ecot3	1	80005-
10		14X-98-35181	Plate, Reflector, Rear Reflecter	2	80005-
11		14X-98-51131	Decal, Machine Model, LHS,LHS	1	80005-
12		14X-98-51231	Decal, Machine Model, RHS,RHS	1	80005-
13		14X-98-11270	Plate, Work Equipment	1	80005-
14		14X-98-51211	Oil Chart	1	80005-
15		09653-A0481	Plate, Warning, High Temperature, Operating Oil Tank	1	80005-
16		09653-A0481	Plate, Warning, High Temperature, Radiator	1	80005-
17		09654-B0641	Plate, Warning, Before Leaving Seat	1	80005-
18		09657-A0881	Plate	2	80005-
19		09651-A0641	Plate, Warning, Read Manual Before Operating	1	80005-
20		09802-16000	Plate	1	80005-
21		09806-B1683	Plate	2	80005-
22		09667-A0481	Plate, Caution, Rotating Object, While Engine Is Running. Don't Open Cover	2	80005-
23		09963-A1640	Tag, Danger, Do Not Operate	1	80005-
24		09808-A0881	Plate, Warning, Battery Cables	1	80005-
25		09664-70001	Decal, Danger, Battery	2	80005-
26		09659-A057B	Plate, Warning, Explosive Hazard	1	80005-
27		14X-98-35420	Plate, Air Cleaner Replace	1	80005-
28		6217-71-6550	Plate	1	80005-
29		14X-98-35250	Plate, Pre Filter Replace	1	80005-
30		09669-0000E	Plate, Symbol, Fuel Filler	1	80005-
31		09649-06012	Plate, Engine Stop	1	80005-
32		09842-A0481	Plate, Caution, No Jump Start	1	80005-
33		09642-16000	Plate, Specify Coolant	1	80005-

https://truckmanualshub.com/

FIG. U0100-054001 Marks And Plates, Italian, With Power Angle Power Tilt Dozer

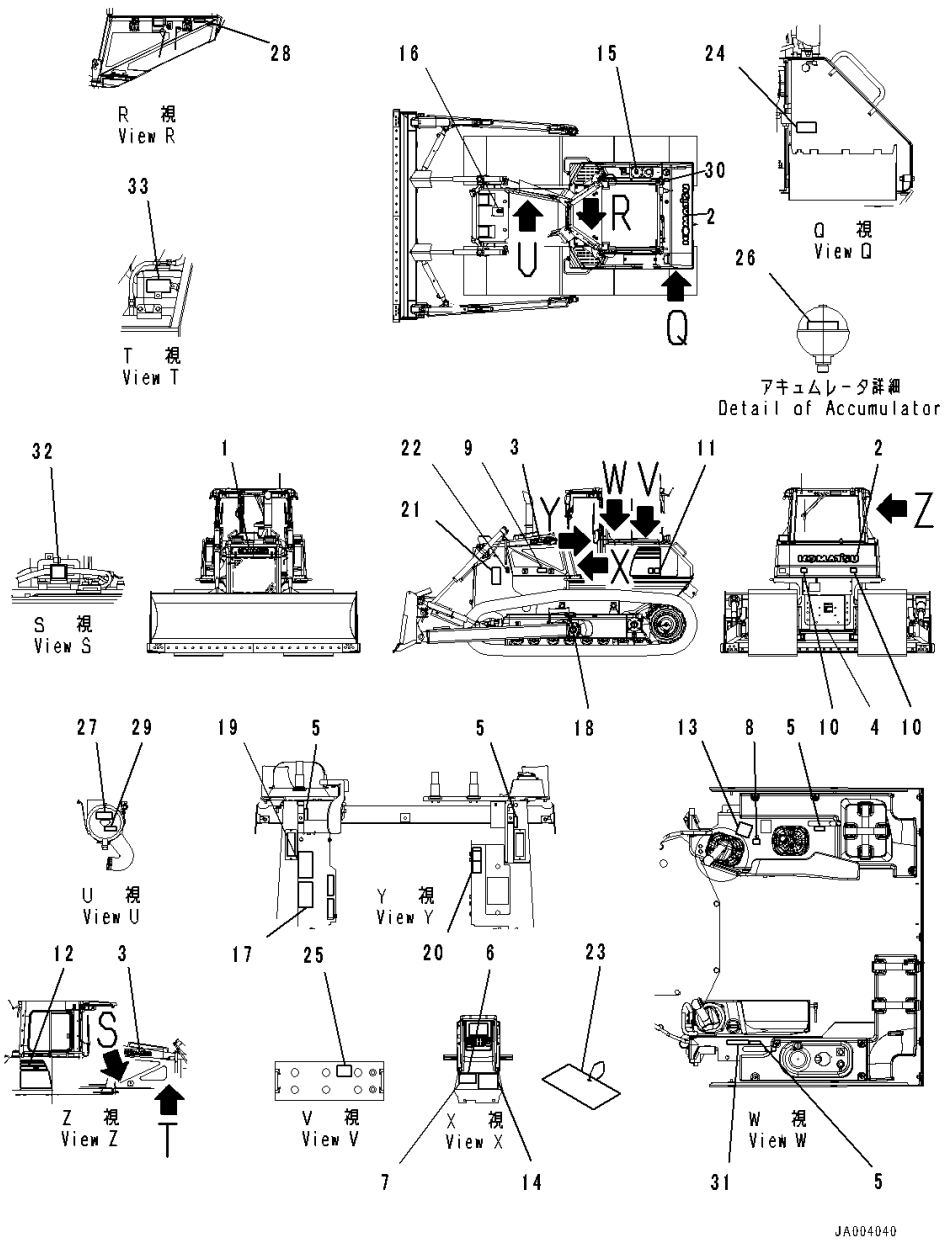

Index	Code	Part Number	Description	Qty	Serial Number
1		09690-F0560	Plate, Mark,Front	1	80005-
2		09690-P1120	Plate, Mark,Rear	1	80005-
3		09690-F0500	Decal, Komatsu Logo,Side	2	80005-
4		09690-M0063	Mark, Komatsu Logo, Anti-Restamp	1	80005-
5		14X-98-11170	Plate, Operating, Lock	4	80005-
6		09602-10001	Plate, Name (Limited Supply)	1	80005-
7		04418-13060	Screw	4	80005-
8		17A-98-11180	Plate, Horn	1	80005-
9		20Y-00-41530	Plate, Symbol, Ecot3	1	80005-
10		14X-98-35181	Plate, Reflector, Rear Reflecter	2	80005-
11		14X-98-51131	Decal, Machine Model, LHS,LHS	1	80005-
12		14X-98-51231	Decal, Machine Model, RHS,RHS	1	80005-
13		124-98-51140	Plate, Work Equipment	1	80005-
14		14X-98-51221	Oil Chart	1	80005-
15		09653-A0481	Plate, Warning, High Temperature, Operating Oil Tank	1	80005-
16		09653-A0481	Plate, Warning, High Temperature, Radiator	1	80005-
17		09654-B0641	Plate, Warning, Before Leaving Seat	1	80005-
18		09657-A0881	Plate	2	80005-
19		09651-A0641	Plate, Warning, Read Manual Before Operating	1	80005-
20		09802-16000	Plate	1	80005-
21		09806-B1683	Plate	2	80005-
22		09667-A0481	Plate, Caution, Rotating Object, While Engine Is Runinng. Don't Open Cover	2	80005-
23		09963-A1640	Tag, Danger, Do Not Operate	1	80005-
24		09808-A0881	Plate, Warning, Battery Cables	1	80005-
25		09664-70001	Decal, Danger, Battery	2	80005-
26		09659-A057B	Plate, Warning, Explosive Hazard	1	80005-
27		14X-98-35420	Plate, Air Cleaner Replace	1	80005-
28		6217-71-6550	Plate	1	80005-
29		14X-98-35250	Plate, Pre Filter Replace	1	80005-
30		09669-0000E	Plate, Symbol, Fuel Filler	1	80005-
31		09649-06012	Plate, Engine Stop	1	80005-
32		09842-A0481	Plate, Caution, No Jump Start	1	80005-
33		09642-16000	Plate, Specify Coolant	1	80005-

https://truckmanualshub.com/

FIG. U0100-055001 Marks And Plates, Portuguese

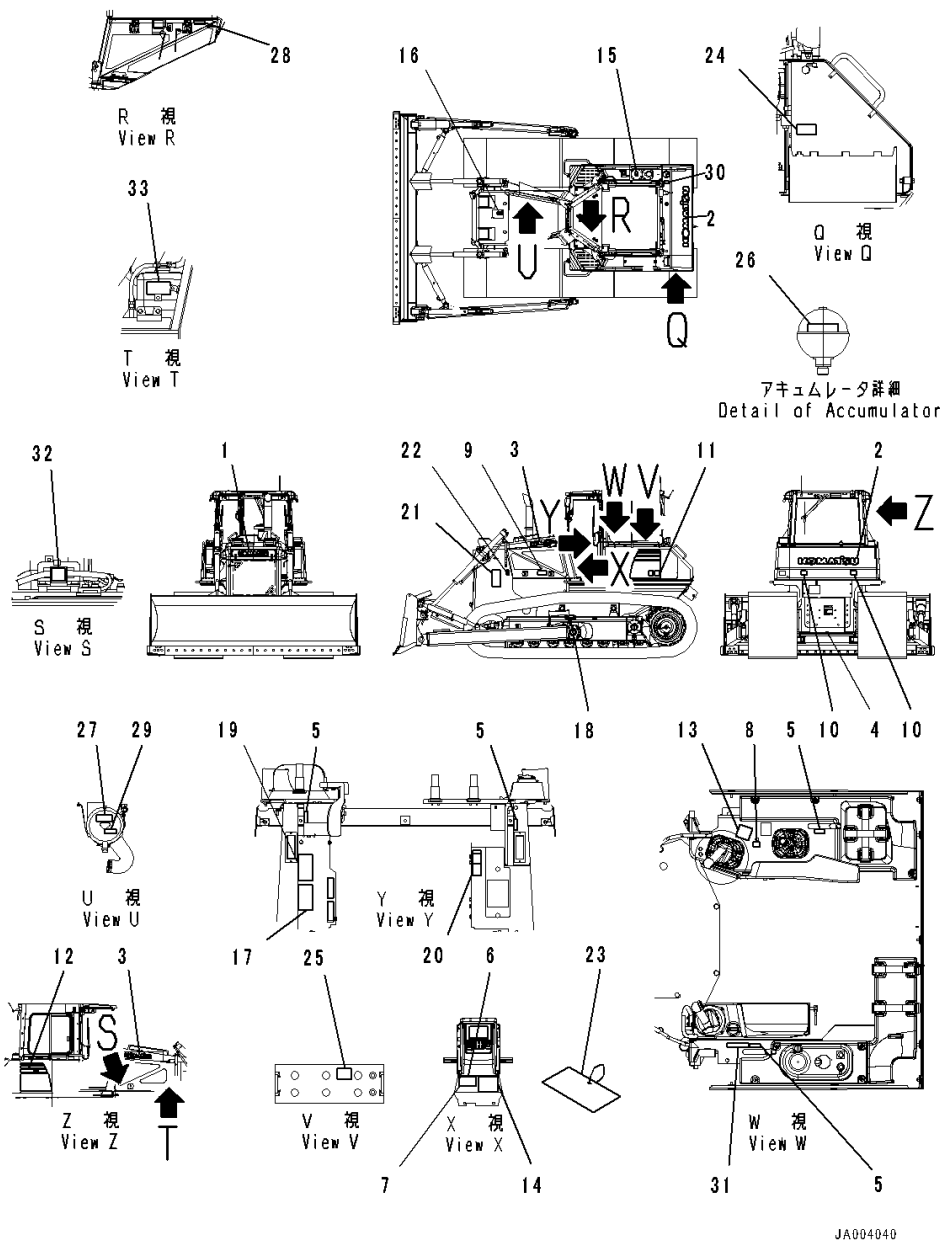

Index	Code	Part Number	Description	Qty	Serial Number
1		09690-F0560	Plate, Mark,Front	1	80005-
2		09690-P1120	Plate, Mark,Rear	1	80005-
3		09690-F0500	Decal, Komatsu Logo,Side	2	80005-
4		09690-M0063	Mark, Komatsu Logo, Anti-Restamp	1	80005-
5		14X-98-11170	Plate, Operating, Lock	4	80005-
6		09602-10001	Plate, Name (Limited Supply)	1	80005-
7		04418-13060	Screw	4	80005-
8		17A-98-11180	Plate, Horn	1	80005-
9		20Y-00-41530	Plate, Symbol, Ecot3	1	80005-
10		14X-98-35181	Plate, Reflector, Rear Reflecter	2	80005-
11		14X-98-51131	Decal, Machine Model, LHS,LHS	1	80005-
12		14X-98-51231	Decal, Machine Model, RHS,RHS	1	80005-
13		14X-98-11250	Plate, Work Equipment	1	80005-
14		14X-98-51211	Oil Chart	1	80005-
15		09653-A0481	Plate, Warning, High Temperature, Operating Oil Tank	1	80005-
16		09653-A0481	Plate, Warning, High Temperature, Radiator	1	80005-
17		09654-B0641	Plate, Warning, Before Leaving Seat	1	80005-
18		09657-A0881	Plate	2	80005-
19		09651-A0641	Plate, Warning, Read Manual Before Operating	1	80005-
20		09802-17000	Plate, Safety Confirm Of Rear	1	80005-
21		09806-B1683	Plate	2	80005-
22		09667-A0481	Plate, Caution, Rotating Object, While Engine Is Running. Don't Open Cover	2	80005-
23		09963-A1640	Tag, Danger, Do Not Operate	1	80005-
24		09808-A0881	Plate, Warning, Battery Cables	1	80005-
25		09664-70001	Decal, Danger, Battery	2	80005-
26		09659-A057B	Plate, Warning, Explosive Hazard	1	80005-
27		14X-98-35330	Plate, Aie Cleaner Replace	1	80005-
28		6217-71-6610	Plate, Fuel Filter Replace	1	80005-
29		14X-98-35160	Plate, Pre Filter Caution	1	80005-
30		09669-0000E	Plate, Symbol, Fuel Filler	1	80005-
31		09649-07012	Plate, Service Instruction	1	80005-
32		09842-A0481	Plate, Caution, No Jump Start	1	80005-
33		09642-17000	Plate, Specify Coolant	1	80005-

https://truckmanualshub.com/

FIG. U0100-056001 Marks And Plates, Portuguese, With Power Tilt Pitch Dozer

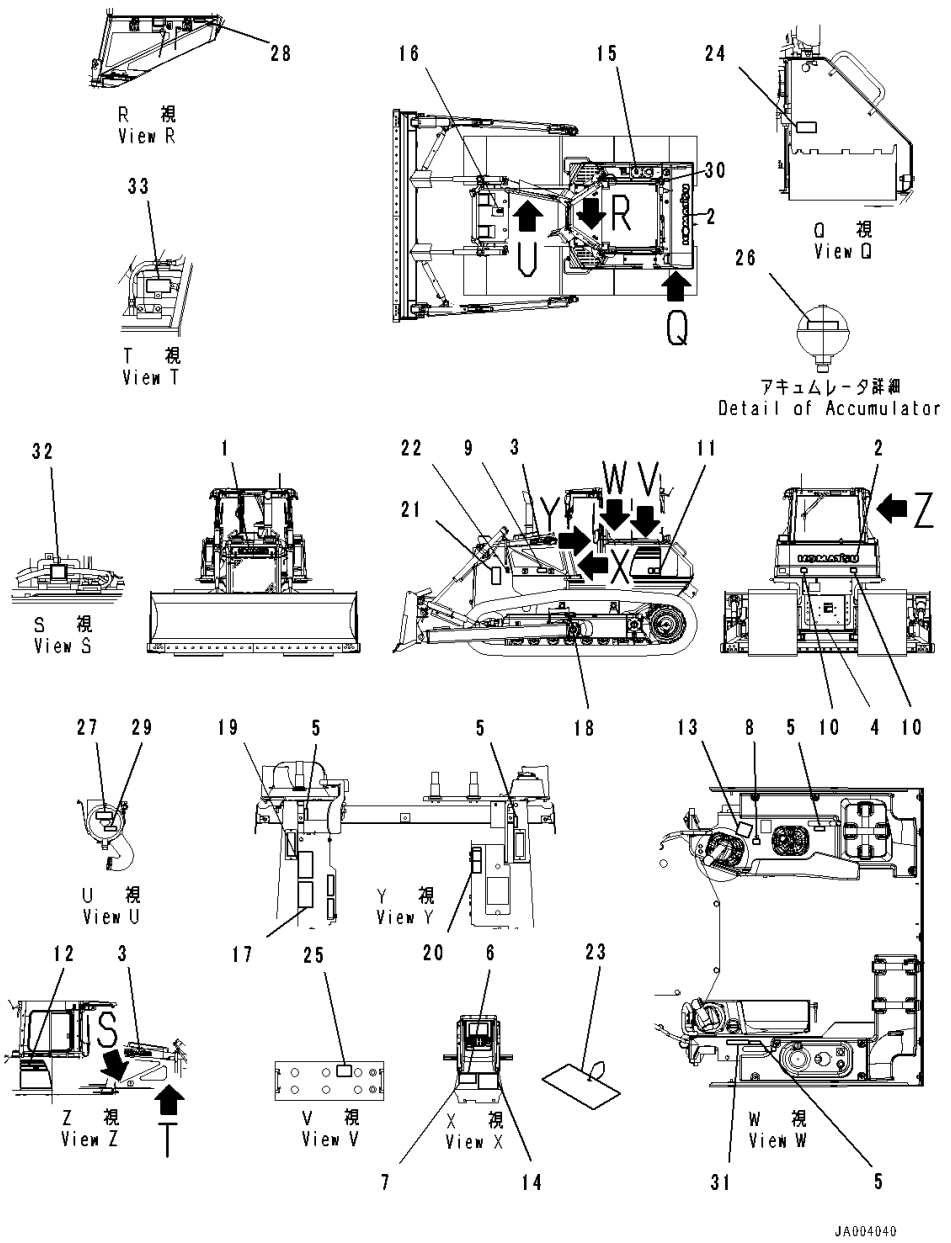

Index	Code	Part Number	Description	Qty	Serial Number
1		09690-F0560	Plate, Mark,Front	1	80005-
2		09690-P1120	Plate, Mark,Rear	1	80005-
3		09690-F0500	Decal, Komatsu Logo,Side	2	80005-
4		09690-M0063	Mark, Komatsu Logo, Anti-Restamp	1	80005-
5		14X-98-11170	Plate, Operating, Lock	4	80005-
6		09602-10001	Plate, Name (Limited Supply)	1	80005-
7		04418-13060	Screw	4	80005-
8		17A-98-11180	Plate, Horn	1	80005-
9		20Y-00-41530	Plate, Symbol, Ecot3	1	80005-
10		14X-98-35181	Plate, Reflector, Rear Reflecter	2	80005-
11		14X-98-51131	Decal, Machine Model, LHS,LHS	1	80005-
12		14X-98-51231	Decal, Machine Model, RHS,RHS	1	80005-
13		14X-98-11270	Plate, Work Equipment	1	80005-
14		14X-98-51211	Oil Chart	1	80005-
15		09653-A0481	Plate, Warning, High Temperature, Operating Oil Tank	1	80005-
16		09653-A0481	Plate, Warning, High Temperature, Radiator	1	80005-
17		09654-B0641	Plate, Warning, Before Leaving Seat	1	80005-
18		09657-A0881	Plate	2	80005-
19		09651-A0641	Plate, Warning, Read Manual Before Operating	1	80005-
20		09802-17000	Plate, Safety Confirm Of Rear	1	80005-
21		09806-B1683	Plate	2	80005-
22		09667-A0481	Plate, Caution, Rotating Object, While Engine Is Running. Don't Open Cover	2	80005-
23		09963-A1640	Tag, Danger, Do Not Operate	1	80005-
24		09808-A0881	Plate, Warning, Battery Cables	1	80005-
25		09664-70001	Decal, Danger, Battery	2	80005-
26		09659-A057B	Plate, Warning, Explosive Hazard	1	80005-
27		14X-98-35330	Plate, Air Cleaner Reapce	1	80005-
28		6217-71-6610	Plate, Fuel Filter Replace	1	80005-
29		14X-98-35160	Plate, Pre Filter Caution	1	80005-
30		09669-0000E	Plate, Symbol, Fuel Filler	1	80005-
31		09649-07012	Plate, Service Instruction	1	80005-
32		09842-A0481	Plate, Caution, No Jump Start	1	80005-
33		09642-17000	Plate, Spacify Coolant	1	80005-

https://truckmanualshub.com/

FIG. U0100-057001 Marks And Plates, Portuguese, With Power Angle Power Tilt Dozer

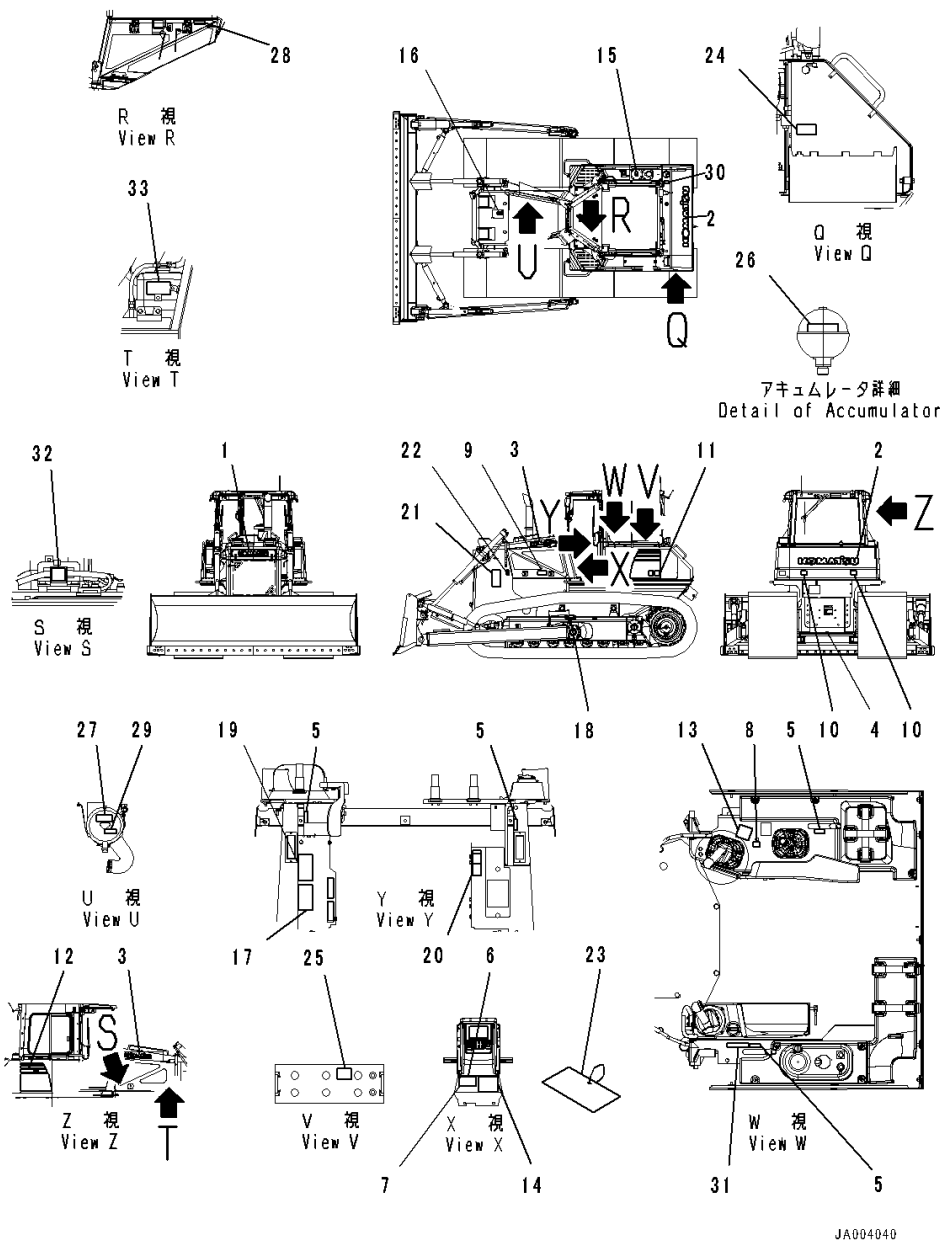

Index	Code	Part Number	Description	Qty	Serial Number
1		09690-F0560	Plate, Mark,Front	1	80005-
2		09690-P1120	Plate, Mark,Rear	1	80005-
3		09690-F0500	Decal, Komatsu Logo,Side	2	80005-
4		09690-M0063	Mark, Komatsu Logo, Anti-Restamp	1	80005-
5		14X-98-11170	Plate, Operating, Lock	4	80005-
6		09602-10001	Plate, Name (Limited Supply)	1	80005-
7		04418-13060	Screw	4	80005-
8		17A-98-11180	Plate, Horn	1	80005-
9		20Y-00-41530	Plate, Symbol, Ecot3	1	80005-
10		14X-98-35181	Plate, Reflector, Rear Reflecter	2	80005-
11		14X-98-51131	Decal, Machine Model, LHS,LHS	1	80005-
12		14X-98-51231	Decal, Machine Model, RHS,RHS	1	80005-
13		124-98-51140	Plate, Work Equipment	1	80005-
14		14X-98-51221	Oil Chart	1	80005-
15		09653-A0481	Plate, Warning, High Temperature, Operating Oil Tank	1	80005-
16		09653-A0481	Plate, Warning, High Temperature, Radiator	1	80005-
17		09654-B0641	Plate, Warning, Before Leaving Seat	1	80005-
18		09657-A0881	Plate	2	80005-
19		09651-A0641	Plate, Warning, Read Manual Before Operating	1	80005-
20		09802-17000	Plate, Safety Confirm Of Rear	1	80005-
21		09806-B1683	Plate	2	80005-
22		09667-A0481	Plate, Caution, Rotating Object, While Engine Is Running. Don't Open Cover	2	80005-
23		09963-A1640	Tag, Danger, Do Not Operate	1	80005-
24		09808-A0881	Plate, Warning, Battery Cables	1	80005-
25		09664-70001	Decal, Danger, Battery	2	80005-
26		09659-A057B	Plate, Warning, Explosive Hazard	1	80005-
27		14X-98-35330	Plate, Air Cleaner Replace	1	80005-
28		6217-71-6610	Plate, Fuel Filter Replace	1	80005-
29		14X-98-35160	Plate, Pre FIlter Caution	1	80005-
30		09669-0000E	Plate, Symbol, Fuel Filler	1	80005-
31		09649-07012	Plate, Service Instruction	1	80005-
32		09842-A0481	Plate, Caution, No Jump Start	1	80005-
33		09642-17000	Plate, Specify Coolant	1	80005-

https://truckmanualshub.com/

FIG. U0100-060001 Marks And Plates, With Power Tilt Pitch Dozer, For EU Safety Regulation

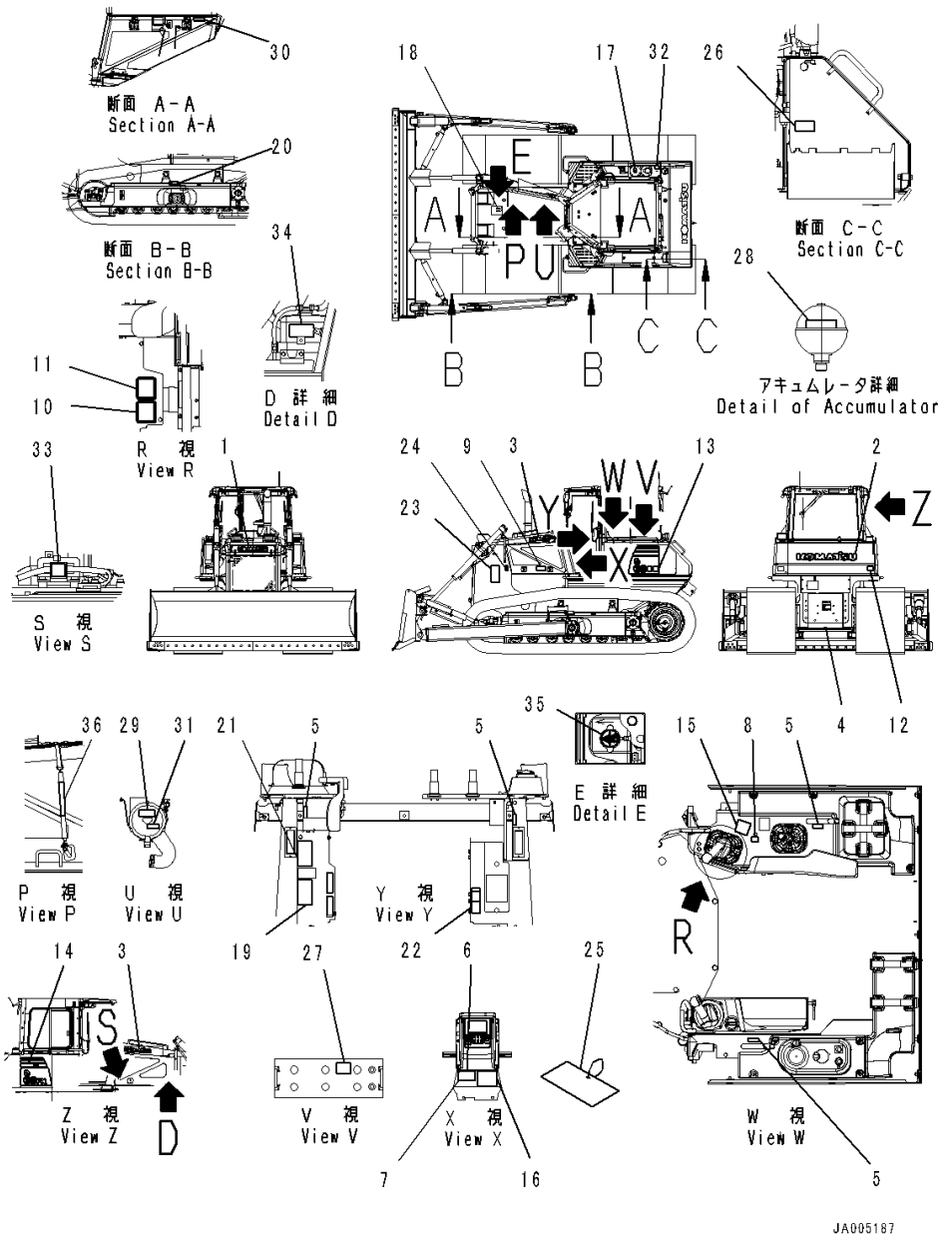

Index	Code	Part Number	Description	Qty	Serial Number
1		09690-F0560	Plate, Mark,Front	1	80062-
2		09690-P1120	Plate, Mark,Rear	1	80062-
3		09690-F0500	Decal, Komatsu Logo,Side	2	80062-
4		09690-M0063	Mark, Komatsu Logo, Anti-Restamp	1	80062-
5		14X-98-11170	Plate, Operating, Lock	4	80062-
6	C2	09602-08000	Plate, Name (Limited Supply)	1	80065-
7		04418-13060	Screw	4	80062-
8		17A-98-11180	Plate, Horn	1	80062-
9		20Y-00-41530	Plate, Symbol, Ecot3	1	80062-
10		09696-50078	Plate, EU Ope Ear Noise, EU Ope Ear Noise	1	80062-
11		09696-40108	Plate, EU Around Noise	1	80062-
12		14X-98-35181	Plate, Reflector, Rear Reflecter	2	80062-
13		14X-98-51131	Decal, Machine Model, LHS	1	80062-
14		14X-98-51231	Decal, Machine Model, RHS	1	80062-
15		14X-98-11270	Plate, Work Equipment	1	80062-
16		14X-98-51211	Oil Chart	1	80062-
17		09653-A0481	Plate, Warning, High Temperature, Operating Oil Tank	1	80062-
18		09653-A0481	Plate, Warning, High Temperature, Radiator	1	80062-
19		09654-B0641	Plate, Warning, Before Leaving Seat, After Operating	1	80062-
20		09657-A0881	Plate, Adjustment Of Track Tension	2	80062-
21		09651-A0641	Plate, Warning, Read Manual Before Operating, Before Operating	1	80062-
22		09802-B0640	Decal, Warning, Before Operation and Traveling	1	80062-
23		09806-B1683	Plate, Caution Danger Keep Away	2	80062-
24		09667-A0481	Plate, Caution, Rotating Object, While Engine Is Running Don't Open Cover	2	80062-
25		09963-A1640	Tag, Danger, Do Not Operate, Check And Equipment	1	80062-
26		09808-A0881	Plate, Warning, Battery Cables, Caution Battery Cables	1	80062-
27		09664-60011	Plate, Danger, Battery	2	80078-
28		09659-A057B	Plate, Warning, Explosive Hazard	1	80062-
29		09637-A0640	Decal, Service Instruction, Air Cleaner	1	80062-
30		6217-71-6860	Plate, Fuel Filter	1	80062-
31		6217-71-6860	Plate, Fuel Filter	1	80062-

https://truckmanualshub.com/

FIG. U0100-060001 Marks And Plates, With Power Tilt Pitch Dozer, For EU Safety Regulation

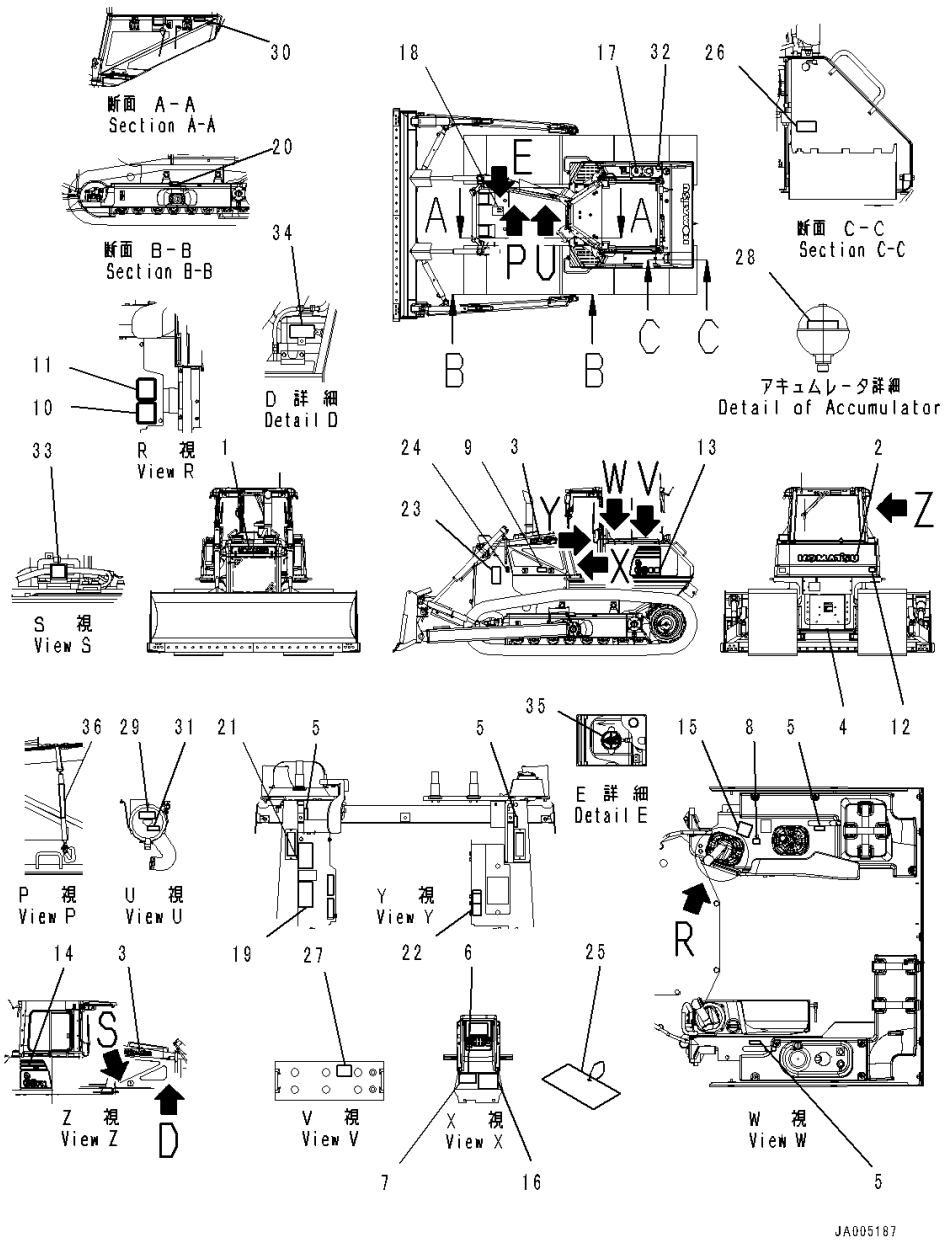

Index	Code	Part Number	Description	Qty	Serial Number
32		09669-0000E	Plate, Symbol, Fuel Filler, Fuel Direction .	1	80062-
33		09842-A0481	Plate, Caution, No Jump Start	1	80062-
34		09642-A0480	Plate, Service Instruction, Engine Coolant AF-NAC	1	80062-
35		23B-53-71190	Plate, Symbol	1	80062-
36		154-98-75370	Plate	2	80078-

https://truckmanualshub.com/

FIG. U0100-061001 Marks And Plates, For EU Safety Regulation, Power Angle Power Tilt Dozer, Inside Frame

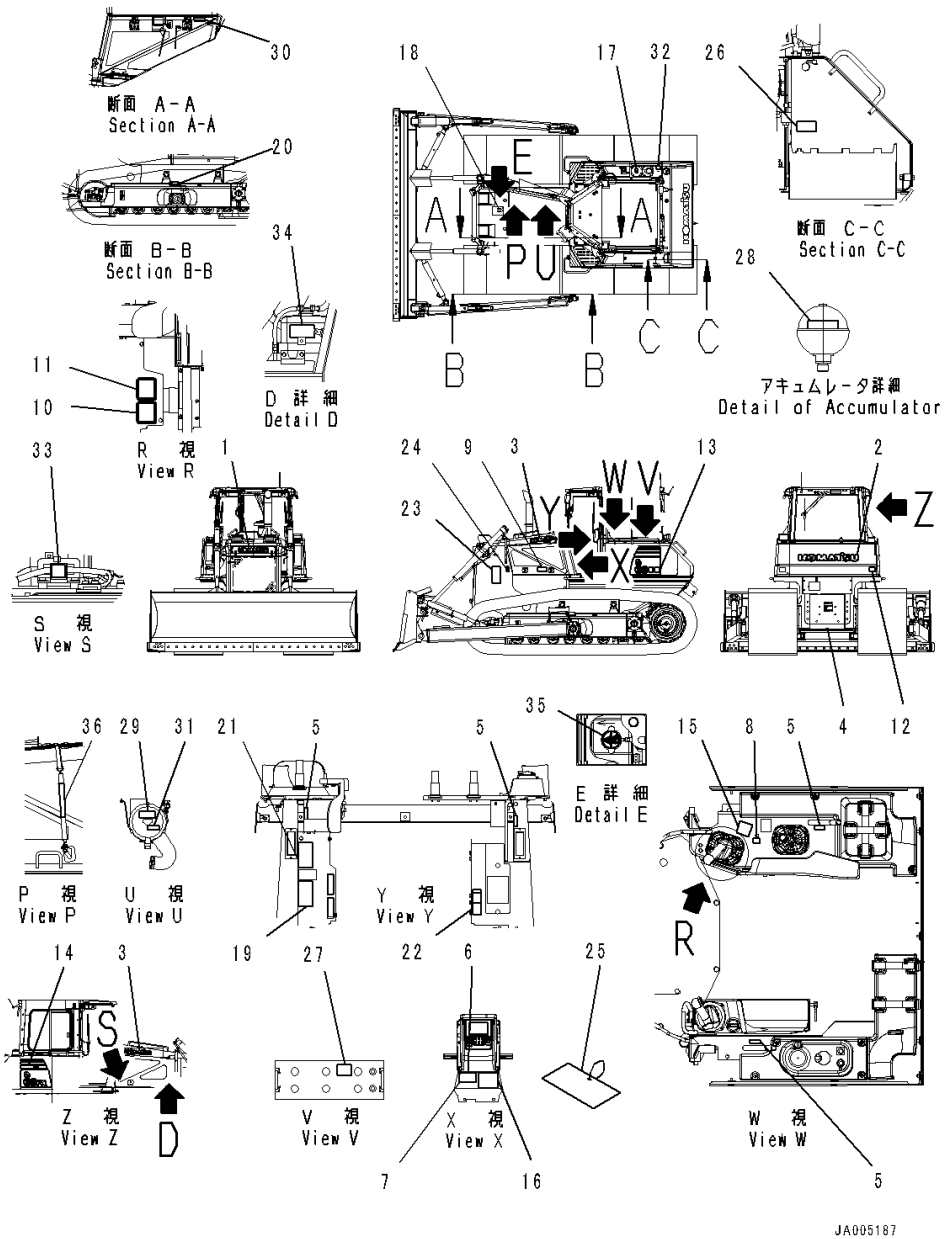

Index	Code	Part Number	Description	Qty	Serial Number
1		09690-F0560	Plate, Mark,Front	1	80062-
2		09690-P1120	Plate, Mark,Rear	1	80062-
3		09690-F0500	Decal, Komatsu Logo,Side	2	80062-
4		09690-M0063	Mark, Komatsu Logo, Anti-Restamp	1	80062-
5		14X-98-11170	Plate, Operating, Lock	4	80062-
6	C2	09602-08000	Plate, Name (Limited Supply)	1	80065-
7		04418-13060	Screw	4	80062-
8		17A-98-11180	Plate, Horn	1	80062-
9		20Y-00-41530	Plate, Symbol, Ecot3	1	80062-
10		09696-50078	Plate, EU Ope Ear Noise, EU Ope Ear Noise	1	80062-
11		09696-40108	Plate, EU Around Noise	1	80062-
12		14X-98-35181	Plate, Reflector, Rear Reflecter	2	80062-
13		14X-98-51131	Decal, Machine Model, LHS	1	80062-
14		14X-98-51231	Decal, Machine Model, RHS	1	80062-
15		124-98-51140	Plate, Work Equipment	1	80062-
16		14X-98-51221	Oil Chart, For PAT	1	80062-
17		09653-A0481	Plate, Warning, High Temperature, Operating Oil Tank	1	80062-
18		09653-A0481	Plate, Warning, High Temperature, Radiator	1	80062-
19		09654-B0641	Plate, Warning, Before Leaving Seat, After Operating	1	80062-
20		09657-A0881	Plate, Adjustment Of Track Tension	2	80062-
21		09651-A0641	Plate, Warning, Read Manual Before Operating, Before Operating	1	80062-
22		09802-B0640	Decal, Warning, Before Operation and Traveling	1	80062-
23		09806-B1683	Plate, Caution Danger Keep Away	2	80062-
24		09667-A0481	Plate, Caution, Rotating Object, While Engine Is Running Don't Open Cover	2	80062-
25		09963-A1640	Tag, Danger, Do Not Operate, Check And Equipment	1	80062-
26		09808-A0881	Plate, Warning, Battery Cables, Caution Battery Cables	1	80062-
27		09664-60011	Plate, Danger, Battery	2	80078-
28		09659-A057B	Plate, Warning, Explosive Hazard	1	80062-
29		09637-A0640	Decal, Service Instruction, Air Cleaner	1	80062-
30		6217-71-6860	Plate, Fuel Filter	1	80062-
31		6217-71-6860	Plate, Fuel Filter	1	80062-

https://truckmanualshub.com/

FIG. U0100-061001 Marks And Plates, For EU Safety Regulation, Power Angle Power Tilt Dozer, Inside Frame

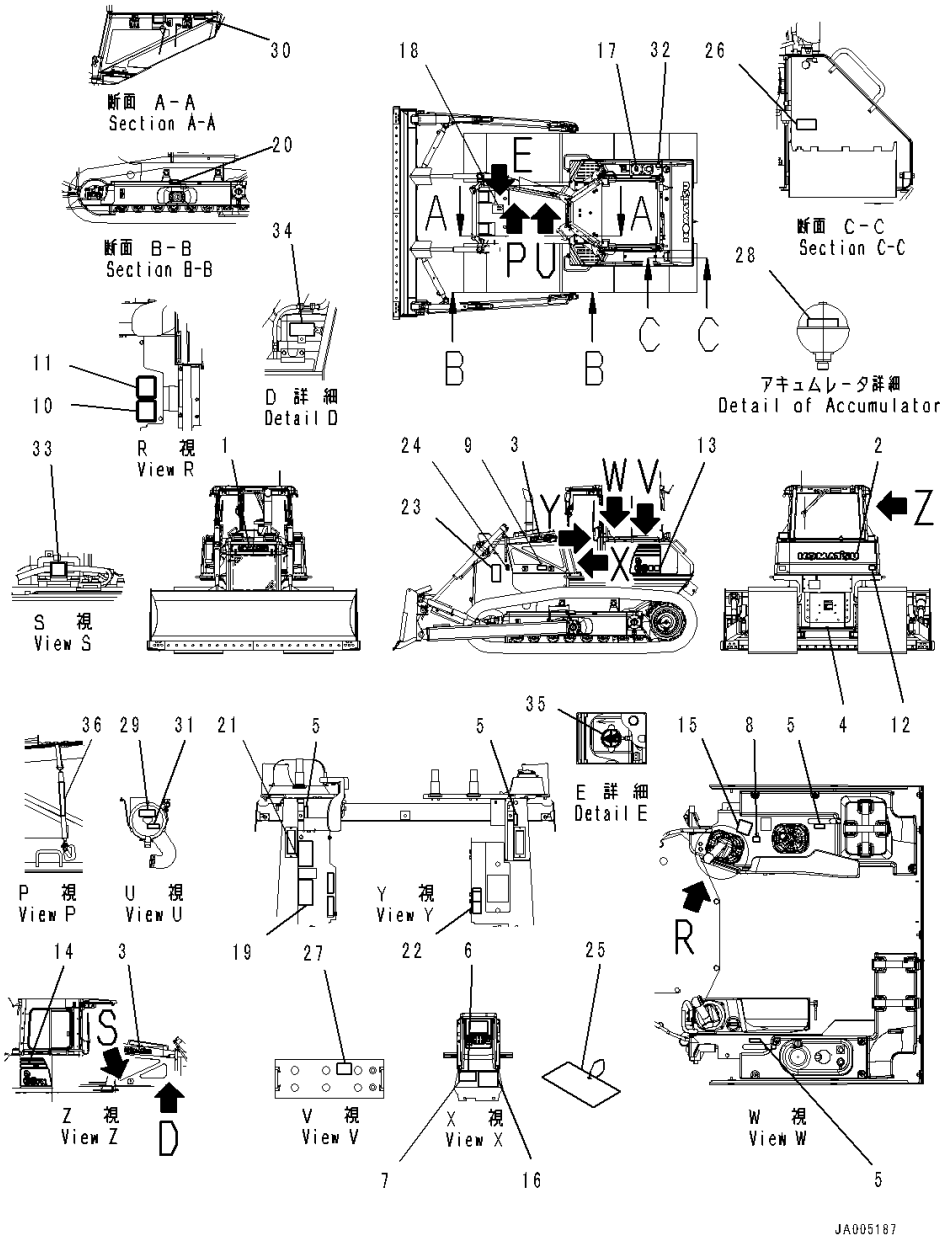

Index	Code	Part Number	Description	Qty	Serial Number
32		09669-0000E	Plate, Symbol, Fuel Filler, Fuel Direction .	1	80062-
33		09842-A0481	Plate, Caution, No Jump Start	1	80062-
34		09642-A0480	Plate, Service Instruction, Engine Coolant AF-NAC	1	80062-
35		23B-53-71190	Plate, Symbol	1	80062-
36		154-98-75370	Plate	2	80078-

https://truckmanualshub.com/

FIG. U0100-059001 Marks And Plates, For EU Safety Regulation

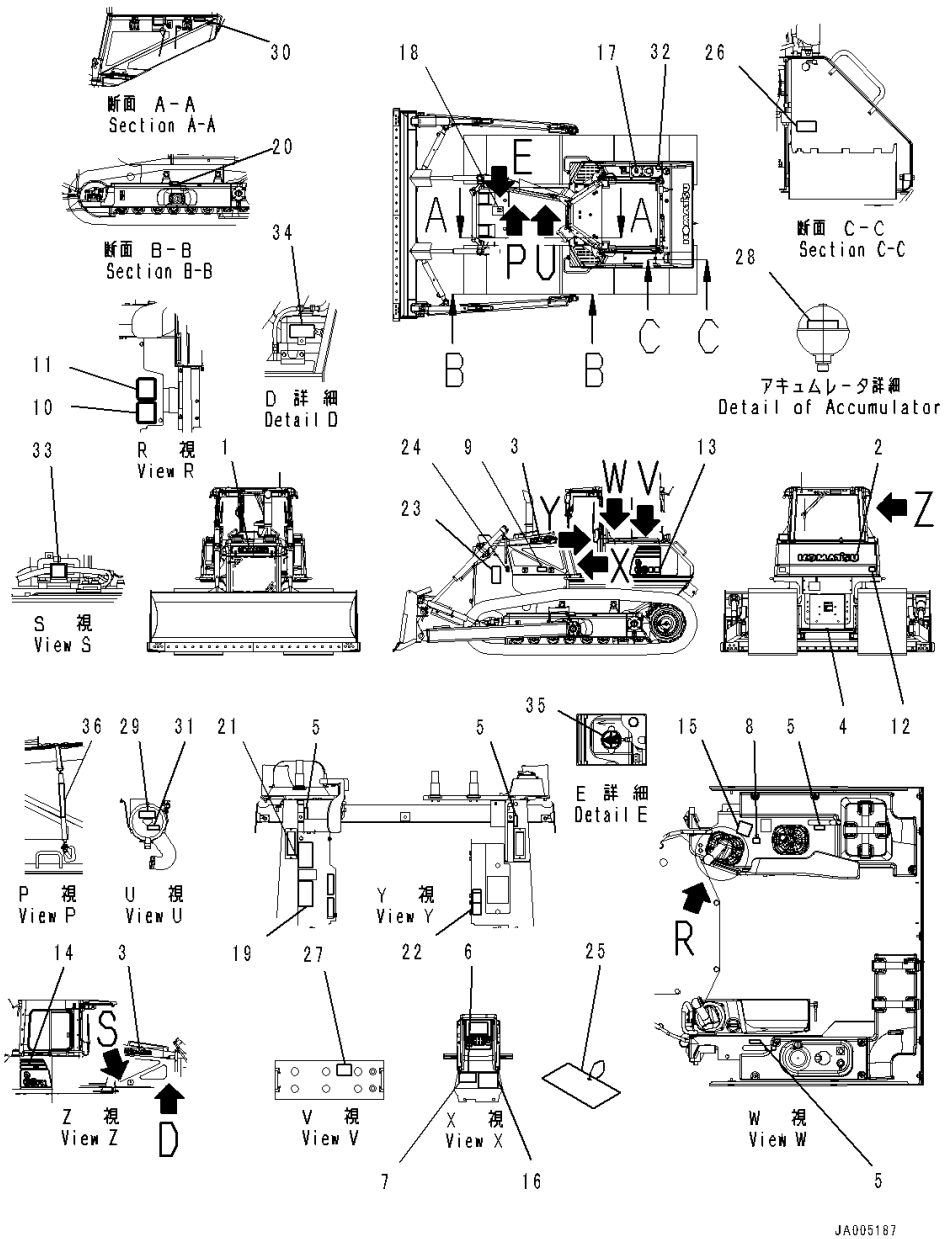

Index	Code	Part Number	Description	Qty	Serial Number
1		09690-F0560	Plate, Mark,Front	1	80062-
2		09690-P1120	Plate, Mark,Rear	1	80062-
3		09690-F0500	Decal, Komatsu Logo,Side	2	80062-
4		09690-M0063	Mark, Komatsu Logo, Anti-Restamp	1	80062-
5		14X-98-11170	Plate, Operating, Lock	4	80062-
6	C2	09602-08000	Plate, Name (Limited Supply)	1	80065-
7		04418-13060	Screw	4	80062-
8		17A-98-11180	Plate, Horn	1	80062-
9		20Y-00-41530	Plate, Symbol, Ecot3	1	80062-
10		09696-50078	Plate, EU Ope Ear Noise, EU Ope Ear Noise	1	80062-
11		09696-40108	Plate, EU Around Noise	1	80062-
12		14X-98-35181	Plate, Reflector, Rear Reflecter	2	80062-
13		14X-98-51131	Decal, Machine Model, LHS	1	80062-
14		14X-98-51231	Decal, Machine Model, RHS	1	80062-
15		14X-98-11250	Plate, Work Equipment For TILT	1	80062-
16		14X-98-51211	Oil Chart	1	80062-
17		09653-A0481	Plate, Warning, High Temperature, Operating Oil Tank	1	80062-
18		09653-A0481	Plate, Warning, High Temperature, Radiator	1	80062-
19		09654-B0641	Plate, Warning, Before Leaving Seat, After Operating	1	80062-
20		09657-A0881	Plate, Adjustment Of Track Tension	2	80062-
21		09651-A0641	Plate, Warning, Read Manual Before Operating, Before Operating	1	80062-
22		09802-B0640	Decal, Warning, Before Operation and Traveling	1	80062-
23		09806-B1683	Plate, Caution Danger Keep Away	2	80062-
24		09667-A0481	Plate, Caution, Rotating Object, While Engine Is Running Don't Open Cover	2	80062-
25		09963-A1640	Tag, Danger, Do Not Operate, Check And Equipment	1	80062-
26		09808-A0881	Plate, Warning, Battery Cables, Caution Battery Cables	1	80062-
27		09664-60011	Plate, Danger, Battery	2	80078-
28		09659-A057B	Plate, Warning, Explosive Hazard	1	80062-
29		09637-A0640	Decal, Service Instruction, Air Cleaner	1	80062-
30		6217-71-6860	Plate, Fuel Filter	1	80062-
31		6217-71-6860	Plate, Fuel Filter	1	80062-

https://truckmanualshub.com/

FIG. U0100-059001 Marks And Plates, For EU Safety Regulation

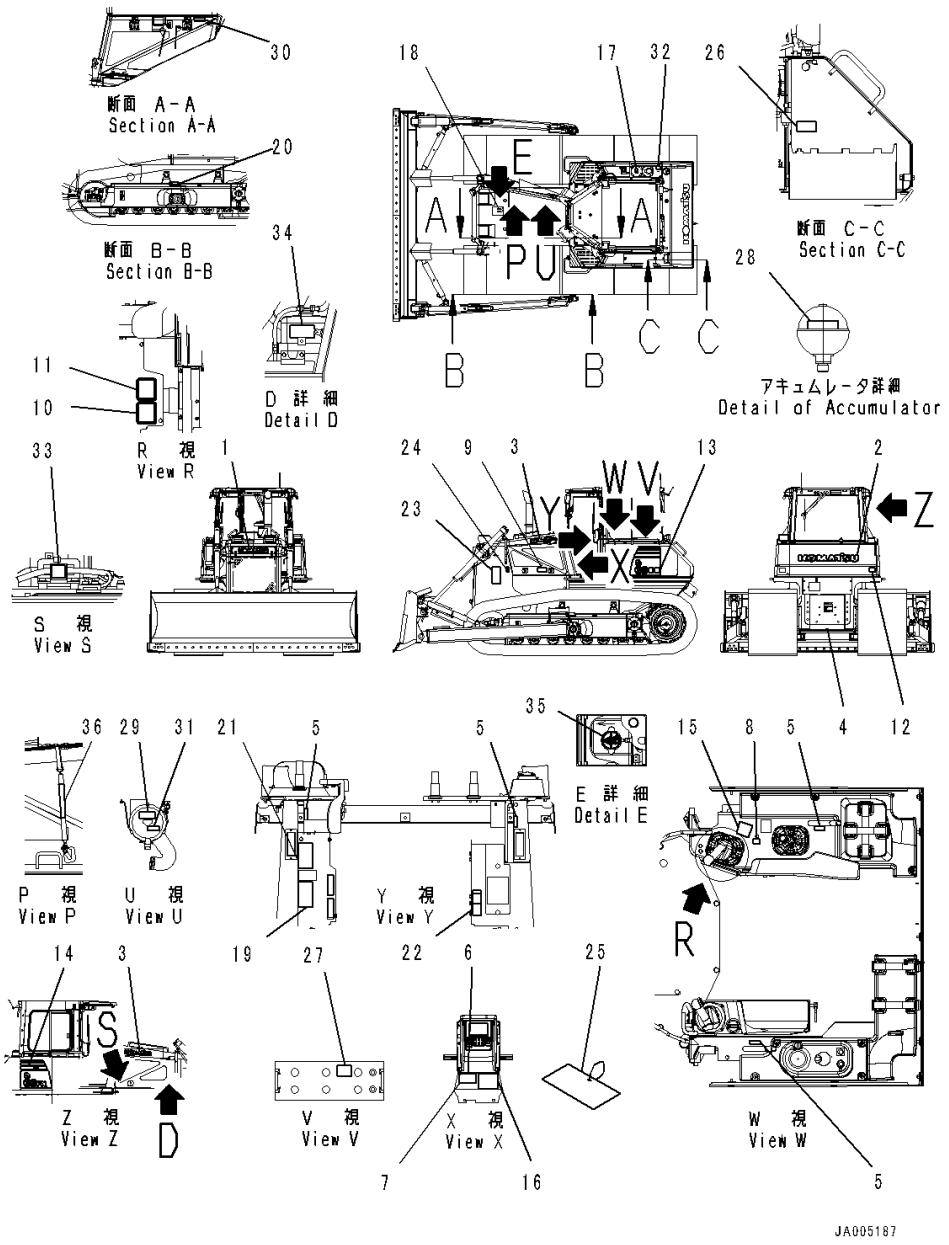

Index	Code	Part Number	Description	Qty	Serial Number
32		09669-0000E	Plate, Symbol, Fuel Filler, Fuel Direction .	1	80062-
33		09842-A0481	Plate, Caution, No Jump Start	1	80062-
34		09642-A0480	Plate, Service Instruction, Engine Coolant AF-NAC	1	80062-
35		23B-53-71190	Plate, Symbol	1	80062-
36		154-98-75370	Plate	2	80078-

https://truckmanualshub.com/

FIG. U0100-066001 Marks And Plates, Turkish-English, EU New Noise Arrangement 2, EU Safety Regulation, For Power Angle Power Tilt Pitch Dozer

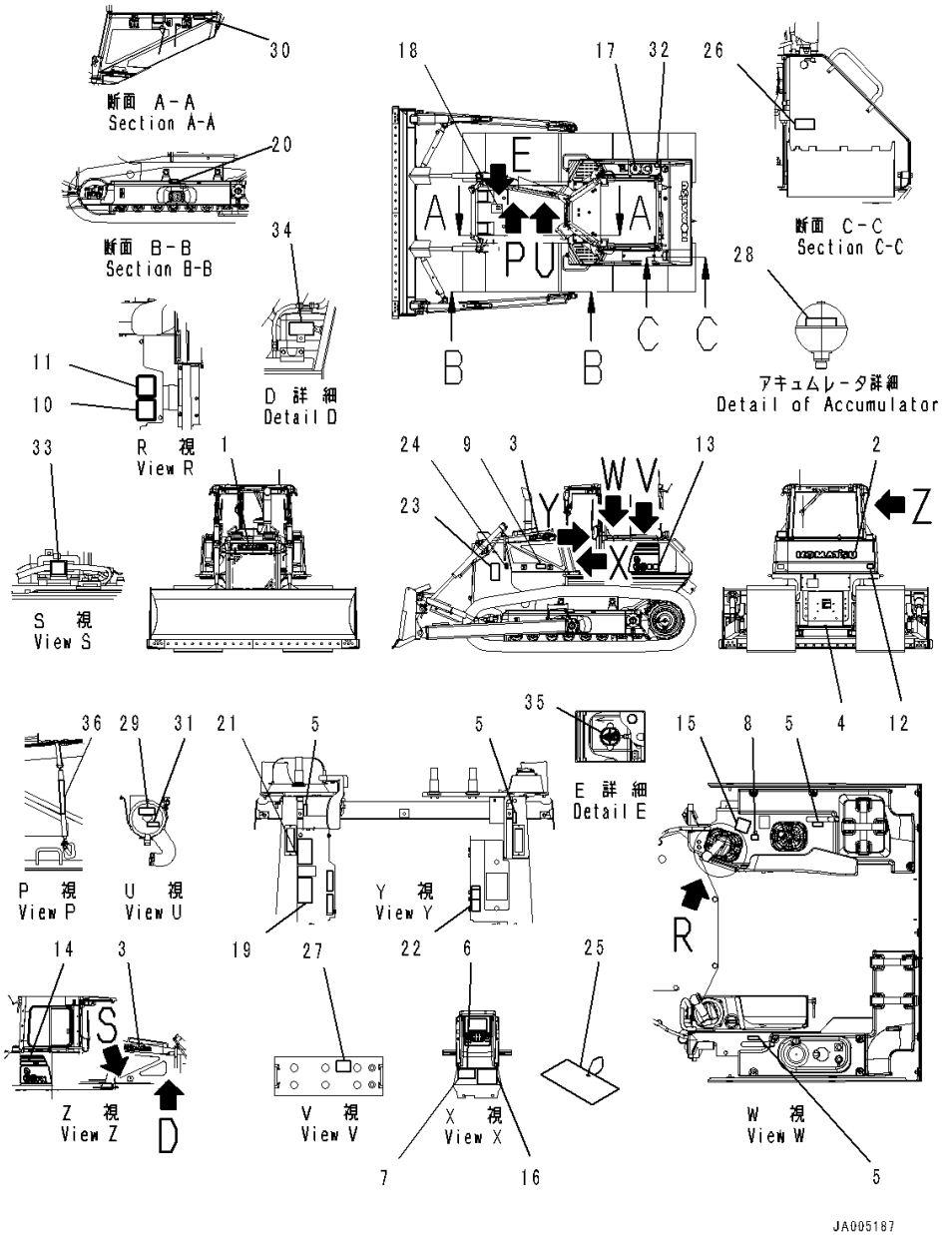

Index	Code	Part Number	Description	Qty	Serial Number
1		09690-F0560	Plate, Mark,Front	1	80087-
2		09690-P1120	Plate, Mark,Rear	1	80087-
3		09690-F0500	Decal, Komatsu Logo,Side	2	80087-
4		09690-M0063	Mark, Komatsu Logo, Anti-Restamp	1	80087-
5		14X-98-11170	Plate, Operating, Lock	4	80087-
6	C2	09602-00003	Plate, Name (Limited Supply)	1	80087-
7		04418-13060	Screw	4	80087-
8		17A-98-11180	Plate, Horn	1	80087-
9		20Y-00-41530	Plate, Symbol, Ecot3	1	80087-
10		09696-50078	Plate, EU Ope Ear Noise, EU Ope Ear Noise	1	80087-
11		09696-40108	Plate, EU Around Noise	1	80087-
12		14X-98-35181	Plate, Reflector, Rear Reflecter	2	80087-
13		14X-98-51131	Decal, Machine Model, LHS	1	80087-
14		14X-98-51231	Decal, Machine Model, RHS	1	80087-
15		14X-98-11270	Plate, Work Equipment	1	80087-
16		14X-98-51211	Oil Chart	1	80087-
17		09653-A0481	Plate, Warning, High Temperature, Operating Oil Tank	1	80087-
18		09653-A0481	Plate, Warning, High Temperature, Radiator	1	80087-
19		09654-B0641	Plate, Warning, Before Leaving Seat, After Operating	1	80087-
20		09657-A0881	Plate, Adjustment Of Track Tension	2	80087-
21		09651-A0641	Plate, Warning, Read Manual Before Operating, Before Operating	1	80087-
22		09802-B0640	Decal, Warning, Before Operation and Traveling	1	80087-
23		09806-B1683	Plate, Caution Danger Keep Away	2	80087-
24		09667-A0481	Plate, Caution, Rotating Object, While Engine Is Running Don't Open Cover	2	80087-
25		09963-A1640	Tag, Danger, Do Not Operate, Check And Equipment	1	80087-
26		09808-A0881	Plate, Warning, Battery Cables, Caution Battery Cables	1	80087-
27		09664-60011	Plate, Danger, Battery	2	80087-
28		09659-A057B	Plate, Warning, Explosive Hazard	1	80087-
29		09637-A0640	Decal, Service Instruction, Air Cleaner	1	80087-
30		6217-71-6860	Plate, Fuel Filter	1	80087-

https://truckmanualshub.com/

FIG. U0100-066001 Marks And Plates, Turkish-English, EU New Noise Arrangement 2, EU Safety Regulation, For Power Angle Power Tilt Pitch Dozer

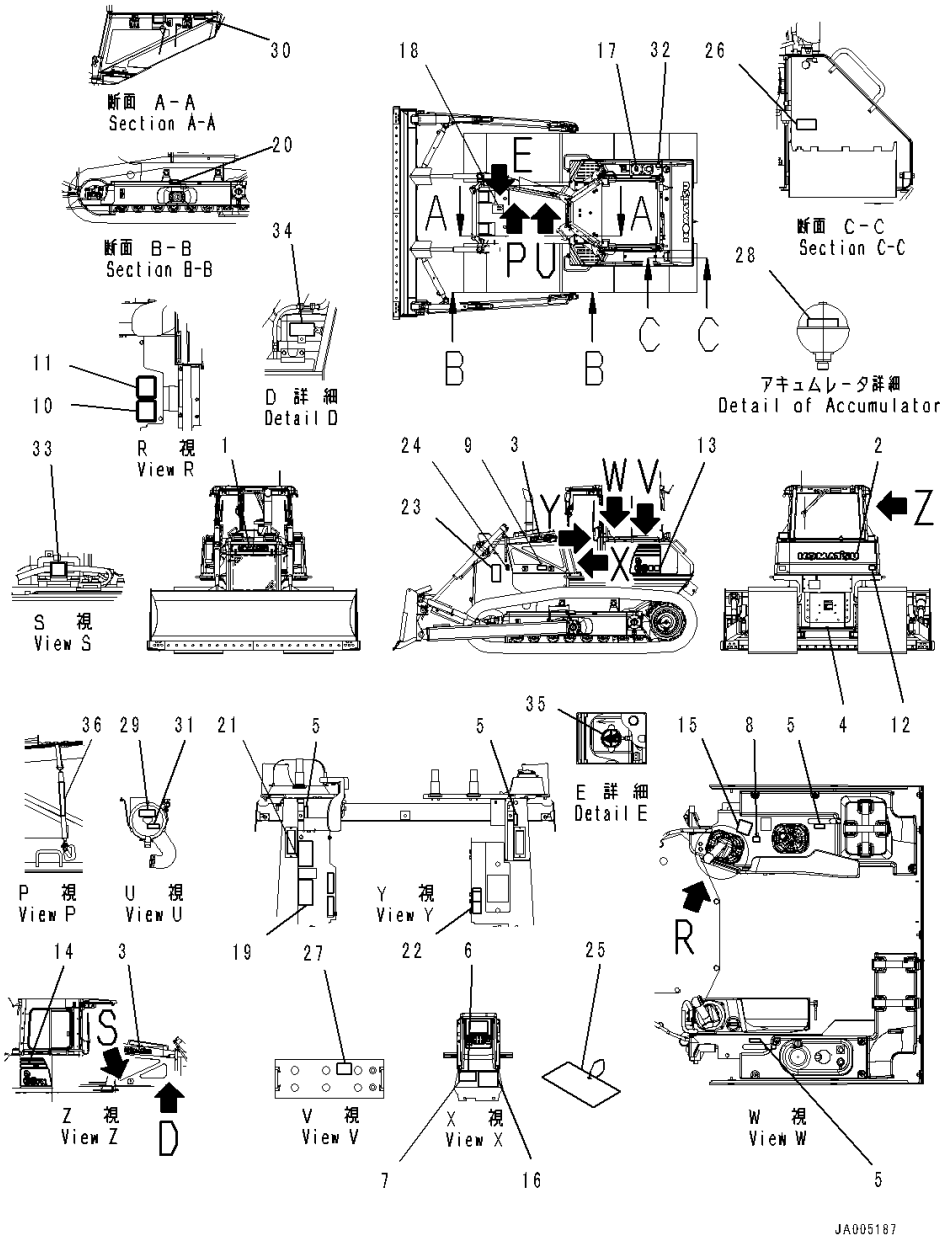

Index	Code	Part Number	Description	Qty	Serial Number
31		6217-71-6860	Plate, Fuel Filter	1	80087-
32		09669-0000E	Plate, Symbol, Fuel Filler, Fuel Direction .	1	80087-
33		09842-A0481	Plate, Caution, No Jump Start	1	80087-
34		09642-A0480	Plate, Service Instruction, Engine Coolant AF-NAC	1	80087-
35		23B-53-71190	Plate, Symbol	1	80087-
36		154-98-75370	Plate	2	80087-

https://truckmanualshub.com/

FIG. U0100-065001 Marks And Plates, Turkish-English, EU New Noise Arrangement 2, EU Safety Regulation

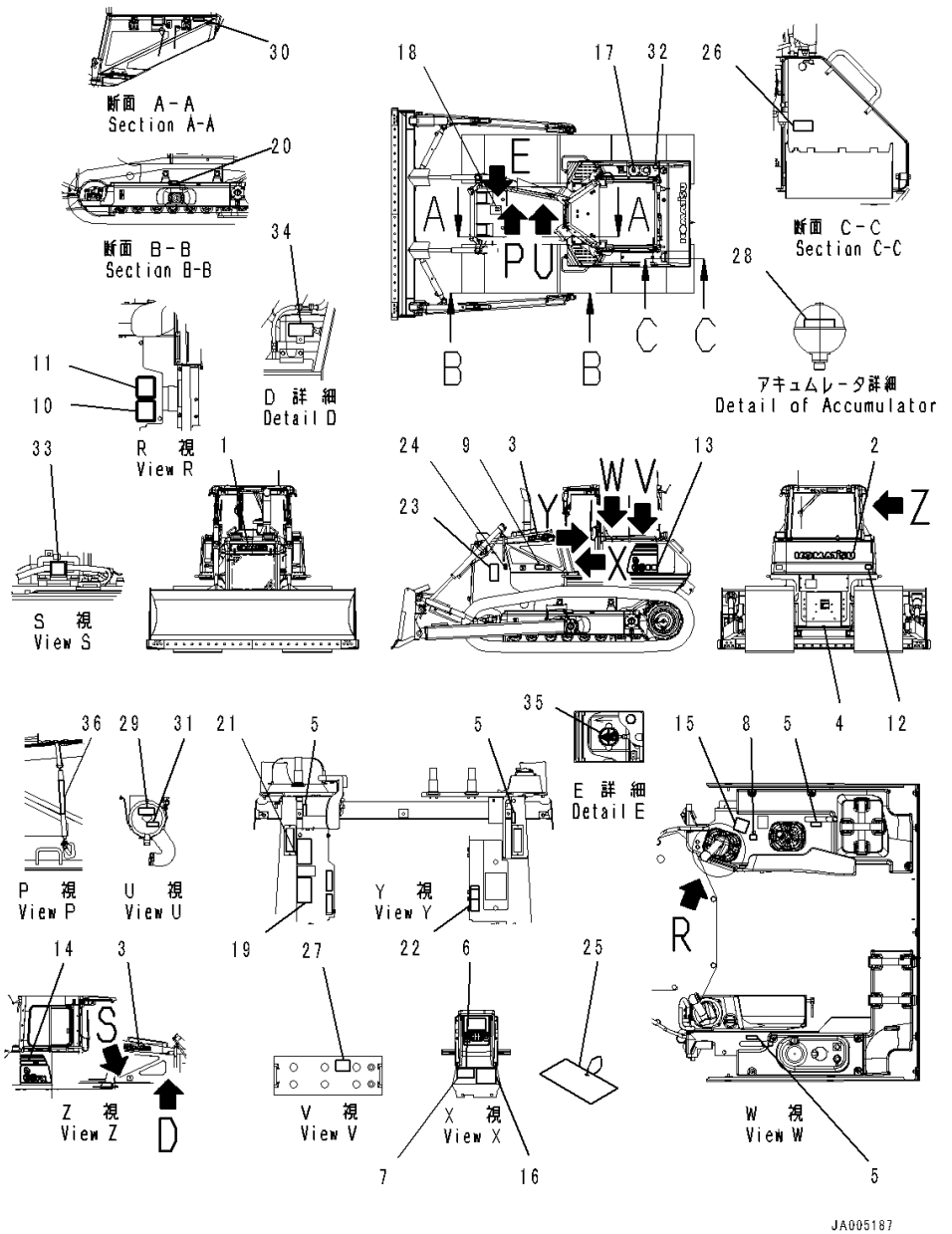

Index	Code	Part Number	Description	Qty	Serial Number
1		09690-F0560	Plate, Mark,Front	1	80087-
2		09690-P1120	Plate, Mark,Rear	1	80087-
3		09690-F0500	Decal, Komatsu Logo,Side	2	80087-
4		09690-M0063	Mark, Komatsu Logo, Anti-Restamp	1	80087-
5		14X-98-11170	Plate, Operating, Lock	4	80087-
6	C2	09602-00003	Plate, Name (Limited Supply)	1	80087-
7		04418-13060	Screw	4	80087-
8		17A-98-11180	Plate, Horn	1	80087-
9		20Y-00-41530	Plate, Symbol, Ecot3	1	80087-
10		09696-50078	Plate, EU Ope Ear Noise, EU Ope Ear Noise	1	80087-
11		09696-40108	Plate, EU Around Noise	1	80087-
12		14X-98-35181	Plate, Reflector, Rear Reflecter	2	80087-
13		14X-98-51131	Decal, Machine Model, LHS	1	80087-
14		14X-98-51231	Decal, Machine Model, RHS	1	80087-
15		14X-98-11250	Plate, Work Equipment For TILT	1	80087-
16		14X-98-51211	Oil Chart	1	80087-
17		09653-A0481	Plate, Warning, High Temperature, Operating Oil Tank	1	80087-
18		09653-A0481	Plate, Warning, High Temperature, Radiator	1	80087-
19		09654-B0641	Plate, Warning, Before Leaving Seat, After Operating	1	80087-
20		09657-A0881	Plate, Adjustment Of Track Tension	2	80087-
21		09651-A0641	Plate, Warning, Read Manual Before Operating, Before Operating	1	80087-
22		09802-B0640	Decal, Warning, Before Operation and Traveling	1	80087-
23		09806-B1683	Plate, Caution Danger Keep Away	2	80087-
24		09667-A0481	Plate, Caution, Rotating Object, While Engine Is Running Don't Open Cover	2	80087-
25		09963-A1640	Tag, Danger, Do Not Operate, Check And Equipment	1	80087-
26		09808-A0881	Plate, Warning, Battery Cables, Caution Battery Cables	1	80087-
27		09664-60011	Plate, Danger, Battery	2	80087-
28		09659-A057B	Plate, Warning, Explosive Hazard	1	80087-
29		09637-A0640	Decal, Service Instruction, Air Cleaner	1	80087-
30		6217-71-6860	Plate, Fuel Filter	1	80087-
31		6217-71-6860	Plate, Fuel Filter	1	80087-

https://truckmanualshub.com/

FIG. U0100-065001 Marks And Plates, Turkish-English, EU New Noise Arrangement 2, EU Safety Regulation

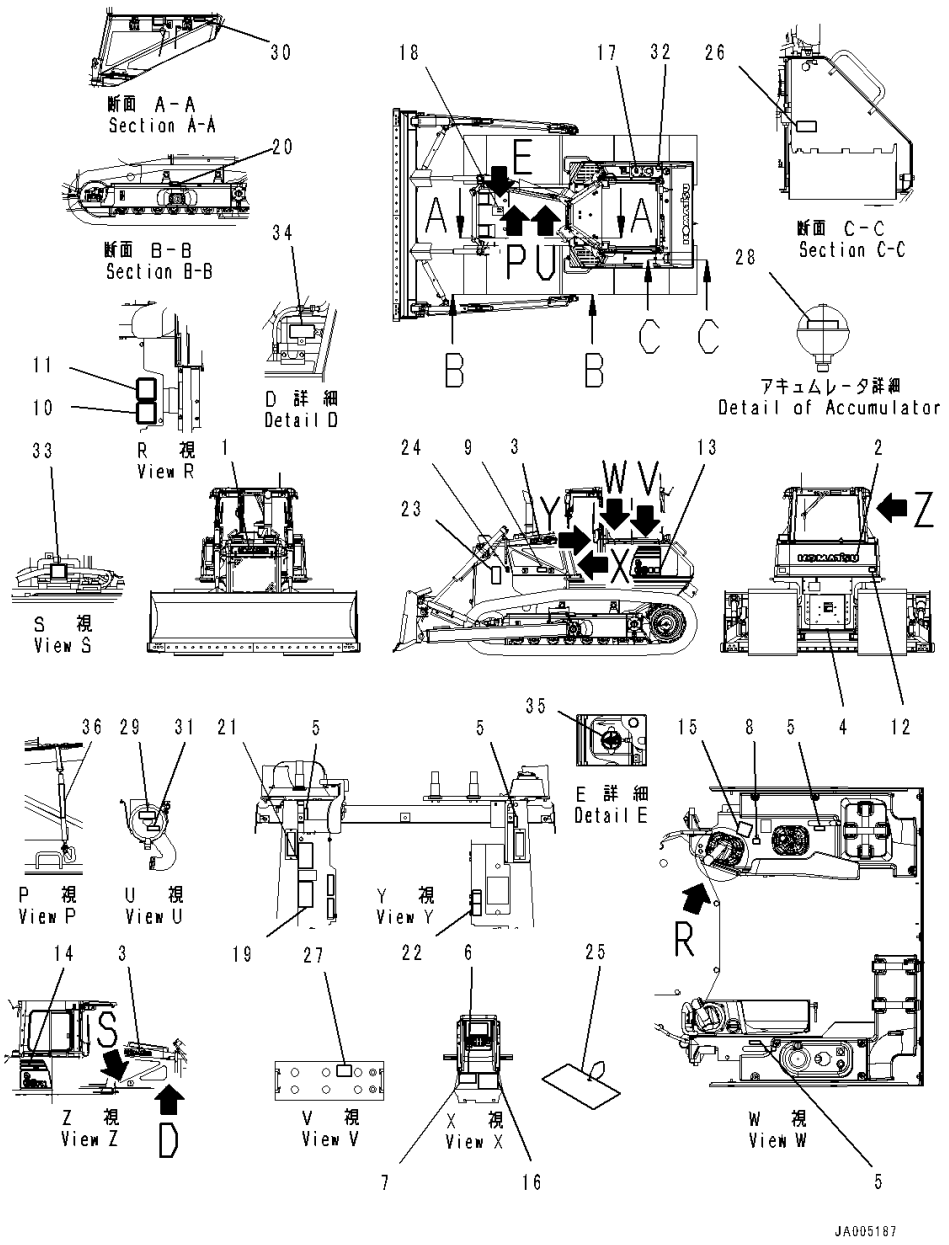

Index	Code	Part Number	Description	Qty	Serial Number
32		09669-0000E	Plate, Symbol, Fuel Filler, Fuel Direction .	1	80087-
33		09842-A0481	Plate, Caution, No Jump Start	1	80087-
34		09642-A0480	Plate, Service Instruction, Engine Coolant AF-NAC	1	80087-
35		23B-53-71190	Plate, Symbol	1	80087-
36		154-98-75370	Plate	2	80087-

https://truckmanualshub.com/

FIG. U0100-067001 Marks And Plates, Turkish-English, EU New Noise Arrangement 2, EU Safety Regulation, For Power Angle Power Tilt Dozer, Inside Frame

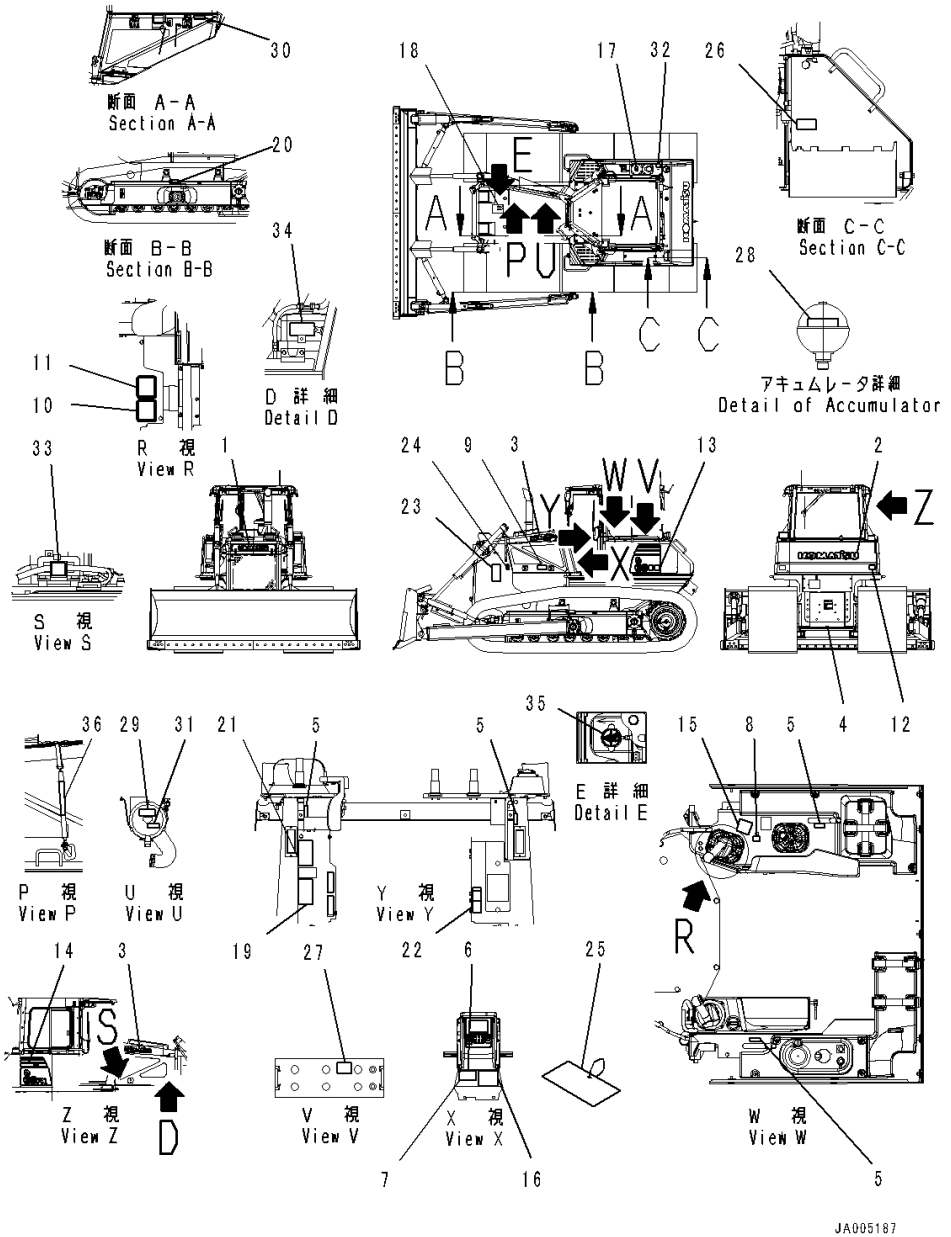

Index	Code	Part Number	Description	Qty	Serial Number
1		09690-F0560	Plate, Mark,Front	1	80087-
2		09690-P1120	Plate, Mark,Rear	1	80087-
3		09690-F0500	Decal, Komatsu Logo,Side	2	80087-
4		09690-M0063	Mark, Komatsu Logo, Anti-Restamp	1	80087-
5		14X-98-11170	Plate, Operating, Lock	4	80087-
6	C2	09602-00003	Plate, Name (Limited Supply)	1	80087-
7		04418-13060	Screw	4	80087-
8		17A-98-11180	Plate, Horn	1	80087-
9		20Y-00-41530	Plate, Symbol, Ecot3	1	80087-
10		09696-50078	Plate, EU Ope Ear Noise, EU Ope Ear Noise	1	80087-
11		09696-40108	Plate, EU Around Noise	1	80087-
12		14X-98-35181	Plate, Reflector, Rear Reflecter	2	80087-
13		14X-98-51131	Decal, Machine Model, LHS	1	80087-
14		14X-98-51231	Decal, Machine Model, RHS	1	80087-
15		124-98-51140	Plate, Work Equipment	1	80087-
16		14X-98-51221	Oil Chart, For PAT	1	80087-
17		09653-A0481	Plate, Warning, High Temperature, Operating Oil Tank	1	80087-
18		09653-A0481	Plate, Warning, High Temperature, Radiator	1	80087-
19		09654-B0641	Plate, Warning, Before Leaving Seat, After Operating	1	80087-
20		09657-A0881	Plate, Adjustment Of Track Tension	2	80087-
21		09651-A0641	Plate, Warning, Read Manual Before Operating, Before Operating	1	80087-
22		09802-B0640	Decal, Warning, Before Operation and Traveling	1	80087-
23		09806-B1683	Plate, Caution Danger Keep Away	2	80087-
24		09667-A0481	Plate, Caution, Rotating Object, While Engine Is Running Don't Open Cover	2	80087-
25		09963-A1640	Tag, Danger, Do Not Operate, Check And Equipment	1	80087-
26		09808-A0881	Plate, Warning, Battery Cables, Caution Battery Cables	1	80087-
27		09664-60011	Plate, Danger, Battery	2	80087-
28		09659-A057B	Plate, Warning, Explosive Hazard	1	80087-
29		09637-A0640	Decal, Service Instruction, Air Cleaner	1	80087-
30		6217-71-6860	Plate, Fuel Filter	1	80087-

https://truckmanualshub.com/

FIG. U0100-067001 Marks And Plates, Turkish-English, EU New Noise Arrangement 2, EU Safety Regulation, For Power Angle Power Tilt Dozer, Inside Frame

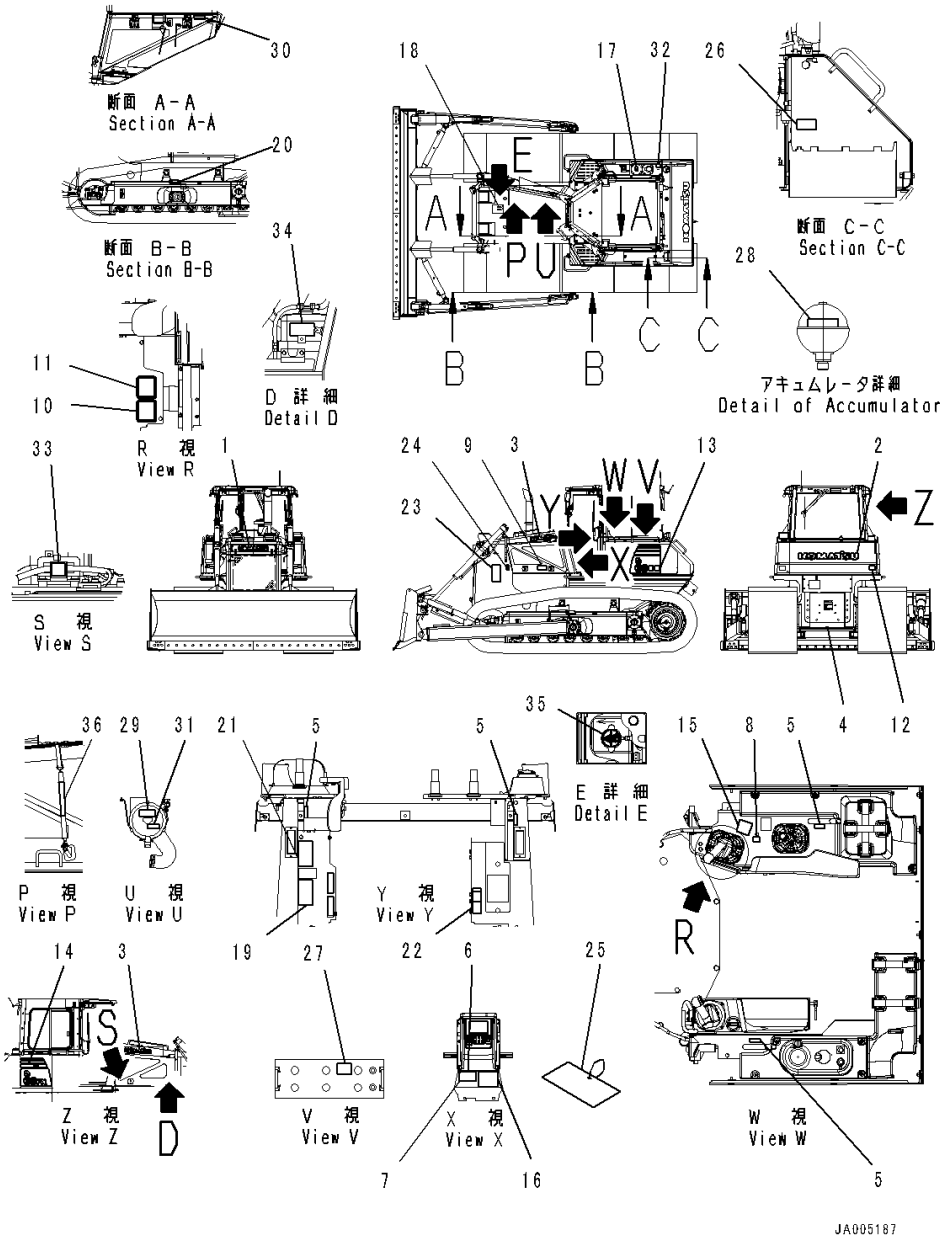

Index	Code	Part Number	Description	Qty	Serial Number
31		6217-71-6860	Plate, Fuel Filter	1	80087-
32		09669-0000E	Plate, Symbol, Fuel Filler, Fuel Direction	1	80087-
33		09842-A0481	Plate, Caution, No Jump Start	1	80087-
34		09642-A0480	Plate, Service Instruction, Engine Coolant AF-NAC	1	80087-
35		23B-53-71190	Plate, Symbol	1	80087-
36		154-98-75370	Plate	2	80087-

https://truckmanualshub.com/

FIG. U0203-001001 Fire Prevention Plates

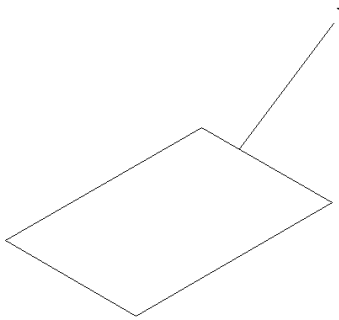

JA002174

Index	Code	Part Number	Description	Qty	Serial Number
1		14X-98-31110	Plate	1	80001-

https://truckmanualshub.com/

FIG. U0205-001001 Caution Plates

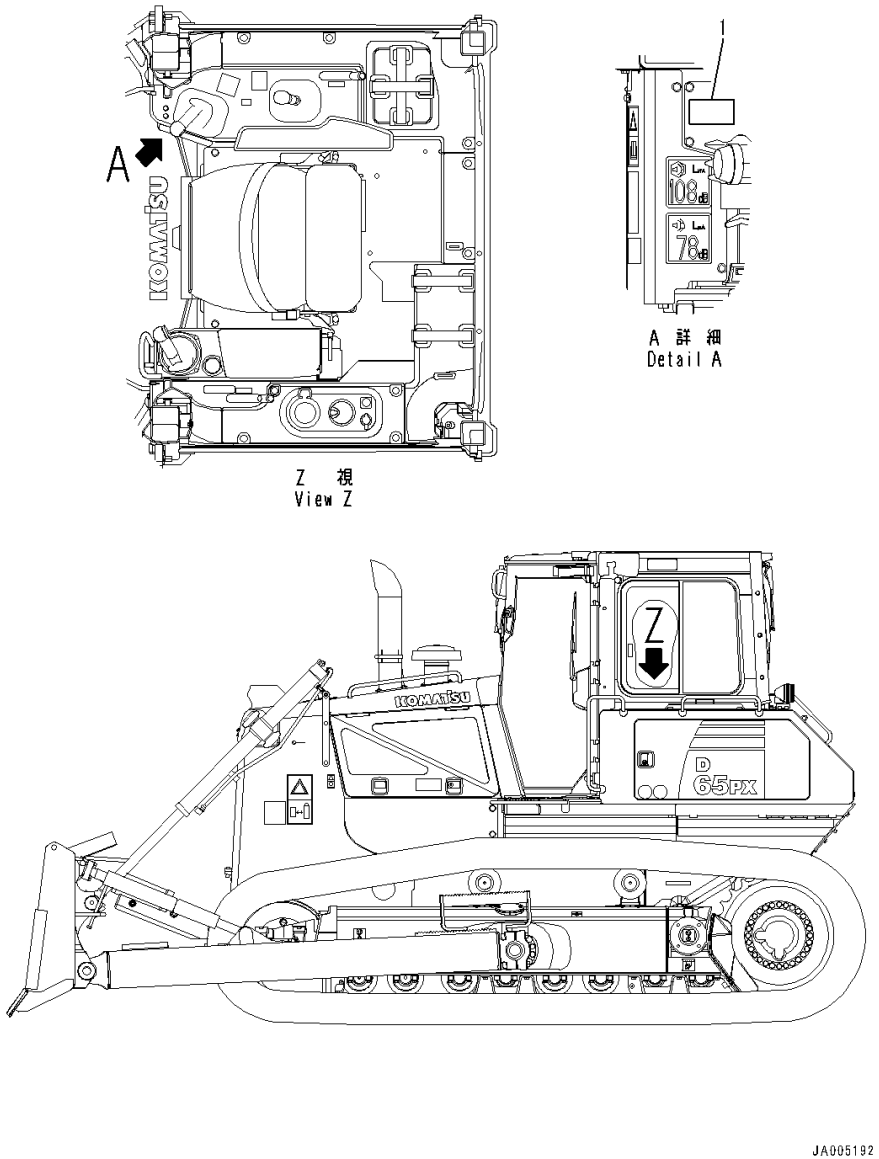

Index	Code	Part Number	Description	Qty	Serial Number
1		09845-00480	Plate, Caution, Blast Site	1	80001-

https://truckmanualshub.com/

FIG. U0400-001001 Balancing Mark

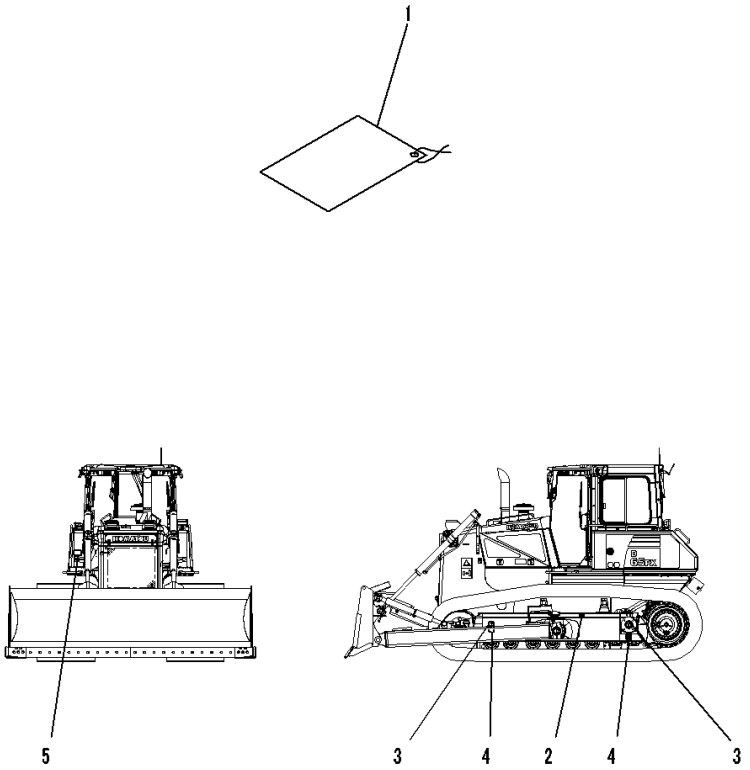

Index	Code	Part Number	Description	Qty	Serial Number
1		130-98-79210	Plate, Location Of Balance	1	80001-
2		09960-00611	Mark, Balancing Position	2	80001-
3		09960-00801	Decal, Lift Point Mark, Hanging Point	4	80001-
4		09960-00802	Decal, Tie Down Point Mark, Tie Position	4	80001-
5		17A-98-41510	Plate, Lift Point and Tie Down Point Marks, Hanging Posture And Tie Posture	1	80001-

https://truckmanualshub.com/

FIG. U0520-002001 ROPS/FOPS Plate, English

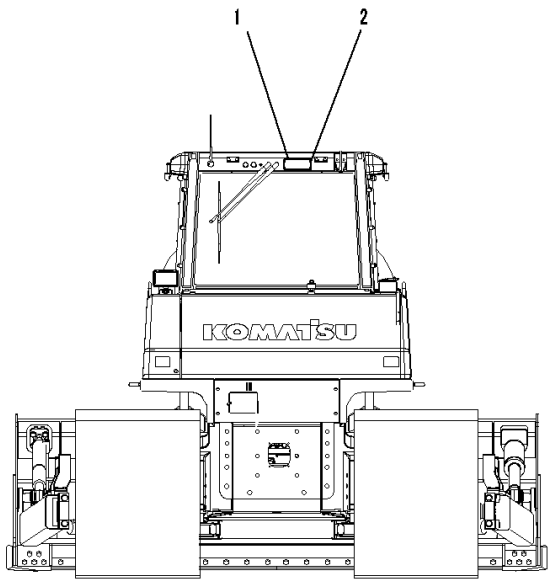

JA002754

Index	Code	Part Number	Description	Qty	Serial Number
1	C2	09620-A2000	Plate, Name, ROPS/FOPS (Limited Supply)	1	80001-
2		04418-13060	Screw	4	80001-

https://truckmanualshub.com/

FIG. U0520-003001 ROPS/FOPS Plate, Spanish

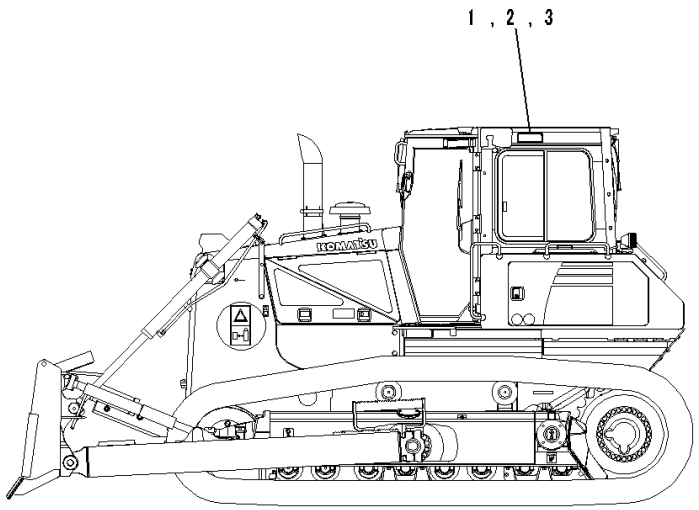

JA004092

Index	Code	Part Number	Description	Qty	Serial Number
1	C2	09620-A2000	Plate, Name, ROPS/FOPS (Limited Supply)	1	80005-
2		09620-A2070	Plate, Certification Mark	1	80005-
3		04418-13060	Screw	4	80005-

https://truckmanualshub.com/

FIG. U0520-004001 ROPS/FOPS Plate, French

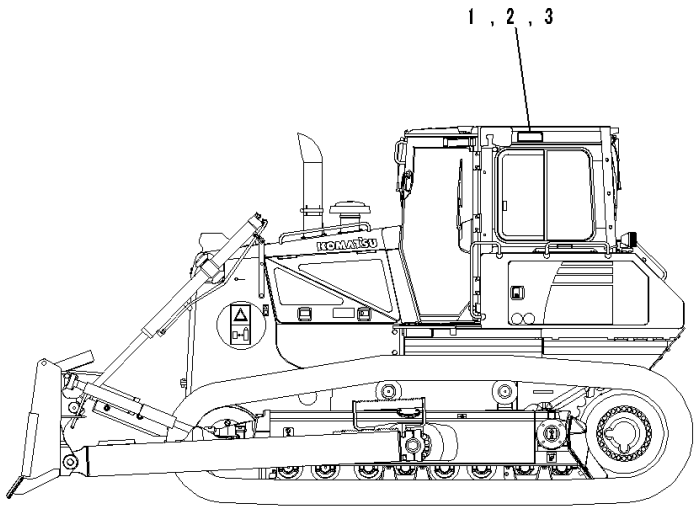

JA004092

Index	Code	Part Number	Description	Qty	Serial Number
1	C2	09620-A2000	Plate, Name, ROPS/FOPS (Limited Supply)	1	80005-
2		09620-A2100	Plate, Certification Mark	1	80005-
3		04418-13060	Screw	4	80005-

https://truckmanualshub.com/

FIG. U0520-005001 ROPS/FOPS Plate, Germany

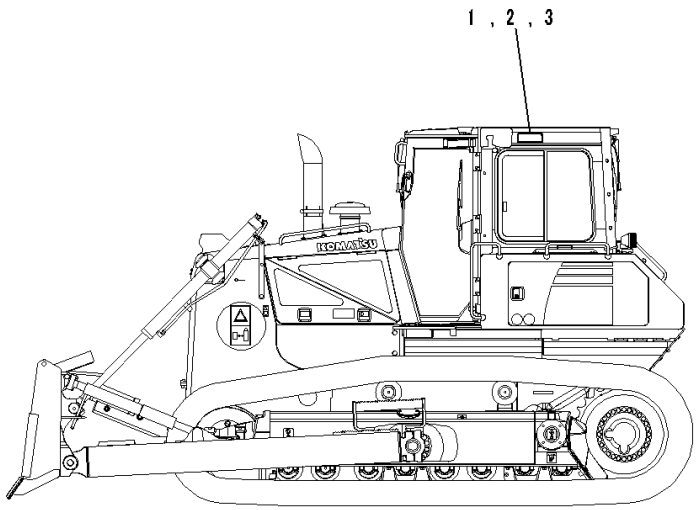

Index	Code	Part Number	Description	Qty	Serial Number
1	C2	09620-A2000	Plate, Name, ROPS/FOPS (Limited Supply)	1	80005-
2		09620-A2080	Plate, Warning	1	80005-
3		04418-13060	Screw	4	80005-

https://truckmanualshub.com/

FIG. U0520-006001 ROPS/FOPS Plate, Turkish

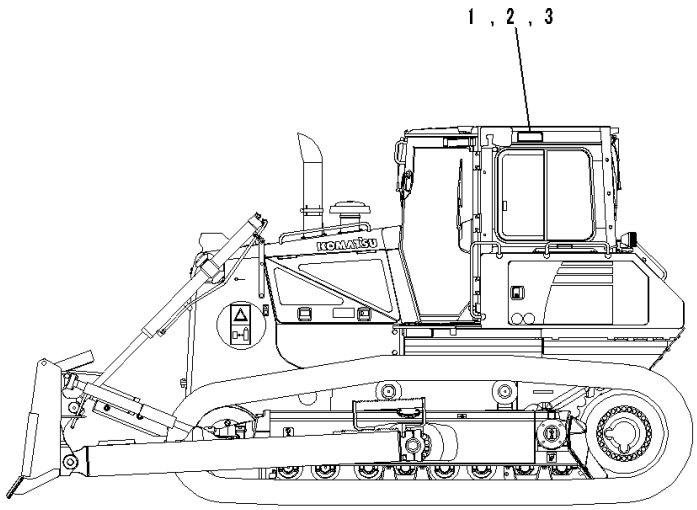

JA004092

Index	Code	Part Number	Description	Qty	Serial Number
1	C2	09620-A2000	Plate, Name, ROPS/FOPS (Limited Supply)	1	80005-
2		17A-98-41320	Plate, Warning	1	80005-
3		04418-13060	Screw	4	80005-

https://truckmanualshub.com/

FIG. U0520-007001 ROPS/FOPS Plate, Italian

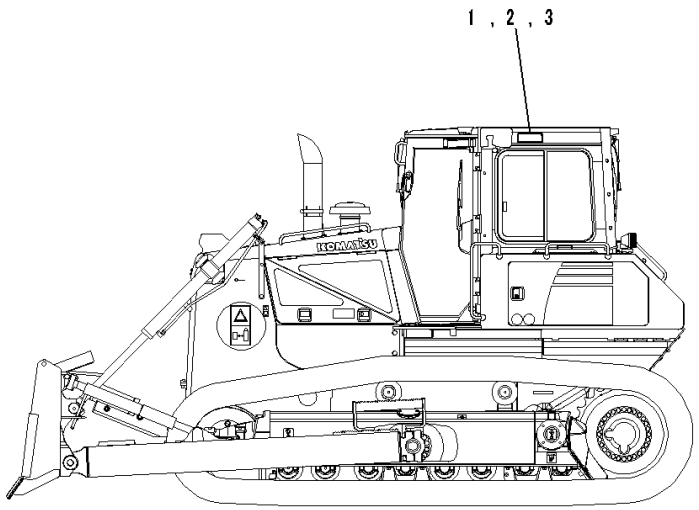

JA004092

Index	Code	Part Number	Description	Qty	Serial Number
1	C2	09620-A2000	Plate, Name, ROPS/FOPS (Limited Supply)	1	80005-
2		09620-A2110	Plate, Warning	1	80005-
3		04418-13060	Screw	4	80005-

https://truckmanualshub.com/

FIG. U0520-008001 ROPS/FOPS Plate, Portuguese

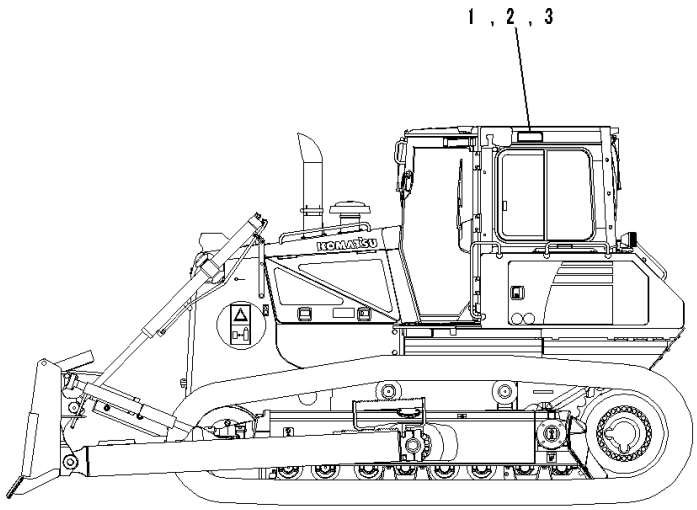

JA004092

Index	Code	Part Number	Description	Qty	Serial Number
1	C2	09620-A2000	Plate, Name, ROPS/FOPS (Limited Supply)	1	80005-
2		09620-A2120	Plate, Certification Mark	1	80005-
3		04418-13060	Screw	4	80005-

https://truckmanualshub.com/

FIG. U0520-009001 ROPS/FOPS Plate, For EU Safety Regulation

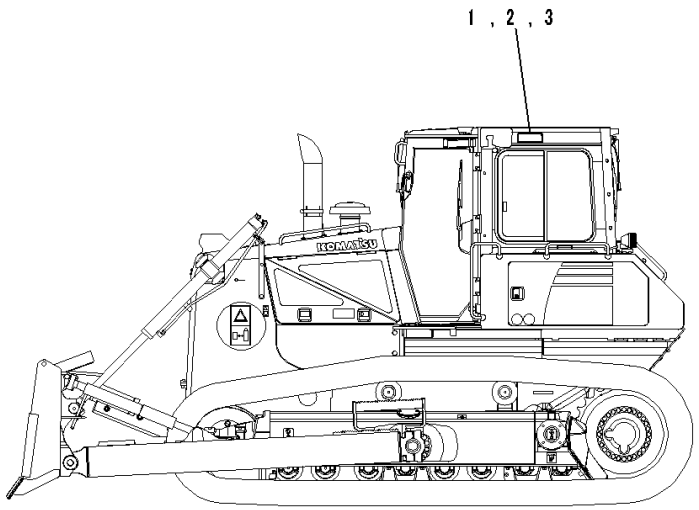

JA004092

Index	Code	Part Number	Description	Qty	Serial Number
1	C2	09620-A2000	Plate, Name, ROPS/FOPS (Limited Supply)	1	80062-
2	C2	09620-A3000	Plate, Safety	1	80062-
3		04418-13060	Screw	4	80062-

https://truckmanualshub.com/

https://truckmanualshub.com/

https://truckmanualshub.com/

AUXILIARY PARTS AND TOOL

FIG. V0100-001001 Spare Parts

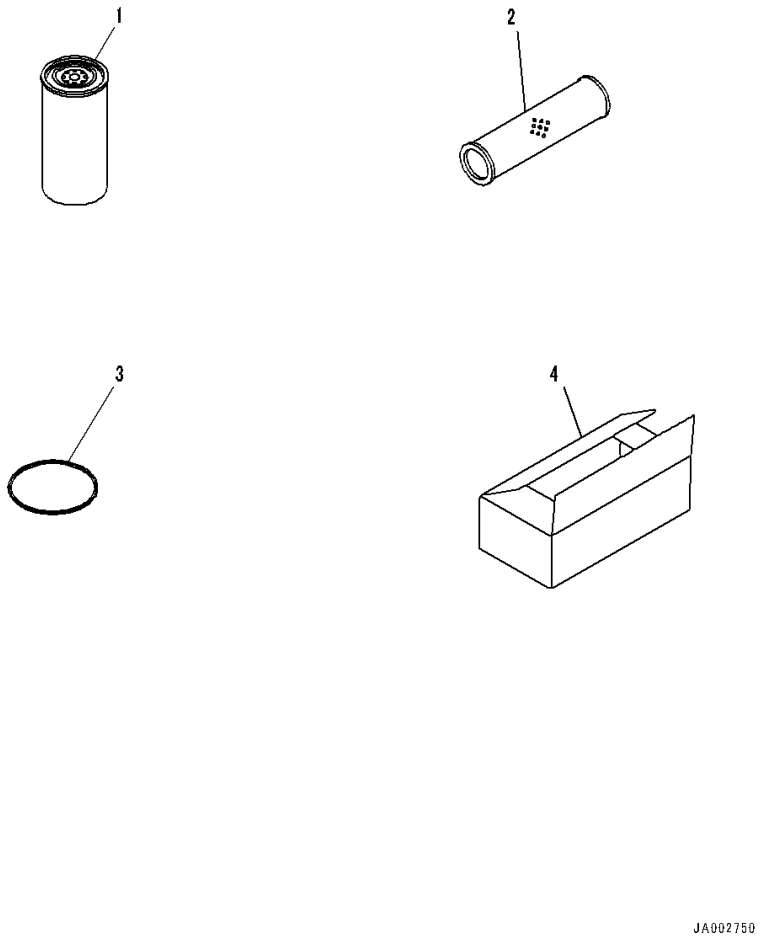

Index	Code	Part Number	Description	Qty	Serial Number
1		714-07-28713	Cartridge	1	80009-
2		14X-60-31150	Element	1	80001-
3		07000-15195	O-ring	1	80001-
4		09059-00800	Box	1	80001-

https://truckmanualshub.com/

FIG. V0200-001001 Cap And Overall

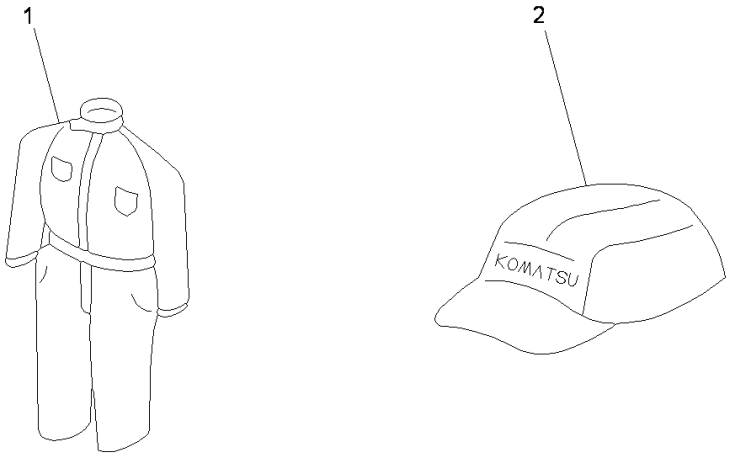

Index	Code	Part Number	Description	Qty	Serial Number
1		09980-10550	Overall	1	80001-
2		09982-10057	Cap	1	80001-

https://truckmanualshub.com/

FIG. V0300-001001 Tool

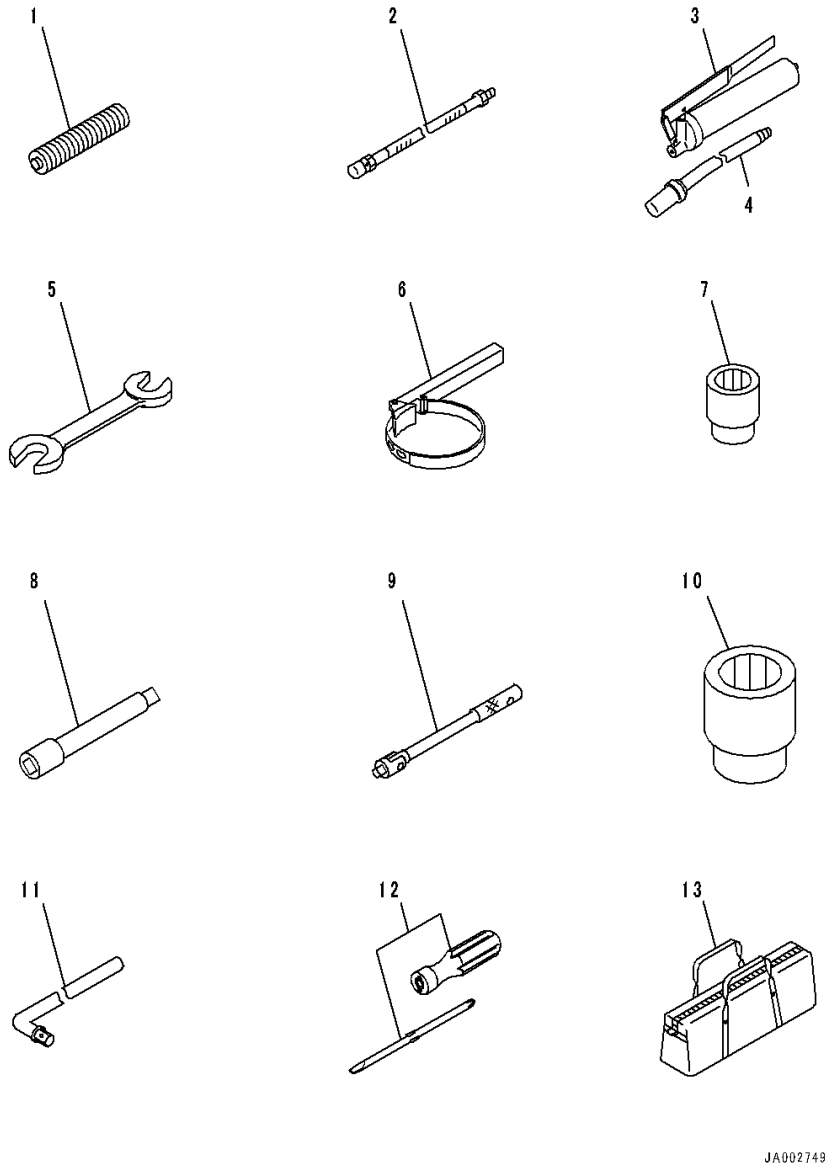

Index	Code	Part Number	Description	Qty	Serial Number
1		07950-90403	Cartridge	1	80001-
2		07951-31400	Nozzle	1	80001-
		07952-70004	Pump Assembly	1	80001-
3		07950-10450	• Pump Assembly	1	80001-
4		07951-41017	• Pump Assembly	1	80001-
5		09002-01317	Wrench, W=13X17mm	1	80001-
		09002-03032	Wrench, W=30X32mm	1	80001-
6		09019-28035	Wrench	1	80001-
7		09021-01725	Socket, W=17mm	1	80001-
		09021-01928	Socket, W=19mm	1	80001-
		09021-02436	Socket, W=24mm	1	80001-
8		09022-00150	Extension	1	80001-
9		09023-00300	Handle	1	80001-
10		09021-03246	Socket, W=32mm	1	80001-
		09021-03653	Socket, W=36mm	1	80001-
11		09024-00300	Handle	1	80001-
12		09033-00190	Driver	1	80001-
13		09056-04613	Bag	1	80001-

https://truckmanualshub.com/

https://truckmanualshub.com/

OTHER EQUIPMENT

FIG. W1113-001001 Fuel Self Charge Pump

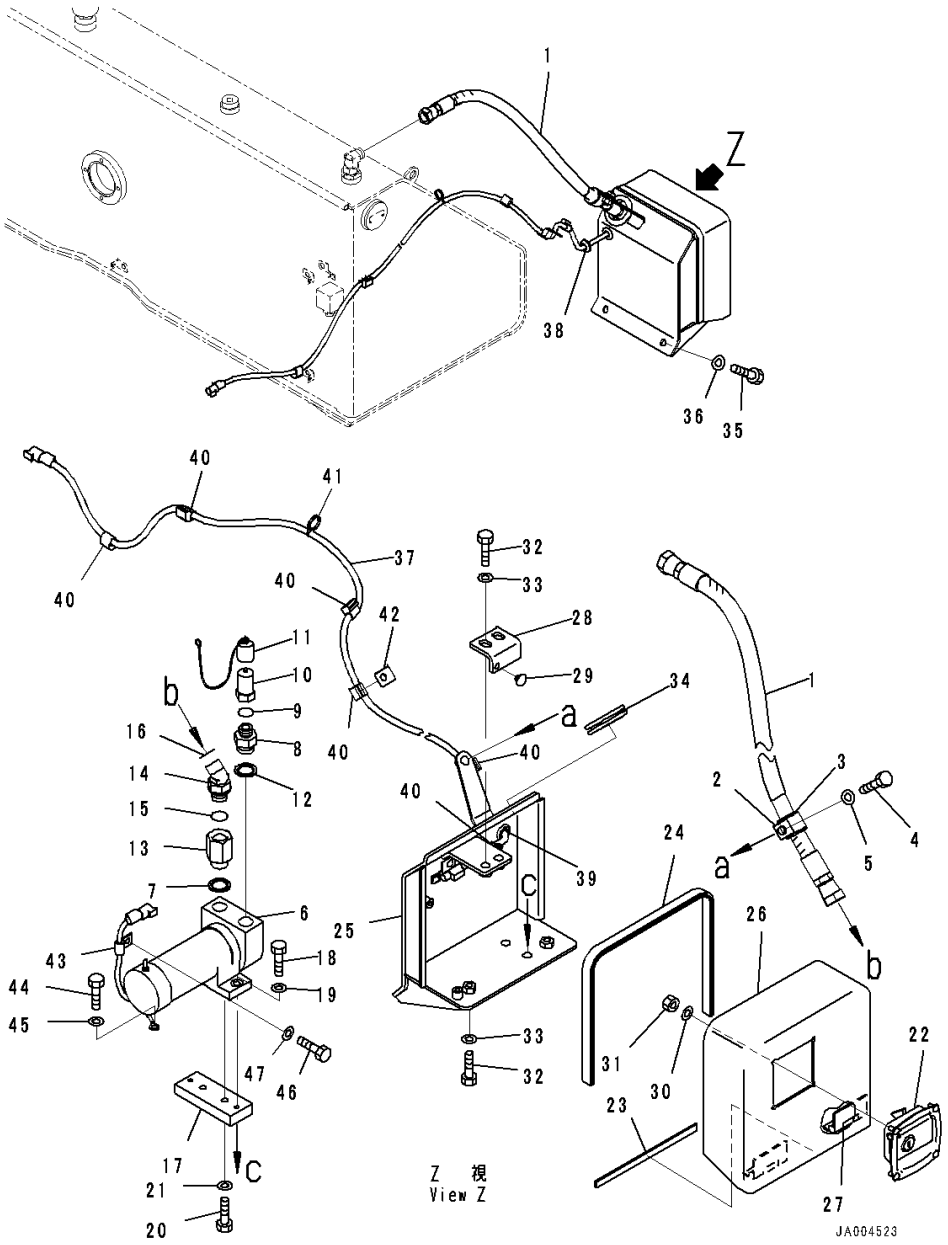

Index	Code	Part Number	Description	Qty	Serial Number
1		14X-04-51620	Hose	1	80001-
2		04434-53212	Clip	1	80001-
3		07095-20523	Cushion	1	80001-
4		01010-81225	Bolt	1	80001-
5		01643-31232	Washer	1	80001-
6		14X-04-31510	Pump	1	80001-
7		205-04-K1370	Washer, Seal	1	80001-
8		14X-04-31530	Union	1	80001-
9		208-38-11590	O-ring	1	80001-
10		134-62-63720	Coupling	1	80001-
11		14X-04-31570	Cap	1	80001-
12		205-04-K1370	Washer, Seal	1	80001-
13		14X-04-51441	Union	1	80001-
14		02783-10522	Elbow	1	80001-
15		07002-12434	O-ring	1	80001-
16		02896-11015	O-ring	1	80001-
17		14X-54-53930	Plate	1	80001-
18		01010-80830	Bolt	2	80001-
19		01643-30823	Washer	2	80001-
20		01010-81225	Bolt	2	80001-
21		01643-31232	Washer	2	80001-
		14X-54-53871	Cover Assembly	1	80001-
22		14X-54-54310	• Lock	1	80001-
23		14X-54-53950	• Sheet	1	80001-
24		14X-54-53940	• Seal	1	80001-
25		14X-54-53891	• Bracket	1	80001-
26	C1		• Cover	1	80001-
27		11Y-54-14220	• • Hinge	2	80001-
28		14X-54-53840	• Plate	1	80001-
29		14X-54-12960	• Stopper	1	80001-
30		01643-30623	• Washer	4	80001-
31		01580-10605	• Nut	4	80001-
32		01010-81230	• Bolt	4	80001-
33		01643-31232	• Washer	4	80001-
34		08037-05016	Grommet	1	80001-
35		01010-81225	Bolt	2	80001-
36		01643-31232	Washer	2	80001-
37		14X-06-52981	Wiring Harness	1	80001-
38		08037-01610	Grommet	1	80001-
39		112-860-1360	Grommet	1	80001-

https://truckmanualshub.com/

FIG. W1113-001001 Fuel Self Charge Pump

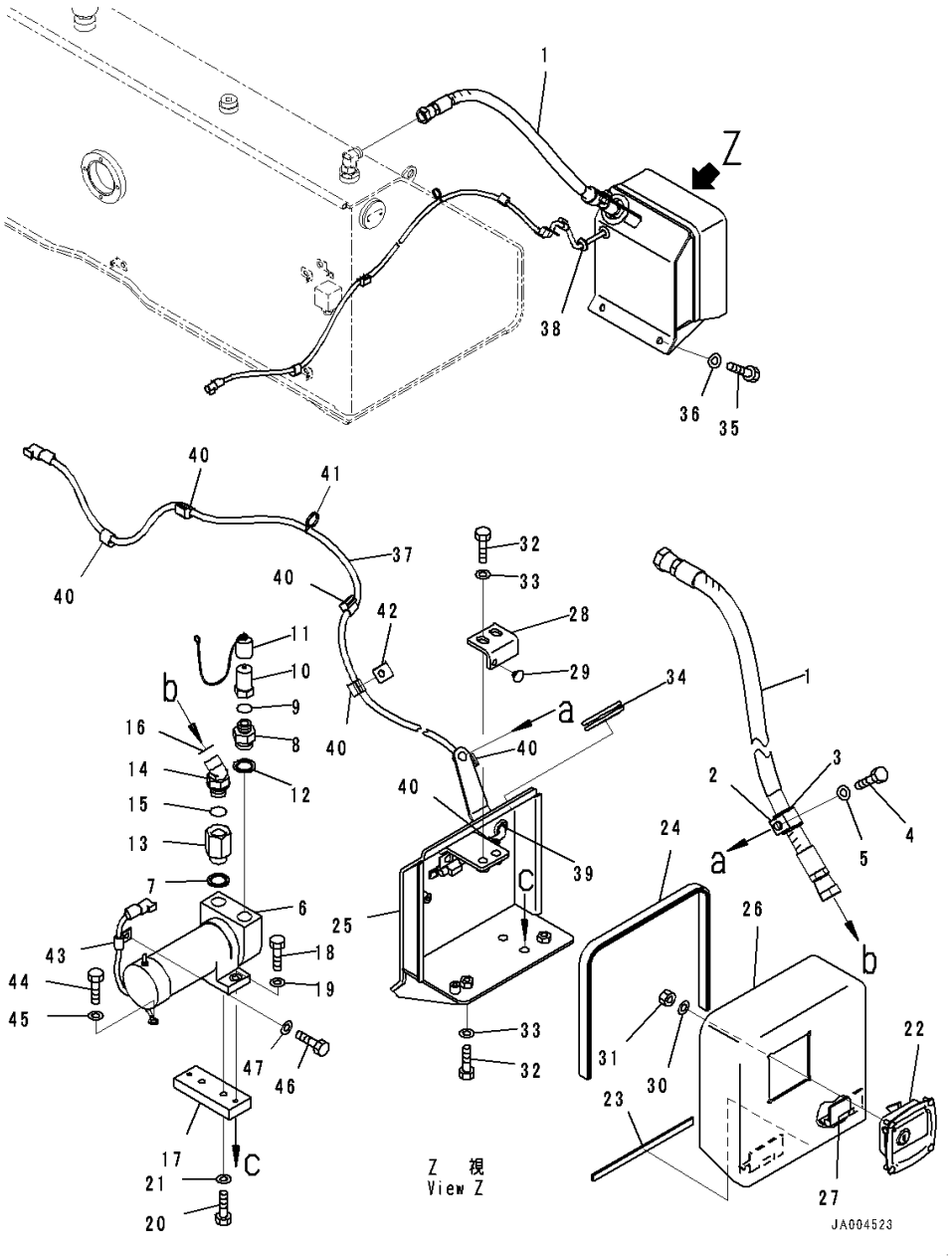

Index	Code	Part Number	Description	Qty	Serial Number
40		08211-00720	Clip	6	80001-
41		08034-40521	Band	1	80001-
42		08057-12010	Clip	1	80001-
43		04434-50808	Clip	1	80001-
44		01010-80812	Bolt	1	80001-
45		01643-30823	Washer	1	80001-
46		01010-80816	Bolt	1	80001-
47		01643-30823	Washer	1	80001-

https://truckmanualshub.com/

FIG. W9970-001001 Parts For Machine Transportation

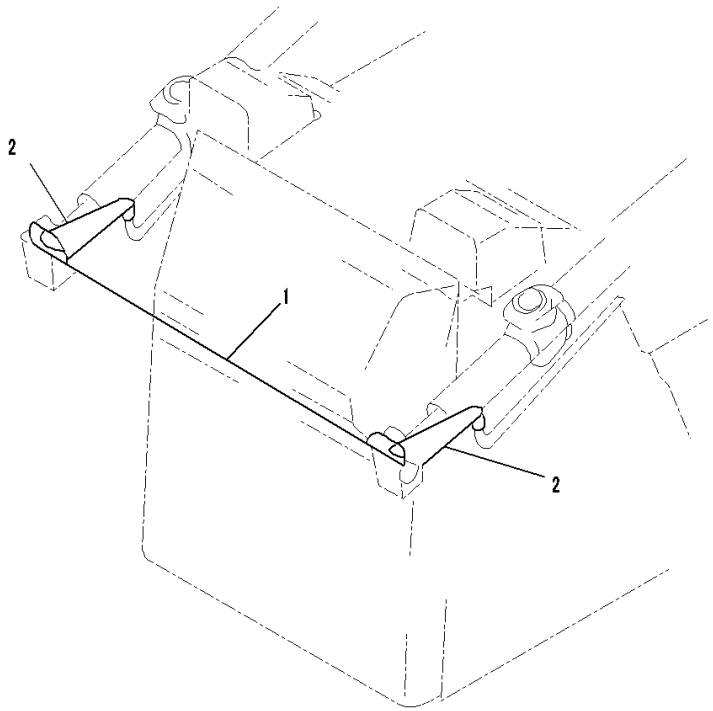

JA002745

Index	Code	Part Number	Description	Qty	Serial Number
1		13F-98-11210	Wire	1	80001-
2		13F-98-11220	Wire	2	80001-

https://truckmanualshub.com/

https://truckmanualshub.com/

FIELD REPAIR SERVICE PARTS

FIG. KIT Service Kit Parts (1/2)

Index	Code	Part Number	Description	Qty	Serial Number
K01		14X-22-05010	Service Kit, Steering		80001-
		02896-61012	• O-ring	1	-
		02896-61018	• O-ring	2	-
		07000-72018	• O-ring	21	-
		07000-72065	• O-ring	1	-
		07000-72095	• O-ring	1	-
		07000-73022	• O-ring	17	-
		07000-73032	• O-ring	1	-
		07000-75180	• O-ring	2	-
		07000-75365	• O-ring	4	-
		07002-12434	• O-ring	1	-
		07002-23634	• O-ring	1	-
		07002-61623	• O-ring	24	-
		07002-62034	• O-ring	1	-
		07002-62434	• O-ring	2	-
		14Y-22-23310	• Seal Ring	2	-
		14Y-22-37470	• O-ring	1	-
		232-15-19270	• Seal Ring	2	-
K02		14X-22-05020	Service Kit, Steering Brake		80001-
		07002-32434	• O-ring	2	-
		07002-33034	• O-ring	2	-
		07002-61623	• O-ring	1	-
		07002-61823	• O-ring	1	-
		113-15-29110	• Seal, Oil	2	-
K03		14X-15-05180	Service Kit, Transmission		80001-
		02896-61018	• O-ring	1	-
		07000-72015	• O-ring	13	-
		07000-72018	• O-ring	5	-
		07000-72021	• O-ring	5	-
		07000-73022	• O-ring	2	-
		07000-73025	• O-ring	2	-
		07000-73032	• O-ring	1	-
		07000-73035	• O-ring	5	-
		07000-73045	• O-ring	1	-
		07002-12434	• O-ring	1	-
		07002-61023	• O-ring	1	-
		07002-62434	• O-ring	3	-
		103-15-12820	• Seal Ring	2	-
		113-15-12870	• Ring	1	-
		124-15-41910	• Seal Ring	3	-
		124-15-41920	• Seal Ring	2	-
		14X-15-19210	• Seal Ring	1	-
		14X-15-29220	• Seal Ring	1	-
		14X-15-29230	• Seal Ring	1	-
		569-15-12860	• Seal Ring	2	-
		714-12-39230	• Seal Ring	2	-
		714-21-19810	• Seal Ring	2	-
K04		14X-15-05190	Service Kit, Transmission		80001-
		07000-71007	• O-ring	5	-
		07000-72015	• O-ring	20	-
		07000-73022	• O-ring	2	-
		07000-A2060	• O-ring	1	-
		07002-61023	• O-ring	6	-
		07002-61223	• O-ring	7	-
		07002-61423	• O-ring	5	-
		07002-61823	• O-ring	1	-
K05		14X-15-05210	Service Kit, Transmission Main Relief Valve		80001-
		07000-73030	• O-ring	5	-
		07002-61023	• O-ring	2	-
		07002-63034	• O-ring	4	-
K06		14X-13-05040	Service Kit, Torque Converter		80001-
		02896-61018	• O-ring	1	-
		07000-72070	• O-ring	1	-
		07000-72090	• O-ring	1	-
		07000-72100	• O-ring	2	-
		07000-72110	• O-ring	1	-
		07000-72130	• O-ring	1	-
		07000-73030	• O-ring	2	-
		07000-73032	• O-ring	2	-
		07000-73045	• O-ring	2	-
		07000-75065	• O-ring	1	-
		07000-75210	• O-ring	1	-
		07002-61023	• O-ring	2	-
		07002-62434	• O-ring	2	-
		07005-01212	• Seal, Washer	6	-
		07012-50095	• Seal, Oil	1	-
		425-13-32710	• Seal Ring	1	-
		426-13-42710	• Seal Ring	1	-
		567-15-12830	• Ring	2	-

https://truckmanualshub.com/

FIG. KIT Service Kit Parts (2/2)

Index	Code	Part Number	Description	Qty	Serial Number
		582-15-19240	• Seal Ring	2	-
K07		14X-32-05010	7		80001-
		154-32-71220	• Nut	30	-
		207-32-71620	• Bolt	30	-
K08		134-32-05010	Shoe Bolt and Nut Kit		80001-
		134-32-61221	• Nut	30	-
		154-32-21323	• Bolt	30	-
K09		13G-32-05010	Shoe Bolt and Nut Kit		80001-
		134-32-61221	• Nut	30	-
		13G-32-61210	• Bolt	30	-
K10		707-99-27120	Service Kit, Lift Cylinder		80001-
		02896-11015	• O-ring	3	-
		07000-12080	• O-ring	1	-
		07000-12085	• O-ring	1	-
		07000-13025	• O-ring	1	-
		07145-00055	• Seal, Dust	2	-
		707-35-52770	• Ring, Back-up	1	-
		707-39-85120	• Ring, Wear	2	-
		707-44-85150	• Ring, Piston	1	-
		707-51-60030	• Packing, Rod	1	-
		707-51-60650	• Ring, Buffer	1	-
		707-56-60740	• Seal, Dust	1	-
K11		707-99-27530	Service Kit, Lift Cylinder		80001-
		02896-11015	• O-ring	3	-
		07000-12085	• O-ring	1	-
		07000-12090	• O-ring	1	-
		07145-00055	• Seal, Dust	2	-
		07146-02086	• Ring, Back-up	1	-
		07156-00912	• Ring, Wear	2	-
		707-44-90150	• Ring, Piston	1	-
		707-51-60030	• Packing, Rod	1	-
		707-51-60650	• Ring, Buffer	1	-
		707-56-60740	• Seal, Dust	1	-
K12		707-99-43320	Service Kit, Tilt And Pitch Cylider		80001-
		02896-11009	• O-ring	2	-
		07000-12120	• O-ring	1	-
		07000-12125	• O-ring	1	-
		07145-00050	• Seal, Dust	2	-
		707-35-91510	• Ring, Back-up	1	-
		707-39-12520	• Ring, Wear	1	-
		707-44-12250	• Ring, Piston	1	-
		707-51-70030	• Packing, Rod	1	-
		707-51-70650	• Ring, Buffer	1	-
		707-56-70740	• Seal, Dust	1	-
K13		707-99-43730	Service Kit, Tilt Cylider		80001-
		02896-11009	• O-ring	2	-
		07000-12125	• O-ring	1	-
		07000-12130	• O-ring	1	-
		07000-13050	• O-ring	4	-
		07146-02126	• Ring, Back-up	1	-
		07156-01315	• Ring, Wear	1	-
		707-44-13150	• Ring, Piston	1	-
		707-51-70030	• Packing, Rod	1	-
		707-51-70650	• Ring, Buffer	1	-
		707-56-70740	• Seal, Dust	1	-
K14		707-99-36680	Service Kit, Angle Cylinder		80001-
		02896-11012	• O-ring	4	-
		07000-12105	• O-ring	1	-
		07000-12110	• O-ring	1	-
		07000-13050	• O-ring	4	-
		07146-02106	• Ring, Back-up	1	-
		07156-01112	• Ring, Wear	2	-
		707-44-11150	• Ring, Piston	1	-
		707-51-65030	• Packing, Rod	1	-
		707-51-65650	• Ring, Buffer	1	-
		707-56-65740	• Seal, Dust	1	-

https://truckmanualshub.com/

https://truckmanualshub.com/

https://truckmanualshub.com/

NUMERICAL INDEX

PartNumber	Page	Index
01010-61460	255	11
01010-61645	231	8
01010-61650	257	1
01010-61660	265	32
01010-61670	231	9
01010-61690	262	15
01010-71225	154	4
	158	3
01010-71230	619	9
	628	11
01010-71285	159	3
01010-80612	166	5
	227	19
	426	39
	520	39
	631	8
	631	17
	632	10
	632	21
	717	20
	722	20
	727	20
01010-80616	385	10
	385	14
	391	15
	395	12
	395	17
	402	13
	403	11
	403	15
	403	19
	403	26
	404	33
	404	40
	404	45
	404	50
	426	30
	427	7
	429	8
	429	11
	431	12
	431	18
	437	2
	439	2
	458	10
	458	14
	464	15
	468	12
	468	17
	475	13
	476	11
	476	15
	476	19
	476	26
	477	33
	477	40
	477	45
	477	50
	495	7
	497	8
	497	11
	499	12
	499	18
	505	2
	507	2
	519	30
	521	12
	521	18
	531	14
	531	17
	545	15
	546	8
	546	11
	548	5
	553	2
	611	4
	717	23
	722	23
	727	23
01010-80620	234	21
	431	20
	499	20
	521	20
01010-80625	383	24
	384	26
	456	24
	457	26
	564	5
	574	5
01010-80630	564	1
	574	1
01010-80645	167	15
01010-80670	583	38
01010-80812	895	44
01010-80816	165	26
	217	10
	412	19
	483	19
	534	19
	545	20
	546	5
	547	9
	611	11
	895	46
01010-80820	165	28
	166	15
	166	38
	167	3
	198	12
	203	20
	205	12
	210	20
	212	12
	356	3
	358	2
	360	3
	363	3
	364	3
	429	2
	429	5
	497	2
	497	5
	546	2
	562	19
	564	3
	572	19
	574	3
	584	1
	590	1
	596	1
	599	1
	602	1
	604	1
	622	4
01010-80825	165	18
	184	26
	186	34
	383	25
	384	14
	409	40
	456	25
	457	14
	516	40
	611	2
01010-80830	201	2
	208	2
	415	11
	415	26
	417	10
	417	25
	486	11
	486	26
	488	10
	488	25
	537	11
	537	26
	538	10
	538	25
	581	10
	586	11
	595	12
	739	12
	894	18
01010-80840	777	45
	779	45
01010-80845	165	15
	260	23
	777	43
	779	43
01010-80850	437	17
	505	17
	553	18
01010-80855	260	24
	593	6
	597	6
	600	6
	605	6
01010-80865	556	1
	566	1
01010-80880	166	18
	562	7
	572	7
01010-81016	166	27
	611	7
	624	5
01010-81020	160	2
	164	1
	165	12
	166	24
	166	32
	167	7
	172	6
	173	16
	173	19
	177	2
	177	11
	180	5
	180	9
	184	17
	186	25
	198	8
	198	16
	198	22
	198	25
	198	29
	198	34
	198	39
	199	44
	200	6
	200	12
	200	18
	200	21
	200	26
	201	5
	201	10
	201	14
	202	5
	202	8
	202	12
	202	18
	202	22
	202	25
	202	28
	202	36
	203	3

PartNumber	Page	Index
	203	7
	203	12
	203	16
	204	7
	205	8
	205	16
	205	22
	205	25
	205	29
	205	34
	205	39
	206	44
	207	6
	207	12
	207	15
	207	20
	208	5
	208	10
	208	14
	209	5
	209	8
	209	12
	209	18
	209	22
	209	25
	209	28
	209	36
	210	3
	210	7
	210	12
	210	16
	211	7
	212	8
	212	16
	212	22
	212	25
	212	29
	212	34
	212	39
	213	44
	214	6
	214	12
	214	18
	214	21
	214	26
	224	2
	224	5
	262	6
	264	9
	265	6
	265	13
	265	22
	265	35
	267	20
	267	23
	267	26
	286	2
	286	5
	286	8
	290	9
	293	47
	295	48
	314	7
	319	4
	373	24
	378	24
	399	2
	399	5
	399	8
	403	5
	407	4
	419	11
	419	14
	420	8
	421	37
	421	41
	422	8
	422	25
	423	29
	425	16
	425	19
	426	25
	426	28
	426	34
	426	37
	426	44
	427	2
	427	5
	427	24
	427	28
	428	34
	429	15
	429	19
	432	14
	441	14
	446	24
	451	24
	472	2
	472	5
	472	8
	476	5
	480	4
	490	8
	491	37
	491	41
	492	8
	492	25
	492	29
	495	2
	495	5
	495	24
	495	28
	496	34
	497	15
	497	19
	500	14
	509	28
	512	14
	517	11
	517	14
	519	16
	519	19
	519	25
	519	28
	519	34
	520	37
	520	44
	526	28
	531	2
	531	5
	531	8
	531	11
	539	11
	539	14
	540	8
	540	37
	541	41
	542	8
	542	25
	542	29
	544	15
	544	18
	544	22
	544	26
	544	29
	545	2
	545	9
	545	12
	545	27
	545	30
	546	15
	549	13
	553	9
	556	8
	556	11
	560	2
	560	34
	562	15
	563	10
	566	8
	566	11
	570	2
	570	34
	572	15
	573	10
	575	2
	575	5
	575	12
	584	16
	584	23
	590	21
	590	26
	593	27
	593	31
	593	35
	593	39
	595	18
	595	21
	596	18
	596	23
	597	24
	597	28
	597	32
	598	37
	599	16
	599	21
	600	24
	600	28
	600	32
	600	36
	602	18
	602	25
	604	21
	604	28
	605	24
	605	28
	605	32
	605	36
	611	21
	611	25
	611	28
	611	32
	611	35
	613	3
	613	7
	619	12
	627	4
	628	14
	629	15
	629	19
	629	24
	629	28
	630	44
	630	48
	630	53
	630	57
	649	10
	652	2
	697	14
	717	11
	717	32
	718	49
	722	11
	722	28
	723	46

PartNumber	Page	Index
	727	11
	727	32
	728	50
	739	18
	781	38
	783	38
01010-81025	166	29
	170	22
	170	25
	170	29
	173	7
	178	14
	192	16
	193	14
	194	14
	195	16
	196	14
	197	14
	200	9
	202	32
	207	9
	209	32
	214	9
	237	14
	244	15
	253	12
	253	29
	259	18
	262	2
	263	2
	265	9
	267	17
	292	7
	292	13
	294	7
	294	13
	308	18
	319	6
	319	9
	405	19
	405	23
	406	27
	406	30
	406	37
	406	40
	416	32
	416	35
	418	30
	425	12
	426	41
	431	22
	478	19
	478	23
	478	27
	479	30
	479	37
	479	40
	487	32
	487	35
	489	30
	499	22
	519	12
	520	41
	521	22
	537	32
	537	35
	538	30
	544	11
	562	9
	572	9
	611	15
01010-81030	171	3
	177	6
	189	1
	200	15
	214	15
	228	7
	230	8
	250	3
	265	2
	407	6
	414	23
	480	6
	485	23
	536	23
	559	5
	562	2
	569	5
	572	2
	593	4
	597	4
	600	4
	605	4
	650	2
	650	8
01010-81035	189	13
	237	12
	251	4
	251	10
	251	24
	265	17
	304	16
	415	5
	417	4
	486	5
	488	4
	537	5
	538	4
	627	6
01010-81040	179	12
01010-81045	170	16
	173	5
	247	1
	265	20
	775	60
01010-81050	166	2
	177	38
	253	14
	317	27
	430	11
	498	11
01010-81055	185	47
	187	55
	247	3
01010-81060	267	14
	406	34
	479	34
01010-81065	249	1
	315	18
01010-81070	265	29
01010-81085	246	21
	264	16
01010-81220	166	9
	167	5
	189	18
	189	21
	189	27
	215	3
	215	8
	216	3
	216	8
	218	21
	218	33
	219	21
	222	21
	223	21
	265	25
	318	9
	350	35
	352	31
	370	4
	509	30
	513	4
	526	30
	528	2
	560	40
	570	40
	648	28
	672	38
	677	40
	696	41
	696	49
	696	52
	699	39
	700	47
	700	50
	716	32
	792	12
01010-81225	156	7
	156	18
	156	21
	177	17
	181	3
	189	24
	189	35
	189	38
	190	43
	192	18
	193	26
	194	26
	195	18
	196	26
	197	26
	200	2
	204	4
	207	2
	211	4
	214	2
	218	24
	220	2
	220	11
	221	2
	221	11
	222	24
	222	33
	232	3
	232	6
	262	17
	285	8
	285	11
	285	20
	286	11
	317	8
	318	13
	318	26
	318	29
	323	29
	323	35
	323	37
	324	40
	330	29
	330	35
	331	37
	331	40
	335	2
	335	9
	336	4
	336	11
	338	4
	338	11
	338	18
	341	9
	341	13
	346	12
	346	15

https://truckmanualshub.com/

PartNumber	Page	Index
	347	12
	347	15
	348	12
	349	12
	383	21
	384	23
	419	5
	423	33
	456	21
	457	23
	493	33
	508	22
	517	5
	526	22
	539	5
	542	33
	560	5
	560	8
	560	13
	560	16
	560	21
	560	24
	560	27
	560	30
	561	43
	570	5
	570	8
	570	13
	570	16
	570	21
	570	24
	570	27
	570	30
	571	43
	575	9
	612	47
	620	23
	622	13
	622	19
	626	4
	626	7
	626	12
	626	15
	630	59
	631	5
	631	14
	632	7
	632	18
	633	4
	633	7
	644	10
	648	24
	649	5
	671	34
	676	36
	696	45
	697	5
	697	8
	700	43
	716	28
	721	4
	721	7
	721	9
	721	13
	721	19
	726	4
	726	7
	726	9
	726	13
	726	19
	756	34
	757	34
	758	34
	759	34
	767	14
	771	12
	771	16
	771	24
	771	31
	790	4
	790	16
	790	32
	791	4
	791	16
	791	33
	792	8
	793	6
	894	4
	894	20
	894	35
01010-81230	171	16
	173	31
	178	3
	178	6
	178	9
	184	21
	186	29
	218	2
	218	5
	218	11
	218	14
	219	2
	219	5
	219	11
	219	14
	222	2
	222	5
	222	11
	222	14
	223	2
	223	5
	223	11
	223	14
	231	24
	236	16
	318	3
	318	7
	318	15
	318	23
	323	2
	323	13
	323	20
	330	2
	330	13
	330	20
	335	6
	335	13
	336	8
	336	15
	338	8
	338	15
	341	32
	341	37
	342	42
	342	45
	343	11
	346	18
	347	18
	347	24
	348	15
	349	15
	349	21
	351	39
	352	35
	402	8
	475	8
	608	24
	609	3
	610	3
	621	2
	624	8
	625	2
	631	20
	632	24
	654	2
	718	43
	718	46
	723	40
	723	43
	728	44
	728	47
	762	11
	763	11
	771	9
	773	12
	774	14
	774	17
	790	25
	791	26
	792	28
	894	32
01010-81235	168	17
	170	19
	177	15
	179	15
	217	7
	255	6
	255	14
	256	5
	256	13
	256	15
	257	6
	260	2
	260	8
	262	30
	266	38
	271	14
	273	9
	274	23
	276	14
	278	9
	279	23
	323	23
	330	23
	337	6
	337	9
	339	6
	339	9
	339	23
	339	26
	341	2
	342	48
	346	9
	347	9
	348	9
	349	9
	653	6
	721	1
	721	15
	726	1
	726	15
	730	6
	731	6
	732	3
	732	6
	733	6
	733	9
	734	3
	734	6
	735	6
	735	9
	739	20
	774	38
01010-81240	227	12
	227	22

https://truckmanualshub.com/

PartNumber	Page	Index
	251	21
	253	20
	314	3
	317	21
	644	2
	651	3
	729	11
	766	27
	768	27
01010-81245	167	11
	189	29
	260	12
	260	16
	272	20
	277	20
	315	4
	420	5
	422	5
	490	5
	492	5
	540	5
	542	5
	560	37
	570	37
	669	20
	693	23
	793	12
	793	17
01010-81250	168	10
01010-81255	231	5
	351	50
	353	46
	790	27
	791	28
	793	30
	793	37
01010-81260	323	26
	323	32
	330	26
	330	32
	338	25
	645	30
	668	37
	674	39
	691	39
	698	37
	713	34
	792	16
	792	24
01010-81265	177	19
	226	5
	260	33
	341	6
	341	16
	769	9
	769	25
	770	9
	770	16
	792	20
01010-81270	252	37
	285	5
	285	15
	317	12
	318	20
	323	6
	323	10
	330	6
	330	10
	343	5
01010-81275	256	19
01010-81280	236	7
	323	17
	330	17
01010-81285	714	20
01010-81290	163	11
01010-81295	234	30
	341	34
	341	39
	347	28
	349	25
	350	5
	721	11
	726	11
01010-81435	179	6
01010-81440	608	10
	608	21
01010-81465	179	9
01010-81625	165	10
	166	13
	370	9
	513	9
	528	7
01010-81630	746	10
	747	10
	790	7
	791	7
01010-81635	653	5
	732	8
	733	11
	734	8
	735	11
	772	11
	793	22
01010-81640	350	29
	352	25
	617	7
	618	7
	621	6
01010-81645	271	4
	274	19
	276	4
	279	19
	738	17
01010-81650	163	17
	268	2
	303	1
	623	1
01010-81660	263	5
01010-81670	616	5
01010-81680	653	3
01010-81840	762	3
	763	3
01010-81845	756	20
	756	27
	757	20
	757	27
	758	20
	758	27
	759	20
	759	27
	760	2
	761	2
01010-81850	756	23
	756	30
	757	23
	757	30
	758	23
	758	30
	759	23
	759	30
01010-81865	742	1
	745	1
	756	24
	756	31
	757	24
	757	31
	758	24
	758	31
	759	24
	759	31
01010-82040	337	19
01010-82055	273	3
	278	3
	281	3
	307	2
	337	3
	339	3
	339	20
	341	25
	341	29
	350	12
	350	16
	352	8
	352	12
	624	2
01010-82060	773	20
	775	51
01010-82065	766	24
	767	18
	768	24
01010-82070	281	1
	739	31
01010-82075	352	3
	769	13
	769	29
	770	13
	770	20
	773	24
	775	55
01010-82085	746	13
	747	13
01010-82460	608	8
	608	19
	736	2
	739	30
01010-82465	796	9
	797	11
	802	11
01010-83375	795	16
	798	16
	799	17
	804	18
01010-83380	796	11
	797	13
	802	13
01010-83390	799	16
01010-D0620	527	3
	554	14
01010-D0635	372	39
	377	39
	445	39
	450	39
01010-D0816	398	6
	471	6
	576	9
	577	6
01010-D0820	431	6
	499	6
	521	6
	622	9
01010-D0825	402	3
	406	45
	408	4
	408	12
	409	34
	409	37
	409	45
	409	48
	435	3
	435	8
	435	11
	435	15
	435	18
	435	26
	435	32

https://truckmanualshub.com/

PartNumber	Page	Index
	436	35
	436	38
	436	45
	475	3
	479	45
	503	3
	503	8
	503	11
	503	15
	503	18
	503	26
	504	32
	504	35
	504	38
	504	45
	515	4
	515	12
	515	34
	516	37
	516	45
	516	48
	522	3
	522	8
	522	11
	522	15
	522	18
	522	26
	522	32
	522	35
	523	38
	523	44
	529	10
	529	14
	545	23
	550	8
	551	5
	551	8
	551	12
	551	20
	551	23
	551	26
	551	29
	551	33
	551	36
	551	39
	552	42
	552	45
	554	6
	554	9
	554	12
	554	17
	554	20
	580	4
	580	10
	585	4
	585	10
	591	4
	603	4
	607	4
	607	10
	609	7
	609	11
	610	7
	610	11
01010-D0835	508	9
	526	9
01010-D1020	357	17
	366	17
	368	19
	422	20
	492	20
	508	15
	526	15
	542	20
	622	22

PartNumber	Page	Index
01010-D1025	508	12
	508	19
	526	12
	526	19
	547	7
01010-D1040	381	2
	454	2
01010-D1055	434	4
	502	4
	549	21
01010-D1070	434	2
	502	2
	549	19
01010-D1220	610	14
01010-D1225	547	21
	550	13
01010-D1230	382	3
	382	6
	455	3
	455	6
	609	15
01010-D1625	528	9
01011-61035	637	9
01011-61600	273	15
	278	15
01011-61615	231	10
01011-81005	315	16
01011-81010	264	14
01011-81020	166	22
01011-81040	562	4
	572	4
01011-81080	166	35
	263	9
01011-81205	163	7
	229	40
01011-81225	643	8
	667	8
	690	8
	712	8
01011-81230	646	20
01011-81250	315	6
	337	12
	339	12
	339	29
01011-81600	776	7
	778	7
01011-81640	287	10
	288	10
01011-82025	769	5
	770	5
01011-82055	351	43
	353	39
01011-82060	284	1
01011-82465	766	5
01011-82480	163	19
	287	1
	288	1
01012-81250	780	3
	785	3
01016-50830	415	7
	417	6
	486	7
	488	6
	537	7
	538	6
01016-51030	421	44
	423	32
	491	44
	493	32
	541	44
	542	32
01016-51090	562	11
	572	11
01016-51245	738	22
01023-10308	412	15

PartNumber	Page	Index
	483	15
	534	15
01023-10406	622	7
01023-10416	426	23
	519	23
01023-10420	544	24
01023-10508	408	21
	515	21
01023-10510	617	4
	618	4
01023-10520	391	9
	464	9
01023-10608	717	18
	722	18
	727	18
01023-10620	429	13
	497	13
	546	13
01023-20416	394	1
	467	1
01023-20425	394	8
	467	8
01023-20510	392	2
	443	2
	465	2
	511	2
	514	2
01023-60410	413	44
	484	44
	535	44
01023-60516	410	11
	481	11
	532	11
01023-60630	204	2
	211	2
01023-70412	371	16
	376	16
	383	20
	384	22
	397	40
	444	16
	449	16
	456	20
	457	22
	470	40
01023-70414	413	46
	484	46
	535	46
01050-31230	127	9
01050-61670	253	24
01052-51260	795	8
	798	8
	799	8
	804	8
01052-81265	796	6
	797	8
	800	6
	801	8
	802	8
	803	8
01084-01650	227	6
01099-03417	769	21
01220-70406	550	10
01224-70316	388	26
	390	26
	461	26
	463	26
01224-70408	410	19
	412	9
	412	13
	481	19
	483	9
	483	13
	532	19
	534	9

PartNumber	Page	Index
	534	13
01224-70410	412	10
	483	10
	534	10
01232-10616	409	26
	435	21
	503	21
	515	26
	522	21
	551	16
01245-00616	373	16
	375	5
	378	16
	380	5
	397	43
	446	16
	448	5
	451	16
	453	5
	470	43
01245-00620	371	9
	372	29
	372	45
	372	49
	373	5
	373	9
	374	31
	374	34
	375	9
	376	9
	377	29
	377	45
	377	49
	378	5
	378	9
	379	31
	379	34
	380	9
	391	4
	392	5
	395	8
	396	4
	396	8
	396	14
	396	22
	397	37
	440	3
	443	5
	444	9
	444	29
	445	45
	445	49
	446	5
	446	9
	447	31
	447	34
	448	9
	449	9
	449	29
	450	45
	450	49
	451	5
	451	9
	452	31
	452	34
	453	9
	464	4
	465	5
	468	8
	469	4
	469	8
	469	14
	469	22
	470	37
	510	3
	511	5
	514	5
	554	1
	576	2
	577	2
	580	7
	585	7
	591	7
	603	7
	607	7
01245-00625	439	8
	439	14
	439	20
	439	23
	507	8
	507	14
	507	20
	507	23
01245-00630	576	5
01245-00816	374	38
	379	38
	447	38
	452	38
	529	8
	720	6
	720	13
	725	6
	725	13
01245-00820	373	21
	378	21
	396	28
	414	21
	446	21
	451	21
	469	28
	485	21
	536	21
01245-00825	372	42
	377	42
	397	46
	398	3
	445	42
	450	42
	470	46
	471	3
	530	3
01245-01020	426	46
	520	46
01245-01030	580	24
	585	24
	591	20
	603	20
	607	24
01245-01225	506	10
	524	10
01252-30625	592	15
01252-60510	246	3
	246	8
01252-60512	411	2
	482	2
	533	2
01252-60616	174	23
	635	17
	656	17
	679	17
	702	17
01252-60630	635	18
	656	18
	660	9
	661	10
	679	18
	683	9
	684	10
	702	18
	706	10
01252-60635	311	23
	312	3
01252-60645	642	4
	666	4
	689	4
	711	4
01252-60650	312	2
	641	16
	665	16
	688	16
	710	16
01252-60820	639	21
	662	21
	685	21
	707	21
01252-60825	309	40
01252-60835	174	35
01252-60845	174	16
01252-61035	259	14
01252-61040	313	14
01252-61255	176	3
01252-61480	304	20
01252-70414	421	31
	422	16
	491	31
	492	16
	540	31
	542	16
01252-70520	231	22
	371	3
	376	3
	413	41
	444	3
	449	3
	484	41
	535	41
01252-70525	371	5
	376	5
	444	5
	449	5
01252-70530	394	5
	467	5
01252-70545	696	55
	700	53
01252-70650	246	15
01252-70816	414	18
	485	18
	536	18
01252-70825	193	18
	194	18
	196	18
	197	18
	412	1
	483	1
	534	1
01252-70860	240	47
01252-71250	228	30
01252-80410	410	12
	481	12
	532	12
01252-80412	414	2
	485	2
	536	2
01252-80414	414	3
	485	3
	536	3
01252-80510	410	13
	410	17
	481	13
	481	17
	532	13
	532	17
	581	3
	586	3
	595	7

PartNumber	Page	Index
01252-80514	388	27
	390	27
	398	9
	413	35
	461	27
	463	27
	471	9
	484	35
	534	35
01252-80516	414	17
	485	17
	536	17
01252-80520	548	18
01252-A1085	646	17
	669	17
	693	19
	714	17
01253-61200	259	11
01253-61210	258	11
01370-10310	408	18
	435	6
	435	29
	503	6
	503	29
	515	18
	522	6
	522	29
01370-30412	396	26
	469	26
01370-40412	397	39
	470	39
01370-40414	395	20
	468	20
01434-00820	192	21
	193	29
	194	29
	195	21
	196	29
	197	29
01435-00620	405	15
	478	15
01435-00625	564	7
	574	7
01435-00812	88	4
01435-00816	62	9
	87	12
01435-00820	60	3
	64	12
	65	12
01435-00825	117	3
01435-00885	424	2
	494	2
	518	2
	543	2
01435-01020	60	5
	127	8
01435-01025	56	10
	64	18
	65	18
01435-01040	56	16
	62	19
01435-01045	114	8
01435-01055	114	7
01435-01065	56	6
01435-01085	62	22
01435-01095	62	23
01435-01235	87	13
01435-01240	132	2
01435-01245	62	16
01435-01255	62	17
01435-40820	547	15
	547	18
01436-01005	62	24
01437-00825	93	5
01508-40603	415	18
	486	18
	537	18
01508-40805	417	17
	488	17
	538	17
01508-41408	420	28
	490	28
	540	28
01546-10812	580	21
	585	21
	591	17
	603	17
	607	21
01580-00605	371	19
	376	19
	444	19
	449	19
	580	23
	585	23
	591	19
	603	19
	607	23
01580-10605	165	21
	383	23
	384	25
	415	22
	456	23
	457	25
	486	22
	537	22
	620	10
	620	21
	629	10
	629	39
	717	14
	722	14
	727	14
	894	31
01580-10806	357	9
	359	9
	361	9
	362	9
	365	9
	366	9
	367	9
	368	9
	391	19
	391	24
	415	8
	417	7
	417	19
	464	19
	464	24
	486	8
	488	7
	488	19
	537	8
	538	7
	538	19
01580-11008	192	6
	193	6
	194	6
	195	6
	196	6
	197	6
	421	43
	423	31
	491	43
	493	31
	541	43
	542	31
	562	12
	572	12
01580-11210	127	6
	385	4
	385	6
	420	22
	422	14
	458	4
	458	6
	490	22
	492	14
	540	22
	542	14
	729	3
	729	6
01580-11411	179	4
01580-11815	762	7
	763	7
01580-12016	769	6
	770	6
01580-12419	805	4
	806	4
01580-13326	805	7
01580-20403	413	25
	484	25
	534	25
01580-31210	159	6
01582-11210	130	4
	131	3
	357	7
	357	11
	359	6
	359	12
	361	7
	361	11
	362	7
	362	11
	365	6
	365	11
	366	6
	366	11
	367	7
	367	12
	368	7
	368	12
01582-11411	289	4
	289	6
	420	26
	490	26
	540	26
01582-11613	227	7
	738	12
01582-12419	795	13
	798	13
	799	13
	804	13
01583-11408	593	13
	597	13
	600	13
	605	13
01583-12012	177	9
01584-00605	80	7
	137	10
01584-00806	395	22
	468	22
01584-01008	56	17
	62	21
	64	14
	65	14
01584-01210	62	11
	132	4
01584-30806	62	8
01590-30809	290	3
01590-31215	780	7
	785	7
01592-11215	795	9
	798	9
	799	9
	804	9

PartNumber	Page	Index
01592-31215	796	7
	797	9
	800	7
	801	9
	802	9
	803	9
01593-31411	289	2
	420	23
	490	23
	540	23
01594-01008	62	5
	717	39
	722	36
	728	40
01595-01008	56	13
01596-00807	789	35
01597-01009	173	23
	285	23
	777	41
	779	41
	781	36
	783	36
01598-01214	769	10
	769	26
	770	10
	770	17
01601-20410	410	14
	481	14
	532	14
01601-20411	414	4
	485	4
	536	4
01601-20512	410	15
	481	15
	532	15
01601-50513	410	18
	481	18
	532	18
01640-20408	413	24
	414	5
	483	24
	485	5
	534	24
	536	5
01640-20508	371	4
	371	6
	376	4
	376	6
	444	4
	444	6
	449	4
	449	6
01640-20610	165	22
	372	32
	377	32
	383	11
	383	15
	384	11
	384	17
	409	29
	415	16
	417	15
	445	32
	450	32
	456	11
	456	15
	457	11
	457	17
	486	16
	488	15
	515	29
	537	16
	538	15
01640-20716	137	19
01640-20816	137	17
	357	6
	359	7
	361	6
	362	6
	365	7
	366	7
	367	6
	368	6
	391	20
	391	25
	464	20
	464	25
01640-21016	581	6
	586	7
	595	9
	718	40
	722	37
	728	41
01640-31223	159	5
01641-20608	564	2
	574	2
	635	19
	656	19
	660	10
	661	11
	679	19
	683	10
	684	11
	702	19
	706	11
01641-20812	93	6
	620	27
	630	63
01641-21423	420	20
	490	20
	540	20
01641-50508	388	28
	390	28
	398	10
	461	28
	463	28
	471	10
	548	17
01643-10623	620	11
	620	22
	629	11
	629	40
01643-11232	154	5
	158	4
	159	4
01643-30623	137	14
	166	6
	167	16
	227	20
	234	22
	385	11
	385	15
	395	13
	395	18
	402	14
	403	12
	403	16
	403	20
	403	27
	404	34
	404	41
	404	46
	404	51
	426	31
	426	40
	427	8
	429	9
	429	12
	431	13
	431	19
	431	21
	437	3
	439	3
	458	11
	458	15
	468	13
	468	18
	475	14
	476	12
	476	16
	476	20
	476	27
	477	34
	477	41
	477	46
	477	51
	495	8
	497	9
	497	12
	499	13
	499	19
	499	21
	505	3
	507	3
	519	31
	520	40
	521	13
	521	19
	521	21
	531	15
	531	18
	545	16
	546	9
	546	12
	548	6
	553	3
	564	6
	574	6
	580	22
	585	22
	591	18
	603	18
	607	22
	611	5
	631	9
	631	18
	632	11
	632	22
	717	15
	717	21
	717	24
	722	15
	722	21
	722	24
	727	15
	727	21
	727	24
	894	30
01643-30823	51	9
	165	16
	165	19
	165	27
	165	29
	166	16
	166	19
	166	39
	167	4
	184	27
	186	35
	193	17
	194	17
	196	17
	197	17
	198	13
	201	3

PartNumber	Page	Index
	203	21
	205	13
	208	3
	210	21
	212	13
	217	11
	356	4
	358	3
	360	4
	363	4
	364	4
	383	5
	383	26
	384	5
	384	15
	409	41
	412	2
	412	20
	414	19
	415	12
	415	27
	417	11
	417	26
	429	3
	429	6
	437	18
	456	5
	456	26
	457	5
	457	15
	483	2
	483	20
	485	19
	486	12
	486	27
	488	11
	488	26
	497	3
	497	6
	505	18
	516	41
	534	2
	534	20
	536	19
	537	12
	537	27
	538	11
	538	26
	545	21
	546	3
	546	6
	547	10
	553	19
	556	2
	562	8
	562	20
	564	4
	566	2
	572	8
	572	20
	574	4
	581	11
	584	2
	586	12
	590	2
	593	7
	595	13
	596	2
	597	7
	599	2
	600	7
	602	2
	604	2
	605	7
	611	3

PartNumber	Page	Index
	611	12
	622	5
	739	13
	777	44
	777	46
	779	44
	779	46
	789	36
	894	19
	895	45
	895	47
01643-31032	56	12
	60	6
	64	15
	65	15
	160	3
	164	2
	165	5
	165	13
	166	3
	166	21
	166	25
	166	28
	166	30
	166	33
	166	36
	167	8
	170	23
	170	26
	170	30
	171	4
	172	7
	173	6
	173	8
	173	17
	173	20
	173	22
	177	3
	177	7
	177	12
	177	39
	178	15
	179	13
	179	14
	180	6
	180	10
	184	18
	185	48
	186	26
	187	56
	189	2
	189	14
	192	7
	192	17
	193	7
	193	15
	194	7
	194	15
	195	7
	195	17
	196	7
	196	15
	197	7
	197	15
	198	9
	198	17
	198	23
	198	26
	198	30
	198	35
	198	40
	199	45
	200	7
	200	10
	200	13

PartNumber	Page	Index
	200	16
	200	19
	200	22
	200	27
	201	6
	201	11
	201	15
	202	6
	202	9
	202	13
	202	19
	202	23
	202	26
	202	29
	202	33
	202	37
	203	4
	203	8
	203	13
	203	17
	204	8
	205	9
	205	17
	205	23
	205	26
	205	30
	205	35
	205	40
	206	45
	207	7
	207	10
	207	13
	207	16
	207	21
	208	6
	208	11
	208	15
	209	6
	209	9
	209	13
	209	19
	209	23
	209	26
	209	29
	209	33
	209	37
	210	4
	210	8
	210	13
	210	17
	211	8
	212	9
	212	17
	212	23
	212	26
	212	30
	212	35
	212	40
	213	45
	214	7
	214	10
	214	13
	214	16
	214	19
	214	22
	214	27
	224	3
	224	6
	228	8
	230	9
	237	13
	237	15
	244	16
	246	22
	247	2

PartNumber	Page	Index
	247	4
	249	2
	250	4
	251	5
	251	11
	251	25
	253	13
	253	15
	253	17
	253	30
	262	3
	262	7
	263	3
	263	10
	264	10
	264	15
	264	17
	265	3
	265	7
	265	10
	265	14
	265	18
	265	21
	265	23
	265	30
	265	36
	267	15
	267	18
	267	21
	267	24
	267	27
	285	24
	286	3
	286	6
	286	9
	290	10
	292	8
	292	14
	293	48
	294	8
	294	14
	295	49
	308	19
	314	8
	315	17
	315	19
	317	28
	319	5
	319	7
	319	10
	373	25
	378	25
	399	3
	399	6
	399	9
	403	6
	405	20
	405	24
	406	28
	406	31
	406	35
	406	38
	406	41
	407	5
	407	7
	414	24
	415	6
	416	33
	416	36
	417	5
	418	31
	419	12
	419	15
	420	9
	421	38

PartNumber	Page	Index
	421	42
	422	9
	422	26
	423	30
	425	13
	425	17
	425	20
	426	26
	426	29
	426	35
	426	38
	426	42
	426	45
	427	3
	427	6
	427	25
	428	29
	428	35
	429	16
	429	20
	430	12
	431	23
	432	15
	441	15
	446	25
	451	25
	472	3
	472	6
	472	9
	476	6
	478	20
	478	24
	478	28
	479	31
	479	35
	479	38
	479	41
	480	5
	480	7
	485	24
	486	6
	487	33
	487	36
	488	5
	489	31
	490	9
	491	38
	491	42
	492	9
	492	26
	493	30
	495	3
	495	6
	495	25
	495	29
	496	35
	497	16
	497	20
	498	12
	499	23
	500	15
	509	29
	512	15
	517	12
	517	15
	519	13
	519	17
	519	20
	519	26
	519	29
	519	35
	520	38
	520	42
	520	45
	521	23

PartNumber	Page	Index
	526	29
	531	3
	531	6
	531	9
	531	12
	536	24
	537	6
	537	33
	537	36
	538	5
	538	31
	539	12
	539	15
	540	9
	540	38
	541	42
	542	9
	542	26
	542	30
	544	12
	544	16
	544	19
	544	23
	544	27
	544	30
	545	3
	545	10
	545	13
	545	28
	545	31
	546	16
	549	14
	553	10
	556	9
	556	12
	559	6
	560	3
	560	35
	562	3
	562	5
	562	10
	562	16
	563	11
	566	9
	566	12
	569	6
	570	3
	570	35
	572	3
	572	5
	572	10
	572	16
	573	11
	575	3
	575	6
	575	13
	584	17
	584	24
	590	22
	590	27
	593	5
	593	28
	593	32
	593	36
	594	40
	595	19
	595	22
	596	19
	596	24
	597	5
	597	25
	597	29
	597	33
	598	38
	599	17

PartNumber	Page	Index
	599	22
	600	5
	600	25
	600	29
	600	33
	600	37
	602	19
	602	26
	604	22
	604	29
	605	5
	605	25
	605	29
	605	33
	605	37
	611	8
	611	16
	611	22
	611	26
	611	29
	611	33
	611	36
	613	4
	613	8
	619	13
	624	6
	627	5
	627	7
	628	15
	629	16
	629	20
	629	25
	629	29
	630	45
	630	49
	630	54
	630	58
	637	10
	649	11
	650	3
	650	9
	652	3
	658	10
	681	10
	697	15
	704	10
	717	12
	717	33
	718	50
	718	52
	722	12
	722	29
	723	47
	723	49
	727	12
	727	33
	728	51
	728	53
	739	19
	775	61
	777	42
	779	42
	781	37
	782	39
	783	37
	784	39
01643-31232	127	5
	127	10
	130	3
	131	1
	156	8
	156	19
	156	22
	163	9
	163	12
	166	10
	167	6
	167	12
	168	11
	168	18
	170	20
	171	17
	173	32
	177	16
	177	18
	178	4
	178	7
	178	10
	179	16
	181	4
	184	22
	186	30
	189	19
	189	22
	189	25
	189	28
	189	30
	189	36
	189	39
	190	44
	192	19
	193	27
	194	27
	195	19
	196	27
	197	27
	200	3
	204	5
	207	3
	211	5
	214	3
	215	4
	215	9
	216	4
	216	9
	217	8
	218	3
	218	6
	218	12
	218	15
	218	22
	218	25
	218	34
	219	3
	219	6
	219	12
	219	15
	219	22
	220	3
	220	12
	221	3
	221	12
	222	3
	222	6
	222	12
	222	15
	222	22
	222	25
	222	34
	223	3
	223	6
	223	12
	223	15
	223	22
	227	13
	227	23
	228	31
	229	41
	231	6
	231	25
	232	4
	232	7
	234	31
	236	8
	236	17
	251	22
	252	38
	253	21
	255	7
	255	15
	256	6
	256	14
	256	16
	256	20
	257	7
	260	3
	260	9
	260	34
	262	18
	262	31
	265	26
	266	39
	266	40
	271	15
	272	21
	273	10
	274	24
	276	15
	277	21
	278	10
	279	24
	285	6
	285	9
	285	12
	285	16
	285	21
	286	12
	314	4
	315	5
	315	7
	317	9
	317	13
	317	22
	318	4
	318	8
	318	10
	318	14
	318	16
	318	21
	318	24
	318	27
	318	30
	323	3
	323	7
	323	11
	323	14
	323	18
	323	21
	323	24
	323	27
	323	30
	323	33
	323	36
	324	38
	324	41
	330	3
	330	7
	330	11
	330	14
	330	18
	330	21
	330	24
	330	27
	330	30
	330	33

PartNumber	Page	Index
	330	36
	331	38
	331	41
	335	3
	335	7
	335	10
	335	14
	336	5
	336	9
	336	12
	336	16
	337	7
	337	10
	337	11
	338	5
	338	9
	338	12
	338	16
	338	19
	338	26
	339	7
	339	10
	339	11
	339	24
	339	27
	339	28
	341	3
	341	7
	341	10
	341	14
	341	17
	341	33
	341	35
	341	38
	341	40
	342	43
	342	46
	342	49
	343	6
	343	12
	346	10
	346	13
	346	16
	346	19
	347	10
	347	13
	347	16
	347	19
	347	25
	347	29
	348	10
	348	13
	348	16
	349	10
	349	13
	349	16
	349	22
	349	26
	350	6
	350	36
	351	40
	351	51
	352	32
	352	36
	353	47
	357	12
	359	13
	361	12
	362	12
	365	12
	366	12
	367	13
	368	13
	370	5
	383	22

PartNumber	Page	Index
	384	24
	402	9
	419	6
	420	6
	422	6
	423	34
	456	22
	457	24
	475	9
	490	6
	492	6
	493	34
	508	23
	509	31
	513	5
	517	6
	526	23
	526	31
	528	3
	539	6
	540	6
	542	6
	542	34
	560	6
	560	9
	560	14
	560	17
	560	22
	560	25
	560	28
	560	31
	560	38
	561	41
	561	44
	570	6
	570	9
	570	14
	570	17
	570	22
	570	25
	570	28
	570	31
	570	38
	571	41
	571	44
	575	10
	608	25
	609	4
	610	4
	612	48
	617	5
	618	5
	620	24
	621	3
	622	14
	622	20
	624	9
	625	3
	625	5
	626	5
	626	8
	626	13
	626	16
	630	60
	631	6
	631	15
	631	21
	632	8
	632	19
	632	25
	633	5
	633	8
	643	9
	644	3
	644	6

PartNumber	Page	Index
	644	11
	645	31
	646	21
	648	25
	648	29
	649	6
	653	7
	654	3
	667	9
	668	38
	669	21
	671	35
	672	39
	675	40
	677	37
	677	41
	690	9
	692	40
	693	24
	696	42
	696	46
	696	50
	696	53
	697	6
	697	9
	698	38
	700	40
	700	44
	700	48
	700	51
	712	9
	713	35
	714	21
	716	29
	716	33
	718	44
	718	47
	721	2
	721	5
	721	8
	721	12
	721	14
	721	16
	723	41
	723	44
	726	2
	726	5
	726	8
	726	12
	726	14
	726	16
	728	45
	728	48
	729	4
	729	12
	730	7
	731	7
	732	4
	732	7
	733	7
	733	10
	734	4
	734	7
	735	7
	735	10
	738	23
	739	21
	756	35
	757	35
	758	35
	759	35
	762	12
	763	12
	766	28
	767	15

PartNumber	Page	Index
	768	28
	771	10
	771	13
	771	17
	771	25
	771	32
	773	13
	774	15
	774	18
	774	39
	780	4
	780	6
	785	4
	785	6
	790	5
	790	17
	790	26
	790	28
	790	33
	791	5
	791	17
	791	27
	791	29
	791	34
	792	9
	792	13
	792	17
	792	21
	792	25
	792	29
	793	7
	793	13
	793	18
	793	31
	793	38
	894	5
	894	21
	894	33
	894	36
01643-31445	179	5
	179	7
	179	10
	255	12
	608	11
	608	22
01643-31645	163	18
	165	9
	166	12
	185	55
	187	63
	231	11
	253	25
	257	2
	262	16
	263	6
	265	33
	268	3
	271	5
	274	20
	276	5
	279	20
	287	11
	288	11
	293	50
	295	51
	303	2
	350	30
	352	26
	528	6
	616	6
	617	8
	618	8
	621	7
	623	2
	653	2
	653	4
	732	9
	733	12
	734	9
	735	12
	738	13
	738	18
	772	12
	790	8
	791	8
	793	23
01643-31845	233	6
	742	2
	745	2
	756	21
	756	25
	756	28
	756	32
	757	21
	757	25
	757	28
	757	32
	758	21
	758	25
	758	28
	758	32
	759	21
	759	25
	759	28
	759	32
	760	3
	761	3
	762	4
	762	8
	763	4
	763	8
01643-32060	177	23
	273	4
	278	4
	281	2
	281	4
	284	2
	284	4
	307	3
	337	4
	337	20
	339	4
	339	21
	341	24
	341	28
	350	4
	350	13
	350	17
	351	44
	352	4
	352	9
	352	13
	353	40
	624	3
	739	32
	746	14
	747	14
	766	25
	767	19
	768	25
	769	7
	769	14
	769	30
	770	7
	770	14
	770	21
	773	21
	773	25
	775	52
	775	56
01643-32460	163	20
	287	2
	288	2
	608	9
	608	20
	736	3
	739	29
	766	6
	773	19
	775	50
	795	12
	796	10
	797	12
	798	12
	799	12
	800	10
	801	12
	802	12
	803	12
	804	12
	805	5
	806	5
01643-33380	795	17
	796	12
	797	14
	798	17
	799	18
	800	12
	801	14
	802	14
	803	14
	804	19
	805	8
01643-50823	240	48
	260	25
	357	10
	359	10
	361	10
	362	10
	365	10
	366	10
	367	10
	368	10
01643-51032	259	15
	259	19
	304	17
	313	15
	315	12
	317	5
	646	18
	669	18
	693	20
	714	18
01643-51232	226	6
	258	12
	259	12
	260	13
	260	17
	357	8
	359	8
	361	8
	362	8
	365	8
	366	8
	367	8
	368	8
	369	2
01643-51645	776	8
	778	8
01643-70623	371	10
	371	12
	371	21
	372	30
	372	35
	372	40

PartNumber	Page	Index
	372	46
	372	50
	373	4
	373	8
	373	15
	374	32
	374	35
	375	4
	375	8
	376	10
	376	12
	376	21
	377	30
	377	35
	377	40
	377	46
	377	50
	378	4
	378	8
	378	15
	379	32
	379	35
	380	4
	380	8
	391	3
	391	16
	392	6
	394	3
	395	7
	396	3
	396	7
	396	13
	396	21
	397	36
	397	42
	409	28
	435	22
	435	30
	439	10
	439	16
	439	19
	439	25
	440	4
	443	6
	444	10
	444	12
	444	21
	445	30
	445	35
	445	40
	445	46
	445	50
	446	4
	446	8
	446	15
	447	32
	447	35
	448	4
	448	8
	449	10
	449	12
	449	21
	450	30
	450	35
	450	40
	450	46
	450	50
	451	4
	451	8
	451	15
	452	32
	452	35
	453	4
	453	8
	464	3
	464	16
	465	6
	467	3
	468	7
	469	3
	469	7
	469	13
	469	21
	470	36
	470	42
	503	22
	504	30
	507	10
	507	16
	507	19
	507	25
	510	4
	511	6
	514	6
	515	28
	522	22
	522	30
	527	4
	551	18
	554	2
	554	15
	576	3
	576	6
	577	3
	580	6
	585	6
	591	6
	603	6
	607	6
01643-70823	371	26
	372	43
	373	20
	374	39
	376	26
	377	43
	378	20
	379	39
	397	29
	398	4
	398	7
	402	4
	406	46
	408	5
	408	13
	409	35
	409	38
	409	46
	409	49
	414	22
	431	7
	435	4
	435	9
	435	12
	435	16
	435	19
	435	27
	436	33
	436	36
	436	39
	444	26
	445	43
	446	20
	447	39
	449	26
	450	43
	451	20
	452	39
	469	29
	471	4
	471	7
	475	4
	479	46
	485	22
	499	7
	503	4
	503	9
	503	12
	503	16
	503	19
	503	27
	504	33
	504	36
	504	39
	508	10
	515	5
	515	13
	515	35
	516	38
	516	46
	516	49
	521	7
	522	4
	522	9
	522	12
	522	16
	522	19
	522	27
	522	33
	523	36
	523	39
	526	10
	529	7
	529	11
	529	15
	530	4
	536	22
	545	24
	551	6
	551	9
	551	13
	551	21
	551	24
	551	27
	551	30
	551	34
	551	37
	551	40
	552	43
	552	46
	554	7
	554	10
	554	13
	554	18
	554	21
	576	10
	577	7
	580	5
	580	11
	585	5
	585	11
	591	5
	603	5
	607	5
	607	11
	609	8
	609	12
	610	8
	610	12
	622	10
	720	7
	720	14
	725	7
	725	14
01643-71032	357	18
	366	18

https://truckmanualshub.com/

PartNumber	Page	Index
	368	20
	381	3
	422	21
	426	47
	434	3
	434	5
	454	3
	492	21
	502	3
	502	5
	508	13
	508	16
	508	20
	520	47
	526	13
	526	16
	526	20
	542	21
	547	8
	549	20
	549	22
	580	25
	585	25
	591	21
	603	21
	607	25
	622	23
01643-71232	382	2
	382	5
	455	2
	455	5
	506	11
	524	11
	547	22
	550	14
	609	16
	610	15
01643-71645	370	10
	385	3
	458	3
	513	10
	528	8
01803-02228	275	4
	280	4
	282	4
	283	4
02090-11270	772	17
	773	8
	774	11
	774	25
	774	33
02290-11219	772	18
	773	9
	774	12
	774	26
	774	34
02720-10104	321	11
	328	11
02720-40104	228	2
02754-00405	262	8
02756-00506	326	1
02761-00206	594	44
	598	42
	601	41
	606	41
02762-00203	317	17
02762-002A4	695	36
	699	34
02762-00303	648	21
	671	31
	676	33
	695	38
	699	36
	716	25
02762-00405	185	41
	187	49
02762-004A5	171	15
02763-004A3	262	28
02764-00204	648	20
	671	30
	676	32
	716	24
02764-00205	648	19
	671	29
	676	31
	716	23
02764-002A4	695	37
	699	35
02781-0021D	584	3
	590	3
	596	3
	599	3
	602	3
	604	3
	694	50
02781-00315	184	8
	186	12
02781-00422	237	19
	262	22
02781-00516	322	12
	329	12
	674	30
	691	30
	713	25
02781-00522	177	29
02781-00628	250	5
	260	28
	260	36
	322	21
	329	21
02782-10210	295	41
	315	21
	315	40
	593	23
	646	28
	646	35
	647	40
	648	12
	648	15
	669	28
	670	35
	670	40
	671	22
	671	25
	676	24
	676	27
	693	30
	694	37
	694	42
	695	20
	695	23
	699	18
	699	21
	714	28
	714	35
	715	40
	716	16
	716	19
02782-10311	292	32
	294	32
	341	20
	672	
	672	41
02782-10420	177	32
	189	3
02782-10422	184	5
	184	28
	184	34
	186	9
	186	36
	187	42
	262	25
02782-10425	262	9
02782-10516	322	15
	329	15
02782-10520	322	18
	329	18
02782-10522	171	12
	186	19
	292	29
	294	29
02782-10628	173	9
	237	16
	262	19
02782-10630	256	25
02782-10632	650	5
02783-10315	645	20
	668	20
	674	20
	691	20
	691	25
	698	20
	698	25
	713	20
02783-10422	292	35
	294	35
	668	25
	674	25
02783-10522	343	7
	894	14
02783-10628	645	15
	668	15
	674	15
	691	15
	698	15
	713	15
02789-00315	791	18
02789-00522	343	14
02896-11008	295	43
	315	23
	315	26
	316	42
	316	45
	584	5
	590	5
	593	16
	593	19
	593	22
	593	25
	596	5
	597	16
	597	19
	597	22
	599	5
	600	16
	600	19
	600	22
	602	5
	604	5
	605	16
	605	19
	605	22
	645	6
	645	11
	646	27
	646	30
	646	32
	646	37
	647	42
	648	14
	648	17
	668	6
	668	11
	669	27
	669	30

PartNumber	Page	Index
	669	32
	670	37
	670	42
	671	24
	671	27
	674	6
	674	11
	676	26
	676	29
	691	6
	691	11
	693	29
	693	32
	693	34
	694	39
	694	44
	694	49
	695	22
	695	25
	698	6
	698	11
	699	20
	699	23
	713	6
	713	11
	714	27
	714	30
	714	32
	714	37
	715	42
	716	18
	716	21
02896-11009	102	3
	184	10
	186	14
	292	34
	294	34
	334	5
	337	2
	337	17
	339	2
	339	17
	339	19
	341	19
	341	21
	341	26
	341	30
	645	22
	646	33
	668	22
	669	33
	674	22
	691	22
	691	27
	694	35
	698	22
	698	27
	713	22
	714	33
	786	2
	787	2
	788	2
	790	2
	790	14
	791	2
	791	14
	793	8
	793	14
	793	19
	899	
02896-11012	109	3
	171	8
	171	10
	177	34
	184	7
	184	30
	184	36
	186	11
	187	38
	187	44
	189	4
	292	37
	294	37
	340	10
	341	18
	668	27
	674	27
	789	2
	789	33
	899	
02896-11015	171	7
	171	13
	177	25
	177	31
	177	36
	186	21
	292	31
	294	31
	315	36
	317	25
	322	2
	322	4
	322	6
	322	8
	322	10
	322	13
	322	16
	322	19
	325	3
	329	2
	329	4
	329	6
	329	8
	329	10
	329	13
	329	16
	329	19
	333	3
	343	8
	343	13
	674	33
	691	33
	713	28
	776	2
	776	37
	777	39
	778	2
	778	37
	779	39
	781	2
	781	34
	783	2
	783	34
	894	16
	899	
02896-11018	293	40
	295	40
	320	5
	322	22
	327	5
	329	22
	645	17
	668	17
	674	17
	691	17
	698	17
	713	17
02896-21018	650	7
02896-61012	237	21
	262	11
	262	24
	262	27
	898	
02896-61018	173	12
	173	14
	237	18
	250	6
	256	27
	260	22
	260	30
	261	38
	262	21
	315	29
	315	33
	315	39
	645	14
	668	14
	674	14
	691	14
	698	14
	713	14
	898	
04010-00516	383	16
	384	18
	415	13
	415	28
	417	12
	417	27
	456	16
	457	18
	486	13
	486	28
	488	12
	488	27
	537	13
	537	28
	538	12
	538	27
04010-00722	177	8
04020-00616	176	2
	312	4
	608	6
	608	17
04020-01024	258	10
	259	10
04020-01228	238	8
	238	18
	239	7
	239	16
	239	31
	241	33
	251	20
	257	3
	268	4
	304	19
04020-01434	231	7
04025-00316	234	8
04050-11610	233	9
04050-11612	290	7
	371	13
	371	23
	372	34
	372	37
	376	13
	376	23
	377	34
	377	37
	383	12
	383	14
	384	12
	384	16
	415	15
	415	20
	417	14
	444	13

PartNumber	Page	Index
	444	23
	445	34
	445	37
	449	13
	449	23
	450	34
	450	37
	456	12
	456	14
	457	12
	457	16
	486	15
	486	20
	488	14
	537	15
	537	20
	538	14
04050-12012	371	28
	376	28
	444	28
	449	28
04050-12015	290	4
	417	22
	488	22
	538	22
	620	28
	630	64
04050-13020	625	4
04050-13022	289	3
	420	19
	420	24
	490	19
	490	24
	540	19
	540	24
	780	5
	785	5
	795	10
	798	10
	799	10
	804	10
04050-13025	796	8
	797	10
	800	8
	801	10
	802	10
	803	10
04050-14025	617	6
	618	6
04050-18080	780	8
	785	8
04064-01010	414	6
	485	6
	536	6
04064-01610	421	32
	422	17
	491	32
	492	17
	540	32
	542	17
04064-01812	233	10
04064-03515	254	4
04064-04518	241	27
04064-05020	230	16
04064-05520	230	15
04064-06020	168	5
04064-07025	252	42
04064-07525	229	36
04064-09030	241	25
04065-01030	236	4
	242	36
	771	6
04065-01104	168	4
	787	5
	787	8
	789	5
	789	8
04065-01154	746	11
	747	11
04065-01254	241	26
04065-01610	234	29
04065-02012	314	2
04065-03212	176	17
04065-04018	258	15
04065-04518	176	10
04065-04818	305	35
04065-05220	243	24
04065-05820	228	11
04065-06220	310	10
04065-06825	298	7
04065-07225	254	3
	304	27
04065-07525	241	21
04065-08025	781	5
	783	5
04065-09030	242	39
	350	22
	352	18
04070-00105	228	13
	240	46
	241	12
04071-00140	236	21
04071-00145	239	14
	251	32
04071-00160	251	6
04082-00212	771	15
	771	23
	771	30
04082-00312	350	38
	352	34
04120-21748	562	13
	572	13
04205-10618	415	19
	486	19
	537	19
04205-10622	290	6
	371	11
	376	11
	444	11
	449	11
04205-10822	417	21
	488	21
	538	21
04205-10828	620	26
	630	62
04205-11442	420	18
	490	18
	540	18
04211-20634	415	21
	486	21
	537	21
04211-20844	417	18
	488	18
	538	18
04221-20634	415	17
	486	17
	537	17
04221-20844	417	16
	488	16
	538	16
04245-41487	289	7
04248-30613	415	23
	486	23
	537	23
04248-30838	417	20
	488	20
	538	20
04250-80847	290	2
04250-81474	233	11
	289	1
	420	25
	490	25
	540	25
04260-00635	236	14
	236	22
	241	6
	241	18
	243	6
	243	22
	251	34
04260-01905	272	18
	277	18
04418-02550	148	2
04418-13060	231	3
	244	8
	772	24
	773	29
	775	63
	802	16
	803	16
	804	17
	808	7
	810	7
	812	7
	814	7
	815	7
	816	7
	817	7
	818	7
	819	7
	820	7
	821	7
	822	7
	823	7
	824	7
	825	7
	826	7
	827	7
	828	7
	829	7
	830	7
	831	7
	832	7
	833	7
	834	7
	835	7
	836	7
	838	7
	839	7
	840	7
	841	7
	842	7
	843	7
	844	7
	845	7
	846	7
	847	7
	848	7
	849	7
	850	7
	851	7
	853	7
	854	7
	855	7
	856	7
	857	7
	859	7
	860	7
	861	7
	862	7
	863	7
	864	7
	865	7
	867	7
	869	7

PartNumber	Page	Index
	871	7
	873	7
	875	7
	880	2
	881	3
	882	3
	883	3
	884	3
	885	3
	886	3
	887	3
04434-50610	177	1
	224	4
	264	4
	293	46
	295	47
	314	6
	508	18
	508	24
	526	18
	526	24
04434-50612	649	4
	696	51
	697	4
	700	49
04434-50808	895	43
04434-50810	253	11
	290	8
	357	16
	366	16
	368	18
	421	40
	422	28
	491	40
	492	28
	540	40
	542	28
04434-50812	697	7
04434-51008	51	7
	412	17
	483	17
	534	17
04434-51010	137	32
	200	14
	200	20
	214	14
	214	20
	264	13
	265	5
	265	12
	265	19
	265	28
	265	34
	357	15
	366	15
	368	17
	419	13
	429	17
	432	13
	437	8
	437	21
	441	13
	497	17
	500	13
	505	8
	505	21
	508	27
	512	13
	517	13
	526	27
	539	13
	545	11
	553	8
04434-51012	215	7
	216	7
	218	20
	218	32
	219	20
	220	10
	221	10
	222	20
	222	32
	223	20
	265	24
	266	37
	506	9
	524	9
04434-51208	88	5
04434-51210	267	25
	597	35
04434-51212	648	22
	671	32
	676	34
	696	44
	700	42
	716	26
04434-51310	185	45
	187	53
	427	1
	495	1
	545	1
04434-51312	350	33
	352	29
04434-51410	198	15
	200	23
	202	24
	205	15
	207	17
	209	24
	212	15
	214	23
	265	4
	265	11
	265	16
	406	44
	419	10
	429	18
	479	44
	497	18
	517	10
	539	10
	593	26
	595	16
	597	23
	600	23
	605	23
04434-51412	156	20
04434-51610	202	10
	209	10
04434-51710	200	8
	207	8
	214	8
	373	23
	378	23
	426	33
	427	27
	428	31
	446	23
	451	23
	495	27
	496	31
	519	33
	593	29
	597	26
	600	26
	605	26
04434-51712	189	17
	648	26
	671	36
	677	38
	696	39
	699	37
	716	30
04434-51810	593	33
	593	37
	597	30
	597	34
	600	30
	600	34
	605	30
	605	34
04434-51910	264	12
	426	32
	428	30
	430	10
	496	30
	498	10
	519	32
	545	8
04434-51912	318	12
	560	4
	560	12
	560	18
	570	4
	570	12
	570	18
04434-52110	200	24
	202	3
	202	20
	207	18
	209	3
	209	20
	214	24
	267	11
04434-52112	560	19
	570	19
	611	19
	611	23
04434-52310	198	14
	199	43
	201	4
	201	9
	205	14
	206	43
	208	4
	208	9
	212	14
	213	43
	425	15
	426	27
	426	36
	426	43
	427	4
	429	14
	432	12
	441	12
	495	4
	497	14
	500	12
	512	12
	519	15
	519	27
	520	36
	520	43
	544	14
	544	28
	546	14
	549	12
04434-52312	189	20
	189	33
	189	37
	190	42
	318	6
04434-52511	200	4
	202	1

PartNumber	Page	Index
	202	34
	207	4
	209	1
	209	34
	214	4
	267	10
	267	19
	286	7
	428	32
	496	32
	612	41
04434-52512	612	45
04434-52711	286	1
	425	14
	425	22
	519	14
	519	22
	544	13
	544	21
04434-52712	189	34
	560	26
	561	42
	570	26
	571	42
	590	20
	604	20
04434-53211	198	27
	201	12
	202	30
	205	27
	208	12
	209	30
	212	27
	319	3
	508	25
	526	25
04434-53212	318	2
	894	2
04434-53411	202	17
	209	17
	262	4
	560	32
	570	32
04434-53412	189	40
	560	10
	570	10
04435-51008	412	18
	483	18
	534	18
04435-51210	267	22
04435-51410	584	15
	584	22
	590	19
	590	25
	596	17
	596	22
	599	15
	599	20
	602	17
	602	24
	604	19
	604	27
04435-52112	189	26
04530-11018	296	6
	297	10
06030-06215	228	34
06030-06309	236	3
	236	10
06030-06921	228	12
06040-06024	272	23
	277	23
06043-06214	252	40
06124-02020	233	5
	415	3
	417	2
	420	10
	422	10
	486	3
	488	2
	490	10
	492	10
	537	3
	538	2
	540	10
	542	10
06124-03020	420	11
	422	11
	490	11
	492	11
	540	11
	542	11
06300-06212	168	6
06300-06921	241	11
06302-32213	227	3
06330-06822	240	45
06330-06918	241	24
06340-06207	236	19
06340-06208	168	15
06340-06210	230	11
06340-06211	230	12
06340-06311	255	4
07000-02012	646	6
	669	6
	693	6
	714	6
07000-02014	646	7
	669	7
	693	7
	714	7
07000-02018	646	9
	669	9
	693	9
	714	9
07000-02110	272	19
	277	19
07000-02115	274	22
	279	22
07000-02145	350	15
	352	11
07000-03038	259	16
07000-05105	281	5
	284	5
07000-05165	271	10
	276	10
07000-11005	639	26
	662	26
	685	26
	707	26
07000-11006	309	42
07000-11007	636	14
	637	5
	639	24
	657	14
	658	5
	662	24
	680	14
	681	5
	683	25
	685	24
	703	14
	704	5
	707	24
07000-11008	174	26
	634	6
	639	33
	639	38
	641	6
	641	30
	655	6
	660	22
	661	23
	662	33
	663	38
	665	6
	665	30
	678	6
	683	22
	684	23
	685	33
	686	38
	688	6
	688	30
	701	6
	706	23
	707	33
	708	38
	710	6
	710	30
07000-11009	174	34
	637	7
	641	13
	658	7
	665	13
	681	7
	688	13
	696	54
	700	52
	704	7
	710	13
07000-12010	308	36
07000-12014	640	5
	664	5
	687	5
	709	5
07000-12016	639	14
	640	3
	643	12
	646	8
	662	14
	664	3
	667	12
	669	8
	685	14
	687	3
	690	12
	693	8
	707	14
	709	3
	712	12
	714	8
07000-12018	584	19
	584	21
	594	51
	596	29
	598	49
	599	27
	601	49
	602	21
	602	23
	604	24
	604	26
	606	48
07000-12020	634	5
	639	31
	655	5
	660	20
	661	21
	662	31
	678	5
	683	20
	684	21
	685	31
	701	5
	706	21
	707	31

PartNumber	Page	Index
07000-12021	306	4
07000-12030	309	41
07000-12065	308	17
07000-12070	587	18
07000-12075	315	8
07000-12080	776	19
	778	19
	899	
07000-12085	184	16
	186	24
	776	16
	778	16
	781	17
	783	17
	899	
07000-12090	781	16
	783	16
	899	
07000-12105	746	5
	747	5
	789	15
	899	
07000-12110	314	5
	789	14
	899	
07000-12120	634	3
	639	32
	655	3
	660	21
	661	22
	662	32
	678	3
	683	21
	684	22
	685	32
	701	3
	706	22
	707	32
	786	13
	788	13
	899	
07000-12125	786	10
	787	17
	788	10
	899	
07000-12130	787	16
	899	
07000-12145	304	18
07000-13024	321	20
	328	20
	641	27
	665	27
	688	27
	710	27
07000-13025	383	2
	384	2
	456	2
	457	2
	644	8
	777	47
	779	47
	899	
07000-13032	315	13
	321	4
	328	4
07000-13035	304	15
	315	15
07000-13040	312	1
07000-13042	639	20
	662	20
	685	20
	707	20
07000-13045	317	23
07000-13050	787	6
	787	9
	789	6
	789	9
	899	
07000-15160	292	6
	292	12
	294	6
	294	12
	303	3
	307	1
07000-15195	890	3
07000-22018	306	2
07000-71007	246	14
	898	
07000-72015	246	13
	247	6
	898	
07000-72018	228	24
	231	13
	231	15
	234	33
	237	4
	243	29
	898	
07000-72021	234	27
	243	28
	898	
07000-72055	257	10
07000-72060	260	11
07000-72065	232	2
	898	
07000-72070	255	9
	898	
07000-72075	257	4
	257	8
07000-72080	260	6
07000-72090	256	4
	898	
07000-72095	231	23
	898	
07000-72100	256	10
	898	
07000-72105	260	1
07000-72110	256	9
	898	
07000-72130	253	32
	898	
07000-73022	228	26
	231	4
	237	11
	244	10
	244	19
	246	20
	898	
07000-73025	244	11
	247	7
	257	12
	898	
07000-73030	249	3
	253	8
	260	21
	898	
07000-73032	235	34
	250	2
	253	9
	257	11
	898	
07000-73035	247	5
	263	7
	898	
07000-73038	260	7
07000-73045	244	17
	256	18
	898	
07000-73048	260	15
07000-75065	253	26
	898	
07000-75180	228	33
	898	
07000-75210	255	16
	898	
07000-75365	228	25
	229	42
	898	
07000-75375	257	5
07000-75460	257	9
07000-A2060	246	19
	898	
07000-A3024	246	18
07000-B1010	311	7
07000-B3025	317	6
07000-E2012	174	15
07000-E2020	174	13
07000-E2025	174	14
07000-E2110	176	1
07000-F2016	174	37
07001-01005	639	27
	662	27
	685	27
	707	27
07001-01007	637	6
	639	25
	658	6
	662	25
	681	6
	685	25
	704	6
	707	25
07001-01009	637	8
	658	8
	681	8
	704	8
07001-02014	640	6
	664	6
	687	6
	709	6
07001-02016	175	38
	639	15
	640	4
	643	13
	662	15
	664	4
	667	13
	685	15
	687	4
	690	13
	707	15
	709	4
	712	13
07001-02018	306	3
07001-02021	306	5
07002-02434	350	19
	352	15
	643	11
	667	11
	690	11
	712	11
07002-03634	271	2
	274	18
	276	2
	279	18
07002-10823	189	11
	635	4
	641	15
	643	3
	646	12
	656	4
	660	4
	661	4
	665	15
	667	3

PartNumber	Page	Index
	669	12
	679	4
	683	4
	684	4
	688	15
	690	3
	693	12
	702	4
	706	4
	710	15
	712	3
	714	12
07002-11023	174	29
	177	28
	267	29
	643	5
	645	8
	667	5
	668	8
	674	8
	690	5
	691	8
	698	8
	712	5
	713	8
07002-11223	639	23
	639	29
	660	26
	661	27
	662	23
	662	29
	684	27
	685	23
	685	29
	706	27
	707	23
	707	29
07002-11423	174	33
	292	33
	293	42
	293	44
	294	33
	295	42
	295	45
	313	8
	315	22
	315	25
	316	41
	316	44
	321	18
	328	18
	341	22
	584	4
	590	4
	593	15
	593	18
	593	21
	593	24
	596	4
	597	15
	597	18
	597	21
	599	4
	600	15
	600	18
	600	21
	602	4
	604	4
	605	15
	605	18
	605	21
	637	3
	641	18
	643	7
	645	5
	645	10
	646	26
	646	29
	646	36
	647	39
	647	41
	648	7
	648	11
	648	13
	648	16
	658	3
	665	18
	667	7
	668	5
	668	10
	669	26
	669	29
	670	36
	670	39
	670	41
	671	11
	671	15
	671	19
	671	21
	671	23
	671	26
	674	5
	674	10
	676	11
	676	15
	676	19
	676	23
	676	25
	676	28
	681	3
	688	18
	690	7
	691	5
	691	10
	693	13
	693	28
	693	31
	694	38
	694	41
	694	43
	694	48
	694	51
	695	7
	695	11
	695	15
	695	19
	695	21
	695	24
	698	5
	698	10
	699	7
	699	11
	699	15
	699	17
	699	19
	699	22
	704	3
	710	18
	712	7
	713	5
	713	10
	714	26
	714	29
	714	36
	715	39
	715	41
	716	7
	716	11
	716	15
	716	17
	716	20
07002-11623	189	7
	304	6
	308	29
	641	29
	646	13
	665	29
	669	13
	688	29
	693	14
	710	29
	714	13
07002-11823	177	33
	189	5
	189	9
07002-12034	171	6
	171	11
	184	6
	184	9
	184	29
	184	32
	184	35
	186	10
	186	13
	186	37
	187	40
	187	43
	292	36
	294	36
	306	8
	307	5
	308	31
	321	15
	322	11
	322	14
	322	17
	322	20
	328	15
	329	11
	329	14
	329	17
	329	20
	636	13
	638	10
	640	10
	645	21
	645	24
	646	16
	646	24
	646	34
	657	13
	659	10
	660	28
	661	29
	664	10
	668	21
	668	24
	668	26
	668	29
	668	31
	669	16
	669	24
	669	34
	674	21
	674	24
	674	26
	674	29
	674	32
	680	13
	682	10
	683	24
	684	29
	687	10
	691	21
	691	24

https://truckmanualshub.com/

PartNumber	Page	Index
	691	26
	691	29
	691	32
	693	18
	693	26
	694	36
	698	21
	698	24
	698	26
	698	29
	698	31
	703	13
	705	10
	706	29
	709	10
	713	21
	713	24
	713	27
	714	16
	714	24
	714	34
07002-12434	171	14
	173	11
	175	39
	177	26
	177	30
	186	20
	244	6
	292	30
	292	39
	294	30
	294	39
	304	11
	315	35
	322	23
	329	23
	343	9
	635	12
	636	3
	638	4
	638	6
	639	9
	639	13
	640	2
	641	22
	645	16
	645	19
	656	12
	657	3
	659	4
	659	8
	660	17
	661	18
	662	9
	662	13
	664	2
	665	22
	668	16
	668	19
	674	16
	674	19
	679	12
	680	3
	682	4
	682	8
	683	17
	684	18
	685	9
	685	13
	687	2
	688	22
	691	16
	691	19
	698	16
	698	19

PartNumber	Page	Index
	702	12
	703	3
	705	4
	705	8
	706	18
	707	9
	707	13
	709	2
	710	22
	713	16
	713	19
	894	15
	898	
07002-13034	184	12
	186	16
	306	6
07002-13334	292	27
	294	27
	645	2
	668	2
	674	2
	691	2
	698	2
	713	2
07002-14234	184	23
	186	31
	321	3
	328	3
07002-21023	174	3
	311	21
07002-21623	311	6
	311	12
07002-21823	174	8
07002-22434	80	13
07002-23334	650	6
07002-23634	232	9
	898	
07002-32434	168	9
	234	18
	898	
07002-33034	234	23
	898	
07002-61023	237	6
	244	14
	246	6
	246	11
	248	3
	253	6
	256	22
	296	8
	297	9
	898	
07002-61223	246	28
	898	
07002-61423	246	26
	898	
07002-61623	228	29
	234	3
	237	2
	898	
07002-61823	234	5
	246	24
	898	
07002-62034	237	20
	262	10
	262	23
	262	26
	315	32
	315	38
	898	
07002-62434	237	17
	244	4
	250	7
	256	24
	256	26

PartNumber	Page	Index
	260	29
	261	37
	262	20
	296	5
	315	28
	645	13
	668	13
	674	13
	691	13
	698	13
	713	13
	898	
07002-63034	248	5
	248	15
	248	23
	898	
07005-01012	156	15
07005-01212	253	18
	898	
07012-50085	168	7
07012-50095	253	31
	898	
07013-10080	271	9
	276	9
07018-10653	227	9
07018-10854	243	26
07018-11805	240	43
	243	25
07020-00000	350	27
	352	23
	416	34
	420	3
	422	3
	487	34
	490	3
	492	3
	537	34
	540	3
	542	3
	767	20
	769	22
	771	4
	771	20
	772	19
	772	20
	772	21
	773	26
	775	57
07020-00675	346	21
	347	21
	348	18
	349	18
	351	52
	353	48
	616	4
	771	26
	771	33
	774	40
	793	40
07020-00900	233	3
	420	14
	490	14
	540	14
	739	10
	771	5
	771	27
07030-00252	286	13
07030-10252	168	13
07040-10807	189	10
	251	9
	646	14
	669	14
	693	15
	714	14
07040-11007	174	2

PartNumber	Page	Index
	174	28
	177	27
	244	13
	253	5
	256	21
	311	20
	645	7
	668	7
	674	7
	691	7
	698	7
	713	7
07040-11409	293	41
	293	43
	295	44
	671	20
	693	16
	699	16
07040-11612	189	6
07040-11812	189	8
	234	4
	246	23
07040-12012	237	9
	306	7
	307	4
	308	30
	668	30
	698	30
07040-12412	244	3
	256	23
07040-12414	350	18
	352	14
07040-13016	184	11
	186	15
07041-13612	273	17
	278	17
07042-20108	56	2
	62	14
07043-70108	230	5
	236	13
	767	21
	794	41
07043-70211	251	19
	255	8
07043-70312	245	4
	251	18
07044-12412	168	8
	244	5
	296	4
07044-13620	271	1
	276	1
07049-01012	247	8
	253	4
	303	4
	350	9
07049-01215	228	32
	231	26
	253	3
	292	9
	294	9
	337	21
	339	30
	346	7
	347	7
	347	30
	348	7
	349	7
	349	27
	756	36
	757	36
	758	36
	759	36
	772	22
	773	22
	775	53
07049-01620	231	16
	274	30
	279	30
	281	6
	284	6
	370	6
	513	6
07049-01822	756	37
	757	37
	758	37
	759	37
07049-02025	274	29
	279	29
	350	8
	352	5
07049-02228	773	27
	775	58
07049-02430	244	2
	346	4
	347	4
	348	4
	349	4
07049-03038	253	2
07049-03342	346	5
	347	5
	348	5
	349	5
07051-00005	292	21
	294	21
07052-31217	738	14
	740	9
	741	9
	743	9
	744	9
07055-30062	292	11
	294	11
07056-18422	184	3
07056-18425	186	7
07058-00010	184	24
	186	32
07059-11830	748	11
	749	11
	750	14
	751	14
	752	14
	753	11
	754	11
	755	11
07059-20721	748	12
	749	12
	750	15
	751	15
	752	15
	753	12
	754	12
	755	12
07094-10620	260	31
	285	13
07094-30417	341	4
	792	14
07094-30620	317	11
	323	4
	323	8
	323	15
	330	4
	330	8
	330	15
07095-00314	645	29
	668	36
	674	38
	691	38
	698	36
	713	33
07095-00317	338	24
	508	26
	526	26
	790	30
	791	31
07095-00318	793	29
	793	36
07095-00420	341	5
07095-00525	318	18
07095-00526	285	4
	343	4
07095-00628	260	32
	285	14
	317	10
	323	5
	323	9
	323	16
	330	5
	330	9
	330	16
07095-00630	172	5
07095-01245	792	30
07095-1042B	792	15
07095-20211	202	11
	209	11
	593	30
	597	27
	600	27
	605	27
	648	27
	671	37
	677	39
	696	40
	699	38
	716	31
07095-20213	593	34
	593	38
	597	31
	598	36
	600	31
	600	35
	605	31
	605	35
	611	20
	611	24
07095-20314	200	25
	202	4
	202	21
	207	19
	209	4
	209	21
	214	25
	267	12
	560	20
	570	20
07095-20318	200	5
	202	2
	202	35
	207	5
	209	2
	209	35
	214	5
	428	33
	496	33
	612	42
	612	46
07095-20419	189	32
07095-20522	318	1
	319	2
07095-20523	190	41
	198	28
	201	13
	202	31
	205	28
	208	13
	209	31
	212	28

https://truckmanualshub.com/

PartNumber	Page	Index
	894	3
07095-20625	262	5
	560	11
	560	33
	570	11
	570	33
07137-05008	787	7
	789	7
07143-10505	786	4
	788	4
07145-00050	786	5
	788	5
	899	
07145-00055	776	11
	778	11
	781	8
	783	8
	899	
07145-00065	774	23
	774	31
07146-02086	781	18
	783	18
	899	
07146-02106	789	16
	899	
07146-02126	787	18
	899	
07156-00912	781	25
	783	25
	899	
07156-01112	789	26
	899	
07156-01315	787	22
	899	
07177-09040	739	2
	739	6
	739	15
07179-12074	776	13
	778	13
	781	10
	783	10
07179-12079	789	13
07179-12084	786	7
	787	11
	788	7
07206-30710	156	13
07206-30812	253	10
07260-23211	285	25
07260-24111	317	18
07260-24713	260	18
07270-01025	184	39
	187	47
07270-01520	173	3
07270-21050	185	43
	187	51
07270-21530	163	21
07280-01920	173	4
07281-00167	185	44
	187	52
07281-00359	61	2
	172	3
07281-00489	87	16
07283-31529	789	34
07283-32236	777	40
	779	40
	781	35
	783	35
07283-32738	173	21
07283-33442	285	22
07283-37663	56	11
07285-00110	180	13
07285-00115	185	40
	187	48
07285-00125	156	11
	189	16
07285-00155	406	43
	479	43
07285-00180	163	22
07285-00220	83	2
07286-00875	189	15
07286-01918	83	1
07289-00035	172	2
07289-00045	285	26
07289-00055	260	19
	317	19
07289-00070	172	9
	172	11
	172	17
07289-00095	315	2
07299-00080	56	4
	173	25
	173	28
07299-00095	173	26
07299-00120	156	4
	173	29
07299-00145	156	5
07371-30640	317	3
07371-31049	315	10
07372-21030	581	5
	586	6
	595	8
07372-21035	315	11
	317	4
07376-70315	337	16
	339	16
07700-40240	184	37
	187	45
07730-40004	173	2
07750-01623	234	25
07750-01628	234	26
07950-10450	892	3
07950-90403	892	1
07951-31400	892	2
07951-41017	892	4
07952-70004	892	
08000-00000	192	
	193	
	194	
	195	
	196	
	197	
08000-00001	192	
	193	
	194	
	195	
	196	
	197	
08000-32215	192	1
	193	1
	196	1
	196	2
08000-3222Z	194	1
	195	1
	197	1
	197	2
08006-40255	192	5
	193	5
	194	5
	195	5
	196	5
	197	5
08007-23549	192	3
	193	3
	194	3
	195	3
08017-31511	557	11
	567	11
08017-31529	188	4
08017-31903	185	42
	187	50
	557	8
	567	8
08017-31906	188	6
08017-31935	188	2
08017-32206	557	5
	567	5
08017-81910	172	13
08017-A1520	430	2
	498	2
08017-C1502	405	6
	478	6
08017-C1503	405	7
	478	7
08017-C2202	405	10
	478	10
08017-C2203	405	11
	478	11
08017-C2204	405	12
	478	12
08017-C2518	405	2
	478	2
08017-C2519	405	4
	478	4
08023-10006	394	4
	467	4
08024-11920	337	
	339	
	793	34
08024-21920	337	
	339	
	793	27
08028-64020	192	10
	193	10
	194	10
	195	10
	196	10
	197	10
08028-ED030	192	13
	195	13
08028-ED040	193	21
	194	21
	196	21
	197	21
	202	27
	209	27
08028-FD040	164	3
08028-GD045	192	8
	193	8
	194	8
	195	8
	196	8
	197	8
08034-20414	792	2
	793	2
08034-20519	373	27
	378	27
	412	7
	425	21
	427	20
	430	8
	432	16
	437	11
	441	16
	446	27
	451	27
	483	7
	495	20
	498	8
	500	16
	505	11
	506	3
	506	13
	512	16
	519	21
	524	3

PartNumber	Page	Index
	524	13
	534	7
	544	20
	545	18
	549	15
	553	13
08034-20876	403	23
	404	30
	476	23
	477	30
	792	31
08034-40521	427	19
	430	7
	495	19
	498	7
	562	17
	572	17
	649	8
	697	12
	895	41
08036-93014	563	9
	573	9
08037-01008	430	5
	498	5
08037-01610	357	14
	366	14
	368	16
	409	50
	506	12
	516	50
	524	12
	894	38
08037-02512	374	36
	379	36
	421	39
	422	27
	447	36
	452	36
	491	39
	492	27
	506	2
	524	2
	540	39
	542	27
08037-05016	550	11
	894	34
08037-11025	437	7
	505	7
	553	7
08037-11425	506	4
	524	4
08037-12536	430	3
	498	3
08038-00035	193	23
	194	23
	196	23
	197	23
	201	7
	208	7
08038-00519	165	7
	166	7
	200	28
	207	22
	214	28
08038-02027	165	3
	165	6
	202	14
	209	14
08041-00500	425	5
	519	5
	544	2
08041-01000	425	6
	519	6
08041-01500	425	7
	519	7
	544	3
08041-02000	425	8
	519	8
	544	4
08041-03000	425	9
	519	9
	544	5
08044-00600	425	2
	519	2
08044-01500	425	3
	519	3
	544	6
08053-00910	427	23
	495	23
	545	26
08057-00810	203	5
	203	14
	210	5
	210	14
	649	9
	697	13
08057-12008	203	18
	210	18
08057-12010	895	42
08057-14010	203	10
	210	10
	611	27
	612	43
	613	2
08059-00413	427	9
	437	19
	495	9
	505	19
	553	20
08064-10000	425	4
	519	4
08068-00001	193	16
	194	16
	196	16
	197	16
08088-30000	201	1
	208	1
08103-02460	216	
08191-00770	137	34
	575	15
08192-12100	137	33
08192-22100	575	14
08192-22830	646	10
	669	10
	693	10
	714	10
08192-28812	411	7
	482	7
	533	7
08193-20010	137	11
	166	26
	412	21
	429	4
	483	21
	497	4
	534	21
	545	29
	595	20
08193-21012	611	34
	613	6
	718	48
	723	45
	728	49
08193-30010	203	2
	210	2
08193-31012	412	22
	483	22
	534	22
08210-00604	594	46
	595	15
	598	44
	606	43
08210-00605	594	43
	598	41
	601	40
	601	43
	606	40
08210-00607	601	46
08211-00720	184	19
	185	50
	186	27
	187	58
	198	18
	203	15
	203	19
	203	22
	205	18
	210	15
	210	19
	210	22
	212	18
	611	17
	613	5
	649	3
	697	3
	895	40
08211-01020	198	19
	198	31
	198	36
	199	41
	203	6
	203	9
	203	11
	205	19
	205	31
	205	36
	206	41
	210	6
	210	9
	210	11
	212	19
	212	31
	212	36
	213	41
	611	18
	611	39
	649	2
	697	2
08211-01320	198	20
	198	32
	200	11
	205	20
	205	32
	207	11
	212	20
	212	32
	214	11
	611	30
08211-01520	611	40
	612	44
08211-01920	198	37
	199	42
	205	37
	206	42
	212	37
	213	42
08672-01000	156	9
09002-01317	892	5
09002-03032	892	
09019-28035	892	6
09021-01725	892	7
09021-01928	892	
09021-02436	892	
09021-03246	892	10
09021-03653	892	

PartNumber	Page	Index
09022-00150	892	8
09023-00300	892	9
09024-00300	892	11
09033-00190	892	12
09056-04613	892	13
09059-00800	890	4
09205-18325	762	6
09205-18330	763	6
09241-50160	771	14
09245-04830	796	4
	797	4
	798	2
	800	4
	801	4
	802	4
	803	4
	804	3
09245-24830	795	5
	799	5
09245-50060	795	4
	796	3
	797	3
	798	1
	799	4
	800	3
	801	3
	802	3
	803	3
	804	2
09247-45180	795	6
	798	3
	799	6
	804	4
09249-00016	795	7
	796	5
	797	7
	798	7
	799	7
	800	5
	801	7
	802	7
	803	7
	804	7
09311-41237	420	21
	422	13
	490	21
	492	13
	540	21
	542	13
	729	5
09409-00001	369	5
09409-00002	369	6
09409-00003	369	7
09409-20000	369	4
09415-00506	550	12
	729	7
09415-00706	370	7
	513	7
09415-01008	370	8
	513	8
09415-01610	409	42
	516	42
09415-02512	427	11
	495	11
	529	12
	545	5
09415-03614	419	7
	427	10
	495	10
	517	7
	539	7
	545	4
	545	34
09453-00002	729	2
09455-13016	627	2
09460-00000	729	10
09467-00002	730	2
	731	2
09467-00006	730	3
	731	3
09479-02400	405	16
	439	28
	478	16
	507	28
	563	3
	563	5
	563	7
	573	3
	573	5
	573	7
	575	18
09484-00560	563	8
	573	8
09485-01005	559	1
	569	1
09495-40010	576	1
	577	1
09601-50000	772	23
	773	28
	775	62
09602-00001	812	6
	822	6
	823	6
	824	6
	825	6
	826	6
	836	6
	838	6
	839	6
	840	6
	841	6
	842	6
	851	6
	853	6
	854	6
	855	6
	856	6
	857	6
09602-00003	871	6
	873	6
	875	6
09602-08000	865	6
	867	6
	869	6
09602-10001	808	6
	810	6
	814	6
	815	6
	816	6
	817	6
	818	6
	819	6
	820	6
	821	6
	827	6
	828	6
	829	6
	830	6
	831	6
	832	6
	833	6
	834	6
	835	6
	843	6
	844	6
	845	6
	846	6
	847	6
	848	6
	849	6
	850	6
	859	6
	860	6
	861	6
	862	6
	863	6
	864	6
09604-05080	231	2
09608-05080	244	7
09620-A2000	880	1
	881	1
	882	1
	883	1
	884	1
	885	1
	886	1
	887	1
09620-A2070	881	2
09620-A2080	883	2
09620-A2100	882	2
09620-A2110	885	2
09620-A2120	886	2
09620-A3000	887	2
09637-A0640	865	29
	867	29
	869	29
	871	29
	873	29
	875	29
09642-11000	816	33
	817	33
	822	35
	830	33
	831	33
	838	35
	845	33
	846	33
	853	35
09642-11100	820	33
	834	33
	849	33
09642-12000	819	33
	824	35
	833	33
	840	35
	848	33
	855	35
09642-13000	809	33
	811	33
	813	35
	814	33
	815	33
	827	33
	828	33
	829	33
	837	35
	843	33
	844	33
	852	35
09642-15000	818	33
	821	33
	823	35
	832	33
	835	33
	839	35
	847	33
	850	33
	854	35
09642-16000	825	35
	841	35
	856	35
	859	33
	860	33
	861	33
09642-17000	826	35

PartNumber	Page	Index
	842	35
	858	35
	862	33
	863	33
	864	33
09642-A0480	866	34
	868	34
	870	34
	872	34
	874	34
	876	34
09649-01012	816	31
	817	31
	822	33
	830	31
	831	31
	838	33
	845	31
	846	31
	853	33
09649-02012	819	31
	824	33
	833	31
	840	33
	848	31
	855	33
09649-03012	809	31
	811	31
	813	33
	814	31
	815	31
	827	31
	828	31
	829	31
	836	33
	843	31
	844	31
	851	33
09649-05012	818	31
	821	31
	823	33
	832	31
	835	31
	839	33
	847	31
	850	31
	854	33
09649-06012	825	33
	841	33
	856	33
	859	31
	860	31
	861	31
09649-07012	826	33
	842	33
	857	33
	862	31
	863	31
	864	31
09651-01001	816	19
	830	19
	845	19
09651-03001	808	19
	810	19
	815	19
	828	19
	829	19
	844	19
09651-05001	821	19
	835	19
	850	19
09651-A0641	812	21
	814	19
	817	19
	818	19
	819	19
	820	19
	822	21
	823	21
	824	21
	825	21
	826	21
	827	19
	831	19
	832	19
	833	19
	834	19
	836	21
	838	21
	839	21
	840	21
	841	21
	842	21
	843	19
	846	19
	847	19
	848	19
	849	19
	851	21
	853	21
	854	21
	855	21
	856	21
	857	21
	859	19
	860	19
	861	19
	862	19
	863	19
	864	19
	865	21
	867	21
	869	21
	871	21
	873	21
	875	21
09652-31221	809	30
	811	30
	815	30
	828	30
	829	30
	844	30
09652-51221	821	30
	835	30
	850	30
09653-01001	816	15
	830	15
	845	15
09653-03001	808	15
	810	15
	815	15
	828	15
	829	15
	844	15
09653-05001	821	15
	835	15
	850	15
09653-A0481	812	17
	812	18
	814	15
	814	16
	817	15
	817	16
	818	15
	818	16
	819	15
	819	16
	820	15
	820	16
	822	17
	822	18
	823	17
	823	18
	824	17
	824	18
	825	17
	825	18
	826	17
	826	18
	827	15
	827	16
	831	15
	831	16
	832	15
	832	16
	833	15
	833	16
	834	15
	834	16
	836	17
	836	18
	838	17
	838	18
	839	17
	839	18
	840	17
	840	18
	841	17
	841	18
	842	17
	842	18
	843	15
	843	16
	846	15
	846	16
	847	15
	847	16
	848	15
	848	16
	849	15
	849	16
	851	17
	851	18
	853	17
	853	18
	854	17
	854	18
	855	17
	855	18
	856	17
	856	18
	857	17
	857	18
	859	15
	859	16
	860	15
	860	16
	861	15
	861	16
	862	15
	862	16
	863	15
	863	16
	864	15
	864	16
	865	17
	865	18
	867	17
	867	18
	869	17
	869	18
	871	17
	871	18
	873	17
	873	18

PartNumber	Page	Index
	875	17
	875	18
09654-31001	816	17
	830	17
	845	17
09654-33001	808	17
	810	17
	815	17
	828	17
	829	17
	844	17
09654-35001	821	17
	835	17
	850	17
09654-B0641	812	19
	814	17
	817	17
	818	17
	819	17
	820	17
	822	19
	823	19
	824	19
	825	19
	826	19
	827	17
	831	17
	832	17
	833	17
	834	17
	836	19
	838	19
	839	19
	840	19
	841	19
	842	19
	843	17
	846	17
	847	17
	848	17
	849	17
	851	19
	853	19
	854	19
	855	19
	856	19
	857	19
	859	17
	860	17
	861	17
	862	17
	863	17
	864	17
	865	19
	867	19
	869	19
	871	19
	873	19
	875	19
09657-01004	816	18
	830	18
	845	18
09657-03003	808	18
	810	18
	815	18
	828	18
	829	18
	844	18
09657-05003	821	18
	835	18
	850	18
09657-A0881	812	20
	814	18
	817	18
	818	18
	819	18
	820	18
	822	20
	823	20
	824	20
	825	20
	826	20
	827	18
	831	18
	832	18
	833	18
	834	18
	836	20
	838	20
	839	20
	840	20
	841	20
	842	20
	843	18
	846	18
	847	18
	848	18
	849	18
	851	20
	853	20
	854	20
	855	20
	856	20
	857	20
	859	18
	860	18
	861	18
	862	18
	863	18
	864	18
	865	20
	867	20
	869	20
	871	20
	873	20
	875	20
09659-51000	816	26
	830	26
	845	26
09659-53000	808	26
	810	26
	815	26
	828	26
	829	26
	844	26
09659-55000	821	26
	835	26
	850	26
09659-A057B	812	28
	814	26
	817	26
	818	26
	819	26
	820	26
	822	28
	823	28
	824	28
	825	28
	826	28
	827	26
	831	26
	832	26
	833	26
	834	26
	836	28
	838	28
	839	28
	840	28
	841	28
	842	28
	843	26
	846	26
	847	26
	848	26
	849	26
	851	28
	853	28
	854	28
	855	28
	856	28
	857	28
	859	26
	860	26
	861	26
	862	26
	863	26
	864	26
	865	28
	867	28
	869	28
	871	28
	873	28
	875	28
09664-20011	821	25
	835	25
	850	25
09664-30011	808	25
	810	25
	828	25
09664-40011	815	25
	829	25
	844	25
09664-40111	816	25
	830	25
	845	25
09664-60000	812	27
	822	27
	823	27
	824	27
	825	27
	826	27
	836	27
	838	27
	839	27
	840	27
	841	27
	842	27
	851	27
	853	27
	854	27
	855	27
	856	27
	857	27
09664-60011	865	27
	867	27
	869	27
	871	27
	873	27
	875	27
09664-70001	814	25
	817	25
	818	25
	819	25
	820	25
	827	25
	831	25
	832	25
	833	25
	834	25
	843	25
	846	25
	847	25
	848	25
	849	25
	859	25

https://truckmanualshub.com/

PartNumber	Page	Index
	860	25
	861	25
	862	25
	863	25
	864	25
09667-01001	816	22
	830	22
	845	22
09667-03001	808	22
	810	22
	815	22
	828	22
	829	22
	844	22
09667-05001	821	22
	835	22
	850	22
09667-A0481	812	24
	814	22
	817	22
	818	22
	819	22
	820	22
	822	24
	823	24
	824	24
	825	24
	826	24
	827	22
	831	22
	832	22
	833	22
	834	22
	836	24
	838	24
	839	24
	840	24
	841	24
	842	24
	843	22
	846	22
	847	22
	848	22
	849	22
	851	24
	853	24
	854	24
	855	24
	856	24
	857	24
	859	22
	860	22
	861	22
	862	22
	863	22
	864	22
	865	24
	867	24
	869	24
	871	24
	873	24
	875	24
09668-01001	816	16
	830	16
	845	16
09668-03001	808	16
	810	16
	815	16
	828	16
	829	16
	844	16
09668-05001	821	16
	835	16
	850	16
09669-0000E	813	32

PartNumber	Page	Index
	814	30
	816	30
	817	30
	818	30
	819	30
	820	30
	822	32
	823	32
	824	32
	825	32
	826	32
	827	30
	830	30
	831	30
	832	30
	833	30
	834	30
	836	32
	838	32
	839	32
	840	32
	841	32
	842	32
	843	30
	845	30
	846	30
	847	30
	848	30
	849	30
	851	32
	853	32
	854	32
	855	32
	856	32
	857	32
	859	30
	860	30
	861	30
	862	30
	863	30
	864	30
	866	32
	868	32
	870	32
	872	32
	874	32
	876	32
09690-F0500	808	3
	810	3
	812	3
	814	3
	815	3
	816	3
	817	3
	818	3
	819	3
	820	3
	821	3
	822	3
	823	3
	824	3
	825	3
	826	3
	827	3
	828	3
	829	3
	830	3
	831	3
	832	3
	833	3
	834	3
	835	3
	836	3
	838	3
	839	3

PartNumber	Page	Index
	840	3
	841	3
	842	3
	843	3
	844	3
	845	3
	846	3
	847	3
	848	3
	849	3
	850	3
	851	3
	853	3
	854	3
	855	3
	856	3
	857	3
	859	3
	860	3
	861	3
	862	3
	863	3
	864	3
	865	3
	867	3
	869	3
	871	3
	873	3
	875	3
09690-F0560	808	1
	810	1
	812	1
	814	1
	815	1
	816	1
	817	1
	818	1
	819	1
	820	1
	821	1
	822	1
	823	1
	824	1
	825	1
	826	1
	827	1
	828	1
	829	1
	830	1
	831	1
	832	1
	833	1
	834	1
	835	1
	836	1
	838	1
	839	1
	840	1
	841	1
	842	1
	843	1
	844	1
	845	1
	846	1
	847	1
	848	1
	849	1
	850	1
	851	1
	853	1
	854	1
	855	1
	856	1
	857	1
	859	1

https://truckmanualshub.com/

PartNumber	Page	Index
	860	1
	861	1
	862	1
	863	1
	864	1
	865	1
	867	1
	869	1
	871	1
	873	1
	875	1
09690-M0063	808	4
	810	4
	812	4
	814	4
	815	4
	816	4
	817	4
	818	4
	819	4
	820	4
	821	4
	822	4
	823	4
	824	4
	825	4
	826	4
	827	4
	828	4
	829	4
	830	4
	831	4
	832	4
	833	4
	834	4
	835	4
	836	4
	838	4
	839	4
	840	4
	841	4
	842	4
	843	4
	844	4
	845	4
	846	4
	847	4
	848	4
	849	4
	850	4
	851	4
	853	4
	854	4
	855	4
	856	4
	857	4
	859	4
	860	4
	861	4
	862	4
	863	4
	864	4
	865	4
	867	4
	869	4
	871	4
	873	4
	875	4
09690-P1120	808	2
	810	2
	812	2
	814	2
	815	2
	816	2
	817	2
	818	2
	819	2
	820	2
	821	2
	822	2
	823	2
	824	2
	825	2
	826	2
	827	2
	828	2
	829	2
	830	2
	831	2
	832	2
	833	2
	834	2
	835	2
	836	2
	838	2
	839	2
	840	2
	841	2
	842	2
	843	2
	844	2
	845	2
	846	2
	847	2
	848	2
	849	2
	850	2
	851	2
	853	2
	854	2
	855	2
	856	2
	857	2
	859	2
	860	2
	861	2
	862	2
	863	2
	864	2
	865	2
	867	2
	869	2
	871	2
	873	2
	875	2
09696-40108	812	11
	822	11
	823	11
	824	11
	825	11
	826	11
	836	11
	838	11
	839	11
	840	11
	841	11
	842	11
	851	11
	853	11
	854	11
	855	11
	856	11
	857	11
	865	11
	867	11
	869	11
	871	11
	873	11
	875	11
09696-50078	812	10
	822	10
	823	10
	824	10
	825	10
	826	10
	836	10
	838	10
	839	10
	840	10
	841	10
	842	10
	851	10
	853	10
	854	10
	855	10
	856	10
	857	10
	865	10
	867	10
	869	10
	871	10
	873	10
	875	10
09697-00001	193	25
	194	25
	196	25
	197	25
09802-11000	816	20
	817	20
	822	22
	830	20
	831	20
	838	22
	845	20
	846	20
	853	22
09802-12000	819	20
	824	22
	833	20
	840	22
	848	20
	855	22
09802-13000	808	20
	810	20
	812	22
	814	20
	815	20
	827	20
	828	20
	829	20
	836	22
	843	20
	844	20
	851	22
09802-15000	818	20
	821	20
	823	22
	832	20
	835	20
	839	22
	847	20
	850	20
	854	22
09802-16000	825	22
	841	22
	856	22
	859	20
	860	20
	861	20
09802-17000	826	22
	842	22
	857	22
	862	20
	863	20
	864	20

https://truckmanualshub.com/

PartNumber	Page	Index
09802-B0640	865	22
	867	22
	869	22
	871	22
	873	22
	875	22
09806-B1683	812	23
	814	21
	817	21
	818	21
	819	21
	820	21
	822	23
	823	23
	824	23
	825	23
	826	23
	827	21
	831	21
	832	21
	833	21
	834	21
	836	23
	838	23
	839	23
	840	23
	841	23
	842	23
	843	21
	846	21
	847	21
	848	21
	849	21
	851	23
	853	23
	854	23
	855	23
	856	23
	857	23
	859	21
	860	21
	861	21
	862	21
	863	21
	864	21
	865	23
	867	23
	869	23
	871	23
	873	23
	875	23
09808-01000	816	24
	830	24
	845	24
09808-03000	808	24
	810	24
	815	24
	828	24
	829	24
	844	24
09808-05000	821	24
	835	24
	850	24
09808-A0881	812	26
	814	24
	817	24
	818	24
	819	24
	820	24
	822	26
	823	26
	824	26
	825	26
	826	26
	827	24
	831	24
	832	24
	833	24
	834	24
	836	26
	838	26
	839	26
	840	26
	841	26
	842	26
	843	24
	846	24
	847	24
	848	24
	849	24
	851	26
	853	26
	854	26
	855	26
	856	26
	857	26
	859	24
	860	24
	861	24
	862	24
	863	24
	864	24
	865	26
	867	26
	869	26
	871	26
	873	26
	875	26
09812-11000	816	21
	830	21
	845	21
09812-13000	808	21
	810	21
	815	21
	828	21
	829	21
	844	21
09812-15000	821	21
	835	21
	850	21
09823-00001	802	15
	803	15
	804	16
09842-A0481	809	32
	811	32
	813	34
	814	32
	815	32
	816	32
	817	32
	818	32
	819	32
	820	32
	821	32
	822	34
	823	34
	824	34
	825	34
	826	34
	827	32
	828	32
	829	32
	830	32
	831	32
	832	32
	833	32
	834	32
	835	32
	836	34
	838	34
	839	34
	840	34
	841	34
	842	34
	843	32
	844	32
	845	32
	846	32
	847	32
	848	32
	849	32
	850	32
	851	34
	853	34
	854	34
	855	34
	856	34
	857	34
	859	32
	860	32
	861	32
	862	32
	863	32
	864	32
	866	33
	868	33
	870	33
	872	33
	874	33
	876	33
09845-00480	878	1
09920-00150	75	13
	77	13
	80	17
09960-00611	879	2
09960-00801	879	3
09960-00802	879	4
09963-01001	816	23
	830	23
	845	23
09963-03001	808	23
	810	23
	815	23
	828	23
	829	23
	844	23
09963-05001	821	23
	835	23
	850	23
09963-A1640	812	25
	814	23
	817	23
	818	23
	819	23
	820	23
	822	25
	823	25
	824	25
	825	25
	826	25
	827	23
	831	23
	832	23
	833	23
	834	23
	836	25
	838	25
	839	25
	840	25
	841	25
	842	25
	843	23
	846	23
	847	23
	848	23

PartNumber	Page	Index
	849	23
	851	25
	853	25
	854	25
	855	25
	856	25
	857	25
	859	23
	860	23
	861	23
	862	23
	863	23
	864	23
	865	25
	867	25
	869	25
	871	25
	873	25
	875	25
09980-10550	891	1
09982-10057	891	2
103-15-12820	238	1
	239	24
	898	
103-15-12880	238	7
	239	5
103-15-12890	239	32
103-43-21380	233	7
103-43-21390	233	8
103-49-14280	646	1
	669	1
	693	1
	714	1
104-15-25480	248	19
104-15-25490	248	17
104-890-5610	369	8
10E-60-16330	324	39
	331	39
112-06-12150	402	15
	475	15
112-860-1360	894	39
113-15-12870	239	29
	898	
113-15-29110	234	20
	898	
113-43-23230	192	22
	193	30
	194	30
	195	22
	196	30
	197	30
11Y-06-22150	415	4
	417	3
	486	4
	488	3
	537	4
	538	3
11Y-09-11140	172	14
11Y-43-11181	581	7
	586	8
	593	11
	595	6
	597	11
	600	11
	605	11
11Y-43-12710	586	4
11Y-54-13630	631	19
	632	23
11Y-54-14220	894	27
11Y-60-11530	646	5
	669	5
	693	5
	714	5
11Y-62-12210	292	38
	294	38

PartNumber	Page	Index
11Y-62-12230	645	9
	668	9
	674	9
	691	9
	698	9
	713	9
11Y-62-36160	645	12
	668	12
	674	12
	691	12
	698	12
	713	12
120-06-24110	427	13
	495	13
120-54-42450	653	1
120-X11-1510	557	1
	567	1
1240101H1	63	2
1241155H1	84	1
124-15-41910	238	12
	239	2
	239	27
	898	
124-15-41920	238	3
	239	25
	898	
124-62-61531	267	28
124-98-51140	810	13
	843	13
	844	13
	845	13
	846	13
	847	13
	848	13
	849	13
	850	13
	851	15
	853	15
	854	15
	855	15
	856	15
	857	15
	861	13
	864	13
	867	15
	875	15
124-A62-1920	628	3
	629	14
	629	23
	630	43
	630	52
	632	4
	632	15
125-15-15290	248	18
1294859H1	84	5
1295465H92	152	
12H-15-14140	248	21
12R-60-11230	292	16
	294	16
12Y-06-11650	398	8
	471	8
12Y-57-11213	369	1
12Y-57-11220	369	3
12Y-978-1390	390	29
	463	29
12Y-978-1410	387	
	460	
12Y-978-1420	387	1
	460	1
12Y-978-1450	387	2
	389	2
	460	2
	462	2
12Y-978-1460	387	3
	389	3

PartNumber	Page	Index
	460	3
	462	3
12Y-978-1470	387	4
	389	4
	460	4
	462	4
12Y-978-1480	387	5
	389	5
	460	5
	462	5
12Y-978-1490	387	6
	389	6
	460	6
	462	6
12Y-978-1510	389	
	462	
12Y-978-1520	389	1
	462	1
12Y-978-1550	387	7
	389	7
	460	7
	462	7
12Y-978-1560	387	9
	389	9
	460	9
	462	9
12Y-978-1570	387	10
	389	10
	460	10
	462	10
12Y-978-1580	387	11
	389	11
	460	11
	462	11
12Y-978-1590	387	12
	389	12
	460	12
	462	12
12Y-978-1610	387	13
	389	13
	460	13
	462	13
12Y-978-1620	387	14
	389	14
	460	14
	462	14
12Y-978-1630	387	15
	389	15
	460	15
	462	15
12Y-978-1640	387	8
	389	8
	460	8
	462	8
12Y-978-1650	387	16
	389	16
	460	16
	462	16
12Y-978-2192	427	16
	495	16
12Y-978-2220	530	2
12Y-978-2280	392	4
	443	4
	465	4
	511	4
	514	4
12Y-978-2431	373	14
	446	14
12Y-978-2441	378	14
	451	14
12Y-978-2490	373	17
	378	17
	446	17
	451	17
12Y-978-2660	375	2

PartNumber	Page	Index
	375	7
	380	2
	380	7
	397	35
	439	9
	439	15
	439	18
	439	24
	448	2
	448	7
	453	2
	453	7
	470	35
	507	9
	507	15
	507	18
	507	24
12Y-978-2890	527	2
12Y-978-3210	371	8
	376	8
	444	8
	449	8
12Y-978-3261	371	25
	444	25
12Y-978-3271	376	25
	449	25
12Y-978-3281	371	14
	376	14
	383	19
	384	21
	444	14
	449	14
	456	19
	457	21
12Y-978-3290	371	15
	376	15
	383	18
	384	20
	444	15
	449	15
	456	18
	457	20
12Y-978-3310	371	22
	372	33
	372	36
	376	22
	377	33
	377	36
	444	22
	445	33
	445	36
	449	22
	450	33
	450	36
12Y-978-3360	371	27
	376	27
	444	27
	449	27
12Y-978-3370	373	1
	378	1
	446	1
	451	1
12Y-978-3480	372	41
	377	41
	445	41
	450	41
12Y-978-4670	529	5
130-09-12370	346	20
	347	20
	348	17
	349	17
130-09-12911	350	24
	352	20
130-30-12170	762	9
	763	9
130-30-12180	762	10
	763	10
130-30-13170	738	11
1304869H1	86	9
130-63-12761	776	30
	778	30
	781	31
	783	31
	789	31
130-69-11190	796	2
	797	2
	800	2
	801	2
	802	2
	803	2
130-70-13241	766	7
1307682H1	63	1
130-98-79210	879	1
131-69-11120	795	2
	799	2
131-69-11130	795	3
	799	3
134-01-61840	80	15
134-03-61410	172	15
	180	14
134-03-73750	556	3
	566	3
134-06-72200	544	7
134-22-66140	237	3
134-22-79320	236	5
134-32-05010	899	K08
134-32-61221	753	15
	754	15
	755	15
	899	
134-43-72490	420	12
	490	12
	540	12
134-54-66190	580	26
	585	26
	591	22
	603	22
	607	26
134-54-69130	550	4
134-54-69140	550	5
134-54-69190	550	6
134-57-61150	356	2
	363	2
	364	2
134-57-61170	358	4
	360	2
134-62-63720	894	10
134-62-72600	171	9
134-69-13140	804	1
134-72-62442	773	14
	775	45
134-72-62474	773	23
	775	54
134-72-71151	773	17
	775	48
134-72-72450	773	15
	775	46
134-72-72460	773	16
	775	47
134-X11-1630	717	28
	727	28
135-03-12110	179	8
135-12-31230	168	14
135-30-14620	739	17
13F-98-11210	896	1
13F-98-11220	896	2
13F-Z27-5610	769	8
	769	24
	770	8
	770	15
13G-32-05010	899	K09
13G-32-61210	755	14
	899	
13G-72-61410	774	9
13G-72-61420	773	5
13G-72-63250	774	10
141-30-00616	746	
	747	
142-43-13180	421	33
	422	18
	491	33
	492	18
	540	33
	542	18
143066	82	1
144-10-12180	255	10
144-14-54610	639	35
	641	2
	663	35
	665	2
	686	35
	688	2
	707	35
	710	2
144-15-21191	240	39
144-32-21191	748	8
	749	8
	753	8
	754	8
	755	8
144-43-81620	717	37
	722	33
	727	37
144-60-15431	776	10
	778	10
	781	7
	783	7
144-60-15450	776	9
	778	9
	781	6
	783	6
144-69-11120	795	1
	799	1
144-69-11130	798	4
144-69-11161	795	11
	798	11
	799	11
	804	11
144-69-11170	798	
144-69-11210	797	5
	798	5
	801	5
	802	5
	803	5
	804	5
144-69-11230	797	6
	798	6
	801	6
	802	6
	803	6
	804	6
144-70-15171	346	2
	347	2
	348	2
	349	2
144-70-15251	616	3
144-817-0670	769	
	770	
144-817-1260	772	9
144-817-2280	769	17
144-817-2420	769	3
	769	18
	770	3
144-817-2570	769	4
	770	4

PartNumber	Page	Index
144-874-7470	253	16
144-920-1780	772	10
144-920-2122	769	23
144-Z79-2840	575	17
145-13-21730	230	13
145-14-11320	238	16
	239	23
	240	36
145-14-11571	240	38
145-14-12780	239	20
145-14-12790	238	6
	238	17
	239	6
145-Z23-4120	805	3
	806	3
145-Z23-4130	800	9
	801	11
	803	11
145-Z23-4140	805	6
14X-01-35150	163	2
	163	14
	287	4
	288	4
14X-01-35161	80	14
14X-01-35171	163	5
14X-01-35180	163	6
14X-01-35650	173	30
14X-01-51111	163	3
14X-01-51121	163	4
14X-01-51131	163	15
14X-01-51141	163	16
	164	4
14X-01-51150	163	8
14X-01-51511	619	8
	628	10
14X-01-51521	154	2
14X-01-51530	619	11
	628	13
14X-01-51540	158	1
14X-01-51551	156	6
14X-01-51561	156	3
14X-01-51570	154	3
	158	2
14X-01-51620	173	24
14X-01-51630	156	2
14X-01-51641	156	17
14X-01-51650	159	1
14X-01-51660	159	2
14X-03-35570	556	4
	566	4
14X-03-35760	180	8
14X-03-51111	170	10
14X-03-51121	170	12
14X-03-51131	170	1
14X-03-51141	173	1
14X-03-51161	171	2
14X-03-51171	171	1
14X-03-51180	179	11
14X-03-51190	172	1
14X-03-51211	172	8
14X-03-51220	172	16
14X-03-51231	172	10
14X-03-51251	173	27
14X-03-51260	172	12
14X-03-51270	180	12
14X-03-51311	177	14
14X-03-51320	177	35
14X-03-51341	181	1
14X-03-51351	181	2
14X-03-51361	180	3
14X-03-51371	180	7
14X-03-51411	170	21
14X-03-51421	170	24
14X-03-51431	170	27
14X-03-51441	178	1
14X-03-51451	178	5
14X-03-51461	178	8
14X-03-51491	178	11
14X-03-51510	170	2
14X-03-51520	170	3
14X-03-51530	170	4
14X-03-51540	170	5
14X-03-51551	178	12
14X-03-51561	178	13
14X-03-51570	170	28
14X-03-51580	178	2
14X-03-51590	170	8
14X-03-51610	179	2
14X-03-51621	170	13
14X-03-51640	170	15
14X-03-51650	170	6
14X-03-51660	170	7
14X-03-51670	575	1
14X-03-51680	575	4
14X-03-51730	160	1
14X-03-51740	170	17
14X-03-51750	170	18
14X-03-51770	170	14
14X-03-51780	180	4
14X-04-21620	184	33
	187	41
14X-04-21660	184	25
	186	33
14X-04-31510	894	6
14X-04-31530	894	8
14X-04-31570	894	11
14X-04-51111	184	1
14X-04-51112	186	1
14X-04-51131	184	20
	186	28
14X-04-51170	185	54
	187	62
	293	49
	295	50
14X-04-51211	189	23
14X-04-51221	189	12
14X-04-51231	188	
14X-04-51240	188	1
14X-04-51251	188	3
14X-04-51281	188	5
14X-04-51311	109	1
14X-04-51321	102	2
14X-04-51330	185	52
	187	60
14X-04-51340	109	4
14X-04-51350	633	6
14X-04-51420	184	13
	186	17
14X-04-51431	186	18
14X-04-51441	894	13
14X-04-51490	184	14
	186	22
14X-04-51620	894	1
14X-06-12260	192	14
	195	14
14X-06-12270	193	24
	194	24
	196	24
	197	24
14X-06-12280	192	9
	192	11
	193	9
	193	11
	194	9
	194	11
	195	9
	195	11
	196	9
	196	11
	197	9
	197	11
14X-06-31311	412	
	483	
	534	
14X-06-31501	413	42
	484	42
	535	42
14X-06-33380	215	5
	216	5
14X-06-35221	165	2
14X-06-35471	165	14
14X-06-35491	165	20
14X-06-51111	264	5
14X-06-51124	425	1
	519	1
14X-06-51132	432	10
	441	10
	500	10
	512	10
14X-06-51140	419	9
	517	9
	539	9
14X-06-51151	412	16
	483	16
	534	16
14X-06-51161	437	
	505	
	553	
14X-06-51162	437	4
	505	4
	553	4
14X-06-51171	437	6
	505	6
	553	6
14X-06-51181	373	22
	378	22
	446	22
	451	22
14X-06-51190	437	10
	505	10
	553	12
14X-06-51212	198	1
	212	1
14X-06-51221	165	1
14X-06-51230	185	49
	187	57
14X-06-51241	203	1
	210	1
14X-06-51261	198	5
	205	5
	212	5
14X-06-51271	649	1
14X-06-51281	201	8
	208	8
14X-06-51291	198	6
	205	6
	212	6
14X-06-51311	265	1
14X-06-51321	265	8
14X-06-51341	265	31
14X-06-51351	425	10
	519	10
	544	9
14X-06-51361	429	1
	497	1
	546	1
14X-06-51370	394	2
	467	2
14X-06-51431	425	11
	519	11
	544	10
14X-06-51441	546	4
14X-06-51451	217	3
14X-06-51461	217	6
14X-06-51481	613	1

PartNumber	Page	Index
14X-06-51490	184	15
	186	23
14X-06-51520	430	6
	437	14
	498	6
	505	14
	553	15
14X-06-51530	437	5
	505	5
	553	5
14X-06-51551	215	2
	216	2
14X-06-51561	198	7
	205	7
14X-06-51571	198	21
	205	21
	212	21
14X-06-51581	198	24
	205	24
	212	24
14X-06-51591	198	33
	205	33
	212	33
14X-06-51610	198	2
	205	2
	212	2
14X-06-51621	198	38
	205	38
	212	38
14X-06-51641	165	8
14X-06-51651	167	1
14X-06-51661	166	20
14X-06-51671	166	1
14X-06-51681	204	3
	211	3
14X-06-51691	441	1
	512	1
14X-06-51710	391	10
	464	10
14X-06-51730	165	4
14X-06-51750	429	21
	497	21
	546	17
14X-06-51771	200	17
	207	14
	214	17
14X-06-51783	611	13
14X-06-51791	200	1
	207	1
	214	1
14X-06-51811	697	1
14X-06-51821	696	47
	700	45
14X-06-51831	437	15
	505	15
	553	16
14X-06-51840	437	16
	505	16
	553	17
14X-06-51881	218	23
	220	1
	221	1
	222	23
14X-06-51981	218	19
	219	19
	222	19
	223	19
14X-06-51991	218	29
	220	7
	221	7
	222	29
14X-06-52111	192	2
	193	2
	194	2
	195	2
	196	3
	197	3
14X-06-52121	192	4
	193	4
	194	4
	195	4
	196	4
	197	4
14X-06-52130	166	11
14X-06-52151	215	6
	216	6
14X-06-52160	427	18
	432	19
	441	19
	495	18
	500	19
	512	19
	545	7
	549	16
14X-06-52171	427	17
	495	17
	545	6
14X-06-52191	432	1
	500	1
	549	1
14X-06-52270	165	17
14X-06-52290	429	22
	497	22
	546	18
14X-06-52311	544	1
14X-06-52340	549	8
14X-06-52390	508	21
	526	21
14X-06-52461	427	14
	495	14
	545	17
14X-06-52470	192	20
	193	28
	196	28
14X-06-52480	194	28
	195	20
	197	28
14X-06-52491	439	27
	507	27
14X-06-52631	391	11
	464	11
14X-06-52661	391	13
	464	13
14X-06-52730	717	
	722	
	727	
14X-06-52740	391	12
	464	12
14X-06-52750	427	21
	495	21
14X-06-52760	427	22
	495	22
14X-06-52780	595	17
14X-06-52811	193	13
	194	13
14X-06-52830	193	22
	194	22
	196	22
	197	22
14X-06-52840	193	19
	194	19
	196	19
	197	19
14X-06-52881	575	11
14X-06-52890	192	15
	195	15
14X-06-52950	212	7
14X-06-52960	196	13
	197	13
14X-06-52981	894	37
14X-06-53160	506	5
	524	5
14X-06-53170	506	6
	524	6
14X-06-53221	508	14
	526	14
14X-06-53390	508	11
	526	11
14X-06-53550	221	9
	222	31
	223	23
14X-06-53560	215	1
14X-06-54110	205	1
14X-10-11712	256	1
14X-10-11721	256	3
14X-12-11102	168	1
14X-12-11210	168	2
14X-12-11411	168	3
14X-12-51110	168	16
14X-13-05040	898	K06
14X-13-12550	253	7
14X-13-14220	255	1
14X-13-14241	255	5
14X-13-51000	251	
	253	
	254	
	255	
	256	
14X-13-51120	251	8
14X-13-51212	252	39
14X-13-51240	251	3
14X-13-51351	252	36
14X-13-51360	253	22
14X-13-51610	251	
14X-13-52210	251	12
14X-13-52220	251	31
14X-13-52260	251	30
14X-13-52620	251	1
14X-13-53111	253	1
14X-13-53260	253	19
14X-13-53350	253	28
14X-13-54320	255	3
14X-13-54330	254	1
14X-13-54341	255	13
14X-13-54411	251	17
14X-13-57111	251	23
14X-13-57210	251	26
14X-15-05180	898	K03
14X-15-05190	898	K04
14X-15-05210	898	K05
14X-15-12910	239	30
14X-15-12960	243	14
14X-15-15850	248	4
	248	22
14X-15-16210	248	20
14X-15-19210	240	42
	898	
14X-15-22421	243	10
14X-15-22710	238	11
	238	20
	239	9
	239	19
	239	34
14X-15-22740	239	26
14X-15-22750	238	15
	239	3
14X-15-22770	239	28
14X-15-22780	238	10
	238	19
	239	8
	239	18
	239	33
14X-15-29220	239	15
	898	
14X-15-29230	240	37

https://truckmanualshub.com/

PartNumber	Page	Index
	898	
14X-15-29410	243	3
14X-15-29440	243	11
14X-15-29510	241	10
14X-15-29520	241	23
	243	8
	243	16
14X-15-29530	241	9
14X-15-29540	241	32
14X-15-29610	241	20
14X-15-51000	238	
	239	
	241	
	243	
	244	
	245	
	246	
	247	
	248	
	249	
	250	
14X-15-51111	244	1
14X-15-51130	238	2
14X-15-51140	238	13
14X-15-51150	239	1
14X-15-51160	239	10
14X-15-51170	239	22
14X-15-51181	239	35
	242	40
14X-15-52111	245	1
14X-15-52120	245	5
14X-15-52140	241	34
14X-15-52151	241	7
14X-15-52160	242	37
14X-15-52170	240	44
14X-15-52211	241	28
14X-15-52220	241	29
14X-15-52240	241	30
14X-15-52250	241	31
14X-15-52311	241	13
14X-15-52320	241	1
14X-15-52330	243	17
14X-15-52340	243	9
14X-15-52350	243	1
14X-15-52370	240	41
14X-15-52420	241	2
14X-15-52430	243	18
14X-15-52510	241	17
	243	21
14X-15-52520	241	5
14X-15-52550	243	5
14X-15-52560	243	4
14X-15-52610	241	22
14X-15-52620	241	8
14X-15-52630	239	17
14X-15-52640	243	15
14X-15-52650	243	7
14X-15-52660	238	9
14X-15-52710	238	5
14X-15-55500	246	
14X-15-55511	246	1
14X-15-55520	243	27
14X-15-55600	246	2
14X-15-56121	250	1
14X-15-56130	244	9
14X-15-56140	244	12
14X-15-59310	241	35
14X-15-59320	243	23
14X-15-59330	242	38
14X-15-59410	241	3
14X-21-13130	229	37
14X-21-13240	229	38
14X-21-51101	346	1
14X-21-51341	346	8
	347	8
	348	8
	349	8
14X-21-51350	346	14
	347	14
14X-21-51361	346	17
	347	17
	348	14
	349	14
	654	1
14X-21-51371	346	11
	347	11
	348	11
	349	11
14X-21-51380	287	5
	288	5
14X-21-51450	346	3
	347	3
	348	3
	349	3
14X-21-51700	348	1
14X-21-52200	347	1
14X-21-52400	349	1
14X-21-53170	288	8
14X-22-05010	898	K01
14X-22-05020	898	K02
14X-22-16170	231	12
14X-22-50000	227	
	228	
	230	
	231	
	232	
	233	
	234	
	236	
	237	
	238	
	239	
	241	
	243	
	244	
	245	
	246	
	247	
	248	
	249	
	250	
	251	
	253	
	254	
	255	
	256	
	257	
	258	
	259	
	260	
	262	
	263	
	264	
	265	
	267	
	268	
14X-22-51000	227	
	228	
	230	
	231	
	232	
	233	
	234	
	236	
	237	
14X-22-51111	268	1
14X-27-00101	274	
	279	
14X-27-05010	271	
	276	
14X-27-11170	271	3
	276	3
14X-27-11220	271	8
	276	8
14X-27-11231	271	7
	276	7
14X-27-11243	271	16
	276	16
14X-27-11312	272	22
	277	22
14X-27-11420	272	24
	277	24
14X-27-11431	274	21
	279	21
14X-27-11502	273	
	278	
14X-27-11512	273	1
	278	1
14X-27-11522	273	5
	278	5
14X-27-11531	273	6
	278	6
14X-27-11542	273	7
	278	7
14X-27-11552	273	2
	278	2
14X-27-11560	273	8
	278	8
14X-27-11612	273	11
	278	11
14X-27-11622	273	12
	278	12
14X-27-11633	273	14
	278	14
14X-27-11640	273	13
	278	13
14X-27-11721	274	25
	279	25
14X-27-11751	274	26
	279	26
14X-27-15112	275	2
	280	2
14X-27-15211	282	2
	283	2
14X-27-31110	275	5
	282	5
14X-27-31120	280	5
	283	5
14X-27-31210	271	6
	276	6
14X-27-31710	275	1
	280	1
	282	1
	283	1
14X-27-52211	347	26
	349	23
14X-27-52221	347	27
	349	24
14X-27-52230	284	3
14X-30-00127	743	
14X-30-00136	744	
14X-30-00143	747	
14X-30-00431	738	
14X-30-01041	746	
14X-30-01050	740	
14X-30-01060	741	
14X-30-11D52	756	5
	756	6
	756	12
	756	13
	757	5
	757	6
	757	12
	757	13
	758	5

PartNumber	Page	Index
	758	6
	758	12
	758	13
	759	5
	759	6
	759	12
	759	13
14X-30-12115	738	1
14X-30-12164	738	3
14X-30-12181	738	2
14X-30-12232	738	6
	738	8
14X-30-12252	738	16
14X-30-13164	739	14
14X-30-13340	740	2
	741	2
	743	2
	744	2
14X-30-14152	740	3
	741	3
	743	3
	744	3
14X-30-14161	740	8
	741	8
	743	8
	744	8
14X-30-14170	740	10
	741	10
	743	10
	744	10
14X-30-14311	743	1
14X-30-14321	744	1
14X-30-14331	740	4
	741	4
	743	4
	744	4
14X-30-14410	740	1
14X-30-14420	741	1
14X-30-15131	746	4
	747	4
14X-30-15140	746	2
	747	2
14X-30-15212	747	1
14X-30-15222	746	3
	747	3
14X-30-15240	746	6
	747	6
14X-30-15251	746	9
	747	9
14X-30-15310	746	1
14X-30-26230	762	5
14X-30-27230	763	5
14X-30-33170	739	11
14X-30-51131	756	1
	759	1
14X-30-51141	756	10
	759	10
14X-30-51191	350	7
14X-30-51231	757	1
	758	1
14X-30-51241	757	10
	758	10
14X-30-51331	756	2
	756	15
	757	2
	757	15
	758	2
	758	15
	759	2
	759	15
14X-30-51341	756	4
	756	16
	757	4
	757	16
	758	4
	758	16
	759	4
	759	16
14X-30-51380	739	27
14X-30-51390	756	22
	757	22
	758	22
	759	22
14X-30-51410	756	29
	757	29
	758	29
	759	29
14X-30-51420	738	15
14X-30-51440	756	19
	756	26
	757	19
	757	26
14X-30-51470	738	19
14X-30-51490	739	22
14X-30-51511	738	5
14X-30-51521	738	7
14X-30-51531	739	1
14X-30-51551	739	4
14X-30-51561	739	3
14X-30-51580	739	5
14X-30-51621	762	1
14X-30-51631	762	2
14X-30-51650	756	7
	756	14
	757	7
	757	14
	758	7
	758	14
	759	7
	759	14
14X-30-51660	350	3
14X-30-51710	763	1
14X-30-51720	763	2
14X-30-51C71	756	3
	756	11
	757	3
	757	11
	758	3
	758	11
	759	3
	759	11
14X-32-00260	748	
14X-32-00270	749	
14X-32-02830	753	
14X-32-02840	754	
14X-32-02850	755	
14X-32-03330	752	
14X-32-05010	899	K07
14X-32-08010	748	
	749	
	753	
	754	
	755	
14X-32-08020	748	
	749	
	753	
	754	
	755	
14X-32-08210	750	
	751	
	752	
14X-32-08220	750	
	751	
	752	
14X-32-11140	748	9
	749	9
	753	9
	754	9
	755	9
14X-32-11350	748	13
	753	17
	754	17
14X-32-12200	748	7
	749	7
	753	7
	754	7
	755	7
14X-32-13150	748	10
	749	10
	753	10
	754	10
	755	10
14X-32-15310	750	20
	751	16
	752	20
14X-32-15380	752	16
	752	19
14X-32-15500	750	7
	751	7
	752	7
14X-32-15510	750	8
	751	8
	752	8
14X-32-15610	750	1
	751	1
	752	1
14X-32-15630	750	2
	751	2
	752	2
14X-32-15640	750	11
	751	11
	752	11
14X-32-15650	750	12
	751	12
	752	12
14X-32-15680	750	10
	751	10
	752	10
14X-32-15700	750	9
	751	9
	752	9
14X-32-15730	750	13
	751	13
	752	13
14X-32-51110	755	13
	755	16
14X-32-51120	753	13
	753	16
14X-32-52120	748	1
	749	1
	753	1
	754	1
	755	1
14X-32-52130	748	2
	749	2
	753	2
	754	2
	755	2
14X-43-12110	420	1
	490	1
	540	1
14X-43-12410	420	27
	490	27
	540	27
14X-43-13760	419	8
	422	1
	492	1
	517	8
	539	8
	542	1
14X-43-32210	420	13
	490	13
	540	13
14X-43-32220	420	16
	490	16

PartNumber	Page	Index
	540	16
14X-43-32230	420	17
	490	17
	540	17
14X-43-34310	581	4
14X-43-34331	412	5
	483	5
	534	5
14X-43-48110	435	14
	503	14
	522	14
	551	11
	580	2
	585	2
	591	2
	603	2
	607	2
14X-43-51111	263	1
14X-43-51120	290	1
14X-43-51211	410	1
	481	1
	532	1
14X-43-51221	412	23
	483	23
	534	23
14X-43-51252	414	1
	485	1
	536	1
14X-43-51311	586	9
14X-43-51330	586	10
14X-43-51340	586	2
14X-43-51350	581	8
	595	10
14X-43-51370	581	9
	595	11
14X-43-51402	414	
	485	
	536	
14X-43-51412	415	1
	486	1
	537	1
14X-43-51421	415	9
	486	9
	537	9
14X-43-51431	415	10
	486	10
	537	10
14X-43-51451	415	25
	486	25
	537	25
14X-43-51461	290	
	290	11
	416	31
	487	31
	537	31
14X-43-51470	415	2
	486	2
	537	2
14X-43-51501	410	
	481	
	532	
14X-43-51511	420	2
	490	2
	540	2
14X-43-51521	422	2
	492	2
	542	2
14X-43-51541	419	3
	517	3
	539	3
14X-43-51551	420	4
	490	4
	540	4
14X-43-51561	422	4
	492	4
	542	4
14X-43-51571	420	7
	422	7
	490	7
	492	7
	540	7
	542	7
14X-43-51581	422	12
	492	12
	542	12
14X-43-51590	420	15
	490	15
	540	15
14X-43-51612	419	1
	517	1
	539	1
14X-43-51631	421	34
	491	34
	540	34
14X-43-51651	421	35
	422	23
	491	35
	492	23
	540	35
	542	23
14X-43-51661	414	7
	485	7
	536	7
14X-43-51681	414	8
	485	8
	536	8
14X-43-51691	410	16
	481	16
	532	16
14X-43-51711	417	1
	488	1
	538	1
14X-43-51721	417	8
	488	8
	538	8
14X-43-51731	417	9
	488	9
	538	9
14X-43-51741	415	24
	486	24
	537	24
14X-43-51751	417	24
	488	24
	538	24
14X-43-51791	417	23
	488	23
	538	23
14X-43-51810	422	19
	492	19
	542	19
14X-43-51821	422	22
	492	22
	542	22
14X-43-51840	415	14
	417	13
	486	14
	488	13
	537	14
	538	13
14X-43-51850	419	2
	517	2
	539	2
14X-43-51860	419	4
	517	4
	539	4
14X-43-51870	421	36
	422	24
	491	36
	492	24
	540	36
	542	24
14X-43-51901	595	5
14X-43-51911	595	1
14X-43-51921	595	4
14X-43-51960	413	36
	484	36
	534	36
14X-43-51980	413	45
	484	45
	535	45
14X-43-52110	412	8
	483	8
	534	8
14X-49-12310	256	7
14X-49-12320	256	11
14X-49-12330	256	8
14X-49-12340	256	12
14X-49-12411	256	2
14X-49-51110	260	10
14X-49-51120	260	14
14X-49-51130	260	20
14X-49-51141	262	1
14X-49-51151	263	4
14X-49-51161	260	35
14X-49-51171	260	26
14X-49-51211	267	1
	286	14
14X-49-51221	267	9
14X-49-51231	267	8
14X-49-51241	267	7
14X-49-51251	267	6
14X-49-51261	285	17
14X-49-51271	286	10
14X-49-51311	263	8
14X-49-51320	286	4
14X-49-51330	260	27
14X-49-51512	256	17
14X-49-51520	264	2
14X-49-51601	260	4
14X-49-51611	260	5
14X-49-51880	173	10
14X-49-52111	256	28
	285	1
14X-49-52121	285	2
14X-49-52141	173	13
14X-49-52151	173	15
14X-49-52161	173	18
14X-49-52170	285	7
14X-49-52180	285	10
14X-49-52211	285	18
14X-49-52231	650	1
14X-50-00111	350	
14X-50-35140	633	3
14X-50-51111	350	20
14X-50-51121	351	48
	353	44
14X-50-51131	351	49
	353	45
14X-50-51181	351	45
	353	41
14X-50-51241	351	41
	352	37
14X-50-51251	351	42
	352	38
14X-50-51290	350	32
	352	28
14X-50-51530	350	37
	352	33
14X-54-12750	729	8
14X-54-12770	729	9
14X-54-12960	631	4
	631	13
	632	6
	632	17
	718	42

PartNumber	Page	Index
	722	39
	728	43
	894	29
14X-54-16490	580	3
	585	3
	591	3
	603	3
	607	3
14X-54-26640	265	27
14X-54-32310	622	15
14X-54-32820	619	10
	628	12
14X-54-36631	414	20
	485	20
	536	20
14X-54-38310	413	37
	484	37
	534	37
14X-54-38320	413	38
	484	38
	535	38
14X-54-38330	413	39
	484	39
	535	39
14X-54-38350	413	40
	484	40
	535	40
14X-54-51111	617	1
14X-54-51121	618	1
14X-54-51130	617	2
	618	2
14X-54-51211	622	
14X-54-51222	622	1
14X-54-51230	622	8
14X-54-51241	622	21
14X-54-51251	622	17
14X-54-51261	622	18
14X-54-51280	780	1
14X-54-51291	785	1
14X-54-52101	619	1
14X-54-52122	621	1
14X-54-52151	625	1
14X-54-52161	619	2
	628	4
14X-54-52171	619	3
	628	5
14X-54-52191	627	1
14X-54-52211	620	1
14X-54-52221	620	12
14X-54-52251	620	3
	620	14
	629	3
	629	32
14X-54-52331	626	6
14X-54-52341	626	14
14X-54-52351	626	2
	626	10
14X-54-52371	626	1
14X-54-52381	626	9
14X-54-52390	620	25
	630	61
14X-54-52411	631	1
14X-54-52421	631	10
14X-54-52430	631	2
	631	11
	632	2
	632	13
14X-54-52440	620	4
	620	15
	629	4
	629	33
14X-54-52450	620	5
	620	16
	629	5
	629	34

PartNumber	Page	Index
14X-54-52460	620	6
	620	17
	629	6
	629	35
14X-54-52470	619	5
	620	7
	620	18
	628	7
	629	7
	629	36
14X-54-52511	624	1
14X-54-52540	626	3
	626	11
14X-54-52550	619	6
	628	8
14X-54-52561	619	7
	628	9
14X-54-52570	619	4
	628	6
14X-54-52610	624	4
14X-54-52931	620	2
	620	13
	629	2
	629	31
14X-54-53112	633	1
14X-54-53122	633	2
14X-54-53191	652	1
14X-54-53212	717	1
	722	1
14X-54-53222	717	10
	722	10
	727	10
14X-54-53261	721	6
	726	6
14X-54-53281	717	31
	722	27
	727	31
14X-54-53301	719	1
	724	1
14X-54-53321	285	19
14X-54-53341	717	2
	722	2
	727	2
14X-54-53360	719	2
	724	2
14X-54-53380	718	51
	723	48
	728	52
14X-54-53390	719	5
	724	5
14X-54-53400	720	1
	725	1
14X-54-53420	720	5
	725	5
14X-54-53440	720	12
	725	12
14X-54-53451	651	1
14X-54-53470	720	2
	720	9
	725	2
	725	9
14X-54-53480	720	3
	720	10
	725	3
	725	10
14X-54-53490	720	4
	720	11
	725	4
	725	11
14X-54-53500	720	8
	725	8
14X-54-53511	730	1
14X-54-53521	731	1
14X-54-53530	730	4
	731	4

PartNumber	Page	Index
14X-54-53540	651	2
14X-54-53560	717	3
	722	3
	727	3
14X-54-53570	717	4
	722	4
	727	4
14X-54-53580	717	5
	722	5
	727	5
14X-54-53611	729	1
14X-54-53670	622	11
14X-54-53680	622	12
14X-54-53710	717	6
	722	6
	727	6
14X-54-53720	717	7
	722	7
	727	7
14X-54-53730	717	8
	722	8
	727	8
14X-54-53740	717	9
	722	9
	727	9
14X-54-53760	722	34
	727	38
14X-54-53770	719	4
	724	4
14X-54-53830	631	3
	631	12
	632	5
	632	16
14X-54-53840	718	41
	722	38
	728	42
	894	28
14X-54-53850	718	45
	723	42
	728	46
14X-54-53860	717	25
	722	25
	727	25
14X-54-53871	894	
14X-54-53891	894	25
14X-54-53930	894	17
14X-54-53940	894	24
14X-54-53950	894	23
14X-54-53960	727	1
14X-54-54111	732	1
14X-54-54121	732	2
	733	5
	734	2
	735	5
14X-54-54131	732	5
	733	8
	734	5
	735	8
14X-54-54211	734	1
14X-54-54310	620	8
	620	19
	629	8
	629	37
	717	13
	722	13
	727	13
	894	22
14X-54-54320	620	9
	620	20
	629	9
	629	38
14X-54-55130	347	22
	349	19
14X-54-55140	347	23
	349	20

PartNumber	Page	Index
14X-54-56111	608	1
14X-54-56121	608	2
14X-54-56131	608	12
14X-54-56141	608	13
14X-54-56151	409	24
	515	24
14X-54-56160	432	17
	441	17
	500	17
	512	17
14X-54-56191	608	7
	608	18
14X-54-56213	608	23
14X-54-56230	609	9
14X-54-56240	436	42
	504	42
	523	41
14X-54-56260	436	43
	504	43
	523	42
14X-54-56270	436	44
	504	44
	523	43
14X-54-56291	435	1
	503	1
	522	1
14X-54-56321	609	1
	610	1
14X-54-56341	609	5
	610	5
14X-54-56352	435	7
	503	7
	522	7
14X-54-56361	435	24
	503	24
	522	24
14X-54-56372	435	10
	503	10
	522	10
	551	7
14X-54-56381	435	13
	503	13
	522	13
14X-54-56391	591	1
14X-54-56411	436	34
	504	34
	522	34
	551	25
14X-54-56421	439	1
	507	1
14X-54-56431	409	39
	516	39
14X-54-56443	435	17
	503	17
	522	17
14X-54-56451	435	31
	504	31
	522	31
	551	22
14X-54-56460	609	6
	610	6
14X-54-56471	436	37
	504	37
	523	37
	551	28
14X-54-56481	435	20
	503	20
	522	20
14X-54-56491	435	2
	435	25
	503	2
	503	25
	522	2
	522	25
14X-54-56511	609	13

PartNumber	Page	Index
14X-54-56531	580	12
	585	12
	591	8
	603	8
	607	12
14X-54-56541	585	13
	591	9
14X-54-56542	580	13
	603	9
	607	13
14X-54-56561	610	13
14X-54-56571	610	9
14X-54-56591	580	15
	585	15
	591	11
	603	11
	607	15
14X-54-56620	609	2
	610	2
14X-54-56631	580	1
	585	1
14X-54-56640	610	10
14X-54-56661	580	8
	585	8
	607	8
14X-54-56670	580	9
	585	9
	607	9
14X-54-56711	434	1
	502	1
14X-54-56721	431	15
	499	15
	521	15
14X-54-56731	431	16
	499	16
	521	16
14X-54-56741	431	17
	499	17
	521	17
14X-54-56751	431	11
	499	11
	521	11
14X-54-56760	436	46
	504	46
	523	45
14X-54-56770	432	9
	441	9
	500	9
	512	9
14X-54-56780	608	4
	608	15
14X-54-56812	431	1
	499	1
	521	1
14X-54-56821	431	8
	499	8
	521	8
14X-54-56891	527	1
14X-54-56910	580	14
	585	14
	591	10
	603	10
	607	14
14X-54-56921	431	9
	499	9
	521	9
14X-54-56941	431	2
	499	2
	521	2
14X-54-56951	431	3
	499	3
	521	3
14X-54-56961	431	4
	499	4
	521	4

PartNumber	Page	Index
14X-54-56970	431	5
	499	5
	521	5
14X-54-56981	436	47
	504	47
	523	46
	552	47
14X-54-58111	547	1
14X-54-58121	547	4
14X-54-58130	547	16
14X-54-58140	548	2
14X-54-58150	547	13
14X-54-58161	548	4
14X-54-58170	547	2
	547	5
14X-54-58190	548	8
14X-54-58210	548	10
14X-54-58221	549	18
14X-54-58231	548	16
14X-54-58241	548	11
14X-54-58250	548	14
14X-54-58260	548	15
14X-54-58280	529	6
14X-54-58290	531	10
14X-54-58340	548	12
14X-54-58360	607	1
14X-54-58410	550	1
14X-54-58511	551	10
14X-54-58520	551	14
14X-54-58530	551	15
14X-54-58541	551	1
14X-54-58551	551	2
14X-54-58561	551	3
14X-54-58571	554	3
14X-54-58581	554	8
14X-54-58590	551	19
14X-54-58611	551	32
14X-54-58621	554	11
14X-54-58631	551	35
14X-54-58641	551	38
14X-54-58650	552	41
14X-54-58660	552	44
14X-54-58671	603	1
14X-54-58710	554	16
14X-54-58720	551	4
14X-54-58730	554	19
14X-54-58740	554	4
14X-54-58750	554	5
14X-54-58760	545	32
14X-54-58770	545	33
14X-54-58781	529	9
14X-54-58790	529	13
14X-54-58860	547	11
14X-54-58870	547	20
14X-54-58880	545	22
14X-54-58890	545	19
14X-54-58910	550	2
14X-54-58921	550	3
14X-54-58930	547	3
14X-54-58940	547	6
14X-54-58950	531	13
14X-54-58960	531	16
14X-57-51110	357	
	361	
	362	
	367	
	368	
14X-57-51120	357	3
	361	3
	362	3
	367	3
	368	3
14X-57-51130	357	4
	361	4
	362	4

PartNumber	Page	Index
	367	4
	368	4
14X-57-51140	357	2
	359	2
	361	2
	362	2
	365	2
	366	2
	367	2
	368	2
14X-57-51150	359	14
	367	14
	368	14
14X-57-51200	359	
	365	
	366	
14X-57-51211	362	1
	367	1
14X-57-51220	359	3
	365	3
	366	3
14X-57-51230	359	4
	365	4
	366	4
14X-57-51311	361	1
14X-57-51411	357	1
	368	1
14X-57-51511	359	1
	365	1
14X-57-51710	356	1
	364	1
14X-57-51810	363	1
14X-57-51910	358	1
14X-57-52110	360	1
14X-57-52210	366	1
14X-60-12120	644	7
14X-60-31150	292	2
	294	2
	890	2
14X-60-51112	292	1
	294	1
14X-60-51131	292	5
	294	5
14X-60-51141	292	10
	294	10
14X-60-51151	292	
	294	
14X-60-51161	292	15
	294	15
14X-60-51171	292	24
	294	24
14X-60-51211	644	1
14X-60-51230	292	25
	294	25
14X-62-11460	337	18
14X-62-32540	177	37
	317	26
14X-62-35531	171	5
14X-62-51111	320	3
	327	3
14X-62-51121	320	4
	327	4
14X-62-51131	322	1
	329	1
14X-62-51141	322	5
	329	5
14X-62-51151	322	3
	329	3
14X-62-51161	322	7
	329	7
14X-62-51171	323	22
	330	22
14X-62-51191	323	28
	330	28
14X-62-51221	323	34
	330	34
14X-62-51230	323	25
	323	31
	330	25
	330	31
14X-62-51241	318	25
14X-62-51271	323	19
	330	19
14X-62-51281	340	3
14X-62-51311	318	17
14X-62-51321	319	1
14X-62-51331	318	5
14X-62-51341	318	11
14X-62-51351	318	22
14X-62-51360	319	8
14X-62-51481	340	5
14X-62-51491	341	8
14X-62-51510	335	12
	336	14
14X-62-51520	341	12
14X-62-51530	341	11
14X-62-51541	341	15
14X-62-51551	340	1
14X-62-51561	793	1
14X-62-51571	340	2
14X-62-51581	340	4
14X-62-51591	793	9
14X-62-51611	793	24
14X-62-51621	334	1
14X-62-51631	334	2
14X-62-51651	341	23
14X-62-51661	341	27
14X-62-51670	341	31
14X-62-51680	341	36
14X-62-51722	334	3
14X-62-51732	340	6
14X-62-51742	340	7
14X-62-51752	334	4
14X-62-51762	340	8
14X-62-51772	340	9
14X-62-51780	341	1
14X-62-51790	342	47
14X-62-51811	793	32
14X-62-51832	793	20
14X-62-51842	793	10
14X-62-51852	793	15
14X-62-51860	793	4
14X-62-51871	792	7
14X-62-51880	792	11
14X-62-51891	792	10
14X-62-51912	792	22
14X-62-51922	792	18
14X-62-51932	792	26
14X-62-51941	336	2
	338	2
14X-62-51961	336	1
	338	1
14X-62-51971	337	1
	339	1
14X-62-51980	337	5
	339	5
14X-62-52161	790	18
	791	19
14X-62-52171	790	21
	791	22
14X-62-52182	790	24
	791	25
14X-62-52211	337	13
	339	13
14X-62-52220	337	
	339	
14X-62-52231	337	8
	339	8
14X-62-52291	790	1
	791	1
14X-62-52321	793	39
14X-62-52351	315	1
14X-62-52361	315	3
14X-62-52371	315	9
14X-62-52380	315	14
14X-62-52391	645	26
	668	33
	674	35
	691	35
	698	33
	713	30
14X-62-52410	317	1
14X-62-52421	317	2
14X-62-52431	315	27
14X-62-52441	317	14
14X-62-52451	317	15
14X-62-52471	267	16
14X-62-52480	317	24
14X-62-52491	262	29
14X-62-52511	317	16
14X-62-52521	648	18
	671	28
	676	30
	716	22
14X-62-52541	645	27
	668	34
	674	36
	691	36
	698	34
	713	31
14X-62-52552	317	7
14X-62-52571	315	37
14X-62-52611	323	12
	330	12
14X-62-52621	323	1
	330	1
14X-62-52631	335	5
	336	7
	338	7
14X-62-52651	793	26
14X-62-52680	793	3
14X-62-52690	792	4
14X-62-52710	792	3
14X-62-52731	339	25
14X-62-52741	792	1
14X-62-52761	315	31
14X-62-52771	790	31
	791	32
14X-62-52781	793	11
	793	16
14X-62-52790	793	5
14X-62-52810	338	14
14X-62-52821	792	27
14X-62-52870	325	2
	333	2
14X-62-52881	335	1
	336	3
	338	3
14X-62-52890	335	8
	336	10
	338	10
14X-62-52911	335	11
	336	13
	338	13
14X-62-52921	315	34
14X-62-52931	645	23
	668	23
	668	28
	674	23
	674	28
	691	23
	691	28
	698	23
	698	28
	713	23

PartNumber	Page	Index
14X-62-52940	645	25
	668	32
	674	34
	691	34
	698	32
	713	29
14X-62-52951	292	26
	294	26
14X-62-52960	646	19
	669	19
	714	19
14X-62-52971	669	22
	693	22
14X-62-52981	646	22
14X-62-52991	674	31
	691	31
	713	26
14X-62-53101	584	
	599	
14X-62-53151	584	
	590	
	599	
	604	
14X-62-53201	590	
	604	
14X-62-53351	584	25
	590	28
	599	23
	604	30
14X-62-53361	584	26
	590	29
	599	24
	604	31
14X-62-53411	590	6
	604	6
14X-62-53510	325	1
14X-62-53531	648	1
	695	1
	699	1
	716	1
14X-62-53541	648	8
	671	12
	676	12
	676	20
	694	45
	695	8
	695	12
	695	16
	699	8
	699	12
	716	8
	716	12
14X-62-53551	646	
	669	
	714	
14X-62-53561	646	2
	669	2
	714	2
14X-62-53581	337	14
	339	14
14X-62-53611	790	9
	791	9
14X-62-53621	790	11
	791	11
14X-62-53640	342	41
14X-62-53650	342	44
14X-62-53661	320	1
	327	1
14X-62-53671	320	2
	327	2
14X-62-53691	590	7
	604	7
14X-62-53751	596	25
	602	27
14X-62-53820	601	42
14X-62-53830	601	45
14X-62-53840	337	15
	339	15
14X-62-53861	793	21
14X-62-53950	584	6
	596	6
	596	12
	599	6
	602	6
	602	12
14X-62-54110	695	26
	699	24
14X-62-54121	695	28
	699	26
14X-62-54131	596	
	602	
14X-62-54141	596	
	602	
14X-62-54150	695	31
	699	29
14X-62-54160	695	33
	699	31
14X-62-54171	596	
	602	
14X-62-54370	332	1
14X-62-54511	584	14
	590	18
	596	16
	599	14
	602	16
	604	18
14X-62-54521	693	
14X-62-54531	693	2
14X-62-54540	693	21
14X-62-54551	339	18
14X-62-54560	339	22
14X-62-54580	338	17
14X-62-54681	696	48
	700	46
14X-62-54690	317	20
14X-62-54710	316	43
	672	40
	677	42
14X-62-54731	318	28
14X-62-54741	335	4
	336	6
	338	6
14X-62-54750	695	35
	699	33
14X-62-54760	584	10
	590	8
	596	13
	599	10
	602	13
	604	8
14X-62-54781	338	20
14X-62-54791	338	21
14X-62-54810	584	
	599	
14X-62-54820	584	7
	590	13
	599	7
	604	13
14X-62-54831	590	
	604	
14X-62-54840	792	6
14X-62-54850	792	5
14X-62-54860	596	26
	602	28
14X-62-54870	645	4
	668	4
	674	4
	691	4
	698	4
	713	4
14X-62-54880	337	22
14X-62-54910	792	23
14X-62-54920	792	19
14X-62-54940	671	1
	671	6
	676	1
	676	6
14X-62-54950	671	16
	676	16
14X-62-54960	648	4
	695	4
	699	4
	716	4
14X-62-54980	790	20
	790	23
	791	21
	791	24
14X-62-54990	337	
	339	
14X-62-55290	333	1
14X-62-55560	671	
	676	
14X-69-11110	795	14
	798	14
	804	14
14X-69-11120	795	15
	798	15
	804	15
14X-69-11210	799	14
14X-69-11220	799	15
14X-69-51101	796	1
	800	1
14X-69-51121	805	1
	806	1
14X-69-51131	805	2
	806	2
14X-69-51200	797	1
	801	1
14X-69-51201	802	1
	803	1
14X-71-00030	616	
14X-71-11E20	769	16
14X-71-12230	766	11
	766	22
	768	11
	768	22
14X-71-12240	772	13
14X-71-13111	769	15
14X-71-51102	772	1
14X-71-51122	772	4
14X-71-51132	772	5
14X-71-51151	772	6
14X-71-51161	772	7
14X-71-51171	772	8
14X-71-53110	616	1
14X-71-53310	766	1
14X-71-53320	766	12
	768	12
14X-71-53340	766	26
	768	26
14X-71-53610	768	1
14X-72-51120	773	2
	774	7
14X-72-51131	773	3
	774	8
14X-72-51161	771	21
	771	29
14X-72-51172	771	22
14X-72-51192	773	10
	774	13
14X-72-51201	767	1
14X-72-51241	767	6
14X-72-51251	767	2
14X-72-51261	767	3
14X-72-51271	767	4

PartNumber	Page	Index
14X-72-51281	767	5
14X-72-51290	771	18
14X-72-51311	771	1
14X-72-51331	771	8
14X-72-51341	771	11
14X-72-51352	771	3
14X-72-51360	771	19
14X-72-51372	771	2
14X-72-51382	773	11
	774	16
14X-72-51390	767	16
	774	35
14X-72-51421	767	17
14X-72-51502	773	1
14X-72-51530	775	59
14X-72-51610	773	4
14X-72-51731	767	12
14X-72-51741	767	13
14X-72-54101	774	1
14X-72-54131	774	2
14X-72-54141	774	3
14X-72-54151	774	4
14X-72-54161	774	5
14X-72-54170	775	41
14X-72-54201	774	27
14X-72-54241	774	28
14X-72-54251	774	32
14X-72-54301	774	19
14X-72-54340	774	20
14X-72-54351	774	24
14X-72-54410	774	37
14X-72-54420	774	36
14X-72-54430	774	22
	774	30
14X-72-54D20	774	6
	774	21
	774	29
14X-78-11180	594	52
	598	50
	601	50
	606	49
14X-78-11490	593	2
	597	2
	600	2
	605	2
14X-78-51112	593	1
	597	1
	600	1
	605	1
14X-78-51131	593	3
	597	3
	600	3
	605	3
14X-78-51141	593	8
	597	8
	600	8
	605	8
14X-78-51171	343	10
14X-78-51181	343	1
14X-78-51191	343	2
14X-78-51281	598	40
	601	39
14X-78-51291	593	12
	597	12
	600	12
	605	12
14X-78-51410	594	41
	598	39
	601	38
	605	38
14X-78-51421	594	48
	598	46
	606	45
14X-78-51431	594	45
	598	43
	606	42
14X-78-51450	594	42
	605	39
14X-911-1690	373	3
	373	7
	378	3
	378	7
	446	3
	446	7
	451	3
	451	7
14X-911-1761	373	2
	373	6
	378	2
	378	6
	446	2
	446	6
	451	2
	451	6
14X-911-6180	578	1
14X-911-7670	403	7
	476	7
	559	2
	569	2
14X-911-8520	717	29
	727	29
14X-911-8534	562	18
	572	18
14X-952-5170	772	2
14X-952-5370	772	3
14X-958-1510	736	1
14X-978-1660	529	2
	529	4
14X-98-11170	808	5
	810	5
	812	5
	814	5
	815	5
	816	5
	817	5
	818	5
	819	5
	820	5
	821	5
	822	5
	823	5
	824	5
	825	5
	826	5
	827	5
	828	5
	829	5
	830	5
	831	5
	832	5
	833	5
	834	5
	835	5
	836	5
	838	5
	839	5
	840	5
	841	5
	842	5
	843	5
	844	5
	845	5
	846	5
	847	5
	848	5
	849	5
	850	5
	851	5
	853	5
	854	5
	855	5
	856	5
	857	5
	859	5
	860	5
	861	5
	862	5
	863	5
	864	5
	865	5
	867	5
	869	5
	871	5
	873	5
	875	5
14X-98-11250	808	13
	812	15
	814	13
	815	13
	816	13
	817	13
	818	13
	819	13
	820	13
	821	13
	822	15
	823	15
	824	15
	825	15
	826	15
	859	13
	862	13
	869	15
	873	15
14X-98-11270	827	13
	828	13
	829	13
	830	13
	831	13
	832	13
	833	13
	834	13
	835	13
	836	15
	838	15
	839	15
	840	15
	841	15
	842	15
	860	13
	863	13
	865	15
	871	15
14X-98-31110	877	1
14X-98-35120	809	29
	811	29
	813	31
	814	29
	815	29
	827	29
	828	29
	829	29
	836	31
	843	29
	844	29
	851	31
14X-98-35130	816	29
	817	29
	822	31
	830	29
	831	29
	838	31
	845	29
	846	29
	853	31

PartNumber	Page	Index
14X-98-35140	819	29
	824	31
	833	29
	840	31
	848	29
	855	31
14X-98-35150	818	29
	821	29
	823	31
	832	29
	835	29
	839	31
	847	29
	850	29
	854	31
14X-98-35160	826	31
	842	31
	857	31
	862	29
	863	29
	864	29
14X-98-35170	820	29
	834	29
	849	29
14X-98-35181	808	10
	810	10
	812	12
	814	10
	815	10
	816	10
	817	10
	818	10
	819	10
	820	10
	821	10
	822	12
	823	12
	824	12
	825	12
	826	12
	827	10
	828	10
	829	10
	830	10
	831	10
	832	10
	833	10
	834	10
	835	10
	836	12
	838	12
	839	12
	840	12
	841	12
	842	12
	843	10
	844	10
	845	10
	846	10
	847	10
	848	10
	849	10
	850	10
	851	12
	853	12
	854	12
	855	12
	856	12
	857	12
	859	10
	860	10
	861	10
	862	10
	863	10
	864	10
	865	12
	867	12
	869	12
	871	12
	873	12
	875	12
14X-98-35250	825	31
	841	31
	856	31
	859	29
	860	29
	861	29
14X-98-35310	819	27
	824	29
	833	27
	840	29
	848	27
	855	29
14X-98-35320	818	27
	821	27
	823	29
	832	27
	835	27
	839	29
	847	27
	850	27
	854	29
14X-98-35330	826	29
	842	29
	857	29
	862	27
	863	27
	864	27
14X-98-35420	825	29
	841	29
	856	29
	859	27
	860	27
	861	27
14X-98-51120	438	1
	525	1
14X-98-51131	808	11
	810	11
	812	13
	814	11
	815	11
	816	11
	817	11
	818	11
	819	11
	820	11
	821	11
	822	13
	823	13
	824	13
	825	13
	826	13
	827	11
	828	11
	829	11
	830	11
	831	11
	832	11
	833	11
	834	11
	835	11
	836	13
	838	13
	839	13
	840	13
	841	13
	842	13
	843	11
	844	11
	845	11
	846	11
	847	11
	848	11
	849	11
	850	11
	851	13
	853	13
	854	13
	855	13
	856	13
	857	13
	859	11
	860	11
	861	11
	862	11
	863	11
	864	11
	865	13
	867	13
	869	13
	871	13
	873	13
	875	13
14X-98-51161	436	41
	438	2
	504	41
	525	2
14X-98-51170	551	31
14X-98-51211	808	14
	812	16
	814	14
	815	14
	816	14
	817	14
	818	14
	819	14
	820	14
	821	14
	822	16
	823	16
	824	16
	825	16
	826	16
	827	14
	828	14
	829	14
	830	14
	831	14
	832	14
	833	14
	834	14
	835	14
	836	16
	838	16
	839	16
	840	16
	841	16
	842	16
	859	14
	860	14
	862	14
	863	14
	865	16
	869	16
	871	16
	873	16
14X-98-51221	810	14
	843	14
	844	14
	845	14
	846	14
	847	14
	848	14
	849	14
	850	14

PartNumber	Page	Index
	851	16
	853	16
	854	16
	855	16
	856	16
	857	16
	861	14
	864	14
	867	16
	875	16
14X-98-51231	808	12
	810	12
	812	14
	814	12
	815	12
	816	12
	817	12
	818	12
	819	12
	820	12
	821	12
	822	14
	823	14
	824	14
	825	14
	826	14
	827	12
	828	12
	829	12
	830	12
	831	12
	832	12
	833	12
	834	12
	835	12
	836	14
	838	14
	839	14
	840	14
	841	14
	842	14
	843	12
	844	12
	845	12
	846	12
	847	12
	848	12
	849	12
	850	12
	851	14
	853	14
	854	14
	855	14
	856	14
	857	14
	859	12
	860	12
	861	12
	862	12
	863	12
	864	12
	865	14
	867	14
	869	14
	871	14
	873	14
	875	14
14X-98-51260	442	1
14X-98-51270	442	2
14X-A62-5112	628	1
14X-A62-5211	629	1
14X-A62-5231	629	30
14X-A62-5311	632	1
14X-A62-5331	632	12
14X-A62-5410	735	1

PartNumber	Page	Index
14X-A62-5420	735	2
14X-A62-5430	735	3
14X-A62-5440	733	2
	735	4
14X-A62-5511	733	1
14X-A62-5521	632	3
14X-A62-5551	632	14
14X-A62-5560	628	2
14X-A62-5581	733	3
14X-A62-5590	733	4
14X-A62-5611	629	12
	629	21
	630	41
	630	50
14X-A62-5630	629	13
	629	22
	630	42
	630	51
14X-A62-5651	629	17
14X-A62-5661	629	18
14X-A62-5671	629	26
14X-A62-5681	629	27
14X-A62-5691	630	55
14X-A62-5711	630	47
14X-A62-5720	630	56
14X-A62-5730	630	46
14X-Y11-1110	403	1
	476	1
14X-Y11-1121	403	14
	476	14
14X-Y11-1131	403	17
	476	17
14X-Y11-1141	403	24
	476	24
14X-Y11-1151	403	8
	476	8
14X-Y11-1160	403	28
	476	28
14X-Y11-1171	404	31
	477	31
14X-Y11-1181	404	35
	477	35
14X-Y11-1191	404	42
	477	42
14X-Y11-1211	404	47
	477	47
14X-Y11-1222	407	1
	480	1
14X-Y11-1231	559	3
	569	3
14X-Y11-1241	403	3
	476	3
14X-Y11-1250	403	9
	476	9
14X-Y11-1260	404	43
	404	48
	477	43
	477	48
14X-Y11-1280	404	36
	477	36
14X-Y11-1291	409	36
	516	36
14X-Y11-1351	557	4
	567	4
14X-Y11-1361	557	7
	567	7
14X-Y11-1371	557	10
	567	10
14X-Y11-1410	562	6
	572	6
14X-Y11-1421	563	2
	573	2
14X-Y11-1431	563	4
	573	4
14X-Y11-1442	408	1

PartNumber	Page	Index
	515	1
14X-Y11-1451	409	30
	515	30
14X-Y11-1461	409	43
	516	43
14X-Y11-1471	407	2
	480	2
14X-Y11-1490	407	3
	480	3
14X-Y11-1511	408	6
	515	6
14X-Y11-1521	408	7
	515	7
14X-Y11-1531	408	8
	515	8
14X-Y11-1540	408	9
	515	9
14X-Y11-1550	408	15
	515	15
14X-Y11-1561	408	14
	515	14
14X-Y11-1570	409	47
	516	47
14X-Y11-1580	559	4
	569	4
14X-Y11-1590	408	10
	515	10
14X-Y11-1611	408	16
	515	16
14X-Y11-1620	409	31
	515	31
14X-Y11-1661	560	7
	570	7
	575	8
14X-Y11-1671	560	15
	570	15
14X-Y11-1681	560	29
	570	29
14X-Y11-1691	560	23
	570	23
14X-Y11-1731	611	14
14X-Y11-1760	556	7
	566	7
14X-Y11-1790	406	36
	479	36
14X-Y11-1822	717	26
	727	26
14X-Y11-1871	405	1
	478	1
14X-Y11-1881	405	3
	478	3
14X-Y11-1891	405	5
	478	5
14X-Y11-1911	405	9
	478	9
14X-Y11-1920	556	10
	566	10
14X-Y11-1930	403	10
	476	10
14X-Y11-1940	404	32
	477	32
14X-Y11-1971	624	7
14X-Y11-1981	560	1
	570	1
14X-Y11-1990	409	51
	516	51
14X-Y11-2110	611	1
14X-Y11-2121	611	6
14X-Y11-2140	611	37
14X-Y11-2150	560	36
	570	36
14X-Y11-2160	611	9
14X-Y11-2170	611	10
14X-Y11-2181	402	5
	475	5

PartNumber	Page	Index
14X-Y11-2211	402	6
	475	6
14X-Y11-2241	722	26
14X-Y11-2250	409	32
	515	32
14X-Y11-2260	403	18
	476	18
14X-Y11-2270	717	27
	727	27
14X-Y79-1113	370	1
	513	1
14X-Y79-1241	439	12
	439	21
	507	12
	507	21
	579	1
14X-Y79-1291	395	21
	468	21
14X-Y79-1311	386	1
	459	1
14X-Y79-1321	386	2
	459	2
14X-Y79-1331	386	3
	459	3
14X-Y79-1340	386	4
	459	4
14X-Y79-1361	373	10
	446	10
14X-Y79-1371	378	10
	451	10
14X-Y79-1380	373	11
	378	11
	446	11
	451	11
14X-Y79-1390	373	12
	378	12
	446	12
	451	12
14X-Y79-1400	387	
	460	
14X-Y79-1410	373	13
	378	13
	446	13
	451	13
14X-Y79-1430	387	
	460	
14X-Y79-1440	387	17
	460	17
14X-Y79-1450	389	
	462	
14X-Y79-1460	389	17
	462	17
14X-Y79-1500	389	
	462	
14X-Y79-1511	218	1
	219	1
	222	1
	223	1
14X-Y79-1521	218	4
	218	13
	219	4
	219	13
	222	4
	222	13
	223	4
	223	13
14X-Y79-1531	218	10
	219	10
	222	10
	223	10
14X-Y79-1541	399	1
	472	1
	531	1
14X-Y79-1551	399	4
	472	4
	531	4
14X-Y79-1561	399	7
	472	7
	531	7
14X-Y79-1570	391	22
	464	22
14X-Y79-1580	391	23
	464	23
14X-Y79-1590	392	3
	440	1
	443	3
	465	3
	510	1
	511	3
	514	3
14X-Y79-1611	430	1
	498	1
14X-Y79-2101	396	9
	469	9
14X-Y79-2131	396	27
	469	27
14X-Y79-2141	395	11
	468	11
14X-Y79-2151	398	5
	471	5
14X-Y79-2161	395	14
	468	14
14X-Y79-2171	398	2
	471	2
14X-Y79-2181	439	4
	507	4
14X-Y79-2190	397	44
	470	44
14X-Y79-2201	396	17
	469	17
14X-Y79-2211	397	30
	470	30
14X-Y79-2221	397	32
	470	32
14X-Y79-2230	404	37
	477	37
14X-Y79-2241	404	38
	477	38
14X-Y79-2250	391	1
	464	1
14X-Y79-2261	396	1
	469	1
14X-Y79-2271	396	5
	469	5
14X-Y79-2280	427	15
	495	15
14X-Y79-2290	385	9
	385	13
	458	9
	458	13
14X-Y79-2310	404	52
	477	52
14X-Y79-2320	439	11
	507	11
14X-Y79-2330	439	17
	507	17
14X-Y79-2350	395	9
	468	9
14X-Y79-2361	439	6
	507	6
14X-Y79-2380	397	34
	470	34
14X-Y79-2611	395	2
	468	2
14X-Y79-2621	395	1
	468	1
14X-Y79-2631	395	5
	468	5
14X-Y79-2641	397	41
	470	41
14X-Y79-2650	395	10
	468	10
14X-Y79-3111	371	1
	444	1
14X-Y79-3121	376	1
	449	1
14X-Y79-3130	371	7
	376	7
	444	7
	449	7
14X-Y79-3220	371	17
	444	17
14X-Y79-3230	376	17
	449	17
14X-Y79-3241	375	6
	448	6
14X-Y79-3251	380	6
	453	6
14X-Y79-3261	375	10
	380	10
	448	10
	453	10
14X-Y79-3270	375	1
	380	1
	448	1
	453	1
14X-Y79-3280	373	19
	446	19
14X-Y79-3290	378	19
	451	19
14X-Y79-3310	372	44
	377	44
	445	44
	450	44
14X-Y79-3321	372	47
	445	47
14X-Y79-3331	377	47
	450	47
14X-Y79-3341	427	12
	495	12
14X-Y79-3350	375	11
	380	11
	448	11
	453	11
14X-Y79-3360	371	18
	376	18
	444	18
	449	18
14X-Y79-3411	382	1
	455	1
14X-Y79-3421	382	4
	455	4
14X-Y79-3431	385	8
	458	8
14X-Y79-3441	385	12
	458	12
14X-Y79-3451	374	37
	447	37
14X-Y79-3461	379	37
	452	37
14X-Y79-3472	374	30
	447	30
14X-Y79-3482	379	30
	452	30
14X-Y79-3491	385	1
	458	1
14X-Y79-3511	383	1
	456	1
14X-Y79-3521	384	1
	457	1
14X-Y79-3531	383	7
	384	7
	456	7
	457	7
14X-Y79-3551	383	8

PartNumber	Page	Index
	384	8
	456	8
	457	8
14X-Y79-3581	383	13
	456	13
14X-Y79-3591	384	13
	457	13
14X-Y79-3611	383	17
	456	17
14X-Y79-3621	384	19
	457	19
14X-Y79-3631	374	40
	379	40
	447	40
	452	40
14X-Y79-3651	371	24
	444	24
14X-Y79-3661	376	24
	449	24
14X-Y79-3671	381	1
	454	1
14X-Y79-3681	383	6
	384	6
	456	6
	457	6
14X-Y79-3711	576	4
14X-Y79-3721	576	8
	577	5
14X-Y79-3731	576	7
	577	4
14X-Y79-3760	383	9
	384	9
	456	9
	457	9
14X-Y79-3770	374	33
	447	33
14X-Y79-3780	379	33
	452	33
14X-Y79-4111	528	1
14X-Y79-4310	549	10
14X-Y79-4320	549	11
14X-Y79-4340	528	11
14X-Y79-4351	528	10
14X-Y79-4611	529	1
14X-Y79-4621	529	3
14X-Z11-9221	562	1
	572	1
14X-Z11-9670	563	1
	573	1
14Y-21-13160	287	6
	288	6
14Y-21-13171	287	8
14Y-21-13190	287	9
	288	9
14Y-21-13210	287	7
	288	7
14Y-21-23150	229	39
14Y-22-14160	269	2
	270	2
14Y-22-21161	227	11
14Y-22-21170	227	8
14Y-22-21180	227	
14Y-22-21190	227	
14Y-22-22110	230	1
14Y-22-22150	230	2
14Y-22-22161	228	5
14Y-22-22170	236	11
14Y-22-22181	236	20
14Y-22-22221	230	10
14Y-22-22231	236	12
14Y-22-22290	228	1
14Y-22-22311	236	1
14Y-22-22321	236	9
14Y-22-22330	236	18
14Y-22-22340	228	4
14Y-22-22360	230	7
14Y-22-22370	228	3
14Y-22-22380	230	3
14Y-22-23110	228	14
14Y-22-23121	228	6
14Y-22-23130	228	21
14Y-22-23140	228	15
14Y-22-23150	228	16
14Y-22-23160	228	17
14Y-22-23170	228	22
14Y-22-23180	228	23
14Y-22-23310	228	20
	898	
14Y-22-24111	228	9
14Y-22-24130	228	18
14Y-22-24190	228	10
14Y-22-25830	227	21
14Y-22-25840	227	
14Y-22-25850	227	
14Y-22-25880	227	15
14Y-22-26180	231	14
14Y-22-37420	231	21
14Y-22-37440	231	19
14Y-22-37470	231	20
	898	
14Y-22-51121	227	1
14Y-22-51130	227	10
14Y-22-52100	234	
14Y-22-54120	269	1
14Y-22-54130	270	1
14Y-22-54260	236	2
14Y-22-55110	231	1
14Y-22-55120	228	27
14Y-22-55142	233	1
14Y-22-55510	231	17
14Y-22-55522	231	18
14Y-22-55800	227	
14Y-22-56240	237	10
14Y-22-58110	262	12
14Y-22-58140	262	13
14Y-27-00310	271	
	273	
	275	
14Y-27-00320	276	
	278	
	280	
14Y-27-00410	271	
	273	
	282	
14Y-27-00420	276	
	278	
	283	
14Y-27-11412	275	7
	280	7
	282	7
	283	7
14Y-27-31150	275	6
	282	6
14Y-27-31160	280	6
	283	6
14Y-30-00210	350	
	352	
14Y-30-11277	756	33
	757	33
	758	33
	759	33
14Y-30-17111	350	1
	352	1
14Y-30-18111	350	14
	352	10
14Y-30-18121	350	11
	352	7
14Y-30-18130	756	8
	756	17
	757	8
	757	17
	758	8
	758	17
	759	8
	759	17
14Y-30-18140	756	9
	756	18
	757	9
	757	18
	758	9
	758	18
	759	9
	759	18
14Y-30-18150	350	10
	352	6
14Y-30-18160	350	2
	352	2
14Y-30-26140	760	1
14Y-30-27130	758	19
	758	26
	759	19
	759	26
14Y-30-27140	761	1
14Y-32-00300	751	
14Y-32-03000	750	
14Y-32-11360	754	13
	754	16
14Y-32-15340	750	16
	750	19
14Y-49-21110	232	1
14Y-49-21120	232	5
14Y-50-00012	352	
14Y-50-11110	352	16
14Y-50-11240	350	26
	352	22
14Y-50-11250	350	21
	352	17
14Y-50-11323	350	25
	352	21
14Y-50-11390	350	28
	352	24
14Y-50-11460	350	23
	352	19
14Y-62-11420	790	3
	791	3
14Y-62-11440	790	15
	791	15
14Y-62-31431	790	13
	791	13
14Y-71-00081	766	
14Y-71-11210	772	14
14Y-71-11330	772	16
	773	6
14Y-71-11340	772	15
	773	7
14Y-71-12131	766	2
	766	13
	768	2
	768	13
14Y-71-12160	790	6
	791	6
14Y-71-12170	766	9
	766	20
	768	9
	768	20
14Y-71-13110	769	1
	770	1
14Y-71-13120	769	2
	769	19
	770	2
14Y-71-13181	766	10
	766	21
	768	10
	768	21
14Y-71-13320	616	2

PartNumber	Page	Index
14Y-71-22150	766	4
14Y-71-22280	766	8
14Z-12-31310	168	19
	226	7
14Z-22-15220	234	28
14Z-40-11220	234	19
14Z-40-11320	234	6
14Z-40-11330	234	7
14Z-40-11340	234	9
14Z-40-11350	234	14
14Z-40-11360	234	17
14Z-40-11371	234	13
14Z-40-11380	234	12
14Z-40-12101	234	
14Z-40-12210	234	24
14Z-43-12411	233	4
	289	
	289	8
14Z-43-12421	233	2
14Z-71-33212	766	23
	768	23
150-30-13430	739	26
150-30-13442	739	23
150-30-13460	739	25
150-30-13480	739	24
150-74-11140	800	11
	801	13
	803	13
154-03-00050	177	
154-03-13180	177	20
154-03-72261	177	4
154-03-72270	177	10
154-15-12550	230	6
154-21-71420	346	6
	347	6
	348	6
	349	6
154-22-22280	230	4
154-22-62220	227	18
154-22-65820	227	14
154-22-65860	227	17
154-22-65890	227	16
154-27-12320	275	3
	280	3
	282	3
	283	3
154-30-73170	739	8
154-32-21323	753	14
	754	14
	899	
154-32-41412	749	13
	755	17
154-32-71220	750	18
	752	18
	899	
154-43-73531	412	3
	483	3
	534	3
154-43-73560	412	4
	483	4
	534	4
154-43-73651	412	14
	483	14
	534	14
154-43-73670	414	9
	485	9
	536	9
154-43-73680	414	10
	485	10
	536	10
154-54-22830	550	7
154-61-16570	64	9
	65	9
154-911-7842	568	
154-911-8140	556	6
	566	6
154-98-75370	866	36
	868	36
	870	36
	872	36
	874	36
	876	36
155-30-13230	738	20
155-61-15350	202	15
	209	15
	264	6
175-03-42140	721	17
	726	17
175-06-81610	437	13
	505	13
	553	14
175-15-11230	239	21
175-15-56470	248	24
175-54-27350	177	21
175-54-28770	177	22
175-54-34170	651	4
	721	10
	721	20
	726	10
	726	20
176-06-42170	371	20
	376	20
	383	27
	384	27
	444	20
	449	20
	456	27
	457	27
17A-03-14111	180	1
17A-03-14120	180	2
17A-04-11191	185	53
	187	61
17A-04-41190	184	
	186	
17A-04-41331	184	31
	187	39
17A-04-41411	184	2
	186	2
17A-06-17931	218	7
	218	16
	218	26
	219	7
	219	16
	220	4
	221	4
	222	7
	222	16
	222	26
	223	7
	223	16
	717	34
	722	30
	727	34
17A-06-17970	218	8
	218	17
	218	27
	219	8
	219	17
	220	5
	221	5
	222	8
	222	17
	222	27
	223	8
	223	17
	717	35
	722	31
	727	35
17A-06-17980	218	9
	218	18
	218	28
	219	9
	219	18
	220	6
	221	6
	222	9
	222	18
	222	28
	223	9
	223	18
	717	36
	722	32
	727	36
17A-06-41981	421	30
	422	15
	491	30
	492	15
	540	30
	542	15
17A-06-42210	391	5
	464	5
17A-06-42220	391	6
	464	6
17A-06-42230	218	31
	219	23
	220	9
17A-06-42240	216	1
17A-06-42250	432	2
	441	2
	500	2
	512	2
	549	2
17A-06-42260	432	3
	441	3
	500	3
	512	3
	549	3
17A-06-43210	545	14
17A-13-24490	254	2
17A-15-22191	228	35
17A-43-24160	289	
	289	9
	421	29
	490	29
	540	29
17A-43-24170	289	5
17A-43-42240	593	9
	597	9
	600	9
	605	9
17A-43-42340	409	23
	515	23
17A-43-42430	595	3
17A-43-46380	580	18
	585	18
	591	14
	603	14
	607	18
17A-54-46440	608	5
	608	16
17A-54-46761	548	9
17A-54-46771	547	19
17A-54-46820	548	13
17A-54-46961	408	20
	515	20
17A-54-48560	547	14
	547	17
17A-54-48580	548	3
17A-57-21170	364	5
	367	11
	368	11
17A-57-23270	357	5
	359	5
	361	5
	362	5

https://truckmanualshub.com/

PartNumber	Page	Index
	365	5
	366	5
	367	5
	368	5
17A-57-23520	359	11
17A-57-41131	609	10
17A-57-41150	357	13
	366	13
	368	15
17A-57-41170	609	14
17A-911-1671	557	2
	567	2
17A-911-4421	405	22
	405	26
	478	22
	478	26
	560	39
	570	39
17A-911-4810	558	
17A-979-1420	391	26
	464	26
17A-979-1611	396	15
	396	23
	469	15
	469	23
17A-979-1620	375	3
	380	3
	395	6
	396	2
	396	6
	396	12
	396	20
	448	3
	453	3
	468	6
	469	2
	469	6
	469	12
	469	20
17A-979-1760	395	15
	468	15
17A-979-1930	396	10
	396	18
	469	10
	469	18
17A-979-2141	409	33
	515	33
17A-979-2251	408	2
	515	2
17A-979-2330	402	7
	475	7
17A-979-2360	409	44
	516	44
17A-979-2390	408	11
	515	11
17A-979-2422	408	22
	515	22
17A-979-2430	408	3
	515	3
17A-979-2850	391	17
	464	17
17A-979-2870	391	21
	464	21
17A-979-3131	402	1
	475	1
17A-979-3140	391	2
	464	2
17A-979-3180	402	10
	475	10
17A-979-3320	372	31
	445	31
17A-979-3330	377	31
	450	31
17A-979-3561	383	10
	456	10
17A-979-3571	384	10
	457	10
17A-979-3811	372	48
	377	48
	445	48
	450	48
17A-979-3890	396	11
	396	19
	469	11
	469	19
17A-98-11180	808	8
	810	8
	812	8
	814	8
	815	8
	816	8
	817	8
	818	8
	819	8
	820	8
	821	8
	822	8
	823	8
	824	8
	825	8
	826	8
	827	8
	828	8
	829	8
	830	8
	831	8
	832	8
	833	8
	834	8
	835	8
	836	8
	838	8
	839	8
	840	8
	841	8
	842	8
	843	8
	844	8
	845	8
	846	8
	847	8
	848	8
	849	8
	850	8
	851	8
	853	8
	854	8
	855	8
	856	8
	857	8
	859	8
	860	8
	861	8
	862	8
	863	8
	864	8
	865	8
	867	8
	869	8
	871	8
	873	8
	875	8
17A-98-21720	820	27
	834	27
	849	27
17A-98-23510	820	31
	834	31
	849	31
17A-98-41320	884	2
17A-98-41510	879	5
17A-Z11-1610	387	18
	389	18
	460	18
	462	18
17A-Z11-1620	387	19
	389	19
	460	19
	462	19
17A-Z11-1660	387	20
	389	20
	460	20
	462	20
17A-Z11-1810	383	3
	384	3
	456	3
	457	3
17A-Z11-2240	440	2
	510	2
17A-Z11-2581	373	18
	378	18
	446	18
	451	18
17A-Z11-2660	373	28
	378	28
	446	28
	451	28
17A-Z11-2813	548	7
17A-Z11-2940	397	38
	470	38
17A-Z11-3592	385	5
	385	7
	458	5
	458	7
17A-Z11-4610	374	29
	379	29
	430	4
	446	29
	451	29
	498	4
17A-Z11-7161	395	19
	396	25
	408	17
	435	5
	435	28
	468	19
	469	25
	503	5
	503	28
	515	17
	522	5
	522	28
17M-22-45471	227	2
17M-911-3530	717	30
	727	30
17M-98-41320	820	20
	834	20
	849	20
195-03-41380	556	5
	566	5
195-27-11140	273	16
	278	16
195-30-14151	739	28
195-30-17960	738	21
195-40-31540	234	10
195-43-43370	580	20
	585	20
	591	16
	603	16
	607	20
195-43-64411	581	1
	586	1
195-54-42550	185	51
	187	59
195-54-42981	721	3
	726	3

PartNumber	Page	Index
195-54-46180	621	4
195-54-68760	717	38
	722	35
	727	39
195-54-78790	409	27
	435	23
	503	23
	515	27
	522	23
	551	17
195-60-51550	292	19
	294	19
195-979-4841	575	16
195-Z11-1371	387	
	389	
	460	
	462	
195-Z11-1381	387	24
	389	24
	460	24
	462	24
195-Z11-2180	398	1
	471	1
	530	1
195-Z11-3630	387	21
	389	21
	460	21
	462	21
195-Z11-3640	387	22
	389	22
	460	22
	462	22
195-Z11-3670	388	25
	390	25
	460	25
	462	25
195-Z11-3860	387	23
	389	23
	460	23
	462	23
195-Z11-4510	377	38
	384	4
	450	38
	457	4
195-Z11-4520	372	38
	383	4
	445	38
	456	4
195-Z11-7250	405	18
	406	29
	478	18
	478	29
198-49-11460	292	4
	294	4
198-54-19150	717	17
	722	17
	727	17
198-54-42260	385	2
	458	2
	608	3
	608	14
198-911-7750	403	4
	476	4
198-911-9240	391	14
	464	14
	546	19
198-Z11-3710	371	2
	376	2
	444	2
	449	2
198-Z11-6370	395	4
	468	4
19M-06-18220	217	9
19M-09-11510	413	29
	484	29
	534	29
	595	2
19M-09-34110	414	11
	485	11
	536	11
19M-43-33110	413	
	484	
	534	
19M-43-33140	413	
	484	
	534	
19M-43-33150	413	33
	484	33
	534	33
19M-43-33160	413	34
	484	34
	534	34
19M-43-33170	413	30
	484	30
	534	30
19M-43-33460	413	31
	484	31
	534	31
19M-43-33470	413	32
	484	32
	534	32
19M-43-33630	412	
	412	11
	483	
	483	11
	534	11
19M-43-33660	412	12
	483	12
	534	12
19M-43-33720	410	3
	481	3
	532	3
19M-43-33730	410	4
	481	4
	532	4
19M-43-33740	410	5
	481	5
	532	5
19M-43-33750	410	6
	481	6
	532	6
19M-43-33760	410	7
	481	7
	532	7
19M-43-33770	410	8
	481	8
	532	8
19M-43-33780	410	9
	481	9
	532	9
19M-43-34120	414	12
	485	12
	536	12
19M-43-34141	414	13
	485	13
	536	13
19M-43-34150	414	14
	485	14
	536	14
19M-43-34182	414	15
	485	15
	536	15
19M-43-34190	414	16
	485	16
	536	16
19M-43-34330	410	10
	481	10
	532	10
19M-43-38220	581	2
19N-911-1250	769	20
201-54-13210	508	17
	526	17
201-60-11390	648	2
	648	5
	648	9
	671	2
	671	7
	671	13
	671	17
	676	2
	676	7
	676	13
	676	17
	676	21
	694	46
	695	2
	695	5
	695	9
	695	13
	695	17
	699	2
	699	5
	699	9
	699	13
	716	2
	716	5
	716	9
	716	13
202-62-21430	351	46
	353	42
203-30-42260	739	9
203-43-56450	433	1
	501	1
	549	17
203-60-62190	646	11
	669	11
	693	11
	714	11
203-62-13520	315	24
203-62-21740	351	47
	353	43
203-62-42920	350	34
	352	30
203-62-44510	714	22
203-62-57730	584	20
	590	24
	596	21
	599	19
	602	22
	604	25
203-62-57910	267	5
203-62-57920	267	4
203-62-57930	267	3
203-62-57940	267	2
205-03-71330	185	46
	187	54
205-03-71331	163	10
205-04-62130	184	38
	187	46
205-04-K1370	894	7
	894	12
205-30-00220	738	
	740	
	741	
	743	
	744	
205-30-66561	738	10
	740	6
	741	6
205-54-51970	717	22
	722	22
	727	22
205-54-53550	631	7
	631	16
	632	9

PartNumber	Page	Index
	632	20
	717	19
	722	19
	727	19
205-54-71680	179	1
205-60-51390	646	3
	669	3
	693	3
	714	3
205-60-71220	547	12
	622	2
	719	3
	724	3
	730	5
	731	5
205-977-7310	218	30
	220	8
	221	8
	222	30
	509	32
	526	32
206-03-43331	180	11
206-62-87990	584	8
	590	9
	590	14
	596	8
	596	14
	599	8
	602	8
	602	14
	604	9
	604	14
	695	34
	699	32
207-01-35140	163	1
	163	13
	287	3
	288	3
207-01-68170	62	12
207-06-71723	392	1
	465	1
207-06-71734	443	1
	511	1
	514	1
207-30-54160	739	7
	739	16
207-32-71620	750	17
	752	17
	899	
207-62-32890	167	13
207-62-62460	646	38
	670	38
	694	40
	714	38
207-62-64740	292	28
	294	28
	645	3
	668	3
	674	3
	691	3
	698	3
	713	3
208-06-11220	350	31
	352	27
208-06-19170	425	18
	519	18
	544	17
208-38-11590	894	9
208-53-11M80	395	16
	468	16
208-53-12220	404	29
	476	29
208-53-12680	407	8
	480	8
208-979-7540	402	2
	475	2
208-979-7650	405	14
	478	14
209-03-12270	271	17
	276	17
209-09-51210	773	18
	775	49
20B-27-11210	304	7
	311	19
	315	30
20K-62-33690	646	31
	669	31
	693	33
	714	31
20N-60-11143	292	22
	294	22
20N-60-11181	292	23
	294	23
20R-54-11460	550	9
	617	3
	618	3
20S-70-82230	771	28
20T-43-71190	412	6
	483	6
	534	6
	586	5
	593	10
	597	10
	600	10
	605	10
20T-54-74510	193	20
	194	20
	196	20
	197	20
20T-62-81790	645	18
	668	18
	674	18
	691	18
	698	18
	713	18
20U-03-21540	170	11
20U-54-46520	373	26
	378	26
	432	18
	437	12
	441	18
	446	26
	451	26
	500	18
	505	12
	512	18
20U-62-41890	646	25
	669	25
	693	27
	714	25
20Y-00-41530	808	9
	810	9
	812	9
	814	9
	815	9
	816	9
	817	9
	818	9
	819	9
	820	9
	821	9
	822	9
	823	9
	824	9
	825	9
	826	9
	827	9
	828	9
	829	9
	830	9
	831	9
	832	9
	833	9
	834	9
	835	9
	836	9
	838	9
	839	9
	840	9
	841	9
	842	9
	843	9
	844	9
	845	9
	846	9
	847	9
	848	9
	849	9
	850	9
	851	9
	853	9
	854	9
	855	9
	856	9
	857	9
	859	9
	860	9
	861	9
	862	9
	863	9
	864	9
	865	9
	867	9
	869	9
	871	9
	873	9
	875	9
20Y-03-11220	406	33
	479	33
20Y-03-41580	170	9
20Y-04-21580	186	4
20Y-06-23472	439	26
	507	26
20Y-06-23940	595	14
20Y-06-41670	508	7
	526	7
20Y-06-41812	224	1
20Y-06-41990	393	
	466	
20Y-06-42180	394	6
	467	6
20Y-06-42190	391	7
	432	4
	441	4
	464	7
	500	4
	512	4
	549	4
20Y-30-16330	746	12
	747	12
20Y-43-41491	439	7
	507	7
20Y-43-41750	432	7
	441	7
	500	7
	512	7
	549	6
20Y-43-41790	432	8
	441	8
	500	8
	512	8
	549	7
20Y-43-41970	439	5
	507	5
20Y-53-11380	370	2

PartNumber	Page	Index
	513	2
	528	5
20Y-53-11390	370	3
	513	3
	528	4
20Y-53-12221	394	7
	467	7
20Y-53-12310	403	13
	403	21
	403	25
	404	39
	404	44
	404	49
	476	13
	476	21
	476	25
	477	39
	477	44
	477	49
20Y-53-13361	403	2
	403	22
	476	2
	476	22
20Y-54-18690	395	3
	396	16
	396	24
	397	31
	397	33
	468	3
	469	16
	469	24
	470	31
	470	33
20Y-54-29232	717	16
	722	16
	727	16
20Y-60-21320	292	17
	294	17
20Y-62-19560	648	3
	648	6
	648	10
	671	3
	671	8
	671	14
	671	18
	676	3
	676	8
	676	14
	676	18
	676	22
	694	47
	695	3
	695	6
	695	10
	695	14
	695	18
	699	3
	699	6
	699	10
	699	14
	716	3
	716	6
	716	10
	716	14
20Y-62-21940	646	23
	669	23
	693	25
	714	23
20Y-62-22790	584	27
	590	30
	594	49
	596	27
	598	47
	599	25
	601	47
	602	29
	604	32
	606	46
20Y-62-22820	584	11
	590	10
	590	15
	596	9
	599	11
	602	9
	604	10
	604	15
	695	27
	695	29
	699	25
	699	27
20Y-62-22830	584	12
	590	11
	590	16
	596	10
	599	12
	602	10
	604	11
	604	16
	695	30
	695	32
	699	28
	699	30
20Y-62-22850	584	9
	584	13
	590	12
	590	17
	596	11
	596	15
	599	9
	599	13
	602	11
	602	15
	604	12
	604	17
20Y-62-22860	584	28
	590	31
	594	47
	596	28
	598	45
	599	26
	601	44
	602	30
	604	33
	606	44
20Y-810-1211	400	
	473	
20Y-810-1240	508	8
	526	8
20Y-979-3120	557	3
	567	3
20Y-979-3130	405	13
	478	13
	557	6
	567	6
20Y-979-3140	557	9
	567	9
20Y-979-3150	405	8
	478	8
	557	12
	567	12
20Y-979-6131	555	
	565	
20Y-979-6161	432	5
	441	5
	500	5
	512	5
20Y-979-6261	409	25
	515	25
20Y-979-6281	406	42
	479	42
20Y-979-6630	408	19
	515	19
20Y-979-6771	402	11
	475	11
21J-06-11570	192	12
	193	12
	194	12
	195	12
	196	12
	197	12
21J-06-13661	165	
	544	8
21K-01-72150	644	5
21K-43-11350	290	5
21K-62-72250	596	7
	602	7
21T-72-23260	648	23
	671	33
	676	35
	696	43
	700	41
	716	27
21U-62-34760	337	
	339	
	790	10
	790	22
	791	10
	791	23
	793	33
21U-62-34770	337	
	339	
	790	12
	790	19
	791	12
	791	20
	793	25
21W-60-41170	292	3
	294	3
21W-60-41310	649	7
	697	11
21W-62-42640	645	1
	668	1
	674	1
	691	1
	698	1
	713	1
21W-62-42660	593	20
	597	20
	600	20
	605	20
21W-62-43121	322	9
	329	9
21W-62-43990	593	17
	597	17
	600	17
	605	17
21W-62-44510	593	14
	597	14
	600	14
	605	14
21W-62-44740	671	4
	671	9
	676	4
	676	9
21W-973-3420	671	5
	671	10
	676	5
	676	10
21W-98-41720	808	27
	810	27
	813	29
	814	27
	815	27
	827	27
	828	27

PartNumber	Page	Index
	829	27
	836	29
	843	27
	844	27
	851	29
21W-98-41940	816	27
	817	27
	822	29
	830	27
	831	27
	838	29
	845	27
	846	27
	853	29
21Y-70-14710	775	43
21Y-70-14850	775	44
22B-06-11690	217	1
	217	4
22B-46-24180	622	6
22B-54-12291	622	3
22B-54-28990	437	20
	505	20
	553	21
22B-60-11160	292	18
	294	18
22D-62-12440	267	13
22L-54-22990	611	38
22M-43-21470	416	29
	417	28
	486	29
	488	28
	537	29
	538	28
22M-60-22130	167	9
	265	15
22M-62-13660	202	16
	209	16
	264	7
22M-977-1140	406	32
	406	39
	479	32
	479	39
22P-62-13510	338	23
	790	29
	791	30
	793	28
	793	35
22P-62-13520	318	19
22P-62-13540	338	22
	645	28
	668	35
	674	37
	691	37
	698	35
	713	32
22P-62-13550	285	3
	343	3
22U-04-21200	186	
22U-04-21220	186	5
22U-04-21241	186	
22U-54-25340	431	10
	499	10
	521	10
22U-54-25581	436	40
	504	40
	523	40
22U-60-21330	646	15
	669	15
	693	17
	714	15
22U-60-21520	184	4
	186	8
22W-43-17330	248	13
232-15-11240	240	40
232-15-19270	228	19

PartNumber	Page	Index
	898	
23A-15-15490	237	7
23B-04-31580	262	14
23B-06-61810	430	9
	498	9
23B-15-11370	244	18
23B-53-71190	866	35
	868	35
	870	35
	872	35
	874	35
	876	35
23E-15-13350	236	6
	236	15
23F-54-15570	627	3
23S-15-45860	432	6
	441	6
	500	6
	512	6
	549	5
23S-62-25850	611	31
23T-62-12160	172	4
23W-13-12680	252	35
281-01-13180	264	8
287-15-15360	239	12
287-15-15710	594	50
	598	48
	601	48
	606	47
361-54-21150	397	45
	470	45
415-46-11370	721	18
	726	18
416-54-21710	622	16
	673	1
416-925-3941	391	18
	464	18
417-43-28270	416	30
	418	29
	487	30
	488	29
	537	30
	538	29
417-923-3980	506	8
	524	8
418-07-21210	405	
418-54-35450	580	17
	580	19
	585	17
	585	19
	591	13
	591	15
	603	13
	603	15
	607	17
	607	19
418-54-42380	506	7
	524	7
41E-15-16251	248	11
421-06-22830	198	3
	205	3
	212	3
421-06-22880	198	4
	205	4
	212	4
421-06-22910	198	10
	205	10
	212	10
421-06-22920	198	11
	205	11
	212	11
421-06-23330	217	2
	217	5
421-06-26210	391	8
	464	8

PartNumber	Page	Index
421-07-31270	402	12
	475	12
421-09-21210	545	25
421-09-31110	177	24
421-20-12690	226	3
421-20-33621	226	1
421-20-34511	226	
421-20-34650	226	4
421-46-12740	775	42
421-60-35170	292	20
	294	20
423-06-42420	427	26
	495	26
423-15-12441	243	2
423-15-12810	241	19
423-20-32631	226	2
423-43-38170	580	16
	585	16
	591	12
	603	12
	607	16
423-54-42790	439	13
	439	22
	507	13
	507	22
	579	2
423-825-1720	780	2
	785	2
423-944-4720	548	19
425-13-32140	251	33
425-13-32710	898	
425-15-19440	241	16
	243	12
	243	20
425-15-32520	243	13
426-13-42710	251	2
	898	
426-15-15480	248	9
426-15-15490	248	7
426-15-15810	248	14
426-15-16261	248	12
426-15-46001	248	
426-56-21990	575	7
427-15-15910	738	4
	740	7
	741	7
	743	7
	744	7
515-35-13930	697	10
561-43-43390	166	17
	264	11
562-15-16110	248	8
565-62-11270	234	16
566-01-12350	644	4
566-02-42200	154	1
566-35-42430	644	9
566-95-91410	179	3
567-07-15210	563	6
	573	6
567-15-12830	251	28
	898	
568-13-13351	251	7
568-15-11380	238	4
568-15-11610	168	12
569-06-61960	429	10
	497	10
	546	10
569-15-12860	238	14
	239	4
	898	
569-15-41310	239	11
569-15-51721	246	16
569-15-51732	246	17
56B-15-15910	166	34
56B-15-16660	248	10

https://truckmanualshub.com/

PartNumber	Page	Index
56D-15-29841	253	23
56E-15-17261	241	14
56E-15-19360	241	15
	243	19
575-41-17420	635	10
	656	10
	660	8
	661	9
	679	10
	683	8
	684	9
	702	10
	706	9
582-15-12811	251	29
582-15-19240	251	27
	899	
582-35-11170	405	17
	405	21
	405	25
	478	17
	478	21
	478	25
600-021-2060	149	1
600-051-1100	165	23
	167	14
600-051-2050	562	14
	572	14
600-051-2060	165	11
600-051-2100	166	23
	166	31
600-051-2140	165	24
	166	37
	202	7
	209	7
600-051-2180	165	25
	166	14
	167	2
600-051-2300	204	6
	211	6
600-051-3100	167	10
600-051-3160	166	8
600-184-1350	155	6
600-184-1510	155	5
600-184-1570	155	4
600-185-5100	155	
600-185-5110	155	2
600-311-3630	106	3
600-311-3640	106	4
600-311-3660	106	
600-311-3670	106	6
600-311-3690	106	9
600-311-3722	106	
600-319-3602	106	
600-319-3610	71	6
	72	6
	106	
	144	6
	145	6
	161	4
	162	4
600-319-3750	71	4
	72	4
	104	1
	161	2
	162	2
600-468-1600	138	1
600-645-7850	177	5
600-815-2170	166	4
600-861-6110	128	
600-861-9120	129	
600-863-5711	133	
600-863-8112	135	
6127-11-5180	62	15
6127-11-5960	87	14
6130-12-1961	75	12
6131-81-8820	156	16
6135-85-8190	130	2
	131	8
6136-21-5770	81	1
6136-21-5870	81	2
6136-21-7120	87	5
6136-21-7190	87	6
6144-11-5630	137	9
6144-81-6580	189	31
6150-23-5620	232	8
6151-11-5280	62	13
6151-53-8190	62	7
6151-53-8280	60	4
6152-11-4970	51	12
	56	8
6155-11-4840	156	1
6155-71-5810	137	12
6155-71-5820	137	13
6155-81-7100	155	
6155-81-7110	155	1
6156-81-7930	156	10
6156-81-8990	156	14
6162-43-5350	79	1
6201-81-6560	64	13
	65	13
6206-71-1770	156	12
6207-51-7690	58	4
	61	9
6207-81-6980	127	4
6211-11-5490	62	3
6215-81-9510	82	17
	101	3
	105	3
6215-81-9530	77	11
6215-81-9710	82	18
	101	4
	105	4
6215-81-9730	77	12
6216-14-6820	123	1
6216-24-5730	51	6
6216-54-7320	137	31
6216-74-6180	137	30
6216-74-6190	131	2
6216-74-6220	109	2
6216-94-3450	82	16
6217-21-7150	87	15
6217-71-5770	107	2
6217-71-6470	808	28
	810	28
	813	30
	814	28
	815	28
	827	28
	828	28
	829	28
	836	30
	843	28
	844	28
	851	30
6217-71-6480	819	28
	824	30
	833	28
	840	30
	848	28
	855	30
6217-71-6490	818	28
	821	28
	823	30
	832	28
	835	28
	839	30
	847	28
	850	28
	854	30
6217-71-6510	816	28
	817	28
	822	30
	830	28
	831	28
	838	30
	845	28
	846	28
	853	30
6217-71-6550	825	30
	841	30
	856	30
	859	28
	860	28
	861	28
6217-71-6610	826	30
	842	30
	857	30
	862	28
	863	28
	864	28
6217-71-6680	820	28
	834	28
	849	28
6217-71-6860	865	30
	865	31
	867	30
	867	31
	869	30
	869	31
	871	30
	872	31
	873	30
	873	31
	875	30
	876	31
6221-81-6810	132	1
6222-11-5940	62	4
6261-81-1900	140	18
6261-81-2901	140	
6261-81-2902	140	
6261-81-2911	140	3
6261-81-6901	140	20
6271-81-2980	150	1
6271-81-9200	140	
6271-81-9201	140	
6271-81-9220	140	2
	140	4
6560-81-4530	97	6
6685-81-7503	157	
6685-81-7513	157	3
6685-81-7540	157	2
6685-81-7550	157	1
6731-22-5410	88	3
6731-51-8150	61	8
6731-61-2151	93	2
6731-71-6270	51	10
6731-74-5910	101	9
	124	3
6732-11-1910	50	11
	74	1
	82	23
	84	3
6732-11-1920	50	12
	74	2
	77	10
	82	24
	84	4
6732-11-1930	93	7
6732-11-4150	105	2
6732-21-1311	77	3
6732-21-1810	82	3
6732-21-1960	50	
	82	
	97	5
	101	

PartNumber	Page	Index
	105	
6732-21-3120	137	16
6732-21-3190	87	2
6732-21-3220	87	3
6732-21-3990	75	11
6732-21-4150	77	8
6732-21-4161	77	9
6732-21-4171	77	5
6732-21-4180	108	12
	137	2
	140	10
6732-21-4220	77	7
6732-21-4290	77	4
6732-21-5160	80	16
	120	2
6732-21-5170	80	12
6732-21-6120	82	12
6732-21-6630	52	3
6732-22-3110	105	9
6732-31-4140	79	2
6732-41-1260	70	4
6732-41-4520	50	18
6732-51-5130	68	1
	74	4
6732-51-8180	61	
6732-51-8370	61	1
6732-61-3110	140	8
6732-61-3140	68	2
	87	7
	101	14
	113	1
6732-61-3170	97	8
6732-61-3260	116	2
6732-61-3410	114	5
6732-61-3420	114	4
6732-61-3430	114	3
6732-61-3440	114	6
6732-61-3450	114	2
6732-61-4120	96	3
	100	8
6732-61-6140	51	11
	137	18
	142	1
6732-62-3410	114	
6732-62-3470	114	1
6732-71-3210	51	8
	137	27
	140	6
6732-71-3220	61	3
	121	2
	137	7
	140	7
6732-71-5620	101	10
6732-71-6510	101	11
	108	2
	108	7
	124	2
6732-81-2810	76	1
6732-81-6840	131	4
6732-81-6880	131	5
6732-81-8810	58	1
6732-81-8820	58	2
6732-81-8830	58	5
6732-81-8850	61	5
6732-81-8860	58	8
	61	6
6733-61-3150	66	11
6733-71-5680	81	3
6734-71-5270	98	4
6734-71-5520	140	11
6734-81-2560	148	1
6735-21-1910	82	
	137	
6735-21-1920	82	19
	137	28
6735-21-1930	82	20
	137	29
6735-21-4160	102	1
6735-21-5530	50	2
	87	1
6735-51-1120	91	2
6735-51-8230	61	7
6735-61-2120	140	9
6735-61-3810	127	2
6735-71-3220	112	1
	127	3
6735-71-5190	51	3
	80	6
6736-11-4460	82	15
6736-21-3210	137	8
6736-21-3360	87	4
6736-21-5310	75	9
	84	7
	103	4
6736-21-5320	80	11
6736-39-1140	152	
6736-39-1150	152	5
6736-39-1160	152	6
6736-51-8710	58	7
	61	4
6736-81-6170	98	5
6736-81-8730	54	1
6738-11-4370	58	6
	63	3
6738-11-4380	63	5
6738-11-4390	63	4
6741-21-1130	82	7
6741-21-1140	82	6
6741-21-2210	82	10
6741-21-3320	74	3
6741-21-3330	74	5
6741-21-3530	75	7
6741-21-3541	75	6
6741-21-3810	75	4
6741-21-3820	75	3
6741-21-4110	77	6
6741-31-4180	78	1
6741-39-1110	152	2
6741-39-1120	152	3
6741-39-1130	152	4
6741-39-1220	152	1
6741-61-1520	117	2
6741-61-1621	71	5
	118	1
	144	5
	161	3
6741-61-2120	98	2
6741-61-6110	93	16
6741-61-6130	121	3
6741-61-7110	84	6
6741-81-6510	127	7
6741-81-6520	127	1
6742-01-0310	80	4
6742-01-0530	75	10
6742-01-0540	75	2
6742-01-0550	75	
6742-01-0950	75	5
6742-01-1080	93	14
6742-01-1360	82	
6742-01-1370	82	2
6742-01-1380	82	25
	84	2
6742-01-1420	82	4
6742-01-1470	82	13
6742-01-1480	82	21
6742-01-1520	82	11
6742-01-1890	126	2
6742-01-2441	93	15
6742-01-2492	93	3
6742-01-2500	93	4
6742-01-2630	80	3
6742-01-2690	80	8
6742-01-2920	50	1
6742-01-3620	59	1
6742-01-3770	137	5
6742-01-3780	96	2
6742-01-4080	82	22
6742-01-4220	93	10
6742-01-4340	86	10
6742-01-4540	71	3
	72	3
	92	1
	144	3
	145	3
	161	1
	162	1
6742-01-5053	77	2
6742-01-5117	93	11
6742-01-5159	82	
6742-01-5160	82	5
6742-01-5199	85	
	152	
6742-01-5202	93	8
6742-01-5233	152	
6742-01-5240	152	
6742-01-5287	152	
6742-01-5288	152	
6742-01-5289	126	1
6742-01-5309	86	3
6742-01-5472	114	9
6742-01-5507	98	3
6742-21-8500	85	
6743-11-1610	50	19
6743-11-3230	99	5
6743-21-4190	77	1
6743-22-5110	88	1
6743-31-3101	86	
6743-31-3121	86	7
6743-31-3210	86	11
6743-51-4430	93	12
6743-51-5550	80	2
6743-61-1411	72	5
	119	1
	145	5
	162	3
6743-61-1501	117	1
6743-61-1531	117	
6743-61-2112	93	1
6743-61-2150	93	9
6743-61-2210	93	13
6743-81-6310	132	3
6744-11-1070	50	6
6744-41-1010	70	3
6744-41-3020	66	3
6744-41-4031	50	16
6744-41-4050	50	17
6744-41-4080	50	15
6744-41-4110	50	5
6744-41-4120	50	7
6744-41-4130	50	4
6744-41-5010	66	1
6744-41-5030	66	2
6744-71-1020	97	3
6744-71-1040	97	4
6744-71-1250	97	7
6744-81-4010	140	19
6745-11-1121	50	
6745-11-1131	50	10
6745-11-1190	50	
6745-11-1811	50	20
6745-11-3102	99	1
6745-11-3110	99	2
6745-11-3150	99	3
6745-11-4110	52	1
6745-11-4120	52	2

PartNumber	Page	Index
6745-11-4140	53	2
6745-11-4150	53	3
6745-11-4161	53	4
6745-11-4180	54	2
6745-11-4190	53	1
6745-11-5110	57	1
6745-11-5131	62	10
6745-11-5162	67	1
6745-11-5170	57	3
6745-11-5180	62	18
6745-11-5190	62	2
6745-11-5210	57	5
6745-11-5250	56	7
6745-11-5380	62	1
6745-11-5811	57	2
6745-11-5820	62	6
6745-11-6170	64	17
	65	17
6745-11-6210	62	20
6745-11-6220	56	5
6745-11-6230	56	9
6745-11-7111	66	10
6745-11-7810	66	12
6745-11-8160	71	2
	72	2
	142	2
	144	2
	145	2
6745-11-8170	142	5
6745-11-8250	51	5
6745-11-8310	142	
6745-11-8320	142	4
6745-11-8810	71	1
	72	1
	142	3
	144	1
	145	1
6745-21-1190	82	
6745-21-1290	82	
6745-21-1330	67	2
6745-21-1611	82	14
6745-21-3111	75	1
6745-21-3210	75	8
6745-21-5130	80	10
6745-21-5220	88	2
6745-21-5310	80	9
6745-21-7110	51	
6745-21-7120	51	1
6745-21-7130	51	2
6745-21-7150	87	10
6745-21-7160	87	9
6745-21-7171	87	11
6745-21-7180	51	4
6745-21-7240	87	8
6745-31-1120	85	
6745-31-2020	86	
6745-31-2140	86	2
6745-31-2150	86	1
6745-31-4200	78	
6745-31-4210	78	2
6745-39-1100	152	
6745-39-1200	152	
6745-39-1300	152	
6745-39-1400	152	
6745-41-1110	70	1
6745-41-1130	70	2
6745-41-2100	73	
6745-41-2110	73	1
6745-41-2120	73	2
6745-41-2130	73	3
6745-41-2140	73	4
6745-41-2151	82	8
6745-41-3100	66	9
6745-41-4151	50	14
6745-41-4161	50	13
6745-41-4220	152	22
6745-41-5110	66	8
6745-41-5201	66	6
6745-41-5401	66	4
6745-41-5430	66	5
	66	7
6745-51-1110	91	1
6745-51-2110	80	1
6745-51-2120	80	5
6745-51-8110	61	10
6745-51-8150	61	11
6745-51-8510	60	2
6745-51-8520	60	1
6745-61-1110	122	1
6745-61-1120	115	1
6745-61-3220	68	3
6745-61-4230	131	9
6745-61-6110	121	1
6745-61-6120	90	1
6745-61-6210	120	1
6745-61-8110	124	1
6745-61-8120	124	6
6745-61-8130	124	7
6745-61-8140	124	8
6745-61-8151	124	9
6745-71-1130	97	1
	101	2
	105	5
	108	4
	108	8
	124	4
	139	1
6745-71-1170	97	
6745-71-1180	97	14
6745-71-1210	96	1
6745-71-1220	97	9
6745-71-1230	97	10
6745-71-1240	97	15
6745-71-1250	97	16
6745-71-1260	97	19
6745-71-1820	108	
6745-71-1830	108	10
6745-71-1840	108	11
6745-71-1860	108	13
6745-71-3210	98	1
6745-71-4110	100	1
6745-71-4120	100	2
6745-71-4140	100	3
6745-71-4150	100	4
6745-71-4310	100	5
6745-71-4320	100	6
6745-71-4330	100	7
6745-71-5110	103	1
6745-71-5120	103	2
6745-71-5160	103	6
	139	5
6745-71-5210	103	3
6745-71-5220	103	5
6745-71-5230	139	4
6745-71-5311	108	1
6745-71-5391	108	5
6745-71-5410	108	6
6745-71-5430	108	9
6745-71-5440	101	5
6745-71-5450	101	13
6745-71-5460	101	6
6745-71-5470	101	7
6745-71-5540	100	
6745-71-5541	100	
6745-71-5550	100	11
6745-71-5610	101	1
6745-71-5690	139	2
6745-71-5860	108	3
6745-71-6130	97	2
	105	6
	124	5
	139	3
6745-71-6190	105	7
6745-71-6240	105	1
6745-71-7203	106	
6745-71-7211	106	1
6745-71-9710	107	3
6745-81-4111	55	1
6745-81-4120	54	3
	55	2
6745-81-6120	130	1
6745-81-7250	56	15
6745-81-7280	56	14
6745-81-7290	56	1
6745-81-8080	58	
6745-81-8140	131	7
6745-81-8150	131	6
6745-81-8410	64	3
	65	3
6745-81-8420	64	2
	65	2
6745-81-8471	64	1
6745-81-8481	64	4
	65	4
6745-81-8490	64	5
	65	5
6745-81-8510	64	6
	65	6
6745-81-8520	64	7
	65	7
6745-81-8531	64	8
	65	8
6745-81-8540	64	10
	65	10
6745-81-8550	64	11
	65	11
6745-81-8562	64	16
	65	16
6745-81-8570	65	1
6745-81-9230	137	4
6745-81-9240	137	1
6745-81-9380	100	13
6745-81-9390	137	3
6745-81-9430	137	15
6745-81-9440	140	5
6745-81-9511	140	17
6745-81-9560	137	36
	140	12
6745-81-9580	101	8
	137	35
6745-81-9710	137	6
6745-81-9720	137	20
6745-81-9730	137	21
6745-81-9740	137	22
6745-81-9750	137	23
6745-81-9770	137	25
6745-81-9790	137	26
6745-81-9810	137	24
6754-11-1160	50	8
6754-11-3120	99	4
6754-11-5150	57	4
6754-61-4111	116	1
6754-71-1991	100	9
6754-71-5430	101	12
6754-71-5540	100	12
6754-71-9710	107	1
6754-79-6140	144	4
	145	4
6754-81-2701	140	21
6754-81-9110	140	14
6754-81-9130	140	15
6754-81-9170	140	13
6754-81-9180	140	16
6754-81-9410	140	1
6930-21-4120	621	5

PartNumber	Page	Index
6933-11-4410	56	3
700-11-31940	246	12
700-11-31980	246	29
700-22-11410	638	2
	638	7
	640	8
	659	2
	659	6
	664	8
	682	2
	682	6
	687	8
	705	2
	705	6
	709	8
700-25-11120	704	9
700-80-51390	239	13
700-80-61260	174	18
	639	6
	662	6
	685	6
	707	6
700-80-61430	639	7
	662	7
	685	7
	707	7
700-80-64220	638	3
	638	8
	640	9
	659	3
	659	7
	664	9
	682	3
	682	7
	687	9
	705	3
	705	7
	709	9
700-85-11111	658	9
	681	9
702-16-01230	592	
702-16-02290	411	1
	482	1
	533	1
702-16-06270	582	
702-16-06280	587	
	588	
702-16-51140	592	3
702-16-51240	582	19
	587	20
702-16-51270	592	8
702-16-52420	237	8
702-16-53120	592	2
702-16-53170	592	7
702-16-53240	584	18
	590	23
	596	20
	599	18
	602	20
	604	23
702-16-54540	592	1
702-16-54550	592	4
702-16-54560	592	6
702-16-54571	592	5
702-16-54580	592	9
702-16-54590	592	10
702-16-54610	592	11
702-16-54620	592	12
702-16-54630	592	13
702-16-54641	592	14
702-16-54650	592	17
702-16-54660	592	16
702-16-54670	592	
702-16-55270	642	5
	666	5

PartNumber	Page	Index
	689	5
	711	5
702-16-58820	587	17
702-16-59330	411	3
	482	3
	533	3
702-16-59670	587	23
702-16-61270	411	6
	482	6
	533	6
702-16-62730	411	4
	482	4
	533	4
702-16-62740	411	5
	482	5
	533	5
702-16-71150	582	15
702-16-71280	582	16
702-16-72810	583	36
702-21-07610	642	3
	666	3
	689	3
	711	3
702-21-11700	321	
	328	
702-21-35130	321	8
	328	8
702-21-53120	308	32
702-21-54180	174	25
702-21-55420	308	34
702-21-55440	308	35
702-21-55450	641	12
	665	12
	688	12
	710	12
702-21-55520	308	33
702-21-55620	246	25
	313	7
	321	17
	328	17
	637	2
	641	17
	643	6
	658	2
	665	17
	667	6
	681	2
	688	17
	690	6
	704	2
	710	17
	712	6
702-21-56220	174	21
702-21-56241	174	17
702-21-57700	311	22
702-21-81130	321	1
	328	1
702-21-81330	321	10
	328	10
702-21-81540	321	2
	328	2
702-21-81550	321	7
	328	7
702-21-81560	321	9
	328	9
702-21-81570	321	12
	328	12
702-21-81580	321	13
	328	13
702-21-81610	321	5
	328	5
702-21-81620	321	16
	328	16
702-21-81630	321	19
	328	19

PartNumber	Page	Index
702-75-03102	306	1
702-75-11520	639	37
	641	5
	663	37
	665	5
	686	37
	688	5
	707	37
	710	5
705-11-33240	258	
705-11-33540	259	
705-17-02011	258	1
705-17-02122	259	3
705-17-02221	258	3
705-17-02330	258	16
705-17-02353	258	
	259	
705-17-02360	258	9
	259	9
705-17-02420	259	13
705-17-02430	258	7
	259	7
705-17-02460	258	8
	259	8
705-17-02510	259	1
705-17-02612	258	6
	259	6
705-17-02830	258	14
705-17-02870	258	13
705-17-02881	259	17
705-17-33012	258	2
	259	2
705-17-33430	258	4
705-17-33450	259	4
705-17-33512	258	5
	259	5
705-29-03310	314	1
705-51-20830	258	
	259	
706-73-72420	304	8
706-7G-11291	304	25
707-00-0H990	787	
707-00-0J361	789	
707-02-00950	776	
707-02-00960	778	
707-02-00970	781	
707-02-00980	783	
707-04-00270	786	
	788	
707-11-11F61	789	1
707-11-12A70	786	1
	788	1
707-11-13860	787	1
707-12-85030	776	1
707-12-85040	778	1
707-12-90280	781	1
707-12-90290	783	1
707-29-10A40	781	9
	783	9
707-29-11A00	789	10
707-29-12660	786	6
	788	6
707-29-13280	787	10
707-29-85320	776	12
	778	12
707-35-52770	776	20
	778	20
	899	
707-35-91510	786	12
	788	12
	899	
707-36-12840	786	16
	788	16
707-36-13240	787	20
707-37-11111	789	20

PartNumber	Page	Index
707-37-85010	776	22
	778	22
707-37-90150	781	19
	783	19
707-39-12520	786	18
	788	18
	899	
707-39-85120	776	28
	778	28
	899	
707-40-11321	789	30
707-40-85020	776	29
	778	29
	781	29
	783	29
707-44-11150	789	25
	899	
707-44-12250	786	17
	788	17
	899	
707-44-13150	787	21
	899	
707-44-85150	776	27
	778	27
	899	
707-44-90150	781	24
	783	24
	899	
707-46-05040	787	4
	789	4
707-46-06020	771	7
707-46-50020	781	4
	783	4
707-51-60030	776	15
	778	15
	781	12
	783	12
	899	
707-51-60650	776	17
	778	17
	781	13
	783	13
	899	
707-51-65030	789	12
	899	
707-51-65650	789	17
	899	
707-51-70030	786	9
	787	13
	788	9
	899	
707-51-70650	786	11
	787	14
	788	11
	899	
707-52-90230	776	35
	778	35
	781	32
	783	32
707-52-90351	776	18
	778	18
	781	14
	783	14
707-52-90401	789	18
707-52-90451	786	14
	788	14
707-52-90461	787	15
707-56-60740	776	14
	778	14
	781	11
	783	11
	899	
707-56-65740	789	11
	899	
707-56-70740	786	8

PartNumber	Page	Index
	787	12
	788	8
	899	
707-58-65901	789	3
707-58-70A10	787	3
707-60-60040	776	3
	778	3
707-60-70110	786	3
	788	3
707-66-60140	776	4
	778	4
707-67-33040	776	34
	778	34
	781	26
	783	26
707-67-48020	789	27
707-67-52030	786	19
	787	23
	788	19
707-69-11011	789	28
707-69-85010	776	33
	778	33
	781	28
	783	28
707-69-85020	776	32
	778	32
	781	27
	783	27
707-75-60110	776	21
	778	21
	781	15
	783	15
707-75-65110	789	19
707-75-70110	786	15
	787	19
	788	15
707-80-16020	789	21
707-81-45251	789	29
707-86-01070	789	32
707-86-55810	776	36
707-86-55820	776	38
707-86-55830	778	36
707-86-55840	778	38
707-86-55850	781	33
707-86-55860	783	33
707-88-11290	776	5
	778	5
707-88-11300	776	6
	778	6
707-88-38850	776	31
	778	31
	781	30
	783	30
707-91-90040	776	
	778	
707-91-90050	781	
	783	
707-91-91111	789	
707-99-27120	899	K10
707-99-27530	899	K11
707-99-36680	899	K14
707-99-43320	899	K12
707-99-43730	899	K13
708-1L-00680	296	
	297	
	298	
	299	
	300	
	301	
	302	
708-1L-01680	296	
	297	
	298	
	299	
	300	

PartNumber	Page	Index
708-1S-00290	308	
	310	
	311	
	312	
	313	
708-1S-03390	311	
708-1S-04330	308	
708-1S-04360	311	1
708-1S-11890	176	9
708-1S-12330	310	6
708-1S-12340	310	7
708-1S-12350	310	9
708-1S-17110	309	39
708-1S-18180	174	31
708-1S-19920	308	16
708-21-12541	174	22
	304	4
	313	13
	639	30
	662	30
	685	30
	707	30
708-21-12970	310	8
708-25-52861	298	5
708-2H-03620	301	
708-2L-22160	298	6
708-2L-23131	304	32
708-2L-23351	305	36
708-2L-23360	176	14
	304	31
708-2L-25490	174	24
708-2L-29460	174	30
708-2L-33350	305	37
708-7L-00070	304	
	306	
708-7L-04180	304	
708-7L-05010	304	24
708-7L-11130	304	1
708-7L-11514	304	2
708-7L-12111	304	21
708-7L-12140	304	23
708-7L-12220	304	
708-7L-12230	304	
708-7L-12240	304	
708-7L-12250	304	
708-7L-12260	304	
708-7L-12270	304	
708-7L-13111	304	28
708-7L-13140	305	34
708-7L-13160	305	33
708-7L-13220	304	29
708-7L-13410	305	39
708-7L-16211	304	12
708-7L-16220	304	13
708-7L-16311	304	14
708-7L-16510	304	9
708-7R-11210	174	5
708-7R-11220	246	27
708-7R-18230	174	32
708-7S-00352	174	
	176	
708-7S-01151	174	
708-7S-01241	174	
708-7S-05110	176	7
708-7S-11740	174	1
708-7S-12140	176	5
708-7S-12220	176	6
708-7S-12330	176	4
708-7S-13120	176	11
708-7S-13250	176	12
708-7S-13350	176	20
708-7S-13360	176	19
708-7S-13420	176	21
708-7S-13530	176	15
708-7S-13550	176	18

PartNumber	Page	Index
708-7S-13560	176	16
708-7S-18120	174	10
708-7S-18310	174	11
708-7S-18320	174	12
708-7T-02271	174	36
708-7T-12330	176	8
708-8E-16150	237	5
	246	5
	246	10
	248	2
	296	7
	297	8
708-8E-16160	643	4
	667	4
	690	4
	712	4
708-8F-12151	304	22
708-8F-12230	304	26
708-8F-16170	304	10
708-8F-33310	305	38
708-8K-16280	304	5
709-25-11390	642	2
	666	2
	689	2
	711	2
709-26-11450	635	15
	656	15
	661	7
	679	15
	684	7
	702	15
	706	7
709-32-12861	174	7
711-47-11770	252	41
711-49-14230	255	2
711-53-11370	226	8
	253	27
712-85-12560	241	4
714-07-28703	650	4
714-07-28713	650	
	890	1
714-07-45500	246	7
714-12-12930	230	14
714-12-39230	245	2
	898	
714-21-19810	245	3
	898	
714-23-15690	246	4
	246	9
720-2M-11550	321	14
	328	14
720-68-19610	176	13
	304	30
721-58-60780	781	3
	783	3
722-10-91130	174	6
722-12-12063	646	4
	669	4
	693	4
	714	4
723-11-15110	228	28
	234	2
	237	1
723-11-18430	174	27
723-11-27280	641	14
	665	14
	688	14
	710	14
723-20-63100	640	7
	664	7
	687	7
	709	7
723-20-66500	638	1
	659	1
	682	1
	705	1
723-20-66600	659	5
	682	5
	705	5
723-20-70600	640	1
	664	1
	687	1
	709	1
723-20-80100	638	9
	659	9
	660	27
	661	28
	682	9
	684	28
	705	9
	706	28
723-21-08200	660	
723-21-08300	661	
	684	
	706	
723-21-08400	683	
723-23-10700	634	
	635	
	636	
	637	
	638	
	639	
	640	
	641	
	642	
	643	
723-24-11500	701	
	702	
	703	
	704	
	705	
	706	
	707	
	709	
	710	
	711	
	712	
723-25-10900	678	
	679	
	680	
	681	
	682	
	683	
	684	
	685	
	687	
	688	
	689	
	690	
723-25-11100	655	
	656	
	657	
	658	
	659	
	660	
	661	
	662	
	664	
	665	
	666	
	667	
723-26-14150	660	25
	661	26
	684	26
	706	26
723-26-14220	636	10
	657	10
	680	10
	703	10
723-26-14230	636	9
	657	9
	660	14
	661	15
	680	9
	683	14
	684	15
	703	9
	706	15
723-26-14240	636	11
	657	11
	680	11
	703	11
723-26-14470	639	11
	662	11
	685	11
	707	11
723-26-14560	635	13
	679	13
	702	13
723-26-14570	635	14
	679	14
	702	14
723-26-14580	635	16
	656	16
	661	6
	679	16
	683	6
	684	6
	702	16
	706	6
723-26-14590	639	4
	662	4
	685	4
	707	4
723-26-14660	656	13
723-26-14670	656	14
723-26-14680	660	6
723-26-15110	635	9
	656	9
	660	7
	661	8
	679	9
	683	7
	684	8
	702	9
	706	8
723-26-15121	635	5
	656	5
	660	5
	661	5
	679	5
	683	5
	684	5
	702	5
	706	5
723-26-15130	635	3
	656	3
	660	3
	661	3
	679	3
	683	3
	684	3
	702	3
	706	3
723-26-15190	637	4
	658	4
	681	4
	704	4
723-26-15210	660	23
	661	24
	684	24
	706	24
723-26-15220	639	28
	660	24
	661	25

PartNumber	Page	Index
	662	28
	684	25
	685	28
	706	25
	707	28
723-26-15230	636	1
	639	8
	641	21
	657	1
	660	16
	661	17
	662	8
	665	21
	680	1
	683	16
	684	17
	685	8
	688	21
	703	1
	706	17
	707	8
	710	21
723-26-15310	636	12
	657	12
	680	12
	683	23
	703	12
723-26-15370	636	2
	657	2
	660	15
	661	16
	680	2
	683	15
	684	16
	703	2
	706	16
723-26-15830	634	4
	655	4
	660	19
	661	20
	678	4
	683	19
	684	20
	701	4
	706	20
723-26-15840	634	7
	639	34
	655	7
	660	18
	661	19
	663	34
	678	7
	683	18
	684	19
	686	34
	701	7
	706	19
	707	34
723-26-15850	639	5
	662	5
	685	5
	707	5
723-26-15860	639	3
	662	3
	685	3
	707	3
723-26-16760	635	8
	656	8
	679	8
	702	8
723-26-16770	635	6
	656	6
	679	6
	702	6
723-26-16780	635	7
	656	7
	679	7
	702	7
723-26-16790	635	11
	656	11
	679	11
	702	11
723-26-21160	639	1
	662	1
	685	1
	707	1
723-26-21250	634	1
	655	1
	678	1
	701	1
723-26-21360	634	2
	655	2
	678	2
	683	1
	701	2
723-26-21420	660	1
	661	1
	684	1
	706	1
723-26-21750	637	1
	658	1
	681	1
723-26-22270	660	2
	661	2
	684	2
	706	2
723-26-22830	635	1
	656	1
	679	1
	702	1
723-26-22840	635	2
	656	2
	679	2
	683	2
	702	2
723-26-22850	639	2
	662	2
	685	2
	707	2
723-26-22860	639	10
	662	10
	685	10
	707	10
723-26-41160	636	4
	657	4
	660	11
	661	12
	680	4
	683	11
	684	12
	703	4
	706	12
723-26-41210	636	5
	657	5
	680	5
	703	5
723-26-51240	636	6
	657	6
	680	6
	683	12
	703	6
723-26-51250	636	8
	657	8
	660	13
	661	14
	680	8
	683	13
	684	14
	703	8
	706	14
723-26-51510	636	7
	657	7
	680	7
	703	7
723-26-51610	660	12
	661	13
	684	13
	706	13
723-36-14120	641	9
	665	9
	688	9
	710	9
723-36-15210	639	18
	662	18
	685	18
	707	18
723-36-15230	639	16
	662	16
	685	16
	707	16
723-36-15250	639	19
	662	19
	685	19
	707	19
723-36-15340	639	17
	662	17
	685	17
	707	17
723-36-41930	321	6
	328	6
723-40-85100	642	
	666	
	689	
	711	
723-40-85110	642	1
	666	1
	689	1
	711	1
723-46-15240	638	5
723-50-02800	639	
723-51-06500	641	
	642	
	665	
	666	
	688	
	689	
	710	
	711	
723-56-12210	643	1
	667	1
	690	1
	712	1
723-56-22170	641	7
	665	7
	688	7
	710	7
723-56-31211	641	8
	665	8
	688	8
	710	8
723-56-31510	641	10
	665	10
	688	10
	710	10
723-56-31630	308	28
	311	11
723-56-31640	641	28
	665	28
	688	28
	710	28
723-56-31720	641	3
	665	3
	688	3
	710	3
723-56-31730	639	36

PartNumber	Page	Index
	641	4
	663	36
	665	4
	686	36
	688	4
	707	36
	710	4
723-56-31980	309	38
723-56-32820	641	11
	665	11
	688	11
	710	11
723-56-33940	643	2
	667	2
	690	2
	712	2
723-56-41590	641	24
	665	24
	688	24
	710	24
723-56-41710	641	20
	665	20
	688	20
	710	20
723-56-41730	641	25
	665	25
	688	25
	710	25
723-56-41970	641	26
	665	26
	688	26
	710	26
723-56-42150	641	19
	665	19
	688	19
	710	19
723-56-42330	641	23
	665	23
	688	23
	710	23
723-60-21102	643	10
	667	10
	690	10
	712	10
723-60-21900	639	12
	662	12
	685	12
	707	12
723-60-27200	313	1
7825-30-1441	413	43
	484	43
	535	43
7826-23-3011	437	1
	505	1
	553	1
7830-74-4000	424	1
	494	1
	518	1
	543	1
7831-69-5002	431	14
	499	14
	521	14
7831-69-5022	548	1
7835-33-1001	508	
	526	
7835-33-1100	508	1
	526	1
7835-33-1201	508	2
	526	2
7835-33-1300	508	
	526	
7835-33-1310	508	3
	526	3
7835-33-1320	508	4
	526	4
7835-33-1330	508	5
	526	5
7835-33-1340	508	6
	526	6
7835-33-8100	506	1
	524	1
7861-74-5100	429	7
	497	7
	546	7
	546	20
7861-93-1812	315	20
7861-93-1850	264	1
7861-93-3320	264	3
	293	45
	295	46
7861-93-5390	204	1
	211	1
799-203-8500	177	13
8233-06-3350	426	24
	432	11
	441	11
	500	11
	512	11
	519	24
	544	25
	549	9
8288-43-1120	234	32
8A13-10-2100	437	9
	505	9
	553	11
KD0-0020-05062	135	39
KD0-0055-05082	134	48
	135	37
KD0-0055-05122	129	28
KD0-0080-06142	129	22
KD0-0083-08802	129	13
KD0-0270-06402	134	43
KD0-0270-06602	136	43
KD0-0274-06202	133	17
	135	15
KD0-0275-06802	128	12
KD0-0276-08402	135	32
KD0-0280-16022	128	17
KD0-0290-20022	129	34
KD0-0291-08010	129	27
KD0-09001-4380	135	30
KD0-09001-4580	133	30
KD0-09006-0660	134	49
	136	47
KD0-09006-0670	134	50
	136	48
KD0-09011-3140	135	27
KD0-09057-0110	135	33
KD0-09057-0190	135	38
KD0-09057-0220	128	29
KD0-09170-2501	128	21
KD0-09201-0760	129	9
KD0-09201-0770	129	4
KD0-09201-0850	135	12
KD0-09201-0980	128	4
KD0-09201-1140	128	7
KD0-09271-3620	133	22
	135	21
KD0-09275-1430	134	52
	136	50
KD0-23100-0251	133	20
KD0-23100-0430	135	18
KD0-23120-0180	135	8
KD0-23200-0331	133	23
KD0-23200-0671	135	20
KD0-23303-0020	135	5
KD0-23310-1730	133	6
KD0-23310-1740	135	9
KD0-23320-0220	133	9
KD0-23500-0970	133	7
KD0-23600-0410	135	13
KD0-23600-0460	133	12
KD0-23611-0690	133	13
KD0-23611-1101	135	14
KD0-23700-0130	133	32
KD0-23710-0221	135	29
KD0-23740-0250	133	26
KD0-23740-0351	135	23
KD0-23750-0250	133	27
KD0-23750-0490	135	24
KD0-23901-0170	134	40
KD0-23904-0070	133	1
KD0-23921-0230	133	15
KD0-23927-0071	133	2
KD0-23951-0301	133	8
KD0-23951-0331	133	11
KD0-25000-8332	134	47
KD0-25000-8521	136	42
KD0-33902-0080	129	18
KD0-33902-0090	129	17
KD0-33902-0100	129	24
KD0-35100-0300	128	1
KD0-35100-0310	129	1
KD0-35120-0250	129	11
KD0-35120-0290	128	18
KD0-35200-0320	129	12
KD0-35200-0460	128	5
KD0-35300-0200	129	5
KD0-35300-0350	128	6
KD0-35411-0640	128	13
KD0-35411-0650	129	31
KD0-35421-0190	129	32
KD0-35421-0240	128	14
KD0-35700-0950	128	
KD0-35700-0970	129	
KD0-35710-1150	128	19
KD0-35710-1190	129	14
KD0-35730-0162	129	15
KD0-35730-0700	128	20
KD0-35761-0190	129	29
KD0-35761-0250	128	31
KD0-35784-0210	128	27
KD0-35784-0290	128	28
KD0-35923-0130	128	23
KD0-35926-0070	128	8
KD0-35926-0080	129	6
KD0-35926-0090	128	10
KD0-35943-0100	129	23
KD0-35943-0140	128	25
KD0-35943-0150	128	22
KD0-35943-0160	128	24
KD0-35943-0170	128	26
KD0-35943-0210	129	16
KD0-35951-0060	128	9
KD0-35951-0080	129	7
KD0-47100-4651	135	19
KD0-47100-4800	133	21
KD0-47761-2671	134	45
	136	45
KD0-47761-2681	134	46
	135	25
KD0-47761-2691	133	24
	135	26
KD0-47927-1390	136	44
KD1-0020-06452	129	19
KD1-0240-06305	133	33
	136	41
KD1-0240-08405	133	37
KD1-0330-06012	129	20
	134	42
KD1-0330-08022	133	39
	135	3
KD1-0330-16012	128	15
KD1-0331-08020	129	26
KD1-0335-06002	129	21

PartNumber	Page	Index
	134	41
KD1-0335-08002	129	25
	133	38
	135	2
KD1-0335-16002	128	16
KD1-0335-20002	129	33
KD1-0345-05001	136	40
KD1-0345-08001	135	4
KD1-0400-20100	133	19
KD1-0400-30100	135	17
KD1-0454-60067	133	10
KD1-0454-62007	133	31
KD1-0454-62047	133	16
KD1-0505-00601	133	28
KD1-09211-0081	135	28
KD1-09211-0980	133	14
KD1-09211-0981	136	46
KD1-09211-1120	135	22
KD1-09257-0050	134	51
	136	49
KD1-09279-0090	135	1
KD1-23111-0160	133	5
KD1-23181-0020	133	4
	135	7
KD1-23320-0290	135	11
KD1-23500-0970	135	10
KD1-23913-0040	133	25
KD1-23914-0020	133	3
	135	6
KD1-23921-0130	133	34
	135	36
KD1-23921-0140	133	35
	135	35
KD1-23941-0040	133	36
	135	34
KD1-23951-0020	133	18
KD1-23951-0051	135	16
KD1-33923-0790	128	2
KD1-33923-0890	129	2
KD1-33926-0660	129	8
KD1-33926-0730	128	11
KD1-33926-0790	129	10
KD1-35921-0010	129	35
KD1-35923-0030	129	3
KD1-35923-0160	128	3
KD1-47921-0790	133	29
	135	31
KD1-47927-1250	134	44
KD7-35719-0181	129	30
KD7-35719-0211	128	30
ND017231-0700	401	28
	474	28
ND047372-0660	558	6
	568	6
ND047410-1570	558	4
	568	4
ND047410-1580	558	
	568	
ND047761-2760	555	3
	565	3
ND047762-0540	555	4
	565	4
ND047762-3000	555	5
	565	5
ND047764-0021	555	7
	565	7
ND047765-0020	555	8
	565	8
ND047782-3720	555	11
	565	11
ND063600-4580	401	35
	474	35
ND063800-0300	401	27
	473	27
ND077500-5650	401	36
	474	36
ND077500-5890	401	29
	474	29
ND077800-0750	401	33
	474	33
ND116140-0050	400	14
	473	14
ND116340-7350	401	38
	474	38
ND116576-3810	400	3
	473	3
ND116576-3820	400	4
	473	4
ND116576-3852	400	25
	473	25
ND116576-3862	400	26
	473	26
ND116650-6850	400	16
	473	16
ND116660-7570	400	15
	473	15
ND116662-7670	400	23
	473	23
ND116662-7681	400	24
	473	24
ND116662-8320	401	44
	474	44
ND116780-2481	400	17
	473	17
ND116780-2491	400	18
	473	18
ND116780-2501	400	19
	473	19
ND116780-2510	400	20
	473	20
ND116780-3130	400	22
	473	22
ND116780-3920	401	31
	474	31
ND116781-3000	400	21
	473	21
ND146340-0560	401	34
	474	34
ND146657-8841	400	10
	473	10
ND146657-8850	400	12
	473	12
ND146657-8860	401	37
	474	37
ND146657-9811	400	11
	473	11
ND146667-0440	401	32
	474	32
ND146691-4470	558	12
	568	12
ND147310-0110	558	2
ND147310-1750	568	2
ND147350-1640	558	3
	568	3
ND245450-5831	400	1
	473	1
ND245450-5840	400	2
	473	2
ND246470-4311	401	42
	474	42
ND246790-2060	401	30
	474	30
ND247300-4152	568	
ND247300-5320	558	
ND445013-0521	555	10
	565	10
ND445013-0811	555	9
	565	9
ND445021-0060	555	12
	565	12
ND445021-0070	555	13
	565	13
ND445021-3941	400	13
	473	13
ND446010-3132	400	
	473	
ND446600-0991	400	5
	473	5
ND447220-4781	558	1
	568	1
ND447500-2750	400	8
	473	8
ND7922-571450	555	2
	565	2
ND7930-591100	555	1
	565	1
ND7935-163610	555	6
	565	6
ND91310-05081	568	11
ND913100-5081	558	11
ND93950-05003	401	43
	474	43
ND949001-1730	401	41
	474	41
ND949008-0330	401	40
	474	40
ND949008-0460	401	39
	474	39
ND949013-7480	558	9
	568	9
ND949013-7500	558	
	568	
ND949013-7510	558	
	568	
ND949046-3100	400	9
	473	9
ND949047-2950	558	5
	568	5
ND949048-0430	558	10
	568	10
ND949070-0640	558	8
	568	8
ND949070-1360	558	7
	568	7
ND949142-0020	400	6
	473	6
ND949142-0030	400	7
	473	7
ND949142-0040	405	
REU419B-418-C	393	15
	466	15
RFU419B-418-A	393	1
	466	1
RFU419B-418-B	393	6
	466	6
RFU419B-418-C	393	7
	466	7
RFU419B-418-D	393	3
	466	3
RFU419B-418-E	393	4
	466	4
RFU419B-418-F	393	16
	466	16

https://truckmanualshub.com/

https://truckmanualshub.com/

D65PX-16 Bulldozer
Form No. FEN01448-00

©2010 KOMATSU
All Rights Reserved
Printed in Japan 10-10