MARÇO 2012

EEPC025100

PARTS BOOK

RUTHZIL TRATOR COMERCIAL DE PEÇAS LTDA 11 97083-6812 ROLANDO CITRANGULO

D65PX-17
Serial No. 1528 and up

SAA6D114E-5B
Serial No. 26900063 and up

FOREWORD

When ordering a spare part, specify the part number, part name, and quantity required, and also specify your machine model code, machine serial number, engine serial number and the service meter reading.

This Parts Book describes not only standard items but also optional equipment and attachments. To order a part, please contact your nearest Komatsu distributor.

This Parts Book contains the information and special codes as follows:

ILLUSTRATION AND PARTS LIST

When you open this Parts Book, you will find an illustration following its figure number (FIG.) Each individual part in the illustration is given an index number. Following the illustration, the component parts of the unit are listed in the order of the index numbers shown in the illustration. The part number, part name, quantity and applicable serial number are given for each part as a parts list.

FIGURE NUMBER (FIG.)

The figure number (FIG.) is the number which shows the figure of the page. It is not the spare part number. The numbers are not always continuous.

PARTS LIST

Spare parts information are listed in the parts list page as follows:

Index:

This is the same as the index number in the illustration. The parts are listed in index number order.

Code:

Codes are used in this column and represent as follows:

A1 This part and the part specified in the line immediately above are interchangeable.

A2 The part specified in the line above can be used instead of this part.

A3 This part can be used instead of the part specified in the line immediately above.

A4 The part specified in the description column can be used instead of this part if it is used as a set.

B1 This shows discontinued part. The part specified in the above line is supplied instead.

B2 This shows a discontinued part. The part specified in the description column is supplied instead as a set.

C1 This part cannot be supplied as an individual part. It is supplied as an assembly.

C2 This part is supplied for authorized Komatsu distributors only. It cannot be supplied as an individual part. It is supplied as an assembly.

C3 This indicates a part supplied as semi-finished. It requires additional work before installation.

Part Number:

The number given in the part number column is the part number for the part shown. It is the identification code used when ordering that part. It is important that there be no mistake in this code number when ordering.

Description:

This gives the name of part that has the part number listed. The mark "·" is put in front of the component part name of an assembly part and the item is entered following the assembly. If a part marked with "·" is a sub assembly, its components are marked with "··".

Example: Tank Assembly
·Tank
·Cap
··Packing

Furthermore, the following marks and abbreviations are used in this column.

Kit	This indicates kit parts. For kit parts, refer to the section FIELD REPAIR SERVICE PARTS in this Parts Book.
D	Diameter
L	Length
L.H.	Left-hand side
R.H.	Right-hand side
T	Thickness
W	Width

Quantity (Qty):

This specifies the number of pieces used for one machine. However, if a part is included in the assembly and/or component, the quantity per such assembly and/or component is specified.
Code AR (as required) shall be used in the Quantity column if the part cannot be specified numbers requires per machine and/or component. In such case, any number of quantities may be ordered depend on the field service requirement.

Serial Numbers:

Applicable engine serial number is indicated for the engine volume. In the chassis volume, this indicates the machine serial number in which the part is used.

If the serial number is enclosed in parenthesis, it shows that it is the applicable serial number for exclusive use of the equipment of figure number (FIG.)

AVANT-PROPOS

Lorsque vous passez une commande d'une pièce de rechange, vous êtes prié de spécifier le numéro de la pièce, la désignation de la pièce et la quantité requise et d'indiquer également le code du modèle de la machine, le numéro de série de la machine, le numéro de série du moteur et la lecture du compteur de service du véhicule.

Sur le présent catalogue des pièces figurent non seulement les équipements standard, mais également les équipements et accessoires en option. Si vous désirez un équipement ou une pièce quelconque, vous êtes prié de prendre contact avec le concessionnaire Komatsu le plus proche.

Ce catalogue des pièces comprend les informations et codes spéciaux de la manière suivante:

FIGURES ET LISTES DES PIÈCES

Lorsque vous ouvrez le présent catalogue, vous pouvez rechercher les figures en fonction du numéro de figure (FIG.). Chaque pièce individuelle dans la figure est fournie d'un numéro de référence. D'après la figure, les éléments de l'unité sont énumérés dans l'ordre des numéros de référence montrés sur la figure. Le numéro de la pièce, la désignation de la pièce, la quantité et le numéro de série utilisés sont indiqués pour chaque pièce comme liste des pièces.

NUMÉRO DE FIGURE (FIG.)

Le numéro de figure (FIG.) est un numéro qui permet d'identifier une figure sur une page. Il ne représente pas le numéro de la pièce de rechange. Les numéros ne sont pas toujours séquentiels.

LISTE DES PIÈCES DE RECHANGE

Les informations des pièces de rechange sont données dans la page de la liste des pièces comme ci-après:

Numéro de référence (Index):

Les numéros de référence correspondent aux numéros de référence notés sur la figure et sont énumérés dans l'ordre des numéros de référence.

Codification (Code):

Les codes sont utilisés dans cette colonne et représentent comme ci-après:

A1 Cette pièce et la pièce qui figure sur la ligne juste au-dessus sont interchangeables.

A2 La pièce indiquée sur la ligne au-dessus peut être utilisée au lieu de cette pièce.

A3 Cette pièce peut être utilisée au lieu de la pièce indiquée sur la ligne juste au-dessus.

A4 La pièce indiquée dans la colonne de description peut être utilisée au lieu de cette pièce si elle est utilisée comme ensemble.

B1 Ceci montre la pièce dont la production est interrompue. La pièce indiquée dans la ligne au-dessus est fournie à sa place.

B2 Ceci montre la pièce dont la production est interrompue. La pièce indiquée dans la colonne de description est fournie à sa place comme ensemble.

C1 Cette pièce ne peut pas être fournie comme pièce individuelle. Elle est fournie en tant qu'ensemble.

C2 Cette pièce est fournie pour les distributeurs autorisés de Komatsu seulement. Elle ne peut pas être fournie comme pièce individuelle. Elle est fournie en tant qu'ensemble.

C3 Ceci indique une pièce fournie à l'état semi-fini. Ceci exige un travail additionnel avant l'installation.

Numéros de pièce (Part Number):

Les numéros indiqués dans cette colonne correspondent aux numéros des pièces représentées et constituent les codes à spécifier pour toute commande de pièce. Il est important de ne pas faire d'erreur avec ce code au moment de la commande.

Description (Description):

Ceci indique le nom de la pièce qui montre le numéro de la pièce énumérée. La marque "·" est placée devant le nom de la pièce du composant d'une pièce d'ensemble et l'item est introduit suivant l'ensemble. Si une pièce marquée avec "·" est un sous-ensemble, ses composants sont marqués avec "· ·".
Exemple: Tank Assembly (Ensemble de réservoir)
· Tank
· Cap
· · Packing

En outre, les marques et abréviations suivantes sont utilisées dans cette colonne.

Kit Ceci indique les pièces de kit. Pour les pièces de kit, se référer à la Section FIELD REPAIR SERVICE PARTS de ce Catalogue des Pièces.
D Diamètre
L Longueur
L.H. Côté gauche
R.H. Côté droit
T Épaisseur
W Largeur

Quantité (Qty):

Ceci spécifie le nombre de pièces nécessaires pour l'équipement en question. S'il s'agit de pièces comprises dans un ensemble et/ou composant, et la quantité indiquée est le nombre de pièces nécessaires pour l'ensemble et/ou le composant en question.
Le code AR (comme requis) sera utilisé dans la colonne de Quantité si la pièce ne peut pas se présenter en nombres indiqués comme requis par machine et/ou composant. Dans ce cas, tout nombre de quantités peut être commandé selon la condition de service de champ.

Numéros de série (Serial Numbers):

Le numéro de série du moteur applicable est indiqué pour le volume du moteur. Dans le volume de la carrosserie, ceci indique le numéro de série de l'équipement sur lequel la pièce est utilisée.

Si le numéro de série est placé entre parenthèses, cela signifie qu'il s'agit d'un numéro de série destiné exclusivement à l'utilisation de l'équipement mentionné dans le numéro de figure (FIG.).

PREFAZIONE

Quando fate un ordinazione di una parte di ricambio, siete pregati di precisare il numero della parte, la designazione della parte e la quantità necessaria ed indicare anche il codice del modello della macchina, il numero di serie della macchina, il numero di serie del motore e la lettura dell'indicatore di servizio del veicolo.

Sul presente catalogo delle parti appaiono non solo le attrezzature standard, ma anche le attrezzature ed accessori in opzione. Se desiderate un'attrezzatura o una parte qualunque, siete pregati di prendere contatto con il concessionario Komatsu più vicino.

Questo catalogo delle parti comprende le informazioni ed i codici speciali nel modo seguente:

ILLUSTRAZIONI ED ELENCO DELLE PARTI

Quando aprite il presente catalogo, troverete una figura secondo il suo numero di figura (FIG.). Ogni parte individuale nella figura è fornita di un numero di riferimento. Secondo la figura, gli elementi dell'unità sono enumerati nell'ordine dei numeri di riferimento mostrati sulla figura. Il numero della parte, la designazione della parte, la quantità ed il numero di serie utilizzati sono indicati per ogni parte come elenco delle parti.

NUMERO DI FIGURA (FIG.)

Il numero di figura (FIG.) è il numero che indica la figura della pagina. Non rappresenta il numero della parte di ricambio. I numeri non sono sempre continui.

ELENCO DELLE PARTI DI RICAMBIO

Le informazioni dei pezzi di ricambio sono elencate nella pagina dell'elenco dei pezzi come segue:

Numero di riferimento (Index):

I numeri di riferimento corrispondono ai numeri di riferimento notati sulla figura e sono enumerati nell'ordine dei numeri di riferimento.

Codice (Code):

I codici sono usati in questa colonna e rappresentano come segue:

A1 Questa parte ed la parte specificata nella linea immediatamente sopra sono intercambiabili.

A2 La parte specificata nella linea sopra può essere usata anziché questa parte.

A3 Questa parte può essere usata anziché la parte specificata nella linea immediatamente sopra.

A4 La parte specificata nella colonna di descrizione può essere usata anziché questa parte se è usata come insieme.

B1 Ciò mostra la parte non più in produzione. La parte specificata nella suddetta linea è invece fornita.

B2 Ciò mostra una parte non più in produzione. La parte specificata nella colonna di descrizione è fornita invece come insieme.

C1 Questa parte non può essere fornita come pezzo individuale. È fornita come insieme.

C2 Questa parte è destinata solo ai distributori autorizzati Komatsu. Non può essere fornita come parte individuale. È fornita come insieme.

C3 Ciò indica una parte fornita come semifinito. Richiede un lavoro supplementare prima dell'installazione.

Numeri di parte (Part Number):

I numeri indicati in questa colonna corrispondono ai numeri delle parti rappresentate e costituiscono i codici da precisare per qualsiasi ordinazione di parte. È importante non fare un errore con questo codice al momento dell'ordinazione.

Descrizione (Description):

Ciò dà il nome della parte che presenta il numero di parte elencato. Il contrassegno "·" è messo davanti al nome della parte componente di una parte di gruppo e l'articolo è inserito dopo il gruppo. Se un pezzo segnato con "·" è un sotto-gruppo, i suoi componenti sono segnati con "· ·".

Esempio: Tank Assembly
· Tank
· Cap
· · Packing

Inoltre, i seguenti contrassegni ed abbreviazioni sono usati in questa colonna.

Kit Ciò indica le parti di kit. Per le parti di kit, riferirsi alla sezione PARTI DI RICAMBIO PER SERVIZIO DI RIPARAZIONE IN SEDE in questo Catalogo delle Parti.
D Diametro
L Lunghezza
L.H. Lato a sinistra
R.H. Lato a destra
T Spessore
W Larghezza

Quantità (Qty):

Questo precisa il numero di parti necessarie per l'attrezzatura in questione. Se si tratta di parti comprese in un insieme e/o componente, e la quantità indicata è il numero di parti necessarie per l'insieme e/o il componente in questione.
Il codice AR (come richiesto) sarà utilizzato nella colonna di Quantità se la parte non può presentarsi in numeri indicati come richiesto per macchina e/o componente. In questo caso, qualsiasi numero di quantità può essere ordinato secondo la condizione di servizio di campo.

Numeri di serie (Serial Numbers):

Il numero di serie del motore applicabile è indicato per il volume del motore. Nel volume della carrozzeria, questo indica il numero di serie dell'attrezzatura sulla quale la parte è utilizzata.

Se il numero seriale è racchiuso tra parentesi, indica che è il numero di serie applicabile per uso esclusivo dell'attrezzatura del numero di figura (FIG.)

Bei der Bestellung von Teilen bitte die Teilenummer, die Teilebezeichnung und die Menge des jeweiligen Teils sowie die Modellnummer, die Seriennummer der Maschine, die Seriennummer des Motors und den Stand des Betriebsstundenzählers angeben.

In dieser Ersatzteilliste ist nicht nur das Standardzubehör aufgeführt, sondern auch als Sonderausstattung erhältliche Teile und Einrichtungen. Bestellungen nimmt Ihr zuständiger Komatsu-Händler entgegen.

Die folgenden Informationen und Kodes sind in der Ersatzteilliste enthalten:

Bilder und Ersatzteilliste

Beim Aufschlagen des Ersatzteilkatalogs finden Sie nach der Bildnummer (BILD) geordnete Bilder. Jedes Einzelteil einer Baugruppe ist mit einer Kennzahl versehen. Ausgehend von den Bildern sind die Bauteile der Baugruppe aufgeführt, und zwar geordnet nach den in den Bildern angegebenen Kennzahlen. Jedes Einzelteil wird mit Teilenummer, Teilebezeichnung und entsprechender Seriennummer angegeben.

Bildnummer (BILD)

Mit der Bildnummer (BILD) können Bilder auf einer Seite identifiziert werden. Es handelt sich dabei nicht um die Nummer des Lieferteils. Auch sind die Bilder nicht fortlaufend nummeriert.

Ersatzteilliste

Angaben zu den Ersatzteilen sind auf der Auflistungsseite wie folgt dargestellt::

Kennzahl (Index):

Hierbei handelt es sich um die Kennzahlen aus den Bildern. Die Bauteile sind nach diesen Kennzahlen geordnet aufgeführt.

Kode (Code):

In dieser Spalte werden Kodes mit den folgenden Bedeutungen benutzt:

A1 Dieses Teil ist mit dem in der vorangegangenen Zeile aufgeführten Teil austauschbar.

A2 Das in der vorangegangen Zeile aufgeführte Teil kann anstelle dieses Teils verwendet werden.

A3 Dieses Teil kann anstelle des in der vorangegangenen Zeile aufgeführten Teils verwendet werden.

A4 Anstelle dieses Teils kann das in der Spalte „Beschreibung“ aufgeführte Teil verwendet werden, wenn das Teil zusammen mit anderen Teilen als ein Bauteilsatz verwendet wird.

B1 Dieses Teil kann nicht mehr geliefert werden. Stattdessen wird das in der vorangegangenen Zeile aufgeführte Teil geliefert.

B2 Dieses Teil kann nicht mehr geliefert werden. Stattdessen wird das in der Spalte „Beschreibung“ aufgeführte Teil als ein Bauteilsatz geliefert.

C1 Dieses Teil kann nicht als Einzelteil, sondern nur als Baugruppe geliefert werden.

C2 Dieses Teil wird nur an autorisierte Komatsu-Händler geliefert. Es kann nicht als Einzelteil, sondern nur als Baugruppe geliefert werden.

C3 Hiermit werden Teile gekennzeichnet, die in vorbearbeitetem Zustand geliefert werden und für den Einbau nachbearbeitet werden müssen.

Teilenummer (Part Number):

Die in der Spalte „Teilenummer“ aufgeführte Nummer entspricht der Teilenummer für das betreffende Teil. Diese Nummer dient zur Identifizierung des Teils bei einer Bestellung. Deshalb sollte bei der Bestellung stets auf die genaue Angabe der Teilenummer geachtet werden.

Beschreibung (Description):

Hierunter wird die Bezeichnung des Teils mit der aufgeführten Teilenummer angegeben. Jedes Baugruppen-Bauteil ist mit dem vorangestellten Symbol „·“ gekennzeichnet und wird hinter der entsprechenden Baugruppe aufgeführt. Handelt es sich bei dem mit „·“ gekennzeichneten Bauteil um eine Baugruppe, sind die Bauteile dieser Baugruppe mit „· ·“ gekennzeichnet.

Beispiel: Tank Assembly
· Tank
· Cap
· · Packing

Zusätzlich werden die folgenden Zeichen und Abkürzungen in dieser Spalte verwendet:

Kit Hiermit werden Teile gekennzeichnet, die nur als Satz erhältlich sind. Siehe dazu den Abschnitt „FIELD REPAIR SERVICE PARTS“ dieses Ersatzteilkatalogs.
D Durchmesser
L Länge
L.H. linke Seite
R.H. Rechte Seite
T Dicke
W Breite

Menge (Qty):

Hierunter wird die Anzahl der Bauteile für eine Maschine angegeben. Im Falle einer Baugruppe oder eines Aggregats wird allerdings die Anzahl der Teile pro Baugruppe angegeben.
Der Kode AR (nach Bedarf) wird in dieser Spalte dann benutzt, wenn keine genaue Angabe darüber möglich ist, wie groß der Mengenbedarf pro Maschine und/oder Baugruppe ist. In diesem Fall kann eine beliebige Menge je nach Bedarf bestellt werden.

Serial Numbers (Seriennummern):

Im Ersatzteilkatalog für den Motor versteht man hierunter die Seriennummer des Motors, in den das betreffende Teil eingebaut ist. Im Ersatzteilkatalog für die Maschine versteht man hierunter die Seriennummer der Maschine, in die das entsprechende Teil eingebaut ist.
Wenn die Seriennummer in Klammern angegeben ist, ist diese Seriennummer ausschließlich für das in der Bildnummer (BILD) angegebene Zubehör bestimmt.

INTRODUÇÃO

Ao solicitar uma peça, informe o número, nome e quantidade da peça necessária, bem como o código de modelo da máquina e seu número de série, o número do motor e a leitura do medidor de serviço.

Este catálogo de peças não somente especifica os acessórios padrões mas também as peças opcionais e aditamentos. Para pedir uma peça, entre em contato com o revendedor Komatsu mais próximo.

Este catálogo de peças contém as seguintes informações e códigos especiais:

LISTA DE PEÇAS E ILUSTRAÇÕES

Ao abrir este catálogo de peças, encontrar-se-á uma ilustração seguida do número da figura (FIG.). A cada peça individual na ilustração corresponde um número de índice. Seguindo a ilustração, as peças componentes da unidade são listadas na ordem dos números de índice nela indicados. O número, nome, quantidade e número de série aplicável da peça são aprsentados como uma lista de peças.

NÚMERO DA FIGURA (FIG.)

O número da figura (FIG.) é o número que mostra a ilustração da página. Não é um número para fornecimento de peças sobressalentes. Os números nem sempre são contínuos.ebene Zubehör bestimmt.

LISTA DE PEÇAS

As informações das peças sobressalentes são relacionadas na página com a lista de peças de acordo com o seguinte:

Índice (Index):

Este é o mesmo que o número de índice na ilustração. As peças são relacionadas na ordem dos números de índice.

Código (Code):

Códigos são utilizados nesta coluna e significam o seguinte:

A1 Esta peça e a peça especificada na linha imediatamente acima são intercambiáveis.

A2 A peça especificada na linha acima pode ser utilizada no lugar desta peça.

A3 Esta peça pode ser utilizada no lugar da peça especificada na linha imediatamente acima.

A4 A peça especificada na coluna “Descrição” pode ser utilizada no lugar desta peça se usada como um conjunto.

B1 Indica peça descontinuada. A peça especificada na linha acima é fornecida em seu lugar.

B2 Indica peça descontinuada. A peça especificada na coluna “Descrição” é fornecida em seu lugar como um conjunto.

C1 Esta peça não pode ser fornecida como peça individual. Ela é fornecida como um conjunto.

C2 Esta peça é fornecida somente para revendedores Komatsu autorizados. Não pode ser fornecida como peça individual. Ela é fornecida como um conjunto.

C3 Indica peça fornecida em condição semiacabada. Requer trabalho adicional antes da instalação.

Número da peça (Part Number):

O número indicado na coluna de números de peça corresponde ao número da peça exibida. É o código de identificação usado para o pedido da peça. É importante não enganar-se de número de código ao pedir a peça.

Descrição (Description):

Indica o nome da peça que tem o seu número de peça relacionado. O símbolo "·" é colocado na frente do nome peça do componente de uma peça de conjunto, e o item é lançado seguindo o conjunto. Se uma peça indicada com "·" é um subconjunto, os seus componentes são indicados por "· ·".

Exemplo: Tank Assembly
· Tank
· Cap
· · Packing

Além disso, os seguintes símbolos e abreviações são usados nesta coluna.

Kit Indica peças de um jogo. Para peças de jogo, referir-se à seção "FIELD REPAIR SERVICE PARTS" neste catálogo de peças.

D Diâmetro
L Comprimento
L.H. Lado esquerdo
R.H. Lado direito
T Espessura
W Largura

Quantidade (Qty):

Indica o número de peças utilizadas em uma máquina. Contudo, se uma peça é incluída no conjunto e/ou componente, a quantidade por conjunto e/ou componente é especificada.
O código AR (como requerido) usar-se-á na coluna "Quantitade" caso o número de peças por máquina e/ou componente não possa ser especificado. Em tal caso, qualquer número de peças pode ser pedido dependendo dos requisitos de serviço em campo.

Números de série (Serial Numbers):

O número de série do motor aplicável é indicado para o volume do motor. No volume da carroceria, indica o número de série da máquina na qual a peça é utilizada.

Se o número de série está entre parêntesis, mostra que é o número de série aplicável para uso exclusivo do equipamento do número da figura (FIG.)

订购零件时，请注明需要零件的货号、品名、数量以及使用机器的车辆编号、发动机型号和系列号、工作时数。

此零件明细表上不仅记载了标准装备零件，还记载了选购零件、附件零件。如果您需要订货，请与最近的小松代理店联系。

为了清楚明了，零件手册中有如下规定：

图表

打开此零件清单后，可以看到附带图号（FIG.）的零件明细表图示。在图示上标有各种零件的索引号码。除图之外，还按索引号码的顺序列表表示货号、品名、数量、适用机型。

图号（FIG.）

图号表示该页图的号码。它不是补充零件用的货号。此号码不一定是连续号码。

零件表

从左栏开始按以下顺序显示零件的明细。

索引 (Index):

与图的索引号码一致，按索引号码顺序编制为表格形式。

代号 (Code):

此栏使用的代号如下所示：

A1　此行零件可与紧挨着的上一行零件互换使用。

A2　上一行的零件可取代此行零件来使用。

A3　此行零件可代替紧挨着的上一行零件使用。

A4　品名栏内的零件配套后，可取代此行零件来使用。

B1　该行零件已停止供应，用上一行的零件代替使用。

B2　该行零件已停止供应，品名栏内的零件配套后代替此行零件供应。

C1　此行零件拟成套供应，不以单一零件供应。

C2　此行零件主要面向特定的代理。不以单一零件供应，只拟成套供应。

C3　此行零件以半成品的形式供应，使用前必需再加工。

货号 (Part Number):

此栏所示的编号是图示零件的货号。它是在订货时需要标明的特定代号，是非常重要的。

品名 (Description):

表示相当于货号的零件名称。构成组装品的零件，在品名的前面有 “·” 标记，记载在组装品之后。
另外，如果标记 “·” 的零件是组装品，则该构成零件的品名前标有 “· ·” 标记。
例： TANK ASSEMBLY
· TANK
· CAP
· · PACKING

另外，说明栏可能显示以下代号。

Kit 表示修理包。关于修理包构件详情，请参考此零件清单中 “现场修理服务零件” 部分的内容。
D 直径
L 全长
L.H. 左侧
R.H. 右侧
T 厚度
W 全宽

数量 (Qty):

表示一台机器中需要使用的该零件数量。但是，如果是组装零件的构成零件时，表示其组装件的件数。
如果不能指定每个机器以及（或者）组装零件中必须的零件数量时，可以在零件数量栏中使用代码 AR。
此时，数量由现场的服务要件决定，然后进行定购。

适用机型 (Serial Numbers):

发动机篇中表示该使用零件的发动机型号，在机体篇中表示该使用零件的车辆号码。

如果适用机型位于括号中，表明该适用机型专门用于图号 (FIG.) 中所指的设备。

ПРЕДИСЛОВИЕ

При заказе запчасти укажите номер части, наименование части и нужное количество; кроме того, укажите код модели вашей машины, серийный номер машины, серийный номер двигателя и показания счетчика мото-часов.

В Каталоге приведены не только стандартные изделия, но и дополнительное оборудование и принадлежности. Для заказа запчасти пожалуйста обратитесь к ближайшему дилеру "Комацу".

Содержащаяся в Каталоге информация и специальные коды разъясняются ниже:

РИСУНОК И ПЕРЕЧЕНЬ ЧАСТЕЙ

Раскрыв Каталог, вы увидите рисунок после номера рисунка (ПОЗ). Каждой отдельной части на рисунке присвоен позиционный номер. За рисунком следует перечень составных частей устройства в порядке номеров позиций рисунка. Перечень частей указывает для каждой части ее номер, наименование, количество и применимый серийный номер.

НОМЕР РИСУНКА (ПОЗ)

Номер рисунка (ПОЗ) – это номер, который указывает рисунок на странице. Он не является номером запчасти. Последовательность номеров не обязательно непрерывна.

ПЕРЕЧЕНЬ ЧАСТЕЙ

Данные запасных частей приведены на странице перечня частей следующим образом:

Индекс (Index):

То же, что номер позиции на рисунке. Части перечислены в порядке их позиционных номеров.

Код: (Code):

В этой колонке находятся коды, обозначающие следующее:

A1 Данная часть и часть, указанная в предыдущей строке, взаимозаменяемы.

A2 Вместо данной части можно использовать часть, указанную в предыдущей строке.

A3 Данную часть можно использовать вместо части, указанной в предыдущей строке.

A4 В комплекте, вместо данной части можно использовать указанную в колонке описания.

B1 Поставки этой части прекращены. Взамен поставляется часть, указанная в предыдущей строке.

B2 Поставки этой части прекращены. Взамен комплектом поставляется часть, указанная в колонке описания.

C1 Данная часть отдельно не поставляется. Она поставляется с узлом.

C2 Данная часть поставляется лишь уполномоченным дилерам "Комацу". Отдельно не поставляется. Поставляется с узлом.

C3 Обозначает часть, поставляемую без доводки. Требует предустановочной подготовки.

Номер части (Part Number):

Приведенный в колонке номеров частей номер является номером изображенной части. Это код-идентификатор для заказа данной части. Важно, чтобы при заказе этот кодовый номер был указан без ошибок.

Описание (Description):

Здесь приводится наименование части, обозначенной номером в перечне. Значок "·" ставится перед наименованием детали компонента, причем деталь записана после узла. Если помеченная "·" часть является подсборкой узла, то ее составные части обозначаются значком "··".

Пример: Tank Assembly
·Tank
·Cap
··Packing

Далее, в этой колонке используются следующие обозначения и сокращения.

Kit	Указывает на элементы комплекта. Элементы комплекта смотри в разделе ЗАПАСНЫЕ ЧАСТИ ДЛЯ РЕМОНТА В УСЛОВИЯХ ЭКСПЛУАТАЦИИ данного Каталога.
D	Диаметр
L	Длина
L.H.	Левая сторона
R.H.	Правая сторона
T	Толщина
W	Ширина

Количество (Qty):

Указывает общее число изделий в одной машине. Если же изделие является частью узла и/или устройства, то указывается количество в таком узле и/или устройстве.
При невозможности указать количество частей на машину и/или устройство, в колонке Количество проставляется код AR (по потребности). В таком случае можно заказывать любые количества в зависимости от потребностей обслуживания на месте.

Серийные номера (Serial Numbers):

В книге по двигателю приводится соответствующий серийный номер двигателя. В книге по шасси указывает на серийный номер машины, где используется данная часть.

Серийный номер, заключенный в круглые скобки означает, что он применяется только для оборудования с номером рисунка (ПОЗ.)

. رقم القطعة (Part Number)

الرقم الوارد في عمود رقم القطعة هو رقم القطعة الخاص بالقطعة المبينة. وهو الرمز المستخدم لطلب تلك القطعة. ومن الضروري عدم ارتكاب اي خطأ في تحديد هذا الرقم عند طلب القطع.

. الوصف (Description)

يعطي اسم القطعة المدرج رقمها في القائمة. توضع العلامة "٠" امام اسم المكون لمجموعة ما ويدرج البند بعد المجموعة. اذا كانت القطعة المشار اليها بالعلامة "٠" هي نفسها عبارة عن مجموعة مكونات, فان كلا من مكوناتها يشار اليها بالعلامة "٠٠".
مثال

Tank Assembly
٠Tank
٠Cap
٠٠Packing

بالاضافة الى ذلك, العلامات والمختصرات التالية تستخدم في هذا العمود.

Kit	هذا يشير الى قطع الطقم. حول قطع الطقم, راجع قسم "قطع غيار خدمة الإصلاح الميداني" في كتاب القطع هذا.
D	قطر
L	طول
L.H.	جانب اليد اليسارى
R.H.	جانب اليد اليمنى
T	السمك
W	العرض

. الكمية (Qty)

هذا هو عدد القطع المستخدمة لآلية واحدة. اما بالنسبة لمجموعات المكونات ومجموعات القطع فانه يتم تحديد عدد القطع لكل مجموعة.
الرمز AR (حسب الطلب) سوف يستخدم في عمود الكمية اذا لم يتم تحديد عدد القطع المطلوبة لكل مانكة و/او للمجموعة. في مثل هذه الحالة, فان اي عدد من الكميات ربما يتم طلبه بشكل يعتمد على متطلبات مجال الخدمة.

. الرقم التسلسلي (Serial Numbers)

في كتاب قطع المحرك يشير هذا الرقم الى الرقم التسلسلي للمحرك الذي تستخدم فيه القطعة. قي كتاب قطع الآلية, يشير هذا الرقم الى الرقم التسلسلي للآلية التي تستخدم فيها القطع.

في حالة وضع الرقم التسلسلي بين الأقواس، فهذا يعني أن هذا هو الرقم التسلسلي الساري للاستخدام الحصري للقطعة الموضحة بالشكل.

عند طلب القطع, يرجى تحديد رقم القطعة واسم القطعة والكمية المطلوبة من القطعة, مع تحديد رقم الموديل والرقم التسلسلي وقراءة عداد الخدمة.

قائمة القطع هذه لا تقتصر على الكميات القياسية فقط بل تشمل ايضاً القطع والملحقات الاختيارية. لطلب القطع, يرجى الاتصال باقرب موزع لمنتجات كوماتسو.

كتاب القطع هذا يحتوي على المعلومات ورموز التخصيص وكما مبين ادناه:

الشكل والقائمة

عندما تفتح كتاب القطع هذا, سوف تجد رسومًا توضيحية تتضمن رقم الشكل (الشكل). كل قطعة مفردة في الرسم يعطى لها رقم فهرس. في الرسم التالي, قطع المجموعة للوحدة تم ادراجها حسب ترتيب ارقام الفهرس المبينة في الرسم.. رقم القطعة, اسم القطعة, الكمية والرقم التسلسلي المطابق يعطى لكل قطعة حسب تسلسل القطع في القائمة.

رقم الشكل (الشكل)

رقم الشكل (الشكل) هو الرقم الذي يميز شكل ما داخل الصفحة. إنه ليس رقم القطعة. وليست الأرقام متتابعة دائمًا.

قائمة القطع

معلومات قطع الغيار مثبتة في صفحة قائمة القطع وكلاتي:

. الفهرست (Index)

هذا الرقم هو نفس رقم الفهرس الوارد في الشكل التوضيحي. تدرج القطع في القائمة مرتبة تبعاً لارقام الفهرس.

. الرمز (Code)

الرموز تستخدم في هذا العمود وتوصف كلاتي:

A1 هذه القطعة والقطعة المذكورة في السطر السابق مباشرة يمكن لكل منهما ان تحل محل الاخرى.

A2 القطعة المذكورة في السطر السابق يمكن استعمالها بدلاً من هذه القطعة.

A3 هذه القطعة يمكن استعمالها بدلاً من القطعة المذكورة في السطر السابق مباشرة.

A4 القطعة المذكورة في عمود الوصف يمكن استعمالها بدلاً من هذه القطعة اذا استخدمت كطقم.

B1 هذه القطعة توقف توريدها. يتم توريد القطعة المذكورة في السطر السابق بدلاً منها.

B2 هذه القطعة توقف توريدها. يتم توريد القطعة المذكورة في عمود "الوصف" بدلاً منها كطقم.

C1 هذه القطعة لا يمكن توريدها كقطعة منفردة. يتم توريدها كمجموعة.

C2 هذه القطعة يتم تجهيزها من قبل موزعين كوماتسو المرخصين فقط. لا يمكن تجهيزها كقطعة مفردة. يتم تجهيزها كمجموعة.

C3 هذا يشير الى قطعة موردة شبه مكتملة التصنيع. تتطلب استكمال تصنيعها قبل الاستعمال.

CONTENTS

FOREWORD 2

	FIG No.	PAGE
ENGINE CYLINDER HEAD AND ITS RELATED PARTS		
Exhaust Connector Clamp	(XS 9258)	
Clamp	AXS00-001001	48
Cylinder Head	(X16-0A90680)	
	A1009-001001	49
Cylinder Head Cover	(VC 9483)	
	AVC00-001001	50
Breather	(BR 9392)	
	ABR00-001001	51
Air Intake Manifold	(IM 9156)	
	AIM00-001001	52
Air Intake Connector	(IC 9653)	
	AIC00-001001	53
Air Intake Connector	(X16-0A20460)	
	A1310-001001	54
Exhaust Manifold	(TB91651)	
	ATB30-001001	55
Komatsu Variable Geometry Turbocharger (KVGT)	(PP99482)	
Related Parts	APP20-001001	56
Komatsu Variable Geometry Turbocharger (KVGT)	(X16-0A90710)	
	A1539-001001	57
Komatsu Variable Geometry Turbocharger (KVGT) Oil Piping	(TP97514)	
	ATP00-001001	58
Exhaust Connection	(IT 9069)	
	AIT00-001001	59
Heat Shield	(SH 9089)	
	ASH00-001001	60
Heat Shield	(X16-0A20480)	
Komatsu Variable Geometry Turbocharger (KVGT) and Komatsu Diesel Particulate Filter (KDPF)	A1570-001001	61
Exhaust Gas Re-circulation (EGR) Valve	(ER 9181)	
	AER00-001001	63
Rocker Arm Housing and Rocker Arm	(RL 9777)	
	ARL00-001001	64
Lifting Arrangement	(LA 9151)	
	ALA00-001001	65
Engine Lifting Bolt	(LA 9119)	
	ALA10-001001	66
Komatsu Diesel Particulate Filter (KDPF)	(X16-0A20510)	
(1/2)	A1610-001001	67
(2/2)	A1610-001002	69
Date Plate	(ED 9077)	
	AED00-001001	70
Exhaust Gas Re-circulation (EGR) Cooler Air Piping	(ER 9146)	
	AER20-001001	71
Exhaust Gas Re-circulation (EGR) Cooler Water Piping	(ER 9187)	
	AER10-001001	72
Exhaust Gas Re-circulation (EGR) Cooler	(X16-0A90730)	
	A1559-001001	73
ENGINE CYLINDER BLOCK AND ITS RELATED PARTS		
Front Gear Cover	(GG 9911)	
	AGG00-001001	76
Front Gear Cover	(GG 9912)	
Mounting Parts	AGG10-001001	77

Front Gear Train .....(DF 9198)
Plug ADF10-001001 78
Front Gear .....(BB 9837)
ABB10-001001 79
Accessory Drive Pulley .....(PA 9001)
APA00-001001 80
Flywheel Housing .....(X16-0A90770)
A2219-001001 81
Flywheel .....(FW90289)
AFW00-001001 82
Flywheel Mounting .....(FW90290)
AFW10-001001 83
Engine Oil Pan .....(OP 9576)
AOP10-001001 84
Engine Oil Pan Drain .....(X16-0A20570)
A2170-001001 85
Engine Oil Level Sensor .....(SD 9057)
ASD00-001001 86
Cylinder Block .....(BB 9293)
Tappet ABB00-001001 87
Cylinder Block .....(X16-0A90750)
A2019-001001 88
Cylinder Block Cover .....(OB 9365)
AOB20-001001 89
Breather Hose .....(X16-0A20430)
A2080-001001 90
Cabin Heater Plug .....(HC 9180)
AHC00-001001 91
Crankshaft .....(X16-0A90790)
A2319-001001 92
Vibration Damper .....(DA 9293)
ADA00-001001 93
Piston and Connecting Rod .....(X16-0A90820)
A2359-001001 94
Engine Oil Filler .....(OB 9547)
AOB10-001001 95
Oil Level Gauge .....(LG90445)
ALG00-001001 96
ENGINE LUBRICATING SYSTEM
Engine Oil Pump .....(LP 9724)
ALP00-001001 98
Engine Oil Filter .....(LF 9102)
ALF00-001001 99
Engine Oil Cooler .....(LC 9370)
ALC00-001001 100
Engine Coolant Vent .....(RP 9175)
ARP00-001001 101
ENGINE FUEL SYSTEM
Fuel Filter Piping .....(FF90141)
AFF20-001001 104
Fuel Supply Pump Support .....(FP90238)
AFP20-001001 105
Fuel Injection Pump .....(FP90596)
AFP10-001001 106
Fuel Injection Piping .....(PP99478)
APP50-001001 107

Fuel Piping .....(X16-0A20590) A4110-001001 108
Fuel Return Fitting .....(X16-0A11360) A4230-001001 109
Fuel Filter Location .....(FF90137) AFF10-001001 110
Fuel Filter Cartridge .....(X16-0B90201) A4119-001001 111
Fuel Transfer Pump .....(FS 9990) AFS00-001001 112
Fuel Drain Piping .....(FD90038) AFD00-002001 113
ENGINE COOLING SYSTEM
Cooling Fan Drive Mounting (For Hardened Pulley) .....(FA 9406) AFA20-002001 116
Cooling Fan Drive Mounting .....(FA 9739) AFA20-001001 117
Cooling Fan Drive Pulley .....(FA 9751) AFA10-001001 118
Cooling Fan Drive Pulley .....(PA 9017) APA00-002001 119
Cooling Fan Belt Tensioner .....(WP97302) AWP20-001001 120
Water Pump .....(WP97366)
Mounting Parts AWP00-001001 121
Water Pump .....(X16-0A90840) A5019-001001 122
Water Pump Drive Belt (For 60Amp. Alternator) .....(WP 9591) AWP10-001001 123
Water Pump Drive Belt (For 90Amp. Alternator) .....(WP 9976) AWP10-002001 124
Water Outlet Connector .....(WO 9170) AWO00-001001 125
Water Inlet Connector .....(WI 9426) AWI10-001001 126
Thermostat .....(EC 9081) AEC00-001001 127
Hydraulic Pump .....(HD 9255) AHD10-001001 128
Hydraulic Pump Piping .....(HD 9310) AHD20-001001 129
ENGINE ELECTRICAL SYSTEM
Alternator Mounting Parts (For 60Amp. Alternator) .....(EH97783) AEH20-001001 132
Alternator Mounting Parts (For 90Amp. Alternator) .....(X16-0A20620) A6020-001001 133
Alternator (60Amp) .....(EE 9186) AEE00-001001 134
Alternator (90Amp) .....(EE 9194) AEE00-002001 135
Alternator Cover (For 60Amp. Alternator) .....(X16-0A10730) A6010-001001 136
Starting Motor Mounting .....(SM 9785) ASM00-001001 137
Starting Motor (7.5KW) .....(ST 9199) AST00-001001 138

Starting Motor (11KW) ..... (ST 9259)
AST00-002001 140
Wiring Harness ..... (WR 9618)
AWR00-001001 142
Wiring Harness ..... (X16-0A20420)
A6810-001001 143
Electric Controller Wiring Harness ..... (PH 9300)
APH10-001001 144
ENGINE ACCESSORIES AND OTHERS
Engine Controller ..... (X16-0A20790)
A4719-001001 146
Parts Performance ..... (PP43599)
Bolt APP10-001001 147
Support APP10-001002 148
Camshaft APP10-001003 149
APP10-001004 150
Injector APP10-001005 151
Engine Control Module ..... (PH 9294)
APH00-001001 152
ENGINE MARKS AND PLATES
Caution Plates ..... (AP 9719)
AAP00-001001 154
Caution Plates (For North America EPA Interim 4th Regulations, EU Exhaust Emissions 3rd Regulations) ..... (X16-0A20850)
A9810-002001 155
Caution Plates (For EU Safety Regulation) ..... (X16-0B90620)
A9810-001001 156
FIELD REPAIR SERVICE PARTS
Repair Service Parts ..... (X16-0A90910)
A8110-001001 158
ENGINE RELATED PARTS
Air Cleaner (Air Intake Pipe With Rain Cap) ..... (X22-1150121)
Cap A1470-501001 160
Air Cleaner Assembly A1470-501002 161
Mounting A1470-501003 162
Air Cleaner (Air Intake Pipe With Pre-Cleaner) ..... (X22-1150131)
Pre-Cleaner A1470-502001 163
Mounting (1/2) A1470-502002 164
Air Cleaner Assembly A1470-501002 161
Mounting (2/2) A1470-501003 162
Exhaust Pipe ..... (X22-0905780)
A1610-501001 165
Guard ..... (X22-1155010)
A6910-501001 166
Spare Parts (For 90Amp. Alternator) ..... (X22-1155030)
A9020-502001 167
Spare Parts (For 60Amp. Alternator) ..... (X22-1155020)
A9020-501001 168
Engine Mounting ..... (X22-1151411)
B0100-001001 169
Komatsu Closed Crankcase Ventilation (KCCV) ..... (X22-1150151)
Ventilator B0201-001001 170
Ventilation Filter Mounting B0201-001002A 171
Engine Wiring Harness ..... (X22-1152581)
Ground B0500-001001 173
Wiring Harness (1/3) B0500-001002 174
Wiring Harness (2/3) B0500-001003 175

Wiring Harness (3/3) B0500-001004 176
Damper ..... (X22-1050152)
B0600-001001 178
COOLING SYSTEM
Cooling System ..... (X22-1152351)
Radiator Core and Aftercooler C0100-001001 180
Frame C0100-001002 181
Piping C0100-001003 182
Oil Cooler C0100-001004 184
Fan Motor (1/2) C0100-001005 185
Fan Motor (2/2) C0100-001006 187
Fan Motor Mounting C0100-001007 188
Baffle C0100-001008 189
Mounting C0100-001009 190
Window Washer Tank C0100-001010 191
Fan Net C0100-001011 192
Shroud C0100-001012 193
FUEL SYSTEM
Fuel Tank (Without Refuel Pump) ..... (X22-1050172)
D0100-001001 196
Fuel Tank (With Refuel Pump) ..... (X22-1173550)
D0100-002001 198
Fuel Supply Piping ..... (X22-1151991)
Piping D0200-001001 200
Pre-Filter D0200-001002 201
Pre-Filter Bracket D0200-001003 202
ELECTRICAL SYSTEM
Battery (Without Refuel Pump, For Large Capacity) ..... (X22-1151611)
E0100-002001 206
Battery (Without Refuel Pump) ..... (X22-1151531)
E0100-001001 207
Battery (With Refuel Pump) ..... (X22-1159190)
E0100-003001 208
Battery (With Refuel Pump, For Large Capacity) ..... (X22-1159200)
E0100-004001 209
Electric Wiring Harness (With 3D Machine Control Plug and Play) ..... (X22-1155100)
Wiring Harness (1/2) E0200-002001 210
Wiring Harness Mounting E0200-002002 212
Battery Cable E0200-002003 213
Mounting E0200-002004 214
Wiring Harness (2/2) E0200-002005 215
Sensor E0200-002006 217
Switch E0200-002007 218
Electric Wiring Harness (Without 3D Machine Control Plug and Play) ..... (X22-1152501)
Wiring Harness (1/2) E0200-002001 210
Wiring Harness Mounting E0200-001002 219
Battery Cable E0200-002003 213
Mounting E0200-002004 214
Wiring Harness (2/2) E0200-001005 220
Sensor E0200-002006 217
Switch E0200-002007 218
Electric Wiring Harness (With Refuel Pump) ..... (X22-1159210)
Wiring Harness (1/2) E0200-003001 221
Wiring Harness Mounting E0200-001002 219
Battery Cable E0200-002003 213
Mounting E0200-002004 214
Wiring Harness (2/2) E0200-001005 220

Sensor E0200-002006 217
Switch E0200-002007 218
Electric Wiring Harness (With Refuel Pump, 3D Machine Control Plug and Play) ..... (X22-1159220)
Wiring Harness (1/2) E0200-003001 221
Wiring Harness Mounting E0200-002002 212
Battery Cable E0200-002003 213
Mounting E0200-002004 214
Wiring Harness (2/2) E0200-002005 215
Sensor E0200-002006 217
Switch E0200-002007 218
Beacon Lamp ..... (X22-1155610)
E0201-001001 223
Working Lamp ..... (X22-1152021)
E0300-001001 224
Additional Working Lamp (For Additional Rear Working Lamp) ..... (X22-1155130)
E0310-003001 225
Additional Working Lamp (For Additional Front Working Lamp) ..... (X22-1155120)
E0310-002001 226
Additional Working Lamp (With Additional Front Working Lamp) ..... (X22-1156790)
E0310-005001 227
Additional Working Lamp (Provision For Additional Front Working Lamp, Additional Rear Working Lamp) ..... (X22-1155110)
E0310-001001 228
Additional Working Lamp (With Additional Front and Rear Working Lamp) ..... (X22-1156780)
E0310-004001 229
Back-up Alarm ..... (X22-1052151)
E0420-001001 230
Rearview Camera (Without Additional Front and Rear Working Lamp) ..... (X22-1158750)
E0450-001001 231
Rearview Camera (With Additional Front and Rear Working Lamp) ..... (X22-1158760)
E0450-002001 232
POWER TRANSMITTING SYSTEM
Universal Joint ..... (X22-1050230)
F2200-001001 234
Power Train (Without Power Angle Power Tilt Dozer, Inside Frame) ..... (X22-1155140)
Bevel Gear and Shaft F2300-001001 235
Brake F2300-001002 236
Carrier F2300-001003 238
Steering Case (1/2) F2300-001004 239
Steering Case (2/2) F2300-001005 240
Steering Case Cover and Steering Valve Control Lever F2300-001006 241
Steering Valve F2300-001007 242
H.S.S. Gear F2300-001008 244
Steering Case Cover Related Parts F2300-001009 245
1st Housing F2300-001010 246
2nd, 3rd, Forward and Reverse Housing F2300-001011 247
Transmission Carrier (1/2) F2300-001012 249
Transmission Carrier (2/2) F2300-001013 251
Transmission Case F2300-001014 252
Input and Output Shaft F2300-001015 253
Transmission E.C.M.V. Valve F2300-001016 254
Transmission E.C.M.V. Valve Mounting F2300-001017 255
Relief Valve F2300-001018 256
Relief Valve Mounting F2300-001019 257
Block F2300-001020 258
Pump and Turbine F2300-001021 259
Torque Converter Case F2300-001022 261

Scavenging Pump Mounting F2300-001023 262
Power takeoff Gear F2300-001024 263
Strainer F2300-001025 264
Mounting (1/2) F2300-001026 265
Inner Parts, Gear Pump (1/2) F2300-001027 266
Inner Parts, Gear Pump (2/2) F2300-001028 267
Power Train to Hydrostatic Tank Piping (1/2) F2300-001029 268
Power Train to Hydrostatic Tank Piping (2/2) F2300-001030 270
Oil Filler F2300-001031 271
Wiring Harness F2300-001032 272
Wiring Harness Clamp F2300-001033 273
Piping F2300-001034 275
Mounting (2/2) F2300-001035 276
Final Drive, Torque Shaft F2300-001036 277
Power Train (Power Angle Power Tilt Dozer, Inside Frame, 3000mm, Power Angle Power Tilt Blade) ... (X22-1155150)
Bevel Gear and Shaft F2300-001001 235
Brake F2300-001002 236
Carrier F2300-001003 238
Steering Case (1/2) F2300-001004 239
Steering Case (2/2) F2300-001005 240
Steering Case Cover and Steering Valve Control Lever F2300-001006 241
Steering Valve F2300-001007 242
H.S.S. Gear F2300-001008 244
Steering Case Cover Related Parts F2300-001009 245
1st Housing F2300-001010 246
2nd, 3rd, Forward and Reverse Housing F2300-001011 247
Transmission Carrier (1/2) F2300-001012 249
Transmission Carrier (2/2) F2300-001013 251
Transmission Case F2300-001014 252
Input and Output Shaft F2300-001015 253
Transmission E.C.M.V. Valve F2300-001016 254
Transmission E.C.M.V. Valve Mounting F2300-001017 255
Relief Valve F2300-001018 256
Relief Valve Mounting F2300-001019 257
Block F2300-001020 258
Pump and Turbine F2300-001021 259
Torque Converter Case F2300-001022 261
Scavenging Pump Mounting F2300-001023 262
Power takeoff Gear F2300-001024 263
Strainer F2300-001025 264
Mounting (1/2) F2300-001026 265
Inner Parts, Gear Pump (1/2) F2300-001027 266
Inner Parts, Gear Pump (2/2) F2300-001028 267
Power Train to Hydrostatic Tank Piping (1/2) F2300-001029 268
Power Train to Hydrostatic Tank Piping (2/2) F2300-001030 270
Oil Filler F2300-001031 271
Wiring Harness F2300-001032 272
Wiring Harness Clamp F2300-001033 273
Piping F2300-001034 275
Mounting (2/2) F2300-001035 276
Final Drive, Torque Shaft F2300-002036 278
Final Drive (Power Angle Power Tilt Dozer, Inside Frame, 3000mm, Power Angle Power Tilt Blade, Plus Type Track Shoe) ..... (X22-1155212)
Sprocket Hub, L.H. F2380-007001 279
Final Gear Case L.H. F2380-007002 280
Final Drive Mounting (1/2) F2380-007003 282
Sprocket Hub, R.H. F2380-007004 283

Final Gear Case R.H. F2380-007005 284
Final Drive Mounting (2/2) F2380-007006 286
Mounting F2380-007007 287
Final Drive (Power Angle Power Tilt Dozer, Inside Frame, For Plus Type Track Shoe) ..... (X22-1155200)
Sprocket Hub, L.H. F2380-004001 288
Final Gear Case L.H. F2380-004002 289
Final Drive Mounting (1/2) F2380-004003 291
Sprocket Hub, R.H. F2380-004004 292
Final Gear Case R.H. F2380-004005 293
Final Drive Mounting (2/2) F2380-004006 295
Final Drive (Power Angle Power Tilt Dozer, Inside Frame, 3000mm, Power Angle Power Tilt Blade) ..... (X22-1155180)
Sprocket Hub, L.H. F2380-003001 296
Final Gear Case L.H. F2380-004002 289
Final Drive Mounting (1/2) F2380-007003 282
Sprocket Hub, R.H. F2380-003004 297
Final Gear Case R.H. F2380-004005 293
Final Drive Mounting (2/2) F2380-007006 286
Mounting F2380-007007 287
Final Drive (Power Angle Power Tilt Dozer, Inside Frame) ..... (X22-1155170)
Sprocket Hub, L.H. F2380-003001 296
Final Gear Case L.H. F2380-004002 289
Final Drive Mounting (1/2) F2380-004003 291
Sprocket Hub, R.H. F2380-003004 297
Final Gear Case R.H. F2380-004005 293
Final Drive Mounting (2/2) F2380-004006 295
Power Train Piping (Power Angle Power Tilt Dozer, Inside Frame) ..... (X22-1152091)
Piping F2730-002001 298
Bracket F2730-002002 299
Mounting F2730-002003 300
Power Train Piping (Without Power Angle Power Tilt Dozer, Inside Frame) ..... (X22-1151981)
Piping F2730-002001 298
Bracket F2730-002002 299
Mounting F2730-001003 301
Steering Control Related Parts ..... (X22-1050270)
Rod F2820-001001 302
Parking Brake Control Cable F2820-001002 303
HYDRAULIC SYSTEM
Hydraulic Oil Tank (Without Rear 1-attachment) ..... (X22-1050282)
H0110-001001 306
Hydraulic Oil Tank (Rear 1-attachment) ..... (X22-1058140)
H0110-002001 308
Hydraulic Oil Tank (Rear 1-attachment, 3D Machine Control Plug and Play) ..... (X22-1157390)
H0110-003001 310
Hydraulic Oil Tank (3D Machine Control Plug and Play) ..... (X22-1157410)
H0110-004001 312
Hydraulic Oil Pump and Motor ..... (X22-1155220)
Inner Parts, HSS Pump (1/7) H0210-001001 314
Inner Parts, HSS Pump (2/7) H0210-001002 315
Inner Parts, HSS Pump (3/7) H0210-001003 316
Inner Parts, HSS Pump (4/7) H0210-001004 317
Inner Parts, HSS Pump (5/7) H0210-001005 318
Inner Parts, HSS Pump (6/7) H0210-001006 319
Inner Parts, HSS Pump (7/7) H0210-001007 320
Pump Mounting (1/2) H0210-001008 321
Inner Parts, HSS Motor (1/2) H0210-001009 322
Inner Parts, HSS Motor (2/2) H0210-001010 324
Motor Mounting H0210-001011 325

Inner Parts, Cooling Fan Pump (1/6) H0210-001012 326
Inner Parts, Cooling Fan Pump (2/6) H0210-001013 327
Inner Parts, Cooling Fan Pump (3/6) H0210-001014 328
Inner Parts, Cooling Fan Pump (4/6) H0210-001015 329
Inner Parts, Cooling Fan Pump (5/6) H0210-001016 330
Inner Parts, Cooling Fan Pump (6/6) H0210-001017 331
Pump Mounting (2/2) H0210-001018 332
Hydraulic Oil Pump Piping ..... (X22-1152101)
Suction and Delivery Piping H0310-001001 333
HSS Motor Piping H0310-001002 335
Fan Motor Related Parts H0310-001003 336
Fan Motor Piping H0310-001004 337
Dozer Blade Lift Cylinder Piping (Blade Cylinder Wired Hose, Power Angle Power Tilt Dozer, Inside Frame) ..... (X22-1155250)
Piping (1/2) H2210-004001 338
Quick Drop Valve H2210-004002 339
Piping (2/2) H2210-004003 340
Clamp H2210-004004 341
Lift Cylinder Piping H2210-004005 343
Dozer Blade Lift Cylinder Piping (Blade Cylinder Wired Hose) ..... (X22-1155240)
Piping (1/2) H2210-004001 338
Quick Drop Valve H2210-004002 339
Piping (2/2) H2210-004003 340
Clamp H2210-004004 341
Lift Cylinder Piping H2210-003005 344
Dozer Blade Lift Cylinder Piping (Blade Cylinder Hose, Power Angle Power Tilt Dozer, Inside Frame) ..... (X22-1151971)
Piping (1/2) H2210-004001 338
Quick Drop Valve H2210-004002 339
Piping (2/2) H2210-004003 340
Clamp H2210-004004 341
Lift Cylinder Piping H2210-002005 345
Dozer Blade Lift Cylinder Piping (Blade Cylinder Hose) ..... (X22-1151941)
Piping (1/2) H2210-004001 338
Quick Drop Valve H2210-004002 339
Piping (2/2) H2210-004003 340
Clamp H2210-004004 341
Lift Cylinder Piping H2210-001005 346
Dozer Blade Tilt Piping (Power Angle Power Tilt Dozer, Inside Frame) ..... (X22-1050761)
Blade Tilt Piping H2220-001001 347
Clamp H2220-001002 348
Dozer Blade Tilt Piping (Straight Tilt Dozer) ..... (X22-1053421)
Blade Tilt Piping H2220-002001 349
Track Frame Cover H2220-002002 350
Dozer Blade Tilt Piping (Provision for Power Angle Power Tilt Pitch Dozer) ..... (X22-1057730)
Hose H2220-004001 351
Track Frame Cover H2220-004002 352
Dozer Blade Angle Piping ..... (X22-1050771)
Blade Angle Piping H2230-001001 353
Clamp H2230-001002 354
Rear Hydraulic Piping ..... (X22-1052161)
H2250-001001 356
FRAME AND ITS RELATED PARTS
Main Frame (Without Power Angle Power Tilt Dozer, Inside Frame) ..... (X22-1152681)
J2100-002001 358
Main Frame (Power Angle Power Tilt Dozer, Inside Frame) ..... (X22-1152421)
J2100-001001 359

Main Frame (With Refuel Pump, Without Power Angle Power Tilt Dozer, Inside Frame) .....(X22-1159230)
J2100-003001 360
Main Frame (With Refuel Pump, Power Angle Power Tilt Dozer, Inside Frame) .....(X22-1159250)
J2100-004001 361
Equalizer Bar and Pivot Shaft (Without Power Angle Power Tilt Dozer, Inside Frame) .....(X22-1155390)
J2700-001001 362
Equalizer Bar and Pivot Shaft (Power Angle Power Tilt Dozer, Inside Frame) .....(X22-1155420)
J2700-002001 364
OPERATOR'S COMPARTMENT AND CONTROL SYSTEM
Operator's Seat (Air Suspension Type, Fabric, Turn Type, Tilt, With Heater, Headrest) .....(X22-1156800)
Mounting K0110-008001 368
Inner Parts, Operator's Seat K0110-008002 369
Operator's Seat (Air Suspension Type, Fabric, Turn Type, Tilt, Hi-Back Type, With Heater, Headrest) ..(X22-1156810)
Mounting K0110-009001 370
Inner Parts, Operator's Seat K0110-009002 371
Operator's Seat (Mechanical Suspension Type, Fabric, Turn, Tilt, With Heater) .....(X22-1155430)
Mounting K0110-001001 372
Inner Parts, Operator's Seat K0110-001002 373
Operator's Seat (Mechanical Suspension Type, Fabric, Turn, Tilt, Hi-Back Type, With Heater) .....(X22-1155440)
Mounting K0110-002001 374
Inner Parts, Operator's Seat K0110-002002 375
Operator's Seat (Mechanical Suspension Type, Leather, Turn, Tilt) .....(X22-1155450)
Mounting K0110-003001 376
Inner Parts, Operator's Seat K0110-003002 377
Operator's Seat (Mechanical Suspension Type, Leather, Turn, Tilt, Hi-Back Type) .....(X22-1155460)
Mounting K0110-004001 378
Inner Parts, Operator's Seat K0110-004002 379
Operator's Seat (Air Suspension Type, Fabric, Turn Type, Tilt, With Heater) .....(X22-1155470)
Mounting K0110-005001 380
Inner Parts, Operator's Seat K0110-005002 381
Operator's Seat (Air Suspension Type, Fabric, Turn Type, Tilt, Hi-Back Type, With Heater) .....(X22-1155480)
Mounting K0110-006001 382
Inner Parts, Operator's Seat K0110-006002 383
Operator's Seat (Mechanical Suspension Type, Fabric, Turn, Tilt, With Heater, Headrest) .....(X22-1156640)
Mounting K0110-007001 384
Inner Parts, Operator's Seat K0110-007002 385
Operator's Seat (Mechanical Suspension Type, Fabric, Turn, Tilt, Hi-Back Type, With Heater, With Headrest) .....(X22-1156650)
Mounting K0110-010001 386
Inner Parts, Operator's Seat K0110-010002 387
Operator's Seat (Mechanical Suspension Type, Leather, Turn, Tilt, With Headrest) .....(X22-1156660)
Mounting K0110-011001 388
Inner Parts, Operator's Seat K0110-011002 389
Operator's Seat (Mechanical Suspension Type, Leather, Turn, Tilt, Hi-Back Type, With Headrest) .....(X22-1156670)
Mounting K0110-012001 390
Inner Parts, Operator's Seat K0110-012002 391
Seat Belt .....(X22-1155500)
K0160-001001 392
ROPS Cab (With AM-FM Stereo Radio With AUX Jack, North America) .....(X22-1155540)
Cab Body K0210-003001 393
Door and Latch, L.H. K0210-003002 394
Door Damper, Window and Wiper, L.H. K0210-003003 396
Door Cover, L.H. K0210-003004 398
Door and Latch, R.H. K0210-003005 399
Door Damper, Window and Wiper, R.H. K0210-003006 401
Door Cover, R.H. K0210-003007 403
Door Hinge K0210-003008 404

Door Open Lock (1/2) K0210-003009 405
Door Open Lock, L.H. K0210-003010 406
Door Open Lock, R.H. K0210-003011 407
Door Open Lock (2/2) K0210-003012 408
Glass Window, Front and Rear K0210-003013 409
Sash type Glass Window, L.H. K0210-003014 410
Sash type Glass Window, R.H. K0210-003015 412
Wiper and Room Lamp K0210-003016 414
Radio K0210-003017 415
Rubber Antenna K0210-003018 416
Rubber Antenna Mounting K0210-003019 417
Roof Cover K0210-003020 418
Garnish K0210-003021 419
Rearview Mirror K0210-003022 421
Outside Cover K0210-003023 422
Air Conditioner Unit (1/3) K0210-003024 423
Air Conditioner Unit (2/3) K0210-003025 425
Air Conditioner Unit (3/3) K0210-003026 426
Air Conditioner Unit Mounting K0210-003027 427
Air Conditioner Duct, R.H. K0210-003028 428
Air Conditioner Duct K0210-003029 430
Air Conditioner Piping K0210-003030 431
Air Conditioner Duct, Outside K0210-003031 433
Air Conditioner Duct, Rear K0210-003032 434
Console Box K0210-003033 436
Travel Control Lever (1/2) K0210-003034 437
Travel Control Lever (2/2) K0210-003035 438
Console Slider K0210-003036 440
Parking Brake Lever K0210-003037 441
Work Equipment Lock Lever K0210-003038 443
Floor Frame Inside Cover K0210-003039 445
Brake Pedal K0210-003040 446
Decelerator Pedal K0210-003041 448
Controller K0210-003042 449
Floor, Wiring Harness (1/3) K0210-003043 450
Floor, Wiring Harness (2/3) K0210-003044A 452
Floor, Wiring Harness (3/3) K0210-003045 454
Window Washer Piping K0210-003046 455
Dashboard Cover K0210-003047 456
Floor, Switch K0210-003048 457
Footrest K0210-003049 458
Floor Cover K0210-003050 459
KOMTRAX Controller K0210-003051 461
Related Parts K0210-003052 462
ROPS Cab (With AM-FM Stereo Radio With AUX Jack, Europe and Asia, For EU New Noise Arrangement 2) ..... (X22-1155550)
Cab Body K0210-003001 393
Door and Latch, L.H. K0210-003002 394
Door Damper, Window and Wiper, L.H. K0210-003003 396
Door Cover, L.H. K0210-003004 398
Door and Latch, R.H. K0210-003005 399
Door Damper, Window and Wiper, R.H. K0210-003006 401
Door Cover, R.H. K0210-003007 403
Door Hinge K0210-003008 404
Door Open Lock (1/2) K0210-003009 405
Door Open Lock, L.H. K0210-003010 406
Door Open Lock, R.H. K0210-003011 407

Door Open Lock (2/2) K0210-003012 408
Glass Window, Front and Rear K0210-003013 409
Sash type Glass Window, L.H. K0210-003014 410
Sash type Glass Window, R.H. K0210-003015 412
Wiper and Room Lamp K0210-003016 414
Radio K0210-004017 463
Rubber Antenna K0210-003018 416
Rubber Antenna Mounting K0210-003019 417
Roof Cover K0210-003020 418
Garnish K0210-003021 419
Rearview Mirror K0210-003022 421
Outside Cover K0210-003023 422
Air Conditioner Unit (1/3) K0210-003024 423
Air Conditioner Unit (2/3) K0210-003025 425
Air Conditioner Unit (3/3) K0210-003026 426
Air Conditioner Unit Mounting K0210-003027 427
Air Conditioner Duct, R.H. K0210-003028 428
Air Conditioner Duct K0210-003029 430
Air Conditioner Piping K0210-003030 431
Air Conditioner Duct, Outside K0210-003031 433
Air Conditioner Duct, Rear K0210-003032 434
Console Box K0210-003033 436
Travel Control Lever (1/2) K0210-003034 437
Travel Control Lever (2/2) K0210-003035 438
Console Slider K0210-003036 440
Parking Brake Lever K0210-003037 441
Work Equipment Lock Lever K0210-003038 443
Floor Frame Inside Cover K0210-003039 445
Brake Pedal K0210-003040 446
Decelerator Pedal K0210-003041 448
Controller K0210-003042 449
Floor, Wiring Harness (1/3) K0210-003043 450
Floor, Wiring Harness (2/3) K0210-003044A 452
Floor, Wiring Harness (3/3) K0210-003045 454
Window Washer Piping K0210-003046 455
Dashboard Cover K0210-003047 456
Floor, Switch K0210-004048 464
Footrest K0210-003049 458
Floor Cover K0210-003050 459
KOMTRAX Controller K0210-003051 461
Related Parts K0210-003052 462
ROPS Cab (With AM-FM Stereo Radio With AUX Jack, North America, For 3D Machine Control Plug and Play) ..... (X22-1155580)
Cab Body K0210-005001 465
Door and Latch, L.H. K0210-003002 394
Door Damper, Window and Wiper, L.H. K0210-003003 396
Door Cover, L.H. K0210-003004 398
Door and Latch, R.H. K0210-005005 466
Door Damper, Window and Wiper, R.H. K0210-003006 401
Door Cover, R.H. K0210-003007 403
Door Hinge K0210-003008 404
Door Open Lock (1/2) K0210-003009 405
Door Open Lock, L.H. K0210-003010 406
Door Open Lock, R.H. K0210-003011 407
Door Open Lock (2/2) K0210-003012 408
Glass Window, Front and Rear K0210-003013 409
Sash type Glass Window, L.H. K0210-003014 410

Sash type Glass Window, R.H. K0210-003015 412
Wiper and Room Lamp K0210-003016 414
Radio K0210-003017 415
Rubber Antenna K0210-003018 416
Rubber Antenna Mounting K0210-003019 417
Roof Cover K0210-003020 418
Garnish K0210-005021 468
Rearview Mirror K0210-003022 421
Outside Cover K0210-003023 422
Air Conditioner Unit (1/3) K0210-003024 423
Air Conditioner Unit (2/3) K0210-003025 425
Air Conditioner Unit (3/3) K0210-003026 426
Air Conditioner Unit Mounting K0210-003027 427
Air Conditioner Duct, R.H. K0210-003028 428
Air Conditioner Duct K0210-003029 430
Air Conditioner Piping K0210-003030 431
Air Conditioner Duct, Outside K0210-003031 433
Air Conditioner Duct, Rear K0210-003032 434
Console Box K0210-003033 436
Travel Control Lever (1/2) K0210-003034 437
Travel Control Lever (2/2) K0210-003035 438
Console Slider K0210-003036 440
Parking Brake Lever K0210-003037 441
Work Equipment Lock Lever K0210-003038 443
Floor Frame Inside Cover K0210-005039 470
Brake Pedal K0210-003040 446
Decelerator Pedal K0210-005041 471
Controller K0210-003042 449
Floor, Wiring Harness (1/3) K0210-003043 450
Floor, Wiring Harness (2/3) K0210-003044A 452
Floor, Wiring Harness (3/3) K0210-003045 454
Window Washer Piping K0210-003046 455
Dashboard Cover K0210-003047 456
Floor, Switch K0210-003048 457
Footrest K0210-003049 458
Floor Cover K0210-003050 459
KOMTRAX Controller K0210-003051 461
GPS Box K0210-005052 473
GPS Antenna K0210-005053A 474
3D Machine Control Cab Back Surrounding Parts K0210-005054A 475
3D Machine Control Cab Front Surrounding Parts K0210-005055 476
Wiring Harness, Knob K0210-005056 478
3D Machine Control Cab Under Surrounding Parts K0210-005057 479
Related Parts K0210-005058 480
ROPS Cab (With AM-FM Stereo Radio With AUX Jack, Europe and Asia, For EU New Noise Arrangement 2, 3D Machine Control Plug and Play) ....(X22-1155590)
Cab Body K0210-005001 465
Door and Latch, L.H. K0210-003002 394
Door Damper, Window and Wiper, L.H. K0210-003003 396
Door Cover, L.H. K0210-003004 398
Door and Latch, R.H. K0210-005005 466
Door Damper, Window and Wiper, R.H. K0210-003006 401
Door Cover, R.H. K0210-003007 403
Door Hinge K0210-003008 404
Door Open Lock (1/2) K0210-003009 405
Door Open Lock, L.H. K0210-003010 406
Door Open Lock, R.H. K0210-003011 407

Door Open Lock (2/2) K0210-003012 408
Glass Window, Front and Rear K0210-003013 409
Sash type Glass Window, L.H. K0210-003014 410
Sash type Glass Window, R.H. K0210-003015 412
Wiper and Room Lamp K0210-003016 414
Radio K0210-004017 463
Rubber Antenna K0210-003018 416
Rubber Antenna Mounting K0210-003019 417
Roof Cover K0210-003020 418
Garnish K0210-005021 468
Rearview Mirror K0210-003022 421
Outside Cover K0210-003023 422
Air Conditioner Unit (1/3) K0210-003024 423
Air Conditioner Unit (2/3) K0210-003025 425
Air Conditioner Unit (3/3) K0210-003026 426
Air Conditioner Unit Mounting K0210-003027 427
Air Conditioner Duct, R.H. K0210-003028 428
Air Conditioner Duct K0210-003029 430
Air Conditioner Piping K0210-003030 431
Air Conditioner Duct, Outside K0210-003031 433
Air Conditioner Duct, Rear K0210-003032 434
Console Box K0210-003033 436
Travel Control Lever (1/2) K0210-003034 437
Travel Control Lever (2/2) K0210-003035 438
Console Slider K0210-003036 440
Parking Brake Lever K0210-003037 441
Work Equipment Lock Lever K0210-003038 443
Floor Frame Inside Cover K0210-005039 470
Brake Pedal K0210-003040 446
Decelerator Pedal K0210-005041 471
Controller K0210-003042 449
Floor, Wiring Harness (1/3) K0210-003043 450
Floor, Wiring Harness (2/3) K0210-003044A 452
Floor, Wiring Harness (3/3) K0210-003045 454
Window Washer Piping K0210-003046 455
Dashboard Cover K0210-003047 456
Floor, Switch K0210-004048 464
Footrest K0210-003049 458
Floor Cover K0210-003050 459
KOMTRAX Controller K0210-003051 461
GPS Box K0210-005052 473
GPS Antenna K0210-005053A 474
3D Machine Control Cab Back Surrounding Parts K0210-005054A 475
3D Machine Control Cab Front Surrounding Parts K0210-005055 476
Wiring Harness, Knob K0210-005056 478
3D Machine Control Cab Under Surrounding Parts K0210-005057 479
Related Parts K0210-005058 480
ROPS Cab (With AM-FM Stereo Radio With AUX Jack, Europe and Asia) ..... (X22-1156480)
Cab Body K0210-003001 393
Door and Latch, L.H. K0210-003002 394
Door Damper, Window and Wiper, L.H. K0210-003003 396
Door Cover, L.H. K0210-003004 398
Door and Latch, R.H. K0210-005005 466
Door Damper, Window and Wiper, R.H. K0210-003006 401
Door Cover, R.H. K0210-003007 403
Door Hinge K0210-003008 404
Door Open Lock (1/2) K0210-003009 405

Door Open Lock, L.H. K0210-003010 406
Door Open Lock, R.H. K0210-003011 407
Door Open Lock (2/2) K0210-003012 408
Glass Window, Front and Rear K0210-003013 409
Sash type Glass Window, L.H. K0210-003014 410
Sash type Glass Window, R.H. K0210-003015 412
Wiper and Room Lamp K0210-003016 414
Radio K0210-004017 463
Rubber Antenna K0210-003018 416
Rubber Antenna Mounting K0210-003019 417
Roof Cover K0210-003020 418
Garnish K0210-003021 419
Rearview Mirror K0210-003022 421
Outside Cover K0210-003023 422
Air Conditioner Unit (1/3) K0210-003024 423
Air Conditioner Unit (2/3) K0210-003025 425
Air Conditioner Unit (3/3) K0210-003026 426
Air Conditioner Unit Mounting K0210-003027 427
Air Conditioner Duct, R.H. K0210-003028 428
Air Conditioner Duct K0210-003029 430
Air Conditioner Piping K0210-003030 431
Air Conditioner Duct, Outside K0210-003031 433
Air Conditioner Duct, Rear K0210-003032 434
Console Box K0210-003033 436
Travel Control Lever (1/2) K0210-003034 437
Travel Control Lever (2/2) K0210-003035 438
Console Slider K0210-003036 440
Parking Brake Lever K0210-003037 441
Work Equipment Lock Lever K0210-003038 443
Floor Frame Inside Cover K0210-003039 445
Brake Pedal K0210-003040 446
Decelerator Pedal K0210-003041 448
Controller K0210-003042 449
Floor, Wiring Harness (1/3) K0210-003043 450
Floor, Wiring Harness (2/3) K0210-003044A 452
Floor, Wiring Harness (3/3) K0210-003045 454
Window Washer Piping K0210-003046 455
Dashboard Cover K0210-003047 456
Floor, Switch K0210-003048 457
Footrest K0210-003049 458
Floor Cover K0210-003050 459
KOMTRAX Controller K0210-003051 461
Related Parts K0210-003052 462
ROPS Cab (With AM-FM Stereo Radio With AUX Jack, Europe and Asia, For 3D Machine Control Plug and Play) ....(X22-1156580)
Cab Body K0210-005001 465
Door and Latch, L.H. K0210-003002 394
Door Damper, Window and Wiper, L.H. K0210-003003 396
Door Cover, L.H. K0210-003004 398
Door and Latch, R.H. K0210-005005 466
Door Damper, Window and Wiper, R.H. K0210-003006 401
Door Cover, R.H. K0210-003007 403
Door Hinge K0210-003008 404
Door Open Lock (1/2) K0210-003009 405
Door Open Lock, L.H. K0210-003010 406
Door Open Lock, R.H. K0210-003011 407
Door Open Lock (2/2) K0210-003012 408

Glass Window, Front and Rear K0210-003013 409
Sash type Glass Window, L.H. K0210-003014 410
Sash type Glass Window, R.H. K0210-003015 412
Wiper and Room Lamp K0210-003016 414
Radio K0210-004017 463
Rubber Antenna K0210-003018 416
Rubber Antenna Mounting K0210-003019 417
Roof Cover K0210-003020 418
Garnish K0210-005021 468
Rearview Mirror K0210-003022 421
Outside Cover K0210-003023 422
Air Conditioner Unit (1/3) K0210-003024 423
Air Conditioner Unit (2/3) K0210-003025 425
Air Conditioner Unit (3/3) K0210-003026 426
Air Conditioner Unit Mounting K0210-003027 427
Air Conditioner Duct, R.H. K0210-003028 428
Air Conditioner Duct K0210-003029 430
Air Conditioner Piping K0210-003030 431
Air Conditioner Duct, Outside K0210-003031 433
Air Conditioner Duct, Rear K0210-003032 434
Console Box K0210-003033 436
Travel Control Lever (1/2) K0210-003034 437
Travel Control Lever (2/2) K0210-003035 438
Console Slider K0210-003036 440
Parking Brake Lever K0210-003037 441
Work Equipment Lock Lever K0210-003038 443
Floor Frame Inside Cover K0210-005039 470
Brake Pedal K0210-003040 446
Decelerator Pedal K0210-005041 471
Controller K0210-003042 449
Floor, Wiring Harness (1/3) K0210-003043 450
Floor, Wiring Harness (2/3) K0210-003044A 452
Floor, Wiring Harness (3/3) K0210-003045 454
Window Washer Piping K0210-003046 455
Dashboard Cover K0210-003047 456
Floor, Switch K0210-003048 457
Footrest K0210-003049 458
Floor Cover K0210-003050 459
KOMTRAX Controller K0210-003051 461
GPS Box K0210-005052 473
GPS Antenna K0210-005053A 474
3D Machine Control Cab Back Surrounding Parts K0210-005054A 475
3D Machine Control Cab Front Surrounding Parts K0210-005055 476
Wiring Harness, Knob K0210-005056 478
3D Machine Control Cab Under Surrounding Parts K0210-005057 479
Related Parts K0210-005058 480
Floor Mat (Without 3D Machine Control Plug and Play) ..... (X22-1053572) K0310-001001 481
Floor Mat (With 3D Machine Control Plug and Play) ..... (X22-1155600) K0310-002001 482
Air Conditioner (Without Hardened Pulley) ..... (X22-1150981)
Air Conditioner Condenser Unit K0710-001001 483
Air Conditioner Condenser Unit Mounting K0710-001002 484
Air Condenser and Piping K0710-001003 485
Compressor K0710-001004 486
Duct K0710-001005 487
Compressor Related Parts K0710-001006 488

Compressor Mounting K0710-001007 490
Heater Unit Mounting K0710-001008 491
Bolt K0710-001009 492
Air Conditioner (With Hardened Pulley) ..... (X22-1159130)
Air Conditioner Condenser Unit K0710-001001 483
Air Conditioner Condenser Unit Mounting K0710-001002 484
Air Condenser and Piping K0710-001003 485
Compressor K0710-002004 493
Duct K0710-001005 487
Compressor Related Parts K0710-001006 488
Compressor Mounting K0710-001007 490
Heater Unit Mounting K0710-001008 491
Bolt K0710-001009 492
Fire Extinguisher ..... (X22-1058530)
K0830-001001 494
Dozer Control (Without Rear 1-attachment) ..... (X22-1155620)
Armrest K2110-001001 495
Lever K2110-001002 496
PPC Valve for Blade K2110-001003 497
Hose K2110-001004 498
Dozer Control (With Rear 1-attachment) ..... (X22-1155630)
Armrest K2110-002001 499
Lever K2110-002002 500
PPC Valve for Blade K2110-001003 497
Hose K2110-001004 498
PPC Valve for Ripper K2110-002005 501
Attachment Lever K2110-002006 502
Dozer Control (With Power Tilt Pitch Dozer) ..... (X22-1155640)
Armrest K2110-003001 504
Lever K2110-003002 505
PPC Valve for Blade K2110-001003 497
Hose K2110-003004 506
Dozer Control (With Power Tilt Pitch Dozer, Rear 1-attachment) ..... (X22-1155650)
Armrest K2110-004001 507
Lever K2110-004002 508
PPC Valve for Blade K2110-001003 497
Hose K2110-003004 506
PPC Valve for Ripper K2110-002005 501
Attachment Lever K2110-004006 509
Dozer Control (With Power Angle Power Tilt Dozer, Inside Frame) ..... (X22-1155660)
Armrest K2110-003001 504
Lever K2110-005002 511
PPC Valve for Blade K2110-001003 497
Hose K2110-005004 512
Dozer Control (With Power Angle Power Tilt Dozer, Inside Frame, Rear 1-attachment) ..... (X22-1155670)
Armrest K2110-004001 507
Lever K2110-006002 513
PPC Valve for Blade K2110-001003 497
Hose K2110-005004 512
PPC Valve for Ripper K2110-002005 501
Attachment Lever K2110-006006 514
Dozer Control (Without Rear 1-attachment, For 3D Machine Control Plug and Play) ..... (X22-1155680)
Armrest K2110-003001 504
Lever K2110-007002 516
PPC Valve for Blade K2110-001003 497
Hose (1/2) K2110-007004 517
EPC Block K2110-007005 518

Hose (2/2) K2110-007006 520
Dozer Control (With Rear 1-attachment, For 3D Machine Control Plug and Play) ..... (X22-1155690)
Armrest K2110-004001 507
Lever K2110-008002 521
PPC Valve for Blade K2110-001003 497
Hose (1/3) K2110-007004 517
PPC Valve for Ripper K2110-002005 501
Hose (2/3) K2110-008006 522
EPC Block K2110-008007 524
Hose (3/3) K2110-008008 526
Dozer Control (With Provision for Power Angle Power Tilt Pitch Dozer, For 3D Machine Control Plug and Play) ..... (X22-1155700)
Armrest K2110-003001 504
Lever K2110-009002 527
PPC Valve for Blade K2110-001003 497
Hose (1/2) K2110-009004 528
EPC Block K2110-007005 518
Hose (2/2) K2110-009006 529
Dozer Control (With Provision for Power Angle Power Tilt Pitch Dozer, Rear 1-attachment, For 3D Machine Control Plug and Play) ..... (X22-1155710)
Armrest K2110-004001 507
Lever K2110-010002 530
PPC Valve for Blade K2110-001003 497
Hose (1/3) K2110-009004 528
PPC Valve for Ripper K2110-002005 501
Hose (2/3) K2110-010006 531
EPC Block K2110-008007 524
Hose (3/3) K2110-010008 533
Dozer Control (With Power Angle Power Tilt Dozer, Inside Frame, For 3D Machine Control Plug and Play) ..... (X22-1155720)
Armrest K2110-003001 504
Lever K2110-011002 534
PPC Valve for Blade K2110-001003 497
Hose (1/2) K2110-007004 517
EPC Block K2110-007005 518
Hose (2/2) K2110-011006 535
Dozer Control (With Power Angle Power Tilt Dozer, Inside Frame, Rear 1-attachment, For 3D Machine Control Plug and Play) ..... (X22-1155730)
Armrest K2110-004001 507
Lever K2110-012002 536
PPC Valve for Blade K2110-001003 497
Hose (1/3) K2110-007004 517
PPC Valve for Ripper K2110-002005 501
Hose (2/3) K2110-010006 531
EPC Block K2110-008007 524
Hose (3/3) K2110-012008 537
Floor Frame Mounting ..... (X22-1156410)
K2120-001001 538
Floor Frame Cover ..... (X22-1155740)
K2130-001001 539
Blade Control Plate (Power Angle Power Tilt Dozer, Inside Frame) ..... (X22-1157900)
K2510-001001 540
Blade Control Plate (Power Angle Power Tilt Dozer, Inside Frame, 3D Machine Control Plug and Play) (X22-1157910)
K2510-002001 541
Blade Control Plate (Straight Tilt Dozer) ..... (X22-1157920)
K2510-003001 542

Blade Control Plate (Straight Tilt Dozer, 3D Machine Control Plug and Play) ....(X22-1157930)
K2510-004001 543
Blade Control Plate (Power Tilt Pitch Dozer) ....(X22-1157940)
K2510-005001 544
Blade Control Plate (Power Tilt Pitch Dozer, 3D Machine Control Plug and Play) ....(X22-1157950)
K2510-006001 545
Window Washer Tank ....(X22-1151051)
K2910-001001 546
KOMTRAX Related Parts (Without 3D Machine Control Plug and Play) ....(X22-1158780)
K4208-002001 548
KOMTRAX Related Parts (With 3D Machine Control Plug and Play) ....(X22-1158890)
K4208-003001 549
GUARDS AND COVERS
Dozer Blade Lift Cylinder Support ....(X22-1050380)
M2111-001001 552
Radiator Mask (Hinged Perforated Radiator Mask) ....(X22-1155780)
M2120-002001 553
Radiator Mask (Strengthened Perforated Radiator Mask) ....(X22-1155770)
M2120-001001 554
Front Guard (EU New Noise Arrangement 2) ....(X22-1150181)
Hood M2140-002001 555
Hood Side Cover M2140-002002 556
Hood Support, Front Side M2140-002003 557
Radiator Cover M2140-002004 558
Hood Mounting M2140-002005 559
Hood Support Rear Side Cover (1/2) M2140-002006 560
Hood Side Cover Lock M2140-002007 561
Hood Support Rear Side Cover (2/2) M2140-002008 562
Front Guard (Engine Hood and Side Cover) ....(X22-1150171)
Hood M2140-001001 563
Hood Side Cover M2140-002002 556
Hood Support, Front Side M2140-002003 557
Radiator Cover M2140-002004 558
Hood Mounting M2140-002005 559
Hood Support Rear Side Cover (1/2) M2140-002006 560
Hood Side Cover Lock M2140-002007 561
Hood Support Rear Side Cover (2/2) M2140-002008 562
Engine Side Cover (For EU New Noise Arrangement 2) ....(X22-1150201)
M2142-002001 564
Engine Side Cover ....(X22-1150191)
M2142-001001 565
Fender (Accumulator, PPC Piping, 3D Machine Control Plug and Play) ....(X22-1154480)
Fender and Bracket M2210-003001 566
Inner Parts, Control Valve (1/10) M2210-003002 567
Inner Parts, Control Valve (2/10) M2210-003003 568
Inner Parts, Control Valve (3/10) M2210-003004 569
Inner Parts, Control Valve (4/10) M2210-003005 570
Inner Parts, Control Valve (5/10) M2210-003006 571
Inner Parts, Control Valve (6/10) M2210-003007 572
Inner Parts, Control Valve (7/10) M2210-003008 574
Inner Parts, Control Valve (8/10) M2210-003009 575
Inner Parts, Control Valve (9/10) M2210-003010 576
Inner Parts, Control Valve (10/10) M2210-003011 577
Control Valve Mounting M2210-003012 578
PPC Valve Piping M2210-003013 579
PPC Lock Solenoid Valve With Accumulator M2210-003014 580
Control Valve Steering Piping M2210-003015 582

Control Valve Wiring Harness M2210-003016 583
Power Line Filter M2210-003017 584
Handrail M2210-003018 585
Grease Pump Holder M2210-003019 586
Mounting M2210-003020 587
Under Cover M2210-003021 588
Fender (Rear 1-attachment, Accumulator, PPC Piping, 3D Machine Control Plug and Play) ..... (X22-1154490)
Fender and Bracket M2210-003001 566
Inner Parts, Control Valve (1/11) M2210-004002 589
Inner Parts, Control Valve (2/11) M2210-004003 590
Inner Parts, Control Valve (3/11) M2210-004004 591
Inner Parts, Control Valve (4/11) M2210-004005 592
Inner Parts, Control Valve (5/11) M2210-004006 593
Inner Parts, Control Valve (6/11) M2210-004007 594
Inner Parts, Control Valve (7/11) M2210-004008 595
Inner Parts, Control Valve (8/11) M2210-004009 597
Inner Parts, Control Valve (9/11) M2210-004010 598
Inner Parts, Control Valve (10/11) M2210-004011 599
Inner Parts, Control Valve (11/11) M2210-004012 600
Control Valve Mounting M2210-003012 578
PPC Valve Piping M2210-004014 602
PPC Lock Solenoid Valve With Accumulator M2210-004015 603
Control Valve Steering Piping M2210-004016 605
Control Valve Wiring Harness M2210-003016 583
Power Line Filter M2210-003017 584
Handrail M2210-003018 585
Grease Pump Mounting M2210-004020 606
Mounting M2210-003020 587
Under Cover M2210-003021 588
Fender (Power Tilt Pitch Dozer, Accumulator, PPC Piping, 3D Machine Control Plug and Play) ..... (X22-1154500)
Fender and Bracket M2210-003001 566
Inner Parts, Control Valve (1/12) M2210-005002 607
Inner Parts, Control Valve (2/12) M2210-005003 608
Inner Parts, Control Valve (3/12) M2210-005004 609
Inner Parts, Control Valve (4/12) M2210-005005 610
Inner Parts, Control Valve (5/12) M2210-005006 611
Inner Parts, Control Valve (6/12) M2210-005007 612
Inner Parts, Control Valve (7/12) M2210-005008 613
Inner Parts, Control Valve (8/12) M2210-005009 614
Inner Parts, Control Valve (9/12) M2210-005010 616
Inner Parts, Control Valve (10/12) M2210-005011 617
Inner Parts, Control Valve (11/12) M2210-005012 618
Inner Parts, Control Valve (12/12) M2210-004012 600
Control Valve Mounting M2210-003012 578
PPC Valve Piping M2210-005015 619
PPC Lock Solenoid Valve With Accumulator M2210-005016 621
Control Valve Steering Piping M2210-005017 623
Control Valve Wiring Harness M2210-005018 625
Power Line Filter M2210-003017 584
Handrail M2210-003018 585
Grease Pump Holder M2210-003019 586
Mounting M2210-003020 587
Under Cover M2210-003021 588
Fender (Power Tilt Pitch Dozer, Rear 1-attachment, Accumulator, PPC Piping, 3D Machine Control Plug and Play) ..... (X22-1154510)
Fender and Bracket M2210-003001 566
Inner Parts, Control Valve (1/12) M2210-005002 607

Inner Parts, Control Valve (2/12) M2210-005003 608
Inner Parts, Control Valve (3/12) M2210-005004 609
Inner Parts, Control Valve (4/12) M2210-005005 610
Inner Parts, Control Valve (5/12) M2210-005006 611
Inner Parts, Control Valve (6/12) M2210-005007 612
Inner Parts, Control Valve (7/12) M2210-005008 613
Inner Parts, Control Valve (8/12) M2210-005009 614
Inner Parts, Control Valve (9/12) M2210-005010 616
Inner Parts, Control Valve (10/12) M2210-005011 617
Inner Parts, Control Valve (11/12) M2210-005012 618
Inner Parts, Control Valve (12/12) M2210-004012 600
Control Valve Mounting M2210-003012 578
PPC Valve Piping M2210-006015 626
PPC Lock Solenoid Valve With Accumulator M2210-005016 621
Control Valve Steering Piping M2210-006017 628
Control Valve Wiring Harness M2210-005018 625
Power Line Filter M2210-003017 584
Handrail M2210-003018 585
Grease Pump Holder M2210-003019 586
Mounting M2210-003020 587
Under Cover M2210-003021 588
Fender (Power Angle Power Tilt Dozer, Inside Frame, Accumulator, PPC Piping, 3D Machine Control Plug and Play) ..... (X22-1154520)
Fender and Bracket M2210-003001 566
Inner Parts, Control Valve (1/12) M2210-007002 630
Inner Parts, Control Valve (2/12) M2210-007003 631
Inner Parts, Control Valve (3/12) M2210-007004 632
Inner Parts, Control Valve (4/12) M2210-007005 633
Inner Parts, Control Valve (5/12) M2210-007006 634
Inner Parts, Control Valve (6/12) M2210-007007 635
Inner Parts, Control Valve (7/12) M2210-007008 636
Inner Parts, Control Valve (8/12) M2210-007009 638
Inner Parts, Control Valve (9/12) M2210-007010 640
Inner Parts, Control Valve (10/12) M2210-007011 641
Inner Parts, Control Valve (11/12) M2210-007012 643
Inner Parts, Control Valve (12/12) M2210-007013 644
Control Valve Mounting M2210-003012 578
PPC Valve Piping M2210-007015 645
PPC Lock Solenoid Valve With Accumulator M2210-007016 647
Solenoid Valve M2210-007017 648
PPC Valve Mounting M2210-007018 649
Control Valve Steering Piping M2210-007019 650
Control Valve Wiring Harness M2210-007020 652
Power Line Filter M2210-003017 584
Plug M2210-007022 653
Grease Pump Mounting M2210-004020 606
Mounting M2210-003020 587
Under Cover M2210-003021 588
Fender (Power Angle Power Tilt Dozer, Inside Frame, Rear 1-attachment, Accumulator, PPC Piping, 3D Machine Control Plug and Play) ..... (X22-1157400)
Fender and Bracket M2210-003001 566
Inner Parts, Control Valve (1/12) M2210-007002 630
Inner Parts, Control Valve (2/12) M2210-007003 631
Inner Parts, Control Valve (3/12) M2210-007004 632
Inner Parts, Control Valve (4/12) M2210-007005 633
Inner Parts, Control Valve (5/12) M2210-007006 634
Inner Parts, Control Valve (6/12) M2210-007007 635

Inner Parts, Control Valve (7/12) M2210-007008 636
Inner Parts, Control Valve (8/12) M2210-007009 638
Inner Parts, Control Valve (9/12) M2210-007010 640
Inner Parts, Control Valve (10/12) M2210-007011 641
Inner Parts, Control Valve (11/12) M2210-007012 643
Inner Parts, Control Valve (12/12) M2210-007013 644
Control Valve Mounting M2210-003012 578
PPC Valve Piping M2210-012015 654
PPC Lock Solenoid Valve With Accumulator M2210-007016 647
Solenoid Valve M2210-007017 648
PPC Valve Mounting M2210-007018 649
Control Valve Steering Piping M2210-012019 656
Control Valve Wiring Harness M2210-007020 652
Power Line Filter M2210-003017 584
Plug M2210-007022 653
Grease Pump Holder M2210-003019 586
Mounting M2210-003020 587
Under Cover M2210-003021 588
Fender (Power Angle Power Tilt Dozer, Inside Frame, Accumulator, PPC Piping) ..... (X22-1155820)
Fender and Bracket M2210-003001 566
Inner Parts, Control Valve (1/12) M2210-007002 630
Inner Parts, Control Valve (2/12) M2210-007003 631
Inner Parts, Control Valve (3/12) M2210-007004 632
Inner Parts, Control Valve (4/12) M2210-007005 633
Inner Parts, Control Valve (5/12) M2210-007006 634
Inner Parts, Control Valve (6/12) M2210-007007 635
Inner Parts, Control Valve (7/12) M2210-007008 636
Inner Parts, Control Valve (8/12) M2210-007009 638
Inner Parts, Control Valve (9/12) M2210-007010 640
Inner Parts, Control Valve (10/12) M2210-007011 641
Inner Parts, Control Valve (11/12) M2210-007012 643
Inner Parts, Control Valve (12/12) M2210-007013 644
Control Valve Mounting M2210-003012 578
PPC Valve Piping M2210-007015 645
PPC Lock Solenoid Valve With Accumulator M2210-007016 647
Solenoid Valve M2210-007017 648
PPC Valve Mounting M2210-011018 658
Control Valve Steering Piping M2210-007019 650
Control Valve Wiring Harness M2210-007020 652
Power Line Filter M2210-003017 584
Plug M2210-007022 653
Grease Pump Holder M2210-003019 586
Mounting M2210-003020 587
Under Cover M2210-003021 588
Fender (Power Tilt Pitch Dozer, Rear 1-attachment, Accumulator, PPC Piping) ..... (X22-1155810)
Fender and Bracket M2210-003001 566
Inner Parts, Control Valve (1/12) M2210-005002 607
Inner Parts, Control Valve (2/12) M2210-005003 608
Inner Parts, Control Valve (3/12) M2210-005004 609
Inner Parts, Control Valve (4/12) M2210-005005 610
Inner Parts, Control Valve (5/12) M2210-005006 611
Inner Parts, Control Valve (6/12) M2210-005007 612
Inner Parts, Control Valve (7/12) M2210-005008 613
Inner Parts, Control Valve (8/12) M2210-005009 614
Inner Parts, Control Valve (9/12) M2210-005010 616
Inner Parts, Control Valve (10/12) M2210-005011 617
Inner Parts, Control Valve (11/12) M2210-005012 618

Inner Parts, Control Valve (12/12) M2210-004012 600
Control Valve Mounting M2210-003012 578
PPC Valve Piping M2210-006015 626
PPC Lock Solenoid Valve With Accumulator M2210-010016 659
Control Valve Steering Piping M2210-006017 628
Control Valve Wiring Harness M2210-005018 625
Power Line Filter M2210-003017 584
Handrail M2210-003018 585
Grease Pump Holder M2210-003019 586
Mounting M2210-003020 587
Under Cover M2210-003021 588
Fender (Power Tilt Pitch Dozer, Accumulator, PPC Piping) ..... (X22-1155800)
Fender and Bracket M2210-003001 566
Inner Parts, Control Valve (1/12) M2210-005002 607
Inner Parts, Control Valve (2/12) M2210-005003 608
Inner Parts, Control Valve (3/12) M2210-005004 609
Inner Parts, Control Valve (4/12) M2210-005005 610
Inner Parts, Control Valve (5/12) M2210-005006 611
Inner Parts, Control Valve (6/12) M2210-005007 612
Inner Parts, Control Valve (7/12) M2210-005008 613
Inner Parts, Control Valve (8/12) M2210-005009 614
Inner Parts, Control Valve (9/12) M2210-005010 616
Inner Parts, Control Valve (10/12) M2210-005011 617
Inner Parts, Control Valve (11/12) M2210-005012 618
Inner Parts, Control Valve (12/12) M2210-004012 600
Control Valve Mounting M2210-003012 578
PPC Valve Piping M2210-005015 619
PPC Lock Solenoid Valve With Accumulator M2210-010016 659
Control Valve Steering Piping M2210-005017 623
Control Valve Wiring Harness M2210-005018 625
Power Line Filter M2210-003017 584
Handrail M2210-003018 585
Grease Pump Mounting M2210-004020 606
Mounting M2210-003020 587
Under Cover M2210-003021 588
Fender (Accumulator, PPC Piping) ..... (X22-1155790)
Fender and Bracket M2210-003001 566
Inner Parts, Control Valve (1/10) M2210-003002 567
Inner Parts, Control Valve (2/10) M2210-003003 568
Inner Parts, Control Valve (3/10) M2210-003004 569
Inner Parts, Control Valve (4/10) M2210-003005 570
Inner Parts, Control Valve (5/10) M2210-003006 571
Inner Parts, Control Valve (6/10) M2210-003007 572
Inner Parts, Control Valve (7/10) M2210-003008 574
Inner Parts, Control Valve (8/10) M2210-003009 575
Inner Parts, Control Valve (9/10) M2210-003010 576
Inner Parts, Control Valve (10/10) M2210-003011 577
Control Valve Mounting M2210-003012 578
PPC Valve Piping M2210-003013 579
PPC Lock Solenoid Valve With Accumulator M2210-008014 661
Control Valve Steering Piping M2210-003015 582
Control Valve Wiring Harness M2210-003016 583
Power Line Filter M2210-003017 584
Handrail M2210-003018 585
Grease Pump Holder M2210-003019 586
Mounting M2210-003020 587
Under Cover M2210-003021 588

Fender (Rear 1-attachment, Accumulator, PPC Piping) .....(X22-1150841)
Fender and Bracket M2210-003001 566
Inner Parts, Control Valve (1/11) M2210-004002 589
Inner Parts, Control Valve (2/11) M2210-004003 590
Inner Parts, Control Valve (3/11) M2210-004004 591
Inner Parts, Control Valve (4/11) M2210-004005 592
Inner Parts, Control Valve (5/11) M2210-004006 593
Inner Parts, Control Valve (6/11) M2210-004007 594
Inner Parts, Control Valve (7/11) M2210-004008 595
Inner Parts, Control Valve (8/11) M2210-004009 597
Inner Parts, Control Valve (9/11) M2210-004010 598
Inner Parts, Control Valve (10/11) M2210-004011 599
Inner Parts, Control Valve (11/11) M2210-002012 663
Control Valve Mounting M2210-003012 578
PPC Valve Piping M2210-004014 602
PPC Lock Solenoid Valve With Accumulator M2210-002015 664
Control Valve Steering Piping M2210-004016 605
Control Valve Wiring Harness M2210-003016 583
Power Line Filter M2210-003017 584
Handrail M2210-003018 585
Grease Pump Holder M2210-003019 586
Mounting M2210-003020 587
Under Cover M2210-003021 588
Fender (Power Angle Power Tilt Dozer, Inside Frame, Rear 1-attachment, Accumulator, PPC Piping) ..(X22-1150611)
Fender and Bracket M2210-003001 566
Inner Parts, Control Valve (1/12) M2210-007002 630
Inner Parts, Control Valve (2/12) M2210-007003 631
Inner Parts, Control Valve (3/12) M2210-007004 632
Inner Parts, Control Valve (4/12) M2210-007005 633
Inner Parts, Control Valve (5/12) M2210-007006 634
Inner Parts, Control Valve (6/12) M2210-007007 635
Inner Parts, Control Valve (7/12) M2210-007008 636
Inner Parts, Control Valve (8/12) M2210-007009 638
Inner Parts, Control Valve (9/12) M2210-007010 640
Inner Parts, Control Valve (10/12) M2210-007011 641
Inner Parts, Control Valve (11/12) M2210-007012 643
Inner Parts, Control Valve (12/12) M2210-007013 644
Control Valve Mounting M2210-003012 578
PPC Valve Piping M2210-012015 654
PPC Lock Solenoid Valve With Accumulator M2210-007016 647
Solenoid Valve M2210-007017 648
PPC Valve Mounting M2210-011018 658
Control Valve Steering Piping M2210-012019 656
Control Valve Wiring Harness M2210-007020 652
Power Line Filter M2210-003017 584
Plug M2210-007022 653
Grease Pump Mounting M2210-004020 606
Mounting M2210-003020 587
Under Cover M2210-003021 588
Fender Cover (Without Refuel Pump) .....(X22-1155830)
Battery Box Cover M2211-001001 666
Valve Cover M2211-001002 668
Step M2211-001003 669
Mounting M2211-001004 670
Fender Cover (With Refuel Pump) .....(X22-1159260)
Battery Box Cover M2211-002001 671
Valve Cover M2211-001002 668

Step M2211-001003 669
Mounting M2211-001004 670
Shovel Holder ..... (X22-1056561)
M2214-001001 673
Rear Cover (Strengthened Type) ..... (X22-1050441)
M2240-001001 674
Rear Cover (Strengthened Type, For Rear 1-attachment) ..... (X22-1053441)
M2240-002001 675
Under Guard (Hinged) ..... (X22-1156970)
M2810-004001 676
Under Guard (Strengthened Type) ..... (X22-1156820)
M2810-003001 677
Under Guard (Hinged, For EU New Noise Arrangement 2) ..... (X22-1155850)
M2810-002001 678
Under Guard (Strengthened Type, For EU New Noise Arrangement 2) ..... (X22-1155840)
M2810-001001 679
Front Pull Hook ..... (X22-1053520)
M2811-001001 680
UNDERCARRIAGE
Front Idler ..... (X22-1050461)
R0110-001001 682
Idler Cushion ..... (X22-1050471)
R0120-001001 683
Track Roller (With Plus Type Track Shoe) ..... (X21-1361980)
Single Roller R0200-001001 684
Double Roller R0200-001002 685
Mounting Parts R0200-001003 686
Track Roller (Without Plus Type Track Shoe) ..... (X22-0220731)
Single Roller R0200-002001 687
Double Roller R0200-002002 688
Mounting Parts R0200-001003 686
Carrier Roller (With Plus Type Track Shoe) ..... (X21-1361990)
R0300-001001 689
Carrier Roller (Without Plus Type Track Shoe) ..... (X22-0220751)
R0300-002001 690
Track Shoe Assembly (Single Grouser Shoe, 915mm Width, Sealed and Lubricated Type, Plus Type) .(X21-1361950)
R0500-001001 691
Track Shoe Assembly (Single Grouser Shoe, 760mm Width, Sealed and Lubricated Type, Plus Type) .(X21-1457160)
R0500-002001 692
Track Shoe Assembly (Single Grouser Shoe, 760mm Width, Sealed and Lubricated Type, HD Links) ..(X21-1458120)
R0500-003001 693
Track Shoe Assembly (Single Grouser Shoe, 915mm Width, Sealed and Lubricated Type, HD Links) ..(X21-1458130)
R0500-004001 694
Track Shoe Assembly (Swamp Shoe, 940mm Width, Sealed and Lubricated Type, HD Links) ..... (X21-1458140)
R0500-005001 695
Track Link Assembly (Supply Only, Plus Type) ..... (X21-1369580)
R0501-001001 696
Track Link Assembly (Supply Only, Heavy Duty Links) ..... (X21-1459040)
R0501-002001 697
Track Link Assembly (Supply Only, Swamp Shoe, Heavy Duty Links) ..... (X21-1459050)
R0501-003001 698
Track Frame (Strengthened Type) ..... (X22-1050621)
R2100-001001 699
Track Frame (Strengthened Type, For Power Angle Power Tilt Dozer, Inside Frame) ..... (X22-1050881)
R2100-002001 700
Track Frame (Strengthened Type, Plus Type Track Shoe) ..... (X22-1059320)
R2100-003001 701

Track Frame (Strengthened Type, Plus Type Track Shoe, For Power Angle Power Tilt Dozer, Inside Frame) ....(X22-1059350)
R2100-004001 702
Track Roller Guard (Center and End Sections) ....(X22-0762570)
R2200-001001 703
Track Roller Guard (Center Track Roller Guard, Plus Type Track Shoe) ....(X22-1018340)
R2200-002001 704
Track Roller Guard (Segmented Full Track Roller Guard) ....(X22-1055041)
R2200-003001 705
Track Roller Guard (Segmented Full Track Roller Guard, Plus Type Track Shoe) ....(X22-1057700)
R2200-004001 706
WORK EQUIPMENT
Dozer Frame (For Straight Tilt Dozer) ....(X22-1050521)
T2110-002001 708
Dozer Frame (For Power Tilt Pitch Dozer) ....(X22-1057860)
T2110-003001 709
Dozer Frame (For Power Angle Power Tilt Dozer, Inside Frame) ....(X22-1155870)
T2110-004001 710
Dozer Arm and Brace (For Straight Tilt Dozer) ....(X22-0220770)
T2115-001001 711
Dozer Arm and Brace (For Power Tilt Pitch Dozer) ....(X22-0229030)
T2115-002001 712
Dozer Arm and Brace (For Power Angle Power Tilt Dozer, Inside Frame) ....(X22-1050821)
T2115-003001 713
Dozer Blade (For Straight Tilt Dozer or Power Angle Power Tilt Pitch Dozer) ....(X22-1050701)
T2120-001001 714
Dozer Blade (For Straight Tilt Dozer, Power Tilt Pitch Dozer, 3D Machine Control Dual Mast) ....(X22-1158050)
T2120-004001 715
Dozer Blade (For Power Angle Power Tilt Dozer, Inside Frame, 3D Machine Control Dual Mast) ....(X22-1158090)
T2120-006001 716
Dozer Blade (For 3000mm, Power Angle Power Tilt Blade, 3D Machine Control Dual Mast) ....(X22-1158110)
Blade T2120-008001 718
Bearing T2120-008002 720
Dozer Blade (For 3000mm, Power Angle Power Tilt Blade) ....(X22-1155970)
Blade T2120-003001 721
Bearing T2120-008002 720
Dozer Blade (For Power Angle Power Tilt Dozer, Inside Frame) ....(X22-1155950)
T2120-002001 723
Dozer Blade Lift Cylinder (For Power Angle Power Tilt Dozer, Inside Frame) ....(X22-1156010)
Inner Parts, Lift Cylinder, L.H. T2140-002001 724
Inner Parts, Lift Cylinder, R.H. T2140-002002 726
Cylinder Fixing Parts T2140-002003 728
Dozer Blade Lift Cylinder (Without Power Angle Power Tilt Dozer, Inside Frame) ....(X22-1156000)
Inner Parts, Lift Cylinder, L.H. T2140-001001 729
Inner Parts, Lift Cylinder, R.H. T2140-001002 731
Cylinder Fixing Parts T2140-001003 733
Dozer Blade Tilt Cylinder (For Power Angle Power Tilt Dozer, Inside Frame) ....(X22-1156030)
Inner Parts, Tilt Cylinder T2150-002001 734
Dozer Blade Tilt Cylinder (Without Power Angle Power Tilt Dozer, Inside Frame) ....(X22-1156020)
Inner Parts, Tilt Cylinder T2150-001001 735
Dozer Blade Pitch Cylinder ....(X22-1156040)
Inner Parts, Pitch Cylinder T2151-001001 736
Dozer Blade Angle Cylinder ....(X22-1156050)
T2153-001001 737
Dozer Blade Tilt Cylinder Piping (For Straight Tilt Dozer) ....(X22-1050571)
T2160-001001 738

Dozer Blade Tilt Cylinder Piping (For Power Tilt Pitch Dozer) .....(X22-1057810)
T2160-003001 739
Dozer Blade Tilt Cylinder Piping (For Power Angle Power Tilt Dozer, Inside Frame) .....(X22-1156150)
Angle Cylinder Piping T2160-005001 740
Tilt Cylinder Piping T2160-005002 741
Drawbar (Rigid Type) .....(X22-0221680)
T2810-001001 743
Drawbar (Rigid Type, With Scraper) .....(X22-0221690)
T2810-002001 744
Drawbar (Hitch) .....(X22-1050931)
T2810-003001 745
Drawbar (Hitch, for EU Spec) .....(X22-1173750)
T2810-006001 746
Drawbar (Rigid Type, for EU Spec) .....(X22-1156180)
T2810-005001 747
MARKS AND PLATES
Marks and Plates (English, For Power Angle Power Tilt Dozer, Inside Frame, EU New Noise Arrangement 2) .....(X22-1157520)
U0100-008001A 750
Marks and Plates (French, For Quebec Canada, For Power Angle Power Tilt Dozer, Inside Frame) .....(X22-1157490)
U0100-007001 752
Marks and Plates (English, USA and Puerto Rico, For Power Angle Power Tilt Dozer, Inside Frame) ...(X22-1157450)
U0100-006001 753
Marks and Plates (English, For EU New Noise Arrangement 2) .....(X22-1157220)
U0100-004001A 754
Marks and Plates (French, For Quebec Canada) .....(X22-1157190)
U0100-003001 756
Marks and Plates (English, USA and Puerto Rico) .....(X22-1157150)
U0100-002001 757
Caution Plates .....(X22-1175510)
U0205-001001 758
Balancing Mark .....(X22-0514220)
U0400-001001 759
Balancing Mark (For EU New Noise Arrangement 2) .....(X22-1156960)
U0400-002001 760
ROPS/FOPS Plate (English) .....(X22-1058040)
U0520-002001 761
ROPS/FOPS Plate (Spanish-English) .....(X22-1171230)
U0520-003001 762
ROPS/FOPS Plate (French-English) .....(X22-1171240)
U0520-004001 763
ROPS/FOPS Plate (German-English) .....(X22-1171250)
U0520-005001 764
ROPS/FOPS Plate (Italian-English) .....(X22-1171270)
U0520-006001 765
ROPS/FOPS Plate (Portuguese-English) .....(X22-1171280)
U0520-007001 766
ROPS/FOPS Plate (For EU Safety Regulation) .....(X22-1173700)
U0520-008001 767
AUXILIARY PARTS AND TOOL
Spare Parts .....(X22-1156390)
V0100-001001 770
Cap and Overall .....(X22-0016710)
V0200-001001 771
Tool .....(X22-1156400)
V0300-001001 772
OTHER EQUIPMENT

Fuel Self Charge Pump .....(X22-1159270)
W1113-001001 774
Parts For Machine Transportation .....(X22-0227680)
W9970-001001 776
SPECIAL PRODUCT AND ITS RELATED PARTS
Main Frame .....(X22-1059620)
X2000-002001 778
FIELD REPAIR SERVICE PARTS
Service Kit Parts .....(Y99-0000002)
KIT 780

ENGINE CYLINDER HEAD AND ITS RELATED PARTS

FIG. AXS00-001001 Exhaust Connector Clamp (Clamp)

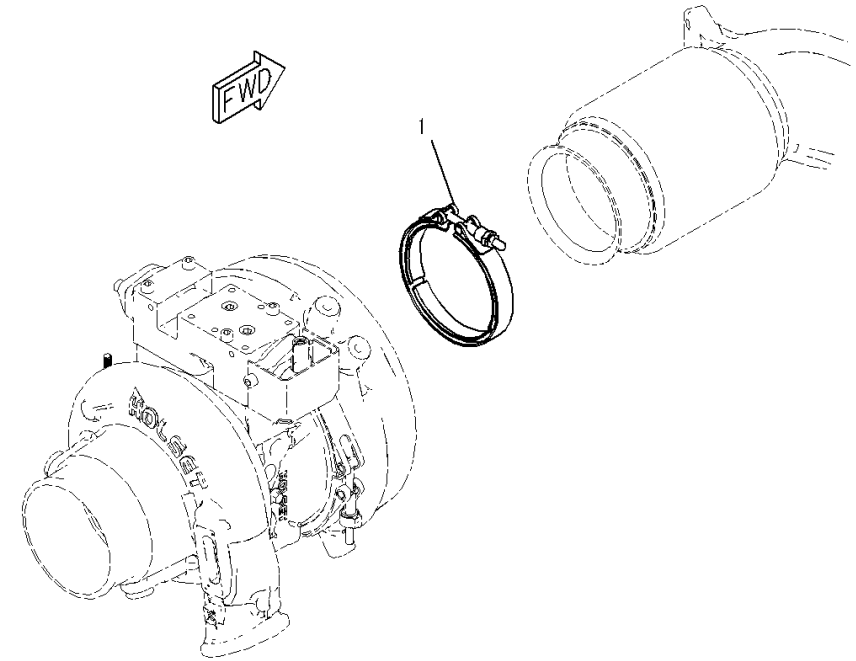

Komatsu Variable Geometry Turbocharger (KVGT)

JY016751

Index	Code	Part Number	Description	Qty	Serial Number
1		6742-01-3620	Clamp	1	26900001-

FIG. A1009-001001 Cylinder Head

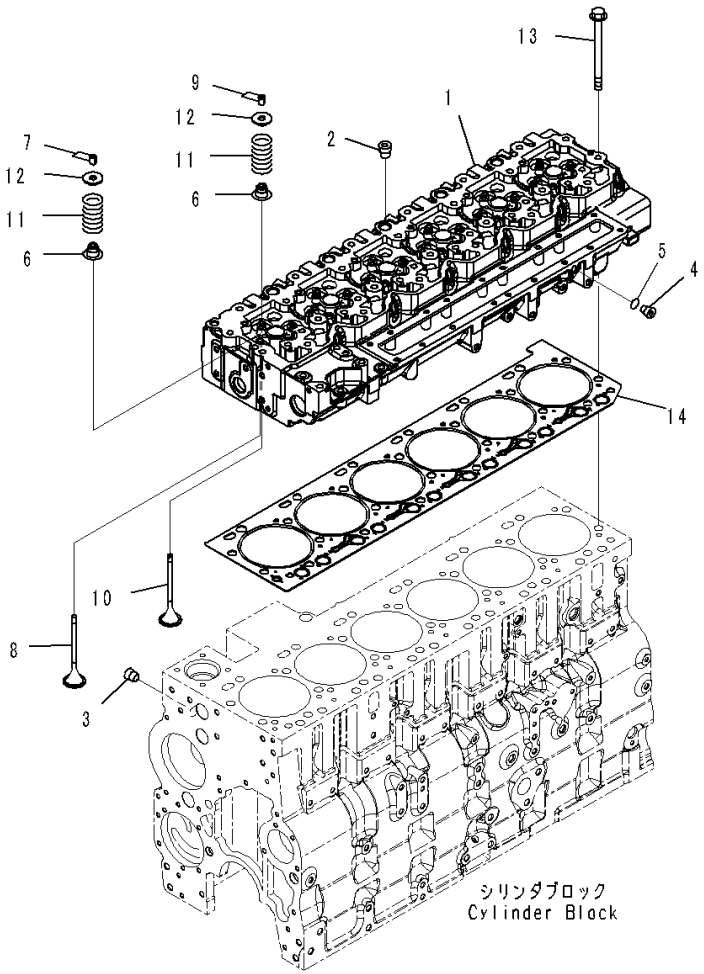

Index	Code	Part Number	Description	Qty	Serial Number
		6746-11-1210	Cylinder Head Assembly	1	26900001-
1	C1		• Head, Cylinder	1	26900001-
2		6732-11-1910	• Plug	5	26900001-
3		6732-11-1920	• Plug	1	26900001-
		6732-21-1960	• Plug Assembly	1	26900001-
4		6215-81-9510	• • Plug	1	26900001-
5		6735-21-1970	• • O-ring	1	26900001-
6		6744-41-4080	Seal	24	26900001-
7		6732-41-4520	Collet	24	26900001-
8		6746-41-4120	Valve, Intake	12	26900001-
9		6732-41-4520	Collet	24	26900001-
10		6746-41-4110	Valve, Exhaust	12	26900001-
11		6744-41-4031	Spring	24	26900001-
12		6744-41-4050	Retainer	24	26900001-
13		6743-11-1610	Bolt	26	26900001-
14		6746-11-1180	Gasket	1	26900001-

FIG. AVC00-001001 Cylinder Head Cover

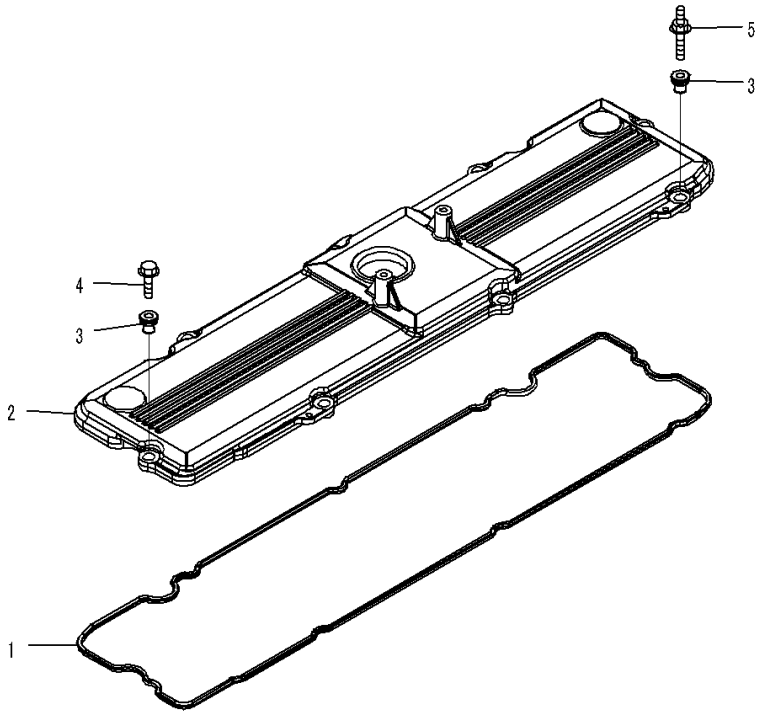

JY016728

Index	Code	Part Number	Description	Qty	Serial Number
		6745-11-8310	Cover	1	26900001-
1		6745-11-8810	• Gasket	1	26900001-
2		6745-11-8320	• Cover	1	26900001-
3		6745-11-8160	Isolator	8	26900001-
4		01435-60835	Bolt	6	26900516-
		6732-61-6140	Bolt	6	26900001-26900515
5		6745-11-8170	Screw	2	26900001-

FIG. ABR00-001001 Breather

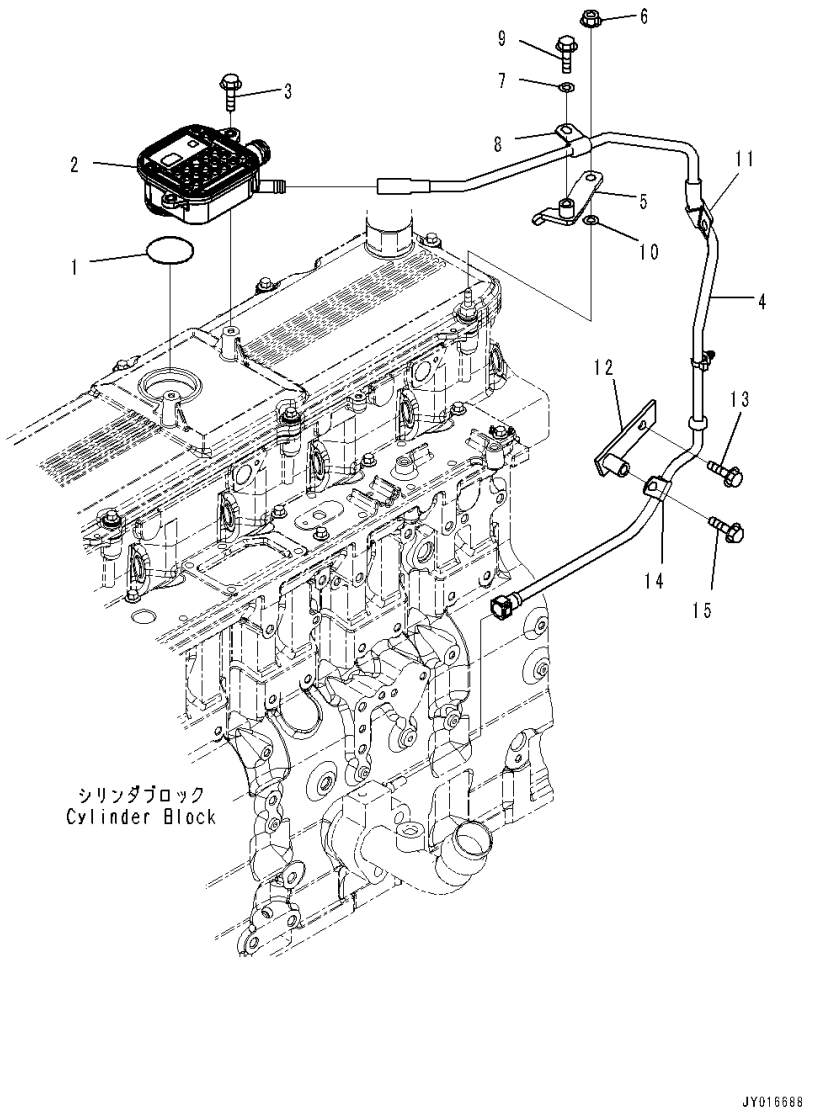

Index	Code	Part Number	Description	Qty	Serial Number
		6745-21-7110	Housing Assembly	1	26900001-
1		6745-21-7120	• O-ring	1	26900001-
2		6745-21-7130	• Housing	1	26900001-
3		6735-71-5190	Bolt	2	26900001-
4		6746-21-7320	Tube	1	26900001-
5		6745-11-8250	Brace	1	26900001-
6		6732-71-3210	Nut	1	26900001-
7		01643-30823	Washer	1	26900001-
8		04434-51008	Clip	1	26900001-
9		6731-71-6270	Screw	1	26900001-
10		01643-30823	Washer	1	26900001-
11		04434-51508	Clip	1	26900001-
12		6746-21-7330	Brace	1	26900001-
13		01435-00820	Bolt	1	26900001-
14		04434-51008	Clip	1	26900001-
15		6731-71-6270	Screw	1	26900001-

FIG. AIM00-001001 Air Intake Manifold

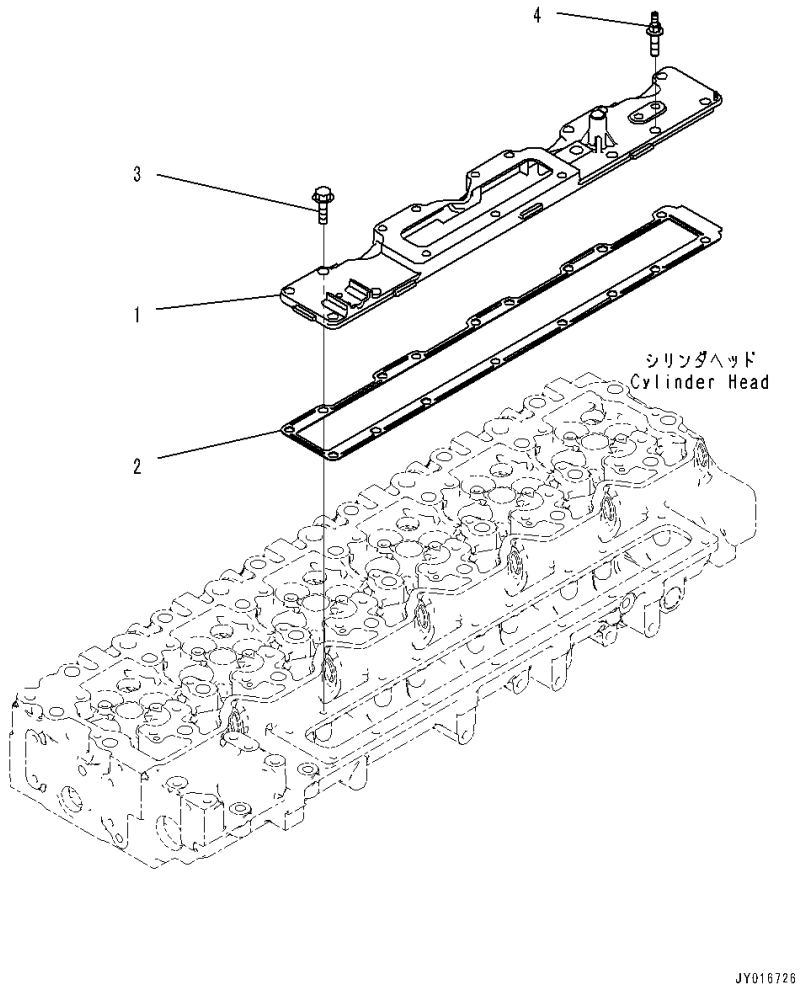

Index	Code	Part Number	Description	Qty	Serial Number
1		6746-11-4140	Cover, Inrake Manifold	1	26900001-
2		6746-11-4150	Gasket	1	26900001-
3		6732-21-6630	Screw	5	26900009-
4		6746-11-4190	Stud	1	26900001-

FIG. AIC00-001001 Air Intake Connector

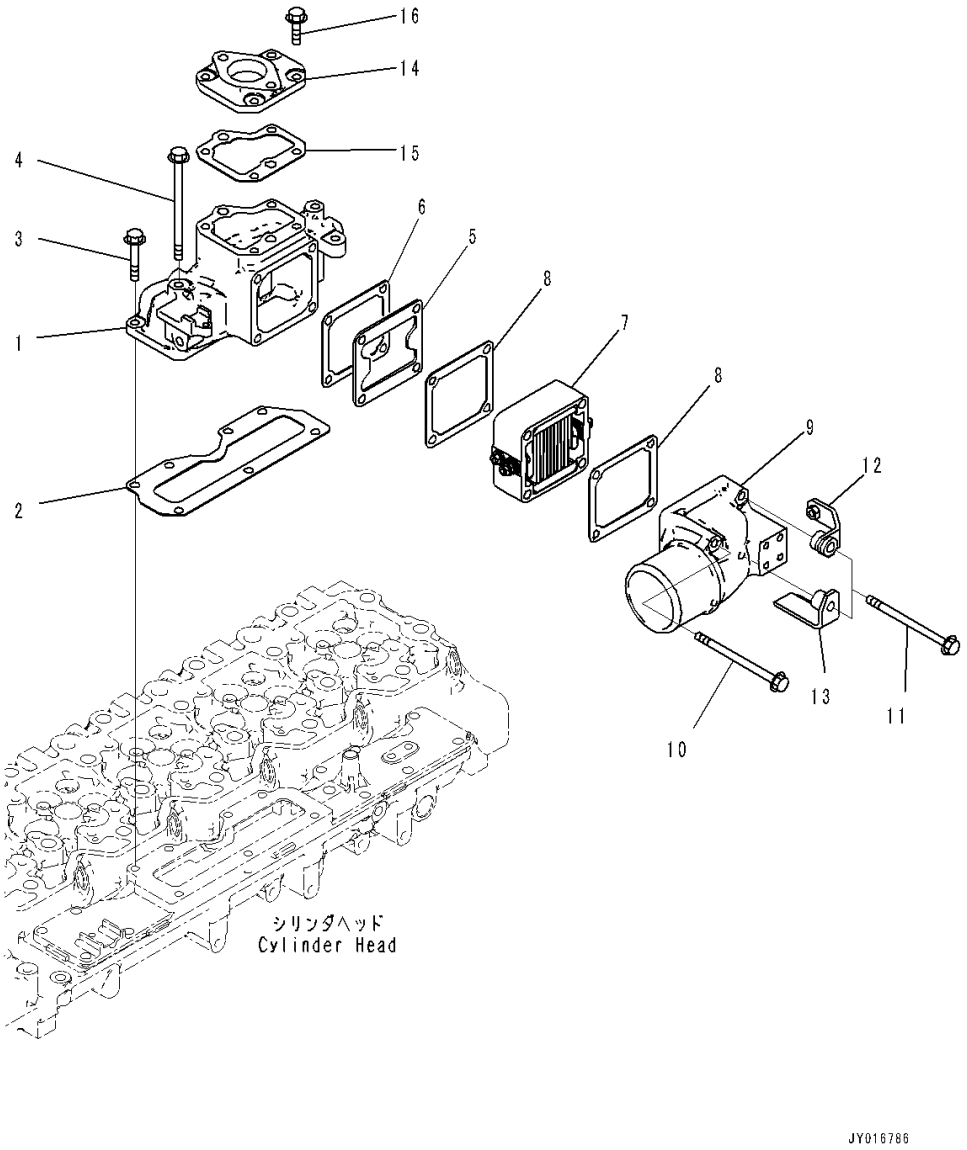

Index	Code	Part Number	Description	Qty	Serial Number
1		6746-11-4161	Connection,Air Intake	1	26900572-
	A2	6746-11-4160	Connection, Air Intake	1	26900001-26900571
2		6746-11-4170	Gasket	1	26900001-
3		01435-60850	Bolt	4	26900516-
		6736-21-3210	Bolt	4	26900001-26900515
4		6746-11-4240	Bolt	3	26900001-
5		6746-11-4210	Plate, Cover	1	26900001-
6		6754-11-4120	Gasket	1	26900001-
7		6754-81-5110	Heater	1	26900001-
8		6754-11-4120	Gasket	2	26900001-
9		6746-11-4230	Pipe, Air Inlet	1	26900001-
10		6746-11-4240	Bolt	2	26900001-
11		6737-11-4910	Bolt	2	26900001-
12		6746-81-5280	Brace	1	26900001-
13		6746-81-5290	Brace	1	26900001-
14		6746-11-4251	Cover,Air Intake	1	26900572-
	A2	6746-11-4250	Cover, Air Intake	1	26900001-26900571
15		6746-11-4260	Gasket	1	26900001-
16		01435-60820	Bolt	4	26900572-
		6732-71-3220	Bolt	4	26900001-26900571

FIG. A1310-001001 Air Intake Connector

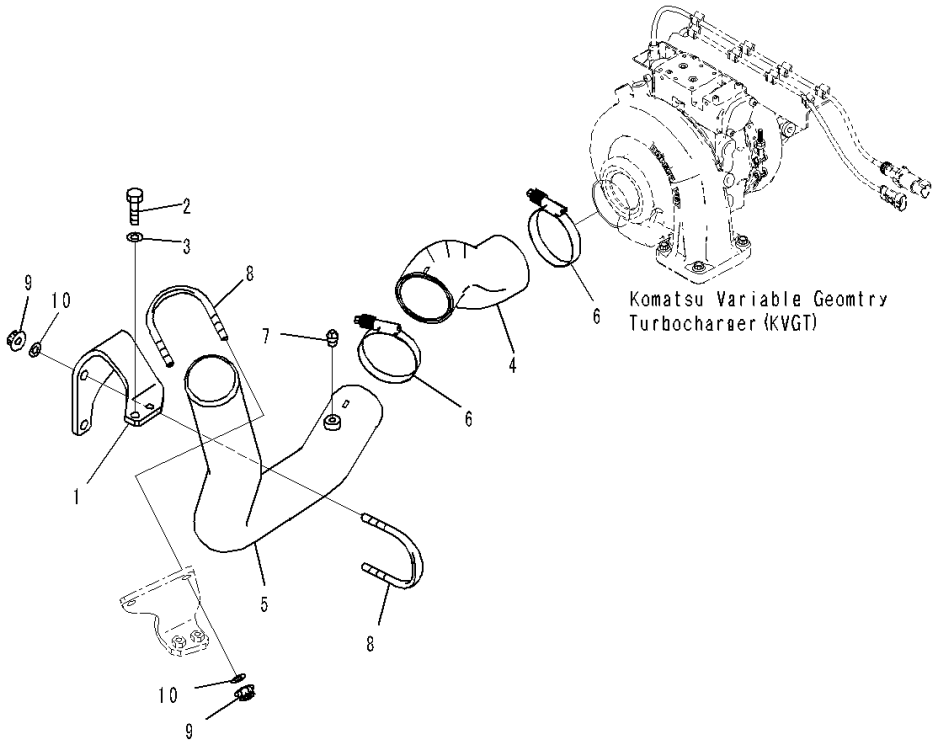

Index	Code	Part Number	Description	Qty	Serial Number
1		6746-11-4130	Bracket	1	26900001-
2		01010-81030	Bolt	2	26900001-
3		01643-31032	Washer	2	26900001-
4		6746-11-4110	Hose	1	26900001-
5		6746-11-4120	Tube	1	26900001-
6		07299-00080	Clamp	2	26900001-
7		07042-20108	Plug	1	26900001-
8		07283-37663	Clip	2	26900001-
9		01597-01009	Nut	4	26900001-
10		01643-31032	Washer	4	26900001-

FIG. ATB30-001001 Exhaust Manifold

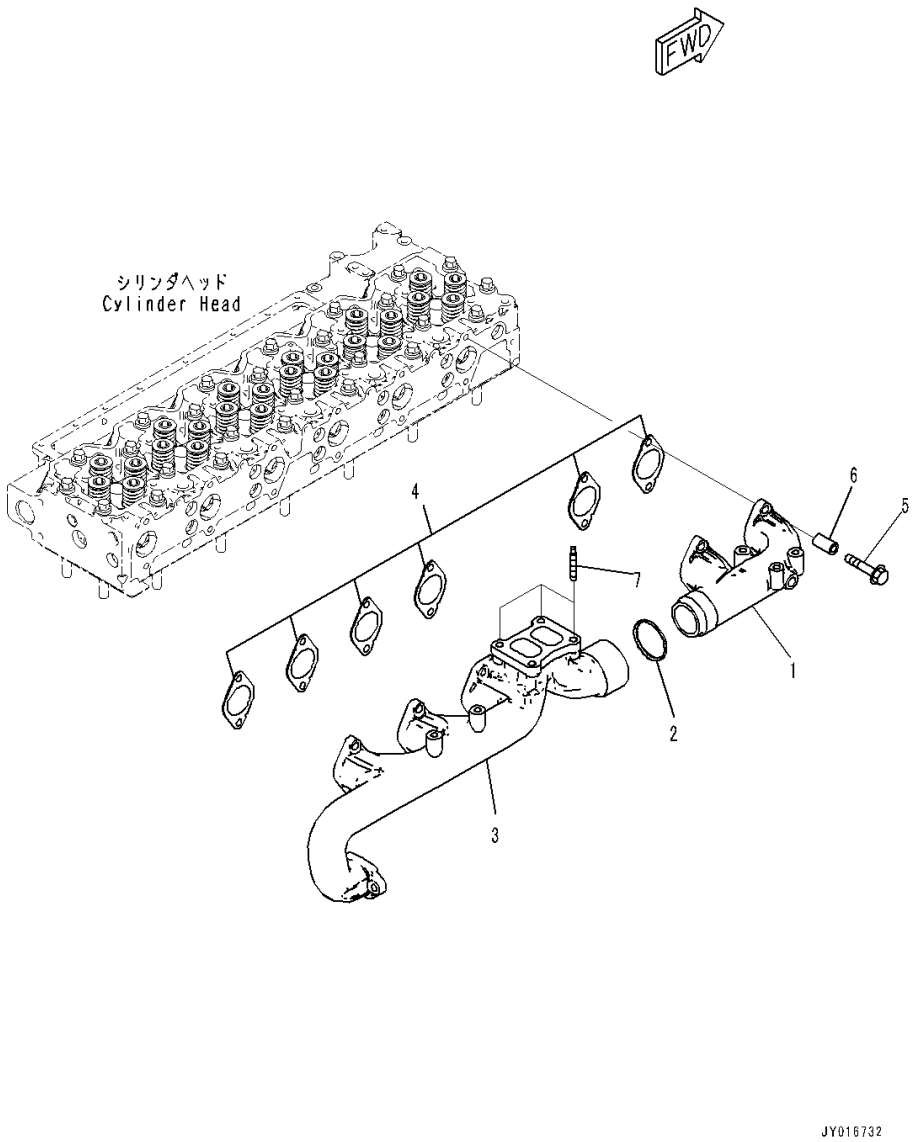

Index	Code	Part Number	Description	Qty	Serial Number
1		6746-11-5520	Manifold, Exhaust	1	26900001-
2		6746-11-5540	Seal	1	26900001-
3		6746-11-5570	Manifold, Exhaust	1	26900001-
4		6745-11-5811	Gasket	6	26900001-
5		6732-11-5860	Bolt	12	26900001-
6		6754-11-5150	Spacer	12	26900001-
7		6746-11-5551	Stud	3	26900647-
		6746-11-5550	Stud	3	26900001-26900646

FIG. APP20-001001 Komatsu Variable Geometry Turbocharger (KVGT) (Related Parts)

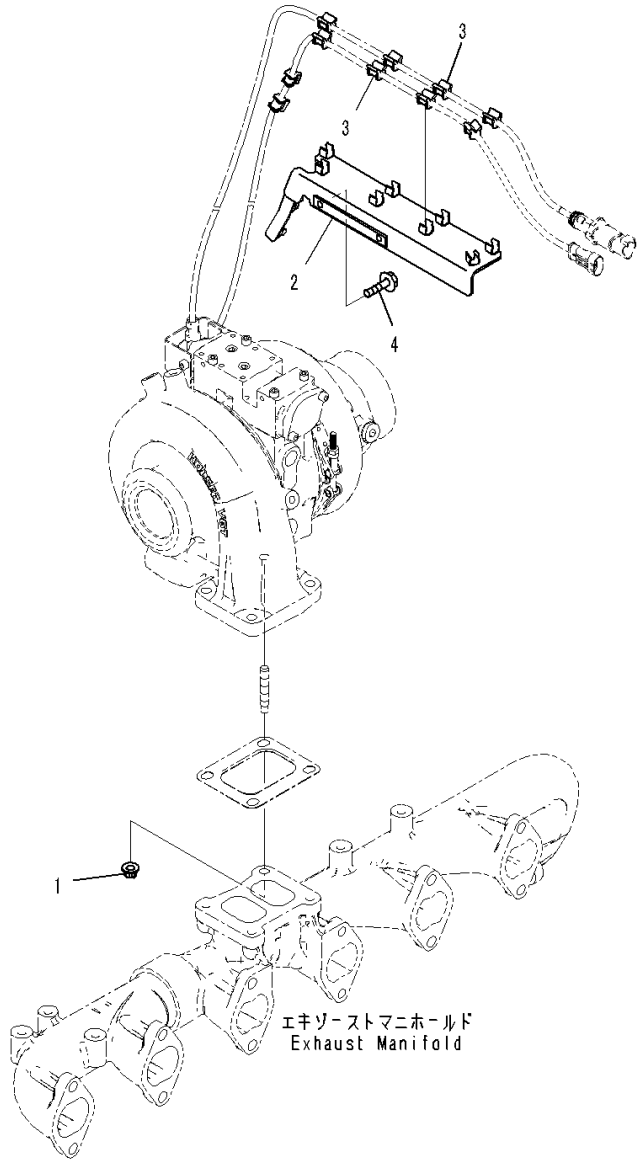

Index	Code	Part Number	Description	Qty	Serial Number
1		6746-11-5580	Nut	4	26900001-
		6746-81-5130	Brace	1	26900001-
2	C1		• Brace	1	26900001-
3		6252-81-9530	• Bushing	10	26900001-
4		6736-81-5110	Bolt	2	26900001-

FIG. A1539-001001 Komatsu Variable Geometry Turbocharger (KVGT)

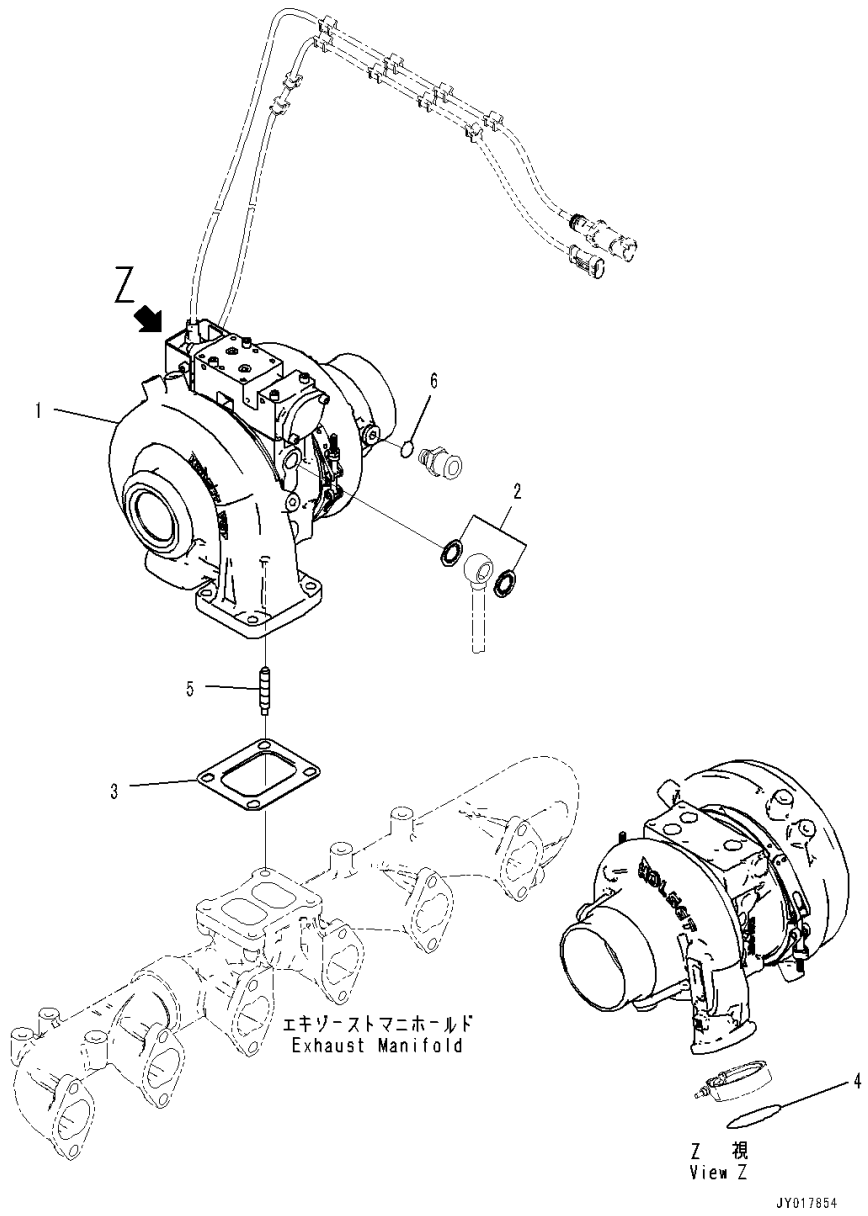

Index	Code	Part Number	Description	Qty	Serial Number
1		6746-81-8131	Turbocharger	1	26900647-
		6746-81-8130	Turbocharger	1	26900001-26900646
2		6755-61-8140	Seal, Washer	5	26900001-
3		6741-81-8830	Gasket	1	26900001-
4		6738-11-4370	O-ring	1	26900001-
5		6746-11-5550	Stud	1	26900001-
6		6755-21-7110	O-ring	1	26900001-

FIG. ATP00-001001 Komatsu Variable Geometry Turbocharger (KVGT) Oil Piping

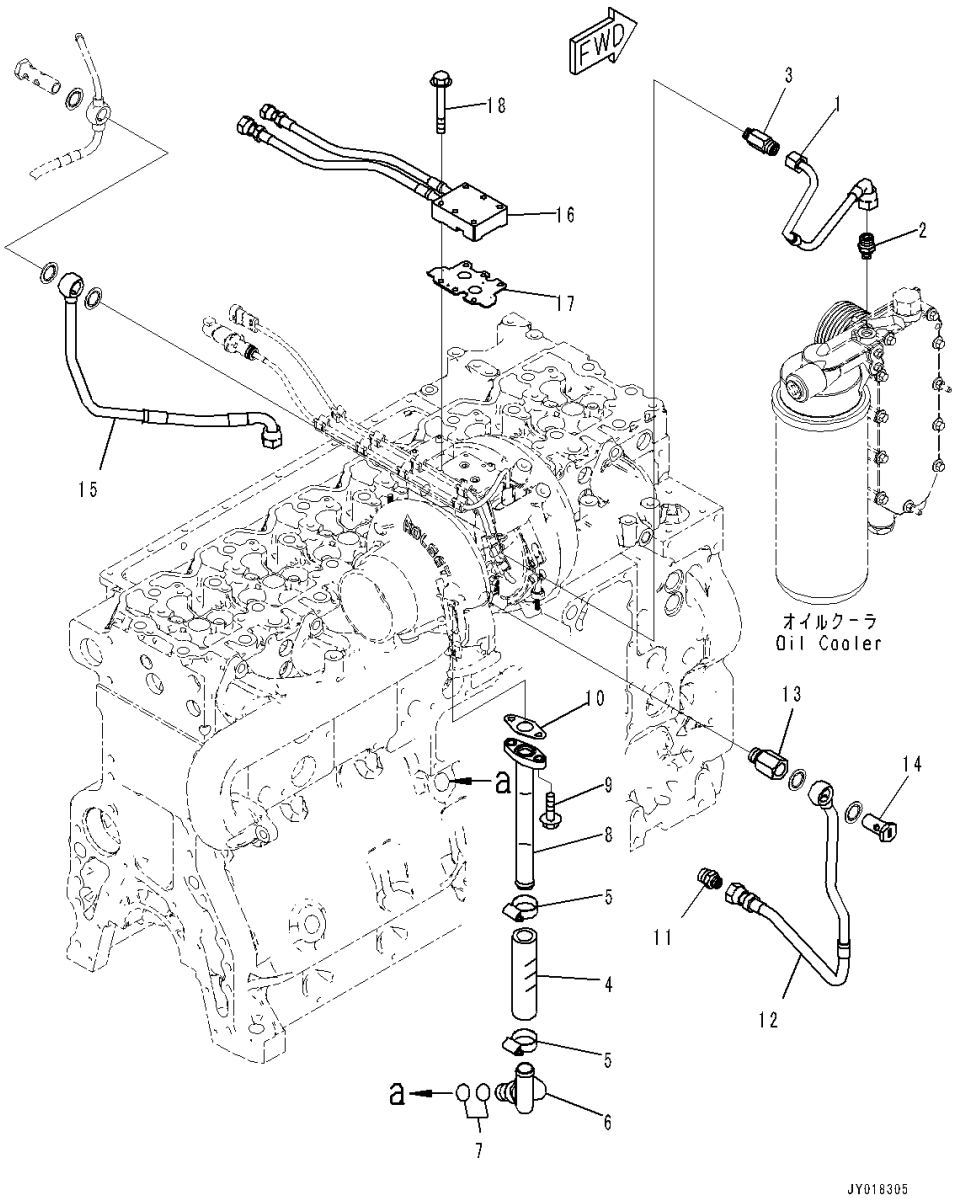

Index	Code	Part Number	Description	Qty	Serial Number
1		6746-51-8150	Tube, Oil Supply	1	26900001-
2		6745-61-8160	Union	1	26900001-
3		6746-51-8180	Tube, Oil Supply	1	26900001-
4		6746-51-8110	Hose	1	26900001-
5		6734-71-5170	Clamp, Hose	2	26900001-
		6746-51-8160	Tube, Oil Drain	1	26900001-
6	C1		• Piece, Distance	1	26900001-
7	C1		• Flange	1	26900001-
8		6746-51-8170	Tube, Oil Drain	1	26900001-
9		01435-60820	Bolt	2	26900572-
		6732-71-3220	Bolt	2	26900001-26900571
10		6754-51-8121	Gasket	1	26900001-
11		6746-61-8150	Union	1	26900001-
12		6746-61-8260	Tube	1	26900001-
13		6746-61-8130	Connector	1	26900001-
14		6755-61-8170	Screw	1	26900001-
15		6746-61-8270	Tube	1	26900001-
16		6746-51-8250	Connection	1	26900001-
17		6755-51-8220	Gasket	1	26900001-
18		6745-81-9430	Bolt	6	26900001-

FIG. AIT00-001001 Exhaust Connection

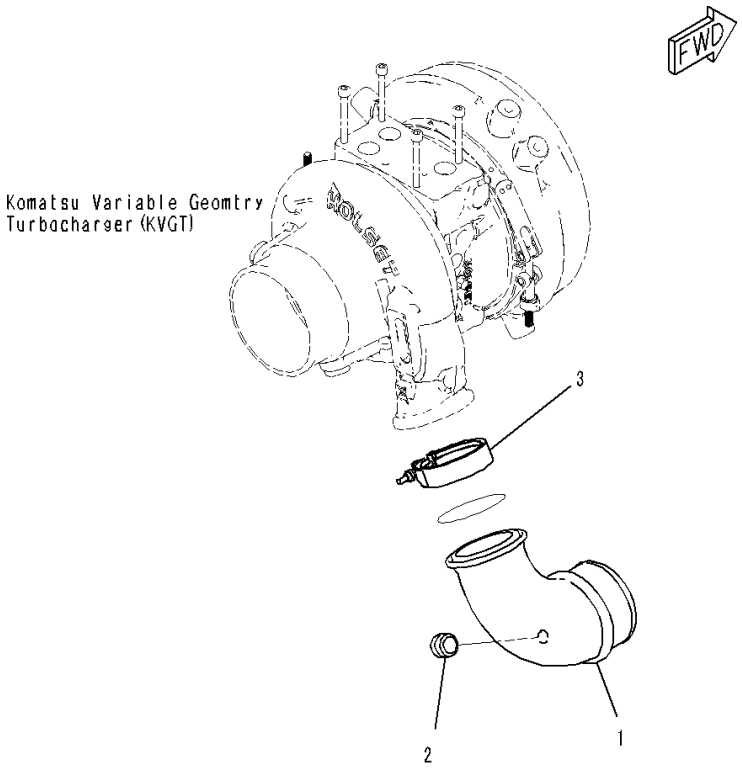

Index	Code	Part Number	Description	Qty	Serial Number
1		1307682H1	Pipe	1	26900001-
2		1240101H1	Plug	1	26900001-
3		6745-11-4230	Clamp	1	26900001-

FIG. ASH00-001001 Heat Shield

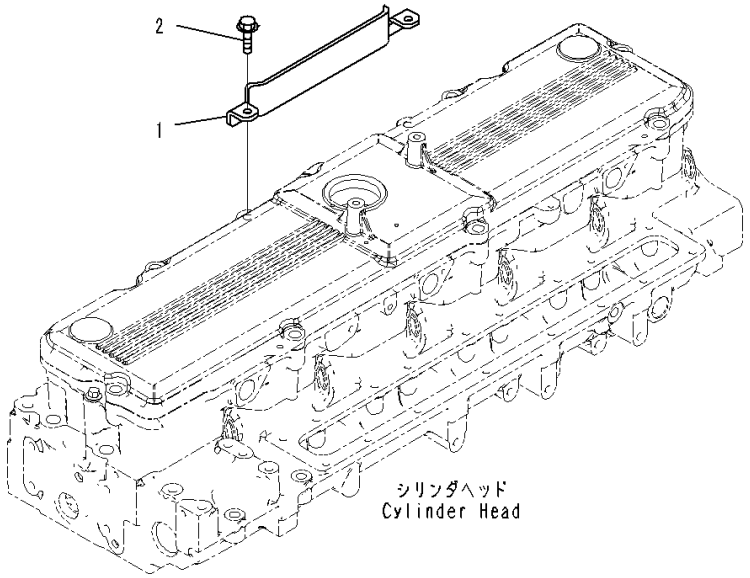

Index	Code	Part Number	Description	Qty	Serial Number
1		6746-81-8710	Shield, Heat	1	26900001-
2		6746-81-8720	Screw	2	26900001-

FIG. A1570-001001 Heat Shield (Komatsu Variable Geometry Turbocharger (KVGT) and Komatsu Diesel Particulate Filter (KDPF))

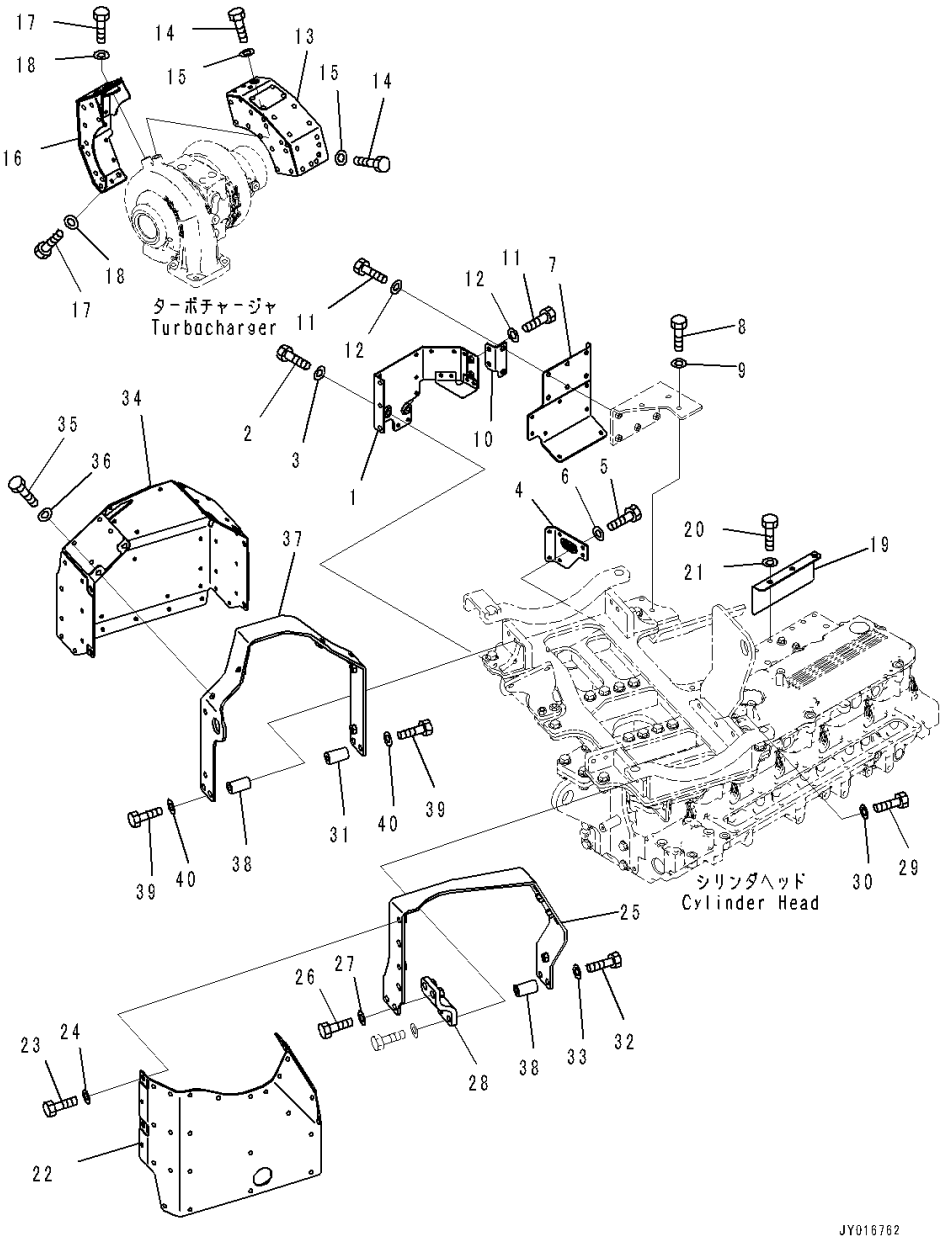

Index	Code	Part Number	Description	Qty	Serial Number
1		6746-11-5270	Cover	1	26900001-
2		01435-00820	Bolt	2	26900408-
	A2	01010-E0820	Bolt	2	26900001-26900407
3		01643-30823	Washer	2	26900001-
4		6746-11-5240	Cover	1	26900001-
5		01435-00816	Bolt	2	26900408-
		01010-E0816	Bolt	2	26900001-26900407
6		01643-30823	Washer	2	26900001-
7		6746-11-5251	Cover	1	26900001-
8		01010-80825	Bolt	3	26900001-
9		01643-30823	Washer	3	26900001-
10		6746-11-5261	Bracket	1	26900001-
11		01010-80816	Bolt	4	26900001-
12		01643-30823	Washer	4	26900001-
13		6746-81-8160	Cover	1	26900001-
14		01435-00816	Bolt	2	26900408-
		01010-E0816	Bolt	2	26900001-26900407
15		01643-30823	Washer	2	26900001-
16		6746-81-8150	Cover	1	26900001-
17		01435-00816	Bolt	2	26900408-
		01010-E0816	Bolt	2	26900001-26900407
18		01643-30823	Washer	2	26900001-
19		6746-11-5230	Cover	1	26900001-
20		01010-80820	Bolt	3	26900001-
21		01643-30823	Washer	3	26900001-
22		14X-01-61320	Cover	1	26900001-
23		01010-81025	Bolt	5	26900001-
24		01643-31032	Washer	5	26900001-
25		14X-01-61340	Bracket	1	26900001-
26		01010-81235	Bolt	2	26900001-
27		01643-31232	Washer	2	26900001-
28		14X-01-61350	Bracket	1	26900001-
29		01010-81235	Bolt	2	26900001-
30		01643-31232	Washer	2	26900001-
31		14X-01-61371	Spacer	2	26900001-
32		01010-81270	Bolt	2	26900001-
33		01643-31232	Washer	2	26900001-
34		14X-01-61330	Cover	1	26900001-
35		01010-81025	Bolt	8	26900001-

FIG. A1570-001001 Heat Shield (Komatsu Variable Geometry Turbocharger (KVGT) and Komatsu Diesel Particulate Filter (KDPF))

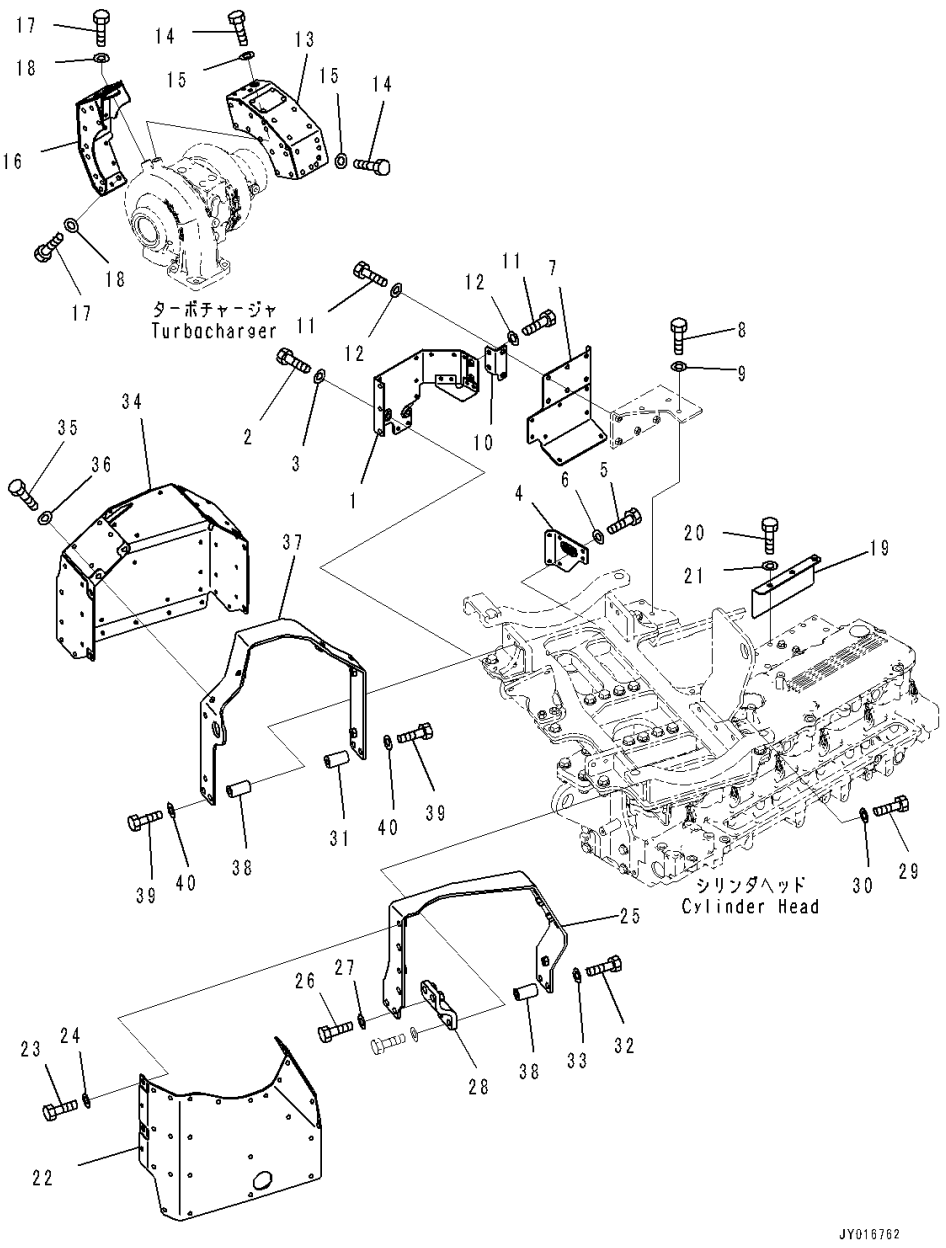

Index	Code	Part Number	Description	Qty	Serial Number
36		01643-31032	Washer	8	26900001-
37		14X-01-61360	Bracket	1	26900001-
38		14X-01-61371	Spacer	4	26900001-
39		01010-81270	Bolt	4	26900001-
40		01643-31232	Washer	4	26900001-

FIG. AER00-001001 Exhaust Gas Re-circulation (EGR) Valve

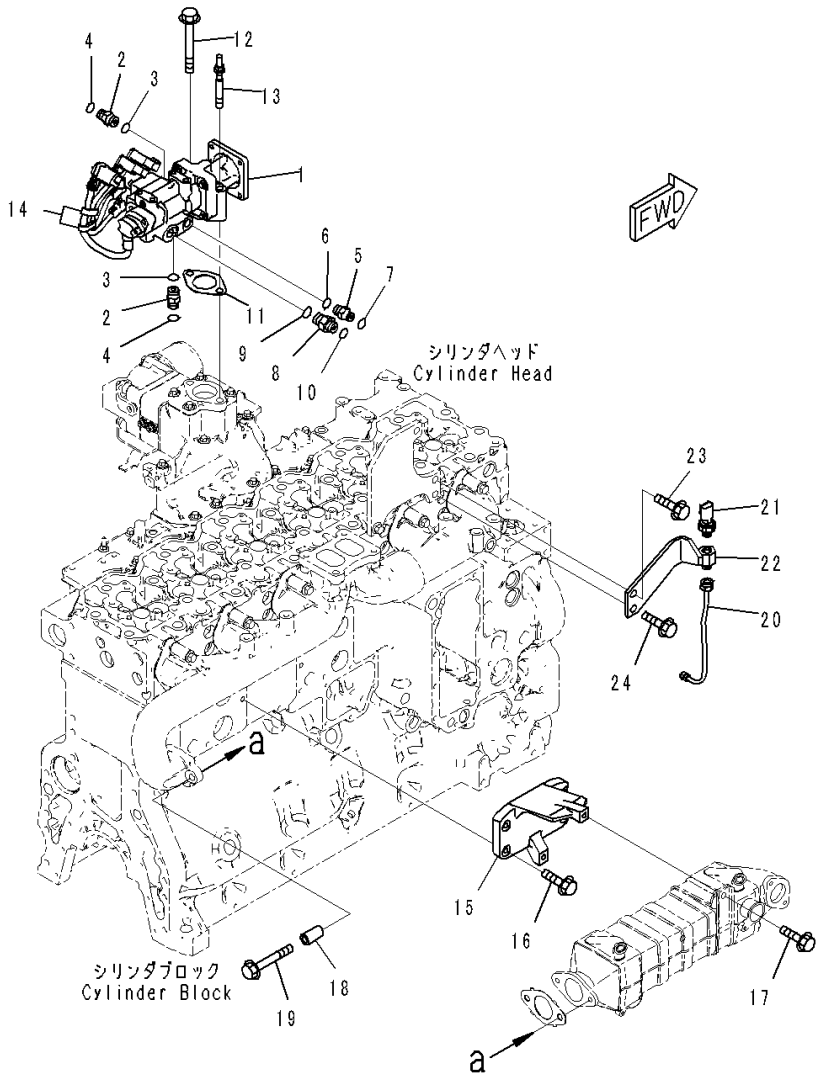

Index	Code	Part Number	Description	Qty	Serial Number
		6755-41-9200	Valve Assembly, Exhaust	1	26900001-
1		6755-41-9100	• Valve	1	26900001-
2		02781-0031D	• Nipple	2	26900001-
3		07002-21423	• O-ring	2	26900001-
4		02896-21009	• O-ring	2	26900001-
5		02781-0021D	• Union	1	26900001-
6		07002-21423	• O-ring	1	26900001-
7		02896-21008	• O-ring	1	26900001-
8		02781-00313	• Union	1	26900001-
9		07002-21823	• O-ring	1	26900001-
10		02896-21009	• O-ring	1	26900001-
11		6755-11-9110	Gasket	1	26900001-
12		6736-81-6190	Bolt	1	26900001-
13		6745-81-9640	Stud	1	26900001-
14		6755-81-9140	Retainer	2	26900001-
15		6746-11-9130	Support	1	26900001-
16		01435-60835	Bolt	4	26900516-
		6732-61-6140	Bolt	4	26900001-26900515
17		01435-60820	Bolt	2	26900572-
		6732-71-3220	Bolt	2	26900001-26900571
18		6754-11-5150	Spacer	2	26900001-
19		6732-11-5860	Bolt	2	26900001-
20		6746-11-9180	Tube	1	26900001-
21		6271-81-9300	Sensor, Pressure	1	26900001-
22		6746-11-9170	Brace	1	26900001-
23		6731-61-4250	Bolt	1	26900001-
24		6731-61-4280	Bolt	1	26900001-

FIG. ARL00-001001 Rocker Arm Housing and Rocker Arm

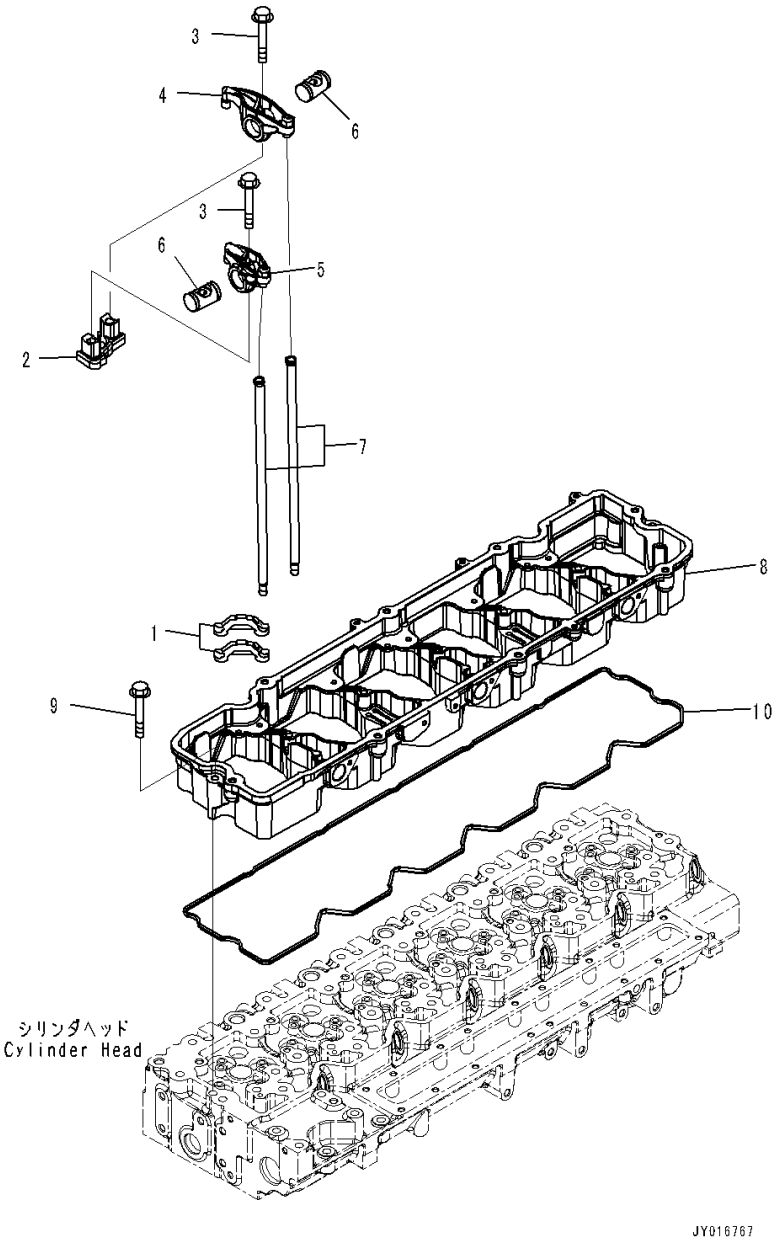

Index	Code	Part Number	Description	Qty	Serial Number
1		6744-41-5010	Crosshead	12	26900001-
2		6744-41-5030	Support	6	26900001-
3		6744-41-3020	Bolt	12	26900001-
4		6745-41-5401	Lever Assembly	6	26900001-
5		6745-41-5201	Lever Assembly	6	26900001-
6		6745-41-5110	Shaft	12	26900001-
7		6745-41-3100	Rod	12	26900001-
8		6746-11-7110	Housing, Rocker Rever	1	26900001-
9		6733-61-3150	Bolt	7	26900001-
10		6745-11-7810	Gasket	1	26900001-

FIG. ALA00-001001 Lifting Arrangement

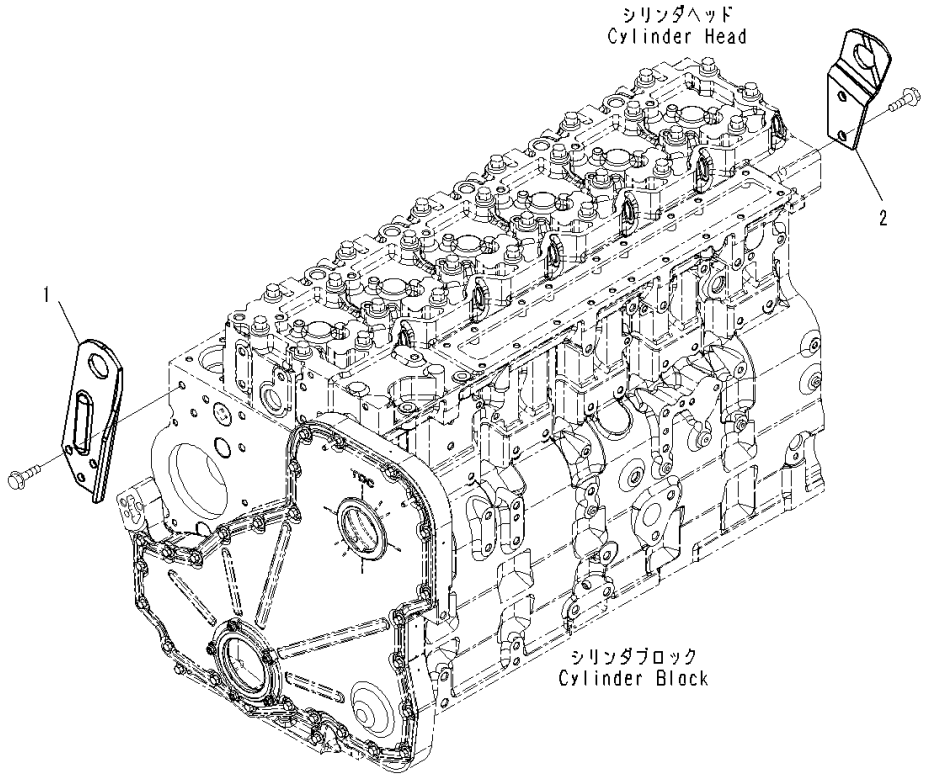

Index	Code	Part Number	Description	Qty	Serial Number
1		6745-21-1311	Bracket	1	26900001-
2		6745-21-1330	Bracket	1	26900001-

FIG. ALA10-001001 Engine Lifting Bolt

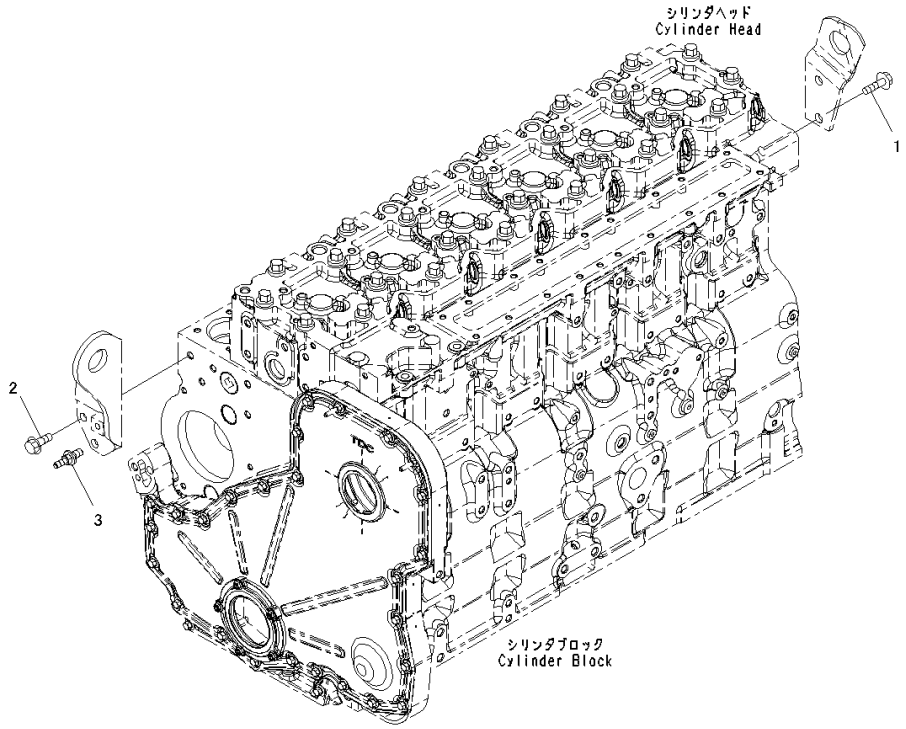

Index	Code	Part Number	Description	Qty	Serial Number
1		6732-51-5130	Bolt	2	26900001-
2		6732-61-3140	Bolt	2	26900001-
3		6745-61-3220	Bolt	1	26900001-

FIG. A1610-001001 Komatsu Diesel Particulate Filter (KDPF) (1/2)

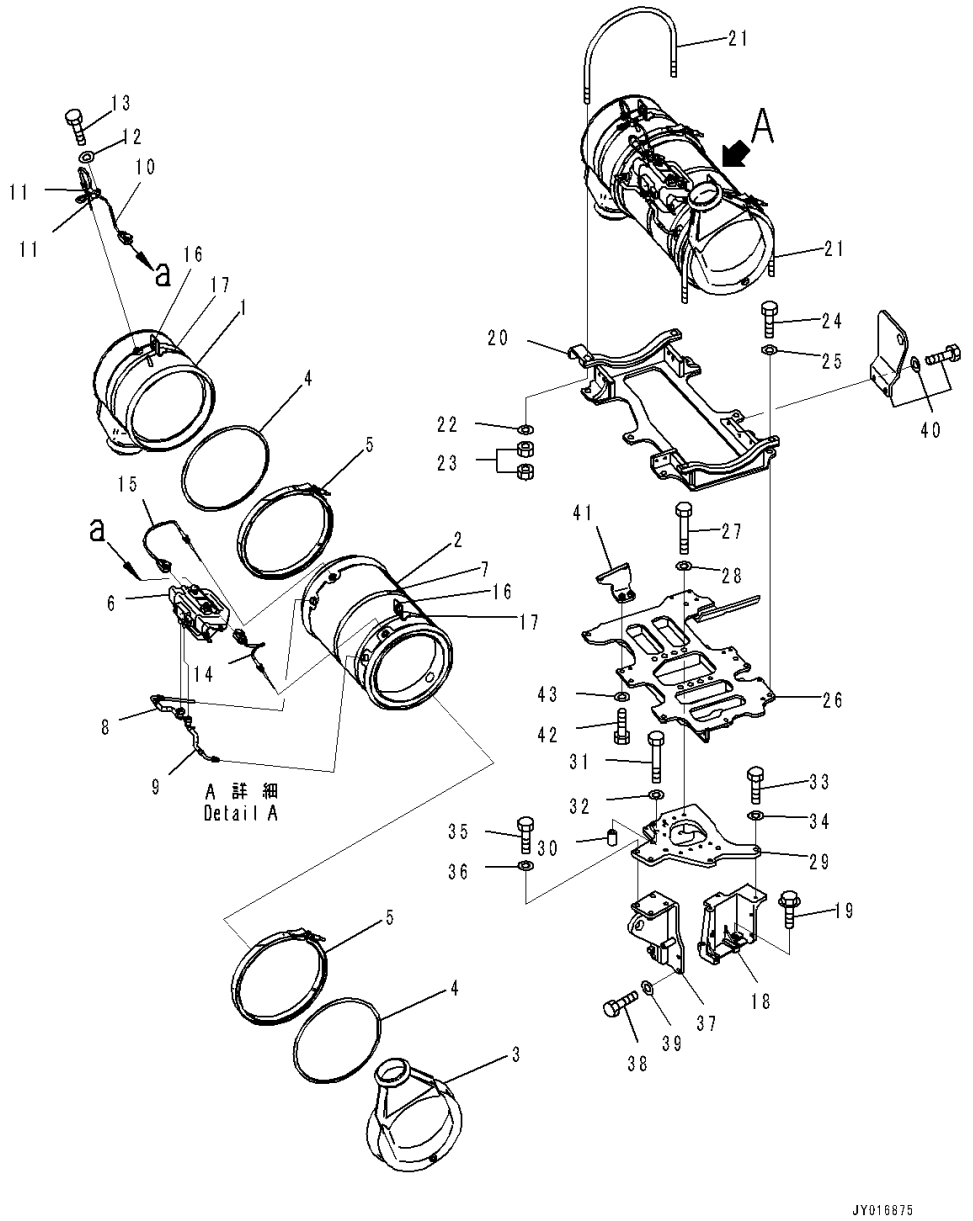

Index	Code	Part Number	Description	Qty	Serial Number
		6525-01-1110	Komatsu Diesel Particulate Filter (KDPF) Assembly	1	26900001-
1		6525-21-1060	• Body	1	26900001-
2		6525-31-1010	• Body	1	26900001-
3		6525-41-1020	• Body	1	26900001-
4		6525-91-1010	• Gasket	2	26900001-
5		6525-91-1020	• Clamp Assembly	2	26900001-
6		6524-81-1010	• Sensor Assembly	1	26900001-
7		6525-91-4010	• Band	1	26900001-
8		6525-81-1020	• Hose	1	26900001-
9		6525-81-1010	• Hose	1	26900001-
10		6520-81-1040	• Sensor	1	26900001-
11		6524-91-1050	• Clip	2	26900001-
12		6524-91-1080	• Washer	1	26900001-
13		01020-00616	• Bolt, Stainless	1	26900001-
14		6520-81-1030	• Sensor	1	26900001-
15		6520-81-1030	• Sensor	1	26900001-
16		6524-91-4011	• Hanger	2	26900001-
17		6525-91-4010	• Band	2	26900001-
18		6746-11-5280	Bracket	1	26900001-
19		01435-01040	Bolt	3	26900001-
20		14X-01-61210	Bracket	1	26900001-
21		14X-01-61281	Bolt	2	26900001-
22		14X-01-61290	Washer	4	26900001-
23		01581-01613	Nut, Stainless	8	26900001-
24		01010-81235	Bolt	6	26900001-
25		01643-31232	Washer	6	26900001-
26		14X-01-61220	Bracket	1	26900001-
27		01010-81285	Bolt	8	26900001-
28		01643-31232	Washer	8	26900001-
29		14X-01-61230	Bracket	1	26900001-
30		581-22-12760	Spacer	3	26900001-
31		01435-01080	Bolt	3	26900408-
		01010-E1080	Bolt	3	26900001-26900407
32		01643-31032	Washer	3	26900001-
33		01010-81035	Bolt	3	26900001-
34		01643-31032	Washer	3	26900001-
35		01010-81245	Bolt	4	26900001-
36		01643-31232	Washer	4	26900001-
37		14X-01-61240	Bracket	1	26900001-

FIG. A1610-001001 Komatsu Diesel Particulate Filter (KDPF) (1/2)

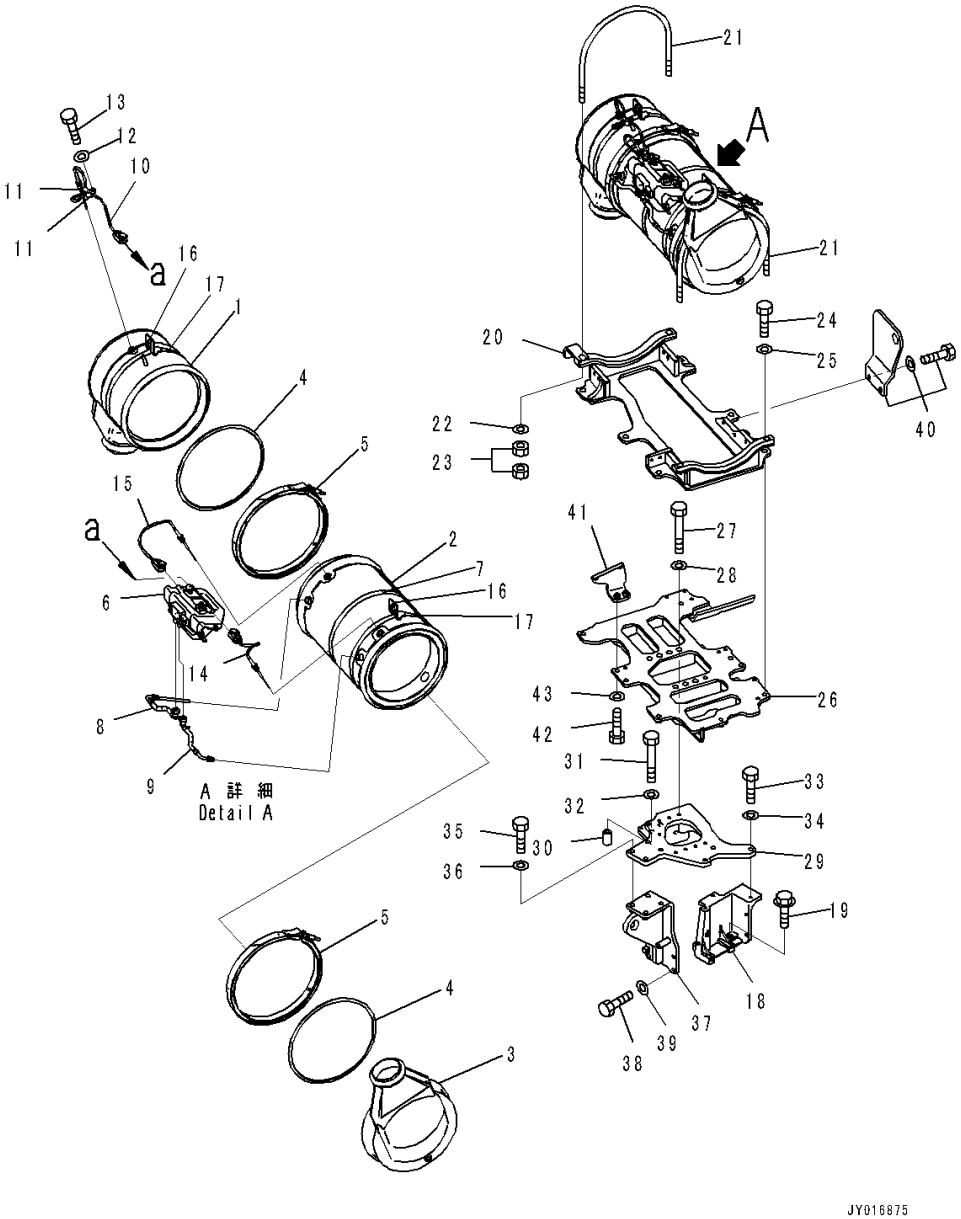

Index	Code	Part Number	Description	Qty	Serial Number
38		01010-81030	Bolt	4	26900001-
39		156-76-11961	Washer	4	26900001-
40		14X-01-61250	Bracket	1	26900001-
41		14X-01-61270	Bracket	1	26900001-
42		01010-81030	Bolt	2	26900001-
43		01643-31032	Washer	2	26900001-

FIG. A1610-001002 Komatsu Diesel Particulate Filter (KDPF) (2/2)

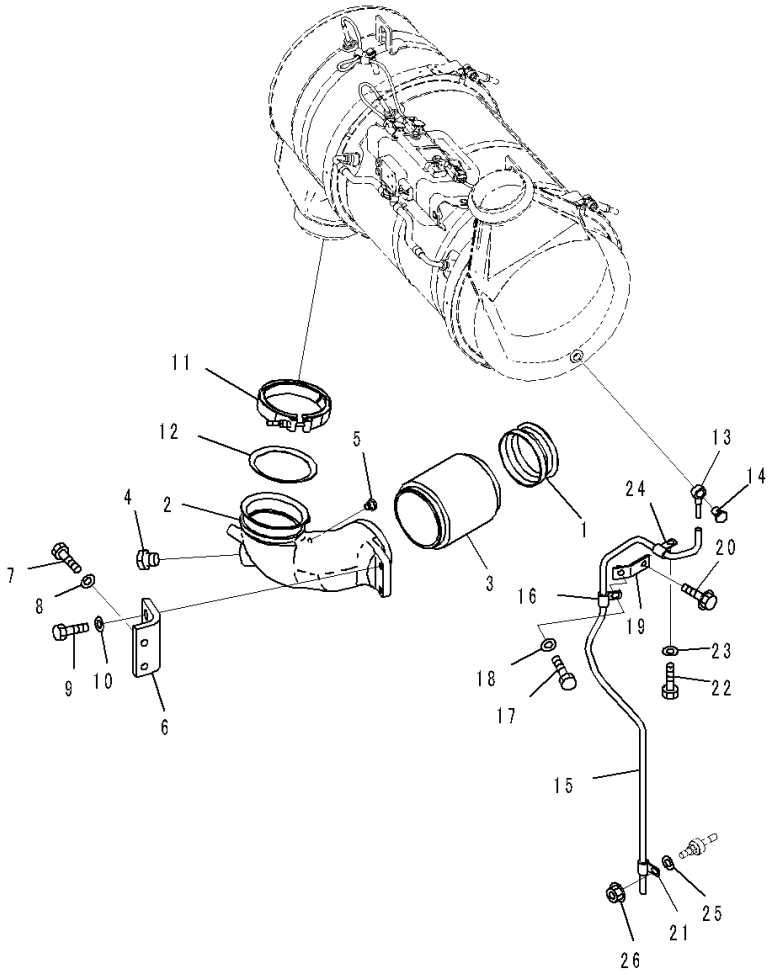

Index	Code	Part Number	Description	Qty	Serial Number
		6746-11-5350	Tube	1	26900001-
1		6746-11-5360	• Connector	1	26900001-
2		6746-11-5370	• Tube	1	26900001-
3		6755-11-5140	• Bellows	1	26900001-
4		6746-11-5330	Plug	1	26900001-
5		6215-11-5920	Plug	1	26900001-
6		6746-11-5380	Bracket	1	26900001-
7		01010-81030	Bolt	2	26900001-
8		01643-31032	Washer	2	26900001-
9		01435-01035	Bolt	2	26900408-
		01010-E1035	Bolt	2	26900001-26900407
10		01643-31032	Washer	2	26900001-
11		6520-91-1020	Clamp	1	26900001-
12		6520-91-1030	Gasket	1	26900001-
13		6746-11-5290	Tube	1	26900001-
14		6755-11-5130	Joint	1	26900001-
15		6746-11-5310	Tube	1	26900001-
16		6215-71-4930	Clamp	1	26900001-
17		01010-80816	Bolt	1	26900001-
18		01643-30823	Washer	1	26900001-
19		6746-11-5320	Bracket	1	26900001-
20		01435-00820	Bolt	1	26900011-
21		6215-71-4930	Clamp	1	26900001-
22		01010-80816	Bolt	1	26900001-
23		01643-30823	Washer	1	26900001-
24		6215-71-4930	Clamp	1	26900001-
25		01643-30823	Washer	1	26900001-
26		01584-30806	Nut	1	26900001-

FIG. AED00-001001 Date Plate

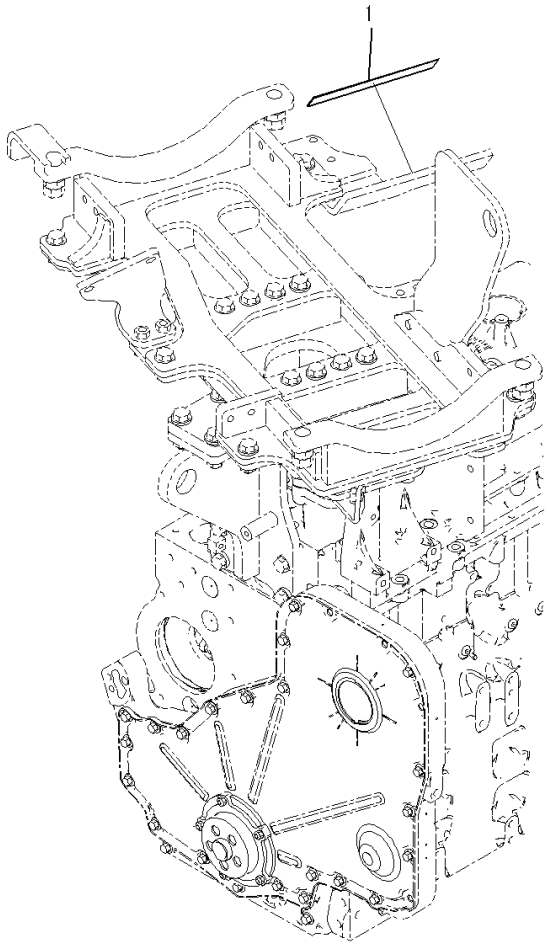

フロントカバー
Front Cover

JY016745

Index	Code	Part Number	Description	Qty	Serial Number
1		6746-81-2540	Plate	1	26900001-

FIG. AER20-001001 Exhaust Gas Re-circulation (EGR) Cooler Air Piping

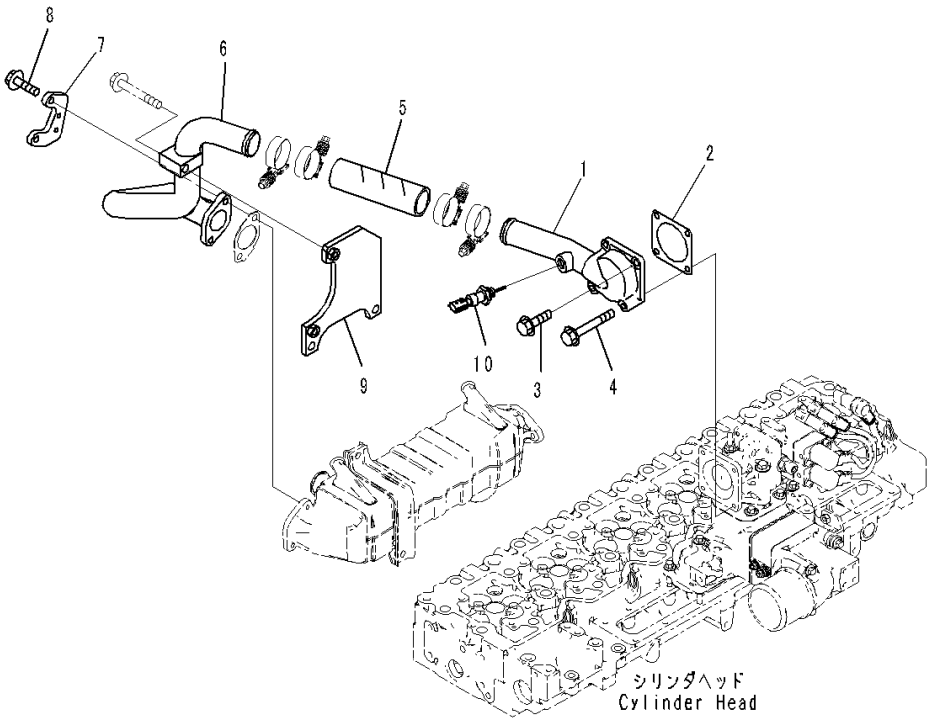

Index	Code	Part Number	Description	Qty	Serial Number
1		6746-11-9110	Tube	1	26900001-
2		6755-11-9220	Gasket	1	26900001-
3		01435-00825	Bolt	2	26900001-
4		6216-84-8710	Bolt	2	26900001-
5		6746-11-9230	Hose	1	26900001-
6		6746-11-9120	Tube	1	26900001-
7		6746-11-9270	Brace	1	26900001-
8		01435-00835	Bolt	2	26900001-
9		6746-11-9150	Brace	1	26900001-
10		6755-81-9130	Sensor, Temperature	1	26900001-

FIG. AER10-001001 Exhaust Gas Re-circulation (EGR) Cooler Water Piping

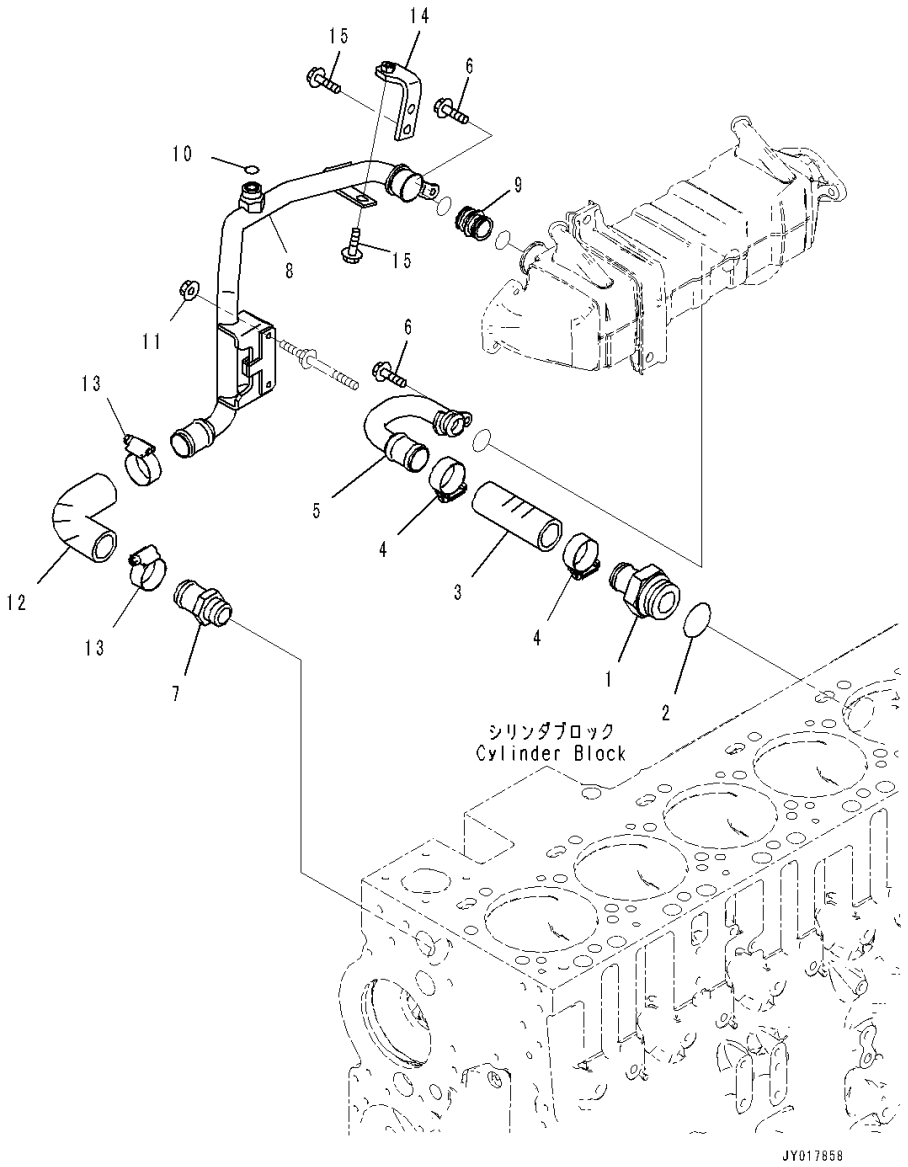

Index	Code	Part Number	Description	Qty	Serial Number
		6746-61-7120	Coupling	1	26900001-
1	C1		• Coupling	1	26900001-
2		6745-21-1130	• O-ring	1	26900001-
3		6746-61-7150	Hose	1	26900001-
4		07289-00035	Clamp	2	26900001-
		6746-61-7140	Tube, Water Inlet	1	26900001-
5		6746-61-7130	• Tube, Water Inlet	1	26900001-
6		01435-60612	Bolt	2	26900491-
		6733-71-5680	Bolt	2	26900001-26900490
7		6746-61-7160	Coupling	1	26900001-
		6746-61-7210	Tube, Water Outlet	1	26900001-
8		6746-61-7170	• Tube,Outlet		26900001-
		6746-61-7190	• Tube, Water Transfer	1	26900001-
9		6746-61-7180	• • Tube	1	26900001-
10		6738-54-8110	• Seal	1	26900001-
11		01584-00605	Nut	2	26900001-
12		6746-61-7220	Hose	1	26900001-
13		07289-00035	Clamp	2	26900001-
14		6746-61-7230	Brace	1	26900001-
15		01435-00820	Bolt	3	26900001-

FIG. A1559-001001 Exhaust Gas Re-circulation (EGR) Cooler

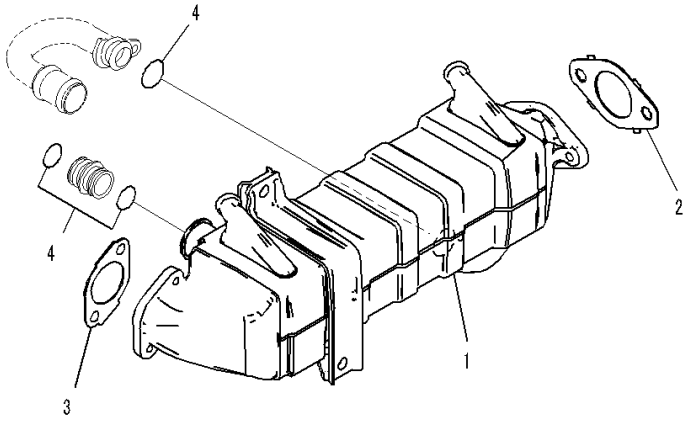

JY017857

Index	Code	Part Number	Description	Qty	Serial Number
1		6755-61-7100	Cooler	1	26900001-
2		6754-11-5141	Gasket	1	26900001-
3		6755-11-9260	Gasket	1	26900001-
4		6735-21-5680	O-ring	3	26900001-

ENGINE CYLINDER BLOCK AND ITS RELATED PARTS

FIG. AGG00-001001 Front Gear Cover

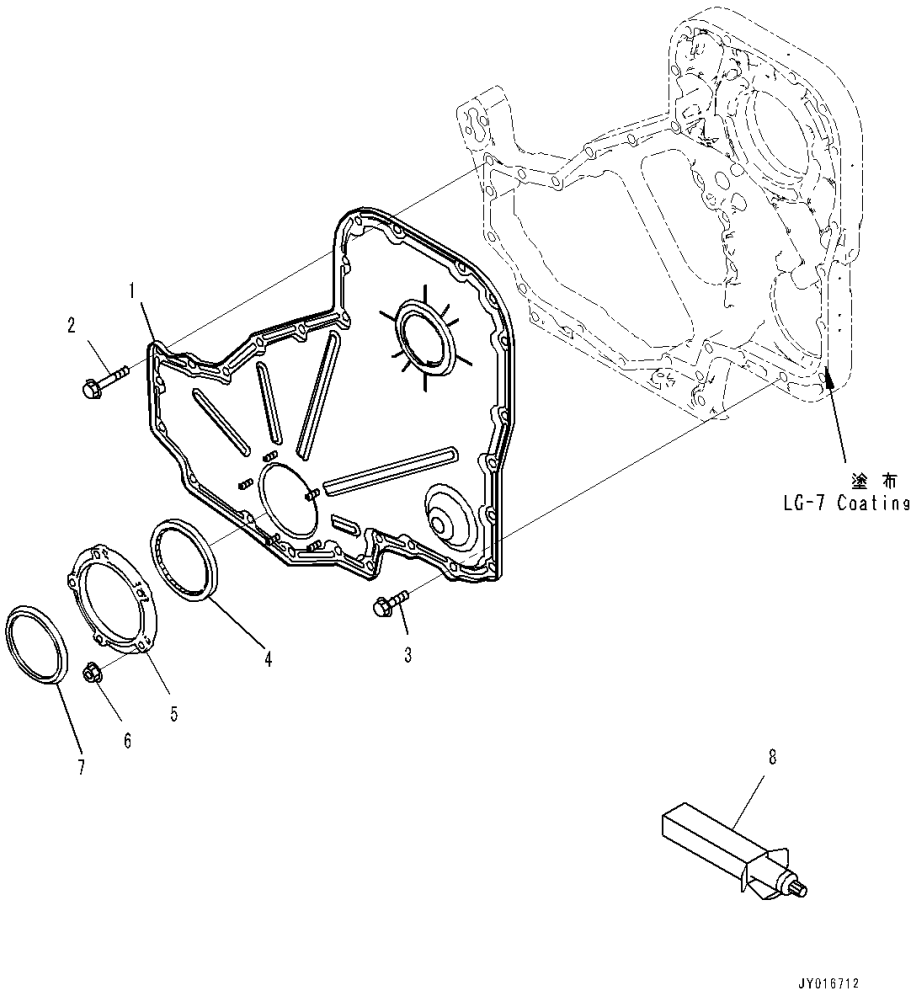

Index	Code	Part Number	Description	Qty	Serial Number
1		6745-22-3130	Cover, Gear	1	26900001-
2		6742-01-0530	Bolt	12	26900001-
3		01435-60825	Bolt	10	26900483-
		6732-21-5160	Bolt	10	26900001-26900482
		6741-21-3520	Seal, Oil	1	26900001-
4		6742-01-0950	• Seal	1	26900001-
5		6741-21-3530	• Carrier	1	26900001-
6		6741-21-3541	Nut	5	26900001-
7		6742-01-3320	Seal, Dust	1	26900001-
8		09920-00150	Liquid gasket, LG-7, 150G	AR	26900001-

FIG. AGG10-001001 Front Gear Cover (Mounting Parts)

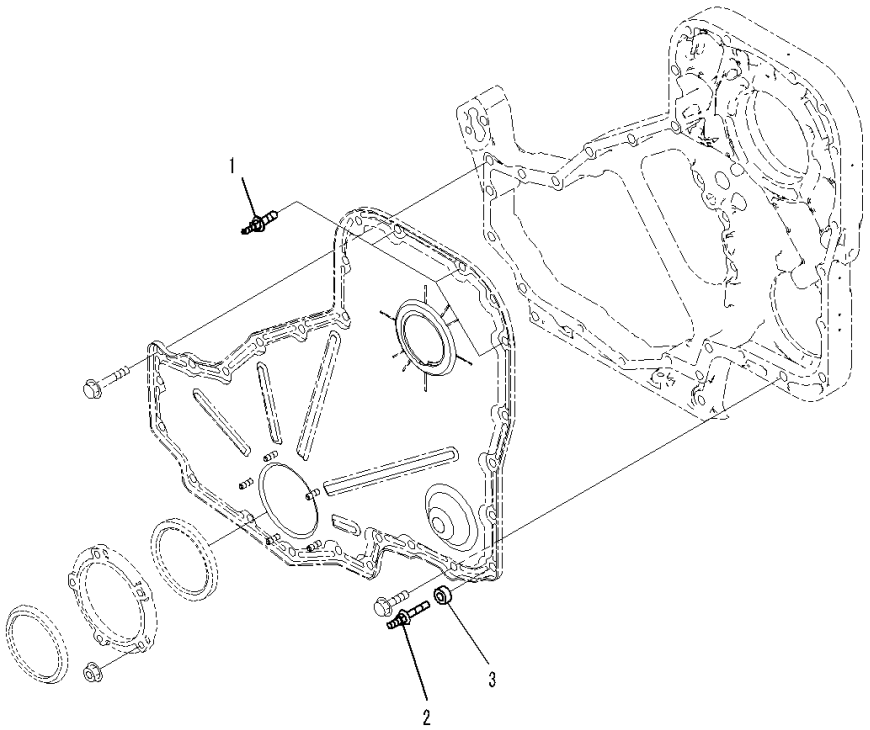

Index	Code	Part Number	Description	Qty	Serial Number
1		6742-01-5195	Screw	3	26900001-
2		6754-71-5380	Bolt	1	26900001-
3		6130-12-1961	Spacer	1	26900001-

FIG. ADF10-001001 Front Gear Train (Plug)

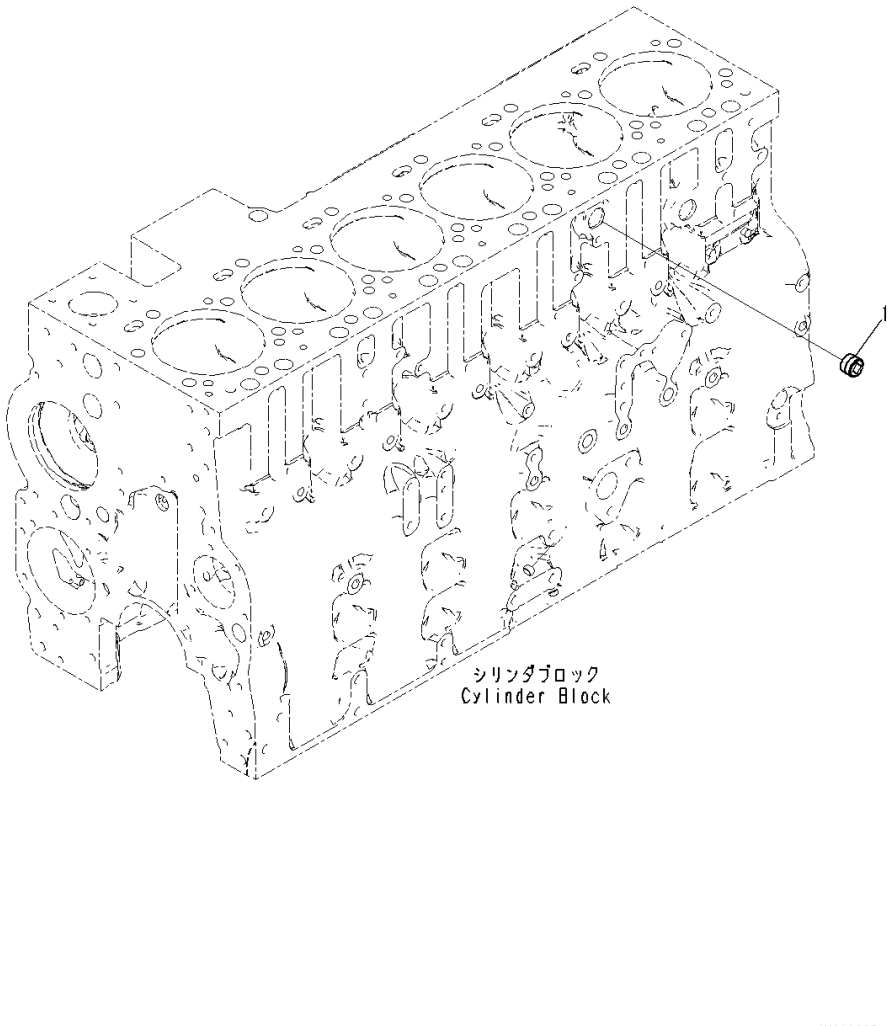

Index	Code	Part Number	Description	Qty	Serial Number
1		6732-11-1910	Plug	2	26900001-

FIG. ABB10-001001 Front Gear

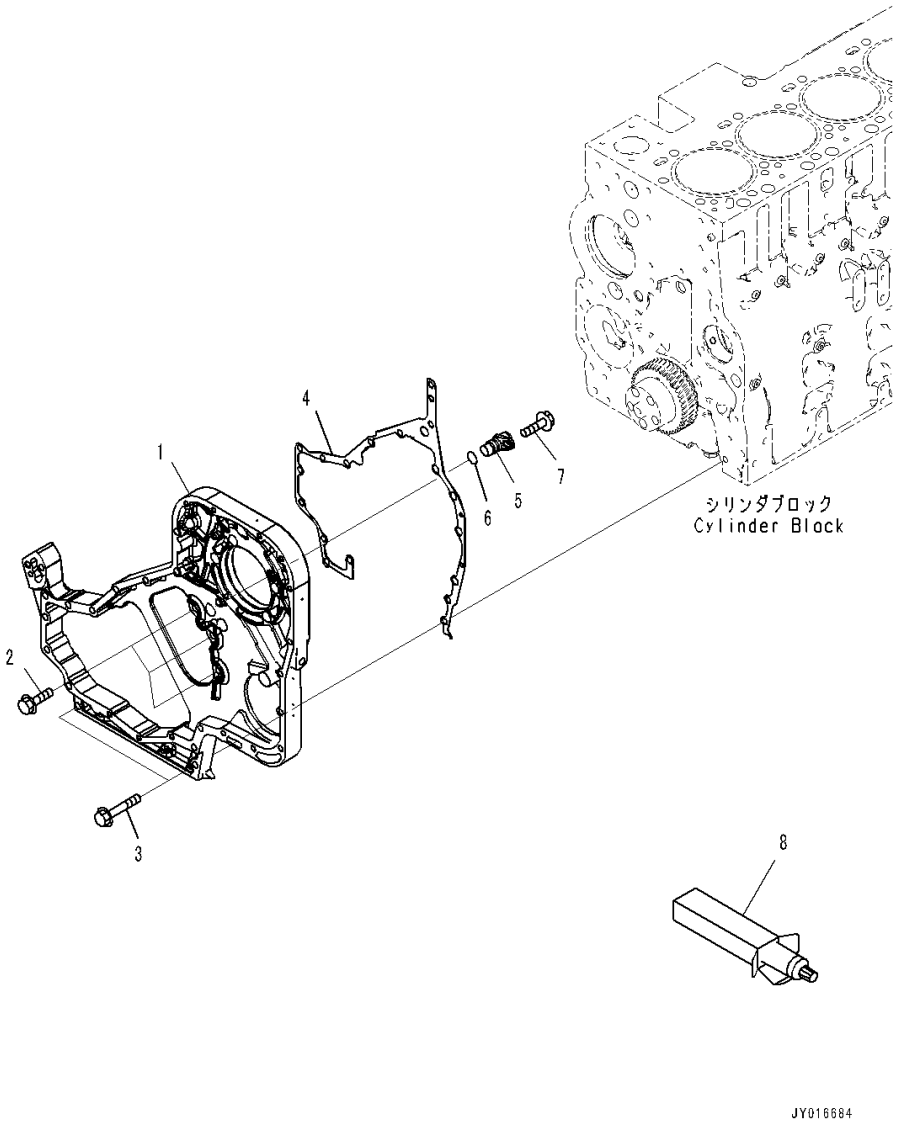

Index	Code	Part Number	Description	Qty	Serial Number
1		6745-22-3110	Housing	1	26900001-
2		6742-01-0540	Bolt	3	26900001-
3		6741-21-3820	Bolt	2	26900001-
4		6741-21-3810	Gasket	1	26900001-
		6745-22-3120	Plug Assembly	1	26900001-
5		6745-22-3140	• Plug	1	26900001-
6		6261-81-2920	• O-ring	1	26900001-
7		6732-21-4180	Bolt	1	26900001-
8		09920-00150	Liquid gasket, LG-7, 150G	AR	26900001-

FIG. APA00-001001 Accessory Drive Pulley

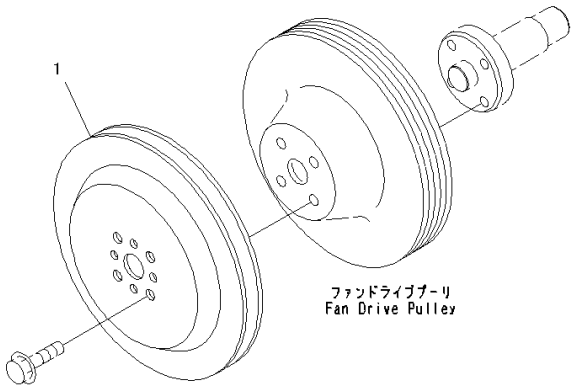

Index	Code	Part Number	Description	Qty	Serial Number
1		6732-81-2810	Pulley	1	26900001-

FIG. A2219-001001 Flywheel Housing

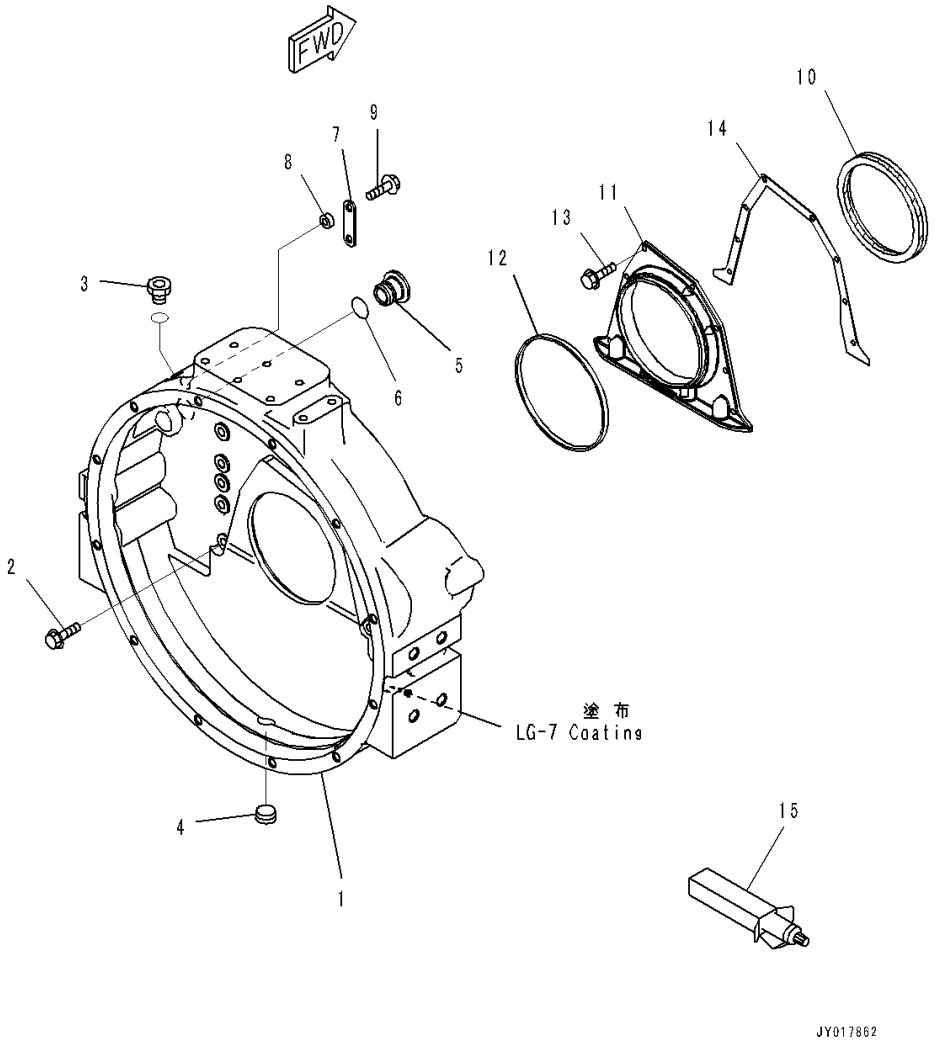

Index	Code	Part Number	Description	Qty	Serial Number
1		6746-21-4120	Housing	1	26900001-
2		6732-21-4220	Bolt	12	26900001-
3		6216-14-6820	Plug Assembly	1	26900001-
4		6732-11-1920	Plug	1	26900001-
5		6732-21-4150	Plug	1	26900001-
6		6732-21-4161	O-ring	1	26900001-
7		6301-11-4630	Plate	1	26900001-
8		6130-12-1961	Spacer	1	26900001-
9		01435-60825	Bolt	1	26900001-
10		6743-81-6310	Stud	2	26900001-
11		6743-21-4190	Gasket	1	26900001-
		6742-01-5053	Cover	1	26900001-
12		6736-21-4221	Seal	1	26900001-
13		6732-21-4290	Bolt	8	26900001-
14		6732-21-4171	Seal Ring	1	26900001-
15		09920-00150	Liquid gasket, LG-7, 150G	AR	26900001-

FIG. AFW00-001001 Flywheel

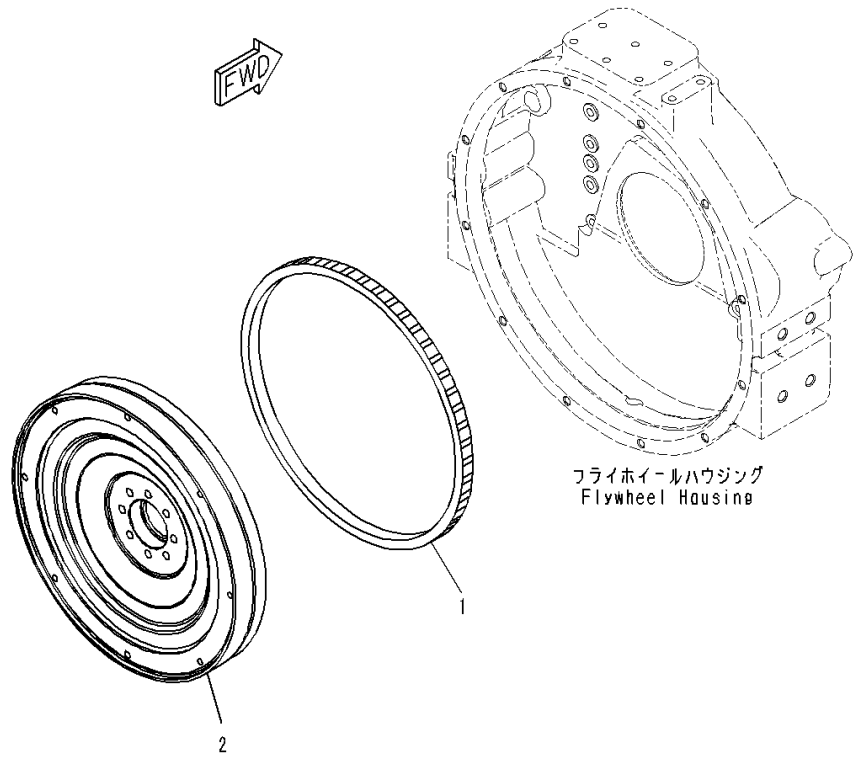

Index	Code	Part Number	Description	Qty	Serial Number
		6745-31-4200	Flywheel	1	26900001-
1		6741-31-4180	• Gear, Ring	1	26900001-
2	C1		• Flywheel	1	26900001-

FIG. AFW10-001001 Flywheel Mounting

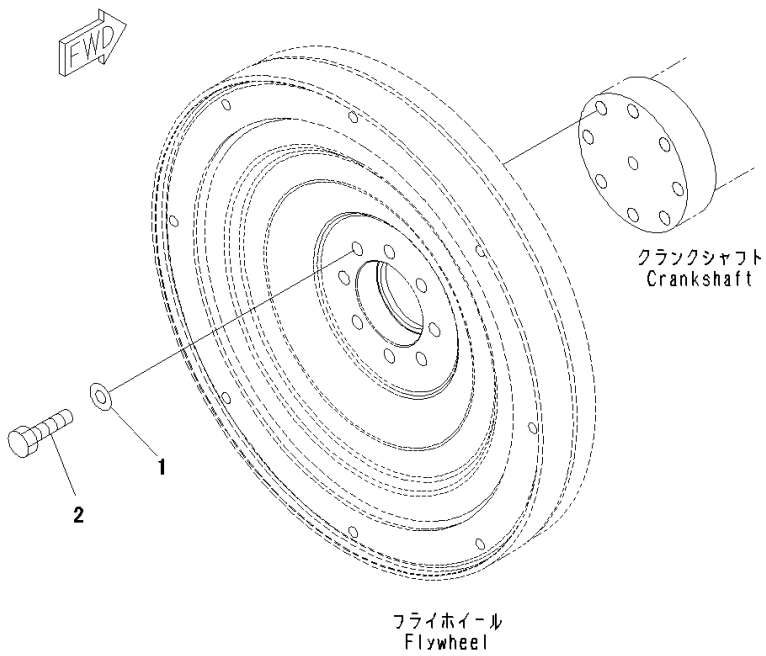

Index	Code	Part Number	Description	Qty	Serial Number
1		6162-43-5350	Washer	8	26900001-
2		6732-31-4140	Bolt	8	26900001-

FIG. AOP10-001001 Engine Oil Pan

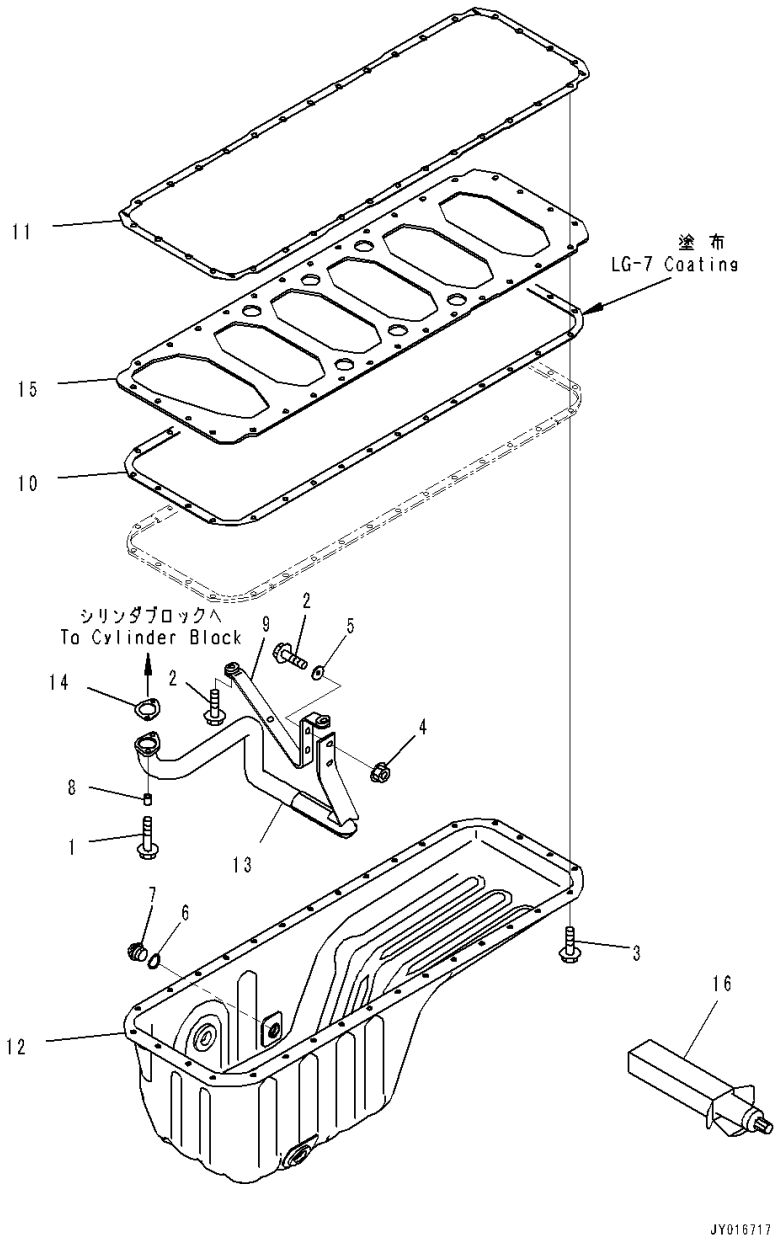

Index	Code	Part Number	Description	Qty	Serial Number
1		6742-01-2630	Bolt	2	26900001-
2		6735-71-5190	Bolt	4	26900001-
3		6732-21-6630	Screw	32	26900001-
4		01584-00605	Nut	2	26900001-
5		6742-01-2690	Washer	2	26900001-
6		6732-21-5170	Gasket	1	26900001-
7		6736-21-5320	Plug	1	26900001-
8		6742-01-0310	Spacer	2	26900001-
9		1307674H1	Brace	1	26900001-
10		6745-21-5130	Gasket	1	26900001-
11		1307596H1	Gasket	1	26900001-
12		6745-21-5311	Pan, Oil	1	26900290-
	A1	6745-21-5310	Pan, Oil	1	26900001-26900289
13		6742-01-5307	Connector	1	26900001-
14		6743-51-5550	Gasket	1	26900001-
15		1304891H1	Plate	1	26900001-
16		09920-00150	Liquid gasket, LG-7, 150G	AR	26900001-

FIG. A2170-001001 Engine Oil Pan Drain

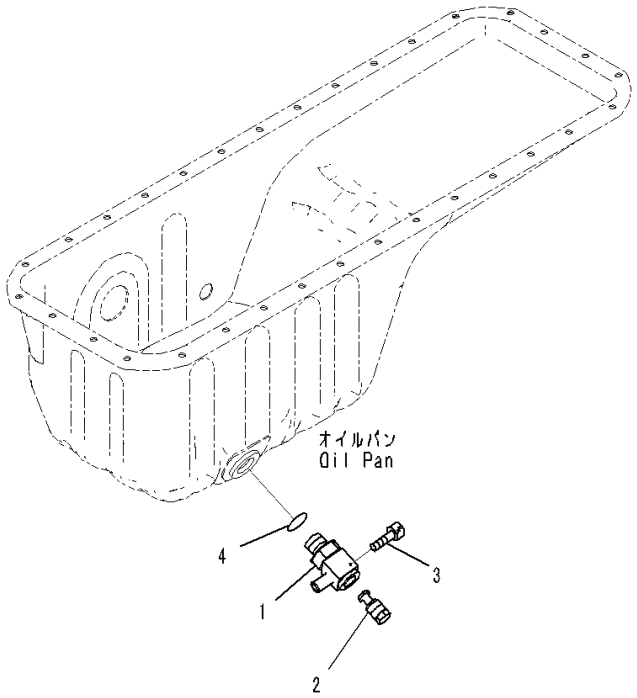

JY016667

Index	Code	Part Number	Description	Qty	Serial Number
1		6746-21-5110	Elbow	1	26900001-
2		134-01-61840	Plug	1	26900001-
3		01252-60510	Bolt	1	26900001-
4		07002-22434	O-ring	1	26900001-

FIG. ASD00-001001 Engine Oil Level Sensor

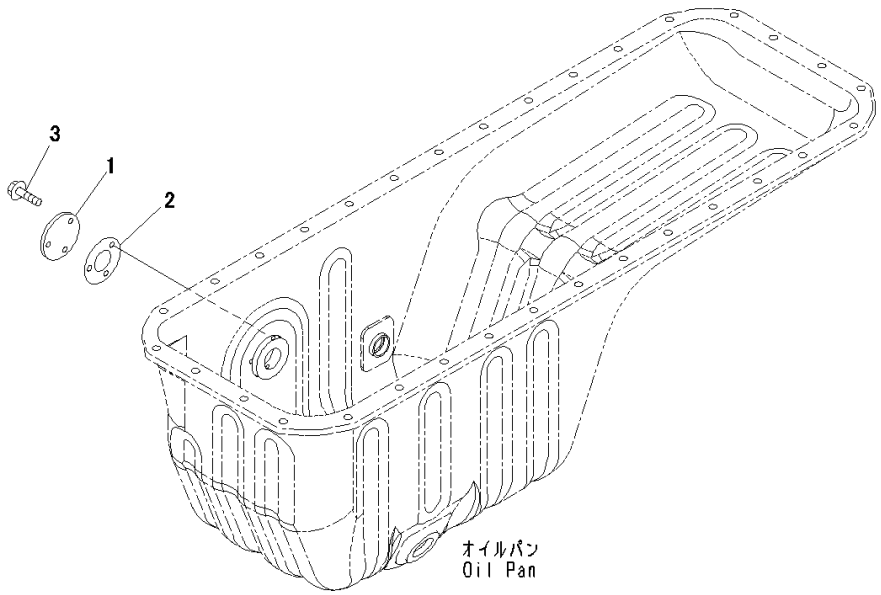

JY013211

Index	Code	Part Number	Description	Qty	Serial Number
1		6136-21-5770	Plate	1	26900001-
2		6136-21-5870	Gasket	1	26900001-
3		01435-60612	Bolt	3	26900491-
		6733-71-5680	Bolt	3	26900001-26900490

FIG. ABB00-001001 Cylinder Block (Tappet)

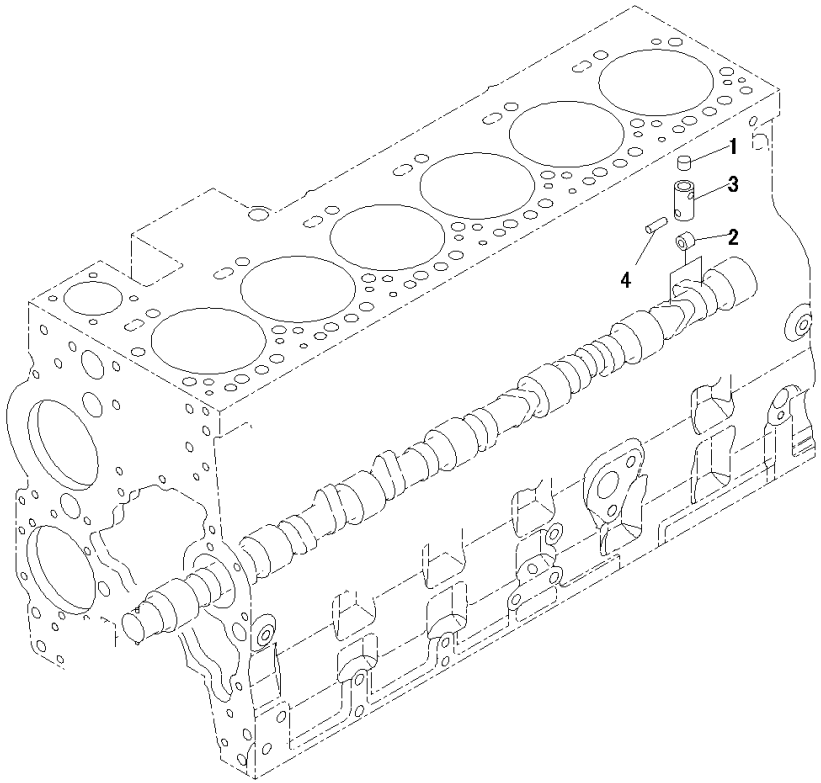

JY013242

Index	Code	Part Number	Description	Qty	Serial Number
		6745-41-2100	Tappet Assembly	12	26900001-
1		6745-41-2110	• Socket	1	26900001-
2		6745-41-2120	• Roller	1	26900001-
3		6745-41-2130	• Tappet	1	26900001-
4		6745-41-2140	• Pin	1	26900001-

FIG. A2019-001001 Cylinder Block

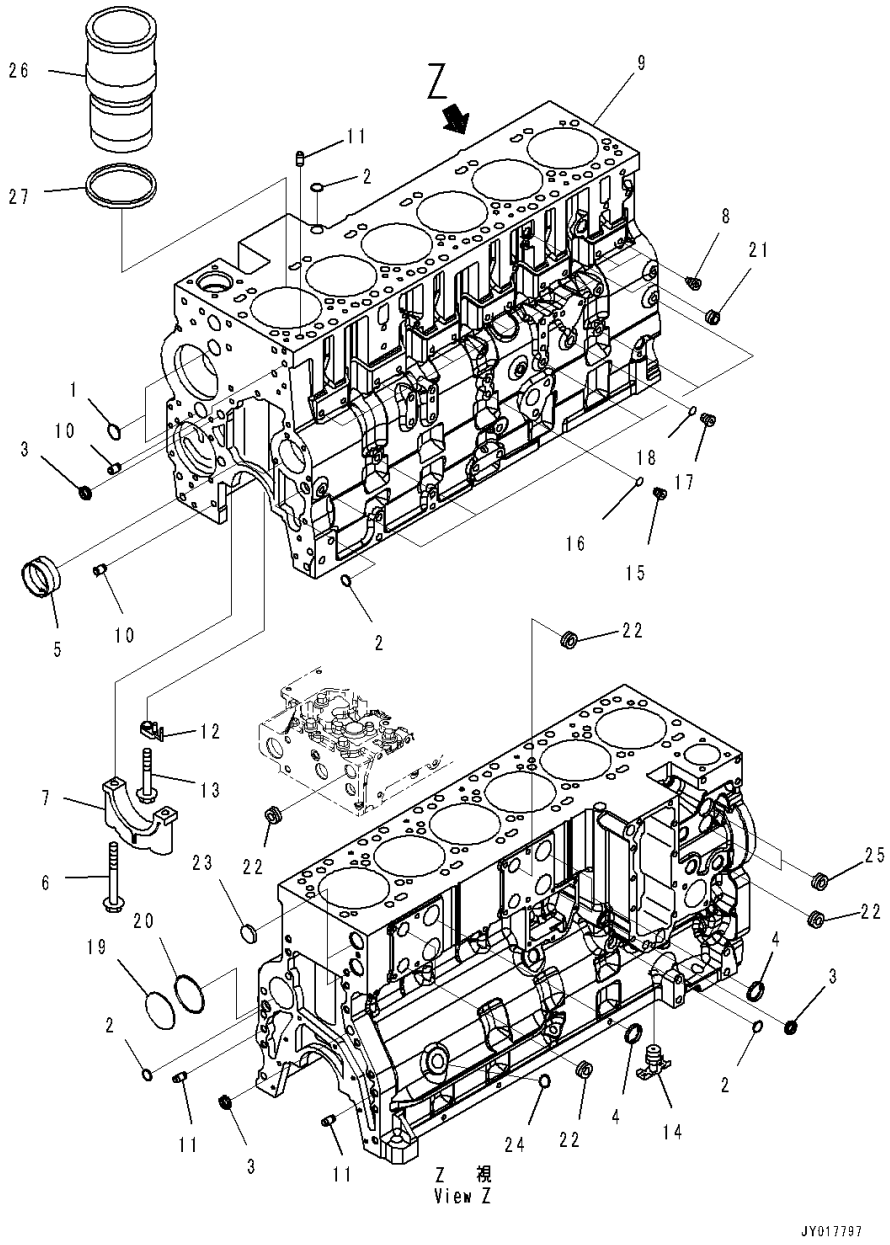

Index	Code	Part Number	Description	Qty	Serial Number
		6745-21-1190	Cylinder Block	1	26900001-
	C1		• Cylinder Block	1	26900001-
1		6742-01-1360	• • Plug	3	26900001-
2		6742-01-1370	• • Plug	4	26900001-
3		6732-21-1810	• • Plug	3	26900001-
4		6742-01-1420	• • Plug	3	26900001-
5		6742-01-5160	• • Bushing	7	26900001-
6		6741-21-1140	• • Bolt	14	26900001-
7	C3	6741-21-1130	• • Cap	7	26900001-
8		6745-41-2151	• • Guide	12	26900001-
9	C1		• • Cylinder Block	1	26900001-
		6746-21-1290	Block Kit	1	26900001-
10		6732-21-6120	• Pin, Dowel	2	26900001-
11		6742-01-1470	• Pin	4	26900001-
12		6746-21-1610	• Nozzle	6	26900001-
13		6736-11-4460	• Bolt	6	26900001-
14		6216-94-3450	• Cock	1	26900001-
		6732-21-1960	• Plug Assembly	6	26900001-
15		6215-81-9510	• • Plug	1	26900001-
16		6735-21-1970	• • O-ring	1	26900001-
		6735-21-1910	• Plug Assembly	1	26900001-
17		6735-21-1920	• • Plug	1	26900001-
18		6735-21-1930	• • O-ring	1	26900001-
19		6742-01-1480	• Plug	1	26900001-
20		6742-01-4080	• O-ring	1	26900001-
21		6732-11-1910	• Plug	2	26900001-
22		6732-11-1920	• Plug	5	26900001-
23		6742-01-1380	• Plug	2	26900001-
24		6735-21-5530	• Plug	1	26900001-
25		6216-14-6820	• Plug Assembly	2	26900001-
		6742-01-5159	Liner Kit	6	26900001-
26		6741-21-2210	• Liner	1	26900001-
27		6742-01-1520	• Seal	1	26900001-

FIG. AOB20-001001 Cylinder Block Cover

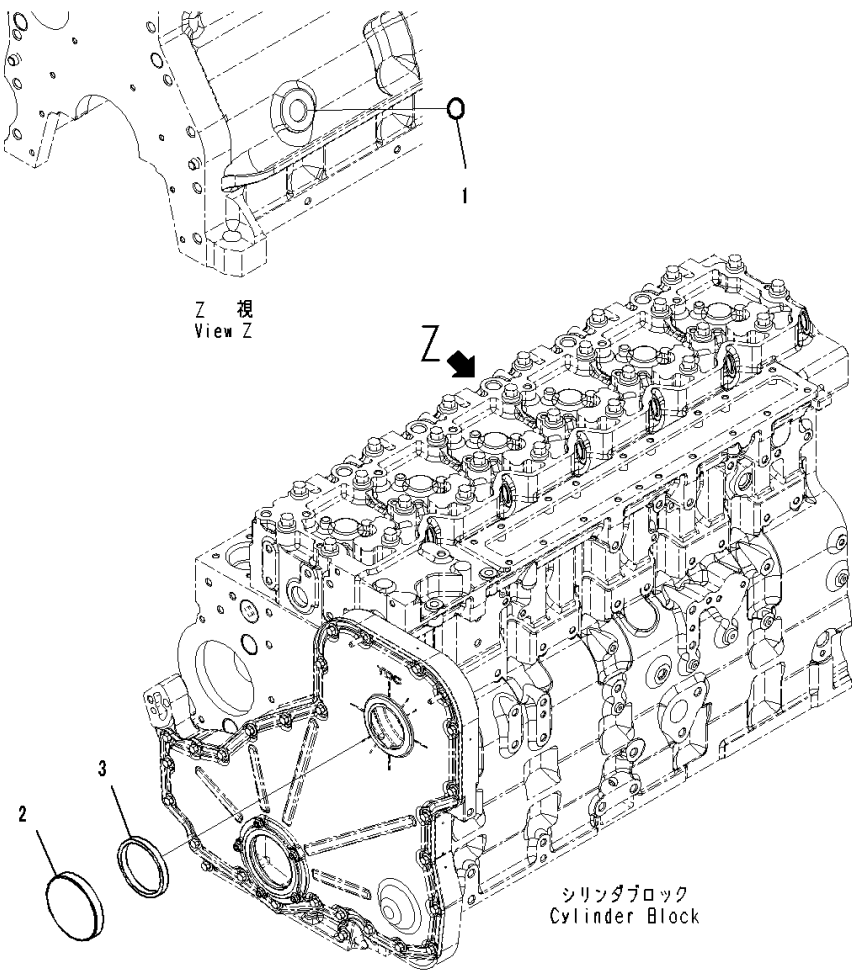

Index	Code	Part Number	Description	Qty	Serial Number
1		6735-21-5530	Plug	1	26900001-
2		6732-21-3190	Cover	1	26900001-
3		6732-21-3220	Seal Ring	1	26900001-

FIG. A2080-001001 Breather Hose

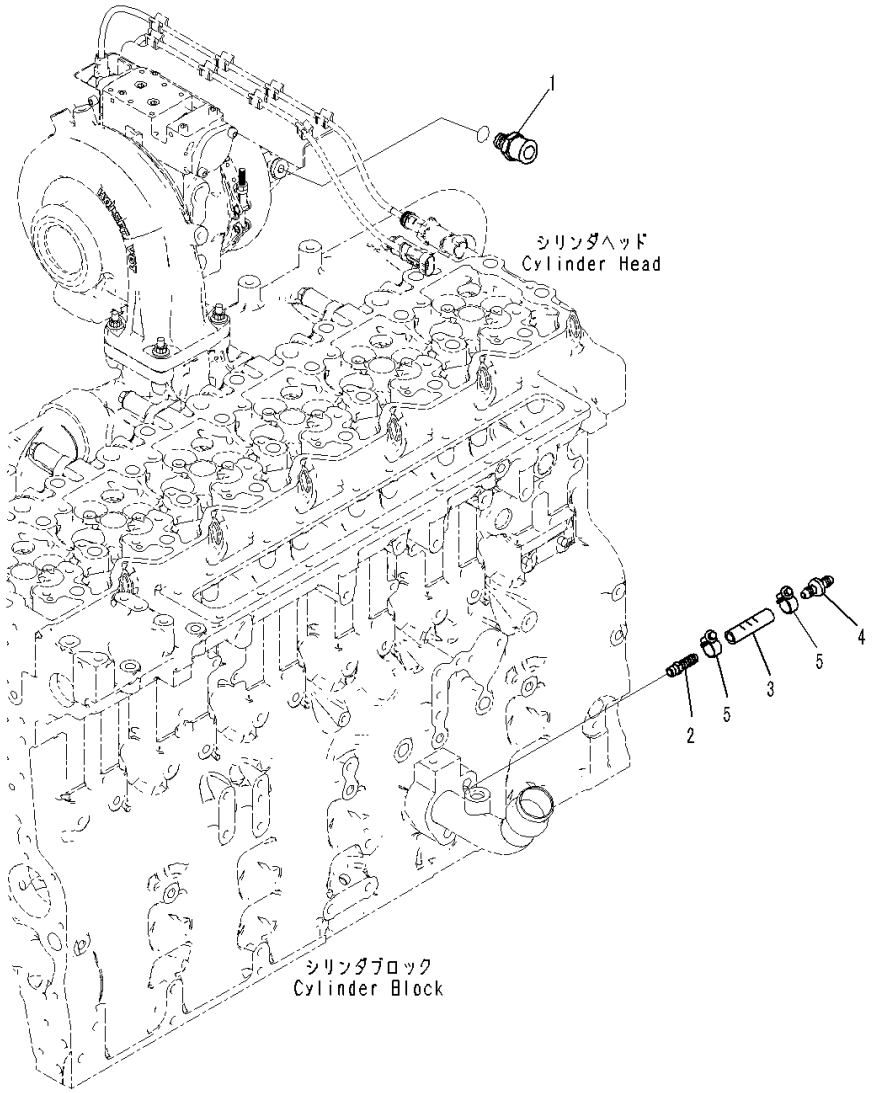

Index	Code	Part Number	Description	Qty	Serial Number
1		6746-21-7170	Connector	1	26900001-
2		6731-61-2230	Coupling	1	26900001-
3		6746-21-7180	Hose	1	26900001-
4		6261-51-2810	Valve, Check	1	26900001-
5		07281-00197	Clamp	2	26900001-

FIG. AHC00-001001 Cabin Heater Plug

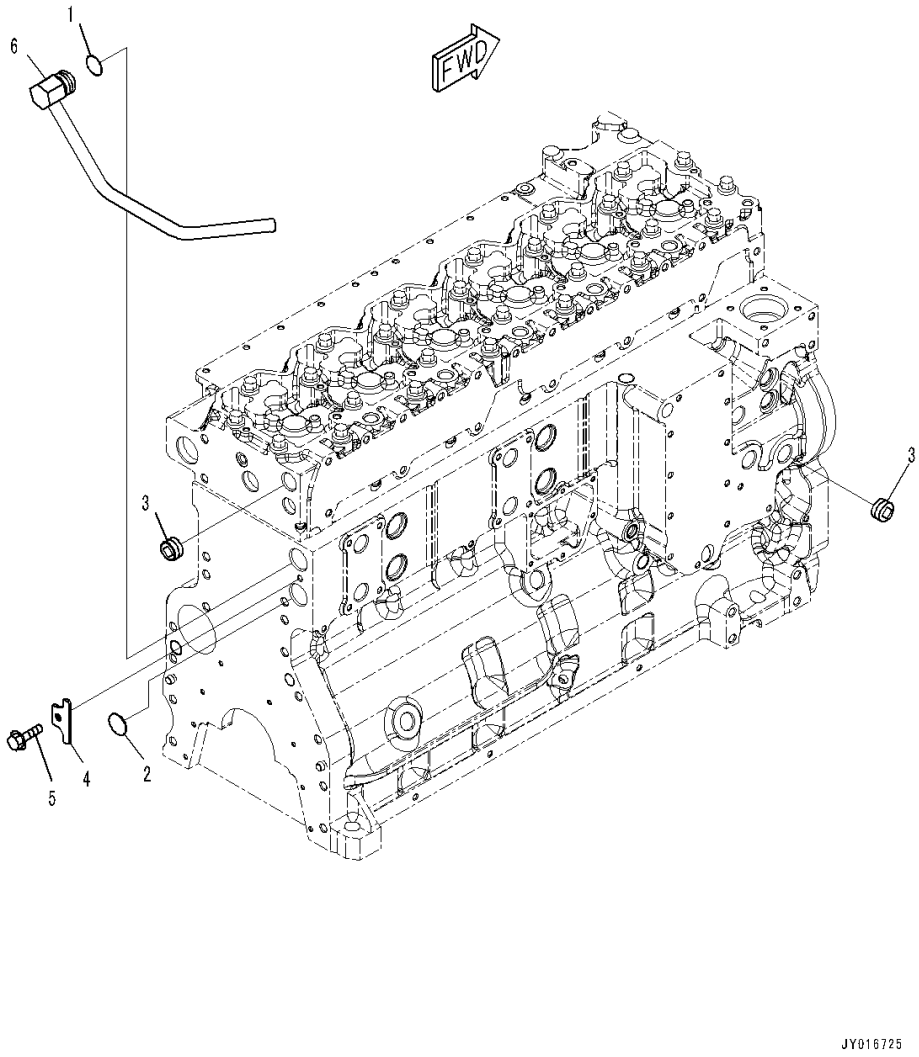

Index	Code	Part Number	Description	Qty	Serial Number
1		1241155H1	O-ring	1	26900001-
2		6742-01-1380	Plug	1	26900001-
3		6732-11-1920	Plug	2	26900001-
4		1294859H1	Plate	1	26900001-
5		01435-60816	Bolt	1	26900572-
		6736-21-5310	Bolt	1	26900001-26900571
6		6746-61-6650	Connection	1	26900001-

FIG. A2319-001001 Crankshaft

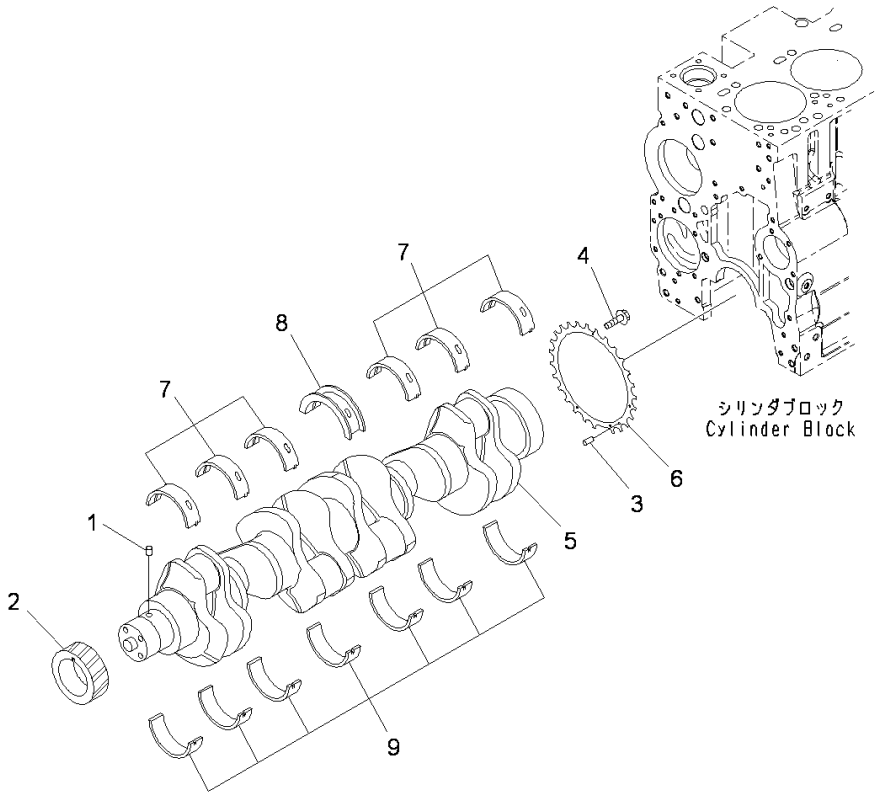

Index	Code	Part Number	Description	Qty	Serial Number
		6746-31-1120	Crankshaft	1	26900001-
1	C1		• Pin, Dowel	1	26900001-
2	C1		• Gear	1	26900001-
	C1		• Crankshaft	1	26900001-
3	C1		• • Pin, Dowel	1	26900001-
4	C1		• • Bolt	4	26900001-
5	C1		• • Crankshaft	1	26900001-
6	C1		• • Ring	1	26900001-
		6742-01-5199	Main Metal Assembly	1	26900001-
7	C1		• Metal	6	26900001-
8	C1		• Metal	1	26900001-
9	C1		• Metal	7	26900001-
		6742-21-8500	Thrust Metal Assembly	1	26900001-
	C1		• Metal	1	26900001-
	C1		• Metal	1	26900001-

FIG. ADA00-001001 Vibration Damper

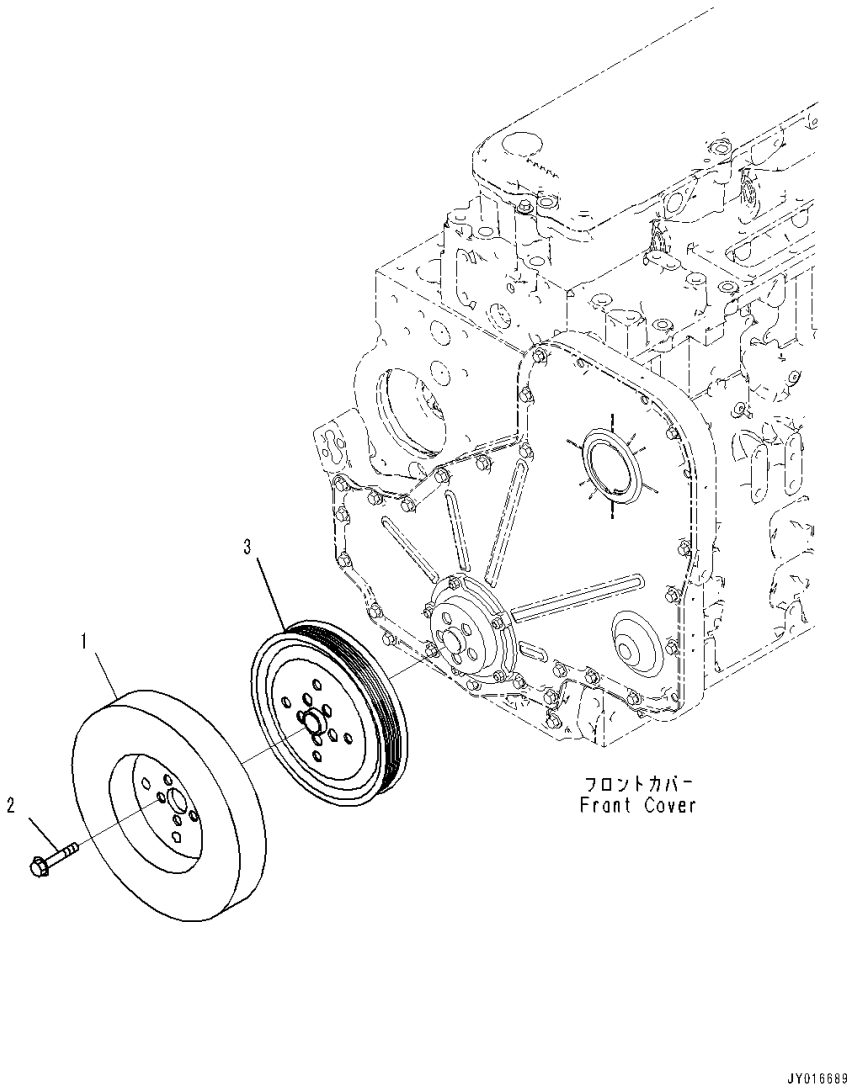

Index	Code	Part Number	Description	Qty	Serial Number
1		6746-31-8210	Damper, Vibration	1	26900001-
2		6745-31-8130	Bolt	5	26900001-
3		6746-61-3150	Pulley, Crankshaft	1	26900001-

FIG. A2359-001001 Piston and Connecting Rod

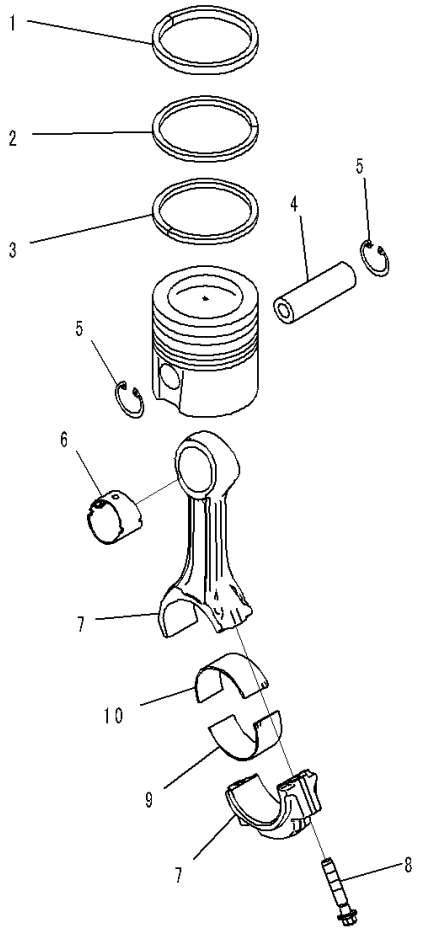

JY017818

Index	Code	Part Number	Description	Qty	Serial Number
		6746-31-2010	Piston Ring Assembly	6	26900001-
1	C1		• Ring,Top	1	26900001-
2	C1		• Ring,2nd	1	26900001-
3	C1		• Ring, Oil	1	26900001-
4		6745-31-2140	Pin	6	26900001-
5		6742-01-5309	Ring, Snap	12	26900001-
		6746-31-3100	Rod Assembly	6	26900001-
6		6743-31-3121	• Bushing	1	26900001-
7	C1		• Rod	1	26900001-
8		6746-31-3130	• Screw	2	26900001-
9		6743-31-3210	Metal	6	26900001-
10		6746-31-3310	Bearing	6	26900001-

FIG. AOB10-001001 Engine Oil Filler

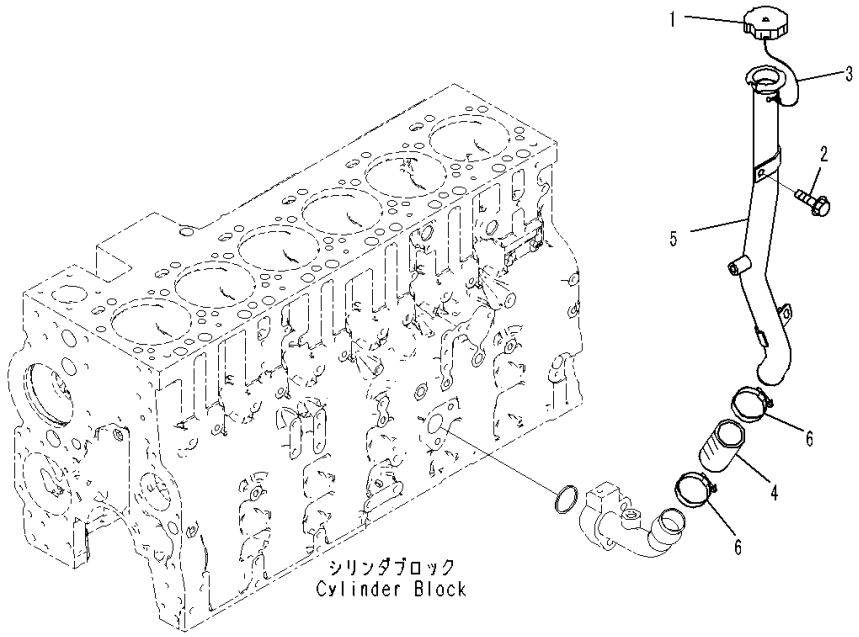

Index	Code	Part Number	Description	Qty	Serial Number
1		6136-21-7120	Cap Assembly	1	26900001-
2		01435-60816	Bolt	1	26900502-
		6732-21-3120	Bolt	1	26900001-26900501
3		6136-21-7190	Chain	1	26900001-
4		6127-11-5960	Hose	1	26900001-
5		6746-21-7350	Tube, Oil Filler	1	26900001-
6		07281-00489	Clamp, Hose	2	26900001-

FIG. ALG00-001001 Oil Level Gauge

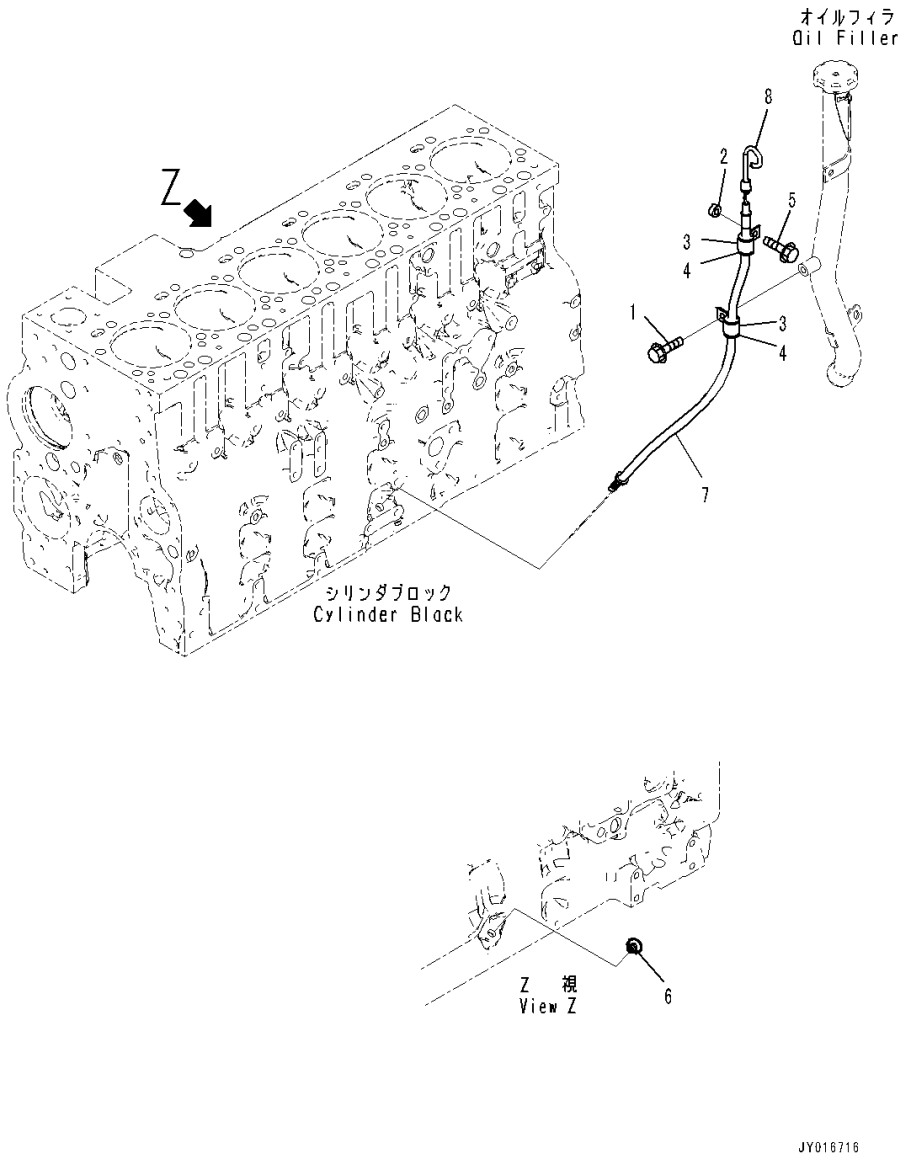

Index	Code	Part Number	Description	Qty	Serial Number
1		6216-74-6180	Bolt	1	26900001-
2		6130-12-1961	Spacer	1	26900001-
3		04434-51708	Clip	2	26900001-
4		07095-40211	Cushion	2	26900001-
5		01435-60825	Bolt	1	26900502-
		6732-21-5160	Bolt	1	26900001-26900501
6		6732-21-5530	Plug	1	26900001-
7		6731-22-5411	Tube	1	26900515-
	A2	6731-22-5410	Tube	1	26900001-26900514
8		6746-21-5130	Gauge	1	26900001-

ENGINE LUBRICATING SYSTEM

FIG. ALP00-001001 Engine Oil Pump

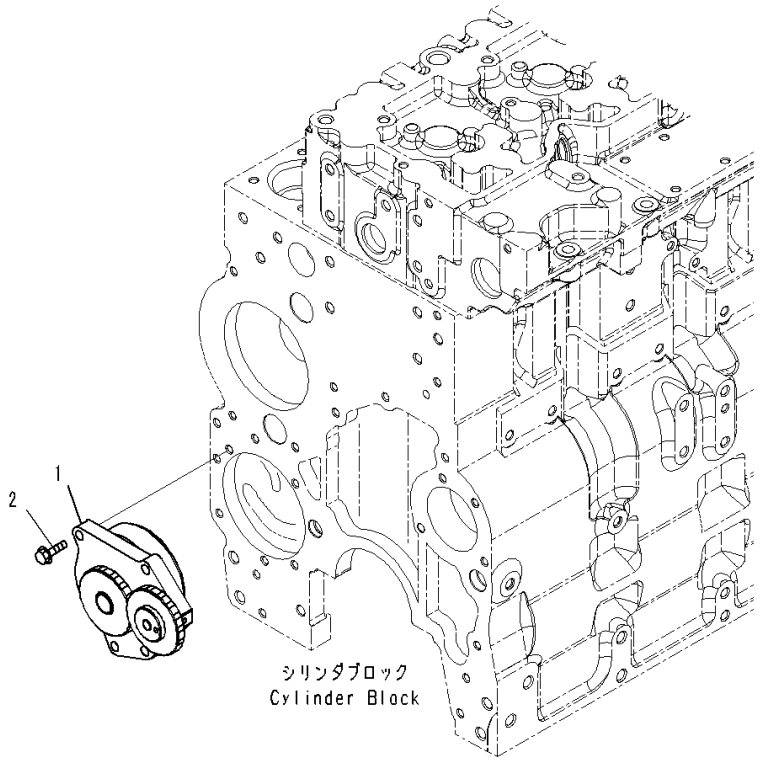

Index	Code	Part Number	Description	Qty	Serial Number
1		6745-51-1110	Pump Assembly	1	26900001-
2		01010-80830	Bolt	4	26900502-
		6735-51-1120	Bolt	4	26900001-26900501

FIG. ALF00-001001 Engine Oil Filter

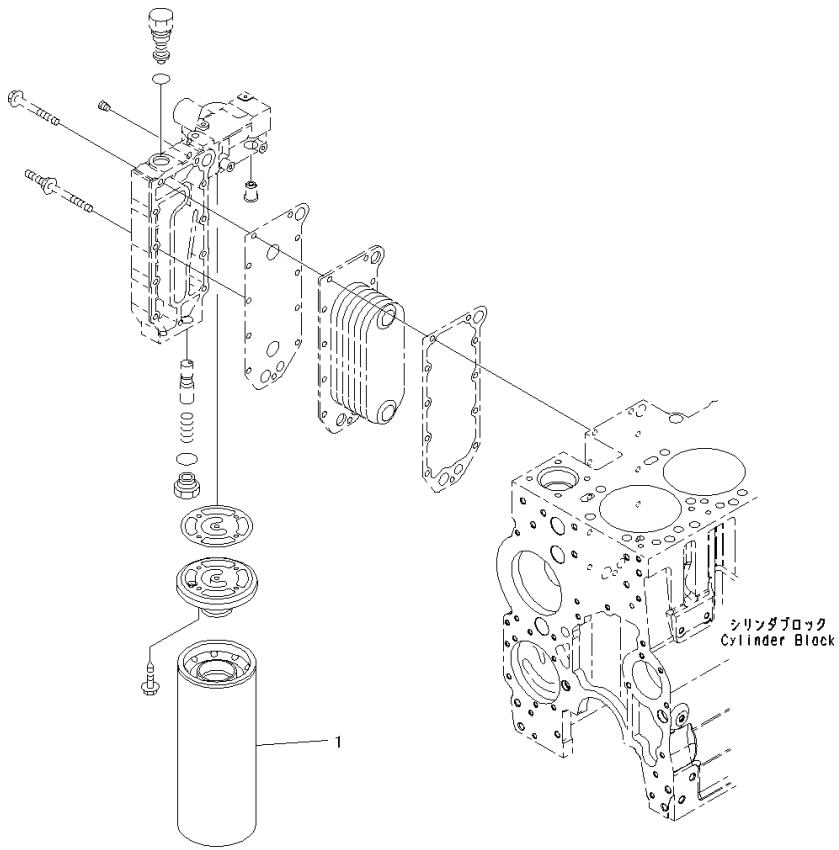

Index	Code	Part Number	Description	Qty	Serial Number
1		6742-01-4540	Cartridge, Oil Filter	1	26900001-

FIG. ALC00-001001 Engine Oil Cooler

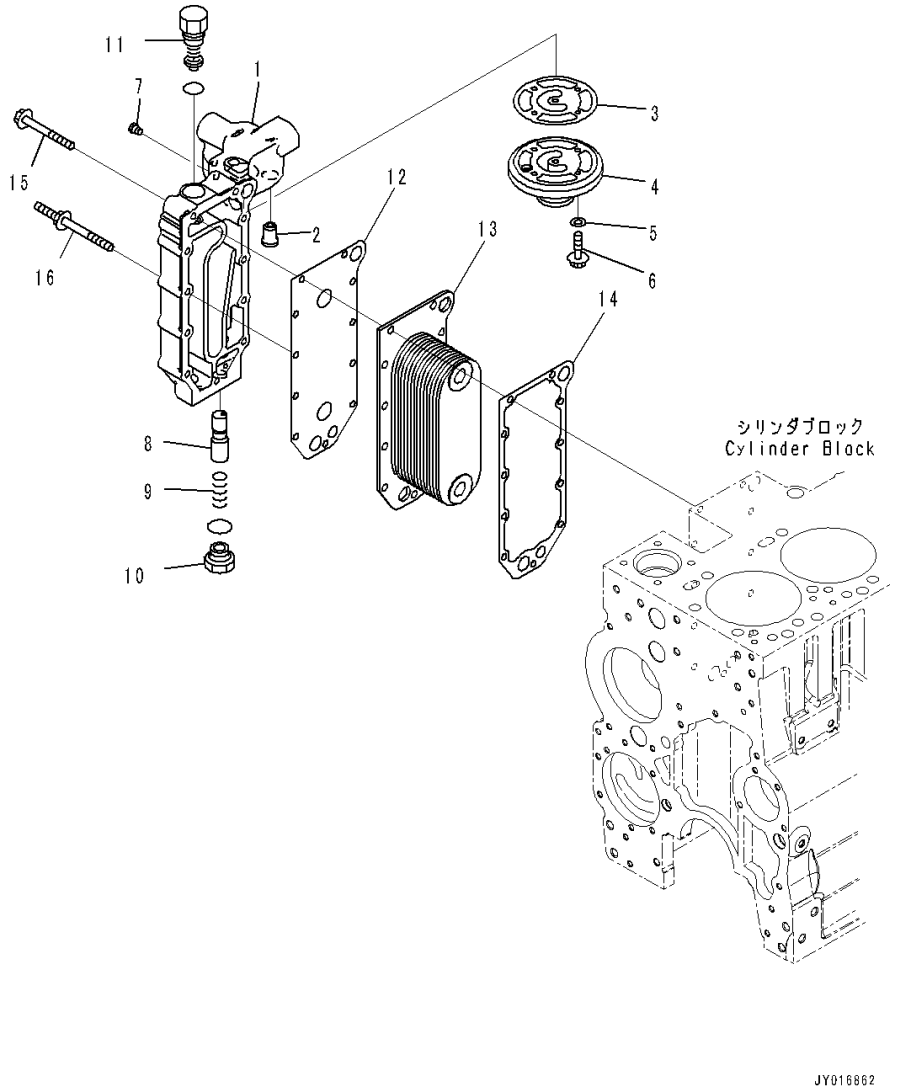

Index	Code	Part Number	Description	Qty	Serial Number
1		6746-61-2110	Cover	1	26900001-
2		6731-61-2151	Valve	1	26900001-
3		6742-01-2492	Gasket	1	26900001-
4		6742-01-2500	Head	1	26900001-
5		01641-20812	Washer	4	26900001-
6		01437-00825	Bolt	4	26900001-
7		6732-11-1930	Plug	2	26900001-
8		6742-01-5202	Plunger	1	26900001-
9		6743-61-2150	Spring	1	26900001-
10		6742-01-4220	Plug	1	26900001-
11		6742-01-5117	Valve	1	26900001-
12		6743-51-4430	Gasket	1	26900001-
13		6745-61-2111	Core	1	26900009-
14		6742-01-1080	Gasket	1	26900001-
15		6742-01-2441	Bolt	6	26900001-
16		6741-61-6110	Screw	5	26900001-

FIG. ARP00-001001 Engine Coolant Vent

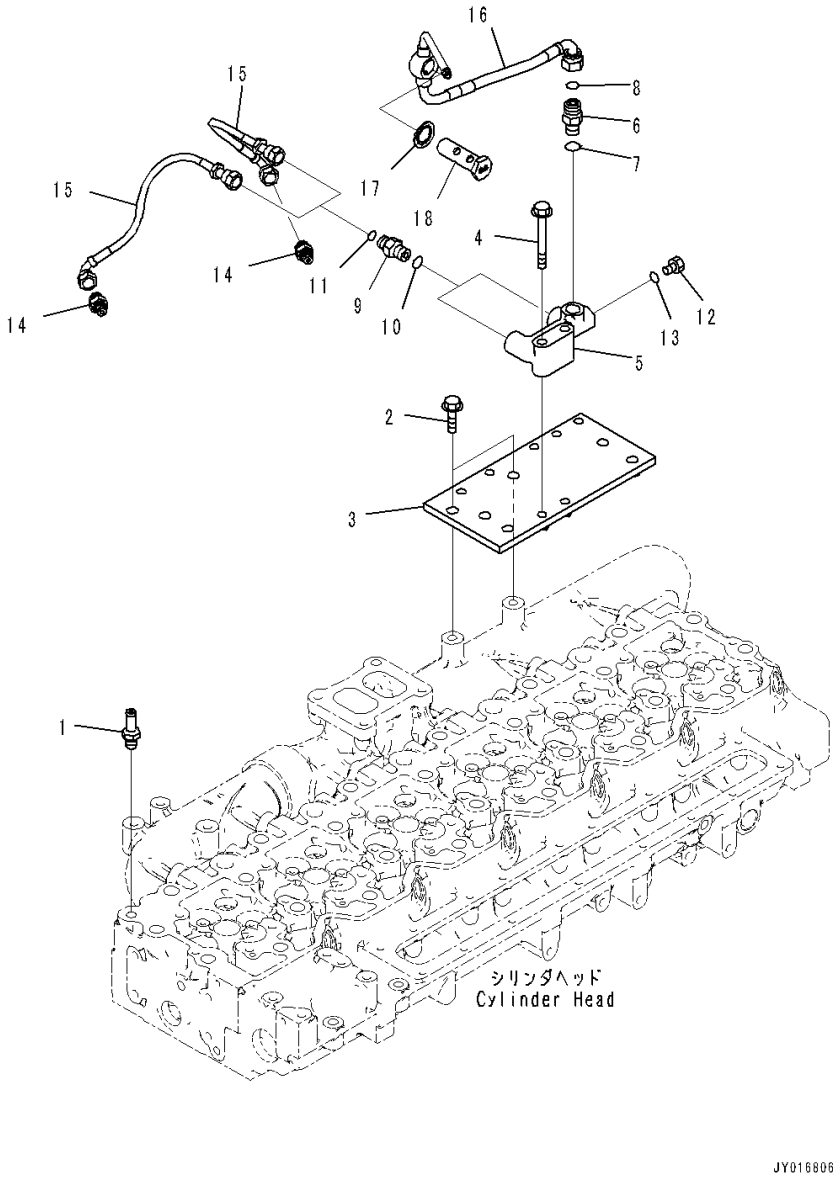

Index	Code	Part Number	Description	Qty	Serial Number
1		6745-61-6120	Fitting	1	26900001-
2		6731-61-4250	Bolt	2	26900001-
3		6746-11-5590	Brace	1	26900001-
4		6751-71-6340	Bolt	2	26900001-
		6746-61-8180	Connection	1	26900001-
5	C1		• Connection	1	26900001-
6		02781-0031D	• Nipple	1	26900001-
7		07002-61423	• O-ring	1	26900001-
8		02896-61009	• O-ring	1	26900001-
9		02781-0021D	• Union	2	26900001-
10		07002-61423	• O-ring	2	26900001-
11		02896-61008	• O-ring	2	26900001-
12		07040-11409	• Plug	1	26900001-
13		07002-61423	• O-ring	1	26900001-
14		6755-61-7120	Union	2	26900001-
15		6746-61-8110	Tube	2	26900001-
16		6746-61-8140	Tube	1	26900001-
17		6755-61-8140	Seal, Washer	1	26900001-
18		6755-61-8190	Screw	1	26900001-

ENGINE FUEL SYSTEM

FIG. AFF20-001001 Fuel Filter Piping

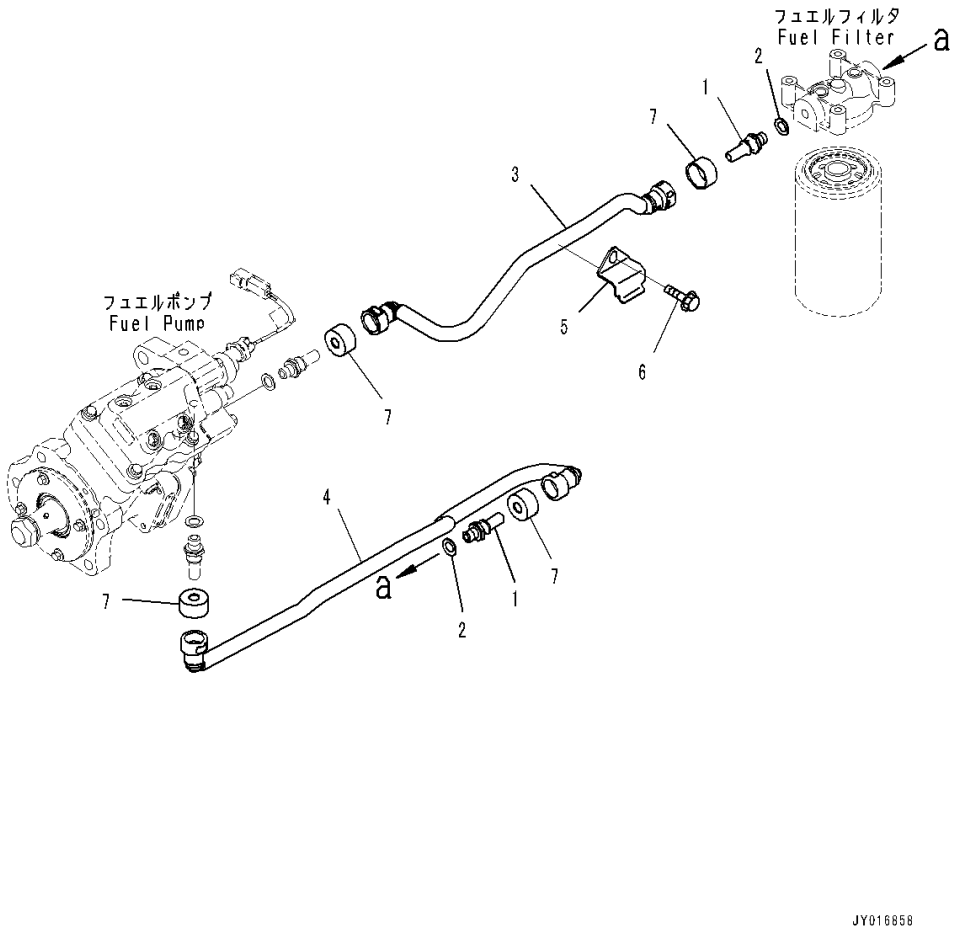

Index	Code	Part Number	Description	Qty	Serial Number
1		6745-71-6130	Connector	2	26900001-
2		6745-71-1130	Washer	2	26900001-
3		6746-71-5630	Tube	1	26900001-
4		6746-71-5660	Tube	1	26900001-
5		6746-71-5680	Brace	1	26900001-
6		01435-60816	Bolt	1	26900572-
		6736-21-5310	Bolt	1	26900001-26900571
7		6745-71-5160	Cover	4	26900001-

FIG. AFP20-001001 Fuel Supply Pump Support

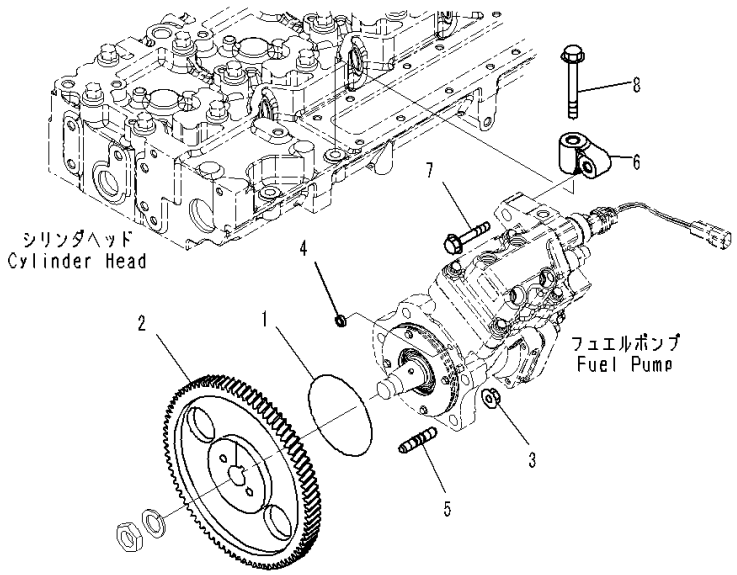

Index	Code	Part Number	Description	Qty	Serial Number
1		6741-61-2120	O-ring	1	26900001-
2		6745-71-3210	Gear	1	26900001-
3		6736-81-6170	Nut	4	26900001-
4		6742-01-5507	Seal	1	26900001-
5		6742-01-5047	Stud	4	26900001-
6		6745-71-1210	Support	1	26900001-
7		6742-01-3780	Bolt	1	26900001-
8		6732-61-4120	Bolt	1	26900001-

FIG. AFP10-001001 Fuel Injection Pump

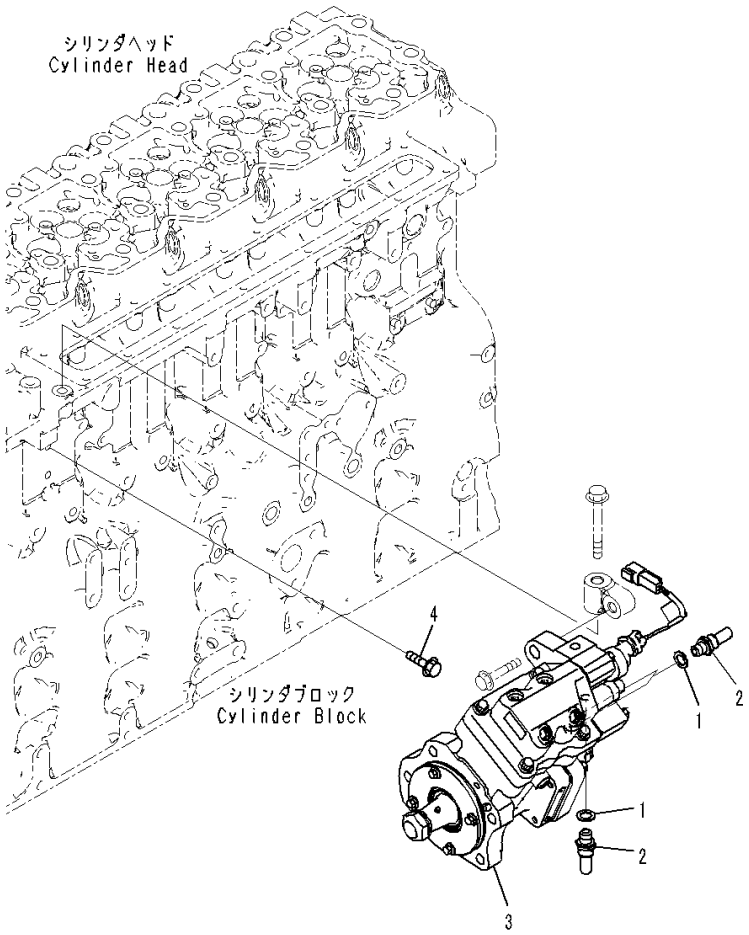

JY016804

Index	Code	Part Number	Description	Qty	Serial Number
		6746-71-1100	Pump Assembly, Fuel Injection	1	26900001-
1		6745-71-1130	• Washer	3	26900001-
2		6745-71-6130	• Connector	3	26900001-
3	C1		• Pump	1	26900001-
4		6745-71-2110	Bolt	1	26900001-26900469

FIG. APP50-001001 Fuel Injection Piping

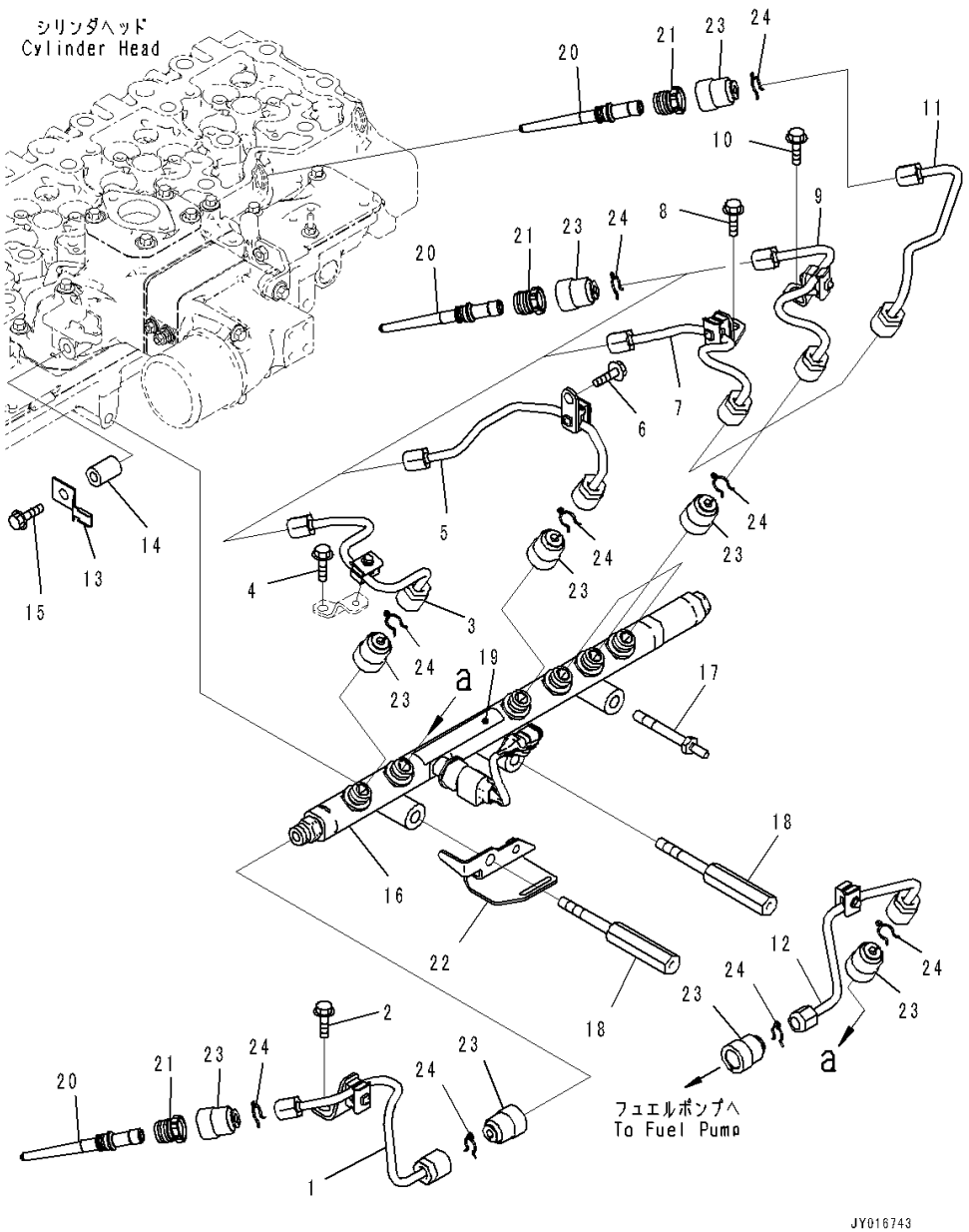

Index	Code	Part Number	Description	Qty	Serial Number
1		6746-71-4110	Tube, Fuel Supply	1	26900001-
2		6732-21-6630	Screw	1	26900001-
3		6746-71-4121	Tube, Fuel Supply	1	26900286-
		6746-71-4120	Tube, Fuel Supply	1	26900001-26900285
4		6732-61-3110	Bolt	1	26900001-
5		6746-71-4130	Tube, Fuel Supply	1	26900001-
6		6731-71-6270	Screw	1	26900001-
7		6746-71-4140	Tube, Fuel Supply	1	26900001-
8		6731-71-6270	Screw	1	26900001-
9		6746-71-4150	Tube, Fuel Supply	1	26900001-
10		6731-71-6270	Screw	1	26900001-
11		6746-71-4160	Tube, Fuel Supply	1	26900001-
12		6746-71-4171	Tube, Fuel Supply	1	26900286-
		6746-71-4170	Tube, Fuel Supply	1	26900001-26900285
13		08193-20010	Clip	1	26900001-
14		6130-12-4581	Spacer	1	26900001-
15		6732-61-3110	Bolt	1	26900013-
16		6746-71-1210	Accumulator	1	26900001-
17		6746-71-1280	Bolt	1	26900001-
18		6746-71-1270	Spacer	2	26900001-
19		6746-71-1980	Decal	1	26900001-
20		6746-71-5520	Connector	6	26900001-
21		6754-71-5541	Retainer	6	26900001-
22	C1		Brace	1	26900001-
23		6754-71-9710	Cover	14	26900001-
24		6217-71-5770	Clamp	14	26900001-

FIG. A4110-001001 Fuel Piping

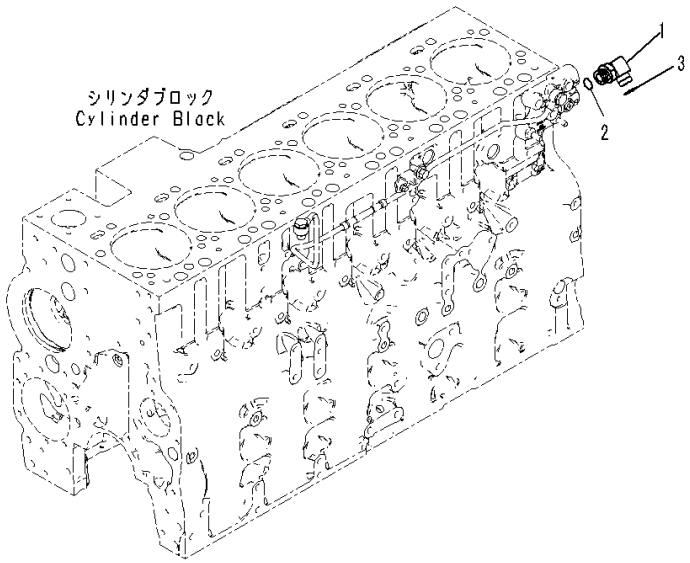

Index	Code	Part Number	Description	Qty	Serial Number
1		14X-04-51311	Elbow	1	26900001-
2		6216-74-6220	O-ring	1	26900001-
3		02896-11012	O-ring	1	26900001-

FIG. A4230-001001 Fuel Return Fitting

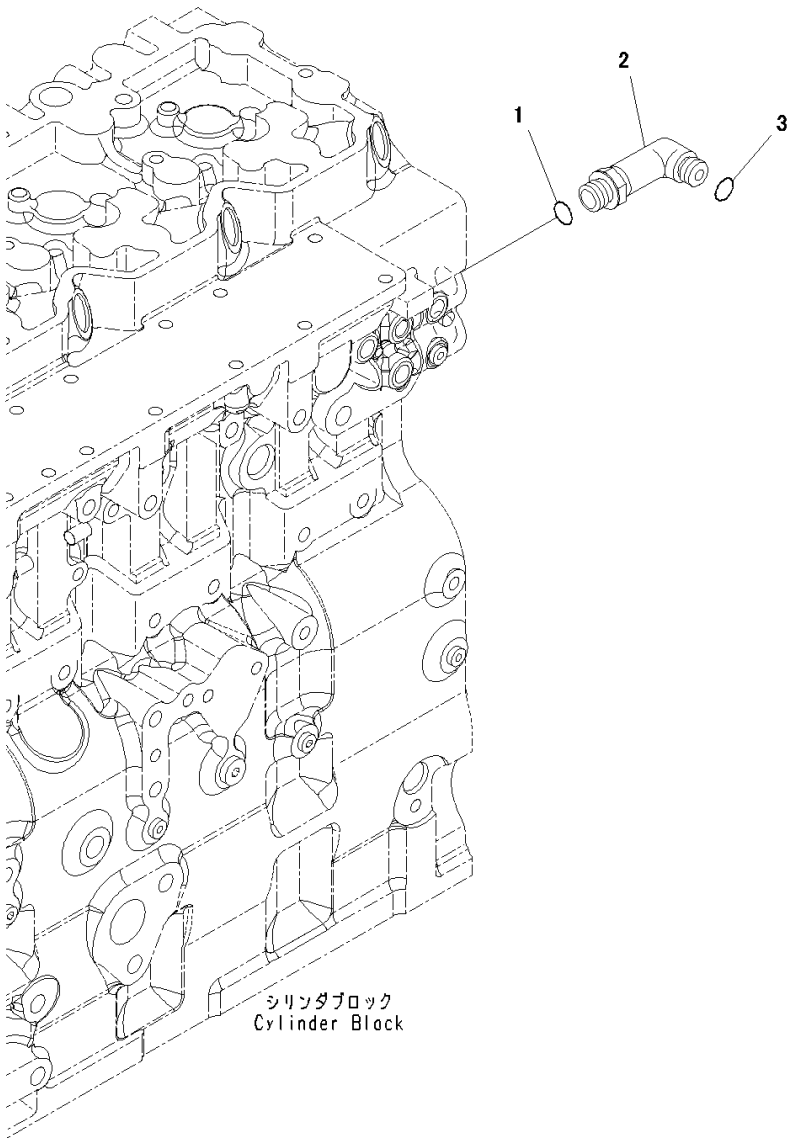

Index	Code	Part Number	Description	Qty	Serial Number
1		6735-21-4160	O-ring	1	26900001-
2		14X-04-51321	Elbow	1	26900001-
3		02896-11009	O-ring	1	26900001-

FIG. AFF10-001001 Fuel Filter Location

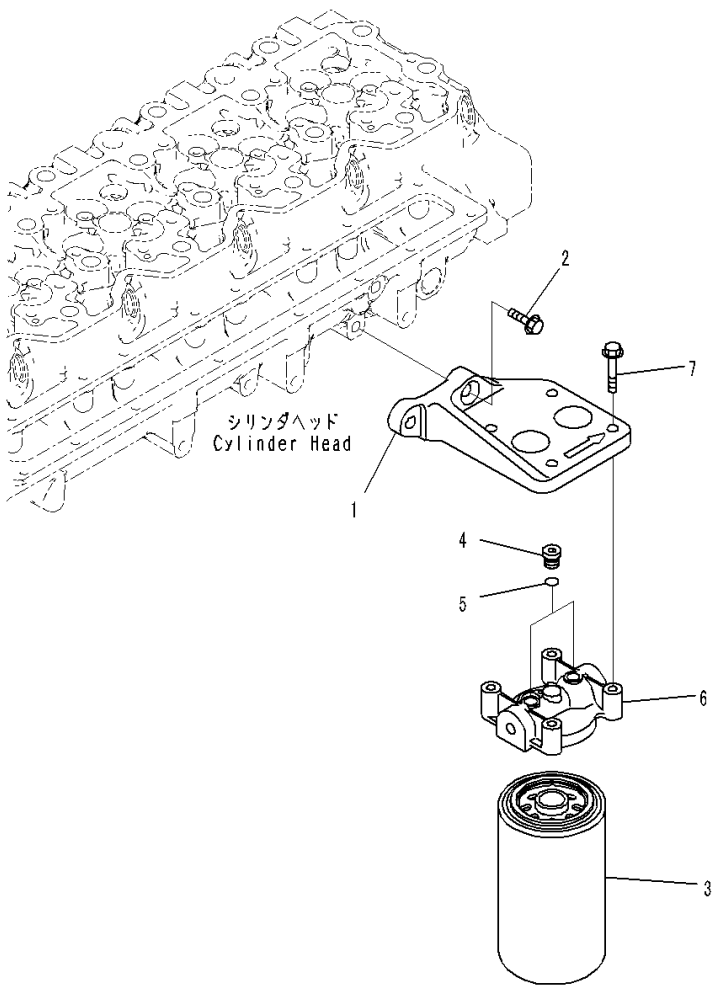

JY016857

Index	Code	Part Number	Description	Qty	Serial Number
1		6745-71-6251	Support	1	26900001-
2		01435-61030	Bolt	2	26900502-
		6735-61-3810	Bolt	2	26900001-26900501
		6754-71-6370	Filter Assembly	1	26900001-
3	C1		• Filter	1	26900001-
		6732-21-1960	• Plug Assembly	2	26900001-
4		6215-81-9510	• • Plug	1	26900001-
5		6735-21-1970	• • O-ring	1	26900001-
6		6754-71-6360	• Head	1	26900001-
7		6732-21-6630	Screw	4	26900001-

FIG. A4119-001001 Fuel Filter Cartridge

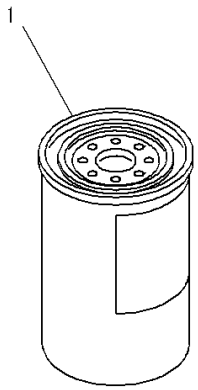

00060578

Index	Code	Part Number	Description	Qty	Serial Number
1		600-319-3750	Cartridge	1	26900001-

FIG. AFS00-001001 Fuel Transfer Pump

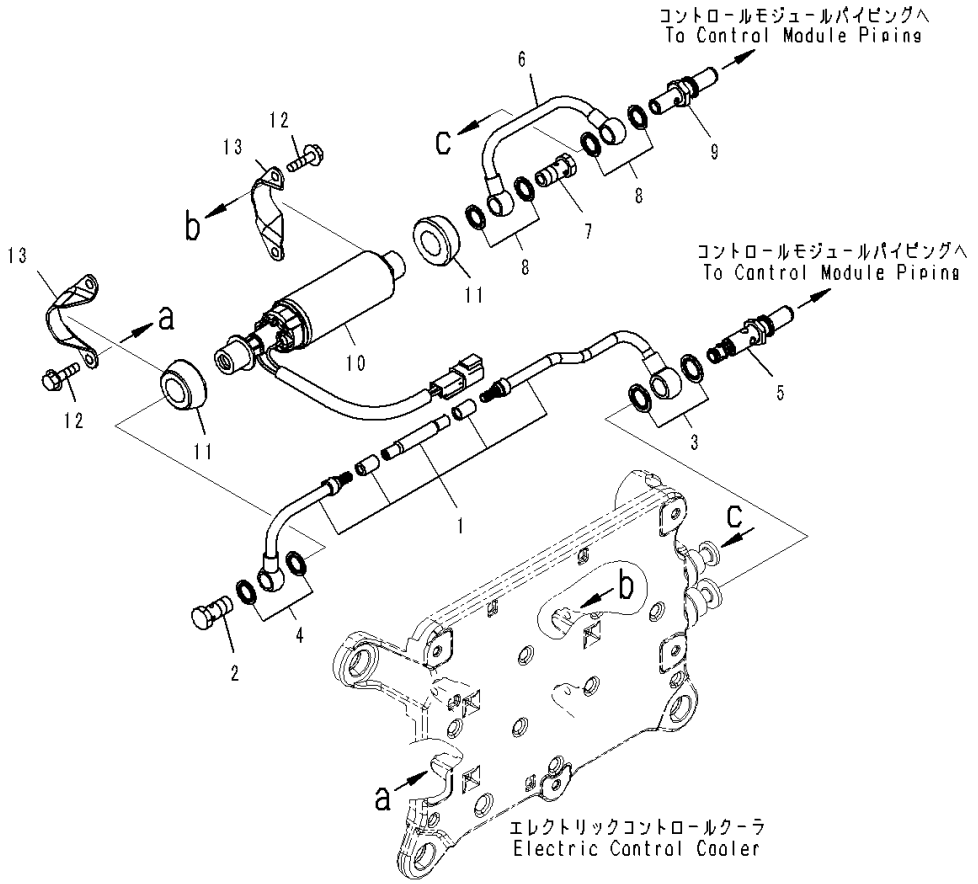

Index	Code	Part Number	Description	Qty	Serial Number
1		6745-71-5311	Tube	1	26900001-
2		6732-71-6510	Bolt	1	26900001-
3		6745-71-5860	Seal, Washer	2	26900001-
4		6745-71-1130	Washer	2	26900001-
5		6745-71-5391	Valve, Check	1	26900001-
6		6745-71-5410	Tube	1	26900001-
7		6732-71-6510	Bolt	1	26900001-
8		6745-71-1130	Washer	4	26900001-
9		6745-71-5430	Connector	1	26900001-
10		6745-71-1821	Pump Assembly	1	26900001-
11		6745-71-1830	• Isolator	2	26900001-
12		6732-21-4180	Bolt	4	26900001-
13		6745-71-1860	Bracket	2	26900001-

FIG. AFD00-002001 Fuel Drain Piping

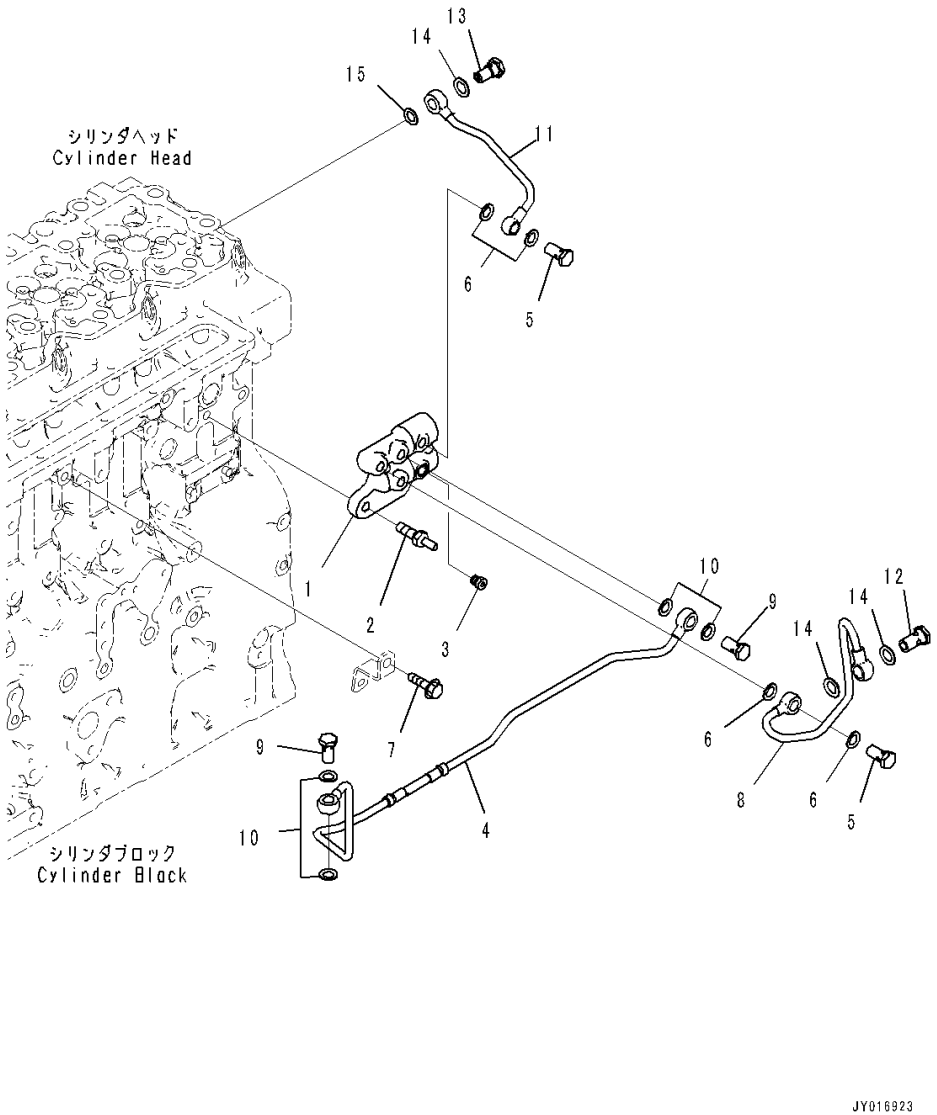

Index	Code	Part Number	Description	Qty	Serial Number
1		6745-71-5610	Connector	1	26900045-
2		6745-81-9580	Bolt	2	26900045-
3		6732-21-1960	Plug Assembly	1	26900045-
4		6746-71-5420	Tube	1	26900045-
5		6732-71-6510	Bolt	2	26900045-
6		6745-71-1130	Washer	4	26900045-
7		6732-61-3140	Bolt	1	26900045-
8		6746-71-5310	Tube	1	26900045-
9		6732-71-6510	Bolt	2	26900045-
10		6745-71-1130	Washer	4	26900045-
11		6745-71-5470	Tube	1	26900045-
12		6732-71-5620	Connector	1	26900045-
13		6754-71-5430	Valve, Check	1	26900045-
14		6731-74-5910	Washer	3	26900045-
15		6745-71-1130	Washer	1	26900045-

ENGINE COOLING SYSTEM

FIG. AFA20-002001 Cooling Fan Drive Mounting (For Hardened Pulley)

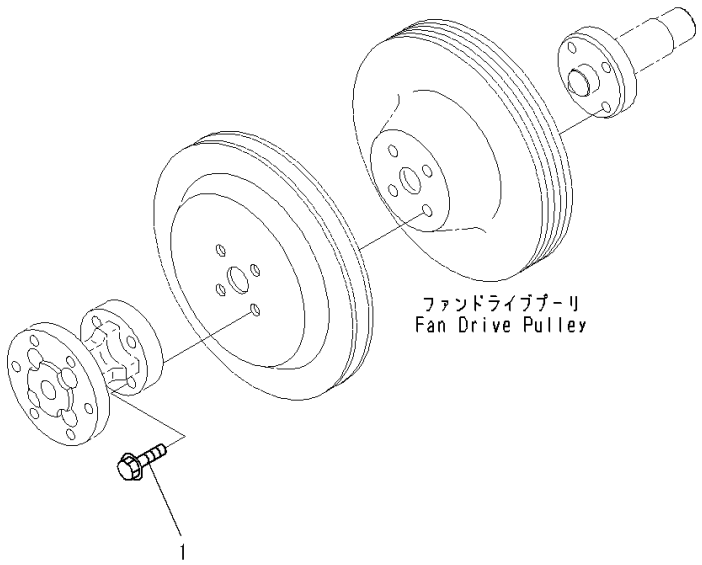

Index	Code	Part Number	Description	Qty	Serial Number
1		01435-61025	Bolt	4	26900491-
		6735-71-3220	Bolt	4	26900012-26900490

FIG. AFA20-001001 Cooling Fan Drive Mounting

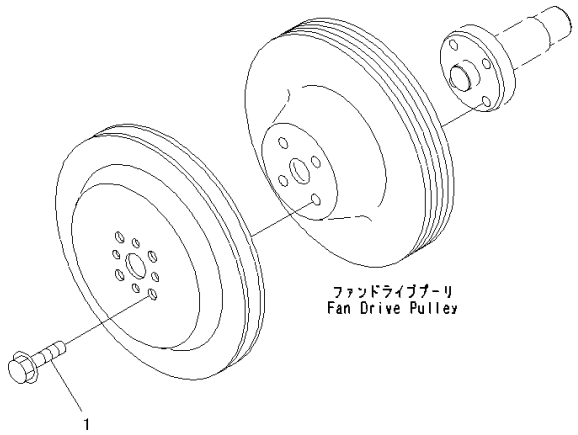

Index	Code	Part Number	Description	Qty	Serial Number
1		6732-61-3140	Bolt	4	26900001-

FIG. AFA10-001001 Cooling Fan Drive Pulley

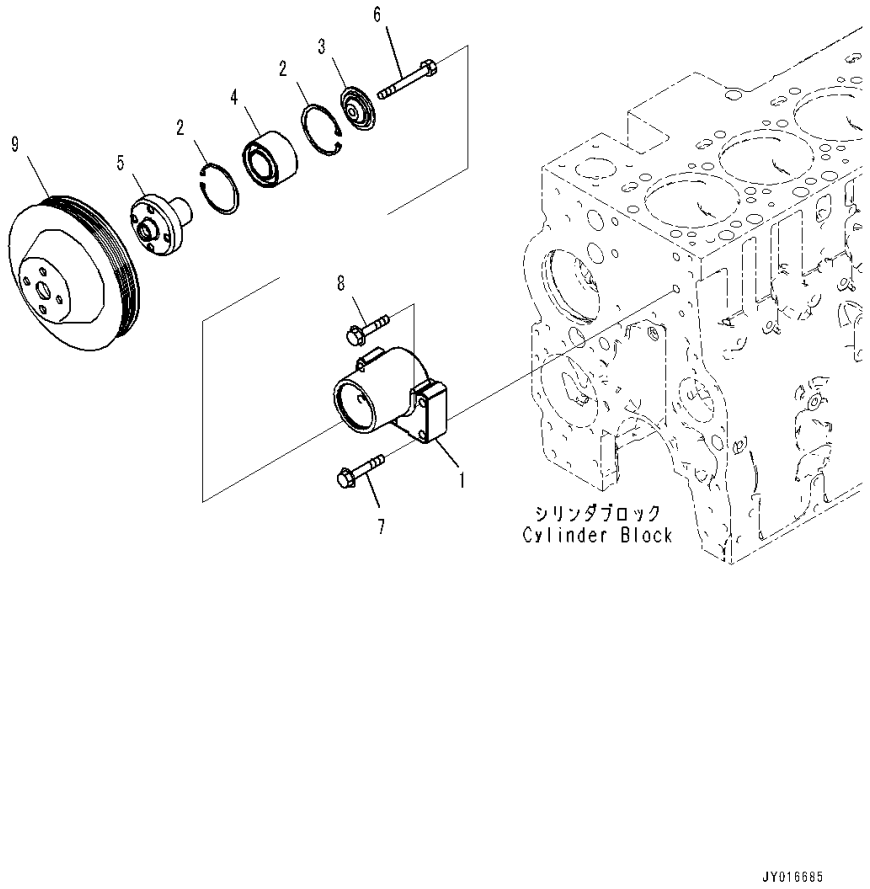

Index	Code	Part Number	Description	Qty	Serial Number
		6732-62-3410	Support Assembly	1	26900001-
1		6732-62-3470	• Support	1	26900001-
2		6732-61-3450	• Ring, Snap	2	26900001-
3		6732-61-3430	• Retainer	1	26900001-
4		6732-61-3420	• Bearing, Ball	1	26900001-
5		6732-61-3410	• Hub	1	26900001-
6		6732-61-3440	• Bolt	1	26900001-
7		01435-01055	Bolt	3	26900001-
8		01435-01045	Bolt	1	26900001-
9		6732-61-3131	Pulley, Fan	1	26900001-

FIG. APA00-002001 Cooling Fan Drive Pulley

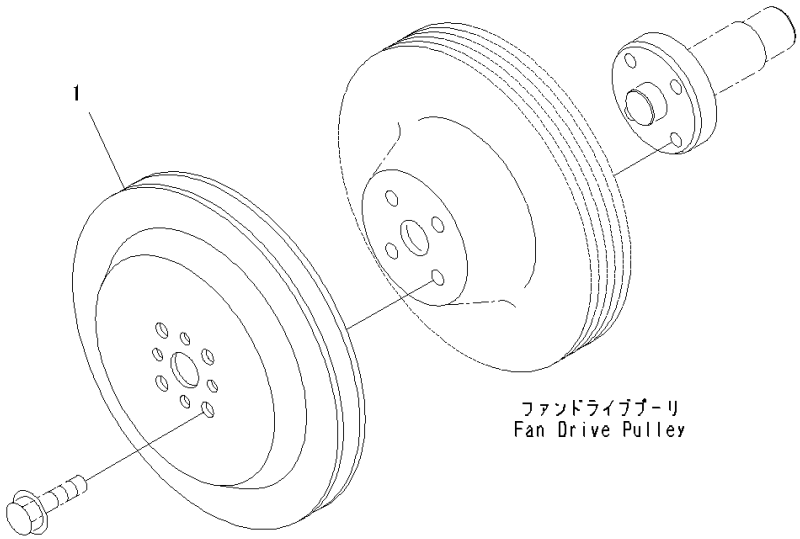

Index	Code	Part Number	Description	Qty	Serial Number
1		6745-61-1120	Pulley	1	26900012-

FIG. AWP20-001001 Cooling Fan Belt Tensioner

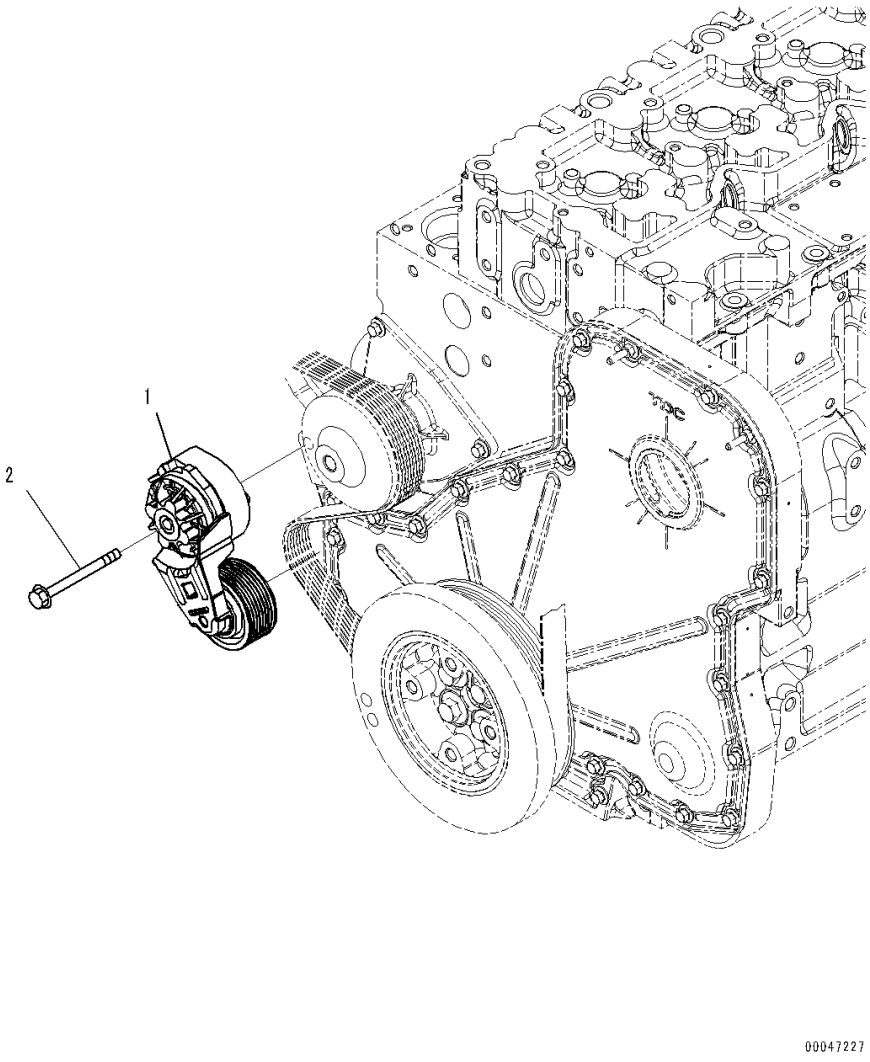

Index	Code	Part Number	Description	Qty	Serial Number
1		6754-61-4111	Tensioner, Belt	1	26900001-
2		6732-61-3260	Bolt	1	26900001-

FIG. AWP00-001001 Water Pump (Mounting Parts)

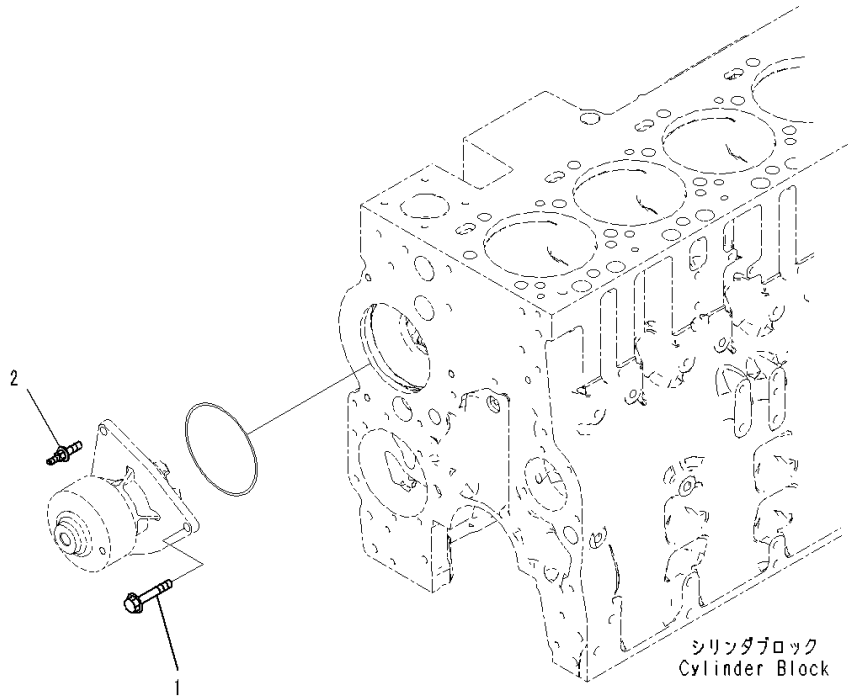

Index	Code	Part Number	Description	Qty	Serial Number
1		01435-00825	Bolt	2	26900001-
2		6742-01-5195	Screw	1	26900001-

FIG. A5019-001001 Water Pump

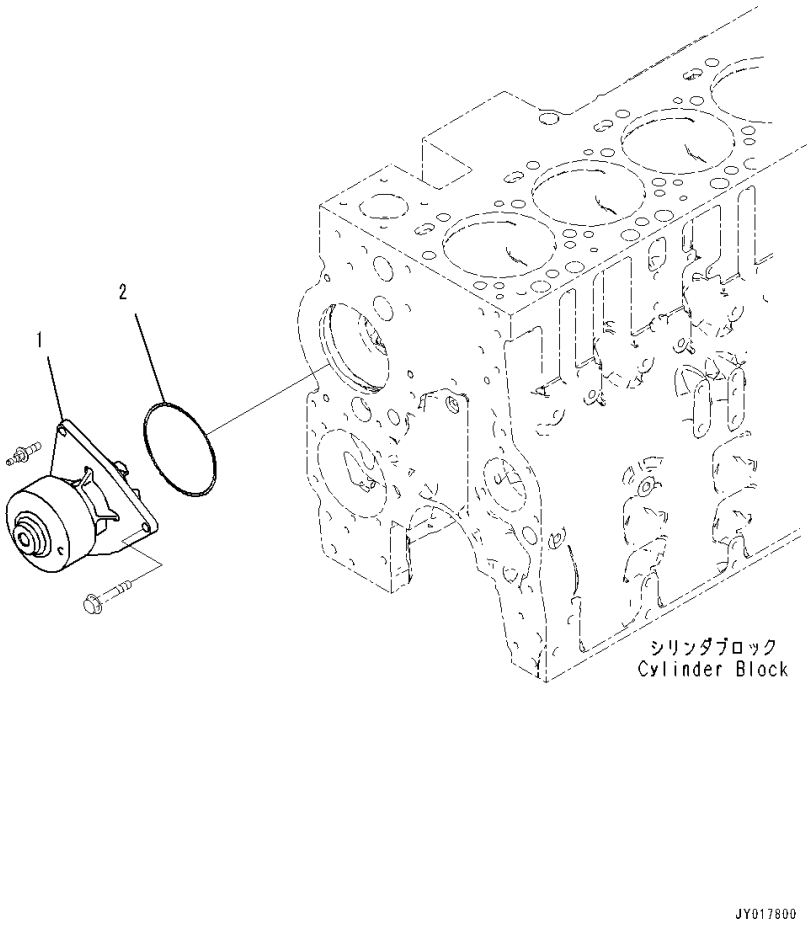

Index	Code	Part Number	Description	Qty	Serial Number
1		6746-61-1100	Pump, Water	1	26900001-
2		6741-61-1520	Seal	1	26900001-

FIG. AWP10-001001 Water Pump Drive Belt (For 60Amp. Alternator)

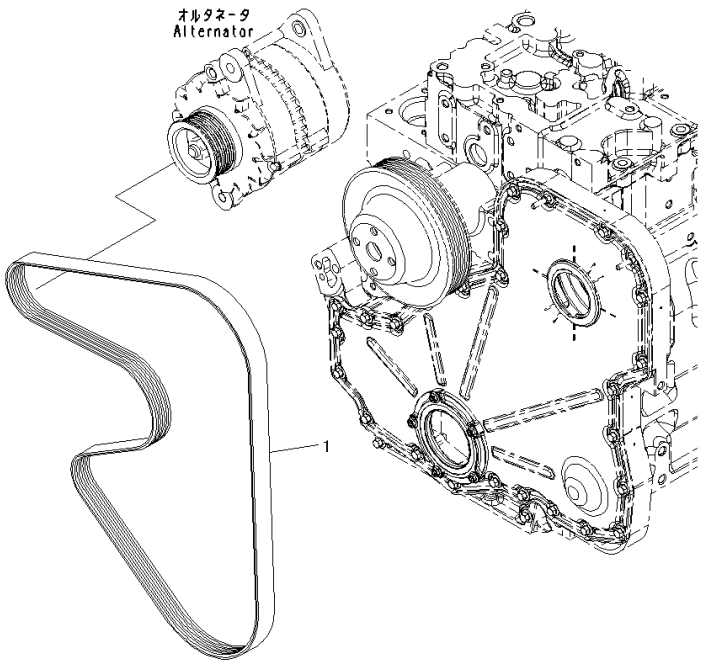

Index	Code	Part Number	Description	Qty	Serial Number
1		6746-61-3710	Belt	1	26900001-

FIG. AWP10-002001 Water Pump Drive Belt (For 90Amp. Alternator)

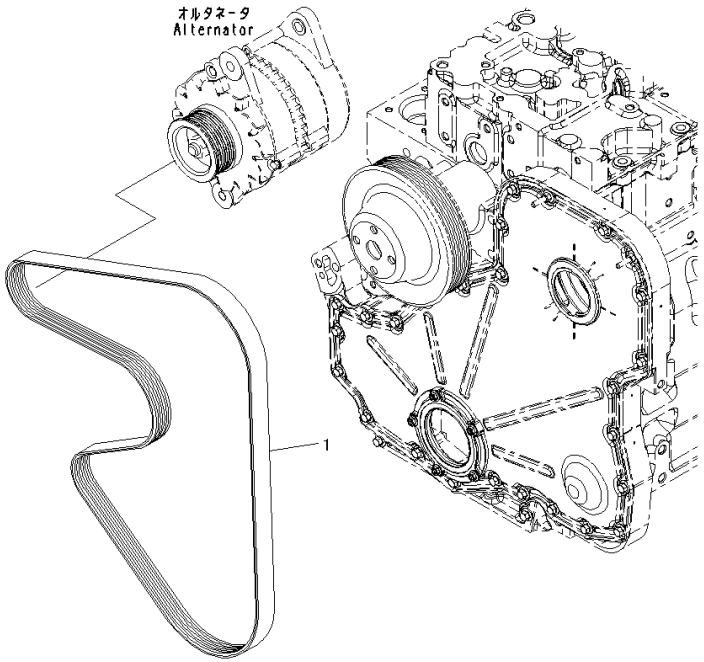

Index	Code	Part Number	Description	Qty	Serial Number
1		6732-82-3430	Belt	1	26900001-

FIG. AWO00-001001 Water Outlet Connector

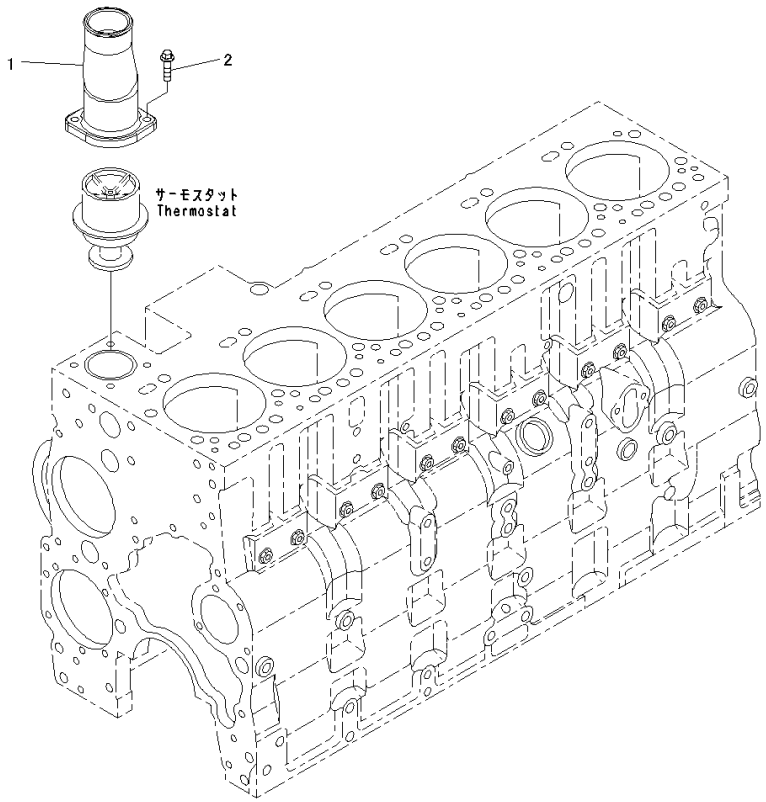

Index	Code	Part Number	Description	Qty	Serial Number
1		6746-61-6130	Connector	1	26900001-
2		01435-60825	Bolt	2	26900483-
		6732-21-5160	Bolt	2	26900001-26900482

FIG. AWI10-001001 Water Inlet Connector

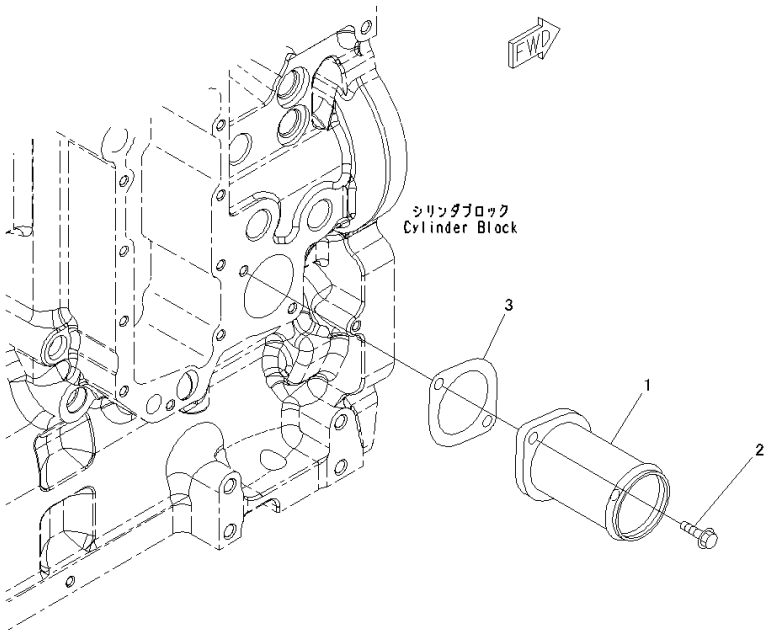

Index	Code	Part Number	Description	Qty	Serial Number
1		6746-61-6150	Connection, Water Inlet	1	26900001-
2		01435-60820	Bolt	2	26900572-
		6732-71-3220	Bolt	2	26900001-26900571
3		6741-61-6130	Gasket	1	26900001-

FIG. AEC00-001001 Thermostat

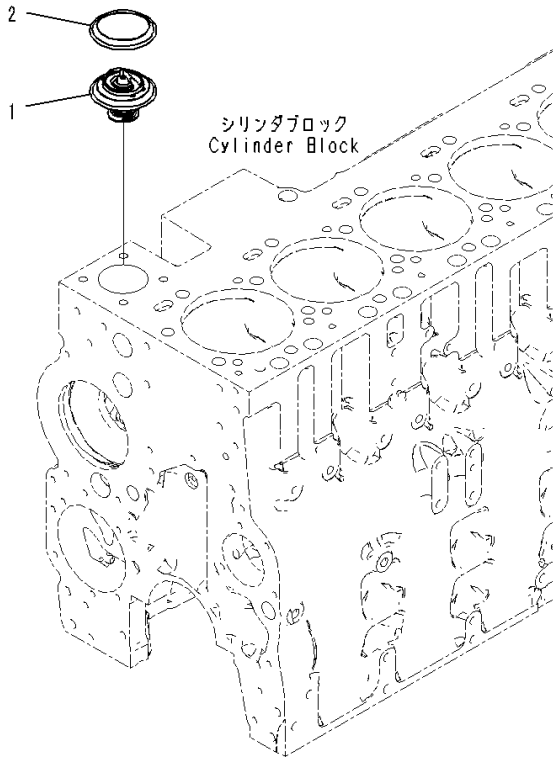

Index	Code	Part Number	Description	Qty	Serial Number
		6746-61-6240	Thermostat	1	26900001-
1	C1		• Thermostat	1	26900001-
2		6746-61-6230	• Seal Ring	1	26900001-

FIG. AHD10-001001 Hydraulic Pump

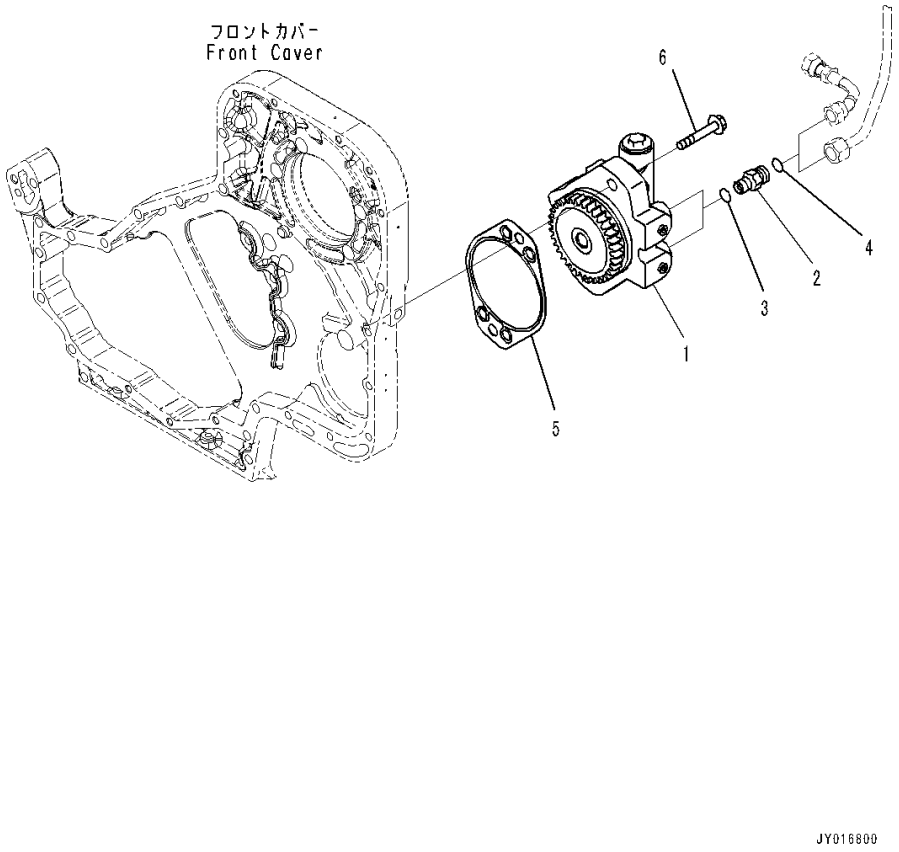

Index	Code	Part Number	Description	Qty	Serial Number
		6746-51-9100	Pump Assembly, Hydraulic	1	26900001-
1	C1		• Pump, Hydraulic	1	26900001-
2		02781-0031D	• Nipple	2	26900001-
3		07002-21423	• O-ring	2	26900001-
4		02896-21009	• O-ring	2	26900001-
5		6754-22-9110	Gasket	1	26900001-
6		6742-01-3780	Bolt	2	26900339-
		6732-21-6910	Bolt	2	26900001-26900338

FIG. AHD20-001001 Hydraulic Pump Piping

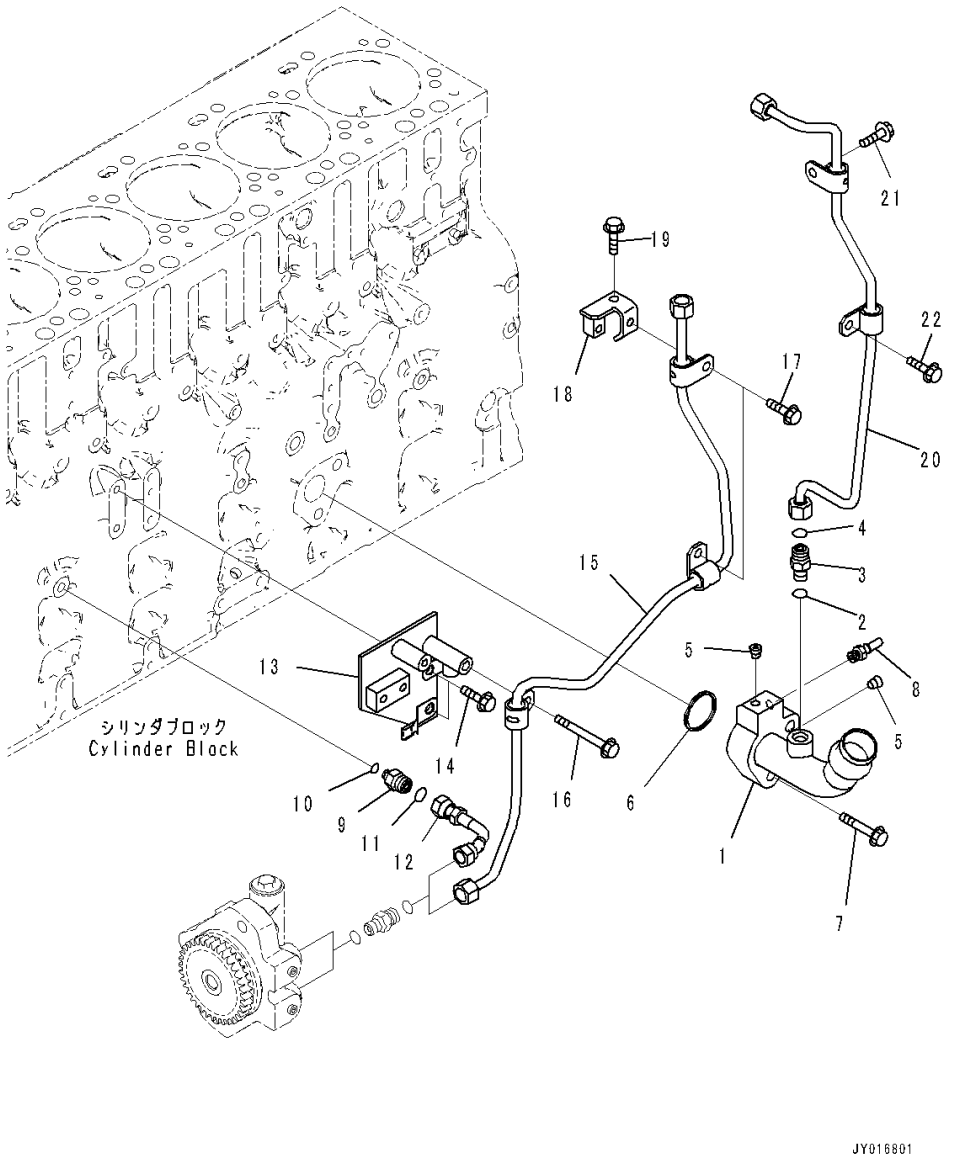

Index	Code	Part Number	Description	Qty	Serial Number
1		6746-21-7270	Connection, Oil Drain	1	26900001-
2		07002-21423	O-ring	1	26900001-
3		02781-0031D	Nipple	1	26900001-
4		02896-21009	O-ring	1	26900001-
5		02720-40204	Plug, Tapered	2	26900001-
6		6736-21-3360	Seal Ring	1	26900001-
7		6742-01-3780	Bolt	2	26900001-
8		6745-21-7240	Connector	1	26900001-
9		6746-51-9210	Union	1	26900001-
10		6735-21-1970	O-ring	1	26900001-
11		02896-21009	O-ring	1	26900001-
12		6746-51-9220	Tube, Oil Transfer	1	26900001-
13		6746-51-9120	Brace	1	26900001-
14		01435-01020	Bolt	2	26900001-
15		6746-51-9130	Tube, Oil Supply	1	26900001-
16		01435-00875	Bolt	1	26900001-
17		01435-60816	Bolt	2	26900572-
		6736-21-5310	Bolt	2	26900001-26900571
18		6746-81-5160	Brace	1	26900001-
19		01435-60816	Bolt	1	26900572-
		6736-21-5310	Bolt	1	26900001-26900571
20		6746-51-9140	Tube, Oil Drain	1	26900001-
21		01435-60820	Bolt	1	26900572-
		6732-71-3220	Bolt	1	26900001-26900571
22		01435-60816	Bolt	1	26900572-
		6736-21-5310	Bolt	1	26900001-26900571

ENGINE ELECTRICAL SYSTEM

FIG. AEH20-001001 Alternator Mounting Parts (For 60Amp. Alternator)

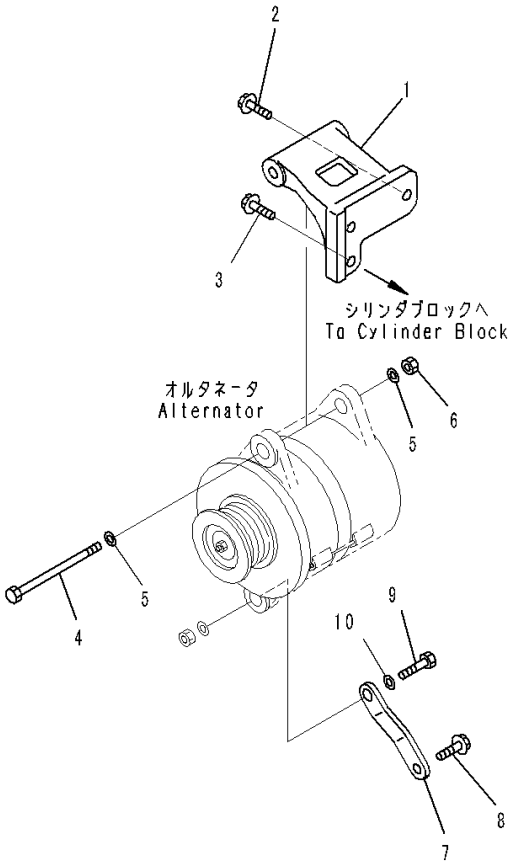

PJ6E818

Index	Code	Part Number	Description	Qty	Serial Number
1		6741-81-6520	Bracket	1	26900001-
2		01435-61030	Bolt	2	26900502-
		6735-61-3810	Bolt	2	26900001-26900501
3		01435-61025	Bolt	1	26900491-
		6735-71-3220	Bolt	1	26900001-26900490
4		6207-81-6980	Bolt	1	26900001-
5		01643-31232	Washer	2	26900001-
6		01580-11210	Nut	1	26900001-
7		6741-81-6510	Brace	1	26900001-
8		01435-01020	Bolt	1	26900001-
9		01050-31230	Bolt	1	26900001-
10		01643-31232	Washer	1	26900001-

FIG. A6020-001001 Alternator Mounting Parts (For 90Amp. Alternator)

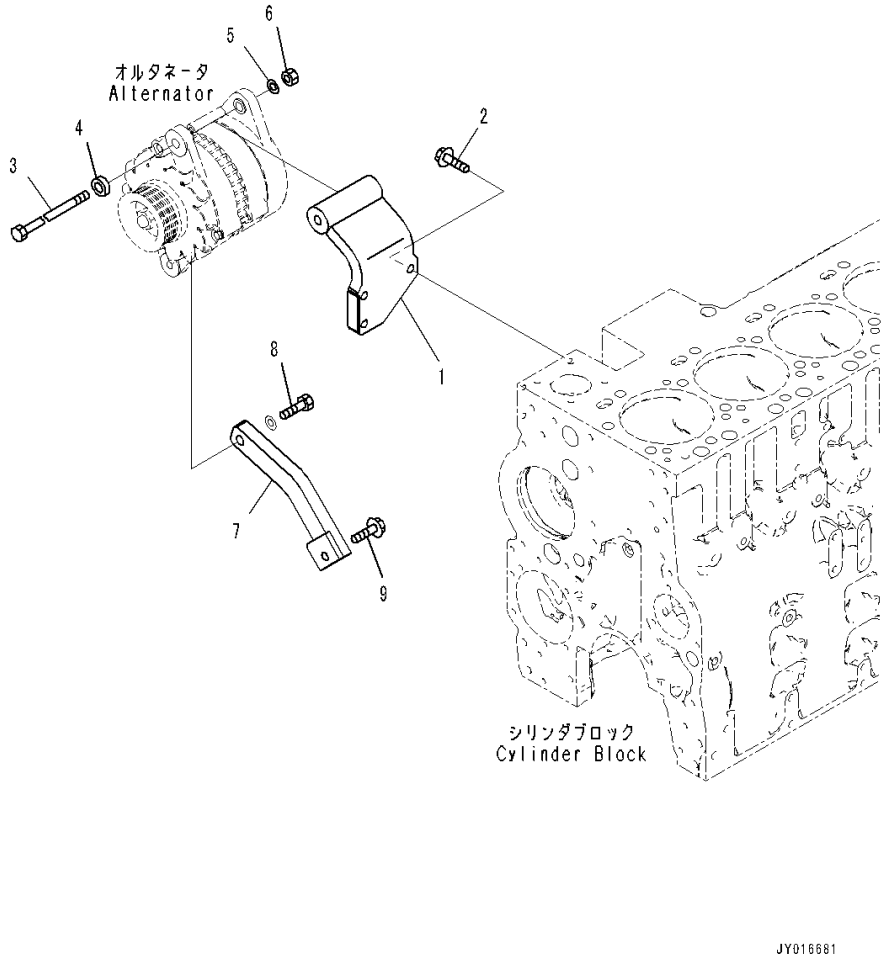

Index	Code	Part Number	Description	Qty	Serial Number
1		6746-81-6130	Bracket	1	26900001-
2		6216-74-6190	Bolt	3	26900001-
3		6732-81-6840	Bolt	1	26900001-
4		6732-81-6880	Washer	1	26900001-
5		01643-31232	Washer	1	26900001-
6		01582-11210	Nut	1	26900001-
7		6746-81-6120	Bracket	1	26900001-
8		6135-85-8190	Bolt	1	26900001-
9		6743-61-3610	Bolt	1	26900001-

FIG. AEE00-001001 Alternator (60Amp)

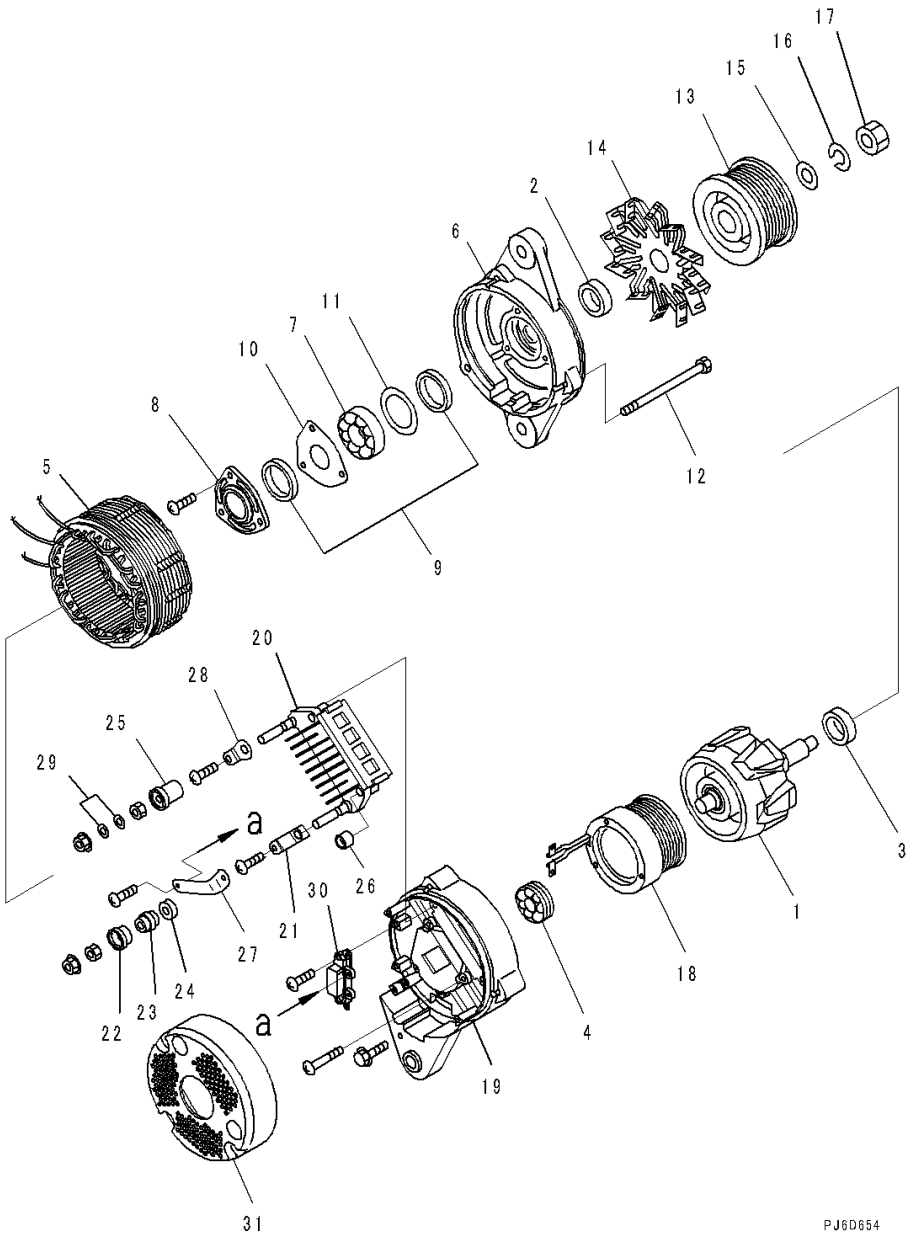

Index	Code	Part Number	Description	Qty	Serial Number
		600-861-6110	Alternator, 60Amp.	1	26900001-
1		KD0-35100-0300	• Rotor Assembly	1	26900001-
2		KD1-33923-0790	• Collar	1	26900001-
3		KD1-35923-0160	• Collar	1	26900001-
4		KD0-09201-0980	• Bearing, Ball	1	26900001-
5		KD0-35200-0460	• Stator Assembly	1	26900001-
6		KD0-35300-0350	• Bracket Assembly	1	26900001-
7		KD0-09201-1140	• • Bearing, Ball	1	26900001-
8		KD0-35926-0070	• • Retainer	1	26900001-
9		KD0-35951-0060	• • Packing	1	26900001-
10		KD0-35926-0090	• • Retainer	2	26900001-
11		KD1-33926-0730	• • Retainer	1	26900001-
12		KD0-0275-06802	• Bolt	1	26900001-
13		KD0-35411-0640	• Pulley	3	26900001-
14		KD0-35421-0240	• Fan	1	26900001-
15		KD1-0330-16012	• Washer	1	26900001-
16		KD1-0335-16002	• Washer, Spring	1	26900001-
17		KD0-0280-16022	• Nut	1	26900001-
18		KD0-35120-0290	• Coil, Field	1	26900001-
		KD0-35700-0950	• Bracket Assembly	1	26900001-
19		KD0-35710-1150	• • Bracket	1	26900001-
20		KD0-35730-0700	• • Rectifier Assembly	1	26900001-
21		KD0-09170-2501	• • Condenser	1	26900001-
22		KD0-35943-0150	• • Bushing	1	26900001-
23		KD0-35923-0130	• • Collar	1	26900001-
24		KD0-35943-0160	• • Bushing	1	26900001-
25		KD0-35943-0140	• • Bushing	1	26900001-
26		KD0-35943-0170	• • Bushing	2	26900001-
27		KD0-35784-0210	• • Bar, Connect	1	26900001-
28		KD0-35784-0290	• • Bar, Plate	1	26900001-
29		KD0-09057-0220	• • Washer	2	26900001-
30		KD7-35719-0211	• • Regulator Assembly	1	26900001-
31		KD0-35761-0250	• Cover	1	26900001-

FIG. AEE00-002001 Alternator (90Amp)

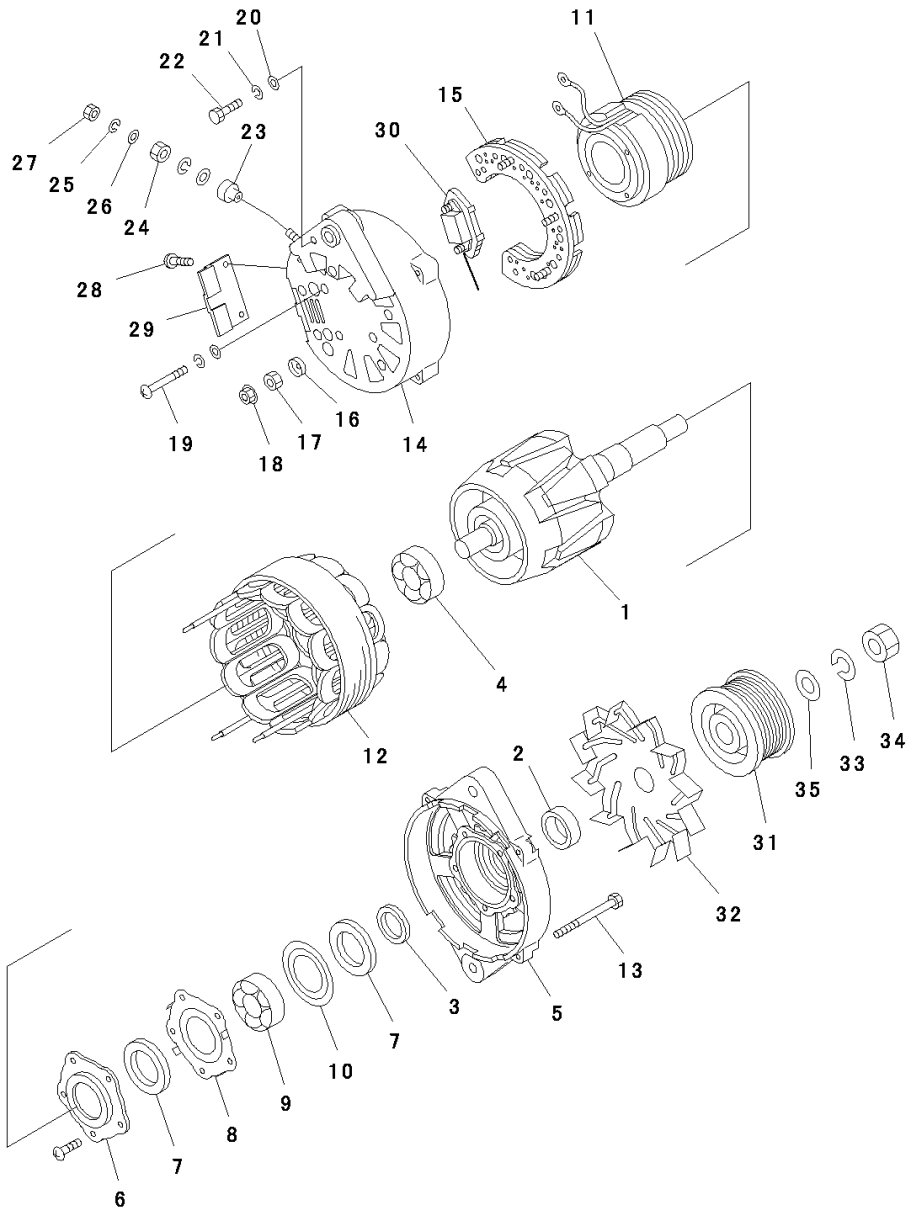

Index	Code	Part Number	Description	Qty	Serial Number
		600-861-9120	Alternator Assembly, 90Amp.	1	26900001-
1		KD0-35100-0310	• Rotor Assembly	1	26900001-
2		KD1-33923-0890	• Collar	1	26900001-
3		KD1-35923-0030	• Collar	1	26900001-
4		KD0-09201-0770	• Bearing, Ball	1	26900001-
5		KD0-35300-0200	• Bracket Assembly	1	26900001-
6		KD0-35926-0080	• Retainer	1	26900001-
7		KD0-35951-0080	• Packing	2	26900001-
8		KD1-33926-0660	• Retainer	1	26900001-
9		KD0-09201-0760	• Bearing, Ball	1	26900001-
10		KD1-33926-0790	• Retainer	1	26900001-
11		KD0-35120-0250	• Coil Assembly, Field	1	26900001-
12		KD0-35200-0320	• Stator Assembly	1	26900001-
13		KD0-0083-08802	• Bolt	4	26900001-
		KD0-35700-0970	• Bracket Assembly	1	26900001-
14		KD0-35710-1190	• • Bracket	1	26900001-
15		KD0-35730-0162	• • Rectifier Assembly	1	26900001-
16		KD0-35943-0210	• • Bushing	1	26900001-
17		KD0-33902-0090	• • Nut	1	26900001-
18		KD0-33902-0080	• • Nut	6	26900001-
19		KD1-0020-06452	• • Screw	4	26900001-
20		KD1-0330-06012	• • Washer, Prain	5	26900001-
21		KD1-0335-06002	• • Washer, Spring	5	26900001-
22		KD0-0080-06142	• • Bolt	1	26900001-
23		KD0-35943-0100	• • Bushing	1	26900001-
24		KD0-33902-0100	• • Nut	1	26900001-
25		KD1-0335-08002	• • Washer, Spring	2	26900001-
26		KD1-0331-08020	• • Washer	2	26900001-
27		KD0-0291-08010	• • Nut	1	26900001-
28		KD0-0055-05122	• • Screw	2	26900001-
29		KD0-35761-0190	• • Cover	1	26900001-
30		KD7-35719-0181	• • Regulator Assembly	1	26900001-
31		KD0-35411-0650	• Pulley	1	26900001-
32		KD0-35421-0190	• Fan	1	26900001-
33		KD1-0335-20002	• Washer, Spring	1	26900001-
34		KD0-0290-20022	• Nut	1	26900001-
35		KD1-35921-0010	• Washer	1	26900001-

FIG. A6010-001001 Alternator Cover (For 60Amp. Alternator)

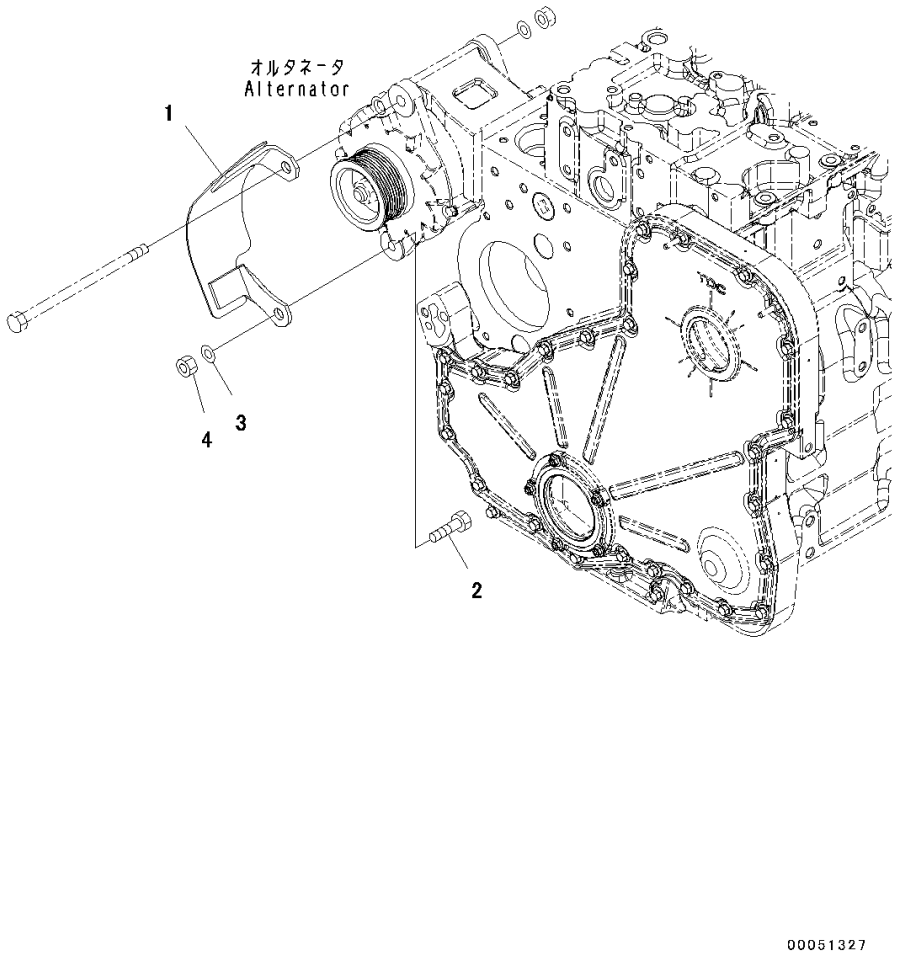

Index	Code	Part Number	Description	Qty	Serial Number
1		6745-81-6120	Cover	1	26900001-
2		6135-85-8190	Bolt	1	26900001-
3		01643-31232	Washer	1	26900001-
4		01582-11210	Nut	1	26900001-

FIG. ASM00-001001 Starting Motor Mounting

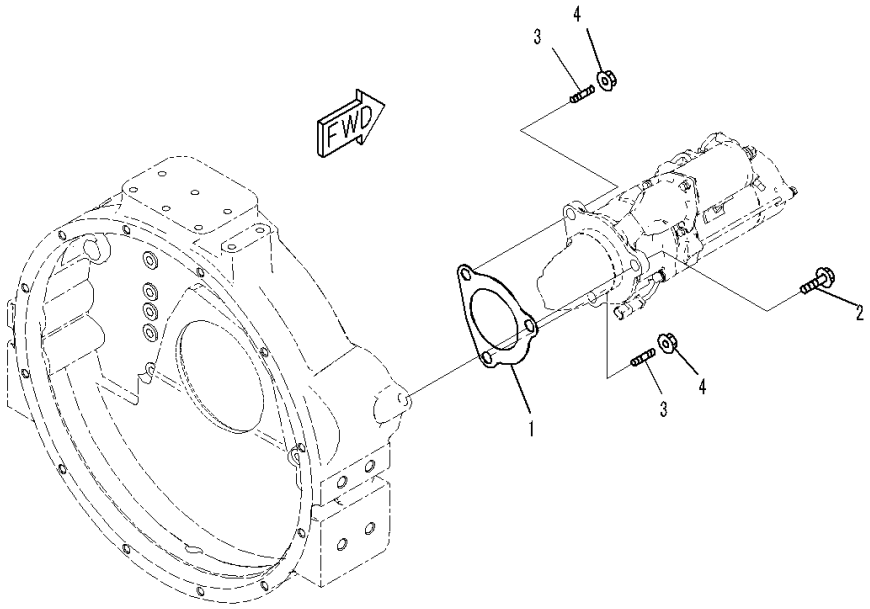

フライホイールハウジング
Flywheel Housing

JY016699

Index	Code	Part Number	Description	Qty	Serial Number
1		6221-81-6810	Gasket	1	26900001-
2		01435-01240	Bolt	1	26900001-
3		6743-81-6310	Stud	2	26900001-
4		01584-01210	Nut	2	26900001-

FIG. AST00-001001 Starting Motor (7.5KW)

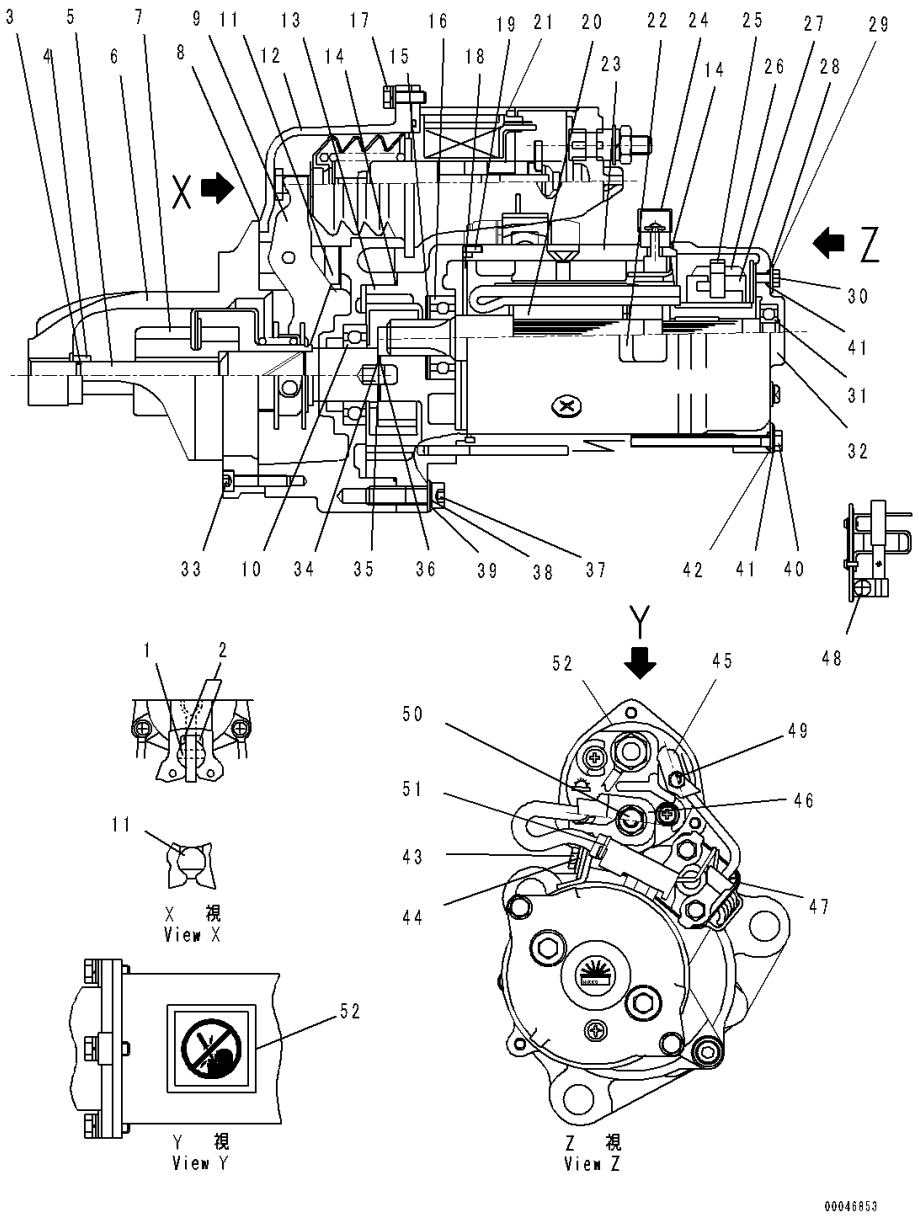

Index	Code	Part Number	Description	Qty	Serial Number
		600-863-5711	Starting Motor Assembly, 7.5Kw	1	26900001-
1		KD0-23904-0070	• Pin	1	26900001-
2		KD0-23927-0071	• Holder	2	26900001-
3		KD1-23914-0020	• Ring	1	26900001-
4		KD1-23181-0020	• Stopper	1	26900001-
5		KD1-23111-0160	• Shaft	1	26900001-
6		KD0-23310-1730	• Bracket	1	26900001-
7		KD0-23500-0970	• Clutch Assembly	1	26900001-
8		KD0-23951-0301	• Packing	1	26900001-
9		KD0-23320-0220	• Lever Assembly	1	26900001-
10		KD1-0454-60067	• Bearing, Ball	1	26900001-
11		KD0-23951-0331	• Packing	1	26900001-
12		KD0-23600-0460	• Bracket Assembly	1	26900001-
13		KD0-23611-0690	• Bracket	1	26900001-
14		KD1-09211-0980	• O-ring	2	26900001-
15		KD0-23921-0230	• Washer	1	26900001-
16		KD1-0454-62047	• Bearing, Ball	1	26900001-
17		KD0-0274-06202	• Bolt	3	26900001-
18		KD1-23951-0020	• Packing	1	26900001-
19		KD1-0400-20100	• Pin	1	26900001-
20		KD0-23100-0251	• Armature Assembly	1	26900001-
21		KD0-47100-4800	• Switch Assembly, Magnetic	1	26900001-
22		KD0-09271-3620	• Name Plate	1	26900001-
23		KD0-23200-0331	• Yoke Assembly	1	26900001-
24		KD0-47761-2691	• Cover	1	26900001-
25		KD1-23913-0040	• Spring	4	26900001-
26		KD0-23740-0250	• Brush Assembly	4	26900001-
27		KD0-23750-0250	• Holder Assembly, Brush	1	26900001-
28		KD1-0505-00601	• O-ring	2	26900001-
29		KD1-47921-0790	• Washer	2	26900001-
30		KD0-09001-4580	• Bolt	2	26900001-
31		KD1-0454-62007	• Bearing, Ball	1	26900001-
32		KD0-23700-0130	• Bracket Assembly	1	26900001-
33		KD1-0240-06305	• Bolt	6	26900001-
34		KD1-23921-0130	• Washer	1	26900001-
35		KD1-23921-0140	• Washer	1	26900001-
36		KD1-23941-0040	• Washer, Insulate	1	26900001-
37		KD1-0240-08405	• Bolt	3	26900001-
38		KD1-0335-08002	• Washer, Spring	3	26900001-
39		KD1-0330-08022	• Washer	3	26900001-

FIG. AST00-001001 Starting Motor (7.5KW)

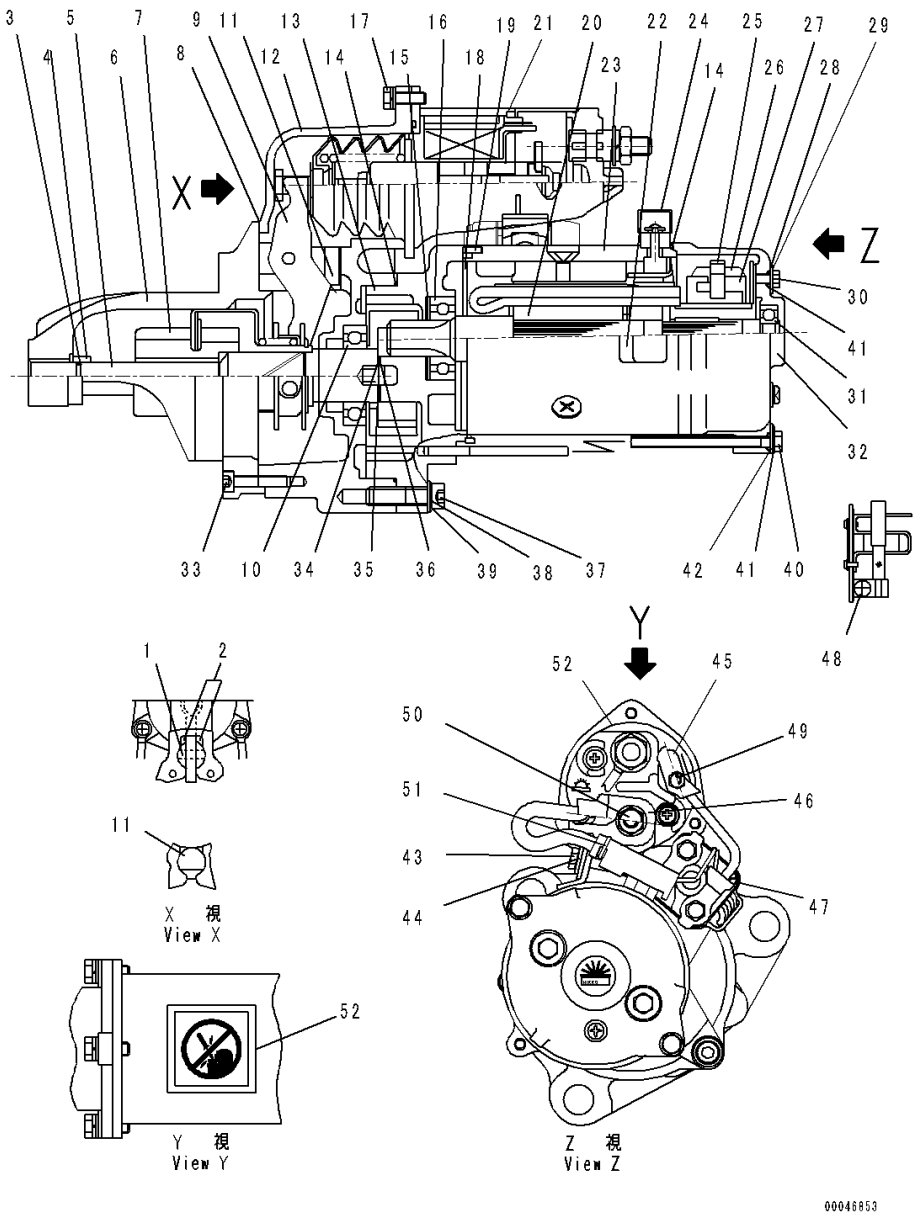

Index	Code	Part Number	Description	Qty	Serial Number
40		KD0-23901-0170	• Bolt	2	26900001-
41		KD1-0335-06002	• Washer, Spring	4	26900001-
42		KD1-0330-06012	• Washer, Prain	2	26900001-
43		KD0-0270-06402	• Bolt	1	26900001-
44		KD1-47927-1250	• Holder	1	26900001-
45		KD0-47761-2671	• Cover	1	26900001-
46		KD0-47761-2681	• Cover	1	26900001-
47		KD0-25000-8332	• Switch Assembly	1	26900001-
48		KD0-0055-05082	• Screw	4	26900001-
49		KD0-09006-0660	• Nut	1	26900001-
50		KD0-09006-0670	• Nut	1	26900001-
51		KD1-09257-0050	• Band	1	26900001-
52		KD0-09275-1430	• Plate, Caution	1	26900001-

FIG. AST00-002001 Starting Motor (11KW)

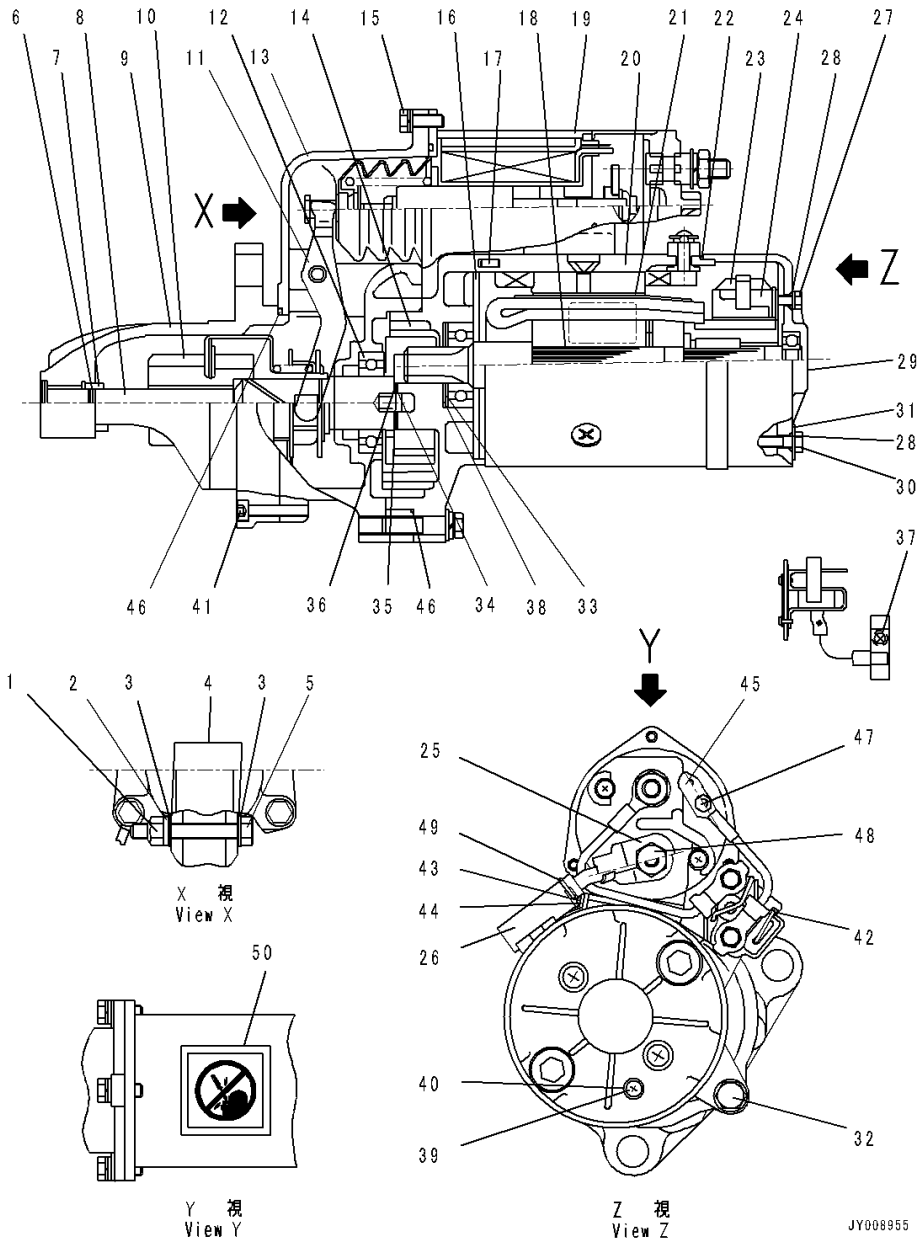

Index	Code	Part Number	Description	Qty	Serial Number
		600-863-8112	Starting Motor Assembly, 11Kw	1	26900001-
1		KD1-09279-0090	• Nut	1	26900001-
2		KD1-0335-08002	• Washer, Spring	4	26900001-
3		KD1-0330-08022	• Washer	5	26900001-
4		KD1-0345-08001	• Washer, Seal	2	26900001-
5		KD0-23303-0020	• Pin	1	26900001-
6		KD1-23914-0020	• Ring	1	26900001-
7		KD1-23181-0020	• Stopper	1	26900001-
8		KD0-23120-0180	• Shaft Assembly	1	26900001-
9		KD0-23310-1740	• Bracket Assembly	1	26900001-
10		KD1-23500-0970	• Clutch Assembly	1	26900001-
11		KD1-23320-0290	• Lever Assembly	1	26900001-
12		KD0-09201-0850	• Bearing, Ball	1	26900001-
13		KD0-23600-0410	• Bracket Assembly	1	26900001-
14		KD0-23611-1101	• Bracket	1	26900001-
15		KD0-0274-06202	• Bolt	3	26900001-
16		KD1-23951-0051	• Packing	1	26900001-
17		KD1-0400-30100	• Pin	1	26900001-
18		KD0-23100-0430	• Armature Assembly	1	26900001-
19		KD0-47100-4651	• Switch Assembly	1	26900001-
20		KD0-23200-0671	• Yoke Assembly	1	26900001-
21		KD0-09271-3620	• Name Plate	1	26900001-
22		KD1-09211-1120	• O-ring	1	26900001-
23		KD0-23740-0351	• Brush Assembly	2	26900001-
24		KD0-23750-0490	• Holder Assembly	1	26900001-
25		KD0-47761-2681	• Cover	1	26900001-
26		KD0-47761-2691	• Cover	1	26900001-
27		KD0-09011-3140	• Screw	2	26900001-
28		KD1-09211-0081	• O-ring	4	26900001-
29		KD0-23710-0221	• Bracket	1	26900001-
30		KD0-09001-4380	• Bolt	2	26900001-
31		KD1-47921-0790	• Washer	2	26900001-
32		KD0-0276-08402	• Bolt	3	26900001-
33		KD0-09057-0110	• Washer	1	26900001-
34		KD1-23941-0040	• Washer, Insulate	1	26900001-
35		KD1-23921-0140	• Washer	1	26900001-
36		KD1-23921-0130	• Washer	1	26900001-
37		KD0-0055-05082	• Screw	2	26900001-
38		KD0-09057-0190	• Washer	1	26900001-
39		KD0-0020-05062	• Screw	1	26900001-

FIG. AST00-002001 Starting Motor (11KW)

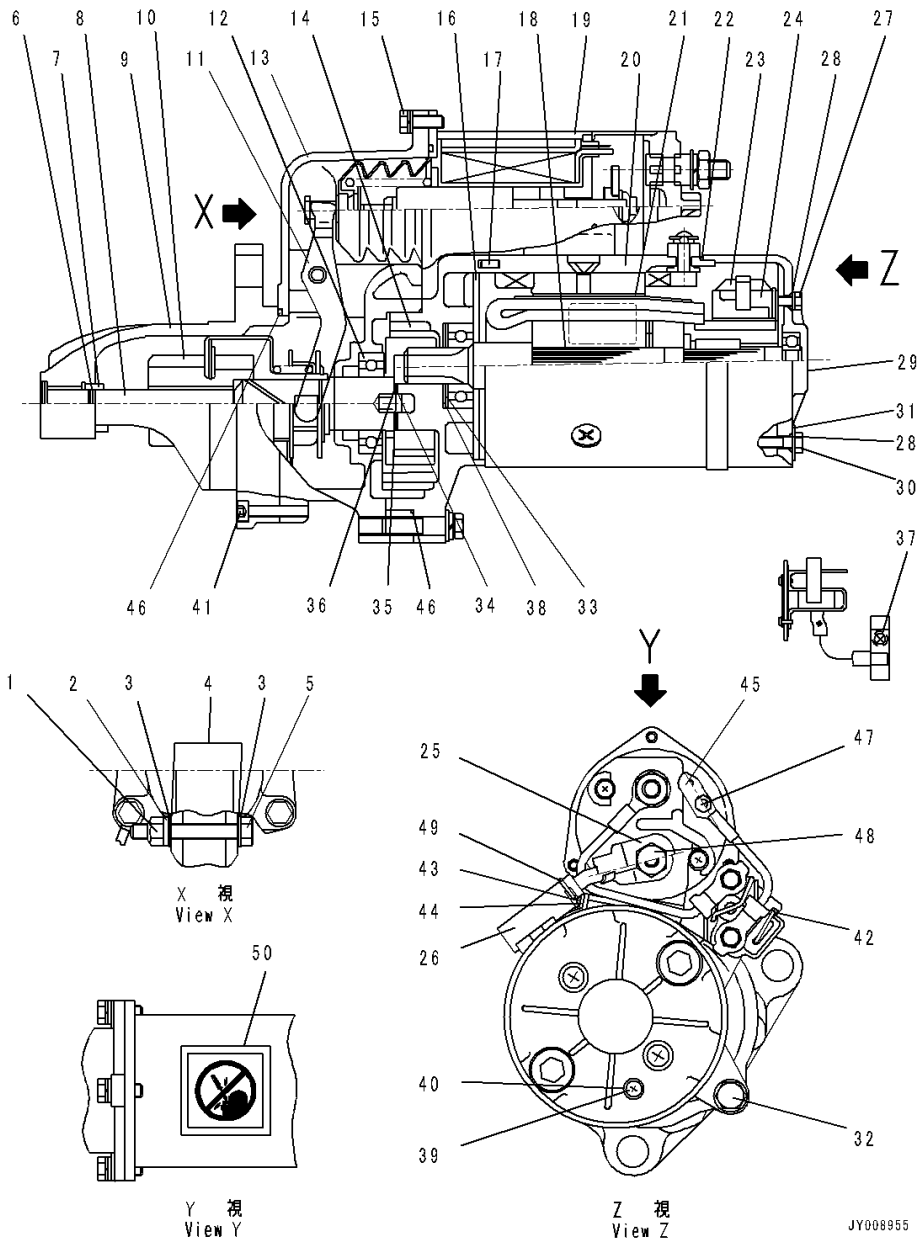

Index	Code	Part Number	Description	Qty	Serial Number
40		KD1-0345-05001	• Washer, Seal	1	26900001-
41		KD1-0240-06305	• Bolt	6	26900001-
42		KD0-25000-8521	• Switch Assembly	1	26900001-
43		KD0-0270-06602	• Bolt	1	26900001-
44		KD0-47927-1390	• Holder	1	26900001-
45		KD0-47761-2671	• Cover	1	26900001-
46		KD1-09211-0981	• O-ring	2	26900001-
47		KD0-09006-0660	• Nut	1	26900001-
48		KD0-09006-0670	• Nut	1	26900001-
49		KD1-09257-0050	• Band	1	26900001-
50		KD0-09275-1430	• Plate, Caution	1	26900001-

FIG. AWR00-001001 Wiring Harness

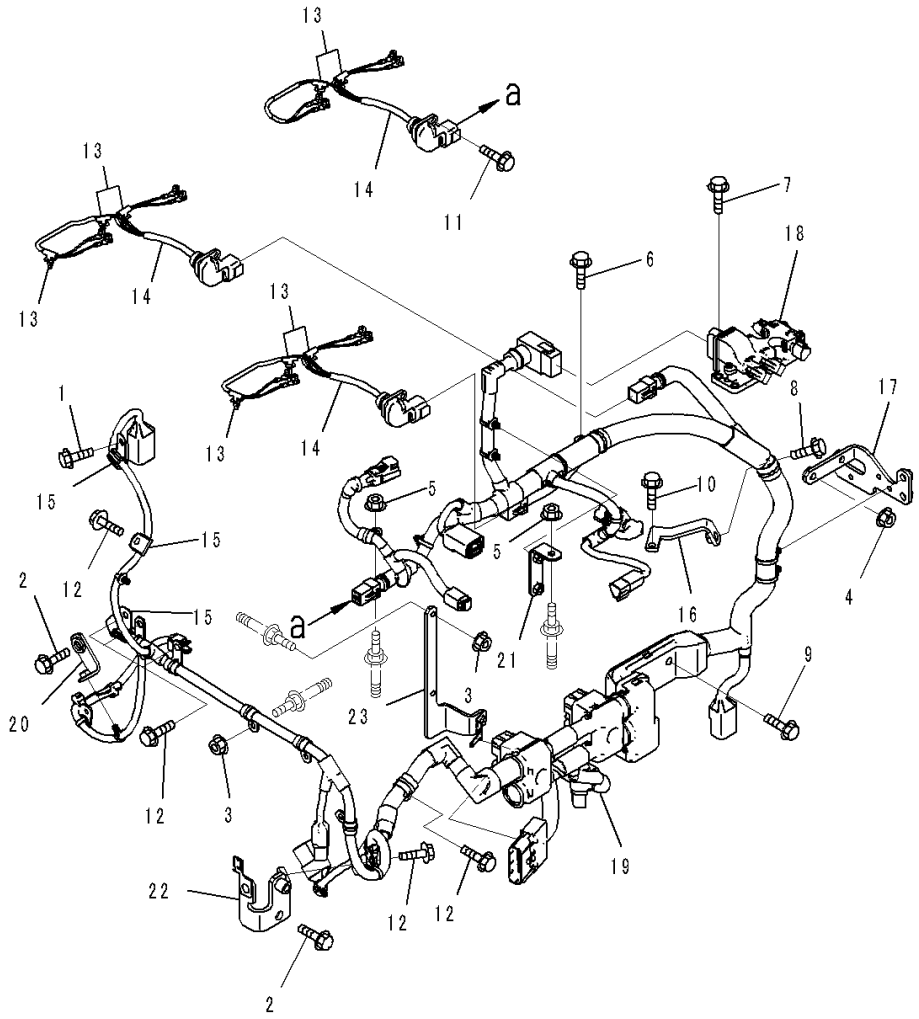

Index	Code	Part Number	Description	Qty	Serial Number
1		01435-00820	Bolt	1	26900001-
2		6731-61-4250	Bolt	2	26900001-
3		01584-00605	Nut	6	26900001-
4		6732-71-3210	Nut	2	26900001-
5		6732-71-3210	Nut	2	26900001-
6		6742-01-3770	Bolt	1	26900001-
7		01435-60816	Bolt	4	26900502-
		6732-21-3120	Bolt	4	26900001-26900501
8		01435-60820	Bolt	1	26900572-
		6732-71-3220	Bolt	1	26900001-26900571
9		6732-61-3110	Bolt	1	26900001-
10		6732-21-6630	Screw	1	26900001-
11		6732-21-4180	Bolt	3	26900001-
12		01435-60816	Bolt	6	26900572-
		6736-21-5310	Bolt	6	26900001-26900571
13		6745-81-9390	Clip	8	26900001-
14		6746-81-9210	Wiring Harness	3	26900001-
15		600-051-1100	Clip	3	26900001-
16		6745-81-9710	Bracket	1	26900001-
17		6745-81-9790	Brace	1	26900001-
18		6755-81-9320	Connector	1	26900001-
19		6746-81-9220	Wiring Harness	1	26900001-
20		6746-81-9290	Brace, Wiring	1	26900001-
21		6746-81-9240	Brace, Wiring	1	26900001-
22		6746-81-5110	Brace, Wiring	1	26900001-
23		6746-81-5120	Brace, Wiring	1	26900001-

FIG. A6810-001001 Wiring Harness

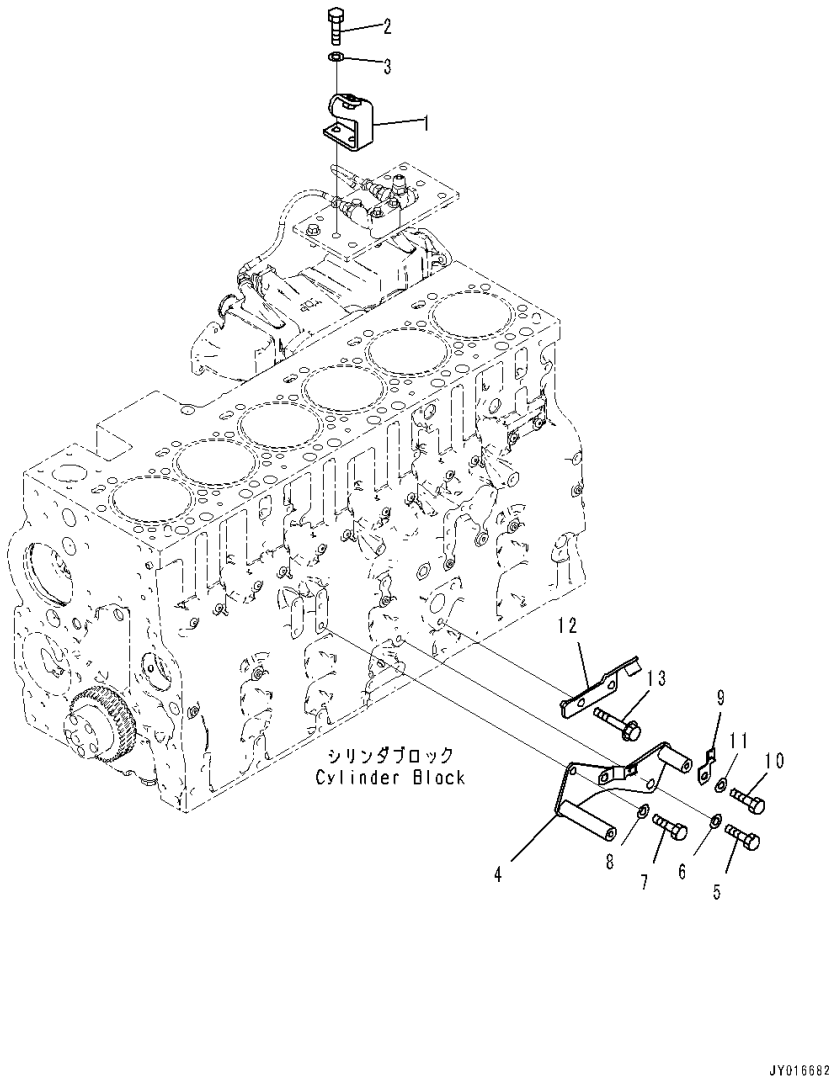

Index	Code	Part Number	Description	Qty	Serial Number
1		14X-06-61631	Plate	1	26900001-
2		01010-81030	Bolt	2	26900001-
3		01643-31032	Washer	2	26900001-
4		14X-06-61651	Bracket	1	26900001-
5		01010-81220	Bolt	1	26900001-
6		01643-31232	Washer	1	26900001-
7		01010-81025	Bolt	1	26900001-
8		01643-31032	Washer	1	26900001-
9		08193-20010	Clip	1	26900001-
10		01010-81020	Bolt	1	26900001-
11		01643-31032	Washer	1	26900001-
12		14X-06-63291	Bracket	1	26900001-
13		6735-21-7160	Bolt	1	26900001-

FIG. APH10-001001 Electric Controller Wiring Harness

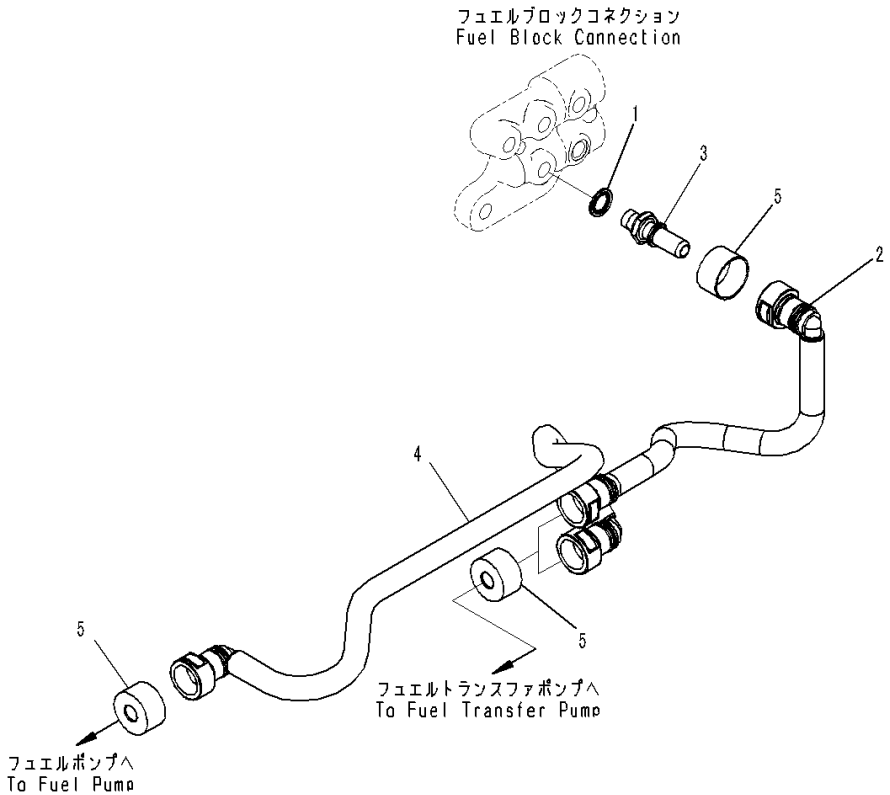

Index	Code	Part Number	Description	Qty	Serial Number
1		6745-71-1130	Washer	1	26900001-
2		6745-71-5690	Tube	1	26900001-
3		6745-71-6130	Connector	1	26900001-
4		6746-71-5640	Tube	1	26900001-
5		6745-71-5160	Cover	4	26900001-

ENGINE ACCESSORIES AND OTHERS

FIG. A4719-001001 Engine Controller

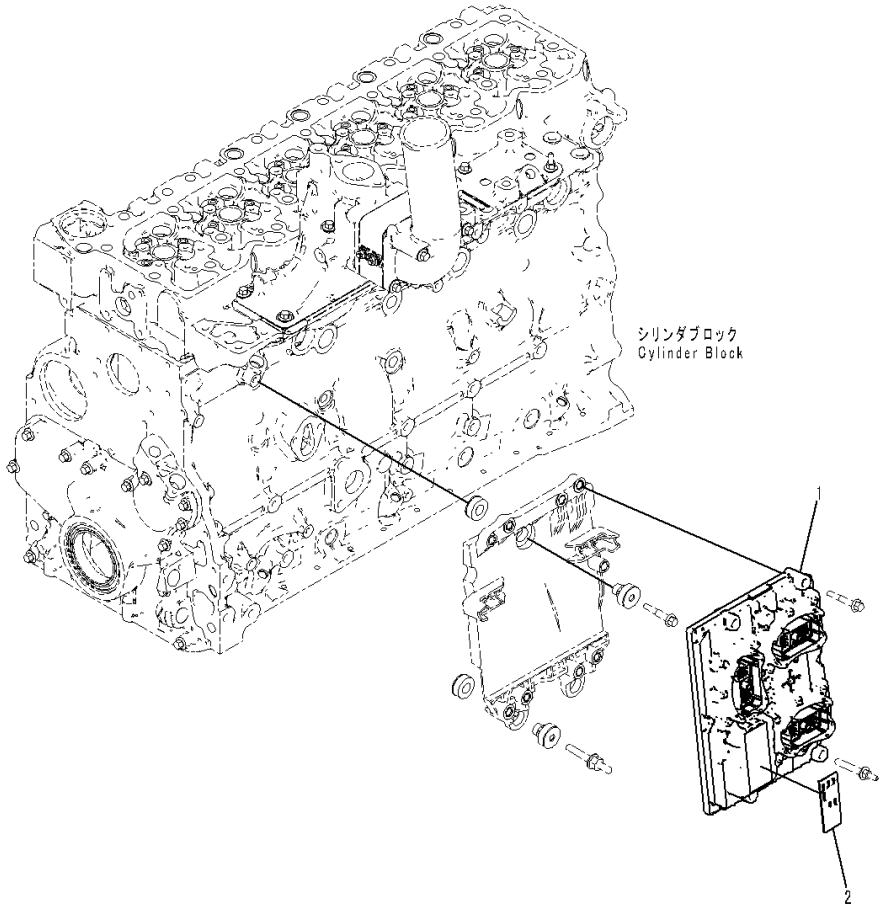

Index	Code	Part Number	Description	Qty	Serial Number
		600-488-1100	Controller Assembly	1	26900001-
1		600-480-1000	• Controller	1	26900001-
2		600-480-3000	• Plate	1	26900001-

FIG. APP10-001001 Parts Performance (Bolt)

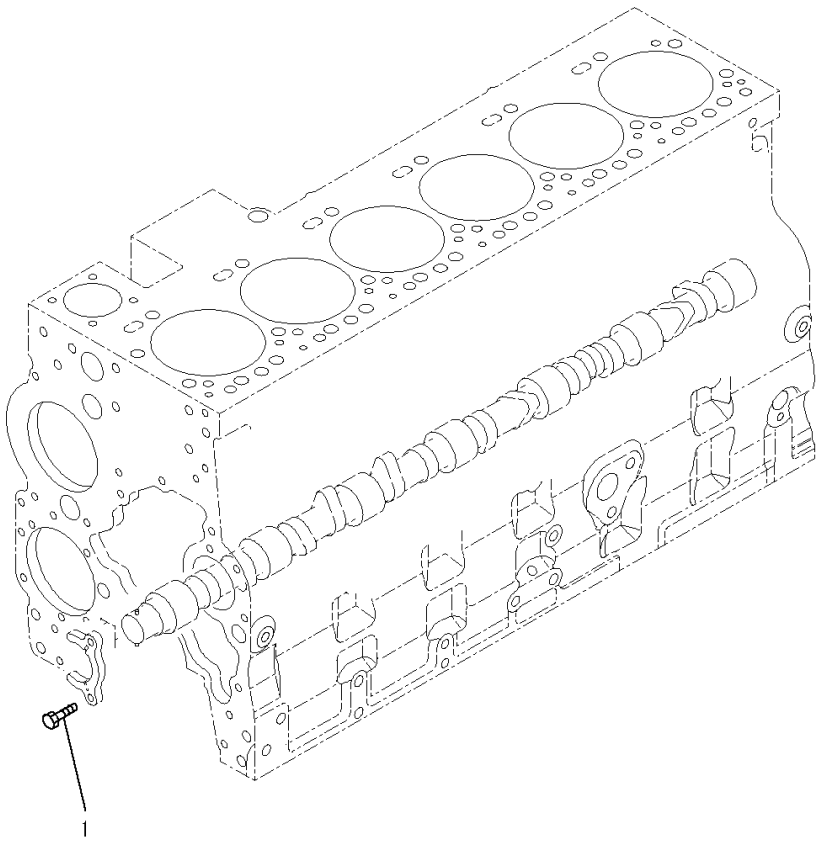

Index	Code	Part Number	Description	Qty	Serial Number
1		6732-41-1260	Bolt	2	26900001-

FIG. APP10-001002 Parts Performance (Support)

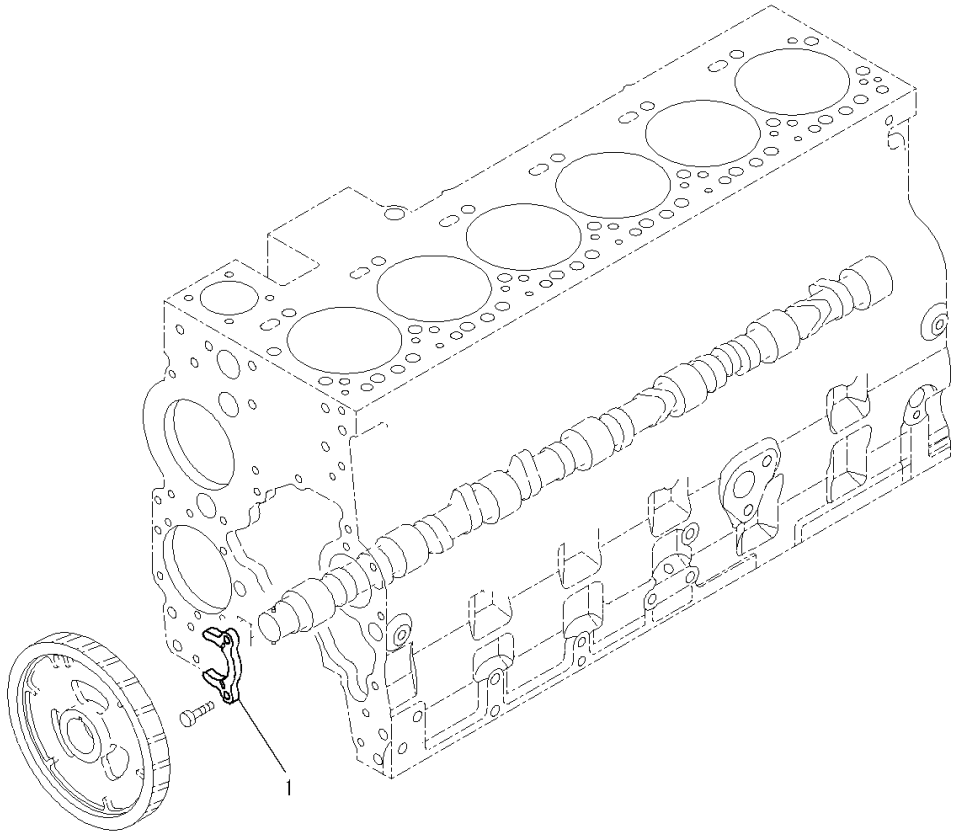

Index	Code	Part Number	Description	Qty	Serial Number
1		6744-41-1010	Support	1	26900001-

FIG. APP10-001003 Parts Performance (Camshaft)

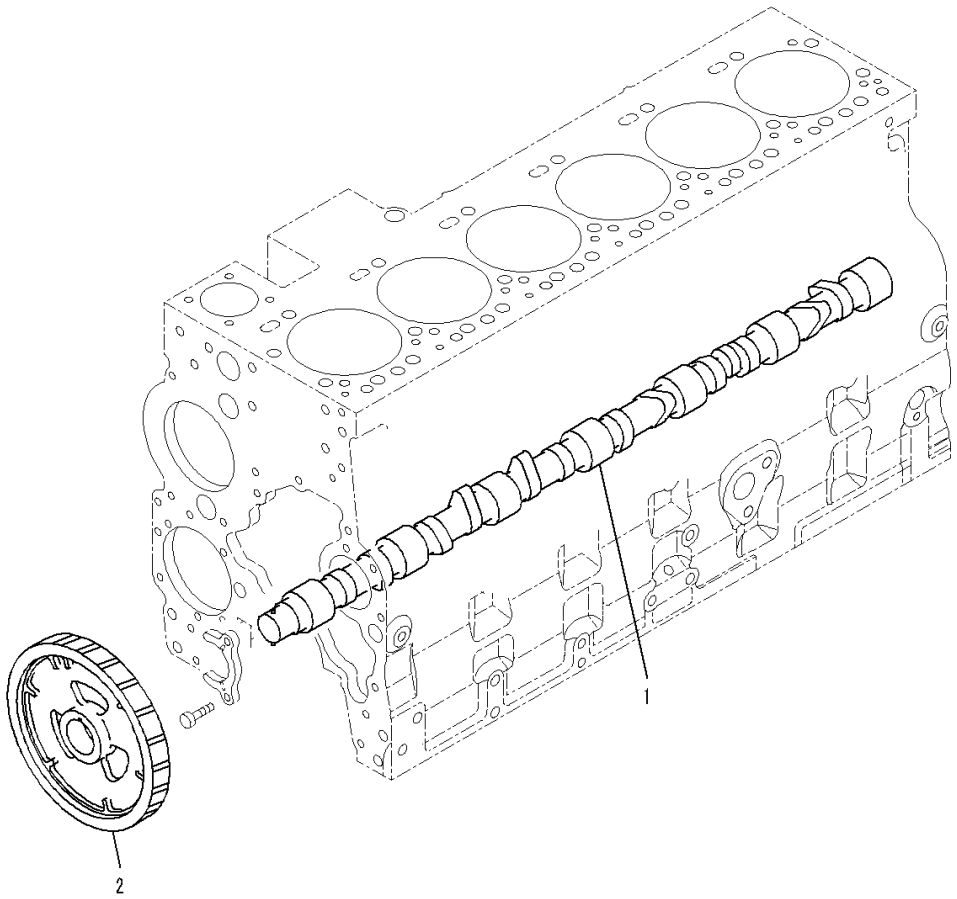

Index	Code	Part Number	Description	Qty	Serial Number
1		6745-41-1110	Camshaft Assembly	1	26900001-
2		6745-41-1130	Gear	1	26900001-

FIG. APP10-001004 Parts Performance

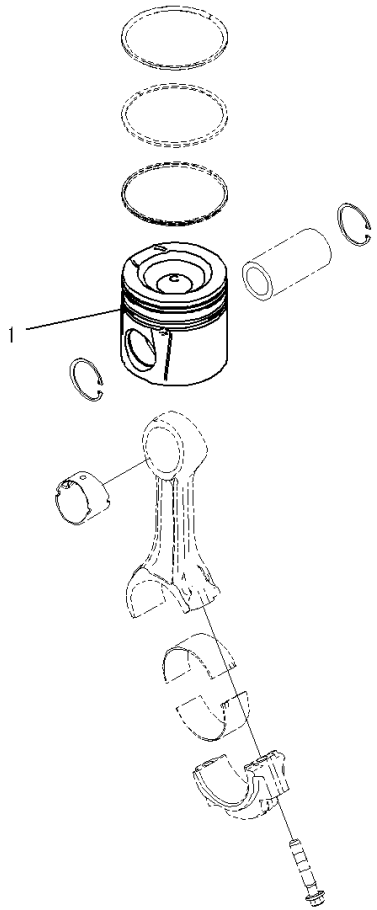

JY018059

Index	Code	Part Number	Description	Qty	Serial Number
1		6746-31-2110	Piston	6	26900001-

FIG. APP10-001005 Parts Performance (Injector)

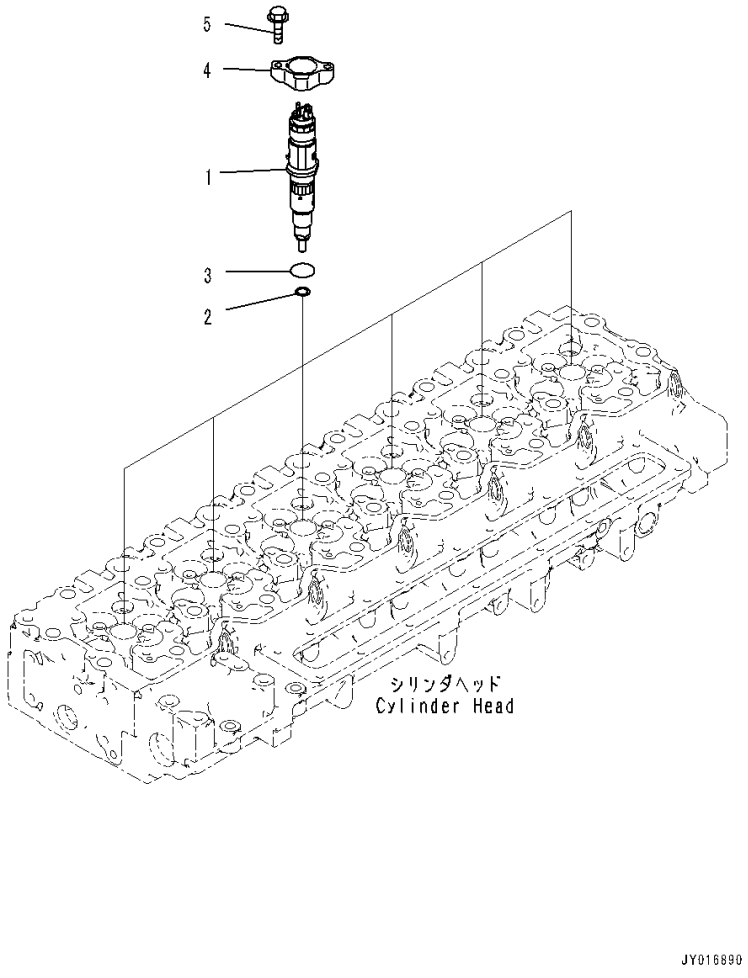

Index	Code	Part Number	Description	Qty	Serial Number
1		6746-11-3100	Injector	6	26900001-
2		6754-11-3130	• Gasket	1	26900001-
3		6754-11-3140	• O-ring	1	26900001-
4		6755-11-3110	Clamp	6	26900001-
5		6742-01-2630	Bolt	12	26900001-

FIG. APH00-001001 Engine Control Module

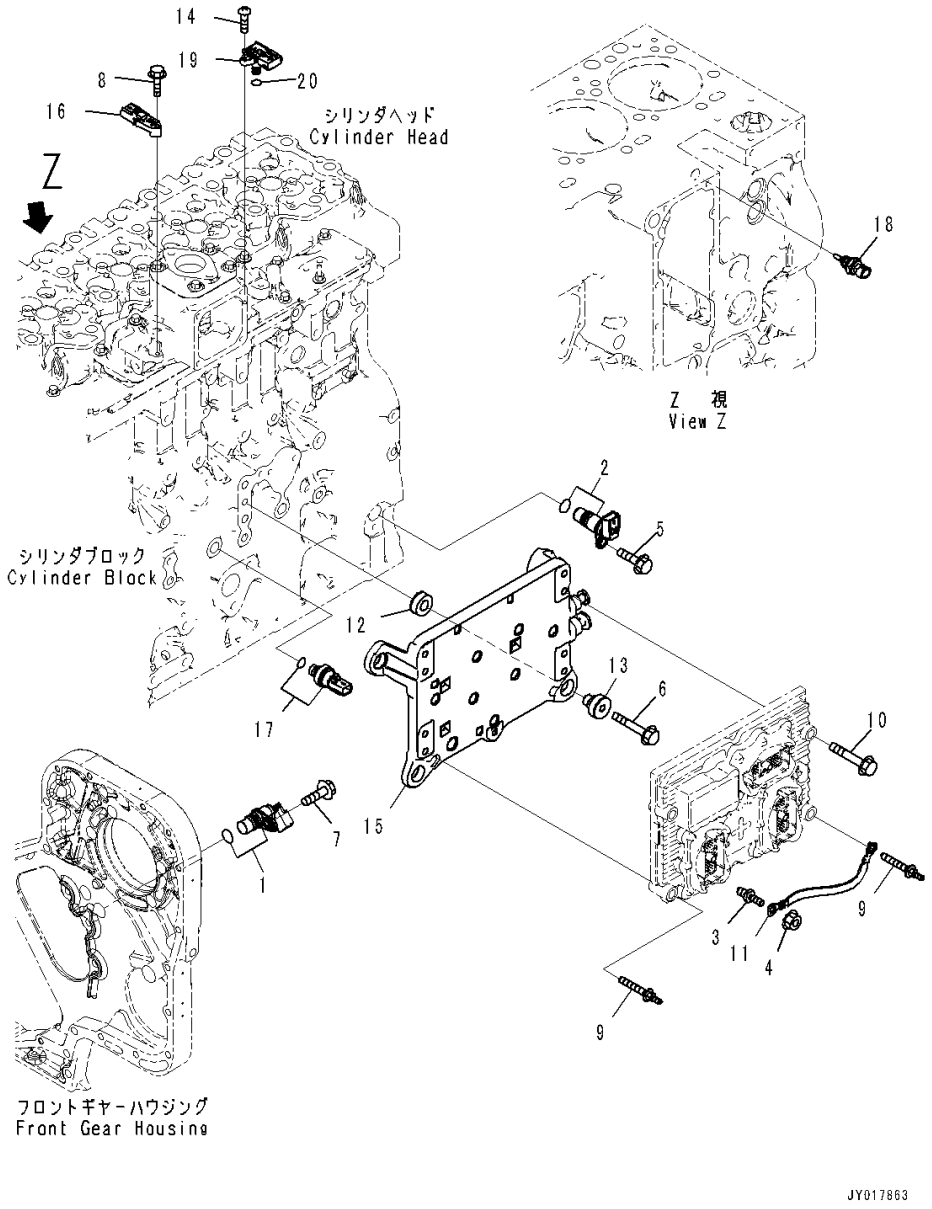

Index	Code	Part Number	Description	Qty	Serial Number
1		6271-81-9201	Sensor Assembly	1	26900001-
		6271-81-9220	• O-ring	1	26900001-
2		6261-81-2902	Sensor Assembly, Speed, Revolution	1	26900001-
		6271-81-9220	• O-ring	1	26900001-
3		6745-81-9440	Bolt	1	26900001-
4		6732-71-3210	Nut	1	26900001-
5		01435-60820	Bolt	1	26900572-
		6732-71-3220	Bolt	1	26900001-26900571
6		6735-61-2120	Bolt	4	26900001-
7		6732-21-4180	Bolt	1	26900001-
8		6734-71-5520	Bolt	1	26900001-
9		6745-81-9560	Bolt	3	26900001-
10		01435-60850	Bolt	1	26900516-
		6736-21-3210	Bolt	1	26900001-26900515
11		6746-81-9190	Wire	1	26900001-
12		6754-81-9110	Isolator	4	26900001-
13		6754-81-9130	Isolator	4	26900001-
14		6754-81-9180	Screw	1	26900001-
15		6746-81-9520	Cooler	1	26900001-
16		6261-81-1900	Sensor	1	26900001-
17		6744-81-4010	Switch	1	26900001-
18		6261-81-6901	Sensor Assembly	1	26900001-
		6746-81-2700	Sensor	1	26900001-
19	C1		• Sensor	1	26900001-26900090
20		6754-81-2710	• O-ring	1	26900001-

ENGINE MARKS AND PLATES

FIG. AAP00-001001 Caution Plates

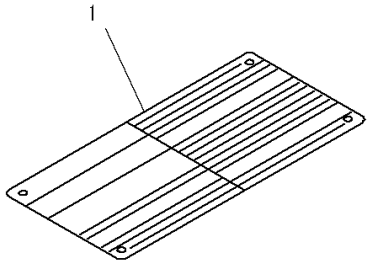

JY016855

Index	Code	Part Number	Description	Qty	Serial Number
1		6746-81-2540	Plate	1	26900001-

FIG. A9810-002001 Caution Plates (For North America EPA Interim 4th Regulations, EU Exhaust Emissions 3rd Regulations)

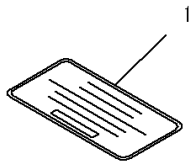

PMD1188

Index	Code	Part Number	Description	Qty	Serial Number
1		6271-81-2980	Plate, Caution	1	26900063-

FIG. A9810-001001 Caution Plates (For EU Safety Regulation)

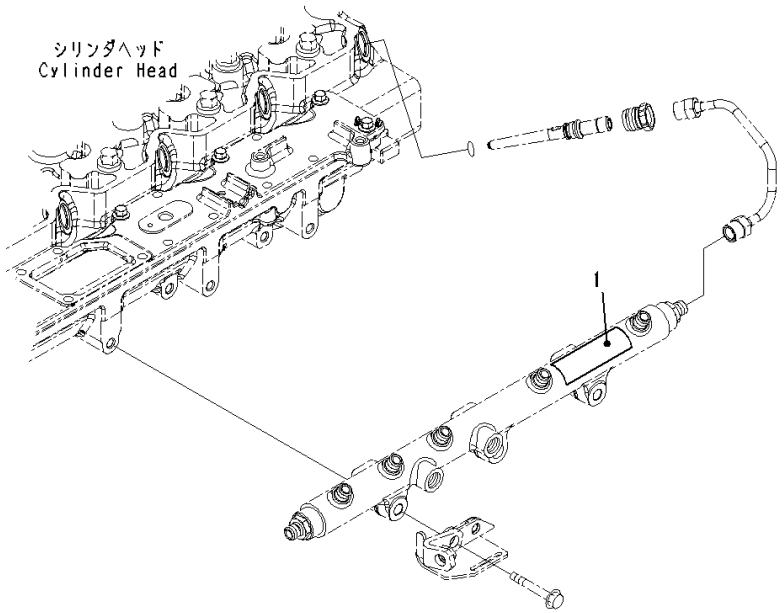

JY015283

Index	Code	Part Number	Description	Qty	Serial Number
1		6271-81-2980	Plate, Caution	1	26900001-

FIELD REPAIR SERVICE PARTS

FIG. A8110-001001 Repair Service Parts

Index	Code	Part Number	Description	Qty	Serial Number
		1295465H92	Seal Assembly	1	26900001-
1		6741-39-1220	• Tool	1	26900001-
2		6741-39-1110	• Seal	1	26900001-
3		6741-39-1120	• Sleeve	1	26900001-
4		6741-39-1130	• Shield	1	26900001-
		6736-39-1130	Sleeve	1	26900001-
5		6736-39-1160	• Sleeve	1	26900001-
6		6736-39-1170	• Seal	1	26900001-
		6742-01-5199	Main Metal Assembly	1	26900001-
7	C1		• Metal	6	26900001-
8	C1		• Metal	1	26900001-
9	C1		• Metal	7	26900001-
		6742-01-5233	Main Metal Assembly, Undersized, 0.25mm	1	26900001-
10	C1		• Metal	6	26900001-
11	C1		• Metal	1	26900001-
12	C1		• Metal	7	26900001-
		6742-01-5240	Main Metal Assembly, Undersized, 0.50mm	1	26900001-
13	C1		• Metal	6	26900001-
14	C1		• Metal	1	26900001-
15	C1		• Metal	7	26900001-
		6742-01-5287	Main Metal Assembly, Undersized, 0.75mm	1	26900001-
16	C1		• Metal	6	26900001-
17	C1		• Metal	1	26900001-
18	C1		• Metal	7	26900001-
		6742-01-5288	Main Metal Assembly, Undersized, 1.00mm	1	26900001-
19	C1		• Metal	6	26900001-
20	C1		• Metal	1	26900001-
21	C1		• Metal	7	26900001-
		6745-39-1100	Metal Assembly, Undersized, 0.25mm	6	26900001-
22	C1		• Metal	1	26900001-
23	C1		• Metal	1	26900001-
		6745-39-1200	Metal Assembly	6	26900001-
24	C1		• Metal	1	26900001-
25	C1		• Metal	1	26900001-
		6745-39-1300	Metal Assembly, Undersized, 0.75mm	6	26900001-
26	C1		• Metal	1	26900001-
27	C1		• Metal	1	26900001-
		6745-39-1400	Metal Assembly, Undersized, 1.00mm	6	26900001-
28	C1		• Metal	1	26900001-
29	C1		• Metal	1	26900001-
30		6745-41-4220	Insert	12	26900001-
31		6745-41-4210	Insert, Exhaust	12	26900001-

ENGINE RELATED PARTS

FIG. A1470-501001 Air Cleaner (Air Intake Pipe With Rain Cap) (Cap)

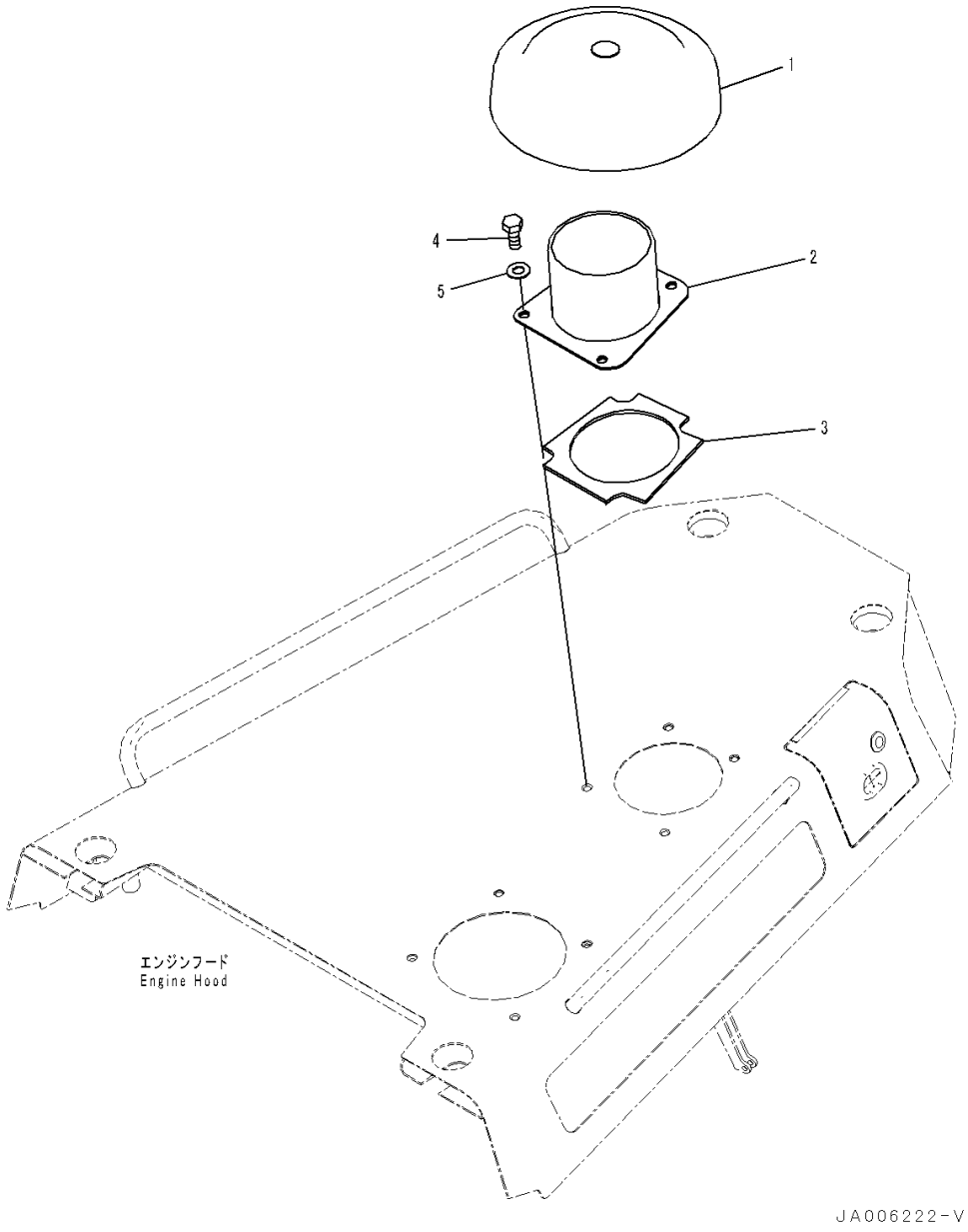

Index	Code	Part Number	Description	Qty	Serial Number
1		566-02-42200	Cap Assembly	1	1001-
2		14X-01-61521	Pipe	1	1001-
3		14X-01-51570	• Seal	1	1001-
4		01010-71225	Bolt	4	1001-
5		01643-11232	Washer	4	1001-

FIG. A1470-501002 Air Cleaner (Air Cleaner Assembly)

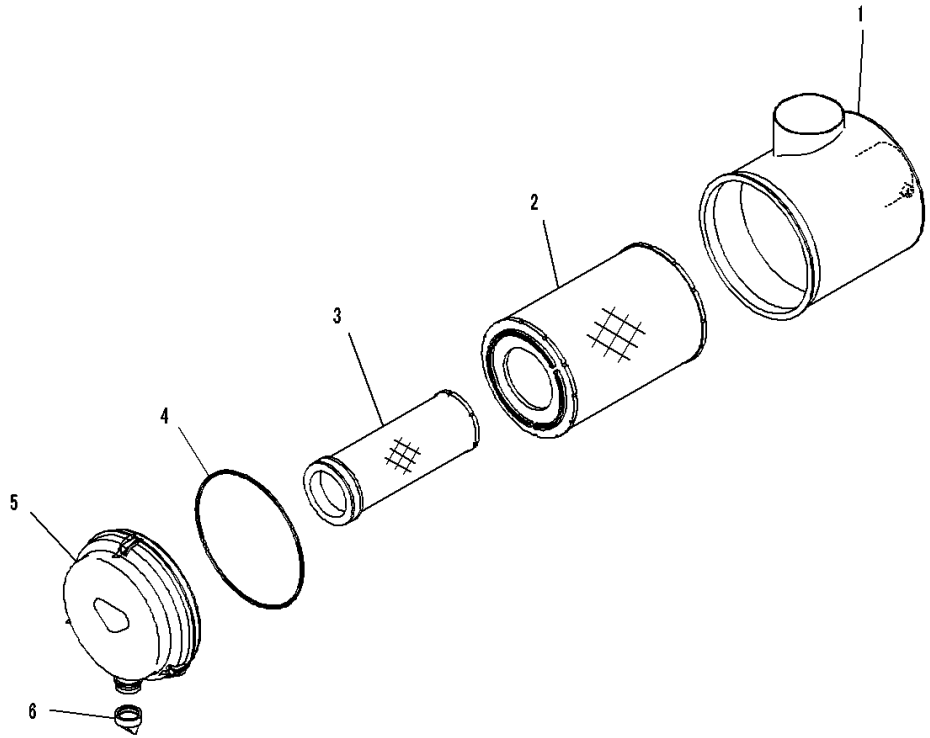

Index	Code	Part Number	Description	Qty	Serial Number
		Note: This list covers following specifications.			
		Air Intake Pipe With Rain Cap			
		Air Intake Pipe With Pre-Cleaner			
1		6252-81-7300	Air Cleaner	1	1001-
		600-185-5100	• Element Assembly	1	1001-
2		600-185-5110	• • Element, Outer	1	1001-
3	C1		• • Element, Inner	1	1001-
4		600-184-1570	• • O-ring	1	1001-
5		600-184-1510	• Cover Assembly	1	1001-
6		600-184-1350	• Valve, Vaquator	1	1001-

FIG. A1470-501003 Air Cleaner (Mounting)

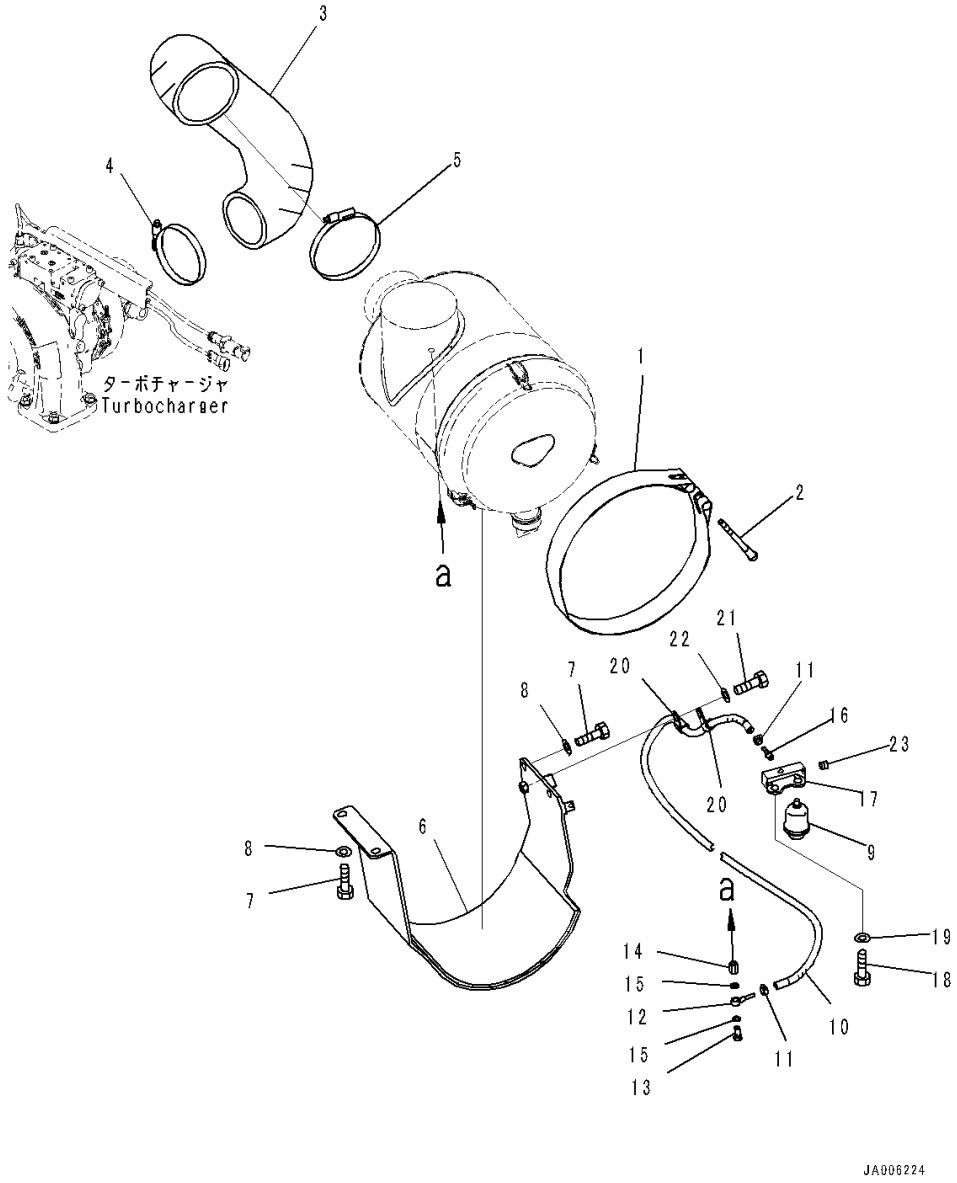

Index	Code	Part Number	Description	Qty	Serial Number
		Note: This list covers following specifications.			
		Air Intake Pipe With Rain Cap			
		Air Intake Pipe With Pre-Cleaner			
1		6155-11-4840	Band	1	1001-
2		14X-01-51630	Bolt	1	1001-
3		14X-01-61561	Hose	1	1001-
4		07299-00120	Clamp	1	1001-
5		07299-00145	Clamp	1	1001-
6		14X-01-61551	Bracket	1	1001-
7		01010-81225	Bolt	4	1001-
8		01643-31232	Washer	4	1001-
9		08672-01000	Indicator, Dust	1	1001-
10		14X-01-61670	Hose	1	1001-
11		07285-00125	Clip	2	1001-
12		6206-71-1770	Joint	1	1001-
13		07206-30710	Bolt, Joint	1	1001-
14		6156-81-8990	Nipple	1	1001-
15		07005-01012	Seal, Washer	2	1001-
16		6131-81-8820	Nipple	1	1001-
17		14X-01-61641	Block	1	1001-
18		01010-81220	Bolt	2	1001-
19		01643-31232	Washer	2	1001-
20		04434-51412	Clip	2	1001-
21		01010-81225	Bolt	2	1001-
22		01643-31232	Washer	2	1001-
23		07043-70108	Plug	1	1001-

FIG. A1470-502001 Air Cleaner (Air Intake Pipe With Pre-Cleaner) (Pre-Cleaner)

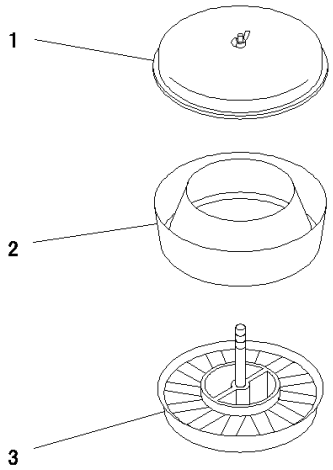

00000923

Index	Code	Part Number	Description	Qty	Serial Number
		6685-81-7503	Pre-cleaner	1	1001-
1		6685-81-7550	• Cover	1	1001-
2		6685-81-7540	• Body	1	1001-
3		6685-81-7513	• Sleeve	1	1001-

FIG. A1470-502002 Air Cleaner (Air Intake Pipe With Pre-Cleaner) (Mounting) (1/2)

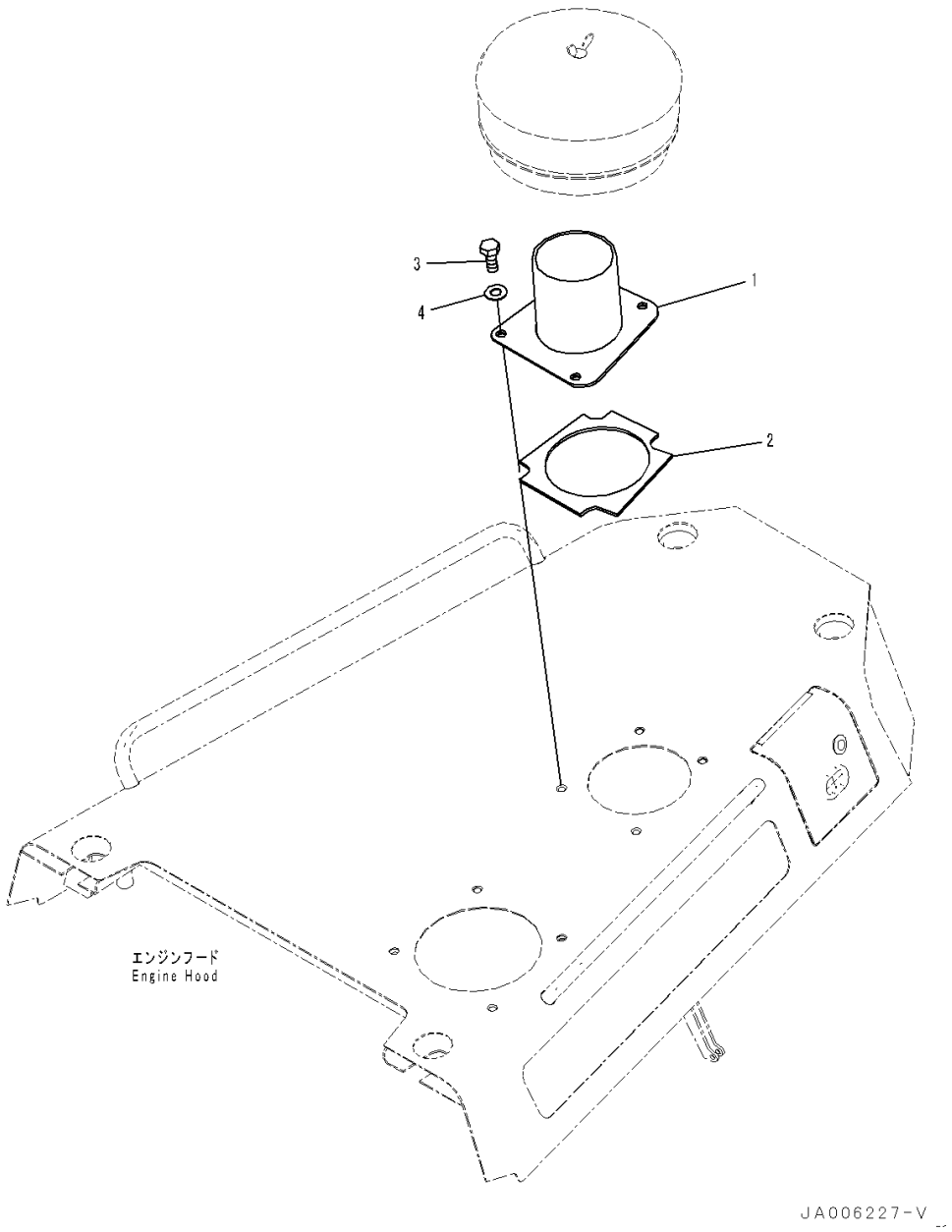

Index	Code	Part Number	Description	Qty	Serial Number
1		14X-01-61541	Pipe	1	1001-
2		14X-01-51570	• Seal	1	1001-
3		01010-71225	Bolt	4	1001-
4		01643-11232	Washer	4	1001-

FIG. A1610-501001 Exhaust Pipe

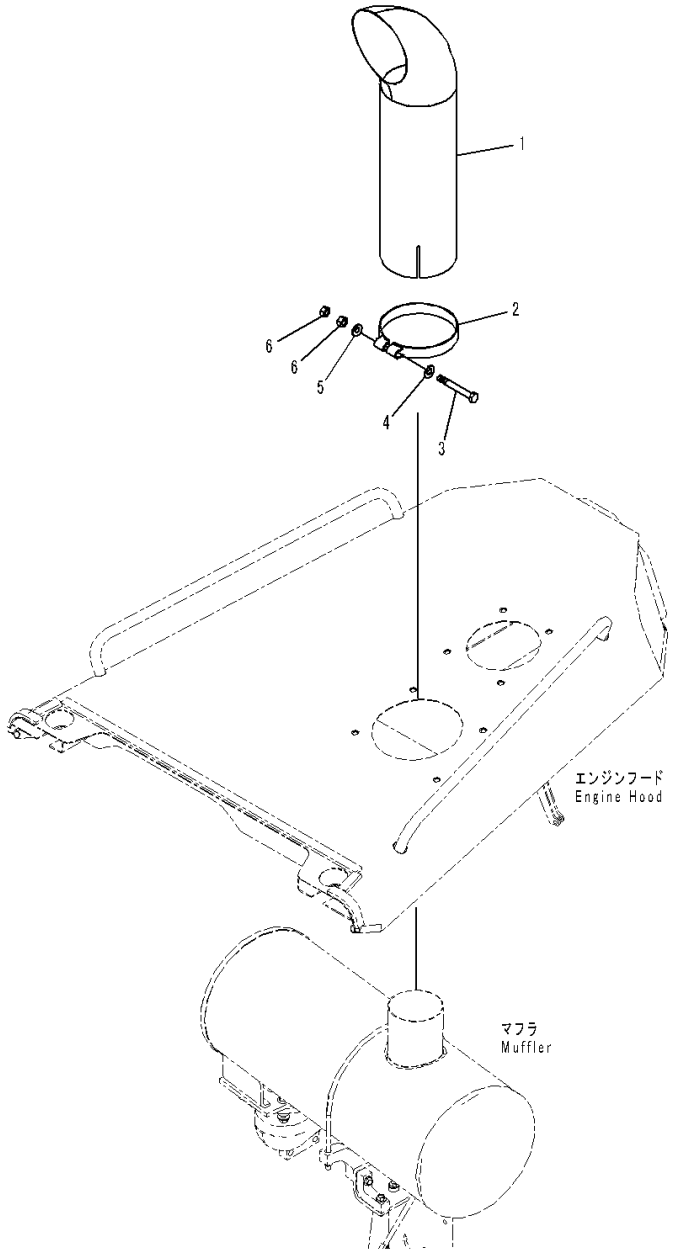

Index	Code	Part Number	Description	Qty	Serial Number
1		14X-01-31630	Pipe	1	1001-
2		421-02-31120	Clamp	1	1001-
3		01010-71285	Bolt	1	1001-
4		01643-11232	Washer	1	1001-
5		01640-31223	Washer, Flat	1	1001-
6		01580-31210	Nut	2	1001-

FIG. A6910-501001 Guard

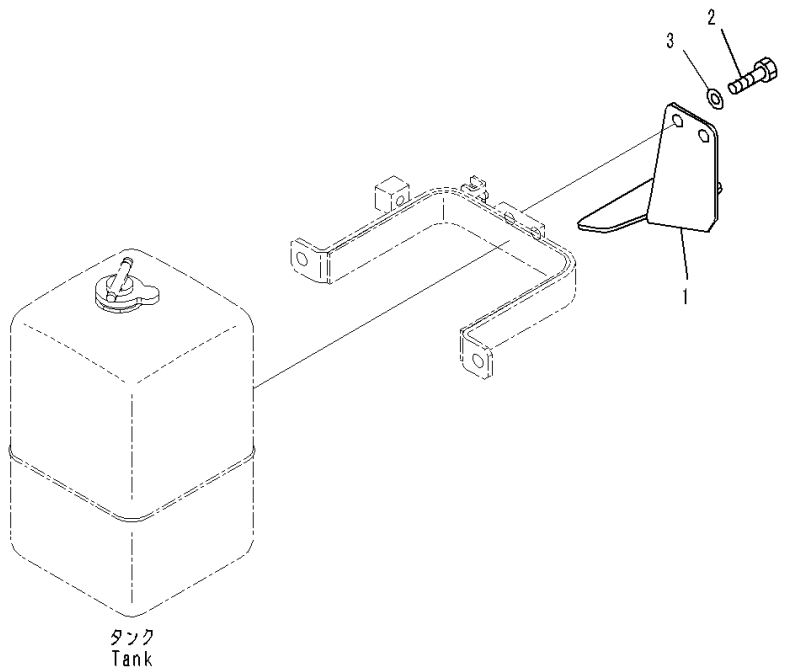

Index	Code	Part Number	Description	Qty	Serial Number
1		14X-03-61731	Plate	1	1001-
2		01010-81020	Bolt	2	1001-
3		01643-31032	Washer	2	1001-

FIG. A9020-502001 Spare Parts (For 90Amp. Alternator)

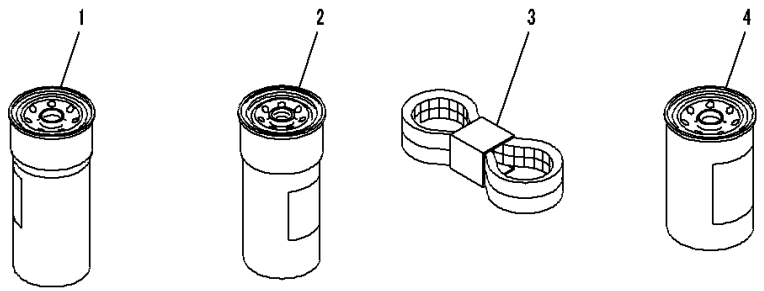

00038969

Index	Code	Part Number	Description	Qty	Serial Number
1		6742-01-4540	Cartridge	1	1001-
2		600-319-3750	Cartridge	1	1001-
3		6732-82-3430	Belt	1	1001-
4		600-319-3610	Cartridge Assembly	1	1001-

FIG. A9020-501001 Spare Parts (For 60Amp. Alternator)

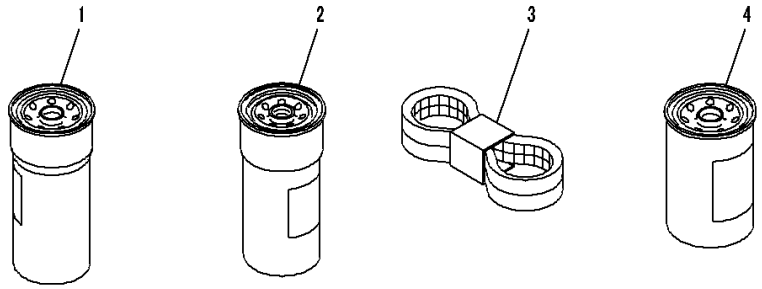

00038969

Index	Code	Part Number	Description	Qty	Serial Number
1		6742-01-4540	Cartridge	1	1001-
2		600-319-3750	Cartridge	1	1001-
3		6746-61-3710	Belt	1	1001-
4		600-319-3610	Cartridge Assembly	1	1001-

FIG. B0100-001001 Engine Mounting

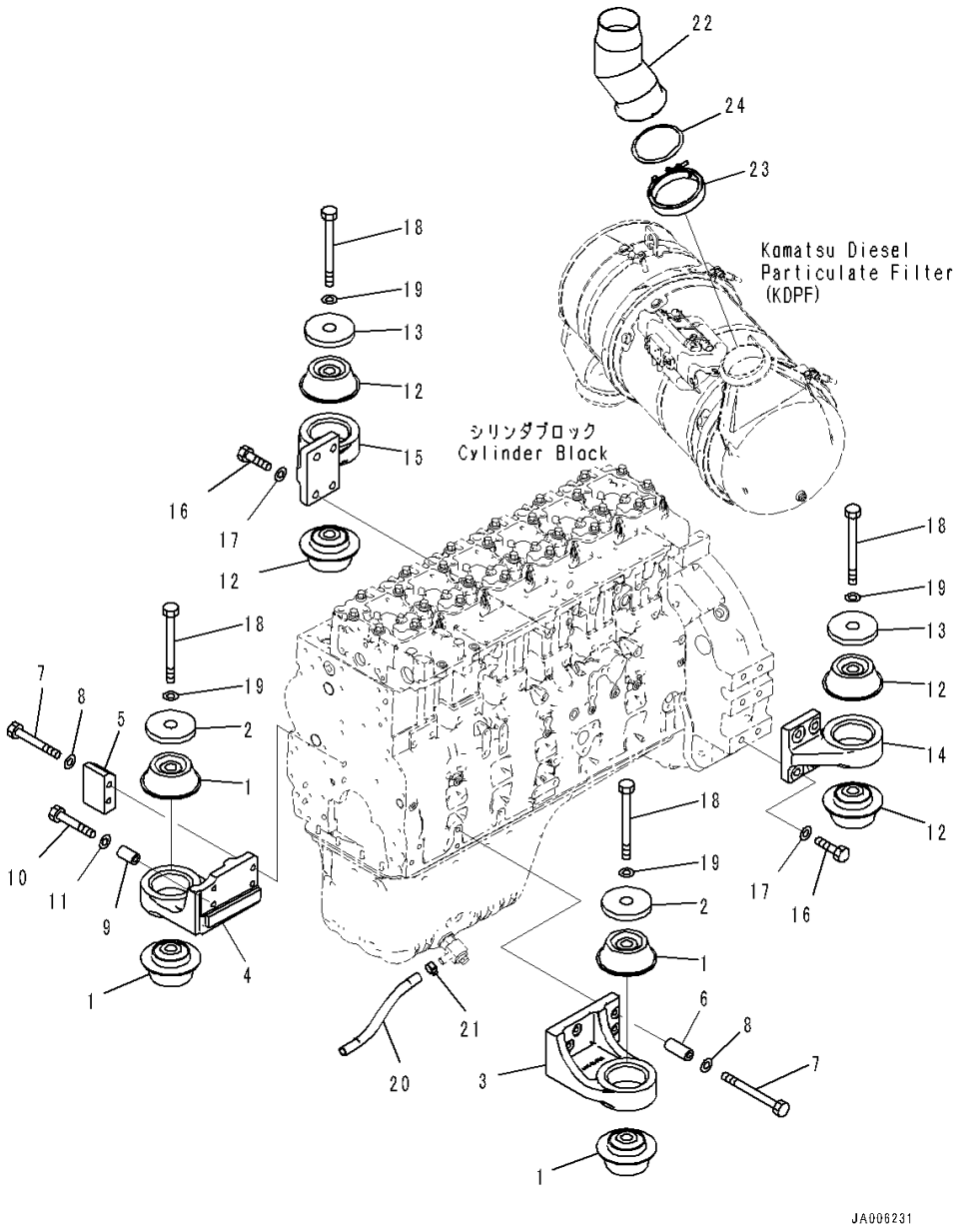

Index	Code	Part Number	Description	Qty	Serial Number
1		207-01-35140	Cushion	4	1001-
2		14X-01-65150	Washer	2	1001-
3		14X-01-61111	Bracket,L.H.	1	1001-
4		14X-01-61121	Bracket,R.H.	1	1001-
5		14X-01-65171	Spacer	1	1001-
6		14X-01-35180	Spacer	4	1001-
7		14X-01-51150	Bolt	6	1001-
8		01643-31232	Washer	6	1001-
9		205-03-71331	Collar	2	1001-
10		14X-01-61150	Bolt	2	1001-
11		01643-31232	Washer	2	1001-
12		207-01-35140	Cushion	4	1001-
13		14X-01-65150	Washer	2	1001-
14		14X-01-51131	Bracket	1	1001-
15		14X-01-51141	Bracket	1	1001-
16		01010-81650	Bolt	8	1001-
17		01643-31645	Washer	8	1001-
18		01011-82480	Bolt	4	1001-
19		01643-32460	Washer	4	1001-
20		07270-21530	Tube	1	1001-
21		07285-00180	Clip	1	1001-
22		14X-01-61311	Pipe	1	1001-
23		6520-91-1020	Clamp	1	1001-
24		6520-91-1030	Gasket	1	1001-

FIG. B0201-001001 Komatsu Closed Crankcase Ventilation (KCCV) (Ventilator)

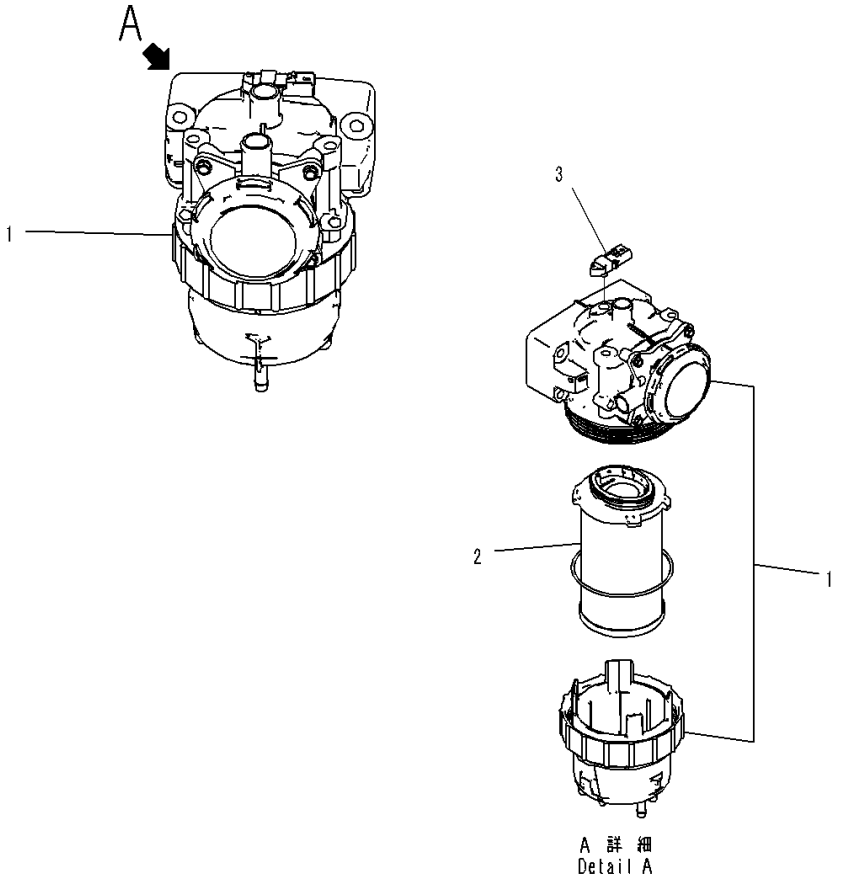

Index	Code	Part Number	Description	Qty	Serial Number
1		600-331-2100	Ventilator	1	1001-
2		600-331-2900	• Element Kit	1	1001-
3		6252-11-2900	• Sensor, Pressure	1	1001-

FIG. B0201-001002A Komatsu Closed Crankcase Ventilation (KCCV) (Ventilation Filter Mounting)

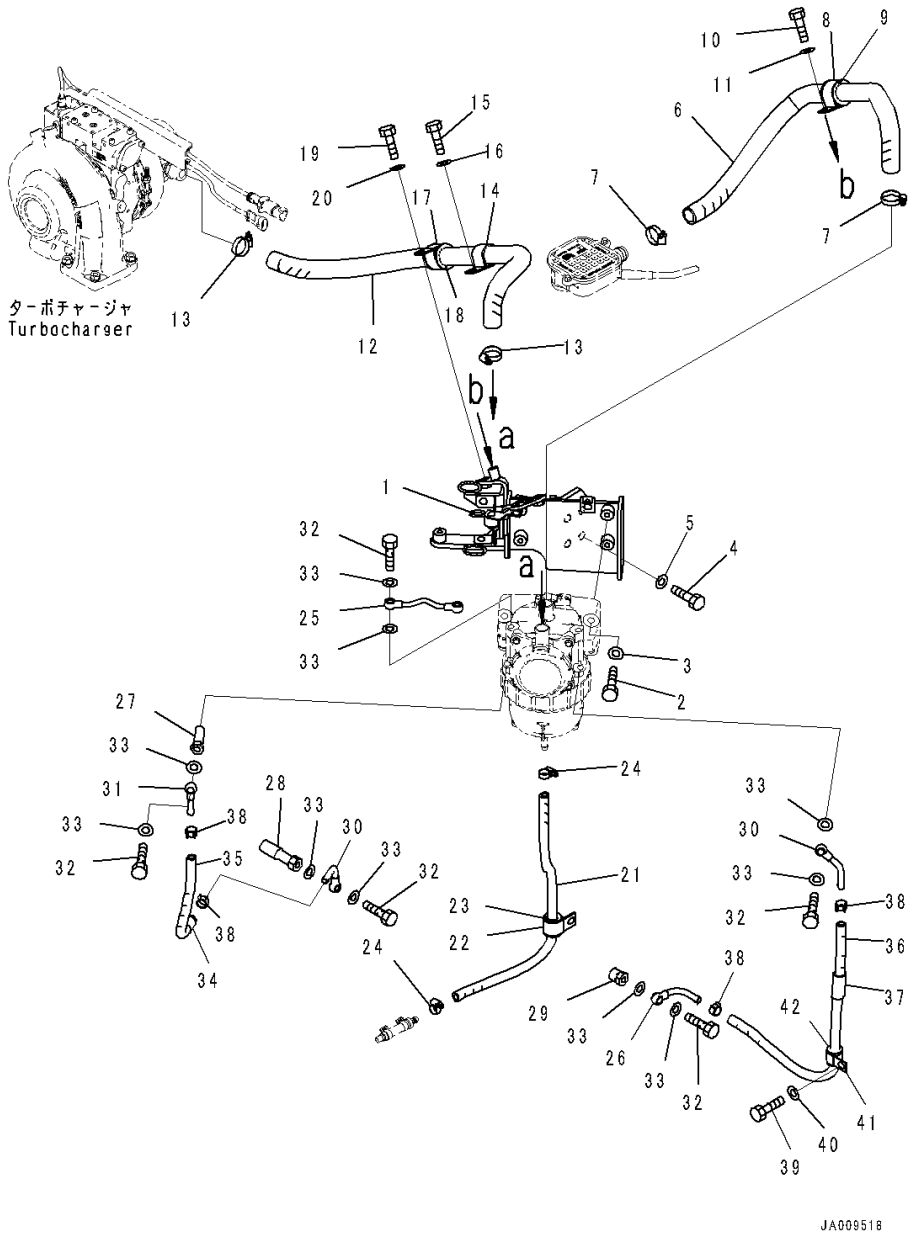

Index	Code	Part Number	Description	Qty	Serial Number
1		14X-01-61411	Bracket	1	1001-
2		01010-81070	Bolt	4	1001-
3		01643-31032	Washer	4	1001-
4		01010-81240	Bolt	4	1001-
5		01643-31232	Washer	4	1001-
6		14X-01-61421	Hose	1	1001-
7		6746-21-7150	Clamp	2	1001-
8		14X-01-61470	Clip	1	1001-
9		17A-49-19940	Cushion	1	1001-
10		01010-81020	Bolt	1	1001-
11		01643-31032	Washer	1	1001-
12		14X-01-61431	Hose	1	1001-
13		6746-21-7150	Clamp	2	1001-
14		04434-53211	Clip	1	1001-
15		01010-81025	Bolt	1	1001-
16		01643-31032	Washer	1	1001-
17		14X-01-61470	Clip	1	1001-
18		17A-49-19940	Cushion	1	1001-
19		01010-81025	Bolt	1	1001-
20		01643-31032	Washer	1	1001-
21		14X-01-61490	Hose	1	1001-
22		04434-52511	Clip	1	1001-
23		07095-20318	Cushion	1	1001-
24		6746-21-7160	Clamp	2	1001-
25		600-331-1950	Tube	1	1528-
26		6746-21-7420	Joint	1	1528-
27		6746-21-7430	Adapter	1	1528-
28		6746-21-7440	Adapter	1	1528-
29		6746-21-7450	Adapter	1	1528-
30		6746-21-7460	Joint	2	1528-
31		6136-71-5540	Tube	1	1528-
32		07206-30812	Bolt, Joint	6	1528-
33		07005-01212	Gasket	12	1528-
34		08017-81901	Conduit	1	1528-
35		14X-01-61821	Hose	1	1528-
36		14X-01-61811	Hose	1	1528-
37		08017-81901	Conduit	1	1528-
38		11Y-09-11140	Clip	4	1528-
39		01010-81025	Bolt	1	1528-
40		01643-31032	Washer	1	1528-

FIG. B0201-001002A Komatsu Closed Crankcase Ventilation (KCCV) (Ventilation Filter Mounting)

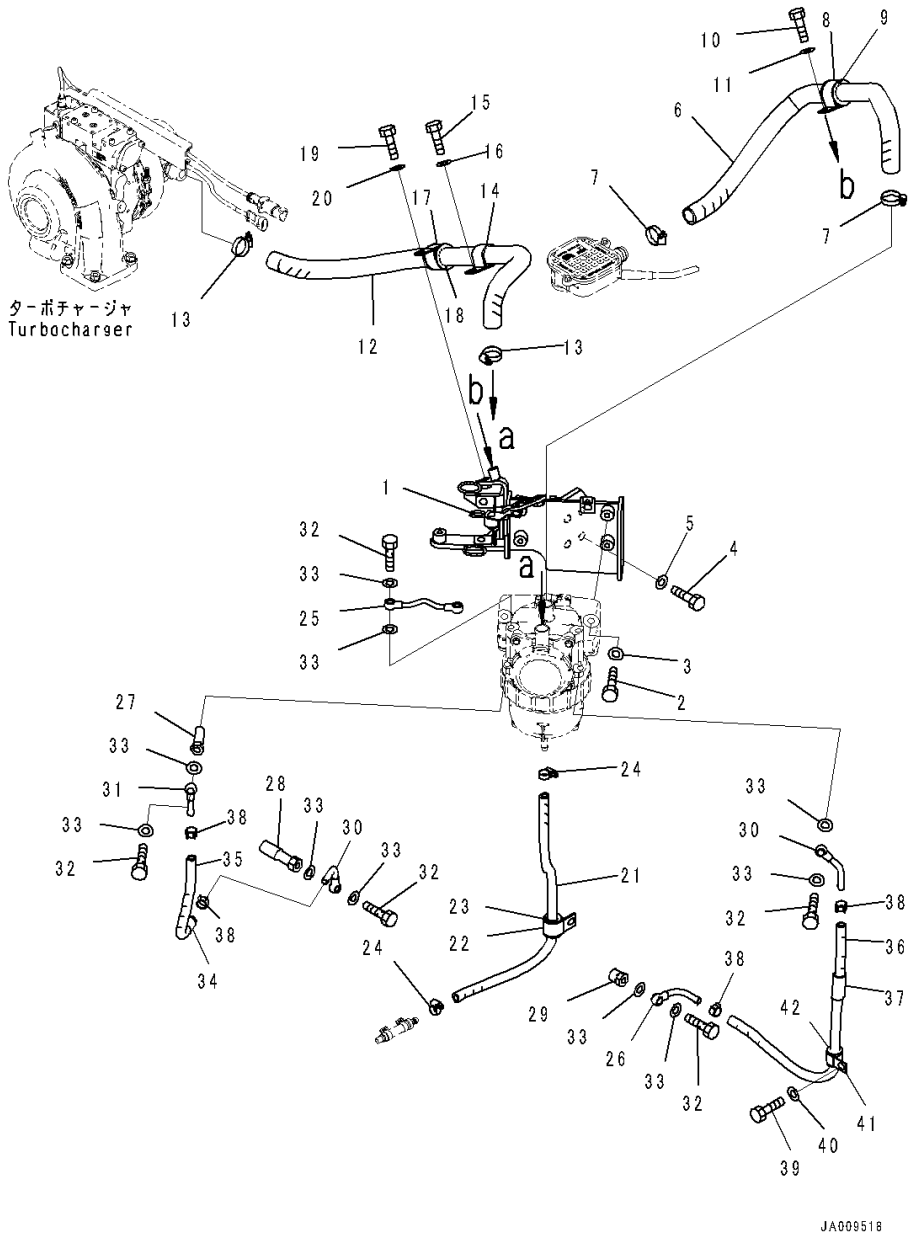

Index	Code	Part Number	Description	Qty	Serial Number
41		14X-01-61870	Clip	1	1528-
42		07095-20314	Cushion	1	1528-

FIG. B0500-001001 Engine Wiring Harness (Ground)

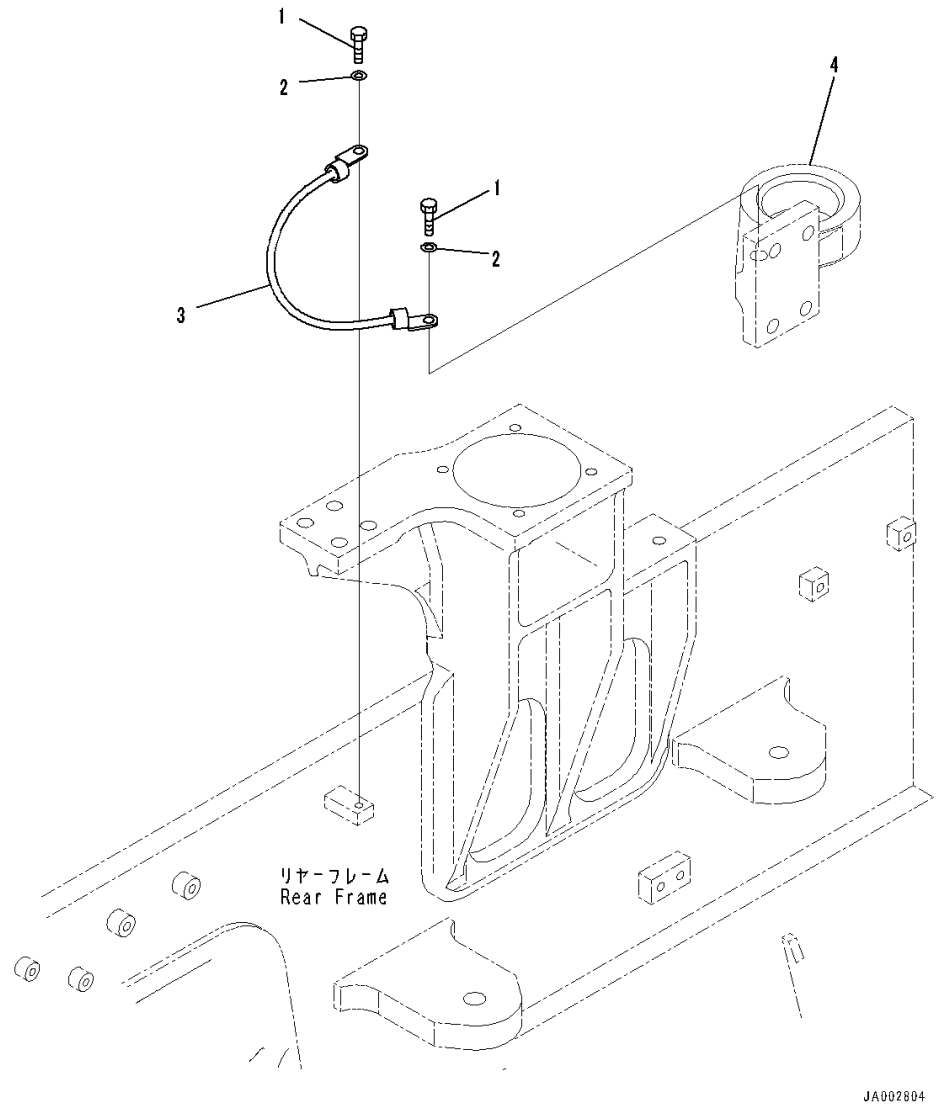

Index	Code	Part Number	Description	Qty	Serial Number
1		01010-81020	Bolt	2	1001-
2		01643-31032	Washer	2	1001-
3		08028-FD040	Cable, Ground	1	1001-
4		(14X-01-51141)	Bracket(Refer to Page 169)		-

FIG. B0500-001002 Engine Wiring Harness (Wiring Harness) (1/3)

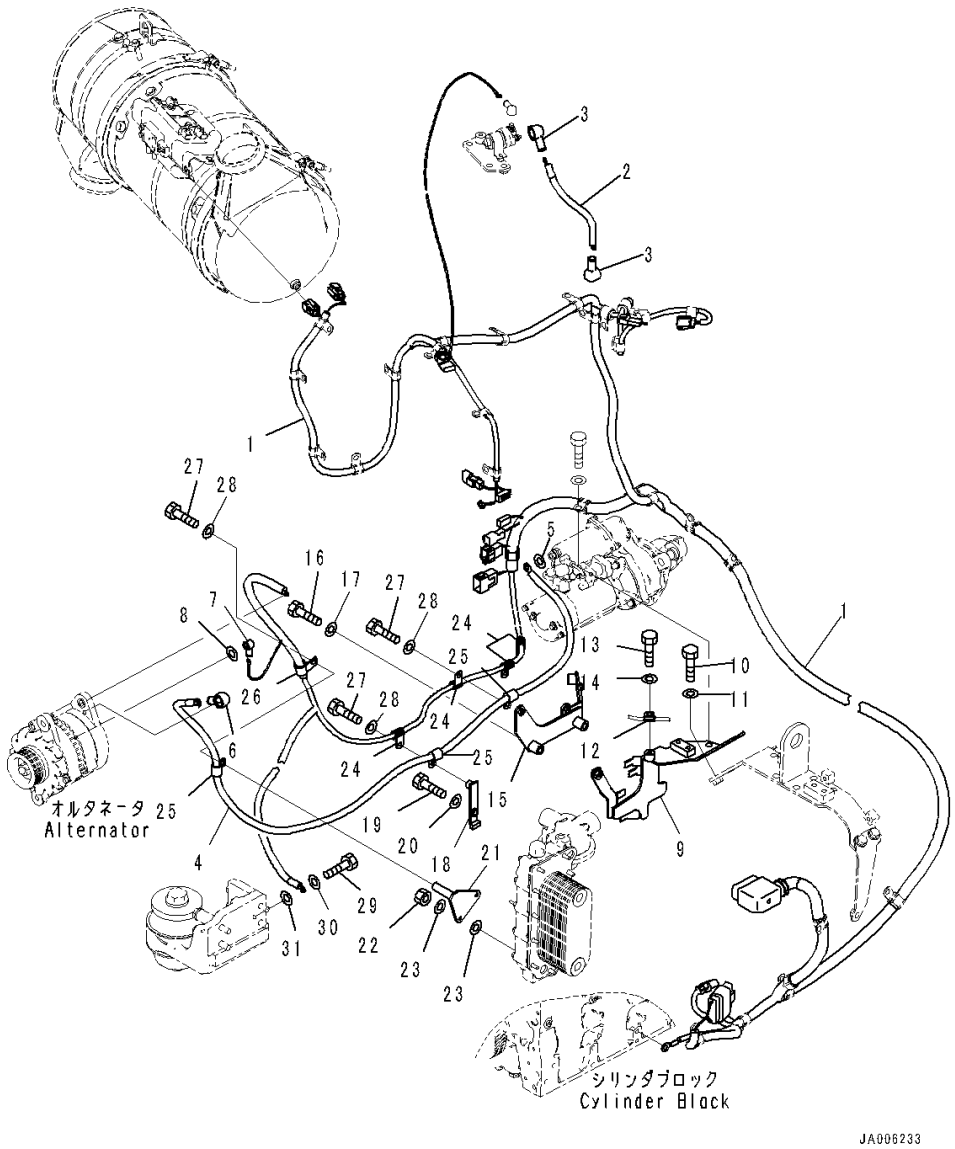

Index	Code	Part Number	Description	Qty	Serial Number
1		14X-06-61222	Wiring Harness	1	1001-
		21J-06-13661	• Diode	2	1001-
2		14X-06-35221	Cable	1	1001-
3		08038-02027	Cap	2	1001-
4		14X-06-61731	Cable	1	1001-
5		01643-31032	Washer	1	1001-
6		08038-02027	Cap	1	1001-
7		08038-00519	Cap	1	1001-
8		01640-20508	Washer	1	1001-
9		14X-06-61641	Bracket	1	1001-
10		01010-81230	Bolt	2	1001-
11		01643-31232	Washer	2	1001-
12		600-051-2060	Clip	1	1001-
13		01010-81020	Bolt	1	1001-
14		01643-31032	Washer	1	1001-
15		14X-06-65471	Bracket	1	1001-
16		01010-80845	Bolt	2	1001-
17		01643-30823	Washer	2	1001-
18		14X-06-62270	Bracket	1	1001-
19		01010-80825	Bolt	1	1001-
20		01643-30823	Washer	1	1001-
21		14X-06-63640	Bracket	1	1001-
22		01580-10605	Nut	2	1001-
23		01640-20610	Washer	4	1001-
24		600-051-1100	Clip	4	1001-
25		600-051-1140	Clip	3	1001-
26		600-051-1180	Clip	1	1001-
27		01010-80816	Bolt	5	1001-
28		01643-30823	Washer	5	1001-
29		01010-80816	Bolt	1	1001-
30		01643-30823	Washer	1	1001-
31		01643-30823	Washer	1	1001-

FIG. B0500-001003 Engine Wiring Harness (Wiring Harness) (2/3)

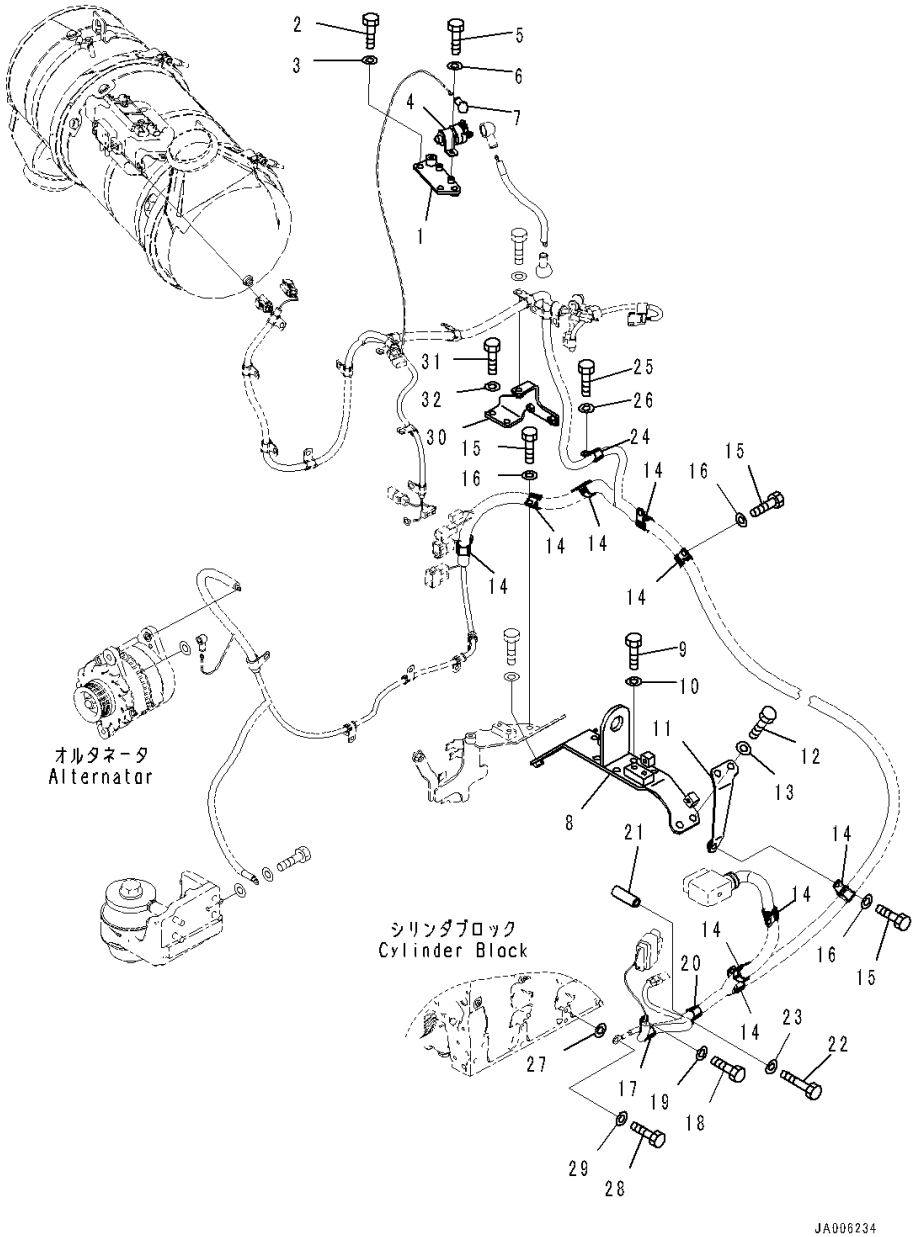

Index	Code	Part Number	Description	Qty	Serial Number
1		14X-06-61671	Bracket	1	1001-
2		01010-81030	Bolt	2	1001-
3		01643-31032	Washer	2	1001-
4		600-815-2170	Switch, Heater	1	1001-
5		01010-80612	Bolt	2	1001-
6		01643-30623	Washer	2	1001-
7		08038-00519	Cap	1	1001-
8		14X-06-63191	Bracket	1	1001-
9		01010-81230	Bolt	6	1001-
10		01643-31232	Washer	6	1001-
11		14X-06-63212	Bracket	1	1001-
12		01010-81230	Bolt	2	1001-
13		01643-31232	Washer	2	1001-
14		600-051-2240	Clip	9	1001-
15		01010-81020	Bolt	8	1001-
16		01643-31032	Washer	8	1001-
17		600-051-2180	Clip	1	1001-
18		01010-81020	Bolt	1	1001-
19		01643-31032	Washer	1	1001-
20		600-051-3190	Clip	1	1001-
21		23B-07-61550	Spacer	1	1001-
22		01010-81285	Bolt	1	1001-
23		01643-31232	Washer	1	1001-
24		600-051-2180	Clip	1	1001-
25		01010-81020	Bolt	1	1001-
26		01643-31032	Washer	1	1001-
27		01643-31032	Washer	1	1001-
28		01010-81020	Bolt	1	1001-
29		01643-31032	Washer	1	1001-
30		14X-06-61621	Bracket	1	1001-
31		01010-81030	Bolt	2	1001-
32		01643-31032	Washer	2	1001-

FIG. B0500-001004 Engine Wiring Harness (Wiring Harness) (3/3)

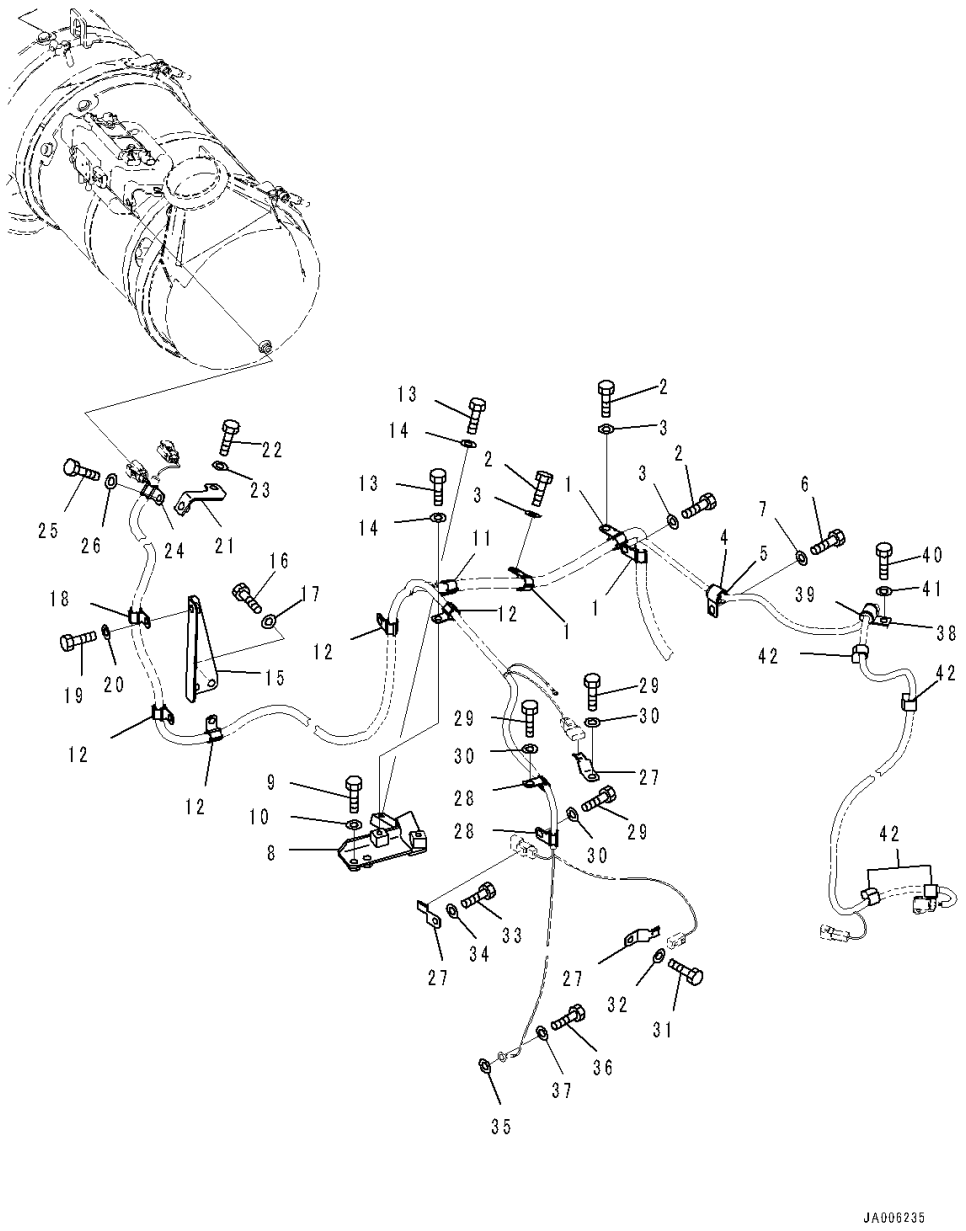

Index	Code	Part Number	Description	Qty	Serial Number
1		600-051-2180	Clip	3	1001-
2		01010-81020	Bolt	3	1001-
3		01643-31032	Washer	3	1001-
4		04434-51710	Clip	1	1001-
5		07095-20211	Cushion	1	1001-
6		01010-81020	Bolt	1	1001-
7		01643-31032	Washer	1	1001-
8		14X-06-63631	Bracket	1	1001-
9		01010-81025	Bolt	2	1001-
10		01643-31032	Washer	2	1001-
11		600-051-2180	Clip	1	1001-
12		600-051-2140	Clip	4	1001-
13		01010-81020	Bolt	5	1001-
14		01643-31032	Washer	5	1001-
15		14X-06-63251	Plate	1	1001-
16		01010-81020	Bolt	2	1001-
17		01643-31032	Washer	2	1001-
18		600-051-2140	Clip	1	1001-
19		01010-81020	Bolt	1	1001-
20		01643-31032	Washer	1	1001-
21		14X-06-63620	Bracket	1	1001-
22		01010-81020	Bolt	1	1001-
23		01643-31032	Washer	1	1001-
24		600-051-2140	Clip	1	1001-
25		01010-81020	Bolt	1	1001-
26		01643-31032	Washer	1	1001-
27		08193-20010	Clip	3	1001-
28		600-051-2100	Clip	2	1001-
29		01010-81020	Bolt	3	1001-
30		01643-31032	Washer	3	1001-
31		01010-81025	Bolt	1	1001-
32		01643-31032	Washer	1	1001-
33		01010-81016	Bolt	1	1001-
34		01643-31032	Washer	1	1001-
35		01643-31032	Washer	1	1001-
36		01010-81020	Bolt	1	1001-
37		01643-31032	Washer	1	1001-
38		04434-51710	Clip	1	1001-
39		07095-20211	Cushion	1	1001-
40		01010-81020	Bolt	1	1001-

FIG. B0500-001004 Engine Wiring Harness (Wiring Harness) (3/3)

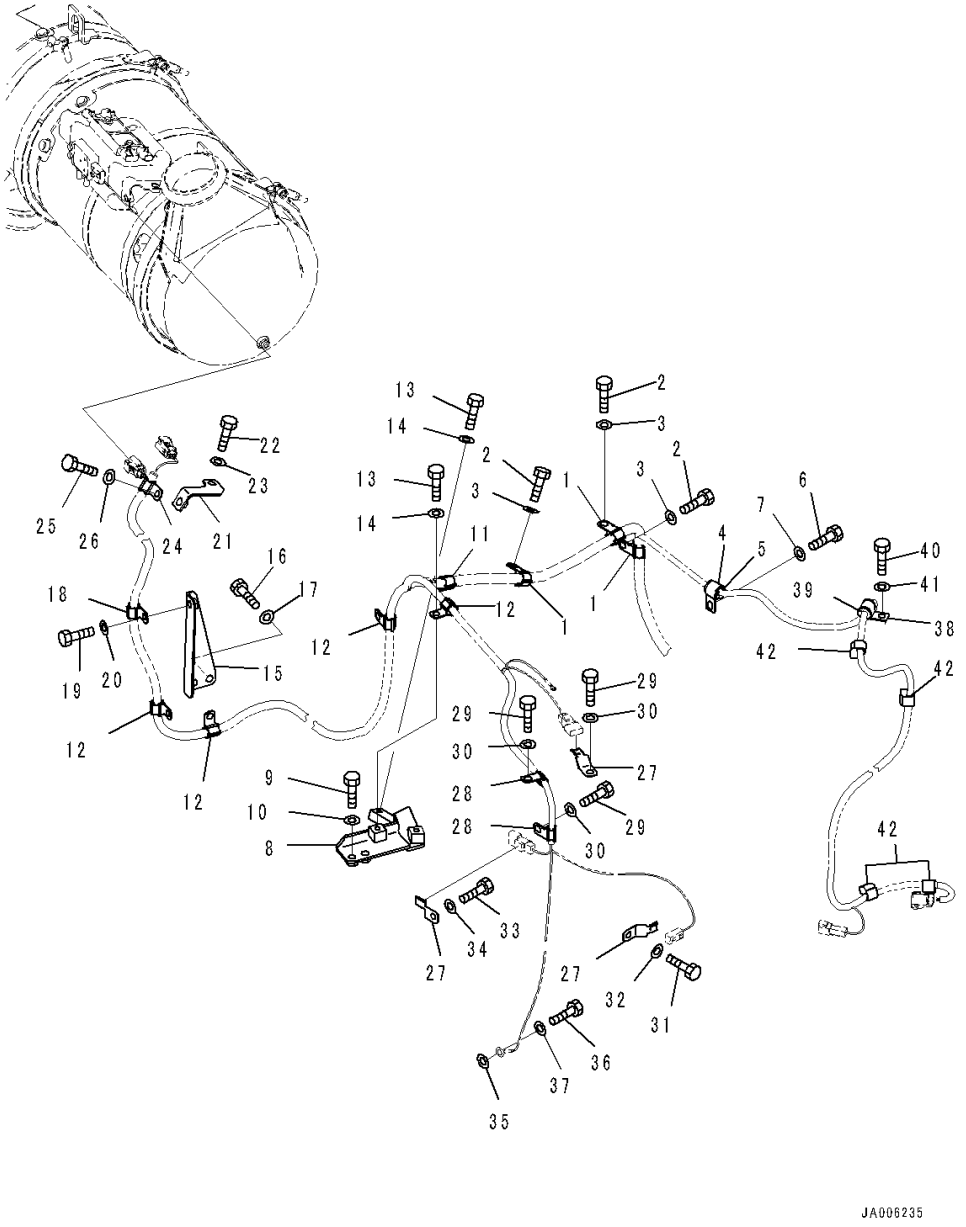

Index	Code	Part Number	Description	Qty	Serial Number
41		01643-31032	Washer	1	1001-
42		08211-00720	Clip	4	1001-

FIG. B0600-001001 Damper

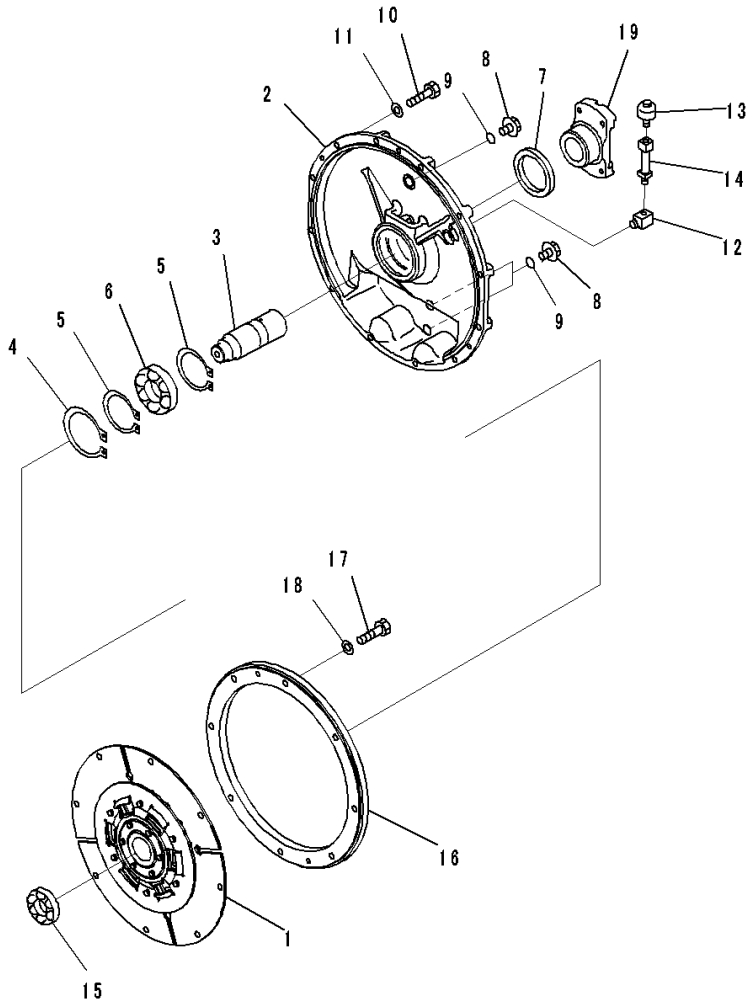

Index	Code	Part Number	Description	Qty	Serial Number
1		14X-12-11102	Damper Disc Assembly	1	1001-
2		14X-12-11210	Cover	1	1001-
3		14X-12-11411	Shaft	1	1001-
4		04065-01104	Ring, Snap	1	1001-
5		04064-06020	Ring, Snap	2	1001-
6		06300-06212	Bearing	1	1001-
7		07012-50085	Seal, Oil	1	1001-
8		07044-12412	Plug	3	1001-
9		07002-32434	O-ring	3	1001-
10		01010-81250	Bolt	12	1001-
11		01643-31232	Washer	12	1001-
12		568-15-11610	Elbow	1	1001-
13		07030-10252	Breather	1	1001-
14		135-12-31230	Tube	1	1001-
15		06340-06208	Bearing	1	1001-
16		14X-12-51110	Weight	1	1001-
17		01010-81235	Bolt	8	1001-
18		01643-31232	Washer	8	1001-
19		14Z-12-31310	Coupling	1	1001-

COOLING SYSTEM

FIG. C0100-001001 Cooling System (Radiator Core and Aftercooler)

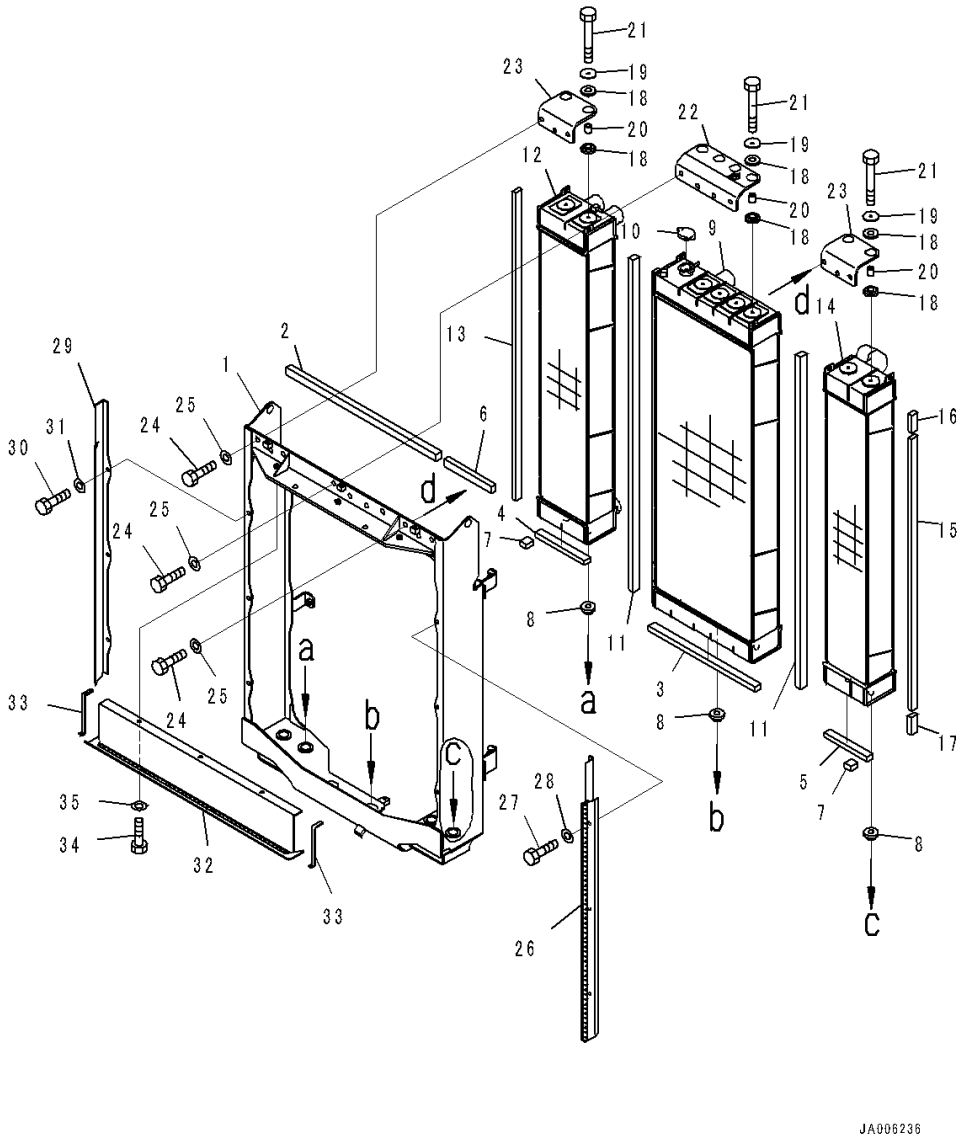

Index	Code	Part Number	Description	Qty	Serial Number
		14X-03-61101	Radiator Assembly	1	1001-
1		14X-03-61131	• Frame	1	1001-
2		14X-03-61570	• Seal	1	1001-
3		14X-03-61580	• Seal	1	1001-
4		14X-03-61590	• Seal	1	1001-
5		14X-03-61920	• Seal	1	1001-
6		14X-03-61930	• Seal	1	1001-
7		14X-03-61940	• Seal	2	1001-
8		20Y-03-41580	• Cushion	7	1001-
9		14X-03-61111	• Radiator Core Assembly	1	1001-
10		20U-03-21540	• Cap	1	1001-
11		14X-03-61520	• Seal	2	1001-
12		14X-03-61911	• Radiator Core Assembly	1	1001-
13		14X-03-61531	• Seal	1	1001-
14		14X-03-61121	• Aftercooler Assembly	1	1001-
15		14X-03-61540	• Seal	1	1001-
16		14X-03-61550	• Seal	1	1001-
17		14X-03-61560	• Seal	1	1001-
18		14X-03-51621	• Cushion	16	1001-
19		14X-03-51770	• Washer	8	1001-
20		14X-03-51640	• Spacer	8	1001-
21		01010-81045	• Bolt	8	1001-
22		14X-03-61740	• Bracket	1	1001-
23		14X-03-61751	• Bracket	2	1001-
24		01010-81235	• Bolt	10	1001-
25		01643-31232	• Washer	10	1001-
26		14X-03-61411	• Baffle	1	1001-
27		01010-81025	• Bolt	3	1001-
28		01643-31032	• Washer	3	1001-
29		14X-03-61421	• Baffle	1	1001-
30		01010-81025	• Bolt	3	1001-
31		01643-31032	• Washer	3	1001-
32		14X-03-61430	• Baffle	1	1001-
33		14X-03-61890	• • Seal	2	1001-
34		01010-81025	• Bolt	3	1001-
35		01643-31032	• Washer	3	1001-

FIG. C0100-001002 Cooling System (Frame)

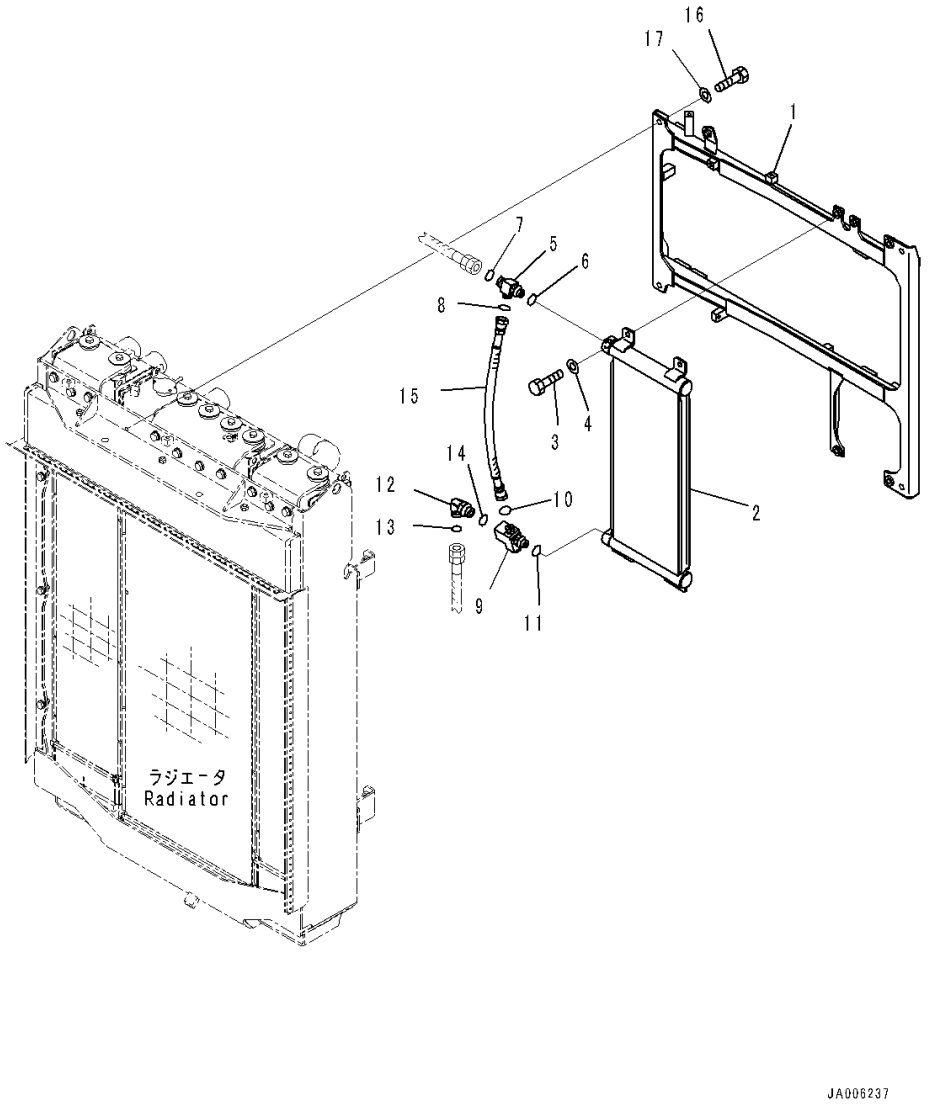

Index	Code	Part Number	Description	Qty	Serial Number
1		14X-03-61172	Frame	1	1001-
2		14X-03-61160	Oil Cooler	1	1001-
3		01010-81030	Bolt	4	1001-
4		01643-31032	Washer	4	1001-
5		14X-62-35531	Tee	1	1001-
6		07002-12034	O-ring	1	1001-
7		02896-11015	O-ring	1	1001-
8		02896-11012	O-ring	1	1001-
9		134-62-72600	Block Assembly	1	1001-
10		02896-11012	O-ring	1	1001-
11		07002-12034	O-ring	1	1001-
12		02782-10522	Elbow	1	1001-
13		02896-11015	O-ring	1	1001-
14		07002-12434	O-ring	1	1001-
15		02762-00406	Hose	1	1001-
16		01010-81230	Bolt	4	1001-
17		01643-31232	Washer	4	1001-

FIG. C0100-001003 Cooling System (Piping)

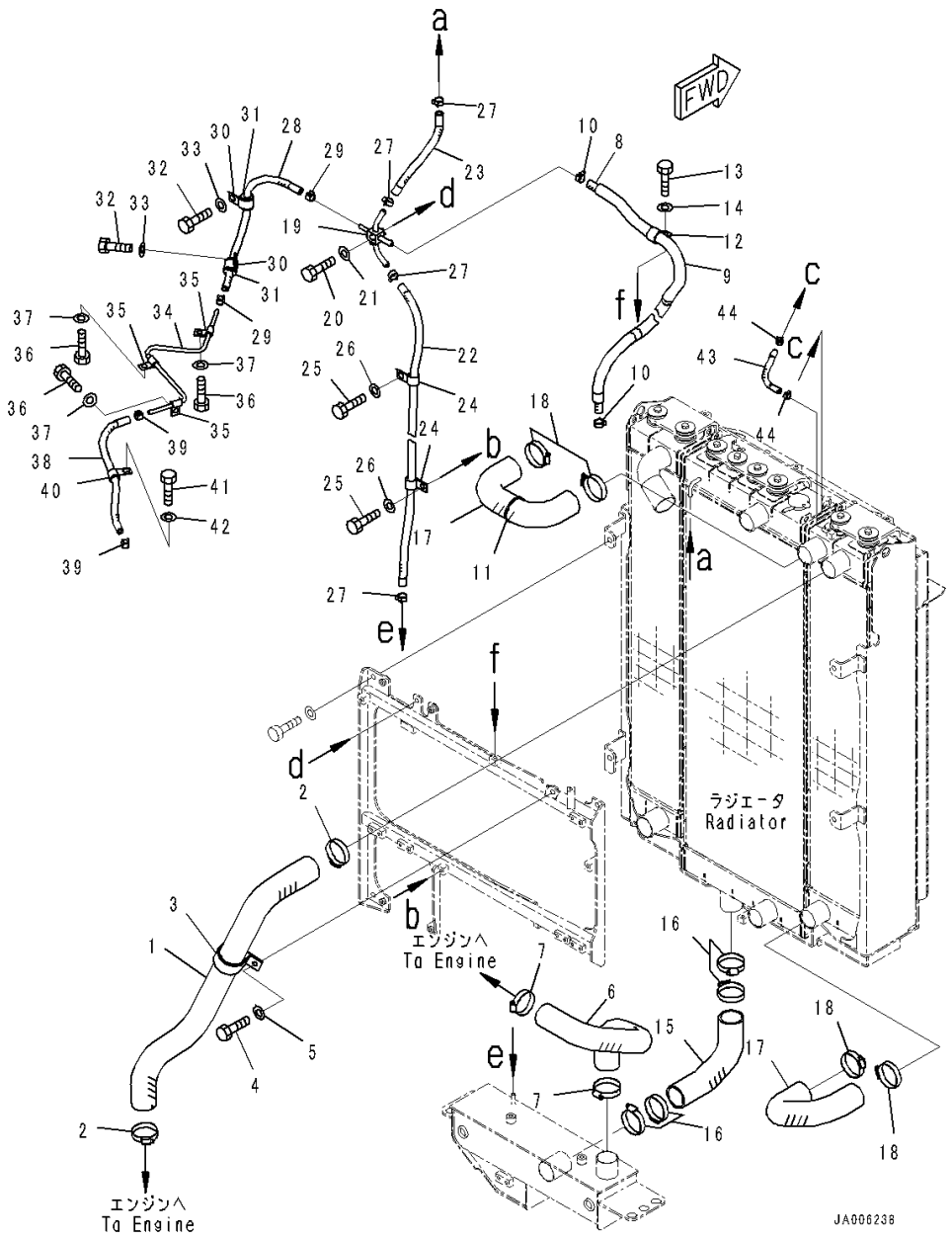

Index	Code	Part Number	Description	Qty	Serial Number
1		14X-03-61211	Hose	1	1001-
2		07289-00070	Clamp	2	1001-
3		14X-03-61670	Clip	1	1001-
4		01010-81230	Bolt	1	1001-
5		01643-31232	Washer	1	1001-
6		14X-03-61231	Hose	1	1001-
7		07289-00070	Clamp	2	1001-
8		14X-03-61261	Hose Assembly	1	1001-
9		08017-71908	• Conduit	1	1001-
10		11Y-09-11140	Clip	2	1001-
11		134-03-61410	Band	2	1001-
12		04434-52310	Clip	1	1001-
13		01010-81020	Bolt	1	1001-
14		01643-31032	Washer	1	1001-
15		14X-03-61221	Hose	1	1001-
16		07289-00070	Clamp	4	1001-
17		14X-03-61780	Hose	2	1001-
18		07289-00070	Clamp	4	1001-
19		14X-03-61291	Tube	1	1001-
20		01010-81025	Bolt	1	1001-
21		01643-31032	Washer	1	1001-
22		14X-03-61191	Hose	1	1001-
23		07260-20922	Hose	1	1001-
24		04434-51610	Clip	2	1001-
25		01010-81020	Bolt	2	1001-
26		01643-31032	Washer	2	1001-
27		11Y-09-11140	Clip	4	1001-
28		14X-03-61770	Hose	1	1001-
29		07285-00130	Clip	2	1001-
30		04434-52110	Clip	2	1001-
31		07095-20314	Cushion	2	1001-
32		01010-81020	Bolt	2	1001-
33		01643-31032	Washer	2	1001-
34		14X-03-61791	Tube	1	1001-
35		04434-50810	Clip	3	1001-
36		01010-81020	Bolt	3	1001-
37		01643-31032	Washer	3	1001-
38		14X-03-61720	Hose	1	1001-
39		07285-00130	Clip	2	1001-
40		04434-51510	Clip	1	1001-

FIG. C0100-001003 Cooling System (Piping)

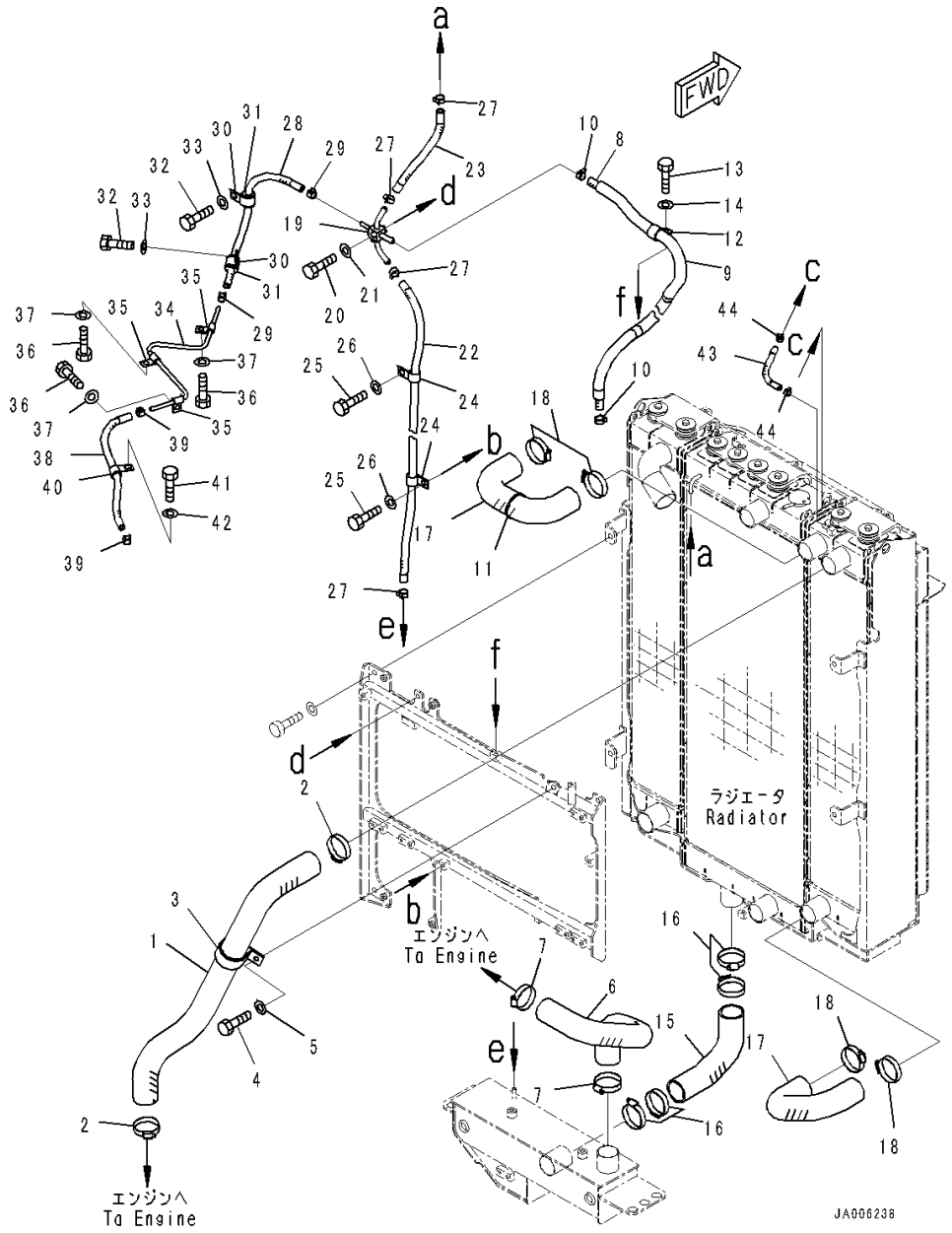

Index	Code	Part Number	Description	Qty	Serial Number
41		01010-81020	Bolt	1	1001-
42		01643-31032	Washer	1	1001-
43		14X-03-61991	Hose	1	1001-
44		07285-00110	Clip, Hose	2	1001-

FIG. C0100-001004 Cooling System (Oil Cooler)

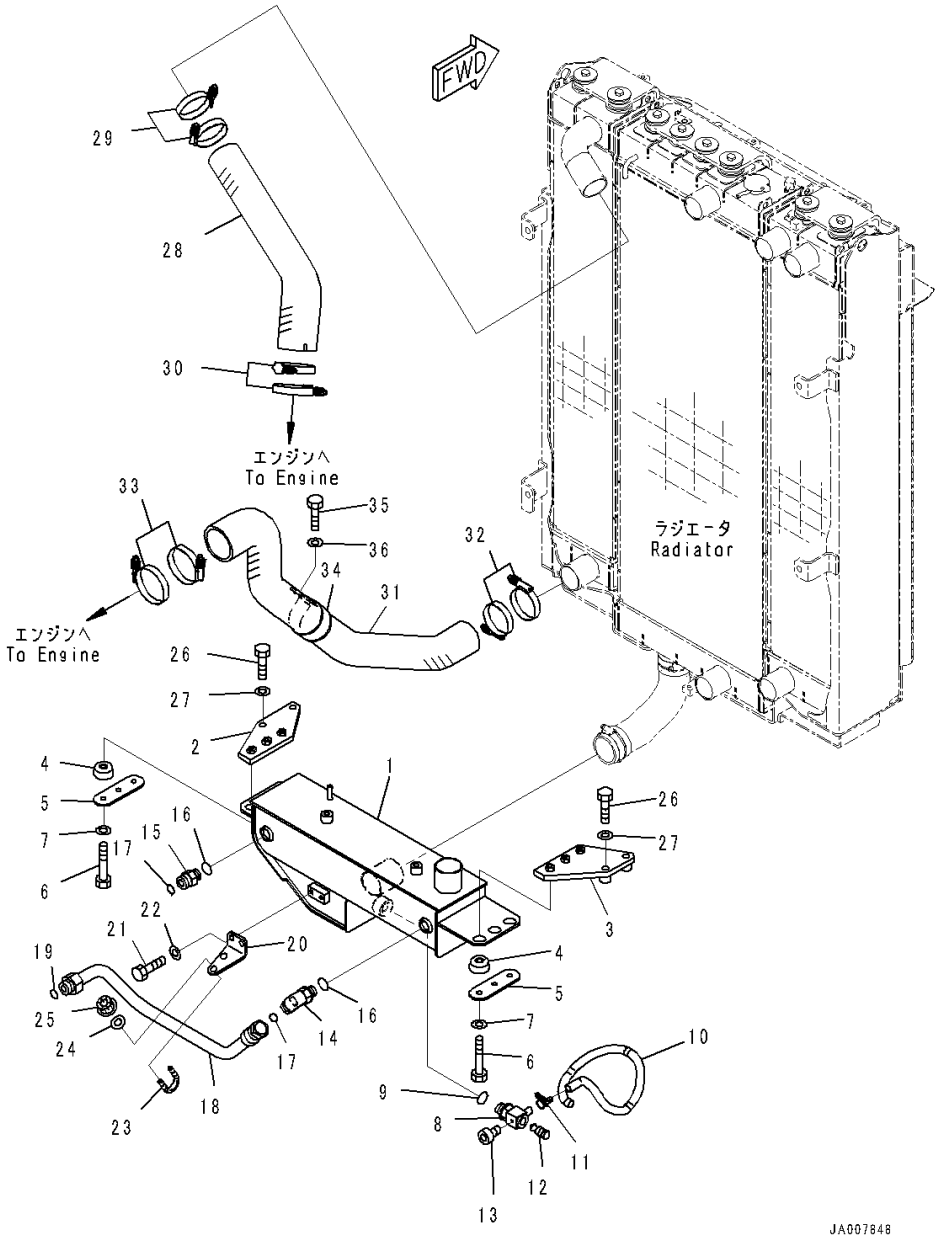

Index	Code	Part Number	Description	Qty	Serial Number
		14X-03-61201	Oil Cooler Assembly	1	1001-
1		14X-03-61141	• Oil Cooler	1	1001-
2		14X-03-61821	• Bracket	1	1001-
3		14X-03-61831	• Bracket	1	1001-
4		195-03-41380	• Cushion	6	1001-
5		14X-03-61711	• Plate	2	1001-
6		01010-81055	• Bolt	6	1001-
7		01643-31032	• Washer	6	1001-
8		6746-21-5110	Elbow	1	1001-
9		07002-12434	O-ring	1	1001-
10		07270-01560	Tube	1	1001-
11		07280-01920	Clamp, Hose	1	1001-
12		134-01-61840	Plug	1	1001-
13		01252-80510	Bolt	1	1001-
14		14X-49-51880	Elbow	1	1001-
15		02781-00628	Union	1	1001-
16		07002-12434	O-ring	2	1001-
17		02896-61018	O-ring	2	1001-
18		14X-49-62141	Tube	1	1001-
19		02896-61018	O-ring	1	1001-
20		14X-03-61841	Plate	1	1001-
21		01010-81025	Bolt	2	1001-
22		01643-31032	Washer	2	1001-
23		07283-32738	Clip, Pipe	1	1001-
24		01643-31032	Washer	2	1001-
25		01597-01009	Nut	2	1001-
26		01010-81250	Bolt	4	1001-
27		01643-31232	Washer	4	1001-
28		14X-01-61621	Hose	1	1001-
29		07299-00080	Clamp	2	1001-
30		07299-00095	Clamp, Hose	2	1001-
31		14X-03-61251	Hose	1	1001-
32		07299-00080	Clamp	2	1001-
33		07299-00095	Clamp, Hose	2	1001-
34		14X-03-61670	Clip	1	1001-
35		01010-81230	Bolt	1	1001-
36		01643-31232	Washer	1	1001-

FIG. C0100-001005 Cooling System (Fan Motor) (1/2)

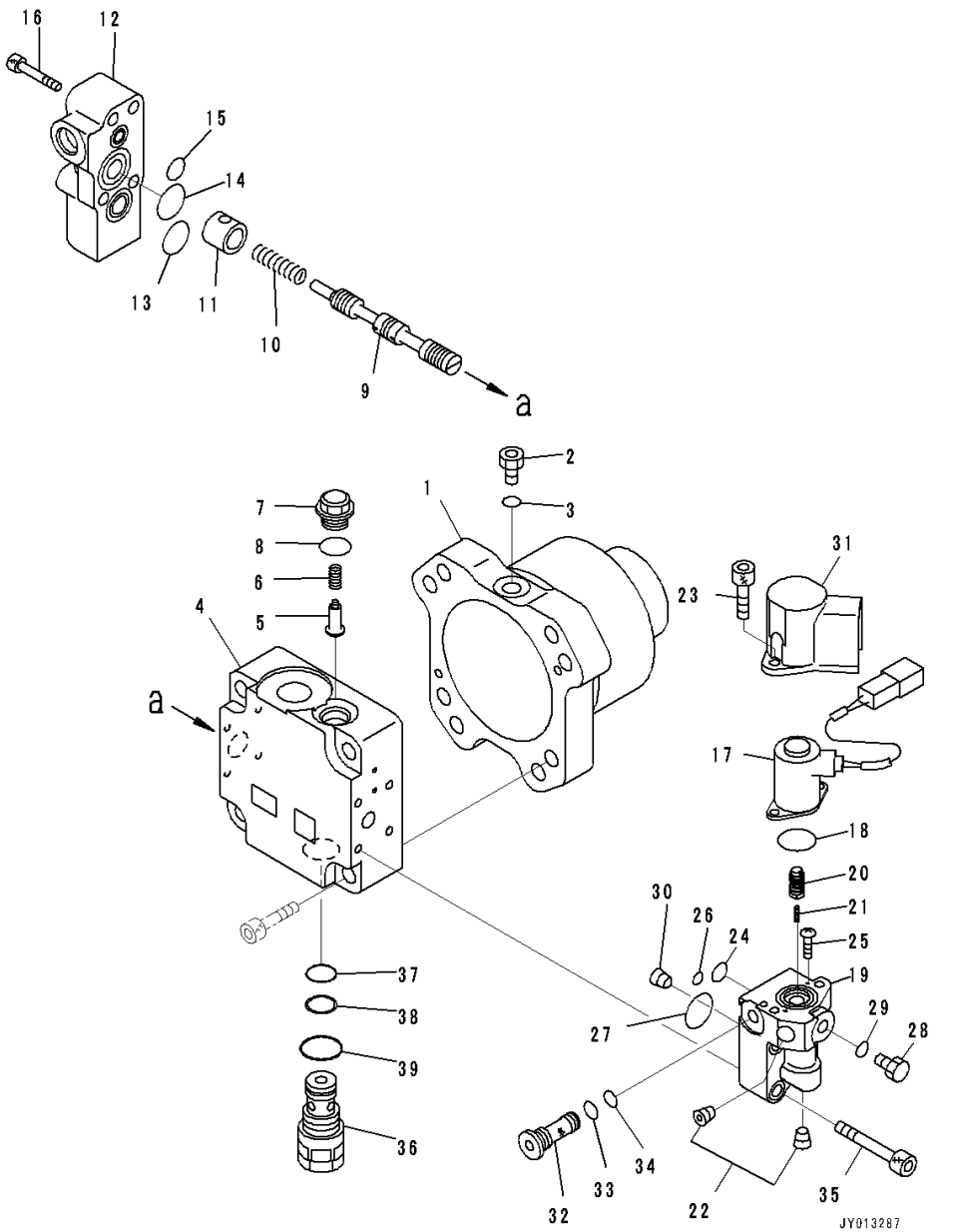

Index	Code	Part Number	Description	Qty	Serial Number
		708-7S-00680	Motor Assembly	1	1001-
1	C2	708-7S-11790	• Case	1	1001-
2		07040-11007	• Plug	1	1001-
3		07002-21023	• O-ring	1	1001-
	C2	708-7S-01241	• Cover Subassembly	1	1001-
4	C1		• • Cover, End	1	1001-
5	C2	708-7R-11210	• • Valve	1	1001-
6	C2	722-10-91130	• • Spring	1	1001-
7	C2	709-32-12861	• • Plug	1	1001-
8		07002-21823	• • O-ring	1	1001-
9	C1		• • Spool	1	1001-
10	C2	708-7S-18120	• • Spring	1	1001-
11	C2	708-7S-18310	• • Spacer	1	1001-
12	C2	708-7S-18320	• • Cover	1	1001-
13		07000-E2020	• • O-ring	1	1001-
14		07000-E2025	• • O-ring	1	1001-
15		07000-E2012	• • O-ring	1	1001-
16		01252-60845	• • Bolt, Hexagon Socket Head	4	1001-
	C2	708-7S-01151	• • Valve Assembly, Pilot	1	1001-
17	C2	702-21-56241	• • • Solenoid	1	1001-
18	C2	700-80-61260	• • • O-ring	1	1001-
19	C1		• • • Case	1	1001-
20	C1		• • • Spool	1	1001-
21	C2	702-21-56220	• • • Spring	1	1001-
22	C2	708-21-12541	• • • Plug	2	1001-
23		01252-60616	• • • Bolt, Hexagon Socket Head	2	1001-
24	C2	708-2L-25490	• • • O-ring	1	1001-
25	C2	702-21-54180	• • • Screw	2	1001-
26		07000-11008	• • • O-ring	1	1001-
27	C2	723-11-18430	• • • O-ring	1	1001-
28		07040-11007	• • • Plug	1	1001-
29		07002-11023	• • • O-ring	1	1001-
30		708-2L-29460	• • • Orifice	1	1001-
31	C2	708-1S-18180	• • • Cover	1	1001-
32	C2	708-7R-18230	• • • Filter	1	1001-
33	C2	07002-11423	• • • O-ring	1	1001-
34	C2	07000-11009	• • • O-ring	1	1001-
35		01252-60835	• • Bolt, Hexagon Socket Head	4	1001-
36		708-7T-02271	• • Valve Assembly	1	1001-
37		07000-F2016	• • • O-ring	1	1001-

FIG. C0100-001005 Cooling System (Fan Motor) (1/2)

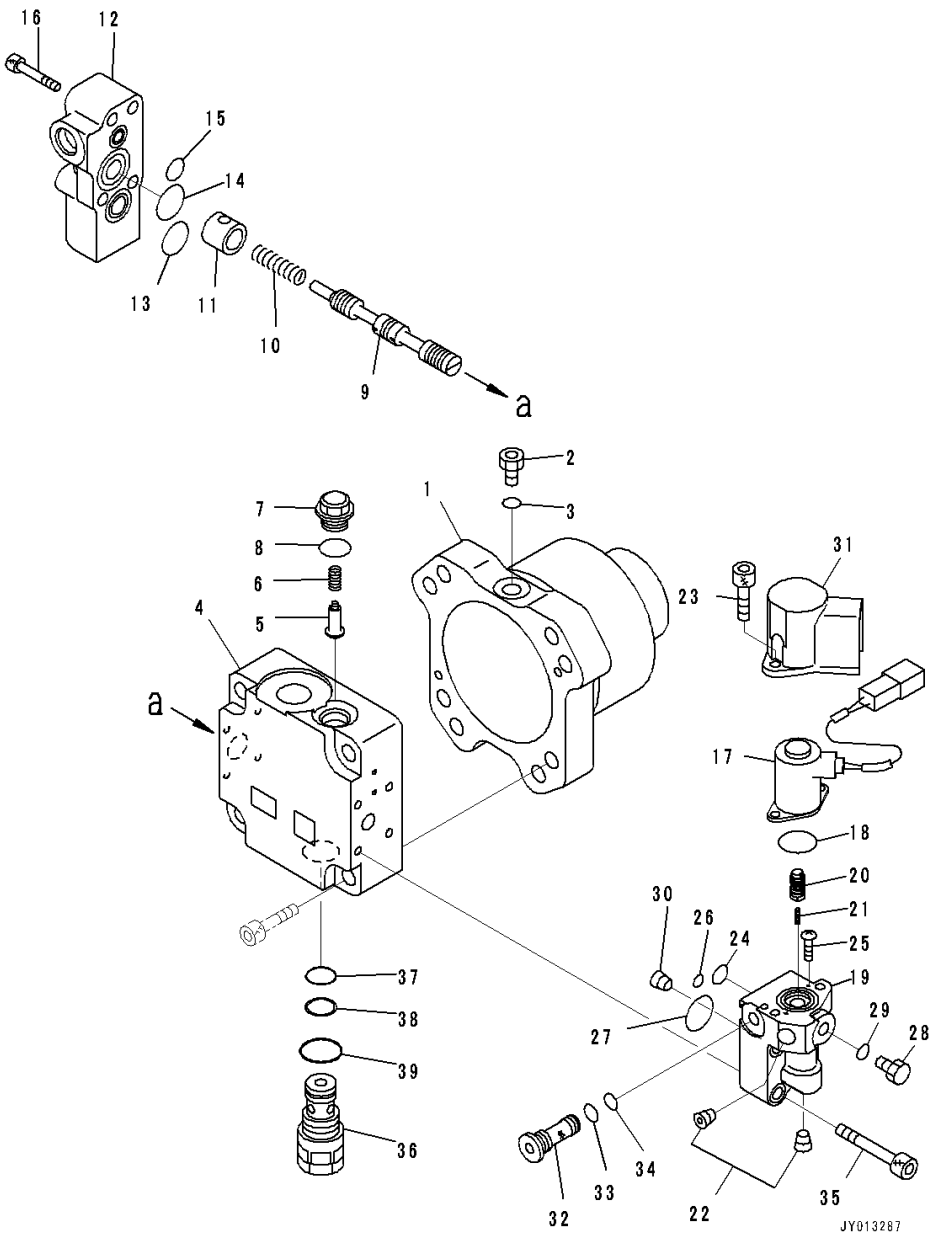

Index	Code	Part Number	Description	Qty	Serial Number
38		07001-02016	• • • Ring, Back-up	1	1001-
39		07002-12434	• • • O-ring	1	1001-

FIG. C0100-001006 Cooling System (Fan Motor) (2/2)

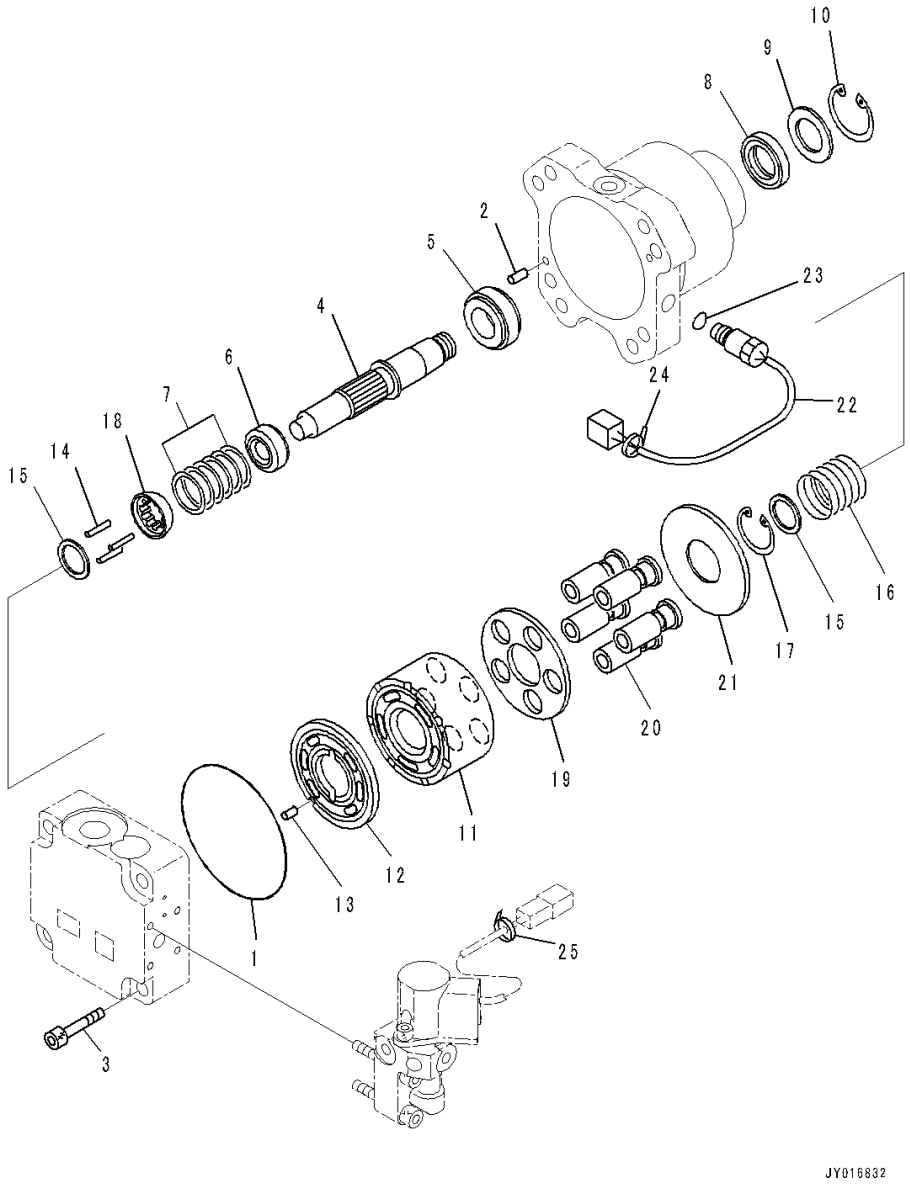

Index	Code	Part Number	Description	Qty	Serial Number
		708-7S-00680	Motor Assembly	1	1001-
1		07000-E2110	• O-ring	1	1001-
2		04020-00616	• Pin, Dowel	2	1001-
3		01252-61255	• Bolt, Hexagon Socket Head	4	1001-
4	C2	708-7S-12330	• Shaft	1	1001-
5	C2	708-7S-12140	• Bearing	1	1001-
6	C2	708-7S-12220	• Bearing	1	1001-
7	C2	708-7S-05110	• Shim Kit	1	1001-
	C1		• • Shim, T=0.85mm	1	1001-
	C1		• • Shim, T=1.05mm	1	1001-
	C1		• • Shim, T=1.25mm	1	1001-
	C1		• • Shim, T=0.75mm	1	1001-
	C1		• • Shim, T=0.95mm	1	1001-
	C1		• • Shim, T=1.15mm	1	1001-
8	C2	708-7T-12330	• Seal, Oil	1	1001-
9	C2	708-1S-11890	• Spacer	1	1001-
10		04065-04518	• Ring, Snap	1	1001-
11	C2	708-7S-13130	• Cylinder Block	1	1001-
12	C2	708-7S-13250	• Plate, Valve	1	1001-
13	C2	720-68-19610	• Pin	1	1001-
14	C2	708-2L-23360	• Pin	3	1001-
15	C2	708-7S-13530	• Spacer	2	1001-
16	C2	708-7S-13560	• Spring	1	1001-
17		04065-03212	• Ring, Snap	1	1001-
18	C2	708-7S-13550	• Guide, Retainer	1	1001-
19	C2	708-7S-13360	• Retainer, Shoe	1	1001-
20	C2	708-7S-13350	• Piston Subassembly	5	1001-
21	C2	708-7S-13420	• Plate, Thrust	1	1001-
22		729-11-41000	• Sensor	1	1001-
23		07002-21423	• O-ring	1	1001-
24		20Y-62-22820	• Band, Blue	1	1001-
25		20Y-62-22850	• Band, Green	1	1001-

FIG. C0100-001007 Cooling System (Fan Motor Mounting)

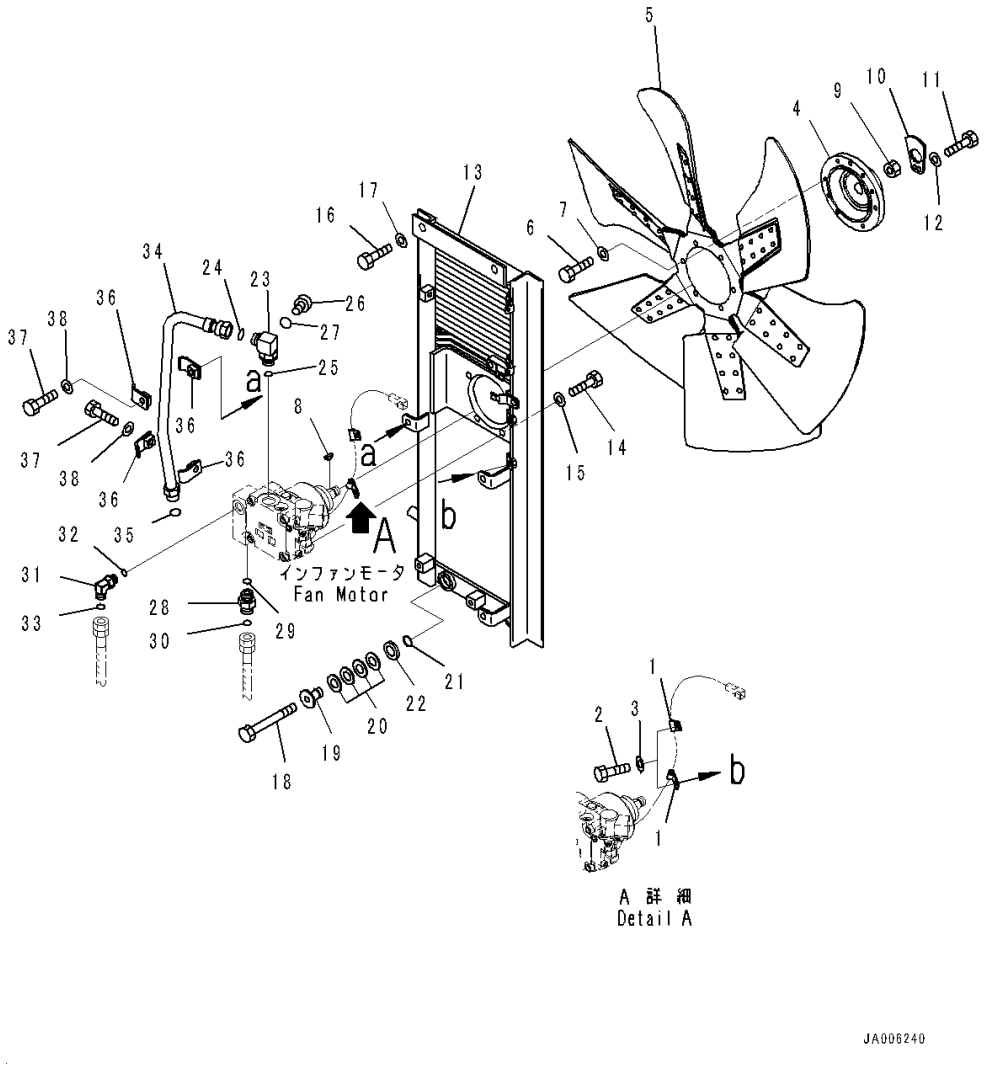

Index	Code	Part Number	Description	Qty	Serial Number
1		04435-50610	Clip	2	1001-
2		01010-81020	Bolt	2	1001-
3		01643-31032	Washer	2	1001-
4		423-03-31710	Boss	1	1001-
5		600-645-7850	Fan	1	1001-
6		01010-81030	Bolt	6	1001-
7		01643-31032	Washer	6	1001-
8		04010-00722	Key	1	1001-
9		01583-12012	Nut	1	1001-
10		154-03-72270	Lock	1	1001-
11		01010-81020	Bolt	1	1001-
12		01643-31032	Washer	1	1001-
13		14X-03-61310	Bracket	1	1001-
14		01010-81235	Bolt	4	1001-
15		01643-31232	Washer	4	1001-
16		01010-81225	Bolt	2	1001-
17		01643-31232	Washer	2	1001-
18		01010-81265	Bolt	2	1001-
		154-03-00050	Spring Assembly	2	1001-
19		154-03-13180	• Spacer	1	1001-
20		175-54-27350	• Spring	4	1001-
21		175-54-28770	• Ring	1	1001-
22		01643-32060	• Washer	1	1001-
23		421-09-31110	Elbow	1	1001-
24		02896-11015	O-ring	1	1001-
25		07002-12434	O-ring	1	1001-
26		07040-11007	Plug	1	1001-
27		07002-11023	O-ring	1	1001-
28		02781-00522	Union	1	1001-
29		07002-12434	O-ring	1	1001-
30		02896-11015	O-ring	1	1001-
31		02782-10420	Elbow	1	1001-
32		07002-11823	O-ring	1	1001-
33		02896-11012	O-ring	1	1001-
34		14X-03-51320	Tube	1	1001-
35		02896-11015	O-ring	1	1001-
36		14X-62-32540	Clamp	4	1001-
37		01010-81050	Bolt	2	1001-
38		01643-31032	Washer	2	1001-

FIG. C0100-001008 Cooling System (Baffle)

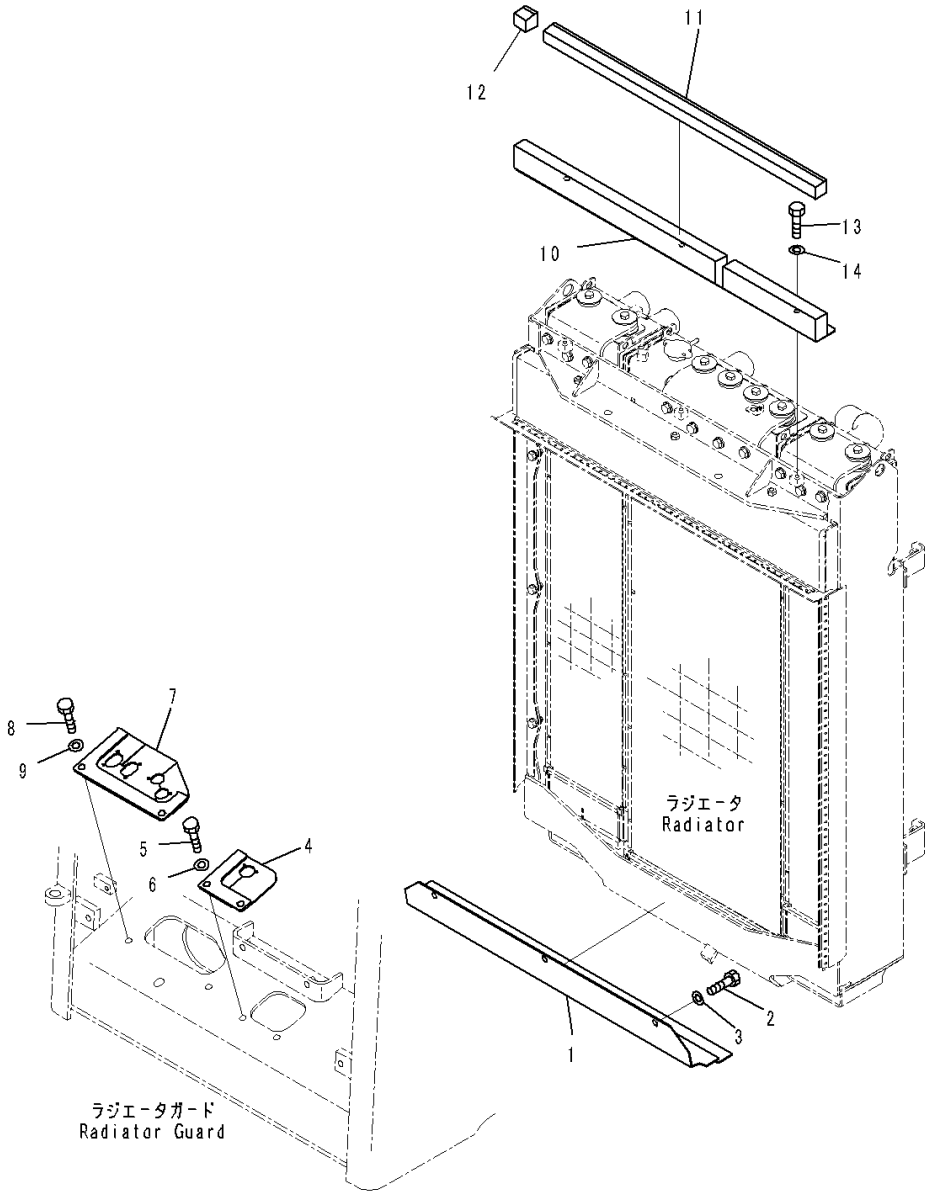

Index	Code	Part Number	Description	Qty	Serial Number
1		14X-03-61441	Baffle	1	1001-
2		01010-81230	Bolt	3	1001-
3		01643-31232	Washer	3	1001-
4		14X-03-51451	Cover	1	1001-
5		01010-81230	Bolt	2	1001-
6		01643-31232	Washer	2	1001-
7		14X-03-51461	Cover	1	1001-
8		01010-81230	Bolt	2	1001-
9		01643-31232	Washer	2	1001-
10		14X-03-61491	Seal	1	1001-
11		14X-03-61970	• Seal	1	1001-
12		14X-03-61980	• Seal	1	1001-
13		01010-81025	Bolt	3	1001-
14		01643-31032	Washer	3	1001-

FIG. C0100-001009 Cooling System (Mounting)

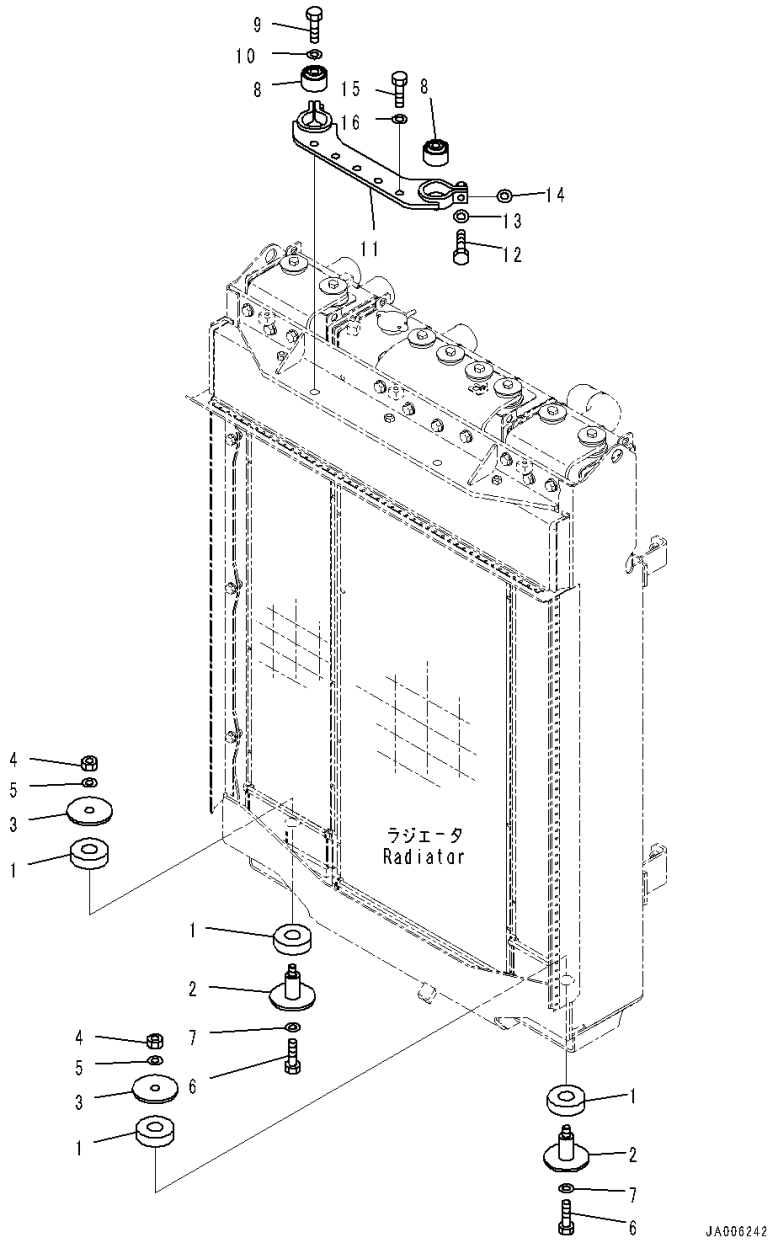

Index	Code	Part Number	Description	Qty	Serial Number
1		205-54-71680	Cushion	4	1001-
2		14X-03-51610	Boss	2	1001-
3		566-95-91410	Plate	2	1001-
4		01580-11411	Nut	2	1001-
5		01643-31445	Washer	2	1001-
6		01010-81435	Bolt	2	1001-
7		01643-31445	Washer	2	1001-
8		135-03-12110	Damper	2	1001-
9		01010-81465	Bolt	2	1001-
10		01643-31445	Washer	2	1001-
11		14X-03-61180	Bracket	1	1001-
12		01010-81040	Bolt	2	1001-
13		01643-31032	Washer	2	1001-
14		01643-31032	Washer	2	1001-
15		01010-81235	Bolt	5	1001-
16		01643-31232	Washer	5	1001-

FIG. C0100-001010 Cooling System (Window Washer Tank)

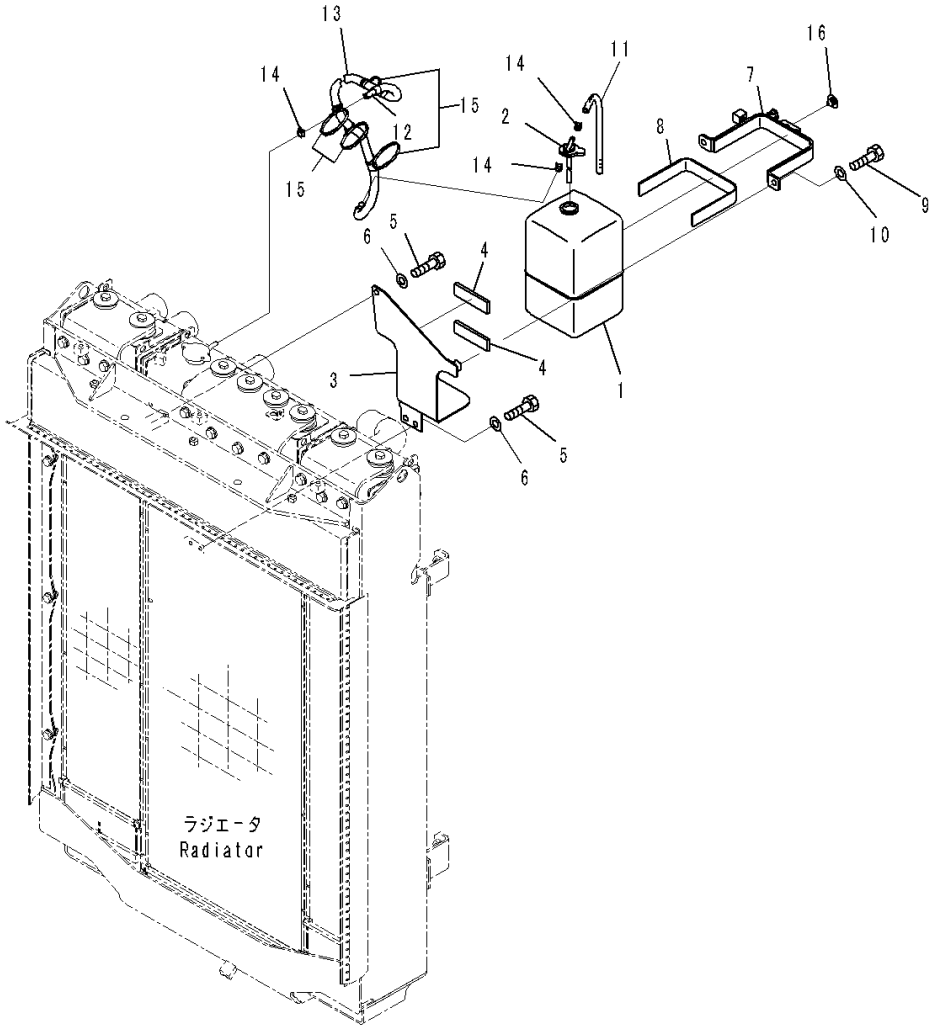

Index	Code	Part Number	Description	Qty	Serial Number
1		17A-03-14111	Tank	1	1001-
2		17A-03-14120	• Cap	1	1001-
3		14X-03-61361	Bracket	1	1001-
4		14X-03-51780	• Sheet	2	1001-
5		01010-81020	Bolt	3	1001-
6		01643-31032	Washer	3	1001-
7		14X-03-61371	Band	1	1001-
8		14X-03-35760	• Sheet	1	1001-
9		01010-81020	Bolt	2	1001-
10		01643-31032	Washer	2	1001-
11		206-03-43331	Hose	1	1001-
12		14X-03-61271	Hose	1	1001-
13		08017-C1316	• Conduit	1	1001-
14		07285-00110	Clip, Hose	3	1001-
15		134-03-61410	Band	5	1001-
16		426-56-21990	Plug	2	1001-

FIG. C0100-001011 Cooling System (Fan Net)

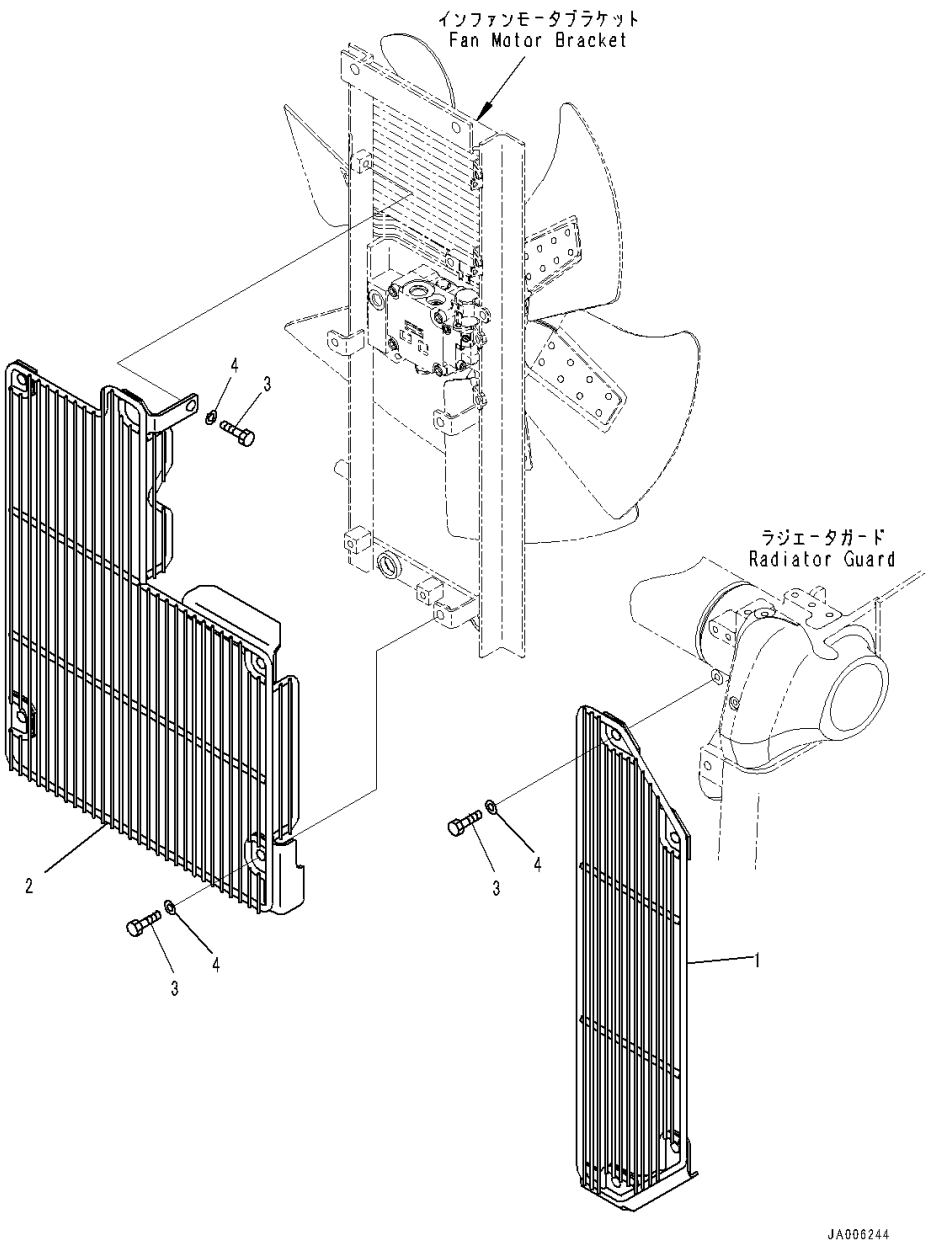

Index	Code	Part Number	Description	Qty	Serial Number
1		14X-03-51341	Net	1	1001-
2		14X-03-61350	Net	1	1001-
3		01010-81225	Bolt	9	1001-
4		01643-31232	Washer	9	1001-

FIG. C0100-001012 Cooling System (Shroud)

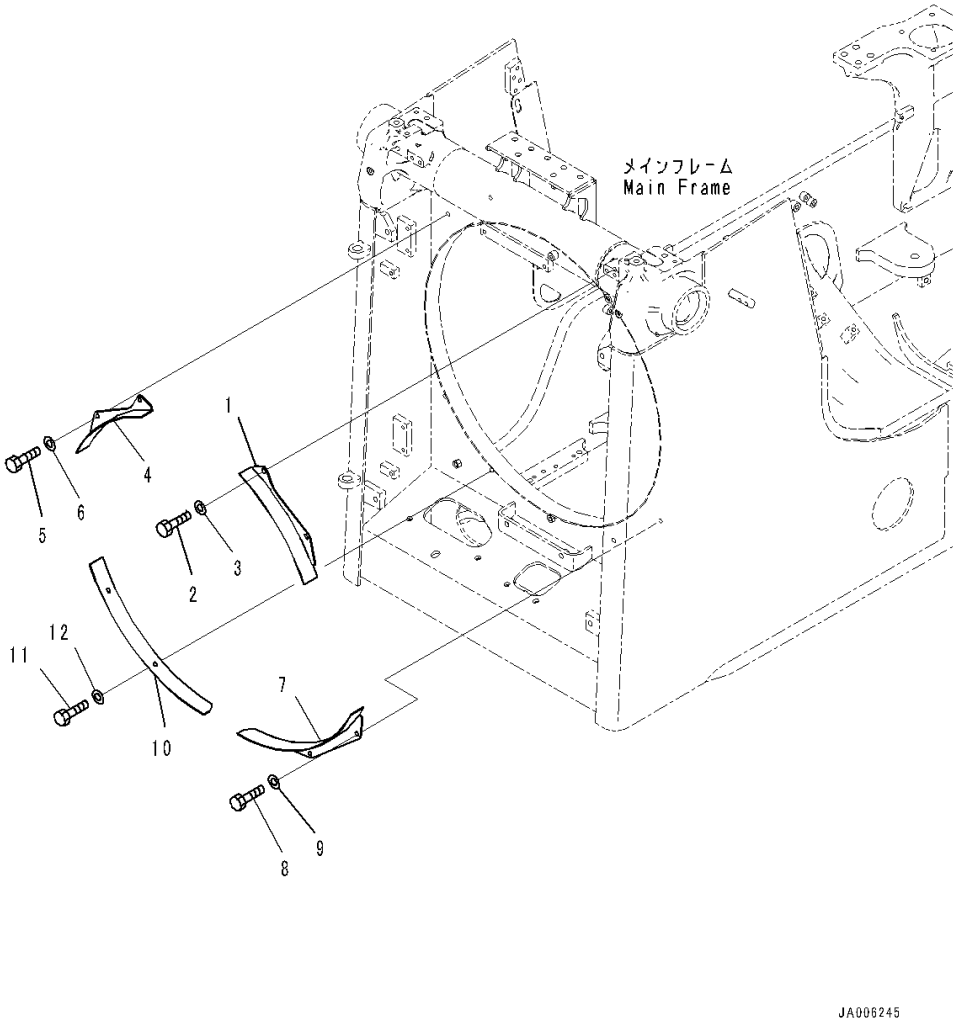

Index	Code	Part Number	Description	Qty	Serial Number
1		14X-03-61850	Shroud,L.H.,Upper	1	1001-
2		01010-81025	Bolt	2	1001-
3		01643-31032	Washer	2	1001-
4		14X-03-61860	Shroud,R.H.,Upper	1	1001-
5		01010-81025	Bolt	2	1001-
6		01643-31032	Washer	2	1001-
7		14X-03-61870	Shroud,L.H.,Lower	1	1001-
8		01010-81025	Bolt	2	1001-
9		01643-31032	Washer	2	1001-
10		14X-03-61880	Shroud,R.H.,Lower	1	1001-
11		01010-81025	Bolt	2	1001-
12		01643-31032	Washer	2	1001-

FUEL SYSTEM

FIG. D0100-001001 Fuel Tank (Without Refuel Pump)

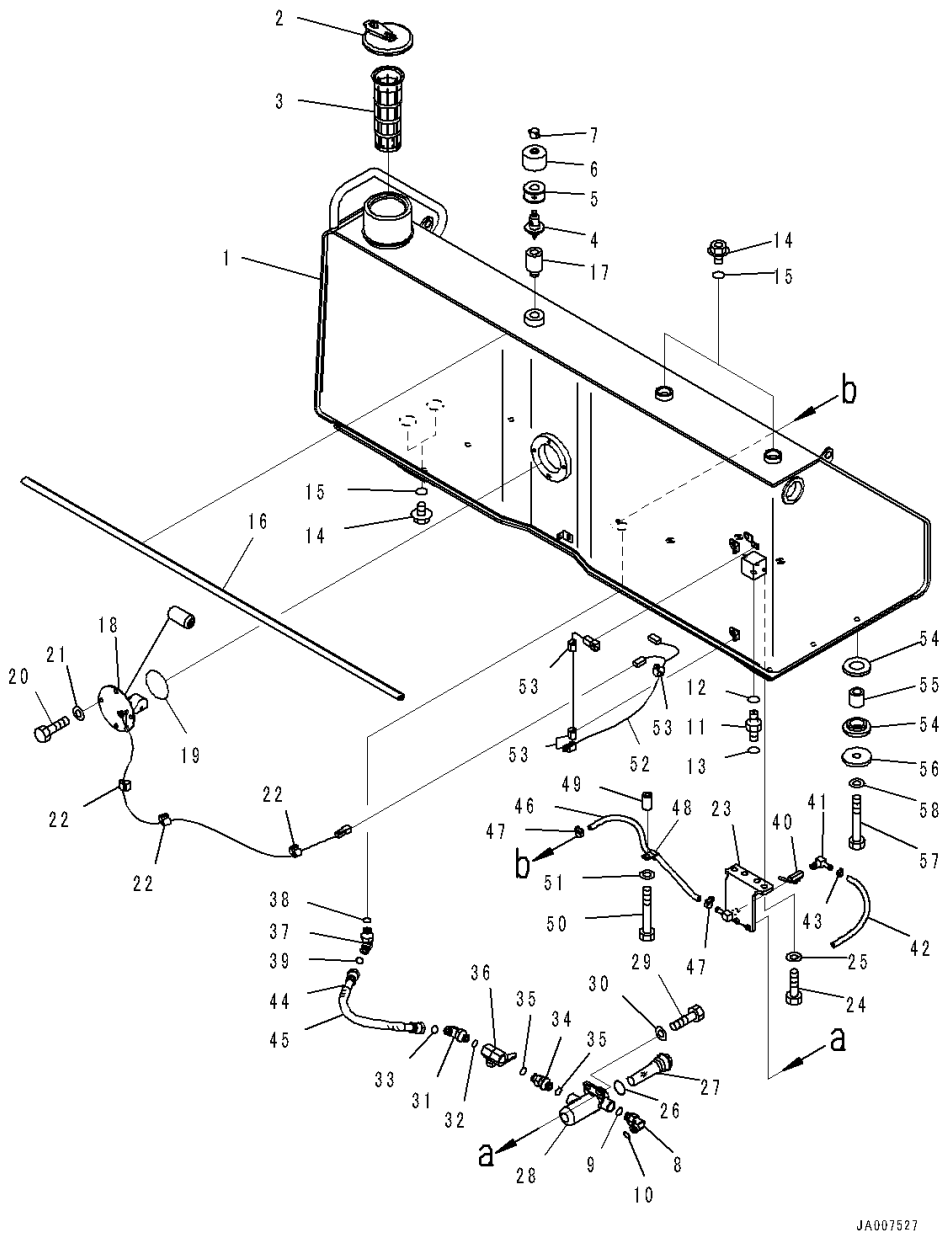

Index	Code	Part Number	Description	Qty	Serial Number
1		14X-04-51112	Tank Assembly, Fuel	1	1155-
2		17A-04-41411	Cap	1	1001-
3		07056-18422	Strainer	1	1001-
4		22U-60-21520	Breather	1	1001-
5		421-60-35170	• Element	1	1001-
6		421-60-35180	• Cover	1	1001-
7		421-60-35190	• Nut	1	1001-
8		02782-10422	Elbow	1	1001-
9		07002-12034	O-ring	1	1001-
10		02896-11012	O-ring	1	1001-
11		02781-00315	Union	1	1001-
12		07002-12034	O-ring	1	1001-
13		02896-11009	O-ring	1	1001-
14		07040-13016	Plug	4	1001-
15		07002-13034	O-ring	4	1001-
16		14X-04-51420	Seal	1	1001-
17		14X-04-51490	Adapter	1	1001-
18		14X-06-51490	Sensor	1	1001-
19		07000-12085	O-ring	1	1001-
20		01010-81020	Bolt	4	1001-
21		01643-31032	Washer	4	1001-
22		08211-00720	Clip	3	1001-
23		14X-04-51131	Bracket	1	1001-
24		01010-81230	Bolt	4	1001-
25		01643-31232	Washer	4	1001-
		17A-04-41190	Filter Assembly	1	1001-
26		07002-14234	• O-ring	1	1001-
27		07058-00010	• Element Assembly	1	1001-
28		14X-04-21660	• Case	1	1001-
29		01010-80825	Bolt	2	1001-
30		01643-30823	Washer	2	1001-
31		02782-10422	Elbow	1	1001-
32		07002-12034	O-ring	1	1001-
33		02896-11012	O-ring	1	1001-
34		17A-04-41331	Connector	1	1001-
35		07002-12034	O-ring	2	1001-
36		14X-04-21620	Valve	1	1001-
37		02782-10422	Elbow	1	1001-
38		07002-12034	O-ring	1	1001-
39		02896-11012	O-ring	1	1001-

FIG. D0100-001001 Fuel Tank (Without Refuel Pump)

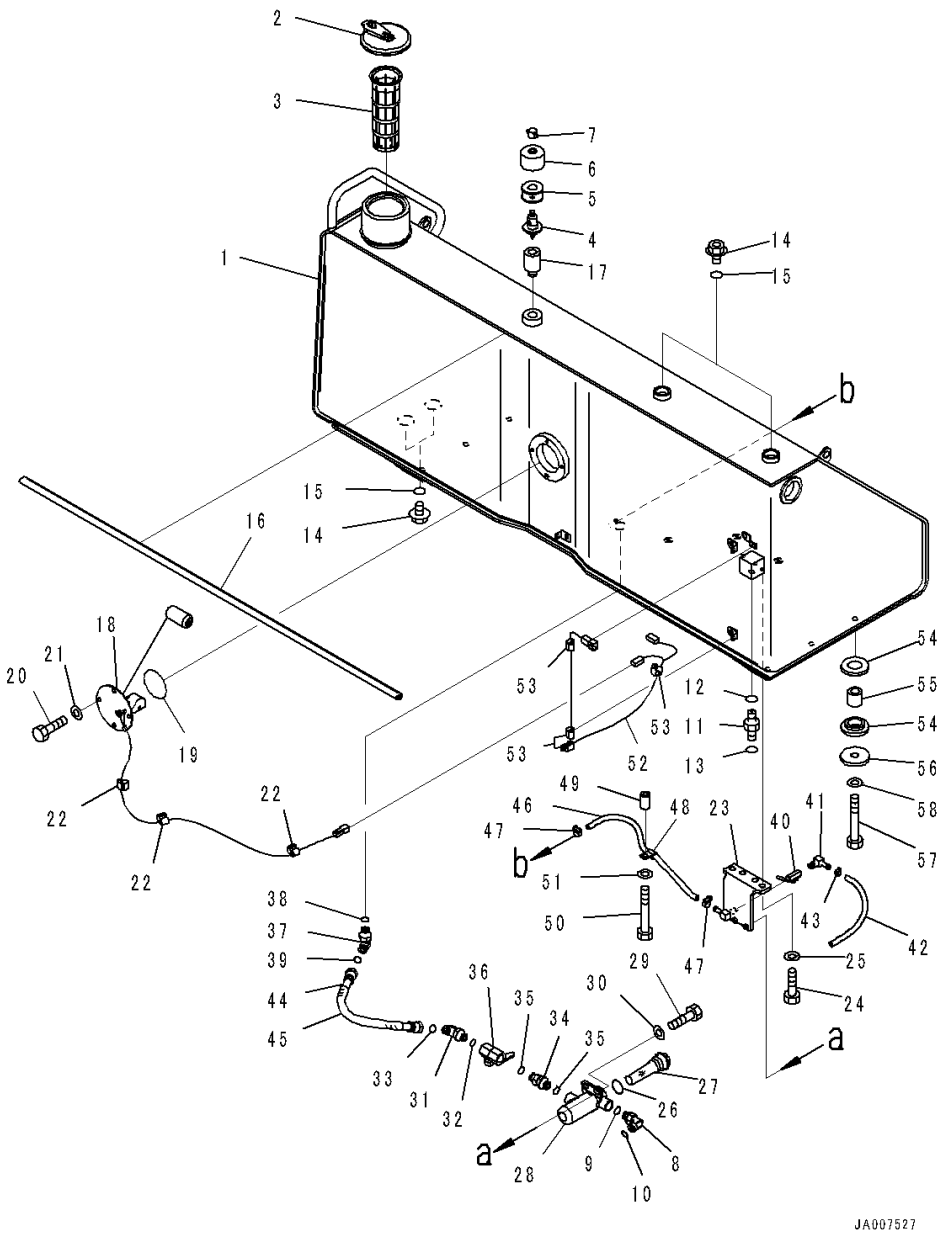

Index	Code	Part Number	Description	Qty	Serial Number
40		07700-40240	Valve	1	1001-
41		205-04-62130	Elbow	1	1001-
42		07270-01025	Tube	1	1001-
43		07285-00115	Clip	1	1001-
44		14X-04-51270	Hose Assembly	1	1001-
45		08017-31903	• Conduit	1	1001-
46		07270-21050	Tube	1	1001-
47		07281-00167	Clamp	2	1001-
48		04434-51310	Clip	1	1001-
49		205-03-71330	Collar	1	1001-
50		01010-81055	Bolt	1	1001-
51		01643-31032	Washer	1	1001-
52		14X-06-51230	Wiring Harness	1	1001-
53		08211-00720	Clip	4	1001-
54		195-54-42550	Cushion	12	1001-
55		14X-04-51330	Boss	6	1001-
56		17A-04-11191	Plate	6	1001-
57		14X-04-51170	Bolt	6	1001-
58		01643-31645	Washer	6	1001-

FIG. D0100-002001 Fuel Tank (With Refuel Pump)

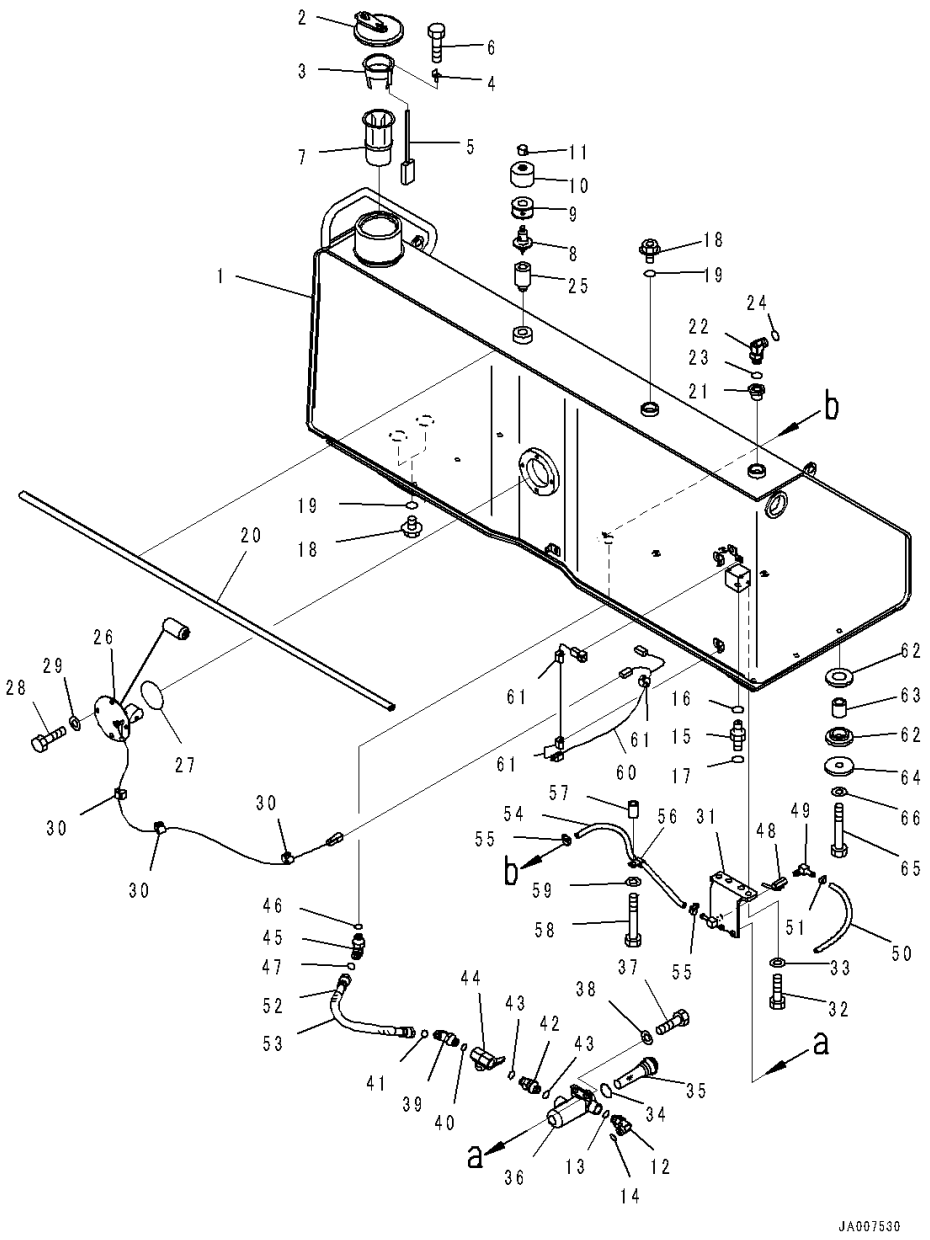

Index	Code	Part Number	Description	Qty	Serial Number
1		14X-04-51112	Tank Assembly, Fuel	1	1001-
2		17A-04-41411	Cap	1	1001-
		22U-04-21241	Strainer Assembly	1	1001-
		22U-04-21200	• Float Assembly	1	1001-
3	C1		• • Guide	1	1001-
4		20Y-04-21580	• • Cap	1	1001-
5		22U-04-21220	• • Float	1	1001-
6	C1		• • Screw	1	1001-
7		07056-18425	• Strainer	1	1001-
8		22U-60-21520	Breather	1	1001-
9		421-60-35170	• Element	1	1001-
10		421-60-35180	• Cover	1	1001-
11		421-60-35190	• Nut	1	1001-
12		02782-10422	Elbow	1	1001-
13		07002-12034	O-ring	1	1001-
14		02896-11012	O-ring	1	1001-
15		02781-00315	Union	1	1001-
16		07002-12034	O-ring	1	1001-
17		02896-11009	O-ring	1	1001-
18		07040-13016	Plug	3	1001-
19		07002-13034	O-ring	4	1001-
20		14X-04-51420	Seal	1	1001-
21		14X-04-51431	Sleeve	1	1001-
22		02782-10522	Elbow	1	1001-
23		07002-12434	O-ring	1	1001-
24		02896-11015	O-ring	1	1001-
25		14X-04-51490	Adapter	1	1001-
26		14X-06-51490	Sensor, FUEL	1	1001-
27		07000-12085	O-ring	1	1001-
28		01010-81020	Bolt	4	1001-
29		01643-31032	Washer	4	1001-
30		08211-00720	Clip	3	1001-
31		14X-04-51131	Bracket	1	1001-
32		01010-81230	Bolt	4	1001-
33		01643-31232	Washer	4	1001-
		17A-04-41190	Filter Assembly	1	1001-
34		07002-14234	• O-ring	1	1001-
35		07058-00010	• Element Assembly	1	1001-
36		14X-04-21660	• Case	1	1001-
37		01010-80825	Bolt	2	1001-

FIG. D0100-002001 Fuel Tank (With Refuel Pump)

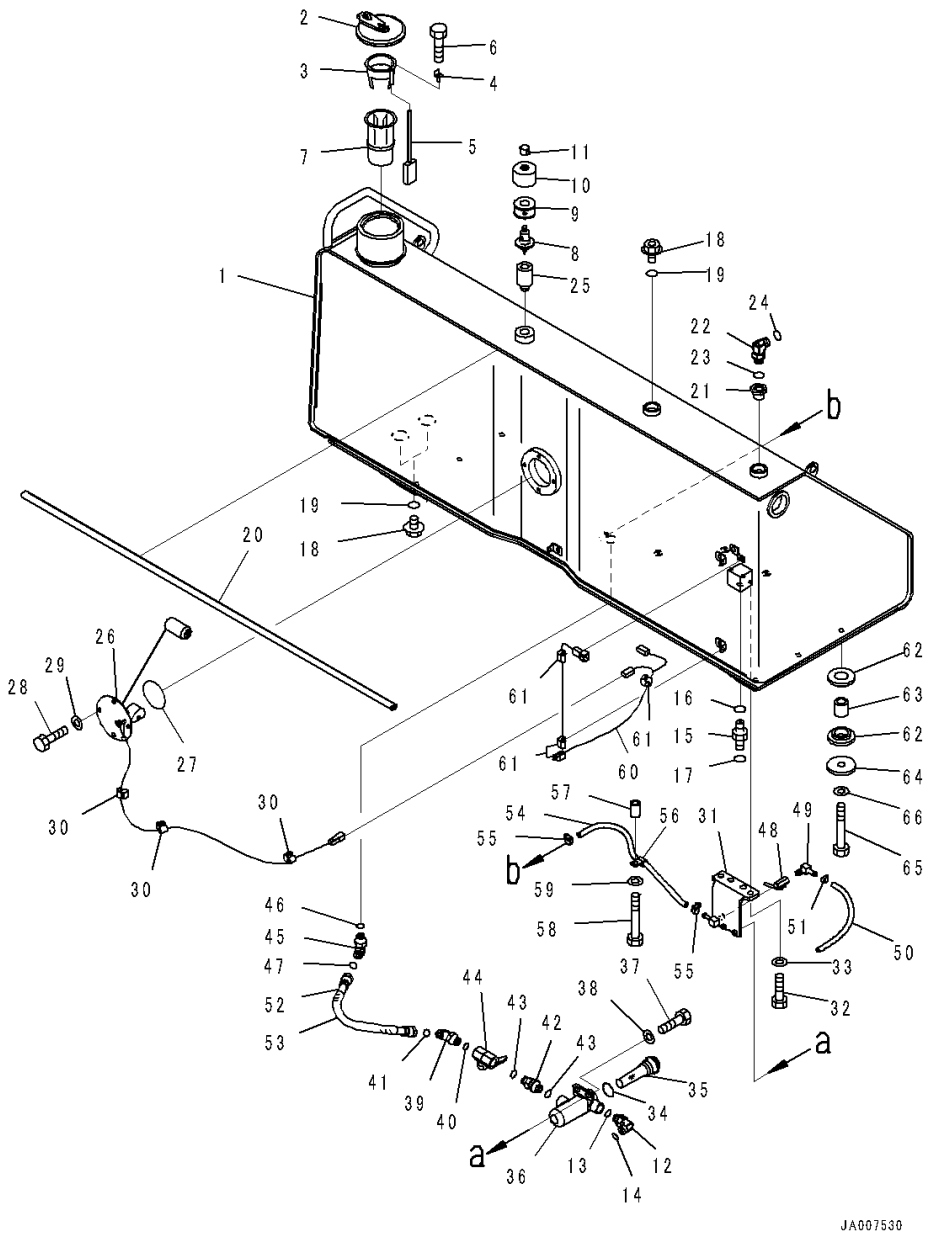

Index	Code	Part Number	Description	Qty	Serial Number
38		01643-30823	Washer	2	1001-
39		02782-10422	Elbow	1	1001-
40		07002-12034	O-ring	1	1001-
41		02896-11012	O-ring	1	1001-
42		17A-04-41331	Connector	1	1001-
43		07002-12034	O-ring	2	1001-
44		14X-04-21620	Valve	1	1001-
45		02782-10422	Elbow	1	1001-
46		07002-12034	O-ring	1	1001-
47		02896-11012	O-ring	1	1001-
48		07700-40240	Valve	1	1001-
49		205-04-62130	Elbow	1	1001-
50		07270-01025	Tube	1	1001-
51		07285-00115	Clip	1	1001-
52		02762-00405	Hose, Face Seal Type	1	1001-
53		08017-31903	Conduit	1	1001-
54		07270-21050	Tube	1	1001-
55		07281-00167	Clamp	2	1001-
56		04434-51310	Clip	1	1001-
57		205-03-71330	Collar	1	1001-
58		01010-81055	Bolt	1	1001-
59		01643-31032	Washer	1	1001-
60		14X-06-51230	Wiring Harness	1	1001-
61		08211-00720	Clip	4	1001-
62		195-54-42550	Cushion	12	1001-
63		14X-04-51330	Boss	6	1001-
64		17A-04-11191	Plate	6	1001-
65		14X-04-51170	Bolt	6	1001-
66		01643-31645	Washer	6	1001-

FIG. D0200-001001 Fuel Supply Piping (Piping)

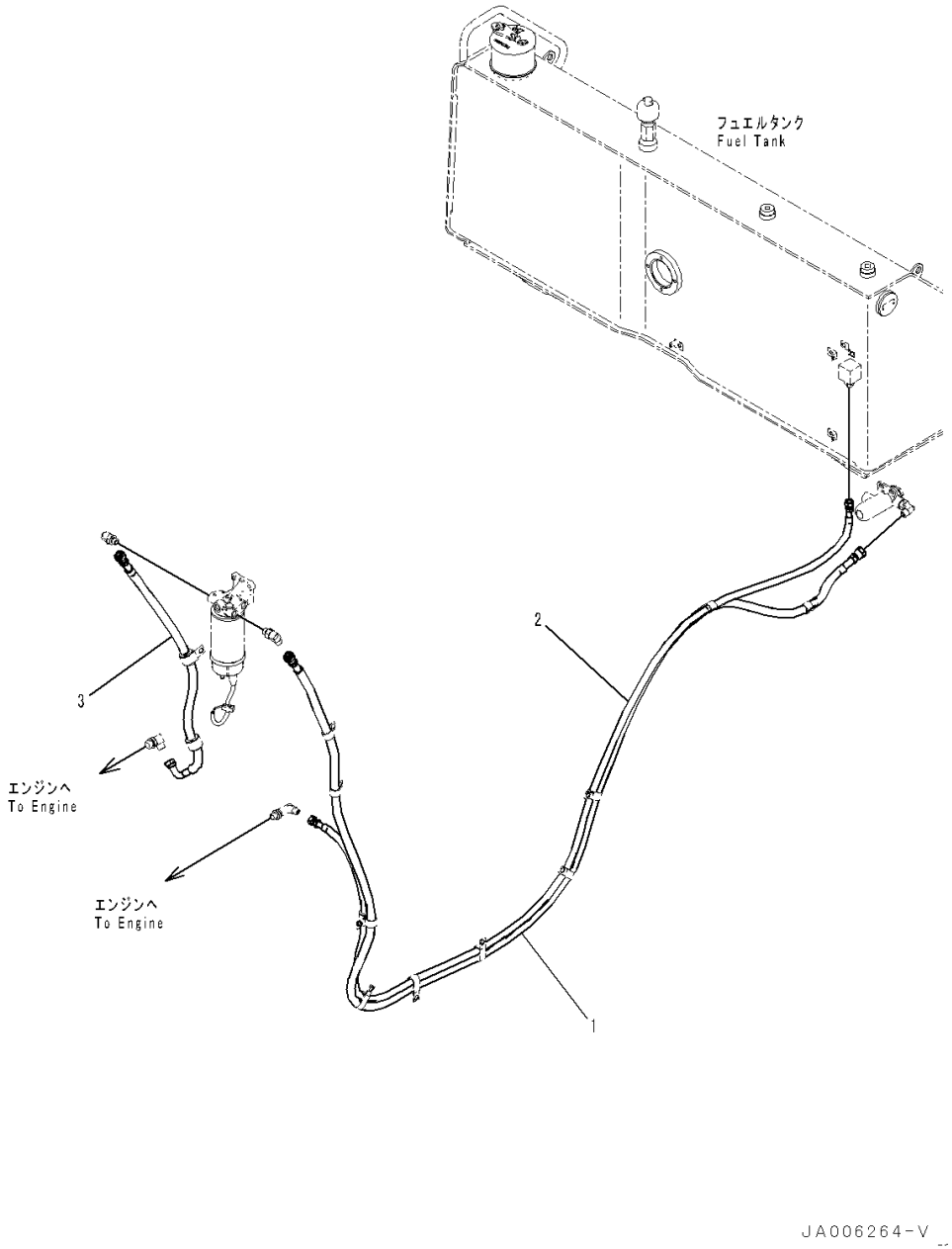

Index	Code	Part Number	Description	Qty	Serial Number
		14X-04-61231	Hose Assembly	1	1001-
1		14X-04-61241	• Hose Assembly	1	1001-
2		14X-04-61251	• Hose Assembly	1	1001-
3		14X-04-61281	Hose Assembly	1	1001-

FIG. D0200-001002 Fuel Supply Piping (Pre-Filter)

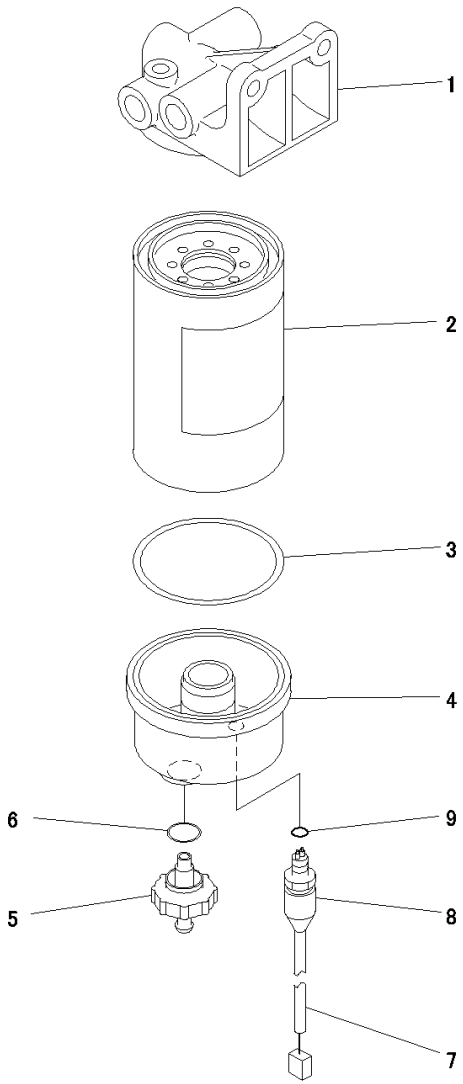

JY013216

Index	Code	Part Number	Description	Qty	Serial Number
		6745-71-7203	Filter Assembly	1	1001-
1		6745-71-7211	• Head	1	1001-
		600-319-3602	• Filter Assembly	1	1001-
		600-319-3610	• • Cartridge Assembly	1	1001-
2	C1		• • • Cartridge	1	1001-
3		600-311-3630	• • • Seal	1	1001-
4		600-311-3640	• • Bowl	1	1001-
		600-311-3660	• • Valve Assembly	1	1001-
5	C1		• • • Valve	1	1001-
6		600-311-3670	• • • Seal	1	1001-
		600-311-3722	• • Sensor	1	1001-
7	C1		• • • Tube	1	1001-
8	C1		• • • Sensor	1	1001-
9		600-311-3690	• • • O-ring	1	1001-

FIG. D0200-001003 Fuel Supply Piping (Pre-Filter Bracket)

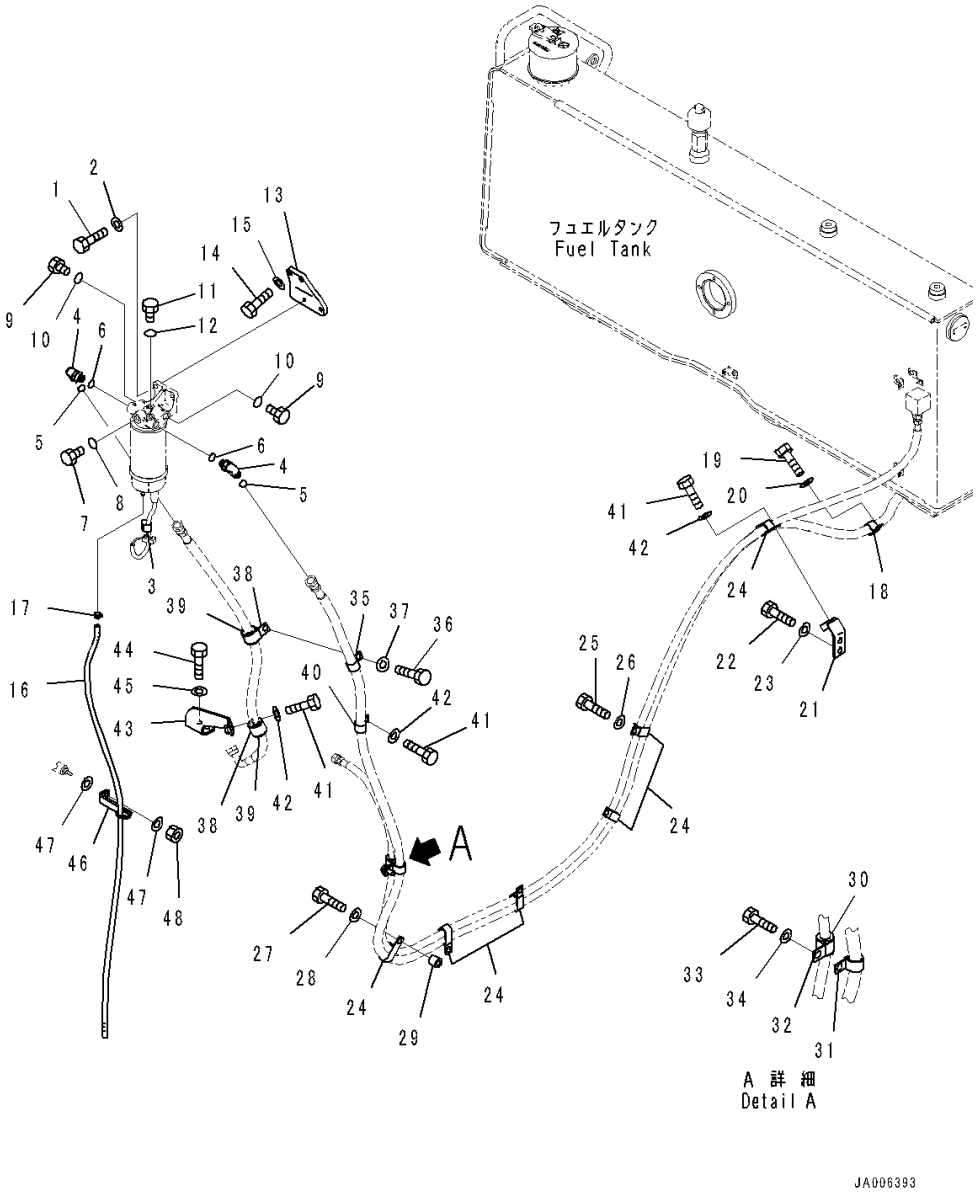

Index	Code	Part Number	Description	Qty	Serial Number
1		01010-81030	Bolt	2	1001-
2		01643-31032	Washer	2	1001-
3		08211-00720	Clip	1	1001-
4		02782-10420	Elbow	2	1001-
5		02896-11012	O-ring	2	1001-
6		07002-11823	O-ring	2	1001-
7		07040-11612	Plug	1	1001-
8		07002-11623	O-ring	1	1001-
9		07040-11812	Plug	2	1001-
10		07002-11823	O-ring	2	1001-
11		07040-10807	Plug	1	1001-
12		07002-10823	O-ring	1	1001-
13		14X-04-61221	Plate	1	1001-
14		01010-81030	Bolt	2	1001-
15		01643-31032	Washer	2	1001-
16		07287-00812	Hose	1	1001-
17		07285-00125	Clip	1	1001-
18		04434-52312	Clip	1	1001-
19		01010-81220	Bolt	1	1001-
20		01643-31232	Washer	1	1001-
21		14X-04-51211	Bracket	1	1001-
22		01010-81225	Bolt	3	1001-
23		01643-31232	Washer	3	1001-
24		04435-52112	Clip	6	1001-
25		01010-81220	Bolt	4	1001-
26		01643-31232	Washer	4	1001-
27		01010-81245	Bolt	1	1001-
28		01643-31232	Washer	1	1001-
29		6144-81-6580	Spacer	1	1001-
30		07095-20419	Cushion	1	1001-
31		04434-52312	Clip	1	1001-
32		04434-52712	Clip	1	1001-
33		01010-81225	Bolt	1	1001-
34		01643-31232	Washer	1	1001-
35		04434-52312	Clip	1	1001-
36		01010-81225	Bolt	1	1001-
37		01643-31232	Washer	1	1001-
38		04434-53412	Clip	2	1001-
39		07095-20523	Cushion	2	1001-
40		04434-52312	Clip	1	1001-

FIG. D0200-001003 Fuel Supply Piping (Pre-Filter Bracket)

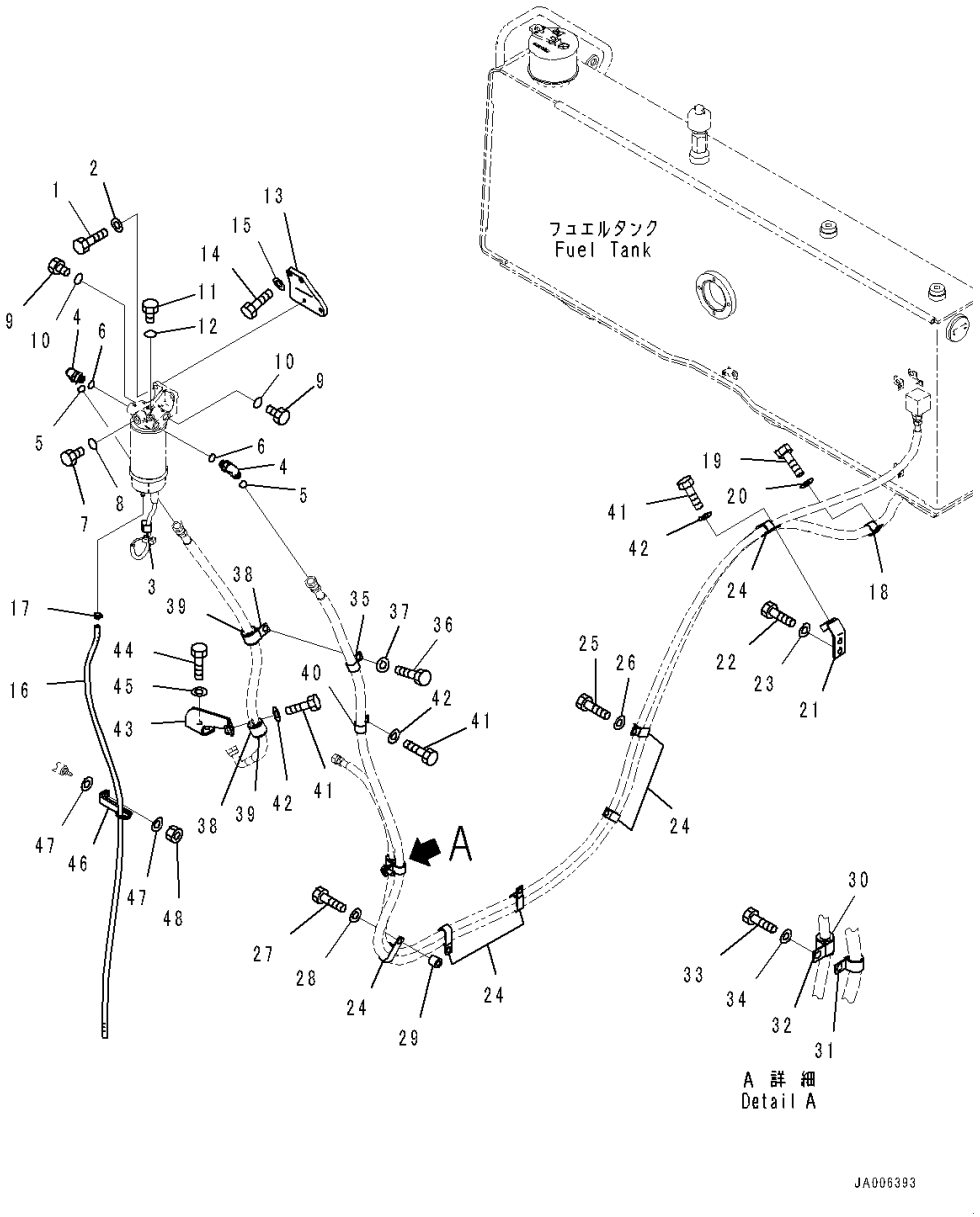

Index	Code	Part Number	Description	Qty	Serial Number
41		01010-81225	Bolt	2	1001-
42		01643-31232	Washer	2	1001-
43		14X-04-61450	Bracket	1	1001-
44		01010-81225	Bolt	2	1001-
45		01643-31232	Washer	2	1001-
46		14X-04-61460	Bracket	1	1001-
47		01643-30823	Washer	2	1001-
48		01580-10806	Nut	1	1001-

ELECTRICAL SYSTEM

FIG. E0100-002001 Battery (Without Refuel Pump, For Large Capacity)

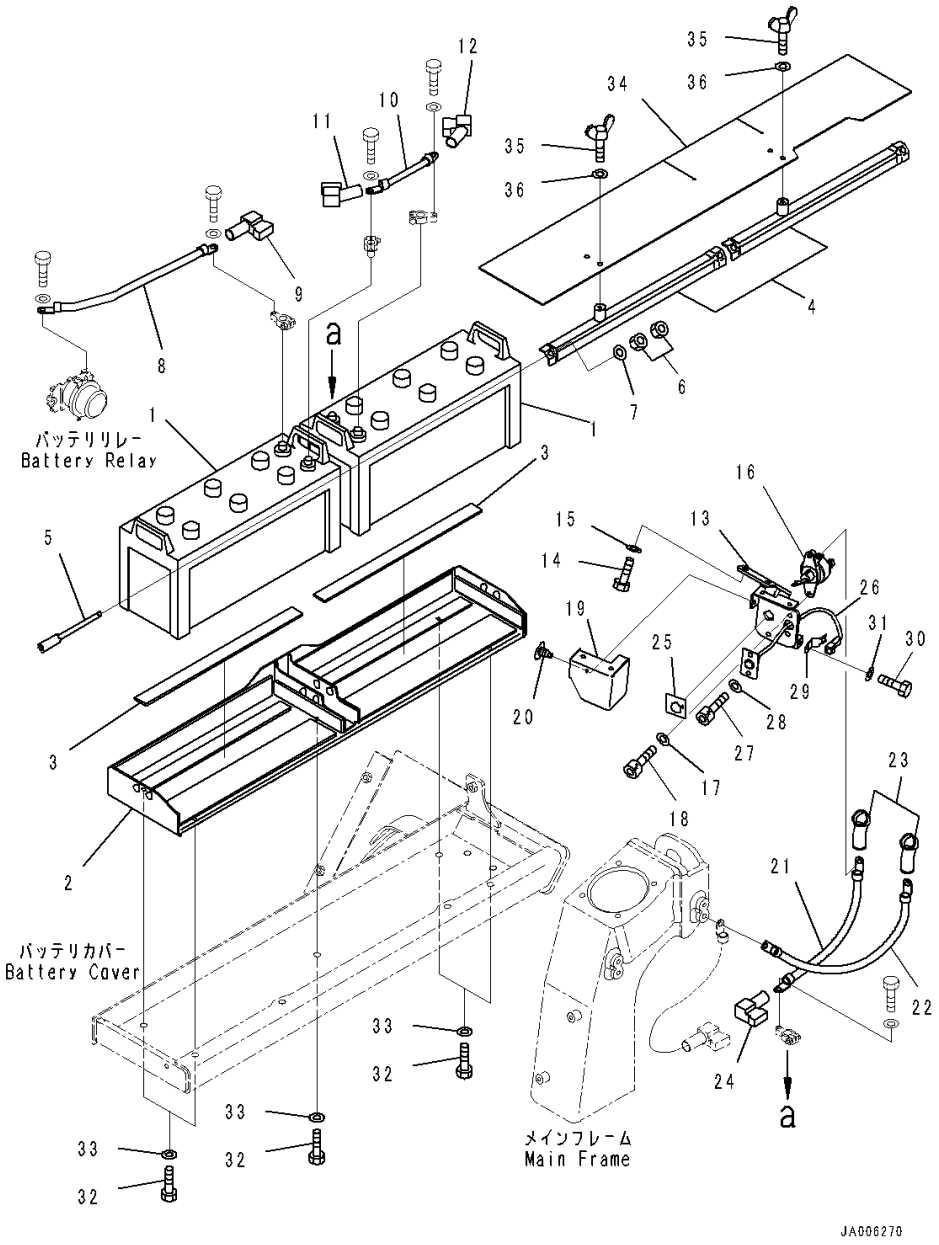

Index	Code	Part Number	Description	Qty	Serial Number
1		08000-3222Z	Battery, Wet, 195G51	2	1001-
		08000-00000	Terminal, (+)	2	1001-
		08000-00001	Terminal, (-)	2	1001-
2		14X-06-62111	Bracket	1	1001-
3		08007-23549	• Cushion, Battery	2	1001-
4		14X-06-62121	Holder	2	1001-
5		14X-06-62261	Bolt	4	1001-
6		01580-11008	Nut	8	1001-
7		01643-31032	Washer	4	1001-
8		08028-GD045	Cable, Ground	1	1001-
9		14X-06-12280	Cover	1	1001-
10		08028-64020	Cable, Ground	1	1001-
11		14X-06-12280	Cover	1	1001-
12		21J-06-11570	Cover	1	1001-
13		14X-06-62811	Bracket	1	1001-
14		01010-81025	Bolt	2	1001-
15		01643-31032	Washer	2	1001-
16		08068-00001	Switch, Battery	1	1001-
17		01643-30823	Washer	2	1001-
18		01252-A0825	Bolt, Hexagon Socket Head	2	1001-
19		14X-06-62840	Cover	1	1001-
20		20T-54-74510	Cap	3	1001-
21		08028-ED040	Cable, Ground	1	1001-
22		14X-06-52830	Cable	1	1001-
23		08038-00035	Cap, Terminal	2	1001-
24		14X-06-12270	Cover	1	1001-
25		09697-00001	Plate, Battery Disconnect Switch	1	1001-
26		08155-02400	Lamp	1	1001-
27		01252-A0820	Bolt, Hexagon Socket Head	2	1001-
28		01643-30823	Washer	2	1001-
29		08193-20010	Clip	1	1001-
30		01010-81020	Bolt	1	1001-
31		01643-31032	Washer	1	1001-
32		01010-81225	Bolt	5	1001-
33		01643-31232	Washer	5	1001-
34		14X-06-62482	Sheet	1	1001-
35		01434-00820	Bolt, Wing	2	1001-
36		113-43-23230	Washer	2	1001-

FIG. E0100-001001 Battery (Without Refuel Pump)

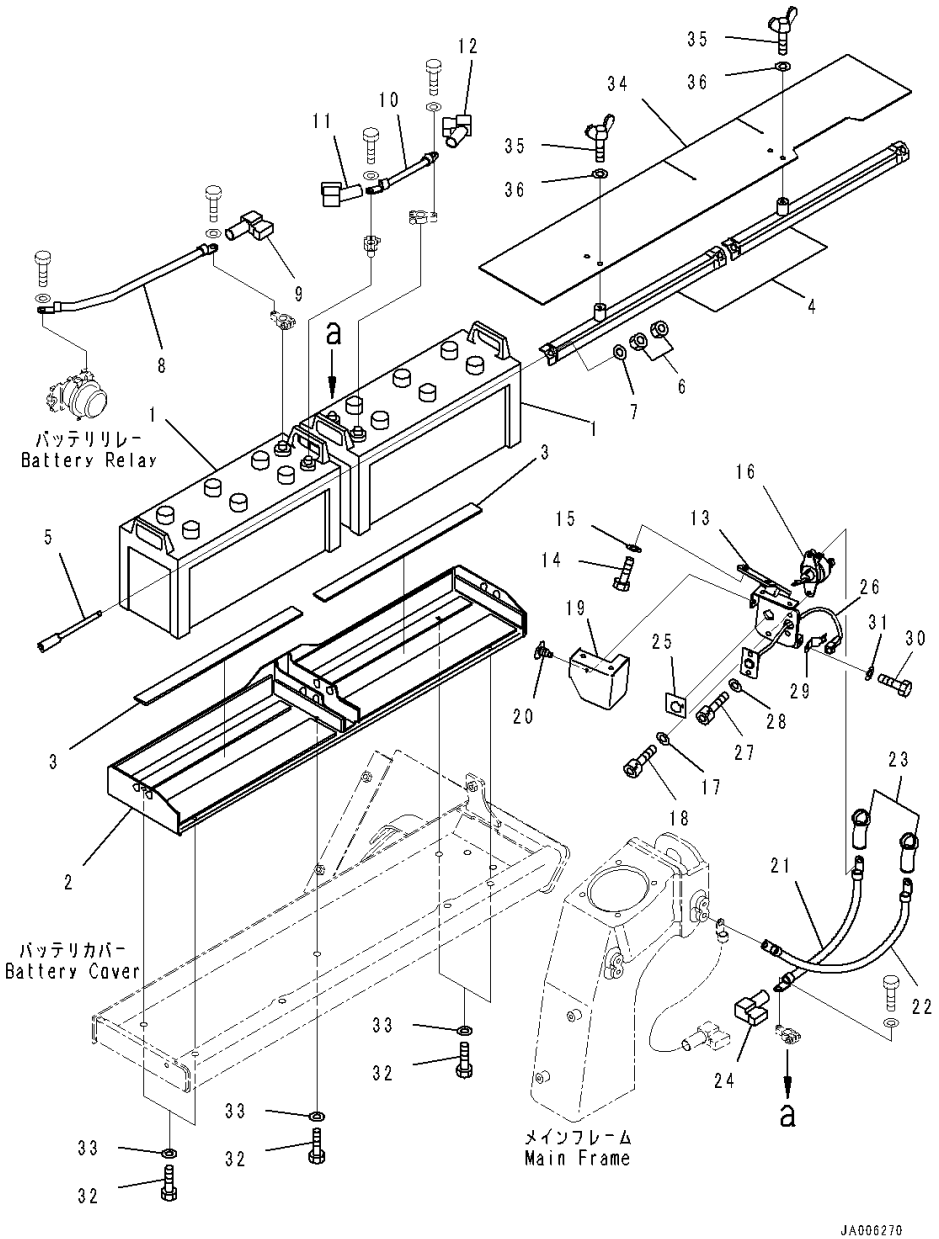

Index	Code	Part Number	Description	Qty	Serial Number
1		08000-32215	Battery, Wet, 145F51	2	1001-
		08000-00000	Terminal, (+)	2	1001-
		08000-00001	Terminal, (-)	2	1001-
2		14X-06-62111	Bracket	1	1001-
3		08007-23549	• Cushion, Battery	2	1001-
4		14X-06-62121	Holder	2	1001-
5		14X-06-62261	Bolt	4	1001-
6		01580-11008	Nut	8	1001-
7		01643-31032	Washer	4	1001-
8		08028-GD045	Cable, Ground	1	1001-
9		14X-06-12280	Cover	1	1001-
10		08028-64020	Cable, Ground	1	1001-
11		14X-06-12280	Cover	1	1001-
12		21J-06-11570	Cover	1	1001-
13		14X-06-62811	Bracket	1	1001-
14		01010-81025	Bolt	2	1001-
15		01643-31032	Washer	2	1001-
16		08068-00001	Switch, Battery	1	1001-
17		01643-30823	Washer	2	1001-
18		01252-A0825	Bolt, Hexagon Socket Head	2	1001-
19		14X-06-62840	Cover	1	1001-
20		20T-54-74510	Cap	3	1001-
21		08028-ED040	Cable, Ground	1	1001-
22		14X-06-52830	Cable	1	1001-
23		08038-00035	Cap, Terminal	2	1001-
24		14X-06-12270	Cover	1	1001-
25		09697-00001	Plate, Battery Disconnect Switch	1	1001-
26		08155-02400	Lamp	1	1001-
27		01252-A0820	Bolt, Hexagon Socket Head	2	1001-
28		01643-30823	Washer	2	1001-
29		08193-20010	Clip	1	1001-
30		01010-81020	Bolt	1	1001-
31		01643-31032	Washer	1	1001-
32		01010-81225	Bolt	5	1001-
33		01643-31232	Washer	5	1001-
34		14X-06-62482	Sheet	1	1001-
35		01434-00820	Bolt, Wing	2	1001-
36		113-43-23230	Washer	2	1001-

FIG. E0100-003001 Battery (With Refuel Pump)

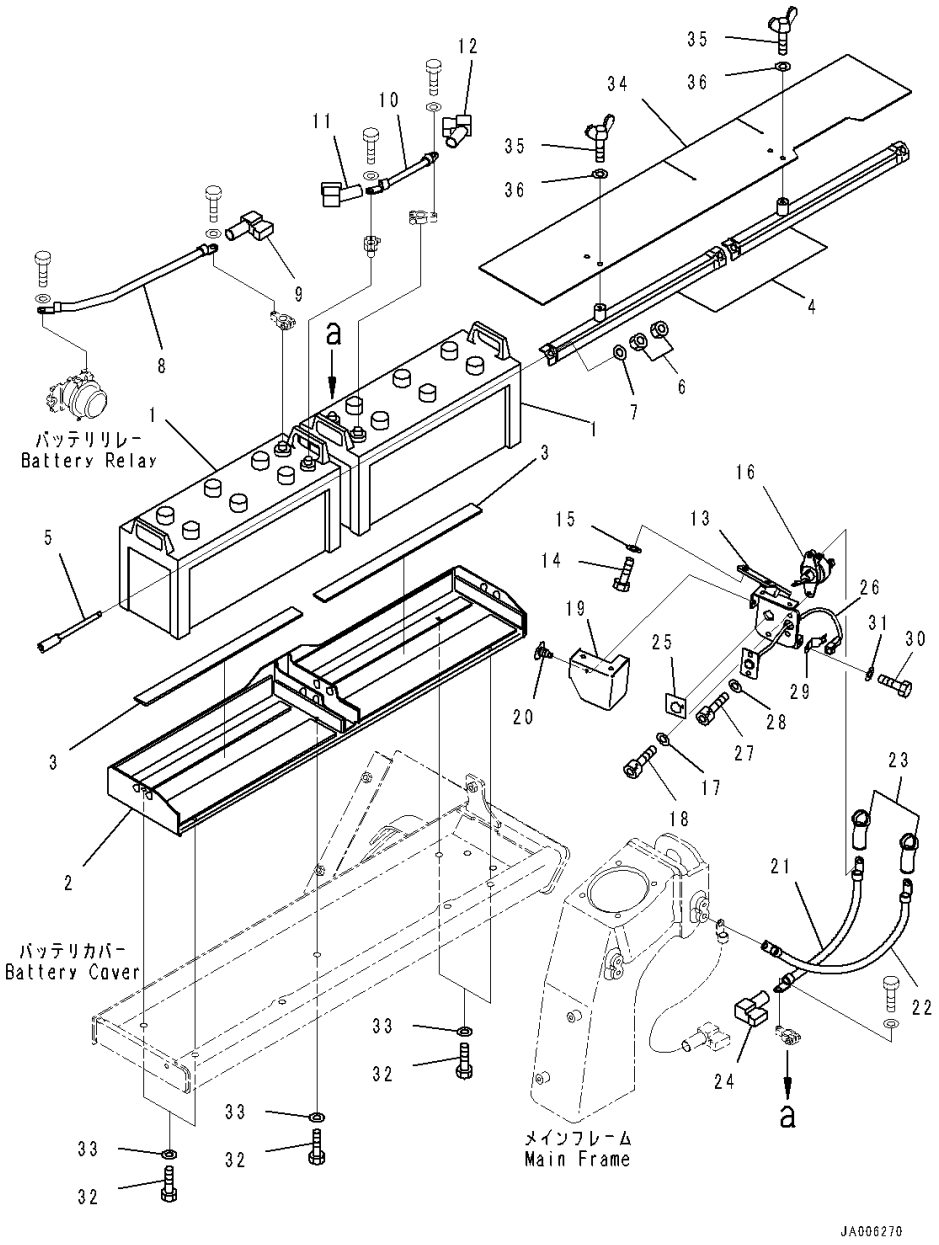

Index	Code	Part Number	Description	Qty	Serial Number
1		08000-32215	Battery, Wet, 145F51	2	1001-
		08000-00000	Terminal, (+)	2	1001-
		08000-00001	Terminal, (-)	2	1001-
2		14X-06-62111	Bracket	1	1001-
3		08007-23549	• Cushion, Battery	2	1001-
4		14X-06-62121	Holder	2	1001-
5		14X-06-62261	Bolt	4	1001-
6		01580-11008	Nut	8	1001-
7		01643-31032	Washer	4	1001-
8		08028-GD045	Cable, Ground	1	1001-
9		14X-06-12280	Cover	1	1001-
10		08028-64020	Cable, Ground	1	1001-
11		14X-06-12280	Cover	1	1001-
12		21J-06-11570	Cover	1	1001-
13		14X-06-62960	Bracket	1	1001-
14		01010-81025	Bolt	2	1001-
15		01643-31032	Washer	2	1001-
16		08068-00001	Switch, Battery	1	1001-
17		01643-30823	Washer	2	1001-
18		01252-A0825	Bolt, Hexagon Socket Head	2	1001-
19		14X-06-62840	Cover	1	1001-
20		20T-54-74510	Cap	3	1001-
21		08028-ED040	Cable, Ground	1	1001-
22		14X-06-52830	Cable	1	1001-
23		08038-00035	Cap, Terminal	2	1001-
24		14X-06-12270	Cover	1	1001-
25		09697-00001	Plate, Battery Disconnect Switch	1	1001-
26		08155-02400	Lamp	1	1001-
27		01252-A0820	Bolt, Hexagon Socket Head	2	1001-
28		01643-30823	Washer	2	1001-
29		08193-20010	Clip	1	1001-
30		01010-81020	Bolt	1	1001-
31		01643-31032	Washer	1	1001-
32		01010-81225	Bolt	5	1001-
33		01643-31232	Washer	5	1001-
34		14X-06-62482	Sheet	1	1001-
35		01434-00820	Bolt, Wing	2	1001-
36		113-43-23230	Washer	2	1001-

FIG. E0100-004001 Battery (With Refuel Pump, For Large Capacity)

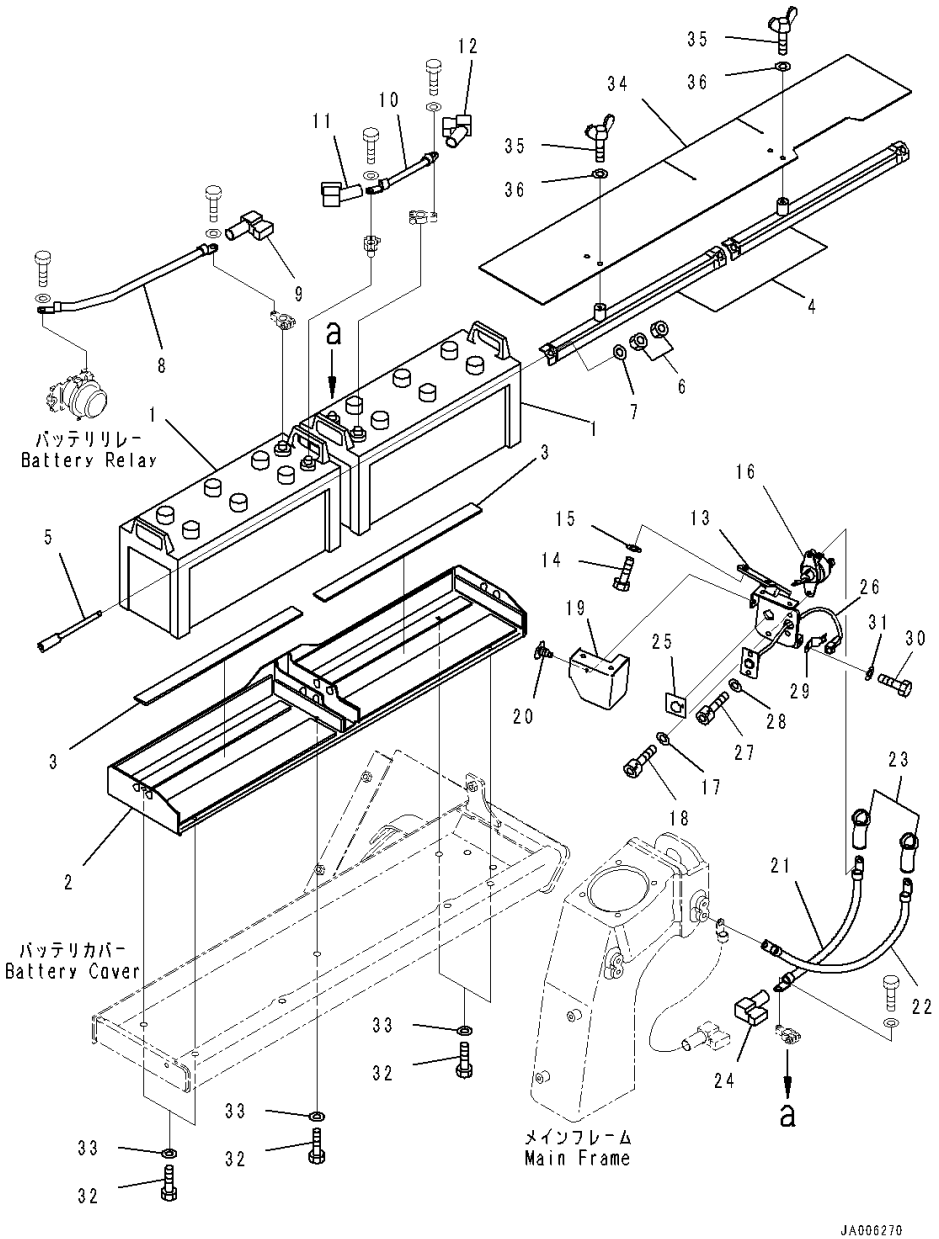

Index	Code	Part Number	Description	Qty	Serial Number
1		08000-3222Z	Battery, Wet, 195G51	2	1001-
		08000-00000	Terminal, (+)	2	1001-
		08000-00001	Terminal, (-)	2	1001-
2		14X-06-62111	Bracket	1	1001-
3		08007-23549	• Cushion, Battery	2	1001-
4		14X-06-62121	Holder	2	1001-
5		14X-06-62261	Bolt	4	1001-
6		01580-11008	Nut	8	1001-
7		01643-31032	Washer	4	1001-
8		08028-GD045	Cable, Ground	1	1001-
9		14X-06-12280	Cover	1	1001-
10		08028-64020	Cable, Ground	1	1001-
11		14X-06-12280	Cover	1	1001-
12		21J-06-11570	Cover	1	1001-
13		14X-06-62960	Bracket	1	1001-
14		01010-81025	Bolt	2	1001-
15		01643-31032	Washer	2	1001-
16		08068-00001	Switch, Battery	1	1001-
17		01643-30823	Washer	2	1001-
18		01252-A0825	Bolt, Hexagon Socket Head	2	1001-
19		14X-06-62840	Cover	1	1001-
20		20T-54-74510	Cap	3	1001-
21		08028-ED040	Cable, Ground	1	1001-
22		14X-06-52830	Cable	1	1001-
23		08038-00035	Cap, Terminal	2	1001-
24		14X-06-12270	Cover	1	1001-
25		09697-00001	Plate, Battery Disconnect Switch	1	1001-
26		08155-02400	Lamp	1	1001-
27		01252-A0820	Bolt, Hexagon Socket Head	2	1001-
28		01643-30823	Washer	2	1001-
29		08193-20010	Clip	1	1001-
30		01010-81020	Bolt	1	1001-
31		01643-31032	Washer	1	1001-
32		01010-81225	Bolt	5	1001-
33		01643-31232	Washer	5	1001-
34		14X-06-62482	Sheet	1	1001-
35		01434-00820	Bolt, Wing	2	1001-
36		113-43-23230	Washer	2	1001-

FIG. E0200-002001 Electric Wiring Harness (Wiring Harness) (1/2)

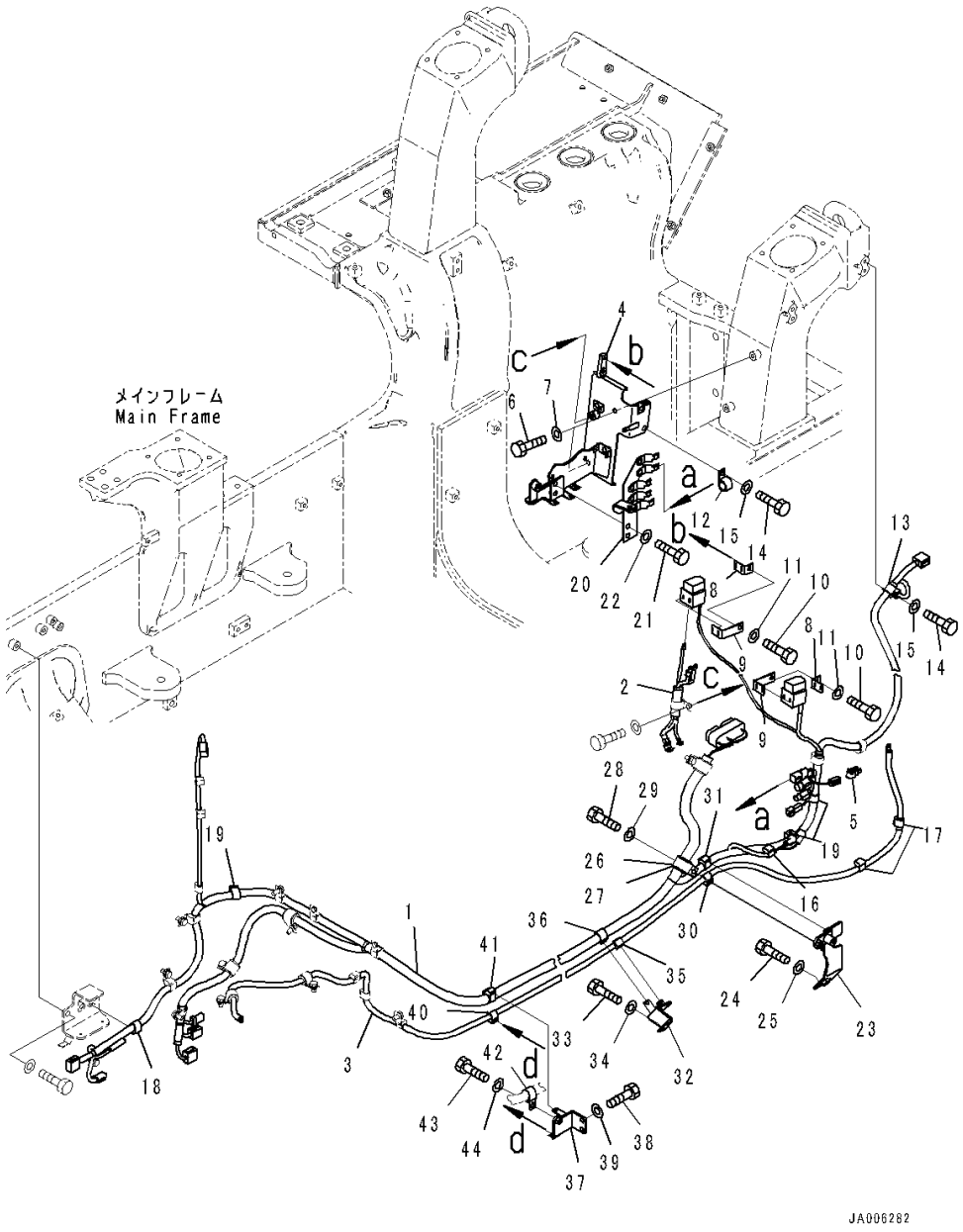

Index	Code	Part Number	Description	Qty	Serial Number
		Note: This list covers following specifications.			
		With 3D Machine Control Plug and Play			
		Without 3D Machine Control Plug and Play			
1		14X-06-61212	Wiring Harness	1	1001-
2		14X-06-61261	Wiring Harness	1	1001-
3		14X-06-61291	Cable	1	1001-
4		14X-06-61561	Bracket	1	1001-
5		20Y-979-6191	Sensor	1	1001-
6		01010-81020	Bolt	2	1001-
7		01643-31032	Washer	2	1001-
8		421-06-22910	Bracket	2	1001-
9		421-06-22920	Bracket	2	1001-
10		01010-80820	Bolt	2	1001-
11		01643-30823	Washer	2	1001-
12		04434-52310	Clip	1	1001-
13		04434-51710	Clip	1	1001-
14		01010-81020	Bolt	2	1001-
15		01643-31032	Washer	2	1001-
16		08211-00720	Clip	1	1001-
17		08211-01020	Clip	2	1001-
18		08211-01320	Clip	1	1001-
19		08211-01520	Clip	3	1001-
20		14X-06-61571	Bracket	1	1001-
21		01010-81020	Bolt	2	1001-
22		01643-31032	Washer	2	1001-
23		14X-06-61581	Bracket	1	1001-
24		01010-81020	Bolt	2	1001-
25		01643-31032	Washer	2	1001-
26		04434-53411	Clip	1	1001-
27		07095-20627	Cushion	1	1001-
28		01010-81020	Bolt	1	1001-
29		01643-31032	Washer	1	1001-
30		08211-01020	Clip	1	1001-
31		08211-01520	Clip	1	1001-
32		14X-06-51591	Bracket	1	1001-
33		01010-81020	Bolt	2	1001-
34		01643-31032	Washer	2	1001-
35		08211-01020	Clip	1	1001-
36		08211-01920	Clip	1	1001-
37		14X-06-61610	Bracket	1	1001-

FIG. E0200-002001 Electric Wiring Harness (Wiring Harness) (1/2)

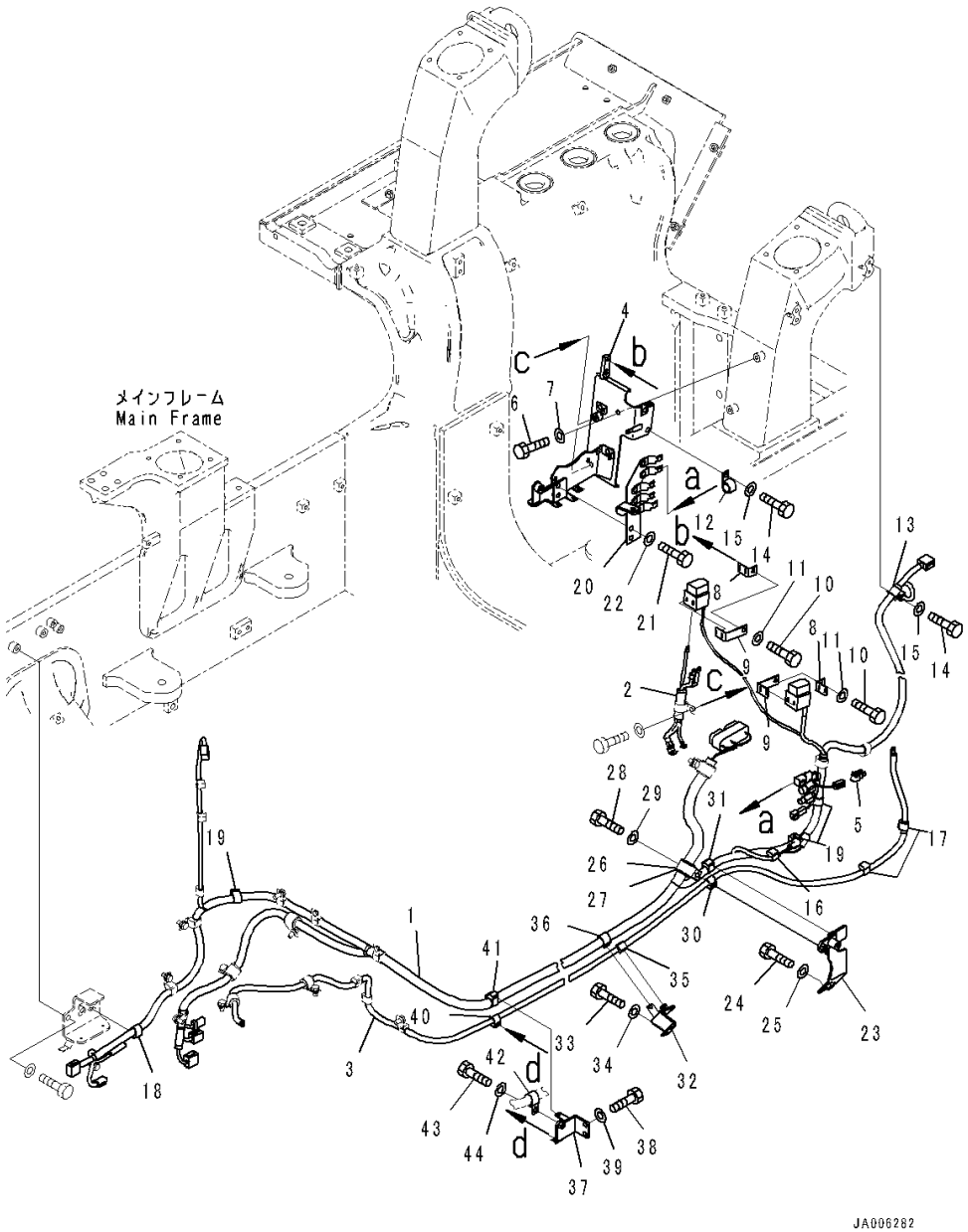

Index	Code	Part Number	Description	Qty	Serial Number
38		01010-81020	Bolt	2	1001-
39		01643-31032	Washer	2	1001-
40		08211-01020	Clip	1	1001-
41		08211-01920	Clip	1	1001-
42		04434-52310	Clip	1	1001-
43		01010-81025	Bolt	1	1001-
44		01643-31032	Washer	1	1001-

FIG. E0200-002002 Electric Wiring Harness (Wiring Harness Mounting)

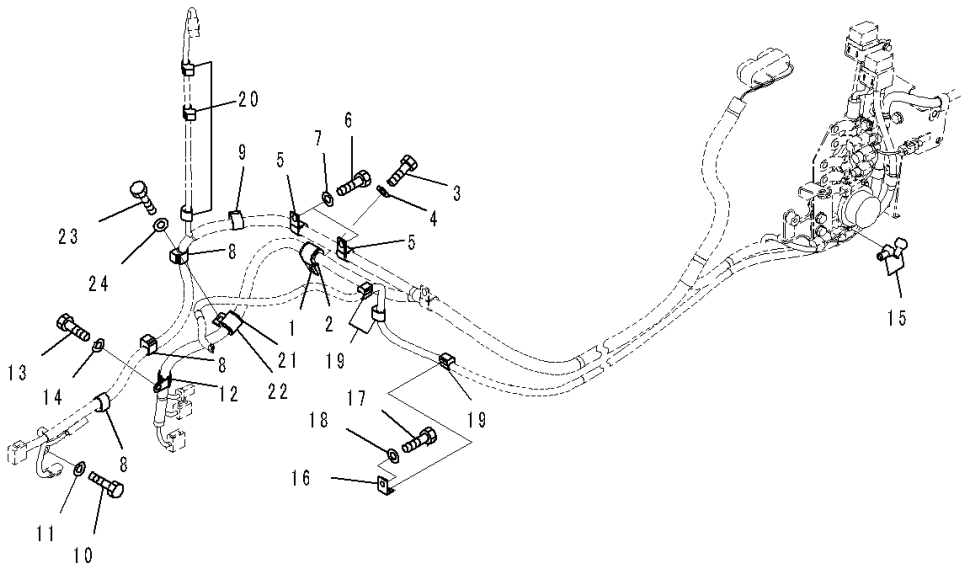

Index	Code	Part Number	Description	Qty	Serial Number
		Note: This list covers following specifications.			
		With 3D Machine Control Plug and Play			
		With Refuel Pump, 3D Machine Control Plug and Play			
1		04434-52711	Clip	1	1001-
2		07095-20419	Cushion	1	1001-
3		01010-81020	Bolt	1	1001-
4		01643-31032	Washer	1	1001-
5		04434-51910	Clip	2	1001-
6		01010-81025	Bolt	2	1001-
7		01643-31032	Washer	2	1001-
8		08211-01320	Clip	3	1001-
9		08211-01520	Clip	1	1001-
10		01010-81020	Bolt	1	1001-
11		01643-31032	Washer	1	1001-
12		600-051-2190	Clip	1	1001-
13		01010-81020	Bolt	1	1001-
14		01643-31032	Washer	1	1001-
15		08038-00519	Cap	2	1001-
16		08057-12010	Clip	1	1001-
17		01010-81020	Bolt	1	1001-
18		01643-31032	Washer	1	1001-
19		08211-01020	Clip	3	1001-
20		08211-00720	Clip	3	1001-
21		07095-40420	Cushion	1	1001-
22		04434-52711	Clip	1	1001-
23		01010-81020	Bolt	1	1001-
24		01643-31032	Washer	1	1001-

FIG. E0200-002003 Electric Wiring Harness (Battery Cable)

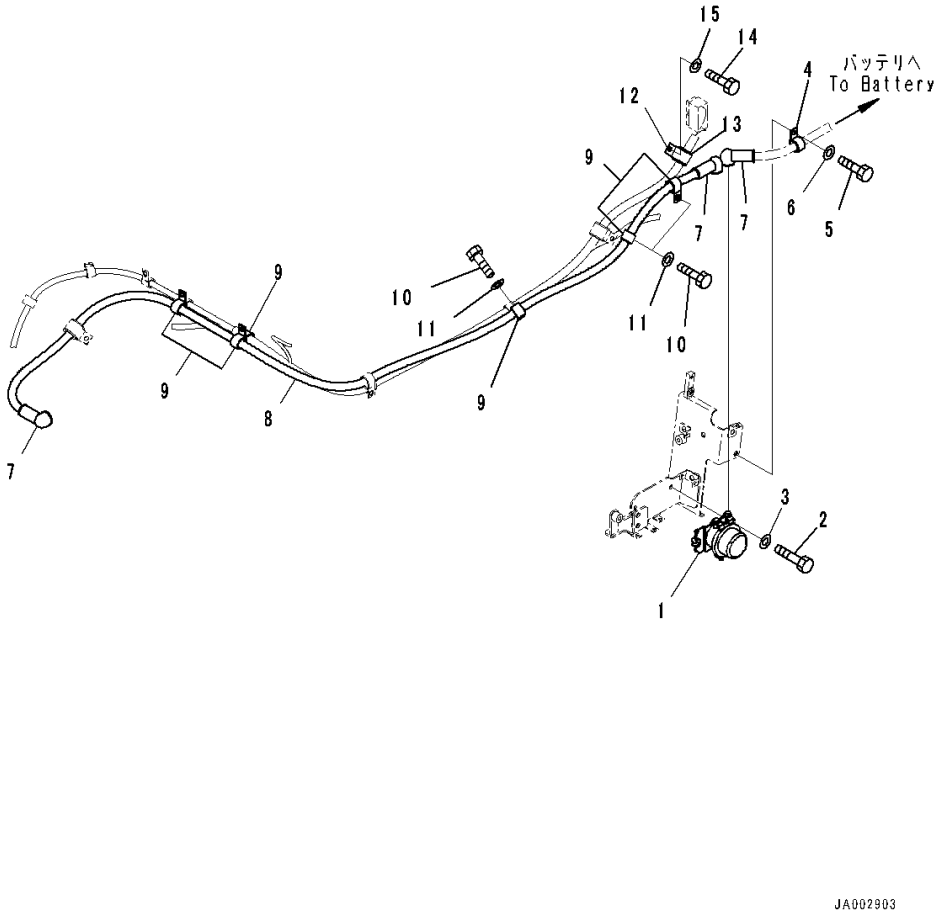

Index	Code	Part Number	Description	Qty	Serial Number
		Note: This list covers following specifications.			
		With 3D Machine Control Plug and Play			
		Without 3D Machine Control Plug and Play			
		With Refuel Pump			
		With Refuel Pump, 3D Machine Control Plug and Play			
1		08088-30000	Switch, Battery Relay	1	1001-
2		01010-80830	Bolt	2	1001-
3		01643-30823	Washer	2	1001-
4		04434-52310	Clip	1	1001-
5		01010-81020	Bolt	2	1001-
6		01643-31032	Washer	2	1001-
7		08038-00035	Cap, Terminal	3	1001-
8		14X-06-61281	Cable	1	1001-
9		04434-52310	Clip	6	1001-
10		01010-81020	Bolt	4	1001-
11		01643-31032	Washer	4	1001-
12		04434-53211	Clip	1	1001-
13		07095-40523	Cushion	1	1001-
14		01010-81020	Bolt	1	1001-
15		01643-31032	Washer	1	1001-

FIG. E0200-002004 Electric Wiring Harness (Mounting)

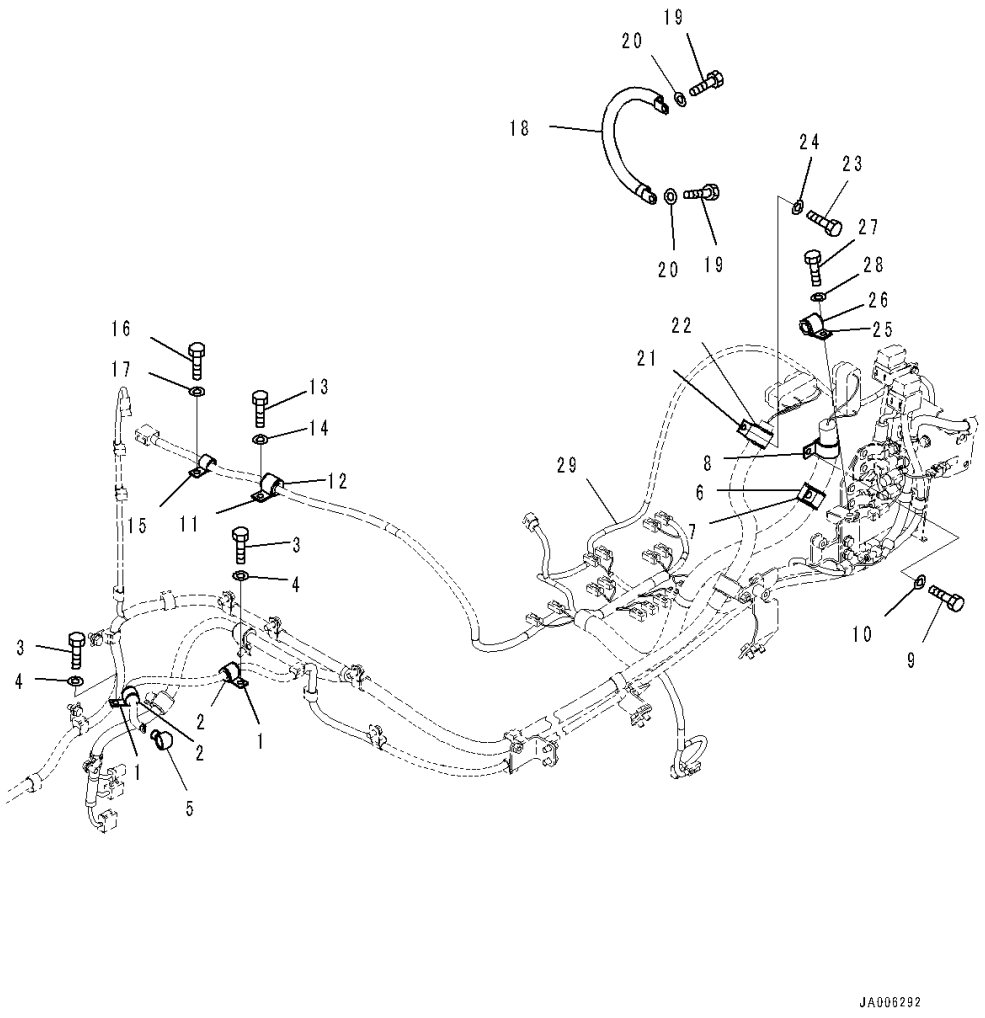

Index	Code	Part Number	Description	Qty	Serial Number
		Note: This list covers following specifications.			
		With 3D Machine Control Plug and Play			
		Without 3D Machine Control Plug and Play			
		With Refuel Pump			
		With Refuel Pump, 3D Machine Control Plug and Play			
1		04434-52110	Clip	2	1001-
2		07095-20314	Cushion	2	1001-
3		01010-81020	Bolt	2	1001-
4		01643-31032	Washer	2	1001-
5		08038-02027	Cap	1	1001-
6		155-61-15350	Clip	1	1001-
7		22M-62-13660	Cushion	1	1001-
8		04434-53411	Clip	1	1001-
9		01010-81020	Bolt	1	1001-
10		01643-31032	Washer	1	1001-
11		04434-52511	Clip	1	1001-
12		07095-20318	Cushion	1	1001-
13		01010-81020	Bolt	1	1001-
14		01643-31032	Washer	1	1001-
15		04434-51810	Clip	1	1001-
16		01010-81020	Bolt	1	1001-
17		01643-31032	Washer	1	1001-
18		08028-ED040	Cable, Ground	1	1001-
19		01010-81020	Bolt	2	1001-
20		01643-31032	Washer	2	1001-
21		04434-53411	Clip	1	1001-
22		07095-20627	Cushion	1	1001-
23		01010-81020	Bolt	1	1001-
24		01643-31032	Washer	1	1001-
25		04434-52511	Clip	1	1001-
26		07095-20318	Cushion	1	1001-
27		01010-81020	Bolt	1	1001-
28		01643-31032	Washer	1	1001-
29		(14X-06-61111)	Wiring Harness(Refer to Page 272)		-

FIG. E0200-002005 Electric Wiring Harness (Wiring Harness) (2/2)

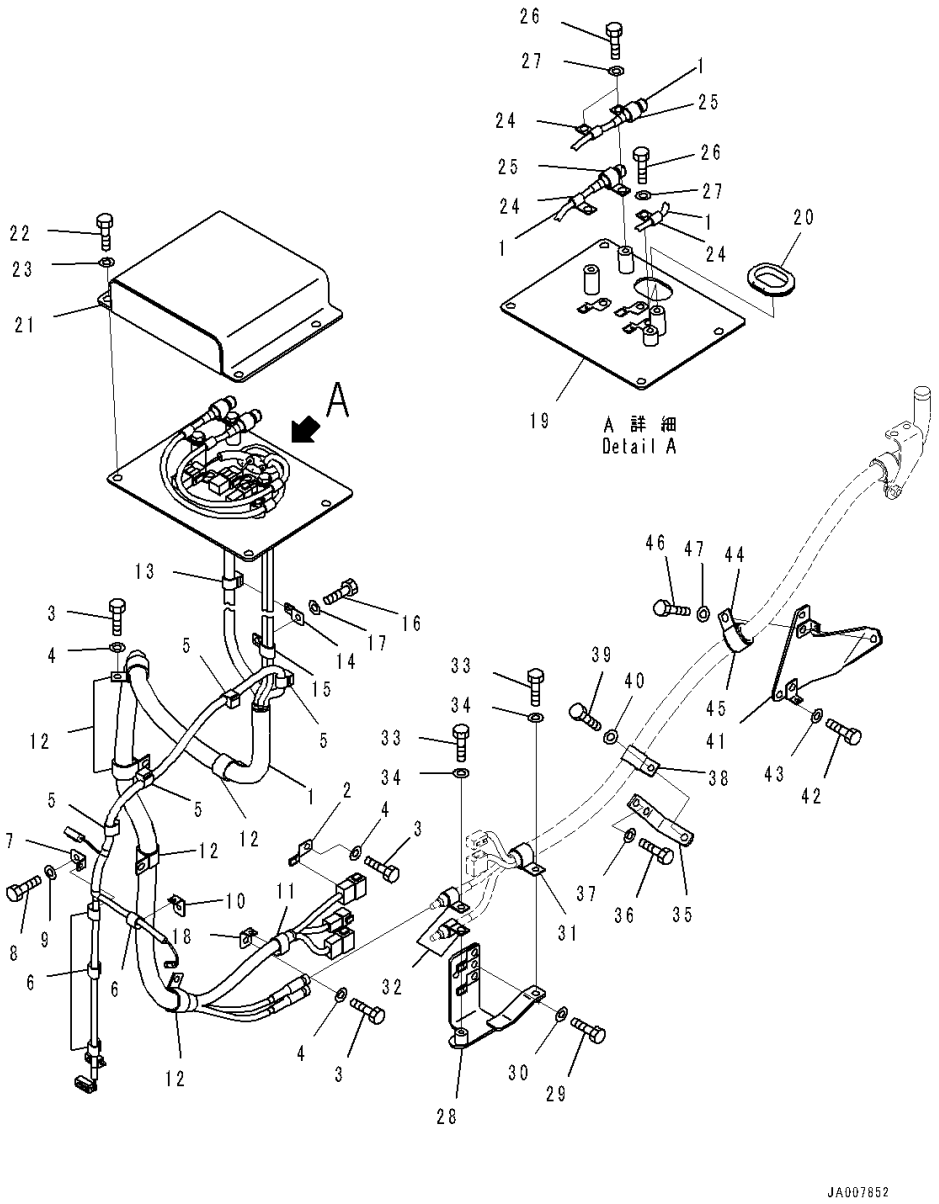

Index	Code	Part Number	Description	Qty	Serial Number
		Note: This list covers following specifications.			
		With 3D Machine Control Plug and Play			
		With Refuel Pump, 3D Machine Control Plug and Play			
1		14X-06-63712	Wiring Harness	1	1001-
2		08193-20010	Clip	1	1001-
3		01010-81020	Bolt	8	1001-
4		01643-31032	Washer	8	1001-
5		08211-01020	Clip	4	1001-
6		08211-00720	Clip	4	1001-
7		08057-12010	Clip	1	1001-
8		01010-80820	Bolt	1	1001-
9		01643-30823	Washer	1	1001-
10		08057-12008	Clip	1	1001-
11		08211-01520	Clip	1	1001-
12		04434-53211	Clip	5	1001-
13		08211-01320	Clip	1	1001-
14		08057-00810	Clip	1	1001-
15		04435-51210	Clip	1	1001-
16		01010-81020	Bolt	1	1001-
17		01643-31032	Washer	1	1001-
18		08057-12010	Clip	1	1001-
19		14X-54-61341	Bracket	1	1001-
20		176-911-4160	Grommet	1	1001-
21		14X-54-61321	Cover	1	1001-
22		01010-81225	Bolt	4	1001-
23		01643-31232	Washer	4	1001-
24		04434-51012	Clip	4	1001-
25		04434-52112	Clip	2	1001-
26		01010-81225	Bolt	4	1001-
27		01643-31232	Washer	4	1001-
28		14X-06-63721	Bracket	1	1001-
29		01010-81020	Bolt	2	1001-
30		01643-31032	Washer	2	1001-
31		04434-52711	Clip	1	1001-
32		04434-51810	Clip	2	1001-
33		01010-81025	Bolt	2	1001-
34		01643-31032	Washer	2	1001-
35		14X-06-63730	Bracket	1	1001-
36		01010-81020	Bolt	2	1001-
37		01643-31032	Washer	2	1001-

FIG. E0200-002005 Electric Wiring Harness (Wiring Harness) (2/2)

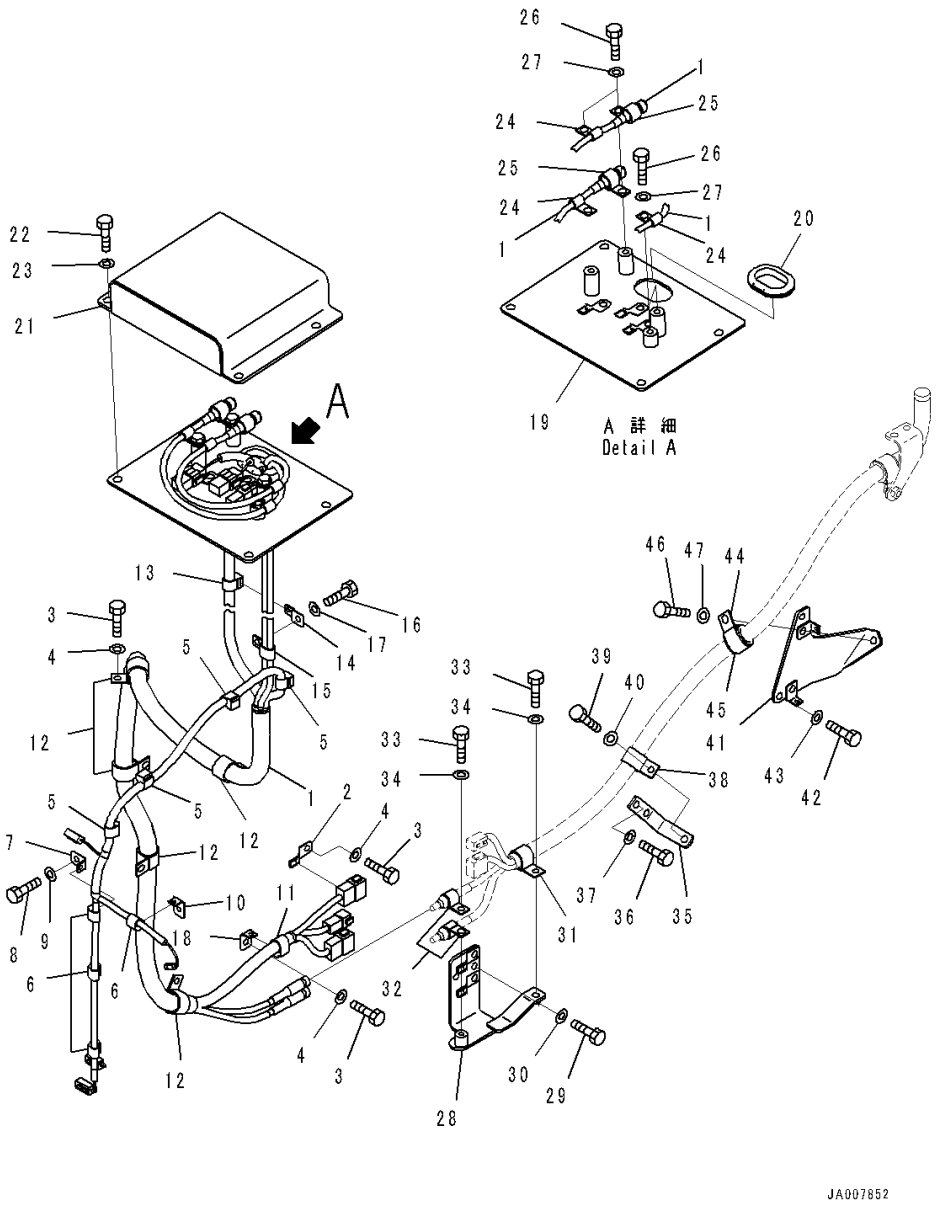

Index	Code	Part Number	Description	Qty	Serial Number
38		04434-52711	Clip	1	1001-
39		01010-81025	Bolt	1	1001-
40		01643-31032	Washer	1	1001-
41		14X-06-62241	Bracket	1	1001-
42		01010-81020	Bolt	2	1001-
43		01643-31032	Washer	2	1001-
44		04434-53411	Clip	1	1001-
45		07095-20627	Cushion	1	1001-
46		01010-81025	Bolt	1	1001-
47		01643-31032	Washer	1	1001-

FIG. E0200-002006 Electric Wiring Harness (Sensor)

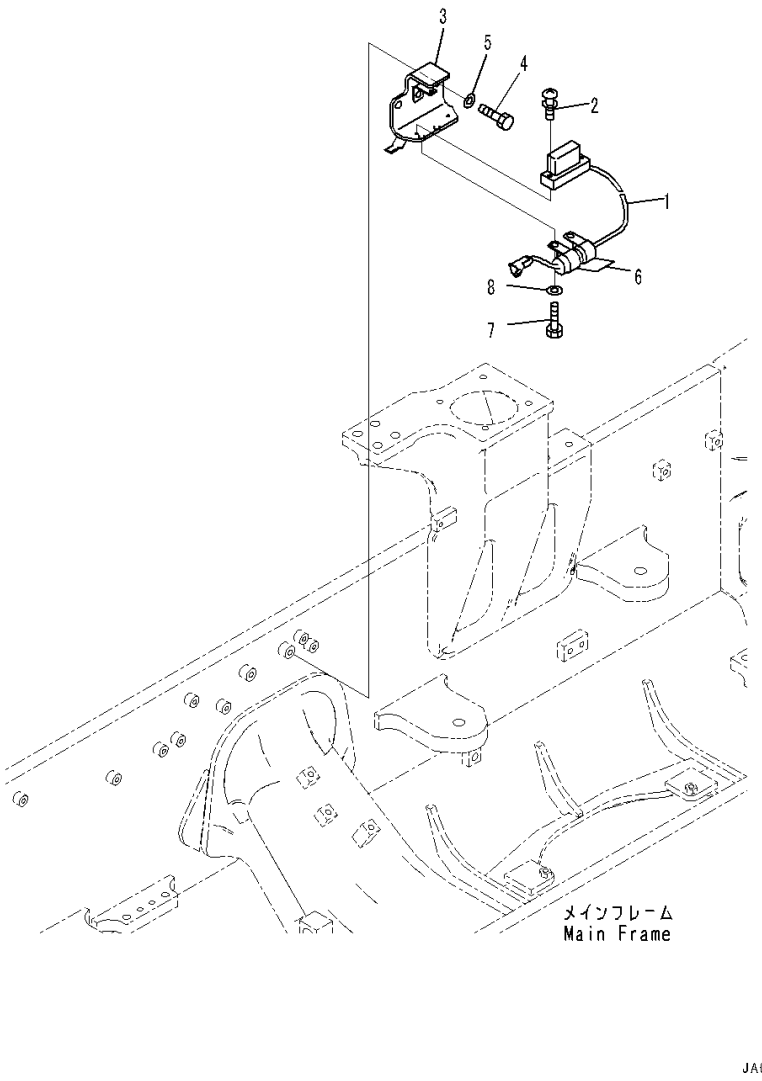

Index	Code	Part Number	Description	Qty	Serial Number
		Note: This list covers following specifications.			
		With 3D Machine Control Plug and Play			
		Without 3D Machine Control Plug and Play			
		With Refuel Pump			
		With Refuel Pump, 3D Machine Control Plug and Play			
1		7861-93-5390	Sensor, Angle	1	1001-
2		01023-60630	Screw	2	1001-
3		14X-06-61681	Bracket	1	1001-
4		01010-81225	Bolt	2	1001-
5		01643-31232	Washer	2	1001-
6		600-051-2300	Clip	2	1001-
7		01010-81020	Bolt	2	1001-
8		01643-31032	Washer	2	1001-

FIG. E0200-002007 Electric Wiring Harness (Switch)

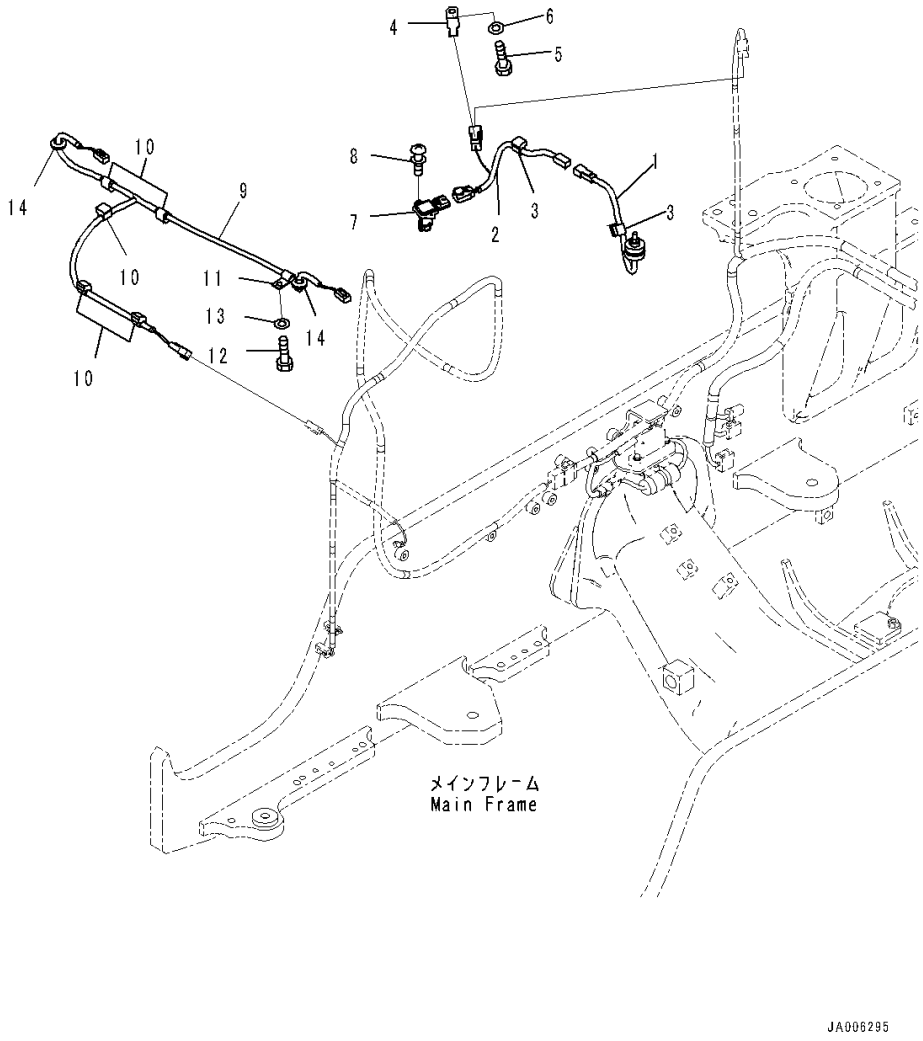

Index	Code	Part Number	Description	Qty	Serial Number
		Note: This list covers following specifications.			
		With 3D Machine Control Plug and Play			
		Without 3D Machine Control Plug and Play			
		With Refuel Pump			
		With Refuel Pump, 3D Machine Control Plug and Play			
1		7861-93-1430	Sensor	1	1001-
2		14X-06-62991	Wiring Harness	1	1001-
3		08211-00720	Clip	2	1001-
4		08193-20010	Clip	1	1001-
5		01010-81020	Bolt	1	1001-
6		01643-31032	Washer	1	1001-
7		6252-81-7900	Sensor	1	1001-
8		01023-10412	Screw	2	1001-
9		14X-06-63611	Wiring Harness	1	1001-
10		08211-00720	Clip	5	1001-
11		04434-51010	Clip	1	1001-
12		01010-81016	Bolt	1	1001-
13		01643-31032	Washer	1	1001-
14		08037-01610	Grommet	2	1001-

FIG. E0200-001002 Electric Wiring Harness (Wiring Harness Mounting)

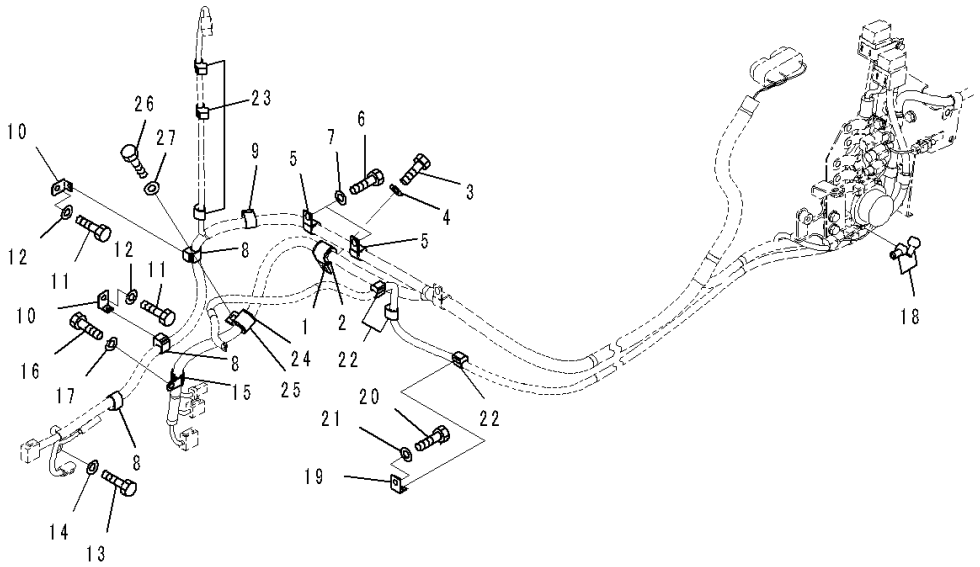

Index	Code	Part Number	Description	Qty	Serial Number
		Note: This list covers following specifications.			
		Without 3D Machine Control Plug and Play			
		With Refuel Pump			
1		04434-52711	Clip	1	1001-
2		07095-20419	Cushion	1	1001-
3		01010-81020	Bolt	1	1001-
4		01643-31032	Washer	1	1001-
5		04434-51910	Clip	2	1001-
6		01010-81025	Bolt	2	1001-
7		01643-31032	Washer	2	1001-
8		08211-01320	Clip	3	1001-
9		08211-01520	Clip	1	1001-
10		08057-12010	Clip	2	1001-
11		01010-81020	Bolt	2	1001-
12		01643-31032	Washer	2	1001-
13		01010-81020	Bolt	1	1001-
14		01643-31032	Washer	1	1001-
15		600-051-2190	Clip	1	1001-
16		01010-81020	Bolt	1	1001-
17		01643-31032	Washer	1	1001-
18		08038-00519	Cap	2	1001-
19		08057-12010	Clip	1	1001-
20		01010-81020	Bolt	1	1001-
21		01643-31032	Washer	1	1001-
22		08211-01020	Clip	3	1001-
23		08211-00720	Clip	3	1001-
24		07095-40420	Cushion	1	1001-
25		04434-52711	Clip	1	1001-
26		01010-81020	Bolt	1	1001-
27		01643-31032	Washer	1	1001-

FIG. E0200-001005 Electric Wiring Harness (Wiring Harness) (2/2)

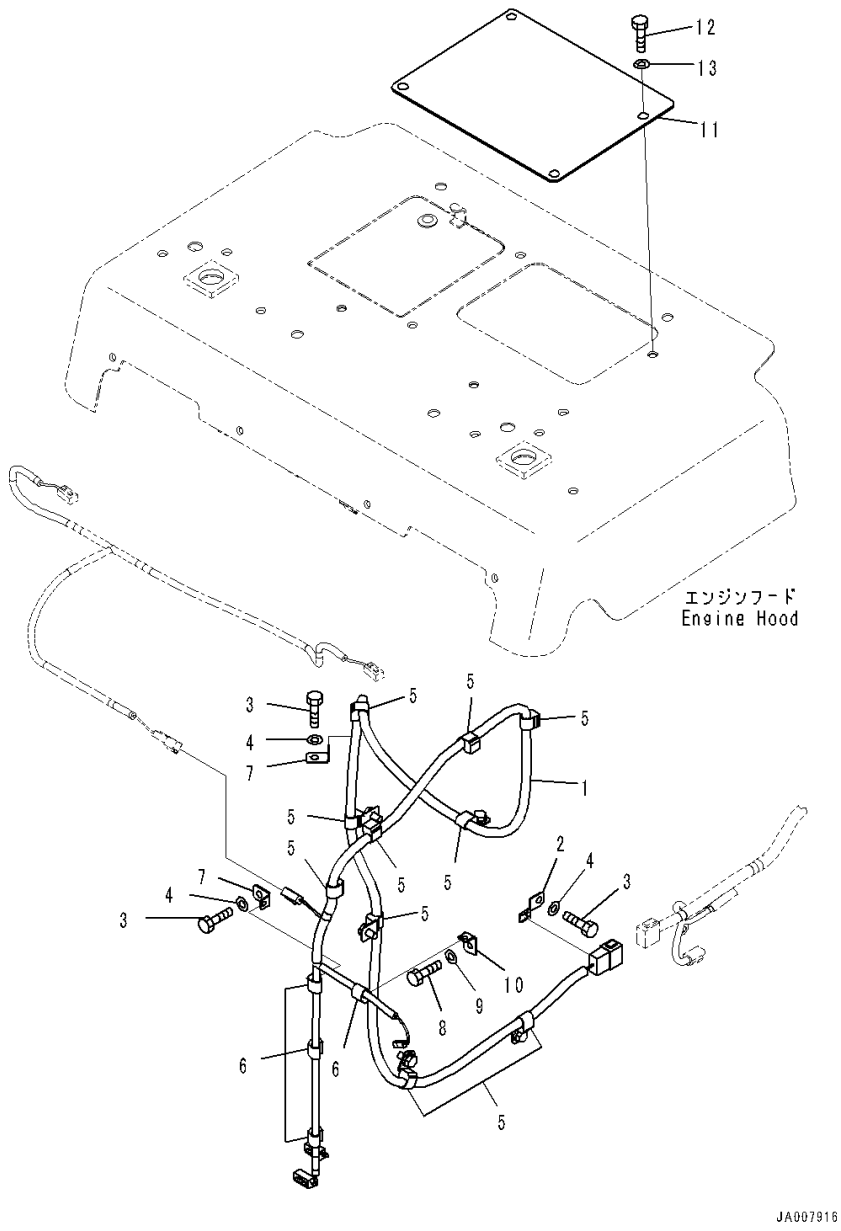

Index	Code	Part Number	Description	Qty	Serial Number
		Note: This list covers following specifications.			
		Without 3D Machine Control Plug and Play			
		With Refuel Pump			
1		14X-06-61241	Wiring Harness	1	1001-
2		08193-20010	Clip	1	1001-
3		01010-81020	Bolt	8	1001-
4		01643-31032	Washer	8	1001-
5		08211-01020	Clip	10	1001-
6		08211-00720	Clip	4	1001-
7		08057-12010	Clip	7	1001-
8		01010-80820	Bolt	1	1001-
9		01643-30823	Washer	1	1001-
10		08057-12008	Clip	1	1001-
11		14X-54-61351	Plate	1	1001-
12		01010-81225	Bolt	4	1001-
13		01643-31232	Washer	4	1001-

FIG. E0200-003001 Electric Wiring Harness (Wiring Harness) (1/2)

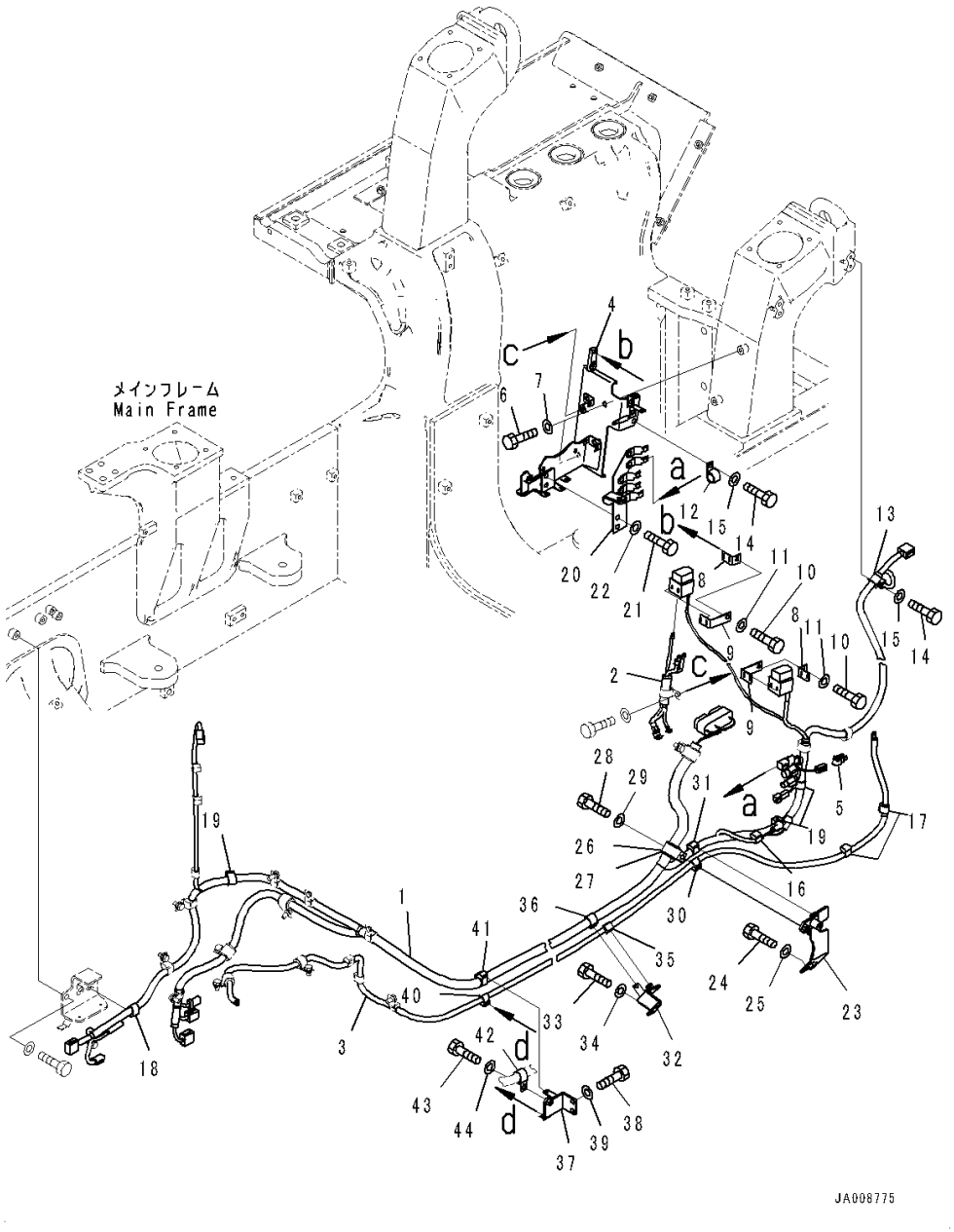

Index	Code	Part Number	Description	Qty	Serial Number
		Note: This list covers following specifications.			
		With Refuel Pump			
		With Refuel Pump, 3D Machine Control Plug and Play			
1		14X-06-61212	Wiring Harness	1	1001-
2		14X-06-61261	Wiring Harness	1	1001-
3		14X-06-61291	Cable	1	1001-
4		14X-06-62950	Bracket	1	1001-
5		20Y-979-6191	Sensor	1	1001-
6		01010-81020	Bolt	2	1001-
7		01643-31032	Washer	2	1001-
8		421-06-22910	Bracket	2	1001-
9		421-06-22920	Bracket	2	1001-
10		01010-80820	Bolt	2	1001-
11		01643-30823	Washer	2	1001-
12		04434-52310	Clip	1	1001-
13		04434-51710	Clip	1	1001-
14		01010-81020	Bolt	2	1001-
15		01643-31032	Washer	2	1001-
16		08211-00720	Clip	1	1001-
17		08211-01020	Clip	2	1001-
18		08211-01320	Clip	1	1001-
19		08211-01520	Clip	3	1001-
20		14X-06-61571	Bracket	1	1001-
21		01010-81020	Bolt	2	1001-
22		01643-31032	Washer	2	1001-
23		14X-06-61581	Bracket	1	1001-
24		01010-81020	Bolt	2	1001-
25		01643-31032	Washer	2	1001-
26		04434-53411	Clip	1	1001-
27		07095-20627	Cushion	1	1001-
28		01010-81020	Bolt	1	1001-
29		01643-31032	Washer	1	1001-
30		08211-01020	Clip	1	1001-
31		08211-01520	Clip	1	1001-
32		14X-06-51591	Bracket	1	1001-
33		01010-81020	Bolt	2	1001-
34		01643-31032	Washer	2	1001-
35		08211-01020	Clip	1	1001-
36		08211-01920	Clip	1	1001-
37		14X-06-61610	Bracket	1	1001-

FIG. E0200-003001 Electric Wiring Harness (Wiring Harness) (1/2)

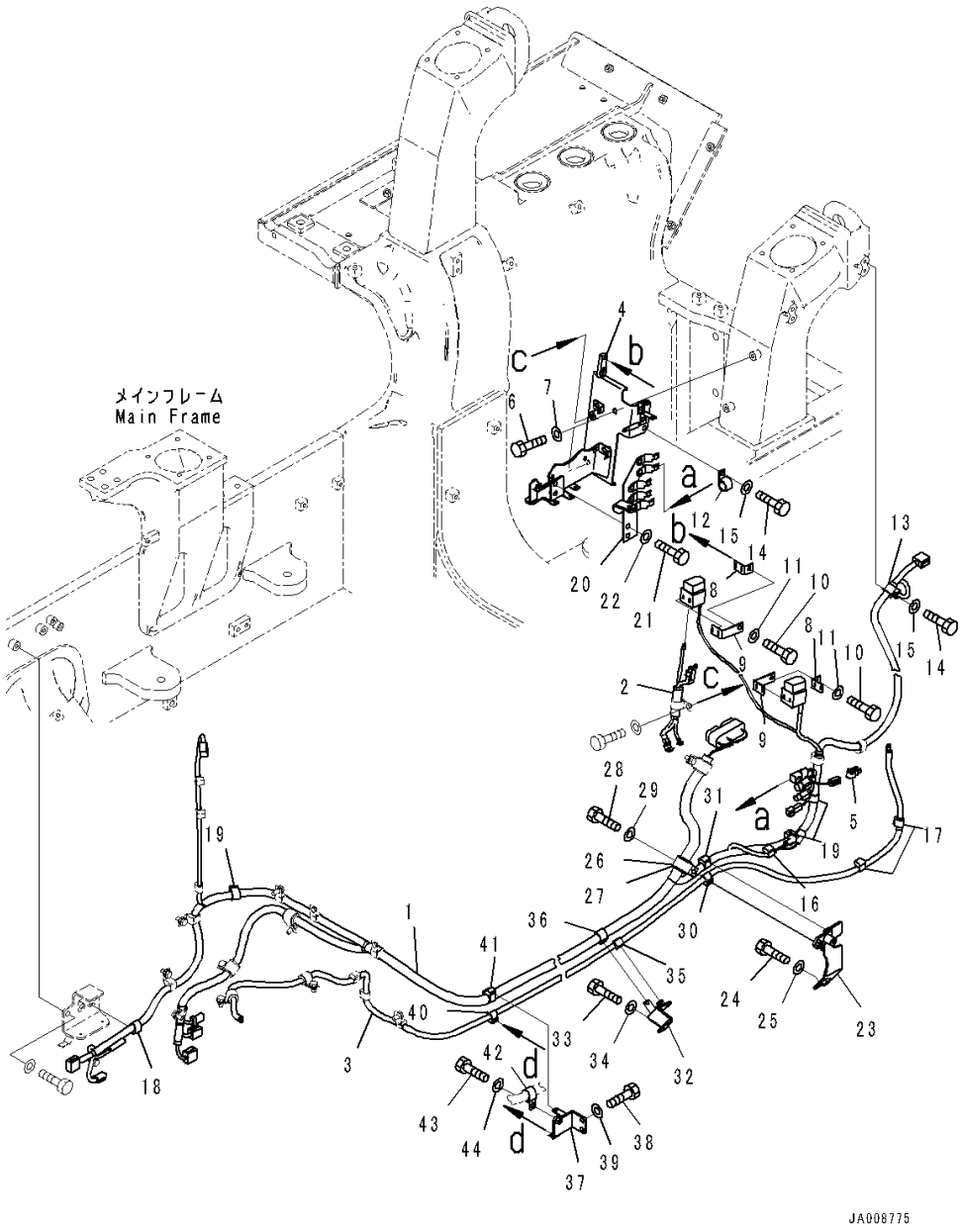

Index	Code	Part Number	Description	Qty	Serial Number
38		01010-81020	Bolt	2	1001-
39		01643-31032	Washer	2	1001-
40		08211-01020	Clip	1	1001-
41		08211-01920	Clip	1	1001-
42		04434-52310	Clip	1	1001-
43		01010-81025	Bolt	1	1001-
44		01643-31032	Washer	1	1001-

FIG. E0201-001001 Beacon Lamp

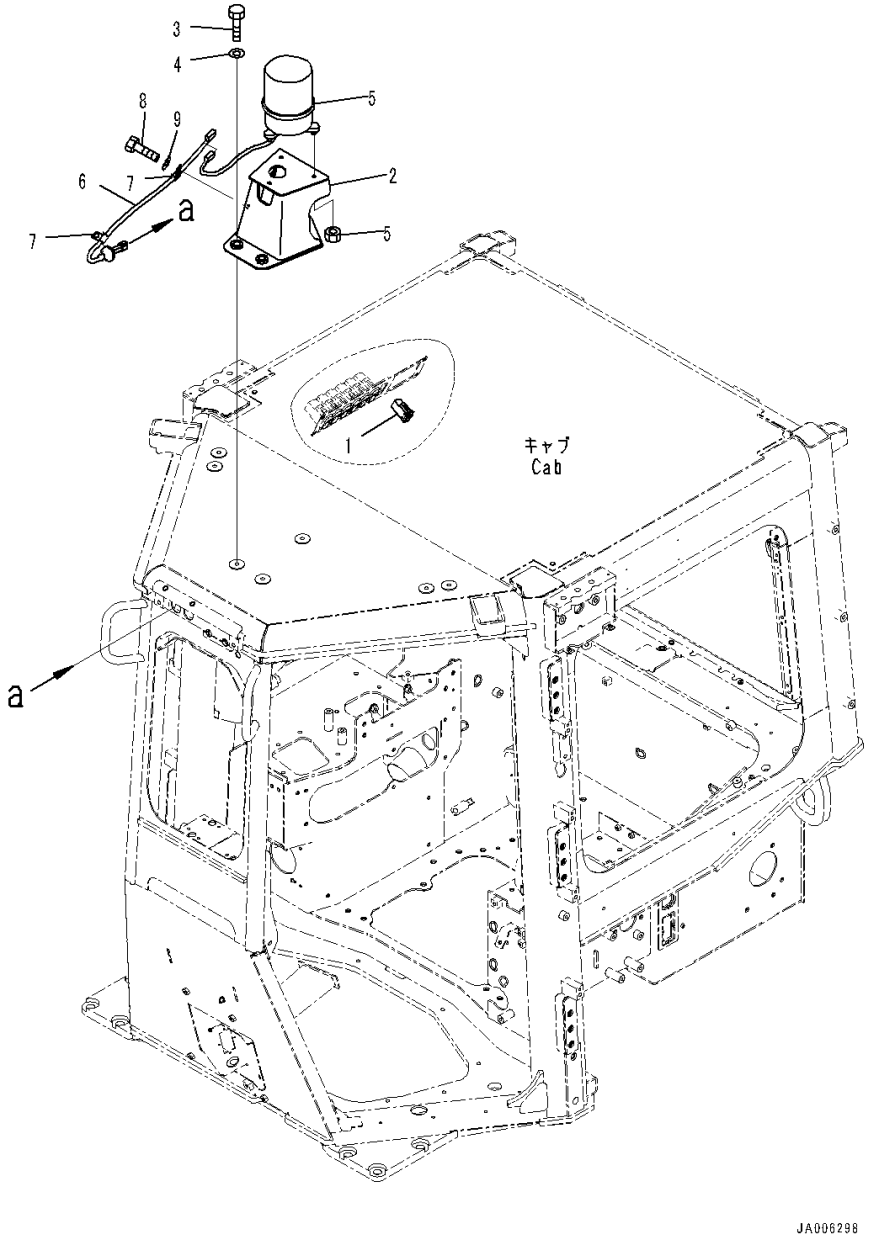

Index	Code	Part Number	Description	Qty	Serial Number
1		17A-06-42240	Switch	1	1001-
2		17A-06-51971	Bracket	1	1001-
3		01010-81230	Bolt	3	1001-
4		01643-31232	Washer	3	1001-
5		14X-06-33380	Beacon Lamp	1	1001-
		08103-02460	• Bulb, 35watt	1	1001-
6		17A-06-51432	Wiring Harness	1	1001-
7		04434-51012	Clip	2	1001-
8		01010-81220	Bolt	2	1001-
9		01643-31232	Washer	2	1001-

FIG. E0300-001001 Working Lamp

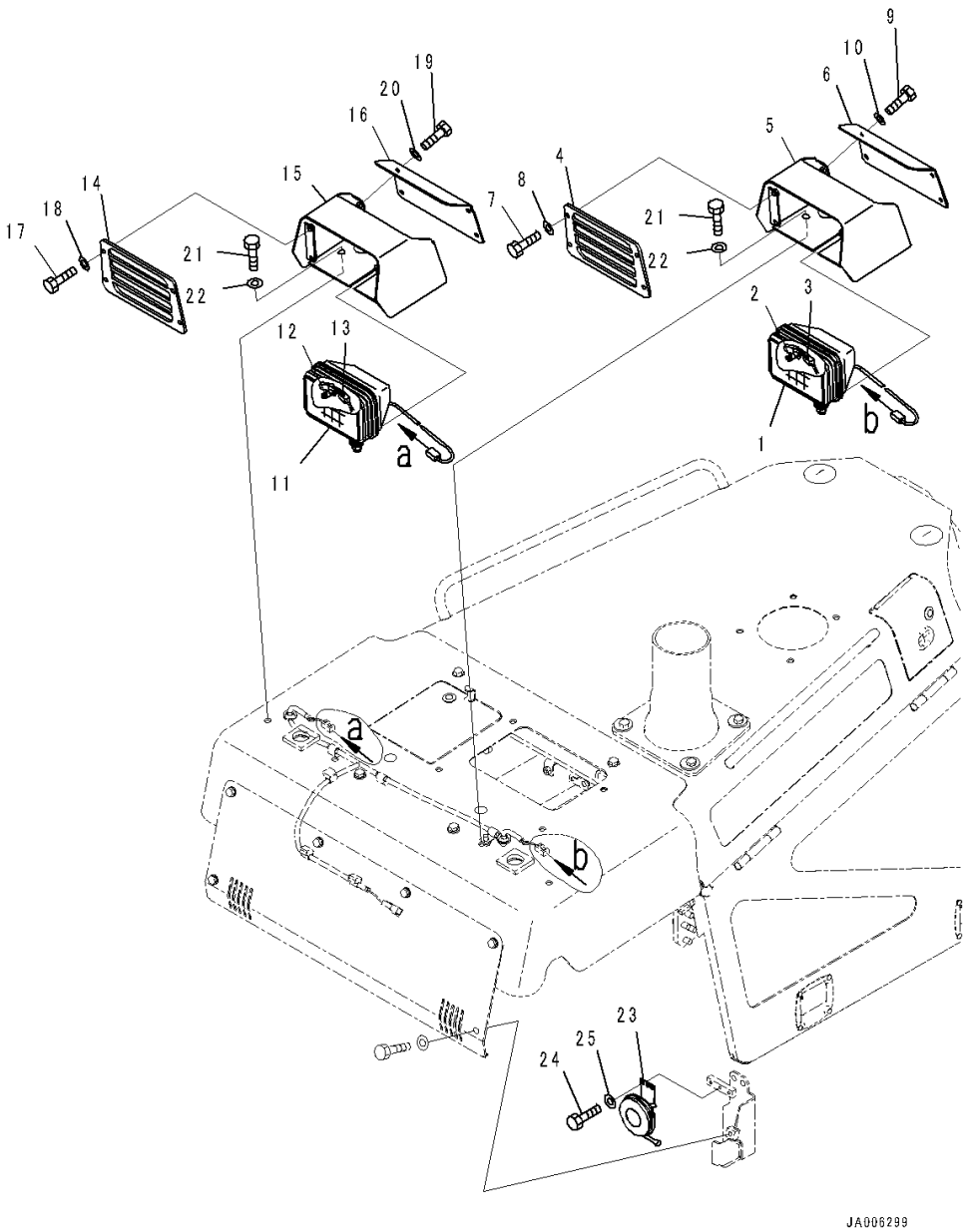

Index	Code	Part Number	Description	Qty	Serial Number
1		17A-06-17931	Lamp Assembly, Working	1	1001-
2		17A-06-17970	• Bulb, 70watt	1	1001-
3		17A-06-17980	• Sleeve	1	1001-
4		14X-06-61761	Cover	1	1001-
5		14X-06-61721	Cover	1	1001-
6		14X-06-61741	Plate	1	1001-
7		01010-D0820	Bolt	4	1001-
8		01643-70823	Washer	4	1001-
9		01010-D0816	Bolt	4	1001-
10		01643-70823	Washer	4	1001-
11		17A-06-17931	Lamp Assembly, Working	1	1001-
12		17A-06-17970	• Bulb, 70watt	1	1001-
13		17A-06-17980	• Sleeve	1	1001-
14		14X-06-61761	Cover	1	1001-
15		14X-06-61721	Cover	1	1001-
16		14X-06-61741	Plate	1	1001-
17		01010-D0820	Bolt	4	1001-
18		01643-70823	Washer	4	1001-
19		01010-D0816	Bolt	4	1001-
20		01643-70823	Washer	4	1001-
21		01010-81235	Bolt	6	1001-
22		01643-31232	Washer	6	1001-
23		19M-06-18220	Horn	1	1001-
24		01010-80816	Bolt	2	1001-
25		01643-30823	Washer	2	1001-

FIG. E0310-003001 Additional Working Lamp (For Additional Rear Working Lamp)

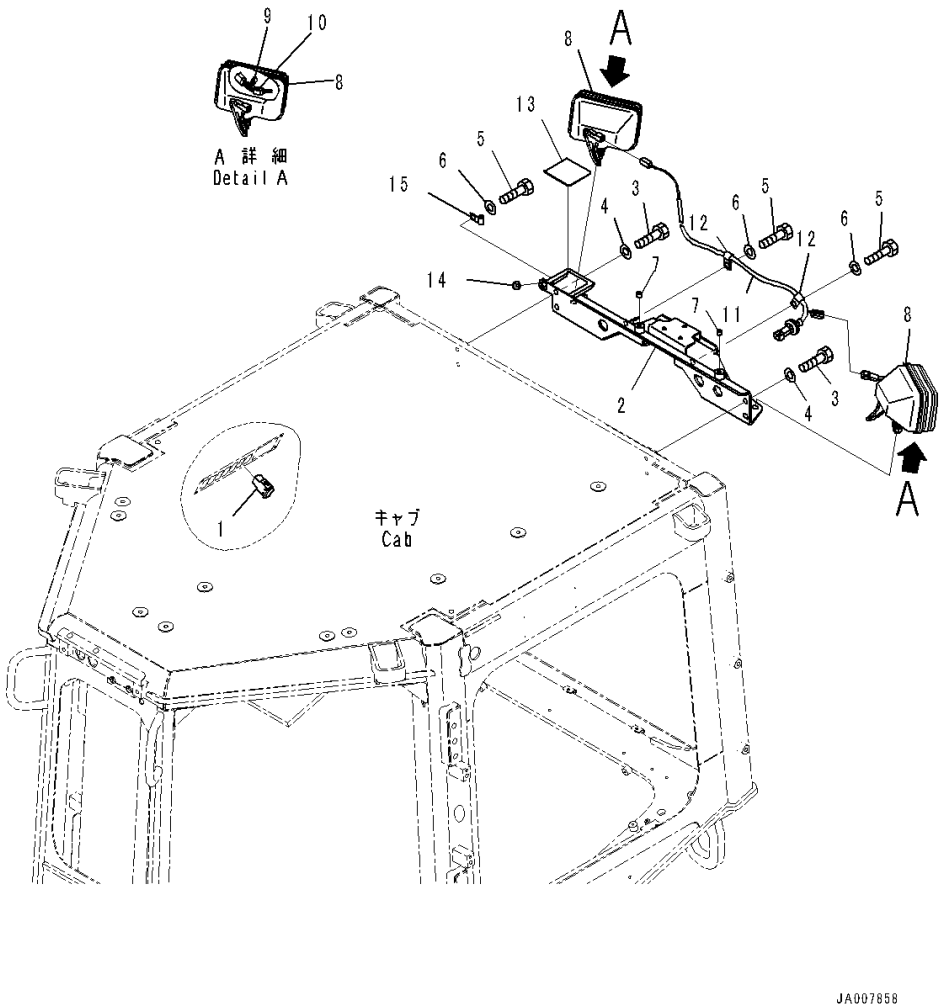

Index	Code	Part Number	Description	Qty	Serial Number
1		423-06-45360	Switch	1	1001-
2		17A-979-5171	Bracket	1	1001-
3		01010-81225	Bolt	4	1001-
4		01643-31232	Washer	4	1001-
5		01010-81225	Bolt	3	1001-
6		01643-31232	Washer	3	1001-
7		01310-21212	Screw	2	1001-
8		17A-06-17931	Lamp Assembly, Working	2	1001-
9		17A-06-17970	• Bulb, 70watt	1	1001-
10		17A-06-17980	• Sleeve	1	1001-
11		17A-06-51262	Wiring Harness	1	1001-
12		04434-51012	Clip	2	1001-
13		17A-06-51950	Plate	1	1004-
14		22T-05-13110	Grommet	1	1004-
15		04434-50812	Clip	1	1004-

FIG. E0310-002001 Additional Working Lamp (For Additional Front Working Lamp)

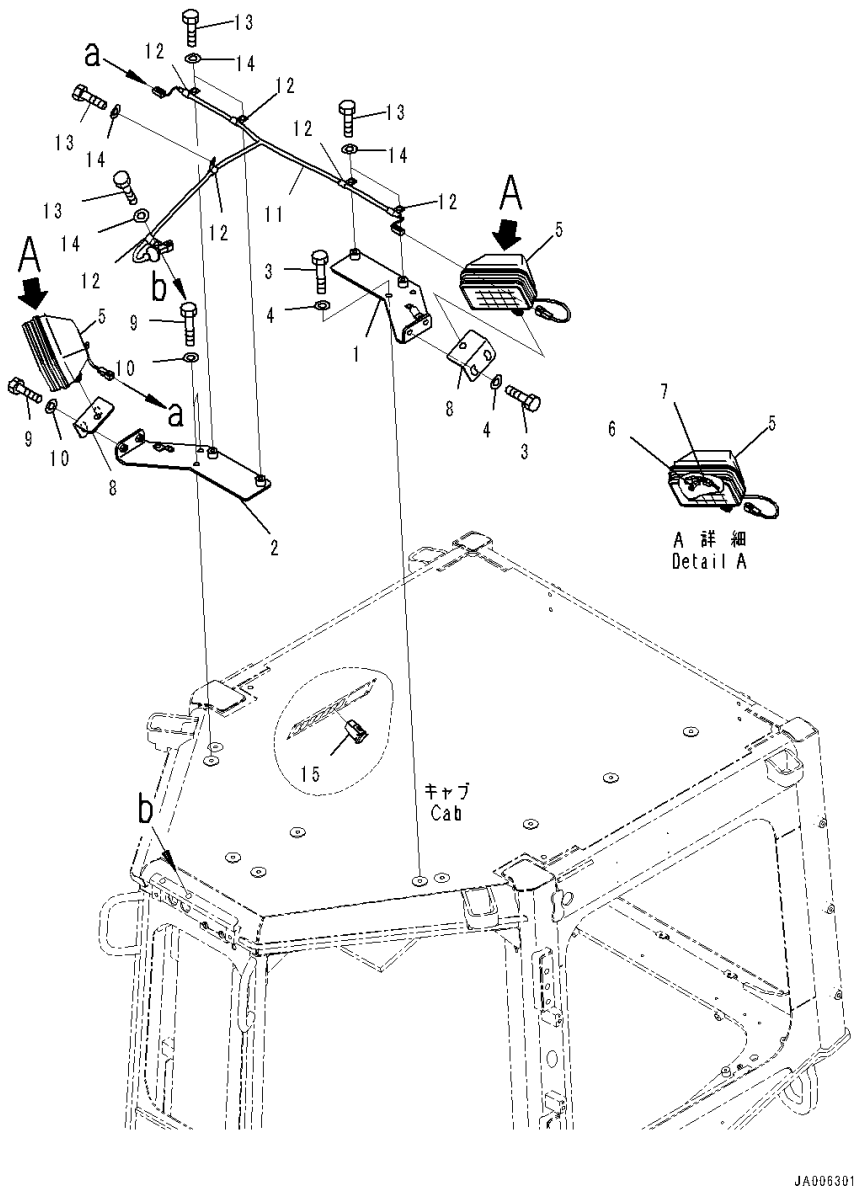

Index	Code	Part Number	Description	Qty	Serial Number
1		14X-Y79-1511	Plate	1	1001-
2		14X-Y79-1531	Plate	1	1001-
3		01010-81230	Bolt	4	1001-
4		01643-31232	Washer	4	1001-
5		17A-06-17931	Lamp Assembly, Working	2	1001-
6		17A-06-17970	• Bulb, 70watt	1	1001-
7		17A-06-17980	• Sleeve	1	1001-
8		14X-Y79-1521	Plate	2	1001-
9		01010-81230	Bolt	4	1001-
10		01643-31232	Washer	4	1001-
11		17A-06-51421	Wiring Harness	1	1001-
12		04434-51012	Clip	6	1001-
13		01010-81220	Bolt	6	1001-
14		01643-31232	Washer	6	1001-
15		423-06-45360	Switch	1	1001-

FIG. E0310-005001 Additional Working Lamp (With Additional Front Working Lamp)

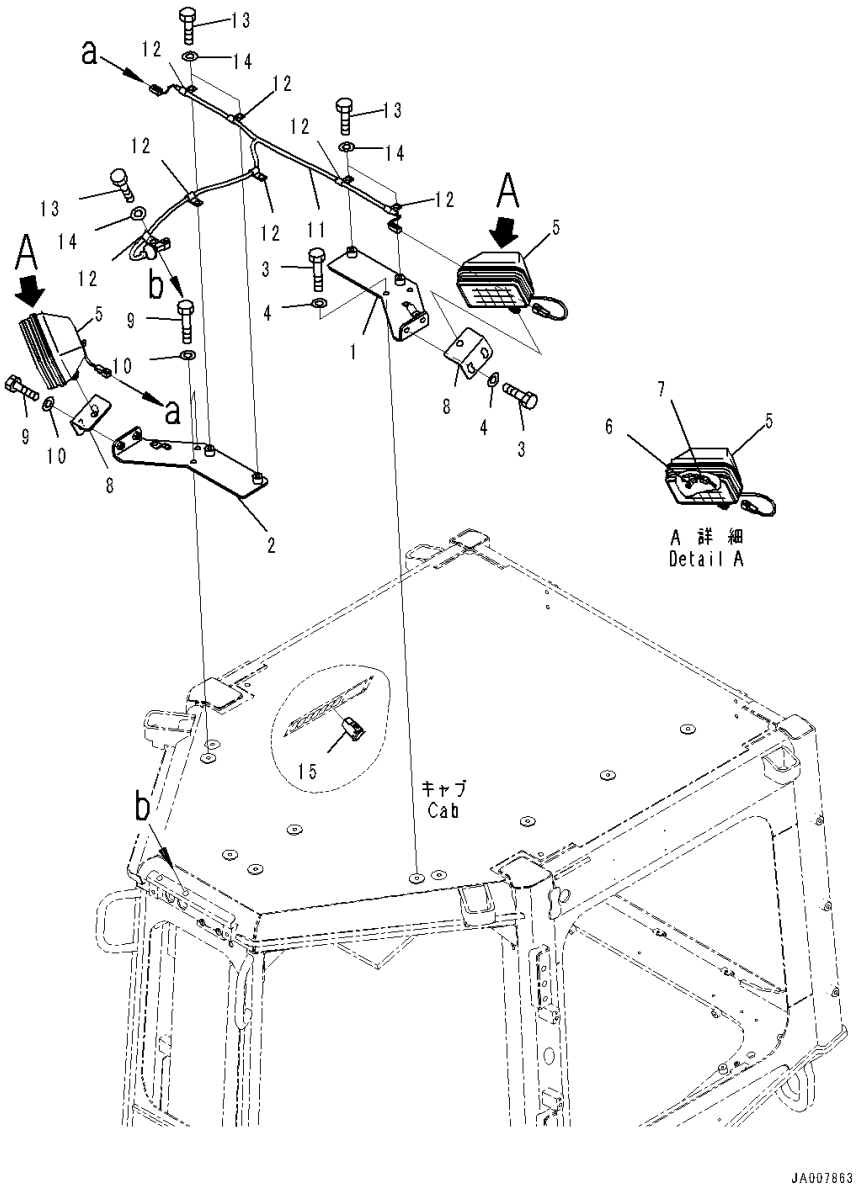

Index	Code	Part Number	Description	Qty	Serial Number
1		14X-Y79-1511	Plate	1	1001-
2		14X-Y79-1531	Plate	1	1001-
3		01010-81230	Bolt	4	1001-
4		01643-31232	Washer	4	1001-
5		17A-06-17931	Lamp Assembly, Working	2	1001-
6		17A-06-17970	• Bulb, 70watt	1	1001-
7		17A-06-17980	• Sleeve	1	1001-
8		14X-Y79-1521	Plate	2	1001-
9		01010-81230	Bolt	4	1001-
10		01643-31232	Washer	4	1001-
11		17A-06-51422	Wiring Harness	1	1001-
12		04434-51012	Clip	7	1001-
13		01010-81220	Bolt	5	1001-
14		01643-31232	Washer	5	1001-
15		423-06-45360	Switch	1	1001-

FIG. E0310-001001 Additional Working Lamp (Provision For Additional Front Working Lamp, Additional Rear Working Lamp)

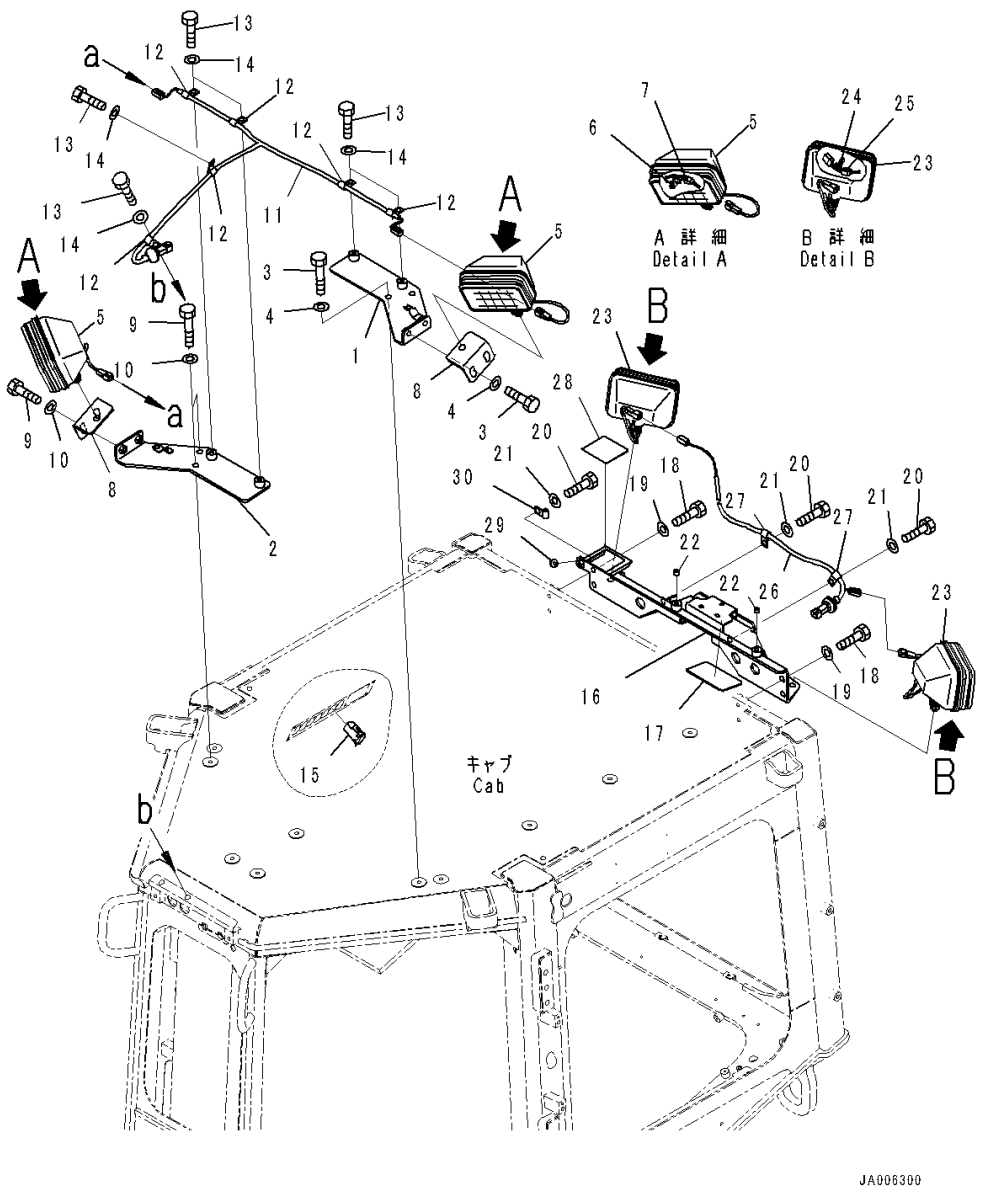

Index	Code	Part Number	Description	Qty	Serial Number
1		14X-Y79-1511	Plate	1	1001-
2		14X-Y79-1531	Plate	1	1001-
3		01010-81230	Bolt	4	1001-
4		01643-31232	Washer	4	1001-
5		17A-06-17931	Lamp Assembly, Working	2	1001-
6		17A-06-17970	• Bulb, 70watt	1	1001-
7		17A-06-17980	• Sleeve	1	1001-
8		14X-Y79-1521	Plate	2	1001-
9		01010-81230	Bolt	4	1001-
10		01643-31232	Washer	4	1001-
11		17A-06-51422	Wiring Harness	1	1004-
12		04434-51012	Clip	6	1001-
13		01010-81220	Bolt	6	1001-
14		01643-31232	Washer	6	1001-
15		423-06-45360	Switch	1	1001-
16		17A-979-5171	Bracket	1	1001-
17		17A-979-5190	• Rubber	1	1001-
18		01010-81225	Bolt	4	1001-
19		01643-31232	Washer	4	1001-
20		01010-81225	Bolt	3	1001-
21		01643-31232	Washer	3	1001-
22		01310-21212	Screw	2	1001-
23		17A-06-17931	Lamp Assembly, Working	2	1001-
24		17A-06-17970	• Bulb, 70watt	1	1001-
25		17A-06-17980	• Sleeve	1	1001-
26		17A-06-51262	Wiring Harness	1	1004-
27		04434-51012	Clip	2	1001-
28		17A-06-51950	Plate	1	1004-
29		22T-05-13110	Grommet	1	1004-
30		04434-50812	Clip	1	1004-

FIG. E0310-004001 Additional Working Lamp (With Additional Front and Rear Working Lamp)

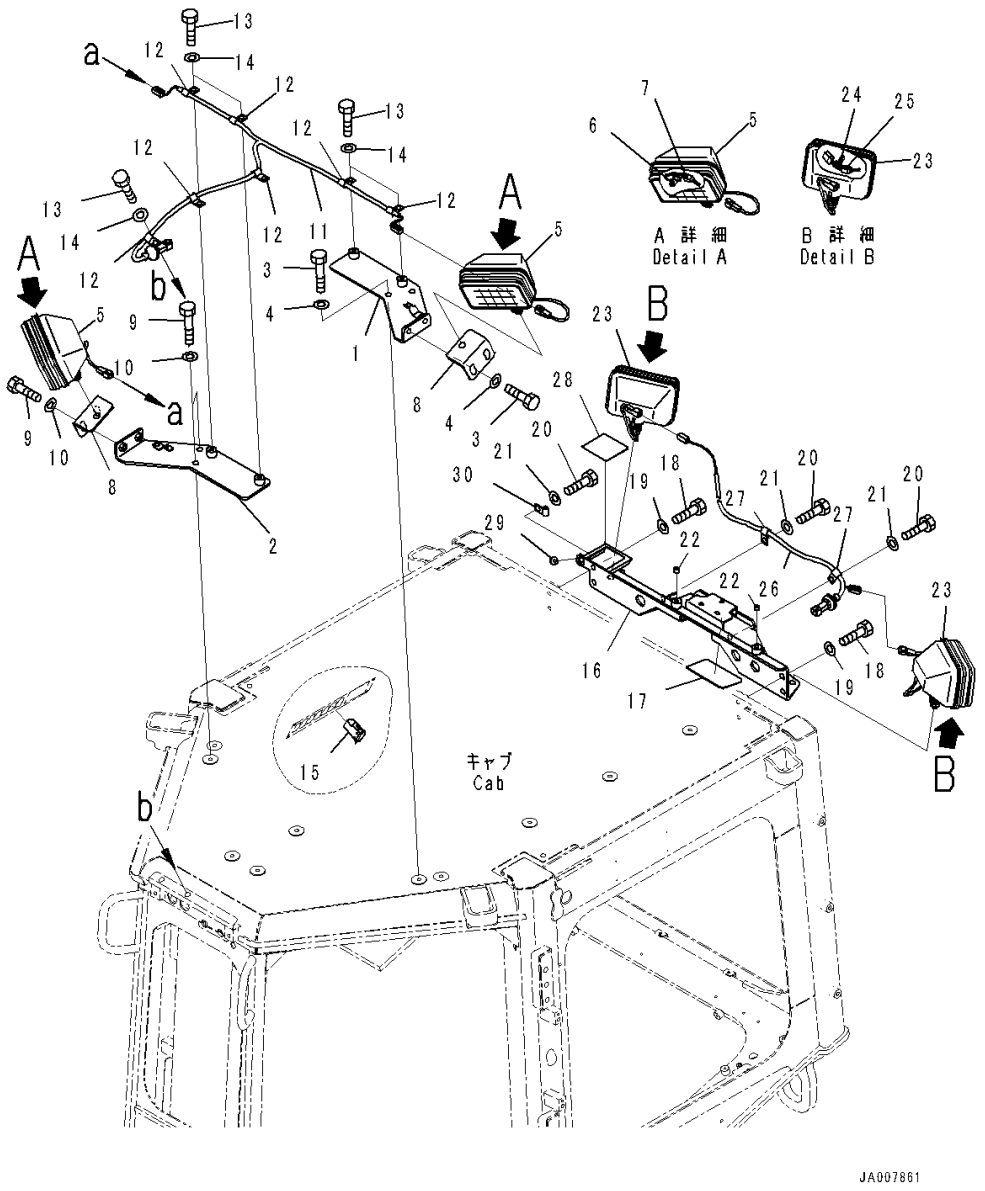

Index	Code	Part Number	Description	Qty	Serial Number
1		14X-Y79-1511	Plate	1	1001-
2		14X-Y79-1531	Plate	1	1001-
3		01010-81230	Bolt	4	1001-
4		01643-31232	Washer	4	1001-
5		17A-06-17931	Lamp Assembly, Working	2	1001-
6		17A-06-17970	• Bulb, 70watt	1	1001-
7		17A-06-17980	• Sleeve	1	1001-
8		14X-Y79-1521	Plate	2	1001-
9		01010-81230	Bolt	4	1001-
10		01643-31232	Washer	4	1001-
11		17A-06-51422	Wiring Harness	1	1001-
12		04434-51012	Clip	7	1001-
13		01010-81220	Bolt	5	1001-
14		01643-31232	Washer	5	1001-
15		423-06-45360	Switch	1	1001-
16		17A-979-5171	Bracket	1	1001-
17		17A-979-5190	• Rubber	1	1001-
18		01010-81225	Bolt	4	1001-
19		01643-31232	Washer	4	1001-
20		01010-81225	Bolt	3	1001-
21		01643-31232	Washer	3	1001-
22		01310-21212	Screw	2	1001-
23		17A-06-17931	Lamp Assembly, Working	2	1001-
24		17A-06-17970	• Bulb, 70watt	1	1001-
25		17A-06-17980	• Sleeve	1	1001-
26		17A-06-51262	Wiring Harness	1	1001-
27		04434-51012	Clip	2	1001-
28		17A-06-51950	Plate	1	1001-
29		22T-05-13110	Grommet	1	1001-
30		04434-50812	Clip	1	1001-

FIG. E0420-001001 Back-up Alarm

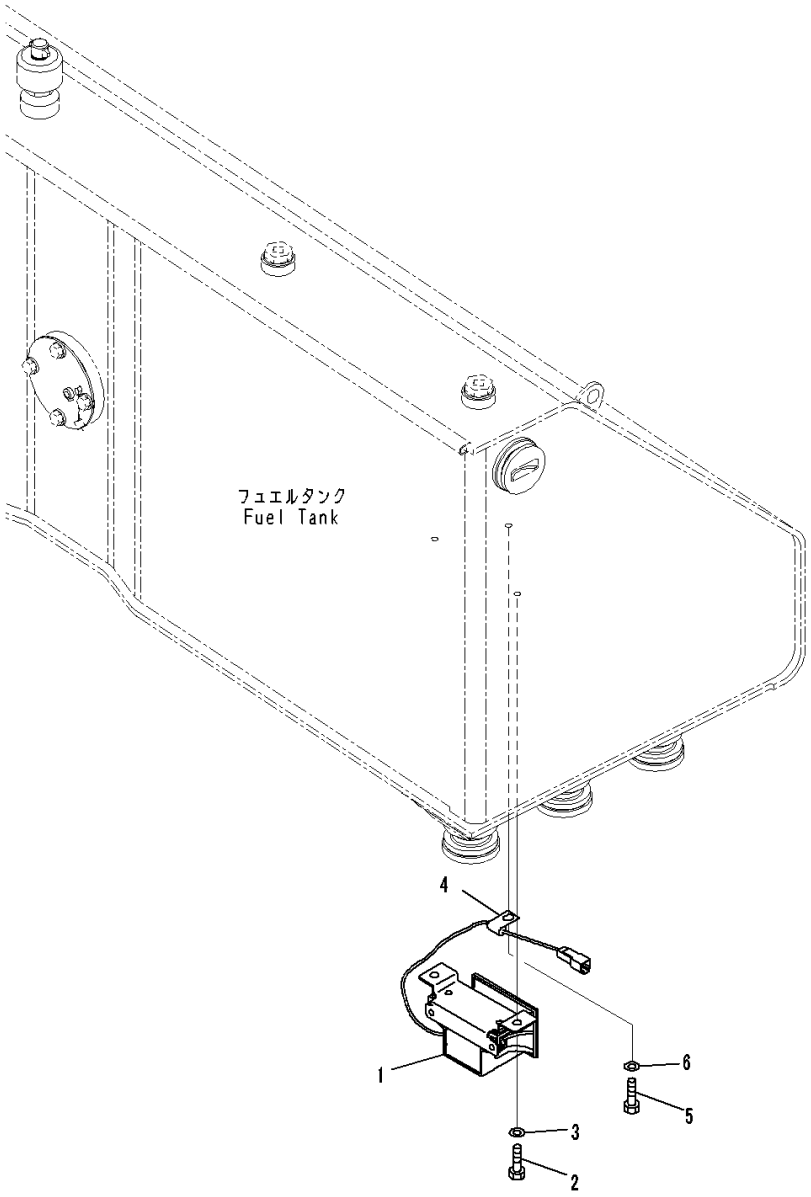

Index	Code	Part Number	Description	Qty	Serial Number
1		20Y-06-41812	Alarm, Back-up	1	1001-
2		01010-81020	Bolt	2	1001-
3		01643-31032	Washer	2	1001-
4		04434-50610	Clip	1	1001-
5		01010-81020	Bolt	1	1001-
6		01643-31032	Washer	1	1001-

FIG. E0450-001001 Rearview Camera (Without Additional Front and Rear Working Lamp)

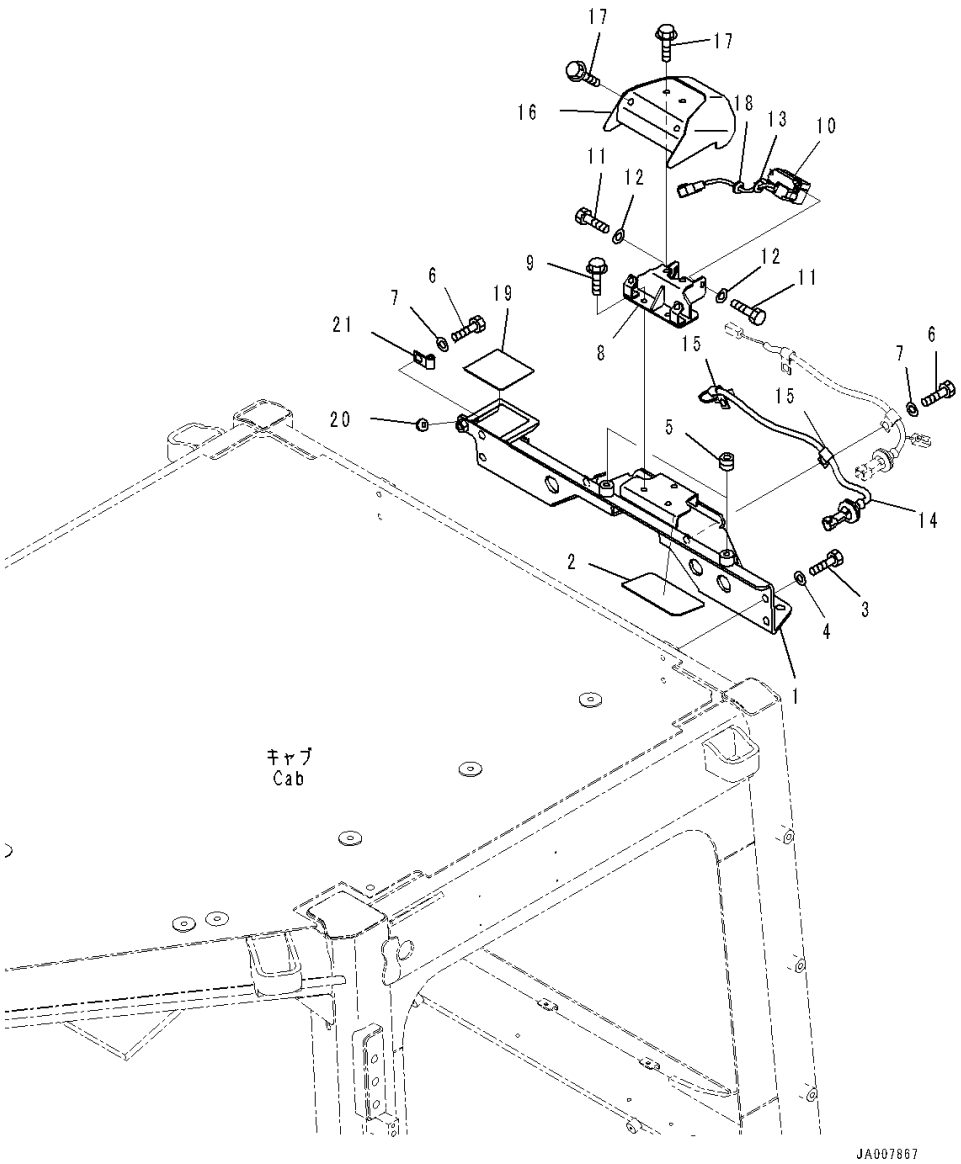

Index	Code	Part Number	Description	Qty	Serial Number
1		17A-979-5171	Bracket	1	1001-
2		17A-979-5190	• Rubber	1	1001-
3		01010-81225	Bolt	4	1001-
4		01643-31232	Washer	4	1001-
5		01310-21212	Screw	2	1001-
6		01010-81225	Bolt	3	1001-
7		01643-31232	Washer	3	1001-
8		14X-Y79-6111	Bracket	1	1001-
9		01435-00816	Bolt	3	1001-
10		7835-33-2000	Camera	1	1001-
11		01010-80616	Bolt	3	1001-
12		01643-30623	Washer	3	1001-
13		14X-06-63660	Grommet	1	1001-
14		17A-06-51252	Wiring Harness	1	1001-
15		04434-51012	Clip	2	1001-
16		17A-979-5161	Cover	1	1001-
17		01435-00816	Bolt	4	1001-
18		14X-06-63660	Grommet	1	1001-
19		17A-06-51950	Plate	1	1001-
20		22T-05-13110	Grommet	1	1001-
21		04434-50812	Clip	1	1001-

FIG. E0450-002001 Rearview Camera (With Additional Front and Rear Working Lamp)

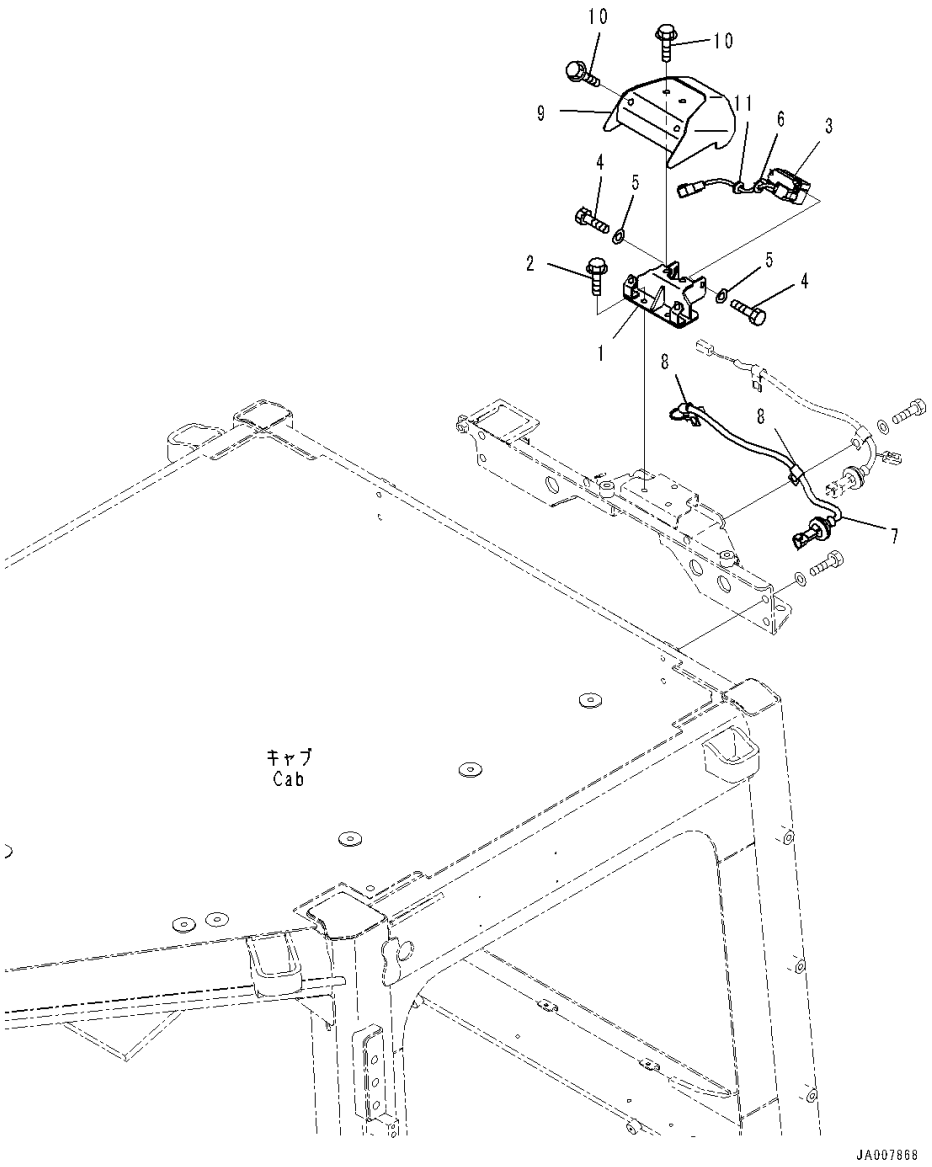

Index	Code	Part Number	Description	Qty	Serial Number
1		14X-Y79-6111	Bracket	1	1001-
2		01435-00816	Bolt	3	1001-
3		7835-33-2000	Camera	1	1001-
4		01010-80616	Bolt	3	1001-
5		01643-30623	Washer	3	1001-
6		14X-06-63660	Grommet	1	1001-
7		17A-06-51252	Wiring Harness	1	1001-
8		04434-51012	Clip	2	1001-
9		17A-979-5161	Cover	1	1001-
10		01435-00816	Bolt	4	1001-
11		14X-06-63660	Grommet	1	1001-

POWER TRANSMITTING SYSTEM

FIG. F2200-001001 Universal Joint

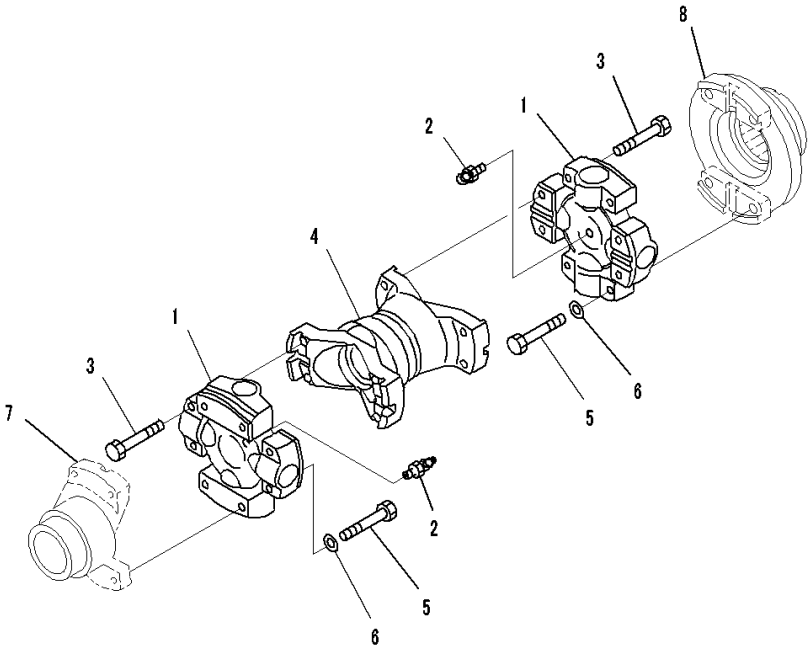

JA002693

Index	Code	Part Number	Description	Qty	Serial Number
		421-20-34511	Shaft Assembly	1	1001-
1		421-20-33621	• Spider Assembly	2	1001-
2		423-20-32631	• • Fitting	1	1001-
3		421-20-12690	• Bolt	8	1001-
4		421-20-34650	• Yoke	1	1001-
5		01010-81265	Bolt	8	1001-
6		01643-51232	Washer	8	1001-
7		(14Z-12-31310)	Coupling(Refer to Page 178)		-
8		(14X-13-51360)	Coupling(Refer to Page 261)		-

FIG. F2300-001001 Power Train (Bevel Gear and Shaft)

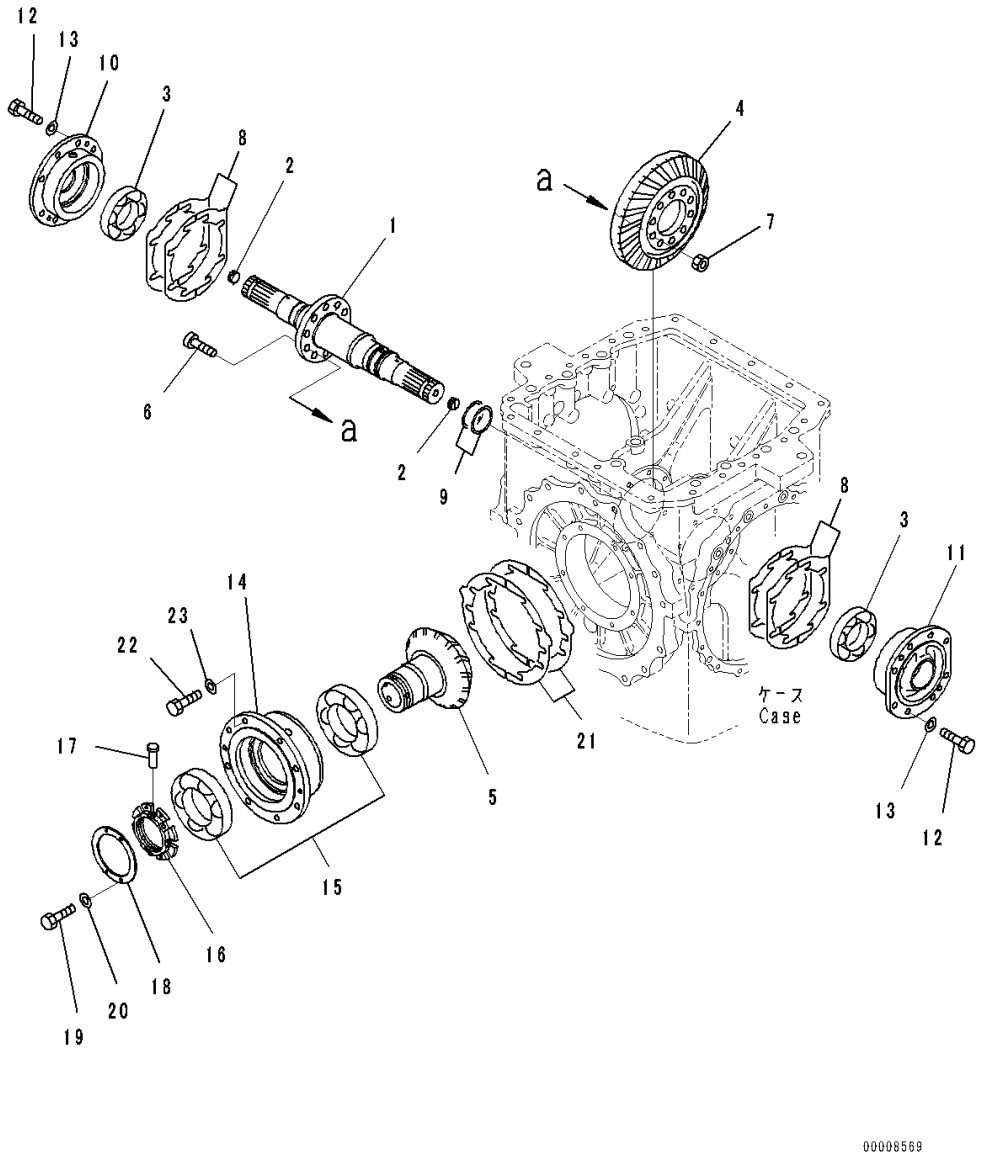

Index	Code	Part Number	Description	Qty	Serial Number
		Note: This list covers following specifications.			
		Without Power Angle Power Tilt Dozer, Inside Frame			
		Power Angle Power Tilt Dozer, Inside Frame, 3000mm,			
		Power Angle Power Tilt Blade			
		14X-22-50002	Power Unit	1	1469-
		14X-22-51000	• Steering Assembly	1	1001-
1		14Y-22-51122	• • Shaft	1	1001-
2		17M-22-45471	• • Orifice	2	1001-
3		06302-32213	• • Bearing	2	1001-
		14Y-22-55800	• • Gear Assembly	1	1001-
4	C1		• • • Gear, Bevel	1	1001-
5	C1		• • • Pinion	1	1001-
6		01084-01650	• • Bolt	10	1001-
7		01582-11613	• • Nut	10	1001-
8		14Y-22-21170	• • Shim, T=0.3mm	8	1001-
		14Y-22-21180	• • Shim, T=0.2mm	8	1001-
		14Y-22-21190	• • Shim, T=0.5mm	4	1001-
9		07018-10653	• • Ring	2	1001-
10		14Y-22-51130	• • Cage	1	1001-
11		14Y-22-21161	• • Cage	1	1001-
12		01010-81240	• • Bolt	16	1001-
13		01643-31232	• • Washer	16	1001-
14		154-22-65820	• • Cage	1	1001-
15		14Y-22-25880	• • Bearing	1	1001-
16		154-22-65890	• • Nut	1	1001-
17		154-22-65860	• • Pin	1	1001-
18		154-22-62220	• • Plate	1	1001-
19		01010-80612	• • Bolt	4	1001-
20		01643-30623	• • Washer	4	1001-
21		14Y-22-25830	• • Shim, T=0.2mm	6	1001-
		14Y-22-25840	• • Shim, T=0.3mm	4	1001-
		14Y-22-25850	• • Shim, T=0.4mm	2	1001-
22		01010-81240	• • Bolt	8	1001-
23		01643-31232	• • Washer	8	1001-

FIG. F2300-001002 Power Train (Brake)

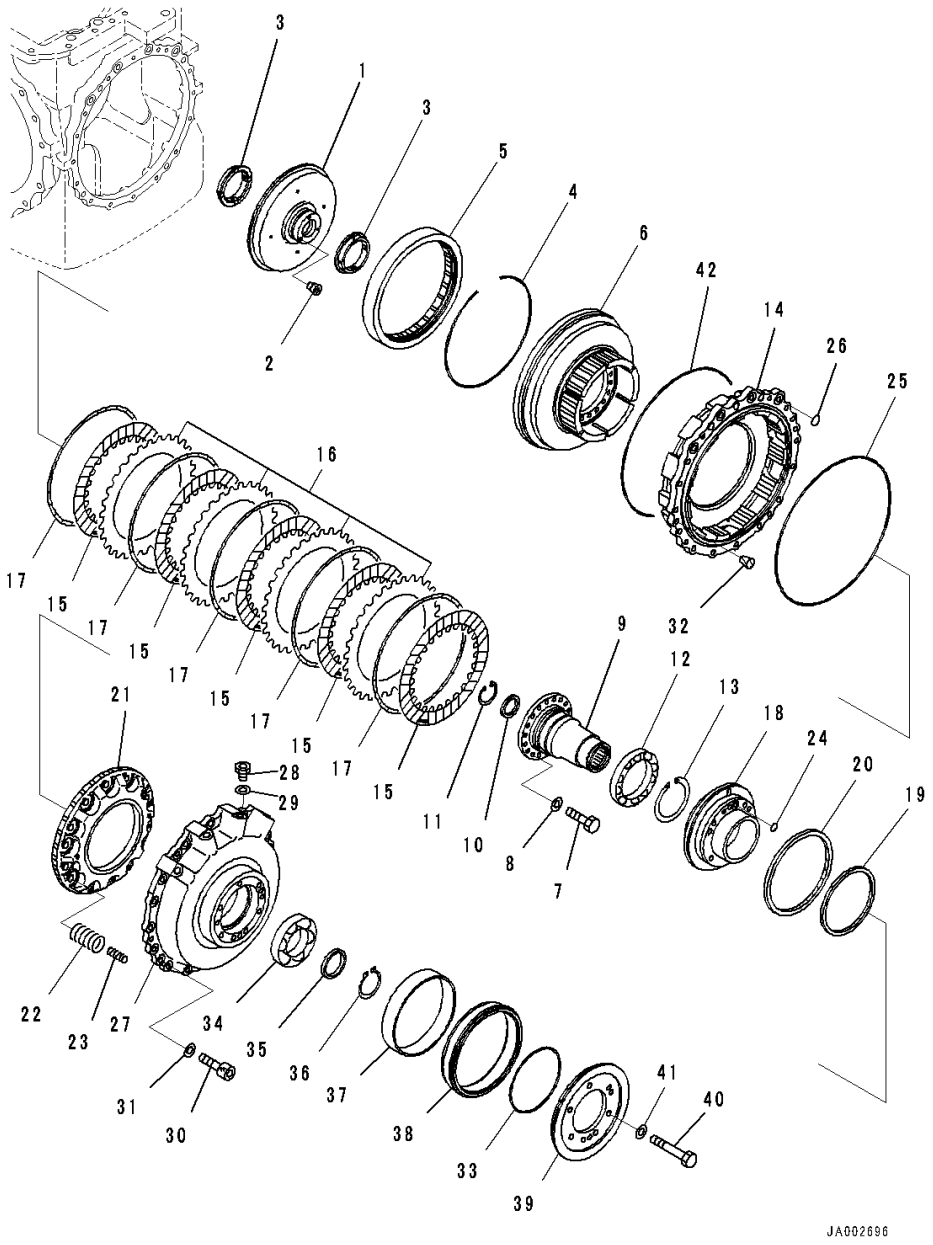

Index	Code	Part Number	Description	Qty	Serial Number
		Note: This list covers following specifications.			
		Without Power Angle Power Tilt Dozer, Inside Frame			
		Power Angle Power Tilt Dozer, Inside Frame, 3000mm,			
		Power Angle Power Tilt Blade			
		14X-22-50002	Power Unit	1	1469-
		14X-22-51000	• Steering Assembly	1	1001-
1		14Y-22-22290	• • Gear	2	1001-
2		02720-40104	• • Plug	6	1001-
3		14Y-22-22370	• • Bushing	4	1001-
4		14Y-22-22340	• • Ring, Snap	2	1001-
5		14Y-22-22161	• • Gear	2	1001-
6		14Y-22-23121	• • Hub	2	1001-
7		01010-81030	• • Bolt	40	1001-
8		01643-31032	• • Washer	40	1001-
9		14Y-22-24111	• • Hub	2	1001-
10		14Y-22-24190	• • Spacer	2	1001-
11		04065-05820	• • Ring, Snap	2	1001-
12		06030-06921	• • Bearing	2	1001-
13		04070-00105	• • Ring, Snap	2	1001-
14		14Y-22-23110	• • Drum	2	1001-
15		14Y-22-23140	• • Disc	10	1001-
16		14Y-22-23150	• • Plate	8	1001-
17		14Y-22-23160	• • Spring	10	1001-
18		14Y-22-24130	• • Cage	2	1001-
19		232-15-19270	• • Seal Ring, (Kit : K01)	2	1001-
20		14Y-22-23310	• • Seal Ring, (Kit : K01)	2	1001-
21		14Y-22-23130	• • Piston	2	1001-
22		14Y-22-23170	• • Spring	28	1001-
23		14Y-22-23180	• • Spring	28	1001-
24		07000-72018	• • O-ring, (Kit : K01)	2	1001-
25		07000-75365	• • O-ring, (Kit : K01)	2	1001-
26		07000-73022	• • O-ring, (Kit : K01)	8	1001-
27		14Y-22-55120	• • Cover	2	1001-
28		723-11-15110	• • Plug	8	1001-
29		07002-61623	• • O-ring, (Kit : K01)	8	1001-
30		01252-71250	• • Bolt	8	1001-
31		01643-31232	• • Washer	8	1001-
32		07049-01418	• • Plug, Cork	4	1001-
33		07000-75180	• • O-ring, (Kit : K01)	2	1001-
34		06030-06215	• • Bearing	2	1001-

FIG. F2300-001002 Power Train (Brake)

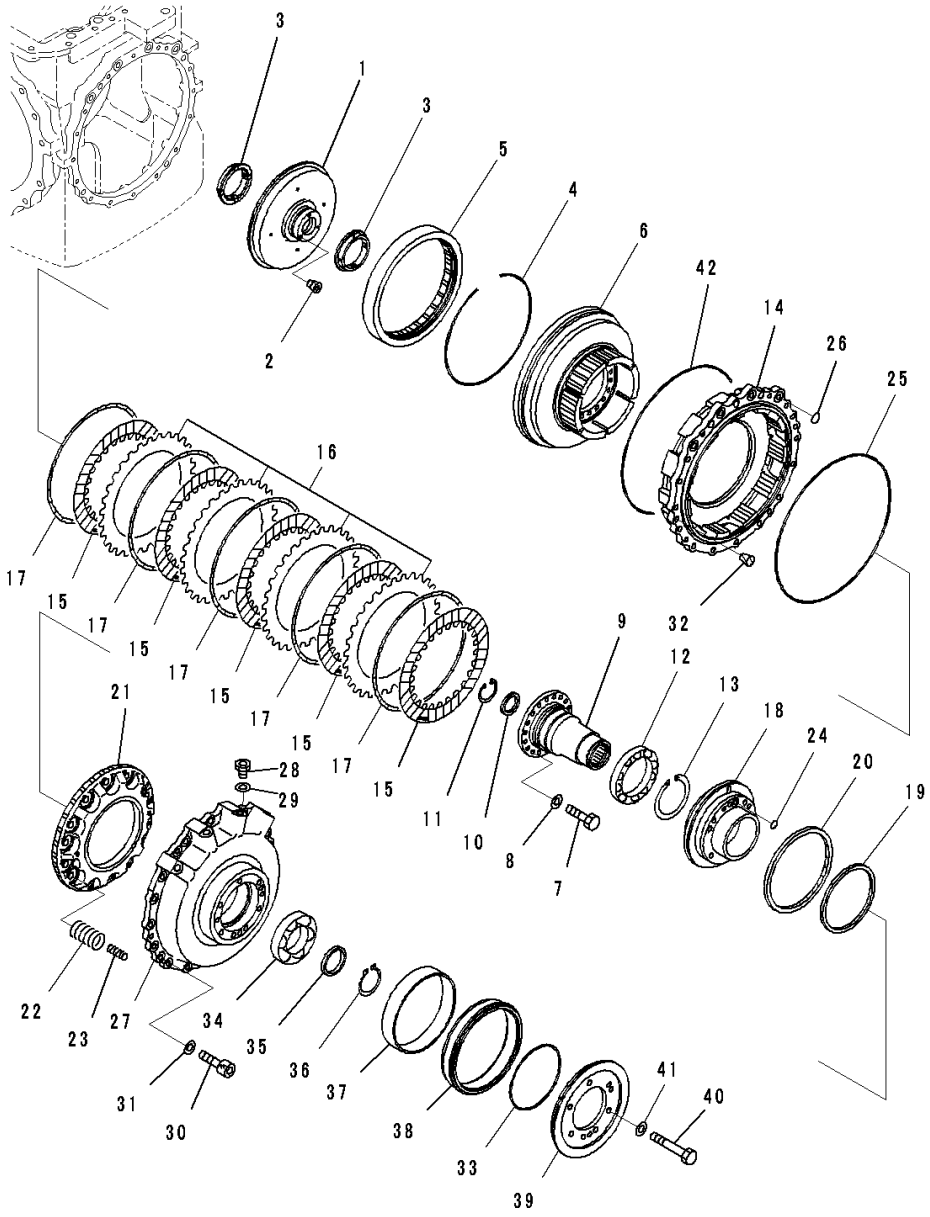

Index	Code	Part Number	Description	Qty	Serial Number
35		17A-15-22191	• • Spacer	2	1001-
36		04064-07525	• • Ring, Snap	2	1001-
37		14X-21-13130	• • Bushing	2	1001-
38		14X-21-13241	• • Collar Assembly	2	1285-
39		14Y-21-23150	• • Flange	2	1001-
40		01011-81205	• • Bolt	12	1001-
41		01643-31232	• • Washer	12	1001-
42		07000-75365	• • O-ring, (Kit : K01)	2	1001-

FIG. F2300-001003 Power Train (Carrier)

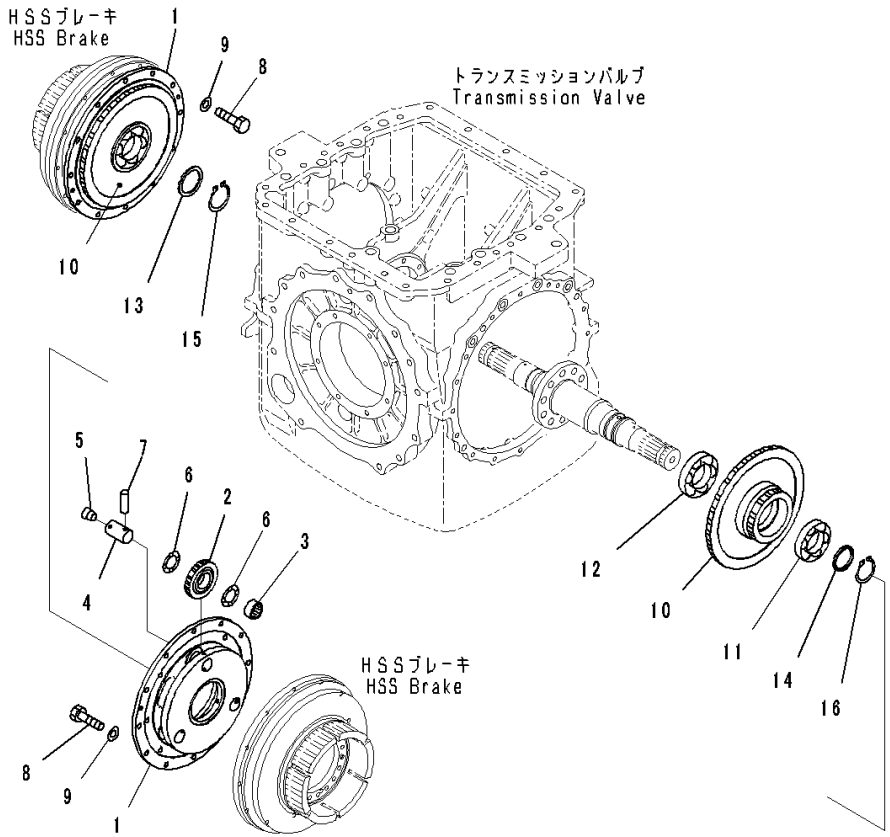

Index	Code	Part Number	Description	Qty	Serial Number
		Note: This list covers following specifications.			
		Without Power Angle Power Tilt Dozer, Inside Frame			
		Power Angle Power Tilt Dozer, Inside Frame, 3000mm,			
		Power Angle Power Tilt Blade			
		14X-22-50002	Power Unit	1	1469-
		14X-22-51000	• Steering Assembly	1	1001-
1		14Y-22-22110	• • Carrier	2	1001-
2		14Y-22-22150	• • Gear	6	1001-
3		14Y-22-22380	• • Bearing	6	1001-
4		154-22-22280	• • Shaft	6	1001-
5		07043-70108	• • Plug	6	1001-
6		154-15-12550	• • Washer, Thrust	12	1001-
7		14Y-22-22360	• • Pin	6	1001-
8		01010-81030	• • Bolt	24	1001-
9		01643-31032	• • Washer	24	1001-
10		14Y-22-22221	• • Gear	2	1001-
11		06340-06210	• • Bearing	2	1001-
12		06340-06211	• • Bearing	2	1001-
13		145-13-21730	• • Spacer	1	1001-
14		714-12-12930	• • Spacer	2	1001-
15		04064-05520	• • Ring, Snap	1	1001-
16		04064-05020	• • Ring, Snap	2	1001-

FIG. F2300-001004 Power Train (Steering Case) (1/2)

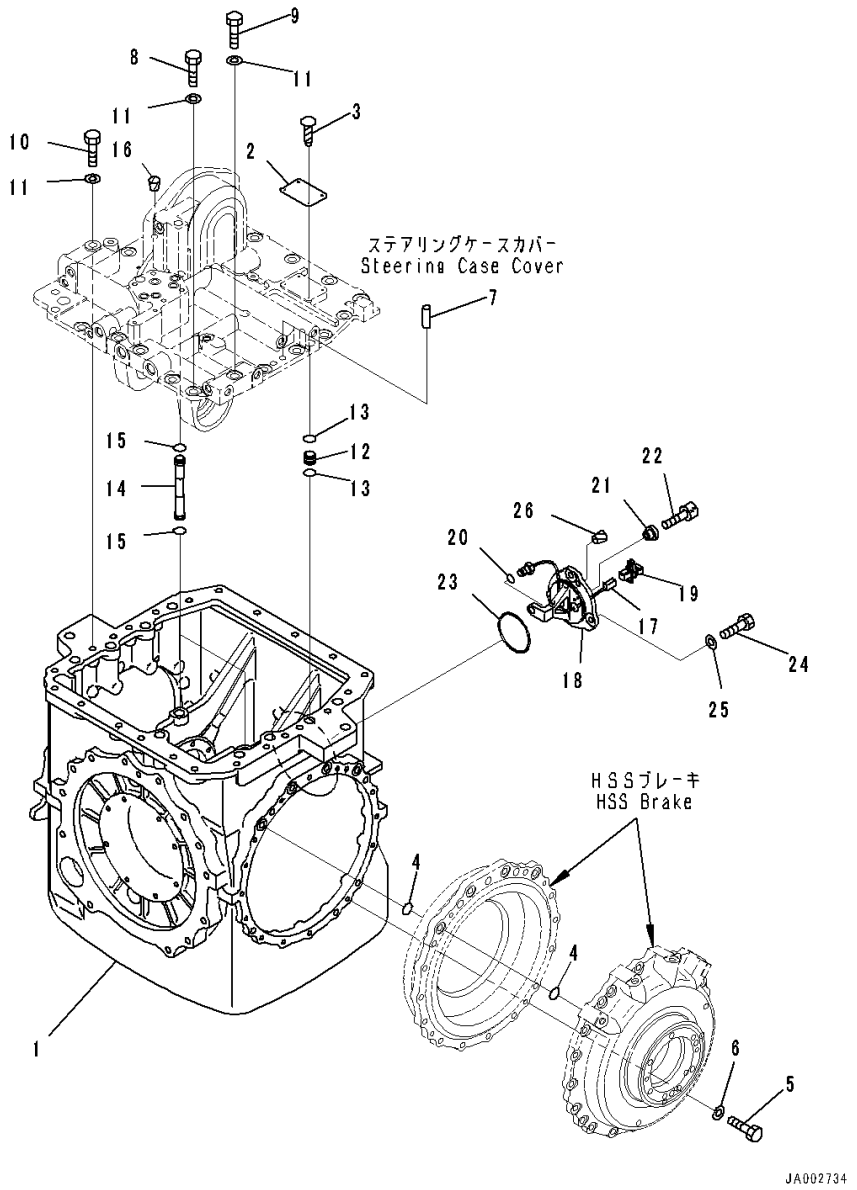

Index	Code	Part Number	Description	Qty	Serial Number
		Note: This list covers following specifications.			
		Without Power Angle Power Tilt Dozer, Inside Frame			
		Power Angle Power Tilt Dozer, Inside Frame, 3000mm,			
		Power Angle Power Tilt Blade			
		14X-22-50002	Power Unit	1	1469-
		14X-22-51000	• Steering Assembly	1	1001-
1		14Y-22-55111	• • Case	1	1391-
2	C2	09604-05080	• • Plate, Limited Supply	1	1001-
3		04418-13060	• • Screw	4	1001-
4		07000-73022	• • O-ring, (Kit : K01)	8	1001-
5		01010-81255	• • Bolt	32	1001-
6		01643-31232	• • Washer	32	1001-
7		04020-01434	• • Pin, Dowel	2	1001-
8		01010-61645	• • Bolt	13	1001-
9		01010-61670	• • Bolt	3	1001-
10		01011-61615	• • Bolt	1	1001-
11		01643-31645	• • Washer	17	1001-
12		14X-22-16170	• • Sleeve	5	1001-
13		07000-72018	• • O-ring, (Kit : K01)	10	1001-
14		14Y-22-26180	• • Tube	2	1001-
15		07000-72018	• • O-ring, (Kit : K01)	4	1001-
16		07049-01620	• • Plug	2	1001-
17		14Y-22-55510	• • Sensor	1	1001-
18		14Y-22-55522	• • Bracket	1	1001-
19		14Y-22-37440	• • Connector	1	1001-
20		14Y-22-37470	• • O-ring, (Kit : K01)	1	1001-
21		14Y-22-37420	• • Collar	1	1001-
22		01252-A0520	• • Bolt, Hexagon Socket Head	1	1001-
23		07000-72095	• • O-ring, (Kit : K01)	1	1001-
24		01010-81230	• • Bolt	2	1001-
25		01643-31232	• • Washer	2	1001-
26		07049-01215	• • Plug	2	1001-

FIG. F2300-001005 Power Train (Steering Case) (2/2)

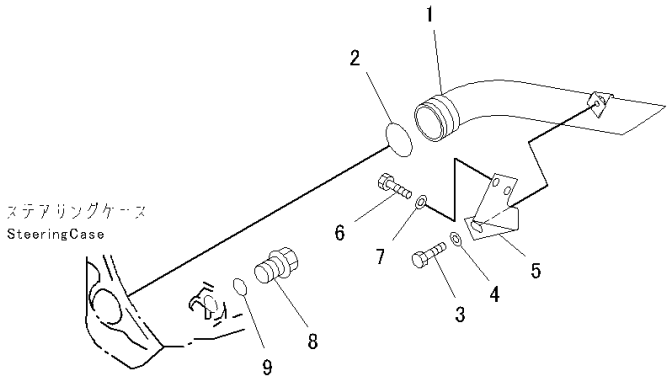

PJ0B953

Index	Code	Part Number	Description	Qty	Serial Number
		Note: This list covers following specifications.			
		Without Power Angle Power Tilt Dozer, Inside Frame			
		Power Angle Power Tilt Dozer, Inside Frame, 3000mm,			
		Power Angle Power Tilt Blade			
		14X-22-50002	Power Unit	1	1469-
		14X-22-51000	• Steering Assembly	1	1001-
1		14Y-49-21110	• • Tube	1	1001-
2		07000-72065	• • O-ring, (Kit : K01)	1	1001-
3		01010-81225	• • Bolt	1	1001-
4		01643-31232	• • Washer	1	1001-
5		14Y-49-21120	• • Plate	1	1001-
6		01010-81225	• • Bolt	2	1001-
7		01643-31232	• • Washer	2	1001-
8		6150-23-5620	• • Plug	1	1001-
9		07002-63634	• • O-ring, (Kit : K01)	1	1001-

FIG. F2300-001006 Power Train (Steering Case Cover and Steering Valve Control Lever)

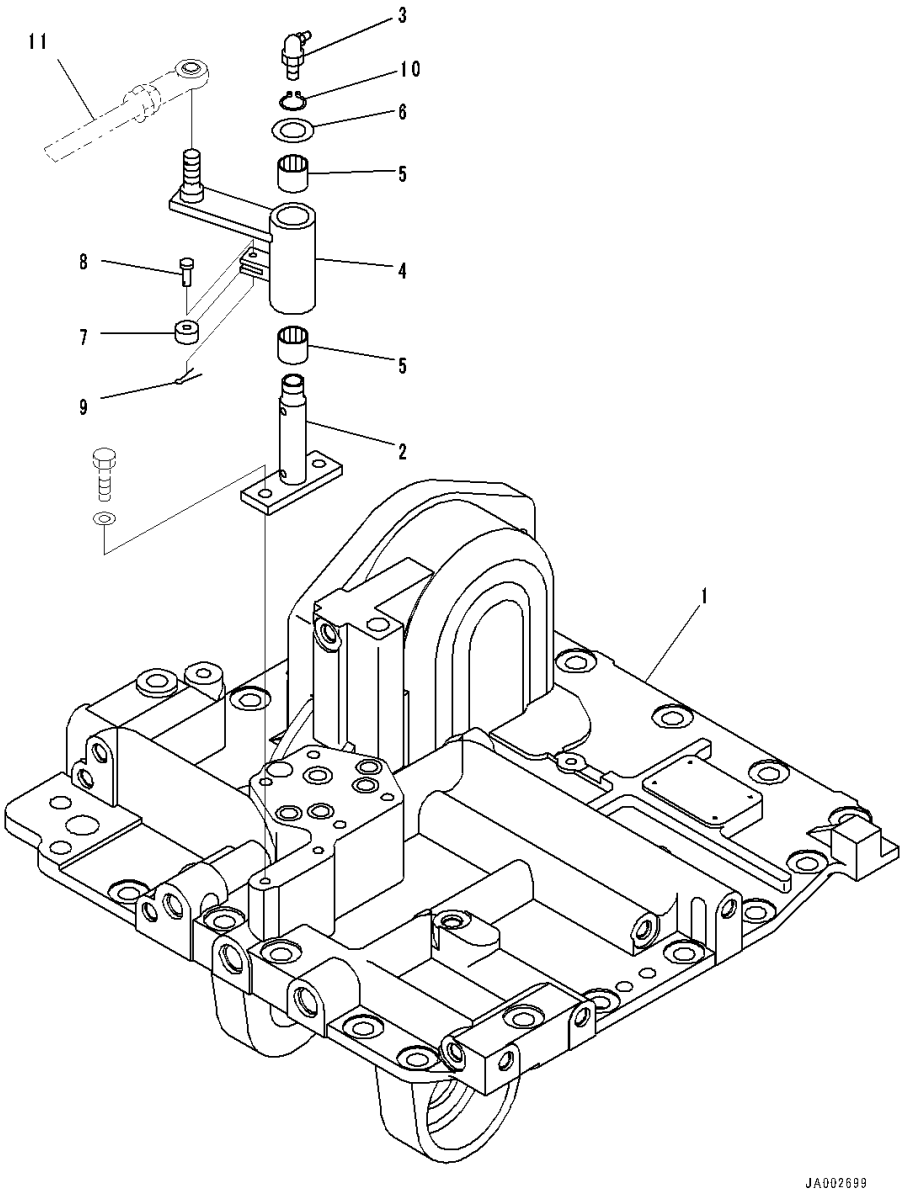

Index	Code	Part Number	Description	Qty	Serial Number
		Note: This list covers following specifications.			
		Without Power Angle Power Tilt Dozer, Inside Frame			
		Power Angle Power Tilt Dozer, Inside Frame, 3000mm,			
		Power Angle Power Tilt Blade			
		14X-22-50002	Power Unit	1	1469-
		14X-22-51000	• Steering Assembly	1	1001-
1		14Y-22-55142	• • Cover	1	1001-
2		14Z-43-12421	• • Shaft	1	1001-
3		07020-00900	• • Fitting, Grease	1	1001-
4		14Z-43-12411	• • Lever	1	1001-
5		06124-02020	• • Bearing	2	1001-
6		01643-31845	• • Washer	1	1001-
7		103-43-21380	• • Roller	1	1001-
8		103-43-21390	• • Pin	1	1001-
9		04050-11610	• • Pin, Cotter	1	1001-
10		04064-01812	• • Ring, Snap, for Shaft Side	1	1001-
11		(04245-41487)	Rod(Refer to Page 302)		-

FIG. F2300-001007 Power Train (Steering Valve)

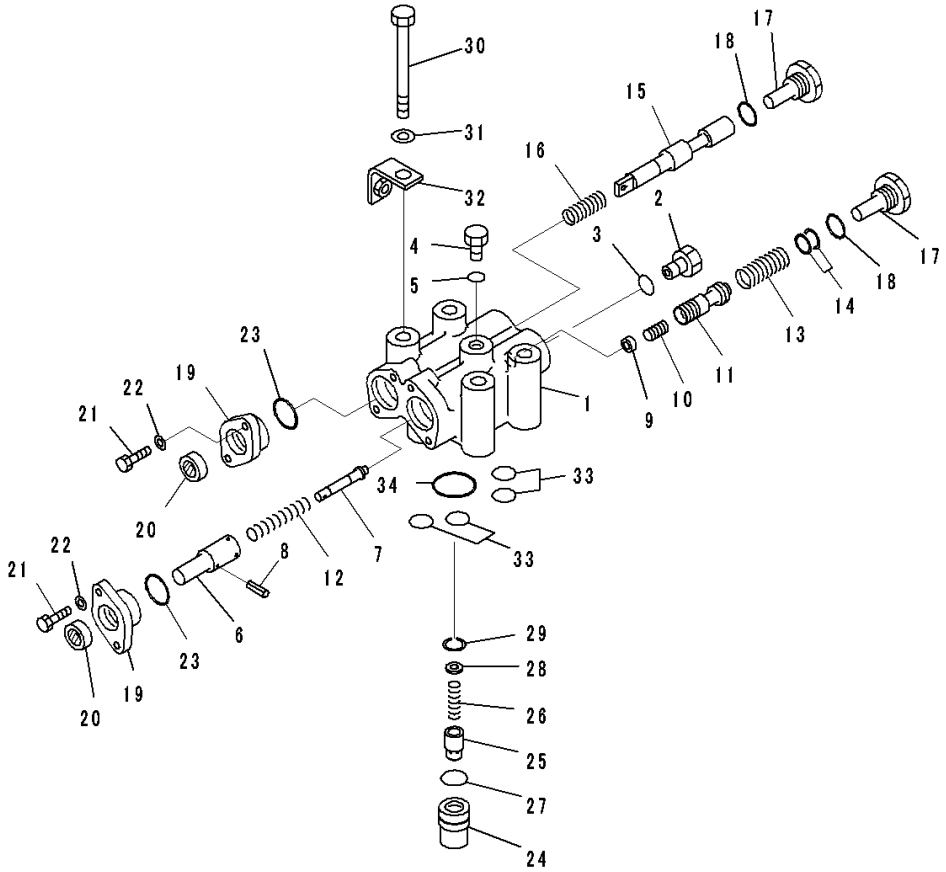

Index	Code	Part Number	Description	Qty	Serial Number
		Note: This list covers following specifications.			
		Without Power Angle Power Tilt Dozer, Inside Frame			
		Power Angle Power Tilt Dozer, Inside Frame, 3000mm,			
		Power Angle Power Tilt Blade			
		14X-22-50002	Power Unit	1	1469-
		14X-22-51000	• Steering Assembly	1	1001-
		14Y-22-52100	• • Valve Assembly	1	1001-
1	C1		• • • Body	1	1001-
2		723-11-15110	• • • Plug	1	1001-
3		07002-61623	• • • O-ring, (Kit : K02)	1	1001-
4		07040-11812	• • • Plug	1	1001-
5		07002-61823	• • • O-ring, (Kit : K02)	1	1001-
6		14Z-40-11320	• • • Guide	1	1001-
7		14Z-40-11330	• • • Shaft	1	1001-
8		04025-00316	• • • Pin, Spring	1	1001-
9		14Z-40-11340	• • • Guide	1	1001-
10		195-40-31540	• • • Piston	1	1001-
11	C1		• • • Valve	1	1001-
12		14Z-40-11380	• • • Spring	1	1001-
13		14Z-40-11371	• • • Spring	1	1001-
14		14Z-40-11350	• • • Shim, T=0.05mm	5	1001-
15	C1		• • • Spool	1	1001-
16		565-62-11270	• • • Spring	1	1001-
17		14Z-40-11360	• • • Plug	2	1001-
18		07002-32434	• • • O-ring, (Kit : K02)	2	1001-
19		14Z-40-11220	• • • Cover	2	1001-
20		113-15-29110	• • • Seal, Oil, (Kit : K02)	2	1001-
21		01010-80620	• • • Bolt	4	1001-
22		01643-30623	• • • Washer	4	1001-
23		07002-33034	• • • O-ring, (Kit : K02)	2	1001-
		14Z-40-12102	• • Valve Assembly	1	1001-
24		14Z-40-12211	• • • Body	1	1001-
25		07750-01623	• • • Valve	1	1001-
26		07750-01628	• • • Spring	1	1001-
27		07000-72021	• • • O-ring	1	1001-
28		14Z-22-15221	• • • Spacer	1	1001-
29		04065-01610	• • • Ring, Snap	1	1001-
30		01010-81295	• • Bolt	4	1001-
31		01643-31232	• • Washer	4	1001-
32		8288-43-1120	• • Bracket	1	1001-

FIG. F2300-001007 Power Train (Steering Valve)

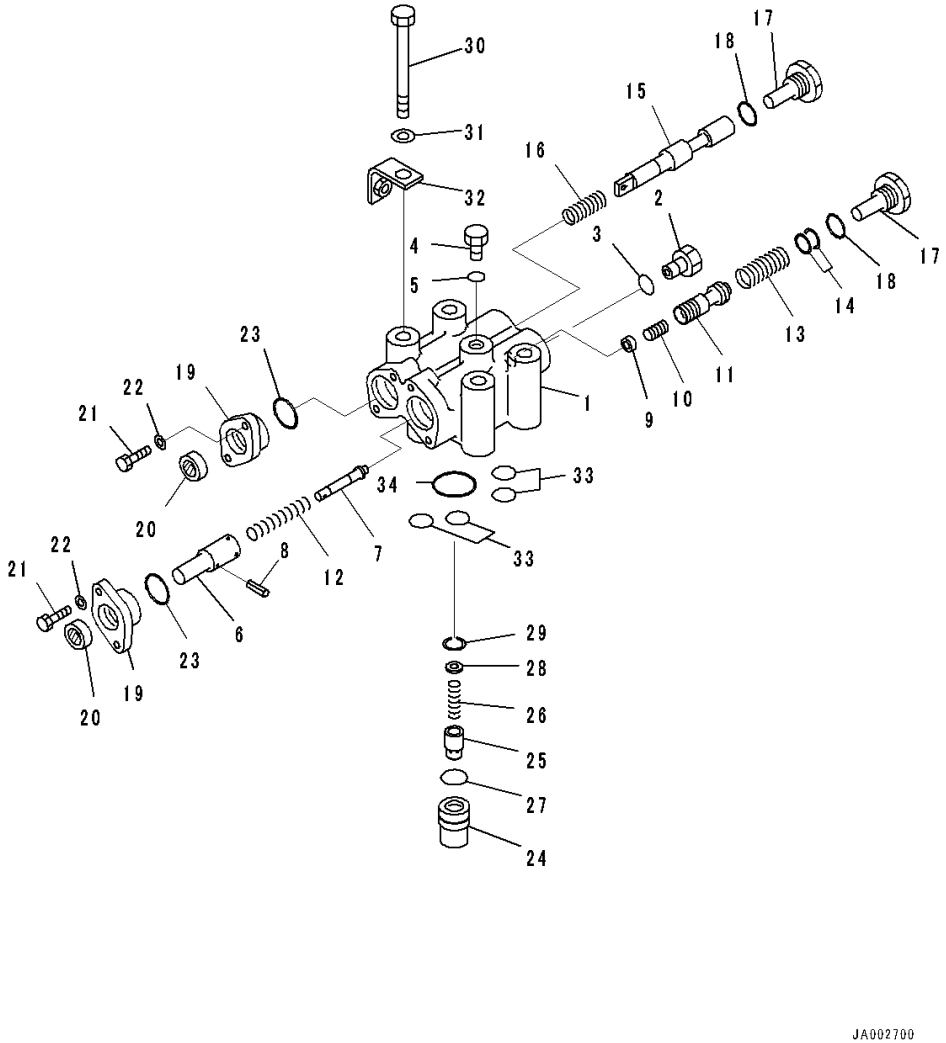

Index	Code	Part Number	Description	Qty	Serial Number
33		07000-72018	• • O-ring, (Kit : K01)	4	1001-
34		07000-73032	• • O-ring, (Kit : K01)	1	1001-

FIG. F2300-001008 Power Train (H.S.S. Gear)

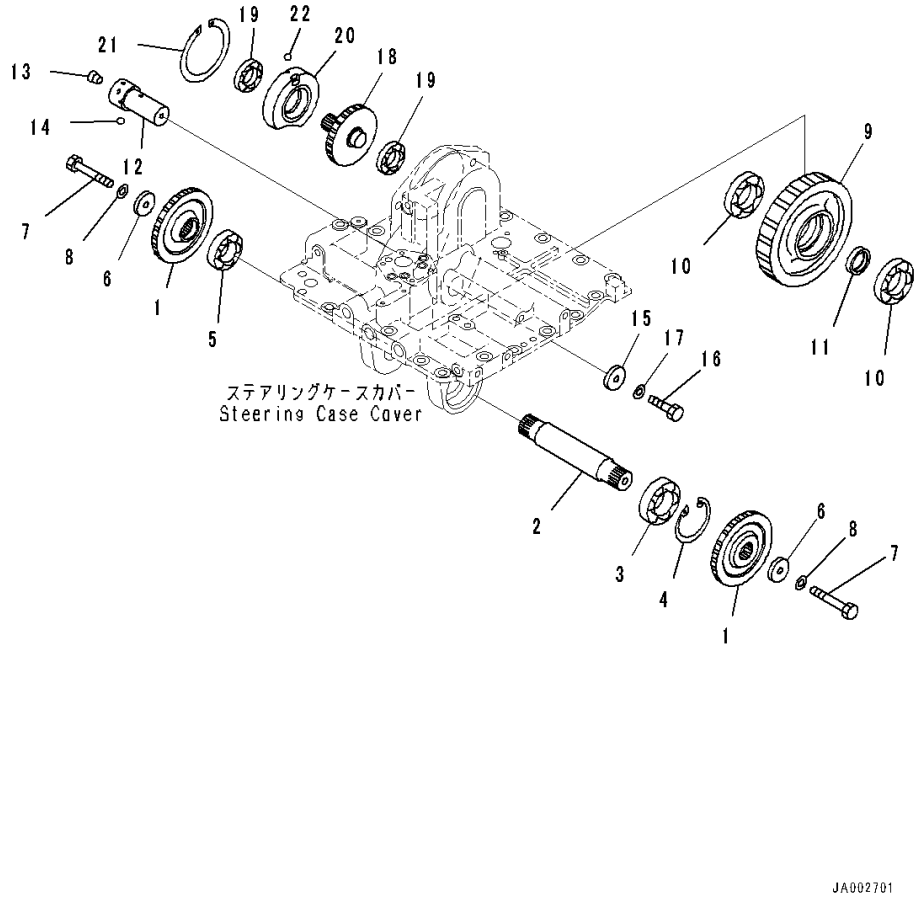

Index	Code	Part Number	Description	Qty	Serial Number
		Note: This list covers following specifications.			
		Without Power Angle Power Tilt Dozer, Inside Frame			
		Power Angle Power Tilt Dozer, Inside Frame, 3000mm,			
		Power Angle Power Tilt Blade			
		14X-22-50002	Power Unit	1	1469-
		14X-22-51000	• Steering Assembly	1	1001-
1		14Y-22-22311	• • Gear	2	1001-
2		14Y-22-54260	• • Shaft	1	1001-
3		06030-06309	• • Bearing	1	1001-
4		04065-01030	• • Ring	1	1001-
5		134-22-79320	• • Bearing	1	1001-
6		23E-15-13350	• • Holder	2	1001-
7		01010-81280	• • Bolt	2	1001-
8		01643-31232	• • Washer	2	1001-
9		14Y-22-22321	• • Gear	1	1001-
10		06030-06309	• • Bearing	2	1001-
11		14Y-22-22170	• • Collar	1	1001-
12		14Y-22-22231	• • Shaft	1	1001-
13		07043-70108	• • Plug	1	1001-
14		04260-00635	• • Ball, Steel	1	1001-
15		23E-15-13350	• • Holder	1	1001-
16		01010-81230	• • Bolt	1	1001-
17		01643-31232	• • Washer	1	1001-
18		14Y-22-22330	• • Gear	1	1001-
19		06340-06207	• • Bearing	2	1001-
20		14Y-22-22181	• • Cage	1	1001-
21		04071-00140	• • Ring, Snap	1	1001-
22		04260-00635	• • Ball, Steel	1	1001-

FIG. F2300-001009 Power Train (Steering Case Cover Related Parts)

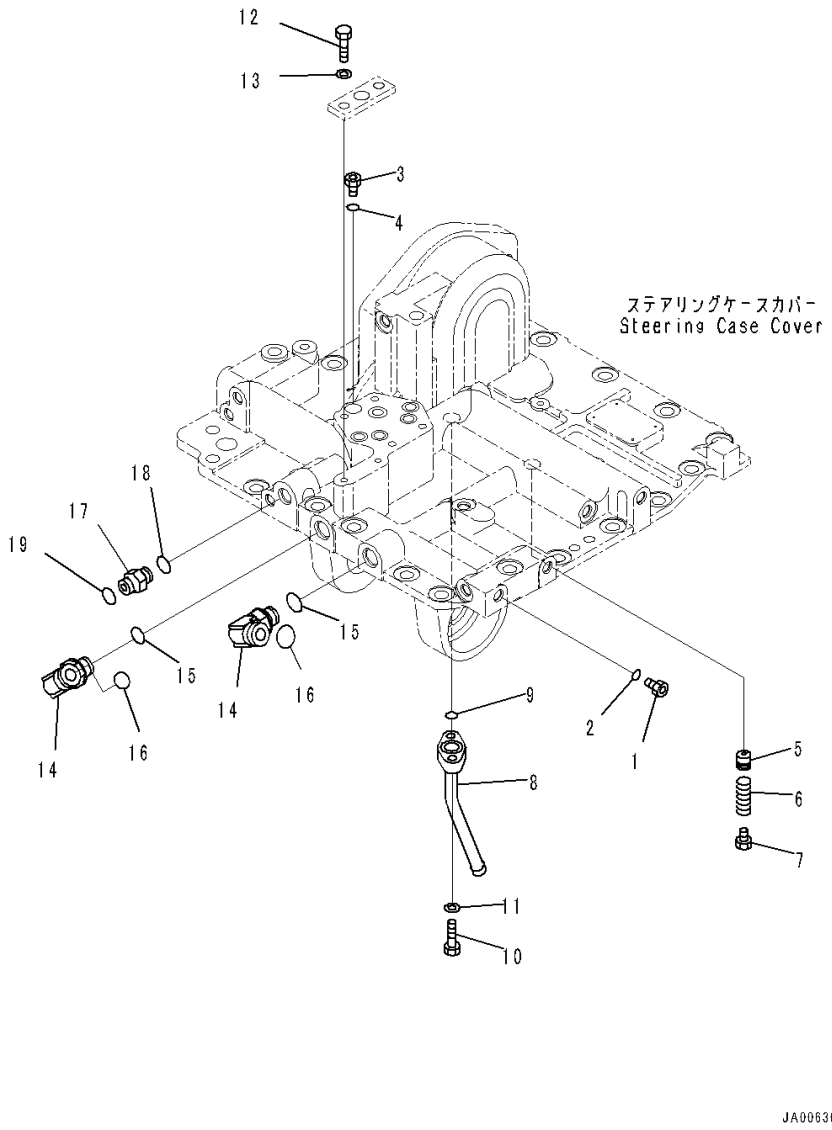

Index	Code	Part Number	Description	Qty	Serial Number
		Note: This list covers following specifications.			
		Without Power Angle Power Tilt Dozer, Inside Frame			
		Power Angle Power Tilt Dozer, Inside Frame, 3000mm,			
		Power Angle Power Tilt Blade			
		14X-22-50002	Power Unit	1	1469-
		14X-22-51000	• Steering Assembly	1	1001-
1		723-11-15110	• • Plug	16	1001-
2		07002-61623	• • O-ring, (Kit : K01)	16	1001-
3		134-22-66140	• • Sleeve	1	1001-
4		07000-72018	• • O-ring, (Kit : K01)	1	1001-
5		23A-15-15490	• • Valve	1	1001-
6		702-16-52420	• • Spring	1	1001-
7		07040-12012	• • Plug	1	1001-
8		14Y-22-56240	• • Tube	1	1001-
9		07000-73022	• • O-ring, (Kit : K01)	1	1001-
10		01010-81035	• • Bolt	2	1001-
11		01643-31032	• • Washer	2	1001-
12		01010-81025	• • Bolt	2	1001-
13		01643-31032	• • Washer	2	1001-
14		02782-10628	• • Elbow	2	1001-
15		07002-62434	• • O-ring, (Kit : K01)	2	1001-
16		02896-61018	• • O-ring, (Kit : K01)	2	1001-
17		02781-00422	• • Union	1	1001-
18		07002-62034	• • O-ring, (Kit : K01)	1	1001-
19		02896-61012	• • O-ring, (Kit : K01)	1	1001-

FIG. F2300-001010 Power Train (1st Housing)

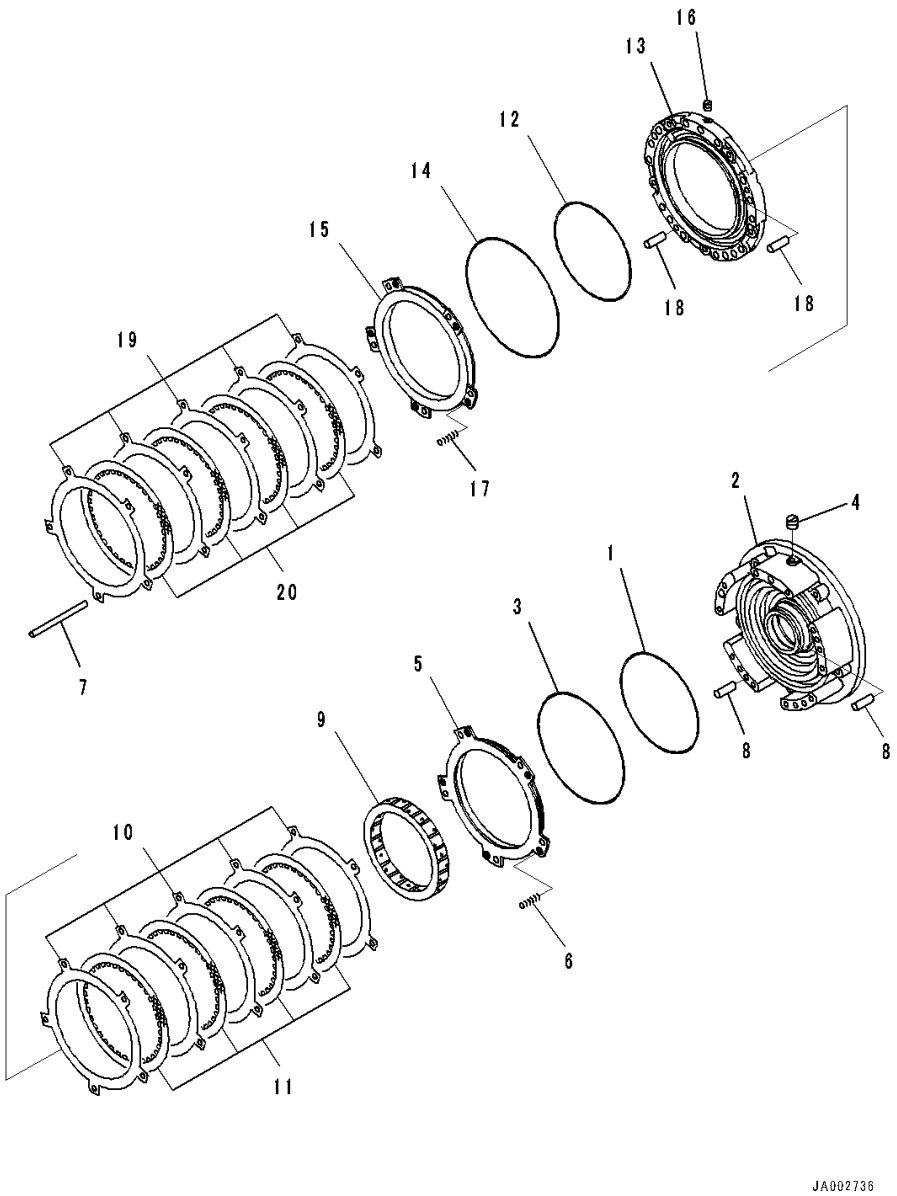

Index	Code	Part Number	Description	Qty	Serial Number
		Note: This list covers following specifications.			
		Without Power Angle Power Tilt Dozer, Inside Frame			
		Power Angle Power Tilt Dozer, Inside Frame, 3000mm,			
		Power Angle Power Tilt Blade			
		14X-22-50002	Power Unit	1	1469-
		14X-15-51001	• Transmission Assembly	1	1001-
1		103-15-12820	• • Seal Ring, (Kit : K03)	1	1001-
2		14X-15-51130	• • Housing	1	1001-
3		124-15-41920	• • Seal Ring, (Kit : K03)	1	1001-
4		568-15-11380	• • Plug	1	1001-
5		14X-15-52710	• • Piston	1	1001-
6		145-14-12790	• • Spring, L=59mm	5	1001-
7		103-15-12880	• • Pin	5	1001-
8		04020-01228	• • Pin, Dowel	2	1001-
9		14X-15-52660	• • Gear, Ring	1	1001-
10		14X-15-22780	• • Plate	5	1001-
11		14X-15-22710	• • Disc	4	1001-
12		124-15-41910	• • Seal Ring, (Kit : K03)	1	1001-
13		14X-15-51140	• • Housing	1	1001-
14		569-15-12860	• • Seal Ring, (Kit : K03)	1	1001-
15		14X-15-22750	• • Piston	1	1001-
16		145-14-11320	• • Plug	1	1001-
17		145-14-12790	• • Spring, L=59mm	5	1001-
18		04020-01228	• • Pin, Dowel	2	1001-
19		14X-15-22780	• • Plate	5	1001-
20		14X-15-22710	• • Disc	4	1001-

FIG. F2300-001011 Power Train (2nd, 3rd, Forward and Reverse Housing)

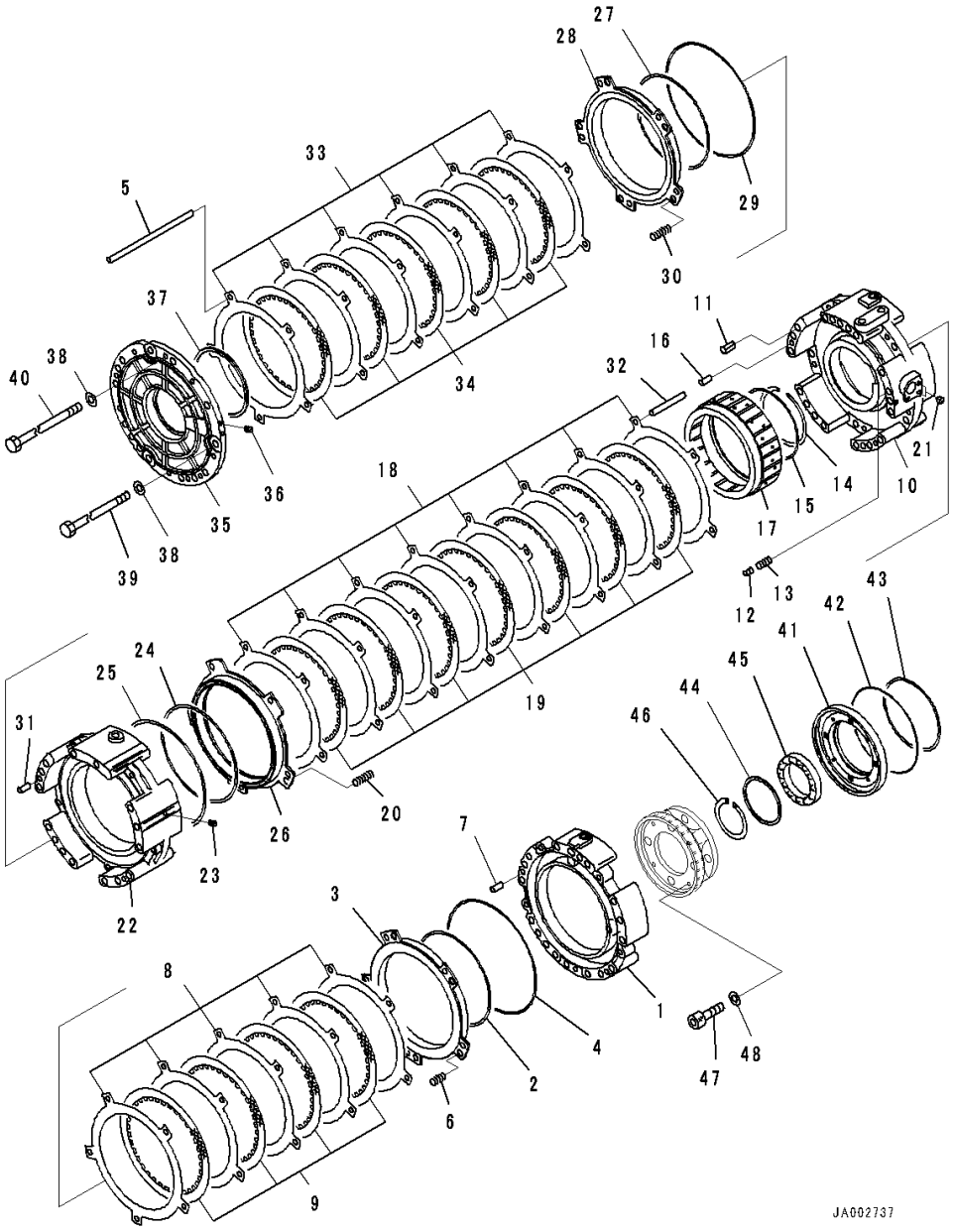

Index	Code	Part Number	Description	Qty	Serial Number
		Note: This list covers following specifications.			
		Without Power Angle Power Tilt Dozer, Inside Frame			
		Power Angle Power Tilt Dozer, Inside Frame, 3000mm,			
		Power Angle Power Tilt Blade			
		14X-22-50002	Power Unit	1	1469-
		14X-15-51001	• Transmission Assembly	1	1001-
1		14X-15-51150	• • Housing	1	1001-
2		124-15-41910	• • Seal Ring, (Kit : K03)	1	1001-
3		14X-15-22750	• • Piston	1	1001-
4		569-15-12860	• • Seal Ring, (Kit : K03)	1	1001-
5		103-15-12880	• • Pin	5	1001-
6		145-14-12790	• • Spring, L=59mm	5	1001-
7		04020-01228	• • Pin, Dowel	2	1001-
8		14X-15-22780	• • Plate	5	1001-
9		14X-15-22710	• • Disc	4	1001-
10		14X-15-51160	• • Housing	1	1001-
11		569-15-41310	• • Sleeve	14	1001-
12		287-15-15360	• • Piston	1	1001-
13		700-80-51390	• • Spring	1	1001-
14		04071-00145	• • Ring, Snap, for Hole Side	1	1001-
15		14X-15-29220	• • Seal Ring, (Kit : K03)	1	1001-
16		04020-01228	• • Pin, Dowel	2	1001-
17		14X-15-52630	• • Gear, Ring	1	1001-
18		14X-15-22780	• • Plate	8	1001-
19		14X-15-22710	• • Disc	7	1001-
20		145-14-12780	• • Spring	5	1001-
21		175-15-11230	• • Plug	2	1001-
22		14X-15-51170	• • Housing	1	1001-
23		145-14-11320	• • Plug	1	1001-
24		103-15-12820	• • Seal Ring, (Kit : K03)	1	1001-
25		124-15-41920	• • Seal Ring, (Kit : K03)	1	1001-
26		14X-15-22740	• • Piston	1	1001-
27		124-15-41910	• • Seal Ring, (Kit : K03)	1	1001-
28		14X-15-22770	• • Piston	1	1001-
29		113-15-12870	• • Ring, (Kit : K03)	1	1001-
30		14X-15-12910	• • Spring	5	1001-
31		04020-01228	• • Pin, Dowel	2	1001-
32		103-15-12890	• • Pin	5	1001-
33		14X-15-22780	• • Plate	6	1001-
34		14X-15-22710	• • Disc	5	1001-

FIG. F2300-001011 Power Train (2nd, 3rd, Forward and Reverse Housing)

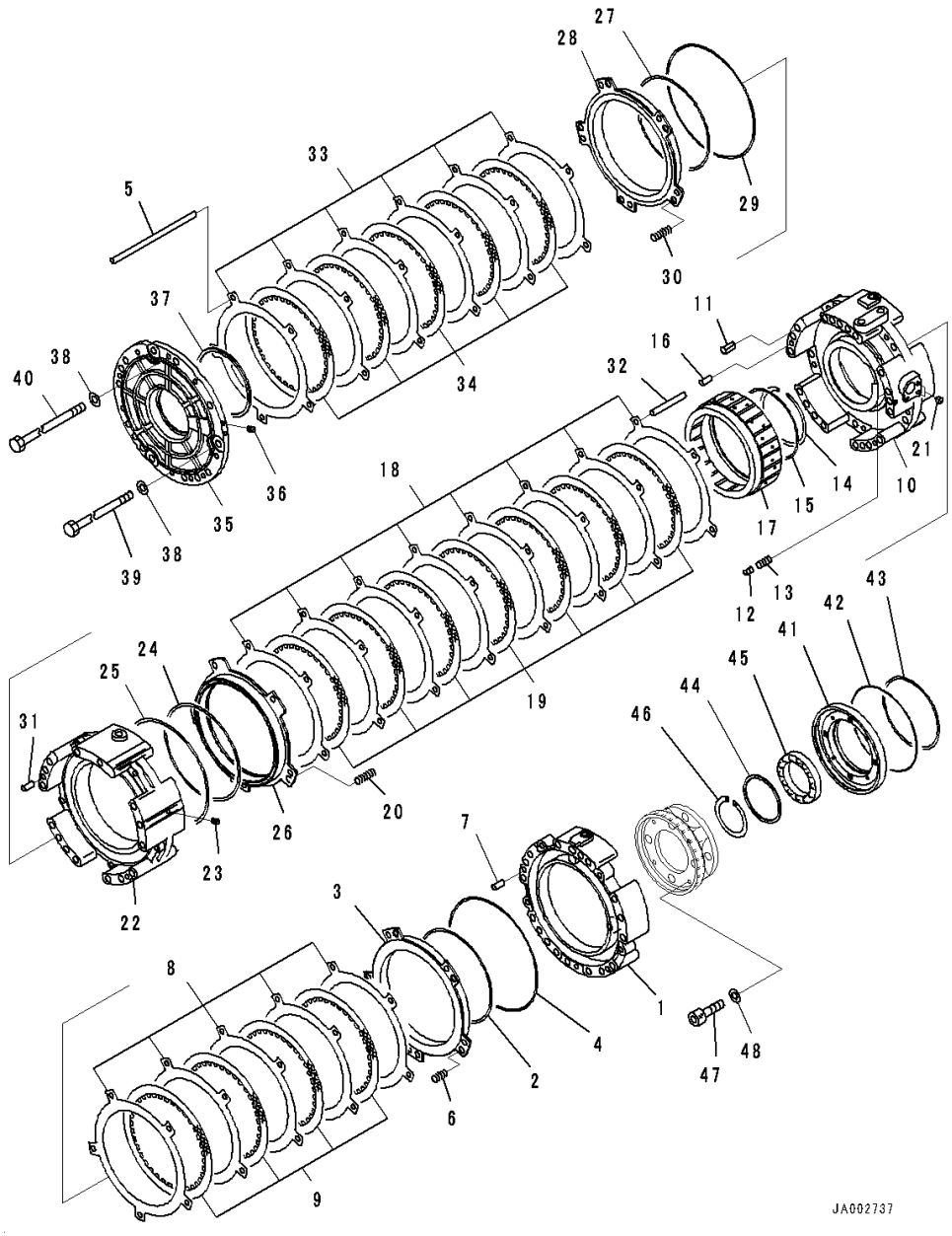

Index	Code	Part Number	Description	Qty	Serial Number
35		14X-15-51181	• • Housing	1	1001-
36		145-14-11320	• • Plug	2	1001-
37		14X-15-29230	• • Seal Ring, (Kit : K03)	1	1001-
38		145-14-11571	• • Washer	14	1001-
39		144-15-21191	• • Bolt	3	1001-
40		232-15-11240	• • Bolt	11	1001-
41		14X-15-52370	• • Cover	1	1001-
42		14X-15-19210	• • Seal Ring, (Kit : K03)	1	1001-
43		07018-11805	• • Seal Ring	1	1001-
44		14X-15-52170	• • Spacer	1	1001-
45		06330-06822	• • Bearing	1	1001-
46		04070-00105	• • Ring, Snap	1	1001-
47		01252-70860	• • Bolt, Hexagon Socket Head	4	1001-
48		01643-50823	• • Washer	4	1001-

FIG. F2300-001012 Power Train (Transmission Carrier) (1/2)

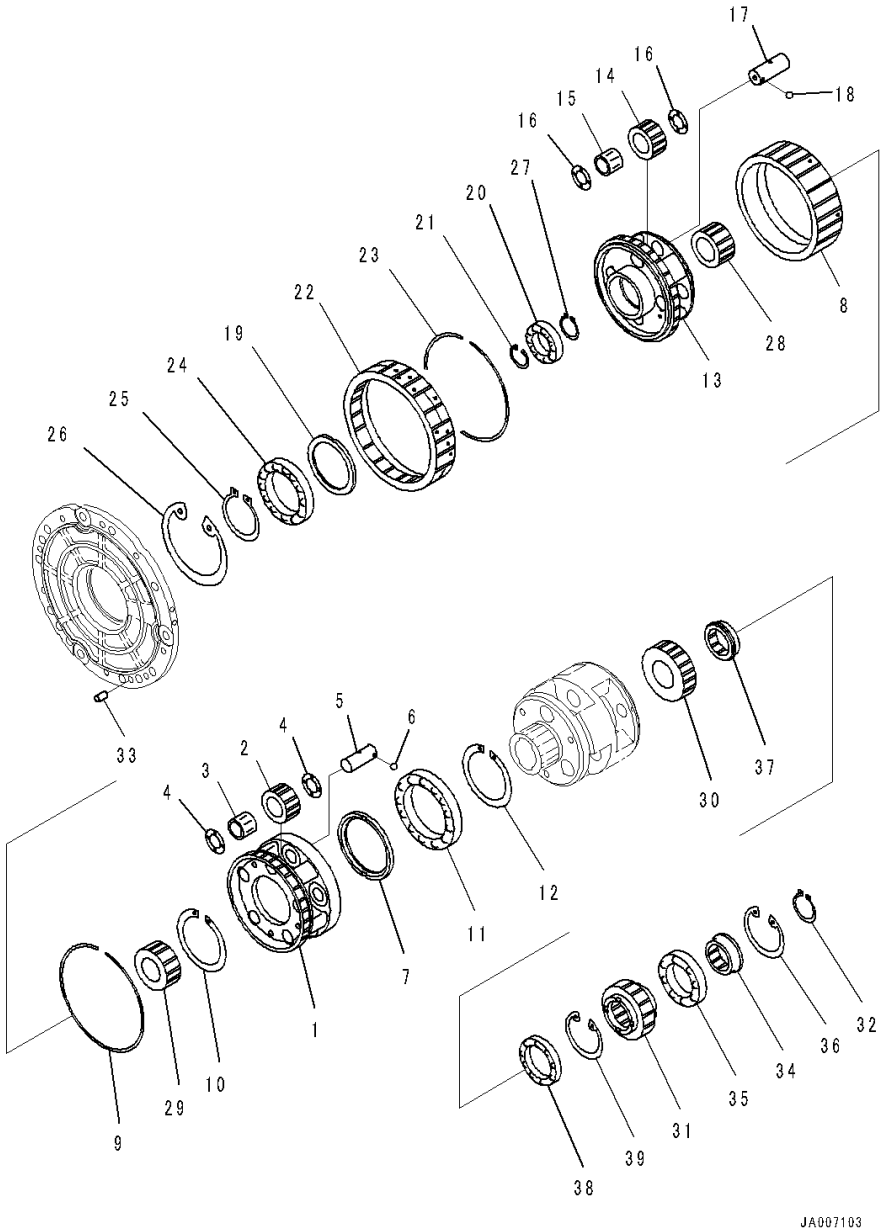

Index	Code	Part Number	Description	Qty	Serial Number
		Note: This list covers following specifications.			
		Without Power Angle Power Tilt Dozer, Inside Frame			
		Power Angle Power Tilt Dozer, Inside Frame, 3000mm,			
		Power Angle Power Tilt Blade			
		14X-22-50002	Power Unit	1	1469-
		14X-15-51001	• Transmission Assembly	1	1001-
1		14X-15-52320	• • Carrier	1	1001-
2		14X-15-52420	• • Gear	5	1001-
3		14X-15-59410	• • Bearing	5	1001-
4		712-85-12560	• • Washer, Thrust	10	1001-
5		14X-15-52520	• • Shaft	5	1001-
6		04260-00635	• • Ball, Steel	5	1001-
7		14X-15-52151	• • Spacer	1	1001-
8		14X-15-52620	• • Gear, Ring	1	1001-
9		14X-15-29530	• • Ring, Snap	1	1001-
10		14X-15-29510	• • Ring, Snap	1	1001-
11		06300-06921	• • Bearing	1	1001-
12		04070-00105	• • Ring, Snap	1	1001-
13		14X-15-52311	• • Carrier	1	1001-
14		56E-15-17261	• • Gear	4	1001-
15		56E-15-19360	• • Bearing, Needle	4	1001-
16		425-15-19440	• • Washer	8	1001-
17		14X-15-52510	• • Shaft	4	1001-
18		04260-00635	• • Ball, Steel	4	1001-
19		423-15-12810	• • Spacer	1	1001-
20		14X-15-29610	• • Bearing	1	1001-
21		04065-07525	• • Ring, Snap, for Hole Side	1	1001-
22		14X-15-52610	• • Gear, Ring	1	1001-
23		14X-15-29520	• • Ring, Snap	1	1001-
24		06330-06918	• • Bearing	1	1001-
25		04064-09030	• • Ring, Snap	1	1001-
26		04065-01254	• • Ring, Snap	1	1001-
27		04064-04518	• • Ring, Snap	5	1001-
28		14X-15-52211	• • Gear	1	1001-
29		14X-15-52220	• • Gear	1	1001-
30		14X-15-52240	• • Gear	1	1001-
31		14X-15-52250	• • Gear	1	1001-
32		14X-15-29540	• • Ring	2	1001-
33		04020-01228	• • Pin, Dowel	2	1001-
34		14X-15-52140	• • Spacer	1	1001-

FIG. F2300-001012 Power Train (Transmission Carrier) (1/2)

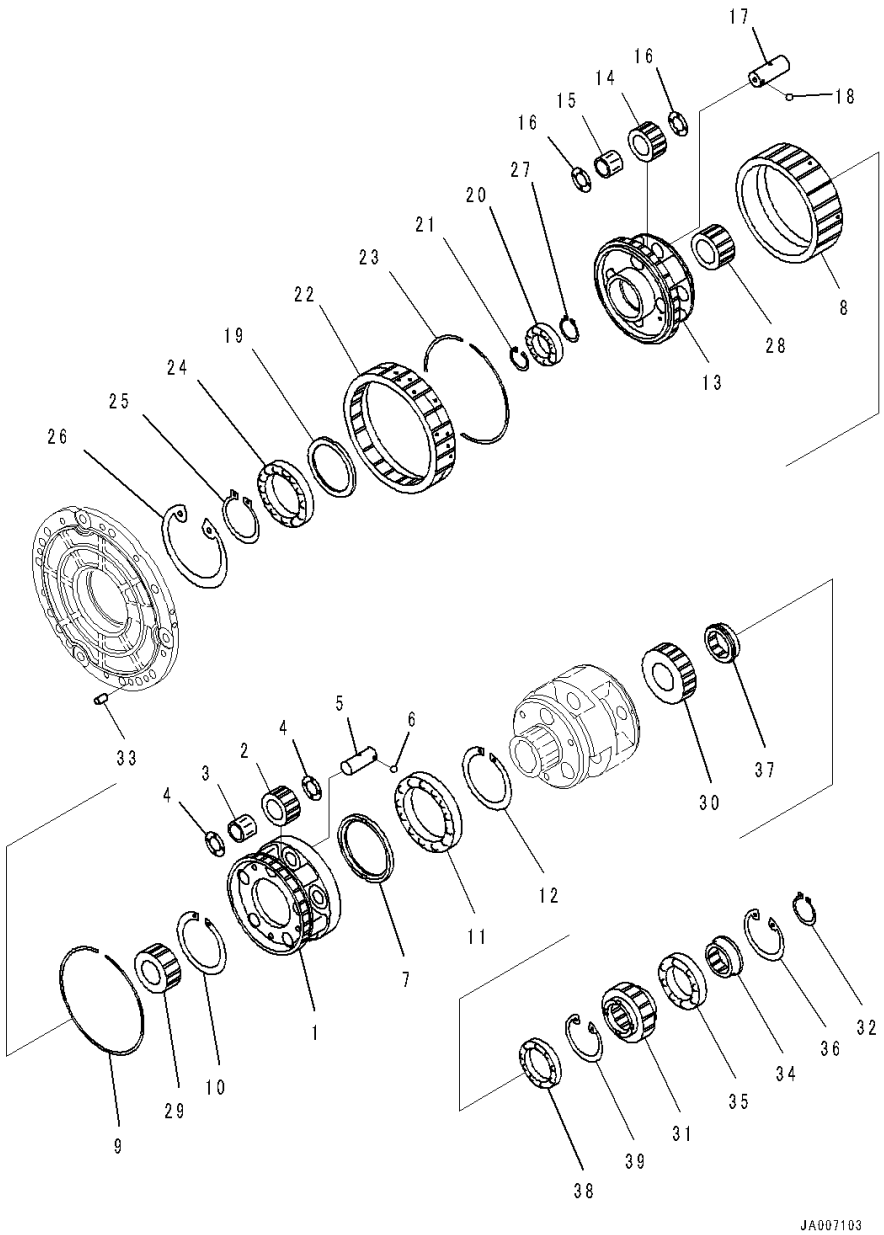

Index	Code	Part Number	Description	Qty	Serial Number
35		14X-15-59310	• • Bearing	1	1001-
36		04065-01030	• • Ring	1	1001-
37		14X-15-52160	• • Spacer	1	1001-
38		14X-15-59330	• • Bearing	1	1001-
39		04065-09030	• • Ring, Snap, for Hole Side	1	1001-

FIG. F2300-001013 Power Train (Transmission Carrier) (2/2)

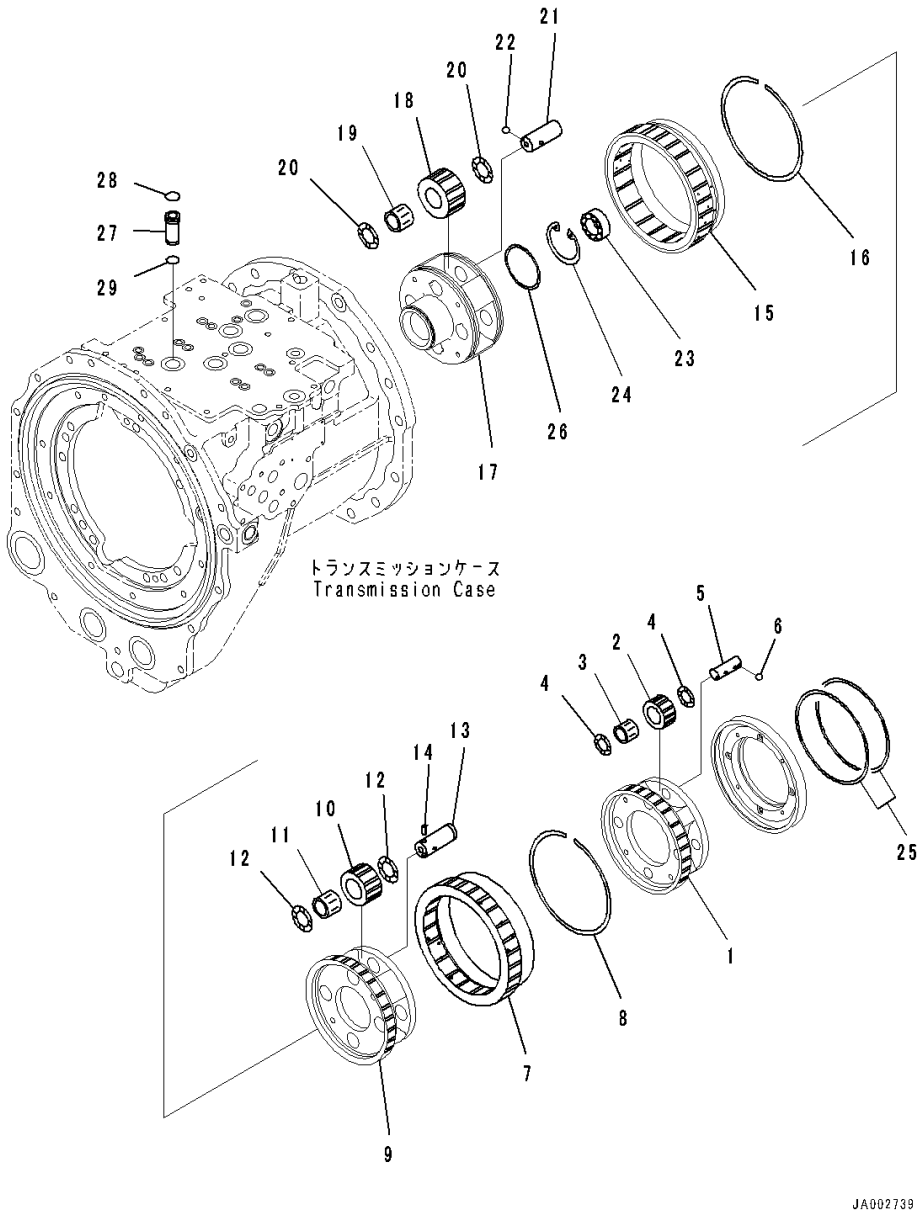

Index	Code	Part Number	Description	Qty	Serial Number
		Note: This list covers following specifications.			
		Without Power Angle Power Tilt Dozer, Inside Frame			
		Power Angle Power Tilt Dozer, Inside Frame, 3000mm,			
		Power Angle Power Tilt Blade			
		14X-22-50002	Power Unit	1	1469-
		14X-15-51001	• Transmission Assembly	1	1001-
1		14X-15-52351	• • Carrier	1	1001-
2		423-15-12441	• • Gear	4	1001-
3		14X-15-29410	• • Bearing	4	1001-
4		14X-15-52560	• • Washer, Thrust	8	1001-
5		14X-15-52550	• • Shaft	4	1001-
6		04260-00635	• • Ball, Steel	4	1001-
7		14X-15-52651	• • Gear, Ring	1	1001-
8		14X-15-29520	• • Ring, Snap	1	1001-
9		14X-15-52340	• • Carrier	1	1001-
10		14X-15-22421	• • Gear	4	1001-
11		14X-15-29440	• • Bearing	4	1001-
12		425-15-19440	• • Washer	8	1001-
13		425-15-32520	• • Shaft	4	1001-
14		14X-15-12960	• • Pin	4	1001-
15		14X-15-52640	• • Gear, Ring	1	1001-
16		14X-15-29520	• • Ring, Snap	1	1001-
17		14X-15-52330	• • Carrier	1	1001-
18		14X-15-52430	• • Gear	4	1001-
19		56E-15-19360	• • Bearing, Needle	4	1001-
20		425-15-19440	• • Washer	8	1001-
21		14X-15-52510	• • Shaft	4	1001-
22		04260-00635	• • Ball, Steel	4	1001-
23		14X-15-59320	• • Bearing	1	1001-
24		04065-05220	• • Ring, Snap	1	1001-
25		07018-11805	• • Seal Ring	2	1001-
26		07018-10854	• • Seal Ring	1	1001-
27		14X-15-55520	• • Sleeve	5	1001-
28		07000-72021	• • O-ring, (Kit : K03)	5	1001-
29		07000-72018	• • O-ring, (Kit : K03)	5	1001-

FIG. F2300-001014 Power Train (Transmission Case)

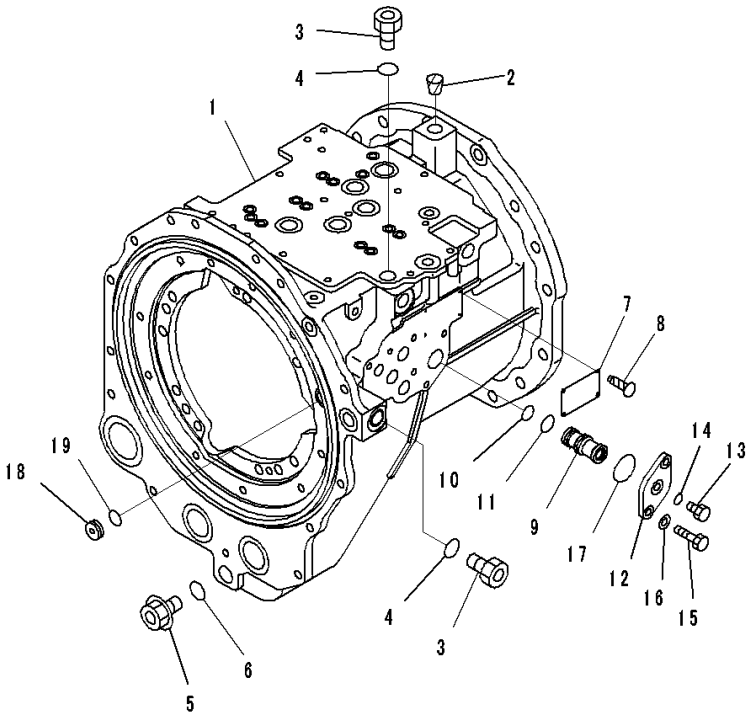

Index	Code	Part Number	Description	Qty	Serial Number
		Note: This list covers following specifications.			
		Without Power Angle Power Tilt Dozer, Inside Frame			
		Power Angle Power Tilt Dozer, Inside Frame, 3000mm,			
		Power Angle Power Tilt Blade			
		14X-22-50002	Power Unit	1	1469-
		14X-15-51001	• Transmission Assembly	1	1001-
1		14X-15-51111	• • Case	1	1001-
2		07049-02430	• • Plug	1	1001-
3		07040-12412	• • Plug	2	1001-
4		07002-62434	• • O-ring, (Kit : K03)	2	1001-
5		07044-12412	• • Plug	1	1001-
6		07002-62434	• • O-ring, (Kit : K03)	1	1001-
7	C2	09608-05080	• • Plate, Name (Limited Supply)	1	1001-
8		04418-13060	• • Screw	4	1001-
9		14X-15-56130	• • Sleeve	1	1001-
10		07000-73022	• • O-ring, (Kit : K03)	1	1001-
11		07000-73025	• • O-ring, (Kit : K03)	1	1001-
12		14X-15-56140	• • Flange	1	1001-
13		07040-11007	• • Plug	1	1001-
14		07002-61023	• • O-ring, (Kit : K03)	1	1001-
15		01010-81025	• • Bolt	2	1001-
16		01643-31032	• • Washer	2	1001-
17		07000-73045	• • O-ring, (Kit : K03)	1	1001-
18		23B-15-11370	• • Stopper	1	1001-
19		07000-73022	• • O-ring, (Kit : K03)	1	1001-

FIG. F2300-001015 Power Train (Input and Output Shaft)

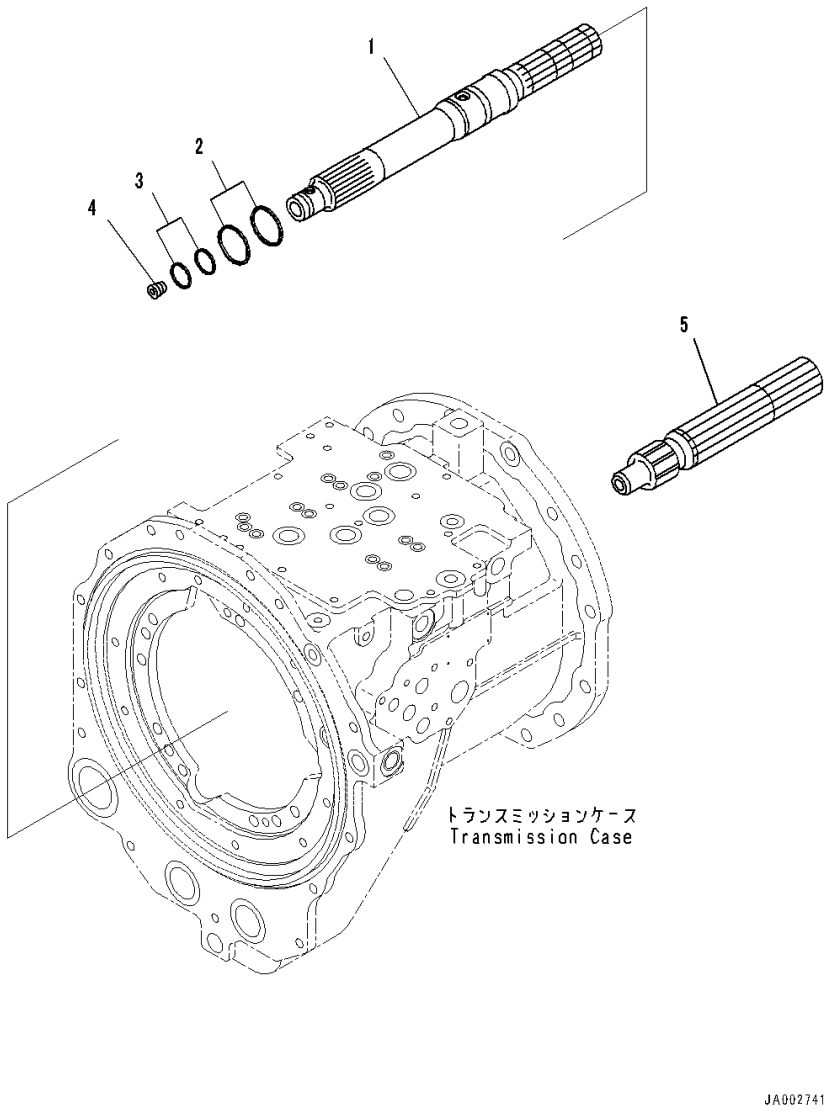

Index	Code	Part Number	Description	Qty	Serial Number
		Note: This list covers following specifications.			
		Without Power Angle Power Tilt Dozer, Inside Frame			
		Power Angle Power Tilt Dozer, Inside Frame, 3000mm,			
		Power Angle Power Tilt Blade			
		14X-22-50002	Power Unit	1	1469-
		14X-15-51001	• Transmission Assembly	1	1001-
1		14X-15-52111	• • Shaft	1	1001-
2		714-12-39230	• • Seal Ring, (Kit : K03)	2	1001-
3		714-21-19810	• • Seal Ring, (Kit : K03)	2	1001-
4		07043-70312	• • Plug	1	1001-
5		14X-15-52120	• • Shaft	1	1001-

FIG. F2300-001016 Power Train (Transmission E.C.M.V. Valve)

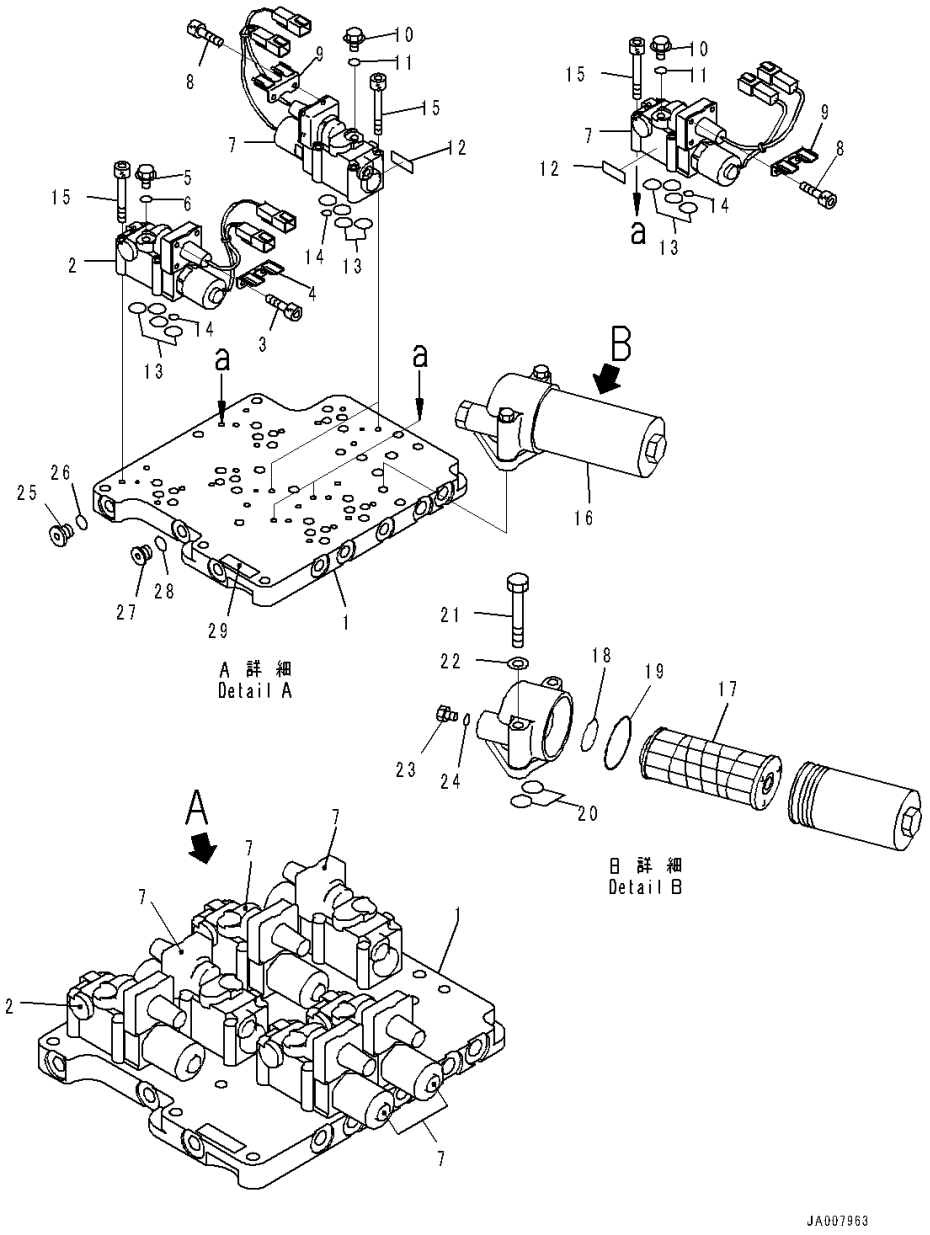

Index	Code	Part Number	Description	Qty	Serial Number
		Note: This list covers following specifications.			
		Without Power Angle Power Tilt Dozer, Inside Frame			
		Power Angle Power Tilt Dozer, Inside Frame, 3000mm,			
		Power Angle Power Tilt Blade			
		14X-22-50002	Power Unit	1	1469-
		14X-15-51001	• Transmission Assembly	1	1001-
		14X-15-55501	• • Valve Assembly	1	1001-
1		14X-15-55511	• • • Seat, Valve	1	1001-
2		17A-13-46200	• • • ECMV Assembly	1	1001-
3		01252-90510	• • • • Bolt, Hexagon Socket Head	4	1001-
4		714-23-15690	• • • • Bracket	1	1001-
5		708-8E-16150	• • • • Plug	1	1001-
6		07002-61023	• • • • O-ring, (Kit : K04)	1	1001-
7		56D-15-35700	• • • ECMV Group	5	1001-
8		01252-90510	• • • • Bolt, Hexagon Socket Head	4	1001-
9		714-23-15690	• • • • Bracket	1	1001-
10		708-8E-16150	• • • • Plug	1	1001-
11		07002-61023	• • • • O-ring, (Kit : K04)	1	1001-
12	C2	700-11-31940	• • • • Plate, Name (Limited Supply)	1	1001-
13		07000-72015	• • • O-ring, (Kit : K04)	24	1001-
14		07000-71007	• • • O-ring, (Kit : K04)	6	1001-
15		01252-70650	• • • Bolt	24	1001-
16		569-15-51721	• • • Filter Assembly	1	1001-
17		569-15-51732	• • • • Element Assembly	1	1001-
18		07000-A3024	• • • • • O-ring	1	1001-
19		07000-A2060	• • • • O-ring, (Kit : K04)	1	1001-
20		07000-73022	• • • O-ring, (Kit : K04)	2	1001-
21		01010-81085	• • • Bolt	2	1001-
22		01643-31032	• • • Washer	2	1001-
23		07040-11812	• • • Plug	1	1001-
24		07002-61823	• • • O-ring, (Kit : K04)	1	1001-
25		714-24-25190	• • • Plug	5	1001-
26		07002-61423	• • • O-ring, (Kit : K04)	5	1001-
27		708-7R-11220	• • • Plug	7	1001-
28		07002-61223	• • • O-ring, (Kit : K04)	7	1001-
29	C2	700-11-31980	• • • Plate, Name (Limited Supply)	1	1001-

FIG. F2300-001017 Power Train (Transmission E.C.M.V. Valve Mounting)

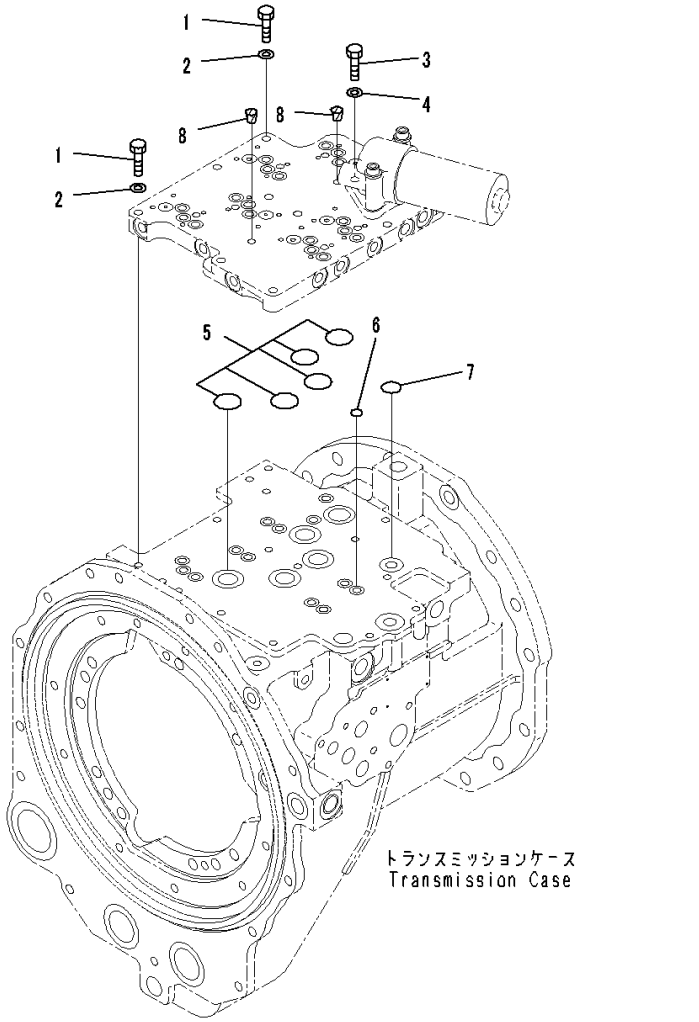

Index	Code	Part Number	Description	Qty	Serial Number
		Note: This list covers following specifications.			
		Without Power Angle Power Tilt Dozer, Inside Frame			
		Power Angle Power Tilt Dozer, Inside Frame, 3000mm,			
		Power Angle Power Tilt Blade			
		14X-22-50002	Power Unit	1	1469-
		14X-15-51001	• Transmission Assembly	1	1001-
1		01010-81045	• • Bolt	2	1001-
2		01643-31032	• • Washer	2	1001-
3		01010-81055	• • Bolt	1	1001-
4		01643-31032	• • Washer	1	1001-
5		07000-73035	• • O-ring, (Kit : K03)	5	1001-
6		07000-72015	• • O-ring, (Kit : K03)	13	1001-
7		07000-73025	• • O-ring, (Kit : K03)	1	1001-
8		07049-01012	• • Plug	1	1001-

FIG. F2300-001018 Power Train (Relief Valve)

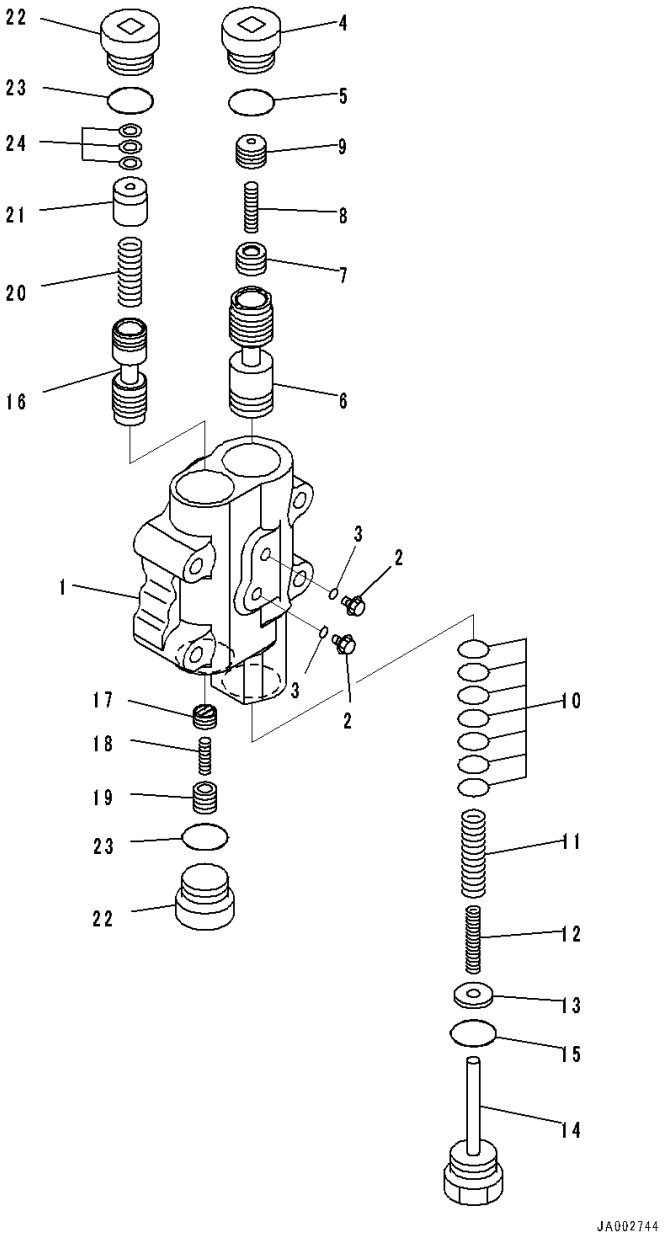

Index	Code	Part Number	Description	Qty	Serial Number
		Note: This list covers following specifications.			
		Without Power Angle Power Tilt Dozer, Inside Frame			
		Power Angle Power Tilt Dozer, Inside Frame, 3000mm,			
		Power Angle Power Tilt Blade			
		14X-22-50002	Power Unit	1	1469-
		14X-15-51001	• Transmission Assembly	1	1001-
		426-15-46001	• • Valve Assembly	1	1001-
1	C1		• • • Valve Body	1	1001-
2		708-8E-16150	• • • Plug	2	1001-
3		07002-61023	• • • O-ring, (Kit : K05)	2	1001-
4		14X-15-15850	• • • Plug	1	1001-
5		07002-63034	• • • O-ring, (Kit : K05)	1	1001-
6	C1		• • • Valve	1	1001-
7		426-15-15490	• • • Valve	1	1001-
8		562-15-16110	• • • Spring	1	1001-
9		426-15-15480	• • • Valve	1	1001-
10		56B-15-16660	• • • Shim, T=0.50mm	7	1001-
11		41E-15-16251	• • • Spring, L=128mm	1	1001-
12		426-15-16261	• • • Spring, L=108.0mm	1	1001-
13		22W-43-17330	• • • Washer	1	1001-
14		426-15-15810	• • • Plug	1	1001-
15		07002-63034	• • • O-ring, (Kit : K05)	1	1001-
16	C1		• • • Spool	1	1001-
17		104-15-25490	• • • Valve	1	1001-
18		125-15-15290	• • • Spring	1	1001-
19		104-15-25480	• • • Valve	1	1001-
20		14X-15-16210	• • • Spring	1	1001-
21		12H-15-14140	• • • Guide	1	1001-
22		14X-15-15850	• • • Plug	2	1001-
23		07002-63034	• • • O-ring, (Kit : K05)	2	1001-
24		175-15-56470	• • • Shim, T=0.50mm	3	1001-

FIG. F2300-001019 Power Train (Relief Valve Mounting)

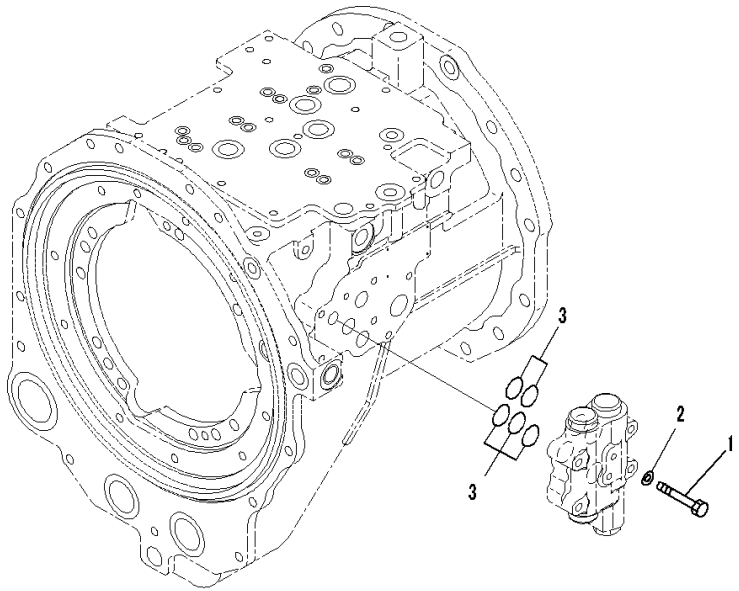

トランスミッションケース
Transmission Case

JA002748

Index	Code	Part Number	Description	Qty	Serial Number
		Note: This list covers following specifications.			
		Without Power Angle Power Tilt Dozer, Inside Frame			
		Power Angle Power Tilt Dozer, Inside Frame, 3000mm,			
		Power Angle Power Tilt Blade			
		14X-22-50002	Power Unit	1	1469-
		14X-15-51001	• Transmission Assembly	1	1001-
1		01010-81065	• • Bolt	4	1001-
2		01643-31032	• • Washer	4	1001-
3		07000-73030	• • O-ring, (Kit : K05)	5	1001-

FIG. F2300-001020 Power Train (Block)

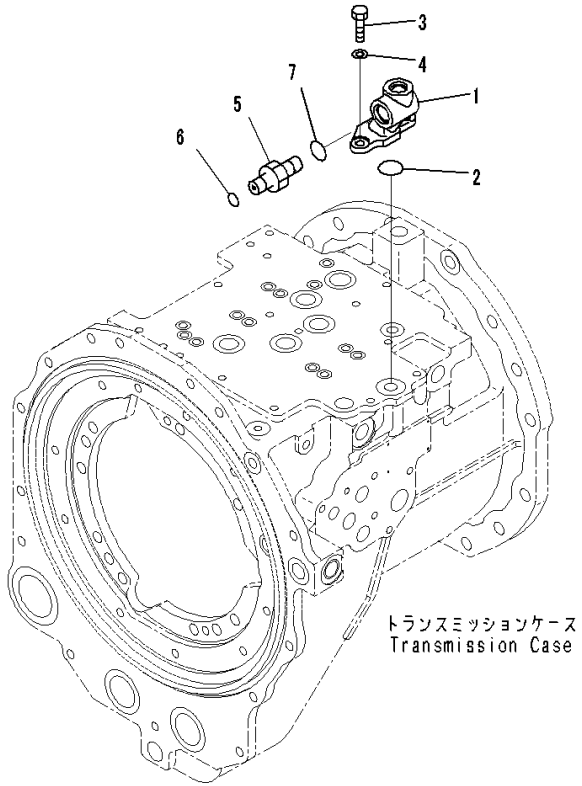

JA002751

Index	Code	Part Number	Description	Qty	Serial Number
		Note: This list covers following specifications.			
		Without Power Angle Power Tilt Dozer, Inside Frame			
		Power Angle Power Tilt Dozer, Inside Frame, 3000mm,			
		Power Angle Power Tilt Blade			
		14X-22-50002	Power Unit	1	1469-
		14X-15-51001	• Transmission Assembly	1	1001-
1		14X-15-56121	• • Block	1	1001-
2		07000-73032	• • O-ring, (Kit : K03)	1	1001-
3		01010-81030	• • Bolt	2	1001-
4		01643-31032	• • Washer	2	1001-
5		02781-00628	• • Union	1	1001-
6		02896-61018	• • O-ring, (Kit : K03)	1	1001-
7		07002-62434	• • O-ring, (Kit : K03)	1	1001-

FIG. F2300-001021 Power Train (Pump and Turbine)

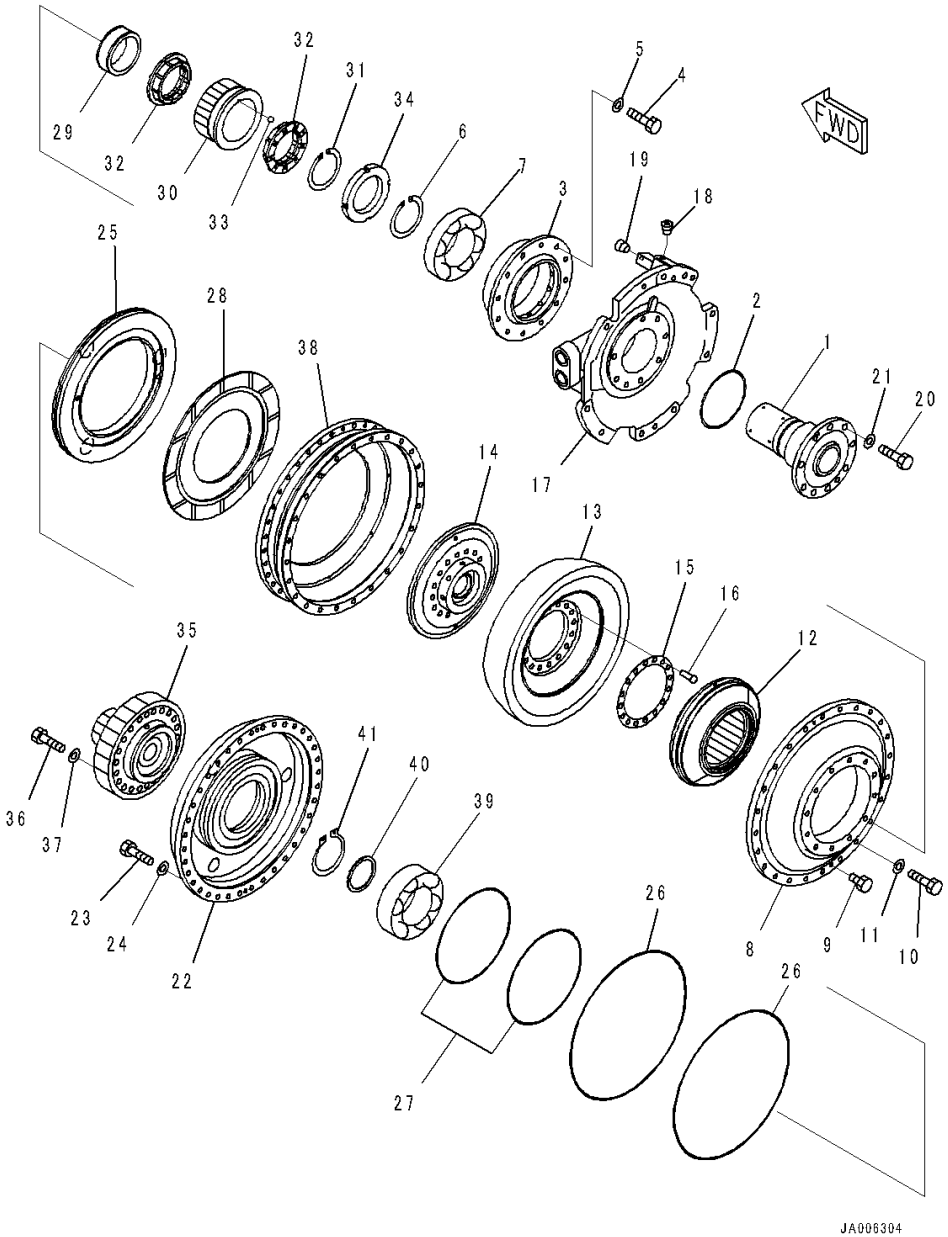

Index	Code	Part Number	Description	Qty	Serial Number
		Note: This list covers following specifications.			
		Without Power Angle Power Tilt Dozer, Inside Frame			
		Power Angle Power Tilt Dozer, Inside Frame, 3000mm,			
		Power Angle Power Tilt Blade			
		14X-22-50002	Power Unit	1	1469-
		14X-13-51001	• Torque Converter Assembly	1	1469-
1		14X-13-52620	• • Shaft	1	1001-
2		426-13-42710	• • Seal Ring, (Kit : K06)	1	1001-
3		14X-13-51240	• • Retainer	1	1001-
4		01010-81035	• • Bolt	12	1001-
5		01643-31032	• • Washer	12	1001-
6		04071-00160	• • Ring, Snap	1	1001-
7		568-13-13351	• • Bearing	1	1001-
8		14X-13-51120	• • Pump	1	1001-
9		07040-10807	• • Plug	2	1001-
10		01010-81035	• • Bolt	24	1001-
11		01643-31032	• • Washer	24	1001-
12		14X-13-52210	• • Stator	1	1001-
		14X-13-51610	• • Turbine	1	1001-
13	C1		• • • Turbine	1	1001-
14	C1		• • • Boss	1	1001-
15	C1		• • • Plate	1	1001-
16	C1		• • • Rivet	16	1001-
17		14X-13-54411	• • Housing	1	1001-
18		07043-70312	• • Plug	1	1001-
19		07043-70211	• • Plug	1	1001-
20		01010-81240	• • Bolt	8	1001-
21		01643-31232	• • Washer	8	1001-
22		14X-13-57111	• • Housing	1	1001-
23		01010-81035	• • Bolt	36	1001-
24		01643-31032	• • Washer	36	1001-
25		14X-13-57210	• • Piston	1	1001-
26		582-15-19240	• • Seal Ring, (Kit : K06)	2	1001-
27		567-15-12830	• • Ring, (Kit : K06)	2	1001-
28		582-15-12811	• • Disc	1	1001-
29		14X-13-52260	• • Free Wheel	1	1001-
30		14X-13-52220	• • Race	1	1001-
31		04071-00145	• • Ring, Snap, for Hole Side	1	1001-
32		425-13-32140	• • Bushing	2	1001-
33		04260-00635	• • Ball, Steel	2	1001-

FIG. F2300-001021 Power Train (Pump and Turbine)

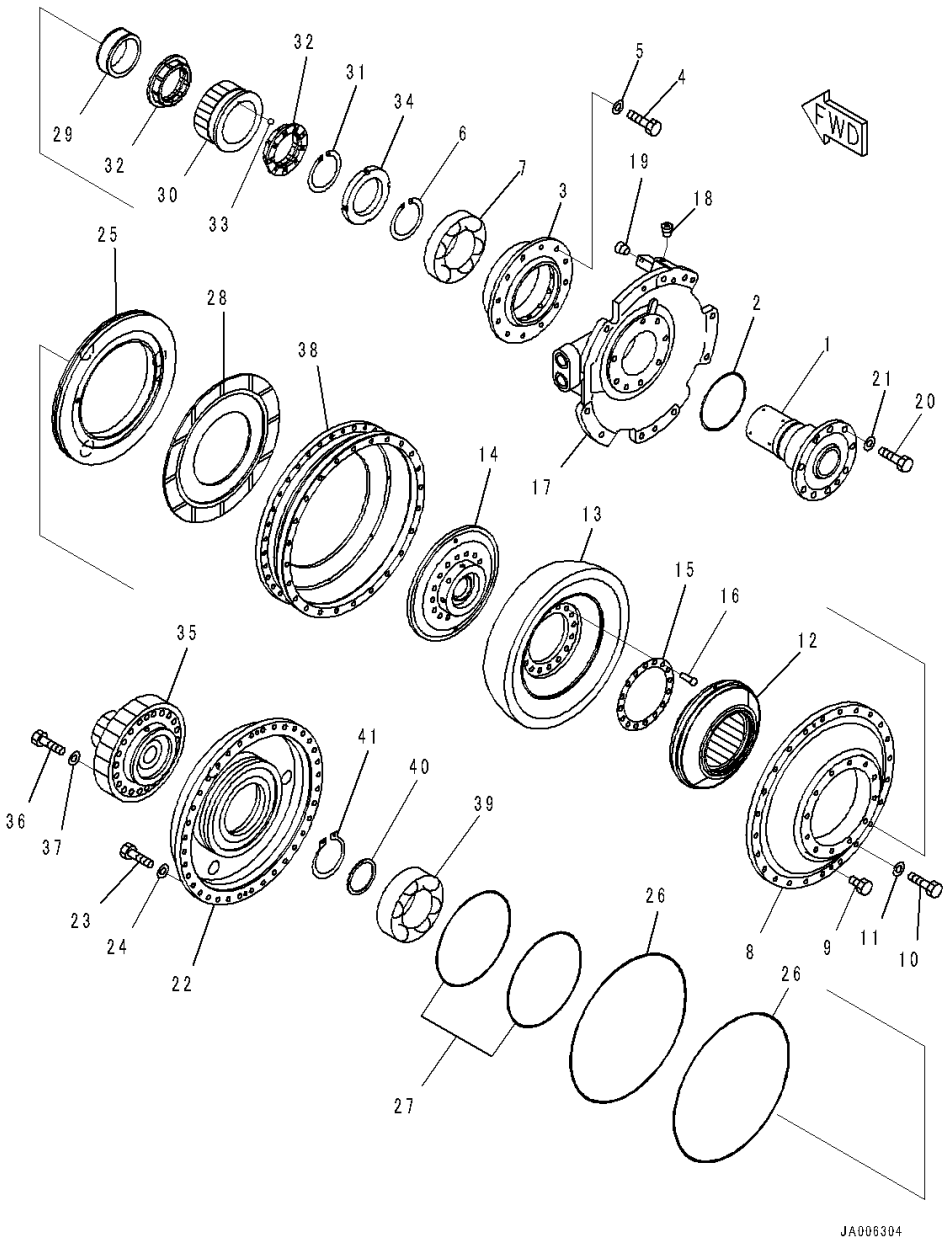

Index	Code	Part Number	Description	Qty	Serial Number
34		23W-13-12680	• • Nut	1	1001-
35		14X-13-51351	• • Shaft	1	1001-
36		01010-81270	• • Bolt	20	1001-
37		01643-31232	• • Washer	20	1001-
38		14X-13-51212	• • Case	1	1001-
39		06043-06214	• • Bearing	1	1001-
40		711-47-11770	• • Plate	1	1001-
41		04064-07025	• • Ring	1	1001-

FIG. F2300-001022 Power Train (Torque Converter Case)

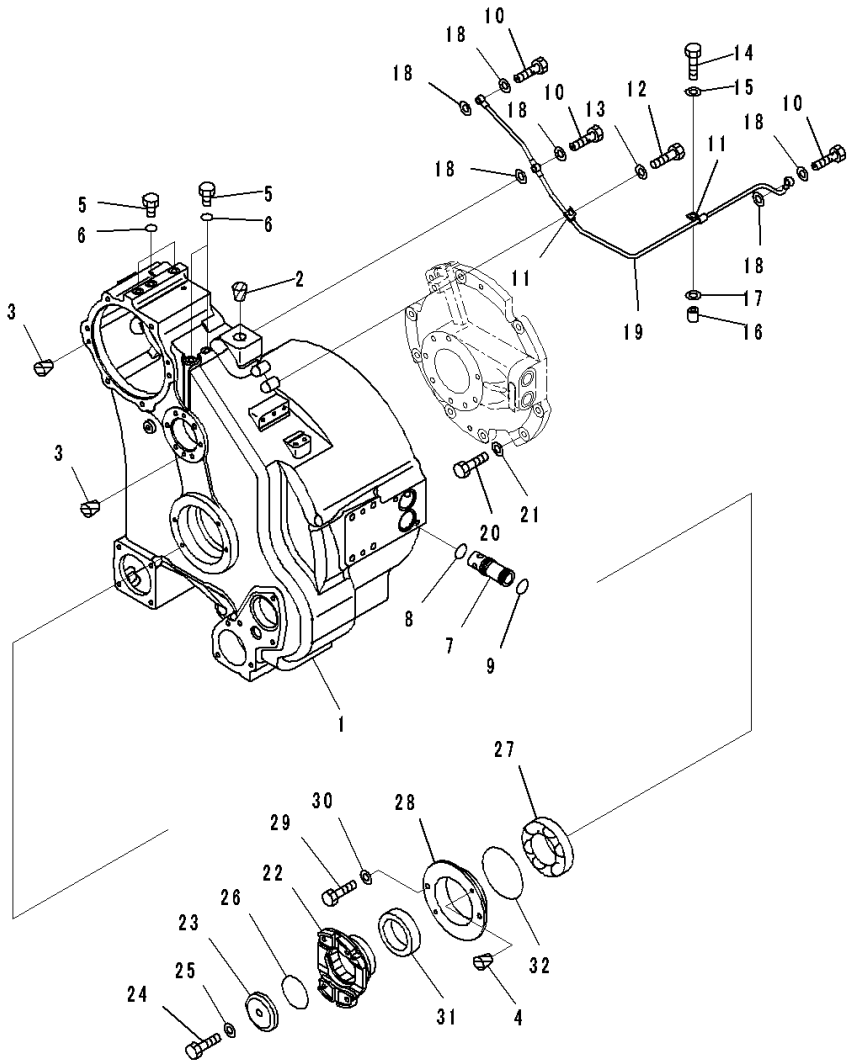

Index	Code	Part Number	Description	Qty	Serial Number
		Note: This list covers following specifications.			
		Without Power Angle Power Tilt Dozer, Inside Frame			
		Power Angle Power Tilt Dozer, Inside Frame, 3000mm,			
		Power Angle Power Tilt Blade			
		14X-22-50002	Power Unit	1	1469-
		14X-13-51001	• Torque Converter Assembly	1	1469-
1		14X-13-53111	• • Case	1	1001-
2		07049-03038	• • Plug	1	1001-
3		07049-01215	• • Plug	4	1001-
4		07049-01012	• • Plug	2	1001-
5		07040-11007	• • Plug	5	1001-
6		07002-61023	• • O-ring, (Kit : K06)	5	1001-
7		14X-13-12550	• • Sleeve	2	1001-
8		07000-73030	• • O-ring, (Kit : K06)	2	1001-
9		07000-73032	• • O-ring, (Kit : K06)	2	1001-
10		07206-30812	• • Bolt, Joint	3	1001-
11		04434-50810	• • Clip	2	1001-
12		01010-81025	• • Bolt	1	1001-
13		01643-31032	• • Washer	1	1001-
14		01010-81050	• • Bolt	1	1001-
15		01643-31032	• • Washer	1	1001-
16		144-874-7470	• • Boss	1	1001-
17		01643-31032	• • Washer	1	1001-
18		07005-01212	• • Gasket, (Kit : K06)	6	1001-
19		14X-13-53260	• • Tube	1	1001-
20		01010-81240	• • Bolt	9	1001-
21		01643-31232	• • Washer	9	1001-
22		14X-13-51360	• • Coupling	1	1001-
23		56D-15-29841	• • Holder	1	1001-
24		01050-61670	• • Bolt	1	1001-
25		01643-31645	• • Washer	1	1001-
26		07000-75065	• • O-ring, (Kit : K06)	1	1001-
27		711-53-11370	• • Bearing	1	1001-
28		14X-13-53350	• • Retainer	1	1001-
29		01010-81025	• • Bolt	2	1001-
30		01643-31032	• • Washer	2	1001-
31		07012-50095	• • Seal, Oil, (Kit : K06)	1	1001-
32		07000-72130	• • O-ring, (Kit : K06)	1	1001-

FIG. F2300-001023 Power Train (Scavenging Pump Mounting)

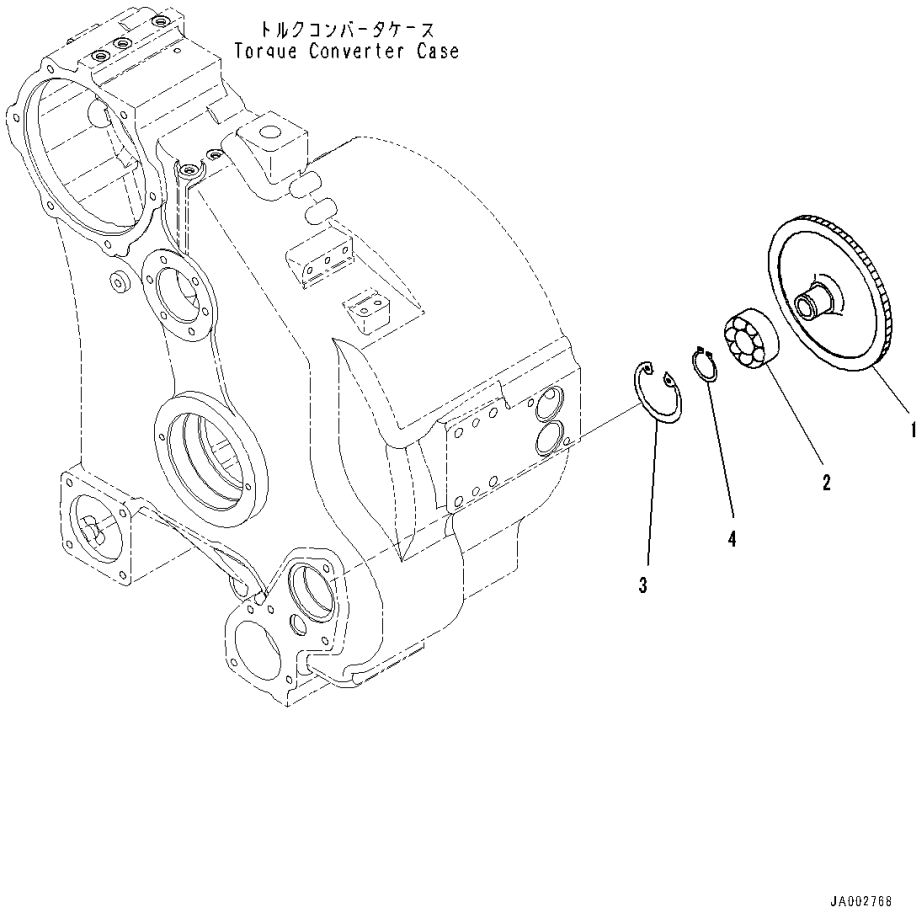

Index	Code	Part Number	Description	Qty	Serial Number
		Note: This list covers following specifications.			
		Without Power Angle Power Tilt Dozer, Inside Frame			
		Power Angle Power Tilt Dozer, Inside Frame, 3000mm,			
		Power Angle Power Tilt Blade			
		14X-22-50002	Power Unit	1	1469-
		14X-13-51001	• Torque Converter Assembly	1	1469-
1		14X-13-54330	• • Gear	1	1001-
2		17A-13-24490	• • Bearing	1	1001-
3		04065-07225	• • Ring, Snap	1	1001-
4		04064-03515	• • Ring, Snap	1	1001-

FIG. F2300-001024 Power Train (Power takeoff Gear)

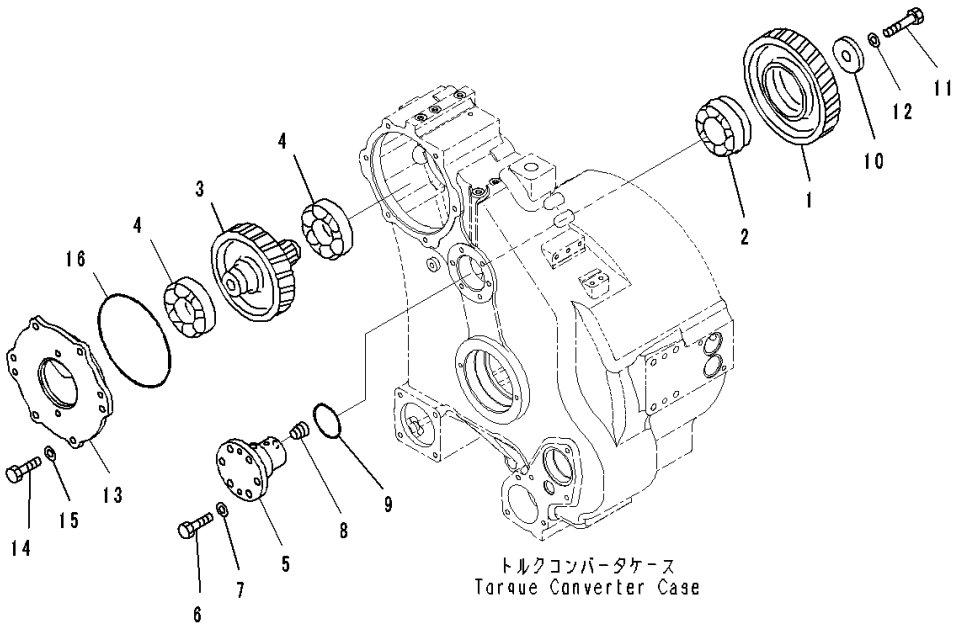

Index	Code	Part Number	Description	Qty	Serial Number
		Note: This list covers following specifications.			
		Without Power Angle Power Tilt Dozer, Inside Frame			
		Power Angle Power Tilt Dozer, Inside Frame, 3000mm,			
		Power Angle Power Tilt Blade			
		14X-22-50002	Power Unit	1	1469-
		14X-13-51001	• Torque Converter Assembly	1	1469-
1		134-13-64220	• • Gear	1	1469-
2		711-49-14230	• • Bearing	1	1001-
3		14X-13-54320	• • Gear	1	1001-
4		06340-06311	• • Bearing	2	1001-
5		14X-13-14241	• • Shaft	1	1001-
6		01010-81235	• • Bolt	6	1001-
7		01643-31232	• • Washer	6	1001-
8		07043-70211	• • Plug	1	1001-
9		07000-72070	• • O-ring, (Kit : K06)	1	1001-
10		144-10-12180	• • Holder	1	1001-
11		01010-61460	• • Bolt	1	1001-
12		01643-31445	• • Washer	1	1001-
13		14X-13-54341	• • Cover	1	1001-
14		01010-81235	• • Bolt	4	1001-
15		01643-31232	• • Washer	4	1001-
16		07000-75210	• • O-ring, (Kit : K06)	1	1001-

FIG. F2300-001025 Power Train (Strainer)

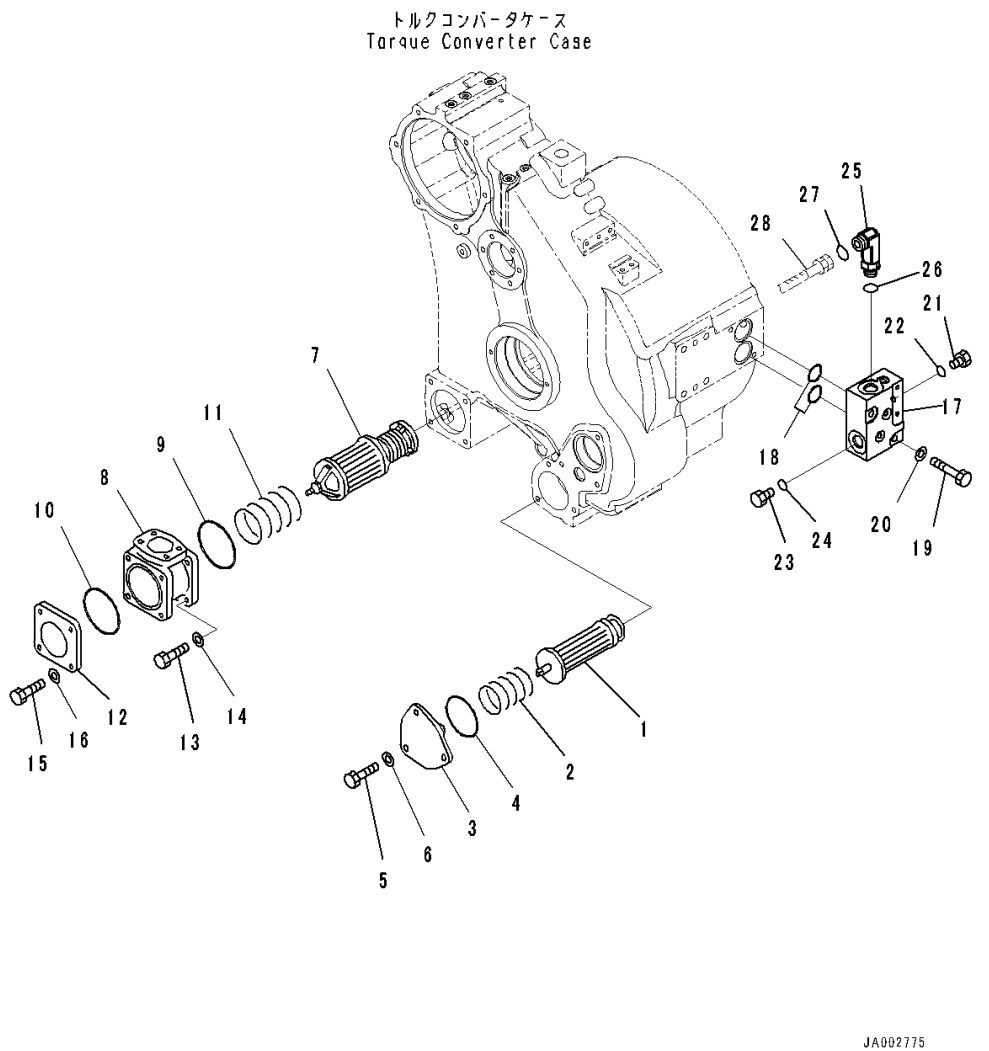

Index	Code	Part Number	Description	Qty	Serial Number
		Note: This list covers following specifications.			
		Without Power Angle Power Tilt Dozer, Inside Frame			
		Power Angle Power Tilt Dozer, Inside Frame, 3000mm,			
		Power Angle Power Tilt Blade			
		14X-22-50002	Power Unit	1	1469-
		14X-13-51001	• Torque Converter Assembly	1	1469-
1		14X-10-11712	• • Strainer	1	1001-
2		14X-49-12411	• • Spring	1	1001-
3		14X-10-11721	• • Cover	1	1001-
4		07000-72090	• • O-ring, (Kit : K06)	1	1001-
5		01010-81235	• • Bolt	3	1001-
6		01643-31232	• • Washer	3	1001-
7		14X-49-12310	• • Magnet Assembly	1	1001-
8		14X-49-12330	• • Head	1	1001-
9		07000-72110	• • O-ring, (Kit : K06)	1	1001-
10		07000-72100	• • O-ring, (Kit : K06)	1	1001-
11		14X-49-12320	• • Spring	1	1001-
12		14X-49-12340	• • Cover	1	1001-
13		01010-81235	• • Bolt	4	1001-
14		01643-31232	• • Washer	4	1001-
15		01010-81235	• • Bolt	4	1001-
16		01643-31232	• • Washer	4	1001-
17		14X-49-51512	• • Block	1	1001-
18		07000-73045	• • O-ring, (Kit : K06)	2	1001-
19		01010-81275	• • Bolt	2	1001-
20		01643-31232	• • Washer	2	1001-
21		07040-11007	• • Plug	2	1001-
22		07002-61023	• • O-ring, (Kit : K06)	2	1001-
23		07040-12412	• • Plug	1	1001-
24		07002-62434	• • O-ring, (Kit : K06)	1	1001-
25		02782-10630	• • Elbow	1	1001-
26		07002-62434	• • O-ring, (Kit : K06)	1	1001-
27		02896-61018	• • O-ring, (Kit : K06)	1	1001-
28		(14X-49-62111)	Hose(Refer to Page 298)		-

FIG. F2300-001026 Power Train (Mounting) (1/2)

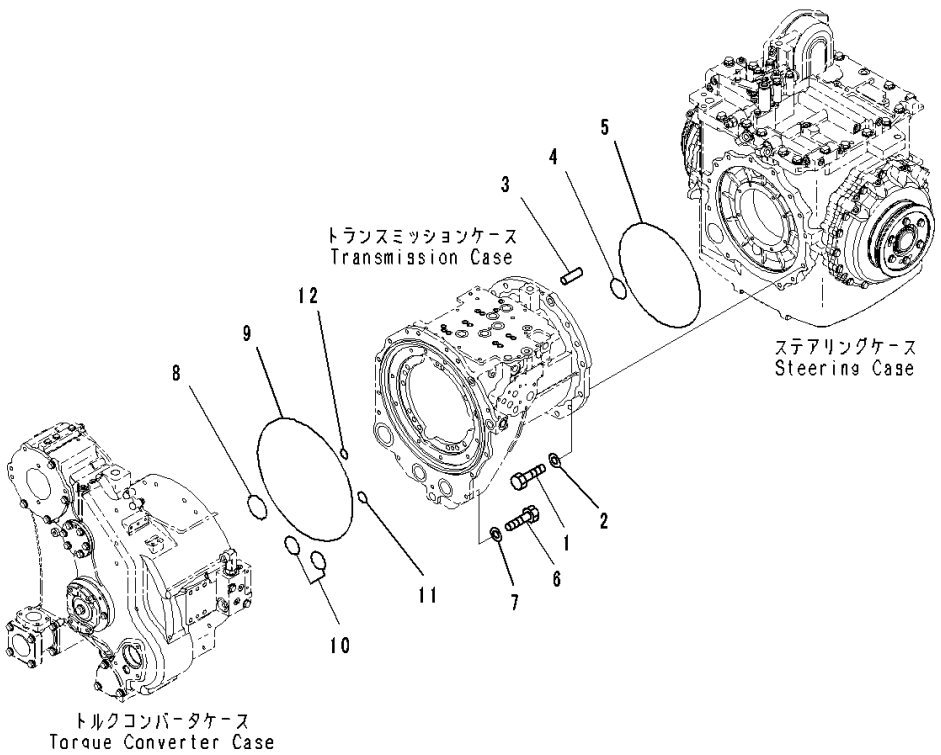

Index	Code	Part Number	Description	Qty	Serial Number
		Note: This list covers following specifications.			
		Without Power Angle Power Tilt Dozer, Inside Frame			
		Power Angle Power Tilt Dozer, Inside Frame, 3000mm,			
		Power Angle Power Tilt Blade			
		14X-22-50002	Power Unit	1	1469-
1		01010-61650	• Bolt	13	1001-
2		01643-31645	• Washer	13	1001-
3		04020-01228	• Pin, Dowel	1	1001-
4		07000-72075	• O-ring	1	1001-
5		07000-75375	• O-ring	1	1001-
6		01010-81235	• Bolt	14	1001-
7		01643-31232	• Washer	14	1001-
8		07000-72075	• O-ring	1	1001-
9		07000-75460	• O-ring	1	1001-
10		07000-72055	• O-ring	2	1001-
11		07000-73032	• O-ring	1	1001-
12		07000-73025	• O-ring	1	1001-

FIG. F2300-001027 Power Train (Inner Parts, Gear Pump) (1/2)

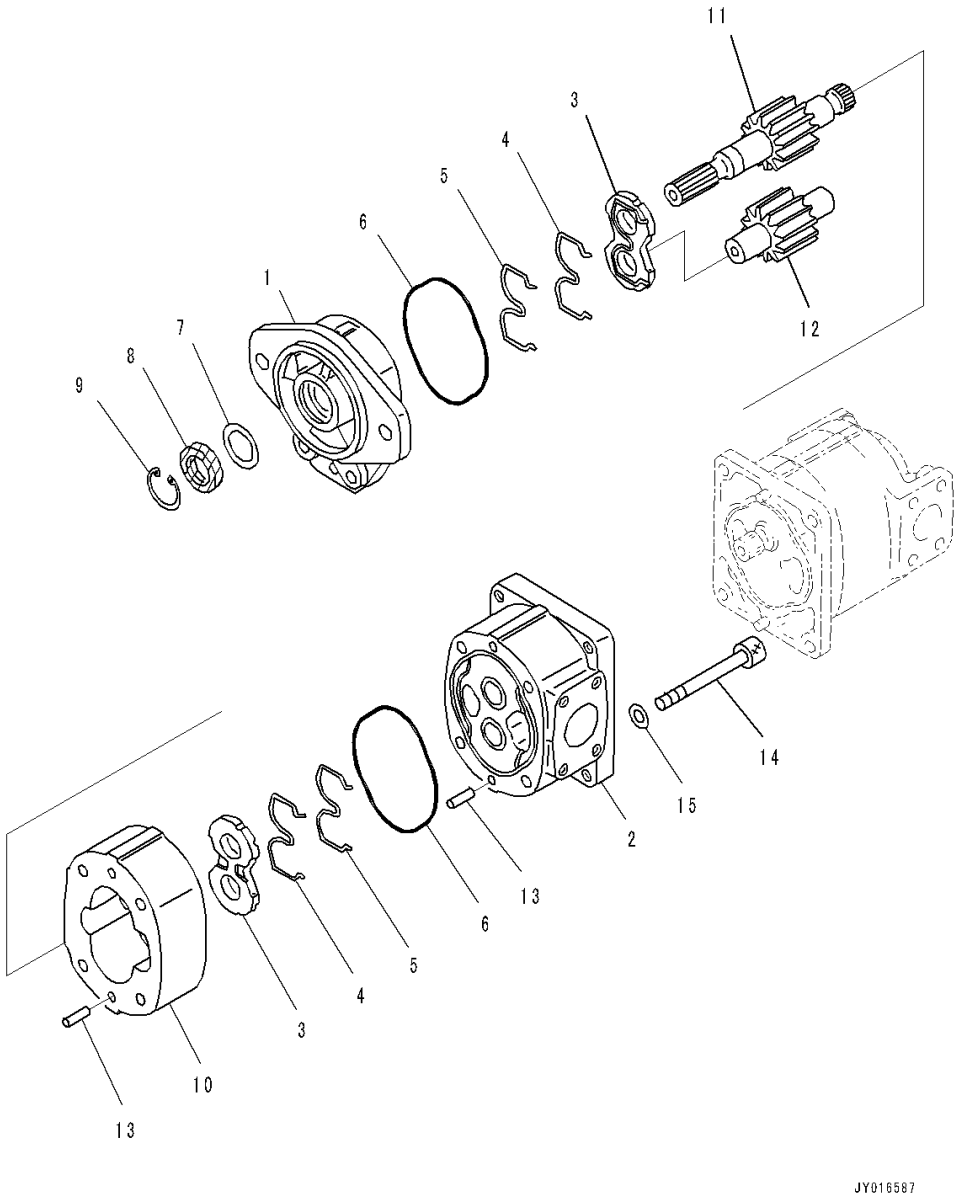

Index	Code	Part Number	Description	Qty	Serial Number
		Note: This list covers following specifications.			
		Without Power Angle Power Tilt Dozer, Inside Frame			
		Power Angle Power Tilt Dozer, Inside Frame, 3000mm,			
		Power Angle Power Tilt Blade			
		14X-22-50002	Power Unit	1	1469-
		705-51-20830	• Pump Assembly	1	1001-
		705-11-33240	• • Pump Assembly	1	1001-
1	C2	705-17-02011	• • • Bracket Assembly	1	1001-
	C2	705-17-02353	• • • • Bushing	2	1001-
2	C2	705-17-02221	• • • Carrier Assembly	1	1001-
	C2	705-17-02353	• • • • Bushing	2	1001-
3		705-17-02612	• • • Plate	2	1001-
4		705-17-02430	• • • Ring, Back-up	2	1001-
5		705-17-02460	• • • Seal Ring	2	1001-
6		705-17-02360	• • • O-ring	2	1001-
7		705-17-02870	• • • Plate	1	1001-
8		705-17-02830	• • • Seal, Oil	1	1001-
9		04065-04018	• • • Ring, Snap	1	1001-
10	C2	705-17-33012	• • • Gear Case	1	1001-
11	C2	705-17-33430	• • • Gear, Drive	1	1001-
12	C2	705-17-33512	• • • Gear, Driven	1	1001-
13		04020-01024	• • • Pin, Dowel	4	1001-
14		01253-61210	• • • Bolt, Hexagon Socket Head	4	1001-
15		01643-51232	• • • Washer	4	1001-

FIG. F2300-001028 Power Train (Inner Parts, Gear Pump) (2/2)

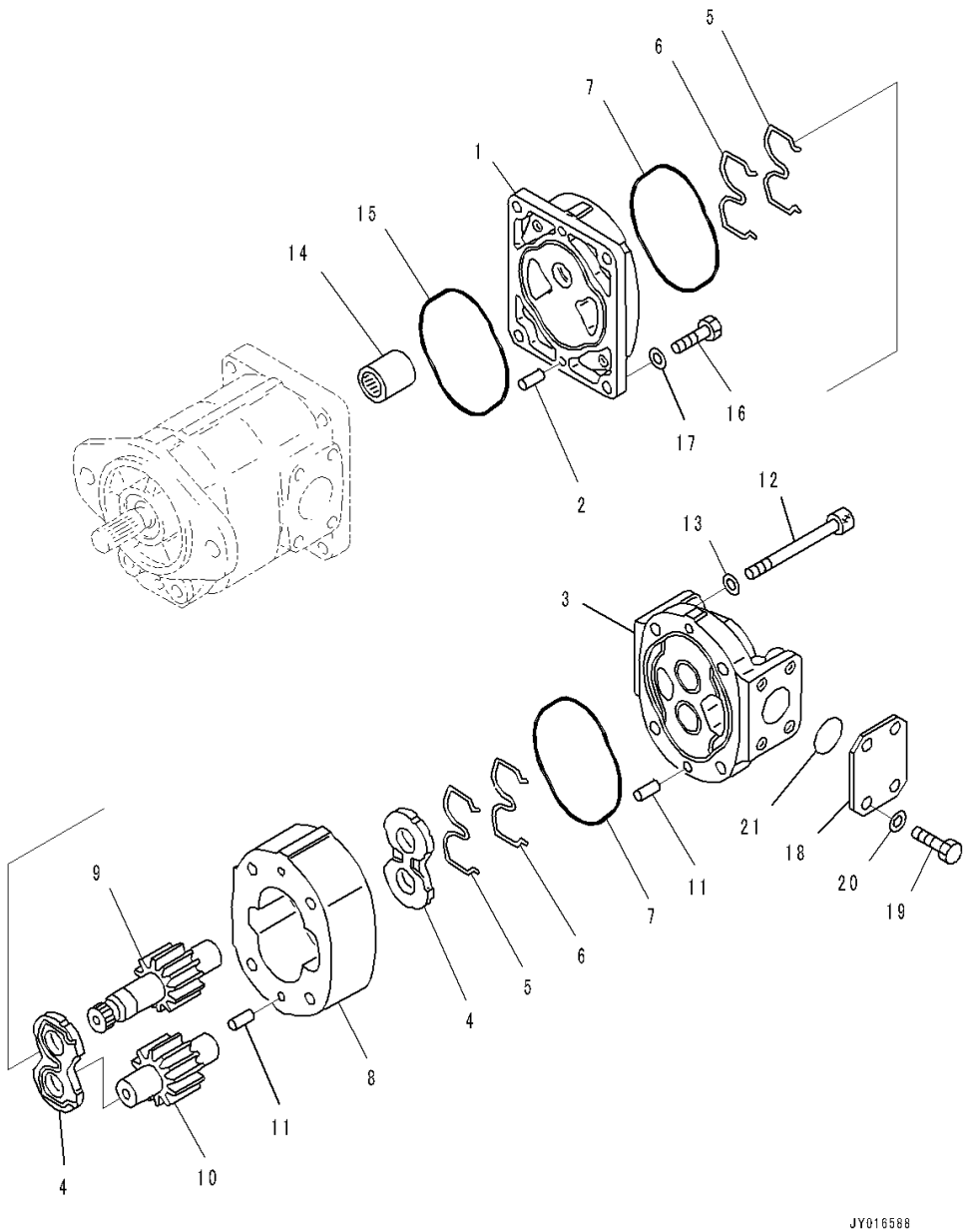

Index	Code	Part Number	Description	Qty	Serial Number
		Note: This list covers following specifications.			
		Without Power Angle Power Tilt Dozer, Inside Frame			
		Power Angle Power Tilt Dozer, Inside Frame, 3000mm,			
		Power Angle Power Tilt Blade			
		14X-22-50002	Power Unit	1	1469-
		705-51-20830	• Pump Assembly	1	1001-
		705-11-33540	• • Pump Assembly	1	1001-
1	C2	705-17-02510	• • • Bracket Assembly	1	1001-
	C2	705-17-02353	• • • • Bushing	2	1001-
2		04020-01024	• • • Pin, Dowel	2	1001-
3	C2	705-17-02122	• • • Cover Assembly	1	1001-
	C2	705-17-02353	• • • • Bushing	2	1001-
4		705-17-02612	• • • Plate	2	1001-
5		705-17-02430	• • • Ring, Back-up	2	1001-
6		705-17-02460	• • • Seal Ring	2	1001-
7		705-17-02360	• • • O-ring	2	1001-
8	C2	705-17-33012	• • • Gear Case	1	1001-
9	C2	705-17-33450	• • • Gear, Drive	1	1001-
10	C2	705-17-33512	• • • Gear, Driven	1	1001-
11		04020-01024	• • • Pin, Dowel	4	1001-
12		01253-61200	• • • Bolt	4	1001-
13		01643-51232	• • • Washer	4	1001-
14		705-17-02330	• • Coupling Assembly	1	1001-
15		705-17-02360	• • O-ring	1	1001-
16		01252-61035	• • Bolt, Hexagon Socket Head	4	1001-
17		01643-51032	• • Washer	4	1001-
18		705-17-02881	• • Plate	1	1001-
19		01010-81025	• • Bolt	4	1001-
20		01643-51032	• • Washer	4	1001-
21		07000-E3038	• • O-ring	1	1001-

FIG. F2300-001029 Power Train (Power Train to Hydrostatic Tank Piping) (1/2)

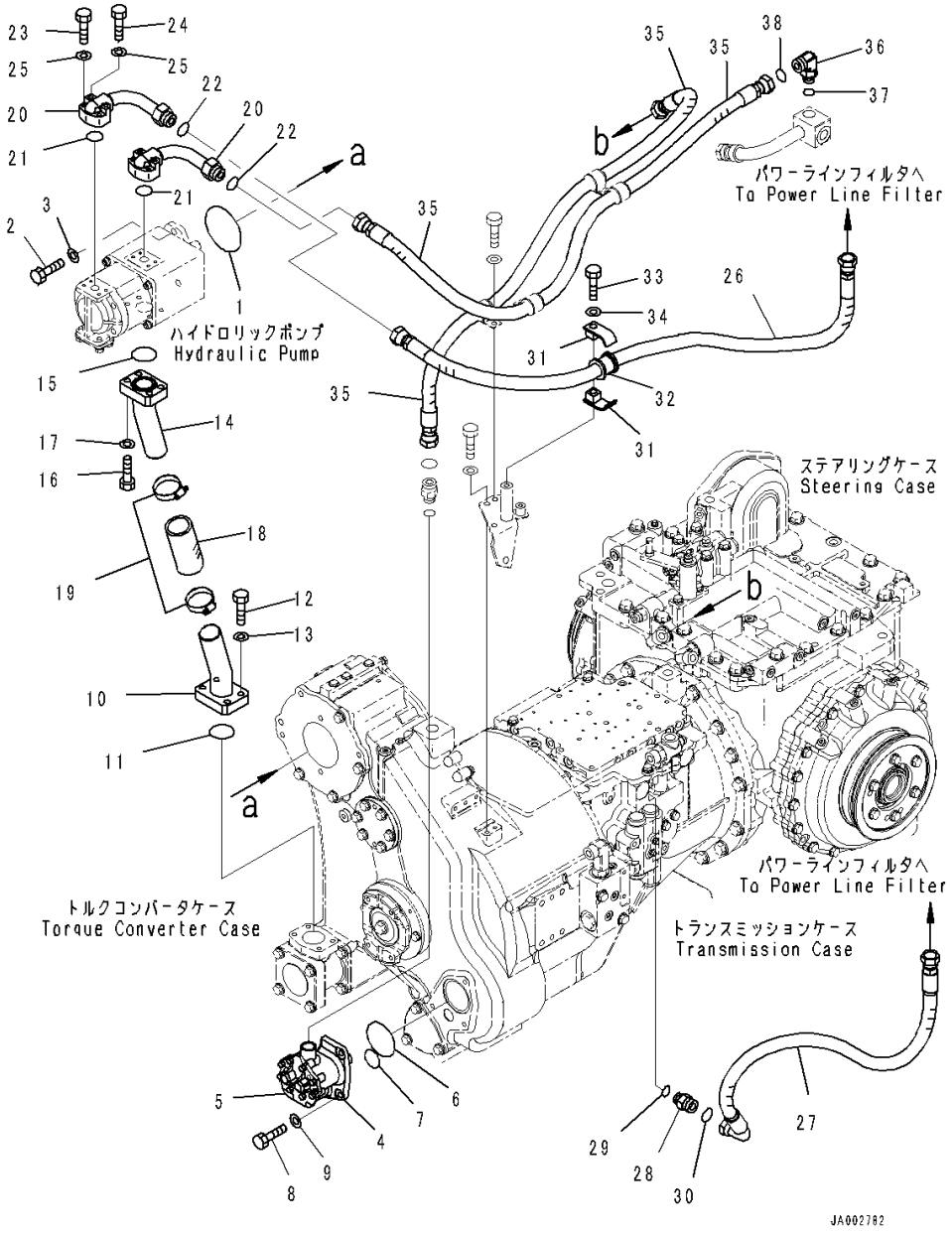

Index	Code	Part Number	Description	Qty	Serial Number
		Note: This list covers following specifications.			
		Without Power Angle Power Tilt Dozer, Inside Frame			
		Power Angle Power Tilt Dozer, Inside Frame, 3000mm,			
		Power Angle Power Tilt Blade			
		14X-22-50002	Power Unit	1	1469-
1		07000-72105	• O-ring	1	1001-
2		01010-81235	• Bolt	2	1001-
3		01643-31232	• Washer	2	1001-
4		14X-49-51601	• Pump Assembly	1	1001-
5		14X-49-51611	• • Cover	1	1001-
6		07000-72080	• O-ring	1	1001-
7		07000-73038	• O-ring	1	1001-
8		01010-81235	• Bolt	3	1001-
9		01643-31232	• Washer	3	1001-
10		14X-49-51110	• Tube	1	1001-
11		07000-72060	• O-ring	1	1001-
12		01010-81245	• Bolt	4	1001-
13		01643-51232	• Washer	4	1001-
14		14X-49-51120	• Tube	1	1001-
15		07000-73048	• O-ring	1	1001-
16		01010-81245	• Bolt	4	1001-
17		01643-51232	• Washer	4	1001-
18		07260-24713	• Hose	1	1001-
19		07289-00055	• Clamp	2	1001-
20		14X-49-51130	• Tube	2	1001-
21		07000-73030	• O-ring	2	1001-
22		02896-61018	• O-ring	2	1001-
23		01010-80845	• Bolt	4	1001-
24		01010-80855	• Bolt	4	1001-
25		01643-50823	• Washer	8	1001-
26		02753-00615	• Hose, Face Seal Type	1	1001-
27		14X-49-51330	• Hose	1	1001-
28		02781-00628	• Union	1	1001-
29		07002-62434	• O-ring	1	1001-
30		02896-61018	• O-ring	1	1001-
31		07094-10620	• Clamp	2	1001-
32		07095-00628	• Cushion	1	1001-
33		01010-81265	• Bolt	1	1001-
34		01643-31232	• Washer	1	1001-
35		14X-49-51161	• Hose	2	1001-

FIG. F2300-001029 Power Train (Power Train to Hydrostatic Tank Piping) (1/2)

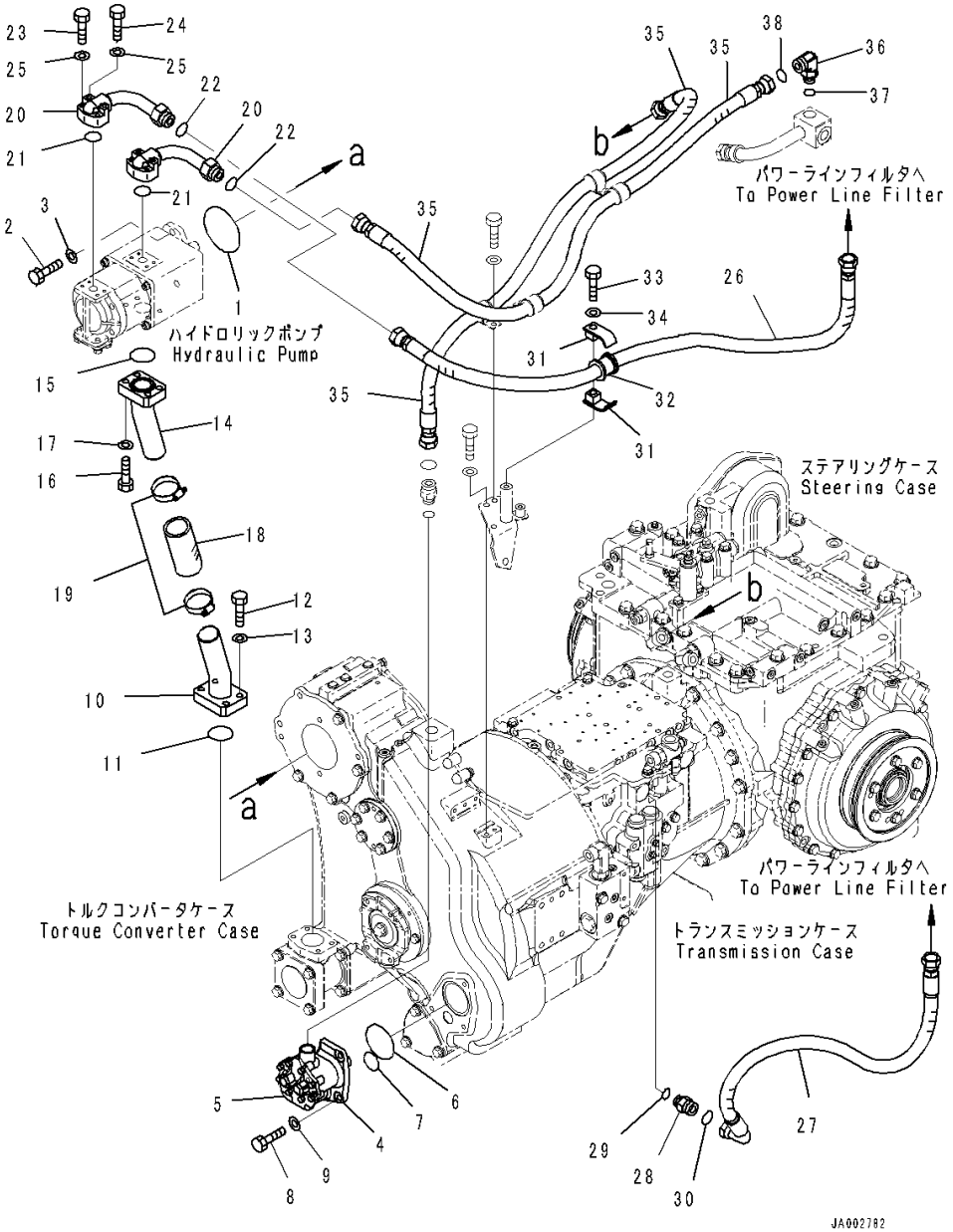

Index	Code	Part Number	Description	Qty	Serial Number
36		02781-00628	• Union	1	1001-
37		07002-62434	• O-ring	1	1001-
38		02896-61018	• O-ring	1	1001-

FIG. F2300-001030 Power Train (Power Train to Hydrostatic Tank Piping) (2/2)

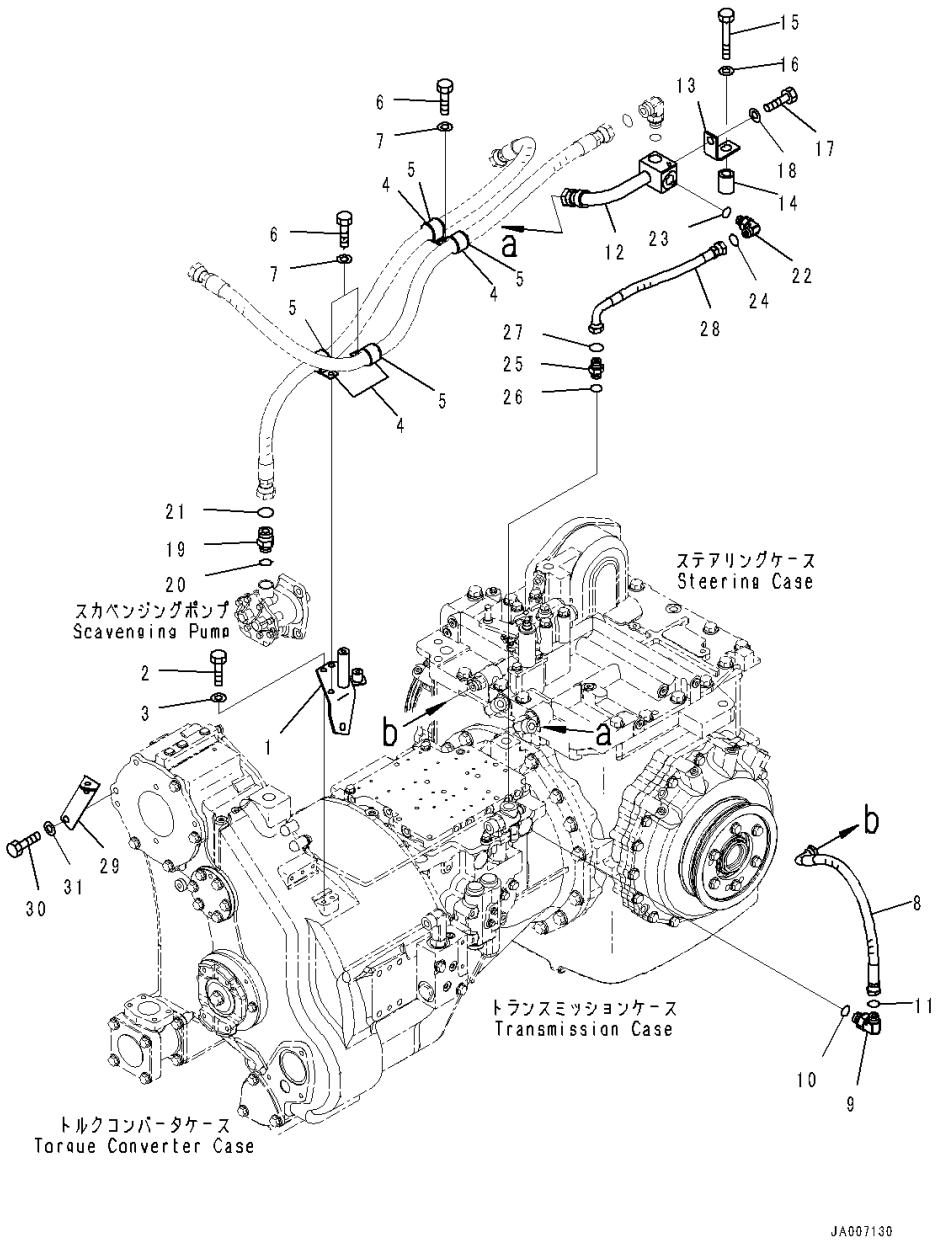

Index	Code	Part Number	Description	Qty	Serial Number
		Note: This list covers following specifications.			
		Without Power Angle Power Tilt Dozer, Inside Frame			
		Power Angle Power Tilt Dozer, Inside Frame, 3000mm,			
		Power Angle Power Tilt Blade			
		14X-22-50002	Power Unit	1	1469-
1		14X-49-51141	• Bracket	1	1001-
2		01010-81025	• Bolt	2	1001-
3		01643-31032	• Washer	2	1001-
4		04434-53411	• Clip	4	1001-
5		07095-20625	• Cushion	4	1001-
6		01010-81020	• Bolt	3	1001-
7		01643-31032	• Washer	3	1001-
8		02754-00405	• Hose, Face Seal Type	1	1001-
9		02782-10425	• Elbow	1	1001-
10		07002-62434	• O-ring	1	1001-
11		02896-61012	• O-ring	1	1001-
12		14Y-22-58110	• Tube	1	1001-
13		14Y-22-58140	• Bracket	1	1001-
14		23B-04-31580	• Spacer	1	1001-
15		01010-61690	• Bolt	1	1001-
16		01643-31645	• Washer	1	1001-
17		01010-81225	• Bolt	1	1001-
18		01643-31232	• Washer	1	1001-
19		02782-10628	• Elbow	1	1001-
20		07002-62434	• O-ring	1	1001-
21		02896-61018	• O-ring	1	1001-
22		02781-00422	• Union	1	1001-
23		07002-62034	• O-ring	1	1001-
24		02896-61012	• O-ring	1	1001-
25		02782-10422	• Elbow	1	1001-
26		07002-62034	• O-ring	1	1001-
27		02896-61012	• O-ring	1	1001-
28		02763-004A3	• Hose, Face Seal Type	1	1001-
29		14X-62-52491	• Bracket	1	1001-
30		01010-81235	• Bolt	2	1001-
31		01643-31232	• Washer	2	1001-

FIG. F2300-001031 Power Train (Oil Filler)

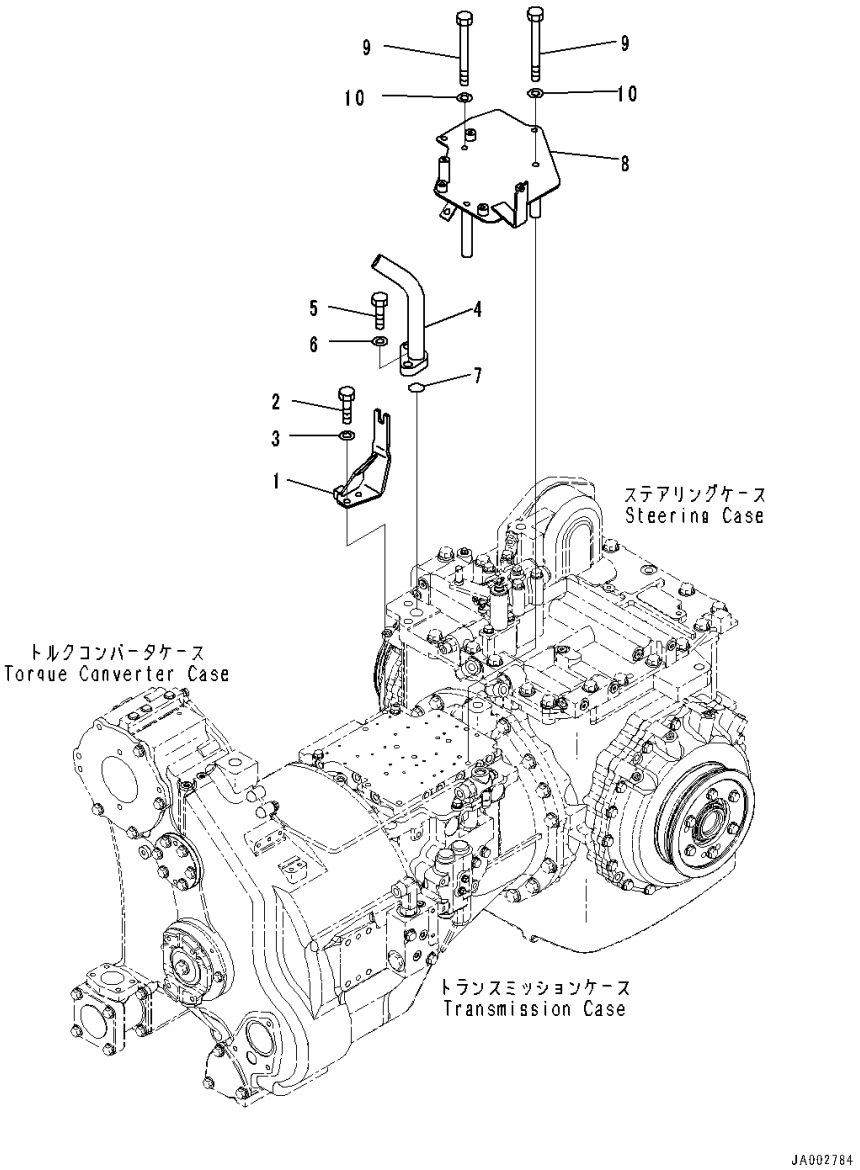

Index	Code	Part Number	Description	Qty	Serial Number
		Note: This list covers following specifications.			
		Without Power Angle Power Tilt Dozer, Inside Frame			
		Power Angle Power Tilt Dozer, Inside Frame, 3000mm,			
		Power Angle Power Tilt Blade			
		14X-22-50002	Power Unit	1	1469-
1		14X-43-51111	• Bracket	1	1001-
2		01010-81025	• Bolt	2	1001-
3		01643-31032	• Washer	2	1001-
4		14X-49-51151	• Filler	1	1001-
5		01010-81660	• Bolt	2	1001-
6		01643-31645	• Washer	2	1001-
7		07000-73035	• O-ring	1	1001-
8		14X-49-51311	• Cover	1	1001-
9		01011-81080	• Bolt	4	1001-
10		01643-31032	• Washer	4	1001-

FIG. F2300-001032 Power Train (Wiring Harness)

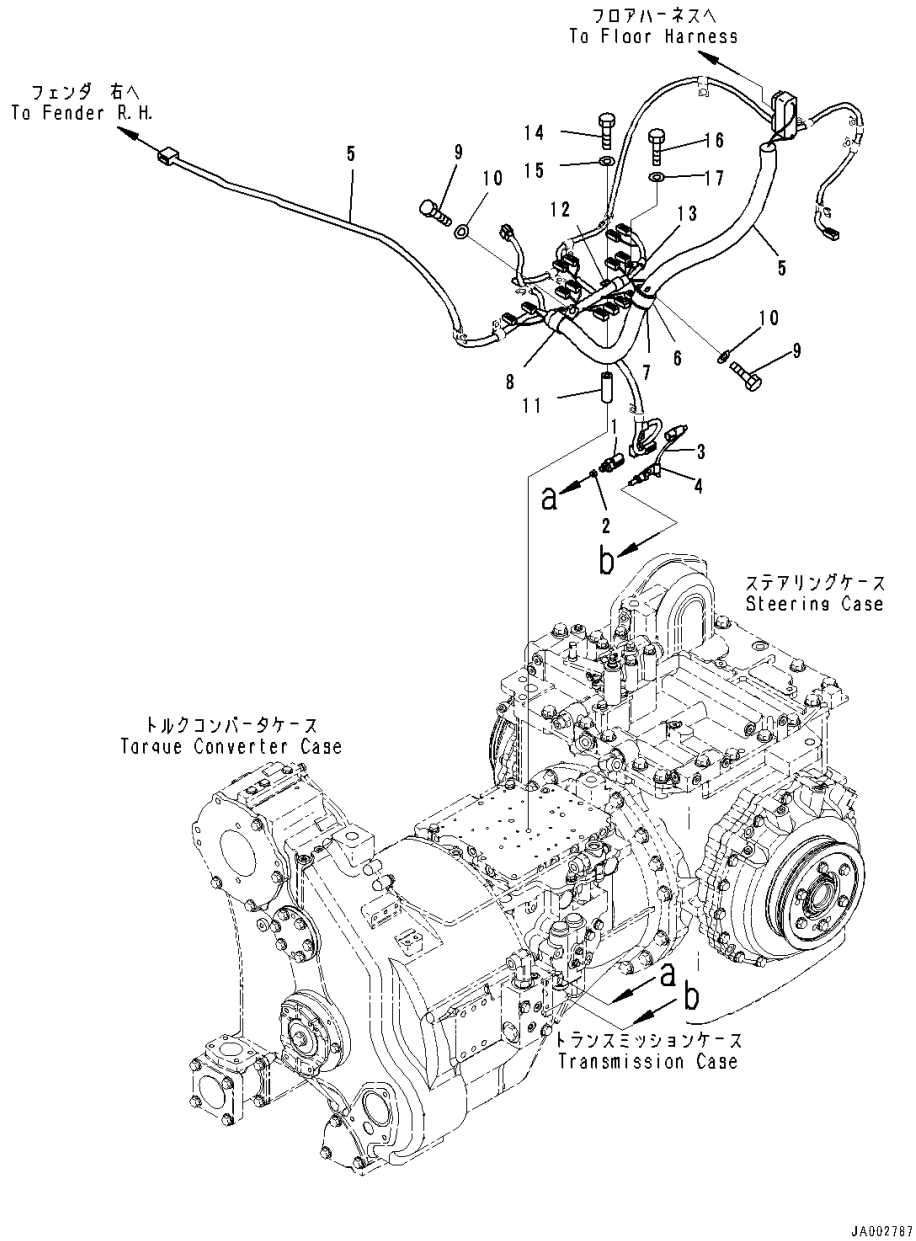

Index	Code	Part Number	Description	Qty	Serial Number
		Note: This list covers following specifications.			
		Without Power Angle Power Tilt Dozer, Inside Frame			
		Power Angle Power Tilt Dozer, Inside Frame, 3000mm,			
		Power Angle Power Tilt Blade			
		14X-22-50002	Power Unit	1	1469-
1		7861-93-1850	• Sensor, Pressure	1	1001-
2		14X-49-51520	• Orifice	1	1001-
3		7861-93-3320	• Sensor, Temperature	1	1001-
4		04434-50610	• Clip	1	1001-
5		14X-06-61111	• Wiring Harness	1	1001-
6		155-61-15350	• Clip	1	1001-
7		22M-62-13660	• Cushion	1	1001-
8		281-01-13180	• Clip	1	1001-
9		01010-81020	• Bolt	2	1001-
10		01643-31032	• Washer	2	1001-
11		561-43-43390	• Spacer	3	1001-
12		04434-51910	• Clip	2	1001-
13		04434-51010	• Clip	1	1001-
14		01011-81010	• Bolt	2	1001-
15		01643-31032	• Washer	2	1001-
16		01010-81085	• Bolt	1	1001-
17		01643-31032	• Washer	1	1001-

FIG. F2300-001033 Power Train (Wiring Harness Clamp)

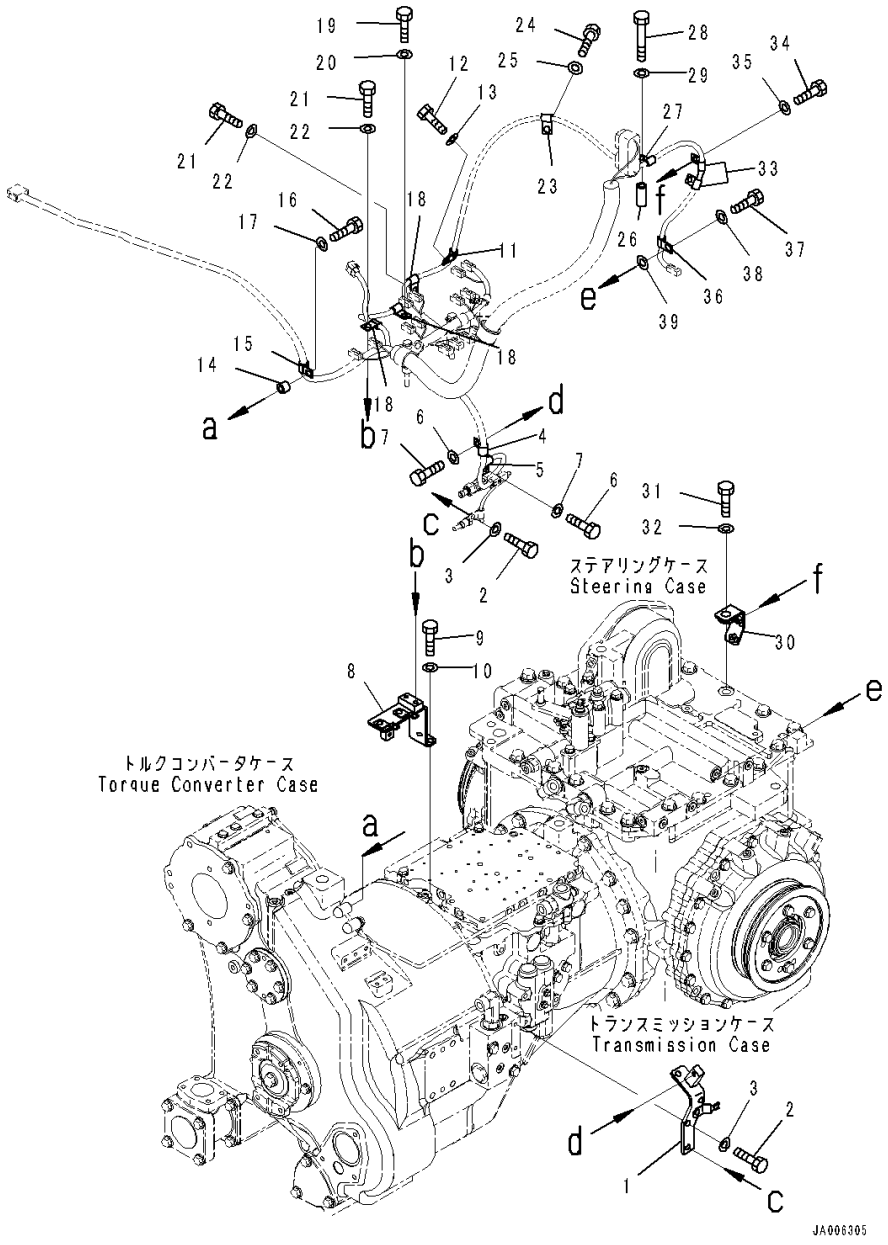

Index	Code	Part Number	Description	Qty	Serial Number
		Note: This list covers following specifications.			
			Without Power Angle Power Tilt Dozer, Inside Frame		
			Power Angle Power Tilt Dozer, Inside Frame, 3000mm,		
			Power Angle Power Tilt Blade		
		14X-22-50002	Power Unit	1	1469-
1		14X-06-51311	• Bracket	1	1001-
2		01010-81030	• Bolt	2	1001-
3		01643-31032	• Washer	2	1001-
4		04434-51410	• Clip	1	1001-
5		04434-51010	• Clip	1	1001-
6		01010-81020	• Bolt	2	1001-
7		01643-31032	• Washer	2	1001-
8		14X-06-51321	• Bracket	1	1001-
9		01010-81025	• Bolt	2	1001-
10		01643-31032	• Washer	2	1001-
11		04434-51010	• Clip	1	1001-
12		01010-81020	• Bolt	1	1001-
13		01643-31032	• Washer	1	1001-
14		22M-60-22130	• Collar	1	1001-
15		04434-51810	• Clip	1	1001-
16		01010-81040	• Bolt	1	1001-
17		01643-31032	• Washer	1	1001-
18		04434-51010	• Clip	3	1001-
19		01010-81045	• Bolt	1	1001-
20		01643-31032	• Washer	1	1001-
21		01010-81020	• Bolt	2	1001-
22		01643-31032	• Washer	2	1001-
23		04434-51012	• Clip	1	1001-
24		01010-81220	• Bolt	1	1001-
25		01643-31232	• Washer	1	1001-
26		14X-54-26640	• Collar	1	1001-
27		04434-51010	• Clip	1	1001-
28		01010-81070	• Bolt	1	1001-
29		01643-31032	• Washer	1	1001-
30		14X-06-51341	• Bracket	1	1001-
31		01010-61660	• Bolt	1	1001-
32		01643-31645	• Washer	1	1001-
33		04434-51010	• Clip	2	1001-
34		01010-81020	• Bolt	2	1001-
35		01643-31032	• Washer	2	1001-

FIG. F2300-001033 Power Train (Wiring Harness Clamp)

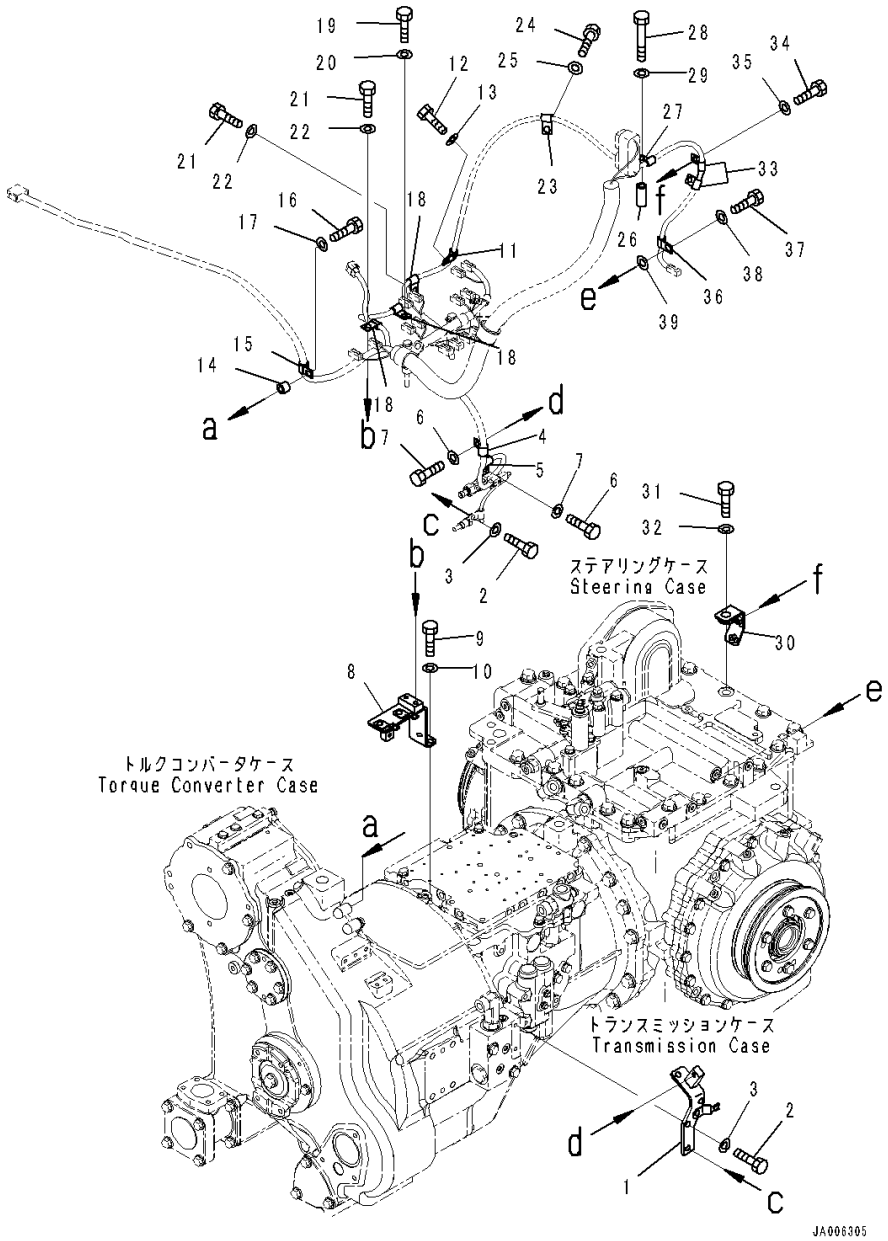

Index	Code	Part Number	Description	Qty	Serial Number
36		04434-51012	• Clip	1	1001-
37		01010-81235	• Bolt	1	1001-
38		01643-31232	• Washer	1	1001-
39		01643-31232	• Washer	1	1001-

FIG. F2300-001034 Power Train (Piping)

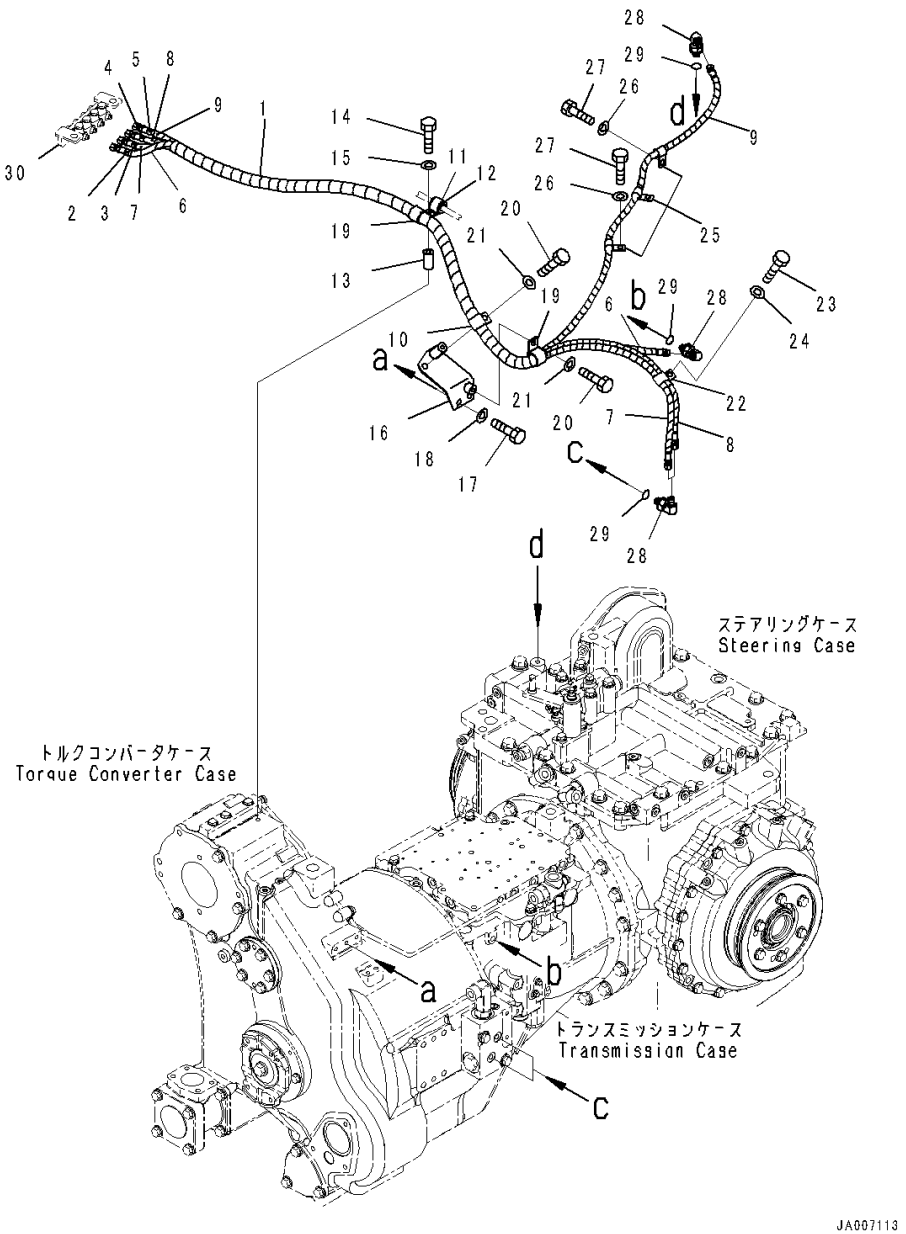

Index	Code	Part Number	Description	Qty	Serial Number
		Note: This list covers following specifications.			
		Without Power Angle Power Tilt Dozer, Inside Frame			
		Power Angle Power Tilt Dozer, Inside Frame, 3000mm,			
		Power Angle Power Tilt Blade			
		14X-22-50002	Power Unit	1	1469-
1		14X-49-51211	• Hose Assembly	1	1001-
2		203-62-57940	• • Mark, 4	2	1001-
3		203-62-57930	• • Mark, 3	2	1001-
4		203-62-57920	• • Mark, 2	2	1001-
5		203-62-57910	• • Mark, 1	2	1001-
6		14X-49-51251	• • Hose, Transmission Main Relief Pressure	1	1001-
7		14X-49-51241	• • Hose, Exit Torque Converter	1	1001-
8		14X-49-51231	• • Hose, Entrans Torque Converter	1	1001-
9		14X-49-51221	• • Hose, Brake	1	1001-
10		04434-52511	• Clip	1	1001-
11		04434-52511	• Clip	1	1001-
12		07095-20318	• Cushion	1	1001-
13		22D-62-12440	• Spacer	1	1001-
14		01010-81060	• Bolt	1	1001-
15		01643-31032	• Washer	1	1001-
16		14X-62-52471	• Bracket	1	1001-
17		01010-81025	• Bolt	2	1001-
18		01643-31032	• Washer	2	1001-
19		04434-52511	• Clip	2	1001-
20		01010-81020	• Bolt	2	1001-
21		01643-31032	• Washer	2	1001-
22		04435-51210	• Clip	1	1001-
23		01010-81020	• Bolt	1	1001-
24		01643-31032	• Washer	1	1001-
25		04434-51210	• Clip	3	1001-
26		01010-81020	• Bolt	3	1001-
27		01643-31032	• Washer	3	1001-
28		124-62-61531	• Elbow	4	1001-
29		07002-61023	• O-ring	4	1001-
30		(14X-49-51271)	Joint Assembly(Refer to Page 299)		-

FIG. F2300-001035 Power Train (Mounting) (2/2)

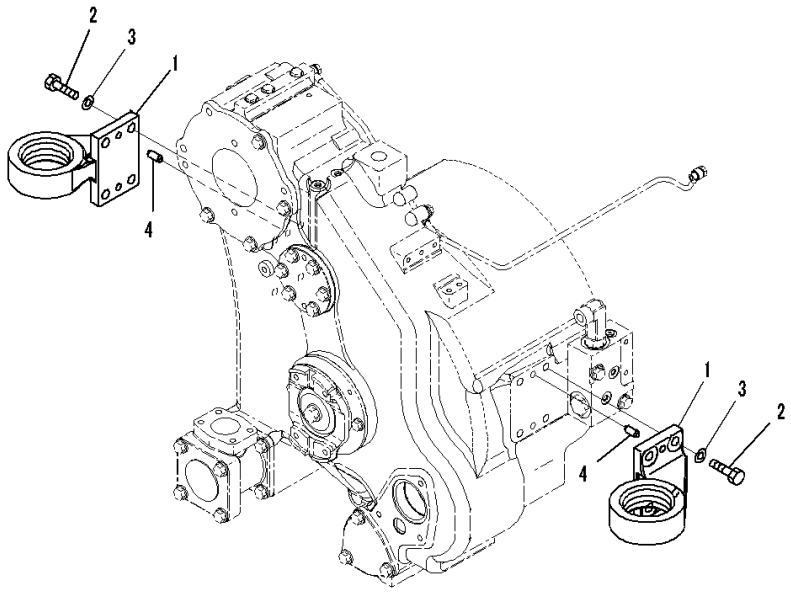

トルクコンバータケース
Torque Converter Case

JA002790

Index	Code	Part Number	Description	Qty	Serial Number
		Note: This list covers following specifications.			
		Without Power Angle Power Tilt Dozer, Inside Frame			
		Power Angle Power Tilt Dozer, Inside Frame, 3000mm,			
		Power Angle Power Tilt Blade			
		14X-22-50002	Power Unit	1	1469-
1		14X-22-51111	• Bracket	2	1001-
2		01010-81650	• Bolt	8	1001-
3		01643-31645	• Washer	8	1001-
4		04020-01228	• Pin, Dowel	4	1001-

FIG. F2300-001036 Power Train (Without Power Angle Power Tilt Dozer, Inside Frame) (Final Drive, Torque Shaft)

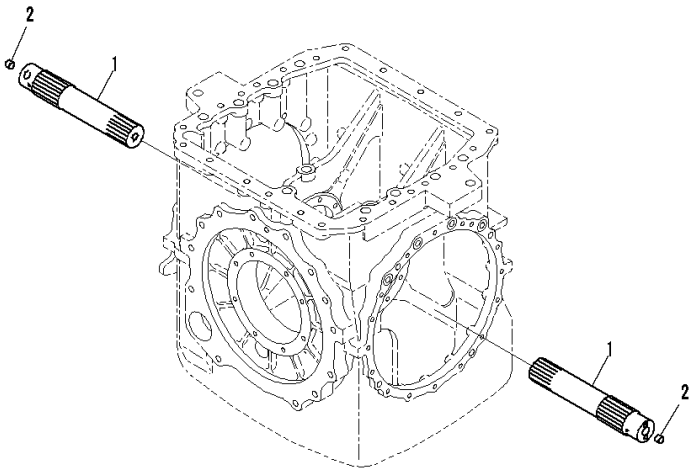

PW08951

Index	Code	Part Number	Description	Qty	Serial Number
1		14Y-22-54120	Shaft	2	1001-
2		14Y-22-14160	Button	2	1001-

FIG. F2300-002036 Power Train (Power Angle Power Tilt Dozer, Inside Frame, 3000mm, Power Angle Power Tilt Blade) (Final Drive, Torque Shaft)

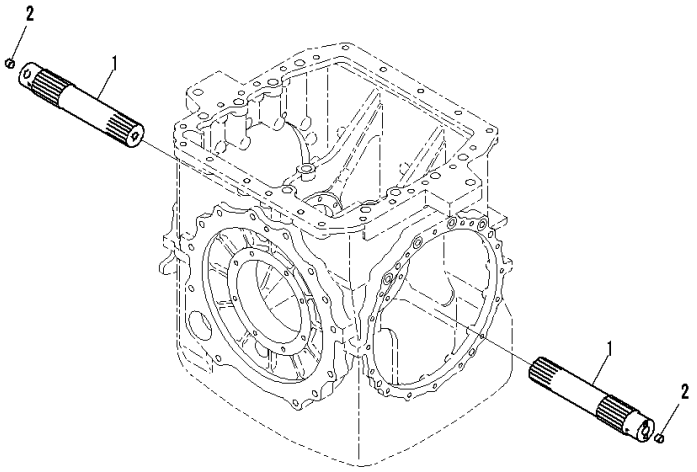

Index	Code	Part Number	Description	Qty	Serial Number
1		14Y-22-54130	Shaft	2	1001-
2		14Y-22-14160	Button	2	1001-

FIG. F2380-007001 Final Drive (Power Angle Power Tilt Dozer, Inside Frame, 3000mm, Power Angle Power Tilt Blade, Plus Type Track Shoe) (Sprocket Hub, L.H.)

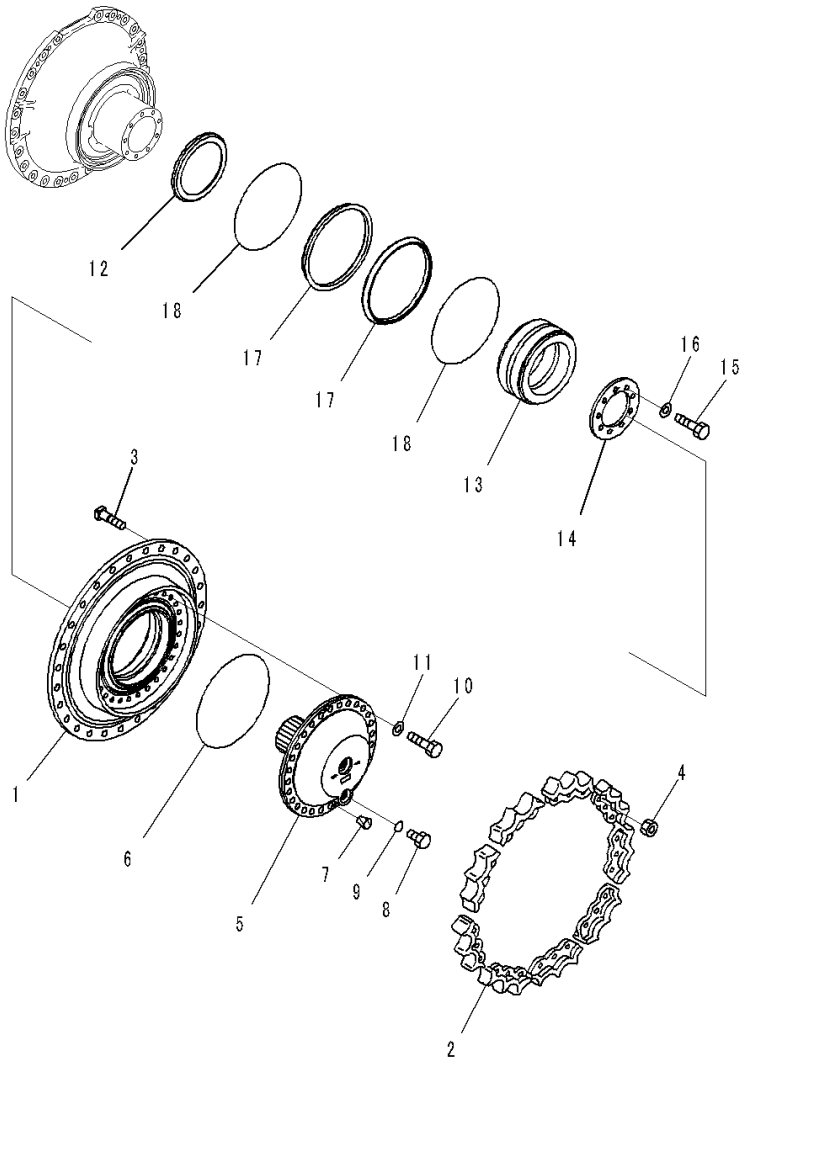

Index	Code	Part Number	Description	Qty	Serial Number
		14X-27-00221	Final Drive Group	1	1001-
1		14X-27-51140	• Hub	1	1001-
2		14X-27-15211	• Teeth	9	1001-
3		154-27-12320	• Bolt	27	1001-
4		01803-02228	• Nut	27	1001-
5		14X-27-51150	• Shaft	1	1001-
6		07000-15360	• O-ring	1	1001-
7		07049-01215	• Plug	2	1001-
8		07044-12412	• Plug	2	1001-
9		07002-12434	• O-ring	2	1001-
10		01010-82055	• Bolt	28	1001-
11		01643-32060	• Washer	28	1001-
12		14X-27-51320	• Collar	1	1001-
13		14X-09-51110	• Bearing	1	1001-
14		14X-27-51330	• Holder	1	1001-
15		01010-81645	• Bolt	9	1001-
16		01643-31645	• Washer	9	1001-
		14X-27-00051	• Floating Seal Assembly	1	1001-
17	C1		• • Seal	2	1001-
18	C1		• • O-ring	2	1001-

FIG. F2380-007002 Final Drive (Power Angle Power Tilt Dozer, Inside Frame, 3000mm, Power Angle Power Tilt Blade, Plus Type Track Shoe) (Final Gear Case L.H.)

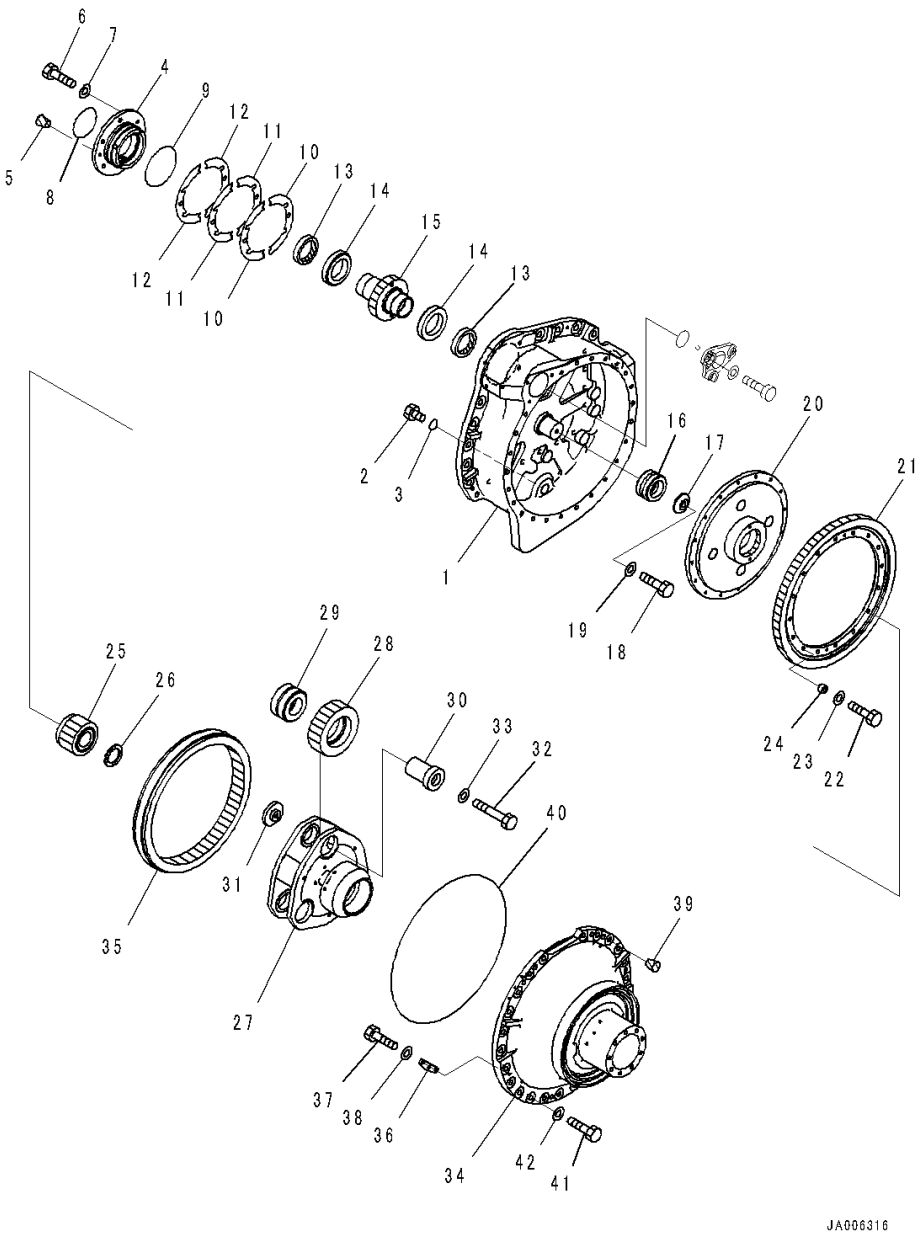

Index	Code	Part Number	Description	Qty	Serial Number
		14X-27-00221	Final Drive Group	1	1001-
1		14X-27-51111	• Case	1	1001-
2		07044-13620	• Plug	2	1001-
3		07002-13634	• O-ring	2	1001-
4		14X-27-51190	• Cage	1	1001-
5		07049-01215	• Plug	2	1001-
6		01010-81235	• Bolt	6	1001-
7		01643-31232	• Washer	6	1001-
8		07000-15105	• O-ring	1	1001-1465
9		07000-15150	• O-ring	1	1001-
		14X-27-00390	• Shim Kit	1	1001-
10	C1		• • Shim, T=0.2mm	8	1001-
11	C1		• • Shim, T=0.3mm	12	1001-
12	C1		• • Shim, T=1.0mm	8	1001-
13		07013-70080	• Seal, Oil	2	1001-
14		14X-09-51130	• Bearing	2	1001-
15		14X-27-51260	• Pinion	1	1001-
16		14X-09-51140	• Bearing	1	1001-
17		154-27-72331	• Holder	1	1001-
18		01010-81645	• Bolt	1	1001-
19		01643-31645	• Washer	1	1001-
20		14X-27-51280	• Hub	1	1001-
21		14X-27-51270	• Gear	1	1001-
22		01010-81250	• Bolt	16	1001-
23		01643-31232	• Washer	16	1001-
24		140-901-6250	• Boss	16	1001-
25		14X-27-51230	• Gear	1	1001-
26		207-27-52270	• Spacer	1	1001-
27		14X-27-55160	• Carrier	1	1001-
28		14X-27-51240	• Gear	3	1001-
29		14X-09-51120	• Bearing	3	1001-
30		14X-27-51310	• Shaft	3	1001-
31		154-27-72320	• Holder	3	1001-
32		01011-81620	• Bolt	3	1001-
33		01643-31645	• Washer	3	1001-
34		14X-27-55132	• Cover	1	1466-
35		14X-27-51250	• Gear	1	1001-
36		14X-27-51350	• Plate	4	1001-
37		01010-81025	• Bolt	12	1001-

FIG. F2380-007002 Final Drive (Power Angle Power Tilt Dozer, Inside Frame, 3000mm, Power Angle Power Tilt Blade, Plus Type Track Shoe) (Final Gear Case L.H.)

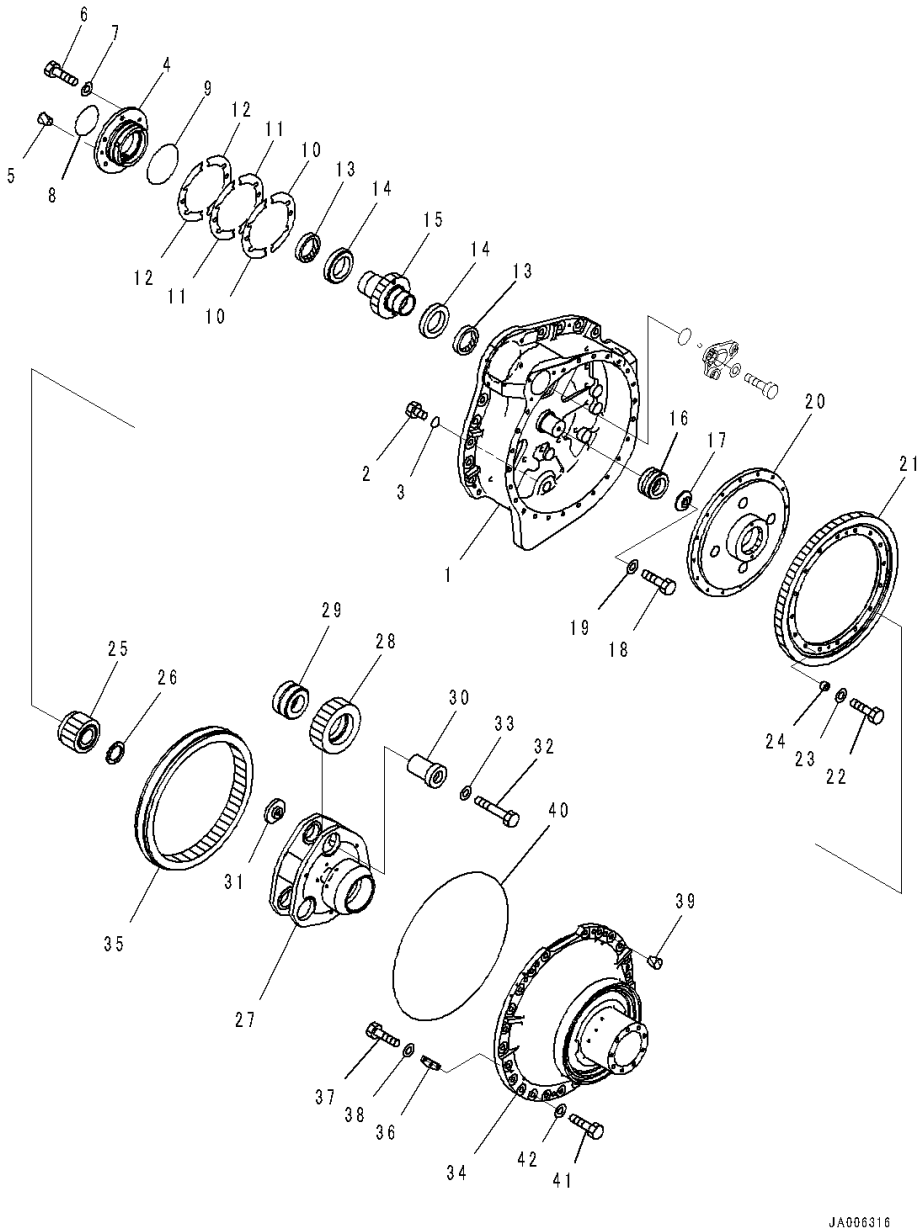

Index	Code	Part Number	Description	Qty	Serial Number
38		01643-31032	• Washer	12	1001-
39		07049-01620	• Plug	4	1466-
40		566-13-13341	• O-ring	1	1001-
41		01010-81645	• Bolt	24	1001-
42		01643-31645	• Washer	24	1001-

FIG. F2380-007003 Final Drive (Final Drive Mounting) (1/2)

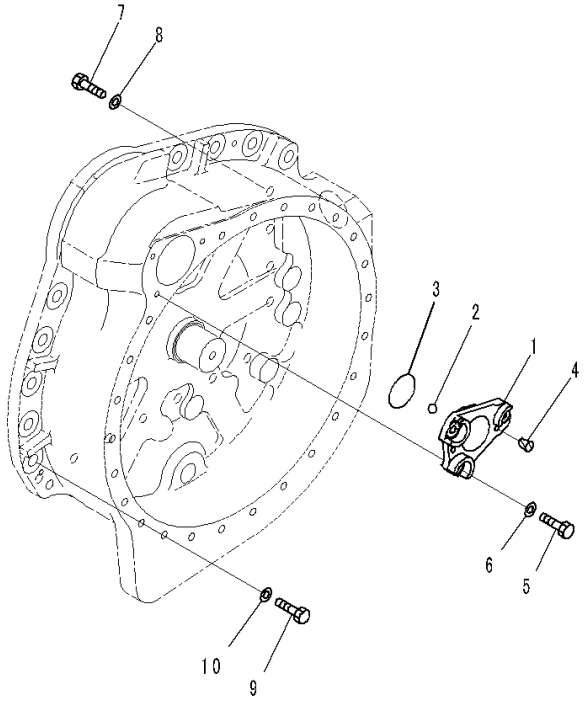

JA006310

Index	Code	Part Number	Description	Qty	Serial Number
		Note: This list covers following specifications.			
		Power Angle Power Tilt Dozer, Inside Frame, 3000mm,			
		Power Angle Power Tilt Blade, Plus Type Track Shoe			
		Power Angle Power Tilt Dozer, Inside Frame, 3000mm,			
		Power Angle Power Tilt Blade			
		14X-27-00221	Final Drive Group	1	1001-
			Power Angle Power Tilt Dozer, Inside Frame, 3000mm, Power Angle Power Tilt Blade, Plus Type Track Shoe		
		14X-27-00260	Final Drive Group,L.H.	1	1001-
			Power Angle Power Tilt Dozer, Inside Frame, 3000mm, Power Angle Power Tilt Blade		
1		14X-27-51180	• Cover	1	1001-
2		04260-01905	• Ball	1	1001-
3		07000-12085	• O-ring	1	1001-
4		07049-01215	• Plug	2	1001-
5		01010-81235	• Bolt	3	1001-
6		01643-31232	• Washer	3	1001-
7		01011-82060	Bolt	11	1001-1465
8		01643-32060	Washer	11	1001-1465
9		14X-27-52230	Bolt	9	1001-1465
10		01643-32060	Washer	9	1001-1465

FIG. F2380-007004 Final Drive (Power Angle Power Tilt Dozer, Inside Frame, 3000mm, Power Angle Power Tilt Blade, Plus Type Track Shoe) (Sprocket Hub, R.H.)

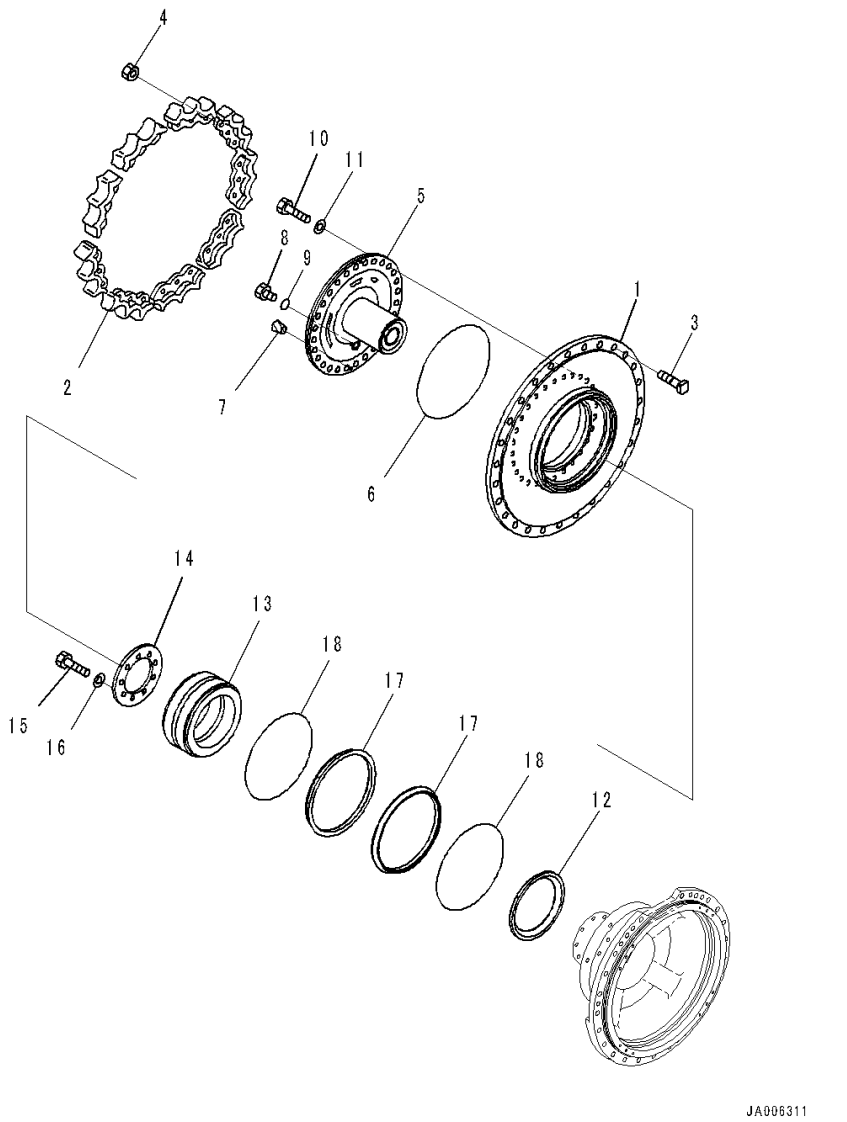

Index	Code	Part Number	Description	Qty	Serial Number
		14X-27-00231	Final Drive Group	1	1001-
1		14X-27-51140	• Hub	1	1001-
2		14X-27-15211	• Teeth	9	1001-
3		154-27-12320	• Bolt	27	1001-
4		01803-02228	• Nut	27	1001-
5		14X-27-51150	• Shaft	1	1001-
6		07000-15360	• O-ring	1	1001-
7		07049-01215	• Plug	2	1001-
8		07044-12412	• Plug	2	1001-
9		07002-12434	• O-ring	2	1001-
10		01010-82055	• Bolt	28	1001-
11		01643-32060	• Washer	28	1001-
12		14X-27-51320	• Collar	1	1001-
13		14X-09-51110	• Bearing	1	1001-
14		14X-27-51330	• Holder	1	1001-
15		01010-81645	• Bolt	9	1001-
16		01643-31645	• Washer	9	1001-
		14X-27-00051	• Floating Seal Assembly	1	1001-
17	C1		• • Seal	2	1001-
18	C1		• • O-ring	2	1001-

FIG. F2380-007005 Final Drive (Power Angle Power Tilt Dozer, Inside Frame, 3000mm, Power Angle Power Tilt Blade, Plus Type Track Shoe) (Final Gear Case R.H.)

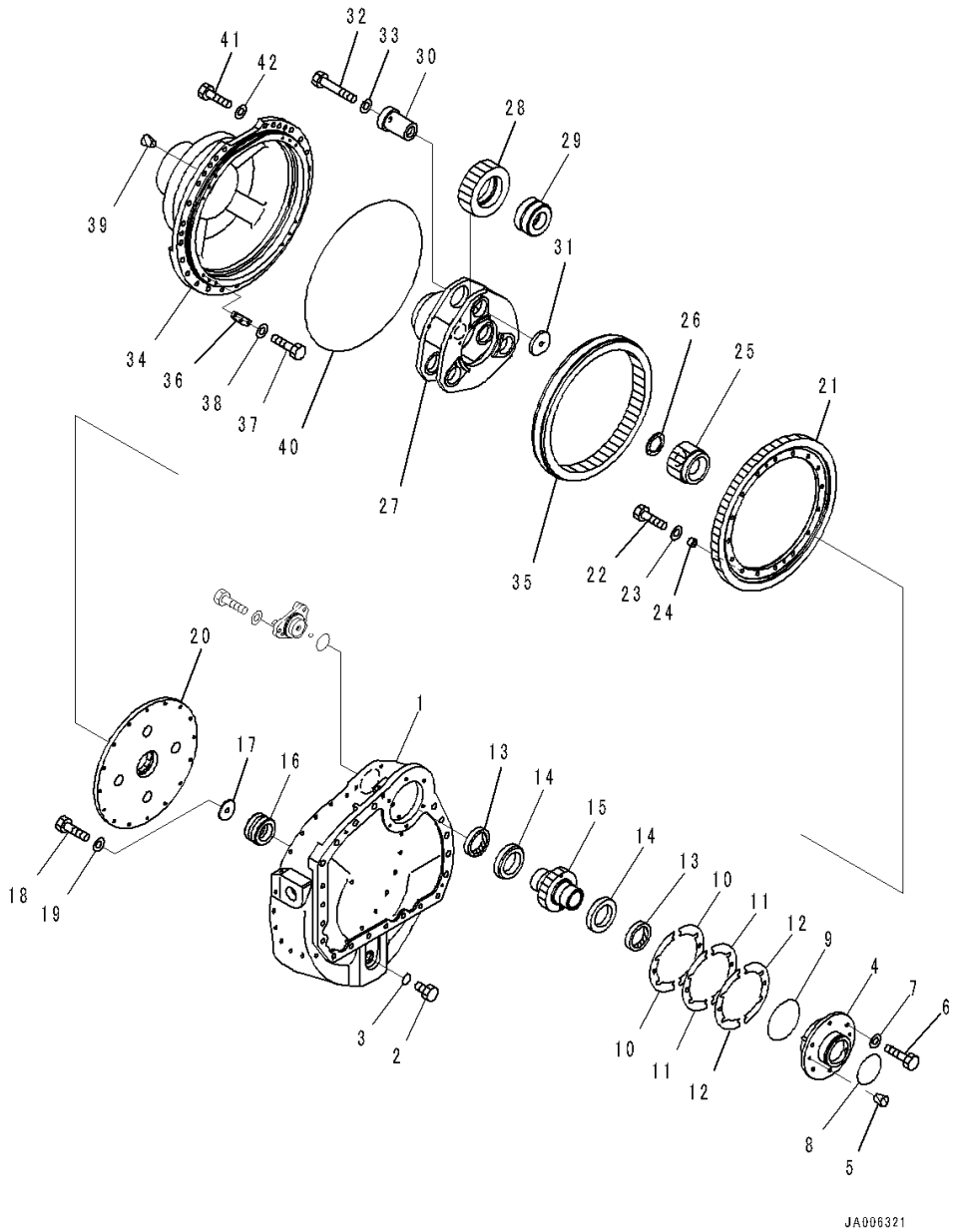

Index	Code	Part Number	Description	Qty	Serial Number
		14X-27-00231	Final Drive Group	1	1001-
1		14X-27-51121	• Case	1	1001-
2		07044-13620	• Plug	2	1001-
3		07002-13634	• O-ring	2	1001-
4		14X-27-51190	• Cage	1	1001-
5		07049-01215	• Plug	2	1001-
6		01010-81235	• Bolt	6	1001-
7		01643-31232	• Washer	6	1001-
8		07000-15105	• O-ring	1	1001-1465
9		07000-15150	• O-ring	1	1001-
		14X-27-00390	• Shim Kit	1	1001-
10	C1		• • Shim, T=0.2mm	8	1001-
11	C1		• • Shim, T=0.3mm	12	1001-
12	C1		• • Shim, T=1.0mm	8	1001-
13		07013-70080	• Seal, Oil	2	1001-
14		14X-09-51130	• Bearing	2	1001-
15		14X-27-51260	• Pinion	1	1001-
16		14X-09-51140	• Bearing	1	1001-
17		154-27-72331	• Holder	1	1001-
18		01010-81645	• Bolt	1	1001-
19		01643-31645	• Washer	1	1001-
20		14X-27-51280	• Hub	1	1001-
21		14X-27-51270	• Gear	1	1001-
22		01010-81250	• Bolt	16	1001-
23		01643-31232	• Washer	16	1001-
24		140-901-6250	• Boss	16	1001-
25		14X-27-51230	• Gear	1	1001-
26		207-27-52270	• Spacer	1	1001-
27		14X-27-55160	• Carrier	1	1001-
28		14X-27-51240	• Gear	3	1001-
29		14X-09-51120	• Bearing	3	1001-
30		14X-27-51310	• Shaft	3	1001-
31		154-27-72320	• Holder	3	1001-
32		01011-81620	• Bolt	3	1001-
33		01643-31645	• Washer	3	1001-
34		14X-27-55132	• Cover	1	1466-
35		14X-27-51250	• Gear	1	1001-
36		14X-27-51350	• Plate	4	1001-
37		01010-81025	• Bolt	12	1001-

FIG. F2380-007005 Final Drive (Power Angle Power Tilt Dozer, Inside Frame, 3000mm, Power Angle Power Tilt Blade, Plus Type Track Shoe) (Final Gear Case R.H.)

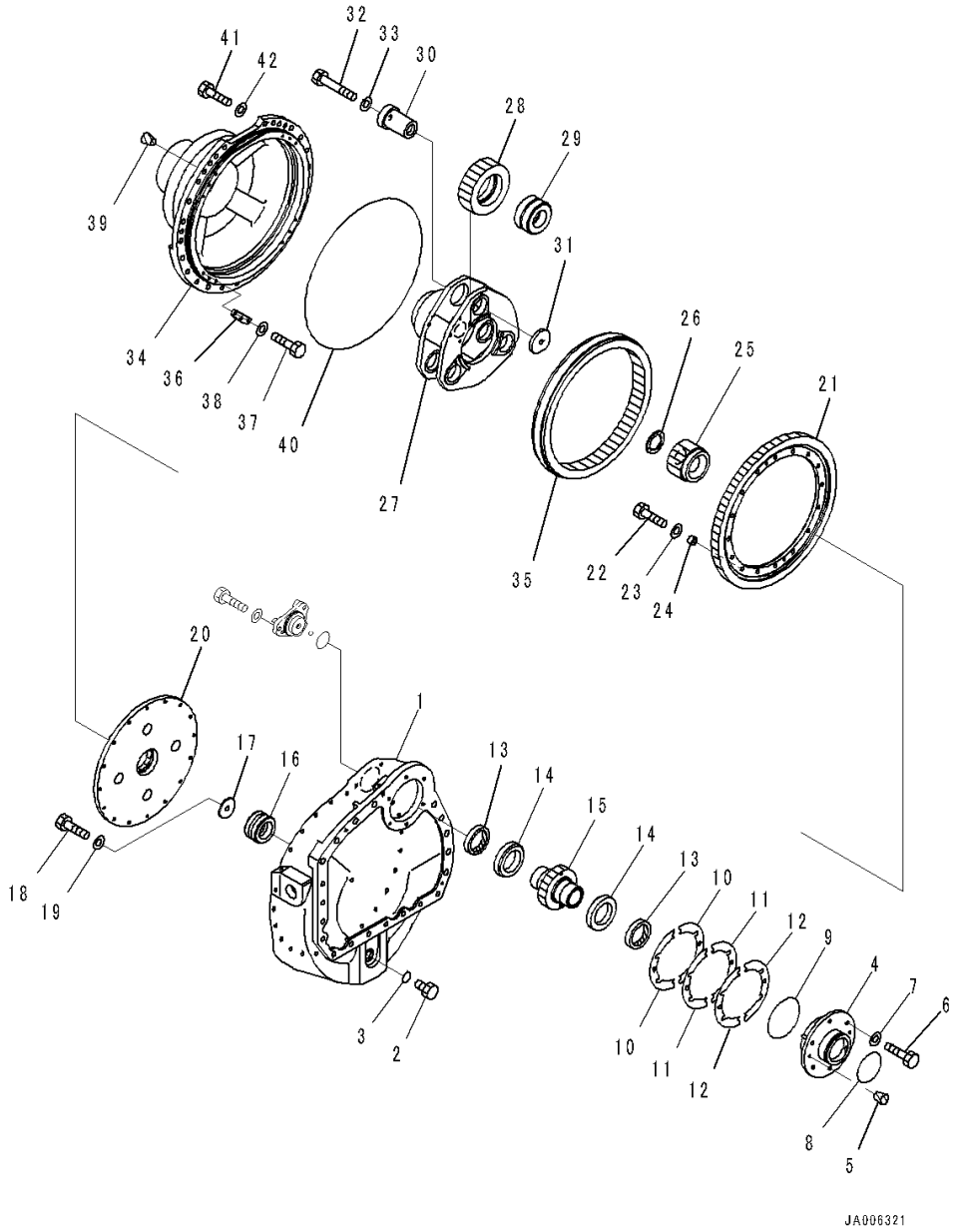

Index	Code	Part Number	Description	Qty	Serial Number
38		01643-31032	• Washer	12	1001-
39		07049-01620	• Plug	4	1466-
40		566-13-13341	• O-ring	1	1001-
41		01010-81645	• Bolt	24	1001-
42		01643-31645	• Washer	24	1001-

FIG. F2380-007006 Final Drive (Final Drive Mounting) (2/2)

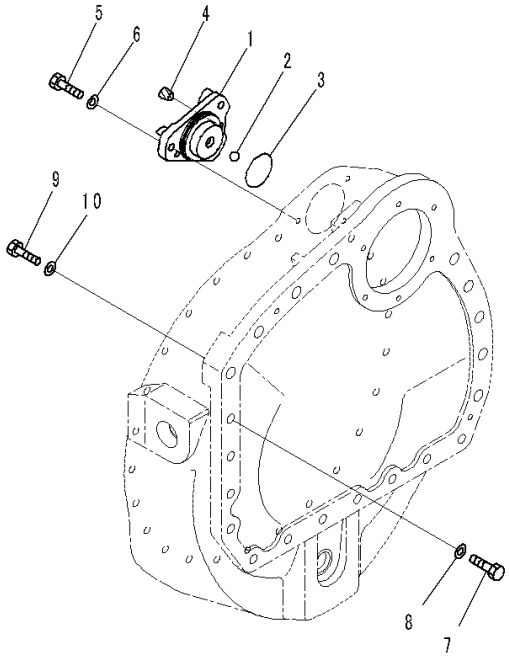

JA006313

Index	Code	Part Number	Description	Qty	Serial Number
		Note: This list covers following specifications.			
		Power Angle Power Tilt Dozer, Inside Frame, 3000mm,			
		Power Angle Power Tilt Blade, Plus Type Track Shoe			
		Power Angle Power Tilt Dozer, Inside Frame, 3000mm,			
		Power Angle Power Tilt Blade			
		14X-27-00231	Final Drive Group ..... Power Angle Power Tilt Dozer, Inside Frame, 3000mm, Power Angle Power Tilt Blade, Plus Type Track Shoe	1	1001-
		14X-27-00270	Final Drive Group,R.H. ..... Power Angle Power Tilt Dozer, Inside Frame, 3000mm, Power Angle Power Tilt Blade	1	1001-
1		14X-27-51180	• Cover	1	1001-
2		04260-01905	• Ball	1	1001-
3		07000-12085	• O-ring	1	1001-
4		07049-01215	• Plug	2	1001-
5		01010-81235	• Bolt	3	1001-
6		01643-31232	• Washer	3	1001-
7		01011-82060	Bolt	11	1001-1465
8		01643-32060	Washer	11	1001-1465
9		14X-27-52230	Bolt	9	1001-1465
10		01643-32060	Washer	9	1001-1465

FIG. F2380-007007 Final Drive (Mounting)

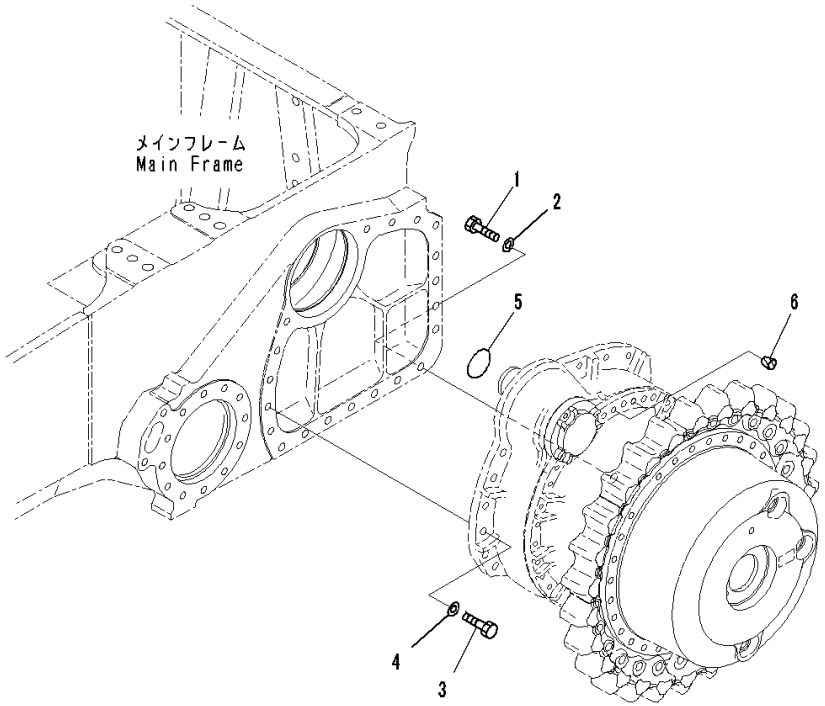

Index	Code	Part Number	Description	Qty	Serial Number
		Note: This list covers following specifications.			
		Power Angle Power Tilt Dozer, Inside Frame, 3000mm,			
		Power Angle Power Tilt Blade, Plus Type Track Shoe			
		Power Angle Power Tilt Dozer, Inside Frame, 3000mm,			
		Power Angle Power Tilt Blade			
1		01011-82060	Bolt	22	1466-
2		01643-32060	Washer	22	1466-
3		14X-27-52230	Bolt	18	1466-
4		01643-32060	Washer	18	1466-
5		07000-15105	O-ring	2	1466-
6		07049-01620	Plug	4	1466-

FIG. F2380-004001 Final Drive (Power Angle Power Tilt Dozer, Inside Frame, For Plus Type Track Shoe) (Sprocket Hub, L.H.)

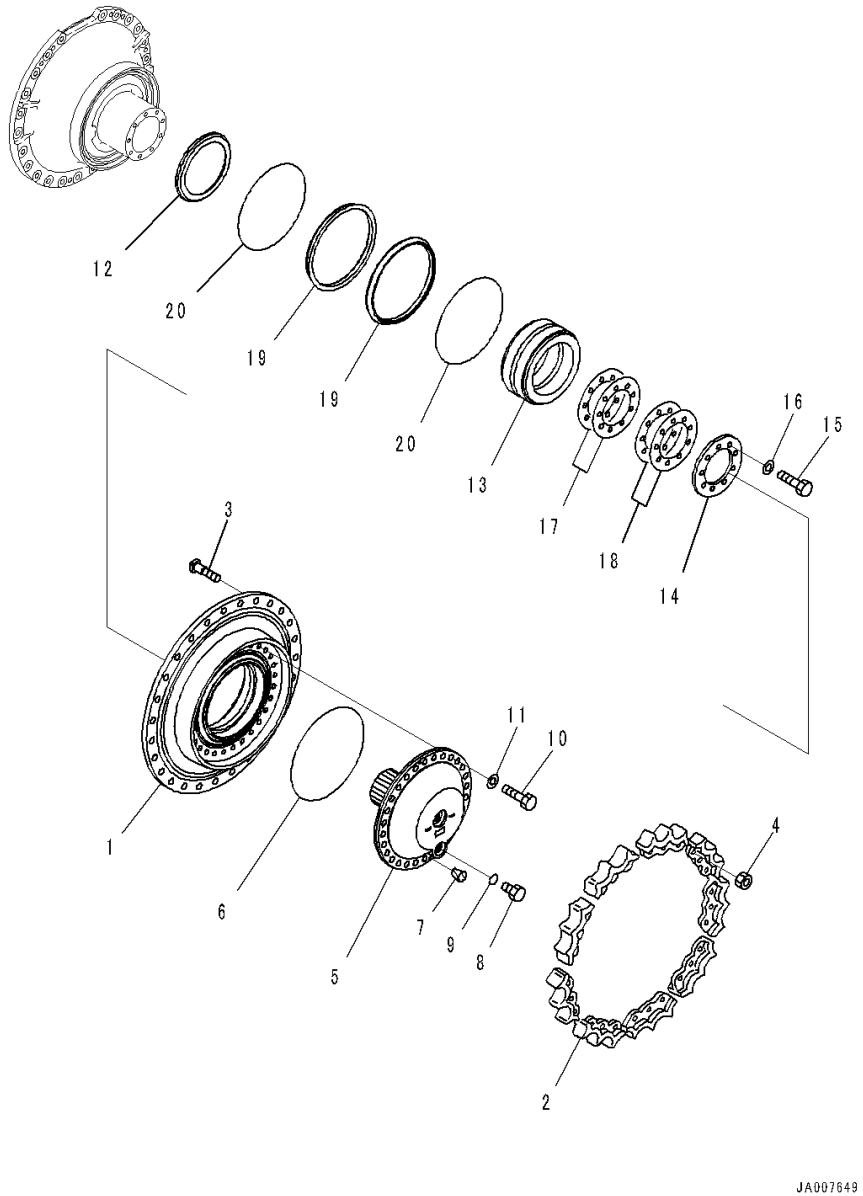

Index	Code	Part Number	Description	Qty	Serial Number
		14X-27-00221	Final Drive Group	1	1001-
1		14X-27-51140	• Hub	1	1001-
2		14X-27-15211	• Teeth	9	1001-
3		154-27-12320	• Bolt	27	1001-
4		01803-02228	• Nut	27	1001-
5		14X-27-51150	• Shaft	1	1001-
6		07000-15360	• O-ring	1	1001-
7		07049-01215	• Plug	2	1001-
8		07044-12412	• Plug	2	1001-
9		07002-12434	• O-ring	2	1001-
10		01010-82055	• Bolt	28	1001-
11		01643-32060	• Washer	28	1001-
12		14X-27-51320	• Collar	1	1001-
13		14X-09-51110	• Bearing	1	1001-
14		14X-27-51330	• Holder	1	1001-
15		01010-81645	• Bolt	9	1001-
16		01643-31645	• Washer	9	1001-
		14X-27-00280	• Shim Assembly	1	1001-
17	C1		• • Shim, T=0.5mm	2	1001-
18	C1		• • Shim, T=0.2mm	2	1001-
		14X-27-00051	• Floating Seal Assembly	1	1001-
19	C1		• • Seal	2	1001-
20	C1		• • O-ring	2	1001-

FIG. F2380-004002 Final Drive (Final Gear Case L.H.)

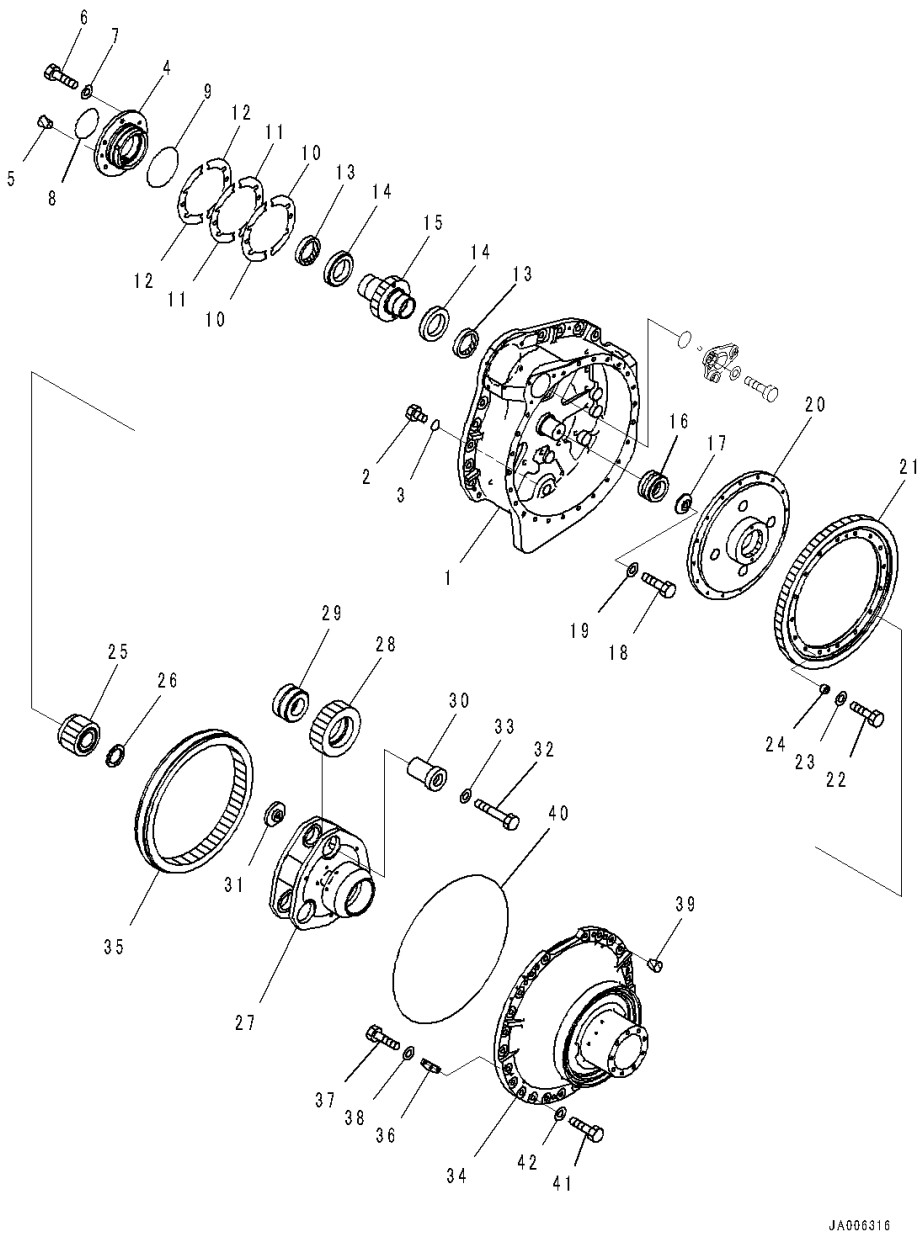

Index	Code	Part Number	Description	Qty	Serial Number
		Note: This list covers following specifications.			
		Power Angle Power Tilt Dozer, Inside Frame, For Plus Type Track Shoe			
		Power Angle Power Tilt Dozer, Inside Frame, 3000mm, Power Angle Power Tilt Blade			
		Power Angle Power Tilt Dozer, Inside Frame			
		14X-27-00221	Final Drive Group ..... Power Angle Power Tilt Dozer, Inside Frame, For Plus Type Track Shoe	1	1001-
		14X-27-00260	Final Drive Group,L.H. ..... Power Angle Power Tilt Dozer, Inside Frame, 3000mm, Power Angle Power Tilt Blade	1	1001-
		14X-27-00260	Final Drive Group,L.H. ..... Power Angle Power Tilt Dozer, Inside Frame	1	1001-
1		14X-27-51111	• Case	1	1001-
2		07044-13620	• Plug	2	1001-
3		07002-13634	• O-ring	2	1001-
4		14X-27-51190	• Cage	1	1001-
5		07049-01215	• Plug	2	1001-
6		01010-81235	• Bolt	6	1001-
7		01643-31232	• Washer	6	1001-
8		07000-15105	• O-ring	1	1001-
9		07000-15150	• O-ring	1	1001-
		14X-27-00390	• Shim Kit	1	1001-
10	C1		• • Shim, T=0.2mm	8	1001-
11	C1		• • Shim, T=0.3mm	12	1001-
12	C1		• • Shim, T=1.0mm	8	1001-
13		07013-70080	• Seal, Oil	2	1001-
14		14X-09-51130	• Bearing	2	1001-
15		14X-27-51260	• Pinion	1	1001-
16		14X-09-51140	• Bearing	1	1001-
17		154-27-72331	• Holder	1	1001-
18		01010-81645	• Bolt	1	1001-
19		01643-31645	• Washer	1	1001-
20		14X-27-51280	• Hub	1	1001-
21		14X-27-51270	• Gear	1	1001-
22		01010-81250	• Bolt	16	1001-
23		01643-31232	• Washer	16	1001-

FIG. F2380-004002 Final Drive (Final Gear Case L.H.)

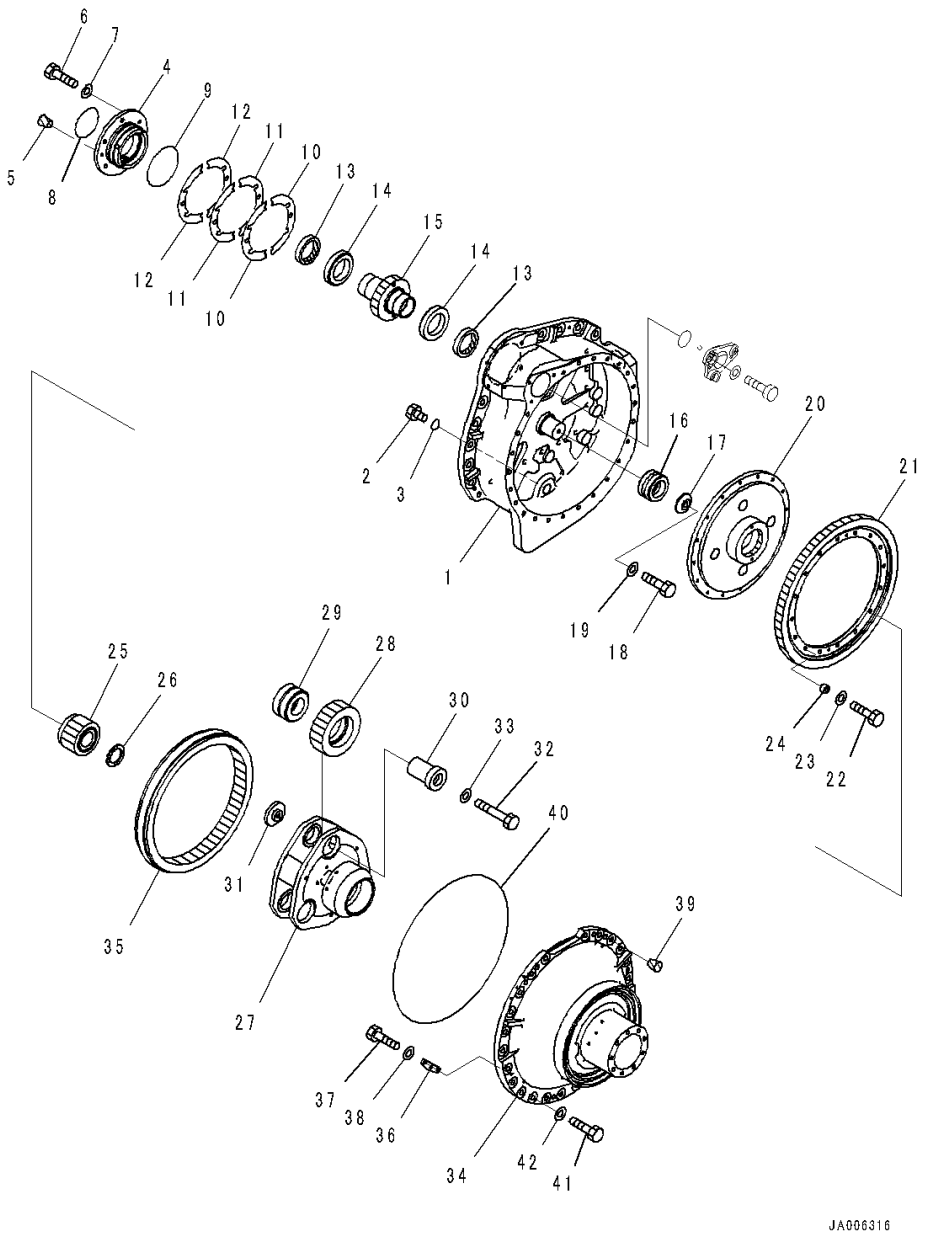

Index	Code	Part Number	Description	Qty	Serial Number
24		140-901-6250	• Boss	16	1001-
25		14X-27-51230	• Gear	1	1001-
26		207-27-52270	• Spacer	1	1001-
27		14X-27-55160	• Carrier	1	1001-
28		14X-27-51240	• Gear	3	1001-
29		14X-09-51120	• Bearing	3	1001-
30		14X-27-51310	• Shaft	3	1001-
31		154-27-72320	• Holder	3	1001-
32		01011-81620	• Bolt	3	1001-
33		01643-31645	• Washer	3	1001-
34		14X-27-55131	• Cover	1	1001-
35		14X-27-51250	• Gear	1	1001-
36		14X-27-51350	• Plate	4	1001-
37		01010-81025	• Bolt	12	1001-
38		01643-31032	• Washer	12	1001-
39		07049-01620	• Plug	6	1001-
40		566-13-13341	• O-ring	1	1001-
41		01010-81645	• Bolt	24	1001-
42		01643-31645	• Washer	24	1001-

FIG. F2380-004003 Final Drive (Final Drive Mounting) (1/2)

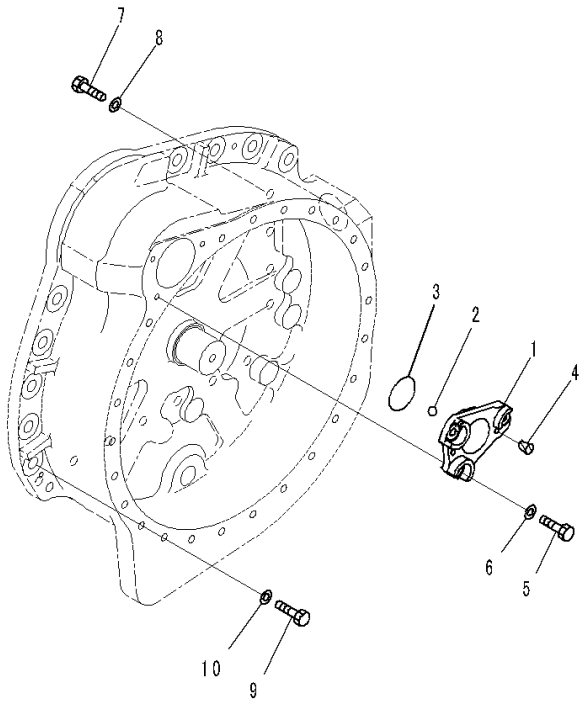

JA006310

Index	Code	Part Number	Description	Qty	Serial Number
		Note: This list covers following specifications.			
		Power Angle Power Tilt Dozer, Inside Frame, For Plus Type Track Shoe			
		Power Angle Power Tilt Dozer, Inside Frame			
		14X-27-00221	Final Drive Group	1	1001-
			Power Angle Power Tilt Dozer, Inside Frame, For Plus Type Track Shoe		
		14X-27-00260	Final Drive Group,L.H.	1	1001-
			Power Angle Power Tilt Dozer, Inside Frame		
1		14X-27-51180	• Cover	1	1001-
2		04260-01905	• Ball	1	1001-
3		07000-12085	• O-ring	1	1001-
4		07049-01215	• Plug	2	1001-
5		01010-81235	• Bolt	3	1001-
6		01643-31232	• Washer	3	1001-
7		01010-82070	Bolt	11	1001-
8		01643-32060	Washer	11	1001-
9		01010-82055	Bolt	9	1001-
10		01643-32060	Washer	9	1001-

FIG. F2380-004004 Final Drive (Power Angle Power Tilt Dozer, Inside Frame, For Plus Type Track Shoe) (Sprocket Hub, R.H.)

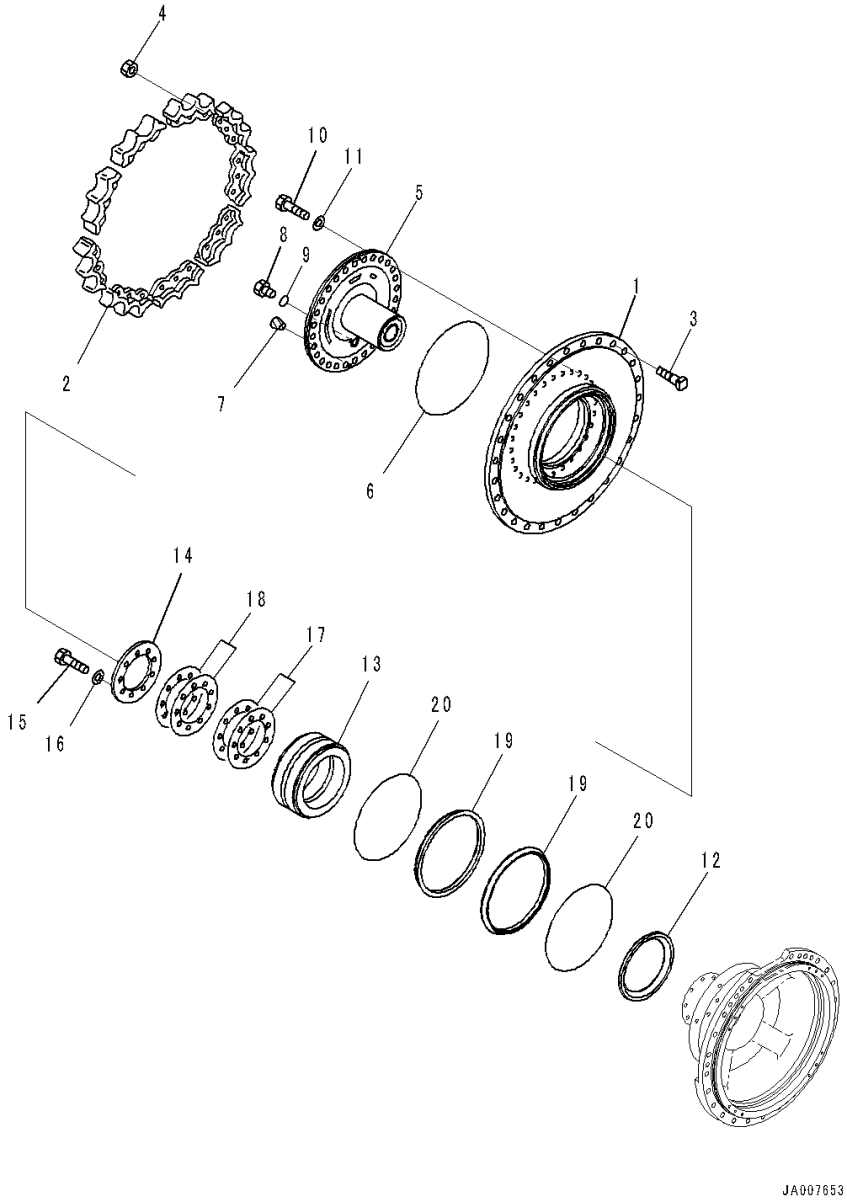

Index	Code	Part Number	Description	Qty	Serial Number
		14X-27-00231	Final Drive Group	1	1001-
1		14X-27-51140	• Hub	1	1001-
2		14X-27-15211	• Teeth	9	1001-
3		154-27-12320	• Bolt	27	1001-
4		01803-02228	• Nut	27	1001-
5		14X-27-51150	• Shaft	1	1001-
6		07000-15360	• O-ring	1	1001-
7		07049-01215	• Plug	2	1001-
8		07044-12412	• Plug	2	1001-
9		07002-12434	• O-ring	2	1001-
10		01010-82055	• Bolt	28	1001-
11		01643-32060	• Washer	28	1001-
12		14X-27-51320	• Collar	1	1001-
13		14X-09-51110	• Bearing	1	1001-
14		14X-27-51330	• Holder	1	1001-
15		01010-81645	• Bolt	9	1001-
16		01643-31645	• Washer	9	1001-
		14X-27-00280	• Shim Assembly	1	1001-
17	C1		• • Shim, T=0.5mm	2	1001-
18	C1		• • Shim, T=0.2mm	2	1001-
		14X-27-00051	• Floating Seal Assembly	1	1001-
19		14X-27-51420	• • Seal	2	1001-
20		14S-27-11270	• • O-ring	2	1001-

FIG. F2380-004005 Final Drive (Final Gear Case R.H.)

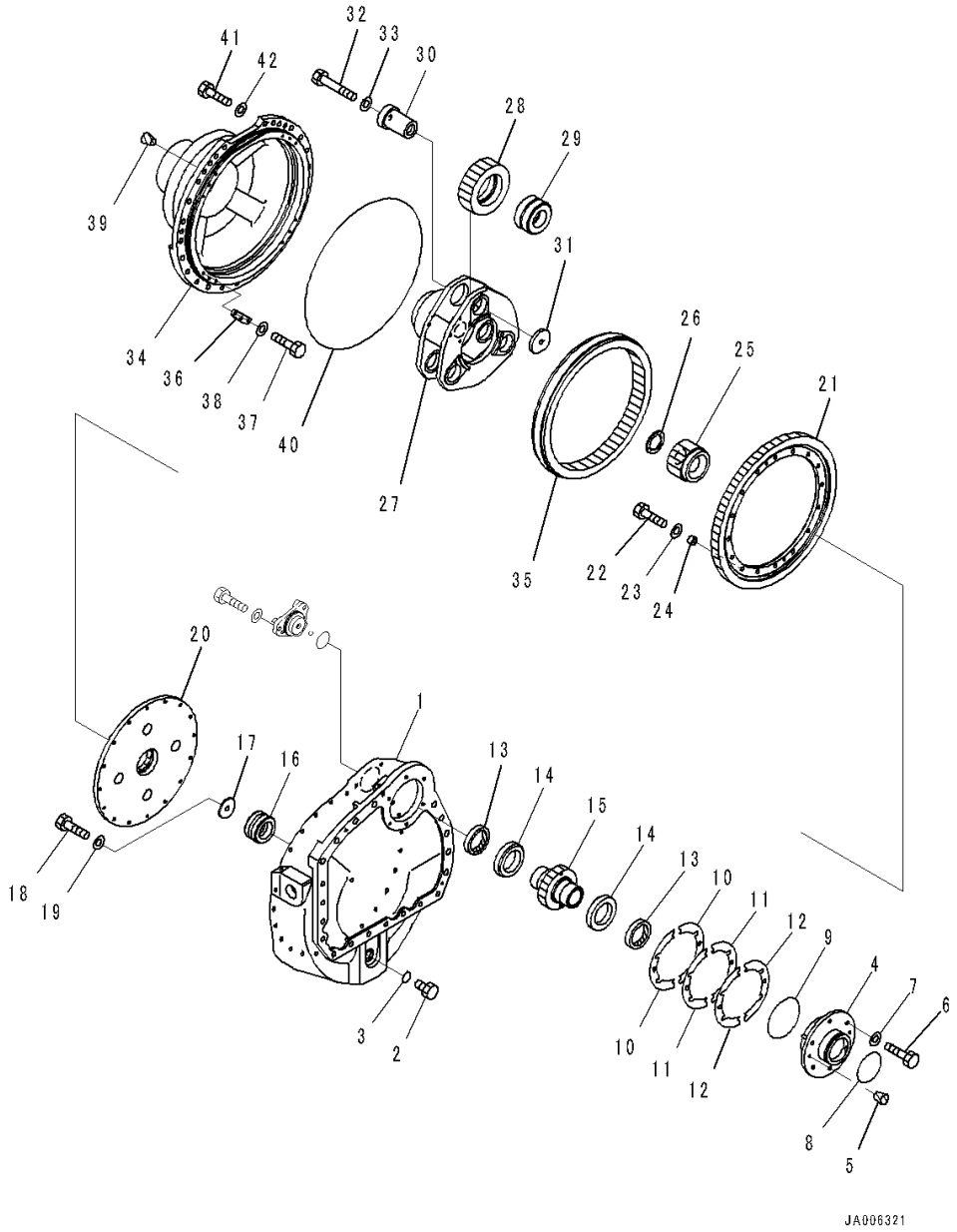

Index	Code	Part Number	Description	Qty	Serial Number
		Note: This list covers following specifications.			
		Power Angle Power Tilt Dozer, Inside Frame, For Plus Type Track Shoe			
		Power Angle Power Tilt Dozer, Inside Frame, 3000mm, Power Angle Power Tilt Blade			
		Power Angle Power Tilt Dozer, Inside Frame			
		14X-27-00231	Final Drive Group ..... Power Angle Power Tilt Dozer, Inside Frame, For Plus Type Track Shoe	1	1001-
		14X-27-00270	Final Drive Group,R.H. ..... Power Angle Power Tilt Dozer, Inside Frame, 3000mm, Power Angle Power Tilt Blade	1	1001-
		14X-27-00270	Final Drive Group,R.H. ..... Power Angle Power Tilt Dozer, Inside Frame	1	1001-
1		14X-27-51121	• Case	1	1001-
2		07044-13620	• Plug	2	1001-
3		07002-13634	• O-ring	2	1001-
4		14X-27-51190	• Cage	1	1001-
5		07049-01215	• Plug	2	1001-
6		01010-81235	• Bolt	6	1001-
7		01643-31232	• Washer	6	1001-
8		07000-15105	• O-ring	1	1001-
9		07000-15150	• O-ring	1	1001-
		14X-27-00390	• Shim Kit	1	1001-
10	C1		• • Shim, T=0.2mm	8	1001-
11	C1		• • Shim, T=0.3mm	12	1001-
12	C1		• • Shim, T=1.0mm	8	1001-
13		07013-70080	• Seal, Oil	2	1001-
14		14X-09-51130	• Bearing	2	1001-
15		14X-27-51260	• Pinion	1	1001-
16		14X-09-51140	• Bearing	1	1001-
17		154-27-72331	• Holder	1	1001-
18		01010-81645	• Bolt	1	1001-
19		01643-31645	• Washer	1	1001-
20		14X-27-51280	• Hub	1	1001-
21		14X-27-51270	• Gear	1	1001-
22		01010-81250	• Bolt	16	1001-
23		01643-31232	• Washer	16	1001-

FIG. F2380-004005 Final Drive (Final Gear Case R.H.)

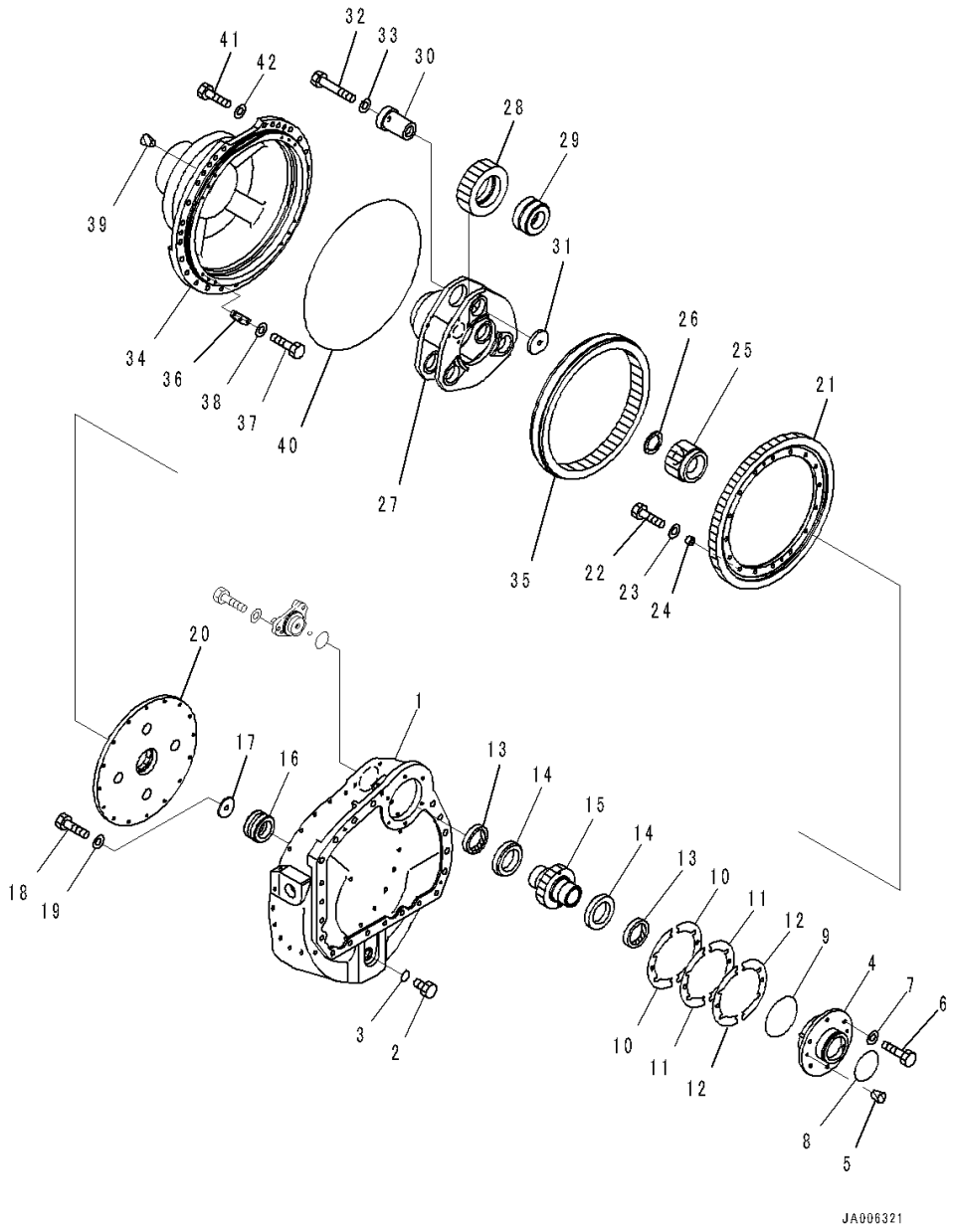

Index	Code	Part Number	Description	Qty	Serial Number
24		140-901-6250	• Boss	16	1001-
25		14X-27-51230	• Gear	1	1001-
26		207-27-52270	• Spacer	1	1001-
27		14X-27-55160	• Carrier	1	1001-
28		14X-27-51240	• Gear	3	1001-
29		14X-09-51120	• Bearing	3	1001-
30		14X-27-51310	• Shaft	3	1001-
31		154-27-72320	• Holder	3	1001-
32		01011-81620	• Bolt	3	1001-
33		01643-31645	• Washer	3	1001-
34		14X-27-55131	• Cover	1	1001-
35		14X-27-51250	• Gear	1	1001-
36		14X-27-51350	• Plate	4	1001-
37		01010-81025	• Bolt	12	1001-
38		01643-31032	• Washer	12	1001-
39		07049-01620	• Plug	6	1001-
40		566-13-13341	• O-ring	1	1001-
41		01010-81645	• Bolt	24	1001-
42		01643-31645	• Washer	24	1001-

FIG. F2380-004006 Final Drive (Final Drive Mounting) (2/2)

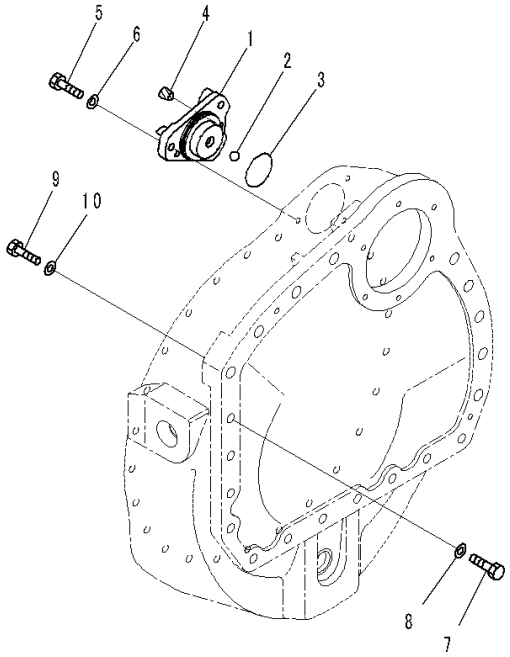

JA006313

Index	Code	Part Number	Description	Qty	Serial Number
		Note: This list covers following specifications.			
		Power Angle Power Tilt Dozer, Inside Frame, For Plus Type Track Shoe			
		Power Angle Power Tilt Dozer, Inside Frame			
		14X-27-00231	Final Drive Group ..... Power Angle Power Tilt Dozer, Inside Frame, For Plus Type Track Shoe	1	1001-
		14X-27-00270	Final Drive Group,R.H. ..... Power Angle Power Tilt Dozer, Inside Frame	1	1001-
1		14X-27-51180	• Cover	1	1001-
2		04260-01905	• Ball	1	1001-
3		07000-12085	• O-ring	1	1001-
4		07049-01215	• Plug	2	1001-
5		01010-81235	• Bolt	3	1001-
6		01643-31232	• Washer	3	1001-
7		01010-82070	Bolt	11	1001-
8		01643-32060	Washer	11	1001-
9		01010-82055	Bolt	9	1001-
10		01643-32060	Washer	9	1001-

FIG. F2380-003001 Final Drive (Sprocket Hub, L.H.)

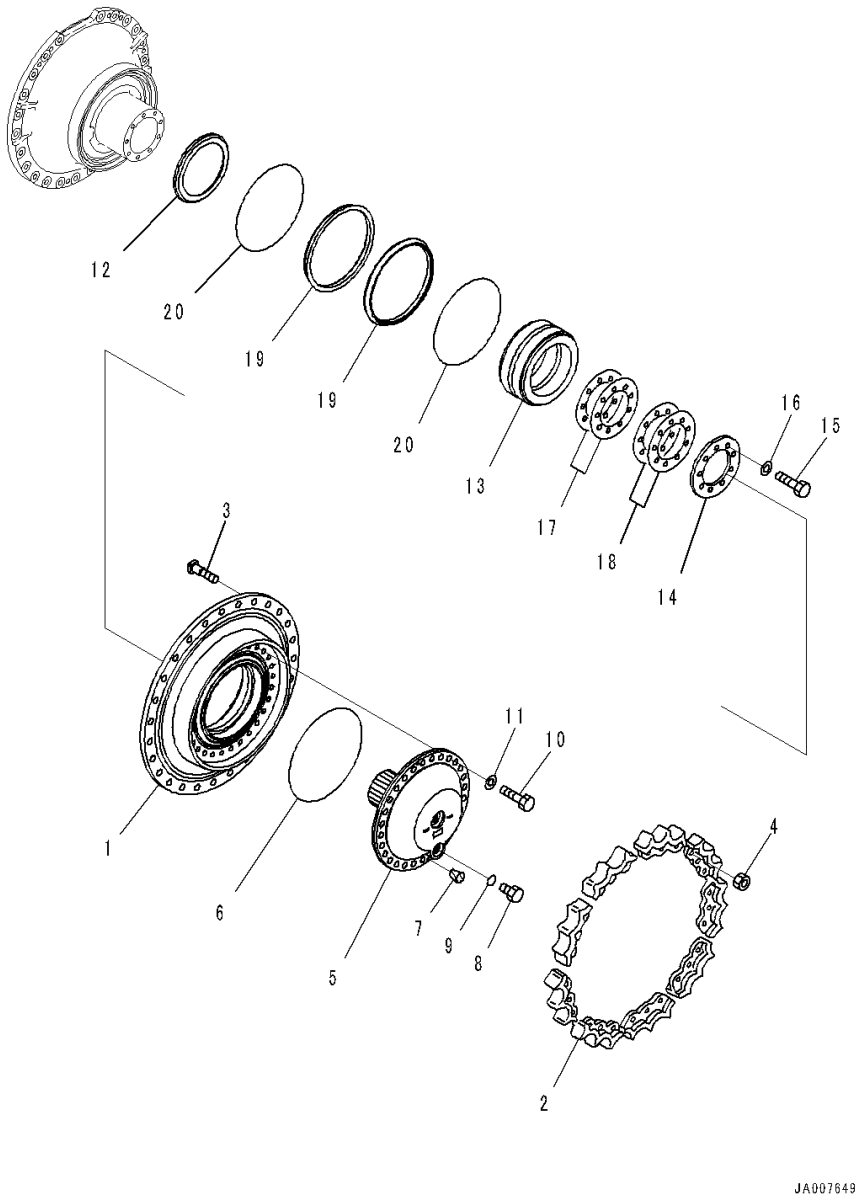

Index	Code	Part Number	Description	Qty	Serial Number
		Note: This list covers following specifications.			
		Power Angle Power Tilt Dozer, Inside Frame, 3000mm,			
		Power Angle Power Tilt Blade			
		Power Angle Power Tilt Dozer, Inside Frame			
		14X-27-00260	Final Drive Group,L.H.	1	1001-
1		14X-27-51140	• Hub	1	1001-
2		14X-27-15112	• Teeth	9	1001-
3		154-27-12320	• Bolt	27	1001-
4		01803-02228	• Nut	27	1001-
5		14X-27-51150	• Shaft	1	1001-
6		07000-15360	• O-ring	1	1001-
7		07049-01215	• Plug	2	1001-
8		07044-12412	• Plug	2	1001-
9		07002-12434	• O-ring	2	1001-
10		01010-82055	• Bolt	28	1001-
11		01643-32060	• Washer	28	1001-
12		14X-27-51320	• Collar	1	1001-
13		14X-09-51110	• Bearing	1	1001-
14		14X-27-51330	• Holder	1	1001-
15		01010-81645	• Bolt	9	1001-
16		01643-31645	• Washer	9	1001-
		14X-27-00280	• Shim Assembly	1	1001-
17	C1		• • Shim, T=0.5mm	2	1001-
18	C1		• • Shim, T=0.2mm	2	1001-
		14X-27-00051	• Floating Seal Assembly	1	1001-
19	C1		• • Seal	2	1001-
20	C1		• • O-ring	2	1001-

FIG. F2380-003004 Final Drive (Sprocket Hub, R.H.)

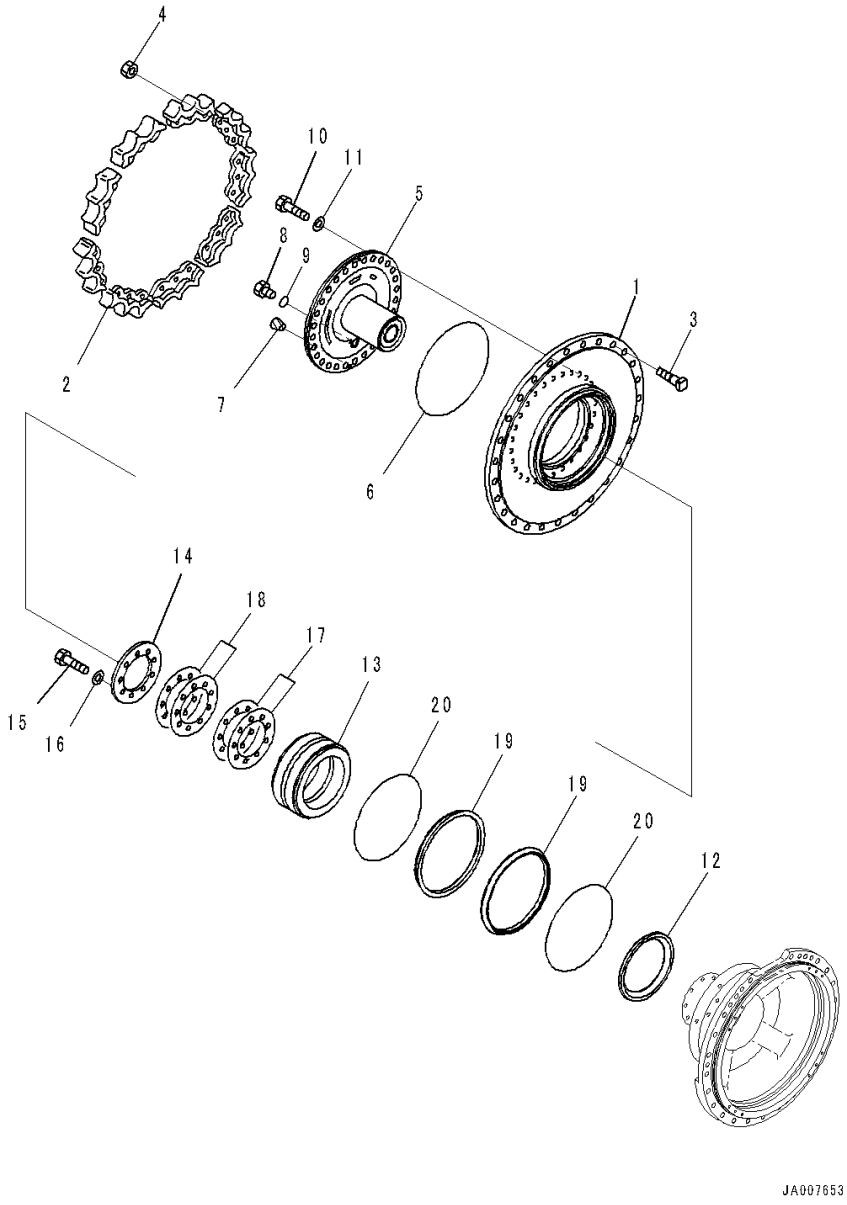

Index	Code	Part Number	Description	Qty	Serial Number
		Note: This list covers following specifications.			
		Power Angle Power Tilt Dozer, Inside Frame, 3000mm,			
		Power Angle Power Tilt Blade			
		Power Angle Power Tilt Dozer, Inside Frame			
		14X-27-00270	Final Drive Group,R.H.	1	1001-
1		14X-27-51140	• Hub	1	1001-
2		14X-27-15112	• Teeth	9	1001-
3		154-27-12320	• Bolt	27	1001-
4		01803-02228	• Nut	27	1001-
5		14X-27-51150	• Shaft	1	1001-
6		07000-15360	• O-ring	1	1001-
7		07049-01215	• Plug	2	1001-
8		07044-12412	• Plug	2	1001-
9		07002-12434	• O-ring	2	1001-
10		01010-82055	• Bolt	28	1001-
11		01643-32060	• Washer	28	1001-
12		14X-27-51320	• Collar	1	1001-
13		14X-09-51110	• Bearing	1	1001-
14		14X-27-51330	• Holder	1	1001-
15		01010-81645	• Bolt	9	1001-
16		01643-31645	• Washer	9	1001-
		14X-27-00280	• Shim Assembly	1	1001-
17	C1		• • Shim, T=0.5mm	2	1001-
18	C1		• • Shim, T=0.2mm	2	1001-
		14X-27-00051	• Floating Seal Assembly	1	1001-
19	C1		• • Seal	2	1001-
20	C1		• • O-ring	2	1001-

FIG. F2730-002001 Power Train Piping (Piping)

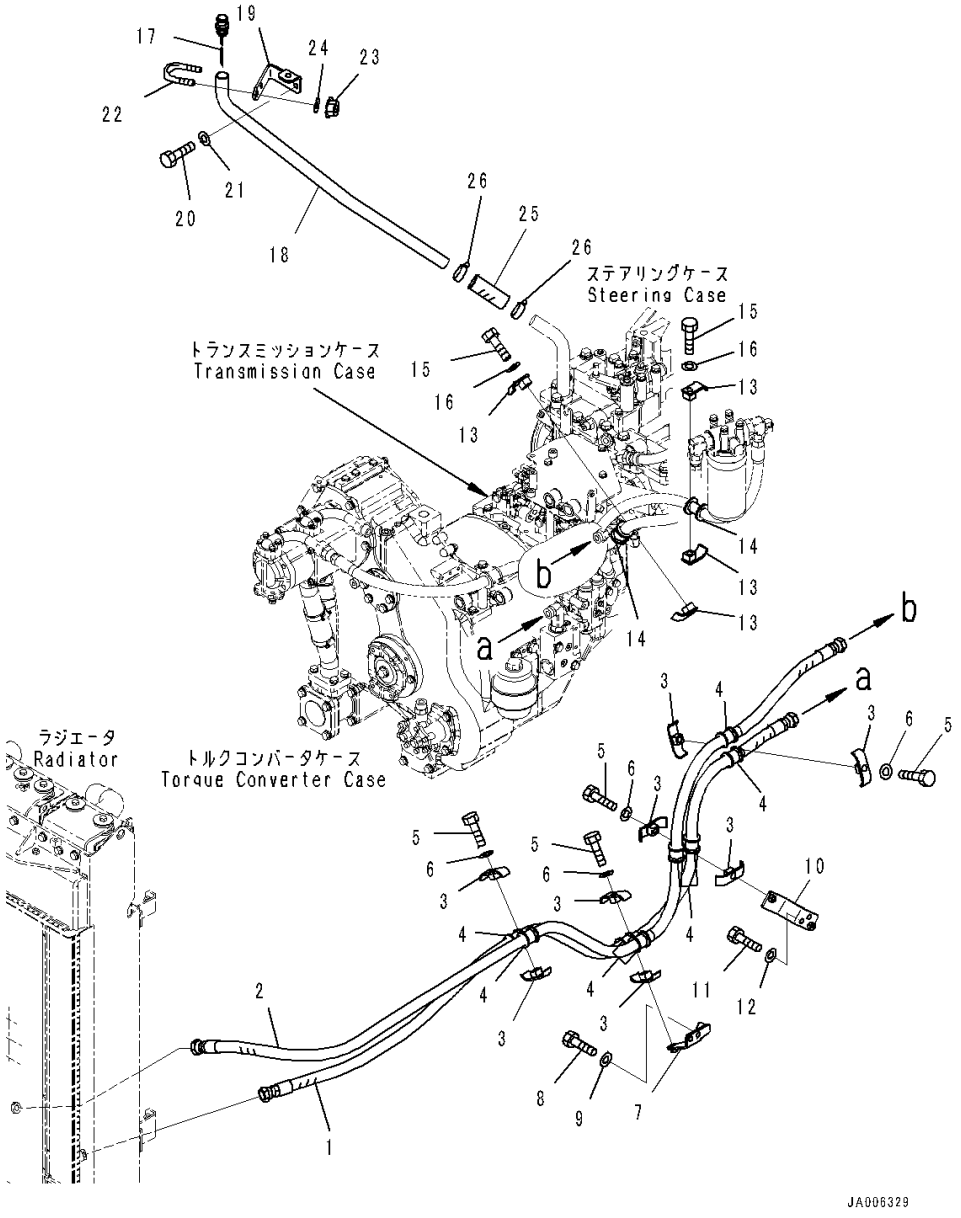

Index	Code	Part Number	Description	Qty	Serial Number
		Note: This list covers following specifications.			
		Power Angle Power Tilt Dozer, Inside Frame			
		Without Power Angle Power Tilt Dozer, Inside Frame			
1		14X-49-62111	Hose	1	1001-
2		14X-49-62120	Hose	1	1001-
3		22P-62-13550	Clamp	8	1001-
4		07095-00526	Cushion	8	1001-
5		01010-81270	Bolt	4	1001-
6		01643-31232	Washer	4	1001-
7		14X-49-52170	Bracket	1	1001-
8		01010-81225	Bolt	2	1001-
9		01643-31232	Washer	2	1001-
10		14X-49-52180	Bracket	1	1001-
11		01010-81225	Bolt	2	1001-
12		01643-31232	Washer	2	1001-
13		07094-10620	Clamp	4	1001-
14		07095-00628	Cushion	2	1001-
15		01010-81270	Bolt	2	1001-
16		01643-31232	Washer	2	1001-
17		14X-49-51261	Gauge	1	1001-
18		14X-49-52211	Filler	1	1001-
19		14X-54-53321	Bracket	1	1001-
20		01010-81225	Bolt	2	1001-
21		01643-31232	Washer	2	1001-
22		07283-33442	Clip, Pipe	1	1001-
23		01597-01009	Nut	2	1001-
24		01643-31032	Washer	2	1001-
25		07260-23211	Hose	1	1001-
26		07289-00045	Clamp, Hose	2	1001-

FIG. F2730-002002 Power Train Piping (Bracket)

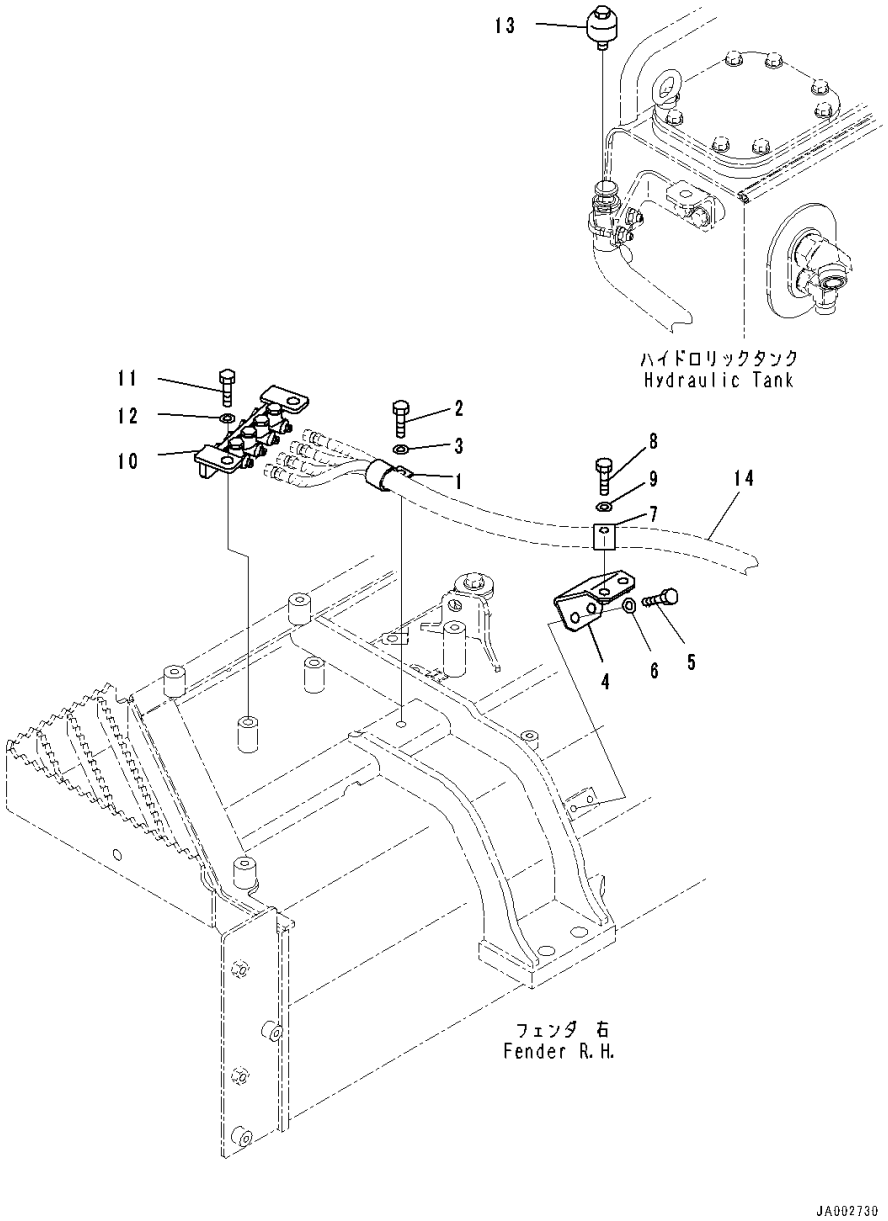

Index	Code	Part Number	Description	Qty	Serial Number
		Note: This list covers following specifications.			
		Power Angle Power Tilt Dozer, Inside Frame			
		Without Power Angle Power Tilt Dozer, Inside Frame			
1		04434-52711	Clip	1	1001-
2		01010-81020	Bolt	1	1001-
3		01643-31032	Washer	1	1001-
4		14X-49-51320	Bracket	1	1001-
5		01010-81020	Bolt	2	1001-
6		01643-31032	Washer	2	1001-
7		04434-52511	Clip	1	1001-
8		01010-81020	Bolt	1	1001-
9		01643-31032	Washer	1	1001-
10		14X-49-51271	Joint Assembly	1	1001-
11		01010-81225	Bolt	2	1001-
12		01643-31232	Washer	2	1001-
13		07030-00252	Breather	1	1001-
14		(14X-49-51211)	Hose Assembly(Refer to Page 275)		-

FIG. F2730-002003 Power Train Piping (Power Angle Power Tilt Dozer, Inside Frame) (Mounting)

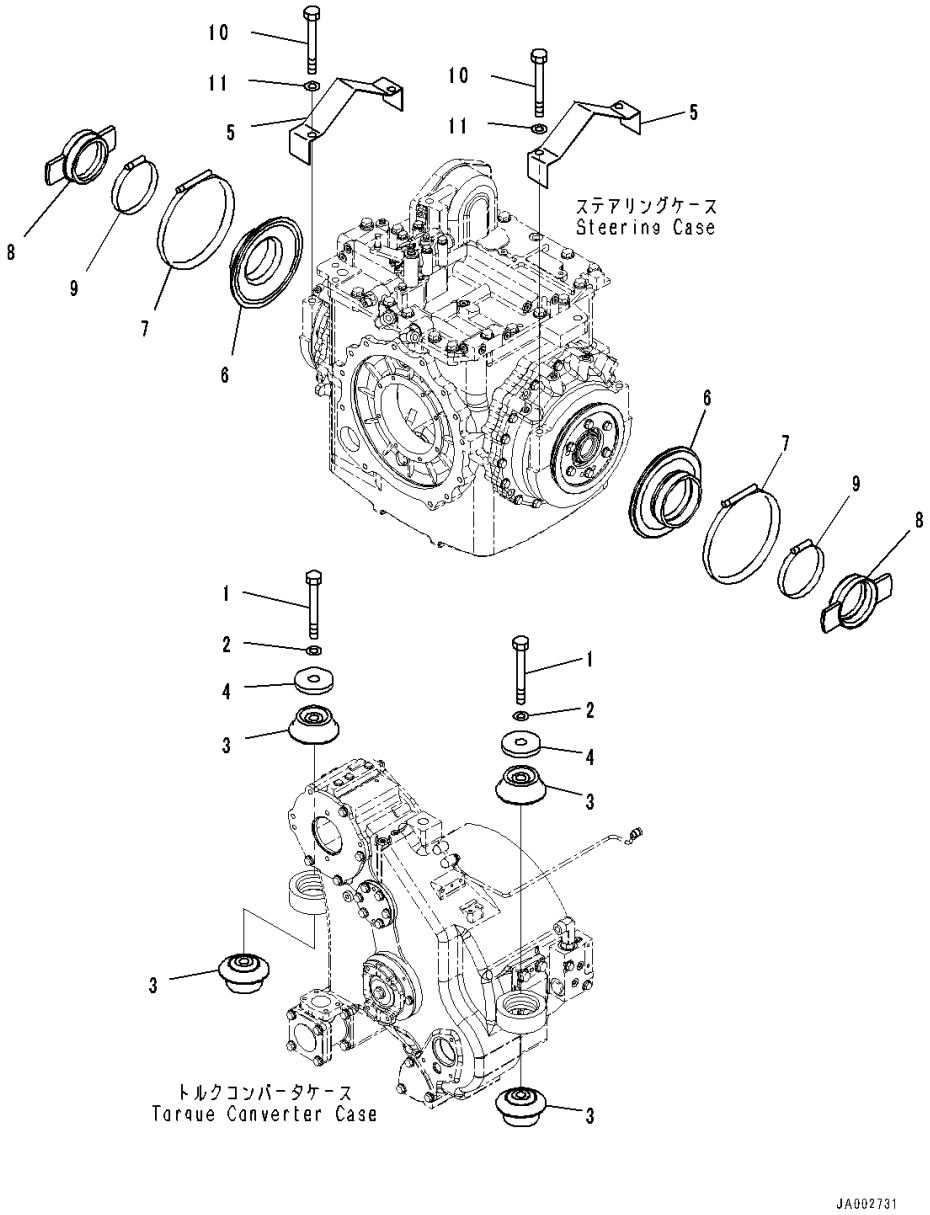

Index	Code	Part Number	Description	Qty	Serial Number
1		01011-82480	Bolt	2	1001-
2		01643-32460	Washer	2	1001-
3		14X-49-61420	Cushion	4	1001-
4		14X-01-65150	Washer	2	1001-
5		14X-21-51380	Cover	2	1001-
6		14Y-21-13160	Seal	2	1001-
7		14Y-21-13210	Coupling	2	1001-
8		14X-21-53170	Cage	2	1001-
9		14Y-21-13190	Clamp	2	1001-
10		01011-81640	Bolt	4	1001-
11		01643-31645	Washer	4	1001-

FIG. F2730-001003 Power Train Piping (Without Power Angle Power Tilt Dozer, Inside Frame) (Mounting)

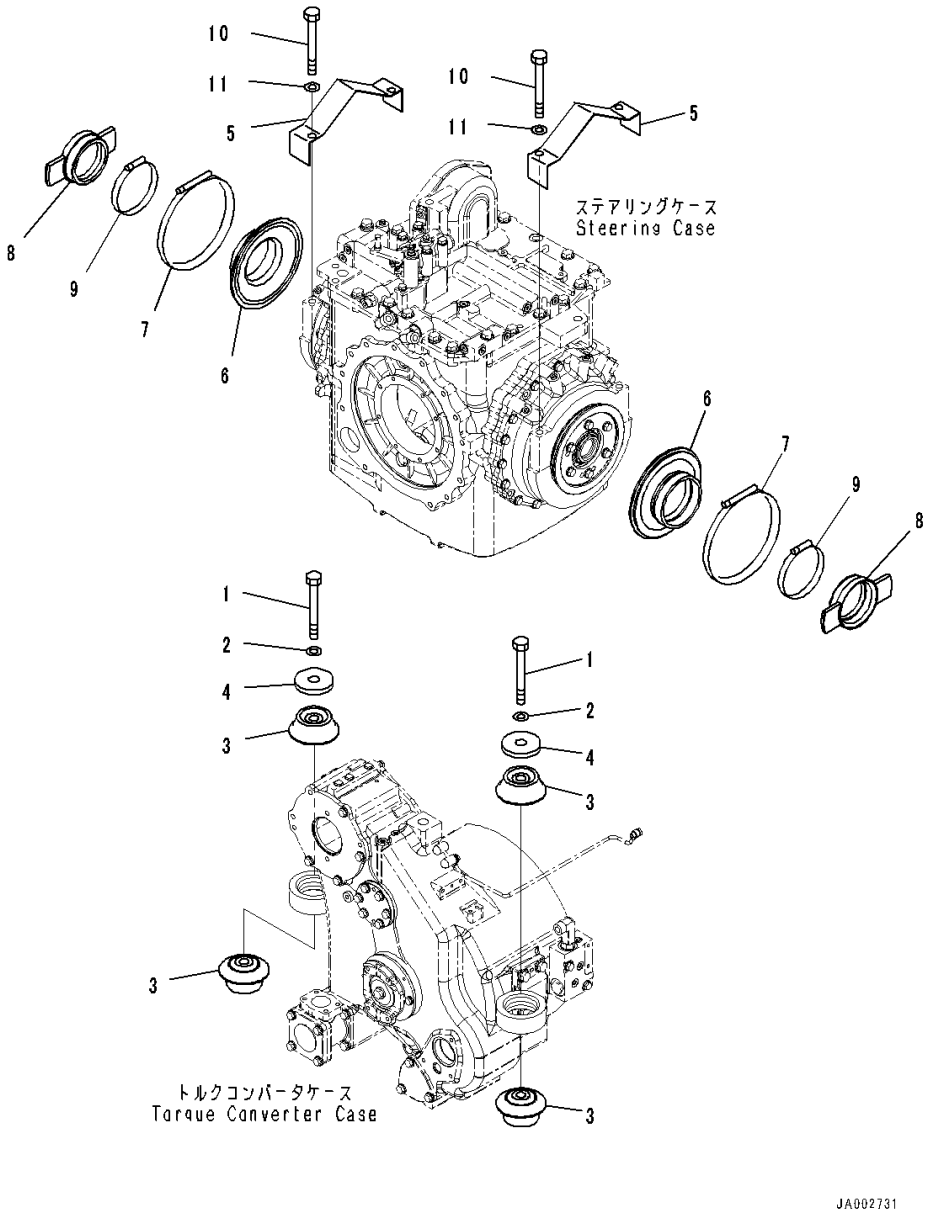

Index	Code	Part Number	Description	Qty	Serial Number
1		01011-82480	Bolt	2	1001-
2		01643-32460	Washer	2	1001-
3		14X-49-61420	Cushion	4	1001-
4		14X-01-65150	Washer	2	1001-
5		14X-21-51380	Cover	2	1001-
6		14Y-21-13160	Seal	2	1001-
7		14Y-21-13210	Coupling	2	1001-
8		14Y-21-13171	Cage	2	1001-
9		14Y-21-13190	Clamp	2	1001-
10		01011-81640	Bolt	4	1001-
11		01643-31645	Washer	4	1001-

FIG. F2820-001001 Steering Control Related Parts (Rod)

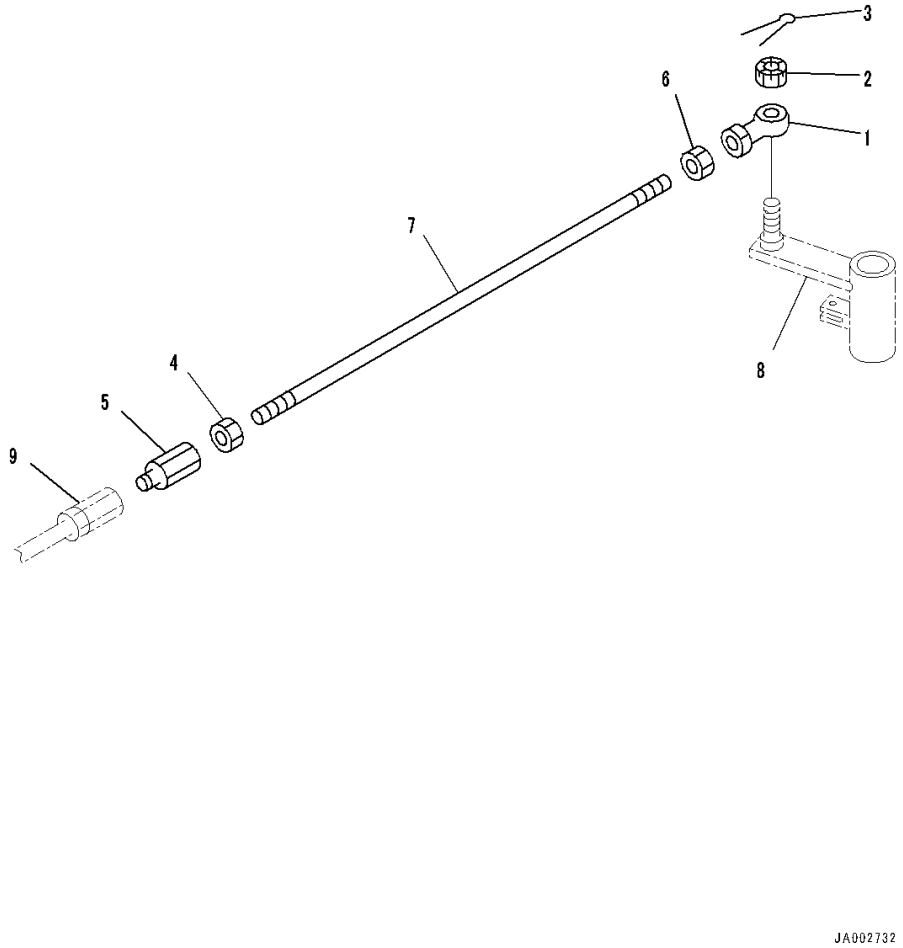

Index	Code	Part Number	Description	Qty	Serial Number
1		04250-81474	End	1	1001-
2		01593-31411	Nut	1	1001-
3		04050-13022	Pin, Cotter	1	1001-
4		01582-11411	Nut	1	1001-
5		17A-43-24170	Joint	1	1001-
6		01582-11411	Nut	1	1001-
7		04245-41487	Rod	1	1001-
8		(14Z-43-12411)	Lever(Refer to Page 241)		-
9		(17A-43-24160)	Joint(Refer to Page 446)		-

FIG. F2820-001002 Steering Control Related Parts (Parking Brake Control Cable)

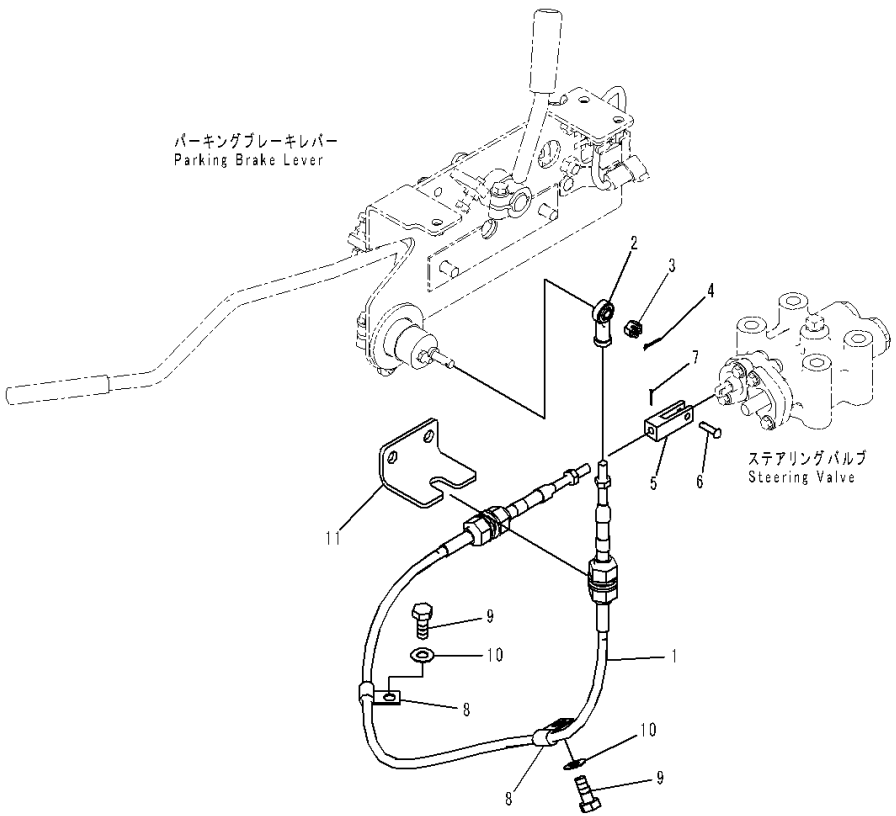

Index	Code	Part Number	Description	Qty	Serial Number
1		14X-43-51120	Cable	1	1001-
2		04250-80847	Rod End	1	1001-
3		01590-30809	Nut	1	1001-
4		04050-12015	Pin, Cotter	1	1001-
5		21K-43-11350	Yoke	1	1001-
6		04205-10622	Pin	1	1001-
7		04050-11612	Pin, Cotter	1	1001-
8		04434-50810	Clip	2	1001-
9		01010-81020	Bolt	2	1001-
10		01643-31032	Washer	2	1001-
11		(14X-43-51461)	Bracket(Refer to Page 441)		-

HYDRAULIC SYSTEM

FIG. H0110-001001 Hydraulic Oil Tank (Without Rear 1-attachment)

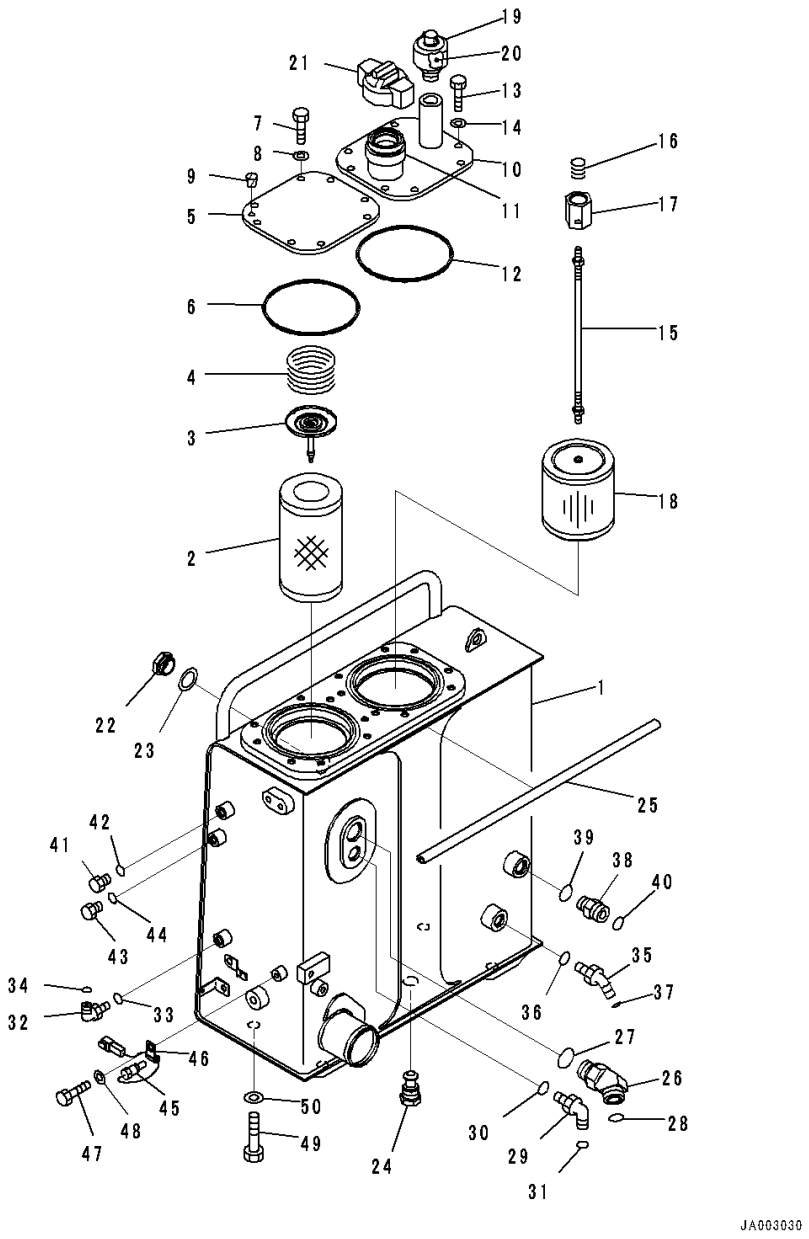

Index	Code	Part Number	Description	Qty	Serial Number
1		14X-60-51112	Tank	1	1001-
2		14X-60-31150	Element	1	1001-
3		21W-60-41170	Valve Assembly	1	1001-
4		198-49-11460	Spring	1	1001-
5		14X-60-51131	Plate	1	1001-
6		07000-15160	O-ring	1	1001-
7		01010-81025	Bolt	8	1001-
8		01643-31032	Washer	8	1001-
9		07049-01215	Plug	1	1001-
10		14X-60-51141	Cover	1	1001-
11		07055-30062	• Filler	1	1001-
12		07000-15160	O-ring	1	1001-
13		01010-81025	Bolt	8	1001-
14		01643-31032	Washer	8	1001-
		14X-60-51151	Strainer Assembly	1	1001-
15		14X-60-51161	• Rod Assembly	1	1001-
16		12R-60-11230	• • Spring	1	1001-
17		20Y-60-21320	• • Holder	1	1001-
18		22B-60-11160	• Strainer	1	1001-
19		195-60-51550	Breather	1	1001-
20		421-60-35170	• Element	1	1001-
21		07092-01000	Cap	1	1001-
22		20N-60-11143	Gauge	1	1001-
23		20N-60-11181	• Gasket	1	1001-
24		14X-60-51171	Plug	1	1001-
25		14X-60-51230	Seal	1	1001-
26		14X-62-52951	Elbow	1	1001-
27		07002-13334	O-ring	1	1001-
28		207-62-64740	O-ring	1	1001-
29		02782-10522	Elbow	1	1001-
30		07002-12434	O-ring	1	1001-
31		02896-11015	O-ring	1	1001-
32		02782-10311	Elbow	1	1001-
33		07002-11423	O-ring	1	1001-
34		02896-11009	O-ring	1	1001-
35		02783-10422	Elbow	1	1001-
36		07002-12034	O-ring	1	1001-
37		02896-11012	O-ring	1	1001-
38		11Y-62-12210	Nipple	1	1001-
39		07002-12434	O-ring	1	1001-

FIG. H0110-001001 Hydraulic Oil Tank (Without Rear 1-attachment)

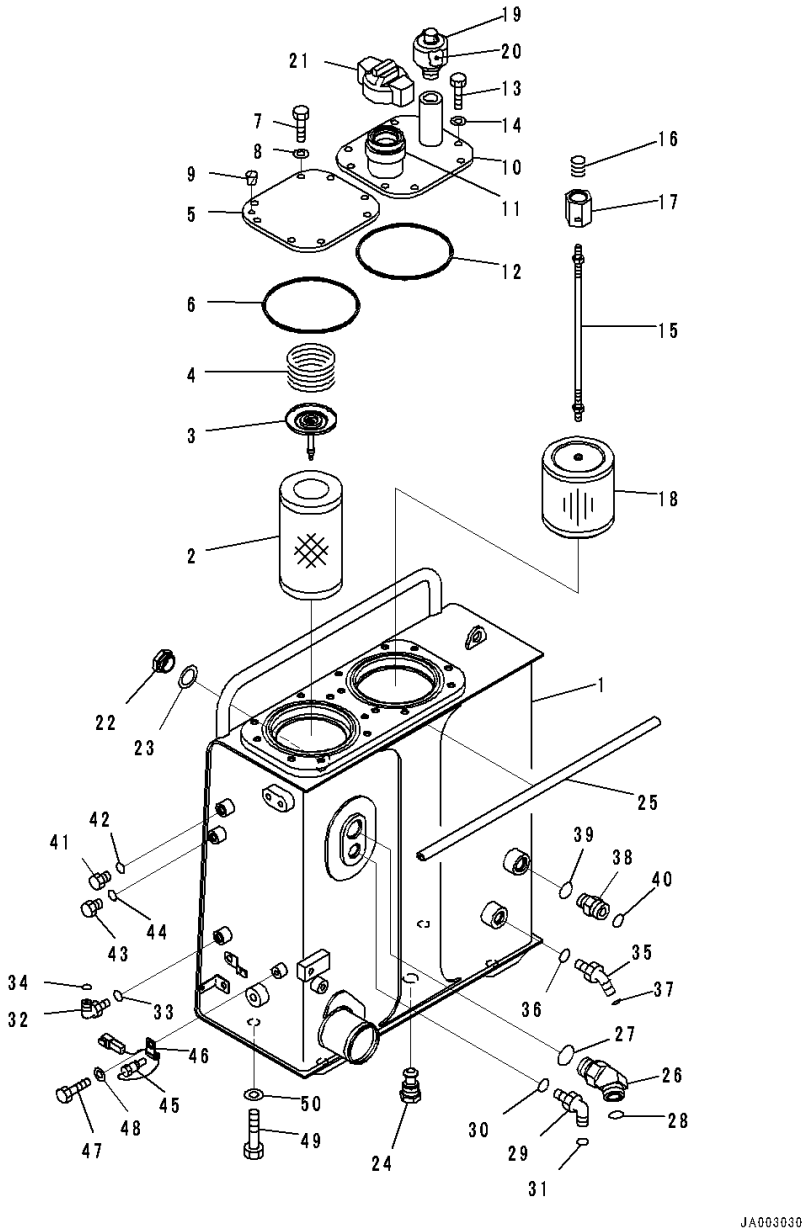

Index	Code	Part Number	Description	Qty	Serial Number
40		02896-11018	O-ring	1	1001-
41		07040-11409	Plug	1	1001-
42		07002-11423	O-ring	1	1001-
43		07040-11409	Plug	1	1001-
44		07002-11423	O-ring	1	1001-
45		7861-93-3320	Sensor, Temperature	1	1001-
46		04434-50610	Clip	1	1001-
47		01010-81020	Bolt	1	1001-
48		01643-31032	Washer	1	1001-
49		14X-04-51170	Bolt	4	1001-
50		01643-31645	Washer	4	1001-

FIG. H0110-002001 Hydraulic Oil Tank (Rear 1-attachment)

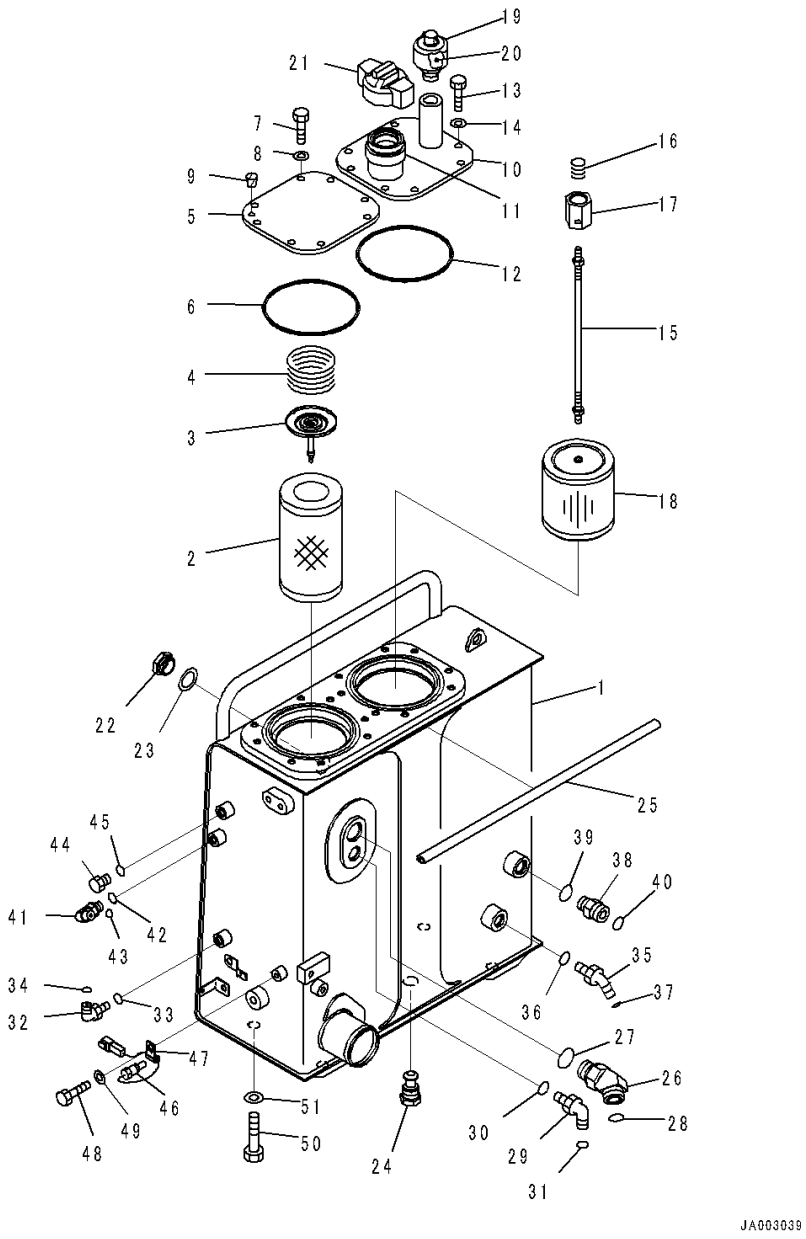

Index	Code	Part Number	Description	Qty	Serial Number
1		14X-60-51112	Tank	1	1001-
2		14X-60-31150	Element	1	1001-
3		21W-60-41170	Valve Assembly	1	1001-
4		198-49-11460	Spring	1	1001-
5		14X-60-51131	Plate	1	1001-
6		07000-15160	O-ring	1	1001-
7		01010-81025	Bolt	8	1001-
8		01643-31032	Washer	8	1001-
9		07049-01215	Plug	1	1001-
10		14X-60-51141	Cover	1	1001-
11		07055-30062	• Filler	1	1001-
12		07000-15160	O-ring	1	1001-
13		01010-81025	Bolt	8	1001-
14		01643-31032	Washer	8	1001-
		14X-60-51151	Strainer Assembly	1	1001-
15		14X-60-51161	• Rod Assembly	1	1001-
16		12R-60-11230	• • Spring	1	1001-
17		20Y-60-21320	• • Holder	1	1001-
18		22B-60-11160	• Strainer	1	1001-
19		195-60-51550	Breather	1	1001-
20		421-60-35170	• Element	1	1001-
21		07092-01000	Cap	1	1001-
22		20N-60-11143	Gauge	1	1001-
23		20N-60-11181	• Gasket	1	1001-
24		14X-60-51171	Plug	1	1001-
25		14X-60-51230	Seal	1	1001-
26		14X-62-52951	Elbow	1	1001-
27		07002-13334	O-ring	1	1001-
28		207-62-64740	O-ring	1	1001-
29		02782-10522	Elbow	1	1001-
30		07002-12434	O-ring	1	1001-
31		02896-11015	O-ring	1	1001-
32		02782-10311	Elbow	1	1001-
33		07002-11423	O-ring	1	1001-
34		02896-11009	O-ring	1	1001-
35		02783-10422	Elbow	1	1001-
36		07002-12034	O-ring	1	1001-
37		02896-11012	O-ring	1	1001-
38		11Y-62-12210	Nipple	1	1001-
39		07002-12434	O-ring	1	1001-

FIG. H0110-002001 Hydraulic Oil Tank (Rear 1-attachment)

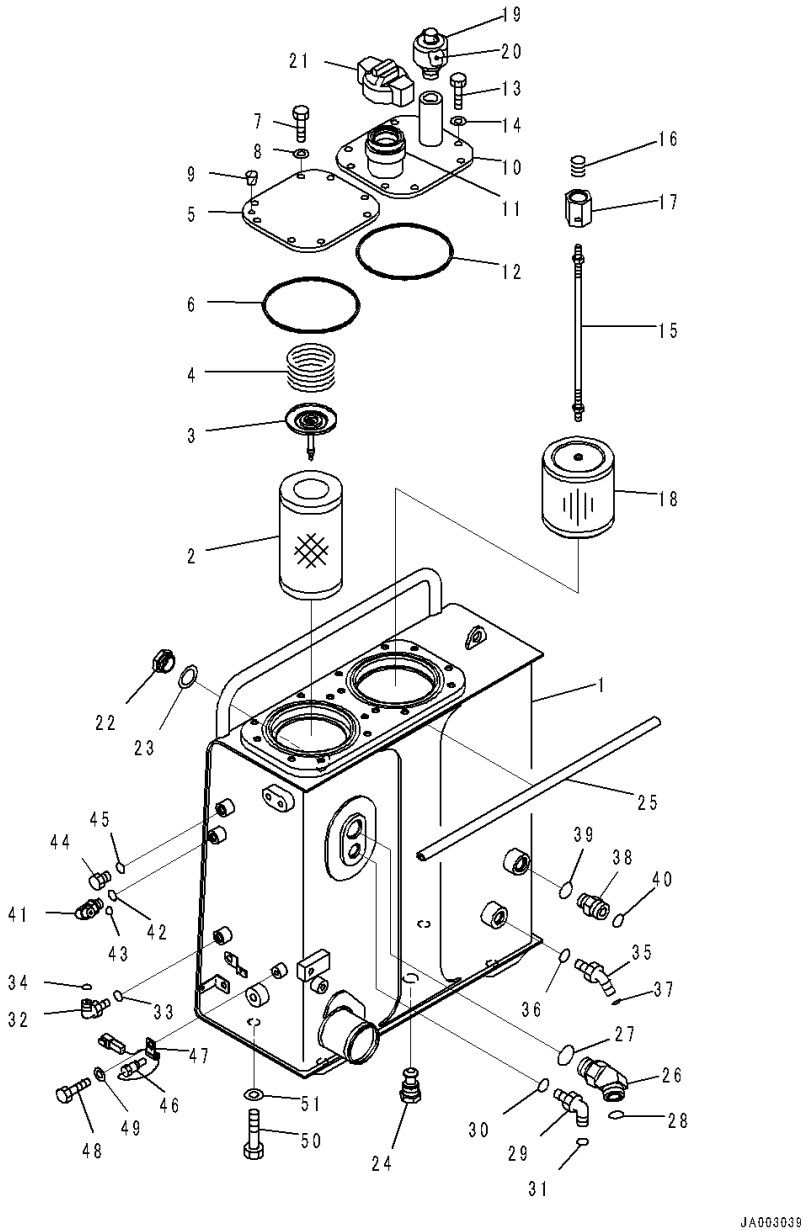

Index	Code	Part Number	Description	Qty	Serial Number
40		02896-11018	O-ring	1	1001-
41		02782-10210	Elbow	1	1001-
42		07002-11423	O-ring	1	1001-
43		02896-11008	O-ring	1	1001-
44		07040-11409	Plug	1	1001-
45		07002-11423	O-ring	1	1001-
46		7861-93-3320	Sensor, Temperature	1	1001-
47		04434-50610	Clip	1	1001-
48		01010-81020	Bolt	1	1001-
49		01643-31032	Washer	1	1001-
50		14X-04-51170	Bolt	4	1001-
51		01643-31645	Washer	4	1001-

FIG. H0110-003001 Hydraulic Oil Tank (Rear 1-attachment, 3D Machine Control Plug and Play)

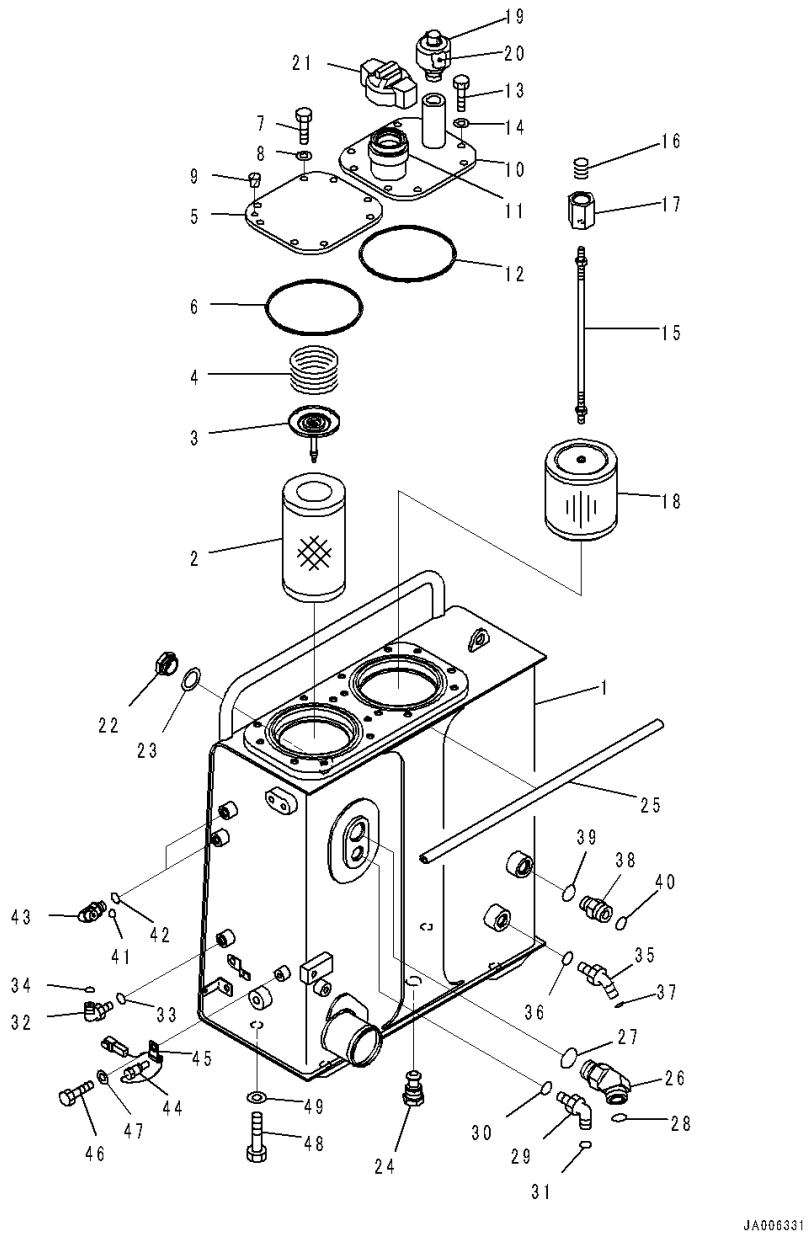

Index	Code	Part Number	Description	Qty	Serial Number
1		14X-60-51112	Tank	1	1001-
2		14X-60-31150	Element	1	1001-
3		21W-60-41170	Valve Assembly	1	1001-
4		198-49-11460	Spring	1	1001-
5		14X-60-51131	Plate	1	1001-
6		07000-15160	O-ring	1	1001-
7		01010-81025	Bolt	8	1001-
8		01643-31032	Washer	8	1001-
9		07049-01215	Plug	1	1001-
10		14X-60-51141	Cover	1	1001-
11		07055-30062	• Filler	1	1001-
12		07000-15160	O-ring	1	1001-
13		01010-81025	Bolt	8	1001-
14		01643-31032	Washer	8	1001-
		14X-60-51151	Strainer Assembly	1	1001-
15		14X-60-51161	• Rod Assembly	1	1001-
16		12R-60-11230	• • Spring	1	1001-
17		20Y-60-21320	• • Holder	1	1001-
18		22B-60-11160	• Strainer	1	1001-
19		195-60-51550	Breather	1	1001-
20		421-60-35170	• Element	1	1001-
21		07092-01000	Cap	1	1001-
22		20N-60-11143	Gauge	1	1001-
23		20N-60-11181	• Gasket	1	1001-
24		14X-60-51171	Plug	1	1001-
25		14X-60-51230	Seal	1	1001-
26		14X-62-52951	Elbow	1	1001-
27		07002-13334	O-ring	1	1001-
28		207-62-64740	O-ring	1	1001-
29		02782-10522	Elbow	1	1001-
30		07002-12434	O-ring	1	1001-
31		02896-11015	O-ring	1	1001-
32		02782-10311	Elbow	1	1001-
33		07002-11423	O-ring	1	1001-
34		02896-11009	O-ring	1	1001-
35		02783-10422	Elbow	1	1001-
36		07002-12034	O-ring	1	1001-
37		02896-11012	O-ring	1	1001-
38		11Y-62-12210	Nipple	1	1001-
39		07002-12434	O-ring	1	1001-

FIG. H0110-003001 Hydraulic Oil Tank (Rear 1-attachment, 3D Machine Control Plug and Play)

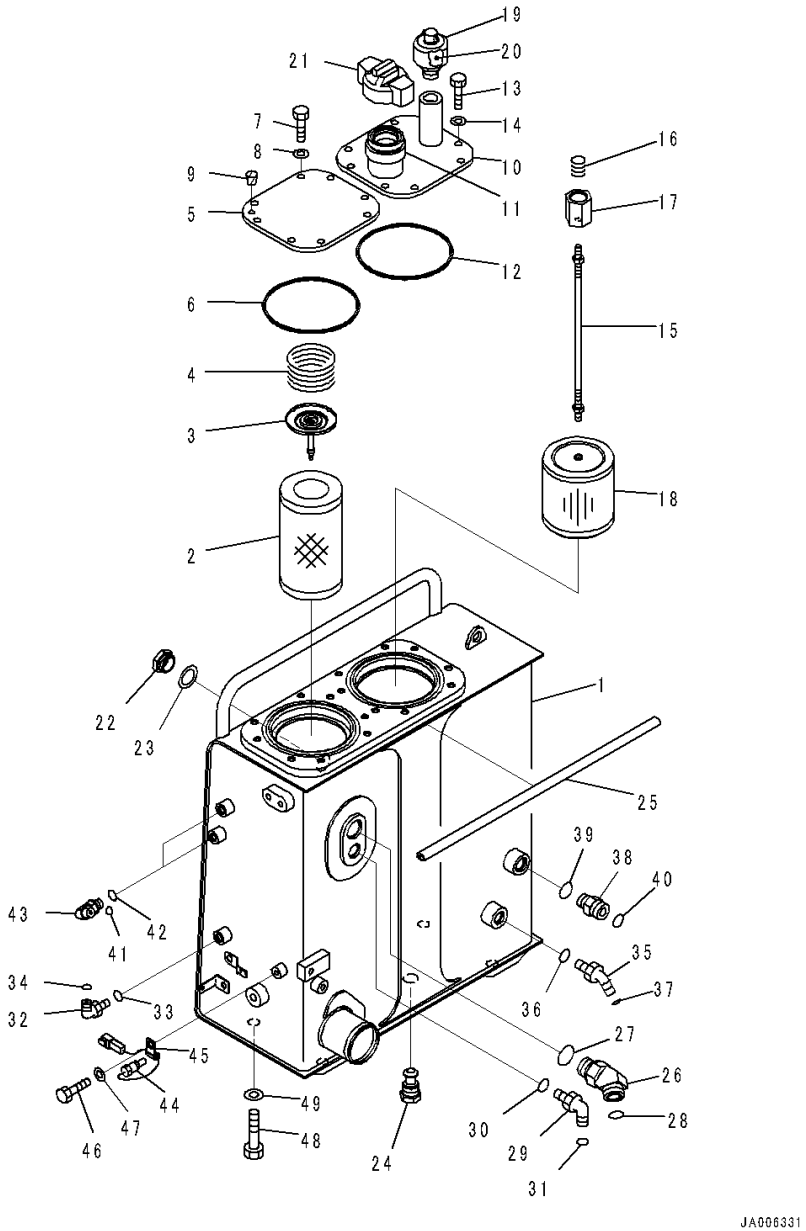

Index	Code	Part Number	Description	Qty	Serial Number
40		02896-11018	O-ring	1	1001-
41		02782-10210	Elbow	2	1001-
42		07002-11423	O-ring	2	1001-
43		02896-11008	O-ring	2	1001-
44		7861-93-3320	Sensor, Temperature	1	1001-
45		04434-50610	Clip	1	1001-
46		01010-81020	Bolt	1	1001-
47		01643-31032	Washer	1	1001-
48		14X-04-51170	Bolt	4	1001-
49		01643-31645	Washer	4	1001-

FIG. H0110-004001 Hydraulic Oil Tank (3D Machine Control Plug and Play)

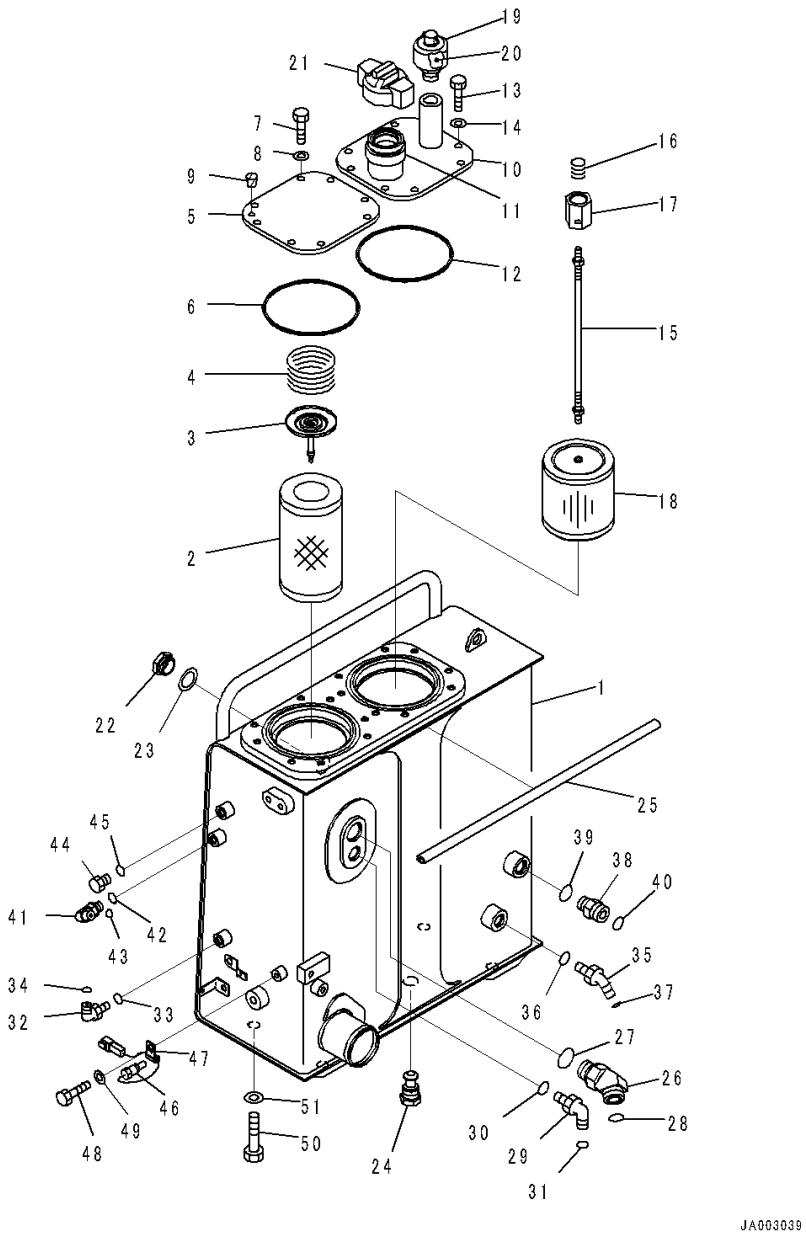

Index	Code	Part Number	Description	Qty	Serial Number
1		14X-60-51112	Tank	1	1001-
2		14X-60-31150	Element	1	1001-
3		21W-60-41170	Valve Assembly	1	1001-
4		198-49-11460	Spring	1	1001-
5		14X-60-51131	Plate	1	1001-
6		07000-15160	O-ring	1	1001-
7		01010-81025	Bolt	8	1001-
8		01643-31032	Washer	8	1001-
9		07049-01215	Plug	1	1001-
10		14X-60-51141	Cover	1	1001-
11		07055-30062	• Filler	1	1001-
12		07000-15160	O-ring	1	1001-
13		01010-81025	Bolt	8	1001-
14		01643-31032	Washer	8	1001-
		14X-60-51151	Strainer Assembly	1	1001-
15		14X-60-51161	• Rod Assembly	1	1001-
16		12R-60-11230	• • Spring	1	1001-
17		20Y-60-21320	• • Holder	1	1001-
18		22B-60-11160	• Strainer	1	1001-
19		195-60-51550	Breather	1	1001-
20		421-60-35170	• Element	1	1001-
21		07092-01000	Cap	1	1001-
22		20N-60-11143	Gauge	1	1001-
23		20N-60-11181	• Gasket	1	1001-
24		14X-60-51171	Plug	1	1001-
25		14X-60-51230	Seal	1	1001-
26		14X-62-52951	Elbow	1	1001-
27		07002-13334	O-ring	1	1001-
28		207-62-64740	O-ring	1	1001-
29		02782-10522	Elbow	1	1001-
30		07002-12434	O-ring	1	1001-
31		02896-11015	O-ring	1	1001-
32		02782-10311	Elbow	1	1001-
33		07002-11423	O-ring	1	1001-
34		02896-11009	O-ring	1	1001-
35		02783-10422	Elbow	1	1001-
36		07002-12034	O-ring	1	1001-
37		02896-11012	O-ring	1	1001-
38		11Y-62-12210	Nipple	1	1001-
39		07002-12434	O-ring	1	1001-

FIG. H0110-004001 Hydraulic Oil Tank (3D Machine Control Plug and Play)

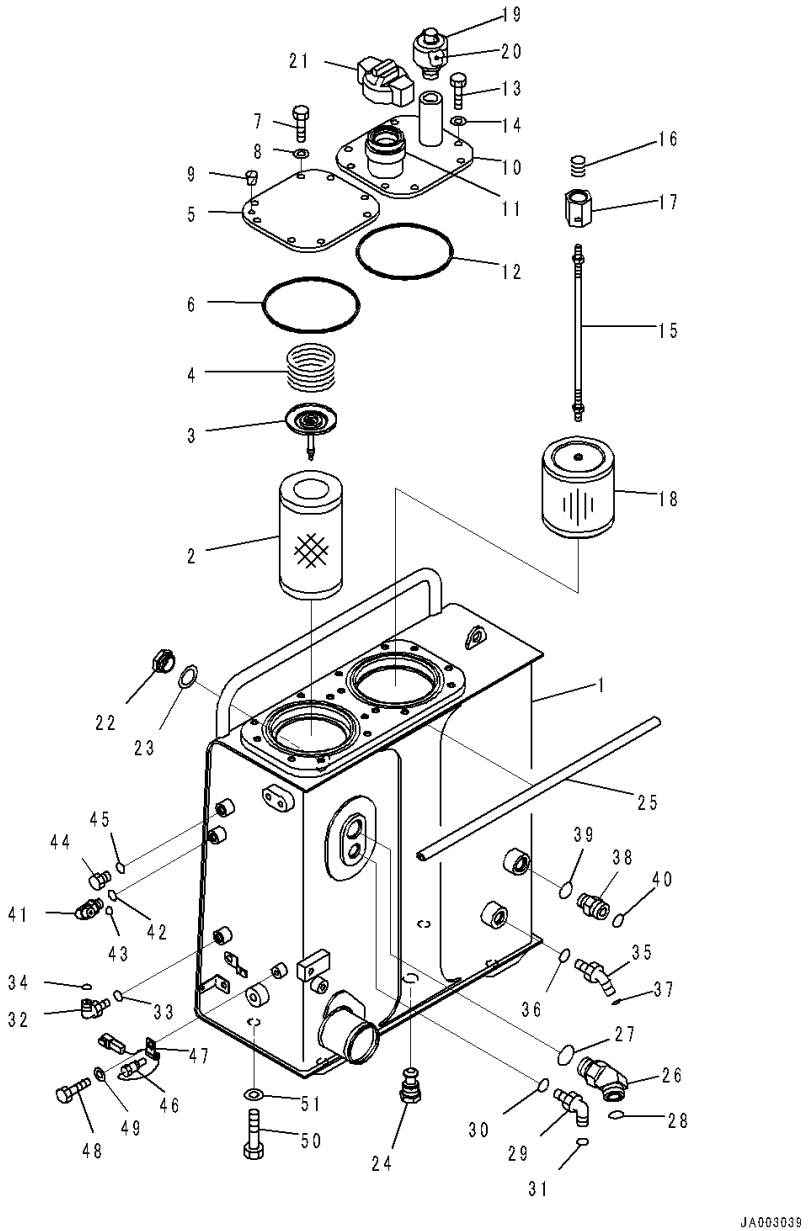

Index	Code	Part Number	Description	Qty	Serial Number
40		02896-11018	O-ring	1	1001-
41		02782-10210	Elbow	1	1001-
42		07002-11423	O-ring	1	1001-
43		02896-11008	O-ring	1	1001-
44		07040-11409	Plug	1	1001-
45		07002-11423	O-ring	1	1001-
46		7861-93-3320	Sensor, Temperature	1	1001-
47		04434-50610	Clip	1	1001-
48		01010-81020	Bolt	1	1001-
49		01643-31032	Washer	1	1001-
50		14X-04-51170	Bolt	4	1001-
51		01643-31645	Washer	4	1001-

FIG. H0210-001001 Hydraulic Oil Pump and Motor (Inner Parts, HSS Pump) (1/7)

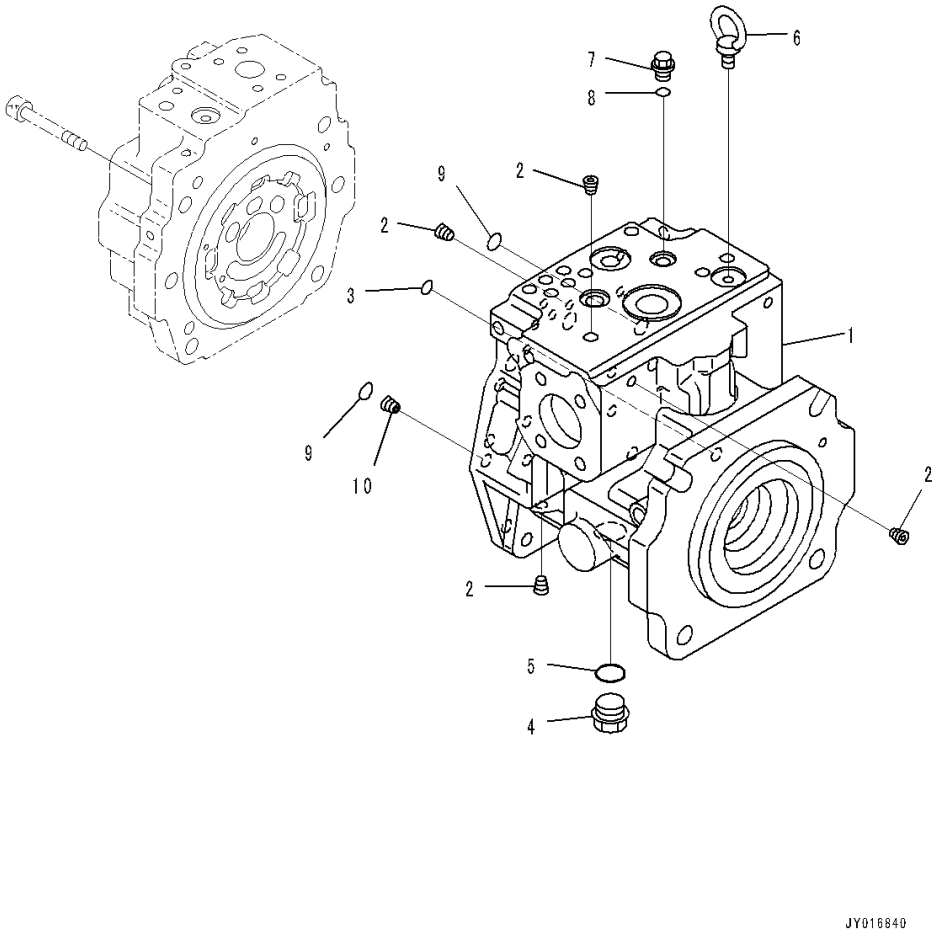

Index	Code	Part Number	Description	Qty	Serial Number
		708-1L-00740	Pump Assembly	1	1001-
	C2	708-1L-01740	• Pump Subassembly	1	1001-
	C2	708-1L-04161	• • Case Assembly	1	1001-
1	C1		• • • Case	1	1001-
2	C1		• • • Plug	26	1001-
3	C2	07000-B1009	• • O-ring	1	1001-
4		07044-12412	• • Plug	1	1001-
5		07002-62434	• • O-ring	1	1001-
6		04530-11018	• • Bolt, Eye	1	1001-
7		708-8E-16150	• • Plug	2	1001-
8		07002-61023	• • O-ring	2	1001-
9	C2	07000-B2012	• • O-ring	3	1001-
10	C2	708-1L-29340	• • Orifice	1	1001-

FIG. H0210-001002 Hydraulic Oil Pump and Motor (Inner Parts, HSS Pump) (2/7)

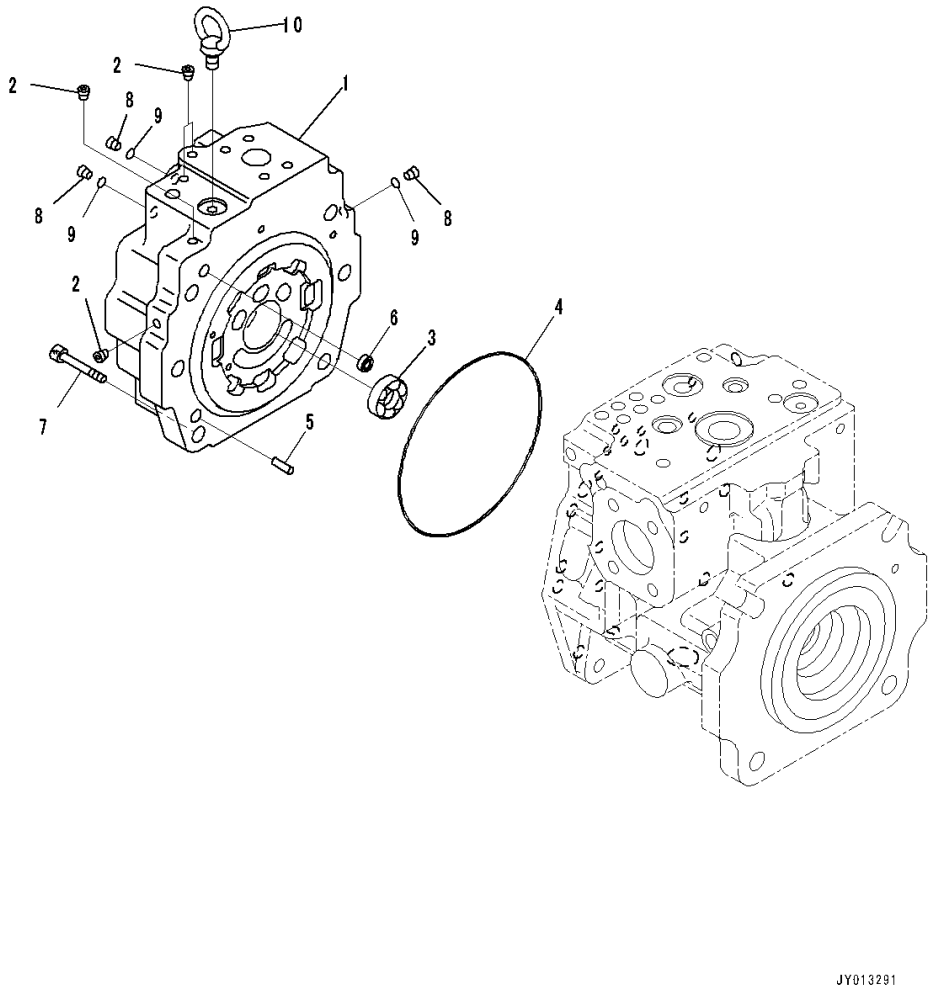

Index	Code	Part Number	Description	Qty	Serial Number
		708-1L-00740	Pump Assembly	1	1001-
	C2	708-1L-01740	• Pump Subassembly	1	1001-
	C2	708-1L-04170	• • Cap Assembly, End	1	1001-
1	C1		• • • Cap, End	1	1001-
2	C1		• • • Plug	4	1001-
3	C2	708-2L-32260	• • Bearing	1	1001-
4	C2	07000-A5165	• • O-ring	1	1001-
5	C2	04020-01228	• • Pin, Dowel	1	1001-
6	C2	708-2L-25480	• • Filter	1	1001-
7	C2	01252-61445	• • Bolt	6	1001-
8		708-8E-16150	• • Plug	3	1001-
9		07002-61023	• • O-ring	3	1001-
10		04530-11018	• • Bolt, Eye	1	1001-

FIG. H0210-001003 Hydraulic Oil Pump and Motor (Inner Parts, HSS Pump) (3/7)

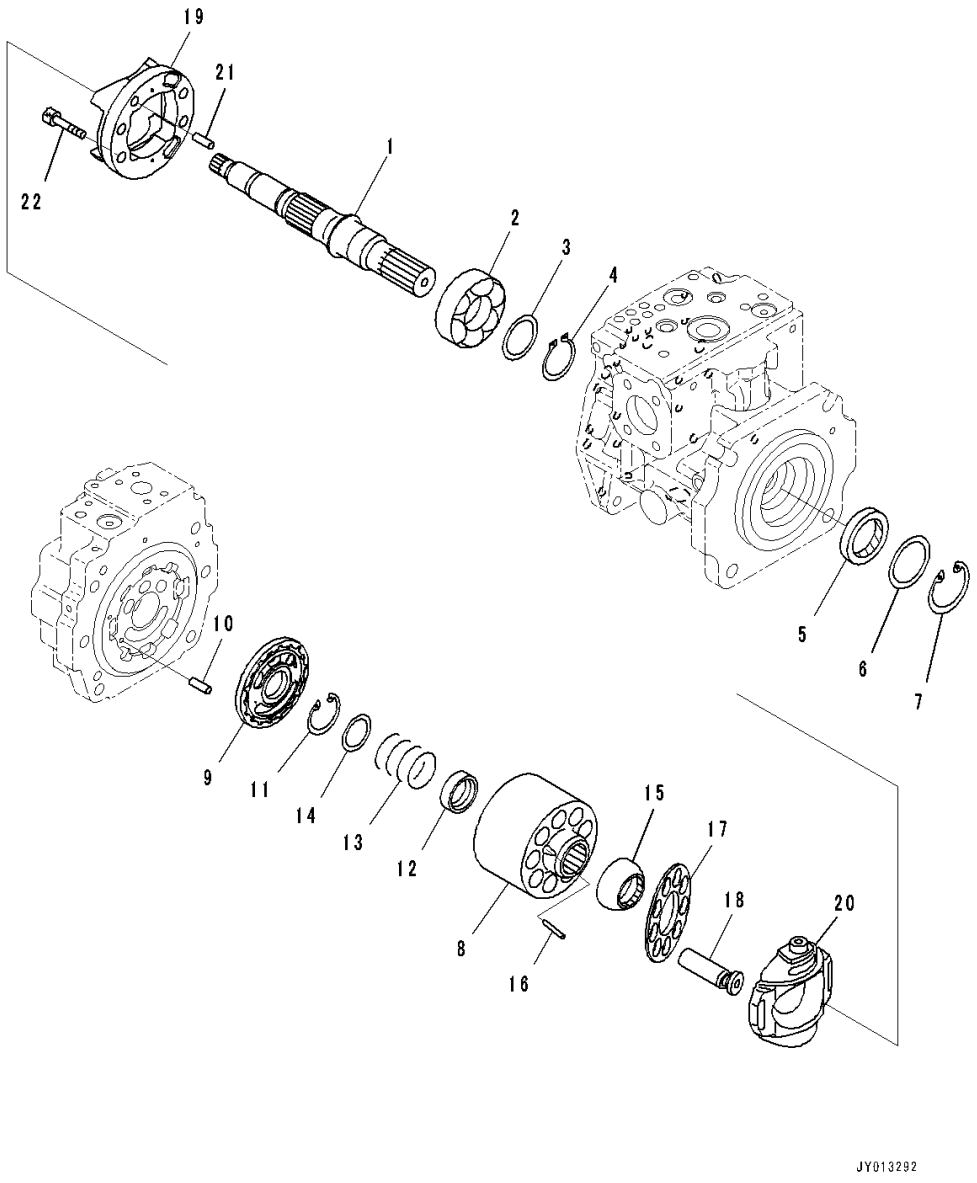

Index	Code	Part Number	Description	Qty	Serial Number
		708-1L-00740	Pump Assembly	1	1001-
	C2	708-1L-01740	• Pump Subassembly	1	1001-
1	C2	708-1L-32340	• • Shaft	1	1001-
2	C2	708-2L-32150	• • Bearing	1	1001-
3	C2	708-2E-05040	• • Washer Kit	1	1001-
	C2	708-2E-12160	• • • Washer, T=3.1mm	1	1001-
	C2	708-2E-12170	• • • Washer, T=3.0mm	1	1001-
	C2	708-2E-12180	• • • Washer, T=2.9mm	1	1001-
	C2	708-2E-12190	• • • Washer, T=2.8mm	1	1001-
4	C2	708-25-12790	• • Ring, Snap	1	1001-
5	C2	708-2L-32460	• • Seal, Oil	1	1001-
6	C2	708-2L-22160	• • Spacer	1	1001-
7	C2	04065-06825	• • Ring, Snap	1	1001-
	C2	708-2L-06470	• • Block Assembly	1	1001-
8	C1		• • • Block, Cylinder	1	1001-
9	C1		• • • Plate	1	1001-
10	C2	720-68-19610	• • Pin	1	1001-
11	C2	04065-04818	• • Ring, Snap	1	1001-
12	C2	708-2L-23131	• • Seat	1	1001-
13	C2	708-2L-33160	• • Spring	1	1001-
14	C2	708-7L-13140	• • Seat	1	1001-
15	C2	708-2L-23351	• • Guide	1	1001-
16	C2	708-2L-23360	• • Pin	3	1001-
17	C2	708-2L-33361	• • Retainer	1	1001-
18	C2	708-2L-33430	• • Piston Subassembly	9	1001-
	C2	708-2L-06630	• • Cradle Assembly	1	1001-
19	C1		• • • Cradle	1	1001-
20	C1		• • • Cam	1	1001-
21	C2	04020-01228	• • Pin, Dowel	1	1001-
22	C2	01252-61230	• • Bolt, Hexagon Socket Head	4	1001-

FIG. H0210-001004 Hydraulic Oil Pump and Motor (Inner Parts, HSS Pump) (4/7)

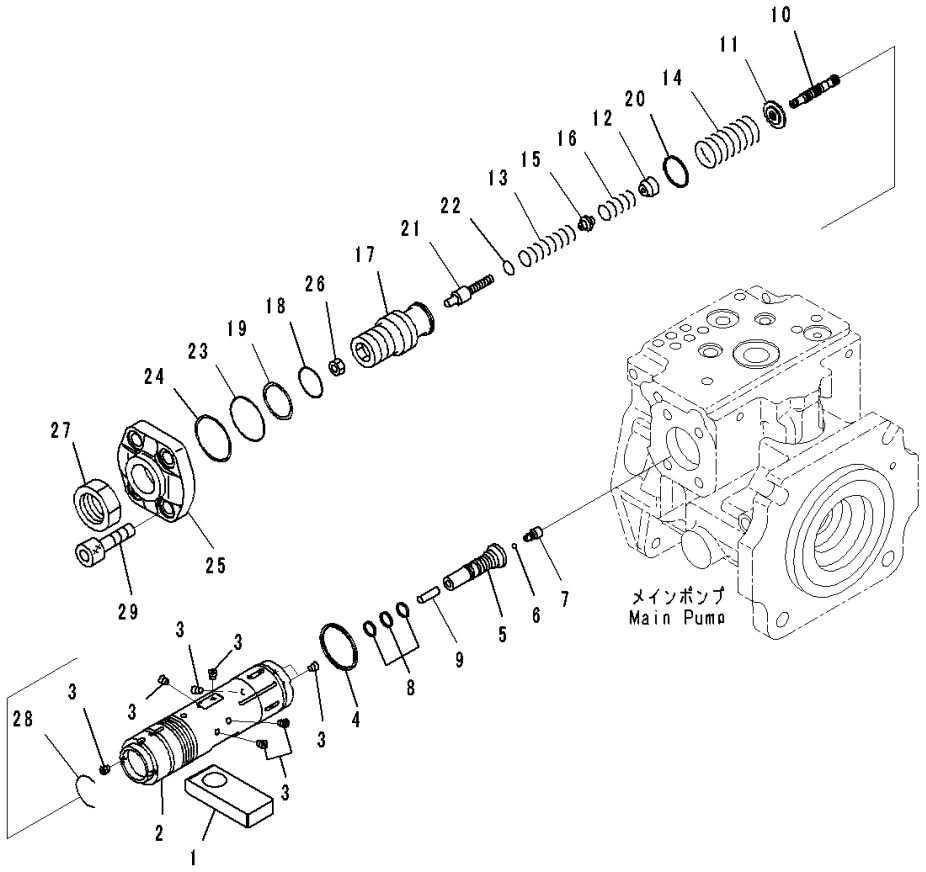

Index	Code	Part Number	Description	Qty	Serial Number
		708-1L-00740	Pump Assembly	1	1001-
	C2	708-1L-01740	• Pump Subassembly	1	1001-
1	C2	708-2L-34120	• • Slider	1	1001-
	C2	708-1L-04880	• • Valve Assembly, Pc	1	1001-
	C1		• • • Piston Assembly, Servo	1	1001-
2	C1		• • • • Piston, Servo	1	1001-
3	C1		• • • • Screw	7	1001-
4	C1		• • • Seal	1	1001-
5	C1		• • • Plug	1	1001-
6	C1		• • • Ball	1	1001-
7	C1		• • • Plug	1	1001-
8	C1		• • • Seal	3	1001-
9	C1		• • • Pin	1	1001-
10	C1		• • • Spool	1	1001-
11	C1		• • • Retainer	1	1001-
12	C1		• • • Seat	1	1001-
13	C1		• • • Spring	1	1001-
14	C1		• • • Spring	1	1001-
15	C1		• • • Seat	1	1001-
16	C1		• • • Spring	1	1001-
17	C1		• • • Screw	1	1001-
18	C1		• • • O-ring	1	1001-
19	C1		• • • Ring, Back-up	1	1001-
20	C1		• • • Seal	1	1001-
21	C1		• • • Plug	1	1001-
22	C1		• • • O-ring	1	1001-
23	C1		• • • O-ring	1	1001-
24	C1		• • • Ring, Back-up	1	1001-
25	C1		• • • Cover	1	1001-
26	C1		• • • Nut	1	1001-
27	C1		• • • Nut	1	1001-
28	C1		• • • Ring, Wear	1	1001-
29	C2	01252-61440	• • Bolt, Hexagon Socket Head	4	1001-

FIG. H0210-001005 Hydraulic Oil Pump and Motor (Inner Parts, HSS Pump) (5/7)

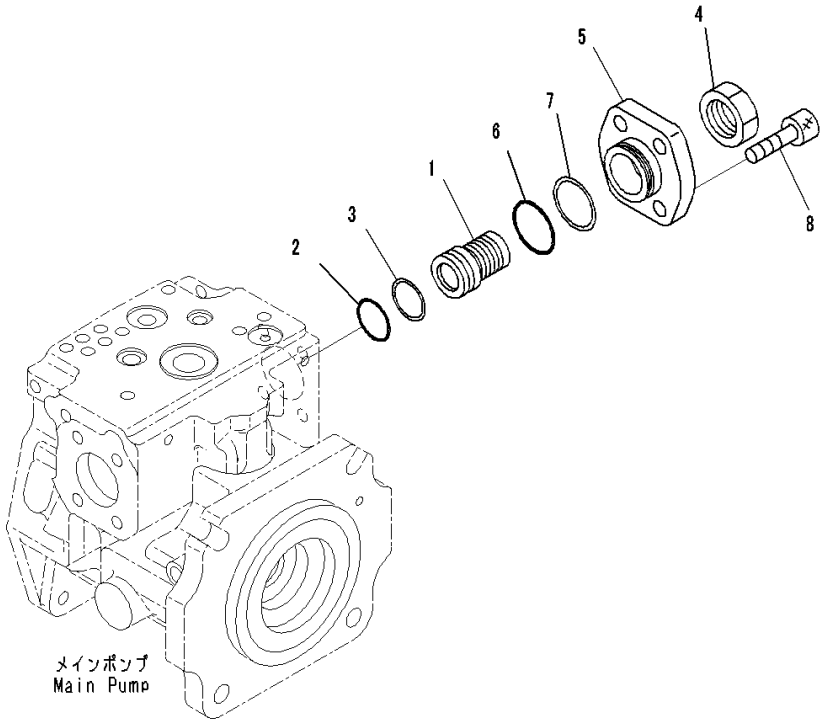

Index	Code	Part Number	Description	Qty	Serial Number
		708-1L-00740	Pump Assembly	1	1001-
	C2	708-1L-01740	• Pump Subassembly	1	1001-
	C2	708-1L-04840	• • Cover Assembly	1	1001-
1	C1		• • • Screw	1	1001-
2	C1		• • • O-ring	1	1001-
3	C1		• • • Ring, Back-up	1	1001-
4	C1		• • • Nut	1	1001-
5	C1		• • • Cover	1	1001-
6	C1		• • • O-ring	1	1001-
7	C1		• • • Ring, Back-up	1	1001-
8	C2	01252-61440	• • Bolt, Hexagon Socket Head	4	1001-

FIG. H0210-001006 Hydraulic Oil Pump and Motor (Inner Parts, HSS Pump) (6/7)

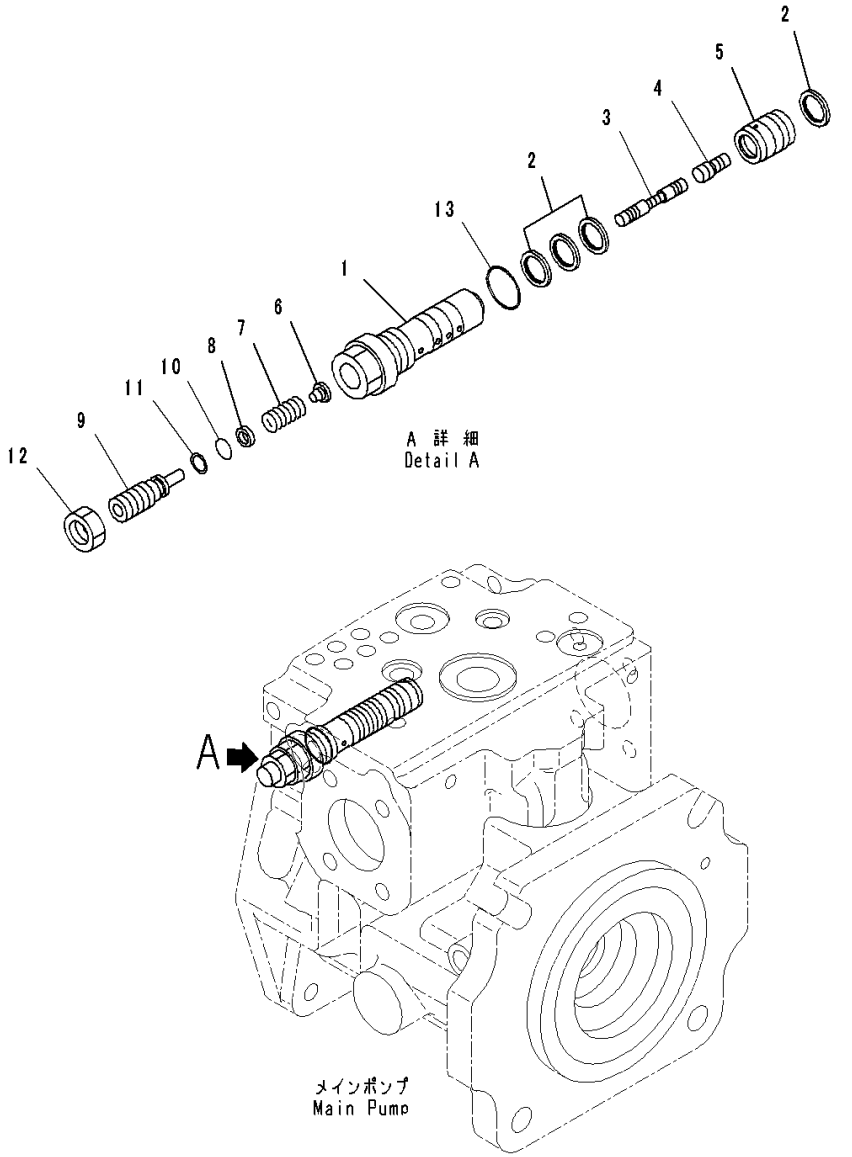

Index	Code	Part Number	Description	Qty	Serial Number
		708-1L-00740	Pump Assembly	1	1001-
	C2	708-2H-03620	• Valve Assembly, Ls	1	1001-
1	C1		• • Sleeve	1	1001-
2	C1		• • Seal	4	1001-
3	C1		• • Spool	1	1001-
4	C1		• • Piston	1	1001-
5	C1		• • Sleeve	1	1001-
6	C1		• • Seat	1	1001-
7	C1		• • Spring	1	1001-
8	C1		• • Seat	1	1001-
9	C1		• • Plug	1	1001-
10	C1		• • O-ring	1	1001-
11	C1		• • Ring, Back-up	1	1001-
12	C1		• • Nut	1	1001-
13	C1		• • O-ring	1	1001-

FIG. H0210-001007 Hydraulic Oil Pump and Motor (Inner Parts, HSS Pump) (7/7)

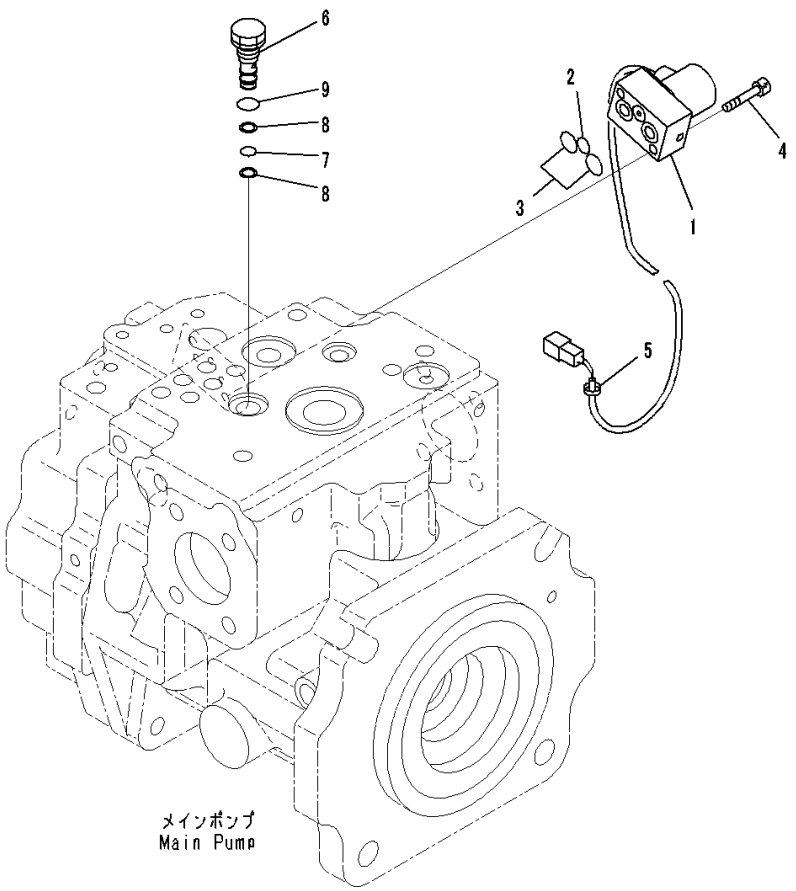

Index	Code	Part Number	Description	Qty	Serial Number
		708-1L-00740	Pump Assembly	1	1001-
1	C2	702-21-61500	• Valve, Pilot	1	1001-
2	C1		• • O-ring	1	1001-
3	C1		• • O-ring	2	1001-
4	C2	01252-60635	• Bolt, Hexagon Socket Head	2	1001-
5	C2	20Y-62-22830	• Band, White	1	1001-
6	C2	708-2L-35941	• Plug	1	1001-
7	C2	07000-B1008	• O-ring	1	1001-
8	C2	07001-01008	• Ring, Back-up	2	1001-
9	C2	07002-61423	• O-ring	1	1001-

FIG. H0210-001008 Hydraulic Oil Pump and Motor (Pump Mounting) (1/2)

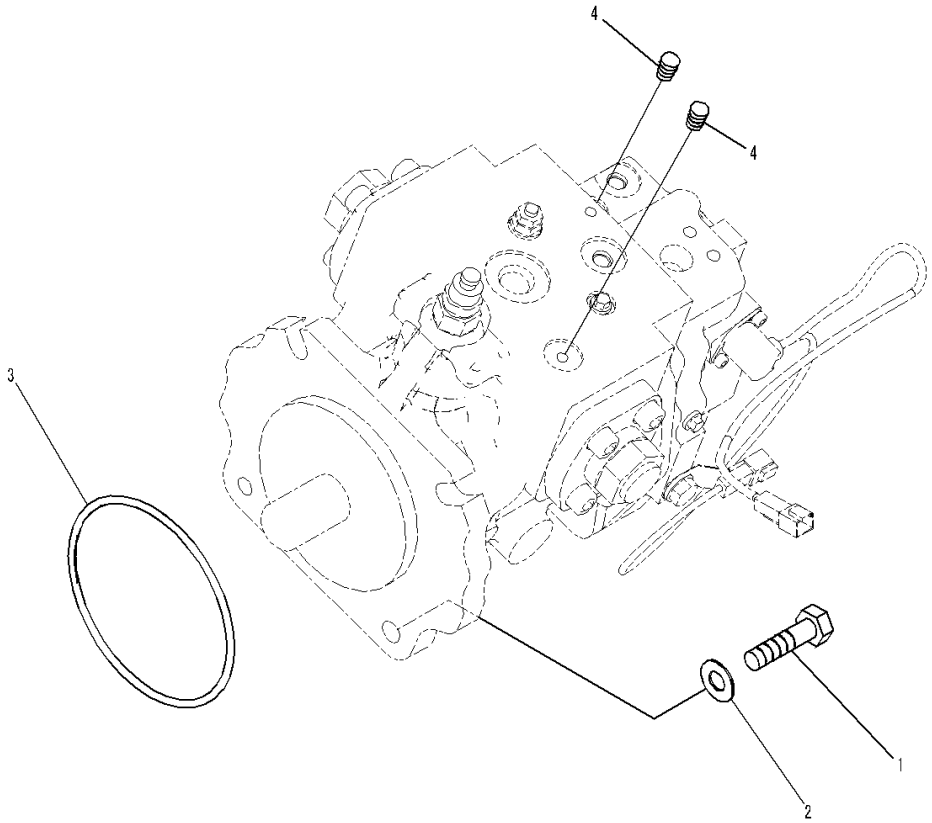

Index	Code	Part Number	Description	Qty	Serial Number
1		01010-81650	Bolt	4	1001-
2		01643-31645	Washer	4	1001-
3		07000-15160	O-ring	1	1001-
4		07049-01012	Plug	2	1001-

FIG. H0210-001009 Hydraulic Oil Pump and Motor (Inner Parts, HSS Motor) (1/2)

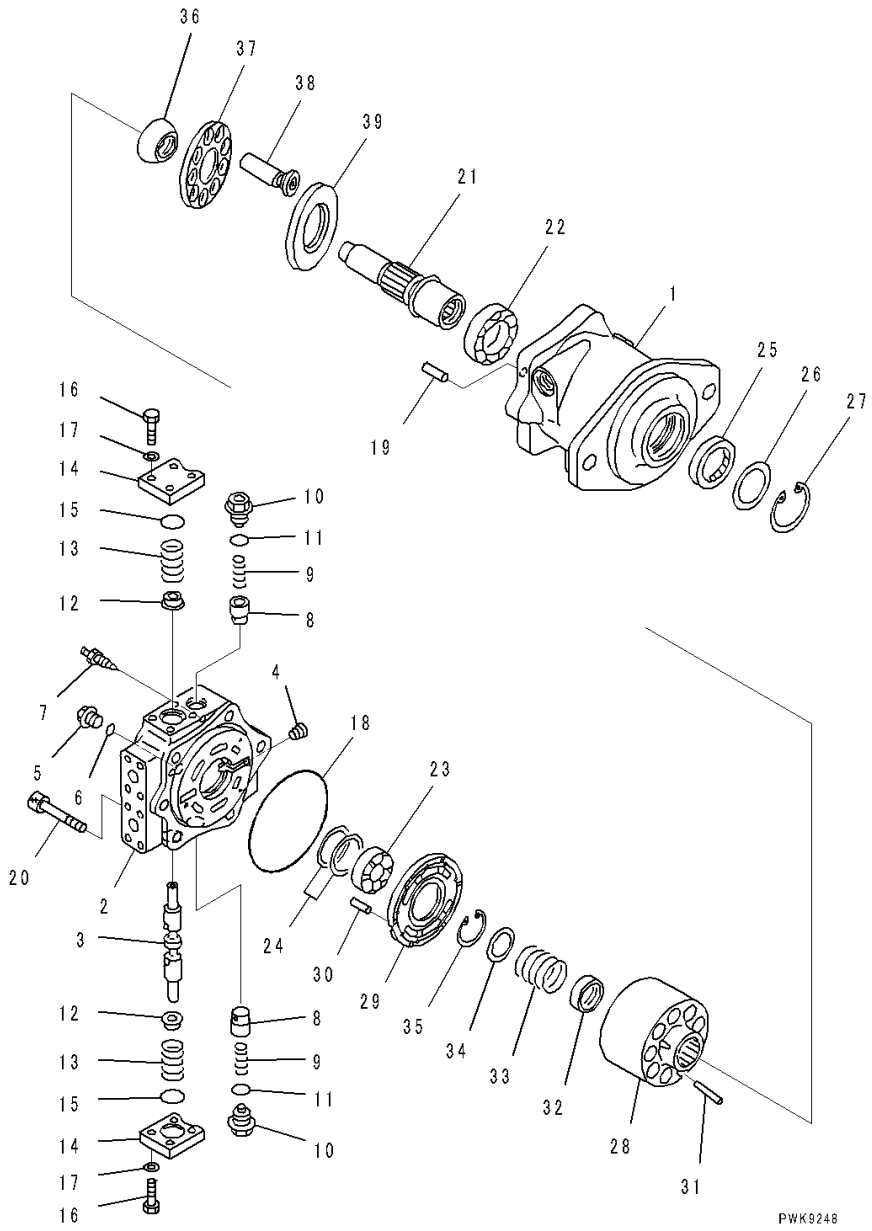

Index	Code	Part Number	Description	Qty	Serial Number
		708-7L-00070	Motor Assembly	1	1001-
1	C2	708-7L-11130	• Case	1	1001-
	C2	708-7L-04180	• Cover Subassembly	1	1001-
2	C1		• • Cover	1	1001-
3	C1		• • Spool	1	1001-
4	C1		• • Plug	1	1001-
5	C2	708-8K-16280	• Plug	3	1001-
6	C2	07002-11623	• O-ring	3	1001-
7		20B-27-11210	• Bleeder	1	1001-
8	C2	706-73-72420	• Valve	2	1001-
9	C2	708-7L-16510	• Spring	2	1001-
10	C2	708-8F-16170	• Plug	2	1001-
11	C2	07002-12434	• O-ring	2	1001-
12		708-7L-16211	• Retainer	2	1001-
13		708-7L-16220	• Spring	2	1001-
14		708-7L-16311	• Cover	2	1001-
15		07000-13035	• O-ring	2	1001-
16		01010-81035	• Bolt	8	1001-
17		01643-51032	• Washer	8	1001-
18	C2	07000-12145	• O-ring	1	1001-
19	C2	04020-01228	• Pin, Dowel	1	1001-
20	C2	01252-61480	• Bolt	6	1001-
21	C2	708-7L-12111	• Shaft	1	1001-
22	C2	708-8F-12151	• Bearing	1	1001-
23	C2	708-7L-12140	• Bearing	1	1001-
24	C2	708-7L-05010	• Spacer Kit	1	1001-
	C1		• • Spacer, T=1.5mm	1	1001-
	C1		• • Spacer, T=1.6mm	1	1001-
	C1		• • Spacer, T=1.7mm	1	1001-
	C1		• • Spacer, T=1.8mm	1	1001-
	C1		• • Spacer, T=1.9mm	1	1001-
	C1		• • Spacer, T=2.0mm	1	1001-
25	C2	706-7G-11291	• Seal, Oil	1	1001-
26	C2	708-8F-12230	• Spacer, T=3.2mm	1	1001-
27	C2	04065-07225	• Ring, Snap	1	1001-
28	C2	708-7L-13111	• Cylinder Block	1	1001-
29	C2	708-7L-13220	• Plate, Valve	1	1001-
30	C2	720-68-19610	• Pin	1	1001-
31	C2	708-2L-23360	• Pin	3	1001-
32	C2	708-2L-23131	• Seat	1	1001-

FIG. H0210-001009 Hydraulic Oil Pump and Motor (Inner Parts, HSS Motor) (1/2)

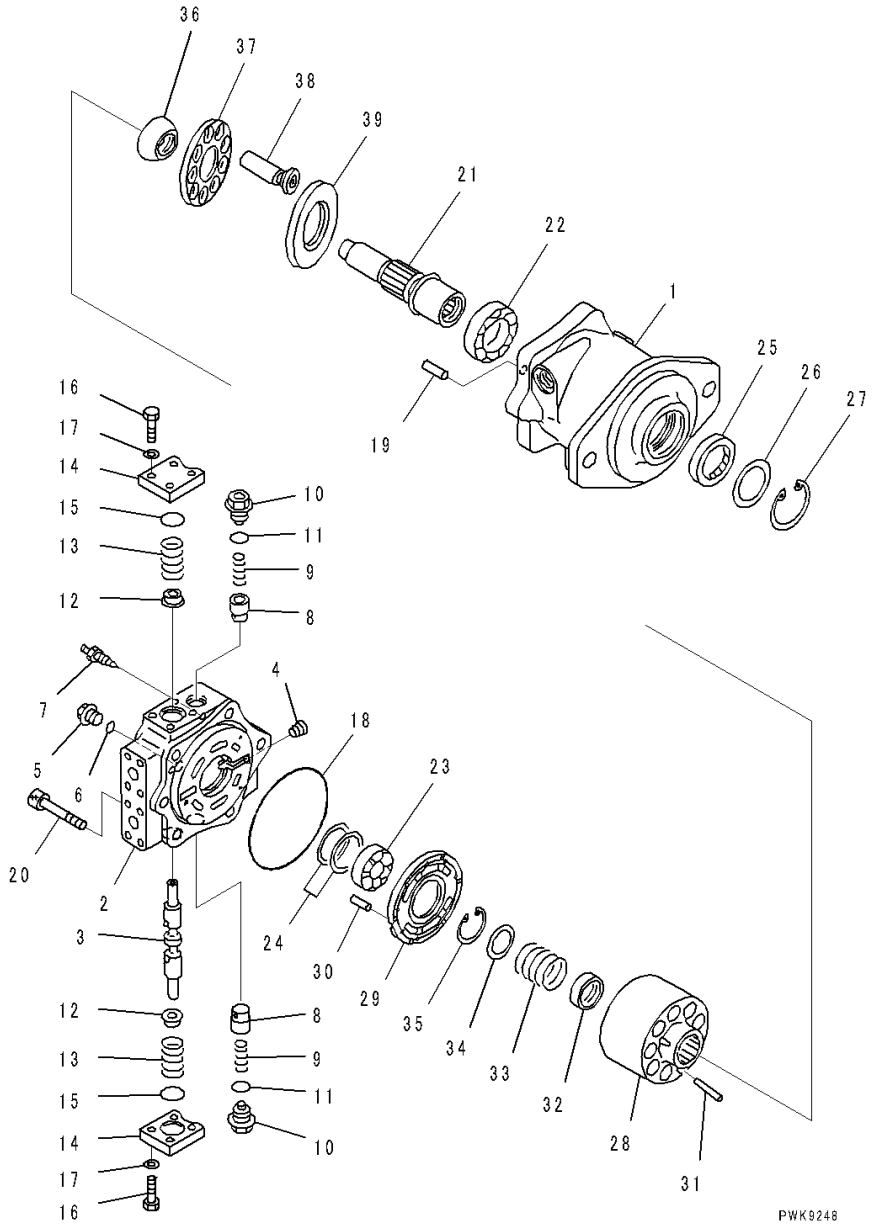

Index	Code	Part Number	Description	Qty	Serial Number
33	C2	708-7L-13160	• Spring	1	1001-
34	C2	708-7L-13140	• Seat	1	1001-
35	C2	04065-04818	• Ring, Snap	1	1001-
36	C2	708-2L-23351	• Guide	1	1001-
37	C2	708-2L-33350	• Retainer	1	1001-
38	C2	708-8F-33310	• Piston Subassembly	9	1001-
39	C2	708-7L-13410	• Plate, Thrust	1	1001-

FIG. H0210-001010 Hydraulic Oil Pump and Motor (Inner Parts, HSS Motor) (2/2)

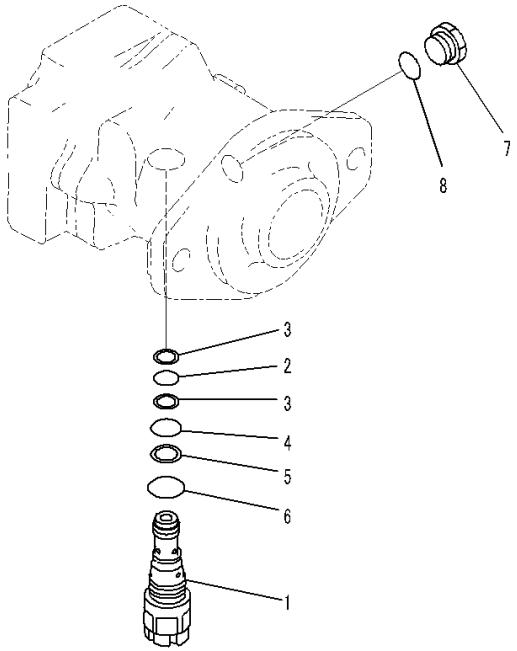

Index	Code	Part Number	Description	Qty	Serial Number
		708-7L-00070	Motor Assembly	1	1001-
1		702-75-03102	• Valve Assembly, Relief	1	1001-
2		07000-22018	• • O-ring	1	1001-
3		07001-02018	• • Ring, Back-up	2	1001-
4		07000-12021	• • O-ring	1	1001-
5		07001-02021	• • Ring	1	1001-
6		07002-13034	• • O-ring	1	1001-
7		07040-12012	• Plug	1	1001-
8		07002-12034	• O-ring	1	1001-

FIG. H0210-001011 Hydraulic Oil Pump and Motor (Motor Mounting)

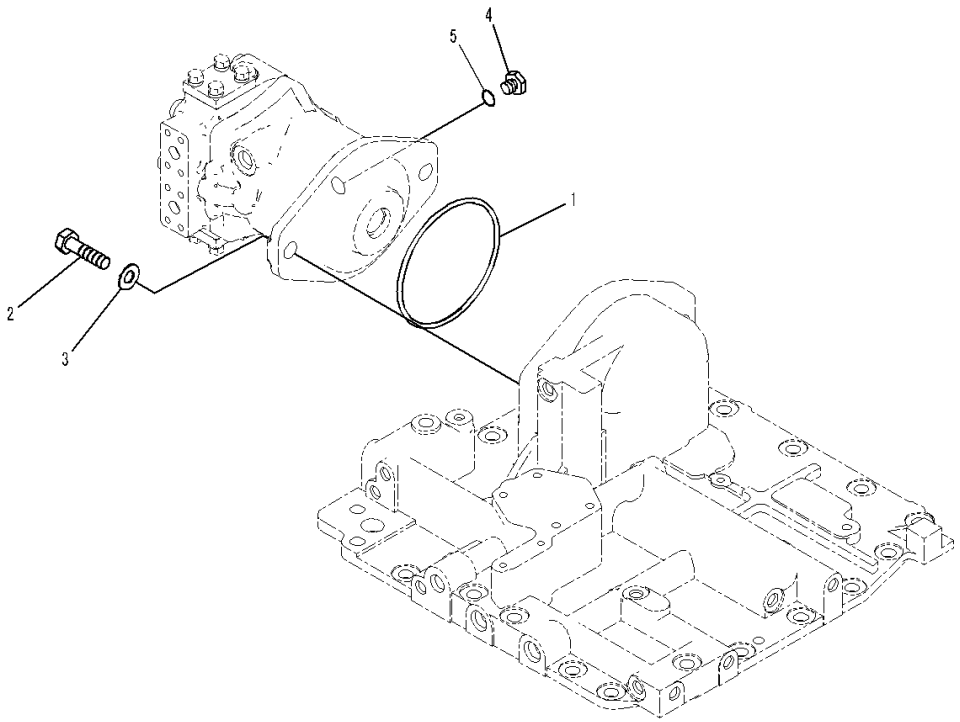

Index	Code	Part Number	Description	Qty	Serial Number
1		07000-15160	O-ring	1	1001-
2		01010-82055	Bolt	2	1001-
3		01643-32060	Washer	2	1001-
4		07040-12012	Plug	1	1001-
5		07002-12034	O-ring	1	1001-

FIG. H0210-001012 Hydraulic Oil Pump and Motor (Inner Parts, Cooling Fan Pump) (1/6)

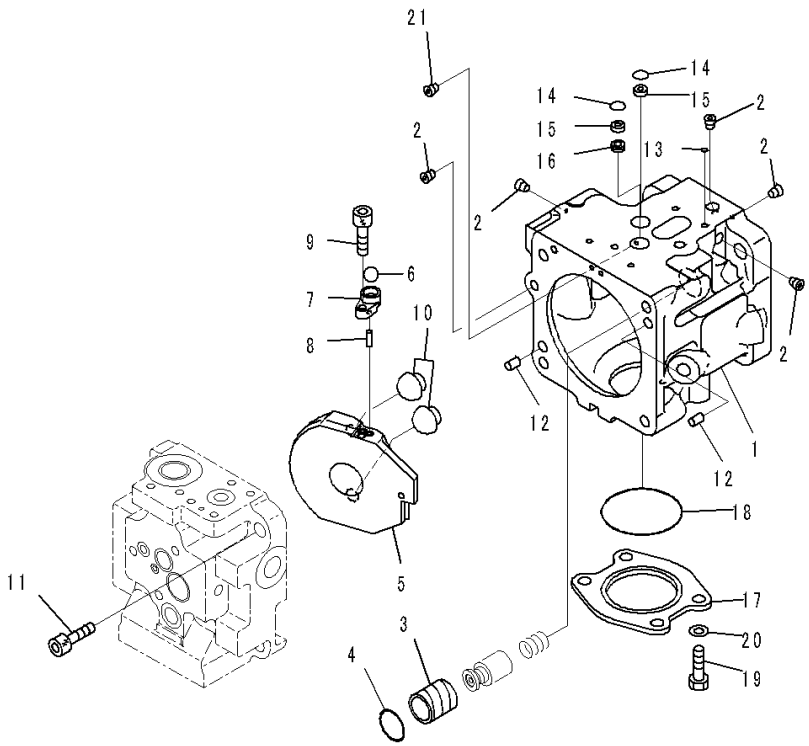

Index	Code	Part Number	Description	Qty	Serial Number
		708-1S-00460	Pump Assembly	1	1001-
	C2	708-1S-01460	• Pump Subassembly	1	1001-
	C2	708-1S-04330	• • Case Subassembly	1	1001-
1	C1		• • • Case	1	1001-
2	C1		• • • Plug	8	1001-
3	C1		• • • Sleeve	1	1001-
4	C1		• • • Ring	1	1001-
5	C2	708-3S-13480	• • Cam	1	1001-
6	C2	04260-01270	• • Ball	1	1001-
7	C2	708-3S-14141	• • Spacer	1	1001-
8	C2	708-1S-13420	• • Pin	2	1001-
9	C2	01252-60616	• • Bolt, Hexagon Socket Head	1	1001-
10	C2	708-1T-33432	• • Ball, Retainer	2	1001-
11	C2	01252-61235	• • Bolt, Hexagon Socket Head	4	1001-
12	C2	04020-01024	• • Pin, Dowel	2	1001-
13	C2	07000-B1006	• • O-ring	1	1001-
14	C2	708-2L-25490	• • O-ring	2	1001-
15	C2	708-2L-25480	• • Filter	2	1001-
16	C2	708-1S-19710	• • Orifice	1	1001-
17		708-1S-19950	• • Plate	1	1001-
18		07000-B2065	• • O-ring	1	1001-
19		01010-81025	• • Bolt	4	1001-
20		01643-31032	• • Washer	4	1001-
21	C2	708-3T-11310	• • Orifice	1	1001-

FIG. H0210-001013 Hydraulic Oil Pump and Motor (Inner Parts, Cooling Fan Pump) (2/6)

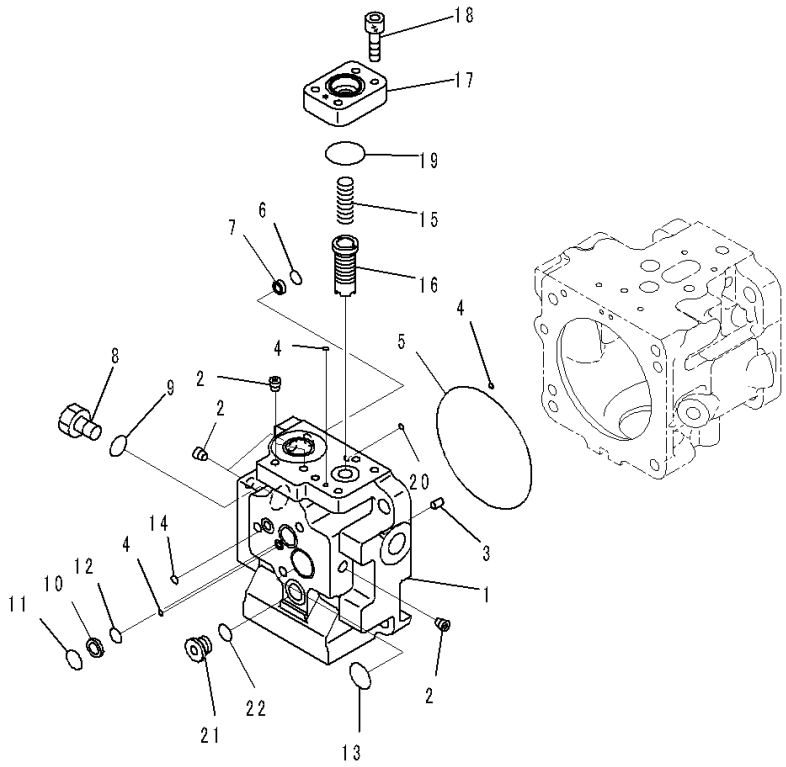

JY016843

Index	Code	Part Number	Description	Qty	Serial Number
		708-1S-00460	Pump Assembly	1	1001-
	C2	708-1S-01460	• Pump Subassembly	1	1001-
	C2	708-1S-04510	• • Cap Subassembly	1	1001-
1	C1		• • • Cap	1	1001-
2	C1		• • • Plug	5	1001-
3	C2	720-68-19610	• • Pin	1	1001-
4	C2	07000-B1006	• • O-ring	3	1001-
5	C2	07000-B2130	• • O-ring	1	1001-
6		708-2L-25490	• • O-ring	1	1001-
7		708-2L-25480	• • Filter	1	1001-
8		07040-12012	• • Plug	1	1001-
9		07002-62034	• • O-ring	1	1001-
10		702-21-53120	• • Filter	1	1001-
11	C2	708-1S-11370	• • O-ring	1	1001-
12	C2	702-21-37520	• • O-ring	1	1001-
13	C2	720-2M-15820	• • O-ring	1	1001-
14	C2	07000-B2010	• • O-ring	1	1001-
15	C2	723-56-31990	• • Spring	1	1001-
16	C2	723-56-31980	• • Valve	1	1001-
17	C2	708-1S-17110	• • Cover	1	1001-
18	C2	01252-60825	• • Bolt, Hexagon Socket Head	4	1001-
19	C2	07000-B2030	• • O-ring	1	1001-
20	C2	07000-B1006	• • O-ring	1	1001-
21		723-56-31630	• • Plug	1	1001-
22		07002-61623	• • O-ring	1	1001-

FIG. H0210-001014 Hydraulic Oil Pump and Motor (Inner Parts, Cooling Fan Pump) (3/6)

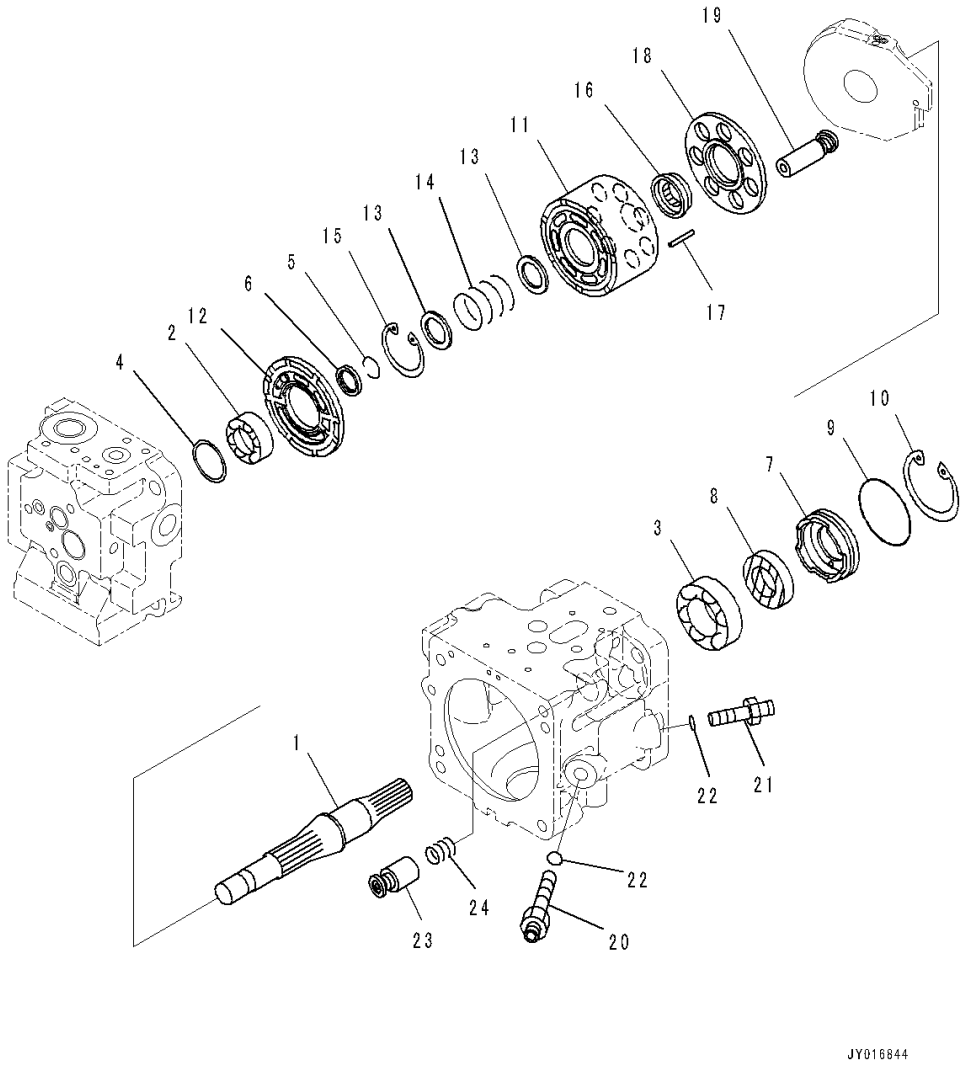

Index	Code	Part Number	Description	Qty	Serial Number
		708-1S-00460	Pump Assembly	1	1001-
	C2	708-1S-01460	• Pump Subassembly	1	1001-
1	C2	708-1S-12320	• • Shaft	1	1001-
2	C2	708-1S-12260	• • Bearing	1	1001-
3	C2	706-73-40890	• • Bearing	1	1001-
4	C2	708-7T-05020	• • Spacer Kit	1	1001-
	C1		• • • Spacer, T=1.6mm	1	1001-
	C1		• • • Spacer, T=1.7mm	1	1001-
	C1		• • • Spacer, T=1.8mm	1	1001-
	C1		• • • Spacer, T=1.9mm	1	1001-
	C1		• • • Spacer, T=2.0mm	1	1001-
	C1		• • • Spacer, T=2.1mm	1	1001-
	C1		• • • Spacer, T=2.2mm	1	1001-
5	C2	708-1S-12280	• • Ring, Wear	1	1001-
6	C2	708-1S-12330	• • Retainer	1	1001-
7		708-1S-12340	• • Case	1	1001-
8		708-21-12970	• • Seal, Oil	1	1001-
9		708-1S-12350	• • O-ring	1	1001-
10		04065-06220	• • Ring, Snap	1	1001-
11	C2	708-1S-13130	• • Block, Cylinder	1	1001-
12	C2	708-1S-13460	• • Plate, Valve	1	1001-
13	C2	708-3S-13160	• • Washer	2	1001-
14	C2	708-3S-13430	• • Spring	1	1001-
15	C2	04065-03515	• • Ring, Snap	1	1001-
16	C2	708-1S-13370	• • Guide, Retainer	1	1001-
17	C2	708-1S-13380	• • Pin	3	1001-
18	C2	708-1S-13360	• • Retainer, Shoe	1	1001-
19	C2	708-1S-13320	• • Piston Subassembly	7	1001-
20	C2	708-3S-14240	• • Plug	1	1001-
21	C2	708-3S-14261	• • Plug	1	1001-
22	C2	07002-61223	• • O-ring	2	1001-
23	C2	708-3S-14290	• • Piston Subassembly	1	1001-
24	C2	708-1S-14241	• • Spring	1	1001-

FIG. H0210-001015 Hydraulic Oil Pump and Motor (Inner Parts, Cooling Fan Pump) (4/6)

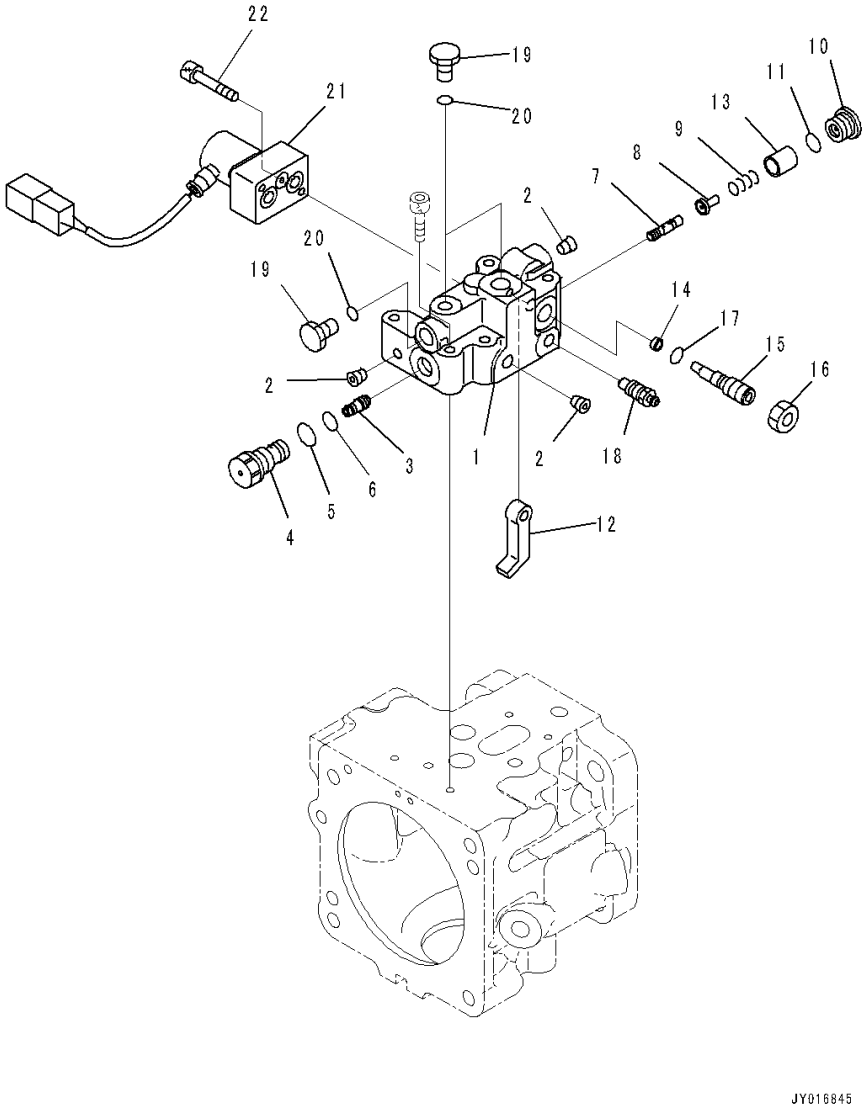

Index	Code	Part Number	Description	Qty	Serial Number
		708-1S-00460	Pump Assembly	1	1001-
	C2	708-1S-01460	• Pump Subassembly	1	1001-
	C2	708-1S-03480	• • Valve Assembly	1	1001-
	C1		• • • Body Subassembly	1	1001-
1	C1		• • • • Body	1	1001-
2	C1		• • • • Plug	3	1001-
3	C1		• • • Piston	1	1001-
4	C1		• • • Sleeve	1	1001-
5		07002-61623	• • • O-ring	1	1001-
6		07000-B1010	• • • O-ring	1	1001-
7	C1		• • • Spool	1	1001-
8	C1		• • • Seat	1	1001-
9	C1		• • • Spring	1	1001-
10		723-56-31630	• • • Plug	1	1001-
11		07002-61623	• • • O-ring	1	1001-
12	C1		• • • Lever	1	1001-
13	C1		• • • Retainer	1	1001-
14	C1		• • • Spacer	1	1001-
15	C1		• • • Plug	1	1001-
16	C1		• • • Nut	1	1001-
17		07000-B1006	• • • O-ring	1	1001-
18		20B-27-11210	• • • Bleeder	1	1001-
19		07040-11007	• • • Plug	3	1001-
20		07002-61023	• • • O-ring	3	1001-
21	C2	702-21-61500	• • • Valve, Pilot	1	1001-
22		01252-60635	• • • Bolt, Hexagon Socket Head	2	1001-

FIG. H0210-001016 Hydraulic Oil Pump and Motor (Inner Parts, Cooling Fan Pump) (5/6)

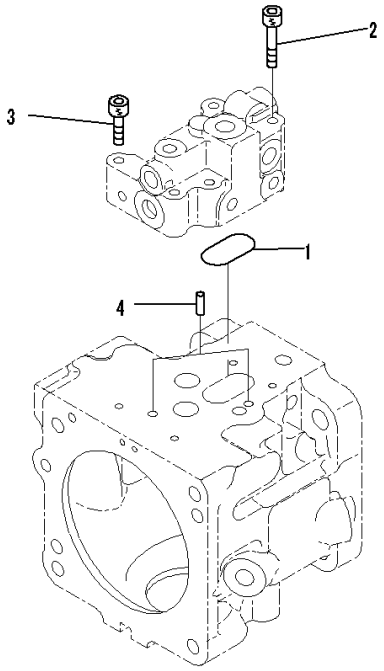

JY013285

Index	Code	Part Number	Description	Qty	Serial Number
		708-1S-00460	Pump Assembly	1	1001-
	C2	708-1S-01460	• Pump Subassembly	1	1001-
1		07000-B3040	• • O-ring	1	1001-
2		01252-60650	• • Bolt, Hexagon Socket Head	1	1001-
3		01252-60635	• • Bolt, Hexagon Socket Head	3	1001-
4	C2	04020-00616	• • Pin, Dowel	2	1001-

FIG. H0210-001017 Hydraulic Oil Pump and Motor (Inner Parts, Cooling Fan Pump) (6/6)

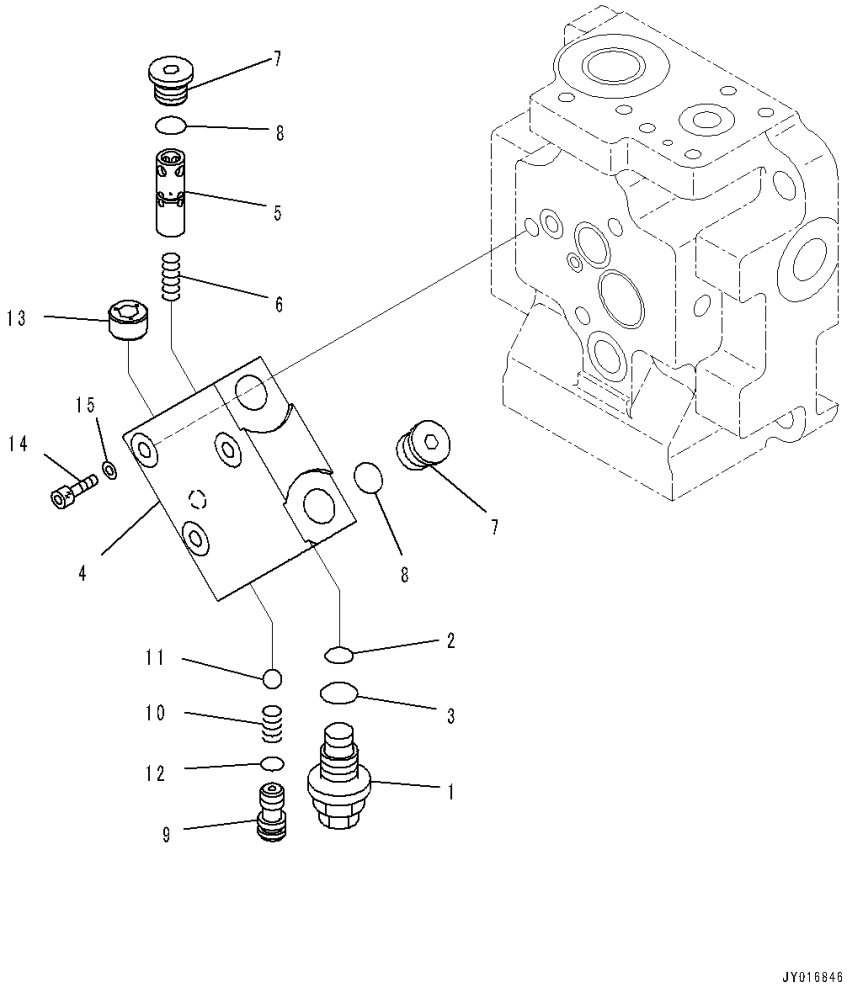

Index	Code	Part Number	Description	Qty	Serial Number
		708-1S-00460	Pump Assembly	1	1001-
		723-40-72200	• Valve Assembly	1	1001-
1	C1		• • Valve, Relief	1	1001-
2		702-16-57270	• • • O-ring	1	1001-
3		07002-61023	• • • O-ring	1	1001-
4	C1		• • Block	1	1001-
5	C1		• • Spool	1	1001-
6	C1		• • Spring	1	1001-
7		702-21-55620	• • Plug	2	1001-
8		07002-61423	• • O-ring	2	1001-
9	C1		• • Seat	1	1001-
10	C1		• • Spring	1	1001-
11	C1		• • Ball	1	1001-
12	C1		• • O-ring	1	1001-
13	C1		• • Plug	2	1001-
14		01252-61040	• Bolt, Hexagon Socket Head	3	1001-
15		01643-51032	• Washer	3	1001-

FIG. H0210-001018 Hydraulic Oil Pump and Motor (Pump Mounting) (2/2)

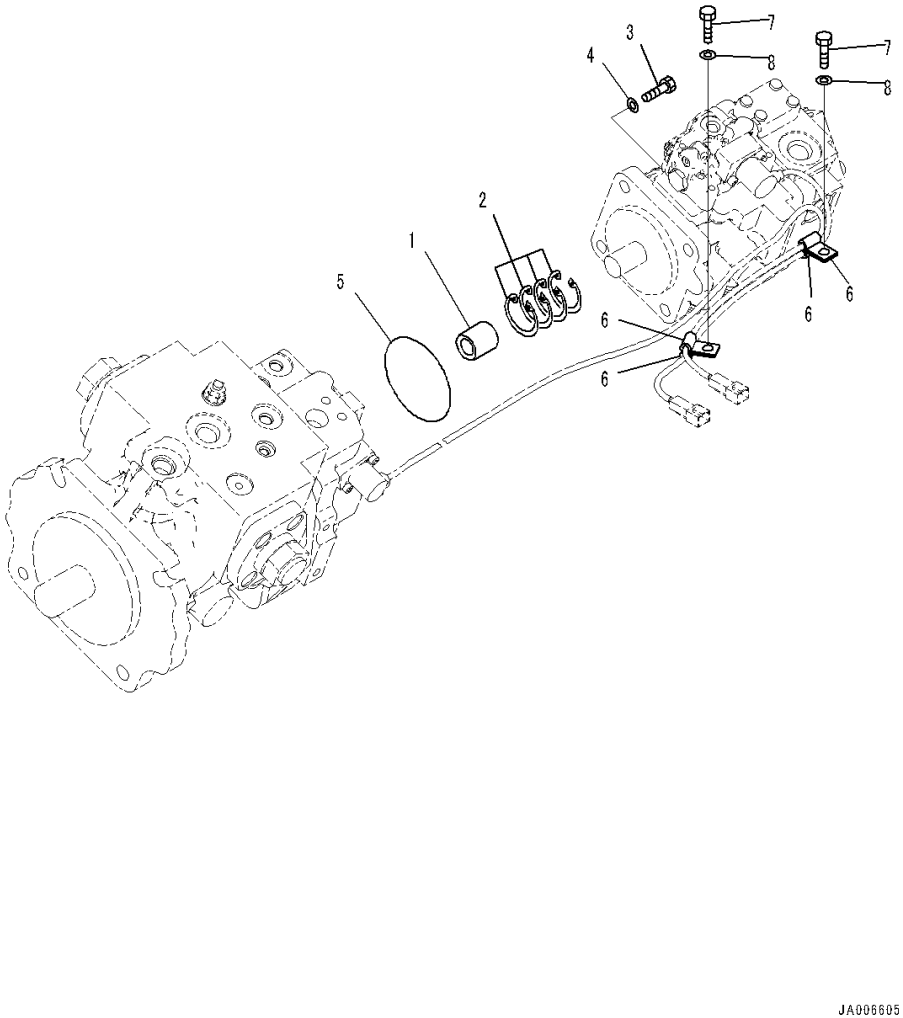

Index	Code	Part Number	Description	Qty	Serial Number
1		705-29-03310	Coupling Assembly	1	1001-
2		04065-02012	• Ring, Snap	1	1001-
3		01010-81240	Bolt	4	1001-
4		01643-31232	Washer	4	1001-
5		07000-12110	O-ring	1	1001-
6		04434-50610	Clip	4	1001-
7		01010-81020	Bolt	2	1001-
8		01643-31032	Washer	2	1001-

FIG. H0310-001001 Hydraulic Oil Pump Piping (Suction and Delivery Piping)

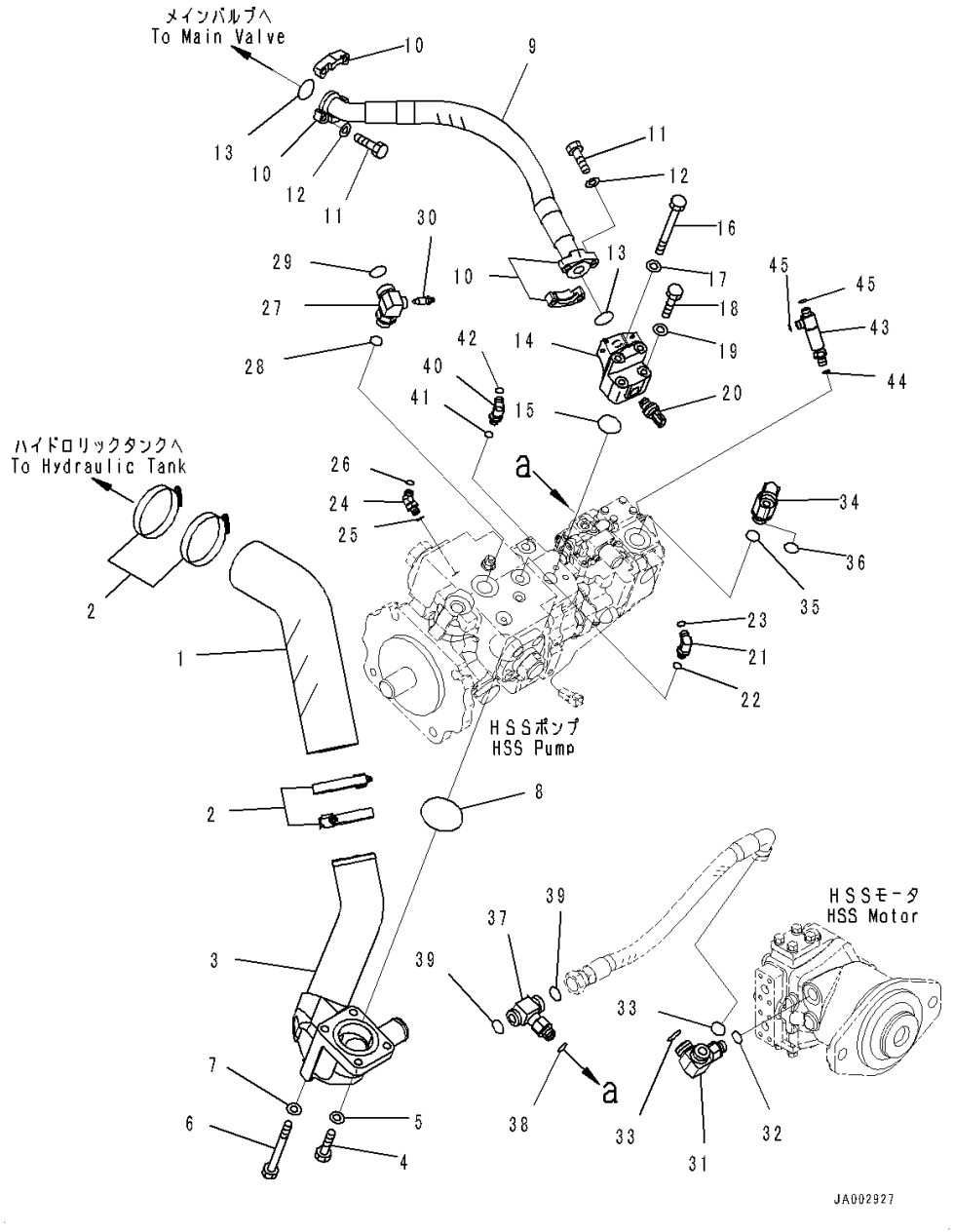

Index	Code	Part Number	Description	Qty	Serial Number
1		14X-62-52351	Hose	1	1001-
2		07289-00095	Clamp	4	1001-
3		14X-62-52361	Tube	1	1001-
4		01010-81245	Bolt	2	1001-
5		01643-31232	Washer	2	1001-
6		01011-81250	Bolt	2	1001-
7		01643-31232	Washer	2	1001-
8		07000-12075	O-ring	1	1001-
9		14X-62-52371	Hose	1	1001-
10		07371-31049	Flange, Split	4	1001-
11		07372-21035	Bolt	8	1001-
12		01643-51032	Washer	8	1001-
13		07000-13032	O-ring	2	1001-
14		14X-62-52380	Block	1	1001-
15		07000-13035	O-ring	1	1001-
16		01011-81005	Bolt	2	1001-
17		01643-31032	Washer	2	1001-
18		01010-81065	Bolt	2	1001-
19		01643-31032	Washer	2	1001-
20		7861-93-1812	Sensor, Pressure	1	1001-
21		02782-10210	Elbow	1	1001-
22		07002-11423	O-ring	1	1001-
23		02896-11008	O-ring	1	1001-
24		203-62-13520	Elbow	1	1001-
25		07002-11423	O-ring	1	1001-
26		02896-11008	O-ring	1	1001-
27		14X-62-52431	Elbow	1	1001-
28		07002-62434	O-ring	1	1001-
29		02896-61018	O-ring	1	1001-
30		20B-27-11210	Bleeder	1	1001-
31		14X-62-52761	Tee	1	1001-
32		07002-62034	O-ring	1	1001-
33		02896-61018	O-ring	2	1001-
34		14X-62-52921	Elbow	1	1001-
35		07002-12434	O-ring	1	1001-
36		02896-11015	O-ring	1	1001-
37		14X-62-52571	Tee	1	1001-
38		07002-62034	O-ring	1	1001-
39		02896-61018	O-ring	2	1001-
40		02782-10210	Elbow	1	1001-

FIG. H0310-001001 Hydraulic Oil Pump Piping (Suction and Delivery Piping)

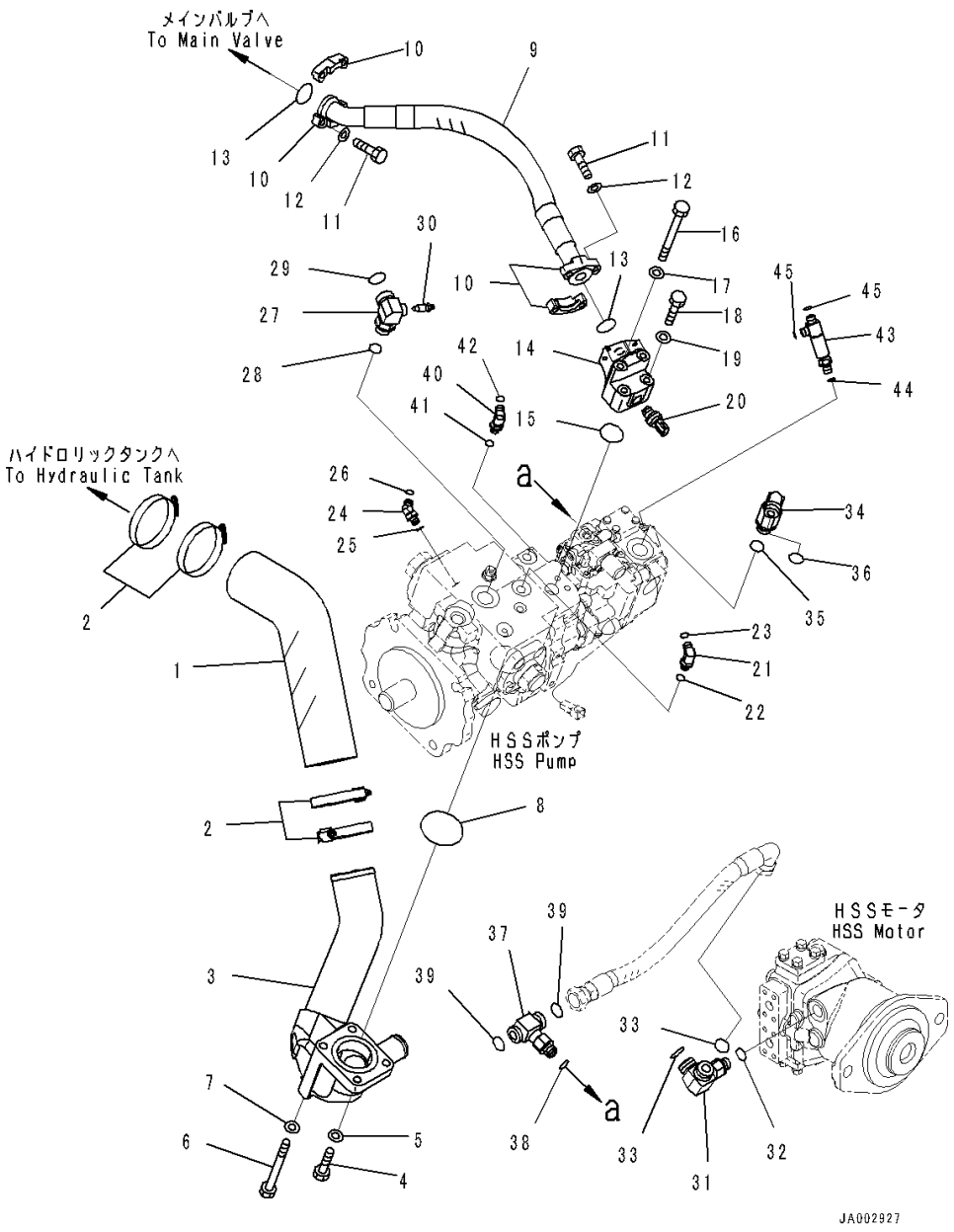

Index	Code	Part Number	Description	Qty	Serial Number
41		07002-11423	O-ring	1	1001-
42		02896-11008	O-ring	1	1001-
43		14X-62-54710	Tee	1	1001-
44		07002-11423	O-ring	1	1001-
45		02896-11008	O-ring	2	1001-

FIG. H0310-001002 Hydraulic Oil Pump Piping (HSS Motor Piping)

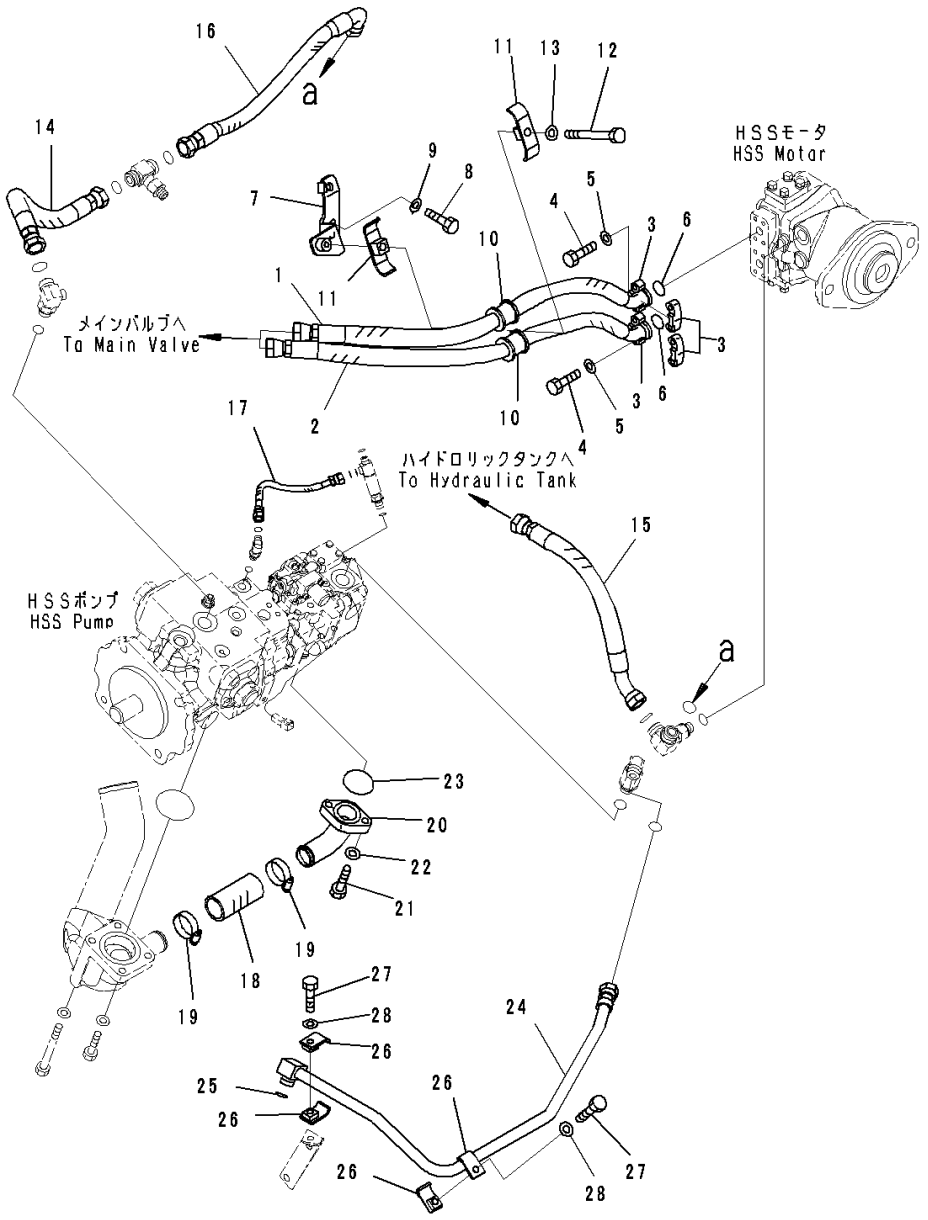

Index	Code	Part Number	Description	Qty	Serial Number
1		14X-62-52410	Hose	1	1001-
2		14X-62-52421	Hose	1	1001-
3		07371-30640	Flange, Split	4	1001-
4		07372-21035	Bolt	8	1001-
5		01643-51032	Washer	8	1001-
6		07000-B3025	O-ring	2	1001-
7		14X-62-52552	Bracket	1	1001-
8		01010-81225	Bolt	2	1001-
9		01643-31232	Washer	2	1001-
10		07095-00628	Cushion	2	1001-
11		07094-30620	Clamp	2	1001-
12		01010-81270	Bolt	1	1001-
13		01643-31232	Washer	1	1001-
14		14X-62-52441	Hose	1	1001-
15		14X-62-52451	Hose	1	1001-
16		14X-62-52511	Hose	1	1001-
17		02762-00203	Hose, Face Seal Type	1	1001-
18		07260-24111	Hose	1	1001-
19		07289-00055	Clamp	2	1001-
20		14X-62-54690	Tube	1	1001-
21		01010-81240	Bolt	2	1001-
22		01643-31232	Washer	2	1001-
23		07000-13045	O-ring	1	1001-
24		14X-62-52480	Tube	1	1001-
25		02896-11015	O-ring	1	1001-
26		14X-62-32540	Clamp	4	1001-
27		01010-81050	Bolt	2	1001-
28		01643-31032	Washer	2	1001-

FIG. H0310-001003 Hydraulic Oil Pump Piping (Fan Motor Related Parts)

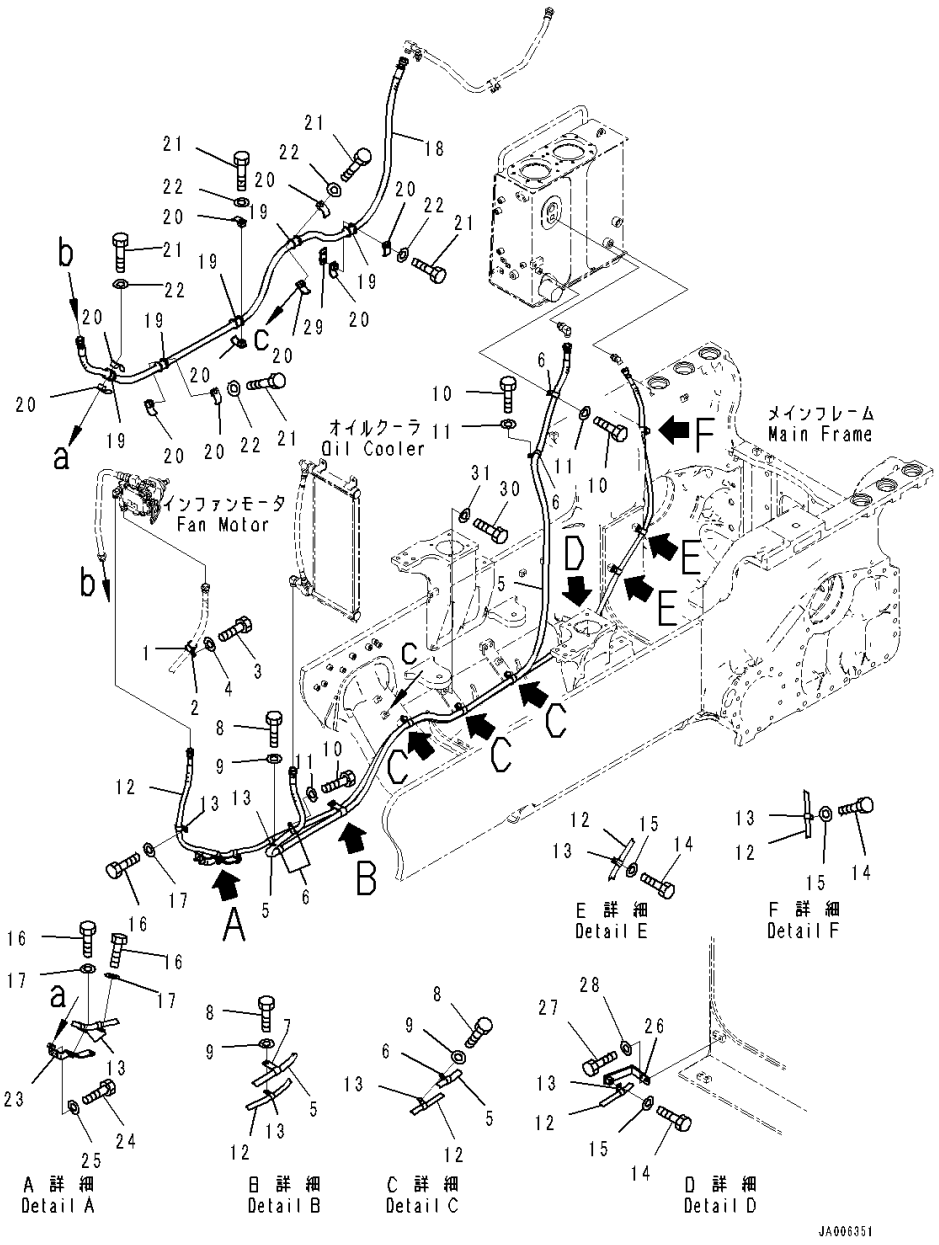

Index	Code	Part Number	Description	Qty	Serial Number
1		07095-20522	Cushion	1	1001-
2		04434-53212	Clip	1	1001-
3		01010-81230	Bolt	1	1001-
4		01643-31232	Washer	1	1001-
5		14X-62-61331	Hose Assembly	1	1001-
6		04434-52312	Clip	7	1001-
7		195-49-31470	Clip	1	1001-
8		01010-81230	Bolt	5	1001-
9		01643-31232	Washer	5	1001-
10		01010-81220	Bolt	3	1001-
11		01643-31232	Washer	3	1001-
12		14X-62-61341	Hose Assembly	1	1001-
13		04434-51912	Clip	12	1001-
14		01010-81225	Bolt	4	1001-
15		01643-31232	Washer	4	1001-
16		01010-81230	Bolt	3	1001-
17		01643-31232	Washer	3	1001-
18		14X-62-61311	Hose Assembly	1	1001-
19		07095-00525	Cushion	5	1001-
20		22P-62-13520	Clamp	10	1001-
21		01010-81270	Bolt	5	1001-
22		01643-31232	Washer	5	1001-
23		14X-62-61351	Bracket	1	1001-
24		01010-81230	Bolt	2	1001-
25		01643-31232	Washer	2	1001-
26		14X-62-54731	Bracket	1	1001-
27		01010-81225	Bolt	2	1001-
28		01643-31232	Washer	2	1001-
29		14X-62-61420	Plate	1	1001-
30		01010-81240	Bolt	1	1001-
31		01643-31232	Washer	1	1001-

FIG. H0310-001004 Hydraulic Oil Pump Piping (Fan Motor Piping)

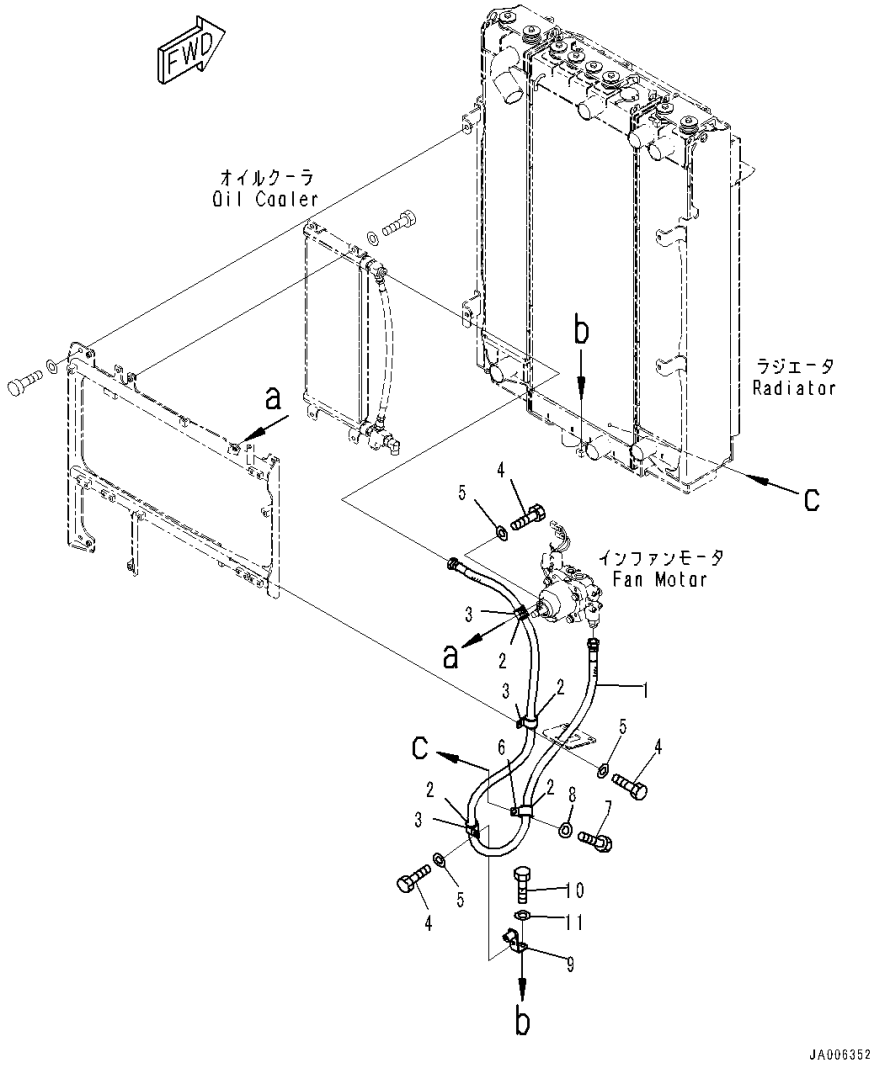

Index	Code	Part Number	Description	Qty	Serial Number
1		14X-62-61321	Hose Assembly	1	1001-
2		07095-20522	Cushion	4	1001-
3		04434-53211	Clip	3	1001-
4		01010-81020	Bolt	3	1001-
5		01643-31032	Washer	3	1001-
6		04434-53212	Clip	1	1001-
7		01010-81230	Bolt	1	1001-
8		01643-31232	Washer	1	1001-
9		14X-62-61362	Bracket	1	1001-
10		01010-81025	Bolt	1	1001-
11		01643-31032	Washer	1	1001-

FIG. H2210-004001 Dozer Blade Lift Cylinder Piping (Piping) (1/2)

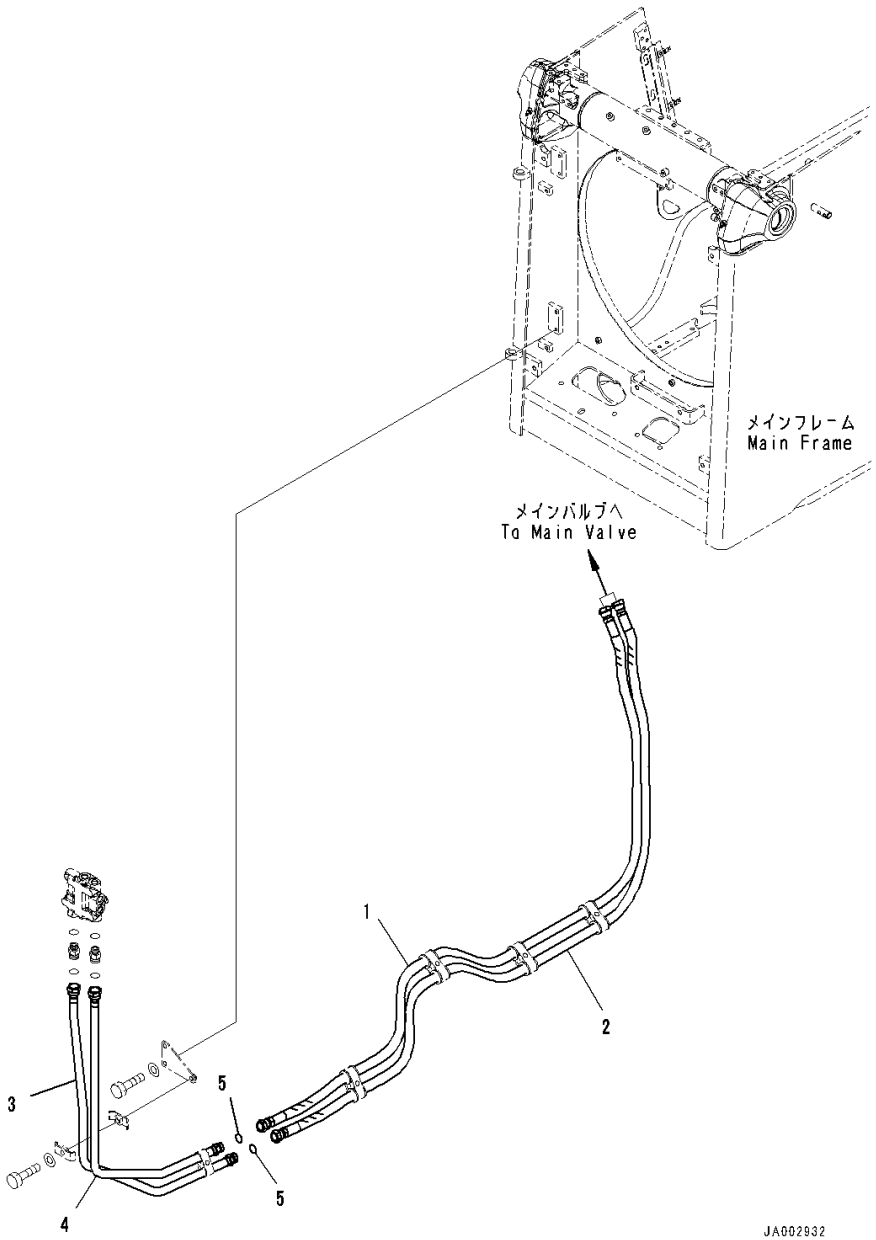

Index	Code	Part Number	Description	Qty	Serial Number
		Note: This list covers following specifications.			
		Blade Cylinder Wired Hose, Power Angle Power Tilt Dozer, Inside Frame			
		Blade Cylinder Wired Hose			
		Blade Cylinder Hose, Power Angle Power Tilt Dozer, Inside Frame			
		Blade Cylinder Hose			
1		14X-62-63660	Hose Assembly	1	1001-
2		14X-62-63670	Hose Assembly	1	1001-
3		14X-62-51111	Tube	1	1001-
4		14X-62-51121	Tube	1	1001-
5		02896-11018	O-ring	2	1001-

FIG. H2210-004002 Dozer Blade Lift Cylinder Piping (Quick Drop Valve)

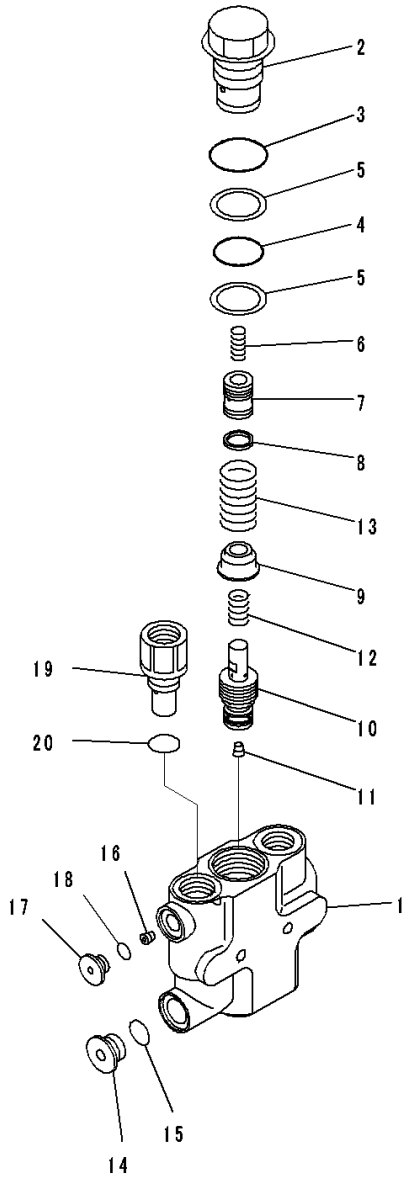

JY013288

Index	Code	Part Number	Description	Qty	Serial Number
		Note: This list covers following specifications.			
		Blade Cylinder Wired Hose, Power Angle Power Tilt Dozer, Inside Frame			
		Blade Cylinder Wired Hose			
		Blade Cylinder Hose, Power Angle Power Tilt Dozer, Inside Frame			
		Blade Cylinder Hose			
		702-21-11700	Valve Assembly	1	1001-
1	C1		• Body	1	1001-
2	C1		• Plug	1	1001-
3		07002-14234	• O-ring	1	1001-
4		07000-13032	• O-ring	1	1001-
5		702-21-81610	• Ring	2	1001-
6		723-36-41930	• Spring	1	1001-
7	C1		• Piston	1	1001-
8	C1		• Seal	1	1001-
9		702-21-81560	• Retainer	1	1001-
10	C1		• Valve	1	1001-
11	C1		• Plug, Tapered	1	1001-
12		702-21-81570	• Spring	1	1001-
13		702-21-81580	• Spring	1	1001-
14		720-2M-11550	• Plug	1	1001-
15		07002-12034	• O-ring	1	1001-
16	C2	702-21-81620	• Orifice	1	1001-
17		702-21-55620	• Plug	1	1001-
18		07002-11423	• O-ring	1	1001-
19		702-21-81630	• Plug	1	1001-
20		07000-13024	• O-ring	1	1001-

FIG. H2210-004003 Dozer Blade Lift Cylinder Piping (Piping) (2/2)

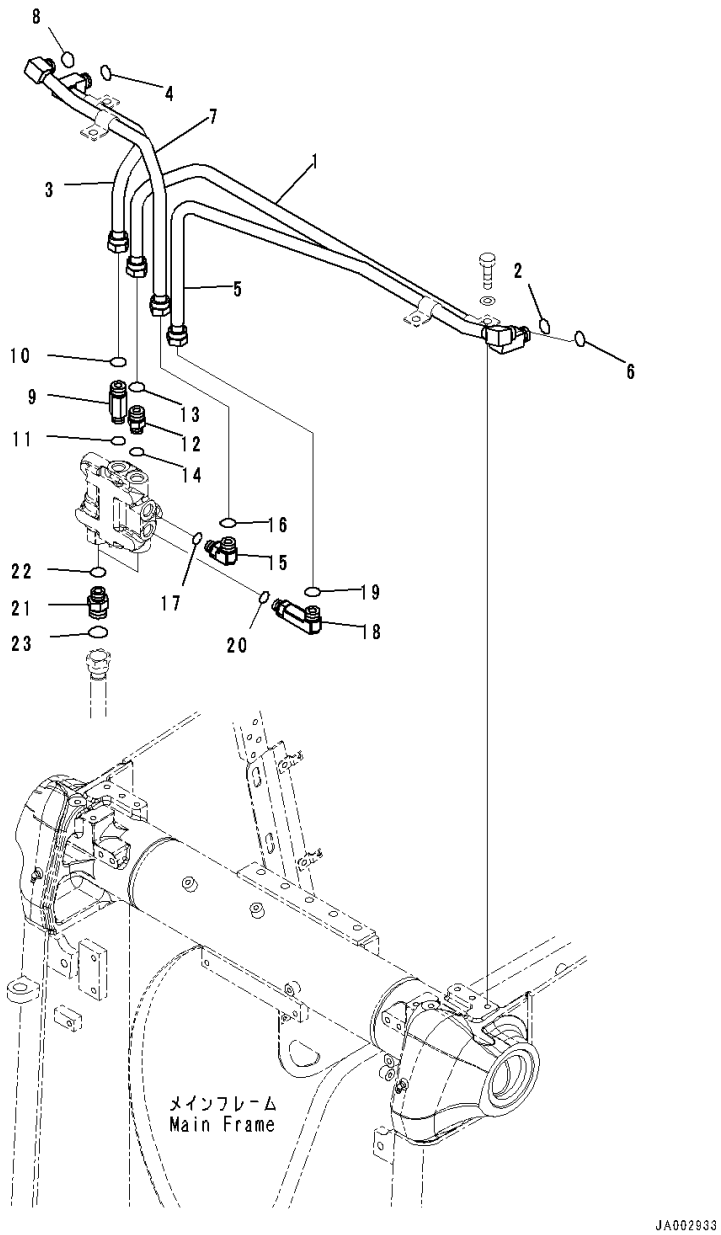

Index	Code	Part Number	Description	Qty	Serial Number
		Note: This list covers following specifications.			
		Blade Cylinder Wired Hose, Power Angle Power Tilt Dozer, Inside Frame			
		Blade Cylinder Wired Hose			
		Blade Cylinder Hose, Power Angle Power Tilt Dozer, Inside Frame			
		Blade Cylinder Hose			
1		14X-62-51131	Tube	1	1001-
2		02896-11015	O-ring	1	1001-
3		14X-62-51151	Tube	1	1001-
4		02896-11015	O-ring	1	1001-
5		14X-62-51141	Tube	1	1001-
6		02896-11015	O-ring	1	1001-
7		14X-62-51161	Tube	1	1001-
8		02896-11015	O-ring	1	1001-
9		21W-62-43121	Nipple	1	1001-
10		02896-11015	O-ring	1	1001-
11		07002-12034	O-ring	1	1001-
12		02781-00516	Union	1	1001-
13		02896-11015	O-ring	1	1001-
14		07002-12034	O-ring	1	1001-
15		02782-10516	Elbow	1	1001-
16		02896-11015	O-ring	1	1001-
17		07002-12034	O-ring	1	1001-
18		02782-10520	Elbow	1	1001-
19		02896-11015	O-ring	1	1001-
20		07002-12034	O-ring	1	1001-
21		02781-00628	Union	2	1001-
22		02896-11018	O-ring	2	1001-
23		07002-12434	O-ring	2	1001-

FIG. H2210-004004 Dozer Blade Lift Cylinder Piping (Clamp)

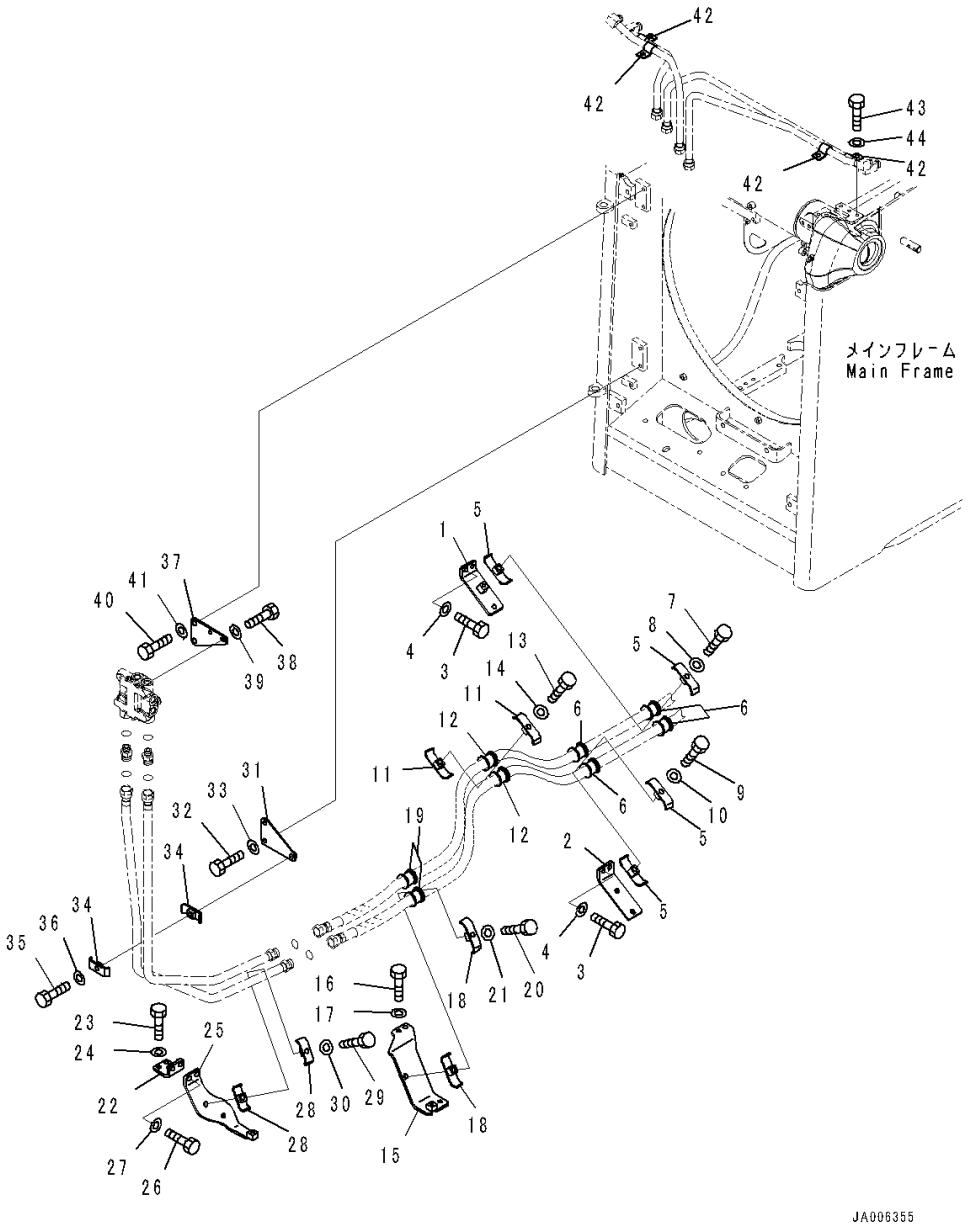

Index	Code	Part Number	Description	Qty	Serial Number
		Note: This list covers following specifications.			
		Blade Cylinder Wired Hose, Power Angle Power Tilt Dozer, Inside Frame			
		Blade Cylinder Wired Hose			
		Blade Cylinder Hose, Power Angle Power Tilt Dozer, Inside Frame			
		Blade Cylinder Hose			
1		14X-62-52621	Bracket	1	1001-
2		14X-62-62621	Bracket	1	1001-
3		01010-81230	Bolt	4	1001-
4		01643-31232	Washer	4	1001-
5		07094-30620	Clamp	4	1001-
6		07095-00628	Cushion	4	1001-
7		01010-81270	Bolt	1	1001-
8		01643-31232	Washer	1	1001-
9		01010-81280	Bolt	1	1001-
10		01643-31232	Washer	1	1001-
11		07094-30620	Clamp	2	1001-
12		07095-00628	Cushion	2	1001-
13		01010-81270	Bolt	1	1001-
14		01643-31232	Washer	1	1001-
15		14X-62-62611	Bracket	1	1001-
16		01010-81230	Bolt	2	1001-
17		01643-31232	Washer	2	1001-
18		07094-30620	Clamp	2	1001-
19		07095-00628	Cushion	2	1001-
20		01010-81280	Bolt	1	1001-
21		01643-31232	Washer	1	1001-
22		14X-62-51271	Bracket	1	1001-
23		01010-81230	Bolt	2	1001-
24		01643-31232	Washer	2	1001-
25		14X-62-61171	Bracket	1	1001-
26		01010-81235	Bolt	2	1001-
27		01643-31232	Washer	2	1001-
28		14X-62-51230	Clamp	2	1001-
29		01010-81260	Bolt	1	1001-
30		01643-31232	Washer	1	1001-
31		14X-62-51191	Bracket	1	1001-
32		01010-81225	Bolt	2	1001-
33		01643-31232	Washer	2	1001-

FIG. H2210-004004 Dozer Blade Lift Cylinder Piping (Clamp)

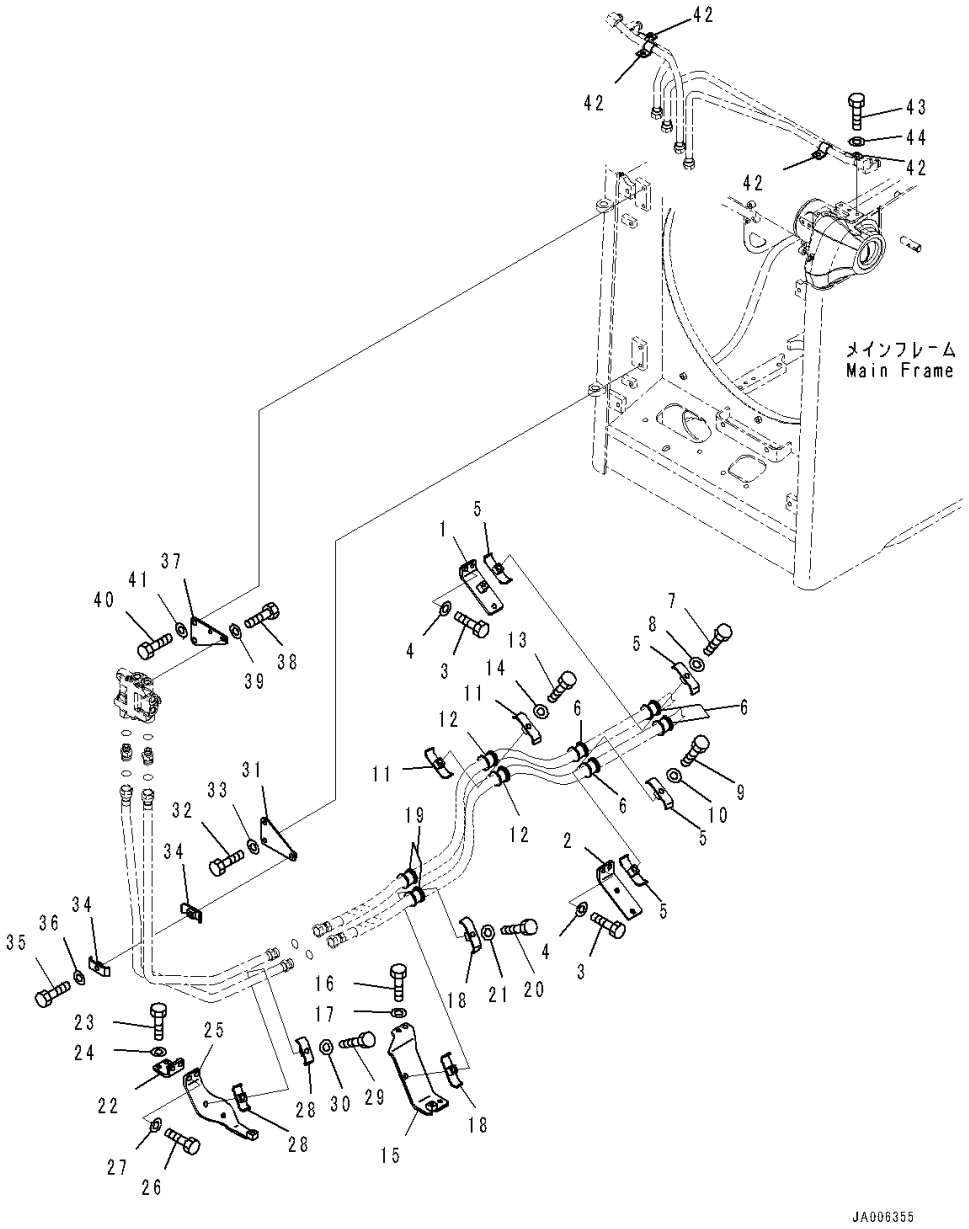

Index	Code	Part Number	Description	Qty	Serial Number
34		14X-62-51230	Clamp	2	1001-
35		01010-81260	Bolt	1	1001-
36		01643-31232	Washer	1	1001-
37		14X-62-51221	Bracket	1	1001-
38		01010-81225	Bolt	2	1001-
39		01643-31232	Washer	2	1001-
40		01010-81225	Bolt	2	1001-
41		01643-31232	Washer	2	1001-
42		10E-60-16330	Clip	4	1001-
43		01010-81225	Bolt	4	1001-
44		01643-31232	Washer	4	1001-

FIG. H2210-004005 Dozer Blade Lift Cylinder Piping (Blade Cylinder Wired Hose, Power Angle Power Tilt Dozer, Inside Frame) (Lift Cylinder Piping)

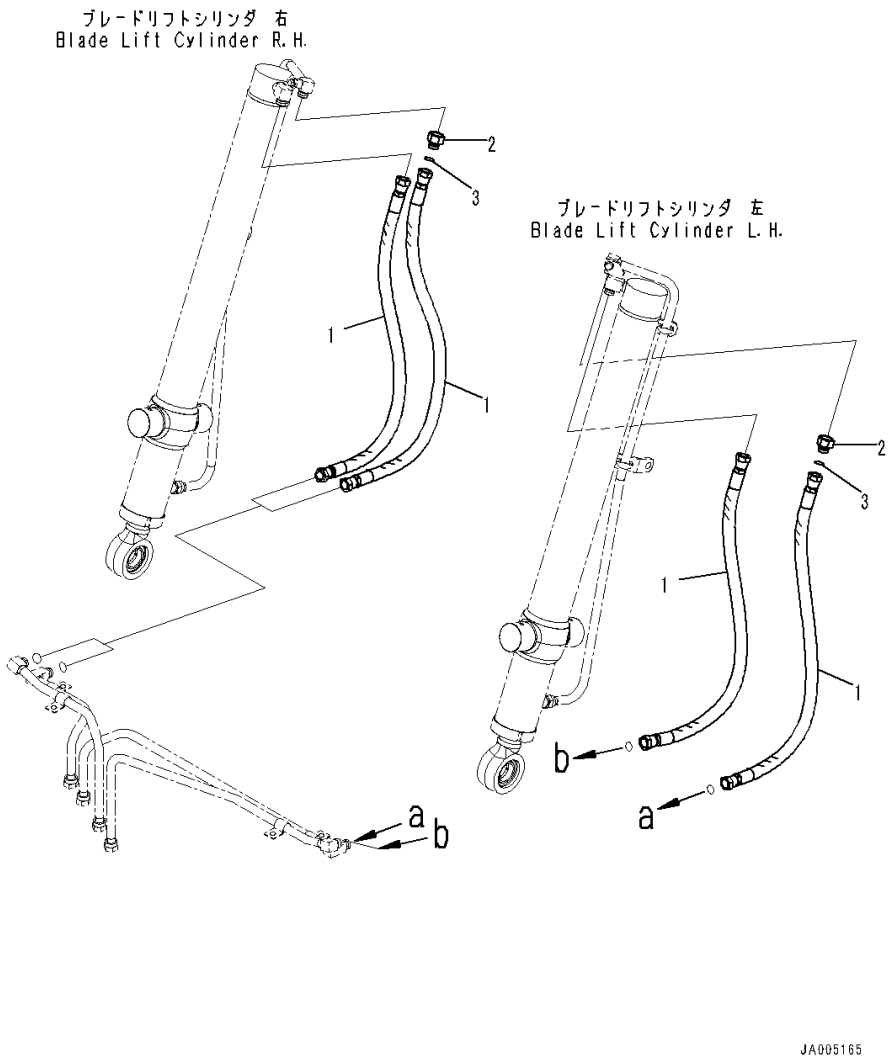

Index	Code	Part Number	Description	Qty	Serial Number
1		14X-62-55290	Hose	4	1001-
2		14X-62-52870	Nipple	2	1001-
3		02896-11015	O-ring	2	1001-

FIG. H2210-003005 Dozer Blade Lift Cylinder Piping (Blade Cylinder Wired Hose) (Lift Cylinder Piping)

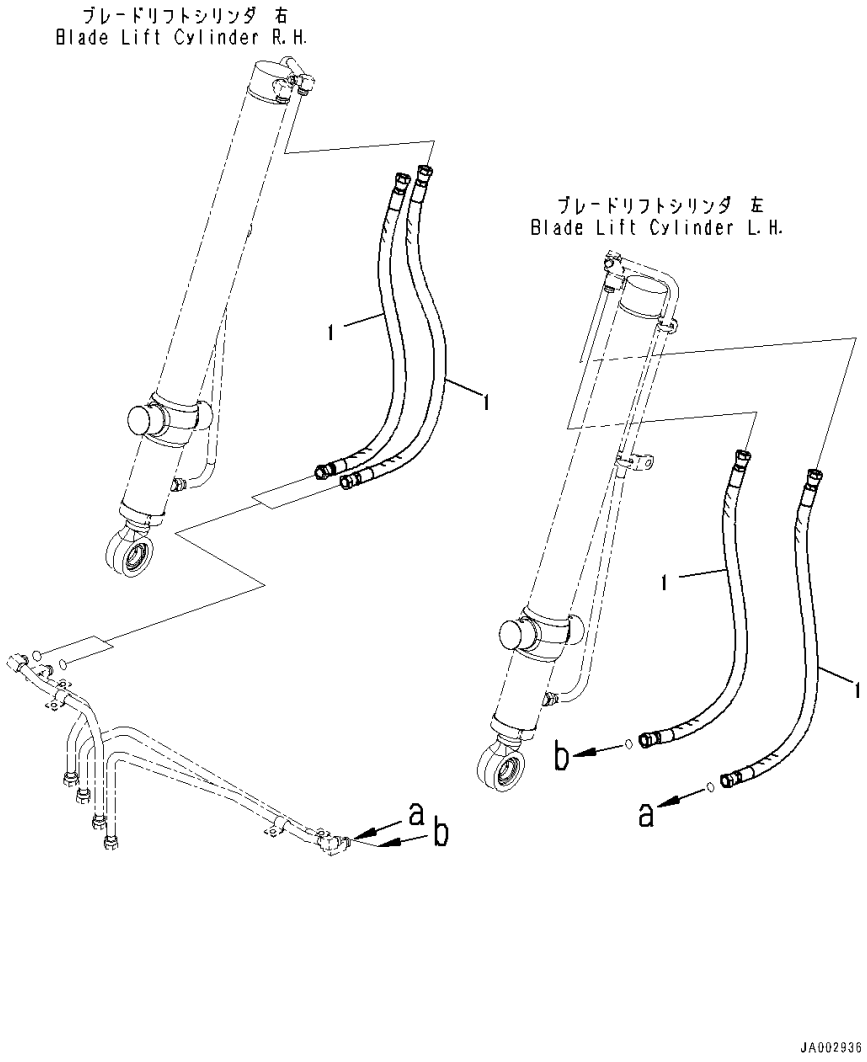

Index	Code	Part Number	Description	Qty	Serial Number
1		14X-62-54370	Hose	4	1001-

FIG. H2210-002005 Dozer Blade Lift Cylinder Piping (Blade Cylinder Hose, Power Angle Power Tilt Dozer, Inside Frame) (Lift Cylinder Piping)

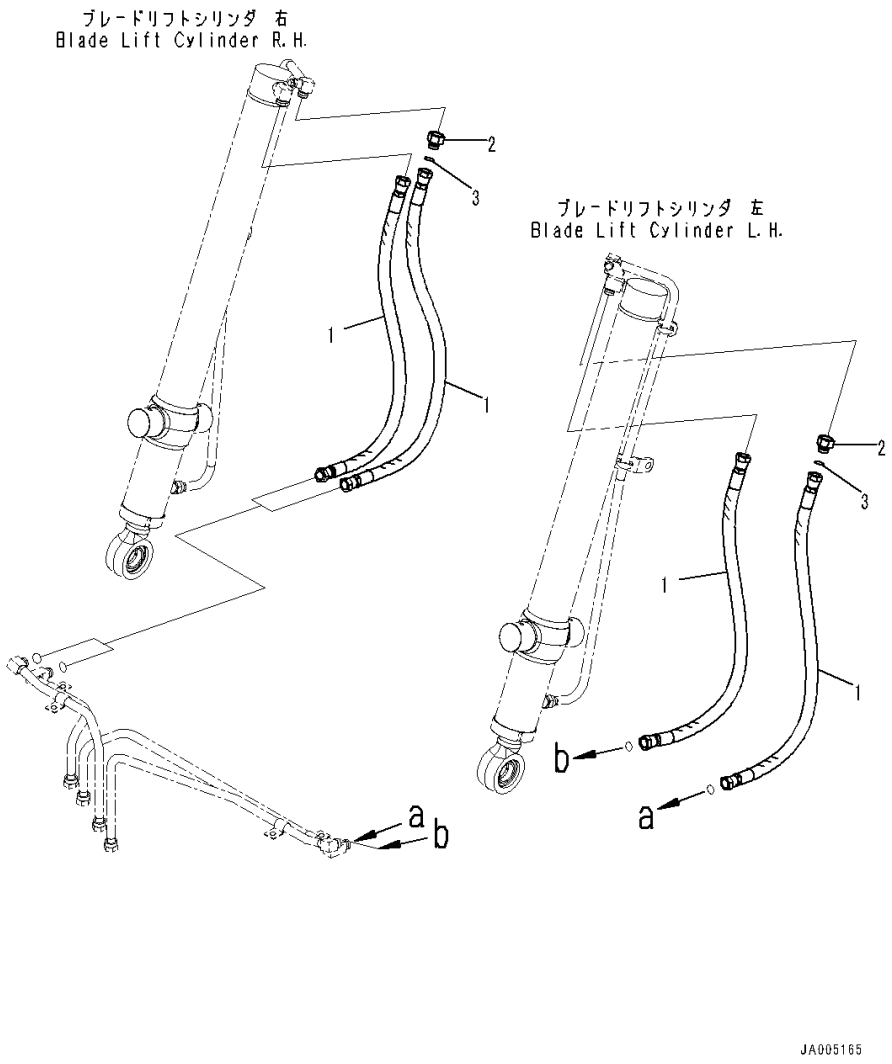

Index	Code	Part Number	Description	Qty	Serial Number
1		14X-62-53510	Hose	4	1001-
2		14X-62-52870	Nipple	2	1001-
3		02896-11015	O-ring	2	1001-

FIG. H2210-001005 Dozer Blade Lift Cylinder Piping (Blade Cylinder Hose) (Lift Cylinder Piping)

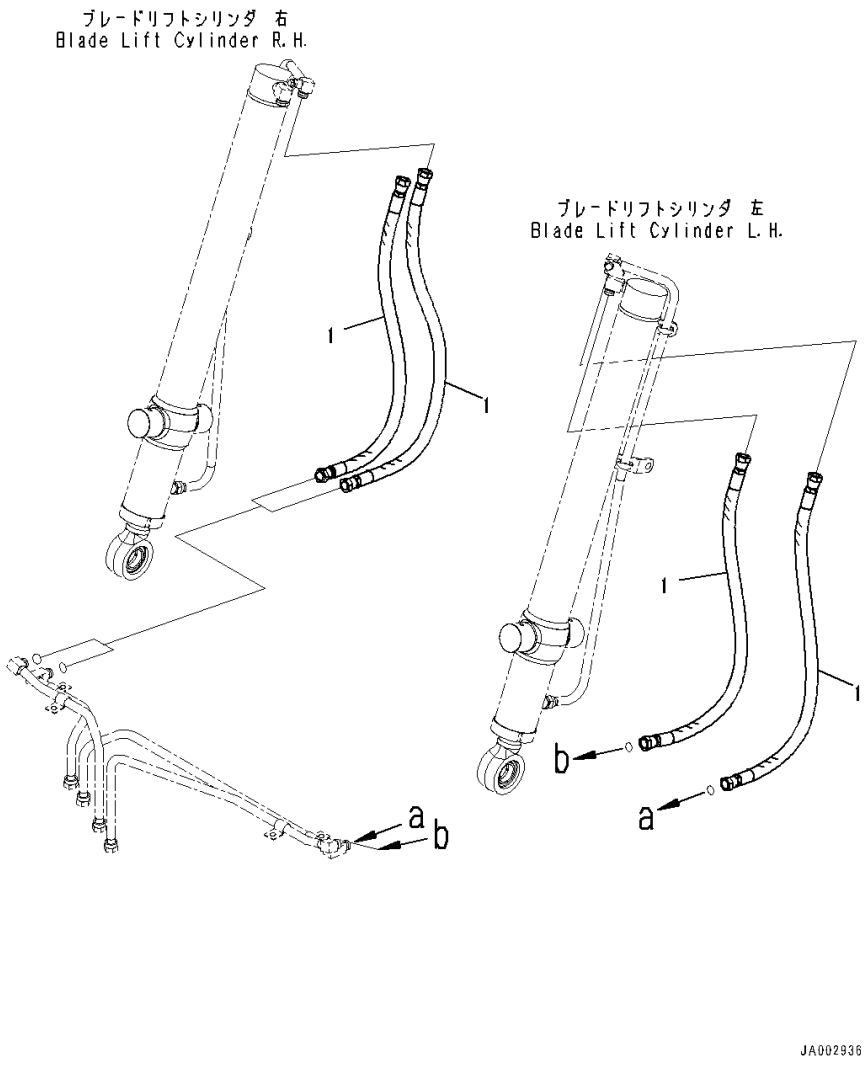

Index	Code	Part Number	Description	Qty	Serial Number
1		02756-00506	Hose, Face Seal Type	4	1001-

FIG. H2220-001001 Dozer Blade Tilt Piping (Power Angle Power Tilt Dozer, Inside Frame) (Blade Tilt Piping)

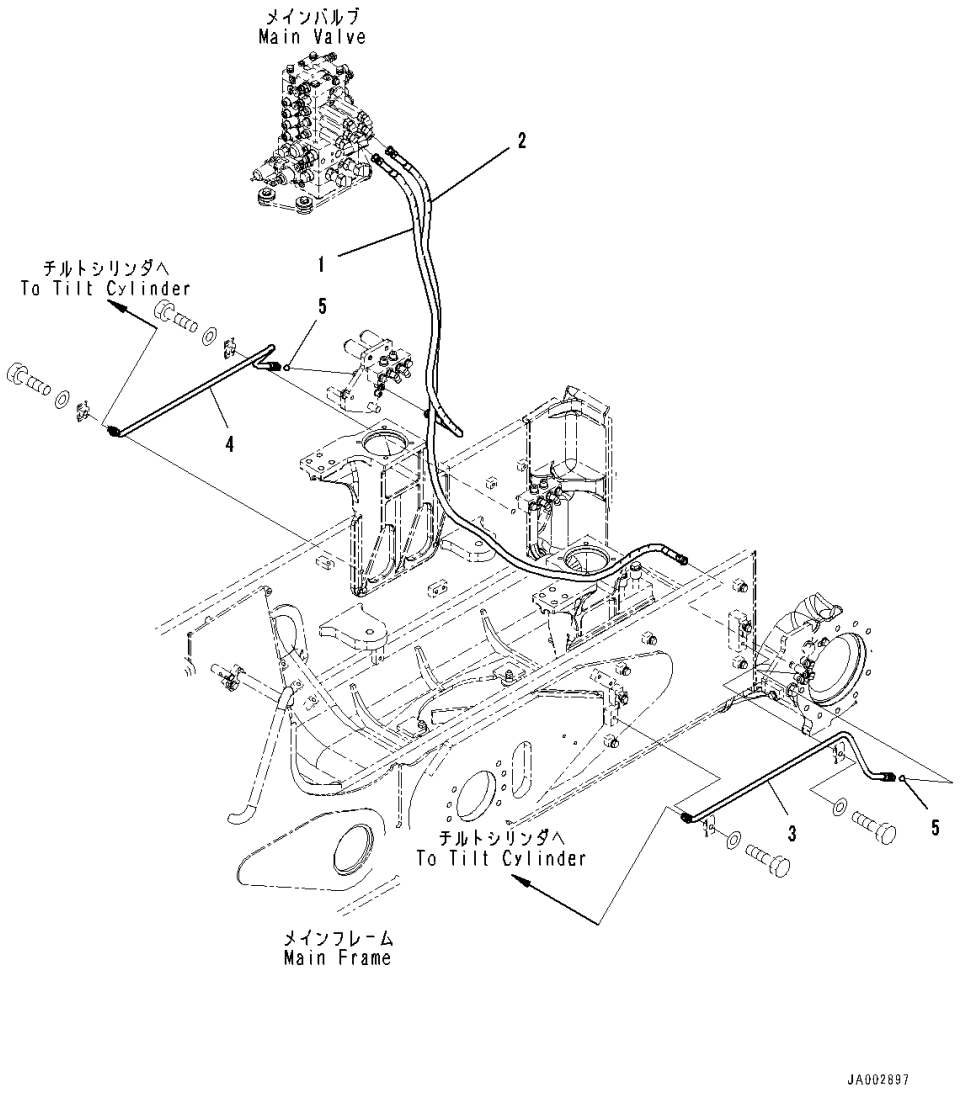

Index	Code	Part Number	Description	Qty	Serial Number
1		14X-62-51621	Hose Assembly	1	1001-
		21U-62-34760	• Band, Red	2	1001-
2		14X-62-51631	Hose Assembly	1	1001-
3		14X-62-51722	Tube,L.H.	1	1001-
4		14X-62-51752	Tube,R.H.	1	1001-
5		02896-11009	O-ring	2	1001-

FIG. H2220-001002 Dozer Blade Tilt Piping (Power Angle Power Tilt Dozer, Inside Frame) (Clamp)

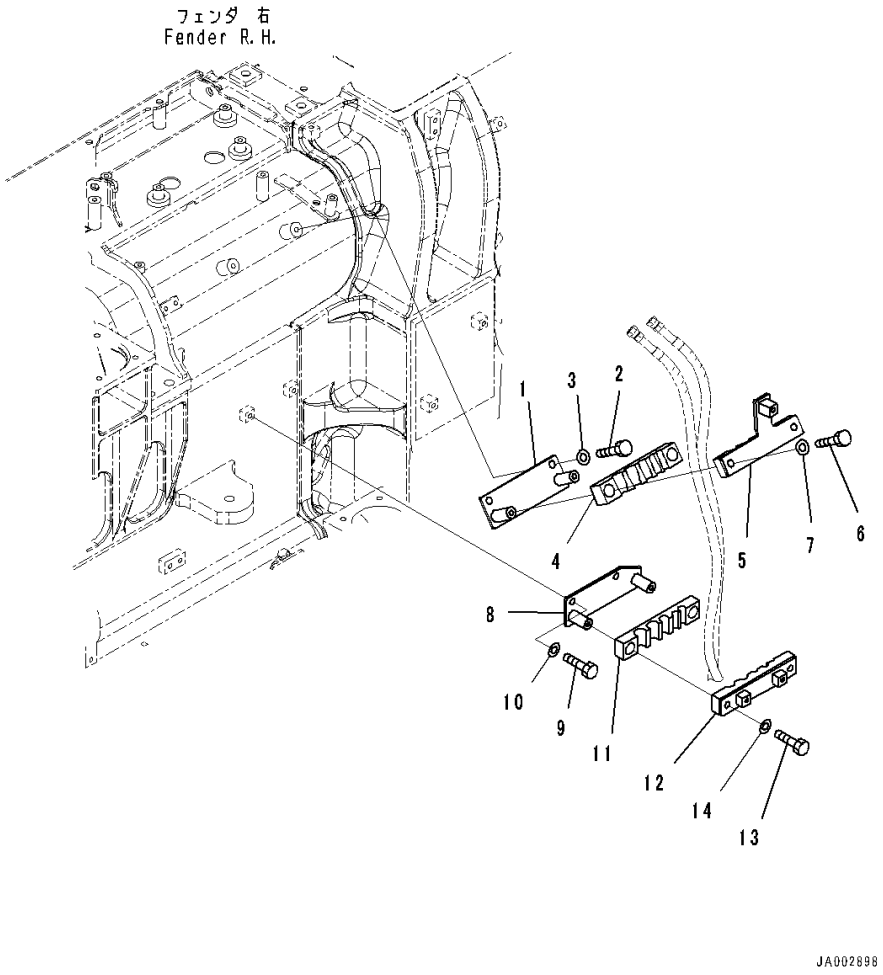

Index	Code	Part Number	Description	Qty	Serial Number
1		14X-62-52881	Plate	1	1001-
2		01010-81225	Bolt	2	1001-
3		01643-31232	Washer	2	1001-
4		14X-62-54741	Rubber	1	1001-
5		14X-62-52631	Clamp	1	1001-
6		01010-81230	Bolt	2	1001-
7		01643-31232	Washer	2	1001-
8		14X-62-52890	Plate	1	1001-
9		01010-81225	Bolt	2	1001-
10		01643-31232	Washer	2	1001-
11		14X-62-52911	Rubber	1	1001-
12		14X-62-51510	Bracket	1	1001-
13		01010-81230	Bolt	2	1001-
14		01643-31232	Washer	2	1001-

FIG. H2220-002001 Dozer Blade Tilt Piping (Straight Tilt Dozer) (Blade Tilt Piping)

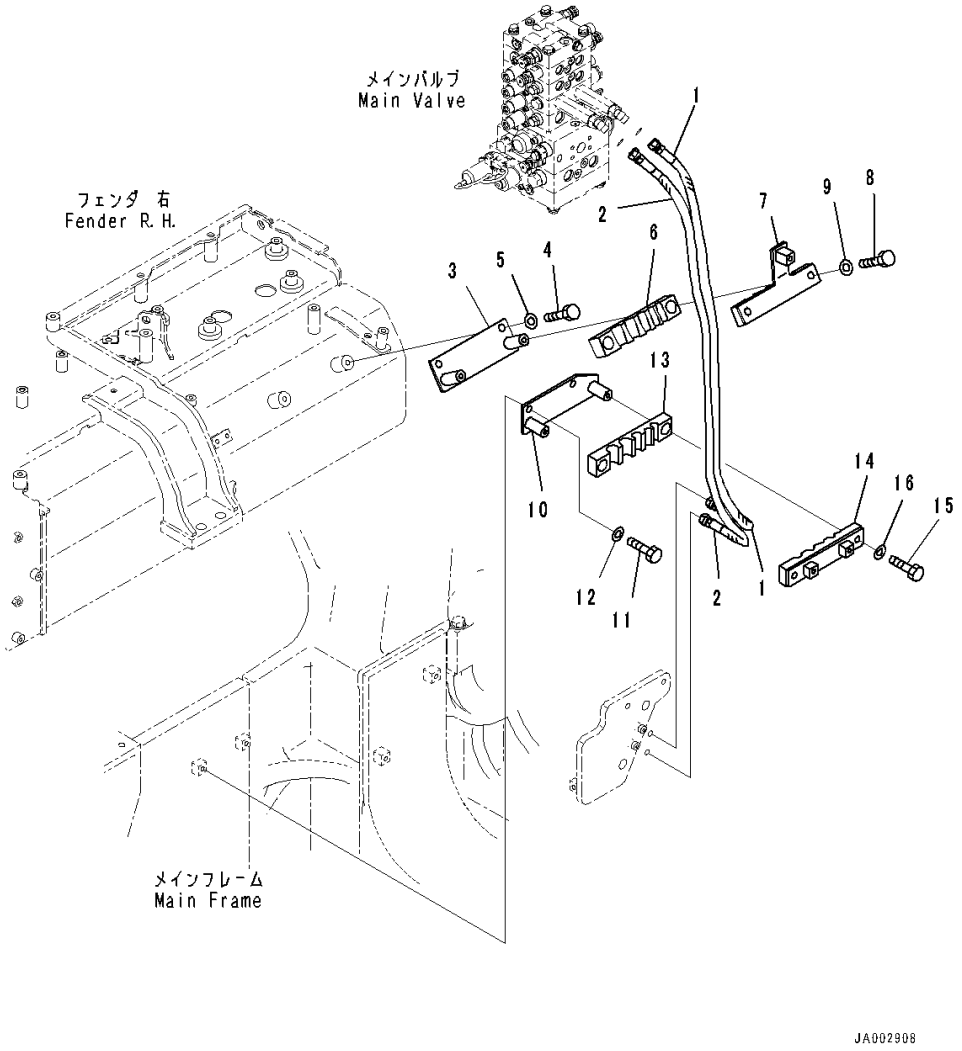

Index	Code	Part Number	Description	Qty	Serial Number
1		14X-62-51961	Hose Assembly	1	1001-
2		14X-62-51941	Hose Assembly	1	1001-
3		14X-62-52881	Plate	1	1001-
4		01010-81225	Bolt	2	1001-
5		01643-31232	Washer	2	1001-
6		14X-62-54741	Rubber	1	1001-
7		14X-62-52631	Clamp	1	1001-
8		01010-81230	Bolt	2	1001-
9		01643-31232	Washer	2	1001-
10		14X-62-52890	Plate	1	1001-
11		01010-81225	Bolt	2	1001-
12		01643-31232	Washer	2	1001-
13		14X-62-52911	Rubber	1	1001-
14		14X-62-51510	Bracket	1	1001-
15		01010-81230	Bolt	2	1001-
16		01643-31232	Washer	2	1001-

FIG. H2220-002002 Dozer Blade Tilt Piping (Straight Tilt Dozer) (Track Frame Cover)

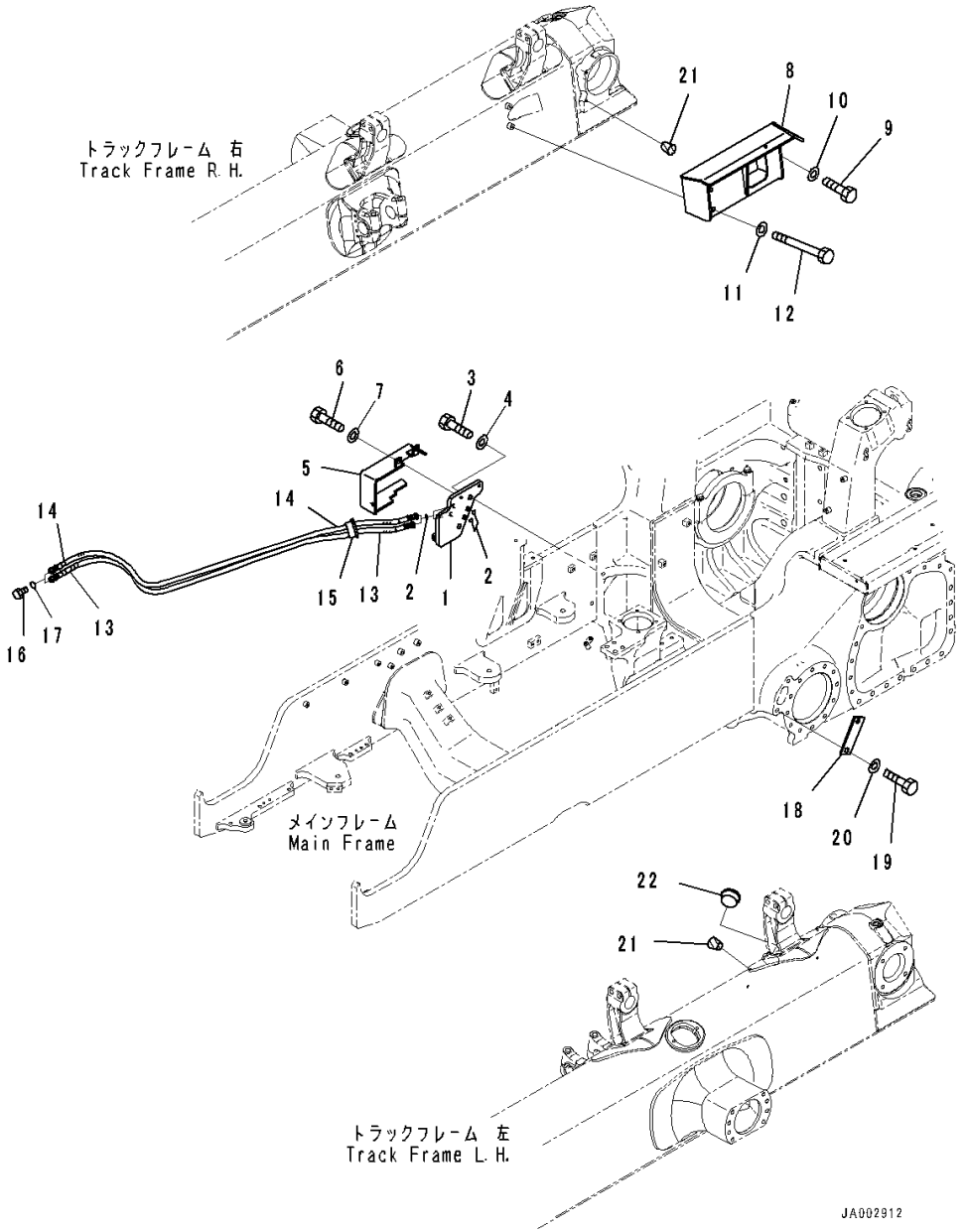

Index	Code	Part Number	Description	Qty	Serial Number
1		14X-62-51971	Bracket	1	1001-
2		02896-11009	O-ring	4	1001-
3		01010-82055	Bolt	2	1001-
4		01643-32060	Washer	2	1001-
5		14X-62-51980	Cover	1	1001-
6		01010-81235	Bolt	3	1001-
7		01643-31232	Washer	3	1001-
8		14X-62-52231	Cover	1	1001-
9		01010-81235	Bolt	1	1001-
10		01643-31232	Washer	1	1001-
11		01643-31232	Washer	2	1001-
12		01011-81250	Bolt	2	1001-
13		14X-62-52211	Hose Assembly	1	1001-
		21U-62-34760	• Band, Red	2	1001-
		14X-62-54990	• Cover	1	1001-
		08024-11920	• Tape, Vinyl, Red	1	1001-
14		14X-62-53581	Hose Assembly	1	1001-
		21U-62-34770	• Band, White	2	1001-
		14X-62-54990	• Cover	1	1001-
		08024-21920	• Tape, White	1	1001-
15		14X-62-53840	Rubber	1	1001-
16		07376-70315	Plug	2	1001-
17		02896-11009	O-ring	2	1001-
18		14X-62-11460	Plate	1	1001-
19		01010-82040	Bolt	2	1001-
20		01643-32060	Washer	2	1001-
21		07049-01215	Plug	5	1001-
22		14X-62-54880	Rubber	1	1001-

FIG. H2220-004001 Dozer Blade Tilt Piping (Provision for Power Angle Power Tilt Pitch Dozer) (Hose)

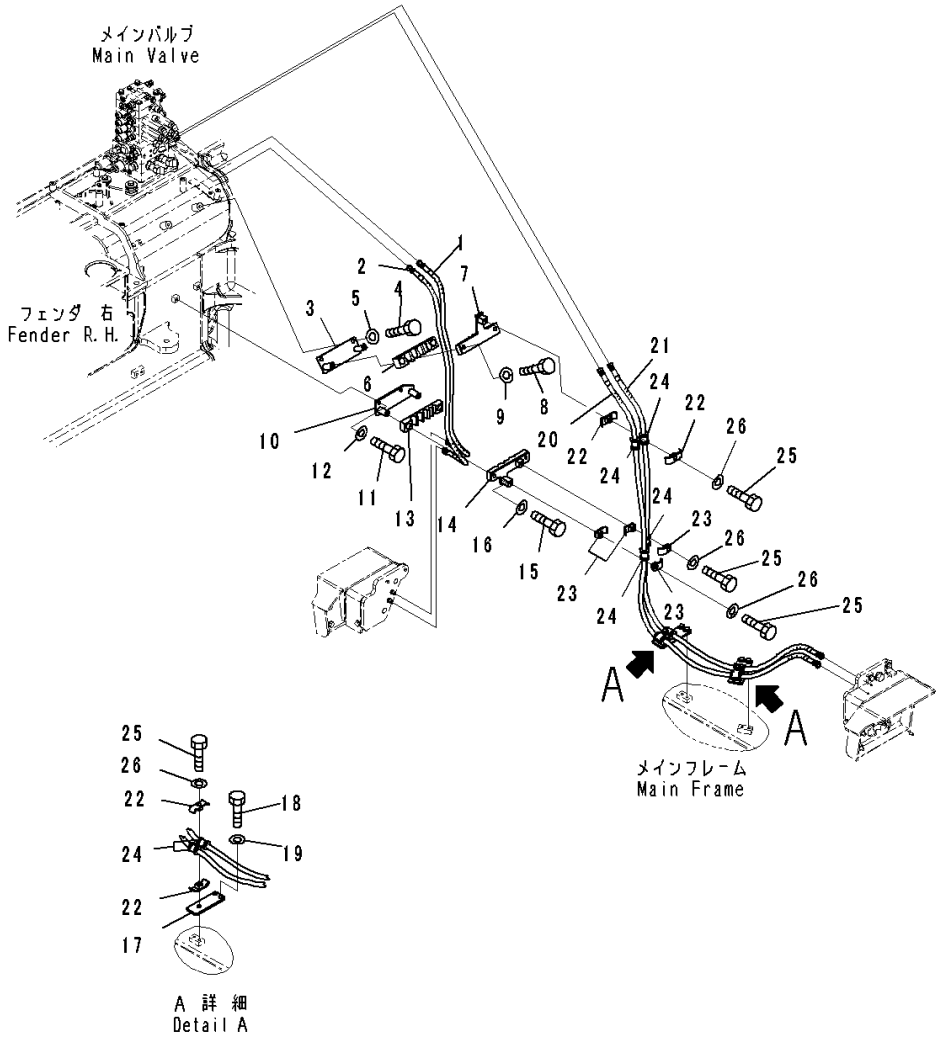

Index	Code	Part Number	Description	Qty	Serial Number
1		14X-62-51961	Hose Assembly	1	1001-
2		14X-62-51941	Hose Assembly	1	1001-
3		14X-62-52881	Plate	1	1001-
4		01010-81225	Bolt	2	1001-
5		01643-31232	Washer	2	1001-
6		14X-62-54741	Rubber	1	1001-
7		14X-62-52631	Clamp	1	1001-
8		01010-81230	Bolt	2	1001-
9		01643-31232	Washer	2	1001-
10		14X-62-52890	Plate	1	1001-
11		01010-81225	Bolt	2	1001-
12		01643-31232	Washer	2	1001-
13		14X-62-52911	Rubber	1	1001-
14		14X-62-52810	Clamp	1	1001-
15		01010-81230	Bolt	2	1001-
16		01643-31232	Washer	2	1001-
17		14X-62-54580	Bracket	2	1001-
18		01010-81225	Bolt	4	1001-
19		01643-31232	Washer	4	1001-
20		14X-62-54781	Hose Assembly	1	1001-
21		14X-62-54791	Hose Assembly	1	1001-
22		22P-62-13540	Clamp	6	1001-
23		22P-62-13510	Clamp	4	1001-
24		07095-00317	Cushion	8	1001-
25		01010-81260	Bolt	5	1001-
26		01643-31232	Washer	5	1001-

FIG. H2220-004002 Dozer Blade Tilt Piping (Provision for Power Angle Power Tilt Pitch Dozer) (Track Frame Cover)

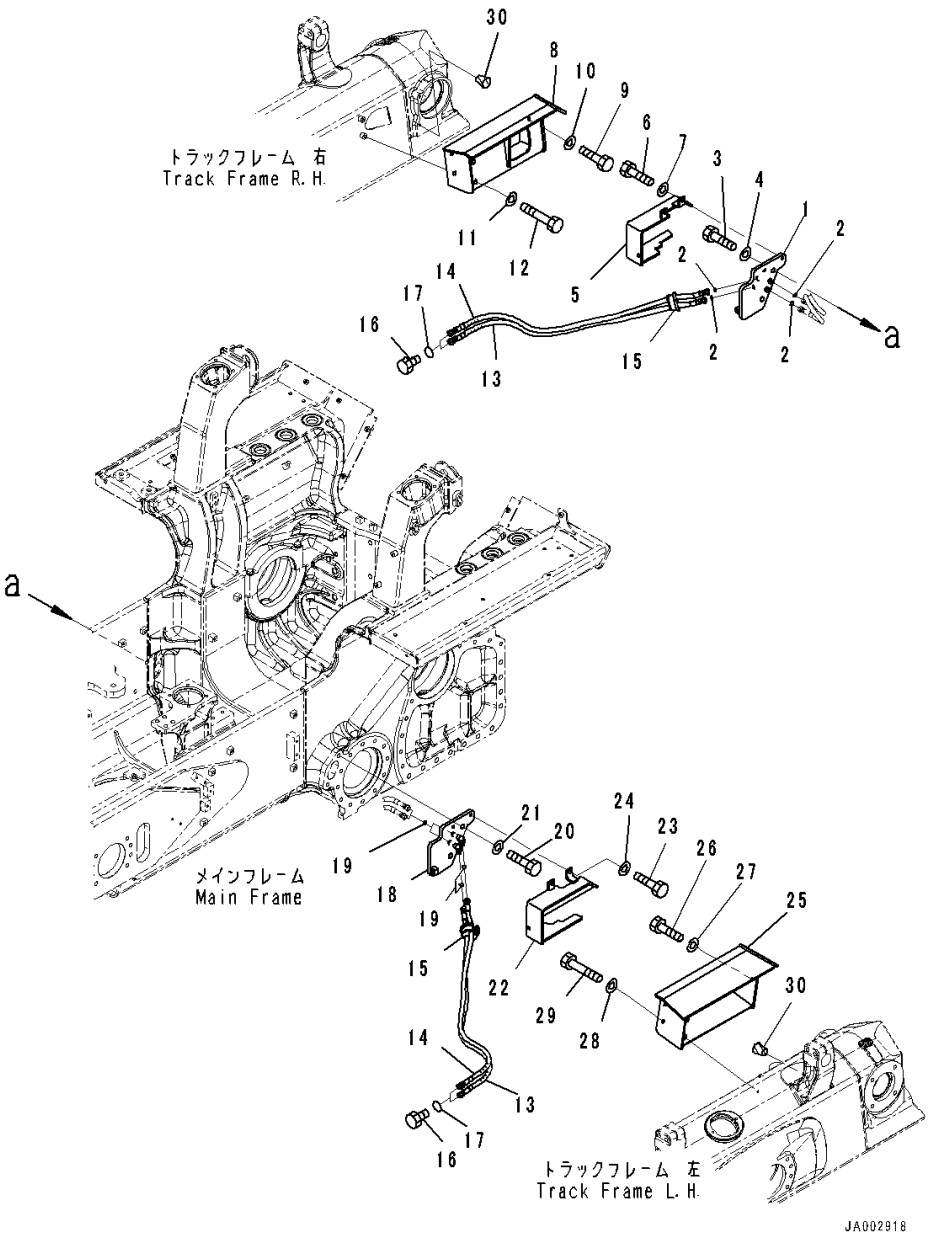

Index	Code	Part Number	Description	Qty	Serial Number
1		14X-62-51971	Bracket	1	1001-
2		02896-11009	O-ring	4	1001-
3		01010-82055	Bolt	2	1001-
4		01643-32060	Washer	2	1001-
5		14X-62-51980	Cover	1	1001-
6		01010-81235	Bolt	3	1001-
7		01643-31232	Washer	3	1001-
8		14X-62-52231	Cover	1	1001-
9		01010-81235	Bolt	1	1001-
10		01643-31232	Washer	1	1001-
11		01643-31232	Washer	2	1001-
12		01011-81250	Bolt	2	1001-
13		14X-62-52211	Hose Assembly	2	1001-
		21U-62-34760	• Band, Red	2	1001-
		14X-62-54990	• Cover	1	1001-
		08024-11920	• Tape, Vinyl, Red	1	1001-
14		14X-62-53581	Hose Assembly	2	1001-
		21U-62-34770	• Band, White	2	1001-
		14X-62-54990	• Cover	1	1001-
		08024-21920	• Tape, White	1	1001-
15		14X-62-53840	Rubber	2	1001-
16		07376-70315	Plug	4	1001-
17		02896-11009	O-ring	4	1001-
18		14X-62-54551	Bracket	1	1001-
19		02896-11009	O-ring	4	1001-
20		01010-82055	Bolt	2	1001-
21		01643-32060	Washer	2	1001-
22		14X-62-54560	Cover	1	1001-
23		01010-81235	Bolt	3	1001-
24		01643-31232	Washer	3	1001-
25		14X-62-52731	Cover,L.H.	1	1001-
26		01010-81235	Bolt	1	1001-
27		01643-31232	Washer	1	1001-
28		01643-31232	Washer	2	1001-
29		01011-81250	Bolt	2	1001-
30		07049-01215	Plug	2	1001-

FIG. H2230-001001 Dozer Blade Angle Piping (Blade Angle Piping)

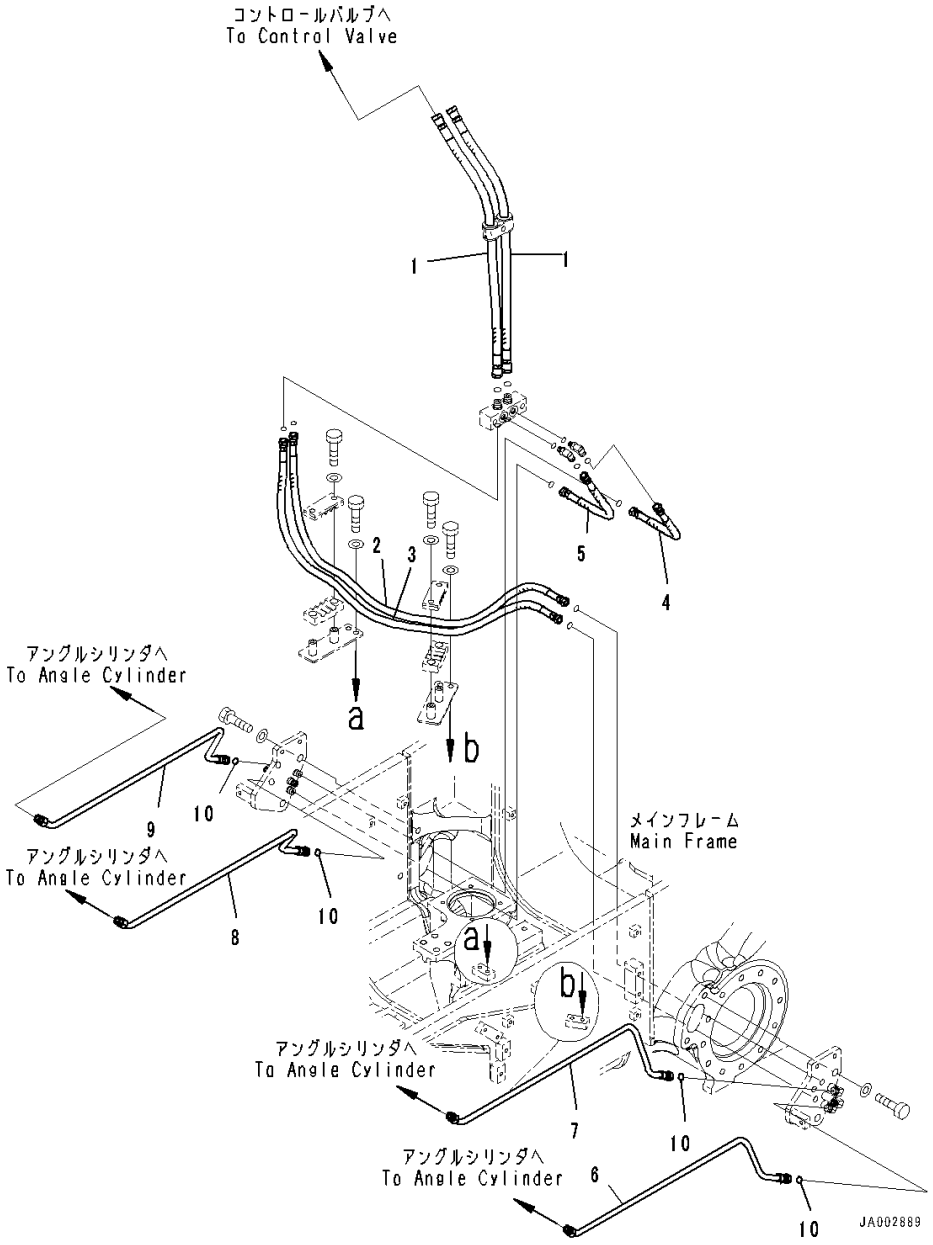

Index	Code	Part Number	Description	Qty	Serial Number
1		14X-62-51551	Hose Assembly	2	1001-
2		14X-62-51571	Hose Assembly	1	1001-
3		14X-62-51281	Hose Assembly	1	1001-
4		14X-62-51581	Hose Assembly	1	1001-
5		14X-62-51481	Hose Assembly	1	1001-
6		14X-62-51732	Tube,L.H.	1	1001-
7		14X-62-51742	Tube,L.H.	1	1001-
8		14X-62-51762	Tube,R.H.	1	1001-
9		14X-62-51772	Tube,R.H.	1	1001-
10		02896-11012	O-ring	4	1001-

FIG. H2230-001002 Dozer Blade Angle Piping (Clamp)

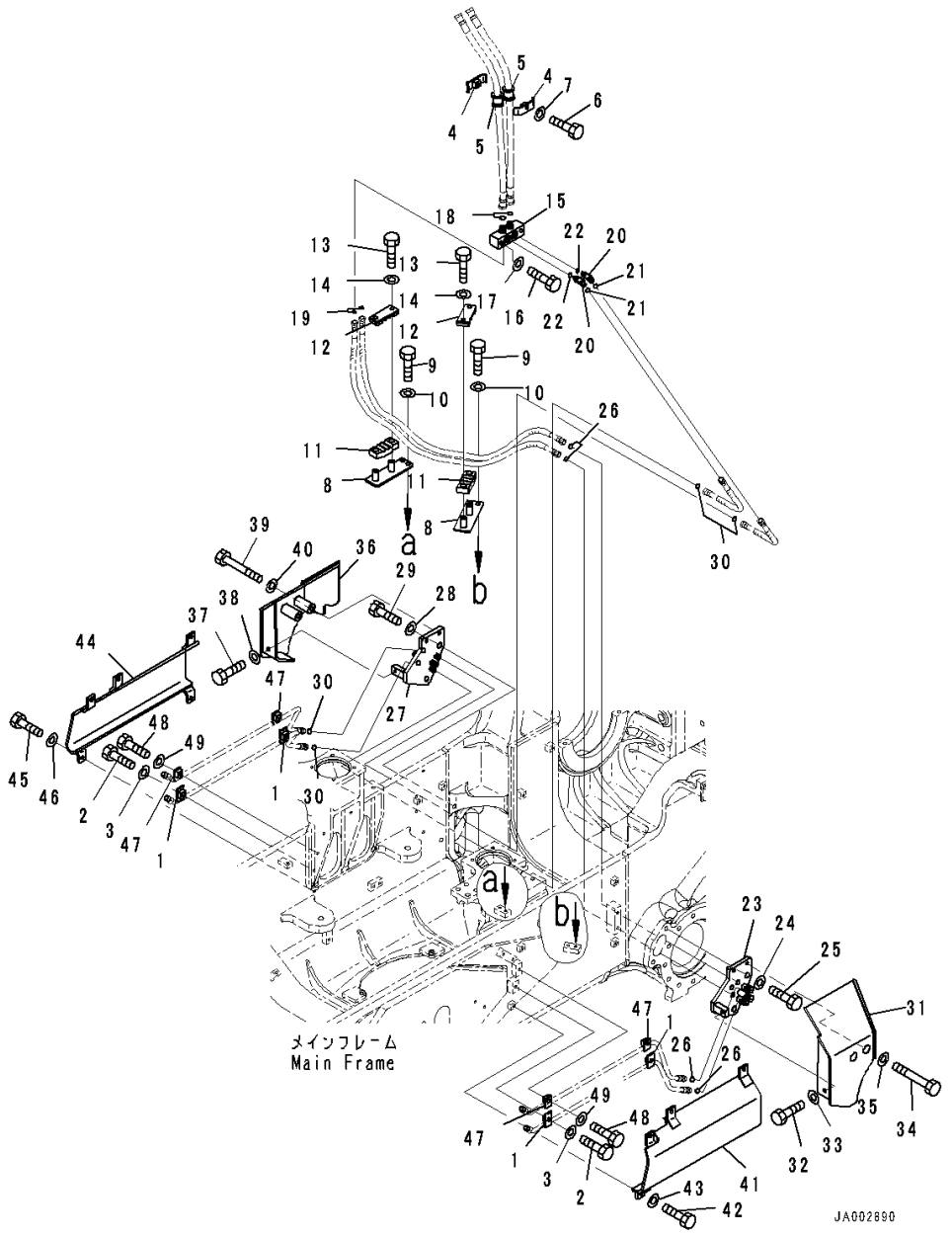

Index	Code	Part Number	Description	Qty	Serial Number
1		14X-62-51780	Clamp	4	1001-
2		01010-81235	Bolt	4	1001-
3		01643-31232	Washer	4	1001-
4		07094-30417	Clamp	2	1001-
5		07095-00420	Cushion	2	1001-
6		01010-81265	Bolt	1	1001-
7		01643-31232	Washer	1	1001-
8		14X-62-51491	Bracket	2	1001-
9		01010-81225	Bolt	4	1001-
10		01643-31232	Washer	4	1001-
11		14X-62-51530	Cushion	2	1001-
12		14X-62-51520	Bracket	2	1001-
13		01010-81225	Bolt	4	1001-
14		01643-31232	Washer	4	1001-
15		14X-62-51541	Block	1	1001-
16		01010-81265	Bolt	2	1001-
17		01643-31232	Washer	2	1001-
18		02896-11012	O-ring	2	1001-
19		02896-11009	O-ring	2	1001-
20		02782-10311	Elbow	2	1001-
21		02896-11009	O-ring	2	1001-
22		07002-11423	O-ring	2	1001-
23		14X-62-51651	Bracket	1	1001-
24		01643-32060	Washer	2	1001-
25		01010-82055	Bolt	2	1001-
26		02896-11009	O-ring	6	1001-
27		14X-62-51661	Bracket	1	1001-
28		01643-32060	Washer	2	1001-
29		01010-82055	Bolt	2	1001-
30		02896-11009	O-ring	6	1001-
31		14X-62-51670	Cover,L.H.	1	1001-
32		01010-81230	Bolt	1	1001-
33		01643-31232	Washer	1	1001-
34		01010-81295	Bolt	2	1001-
35		01643-31232	Washer	2	1001-
36		14X-62-51680	Cover,R.H.	1	1001-
37		01010-81230	Bolt	1	1001-
38		01643-31232	Washer	1	1001-
39		01010-81295	Bolt	2	1001-
40		01643-31232	Washer	2	1001-

FIG. H2230-001002 Dozer Blade Angle Piping (Clamp)

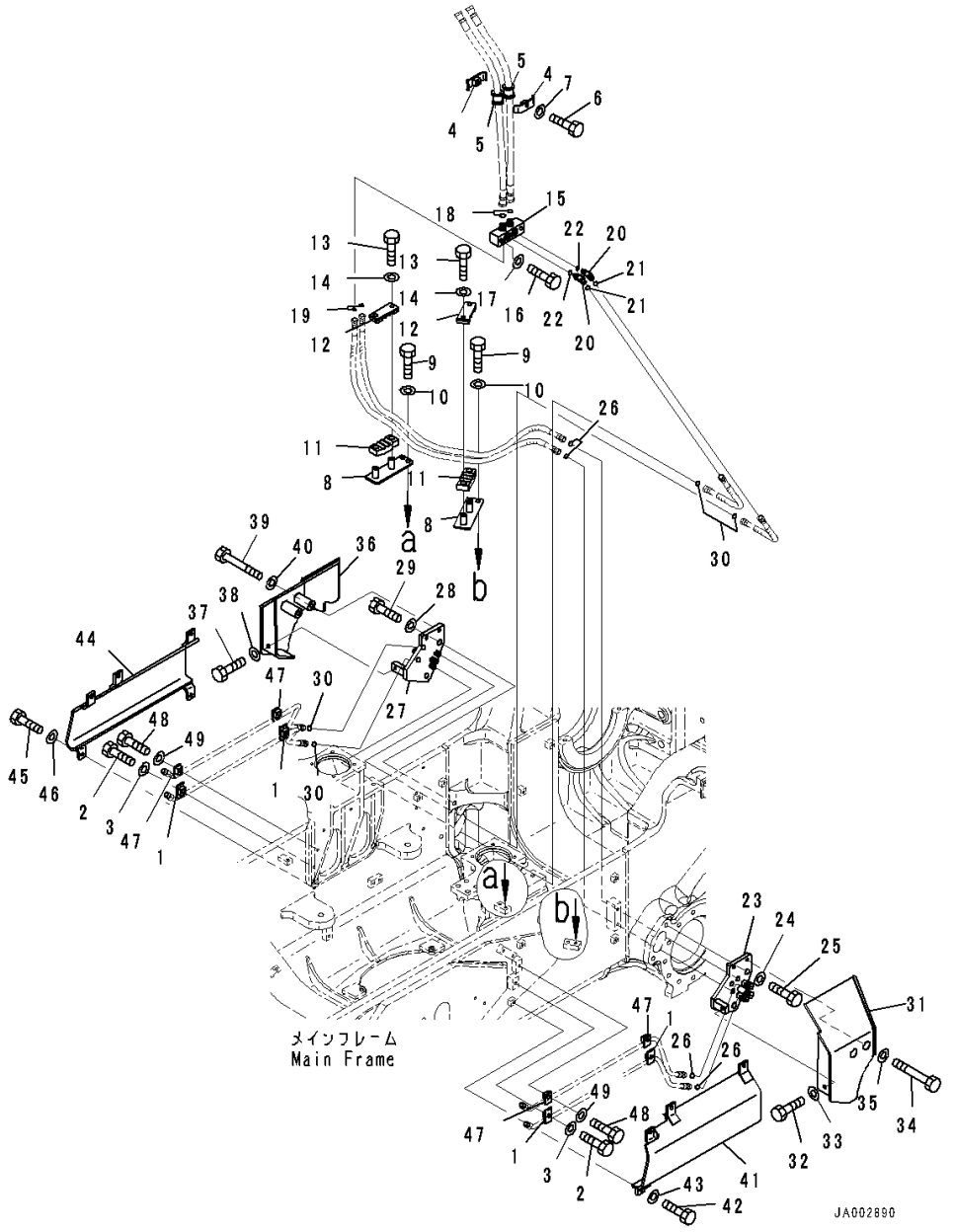

Index	Code	Part Number	Description	Qty	Serial Number
41		14X-62-53640	Cover,L.H.	1	1001-
42		01010-81230	Bolt	5	1001-
43		01643-31232	Washer	5	1001-
44		14X-62-53650	Cover,R.H.	1	1001-
45		01010-81230	Bolt	5	1001-
46		01643-31232	Washer	5	1001-
47		14X-62-51790	Clamp	4	1001-
48		01010-81235	Bolt	4	1001-
49		01643-31232	Washer	4	1001-

FIG. H2250-001001 Rear Hydraulic Piping

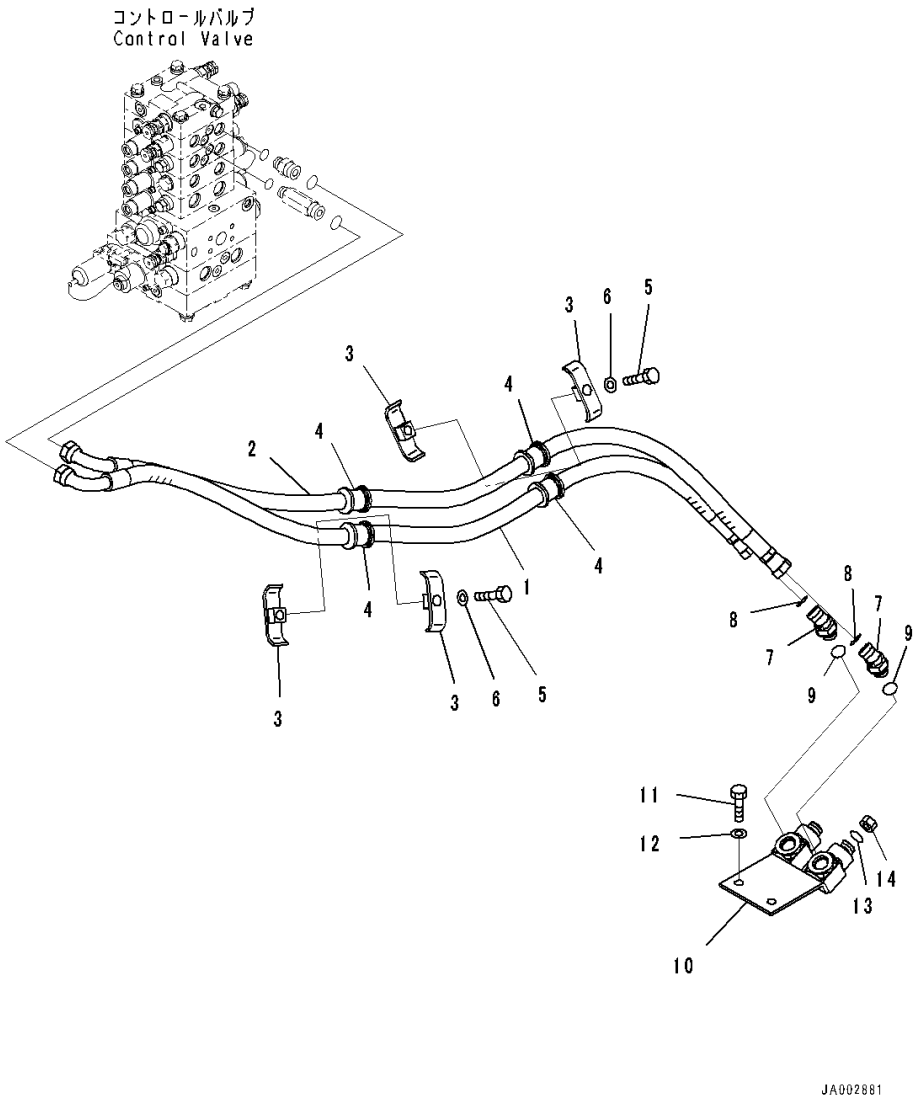

Index	Code	Part Number	Description	Qty	Serial Number
1		14X-78-51181	Hose Assembly	1	1001-
2		14X-78-51191	Hose Assembly	1	1001-
3		22P-62-13550	Clamp	4	1001-
4		07095-00526	Cushion	4	1001-
5		01010-81270	Bolt	2	1001-
6		01643-31232	Washer	2	1001-
7		02783-10522	Elbow	2	1001-
8		02896-11015	O-ring	2	1001-
9		07002-12434	O-ring	2	1001-
10		14X-78-51171	Block	1	1001-
11		01010-81230	Bolt	2	1001-
12		01643-31232	Washer	2	1001-
13		02896-11015	O-ring	2	1001-
14		02789-00522	Plug, Face Seal Type	2	1001-

FRAME AND ITS RELATED PARTS

FIG. J2100-002001 Main Frame (Without Power Angle Power Tilt Dozer, Inside Frame)

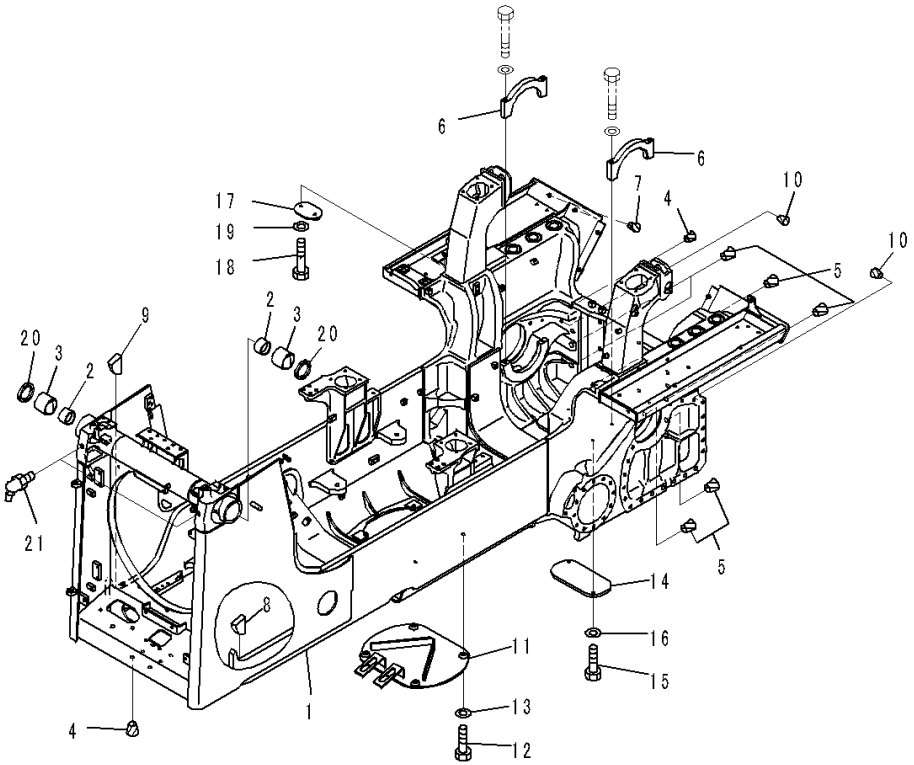

Index	Code	Part Number	Description	Qty	Serial Number
1		14X-21-61104	Frame Assembly	1	1040-
2		144-70-15171	• Bushing	2	1001-
3		14X-21-51450	• Bushing	2	1001-
4		07049-02430	Plug	18	1001-
5		07049-03342	Plug, Cork	6	1001-
6		154-21-71420	Cap	2	1001-
7		07049-01215	Plug	2	1001-
8		14X-03-61950	Seal	1	1001-
9		14X-03-61960	Seal	1	1001-
10		07049-02025	Plug	2	1001-
11		14X-21-51341	Cover	1	1001-
12		01010-81235	Bolt	4	1001-
13		01643-31232	Washer	4	1001-
14		14X-21-51371	Cover	1	1001-
15		01010-81225	Bolt	2	1001-
16		01643-31232	Washer	2	1001-
17		14X-21-51361	Cover	1	1001-
18		01010-81230	Bolt	2	1001-
19		01643-31232	Washer	2	1001-
20		130-09-12370	Seal	2	1001-
21		07020-00675	Fitting, Grease	2	1001-

FIG. J2100-001001 Main Frame (Power Angle Power Tilt Dozer, Inside Frame)

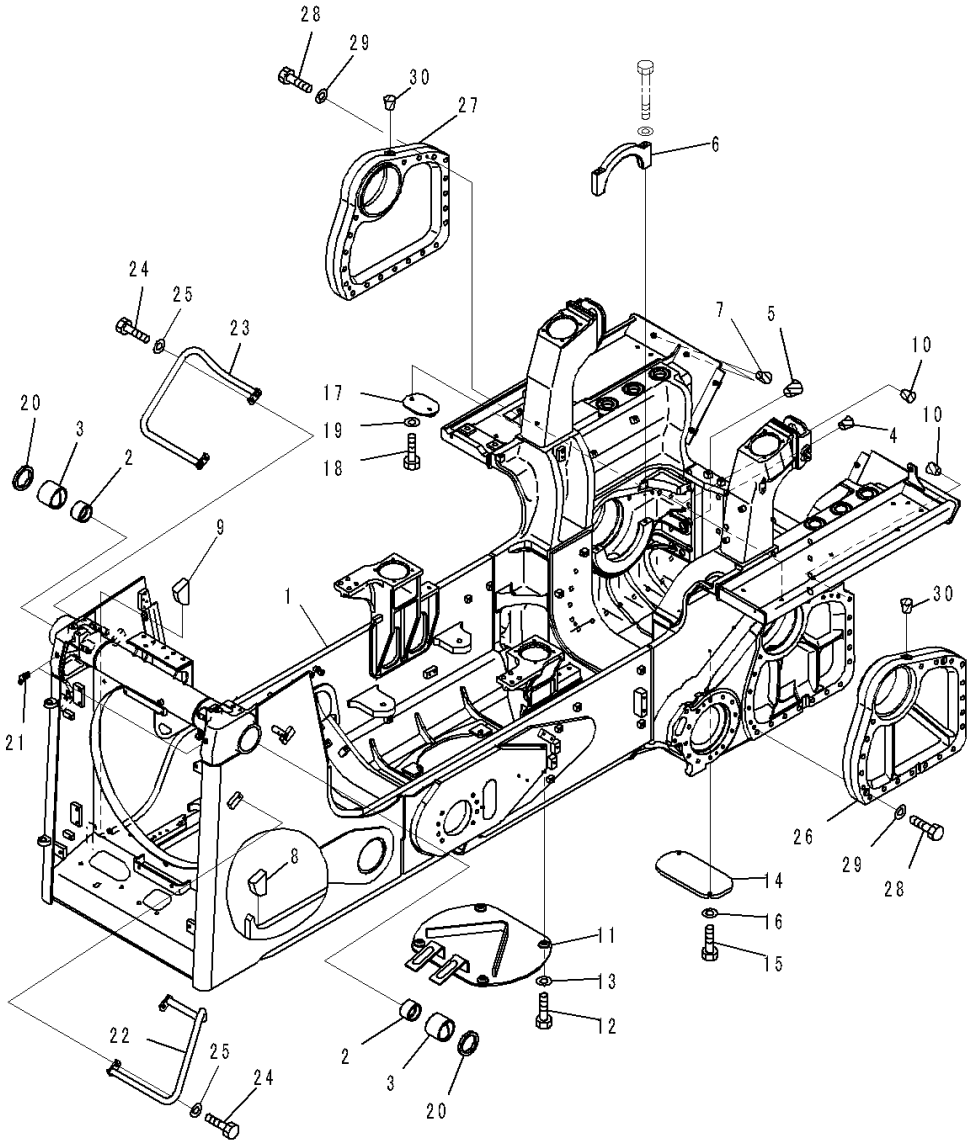

Index	Code	Part Number	Description	Qty	Serial Number
1		14X-21-62204	Frame Assembly	1	1040-
2		144-70-15171	• Bushing	2	1001-
3		14X-21-51450	• Bushing	2	1001-
4		07049-02430	Plug	18	1001-
5		07049-03342	Plug, Cork	6	1001-
6		154-21-71420	Cap	2	1001-
7		07049-01215	Plug	2	1001-
8		14X-03-61950	Seal	1	1001-
9		14X-03-61960	Seal	1	1001-
10		07049-02025	Plug	2	1001-
11		14X-21-51341	Cover	1	1001-
12		01010-81235	Bolt	4	1001-
13		01643-31232	Washer	4	1001-
14		14X-21-51371	Cover	1	1001-
15		01010-81225	Bolt	2	1001-
16		01643-31232	Washer	2	1001-
17		14X-21-51361	Cover	1	1001-
18		01010-81230	Bolt	2	1001-
19		01643-31232	Washer	2	1001-
20		130-09-12370	Seal	2	1001-
21		07020-00675	Fitting, Grease	2	1001-
22		14X-54-55130	Handle	1	1001-
23		14X-54-55140	Handle	1	1001-
24		01010-81230	Bolt	4	1001-
25		01643-31232	Washer	4	1001-
26		14X-27-52211	Spacer	1	1001-
27		14X-27-52221	Spacer	1	1001-
28		01010-81295	Bolt	4	1001-
29		01643-31232	Washer	4	1001-
30		07049-01215	Plug	2	1001-

FIG. J2100-003001 Main Frame (With Refuel Pump, Without Power Angle Power Tilt Dozer, Inside Frame)

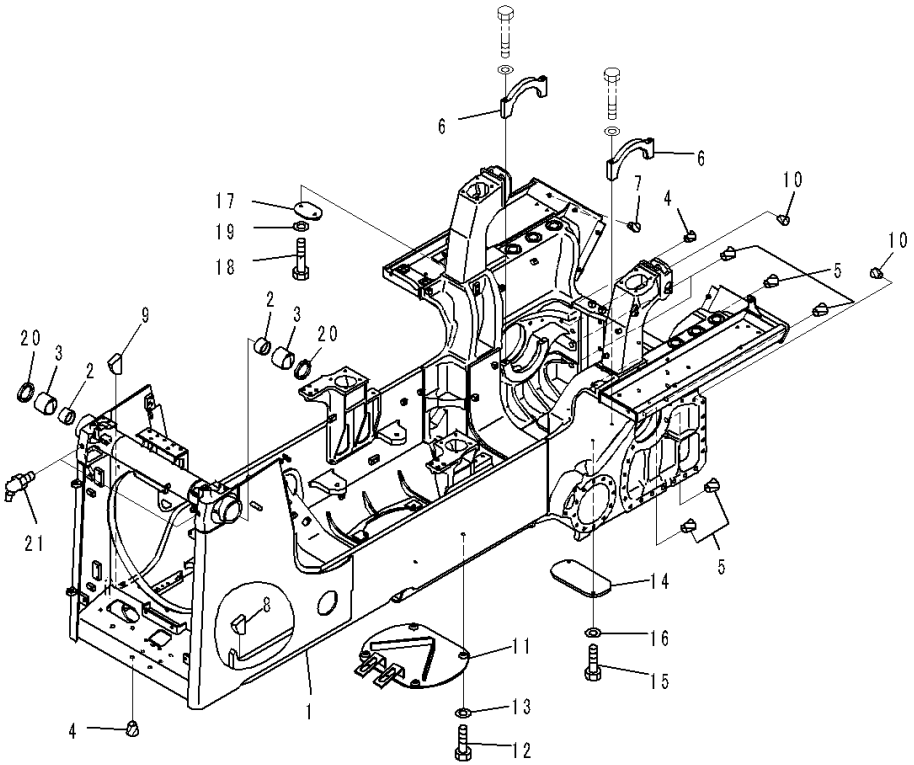

Index	Code	Part Number	Description	Qty	Serial Number
1		14X-21-61700	Frame Assembly	1	1001-
2		144-70-15171	• Bushing	2	1001-
3		14X-21-51450	• Bushing	2	1001-
4		07049-02430	Plug	18	1001-
5		07049-03342	Plug, Cork	6	1001-
6		154-21-71420	Cap	2	1001-
7		07049-01215	Plug	2	1001-
8		14X-03-61950	Seal	1	1001-
9		14X-03-61960	Seal	1	1001-
10		07049-02025	Plug	2	1001-
11		14X-21-51341	Cover	1	1001-
12		01010-81235	Bolt	4	1001-
13		01643-31232	Washer	4	1001-
14		14X-21-51371	Cover	1	1001-
15		01010-81225	Bolt	2	1001-
16		01643-31232	Washer	2	1001-
17		14X-21-51361	Cover	1	1001-
18		01010-81230	Bolt	2	1001-
19		01643-31232	Washer	2	1001-
20		130-09-12370	Seal	2	1001-
21		07020-00675	Fitting, Grease	2	1001-

FIG. J2100-004001 Main Frame (With Refuel Pump, Power Angle Power Tilt Dozer, Inside Frame)

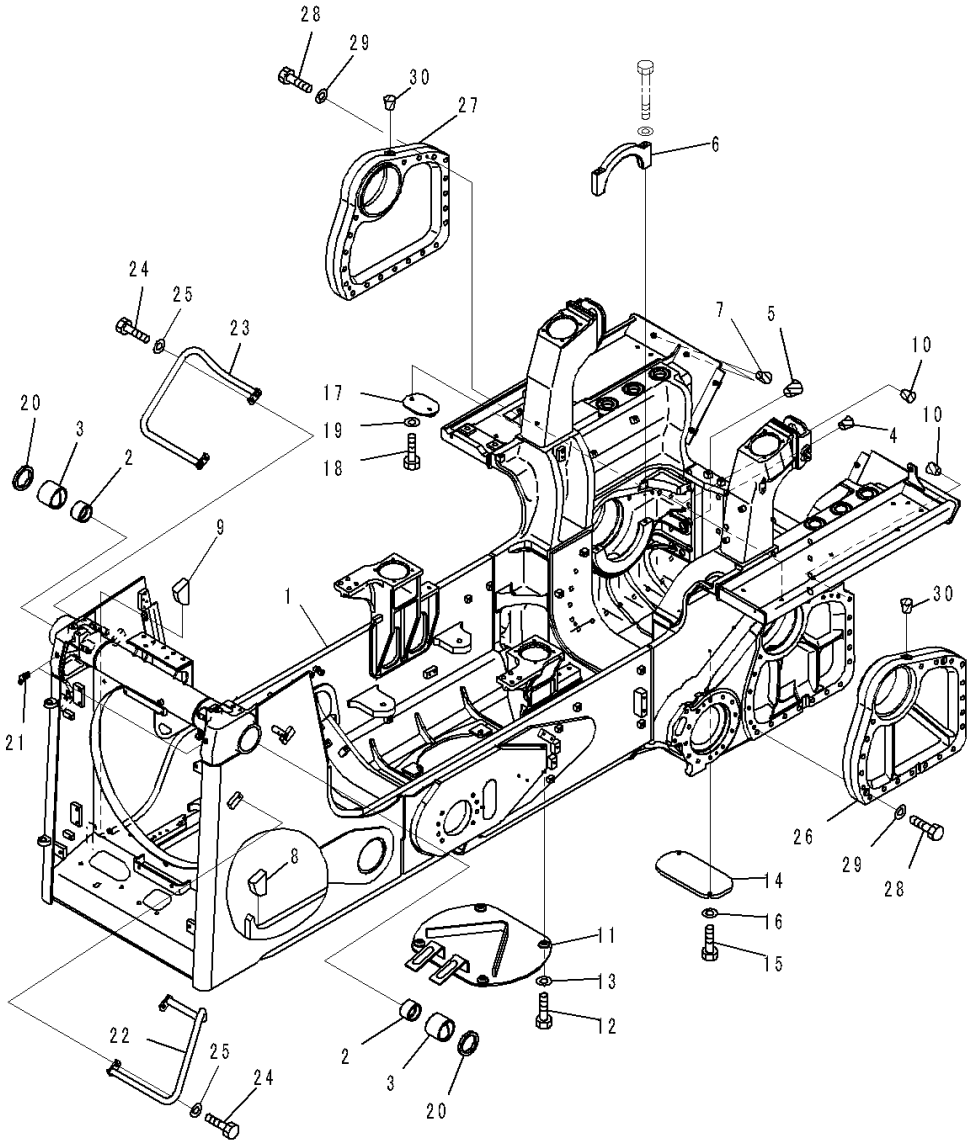

Index	Code	Part Number	Description	Qty	Serial Number
1		14X-21-62400	Frame Assembly	1	1001-
2		144-70-15171	• Bushing	2	1001-
3		14X-21-51450	• Bushing	2	1001-
4		07049-02430	Plug	18	1001-
5		07049-03342	Plug, Cork	6	1001-
6		154-21-71420	Cap	2	1001-
7		07049-01215	Plug	2	1001-
8		14X-03-61950	Seal	1	1001-
9		14X-03-61960	Seal	1	1001-
10		07049-02025	Plug	2	1001-
11		14X-21-51341	Cover	1	1001-
12		01010-81235	Bolt	4	1001-
13		01643-31232	Washer	4	1001-
14		14X-21-51371	Cover	1	1001-
15		01010-81225	Bolt	2	1001-
16		01643-31232	Washer	2	1001-
17		14X-21-51361	Cover	1	1001-
18		01010-81230	Bolt	2	1001-
19		01643-31232	Washer	2	1001-
20		130-09-12370	Seal	2	1001-
21		07020-00675	Fitting, Grease	2	1001-
22		14X-54-55130	Handle	1	1001-
23		14X-54-55140	Handle	1	1001-
24		01010-81230	Bolt	4	1001-
25		01643-31232	Washer	4	1001-
26		14X-27-52211	Spacer	1	1001-
27		14X-27-52221	Spacer	1	1001-
28		01010-81295	Bolt	4	1001-
29		01643-31232	Washer	4	1001-
30		07049-01215	Plug	2	1001-

FIG. J2700-001001 Equalizer Bar and Pivot Shaft (Without Power Angle Power Tilt Dozer, Inside Frame)

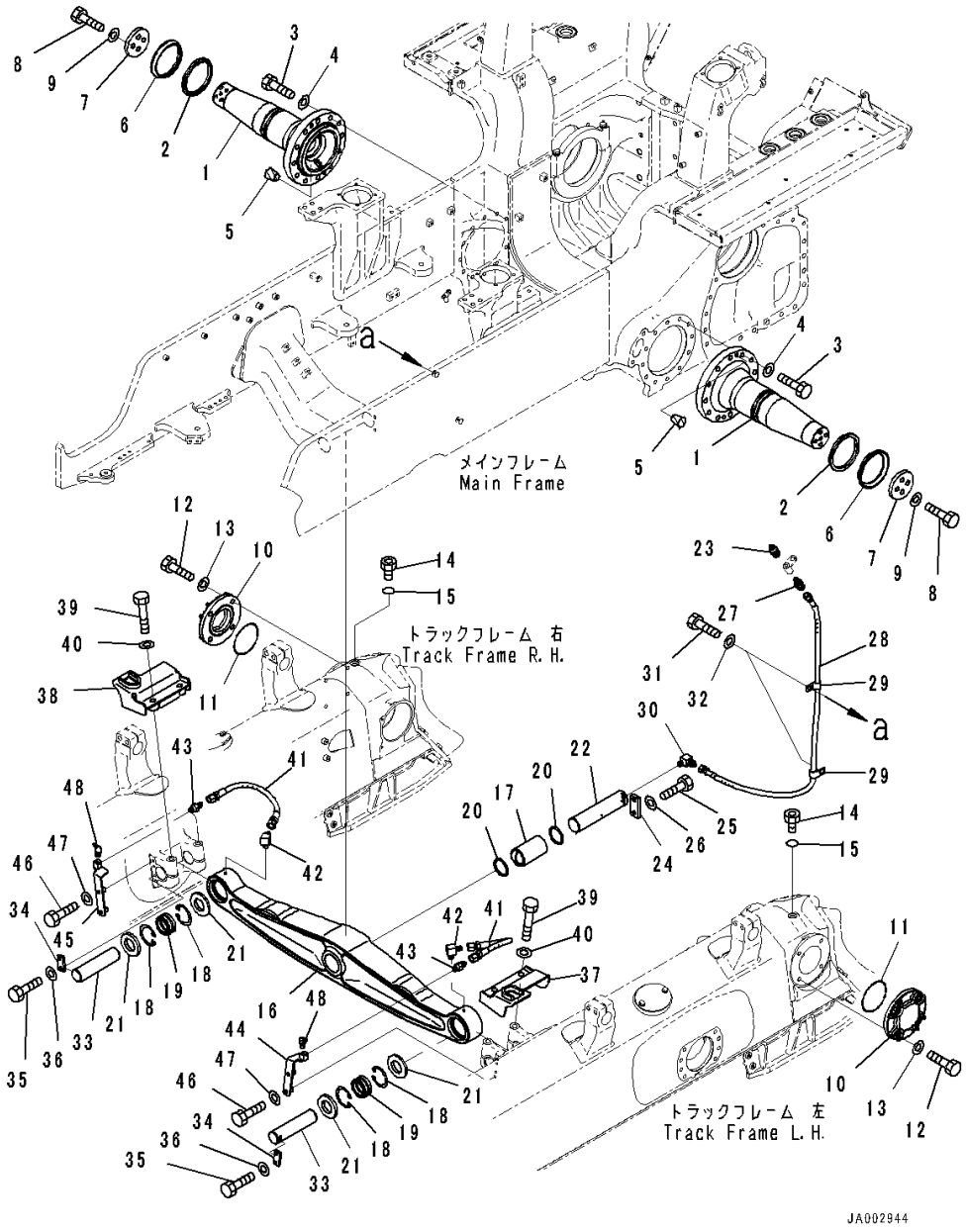

Index	Code	Part Number	Description	Qty	Serial Number
		14Y-30-00210	Pivot Shaft Assembly	2	1001-
1	C1		• Shaft	1	1001-
2		14Y-30-18160	Ring	2	1001-
3		01010-82075	Bolt	24	1001-
4		01643-32060	Washer	24	1001-
5		07049-02025	Plug	4	1001-
6		14Y-30-18150	Seal	2	1001-
7		14Y-30-18121	Spacer	2	1001-
8		01010-82055	Bolt	8	1001-
9		01643-32060	Washer	8	1001-
10		14Y-30-18111	Cover	2	1001-
11		07000-02145	O-ring	2	1001-
12		01010-82055	Bolt	8	1001-
13		01643-32060	Washer	8	1001-
14		07040-12414	Plug	2	1001-
15		07002-02434	O-ring	2	1001-
		14Y-50-00012	Equalizer Bar Assembly	1	1001-
16	C1		• Equalizer Bar	1	1001-
17		14Y-50-11250	• Bushing	1	1001-
18		04065-09030	• Ring, Snap, for Hole Side	4	1001-
19		14Y-50-11460	• Bushing	2	1001-
20		130-09-12911	Seal	2	1001-
21		14Y-50-11323	Seal	4	1001-
22		14Y-50-11240	Pin	1	1001-
23		07020-00000	Fitting, Grease	1	1001-
24		14Y-50-11390	Lock	1	1001-
25		01010-81640	Bolt	2	1001-
26		01643-31645	Washer	2	1001-
27		208-06-11220	Nipple	1	1001-
28		14X-50-61291	Hose	1	1001-
29		04434-51312	Clip	2	1001-
30		203-62-42920	Elbow	1	1001-
31		01010-81220	Bolt	2	1001-
32		01643-31232	Washer	2	1001-
33		14X-50-51530	Pin	2	1001-
34		04082-00312	Lock	2	1001-
35		01010-81230	Bolt	4	1001-
36		01643-31232	Washer	4	1001-
37		14X-50-51241	Cover	1	1001-
38		14X-50-51251	Cover	1	1001-

FIG. J2700-001001 Equalizer Bar and Pivot Shaft (Without Power Angle Power Tilt Dozer, Inside Frame)

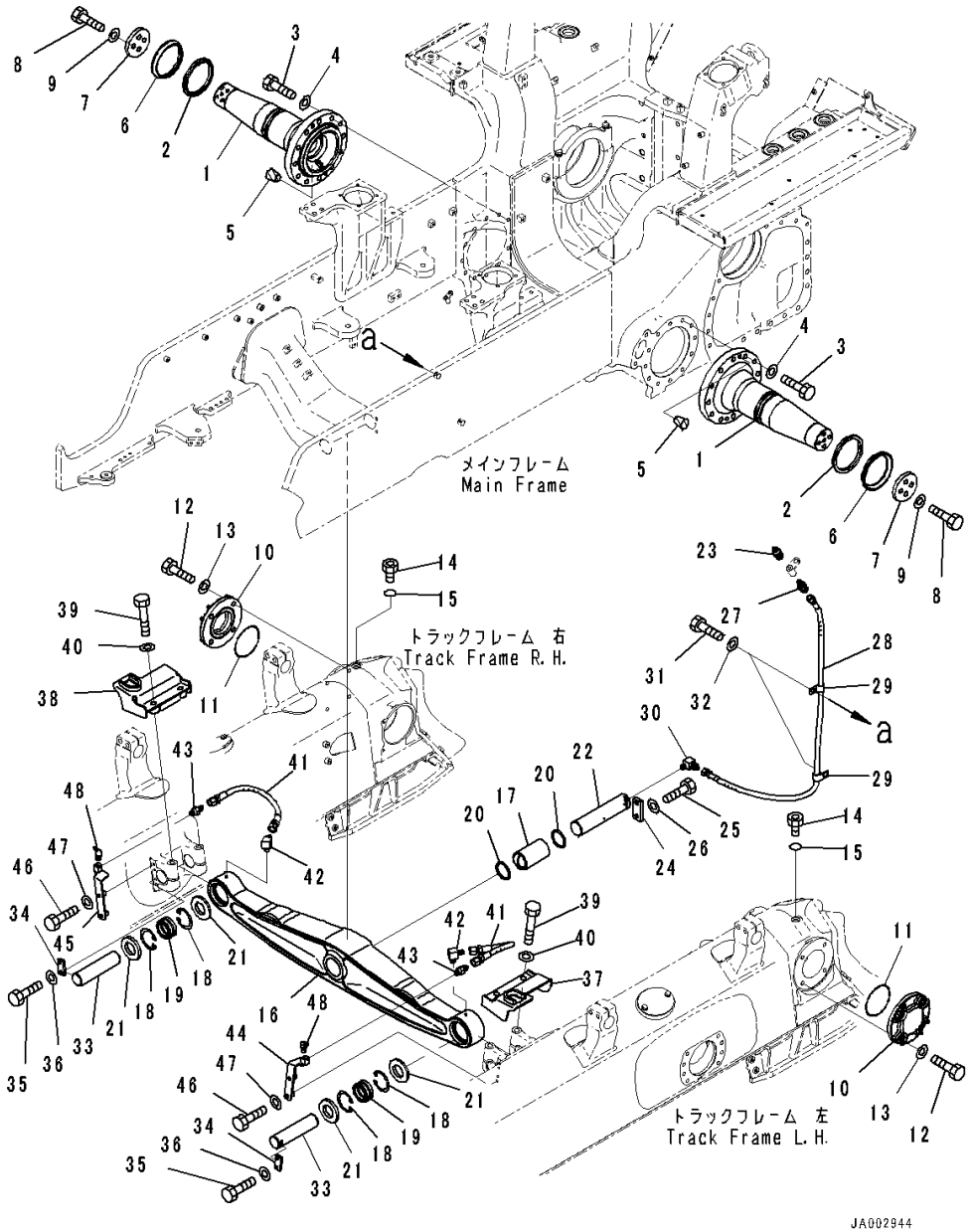

Index	Code	Part Number	Description	Qty	Serial Number
39		01011-82055	Bolt	4	1001-
40		01643-32060	Washer	4	1001-
41		14X-50-51181	Hose	2	1001-
42		202-62-21430	Elbow	2	1001-
43		203-62-21740	Nipple	2	1001-
44		14X-50-51121	Bracket	1	1001-
45		14X-50-51131	Bracket	1	1001-
46		01010-81255	Bolt	4	1001-
47		01643-31232	Washer	4	1001-
48		07020-00675	Fitting, Grease	2	1001-

FIG. J2700-002001 Equalizer Bar and Pivot Shaft (Power Angle Power Tilt Dozer, Inside Frame)

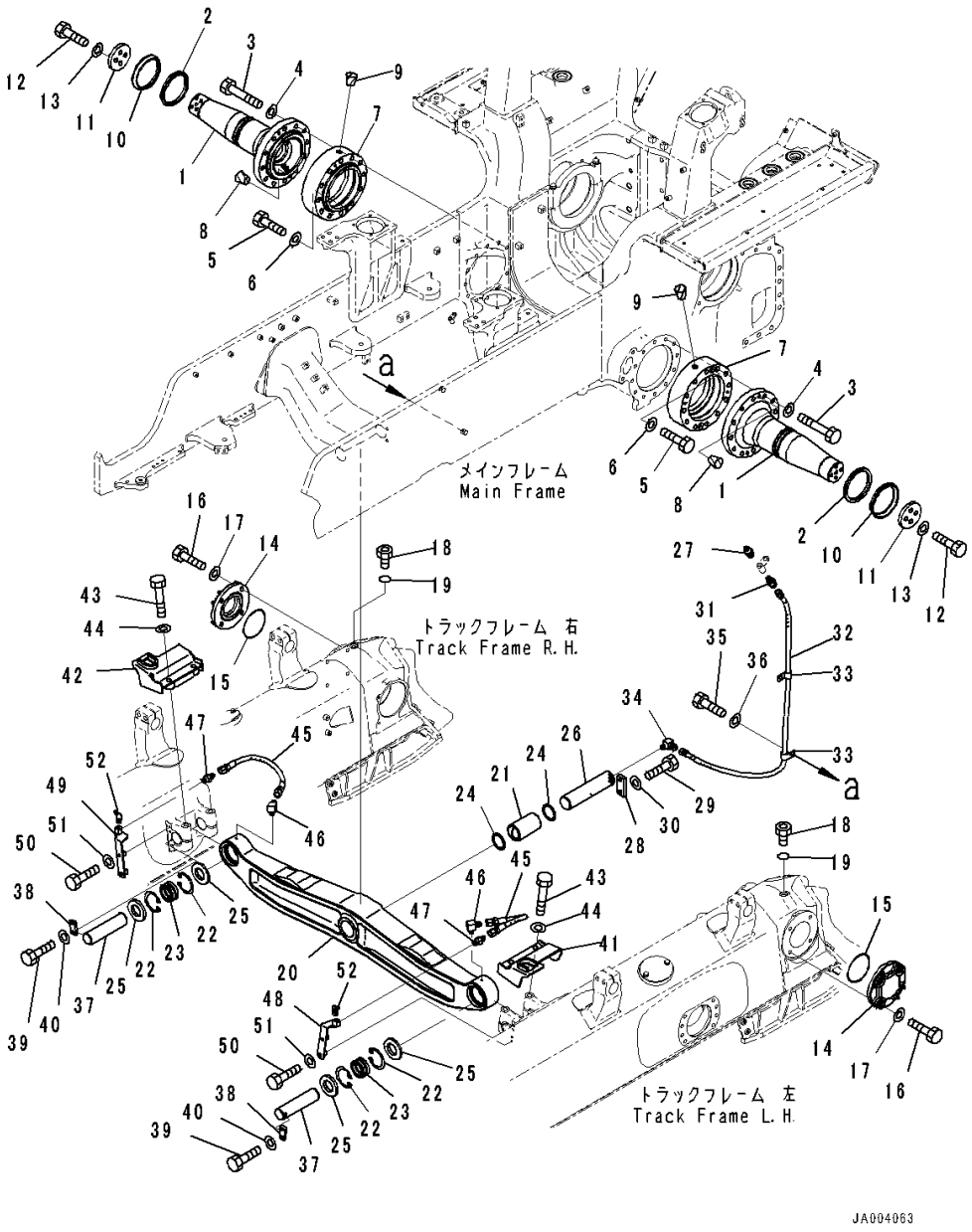

Index	Code	Part Number	Description	Qty	Serial Number
		14Y-30-00210	Pivot Shaft Assembly	2	1001-
1	C1		• Shaft	1	1001-
2		14Y-30-18160	Ring	2	1001-
3		14X-30-51660	Bolt	24	1001-
4		01643-32060	Washer	24	1001-
5		01010-81295	Bolt	4	1001-
6		01643-31232	Washer	4	1001-
7		14X-30-51191	Spacer	2	1001-
8		07049-02025	Plug	4	1001-
9		07049-01012	Plug	2	1001-
10		14Y-30-18150	Seal	2	1001-
11		14Y-30-18121	Spacer	2	1001-
12		01010-82055	Bolt	8	1001-
13		01643-32060	Washer	8	1001-
14		14Y-30-18111	Cover	2	1001-
15		07000-02145	O-ring	2	1001-
16		01010-82055	Bolt	8	1001-
17		01643-32060	Washer	8	1001-
18		07040-12414	Plug	2	1001-
19		07002-02434	O-ring	2	1001-
		14X-50-00111	Equalizer Bar Assembly	1	1001-
20	C1		• Equalizer Bar	1	1001-
21		14Y-50-11250	• Bushing	1	1001-
22		04065-09030	• Ring, Snap, for Hole Side	4	1001-
23		14Y-50-11460	• Bushing	2	1001-
24		130-09-12911	Seal	2	1001-
25		14Y-50-11323	Seal	4	1001-
26		14Y-50-11240	Pin	1	1001-
27		07020-00000	Fitting, Grease	1	1001-
28		14Y-50-11390	Lock	1	1001-
29		01010-81640	Bolt	2	1001-
30		01643-31645	Washer	2	1001-
31		208-06-11220	Nipple	1	1001-
32		14X-50-61291	Hose	1	1001-
33		04434-51312	Clip	2	1001-
34		203-62-42920	Elbow	1	1001-
35		01010-81220	Bolt	2	1001-
36		01643-31232	Washer	2	1001-
37		14X-50-51530	Pin	2	1001-
38		04082-00312	Lock	2	1001-

FIG. J2700-002001 Equalizer Bar and Pivot Shaft (Power Angle Power Tilt Dozer, Inside Frame)

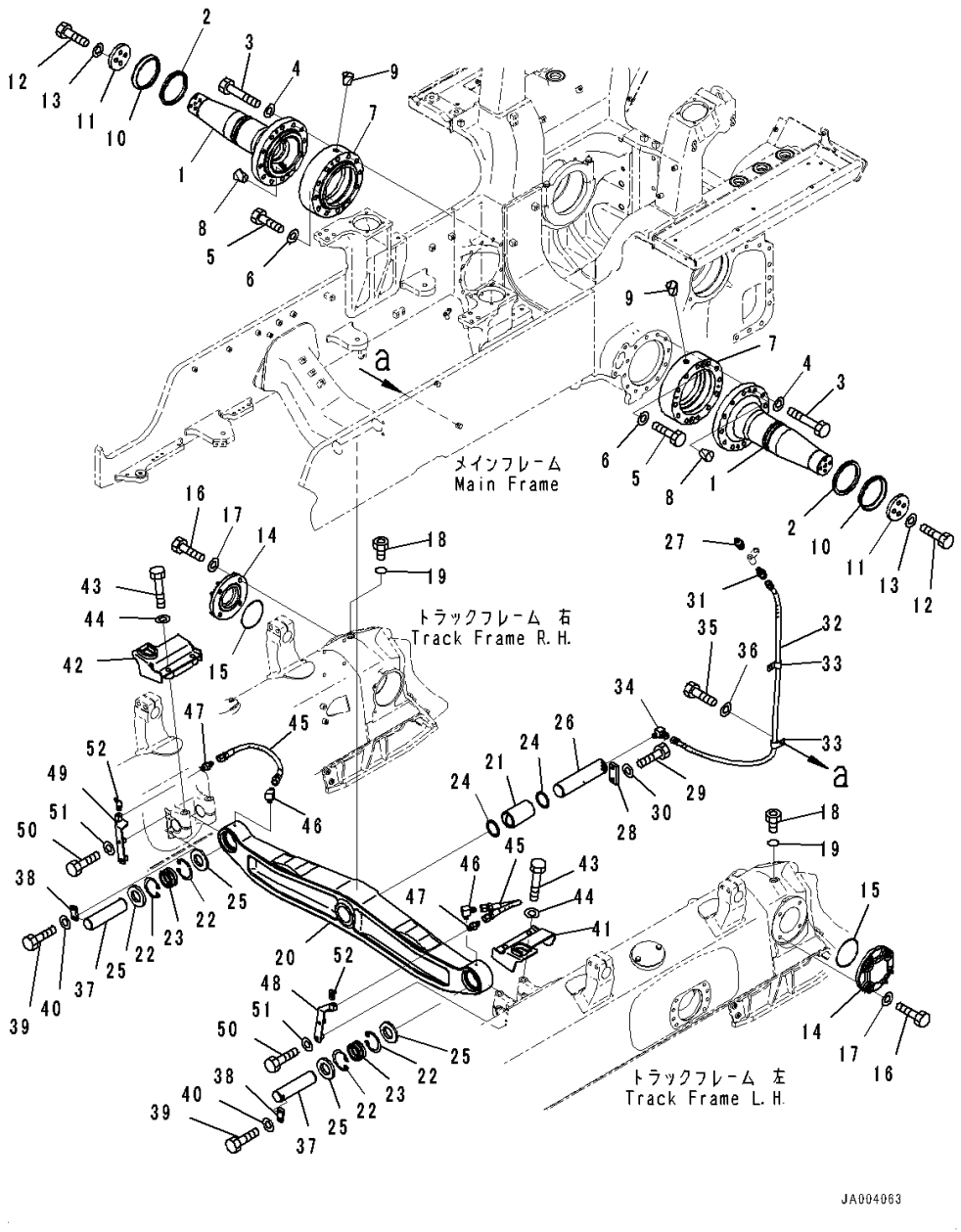

Index	Code	Part Number	Description	Qty	Serial Number
39		01010-81230	Bolt	4	1001-
40		01643-31232	Washer	4	1001-
41		14X-50-51241	Cover	1	1001-
42		14X-50-51251	Cover	1	1001-
43		01011-82055	Bolt	4	1001-
44		01643-32060	Washer	4	1001-
45		14X-50-51181	Hose	2	1001-
46		202-62-21430	Elbow	2	1001-
47		203-62-21740	Nipple	2	1001-
48		14X-50-51121	Bracket	1	1001-
49		14X-50-51131	Bracket	1	1001-
50		01010-81255	Bolt	4	1001-
51		01643-31232	Washer	4	1001-
52		07020-00675	Fitting, Grease	2	1001-

OPERATOR'S COMPARTMENT AND CONTROL SYSTEM

FIG. K0110-008001 Operator's Seat (Air Suspension Type, Fabric, Turn Type, Tilt, With Heater, Headrest) (Mounting)

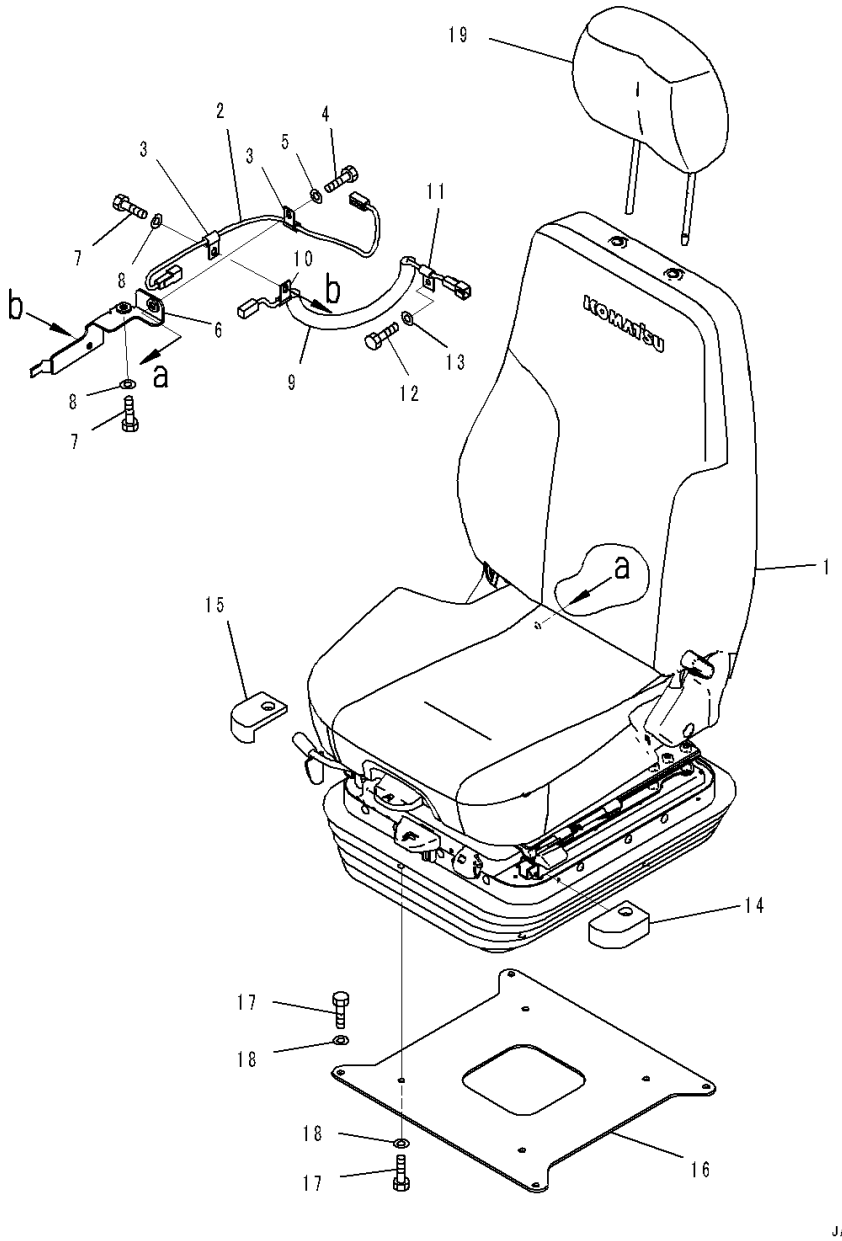

Index	Code	Part Number	Description	Qty	Serial Number
1		17A-57-52500	Seat Assembly	1	1001-
2		17A-57-51130	Wiring Harness	1	1001-
3		04434-50808	Clip	2	1001-
4		01010-D0825	Bolt	1	1001-
5		01643-70823	Washer	1	1001-
6		17A-57-51181	Plate	1	1001-
7		01010-D0825	Bolt	2	1001-
8		01643-70823	Washer	2	1001-
9		17A-57-51171	Cable	1	1001-
10		04434-50608	Clip	1	1001-
11		04434-50610	Clip	1	1001-
12		01010-D1020	Bolt	1	1001-
13		01643-71032	Washer	1	1001-
14		17A-57-51240	Cushion,L.H.	1	1001-
15		17A-57-51250	Cushion,R.H.	1	1001-
16		17A-57-51191	Plate	1	1001-
17		01010-D0825	Bolt	8	1001-
18		01643-70823	Washer	8	1001-
19		17A-57-52190	Headrest	1	1001-

FIG. K0110-008002 Operator's Seat (Air Suspension Type, Fabric, Turn Type, Tilt, With Heater, Headrest) (Inner Parts, Operator's Seat)

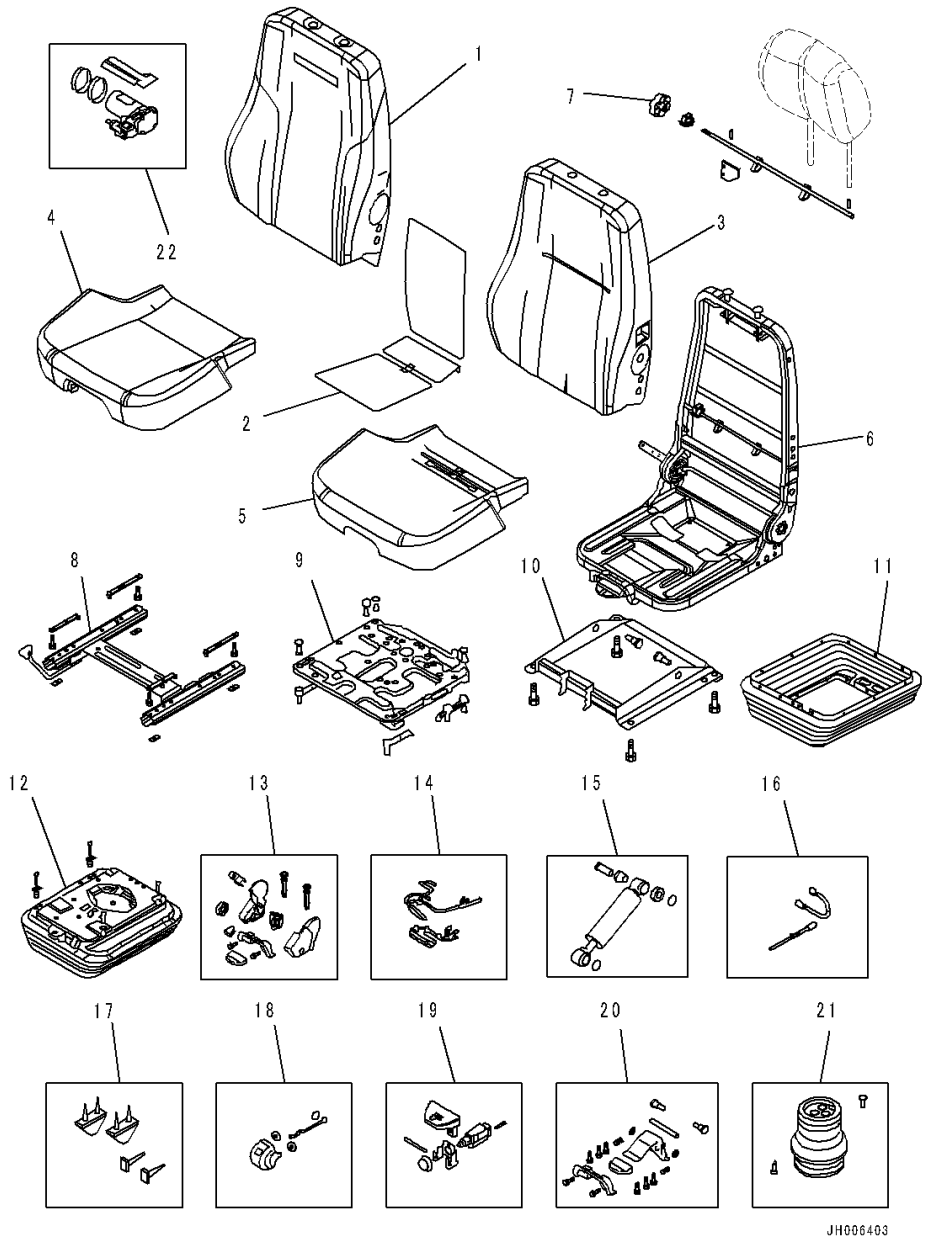

Index	Code	Part Number	Description	Qty	Serial Number
		17A-57-52500	Seat Assembly	1	1001-
		AS203504	• Upper Kit	1	1001-
1		AS203512	• • Back Cover Kit	1	1001-
2		AS202810	• • Heater Kit	1	1001-
3		AS203519	• • Back Foam Kit	1	1001-
4		AS203514	• • Seat Cover Kit	1	1001-
5		AS203521	• • Seat Foam Kit	1	1001-
6		AS203525	• • Frame Kit	1	1001-
7		AS203549	• • Lumbar Kit	1	1001-
8		AS203532	• Sliderail Kit	1	1001-
9		AS203528	• Swivel Kit	1	1001-
10		AS203527	• Tilt Kit	1	1001-
11		AS203538	• Suspension Cover Kit	1	1001-
12		AS203536	• Suspension Kit	1	1001-
13		AS203541	• Plastic Parts Kit	1	1001-
14		AS202487	• Suspension Loom Kit	1	1001-
15		AS198316	• Damper Kit	1	1001-
16		AS203545	• Flylead Kit	1	1001-
17		AS167554	• Up Stop And Bump Stop Kit	1	1001-
18		AS170373	• Ride Indicator Kit	1	1001-
19		AS203544	• Valve Kit	1	1001-
20		AS203542	• Tilt Lever Kit	1	1001-
21		AS202486	• Air Spring Kit	1	1001-
22		AS196440	• Compressor Kit	1	1001-

FIG. K0110-009001 Operator's Seat (Air Suspension Type, Fabric, Turn Type, Tilt, Hi-Back Type, With Heater, Headrest) (Mounting)

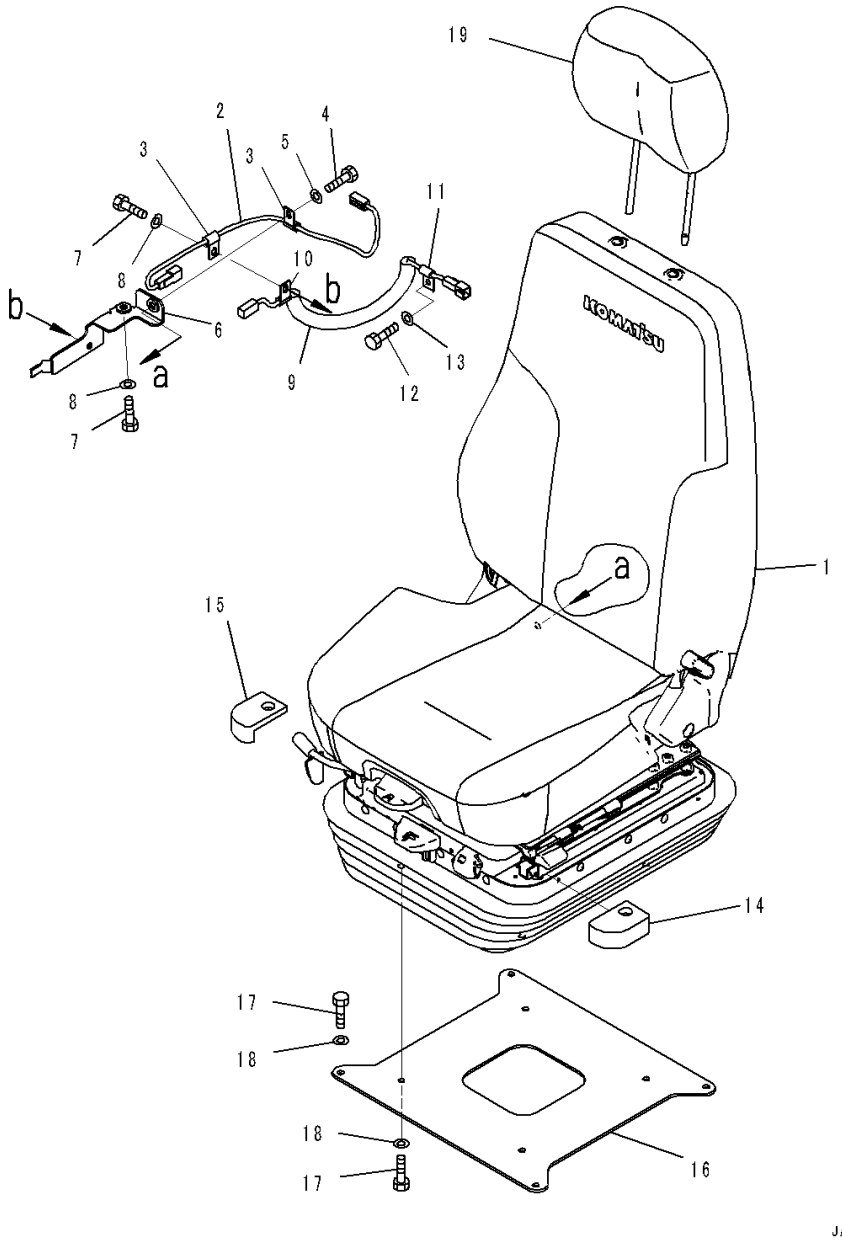

Index	Code	Part Number	Description	Qty	Serial Number
1		17A-57-52600	Seat Assembly	1	1001-
2		17A-57-51130	Wiring Harness	1	1001-
3		04434-50808	Clip	2	1001-
4		01010-D0825	Bolt	1	1001-
5		01643-70823	Washer	1	1001-
6		17A-57-51181	Plate	1	1001-
7		01010-D0825	Bolt	2	1001-
8		01643-70823	Washer	2	1001-
9		17A-57-51171	Cable	1	1001-
10		04434-50608	Clip	1	1001-
11		04434-50610	Clip	1	1001-
12		01010-D1020	Bolt	1	1001-
13		01643-71032	Washer	1	1001-
14		17A-57-51240	Cushion,L.H.	1	1001-
15		17A-57-51250	Cushion,R.H.	1	1001-
16		17A-57-51191	Plate	1	1001-
17		01010-D0825	Bolt	8	1001-
18		01643-70823	Washer	8	1001-
19		17A-57-52190	Headrest	1	1001-

FIG. K0110-009002 Operator's Seat (Air Suspension Type, Fabric, Turn Type, Tilt, Hi-Back Type, With Heater, Headrest) (Inner Parts, Operator's Seat)

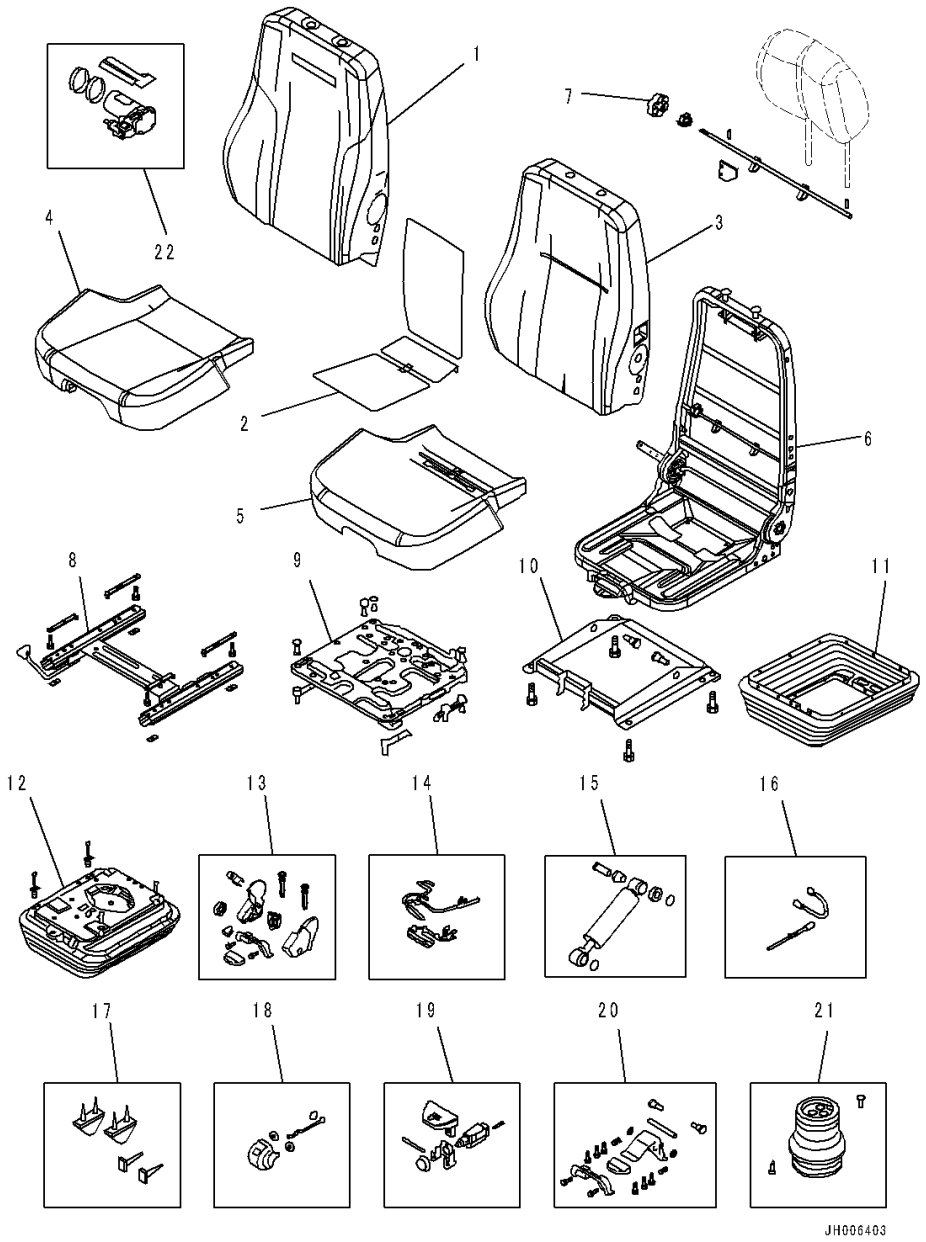

Index	Code	Part Number	Description	Qty	Serial Number
		17A-57-52600	Seat Assembly	1	1001-
		AS203500	• Upper Kit	1	1001-
1		AS203510	• • Back Cover Kit	1	1001-
2		AS202810	• • Heater Kit	1	1001-
3		AS203518	• • Back Foam Kit	1	1001-
4		AS203514	• • Seat Cover Kit	1	1001-
5		AS203521	• • Seat Foam Kit	1	1001-
6		AS203523	• • Frame Kit	1	1001-
7		AS203549	• • Lumbar Kit	1	1001-
8		AS203532	• Sliderail Kit	1	1001-
9		AS203528	• Swivel Kit	1	1001-
10		AS203527	• Tilt Kit	1	1001-
11		AS203538	• Suspension Cover Kit	1	1001-
12		AS203536	• Suspension Kit	1	1001-
13		AS203541	• Plastic Parts Kit	1	1001-
14		AS202487	• Suspension Loom Kit	1	1001-
15		AS198316	• Damper Kit	1	1001-
16		AS203545	• Flylead Kit	1	1001-
17		AS167554	• Up Stop And Bump Stop Kit	1	1001-
18		AS170373	• Ride Indicator Kit	1	1001-
19		AS203544	• Valve Kit	1	1001-
20		AS203542	• Tilt Lever Kit	1	1001-
21		AS202486	• Air Spring Kit	1	1001-
22		AS196440	• Compressor Kit	1	1001-

FIG. K0110-001001 Operator's Seat (Mechanical Suspension Type, Fabric, Turn, Tilt, With Heater) (Mounting)

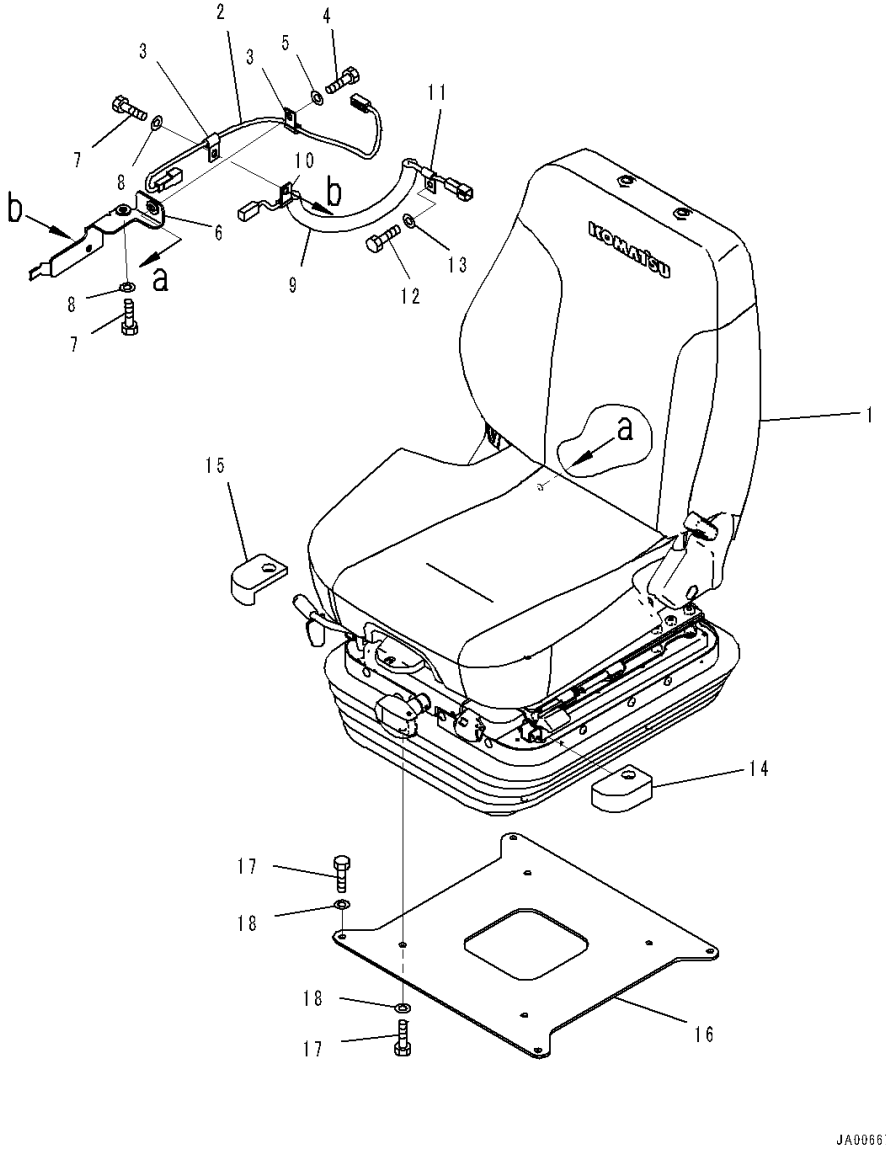

Index	Code	Part Number	Description	Qty	Serial Number
1		17A-57-52100	Seat Assembly	1	1001-
2		17A-57-51130	Wiring Harness	1	1001-
3		04434-50808	Clip	2	1001-
4		01010-D0825	Bolt	1	1001-
5		01643-70823	Washer	1	1001-
6		17A-57-51181	Plate	1	1001-
7		01010-D0825	Bolt	2	1001-
8		01643-70823	Washer	2	1001-
9		17A-57-51171	Cable	1	1001-
10		04434-50608	Clip	1	1001-
11		04434-50610	Clip	1	1001-
12		01010-D1020	Bolt	1	1001-
13		01643-71032	Washer	1	1001-
14		17A-57-51240	Cushion,L.H.	1	1001-
15		17A-57-51250	Cushion,R.H.	1	1001-
16		17A-57-51191	Plate	1	1001-
17		01010-D0825	Bolt	8	1001-
18		01643-70823	Washer	8	1001-

FIG. K0110-001002 Operator's Seat (Mechanical Suspension Type, Fabric, Turn, Tilt, With Heater) (Inner Parts, Operator's Seat)

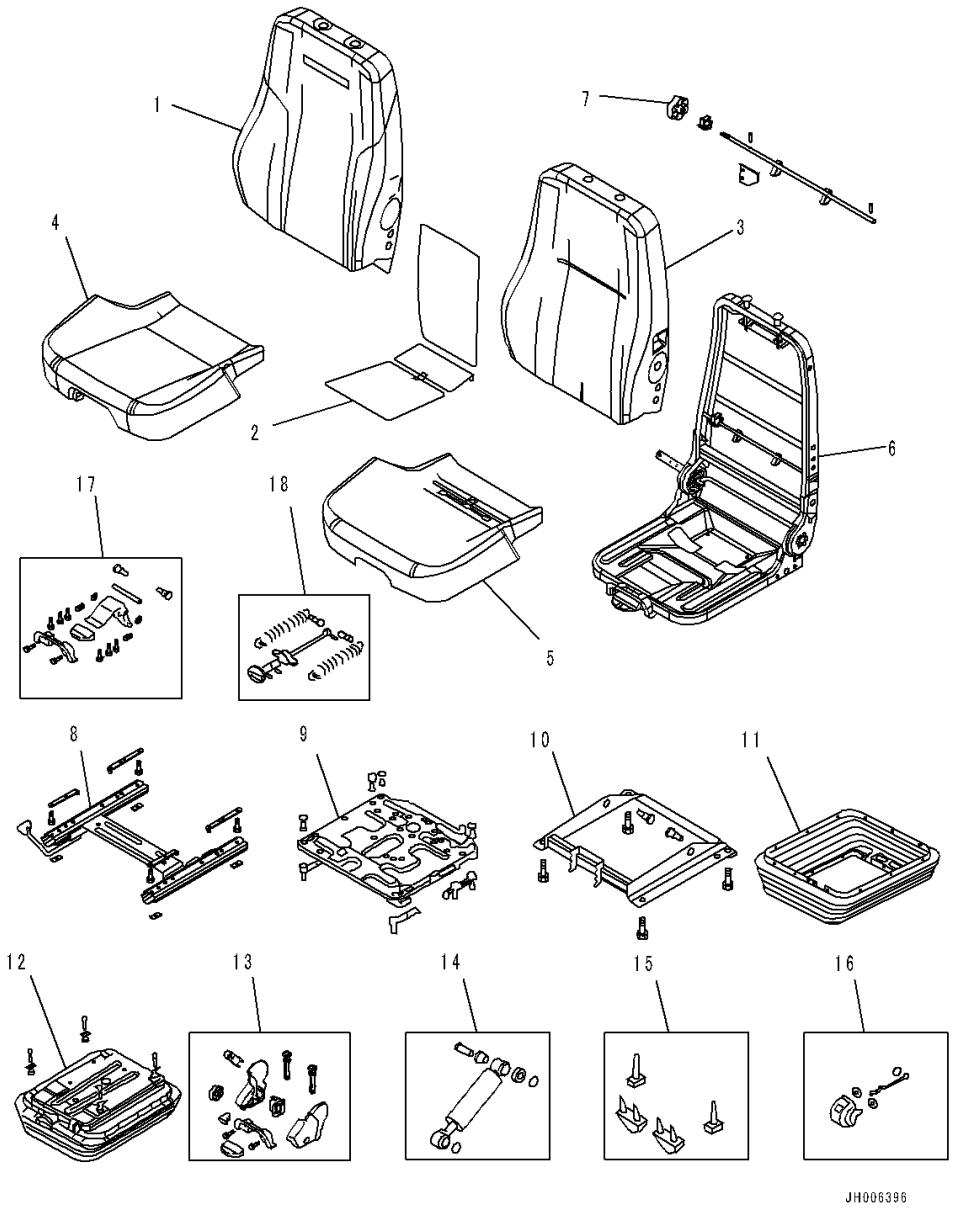

Index	Code	Part Number	Description	Qty	Serial Number
		17A-57-52100	Seat Assembly	1	1001-
		AS203504	• Upper Kit	1	1001-
1		AS203512	• • Back Cover Kit	1	1001-
2		AS202810	• • Heater Kit	1	1001-
3		AS203519	• • Back Foam Kit	1	1001-
4		AS203514	• • Seat Cover Kit	1	1001-
5		AS203521	• • Seat Foam Kit	1	1001-
6		AS203525	• • Frame Kit	1	1001-
7		AS203549	• • Lumbar Kit	1	1001-
8		AS203532	• Sliderail Kit	1	1001-
9		AS203528	• Swivel Kit	1	1001-
10		AS203527	• Tilt Kit	1	1001-
11		AS203538	• Suspension Cover Kit	1	1001-
12		AS203537	• Suspension Kit	1	1001-
13		AS203541	• Plastic Parts Kit	1	1001-
14		AS198304	• Damper Kit	1	1001-
15		AS167554	• Up Stop And Bump Stop Kit	1	1001-
16		AS170373	• Ride Indicator Kit	1	1001-
17		AS203542	• Tilt Lever Kit	1	1001-
18		AS203547	• Height Adjuster Kit	1	1001-

FIG. K0110-002001 Operator's Seat (Mechanical Suspension Type, Fabric, Turn, Tilt, Hi-Back Type, With Heater) (Mounting)

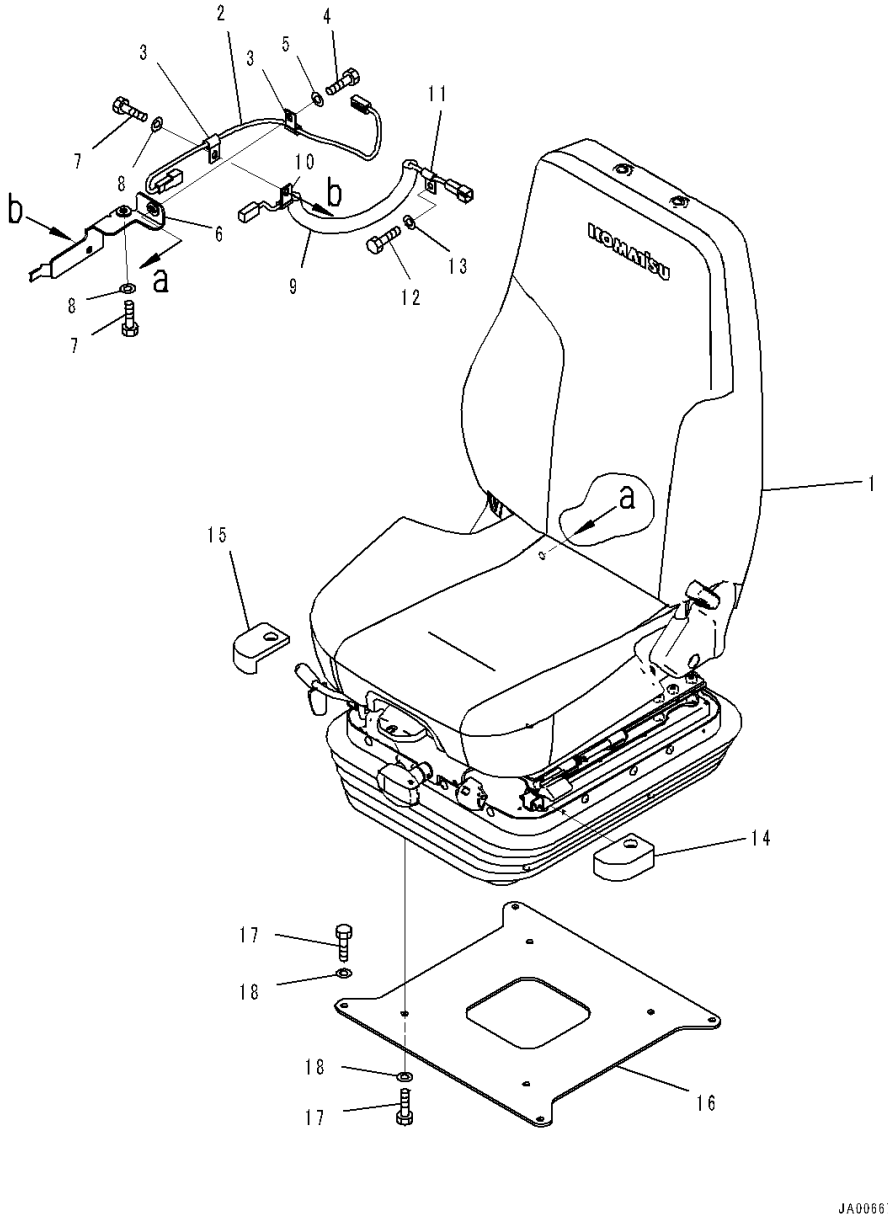

Index	Code	Part Number	Description	Qty	Serial Number
1		17A-57-52200	Seat Assembly	1	1001-
2		17A-57-51130	Wiring Harness	1	1001-
3		04434-50808	Clip	2	1001-
4		01010-D0825	Bolt	1	1001-
5		01643-70823	Washer	1	1001-
6		17A-57-51181	Plate	1	1001-
7		01010-D0825	Bolt	2	1001-
8		01643-70823	Washer	2	1001-
9		17A-57-51171	Cable	1	1001-
10		04434-50608	Clip	1	1001-
11		04434-50610	Clip	1	1001-
12		01010-D1020	Bolt	1	1001-
13		01643-71032	Washer	1	1001-
14		17A-57-51240	Cushion,L.H.	1	1001-
15		17A-57-51250	Cushion,R.H.	1	1001-
16		17A-57-51191	Plate	1	1001-
17		01010-D0825	Bolt	8	1001-
18		01643-70823	Washer	8	1001-

FIG. K0110-002002 Operator's Seat (Mechanical Suspension Type, Fabric, Turn, Tilt, Hi-Back Type, With Heater) (Inner Parts, Operator's Seat)

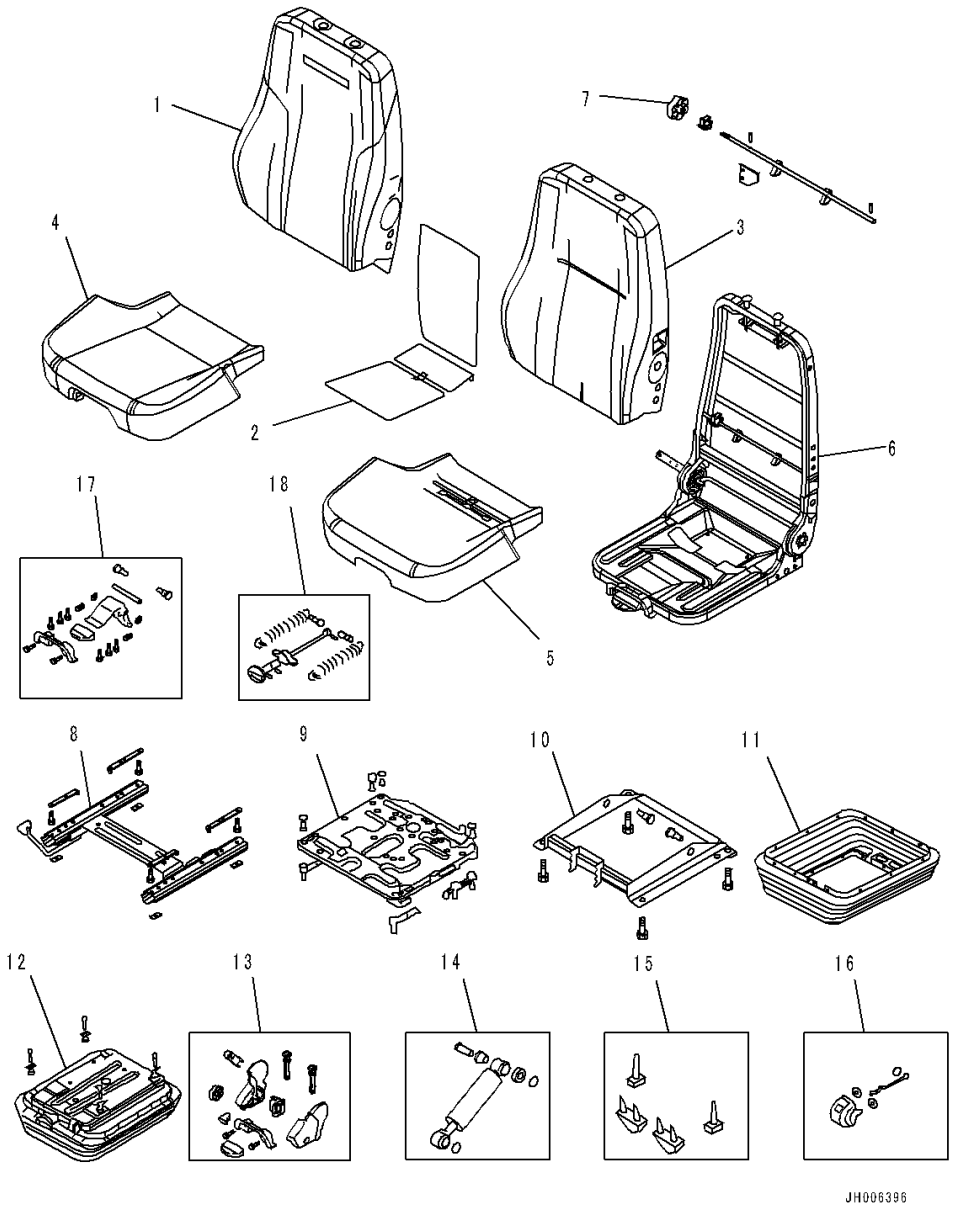

Index	Code	Part Number	Description	Qty	Serial Number
		17A-57-52200	Seat Assembly	1	1001-
		AS203500	• Upper Kit	1	1001-
1		AS203510	• • Back Cover Kit	1	1001-
2		AS202810	• • Heater Kit	1	1001-
3		AS203518	• • Back Foam Kit	1	1001-
4		AS203514	• • Seat Cover Kit	1	1001-
5		AS203521	• • Seat Foam Kit	1	1001-
6		AS203523	• • Frame Kit	1	1001-
7		AS203549	• • Lumbar Kit	1	1001-
8		AS203532	• Sliderail Kit	1	1001-
9		AS203528	• Swivel Kit	1	1001-
10		AS203527	• Tilt Kit	1	1001-
11		AS203538	• Suspension Cover Kit	1	1001-
12		AS203537	• Suspension Kit	1	1001-
13		AS203541	• Plastic Parts Kit	1	1001-
14		AS198304	• Damper Kit	1	1001-
15		AS167554	• Up Stop And Bump Stop Kit	1	1001-
16		AS170373	• Ride Indicator Kit	1	1001-
17		AS203542	• Tilt Lever Kit	1	1001-
18		AS203547	• Height Adjuster Kit	1	1001-

FIG. K0110-003001 Operator's Seat (Mechanical Suspension Type, Leather, Turn, Tilt) (Mounting)

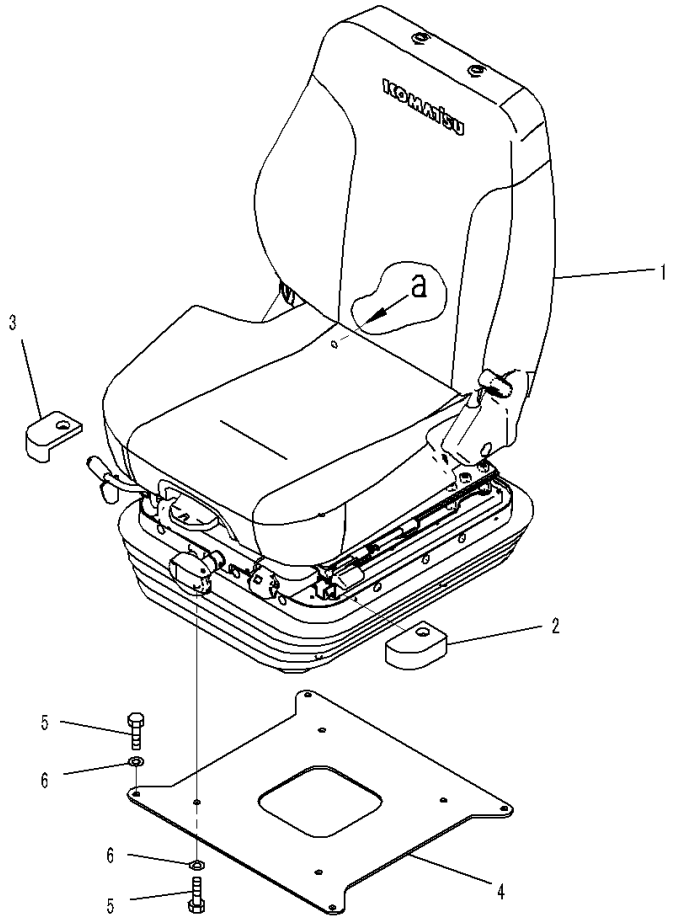

Index	Code	Part Number	Description	Qty	Serial Number
1		17A-57-52300	Seat Assembly	1	1001-
2		17A-57-51240	Cushion,L.H.	1	1001-
3		17A-57-51250	Cushion,R.H.	1	1001-
4		17A-57-51191	Plate	1	1001-
5		01010-D0825	Bolt	8	1001-
6		01643-70823	Washer	8	1001-

FIG. K0110-003002 Operator's Seat (Mechanical Suspension Type, Leather, Turn, Tilt) (Inner Parts, Operator's Seat)

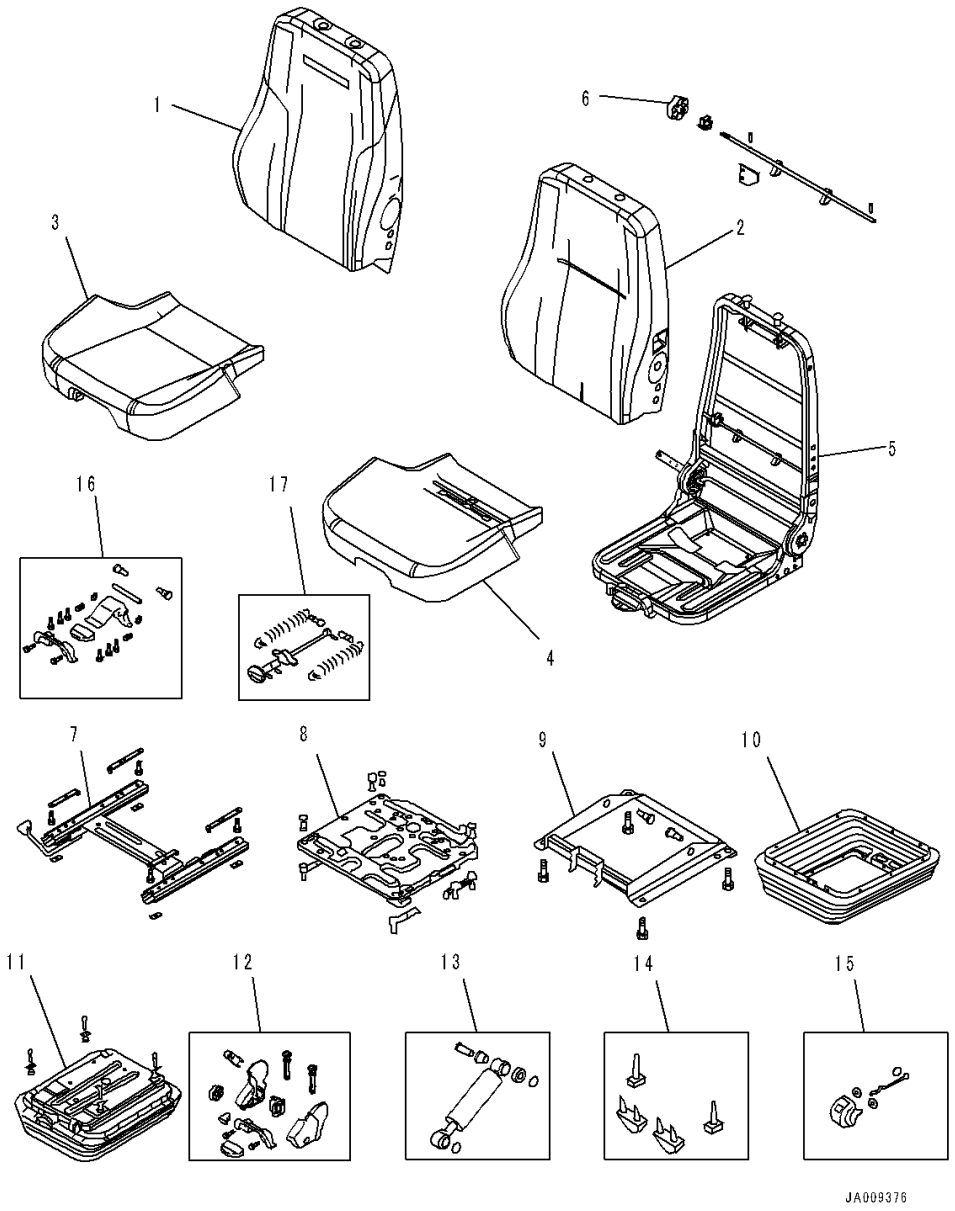

Index	Code	Part Number	Description	Qty	Serial Number
		17A-57-52300	Seat Assembly	1	1001-
		AS203505	• Upper Kit	1	1001-
1		AS203513	• • Back Cover Kit	1	1001-
2		AS203519	• • Back Foam Kit	1	1001-
3		AS203515	• • Seat Cover Kit	1	1001-
4		AS203521	• • Seat Foam Kit	1	1001-
5		AS203525	• • Frame Kit	1	1001-
6		AS203549	• • Lumbar Kit	1	1001-
7		AS203532	• Sliderail Kit	1	1001-
8		AS203528	• Swivel Kit	1	1001-
9		AS203527	• Tilt Kit	1	1001-
10		AS203538	• Suspension Cover Kit	1	1001-
11		AS203537	• Suspension Kit	1	1001-
12		AS203541	• Plastic Parts Kit	1	1001-
13		AS198304	• Damper Kit	1	1001-
14		AS167554	• Up Stop And Bump Stop Kit	1	1001-
15		AS170373	• Ride Indicator Kit	1	1001-
16		AS203542	• Tilt Lever Kit	1	1001-
17		AS203547	• Height Adjuster Kit	1	1001-

FIG. K0110-004001 Operator's Seat (Mechanical Suspension Type, Leather, Turn, Tilt, Hi-Back Type) (Mounting)

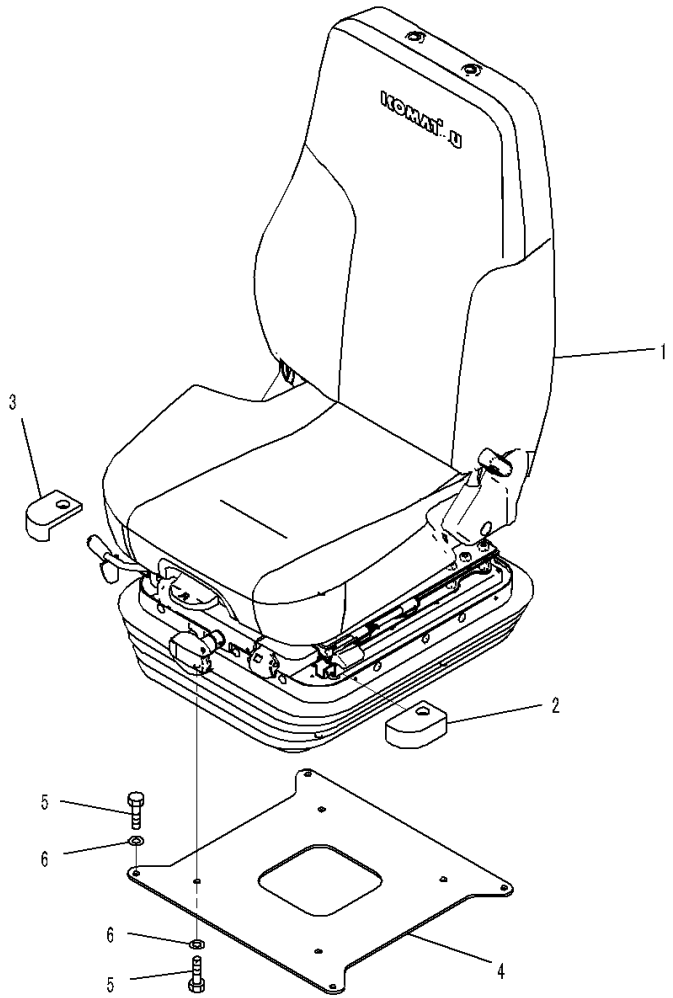

Index	Code	Part Number	Description	Qty	Serial Number
1		17A-57-52400	Seat Assembly	1	1001-
2		17A-57-51240	Cushion,L.H.	1	1001-
3		17A-57-51250	Cushion,R.H.	1	1001-
4		17A-57-51191	Plate	1	1001-
5		01010-D0825	Bolt	8	1001-
6		01643-70823	Washer	8	1001-

FIG. K0110-004002 Operator's Seat (Mechanical Suspension Type, Leather, Turn, Tilt, Hi-Back Type) (Inner Parts, Operator's Seat)

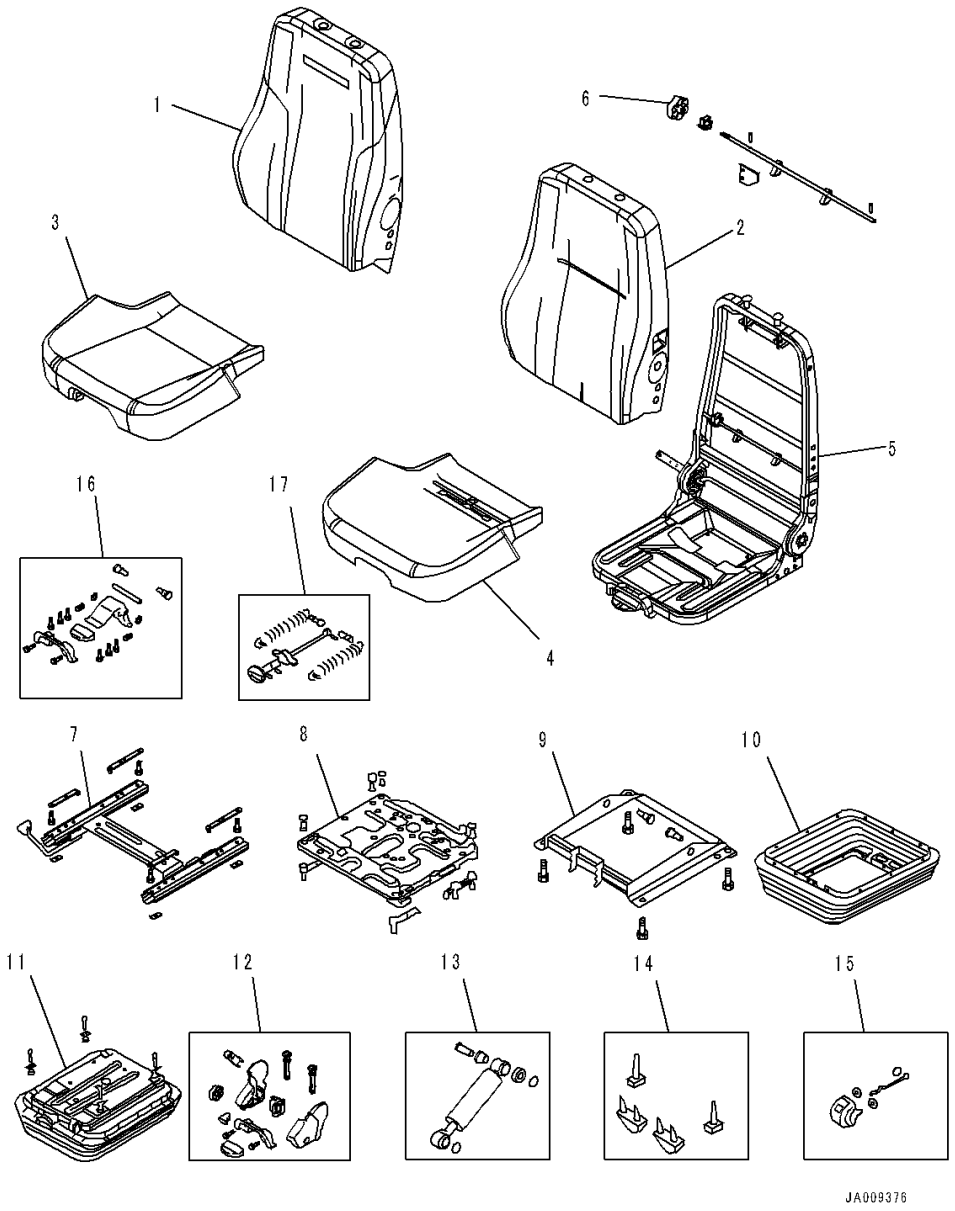

Index	Code	Part Number	Description	Qty	Serial Number
		17A-57-52400	Seat Assembly	1	1001-
		AS203503	• Upper Kit	1	1001-
1		AS203511	• • Back Cover Kit	1	1001-
2		AS203518	• • Back Foam Kit	1	1001-
3		AS203515	• • Seat Cover Kit	1	1001-
4		AS203521	• • Seat Foam Kit	1	1001-
5		AS203523	• • Frame Kit	1	1001-
6		AS203549	• • Lumbar Kit	1	1001-
7		AS203532	• Sliderail Kit	1	1001-
8		AS203528	• Swivel Kit	1	1001-
9		AS203527	• Tilt Kit	1	1001-
10		AS203538	• Suspension Cover Kit	1	1001-
11		AS203537	• Suspension Kit	1	1001-
12		AS203541	• Plastic Parts Kit	1	1001-
13		AS198304	• Damper Kit	1	1001-
14		AS167554	• Up Stop And Bump Stop Kit	1	1001-
15		AS170373	• Ride Indicator Kit	1	1001-
16		AS203542	• Tilt Lever Kit	1	1001-
17		AS203547	• Height Adjuster Kit	1	1001-

FIG. K0110-005001 Operator's Seat (Air Suspension Type, Fabric, Turn Type, Tilt, With Heater) (Mounting)

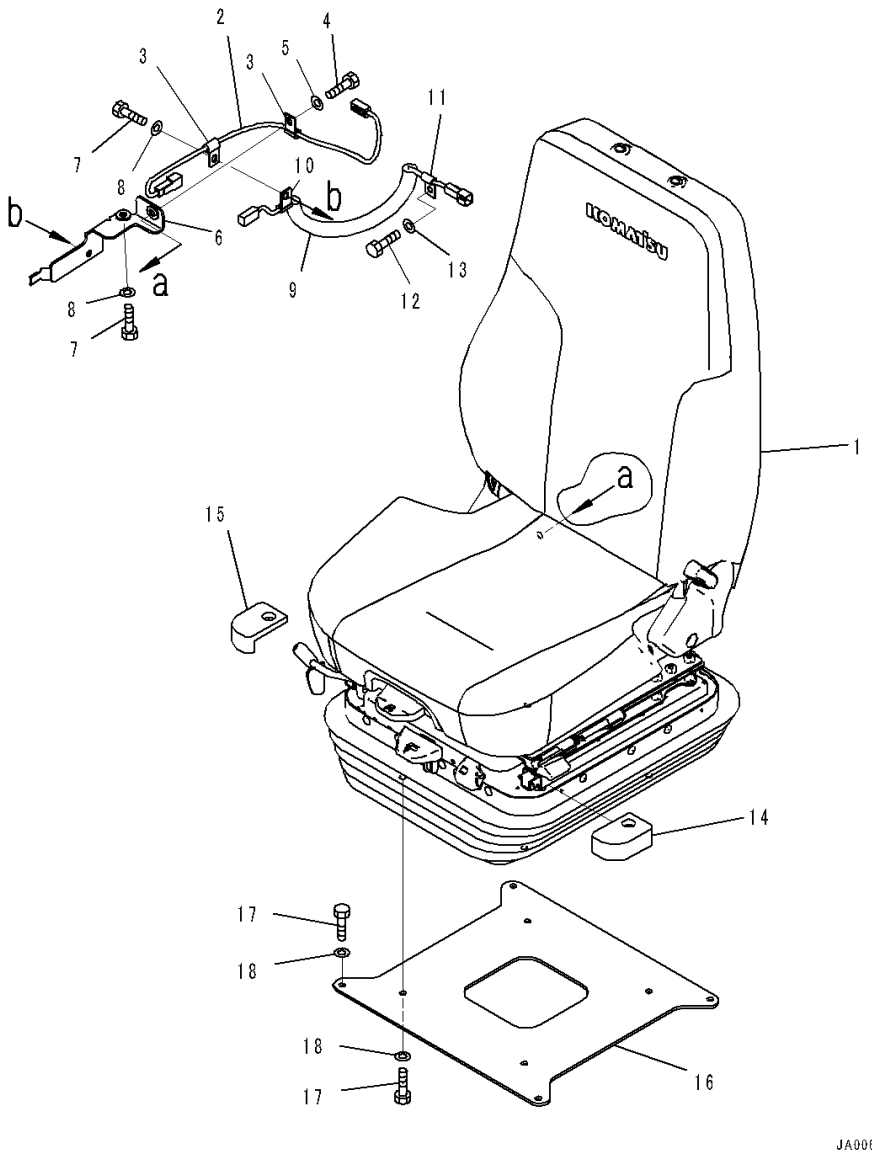

Index	Code	Part Number	Description	Qty	Serial Number
1		17A-57-52500	Seat Assembly	1	1001-
2		17A-57-51130	Wiring Harness	1	1001-
3		04434-50808	Clip	2	1001-
4		01010-D0825	Bolt	1	1001-
5		01643-70823	Washer	1	1001-
6		17A-57-51181	Plate	1	1001-
7		01010-D0825	Bolt	2	1001-
8		01643-70823	Washer	2	1001-
9		17A-57-51171	Cable	1	1001-
10		04434-50608	Clip	1	1001-
11		04434-50610	Clip	1	1001-
12		01010-D1020	Bolt	1	1001-
13		01643-71032	Washer	1	1001-
14		17A-57-51240	Cushion,L.H.	1	1001-
15		17A-57-51250	Cushion,R.H.	1	1001-
16		17A-57-51191	Plate	1	1001-
17		01010-D0825	Bolt	8	1001-
18		01643-70823	Washer	8	1001-

FIG. K0110-005002 Operator's Seat (Air Suspension Type, Fabric, Turn Type, Tilt, With Heater) (Inner Parts, Operator's Seat)

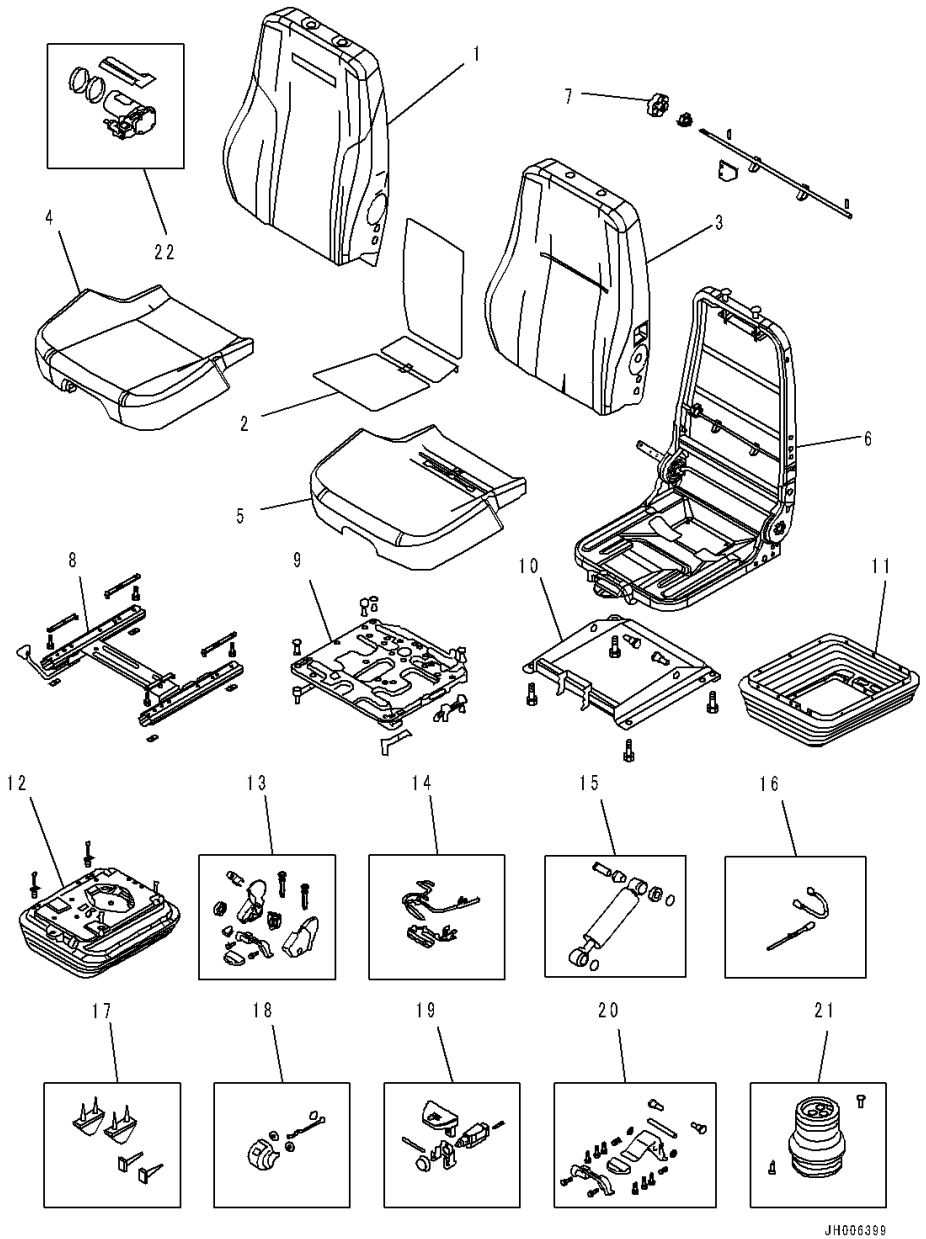

Index	Code	Part Number	Description	Qty	Serial Number
		17A-57-52500	Seat Assembly	1	1001-
		AS203504	• Upper Kit	1	1001-
1		AS203512	• • Back Cover Kit	1	1001-
2		AS202810	• • Heater Kit	1	1001-
3		AS203519	• • Back Foam Kit	1	1001-
4		AS203514	• • Seat Cover Kit	1	1001-
5		AS203521	• • Seat Foam Kit	1	1001-
6		AS203525	• • Frame Kit	1	1001-
7		AS203549	• • Lumbar Kit	1	1001-
8		AS203532	• Sliderail Kit	1	1001-
9		AS203528	• Swivel Kit	1	1001-
10		AS203527	• Tilt Kit	1	1001-
11		AS203538	• Suspension Cover Kit	1	1001-
12		AS203536	• Suspension Kit	1	1001-
13		AS203541	• Plastic Parts Kit	1	1001-
14		AS202487	• Suspension Loom Kit	1	1001-
15		AS198316	• Damper Kit	1	1001-
16		AS203545	• Flylead Kit	1	1001-
17		AS167554	• Up Stop And Bump Stop Kit	1	1001-
18		AS170373	• Ride Indicator Kit	1	1001-
19		AS203544	• Valve Kit	1	1001-
20		AS203542	• Tilt Lever Kit	1	1001-
21		AS202486	• Air Spring Kit	1	1001-
22		AS196440	• Compressor Kit	1	1001-

FIG. K0110-006001 Operator's Seat (Air Suspension Type, Fabric, Turn Type, Tilt, Hi-Back Type, With Heater) (Mounting)

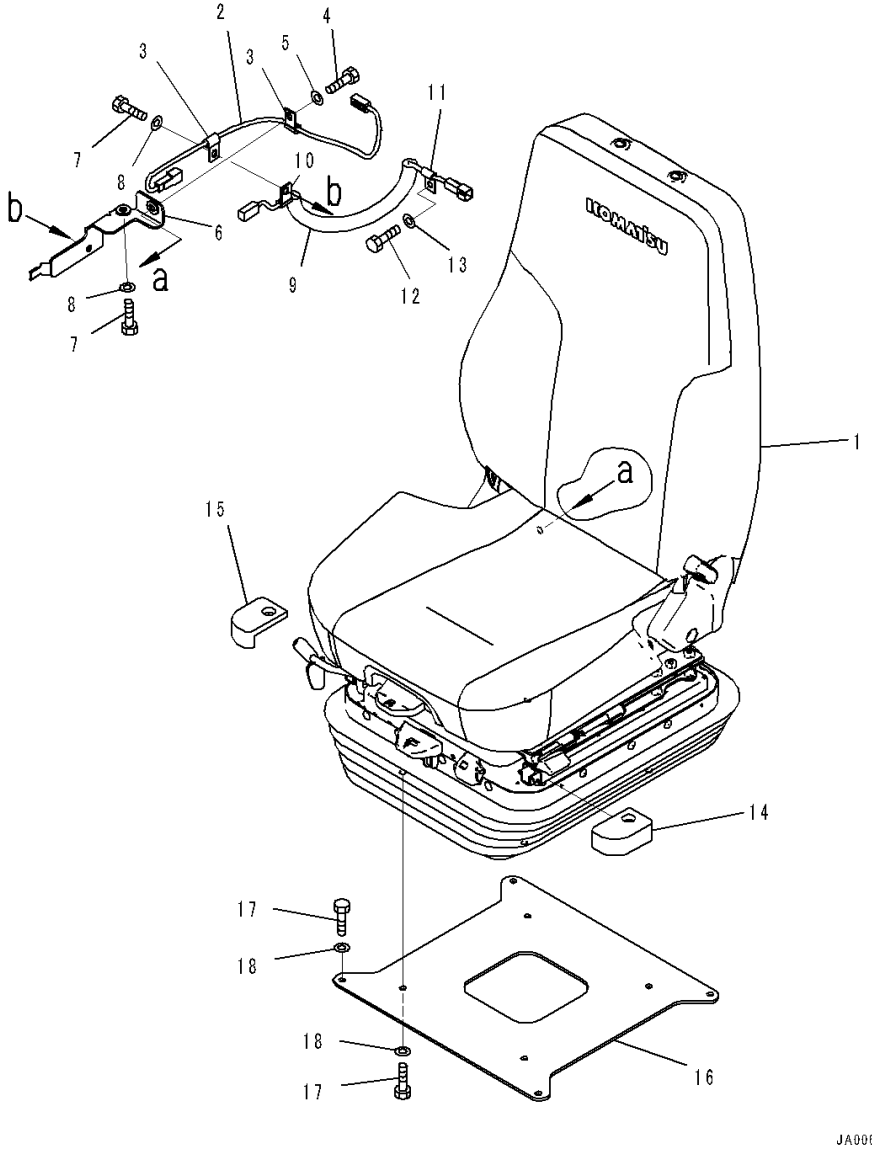

Index	Code	Part Number	Description	Qty	Serial Number
1		17A-57-52600	Seat Assembly	1	1001-
2		17A-57-51130	Wiring Harness	1	1001-
3		04434-50808	Clip	2	1001-
4		01010-D0825	Bolt	1	1001-
5		01643-70823	Washer	1	1001-
6		17A-57-51181	Plate	1	1001-
7		01010-D0825	Bolt	2	1001-
8		01643-70823	Washer	2	1001-
9		17A-57-51171	Cable	1	1001-
10		04434-50608	Clip	1	1001-
11		04434-50610	Clip	1	1001-
12		01010-D1020	Bolt	1	1001-
13		01643-71032	Washer	1	1001-
14		17A-57-51240	Cushion,L.H.	1	1001-
15		17A-57-51250	Cushion,R.H.	1	1001-
16		17A-57-51191	Plate	1	1001-
17		01010-D0825	Bolt	8	1001-
18		01643-70823	Washer	8	1001-

FIG. K0110-006002 Operator's Seat (Air Suspension Type, Fabric, Turn Type, Tilt, Hi-Back Type, With Heater) (Inner Parts, Operator's Seat)

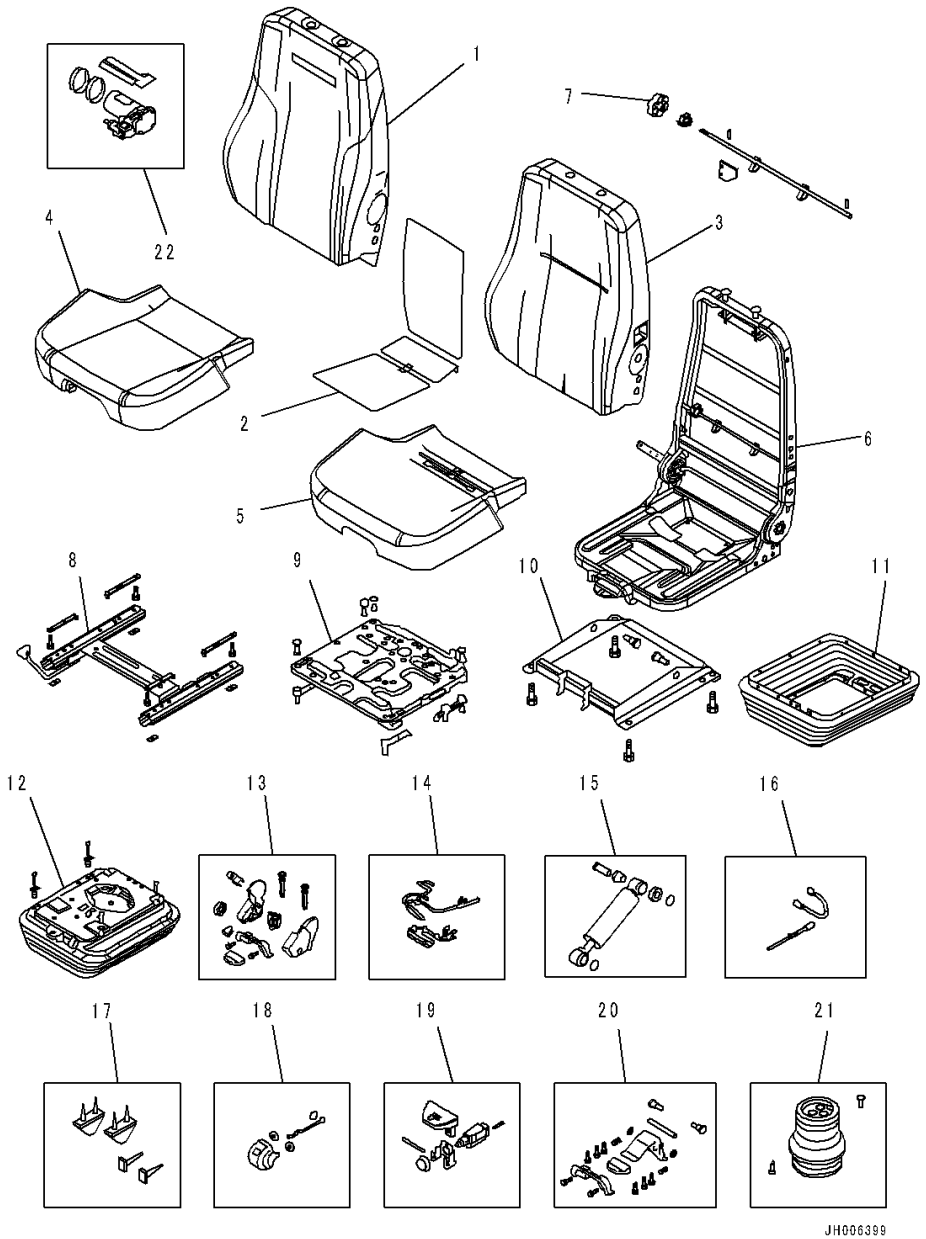

Index	Code	Part Number	Description	Qty	Serial Number
		17A-57-52600	Seat Assembly	1	1001-
		AS203500	• Upper Kit	1	1001-
1		AS203510	• • Back Cover Kit	1	1001-
2		AS202810	• • Heater Kit	1	1001-
3		AS203518	• • Back Foam Kit	1	1001-
4		AS203514	• • Seat Cover Kit	1	1001-
5		AS203521	• • Seat Foam Kit	1	1001-
6		AS203523	• • Frame Kit	1	1001-
7		AS203549	• • Lumbar Kit	1	1001-
8		AS203532	• Sliderail Kit	1	1001-
9		AS203528	• Swivel Kit	1	1001-
10		AS203527	• Tilt Kit	1	1001-
11		AS203538	• Suspension Cover Kit	1	1001-
12		AS203536	• Suspension Kit	1	1001-
13		AS203541	• Plastic Parts Kit	1	1001-
14		AS202487	• Suspension Loom Kit	1	1001-
15		AS198316	• Damper Kit	1	1001-
16		AS203545	• Flylead Kit	1	1001-
17		AS167554	• Up Stop And Bump Stop Kit	1	1001-
18		AS170373	• Ride Indicator Kit	1	1001-
19		AS203544	• Valve Kit	1	1001-
20		AS203542	• Tilt Lever Kit	1	1001-
21		AS202486	• Air Spring Kit	1	1001-
22		AS196440	• Compressor Kit	1	1001-

FIG. K0110-007001 Operator's Seat (Mechanical Suspension Type, Fabric, Turn, Tilt, With Heater, Headrest) (Mounting)

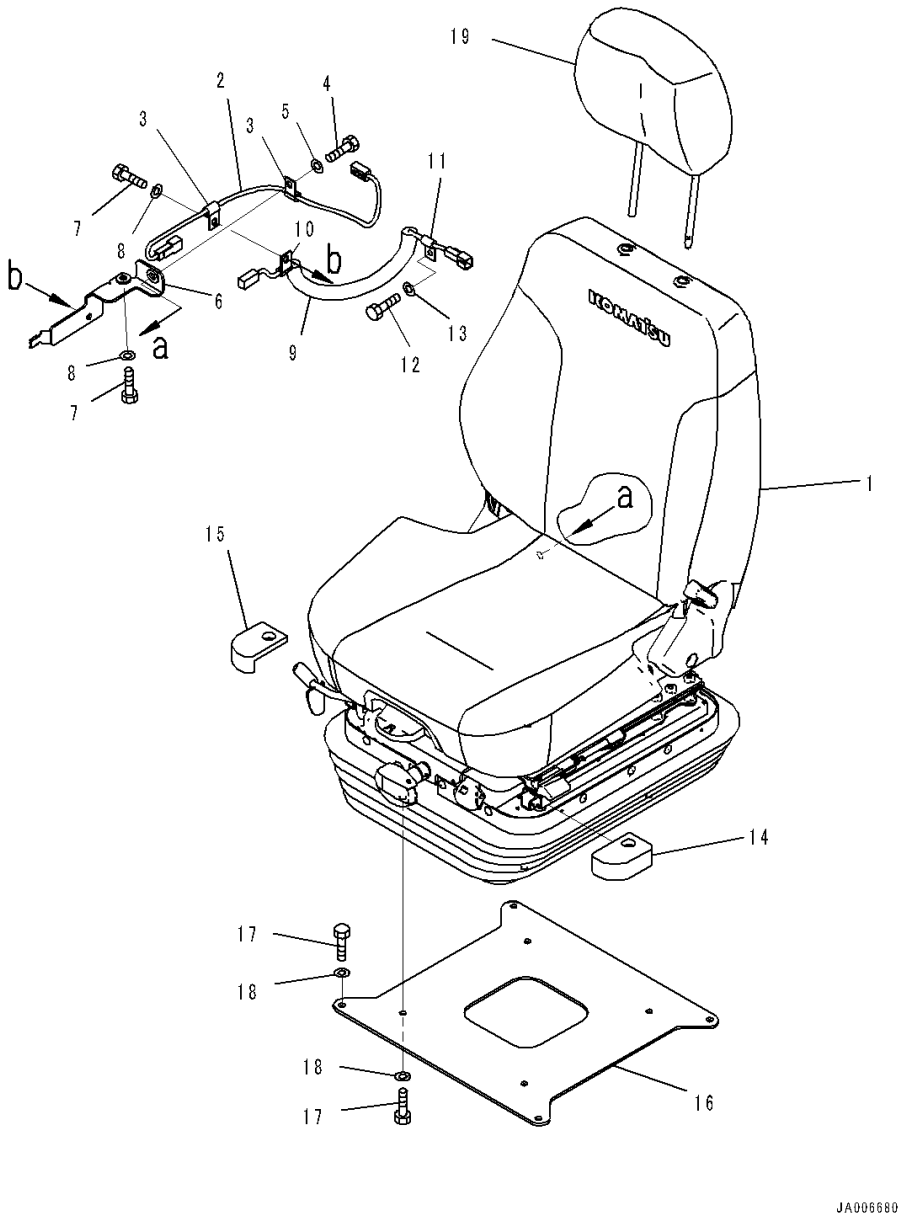

Index	Code	Part Number	Description	Qty	Serial Number
1		17A-57-52100	Seat Assembly	1	1001-
2		17A-57-51130	Wiring Harness	1	1001-
3		04434-50808	Clip	2	1001-
4		01010-D0825	Bolt	1	1001-
5		01643-70823	Washer	1	1001-
6		17A-57-51181	Plate	1	1001-
7		01010-D0825	Bolt	2	1001-
8		01643-70823	Washer	2	1001-
9		17A-57-51171	Cable	1	1001-
10		04434-50608	Clip	1	1001-
11		04434-50610	Clip	1	1001-
12		01010-D1020	Bolt	1	1001-
13		01643-71032	Washer	1	1001-
14		17A-57-51240	Cushion,L.H.	1	1001-
15		17A-57-51250	Cushion,R.H.	1	1001-
16		17A-57-51191	Plate	1	1001-
17		01010-D0825	Bolt	8	1001-
18		01643-70823	Washer	8	1001-
19		17A-57-52190	Headrest	1	1001-

FIG. K0110-007002 Operator's Seat (Mechanical Suspension Type, Fabric, Turn, Tilt, With Heater, Headrest) (Inner Parts, Operator's Seat)

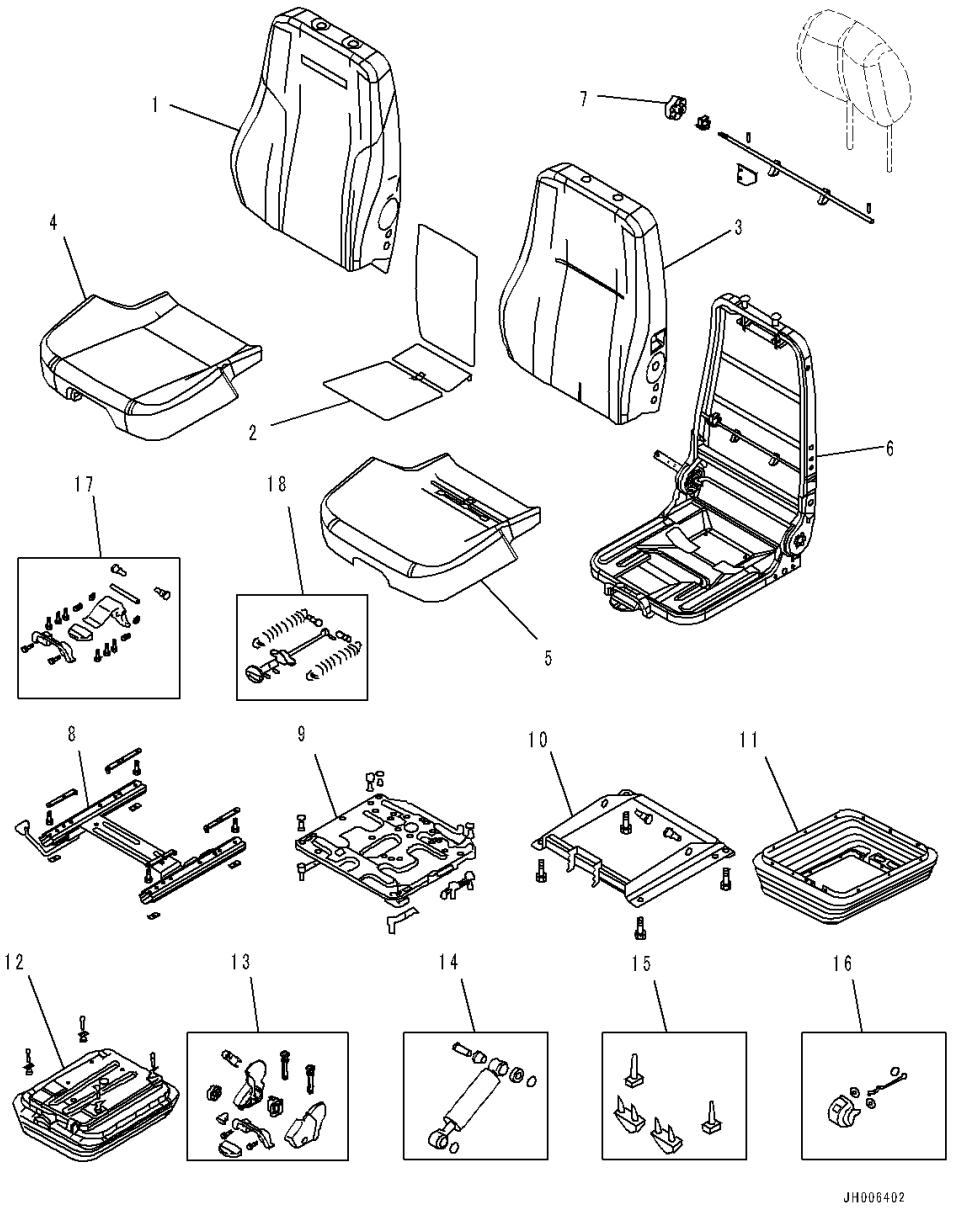

Index	Code	Part Number	Description	Qty	Serial Number
		17A-57-52100	Seat Assembly	1	1001-
		AS203504	• Upper Kit	1	1001-
1		AS203512	• • Back Cover Kit	1	1001-
2		AS202810	• • Heater Kit	1	1001-
3		AS203519	• • Back Foam Kit	1	1001-
4		AS203514	• • Seat Cover Kit	1	1001-
5		AS203521	• • Seat Foam Kit	1	1001-
6		AS203525	• • Frame Kit	1	1001-
7		AS203549	• • Lumbar Kit	1	1001-
8		AS203532	• Sliderail Kit	1	1001-
9		AS203528	• Swivel Kit	1	1001-
10		AS203527	• Tilt Kit	1	1001-
11		AS203538	• Suspension Cover Kit	1	1001-
12		AS203537	• Suspension Kit	1	1001-
13		AS203541	• Plastic Parts Kit	1	1001-
14		AS198304	• Damper Kit	1	1001-
15		AS167554	• Up Stop And Bump Stop Kit	1	1001-
16		AS170373	• Ride Indicator Kit	1	1001-
17		AS203542	• Tilt Lever Kit	1	1001-
18		AS203547	• Height Adjuster Kit	1	1001-

FIG. K0110-010001 Operator's Seat (Mechanical Suspension Type, Fabric, Turn, Tilt, Hi-Back Type, With Heater, With Headrest) (Mounting)

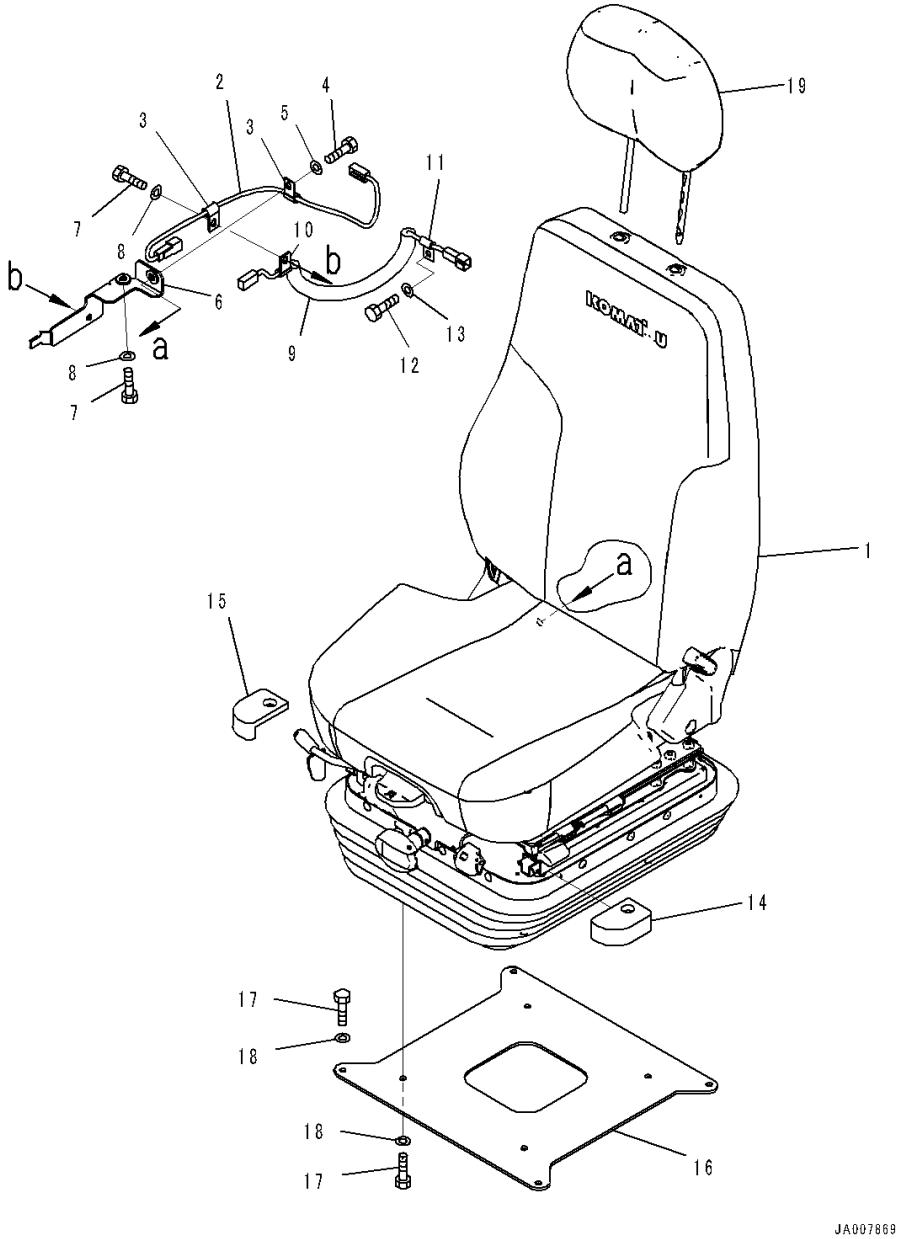

Index	Code	Part Number	Description	Qty	Serial Number
1		17A-57-52200	Seat Assembly	1	1001-
2		17A-57-51130	Wiring Harness	1	1001-
3		04434-50808	Clip	2	1001-
4		01010-D0825	Bolt	1	1001-
5		01643-70823	Washer	1	1001-
6		17A-57-51181	Plate	1	1001-
7		01010-D0825	Bolt	2	1001-
8		01643-70823	Washer	2	1001-
9		17A-57-51171	Cable	1	1001-
10		04434-50608	Clip	1	1001-
11		04434-50610	Clip	1	1001-
12		01010-D1020	Bolt	1	1001-
13		01643-71032	Washer	1	1001-
14		17A-57-51240	Cushion,L.H.	1	1001-
15		17A-57-51250	Cushion,R.H.	1	1001-
16		17A-57-51191	Plate	1	1001-
17		01010-D0825	Bolt	8	1001-
18		01643-70823	Washer	8	1001-
19		17A-57-52190	Headrest	1	1001-

FIG. K0110-010002 Operator's Seat (Mechanical Suspension Type, Fabric, Turn, Tilt, Hi-Back Type, With Heater, With Headrest) (Inner Parts, Operator's Seat)

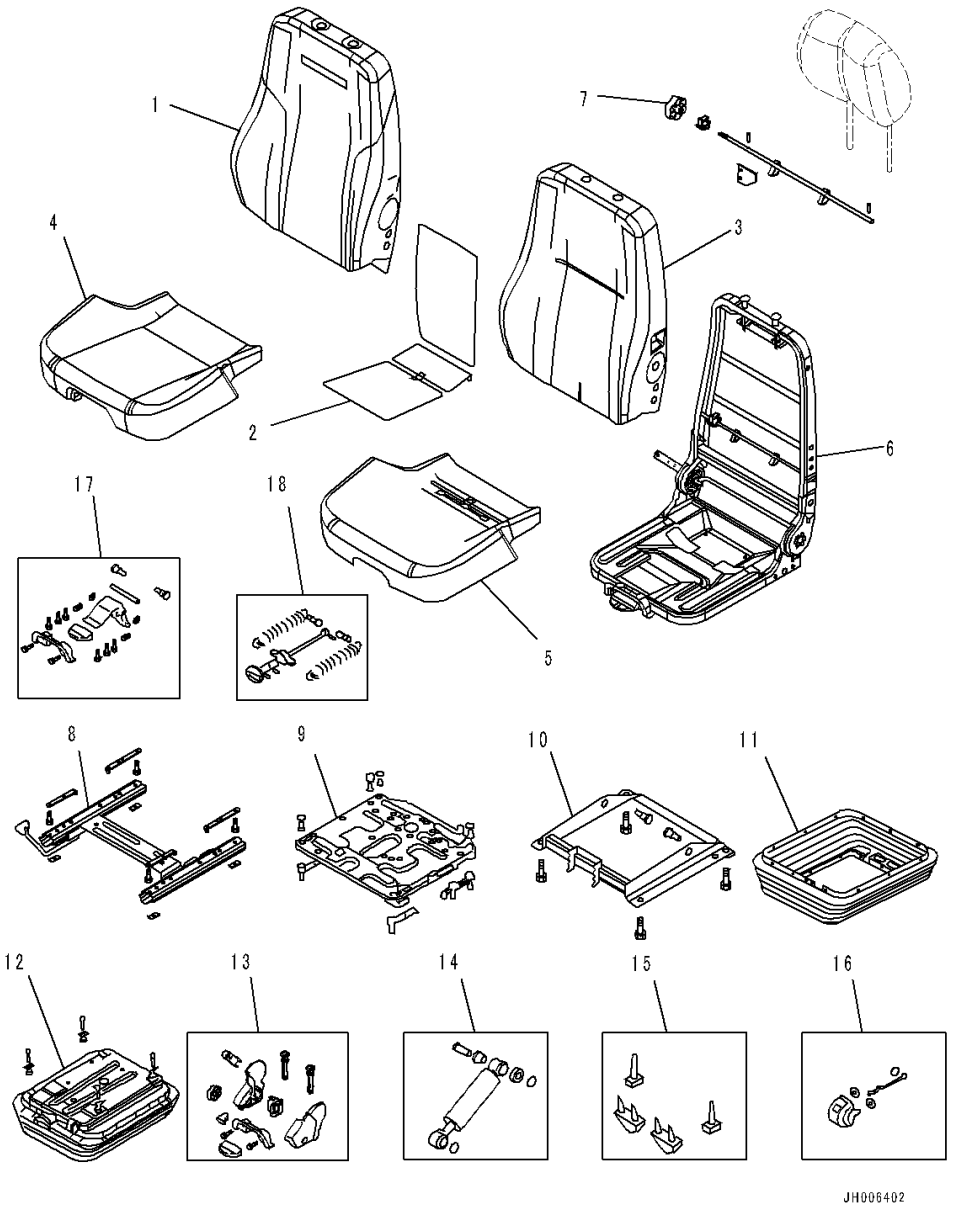

Index	Code	Part Number	Description	Qty	Serial Number
		17A-57-52200	Seat Assembly	1	1001-
		AS203500	• Upper Kit	1	1001-
1		AS203510	• • Back Cover Kit	1	1001-
2		AS202810	• • Heater Kit	1	1001-
3		AS203518	• • Back Foam Kit	1	1001-
4		AS203514	• • Seat Cover Kit	1	1001-
5		AS203521	• • Seat Foam Kit	1	1001-
6		AS203523	• • Frame Kit	1	1001-
7		AS203549	• • Lumbar Kit	1	1001-
8		AS203532	• Sliderail Kit	1	1001-
9		AS203528	• Swivel Kit	1	1001-
10		AS203527	• Tilt Kit	1	1001-
11		AS203538	• Suspension Cover Kit	1	1001-
12		AS203537	• Suspension Kit	1	1001-
13		AS203541	• Plastic Parts Kit	1	1001-
14		AS198304	• Damper Kit	1	1001-
15		AS167554	• Up Stop And Bump Stop Kit	1	1001-
16		AS170373	• Ride Indicator Kit	1	1001-
17		AS203542	• Tilt Lever Kit	1	1001-
18		AS203547	• Height Adjuster Kit	1	1001-

FIG. K0110-011001 Operator's Seat (Mechanical Suspension Type, Leather, Turn, Tilt, With Headrest) (Mounting)

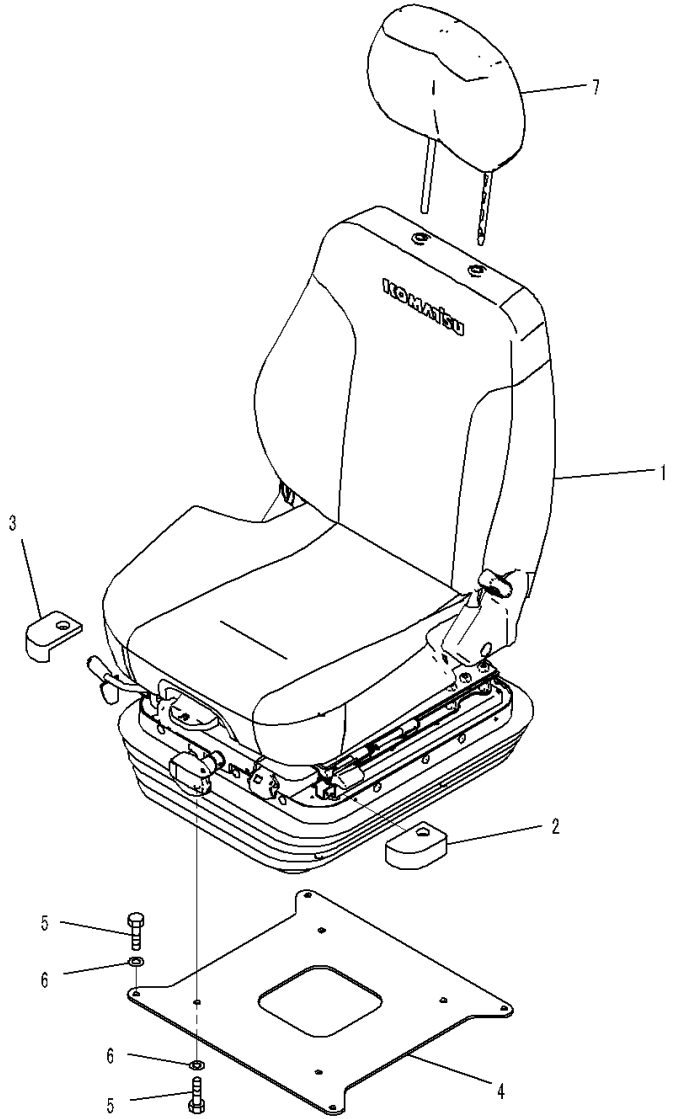

Index	Code	Part Number	Description	Qty	Serial Number
1		17A-57-52300	Seat Assembly	1	1001-
2		17A-57-51240	Cushion	1	1001-
3		17A-57-51250	Cushion	1	1001-
4		17A-57-51191	Plate	1	1001-
5		01010-D0825	Bolt	8	1001-
6		01643-70823	Washer	8	1001-
7		17A-57-52390	Headrest	1	1001-

FIG. K0110-011002 Operator's Seat (Mechanical Suspension Type, Leather, Turn, Tilt, With Headrest) (Inner Parts, Operator's Seat)

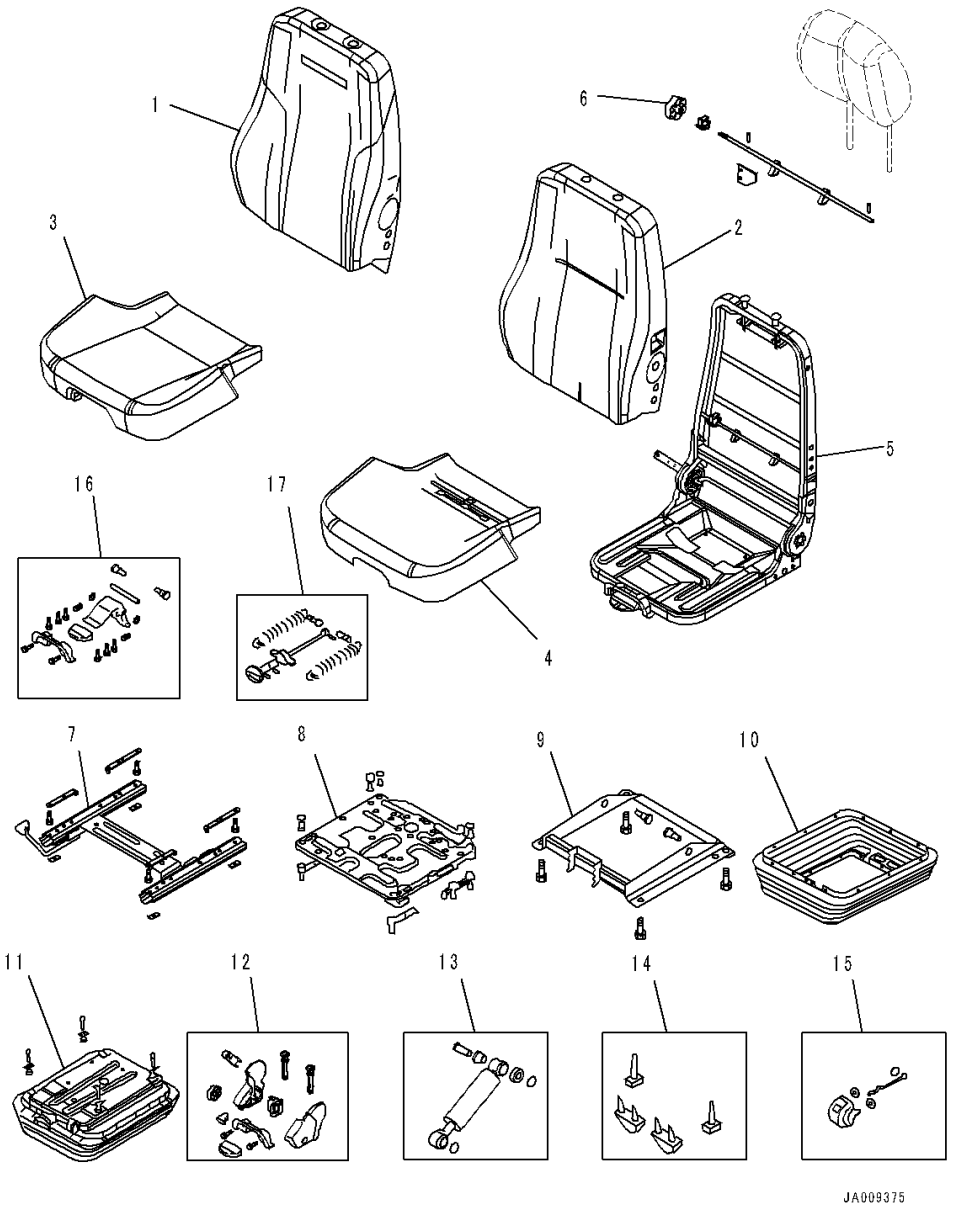

Index	Code	Part Number	Description	Qty	Serial Number
		17A-57-52300	Seat Assembly	1	1001-
		AS203505	• Upper Kit	1	1001-
1		AS203513	• • Back Cover Kit	1	1001-
2		AS203519	• • Back Foam Kit	1	1001-
3		AS203515	• • Seat Cover Kit	1	1001-
4		AS203521	• • Seat Foam Kit	1	1001-
5		AS203525	• • Frame Kit	1	1001-
6		AS203549	• • Lumbar Kit	1	1001-
7		AS203532	• Sliderail Kit	1	1001-
8		AS203528	• Swivel Kit	1	1001-
9		AS203527	• Tilt Kit	1	1001-
10		AS203538	• Suspension Cover Kit	1	1001-
11		AS203537	• Suspension Kit	1	1001-
12		AS203541	• Plastic Parts Kit	1	1001-
13		AS198304	• Damper Kit	1	1001-
14		AS167554	• Up Stop And Bump Stop Kit	1	1001-
15		AS170373	• Ride Indicator Kit	1	1001-
16		AS203542	• Tilt Lever Kit	1	1001-
17		AS203547	• Height Adjuster Kit	1	1001-

FIG. K0110-012001 Operator's Seat (Mechanical Suspension Type, Leather, Turn, Tilt, Hi-Back Type, With Headrest) (Mounting)

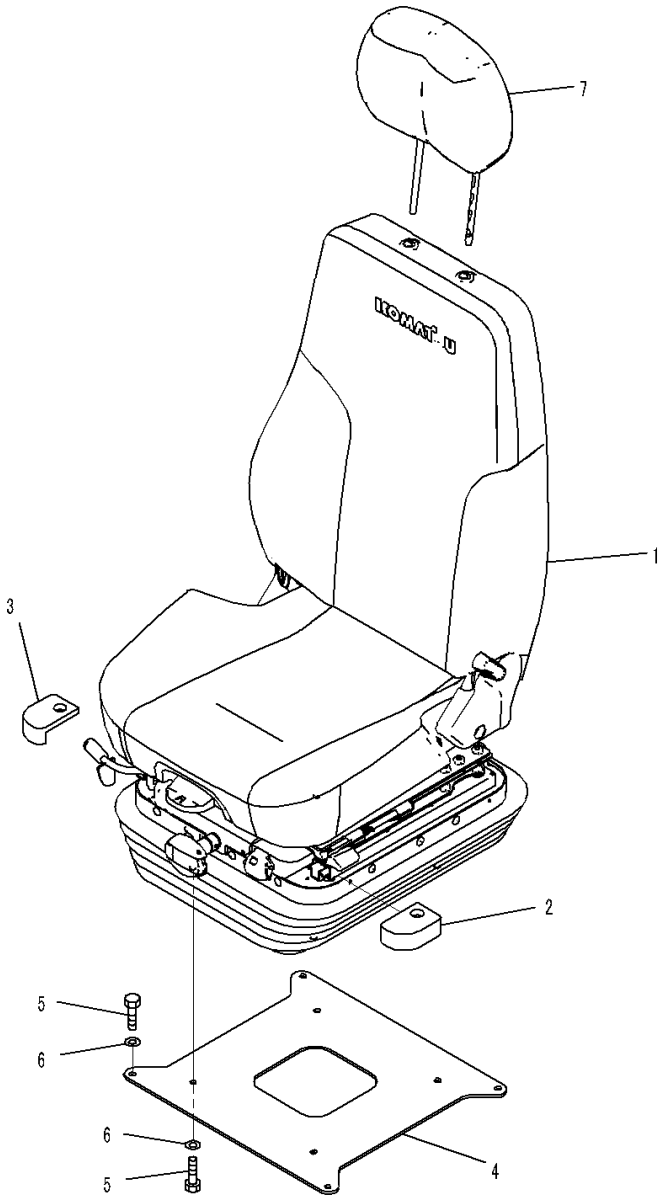

Index	Code	Part Number	Description	Qty	Serial Number
1		17A-57-52400	Seat Assembly	1	1001-
2		17A-57-51240	Cushion	1	1001-
3		17A-57-51250	Cushion	1	1001-
4		17A-57-51191	Plate	1	1001-
5		01010-D0825	Bolt	8	1001-
6		01643-70823	Washer	8	1001-
7		17A-57-52390	Headrest	1	1001-

FIG. K0110-012002 Operator's Seat (Mechanical Suspension Type, Leather, Turn, Tilt, Hi-Back Type, With Headrest) (Inner Parts, Operator's Seat)

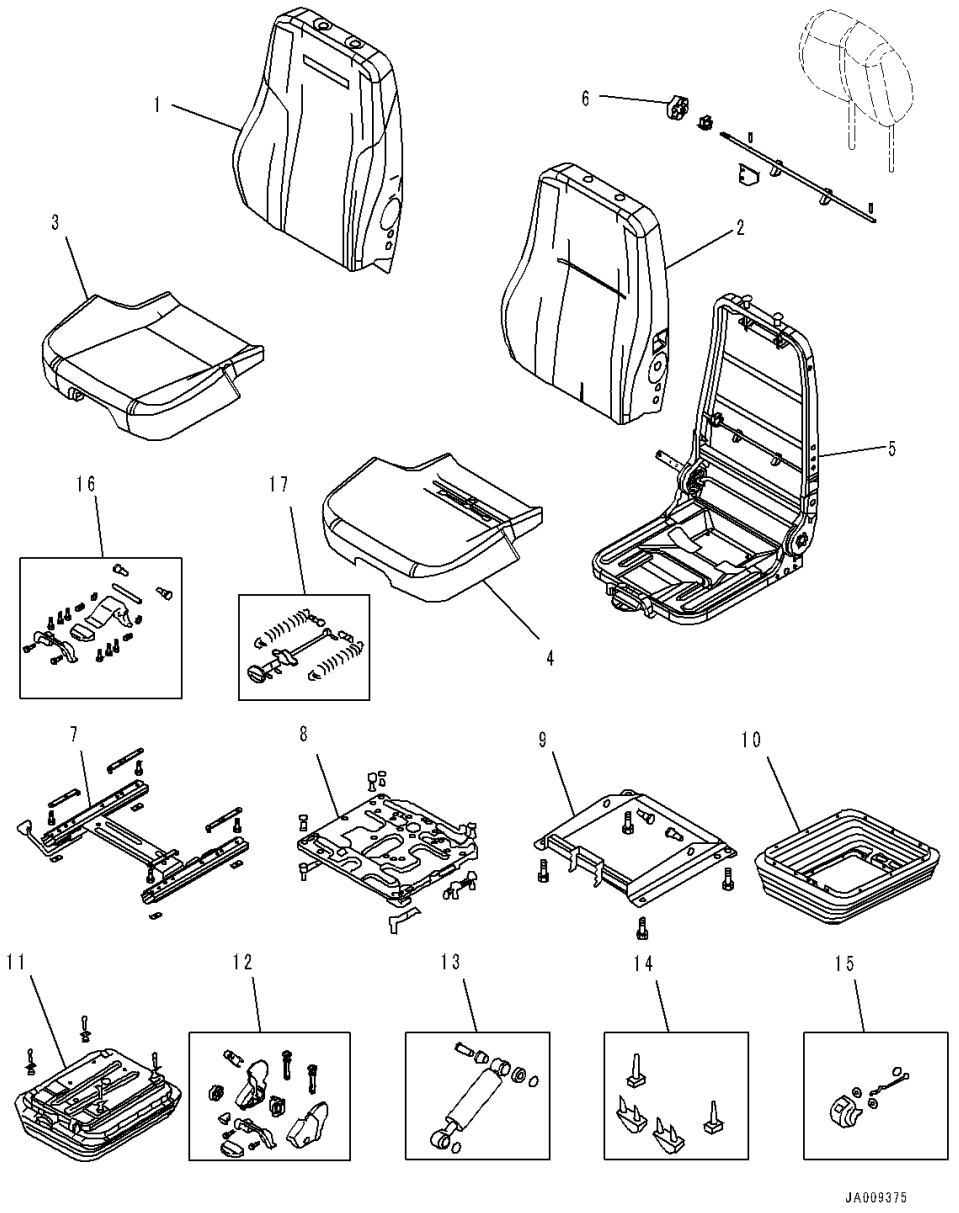

Index	Code	Part Number	Description	Qty	Serial Number
		17A-57-52400	Seat Assembly	1	1001-
		AS203503	• Upper Kit	1	1001-
1		AS203511	• • Back Cover Kit	1	1001-
2		AS203518	• • Back Foam Kit	1	1001-
3		AS203515	• • Seat Cover Kit	1	1001-
4		AS203521	• • Seat Foam Kit	1	1001-
5		AS203523	• • Frame Kit	1	1001-
6		AS203549	• • Lumbar Kit	1	1001-
7		AS203532	• Sliderail Kit	1	1001-
8		AS203528	• Swivel Kit	1	1001-
9		AS203527	• Tilt Kit	1	1001-
10		AS203538	• Suspension Cover Kit	1	1001-
11		AS203537	• Suspension Kit	1	1001-
12		AS203541	• Plastic Parts Kit	1	1001-
13		AS198304	• Damper Kit	1	1001-
14		AS167554	• Up Stop And Bump Stop Kit	1	1001-
15		AS170373	• Ride Indicator Kit	1	1001-
16		AS203542	• Tilt Lever Kit	1	1001-
17		AS203547	• Height Adjuster Kit	1	1001-

FIG. K0160-001001 Seat Belt

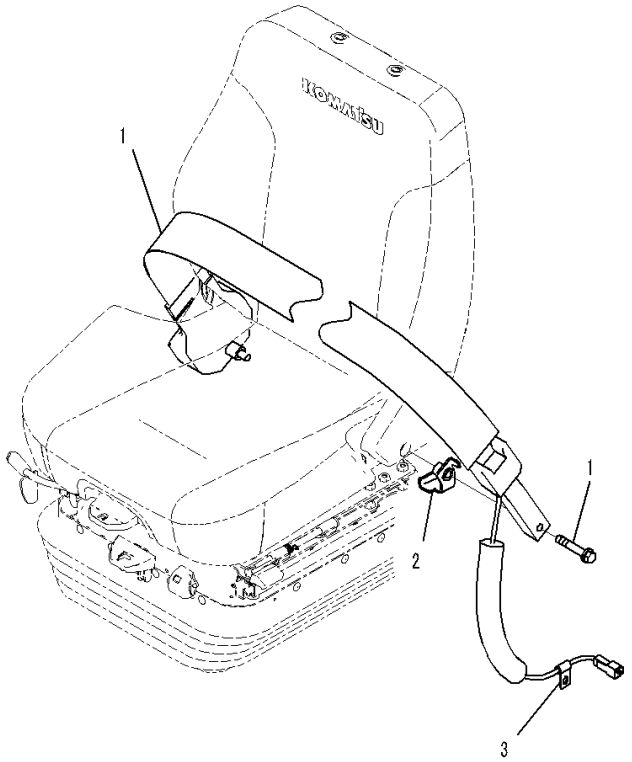

Index	Code	Part Number	Description	Qty	Serial Number
1		17A-57-51211	Seat Belt Kit	1	1001-
2		17A-57-51230	• Bracket	1	1001-
3		04434-50608	Clip	1	1001-

FIG. K0210-003001 ROPS Cab (Cab Body)

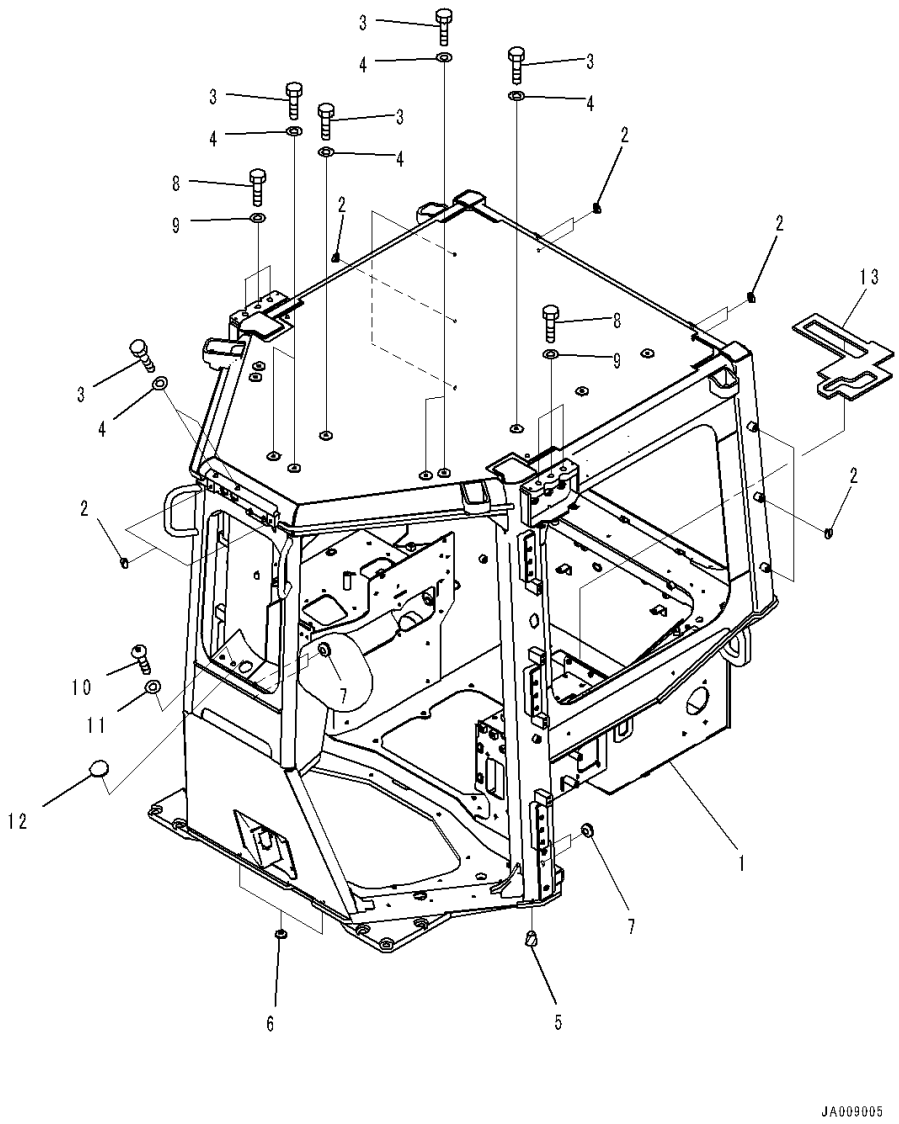

Index	Code	Part Number	Description	Qty	Serial Number
		Note: This list covers following specifications.			
		With AM-FM Stereo Radio With AUX Jack, North America			
		With AM-FM Stereo Radio With AUX Jack, Europe and Asia,			
		For EU New Noise Arrangement 2			
		With AM-FM Stereo Radio With AUX Jack, Europe and Asia			
1		154-Z11-8111	Cab Assembly	1	1001-
2		20Y-53-11380	Cap	12	1001-
3		01010-81220	Bolt	12	1001-
4		01643-31232	Washer	12	1001-
5		07049-01620	Plug	2	1001-
6		09415-00706	Cap	2	1001-
7		09415-01008	Cap	4	1001-
8		01010-82035	Bolt	6	1001-
9		01643-32060	Washer	6	1001-
10		01245-01230	Screw	2	1001-
11		01643-71232	Washer	2	1001-
12		09415-03614	Cap	1	1001-
13		17M-911-7641	Sheet	1	1001-

FIG. K0210-003002 ROPS Cab (Door and Latch, L.H.)

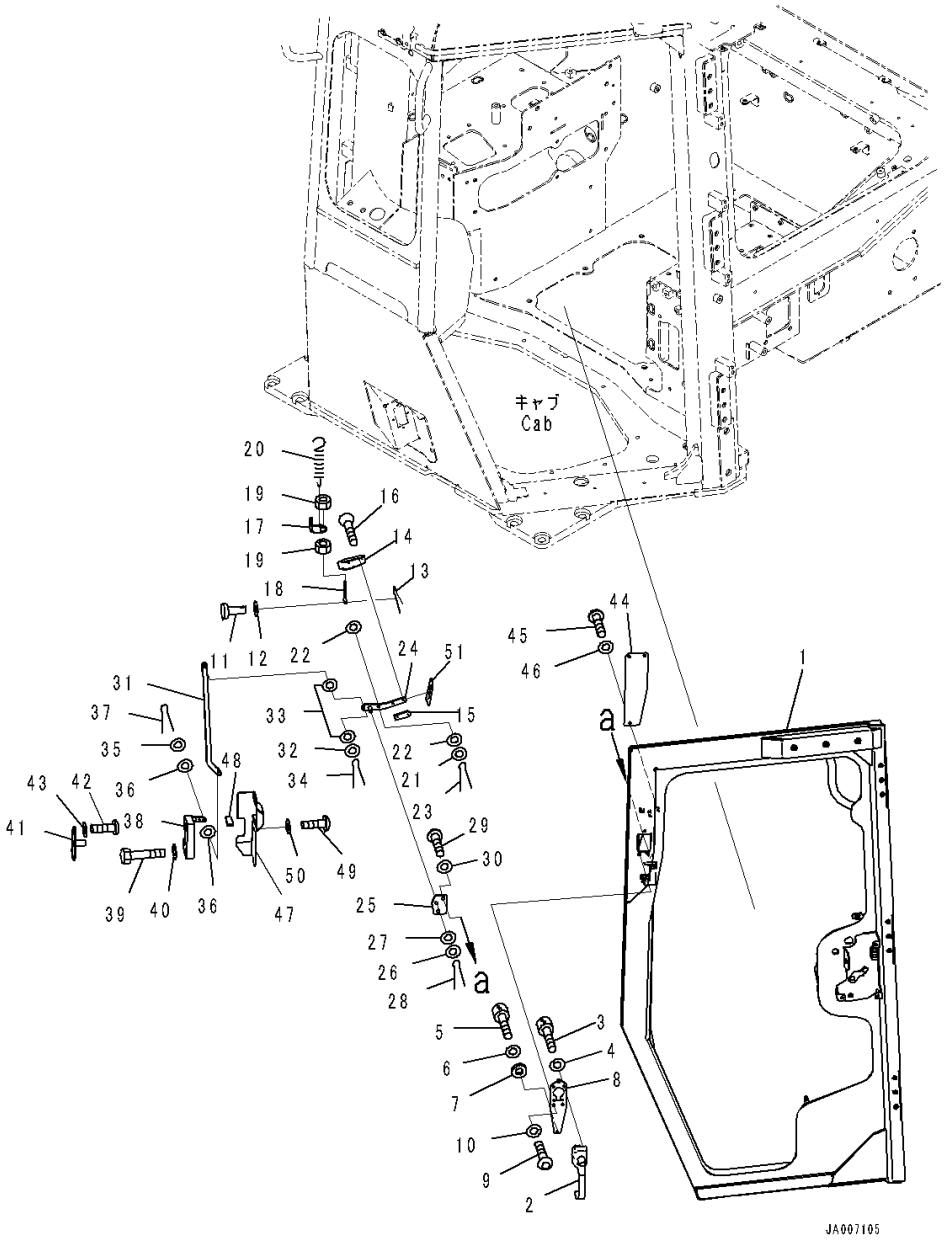

Index	Code	Part Number	Description	Qty	Serial Number
		Note: This list covers following specifications.			
		With AM-FM Stereo Radio With AUX Jack, North America			
		With AM-FM Stereo Radio With AUX Jack, Europe and Asia, For EU New Noise Arrangement 2			
		With AM-FM Stereo Radio With AUX Jack, North America, For 3D Machine Control Plug and Play			
		With AM-FM Stereo Radio With AUX Jack, Europe and Asia, For EU New Noise Arrangement 2, 3D Machine Control Plug and Play			
		With AM-FM Stereo Radio With AUX Jack, Europe and Asia			
		With AM-FM Stereo Radio With AUX Jack, Europe and Asia, For 3D Machine Control Plug and Play			
1		14X-Y79-6810	Door Assembly,L.H.	1	1001-
2		11Y-979-2571	Handle Assembly	1	1001-
3		01252-70520	Bolt	4	1001-
4		01641-20508	Washer, Flat	4	1001-
5		01252-70525	Bolt, Hexagon Socket Head	1	1001-
6		01641-20508	Washer, Flat	1	1001-
7		14X-Y79-3130	Spacer	1	1001-
8		12Y-978-3210	Plate	1	1001-
9		01245-00620	Screw	3	1001-
10		01643-70623	Washer	3	1001-
11		04205-10622	Pin	1	1001-
12		01643-70623	Washer	4	1001-
13		04050-11612	Pin, Cotter	1	1001-
14		12Y-978-3281	Knob	1	1001-
15		12Y-978-3290	Plate	1	1001-
16		01023-70412	Screw	2	1001-
17		14X-Y79-3220	Plate	1	1001-
18		14X-Y79-3360	Rod	1	1001-
19		01580-10605	Nut	2	1001-
20		176-06-42170	Spring	1	1001-
21		01643-70623	Washer	1	1001-
22		12Y-978-3310	Rubber	2	1001-
23		04050-11612	Pin, Cotter	1	1001-
24		14X-Y79-3651	Plate	1	1001-
25		12Y-978-3261	Plate	1	1001-
26		01643-70823	Washer	1	1001-
27		12Y-978-3360	Rubber	1	1001-
28		04050-12012	Pin, Cotter	1	1001-

FIG. K0210-003002 ROPS Cab (Door and Latch, L.H.)

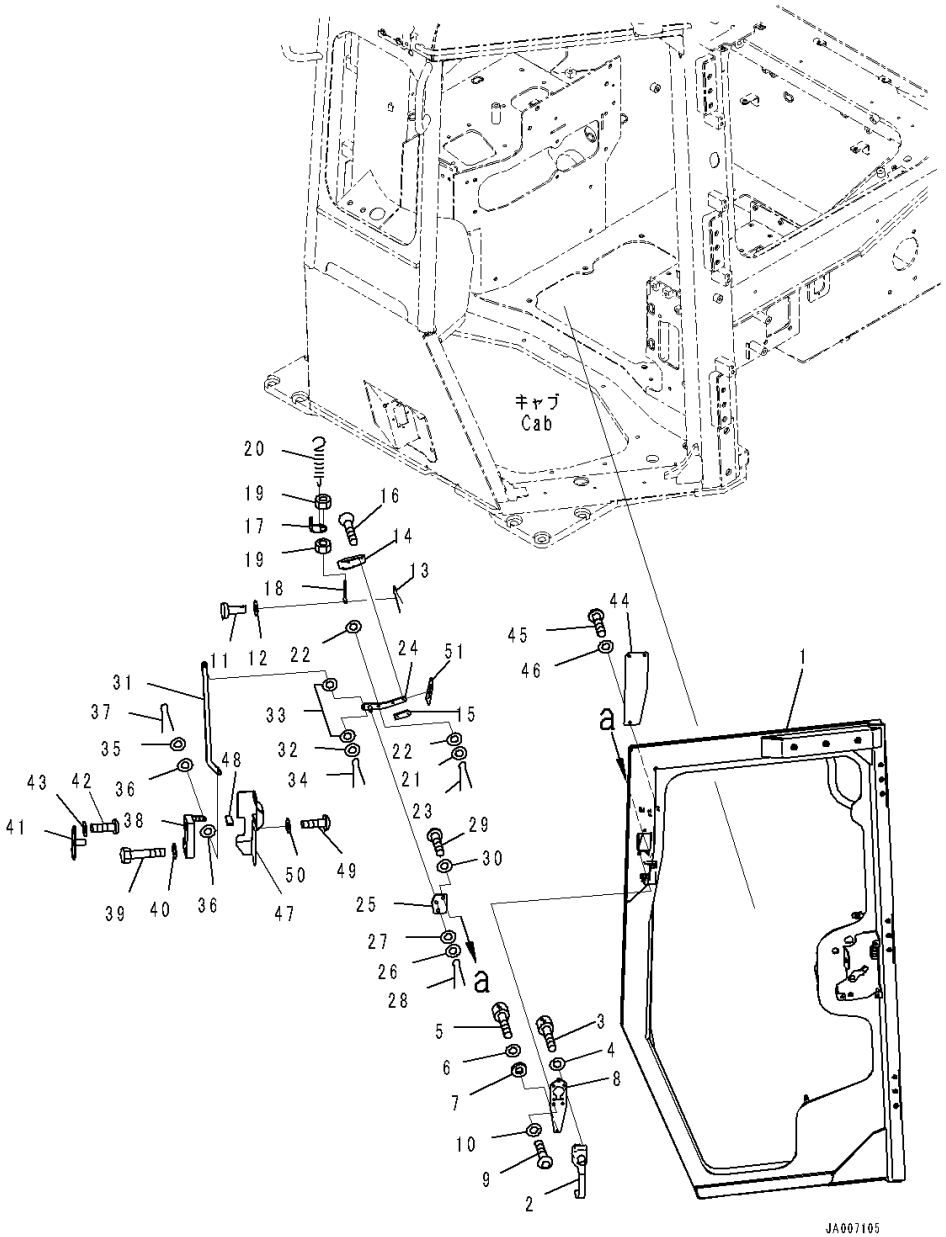

Index	Code	Part Number	Description	Qty	Serial Number
29		01245-00620	Screw	2	1001-
30		01643-70623	Washer	2	1001-
31		17A-979-3320	Plate	1	1001-
32		01640-20610	Washer	1	1001-
33		12Y-978-3310	Rubber	2	1001-
34		04050-11612	Pin, Cotter	1	1001-
35		01643-70623	Washer	1	1001-
36		12Y-978-3310	Rubber	2	1001-
37		04050-11612	Pin, Cotter	1	1001-
38		195-Z11-4520	Lock	1	1001-
39		01010-D0635	Bolt	4	1001-
40		01643-70623	Washer	4	1001-
41		12Y-978-3480	Striker	1	1001-
42		01245-00825	Screw	4	1001-
43		01643-70823	Washer	4	1001-
44		14X-Y79-3310	Plate	1	1001-
45		01245-00620	Screw	3	1001-
46		01643-70623	Washer	3	1001-
47		14X-Y79-6820	Cover,L.H.	1	1001-
48		17A-979-3811	• Sheet	1	1001-
49		01245-00620	Screw	2	1001-
50		01643-70623	Washer	2	1001-
51		17A-979-4120	Sheet	1	1001-

FIG. K0210-003003 ROPS Cab (Door Damper, Window and Wiper, L.H.)

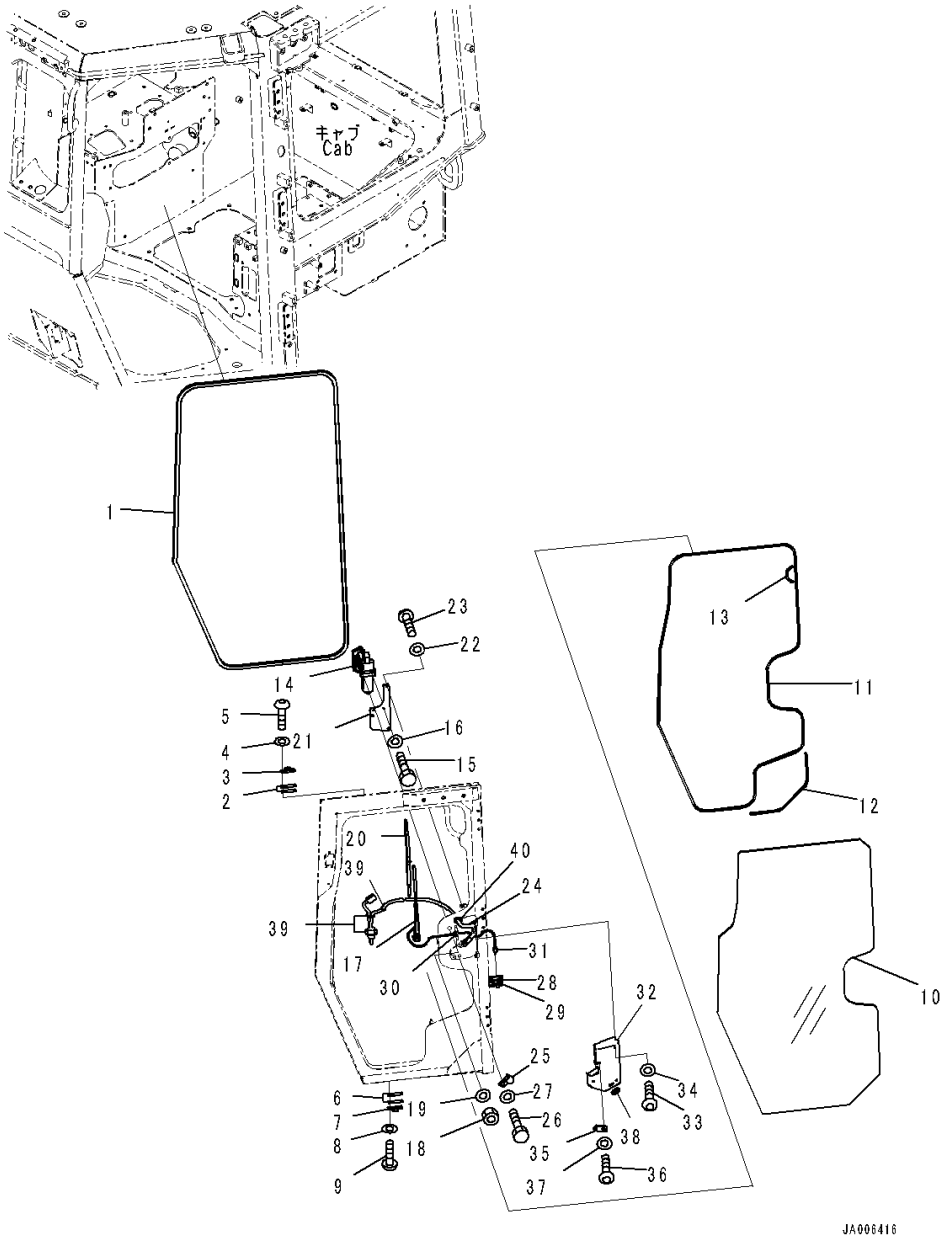

Index	Code	Part Number	Description	Qty	Serial Number
		Note: This list covers following specifications.			
		With AM-FM Stereo Radio With AUX Jack, North America			
		With AM-FM Stereo Radio With AUX Jack, Europe and Asia, For EU New Noise Arrangement 2			
		With AM-FM Stereo Radio With AUX Jack, North America, For 3D Machine Control Plug and Play			
		With AM-FM Stereo Radio With AUX Jack, Europe and Asia, For EU New Noise Arrangement 2, 3D Machine Control Plug and Play			
		With AM-FM Stereo Radio With AUX Jack, Europe and Asia			
		With AM-FM Stereo Radio With AUX Jack, Europe and Asia, For 3D Machine Control Plug and Play			
1		12Y-54-26611	Seal,L.H.	1	1001-
2		14X-911-1761	Shim, T=1.2mm	2	1001-
3		14X-911-1690	Damper	1	1001-
4		01643-70623	Washer	2	1001-
5		01245-00620	Screw	2	1001-
6		14X-911-1761	Shim, T=1.2mm	2	1001-
7		14X-911-1690	Damper	1	1001-
8		01643-70623	Washer	2	1001-
9		01245-00620	Screw	2	1001-
10		14X-Y79-1361	Glass	1	1001-
11		14X-Y79-1380	Seal	1	1001-
12		14X-Y79-1390	Seal	1	1001-
13		14X-Y79-1410	Seal	1	1001-
14		12Y-978-2431	Wiper Motor	1	1001-
15		01010-80616	Bolt	2	1001-
16		01643-30623	Washer	2	1001-
17		12Y-978-2490	Arm, Wiper	1	1001-
18		01580-10806	Nut	1	1001-
19		01640-20816	Washer	1	1001-
20		17A-Z11-2581	Wiper Blade	1	1001-
21		14X-Y79-3280	Plate	1	1001-
22		01643-70823	Washer	3	1001-
23		01245-00820	Screw	3	1001-
24		17A-06-52142	Wiring Harness	1	1235-
25		04434-51710	Clip	1	1001-
26		01010-81020	Bolt	1	1001-
27		01643-31032	Washer	1	1001-
28		20U-54-46520	Hook, Sticker Type	1	1001-

FIG. K0210-003003 ROPS Cab (Door Damper, Window and Wiper, L.H.)

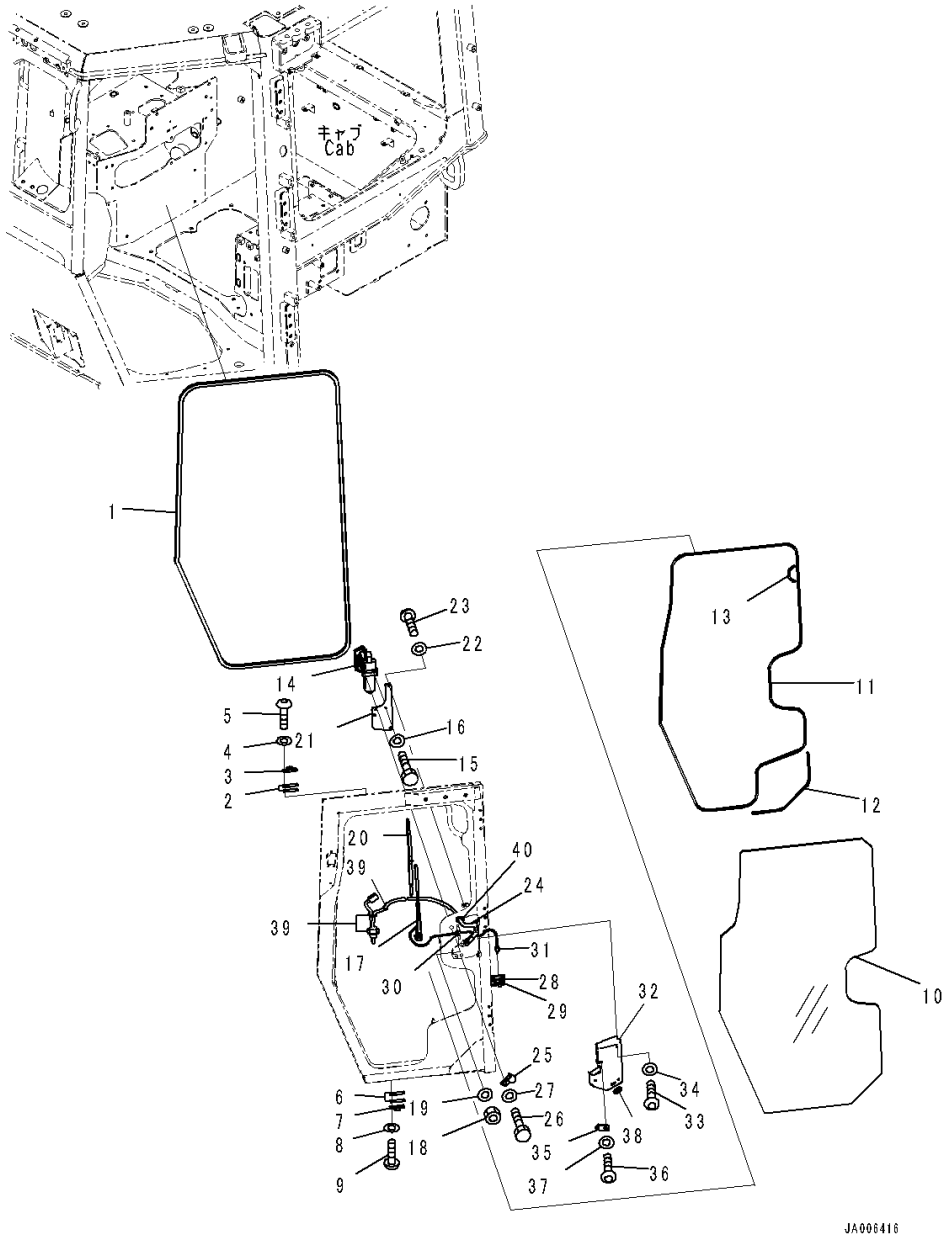

Index	Code	Part Number	Description	Qty	Serial Number
29		08034-20519	Band	1	1001-
30		17A-Z11-2660	Cap	1	1001-
31		17A-Z11-4610	Valve	1	1001-
32		14X-Y79-3472	Cover	1	1001-
33		01245-00620	Screw	3	1001-
34		01643-70623	Washer	3	1001-
35		14X-Y79-3770	Bracket	1	1001-
36		01245-00620	Screw	1	1001-
37		01643-70623	Washer	1	1001-
38		08037-02512	Grommet	1	1001-
39		08034-20519	Band	3	1001-
40		135-06-34260	Grommet	1	1001-

FIG. K0210-003004 ROPS Cab (Door Cover, L.H.)

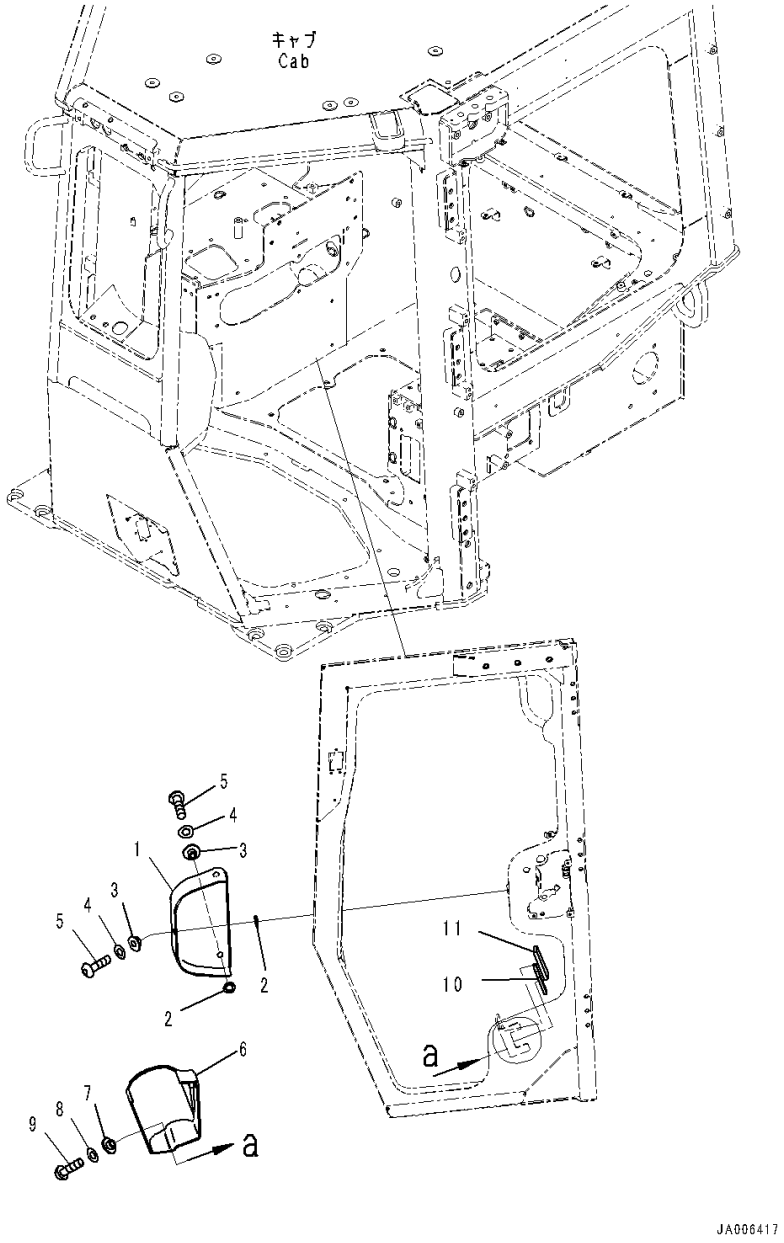

Index	Code	Part Number	Description	Qty	Serial Number
		Note: This list covers following specifications.			
		With AM-FM Stereo Radio With AUX Jack, North America			
		With AM-FM Stereo Radio With AUX Jack, Europe and Asia, For EU New Noise Arrangement 2			
		With AM-FM Stereo Radio With AUX Jack, North America, For 3D Machine Control Plug and Play			
		With AM-FM Stereo Radio With AUX Jack, Europe and Asia, For EU New Noise Arrangement 2, 3D Machine Control Plug and Play			
		With AM-FM Stereo Radio With AUX Jack, Europe and Asia			
		With AM-FM Stereo Radio With AUX Jack, Europe and Asia, For 3D Machine Control Plug and Play			
1		17A-Z11-5430	Cover	1	1001-
2		17A-Z11-5651	• Sheet	3	1001-
3		12Y-978-2660	Collar	3	1001-
4		01643-70623	Washer	3	1001-
5		01245-00620	Screw	3	1001-
6		14X-Y79-3240	Cover	1	1001-
7		12Y-978-2660	Collar	3	1001-
8		01643-70623	Washer	3	1001-
9		01245-00620	Screw	3	1001-
10		14X-Y79-3261	Rubber	1	1001-
11		14X-Y79-3350	Rubber	1	1001-

FIG. K0210-003005 ROPS Cab (Door and Latch, R.H.)

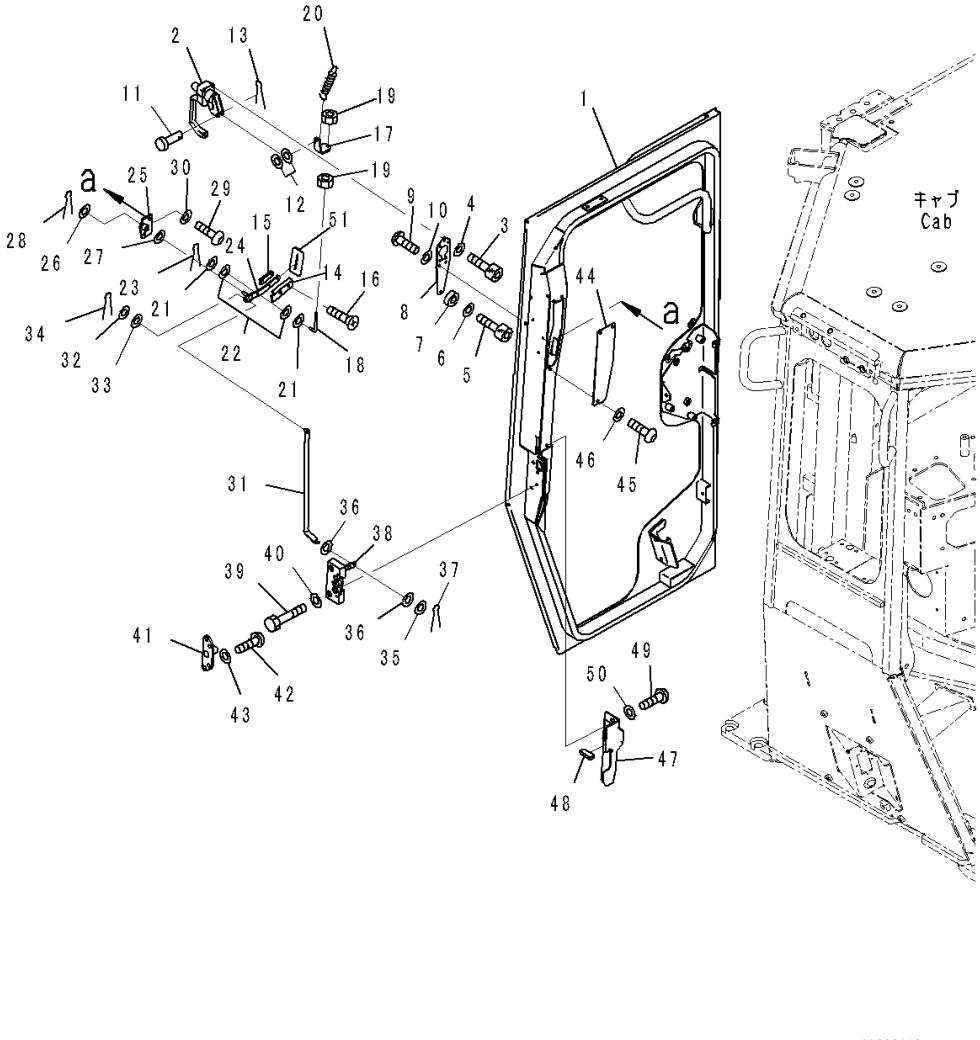

Index	Code	Part Number	Description	Qty	Serial Number
		Note: This list covers following specifications.			
		With AM-FM Stereo Radio With AUX Jack, North America			
		With AM-FM Stereo Radio With AUX Jack, Europe and Asia,			
		For EU New Noise Arrangement 2			
1		14X-Y79-6910	Door Assembly	1	1001-
2		11Y-979-2571	Handle Assembly	1	1001-
3		01252-70520	Bolt	4	1001-
4		01641-20508	Washer, Flat	4	1001-
5		01252-70525	Bolt, Hexagon Socket Head	1	1001-
6		01641-20508	Washer, Flat	1	1001-
7		14X-Y79-3130	Spacer	1	1001-
8		12Y-978-3210	Plate	1	1001-
9		01245-00620	Screw	3	1001-
10		01643-70623	Washer	3	1001-
11		04205-10622	Pin	1	1001-
12		01643-70623	Washer	4	1001-
13		04050-11612	Pin, Cotter	1	1001-
14		12Y-978-3281	Knob	1	1001-
15		12Y-978-3290	Plate	1	1001-
16		01023-70412	Screw	2	1001-
17		14X-Y79-3230	Plate	1	1001-
18		14X-Y79-3360	Rod	1	1001-
19		01580-10605	Nut	2	1001-
20		176-06-42170	Spring	1	1001-
21		01643-70623	Washer	1	1001-
22		12Y-978-3310	Rubber	2	1001-
23		04050-11612	Pin, Cotter	1	1001-
24		14X-Y79-3661	Plate	1	1001-
25		12Y-978-3271	Plate	1	1001-
26		01643-70823	Washer	1	1001-
27		12Y-978-3360	Rubber	1	1001-
28		04050-12012	Pin, Cotter	1	1001-
29		01245-00620	Screw	2	1001-
30		01643-70623	Washer	2	1001-
31		17A-979-3330	Plate	1	1001-
32		01640-20610	Washer	1	1001-
33		12Y-978-3310	Rubber	2	1001-
34		04050-11612	Pin, Cotter	1	1001-
35		01643-70623	Washer	1	1001-
36		12Y-978-3310	Rubber	2	1001-

FIG. K0210-003005 ROPS Cab (Door and Latch, R.H.)

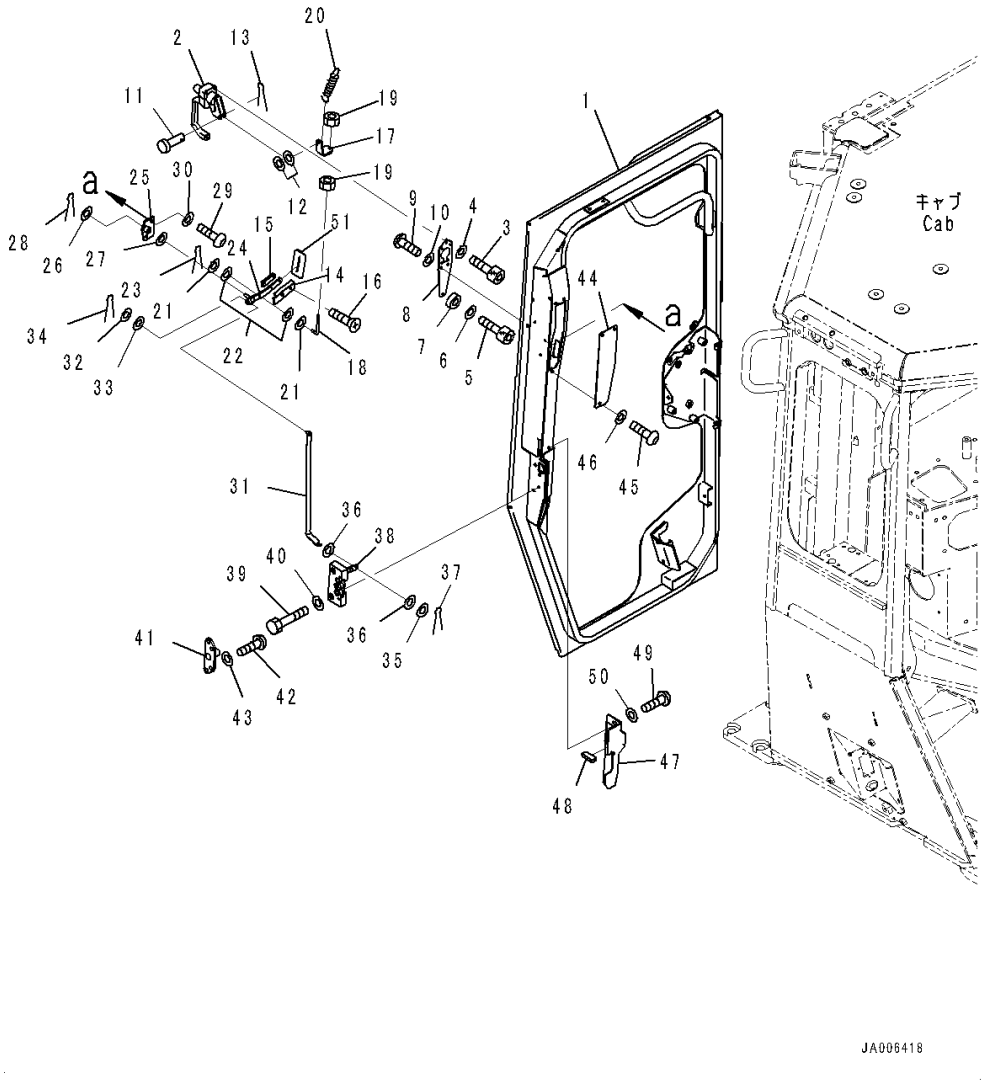

Index	Code	Part Number	Description	Qty	Serial Number
37		04050-11612	Pin, Cotter	1	1001-
38		195-Z11-4510	Lock	1	1001-
39		01010-D0635	Bolt	4	1001-
40		01643-70623	Washer	4	1001-
41		12Y-978-3480	Striker	1	1001-
42		01245-00825	Screw	4	1001-
43		01643-70823	Washer	4	1001-
44		14X-Y79-3310	Plate	1	1001-
45		01245-00620	Screw	3	1001-
46		01643-70623	Washer	3	1001-
47		14X-Y79-6830	Cover,R.H.	1	1001-
48		17A-979-3811	• Sheet	1	1001-
49		01245-00620	Screw	2	1001-
50		01643-70623	Washer	2	1001-
51		17A-979-4120	Sheet	1	1001-

FIG. K0210-003006 ROPS Cab (Door Damper, Window and Wiper, R.H.)

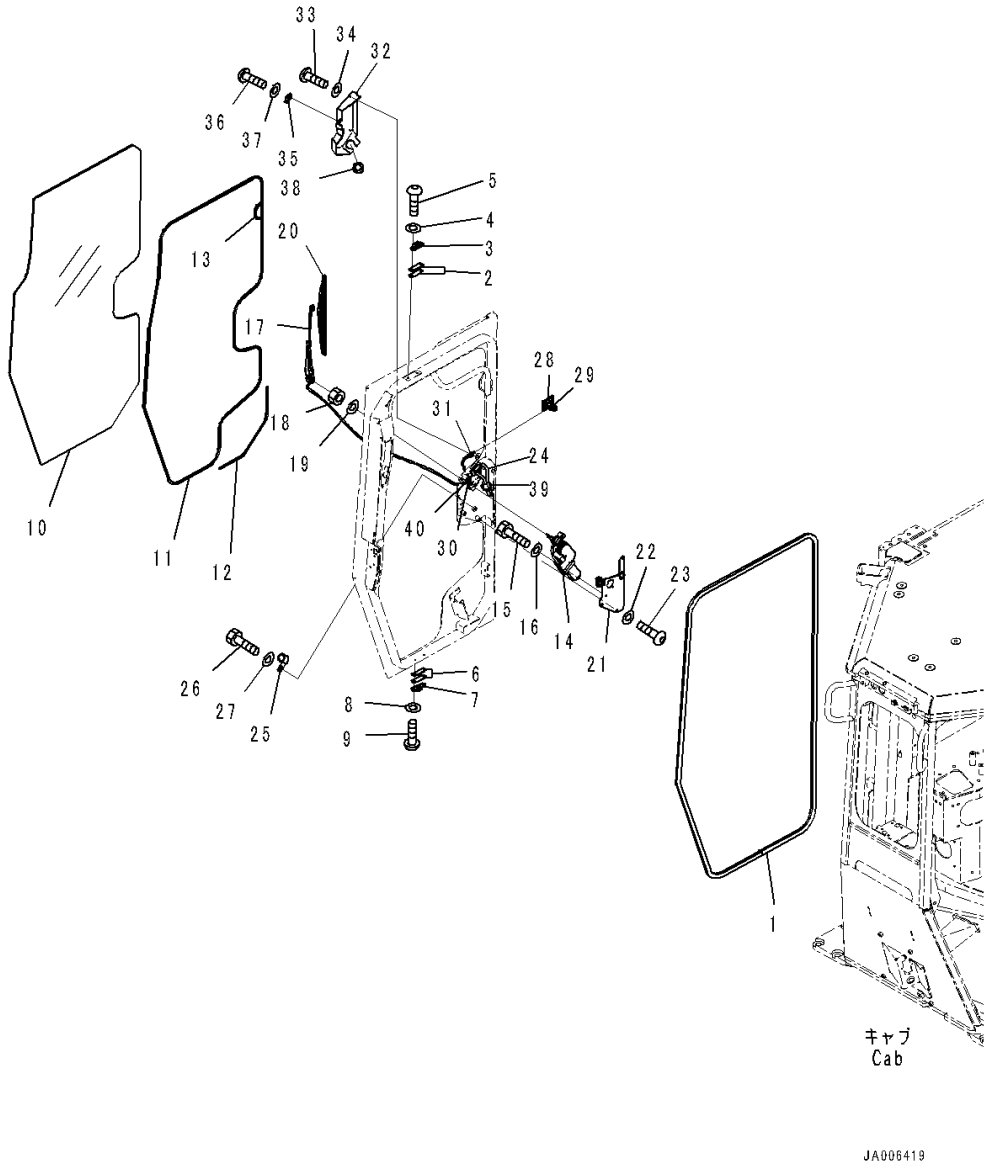

Index	Code	Part Number	Description	Qty	Serial Number
		Note: This list covers following specifications.			
		With AM-FM Stereo Radio With AUX Jack, North America			
		With AM-FM Stereo Radio With AUX Jack, Europe and Asia, For EU New Noise Arrangement 2			
		With AM-FM Stereo Radio With AUX Jack, North America, For 3D Machine Control Plug and Play			
		With AM-FM Stereo Radio With AUX Jack, Europe and Asia, For EU New Noise Arrangement 2, 3D Machine Control Plug and Play			
		With AM-FM Stereo Radio With AUX Jack, Europe and Asia			
		With AM-FM Stereo Radio With AUX Jack, Europe and Asia, For 3D Machine Control Plug and Play			
1		12Y-54-26621	Seal,R.H.	1	1001-
2		14X-911-1761	Shim, T=1.2mm	2	1001-
3		14X-911-1690	Damper	1	1001-
4		01643-70623	Washer	2	1001-
5		01245-00620	Screw	2	1001-
6		14X-911-1761	Shim, T=1.2mm	2	1001-
7		14X-911-1690	Damper	1	1001-
8		01643-70623	Washer	2	1001-
9		01245-00620	Screw	2	1001-
10		14X-Y79-1371	Glass	1	1001-
11		14X-Y79-1380	Seal	1	1001-
12		14X-Y79-1390	Seal	1	1001-
13		14X-Y79-1410	Seal	1	1001-
14		12Y-978-2441	Wiper Motor	1	1001-
15		01010-80616	Bolt	2	1001-
16		01643-30623	Washer	2	1001-
17		12Y-978-2490	Arm, Wiper	1	1001-
18		01580-10806	Nut	1	1001-
19		01640-20816	Washer	1	1001-
20		17A-Z11-2581	Wiper Blade	1	1001-
21		14X-Y79-6290	Plate,R.H.	1	1001-
22		01643-70823	Washer	3	1001-
23		01245-00820	Screw	3	1001-
24		17A-06-52152	Wiring Harness	1	1235-
25		04434-51710	Clip	1	1001-
26		01010-81020	Bolt	1	1001-
27		01643-31032	Washer	1	1001-
28		20U-54-46520	Hook, Sticker Type	1	1001-

FIG. K0210-003006 ROPS Cab (Door Damper, Window and Wiper, R.H.)

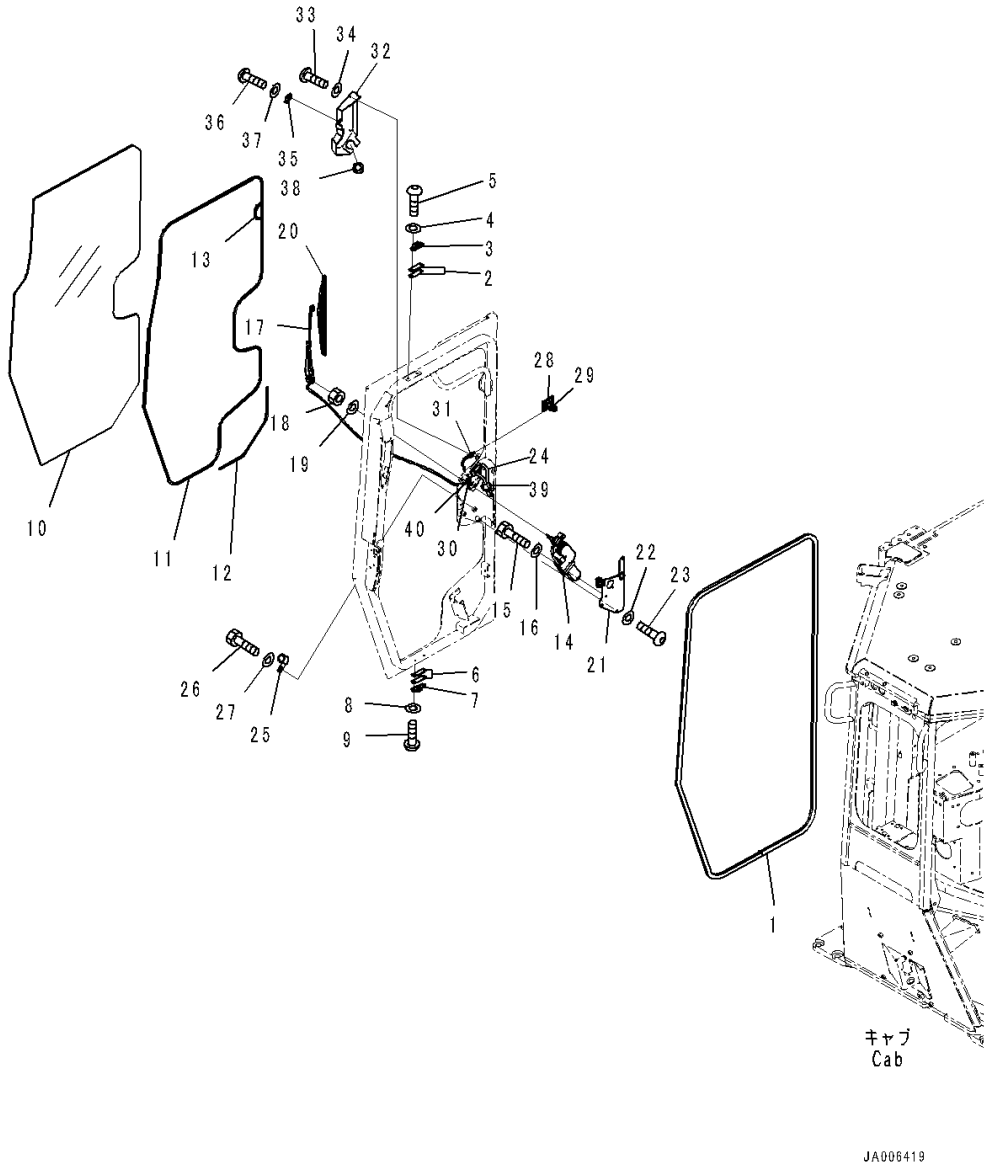

Index	Code	Part Number	Description	Qty	Serial Number
29		08034-20519	Band	1	1001-
30		17A-Z11-2660	Cap	1	1001-
31		17A-Z11-4610	Valve	1	1001-
32		14X-Y79-3482	Cover	1	1001-
33		01245-00620	Screw	3	1001-
34		01643-70623	Washer	3	1001-
35		14X-Y79-3780	Bracket	1	1001-
36		01245-00620	Screw	1	1001-
37		01643-70623	Washer	1	1001-
38		08037-02512	Grommet	1	1001-
39		08034-20519	Band	1	1001-
40		135-06-34260	Grommet	1	1001-

FIG. K0210-003007 ROPS Cab (Door Cover, R.H.)

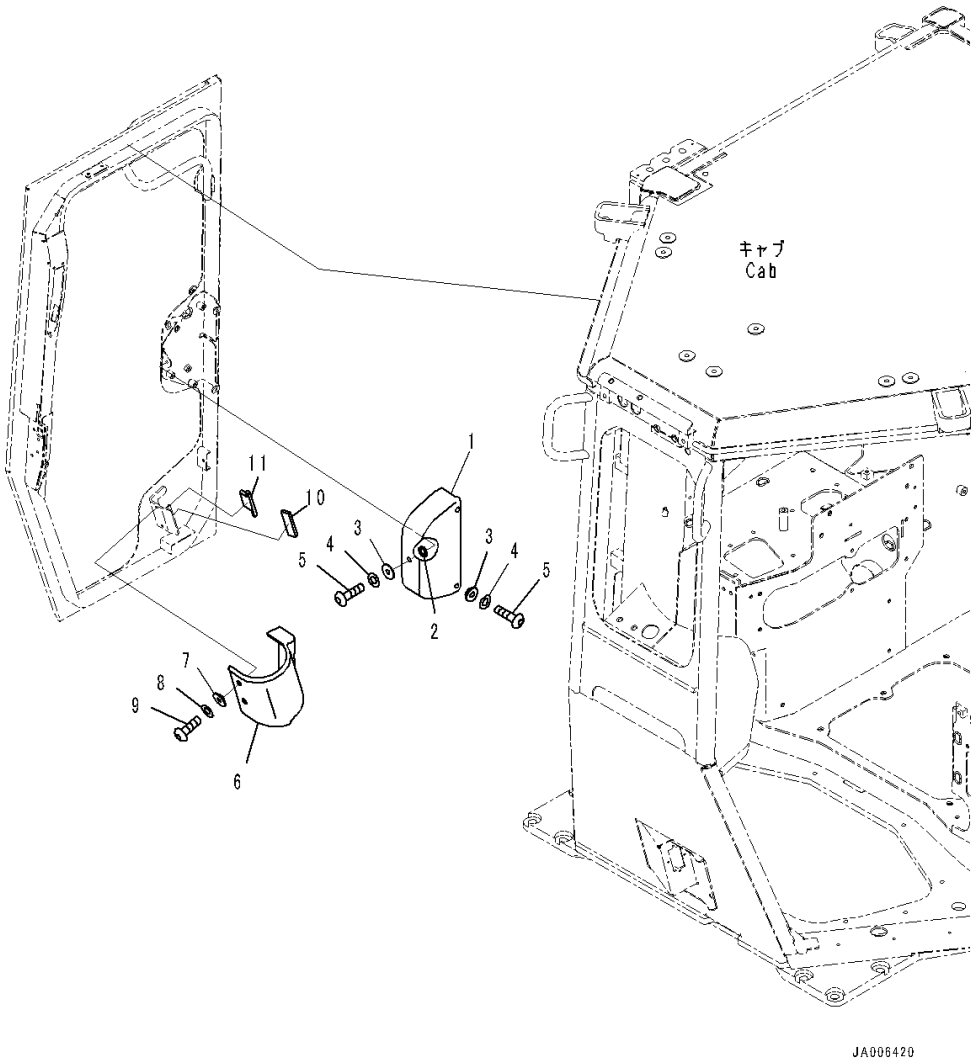

Index	Code	Part Number	Description	Qty	Serial Number
		Note: This list covers following specifications.			
		With AM-FM Stereo Radio With AUX Jack, North America			
		With AM-FM Stereo Radio With AUX Jack, Europe and Asia, For EU New Noise Arrangement 2			
		With AM-FM Stereo Radio With AUX Jack, North America, For 3D Machine Control Plug and Play			
		With AM-FM Stereo Radio With AUX Jack, Europe and Asia, For EU New Noise Arrangement 2, 3D Machine Control Plug and Play			
		With AM-FM Stereo Radio With AUX Jack, Europe and Asia			
		With AM-FM Stereo Radio With AUX Jack, Europe and Asia, For 3D Machine Control Plug and Play			
1		17A-Z11-5430	Cover	1	1001-
2		17A-Z11-5651	• Sheet	3	1001-
3		12Y-978-2660	Collar	3	1001-
4		01643-70623	Washer	3	1001-
5		01245-00620	Screw	3	1001-
6		14X-Y79-3250	Cover,R.H.	1	1001-
7		12Y-978-2660	Collar	3	1001-
8		01643-70623	Washer	3	1001-
9		01245-00620	Screw	3	1001-
10		14X-Y79-3261	Rubber	1	1001-
11		14X-Y79-3350	Rubber	1	1001-

FIG. K0210-003008 ROPS Cab (Door Hinge)

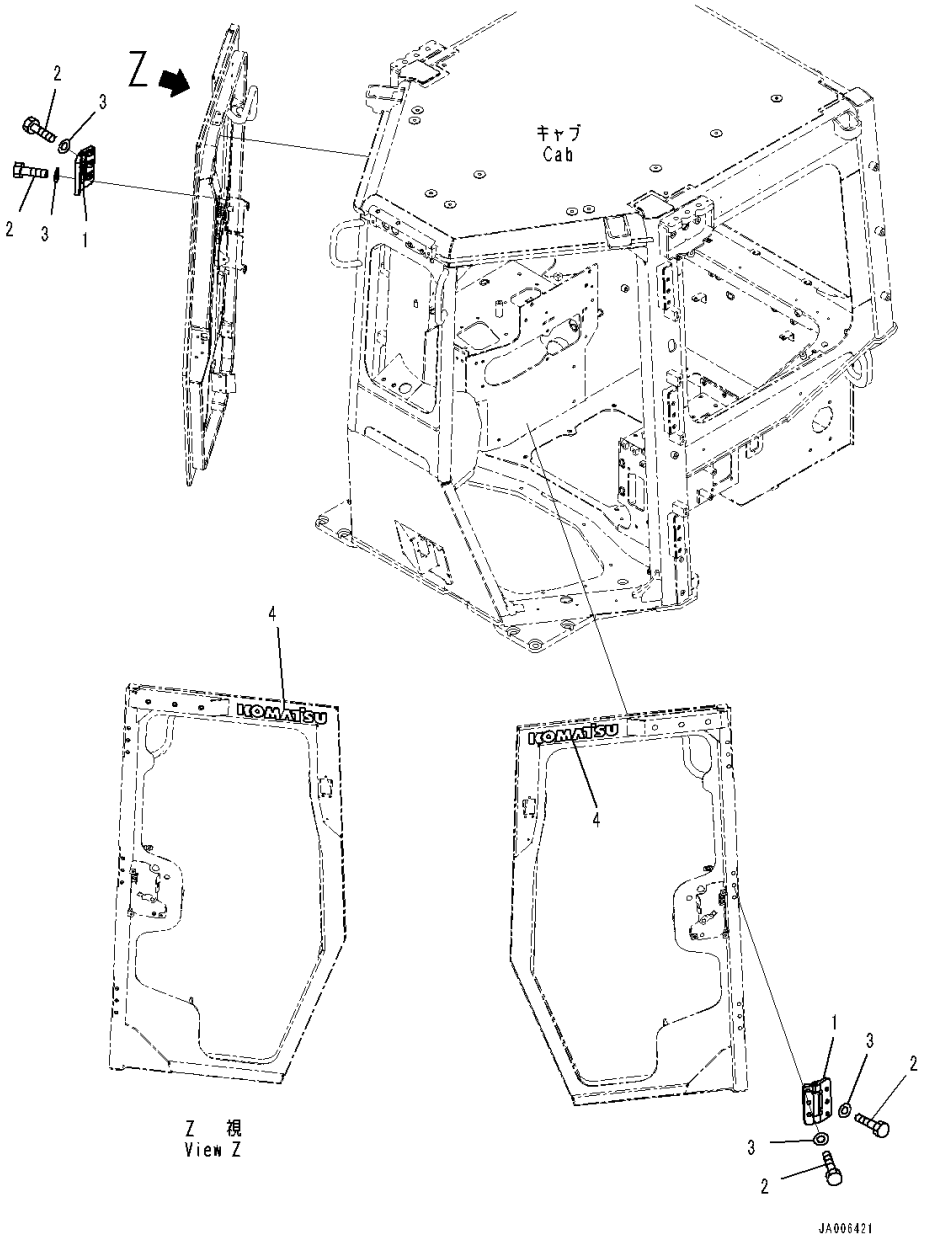

Index	Code	Part Number	Description	Qty	Serial Number
		Note: This list covers following specifications.			
		With AM-FM Stereo Radio With AUX Jack, North America			
		With AM-FM Stereo Radio With AUX Jack, Europe and Asia, For EU New Noise Arrangement 2			
		With AM-FM Stereo Radio With AUX Jack, North America, For 3D Machine Control Plug and Play			
		With AM-FM Stereo Radio With AUX Jack, Europe and Asia, For EU New Noise Arrangement 2, 3D Machine Control Plug and Play			
		With AM-FM Stereo Radio With AUX Jack, Europe and Asia			
		With AM-FM Stereo Radio With AUX Jack, Europe and Asia, For 3D Machine Control Plug and Play			
1		14X-Y79-3671	Hinge	6	1001-
2		01010-D1040	Bolt	36	1001-
3		01643-71032	Washer	36	1001-
4		09693-00300	Emblem, KOMATSU	2	1113-

FIG. K0210-003009 ROPS Cab (Door Open Lock) (1/2)

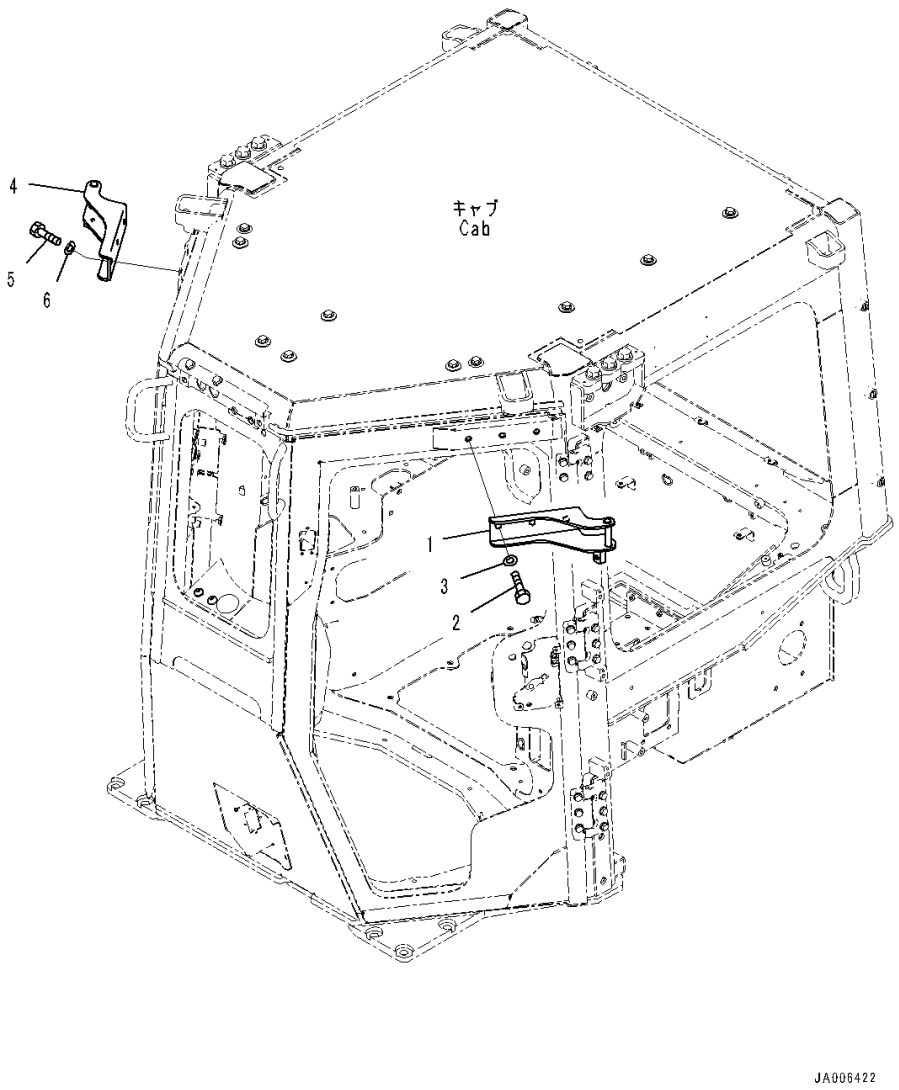

Index	Code	Part Number	Description	Qty	Serial Number
		Note: This list covers following specifications.			
		With AM-FM Stereo Radio With AUX Jack, North America			
		With AM-FM Stereo Radio With AUX Jack, Europe and Asia, For EU New Noise Arrangement 2			
		With AM-FM Stereo Radio With AUX Jack, North America, For 3D Machine Control Plug and Play			
		With AM-FM Stereo Radio With AUX Jack, Europe and Asia, For EU New Noise Arrangement 2, 3D Machine Control Plug and Play			
		With AM-FM Stereo Radio With AUX Jack, Europe and Asia			
		With AM-FM Stereo Radio With AUX Jack, Europe and Asia, For 3D Machine Control Plug and Play			
1		14X-Y79-6410	Striker	1	1001-
2		01010-D1230	Bolt	3	1001-
3		01643-71232	Washer	3	1001-
4		14X-Y79-6420	Striker	1	1001-
5		01010-D1230	Bolt	3	1001-
6		01643-71232	Washer	3	1001-

FIG. K0210-003010 ROPS Cab (Door Open Lock, L.H.)

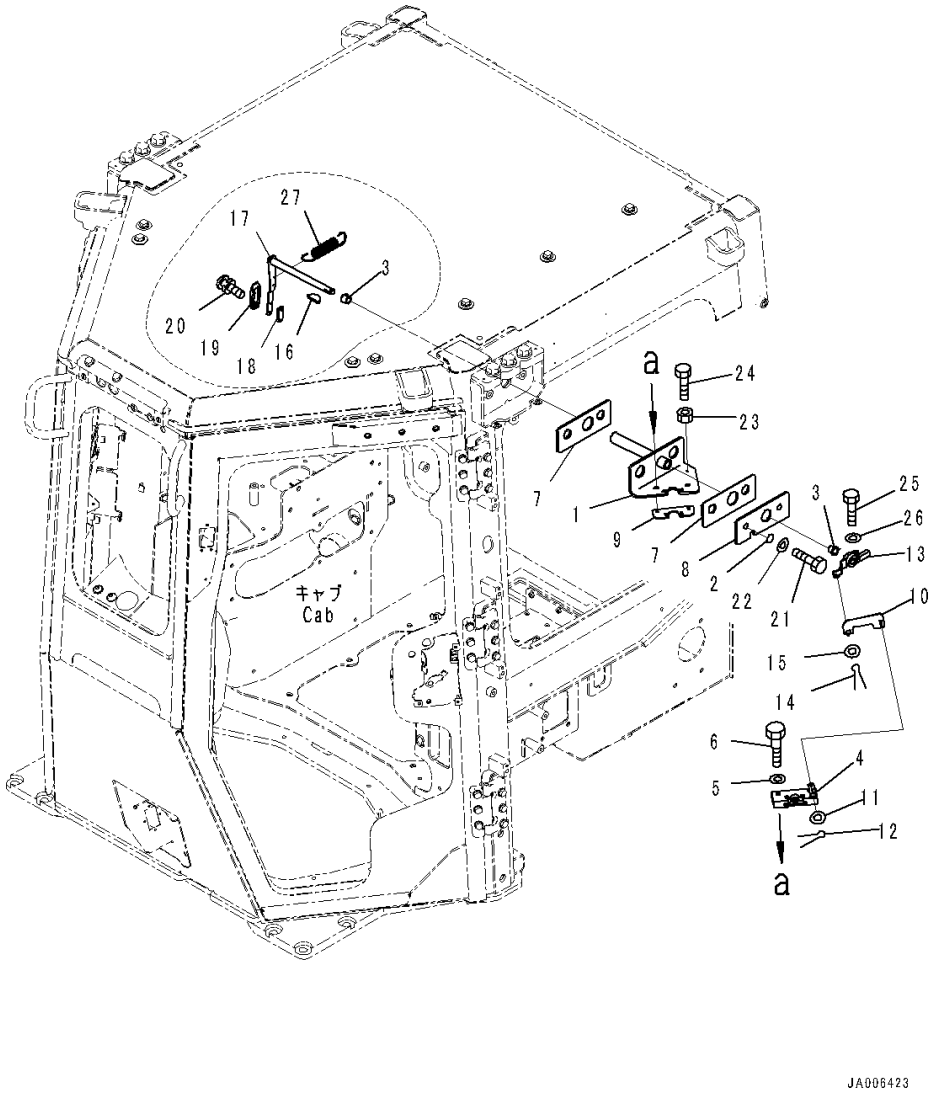

Index	Code	Part Number	Description	Qty	Serial Number
		Note: This list covers following specifications.			
		With AM-FM Stereo Radio With AUX Jack, North America			
		With AM-FM Stereo Radio With AUX Jack, Europe and Asia, For EU New Noise Arrangement 2			
		With AM-FM Stereo Radio With AUX Jack, North America, For 3D Machine Control Plug and Play			
		With AM-FM Stereo Radio With AUX Jack, Europe and Asia, For EU New Noise Arrangement 2, 3D Machine Control Plug and Play			
		With AM-FM Stereo Radio With AUX Jack, Europe and Asia			
		With AM-FM Stereo Radio With AUX Jack, Europe and Asia, For 3D Machine Control Plug and Play			
1		14X-Y79-3511	Bracket	1	1001-
2		07000-13025	O-ring	2	1001-
3		17A-Z11-1810	Bushing	2	1001-
4		195-Z11-4520	Lock	1	1001-
5		01643-30823	Washer	4	1001-
6		14X-Y79-3681	Bolt	4	1001-
7		14X-Y79-3531	Rubber	2	1001-
8		14X-Y79-3551	Plate	1	1001-
9		17A-Z11-5750	Plate	1	1001-
10		17A-979-3561	Plate	1	1001-
11		01640-20610	Washer	1	1001-
12		04050-11612	Pin, Cotter	1	1001-
13		14X-Y79-3581	Lever	1	1001-
14		04050-11612	Pin, Cotter	1	1001-
15		01640-20610	Washer	1	1001-
16		04010-00516	Key	1	1001-
17		14X-Y79-3611	Lever	1	1001-
18		12Y-978-3290	Plate	1	1001-
19		12Y-978-3281	Knob	1	1001-
20		01023-70412	Screw	2	1001-
21		01010-81225	Bolt	2	1001-
22		01643-31232	Washer	2	1001-
23		01580-10605	Nut	1	1001-
24		01010-80625	Bolt	1	1001-
25		01010-80830	Bolt	1	1001-
26		01643-30823	Washer	1	1001-
27		176-06-42170	Spring	1	1001-

FIG. K0210-003011 ROPS Cab (Door Open Lock, R.H.)

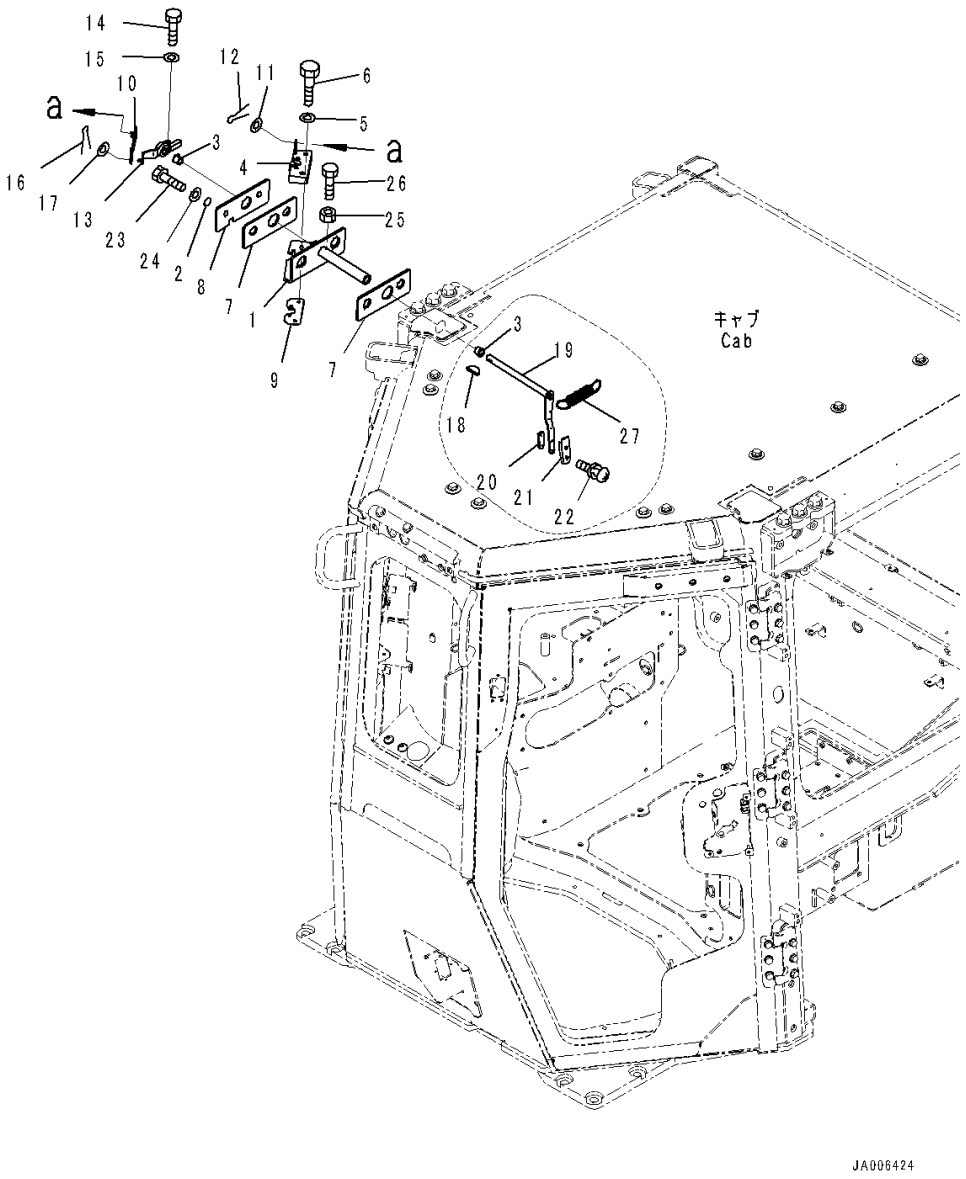

Index	Code	Part Number	Description	Qty	Serial Number
		Note: This list covers following specifications.			
		With AM-FM Stereo Radio With AUX Jack, North America			
		With AM-FM Stereo Radio With AUX Jack, Europe and Asia, For EU New Noise Arrangement 2			
		With AM-FM Stereo Radio With AUX Jack, North America, For 3D Machine Control Plug and Play			
		With AM-FM Stereo Radio With AUX Jack, Europe and Asia, For EU New Noise Arrangement 2, 3D Machine Control Plug and Play			
		With AM-FM Stereo Radio With AUX Jack, Europe and Asia			
		With AM-FM Stereo Radio With AUX Jack, Europe and Asia, For 3D Machine Control Plug and Play			
1		14X-Y79-3521	Bracket	1	1001-
2		07000-13025	O-ring	2	1001-
3		17A-Z11-1810	Bushing	2	1001-
4		195-Z11-4510	Lock	1	1001-
5		01643-30823	Washer	4	1001-
6		14X-Y79-3681	Bolt	4	1001-
7		14X-Y79-3531	Rubber	2	1001-
8		14X-Y79-3551	Plate	1	1001-
9		17A-Z11-5750	Plate	1	1001-
10		17A-979-3571	Plate	1	1001-
11		01640-20610	Washer	1	1001-
12		04050-11612	Pin, Cotter	1	1001-
13		14X-Y79-3591	Lever	1	1001-
14		01010-80830	Bolt	1	1001-
15		01643-30823	Washer	1	1001-
16		04050-11612	Pin, Cotter	1	1001-
17		01640-20610	Washer	1	1001-
18		04010-00516	Key	1	1001-
19		14X-Y79-3621	Lever	1	1001-
20		12Y-978-3290	Plate	1	1001-
21		12Y-978-3281	Knob	1	1001-
22		01023-70412	Screw	2	1001-
23		01010-81225	Bolt	2	1001-
24		01643-31232	Washer	2	1001-
25		01580-10605	Nut	1	1001-
26		01010-80625	Bolt	1	1001-
27		176-06-42170	Spring	1	1001-

FIG. K0210-003012 ROPS Cab (Door Open Lock) (2/2)

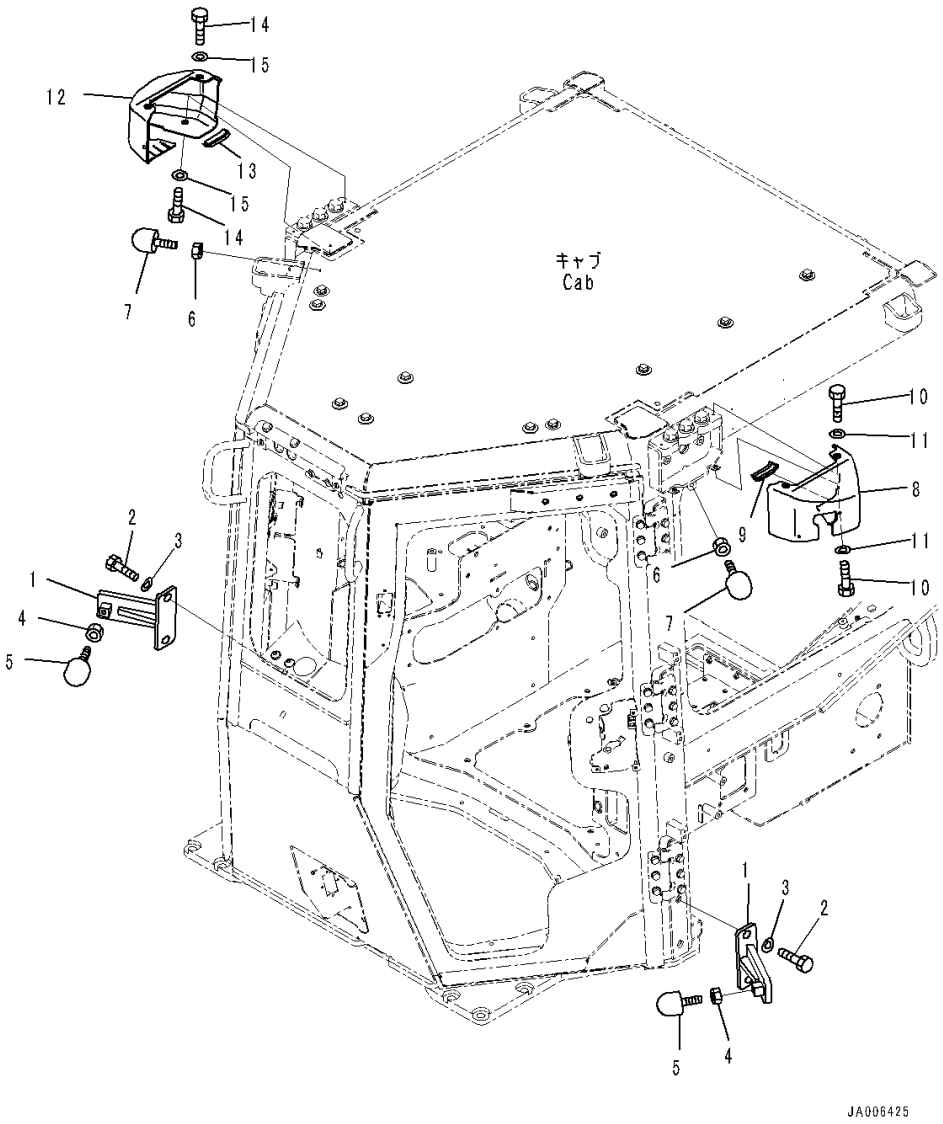

Index	Code	Part Number	Description	Qty	Serial Number
		Note: This list covers following specifications.			
		With AM-FM Stereo Radio With AUX Jack, North America			
		With AM-FM Stereo Radio With AUX Jack, Europe and Asia, For EU New Noise Arrangement 2			
		With AM-FM Stereo Radio With AUX Jack, North America, For 3D Machine Control Plug and Play			
		With AM-FM Stereo Radio With AUX Jack, Europe and Asia, For EU New Noise Arrangement 2, 3D Machine Control Plug and Play			
		With AM-FM Stereo Radio With AUX Jack, Europe and Asia			
		With AM-FM Stereo Radio With AUX Jack, Europe and Asia, For 3D Machine Control Plug and Play			
1		14X-Y79-6490	Bracket	2	1001-
2		198-54-42260	Bolt	4	1001-
3		01643-71645	Washer	4	1001-
4		01580-11210	Nut	2	1001-
5		17A-Z11-3592	Stopper	2	1001-
6		01580-11210	Nut	2	1001-
7		17A-Z11-3592	Stopper	2	1001-
8		17A-Z11-5410	Cover,L.H.	1	1001-
9		14Y-Y79-2290	• Trim	1	1001-
10		01010-80616	Bolt	4	1001-
11		01643-30623	Washer	4	1001-
12		17A-Z11-5420	Cover,R.H.	1	1001-
13		14X-Y79-2290	• Trim	1	1001-
14		01010-80616	Bolt	4	1001-
15		01643-30623	Washer	4	1001-

FIG. K0210-003013 ROPS Cab (Glass Window, Front and Rear)

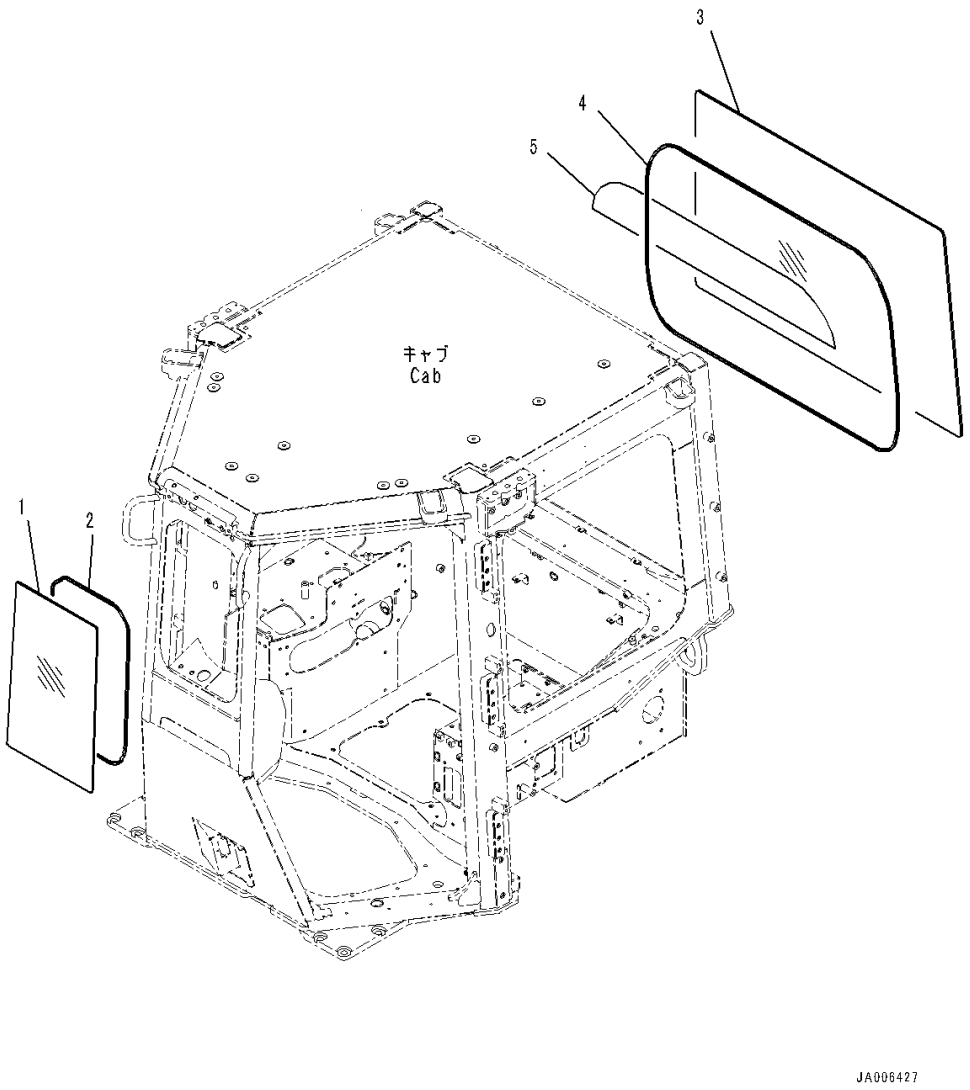

Index	Code	Part Number	Description	Qty	Serial Number
		Note: This list covers following specifications.			
		With AM-FM Stereo Radio With AUX Jack, North America			
		With AM-FM Stereo Radio With AUX Jack, Europe and Asia, For EU New Noise Arrangement 2			
		With AM-FM Stereo Radio With AUX Jack, North America, For 3D Machine Control Plug and Play			
		With AM-FM Stereo Radio With AUX Jack, Europe and Asia, For EU New Noise Arrangement 2, 3D Machine Control Plug and Play			
		With AM-FM Stereo Radio With AUX Jack, Europe and Asia			
		With AM-FM Stereo Radio With AUX Jack, Europe and Asia, For 3D Machine Control Plug and Play			
1		14X-Y79-1311	Glass	1	1001-
2		14X-Y79-1321	Seal	1	1001-
3		17A-Z11-5671	Glass	1	1001-
4		14X-Y79-1340	Seal	1	1001-
5		17A-98-51271	Plate	1	1001-

FIG. K0210-003014 ROPS Cab (Sash type Glass Window, L.H.)

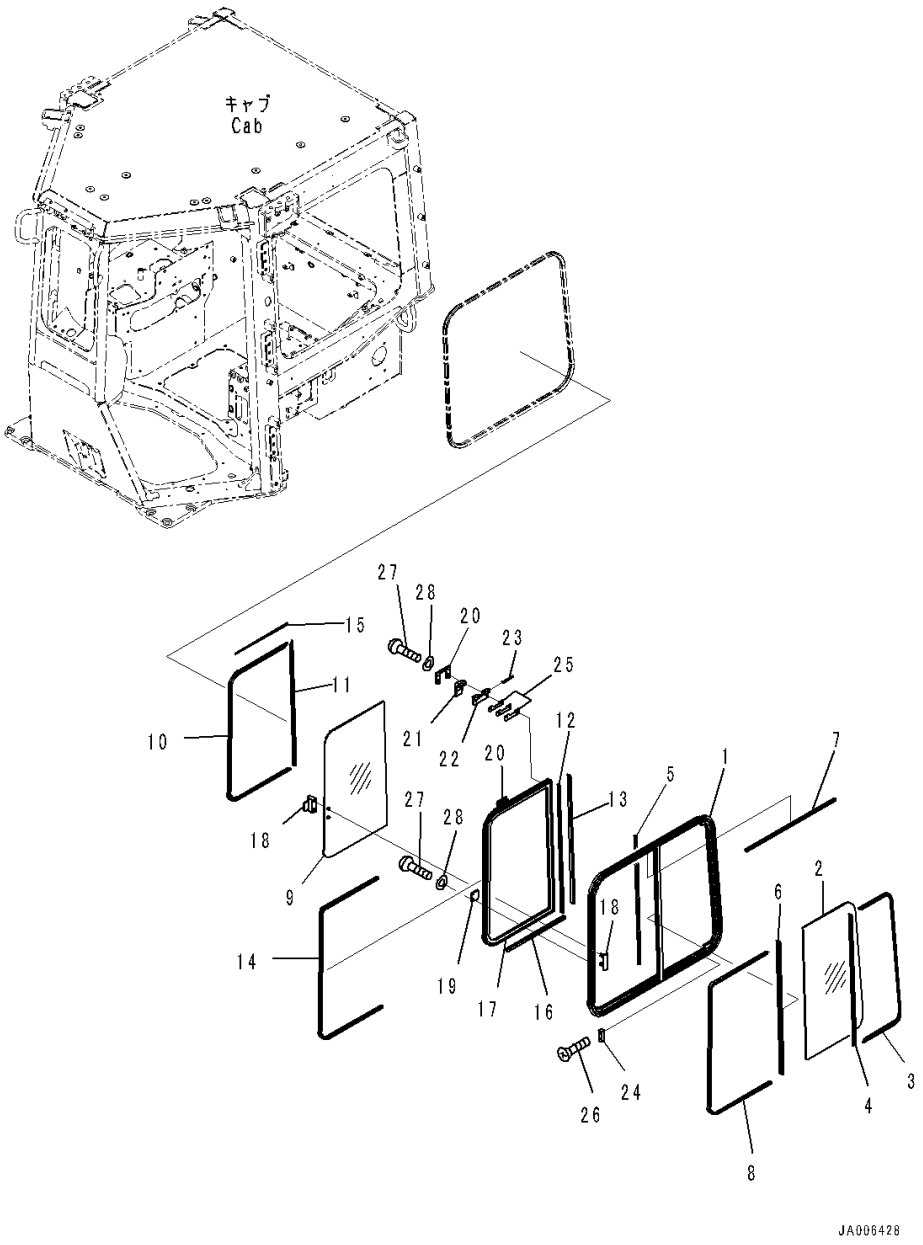

Index	Code	Part Number	Description	Qty	Serial Number
		Note: This list covers following specifications.			
		With AM-FM Stereo Radio With AUX Jack, North America			
		With AM-FM Stereo Radio With AUX Jack, Europe and Asia, For EU New Noise Arrangement 2			
		With AM-FM Stereo Radio With AUX Jack, North America, For 3D Machine Control Plug and Play			
		With AM-FM Stereo Radio With AUX Jack, Europe and Asia, For EU New Noise Arrangement 2, 3D Machine Control Plug and Play			
		With AM-FM Stereo Radio With AUX Jack, Europe and Asia			
		With AM-FM Stereo Radio With AUX Jack, Europe and Asia, For 3D Machine Control Plug and Play			
		14X-Y79-1400	Sash Assembly	1	1001-
		12Y-978-1410	• Sash Assembly	1	1001-
1		12Y-978-1420	• • Frame	1	1001-
2		12Y-978-1450	• • Glass	1	1001-
3		12Y-978-1460	• • Seal	1	1001-
4		12Y-978-1470	• • Seal	1	1001-
5		12Y-978-1480	• • Seal	1	1001-
6		12Y-978-1490	• • Seal	1	1001-
7		12Y-978-1550	• • Seal	1	1001-
8		12Y-978-1640	• Seal	1	1001-
		14X-Y79-1430	• Sash Assembly	1	1001-
9		12Y-978-1560	• • Glass	1	1001-
10		12Y-978-1570	• • Seal	1	1001-
11		12Y-978-1580	• • Seal	1	1001-
12		12Y-978-1590	• • Seal	1	1001-
13		12Y-978-1610	• • Seal	1	1001-
14		12Y-978-1620	• • Run Channel	1	1001-
15		12Y-978-1630	• • Seal	1	1001-
16		12Y-978-1650	• • Seal	1	1001-
17		14X-Y79-1440	• • Frame	1	1001-
18		17A-Z11-1610	• Lock Assembly	1	1001-
19		17A-Z11-1620	• Striker	1	1001-
20		17A-Z11-1660	• Plate	2	1001-
		195-Z11-1371	• Lock Assembly	2	1001-
21		195-Z11-3630	• • Lever	1	1001-
22		195-Z11-3640	• • Plate	1	1001-
23		195-Z11-3860	• • Pin, Spring	1	1001-
24		195-Z11-1381	• Stopper	1	1001-

FIG. K0210-003014 ROPS Cab (Sash type Glass Window, L.H.)

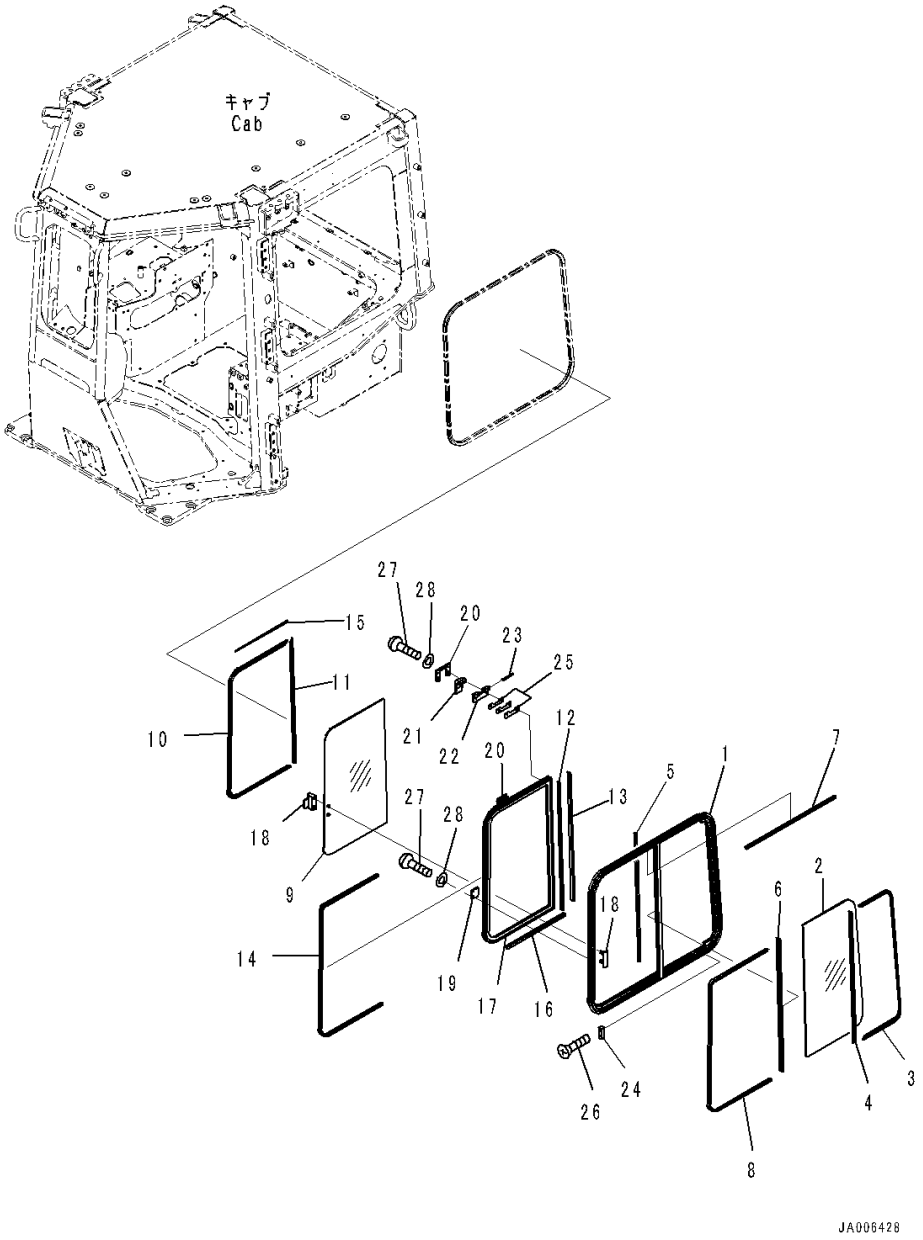

Index	Code	Part Number	Description	Qty	Serial Number
25		195-Z11-3670	• Shim, T=0.5mm	6	1001-
26		01224-70316	• Screw	2	1001-
27		01252-80514	• Bolt	6	1001-
28		01641-50508	• Washer, Flat	6	1001-

FIG. K0210-003015 ROPS Cab (Sash type Glass Window, R.H.)

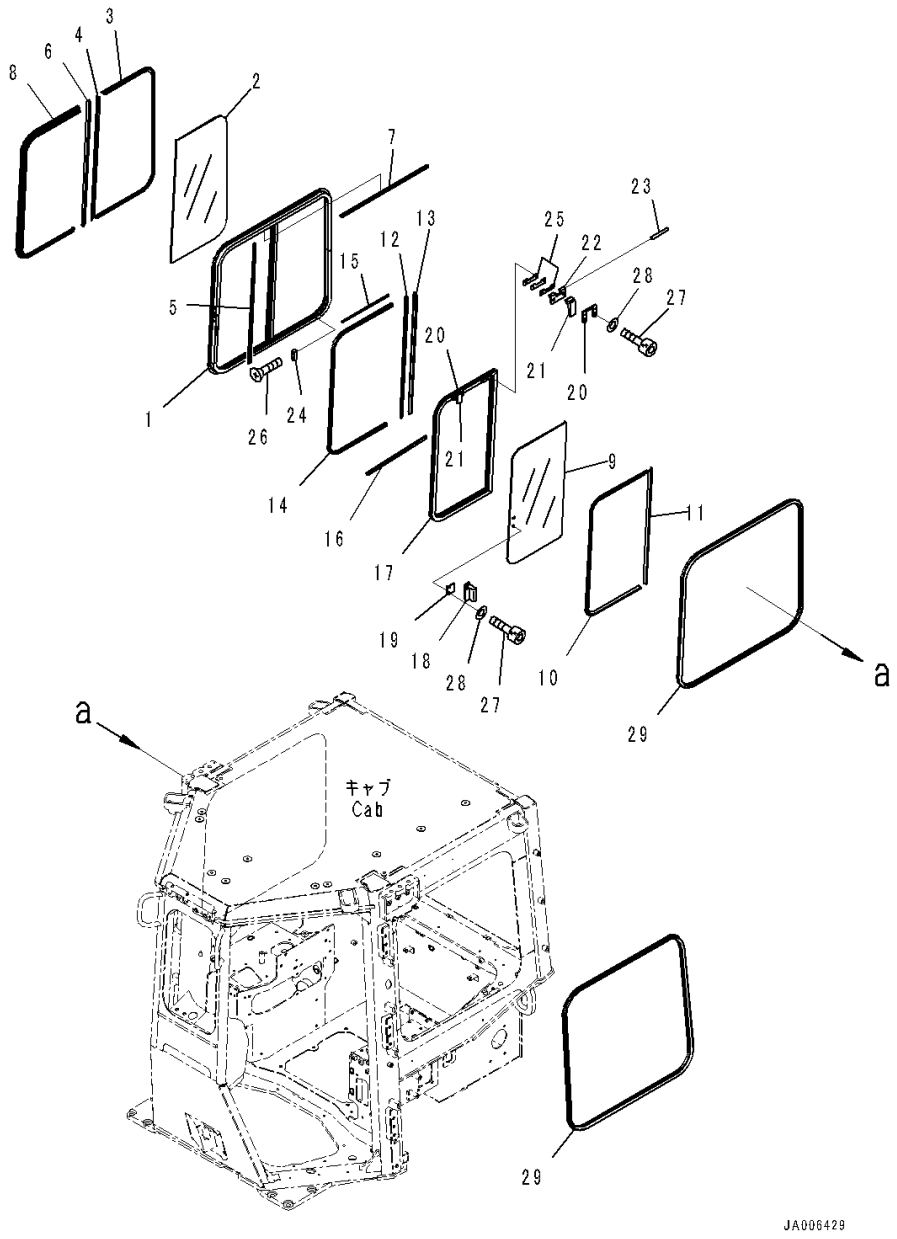

Index	Code	Part Number	Description	Qty	Serial Number
		Note: This list covers following specifications.			
		With AM-FM Stereo Radio With AUX Jack, North America			
		With AM-FM Stereo Radio With AUX Jack, Europe and Asia, For EU New Noise Arrangement 2			
		With AM-FM Stereo Radio With AUX Jack, North America, For 3D Machine Control Plug and Play			
		With AM-FM Stereo Radio With AUX Jack, Europe and Asia, For EU New Noise Arrangement 2, 3D Machine Control Plug and Play			
		With AM-FM Stereo Radio With AUX Jack, Europe and Asia			
		With AM-FM Stereo Radio With AUX Jack, Europe and Asia, For 3D Machine Control Plug and Play			
		14X-Y79-1500	Sash Assembly	1	1001-
		12Y-978-1510	• Sash Assembly	1	1001-
1		12Y-978-1520	• • Frame	1	1001-
2		12Y-978-1450	• • Glass	1	1001-
3		12Y-978-1460	• • Seal	1	1001-
4		12Y-978-1470	• • Seal	1	1001-
5		12Y-978-1480	• • Seal	1	1001-
6		12Y-978-1490	• • Seal	1	1001-
7		12Y-978-1550	• • Seal	1	1001-
8		12Y-978-1640	• Seal	1	1001-
		14X-Y79-1450	• Sash Assembly	1	1001-
9		12Y-978-1560	• • Glass	1	1001-
10		12Y-978-1570	• • Seal	1	1001-
11		12Y-978-1580	• • Seal	1	1001-
12		12Y-978-1590	• • Seal	1	1001-
13		12Y-978-1610	• • Seal	1	1001-
14		12Y-978-1620	• • Run Channel	1	1001-
15		12Y-978-1630	• • Seal	1	1001-
16		12Y-978-1650	• • Seal	1	1001-
17		14X-Y79-1460	• • Frame	1	1001-
18		17A-Z11-1610	• Lock Assembly	1	1001-
19		17A-Z11-1620	• Striker	1	1001-
20		17A-Z11-1660	• Plate	2	1001-
		195-Z11-1371	• Lock Assembly	2	1001-
21		195-Z11-3630	• • Lever	1	1001-
22		195-Z11-3640	• • Plate	1	1001-
23		195-Z11-3860	• • Pin, Spring	1	1001-
24		195-Z11-1381	• Stopper	1	1001-

FIG. K0210-003015 ROPS Cab (Sash type Glass Window, R.H.)

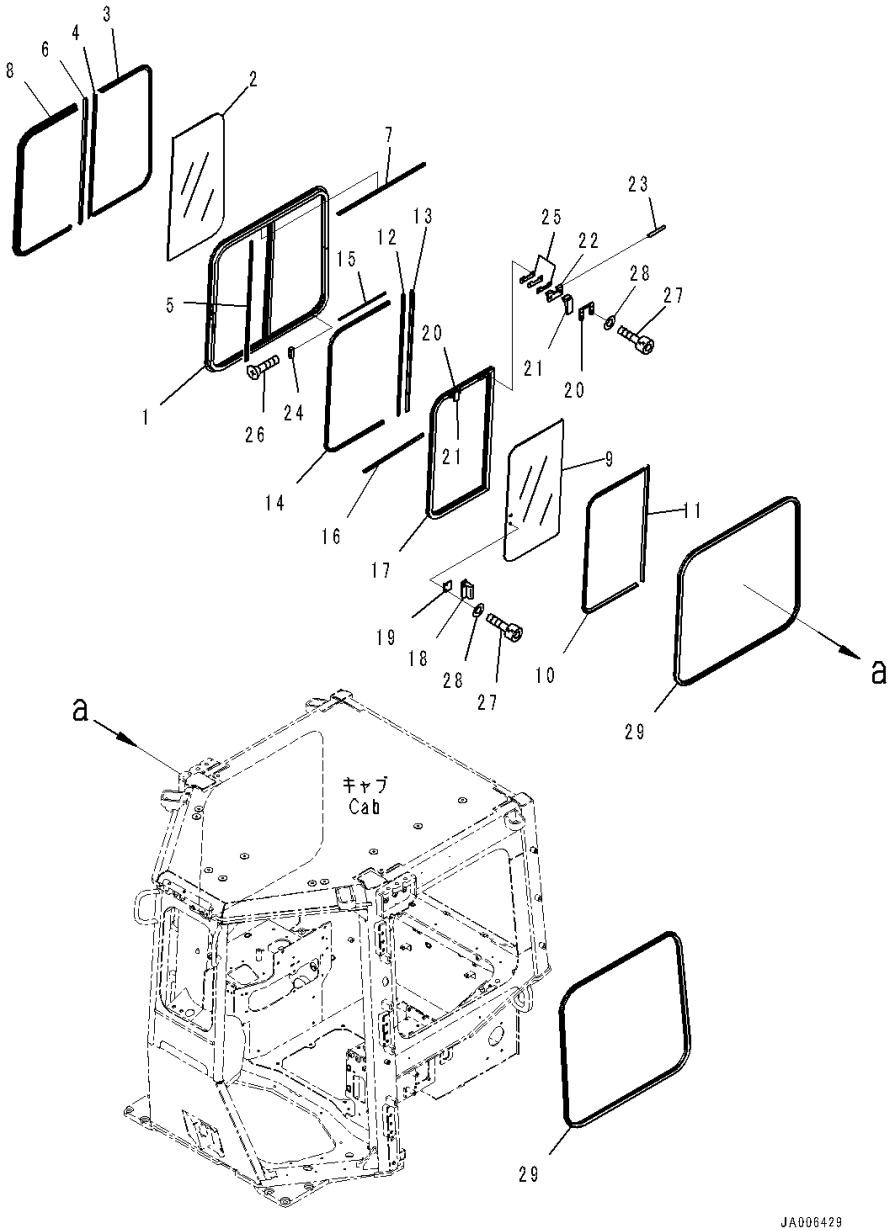

Index	Code	Part Number	Description	Qty	Serial Number
25		195-Z11-3670	• Shim, T=0.5mm	6	1001-
26		01224-70316	• Screw	2	1001-
27		01252-80514	• Bolt	6	1001-
28		01641-50508	• Washer, Flat	6	1001-
29		12Y-978-1390	Weather Strip	2	1001-

FIG. K0210-003016 ROPS Cab (Wiper and Room Lamp)

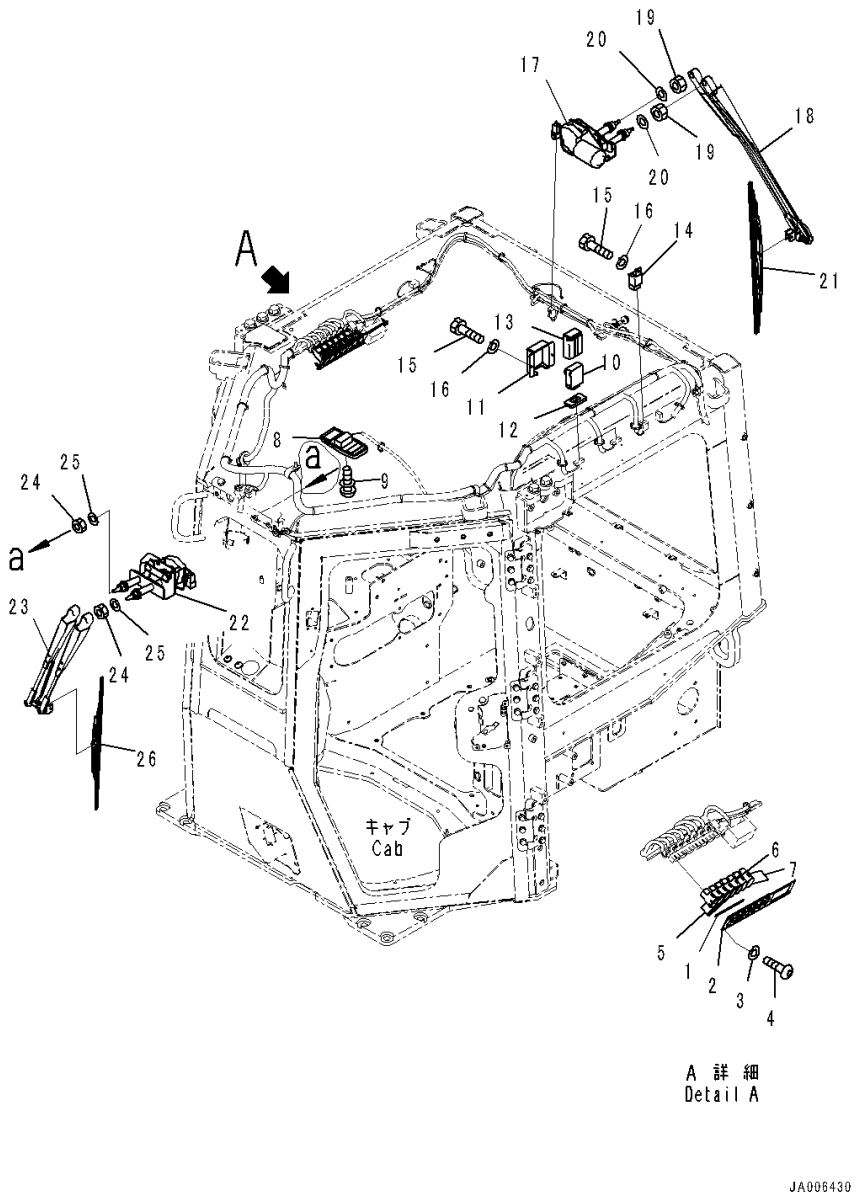

Index	Code	Part Number	Description	Qty	Serial Number
		Note: This list covers following specifications.			
		With AM-FM Stereo Radio With AUX Jack, North America			
		With AM-FM Stereo Radio With AUX Jack, Europe and Asia, For EU New Noise Arrangement 2			
		With AM-FM Stereo Radio With AUX Jack, North America, For 3D Machine Control Plug and Play			
		With AM-FM Stereo Radio With AUX Jack, Europe and Asia, For EU New Noise Arrangement 2, 3D Machine Control Plug and Play			
		With AM-FM Stereo Radio With AUX Jack, Europe and Asia			
		With AM-FM Stereo Radio With AUX Jack, Europe and Asia, For 3D Machine Control Plug and Play			
1		14X-Y79-2250	Panel	1	1001-
2		17A-979-3140	Cover	1	1001-
3		01643-70623	Washer	4	1001-
4		01245-00620	Screw	4	1001-
5		17A-06-42210	Switch	4	1001-
6		17A-06-42220	Switch, Wiper	1	1001-
7		20Y-06-42190	Cover	2	1001-
8		421-06-26210	Room Lamp	1	1001-
9		01023-10520	Screw	2	1001-
10		14X-06-51710	Relay	2	1001-
11		14X-06-52631	Bracket	2	1001-
12		14X-06-52740	Sheet	2	1001-
13		14X-06-52661	Sheet	2	1001-
14		198-911-9240	Relay Assembly	1	1001-
15		01010-80616	Bolt	5	1001-
16		01643-30623	Washer	5	1001-
17		17A-979-2850	Wiper Motor	1	1001-
18		416-925-3941	Arm, Wiper	1	1001-
19		01580-10806	Nut	2	1001-
20		01640-20816	Washer	2	1001-
21		17A-979-2870	Wiper Blade	1	1001-
22		14X-Y79-1570	Wiper Motor	1	1001-
23		14X-Y79-1580	Arm, Wiper	1	1001-
24		01580-10806	Nut	2	1001-
25		01640-20816	Washer	2	1001-
26		17A-979-1420	Wiper Blade	1	1001-

FIG. K0210-003017 ROPS Cab (Radio)

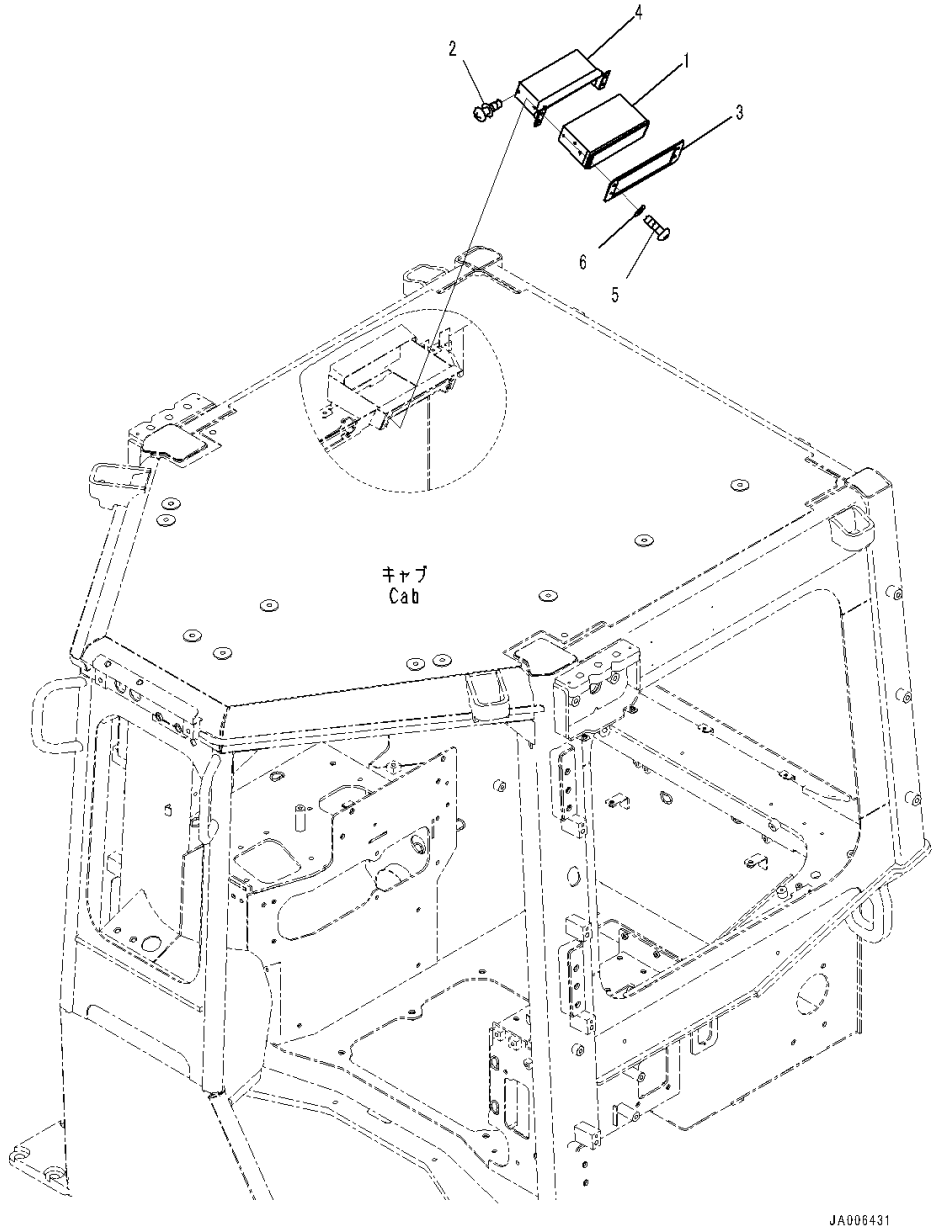

Index	Code	Part Number	Description	Qty	Serial Number
		Note: This list covers following specifications.			
		With AM-FM Stereo Radio With AUX Jack, North America			
		With AM-FM Stereo Radio With AUX Jack, North America,			
		For 3D Machine Control Plug and Play			
1		2A5-06-11922	Radio	1	1001-
2		01023-20510	Screw	4	1001-
3		12Y-54-28210	Bracket	1	1001-
4		12Y-54-28220	Plate	1	1001-
5		01245-00620	Screw	4	1001-
6		01643-70623	Washer	4	1001-

FIG. K0210-003018 ROPS Cab (Rubber Antenna)

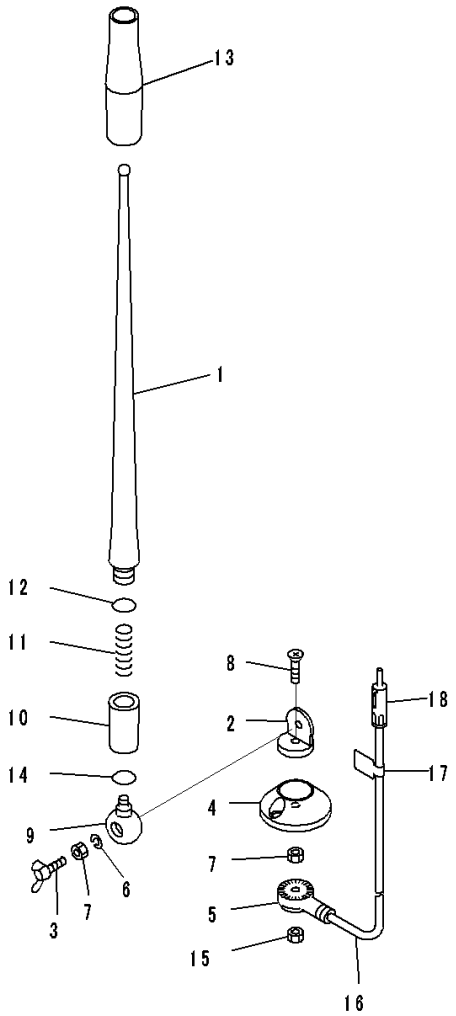

Index	Code	Part Number	Description	Qty	Serial Number
		Note: This list covers following specifications.			
		With AM-FM Stereo Radio With AUX Jack, North America			
		With AM-FM Stereo Radio With AUX Jack, Europe and Asia, For EU New Noise Arrangement 2			
		With AM-FM Stereo Radio With AUX Jack, North America, For 3D Machine Control Plug and Play			
		With AM-FM Stereo Radio With AUX Jack, Europe and Asia, For EU New Noise Arrangement 2, 3D Machine Control Plug and Play			
		With AM-FM Stereo Radio With AUX Jack, Europe and Asia			
		With AM-FM Stereo Radio With AUX Jack, Europe and Asia, For 3D Machine Control Plug and Play			
		20Y-06-41990	Antenna	1	1001-
1		RFU419B-418-A	• Rod	1	1001-
2	C1		• Holder	1	1001-
3		RFU419B-418-D	• Bolt, Wing	1	1001-
4		RFU419B-418-E	• Base	1	1001-
5	C1		• Holder	1	1001-
6		RFU419B-418-B	• Washer, Spring	1	1001-
7		RFU419B-418-C	• Nut	2	1001-
8	C1		• Screw	1	1001-
9	C1		• Holder	1	1001-
10	C1		• Holder Assembly	1	1001-
11	C1		• Spring	1	1001-
12	C1		• O-ring	1	1001-
13	C1		• Tube	1	1001-
14	C1		• O-ring	1	1001-
15		REU419B-418-C	• Nut	1	1001-
16		RFU419B-418-F	• Cable	1	1001-
17	C1		• Plate	1	1001-
18	C1		• Plug	1	1001-

FIG. K0210-003019 ROPS Cab (Rubber Antenna Mounting)

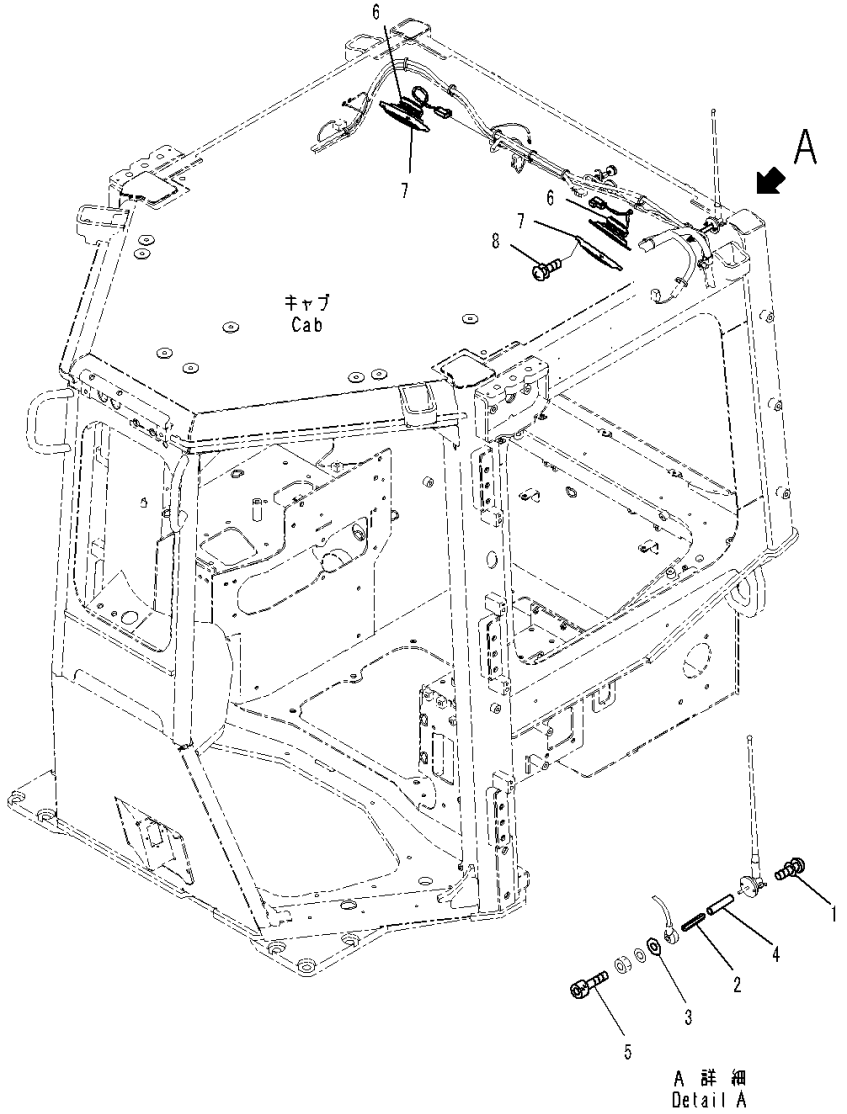

Index	Code	Part Number	Description	Qty	Serial Number
		Note: This list covers following specifications.			
		With AM-FM Stereo Radio With AUX Jack, North America			
		With AM-FM Stereo Radio With AUX Jack, Europe and Asia, For EU New Noise Arrangement 2			
		With AM-FM Stereo Radio With AUX Jack, North America, For 3D Machine Control Plug and Play			
		With AM-FM Stereo Radio With AUX Jack, Europe and Asia, For EU New Noise Arrangement 2, 3D Machine Control Plug and Play			
		With AM-FM Stereo Radio With AUX Jack, Europe and Asia			
		With AM-FM Stereo Radio With AUX Jack, Europe and Asia, For 3D Machine Control Plug and Play			
1		01023-20416	Screw	2	1001-
2		14X-06-51370	Bar	1	1001-
3		01643-70623	Washer	1	1001-
4		08023-10006	Tube	1	1001-
5		01252-B0530	Bolt, Hexagon Socket Head	1	1001-
6		20Y-06-42180	Speaker	2	1001-
7		20Y-53-12221	Cover	2	1001-
8		01023-20416	Screw	8	1001-

FIG. K0210-003020 ROPS Cab (Roof Cover)

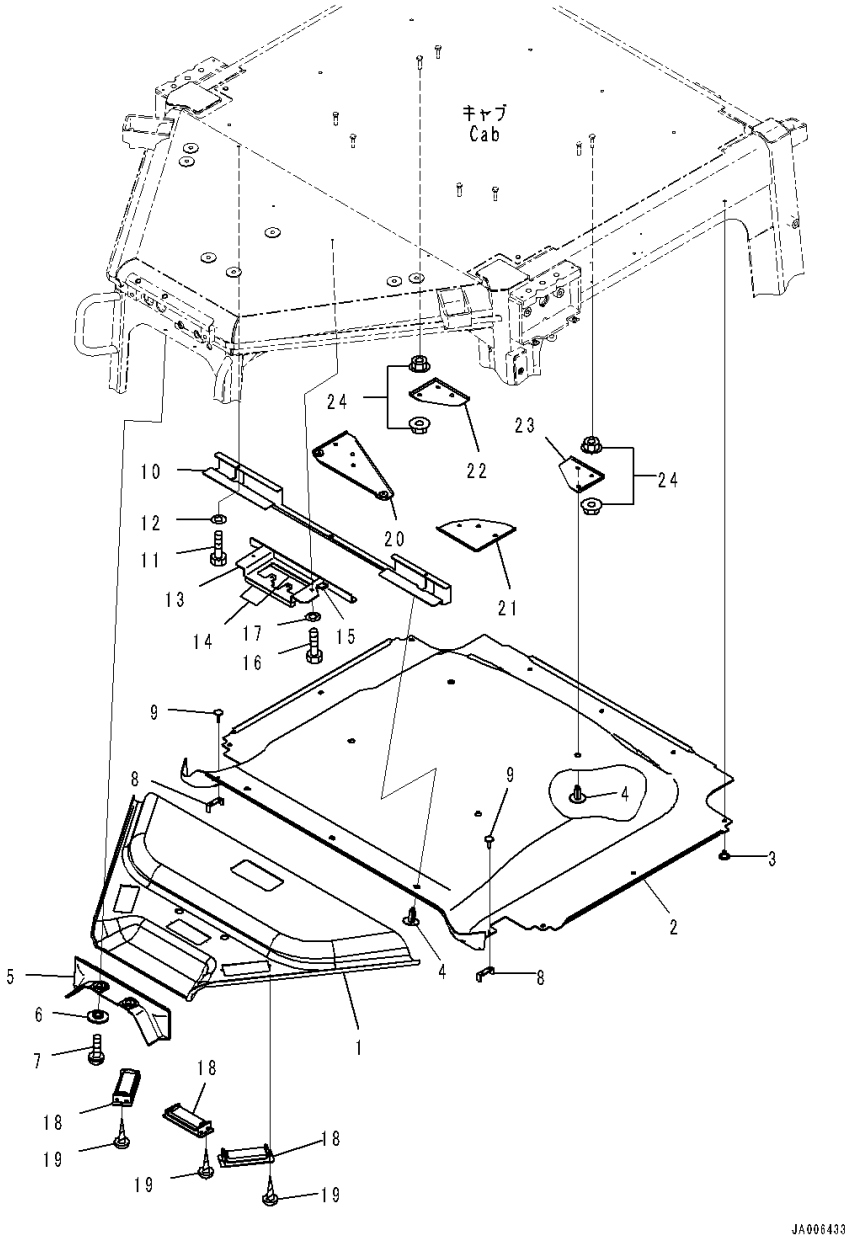

Index	Code	Part Number	Description	Qty	Serial Number
		Note: This list covers following specifications.			
		With AM-FM Stereo Radio With AUX Jack, North America			
		With AM-FM Stereo Radio With AUX Jack, Europe and Asia, For EU New Noise Arrangement 2			
		With AM-FM Stereo Radio With AUX Jack, North America, For 3D Machine Control Plug and Play			
		With AM-FM Stereo Radio With AUX Jack, Europe and Asia, For EU New Noise Arrangement 2, 3D Machine Control Plug and Play			
		With AM-FM Stereo Radio With AUX Jack, Europe and Asia			
		With AM-FM Stereo Radio With AUX Jack, Europe and Asia, For 3D Machine Control Plug and Play			
1		14X-Y79-2621	Cover	1	1001-
2		17A-Z11-5460	Cover	1	1001-
3		20Y-54-18690	Rivet	9	1001-
4		198-Z11-6370	Clip	7	1001-
5		17A-Z11-5591	Cover	1	1001-
6		12Y-978-2660	Collar	2	1001-
7		01245-00620	Screw	2	1001-
8		14X-Y79-2350	Plate	2	1001-
9		14X-Y79-2650	Clip	4	1001-
10		17A-Z11-5631	Bracket	1	1001-
11		01010-80616	Bolt	2	1001-
12		01643-30623	Washer	2	1001-
13		14X-Y79-2161	Bracket	1	1001-
14		17A-979-1760	• Sheet	2	1001-
15		208-53-11M80	• Ring	1	1001-
16		01010-80616	Bolt	2	1001-
17		01643-30623	Washer	2	1001-
18		17A-Z11-7161	Louver	3	1001-
19		01370-40414	Screw	6	1001-
20		14X-Y79-6131	Bracket	1	1001-
21		14X-Y79-6140	Bracket	1	1001-
22		14X-Y79-6150	Bracket	1	1001-
23		14X-Y79-6160	Bracket	1	1001-
24		01584-00806	Nut	16	1001-

FIG. K0210-003021 ROPS Cab (Garnish)

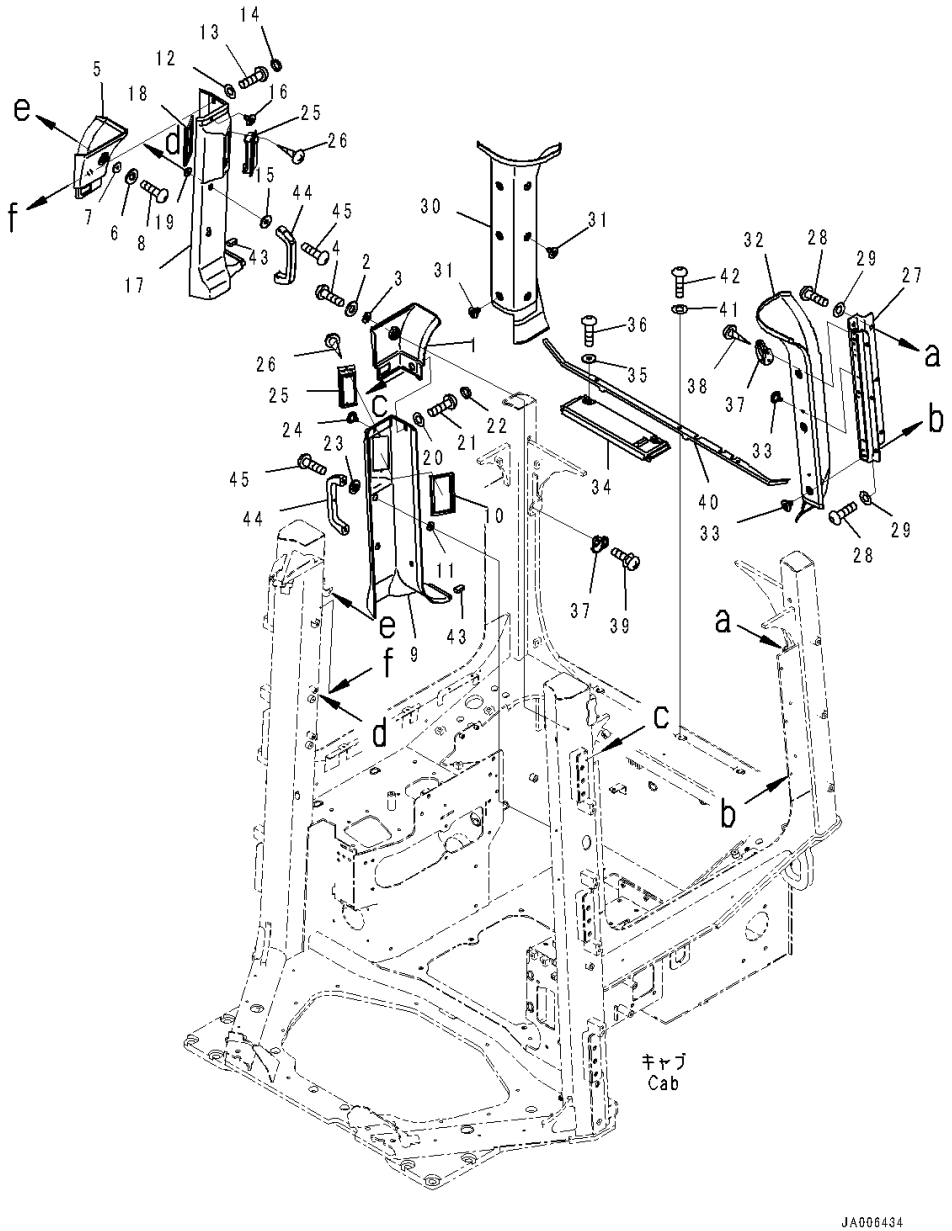

Index	Code	Part Number	Description	Qty	Serial Number
		Note: This list covers following specifications.			
		With AM-FM Stereo Radio With AUX Jack, North America			
		With AM-FM Stereo Radio With AUX Jack, Europe and Asia,			
		For EU New Noise Arrangement 2			
		With AM-FM Stereo Radio With AUX Jack, Europe and Asia			
1		17A-Z11-5511	Cover Assembly	1	1001-
2		14X-Y79-6790	• Sheet	1	1001-
3		12Y-978-2660	Collar	1	1001-
4		01245-00620	Screw	1	1001-
5		17A-Z11-5521	Cover Assembly	1	1001-
6		14X-Y79-6790	• Sheet	1	1001-
7		12Y-978-2660	Collar	1	1001-
8		01245-00620	Screw	1	1001-
9		17A-Z11-5530	Cover Assembly	1	1001-
10		17A-979-1930	• Seal	1	1001-
11		17A-979-3890	• Plate	2	1001-
12		423-925-5851	Washer	2	1001-
13		01240-00620	Screw	2	1001-
14		423-925-5860	Cap	2	1001-
15		17A-979-1611	Collar	2	1001-
16		20Y-54-18690	Rivet	1	1001-
17		17A-Z11-5540	Cover Assembly	1	1001-
18		17A-979-1930	• Seal	1	1001-
19		17A-979-3890	• Plate	2	1001-
20		423-925-5851	Washer	2	1001-
21		01240-00620	Screw	2	1001-
22		423-925-5860	Cap	2	1001-
23		17A-979-1611	Collar	2	1001-
24		20Y-54-18690	Rivet	1	1001-
25		17A-Z11-7161	Louver	2	1001-
26		01370-40414	Screw	4	1001-
27		14X-Y79-2132	Bracket	1	1001-
28		01245-00820	Screw	6	1001-
29		01643-70823	Washer	6	1001-
30		14X-Y79-2211	Cover	1	1001-
31		20Y-54-18690	Rivet	6	1001-
32		14X-Y79-2222	Cover	1	1001-
33		20Y-54-18690	Rivet	5	1001-
34		17A-Z11-5570	Cover	1	1001-
35		12Y-978-2660	Collar	2	1001-

FIG. K0210-003021 ROPS Cab (Garnish)

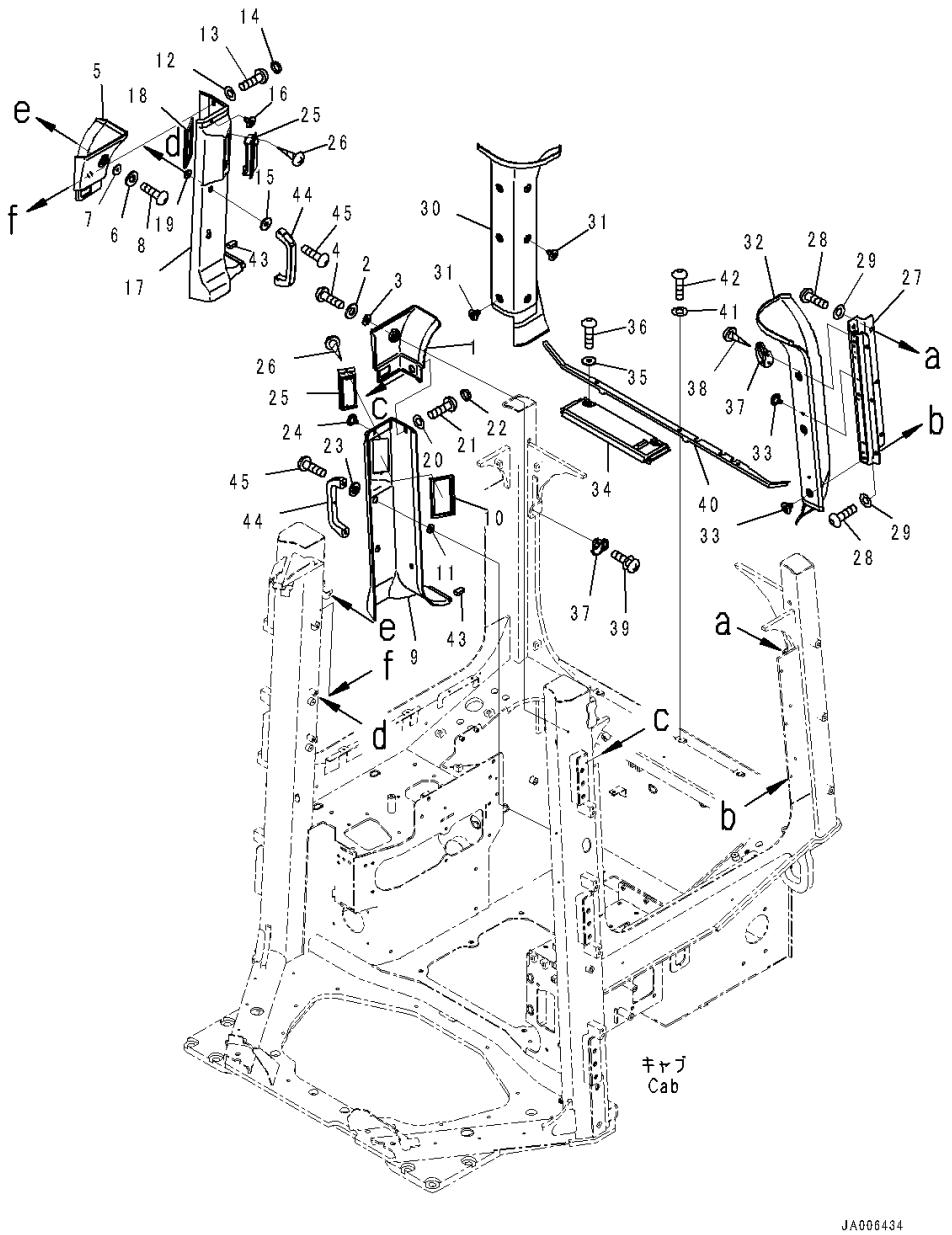

Index	Code	Part Number	Description	Qty	Serial Number
36		01245-00620	Screw	2	1001-
37		17A-Z11-2941	Hook	2	1001-
38		01370-40414	Screw	2	1001-
39		01023-70412	Screw	2	1001-
40		14X-Y79-2641	Cover	1	1001-
41		01643-70623	Washer	3	1001-
42		01245-00620	Screw	3	1001-
43		14X-Y79-2190	Seal	2	1001-
44		361-54-21150	Handle	2	1001-
45		01245-00825	Screw	4	1001-

FIG. K0210-003022 ROPS Cab (Rearview Mirror)

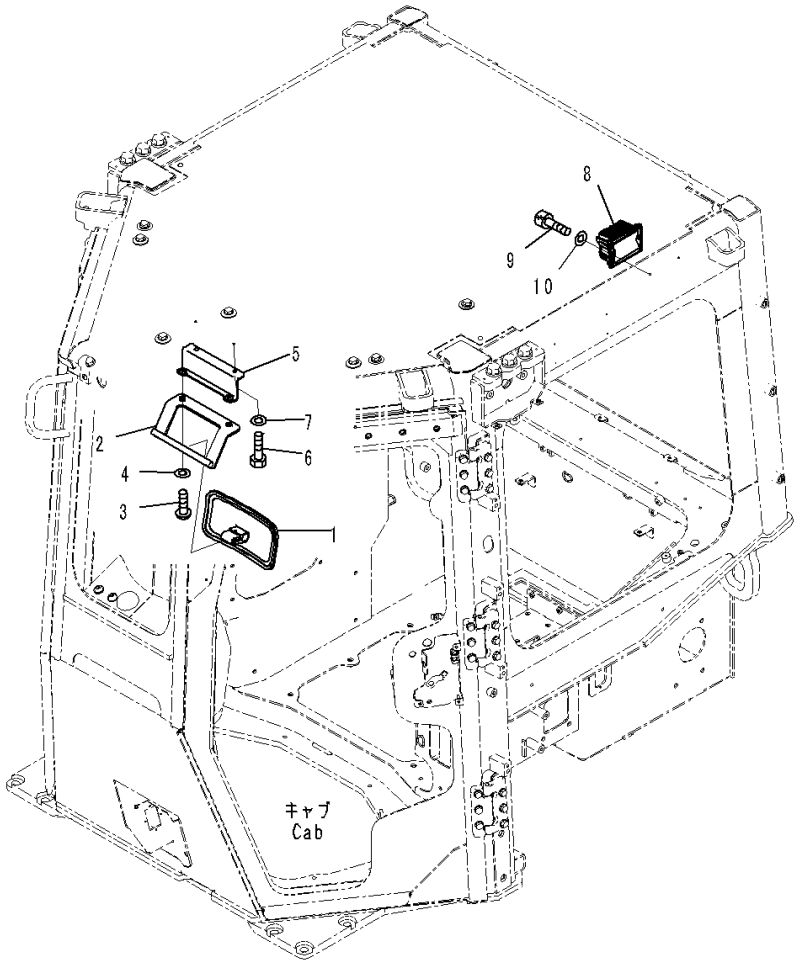

JA006435

Index	Code	Part Number	Description	Qty	Serial Number
		Note: This list covers following specifications.			
		With AM-FM Stereo Radio With AUX Jack, North America			
		With AM-FM Stereo Radio With AUX Jack, Europe and Asia, For EU New Noise Arrangement 2			
		With AM-FM Stereo Radio With AUX Jack, North America, For 3D Machine Control Plug and Play			
		With AM-FM Stereo Radio With AUX Jack, Europe and Asia, For EU New Noise Arrangement 2, 3D Machine Control Plug and Play			
		With AM-FM Stereo Radio With AUX Jack, Europe and Asia			
		With AM-FM Stereo Radio With AUX Jack, Europe and Asia, For 3D Machine Control Plug and Play			
1		195-Z11-2180	Mirror	1	1001-
2		14X-Y79-6170	Bracket	1	1001-
3		01245-00825	Screw	2	1001-
4		01643-70823	Washer	2	1001-
5		14X-Y79-2151	Bracket	1	1001-
6		01010-80816	Bolt	2	1001-
7		01643-30823	Washer	2	1001-
8		2A5-06-11881	Converter	1	1001-
9		01252-B0525	Bolt, Hexagon Socket Head	2	1001-
10		01641-50508	Washer, Flat	2	1001-

FIG. K0210-003023 ROPS Cab (Outside Cover)

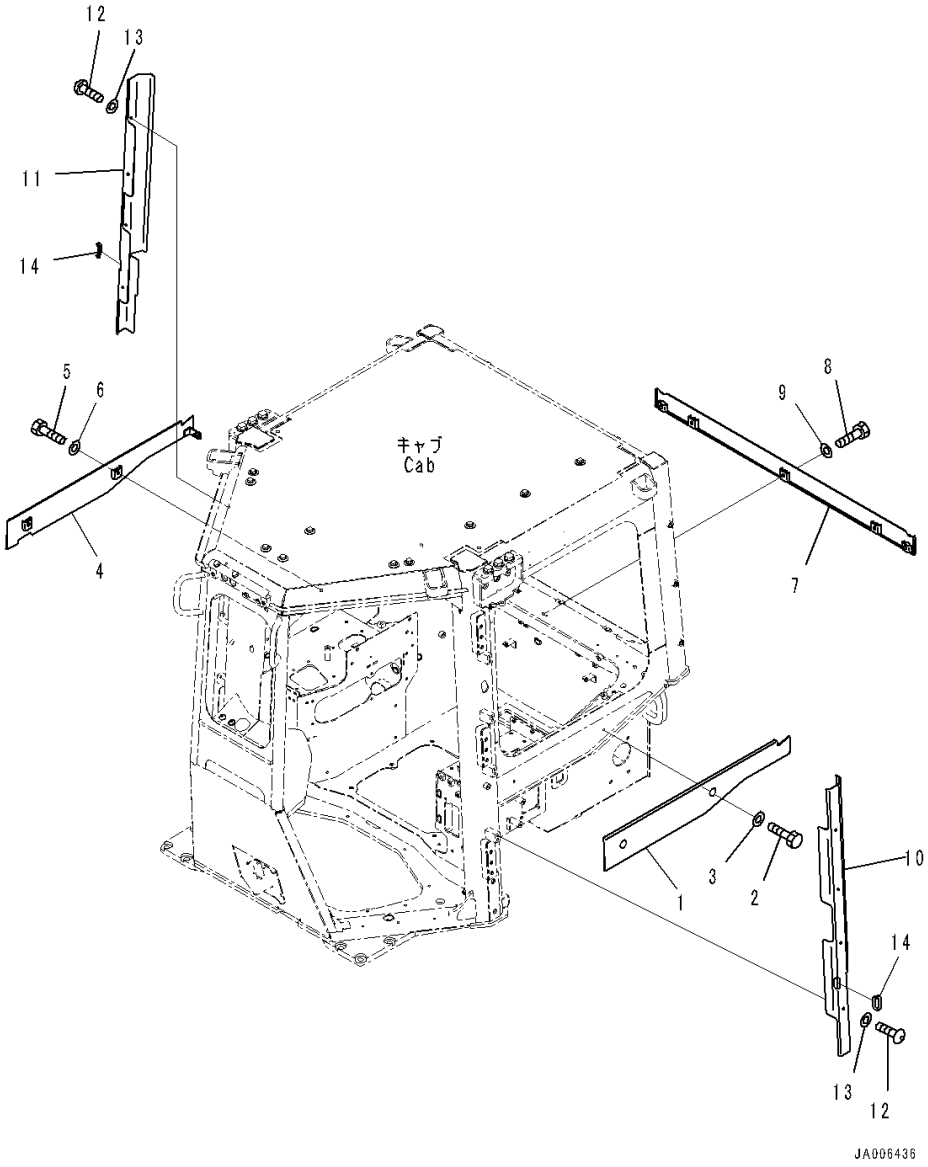

Index	Code	Part Number	Description	Qty	Serial Number
		Note: This list covers following specifications.			
		With AM-FM Stereo Radio With AUX Jack, North America			
		With AM-FM Stereo Radio With AUX Jack, Europe and Asia, For EU New Noise Arrangement 2			
		With AM-FM Stereo Radio With AUX Jack, North America, For 3D Machine Control Plug and Play			
		With AM-FM Stereo Radio With AUX Jack, Europe and Asia, For EU New Noise Arrangement 2, 3D Machine Control Plug and Play			
		With AM-FM Stereo Radio With AUX Jack, Europe and Asia			
		With AM-FM Stereo Radio With AUX Jack, Europe and Asia, For 3D Machine Control Plug and Play			
1		14X-Y79-1541	Plate	1	1001-
2		01010-81020	Bolt	2	1001-
3		01643-31032	Washer	2	1001-
4		14X-Y79-1551	Plate	1	1001-
5		01010-81020	Bolt	2	1001-
6		01643-31032	Washer	2	1001-
7		14X-Y79-1561	Plate	1	1001-
8		01010-81020	Bolt	5	1001-
9		01643-31032	Washer	5	1001-
10		14X-Y79-3451	Cover	1	1001-
11		14X-Y79-3461	Cover	1	1001-
12		01245-00816	Screw	8	1001-
13		01643-70823	Washer	8	1001-
14		14X-Y79-3631	Seal	2	1001-

FIG. K0210-003024 ROPS Cab (Air Conditioner Unit) (1/3)

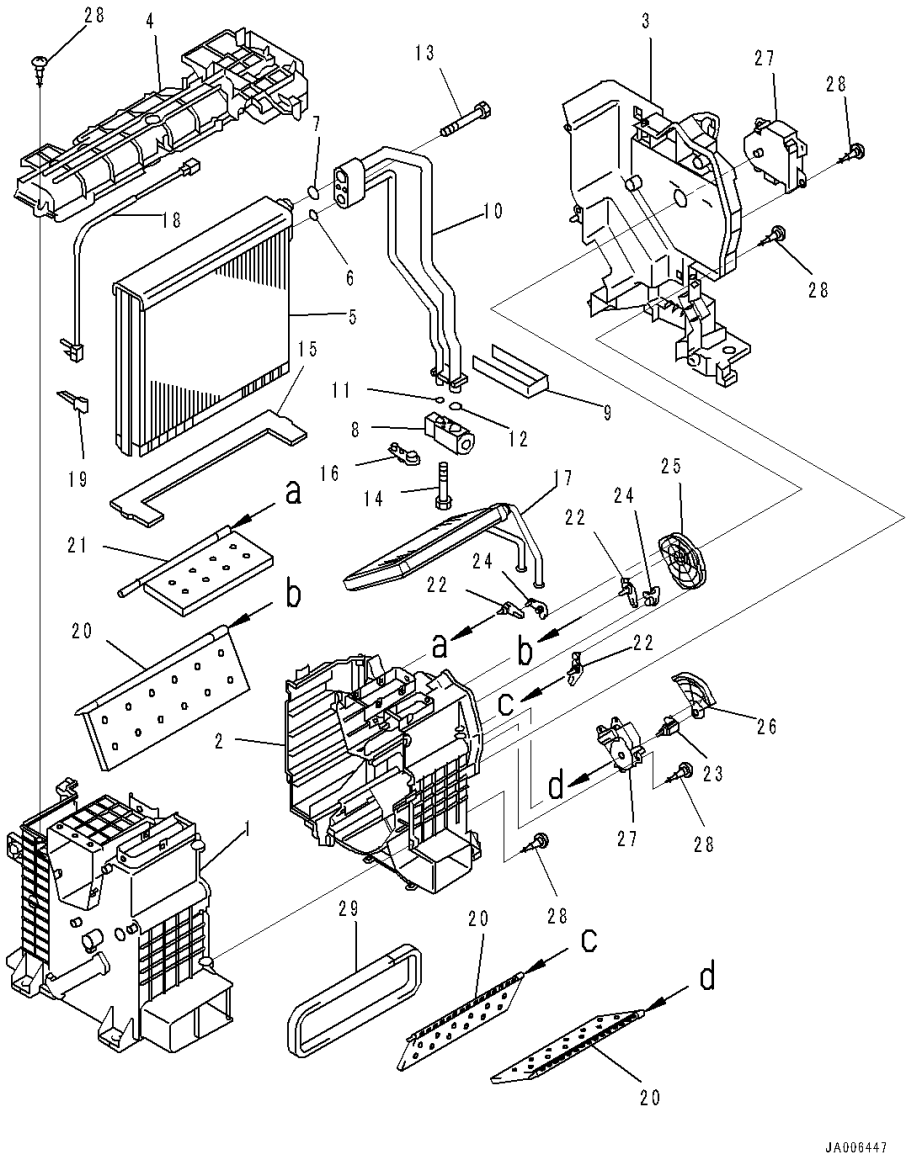

Index	Code	Part Number	Description	Qty	Serial Number
		Note: This list covers following specifications.			
		With AM-FM Stereo Radio With AUX Jack, North America			
		With AM-FM Stereo Radio With AUX Jack, Europe and Asia, For EU New Noise Arrangement 2			
		With AM-FM Stereo Radio With AUX Jack, North America, For 3D Machine Control Plug and Play			
		With AM-FM Stereo Radio With AUX Jack, Europe and Asia, For EU New Noise Arrangement 2, 3D Machine Control Plug and Play			
		With AM-FM Stereo Radio With AUX Jack, Europe and Asia			
		With AM-FM Stereo Radio With AUX Jack, Europe and Asia, For 3D Machine Control Plug and Play			
		2A5-979-1112	Air Conditioner	1	1001-
		ND443120-1961	• Cooling Unit Assembly	1	1001-
1		ND245450-8520	• • Case	1	1001-
2		ND245450-8530	• • Case	1	1001-
3		ND245450-8540	• • Case	1	1001-
4		ND116577-0970	• • Plate	1	1001-
		ND446010-5360	• • Evaporator	1	1001-
5		ND447610-0630	• • • Evaporator Assembly	1	1001-
6		ND949142-0020	• • • O-ring	1	1001-
7		ND949142-0030	• • • O-ring	1	1001-
8		ND447500-3750	• • • Valve	1	1001-
9		ND146636-7450	• • • Packing	1	1001-
10		ND446260-2160	• • • Tube	1	1001-
11		ND949142-0020	• • • O-ring	1	1001-
12		ND949142-0030	• • • O-ring	1	1001-
13		ND949046-3610	• • • Bolt	2	1001-
14		ND949046-3100	• • • Bolt	2	1001-
15		ND146636-7460	• • • Packing	1	1001-
16		ND445021-3941	• • • Plug	1	1001-
17		ND116420-7450	• • Core Subassembly	1	1001-
18		ND100775-8400	• • Thermistor Assembly	1	1001-
19		ND246790-2060	• • Clamp	1	1001-
20		ND116740-4980	• • Door Assembly	3	1001-
21		ND116740-4990	• • Door Assembly	1	1001-
22		ND116782-6690	• • Lever	3	1001-
23		ND116782-6700	• • Lever	1	1001-
24		ND116780-5651	• • Lever Subassembly	2	1001-
25		ND116577-0981	• • Plate	1	1001-

FIG. K0210-003024 ROPS Cab (Air Conditioner Unit) (1/3)

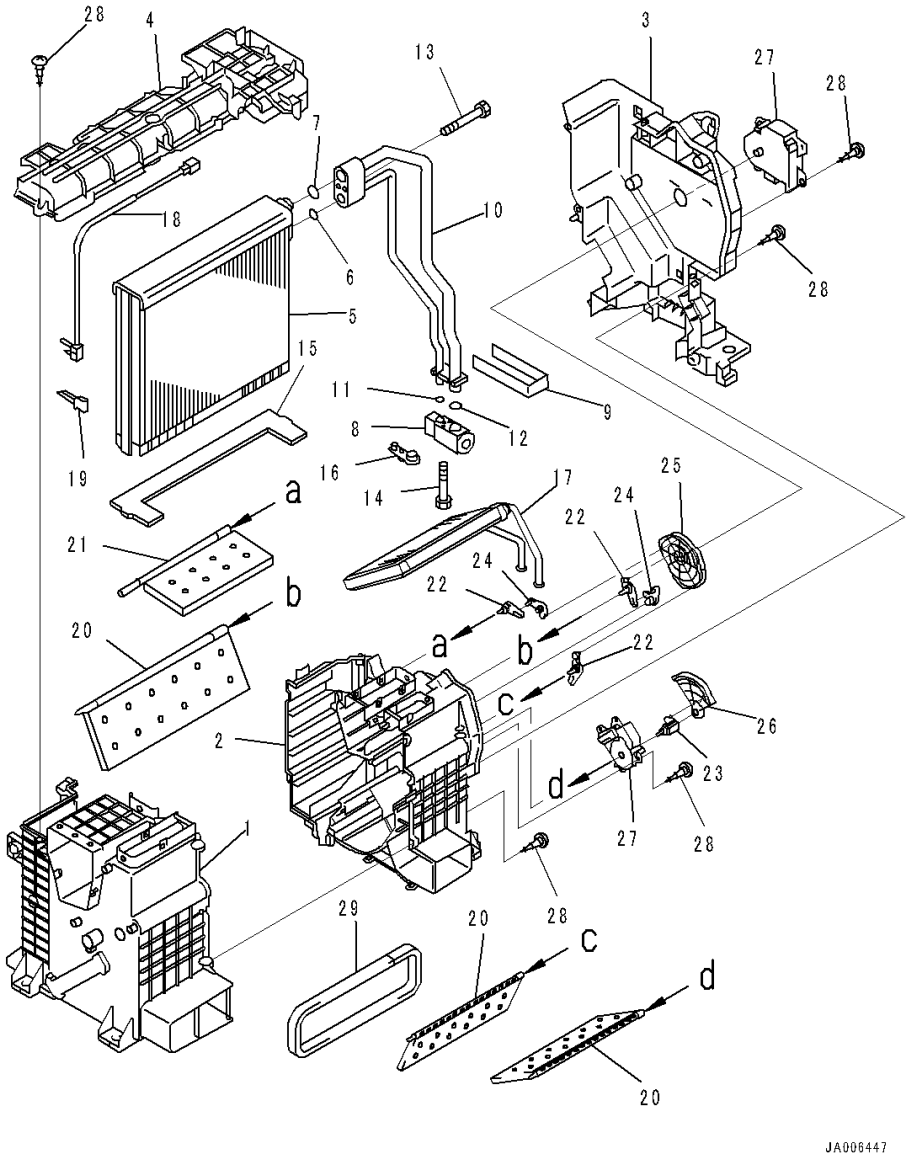

Index	Code	Part Number	Description	Qty	Serial Number
26		ND116577-0990	• • Plate	1	1001-
27		ND063800-0300	• • Servo Motor Assembly	2	1001-
28		ND949001-1730	• • Screw, Tapping	23	1001-
29		ND146636-7560	• • Packing	1	1001-

FIG. K0210-003025 ROPS Cab (Air Conditioner Unit) (2/3)

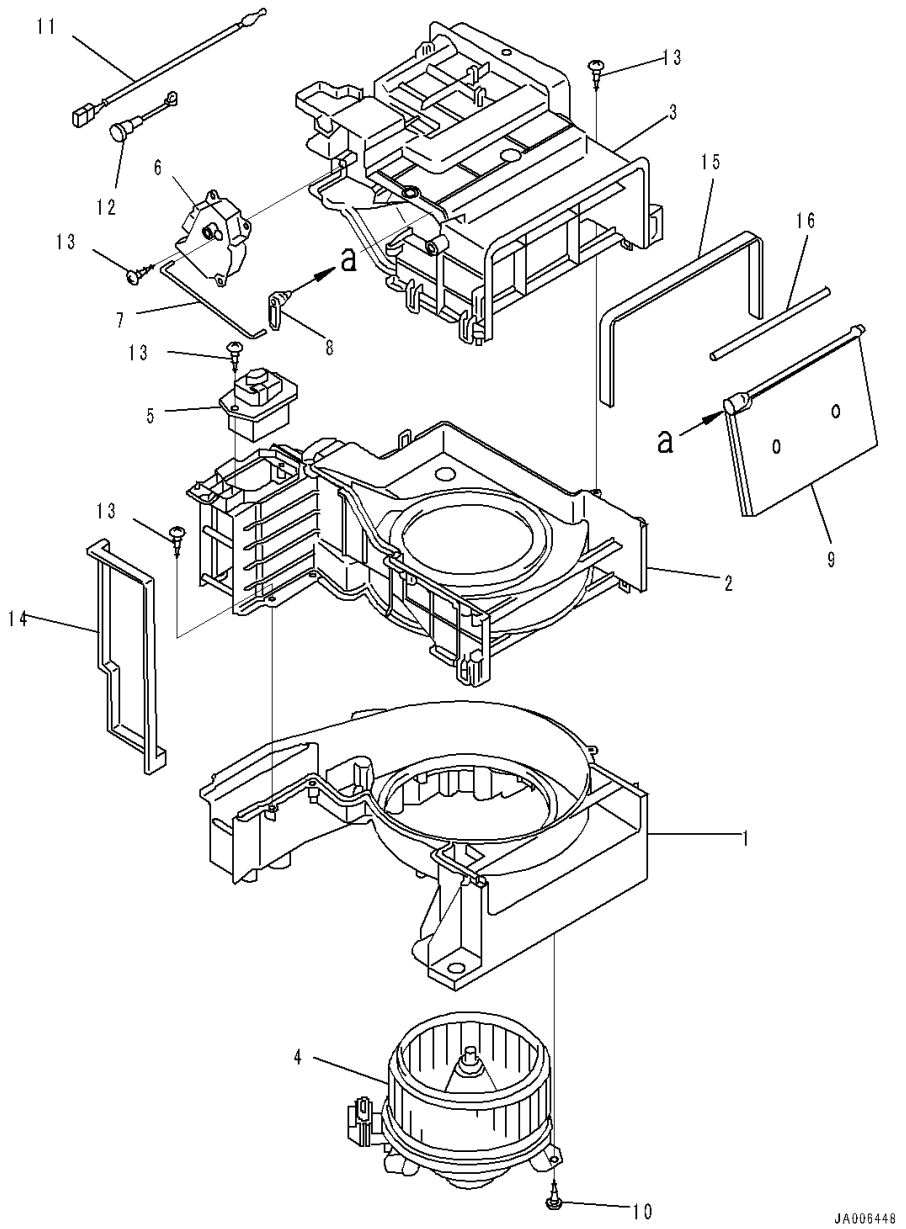

Index	Code	Part Number	Description	Qty	Serial Number
		Note: This list covers following specifications.			
		With AM-FM Stereo Radio With AUX Jack, North America			
		With AM-FM Stereo Radio With AUX Jack, Europe and Asia, For EU New Noise Arrangement 2			
		With AM-FM Stereo Radio With AUX Jack, North America, For 3D Machine Control Plug and Play			
		With AM-FM Stereo Radio With AUX Jack, Europe and Asia, For EU New Noise Arrangement 2, 3D Machine Control Plug and Play			
		With AM-FM Stereo Radio With AUX Jack, Europe and Asia			
		With AM-FM Stereo Radio With AUX Jack, Europe and Asia, For 3D Machine Control Plug and Play			
		2A5-979-1112	Air Conditioner	1	1001-
		ND117300-2600	• Motor Assembly	1	1001-
1		ND116242-7000	• • Case	1	1001-
2		ND116242-7010	• • Case	1	1001-
3		ND017321-4600	• • Case	1	1001-
4		ND116360-0030	• • Motor Assembly	1	1001-
5		ND077800-1040	• • Transistor	1	1001-
6		ND063600-4580	• • Servo Motor Assembly	1	1001-
7		ND116662-8530	• • Shaft	1	1001-
8		ND116782-6720	• • Lever	1	1001-
9		ND116740-5000	• • Door Assembly	1	1001-
10		ND949008-0330	• • Screw, Tapping	3	1001-
11		ND077500-5650	• • Thermistor Assembly	1	1001-
12		ND017661-3560	• • Bracket	1	1001-
13		ND949001-1730	• • Screw, Tapping	11	1001-
14		ND146636-7530	• • Packing	1	1001-
15		ND146636-7540	• • Packing	1	1001-
16		ND146636-7550	• • Packing	1	1001-

FIG. K0210-003026 ROPS Cab (Air Conditioner Unit) (3/3)

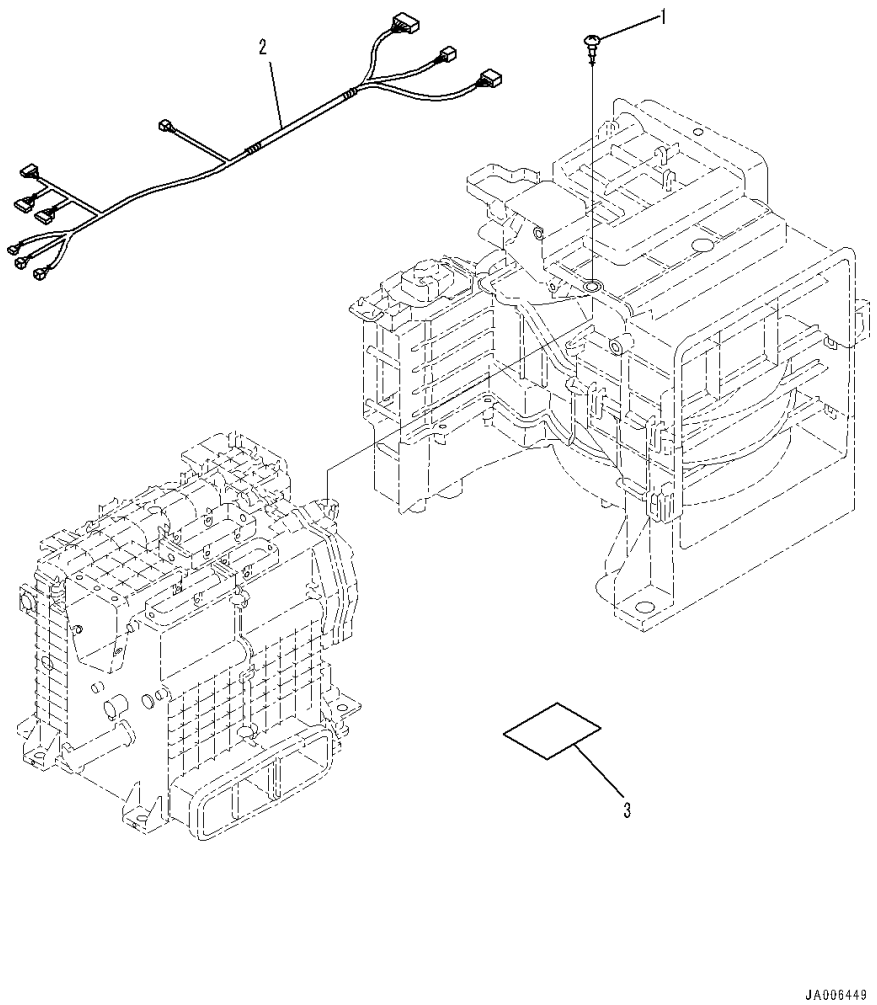

Index	Code	Part Number	Description	Qty	Serial Number
		Note: This list covers following specifications.			
		With AM-FM Stereo Radio With AUX Jack, North America			
		With AM-FM Stereo Radio With AUX Jack, Europe and Asia, For EU New Noise Arrangement 2			
		With AM-FM Stereo Radio With AUX Jack, North America, For 3D Machine Control Plug and Play			
		With AM-FM Stereo Radio With AUX Jack, Europe and Asia, For EU New Noise Arrangement 2, 3D Machine Control Plug and Play			
		With AM-FM Stereo Radio With AUX Jack, Europe and Asia			
		With AM-FM Stereo Radio With AUX Jack, Europe and Asia, For 3D Machine Control Plug and Play			
		2A5-979-1112	Air Conditioner	1	1001-
1		ND949008-0330	• Screw, Tapping	2	1001-
2		ND246470-8152	• Wiring Harness Assembly	1	1001-
3		ND113104-2260	• Plate, Name	1	1001-

FIG. K0210-003027 ROPS Cab (Air Conditioner Unit Mounting)

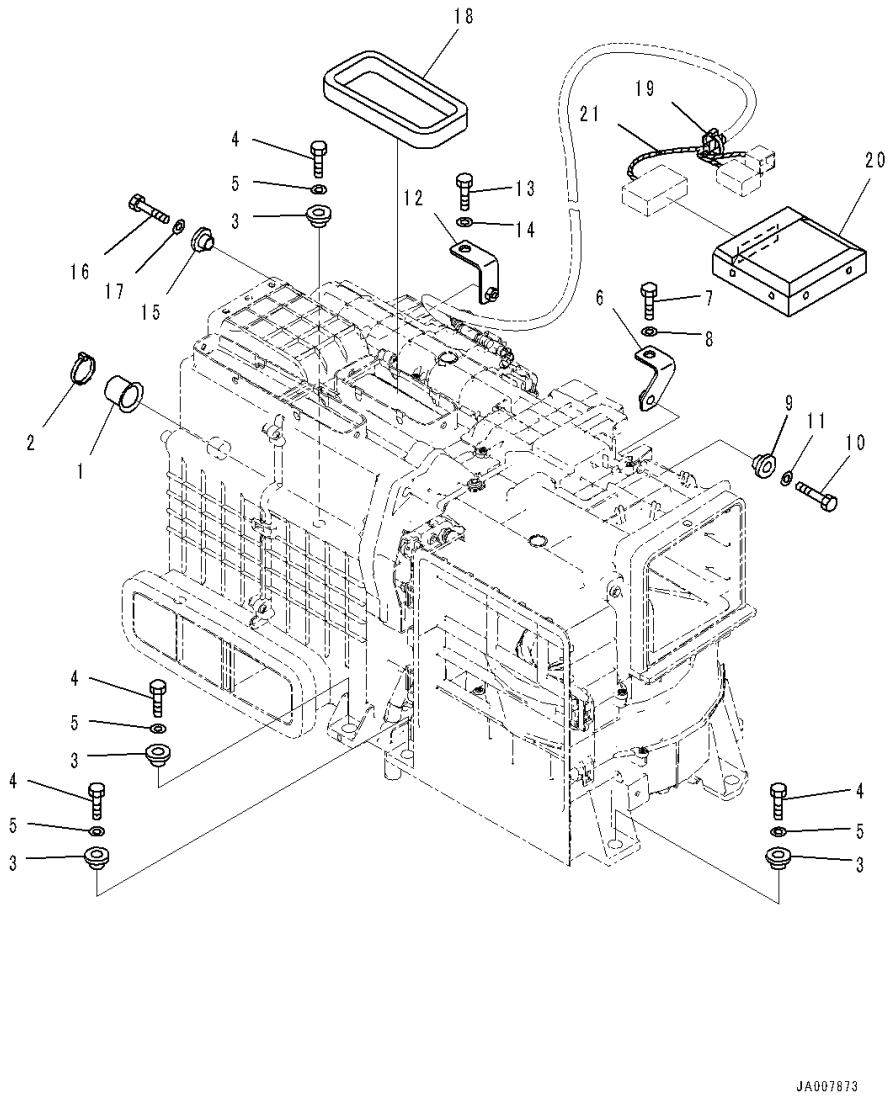

Index	Code	Part Number	Description	Qty	Serial Number
		Note: This list covers following specifications.			
		With AM-FM Stereo Radio With AUX Jack, North America			
		With AM-FM Stereo Radio With AUX Jack, Europe and Asia, For EU New Noise Arrangement 2			
		With AM-FM Stereo Radio With AUX Jack, North America, For 3D Machine Control Plug and Play			
		With AM-FM Stereo Radio With AUX Jack, Europe and Asia, For EU New Noise Arrangement 2, 3D Machine Control Plug and Play			
		With AM-FM Stereo Radio With AUX Jack, Europe and Asia			
		With AM-FM Stereo Radio With AUX Jack, Europe and Asia, For 3D Machine Control Plug and Play			
1		17A-979-3131	Cap	1	1001-
2		08034-20519	Band	1	1001-
3		208-979-7540	Collar	6	1001-
4		01010-D0835	Bolt	6	1001-
5		01643-70823	Washer	6	1001-
6		17A-911-5331	Bracket	1	1001-
7		01010-D0825	Bolt	1	1001-
8		01643-70823	Washer	1	1001-
9		208-979-7540	Collar	1	1001-
10		01010-D0835	Bolt	1	1001-
11		01643-70823	Washer	1	1001-
12		17A-911-5481	Bracket	1	1001-
13		01010-D0825	Bolt	1	1001-
14		01643-70823	Washer	1	1001-
15		208-979-7540	Collar	1	1001-
16		01010-D0835	Bolt	1	1001-
17		01643-70823	Washer	1	1001-
18		17A-911-5261	Seal	1	1001-
19		08034-20519	Band	1	1001-
20		2A5-979-1121	Controller, Air Conditioner	1	1001-
21		08210-01205	Spiral Tube	1	1001-

FIG. K0210-003028 ROPS Cab (Air Conditioner Duct, R.H.)

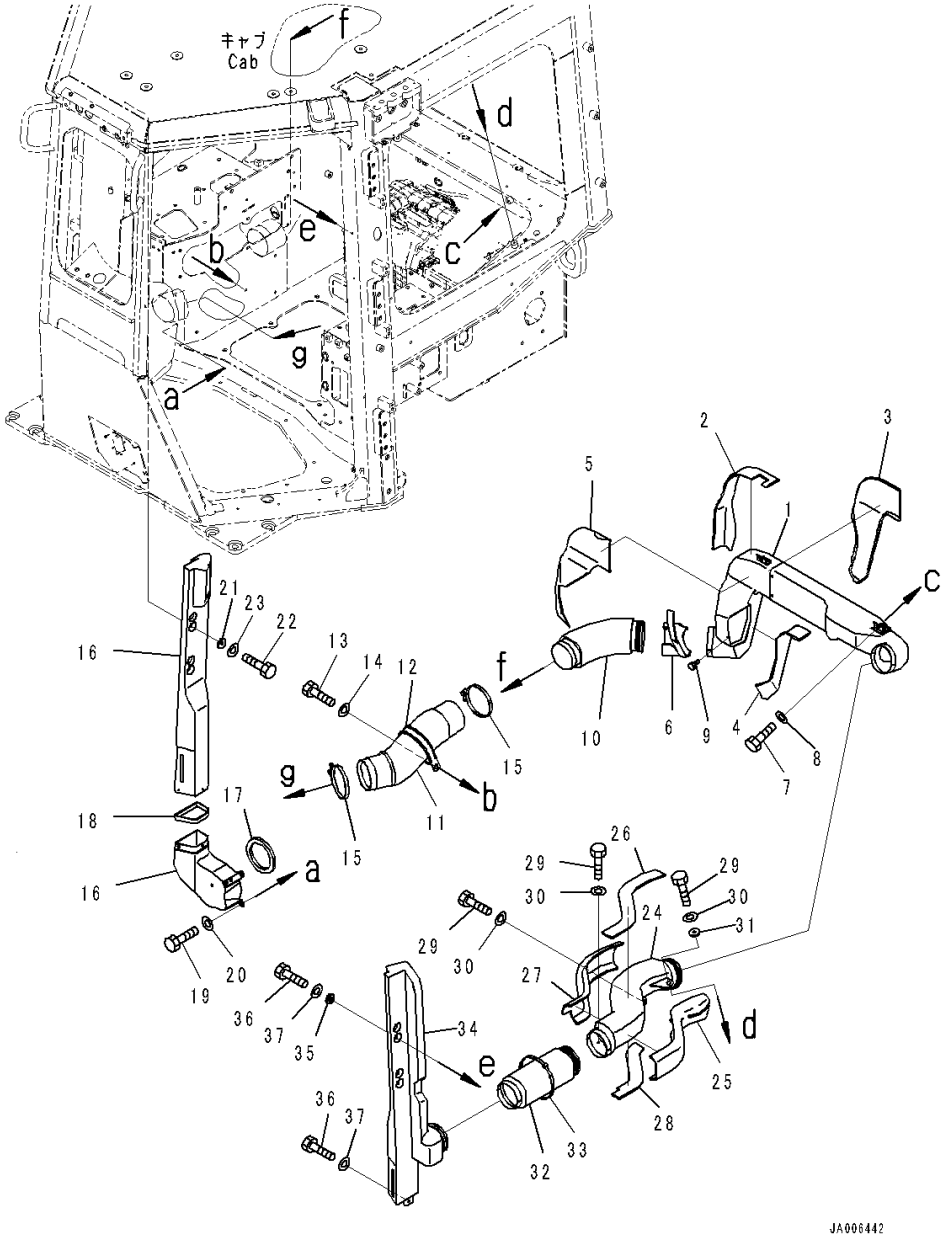

Index	Code	Part Number	Description	Qty	Serial Number
		Note: This list covers following specifications.			
		With AM-FM Stereo Radio With AUX Jack, North America			
		With AM-FM Stereo Radio With AUX Jack, Europe and Asia, For EU New Noise Arrangement 2			
		With AM-FM Stereo Radio With AUX Jack, North America, For 3D Machine Control Plug and Play			
		With AM-FM Stereo Radio With AUX Jack, Europe and Asia, For EU New Noise Arrangement 2, 3D Machine Control Plug and Play			
		With AM-FM Stereo Radio With AUX Jack, Europe and Asia			
		With AM-FM Stereo Radio With AUX Jack, Europe and Asia, For 3D Machine Control Plug and Play			
1		14X-Y11-6420	Duct	1	1001-
2		14X-Y11-6240	• Sheet	1	1001-
3		14X-Y11-6250	• Sheet	1	1001-
4		14X-Y11-6260	• Sheet	1	1001-
5		14X-Y11-6270	• Sheet	1	1001-
6		14X-Y11-6280	• Sheet	1	1001-
7		01010-80616	Bolt	2	1001-
8		01643-30623	Washer	2	1001-
9		208-53-12680	Clip	1	1001-
10		20Y-53-13461	Duct	1	1001-
11		14X-Y11-1241	Hose	1	1001-
12		198-911-7750	Clip	1	1001-
13		01010-81020	Bolt	1	1001-
14		01643-31032	Washer	1	1001-
15		14X-911-7670	Clamp	2	1001-
16		14X-Y11-1151	Duct	1	1001-
17		14X-Y11-1250	• Seal	1	1001-
18		14X-Y11-1931	• Sheet	1	1001-
19		01010-80616	Bolt	3	1001-
20		01643-30623	Washer	3	1001-
21		20Y-53-12310	Collar	2	1001-
22		01010-80616	Bolt	2	1001-
23		01643-30623	Washer	2	1001-
24		14X-Y11-6410	Duct	1	1001-
25		14X-Y11-6370	• Sheet	1	1001-
26		14X-Y11-6210	• Sheet	1	1001-
27		14X-Y11-6220	• Sheet	1	1001-
28		14X-Y11-6230	• Sheet	1	1001-

FIG. K0210-003028 ROPS Cab (Air Conditioner Duct, R.H.)

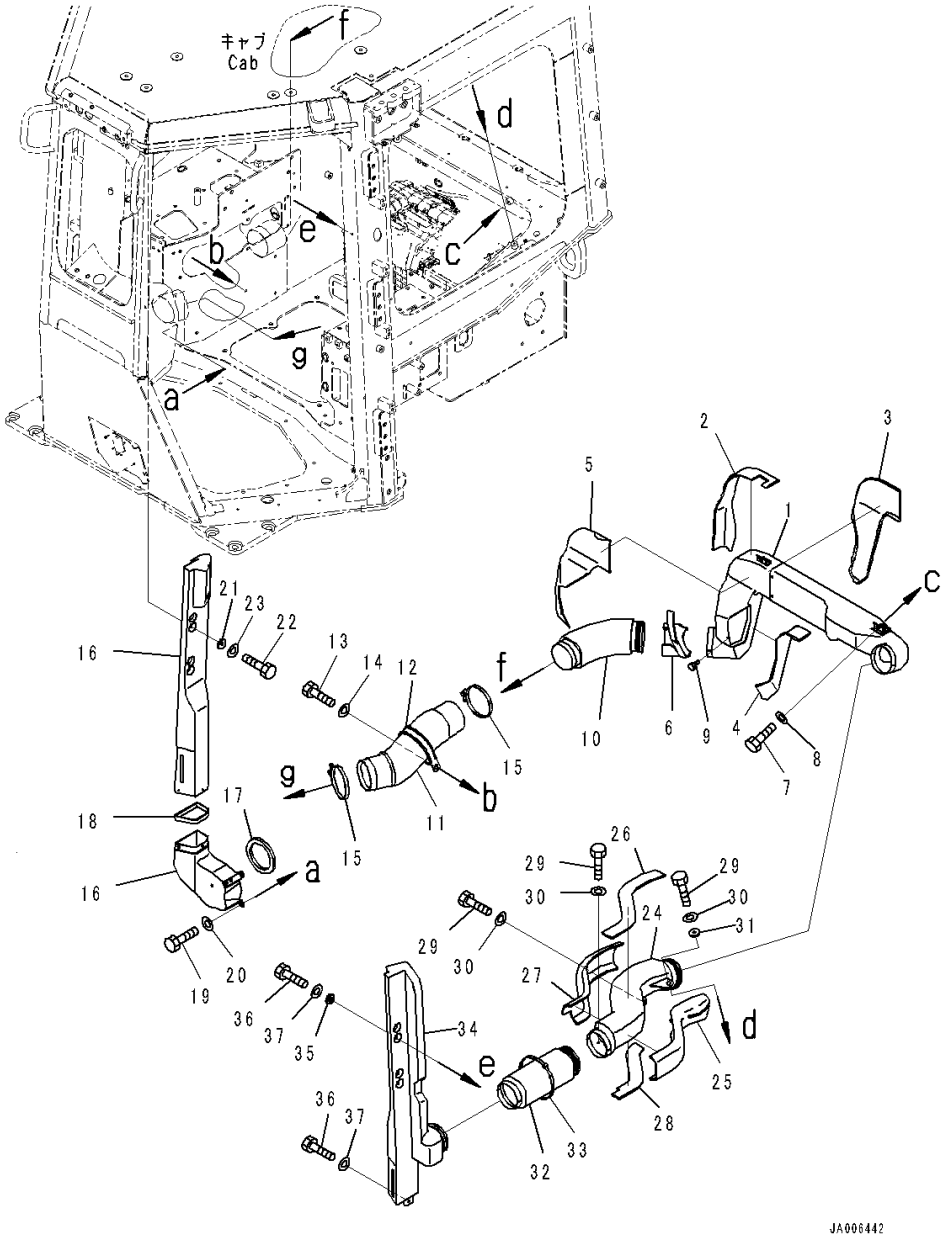

Index	Code	Part Number	Description	Qty	Serial Number
29		01010-80616	Bolt	3	1001-
30		01643-30623	Washer	3	1001-
31		20Y-53-12310	Collar	1	1001-
32		20Y-53-13361	Duct	1	1001-
33		08034-20876	Band	1	1001-
34		14X-Y11-1141	Duct	1	1001-
35		20Y-53-12310	Collar	2	1001-
36		01010-80616	Bolt	3	1001-
37		01643-30623	Washer	3	1001-

FIG. K0210-003029 ROPS Cab (Air Conditioner Duct)

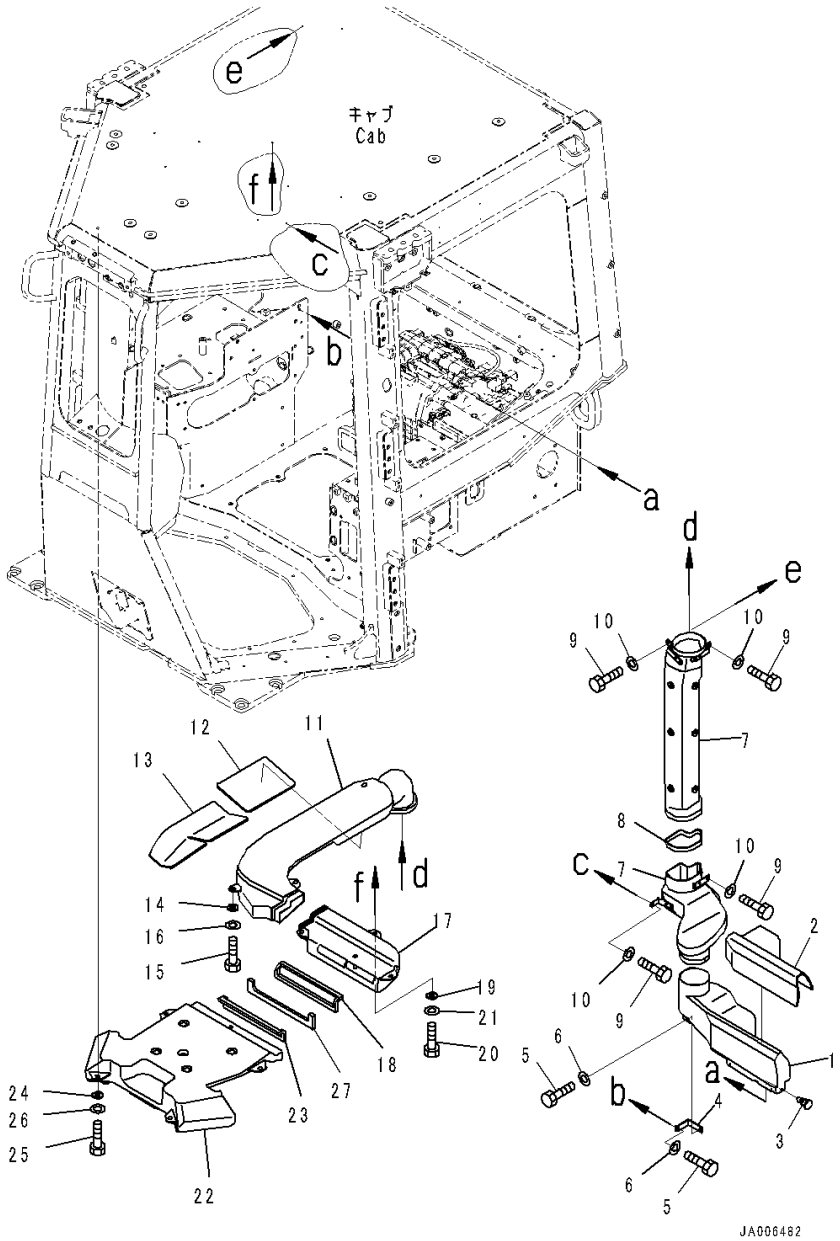

Index	Code	Part Number	Description	Qty	Serial Number
		Note: This list covers following specifications.			
		With AM-FM Stereo Radio With AUX Jack, North America			
		With AM-FM Stereo Radio With AUX Jack, Europe and Asia, For EU New Noise Arrangement 2			
		With AM-FM Stereo Radio With AUX Jack, North America, For 3D Machine Control Plug and Play			
		With AM-FM Stereo Radio With AUX Jack, Europe and Asia, For EU New Noise Arrangement 2, 3D Machine Control Plug and Play			
		With AM-FM Stereo Radio With AUX Jack, Europe and Asia			
		With AM-FM Stereo Radio With AUX Jack, Europe and Asia, For 3D Machine Control Plug and Play			
1		14X-Y11-6430	Duct	1	1001-
2		14X-Y11-6290	• Sheet	1	1001-
3		208-53-12680	Clip	1	1001-
4		17A-911-5421	Bracket	1	1001-
5		01010-80616	Bolt	2	1001-
6		01643-30623	Washer	2	1001-
7		14X-Y11-1171	Duct	1	1001-
8		14X-Y11-1941	• Sheet	1	1001-
9		01010-80616	Bolt	4	1001-
10		01643-30623	Washer	4	1001-
11		14X-Y11-1181	Duct	1	1001-
12		14X-Y79-2230	• Sheet	1	1001-
13		14X-Y79-2241	• Sheet	1	1001-
14		20Y-53-12310	Collar	3	1001-
15		01010-80616	Bolt	3	1001-
16		01643-30623	Washer	3	1001-
17		14X-Y11-1191	Duct	1	1001-
18		14X-Y11-1260	• Seal	1	1001-
19		20Y-53-12310	Collar	3	1001-
20		01010-80616	Bolt	3	1001-
21		01643-30623	Washer	3	1001-
22		14X-Y11-1211	Duct	1	1001-
23		14X-Y11-1260	• Seal	1	1001-
24		20Y-53-12310	Collar	4	1001-
25		01010-80616	Bolt	4	1001-
26		01643-30623	Washer	4	1001-
27		14X-Y79-2310	Sheet	1	1001-

FIG. K0210-003030 ROPS Cab (Air Conditioner Piping)

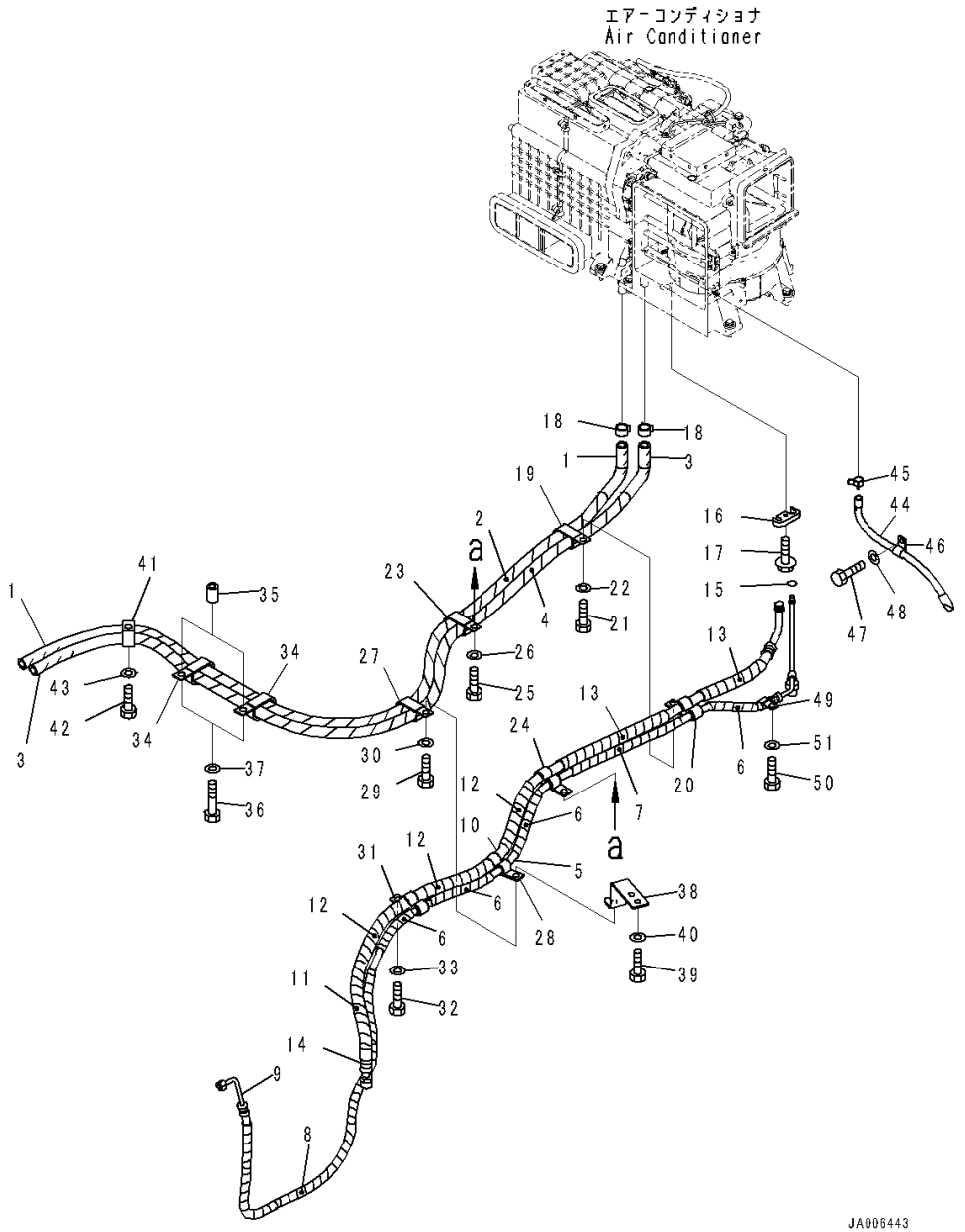

Index	Code	Part Number	Description	Qty	Serial Number
		Note: This list covers following specifications.			
		With AM-FM Stereo Radio With AUX Jack, North America			
		With AM-FM Stereo Radio With AUX Jack, Europe and Asia, For EU New Noise Arrangement 2			
		With AM-FM Stereo Radio With AUX Jack, North America, For 3D Machine Control Plug and Play			
		With AM-FM Stereo Radio With AUX Jack, Europe and Asia, For EU New Noise Arrangement 2, 3D Machine Control Plug and Play			
		With AM-FM Stereo Radio With AUX Jack, Europe and Asia			
		With AM-FM Stereo Radio With AUX Jack, Europe and Asia, For 3D Machine Control Plug and Play			
1		154-911-8960	Hose	1	1001-
2		08017-C2519	• Conduit	1	1001-
3		154-911-8950	Hose	1	1001-
4		08017-C2520	• Conduit	1	1001-
5		154-911-8911	Hose Assembly	1	1001-
6		08017-C1502	• Conduit	6	1001-
7		08017-C1503	• Conduit	2	1001-
8		08017-C1511	• Conduit	1	1001-
9		154-911-8931	• Hose	1	1001-
10		154-911-8921	Hose Assembly	1	1001-
11		08017-C2201	• Conduit	1	1001-
12		08017-C2202	• Conduit	4	1001-
13		08017-C2203	• Conduit	3	1001-
14		154-911-8941	• Hose	1	1001-
15		20Y-979-3130	• • O-ring	1	1001-
16		208-979-7650	Connector	1	1001-
17		01435-00620	Bolt	1	1001-
18		09479-02400	Clip	2	1001-
19		582-35-11170	Clip	1	1001-
20		195-Z11-7250	Clip	1	1001-
21		01010-81025	Bolt	1	1001-
22		01643-31032	Washer	1	1001-
23		582-35-11170	Clip	1	1001-
24		17A-911-4421	Clip	1	1001-
25		01010-81025	Bolt	1	1001-
26		01643-31032	Washer	1	1001-
27		582-35-11170	Clip	1	1001-
28		17A-911-4421	Clip	1	1001-

FIG. K0210-003030 ROPS Cab (Air Conditioner Piping)

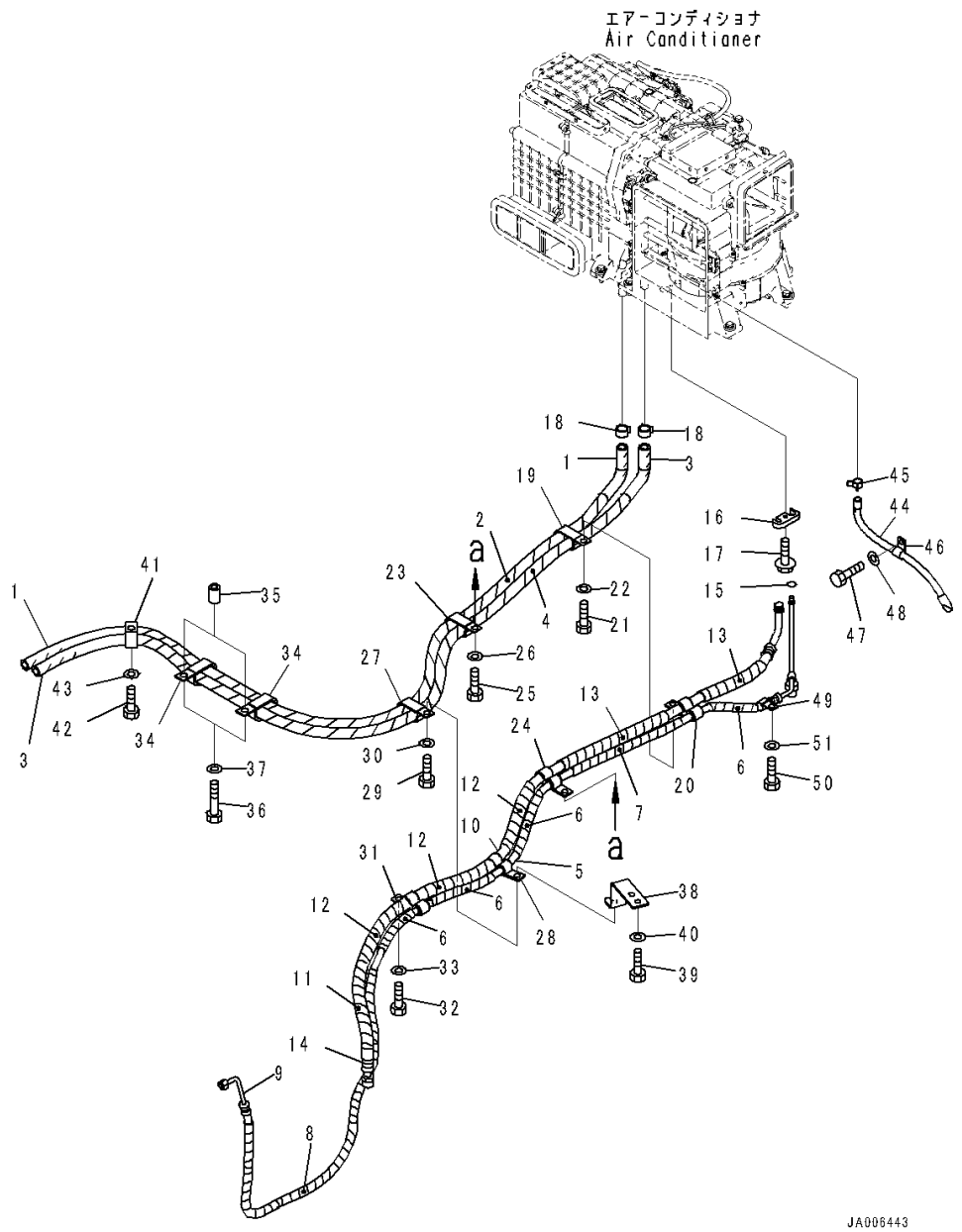

Index	Code	Part Number	Description	Qty	Serial Number
29		01010-81025	Bolt	1	1001-
30		01643-31032	Washer	1	1001-
31		195-Z11-7250	Clip	1	1001-
32		01010-81025	Bolt	1	1001-
33		01643-31032	Washer	1	1001-
34		22M-977-1140	Clip	2	1001-
35		20Y-03-11220	Collar	2	1001-
36		01010-81060	Bolt	2	1001-
37		01643-31032	Washer	2	1001-
38		14X-Y11-1790	Bracket	1	1001-
39		01010-81025	Bolt	2	1001-
40		01643-31032	Washer	2	1001-
41		22M-977-1140	Clip	1	1001-
42		01010-81025	Bolt	1	1001-
43		01643-31032	Washer	1	1001-
44		20Y-979-6281	Hose	1	1001-
45		07285-00155	Clip	1	1001-
46		04434-51410	Clip	1	1001-
47		01010-81020	Bolt	1	1001-
48		01643-31032	Washer	1	1001-
49		04434-51510	Clip	1	1001-
50		01010-81025	Bolt	1	1001-
51		01643-31032	Washer	1	1001-

FIG. K0210-003031 ROPS Cab (Air Conditioner Duct, Outside)

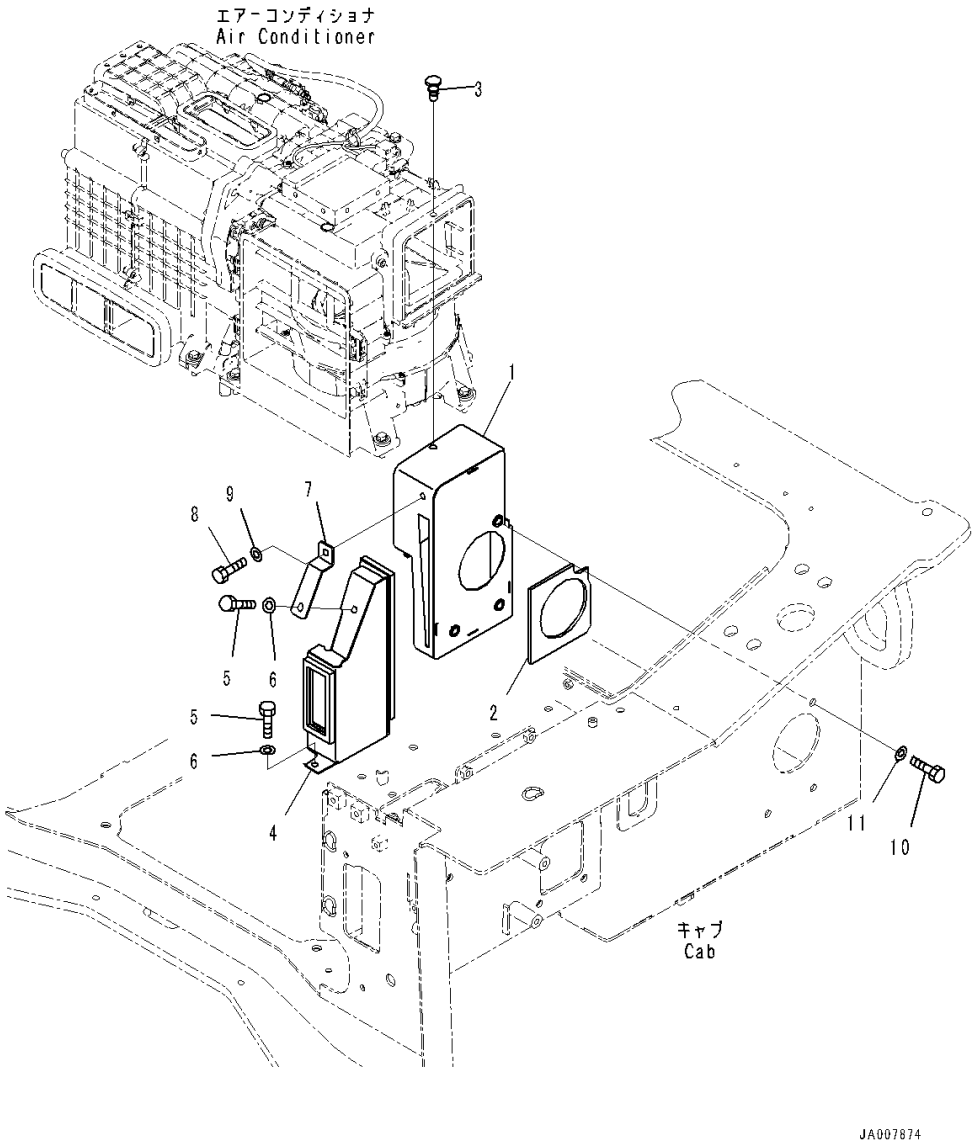

Index	Code	Part Number	Description	Qty	Serial Number
		Note: This list covers following specifications.			
		With AM-FM Stereo Radio With AUX Jack, North America			
		With AM-FM Stereo Radio With AUX Jack, Europe and Asia, For EU New Noise Arrangement 2			
		With AM-FM Stereo Radio With AUX Jack, North America, For 3D Machine Control Plug and Play			
		With AM-FM Stereo Radio With AUX Jack, Europe and Asia, For EU New Noise Arrangement 2, 3D Machine Control Plug and Play			
		With AM-FM Stereo Radio With AUX Jack, Europe and Asia			
		With AM-FM Stereo Radio With AUX Jack, Europe and Asia, For 3D Machine Control Plug and Play			
1		14X-Y11-3111	Duct	1	1001-
2		14X-Y11-1490	• Sheet	1	1001-
3		208-53-12680	Clip	1	1001-
4		17A-911-5591	Duct	1	1001-
5		01010-D0825	Bolt	2	1001-
6		01643-70823	Washer	2	1001-
7		17A-911-5641	Bracket	1	1001-
8		01010-D0825	Bolt	1	1001-
9		01643-70823	Washer	1	1001-
10		01010-81025	Bolt	3	1001-
11		01643-31032	Washer	3	1001-

FIG. K0210-003032 ROPS Cab (Air Conditioner Duct, Rear)

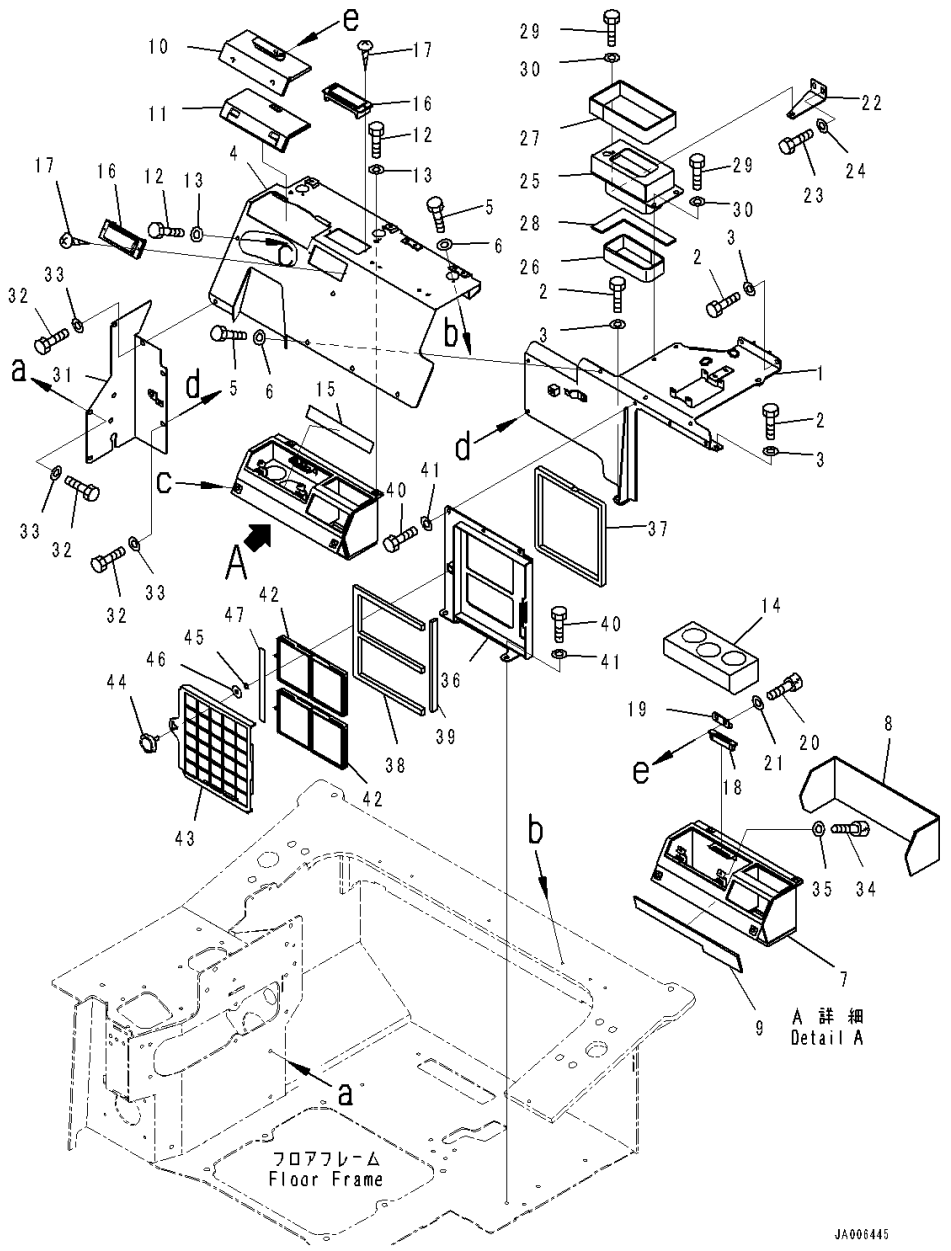

Index	Code	Part Number	Description	Qty	Serial Number
		Note: This list covers following specifications.			
		With AM-FM Stereo Radio With AUX Jack, North America			
		With AM-FM Stereo Radio With AUX Jack, Europe and Asia, For EU New Noise Arrangement 2			
		With AM-FM Stereo Radio With AUX Jack, North America, For 3D Machine Control Plug and Play			
		With AM-FM Stereo Radio With AUX Jack, Europe and Asia, For EU New Noise Arrangement 2, 3D Machine Control Plug and Play			
		With AM-FM Stereo Radio With AUX Jack, Europe and Asia			
		With AM-FM Stereo Radio With AUX Jack, Europe and Asia, For 3D Machine Control Plug and Play			
1		17A-911-5211	Cover	1	1001-
2		01010-D0825	Bolt	4	1001-
3		01643-70823	Washer	4	1001-
4		17A-911-5221	Cover	1	1001-
5		01010-D0825	Bolt	6	1001-
6		01643-70823	Washer	6	1001-
7		14X-Y11-6440	Duct	1	1001-
8		14X-Y11-6310	• Sheet	1	1001-
9		14X-Y11-6390	• Sheet	1	1001-
10		17A-911-5651	Cover	1	1001-
11		17A-911-5561	• Sheet	1	1001-
12		01010-D0825	Bolt	4	1001-
13		01643-70823	Washer	4	1001-
14		17A-911-5411	Cushion	1	1001-
15		14X-Y11-1611	Plate	1	1001-
16		17A-Z11-7161	Louver	2	1001-
17		01370-40414	Screw	4	1001-
18		20Y-979-6630	Catcher	1	1001-
19		17A-911-5670	Plate	1	1001-
20		01252-B0512	Bolt, Hexagon Socket Head	2	1001-
21		01640-50508	Washer, Flat	2	1001-
22		17A-911-5550	Bracket	1	1001-
23		01010-D0825	Bolt	2	1001-
24		01643-70823	Washer	2	1001-
25		14X-Y11-6450	Duct	1	1001-
26		14X-Y11-6320	• Sheet	1	1001-
27		14X-Y11-6330	• Sheet	1	1001-
28		14X-Y11-6340	• Sheet	1	1001-

FIG. K0210-003032 ROPS Cab (Air Conditioner Duct, Rear)

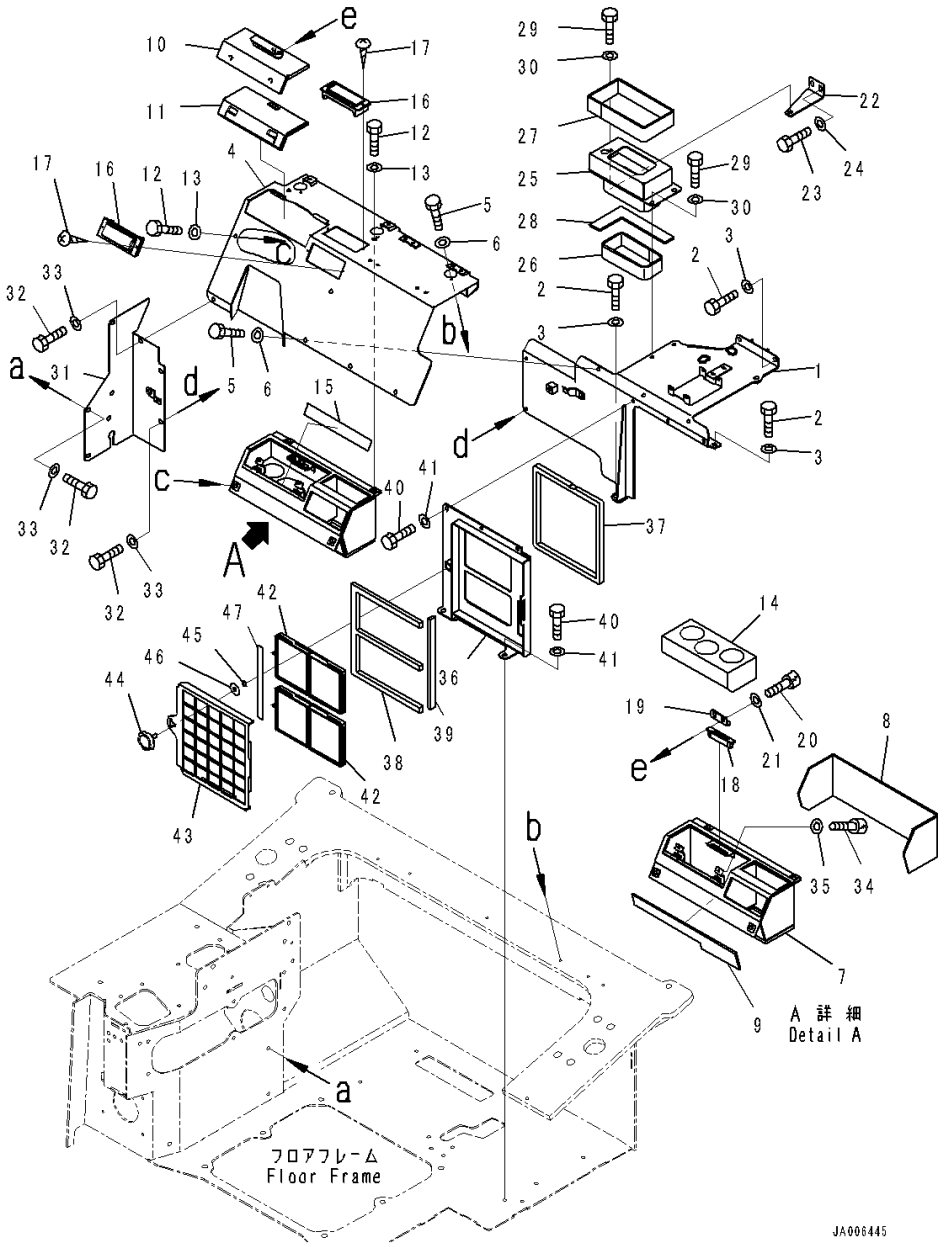

Index	Code	Part Number	Description	Qty	Serial Number
29		01010-D0825	Bolt	3	1001-
30		01643-70823	Washer	3	1001-
31		14X-54-66430	Cover	1	1001-
32		01010-D0825	Bolt	6	1001-
33		01643-70823	Washer	6	1001-
34		01252-B0512	Bolt, Hexagon Socket Head	2	1001-
35		01640-50508	Washer, Flat	2	1001-
36		17A-911-5431	Bracket	1	1001-
37		17A-911-5471	• Seal	1	1001-
38		17A-911-5721	• Seal	1	1001-
39		17A-911-5731	• Seal	1	1001-
40		01010-D0825	Bolt	5	1001-
41		01643-70823	Washer	5	1001-
42		20Y-979-6261	Filter	2	1001-
43		17A-911-5611	Cover	1	1001-
44		561-06-86280	Screw	1	1001-
45		195-54-78790	Ring, Snap	1	1001-
46		17A-911-5740	Plate	1	1001-
47		17A-98-51310	Plate	1	1001-

FIG. K0210-003033 ROPS Cab (Console Box)

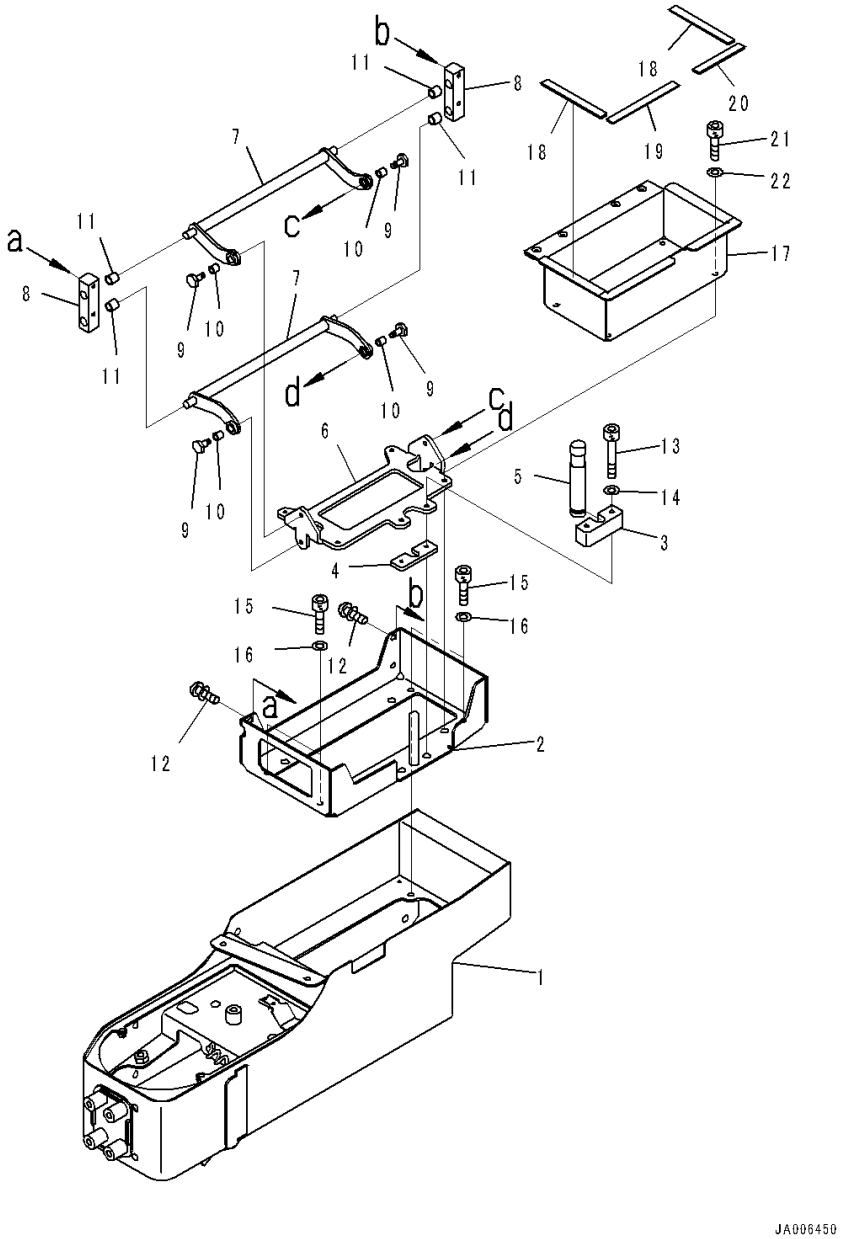

Index	Code	Part Number	Description	Qty	Serial Number
		Note: This list covers following specifications.			
		With AM-FM Stereo Radio With AUX Jack, North America			
		With AM-FM Stereo Radio With AUX Jack, Europe and Asia, For EU New Noise Arrangement 2			
		With AM-FM Stereo Radio With AUX Jack, North America, For 3D Machine Control Plug and Play			
		With AM-FM Stereo Radio With AUX Jack, Europe and Asia, For EU New Noise Arrangement 2, 3D Machine Control Plug and Play			
		With AM-FM Stereo Radio With AUX Jack, Europe and Asia			
		With AM-FM Stereo Radio With AUX Jack, Europe and Asia, For 3D Machine Control Plug and Play			
1		14X-43-61211	Box, Console	1	1001-
		14X-43-61500	Bracket	1	1001-
2	C1		• Bracket	1	1001-
3		14X-43-62120	• Plate	1	1001-
4		14X-43-62130	• Plate	1	1001-
5		14X-43-62140	• Knob	1	1001-
6		14X-43-62150	• Bracket	1	1001-
7		19M-43-33730	• Arm	2	1001-
8		19M-43-33740	• Block	2	1001-
9		19M-43-33750	• Pin	4	1001-
10		19M-43-33760	• Bushing	4	1001-
11		19M-43-34330	• Bushing	4	1001-
12		01023-60516	• Screw	4	1001-
13		01252-B0430	• Bolt, Hexagon Socket Head	2	1001-
14		01601-20410	• Washer	2	1001-
15		01252-B0510	Bolt, Hexagon Socket Head	4	1001-
16		01601-50513	Washer, Spring	4	1001-
17		17A-43-46831	Bracket	1	1001-
18		17A-43-46870	• Sheet	2	1001-
19		17A-43-46880	• Sheet	1	1001-
20		17A-43-46890	• Sheet	1	1001-
21		01252-B0510	Bolt, Hexagon Socket Head	4	1001-
22		01601-50513	Washer, Spring	4	1001-

FIG. K0210-003034 ROPS Cab (Travel Control Lever) (1/2)

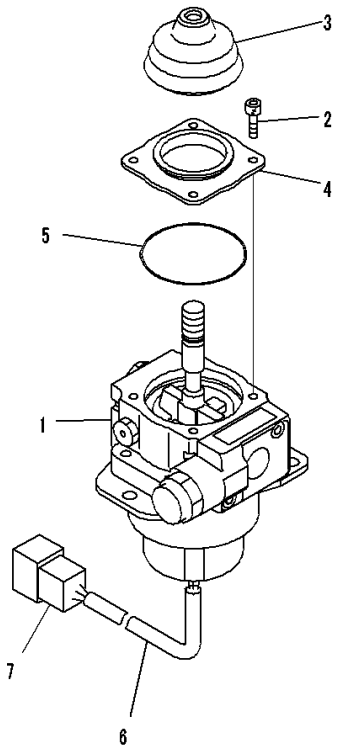

JY013289

Index	Code	Part Number	Description	Qty	Serial Number
		Note: This list covers following specifications.			
		With AM-FM Stereo Radio With AUX Jack, North America			
		With AM-FM Stereo Radio With AUX Jack, Europe and Asia, For EU New Noise Arrangement 2			
		With AM-FM Stereo Radio With AUX Jack, North America, For 3D Machine Control Plug and Play			
		With AM-FM Stereo Radio With AUX Jack, Europe and Asia, For EU New Noise Arrangement 2, 3D Machine Control Plug and Play			
		With AM-FM Stereo Radio With AUX Jack, Europe and Asia			
		With AM-FM Stereo Radio With AUX Jack, Europe and Asia, For 3D Machine Control Plug and Play			
1		702-16-02290	Lever Assembly	1	1001-
2		01252-60512	• Bolt	4	1001-
3		702-16-59330	• Boot	1	1001-
4		702-16-62730	• Cover	1	1001-
5		702-16-62740	• O-ring	1	1001-
6		702-16-61270	• Tube	1	1001-
7	C1		• Connector	1	1001-

FIG. K0210-003035 ROPS Cab (Travel Control Lever) (2/2)

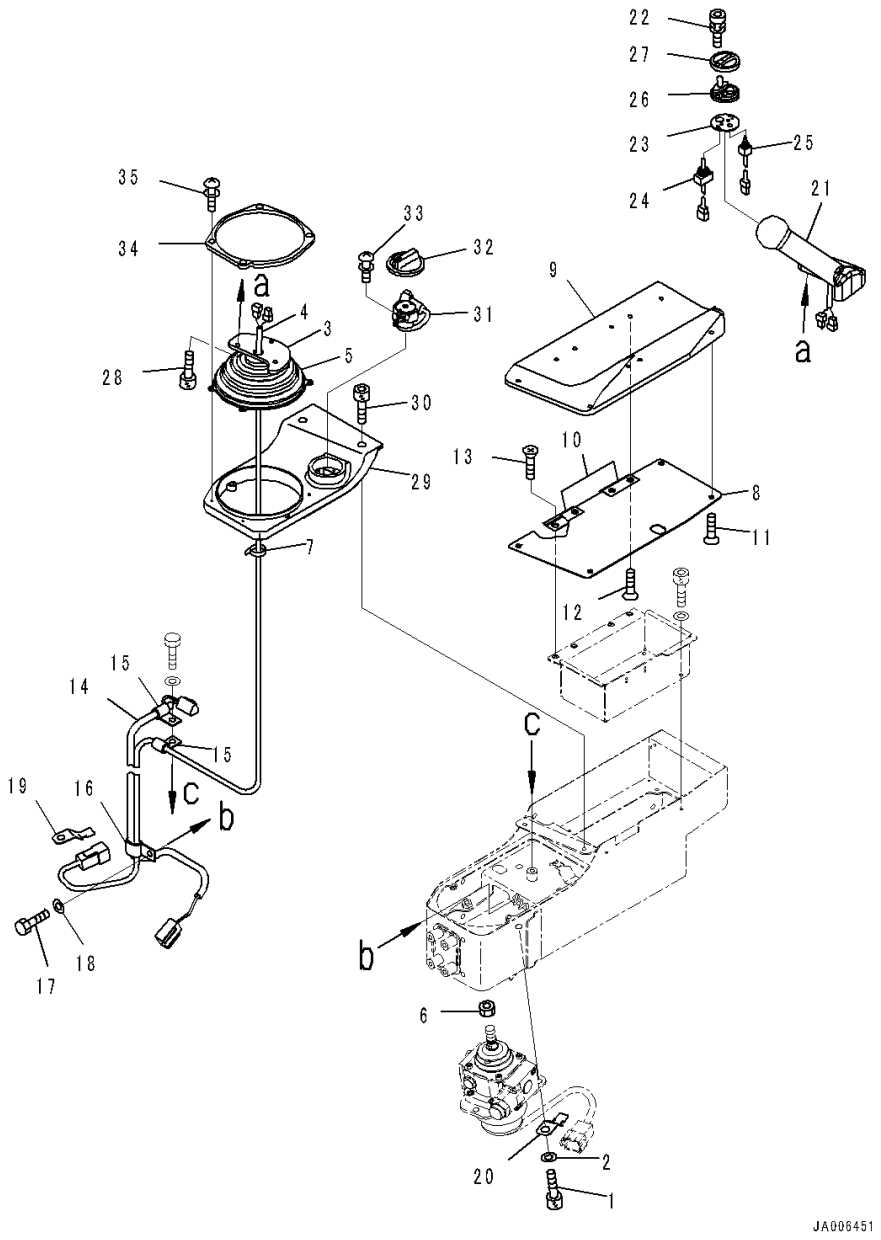

Index	Code	Part Number	Description	Qty	Serial Number
		Note: This list covers following specifications.			
		With AM-FM Stereo Radio With AUX Jack, North America			
		With AM-FM Stereo Radio With AUX Jack, Europe and Asia, For EU New Noise Arrangement 2			
		With AM-FM Stereo Radio With AUX Jack, North America, For 3D Machine Control Plug and Play			
		With AM-FM Stereo Radio With AUX Jack, Europe and Asia, For EU New Noise Arrangement 2, 3D Machine Control Plug and Play			
		With AM-FM Stereo Radio With AUX Jack, Europe and Asia			
		With AM-FM Stereo Radio With AUX Jack, Europe and Asia, For 3D Machine Control Plug and Play			
1		01252-70825	Bolt, Hexagon Socket Head	3	1001-
2		01643-30823	Washer	3	1001-
		17A-43-46760	Lever Assembly	1	1001-
3		154-43-73531	• Bracket	1	1001-
4		154-43-73560	• Wiring Harness	1	1001-
5		17A-43-43150	• Boot	1	1001-
6		20T-43-71190	Nut	1	1001-
7		08034-20519	Band	2	1001-
8		17A-43-46810	Pad	1	1001-
9		17M-43-52430	• Pad	1	1001-
10		19M-43-33660	• Hinge,Welded	2	1001-
11		01224-70408	• Screw, Philips Head	4	1001-
12		01224-70410	• Screw, Philips Head	4	1001-
13		01224-70408	Screw, Philips Head	4	1001-
14		14X-06-51151	Wiring Harness	1	1001-
15		04434-51008	Clip	2	1001-
16		04435-51008	Clip	1	1001-
17		01010-80816	Bolt	2	1001-
18		01643-30823	Washer	2	1001-
19		08193-20010	Clip	1	1001-
20		08193-30010	Clip	1	1001-
21		19M-43-33111	Knob Assembly	1	1001-
22		19M-09-11510	• Bolt	2	1001-
		19M-43-33141	• Switch Assembly	1	1001-
23		19M-43-33171	• • Plate	1	1001-
24		19M-43-33460	• • Switch	1	1001-
25		19M-43-33470	• • Switch	1	1001-
26		19M-43-33151	• Rubber	1	1001-

FIG. K0210-003035 ROPS Cab (Travel Control Lever) (2/2)

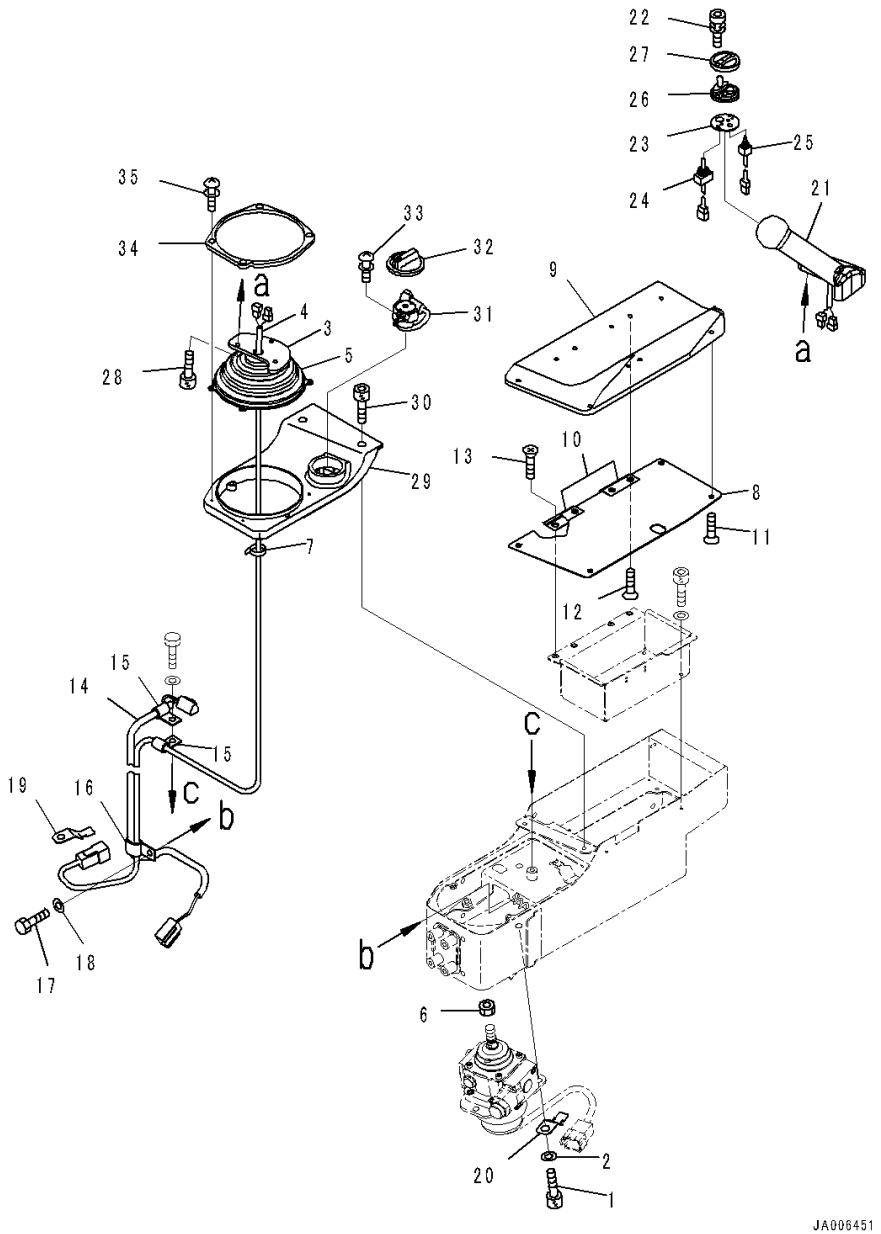

Index	Code	Part Number	Description	Qty	Serial Number
27		19M-43-33161	• Cover	1	1001-
28		01252-B0514	Bolt, Hexagon Socket Head	3	1001-
29		14X-43-51970	Finisher	1	1001-
30		01252-B0520	Bolt, Hexagon Socket Head	4	1001-
31		14X-06-31502	Dial	1	1235-
32		7825-30-1441	• Knob	1	1001-
33		01023-60410	Screw	2	1001-
34		14X-43-51980	Cover	1	1001-
35		01252-B0412	Bolt, Hexagon Socket Head	4	1001-

FIG. K0210-003036 ROPS Cab (Console Slider)

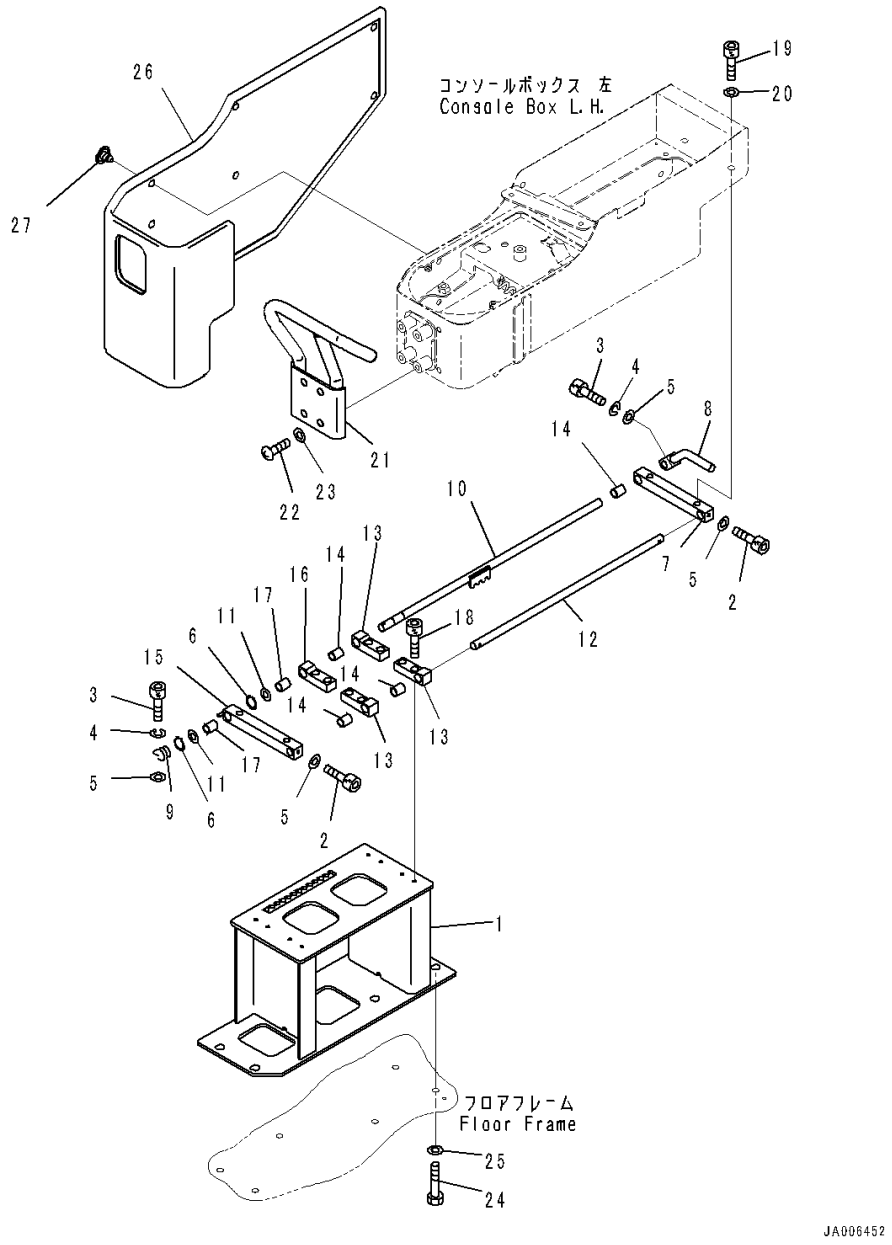

Index	Code	Part Number	Description	Qty	Serial Number
		Note: This list covers following specifications.			
		With AM-FM Stereo Radio With AUX Jack, North America			
		With AM-FM Stereo Radio With AUX Jack, Europe and Asia, For EU New Noise Arrangement 2			
		With AM-FM Stereo Radio With AUX Jack, North America, For 3D Machine Control Plug and Play			
		With AM-FM Stereo Radio With AUX Jack, Europe and Asia, For EU New Noise Arrangement 2, 3D Machine Control Plug and Play			
		With AM-FM Stereo Radio With AUX Jack, Europe and Asia			
		With AM-FM Stereo Radio With AUX Jack, Europe and Asia, For 3D Machine Control Plug and Play			
1		17A-43-46860	Bracket	1	1001-
2		01252-80412	Bolt	2	1001-
3		01252-80414	Bolt	2	1001-
4		01601-20411	Washer	2	1001-
5		01640-20408	Washer, Flat	4	1001-
6		04064-01010	Ring, Snap	2	1001-
7		14X-43-51661	Guide	1	1001-
8		14X-43-51681	Lever	1	1001-
9		154-43-73670	Spring	1	1001-
10		154-43-73680	Shaft	1	1001-
11		19M-09-34110	Washer	2	1001-
12		19M-43-34120	Shaft	1	1001-
13		19M-43-34141	Guide	3	1001-
14		19M-43-34150	Bushing	4	1001-
15		19M-43-34182	Guide	1	1001-
16		19M-43-34260	Guide	1	1001-
17		19M-43-34190	Bushing	2	1001-
18		01252-B0516	Bolt, Hexagon Socket Head	8	1001-
19		01252-B0816	Bolt, Hexagon Socket Head	4	1001-
20		01643-70823	Washer	4	1001-
21		14X-54-36631	Handle	1	1001-
22		01245-00820	Screw	4	1001-
23		01643-70823	Washer	4	1001-
24		01010-81030	Bolt	6	1001-
25		01643-31032	Washer	6	1001-
26		14X-43-62510	Pad	1	1001-
27		22B-54-16461	Rivet	6	1001-

FIG. K0210-003037 ROPS Cab (Parking Brake Lever)

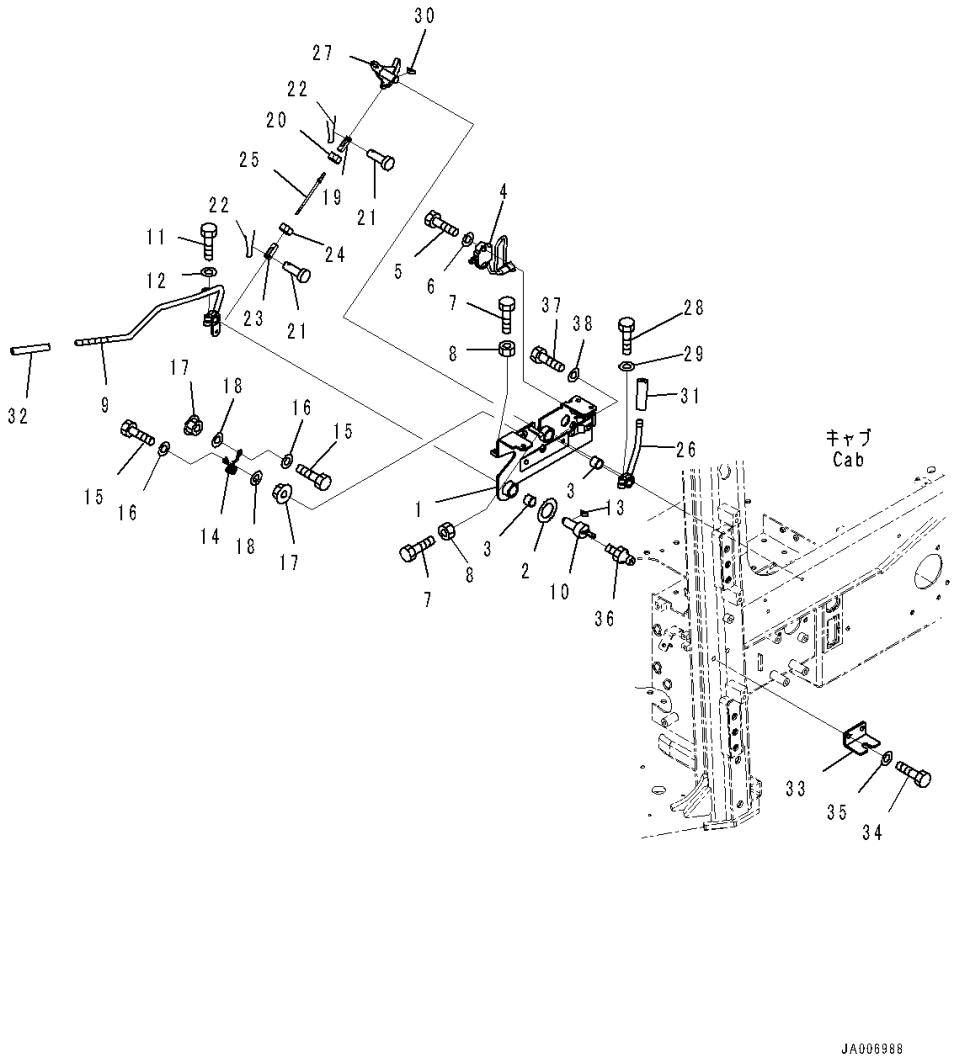

Index	Code	Part Number	Description	Qty	Serial Number
		Note: This list covers following specifications.			
		With AM-FM Stereo Radio With AUX Jack, North America			
		With AM-FM Stereo Radio With AUX Jack, Europe and Asia, For EU New Noise Arrangement 2			
		With AM-FM Stereo Radio With AUX Jack, North America, For 3D Machine Control Plug and Play			
		With AM-FM Stereo Radio With AUX Jack, Europe and Asia, For EU New Noise Arrangement 2, 3D Machine Control Plug and Play			
		With AM-FM Stereo Radio With AUX Jack, Europe and Asia			
		With AM-FM Stereo Radio With AUX Jack, Europe and Asia, For 3D Machine Control Plug and Play			
1		14X-43-61412	Bracket	1	1001-
2		14X-43-51470	• Sheet	1	1001-
3		06124-02020	Bearing	2	1001-
4		11Y-06-22150	Switch	1	1001-
5		01010-81035	Bolt	2	1001-
6		01643-31032	Washer	2	1001-
7		01016-50830	Bolt	2	1001-
8		01580-10806	Nut	2	1001-
9		14X-43-51421	Lever	1	1001-
10		14X-43-51431	Lever	1	1001-
11		01010-80830	Bolt	1	1001-
12		01643-30823	Washer	1	1001-
13		04010-00516	Key	1	1001-
14		17A-43-51840	Spring	1	1001-
15		01010-80625	Bolt	2	1001-
16		01643-30623	Washer	2	1001-
17		01584-00605	Nut	2	1001-
18		01643-30623	Washer	2	1001-
19		04221-20634	Yoke	1	1001-
20		01508-40603	Nut, Left-handed	1	1001-
21		04205-10618	Pin	2	1001-
22		04050-11612	Pin, Cotter	2	1001-
23		04211-20634	Yoke	1	1001-
24		01580-10605	Nut	1	1001-
25		04248-30613	Rod	1	1001-
26		14X-43-51741	Lever	1	1001-
27		14X-43-61452	Lever	1	1001-
28		01010-80830	Bolt	1	1001-

FIG. K0210-003037 ROPS Cab (Parking Brake Lever)

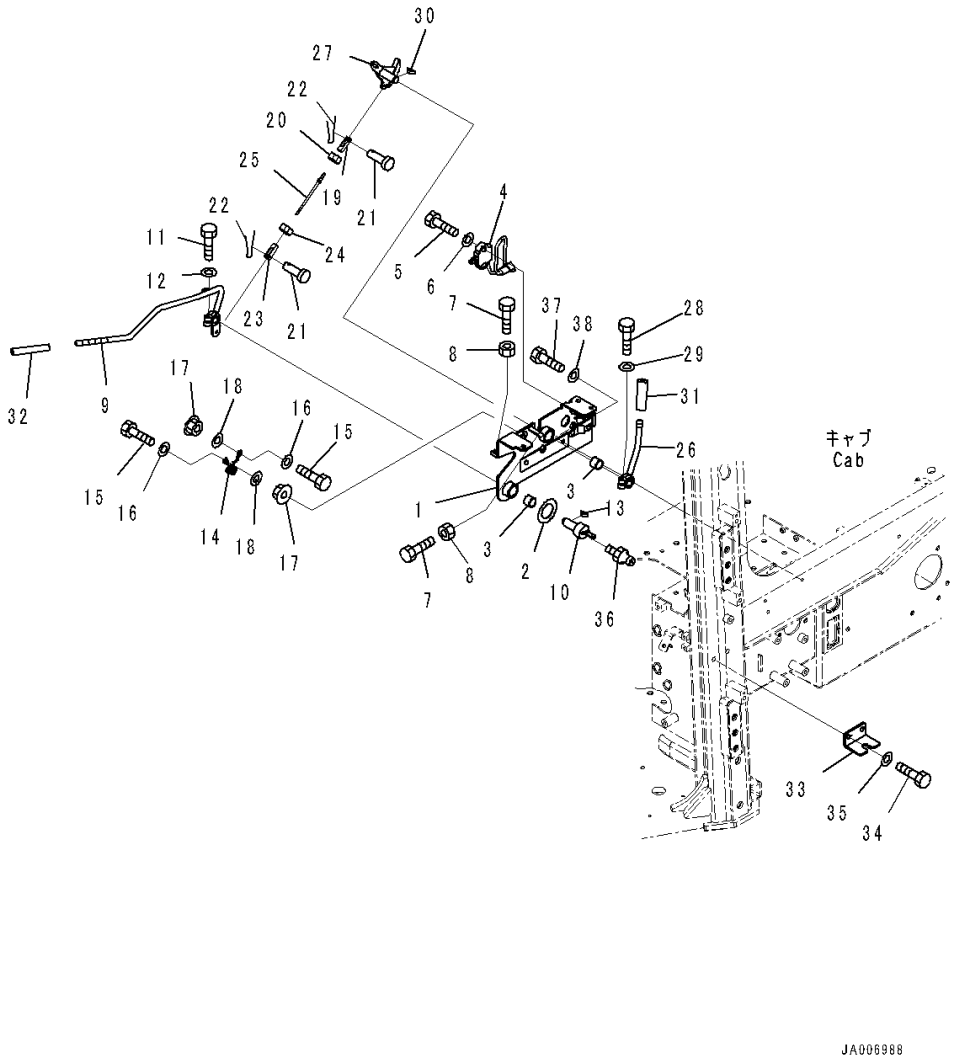

Index	Code	Part Number	Description	Qty	Serial Number
29		01643-30823	Washer	1	1001-
30		04010-00516	Key	1	1001-
31		22M-43-21470	Knob	1	1001-
32		417-43-28270	Cap	1	1001-
33		14X-43-51461	Bracket	1	1001-
34		01010-81025	Bolt	2	1001-
35		01643-31032	Washer	2	1001-
36		07020-00000	Fitting, Grease	1	1001-
37		01010-81025	Bolt	2	1001-
38		01643-31032	Washer	2	1001-

FIG. K0210-003038 ROPS Cab (Work Equipment Lock Lever)

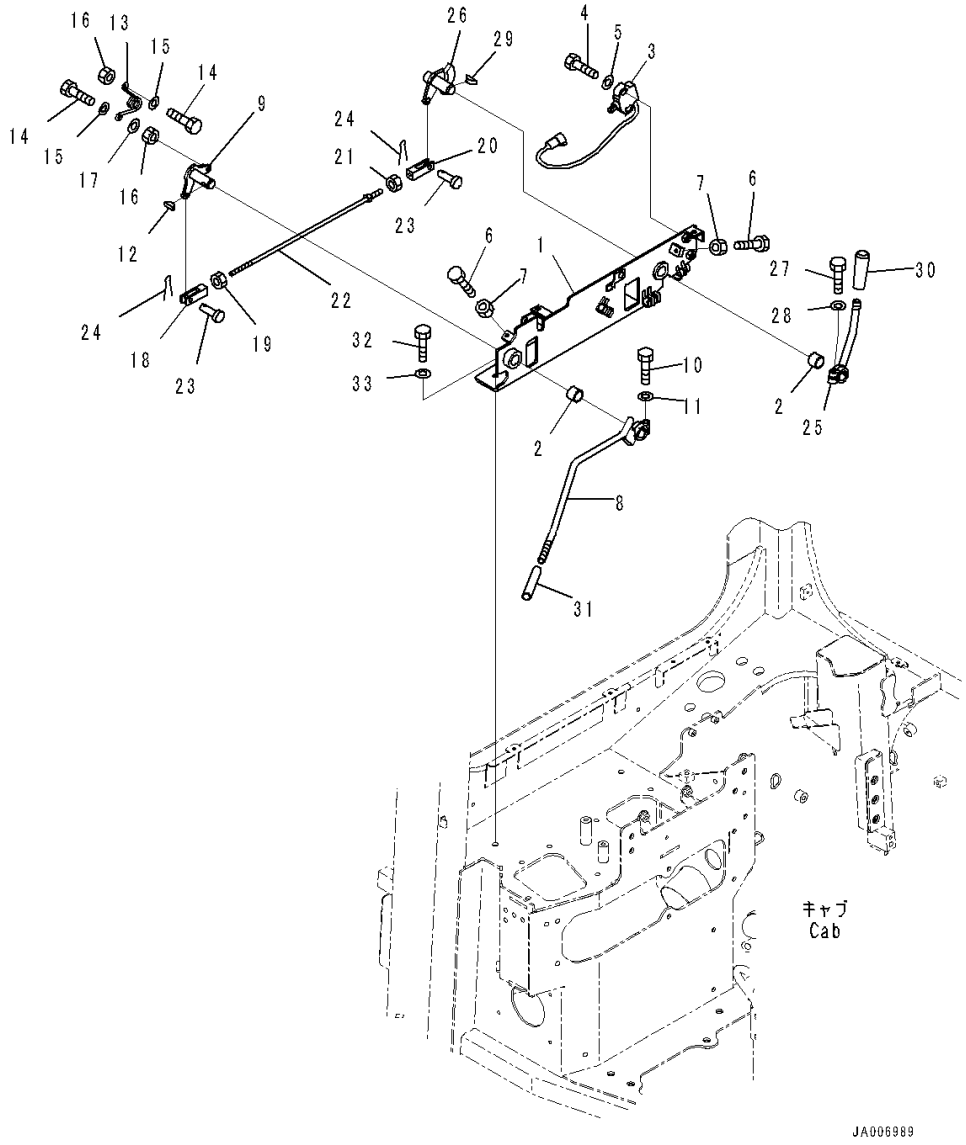

Index	Code	Part Number	Description	Qty	Serial Number
		Note: This list covers following specifications.			
		With AM-FM Stereo Radio With AUX Jack, North America			
		With AM-FM Stereo Radio With AUX Jack, Europe and Asia, For EU New Noise Arrangement 2			
		With AM-FM Stereo Radio With AUX Jack, North America, For 3D Machine Control Plug and Play			
		With AM-FM Stereo Radio With AUX Jack, Europe and Asia, For EU New Noise Arrangement 2, 3D Machine Control Plug and Play			
		With AM-FM Stereo Radio With AUX Jack, Europe and Asia			
		With AM-FM Stereo Radio With AUX Jack, Europe and Asia, For 3D Machine Control Plug and Play			
1		14X-43-61711	Bracket	1	1001-
2		06124-02020	Bearing	2	1001-
3		11Y-06-22150	Switch	1	1001-
4		01010-81035	Bolt	2	1001-
5		01643-31032	Washer	2	1001-
6		01016-50830	Bolt	2	1001-
7		01580-10806	Nut	2	1001-
8		14X-43-51721	Lever	1	1001-
9		14X-43-61730	Lever	1	1001-
10		01010-80830	Bolt	1	1001-
11		01643-30823	Washer	1	1001-
12		04010-00516	Key	1	1001-
13		14X-43-51840	Spring	1	1001-
14		01010-80625	Bolt	2	1001-
15		01643-30623	Washer	2	1001-
16		01580-10605	Nut	2	1001-
17		01643-30623	Washer	1	1001-
18		04221-20844	York, Left-handed Thread	1	1001-
19		01508-40805	Nut	1	1001-
20		04211-20844	Yoke	1	1001-
21		01580-10806	Nut	1	1001-
22		04248-30838	Rod	1	1001-
23		04205-10822	Pin	2	1001-
24		04050-12015	Pin, Cotter	2	1001-
25		14X-43-51791	Lever	1	1001-
26		14X-43-61750	Lever	1	1001-
27		01010-80830	Bolt	1	1001-
28		01643-30823	Washer	1	1001-

FIG. K0210-003038 ROPS Cab (Work Equipment Lock Lever)

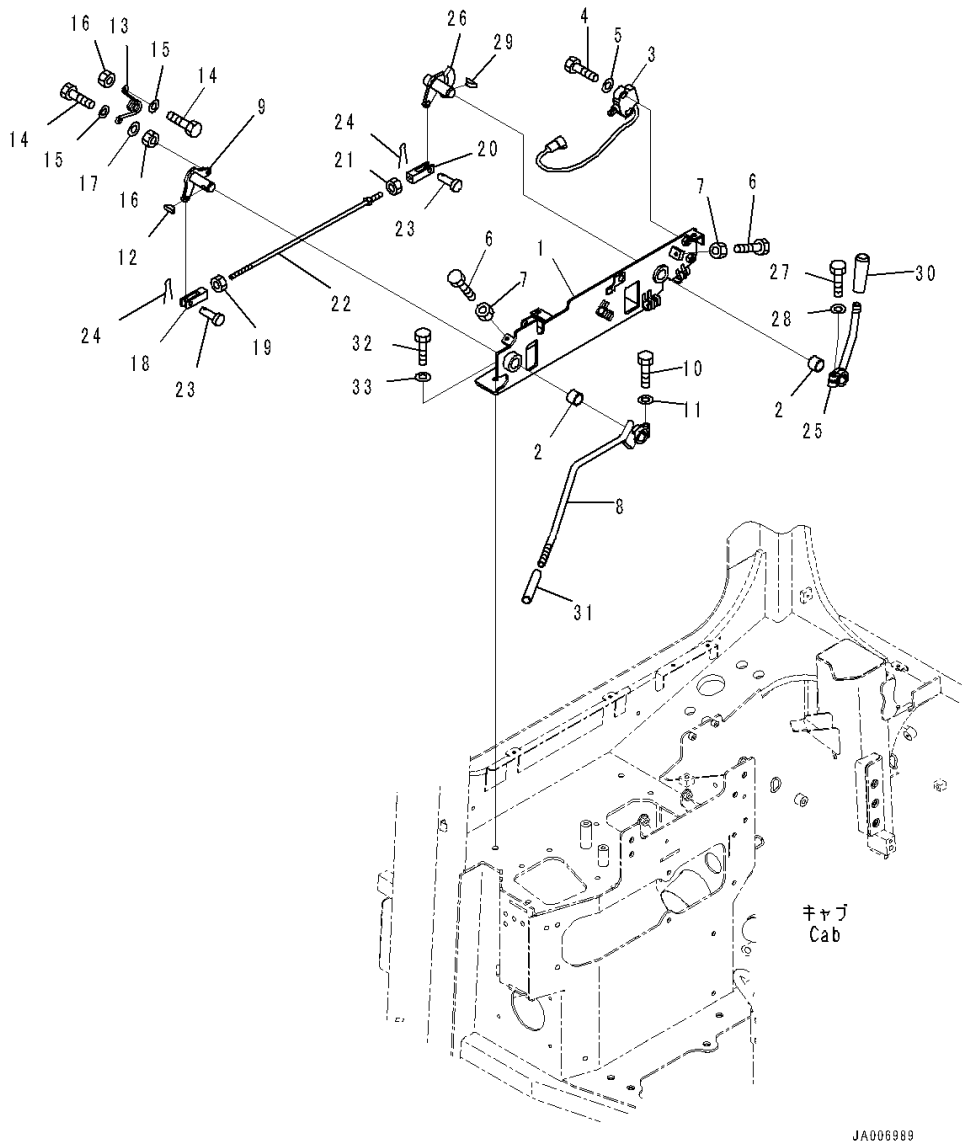

Index	Code	Part Number	Description	Qty	Serial Number
29		04010-00516	Key	1	1001-
30		22M-43-21470	Knob	1	1001-
31		417-43-28270	Cap	1	1001-
32		01010-81025	Bolt	2	1001-
33		01643-31032	Washer	2	1001-

FIG. K0210-003039 ROPS Cab (Floor Frame Inside Cover)

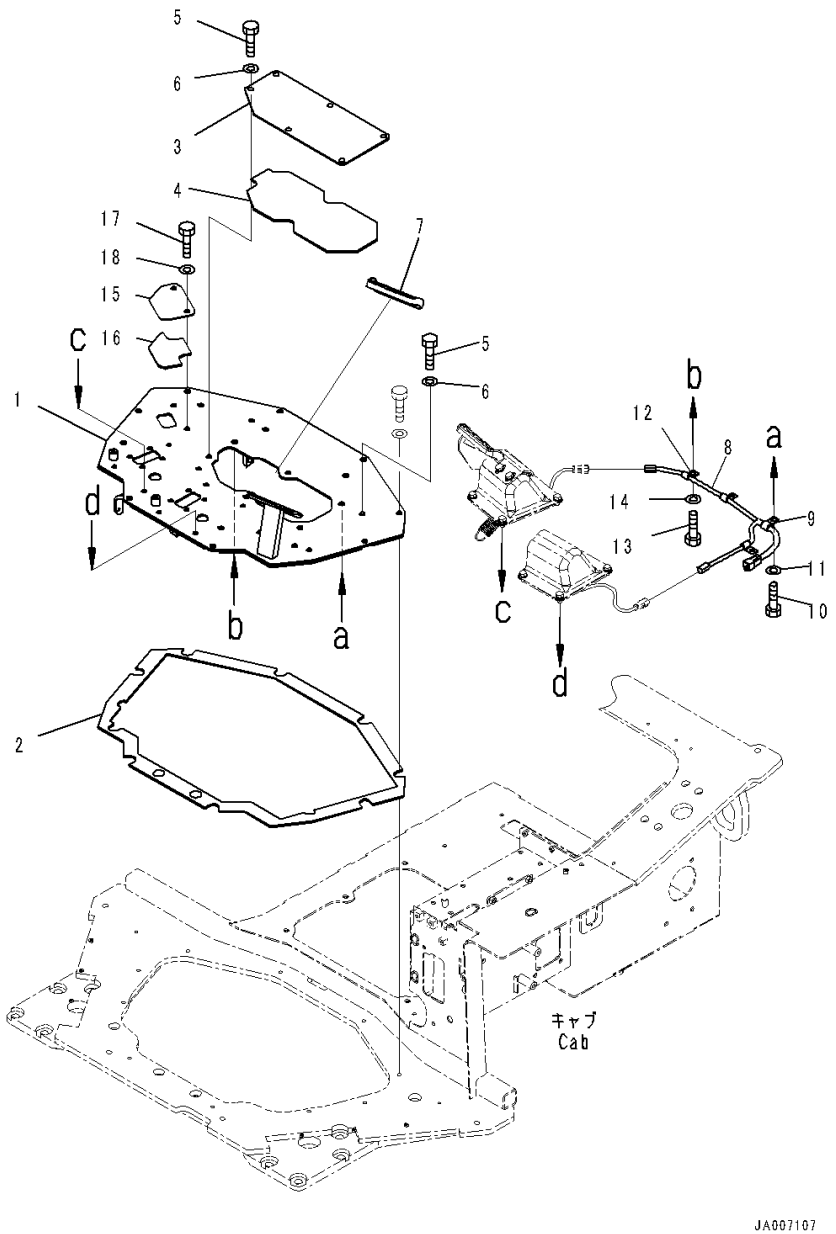

Index	Code	Part Number	Description	Qty	Serial Number
		Note: This list covers following specifications.			
		With AM-FM Stereo Radio With AUX Jack, North America			
		With AM-FM Stereo Radio With AUX Jack, Europe and Asia,			
		For EU New Noise Arrangement 2			
		With AM-FM Stereo Radio With AUX Jack, Europe and Asia			
1		14X-43-61610	Floor	1	1001-
2		14X-43-51850	• Sheet	1	1001-
3		14X-43-51541	Cover	1	1001-
4		14X-43-51860	• Sheet	1	1001-
5		01010-81225	Bolt	14	1001-
6		01643-31232	Washer	14	1001-
7		14X-43-13760	Cap	1	1001-
8		14X-06-51140	Wiring Harness	1	1001-
9		04434-51410	Clip	1	1001-
10		01010-81020	Bolt	1	1001-
11		01643-31032	Washer	1	1001-
12		04434-51010	Clip	3	1001-
13		01010-81020	Bolt	3	1001-
14		01643-31032	Washer	3	1001-
15		14X-43-61490	Cover	1	1001-
16		14X-43-61990	• Sheet	1	1001-
17		01010-81225	Bolt	2	1001-
18		01643-31232	Washer	2	1001-

FIG. K0210-003040 ROPS Cab (Brake Pedal)

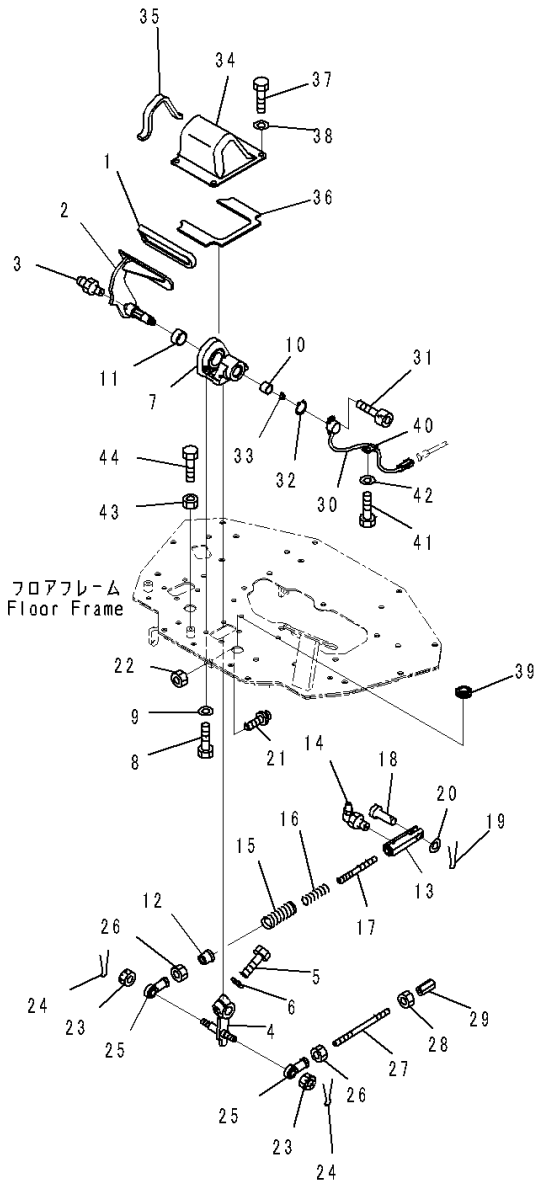

Index	Code	Part Number	Description	Qty	Serial Number
		Note: This list covers following specifications.			
		With AM-FM Stereo Radio With AUX Jack, North America			
		With AM-FM Stereo Radio With AUX Jack, Europe and Asia, For EU New Noise Arrangement 2			
		With AM-FM Stereo Radio With AUX Jack, North America, For 3D Machine Control Plug and Play			
		With AM-FM Stereo Radio With AUX Jack, Europe and Asia, For EU New Noise Arrangement 2, 3D Machine Control Plug and Play			
		With AM-FM Stereo Radio With AUX Jack, Europe and Asia			
		With AM-FM Stereo Radio With AUX Jack, Europe and Asia, For 3D Machine Control Plug and Play			
1		14X-43-12110	Pedal Cap	1	1001-
2		14X-43-51511	Pedal	1	1001-
3		07020-00000	Fitting, Grease	1	1001-
4		14X-43-51551	Lever	1	1001-
5		01010-81245	Bolt	1	1001-
6		01643-31232	Washer	1	1001-
7		14X-43-51571	Bracket	1	1001-
8		01010-81020	Bolt	4	1001-
9		01643-31032	Washer	4	1001-
10		06124-02020	Bearing	1	1001-
11		06124-03020	Bearing	1	1001-
12		134-43-72490	Guide	1	1001-
13		14X-43-32210	Yoke	1	1001-
14		07020-00900	Fitting, Grease	1	1001-
15		14X-43-51590	Spring	1	1001-
16		14X-43-32220	Spring	1	1001-
17		14X-43-32230	Rod	1	1001-
18		04205-11442	Pin	1	1001-
19		04050-13022	Pin, Cotter	1	1001-
20		01641-21423	Washer, Flat	1	1001-
21		09311-41237	Bumper, Pedal	1	1001-
22		01580-11210	Nut	1	1001-
23		01593-31411	Nut	2	1001-
24		04050-13022	Pin, Cotter	2	1001-
25		04250-81474	End	2	1001-
26		01582-11411	Nut	2	1001-
27		14X-43-12410	Rod	1	1001-
28		01508-41408	Nut	1	1001-

FIG. K0210-003040 ROPS Cab (Brake Pedal)

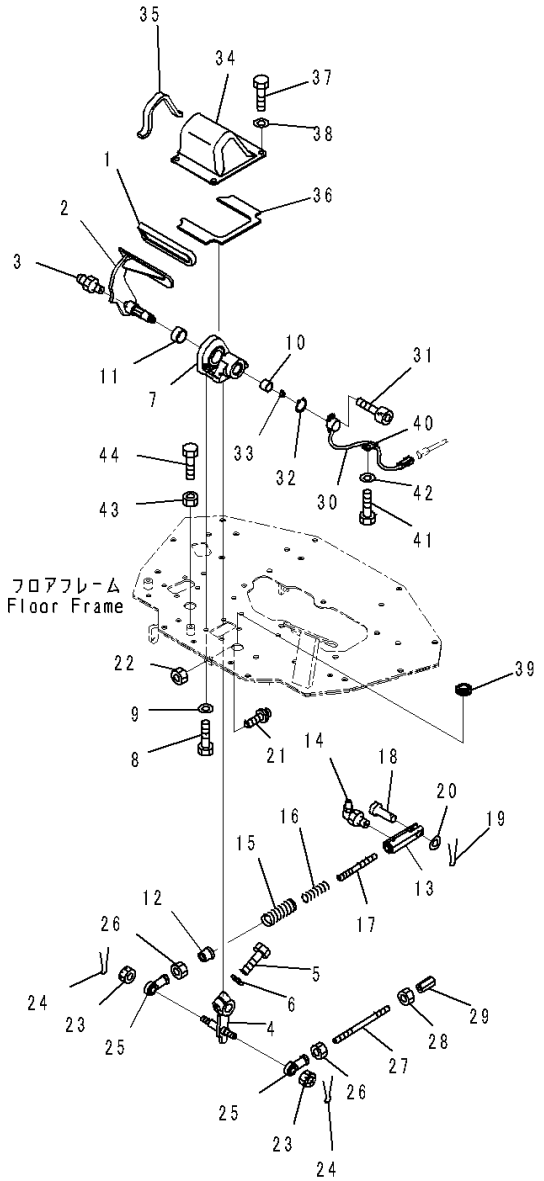

Index	Code	Part Number	Description	Qty	Serial Number
29		17A-43-24160	Joint	1	1001-
30		17A-06-41981	Sensor	1	1001-
31		01252-70414	Bolt	2	1001-
32		04064-01610	Ring, Snap	1	1001-
33		142-43-13180	Spring	1	1001-
34		14X-43-51631	Cover	1	1001-
35		14X-43-51651	• Sheet	1	1001-
36		14X-43-51870	• Sheet	1	1001-
37		01010-81020	Bolt	4	1001-
38		01643-31032	Washer	4	1001-
39		08037-02512	Grommet	1	1001-
40		04434-50810	Clip	1	1001-
41		01010-81020	Bolt	1	1001-
42		01643-31032	Washer	1	1001-
43		01580-11008	Nut	1	1001-
44		01016-51030	Bolt	1	1001-

FIG. K0210-003041 ROPS Cab (Decelerator Pedal)

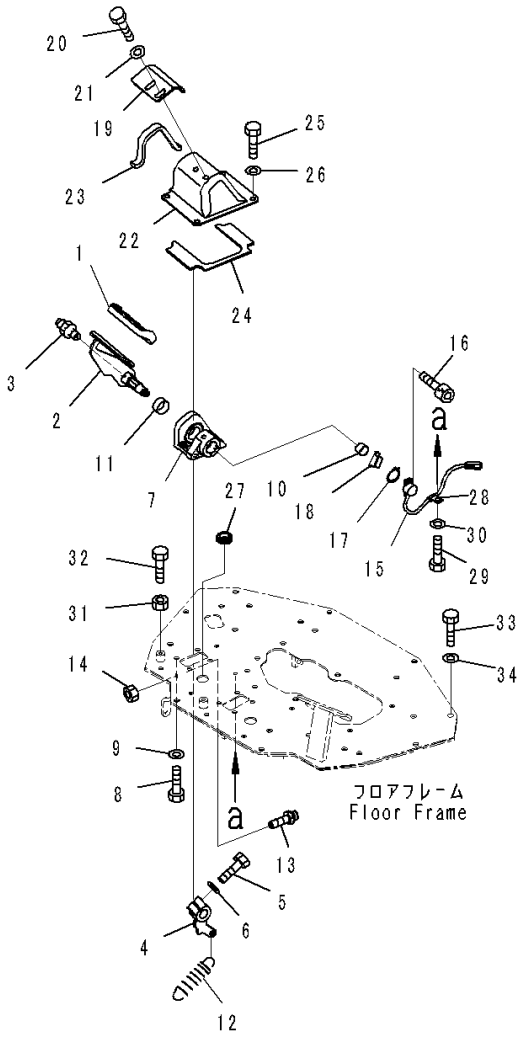

Index	Code	Part Number	Description	Qty	Serial Number
		Note: This list covers following specifications.			
		With AM-FM Stereo Radio With AUX Jack, North America			
		With AM-FM Stereo Radio With AUX Jack, Europe and Asia,			
		For EU New Noise Arrangement 2			
		With AM-FM Stereo Radio With AUX Jack, Europe and Asia			
1		14X-43-13760	Cap	1	1001-
2		14X-43-51521	Pedal	1	1001-
3		07020-00000	Fitting, Grease	1	1001-
4		14X-43-51561	Lever	1	1001-
5		01010-81245	Bolt	1	1001-
6		01643-31232	Washer	1	1001-
7		14X-43-51571	Bracket	1	1001-
8		01010-81020	Bolt	4	1001-
9		01643-31032	Washer	4	1001-
10		06124-02020	Bearing	1	1001-
11		06124-03020	Bearing	1	1001-
12		14X-43-51581	Spring	1	1001-
13		09311-41237	Bumper, Pedal	1	1001-
14		01580-11210	Nut	1	1001-
15		17A-06-41981	Sensor	1	1001-
16		01252-70414	Bolt	2	1001-
17		04064-01610	Ring, Snap	1	1001-
18		142-43-13180	Spring	1	1001-
19		14X-43-51810	Bracket	1	1001-
20		01010-D1020	Bolt	2	1001-
21		01643-71032	Washer	2	1001-
22		14X-43-51821	Cover	1	1001-
23		14X-43-51651	• Sheet	1	1001-
24		14X-43-51870	• Sheet	1	1001-
25		01010-81020	Bolt	4	1001-
26		01643-31032	Washer	4	1001-
27		08037-02512	Grommet	1	1001-
28		04434-50810	Clip	1	1001-
29		01010-81020	Bolt	1	1001-
30		01643-31032	Washer	1	1001-
31		01580-11008	Nut	1	1001-
32		01016-51030	Bolt	1	1001-
33		01010-81225	Bolt	10	1001-
34		01643-31232	Washer	10	1001-

FIG. K0210-003042 ROPS Cab (Controller)

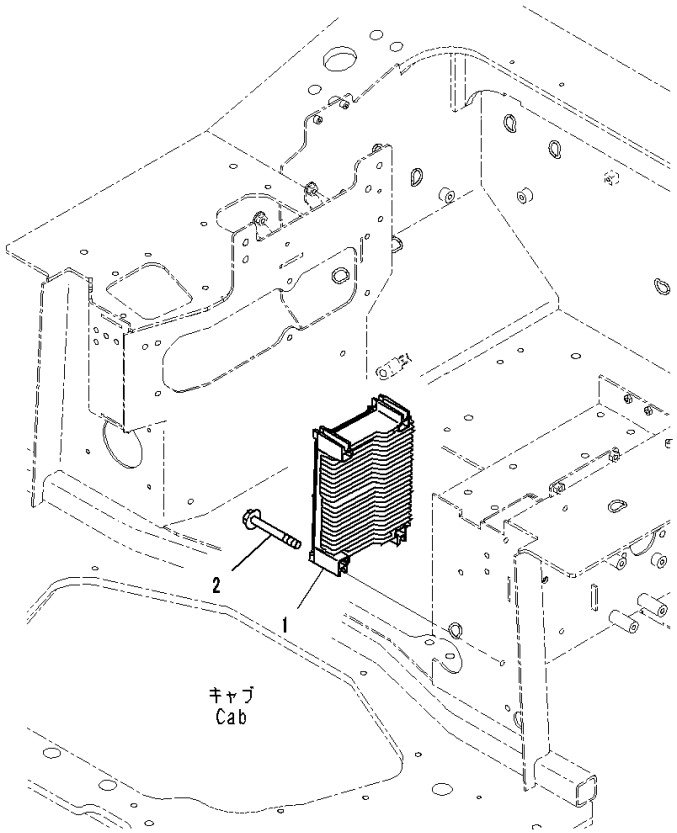

Index	Code	Part Number	Description	Qty	Serial Number
		Note: This list covers following specifications.			
		With AM-FM Stereo Radio With AUX Jack, North America			
		With AM-FM Stereo Radio With AUX Jack, Europe and Asia, For EU New Noise Arrangement 2			
		With AM-FM Stereo Radio With AUX Jack, North America, For 3D Machine Control Plug and Play			
		With AM-FM Stereo Radio With AUX Jack, Europe and Asia, For EU New Noise Arrangement 2, 3D Machine Control Plug and Play			
		With AM-FM Stereo Radio With AUX Jack, Europe and Asia			
		With AM-FM Stereo Radio With AUX Jack, Europe and Asia, For 3D Machine Control Plug and Play			
1		7830-74-5002	Controller	1	1001-
2		01435-00885	Bolt	4	1001-

FIG. K0210-003043 ROPS Cab (Floor, Wiring Harness) (1/3)

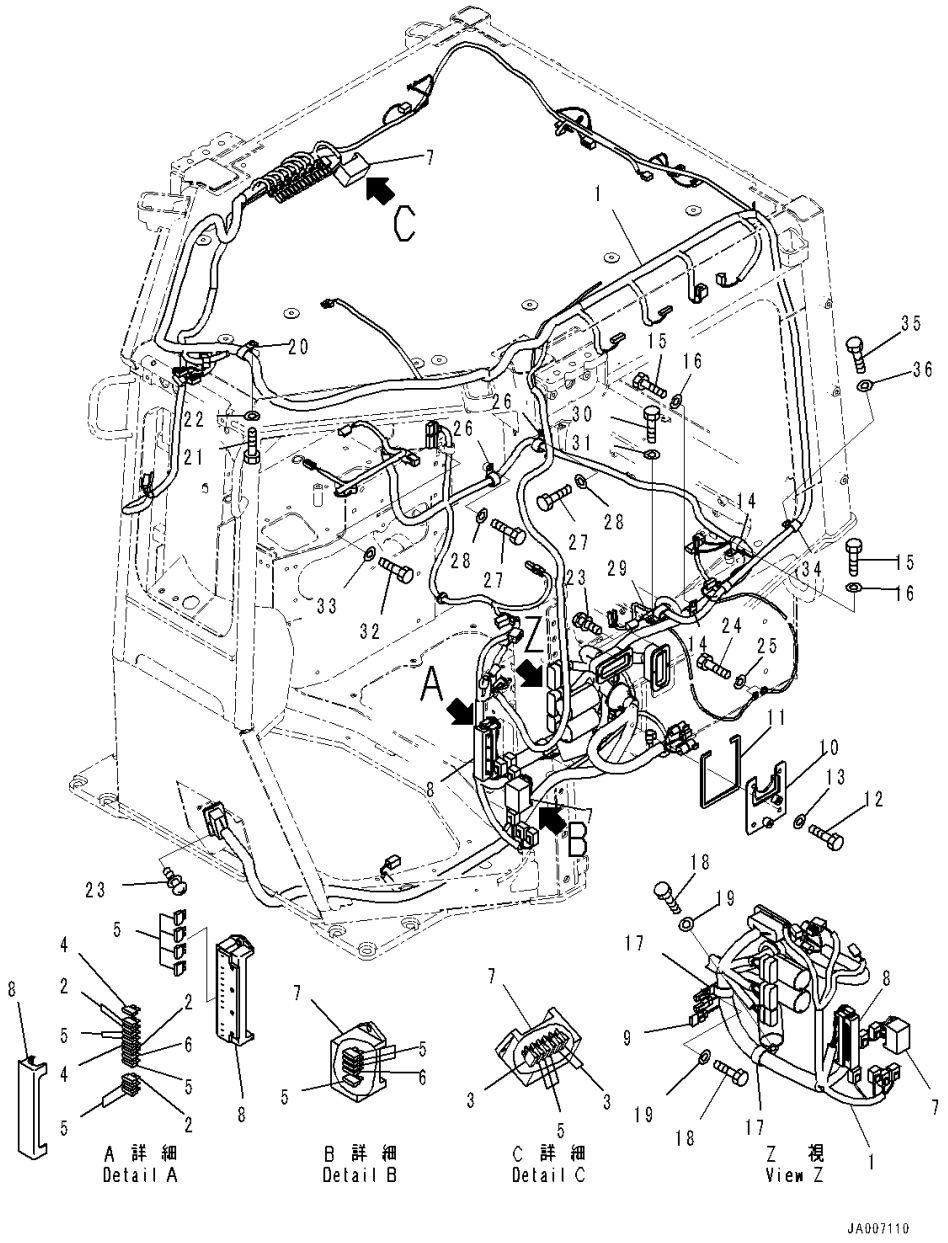

Index	Code	Part Number	Description	Qty	Serial Number
		Note: This list covers following specifications.			
		With AM-FM Stereo Radio With AUX Jack, North America			
		With AM-FM Stereo Radio With AUX Jack, Europe and Asia, For EU New Noise Arrangement 2			
		With AM-FM Stereo Radio With AUX Jack, North America, For 3D Machine Control Plug and Play			
		With AM-FM Stereo Radio With AUX Jack, Europe and Asia, For EU New Noise Arrangement 2, 3D Machine Control Plug and Play			
		With AM-FM Stereo Radio With AUX Jack, Europe and Asia			
		With AM-FM Stereo Radio With AUX Jack, Europe and Asia, For 3D Machine Control Plug and Play			
1		154-06-81122	Wiring Harness	1	1113-
2		08041-00500	• Fuse, 5Amp.	5	1001-
3		08041-01000	• Fuse, 10Amp.	4	1001-
4		08041-01500	• Fuse, 15Amp.	3	1001-
5		08041-02000	• Fuse, 20Amp.	14	1001-
6		08041-03000	• Fuse, 30Amp.	3	1001-
7		08044-00600	• Box Assembly, Fuse	2	1001-
8		08044-01500	• Box, Fuse	1	1001-
9		21J-06-13661	• Diode	1	1001-
10		14X-06-63570	Bracket	1	1001-
11		14X-06-51431	• Sheet	1	1001-
12		01010-81025	Bolt	4	1001-
13		01643-31032	Washer	4	1001-
14		04434-52310	Clip	2	1001-
15		01010-81020	Bolt	6	1001-
16		01643-31032	Washer	6	1001-
17		208-06-19170	Clip	2	1001-
18		01010-81020	Bolt	2	1001-
19		01643-31032	Washer	2	1001-
20		04434-52310	Clip	1	1001-
21		01010-81020	Bolt	1	1001-
22		01643-31032	Washer	1	1001-
23		01023-10416	Screw	12	1001-
24		01010-81020	Bolt	2	1001-
25		01643-31032	Washer	2	1001-
26		04434-52310	Clip	2	1001-
27		01010-81020	Bolt	2	1001-
28		01643-31032	Washer	2	1001-

FIG. K0210-003043 ROPS Cab (Floor, Wiring Harness) (1/3)

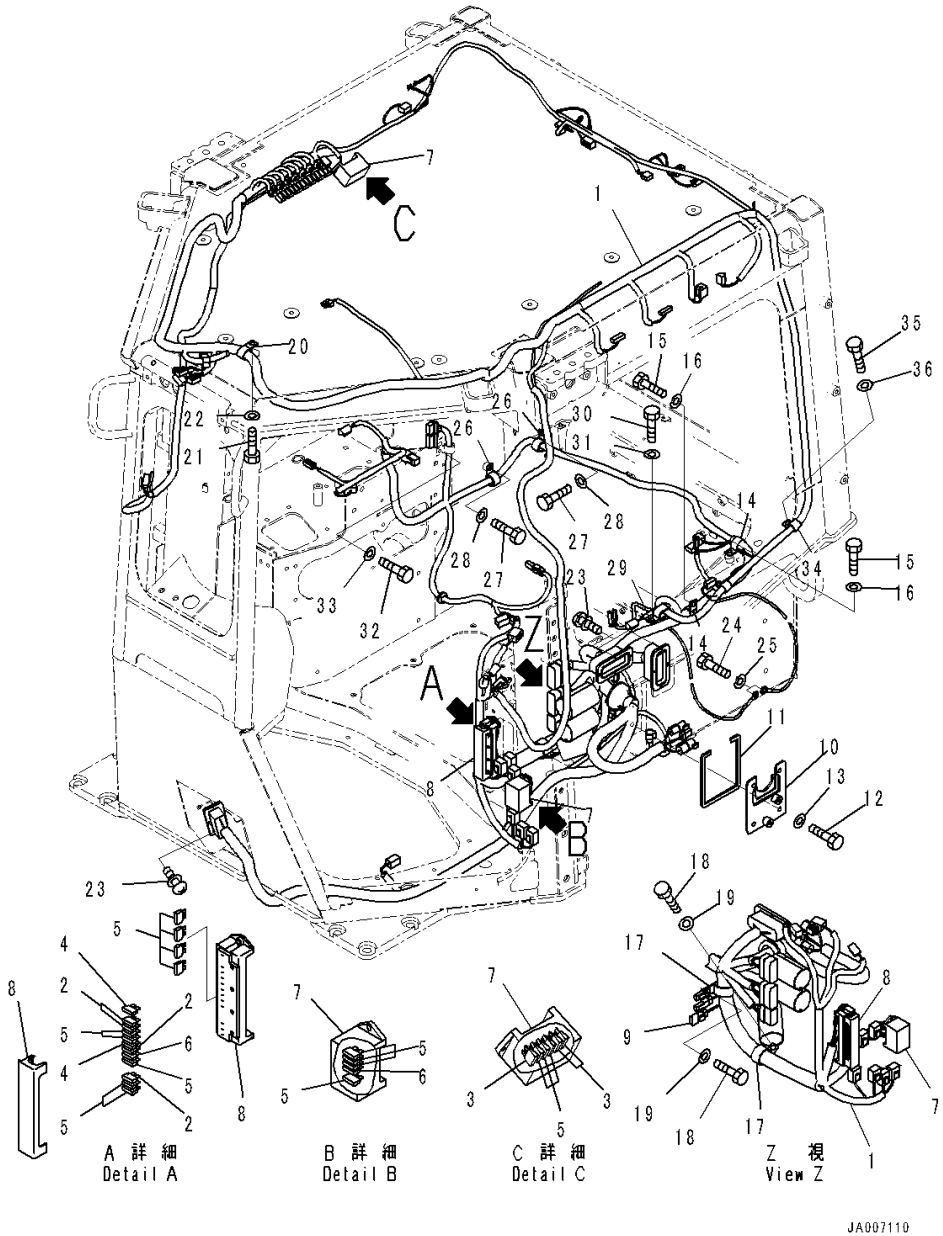

Index	Code	Part Number	Description	Qty	Serial Number
29		04435-51710	Clip	1	1001-
30		01010-81020	Bolt	1	1001-
31		01643-31032	Washer	1	1001-
32		01010-80616	Bolt	1	1001-
33		01643-30623	Washer	1	1001-
34		04434-51710	Clip	2	1001-
35		01010-81020	Bolt	2	1001-
36		01643-31032	Washer	2	1001-

FIG. K0210-003044A ROPS Cab (Floor, Wiring Harness) (2/3)

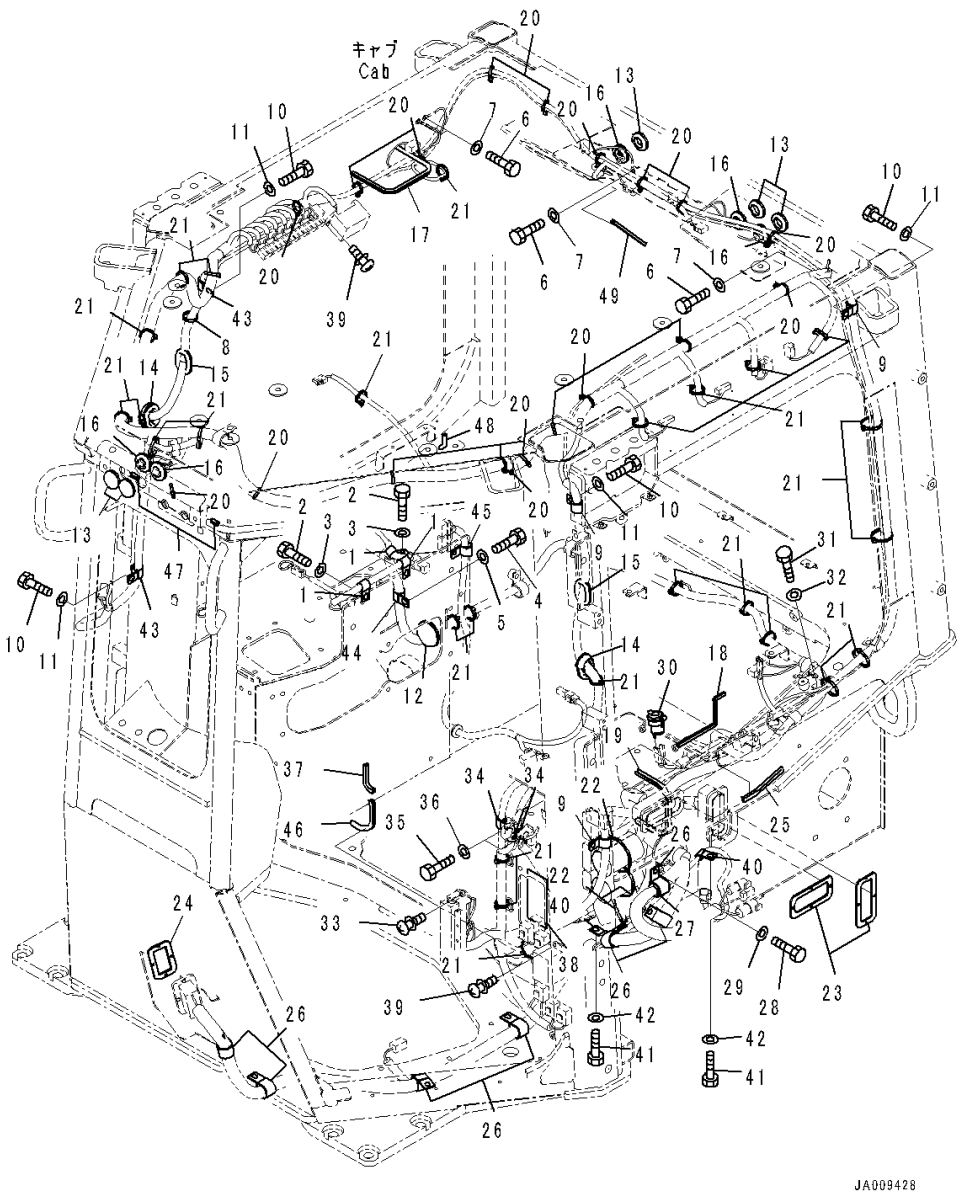

Index	Code	Part Number	Description	Qty	Serial Number
		Note: This list covers following specifications.			
		With AM-FM Stereo Radio With AUX Jack, North America			
		With AM-FM Stereo Radio With AUX Jack, Europe and Asia, For EU New Noise Arrangement 2			
		With AM-FM Stereo Radio With AUX Jack, North America, For 3D Machine Control Plug and Play			
		With AM-FM Stereo Radio With AUX Jack, Europe and Asia, For EU New Noise Arrangement 2, 3D Machine Control Plug and Play			
		With AM-FM Stereo Radio With AUX Jack, Europe and Asia			
		With AM-FM Stereo Radio With AUX Jack, Europe and Asia, For 3D Machine Control Plug and Play			
1		04434-51310	Clip	3	1001-
2		01010-81020	Bolt	5	1001-
3		01643-31032	Washer	5	1001-
4		01010-81020	Bolt	1	1001-
5		01643-31032	Washer	1	1001-
6		01010-80616	Bolt	4	1001-
7		01643-30623	Washer	4	1001-
8		08034-20519	Band	1	1001-
9		04434-51710	Clip	3	1001-
10		01010-81020	Bolt	5	1001-
11		01643-31032	Washer	5	1001-
12		09415-03614	Cap	1	1001-
13		09415-02512	Cap	5	1001-
14		14X-Y79-6340	Grommet	2	1001-
15		120-06-24110	Grommet	2	1001-
16		14X-06-52461	Cap	5	1001-
17		14X-Y79-2280	Seal	1	1001-
18		12Y-978-2192	Seal	1	1001-
19		14X-06-52171	Trim	1	1001-
20		08034-40521	Band	21	1001-
21		08034-20519	Band	26	1001-
22		08034-20536	Band	3	1001-
23		14X-06-52750	Gasket	2	1001-
24		14X-06-52760	Gasket	1	1001-
25		423-06-42420	Finisher	1	1001-
26		04434-52711	Clip	7	1001-
27		07095-20419	Cushion	1	1001-
28		01010-81020	Bolt	1	1001-

FIG. K0210-003044A ROPS Cab (Floor, Wiring Harness) (2/3)

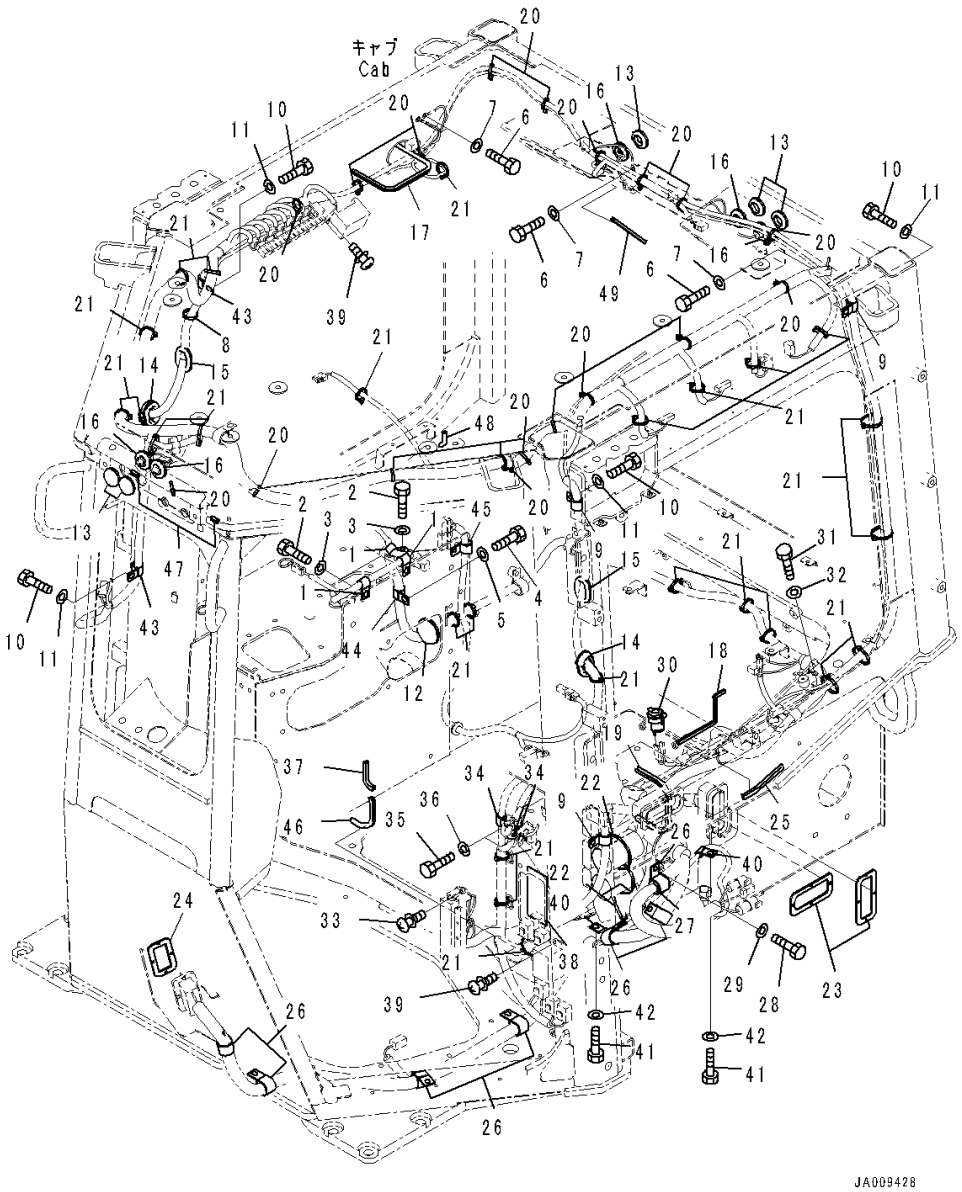

Index	Code	Part Number	Description	Qty	Serial Number
29		01643-31032	Washer	1	1001-
30		12Y-06-11640	Socket Assembly	1	1001-
31		01010-80612	Bolt	1	1001-
32		01643-30623	Washer	1	1001-
33		01023-10620	Screw	2	1001-
34		04434-51410	Clip	3	1001-
35		01010-81020	Bolt	2	1001-
36		01643-31032	Washer	2	1001-
37		12Y-979-1850	Trim	1	1001-
38		17A-06-51780	Sheet	1	1001-
39		01023-10520	Screw	4	1001-
40		04434-51010	Clip	2	1001-
41		01010-81025	Bolt	2	1001-
42		01643-31032	Washer	2	1001-
43		04434-51710	Clip	2	1001-
44		04434-51910	Clip	1	1001-
45		04434-51708	Clip	1	1001-
46		12Y-06-26710	Trim	1	1001-
47		17A-911-5660	Seal	2	1001-
48		22B-54-25190	Trim	1	1001-
49		423-923-4840	Trim	1	1235-

FIG. K0210-003045 ROPS Cab (Floor, Wiring Harness) (3/3)

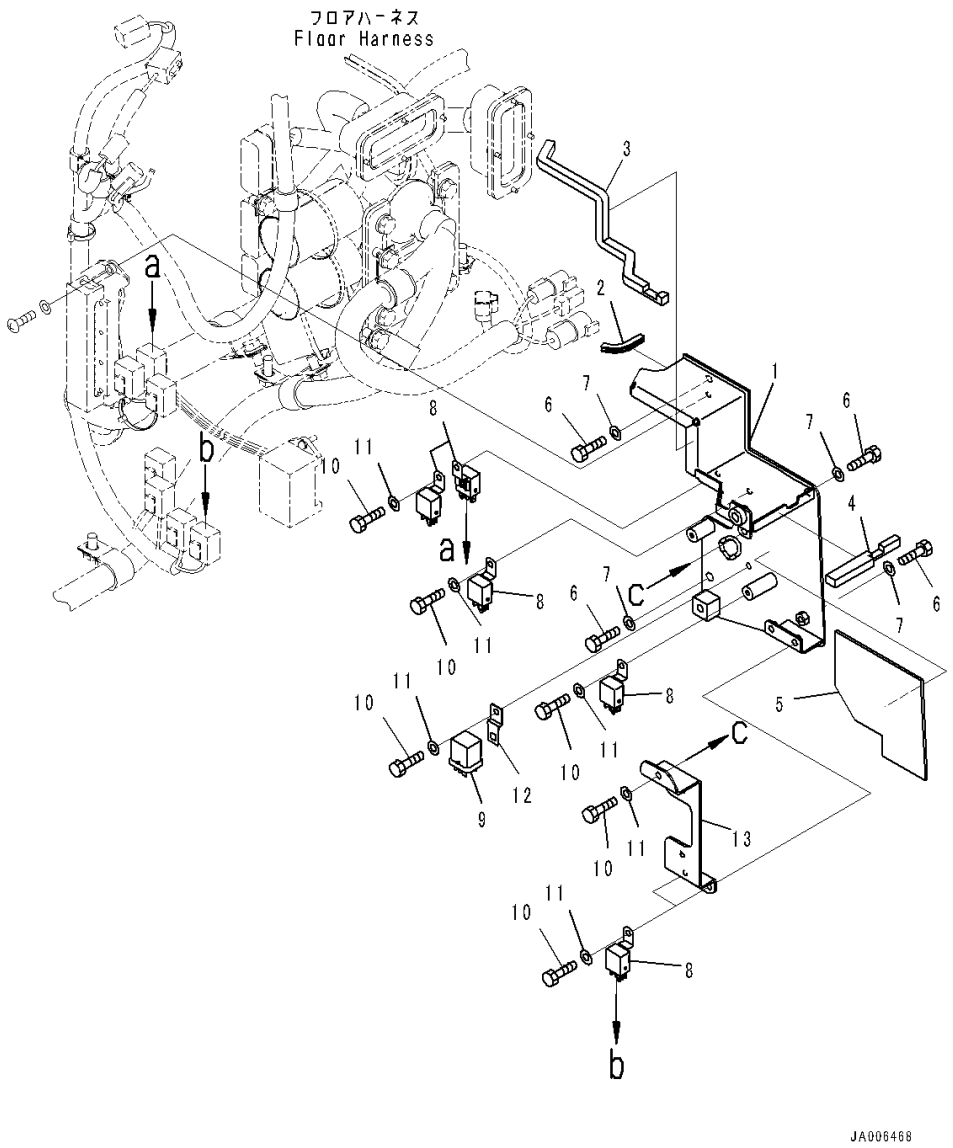

Index	Code	Part Number	Description	Qty	Serial Number
		Note: This list covers following specifications.			
		With AM-FM Stereo Radio With AUX Jack, North America			
		With AM-FM Stereo Radio With AUX Jack, Europe and Asia, For EU New Noise Arrangement 2			
		With AM-FM Stereo Radio With AUX Jack, North America, For 3D Machine Control Plug and Play			
		With AM-FM Stereo Radio With AUX Jack, Europe and Asia, For EU New Noise Arrangement 2, 3D Machine Control Plug and Play			
		With AM-FM Stereo Radio With AUX Jack, Europe and Asia			
		With AM-FM Stereo Radio With AUX Jack, Europe and Asia, For 3D Machine Control Plug and Play			
1		14X-06-63770	Bracket	1	1001-
2		12Y-978-2160	• Seal	1	1001-
3		17A-06-51521	• Seal	1	1001-
4		17A-06-51530	• Seal	1	1001-
5		17A-06-51721	• Seal	1	1001-
6		01010-D0825	Bolt	4	1001-
7		01643-70823	Washer	4	1001-
8		7861-74-5100	Relay	6	1001-
9		569-06-61970	Relay	1	1001-
10		01010-80616	Bolt	7	1001-
11		01643-30623	Washer	7	1001-
12		287-06-16420	Bracket	1	1001-
13		14X-06-61151	Bracket	1	1001-

FIG. K0210-003046 ROPS Cab (Window Washer Piping)

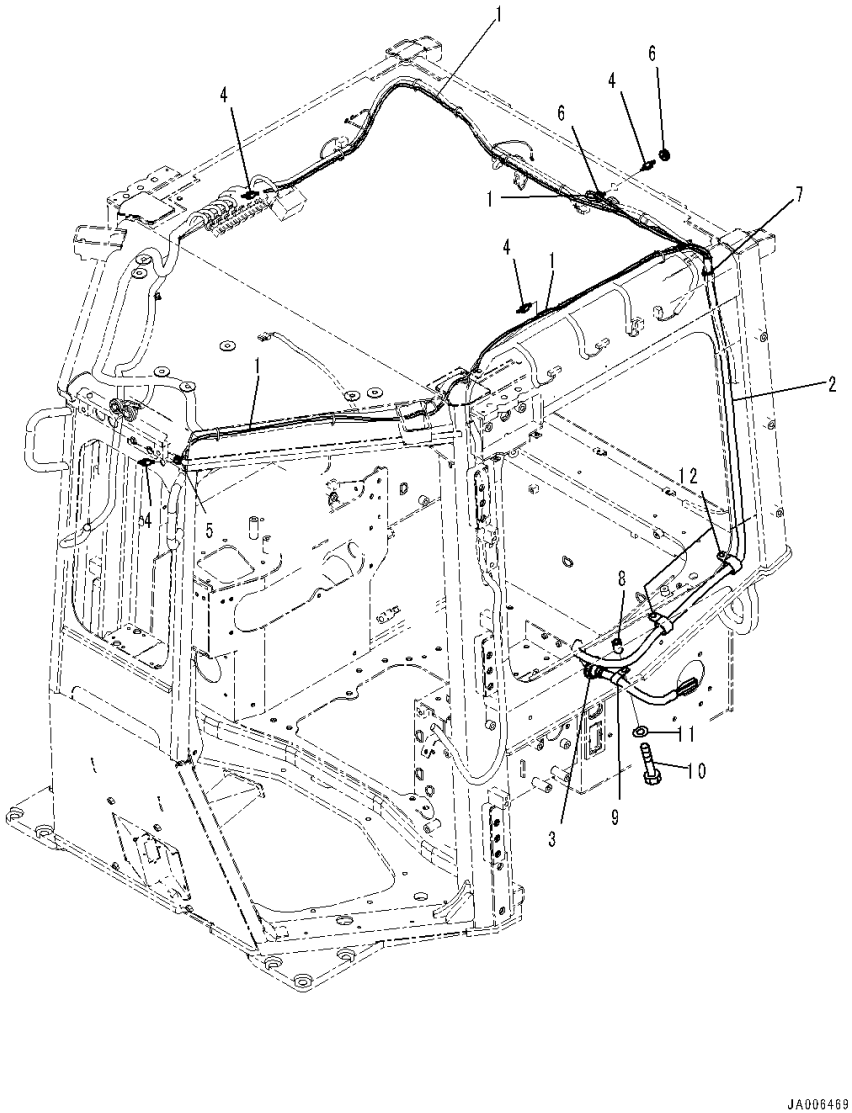

Index	Code	Part Number	Description	Qty	Serial Number
		Note: This list covers following specifications.			
		With AM-FM Stereo Radio With AUX Jack, North America			
		With AM-FM Stereo Radio With AUX Jack, Europe and Asia, For EU New Noise Arrangement 2			
		With AM-FM Stereo Radio With AUX Jack, North America, For 3D Machine Control Plug and Play			
		With AM-FM Stereo Radio With AUX Jack, Europe and Asia, For EU New Noise Arrangement 2, 3D Machine Control Plug and Play			
		With AM-FM Stereo Radio With AUX Jack, Europe and Asia			
		With AM-FM Stereo Radio With AUX Jack, Europe and Asia, For 3D Machine Control Plug and Play			
1		14X-Y79-1611	Hose Assembly	1	1001-
2		08017-A1520	• Conduit	1	1001-
3		08037-12536	• Grommet	1	1001-
4		17A-Z11-4610	• Valve	4	1001-
5		08037-01008	Grommet	1	1001-
6		14X-06-51520	Grommet	2	1001-
7		08034-20519	Band	1	1001-
8		23B-06-61810	Spacer	1	1001-
9		04434-51910	Clip	1	1001-
10		01010-81050	Bolt	1	1001-
11		01643-31032	Washer	1	1001-
12		04434-51910	Clip	2	1001-

FIG. K0210-003047 ROPS Cab (Dashboard Cover)

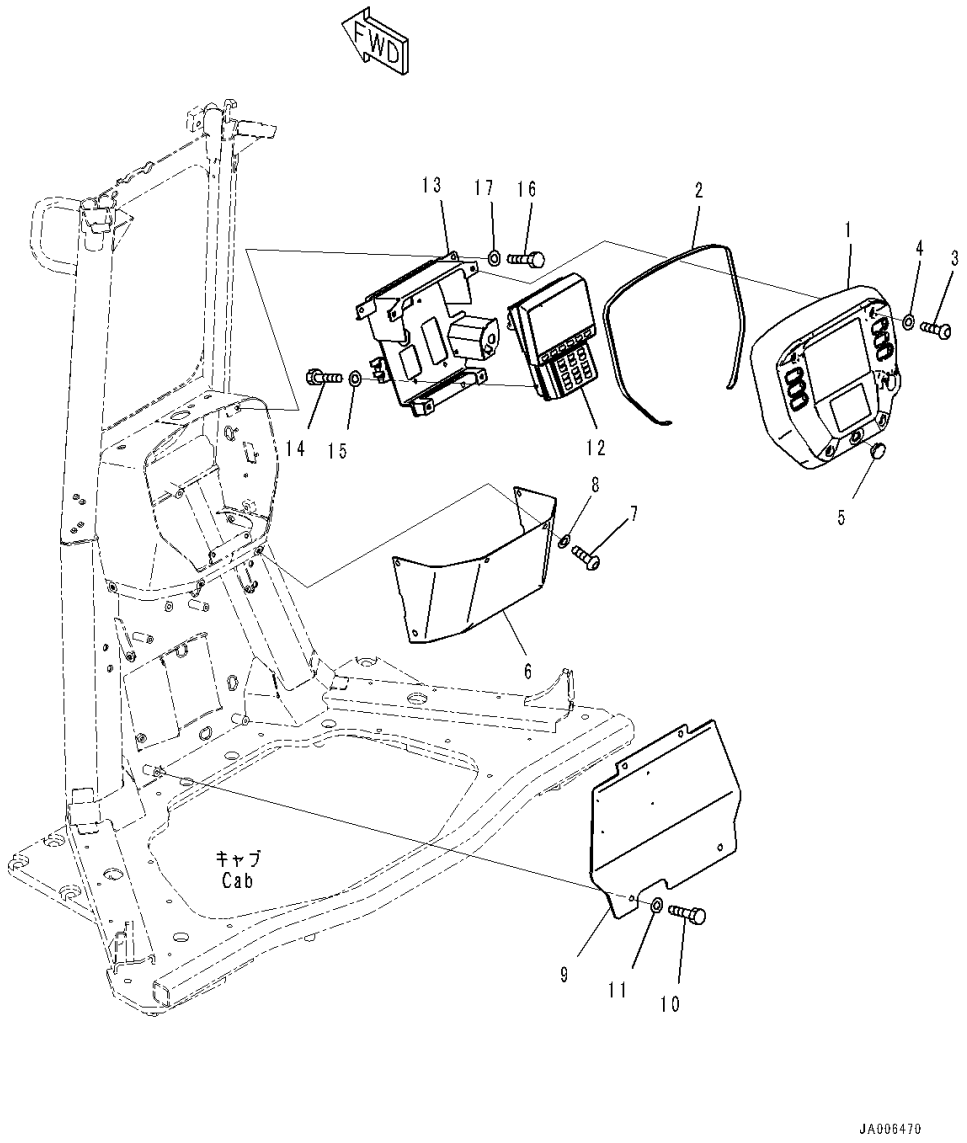

Index	Code	Part Number	Description	Qty	Serial Number
		Note: This list covers following specifications.			
		With AM-FM Stereo Radio With AUX Jack, North America			
		With AM-FM Stereo Radio With AUX Jack, Europe and Asia, For EU New Noise Arrangement 2			
		With AM-FM Stereo Radio With AUX Jack, North America, For 3D Machine Control Plug and Play			
		With AM-FM Stereo Radio With AUX Jack, Europe and Asia, For EU New Noise Arrangement 2, 3D Machine Control Plug and Play			
		With AM-FM Stereo Radio With AUX Jack, Europe and Asia			
		With AM-FM Stereo Radio With AUX Jack, Europe and Asia, For 3D Machine Control Plug and Play			
1		17A-54-51511	Cover	1	1001-
2		17A-54-51550	• Seal	1	1001-
3		01245-00620	Screw	4	1001-
4		01643-70623	Washer	4	1001-
5		134-54-78370	Cap	1	1001-
6		154-54-89121	Cover	1	1001-
7		01245-00820	Screw	6	1001-
8		01643-70823	Washer	6	1001-
9		154-54-89110	Plate	1	1001-
10		01010-D0825	Bolt	4	1001-
11		01643-70823	Washer	4	1001-
12		7831-69-7102	Monitor	1	1235-
13		17A-54-51531	Bracket	1	1001-
14		01010-80616	Bolt	4	1001-
15		01643-30623	Washer	4	1001-
16		01010-D0825	Bolt	4	1001-
17		01643-70823	Washer	4	1001-

FIG. K0210-003048 ROPS Cab (Floor, Switch)

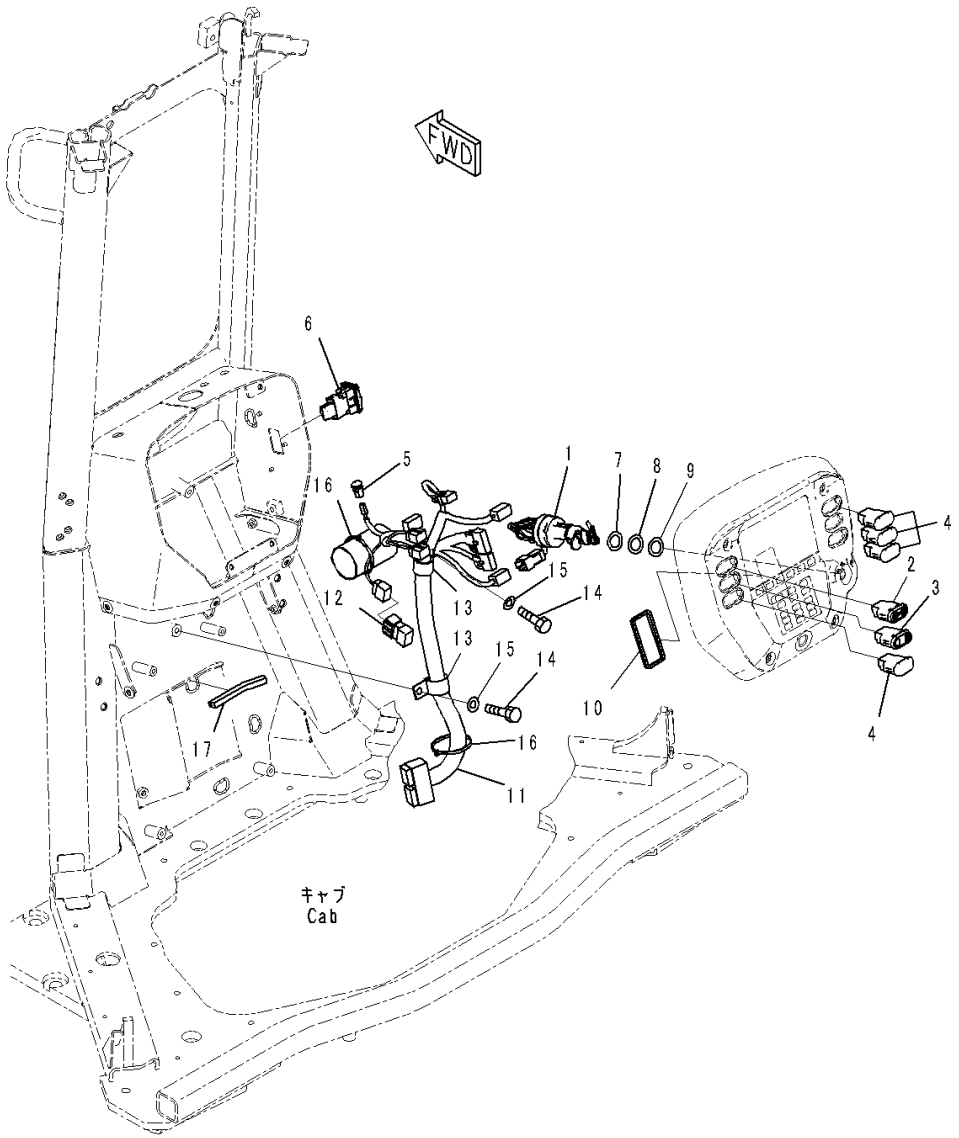

Index	Code	Part Number	Description	Qty	Serial Number
		Note: This list covers following specifications.			
		With AM-FM Stereo Radio With AUX Jack, North America			
		With AM-FM Stereo Radio With AUX Jack, North America, For 3D Machine Control Plug and Play			
		With AM-FM Stereo Radio With AUX Jack, Europe and Asia			
		With AM-FM Stereo Radio With AUX Jack, Europe and Asia, For 3D Machine Control Plug and Play			
1		14X-06-52191	Switch, Key	1	1001-
2		17A-06-51650	Switch	1	1001-
3		17A-06-51661	Switch	1	1001-
4		20Y-06-42190	Cover	4	1001-
5		20Y-979-6161	Sensor	1	1001-
6		08085-00001	Switch, Engine Stop	1	1001-
7		23S-15-45860	Shim, T=0.5mm	2	1001-
8		20Y-43-41750	Washer	2	1001-
9		20Y-43-41790	Washer	2	1001-
10		14X-54-67110	Trim	1	1001-
11		154-06-81131	Wiring Harness	1	1001-
12		8233-06-3350	• Diode	1	1001-
13		04434-52711	Clip	2	1001-
14		01010-81020	Bolt	2	1001-
15		01643-31032	Washer	2	1001-
16		08034-20519	Band	2	1001-
17		14X-54-56160	Seal	1	1001-

FIG. K0210-003049 ROPS Cab (Footrest)

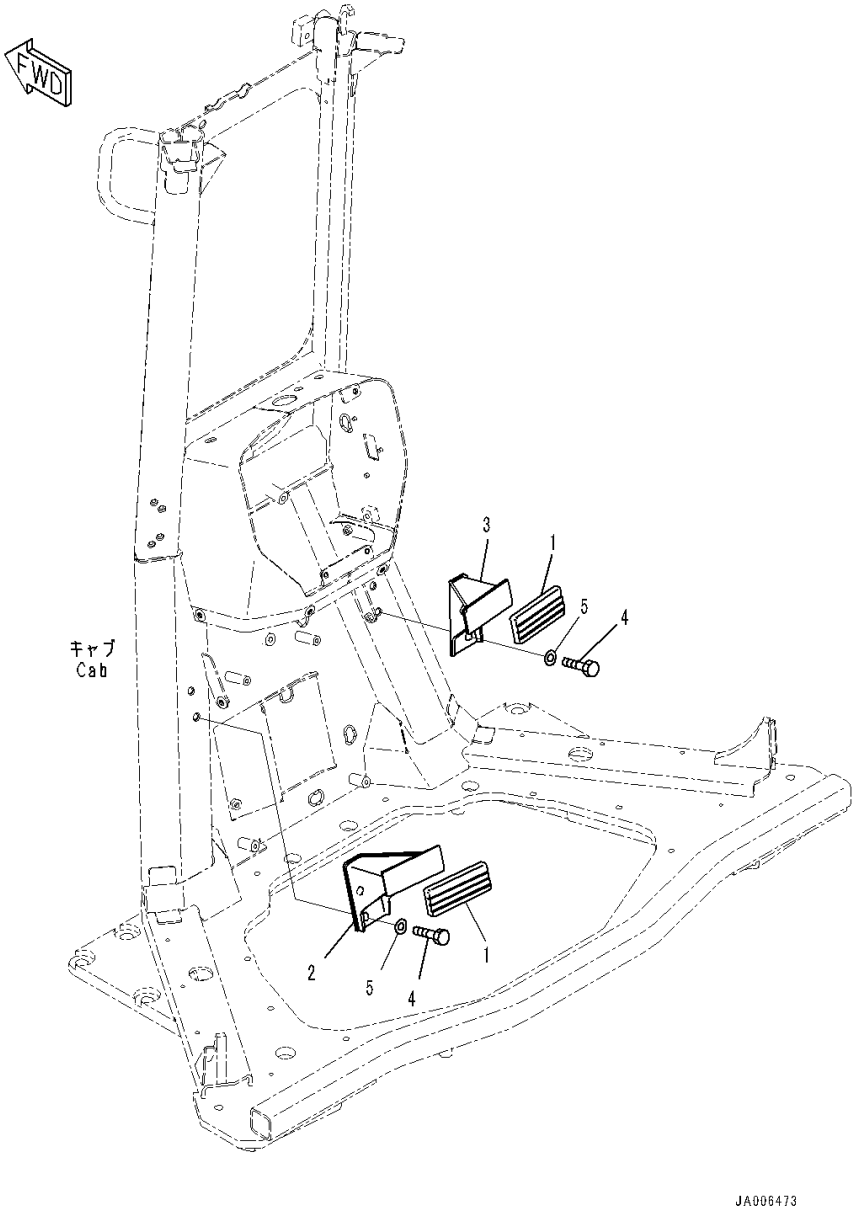

Index	Code	Part Number	Description	Qty	Serial Number
		Note: This list covers following specifications.			
		With AM-FM Stereo Radio With AUX Jack, North America			
		With AM-FM Stereo Radio With AUX Jack, Europe and Asia, For EU New Noise Arrangement 2			
		With AM-FM Stereo Radio With AUX Jack, North America, For 3D Machine Control Plug and Play			
		With AM-FM Stereo Radio With AUX Jack, Europe and Asia, For EU New Noise Arrangement 2, 3D Machine Control Plug and Play			
		With AM-FM Stereo Radio With AUX Jack, Europe and Asia			
		With AM-FM Stereo Radio With AUX Jack, Europe and Asia, For 3D Machine Control Plug and Play			
1		203-43-56450	Pedal Cap	2	1001-
2		17A-43-46581	Bracket,L.H.	1	1001-
3		17A-43-46591	Bracket,R.H.	1	1001-
4		01010-D1230	Bolt	4	1001-
5		01643-71232	Washer	4	1001-

FIG. K0210-003050 ROPS Cab (Floor Cover)

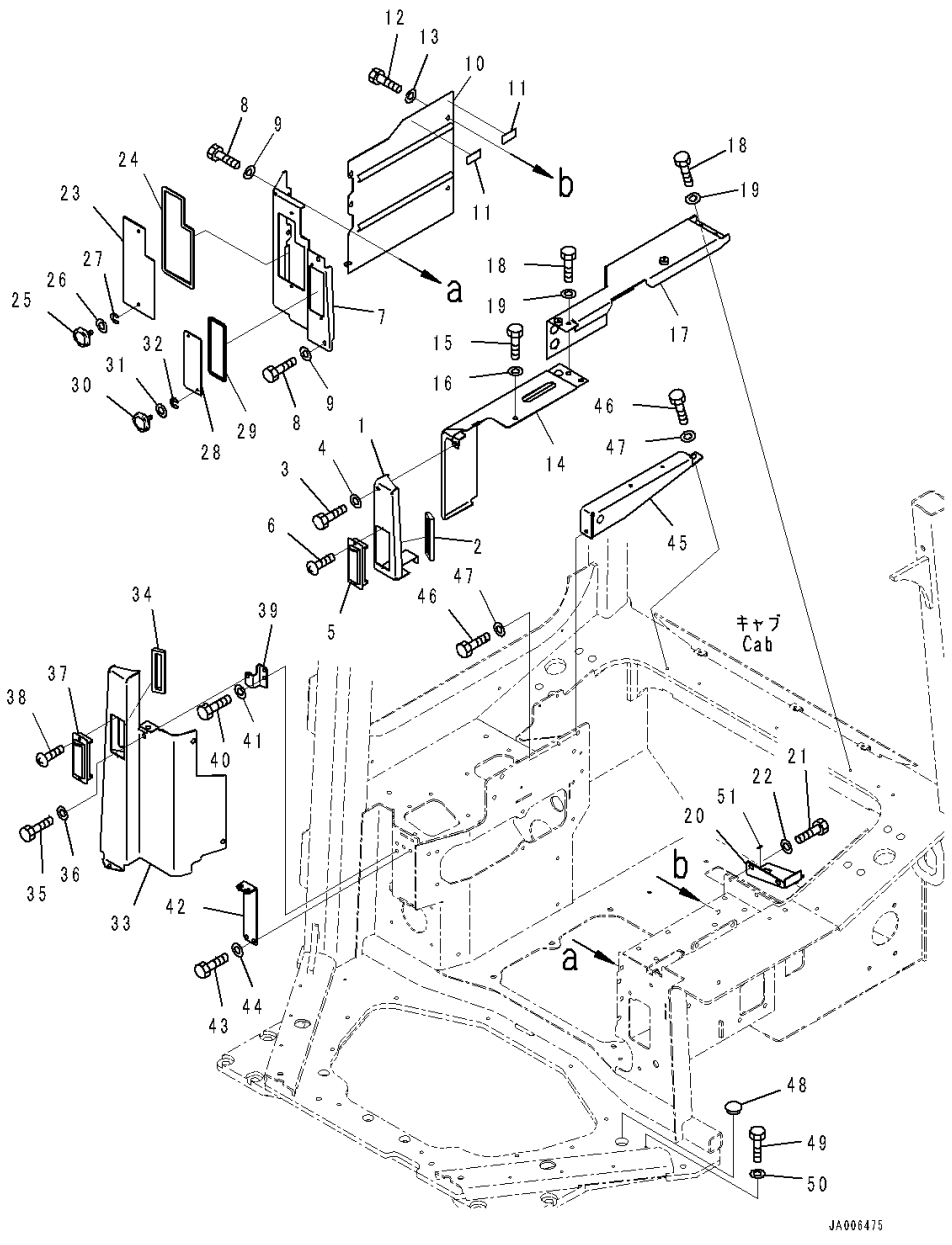

Index	Code	Part Number	Description	Qty	Serial Number
		Note: This list covers following specifications.			
		With AM-FM Stereo Radio With AUX Jack, North America			
		With AM-FM Stereo Radio With AUX Jack, Europe and Asia, For EU New Noise Arrangement 2			
		With AM-FM Stereo Radio With AUX Jack, North America, For 3D Machine Control Plug and Play			
		With AM-FM Stereo Radio With AUX Jack, Europe and Asia, For EU New Noise Arrangement 2, 3D Machine Control Plug and Play			
		With AM-FM Stereo Radio With AUX Jack, Europe and Asia			
		With AM-FM Stereo Radio With AUX Jack, Europe and Asia, For 3D Machine Control Plug and Play			
1		14X-54-56291	Cover	1	1001-
2		14X-54-56491	• Sheet	1	1001-
3		01010-D0825	Bolt	2	1001-
4		01643-70823	Washer	2	1001-
5		17A-Z11-7161	Louver	1	1001-
6		01370-10310	Screw	2	1001-
7		14X-54-66441	Cover	1	1001-
8		01010-D0825	Bolt	4	1001-
9		01643-70823	Washer	4	1001-
10		14X-54-66361	Cover	1	1001-
11		17A-43-42310	• Rubber	2	1001-
12		01010-D0825	Bolt	4	1001-
13		01643-70823	Washer	4	1001-
14		14X-54-66380	Cover	1	1001-
15		01010-D0825	Bolt	2	1001-
16		01643-70823	Washer	2	1001-
17		14X-54-56443	Cover	1	1001-
18		01010-D0825	Bolt	3	1001-
19		01643-70823	Washer	3	1001-
20		17A-54-51271	Cover	1	1001-
21		01010-D0825	Bolt	2	1001-
22		01643-70823	Washer	2	1001-
23		14X-06-63790	Cover	1	1001-
24		14X-06-63780	• Seal	1	1001-
25		561-06-86280	Screw	2	1001-
26		01640-20610	Washer	2	1001-
27		195-54-78790	Ring, Snap	2	1001-
28		14X-06-63810	Cover	1	1001-

FIG. K0210-003050 ROPS Cab (Floor Cover)

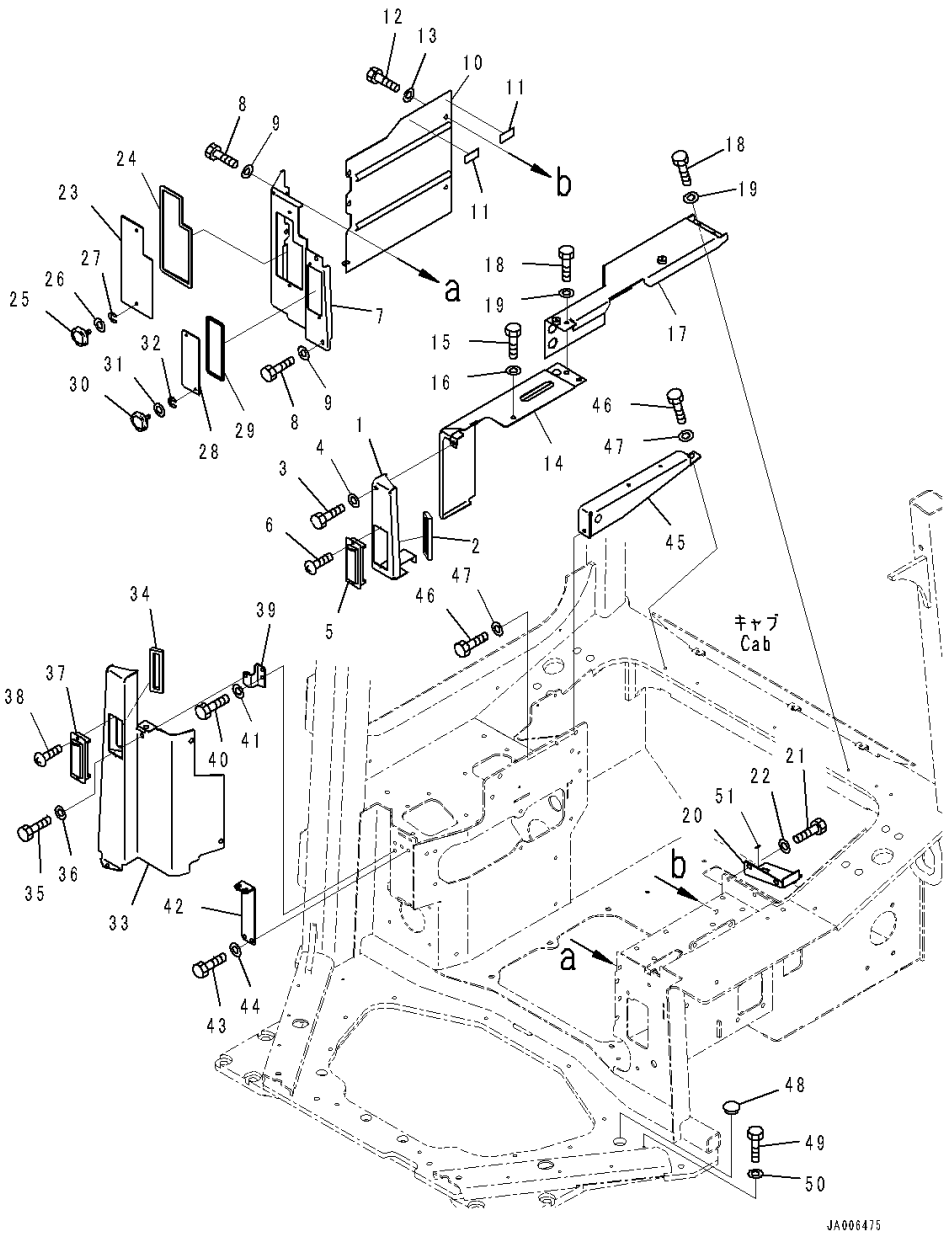

Index	Code	Part Number	Description	Qty	Serial Number
29		17A-06-51571	• Seal	1	1001-
30		561-06-86280	Screw	2	1001-
31		01640-20610	Washer	2	1001-
32		195-54-78790	Ring, Snap	2	1001-
33		14X-54-56361	Cover	1	1001-
34		14X-54-56491	• Sheet	1	1001-
35		01010-D0825	Bolt	5	1001-
36		01643-70823	Washer	5	1001-
37		17A-Z11-7161	Louver	1	1001-
38		01370-10310	Screw	2	1001-
39		14X-54-56451	Bracket	1	1001-
40		01010-D0825	Bolt	2	1001-
41		01643-70823	Washer	2	1001-
42		14X-54-56411	Bracket	1	1001-
43		01010-D0825	Bolt	2	1001-
44		01643-70823	Washer	2	1001-
45		14X-54-66470	Bracket	1	1001-
46		01010-D0825	Bolt	2	1001-
47		01643-70823	Washer	2	1001-
48		22U-54-25581	Grommet	1	1001-
49		01010-D0825	Bolt	1	1001-
50		01643-70823	Washer	1	1001-
51		17A-98-51121	Plate, 12volt	1	1001-

FIG. K0210-003051 ROPS Cab (KOMTRAX Controller)

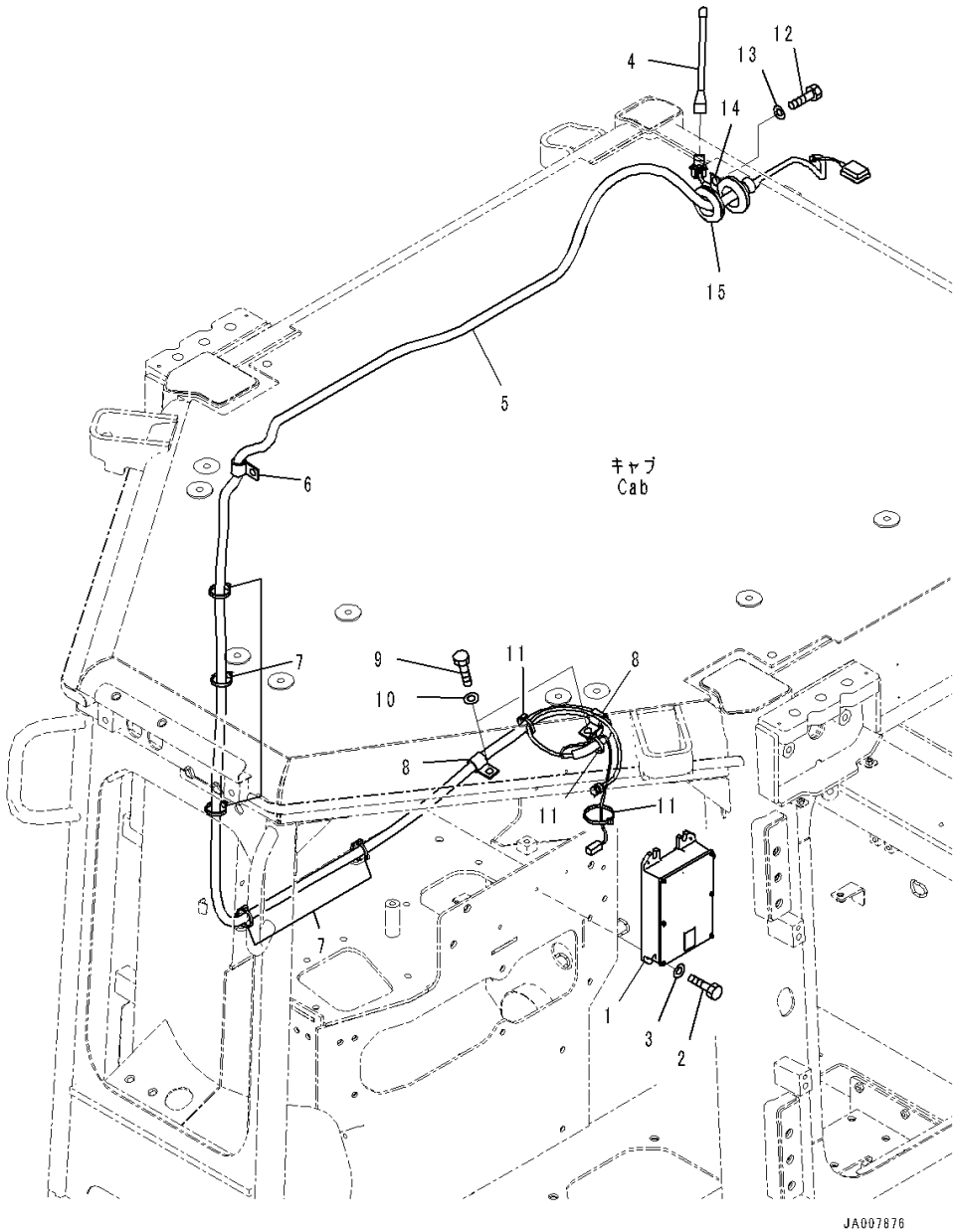

Index	Code	Part Number	Description	Qty	Serial Number
		Note: This list covers following specifications.			
		With AM-FM Stereo Radio With AUX Jack, North America			
		With AM-FM Stereo Radio With AUX Jack, Europe and Asia, For EU New Noise Arrangement 2			
		With AM-FM Stereo Radio With AUX Jack, North America, For 3D Machine Control Plug and Play			
		With AM-FM Stereo Radio With AUX Jack, Europe and Asia, For EU New Noise Arrangement 2, 3D Machine Control Plug and Play			
		With AM-FM Stereo Radio With AUX Jack, Europe and Asia			
		With AM-FM Stereo Radio With AUX Jack, Europe and Asia, For 3D Machine Control Plug and Play			
1		7826-25-3000	Controller, KOMTRAX	1	1001-
2		01010-80625	Bolt	4	1001-
3		01643-30623	Washer	4	1001-
4		8A13-10-2100	Antenna	1	1001-
5		17A-06-51143	Wiring Harness	1	1235-
6		04434-51410	Clip	1	1001-
7		08034-20519	Band	5	1001-
8		04434-51410	Clip	2	1001-
9		01010-81020	Bolt	2	1001-
10		01643-31032	Washer	2	1001-
11		08034-20519	Band	3	1001-
12		01010-81020	Bolt	1	1001-
13		01643-31032	Washer	1	1001-
14		04434-50810	Clip	1	1001-
15		08037-03614	Grommet	1	1001-

FIG. K0210-003052 ROPS Cab (Related Parts)

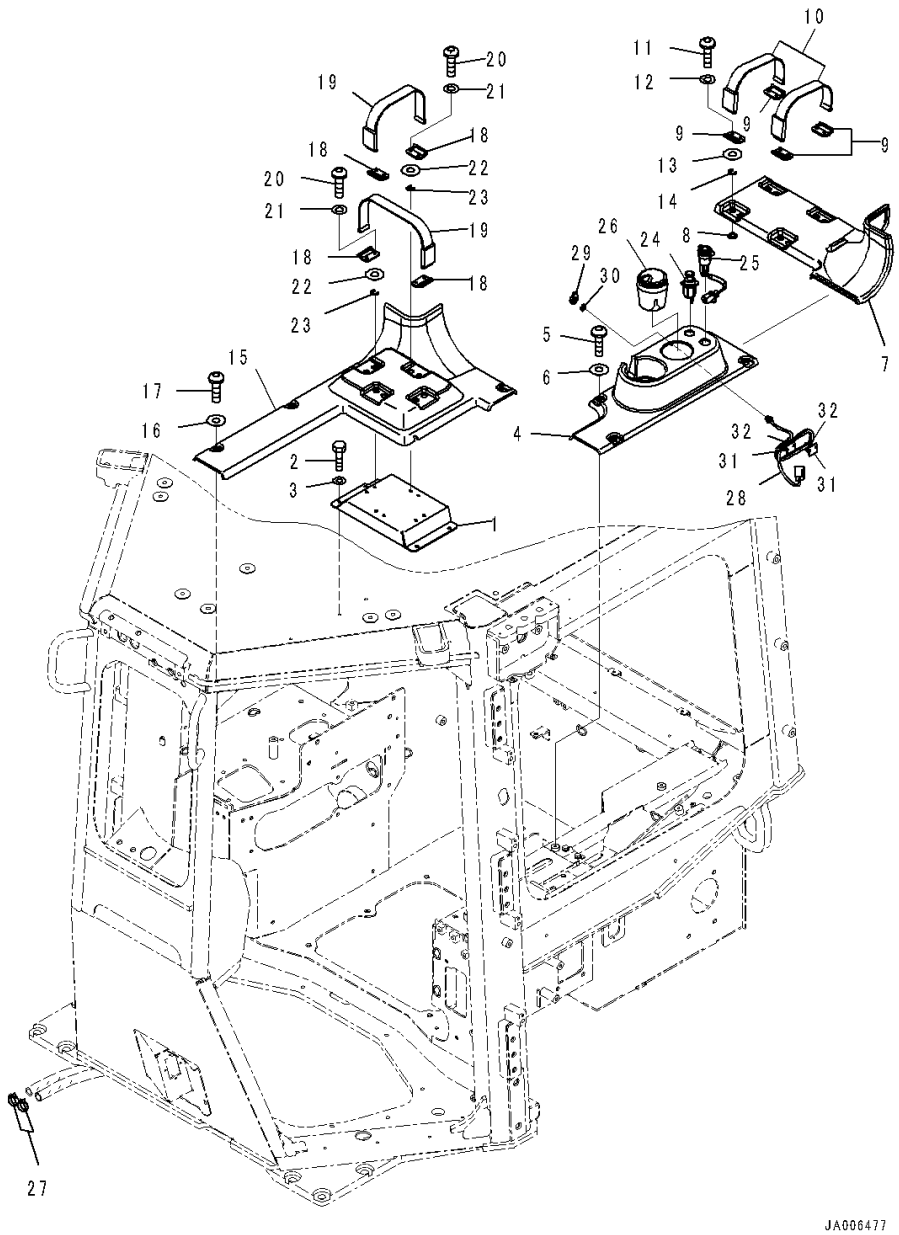

Index	Code	Part Number	Description	Qty	Serial Number
		Note: This list covers following specifications.			
		With AM-FM Stereo Radio With AUX Jack, North America			
		With AM-FM Stereo Radio With AUX Jack, Europe and Asia,			
		For EU New Noise Arrangement 2			
		With AM-FM Stereo Radio With AUX Jack, Europe and Asia			
1		14X-54-56421	Bracket	1	1001-
2		01010-80616	Bolt	4	1001-
3		01643-30623	Washer	4	1001-
4		17A-Z11-5761	Cover	1	1001-
5		01245-00620	Screw	4	1001-
6		12Y-978-2660	Collar	4	1001-
7		17A-Z11-5561	Cover	1	1001-
8		17A-Z11-5651	• Sheet	8	1001-
9		14X-Y79-1241	Plate	4	1001-
10		423-54-42790	Band	2	1001-
11		17A-Z11-5890	Screw	8	1001-
12		01643-70623	Washer	8	1001-
13		12Y-978-2660	Collar	8	1001-
14		195-54-78790	Ring, Snap	8	1001-
15		17A-Z11-5580	Cover	1	1001-
16		12Y-978-2660	Collar	3	1001-
17		01245-00620	Screw	3	1001-
18		14X-Y79-1241	Plate	4	1001-
19		423-54-42790	Band	2	1001-
20		17A-Z11-5890	Screw	8	1001-
21		01643-70623	Washer	8	1001-
22		12Y-978-2660	Collar	8	1001-
23		195-54-78790	Ring, Snap	8	1001-
24		20Y-06-23472	Cigarette Lighter	1	1001-
25		14X-06-52491	Socket Assembly	1	1001-
26		20Y-43-41491	Ashtray	1	1001-
27		09479-02400	Clip	2	1001-
28		2A5-06-11940	Cable	1	1001-
29		2A5-06-12131	Cap	1	1001-
30		2A5-53-12580	Nut	1	1001-
31		20U-54-46520	Hook, Sticker Type	2	1001-
32		08034-20519	Band	2	1001-

FIG. K0210-004017 ROPS Cab (Radio)

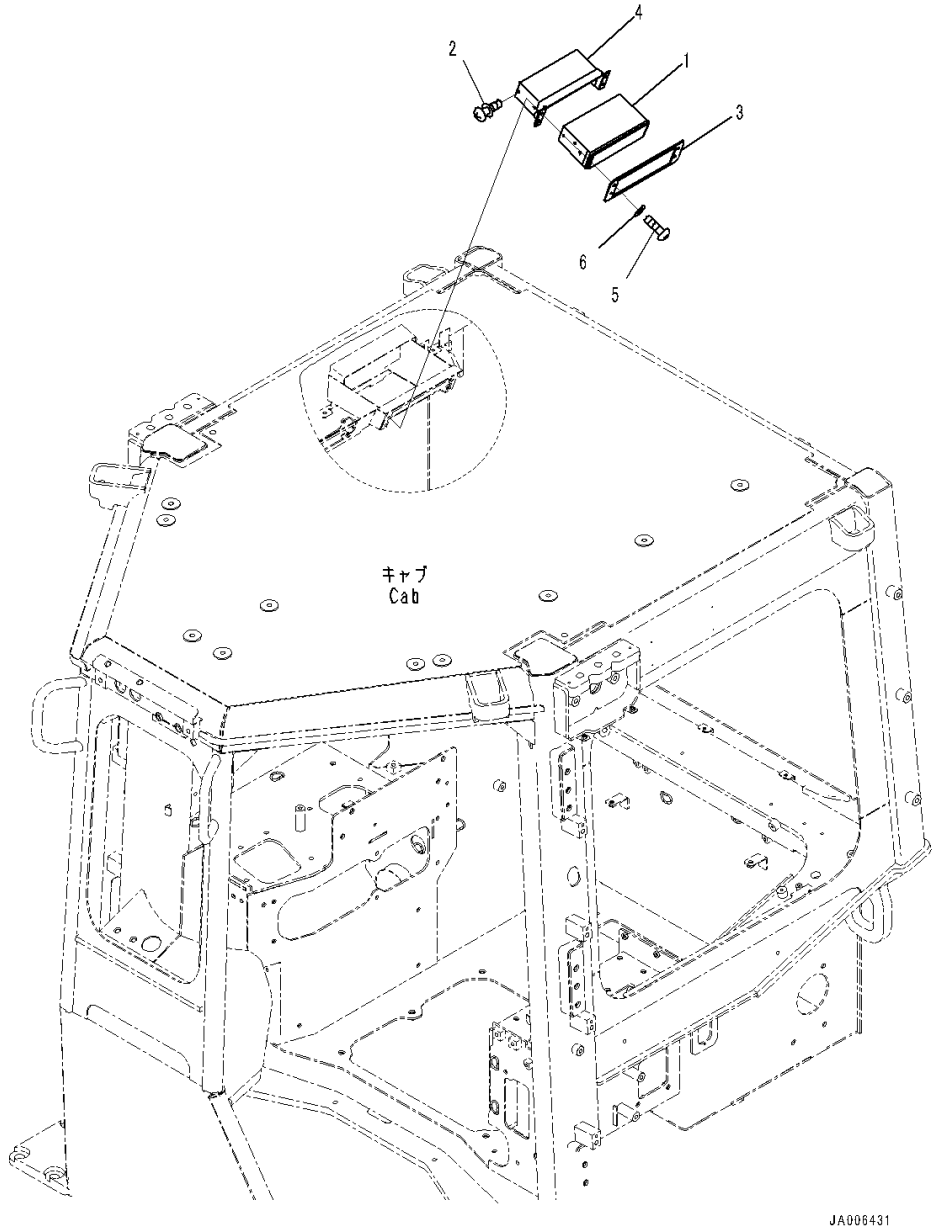

Index	Code	Part Number	Description	Qty	Serial Number
		Note: This list covers following specifications.			
		With AM-FM Stereo Radio With AUX Jack, Europe and Asia, For EU New Noise Arrangement 2			
		With AM-FM Stereo Radio With AUX Jack, Europe and Asia, For EU New Noise Arrangement 2, 3D Machine Control Plug and Play			
		With AM-FM Stereo Radio With AUX Jack, Europe and Asia			
		With AM-FM Stereo Radio With AUX Jack, Europe and Asia, For 3D Machine Control Plug and Play			
1		2A5-06-11932	Radio	1	1001-
2		01023-20510	Screw	4	1001-
3		12Y-54-28210	Bracket	1	1001-
4		12Y-54-28220	Plate	1	1001-
5		01245-00620	Screw	4	1001-
6		01643-70623	Washer	4	1001-

FIG. K0210-004048 ROPS Cab (Floor, Switch)

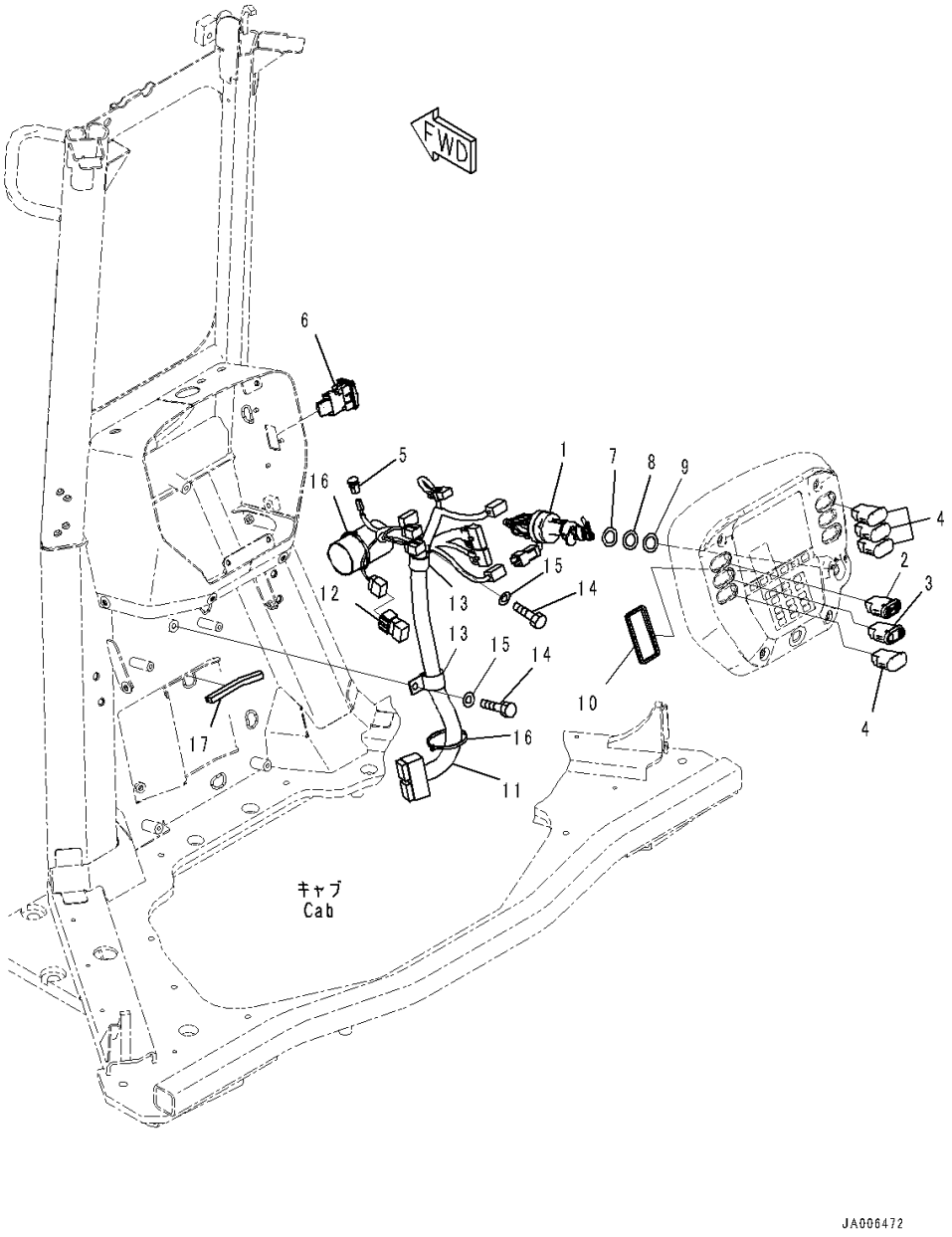

Index	Code	Part Number	Description	Qty	Serial Number
		Note: This list covers following specifications. With AM-FM Stereo Radio With AUX Jack, Europe and Asia, For EU New Noise Arrangement 2 With AM-FM Stereo Radio With AUX Jack, Europe and Asia, For EU New Noise Arrangement 2, 3D Machine Control Plug and Play			
1		14X-06-51691	Switch, Key	1	1001-
2		17A-06-51650	Switch	1	1001-
3		17A-06-51661	Switch	1	1001-
4		20Y-06-42190	Cover	4	1001-
5		20Y-979-6161	Sensor	1	1001-
6		08085-00001	Switch, Engine Stop	1	1001-
7		23S-15-45860	Shim, T=0.5mm	2	1001-
8		20Y-43-41750	Washer	2	1001-
9		20Y-43-41790	Washer	2	1001-
10		14X-54-67110	Trim	1	1001-
11		154-06-81131	Wiring Harness	1	1001-
12		8233-06-3350	• Diode	1	1001-
13		04434-52711	Clip	2	1001-
14		01010-81020	Bolt	2	1001-
15		01643-31032	Washer	2	1001-
16		08034-20519	Band	2	1001-
17		14X-54-56160	Seal	1	1001-

FIG. K0210-005001 ROPS Cab (Cab Body)

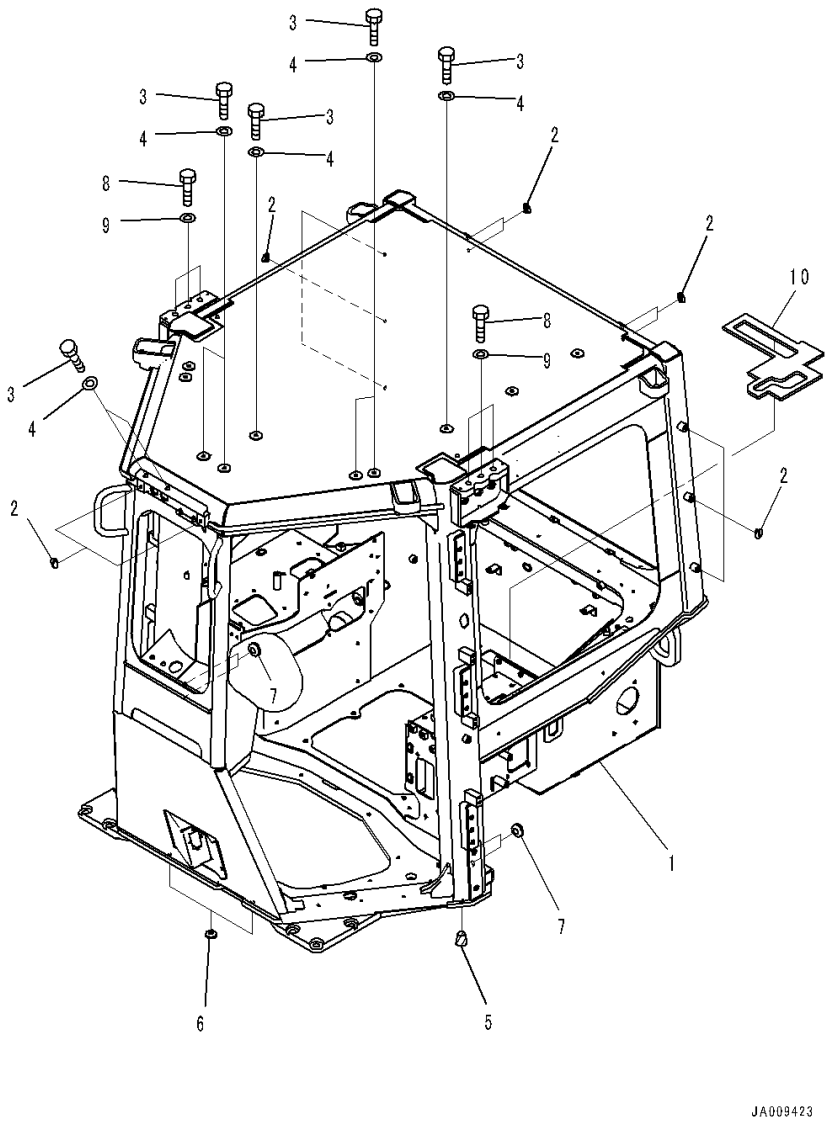

Index	Code	Part Number	Description	Qty	Serial Number
		Note: This list covers following specifications. With AM-FM Stereo Radio With AUX Jack, North America, For 3D Machine Control Plug and Play With AM-FM Stereo Radio With AUX Jack, Europe and Asia, For EU New Noise Arrangement 2, 3D Machine Control Plug and Play With AM-FM Stereo Radio With AUX Jack, Europe and Asia, For 3D Machine Control Plug and Play			
1		154-Z11-8111	Cab Assembly	1	1001-
2		20Y-53-11380	Cap	12	1001-
3		01010-81220	Bolt	12	1001-
4		01643-31232	Washer	12	1001-
5		07049-01620	Plug	2	1001-
6		09415-00706	Cap	2	1001-
7		09415-01008	Cap	4	1001-
8		01010-82035	Bolt	6	1001-
9		01643-32060	Washer	6	1001-
10		17M-911-7641	Sheet	1	1001-

FIG. K0210-005005 ROPS Cab (Door and Latch, R.H.)

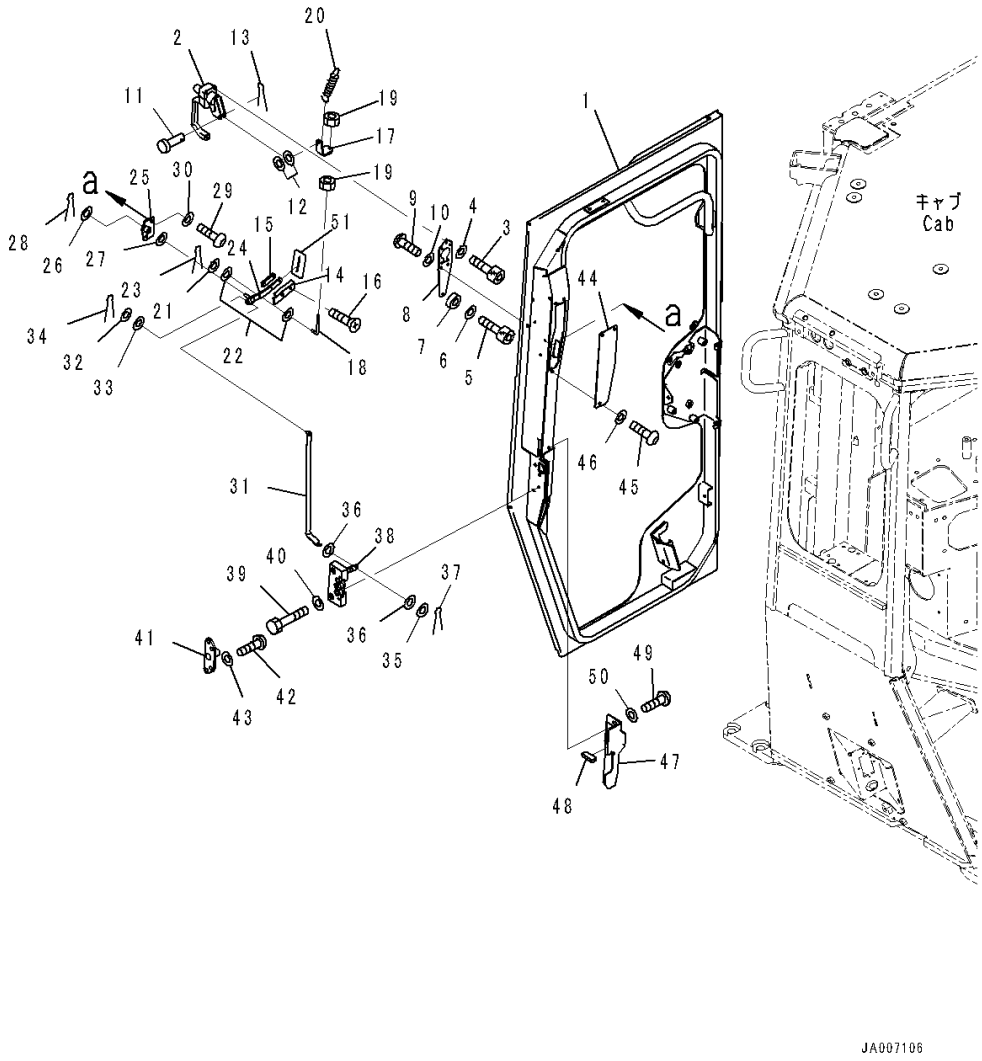

Index	Code	Part Number	Description	Qty	Serial Number
		Note: This list covers following specifications.			
		With AM-FM Stereo Radio With AUX Jack, North America, For 3D Machine Control Plug and Play			
		With AM-FM Stereo Radio With AUX Jack, Europe and Asia, For EU New Noise Arrangement 2, 3D Machine Control Plug and Play			
		With AM-FM Stereo Radio With AUX Jack, Europe and Asia			
		With AM-FM Stereo Radio With AUX Jack, Europe and Asia, For 3D Machine Control Plug and Play			
1		14X-Y79-6910	Door Assembly	1	1001-
2		11Y-979-2571	Handle Assembly	1	1001-
3		01252-70520	Bolt	4	1001-
4		01641-20508	Washer, Flat	4	1001-
5		01252-70525	Bolt, Hexagon Socket Head	1	1001-
6		01641-20508	Washer, Flat	1	1001-
7		14X-Y79-3130	Spacer	1	1001-
8		12Y-978-3210	Plate	1	1001-
9		01245-00620	Screw	3	1001-
10		01643-70623	Washer	3	1001-
11		04205-10622	Pin	1	1001-
12		01643-70623	Washer	4	1001-
13		04050-11612	Pin, Cotter	1	1001-
14		12Y-978-3281	Knob	1	1001-
15		12Y-978-3290	Plate	1	1001-
16		01023-70412	Screw	2	1001-
17		14X-Y79-3230	Plate	1	1001-
18		14X-Y79-3360	Rod	1	1001-
19		01580-10605	Nut	2	1001-
20		176-06-42170	Spring	1	1001-
21		01643-70623	Washer	1	1001-
22		12Y-978-3310	Rubber	2	1001-
23		04050-11612	Pin, Cotter	1	1001-
24		14X-Y79-3661	Plate	1	1001-
25		12Y-978-3271	Plate	1	1001-
26		01643-70823	Washer	1	1001-
27		12Y-978-3360	Rubber	1	1001-
28		04050-12012	Pin, Cotter	1	1001-
29		01245-00620	Screw	2	1001-
30		01643-70623	Washer	2	1001-
31		17A-979-3330	Plate	1	1001-

FIG. K0210-005005 ROPS Cab (Door and Latch, R.H.)

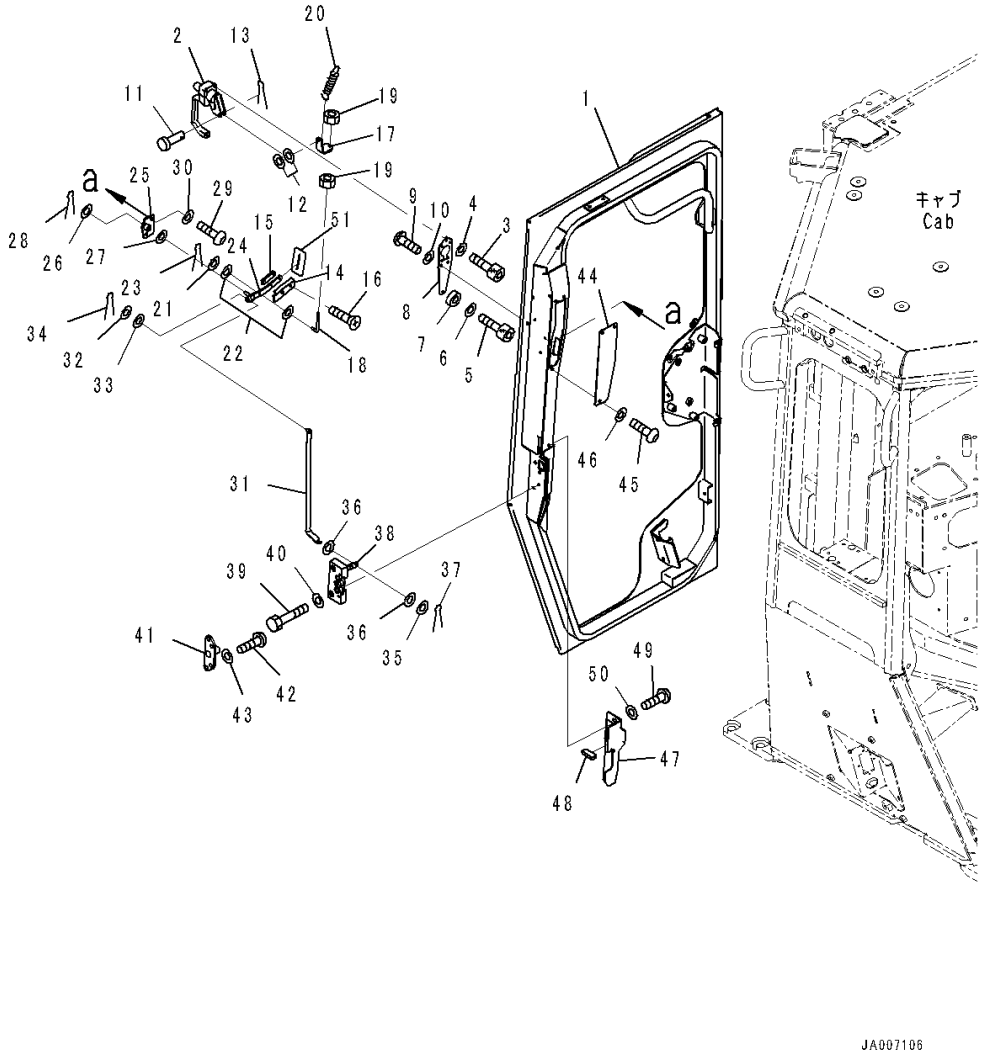

Index	Code	Part Number	Description	Qty	Serial Number
32		01640-20610	Washer	1	1001-
33		12Y-978-3310	Rubber	2	1001-
34		04050-11612	Pin, Cotter	1	1001-
35		01643-70623	Washer	1	1001-
36		12Y-978-3310	Rubber	2	1001-
37		04050-11612	Pin, Cotter	1	1001-
38		195-Z11-4510	Lock	1	1001-
39		01010-D0635	Bolt	4	1001-
40		01643-70623	Washer	4	1001-
41		12Y-978-3480	Striker	1	1001-
42		01245-00825	Screw	4	1001-
43		01643-70823	Washer	4	1001-
44		14X-Y79-3310	Plate	1	1001-
45		01245-00620	Screw	3	1001-
46		01643-70623	Washer	3	1001-
47		14X-Y79-6830	Cover,R.H.	1	1001-
48		17A-979-3811	• Sheet	1	1001-
49		01245-00620	Screw	2	1001-
50		01643-70623	Washer	2	1001-
51		17A-979-4120	Sheet	1	1001-

FIG. K0210-005021 ROPS Cab (Garnish)

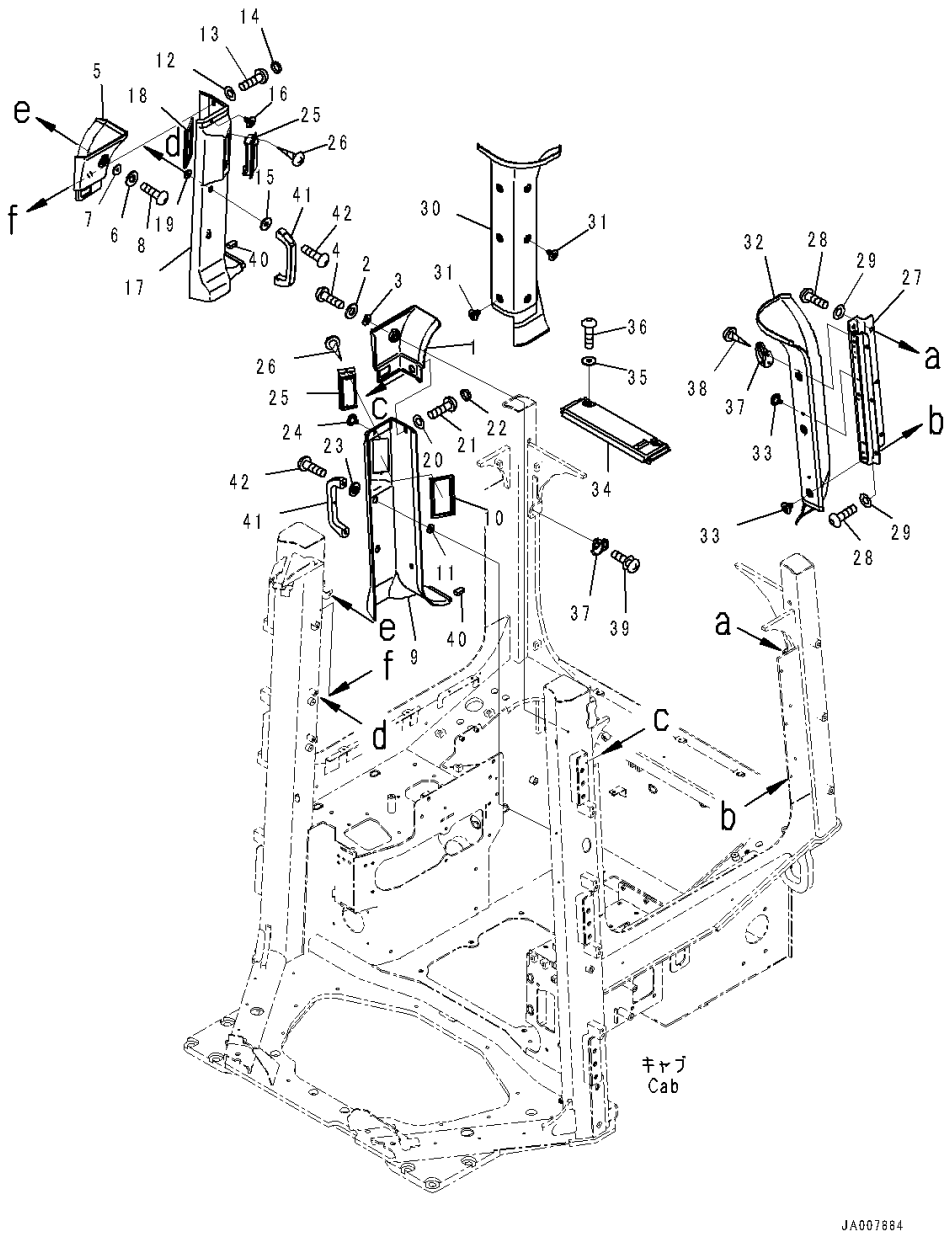

Index	Code	Part Number	Description	Qty	Serial Number
		Note: This list covers following specifications.			
		With AM-FM Stereo Radio With AUX Jack, North America, For 3D Machine Control Plug and Play			
		With AM-FM Stereo Radio With AUX Jack, Europe and Asia, For EU New Noise Arrangement 2, 3D Machine Control Plug and Play			
		With AM-FM Stereo Radio With AUX Jack, Europe and Asia, For 3D Machine Control Plug and Play			
1		17A-Z11-5511	Cover Assembly	1	1001-
2		14X-Y79-6790	• Sheet	1	1001-
3		12Y-978-2660	Collar	1	1001-
4		01245-00620	Screw	1	1001-
5		17A-Z11-5521	Cover Assembly	1	1001-
6		14X-Y79-6790	• Sheet	1	1001-
7		12Y-978-2660	Collar	1	1001-
8		01245-00620	Screw	1	1001-
9		17A-Z11-5530	Cover Assembly	1	1001-
10		17A-979-1930	• Seal	1	1001-
11		17A-979-3890	• Plate	2	1001-
12		423-925-5851	Washer	2	1001-
13		01240-00620	Screw	2	1001-
14		423-925-5860	Cap	2	1001-
15		17A-979-1611	Collar	2	1001-
16		20Y-54-18690	Rivet	1	1001-
17		17A-Z11-5540	Cover Assembly	1	1001-
18		17A-979-1930	• Seal	1	1001-
19		17A-979-3890	• Plate	2	1001-
20		423-925-5851	Washer	2	1001-
21		01240-00620	Screw	2	1001-
22		423-925-5860	Cap	2	1001-
23		17A-979-1611	Collar	2	1001-
24		20Y-54-18690	Rivet	1	1001-
25		17A-Z11-7161	Louver	2	1001-
26		01370-40414	Screw	4	1001-
27		14X-Y79-2132	Bracket	1	1001-
28		01245-00820	Screw	6	1001-
29		01643-70823	Washer	6	1001-
30		14X-Y79-2211	Cover	1	1001-
31		20Y-54-18690	Rivet	6	1001-
32		14X-Y79-2222	Cover	1	1001-

FIG. K0210-005021 ROPS Cab (Garnish)

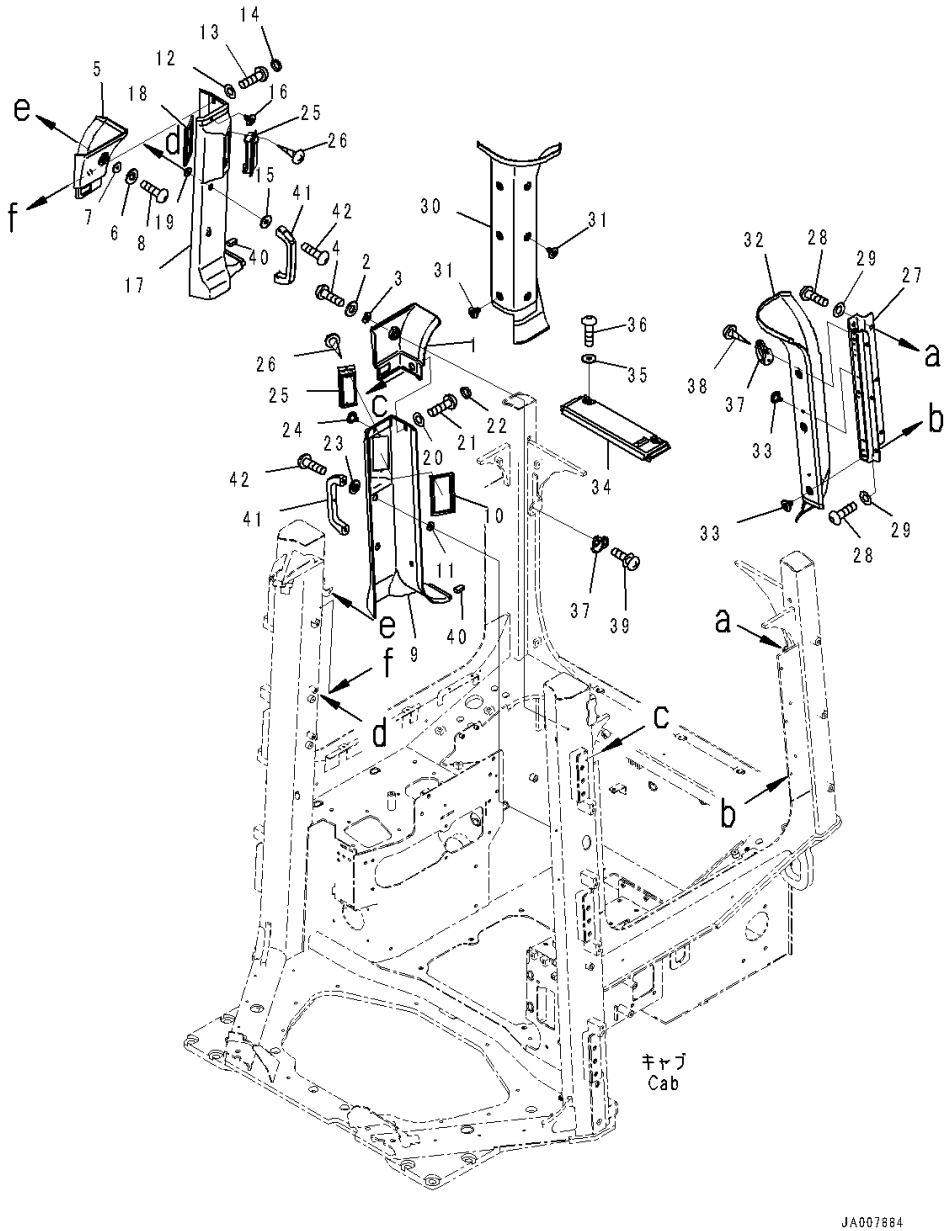

Index	Code	Part Number	Description	Qty	Serial Number
33		20Y-54-18690	Rivet	5	1001-
34		17A-Z11-5570	Cover	1	1001-
35		12Y-978-2660	Collar	2	1001-
36		01245-00620	Screw	2	1001-
37		17A-Z11-2941	Hook	2	1001-
38		01370-40414	Screw	2	1001-
39		01023-70412	Screw	2	1001-
40		14X-Y79-2190	Seal	2	1001-
41		361-54-21150	Handle	2	1001-
42		01245-00825	Screw	4	1001-

FIG. K0210-005039 ROPS Cab (Floor Frame Inside Cover)

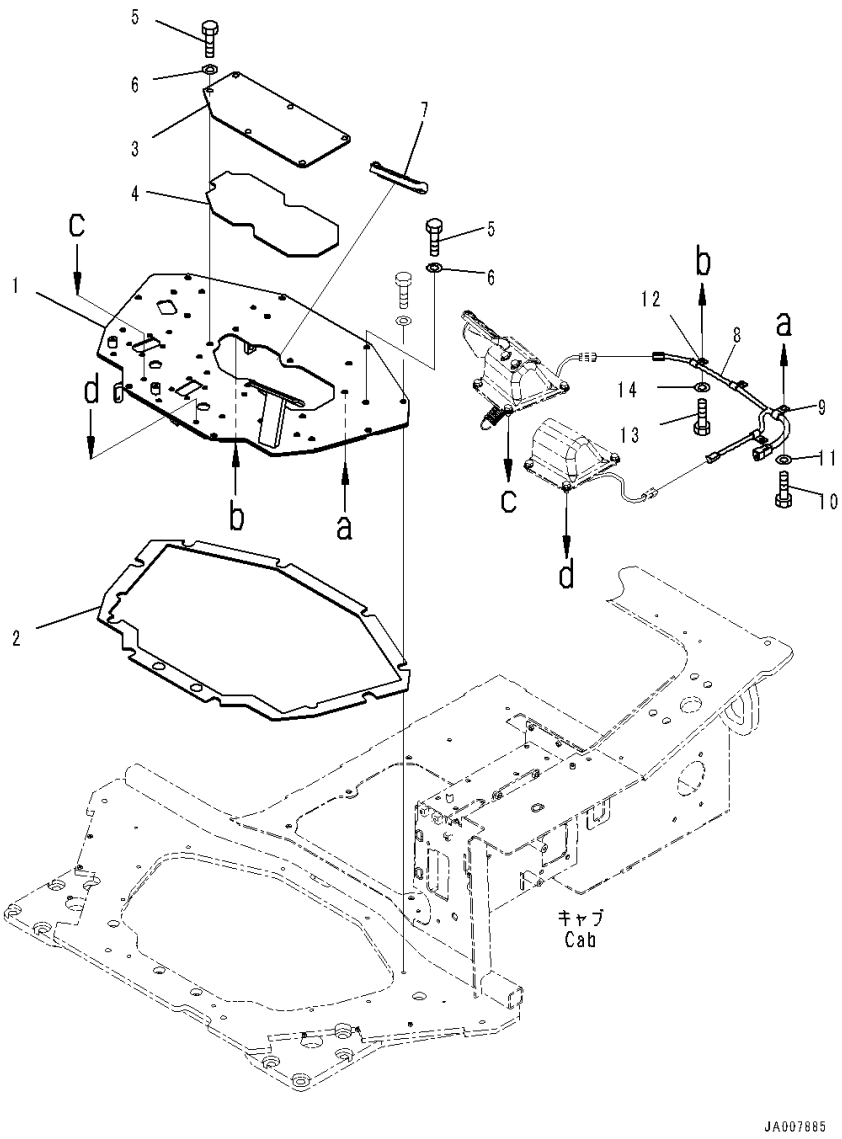

Index	Code	Part Number	Description	Qty	Serial Number
		Note: This list covers following specifications.			
		With AM-FM Stereo Radio With AUX Jack, North America, For 3D Machine Control Plug and Play			
		With AM-FM Stereo Radio With AUX Jack, Europe and Asia, For EU New Noise Arrangement 2, 3D Machine Control Plug and Play			
		With AM-FM Stereo Radio With AUX Jack, Europe and Asia, For 3D Machine Control Plug and Play			
1		14X-43-61610	Floor	1	1001-
2		14X-43-51850	• Sheet	1	1001-
3		14X-43-51541	Cover	1	1001-
4		14X-43-51860	• Sheet	1	1001-
5		01010-81225	Bolt	14	1001-
6		01643-31232	Washer	14	1001-
7		14X-43-13760	Cap	1	1001-
8		14X-06-51140	Wiring Harness	1	1001-
9		04434-51410	Clip	1	1001-
10		01010-81020	Bolt	1	1001-
11		01643-31032	Washer	1	1001-
12		04434-51010	Clip	3	1001-
13		01010-81020	Bolt	3	1001-
14		01643-31032	Washer	3	1001-

FIG. K0210-005041 ROPS Cab (Decelerator Pedal)

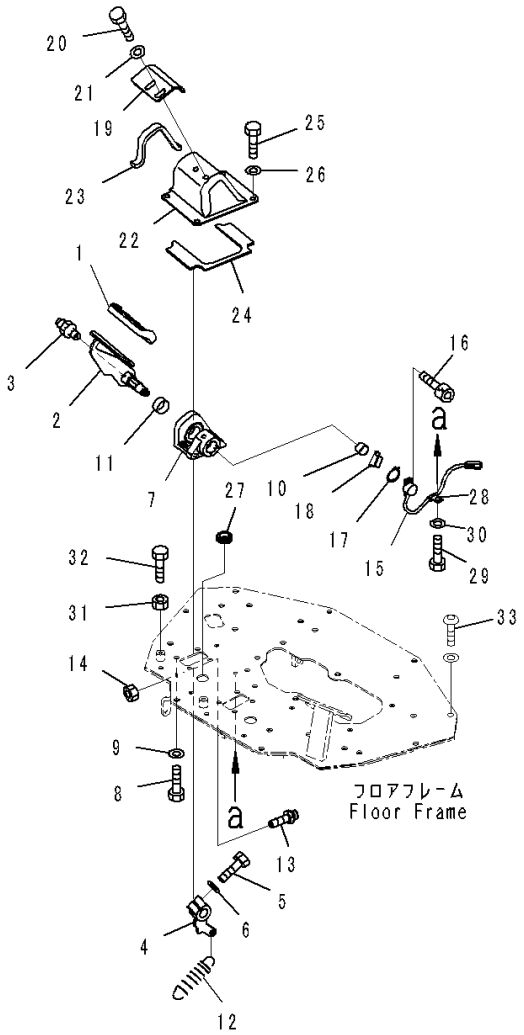

Index	Code	Part Number	Description	Qty	Serial Number
		Note: This list covers following specifications. With AM-FM Stereo Radio With AUX Jack, North America, For 3D Machine Control Plug and Play With AM-FM Stereo Radio With AUX Jack, Europe and Asia, For EU New Noise Arrangement 2, 3D Machine Control Plug and Play With AM-FM Stereo Radio With AUX Jack, Europe and Asia, For 3D Machine Control Plug and Play			
1		14X-43-13760	Cap	1	1001-
2		14X-43-51521	Pedal	1	1001-
3		07020-00000	Fitting, Grease	1	1001-
4		14X-43-51561	Lever	1	1001-
5		01010-81245	Bolt	1	1001-
6		01643-31232	Washer	1	1001-
7		14X-43-51571	Bracket	1	1001-
8		01010-81020	Bolt	4	1001-
9		01643-31032	Washer	4	1001-
10		06124-02020	Bearing	1	1001-
11		06124-03020	Bearing	1	1001-
12		14X-43-51581	Spring	1	1001-
13		09311-41237	Bumper, Pedal	1	1001-
14		01580-11210	Nut	1	1001-
15		17A-06-41981	Sensor	1	1001-
16		01252-70414	Bolt	2	1001-
17		04064-01610	Ring, Snap	1	1001-
18		142-43-13180	Spring	1	1001-
19		14X-43-51810	Bracket	1	1001-
20		01010-D1020	Bolt	2	1001-
21		01643-71032	Washer	2	1001-
22		14X-43-51821	Cover	1	1001-
23		14X-43-51651	• Sheet	1	1001-
24		14X-43-51870	• Sheet	1	1001-
25		01010-81020	Bolt	4	1001-
26		01643-31032	Washer	4	1001-
27		08037-02512	Grommet	1	1001-
28		04434-50810	Clip	1	1001-
29		01010-81020	Bolt	1	1001-
30		01643-31032	Washer	1	1001-
31		01580-11008	Nut	1	1001-
32		01016-51030	Bolt	1	1001-

FIG. K0210-005041 ROPS Cab (Decelerator Pedal)

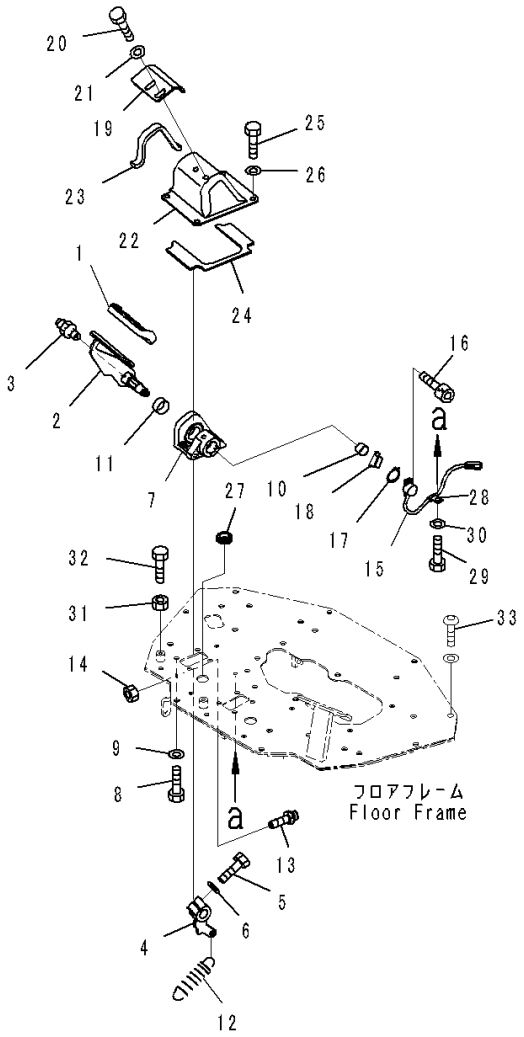

JA007886

Index	Code	Part Number	Description	Qty	Serial Number
33		(01245-01225)	Screw, Hexagon Socket Head(Refer to Page 476)		-

FIG. K0210-005052 ROPS Cab (GPS Box)

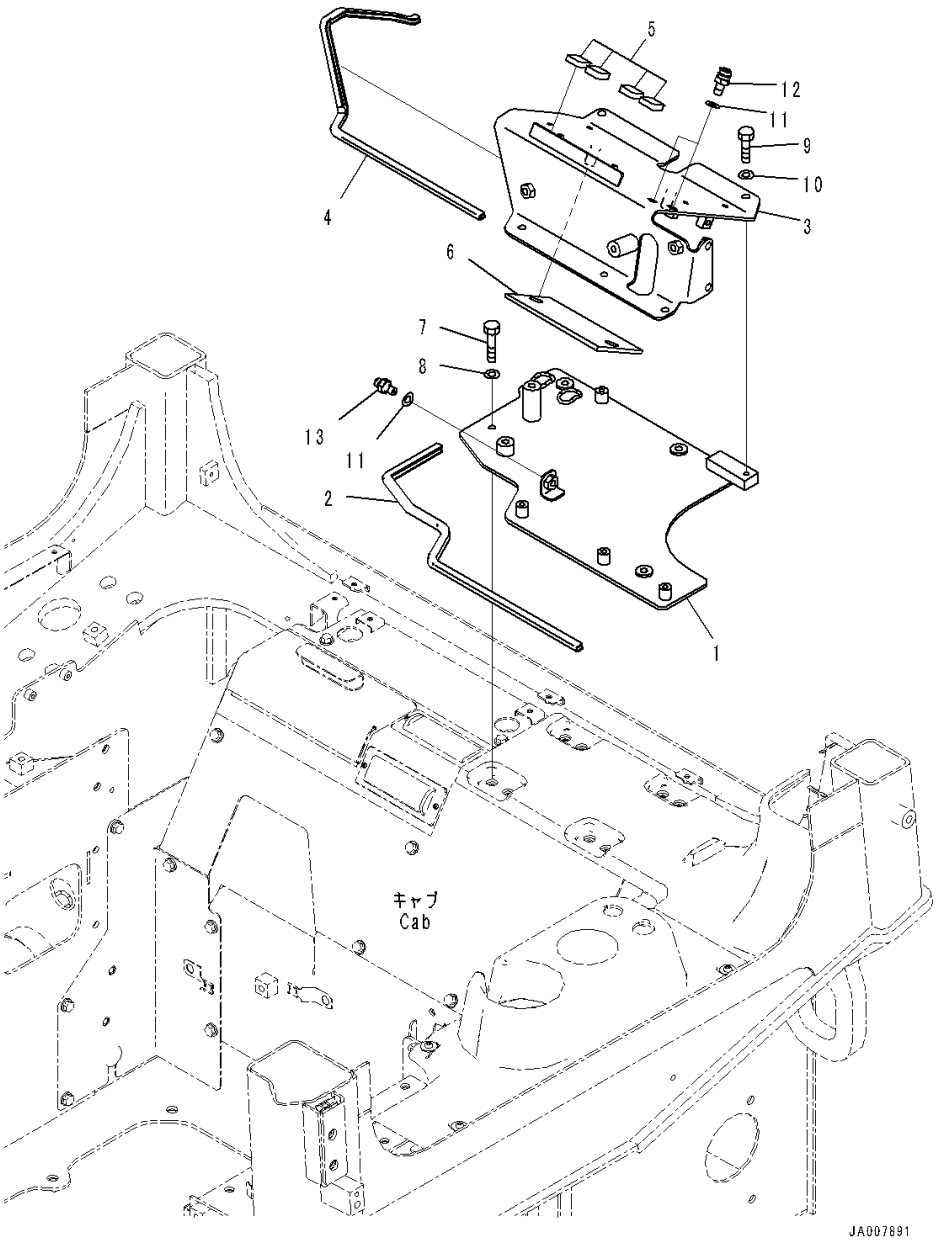

Index	Code	Part Number	Description	Qty	Serial Number
		Note: This list covers following specifications.			
		With AM-FM Stereo Radio With AUX Jack, North America, For 3D Machine Control Plug and Play			
		With AM-FM Stereo Radio With AUX Jack, Europe and Asia, For EU New Noise Arrangement 2, 3D Machine Control Plug and Play			
		With AM-FM Stereo Radio With AUX Jack, Europe and Asia, For 3D Machine Control Plug and Play			
1		14X-06-61851	Bracket	1	1001-
2		423-S35-4260	• Finisher	1	1001-
3		14X-06-63833	Bracket	1	1235-
4		11Y-06-32540	• Cushion	1	1001-
5		14X-06-63391	• Sheet	4	1004-
6		425-54-32540	• Finisher	1	1001-
7		01010-D0650	Bolt	4	1001-
8		01643-70623	Washer	4	1001-
9		01010-D0816	Bolt	5	1001-
10		01643-70823	Washer	5	1001-
11		01643-71032	Washer	3	1001-
12		14X-06-63850	Plug	2	1001-
13		14X-06-63860	Plug	1	1001-

FIG. K0210-005053A ROPS Cab (GPS Antenna)

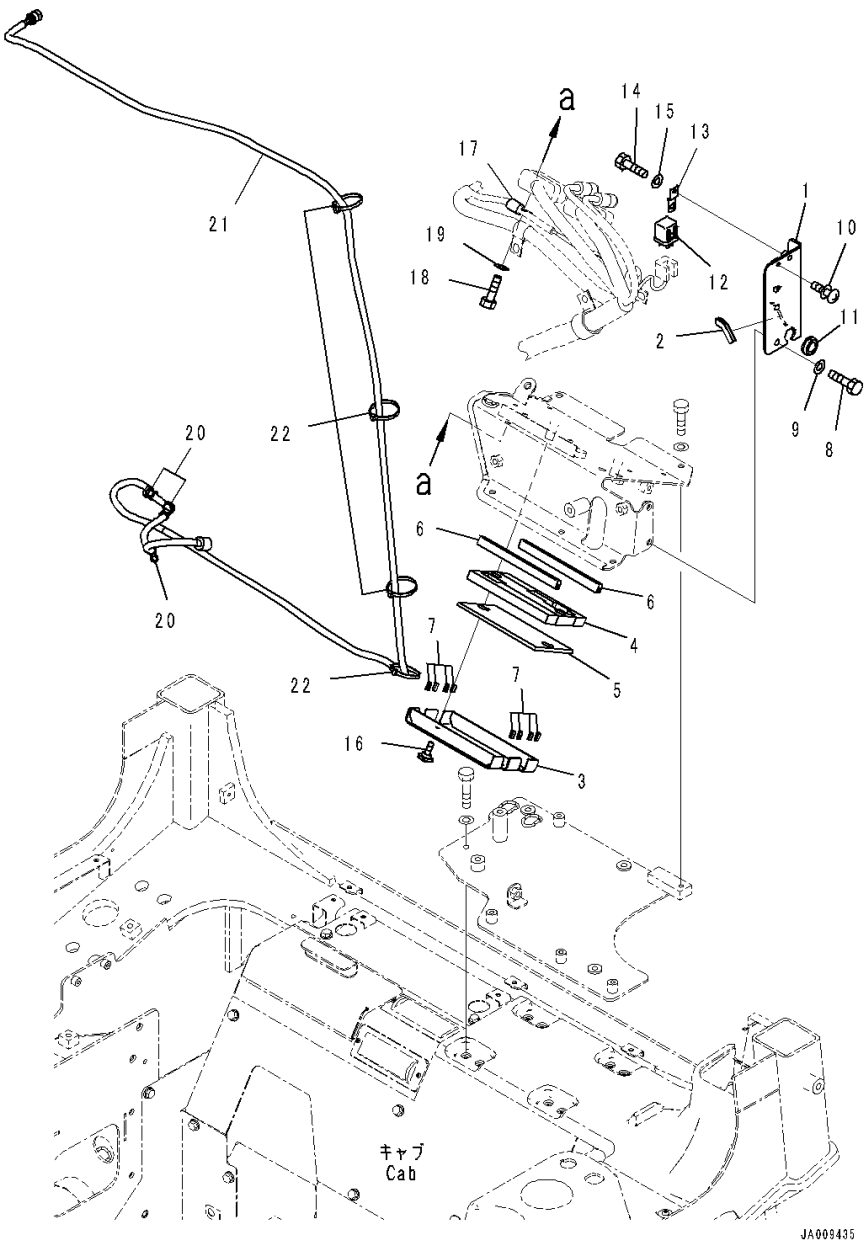

Index	Code	Part Number	Description	Qty	Serial Number
		Note: This list covers following specifications.			
		With AM-FM Stereo Radio With AUX Jack, North America, For 3D Machine Control Plug and Play			
		With AM-FM Stereo Radio With AUX Jack, Europe and Asia, For EU New Noise Arrangement 2, 3D Machine Control Plug and Play			
		With AM-FM Stereo Radio With AUX Jack, Europe and Asia, For 3D Machine Control Plug and Play			
1		14X-06-63841	Bracket	1	1001-
2		21W-62-51740	• Finisher	1	1001-
3		14X-06-53510	Cover	1	1001-
4		11Y-06-32550	• Cushion	1	1001-
5		11Y-06-32540	• Cushion	1	1001-
6		11Y-06-32560	• Seal	2	1001-
7		14X-06-53290	• Trim	8	1001-
8		01010-D0816	Bolt	3	1001-
9		01643-70823	Washer	3	1001-
10		01023-20512	Screw	2	1001-
11		201-54-13210	Grommet	1	1001-
12		569-06-61960	Relay	1	1001-
13		287-06-16420	Bracket	1	1001-
14		01010-D0612	Bolt	1	1001-
15		01643-70623	Washer	1	1001-
16		01232-10616	Screw, Knurled Head	2	1001-
17		04434-51010	Clip	1	1001-
18		01010-D1020	Bolt	1	1001-
19		01643-71032	Washer	1	1001-
20		08034-40521	Band	3	1235-
21		14X-06-61161	Cable	1	1113-
22		08034-20519	Band	4	1001-

FIG. K0210-005054A ROPS Cab (3D Machine Control Cab Back Surrounding Parts)

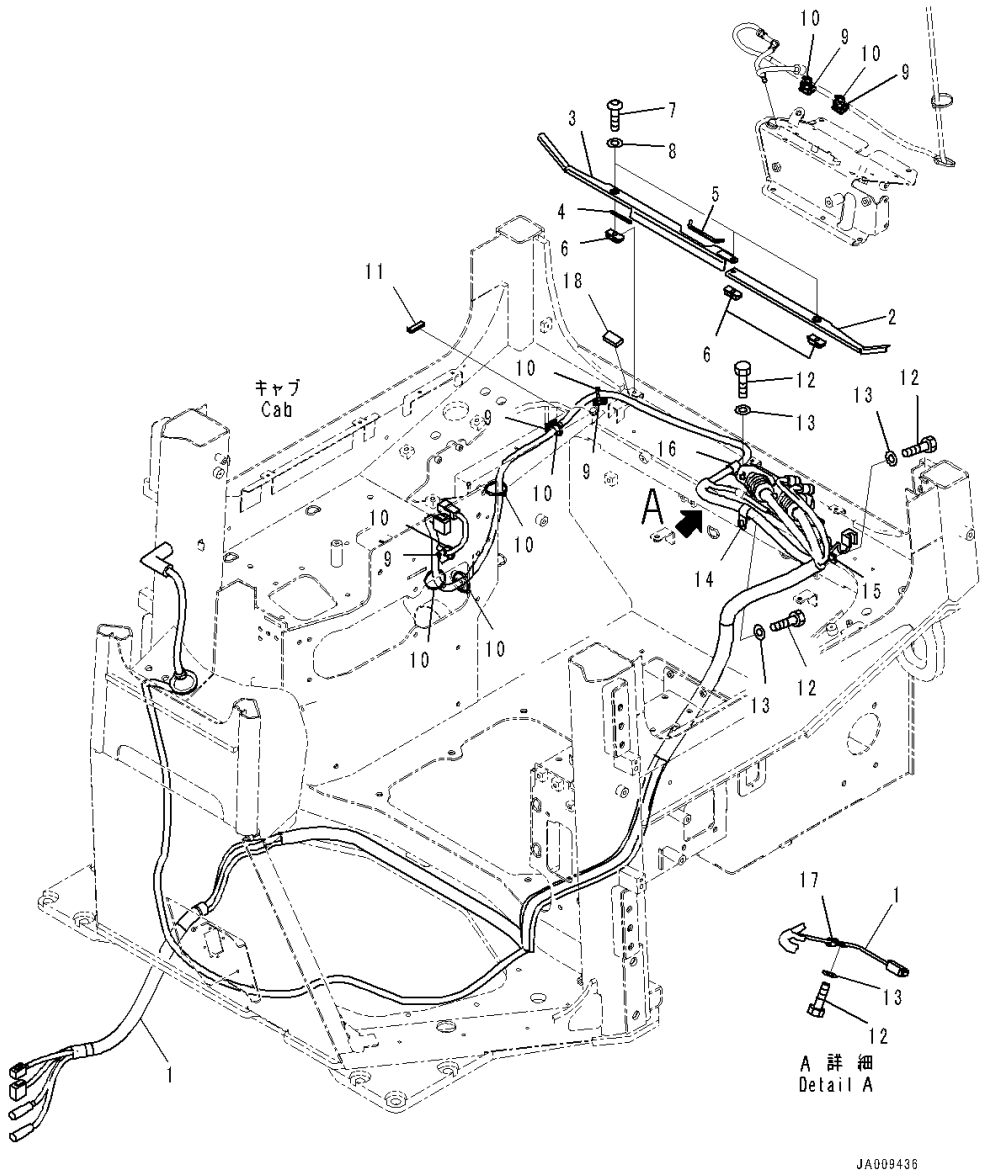

Index	Code	Part Number	Description	Qty	Serial Number
		Note: This list covers following specifications.			
		With AM-FM Stereo Radio With AUX Jack, North America, For 3D Machine Control Plug and Play			
		With AM-FM Stereo Radio With AUX Jack, Europe and Asia, For EU New Noise Arrangement 2, 3D Machine Control Plug and Play			
		With AM-FM Stereo Radio With AUX Jack, Europe and Asia, For 3D Machine Control Plug and Play			
1		14X-06-61172	Wiring Harness	1	1001-
2		14X-06-53420	Plate	1	1001-
3		14X-06-53430	Plate	1	1001-
4		14X-06-53440	• Trim	1	1001-
5		14X-06-53450	• Trim	1	1001-
6		14X-06-53250	Bracket	3	1001-
7		01245-00616	Screw, Hexagon Socket Head	3	1001-
8		01643-70623	Washer	3	1001-
9		20U-54-46520	Hook, Sticker Type	5	1001-
10		08034-20519	Band	8	1001-
11		21W-62-51740	Finisher	1	1001-
12		01010-D1020	Bolt	4	1235-
13		01643-71032	Washer	4	1235-
14		04434-51710	Clip	1	1001-
15		04434-51710	Clip	1	1001-
16		04434-51410	Clip	1	1001-
17		04434-51010	Clip	1	1001-
18		14X-06-53520	Sheet	1	1001-

FIG. K0210-005055 ROPS Cab (3D Machine Control Cab Front Surrounding Parts)

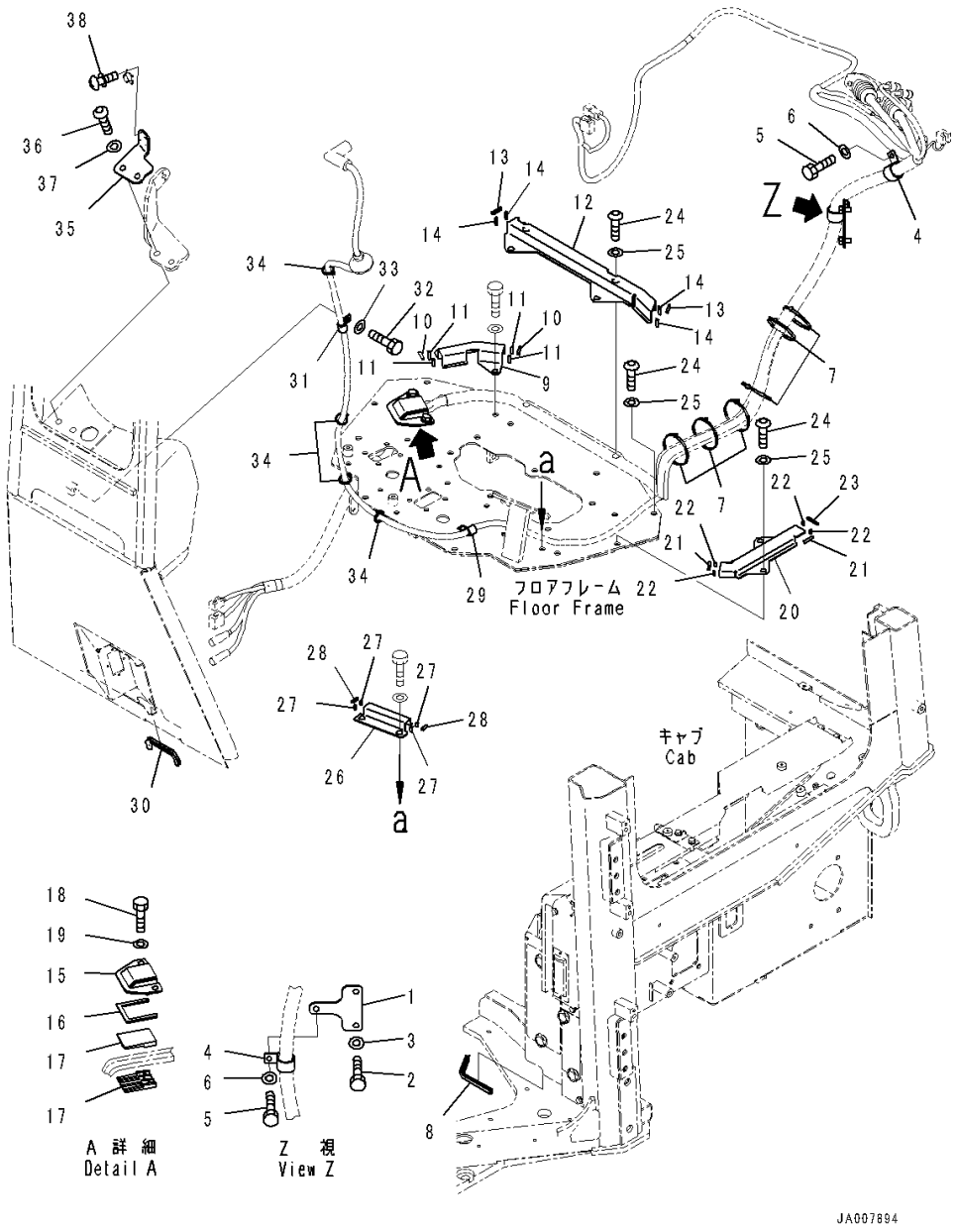

Index	Code	Part Number	Description	Qty	Serial Number
		Note: This list covers following specifications.			
		With AM-FM Stereo Radio With AUX Jack, North America, For 3D Machine Control Plug and Play			
		With AM-FM Stereo Radio With AUX Jack, Europe and Asia, For EU New Noise Arrangement 2, 3D Machine Control Plug and Play			
		With AM-FM Stereo Radio With AUX Jack, Europe and Asia, For 3D Machine Control Plug and Play			
1		14X-06-53370	Plate	1	1001-
2		01010-D1020	Bolt	2	1001-
3		01643-71032	Washer	2	1001-
4		04434-53411	Clip	2	1001-
5		01010-D1020	Bolt	2	1001-
6		01643-71032	Washer	2	1001-
7		08034-20536	Band	6	1001-
8		417-923-3980	Finisher	1	1001-
9		14X-06-63180	Cover	1	1001-
10		14X-06-53280	• Trim	2	1001-
11		14X-06-53350	• Trim	4	1001-
12		14X-06-63320	Plate	1	1001-
13		14X-06-53280	• Trim	2	1001-
14		14X-06-53350	• Trim	4	1001-
15		14X-06-63331	Cover	1	1001-
16		14X-06-63360	• Sheet	1	1001-
17		14X-06-63350	Cushion	2	1001-
18		01010-81225	Bolt	2	1001-
19		01643-31232	Washer	2	1001-
20		14X-06-53160	Cover	1	1001-
21		14X-06-53280	• Trim	2	1001-
22		14X-06-53290	• Trim	4	1001-
23		14X-06-53310	• Trim	1	1001-
24		01245-01225	Screw, Hexagon Socket Head	10	1001-
25		01643-71232	Washer	10	1001-
26		14X-06-53170	Plate	1	1001-
27		14X-06-53290	• Trim	4	1001-
28		14X-06-53350	• Trim	2	1001-
29		04434-51412	Clip	1	1001-
30		418-54-42380	Finisher	1	1001-
31		04434-51410	Clip	1	1001-
32		01010-81020	Bolt	1	1001-

FIG. K0210-005055 ROPS Cab (3D Machine Control Cab Front Surrounding Parts)

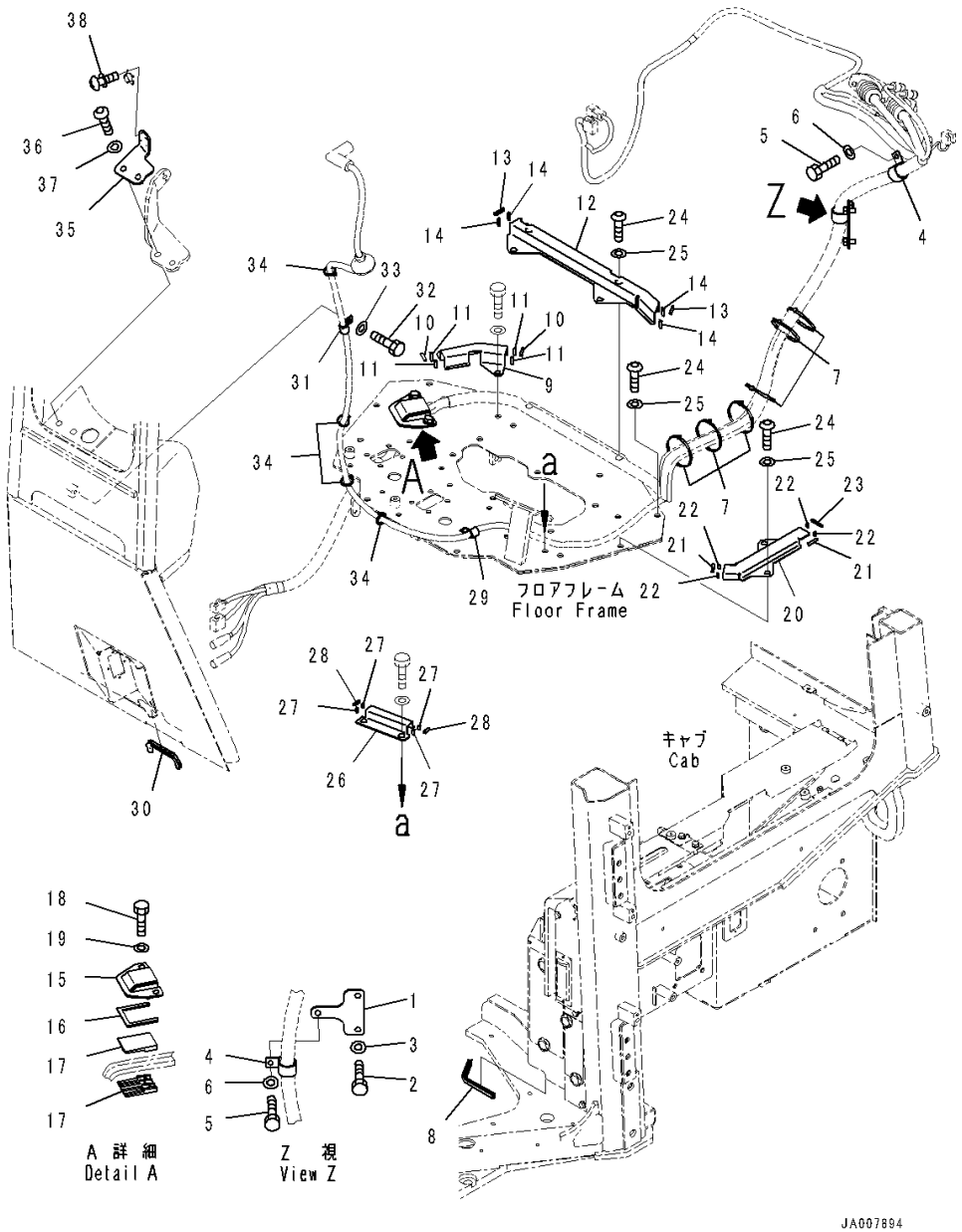

Index	Code	Part Number	Description	Qty	Serial Number
33		01643-31032	Washer	1	1001-
34		08034-20519	Band	4	1001-
35		14X-06-63311	Bracket	1	1001-
36		01245-01235	Screw, Hexagon Socket Head	2	1001-
37		01643-71232	Washer	2	1001-
38		01023-20208	Screw	4	1001-

FIG. K0210-005056 ROPS Cab (Wiring Harness, Knob)

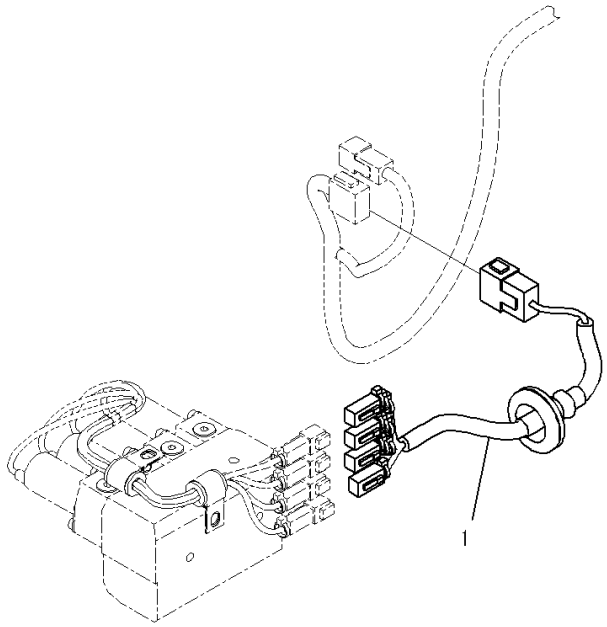

JA007895

Index	Code	Part Number	Description	Qty	Serial Number
		Note: This list covers following specifications. With AM-FM Stereo Radio With AUX Jack, North America, For 3D Machine Control Plug and Play With AM-FM Stereo Radio With AUX Jack, Europe and Asia, For EU New Noise Arrangement 2, 3D Machine Control Plug and Play With AM-FM Stereo Radio With AUX Jack, Europe and Asia, For 3D Machine Control Plug and Play			
1		14X-06-61911	Wiring Harness	1	1001-

FIG. K0210-005057 ROPS Cab (3D Machine Control Cab Under Surrounding Parts)

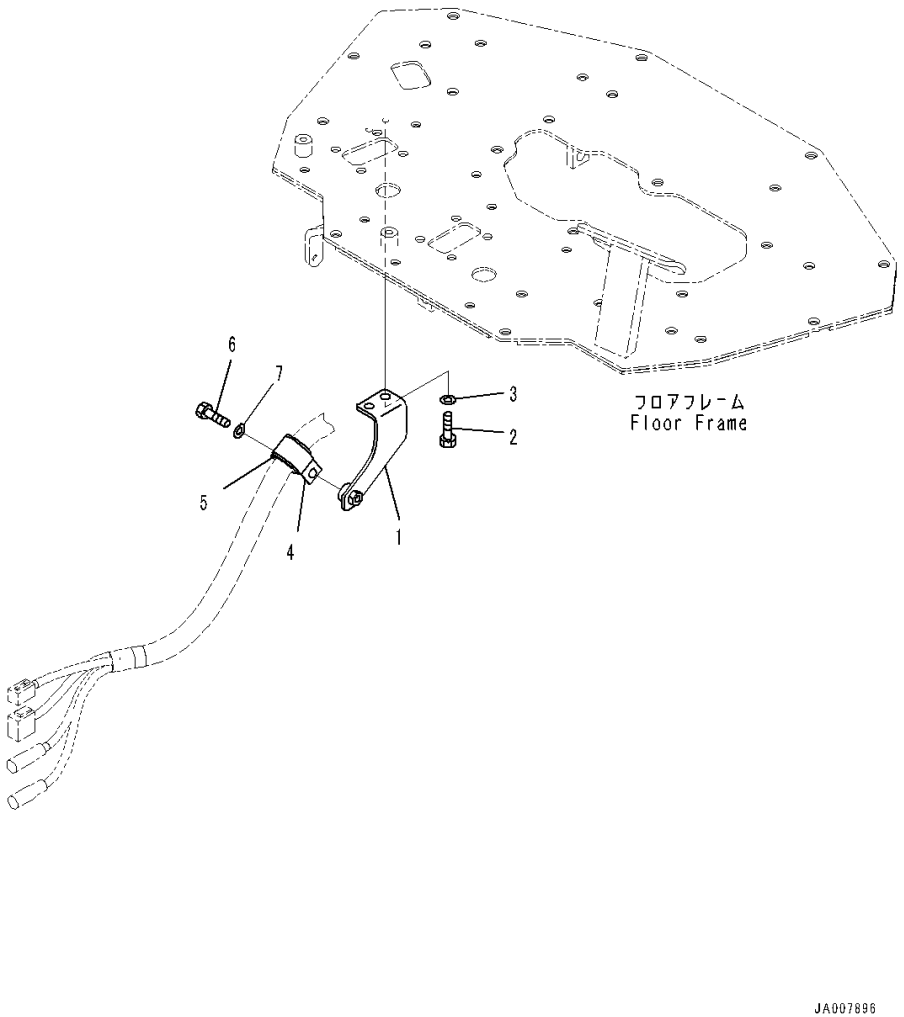

Index	Code	Part Number	Description	Qty	Serial Number
		Note: This list covers following specifications. With AM-FM Stereo Radio With AUX Jack, North America, For 3D Machine Control Plug and Play With AM-FM Stereo Radio With AUX Jack, Europe and Asia, For EU New Noise Arrangement 2, 3D Machine Control Plug and Play With AM-FM Stereo Radio With AUX Jack, Europe and Asia, For 3D Machine Control Plug and Play			
1		14X-06-62251	Bracket	1	1001-
2		01010-81020	Bolt	2	1001-
3		01643-31032	Washer	2	1001-
4		04434-53411	Clip	1	1001-
5		07095-20627	Cushion	1	1001-
6		01010-81035	Bolt	1	1001-
7		01643-31032	Washer	1	1001-

FIG. K0210-005058 ROPS Cab (Related Parts)

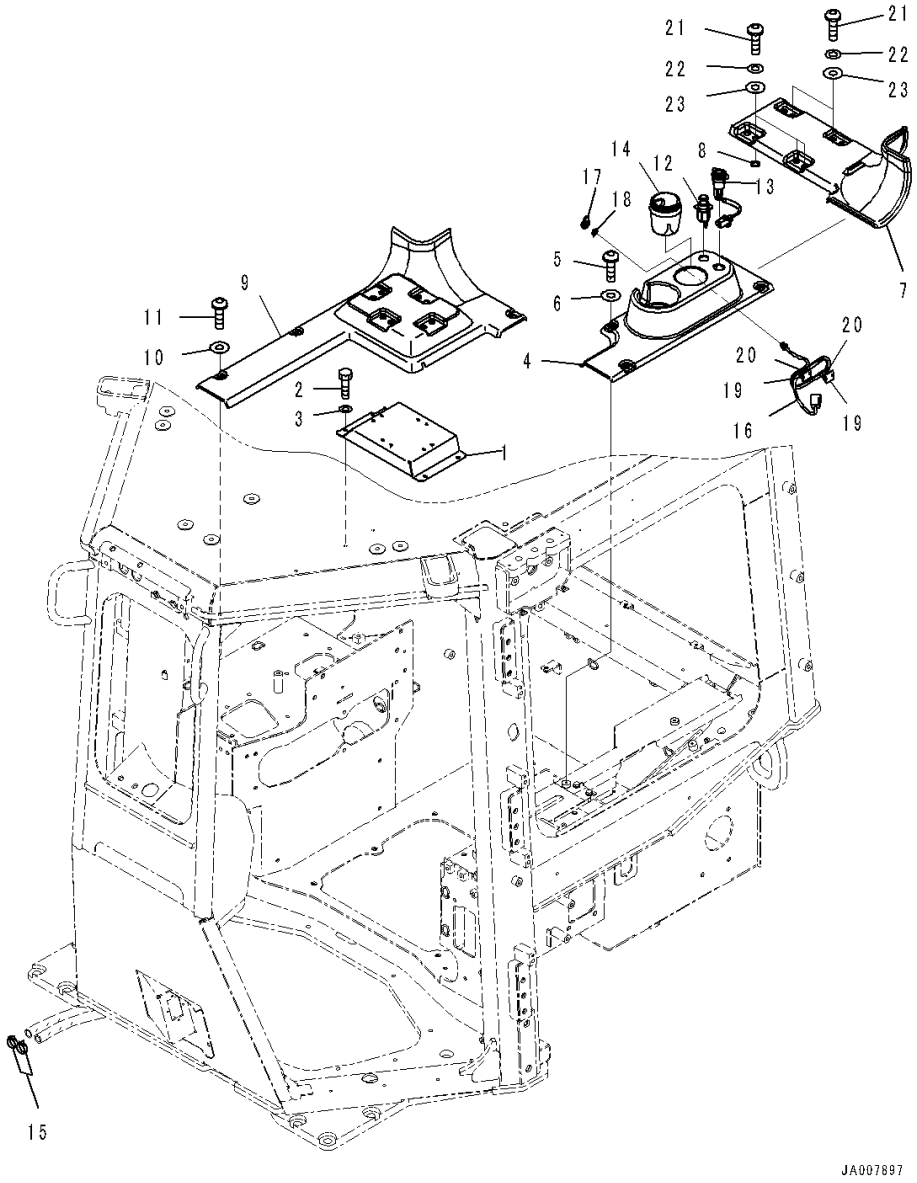

Index	Code	Part Number	Description	Qty	Serial Number
		Note: This list covers following specifications. With AM-FM Stereo Radio With AUX Jack, North America, For 3D Machine Control Plug and Play With AM-FM Stereo Radio With AUX Jack, Europe and Asia, For EU New Noise Arrangement 2, 3D Machine Control Plug and Play With AM-FM Stereo Radio With AUX Jack, Europe and Asia, For 3D Machine Control Plug and Play			
1		14X-54-56421	Bracket	1	1001-
2		01010-80616	Bolt	4	1001-
3		01643-30623	Washer	4	1001-
4		17A-Z11-5761	Cover	1	1001-
5		01245-00620	Screw	3	1001-
6		12Y-978-2660	Collar	4	1001-
7		17A-Z11-5561	Cover	1	1001-
8		17A-Z11-5651	• Sheet	8	1001-
9		17A-Z11-5580	Cover	1	1001-
10		12Y-978-2660	Collar	3	1001-
11		01245-00620	Screw	3	1001-
12		20Y-06-23472	Cigarette Lighter	1	1001-
13		14X-06-52491	Socket Assembly	1	1001-
14		20Y-43-41491	Ashtray	1	1001-
15		09479-02400	Clip	2	1001-
16		2A5-06-11940	Cable	1	1001-
17		2A5-06-12131	Cap	1	1001-
18		2A5-53-12580	Nut	1	1001-
19		20U-54-46520	Hook, Sticker Type	2	1001-
20		08034-20519	Band	2	1001-
21		01245-00625	Screw	5	1001-
22		01643-70623	Washer	5	1001-
23		12Y-978-2660	Collar	8	1001-

FIG. K0310-001001 Floor Mat (Without 3D Machine Control Plug and Play)

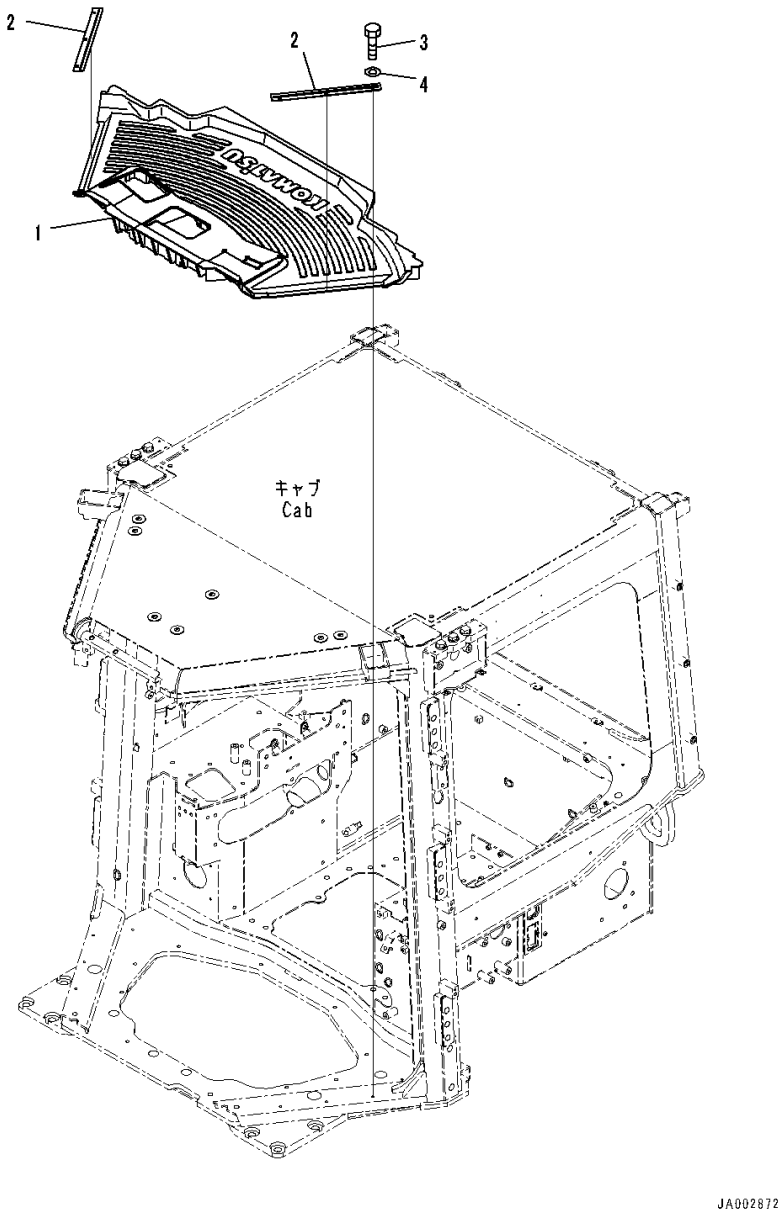

Index	Code	Part Number	Description	Qty	Serial Number
1		14X-54-56891	Mat	1	1001-
2		12Y-978-2890	Plate	2	1001-
3		01010-D0620	Bolt	6	1001-
4		01643-70623	Washer	6	1001-

FIG. K0310-002001 Floor Mat (With 3D Machine Control Plug and Play)

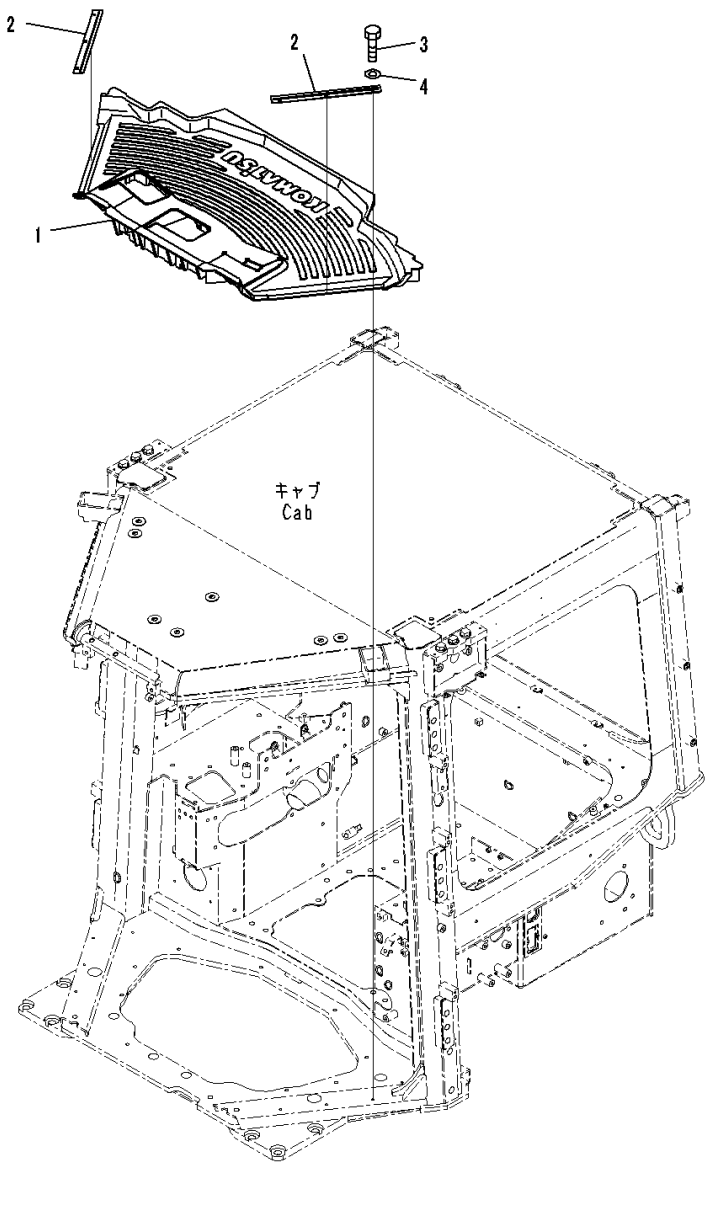

Index	Code	Part Number	Description	Qty	Serial Number
1		14X-54-66891	Mat	1	1001-
2		12Y-978-2890	Plate	2	1001-
3		01010-D0620	Bolt	6	1001-
4		01643-70623	Washer	6	1001-

FIG. K0710-001001 Air Conditioner (Air Conditioner Condenser Unit)

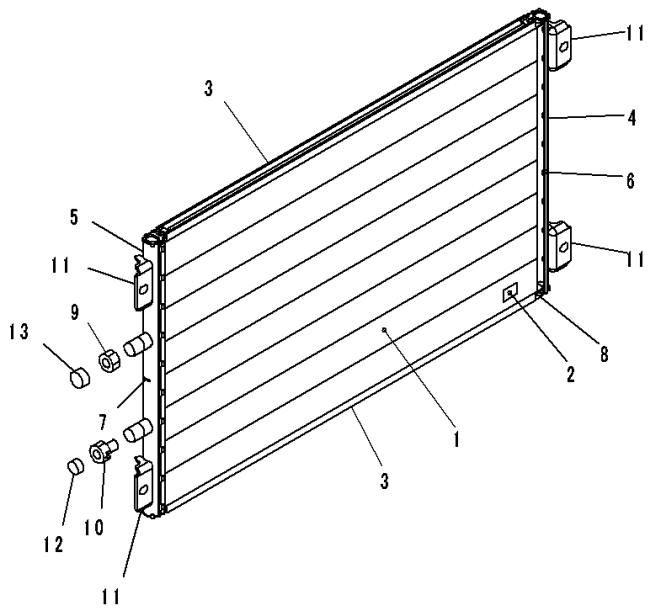

00071634

Index	Code	Part Number	Description	Qty	Serial Number
		Note: This list covers following specifications.			
		Without Hardened Pulley			
		With Hardened Pulley			
		20Y-979-6131	Condenser Assembly	1	1001-
1		ND7930-591100	• Tube	36	1001-
2		ND7922-571450	• Fin	37	1001-
3		ND047761-2760	• Plate	2	1001-
4		ND047762-0540	• Tank	1	1001-
5		ND047762-3000	• Tank	1	1001-
6		ND7935-163610	• Plate	2	1001-
7		ND047764-0021	• Plate	1	1001-
8		ND047765-0020	• Cap	4	1001-
9		ND445013-0811	• Union	1	1001-
10		ND445013-0521	• Union	1	1001-
11		ND047782-3720	• Bracket	4	1001-
12		ND445021-0060	• Plug	1	1001-
13		ND445021-0070	• Plug	1	1001-

FIG. K0710-001002 Air Conditioner (Air Conditioner Condenser Unit Mounting)

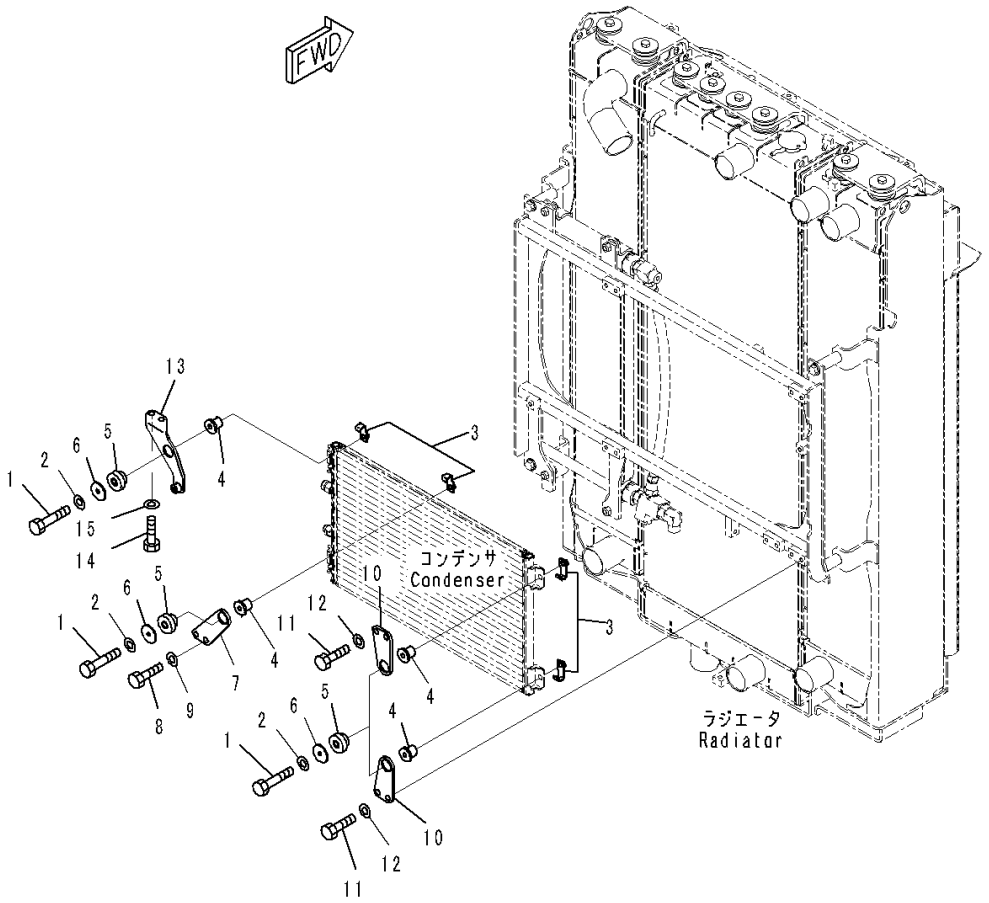

Index	Code	Part Number	Description	Qty	Serial Number
		Note: This list covers following specifications.			
		Without Hardened Pulley			
		With Hardened Pulley			
1		01010-80870	Bolt	4	1001-
2		01643-30823	Washer	4	1001-
3		134-03-73750	Bracket	4	1001-
4		14X-03-35570	Collar	4	1001-
5		195-03-41380	Cushion	4	1001-
6		154-911-8140	Collar	4	1001-
7		14X-Y11-1760	Plate	1	1001-
8		01010-81025	Bolt	2	1001-
9		01643-31032	Washer	2	1001-
10		14X-Y11-3920	Plate	2	1001-
11		01010-81025	Bolt	4	1001-
12		01643-31032	Washer	4	1001-
13		14X-Y11-3761	Bracket	1	1001-
14		01010-81025	Bolt	2	1001-
15		01643-31032	Washer	2	1001-

FIG. K0710-001003 Air Conditioner (Air Condenser and Piping)

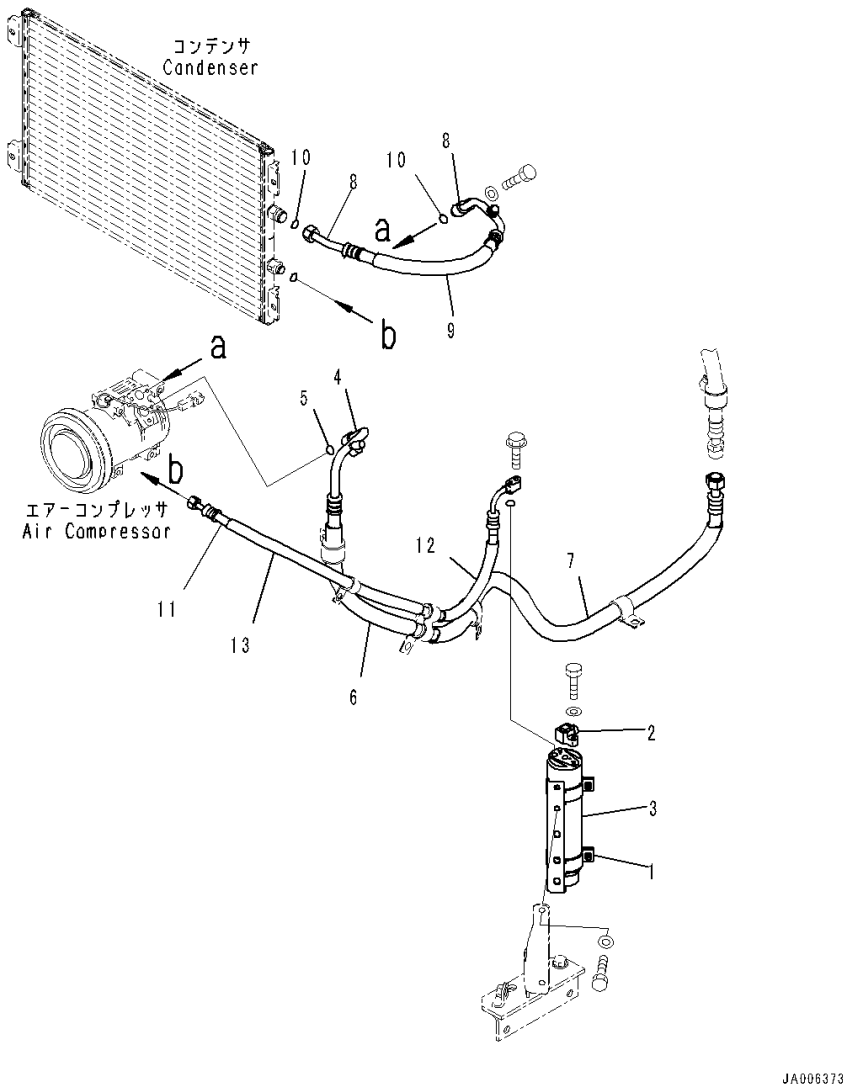

Index	Code	Part Number	Description	Qty	Serial Number
		Note: This list covers following specifications.			
		Without Hardened Pulley			
		With Hardened Pulley			
1		120-X11-1510	Holder	1	1001-
2		17A-911-1671	Joint	1	1001-
3		20Y-979-3120	Tank, Receiver	1	1001-
4		14X-Y11-3351	Hose Assembly	1	1001-
5		20Y-979-3130	• O-ring	2	1001-
6		08017-82203	• Conduit	1	1001-
7		08017-82209	• Conduit	1	1001-
8		14X-Y11-3361	Hose Assembly	1	1001-
9		08017-81903	• Conduit	1	1001-
10		20Y-979-3140	• O-ring	2	1001-
11		14X-Y11-3371	Hose Assembly	1	1001-
12		08017-81502	• Conduit	1	1001-
13		08017-81505	• Conduit	1	1001-

FIG. K0710-001004 Air Conditioner (Without Hardened Pulley) (Compressor)

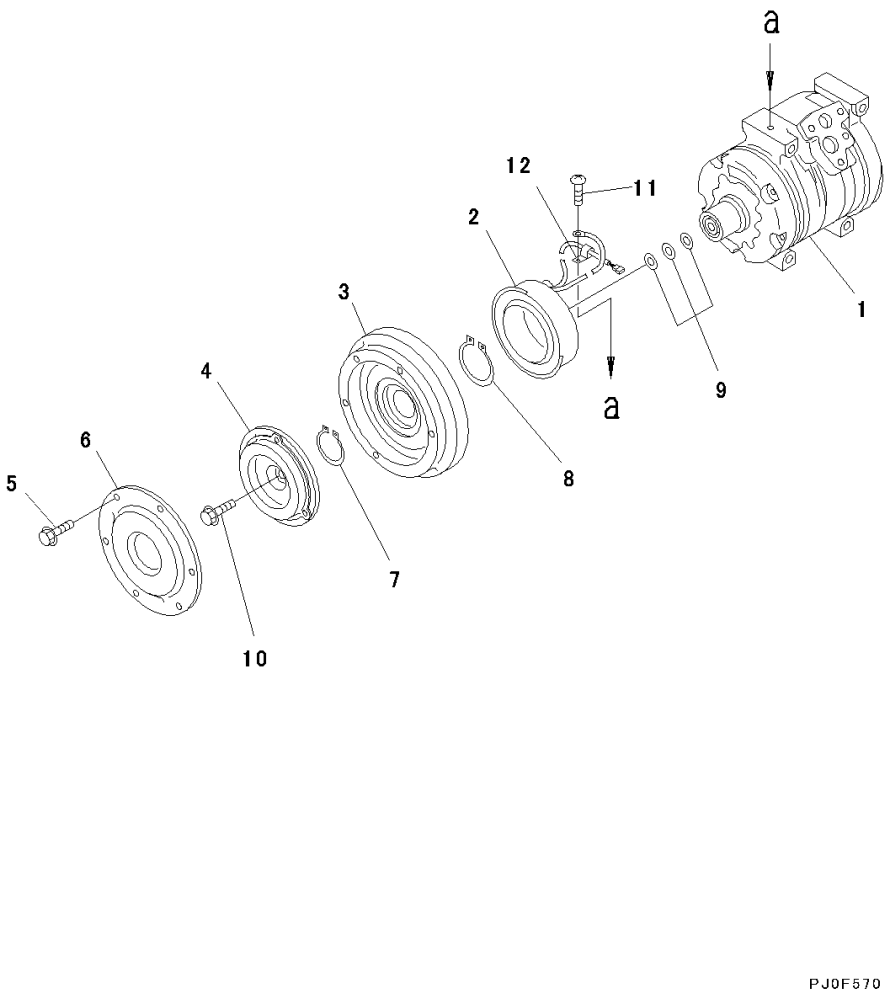

Index	Code	Part Number	Description	Qty	Serial Number
		17A-911-4810	Compressor Assembly	1	1001-
1		ND447220-4780	• Compressor Assembly	1	1001-
		ND247300-1070	• Clutch Assembly, Magnetic	1	1001-
2		ND147310-0110	• • Stator	1	1001-
3		ND147350-1640	• • Rotor	1	1001-
4		ND047410-1570	• • Hub	10	1001-
		ND147410-1580	• • Hub	10	1001-
5		ND949047-2950	• • Bolt and Washer	6	1001-
6		ND047372-0660	• Dust Cover	1	1001-
7		ND949070-1360	• Ring, Snap	1	1001-
8		ND949070-0640	• Ring, Snap	1	1001-
9		ND949013-7480	• Washer, T=0.1mm	1	1001-
		ND949013-7500	• Washer, T=0.3mm	1	1001-
		ND949013-7510	• Washer, T=0.5mm	1	1001-
10		ND949048-0430	• Bolt	1	1001-
11		ND91310-05081	• Screw	1	1001-
12		ND146691-4470	• Clamp	1	1001-

FIG. K0710-001005 Air Conditioner (Duct)

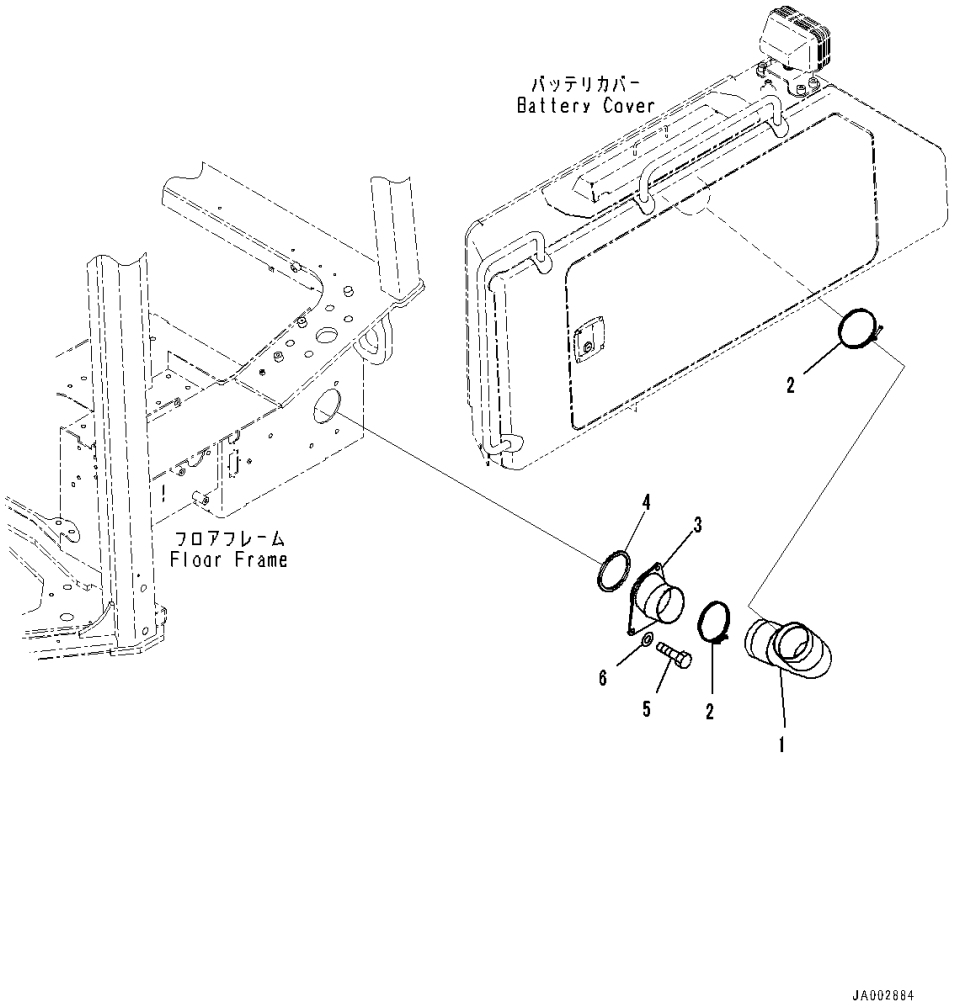

Index	Code	Part Number	Description	Qty	Serial Number
		Note: This list covers following specifications.			
		Without Hardened Pulley			
		With Hardened Pulley			
1		09485-01005	Hose, Air	1	1001-
2		14X-911-7670	Clamp	2	1001-
3		14X-Y11-1231	Duct	1	1001-
4		14X-Y11-1580	• Seal	1	1001-
5		01010-81030	Bolt	3	1001-
6		01643-31032	Washer	3	1001-

FIG. K0710-001006 Air Conditioner (Compressor Related Parts)

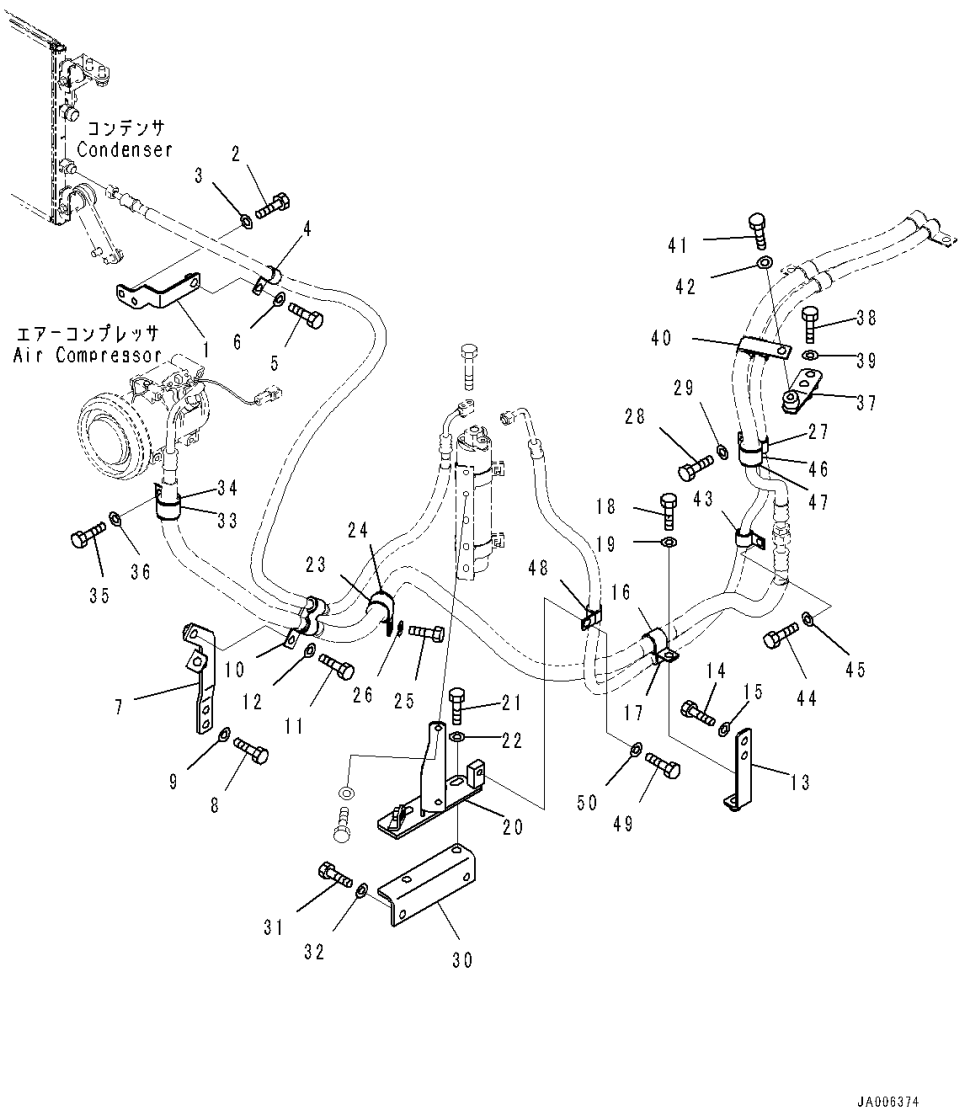

Index	Code	Part Number	Description	Qty	Serial Number
		Note: This list covers following specifications.			
		Without Hardened Pulley			
		With Hardened Pulley			
1		14X-Y11-3981	Bracket	1	1001-
2		01010-81020	Bolt	2	1001-
3		01643-31032	Washer	2	1001-
4		04434-51912	Clip	1	1001-
5		01010-81225	Bolt	1	1001-
6		01643-31232	Washer	1	1001-
7		14X-Y11-3661	Bracket	1	1001-
8		01010-81225	Bolt	2	1001-
9		01643-31232	Washer	2	1001-
10		195-Z11-7250	Clip	1	1001-
11		01010-81225	Bolt	1	1001-
12		01643-31232	Washer	1	1001-
13		14X-Y11-3671	Bracket	1	1001-
14		01010-81225	Bolt	2	1001-
15		01643-31232	Washer	2	1001-
16		04434-52712	Clip	1	1001-
17		04434-51912	Clip	1	1001-
18		01010-81225	Bolt	1	1001-
19		01643-31232	Washer	1	1001-
20		14X-Y11-3691	Bracket	1	1001-
21		01010-81225	Bolt	2	1001-
22		01643-31232	Washer	2	1001-
23		04434-53412	Clip	1	1001-
24		07095-20625	Cushion	1	1001-
25		01010-81225	Bolt	1	1001-
26		01643-31232	Washer	1	1001-
27		04434-51912	Clip	1	1001-
28		01010-81225	Bolt	1	1001-
29		01643-31232	Washer	1	1001-
30		14X-Y11-1681	Bracket	1	1001-
31		01010-81225	Bolt	2	1001-
32		01643-31232	Washer	2	1001-
33		04434-53411	Clip	1	1001-
34		07095-20625	Cushion	1	1001-
35		01010-81020	Bolt	1	1001-
36		01643-31032	Washer	1	1001-
37		14X-Y11-3150	Bracket	1	1001-

FIG. K0710-001006 Air Conditioner (Compressor Related Parts)

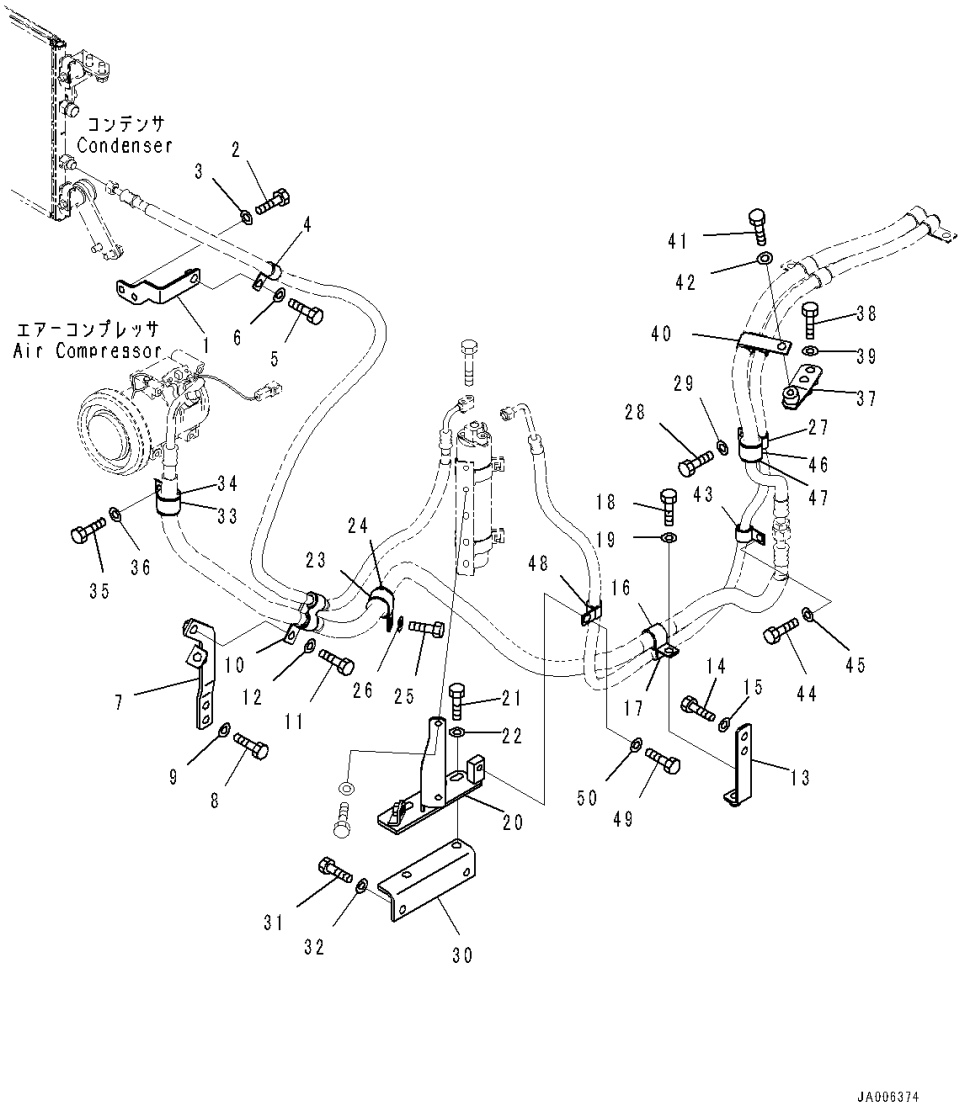

Index	Code	Part Number	Description	Qty	Serial Number
38		01010-81245	Bolt	2	1001-
39		01643-31232	Washer	2	1001-
40		17A-911-4421	Clip	1	1001-
41		01010-81220	Bolt	1	1001-
42		01643-31232	Washer	1	1001-
43		04434-51912	Clip	1	1001-
44		01010-81225	Bolt	1	1001-
45		01643-31232	Washer	1	1001-
46		04434-53212	Clip	1	1001-
47		07095-20522	Cushion	1	1001-
48		04434-51912	Clip	1	1001-
49		01010-81225	Bolt	1	1001-
50		01643-31232	Washer	1	1001-

FIG. K0710-001007 Air Conditioner (Compressor Mounting)

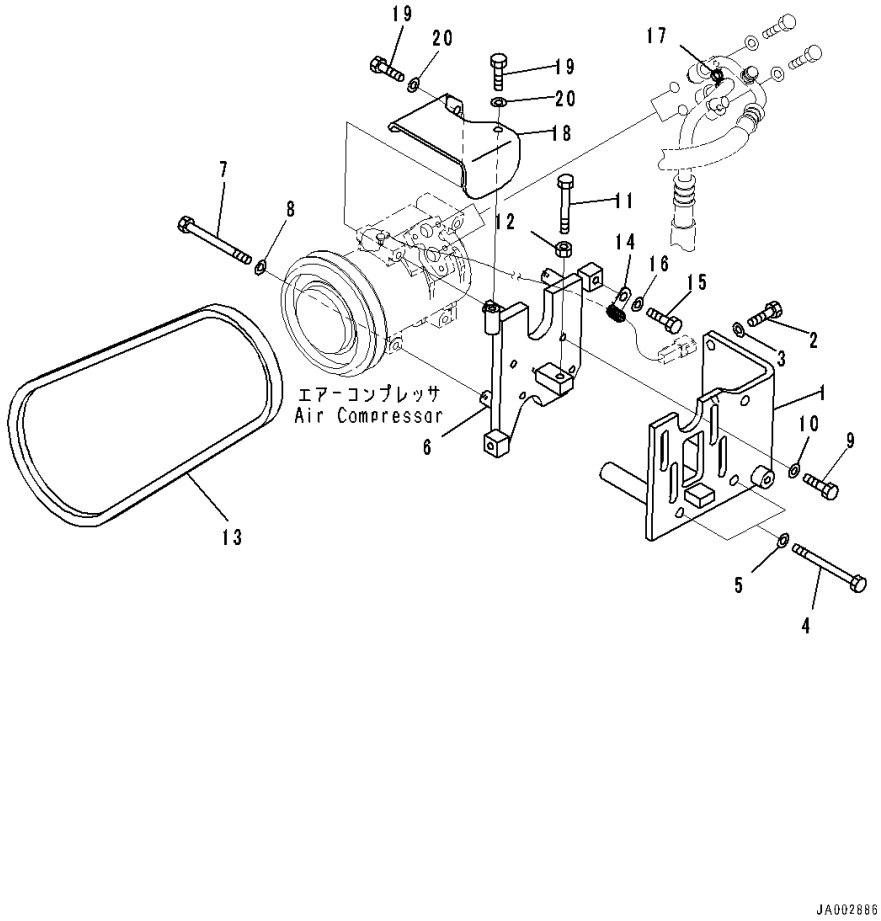

Index	Code	Part Number	Description	Qty	Serial Number
		Note: This list covers following specifications.			
		Without Hardened Pulley			
		With Hardened Pulley			
1		14X-Y11-3221	Bracket	1	1001-
2		01010-81030	Bolt	2	1001-
3		01643-31032	Washer	2	1001-
4		01011-81040	Bolt	2	1001-
5		01643-31032	Washer	2	1001-
6		14X-Y11-1410	Bracket	1	1001-
7		01010-80880	Bolt	4	1001-
8		01643-30823	Washer	4	1001-
9		01010-81025	Bolt	4	1001-
10		01643-31032	Washer	4	1001-
11		01016-51090	Bolt	1	1001-
12		01580-11008	Nut	1	1001-
13		04120-21748	V-belt	1	1001-
14		600-051-2050	Clip	1	1001-
15		01010-81020	Bolt	1	1001-
16		01643-31032	Washer	1	1001-
17		08034-40521	Band	1	1001-
18		14X-911-8534	Cover	1	1001-
19		01010-80820	Bolt	2	1001-
20		01643-30823	Washer	2	1001-

FIG. K0710-001008 Air Conditioner (Heater Unit Mounting)

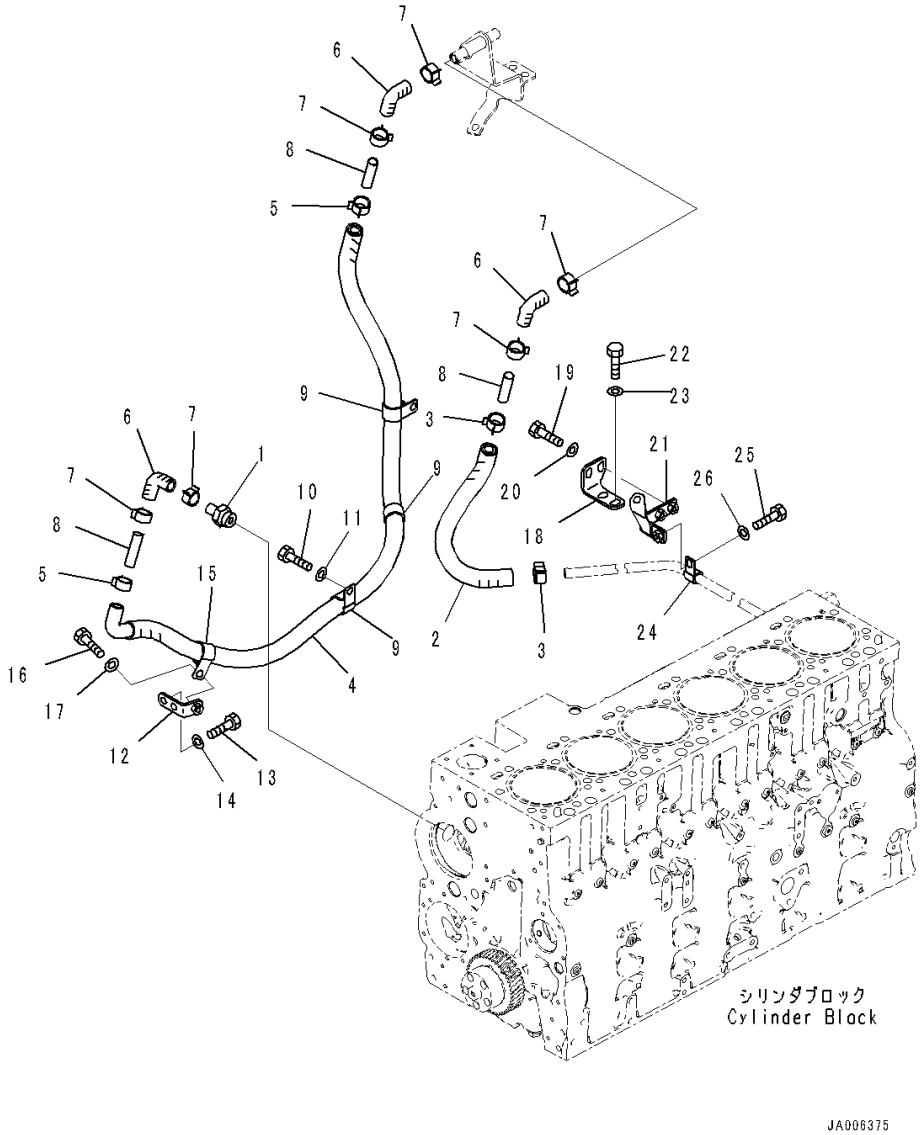

Index	Code	Part Number	Description	Qty	Serial Number
		Note: This list covers following specifications.			
		Without Hardened Pulley			
		With Hardened Pulley			
1		14X-Z11-9670	Nipple	1	1001-
2		14X-Y11-1421	Hose	1	1001-
3		09479-02400	Clip	2	1001-
4		14X-Y11-3431	Hose	1	1001-
5		09479-02400	Clip	2	1001-
6		567-07-15210	Hose	3	1001-
7		09479-02400	Clip	6	1001-
8		09484-00560	Connector	3	1001-
9		08036-93014	Clip	3	1001-
10		01010-81020	Bolt	3	1001-
11		01643-31032	Washer	3	1001-
12		14X-Y11-3440	Bracket	1	1001-
13		01010-81020	Bolt	2	1001-
14		01643-31032	Washer	2	1001-
15		08036-93014	Clip	1	1001-
16		01010-81020	Bolt	1	1001-
17		01643-31032	Washer	1	1001-
18		14X-Y11-3630	Bracket	1	1001-
19		01010-81025	Bolt	2	1001-
20		01643-31032	Washer	2	1001-
21		14X-Y11-3641	Bracket	1	1001-
22		01010-81025	Bolt	2	1001-
23		01643-31032	Washer	2	1001-
24		04434-51610	Clip	1	1001-
25		01010-81025	Bolt	1	1001-
26		01643-31032	Washer	1	1001-

FIG. K0710-001009 Air Conditioner (Bolt)

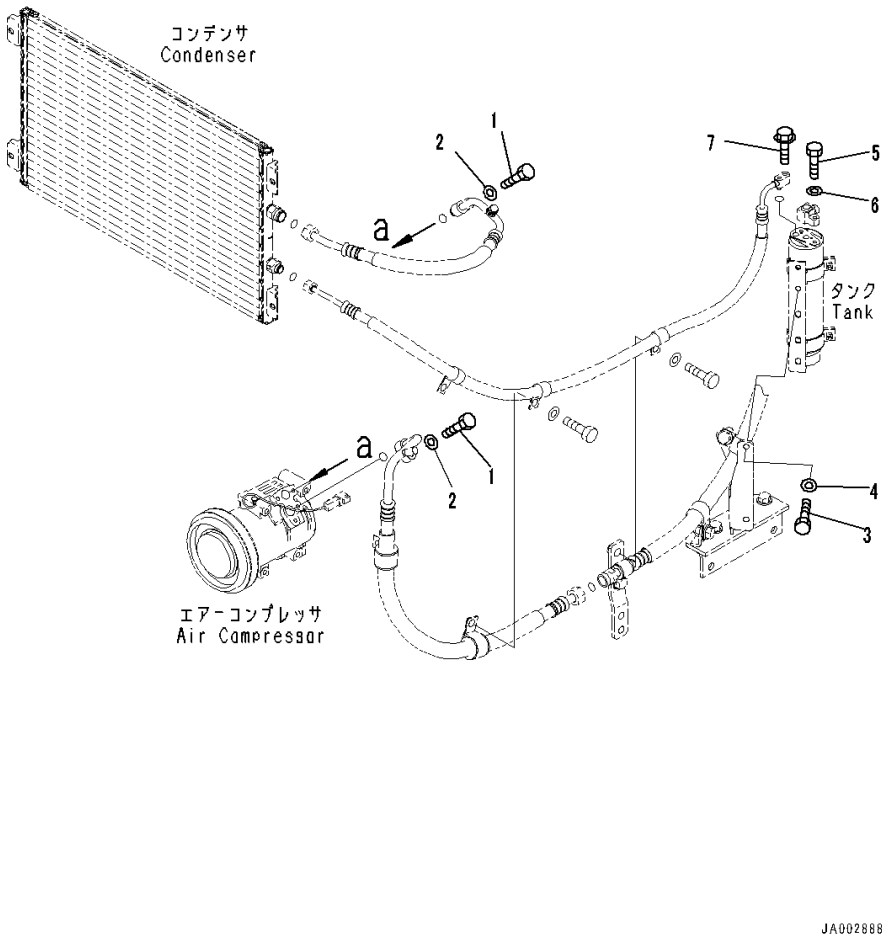

Index	Code	Part Number	Description	Qty	Serial Number
		Note: This list covers following specifications.			
		Without Hardened Pulley			
		With Hardened Pulley			
1		01010-80630	Bolt	2	1001-
2		01641-20608	Washer	2	1001-
3		01010-80820	Bolt	2	1001-
4		01643-30823	Washer	2	1001-
5		01010-80625	Bolt	1	1001-
6		01643-30623	Washer	1	1001-
7		01435-00625	Bolt	1	1001-

FIG. K0710-002004 Air Conditioner (With Hardened Pulley) (Compressor)

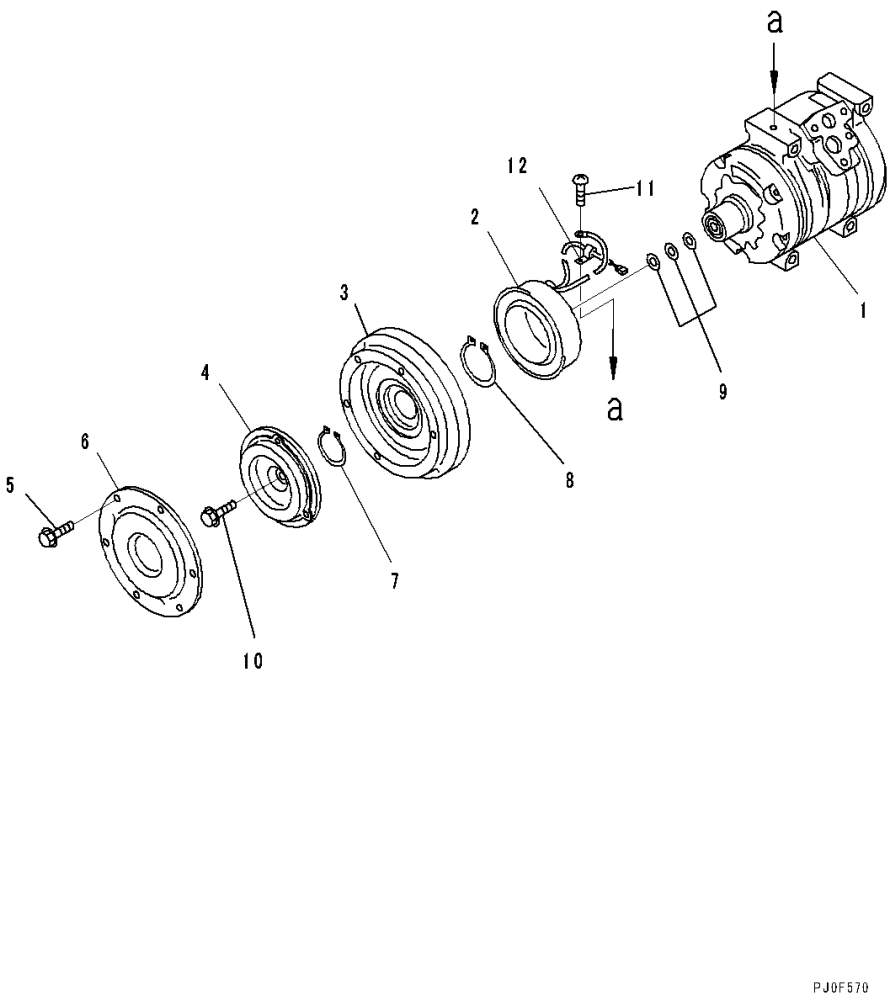

Index	Code	Part Number	Description	Qty	Serial Number
		154-911-7842	Compressor Assembly	1	1001-
1		ND447220-4781	• Compressor Assembly	1	1001-
		ND247300-4152	• Clutch Assembly, Magnetic	1	1001-
2		ND147310-1750	• • Stator	1	1001-
3		ND147350-1640	• • Rotor	1	1001-
4		ND047410-1570	• • Hub	10	1001-
		ND047410-1580	• • Hub	10	1001-
5		ND949047-2950	• • Bolt and Washer	6	1001-
6		ND047372-0660	• • Dust Cover	1	1001-
7		ND949070-1360	• Ring, Snap	1	1001-
8		ND949070-0640	• Ring, Snap	1	1001-
9		ND949013-7480	• Washer, T=0.1mm	1	1001-
		ND949013-7500	• Washer, T=0.3mm	1	1001-
		ND949013-7510	• Washer, T=0.5mm	1	1001-
10		ND949048-0430	• Bolt	1	1001-
11		ND91310-05081	• Screw	1	1001-
12		ND146691-4470	• Clamp	1	1001-

FIG. K0830-001001 Fire Extinguisher

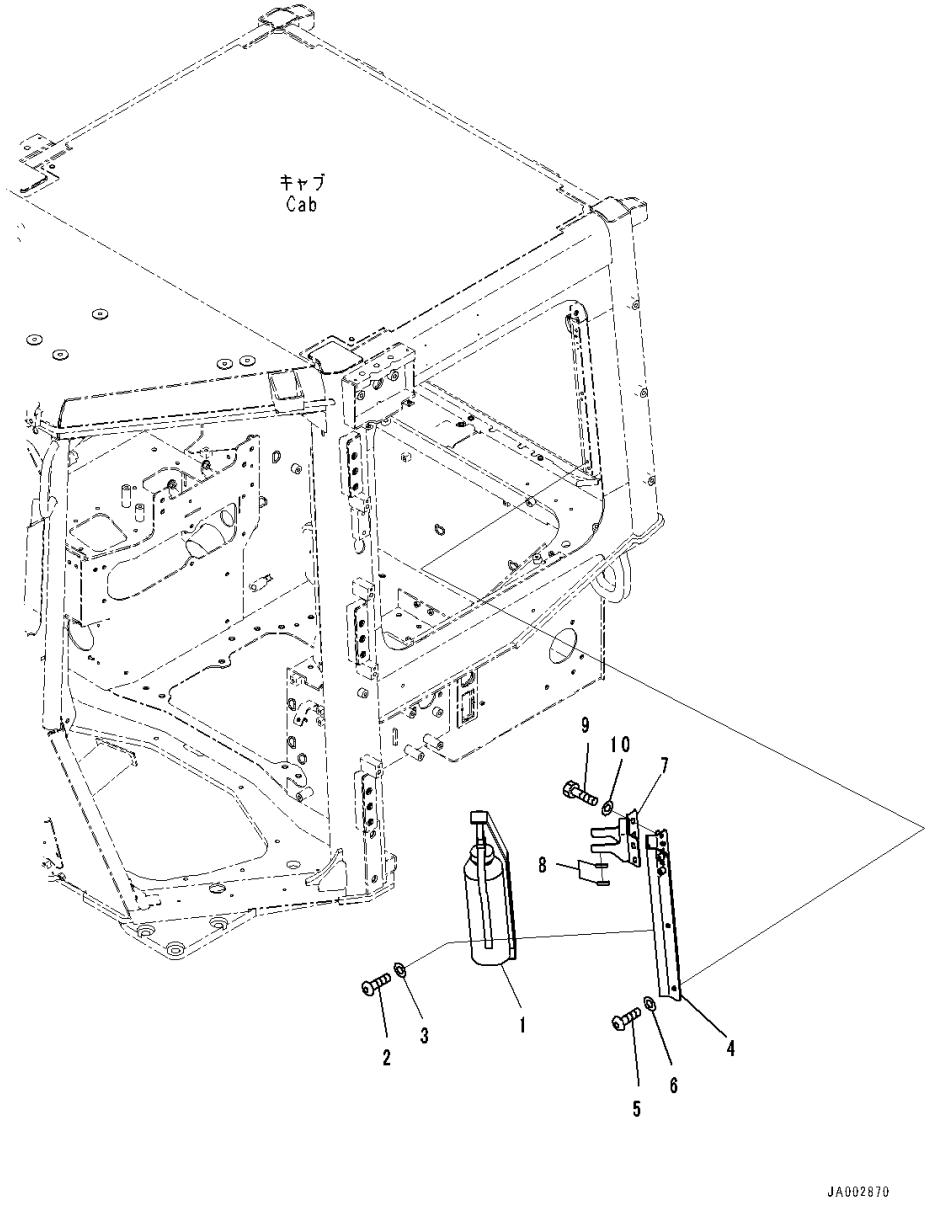

Index	Code	Part Number	Description	Qty	Serial Number
1		09495-40010	Fire Extinguisher, English	1	1001-
2		01245-00620	Screw	6	1001-
3		01643-70623	Washer	6	1001-
4		14X-Y79-3711	Bracket	1	1001-
5		01245-00630	Screw, Hexagon Socket Head	6	1001-
6		01643-70623	Washer	6	1001-
7		14X-Y79-3731	Bracket	1	1001-
8		14X-Y79-3721	• Trim	2	1001-
9		01010-D0816	Bolt	4	1001-
10		01643-70823	Washer	4	1001-

FIG. K2110-001001 Dozer Control (Without Rear 1-attachment) (Armrest)

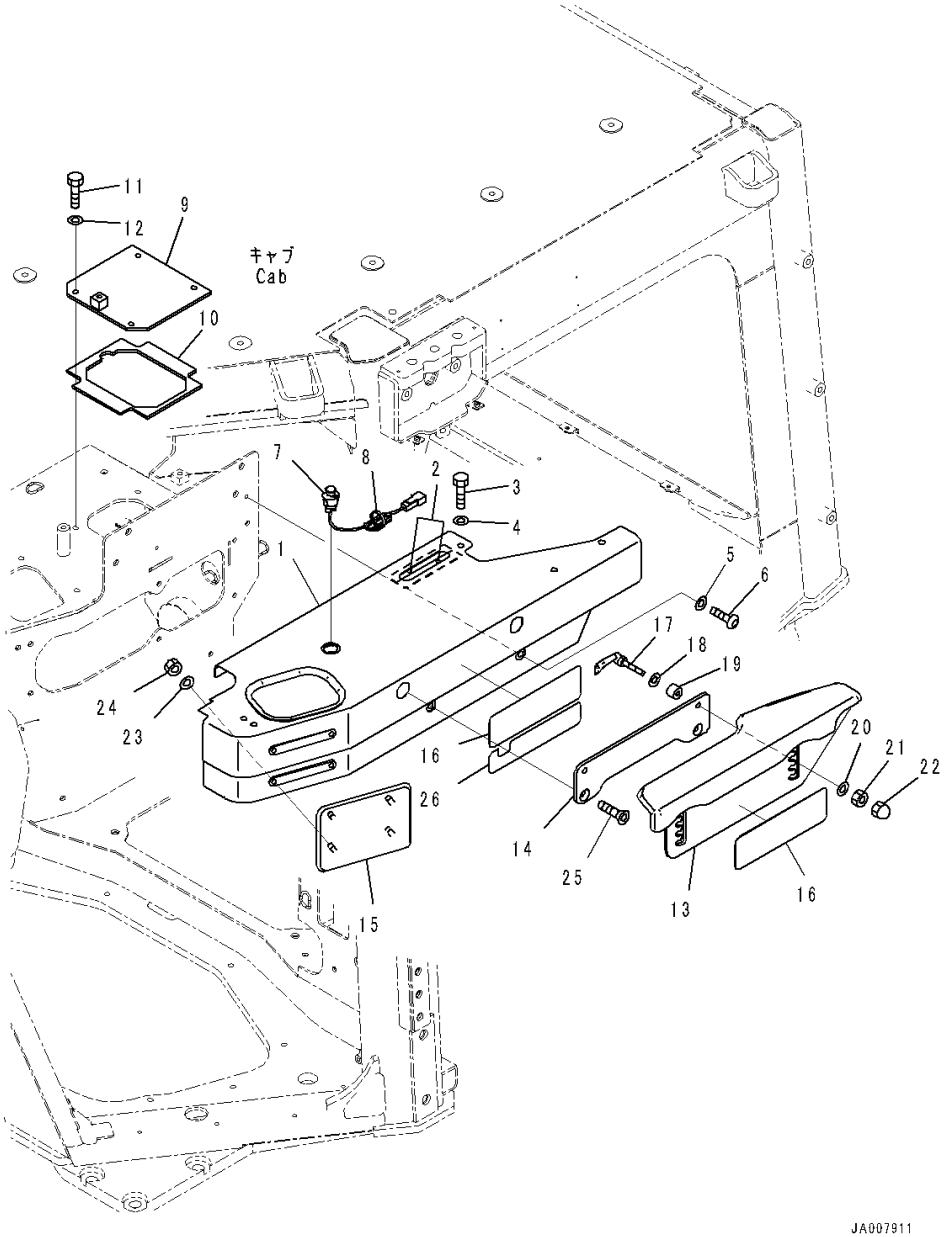

Index	Code	Part Number	Description	Qty	Serial Number
1		154-54-89140	Cover	1	1001-
2		14X-43-48111	• Awning	2	1001-
3		01010-D0825	Bolt	4	1001-
4		01643-70823	Washer	4	1001-
5		01643-70623	Washer	2	1001-
6		01245-00620	Screw	2	1001-
7		423-06-5113C	Switch, Horn	1	1001-
8		08034-20519	Band	1	1001-
9		14X-54-56661	Cover	1	1001-
10		14X-54-56670	• Seal	1	1001-
11		01010-D0825	Bolt	4	1001-
12		01643-70823	Washer	4	1001-
13		154-43-89131	Armrest Assembly	1	1001-
14		17A-43-46291	Plate	1	1001-
15		17A-43-46281	Pad	1	1001-
16		14X-54-56591	Plate	2	1001-
17		423-43-38170	Lever	2	1001-
18		418-54-35450	Washer	2	1001-
19		17A-43-46380	Spacer	2	1001-
20		418-54-35450	Washer	2	1001-
21		195-43-43370	Nut	2	1001-
22		01546-10812	Nut	2	1001-
23		01643-30623	Washer	4	1001-
24		01580-10605	Nut	4	1001-
25		01240-01030	Screw, Hexagon Socket Head	2	1001-
26		17A-54-51910	Plate	1	1001-

FIG. K2110-001002 Dozer Control (Without Rear 1-attachment) (Lever)

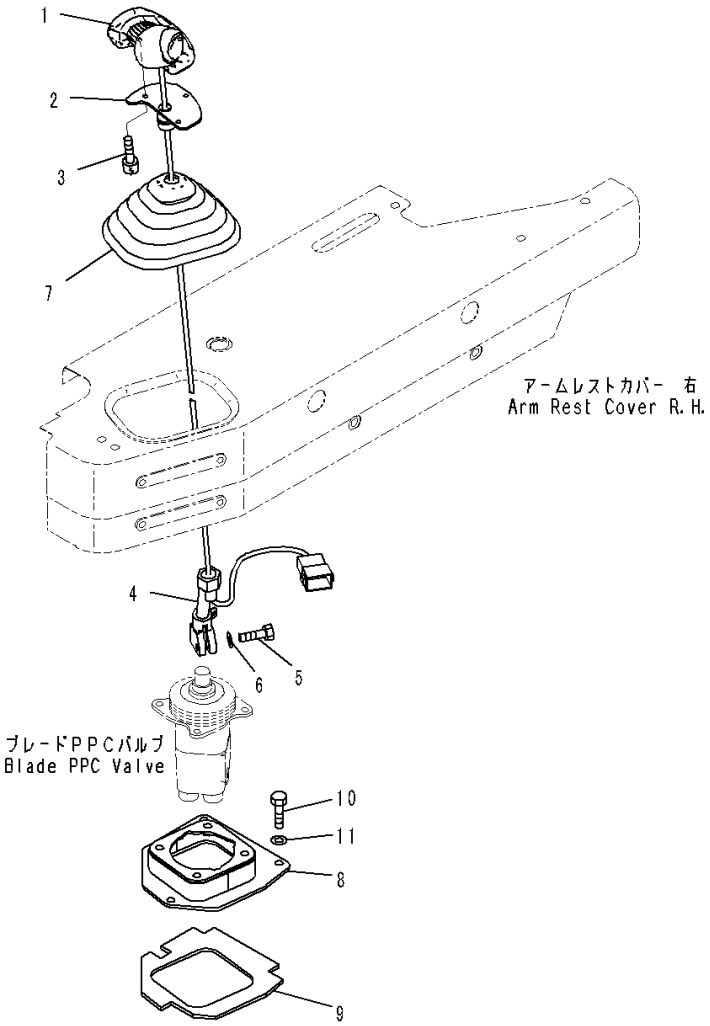

Index	Code	Part Number	Description	Qty	Serial Number
1		195-43-64411	Knob Assembly	1	1001-
2		19M-43-38220	Bracket	1	1001-
3		01252-80510	Bolt	3	1001-
4		14X-43-34310	Lever	1	1001-
5		07372-21030	Bolt	1	1001-
6		01640-21016	Washer	1	1001-
7		17A-43-46270	Boot	1	1001-
8		14X-43-51350	Bracket	1	1001-
9		14X-43-51370	• Seal	1	1001-
10		01010-80830	Bolt	4	1001-
11		01643-30823	Washer	4	1001-

FIG. K2110-001003 Dozer Control (PPC Valve for Blade)

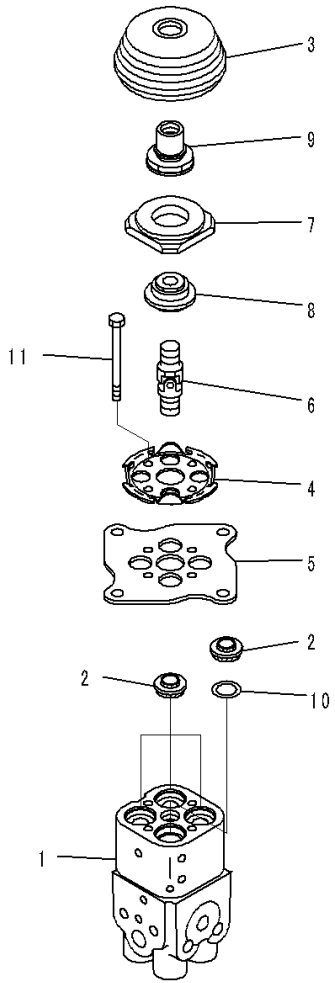

JY016854

Index	Code	Part Number	Description	Qty	Serial Number
		Note: This list covers following specifications.			
		Without Rear 1-attachment			
		With Rear 1-attachment			
		With Power Tilt Pitch Dozer			
		With Power Tilt Pitch Dozer, Rear 1-attachment			
		With Power Angle Power Tilt Dozer, Inside Frame			
		With Power Angle Power Tilt Dozer, Inside Frame, Rear 1-attachment			
		Without Rear 1-attachment, For 3D Machine Control Plug and Play			
		With Rear 1-attachment, For 3D Machine Control Plug and Play			
		With Provision for Power Angle Power Tilt Pitch Dozer, For 3D Machine Control Plug and Play			
		With Provision for Power Angle Power Tilt Pitch Dozer, Rear 1-attachment, For 3D Machine Control Plug and Play			
		With Power Angle Power Tilt Dozer, Inside Frame, For 3D Machine Control Plug and Play			
		With Power Angle Power Tilt Dozer, Inside Frame, Rear 1-attachment, For 3D Machine Control Plug and Play			
1		702-16-06270	Valve, Pilot	1	1001-
2		702-16-71150	• Seal	4	1001-
3		702-16-71280	• Boot	1	1001-
4		702-16-71131	• Plate	1	1001-
5		702-16-71141	• Plate	1	1001-
6		702-16-51240	• Universal Joint	1	1001-
7		702-16-75810	• Disc	1	1001-
8		702-16-71270	• Nut	1	1001-
9		702-16-71260	• Nut	1	1001-
10		702-16-72810	• Seat	1	1001-
11		01010-80670	• Bolt	4	1001-

FIG. K2110-001004 Dozer Control (Hose)

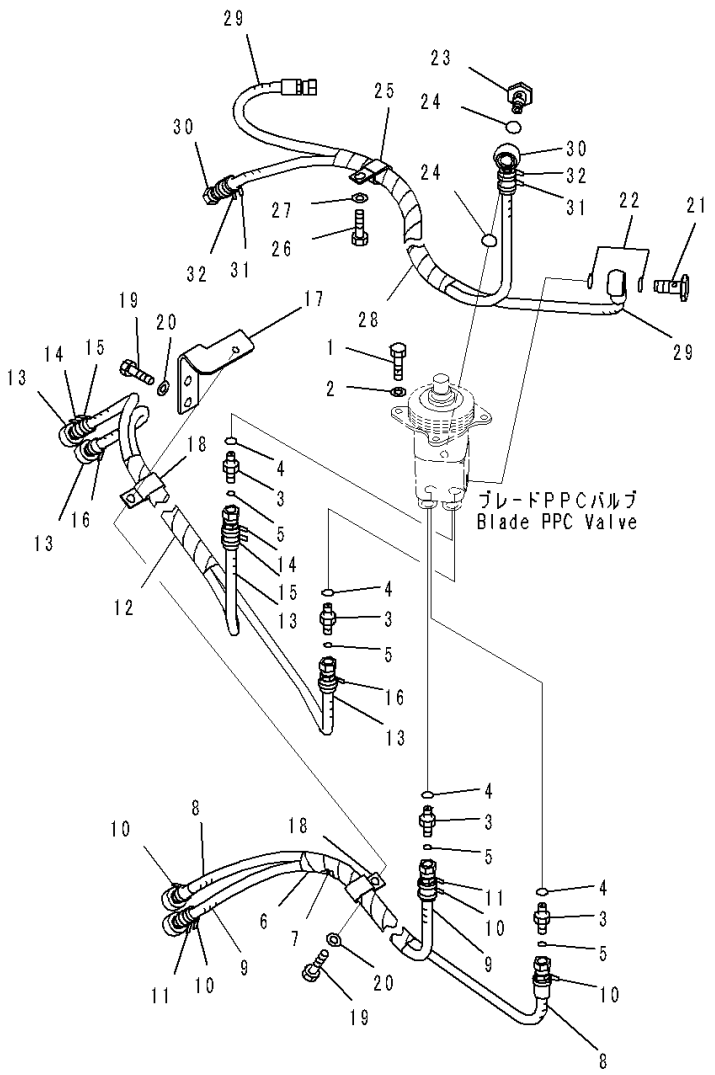

Index	Code	Part Number	Description	Qty	Serial Number
		Note: This list covers following specifications.			
		Without Rear 1-attachment			
		With Rear 1-attachment			
1		01010-80820	Bolt	4	1001-
2		01643-30823	Washer	4	1001-
3		02781-0021D	Union	4	1001-
4		07002-11423	O-ring	4	1001-
5		02896-11008	O-ring	4	1001-
6		14X-62-53101	Hose Assembly	1	1001-
7		08017-C1001	• Conduit	1	1001-
8		14X-62-53950	• Hose	1	1001-
9		14X-62-54820	• Hose	1	1001-
10		206-62-87990	• Band, Orange	4	1001-
11		20Y-62-22850	• Band, Green	2	1001-
12		14X-62-54810	Hose Assembly	1	1001-
13		14X-62-54760	• Hose	2	1001-
14		20Y-62-22820	• Band, Blue	2	1001-
15		20Y-62-22830	• Band, White	2	1001-
16		20Y-62-22850	• Band, Green	2	1001-
17		14X-62-54511	Bracket	1	1001-
18		04435-51410	Clip	2	1001-
19		01010-81020	Bolt	3	1001-
20		01643-31032	Washer	3	1001-
21		702-16-53240	Plug	1	1001-
22		07000-12018	O-ring	2	1001-
23		203-62-57730	Bolt, Eye	1	1001-
24		07000-12018	O-ring	2	1001-
25		04435-51410	Clip	1	1001-
26		01010-81020	Bolt	1	1001-
27		01643-31032	Washer	1	1001-
28		14X-62-53151	Hose Assembly	1	1001-
29		14X-62-53351	• Hose	1	1001-
30		14X-62-53361	• Hose	1	1001-
31		20Y-62-22790	• Band, Red	2	1001-
32		20Y-62-22860	• Band, Brown	2	1001-

FIG. K2110-002001 Dozer Control (With Rear 1-attachment) (Armrest)

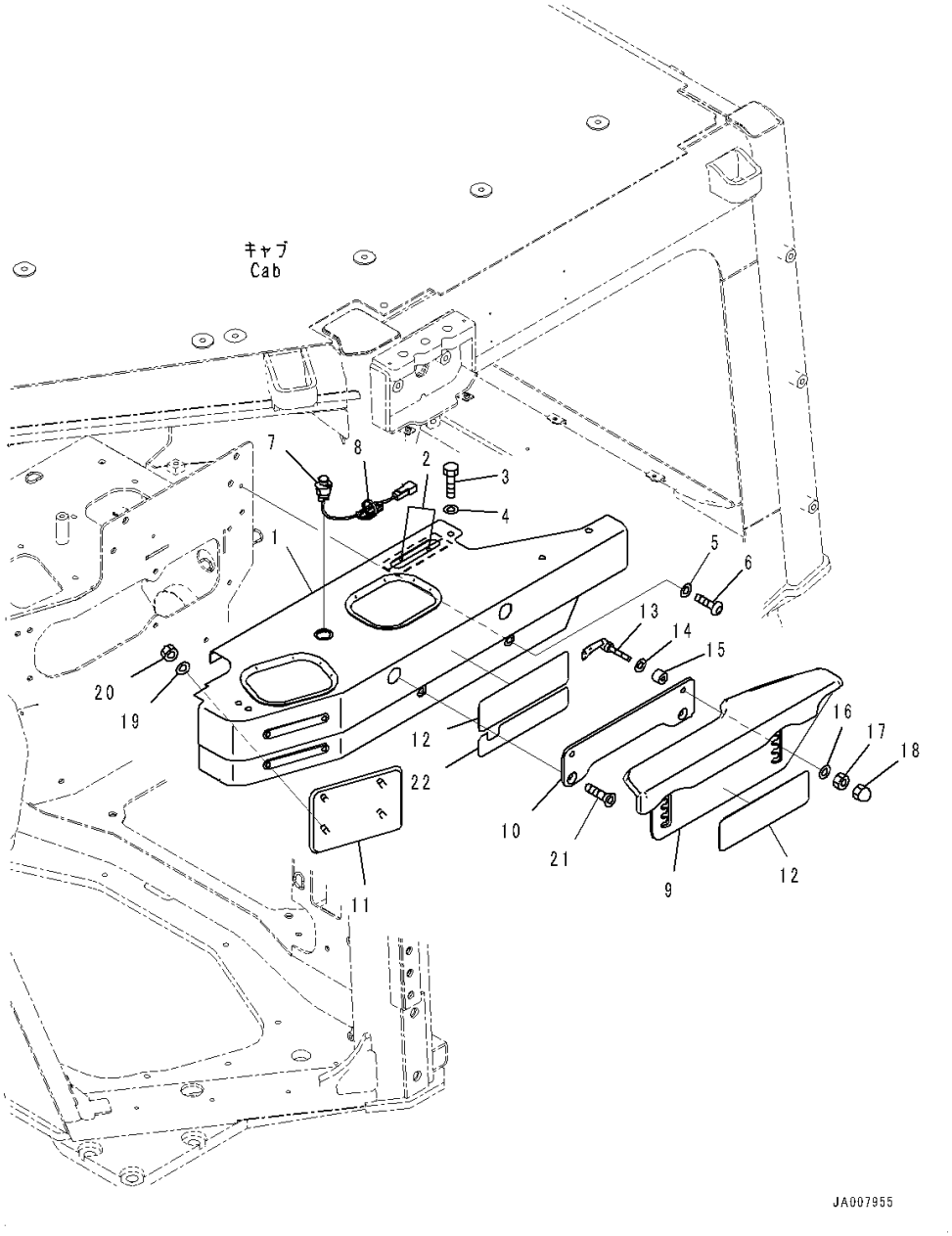

Index	Code	Part Number	Description	Qty	Serial Number
1		154-54-89131	Cover	1	1001-
2		14X-43-48111	• Awning	2	1001-
3		01010-D0825	Bolt	4	1001-
4		01643-70823	Washer	4	1001-
5		01643-70623	Washer	2	1001-
6		01245-00620	Screw	2	1001-
7		423-06-5113C	Switch	1	1001-
8		08034-20519	Band	1	1001-
9		154-43-89131	Armrest Assembly	1	1001-
10		17A-43-46291	Plate	1	1001-
11		17A-43-46281	Pad	1	1001-
12		14X-54-56591	Plate	2	1001-
13		423-43-38170	Lever	2	1001-
14		418-54-35450	Washer	2	1001-
15		17A-43-46380	Spacer	2	1001-
16		418-54-35450	Washer	2	1001-
17		195-43-43370	Nut	2	1001-
18		01546-10812	Nut	2	1001-
19		01643-30623	Washer	4	1001-
20		01580-10605	Nut	4	1001-
21		01240-01030	Screw, Hexagon Socket Head	2	1001-
22		17A-54-51910	Plate	1	1001-

FIG. K2110-002002 Dozer Control (With Rear 1-attachment) (Lever)

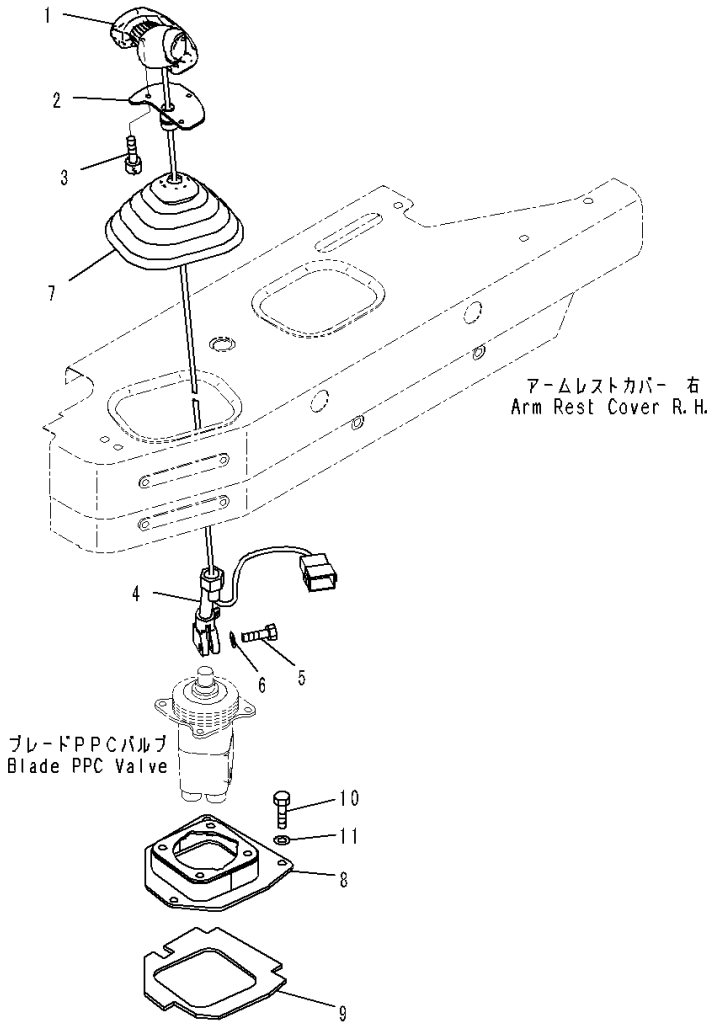

Index	Code	Part Number	Description	Qty	Serial Number
1		195-43-64411	Knob Assembly	1	1001-
2		19M-43-38220	Bracket	1	1001-
3		01252-80510	Bolt	3	1001-
4		14X-43-34310	Lever	1	1001-
5		07372-21030	Bolt	1	1001-
6		01640-21016	Washer	1	1001-
7		17A-43-46270	Boot	1	1001-
8		14X-43-51350	Bracket	1	1001-
9		14X-43-51370	• Seal	1	1001-
10		01010-80830	Bolt	4	1001-
11		01643-30823	Washer	4	1001-

FIG. K2110-002005 Dozer Control (PPC Valve for Ripper)

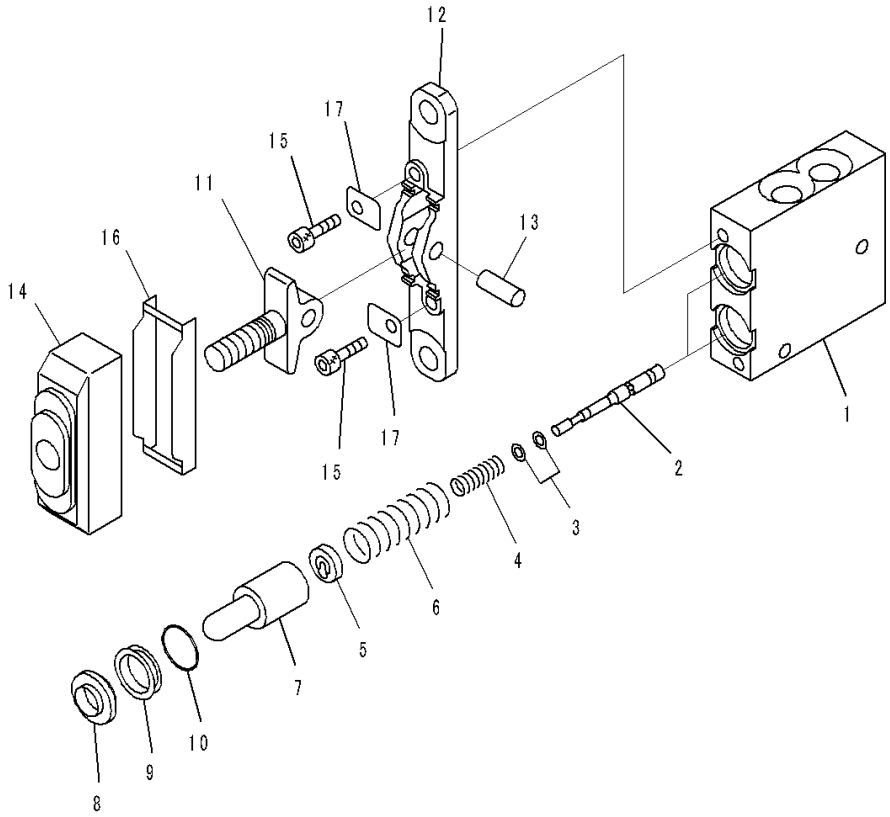

Index	Code	Part Number	Description	Qty	Serial Number
		Note: This list covers following specifications.			
		With Rear 1-attachment			
		With Power Tilt Pitch Dozer, Rear 1-attachment			
		With Power Angle Power Tilt Dozer, Inside Frame, Rear 1-attachment			
		With Rear 1-attachment, For 3D Machine Control Plug and Play			
		With Provision for Power Angle Power Tilt Pitch Dozer, Rear 1-attachment, For 3D Machine Control Plug and Play			
		With Power Angle Power Tilt Dozer, Inside Frame, Rear 1-attachment, For 3D Machine Control Plug and Play			
		702-16-01230	Valve Assembly, PPC	1	1001-
1	C1		• Body	1	1001-
2	C1		• Valve	2	1001-
3		702-16-51140	• Shim, T=0.30mm	2	1001-
		702-16-54670	• Shim, T=0.20mm	4	1001-
4		702-16-54550	• Spring	2	1001-
5		702-16-54571	• Retainer	2	1001-
6		702-16-54560	• Spring	2	1001-
7		702-16-53170	• Piston	2	1001-
8		702-16-51270	• Seal	2	1001-
9		702-16-54580	• Collar	2	1001-
10		702-16-54590	• O-ring	2	1001-
11	C1		• Lever	1	1001-
12	C1		• Plate	1	1001-
13	C1		• Shaft	1	1001-
14		702-16-54641	• Boot	1	1001-
15		01252-30625	• Bolt	2	1001-
16		702-16-54660	• Plate	1	1001-
17		702-16-54650	• Plate	2	1001-

FIG. K2110-002006 Dozer Control (With Rear 1-attachment) (Attachment Lever)

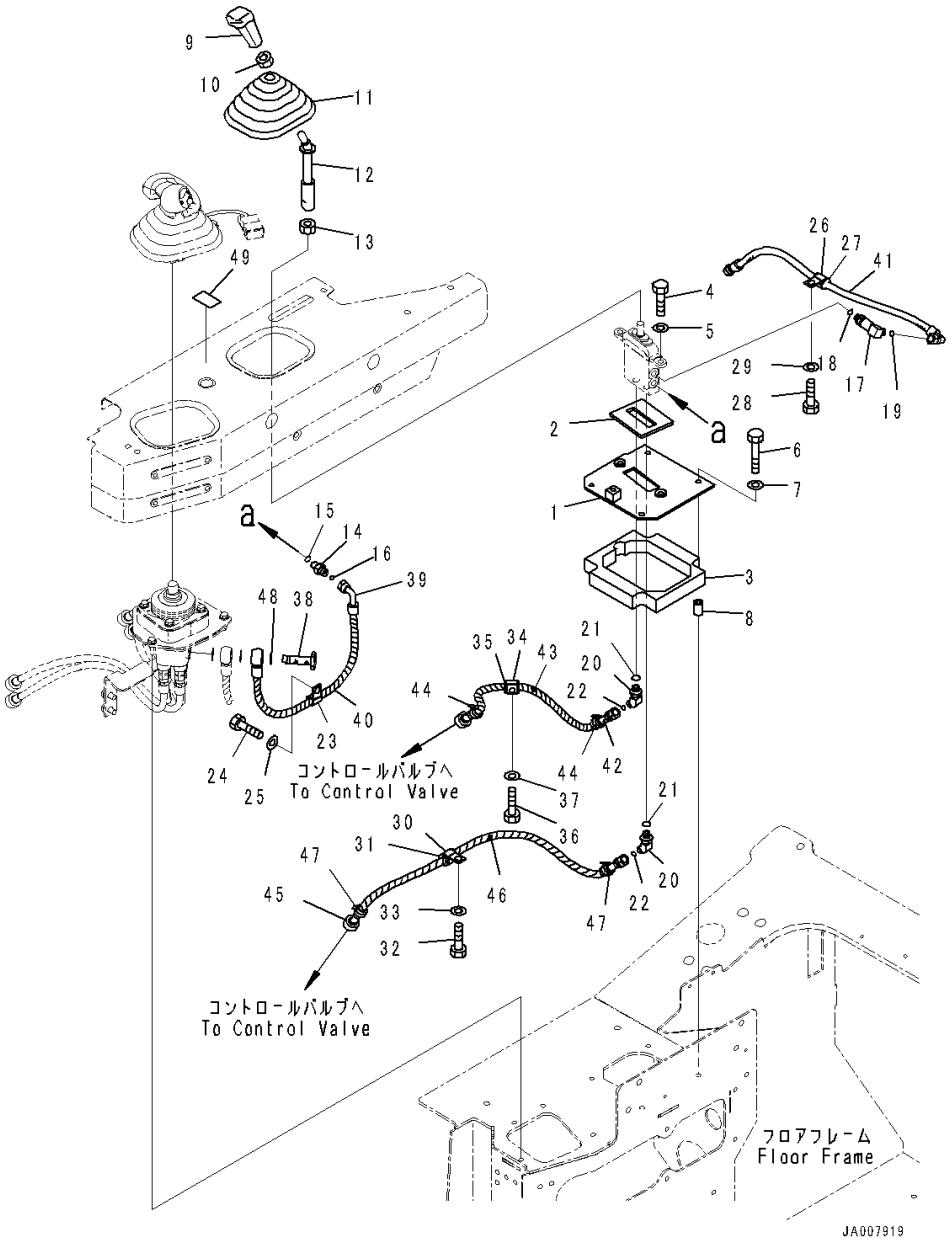

Index	Code	Part Number	Description	Qty	Serial Number
1		14X-78-51112	Bracket	1	1001-
2		14X-78-11490	• Seal	1	1001-
3		14X-78-51131	• Seal	1	1001-
4		01010-81030	Bolt	2	1001-
5		01643-31032	Washer	2	1001-
6		01010-80850	Bolt	4	1001-
7		01643-30823	Washer	4	1001-
8		14X-78-51141	Spacer	4	1001-
9		17A-43-42240	Knob	1	1001-
10		20T-43-71190	Nut	1	1001-
11		17A-43-46270	Boot	1	1001-
12		14X-78-51291	Lever	1	1001-
13		01583-11408	Nut	1	1001-
14		21W-62-44510	Nipple	1	1001-
15		07002-11423	O-ring	1	1001-
16		02896-11008	O-ring	1	1001-
17		21W-62-43990	Elbow	1	1001-
18		07002-11423	O-ring	1	1001-
19		02896-11008	O-ring	1	1001-
20		21W-62-42660	Elbow	2	1001-
21		07002-11423	O-ring	2	1001-
22		02896-11008	O-ring	2	1001-
23		04434-51410	Clip	1	1001-
24		01010-81020	Bolt	1	1001-
25		01643-31032	Washer	1	1001-
26		04434-51710	Clip	1	1001-
27		07095-20211	Cushion	1	1001-
28		01010-81020	Bolt	1	1001-
29		01643-31032	Washer	1	1001-
30		04434-51810	Clip	1	1001-
31		07095-20213	Cushion	1	1001-
32		01010-81020	Bolt	1	1001-
33		01643-31032	Washer	1	1001-
34		04434-51810	Clip	1	1001-
35		07095-20213	Cushion	1	1001-
36		01010-81020	Bolt	1	1001-
37		01643-31032	Washer	1	1001-
38		14X-78-51410	Bolt, Eye	1	1001-
39		14X-78-51281	Hose Assembly	1	1001-
40		08210-00605	• Tube, Spiral	1	1001-

FIG. K2110-002006 Dozer Control (With Rear 1-attachment) (Attachment Lever)

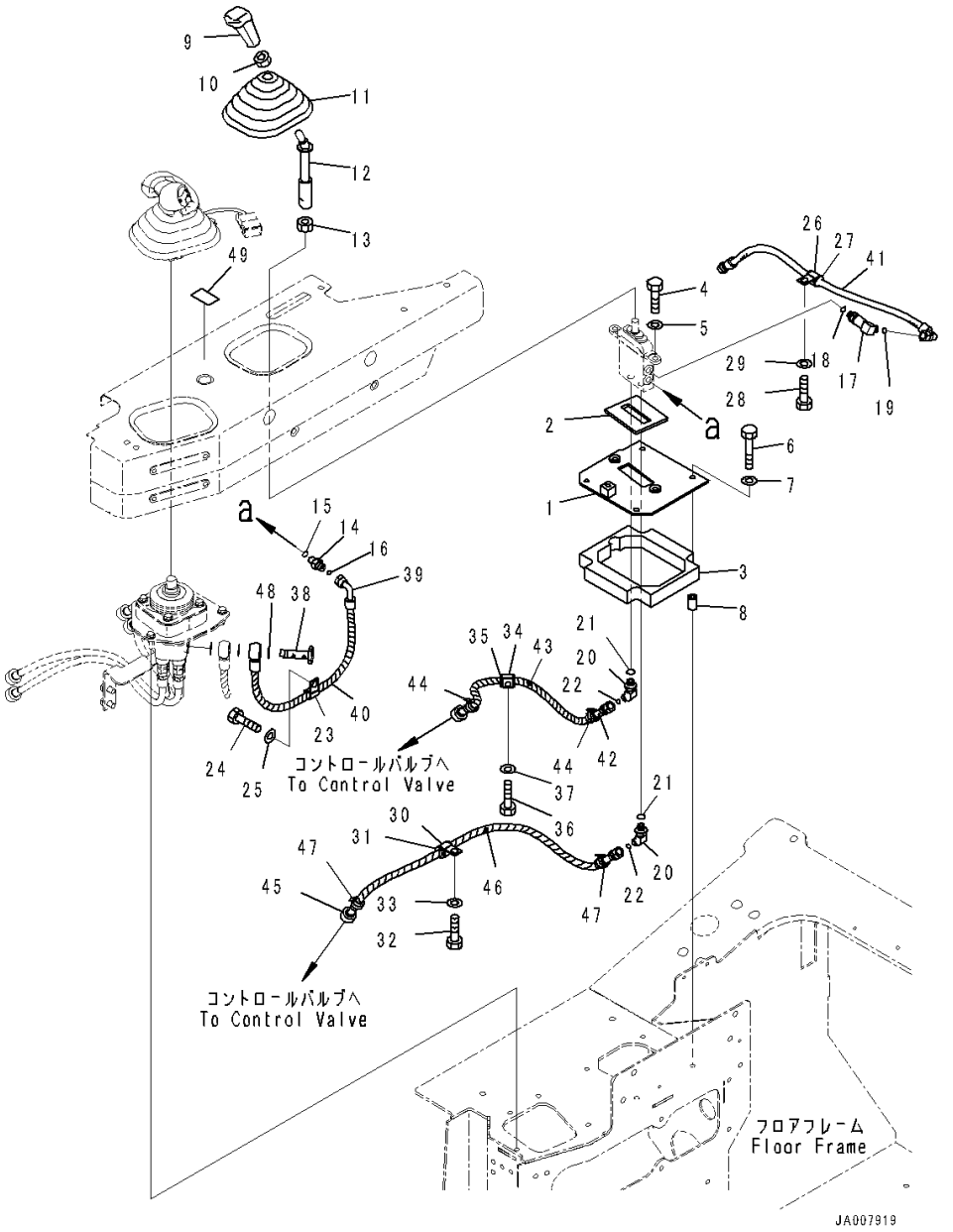

Index	Code	Part Number	Description	Qty	Serial Number
41		02761-00206	Hose, Face Seal Type	1	1001-
42		14X-62-53820	Hose	1	1001-
43		08210-00605	• Tube, Spiral	1	1001-
44		20Y-62-22860	• Band, Brown	2	1001-
45		14X-62-53830	Hose	1	1001-
46		08210-00607	• Tube, Spiral	1	1001-
47		20Y-62-22790	• Band, Red	2	1001-
48		287-15-15710	Shim, T=0.5mm	1	1001-
49		14X-78-21180	Plate	1	1001-

FIG. K2110-003001 Dozer Control (Armrest)

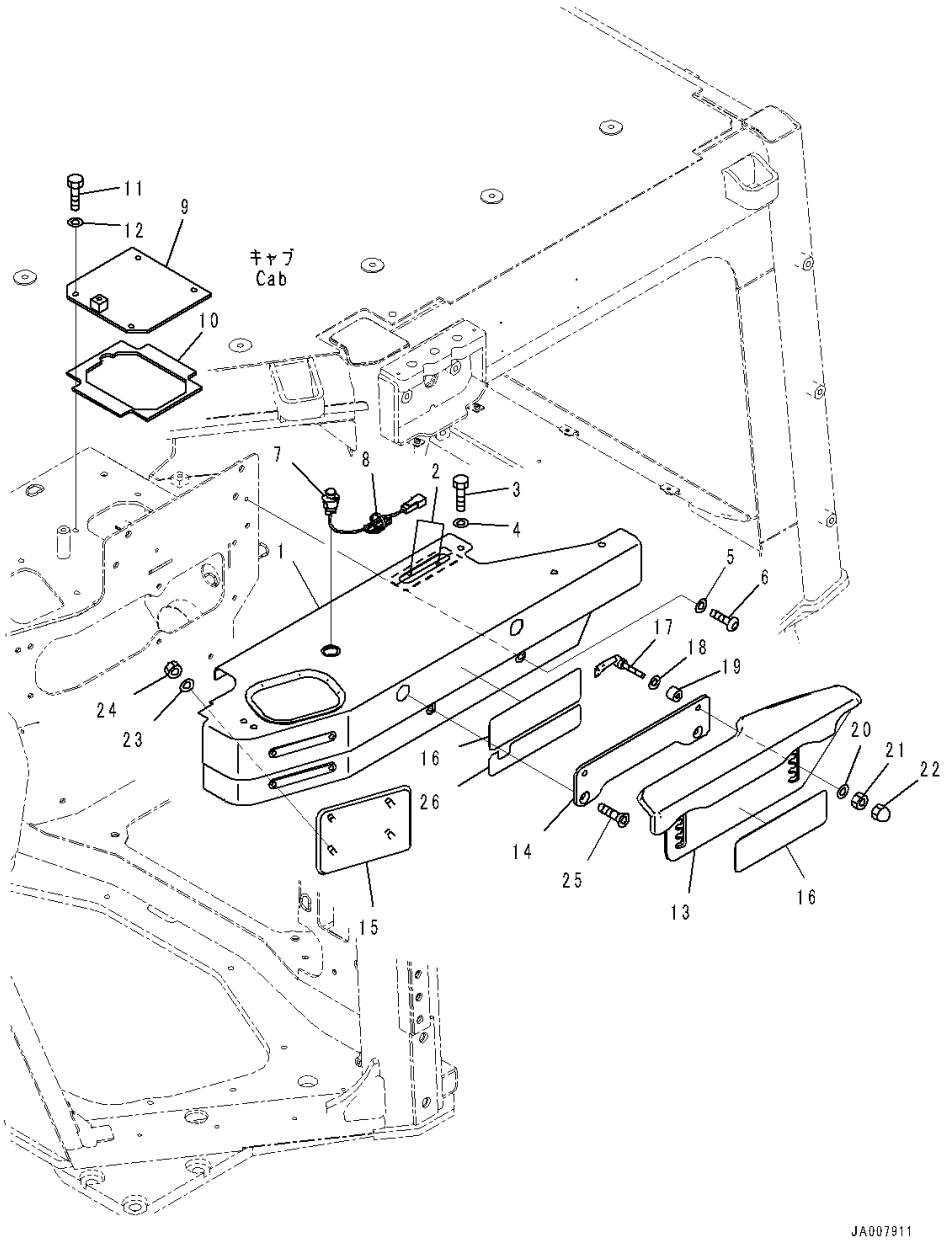

Index	Code	Part Number	Description	Qty	Serial Number
		Note: This list covers following specifications.			
		With Power Tilt Pitch Dozer			
		With Power Angle Power Tilt Dozer, Inside Frame			
		Without Rear 1-attachment, For 3D Machine Control Plug and Play			
		With Provision for Power Angle Power Tilt Pitch Dozer, For 3D Machine Control Plug and Play			
		With Power Angle Power Tilt Dozer, Inside Frame, For 3D Machine Control Plug and Play			
1		154-54-89140	Cover	1	1001-
2		14X-43-48111	• Awning	2	1001-
3		01010-D0825	Bolt	4	1001-
4		01643-70823	Washer	4	1001-
5		01643-70623	Washer	2	1001-
6		01245-00620	Screw	2	1001-
7		423-06-51130	Switch, Horn	1	1001-
8		08034-20519	Band	1	1001-
9		14X-54-56661	Cover	1	1001-
10		14X-54-56670	• Seal	1	1001-
11		01010-D0825	Bolt	4	1001-
12		01643-70823	Washer	4	1001-
13		154-43-89131	Armrest Assembly	1	1001-
14		17A-43-46291	Plate	1	1001-
15		17A-43-46281	Pad	1	1001-
16		14X-54-56591	Plate	2	1001-
17		423-43-38170	Lever	2	1001-
18		418-54-35450	Washer	2	1001-
19		17A-43-46380	Spacer	2	1001-
20		418-54-35450	Washer	2	1001-
21		195-43-43370	Nut	2	1001-
22		01546-10812	Nut	2	1001-
23		01643-30623	Washer	4	1001-
24		01580-10605	Nut	4	1001-
25		01240-01030	Screw, Hexagon Socket Head	2	1001-
26		17A-54-51910	Plate	1	1001-

FIG. K2110-003002 Dozer Control (With Power Tilt Pitch Dozer) (Lever)

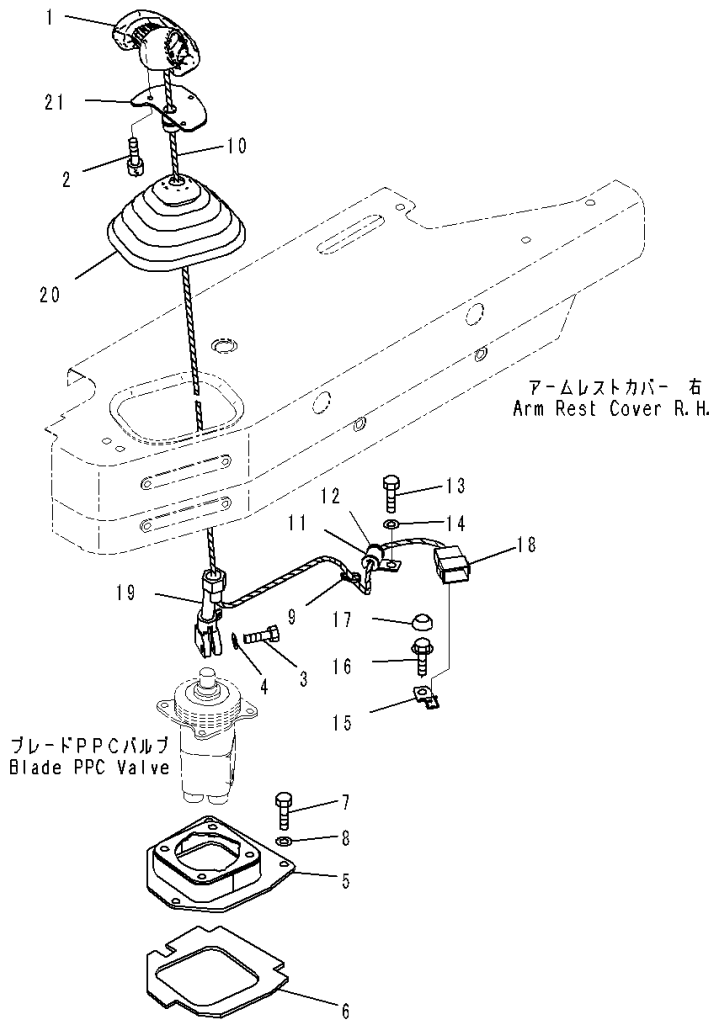

Index	Code	Part Number	Description	Qty	Serial Number
1		14X-43-51911	Knob Assembly	1	1001-
2		01252-80510	Bolt	3	1001-
3		07372-21030	Bolt	1	1001-
4		01640-21016	Washer	1	1001-
5		14X-43-51350	Bracket	1	1001-
6		14X-43-51370	• Seal	1	1001-
7		01010-80830	Bolt	4	1001-
8		01643-30823	Washer	4	1001-
9		20Y-06-23940	Clip	1	1001-
10		08210-00604	Tube, Spiral	1	1001-
11		04434-51410	Clip	1	1001-
12		14X-06-52780	Cushion	1	1001-
13		01010-81020	Bolt	1	1001-
14		01643-31032	Washer	1	1001-
15		08193-20010	Clip	1	1001-
16		01435-41020	Bolt	1	1001-
17		363-54-31450	Cap, Bolt	1	1001-
18		14X-06-61471	Wiring Harness	1	1001-
19		17A-43-46741	Lever	1	1001-
20		17A-43-46270	Boot	1	1001-
21		19M-43-38220	Bracket	1	1001-

FIG. K2110-003004 Dozer Control (Hose)

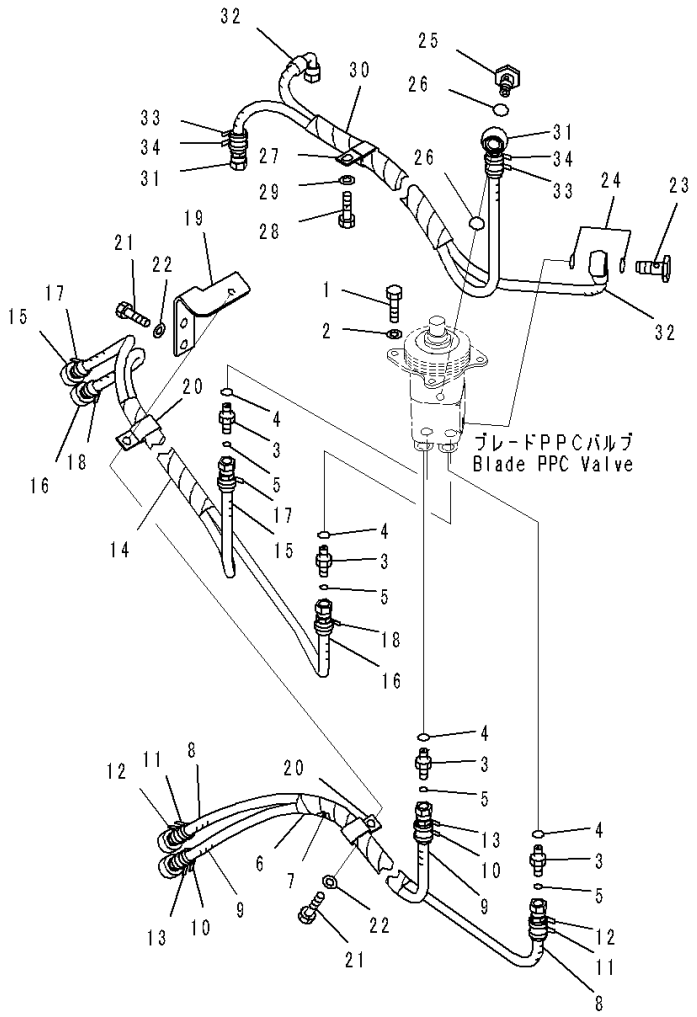

Index	Code	Part Number	Description	Qty	Serial Number
		Note: This list covers following specifications.			
		With Power Tilt Pitch Dozer			
		With Power Tilt Pitch Dozer, Rear 1-attachment			
1		01010-80820	Bolt	4	1001-
2		01643-30823	Washer	4	1001-
3		02781-0021D	Union	4	1001-
4		07002-11423	O-ring	4	1001-
5		02896-11008	O-ring	4	1001-
6		14X-62-54131	Hose Assembly	1	1001-
7		08017-C1001	• Conduit	1	1001-
8		14X-62-53950	• Hose	1	1001-
9		21K-62-72250	• Hose	1	1001-
10		206-62-87990	• Band, Orange	2	1001-
11		20Y-62-22820	• Band, Blue	2	1001-
12		20Y-62-22830	• Band, White	2	1001-
13		20Y-62-22850	• Band, Green	2	1001-
14		14X-62-54171	Hose Assembly	1	1001-
15		14X-62-53950	• Hose	1	1001-
16		14X-62-54760	• Hose	1	1001-
17		206-62-87990	• Band, Orange	2	1001-
18		20Y-62-22850	• Band, Green	2	1001-
19		14X-62-54511	Bracket	1	1001-
20		04435-51410	Clip	2	1001-
21		01010-81020	Bolt	3	1001-
22		01643-31032	Washer	3	1001-
23		702-16-53240	Plug	1	1001-
24		07000-12018	O-ring	2	1001-
25		203-62-57730	Bolt, Eye	1	1001-
26		07000-12018	O-ring	2	1001-
27		04435-51410	Clip	1	1001-
28		01010-81020	Bolt	1	1001-
29		01643-31032	Washer	1	1001-
30		14X-62-54141	Hose Assembly	1	1001-
31		14X-62-53751	• Hose	1	1001-
32		14X-62-54860	• Hose	1	1001-
33		20Y-62-22790	• Band, Red	2	1001-
34		20Y-62-22860	• Band, Brown	2	1001-

FIG. K2110-004001 Dozer Control (Armrest)

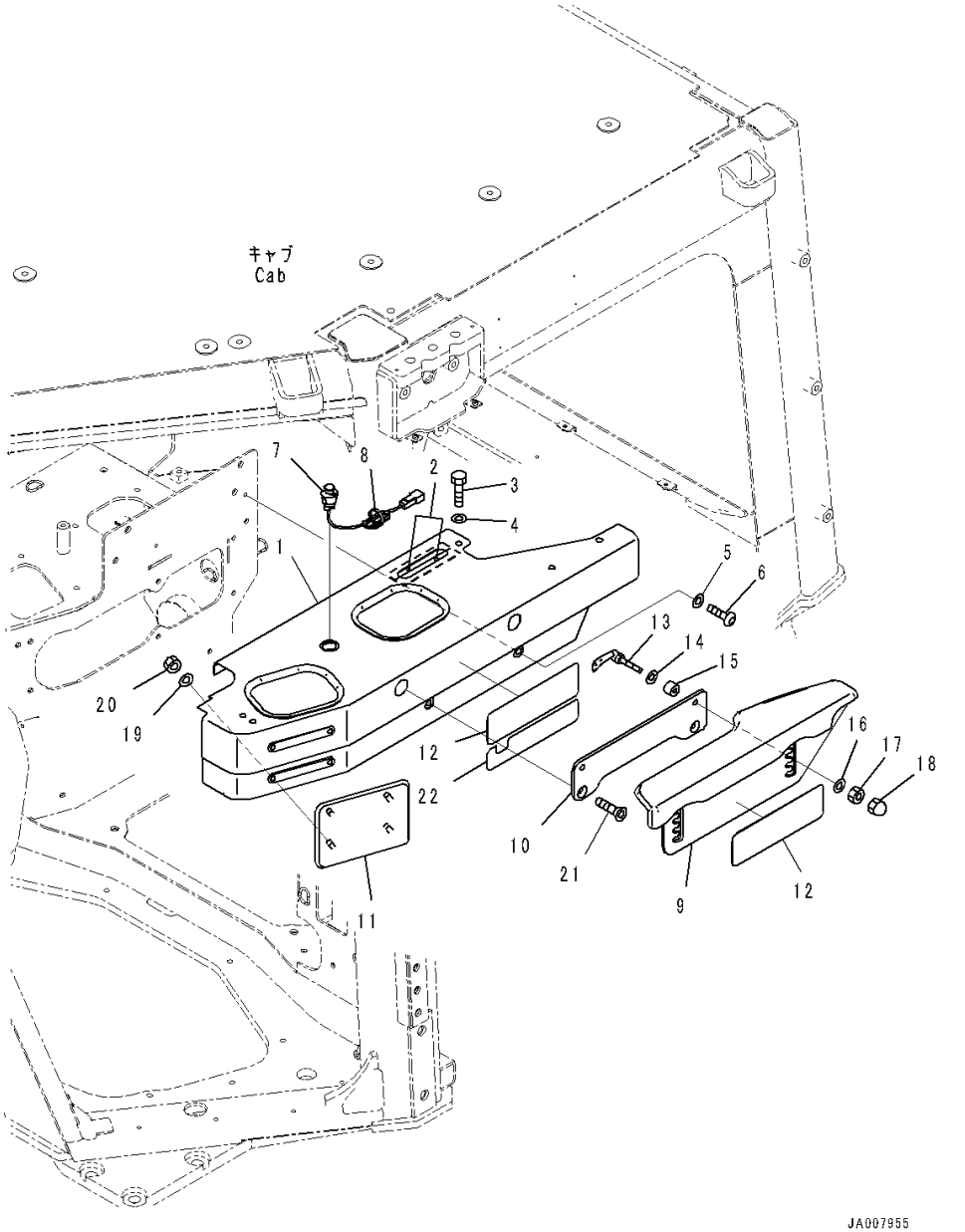

Index	Code	Part Number	Description	Qty	Serial Number
		Note: This list covers following specifications. With Power Tilt Pitch Dozer, Rear 1-attachment With Power Angle Power Tilt Dozer, Inside Frame, Rear 1-attachment With Rear 1-attachment, For 3D Machine Control Plug and Play With Provision for Power Angle Power Tilt Pitch Dozer, Rear 1-attachment, For 3D Machine Control Plug and Play With Power Angle Power Tilt Dozer, Inside Frame, Rear 1-attachment, For 3D Machine Control Plug and Play			
1		154-54-89131	Cover	1	1001-
2		14X-43-48111	• Awning	2	1001-
3		01010-D0825	Bolt	4	1001-
4		01643-70823	Washer	4	1001-
5		01643-70623	Washer	2	1001-
6		01245-00620	Screw	2	1001-
7		423-06-51130	Switch, Horn	1	1001-
8		08034-20519	Band	1	1001-
9		154-43-89131	Armrest Assembly	1	1001-
10		17A-43-46291	Plate	1	1001-
11		17A-43-46281	Pad	1	1001-
12		14X-54-56591	Plate	2	1001-
13		423-43-38170	Lever	2	1001-
14		418-54-35450	Washer	2	1001-
15		17A-43-46380	Spacer	2	1001-
16		418-54-35450	Washer	2	1001-
17		195-43-43370	Nut	2	1001-
18		01546-10812	Nut	2	1001-
19		01643-30623	Washer	4	1001-
20		01580-10605	Nut	4	1001-
21		01240-01030	Screw, Hexagon Socket Head	2	1001-
22		17A-54-51910	Plate	1	1001-

FIG. K2110-004002 Dozer Control (With Power Tilt Pitch Dozer, Rear 1-attachment) (Lever)

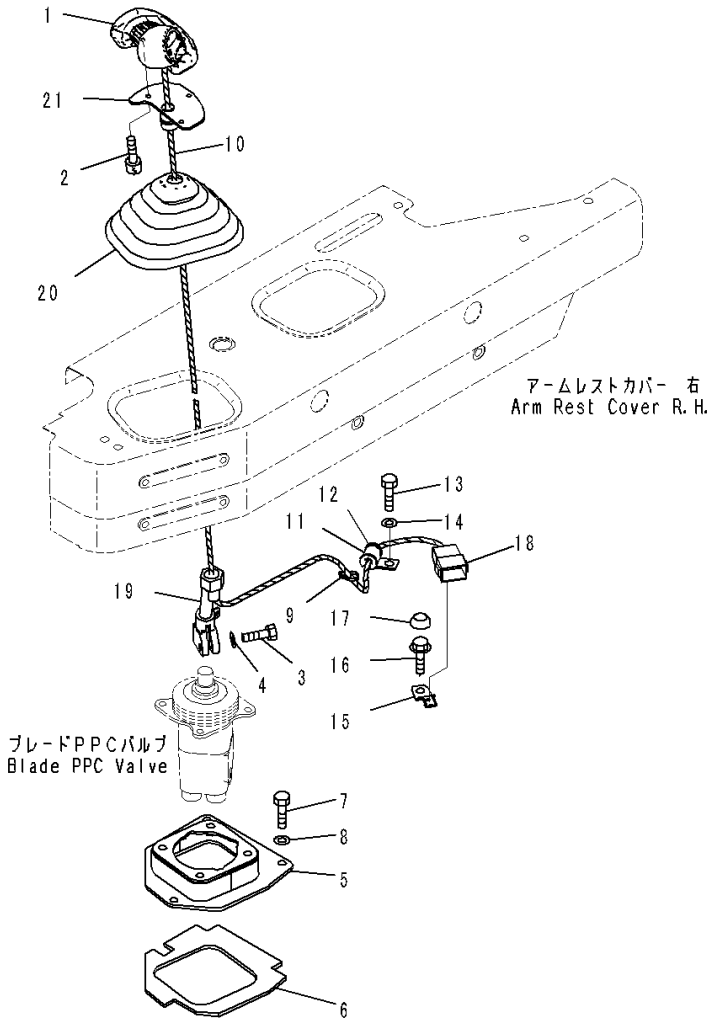

Index	Code	Part Number	Description	Qty	Serial Number
1		14X-43-51911	Knob Assembly	1	1001-
2		01252-80510	Bolt	3	1001-
3		07372-21030	Bolt	1	1001-
4		01640-21016	Washer	1	1001-
5		14X-43-51350	Bracket	1	1001-
6		14X-43-51370	• Seal	1	1001-
7		01010-80830	Bolt	4	1001-
8		01643-30823	Washer	4	1001-
9		20Y-06-23940	Clip	1	1001-
10		08210-00604	Tube, Spiral	1	1001-
11		04434-51410	Clip	1	1001-
12		14X-06-52780	Cushion	1	1001-
13		01010-81020	Bolt	1	1001-
14		01643-31032	Washer	1	1001-
15		08193-20010	Clip	1	1001-
16		01435-41020	Bolt	1	1001-
17		363-54-31450	Cap, Bolt	1	1001-
18		14X-06-61471	Wiring Harness	1	1001-
19		17A-43-46741	Lever	1	1001-
20		17A-43-46270	Boot	1	1001-
21		19M-43-38220	Bracket	1	1001-

FIG. K2110-004006 Dozer Control (With Power Tilt Pitch Dozer, Rear 1-attachment) (Attachment Lever)

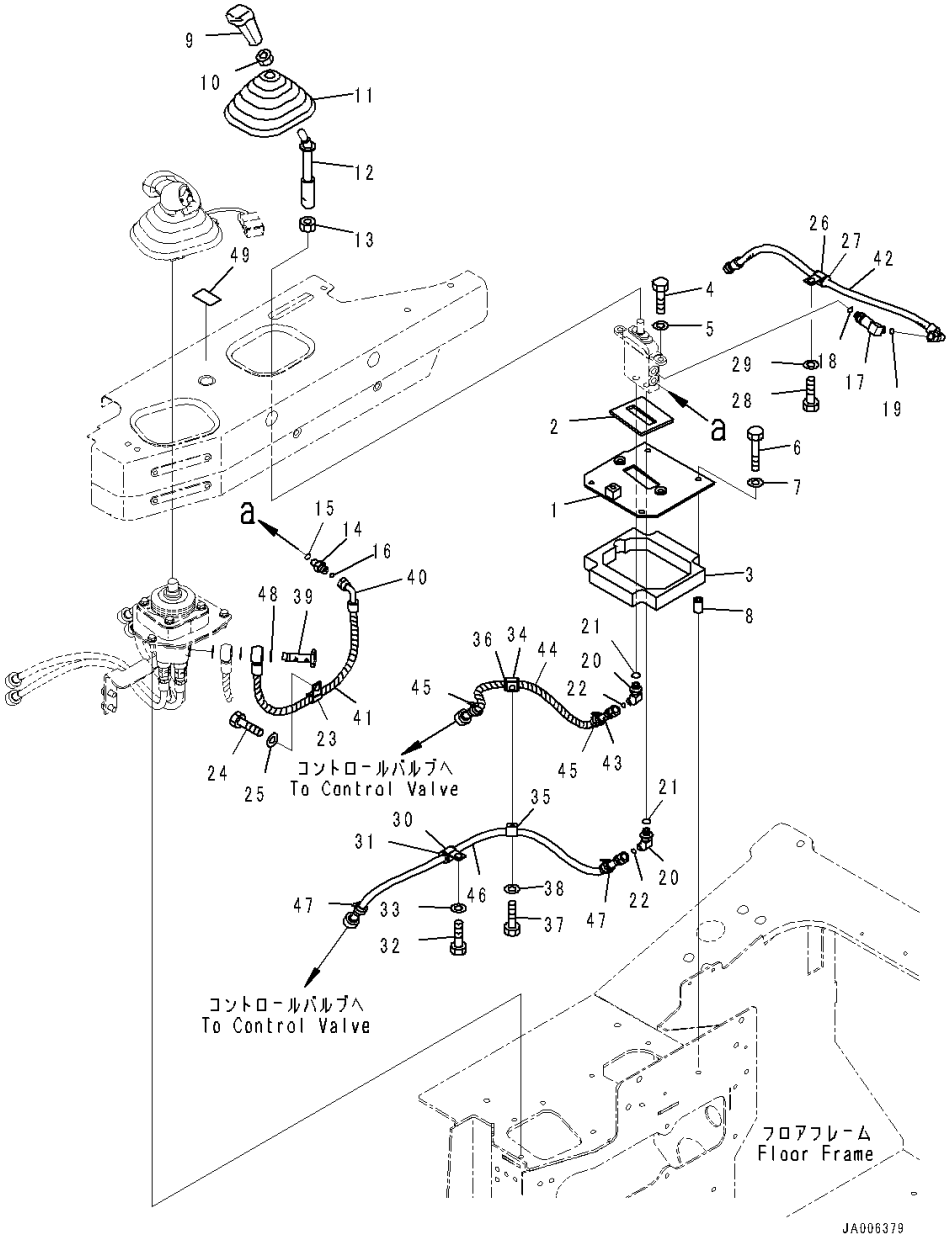

Index	Code	Part Number	Description	Qty	Serial Number
1		14X-78-51112	Bracket	1	1001-
2		14X-78-11490	• Seal	1	1001-
3		14X-78-51131	• Seal	1	1001-
4		01010-81030	Bolt	2	1001-
5		01643-31032	Washer	2	1001-
6		01010-80850	Bolt	4	1001-
7		01643-30823	Washer	4	1001-
8		14X-78-51141	Spacer	4	1001-
9		17A-43-42240	Knob	1	1001-
10		20T-43-71190	Nut	1	1001-
11		17A-43-46270	Boot	1	1001-
12		14X-78-51291	Lever	1	1001-
13		01583-11408	Nut	1	1001-
14		21W-62-44510	Nipple	1	1001-
15		07002-11423	O-ring	1	1001-
16		02896-11008	O-ring	1	1001-
17		21W-62-43990	Elbow	1	1001-
18		07002-11423	O-ring	1	1001-
19		02896-11008	O-ring	1	1001-
20		21W-62-42660	Elbow	2	1001-
21		07002-11423	O-ring	2	1001-
22		02896-11008	O-ring	2	1001-
23		04434-51410	Clip	1	1001-
24		01010-81020	Bolt	1	1001-
25		01643-31032	Washer	1	1001-
26		04434-51710	Clip	1	1001-
27		07095-20211	Cushion	1	1001-
28		01010-81020	Bolt	1	1001-
29		01643-31032	Washer	1	1001-
30		04434-51810	Clip	1	1001-
31		07095-20213	Cushion	1	1001-
32		01010-81020	Bolt	1	1001-
33		01643-31032	Washer	1	1001-
34		04434-51810	Clip	1	1001-
35		04434-51210	Clip	1	1001-
36		07095-20213	Cushion	1	1001-
37		01010-81020	Bolt	1	1001-
38		01643-31032	Washer	1	1001-
39		14X-78-51410	Bolt, Eye	1	1001-
40		14X-78-51281	Hose Assembly	1	1001-

FIG. K2110-004006 Dozer Control (With Power Tilt Pitch Dozer, Rear 1-attachment) (Attachment Lever)

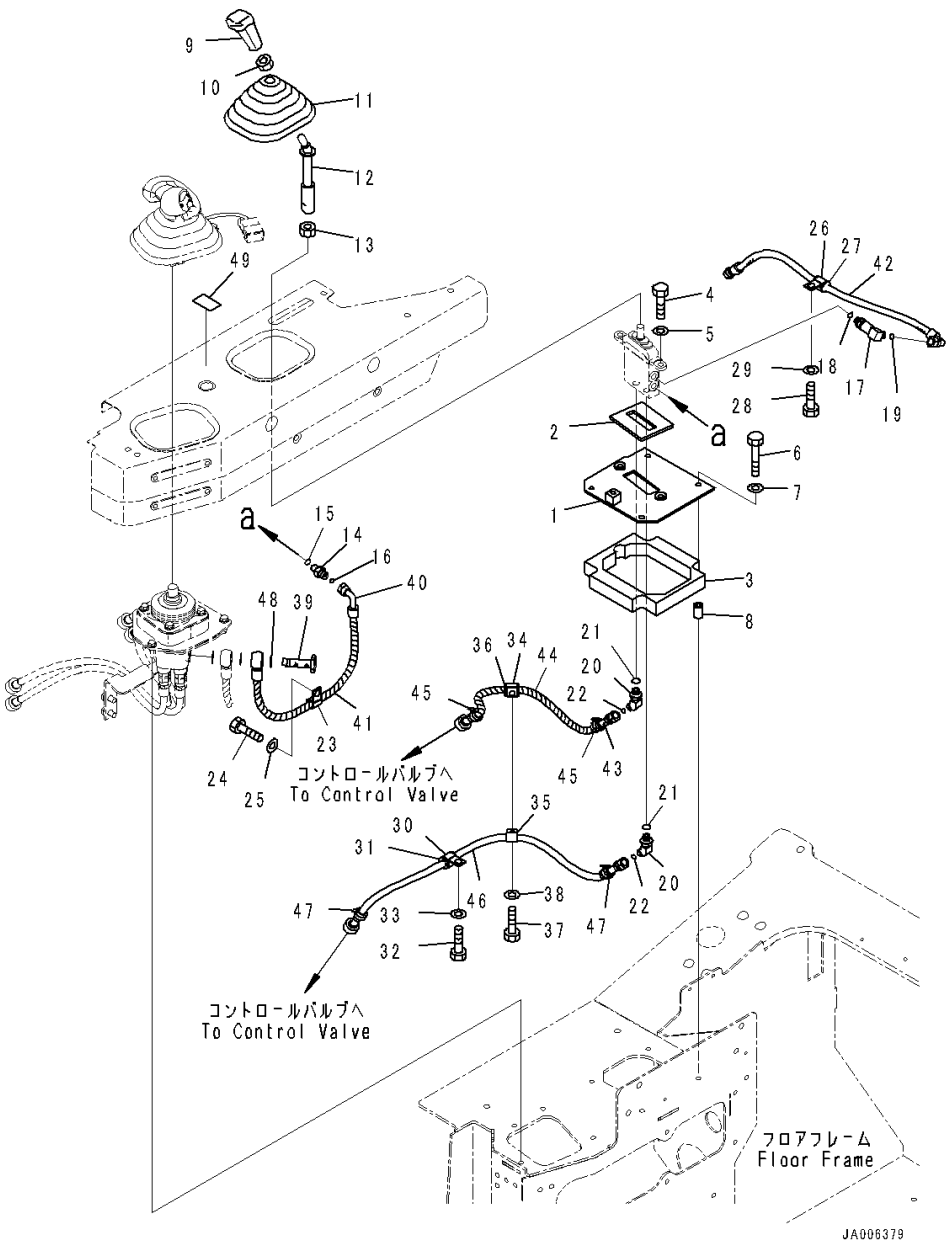

Index	Code	Part Number	Description	Qty	Serial Number
41		08210-00605	• Tube, Spiral	1	1001-
42		02761-00206	Hose, Face Seal Type	1	1001-
43		14X-78-51431	Hose Assembly	1	1001-
44		08210-00604	• Tube, Spiral	1	1001-
45		20Y-62-22860	• Band, Brown	2	1001-
46		14X-78-51421	Hose Assembly	1	1001-
47		20Y-62-22790	• Band, Red	2	1001-
48		287-15-15710	Shim, T=0.5mm	1	1001-
49		14X-78-21180	Plate	1	1001-

FIG. K2110-005002 Dozer Control (With Power Angle Power Tilt Dozer, Inside Frame) (Lever)

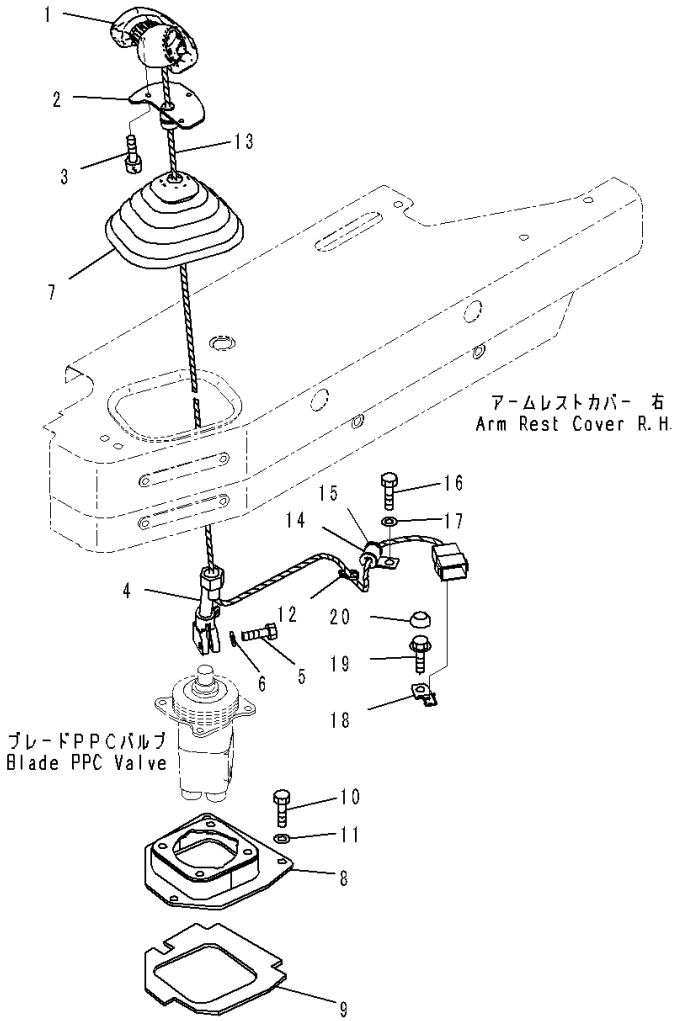

Index	Code	Part Number	Description	Qty	Serial Number
1		14X-43-66121	Knob	1	1001-
2		19M-43-38220	Bracket	1	1001-
3		01252-80510	Bolt	3	1001-
4		17A-43-46741	Lever	1	1001-
5		07372-21030	Bolt	1	1001-
6		01640-21016	Washer	1	1001-
7		17A-43-46270	Boot	1	1001-
8		14X-43-51350	Bracket	1	1001-
9		14X-43-51370	• Seal	1	1001-
10		01010-80830	Bolt	4	1001-
11		01643-30823	Washer	4	1001-
12		20Y-06-23940	Clip	1	1001-
13		08210-00604	Tube, Spiral	1	1001-
14		04434-51410	Clip	1	1001-
15		14X-06-52780	Cushion	1	1001-
16		01010-81020	Bolt	1	1001-
17		01643-31032	Washer	1	1001-
18		08193-20010	Clip	1	1001-
19		01435-41020	Bolt	1	1001-
20		363-54-31450	Cap, Bolt	1	1001-

FIG. K2110-005004 Dozer Control (Hose)

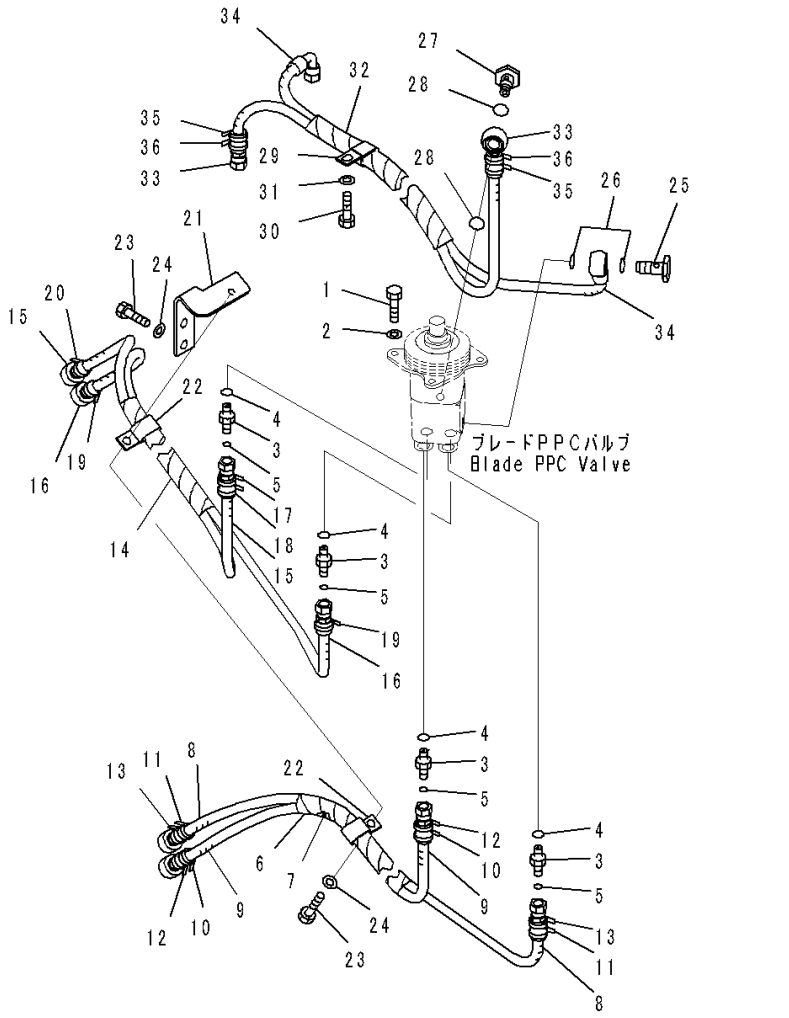

Index	Code	Part Number	Description	Qty	Serial Number
		Note: This list covers following specifications. With Power Angle Power Tilt Dozer, Inside Frame With Power Angle Power Tilt Dozer, Inside Frame, Rear 1-attachment			
1		01010-80820	Bolt	4	1001-
2		01643-30823	Washer	4	1001-
3		02781-0021D	Union	4	1001-
4		07002-11423	O-ring	4	1001-
5		02896-11008	O-ring	4	1001-
6		14X-62-63101	Hose Assembly	1	1001-
7		08017-C1001	• Conduit	1	1001-
8		14X-62-54820	• Hose	1	1001-
9		14X-62-63950	• Hose	1	1001-
10		206-62-87990	• Band, Orange	1	1001-
11		20Y-62-22820	• Band, Blue	1	1001-
12		20Y-62-22850	• Band, Green	2	1001-
13		20Y-62-22830	• Band, White	2	1001-
14		14X-62-64811	Hose Assembly	1	1001-
15		14X-62-54760	• Hose	1	1001-
16		14X-62-64760	• Hose	1	1001-
17		20Y-62-22820	• Band, Blue	1	1001-
18		20Y-62-22830	• Band, White	1	1001-
19		20Y-62-22850	• Band, Green	2	1001-
20		206-62-87990	• Band, Orange	1	1001-
21		14X-62-54511	Bracket	1	1001-
22		04435-51410	Clip	2	1001-
23		01010-81020	Bolt	3	1001-
24		01643-31032	Washer	3	1001-
25		702-16-53240	Plug	1	1001-
26		07000-12018	O-ring	2	1001-
27		203-62-57730	Bolt, Eye	1	1001-
28		07000-12018	O-ring	2	1001-
29		04435-51410	Clip	1	1001-
30		01010-81020	Bolt	1	1001-
31		01643-31032	Washer	1	1001-
32		14X-62-53151	Hose Assembly	1	1001-
33		14X-62-53351	• Hose	1	1001-
34		14X-62-53361	• Hose	1	1001-
35		20Y-62-22790	• Band, Red	2	1001-
36		20Y-62-22860	• Band, Brown	2	1001-

FIG. K2110-006002 Dozer Control (With Power Angle Power Tilt Dozer, Inside Frame, Rear 1-attachment) (Lever)

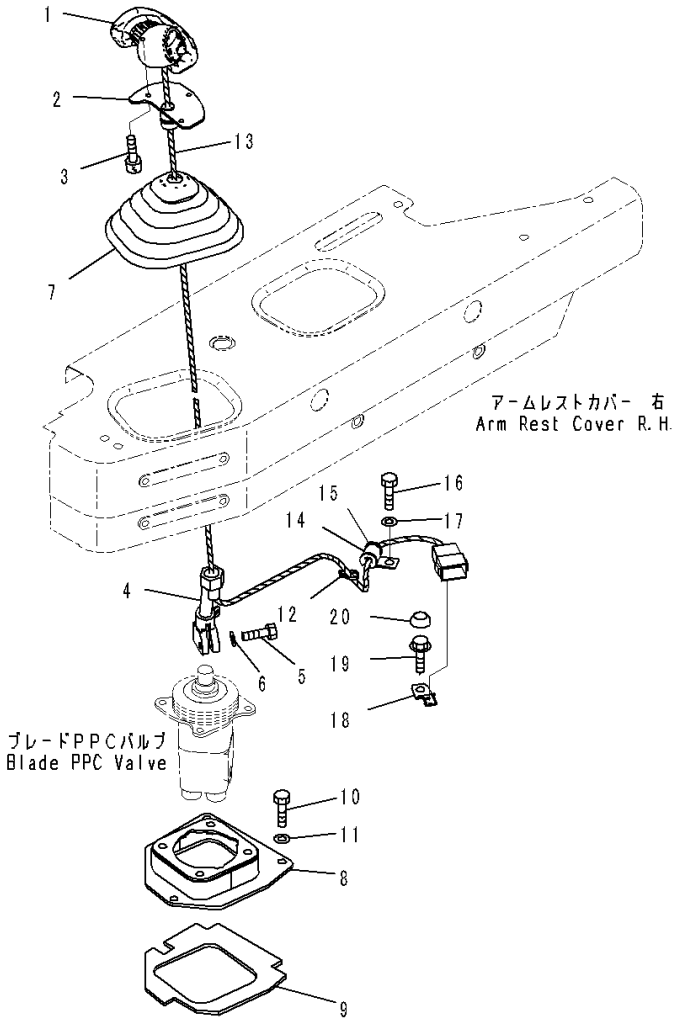

Index	Code	Part Number	Description	Qty	Serial Number
1		14X-43-66121	Knob	1	1001-
2		19M-43-38220	Bracket	1	1001-
3		01252-80510	Bolt	3	1001-
4		17A-43-46741	Lever	1	1001-
5		07372-21030	Bolt	1	1001-
6		01640-21016	Washer	1	1001-
7		17A-43-46270	Boot	1	1001-
8		14X-43-51350	Bracket	1	1001-
9		14X-43-51370	• Seal	1	1001-
10		01010-80830	Bolt	4	1001-
11		01643-30823	Washer	4	1001-
12		20Y-06-23940	Clip	1	1001-
13		08210-00604	Tube, Spiral	1	1001-
14		04434-51410	Clip	1	1001-
15		14X-06-52780	Cushion	1	1001-
16		01010-81020	Bolt	1	1001-
17		01643-31032	Washer	1	1001-
18		08193-20010	Clip	1	1001-
19		01435-41020	Bolt	1	1001-
20		363-54-31450	Cap, Bolt	1	1001-

FIG. K2110-006006 Dozer Control (With Power Angle Power Tilt Dozer, Inside Frame, Rear 1-attachment) (Attachment Lever)

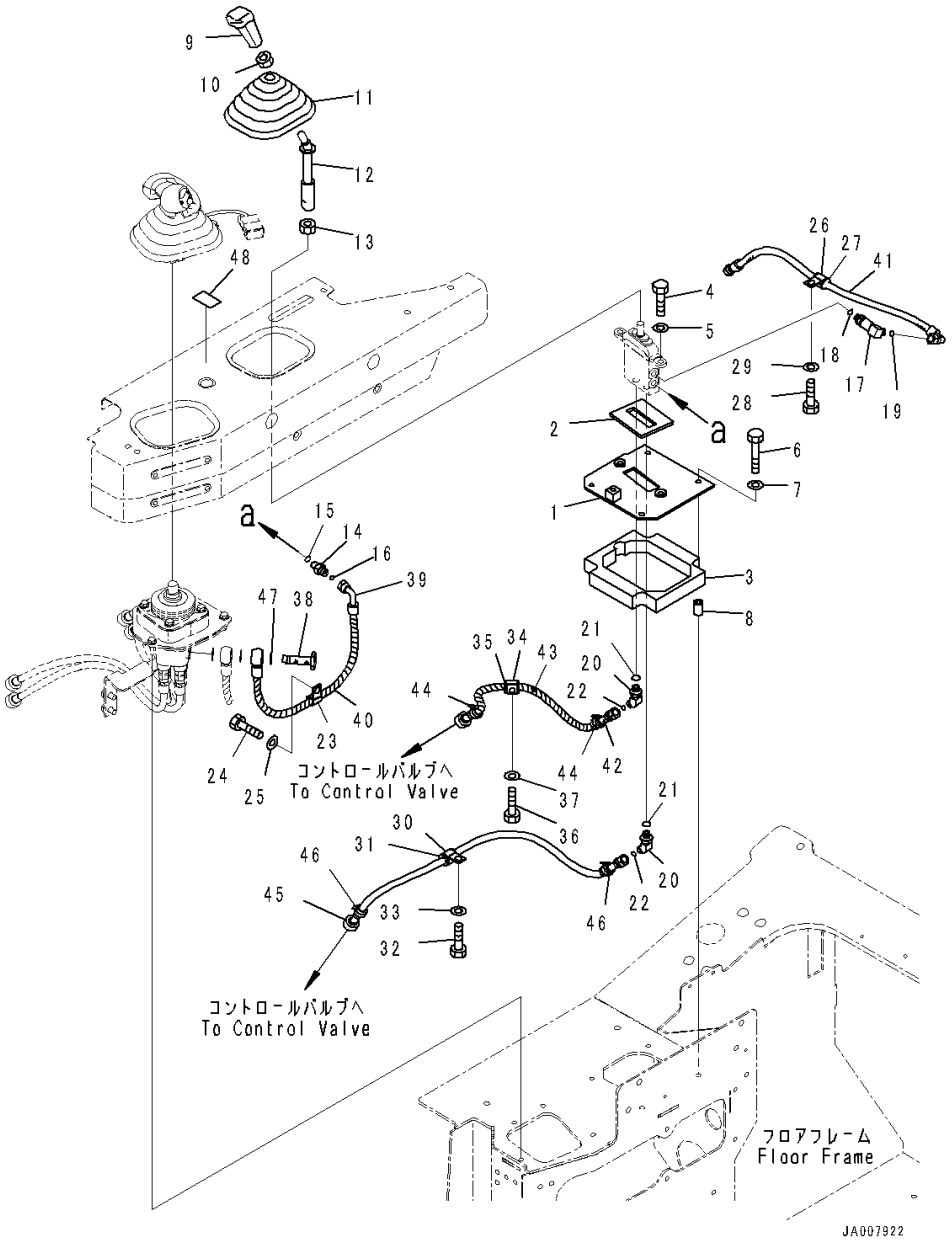

Index	Code	Part Number	Description	Qty	Serial Number
1		14X-78-51112	Bracket	1	1001-
2		14X-78-11490	• Seal	1	1001-
3		14X-78-51131	• Seal	1	1001-
4		01010-81030	Bolt	2	1001-
5		01643-31032	Washer	2	1001-
6		01010-80850	Bolt	4	1001-
7		01643-30823	Washer	4	1001-
8		14X-78-51141	Spacer	4	1001-
9		17A-43-42240	Knob	1	1001-
10		20T-43-71190	Nut	1	1001-
11		17A-43-46270	Boot	1	1001-
12		14X-78-51291	Lever	1	1001-
13		01583-11408	Nut	1	1001-
14		21W-62-44510	Nipple	1	1001-
15		07002-11423	O-ring	1	1001-
16		02896-11008	O-ring	1	1001-
17		21W-62-43990	Elbow	1	1001-
18		07002-11423	O-ring	1	1001-
19		02896-11008	O-ring	1	1001-
20		21W-62-42660	Elbow	2	1001-
21		07002-11423	O-ring	2	1001-
22		02896-11008	O-ring	2	1001-
23		04434-51410	Clip	1	1001-
24		01010-81020	Bolt	1	1001-
25		01643-31032	Washer	1	1001-
26		04434-51710	Clip	1	1001-
27		07095-20211	Cushion	1	1001-
28		01010-81020	Bolt	1	1001-
29		01643-31032	Washer	1	1001-
30		04434-51810	Clip	1	1001-
31		07095-20213	Cushion	1	1001-
32		01010-81020	Bolt	1	1001-
33		01643-31032	Washer	1	1001-
34		04434-51810	Clip	1	1001-
35		07095-20213	Cushion	1	1001-
36		01010-81020	Bolt	1	1001-
37		01643-31032	Washer	1	1001-
38		14X-78-51410	Bolt, Eye	1	1001-
39		14X-78-51281	Hose Assembly	1	1001-

FIG. K2110-006006 Dozer Control (With Power Angle Power Tilt Dozer, Inside Frame, Rear 1-attachment) (Attachment Lever)

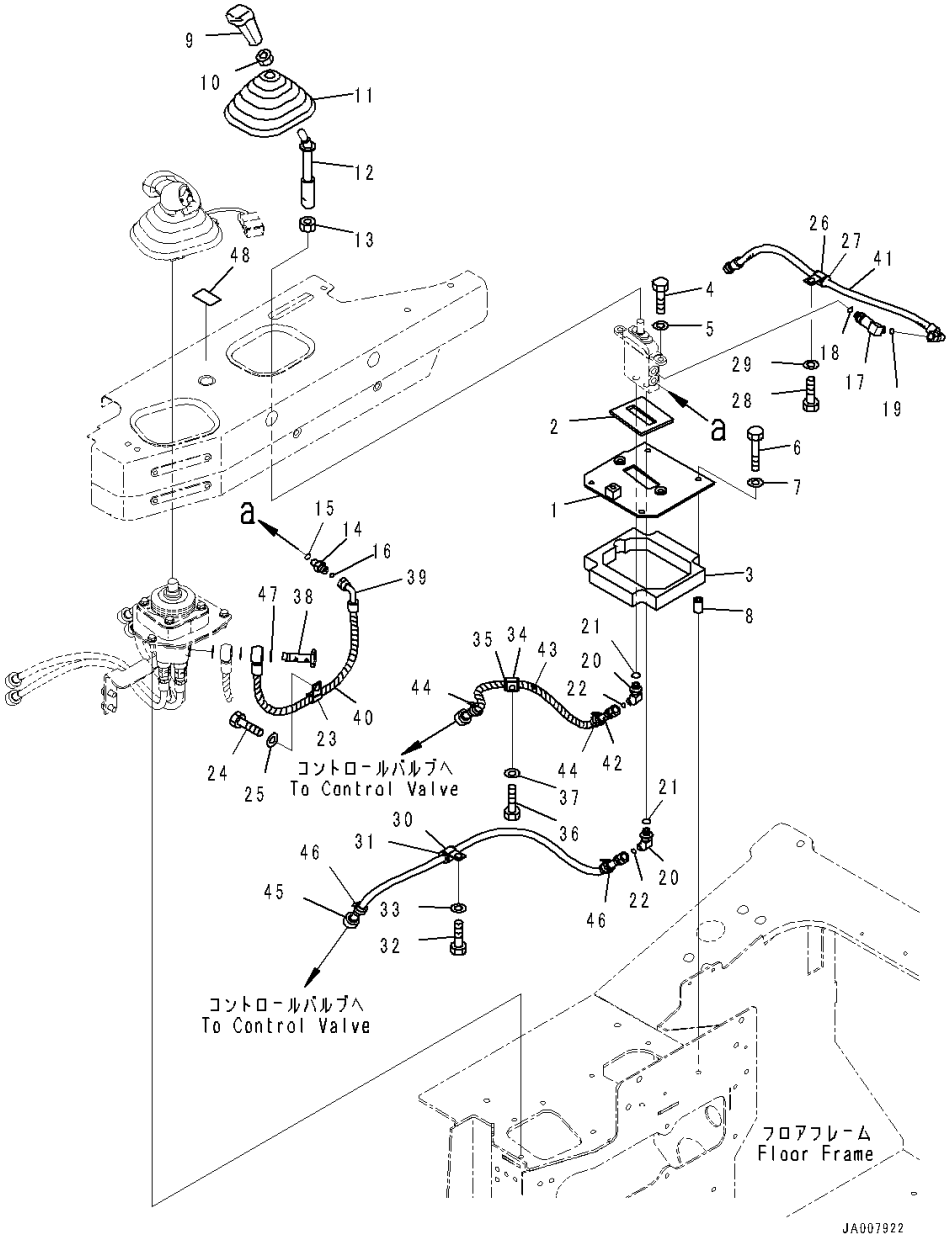

Index	Code	Part Number	Description	Qty	Serial Number
40		08210-00605	• Tube, Spiral	1	1001-
41		02761-00206	Hose, Face Seal Type	1	1001-
42		14X-78-51431	Hose Assembly	1	1001-
43		08210-00604	• Tube, Spiral	1	1001-
44		20Y-62-22860	• Band, Brown	2	1001-
45		14X-78-51421	Hose Assembly	1	1001-
46		20Y-62-22790	• Band, Red	2	1001-
47		287-15-15710	Shim, T=0.5mm	1	1001-
48		14X-78-21180	Plate	1	1001-

FIG. K2110-007002 Dozer Control (Without Rear 1-attachment, For 3D Machine Control Plug and Play) (Lever)

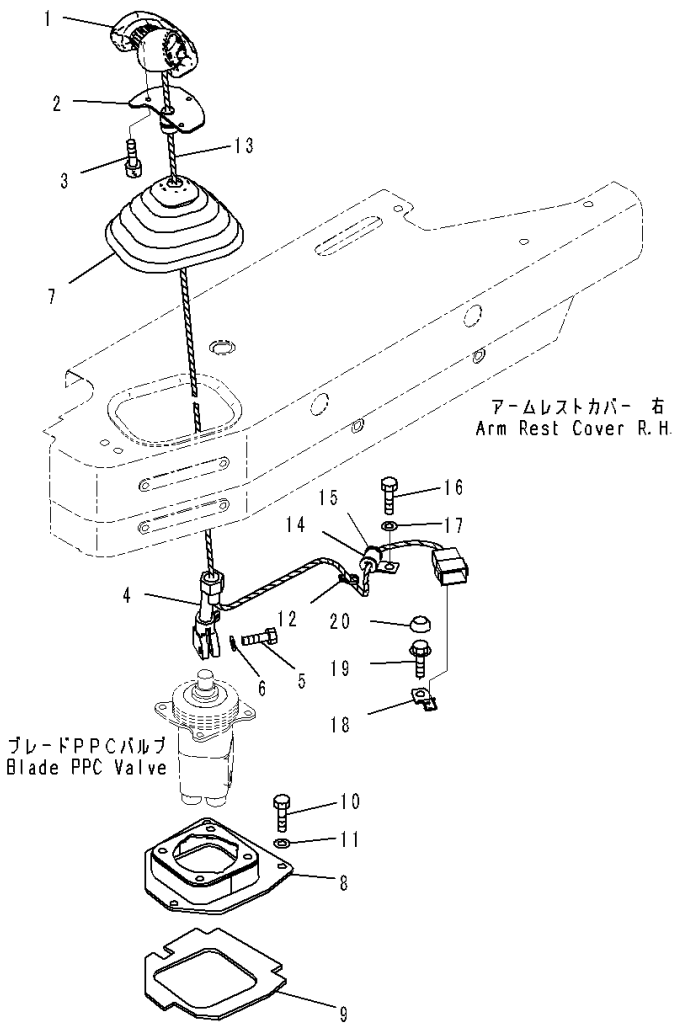

Index	Code	Part Number	Description	Qty	Serial Number
1		14X-43-66141	Knob	1	1001-
2		19M-43-38220	Bracket	1	1001-
3		01252-80510	Bolt	3	1001-
4		17A-43-46741	Lever	1	1001-
5		07372-21030	Bolt	1	1001-
6		01640-21016	Washer	1	1001-
7		17A-43-46270	Boot	1	1001-
8		14X-43-51350	Bracket	1	1001-
9		14X-43-51370	• Seal	1	1001-
10		01010-80830	Bolt	4	1001-
11		01643-30823	Washer	4	1001-
12		20Y-06-23940	Clip	1	1001-
13		08210-00604	Tube, Spiral	1	1001-
14		04434-51410	Clip	1	1001-
15		14X-06-52780	Cushion	1	1001-
16		01010-81020	Bolt	1	1001-
17		01643-31032	Washer	1	1001-
18		08193-20010	Clip	1	1001-
19		01435-41020	Bolt	1	1001-
20		363-54-31450	Cap, Bolt	1	1001-

FIG. K2110-007004 Dozer Control (Hose) (1/2)

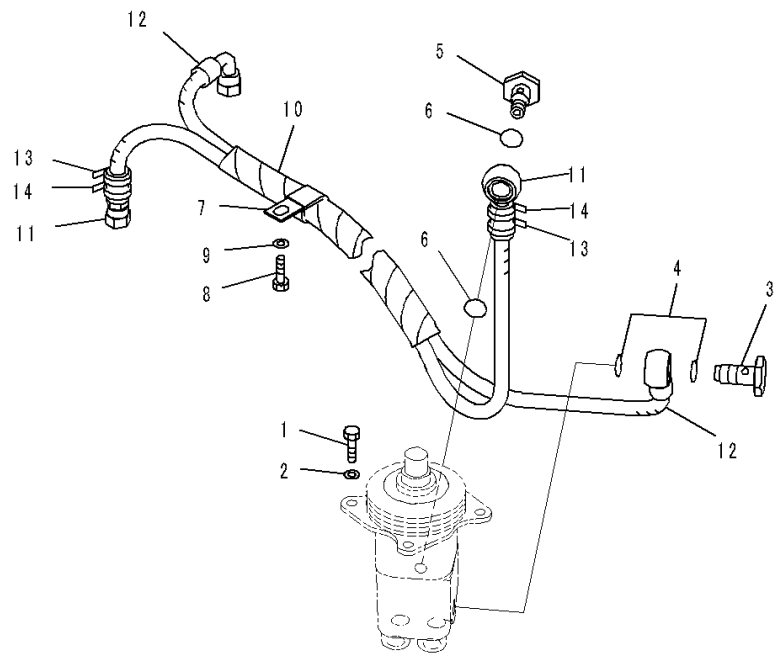

Index	Code	Part Number	Description	Qty	Serial Number
		Note: This list covers following specifications. Without Rear 1-attachment, For 3D Machine Control Plug and Play With Rear 1-attachment, For 3D Machine Control Plug and Play With Power Angle Power Tilt Dozer, Inside Frame, For 3D Machine Control Plug and Play With Power Angle Power Tilt Dozer, Inside Frame, Rear 1-attachment, For 3D Machine Control Plug and Play			
1		01010-80820	Bolt	4	1001-
2		01643-30823	Washer	4	1001-
3		702-16-53240	Plug	1	1001-
4		07000-12018	O-ring	2	1001-
5		203-62-57730	Bolt, Eye	1	1001-
6		07000-12018	O-ring	2	1001-
7		04435-51410	Clip	1	1001-
8		01010-81020	Bolt	1	1001-
9		01643-31032	Washer	1	1001-
10		14X-62-53151	Hose Assembly	1	1001-
11		14X-62-53351	• Hose	1	1001-
12		14X-62-53361	• Hose	1	1001-
13		20Y-62-22790	• Band, Red	2	1001-
14		20Y-62-22860	• Band, Brown	2	1001-

FIG. K2110-007005 Dozer Control (EPC Block)

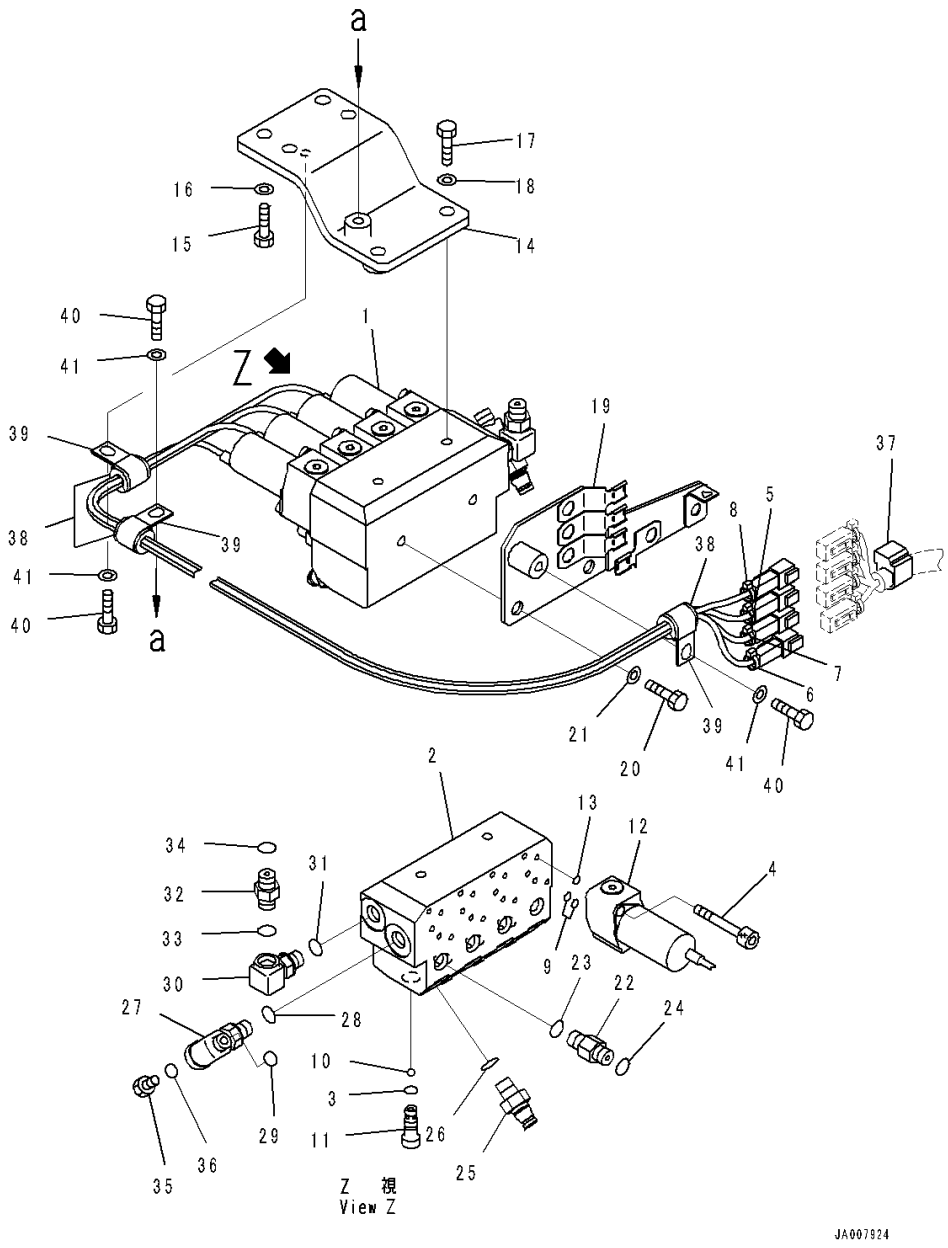

Index	Code	Part Number	Description	Qty	Serial Number
		Note: This list covers following specifications.			
		Without Rear 1-attachment, For 3D Machine Control Plug and Play			
		With Provision for Power Angle Power Tilt Pitch Dozer, For 3D Machine Control Plug and Play			
		With Power Angle Power Tilt Dozer, Inside Frame, For 3D Machine Control Plug and Play			
1		14X-62-54401	Block Assembly	1	1001-
2		11Y-62-31921	• Block	1	1001-
3		07000-11006	• O-ring	4	1001-
4		203-60-62220	• Bolt	8	1001-
5		206-62-87990	• Band, Orange	1	1001-
6		20Y-62-22790	• Band, Red	1	1001-
7		20Y-62-22820	• Band, Blue	1	1001-
8		20Y-62-22850	• Band, Green	1	1001-
9		700-22-11410	• O-ring	8	1001-
10		702-16-73140	• Ball	4	1001-
11		702-16-73150	• Plug	4	1001-
12		702-21-07620	• Valve, Solenoid	4	1001-
13		702-21-39450	• O-ring	4	1001-
14		14X-62-54421	Bracket	1	1001-
15		01010-81025	Bolt	4	1001-
16		01643-31032	Washer	4	1001-
17		01010-81030	Bolt	2	1001-
18		01643-31032	Washer	2	1001-
19		14X-62-54431	Bracket	1	1001-
20		01010-81020	Bolt	2	1001-
21		01643-31032	Washer	2	1001-
22		22L-62-22590	Nipple	4	1001-
23		07002-11423	O-ring	4	1001-
24		02896-11008	O-ring	4	1001-
25		20Y-62-16630	Nipple	4	1001-
26		07002-11423	O-ring	4	1001-
27		22B-62-15840	Tee	1	1001-
28		07002-11423	O-ring	1	1001-
29		02896-11008	O-ring	1	1001-
30		22L-62-24730	Elbow	1	1001-
31		07002-11423	O-ring	1	1001-
32		22L-62-21171	Union	1	1001-
33		07002-11423	O-ring	1	1001-

FIG. K2110-007005 Dozer Control (EPC Block)

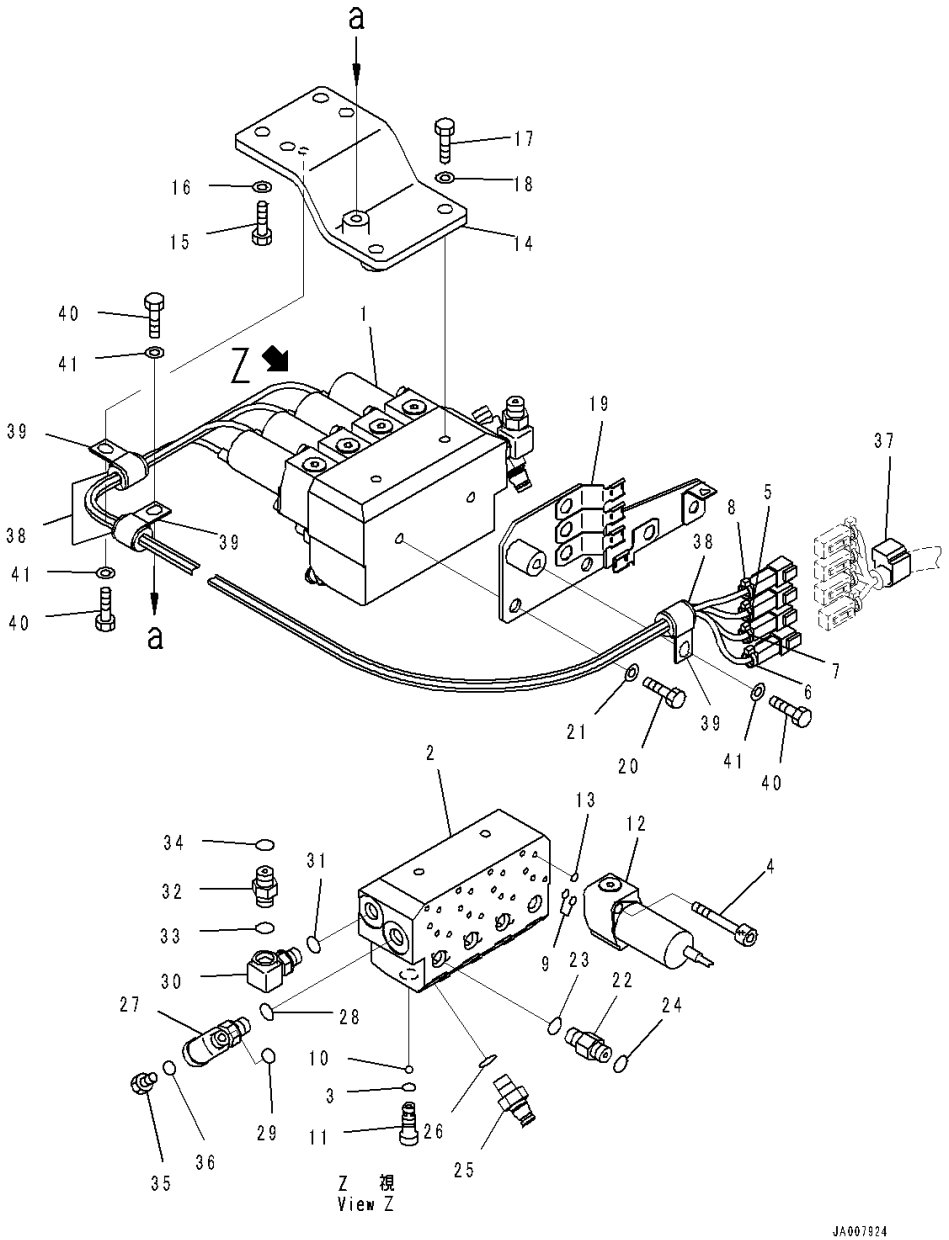

Index	Code	Part Number	Description	Qty	Serial Number
34		02896-11008	O-ring	1	1001-
35		07040-11409	Plug	1	1001-
36		07002-11423	O-ring	1	1001-
37		08211-01020	Clip	1	1001-
38		07095-20211	Cushion	3	1001-
39		04434-51710	Clip	3	1001-
40		01010-81020	Bolt	3	1001-
41		01643-31032	Washer	3	1001-

FIG. K2110-007006 Dozer Control (Without Rear 1-attachment, For 3D Machine Control Plug and Play) (Hose) (2/2)

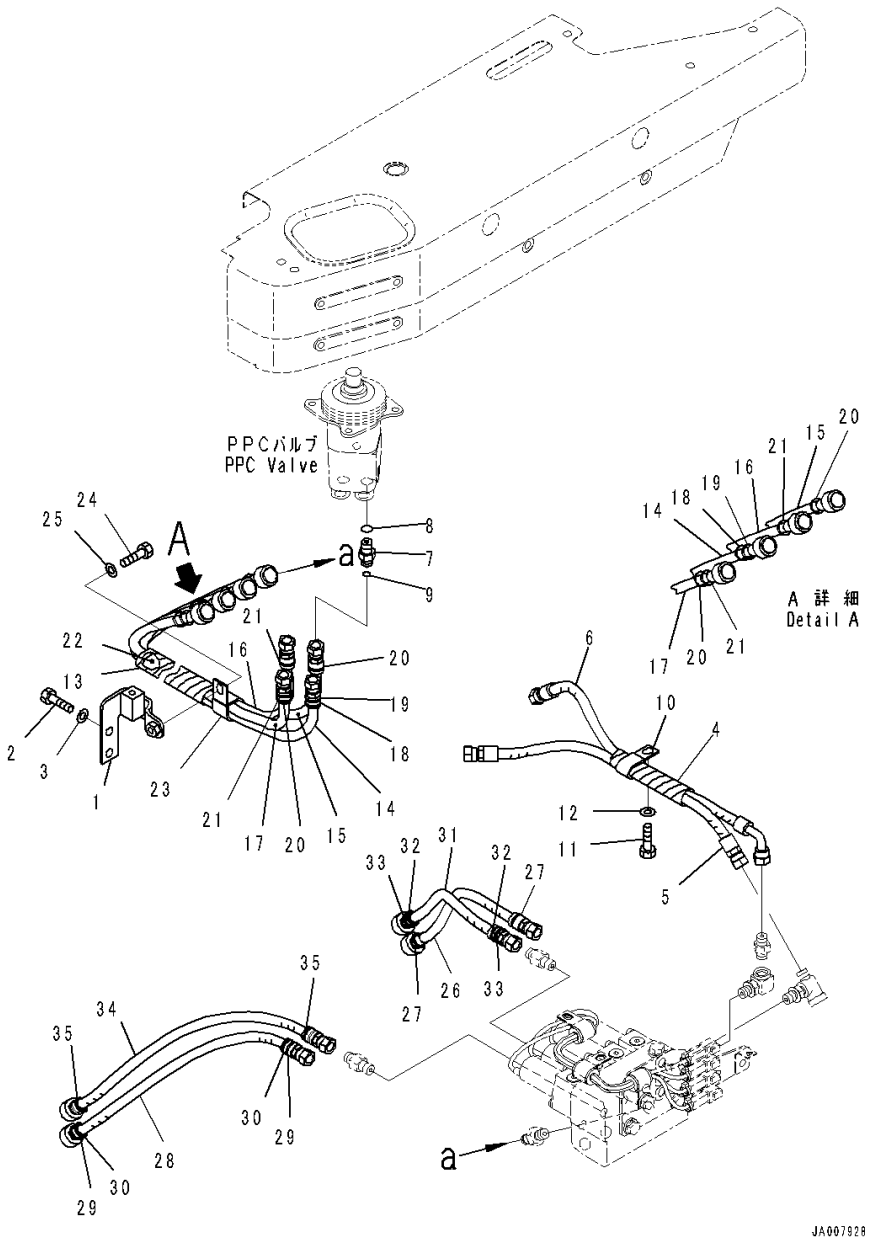

Index	Code	Part Number	Description	Qty	Serial Number
1		14X-62-55170	Bracket	1	1001-
2		01010-81020	Bolt	2	1001-
3		01643-31032	Washer	2	1001-
4		14X-62-65310	Hose Assembly	1	1001-
5		14X-62-55330	• Hose	1	1001-
6		14X-62-55340	• Hose, Blue-Red	1	1001-
7		02781-0021D	Union	4	1001-
8		07002-11423	O-ring	4	1001-
9		02896-11008	O-ring	4	1001-
10		04435-51410	Clip	1	1001-
11		01010-81020	Bolt	1	1001-
12		01643-31032	Washer	1	1001-
13		14X-62-55410	Hose Assembly	1	1001-
14		14X-62-53980	• Hose	1	1001-
15		14X-62-53941	• Hose	1	1001-
16		14X-62-55440	• Hose	1	1001-
17		14X-62-55450	• Hose	1	1001-
18		20Y-62-22820	• Band, Blue	2	1001-
19		20Y-62-22830	• Band, White	2	1001-
20		20Y-62-22850	• Band, Green	4	1001-
21		206-62-87990	• Band, Orange	4	1001-
22		08017-C1001	• Conduit	1	1001-
23		04434-52711	Clip	1	1001-
24		01010-81020	Bolt	1	1001-
25		01643-31032	Washer	1	1001-
26		14X-62-54441	Hose	1	1001-
27		20Y-62-22850	• Band, Green	2	1001-
28		14X-62-54451	Hose	1	1001-
29		206-62-87990	• Band, Orange	2	1001-
30		20Y-62-22850	• Band, Green	2	1001-
31		14X-62-54461	Hose	1	1001-
32		20Y-62-22820	• Band, Blue	2	1001-
33		20Y-62-22830	• Band, White	2	1001-
34		14X-62-54471	Hose	1	1001-
35		206-62-87990	• Band, Orange	2	1001-

FIG. K2110-008002 Dozer Control (With Rear 1-attachment, For 3D Machine Control Plug and Play) (Lever)

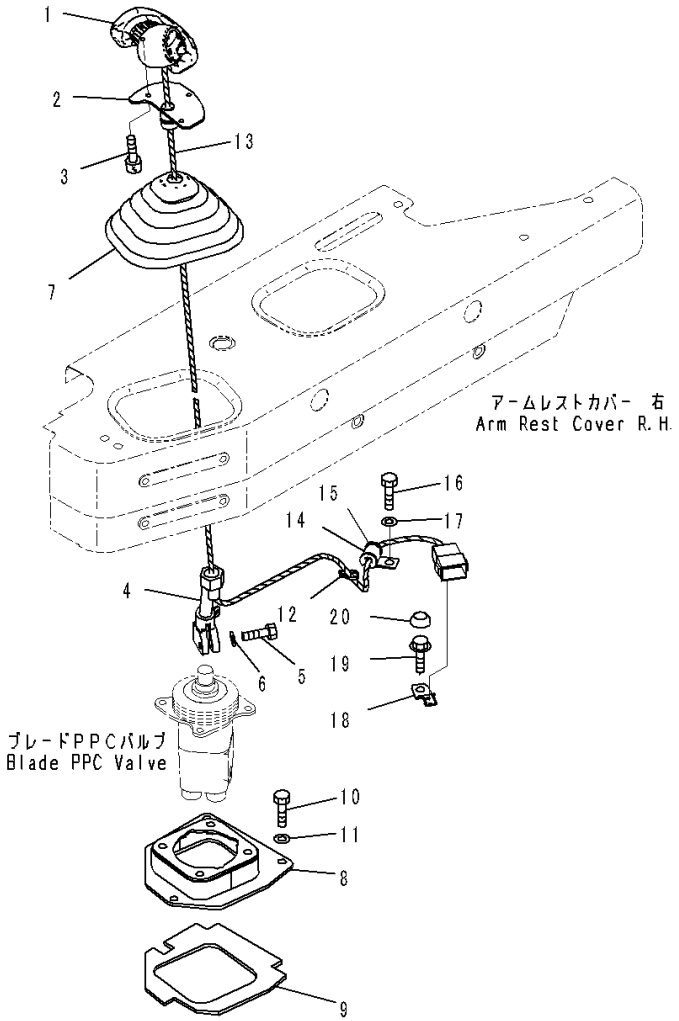

Index	Code	Part Number	Description	Qty	Serial Number
1		14X-43-66141	Knob	1	1001-
2		19M-43-38220	Bracket	1	1001-
3		01252-80510	Bolt	3	1001-
4		17A-43-46741	Lever	1	1001-
5		07372-21030	Bolt	1	1001-
6		01640-21016	Washer	1	1001-
7		17A-43-46270	Boot	1	1001-
8		14X-43-51350	Bracket	1	1001-
9		14X-43-51370	• Seal	1	1001-
10		01010-80830	Bolt	4	1001-
11		01643-30823	Washer	4	1001-
12		20Y-06-23940	Clip	1	1001-
13		08210-00604	Tube, Spiral	1	1001-
14		04434-51410	Clip	1	1001-
15		14X-06-52780	Cushion	1	1001-
16		01010-81020	Bolt	1	1001-
17		01643-31032	Washer	1	1001-
18		08193-20010	Clip	1	1001-
19		01435-41020	Bolt	1	1001-
20		363-54-31450	Cap, Bolt	1	1001-

FIG. K2110-008006 Dozer Control (With Rear 1-attachment, For 3D Machine Control Plug and Play) (Hose) (2/3)

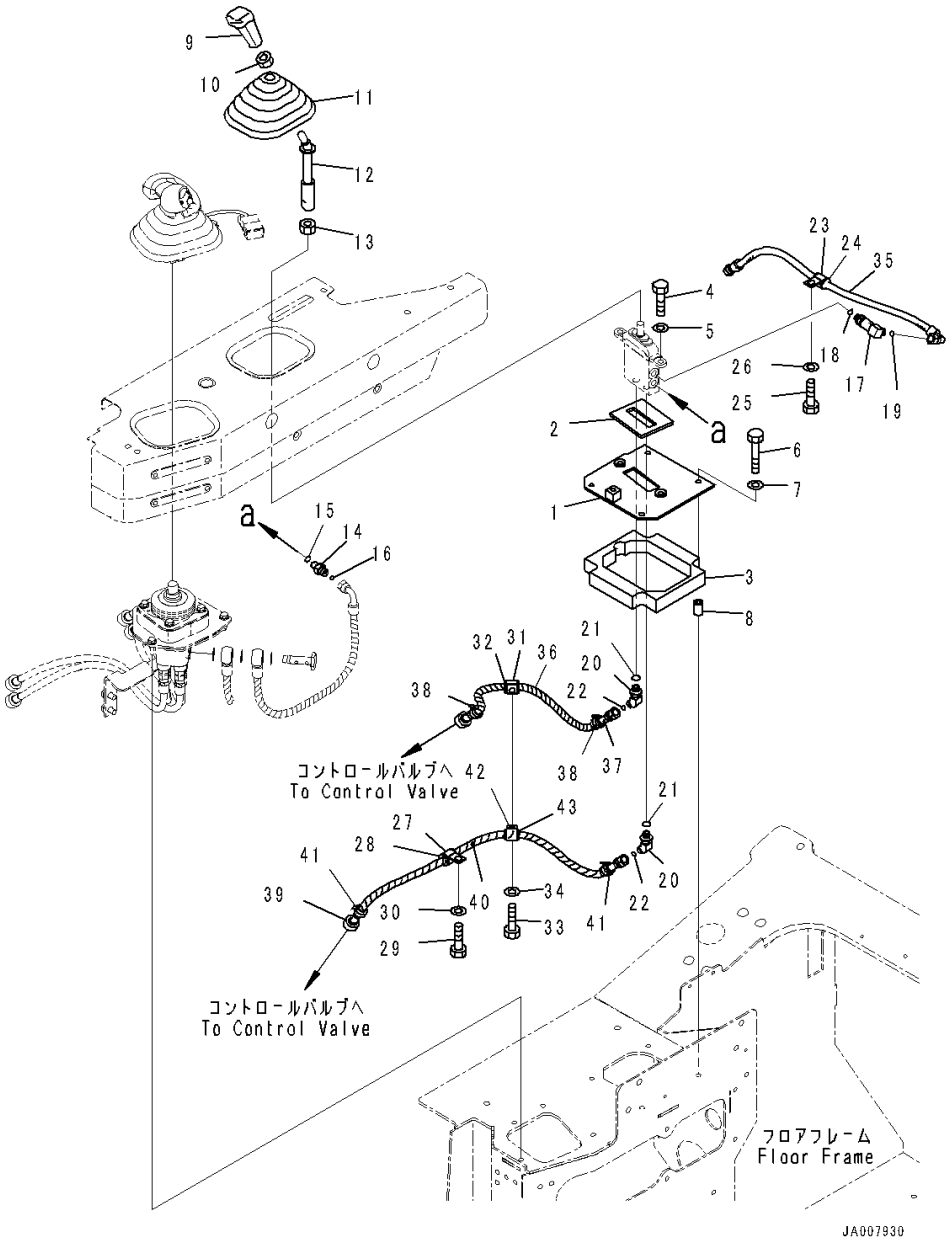

Index	Code	Part Number	Description	Qty	Serial Number
1		14X-78-51112	Bracket	1	1001-
2		14X-78-11490	• Seal	1	1001-
3		14X-78-51131	• Seal	1	1001-
4		01010-81030	Bolt	2	1001-
5		01643-31032	Washer	2	1001-
6		01010-80850	Bolt	4	1001-
7		01643-30823	Washer	4	1001-
8		14X-78-51141	Spacer	4	1001-
9		17A-43-42240	Knob	1	1001-
10		20T-43-71190	Nut	1	1001-
11		17A-43-46270	Boot	1	1001-
12		14X-78-51291	Lever	1	1001-
13		01583-11408	Nut	1	1001-
14		21W-62-44510	Nipple	1	1001-
15		07002-11423	O-ring	1	1001-
16		02896-11008	O-ring	1	1001-
17		21W-62-43990	Elbow	1	1001-
18		07002-11423	O-ring	1	1001-
19		02896-11008	O-ring	1	1001-
20		21W-62-42660	Elbow	2	1001-
21		07002-11423	O-ring	2	1001-
22		02896-11008	O-ring	2	1001-
23		04434-51710	Clip	1	1001-
24		07095-20211	Cushion	1	1001-
25		01010-81020	Bolt	1	1001-
26		01643-31032	Washer	1	1001-
27		04434-51810	Clip	1	1001-
28		07095-20213	Cushion	1	1001-
29		01010-81020	Bolt	1	1001-
30		01643-31032	Washer	1	1001-
31		04434-51810	Clip	1	1001-
32		07095-20213	Cushion	1	1001-
33		01010-81020	Bolt	1	1001-
34		01643-31032	Washer	1	1001-
35		02761-00206	Hose, Face Seal Type	1	1001-
36		14X-62-53820	Hose	1	1001-
37		08210-00605	• Tube, Spiral	1	1001-
38		20Y-62-22860	• Band, Brown	2	1001-
39		14X-62-53830	Hose	1	1001-
40		08210-00607	• Tube, Spiral	1	1001-

FIG. K2110-008006 Dozer Control (With Rear 1-attachment, For 3D Machine Control Plug and Play) (Hose) (2/3)

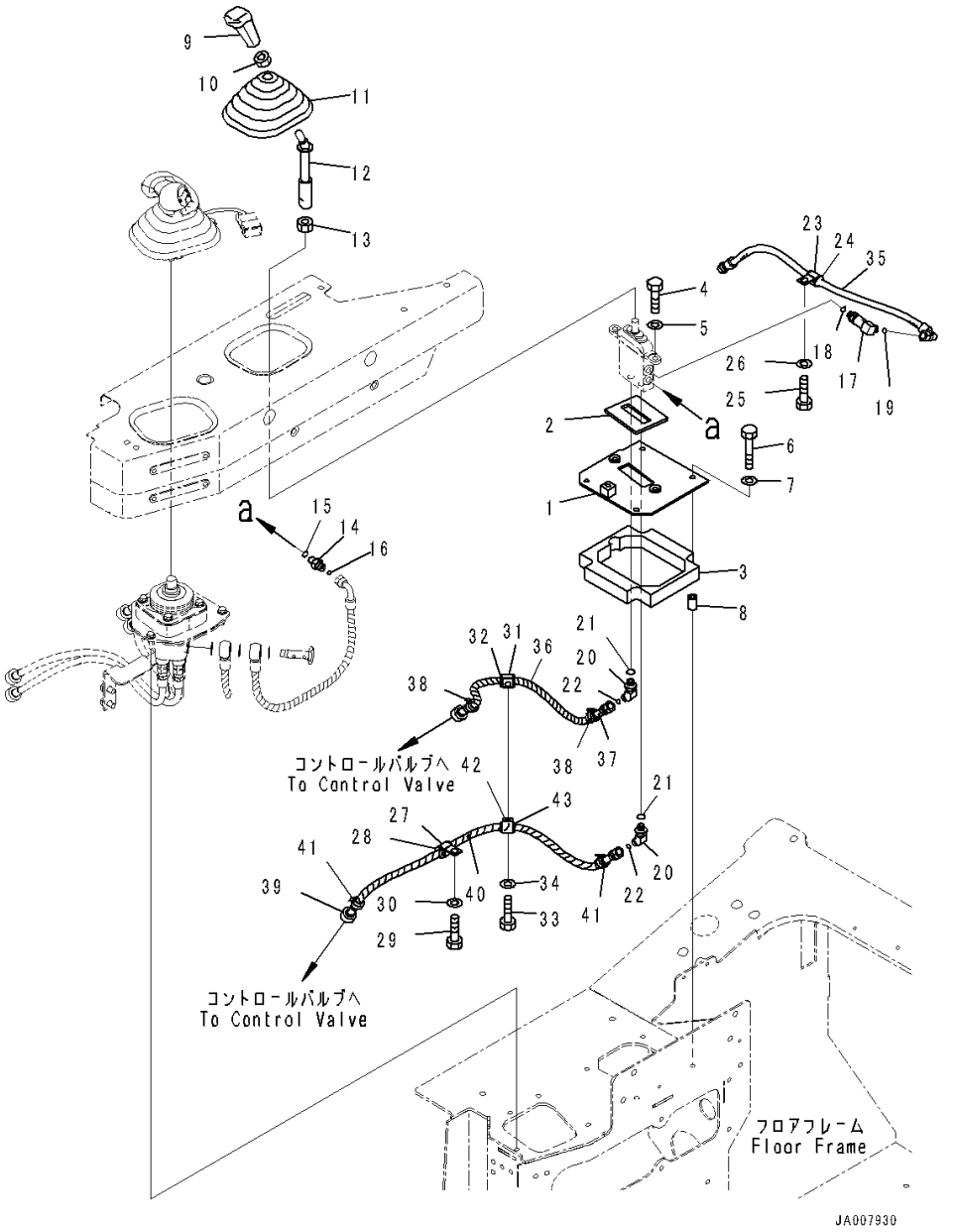

Index	Code	Part Number	Description	Qty	Serial Number
41		20Y-62-22790	• Band, Red	2	1001-
42		04434-51810	Clip	1	1001-
43		07095-20213	Cushion	1	1001-

FIG. K2110-008007 Dozer Control (EPC Block)

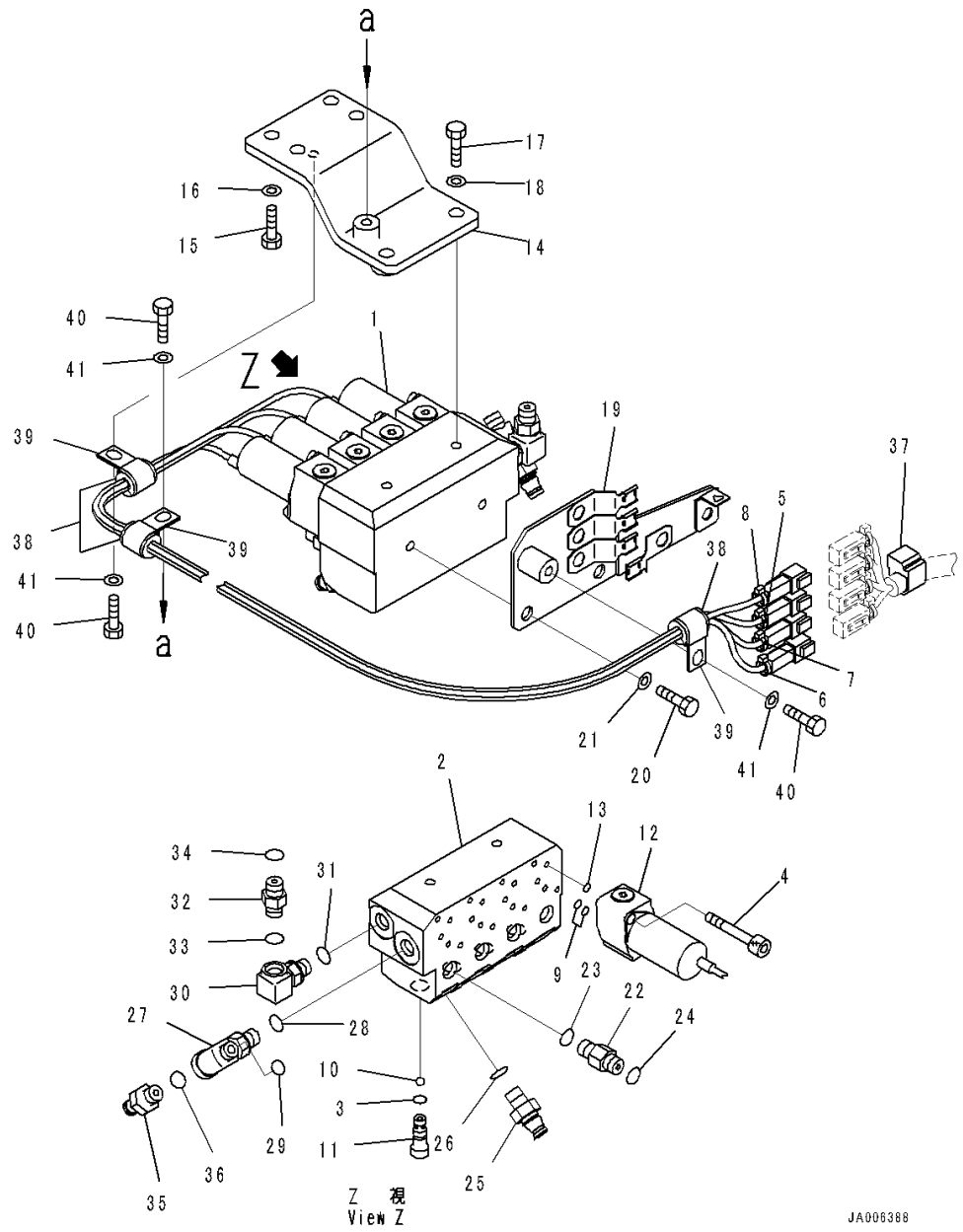

Index	Code	Part Number	Description	Qty	Serial Number
		Note: This list covers following specifications. With Rear 1-attachment, For 3D Machine Control Plug and Play With Provision for Power Angle Power Tilt Pitch Dozer, Rear 1-attachment, For 3D Machine Control Plug and Play With Power Angle Power Tilt Dozer, Inside Frame, Rear 1-attachment, For 3D Machine Control Plug and Play			
1		14X-62-54401	Block Assembly	1	1001-
2		11Y-62-31921	• Block	1	1001-
3		07000-11006	• O-ring	4	1001-
4		203-60-62220	• Bolt	8	1001-
5		206-62-87990	• Band, Orange	1	1001-
6		20Y-62-22790	• Band, Red	1	1001-
7		20Y-62-22820	• Band, Blue	1	1001-
8		20Y-62-22850	• Band, Green	1	1001-
9		700-22-11410	• O-ring	8	1001-
10		702-16-73140	• Ball	4	1001-
11		702-16-73150	• Plug	4	1001-
12		702-21-07620	• Valve, Solenoid	4	1001-
13		702-21-39450	• O-ring	4	1001-
14		14X-62-54421	Bracket	1	1001-
15		01010-81025	Bolt	4	1001-
16		01643-31032	Washer	4	1001-
17		01010-81030	Bolt	2	1001-
18		01643-31032	Washer	2	1001-
19		14X-62-54431	Bracket	1	1001-
20		01010-81020	Bolt	2	1001-
21		01643-31032	Washer	2	1001-
22		22L-62-22590	Nipple	4	1001-
23		07002-11423	O-ring	4	1001-
24		02896-11008	O-ring	4	1001-
25		20Y-62-16630	Nipple	4	1001-
26		07002-11423	O-ring	4	1001-
27		22B-62-15840	Tee	1	1001-
28		07002-11423	O-ring	1	1001-
29		02896-11008	O-ring	1	1001-
30		22L-62-24730	Elbow	1	1001-
31		07002-11423	O-ring	1	1001-
32		22L-62-21171	Union	1	1001-
33		07002-11423	O-ring	1	1001-

FIG. K2110-008007 Dozer Control (EPC Block)

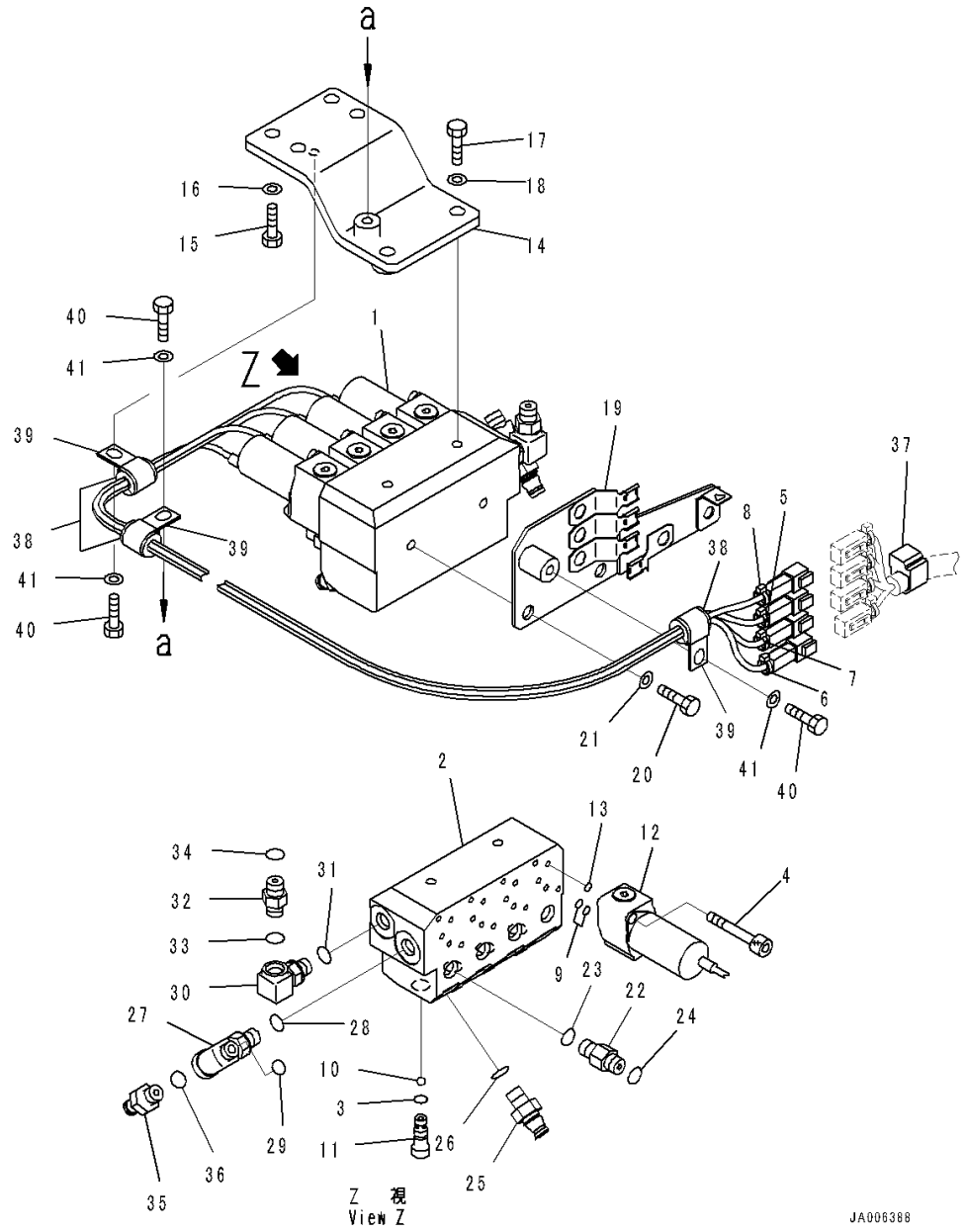

Index	Code	Part Number	Description	Qty	Serial Number
34		02896-11008	O-ring	1	1001-
35		20Y-62-16630	Nipple	1	1001-
36		07002-11423	O-ring	1	1001-
37		08211-01020	Clip	1	1001-
38		07095-20211	Cushion	3	1001-
39		04434-51710	Clip	3	1001-
40		01010-81020	Bolt	3	1001-
41		01643-31032	Washer	3	1001-

FIG. K2110-008008 Dozer Control (With Rear 1-attachment, For 3D Machine Control Plug and Play) (Hose) (3/3)

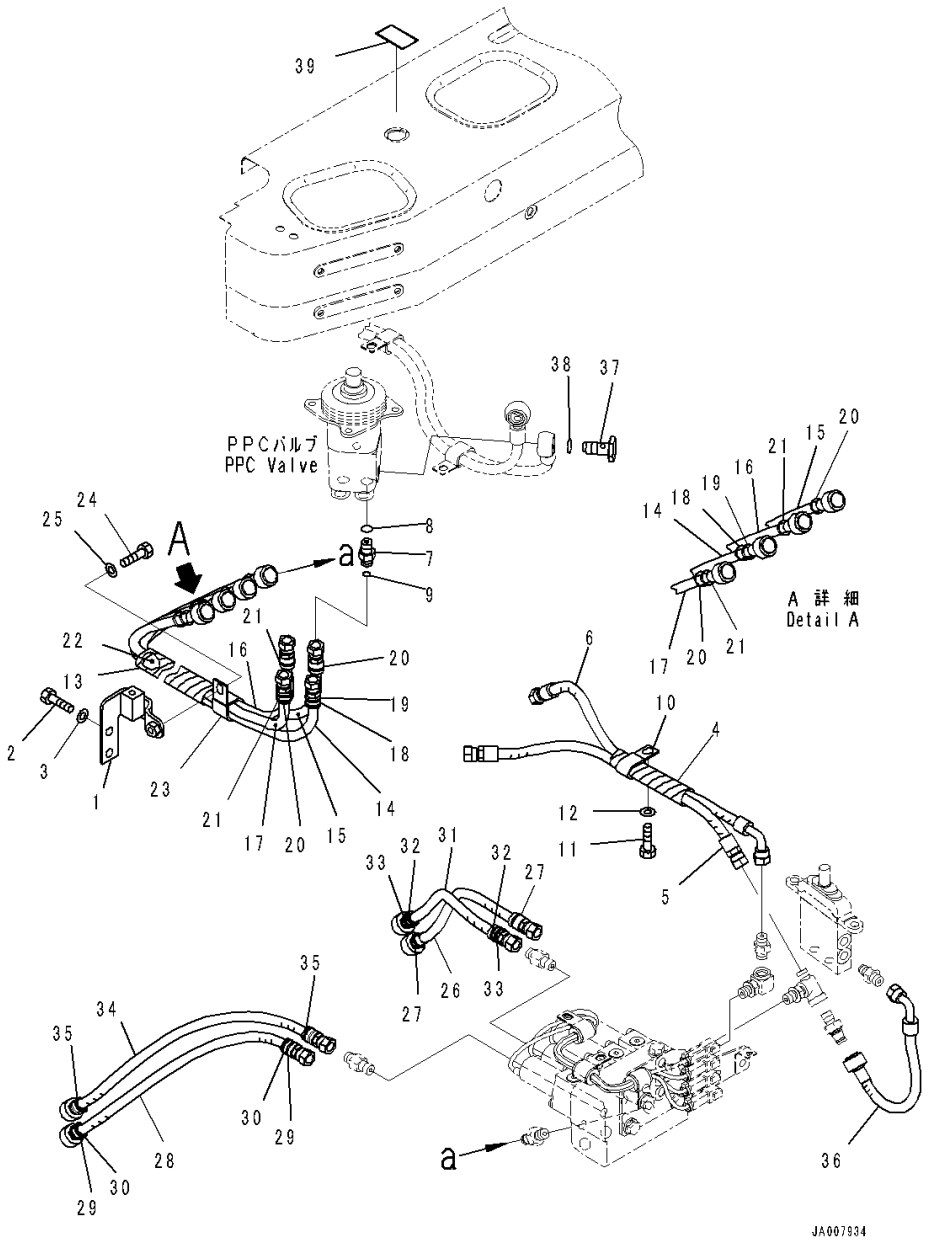

Index	Code	Part Number	Description	Qty	Serial Number
1		14X-62-55170	Bracket	1	1001-
2		01010-81020	Bolt	2	1001-
3		01643-31032	Washer	2	1001-
4		14X-62-65310	Hose Assembly	1	1001-
5		14X-62-55330	• Hose	1	1001-
6		14X-62-55340	• Hose, Blue-Red	1	1001-
7		02781-0021D	Union	4	1001-
8		07002-11423	O-ring	4	1001-
9		02896-11008	O-ring	4	1001-
10		04435-51410	Clip	1	1001-
11		01010-81020	Bolt	1	1001-
12		01643-31032	Washer	1	1001-
13		14X-62-55410	Hose Assembly	1	1001-
14		14X-62-53980	• Hose	1	1001-
15		14X-62-53941	• Hose	1	1001-
16		14X-62-55440	• Hose	1	1001-
17		14X-62-55450	• Hose	1	1001-
18		20Y-62-22820	• Band, Blue	2	1001-
19		20Y-62-22830	• Band, White	2	1001-
20		20Y-62-22850	• Band, Green	4	1001-
21		206-62-87990	• Band, Orange	4	1001-
22		08017-C1001	• Conduit	1	1001-
23		04434-52711	Clip	1	1001-
24		01010-81020	Bolt	1	1001-
25		01643-31032	Washer	1	1001-
26		14X-62-54441	Hose	1	1001-
27		20Y-62-22850	• Band, Green	2	1001-
28		14X-62-54451	Hose	1	1001-
29		206-62-87990	• Band, Orange	2	1001-
30		20Y-62-22850	• Band, Green	2	1001-
31		14X-62-54461	Hose	1	1001-
32		20Y-62-22820	• Band, Blue	2	1001-
33		20Y-62-22830	• Band, White	2	1001-
34		14X-62-54471	Hose	1	1001-
35		206-62-87990	• Band, Orange	2	1001-
36		14X-62-55360	Hose	1	1001-
37		702-16-53240	Plug	1	1001-
38		07000-12018	O-ring	1	1001-
39		14X-78-21180	Plate	1	1001-

FIG. K2110-009002 Dozer Control (With Provision for Power Angle Power Tilt Pitch Dozer, For 3D Machine Control Plug and Play) (Lever)

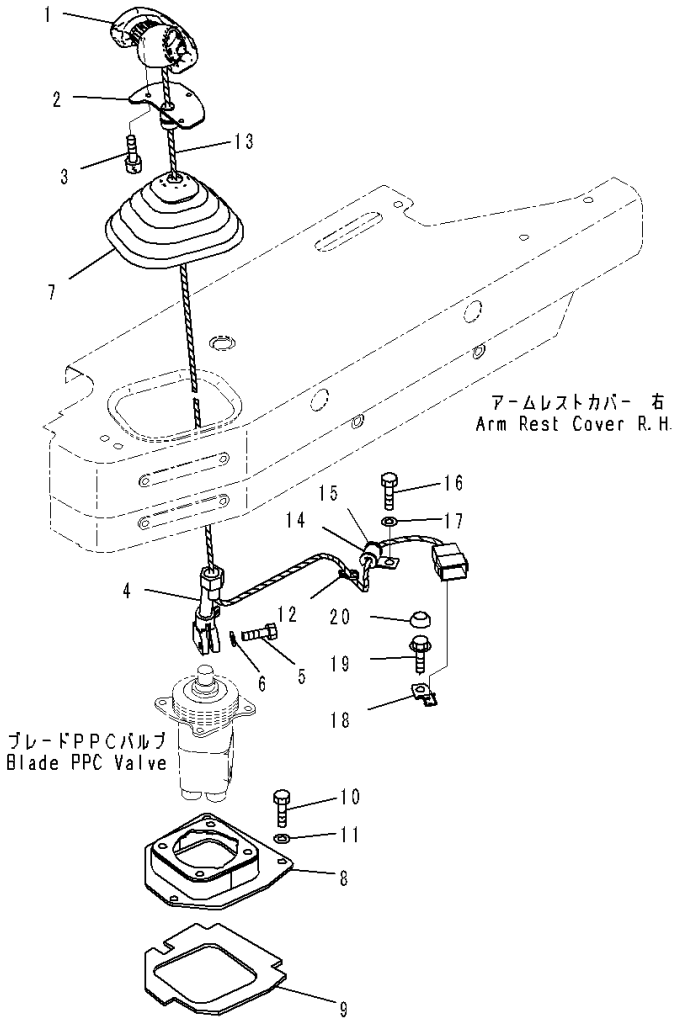

Index	Code	Part Number	Description	Qty	Serial Number
1		14X-43-66151	Knob	1	1001-
2		19M-43-38220	Bracket	1	1001-
3		01252-80510	Bolt	3	1001-
4		17A-43-46741	Lever	1	1001-
5		07372-21030	Bolt	1	1001-
6		01640-21016	Washer	1	1001-
7		17A-43-46270	Boot	1	1001-
8		14X-43-51350	Bracket	1	1001-
9		14X-43-51370	• Seal	1	1001-
10		01010-80830	Bolt	4	1001-
11		01643-30823	Washer	4	1001-
12		20Y-06-23940	Clip	1	1001-
13		08210-00604	Tube, Spiral	1	1001-
14		04434-51410	Clip	1	1001-
15		14X-06-52780	Cushion	1	1001-
16		01010-81020	Bolt	1	1001-
17		01643-31032	Washer	1	1001-
18		08193-20010	Clip	1	1001-
19		01435-41020	Bolt	1	1001-
20		363-54-31450	Cap, Bolt	1	1001-

FIG. K2110-009004 Dozer Control (Hose) (1/2)

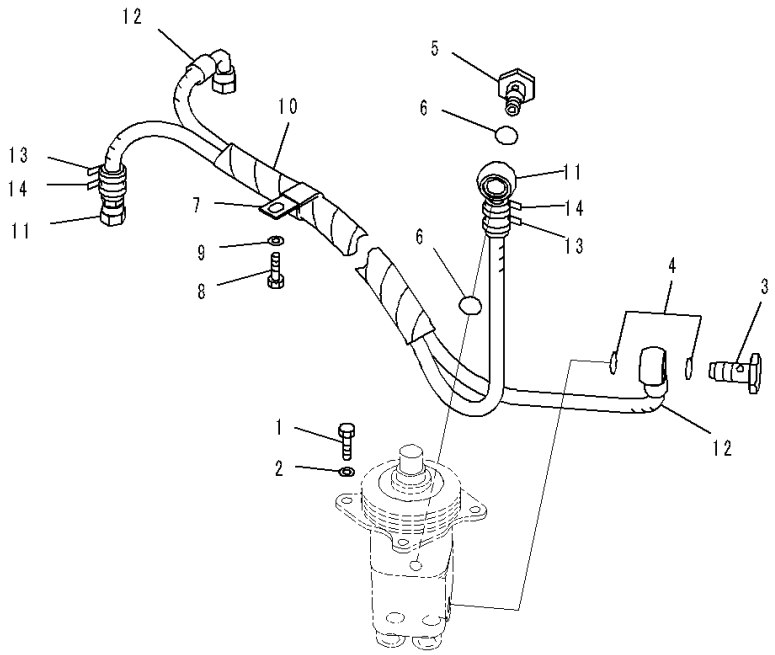

ブレードPPCバルブ
Blade PPC Valve

JA006386

Index	Code	Part Number	Description	Qty	Serial Number
		Note: This list covers following specifications.			
		With Provision for Power Angle Power Tilt Pitch Dozer, For 3D Machine Control Plug and Play			
		With Provision for Power Angle Power Tilt Pitch Dozer, Rear 1-attachment, For 3D Machine Control Plug and Play			
1		01010-80820	Bolt	4	1001-
2		01643-30823	Washer	4	1001-
3		702-16-53240	Plug	1	1001-
4		07000-12018	O-ring	2	1001-
5		203-62-57730	Bolt, Eye	1	1001-
6		07000-12018	O-ring	2	1001-
7		04435-51410	Clip	1	1001-
8		01010-81020	Bolt	1	1001-
9		01643-31032	Washer	1	1001-
10		14X-62-54141	Hose Assembly	1	1001-
11		14X-62-53751	• Hose	1	1001-
12		14X-62-54860	• Hose	1	1001-
13		20Y-62-22790	• Band, Red	2	1001-
14		20Y-62-22860	• Band, Brown	2	1001-

FIG. K2110-009006 Dozer Control (With Provision for Power Angle Power Tilt Pitch Dozer, For 3D Machine Control Plug and Play) (Hose) (2/2)

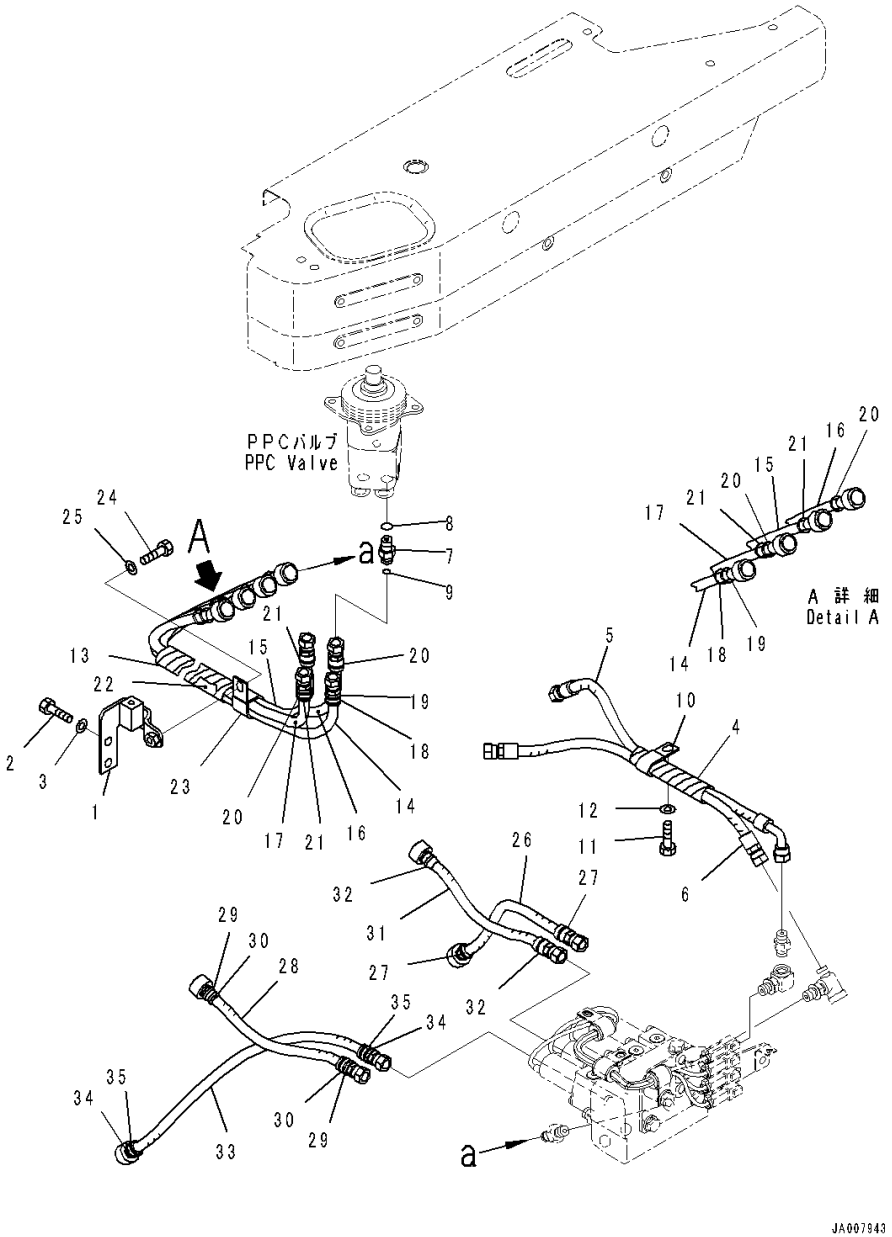

Index	Code	Part Number	Description	Qty	Serial Number
1		14X-62-55170	Bracket	1	1001-
2		01010-81020	Bolt	2	1001-
3		01643-31032	Washer	2	1001-
4		14X-62-55320	Hose Assembly	1	1001-
5		14X-62-55340	• Hose, Blue-Red	1	1001-
6		14X-62-55350	• Hose	1	1001-
7		02781-0021D	Union	4	1001-
8		07002-11423	O-ring	4	1001-
9		02896-11008	O-ring	4	1001-
10		04435-51410	Clip	1	1001-
11		01010-81020	Bolt	1	1001-
12		01643-31032	Washer	1	1001-
13		14X-62-55430	Hose Assembly	1	1001-
14		14X-62-53980	• Hose	1	1001-
15		14X-62-53961	• Hose	1	1001-
16		14X-62-55450	• Hose	1	1001-
17		14X-62-55490	• Hose	1	1001-
18		20Y-62-22820	• Band, Blue	2	1001-
19		20Y-62-22830	• Band, White	2	1001-
20		20Y-62-22850	• Band, Green	4	1001-
21		206-62-87990	• Band, Orange	4	1001-
22		08017-C1001	• Conduit	1	1001-
23		04434-52711	Clip	1	1001-
24		01010-81020	Bolt	1	1001-
25		01643-31032	Washer	1	1001-
26		14X-62-54441	Hose	1	1001-
27		20Y-62-22850	• Band, Green	2	1001-
28		14X-62-55230	Hose	1	1001-
29		20Y-62-22820	• Band, Blue	2	1001-
30		20Y-62-22830	• Band, White	2	1001-
31		14X-62-55210	Hose	1	1001-
32		206-62-87990	• Band, Orange	2	1001-
33		14X-62-55220	Hose	1	1001-
34		206-62-87990	• Band, Orange	2	1001-
35		20Y-62-22850	• Band, Green	2	1001-

FIG. K2110-010002 Dozer Control (With Provision for Power Angle Power Tilt Pitch Dozer, Rear 1-attachment, For 3D Machine Control Plug and Play) (Lever)

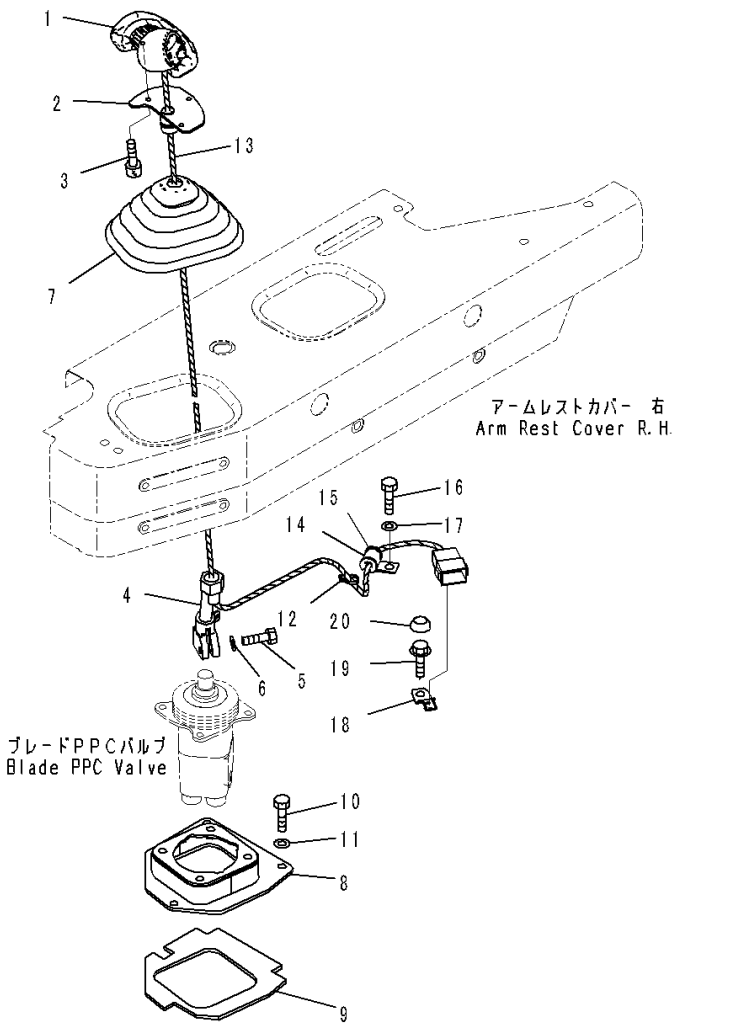

Index	Code	Part Number	Description	Qty	Serial Number
1		14X-43-66151	Knob	1	1001-
2		19M-43-38220	Bracket	1	1001-
3		01252-80510	Bolt	3	1001-
4		17A-43-46741	Lever	1	1001-
5		07372-21030	Bolt	1	1001-
6		01640-21016	Washer	1	1001-
7		17A-43-46270	Boot	1	1001-
8		14X-43-51350	Bracket	1	1001-
9		14X-43-51370	• Seal	1	1001-
10		01010-80830	Bolt	4	1001-
11		01643-30823	Washer	4	1001-
12		20Y-06-23940	Clip	1	1001-
13		08210-00604	Tube, Spiral	1	1001-
14		04434-51410	Clip	1	1001-
15		14X-06-52780	Cushion	1	1001-
16		01010-81020	Bolt	1	1001-
17		01643-31032	Washer	1	1001-
18		08193-20010	Clip	1	1001-
19		01435-41020	Bolt	1	1001-
20		363-54-31450	Cap, Bolt	1	1001-

FIG. K2110-010006 Dozer Control (Hose) (2/3)

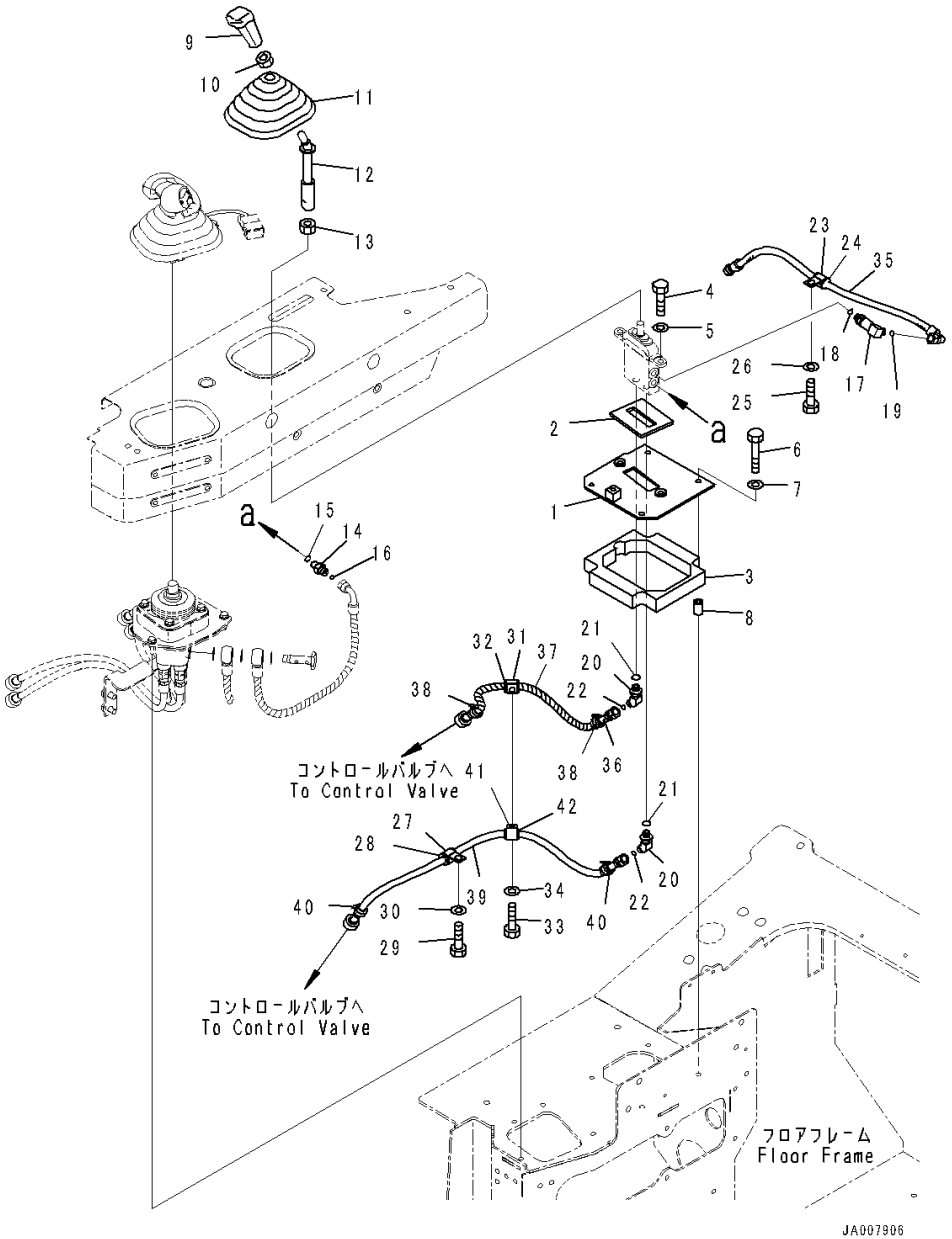

Index	Code	Part Number	Description	Qty	Serial Number
		Note: This list covers following specifications. With Provision for Power Angle Power Tilt Pitch Dozer, Rear 1-attachment, For 3D Machine Control Plug and Play With Power Angle Power Tilt Dozer, Inside Frame, Rear 1-attachment, For 3D Machine Control Plug and Play			
1		14X-78-51112	Bracket	1	1001-
2		14X-78-11490	• Seal	1	1001-
3		14X-78-51131	• Seal	1	1001-
4		01010-81030	Bolt	2	1001-
5		01643-31032	Washer	2	1001-
6		01010-80850	Bolt	4	1001-
7		01643-30823	Washer	4	1001-
8		14X-78-51141	Spacer	4	1001-
9		17A-43-42240	Knob	1	1001-
10		20T-43-71190	Nut	1	1001-
11		17A-43-46270	Boot	1	1001-
12		14X-78-51291	Lever	1	1001-
13		01583-11408	Nut	1	1001-
14		21W-62-44510	Nipple	1	1001-
15		07002-11423	O-ring	1	1001-
16		02896-11008	O-ring	1	1001-
17		21W-62-43990	Elbow	1	1001-
18		07002-11423	O-ring	1	1001-
19		02896-11008	O-ring	1	1001-
20		21W-62-42660	Elbow	2	1001-
21		07002-11423	O-ring	2	1001-
22		02896-11008	O-ring	2	1001-
23		04434-51710	Clip	1	1001-
24		07095-20211	Cushion	1	1001-
25		01010-81020	Bolt	1	1001-
26		01643-31032	Washer	1	1001-
27		04434-51810	Clip	1	1001-
28		07095-20213	Cushion	1	1001-
29		01010-81020	Bolt	1	1001-
30		01643-31032	Washer	1	1001-
31		04434-51810	Clip	1	1001-
32		07095-20213	Cushion	1	1001-
33		01010-81020	Bolt	1	1001-
34		01643-31032	Washer	1	1001-
35		02761-00206	Hose, Face Seal Type	1	1001-

FIG. K2110-010006 Dozer Control (Hose) (2/3)

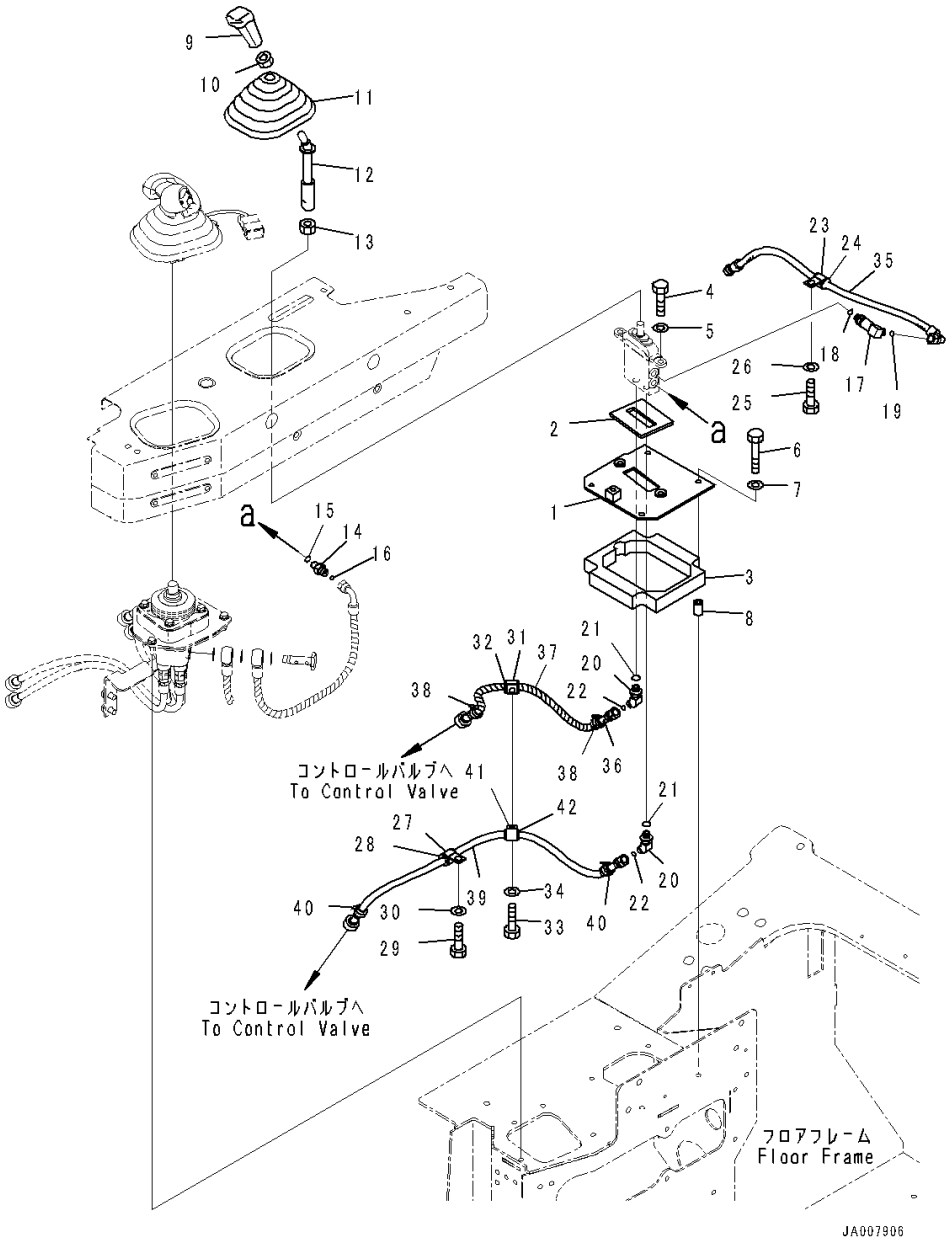

Index	Code	Part Number	Description	Qty	Serial Number
		14X-78-51431	Hose Assembly	1	1001-
36		08210-00604	• Tube, Spiral	1	1001-
37		14X-62-53931	• Hose	1	1001-
38		20Y-62-22860	• Band, Brown	2	1001-
39		14X-78-51421	Hose Assembly	1	1001-
40		20Y-62-22790	• Band, Red	2	1001-
41		04434-51810	Clip	1	1001-
42		07095-20213	Cushion	1	1001-

FIG. K2110-010008 Dozer Control (With Provision for Power Angle Power Tilt Pitch Dozer, Rear 1-attachment, For 3D Machine Control Plug and Play) (Hose) (3/3)

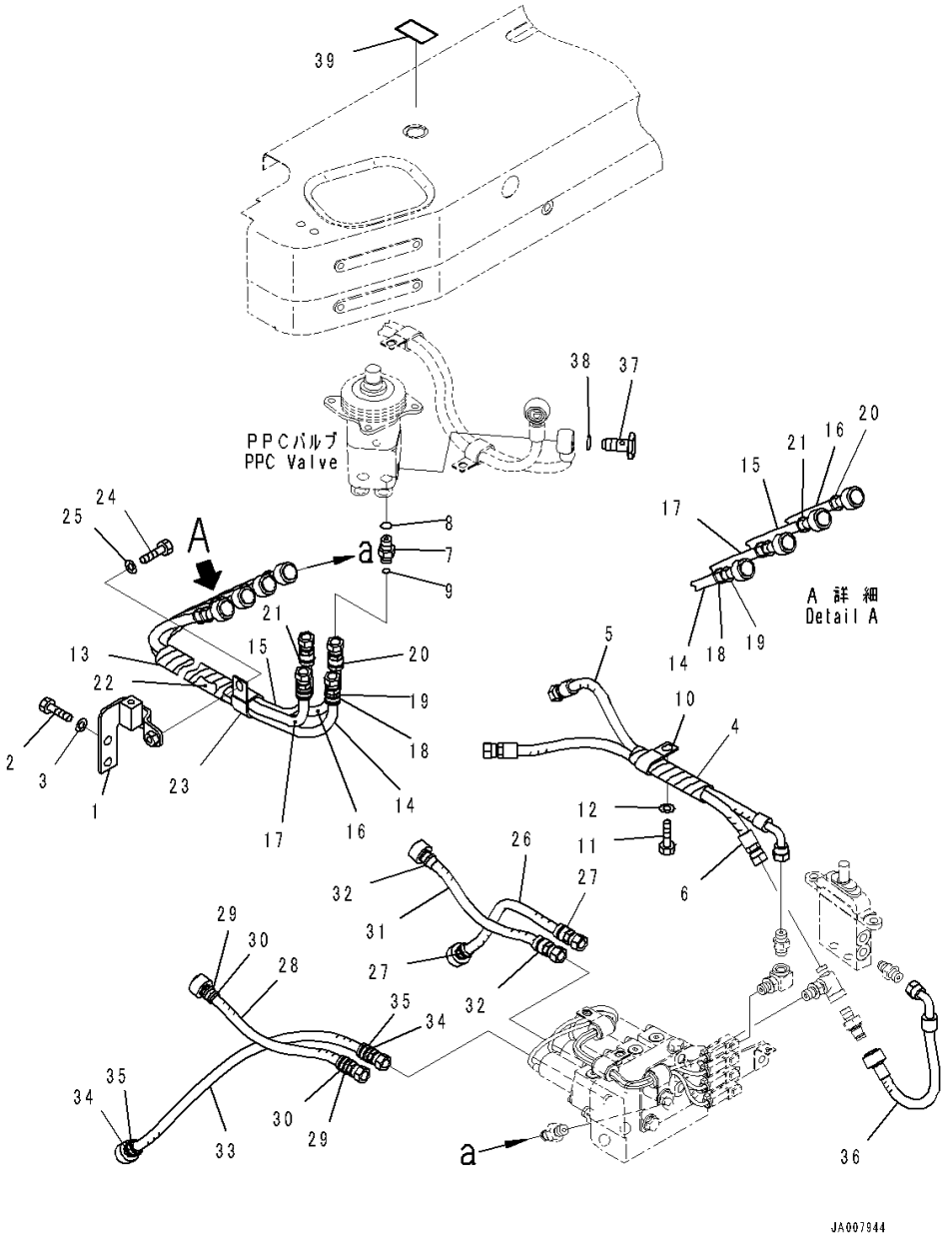

Index	Code	Part Number	Description	Qty	Serial Number
1		14X-62-55170	Bracket	1	1001-
2		01010-81020	Bolt	2	1001-
3		01643-31032	Washer	2	1001-
4		14X-62-55320	Hose Assembly	1	1001-
5		14X-62-55340	• Hose, Blue-Red	1	1001-
6		14X-62-55350	• Hose	1	1001-
7		02781-0021D	Union	4	1001-
8		07002-11423	O-ring	4	1001-
9		02896-11008	O-ring	4	1001-
10		04435-51410	Clip	1	1001-
11		01010-81020	Bolt	1	1001-
12		01643-31032	Washer	1	1001-
13		14X-62-55430	Hose Assembly	1	1001-
14		14X-62-53980	• Hose	1	1001-
15		14X-62-53961	• Hose	1	1001-
16		14X-62-55450	• Hose	1	1001-
17		14X-62-55490	• Hose	1	1001-
18		20Y-62-22820	• Band, Blue	2	1001-
19		20Y-62-22830	• Band, White	2	1001-
20		20Y-62-22850	• Band, Green	4	1001-
21		206-62-87990	• Band, Orange	4	1001-
22		08017-C1001	• Conduit	1	1001-
23		04434-52711	Clip	1	1001-
24		01010-81020	Bolt	1	1001-
25		01643-31032	Washer	1	1001-
26		14X-62-54441	Hose	1	1001-
27		20Y-62-22850	• Band, Green	2	1001-
28		14X-62-55230	Hose	1	1001-
29		20Y-62-22820	• Band, Blue	2	1001-
30		20Y-62-22830	• Band, White	2	1001-
31		14X-62-55210	Hose	1	1001-
32		206-62-87990	• Band, Orange	2	1001-
33		14X-62-55220	Hose	1	1001-
34		206-62-87990	• Band, Orange	2	1001-
35		20Y-62-22850	• Band, Green	2	1001-
36		14X-62-55360	Hose	1	1001-
37		702-16-53240	Plug	1	1001-
38		07000-12018	O-ring	1	1001-
39		14X-78-21180	Plate	1	1001-

FIG. K2110-011002 Dozer Control (With Power Angle Power Tilt Dozer, Inside Frame, For 3D Machine Control Plug and Play) (Lever)

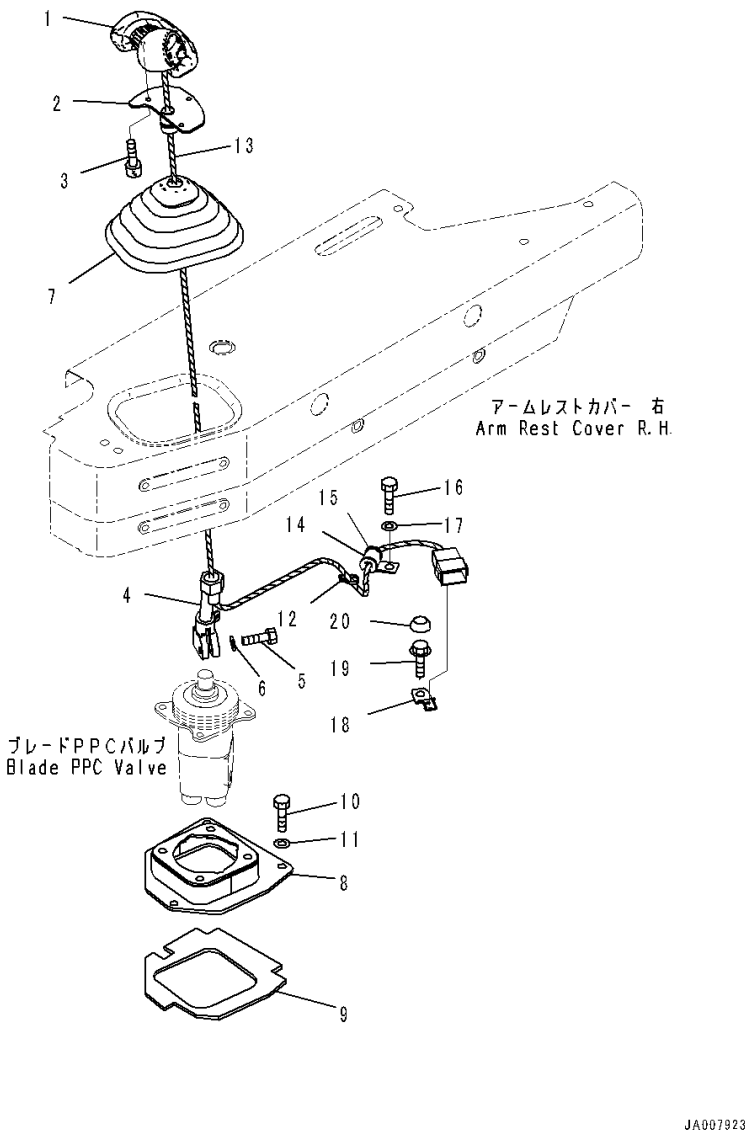

Index	Code	Part Number	Description	Qty	Serial Number
1		14X-43-66131	Knob	1	1001-
2		19M-43-38220	Bracket	1	1001-
3		01252-80510	Bolt	3	1001-
4		17A-43-46741	Lever	1	1001-
5		07372-21030	Bolt	1	1001-
6		01640-21016	Washer	1	1001-
7		17A-43-46270	Boot	1	1001-
8		14X-43-51350	Bracket	1	1001-
9		14X-43-51370	• Seal	1	1001-
10		01010-80830	Bolt	4	1001-
11		01643-30823	Washer	4	1001-
12		20Y-06-23940	Clip	1	1001-
13		08210-00604	Tube, Spiral	1	1001-
14		04434-51410	Clip	1	1001-
15		14X-06-52780	Cushion	1	1001-
16		01010-81020	Bolt	1	1001-
17		01643-31032	Washer	1	1001-
18		08193-20010	Clip	1	1001-
19		01435-41020	Bolt	1	1001-
20		363-54-31450	Cap, Bolt	1	1001-

FIG. K2110-011006 Dozer Control (With Power Angle Power Tilt Dozer, Inside Frame, For 3D Machine Control Plug and Play) (Hose) (2/2)

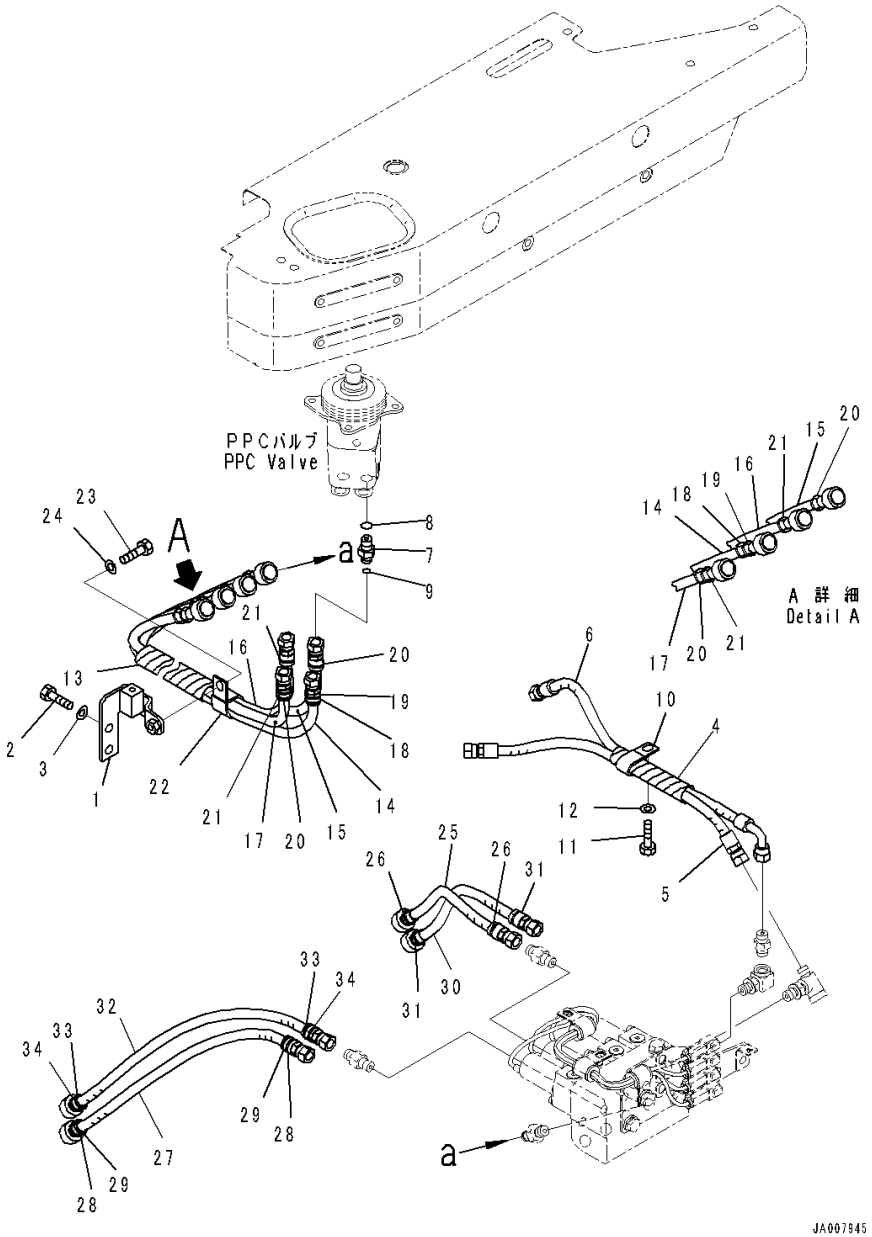

Index	Code	Part Number	Description	Qty	Serial Number
1		14X-62-55170	Bracket	1	1001-
2		01010-81020	Bolt	2	1001-
3		01643-31032	Washer	2	1001-
4		14X-62-65310	Hose Assembly	1	1001-
5		14X-62-55330	• Hose	1	1001-
6		14X-62-55340	• Hose, Blue-Red	1	1001-
7		02781-0021D	Union	4	1001-
8		07002-11423	O-ring	4	1001-
9		02896-11008	O-ring	4	1001-
10		04435-51410	Clip	1	1001-
11		01010-81020	Bolt	1	1001-
12		01643-31032	Washer	1	1001-
13		14X-62-55420	Hose Assembly	1	1001-
14		14X-62-53980	• Hose	1	1001-
15		14X-62-53931	• Hose	1	1001-
16		14X-62-55470	• Hose	1	1001-
17		14X-62-55480	• Hose	1	1001-
18		20Y-62-22820	• Band, Blue	2	1001-
19		20Y-62-22830	• Band, White	2	1001-
20		20Y-62-22850	• Band, Green	4	1001-
21		206-62-87990	• Band, Orange	4	1001-
22		04434-52711	Clip	1	1001-
23		01010-81020	Bolt	1	1001-
24		01643-31032	Washer	1	1001-
25		14X-62-54441	Hose	1	1001-
26		20Y-62-22850	• Band, Green	2	1001-
27		14X-62-54451	Hose	1	1001-
28		206-62-87990	• Band, Orange	2	1001-
29		20Y-62-22850	• Band, Green	2	1001-
30		14X-62-55180	Hose	1	1001-
31		206-62-87990	• Band, Orange	2	1001-
32		14X-62-55190	Hose	1	1001-
33		20Y-62-22820	• Band, Blue	2	1001-
34		20Y-62-22830	• Band, White	2	1001-

FIG. K2110-012002 Dozer Control (With Power Angle Power Tilt Dozer, Inside Frame, Rear 1-attachment, For 3D Machine Control Plug and Play) (Lever)

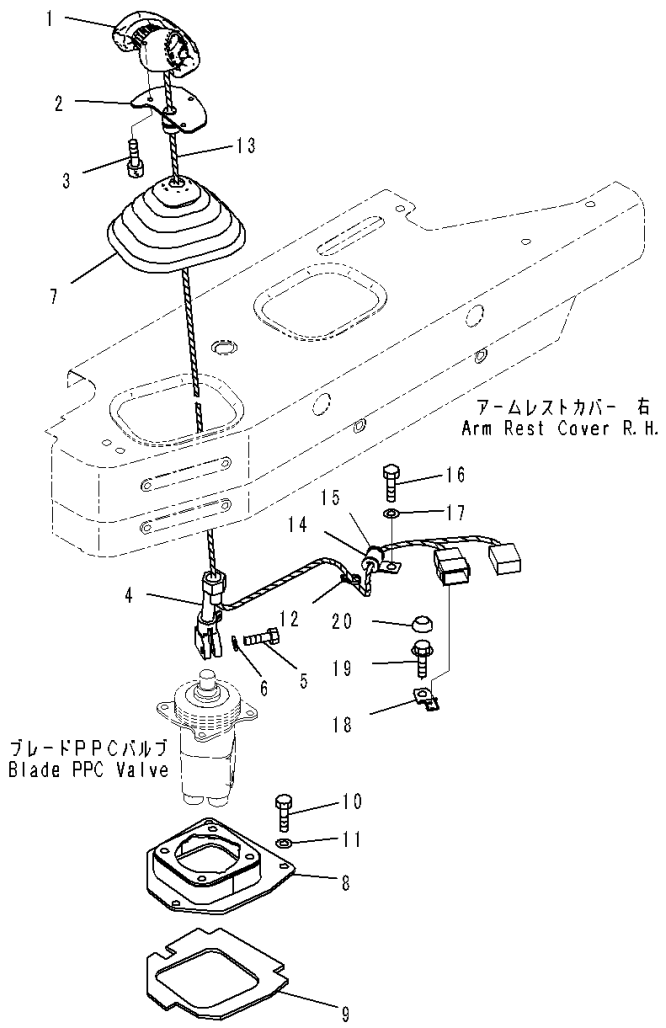

Index	Code	Part Number	Description	Qty	Serial Number
1		14X-43-66131	Knob	1	1001-
2		19M-43-38220	Bracket	1	1001-
3		01252-80510	Bolt	3	1001-
4		17A-43-46741	Lever	1	1001-
5		07372-21030	Bolt	1	1001-
6		01640-21016	Washer	1	1001-
7		17A-43-46270	Boot	1	1001-
8		14X-43-51350	Bracket	1	1001-
9		14X-43-51370	• Seal	1	1001-
10		01010-80830	Bolt	4	1001-
11		01643-30823	Washer	4	1001-
12		20Y-06-23940	Clip	1	1001-
13		08210-00604	Tube, Spiral	1	1001-
14		04434-51410	Clip	1	1001-
15		14X-06-52780	Cushion	1	1001-
16		01010-81020	Bolt	1	1001-
17		01643-31032	Washer	1	1001-
18		08193-20010	Clip	1	1001-
19		01435-41020	Bolt	1	1001-
20		363-54-31450	Cap, Bolt	1	1001-

FIG. K2110-012008 Dozer Control (With Power Angle Power Tilt Dozer, Inside Frame, Rear 1-attachment, For 3D Machine Control Plug and Play) (Hose) (3/3)

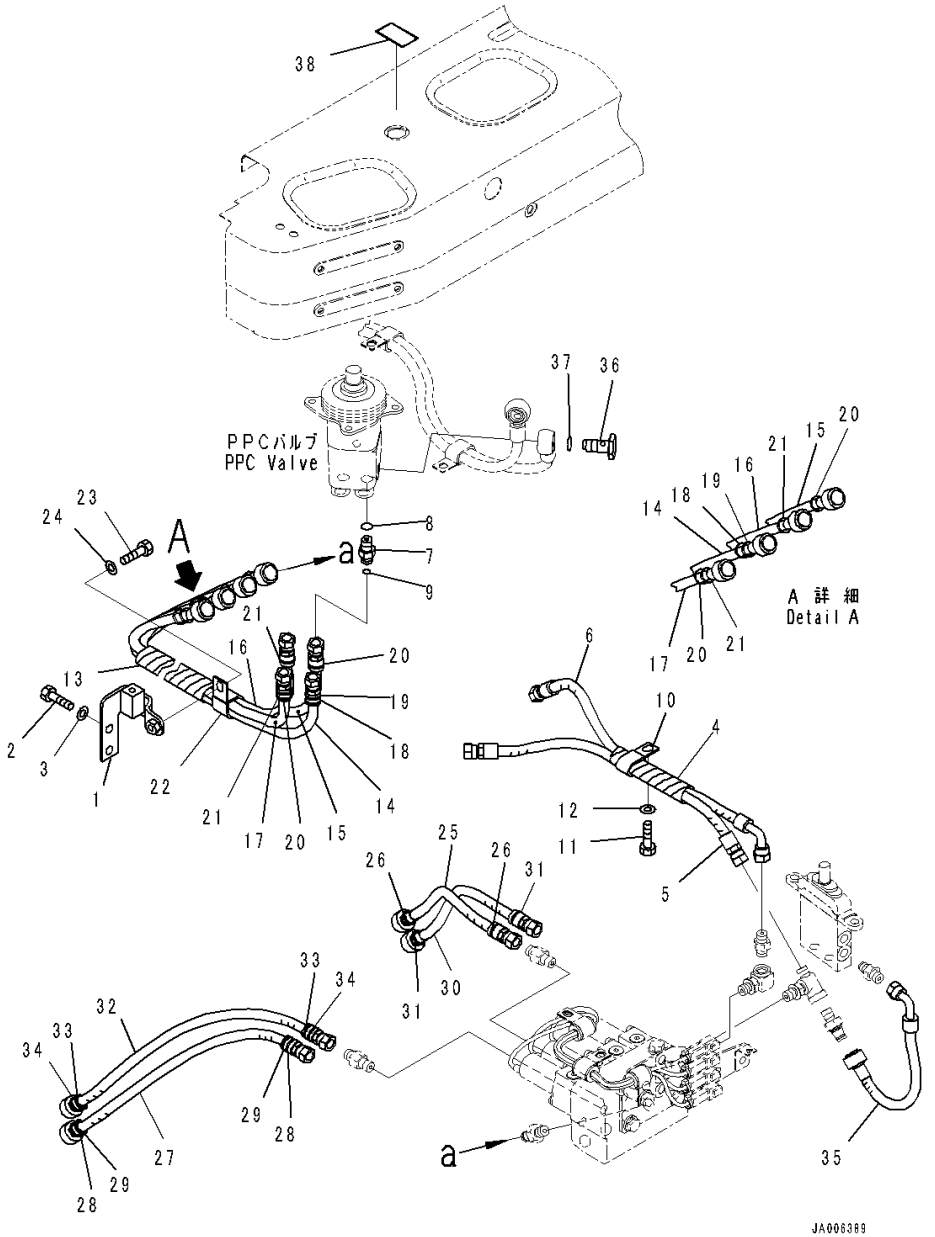

Index	Code	Part Number	Description	Qty	Serial Number
1		14X-62-55170	Bracket	1	1001-
2		01010-81020	Bolt	2	1001-
3		01643-31032	Washer	2	1001-
4		14X-62-65310	Hose Assembly	1	1001-
5		14X-62-55330	• Hose	1	1001-
6		14X-62-55340	• Hose, Blue-Red	1	1001-
7		02781-0021D	Union	4	1001-
8		07002-11423	O-ring	4	1001-
9		02896-11008	O-ring	4	1001-
10		04435-51410	Clip	1	1001-
11		01010-81020	Bolt	1	1001-
12		01643-31032	Washer	1	1001-
13		14X-62-55420	Hose Assembly	1	1001-
14		14X-62-53980	• Hose	1	1001-
15		14X-62-53931	• Hose	1	1001-
16		14X-62-55470	• Hose	1	1001-
17		14X-62-55480	• Hose	1	1001-
18		20Y-62-22820	• Band, Blue	2	1001-
19		20Y-62-22830	• Band, White	2	1001-
20		20Y-62-22850	• Band, Green	4	1001-
21		206-62-87990	• Band, Orange	4	1001-
22		04434-52711	Clip	1	1001-
23		01010-81020	Bolt	1	1001-
24		01643-31032	Washer	1	1001-
25		14X-62-54441	Hose	1	1001-
26		20Y-62-22850	• Band, Green	2	1001-
27		14X-62-54451	Hose	1	1001-
28		206-62-87990	• Band, Orange	2	1001-
29		20Y-62-22850	• Band, Green	2	1001-
30		14X-62-55180	Hose	1	1001-
31		206-62-87990	• Band, Orange	2	1001-
32		14X-62-55190	Hose	1	1001-
33		20Y-62-22820	• Band, Blue	2	1001-
34		20Y-62-22830	• Band, White	2	1001-
35		14X-62-55360	Hose	1	1001-
36		702-16-53240	Plug	1	1001-
37		07000-12018	O-ring	1	1001-
38		14X-78-21180	Plate	1	1001-

FIG. K2120-001001 Floor Frame Mounting

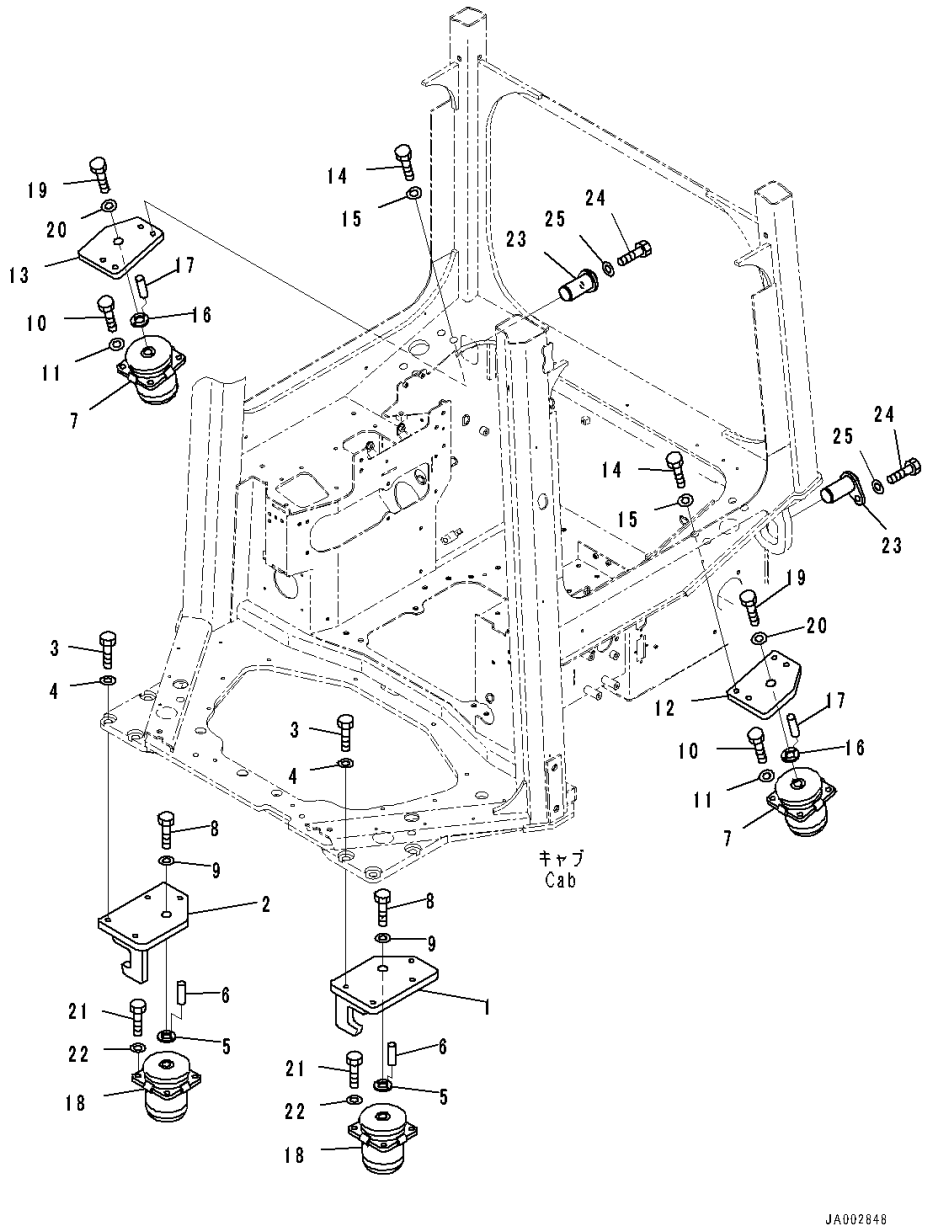

Index	Code	Part Number	Description	Qty	Serial Number
1		14X-54-56111	Bracket	1	1001-
2		14X-54-56121	Bracket	1	1001-
3		198-54-42260	Bolt	8	1001-
4		14X-54-56780	Washer	8	1001-
5		17A-54-46440	Plate	2	1001-
6		04020-00616	Pin, Dowel	4	1001-
7		14X-54-56191	Cushion	2	1001-
8		01010-82460	Bolt	2	1001-
9		01643-32460	Washer	2	1001-
10		01010-81440	Bolt	8	1001-
11		01643-31445	Washer	8	1001-
12		14X-54-56131	Plate	1	1001-
13		14X-54-56141	Plate	1	1001-
14		198-54-42260	Bolt	8	1001-
15		14X-54-56780	Washer	8	1001-
16		17A-54-46440	Plate	2	1001-
17		04020-00616	Pin, Dowel	4	1001-
18		14X-54-56191	Cushion	2	1001-
19		01010-82460	Bolt	2	1001-
20		01643-32460	Washer	2	1001-
21		01010-81440	Bolt	8	1001-
22		01643-31445	Washer	8	1001-
23		14X-54-56213	Pin	2	1001-
24		01010-81230	Bolt	2	1001-
25		01643-31232	Washer	2	1001-

FIG. K2130-001001 Floor Frame Cover

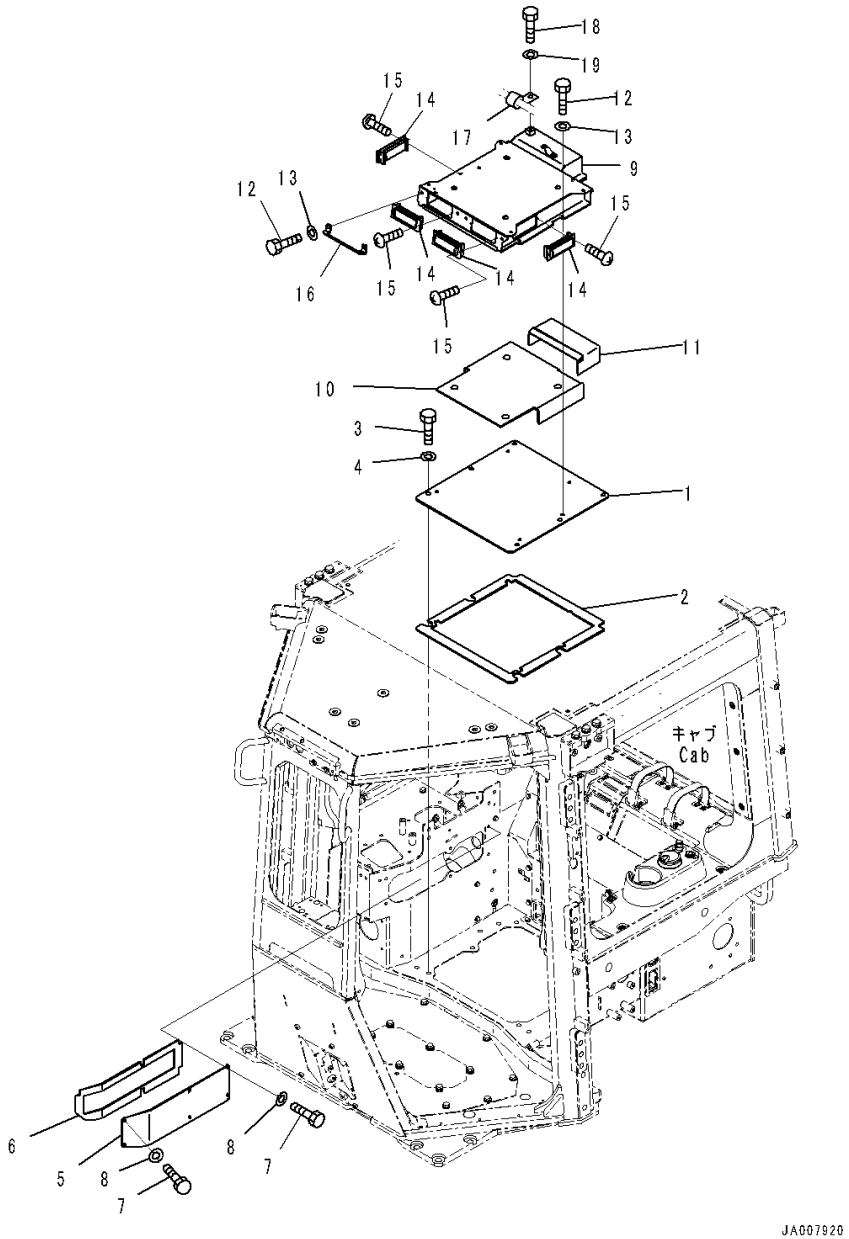

Index	Code	Part Number	Description	Qty	Serial Number
1		14X-54-66320	Cover	1	1001-
2		14X-54-66620	• Sheet	1	1001-
3		01010-D1230	Bolt	6	1001-
4		01643-71232	Washer	6	1001-
5		14X-54-56341	Cover	1	1001-
6		14X-54-56460	• Seal	1	1001-
7		01010-D0825	Bolt	6	1001-
8		01643-70823	Washer	6	1001-
9		14X-Y11-6381	Bracket	1	1235-
10		14X-Y11-6350	• Sheet	1	1001-
11		14X-Y11-6360	• Sheet	1	1001-
12		01010-D0825	Bolt	9	1001-
13		01643-70823	Washer	9	1001-
14		17A-Z11-7161	Louver	4	1001-
15		01370-40414	Screw	8	1001-
16		17A-911-5682	Plate	2	1001-
17		04434-51410	Clip	1	1001-
18		01010-D1020	Bolt	1	1001-
19		01643-71032	Washer	1	1001-

FIG. K2510-001001 Blade Control Plate (Power Angle Power Tilt Dozer, Inside Frame)

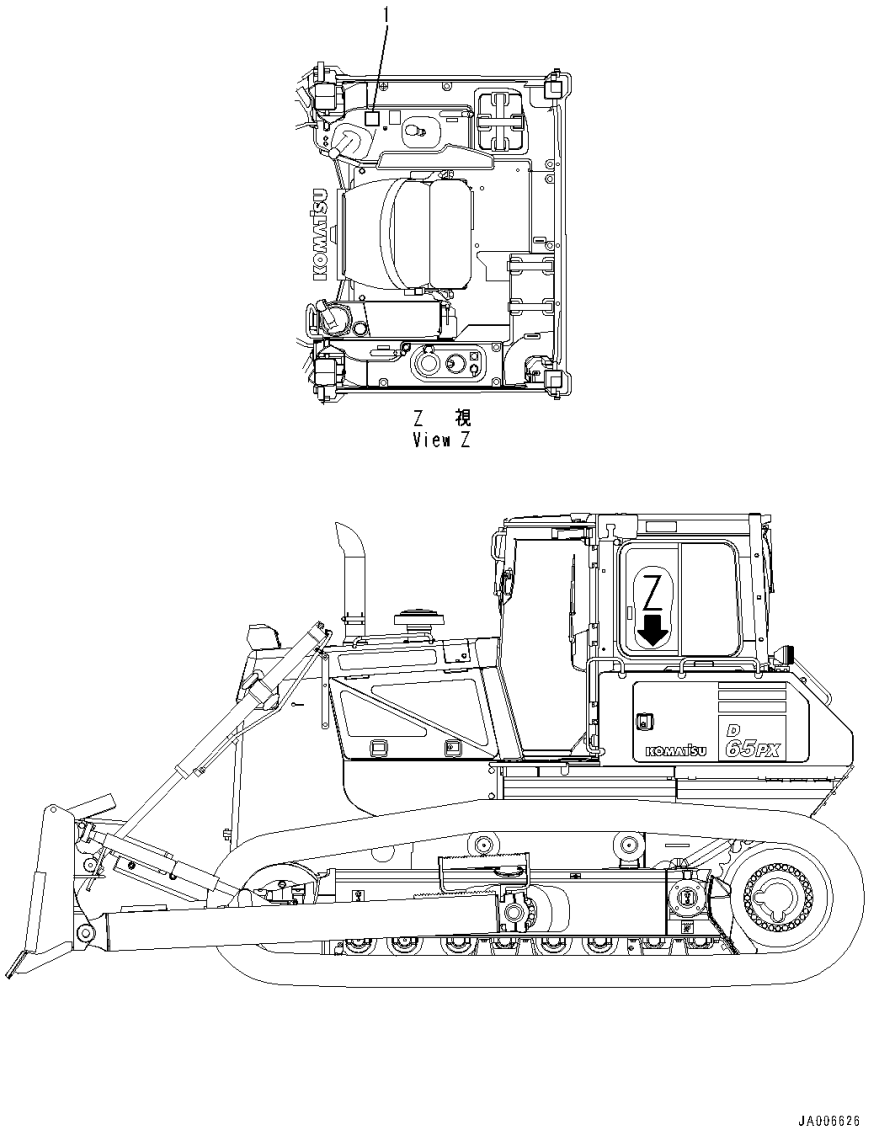

Index	Code	Part Number	Description	Qty	Serial Number
1		14X-98-61311	Plate	1	1001-

FIG. K2510-002001 Blade Control Plate (Power Angle Power Tilt Dozer, Inside Frame, 3D Machine Control Plug and Play)

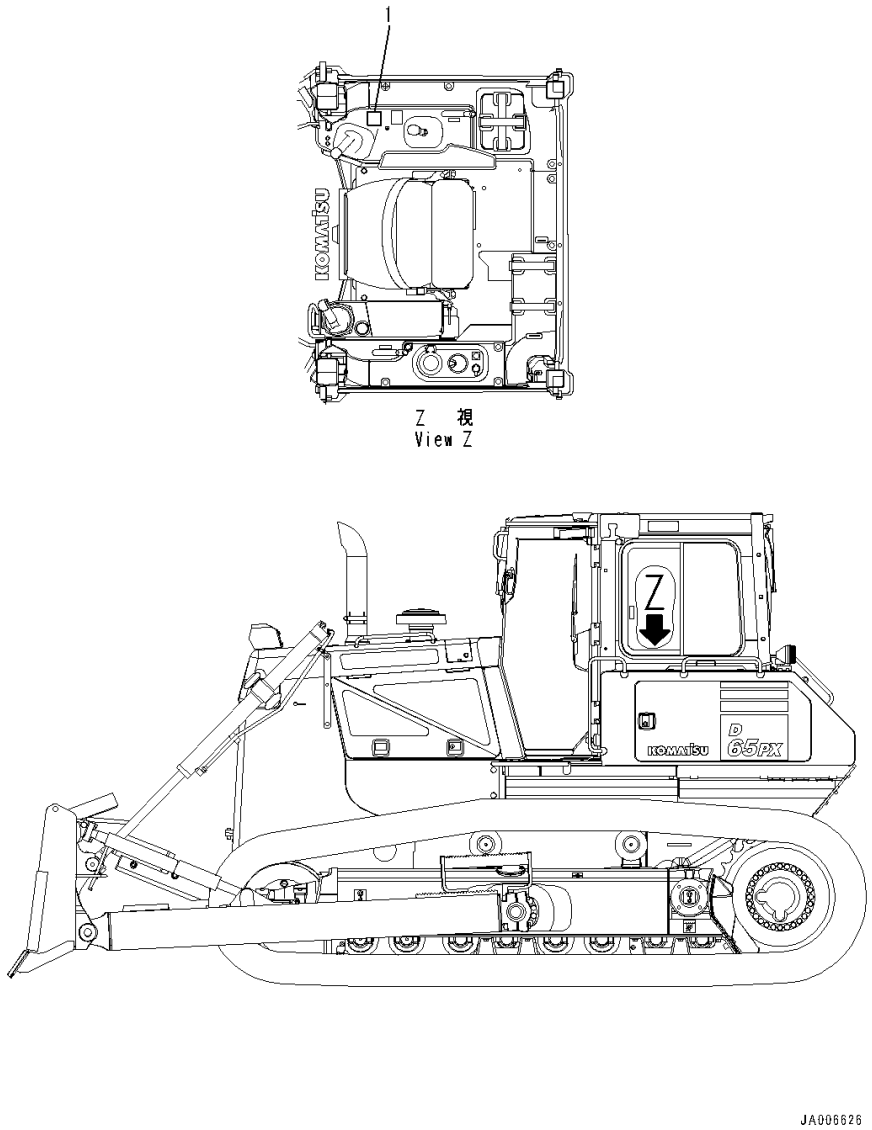

Index	Code	Part Number	Description	Qty	Serial Number
1		14X-98-61321	Plate	1	1001-

FIG. K2510-003001 Blade Control Plate (Straight Tilt Dozer)

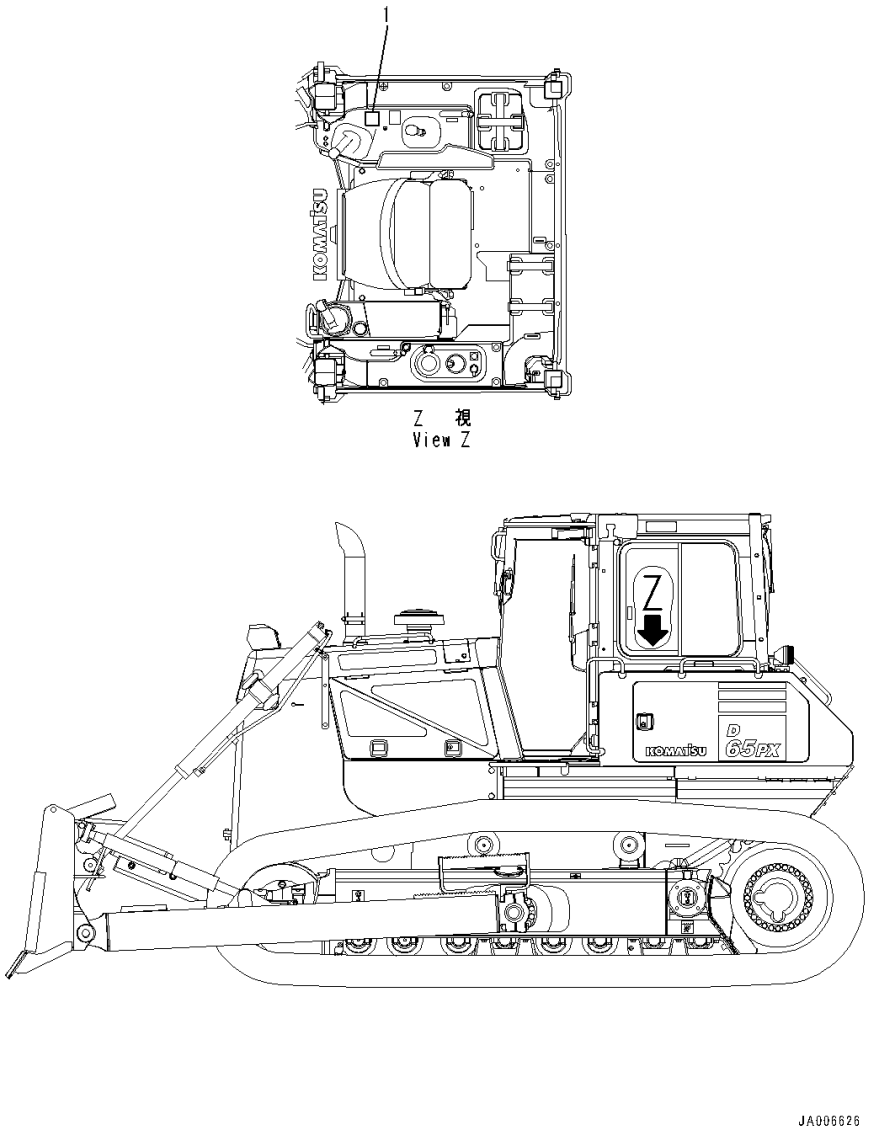

Index	Code	Part Number	Description	Qty	Serial Number
1		14X-98-61331	Plate	1	1001-

FIG. K2510-004001 Blade Control Plate (Straight Tilt Dozer, 3D Machine Control Plug and Play)

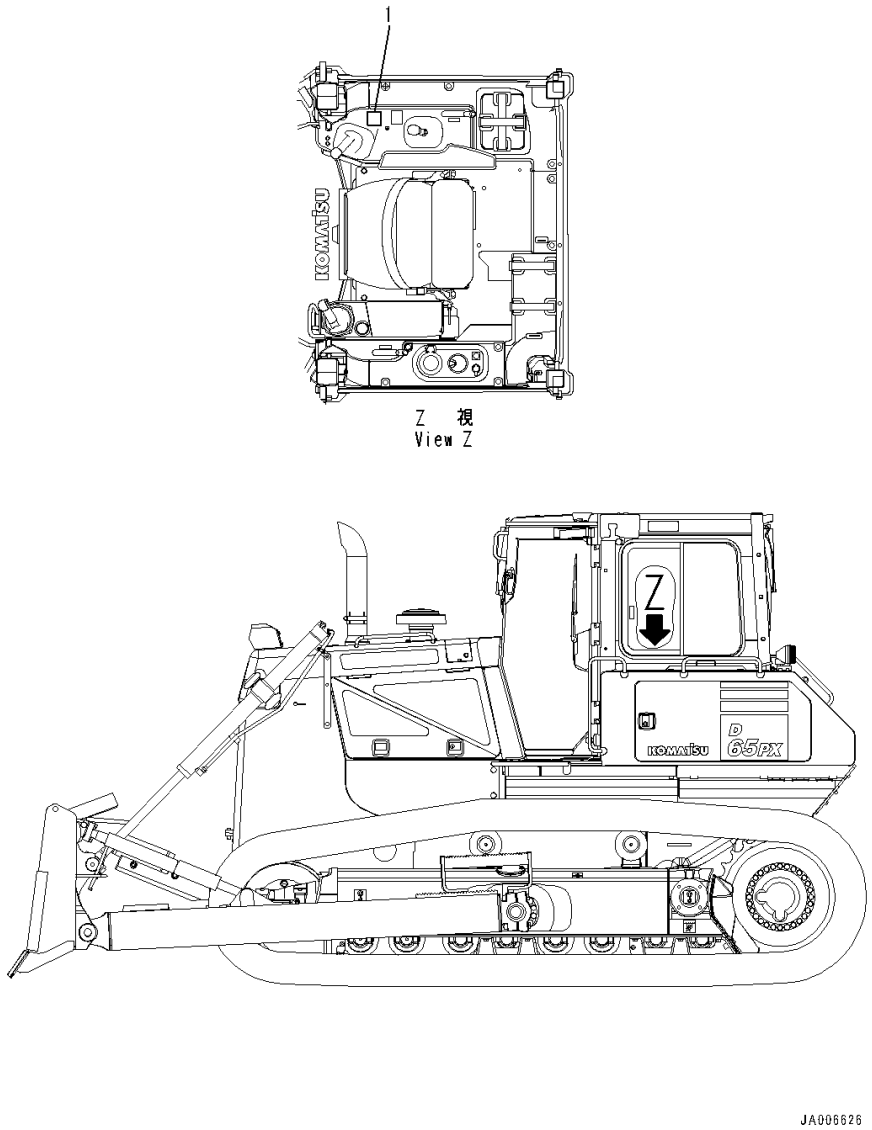

Index	Code	Part Number	Description	Qty	Serial Number
1		14X-98-61341	Plate	1	1001-

FIG. K2510-005001 Blade Control Plate (Power Tilt Pitch Dozer)

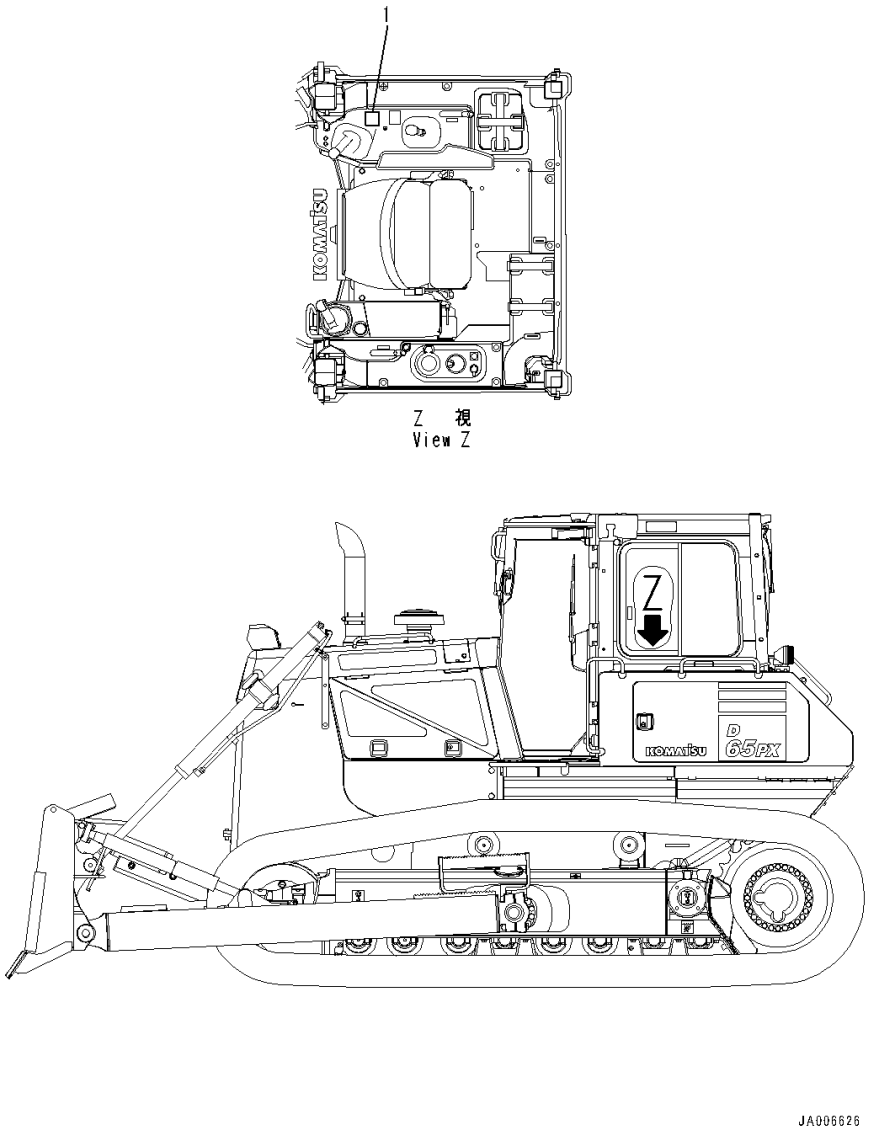

Index	Code	Part Number	Description	Qty	Serial Number
1		14X-98-61351	Plate	1	1001-

FIG. K2510-006001 Blade Control Plate (Power Tilt Pitch Dozer, 3D Machine Control Plug and Play)

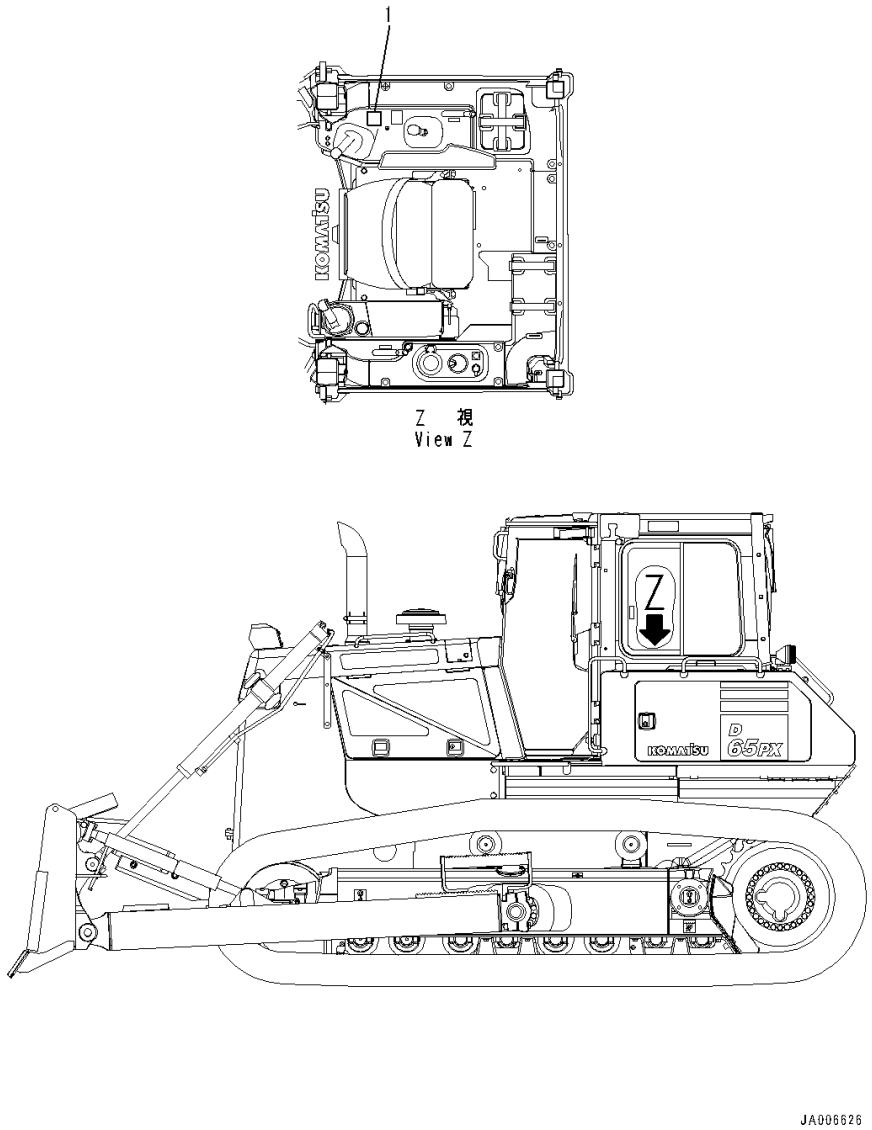

Index	Code	Part Number	Description	Qty	Serial Number
1		14X-98-61361	Plate	1	1001-

FIG. K2910-001001 Window Washer Tank

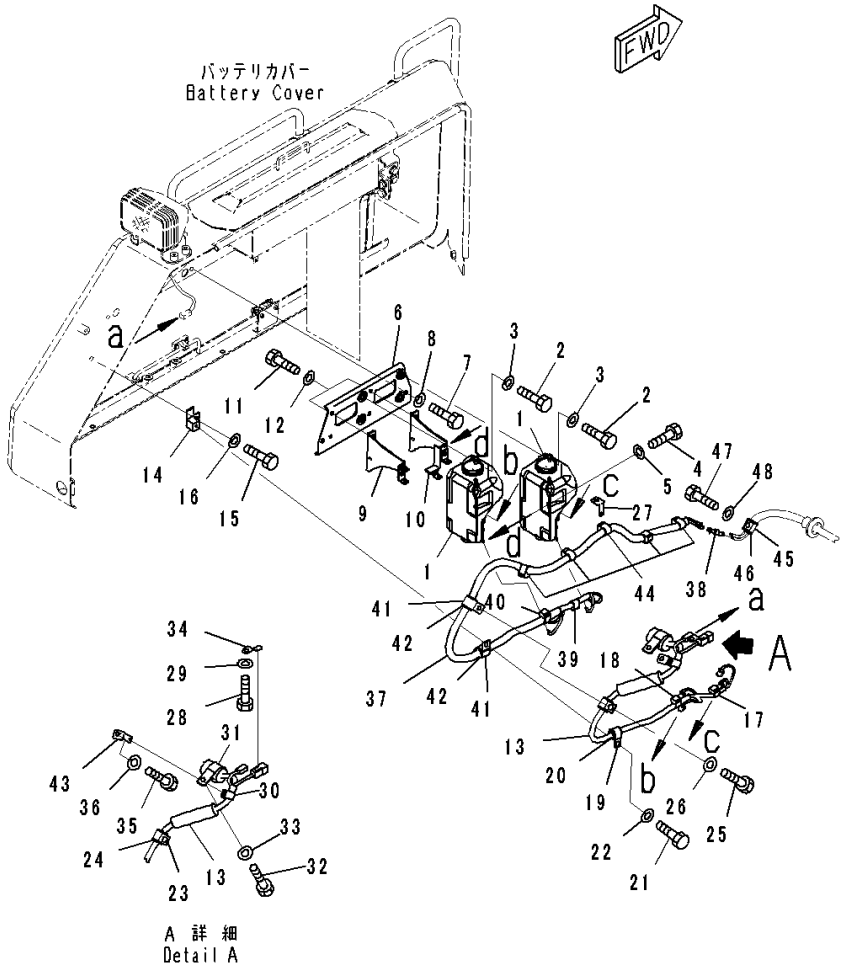

Index	Code	Part Number	Description	Qty	Serial Number
1		14X-Y11-2110	Tank Assembly	2	1001-
2		01010-80825	Bolt	4	1001-
3		01643-30823	Washer	4	1001-
4		01010-80616	Bolt	2	1001-
5		01643-30623	Washer	2	1001-
6		14X-Y11-2121	Bracket	1	1001-
7		01010-81016	Bolt	2	1001-
8		01643-31032	Washer	2	1001-
9		14X-Y11-2160	Bracket	1	1001-
10		14X-Y11-2170	Bracket	1	1001-
11		01010-80816	Bolt	4	1001-
12		01643-30823	Washer	4	1001-
13		14X-06-61781	Wiring Harness	1	1001-
14		14X-Y11-1731	Bracket	1	1001-
15		01010-81025	Bolt	1	1001-
16		01643-31032	Washer	1	1001-
17		08211-00720	Clip	1	1001-
18		08211-01020	Clip	1	1001-
19		04434-52112	Clip	1	1001-
20		07095-20213	Cushion	1	1001-
21		01010-81020	Bolt	1	1001-
22		01643-31032	Washer	1	1001-
23		04434-52112	Clip	1	1001-
24		07095-20213	Cushion	1	1001-
25		01010-81020	Bolt	1	1001-
26		01643-31032	Washer	1	1001-
27		08057-14010	Clip	1	1001-
28		01010-81020	Bolt	1	1001-
29		01643-31032	Washer	1	1001-
30		08211-01320	Clip	1	1001-
31		23S-62-25850	Clip	1	1001-
32		01010-81020	Bolt	1	1001-
33		01643-31032	Washer	1	1001-
34		08193-21012	Clip	1	1001-
35		01010-81020	Bolt	1	1001-
36		01643-31032	Washer	1	1001-
37		14X-Y11-2140	Hose Assembly	1	1001-
38		22L-54-22990	• Joint	4	1001-
39		08211-01020	Clip	1	1001-
40		08211-01520	Clip	1	1001-

FIG. K2910-001001 Window Washer Tank

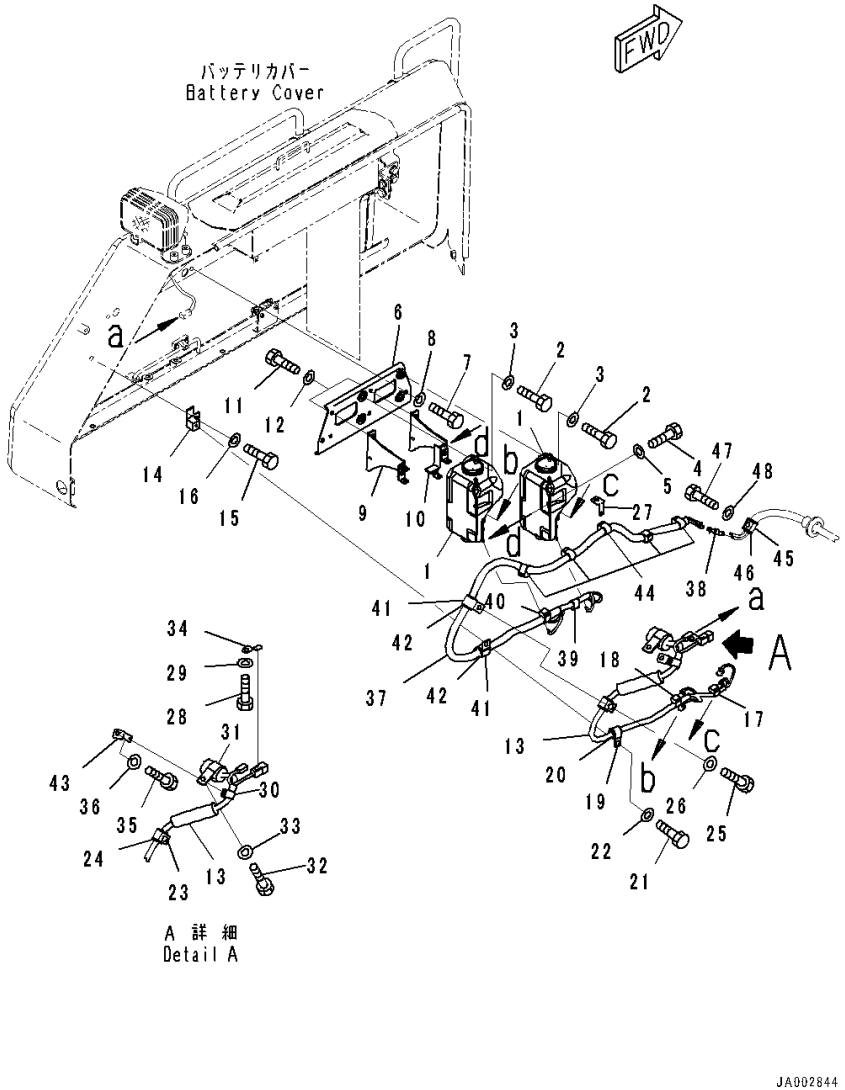

Index	Code	Part Number	Description	Qty	Serial Number
41		04434-52511	Clip	2	1001-
42		07095-20318	Cushion	2	1001-
43		08057-14010	Clip	1	1001-
44		08211-01520	Clip	5	1001-
45		04434-52512	Clip	1	1001-
46		07095-20318	Cushion	1	1001-
47		01010-81235	Bolt	1	1001-
48		01643-31232	Washer	1	1001-

FIG. K4208-002001 KOMTRAX Related Parts (Without 3D Machine Control Plug and Play)

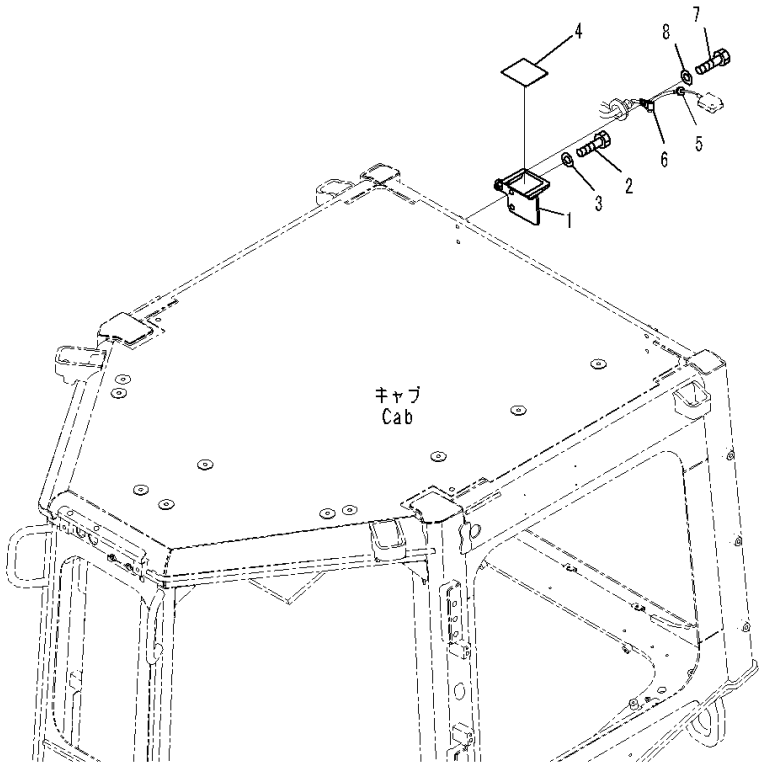

Index	Code	Part Number	Description	Qty	Serial Number
1		17A-979-5220	Bracket	1	1001-
2		01010-81225	Bolt	2	1001-
3		01643-31232	Washer	2	1001-
4		17A-06-51950	Plate	1	1001-
5		22T-05-13110	Grommet	1	1001-
6		04434-50812	Clip	1	1001-
7		01010-81225	Bolt	1	1001-
8		01643-31232	Washer	1	1001-

FIG. K4208-003001 KOMTRAX Related Parts (With 3D Machine Control Plug and Play)

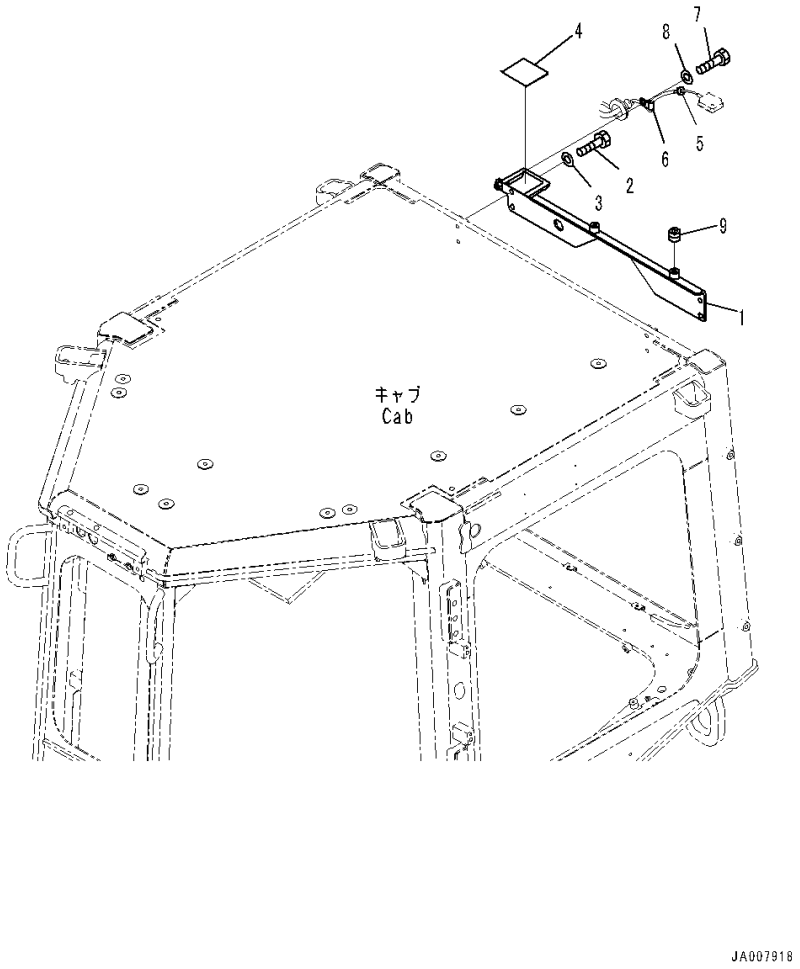

Index	Code	Part Number	Description	Qty	Serial Number
1		14X-06-63110	Bracket	1	1001-
2		01010-81225	Bolt	4	1001-
3		01643-31232	Washer	4	1001-
4		17A-06-51950	Plate	1	1001-
5		22T-05-13110	Grommet	1	1001-
6		04434-50812	Clip	1	1001-
7		01010-81225	Bolt	1	1001-
8		01643-31232	Washer	1	1001-
9		01310-21212	Screw	2	1001-

GUARDS AND COVERS

FIG. M2111-001001 Dozer Blade Lift Cylinder Support

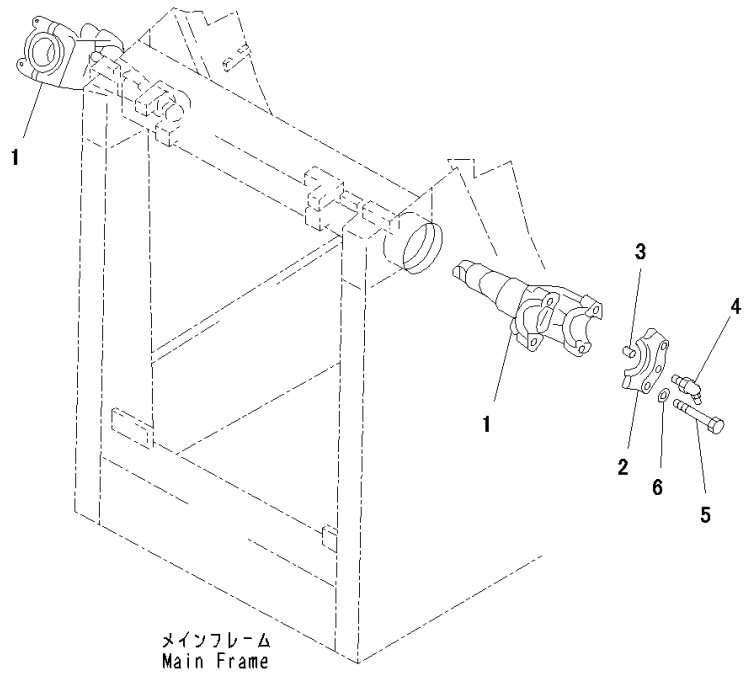

P4A1983

Index	Code	Part Number	Description	Qty	Serial Number
		14X-71-00030	Yoke Assembly	1	1001-
1		14X-71-53110	• Yoke	2	1001-
2		14Y-71-13320	• Cap	4	1001-
3		144-70-15251	• Pin, Dowel	4	1001-
4		07020-00675	• Fitting, Grease	4	1001-
5		01010-81670	Bolt	8	1001-
6		01643-31645	Washer	8	1001-

FIG. M2120-002001 Radiator Mask (Hinged Perforated Radiator Mask)

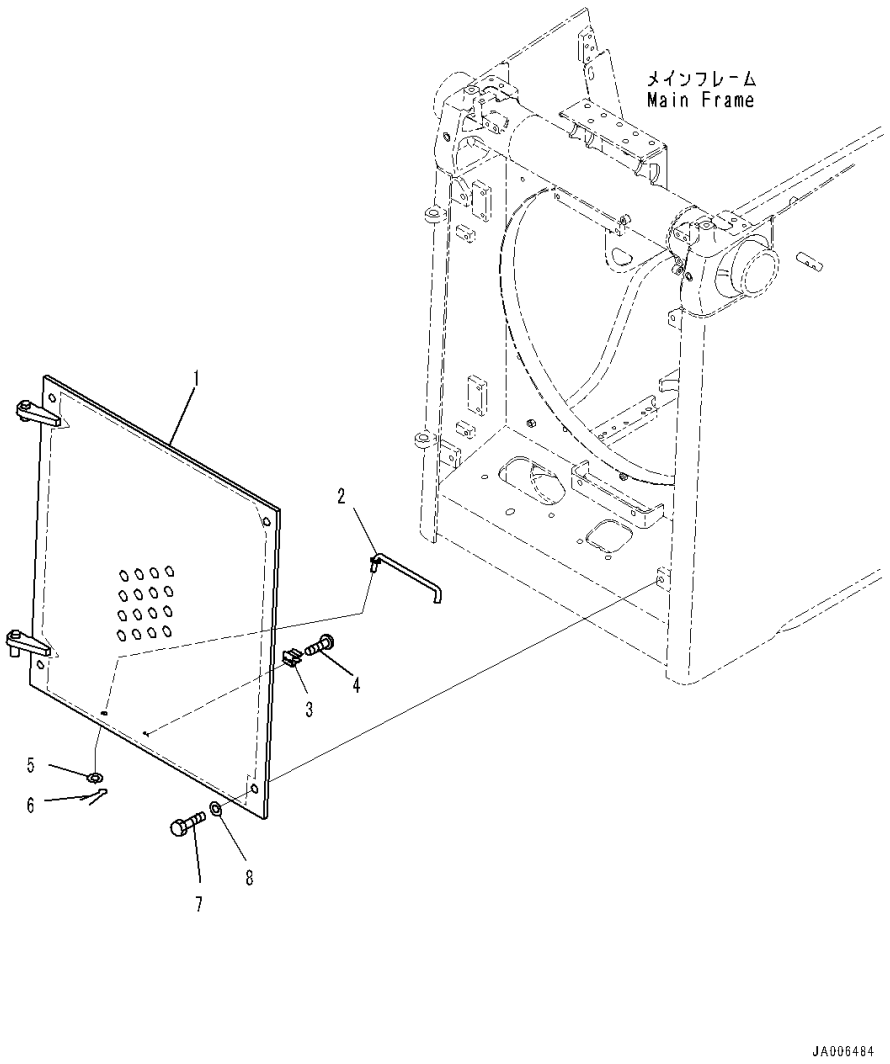

Index	Code	Part Number	Description	Qty	Serial Number
1		14X-54-51121	Mask	1	1001-
2		14X-54-51130	Bar	1	1001-
3		20R-54-11460	Spring	1	1001-
4		01023-10510	Screw	2	1001-
5		01643-31232	Washer	1	1001-
6		04050-14025	Pin, Cotter	1	1001-
7		01010-D1640	Bolt	4	1001-
8		01643-71645	Washer	4	1001-

FIG. M2120-001001 Radiator Mask (Strengthened Perforated Radiator Mask)

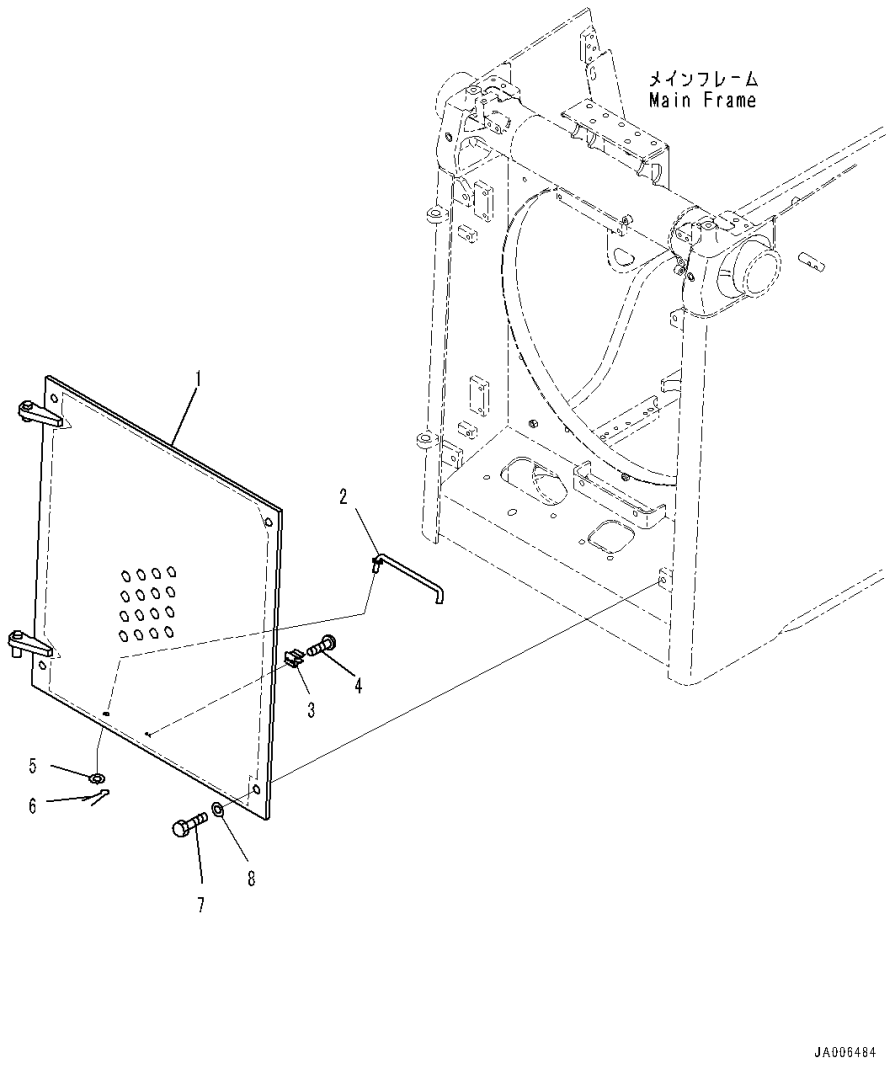

Index	Code	Part Number	Description	Qty	Serial Number
1		14X-54-51111	Mask	1	1001-
2		14X-54-51130	Bar	1	1001-
3		20R-54-11460	Spring	1	1001-
4		01023-10510	Screw	2	1001-
5		01643-31232	Washer	1	1001-
6		04050-14025	Pin, Cotter	1	1001-
7		01010-D1640	Bolt	4	1001-
8		01643-71645	Washer	4	1001-

FIG. M2140-002001 Front Guard (EU New Noise Arrangement 2) (Hood)

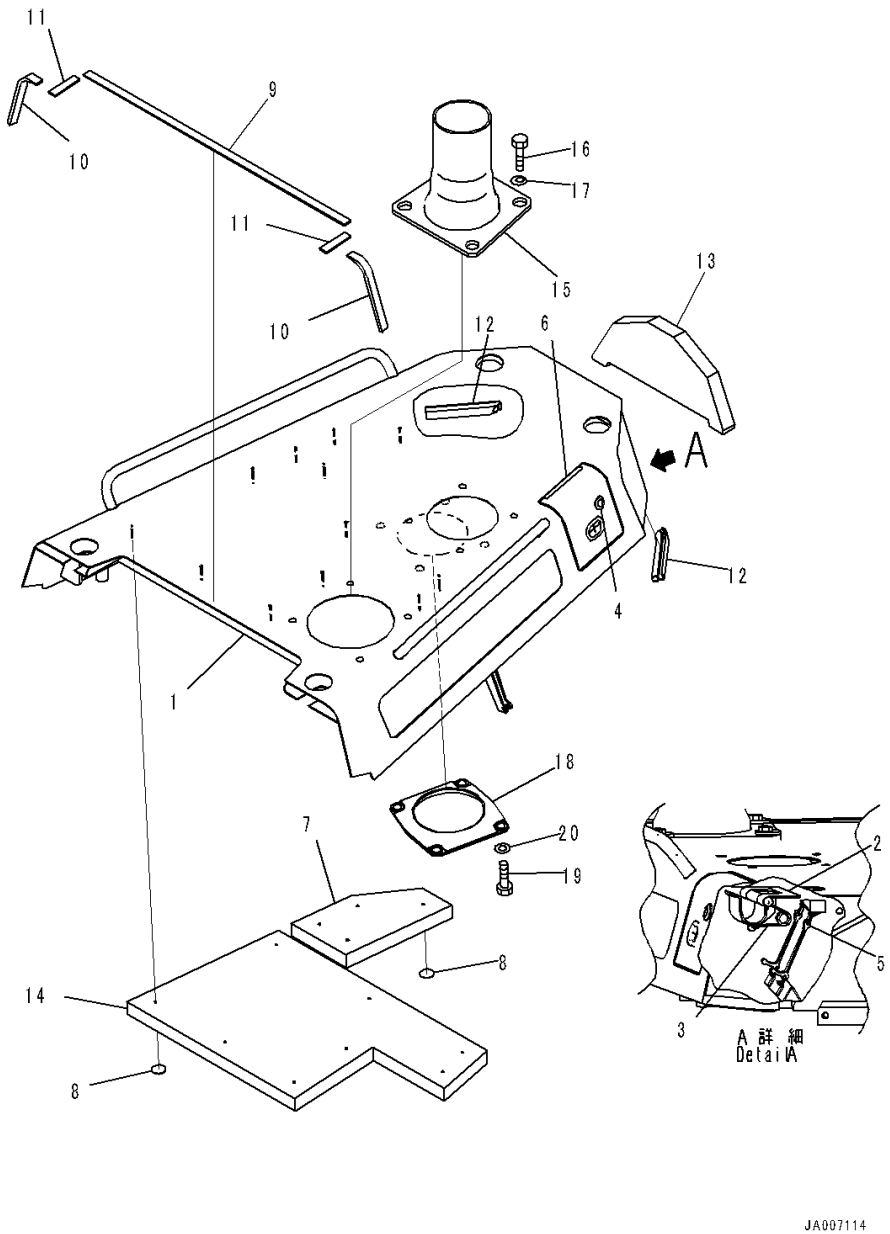

Index	Code	Part Number	Description	Qty	Serial Number
		14X-A62-6113	Hood Assembly	1	1001-
1		14X-A62-6123	• Hood	1	1001-
2		14X-54-62621	• • Bracket,Welded	1	1001-
3		09467-00006	• • Spring	1	1001-
4		205-60-71220	• • Lock Assembly	1	1001-
5		14X-54-61470	• • Band	2	1001-
6		14X-54-62191	• • Seal	1	1001-
7		14X-A62-6560	• Sheet	1	1001-
8		124-A62-1920	• Cap	12	1001-
9		14X-54-62160	• Sheet	1	1001-
10		14X-54-62181	• Sheet	2	1001-
11		14X-54-62171	• Sheet	2	1001-
12		14X-54-52550	• Seal	2	1001-
13		14X-54-62562	• Seal	1	1001-
14		14X-A62-6581	• Sheet	1	1001-
15		14X-54-61511	Pipe	1	1001-
16		01010-71235	Bolt	4	1001-
17		14X-54-32820	Washer	4	1001-
18		14X-01-61530	Cover	1	1001-
19		01010-81020	Bolt	4	1001-
20		01643-31032	Washer	4	1001-

FIG. M2140-002002 Front Guard (Hood Side Cover)

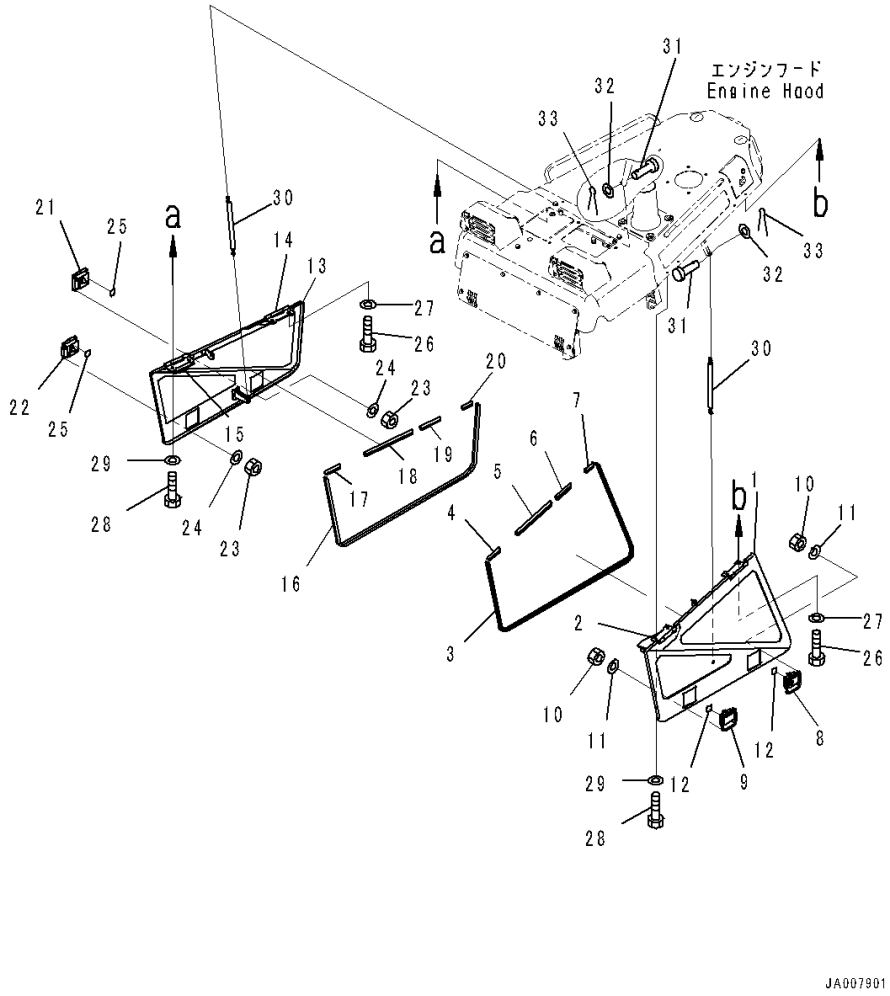

Index	Code	Part Number	Description	Qty	Serial Number
		Note: This list covers following specifications.			
		EU New Noise Arrangement 2			
		Engine Hood and Side Cover			
1		14X-54-62213	Side Cover Assembly	1	1528-
2		14X-54-52931	• Hinge	2	1001-
3		14X-54-52251	• Seal	1	1001-
4		14X-54-52440	• Seal	1	1001-
5		14X-54-62441	• Seal	1	1001-
6		14X-54-62471	• Seal	1	1001-
7		14X-54-52470	• Seal	1	1001-
8		14X-54-54310	• Lock	1	1001-
9		14X-54-54320	• Lock	1	1001-
10		01580-10605	• Nut	8	1001-
11		01643-30623	• Washer	8	1001-
12		14X-54-62250	• Plate	2	1001-
13		14X-54-62222	Side Cover Assembly, R.H.	1	1001-
14		14X-54-52931	• Hinge,Welded	2	1001-
15		21M-46-24450	• Seat	1	1001-
16		14X-54-52251	• Seal	1	1001-
17		14X-54-52440	• Seal	1	1001-
18		14X-54-62451	• Seal	1	1001-
19		14X-54-62461	• Seal	1	1001-
20		14X-54-52470	• Seal	1	1001-
21		14X-54-54310	• Lock	1	1001-
22		14X-54-54320	• Lock	1	1001-
23		01580-10605	• Nut	8	1001-
24		01643-30623	• Washer	8	1001-
25		14X-54-62250	• Plate	2	1001-
26		01010-81225	Bolt	4	1001-
27		01643-31232	Washer	4	1001-
28		01010-81230	Bolt	4	1001-
29		01643-31232	Washer	4	1001-
30		14X-54-52390	Dumper	2	1001-
31		04205-10828	Pin	4	1001-
32		01641-20812	Washer	4	1001-
33		04050-12015	Pin, Cotter	4	1001-

FIG. M2140-002003 Front Guard (Hood Support, Front Side)

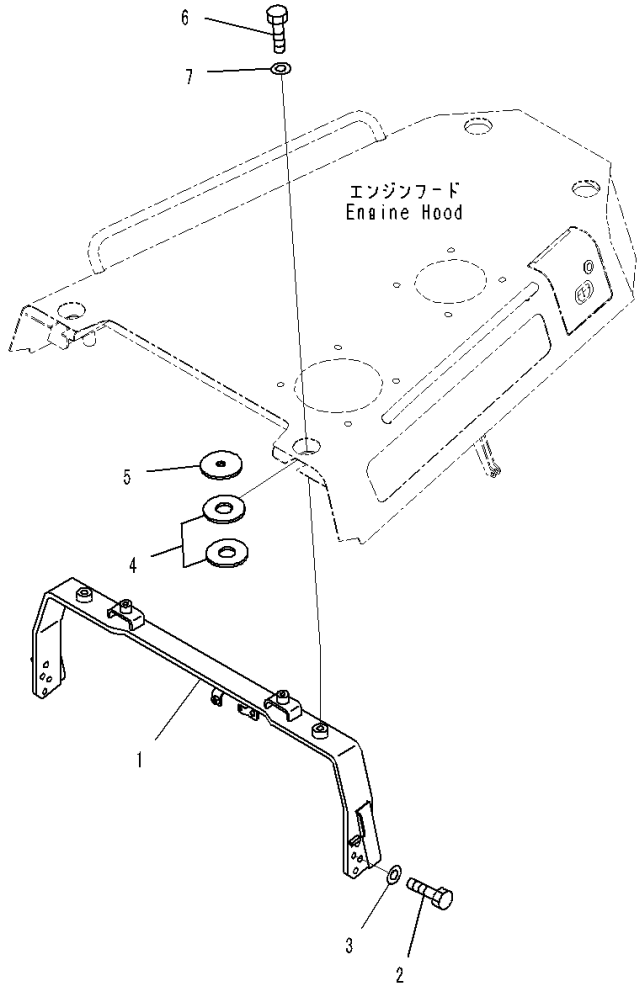

Index	Code	Part Number	Description	Qty	Serial Number
		Note: This list covers following specifications.			
		EU New Noise Arrangement 2			
		Engine Hood and Side Cover			
1		14X-54-62121	Bracket	1	1001-
2		01010-81230	Bolt	8	1001-
3		01643-31232	Washer	8	1001-
4		195-54-46180	Plate	4	1001-
5		6930-21-4120	Plate	2	1001-
6		01010-81640	Bolt	2	1001-
7		01643-31645	Washer	2	1001-

FIG. M2140-002004 Front Guard (Radiator Cover)

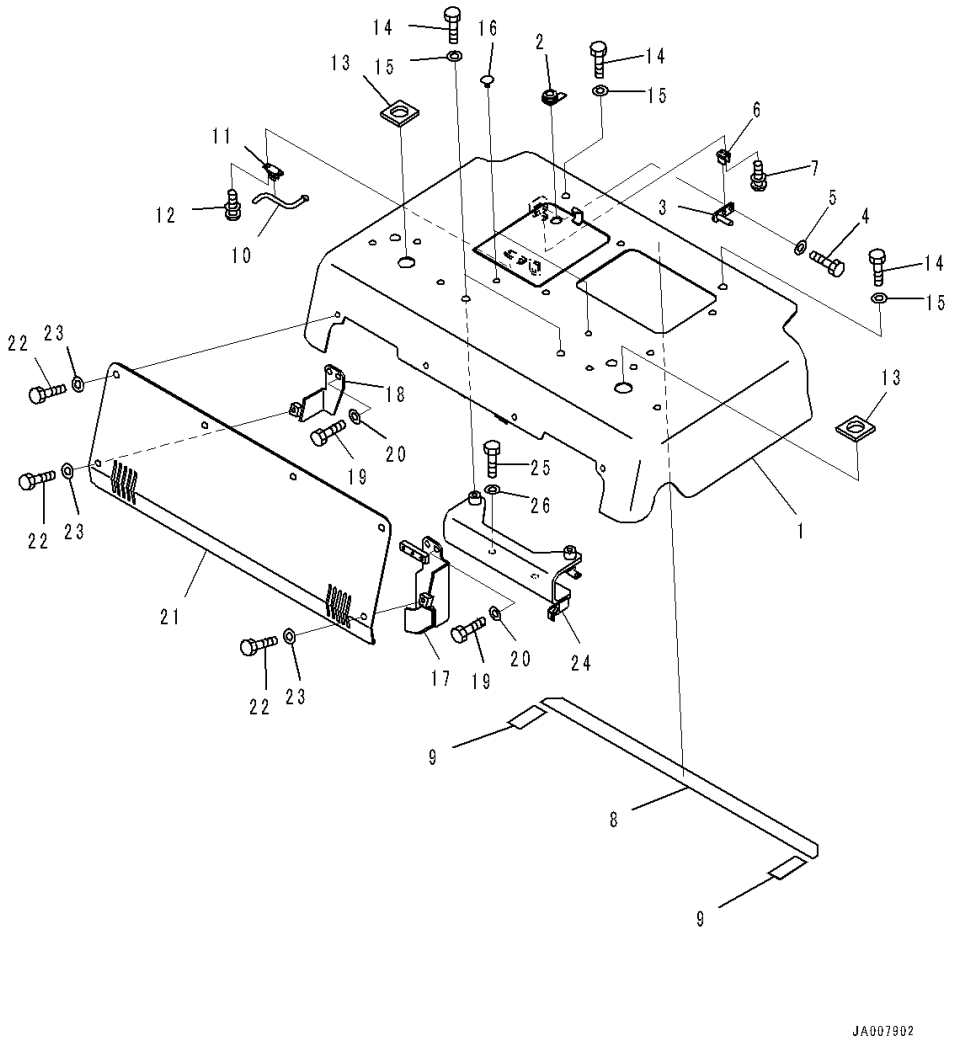

Index	Code	Part Number	Description	Qty	Serial Number
		Note: This list covers following specifications.			
		EU New Noise Arrangement 2			
		Engine Hood and Side Cover			
		14X-54-61212	Cover Assembly	1	1001-
1		14X-54-61222	• Cover	1	1001-
2		205-60-71220	• Lock Assembly	1	1001-
3		22B-54-12291	• Bracket	1	1001-
4		01010-80820	• Bolt	2	1001-
5		01643-30823	• Washer	2	1001-
6		22B-46-24180	• Spring	1	1001-
7		01023-10406	• Screw	2	1001-
8		14X-54-63671	• Plate	1	1001-
9		14X-54-63681	• Plate	2	1001-
10		14X-54-61361	• Bar	1	1001-
11		198-54-19150	• Spring	1	1001-
12		01023-10608	• Screw	2	1001-
13		14X-54-61630	• Sheet	2	1001-
14		01010-81225	Bolt	4	1001-
15		01643-31232	Washer	4	1001-
16		416-54-21710	Plug	2	1001-
17		14X-54-61252	Bracket	1	1001-
18		14X-54-61261	Bracket	1	1001-
19		01010-81225	Bolt	4	1001-
20		01643-31232	Washer	4	1001-
21		14X-54-61241	Plate	1	1001-
22		01010-D1020	Bolt	6	1001-
23		01643-71032	Washer	6	1001-
24		14X-54-61331	Bracket	1	1001-
25		01010-81235	Bolt	2	1001-
26		01643-31232	Washer	2	1001-

FIG. M2140-002005 Front Guard (Hood Mounting)

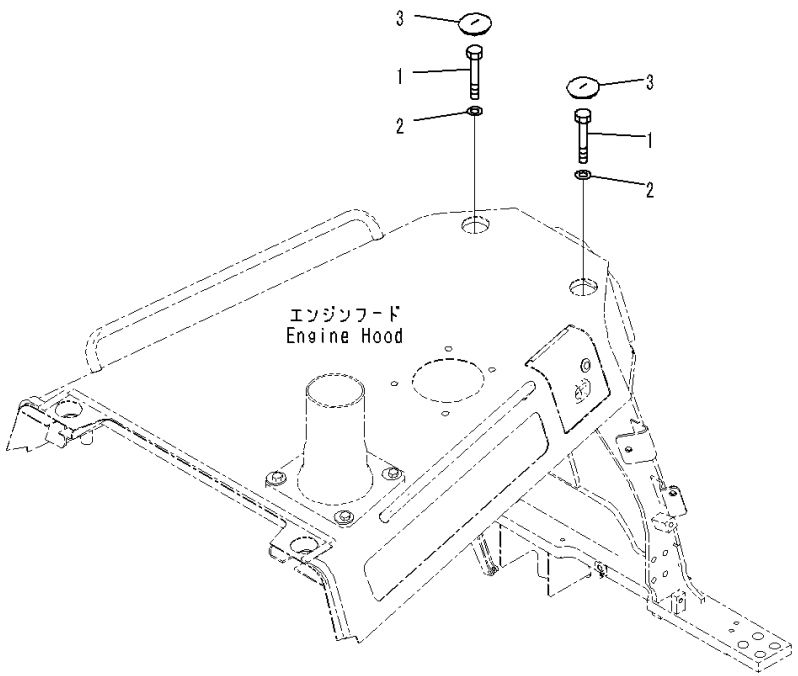

Index	Code	Part Number	Description	Qty	Serial Number
		Note: This list covers following specifications.			
		EU New Noise Arrangement 2			
		Engine Hood and Side Cover			
1		01011-81600	Bolt	2	1001-
2		01643-31645	Washer	2	1001-
3		14X-54-12590	Cap	2	1001-

FIG. M2140-002006 Front Guard (Hood Support Rear Side Cover) (1/2)

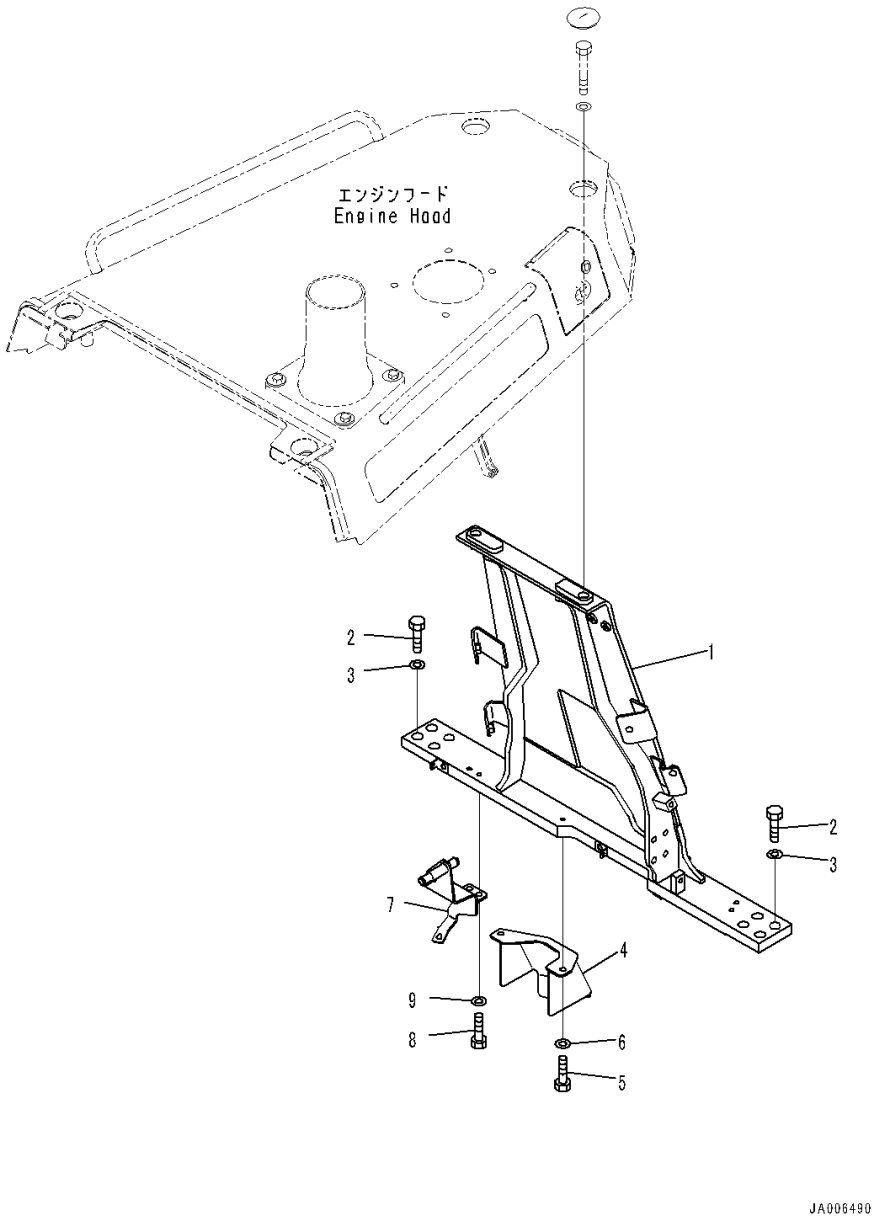

Index	Code	Part Number	Description	Qty	Serial Number
		Note: This list covers following specifications.			
		EU New Noise Arrangement 2			
		Engine Hood and Side Cover			
1		14X-54-62511	Bracket	1	1001-
2		01010-82055	Bolt	8	1001-
3		01643-32060	Washer	8	1001-
4		14X-54-62611	Plate	1	1001-
5		01010-81020	Bolt	2	1001-
6		01643-31032	Washer	2	1001-
7		14X-Y11-3971	Bracket	1	1001-
8		01010-81230	Bolt	2	1001-
9		01643-31232	Washer	2	1001-

FIG. M2140-002007 Front Guard (Hood Side Cover Lock)

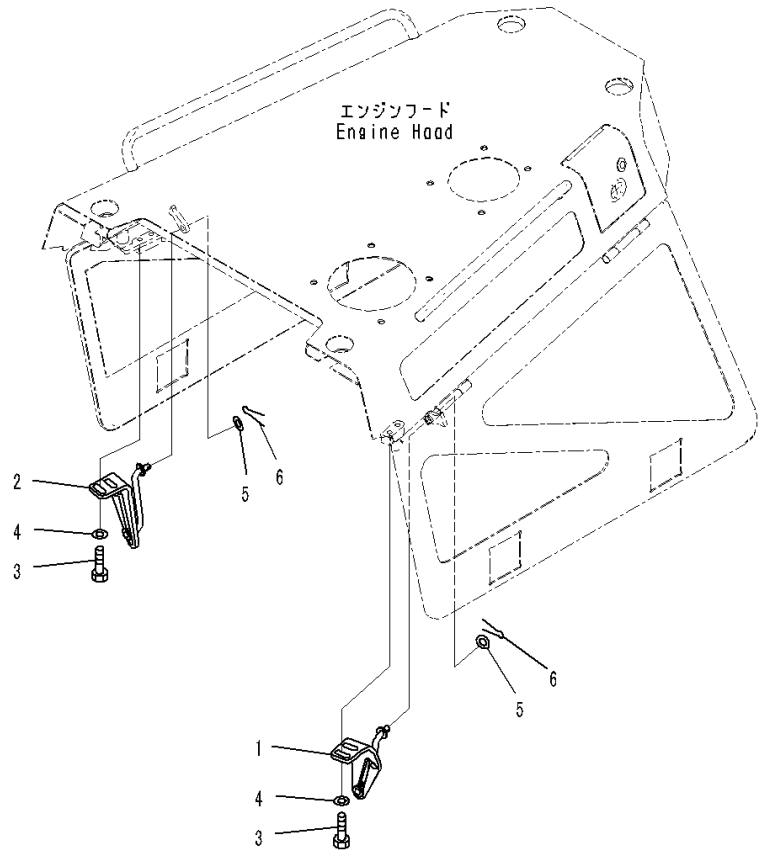

Index	Code	Part Number	Description	Qty	Serial Number
		Note: This list covers following specifications.			
		EU New Noise Arrangement 2			
		Engine Hood and Side Cover			
1		14X-54-62151	Bracket,L.H.	1	1001-
2		14X-54-62141	Bracket,R.H.	1	1001-
3		01010-81230	Bolt	4	1001-
4		01643-31232	Washer	4	1001-
5		01643-31232	Washer	2	1001-
6		04050-14025	Pin, Cotter	2	1001-

FIG. M2140-002008 Front Guard (Hood Support Rear Side Cover) (2/2)

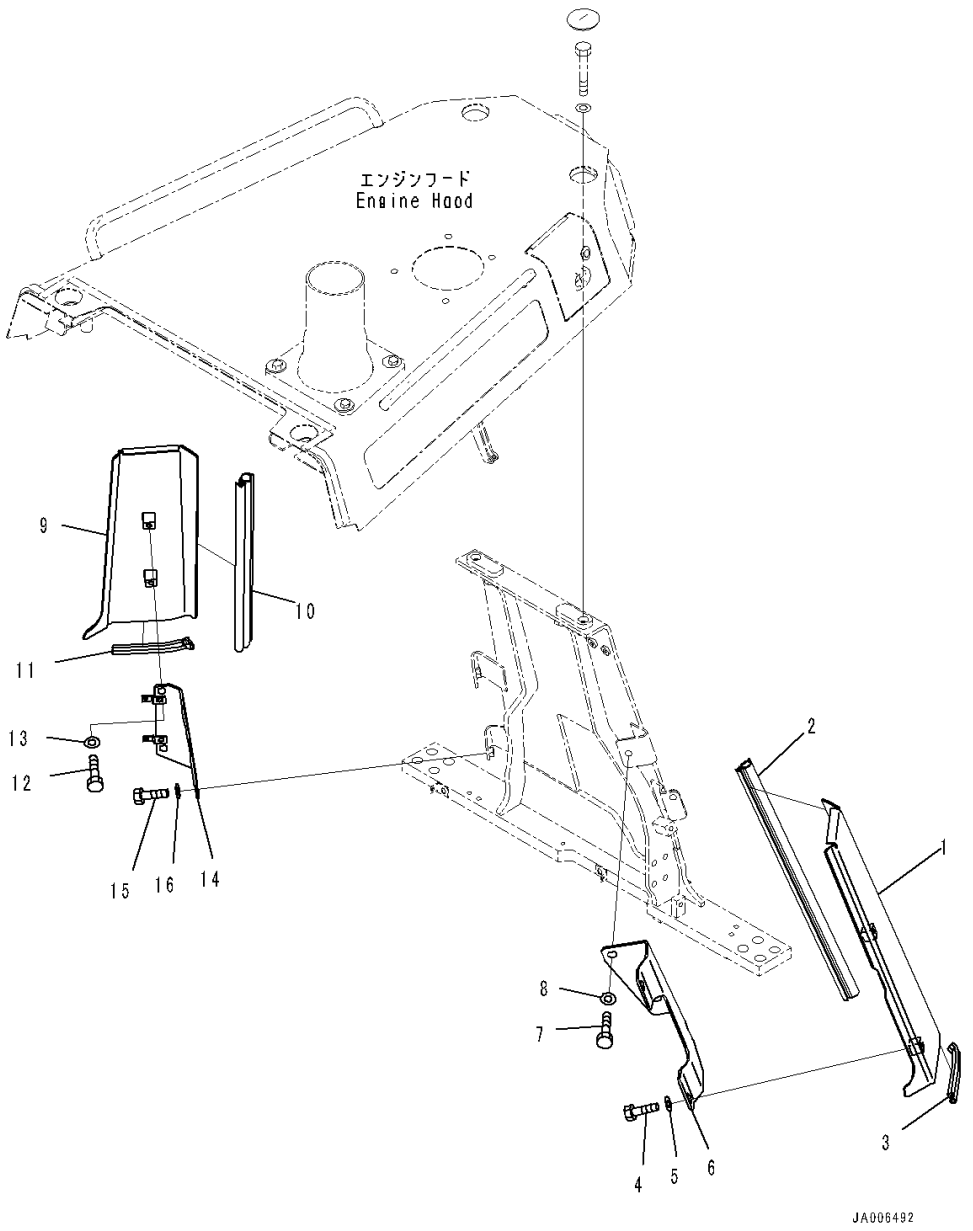

Index	Code	Part Number	Description	Qty	Serial Number
		Note: This list covers following specifications.			
		EU New Noise Arrangement 2			
		Engine Hood and Side Cover			
1		14X-54-62371	Cover Assembly	1	1001-
2		14X-54-52351	• Seal	1	1001-
3		14X-54-52540	• Seal	1	1001-
4		01010-81225	Bolt	2	1001-
5		01643-31232	Washer	2	1001-
6		14X-54-62331	Bracket	1	1001-
7		01010-81225	Bolt	2	1001-
8		01643-31232	Washer	2	1001-
9		14X-54-62381	Cover Assembly,R.H.	1	1001-
10		14X-54-52351	• Seal	1	1001-
11		14X-54-52540	• Seal	1	1001-
12		01010-81225	Bolt	2	1001-
13		01643-31232	Washer	2	1001-
14		14X-54-62341	Bracket,R.H.	1	1001-
15		01010-81225	Bolt	2	1001-
16		01643-31232	Washer	2	1001-

FIG. M2140-001001 Front Guard (Engine Hood and Side Cover) (Hood)

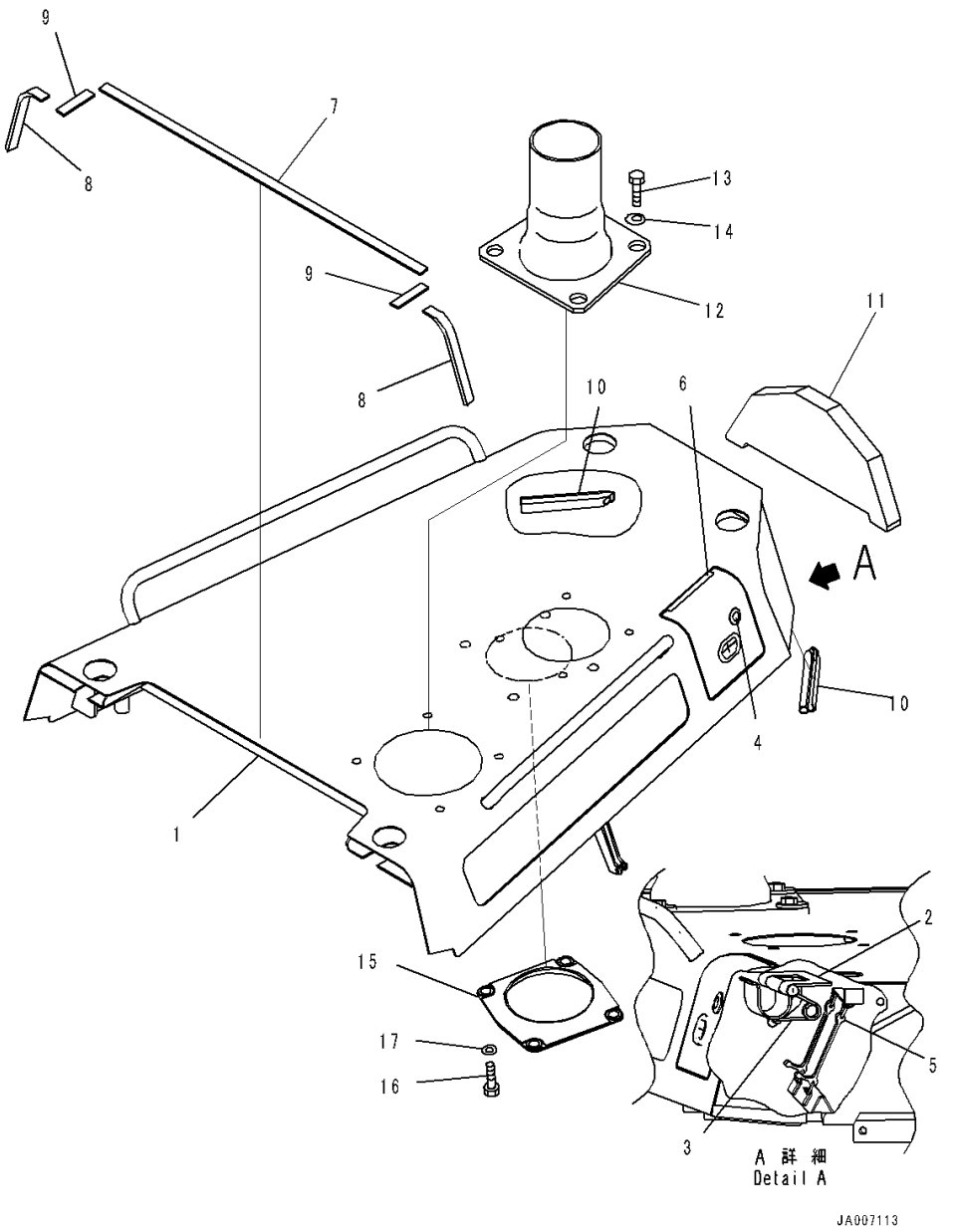

Index	Code	Part Number	Description	Qty	Serial Number
		14X-54-62103	Hood Assembly	1	1001-
1		14X-54-62113	• Hood	1	1001-
2		14X-54-62621	• • Bracket,Welded	1	1001-
3		09467-00006	• • Spring	1	1001-
4		205-60-71220	• • Lock Assembly	1	1001-
5		14X-54-61470	• • Band	2	1001-
6		14X-54-62191	• • Seal	1	1001-
7		14X-54-62160	• Sheet	1	1001-
8		14X-54-62181	• Sheet	2	1001-
9		14X-54-62171	• Sheet	2	1001-
10		14X-54-52550	• Seal	2	1001-
11		14X-54-62562	• Seal	1	1001-
12		14X-54-61511	Pipe	1	1001-
13		01010-71235	Bolt	4	1001-
14		14X-54-32820	Washer	4	1001-
15		14X-01-61530	Cover	1	1001-
16		01010-81020	Bolt	4	1001-
17		01643-31032	Washer	4	1001-

FIG. M2142-002001 Engine Side Cover (For EU New Noise Arrangement 2)

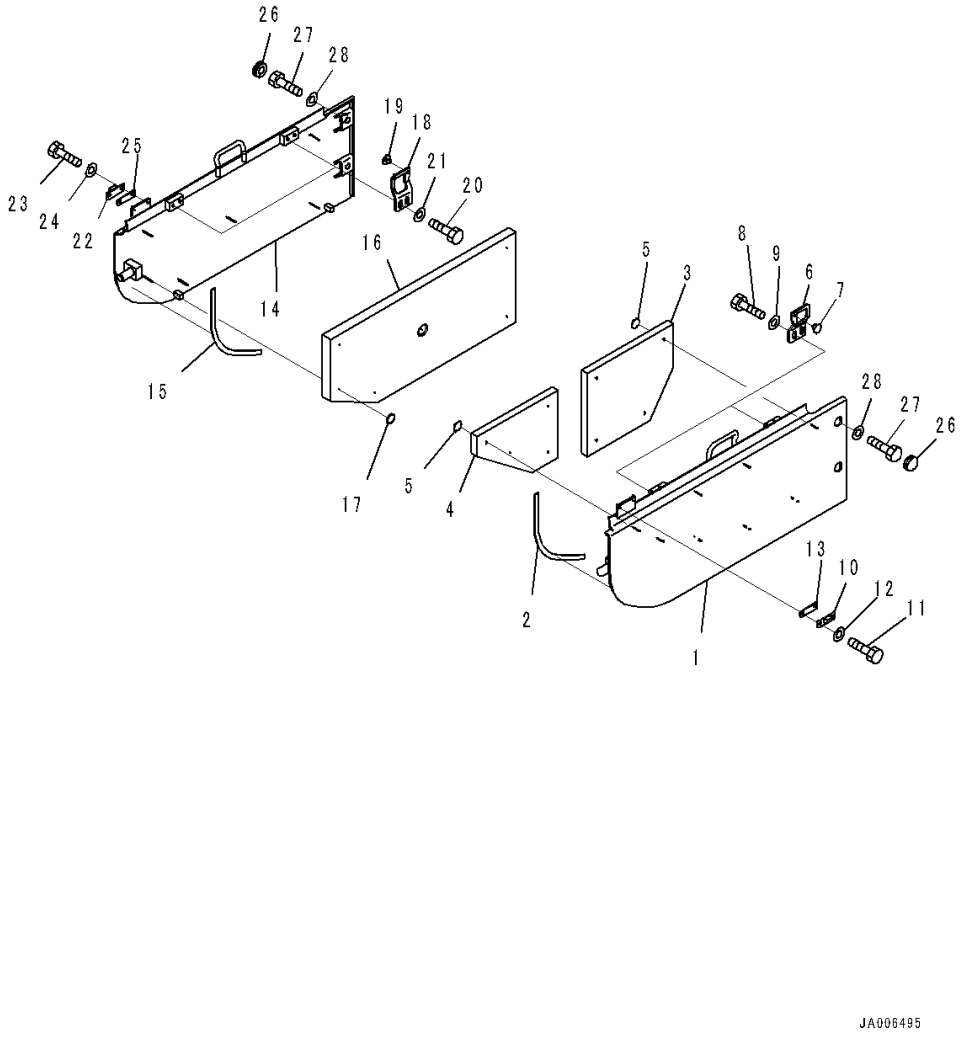

Index	Code	Part Number	Description	Qty	Serial Number
1		14X-A62-6312	Cover, L.H.	1	1001-
2		14X-54-62431	• Rubber	1	1001-
3		14X-A62-6520	• Sheet	1	1001-
4		14X-A62-6530	• Sheet	1	1001-
5		124-A62-1920	• Cap	8	1001-
6		14X-54-63831	Plate	2	1001-
7		14X-54-12960	Stopper	2	1001-
8		01010-81225	Bolt	4	1001-
9		01643-31232	Washer	4	1001-
10		205-54-53550	Dovetail	1	1001-
11		01010-80616	Bolt	2	1001-
12		01643-30623	Washer	2	1001-
13		124-54-62640	Plate	1	1001-
14		14X-A62-6332	Cover, R.H.	1	1001-
15		14X-54-62661	• Rubber	1	1001-
16		14X-A62-6550	• Sheet	1	1001-
17		124-A62-1920	• Cap	6	1001-
18		14X-54-63831	Plate	2	1001-
19		14X-54-12960	Stopper	2	1001-
20		01010-81225	Bolt	4	1001-
21		01643-31232	Washer	4	1001-
22		205-54-53550	Dovetail	1	1001-
23		01010-80616	Bolt	2	1001-
24		01643-30623	Washer	2	1001-
25		124-54-62640	Plate	1	1001-
26		11Y-54-13630	Cap	4	1001-
27		01010-81230	Bolt	4	1001-
28		01643-31232	Washer	4	1001-

FIG. M2142-001001 Engine Side Cover

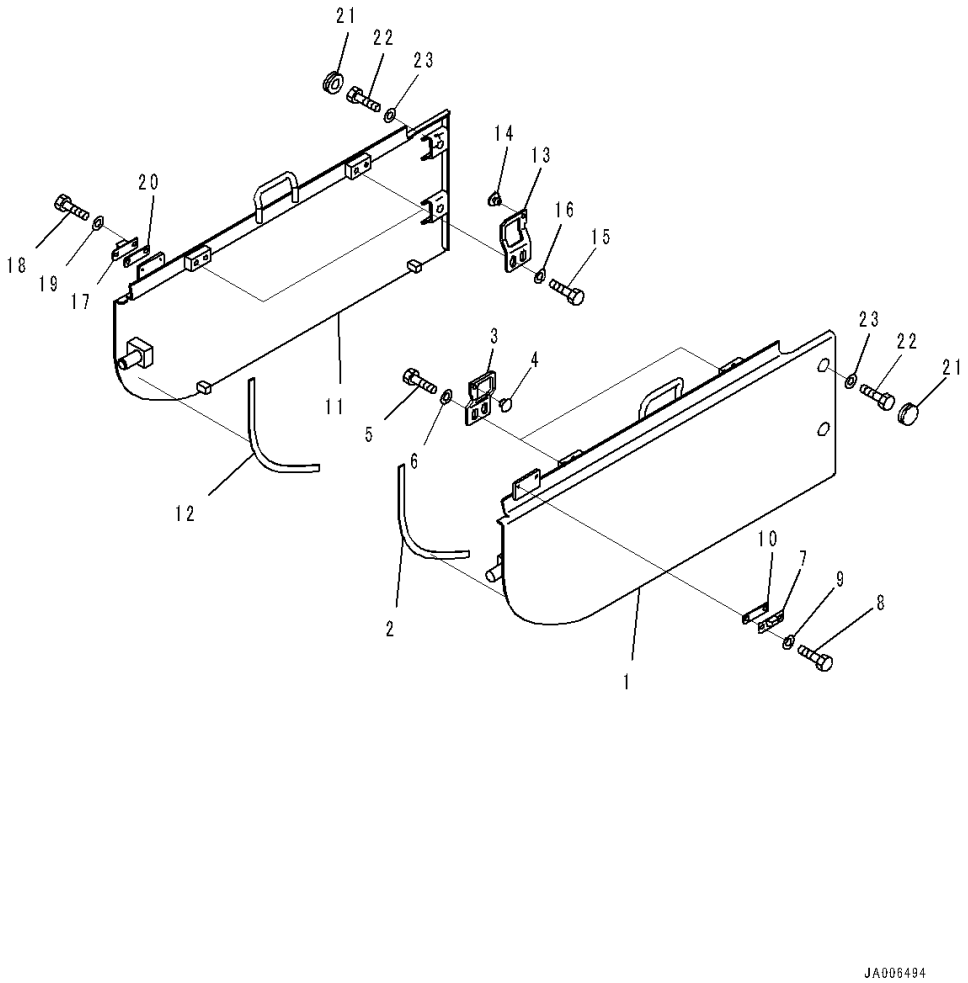

Index	Code	Part Number	Description	Qty	Serial Number
1		14X-54-62412	Cover, L.H.	1	1001-
2		14X-54-62431	• Rubber	1	1001-
3		14X-54-63831	Plate	2	1001-
4		14X-54-12960	Stopper	2	1001-
5		01010-81225	Bolt	4	1001-
6		01643-31232	Washer	4	1001-
7		205-54-53550	Dovetail	1	1001-
8		01010-80616	Bolt	2	1001-
9		01643-30623	Washer	2	1001-
10		124-54-62640	Plate	1	1001-
11		14X-54-62422	Cover, R.H.	1	1001-
12		14X-54-62661	• Rubber	1	1001-
13		14X-54-63831	Plate	2	1001-
14		14X-54-12960	Stopper	2	1001-
15		01010-81225	Bolt	4	1001-
16		01643-31232	Washer	4	1001-
17		205-54-53550	Dovetail	1	1001-
18		01010-80616	Bolt	2	1001-
19		01643-30623	Washer	2	1001-
20		124-54-62640	Plate	1	1001-
21		11Y-54-13630	Cap	4	1001-
22		01010-81230	Bolt	4	1001-
23		01643-31232	Washer	4	1001-

FIG. M2210-003001 Fender (Fender and Bracket)

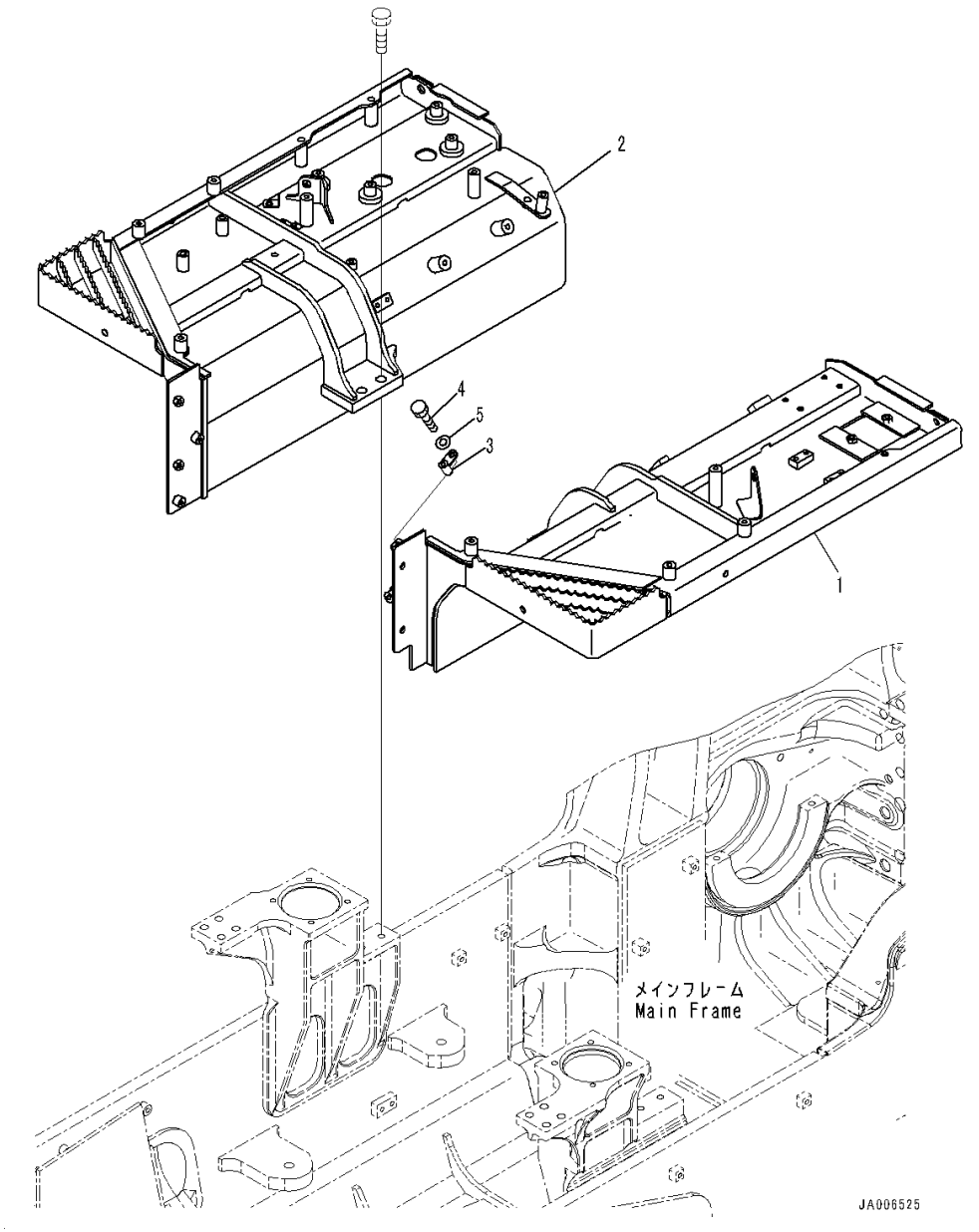

Index	Code	Part Number	Description	Qty	Serial Number
		Note: This list covers following specifications. Accumulator, PPC Piping, 3D Machine Control Plug and Play Rear 1-attachment, Accumulator, PPC Piping, 3D Machine Control Plug and Play Power Tilt Pitch Dozer, Accumulator, PPC Piping, 3D Machine Control Plug and Play Power Tilt Pitch Dozer, Rear 1-attachment, Accumulator, PPC Piping, 3D Machine Control Plug and Play Power Angle Power Tilt Dozer, Inside Frame, Accumulator, PPC Piping, 3D Machine Control Plug and Play Power Angle Power Tilt Dozer, Inside Frame, Rear 1-attachment, Accumulator, PPC Piping, 3D Machine Control Plug and Play Power Angle Power Tilt Dozer, Inside Frame, Accumulator, PPC Piping Power Tilt Pitch Dozer, Rear 1-attachment, Accumulator, PPC Piping Power Tilt Pitch Dozer, Accumulator, PPC Piping Accumulator, PPC Piping Rear 1-attachment, Accumulator, PPC Piping Power Angle Power Tilt Dozer, Inside Frame, Rear 1-attachment, Accumulator, PPC Piping		
1		14X-54-63112	Fender	1	1528-
2		14X-54-63121	Fender,R.H.	1	1001-
3		14X-50-35140	Bracket	1	1001-
4		01010-81225	Bolt	1	1001-
5		01643-31232	Washer	1	1001-

FIG. M2210-003002 Fender (Inner Parts, Control Valve) (1/10)

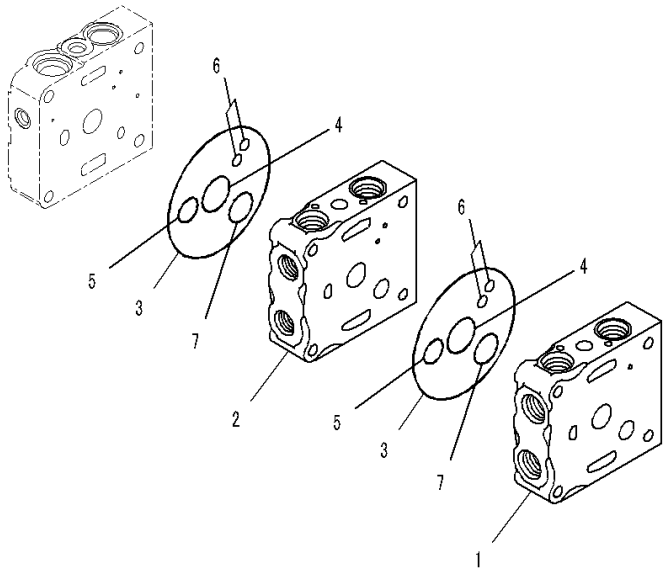

JY016821

Index	Code	Part Number	Description	Qty	Serial Number
		Note: This list covers following specifications. Accumulator, PPC Piping, 3D Machine Control Plug and Play Accumulator, PPC Piping			
		723-23-10800	Valve, Control	1	1001-
	C1		• Body Group	1	1001-
1	C1		• • Valve Body	1	1001-
2	C1		• • Valve Body	1	1001-
3		07000-12120	• • O-ring	2	1001-
4		723-26-15830	• • O-ring	2	1001-
5		07000-12020	• • O-ring	2	1001-
6		07000-11008	• • O-ring	4	1001-
7		723-26-15840	• • O-ring	2	1001-

FIG. M2210-003003 Fender (Inner Parts, Control Valve) (2/10)

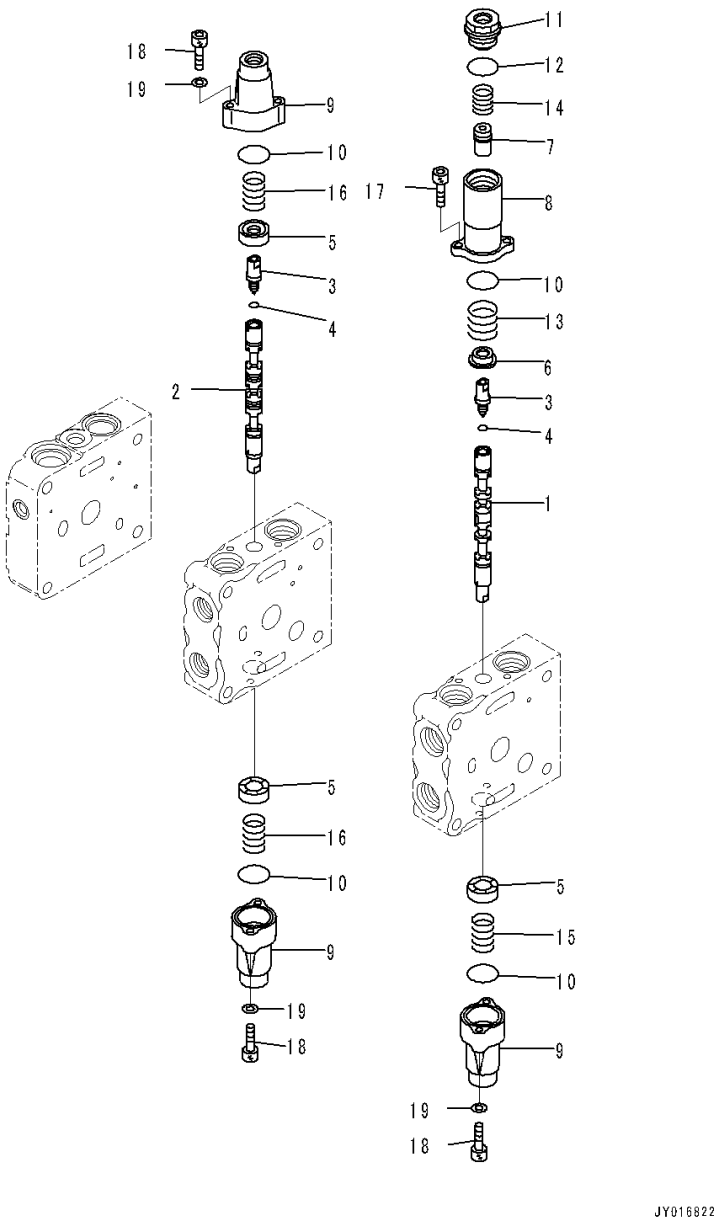

Index	Code	Part Number	Description	Qty	Serial Number
		Note: This list covers following specifications. Accumulator, PPC Piping, 3D Machine Control Plug and Play Accumulator, PPC Piping			
		723-23-10800	Valve, Control	1	1001-
	C1		• Body Group	1	1001-
1	C1		• • Spool	1	1001-
2	C1		• • Spool	1	1001-
3	C1		• • Plug	2	1001-
4	C1		• • O-ring	2	1001-
5		723-26-15121	• • Retainer	3	1001-
6		723-26-16770	• • Retainer	1	1001-
7		723-26-16780	• • Retainer	1	1001-
8		723-26-16760	• • Case	1	1001-
9		723-26-15110	• • Case	3	1001-
10		575-41-17420	• • O-ring	4	1001-
11		723-26-16790	• • Plug	1	1001-
12		07002-12434	• • O-ring	1	1001-
13		723-26-14560	• • Spring	1	1001-
14		723-26-14570	• • Spring	1	1001-
15		709-26-11450	• • Spring	1	1001-
16		723-26-14580	• • Spring	2	1001-
17		01252-60616	• • Bolt, Hexagon Socket Head	2	1001-
18		01252-60630	• • Bolt, Hexagon Socket Head	6	1001-
19		01641-20608	• • Washer	6	1001-

FIG. M2210-003004 Fender (Inner Parts, Control Valve) (3/10)

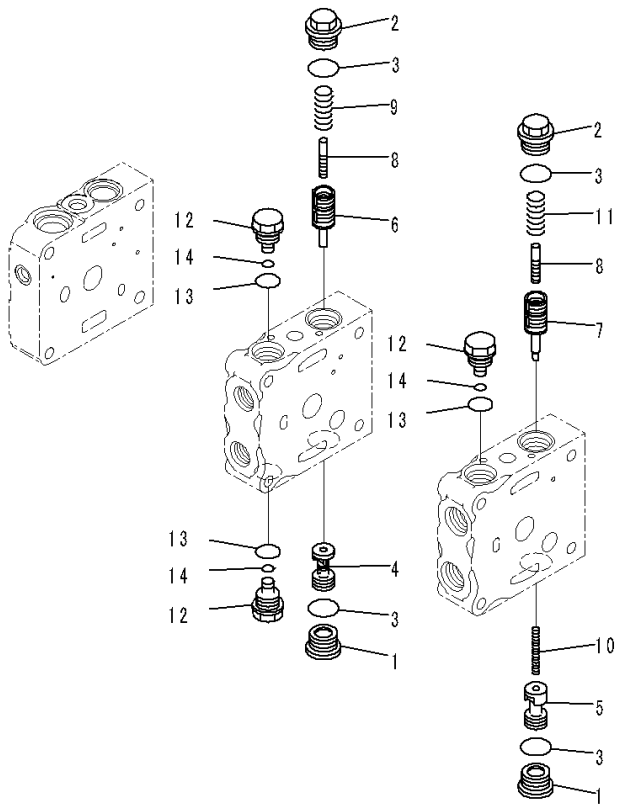

Index	Code	Part Number	Description	Qty	Serial Number
		Note: This list covers following specifications. Accumulator, PPC Piping, 3D Machine Control Plug and Play			
		Accumulator, PPC Piping			
		723-23-10800	Valve, Control	1	1001-
	C1		• Body Group	1	1001-
1		723-26-15230	• • Plug	2	1001-
2		723-26-15370	• • Plug	2	1001-
3		07002-12434	• • O-ring	4	1001-
4	C1		• • Valve	1	1001-
5	C1		• • Valve	1	1001-
6	C1		• • Valve	1	1001-
7	C1		• • Valve	1	1001-
8	C1		• • Piston	2	1001-
9		723-26-14230	• • Spring	1	1001-
10		723-26-14220	• • Spring	1	1001-
11		723-26-14240	• • Spring	1	1001-
12		723-26-15310	• • Plug	3	1001-
13		07002-12034	• • O-ring	3	1001-
14		07000-11007	• • O-ring	3	1001-

FIG. M2210-003005 Fender (Inner Parts, Control Valve) (4/10)

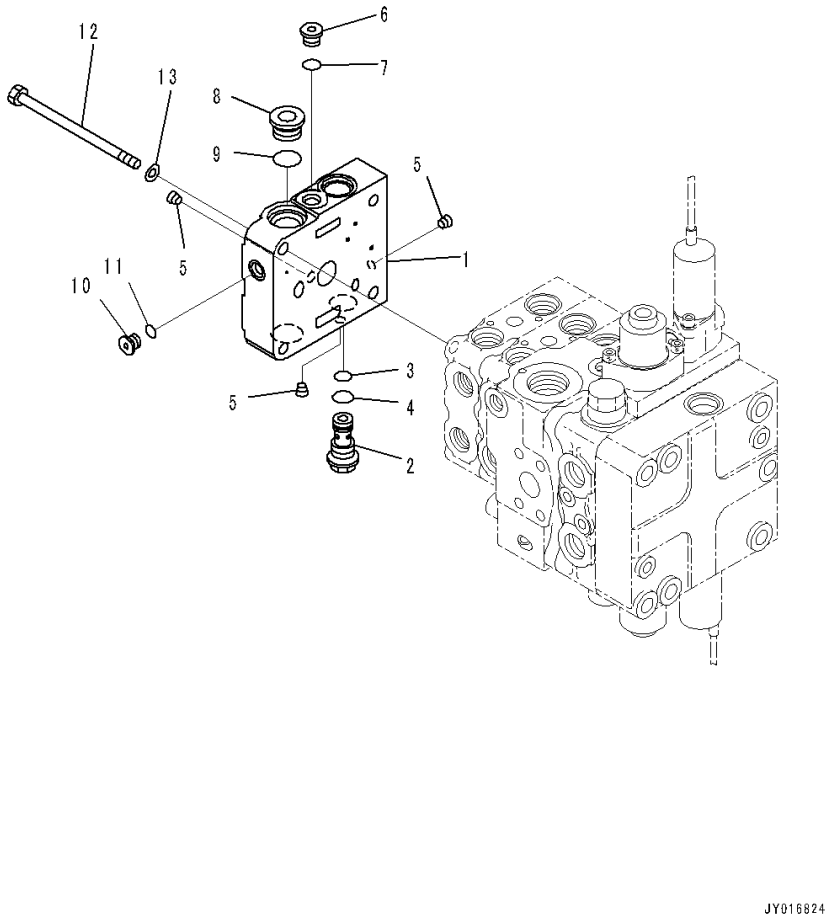

Index	Code	Part Number	Description	Qty	Serial Number
		Note: This list covers following specifications. Accumulator, PPC Piping, 3D Machine Control Plug and Play Accumulator, PPC Piping			
		723-23-10800	Valve, Control	1	1001-
1	C1		• Cover	1	1001-
2		723-26-17210	• Filter	1	1001-
3		723-11-19970	• O-ring	1	1001-
4		07002-12034	• O-ring	1	1001-
5	C1		• Plug	3	1001-
6		702-21-55620	• Plug	1	1001-
7		07002-11423	• O-ring	1	1001-
8		723-26-15230	• Plug	1	1001-
9		07002-12434	• O-ring	1	1001-
10		708-7R-11220	• Plug	1	1001-
11		07002-11223	• O-ring	1	1001-
12		01011-61035	• Bolt	4	1001-
13		01643-31032	• Washer	4	1001-

FIG. M2210-003006 Fender (Inner Parts, Control Valve) (5/10)

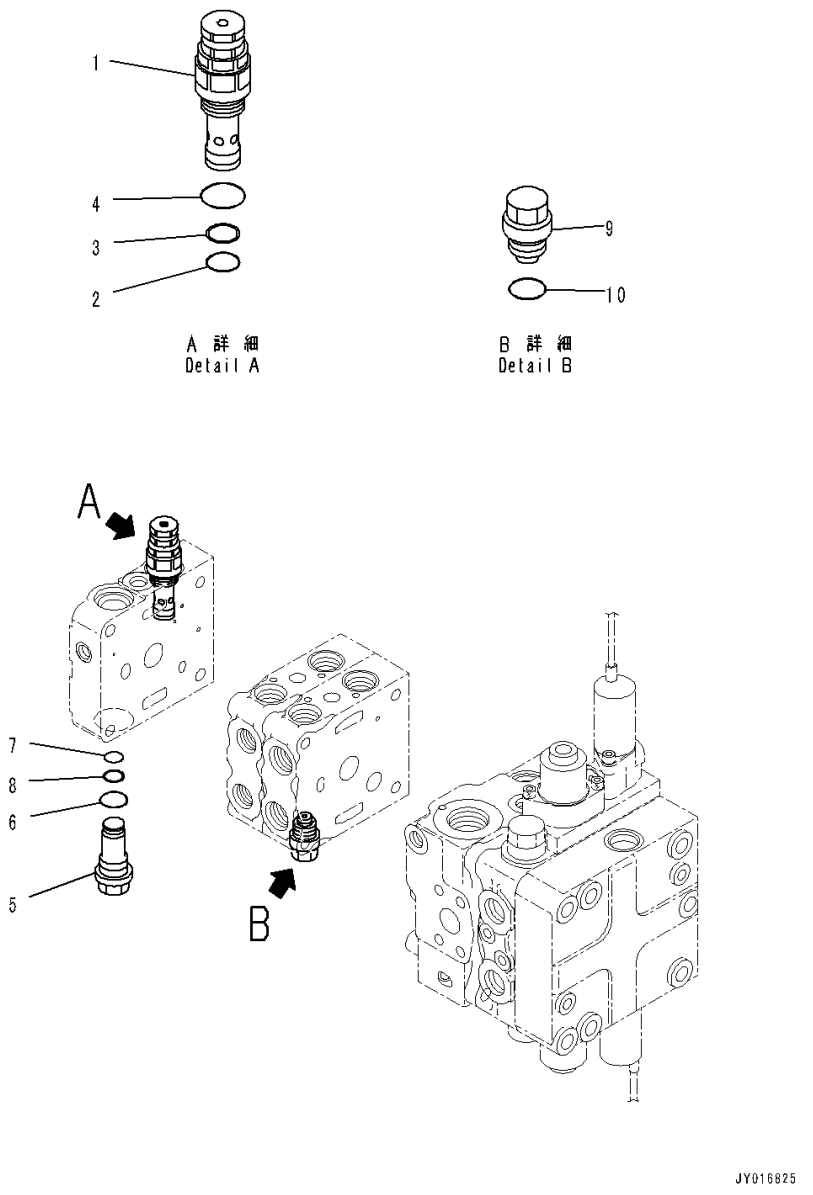

Index	Code	Part Number	Description	Qty	Serial Number
		Note: This list covers following specifications. Accumulator, PPC Piping, 3D Machine Control Plug and Play Accumulator, PPC Piping			
		723-23-10800	Valve, Control	1	1001-
1		723-20-66500	• Valve, Relief	1	1001-
2		700-22-11410	• • O-ring	1	1001-
3		700-80-64220	• • Ring, Back-up	1	1001-
4		07002-12434	• • O-ring	1	1001-
5		723-46-15240	• Plug	1	1001-
6		07002-12434	• O-ring	1	1001-
7		700-22-11410	• O-ring	1	1001-
8		700-80-64220	• Ring, Back-up	1	1001-
9		723-20-80100	• Valve Assembly, Suction	1	1001-
10		07002-12034	• • O-ring	1	1001-

FIG. M2210-003007 Fender (Inner Parts, Control Valve) (6/10)

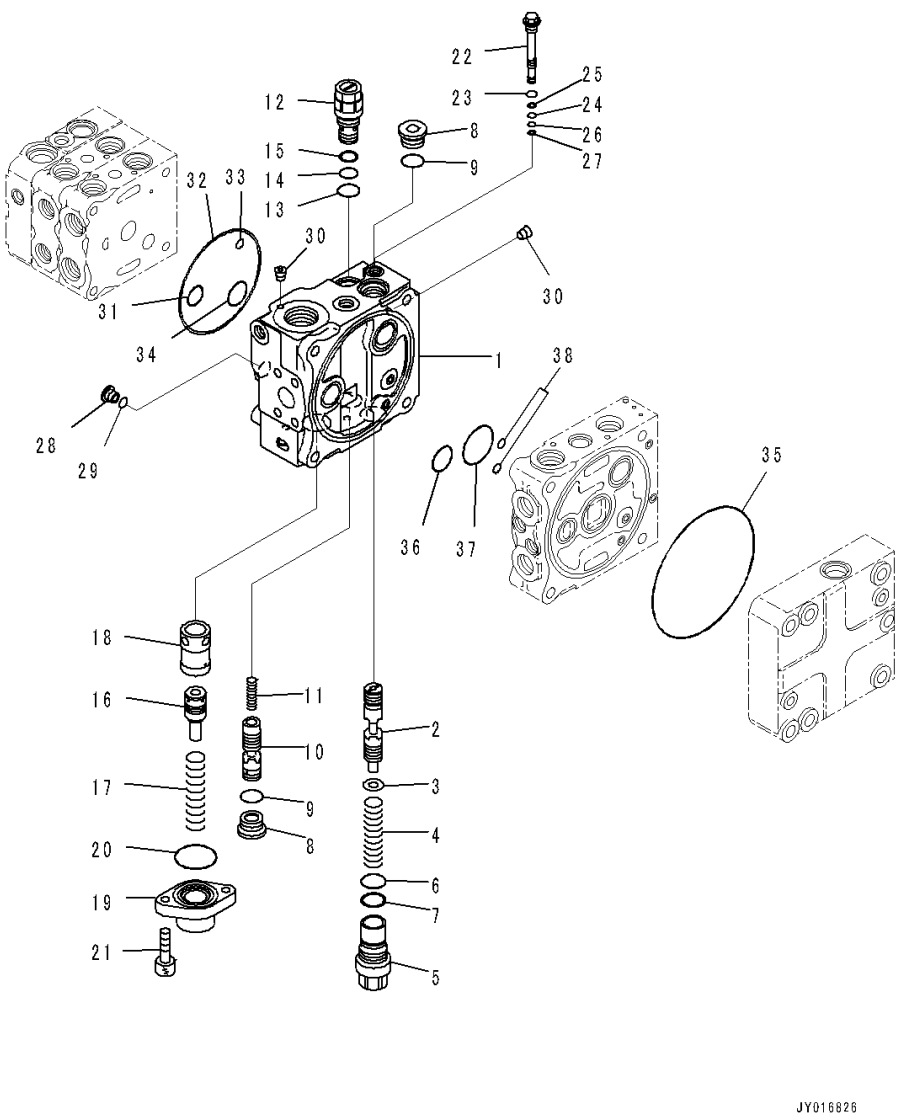

Index	Code	Part Number	Description	Qty	Serial Number
		Note: This list covers following specifications. Accumulator, PPC Piping, 3D Machine Control Plug and Play Accumulator, PPC Piping			
		723-23-10800	Valve, Control	1	1001-
	C1		• Block Subassembly	1	1001-
1	C1		• • Block	1	1001-
2	C1		• • Spool	1	1001-
3		723-26-15861	• • Washer	1	1001-
4		723-26-14590	• • Spring	1	1001-
5		723-26-15851	• • Plug	1	1001-
6		700-80-61260	• • O-ring	1	1001-
7		700-80-61430	• • Ring	1	1001-
8		723-26-15230	• • Plug	2	1001-
9		07002-12434	• • O-ring	2	1001-
10	C1		• • Spool	1	1001-
11		723-26-14470	• • Spring	1	1001-
12		723-60-21900	• • Valve, Relief	1	1001-
13		07002-12434	• • • O-ring	1	1001-
14		07000-12016	• • • O-ring	1	1001-
15		07001-02016	• • • Ring, Back-up	1	1001-
16	C1		• • Piston	1	1001-
17		723-36-15340	• • Spring	1	1001-
18	C1		• • Sleeve	1	1001-
19		723-36-15250	• • Case	1	1001-
20		07000-13042	• • O-ring	1	1001-
21		01252-60820	• • Bolt, Hexagon Socket Head	2	1001-
22	C1		• • Valve Assembly	1	1001-
23		07002-11223	• • • O-ring	1	1001-
24		07000-11007	• • • O-ring	1	1001-
25		07001-01007	• • • Ring, Back-up	1	1001-
26		07000-11005	• • • O-ring	1	1001-
27		07001-01005	• • • Ring, Back-up	1	1001-
28		723-26-15220	• • Plug	1	1001-
29		07002-11223	• • O-ring	1	1001-
30	C1		• • Plug	5	1001-
31		07000-12020	• • O-ring	1	1001-
32		07000-12120	• • O-ring	1	1001-
33		07000-11008	• • O-ring	1	1001-
34		723-26-15840	• • O-ring	1	1001-

FIG. M2210-003007 Fender (Inner Parts, Control Valve) (6/10)

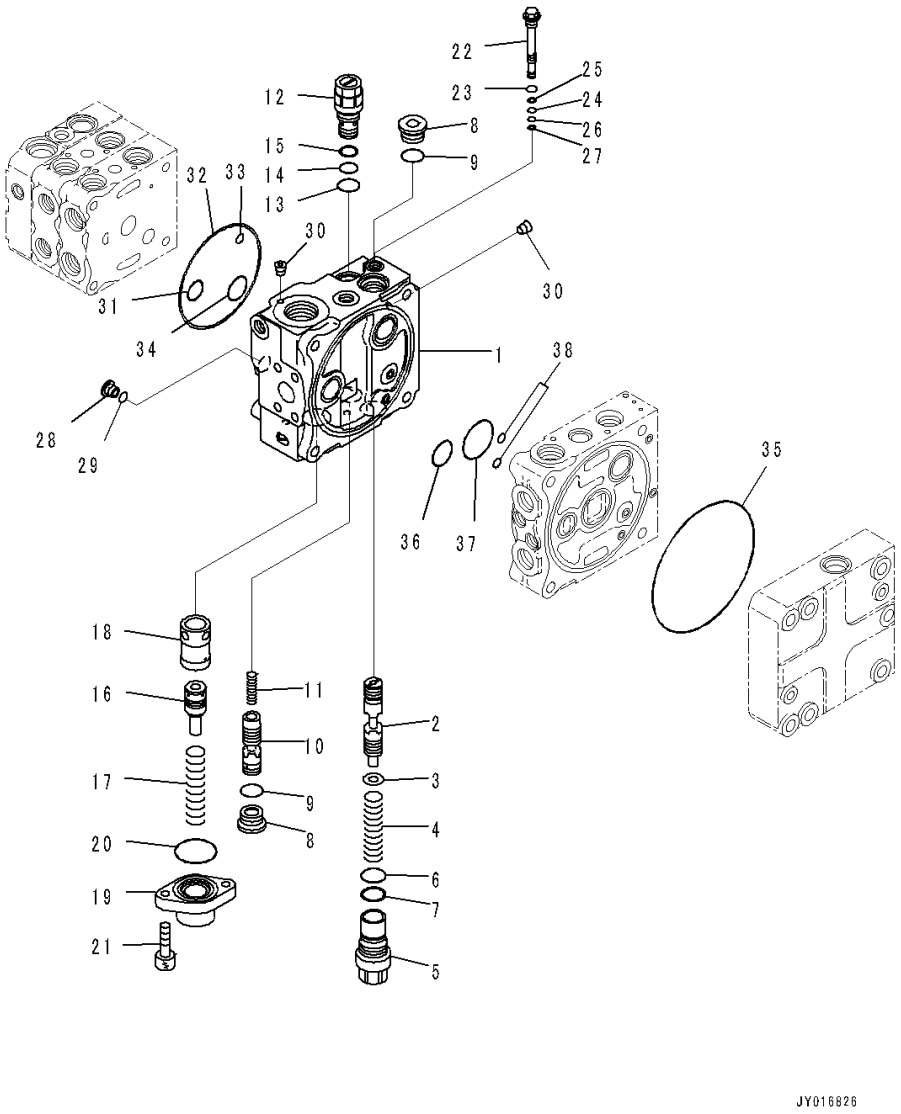

Index	Code	Part Number	Description	Qty	Serial Number
35		144-14-54610	• • O-ring	1	1001-
36		723-56-31730	• • O-ring	1	1001-
37		702-75-11520	• • O-ring	1	1001-
38		07000-11008	• • O-ring	2	1001-

FIG. M2210-003008 Fender (Inner Parts, Control Valve) (7/10)

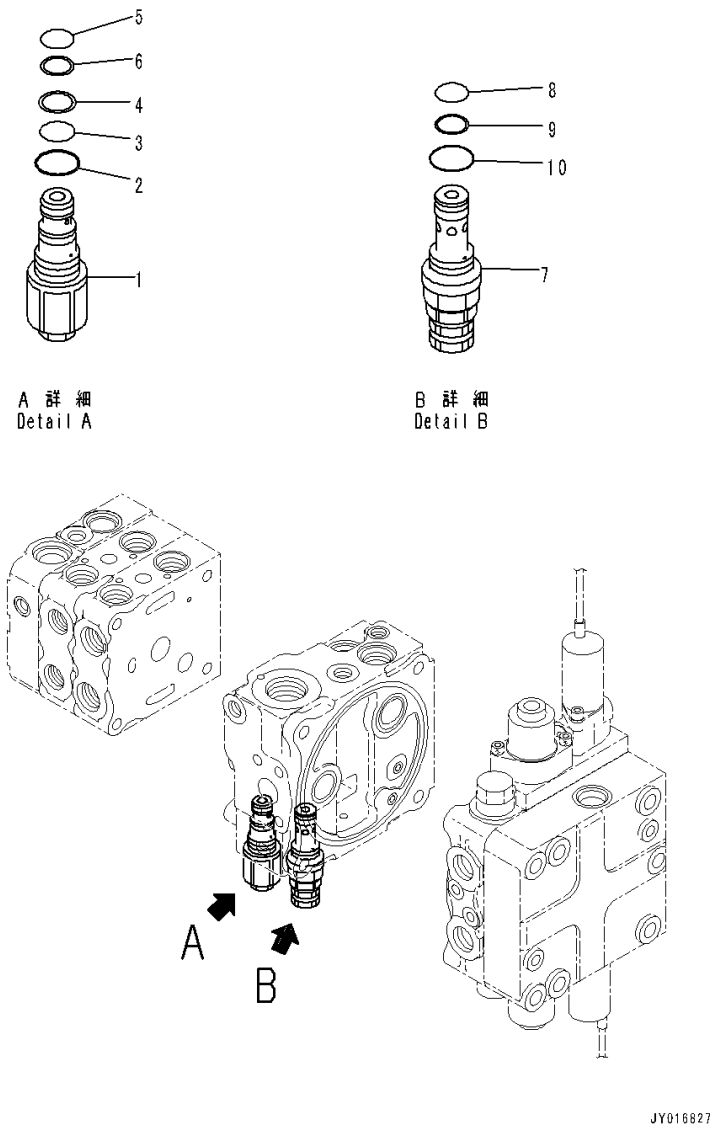

Index	Code	Part Number	Description	Qty	Serial Number
		Note: This list covers following specifications. Accumulator, PPC Piping, 3D Machine Control Plug and Play Accumulator, PPC Piping			
		723-23-10800	Valve, Control	1	1001-
1		723-20-70600	• Valve Assembly	1	1001-
2		07002-12434	• • O-ring	1	1001-
3		07000-12016	• • O-ring	1	1001-
4		07001-02016	• • Ring, Back-up	1	1001-
5		07000-12014	• • O-ring	1	1001-
6		07001-02014	• • Ring, Back-up	1	1001-
7		723-20-63100	• Valve, Relief	1	1001-
8		700-22-11410	• • O-ring	1	1001-
9		700-80-64220	• • Ring, Back-up	1	1001-
10		07002-12034	• • O-ring	1	1001-

FIG. M2210-003009 Fender (Inner Parts, Control Valve) (8/10)

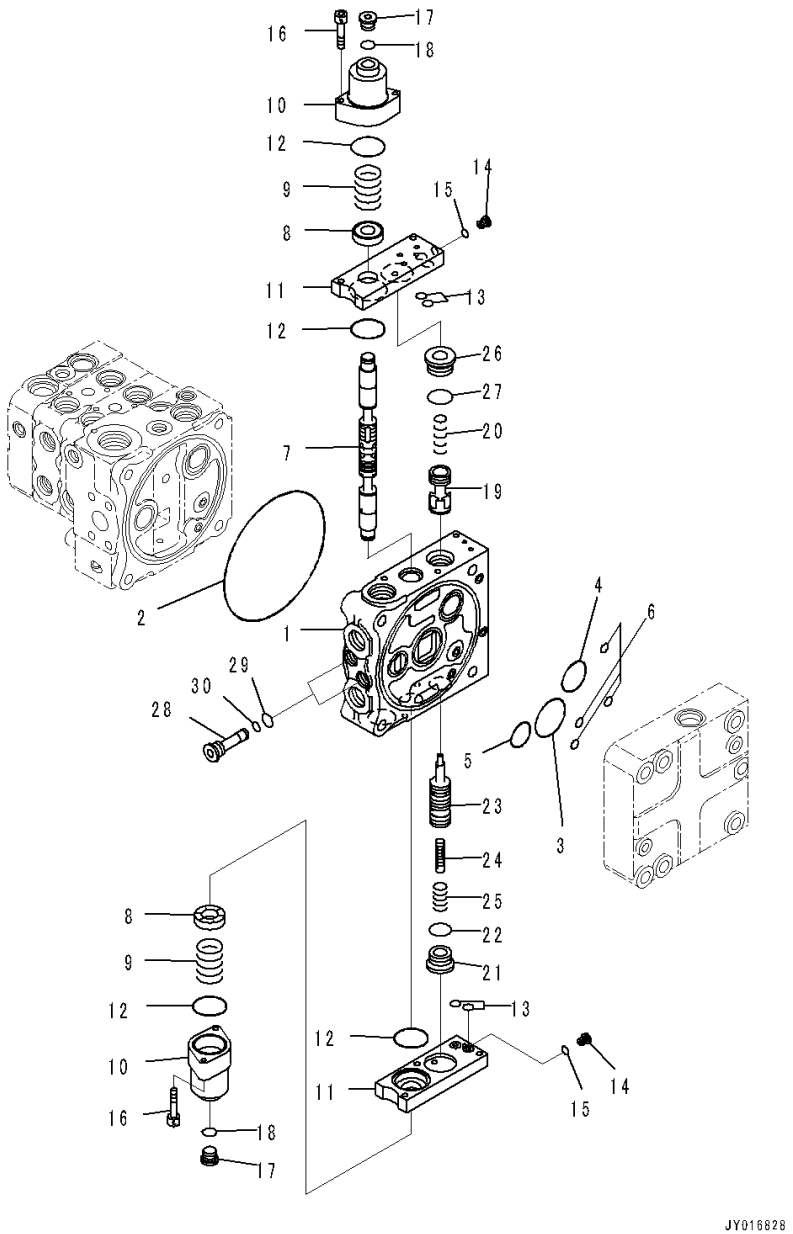

Index	Code	Part Number	Description	Qty	Serial Number
		Note: This list covers following specifications. Accumulator, PPC Piping, 3D Machine Control Plug and Play Accumulator, PPC Piping			
		723-23-10800	Valve, Control	1	1001-
	C1		• Body Group	1	1001-
1	C1		• • Valve Body	1	1001-
2		144-14-54610	• • O-ring	1	1001-
3		723-56-31720	• • O-ring	1	1001-
4		723-56-31730	• • O-ring	1	1001-
5		702-75-11520	• • O-ring	1	1001-
6		07000-11008	• • O-ring	4	1001-
7	C1		• • Spool	1	1001-
8		723-56-31211	• • Retainer	2	1001-
9		723-36-14120	• • Spring	2	1001-
10		723-56-31510	• • Case	2	1001-
11		723-56-32820	• • Plate	2	1001-
12		702-21-55450	• • O-ring	4	1001-
13		07000-11009	• • O-ring	4	1001-
14		723-11-27280	• • Plug	2	1001-
15		07002-10823	• • O-ring	2	1001-
16		01252-60650	• • Bolt, Hexagon Socket Head	4	1001-
17		702-21-55620	• • Plug	2	1001-
18		07002-11423	• • O-ring	2	1001-
19	C1		• • Valve	1	1001-
20		723-56-41710	• • Spring	1	1001-
21		723-26-15230	• • Plug	1	1001-
22		07002-12434	• • O-ring	1	1001-
23	C1		• • Valve	1	1001-
24	C1		• • Piston	1	1001-
25		723-56-41730	• • Spring	1	1001-
26		723-56-41970	• • Plug	1	1001-
27		07000-13024	• • O-ring	1	1001-
28		723-56-31640	• • Plug	2	1001-
29		07002-11623	• • O-ring	2	1001-
30		07000-11008	• • O-ring	2	1001-

FIG. M2210-003010 Fender (Inner Parts, Control Valve) (9/10)

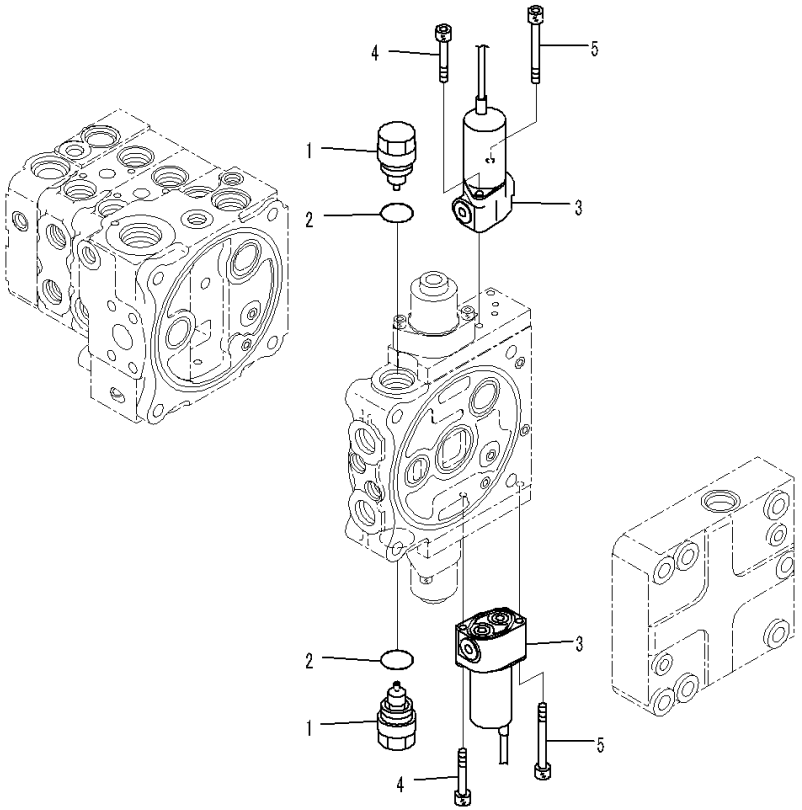

Index	Code	Part Number	Description	Qty	Serial Number
		Note: This list covers following specifications. Accumulator, PPC Piping, 3D Machine Control Plug and Play Accumulator, PPC Piping			
		723-23-10800	Valve, Control	1	1001-
	C1		• Body Group	1	1001-
1		723-40-85100	• • Valve Assembly, Suction	2	1001-
2		709-25-11390	• • • O-ring	1	1001-
3		702-21-07610	• • Valve, Solenoid	2	1001-
4		01252-60645	• • Bolt, Hexagon Socket Head	2	1001-
5		702-16-55270	• • Bolt	2	1001-

FIG. M2210-003011 Fender (Inner Parts, Control Valve) (10/10)

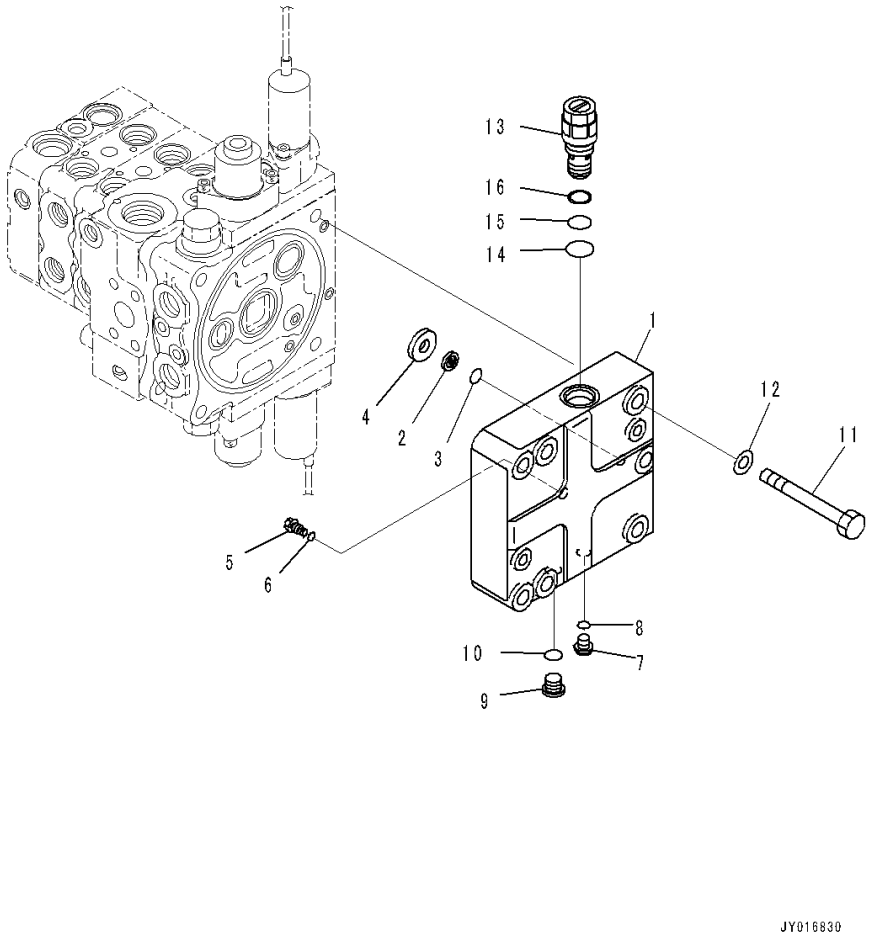

Index	Code	Part Number	Description	Qty	Serial Number
		Note: This list covers following specifications. Accumulator, PPC Piping, 3D Machine Control Plug and Play Accumulator, PPC Piping			
		723-23-10800	Valve, Control	1	1001-
1	C1		• Cover	1	1001-
2		702-21-53120	• Filter	1	1001-
3		702-21-55420	• O-ring	1	1001-
4	C1		• Seat	1	1001-
5		723-56-33960	• Orifice	1	1001-
6		07002-10823	• O-ring	1	1001-
7		708-8E-16160	• Plug	2	1001-
8		07002-11023	• O-ring	2	1001-
9		702-21-55620	• Plug	1	1001-
10		07002-11423	• O-ring	1	1001-
11		01011-81225	• Bolt	4	1001-
12		01643-31232	• Washer	4	1001-
13		723-60-21102	• Valve, Relief	1	1001-
14		07002-02434	• • O-ring	1	1001-
15		07000-12016	• • O-ring	1	1001-
16		07001-02016	• • Ring, Back-up	1	1001-

FIG. M2210-003012 Fender (Control Valve Mounting)

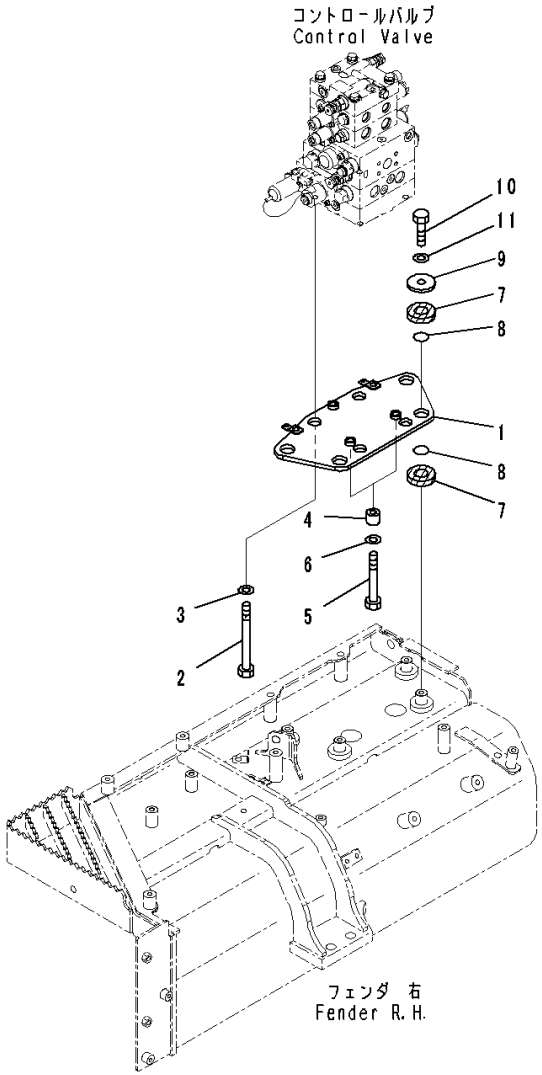

Index	Code	Part Number	Description	Qty	Serial Number
		Note: This list covers following specifications. Accumulator, PPC Piping, 3D Machine Control Plug and Play Rear 1-attachment, Accumulator, PPC Piping, 3D Machine Control Plug and Play Power Tilt Pitch Dozer, Accumulator, PPC Piping, 3D Machine Control Plug and Play Power Tilt Pitch Dozer, Rear 1-attachment, Accumulator, PPC Piping, 3D Machine Control Plug and Play Power Angle Power Tilt Dozer, Inside Frame, Accumulator, PPC Piping, 3D Machine Control Plug and Play Power Angle Power Tilt Dozer, Inside Frame, Rear 1-attachment, Accumulator, PPC Piping, 3D Machine Control Plug and Play Power Angle Power Tilt Dozer, Inside Frame, Accumulator, PPC Piping Power Tilt Pitch Dozer, Rear 1-attachment, Accumulator, PPC Piping Power Tilt Pitch Dozer, Accumulator, PPC Piping Accumulator, PPC Piping Rear 1-attachment, Accumulator, PPC Piping Power Angle Power Tilt Dozer, Inside Frame, Rear 1-attachment, Accumulator, PPC Piping		
1		14X-60-51211	Plate	1	1001-
2		01010-81240	Bolt	1	1001-
3		01643-31232	Washer	1	1001-
4		566-01-12350	Boss	2	1001-
5		21K-01-72150	Bolt	2	1001-
6		01643-31232	Washer	2	1001-
7		14X-60-12120	Cushion	8	1001-
8		07000-13025	O-ring	8	1001-
9		566-35-42430	Plate	4	1001-
10		01010-81225	Bolt	4	1001-
11		01643-31232	Washer	4	1001-

FIG. M2210-003013 Fender (PPC Valve Piping)

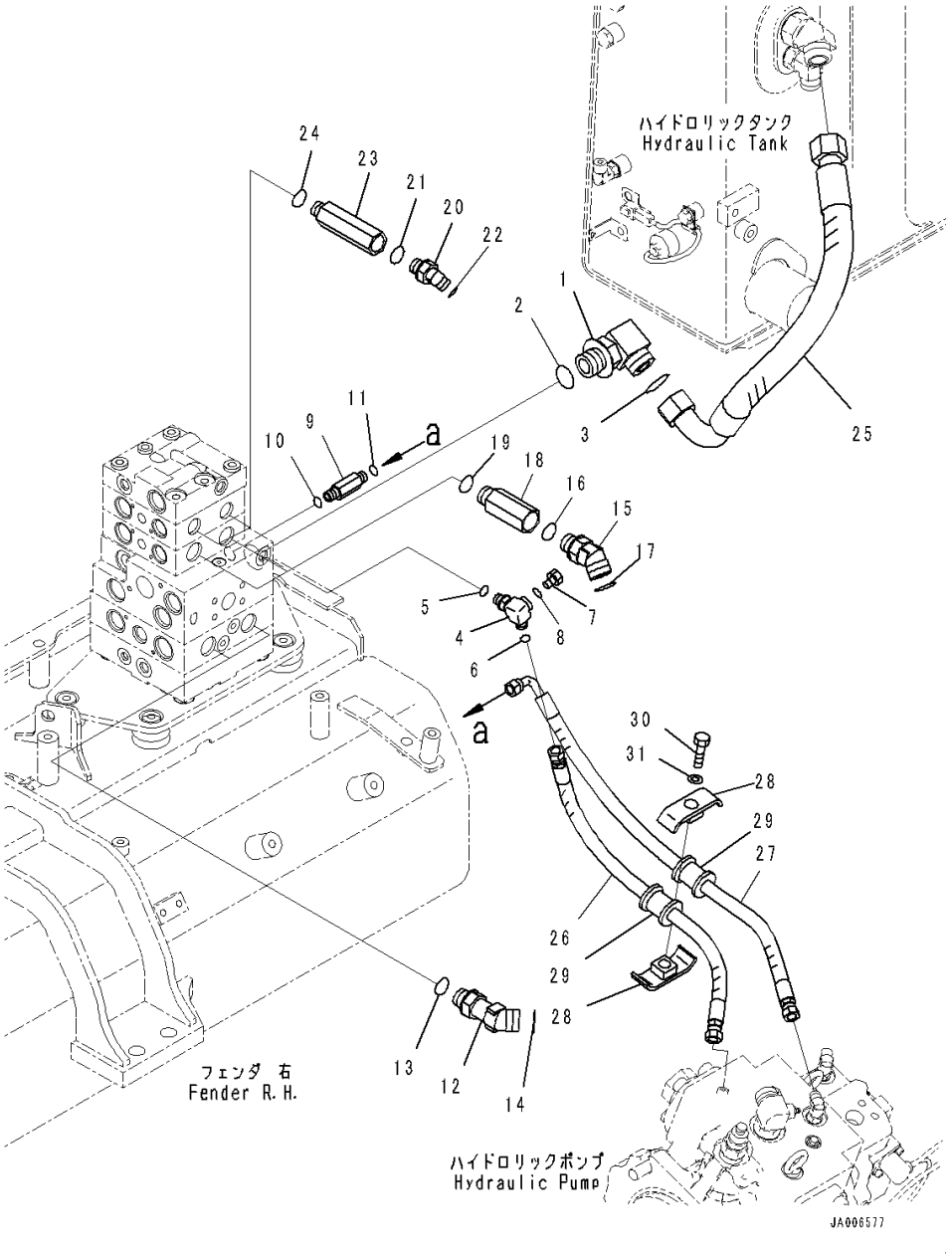

Index	Code	Part Number	Description	Qty	Serial Number
		Note: This list covers following specifications. Accumulator, PPC Piping, 3D Machine Control Plug and Play Accumulator, PPC Piping			
1		21W-62-42640	Elbow	1	1001-
2		07002-13334	O-ring	1	1001-
3		207-62-64740	O-ring	1	1001-
4		14X-62-54870	Tee	1	1001-
5		07002-11423	O-ring	1	1001-
6		02896-11008	O-ring	1	1001-
7		07040-11007	Plug	1	1001-
8		07002-11023	O-ring	1	1001-
9		11Y-62-12230	Union	1	1001-
10		07002-11423	O-ring	1	1001-
11		02896-11008	O-ring	1	1001-
12		11Y-62-36160	Elbow	2	1001-
13		07002-62434	O-ring	2	1001-
14		02896-61018	O-ring	2	1001-
15		02783-10628	Elbow	2	1001-
16		07002-12434	O-ring	2	1001-
17		02896-11018	O-ring	2	1001-
18		20T-62-81790	Joint	2	1001-
19		07002-12434	O-ring	2	1001-
20		02783-10315	Elbow	2	1001-
21		07002-12034	O-ring	2	1001-
22		02896-11009	O-ring	2	1001-
23		14X-62-52931	Joint	2	1001-
24		07002-12034	O-ring	2	1001-
25		14X-62-52940	Hose	1	1001-
26		14X-62-52391	Hose	1	1001-
27		14X-62-52541	Hose	1	1001-
28		22P-62-13540	Clamp	2	1001-
29		07095-00314	Cushion	2	1001-
30		01010-81260	Bolt	1	1001-
31		01643-31232	Washer	1	1001-

FIG. M2210-003014 Fender (Accumulator, PPC Piping, 3D Machine Control Plug and Play) (PPC Lock Solenoid Valve With Accumulator)

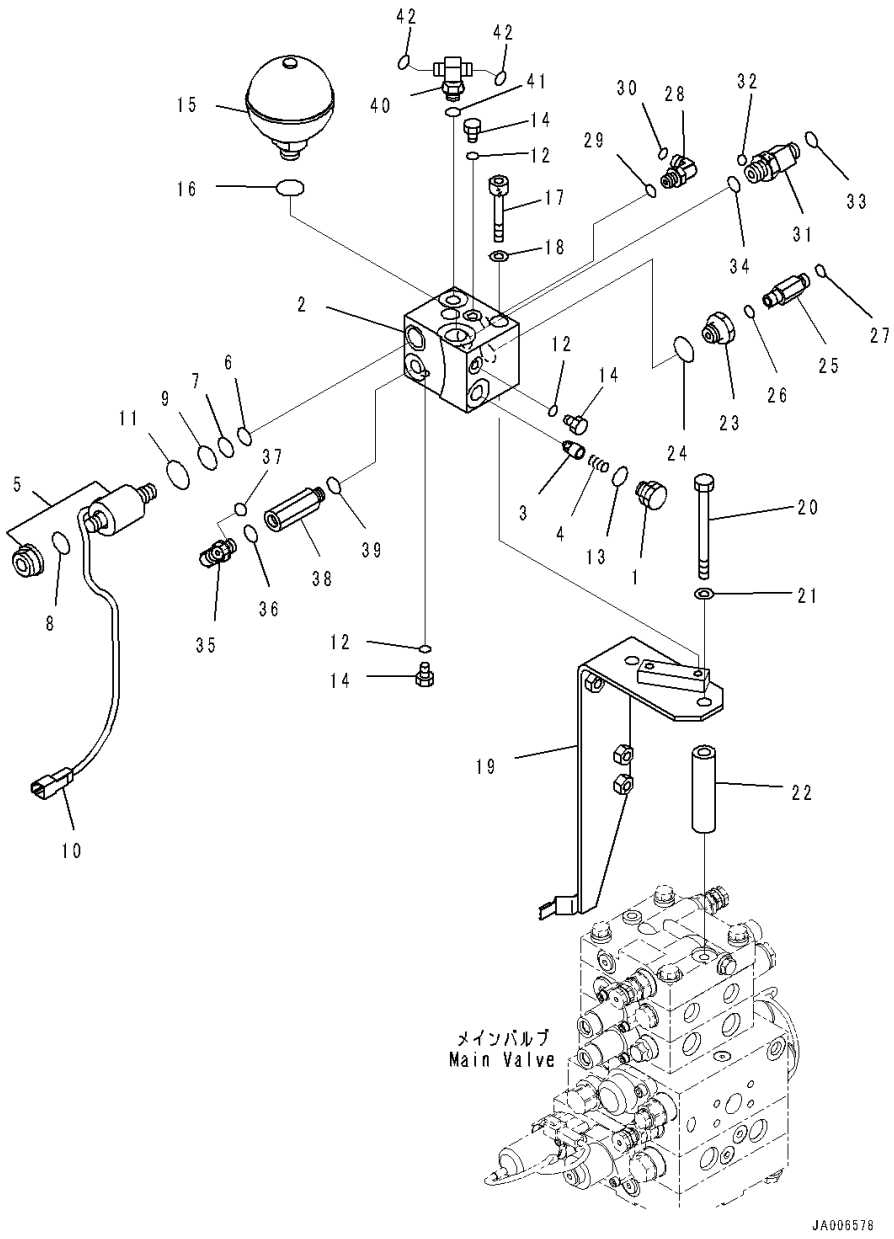

Index	Code	Part Number	Description	Qty	Serial Number
		14X-62-53551	Block Assembly	1	1001-
1		103-49-14280	• Plug	1	1001-
2		14X-62-53561	• Block	1	1001-
3		205-60-51390	• Poppet	1	1001-
4		722-12-12063	• Spring	1	1001-
5		11Y-60-11530	• Valve, Solenoid	1	1001-
6		07000-02012	• • O-ring	1	1001-
7		07000-02014	• • O-ring	1	1001-
8		07000-12016	• • O-ring	1	1001-
9		07000-02018	• • O-ring	1	1001-
10	C1		• • Connector	1	1001-
11		203-60-62190	• • O-ring	1	1001-
12		07002-10823	• O-ring	3	1001-
13		07002-11623	• O-ring	1	1001-
14		07040-10807	• Plug	3	1001-
15		22U-60-21330	Accumulator	1	1001-
16		07002-12034	O-ring	1	1001-
17		01252-A1085	Bolt, Hexagon Socket Head	2	1001-
18		01643-51032	Washer	2	1001-
19		14X-62-52960	Bracket	1	1001-
20		01011-81230	Bolt	2	1001-
21		01643-31232	Washer	2	1001-
22		14X-62-52981	Spacer	2	1001-
23		20Y-62-21940	Filter Assembly	1	1001-
24		07002-12034	O-ring	1	1001-
25		20U-62-41890	Nipple	1	1001-
26		07002-11423	O-ring	1	1001-
27		02896-11008	O-ring	1	1001-
28		02782-10210	Elbow	1	1001-
29		07002-11423	O-ring	1	1001-
30		02896-11008	O-ring	1	1001-
31		20K-62-33690	Tee	1	1001-
32		02896-11008	• O-ring	1	1001-
33		02896-11009	• O-ring	1	1001-
34		07002-12034	O-ring	1	1001-
35		02782-10210	Elbow	1	1001-
36		07002-11423	O-ring	1	1001-
37		02896-11008	O-ring	1	1001-
38		207-62-62460	Adapter	1	1001-

FIG. M2210-003014 Fender (Accumulator, PPC Piping, 3D Machine Control Plug and Play) (PPC Lock Solenoid Valve With Accumulator)

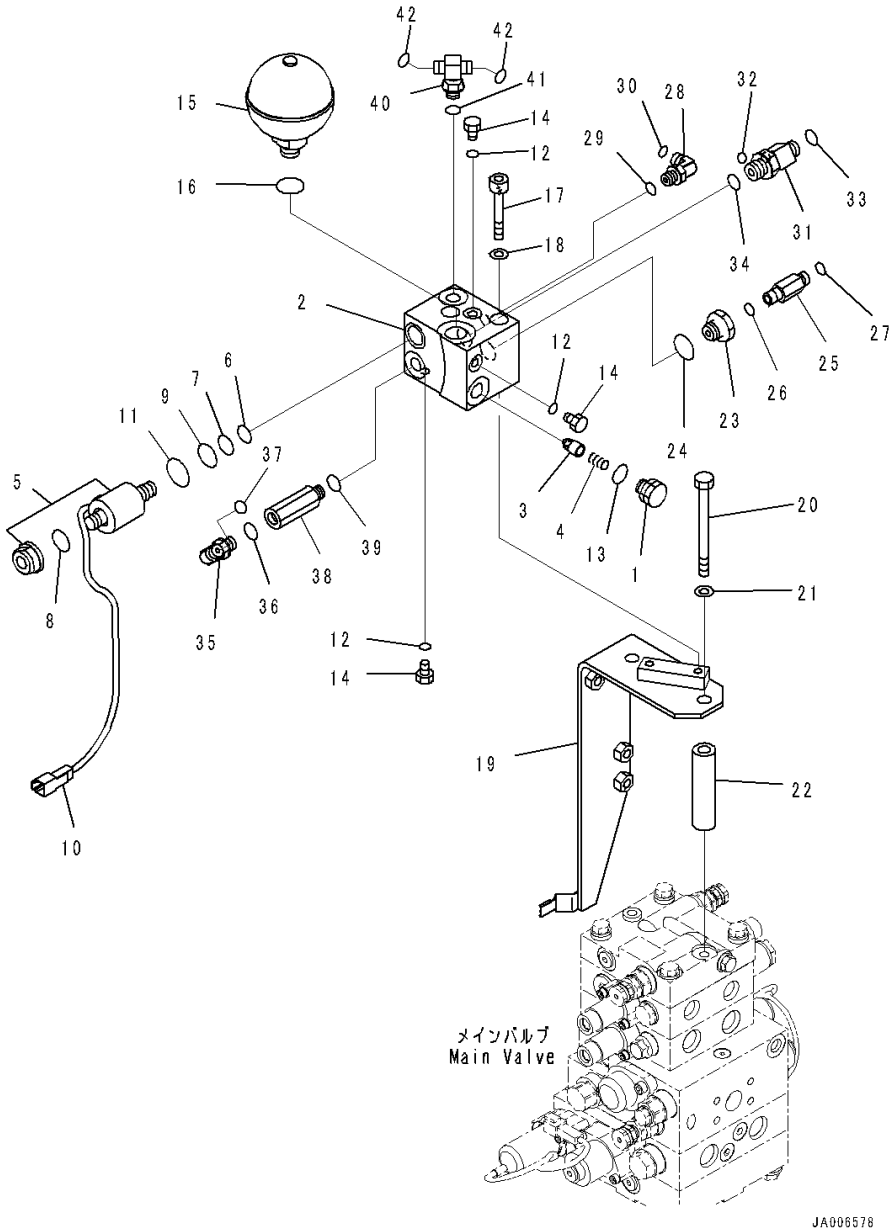

Index	Code	Part Number	Description	Qty	Serial Number
39		07002-11423	O-ring	1	1001-
40		22L-62-21150	Tee	1	1001-
41		07002-11423	O-ring	1	1001-
42		02896-11008	O-ring	2	1001-

FIG. M2210-003015 Fender (Control Valve Steering Piping)

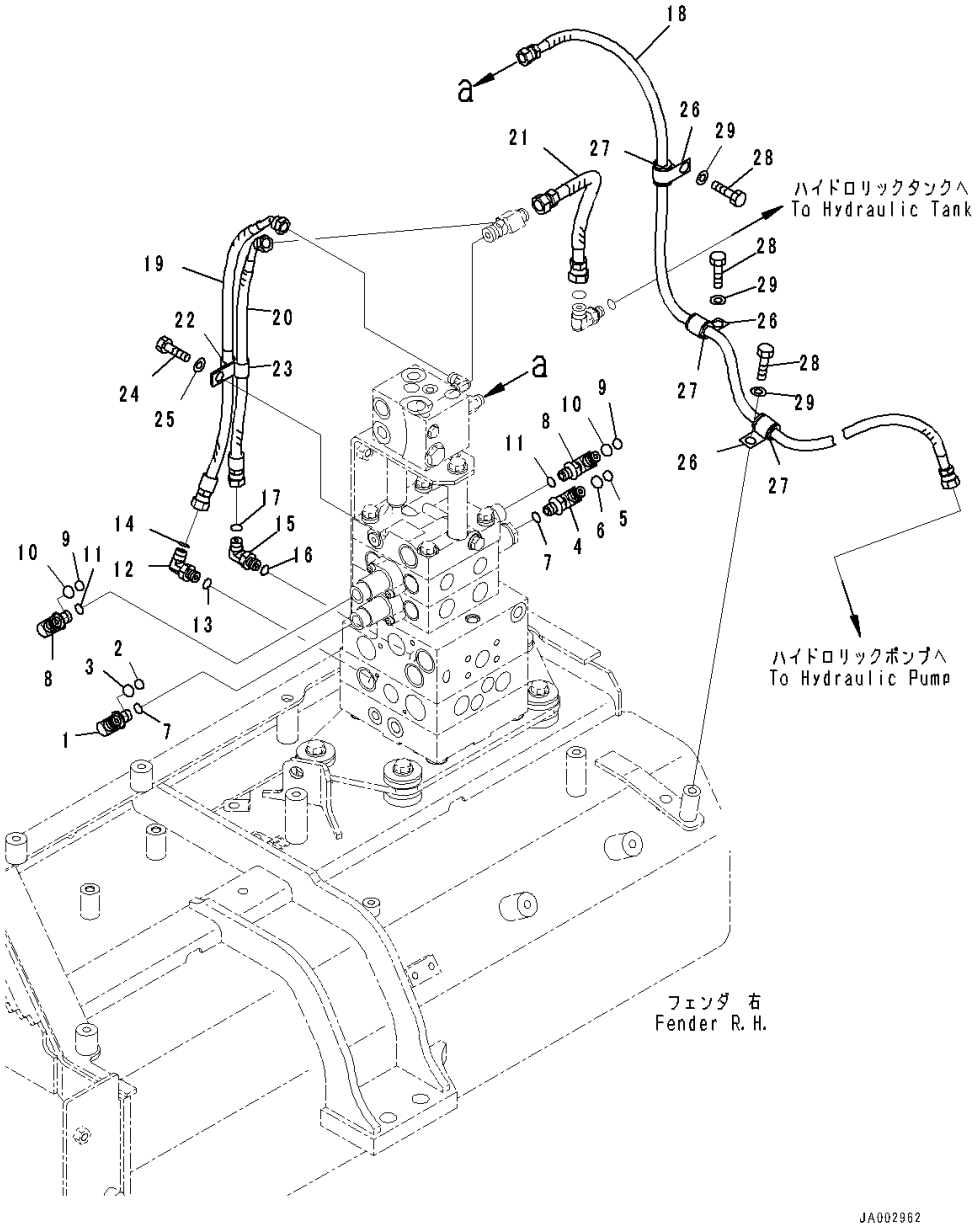

Index	Code	Part Number	Description	Qty	Serial Number
		Note: This list covers following specifications. Accumulator, PPC Piping, 3D Machine Control Plug and Play Accumulator, PPC Piping			
1		14X-62-53531	Elbow	1	1001-
2		201-60-11390	• O-ring	1	1001-
3		20Y-62-19560	• O-ring	1	1001-
4		14X-62-54960	Elbow	1	1001-
5		201-60-11390	• O-ring	1	1001-
6		20Y-62-19560	• O-ring	1	1001-
7		07002-11423	O-ring	2	1001-
8		14X-62-53541	Elbow	2	1001-
9		201-60-11390	• O-ring	1	1001-
10		20Y-62-19560	• O-ring	1	1001-
11		07002-11423	O-ring	2	1001-
12		02782-10210	Elbow	1	1001-
13		07002-11423	O-ring	1	1001-
14		02896-11008	O-ring	1	1001-
15		02782-10210	Elbow	1	1001-
16		07002-11423	O-ring	1	1001-
17		02896-11008	O-ring	1	1001-
18		14X-62-52521	Hose	1	1001-
19		02764-00205	Hose, Face Seal Type	1	1001-
20		02764-00204	Hose, Face Seal Type	1	1001-
21		02762-00303	Hose, Face Seal Type	1	1001-
22		04434-51212	Clip	1	1001-
23		21T-72-23260	Clip	1	1001-
24		01010-81225	Bolt	1	1001-
25		01643-31232	Washer	1	1001-
26		04434-51712	Clip	3	1001-
27		07095-20211	Cushion	3	1001-
28		01010-81220	Bolt	3	1001-
29		01643-31232	Washer	3	1001-

FIG. M2210-003016 Fender (Control Valve Wiring Harness)

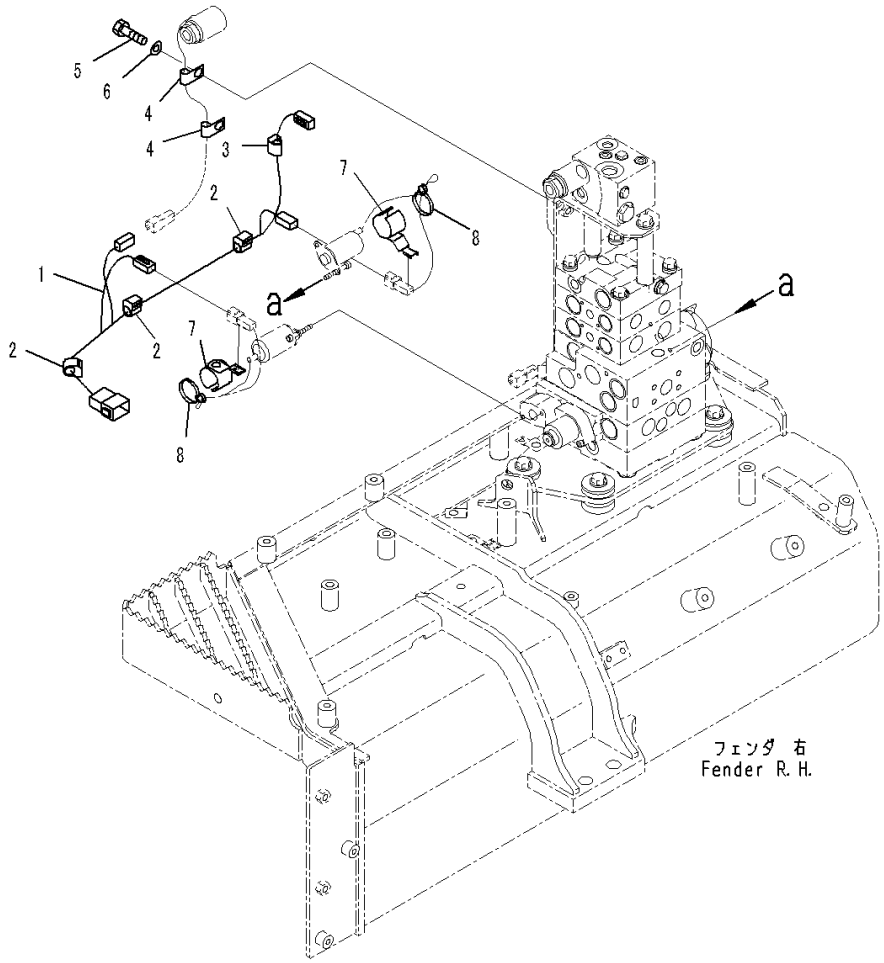

Index	Code	Part Number	Description	Qty	Serial Number
		Note: This list covers following specifications.			
		Accumulator, PPC Piping, 3D Machine Control Plug and Play			
		Rear 1-attachment, Accumulator, PPC Piping, 3D Machine Control Plug and Play			
		Accumulator, PPC Piping			
		Rear 1-attachment, Accumulator, PPC Piping			
1		14X-06-51271	Wiring Harness	1	1001-
2		08211-01020	Clip	3	1001-
3		08211-00720	Clip	1	1001-
4		04434-50612	Clip	2	1001-
5		01010-81225	Bolt	2	1001-
6		01643-31232	Washer	2	1001-
7		21W-60-41310	Clip	2	1001-
8		08034-40521	Band	2	1001-

FIG. M2210-003017 Fender (Power Line Filter)

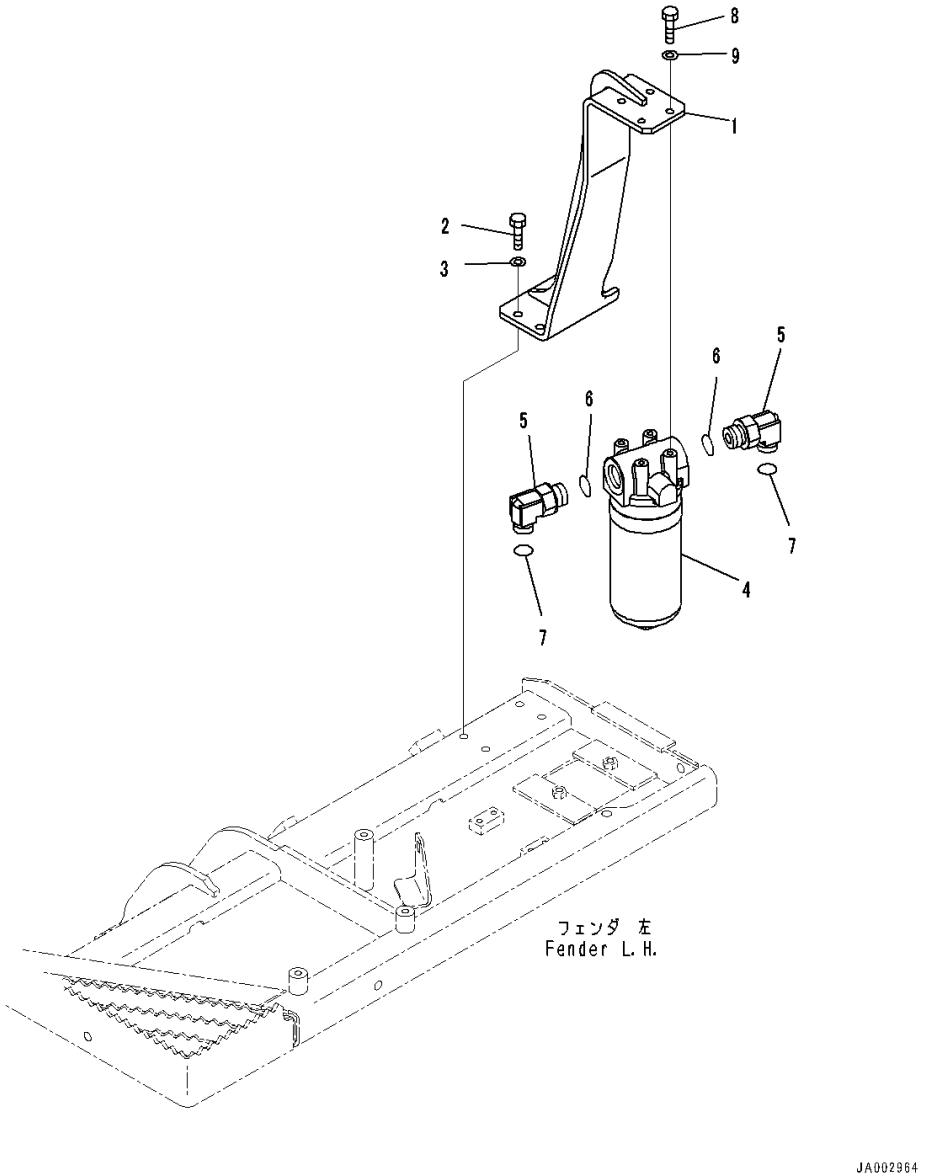

Index	Code	Part Number	Description	Qty	Serial Number
		Note: This list covers following specifications.			
		Accumulator, PPC Piping, 3D Machine Control Plug and Play			
		Rear 1-attachment, Accumulator, PPC Piping, 3D Machine Control Plug and Play			
		Power Tilt Pitch Dozer, Accumulator, PPC Piping, 3D Machine Control Plug and Play			
		Power Tilt Pitch Dozer, Rear 1-attachment, Accumulator, PPC Piping, 3D Machine Control Plug and Play			
		Power Angle Power Tilt Dozer, Inside Frame, Accumulator, PPC Piping, 3D Machine Control Plug and Play			
		Power Angle Power Tilt Dozer, Inside Frame, Rear 1-attachment, Accumulator, PPC Piping, 3D Machine Control Plug and Play			
		Power Angle Power Tilt Dozer, Inside Frame, Accumulator, PPC Piping			
		Power Tilt Pitch Dozer, Rear 1-attachment, Accumulator, PPC Piping			
		Power Tilt Pitch Dozer, Accumulator, PPC Piping			
		Accumulator, PPC Piping			
		Rear 1-attachment, Accumulator, PPC Piping			
		Power Angle Power Tilt Dozer, Inside Frame, Rear 1-attachment, Accumulator, PPC Piping			
1		14X-49-52231	Bracket	1	1001-
2		01010-81030	Bolt	4	1001-
3		01643-31032	Washer	4	1001-
4		14X-49-61400	Filter Assembly	1	1001-
5		02782-10632	Elbow	2	1001-
6		07002-23334	O-ring	2	1001-
7		02896-21018	O-ring	2	1001-
8		01010-81030	Bolt	4	1001-
9		01643-31032	Washer	4	1001-

FIG. M2210-003018 Fender (Handrail)

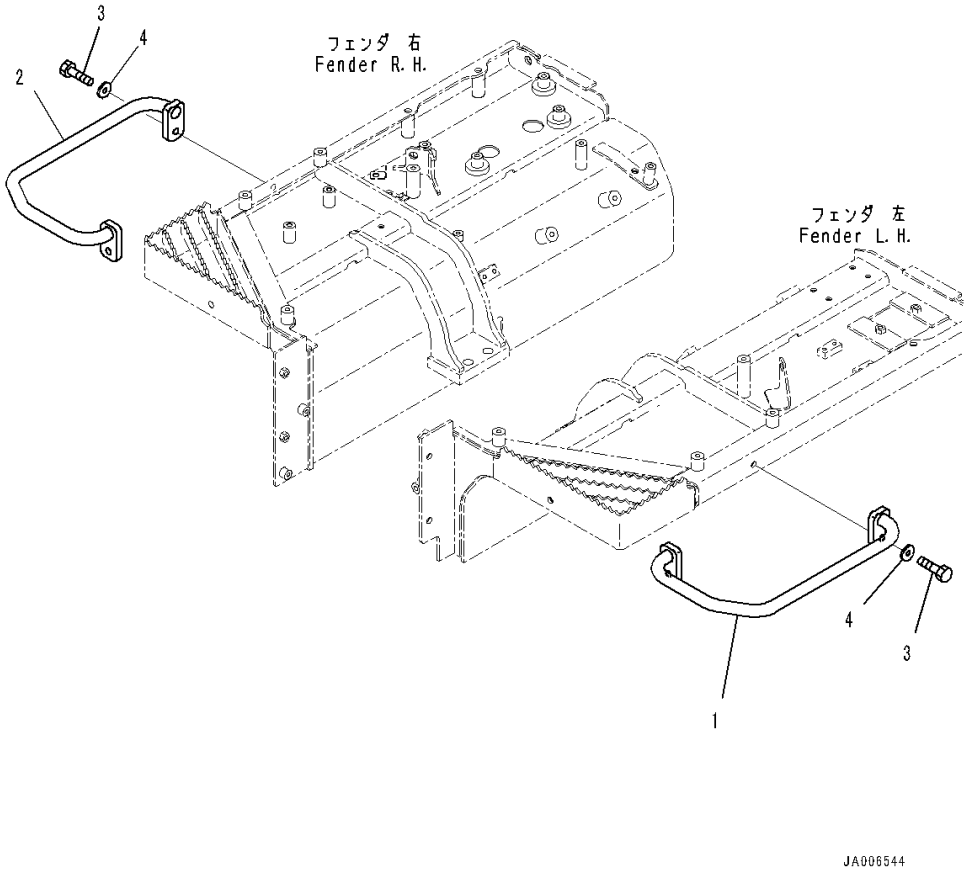

Index	Code	Part Number	Description	Qty	Serial Number
		Note: This list covers following specifications.			
		Accumulator, PPC Piping, 3D Machine Control Plug and Play			
		Rear 1-attachment, Accumulator, PPC Piping, 3D Machine Control Plug and Play			
		Power Tilt Pitch Dozer, Accumulator, PPC Piping, 3D Machine Control Plug and Play			
		Power Tilt Pitch Dozer, Rear 1-attachment, Accumulator, PPC Piping, 3D Machine Control Plug and Play			
		Power Tilt Pitch Dozer, Rear 1-attachment, Accumulator, PPC Piping			
		Power Tilt Pitch Dozer, Accumulator, PPC Piping			
		Accumulator, PPC Piping			
		Rear 1-attachment, Accumulator, PPC Piping			
1		14X-54-53451	Handle	1	1001-
2		14X-54-53540	Handle	1	1001-
3		01010-81240	Bolt	4	1001-
4		175-54-34170	Washer	4	1001-

FIG. M2210-003019 Fender (Grease Pump Holder)

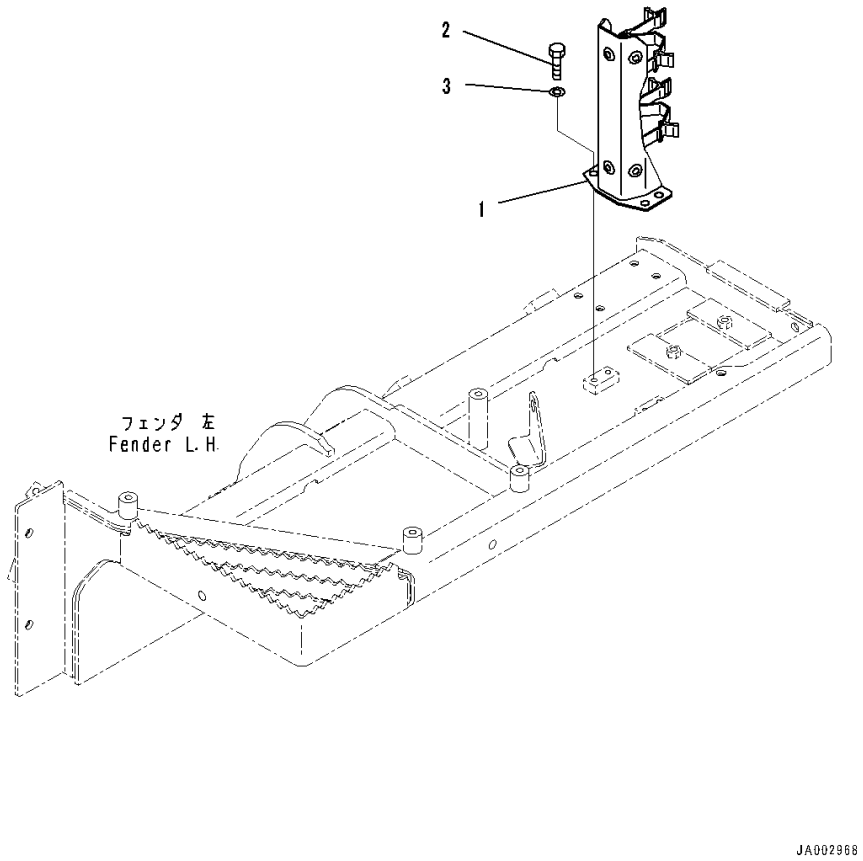

Index	Code	Part Number	Description	Qty	Serial Number
		Note: This list covers following specifications.			
		Accumulator, PPC Piping, 3D Machine Control Plug and Play			
		Power Tilt Pitch Dozer, Accumulator, PPC Piping, 3D Machine Control Plug and Play			
		Power Tilt Pitch Dozer, Rear 1-attachment, Accumulator, PPC Piping, 3D Machine Control Plug and Play			
		Power Angle Power Tilt Dozer, Inside Frame, Rear 1-attachment, Accumulator, PPC Piping, 3D Machine Control Plug and Play			
		Power Angle Power Tilt Dozer, Inside Frame, Accumulator, PPC Piping			
		Power Tilt Pitch Dozer, Rear 1-attachment, Accumulator, PPC Piping			
		Accumulator, PPC Piping			
		Rear 1-attachment, Accumulator, PPC Piping			
1		14X-54-63191	Bracket	1	1001-
2		01010-81020	Bolt	4	1001-
3		01643-31032	Washer	4	1001-

FIG. M2210-003020 Fender (Mounting)

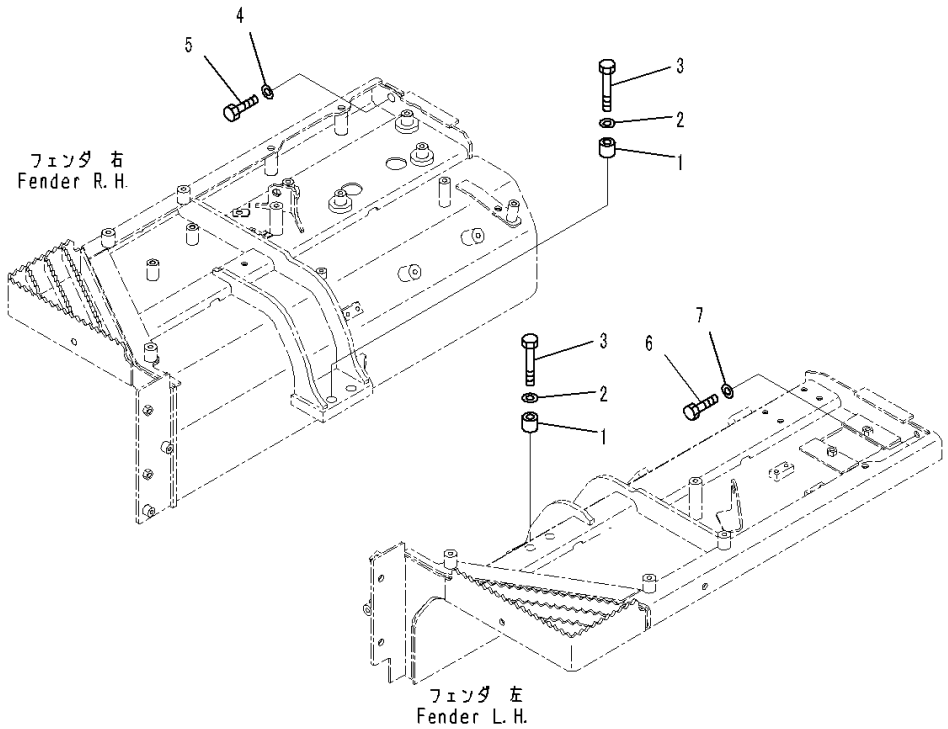

Index	Code	Part Number	Description	Qty	Serial Number
		Note: This list covers following specifications. Accumulator, PPC Piping, 3D Machine Control Plug and Play Rear 1-attachment, Accumulator, PPC Piping, 3D Machine Control Plug and Play Power Tilt Pitch Dozer, Accumulator, PPC Piping, 3D Machine Control Plug and Play Power Tilt Pitch Dozer, Rear 1-attachment, Accumulator, PPC Piping, 3D Machine Control Plug and Play Power Angle Power Tilt Dozer, Inside Frame, Accumulator, PPC Piping, 3D Machine Control Plug and Play Power Angle Power Tilt Dozer, Inside Frame, Rear 1-attachment, Accumulator, PPC Piping, 3D Machine Control Plug and Play Power Angle Power Tilt Dozer, Inside Frame, Accumulator, PPC Piping Power Tilt Pitch Dozer, Rear 1-attachment, Accumulator, PPC Piping Power Tilt Pitch Dozer, Accumulator, PPC Piping Accumulator, PPC Piping Rear 1-attachment, Accumulator, PPC Piping Power Angle Power Tilt Dozer, Inside Frame, Rear 1-attachment, Accumulator, PPC Piping		
1		120-54-42450	Spacer	4	1001-
2		01643-31645	Washer	4	1001-
3		01010-81680	Bolt	4	1001-
4		01643-31645	Washer	1	1001-
5		01010-81635	Bolt	1	1001-
6		01010-81235	Bolt	1	1001-
7		01643-31232	Washer	1	1001-

FIG. M2210-003021 Fender (Under Cover)

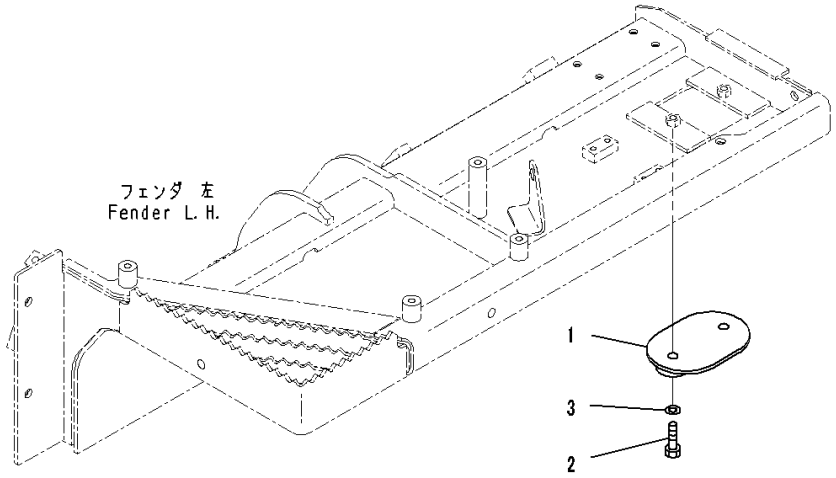

Index	Code	Part Number	Description	Qty	Serial Number
		Note: This list covers following specifications.			
		Accumulator, PPC Piping, 3D Machine Control Plug and Play			
		Rear 1-attachment, Accumulator, PPC Piping, 3D Machine Control Plug and Play			
		Power Tilt Pitch Dozer, Accumulator, PPC Piping, 3D Machine Control Plug and Play			
		Power Tilt Pitch Dozer, Rear 1-attachment, Accumulator, PPC Piping, 3D Machine Control Plug and Play			
		Power Angle Power Tilt Dozer, Inside Frame, Accumulator, PPC Piping, 3D Machine Control Plug and Play			
		Power Angle Power Tilt Dozer, Inside Frame, Rear 1-attachment, Accumulator, PPC Piping, 3D Machine Control Plug and Play			
		Power Angle Power Tilt Dozer, Inside Frame, Accumulator, PPC Piping			
		Power Tilt Pitch Dozer, Rear 1-attachment, Accumulator, PPC Piping			
		Power Tilt Pitch Dozer, Accumulator, PPC Piping			
		Accumulator, PPC Piping			
		Rear 1-attachment, Accumulator, PPC Piping			
		Power Angle Power Tilt Dozer, Inside Frame, Rear 1-attachment, Accumulator, PPC Piping			
1		14X-21-51361	Cover	1	1001-
2		01010-81230	Bolt	2	1001-
3		01643-31232	Washer	2	1001-

FIG. M2210-004002 Fender (Inner Parts, Control Valve) (1/11)

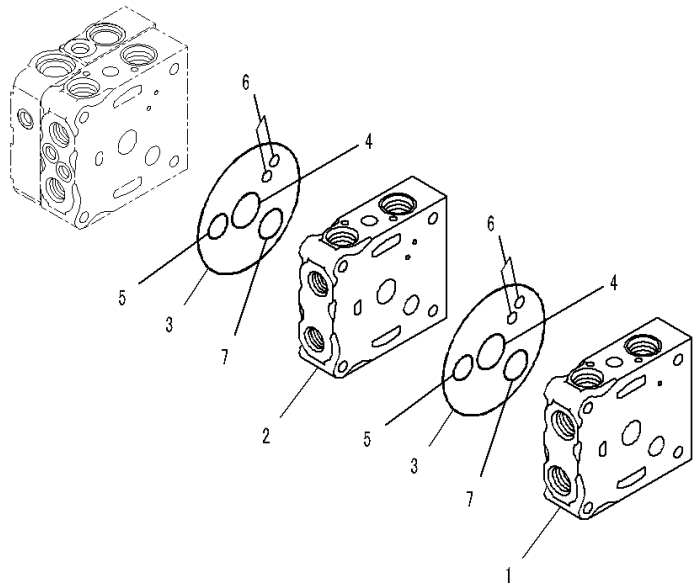

JY016808

Index	Code	Part Number	Description	Qty	Serial Number
		Note: This list covers following specifications.			
		Rear 1-attachment, Accumulator, PPC Piping, 3D Machine Control Plug and Play			
		Rear 1-attachment, Accumulator, PPC Piping			
		723-24-11700	Valve, Control	1	1001-
	C1		• Body Group	1	1001-
1	C1		• • Valve Body	1	1001-
2	C1		• • Valve Body	1	1001-
3		07000-12120	• • O-ring	2	1001-
4		723-26-15830	• • O-ring	2	1001-
5		07000-12020	• • O-ring	2	1001-
6		07000-11008	• • O-ring	4	1001-
7		723-26-15840	• • O-ring	2	1001-

FIG. M2210-004003 Fender (Inner Parts, Control Valve) (2/11)

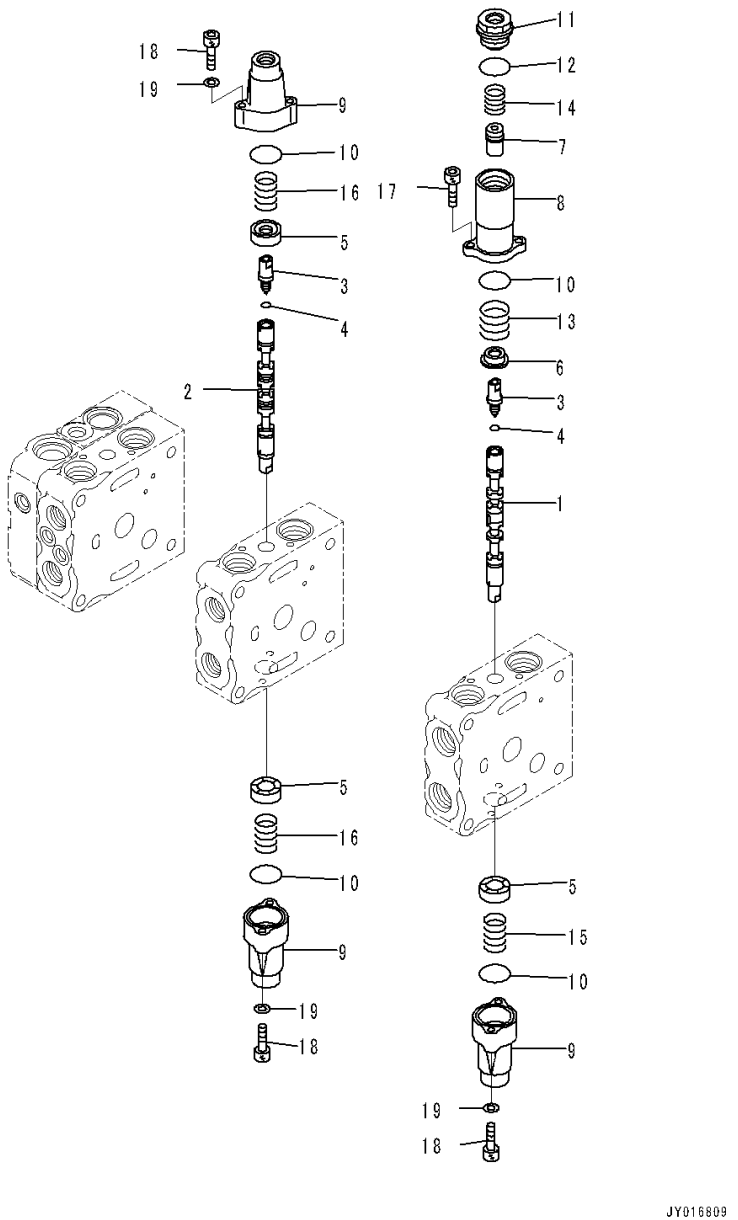

Index	Code	Part Number	Description	Qty	Serial Number
		Note: This list covers following specifications.			
		Rear 1-attachment, Accumulator, PPC Piping, 3D Machine Control Plug and Play			
		Rear 1-attachment, Accumulator, PPC Piping			
		723-24-11700	Valve, Control	1	1001-
	C1		• Body Group	1	1001-
1	C1		• • Spool	1	1001-
2	C1		• • Spool	1	1001-
3	C1		• • Plug	2	1001-
4	C1		• • O-ring	2	1001-
5		723-26-15121	• • Retainer	3	1001-
6		723-26-16770	• • Retainer	1	1001-
7		723-26-16780	• • Retainer	1	1001-
8		723-26-16760	• • Case	1	1001-
9		723-26-15110	• • Case	3	1001-
10		575-41-17420	• • O-ring	4	1001-
11		723-26-16790	• • Plug	1	1001-
12		07002-12434	• • O-ring	1	1001-
13		723-26-14560	• • Spring	1	1001-
14		723-26-14570	• • Spring	1	1001-
15		709-26-11450	• • Spring	1	1001-
16		723-26-14580	• • Spring	2	1001-
17		01252-60616	• • Bolt, Hexagon Socket Head	2	1001-
18		01252-60630	• • Bolt, Hexagon Socket Head	6	1001-
19		01641-20608	• • Washer	6	1001-

FIG. M2210-004004 Fender (Inner Parts, Control Valve) (3/11)

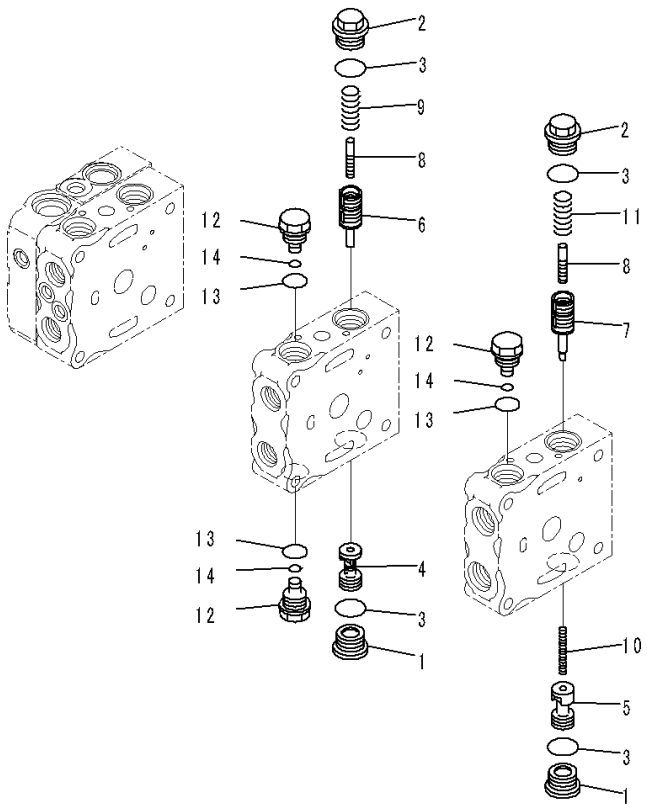

Index	Code	Part Number	Description	Qty	Serial Number
		Note: This list covers following specifications.			
		Rear 1-attachment, Accumulator, PPC Piping, 3D Machine Control Plug and Play			
		Rear 1-attachment, Accumulator, PPC Piping			
		723-24-11700	Valve, Control	1	1001-
	C1		• Body Group	1	1001-
1		723-26-15230	• • Plug	2	1001-
2		723-26-15370	• • Plug	2	1001-
3		07002-12434	• • O-ring	4	1001-
4	C1		• • Valve	1	1001-
5	C1		• • Valve	1	1001-
6	C1		• • Valve	1	1001-
7	C1		• • Valve	1	1001-
8	C1		• • Piston	2	1001-
9		723-26-14230	• • Spring	1	1001-
10		723-26-14220	• • Spring	1	1001-
11		723-26-14240	• • Spring	1	1001-
12		723-26-15310	• • Plug	3	1001-
13		07002-12034	• • O-ring	3	1001-
14		07000-11007	• • O-ring	3	1001-

FIG. M2210-004005 Fender (Inner Parts, Control Valve) (4/11)

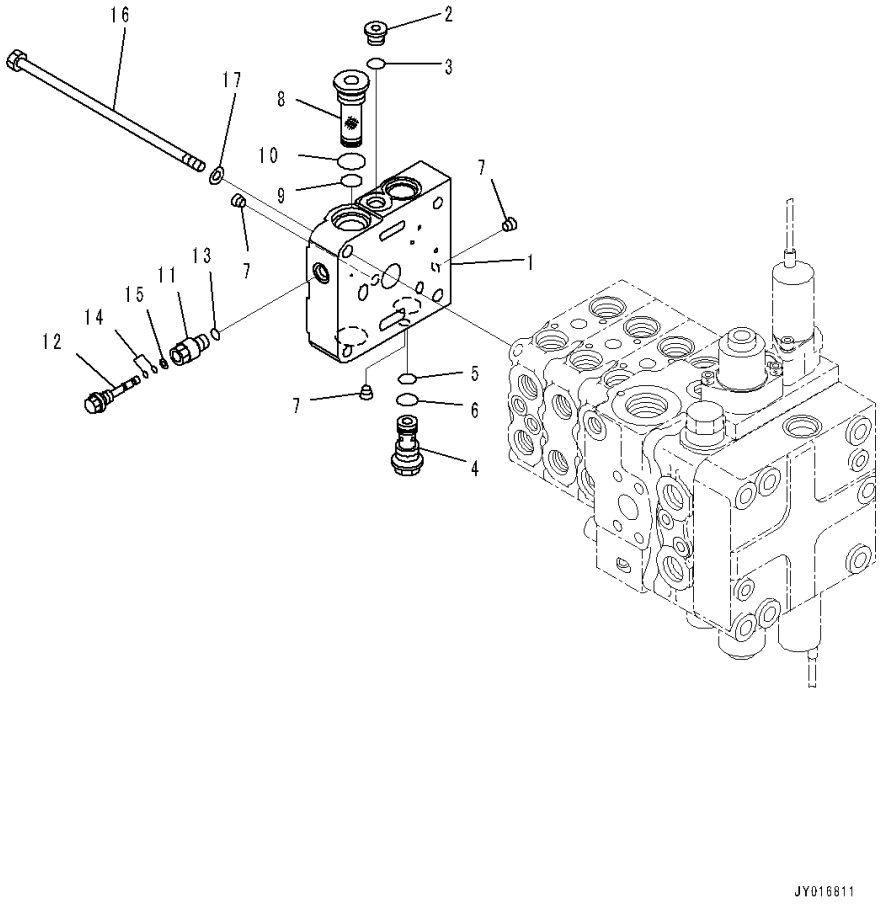

Index	Code	Part Number	Description	Qty	Serial Number
		Note: This list covers following specifications.			
		Rear 1-attachment, Accumulator, PPC Piping, 3D Machine Control Plug and Play			
		Rear 1-attachment, Accumulator, PPC Piping			
		723-24-11700	Valve, Control	1	1001-
1	C1		• Cover	1	1001-
2		702-21-55620	• Plug	1	1001-
3		07002-11423	• O-ring	1	1001-
4		723-26-17210	• Filter	1	1001-
5		723-11-19970	• O-ring	1	1001-
6		07002-12034	• O-ring	1	1001-
7	C1		• Plug	3	1001-
8		723-11-14390	• Filter	1	1001-
9		723-11-19130	• O-ring	1	1001-
10		07002-12434	• O-ring	1	1001-
11		723-11-38620	• Plug	1	1001-
12		723-26-16990	• Plug	1	1001-
13		07002-11223	• O-ring	1	1001-
14		07000-11003	• O-ring	2	1001-
15		07001-01003	• Ring, Back-up	1	1001-
16		700-25-11120	• Bolt	4	1001-
17		01643-31032	• Washer	4	1001-

FIG. M2210-004006 Fender (Inner Parts, Control Valve) (5/11)

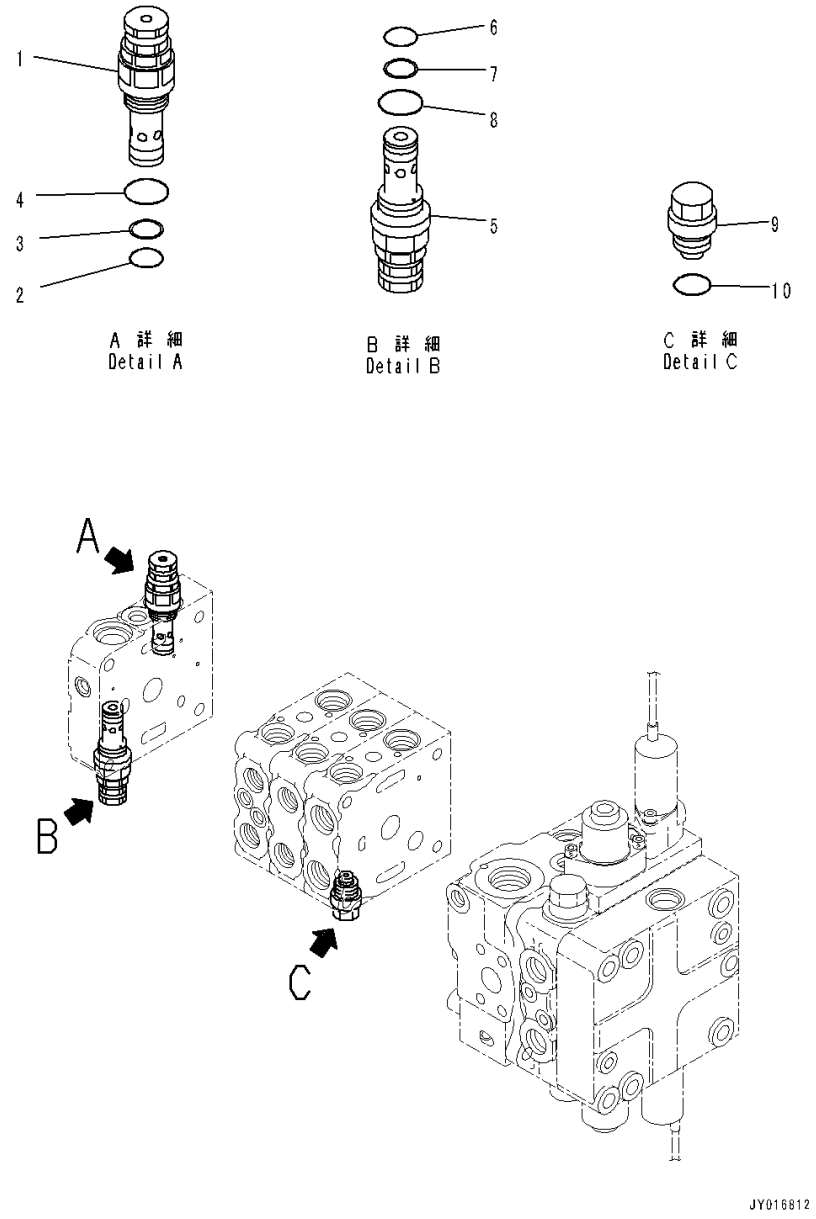

Index	Code	Part Number	Description	Qty	Serial Number
		Note: This list covers following specifications.			
		Rear 1-attachment, Accumulator, PPC Piping, 3D Machine Control Plug and Play			
		Rear 1-attachment, Accumulator, PPC Piping			
		723-24-11700	Valve, Control	1	1001-
1		723-20-66500	• Valve, Relief	1	1001-
2		700-22-11410	• • O-ring	1	1001-
3		700-80-64220	• • Ring, Back-up	1	1001-
4		07002-12434	• • O-ring	1	1001-
5		723-20-66600	• Valve, Relief	1	1001-
6		700-22-11410	• • O-ring	1	1001-
7		700-80-64220	• • Ring, Back-up	1	1001-
8		07002-12434	• • O-ring	1	1001-
9		723-20-80100	• Valve Assembly, Suction	1	1001-
10		07002-12034	• • O-ring	1	1001-

FIG. M2210-004007 Fender (Inner Parts, Control Valve) (6/11)

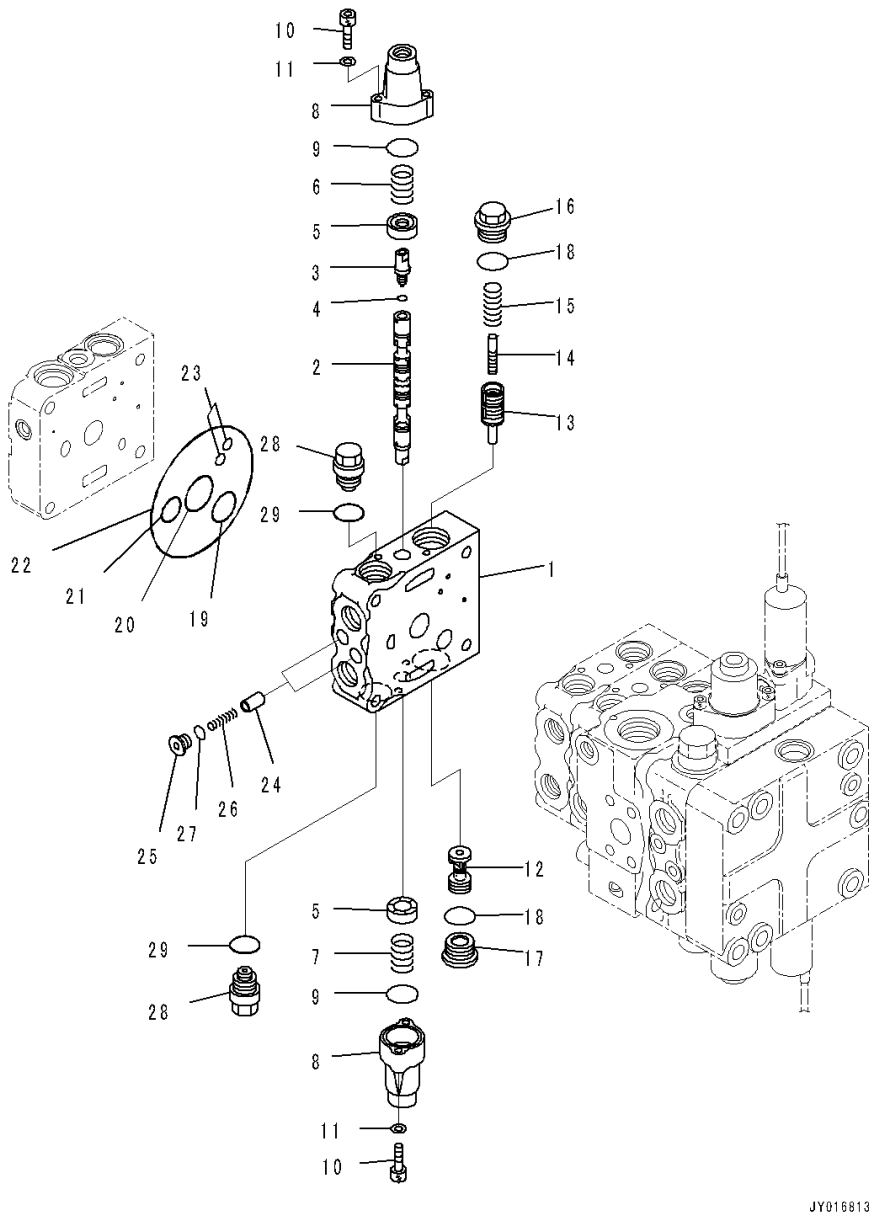

Index	Code	Part Number	Description	Qty	Serial Number
		Note: This list covers following specifications.			
		Rear 1-attachment, Accumulator, PPC Piping, 3D Machine Control Plug and Play			
		Rear 1-attachment, Accumulator, PPC Piping			
		723-24-11700	Valve, Control	1	1001-
		723-21-08300	• Valve Subassembly	1	1001-
1	C1		• • Valve Body	1	1001-
2	C1		• • Spool	1	1001-
3	C1		• • Plug	1	1001-
4	C1		• • O-ring	1	1001-
5		723-26-15121	• • Retainer	2	1001-
6		723-26-14580	• • Spring	1	1001-
7		709-26-11450	• • Spring	1	1001-
8		723-26-15110	• • Case	2	1001-
9		575-41-17420	• • O-ring	2	1001-
10		01252-60630	• • Bolt, Hexagon Socket Head	4	1001-
11		01641-20608	• • Washer	4	1001-
12	C1		• • Valve	1	1001-
13	C1		• • Valve	1	1001-
14	C1		• • Piston	1	1001-
15		723-26-14230	• • Spring	1	1001-
16		723-26-15370	• • Plug	1	1001-
17		723-26-15230	• • Plug	1	1001-
18		07002-12434	• • O-ring	2	1001-
19		723-26-15840	• • O-ring	1	1001-
20		723-26-15830	• • O-ring	1	1001-
21		07000-12020	• • O-ring	1	1001-
22		07000-12120	• • O-ring	1	1001-
23		07000-11008	• • O-ring	2	1001-
24	C1		• • Valve	2	1001-
25		723-26-15220	• • Plug	2	1001-
26		723-26-14150	• • Spring	2	1001-
27		07002-11223	• • O-ring	2	1001-
28		723-20-80100	• • Valve Assembly, Suction	2	1001-
29		07002-12034	• • • O-ring	1	1001-

FIG. M2210-004008 Fender (Inner Parts, Control Valve) (7/11)

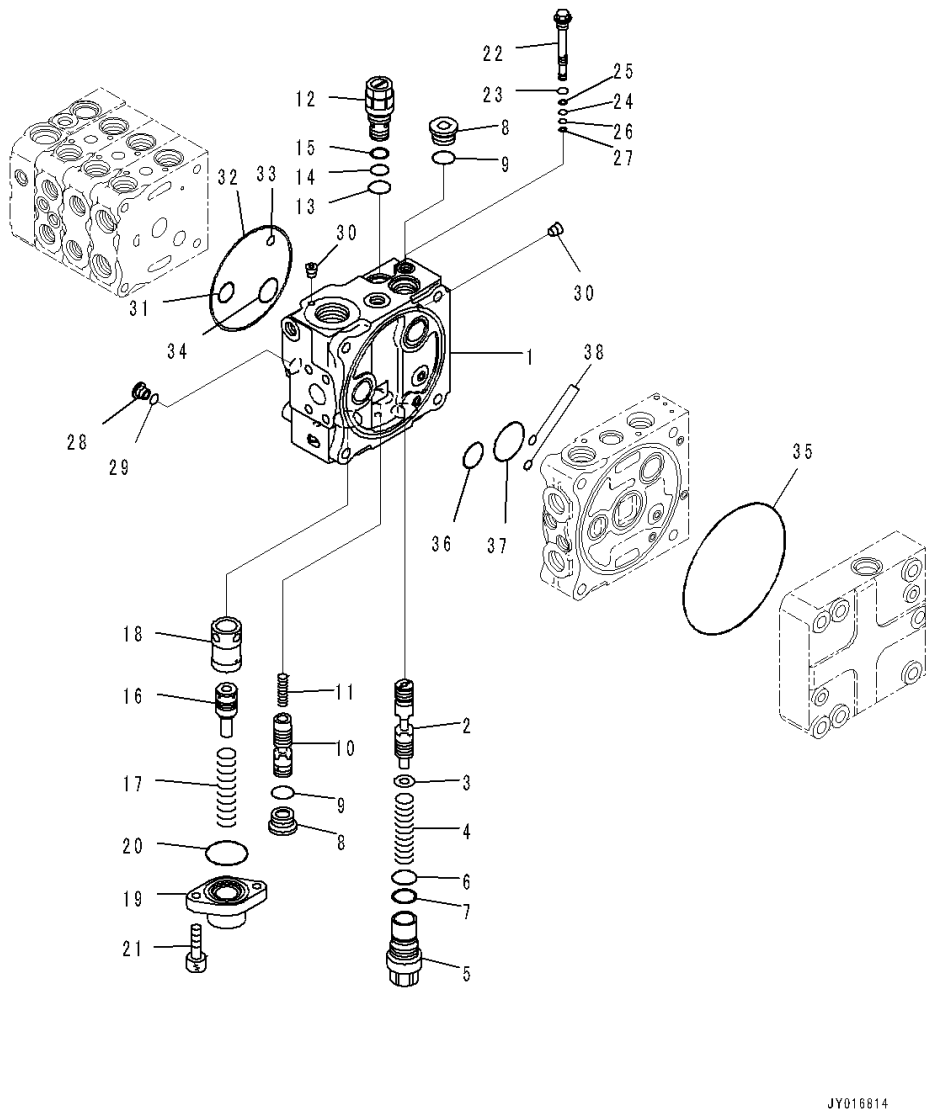

Index	Code	Part Number	Description	Qty	Serial Number
		Note: This list covers following specifications.			
		Rear 1-attachment, Accumulator, PPC Piping, 3D Machine Control Plug and Play			
		Rear 1-attachment, Accumulator, PPC Piping			
		723-24-11700	Valve, Control	1	1001-
		723-50-02801	• Block Subassembly	1	1001-
1	C1		• • Block	1	1001-
2	C1		• • Spool	1	1001-
3		723-26-15861	• • Washer	1	1001-
4		723-26-14590	• • Spring	1	1001-
5		723-26-15851	• • Plug	1	1001-
6		700-80-61260	• • O-ring	1	1001-
7		700-80-61430	• • Ring	1	1001-
8		723-26-15230	• • Plug	2	1001-
9		07002-12434	• • O-ring	2	1001-
10	C1		• • Spool	1	1001-
11		723-26-14470	• • Spring	1	1001-
12		723-60-21900	• • Valve, Relief	1	1001-
13		07002-12434	• • • O-ring	1	1001-
14		07000-12016	• • • O-ring	1	1001-
15		07001-02016	• • • Ring, Back-up	1	1001-
16	C1		• • Piston	1	1001-
17		723-36-15340	• • Spring	1	1001-
18	C1		• • Sleeve	1	1001-
19		723-36-15250	• • Case	1	1001-
20		07000-13042	• • O-ring	1	1001-
21		01252-60820	• • Bolt, Hexagon Socket Head	2	1001-
22	C1		• • Valve Assembly	1	1001-
23		07002-11223	• • • O-ring	1	1001-
24		07000-11007	• • • O-ring	1	1001-
25		07001-01007	• • • Ring, Back-up	1	1001-
26		07000-11005	• • • O-ring	1	1001-
27		07001-01005	• • • Ring, Back-up	1	1001-
28		723-26-15220	• • Plug	1	1001-
29		07002-11223	• • O-ring	1	1001-
30	C1		• • Plug	5	1001-
31		07000-12020	• • O-ring	1	1001-
32		07000-12120	• • O-ring	1	1001-
33		07000-11008	• • O-ring	1	1001-
34		723-26-15840	• • O-ring	1	1001-

FIG. M2210-004008 Fender (Inner Parts, Control Valve) (7/11)

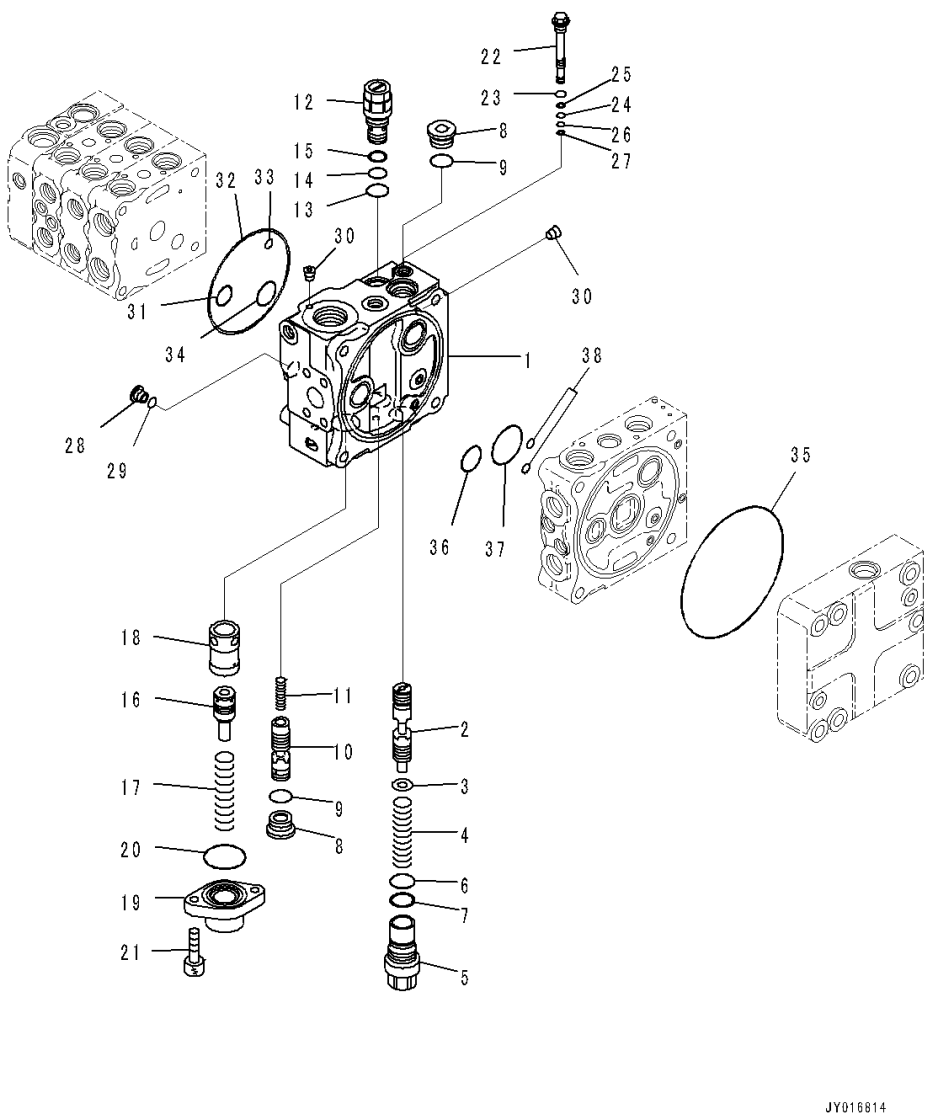

Index	Code	Part Number	Description	Qty	Serial Number
35		144-14-54610	• • O-ring	1	1001-
36		723-56-31730	• • O-ring	1	1001-
37		702-75-11520	• • O-ring	1	1001-
38		07000-11008	• • O-ring	2	1001-

FIG. M2210-004009 Fender (Inner Parts, Control Valve) (8/11)

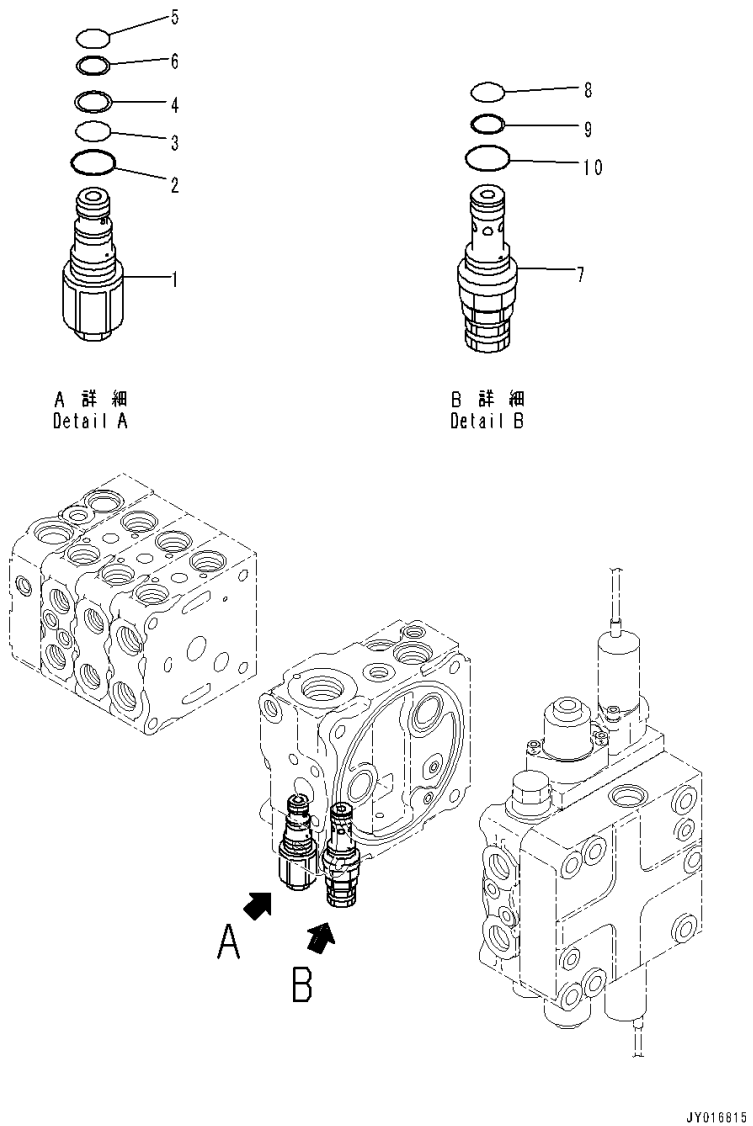

Index	Code	Part Number	Description	Qty	Serial Number
		Note: This list covers following specifications.			
		Rear 1-attachment, Accumulator, PPC Piping, 3D Machine Control Plug and Play			
		Rear 1-attachment, Accumulator, PPC Piping			
		723-24-11700	Valve, Control	1	1001-
1		723-20-70600	• Valve Assembly	1	1001-
2		07002-12434	• • O-ring	1	1001-
3		07000-12016	• • O-ring	1	1001-
4		07001-02016	• • Ring, Back-up	1	1001-
5		07000-12014	• • O-ring	1	1001-
6		07001-02014	• • Ring, Back-up	1	1001-
7		723-20-63100	• Valve, Relief	1	1001-
8		700-22-11410	• • O-ring	1	1001-
9		700-80-64220	• • Ring, Back-up	1	1001-
10		07002-12034	• • O-ring	1	1001-

FIG. M2210-004010 Fender (Inner Parts, Control Valve) (9/11)

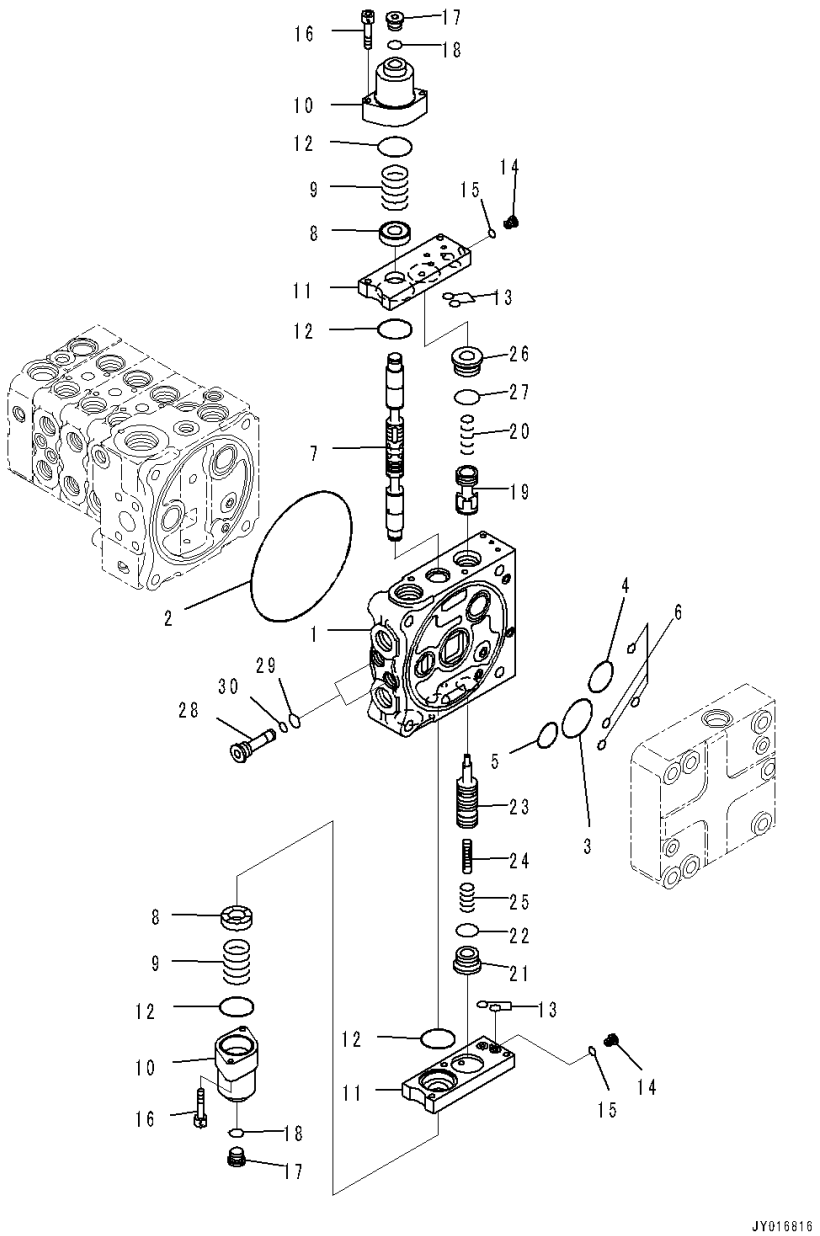

Index	Code	Part Number	Description	Qty	Serial Number
		Note: This list covers following specifications.			
		Rear 1-attachment, Accumulator, PPC Piping, 3D Machine Control Plug and Play			
		Rear 1-attachment, Accumulator, PPC Piping			
		723-24-11700	Valve, Control	1	1001-
	C1		• Body Group	1	1001-
1	C1		• • Valve Body	1	1001-
2		144-14-54610	• • O-ring	1	1001-
3		723-56-31720	• • O-ring	1	1001-
4		723-56-31730	• • O-ring	1	1001-
5		702-75-11520	• • O-ring	1	1001-
6		07000-11008	• • O-ring	4	1001-
7	C1		• • Spool	1	1001-
8		723-56-31211	• • Retainer	2	1001-
9		723-36-14120	• • Spring	2	1001-
10		723-56-31510	• • Case	2	1001-
11		723-56-32820	• • Plate	2	1001-
12		702-21-55450	• • O-ring	4	1001-
13		07000-11009	• • O-ring	4	1001-
14		723-11-27280	• • Plug	2	1001-
15		07002-10823	• • O-ring	2	1001-
16		01252-60650	• • Bolt, Hexagon Socket Head	4	1001-
17		702-21-55620	• • Plug	2	1001-
18		07002-11423	• • O-ring	2	1001-
19	C1		• • Valve	1	1001-
20		723-56-41710	• • Spring	1	1001-
21		723-26-15230	• • Plug	1	1001-
22		07002-12434	• • O-ring	1	1001-
23	C1		• • Valve	1	1001-
24	C1		• • Piston	1	1001-
25		723-56-41730	• • Spring	1	1001-
26		723-56-41970	• • Plug	1	1001-
27		07000-13024	• • O-ring	1	1001-
28		723-56-31640	• • Plug	2	1001-
29		07002-11623	• • O-ring	2	1001-
30		07000-11008	• • O-ring	2	1001-

FIG. M2210-004011 Fender (Inner Parts, Control Valve) (10/11)

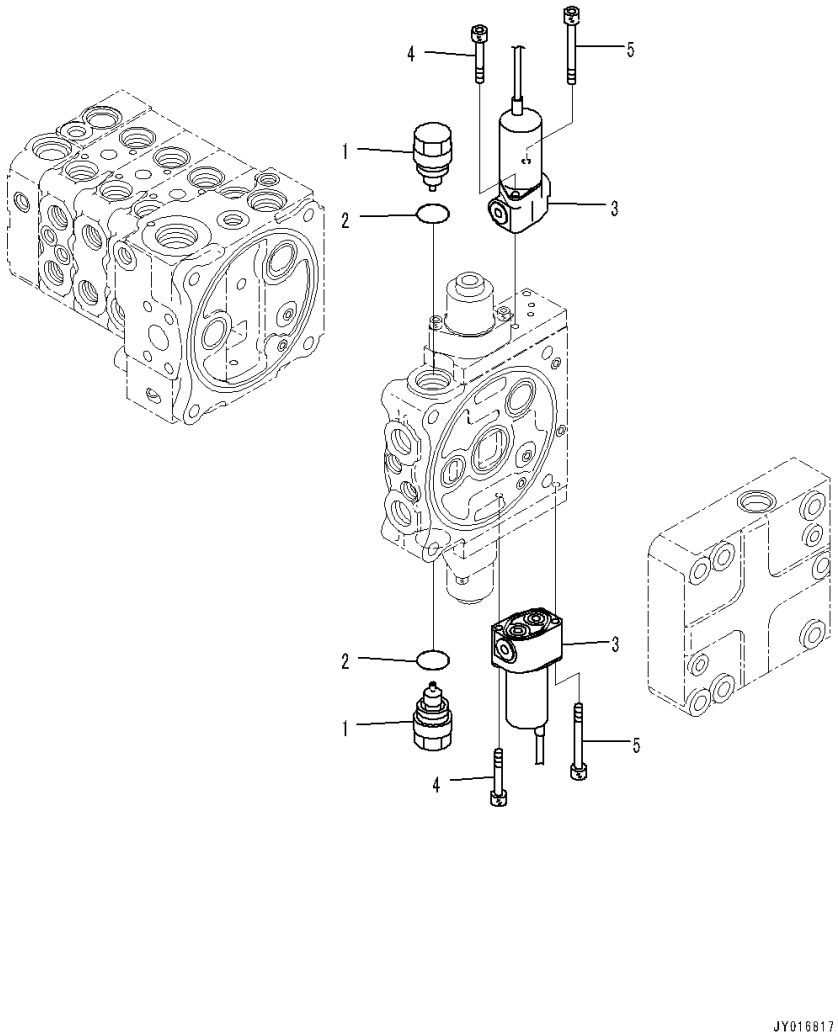

Index	Code	Part Number	Description	Qty	Serial Number
		Note: This list covers following specifications.			
		Rear 1-attachment, Accumulator, PPC Piping, 3D Machine Control Plug and Play			
		Rear 1-attachment, Accumulator, PPC Piping			
		723-24-11700	Valve, Control	1	1001-
	C1		• Body Group	1	1001-
1		723-40-85100	• • Valve Assembly, Suction	2	1001-
2		709-25-11390	• • • O-ring	1	1001-
3		702-21-07610	• • Valve, Solenoid	2	1001-
4		01252-60645	• • Bolt, Hexagon Socket Head	2	1001-
5		702-16-55270	• • Bolt	2	1001-

FIG. M2210-004012 Fender (Inner Parts, Control Valve) (11/11)

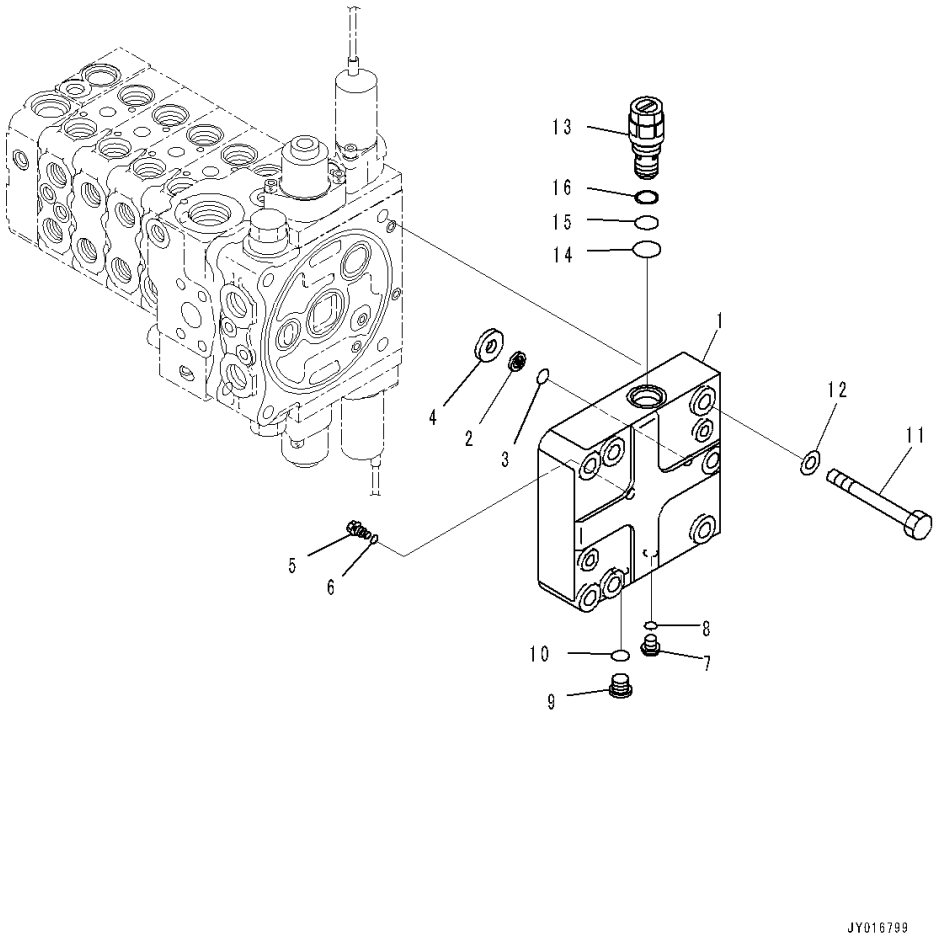

Index	Code	Part Number	Description	Qty	Serial Number
		Note: This list covers following specifications.			
		Rear 1-attachment, Accumulator, PPC Piping, 3D Machine Control Plug and Play			
		Power Tilt Pitch Dozer, Accumulator, PPC Piping, 3D Machine Control Plug and Play			
		Power Tilt Pitch Dozer, Rear 1-attachment, Accumulator, PPC Piping, 3D Machine Control Plug and Play			
		Power Tilt Pitch Dozer, Rear 1-attachment, Accumulator, PPC Piping			
		Power Tilt Pitch Dozer, Accumulator, PPC Piping			
		723-24-11700	Valve, Control ..... Rear 1-attachment, Accumulator, PPC Piping, 3D Machine Control Plug and Play	1	1001-
		723-25-11300	Valve, Control ..... Power Tilt Pitch Dozer, Accumulator, PPC Piping, 3D Machine Control Plug and Play	1	1001-
		723-25-11300	Valve, Control ..... Power Tilt Pitch Dozer, Rear 1-attachment, Accumulator, PPC Piping, 3D Machine Control Plug and Play	1	1001-
		723-25-11300	Valve, Control ..... Power Tilt Pitch Dozer, Rear 1-attachment, Accumulator, PPC Piping	1	1001-
		723-25-11300	Valve, Control ..... Power Tilt Pitch Dozer, Accumulator, PPC Piping	1	1001-
1	C1		• Cover	1	1001-
2		702-21-53120	• Filter	1	1001-
3		702-21-55420	• O-ring	1	1001-
4	C1		• Seat	1	1001-
5		723-56-33960	• Orifice	1	1001-
6		07002-10823	• O-ring	1	1001-
7		708-8E-16160	• Plug	2	1001-
8		07002-11023	• O-ring	2	1001-
9		702-21-55620	• Plug	1	1001-
10		07002-11423	• O-ring	1	1001-
11		01011-81225	• Bolt	4	1001-
12		01643-31232	• Washer	4	1001-

FIG. M2210-004012 Fender (Inner Parts, Control Valve) (11/11)

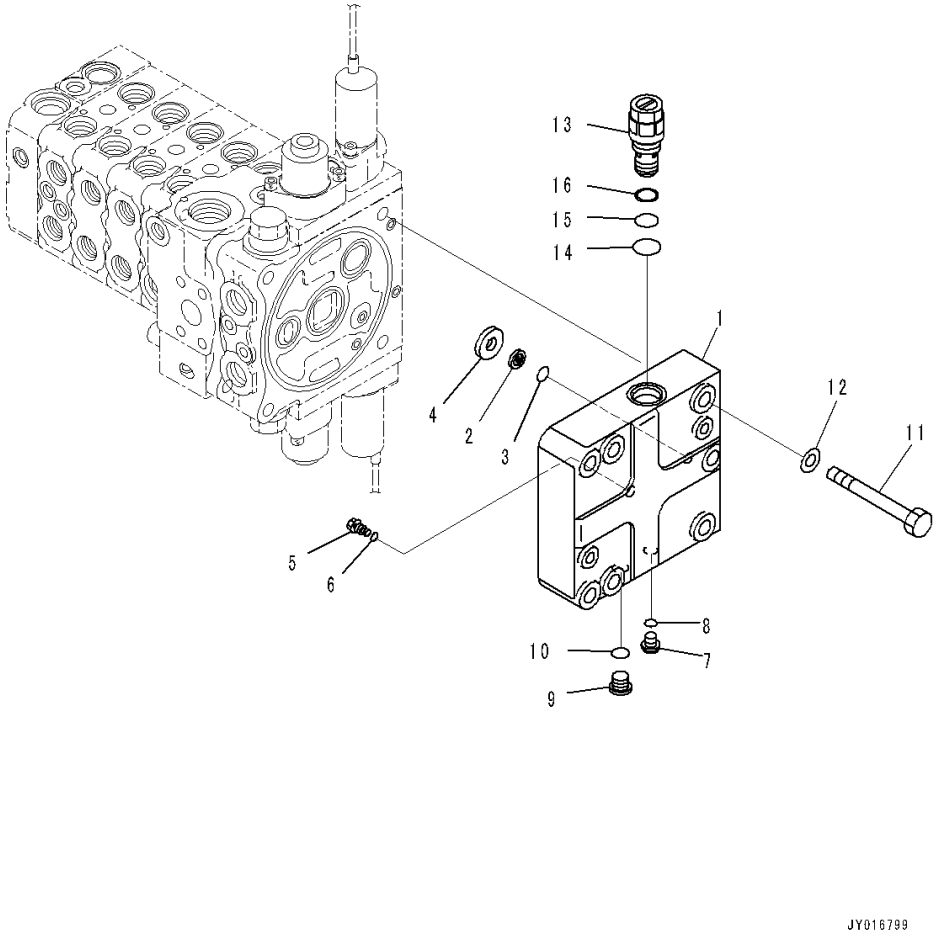

Index	Code	Part Number	Description	Qty	Serial Number
13		723-60-21102	• Valve, Relief	1	1001-
14		07002-02434	• • O-ring	1	1001-
15		07000-12016	• • O-ring	1	1001-
16		07001-02016	• • Ring, Back-up	1	1001-

FIG. M2210-004014 Fender (PPC Valve Piping)

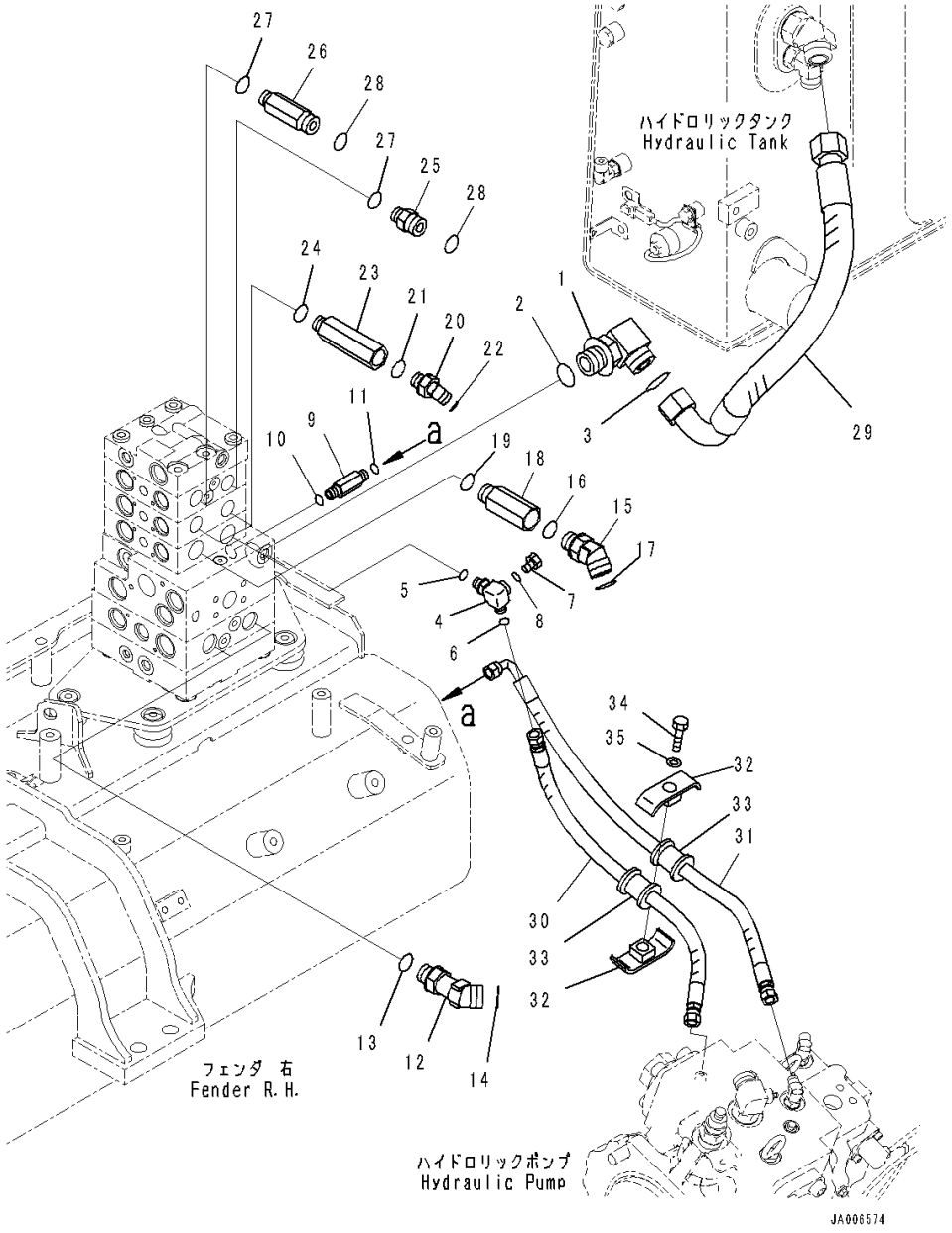

Index	Code	Part Number	Description	Qty	Serial Number
		Note: This list covers following specifications.			
		Rear 1-attachment, Accumulator, PPC Piping, 3D Machine Control Plug and Play			
		Rear 1-attachment, Accumulator, PPC Piping			
1		21W-62-42640	Elbow	1	1001-
2		07002-13334	O-ring	1	1001-
3		207-62-64740	O-ring	1	1001-
4		14X-62-54870	Tee	1	1001-
5		07002-11423	O-ring	1	1001-
6		02896-11008	O-ring	1	1001-
7		07040-11007	Plug	1	1001-
8		07002-11023	O-ring	1	1001-
9		11Y-62-12230	Union	1	1001-
10		07002-11423	O-ring	1	1001-
11		02896-11008	O-ring	1	1001-
12		11Y-62-36160	Elbow	2	1001-
13		07002-62434	O-ring	2	1001-
14		02896-61018	O-ring	2	1001-
15		02783-10628	Elbow	2	1001-
16		07002-12434	O-ring	2	1001-
17		02896-11018	O-ring	2	1001-
18		20T-62-81790	Joint	2	1001-
19		07002-12434	O-ring	2	1001-
20		02783-10315	Elbow	2	1001-
21		07002-12034	O-ring	2	1001-
22		02896-11009	O-ring	2	1001-
23		14X-62-52931	Joint	2	1001-
24		07002-12034	O-ring	2	1001-
25		02781-00516	Union	1	1001-
26		14X-62-52991	Nipple	1	1001-
27		07002-12034	O-ring	2	1001-
28		02896-11015	O-ring	2	1001-
29		14X-62-52940	Hose	1	1001-
30		14X-62-52391	Hose	1	1001-
31		14X-62-52541	Hose	1	1001-
32		22P-62-13540	Clamp	2	1001-
33		07095-00314	Cushion	2	1001-
34		01010-81260	Bolt	1	1001-
35		01643-31232	Washer	1	1001-

FIG. M2210-004015 Fender (Rear 1-attachment, Accumulator, PPC Piping, 3D Machine Control Plug and Play) (PPC Lock Solenoid Valve With Accumulator)

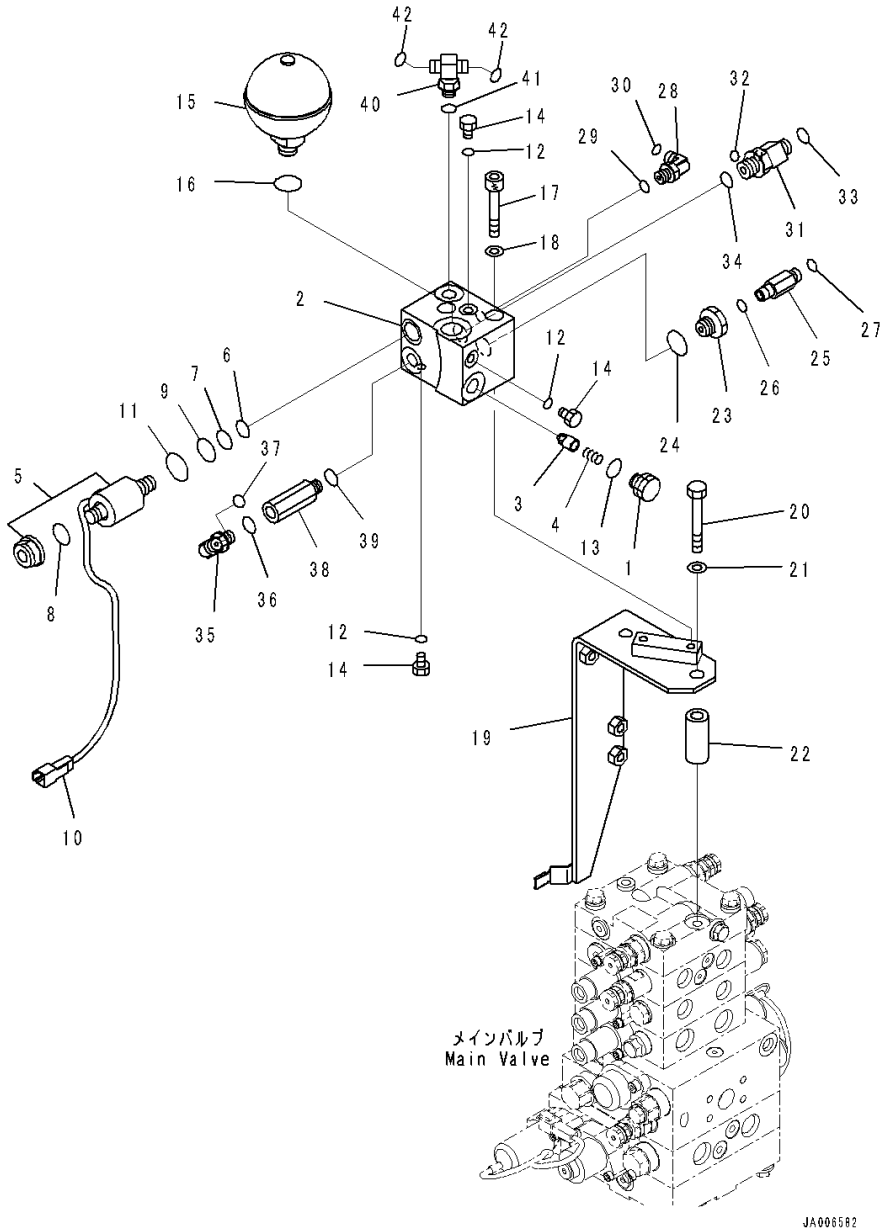

Index	Code	Part Number	Description	Qty	Serial Number
		14X-62-53551	Block Assembly	1	1001-
1		103-49-14280	• Plug	1	1001-
2		14X-62-53561	• Block	1	1001-
3		205-60-51390	• Poppet	1	1001-
4		722-12-12063	• Spring	1	1001-
5		11Y-60-11530	• Valve, Solenoid	1	1001-
6		07000-02012	• • O-ring	1	1001-
7		07000-02014	• • O-ring	1	1001-
8		07000-12016	• • O-ring	1	1001-
9		07000-02018	• • O-ring	1	1001-
10	C1		• • Connector	1	1001-
11		203-60-62190	• • O-ring	1	1001-
12		07002-10823	• O-ring	3	1001-
13		07002-11623	• O-ring	1	1001-
14		07040-10807	• Plug	3	1001-
15		22U-60-21330	Accumulator	1	1001-
16		07002-12034	O-ring	1	1001-
17		01252-A1085	Bolt, Hexagon Socket Head	2	1001-
18		01643-51032	Washer	2	1001-
19		14X-62-52960	Bracket	1	1001-
20		01010-81285	Bolt	2	1001-
21		01643-31232	Washer	2	1001-
22		203-62-44510	Spacer	2	1001-
23		20Y-62-21940	Filter Assembly	1	1001-
24		07002-12034	O-ring	1	1001-
25		20U-62-41890	Nipple	1	1001-
26		07002-11423	O-ring	1	1001-
27		02896-11008	O-ring	1	1001-
28		02782-10210	Elbow	1	1001-
29		07002-11423	O-ring	1	1001-
30		02896-11008	O-ring	1	1001-
31		20K-62-33690	Tee	1	1001-
32		02896-11008	• O-ring	1	1001-
33		02896-11009	• O-ring	1	1001-
34		07002-12034	O-ring	1	1001-
35		02782-10210	Elbow	1	1001-
36		07002-11423	O-ring	1	1001-
37		02896-11008	O-ring	1	1001-
38		207-62-62460	Adapter	1	1001-

FIG. M2210-004015 Fender (Rear 1-attachment, Accumulator, PPC Piping, 3D Machine Control Plug and Play) (PPC Lock Solenoid Valve With Accumulator)

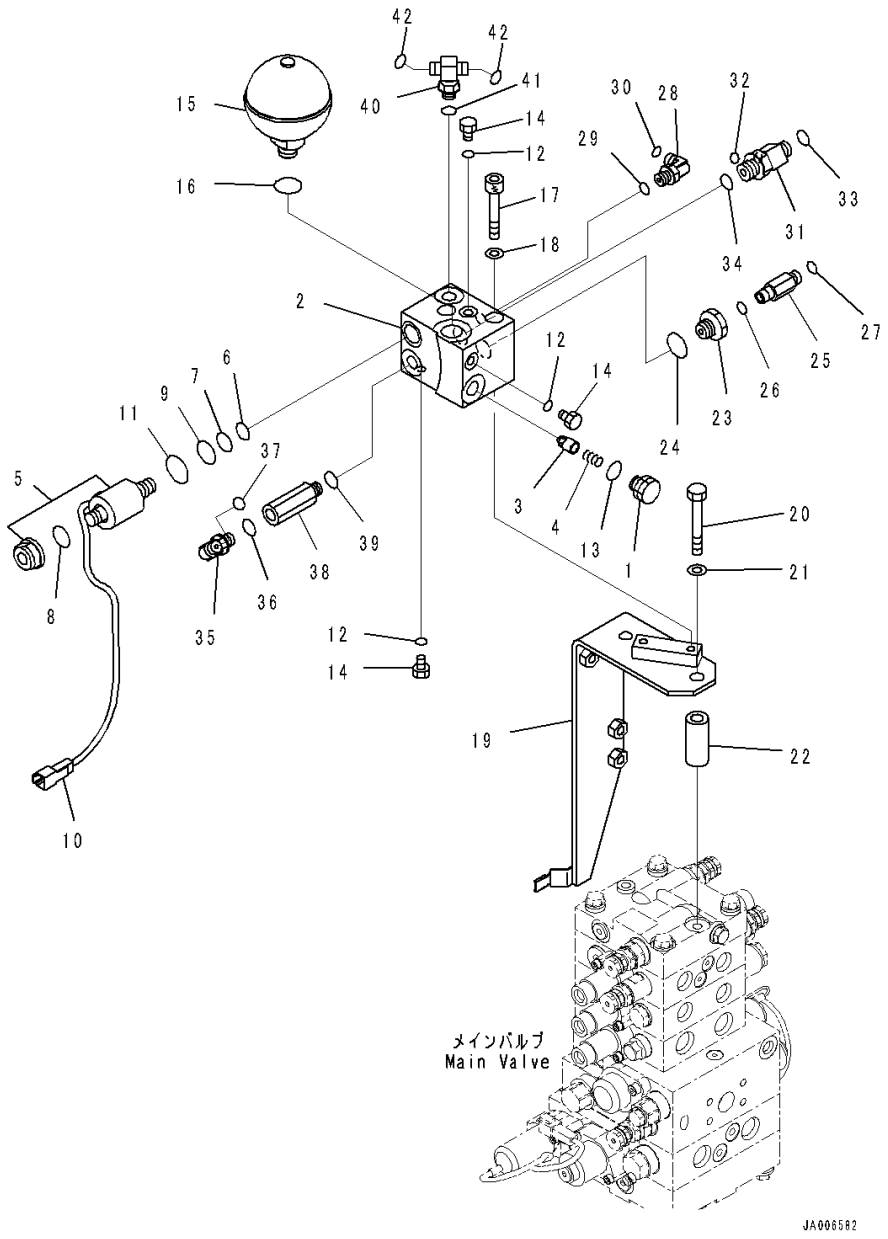

Index	Code	Part Number	Description	Qty	Serial Number
39		07002-11423	O-ring	1	1001-
40		22L-62-21150	Tee	1	1001-
41		07002-11423	O-ring	1	1001-
42		02896-11008	O-ring	2	1001-

FIG. M2210-004016 Fender (Control Valve Steering Piping)

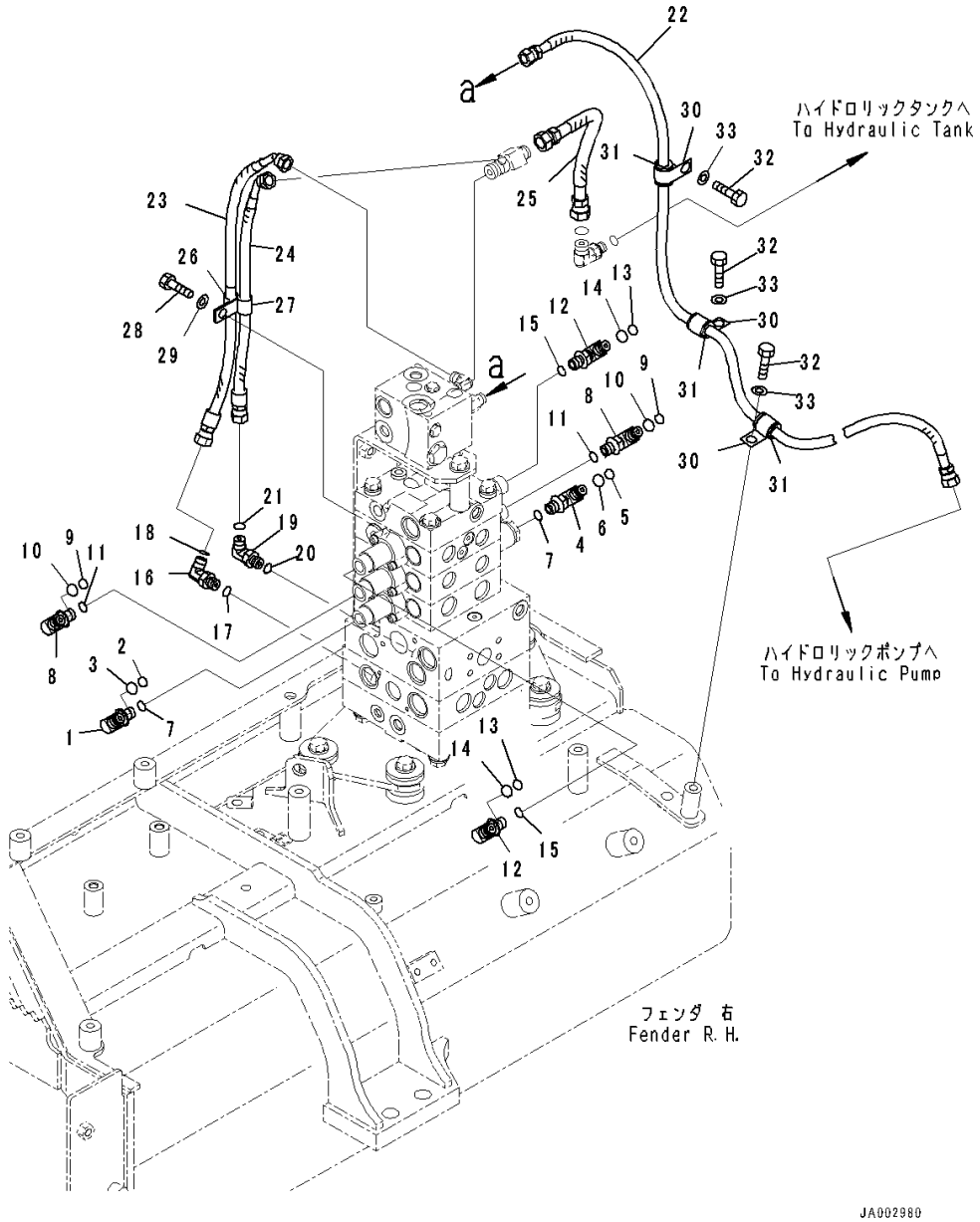

Index	Code	Part Number	Description	Qty	Serial Number
		Note: This list covers following specifications.			
		Rear 1-attachment, Accumulator, PPC Piping, 3D Machine Control Plug and Play			
		Rear 1-attachment, Accumulator, PPC Piping			
1		14X-62-53531	Elbow	1	1001-
2		201-60-11390	• O-ring	1	1001-
3		20Y-62-19560	• O-ring	1	1001-
4		14X-62-54960	Elbow	1	1001-
5		201-60-11390	• O-ring	1	1001-
6		20Y-62-19560	• O-ring	1	1001-
7		07002-11423	O-ring	2	1001-
8		14X-62-53541	Elbow	2	1001-
9		201-60-11390	• O-ring	1	1001-
10		20Y-62-19560	• O-ring	1	1001-
11		07002-11423	O-ring	2	1001-
12		14X-62-53541	Elbow	2	1001-
13		201-60-11390	• O-ring	1	1001-
14		20Y-62-19560	• O-ring	1	1001-
15		07002-11423	O-ring	2	1001-
16		02782-10210	Elbow	1	1001-
17		07002-11423	O-ring	1	1001-
18		02896-11008	O-ring	1	1001-
19		02782-10210	Elbow	1	1001-
20		07002-11423	O-ring	1	1001-
21		02896-11008	O-ring	1	1001-
22		14X-62-52521	Hose	1	1001-
23		02764-00205	Hose, Face Seal Type	1	1001-
24		02764-00204	Hose, Face Seal Type	1	1001-
25		02762-00303	Hose, Face Seal Type	1	1001-
26		04434-51212	Clip	1	1001-
27		21T-72-23260	Clip	1	1001-
28		01010-81225	Bolt	1	1001-
29		01643-31232	Washer	1	1001-
30		04434-51712	Clip	3	1001-
31		07095-20211	Cushion	3	1001-
32		01010-81220	Bolt	3	1001-
33		01643-31232	Washer	3	1001-

FIG. M2210-004020 Fender (Grease Pump Mounting)

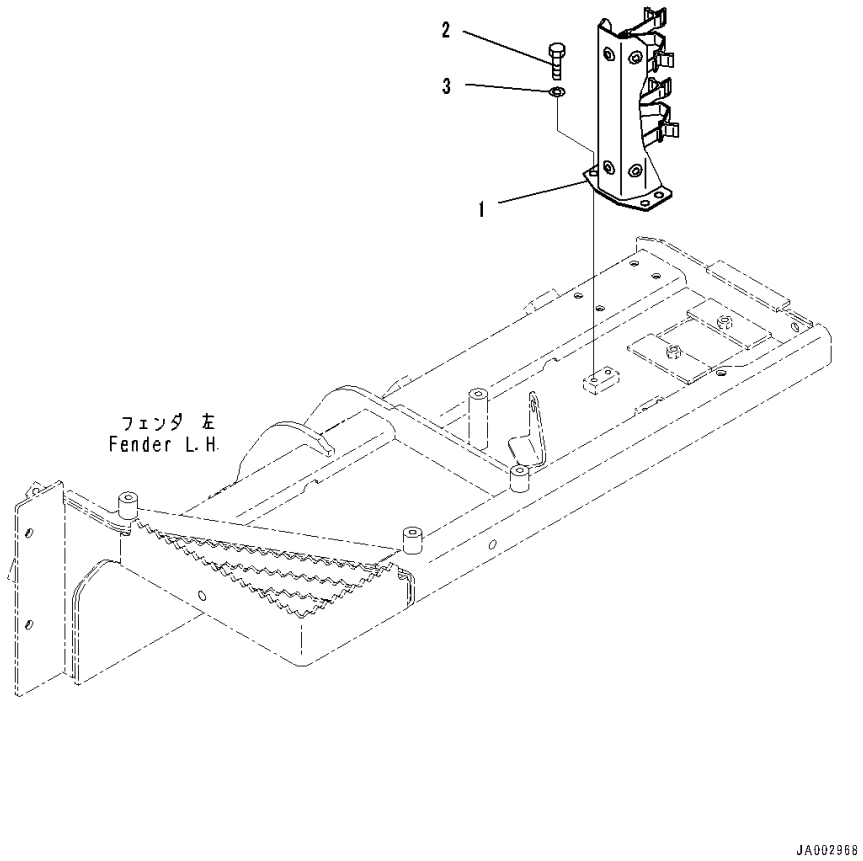

Index	Code	Part Number	Description	Qty	Serial Number
		Note: This list covers following specifications. Rear 1-attachment, Accumulator, PPC Piping, 3D Machine Control Plug and Play Power Angle Power Tilt Dozer, Inside Frame, Accumulator, PPC Piping, 3D Machine Control Plug and Play Power Tilt Pitch Dozer, Accumulator, PPC Piping Power Angle Power Tilt Dozer, Inside Frame, Rear 1-attachment, Accumulator, PPC Piping			
1		14X-54-63191	Bracket	1	1001-
2		01010-81020	Bolt	4	1001-
3		01643-31032	Washer	4	1001-

FIG. M2210-005002 Fender (Inner Parts, Control Valve) (1/12)

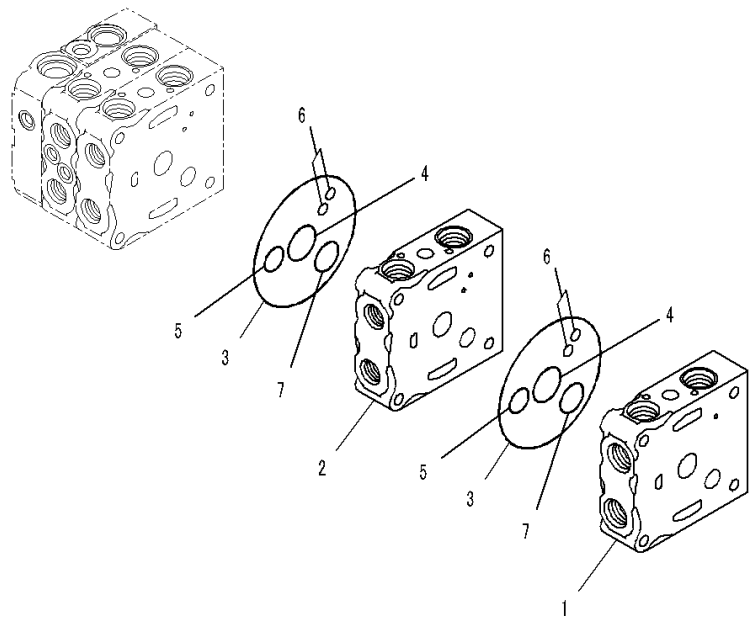

Index	Code	Part Number	Description	Qty	Serial Number
		Note: This list covers following specifications.			
		Power Tilt Pitch Dozer, Accumulator, PPC Piping, 3D Machine Control Plug and Play			
		Power Tilt Pitch Dozer, Rear 1-attachment, Accumulator, PPC Piping, 3D Machine Control Plug and Play			
		Power Tilt Pitch Dozer, Rear 1-attachment, Accumulator, PPC Piping			
		Power Tilt Pitch Dozer, Accumulator, PPC Piping			
		723-25-11300	Valve, Control	1	1001-
	C1		• Body Group	1	1001-
1	C1		• • Valve Body	1	1001-
2	C1		• • Valve Body	1	1001-
3		07000-12120	• • O-ring	2	1001-
4		723-26-15830	• • O-ring	2	1001-
5		07000-12020	• • O-ring	2	1001-
6		07000-11008	• • O-ring	4	1001-
7		723-26-15840	• • O-ring	2	1001-

FIG. M2210-005003 Fender (Inner Parts, Control Valve) (2/12)

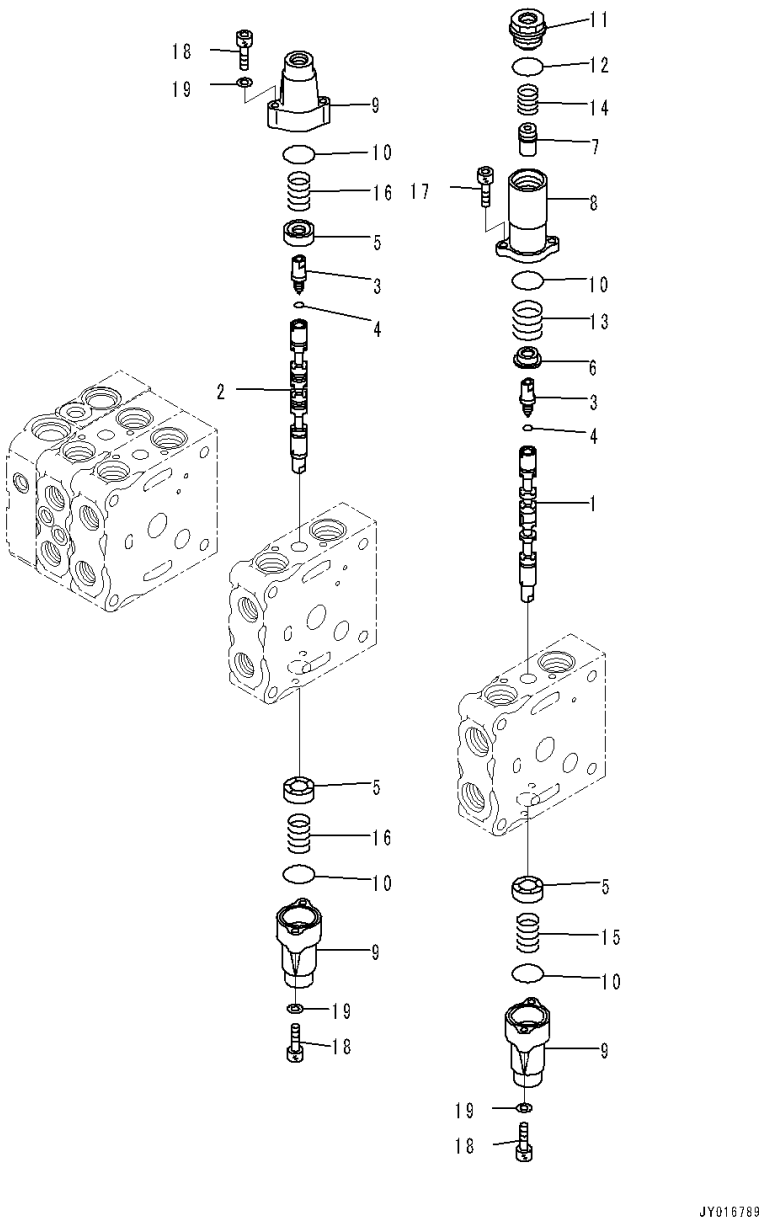

Index	Code	Part Number	Description	Qty	Serial Number
		Note: This list covers following specifications.			
		Power Tilt Pitch Dozer, Accumulator, PPC Piping, 3D Machine Control Plug and Play			
		Power Tilt Pitch Dozer, Rear 1-attachment, Accumulator, PPC Piping, 3D Machine Control Plug and Play			
		Power Tilt Pitch Dozer, Rear 1-attachment, Accumulator, PPC Piping			
		Power Tilt Pitch Dozer, Accumulator, PPC Piping			
		723-25-11300	Valve, Control	1	1001-
	C1		• Body Group	1	1001-
1	C1		• • Spool	1	1001-
2	C1		• • Spool	1	1001-
3	C1		• • Plug	2	1001-
4	C1		• • O-ring	2	1001-
5		723-26-15121	• • Retainer	3	1001-
6		723-26-16770	• • Retainer	1	1001-
7		723-26-16780	• • Retainer	1	1001-
8		723-26-16760	• • Case	1	1001-
9		723-26-15110	• • Case	3	1001-
10		575-41-17420	• • O-ring	4	1001-
11		723-26-16790	• • Plug	1	1001-
12		07002-12434	• • O-ring	1	1001-
13		723-26-14560	• • Spring	1	1001-
14		723-26-14570	• • Spring	1	1001-
15		709-26-11450	• • Spring	1	1001-
16		723-26-14580	• • Spring	2	1001-
17		01252-60616	• • Bolt, Hexagon Socket Head	2	1001-
18		01252-60630	• • Bolt, Hexagon Socket Head	6	1001-
19		01641-20608	• • Washer	6	1001-

FIG. M2210-005004 Fender (Inner Parts, Control Valve) (3/12)

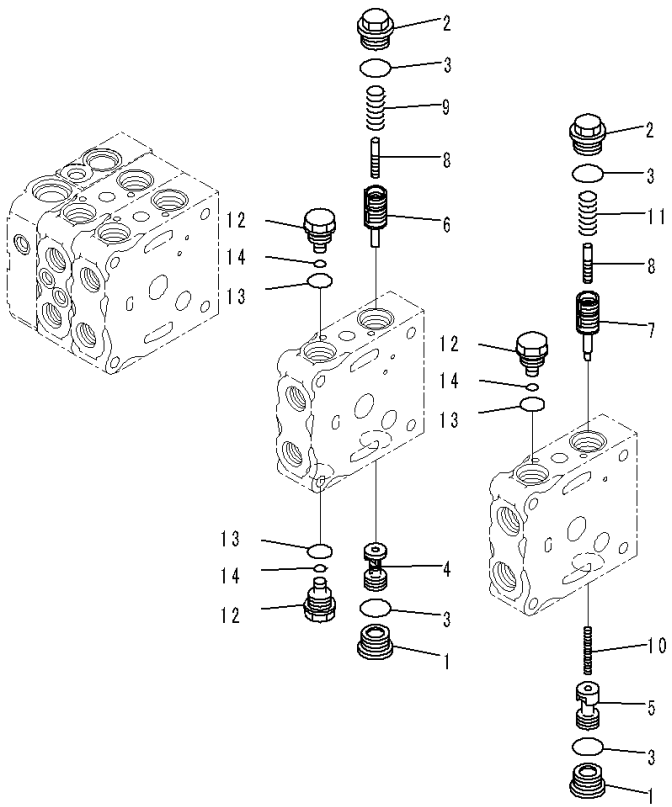

Index	Code	Part Number	Description	Qty	Serial Number
		Note: This list covers following specifications.			
		Power Tilt Pitch Dozer, Accumulator, PPC Piping, 3D Machine Control Plug and Play			
		Power Tilt Pitch Dozer, Rear 1-attachment, Accumulator, PPC Piping, 3D Machine Control Plug and Play			
		Power Tilt Pitch Dozer, Rear 1-attachment, Accumulator, PPC Piping			
		Power Tilt Pitch Dozer, Accumulator, PPC Piping			
		723-25-11300	Valve, Control	1	1001-
	C1		• Body Group	1	1001-
1		723-26-15230	• • Plug	2	1001-
2		723-26-15370	• • Plug	2	1001-
3		07002-12434	• • O-ring	4	1001-
4	C1		• • Valve	1	1001-
5	C1		• • Valve	1	1001-
6	C1		• • Valve	1	1001-
7	C1		• • Valve	1	1001-
8	C1		• • Piston	2	1001-
9		723-26-14230	• • Spring	1	1001-
10		723-26-14220	• • Spring	1	1001-
11		723-26-14240	• • Spring	1	1001-
12		723-26-15310	• • Plug	3	1001-
13		07002-12034	• • O-ring	3	1001-
14		07000-11007	• • O-ring	3	1001-

FIG. M2210-005005 Fender (Inner Parts, Control Valve) (4/12)

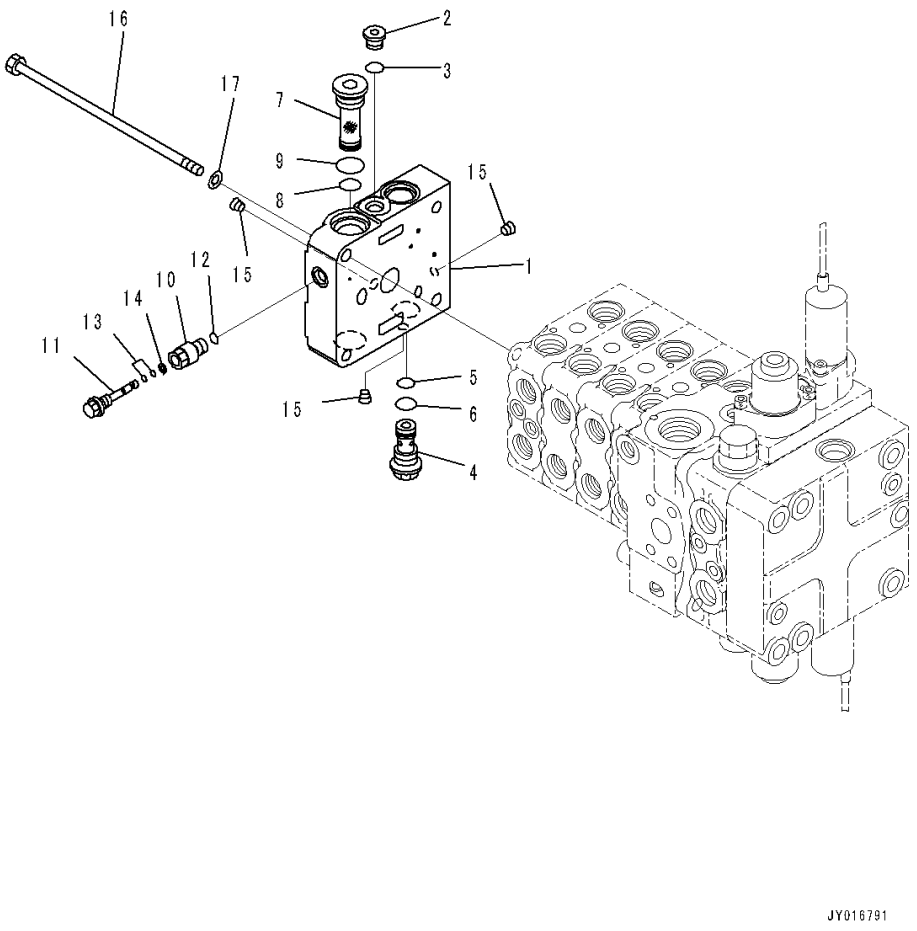

Index	Code	Part Number	Description	Qty	Serial Number
		Note: This list covers following specifications.			
		Power Tilt Pitch Dozer, Accumulator, PPC Piping, 3D Machine Control Plug and Play			
		Power Tilt Pitch Dozer, Rear 1-attachment, Accumulator, PPC Piping, 3D Machine Control Plug and Play			
		Power Tilt Pitch Dozer, Rear 1-attachment, Accumulator, PPC Piping			
		Power Tilt Pitch Dozer, Accumulator, PPC Piping			
		723-25-11300	Valve, Control	1	1001-
1	C1		• Cover	1	1001-
2		702-21-55620	• Plug	1	1001-
3		07002-11423	• O-ring	1	1001-
4		723-26-17210	• Filter	1	1001-
5		723-11-19970	• O-ring	1	1001-
6		07002-12034	• O-ring	1	1001-
7		723-11-14390	• Filter	1	1001-
8		723-11-19130	• O-ring	1	1001-
9		07002-12434	• O-ring	1	1001-
10		723-11-38620	• Plug	1	1001-
11		723-26-16990	• Plug	1	1001-
12		07002-11223	• O-ring	1	1001-
13		07000-11003	• O-ring	2	1001-
14		07001-01003	• Ring, Back-up	1	1001-
15	C1		• Plug	3	1001-
16		700-85-11111	• Bolt	4	1001-
17		01643-31032	• Washer	4	1001-

FIG. M2210-005006 Fender (Inner Parts, Control Valve) (5/12)

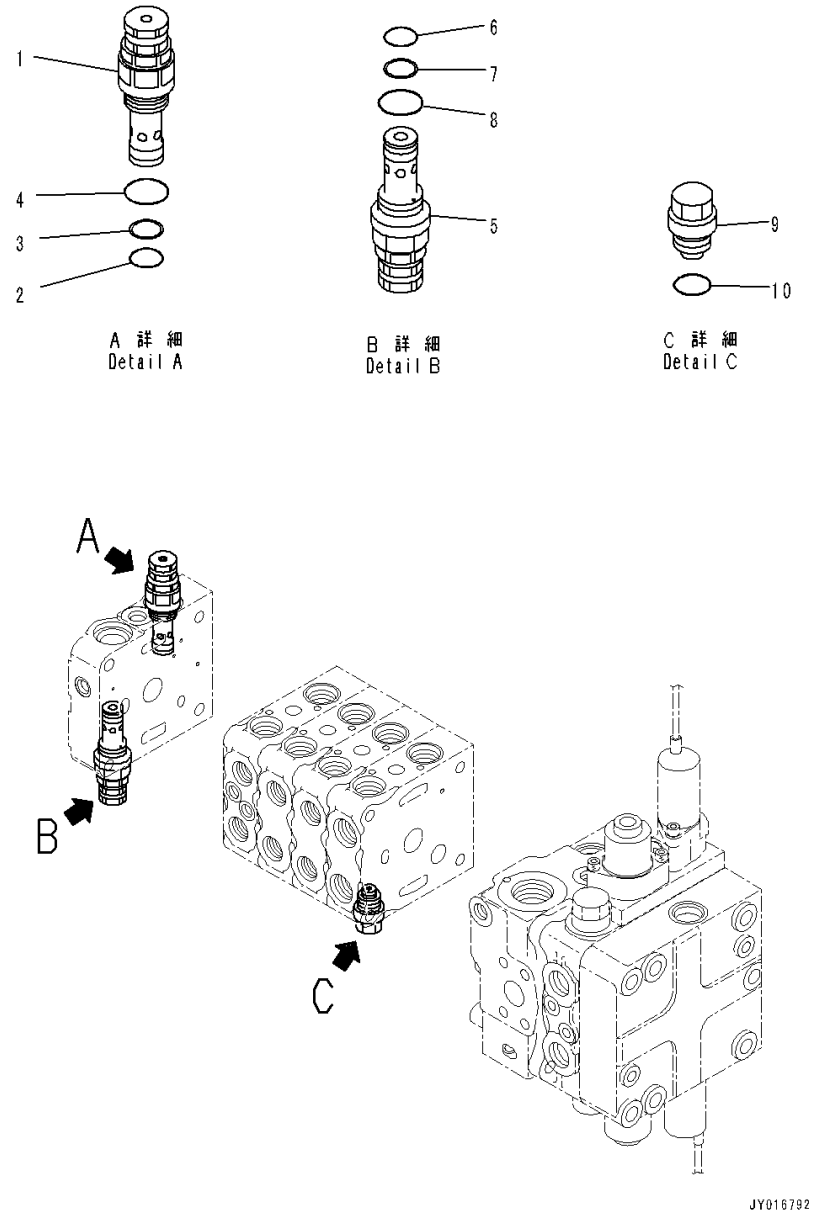

Index	Code	Part Number	Description	Qty	Serial Number
		Note: This list covers following specifications.			
		Power Tilt Pitch Dozer, Accumulator, PPC Piping, 3D Machine Control Plug and Play			
		Power Tilt Pitch Dozer, Rear 1-attachment, Accumulator, PPC Piping, 3D Machine Control Plug and Play			
		Power Tilt Pitch Dozer, Rear 1-attachment, Accumulator, PPC Piping			
		Power Tilt Pitch Dozer, Accumulator, PPC Piping			
		723-25-11300	Valve, Control	1	1001-
1		723-20-66500	• Valve, Relief	1	1001-
2		700-22-11410	• • O-ring	1	1001-
3		700-80-64220	• • Ring, Back-up	1	1001-
4		07002-12434	• • O-ring	1	1001-
5		723-20-66600	• Valve, Relief	1	1001-
6		700-22-11410	• • O-ring	1	1001-
7		700-80-64220	• • Ring, Back-up	1	1001-
8		07002-12434	• • O-ring	1	1001-
9		723-20-80100	• Valve Assembly, Suction	1	1001-
10		07002-12034	• • O-ring	1	1001-

FIG. M2210-005007 Fender (Inner Parts, Control Valve) (6/12)

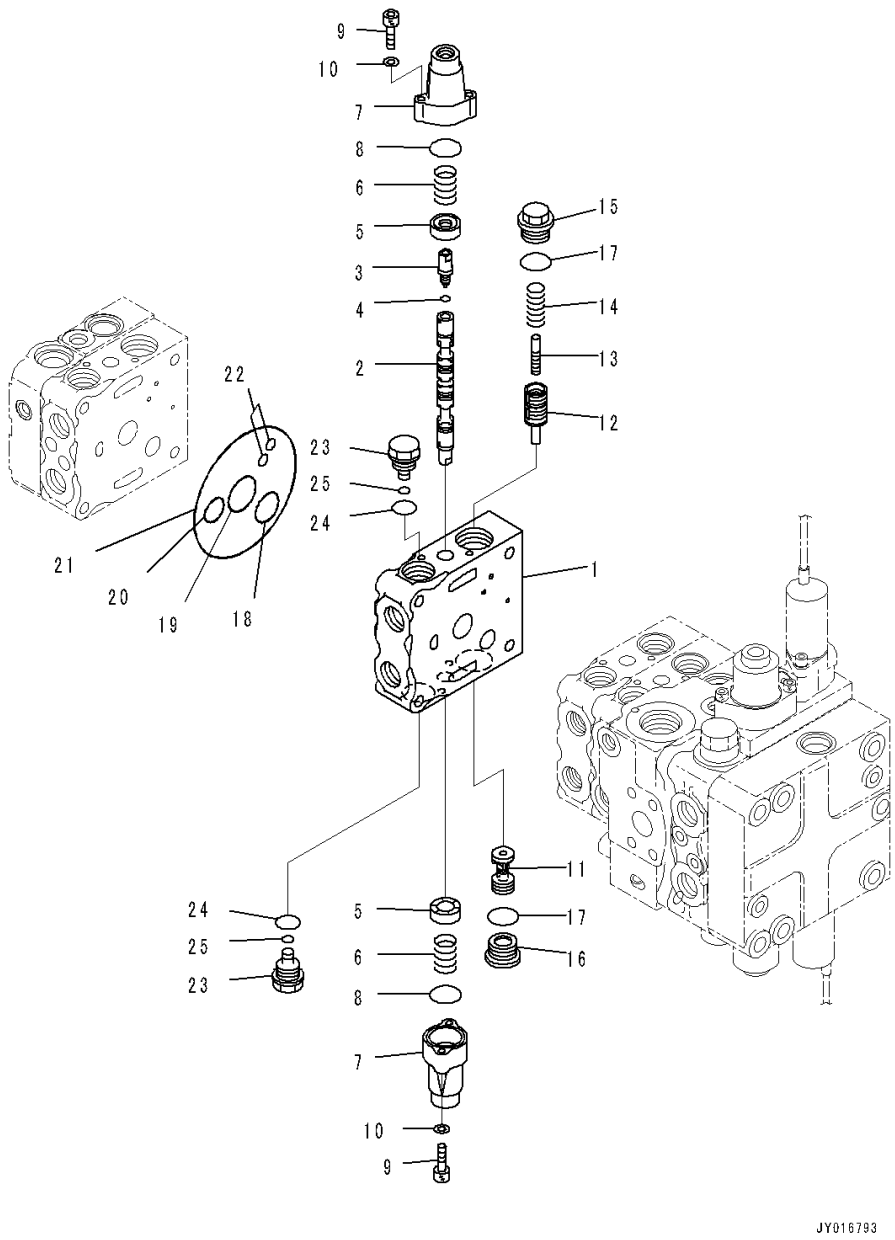

Index	Code	Part Number	Description	Qty	Serial Number
		Note: This list covers following specifications.			
		Power Tilt Pitch Dozer, Accumulator, PPC Piping, 3D Machine Control Plug and Play			
		Power Tilt Pitch Dozer, Rear 1-attachment, Accumulator, PPC Piping, 3D Machine Control Plug and Play			
		Power Tilt Pitch Dozer, Rear 1-attachment, Accumulator, PPC Piping			
		Power Tilt Pitch Dozer, Accumulator, PPC Piping			
		723-25-11300	Valve, Control	1	1001-
		723-21-08400	• Valve Subassembly	1	1001-
1	C1		• • Valve Body	1	1001-
2	C1		• • Spool	1	1001-
3	C1		• • Plug	1	1001-
4	C1		• • O-ring	1	1001-
5		723-26-15121	• • Retainer	2	1001-
6		723-26-14580	• • Spring	2	1001-
7		723-26-15110	• • Case	2	1001-
8		575-41-17420	• • O-ring	2	1001-
9		01252-60630	• • Bolt, Hexagon Socket Head	4	1001-
10		01641-20608	• • Washer	4	1001-
11	C1		• • Valve	1	1001-
12	C1		• • Valve	1	1001-
13	C1		• • Piston	1	1001-
14		723-26-14230	• • Spring	1	1001-
15		723-26-15370	• • Plug	1	1001-
16		723-26-15230	• • Plug	1	1001-
17		07002-12434	• • O-ring	2	1001-
18		723-26-15840	• • O-ring	1	1001-
19		723-26-15830	• • O-ring	1	1001-
20		07000-12020	• • O-ring	1	1001-
21		07000-12120	• • O-ring	1	1001-
22		07000-11008	• • O-ring	2	1001-
23		723-26-15310	• • Plug	2	1001-
24		07002-12034	• • O-ring	2	1001-
25		07000-11007	• • O-ring	2	1001-

FIG. M2210-005008 Fender (Inner Parts, Control Valve) (7/12)

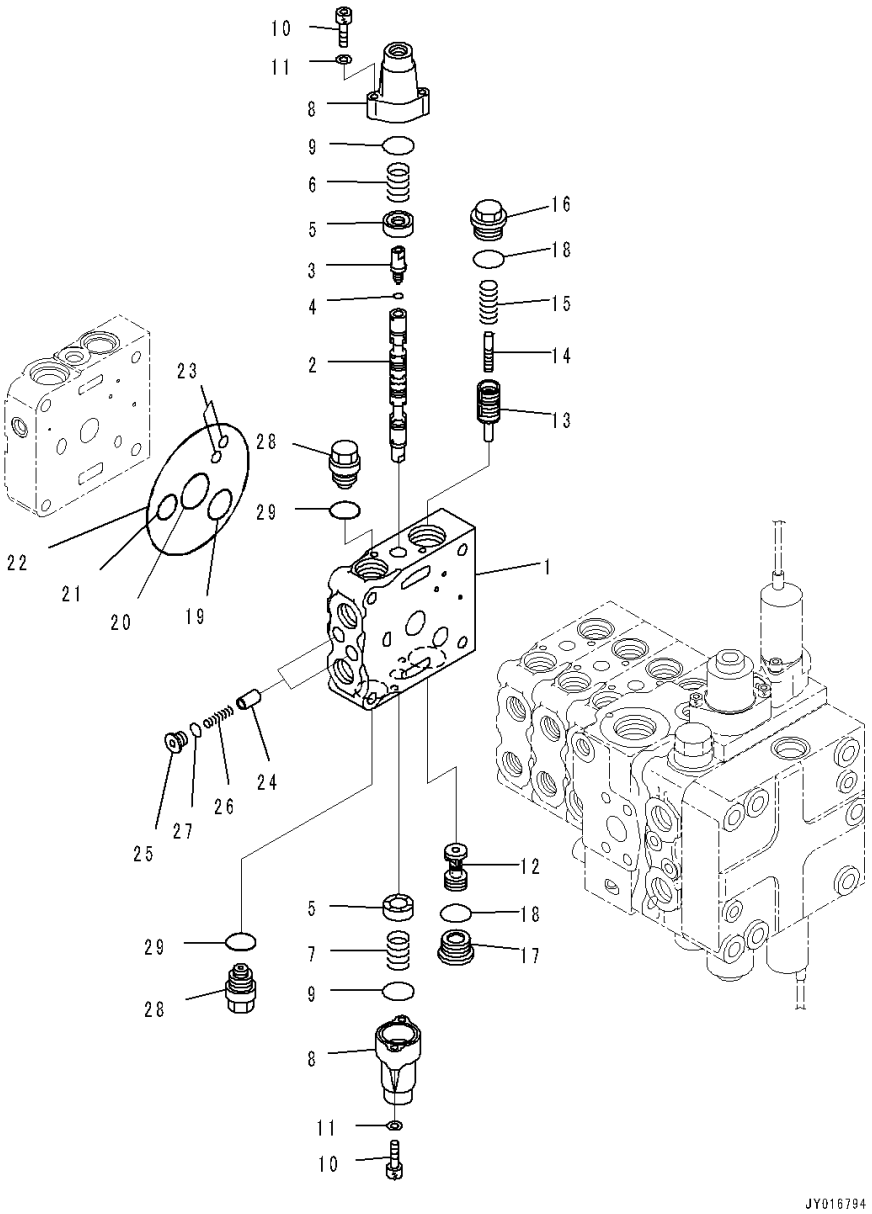

Index	Code	Part Number	Description	Qty	Serial Number
		Note: This list covers following specifications.			
			Power Tilt Pitch Dozer, Accumulator, PPC Piping, 3D Machine Control Plug and Play		
			Power Tilt Pitch Dozer, Rear 1-attachment, Accumulator, PPC Piping, 3D Machine Control Plug and Play		
			Power Tilt Pitch Dozer, Rear 1-attachment, Accumulator, PPC Piping		
			Power Tilt Pitch Dozer, Accumulator, PPC Piping		
		723-25-11300	Valve, Control	1	1001-
		723-21-08300	• Valve Subassembly	1	1001-
1	C1		• • Valve Body	1	1001-
2	C1		• • Spool	1	1001-
3	C1		• • Plug	1	1001-
4	C1		• • O-ring	1	1001-
5		723-26-15121	• • Retainer	2	1001-
6		723-26-14580	• • Spring	1	1001-
7		709-26-11450	• • Spring	1	1001-
8		723-26-15110	• • Case	2	1001-
9		575-41-17420	• • O-ring	2	1001-
10		01252-60630	• • Bolt, Hexagon Socket Head	4	1001-
11		01641-20608	• • Washer	4	1001-
12	C1		• • Valve	1	1001-
13	C1		• • Valve	1	1001-
14	C1		• • Piston	1	1001-
15		723-26-14230	• • Spring	1	1001-
16		723-26-15370	• • Plug	1	1001-
17		723-26-15230	• • Plug	1	1001-
18		07002-12434	• • O-ring	2	1001-
19		723-26-15840	• • O-ring	1	1001-
20		723-26-15830	• • O-ring	1	1001-
21		07000-12020	• • O-ring	1	1001-
22		07000-12120	• • O-ring	1	1001-
23		07000-11008	• • O-ring	2	1001-
24	C1		• • Valve	2	1001-
25		723-26-15220	• • Plug	2	1001-
26		723-26-14150	• • Spring	2	1001-
27		07002-11223	• • O-ring	2	1001-
28		723-20-80100	• • Valve Assembly, Suction	2	1001-
29		07002-12034	• • • O-ring	1	1001-

FIG. M2210-005009 Fender (Inner Parts, Control Valve) (8/12)

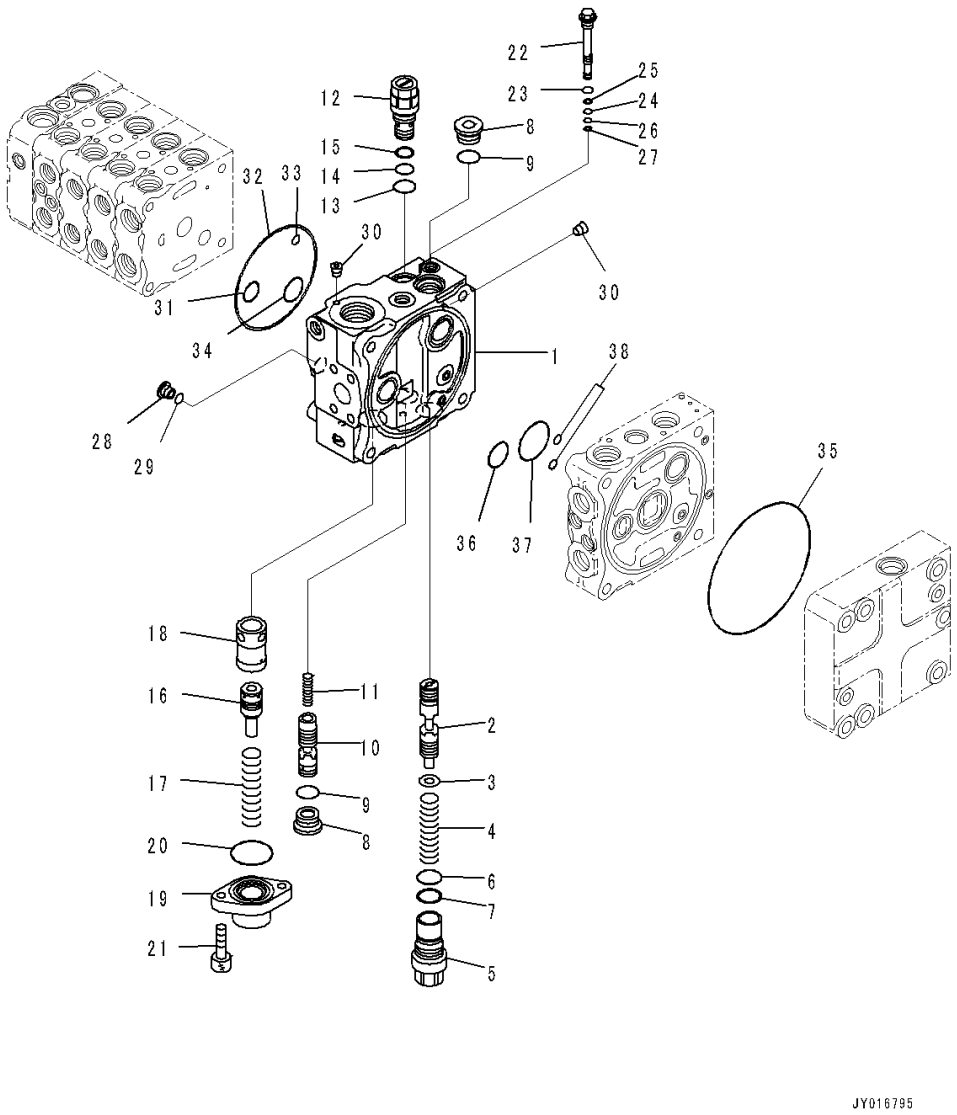

Index	Code	Part Number	Description	Qty	Serial Number
		Note: This list covers following specifications.			
		Power Tilt Pitch Dozer, Accumulator, PPC Piping, 3D Machine Control Plug and Play			
		Power Tilt Pitch Dozer, Rear 1-attachment, Accumulator, PPC Piping, 3D Machine Control Plug and Play			
		Power Tilt Pitch Dozer, Rear 1-attachment, Accumulator, PPC Piping			
		Power Tilt Pitch Dozer, Accumulator, PPC Piping			
		723-25-11300	Valve, Control	1	1001-
	C1		• Block Subassembly	1	1001-
1	C1		• • Block	1	1001-
2	C1		• • Spool	1	1001-
3		723-26-15861	• • Washer	1	1001-
4		723-26-14590	• • Spring	1	1001-
5		723-26-15851	• • Plug	1	1001-
6		700-80-61260	• • O-ring	1	1001-
7		700-80-61430	• • Ring	1	1001-
8		723-26-15230	• • Plug	2	1001-
9		07002-12434	• • O-ring	2	1001-
10	C1		• • Spool	1	1001-
11		723-26-14470	• • Spring	1	1001-
12		723-60-21900	• • Valve, Relief	1	1001-
13		07002-12434	• • • O-ring	1	1001-
14		07000-12016	• • • O-ring	1	1001-
15		07001-02016	• • • Ring, Back-up	1	1001-
16	C1		• • Piston	1	1001-
17		723-36-15340	• • Spring	1	1001-
18	C1		• • Sleeve	1	1001-
19		723-36-15250	• • Case	1	1001-
20		07000-13042	• • O-ring	1	1001-
21		01252-60820	• • Bolt, Hexagon Socket Head	2	1001-
22	C1		• • Valve Assembly	1	1001-
23		07002-11223	• • • O-ring	1	1001-
24		07000-11007	• • • O-ring	1	1001-
25		07001-01007	• • • Ring, Back-up	1	1001-
26		07000-11005	• • • O-ring	1	1001-
27		07001-01005	• • • Ring, Back-up	1	1001-
28		723-26-15220	• • Plug	1	1001-
29		07002-11223	• • O-ring	1	1001-
30	C1		• • Plug	5	1001-

FIG. M2210-005009 Fender (Inner Parts, Control Valve) (8/12)

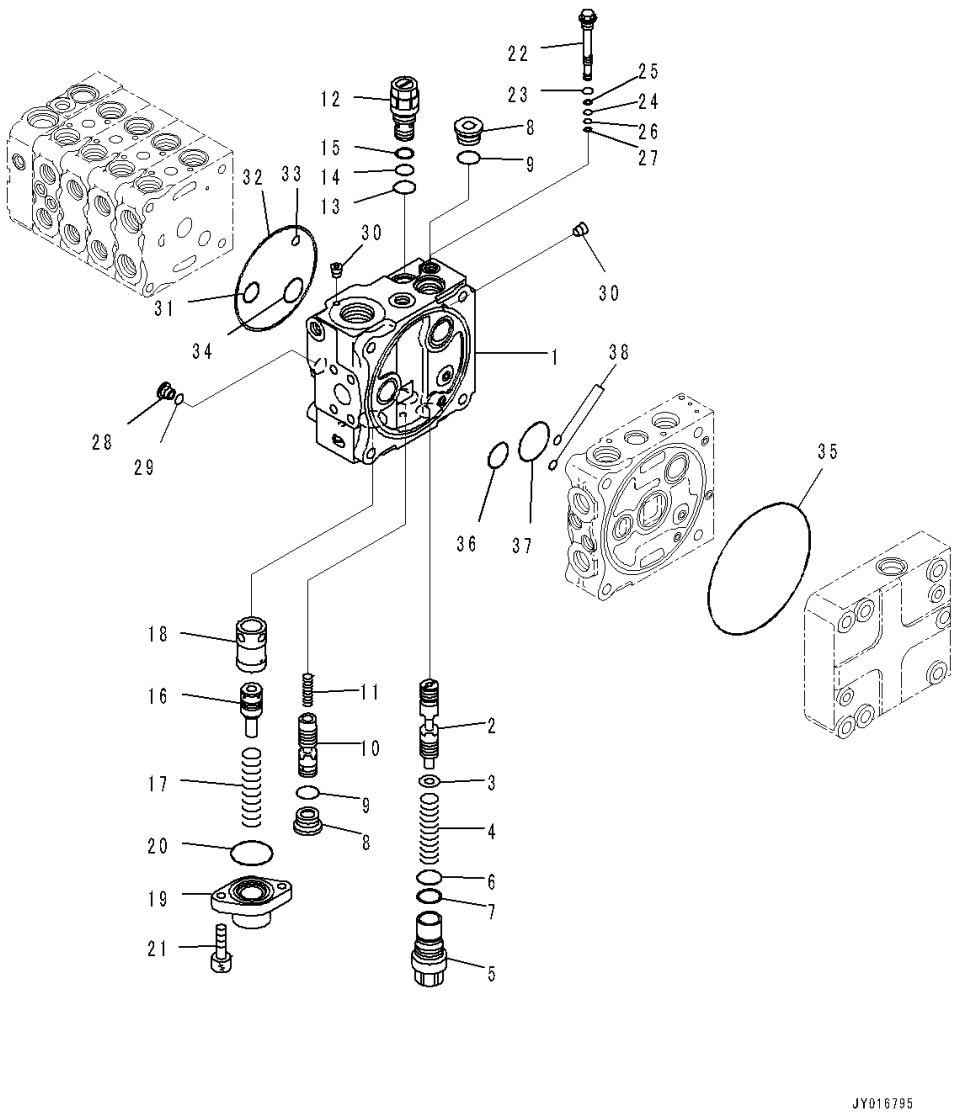

Index	Code	Part Number	Description	Qty	Serial Number
31		07000-12020	• • O-ring	1	1001-
32		07000-12120	• • O-ring	1	1001-
33		07000-11008	• • O-ring	1	1001-
34		723-26-15840	• • O-ring	1	1001-
35		144-14-54610	• • O-ring	1	1001-
36		723-56-31730	• • O-ring	1	1001-
37		702-75-11520	• • O-ring	1	1001-
38		07000-11008	• • O-ring	2	1001-

FIG. M2210-005010 Fender (Inner Parts, Control Valve) (9/12)

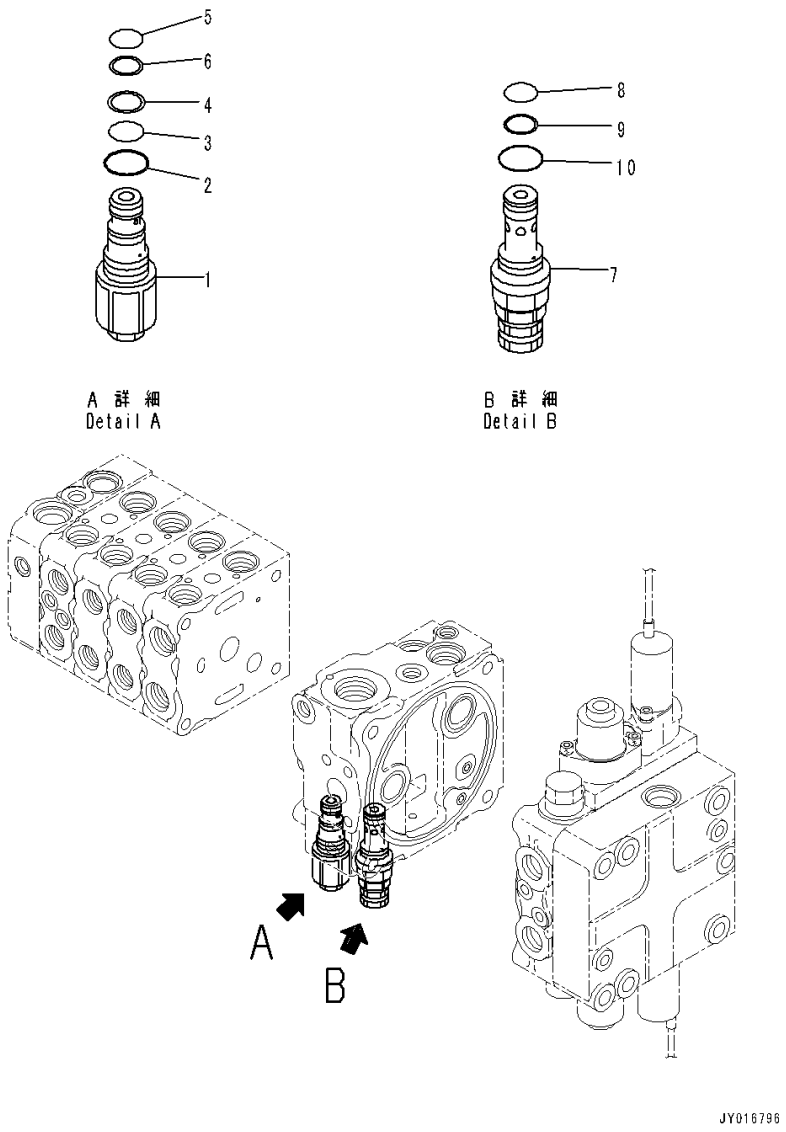

Index	Code	Part Number	Description	Qty	Serial Number
		Note: This list covers following specifications.			
		Power Tilt Pitch Dozer, Accumulator, PPC Piping, 3D Machine Control Plug and Play			
		Power Tilt Pitch Dozer, Rear 1-attachment, Accumulator, PPC Piping, 3D Machine Control Plug and Play			
		Power Tilt Pitch Dozer, Rear 1-attachment, Accumulator, PPC Piping			
		Power Tilt Pitch Dozer, Accumulator, PPC Piping			
		723-25-11300	Valve, Control	1	1001-
1		723-20-70600	• Valve Assembly	1	1001-
2		07002-12434	• • O-ring	1	1001-
3		07000-12016	• • O-ring	1	1001-
4		07001-02016	• • Ring, Back-up	1	1001-
5		07000-12014	• • O-ring	1	1001-
6		07001-02014	• • Ring, Back-up	1	1001-
7		723-20-63100	• Valve, Relief	1	1001-
8		700-22-11410	• • O-ring	1	1001-
9		700-80-64220	• • Ring, Back-up	1	1001-
10		07002-12034	• • O-ring	1	1001-

FIG. M2210-005011 Fender (Inner Parts, Control Valve) (10/12)

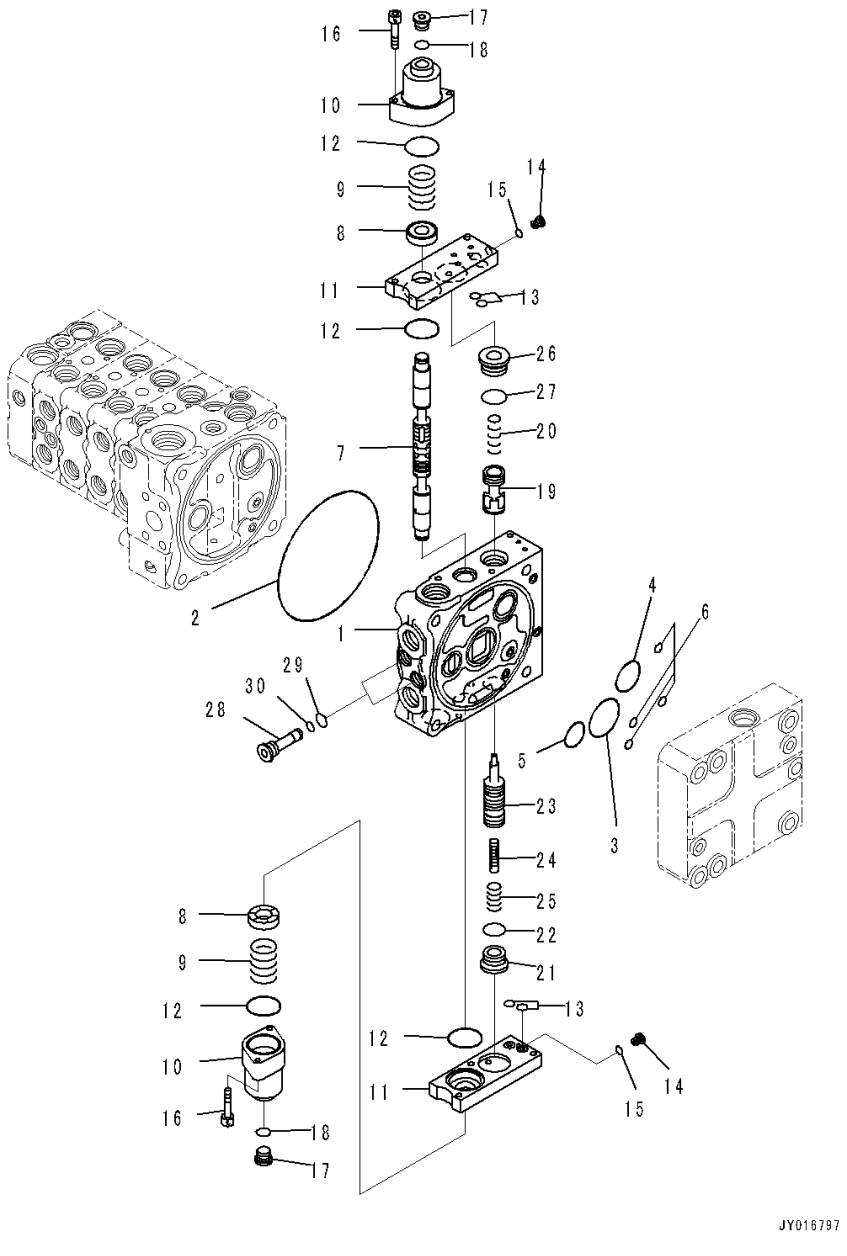

Index	Code	Part Number	Description	Qty	Serial Number
		Note: This list covers following specifications.			
		Power Tilt Pitch Dozer, Accumulator, PPC Piping, 3D Machine Control Plug and Play			
		Power Tilt Pitch Dozer, Rear 1-attachment, Accumulator, PPC Piping, 3D Machine Control Plug and Play			
		Power Tilt Pitch Dozer, Rear 1-attachment, Accumulator, PPC Piping			
		Power Tilt Pitch Dozer, Accumulator, PPC Piping			
		723-25-11300	Valve, Control	1	1001-
	C1		• Body Group	1	1001-
1	C1		• • Valve Body	1	1001-
2		144-14-54610	• • O-ring	1	1001-
3		723-56-31720	• • O-ring	1	1001-
4		723-56-31730	• • O-ring	1	1001-
5		702-75-11520	• • O-ring	1	1001-
6		07000-11008	• • O-ring	4	1001-
7	C1		• • Spool	1	1001-
8		723-56-31211	• • Retainer	2	1001-
9		723-36-14120	• • Spring	2	1001-
10		723-56-31510	• • Case	2	1001-
11		723-56-32820	• • Plate	2	1001-
12		702-21-55450	• • O-ring	4	1001-
13		07000-11009	• • O-ring	4	1001-
14		723-11-27280	• • Plug	2	1001-
15		07002-10823	• • O-ring	2	1001-
16		01252-60650	• • Bolt, Hexagon Socket Head	4	1001-
17		702-21-55620	• • Plug	2	1001-
18		07002-11423	• • O-ring	2	1001-
19	C1		• • Valve	1	1001-
20		723-56-41710	• • Spring	1	1001-
21		723-26-15230	• • Plug	1	1001-
22		07002-12434	• • O-ring	1	1001-
23	C1		• • Valve	1	1001-
24	C1		• • Piston	1	1001-
25		723-56-41730	• • Spring	1	1001-
26		723-56-41970	• • Plug	1	1001-
27		07000-13024	• • O-ring	1	1001-
28		723-56-31640	• • Plug	2	1001-
29		07002-11623	• • O-ring	2	1001-
30		07000-11008	• • O-ring	2	1001-

FIG. M2210-005012 Fender (Inner Parts, Control Valve) (11/12)

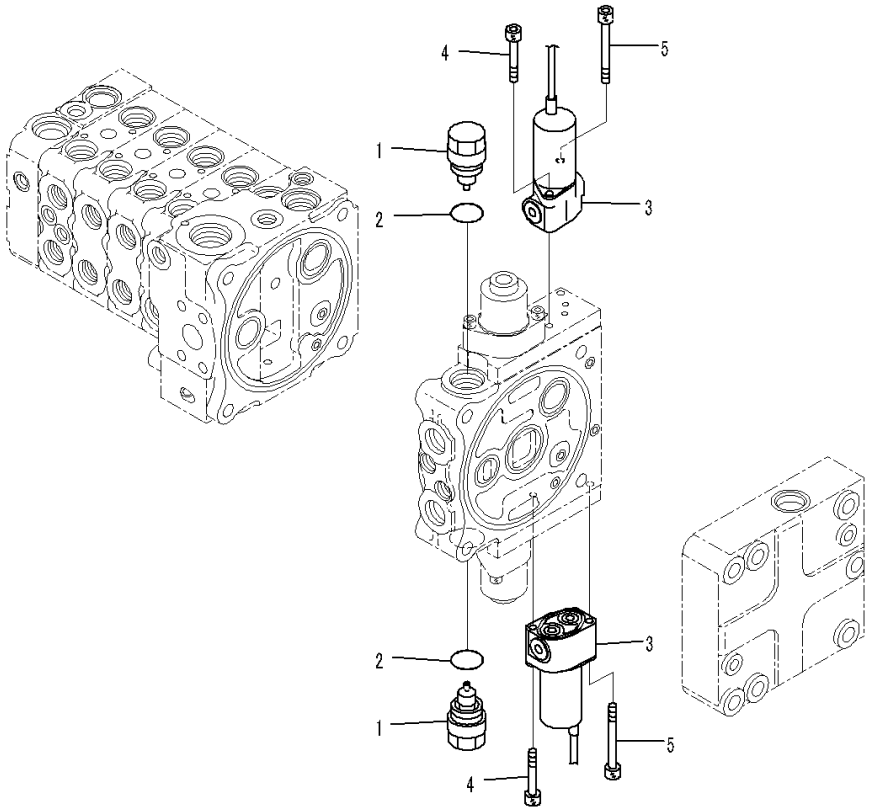

Index	Code	Part Number	Description	Qty	Serial Number
		Note: This list covers following specifications.			
		Power Tilt Pitch Dozer, Accumulator, PPC Piping, 3D Machine Control Plug and Play			
		Power Tilt Pitch Dozer, Rear 1-attachment, Accumulator, PPC Piping, 3D Machine Control Plug and Play			
		Power Tilt Pitch Dozer, Rear 1-attachment, Accumulator, PPC Piping			
		Power Tilt Pitch Dozer, Accumulator, PPC Piping			
		723-25-11300	Valve, Control	1	1001-
	C1		• Body Group	1	1001-
1		723-40-85100	• • Valve Assembly, Suction	2	1001-
2		709-25-11390	• • • O-ring	1	1001-
3		702-21-07610	• • Valve, Solenoid	2	1001-
4		01252-60645	• • Bolt, Hexagon Socket Head	2	1001-
5		702-16-55270	• • Bolt	2	1001-

FIG. M2210-005015 Fender (PPC Valve Piping)

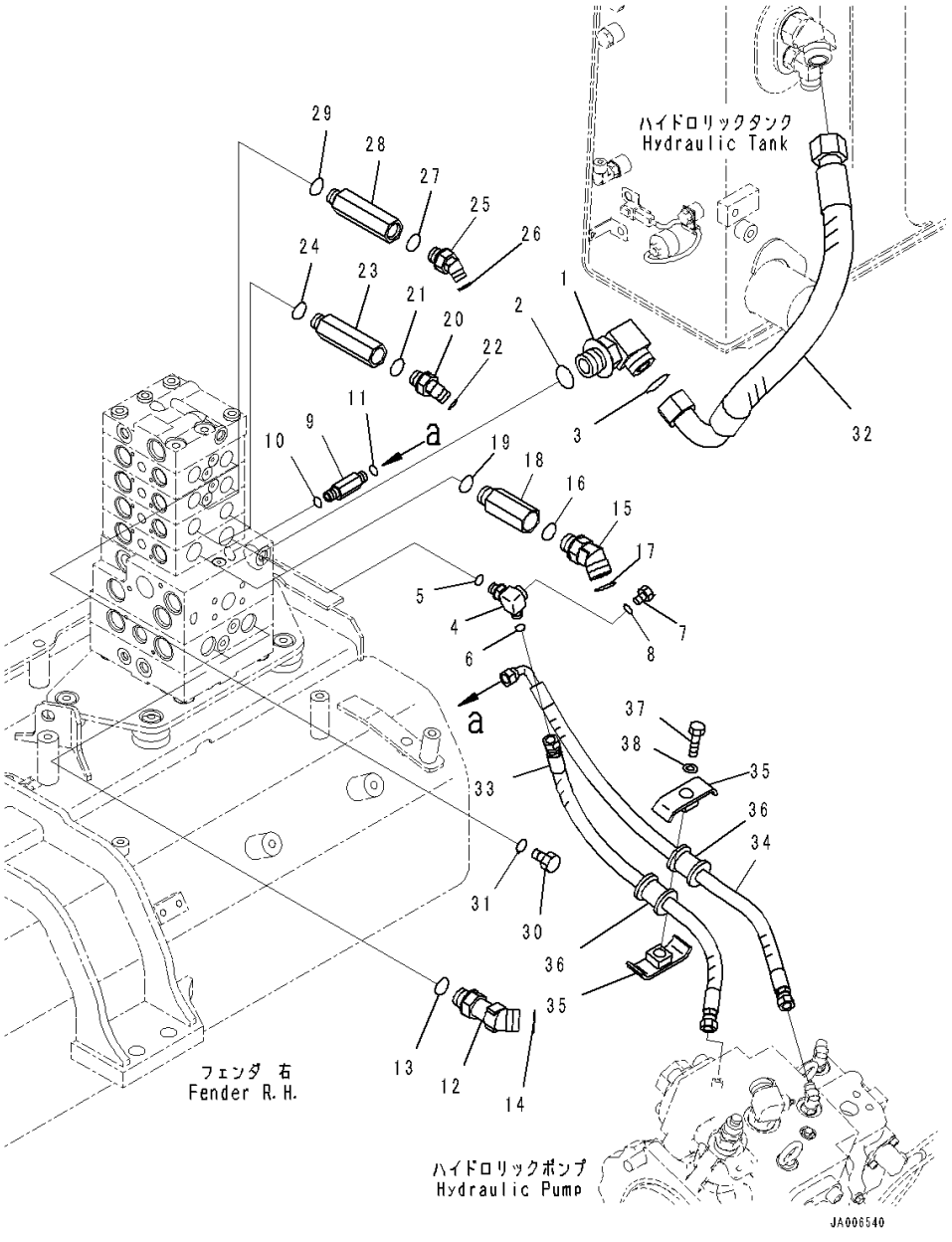

Index	Code	Part Number	Description	Qty	Serial Number
		Note: This list covers following specifications.			
		Power Tilt Pitch Dozer, Accumulator, PPC Piping, 3D			
		Machine Control Plug and Play			
		Power Tilt Pitch Dozer, Accumulator, PPC Piping			
1		21W-62-42640	Elbow	1	1001-
2		07002-13334	O-ring	1	1001-
3		207-62-64740	O-ring	1	1001-
4		14X-62-54870	Tee	1	1001-
5		07002-11423	O-ring	1	1001-
6		02896-11008	O-ring	1	1001-
7		07040-11007	Plug	1	1001-
8		07002-11023	O-ring	1	1001-
9		11Y-62-12230	Union	1	1001-
10		07002-11423	O-ring	1	1001-
11		02896-11008	O-ring	1	1001-
12		11Y-62-36160	Elbow	2	1001-
13		07002-62434	O-ring	2	1001-
14		02896-61018	O-ring	2	1001-
15		02783-10628	Elbow	2	1001-
16		07002-12434	O-ring	2	1001-
17		02896-11018	O-ring	2	1001-
18		20T-62-81790	Joint	2	1001-
19		07002-12434	O-ring	2	1001-
20		02783-10315	Elbow	2	1001-
21		07002-12034	O-ring	2	1001-
22		02896-11009	O-ring	2	1001-
23		14X-62-52931	Joint	2	1001-
24		07002-12034	O-ring	2	1001-
25		02783-10315	Elbow	2	1001-
26		07002-12034	O-ring	2	1001-
27		02896-11009	O-ring	2	1001-
28		14X-62-52931	Joint	2	1001-
29		07002-12034	O-ring	2	1001-
30		07040-12012	Plug	2	1001-
31		07002-12034	O-ring	2	1001-
32		14X-62-52940	Hose	1	1001-
33		14X-62-52391	Hose	1	1001-
34		14X-62-52541	Hose	1	1001-
35		22P-62-13540	Clamp	2	1001-
36		07095-00314	Cushion	2	1001-

FIG. M2210-005015 Fender (PPC Valve Piping)

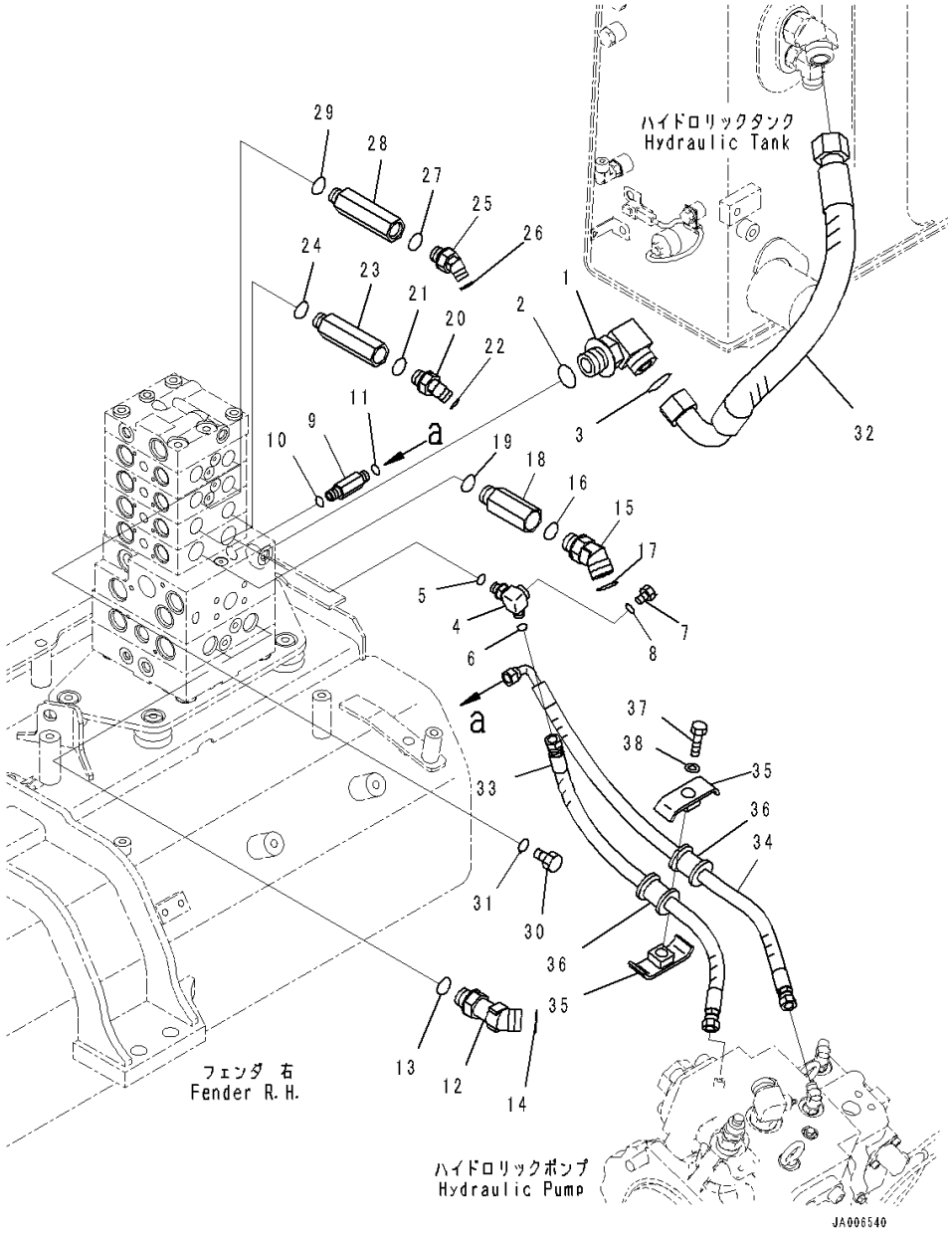

Index	Code	Part Number	Description	Qty	Serial Number
37		01010-81260	Bolt	1	1001-
38		01643-31232	Washer	1	1001-

FIG. M2210-005016 Fender (PPC Lock Solenoid Valve With Accumulator)

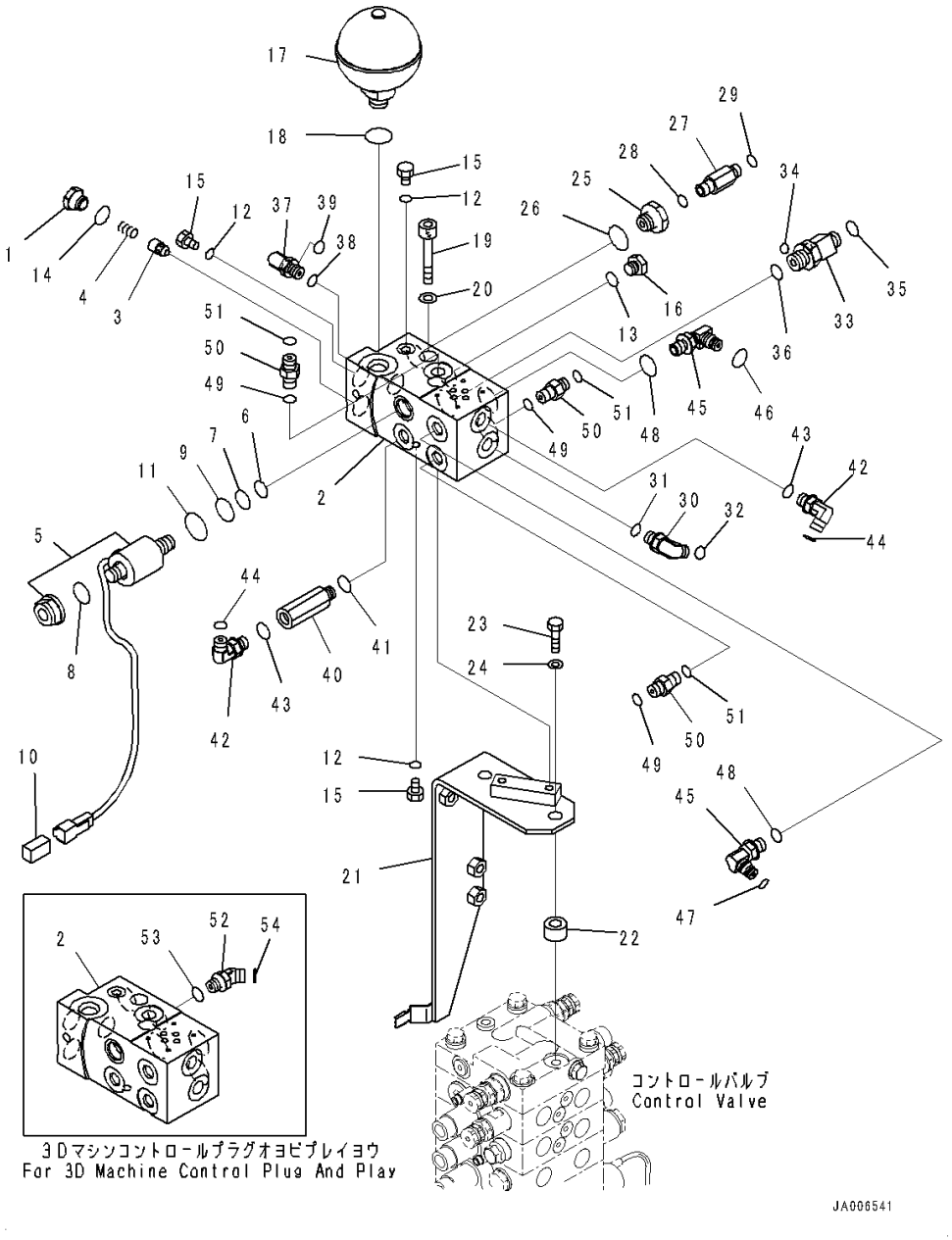

Index	Code	Part Number	Description	Qty	Serial Number
		Note: This list covers following specifications.			
		Power Tilt Pitch Dozer, Accumulator, PPC Piping, 3D			
		Machine Control Plug and Play			
		Power Tilt Pitch Dozer, Rear 1-attachment, Accumulator,			
		PPC Piping, 3D Machine Control Plug and Play			
		14X-62-54521	Block Assembly	1	1001-
1		103-49-14280	• Plug	1	1001-
2		14X-62-54531	• Block	1	1001-
3		205-60-51390	• Poppet	1	1001-
4		722-12-12063	• Spring	1	1001-
5		11Y-60-11530	• Valve, Solenoid	1	1001-
6		07000-02012	• • O-ring	1	1001-
7		07000-02014	• • O-ring	1	1001-
8		07000-12016	• • O-ring	1	1001-
9		07000-02018	• • O-ring	1	1001-
10	C1		• • Connector	1	1001-
11		203-60-62190	• • O-ring	1	1001-
12		07002-10823	• O-ring	4	1001-
13		07002-11423	• O-ring	1	1001-
14		07002-11623	• O-ring	1	1001-
15		07040-10807	• Plug	4	1001-
16		07040-11409	• Plug	1	1001-
17		22U-60-21330	Accumulator	1	1001-
18		07002-12034	O-ring	1	1001-
19		01252-A1085	Bolt, Hexagon Socket Head	2	1001-
20		01643-51032	Washer	2	1001-
21		14X-62-54540	Bracket	1	1001-
22		14X-62-52971	Spacer	2	1001-
23		01010-81245	Bolt	2	1001-
24		01643-31232	Washer	2	1001-
25		20Y-62-21940	Filter Assembly	1	1001-
26		07002-12034	O-ring	1	1001-
27		20U-62-41890	Nipple	1	1001-
28		07002-11423	O-ring	1	1001-
29		02896-11008	O-ring	1	1001-
30		02782-10210	Elbow	1	1001-
31		07002-11423	O-ring	1	1001-
32		02896-11008	O-ring	1	1001-
33		20K-62-33690	Tee	1	1001-
34		02896-11008	• O-ring	1	1001-

FIG. M2210-005016 Fender (PPC Lock Solenoid Valve With Accumulator)

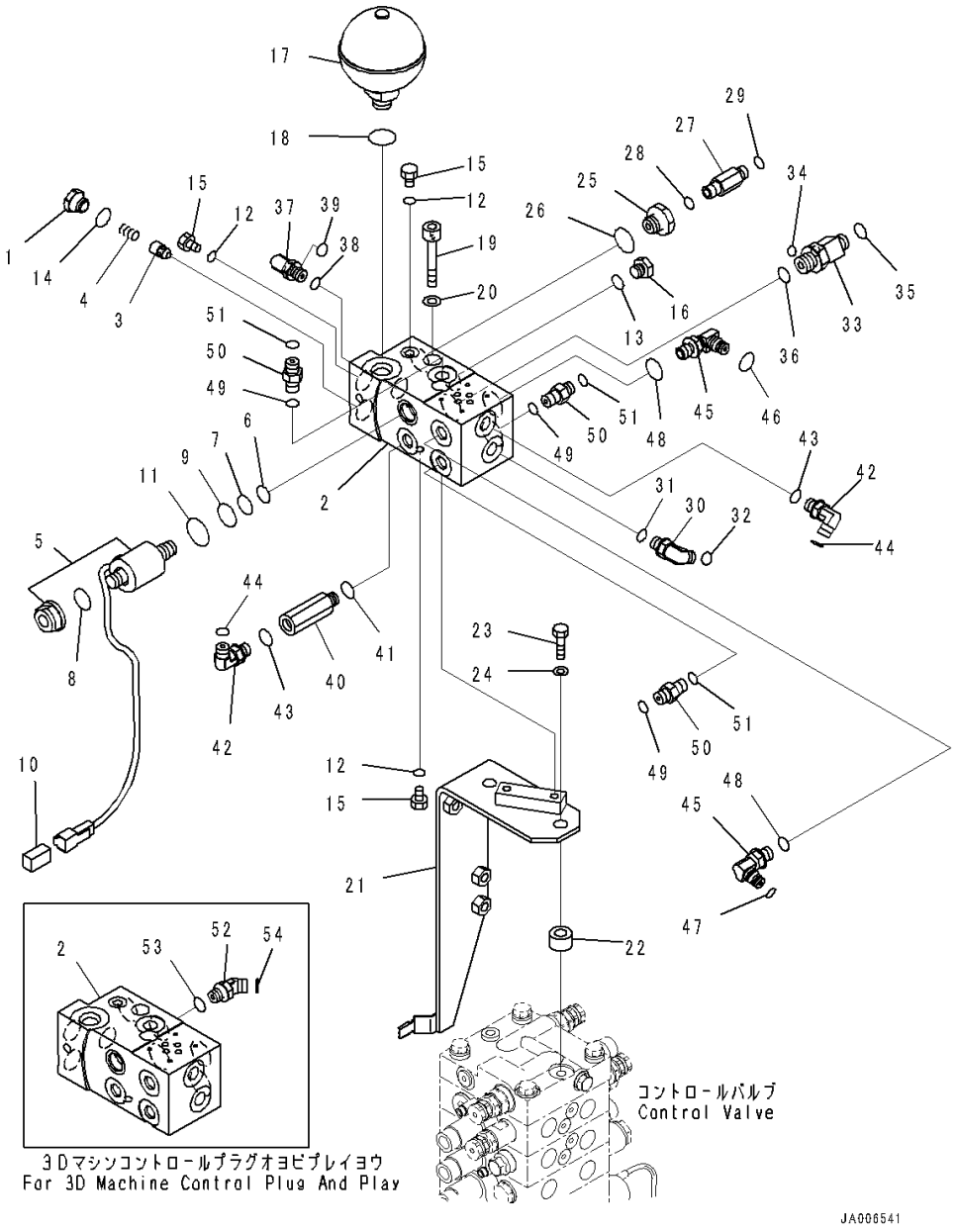

Index	Code	Part Number	Description	Qty	Serial Number
35		02896-11009	• O-ring	1	1001-
36		07002-12034	O-ring	1	1001-
37		02782-10210	Elbow	1	1001-
38		07002-11423	O-ring	1	1001-
39		02896-11008	O-ring	1	1001-
40		207-62-62460	Adapter	1	1001-
41		07002-11423	O-ring	1	1001-
42		02782-10210	Elbow	2	1001-
43		07002-11423	O-ring	2	1001-
44		02896-11008	O-ring	2	1001-
45		14X-62-53541	Elbow	2	1001-
46		201-60-11390	• O-ring	1	1001-
47		20Y-62-19560	• O-ring	1	1001-
48		07002-11423	O-ring	2	1001-
49		02896-11008	O-ring	3	1001-
50		02781-0021D	Union	3	1001-
51		07002-11423	O-ring	3	1001-
52		02783-10210	Elbow	1	1001-
53		07002-11423	O-ring	1	1001-
54		02896-11008	O-ring	1	1001-

FIG. M2210-005017 Fender (Control Valve Steering Piping)

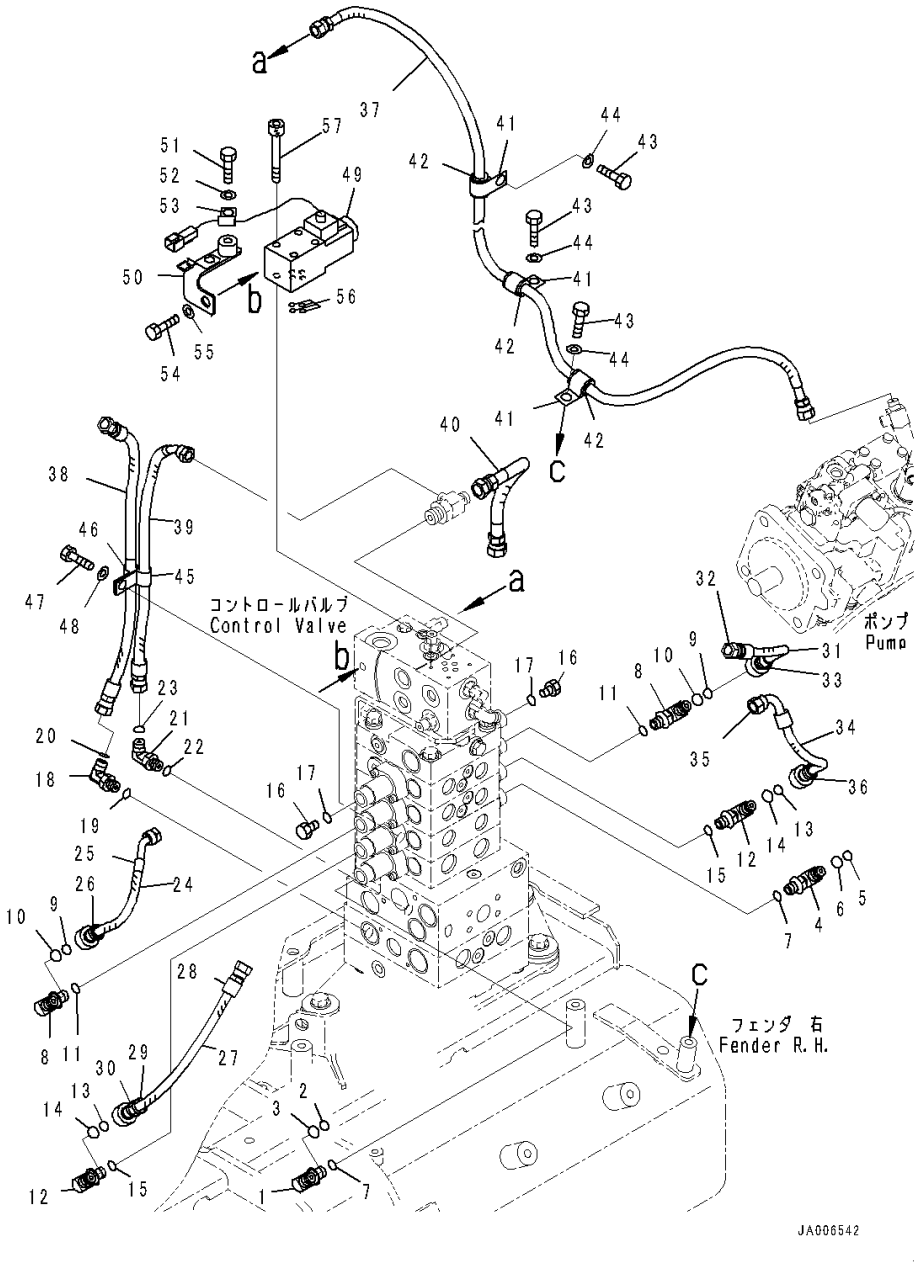

Index	Code	Part Number	Description	Qty	Serial Number
		Note: This list covers following specifications.			
		Power Tilt Pitch Dozer, Accumulator, PPC Piping, 3D			
		Machine Control Plug and Play			
		Power Tilt Pitch Dozer, Accumulator, PPC Piping			
1		14X-62-53531	Elbow	1	1001-
2		201-60-11390	• O-ring	1	1001-
3		20Y-62-19560	• O-ring	1	1001-
4		14X-62-54960	Elbow	1	1001-
5		201-60-11390	• O-ring	1	1001-
6		20Y-62-19560	• O-ring	1	1001-
7		07002-11423	O-ring	2	1001-
8		14X-62-53541	Elbow	2	1001-
9		201-60-11390	• O-ring	1	1001-
10		20Y-62-19560	• O-ring	1	1001-
11		07002-11423	O-ring	2	1001-
12		14X-62-53541	Elbow	2	1001-
13		201-60-11390	• O-ring	1	1001-
14		20Y-62-19560	• O-ring	1	1001-
15		07002-11423	O-ring	2	1001-
16		07040-11409	Plug	2	1001-
17		07002-11423	O-ring	2	1001-
18		02782-10210	Elbow	1	1001-
19		07002-11423	O-ring	1	1001-
20		02896-11008	O-ring	1	1001-
21		02782-10210	Elbow	1	1001-
22		07002-11423	O-ring	1	1001-
23		02896-11008	O-ring	1	1001-
24		14X-62-54110	Hose Assembly	1	1001-
25		14X-62-53710	• Hose	1	1001-
26		20Y-62-22820	• Band, Blue	1	1001-
27		14X-62-54121	Hose Assembly	1	1001-
28		14X-62-53721	• Hose	1	1001-
29		20Y-62-22820	• Band, Blue	2	1001-
30		20Y-62-22830	• Band, White	2	1001-
31		14X-62-54150	Hose Assembly	1	1001-
32		14X-62-53770	• Hose	1	1001-
33		20Y-62-22830	• Band, White	2	1001-
34		14X-62-54160	Hose Assembly	1	1001-
35		14X-62-53780	• Hose	1	1001-
36		206-62-87990	• Band, Orange	2	1001-

FIG. M2210-005017 Fender (Control Valve Steering Piping)

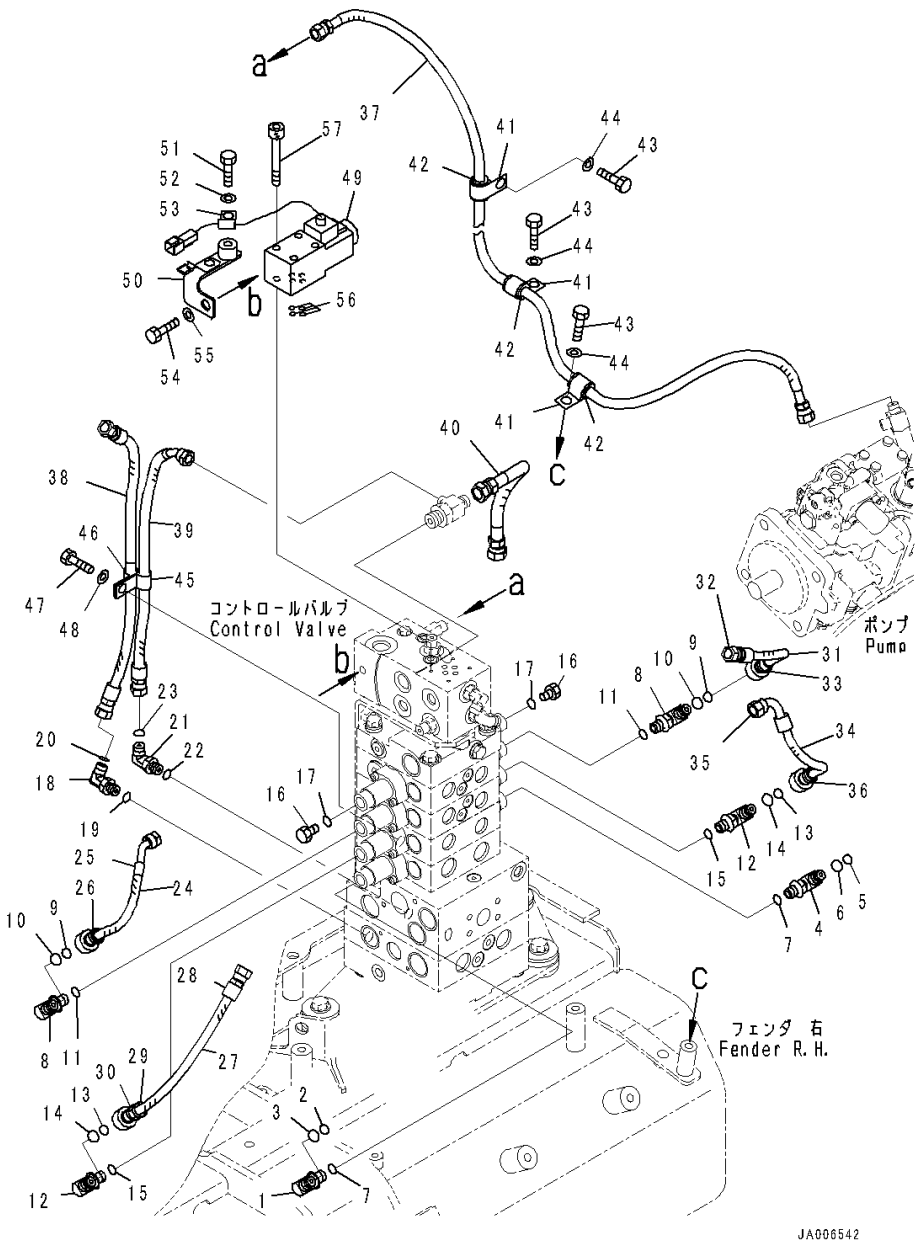

Index	Code	Part Number	Description	Qty	Serial Number
37		14X-62-54750	Hose	1	1001-
38		02762-002A4	Hose	1	1001-
39		02764-002A4	Hose, Face Seal Type	1	1001-
40		02762-00303	Hose, Face Seal Type	1	1001-
41		04434-51712	Clip	3	1001-
42		07095-20211	Cushion	3	1001-
43		01010-81220	Bolt	3	1001-
44		01643-31232	Washer	3	1001-
45		21T-72-23260	Clip	1	1001-
46		04434-51212	Clip	1	1001-
47		01010-81225	Bolt	1	1001-
48		01643-31232	Washer	1	1001-
49		14X-06-51821	Valve	1	1001-
50		14X-62-54681	Bracket	1	1001-
51		01010-81220	Bolt	1	1001-
52		01643-31232	Washer	1	1001-
53		04434-50612	Clip	1	1001-
54		01010-81220	Bolt	1	1001-
55		01643-31232	Washer	1	1001-
56		07000-11009	O-ring	4	1001-
57		01252-70545	Bolt, Hexagon Socket Head	4	1001-

FIG. M2210-005018 Fender (Control Valve Wiring Harness)

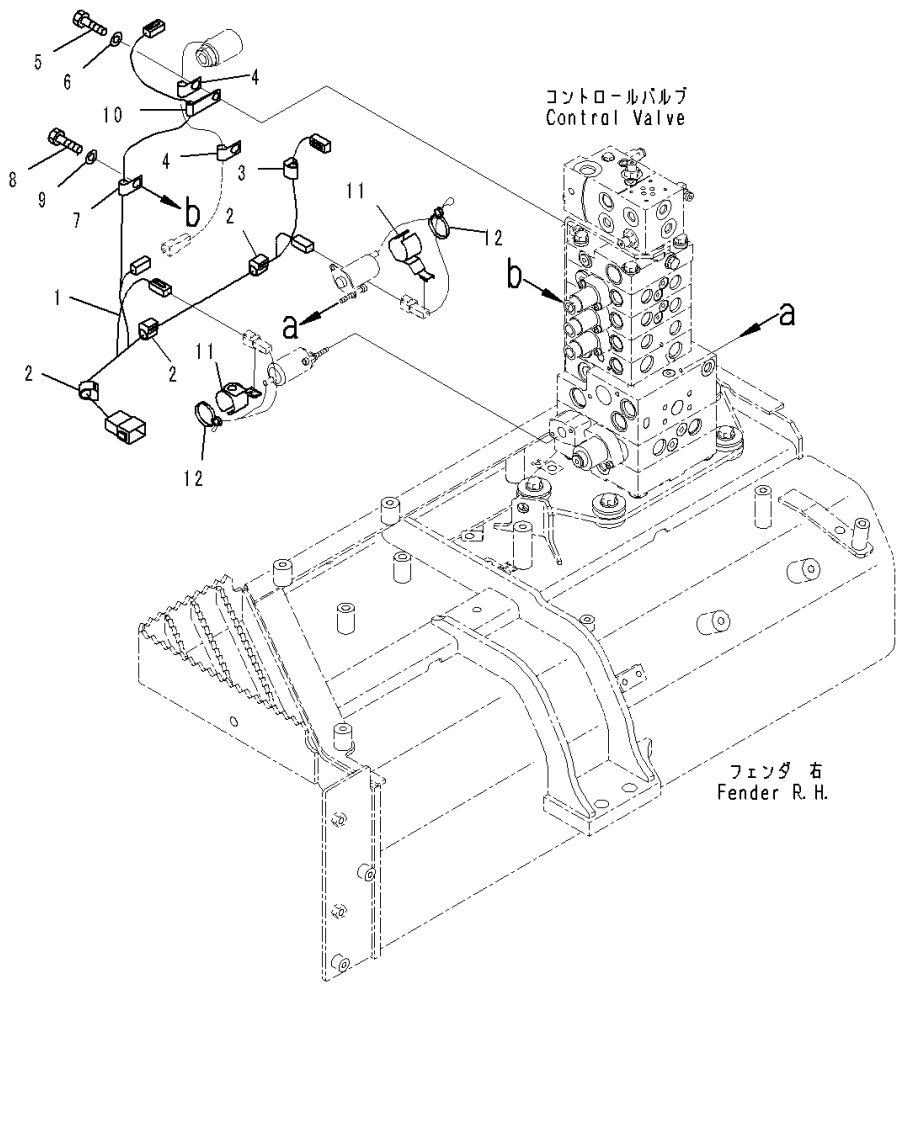

Index	Code	Part Number	Description	Qty	Serial Number
		Note: This list covers following specifications.			
		Power Tilt Pitch Dozer, Accumulator, PPC Piping, 3D Machine Control Plug and Play			
		Power Tilt Pitch Dozer, Rear 1-attachment, Accumulator, PPC Piping, 3D Machine Control Plug and Play			
		Power Tilt Pitch Dozer, Rear 1-attachment, Accumulator, PPC Piping			
		Power Tilt Pitch Dozer, Accumulator, PPC Piping			
1		14X-06-51811	Wiring Harness	1	1001-
2		08211-01020	Clip	3	1001-
3		08211-00720	Clip	1	1001-
4		04434-50612	Clip	2	1001-
5		01010-81225	Bolt	2	1001-
6		01643-31232	Washer	2	1001-
7		04434-50812	Clip	1	1001-
8		01010-81225	Bolt	1	1001-
9		01643-31232	Washer	1	1001-
10		515-35-13930	Clip	1	1001-
11		21W-60-41310	Clip	2	1001-
12		08034-40521	Band	2	1001-

FIG. M2210-006015 Fender (PPC Valve Piping)

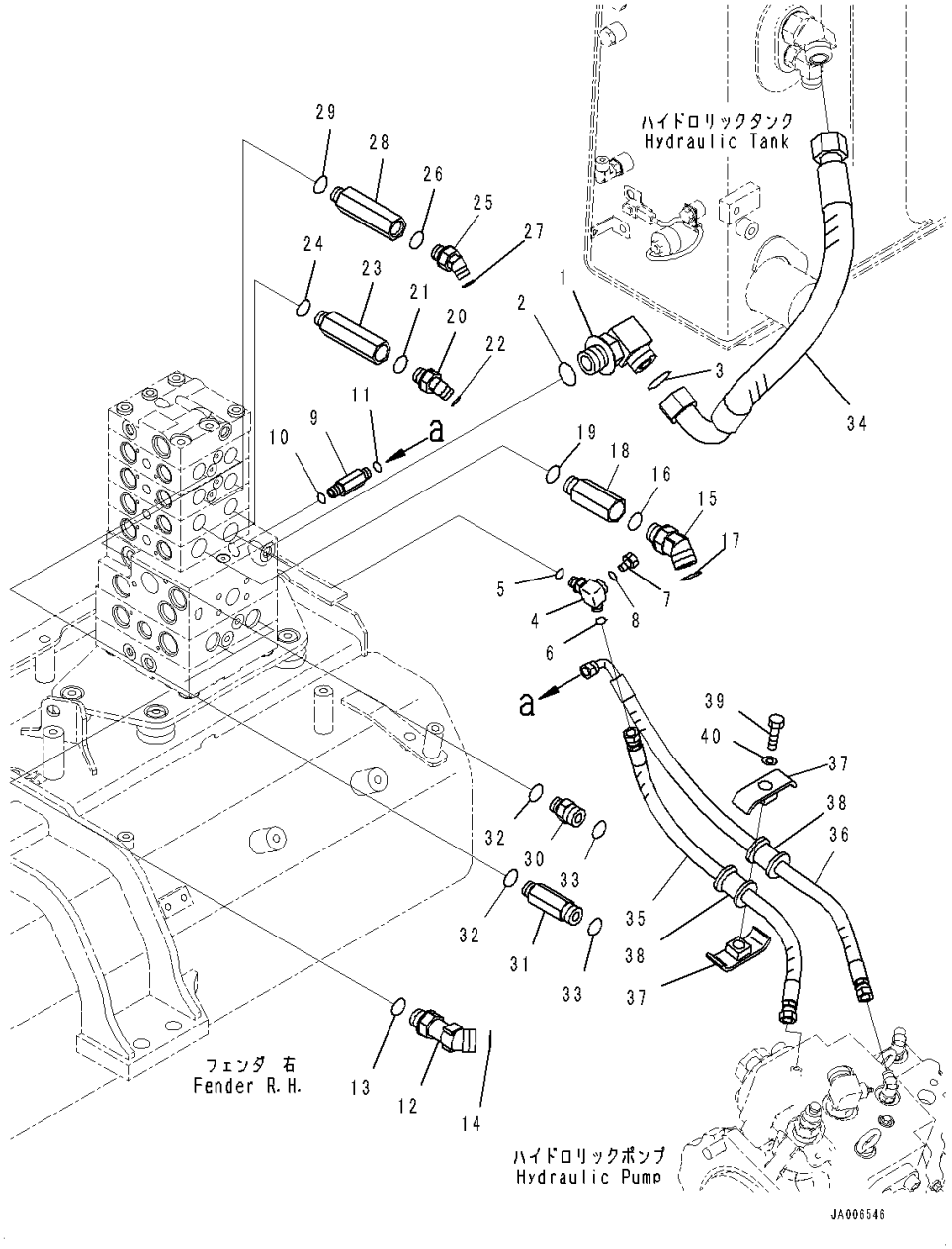

Index	Code	Part Number	Description	Qty	Serial Number
		Note: This list covers following specifications.			
		Power Tilt Pitch Dozer, Rear 1-attachment, Accumulator,			
		PPC Piping, 3D Machine Control Plug and Play			
		Power Tilt Pitch Dozer, Rear 1-attachment, Accumulator,			
		PPC Piping			
1		21W-62-42640	Elbow	1	1001-
2		07002-13334	O-ring	1	1001-
3		207-62-64740	O-ring	1	1001-
4		14X-62-54870	Tee	1	1001-
5		07002-11423	O-ring	1	1001-
6		02896-11008	O-ring	1	1001-
7		07040-11007	Plug	1	1001-
8		07002-11023	O-ring	1	1001-
9		11Y-62-12230	Union	1	1001-
10		07002-11423	O-ring	1	1001-
11		02896-11008	O-ring	1	1001-
12		11Y-62-36160	Elbow	2	1001-
13		07002-62434	O-ring	2	1001-
14		02896-61018	O-ring	2	1001-
15		02783-10628	Elbow	2	1001-
16		07002-12434	O-ring	2	1001-
17		02896-11018	O-ring	2	1001-
18		20T-62-81790	Joint	2	1001-
19		07002-12434	O-ring	2	1001-
20		02783-10315	Elbow	2	1001-
21		07002-12034	O-ring	2	1001-
22		02896-11009	O-ring	2	1001-
23		14X-62-52931	Joint	2	1001-
24		07002-12034	O-ring	2	1001-
25		02783-10315	Elbow	2	1001-
26		07002-12034	O-ring	2	1001-
27		02896-11009	O-ring	2	1001-
28		14X-62-52931	Joint	2	1001-
29		07002-12034	O-ring	2	1001-
30		02781-00516	Union	1	1001-
31		14X-62-52991	Nipple	1	1001-
32		07002-12034	O-ring	2	1001-
33		02896-11015	O-ring	2	1001-
34		14X-62-52940	Hose	1	1001-
35		14X-62-52391	Hose	1	1001-

FIG. M2210-006015 Fender (PPC Valve Piping)

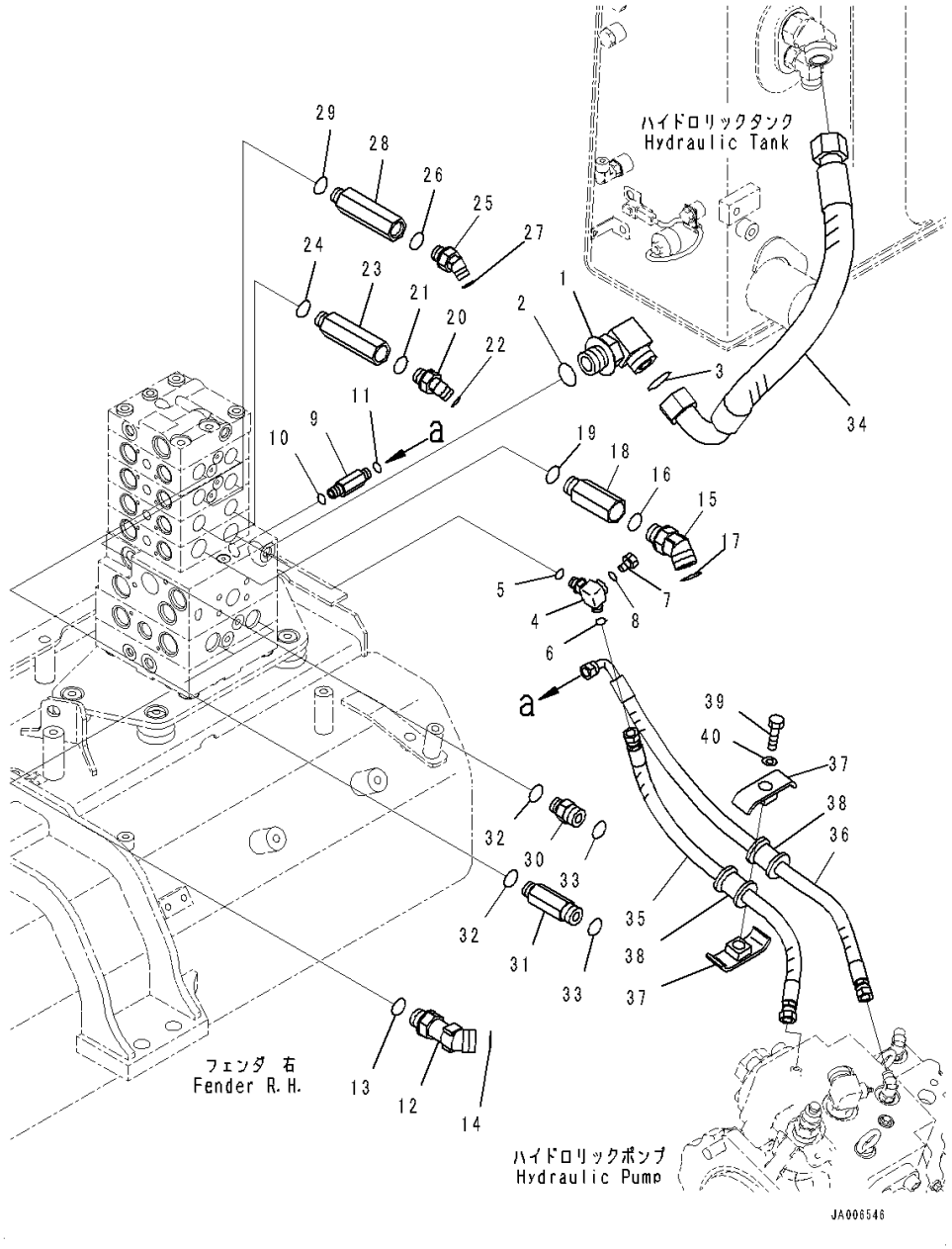

Index	Code	Part Number	Description	Qty	Serial Number
36		14X-62-52541	Hose	1	1001-
37		22P-62-13540	Clamp	2	1001-
38		07095-00314	Cushion	2	1001-
39		01010-81260	Bolt	1	1001-
40		01643-31232	Washer	1	1001-

FIG. M2210-006017 Fender (Control Valve Steering Piping)

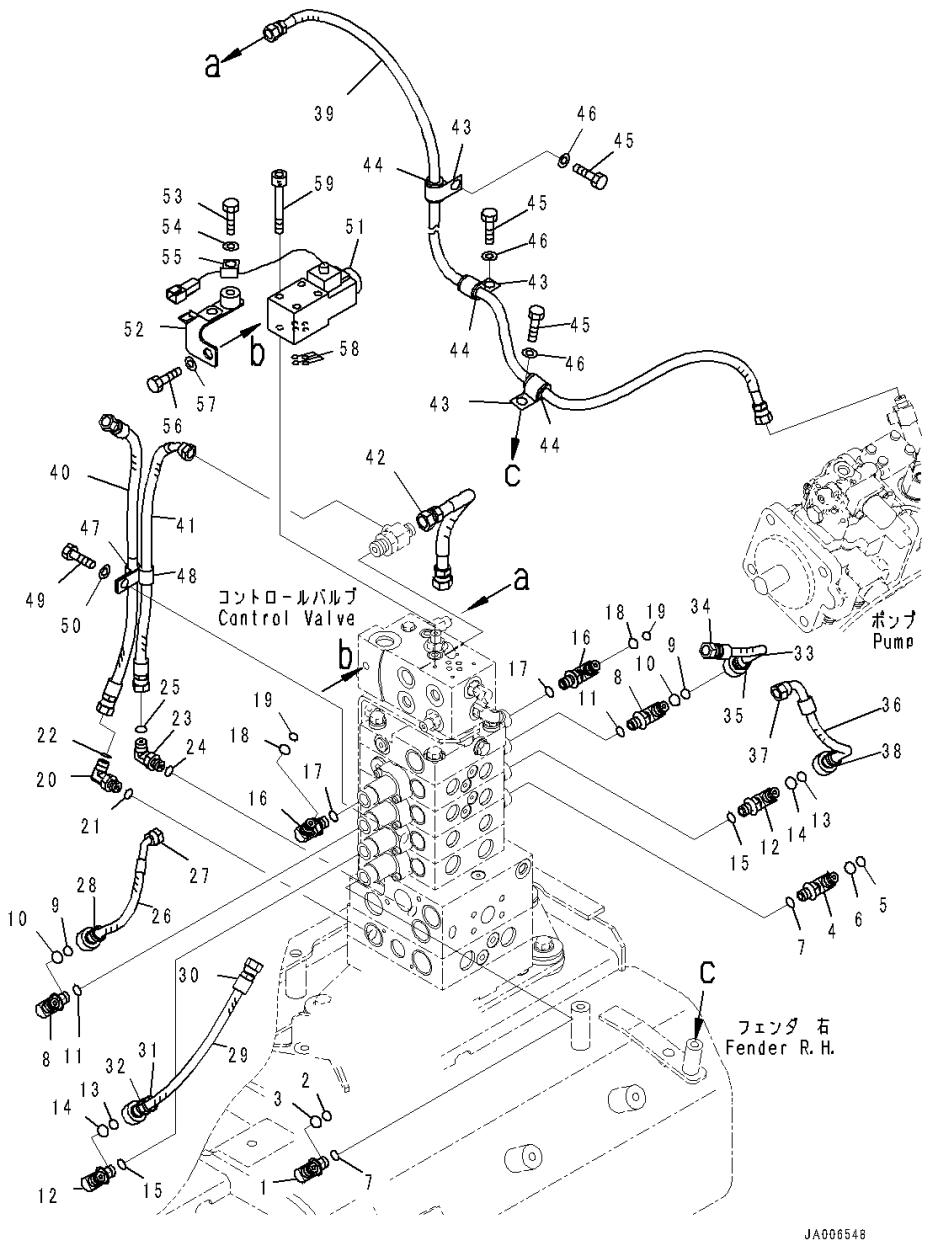

Index	Code	Part Number	Description	Qty	Serial Number
		Note: This list covers following specifications.			
		Power Tilt Pitch Dozer, Rear 1-attachment, Accumulator,			
		PPC Piping, 3D Machine Control Plug and Play			
		Power Tilt Pitch Dozer, Rear 1-attachment, Accumulator,			
		PPC Piping			
1		14X-62-53531	Elbow	1	1001-
2		201-60-11390	• O-ring	1	1001-
3		20Y-62-19560	• O-ring	1	1001-
4		14X-62-54960	Elbow	1	1001-
5		201-60-11390	• O-ring	1	1001-
6		20Y-62-19560	• O-ring	1	1001-
7		07002-11423	O-ring	2	1001-
8		14X-62-53541	Elbow	2	1001-
9		201-60-11390	• O-ring	1	1001-
10		20Y-62-19560	• O-ring	1	1001-
11		07002-11423	O-ring	2	1001-
12		14X-62-53541	Elbow	2	1001-
13		201-60-11390	• O-ring	1	1001-
14		20Y-62-19560	• O-ring	1	1001-
15		07002-11423	O-ring	2	1001-
16		14X-62-53541	Elbow	2	1001-
17		201-60-11390	• O-ring	1	1001-
18		20Y-62-19560	• O-ring	1	1001-
19		07002-11423	O-ring	2	1001-
20		02782-10210	Elbow	1	1001-
21		07002-11423	O-ring	1	1001-
22		02896-11008	O-ring	1	1001-
23		02782-10210	Elbow	1	1001-
24		07002-11423	O-ring	1	1001-
25		02896-11008	O-ring	1	1001-
26		14X-62-54110	Hose Assembly	1	1001-
27		14X-62-53710	• Hose	1	1001-
28		20Y-62-22820	• Band, Blue	1	1001-
29		14X-62-54121	Hose Assembly	1	1001-
30		14X-62-53721	• Hose	1	1001-
31		20Y-62-22820	• Band, Blue	2	1001-
32		20Y-62-22830	• Band, White	2	1001-
33		14X-62-54150	Hose Assembly	1	1001-
34		14X-62-53770	• Hose	1	1001-
35		20Y-62-22830	• Band, White	2	1001-

FIG. M2210-006017 Fender (Control Valve Steering Piping)

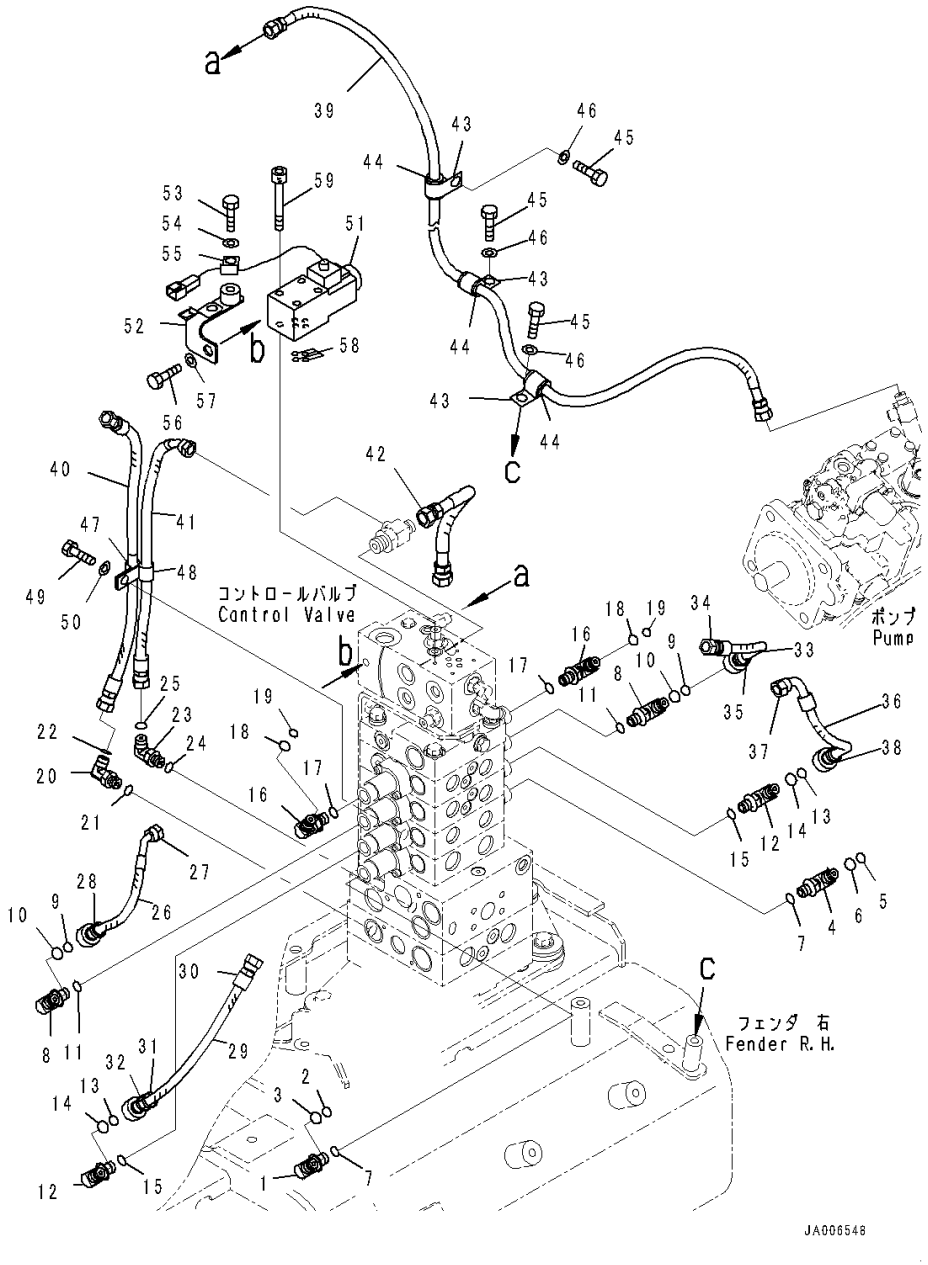

Index	Code	Part Number	Description	Qty	Serial Number
36		14X-62-54160	Hose Assembly	1	1001-
37		14X-62-53780	• Hose	1	1001-
38		206-62-87990	• Band, Orange	2	1001-
39		14X-62-54750	Hose	1	1001-
40		02762-002A4	Hose	1	1001-
41		02764-002A4	Hose, Face Seal Type	1	1001-
42		02762-00303	Hose, Face Seal Type	1	1001-
43		04434-51712	Clip	3	1001-
44		07095-20211	Cushion	3	1001-
45		01010-81220	Bolt	3	1001-
46		01643-31232	Washer	3	1001-
47		21T-72-23260	Clip	1	1001-
48		04434-51212	Clip	1	1001-
49		01010-81225	Bolt	1	1001-
50		01643-31232	Washer	1	1001-
51		14X-06-51821	Valve	1	1001-
52		14X-62-54681	Bracket	1	1001-
53		01010-81220	Bolt	1	1001-
54		01643-31232	Washer	1	1001-
55		04434-50612	Clip	1	1001-
56		01010-81220	Bolt	1	1001-
57		01643-31232	Washer	1	1001-
58		07000-11009	O-ring	4	1001-
59		01252-70545	Bolt, Hexagon Socket Head	4	1001-

FIG. M2210-007002 Fender (Inner Parts, Control Valve) (1/12)

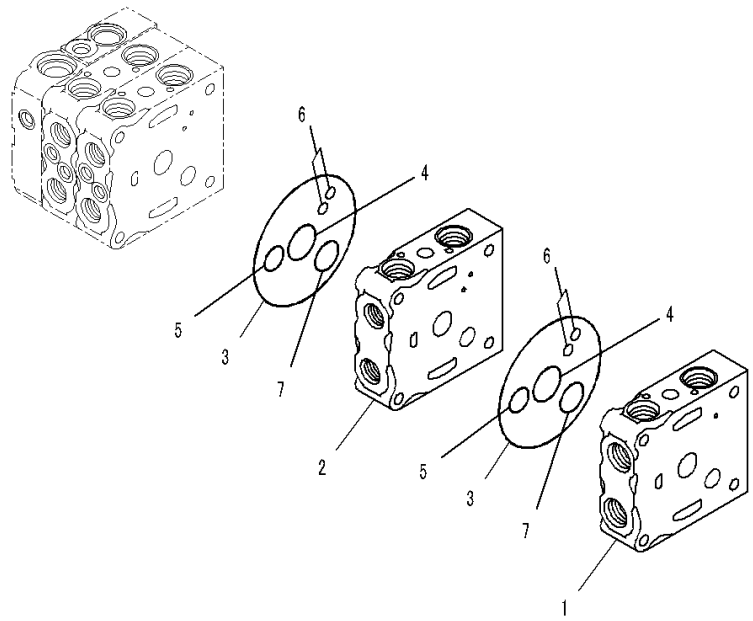

Index	Code	Part Number	Description	Qty	Serial Number
		Note: This list covers following specifications.			
		Power Angle Power Tilt Dozer, Inside Frame, Accumulator, PPC Piping, 3D Machine Control Plug and Play			
		Power Angle Power Tilt Dozer, Inside Frame, Rear 1-attachment, Accumulator, PPC Piping, 3D Machine Control Plug and Play			
		Power Angle Power Tilt Dozer, Inside Frame, Accumulator, PPC Piping			
		Power Angle Power Tilt Dozer, Inside Frame, Rear 1-attachment, Accumulator, PPC Piping			
		723-25-11200	Valve, Control	1	1001-
	C1		• Body Group	1	1001-
1	C1		• • Valve Body	1	1001-
2	C1		• • Valve Body	1	1001-
3		07000-12120	• • O-ring	2	1001-
4		723-26-15830	• • O-ring	2	1001-
5		07000-12020	• • O-ring	2	1001-
6		07000-11008	• • O-ring	4	1001-
7		723-26-15840	• • O-ring	2	1001-

FIG. M2210-007003 Fender (Inner Parts, Control Valve) (2/12)

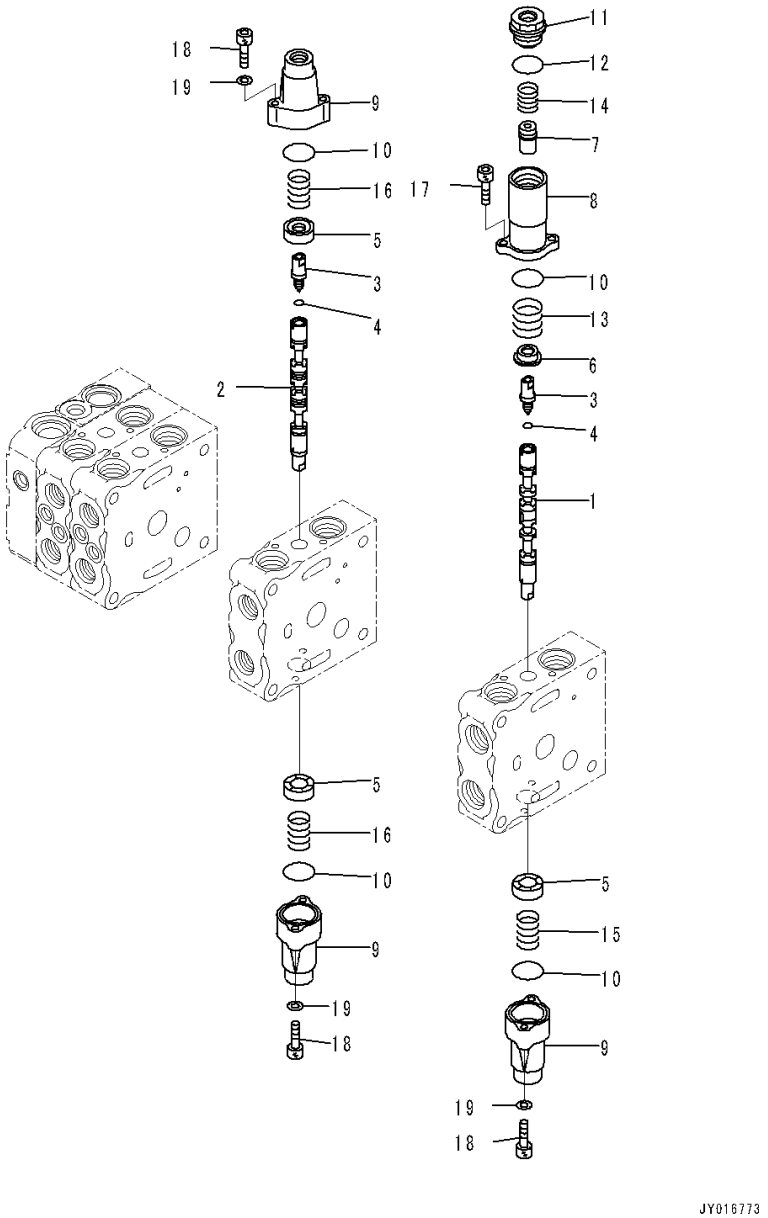

Index	Code	Part Number	Description	Qty	Serial Number
		Note: This list covers following specifications. Power Angle Power Tilt Dozer, Inside Frame, Accumulator, PPC Piping, 3D Machine Control Plug and Play Power Angle Power Tilt Dozer, Inside Frame, Rear 1-attachment, Accumulator, PPC Piping, 3D Machine Control Plug and Play Power Angle Power Tilt Dozer, Inside Frame, Accumulator, PPC Piping Power Angle Power Tilt Dozer, Inside Frame, Rear 1-attachment, Accumulator, PPC Piping		
		723-25-11200	Valve, Control	1	1001-
	C1		• Body Group	1	1001-
1	C1		• • Spool	1	1001-
2	C1		• • Spool	1	1001-
3	C1		• • Plug	2	1001-
4	C1		• • O-ring	2	1001-
5		723-26-15121	• • Retainer	3	1001-
6		723-26-16770	• • Retainer	1	1001-
7		723-26-16780	• • Retainer	1	1001-
8		723-26-16760	• • Case	1	1001-
9		723-26-15110	• • Case	3	1001-
10		575-41-17420	• • O-ring	4	1001-
11		723-26-16790	• • Plug	1	1001-
12		07002-12434	• • O-ring	1	1001-
13		723-26-14660	• • Spring	1	1001-
14		723-26-14670	• • Spring	1	1001-
15		709-26-11450	• • Spring	1	1001-
16		723-26-14580	• • Spring	2	1001-
17		01252-60616	• • Bolt, Hexagon Socket Head	2	1001-
18		01252-60630	• • Bolt, Hexagon Socket Head	6	1001-
19		01641-20608	• • Washer	6	1001-

FIG. M2210-007004 Fender (Inner Parts, Control Valve) (3/12)

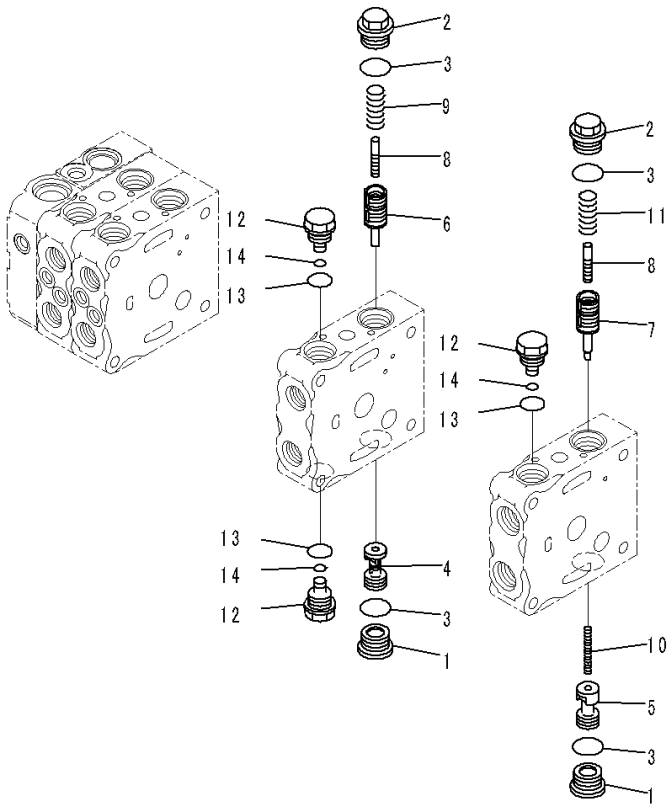

Index	Code	Part Number	Description	Qty	Serial Number
		Note: This list covers following specifications.			
		Power Angle Power Tilt Dozer, Inside Frame, Accumulator, PPC Piping, 3D Machine Control Plug and Play			
		Power Angle Power Tilt Dozer, Inside Frame, Rear 1-attachment, Accumulator, PPC Piping, 3D Machine Control Plug and Play			
		Power Angle Power Tilt Dozer, Inside Frame, Accumulator, PPC Piping			
		Power Angle Power Tilt Dozer, Inside Frame, Rear 1-attachment, Accumulator, PPC Piping			
		723-25-11200	Valve, Control	1	1001-
	C1		• Body Group	1	1001-
1		723-26-15230	• • Plug	2	1001-
2		723-26-15370	• • Plug	2	1001-
3		07002-12434	• • O-ring	4	1001-
4	C1		• • Valve	1	1001-
5	C1		• • Valve	1	1001-
6	C1		• • Valve	1	1001-
7	C1		• • Valve	1	1001-
8	C1		• • Piston	2	1001-
9		723-26-14230	• • Spring	1	1001-
10		723-26-14220	• • Spring	1	1001-
11		723-26-14240	• • Spring	1	1001-
12		723-26-15310	• • Plug	3	1001-
13		07002-12034	• • O-ring	3	1001-
14		07000-11007	• • O-ring	3	1001-

FIG. M2210-007005 Fender (Inner Parts, Control Valve) (4/12)

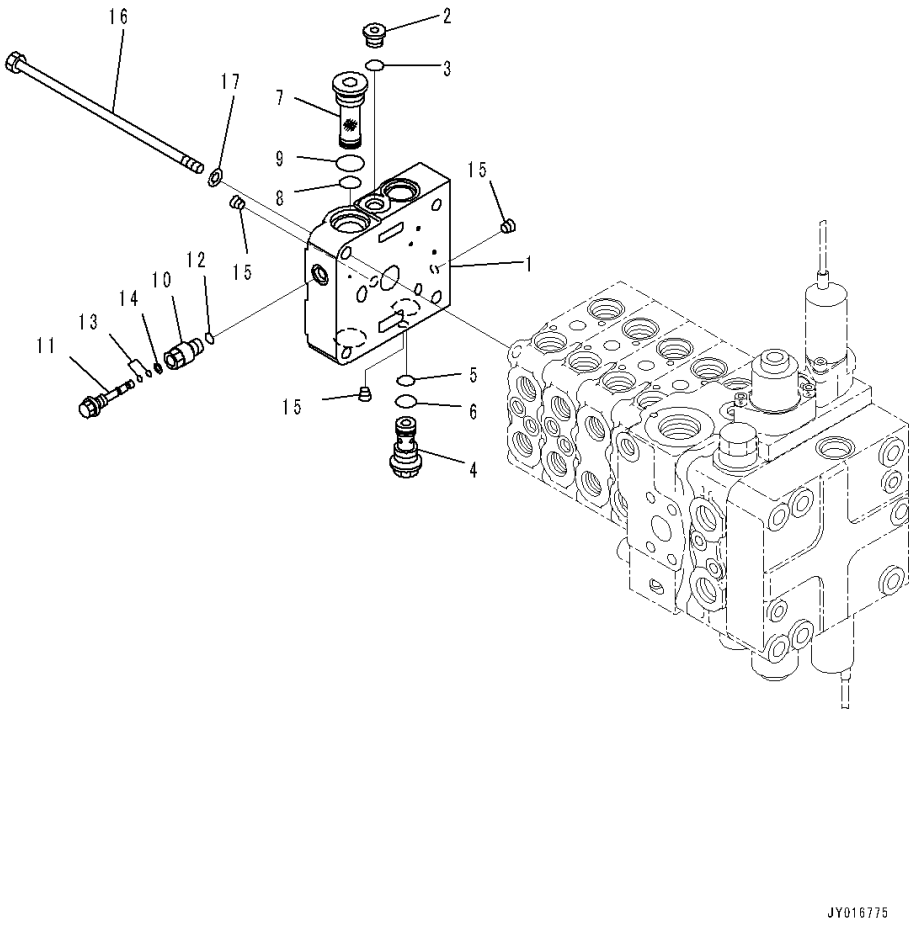

Index	Code	Part Number	Description	Qty	Serial Number
		Note: This list covers following specifications. Power Angle Power Tilt Dozer, Inside Frame, Accumulator, PPC Piping, 3D Machine Control Plug and Play Power Angle Power Tilt Dozer, Inside Frame, Rear 1-attachment, Accumulator, PPC Piping, 3D Machine Control Plug and Play Power Angle Power Tilt Dozer, Inside Frame, Accumulator, PPC Piping Power Angle Power Tilt Dozer, Inside Frame, Rear 1-attachment, Accumulator, PPC Piping		
		723-25-11200	Valve, Control	1	1001-
1	C1		• Cover	1	1001-
2		702-21-55620	• Plug	1	1001-
3		07002-11423	• O-ring	1	1001-
4		723-26-17210	• Filter	1	1001-
5		723-11-19970	• O-ring	1	1001-
6		07002-12034	• O-ring	1	1001-
7		723-11-14390	• Filter	1	1001-
8		723-11-19130	• O-ring	1	1001-
9		07002-12434	• O-ring	1	1001-
10		723-11-38620	• Plug	1	1001-
11		723-26-16990	• Plug	1	1001-
12		07002-11223	• O-ring	1	1001-
13		07000-11003	• O-ring	2	1001-
14		07001-01003	• Ring, Back-up	1	1001-
15	C1		• Plug	3	1001-
16		700-85-11111	• Bolt	4	1001-
17		01643-31032	• Washer	4	1001-

FIG. M2210-007006 Fender (Inner Parts, Control Valve) (5/12)

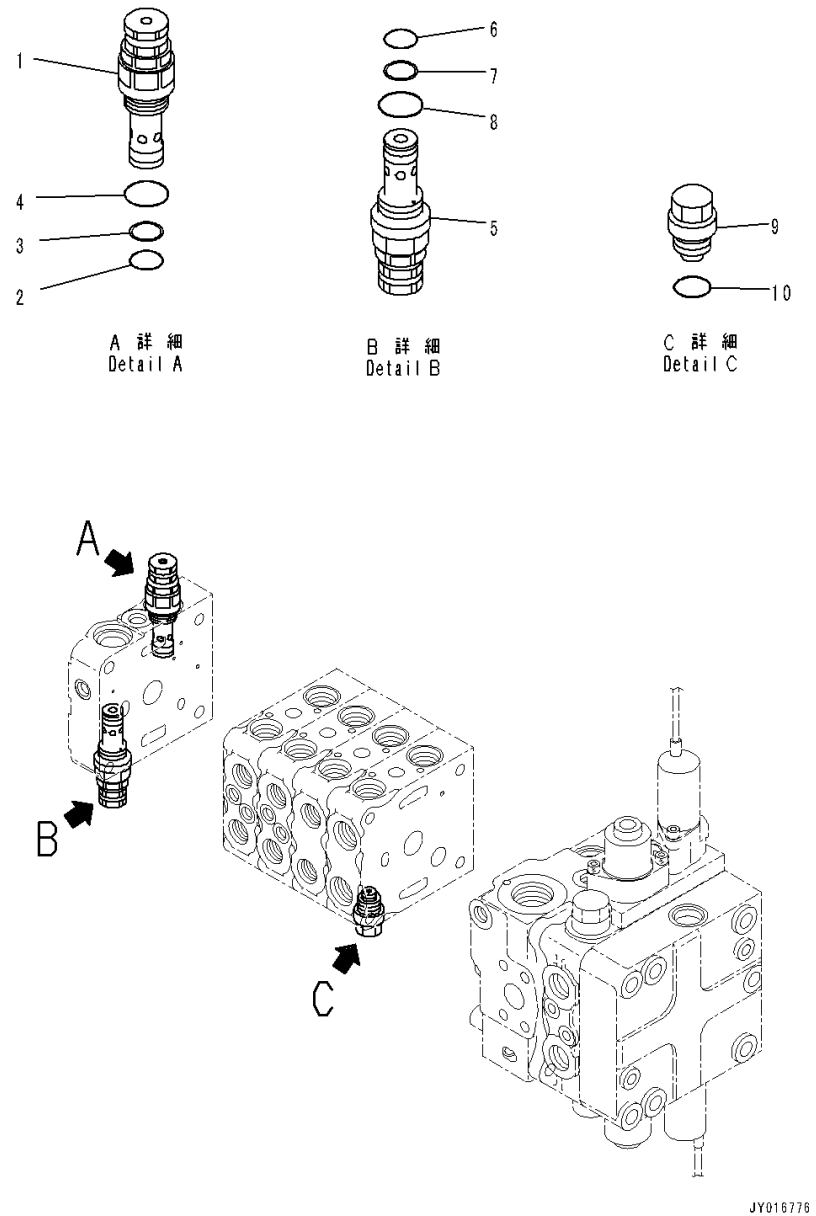

Index	Code	Part Number	Description	Qty	Serial Number
		Note: This list covers following specifications.			
		Power Angle Power Tilt Dozer, Inside Frame, Accumulator, PPC Piping, 3D Machine Control Plug and Play			
		Power Angle Power Tilt Dozer, Inside Frame, Rear 1-attachment, Accumulator, PPC Piping, 3D Machine Control Plug and Play			
		Power Angle Power Tilt Dozer, Inside Frame, Accumulator, PPC Piping			
		Power Angle Power Tilt Dozer, Inside Frame, Rear 1-attachment, Accumulator, PPC Piping			
		723-25-11200	Valve, Control	1	1001-
1		723-20-66500	• Valve, Relief	1	1001-
2		700-22-11410	• • O-ring	1	1001-
3		700-80-64220	• • Ring, Back-up	1	1001-
4		07002-12434	• • O-ring	1	1001-
5		723-20-66600	• Valve, Relief	1	1001-
6		700-22-11410	• • O-ring	1	1001-
7		700-80-64220	• • Ring, Back-up	1	1001-
8		07002-12434	• • O-ring	1	1001-
9		723-20-80100	• Valve Assembly, Suction	1	1001-
10		07002-12034	• • O-ring	1	1001-

FIG. M2210-007007 Fender (Inner Parts, Control Valve) (6/12)

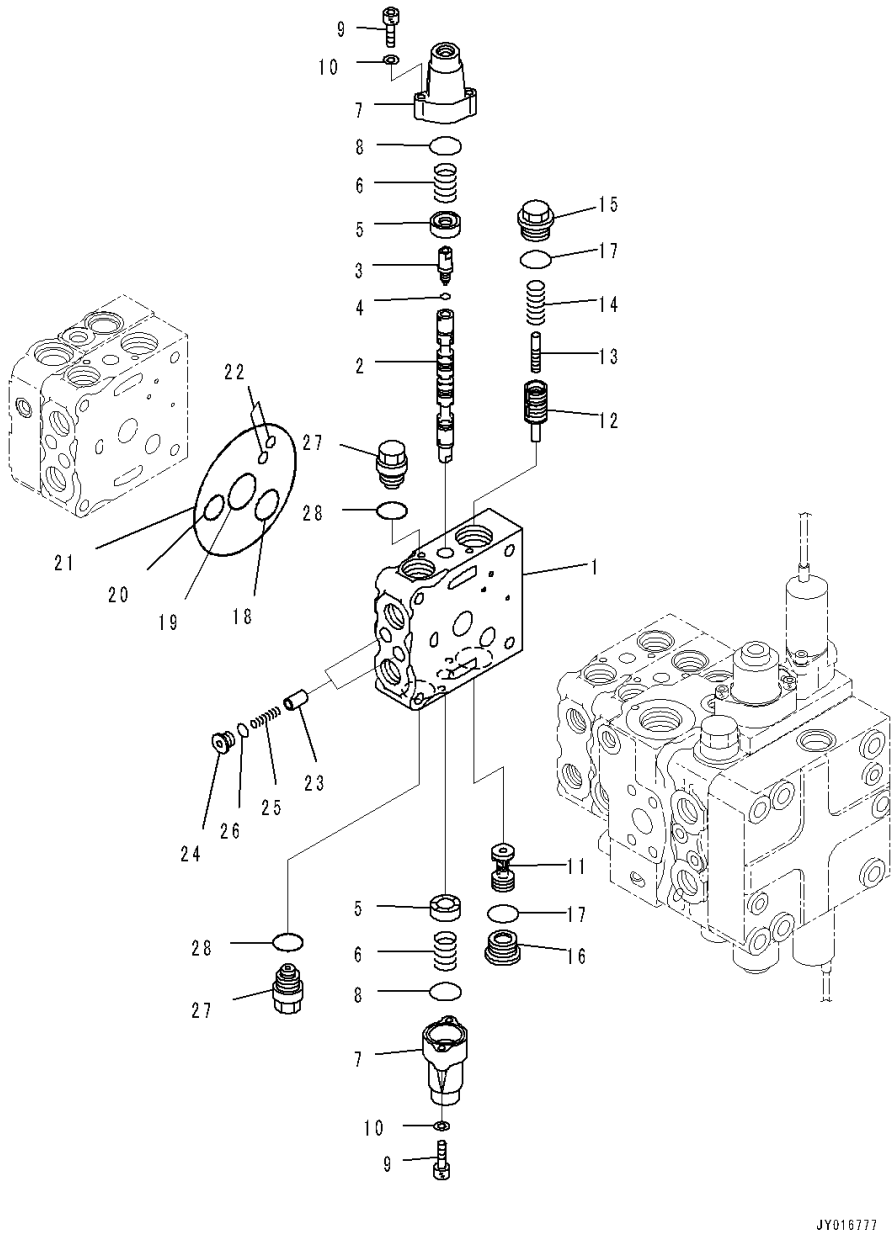

Index	Code	Part Number	Description	Qty	Serial Number
		Note: This list covers following specifications.			
		Power Angle Power Tilt Dozer, Inside Frame, Accumulator, PPC Piping, 3D Machine Control Plug and Play			
		Power Angle Power Tilt Dozer, Inside Frame, Rear 1-attachment, Accumulator, PPC Piping, 3D Machine Control Plug and Play			
		Power Angle Power Tilt Dozer, Inside Frame, Accumulator, PPC Piping			
		Power Angle Power Tilt Dozer, Inside Frame, Rear 1-attachment, Accumulator, PPC Piping			
		723-25-11200	Valve, Control	1	1001-
		723-21-08200	• Valve Subassembly	1	1001-
1	C1		• • Valve Body	1	1001-
2	C1		• • Spool	1	1001-
3	C1		• • Plug	1	1001-
4	C1		• • O-ring	1	1001-
5		723-26-15121	• • Retainer	2	1001-
6		723-26-14680	• • Spring	2	1001-
7		723-26-15110	• • Case	2	1001-
8		575-41-17420	• • O-ring	2	1001-
9		01252-60630	• • Bolt, Hexagon Socket Head	4	1001-
10		01641-20608	• • Washer	4	1001-
11	C1		• • Valve	1	1001-
12	C1		• • Valve	1	1001-
13	C1		• • Piston	1	1001-
14		723-26-14230	• • Spring	1	1001-
15		723-26-15370	• • Plug	1	1001-
16		723-26-15230	• • Plug	1	1001-
17		07002-12434	• • O-ring	2	1001-
18		723-26-15840	• • O-ring	1	1001-
19		723-26-15830	• • O-ring	1	1001-
20		07000-12020	• • O-ring	1	1001-
21		07000-12120	• • O-ring	1	1001-
22		07000-11008	• • O-ring	2	1001-
23		723-26-15210	• • Valve	2	1001-
24		723-26-15220	• • Plug	2	1001-
25		723-26-14150	• • Spring	2	1001-
26		07002-11223	• • O-ring	2	1001-
27		723-20-80100	• • Valve Assembly, Suction	2	1001-
28		07002-12034	• • • O-ring	1	1001-

FIG. M2210-007008 Fender (Inner Parts, Control Valve) (7/12)

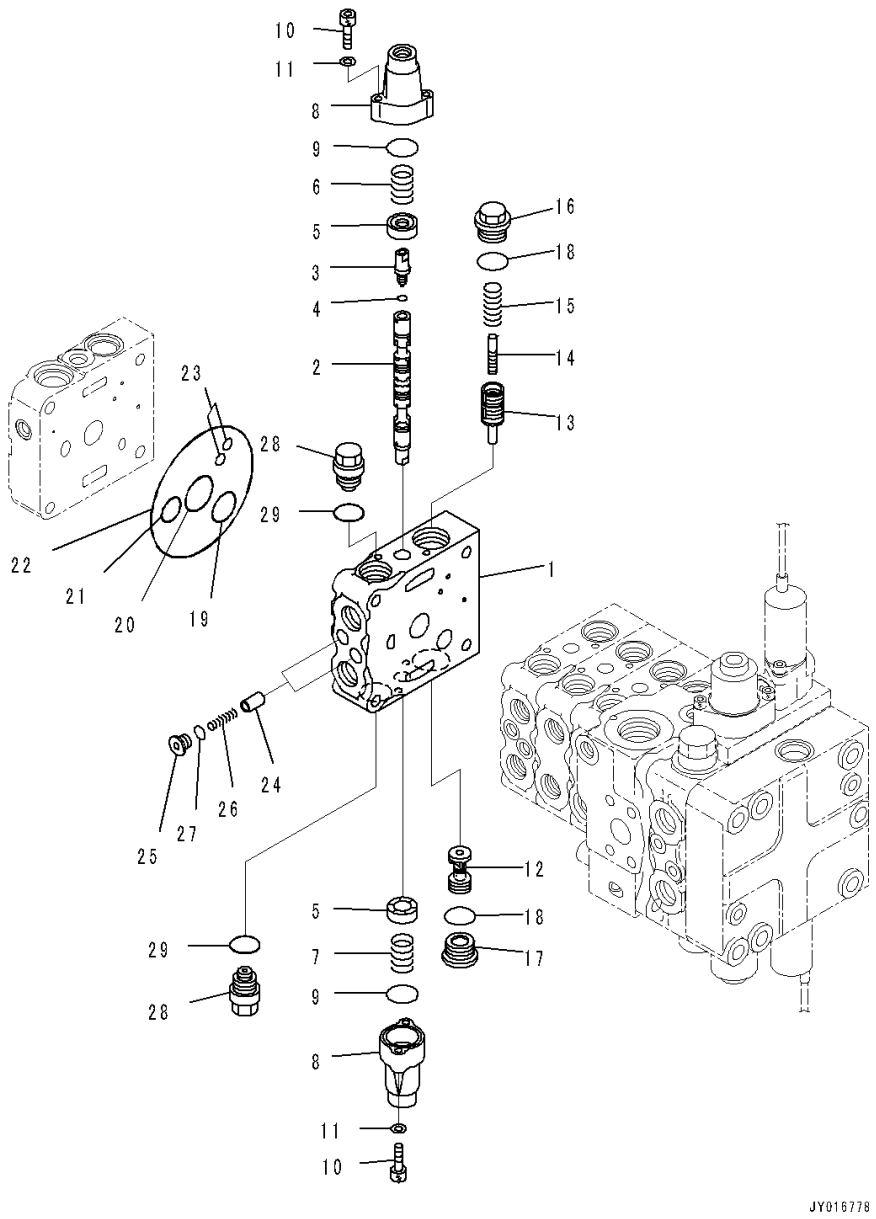

Index	Code	Part Number	Description	Qty	Serial Number
		Note: This list covers following specifications.			
		Power Angle Power Tilt Dozer, Inside Frame, Accumulator, PPC Piping, 3D Machine Control Plug and Play			
		Power Angle Power Tilt Dozer, Inside Frame, Rear 1-attachment, Accumulator, PPC Piping, 3D Machine Control Plug and Play			
		Power Angle Power Tilt Dozer, Inside Frame, Accumulator, PPC Piping			
		Power Angle Power Tilt Dozer, Inside Frame, Rear 1-attachment, Accumulator, PPC Piping			
		723-25-11200	Valve, Control	1	1001-
		723-21-08300	• Valve Subassembly	1	1001-
1	C1		• • Valve Body	1	1001-
2	C1		• • Spool	1	1001-
3	C1		• • Plug	1	1001-
4	C1		• • O-ring	1	1001-
5		723-26-15121	• • Retainer	2	1001-
6		723-26-14580	• • Spring	1	1001-
7		709-26-11450	• • Spring	1	1001-
8		723-26-15110	• • Case	2	1001-
9		575-41-17420	• • O-ring	2	1001-
10		01252-60630	• • Bolt, Hexagon Socket Head	4	1001-
11		01641-20608	• • Washer	4	1001-
12	C1		• • Valve	1	1001-
13	C1		• • Valve	1	1001-
14	C1		• • Piston	1	1001-
15		723-26-14230	• • Spring	1	1001-
16		723-26-15370	• • Plug	1	1001-
17		723-26-15230	• • Plug	1	1001-
18		07002-12434	• • O-ring	2	1001-
19		723-26-15840	• • O-ring	1	1001-
20		723-26-15830	• • O-ring	1	1001-
21		07000-12020	• • O-ring	1	1001-
22		07000-12120	• • O-ring	1	1001-
23		07000-11008	• • O-ring	2	1001-
24	C1		• • Valve	2	1001-
25		723-26-15220	• • Plug	2	1001-
26		723-26-14150	• • Spring	2	1001-
27		07002-11223	• • O-ring	2	1001-
28		723-20-80100	• • Valve Assembly, Suction	2	1001-

FIG. M2210-007008 Fender (Inner Parts, Control Valve) (7/12)

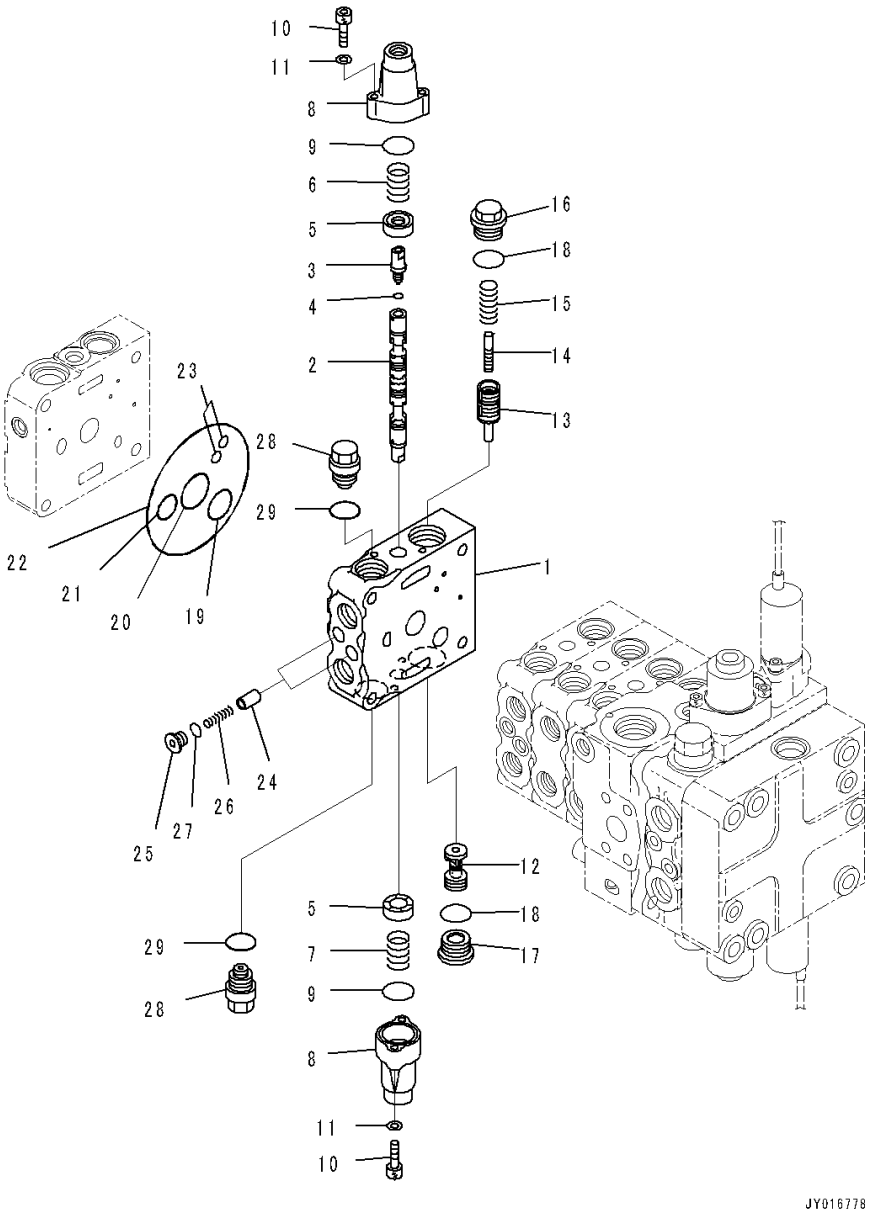

Index	Code	Part Number	Description	Qty	Serial Number
29		07002-12034	• • • O-ring	1	1001-

FIG. M2210-007009 Fender (Inner Parts, Control Valve) (8/12)

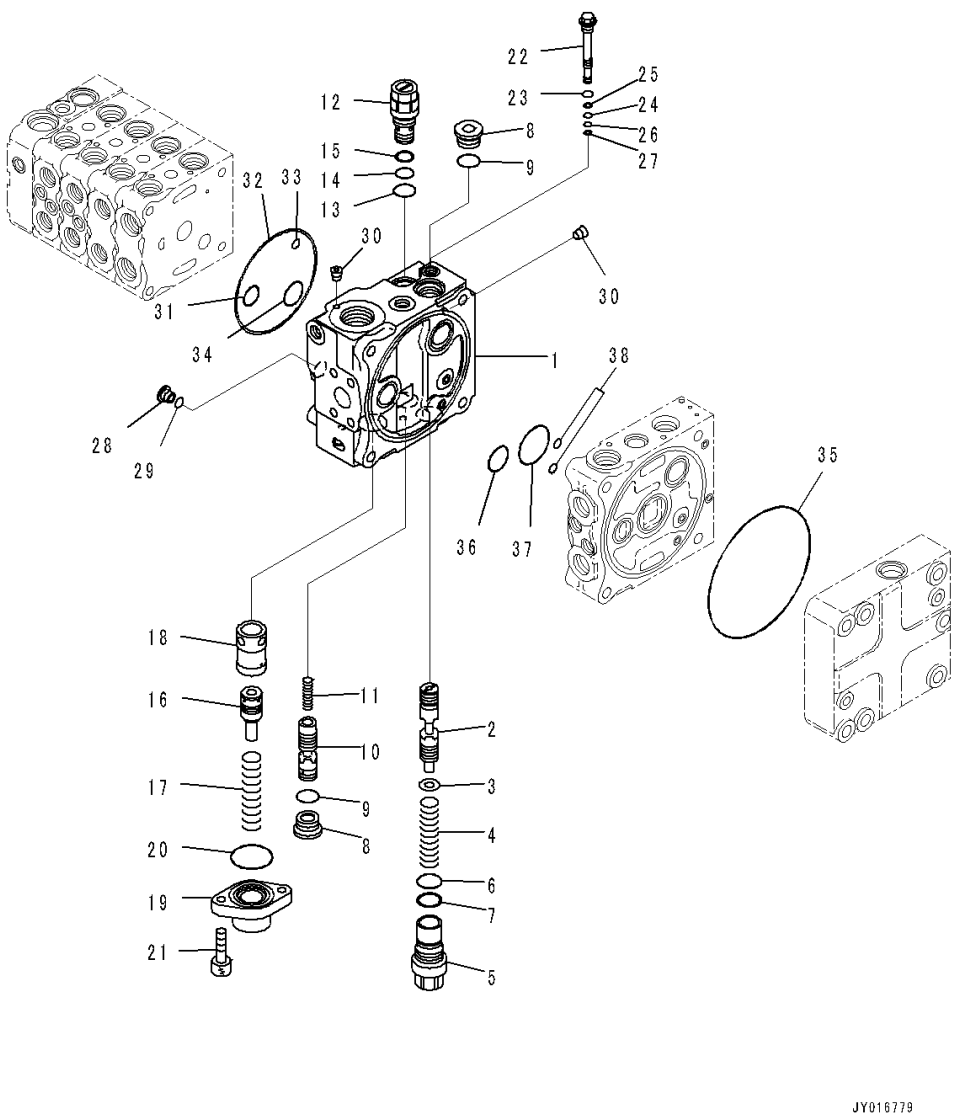

Index	Code	Part Number	Description	Qty	Serial Number
		Note: This list covers following specifications.			
		Power Angle Power Tilt Dozer, Inside Frame, Accumulator, PPC Piping, 3D Machine Control Plug and Play			
		Power Angle Power Tilt Dozer, Inside Frame, Rear 1-attachment, Accumulator, PPC Piping, 3D Machine Control Plug and Play			
		Power Angle Power Tilt Dozer, Inside Frame, Accumulator, PPC Piping			
		Power Angle Power Tilt Dozer, Inside Frame, Rear 1-attachment, Accumulator, PPC Piping			
		723-25-11200	Valve, Control	1	1001-
	C1		• Block Subassembly	1	1001-
1	C1		• • Block	1	1001-
2	C1		• • Spool	1	1001-
3		723-26-15861	• • Washer	1	1001-
4		723-26-14590	• • Spring	1	1001-
5		723-26-15851	• • Plug	1	1001-
6		700-80-61260	• • O-ring	1	1001-
7		700-80-61430	• • Ring	1	1001-
8		723-26-15230	• • Plug	2	1001-
9		07002-12434	• • O-ring	2	1001-
10	C1		• • Spool	1	1001-
11		723-26-14470	• • Spring	1	1001-
12		723-60-21900	• • Valve, Relief	1	1001-
13		07002-12434	• • • O-ring	1	1001-
14		07000-12016	• • • O-ring	1	1001-
15		07001-02016	• • • Ring, Back-up	1	1001-
16	C1		• • Piston	1	1001-
17		723-36-15340	• • Spring	1	1001-
18	C1		• • Sleeve	1	1001-
19		723-36-15250	• • Case	1	1001-
20		07000-13042	• • O-ring	1	1001-
21		01252-60820	• • Bolt, Hexagon Socket Head	2	1001-
22	C1		• • Valve Assembly	1	1001-
23		07002-11223	• • • O-ring	1	1001-
24		07000-11007	• • • O-ring	1	1001-
25		07001-01007	• • • Ring, Back-up	1	1001-
26		07000-11005	• • • O-ring	1	1001-
27		07001-01005	• • • Ring, Back-up	1	1001-
28		723-26-15220	• • Plug	1	1001-

FIG. M2210-007009 Fender (Inner Parts, Control Valve) (8/12)

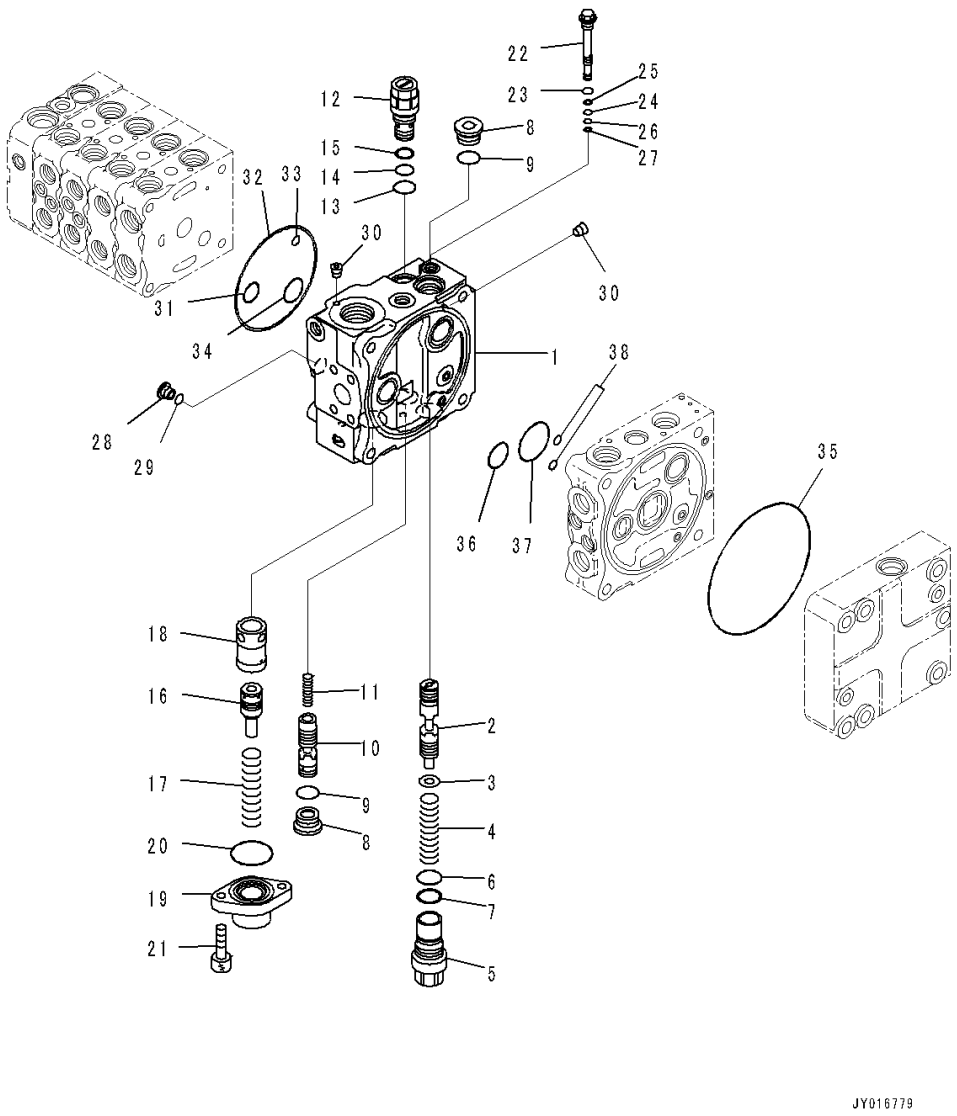

Index	Code	Part Number	Description	Qty	Serial Number
29		07002-11223	• • O-ring	1	1001-
30	C1		• • Plug	5	1001-
31		07000-12020	• • O-ring	1	1001-
32		07000-12120	• • O-ring	1	1001-
33		07000-11008	• • O-ring	1	1001-
34		723-26-15840	• • O-ring	1	1001-
35		144-14-54610	• • O-ring	1	1001-
36		723-56-31730	• • O-ring	1	1001-
37		702-75-11520	• • O-ring	1	1001-
38		07000-11008	• • O-ring	2	1001-

FIG. M2210-007010 Fender (Inner Parts, Control Valve) (9/12)

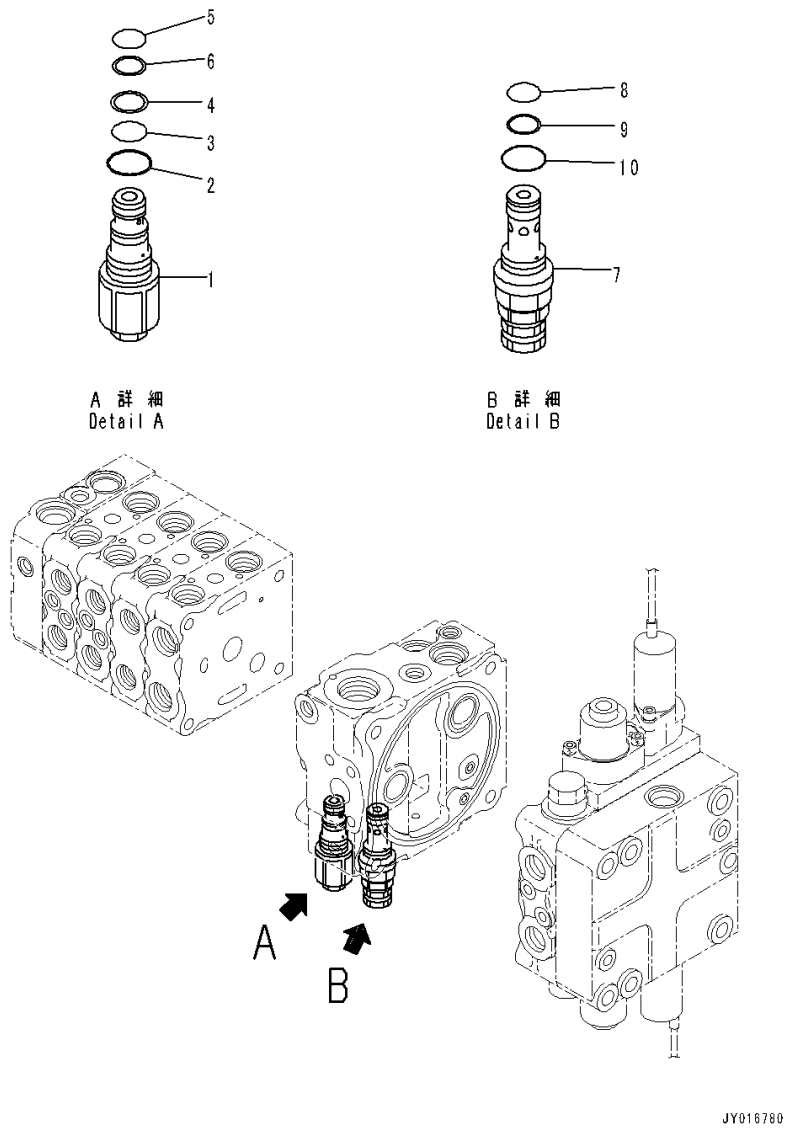

Index	Code	Part Number	Description	Qty	Serial Number
		Note: This list covers following specifications.			
		Power Angle Power Tilt Dozer, Inside Frame, Accumulator, PPC Piping, 3D Machine Control Plug and Play			
		Power Angle Power Tilt Dozer, Inside Frame, Rear 1-attachment, Accumulator, PPC Piping, 3D Machine Control Plug and Play			
		Power Angle Power Tilt Dozer, Inside Frame, Accumulator, PPC Piping			
		Power Angle Power Tilt Dozer, Inside Frame, Rear 1-attachment, Accumulator, PPC Piping			
		723-25-11200	Valve, Control	1	1001-
1		723-20-70600	• Valve Assembly	1	1001-
2		07002-12434	• • O-ring	1	1001-
3		07000-12016	• • O-ring	1	1001-
4		07001-02016	• • Ring, Back-up	1	1001-
5		07000-12014	• • O-ring	1	1001-
6		07001-02014	• • Ring, Back-up	1	1001-
7		723-20-63100	• Valve, Relief	1	1001-
8		700-22-11410	• • O-ring	1	1001-
9		700-80-64220	• • Ring, Back-up	1	1001-
10		07002-12034	• • O-ring	1	1001-

FIG. M2210-007011 Fender (Inner Parts, Control Valve) (10/12)

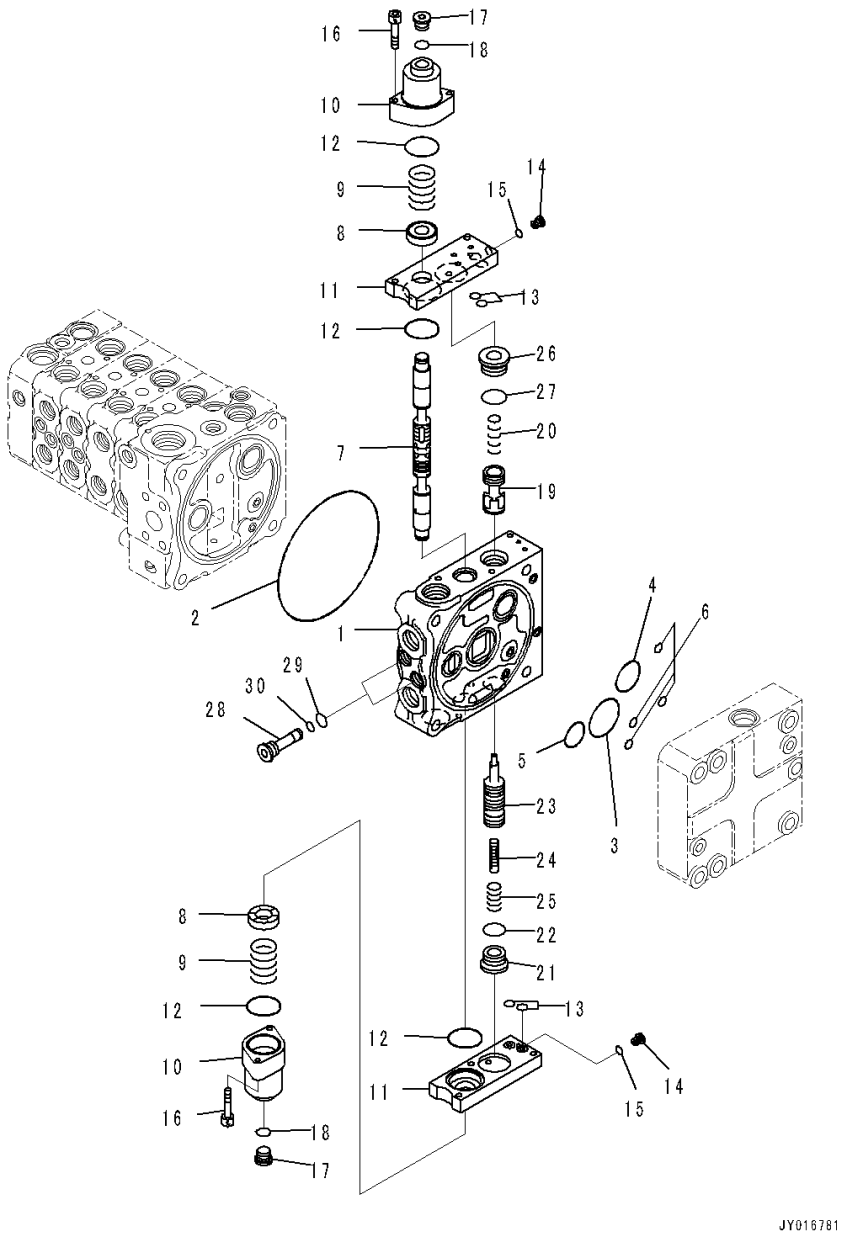

Index	Code	Part Number	Description	Qty	Serial Number
		Note: This list covers following specifications.			
			Power Angle Power Tilt Dozer, Inside Frame, Accumulator, PPC Piping, 3D Machine Control Plug and Play		
			Power Angle Power Tilt Dozer, Inside Frame, Rear 1-attachment, Accumulator, PPC Piping, 3D Machine Control Plug and Play		
			Power Angle Power Tilt Dozer, Inside Frame, Accumulator, PPC Piping		
			Power Angle Power Tilt Dozer, Inside Frame, Rear 1-attachment, Accumulator, PPC Piping		
		723-25-11200	Valve, Control	1	1001-
	C1		• Body Group	1	1001-
1	C1		• • Valve Body	1	1001-
2		144-14-54610	• • O-ring	1	1001-
3		723-56-31720	• • O-ring	1	1001-
4		723-56-31730	• • O-ring	1	1001-
5		702-75-11520	• • O-ring	1	1001-
6		07000-11008	• • O-ring	4	1001-
7	C1		• • Spool	1	1001-
8		723-56-31211	• • Retainer	2	1001-
9		723-36-14120	• • Spring	2	1001-
10		723-56-31510	• • Case	2	1001-
11		723-56-32820	• • Plate	2	1001-
12		702-21-55450	• • O-ring	4	1001-
13		07000-11009	• • O-ring	4	1001-
14		723-11-27280	• • Plug	2	1001-
15		07002-10823	• • O-ring	2	1001-
16		01252-60650	• • Bolt, Hexagon Socket Head	4	1001-
17		702-21-55620	• • Plug	2	1001-
18		07002-11423	• • O-ring	2	1001-
19	C1		• • Valve	1	1001-
20		723-56-41710	• • Spring	1	1001-
21		723-26-15230	• • Plug	1	1001-
22		07002-12434	• • O-ring	1	1001-
23	C1		• • Valve	1	1001-
24	C1		• • Piston	1	1001-
25		723-56-41730	• • Spring	1	1001-
26		723-56-41970	• • Plug	1	1001-
27		07000-13024	• • O-ring	1	1001-
28		723-56-31640	• • Plug	2	1001-

FIG. M2210-007011 Fender (Inner Parts, Control Valve) (10/12)

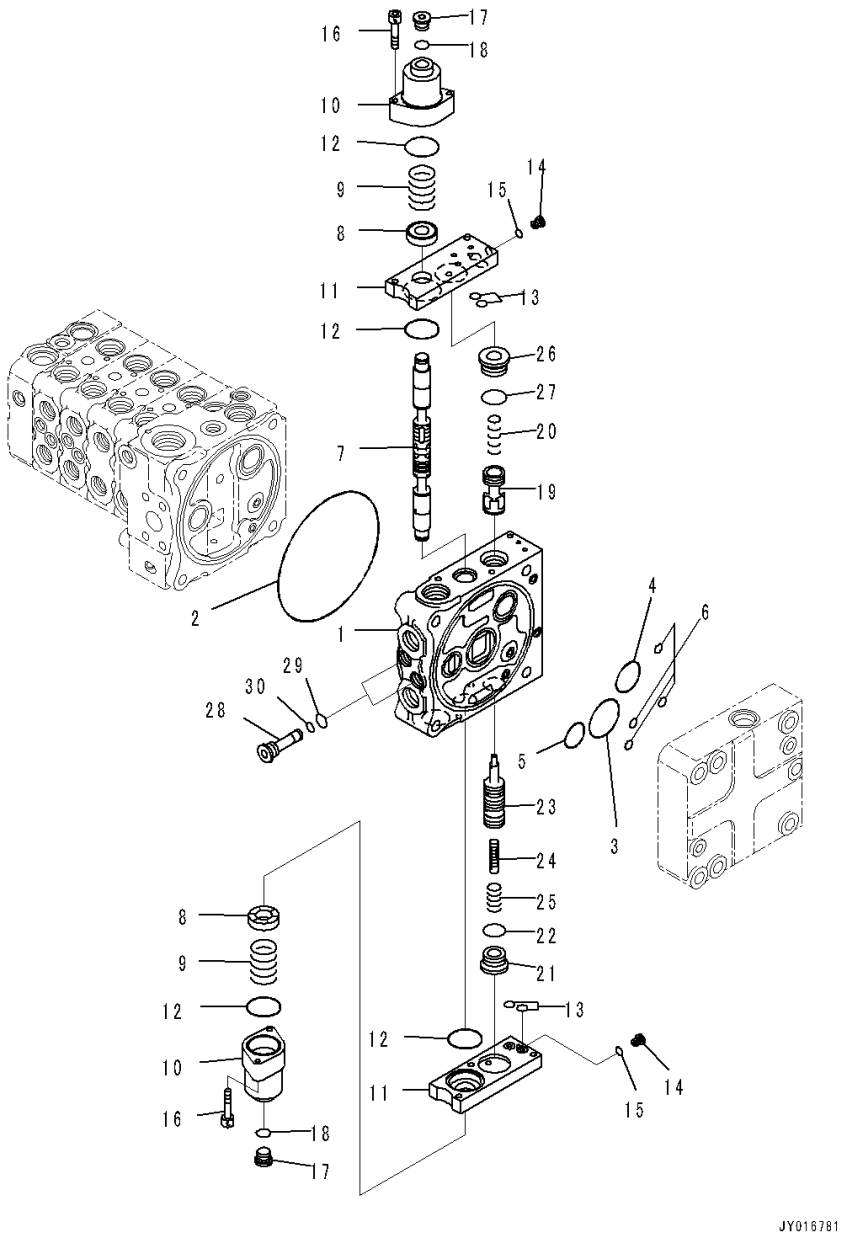

Index	Code	Part Number	Description	Qty	Serial Number
29		07002-11623	• • O-ring	2	1001-
30		07000-11008	• • O-ring	2	1001-

FIG. M2210-007012 Fender (Inner Parts, Control Valve) (11/12)

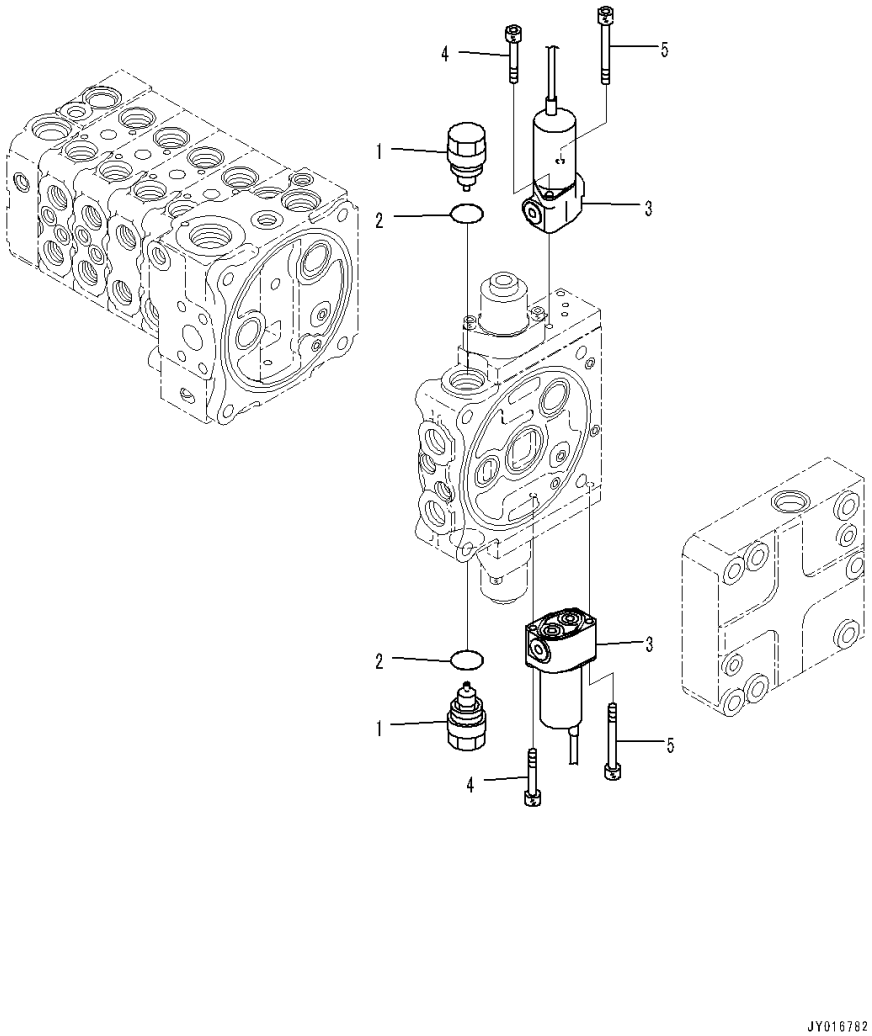

Index	Code	Part Number	Description	Qty	Serial Number
		Note: This list covers following specifications.			
		Power Angle Power Tilt Dozer, Inside Frame, Accumulator, PPC Piping, 3D Machine Control Plug and Play			
		Power Angle Power Tilt Dozer, Inside Frame, Rear 1-attachment, Accumulator, PPC Piping, 3D Machine Control Plug and Play			
		Power Angle Power Tilt Dozer, Inside Frame, Accumulator, PPC Piping			
		Power Angle Power Tilt Dozer, Inside Frame, Rear 1-attachment, Accumulator, PPC Piping			
		723-25-11200	Valve, Control	1	1001-
	C1		• Body Group	1	1001-
1		723-40-85100	• • Valve Assembly, Suction	2	1001-
2		709-25-11390	• • • O-ring	1	1001-
3		702-21-07610	• • Valve, Solenoid	2	1001-
4		01252-60645	• • Bolt, Hexagon Socket Head	2	1001-
5		702-16-55270	• • Bolt	2	1001-

FIG. M2210-007013 Fender (Inner Parts, Control Valve) (12/12)

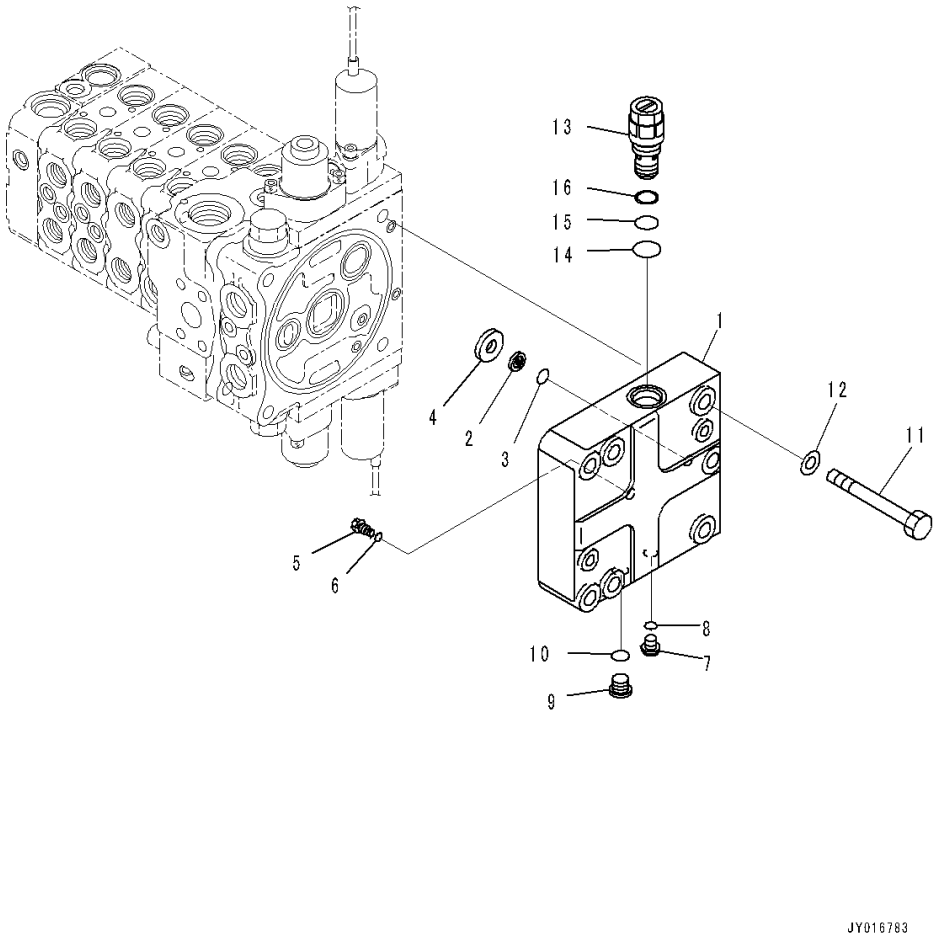

Index	Code	Part Number	Description	Qty	Serial Number
		Note: This list covers following specifications.			
		Power Angle Power Tilt Dozer, Inside Frame, Accumulator, PPC Piping, 3D Machine Control Plug and Play			
		Power Angle Power Tilt Dozer, Inside Frame, Rear 1-attachment, Accumulator, PPC Piping, 3D Machine Control Plug and Play			
		Power Angle Power Tilt Dozer, Inside Frame, Accumulator, PPC Piping			
		Power Angle Power Tilt Dozer, Inside Frame, Rear 1-attachment, Accumulator, PPC Piping			
		723-25-11200	Valve, Control	1	1001-
1	C1		• Cover	1	1001-
2		702-21-53120	• Filter	1	1001-
3		702-21-55420	• O-ring	1	1001-
4	C1		• Seat	1	1001-
5		723-56-33960	• Orifice	1	1001-
6		07002-10823	• O-ring	1	1001-
7		708-8E-16160	• Plug	2	1001-
8		07002-11023	• O-ring	2	1001-
9		702-21-55620	• Plug	1	1001-
10		07002-11423	• O-ring	1	1001-
11		01011-81225	• Bolt	4	1001-
12		01643-31232	• Washer	4	1001-
13		723-60-21102	• Valve, Relief	1	1001-
14		07002-02434	• • O-ring	1	1001-
15		07000-12016	• • O-ring	1	1001-
16		07001-02016	• • Ring, Back-up	1	1001-

FIG. M2210-007015 Fender (PPC Valve Piping)

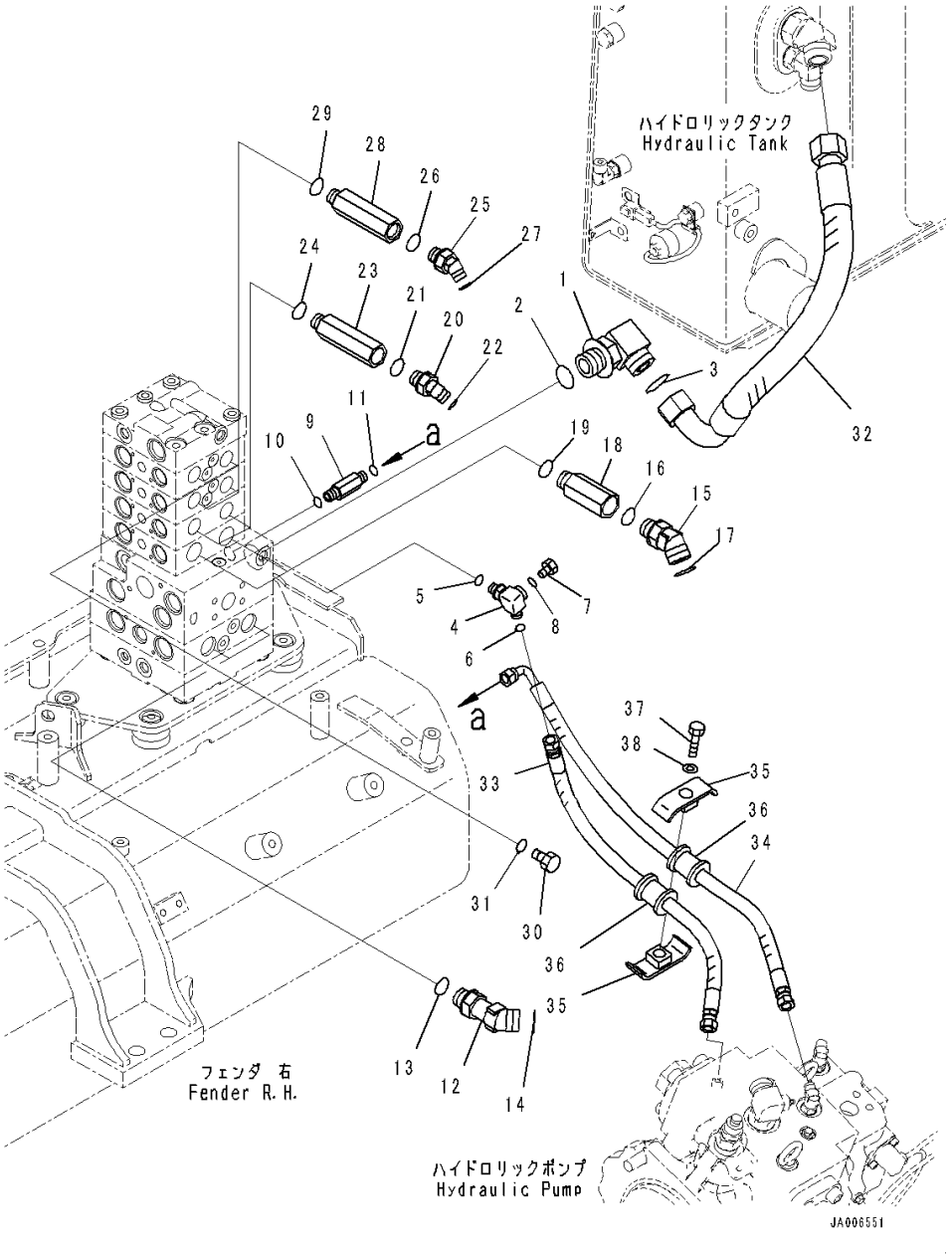

Index	Code	Part Number	Description	Qty	Serial Number
		Note: This list covers following specifications. Power Angle Power Tilt Dozer, Inside Frame, Accumulator, PPC Piping, 3D Machine Control Plug and Play Power Angle Power Tilt Dozer, Inside Frame, Accumulator, PPC Piping			
1		21W-62-42640	Elbow	1	1001-
2		07002-13334	O-ring	1	1001-
3		207-62-64740	O-ring	1	1001-
4		14X-62-54870	Tee	1	1001-
5		07002-11423	O-ring	1	1001-
6		02896-11008	O-ring	1	1001-
7		07040-11007	Plug	1	1001-
8		07002-11023	O-ring	1	1001-
9		11Y-62-12230	Union	1	1001-
10		07002-11423	O-ring	1	1001-
11		02896-11008	O-ring	1	1001-
12		11Y-62-36160	Elbow	2	1001-
13		07002-62434	O-ring	2	1001-
14		02896-61018	O-ring	2	1001-
15		02783-10628	Elbow	2	1001-
16		07002-12434	O-ring	2	1001-
17		02896-11018	O-ring	2	1001-
18		20T-62-81790	Joint	2	1001-
19		07002-12434	O-ring	2	1001-
20		02783-10315	Elbow	2	1001-
21		07002-12034	O-ring	2	1001-
22		02896-11009	O-ring	2	1001-
23		14X-62-52931	Joint	2	1001-
24		07002-12034	O-ring	2	1001-
25		02783-10422	Elbow	2	1001-
26		07002-12034	O-ring	2	1001-
27		02896-11012	O-ring	2	1001-
28		14X-62-52931	Joint	2	1001-
29		07002-12034	O-ring	2	1001-
30		07040-12012	Plug	2	1001-
31		07002-12034	O-ring	2	1001-
32		14X-62-52940	Hose	1	1001-
33		14X-62-52391	Hose	1	1001-
34		14X-62-52541	Hose	1	1001-
35		22P-62-13540	Clamp	2	1001-

FIG. M2210-007015 Fender (PPC Valve Piping)

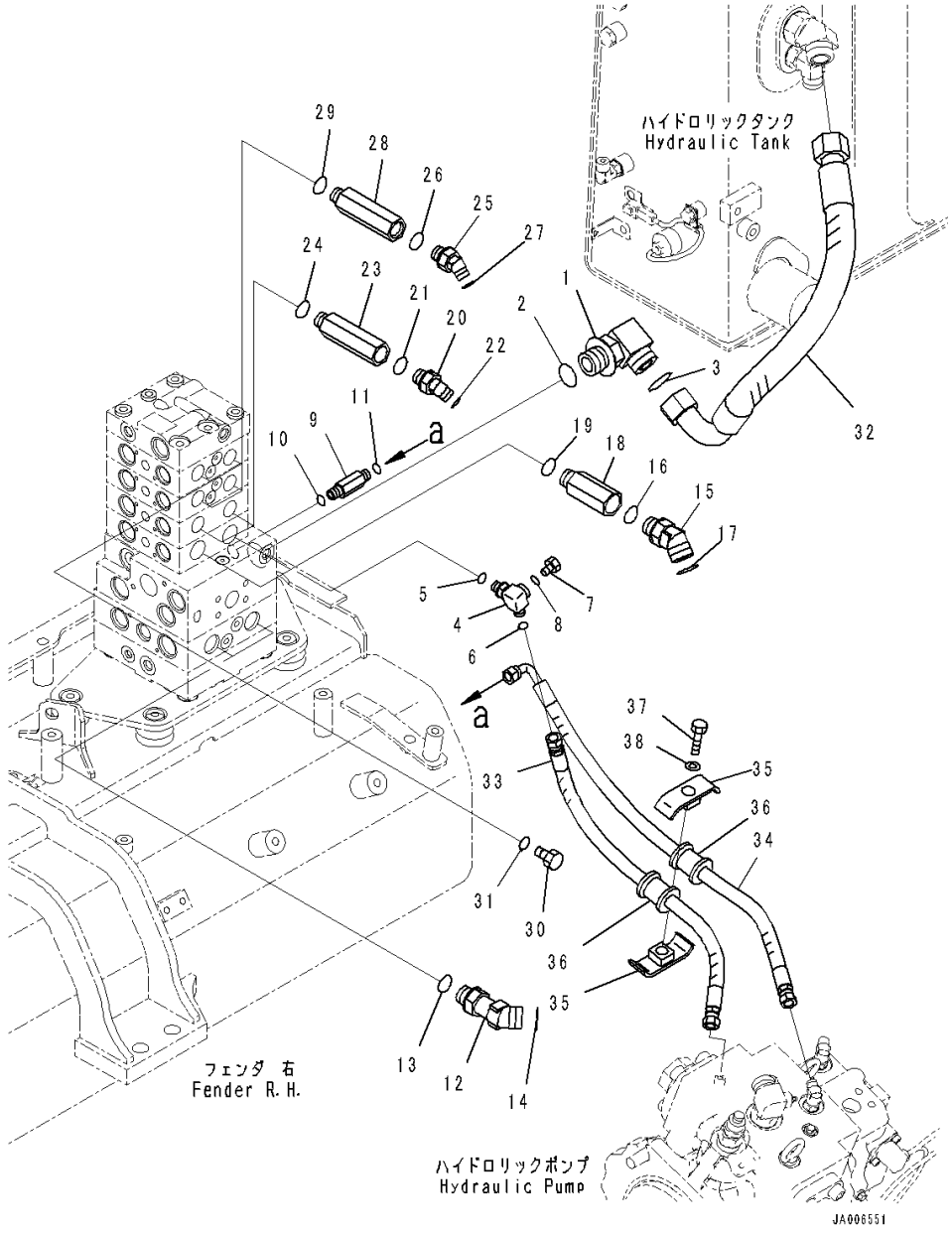

Index	Code	Part Number	Description	Qty	Serial Number
36		07095-00314	Cushion	2	1001-
37		01010-81260	Bolt	1	1001-
38		01643-31232	Washer	1	1001-

FIG. M2210-007016 Fender (PPC Lock Solenoid Valve With Accumulator)

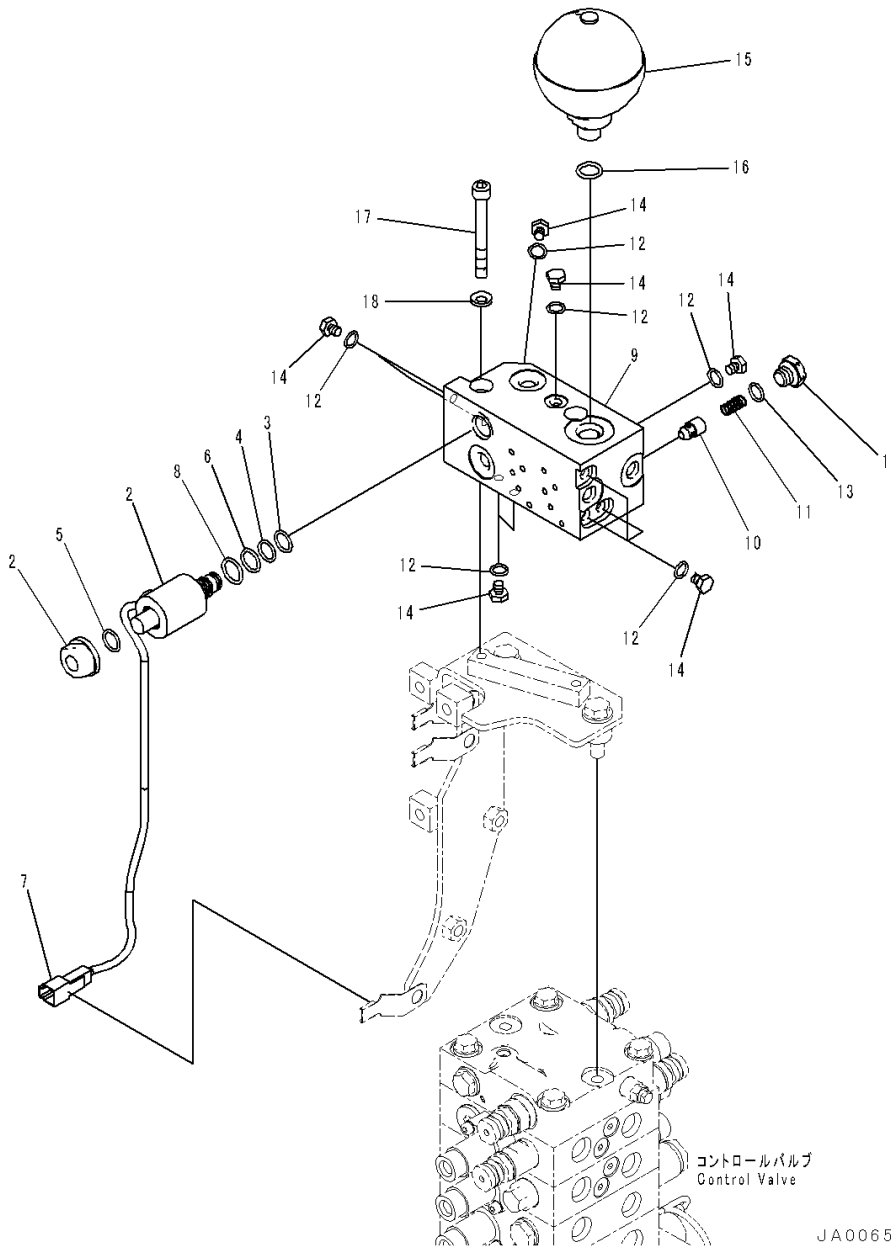

Index	Code	Part Number	Description	Qty	Serial Number
		Note: This list covers following specifications.			
		Power Angle Power Tilt Dozer, Inside Frame, Accumulator, PPC Piping, 3D Machine Control Plug and Play			
		Power Angle Power Tilt Dozer, Inside Frame, Rear 1-attachment, Accumulator, PPC Piping, 3D Machine Control Plug and Play			
		Power Angle Power Tilt Dozer, Inside Frame, Accumulator, PPC Piping			
		Power Angle Power Tilt Dozer, Inside Frame, Rear 1-attachment, Accumulator, PPC Piping			
		14X-62-65701	Block Assembly	1	1001-
1		103-49-14280	• Plug	1	1001-
2		11Y-60-11530	• Valve, Solenoid	1	1001-
3		07000-02012	• • O-ring	1	1001-
4		07000-02014	• • O-ring	1	1001-
5		07000-12016	• • O-ring	1	1001-
6		07000-02018	• • O-ring	1	1001-
7	C1		• • Connector	1	1001-
8		203-60-62190	• • O-ring	1	1001-
9		14X-62-65711	• Block	1	1001-
10		205-60-51390	• Poppet	1	1001-
11		722-12-12063	• Spring	1	1001-
12		07002-10823	• O-ring	10	1001-
13		07002-11623	• O-ring	1	1001-
14		07040-10807	• Plug	10	1001-
15		22U-60-21330	Accumulator	1	1001-
16		07002-12034	O-ring	1	1001-
17		01252-A1085	Bolt, Hexagon Socket Head	2	1001-
18		01643-51032	Washer	2	1001-

FIG. M2210-007017 Fender (Solenoid Valve)

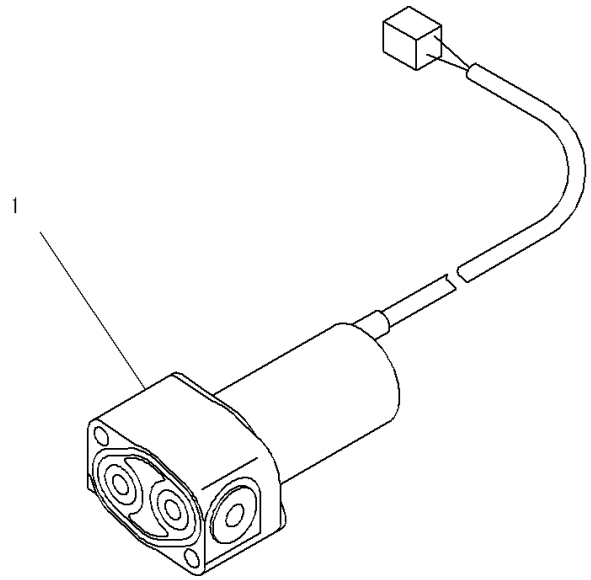

Index	Code	Part Number	Description	Qty	Serial Number
		Note: This list covers following specifications. Power Angle Power Tilt Dozer, Inside Frame, Accumulator, PPC Piping, 3D Machine Control Plug and Play Power Angle Power Tilt Dozer, Inside Frame, Rear 1-attachment, Accumulator, PPC Piping, 3D Machine Control Plug and Play Power Angle Power Tilt Dozer, Inside Frame, Accumulator, PPC Piping Power Angle Power Tilt Dozer, Inside Frame, Rear 1-attachment, Accumulator, PPC Piping			
1		702-21-07610	Valve, Solenoid	2	1001-

FIG. M2210-007018 Fender (PPC Valve Mounting)

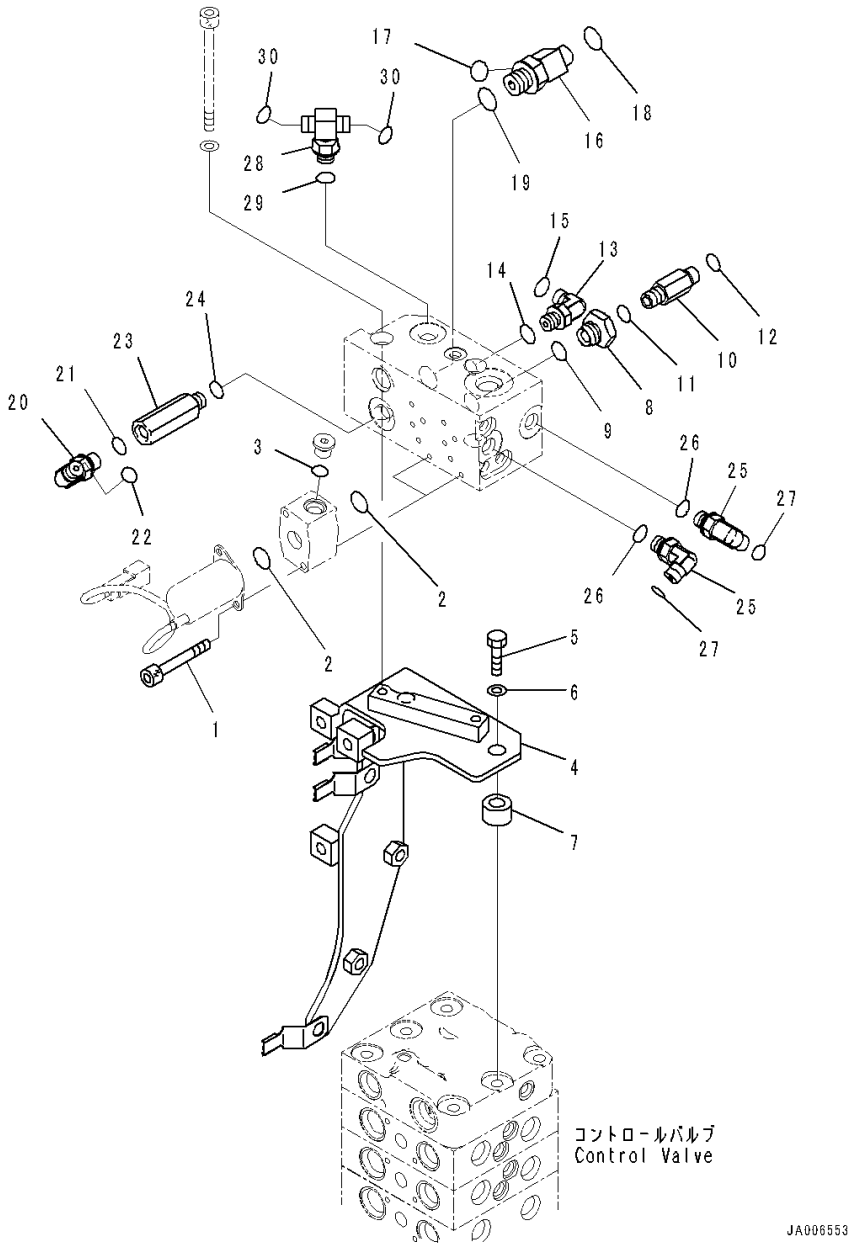

Index	Code	Part Number	Description	Qty	Serial Number
		Note: This list covers following specifications. Power Angle Power Tilt Dozer, Inside Frame, Accumulator, PPC Piping, 3D Machine Control Plug and Play Power Angle Power Tilt Dozer, Inside Frame, Rear 1-attachment, Accumulator, PPC Piping, 3D Machine Control Plug and Play			
1		203-60-62220	Bolt	4	1001-
2		700-22-11410	O-ring	4	1001-
3		702-21-39450	O-ring	2	1001-
4		14X-62-65721	Bracket	1	1001-
5		01010-81245	Bolt	2	1001-
6		01643-31232	Washer	2	1001-
7		14X-62-52971	Spacer	2	1001-
8		20Y-62-21940	Filter Assembly	1	1001-
9		07002-12034	O-ring	1	1001-
10		20U-62-41890	Nipple	1	1001-
11		07002-11423	O-ring	1	1001-
12		02896-11008	O-ring	1	1001-
13		02782-10210	Elbow	1	1001-
14		07002-11423	O-ring	1	1001-
15		02896-11008	O-ring	1	1001-
16		20K-62-33690	Tee	1	1001-
17		02896-11008	• O-ring	1	1001-
18		02896-11009	• O-ring	1	1001-
19		07002-12034	O-ring	1	1001-
20		02782-10210	Elbow	1	1001-
21		07002-11423	O-ring	1	1001-
22		02896-11008	O-ring	1	1001-
23		207-62-62460	Adapter	1	1001-
24		07002-11423	O-ring	1	1001-
25		02782-10210	Elbow	2	1001-
26		07002-11423	O-ring	2	1001-
27		02896-11008	O-ring	2	1001-
28		22L-62-21150	Tee	1	1001-
29		07002-11423	O-ring	1	1001-
30		02896-11008	O-ring	2	1001-

FIG. M2210-007019 Fender (Control Valve Steering Piping)

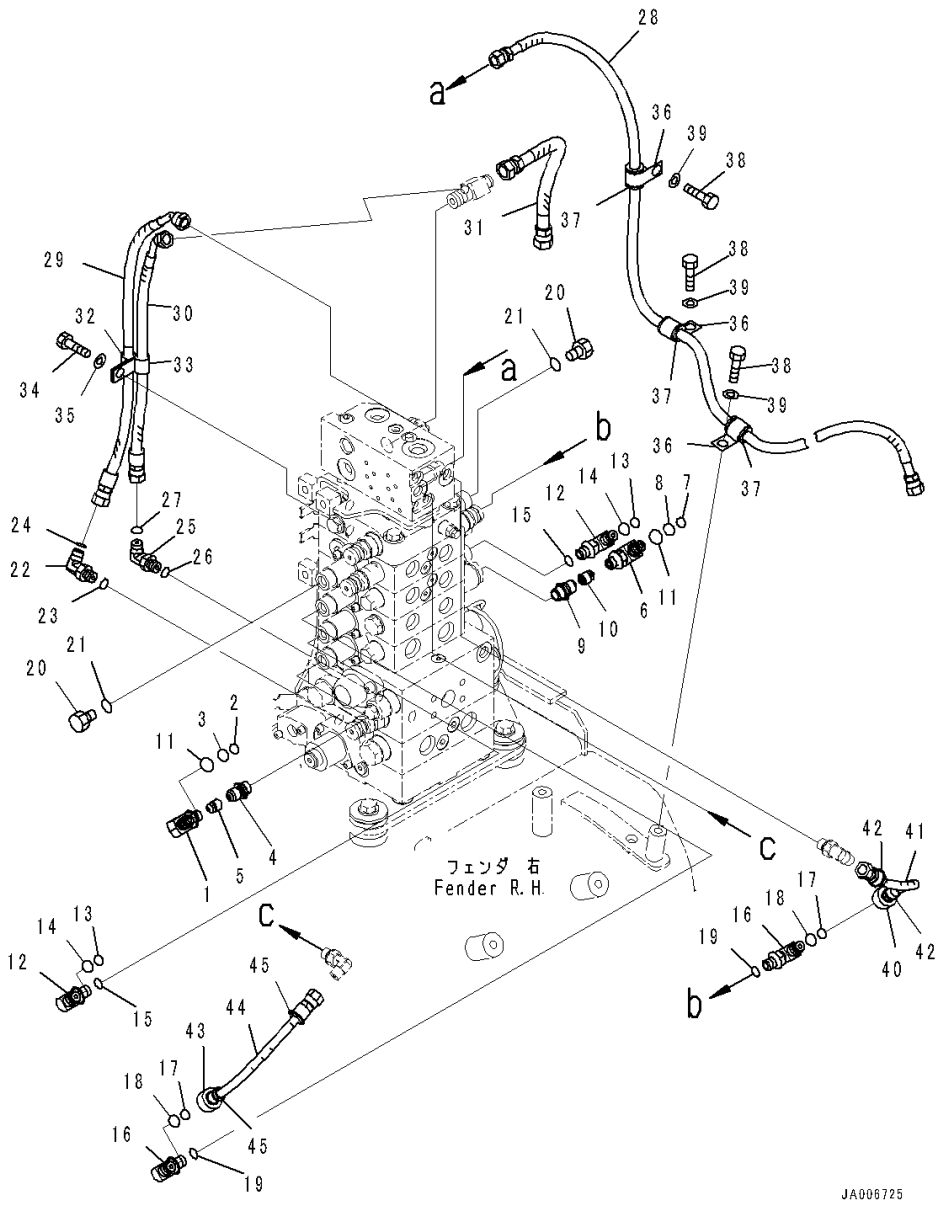

Index	Code	Part Number	Description	Qty	Serial Number
		Note: This list covers following specifications.			
		Power Angle Power Tilt Dozer, Inside Frame, Accumulator, PPC Piping, 3D Machine Control Plug and Play			
		Power Angle Power Tilt Dozer, Inside Frame, Accumulator, PPC Piping			
		14X-62-55560	Valve Assembly	1	1001-
1		14X-62-54940	• Elbow	1	1001-
2		201-60-11390	• • O-ring	1	1001-
3		20Y-62-19560	• • O-ring	1	1001-
4		21W-62-44740	• Plug	1	1001-
5		21W-973-3420	• Poppet	1	1001-
		14X-62-55560	Valve Assembly	1	1001-
6		14X-62-54940	• Elbow	1	1001-
7		201-60-11390	• • O-ring	1	1001-
8		20Y-62-19560	• • O-ring	1	1001-
9		21W-62-44740	• Plug	1	1001-
10		21W-973-3420	• Poppet	1	1001-
11		07002-11423	O-ring	2	1001-
12		14X-62-53541	Elbow	2	1001-
13		201-60-11390	• O-ring	1	1001-
14		20Y-62-19560	• O-ring	1	1001-
15		07002-11423	O-ring	2	1001-
16		14X-62-54950	Elbow	2	1001-
17		201-60-11390	• O-ring	1	1001-
18		20Y-62-19560	• O-ring	1	1001-
19		07002-11423	O-ring	2	1001-
20		07040-11409	Plug	2	1001-
21		07002-11423	O-ring	2	1001-
22		02782-10210	Elbow	1	1001-
23		07002-11423	O-ring	1	1001-
24		02896-11008	O-ring	1	1001-
25		02782-10210	Elbow	1	1001-
26		07002-11423	O-ring	1	1001-
27		02896-11008	O-ring	1	1001-
28		14X-62-52521	Hose	1	1001-
29		02764-00205	Hose, Face Seal Type	1	1001-
30		02764-00204	Hose, Face Seal Type	1	1001-
31		02762-00303	Hose, Face Seal Type	1	1001-
32		04434-51212	Clip	1	1001-
33		21T-72-23260	Clip	1	1001-

FIG. M2210-007019 Fender (Control Valve Steering Piping)

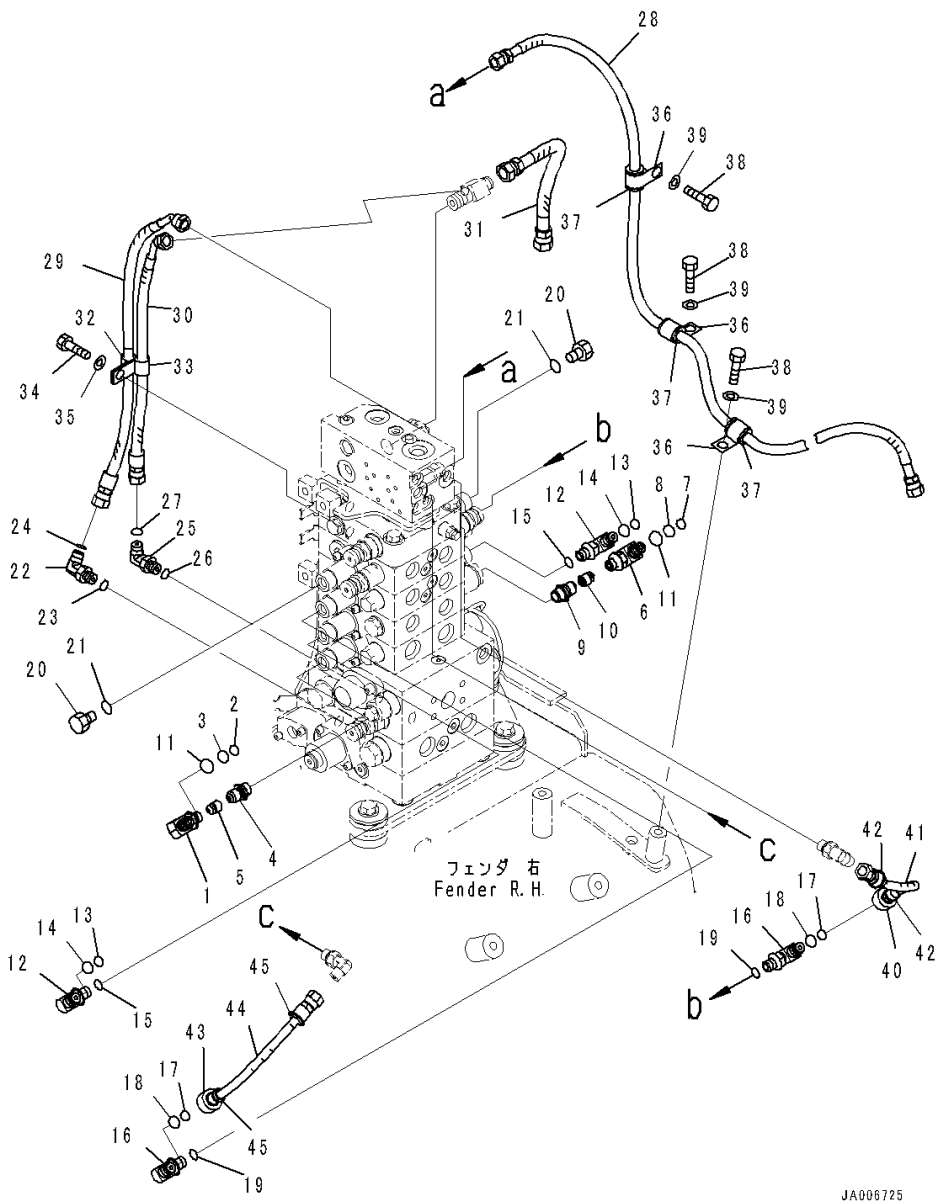

Index	Code	Part Number	Description	Qty	Serial Number
34		01010-81225	Bolt	1	1001-
35		01643-31232	Washer	1	1001-
36		04434-51712	Clip	3	1001-
37		07095-20211	Cushion	3	1001-
38		01010-81220	Bolt	3	1001-
39		01643-31232	Washer	3	1001-
40		14X-62-65741	Hose Assembly	1	1001-
41		14X-62-65751	• Hose	1	1001-
42		20Y-62-22830	• Band, White	2	1001-
43		14X-62-65761	Hose Assembly	1	1001-
44		14X-62-65771	• Hose	1	1001-
45		20Y-62-22820	• Band, Blue	2	1001-

FIG. M2210-007020 Fender (Control Valve Wiring Harness)

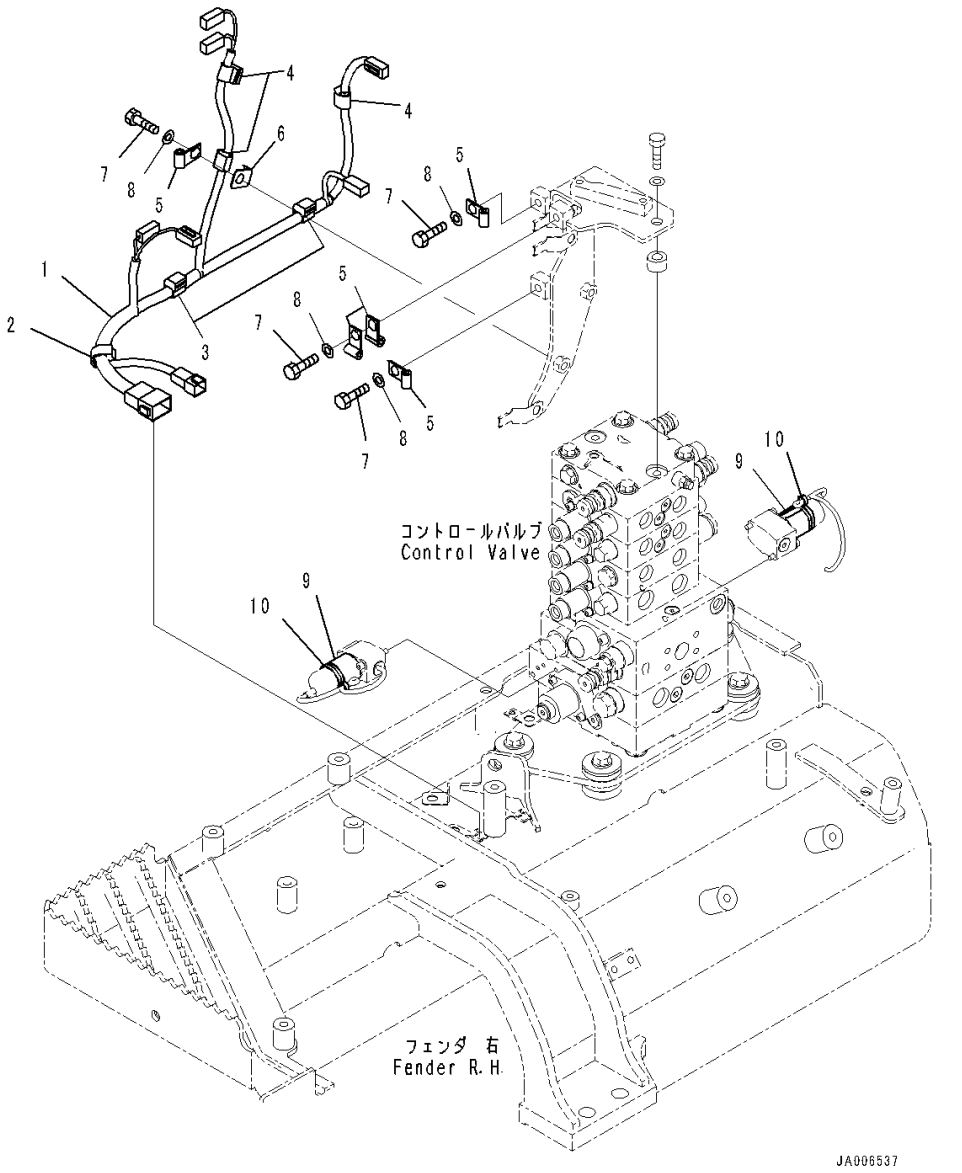

Index	Code	Part Number	Description	Qty	Serial Number
		Note: This list covers following specifications. Power Angle Power Tilt Dozer, Inside Frame, Accumulator, PPC Piping, 3D Machine Control Plug and Play Power Angle Power Tilt Dozer, Inside Frame, Rear 1-attachment, Accumulator, PPC Piping, 3D Machine Control Plug and Play Power Angle Power Tilt Dozer, Inside Frame, Accumulator, PPC Piping Power Angle Power Tilt Dozer, Inside Frame, Rear 1-attachment, Accumulator, PPC Piping		
1		14X-06-62591	Wiring Harness	1	1001-
2		08211-01320	Clip	1	1001-
3		08211-01020	Clip	2	1001-
4		08211-00720	Clip	3	1001-
5		04434-50612	Clip	5	1001-
6		08057-12012	Clip	1	1001-
7		01010-81225	Bolt	4	1001-
8		01643-31232	Washer	4	1001-
9		21W-60-41310	Clip	2	1001-
10		08034-40521	Band	2	1001-

FIG. M2210-007022 Fender (Plug)

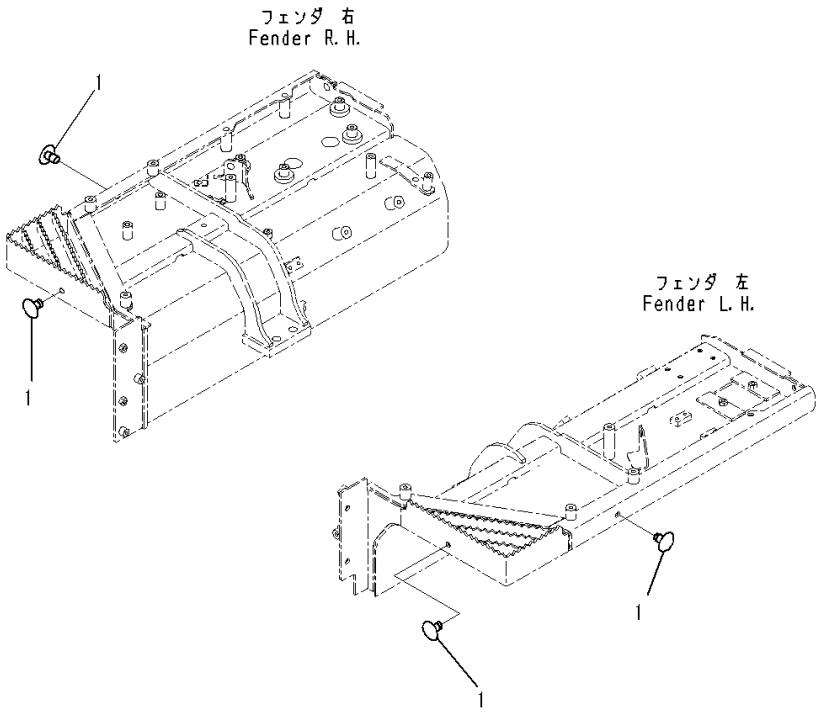

Index	Code	Part Number	Description	Qty	Serial Number
		Note: This list covers following specifications. Power Angle Power Tilt Dozer, Inside Frame, Accumulator, PPC Piping, 3D Machine Control Plug and Play Power Angle Power Tilt Dozer, Inside Frame, Rear 1-attachment, Accumulator, PPC Piping, 3D Machine Control Plug and Play Power Angle Power Tilt Dozer, Inside Frame, Accumulator, PPC Piping Power Angle Power Tilt Dozer, Inside Frame, Rear 1-attachment, Accumulator, PPC Piping			
1		416-54-21710	Plug	4	1001-

FIG. M2210-012015 Fender (PPC Valve Piping)

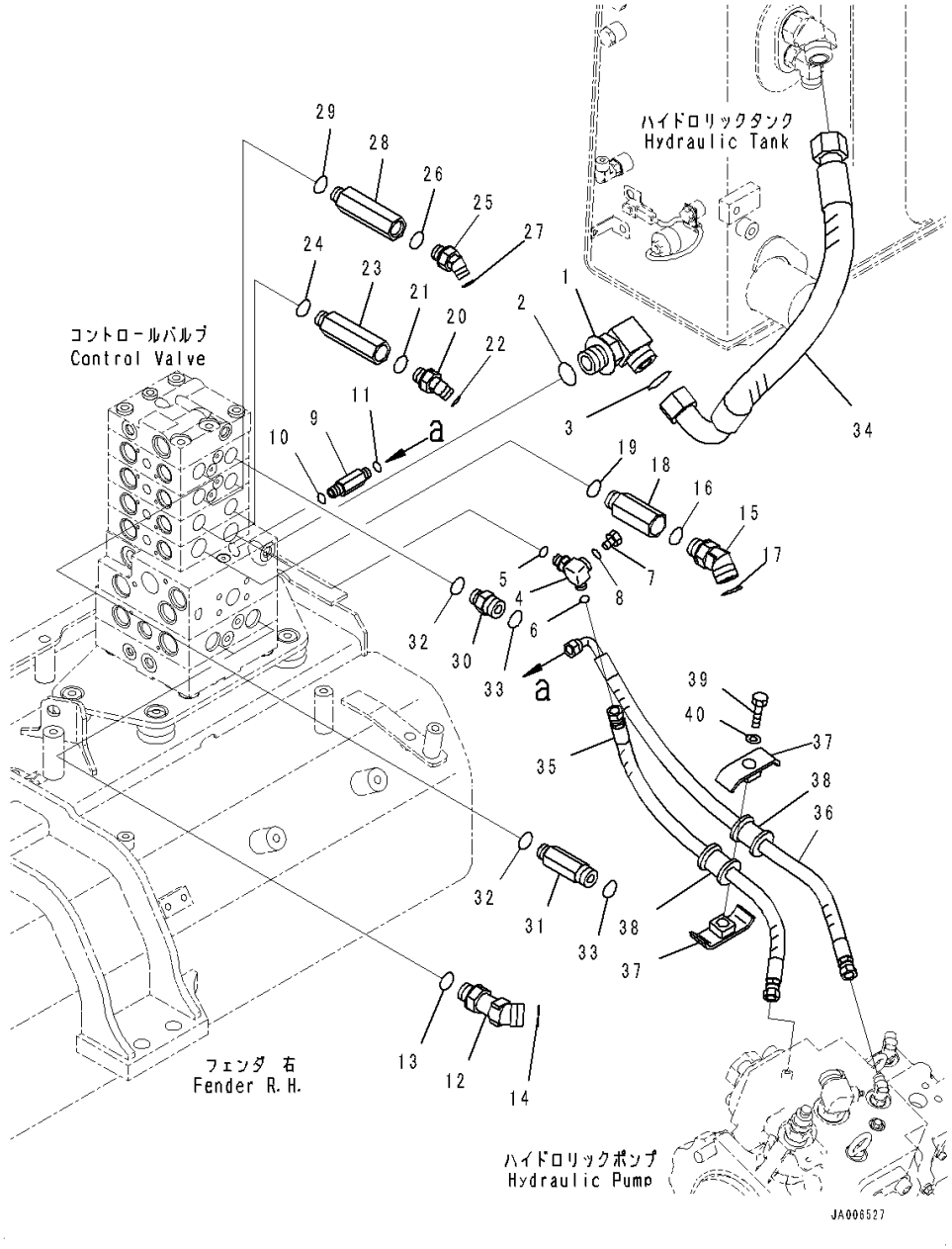

Index	Code	Part Number	Description	Qty	Serial Number
		Note: This list covers following specifications.			
		Power Angle Power Tilt Dozer, Inside Frame, Rear 1-attachment, Accumulator, PPC Piping, 3D Machine Control Plug and Play			
		Power Angle Power Tilt Dozer, Inside Frame, Rear 1-attachment, Accumulator, PPC Piping			
1		21W-62-42640	Elbow	1	1001-
2		07002-13334	O-ring	1	1001-
3		207-62-64740	O-ring	1	1001-
4		14X-62-54870	Tee	1	1001-
5		07002-11423	O-ring	1	1001-
6		02896-11008	O-ring	1	1001-
7		07040-11007	Plug	1	1001-
8		07002-11023	O-ring	1	1001-
9		11Y-62-12230	Union	1	1001-
10		07002-11423	O-ring	1	1001-
11		02896-11008	O-ring	1	1001-
12		11Y-62-36160	Elbow	2	1001-
13		07002-62434	O-ring	2	1001-
14		02896-61018	O-ring	2	1001-
15		02783-10628	Elbow	2	1001-
16		07002-12434	O-ring	2	1001-
17		02896-11018	O-ring	2	1001-
18		20T-62-81790	Joint	2	1001-
19		07002-12434	O-ring	2	1001-
20		02783-10315	Elbow	2	1001-
21		07002-12034	O-ring	2	1001-
22		02896-11009	O-ring	2	1001-
23		14X-62-52931	Joint	2	1001-
24		07002-12034	O-ring	2	1001-
25		02783-10422	Elbow	2	1001-
26		07002-12034	O-ring	2	1001-
27		02896-11012	O-ring	2	1001-
28		14X-62-52931	Joint	2	1001-
29		07002-12034	O-ring	2	1001-
30		02781-00516	Union	1	1001-
31		14X-62-52991	Nipple	1	1001-
32		07002-12034	O-ring	2	1001-
33		02896-11015	O-ring	2	1001-
34		14X-62-52940	Hose	1	1001-

FIG. M2210-012015 Fender (PPC Valve Piping)

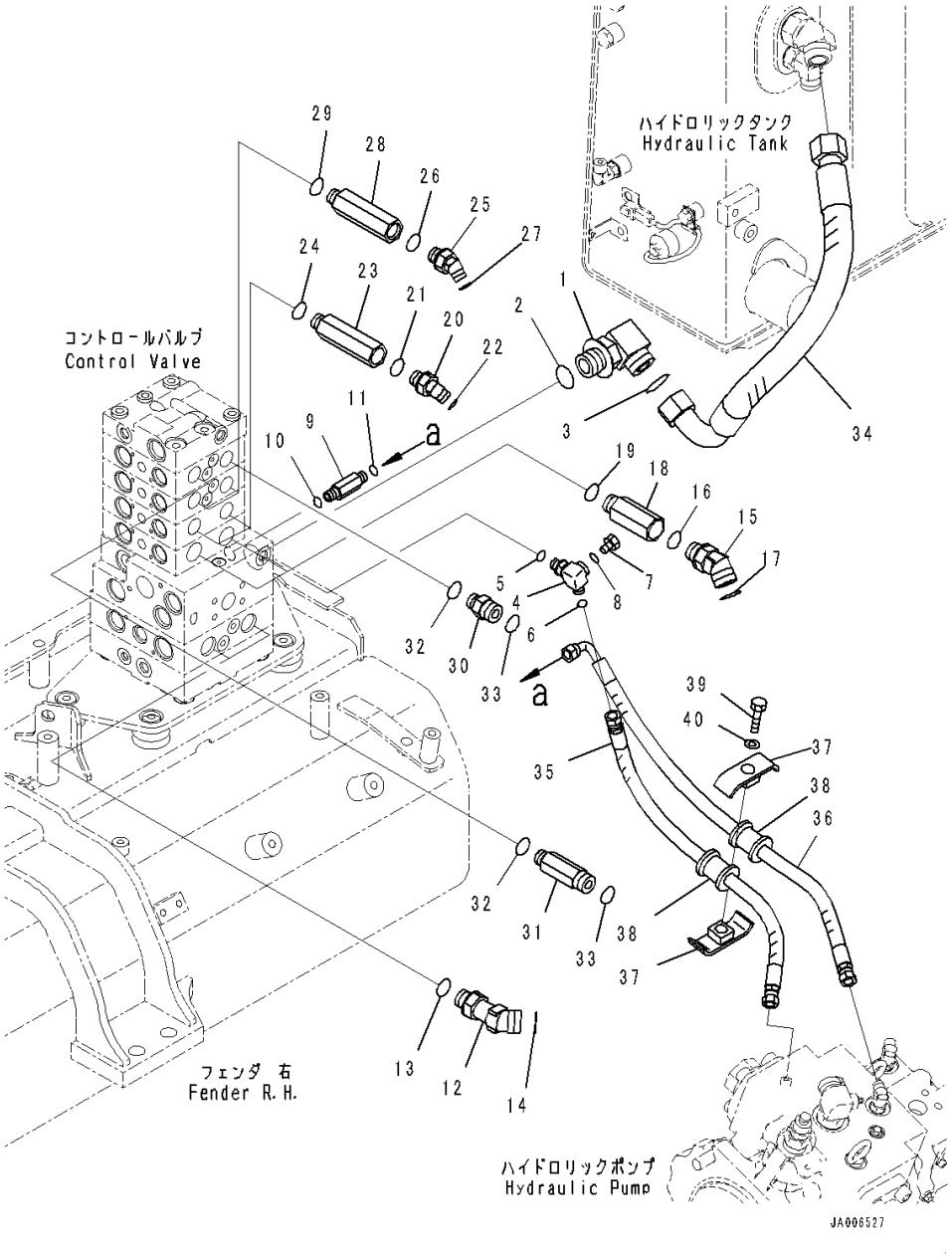

Index	Code	Part Number	Description	Qty	Serial Number
35		14X-62-52391	Hose	1	1001-
36		14X-62-52541	Hose	1	1001-
37		22P-62-13540	Clamp	2	1001-
38		07095-00314	Cushion	2	1001-
39		01010-81260	Bolt	1	1001-
40		01643-31232	Washer	1	1001-

FIG. M2210-012019 Fender (Control Valve Steering Piping)

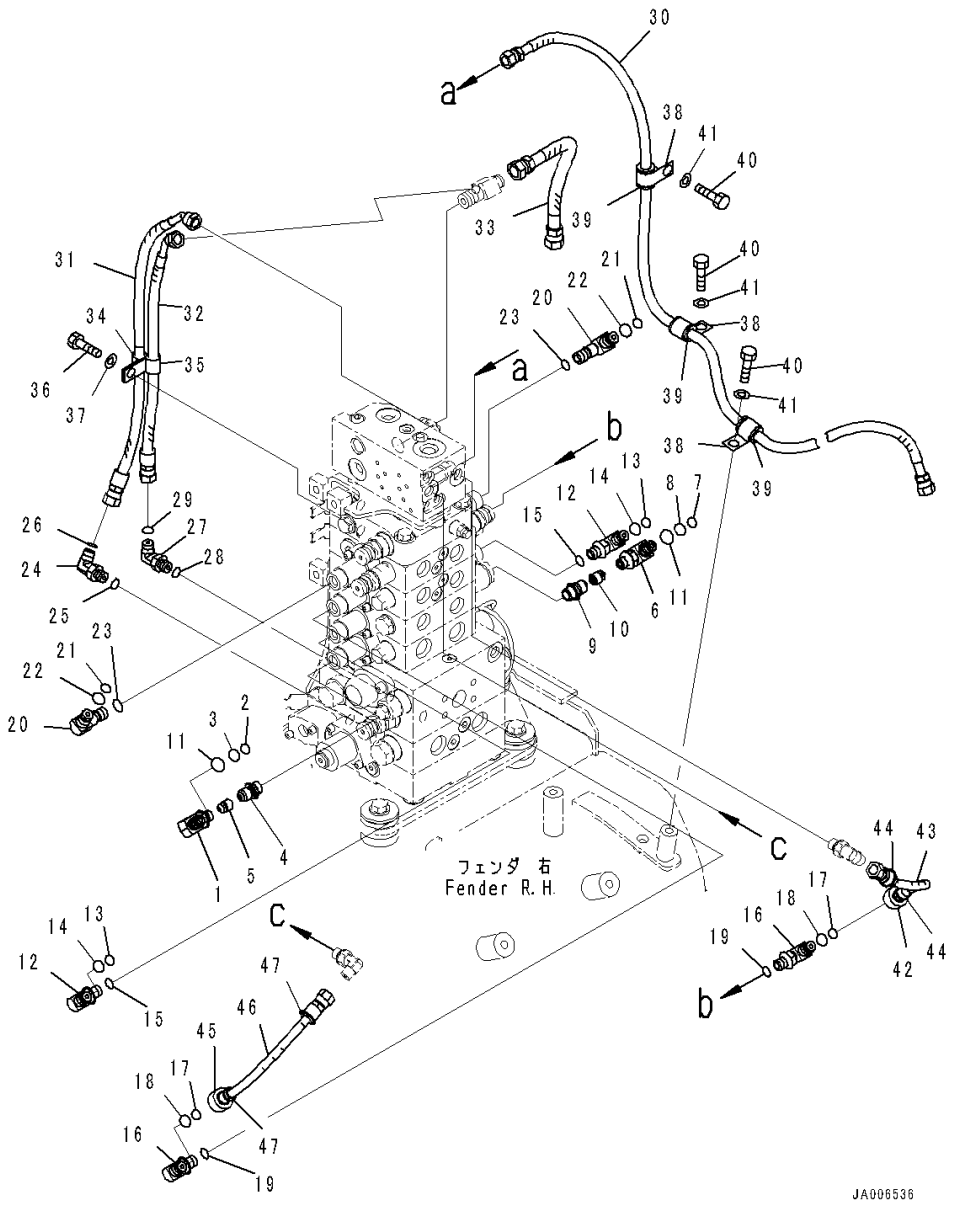

Index	Code	Part Number	Description	Qty	Serial Number
		Note: This list covers following specifications.			
		Power Angle Power Tilt Dozer, Inside Frame, Rear 1-attachment, Accumulator, PPC Piping, 3D Machine Control Plug and Play			
		Power Angle Power Tilt Dozer, Inside Frame, Rear 1-attachment, Accumulator, PPC Piping			
		14X-62-55560	Valve Assembly	1	1001-
1		14X-62-54940	• Elbow	1	1001-
2		201-60-11390	• • O-ring	1	1001-
3		20Y-62-19560	• • O-ring	1	1001-
4		21W-62-44740	• Plug	1	1001-
5		21W-973-3420	• Poppet	1	1001-
		14X-62-55560	Valve Assembly	1	1001-
6		14X-62-54940	• Elbow	1	1001-
7		201-60-11390	• • O-ring	1	1001-
8		20Y-62-19560	• • O-ring	1	1001-
9		21W-62-44740	• Plug	1	1001-
10		21W-973-3420	• Poppet	1	1001-
11		07002-11423	O-ring	2	1001-
12		14X-62-53541	Elbow	2	1001-
13		201-60-11390	• O-ring	1	1001-
14		20Y-62-19560	• O-ring	1	1001-
15		07002-11423	O-ring	2	1001-
16		14X-62-54950	Elbow	2	1001-
17		201-60-11390	• O-ring	1	1001-
18		20Y-62-19560	• O-ring	1	1001-
19		07002-11423	O-ring	2	1001-
20		14X-62-53541	Elbow	2	1001-
21		201-60-11390	• O-ring	1	1001-
22		20Y-62-19560	• O-ring	1	1001-
23		07002-11423	O-ring	2	1001-
24		02782-10210	Elbow	1	1001-
25		07002-11423	O-ring	1	1001-
26		02896-11008	O-ring	1	1001-
27		02782-10210	Elbow	1	1001-
28		07002-11423	O-ring	1	1001-
29		02896-11008	O-ring	1	1001-
30		14X-62-52521	Hose	1	1001-
31		02764-00205	Hose, Face Seal Type	1	1001-
32		02764-00204	Hose, Face Seal Type	1	1001-

FIG. M2210-012019 Fender (Control Valve Steering Piping)

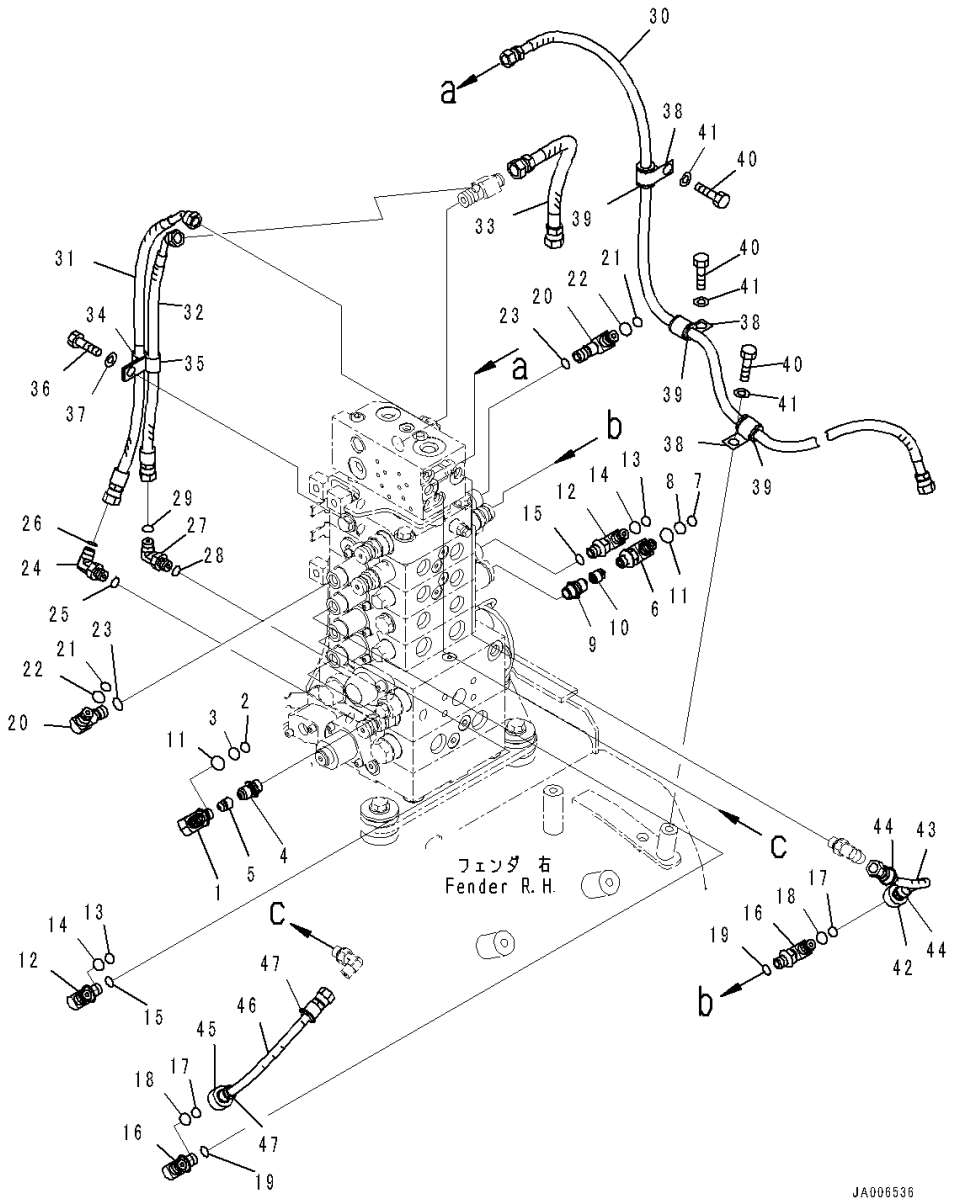

Index	Code	Part Number	Description	Qty	Serial Number
33		02762-00303	Hose, Face Seal Type	1	1001-
34		04434-51212	Clip	1	1001-
35		21T-72-23260	Clip	1	1001-
36		01010-81225	Bolt	1	1001-
37		01643-31232	Washer	1	1001-
38		04434-51712	Clip	3	1001-
39		07095-20211	Cushion	3	1001-
40		01010-81220	Bolt	3	1001-
41		01643-31232	Washer	3	1001-
42		14X-62-65741	Hose Assembly	1	1001-
43		14X-62-65751	• Hose	1	1001-
44		20Y-62-22830	• Band, White	2	1001-
45		14X-62-65761	Hose Assembly	1	1001-
46		14X-62-65771	• Hose	1	1001-
47		20Y-62-22820	• Band, Blue	2	1001-

FIG. M2210-011018 Fender (PPC Valve Mounting)

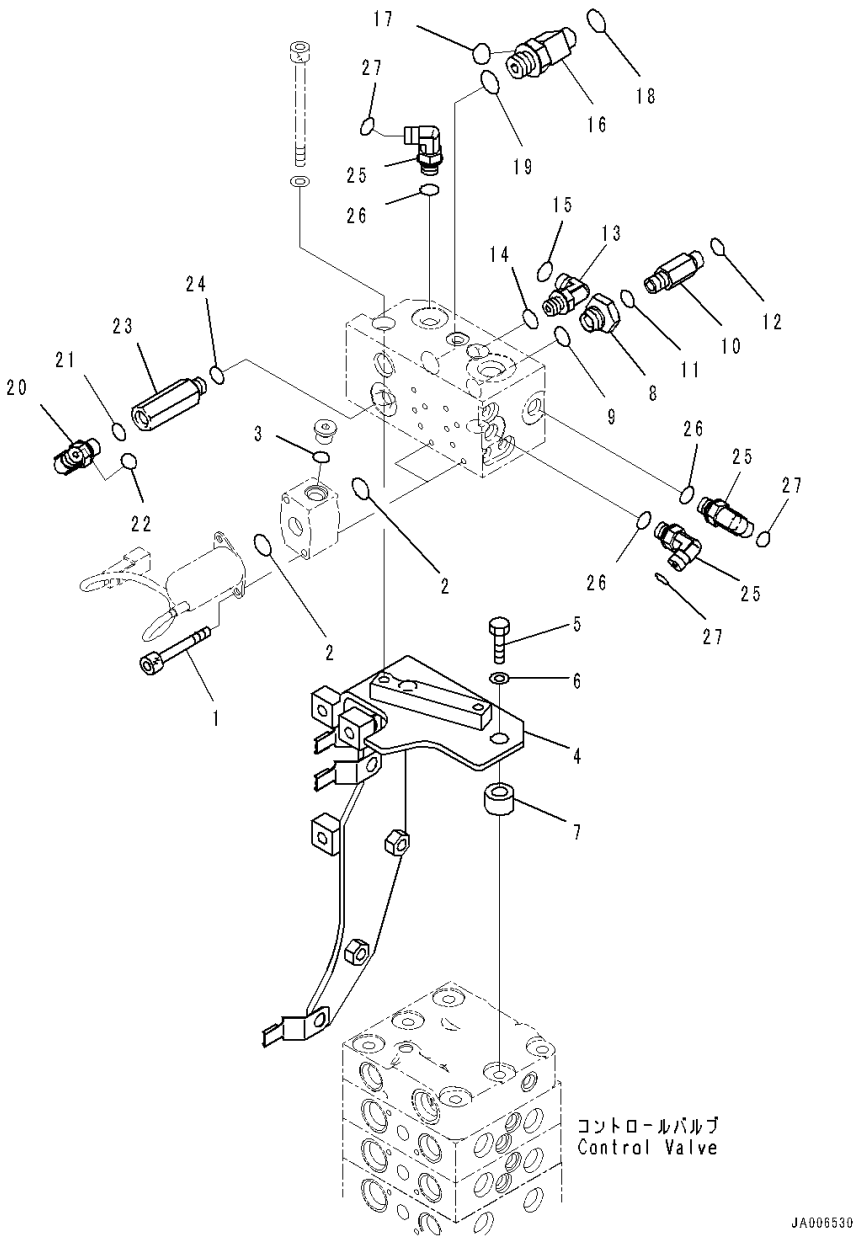

Index	Code	Part Number	Description	Qty	Serial Number
		Note: This list covers following specifications.			
		Power Angle Power Tilt Dozer, Inside Frame, Accumulator, PPC Piping			
		Power Angle Power Tilt Dozer, Inside Frame, Rear 1-attachment, Accumulator, PPC Piping			
1		203-60-62220	Bolt	4	1001-
2		700-22-11410	O-ring	4	1001-
3		702-21-39450	O-ring	2	1001-
4		14X-62-65721	Bracket	1	1001-
5		01010-81245	Bolt	2	1001-
6		01643-31232	Washer	2	1001-
7		14X-62-52971	Spacer	2	1001-
8		20Y-62-21940	Filter Assembly	1	1001-
9		07002-12034	O-ring	1	1001-
10		20U-62-41890	Nipple	1	1001-
11		07002-11423	O-ring	1	1001-
12		02896-11008	O-ring	1	1001-
13		02782-10210	Elbow	1	1001-
14		07002-11423	O-ring	1	1001-
15		02896-11008	O-ring	1	1001-
16		20K-62-33690	Tee	1	1001-
17		02896-11008	• O-ring	1	1001-
18		02896-11009	• O-ring	1	1001-
19		07002-12034	O-ring	1	1001-
20		02782-10210	Elbow	1	1001-
21		07002-11423	O-ring	1	1001-
22		02896-11008	O-ring	1	1001-
23		207-62-62460	Adapter	1	1001-
24		07002-11423	O-ring	1	1001-
25		02782-10210	Elbow	3	1001-
26		07002-11423	O-ring	3	1001-
27		02896-11008	O-ring	3	1001-

FIG. M2210-010016 Fender (PPC Lock Solenoid Valve With Accumulator)

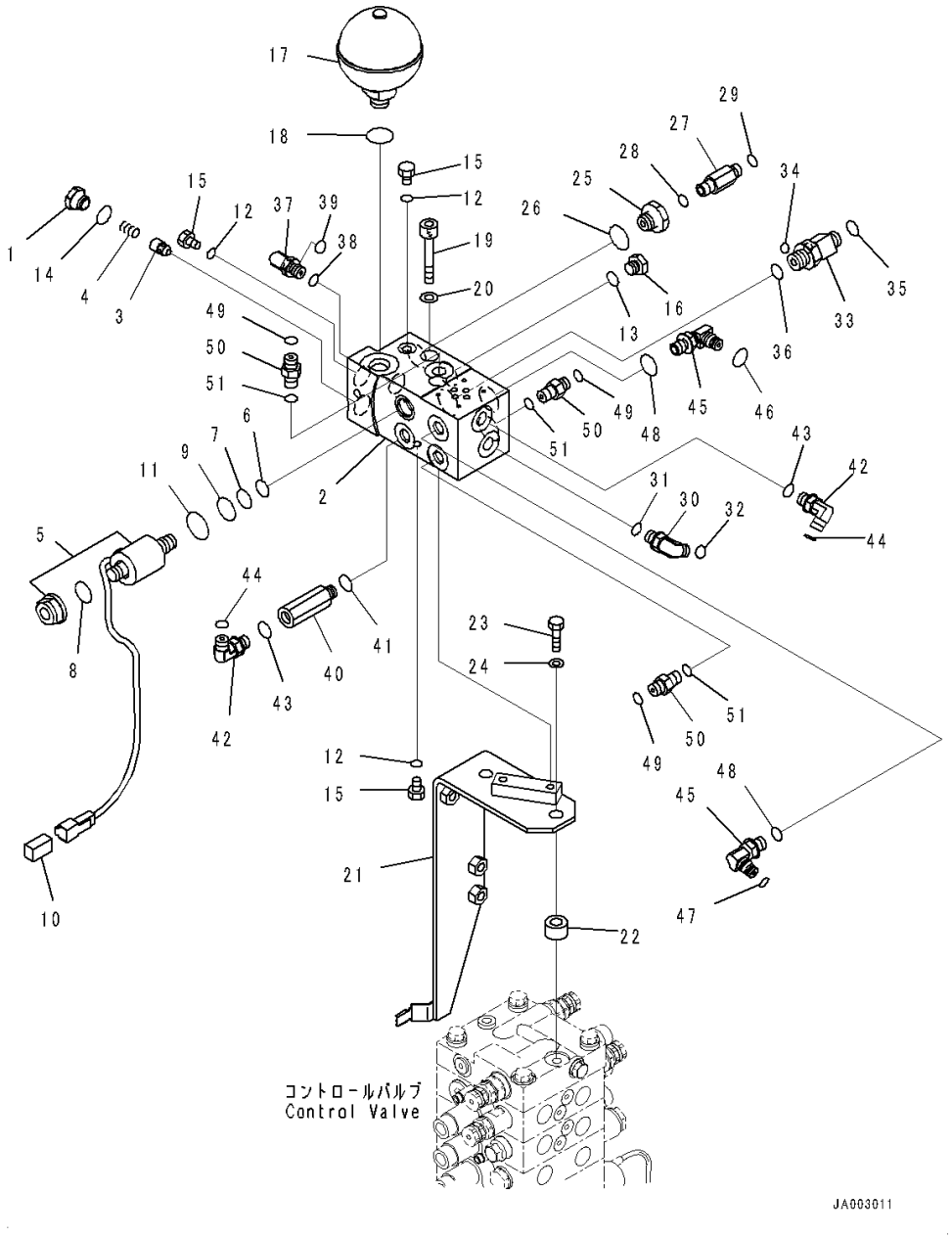

Index	Code	Part Number	Description	Qty	Serial Number
		Note: This list covers following specifications.			
		Power Tilt Pitch Dozer, Rear 1-attachment, Accumulator, PPC Piping			
		Power Tilt Pitch Dozer, Accumulator, PPC Piping			
		14X-62-54521	Block Assembly	1	1001-
1		103-49-14280	• Plug	1	1001-
2		14X-62-54531	• Block	1	1001-
3		205-60-51390	• Poppet	1	1001-
4		722-12-12063	• Spring	1	1001-
5		11Y-60-11530	• Valve, Solenoid	1	1001-
6		07000-02012	• • O-ring	1	1001-
7		07000-02014	• • O-ring	1	1001-
8		07000-12016	• • O-ring	1	1001-
9		07000-02018	• • O-ring	1	1001-
10	C1		• • Connector	1	1001-
11		203-60-62190	• • O-ring	1	1001-
12		07002-10823	• O-ring	4	1001-
13		07002-11423	• O-ring	1	1001-
14		07002-11623	• O-ring	1	1001-
15		07040-10807	• Plug	4	1001-
16		07040-11409	• Plug	1	1001-
17		22U-60-21330	Accumulator	1	1001-
18		07002-12034	O-ring	1	1001-
19		01252-A1085	Bolt, Hexagon Socket Head	2	1001-
20		01643-51032	Washer	2	1001-
21		14X-62-54540	Bracket	1	1001-
22		14X-62-52971	Spacer	2	1001-
23		01010-81245	Bolt	2	1001-
24		01643-31232	Washer	2	1001-
25		20Y-62-21940	Filter Assembly	1	1001-
26		07002-12034	O-ring	1	1001-
27		20U-62-41890	Nipple	1	1001-
28		07002-11423	O-ring	1	1001-
29		02896-11008	O-ring	1	1001-
30		02782-10210	Elbow	1	1001-
31		07002-11423	O-ring	1	1001-
32		02896-11008	O-ring	1	1001-
33		20K-62-33690	Tee	1	1001-
34		02896-11008	• O-ring	1	1001-
35		02896-11009	• O-ring	1	1001-

FIG. M2210-010016 Fender (PPC Lock Solenoid Valve With Accumulator)

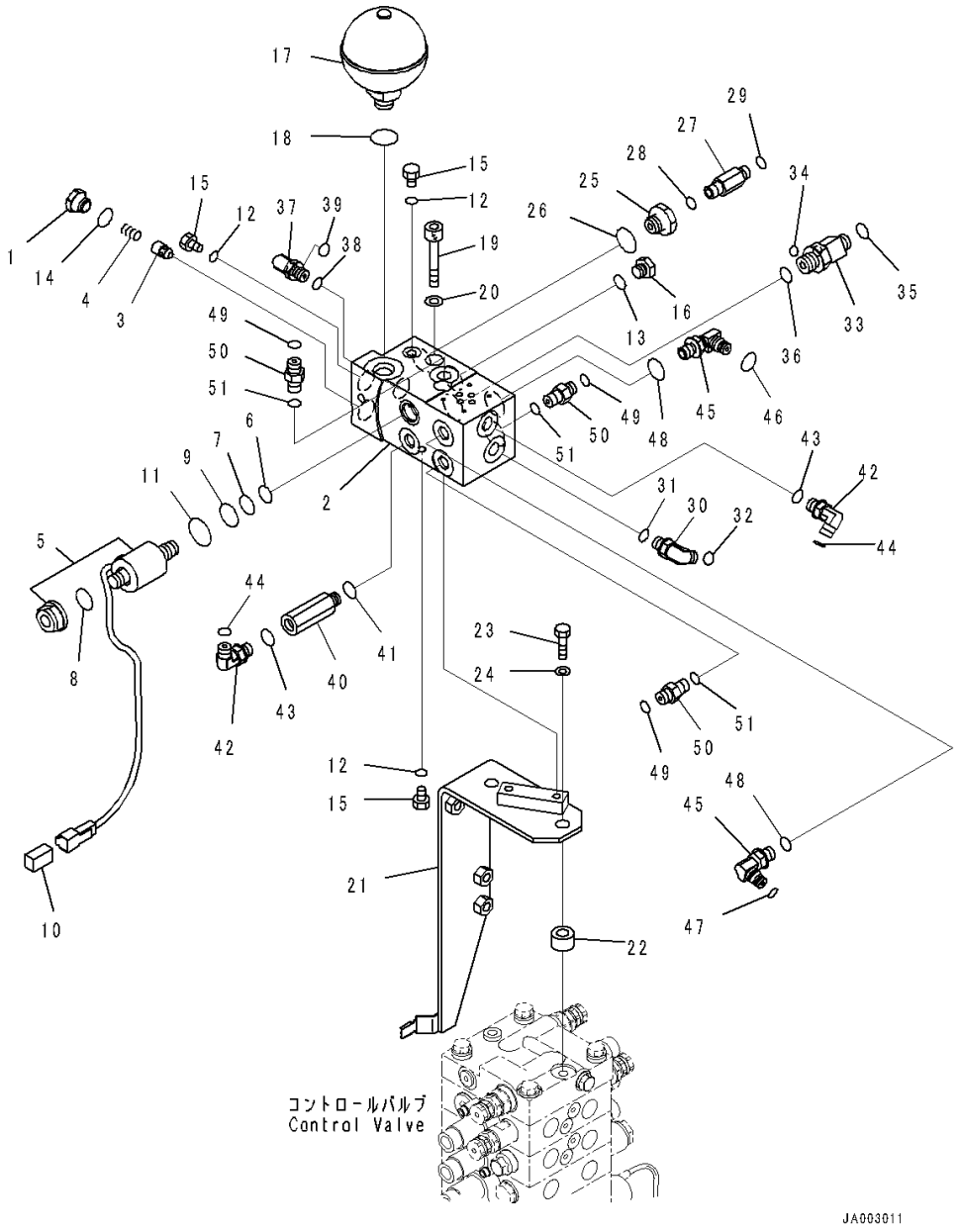

Index	Code	Part Number	Description	Qty	Serial Number
36		07002-12034	O-ring	1	1001-
37		02782-10210	Elbow	1	1001-
38		07002-11423	O-ring	1	1001-
39		02896-11008	O-ring	1	1001-
40		207-62-62460	Adapter	1	1001-
41		07002-11423	O-ring	1	1001-
42		02782-10210	Elbow	2	1001-
43		07002-11423	O-ring	2	1001-
44		02896-11008	O-ring	2	1001-
45		14X-62-53541	Elbow	2	1001-
46		201-60-11390	• O-ring	1	1001-
47		20Y-62-19560	• O-ring	1	1001-
48		07002-11423	O-ring	2	1001-
49		02896-11008	O-ring	3	1001-
50		02781-0021D	Union	3	1001-
51		07002-11423	O-ring	3	1001-

FIG. M2210-008014 Fender (Accumulator, PPC Piping) (PPC Lock Solenoid Valve With Accumulator)

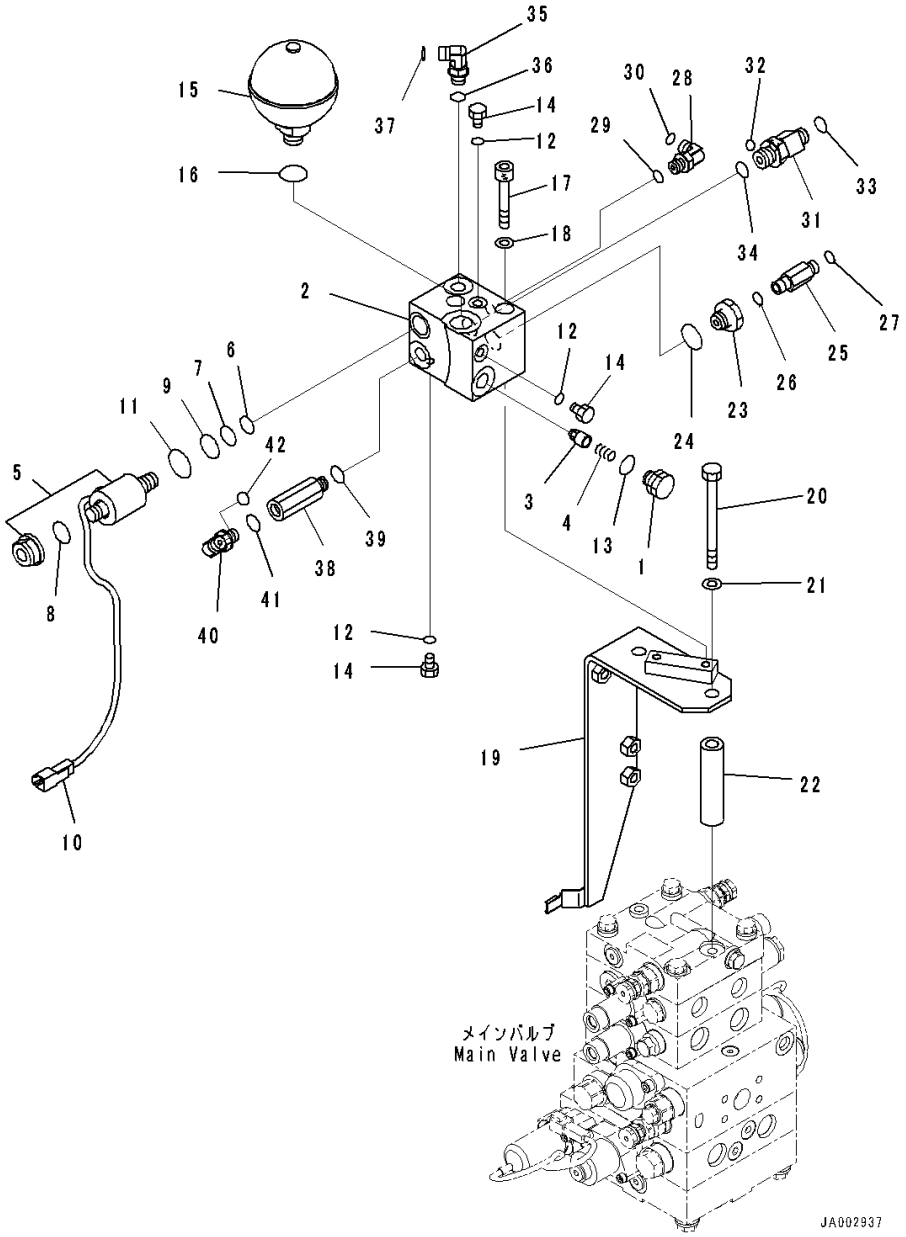

Index	Code	Part Number	Description	Qty	Serial Number
		14X-62-53551	Block Assembly	1	1001-
1		103-49-14280	• Plug	1	1001-
2		14X-62-53561	• Block	1	1001-
3		205-60-51390	• Poppet	1	1001-
4		722-12-12063	• Spring	1	1001-
5		11Y-60-11530	• Valve, Solenoid	1	1001-
6		07000-02012	• • O-ring	1	1001-
7		07000-02014	• • O-ring	1	1001-
8		07000-12016	• • O-ring	1	1001-
9		07000-02018	• • O-ring	1	1001-
10	C1		• • Connector	1	1001-
11		203-60-62190	• • O-ring	1	1001-
12		07002-10823	• O-ring	3	1001-
13		07002-11623	• O-ring	1	1001-
14		07040-10807	• Plug	3	1001-
15		22U-60-21330	Accumulator	1	1001-
16		07002-12034	O-ring	1	1001-
17		01252-A1085	Bolt, Hexagon Socket Head	2	1001-
18		01643-51032	Washer	2	1001-
19		14X-62-52960	Bracket	1	1001-
20		01011-81230	Bolt	2	1001-
21		01643-31232	Washer	2	1001-
22		14X-62-52981	Spacer	2	1001-
23		20Y-62-21940	Filter Assembly	1	1001-
24		07002-12034	O-ring	1	1001-
25		20U-62-41890	Nipple	1	1001-
26		07002-11423	O-ring	1	1001-
27		02896-11008	O-ring	1	1001-
28		02782-10210	Elbow	1	1001-
29		07002-11423	O-ring	1	1001-
30		02896-11008	O-ring	1	1001-
31		20K-62-33690	Tee	1	1001-
32		02896-11008	• O-ring	1	1001-
33		02896-11009	• O-ring	1	1001-
34		07002-12034	O-ring	1	1001-
35		02782-10210	Elbow	1	1001-
36		07002-11423	O-ring	1	1001-
37		02896-11008	O-ring	1	1001-
38		207-62-62460	Adapter	1	1001-
39		07002-11423	O-ring	1	1001-

FIG. M2210-008014 Fender (Accumulator, PPC Piping) (PPC Lock Solenoid Valve With Accumulator)

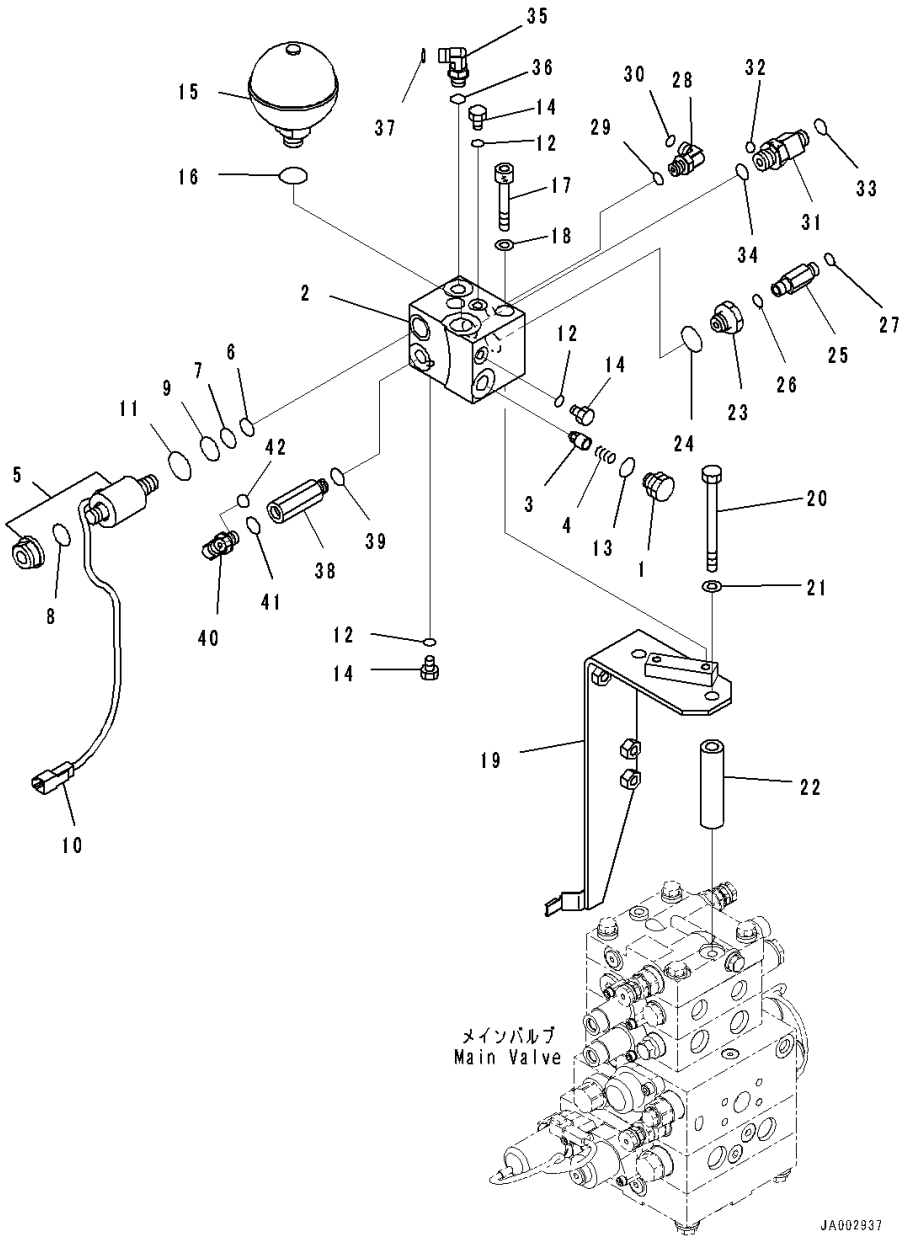

Index	Code	Part Number	Description	Qty	Serial Number
40		02782-10210	Elbow	1	1001-
41		07002-11423	O-ring	1	1001-
42		02896-11008	O-ring	1	1001-

FIG. M2210-002012 Fender (Rear 1-attachment, Accumulator, PPC Piping) (Inner Parts, Control Valve) (11/11)

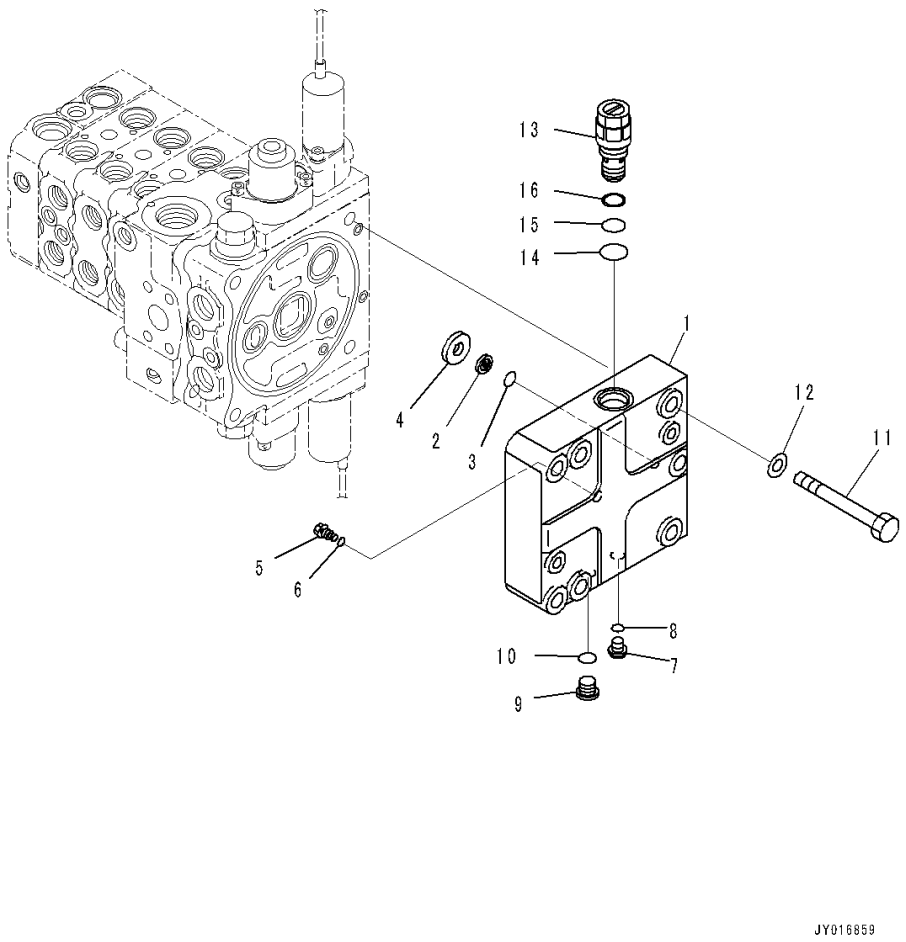

Index	Code	Part Number	Description	Qty	Serial Number
		723-24-11700	Valve, Control	1	1001-
1	C1		• Cover	1	1001-
2		702-21-53120	• Filter	1	1001-
3		702-21-55420	• O-ring	1	1001-
4	C1		• Seat	1	1001-
5		723-56-33960	• Orifice	1	1001-
6		07002-10823	• O-ring	1	1001-
7		708-8E-16160	• Plug	2	1001-
8		07002-11023	• O-ring	2	1001-
9		702-21-55620	• Plug	1	1001-
10		07002-11423	• O-ring	1	1001-
11		01011-81225	• Bolt	4	1001-
12		01643-31232	• Washer	4	1001-
13		723-60-21102	• Valve, Relief	1	1001-
14		07002-02434	• • O-ring	1	1001-
15		07000-12016	• • O-ring	1	1001-
16		07001-02016	• • Ring, Back-up	1	1001-

FIG. M2210-002015 Fender (Rear 1-attachment, Accumulator, PPC Piping) (PPC Lock Solenoid Valve With Accumulator)

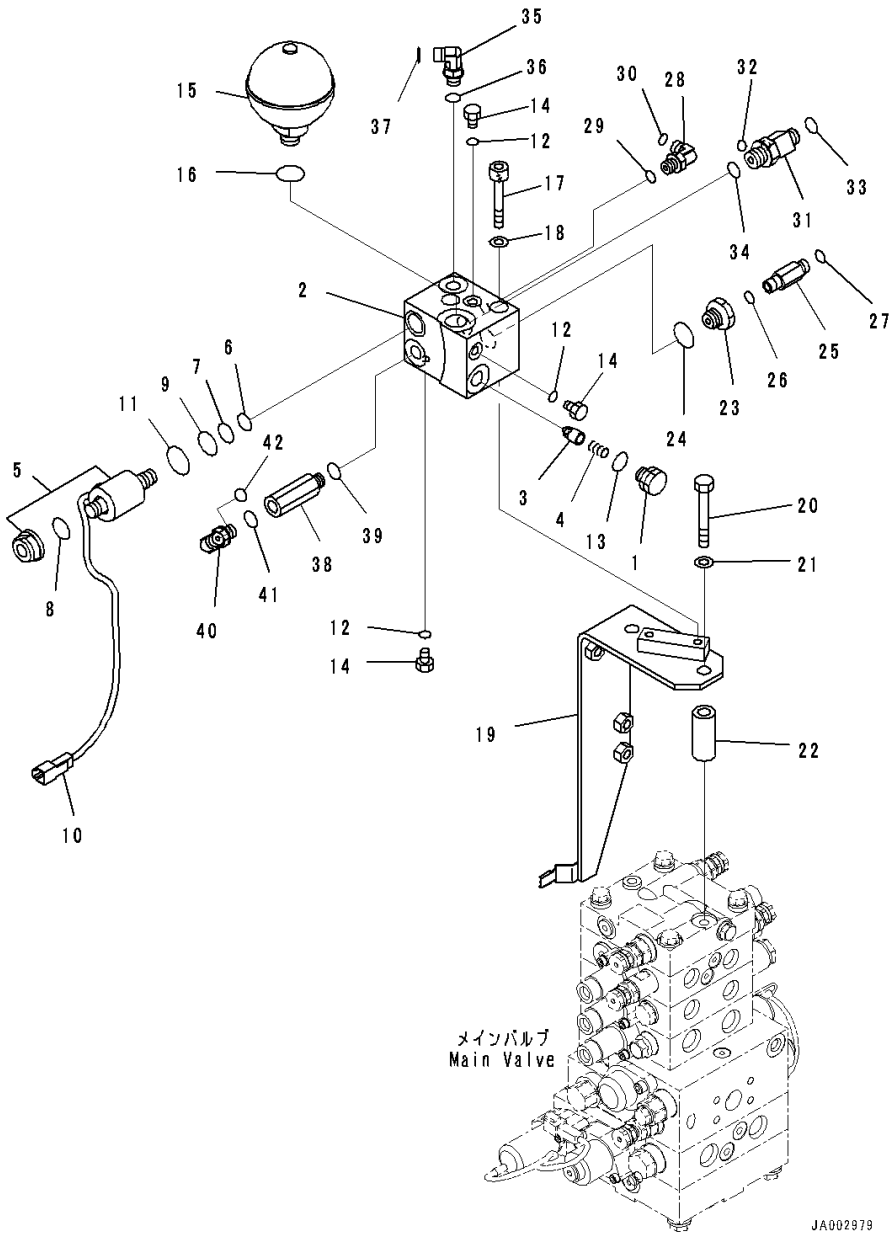

Index	Code	Part Number	Description	Qty	Serial Number
		14X-62-53551	Block Assembly	1	1001-
1		103-49-14280	• Plug	1	1001-
2		14X-62-53561	• Block	1	1001-
3		205-60-51390	• Poppet	1	1001-
4		722-12-12063	• Spring	1	1001-
5		11Y-60-11530	• Valve, Solenoid	1	1001-
6		07000-02012	• • O-ring	1	1001-
7		07000-02014	• • O-ring	1	1001-
8		07000-12016	• • O-ring	1	1001-
9		07000-02018	• • O-ring	1	1001-
10	C1		• • Connector	1	1001-
11		203-60-62190	• • O-ring	1	1001-
12		07002-10823	• O-ring	3	1001-
13		07002-11623	• O-ring	1	1001-
14		07040-10807	• Plug	3	1001-
15		22U-60-21330	Accumulator	1	1001-
16		07002-12034	O-ring	1	1001-
17		01252-A1085	Bolt, Hexagon Socket Head	2	1001-
18		01643-51032	Washer	2	1001-
19		14X-62-52960	Bracket	1	1001-
20		01010-81285	Bolt	2	1001-
21		01643-31232	Washer	2	1001-
22		203-62-44510	Spacer	2	1001-
23		20Y-62-21940	Filter Assembly	1	1001-
24		07002-12034	O-ring	1	1001-
25		20U-62-41890	Nipple	1	1001-
26		07002-11423	O-ring	1	1001-
27		02896-11008	O-ring	1	1001-
28		02782-10210	Elbow	1	1001-
29		07002-11423	O-ring	1	1001-
30		02896-11008	O-ring	1	1001-
31		20K-62-33690	Tee	1	1001-
32		02896-11008	• O-ring	1	1001-
33		02896-11009	• O-ring	1	1001-
34		07002-12034	O-ring	1	1001-
35		02782-10210	Elbow	1	1001-
36		07002-11423	O-ring	1	1001-
37		02896-11008	O-ring	1	1001-
38		207-62-62460	Adapter	1	1001-

FIG. M2210-002015 Fender (Rear 1-attachment, Accumulator, PPC Piping) (PPC Lock Solenoid Valve With Accumulator)

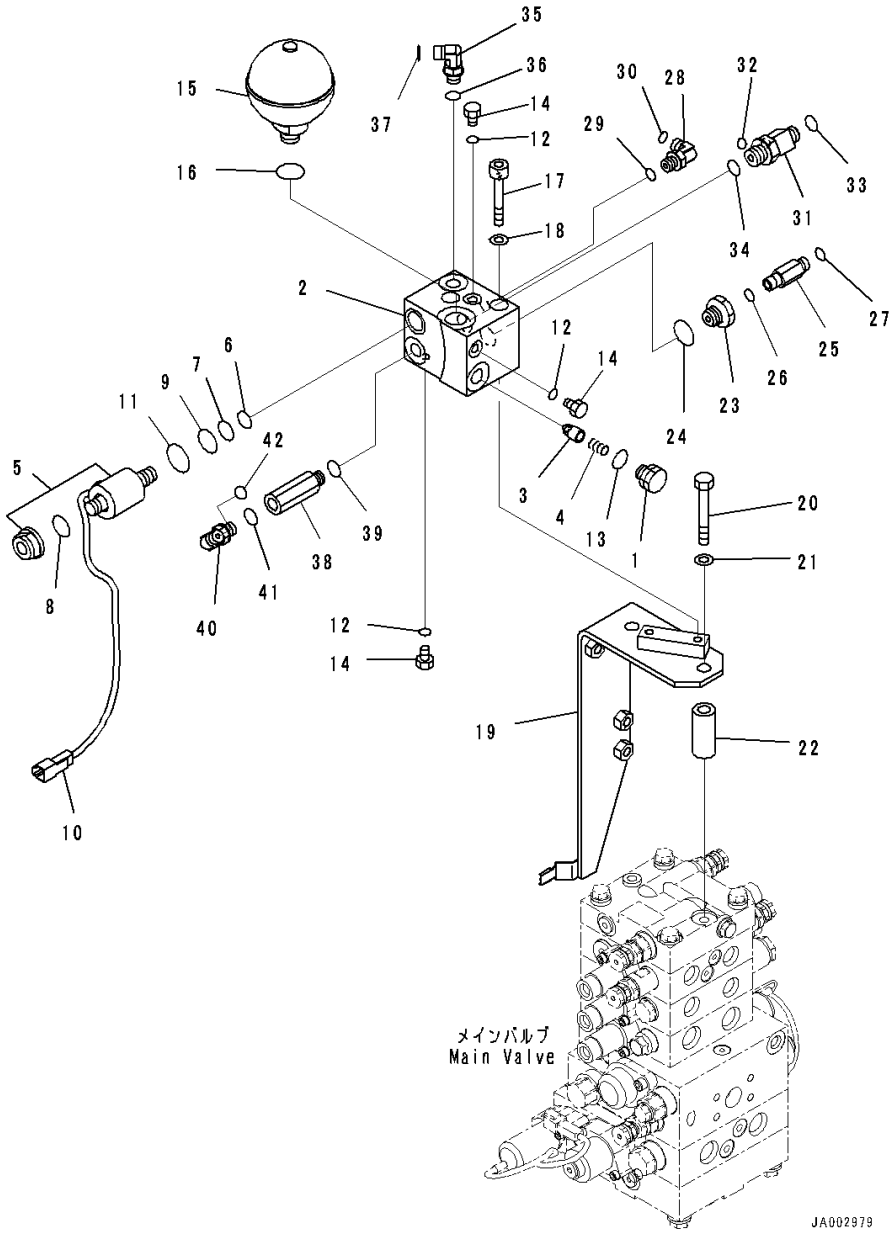

Index	Code	Part Number	Description	Qty	Serial Number
39		07002-11423	O-ring	1	1001-
40		02782-10210	Elbow	1	1001-
41		07002-11423	O-ring	1	1001-
42		02896-11008	O-ring	1	1001-

FIG. M2211-001001 Fender Cover (Without Refuel Pump) (Battery Box Cover)

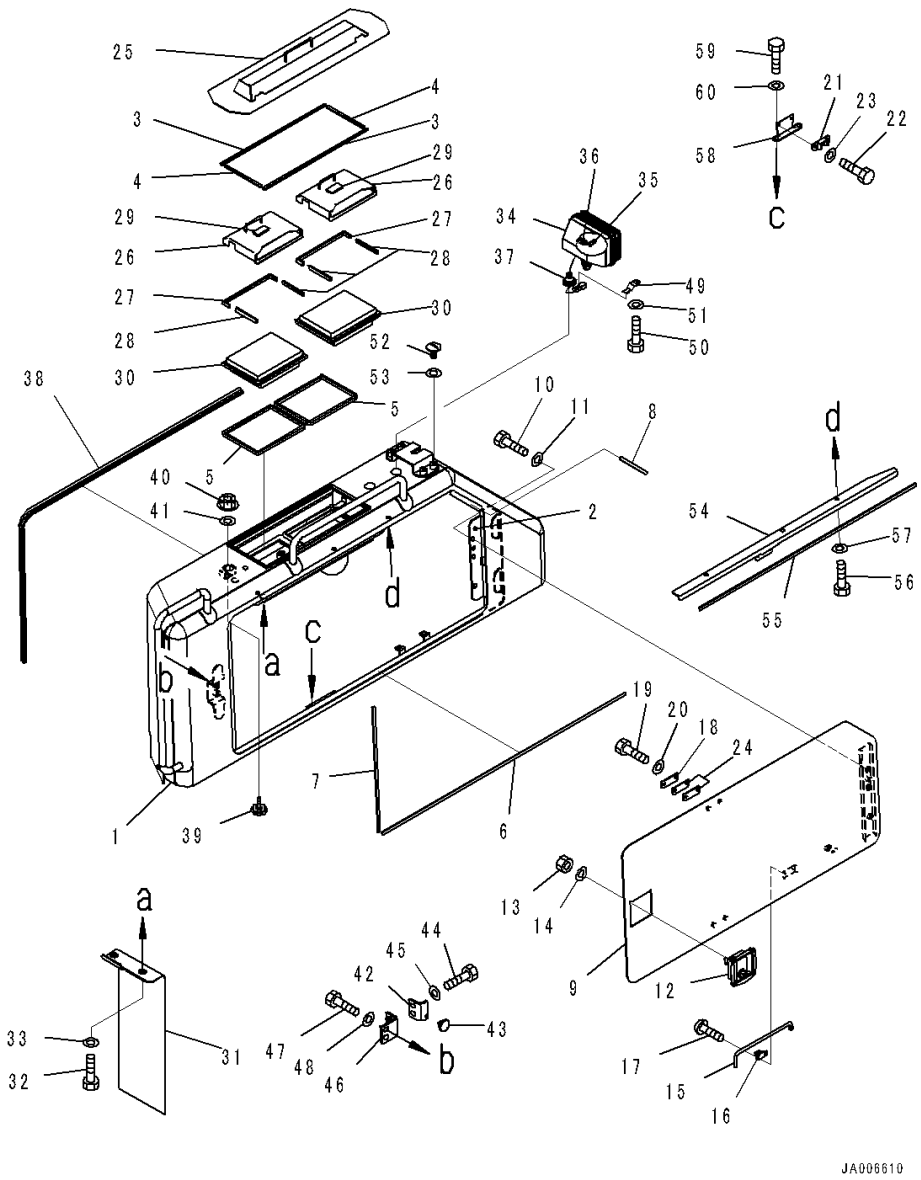

Index	Code	Part Number	Description	Qty	Serial Number
1		14X-54-63212	Cover	1	1001-
2		14X-54-53341	• Hinge,Welded	1	1001-
3		14X-54-53560	• Sheet	2	1001-
4		14X-54-53570	• Sheet	2	1001-
5		14X-54-53580	• Seal	2	1001-
6		14X-54-53710	• Sheet	1	1001-
7		14X-54-53720	• Sheet	1	1001-
8		14X-54-53740	• Sheet	1	1001-
9		14X-54-63221	Cover	1	1001-
10		01010-81020	Bolt	3	1001-
11		01643-31032	Washer	3	1001-
12		14X-54-54310	Lock	1	1001-
13		01580-10605	Nut	4	1001-
14		01643-30623	Washer	4	1001-
15		20Y-54-29232	Bar	1	1001-
16		198-54-19150	Spring	1	1001-
17		01023-10608	Screw	2	1001-
18		205-54-53550	Dovetail	2	1001-
19		01010-80612	Bolt	4	1001-
20		01643-30623	Washer	4	1001-
21		205-54-51970	Dovetail	2	1001-
22		01010-80616	Bolt	4	1001-
23		01643-30623	Washer	4	1001-
24		14X-54-53860	Spacer	4	1001-
25		14X-Y11-1822	Cover	1	1001-
26		14X-Y11-3272	Cover Assembly	2	1001-
27		14X-Y11-3471	• Seal	1	1001-
28		14X-Y11-3481	• Seal	2	1001-
29		14X-911-8520	• Seal	1	1001-
30		17M-911-3530	Element	2	1001-
31		14X-54-53281	Plate	1	1001-
32		01010-81020	Bolt	2	1001-
33		01643-31032	Washer	2	1001-
		14X-06-52730	Lamp Assembly, Working	1	1001-
34		17A-06-17931	• Lamp Assembly, Working	1	1001-
35		17A-06-17970	• • Bulb, 70watt	1	1001-
36		17A-06-17980	• • Sleeve	1	1001-
37		144-43-81620	• Grommet	1	1001-
38		14X-54-53760	Seal	1	1001-
39		195-54-68760	Knob	2	1001-

FIG. M2211-001001 Fender Cover (Without Refuel Pump) (Battery Box Cover)

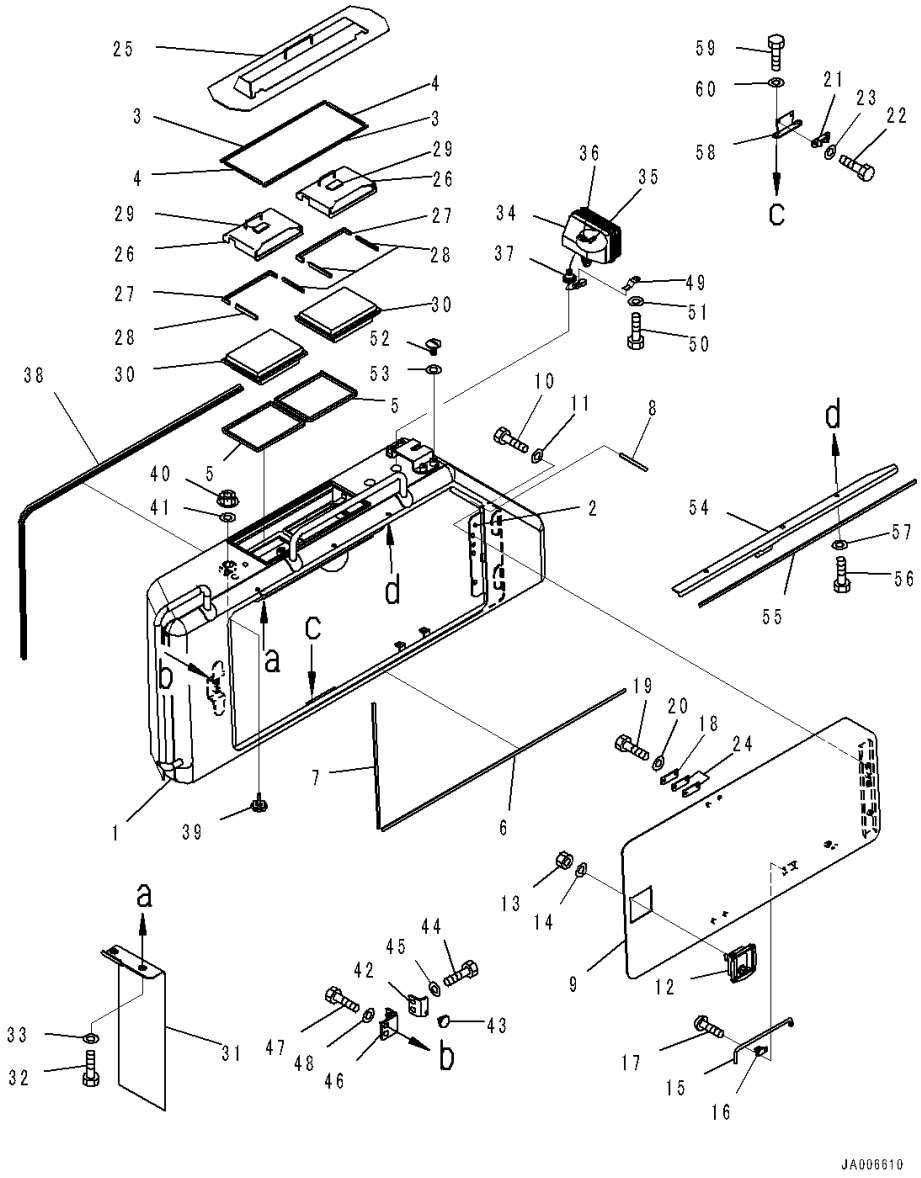

Index	Code	Part Number	Description	Qty	Serial Number
40		01594-01008	Nut	2	1001-
41		01640-21016	Washer	2	1001-
42		14X-54-53840	Plate	1	1001-
43		14X-54-12960	Stopper	1	1001-
44		01010-81230	Bolt	2	1001-
45		01643-31232	Washer	2	1001-
46		14X-54-53850	Plate	1	1001-
47		01010-81230	Bolt	2	1001-
48		01643-31232	Washer	2	1001-
49		08193-21012	Clip	1	1001-
50		01010-81020	Bolt	1	1001-
51		01643-31032	Washer	1	1001-
52		14X-54-53380	Cap	4	1001-
53		01643-31032	Washer	4	1001-
54		14X-54-63971	Bracket	1	1001-
55		14X-54-63741	• Sheet	1	1001-
56		01010-81025	Bolt	3	1277-
57		01643-31032	Washer	3	1277-
58		14X-54-63280	Bracket	1	1001-
59		01010-81020	Bolt	2	1001-
60		01643-31032	Washer	2	1001-

FIG. M2211-001002 Fender Cover (Valve Cover)

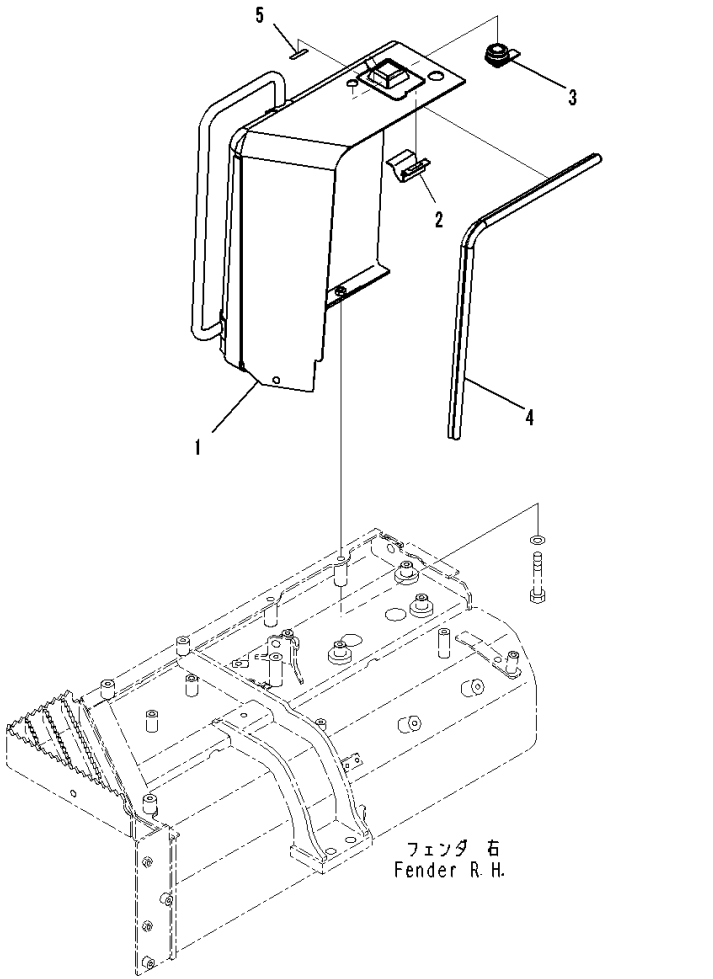

Index	Code	Part Number	Description	Qty	Serial Number
		Note: This list covers following specifications.			
		Without Refuel Pump			
		With Refuel Pump			
1		14X-54-53301	Cover Assembly,R.H.	1	1001-
2		14X-54-53360	• Hinge	1	1001-
3		205-60-71220	• Lock Assembly	1	1001-
4		14X-54-53770	• Seal	1	1001-
5		14X-54-53390	• Plate	1	1001-

FIG. M2211-001003 Fender Cover (Step)

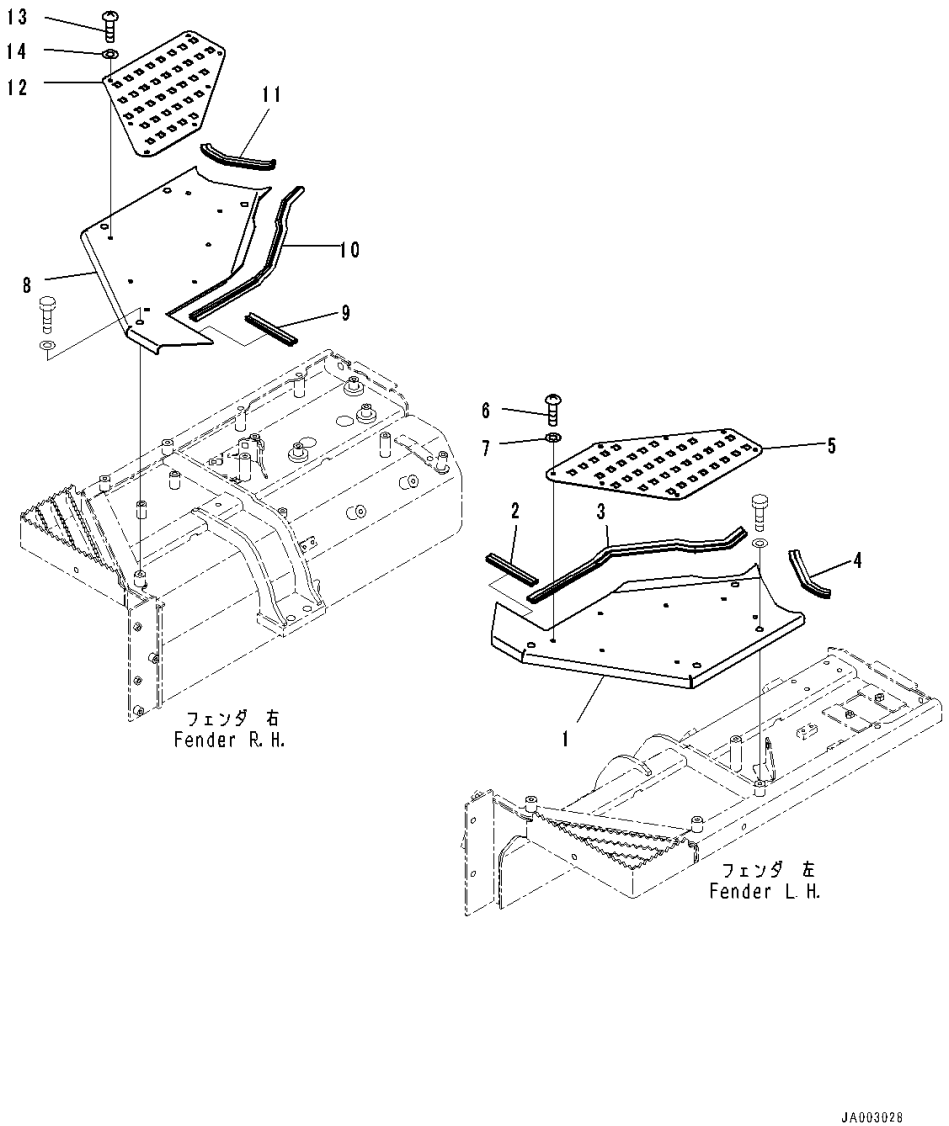

Index	Code	Part Number	Description	Qty	Serial Number
		Note: This list covers following specifications.			
		Without Refuel Pump			
		With Refuel Pump			
1		14X-54-63401	Cover Assembly,L.H.	1	1001-
2		14X-54-53470	• Seal	1	1001-
3		14X-54-53480	• Seal	1	1001-
4		14X-54-63490	• Seal	1	1001-
5		14X-54-53420	Plate	1	1001-
6		01245-00816	Screw	7	1001-
7		01643-70823	Washer	7	1001-
8		14X-54-63501	Cover Assembly,R.H.	1	1001-
9		14X-54-53470	• Seal	1	1001-
10		14X-54-53480	• Seal	1	1001-
11		14X-54-63490	• Seal	1	1001-
12		14X-54-53440	Plate	1	1001-
13		01245-00816	Screw	7	1001-
14		01643-70823	Washer	7	1001-

FIG. M2211-001004 Fender Cover (Mounting)

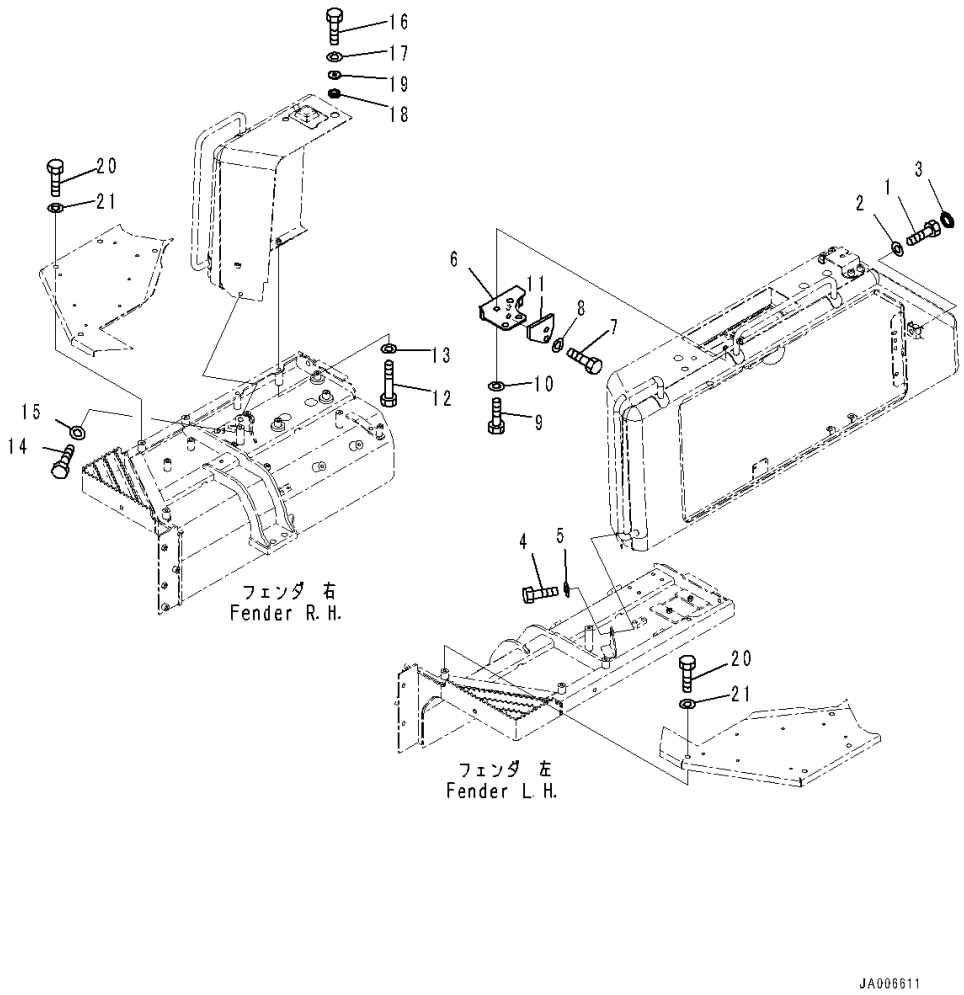

Index	Code	Part Number	Description	Qty	Serial Number
		Note: This list covers following specifications.			
		Without Refuel Pump			
		With Refuel Pump			
1		01010-81235	Bolt	4	1001-
2		01643-31232	Washer	4	1001-
3		195-54-42981	Cap	1	1001-
4		01010-81225	Bolt	1	1001-
5		01643-31232	Washer	1	1001-
6		14X-54-63261	Bracket	1	1001-
7		01010-81645	Bolt	2	1001-
8		01643-31645	Washer	2	1001-
9		01010-81230	Bolt	4	1001-
10		175-54-34170	Washer	4	1001-
11		14X-54-63981	Plate	1	1001-
12		01010-81295	Bolt	2	1001-
13		01643-31232	Washer	2	1001-
14		01010-81225	Bolt	1	1001-
15		01643-31232	Washer	1	1001-
16		01010-81235	Bolt	1	1001-
17		01643-31232	Washer	1	1001-
18		175-03-42140	Rubber	1	1001-
19		415-46-11370	Spacer	1	1001-
20		01010-81225	Bolt	8	1001-
21		175-54-34170	Washer	8	1001-

FIG. M2211-002001 Fender Cover (With Refuel Pump) (Battery Box Cover)

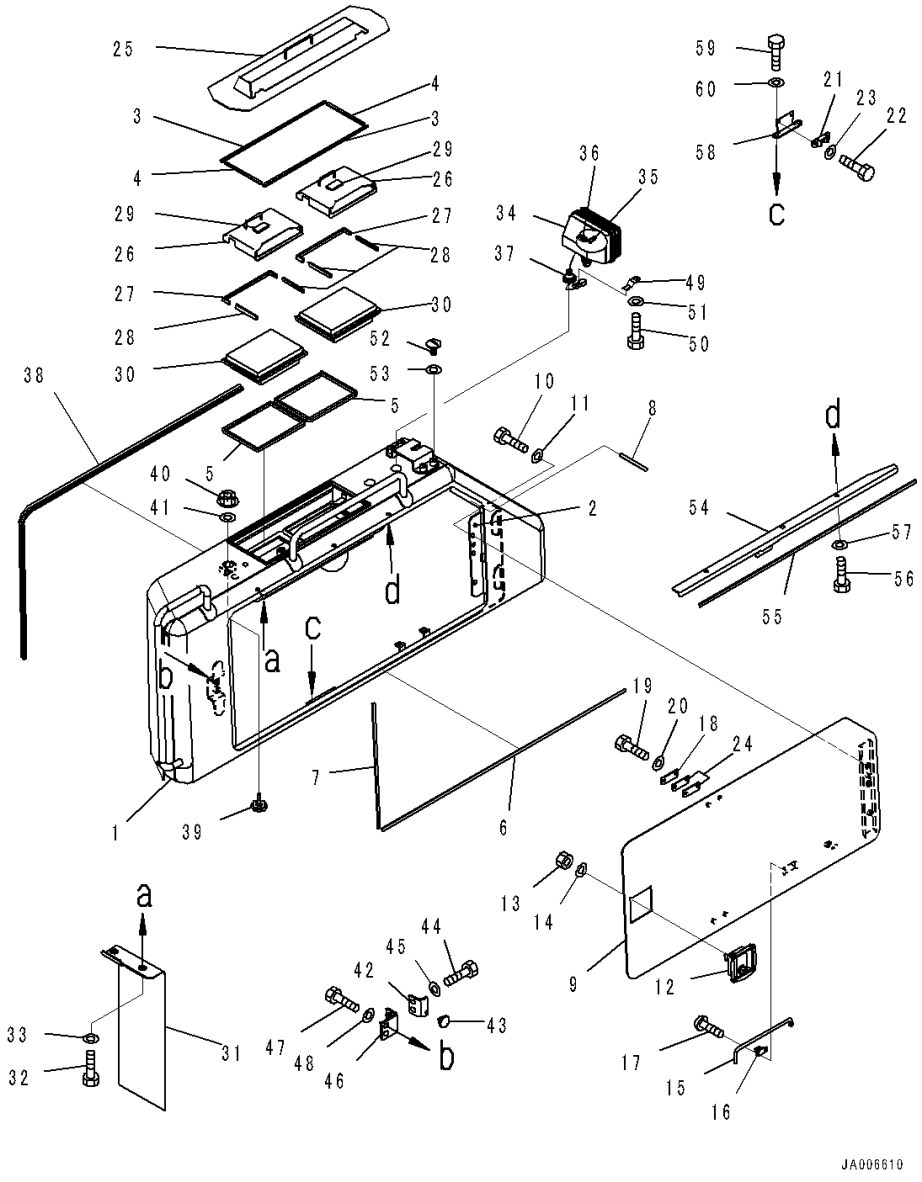

Index	Code	Part Number	Description	Qty	Serial Number
1		14X-54-63960	Cover	1	1001-
		14X-54-63212	• Cover	1	1001-
2		14X-54-53341	• • Hinge,Welded	1	1001-
3		14X-54-53560	• • Sheet	2	1001-
4		14X-54-53570	• • Sheet	2	1001-
5		14X-54-53580	• • Seal	2	1001-
6		14X-54-53710	• • Sheet	1	1001-
7		14X-54-53720	• • Sheet	1	1001-
8		14X-54-53740	• • Sheet	1	1001-
9		14X-54-63221	Cover	1	1001-
10		01010-81020	Bolt	3	1001-
11		01643-31032	Washer	3	1001-
12		14X-54-54310	Lock	1	1001-
13		01580-10605	Nut	4	1001-
14		01643-30623	Washer	4	1001-
15		20Y-54-29232	Bar	1	1001-
16		198-54-19150	Spring	1	1001-
17		01023-10608	Screw	2	1001-
18		205-54-53550	Dovetail	2	1001-
19		01010-80612	Bolt	4	1001-
20		01643-30623	Washer	4	1001-
21		205-54-51970	Dovetail	2	1001-
22		01010-80616	Bolt	4	1001-
23		01643-30623	Washer	4	1001-
24		14X-54-53860	Spacer	4	1001-
25		14X-Y11-1822	Cover	1	1001-
26		14X-Y11-3272	Cover Assembly	2	1001-
27		14X-Y11-3471	• Seal	1	1001-
28		14X-Y11-3481	• Seal	2	1001-
29		14X-911-8520	• Seal	1	1001-
30		17M-911-3530	Element	2	1001-
31		14X-54-53281	Plate	1	1001-
32		01010-81020	Bolt	2	1001-
33		01643-31032	Washer	2	1001-
		14X-06-52730	Lamp Assembly, Working	1	1001-
34		17A-06-17931	• Lamp Assembly, Working	1	1001-
35		17A-06-17970	• • Bulb, 70watt	1	1001-
36		17A-06-17980	• • Sleeve	1	1001-
37		144-43-81620	• Grommet	1	1001-
38		14X-54-53760	Seal	1	1001-

FIG. M2211-002001 Fender Cover (With Refuel Pump) (Battery Box Cover)

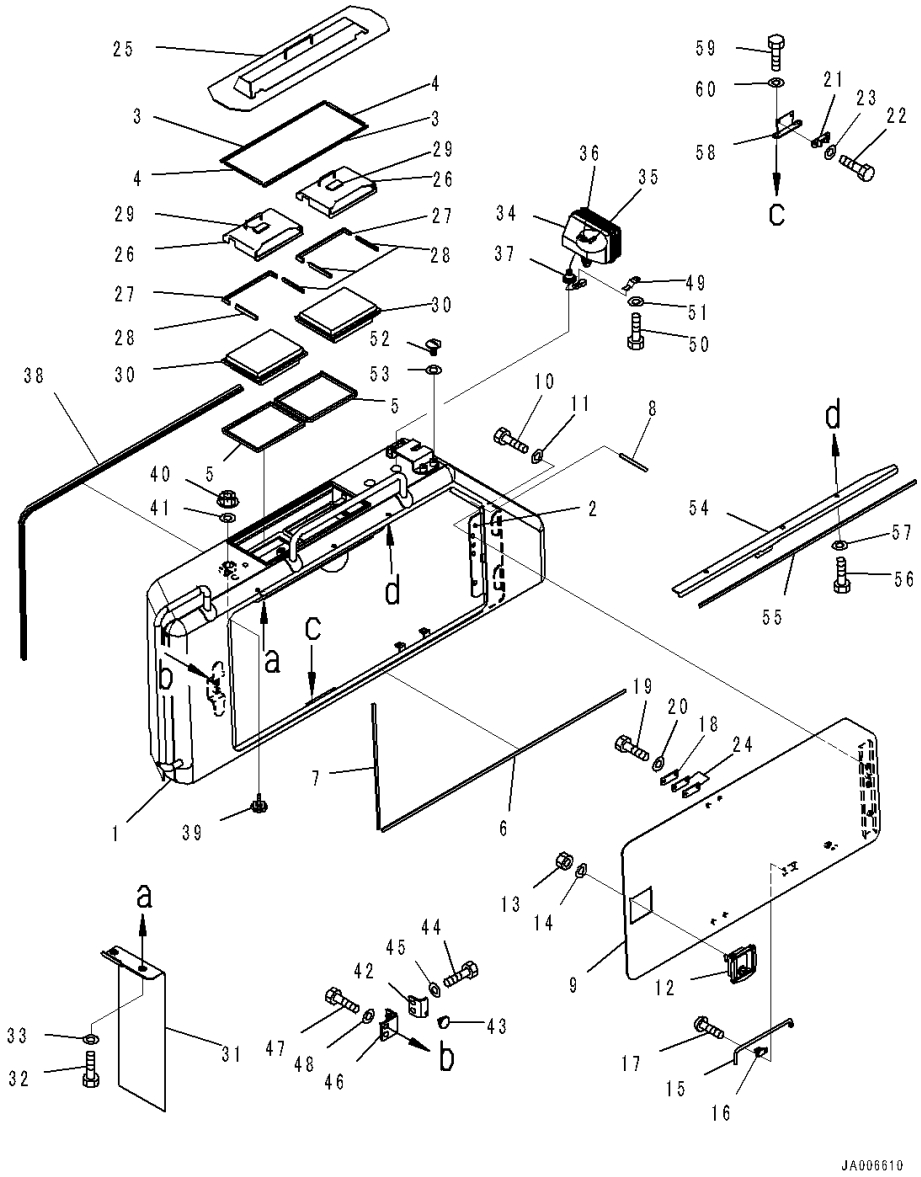

Index	Code	Part Number	Description	Qty	Serial Number
39		195-54-68760	Knob	2	1001-
40		01594-01008	Nut	2	1001-
41		01640-21016	Washer	2	1001-
42		14X-54-53840	Plate	1	1001-
43		14X-54-12960	Stopper	1	1001-
44		01010-81230	Bolt	2	1001-
45		01643-31232	Washer	2	1001-
46		14X-54-53850	Plate	1	1001-
47		01010-81230	Bolt	2	1001-
48		01643-31232	Washer	2	1001-
49		08193-21012	Clip	1	1001-
50		01010-81020	Bolt	1	1001-
51		01643-31032	Washer	1	1001-
52		14X-54-53380	Cap	4	1001-
53		01643-31032	Washer	4	1001-
54		14X-54-63971	Bracket	1	1001-
55		14X-54-63741	• Sheet	1	1001-
56		01010-81025	Bolt	3	1001-
57		01643-31032	Washer	3	1001-
58		14X-54-63280	Bracket	1	1001-
59		01010-81020	Bolt	2	1001-
60		01643-31032	Washer	2	1001-

FIG. M2214-001001 Shovel Holder

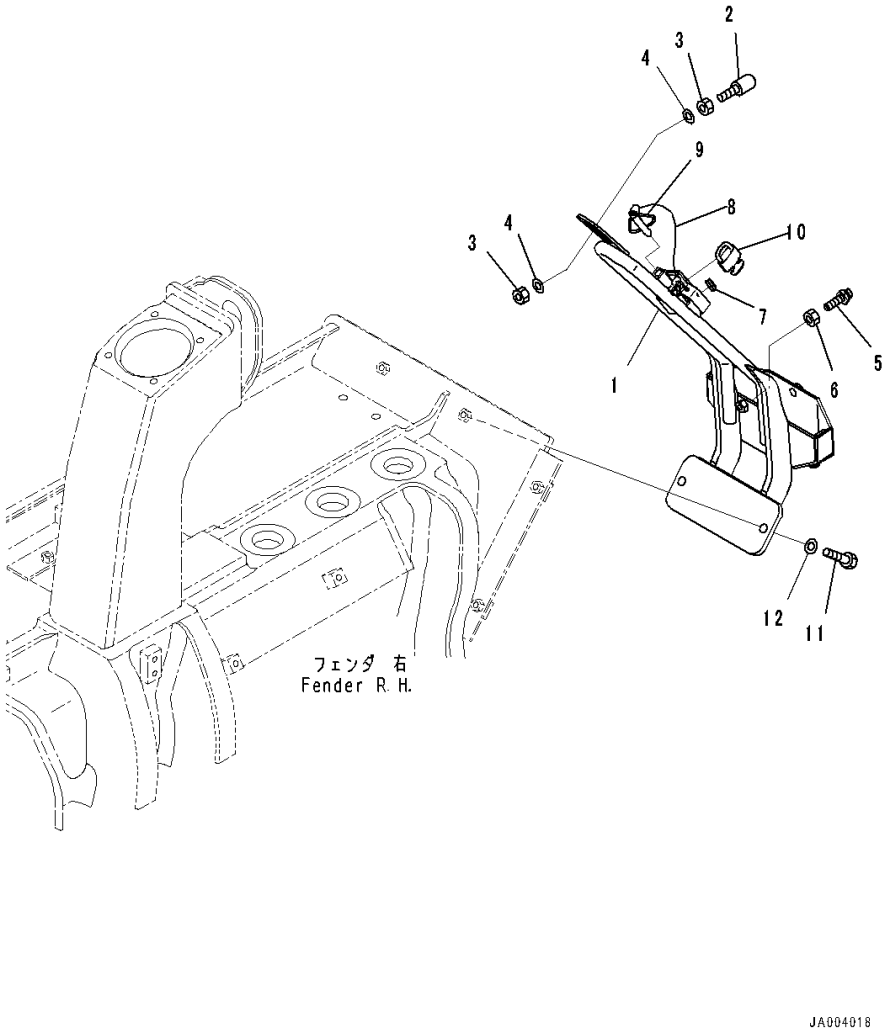

Index	Code	Part Number	Description	Qty	Serial Number
1		14X-54-53611	Holder	1	1001-
2		09453-00002	Stopper, Door	1	1001-
3		01580-11210	Nut	2	1001-
4		01643-31232	Washer	2	1001-
5		09311-41237	Bumper, Pedal	3	1001-
6		01580-11210	Nut	3	1001-
7		09415-00506	Cap	1	1001-
8		14X-54-12750	Holder	1	1001-
9		14X-54-12770	Holder	1	1001-
10		09460-00000	Padlock	1	1001-
11		01010-81240	Bolt	2	1001-
12		01643-31232	Washer	2	1001-

FIG. M2240-001001 Rear Cover (Strengthened Type)

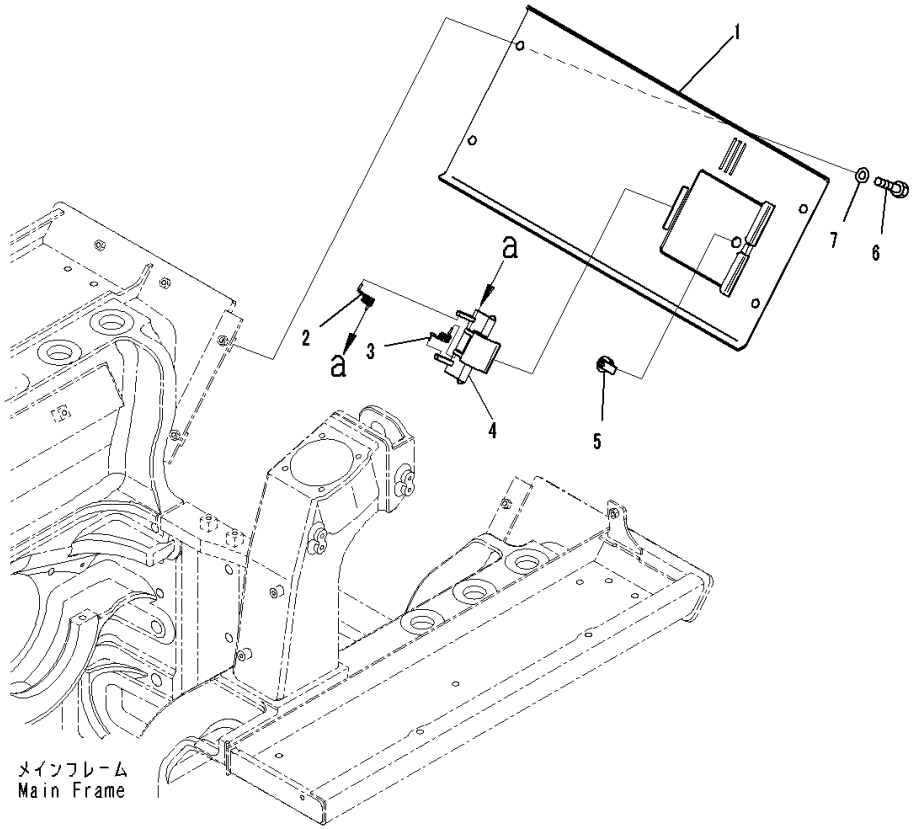

Index	Code	Part Number	Description	Qty	Serial Number
1		14X-54-53511	Cover	1	1001-
2		09467-00002	• Spring	1	1001-
3		09467-00006	• Spring	1	1001-
4		14X-54-53530	• Bracket	1	1001-
5		205-60-71220	• Lock Assembly	1	1001-
6		01010-81235	Bolt	4	1001-
7		01643-31232	Washer	4	1001-

FIG. M2240-002001 Rear Cover (Strengthened Type, For Rear 1-attachment)

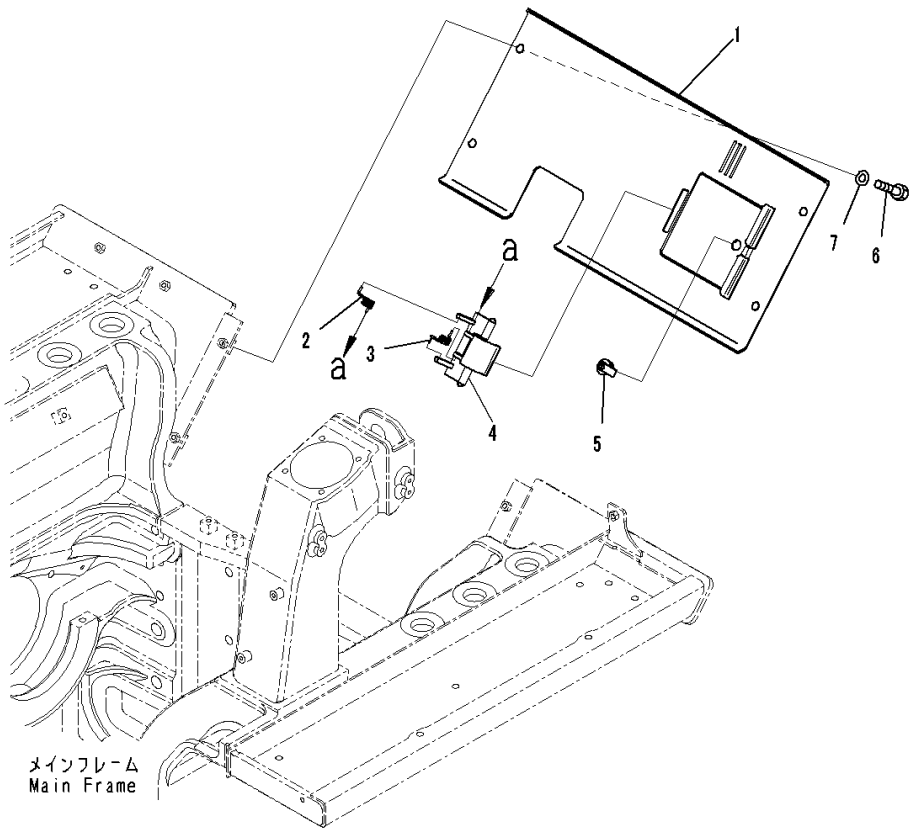

Index	Code	Part Number	Description	Qty	Serial Number
1		14X-54-53521	Cover	1	1001-
2		09467-00002	• Spring	1	1001-
3		09467-00006	• Spring	1	1001-
4		14X-54-53530	• Bracket	1	1001-
5		205-60-71220	• Lock Assembly	1	1001-
6		01010-81235	Bolt	4	1001-
7		01643-31232	Washer	4	1001-

FIG. M2810-004001 Under Guard (Hinged)

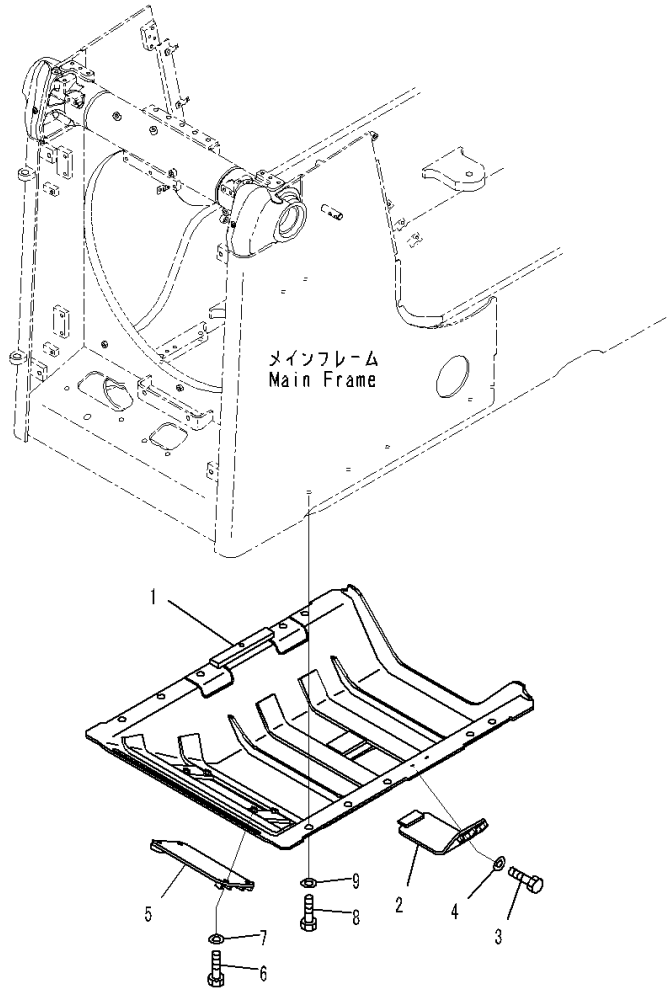

JA006606

Index	Code	Part Number	Description	Qty	Serial Number
1		14X-54-64211	Guard	1	1001-
2		14X-54-54121	Cover	1	1001-
3		01010-81235	Bolt	2	1001-
4		01643-31232	Washer	2	1001-
5		14X-54-54131	Cover	1	1001-
6		01010-81235	Bolt	4	1001-
7		01643-31232	Washer	4	1001-
8		01010-81635	Bolt	11	1001-
9		01643-31645	Washer	11	1001-

FIG. M2810-003001 Under Guard (Strengthened Type)

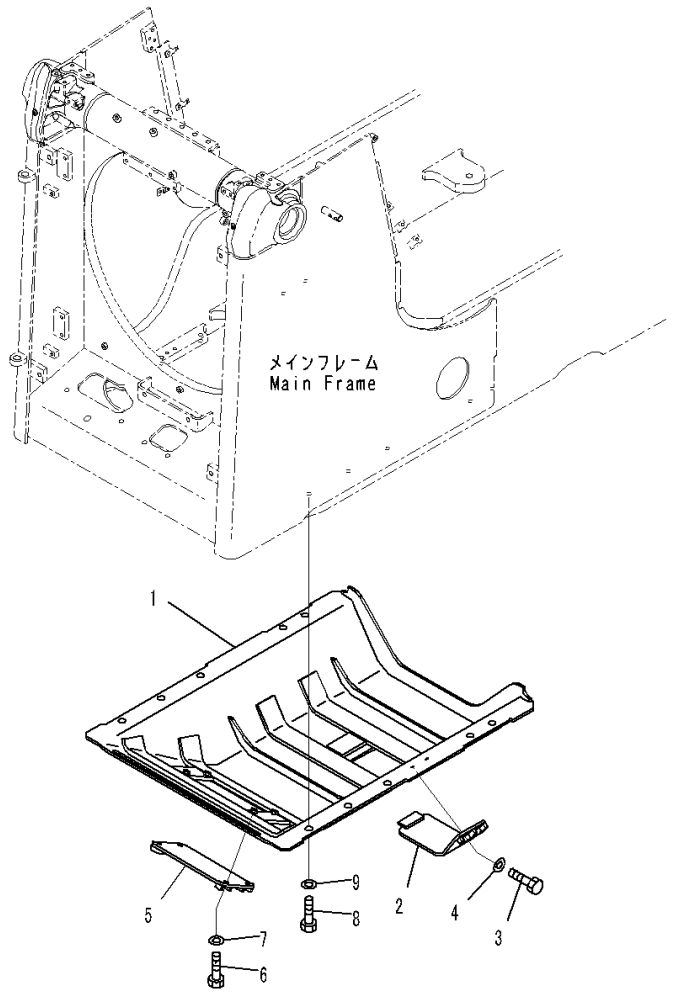

Index	Code	Part Number	Description	Qty	Serial Number
1		14X-54-64111	Guard	1	1001-
2		14X-54-54121	Cover	1	1001-
3		01010-81235	Bolt	2	1001-
4		01643-31232	Washer	2	1001-
5		14X-54-54131	Cover	1	1001-
6		01010-81235	Bolt	4	1001-
7		01643-31232	Washer	4	1001-
8		01010-81635	Bolt	10	1001-
9		01643-31645	Washer	10	1001-

FIG. M2810-002001 Under Guard (Hinged, For EU New Noise Arrangement 2)

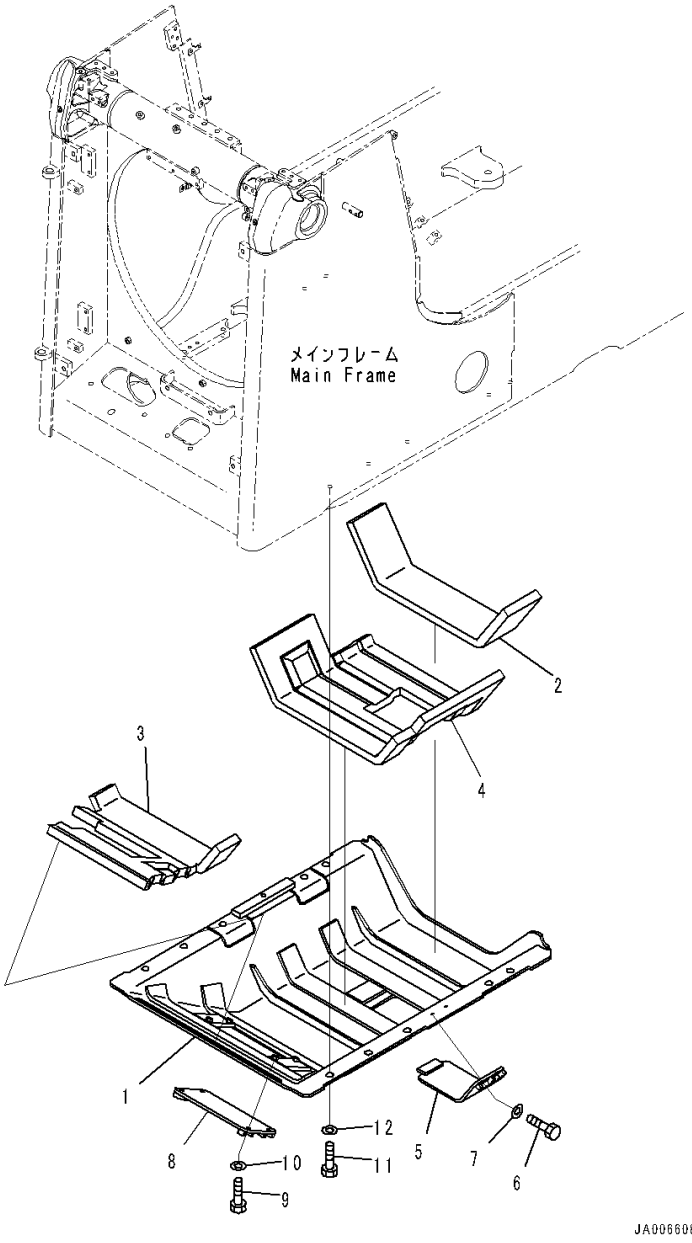

Index	Code	Part Number	Description	Qty	Serial Number
1		14X-A62-6511	Guard	1	1001-
2		14X-A62-5440	• Sheet	1	1001-
3		14X-A62-6421	• Sheet	1	1001-
4		14X-A62-6591	• Sheet	1	1001-
5		14X-54-54121	Cover	1	1001-
6		01010-81235	Bolt	2	1001-
7		01643-31232	Washer	2	1001-
8		14X-54-54131	Cover	1	1001-
9		01010-81235	Bolt	4	1001-
10		01643-31232	Washer	4	1001-
11		01010-81635	Bolt	11	1001-
12		01643-31645	Washer	11	1001-

FIG. M2810-001001 Under Guard (Strengthened Type, For EU New Noise Arrangement 2)

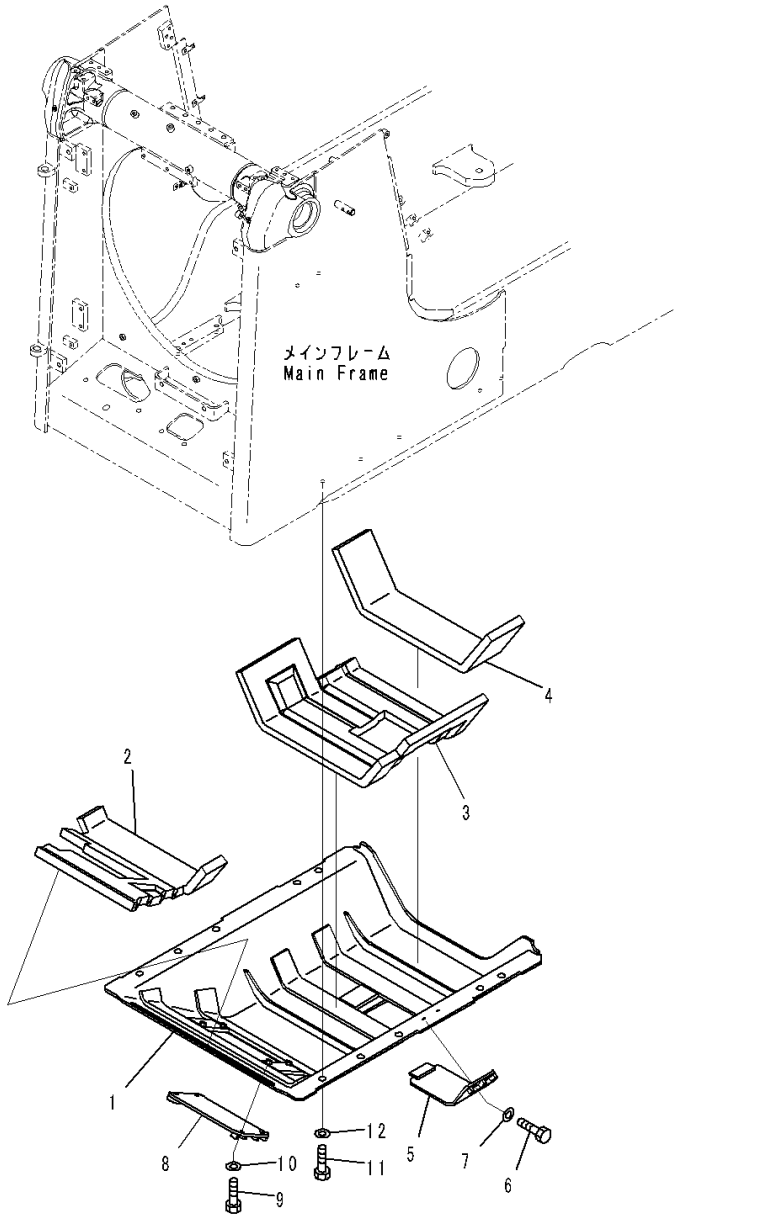

Index	Code	Part Number	Description	Qty	Serial Number
1		14X-A62-6411	Guard	1	1001-
2		14X-A62-6421	• Sheet	1	1001-
3		14X-A62-6431	• Sheet	1	1001-
4		14X-A62-5440	• Sheet	1	1001-
5		14X-54-54121	Cover	1	1001-
6		01010-81235	Bolt	2	1001-
7		01643-31232	Washer	2	1001-
8		14X-54-54131	Cover	1	1001-
9		01010-81235	Bolt	4	1001-
10		01643-31232	Washer	4	1001-
11		01010-81635	Bolt	10	1001-
12		01643-31645	Washer	10	1001-

FIG. M2811-001001 Front Pull Hook

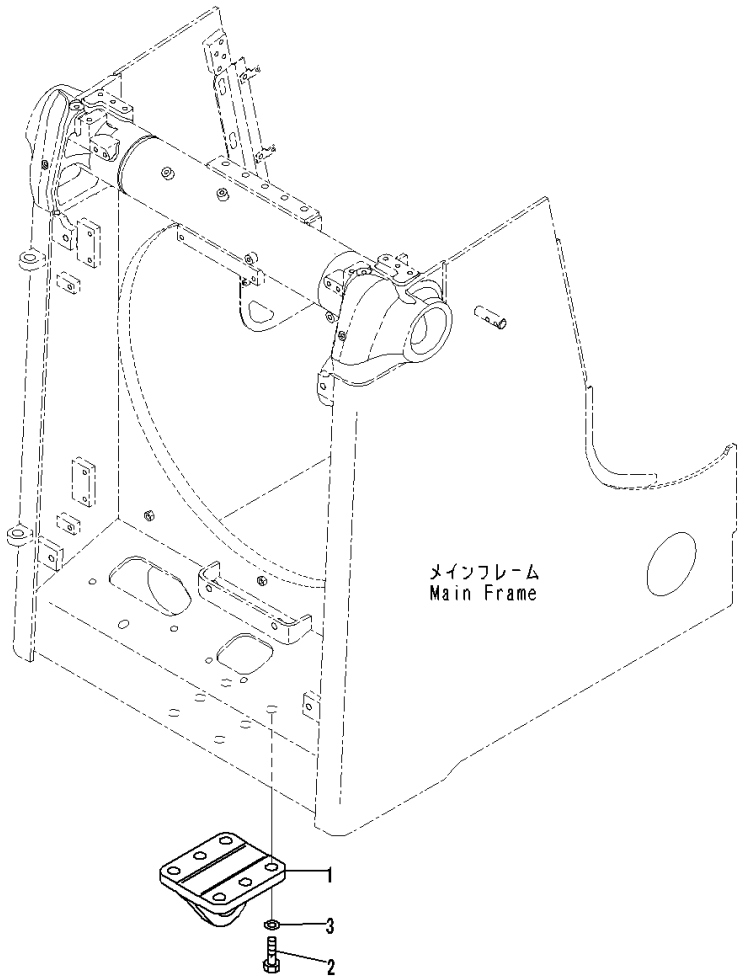

Index	Code	Part Number	Description	Qty	Serial Number
1		14X-958-1510	Hook	1	1001-
2		01010-82460	Bolt	6	1001-
3		01643-32460	Washer	6	1001-

UNDERCARRIAGE

FIG. R0110-001001 Front Idler

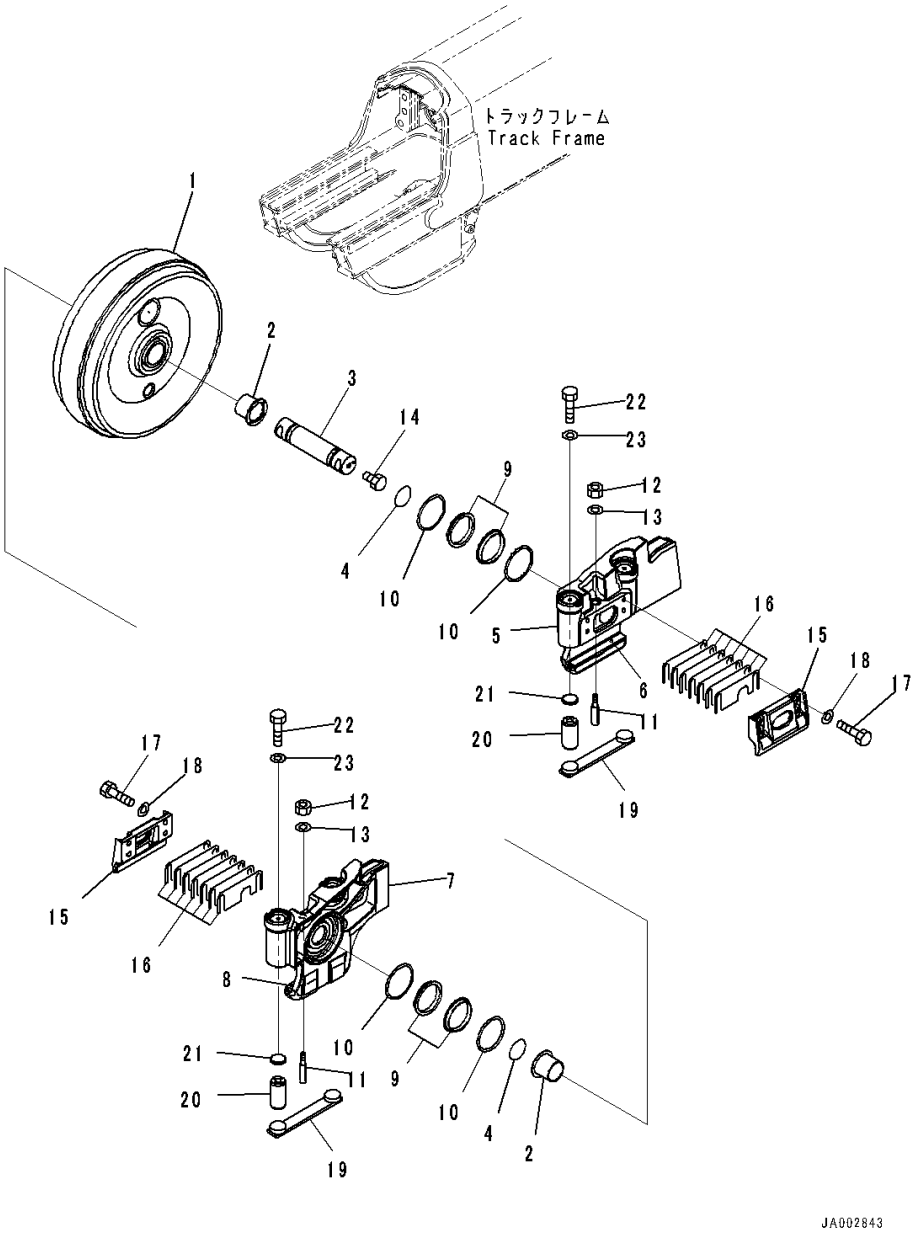

Index	Code	Part Number	Description	Qty	Serial Number
		14X-30-00431	Idler Assembly	2	1001-
1	C1		• Idler	1	1001-
2		14X-30-12181	• Bushing	2	1001-
3		14X-30-12164	• Shaft	1	1001-
4		427-15-15910	• O-ring	2	1001-
5		14X-30-51511	• Support	1	1001-
6		14X-30-12232	• • Plate	1	1001-
7		14X-30-51521	• Support	1	1001-
8		14X-30-12232	• • Plate	1	1001-
		205-30-00220	• Floating Seal Assembly	2	1001-
9	C1		• • Seal	2	1001-
10	C1		• • O-ring	2	1001-
11		130-30-13170	• Bolt	2	1001-
12		01582-11613	• Nut	2	1001-
13		01643-31645	• Washer	2	1001-
14		07052-31217	• Plug	1	1001-
15		14X-30-51420	Cover	4	1001-
16		14X-30-12252	Shim, T=1.0mm	28	1001-
17		01010-81645	Bolt	16	1001-
18		01643-31645	Washer	16	1001-
19		14X-30-51470	Plate Assembly	4	1001-
20		155-30-13230	Spring	8	1001-
21		195-30-17960	Plate	8	1001-
22		01016-51245	Bolt	8	1001-
23		01643-31232	Washer	8	1001-

FIG. R0120-001001 Idler Cushion

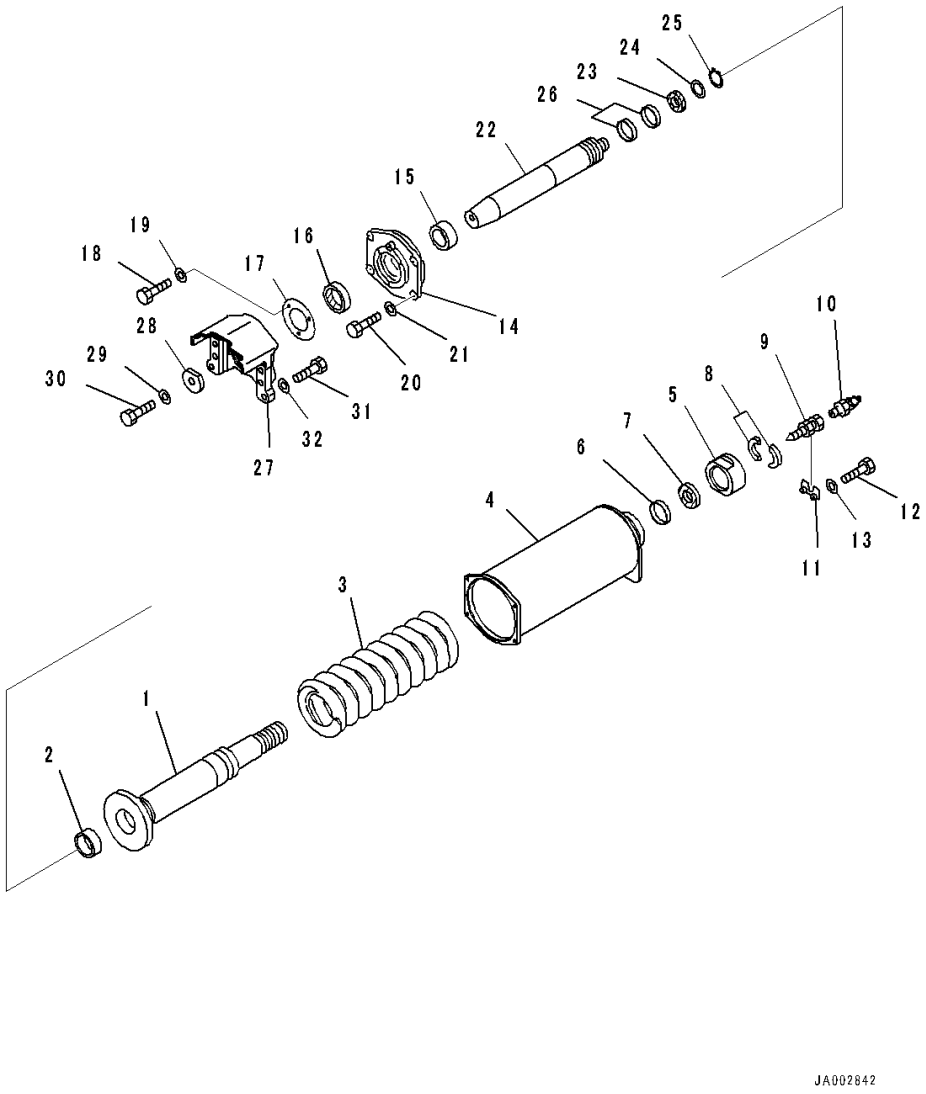

Index	Code	Part Number	Description	Qty	Serial Number
1		14X-30-51531	Cylinder	2	1001-
2		07177-09040	Bushing	2	1001-
3		14X-30-51561	Spring	2	1001-
4		14X-30-51551	Cab	2	1001-
5		14X-30-51580	Nut	2	1001-
6		07177-09040	Bushing	2	1001-
7		207-30-54160	Seal	2	1001-
8		154-30-73170	Spacer	4	1001-
9		203-30-42260	Valve	2	1001-
10		07020-00900	Fitting, Grease	2	1001-
11		14X-30-33170	Plate	2	1001-
12		01010-80830	Bolt	4	1001-
13		01643-30823	Washer	4	1001-
14		14X-30-13164	Holder	2	1001-
15		07177-09040	Bushing	2	1001-
16		207-30-54160	Seal	2	1001-
17		135-30-14620	Cover	2	1001-
18		01010-81020	Bolt	6	1001-
19		01643-31032	Washer	6	1001-
20		01010-81235	Bolt	8	1001-
21		01643-31232	Washer	8	1001-
22		14X-30-51490	Piston	2	1001-
23		150-30-13442	Packing	2	1001-
24		150-30-13480	Ring	2	1001-
25		150-30-13460	Ring	2	1001-
26		150-30-13430	Ring	4	1001-
27		14X-30-51380	Yoke	2	1001-
28		195-30-14151	Washer	2	1001-
29		01643-32460	Washer	2	1001-
30		01010-82460	Bolt	2	1001-
31		01010-82070	Bolt	12	1001-
32		01643-32060	Washer	12	1001-

FIG. R0200-001001 Track Roller (With Plus Type Track Shoe) (Single Roller)

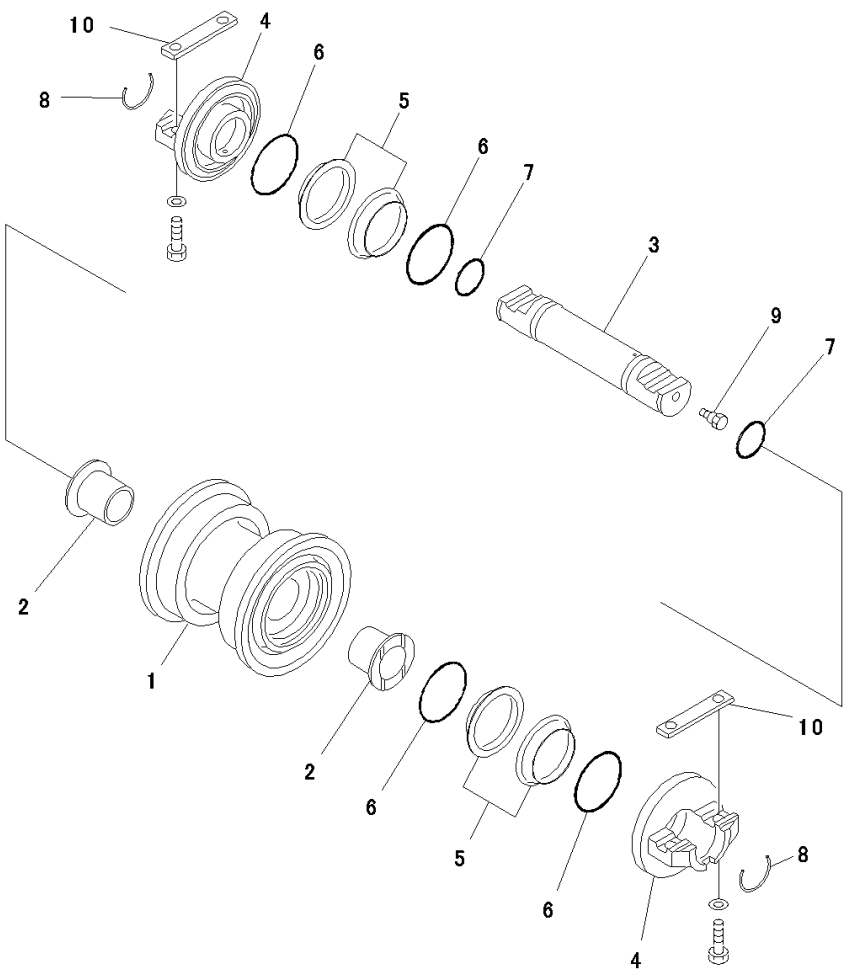

Index	Code	Part Number	Description	Qty	Serial Number
		14X-30-01050	Roller Assembly, Track	12	1001-
1		14X-30-14410	• Roller, Track, Single Flanged	1	1001-
2		14X-30-13340	• Bushing	2	1001-
3		14X-30-14152	• Shaft	1	1001-
4		14X-30-14331	• Collar	2	1001-
		205-30-00220	• Floating Seal Assembly	2	1001-
5	C1		• • Seal	2	1001-
6	C1		• • O-ring	2	1001-
7		427-15-15910	• O-ring	2	1001-
8		14X-30-14161	• Lock	2	1001-
9		07052-31217	• Plug	1	1001-
10		14X-30-14170	Key	24	1001-

FIG. R0200-001002 Track Roller (With Plus Type Track Shoe) (Double Roller)

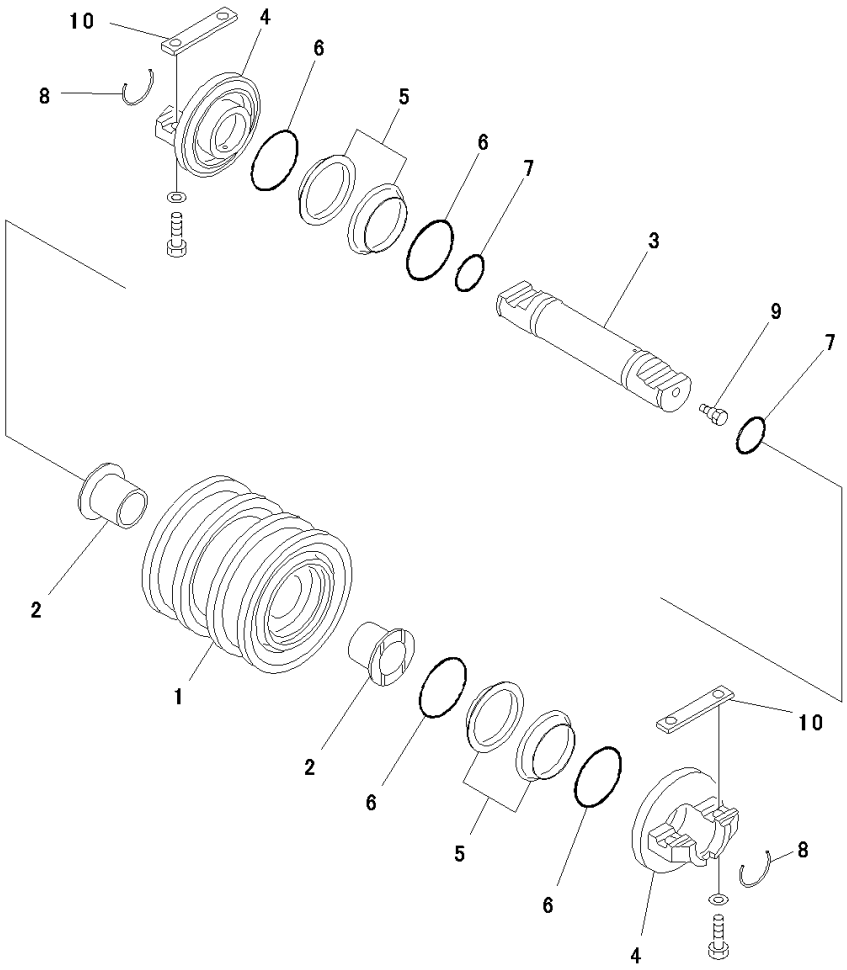

Index	Code	Part Number	Description	Qty	Serial Number
		14X-30-01060	Roller Assembly, Track	4	1001-
1		14X-30-14420	• Roller, Track, Double Flanged	1	1001-
2		14X-30-13340	• Bushing	2	1001-
3		14X-30-14152	• Shaft	1	1001-
4		14X-30-14331	• Collar	2	1001-
		205-30-00220	• Floating Seal Assembly	2	1001-
5	C1		• • Seal	2	1001-
6	C1		• • O-ring	2	1001-
7		427-15-15910	• O-ring	2	1001-
8		14X-30-14161	• Lock	2	1001-
9		07052-31217	• Plug	1	1001-
10		14X-30-14170	Key	8	1001-

FIG. R0200-001003 Track Roller (Mounting Parts)

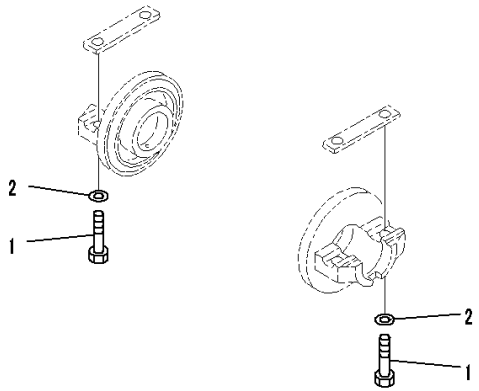

00035937

Index	Code	Part Number	Description	Qty	Serial Number
		Note: This list covers following specifications.			
		With Plus Type Track Shoe			
		Without Plus Type Track Shoe			
1		01010-81865	Bolt	64	1001-
2		01643-31845	Washer	64	1001-

FIG. R0200-002001 Track Roller (Without Plus Type Track Shoe) (Single Roller)

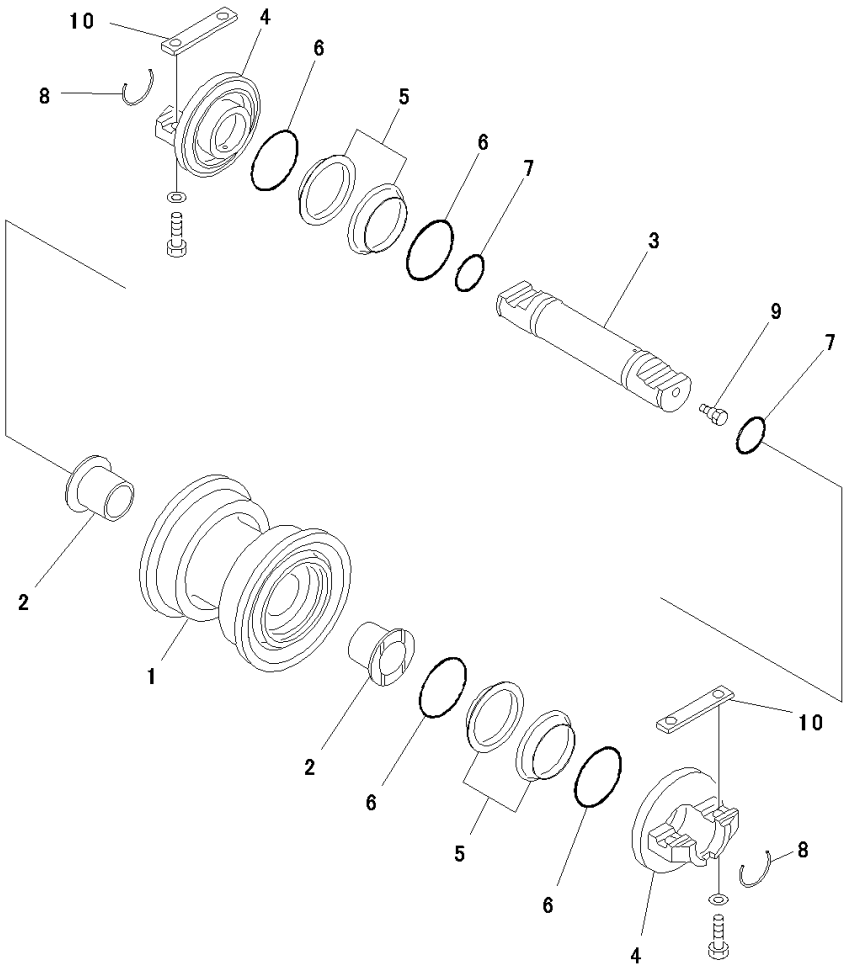

Index	Code	Part Number	Description	Qty	Serial Number
		14X-30-00127	Track Roller Assembly, Single Flange	12	1001-
1		14X-30-14311	• Roller, Track, Single Flanged	1	1001-
2		14X-30-13340	• Bushing	2	1001-
3		14X-30-14152	• Shaft	1	1001-
4		14X-30-14331	• Collar	2	1001-
		205-30-00220	• Floating Seal Assembly	2	1001-
5	C1		• • Seal	2	1001-
6	C1		• • O-ring	2	1001-
7		427-15-15910	• O-ring	2	1001-
8		14X-30-14161	• Lock	2	1001-
9		07052-31217	• Plug	1	1001-
10		14X-30-14170	Key	24	1001-

FIG. R0200-002002 Track Roller (Without Plus Type Track Shoe) (Double Roller)

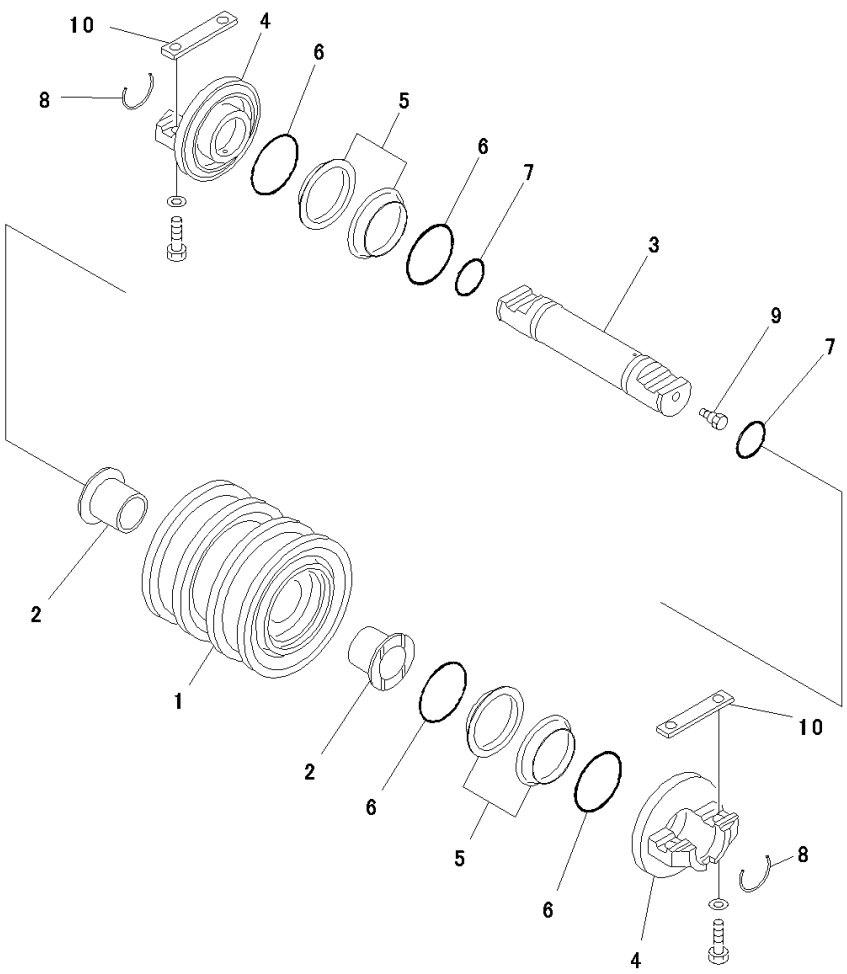

Index	Code	Part Number	Description	Qty	Serial Number
		14X-30-00136	Track Roller Assembly	4	1001-
1		14X-30-14321	• Roller, Track, Double Flanged	1	1001-
2		14X-30-13340	• Bushing	2	1001-
3		14X-30-14152	• Shaft	1	1001-
4		14X-30-14331	• Collar	2	1001-
		205-30-00220	• Floating Seal Assembly	2	1001-
5	C1		• • Seal	2	1001-
6	C1		• • O-ring	2	1001-
7		427-15-15910	• O-ring	2	1001-
8		14X-30-14161	• Lock	2	1001-
9		07052-31217	• Plug	1	1001-
10		14X-30-14170	Key	8	1001-

FIG. R0300-001001 Carrier Roller (With Plus Type Track Shoe)

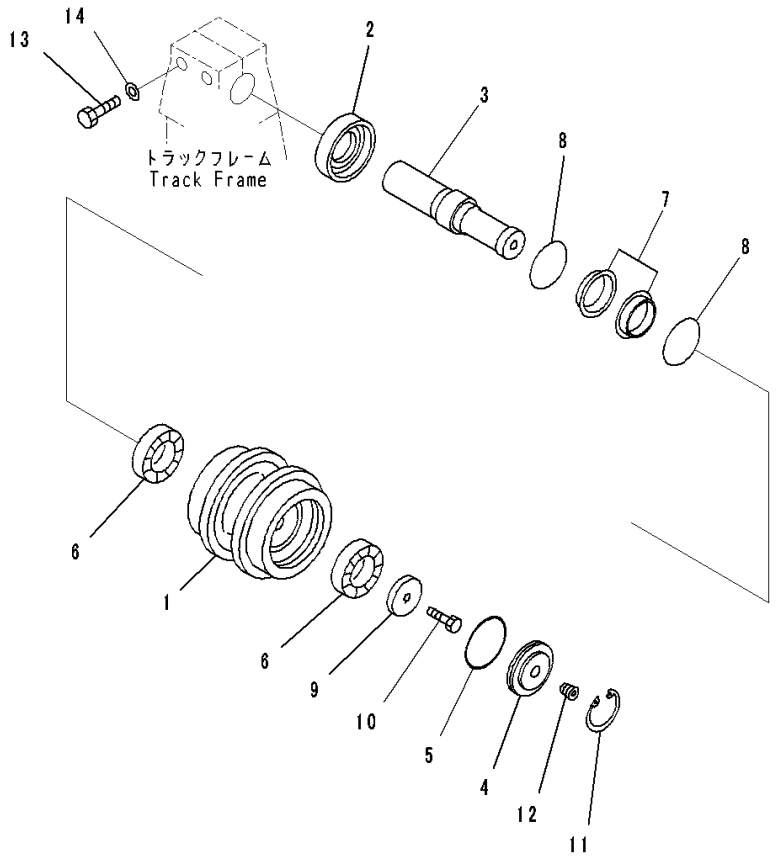

Index	Code	Part Number	Description	Qty	Serial Number
		14X-30-01041	Carrier Assembly	4	1001-
1		14X-30-15310	• Roller	1	1001-
2		14X-30-15140	• Ring	1	1001-
3		14X-30-15222	• Shaft	1	1001-
4		14X-30-15131	• Cover	1	1001-
5		07000-12105	• O-ring	1	1001-
6		14X-30-15240	• Bearing	2	1001-
		141-30-00616	• Floating Seal Assembly	1	1001-
7	C1		• • Seal	2	1001-
8	C1		• • O-ring	2	1001-
9		14X-30-15251	• Holder	1	1001-
10		01010-81630	• Bolt	1	1001-
11		04065-01154	• Ring	1	1001-
12		20Y-30-16330	• Plug	1	1001-
13		01010-82085	Bolt	8	1001-
14		01643-32060	Washer	8	1001-

FIG. R0300-002001 Carrier Roller (Without Plus Type Track Shoe)

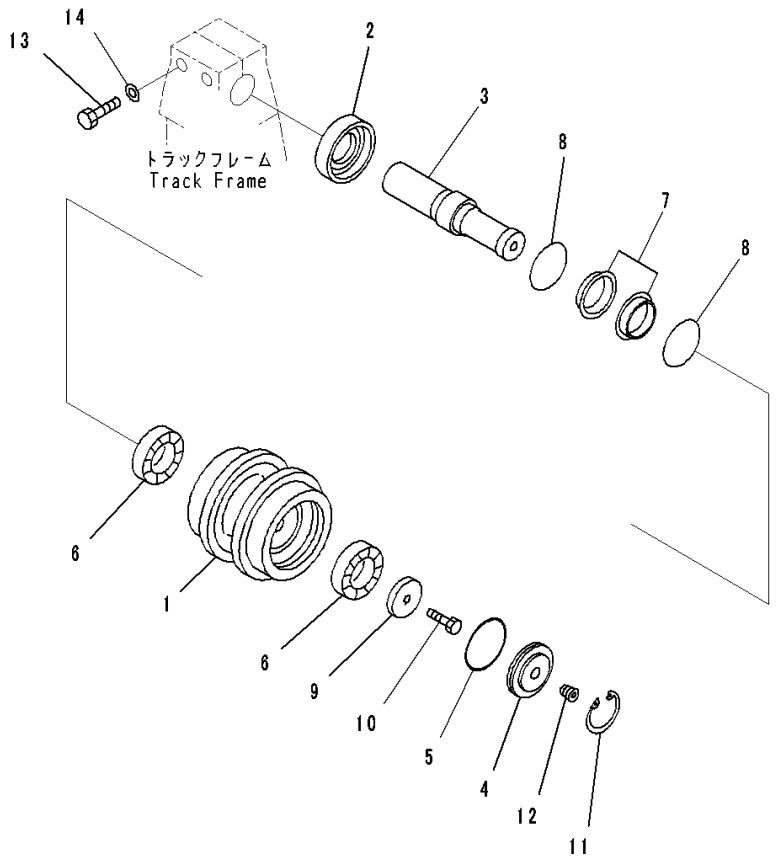

Index	Code	Part Number	Description	Qty	Serial Number
		14X-30-00143	Carrier Assembly	4	1001-
1		14X-30-15212	• Roller	1	1001-
2		14X-30-15140	• Ring	1	1001-
3		14X-30-15222	• Shaft	1	1001-
4		14X-30-15131	• Cover	1	1001-
5		07000-12105	• O-ring	1	1001-
6		14X-30-15240	• Bearing	2	1001-
		141-30-00616	• Floating Seal Assembly	1	1001-
7	C1		• • Seal	2	1001-
8	C1		• • O-ring	2	1001-
9		14X-30-15251	• Holder	1	1001-
10		01010-81630	• Bolt	1	1001-
11		04065-01154	• Ring	1	1001-
12		20Y-30-16330	• Plug	1	1001-
13		01010-82085	Bolt	8	1001-
14		01643-32060	Washer	8	1001-

FIG. R0500-001001 Track Shoe Assembly (Single Grouser Shoe, 915mm Width, Sealed and Lubricated Type, Plus Type)

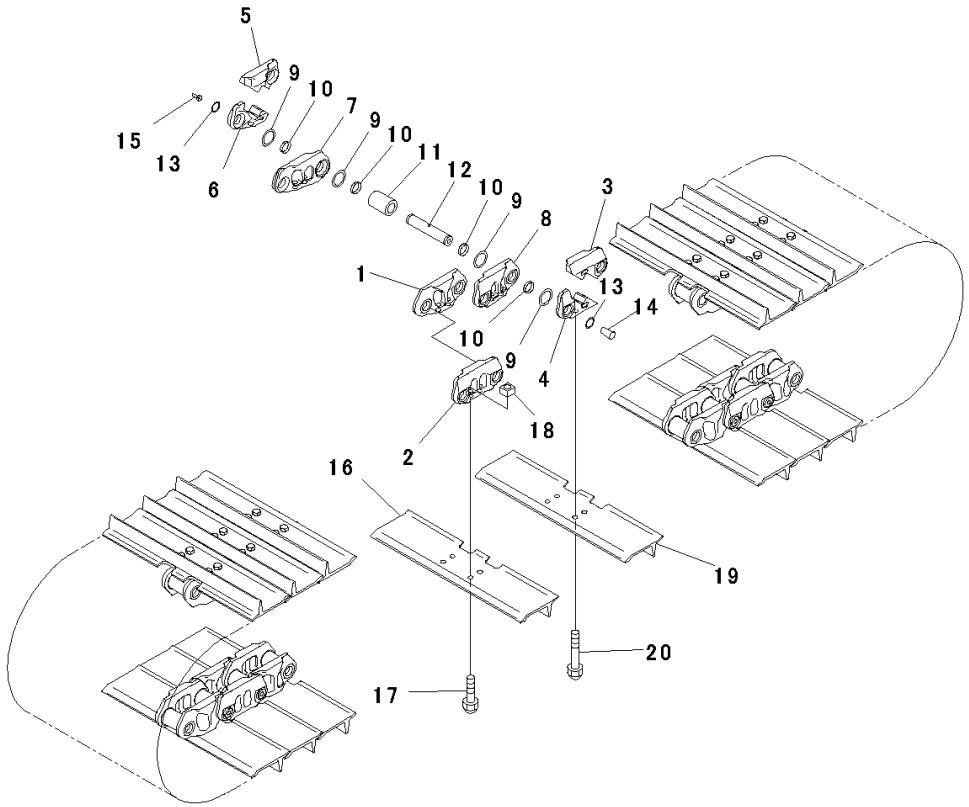

Index	Code	Part Number	Description	Qty	Serial Number
		14Y-32-03001	Track Shoe Assembly	1	1208-
1		14X-32-15610	• Link,Inner	88	1001-
2		14X-32-15630	• Link,Outer	84	1001-
		14X-32-08210	• Link Kit, Master,L.H.	2	1001-
3	C1		• • Link, Master	1	1001-
4	C1		• • Link, Master	1	1001-
		14X-32-08220	• Link Kit, Master,R.H.	2	1001-
5	C1		• • Link, Master	1	1001-
6	C1		• • Link, Master	1	1001-
7		14X-32-15500	• Link,R.H.	2	1001-
8		14X-32-15510	• Link,L.H.	2	1001-
9		14X-32-15701	• Seal Assembly	360	1208-
10		14X-32-15680	• Spacer	360	1001-
11		14X-32-15640	• Bushing	90	1001-
12		14X-32-15650	• Pin	90	1001-
13		14X-32-15730	• Ring	180	1001-
14		07059-11830	• Plug, Large	90	1001-
15		07059-20721	• Plug, Small	90	1001-
16		14Y-32-15340	• Shoe	88	1001-
17		207-32-71620	• Bolt, (Kit : K07)	352	1001-
18		154-32-71220	• Nut, (Kit : K07)	352	1001-
19		14Y-32-15340	• Shoe	2	1001-
20		14X-32-15310	• Bolt, Master Track Shoe	8	1001-

FIG. R0500-002001 Track Shoe Assembly (Single Grouser Shoe, 760mm Width, Sealed and Lubricated Type, Plus Type)

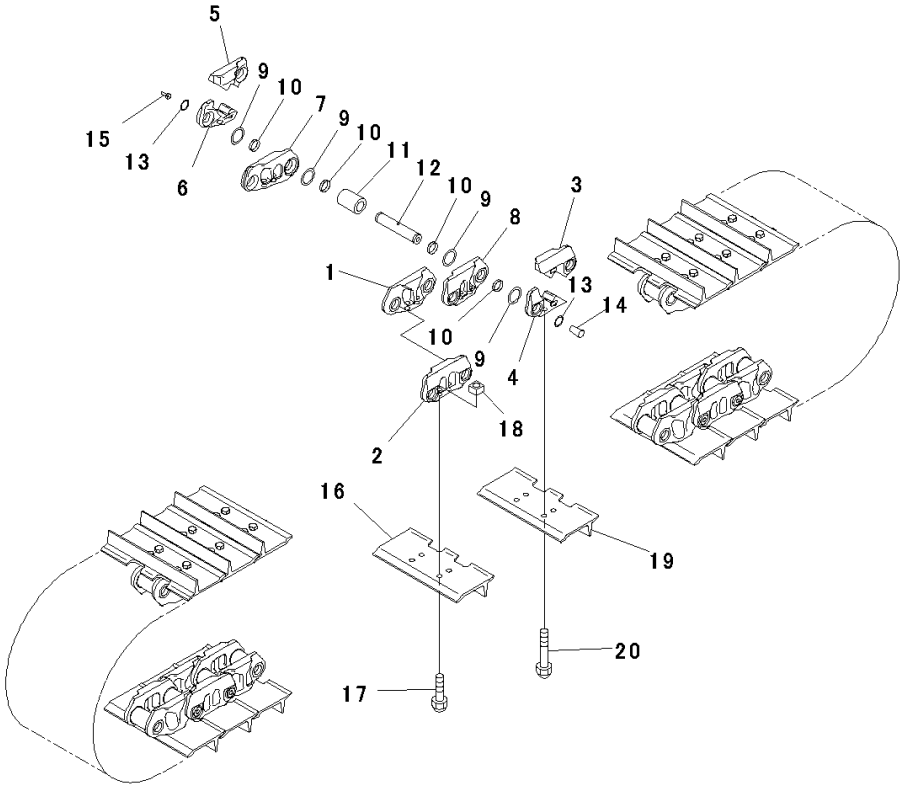

Index	Code	Part Number	Description	Qty	Serial Number
		14X-32-03331	Track Shoe Assembly	1	1208-
1		14X-32-15610	• Link,Inner	88	1001-
2		14X-32-15630	• Link,Outer	84	1001-
		14X-32-08210	• Link Kit, Master,L.H.	2	1001-
3	C1		• • Link, Master	1	1001-
4	C1		• • Link, Master	1	1001-
		14X-32-08220	• Link Kit, Master,R.H.	2	1001-
5	C1		• • Link, Master	1	1001-
6	C1		• • Link, Master	1	1001-
7		14X-32-15500	• Link,R.H.	2	1001-
8		14X-32-15510	• Link,L.H.	2	1001-
9		14X-32-15701	• Seal Assembly	360	1208-
10		14X-32-15680	• Spacer	360	1001-
11		14X-32-15640	• Bushing	90	1001-
12		14X-32-15650	• Pin	90	1001-
13		14X-32-15730	• Ring	180	1001-
14		07059-11830	• Plug, Large	90	1001-
15		07059-20721	• Plug, Small	90	1001-
16		14X-32-15380	• Shoe	88	1001-
17		207-32-71620	• Bolt, (Kit : K07)	352	1001-
18		154-32-71220	• Nut, (Kit : K07)	352	1001-
19		14X-32-15380	• Shoe	2	1001-
20		14X-32-15310	• Bolt, Master Track Shoe	8	1001-

FIG. R0500-003001 Track Shoe Assembly (Single Grouser Shoe, 760mm Width, Sealed and Lubricated Type, HD Links)

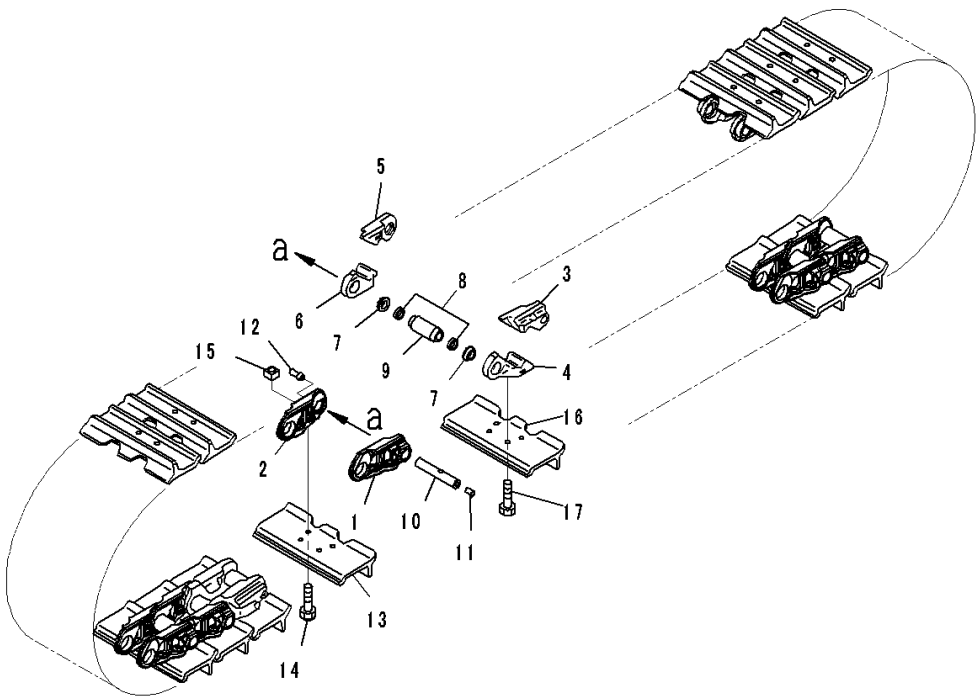

Index	Code	Part Number	Description	Qty	Serial Number
		14X-32-02830	Track Shoe Assembly	1	1001-
1		14X-32-52120	• Link,L.H.	88	1001-
2		14X-32-52130	• Link,R.H.	88	1001-
		14X-32-08010	• Link Kit, Master,L.H.	2	1001-
3	C1		• • Link, Master	1	1001-
4	C1		• • Link, Master	1	1001-
		14X-32-08020	• Link Kit, Master,R.H.	2	1001-
5	C1		• • Link, Master	1	1001-
6	C1		• • Link, Master	1	1001-
7		14X-32-12200	• Seal Assembly	180	1001-
8		144-32-21191	• Spacer	180	1001-
9		14X-32-11140	• Bushing	90	1001-
10		14X-32-13150	• Pin	90	1001-
11		07059-11830	• Plug, Large	90	1001-
12		07059-20721	• Plug, Small	90	1001-
13		14X-32-51120	• Shoe	88	1001-
14		154-32-21323	• Bolt, (Kit : K08)	352	1001-
15		134-32-61221	• Nut, (Kit : K08)	352	1001-
16		14X-32-51120	• Shoe	2	1001-
17		14X-32-11350	• Bolt, Master Track Shoe	8	1001-

FIG. R0500-004001 Track Shoe Assembly (Single Grouser Shoe, 915mm Width, Sealed and Lubricated Type, HD Links)

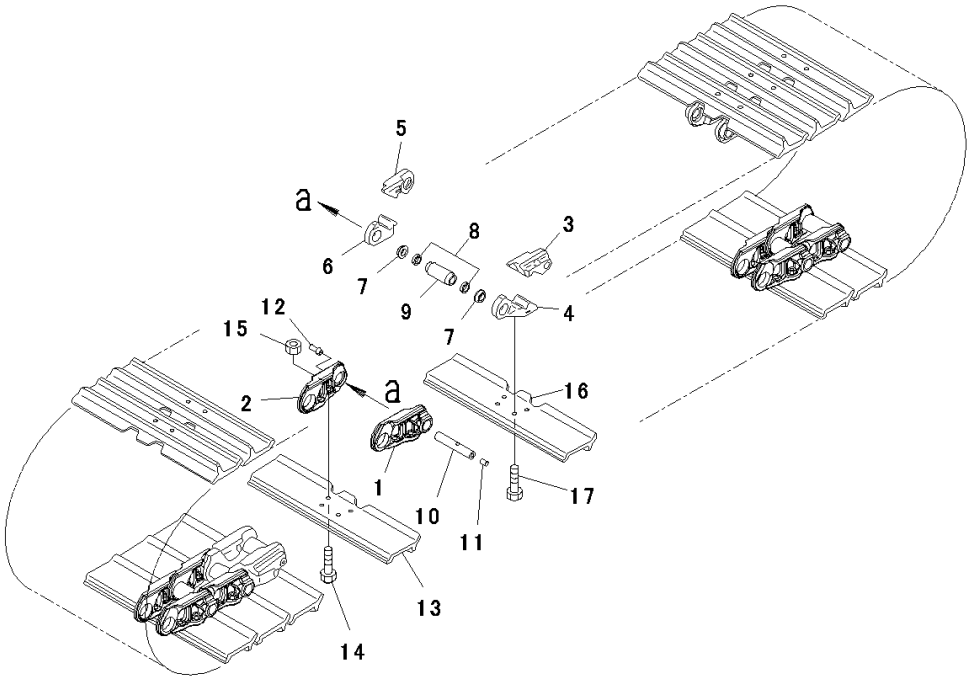

JH002837

Index	Code	Part Number	Description	Qty	Serial Number
		14X-32-02840	Track Shoe Assembly	1	1001-
1		14X-32-52120	• Link,L.H.	88	1001-
2		14X-32-52130	• Link,R.H.	88	1001-
		14X-32-08010	• Link Kit, Master,L.H.	2	1001-
3	C1		• • Link, Master	1	1001-
4	C1		• • Link, Master	1	1001-
		14X-32-08020	• Link Kit, Master,R.H.	2	1001-
5	C1		• • Link, Master	1	1001-
6	C1		• • Link, Master	1	1001-
7		14X-32-12200	• Seal Assembly	180	1001-
8		144-32-21191	• Spacer	180	1001-
9		14X-32-11140	• Bushing	90	1001-
10		14X-32-13150	• Pin	90	1001-
11		07059-11830	• Plug, Large	90	1001-
12		07059-20721	• Plug, Small	90	1001-
13		14Y-32-11360	• Shoe	88	1001-
14		154-32-21323	• Bolt, (Kit : K08)	352	1001-
15		134-32-61221	• Nut, (Kit : K08)	352	1001-
16		14Y-32-11360	• Shoe	2	1001-
17		14X-32-11350	• Bolt, Master Track Shoe	8	1001-

FIG. R0500-005001 Track Shoe Assembly (Swamp Shoe, 940mm Width, Sealed and Lubricated Type, HD Links)

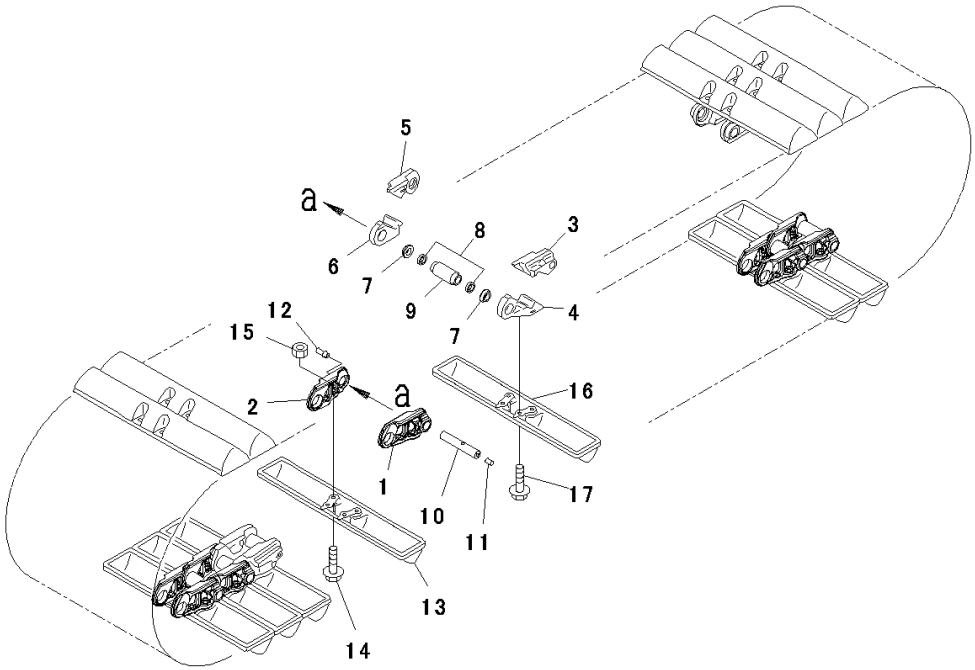

Index	Code	Part Number	Description	Qty	Serial Number
		14X-32-02850	Track Shoe Assembly	1	1001-
1		14X-32-52120	• Link,L.H.	88	1001-
2		14X-32-52130	• Link,R.H.	88	1001-
		14X-32-08010	• Link Kit, Master,L.H.	2	1001-
3	C1		• • Link, Master	1	1001-
4	C1		• • Link, Master	1	1001-
		14X-32-08020	• Link Kit, Master,R.H.	2	1001-
5	C1		• • Link, Master	1	1001-
6	C1		• • Link, Master	1	1001-
7		14X-32-12200	• Seal Assembly	180	1001-
8		144-32-21191	• Spacer	180	1001-
9		14X-32-11140	• Bushing	90	1001-
10		14X-32-13150	• Pin	90	1001-
11		07059-11830	• Plug, Large	90	1001-
12		07059-20721	• Plug, Small	90	1001-
13		14X-32-51110	• Shoe	88	1001-
14		13G-32-61210	• Bolt, (Kit : K09)	352	1001-
15		134-32-61221	• Nut, (Kit : K09)	352	1001-
16		14X-32-51110	• Shoe	2	1001-
17		154-32-41412	• Bolt, Master Track Shoe	8	1001-

FIG. R0501-001001 Track Link Assembly (Supply Only, Plus Type)

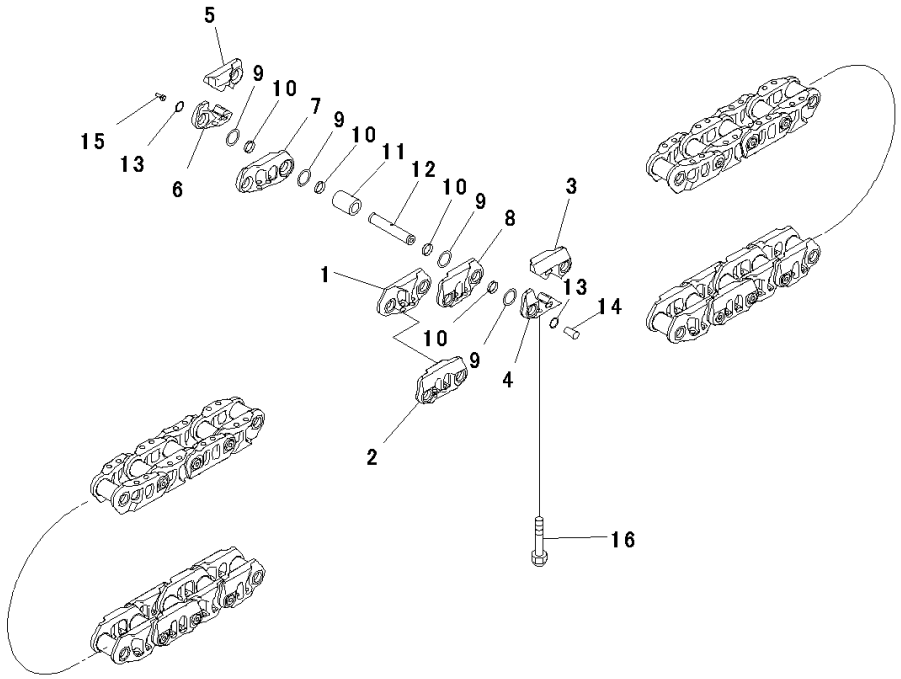

Index	Code	Part Number	Description	Qty	Serial Number
		14Y-32-00301	Track Link Assembly	1	1208-
1		14X-32-15610	• Link	88	1001-
2		14X-32-15630	• Link	84	1001-
		14X-32-08210	• Link Kit, Master	2	1001-
3	C1		• • Link, Master	1	1001-
4	C1		• • Link, Master	1	1001-
		14X-32-08220	• Link Kit, Master	2	1001-
5	C1		• • Link, Master	1	1001-
6	C1		• • Link, Master	1	1001-
7		14X-32-15500	• Link	2	1001-
8		14X-32-15510	• Link	2	1001-
9		14X-32-15701	• Seal Assembly	360	1208-
10		14X-32-15680	• Spacer	360	1001-
11		14X-32-15640	• Bushing	90	1001-
12		14X-32-15650	• Pin	90	1001-
13		14X-32-15730	• Ring	180	1001-
14		07059-11830	• Plug, Large	90	1001-
15		07059-20721	• Plug, Small	90	1001-
16		14X-32-15310	• Bolt, Master Track Shoe	8	1001-

FIG. R0501-002001 Track Link Assembly (Supply Only, Heavy Duty Links)

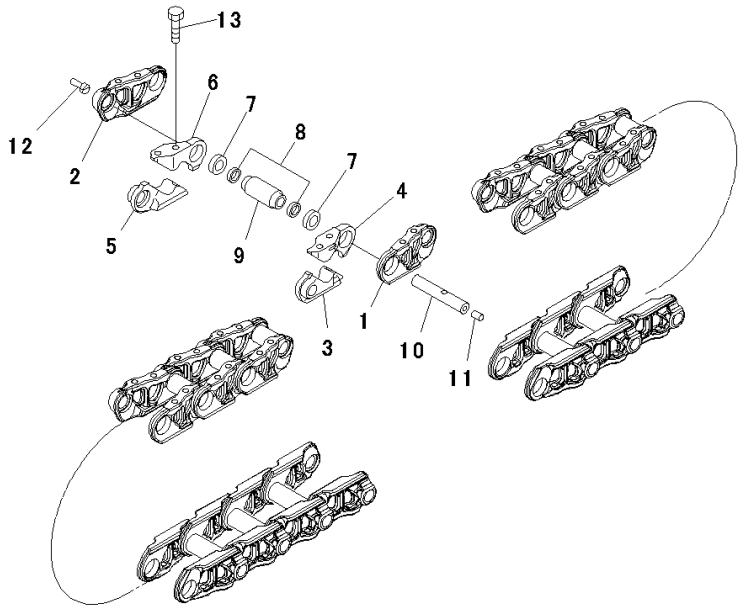

JH002832

Index	Code	Part Number	Description	Qty	Serial Number
		14X-32-00260	Track Link Assembly	1	1001-
1		14X-32-52120	• Link,L.H.	88	1001-
2		14X-32-52130	• Link,R.H.	88	1001-
		14X-32-08010	• Link Kit, Master,L.H.	2	1001-
3	C1		• • Link, Master	1	1001-
4	C1		• • Link, Master	1	1001-
		14X-32-08020	• Link Kit, Master,R.H.	2	1001-
5	C1		• • Link, Master	1	1001-
6	C1		• • Link, Master	1	1001-
7		14X-32-12200	• Seal Assembly	180	1001-
8		144-32-21191	• Spacer	180	1001-
9		14X-32-11140	• Bushing	90	1001-
10		14X-32-13150	• Pin	90	1001-
11		07059-11830	• Plug, Large	90	1001-
12		07059-20721	• Plug, Small	90	1001-
13		14X-32-11350	• Bolt, Master Track Shoe	8	1001-

FIG. R0501-003001 Track Link Assembly (Supply Only, Swamp Shoe, Heavy Duty Links)

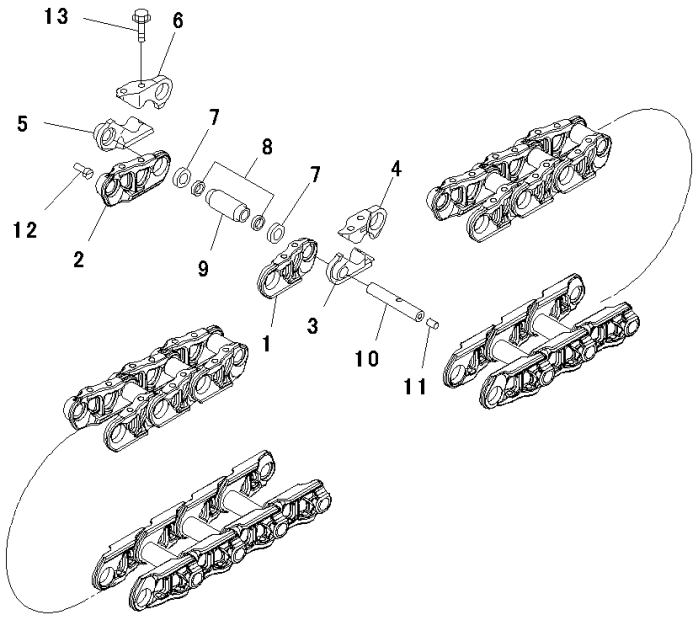

JH002841

Index	Code	Part Number	Description	Qty	Serial Number
		14X-32-00270	Track Link Assembly	1	1001-
1		14X-32-52120	• Link,L.H.	88	1001-
2		14X-32-52130	• Link,R.H.	88	1001-
		14X-32-08010	• Link Kit, Master,L.H.	2	1001-
3	C1		• • Link, Master	1	1001-
4	C1		• • Link, Master	1	1001-
		14X-32-08020	• Link Kit, Master,R.H.	2	1001-
5	C1		• • Link, Master	1	1001-
6	C1		• • Link, Master	1	1001-
7		14X-32-12200	• Seal Assembly	180	1001-
8		144-32-21191	• Spacer	180	1001-
9		14X-32-11140	• Bushing	90	1001-
10		14X-32-13150	• Pin	90	1001-
11		07059-11830	• Plug, Large	90	1001-
12		07059-20721	• Plug, Small	90	1001-
13		154-32-41412	• Bolt, Master Track Shoe	8	1001-

FIG. R2100-001001 Track Frame (Strengthened Type)

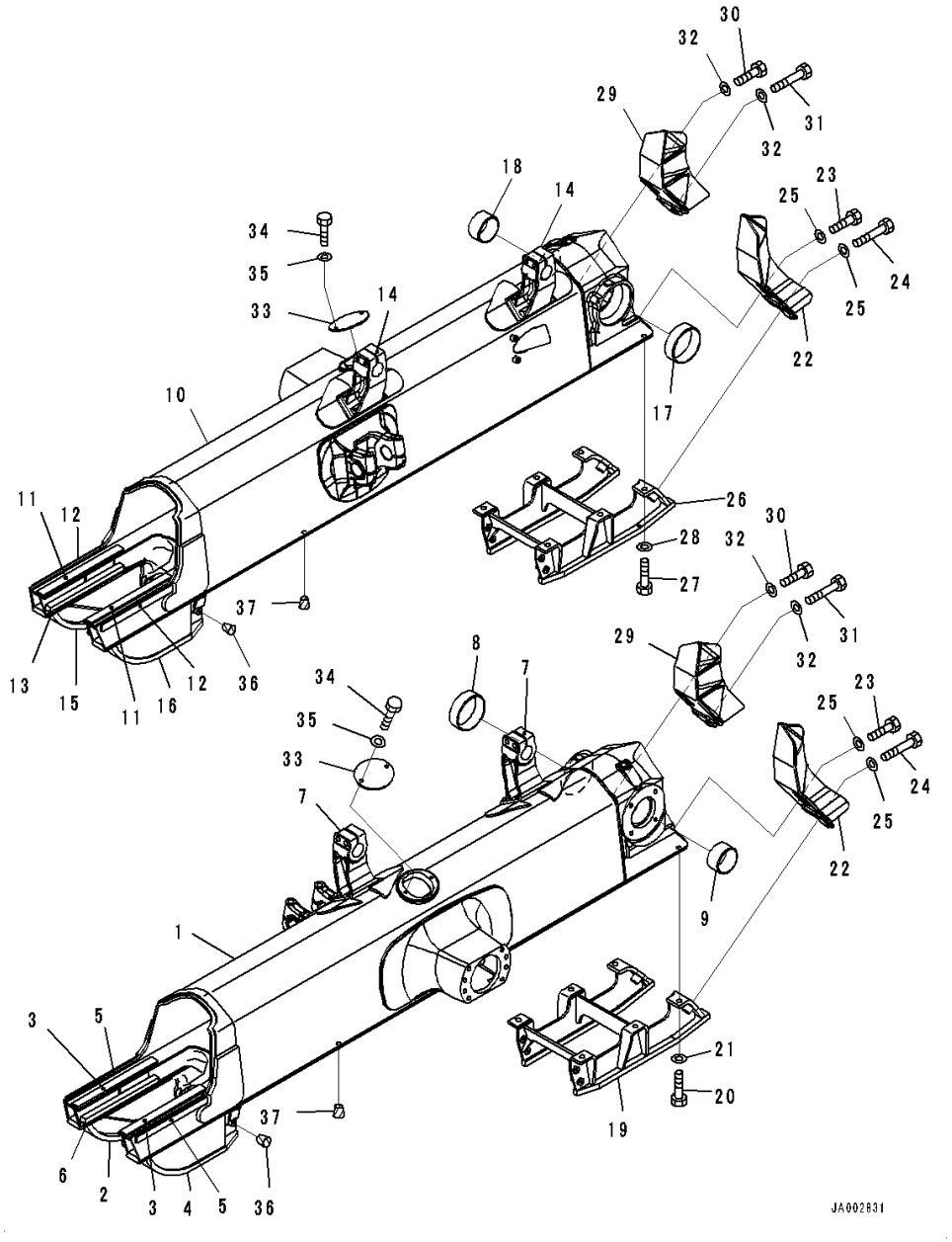

Index	Code	Part Number	Description	Qty	Serial Number
1		14X-30-51131	Frame,L.H.	1	1001-
2		14X-30-51331	• Guard,Welded	1	1001-
3		14X-30-51C71	• Plate,Welded	2	1001-
4		14X-30-51341	• Guard,Welded	1	1001-
5		14X-30-11D52	• Plate,Welded	2	1001-
6		14X-30-11D52	• Plate,Welded	2	1001-
7		14X-30-51650	• Bracket,Welded	2	1001-
8		14Y-30-18130	Bushing	1	1001-
9		14Y-30-18140	Bushing	1	1001-
10		14X-30-51141	Frame,R.H.	1	1001-
11		14X-30-51C71	• Plate,Welded	2	1001-
12		14X-30-11D52	• Plate,Welded	2	1001-
13		14X-30-11D52	• Plate,Welded	2	1001-
14		14X-30-51650	• Bracket,Welded	2	1001-
15		14X-30-51331	• Guard,Welded	1	1001-
16		14X-30-51341	• Guard,Welded	1	1001-
17		14Y-30-18130	Bushing	1	1001-
18		14Y-30-18140	Bushing	1	1001-
19		14X-30-51440	Guard	1	1001-
20		01010-81845	Bolt	6	1001-
21		01643-31845	Washer	6	1001-
22		14X-30-51390	Bracket	2	1001-
23		01010-81850	Bolt	4	1001-
24		01010-81865	Bolt	4	1001-
25		01643-31845	Washer	8	1001-
26		14X-30-51440	Guard	1	1001-
27		01010-81845	Bolt	6	1001-
28		01643-31845	Washer	6	1001-
29		14X-30-51410	Bracket	2	1001-
30		01010-81850	Bolt	4	1001-
31		01010-81865	Bolt	4	1001-
32		01643-31845	Washer	8	1001-
33		14Y-30-11277	Cover	2	1001-
34		01010-81225	Bolt	4	1001-
35		01643-31232	Washer	4	1001-
36		07049-01215	Plug	16	1001-
37		07049-01822	Plug	12	1001-

FIG. R2100-002001 Track Frame (Strengthened Type, For Power Angle Power Tilt Dozer, Inside Frame)

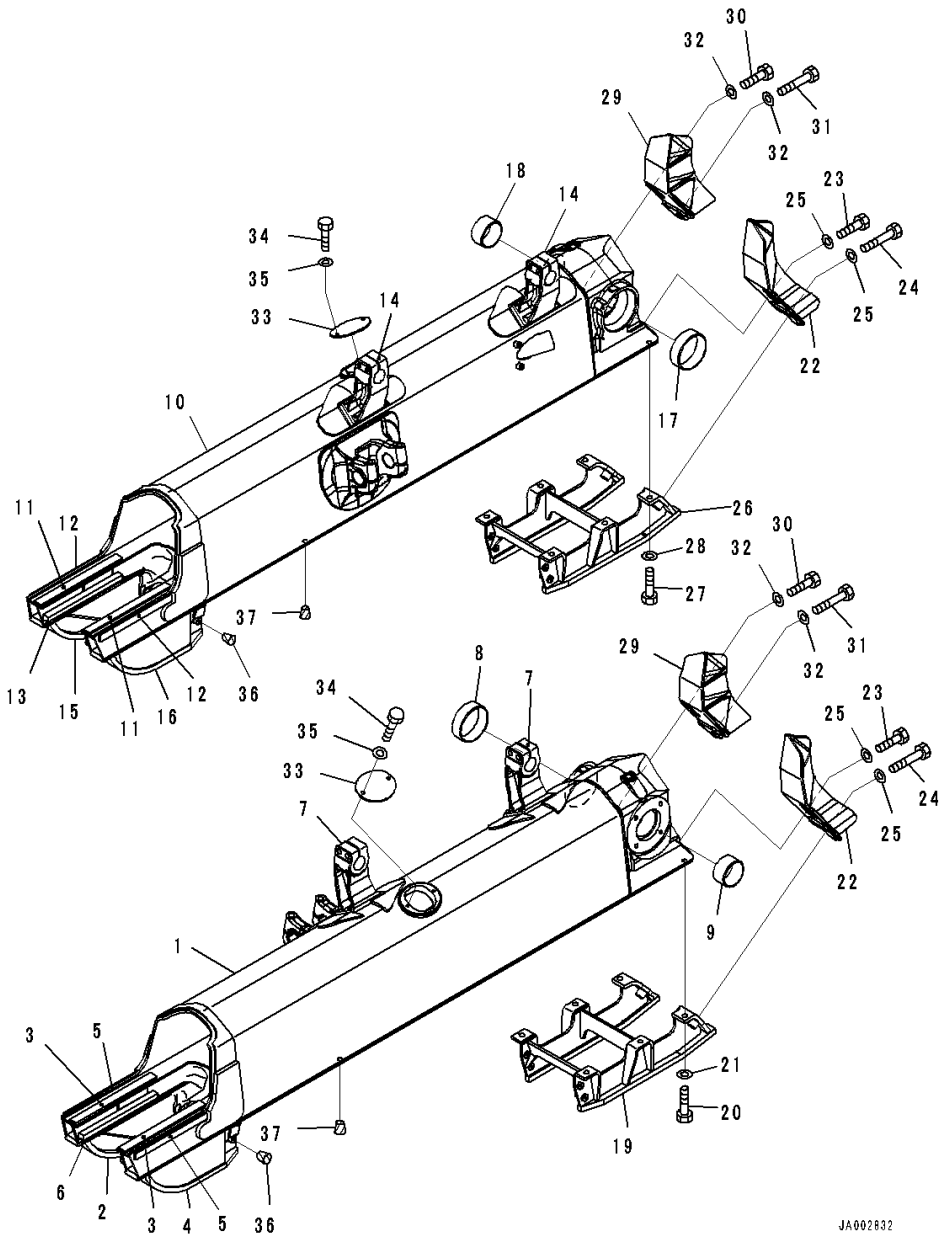

Index	Code	Part Number	Description	Qty	Serial Number
1		14X-30-51231	Frame,L.H.	1	1001-
2		14X-30-51331	• Guard,Welded	1	1001-
3		14X-30-51C71	• Plate,Welded	2	1001-
4		14X-30-51341	• Guard,Welded	1	1001-
5		14X-30-11D52	• Plate,Welded	2	1001-
6		14X-30-11D52	• Plate,Welded	2	1001-
7		14X-30-51650	• Bracket,Welded	2	1001-
8		14Y-30-18130	Bushing	1	1001-
9		14Y-30-18140	Bushing	1	1001-
10		14X-30-51241	Frame,R.H.	1	1001-
11		14X-30-51C71	• Plate,Welded	2	1001-
12		14X-30-11D52	• Plate,Welded	2	1001-
13		14X-30-11D52	• Plate,Welded	2	1001-
14		14X-30-51650	• Bracket,Welded	2	1001-
15		14X-30-51331	• Guard,Welded	1	1001-
16		14X-30-51341	• Guard,Welded	1	1001-
17		14Y-30-18130	Bushing	1	1001-
18		14Y-30-18140	Bushing	1	1001-
19		14X-30-51440	Guard	1	1001-
20		01010-81845	Bolt	6	1001-
21		01643-31845	Washer	6	1001-
22		14X-30-51390	Bracket	2	1001-
23		01010-81850	Bolt	4	1001-
24		01010-81865	Bolt	4	1001-
25		01643-31845	Washer	8	1001-
26		14X-30-51440	Guard	1	1001-
27		01010-81845	Bolt	6	1001-
28		01643-31845	Washer	6	1001-
29		14X-30-51410	Bracket	2	1001-
30		01010-81850	Bolt	4	1001-
31		01010-81865	Bolt	4	1001-
32		01643-31845	Washer	8	1001-
33		14Y-30-11277	Cover	2	1001-
34		01010-81225	Bolt	4	1001-
35		01643-31232	Washer	4	1001-
36		07049-01215	Plug	16	1001-
37		07049-01822	Plug	12	1001-

FIG. R2100-003001 Track Frame (Strengthened Type, Plus Type Track Shoe)

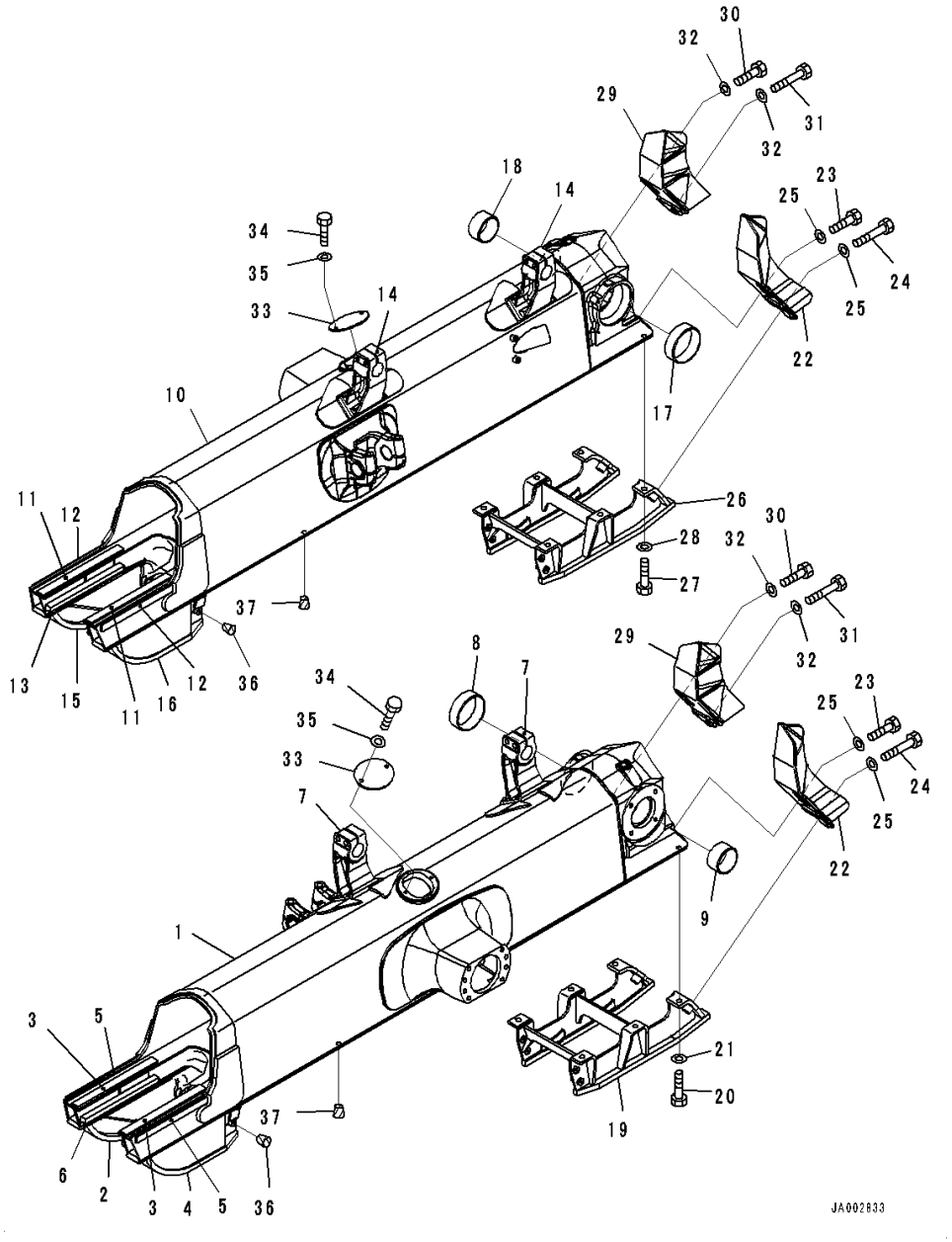

Index	Code	Part Number	Description	Qty	Serial Number
1		14X-30-51131	Frame,L.H.	1	1001-
2		14X-30-51331	• Guard,Welded	1	1001-
3		14X-30-51C71	• Plate,Welded	2	1001-
4		14X-30-51341	• Guard,Welded	1	1001-
5		14X-30-11D52	• Plate,Welded	2	1001-
6		14X-30-11D52	• Plate,Welded	2	1001-
7		14X-30-51650	• Bracket,Welded	2	1001-
8		14Y-30-18130	Bushing	1	1001-
9		14Y-30-18140	Bushing	1	1001-
10		14X-30-51141	Frame,R.H.	1	1001-
11		14X-30-51C71	• Plate,Welded	2	1001-
12		14X-30-11D52	• Plate,Welded	2	1001-
13		14X-30-11D52	• Plate,Welded	2	1001-
14		14X-30-51650	• Bracket,Welded	2	1001-
15		14X-30-51331	• Guard,Welded	1	1001-
16		14X-30-51341	• Guard,Welded	1	1001-
17		14Y-30-18130	Bushing	1	1001-
18		14Y-30-18140	Bushing	1	1001-
19		14Y-30-27130	Guard	1	1001-
20		01010-81845	Bolt	6	1001-
21		01643-31845	Washer	6	1001-
22		14X-30-51390	Bracket	2	1001-
23		01010-81850	Bolt	4	1001-
24		01010-81865	Bolt	4	1001-
25		01643-31845	Washer	8	1001-
26		14Y-30-27130	Guard	1	1001-
27		01010-81845	Bolt	6	1001-
28		01643-31845	Washer	6	1001-
29		14X-30-51410	Bracket	2	1001-
30		01010-81850	Bolt	4	1001-
31		01010-81865	Bolt	4	1001-
32		01643-31845	Washer	8	1001-
33		14Y-30-11277	Cover	2	1001-
34		01010-81225	Bolt	4	1001-
35		01643-31232	Washer	4	1001-
36		07049-01215	Plug	16	1001-
37		07049-01822	Plug	12	1001-

FIG. R2100-004001 Track Frame (Strengthened Type, Plus Type Track Shoe, For Power Angle Power Tilt Dozer, Inside Frame)

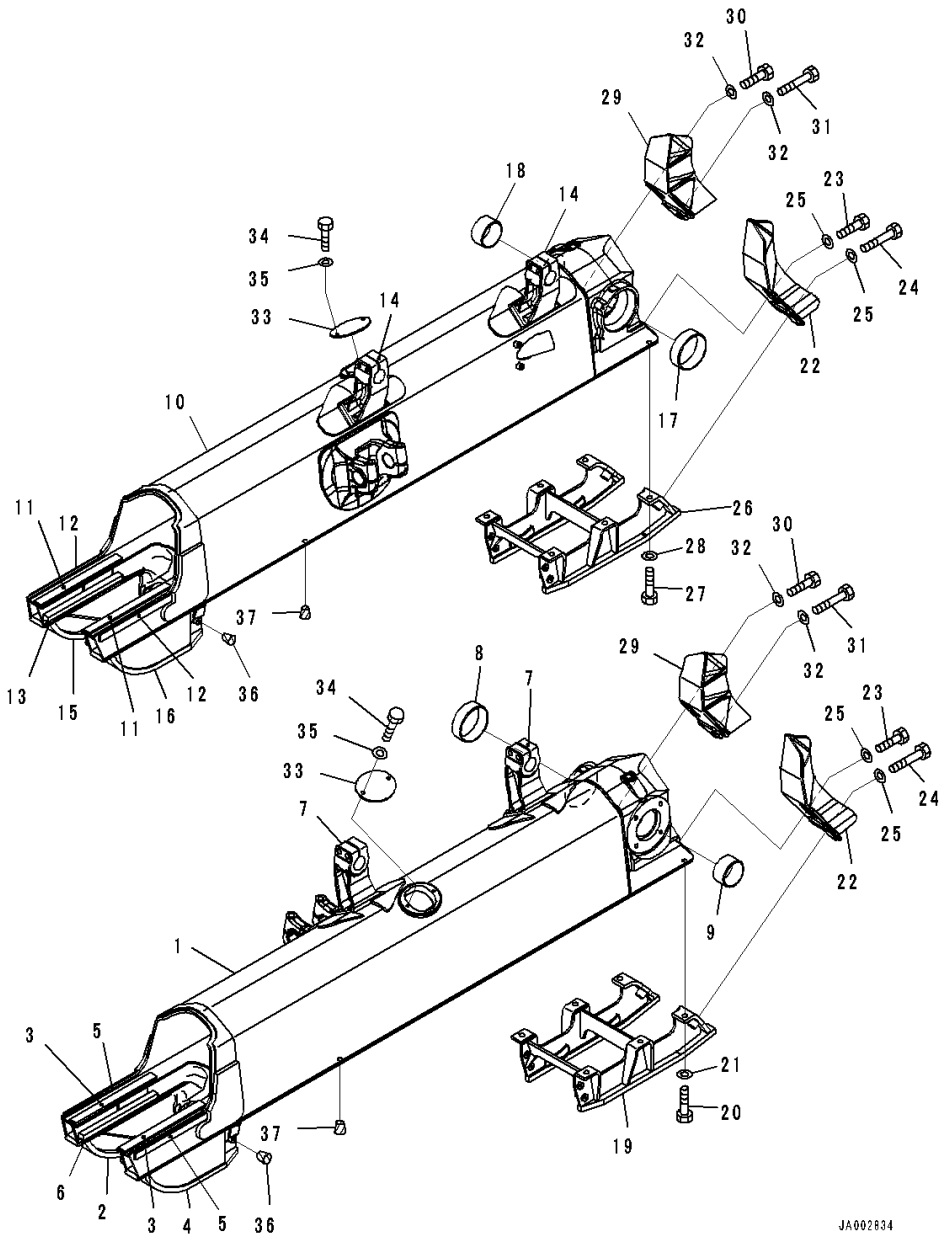

Index	Code	Part Number	Description	Qty	Serial Number
1		14X-30-51231	Frame,L.H.	1	1001-
2		14X-30-51331	• Guard,Welded	1	1001-
3		14X-30-51C71	• Plate,Welded	2	1001-
4		14X-30-51341	• Guard,Welded	1	1001-
5		14X-30-11D52	• Plate,Welded	2	1001-
6		14X-30-11D52	• Plate,Welded	2	1001-
7		14X-30-51650	• Bracket,Welded	2	1001-
8		14Y-30-18130	Bushing	1	1001-
9		14Y-30-18140	Bushing	1	1001-
10		14X-30-51241	Frame,R.H.	1	1001-
11		14X-30-51C71	• Plate,Welded	2	1001-
12		14X-30-11D52	• Plate,Welded	2	1001-
13		14X-30-11D52	• Plate,Welded	2	1001-
14		14X-30-51650	• Bracket,Welded	2	1001-
15		14X-30-51331	• Guard,Welded	1	1001-
16		14X-30-51341	• Guard,Welded	1	1001-
17		14Y-30-18130	Bushing	1	1001-
18		14Y-30-18140	Bushing	1	1001-
19		14Y-30-27130	Guard	1	1001-
20		01010-81845	Bolt	6	1001-
21		01643-31845	Washer	6	1001-
22		14X-30-51390	Bracket	2	1001-
23		01010-81850	Bolt	4	1001-
24		01010-81865	Bolt	4	1001-
25		01643-31845	Washer	8	1001-
26		14Y-30-27130	Guard	1	1001-
27		01010-81845	Bolt	6	1001-
28		01643-31845	Washer	6	1001-
29		14X-30-51410	Bracket	2	1001-
30		01010-81850	Bolt	4	1001-
31		01010-81865	Bolt	4	1001-
32		01643-31845	Washer	8	1001-
33		14Y-30-11277	Cover	2	1001-
34		01010-81225	Bolt	4	1001-
35		01643-31232	Washer	4	1001-
36		07049-01215	Plug	16	1001-
37		07049-01822	Plug	12	1001-

FIG. R2200-001001 Track Roller Guard (Center and End Sections)

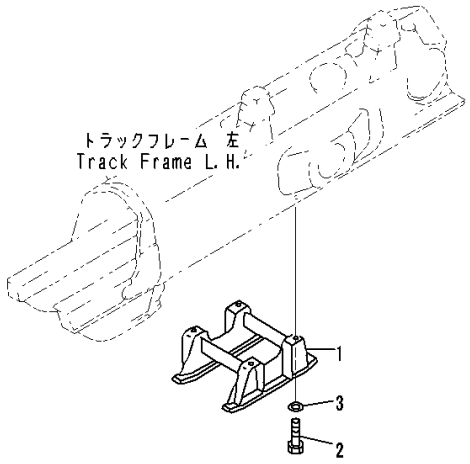

PWA6429

Index	Code	Part Number	Description	Qty	Serial Number
1		14Y-30-26140	Guard	2	1001-
2		01010-81845	Bolt	8	1001-
3		01643-31845	Washer	8	1001-

FIG. R2200-002001 Track Roller Guard (Center Track Roller Guard, Plus Type Track Shoe)

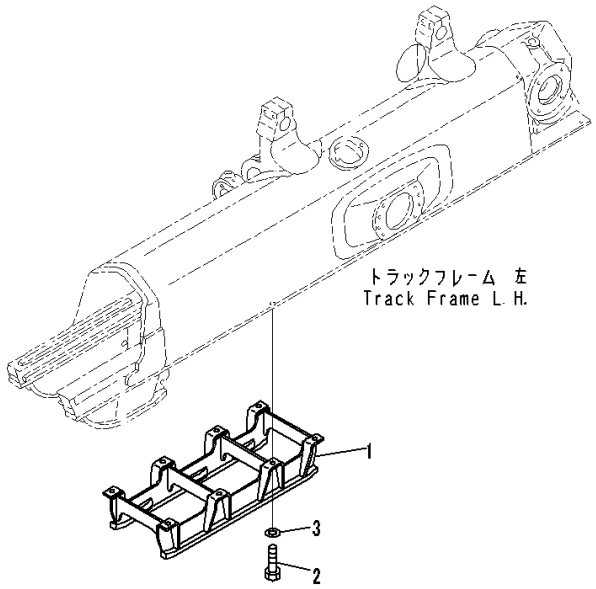

00083091

Index	Code	Part Number	Description	Qty	Serial Number
1		14Y-30-27140	Guard	2	1001-
2		01010-81845	Bolt	16	1001-
3		01643-31845	Washer	16	1001-

FIG. R2200-003001 Track Roller Guard (Segmented Full Track Roller Guard)

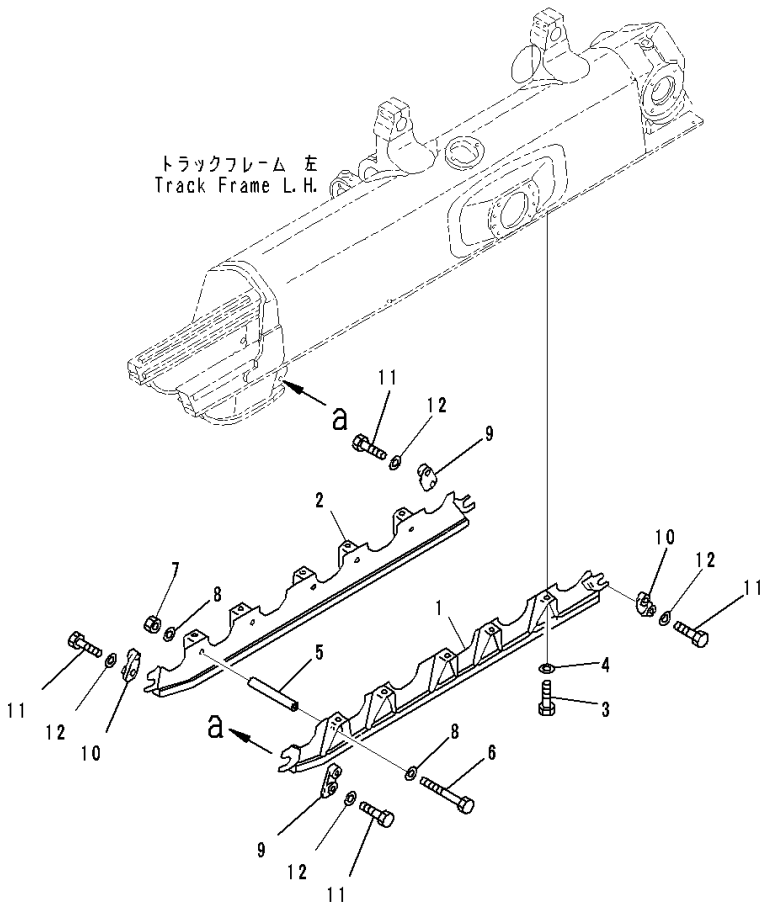

Index	Code	Part Number	Description	Qty	Serial Number
1		14X-30-51621	Guard,L.H.	2	1001-
2		14X-30-51631	Guard,R.H.	2	1001-
3		01010-81840	Bolt	20	1001-
4		01643-31845	Washer	20	1001-
5		14X-30-26230	Collar	10	1001-
6		09205-18325	Bolt	10	1001-
7		01580-11815	Nut	10	1001-
8		01643-31845	Washer	20	1001-
9		130-30-12170	Plate	4	1001-
10		130-30-12180	Plate	4	1001-
11		01010-81230	Bolt	16	1001-
12		01643-31232	Washer	16	1001-

FIG. R2200-004001 Track Roller Guard (Segmented Full Track Roller Guard, Plus Type Track Shoe)

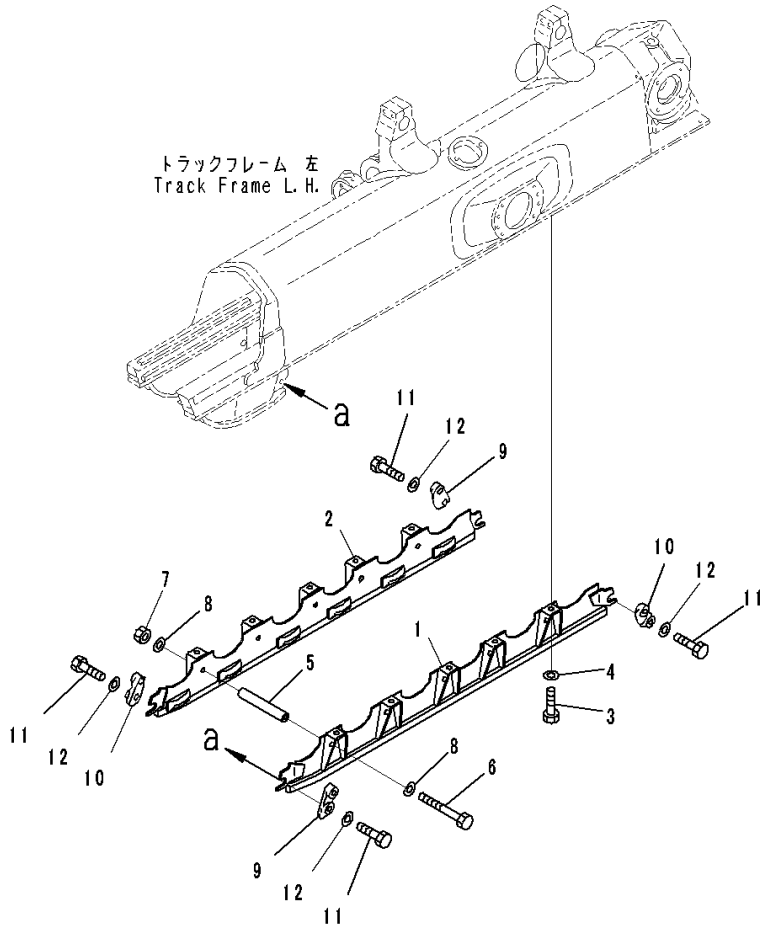

Index	Code	Part Number	Description	Qty	Serial Number
1		14X-30-51710	Guard,L.H.	2	1001-
2		14X-30-51720	Guard,R.H.	2	1001-
3		01010-81840	Bolt	20	1001-
4		01643-31845	Washer	20	1001-
5		14X-30-27230	Collar	10	1001-
6		09205-18330	Bolt	10	1001-
7		01580-11815	Nut	10	1001-
8		01643-31845	Washer	20	1001-
9		130-30-12170	Plate	4	1001-
10		130-30-12180	Plate	4	1001-
11		01010-81230	Bolt	16	1001-
12		01643-31232	Washer	16	1001-

WORK EQUIPMENT

FIG. T2110-002001 Dozer Frame (For Straight Tilt Dozer)

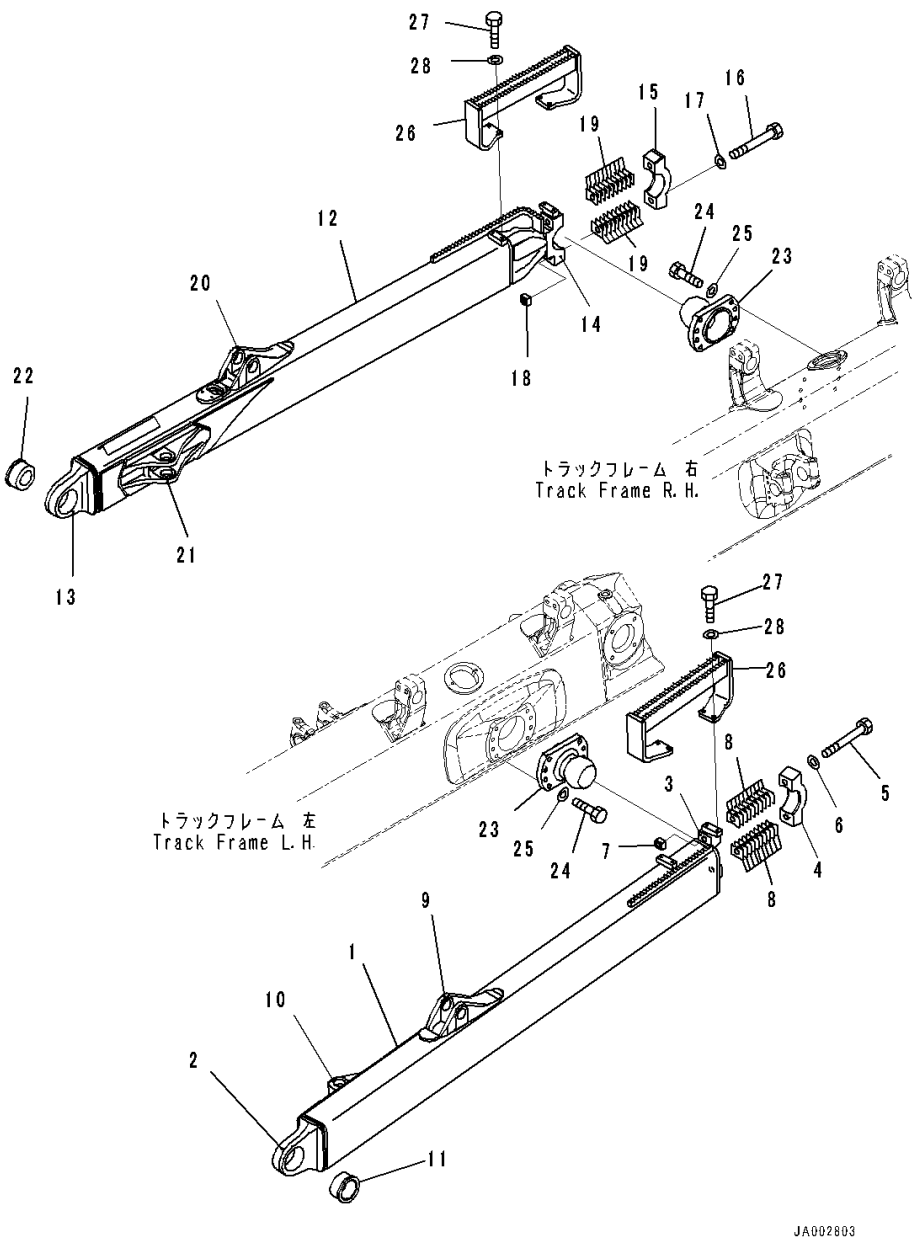

Index	Code	Part Number	Description	Qty	Serial Number
1		14X-71-53311	Frame,L.H.	1	1001-
2		14Y-71-12131	• Joint,Welded	1	1001-
		14Y-71-00082	• Pivot Assembly	1	1001-
3	C1		• • Bearing	1	1001-
4		14Y-71-22151	• • Cap	1	1001-
5		01011-82465	• • Bolt	2	1001-
6		01643-32460	• • Washer	2	1001-
7		130-70-13241	• • Nut	2	1001-
8		14Y-71-22280	• • Shim, T=1.0mm	20	1001-
9		14Y-71-12170	• Bracket,Welded	1	1001-
10		14Y-71-13181	• Bracket,Welded	1	1001-
11		14X-71-12230	Bearing	1	1001-
12		14X-71-53321	Frame,R.H.	1	1001-
13		14Y-71-12131	• Joint,Welded	1	1001-
		14Y-71-00092	• Pivot Assembly	1	1001-
14	C1		• • Bearing	1	1001-
15		14Y-71-22151	• • Cap	1	1001-
16		01011-82465	• • Bolt	2	1001-
17		01643-32460	• • Washer	2	1001-
18		130-70-13241	• • Nut	2	1001-
19		14Y-71-22280	• • Shim, T=1.0mm	20	1001-
20		14Y-71-12170	• Bracket,Welded	1	1001-
21		14Y-71-13181	• Bracket,Welded	1	1001-
22		14X-71-12230	Bearing	1	1001-
23		14Z-71-33212	Trunnion	2	1001-
24		01010-82065	Bolt	16	1001-
25		01643-32060	Washer	16	1001-
26		14X-71-53340	Step	2	1001-
27		01010-81240	Bolt	8	1001-
28		01643-31232	Washer	8	1001-

FIG. T2110-003001 Dozer Frame (For Power Tilt Pitch Dozer)

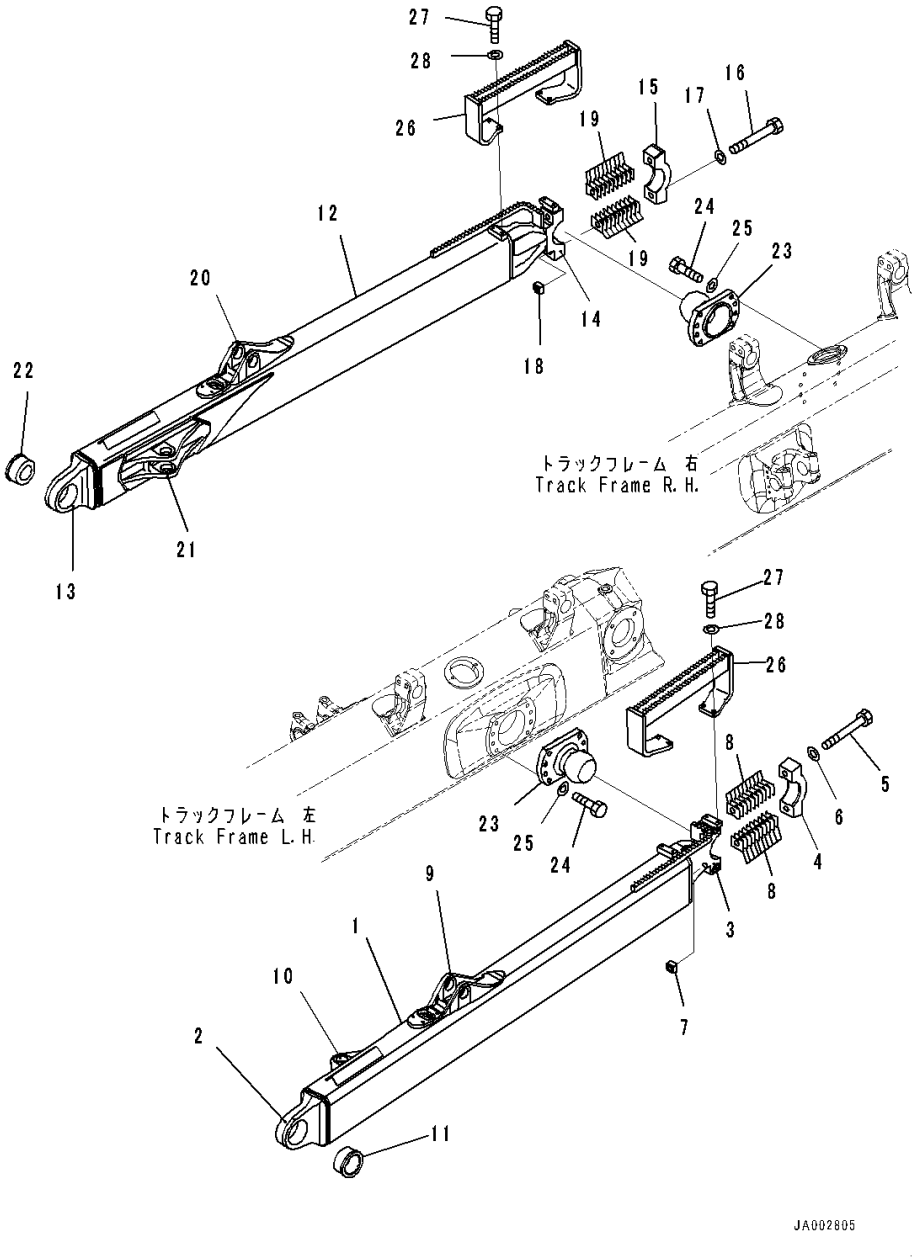

Index	Code	Part Number	Description	Qty	Serial Number
1		14X-71-53611	Frame,L.H.	1	1001-
2		14Y-71-12131	• Joint,Welded	1	1001-
		14Y-71-00092	• Pivot Assembly	1	1001-
3	C1		• • Bearing	1	1001-
4		14Y-71-22151	• • Cap	1	1001-
5		01011-82465	• • Bolt	2	1001-
6		01643-32460	• • Washer	2	1001-
7		130-70-13241	• • Nut	2	1001-
8		14Y-71-22280	• • Shim, T=1.0mm	20	1001-
9		14Y-71-12170	• Bracket,Welded	1	1001-
10		14Y-71-13181	• Bracket,Welded	1	1001-
11		14X-71-12230	Bearing	1	1001-
12		14X-71-53321	Frame	1	1001-
13		14Y-71-12131	• Joint,Welded	1	1001-
		14Y-71-00092	• Pivot Assembly	1	1001-
14	C1		• • Bearing	1	1001-
15		14Y-71-22151	• • Cap	1	1001-
16		01011-82465	• • Bolt	2	1001-
17		01643-32460	• • Washer	2	1001-
18		130-70-13241	• • Nut	2	1001-
19		14Y-71-22280	• • Shim, T=1.0mm	20	1001-
20		14Y-71-12170	• Bracket,Welded	1	1001-
21		14Y-71-13181	• Bracket,Welded	1	1001-
22		14X-71-12230	Bearing	1	1001-
23		14Z-71-33212	Trunnion	2	1001-
24		01010-82065	Bolt	16	1001-
25		01643-32060	Washer	16	1001-
26		14X-71-53340	Step	2	1001-
27		01010-81240	Bolt	8	1001-
28		01643-31232	Washer	8	1001-

FIG. T2110-004001 Dozer Frame (For Power Angle Power Tilt Dozer, Inside Frame)

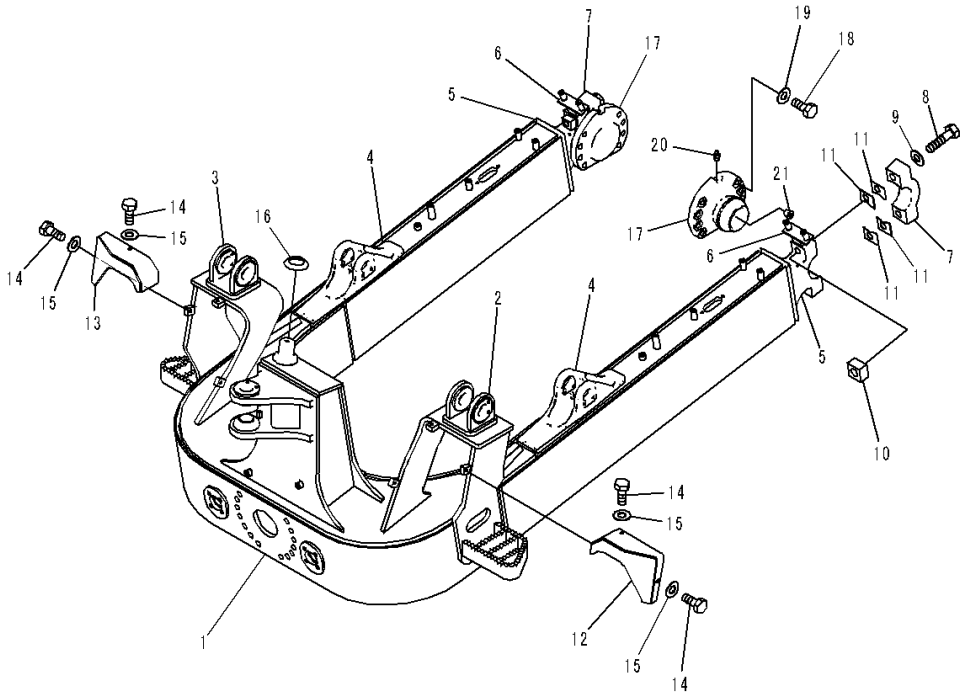

Index	Code	Part Number	Description	Qty	Serial Number
1		14X-72-51201	Frame Assembly	1	1001-
2		14X-72-51251	• Bracket,L.H.,Welded	1	1001-
3		14X-72-51261	• Bracket,R.H.,Welded	1	1001-
4		14X-72-51271	• Bracket,Welded	2	1001-
5		14X-72-51281	• Bearing,Welded	2	1001-
6		14X-72-51241	• Bracket,Welded	2	1001-
7	C1		• Cap	2	1001-
8	C1		• Bolt	4	1001-
9	C1		• Washer	4	1001-
10	C1		• Nut	4	1001-
11	C1		• Shim, T=1.0mm	40	1001-
12		14X-72-51731	Cover,L.H.	1	1001-
13		14X-72-51741	Cover,R.H.	1	1001-
14		01010-81225	Bolt	6	1001-
15		01643-31232	Washer	6	1001-
16		14X-72-51390	Spacer	1	1001-
17		14X-72-61421	Trunnion	2	1001-
18		01010-82065	Bolt	16	1001-
19		01643-32060	Washer	16	1001-
20		07020-00000	Fitting, Grease	2	1001-
21		07043-70108	Plug	2	1001-

FIG. T2115-001001 Dozer Arm and Brace (For Straight Tilt Dozer)

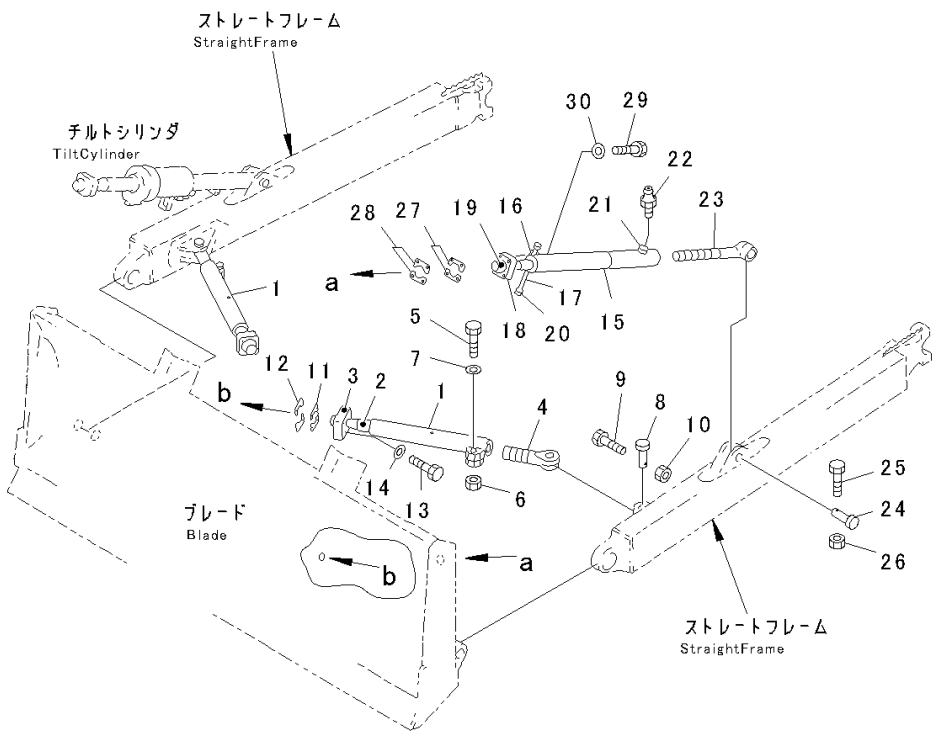

Index	Code	Part Number	Description	Qty	Serial Number
1		14Y-71-13110	Brace	2	1001-
2		14Y-71-13120	• Shaft,Welded	1	1001-
3		144-817-2420	• Retainer	1	1001-
4		144-817-2570	Joint	2	1001-
5		01011-82025	Bolt	2	1001-
6		01580-12016	Nut	2	1001-
7		01643-32060	Washer	2	1001-
8		13F-Z27-5610	Pin	2	1001-
9		01010-81265	Bolt	2	1001-
10		01598-01214	Nut	2	1001-
		144-817-0670	Shim Kit	2	1001-
11	C1		• Shim, T=1.0mm	12	1001-
12	C1		• Shim, T=0.5mm	4	1001-
13		01010-82075	Bolt	8	1001-
14		01643-32060	Washer	8	1001-
15		14X-71-13111	Brace	1	1001-
16		14X-71-11E20	• Plate,Welded	1	1001-
17		144-817-2280	• Rod	1	1001-
18		144-817-2420	• Retainer	1	1001-
19		14Y-71-13120	• Shaft,Welded	1	1001-
20		19N-911-1250	• Spacer,Welded	1	1001-
21		01099-03417	• Protector,Welded	1	1001-
22		07020-00000	Fitting, Grease	1	1001-
23		144-920-2122	Joint	1	1001-
24		13F-Z27-5610	Pin	2	1001-
25		01010-81265	Bolt	2	1001-
26		01598-01214	Nut	2	1001-
		144-817-0670	Shim Kit	2	1001-
27	C1		• Shim, T=1.0mm	12	1001-
28	C1		• Shim, T=0.5mm	4	1001-
29		01010-82075	Bolt	8	1001-
30		01643-32060	Washer	8	1001-

FIG. T2115-002001 Dozer Arm and Brace (For Power Tilt Pitch Dozer)

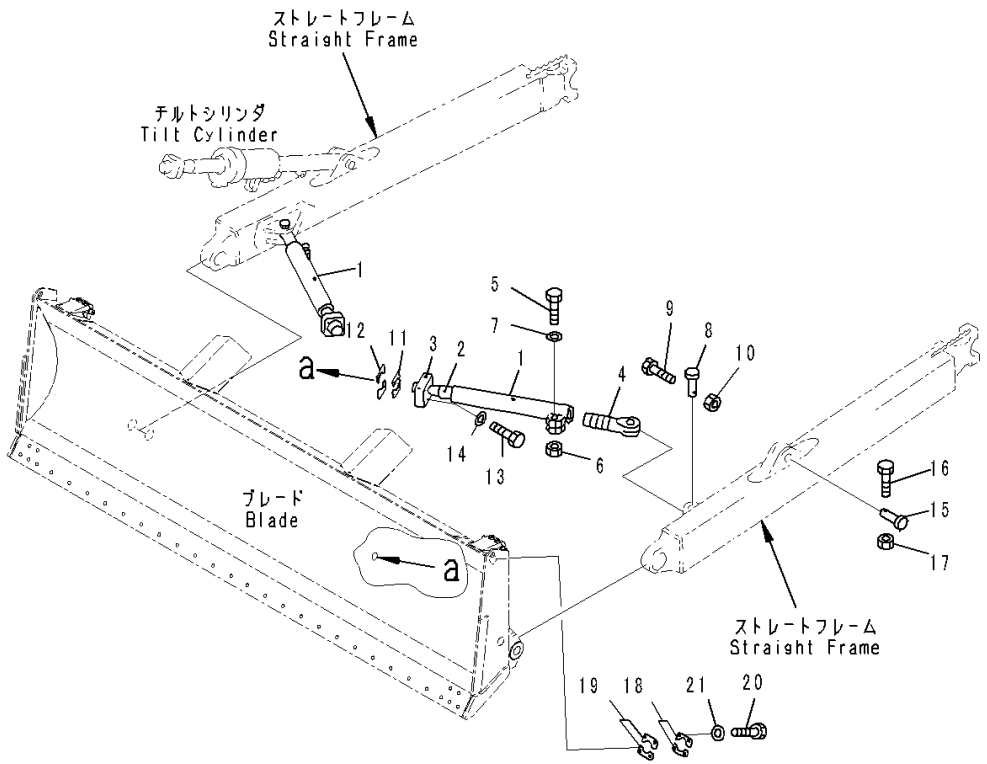

Index	Code	Part Number	Description	Qty	Serial Number
1		14Y-71-13110	Brace	2	1001-
2		14Y-71-13120	• Shaft,Welded	1	1001-
3		144-817-2420	• Retainer	1	1001-
4		144-817-2570	Joint	2	1001-
5		01011-82025	Bolt	2	1001-
6		01580-12016	Nut	2	1001-
7		01643-32060	Washer	2	1001-
8		13F-Z27-5610	Pin	2	1001-
9		01010-81265	Bolt	2	1001-
10		01598-01214	Nut	2	1001-
		144-817-0670	Shim Kit	2	1001-
11	C1		• Shim, T=1.0mm	12	1001-
12	C1		• Shim, T=0.5mm	4	1001-
13		01010-82075	Bolt	8	1001-
14		01643-32060	Washer	8	1001-
15		13F-Z27-5610	Pin	2	1001-
16		01010-81265	Bolt	2	1001-
17		01598-01214	Nut	2	1001-
		144-817-0670	Shim Kit	2	1001-
18	C1		• Shim, T=1.0mm	12	1001-
19	C1		• Shim, T=0.5mm	4	1001-
20		01010-82075	Bolt	8	1001-
21		01643-32060	Washer	8	1001-

FIG. T2115-003001 Dozer Arm and Brace (For Power Angle Power Tilt Dozer, Inside Frame)

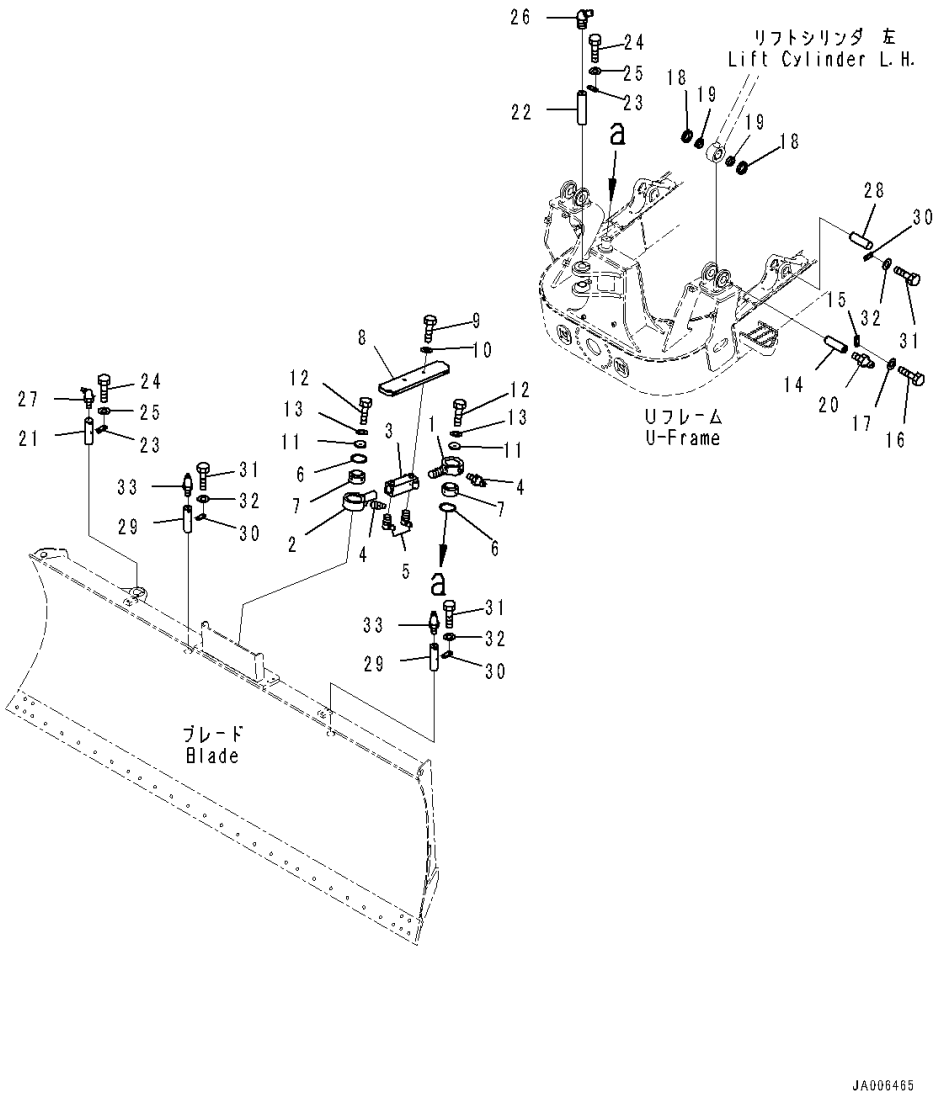

Index	Code	Part Number	Description	Qty	Serial Number
1		14X-72-51311	Rod	1	1001-
2		14X-72-51372	Rod	1	1001-
3		14X-72-51352	Bar	1	1001-
4		07020-00000	Fitting, Grease	2	1001-
5		07020-00900	Fitting, Grease	2	1001-
6		04065-01030	Ring	2	1001-
7		707-46-06020	Bushing	2	1001-
8		14X-72-51331	Cover	1	1001-
9		01010-81230	Bolt	2	1001-
10		01643-31232	Washer	2	1001-
11		14X-72-51341	Washer	2	1001-
12		01010-81225	Bolt	2	1001-
13		01643-31232	Washer	2	1001-
14		09241-50160	Pin	2	1001-
15		04082-00212	Lock	2	1001-
16		01010-81225	Bolt	4	1001-
17		01643-31232	Washer	4	1001-
18		14X-72-51290	Cushion	4	1001-
19		14X-72-51360	Spacer	4	1001-
20		07020-00000	Fitting, Grease	2	1001-
21		14X-72-51161	Pin	1	1001-
22		14X-72-51172	Pin	1	1001-
23		04082-00212	Lock	2	1001-
24		01010-81225	Bolt	4	1001-
25		01643-31232	Washer	4	1001-
26		07020-00675	Fitting, Grease	1	1001-
27		07020-00900	Fitting, Grease	1	1001-
28		20S-70-82230	Pin	2	1001-
29		14X-72-51161	Pin	2	1001-
30		04082-00212	Lock	4	1001-
31		01010-81225	Bolt	8	1001-
32		01643-31232	Washer	8	1001-
33		07020-00675	Fitting, Grease	2	1001-

FIG. T2120-001001 Dozer Blade (For Straight Tilt Dozer or Power Angle Power Tilt Pitch Dozer)

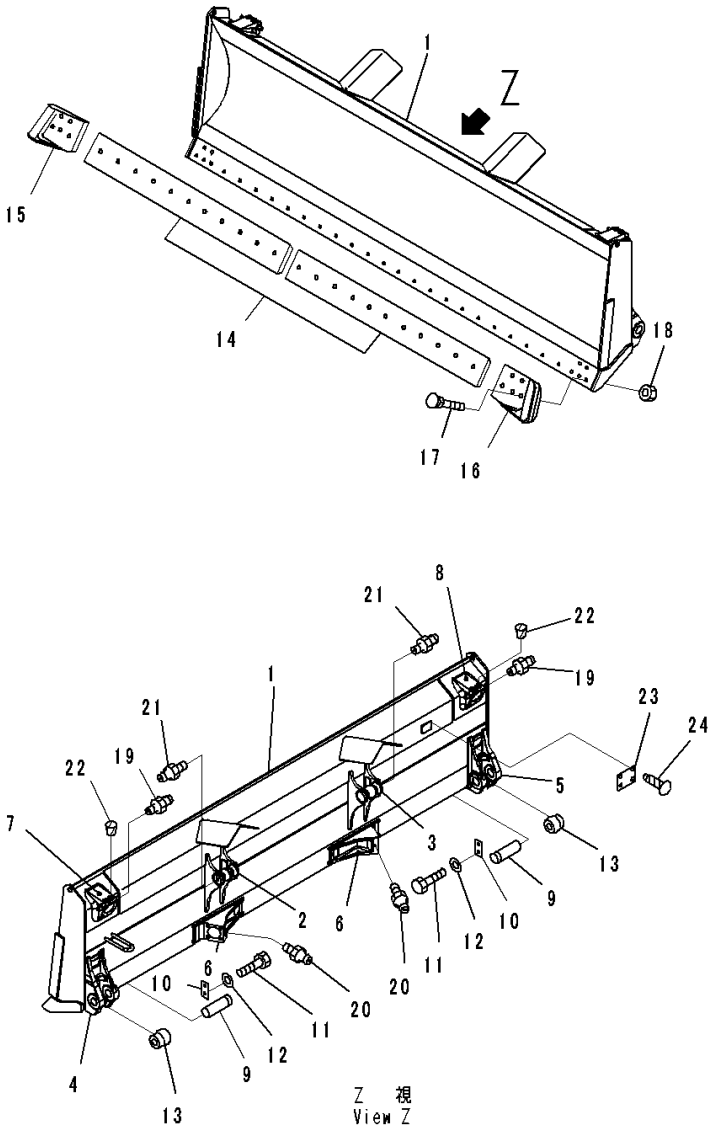

Index	Code	Part Number	Description	Qty	Serial Number
1		14X-71-51102	Blade	1	1001-
2		14X-952-5170	• Bracket,L.H.,Welded	1	1001-
3		14X-952-5370	• Bracket,R.H.,Welded	1	1001-
4		14X-71-51122	• Bracket,L.H.,Welded	1	1001-
5		14X-71-51132	• Bracket,R.H.,Welded	1	1001-
6		14X-71-51151	• Bracket,Welded	1	1001-
7		14X-71-51161	• Bracket,L.H.,Welded	1	1001-
8		14X-71-51171	• Bracket,R.H.,Welded	1	1001-
9		144-817-1260	Shaft	2	1001-
10		144-920-1780	Lock	2	1001-
11		01010-81635	Bolt	4	1001-
12		01643-31645	Washer	4	1001-
13		14X-71-12240	Cap	2	1001-
14		14Y-71-11210	Cutting Edge	2	1001-
15		14Y-71-11340	End Bit,R.H.	1	1001-
16		14Y-71-11330	End Bit,L.H.	1	1001-
17		02090-11270	Bolt	32	1001-
18		02290-11219	Nut	32	1001-
19		07020-00000	Fitting, Grease	2	1001-
20		07020-00000	Fitting, Grease	2	1001-
21		07020-00000	Fitting, Grease	2	1001-
22		07049-01215	Plug	4	1001-
23	C2	09601-50000	Plate, Name (Limited Supply), EU Regulation	1	1001-
24		04418-13060	Screw	4	1001-

FIG. T2120-004001 Dozer Blade (For Straight Tilt Dozer, Power Tilt Pitch Dozer, 3D Machine Control Dual Mast)

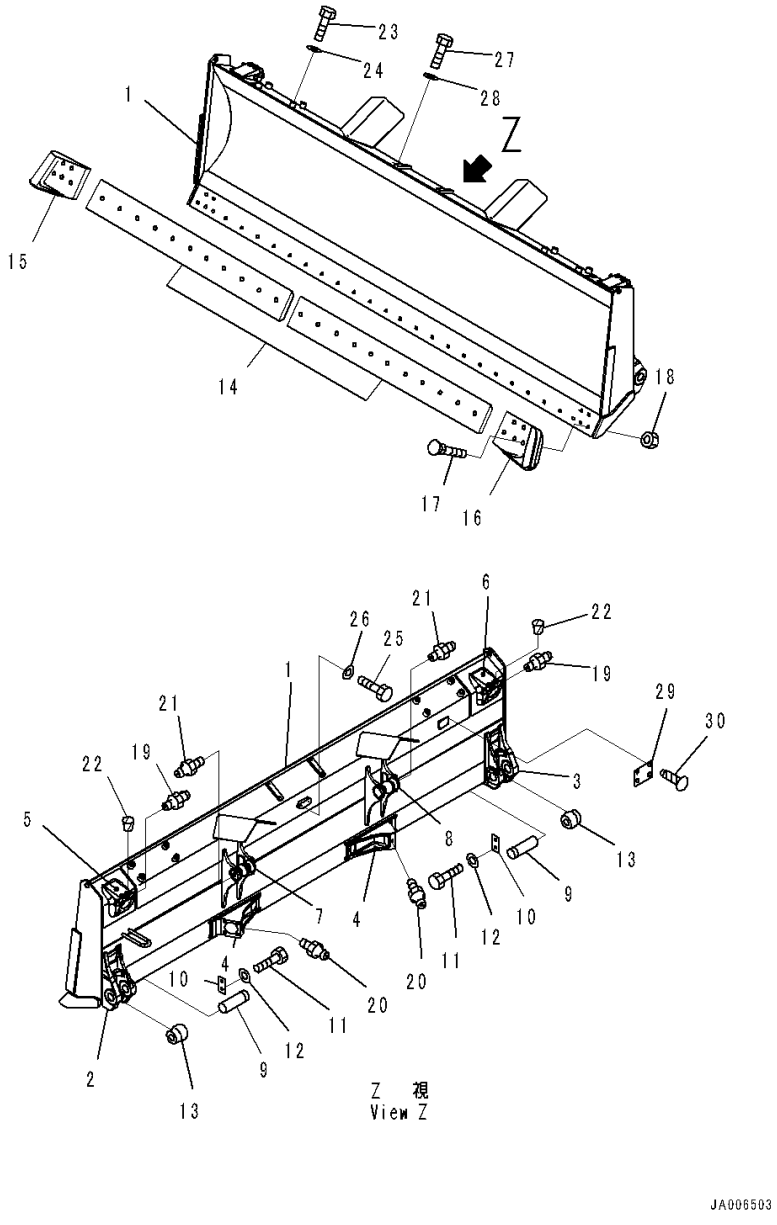

Index	Code	Part Number	Description	Qty	Serial Number
1		14X-71-61101	Blade	1	1001-
2		14X-71-51122	• Bracket,L.H.,Welded	1	1001-
3		14X-71-51132	• Bracket,R.H.,Welded	1	1001-
4		14X-71-51151	• Bracket,Welded	2	1001-
5		14X-71-51161	• Bracket,L.H.,Welded	1	1001-
6		14X-71-51171	• Bracket,R.H.,Welded	1	1001-
7		14X-952-5170	• Bracket,L.H.,Welded	1	1001-
8		14X-952-5370	• Bracket,R.H.,Welded	1	1001-
9		144-817-1260	Shaft	2	1001-
10		144-920-1780	Lock	2	1001-
11		01010-81635	Bolt	4	1001-
12		01643-31645	Washer	4	1001-
13		14X-71-12240	Cap	2	1001-
14		14Y-71-11210	Cutting Edge	2	1001-
15		14Y-71-11340	End Bit,R.H.	1	1001-
16		14Y-71-11330	End Bit,L.H.	1	1001-
17		02090-11270	Bolt	32	1001-
18		02290-11219	Nut	32	1001-
19		07020-00000	Fitting, Grease	2	1001-
20		07020-00000	Fitting, Grease	2	1001-
21		07020-00000	Fitting, Grease	2	1001-
22		07049-01215	Plug	4	1001-
23		01010-82035	Bolt	8	1001-
24		01643-32060	Washer	8	1001-
25		01010-81016	Bolt	2	1001-
26		01643-31032	Washer	2	1001-
27		01010-81220	Bolt	4	1001-
28		01643-31232	Washer	4	1001-
29	C2	09601-50000	Plate, Name (Limited Supply), EU Regulation	1	1001-
30		04418-13060	Screw	4	1001-

FIG. T2120-006001 Dozer Blade (For Power Angle Power Tilt Dozer, Inside Frame, 3D Machine Control Dual Mast)

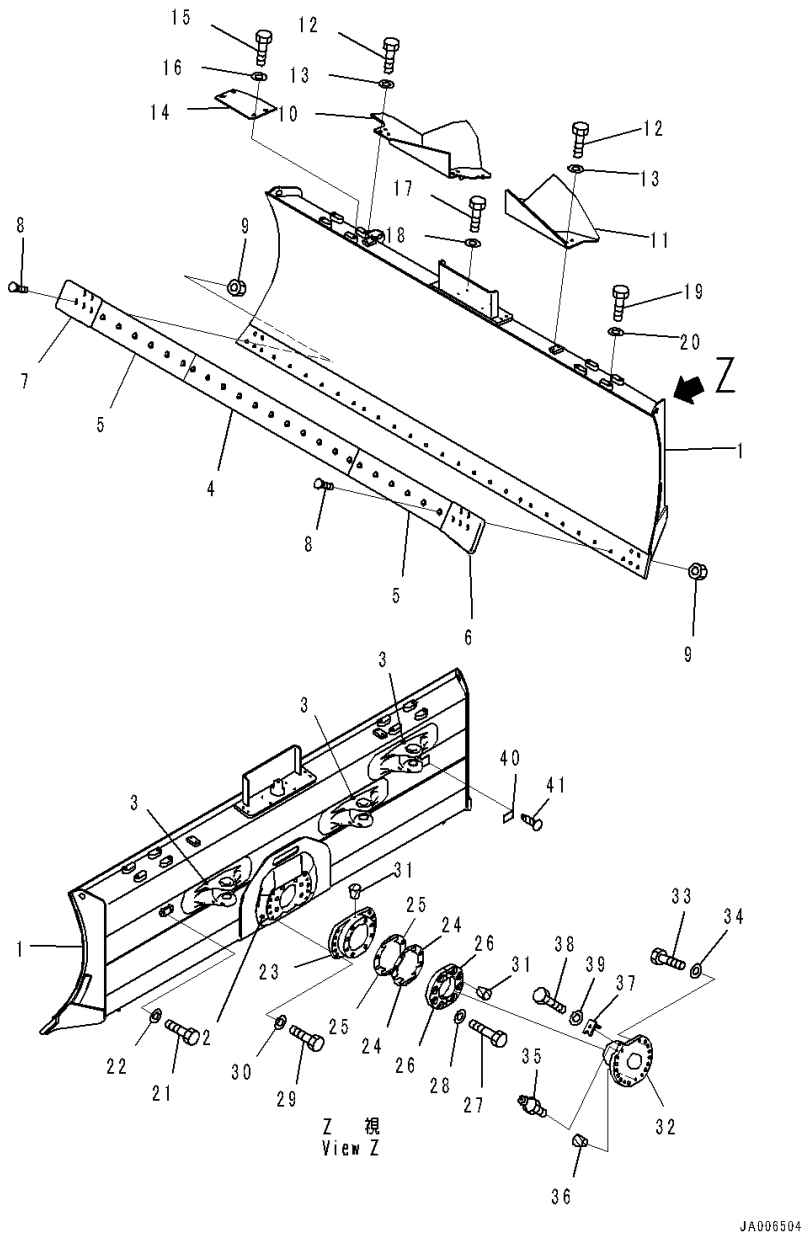

Index	Code	Part Number	Description	Qty	Serial Number
1		14X-72-64501	Blade	1	1001-
2		14X-72-51120	• Plate,Welded	1	1001-
3		14X-72-51131	• Bracket,Welded	3	1001-
4		14X-72-51610	Cutting Edge	1	1001-
5		13G-72-61420	Cutting Edge	2	1001-
6		14Y-71-11330	End Bit,L.H.	1	1001-
7		14Y-71-11340	End Bit,R.H.	1	1001-
8		02090-11270	Bolt	33	1001-
9		02290-11219	Nut	33	1001-
10		14X-72-61192	Cover	1	1001-
11		14X-72-61381	Cover	1	1001-
12		01010-81230	Bolt	8	1001-
13		01643-31232	Washer	8	1001-
14		14X-72-61690	Plate	1	1001-
15		01010-82040	Bolt	4	1001-
16		01643-32060	Washer	4	1001-
17		01010-81220	Bolt	4	1001-
18		01643-31232	Washer	4	1001-
19		01010-82035	Bolt	4	1001-
20		01643-32060	Washer	4	1001-
21		01010-81016	Bolt	2	1001-
22		01643-31032	Washer	2	1001-
23		134-72-62442	Bearing	1	1001-
24		134-72-72450	Shim, T=0.5mm	4	1001-
25		134-72-72460	Shim, T=1.0mm	14	1001-
26		134-72-71151	Cap	2	1001-
27		209-09-51210	Bolt	8	1001-
28		01643-32460	Washer	8	1001-
29		01010-82060	Bolt	10	1001-
30		01643-32060	Washer	10	1001-
31		07049-01215	Plug	6	1001-
32		134-72-62474	Trunnion	1	1001-
33		01010-82075	Bolt	14	1001-
34		01643-32060	Washer	14	1001-
35		07020-00000	Fitting, Grease	1	1001-
36		07049-02228	Plug, Cork	3	1001-
37		14X-72-51530	Bracket	1	1001-
38		01010-81045	Bolt	1	1001-
39		01643-31032	Washer	1	1001-

FIG. T2120-006001 Dozer Blade (For Power Angle Power Tilt Dozer, Inside Frame, 3D Machine Control Dual Mast)

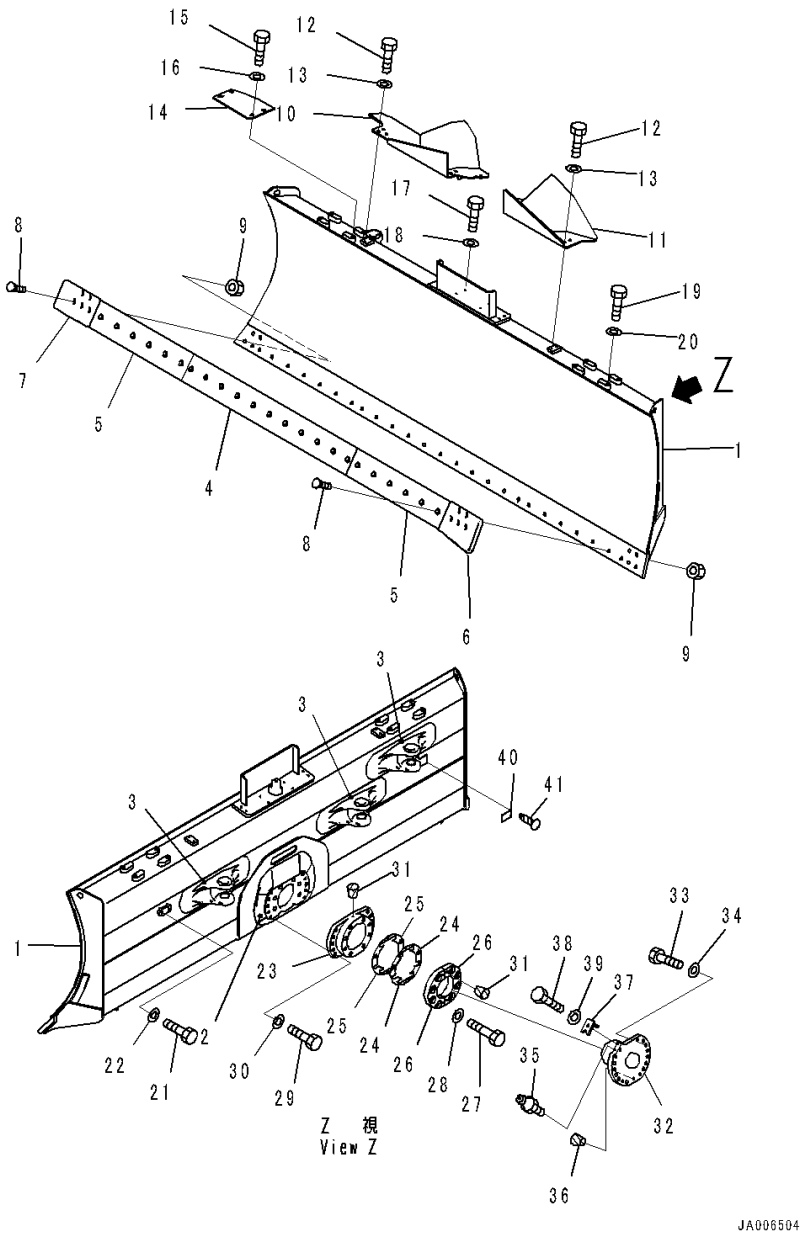

Index	Code	Part Number	Description	Qty	Serial Number
40	C2	09601-50000	Plate, Name (Limited Supply), EU Regulation	1	1001-
41		04418-13060	Screw	4	1001-

FIG. T2120-008001 Dozer Blade (For 3000mm, Power Angle Power Tilt Blade, 3D Machine Control Dual Mast) (Blade)

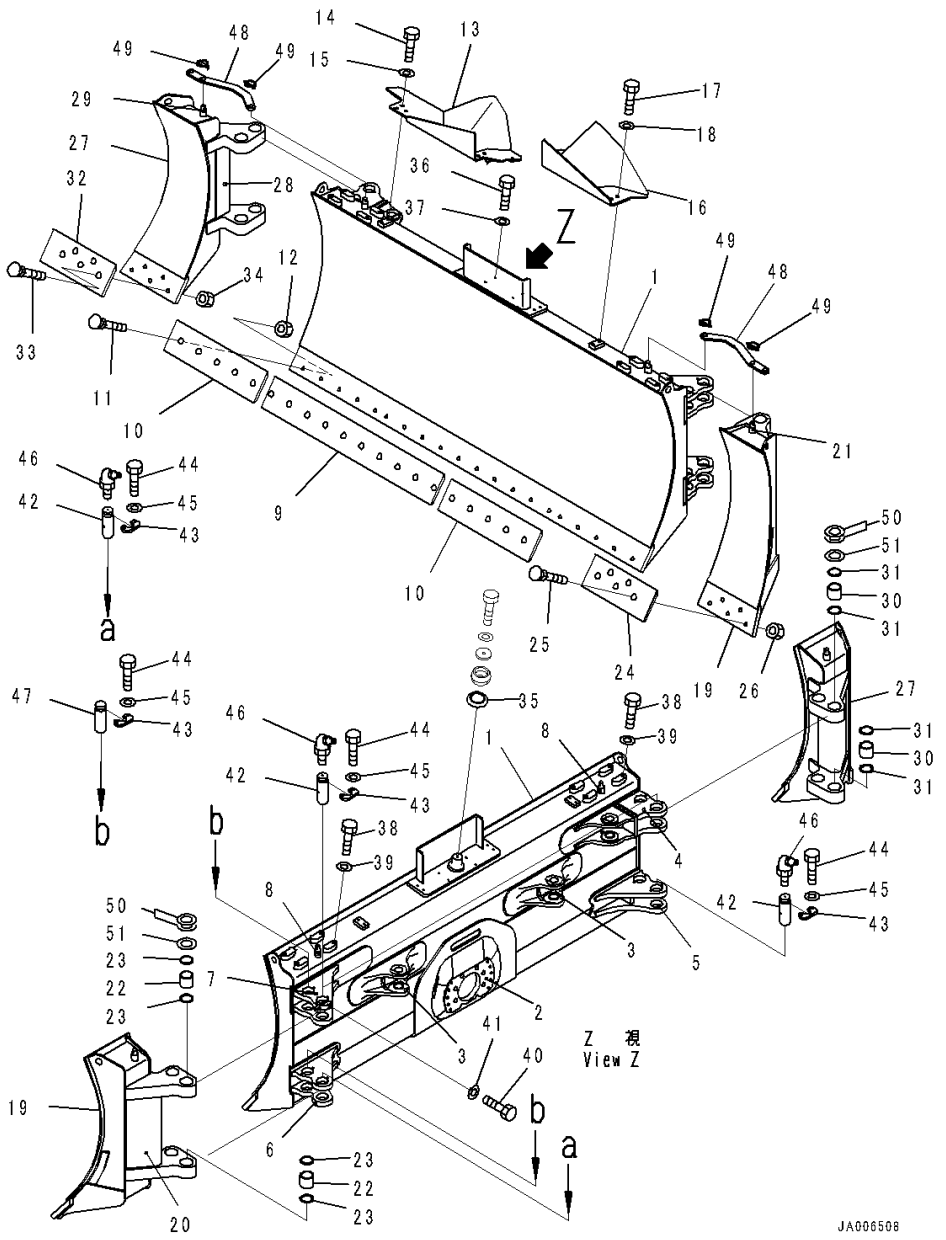

Index	Code	Part Number	Description	Qty	Serial Number
1		14X-72-64101	Blade Assembly	1	1001-
2		14X-72-51120	• Plate,Welded	1	1001-
3		14X-72-51131	• Bracket,Welded	2	1001-
4		14X-72-54131	• Bracket,Welded	1	1001-
5		14X-72-54141	• Bracket,Welded	1	1001-
6		14X-72-54151	• Bracket,Welded	1	1001-
7		14X-72-54161	• Bracket,Welded	1	1001-
8		14X-72-54D20	• Pin,Welded	2	1001-
9		13G-72-61410	Cutting Edge	1	1001-
10		13G-72-63250	Cutting Edge	2	1001-
11		02090-11270	Bolt	20	1001-
12		02290-11219	Nut	20	1001-
13		14X-72-61192	Cover	1	1001-
14		01010-81230	Bolt	4	1001-
15		01643-31232	Washer	4	1001-
16		14X-72-61381	Cover	1	1001-
17		01010-81230	Bolt	4	1001-
18		01643-31232	Washer	4	1001-
19		14X-72-64301	Blade	1	1001-
20		14X-72-54340	• Bracket,Welded	1	1001-
21		14X-72-54D20	• Pin,Welded	1	1001-
22		14X-72-54430	Bushing	4	1001-
23		07145-00065	Seal, Dust	8	1001-
24		14X-72-54351	End Bit	1	1001-
25		02090-11270	Bolt	5	1001-
26		02290-11219	Nut	5	1001-
27		14X-72-64201	Blade	1	1001-
28		14X-72-54241	• Bracket,Welded	1	1001-
29		14X-72-54D20	• Pin,Welded	1	1001-
30		14X-72-54430	Bushing	4	1001-
31		07145-00065	Seal, Dust	8	1001-
32		14X-72-54251	End Bit	1	1001-
33		02090-11270	Bolt	5	1001-
34		02290-11219	Nut	5	1001-
35		14X-72-51390	Spacer	1	1001-
36		01010-81220	Bolt	4	1001-
37		01643-31232	Washer	4	1001-
38		01010-82035	Bolt	8	1001-
39		01643-32060	Washer	8	1001-
40		01010-81016	Bolt	2	1001-

FIG. T2120-008001 Dozer Blade (For 3000mm, Power Angle Power Tilt Blade, 3D Machine Control Dual Mast) (Blade)

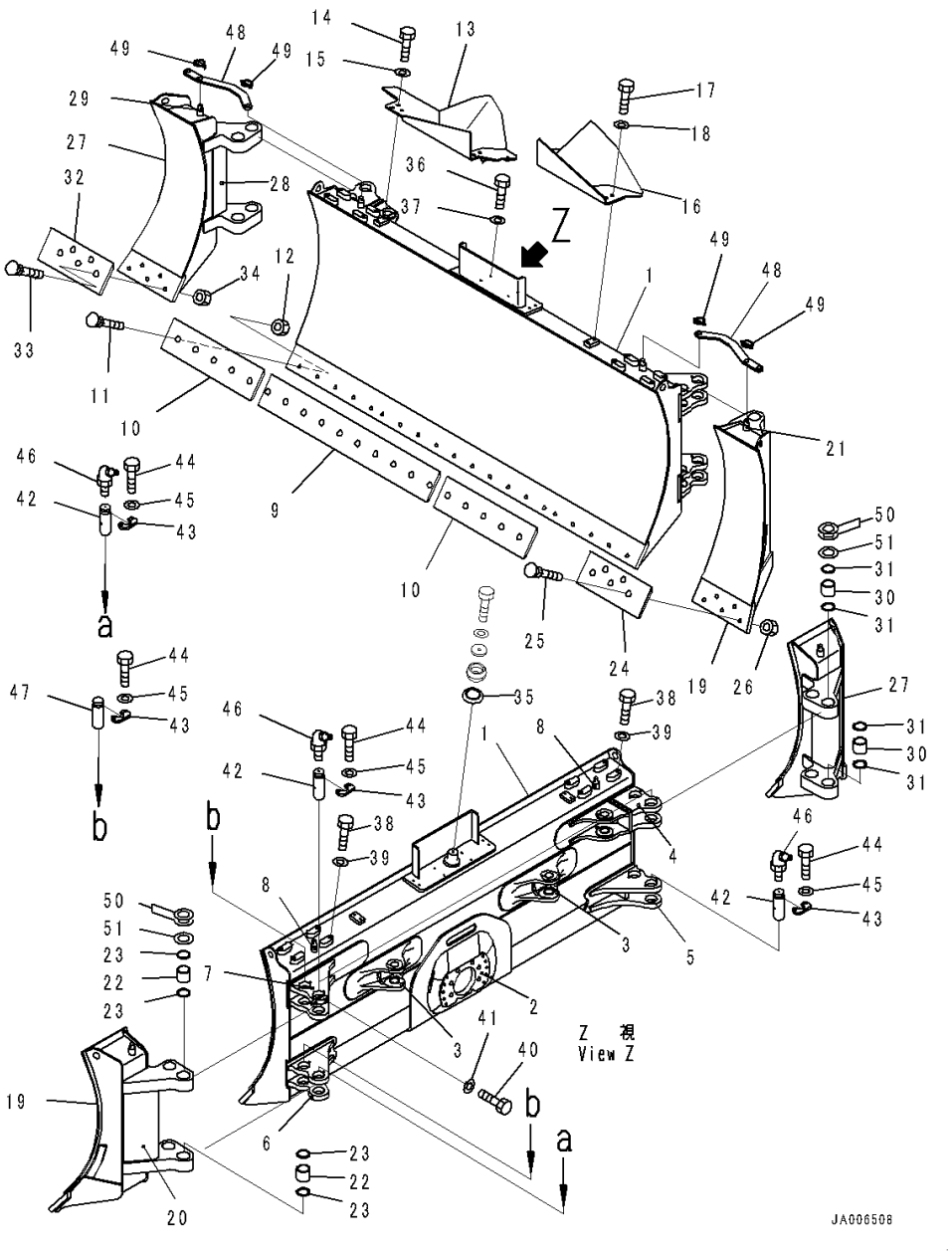

Index	Code	Part Number	Description	Qty	Serial Number
41		01643-31032	Washer	2	1001-
42		14X-72-54420	Pin	4	1001-
43		14X-72-54410	Plate	8	1001-
44		01010-81235	Bolt	16	1001-
45		01643-31232	Washer	16	1001-
46		07020-00675	Fitting, Grease	4	1001-
47		14X-72-54470	Pin	4	1001-
48		14X-72-64170	Plate	2	1001-
49		421-46-12740	Pin, Linch	4	1001-
50		21Y-70-14710	Spacer, T=1.0mm	8	1001-
51		21Y-70-14850	Spacer, T=0.20mm	4	1001-

FIG. T2120-008002 Dozer Blade (Bearing)

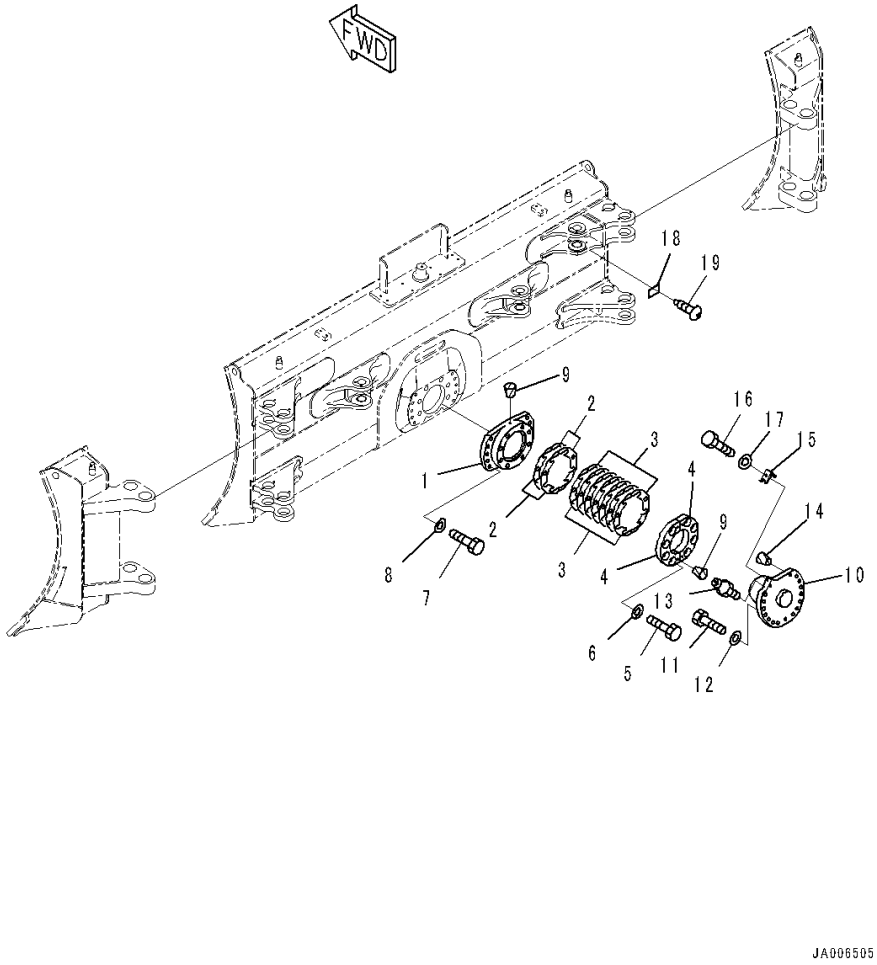

Index	Code	Part Number	Description	Qty	Serial Number
		Note: This list covers following specifications. For 3000mm, Power Angle Power Tilt Blade, 3D Machine Control Dual Mast For 3000mm, Power Angle Power Tilt Blade			
1		134-72-62442	Bearing	1	1001-
2		134-72-72450	Shim, T=0.5mm	4	1001-
3		134-72-72460	Shim, T=1.0mm	14	1001-
4		134-72-71151	Cap	2	1001-
5		209-09-51210	Bolt	8	1001-
6		01643-32460	Washer	8	1001-
7		01010-82060	Bolt	10	1001-
8		01643-32060	Washer	10	1001-
9		07049-01215	Plug	6	1001-
10		134-72-62474	Trunnion	1	1001-
11		01010-82075	Bolt	14	1001-
12		01643-32060	Washer	14	1001-
13		07020-00000	Fitting, Grease	1	1001-
14		07049-02228	Plug, Cork	3	1001-
15		14X-72-51530	Bracket	1	1001-
16		01010-81045	Bolt	1	1001-
17		01643-31032	Washer	1	1001-
18	C2	09601-50000	Plate, Name (Limited Supply), EU Regulation	1	1001-
19		04418-13060	Screw	4	1001-

FIG. T2120-003001 Dozer Blade (For 3000mm, Power Angle Power Tilt Blade) (Blade)

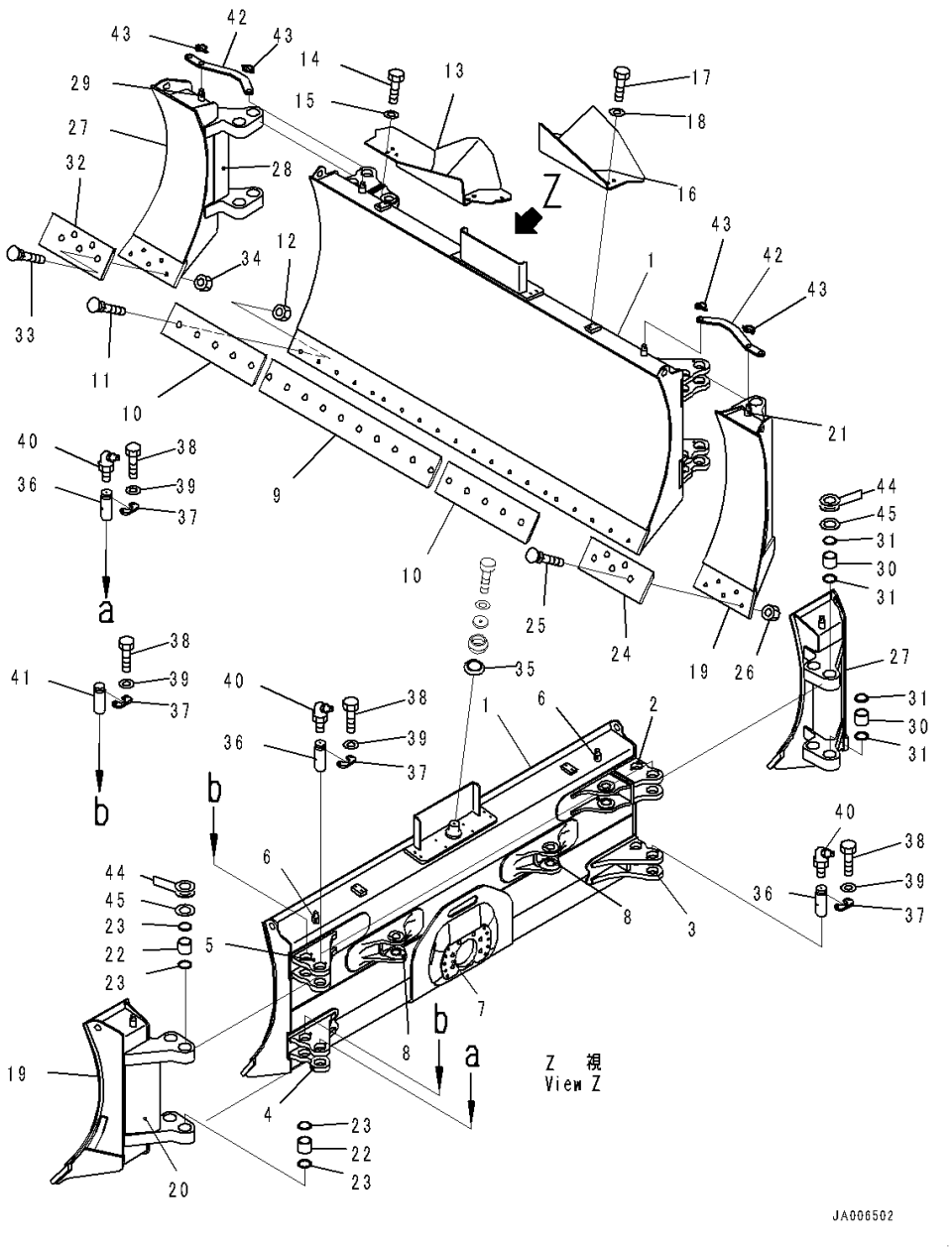

Index	Code	Part Number	Description	Qty	Serial Number
1		14X-72-54101	Blade Assembly	1	1001-
2		14X-72-54131	• Bracket,Welded	1	1001-
3		14X-72-54141	• Bracket,Welded	1	1001-
4		14X-72-54151	• Bracket,Welded	1	1001-
5		14X-72-54161	• Bracket,Welded	1	1001-
6		14X-72-54D20	• Pin,Welded	2	1001-
7		14X-72-51120	• Plate,Welded	1	1001-
8		14X-72-51131	• Bracket,Welded	2	1001-
9		13G-72-61410	Cutting Edge	1	1001-
10		13G-72-63250	Cutting Edge	2	1001-
11		02090-11270	Bolt	20	1001-
12		02290-11219	Nut	20	1001-
13		14X-72-61150	Cover	1	1001-
14		01010-81230	Bolt	4	1001-
15		01643-31232	Washer	4	1001-
16		14X-72-61381	Cover	1	1001-
17		01010-81230	Bolt	4	1001-
18		01643-31232	Washer	4	1001-
19		14X-72-64301	Blade	1	1001-
20		14X-72-54340	• Bracket,Welded	1	1001-
21		14X-72-54D20	• Pin,Welded	1	1001-
22		14X-72-54430	Bushing	4	1001-
23		07145-00065	Seal, Dust	8	1001-
24		14X-72-54351	End Bit	1	1001-
25		02090-11270	Bolt	5	1001-
26		02290-11219	Nut	5	1001-
27		14X-72-64201	Blade	1	1001-
28		14X-72-54241	• Bracket,Welded	1	1001-
29		14X-72-54D20	• Pin,Welded	1	1001-
30		14X-72-54430	Bushing	4	1001-
31		07145-00065	Seal, Dust	8	1001-
32		14X-72-54251	End Bit	1	1001-
33		02090-11270	Bolt	5	1001-
34		02290-11219	Nut	5	1001-
35		14X-72-51390	Spacer	1	1001-
36		14X-72-54420	Pin	4	1001-
37		14X-72-54410	Plate	8	1001-
38		01010-81235	Bolt	16	1001-
39		01643-31232	Washer	16	1001-
40		07020-00675	Fitting, Grease	4	1001-

FIG. T2120-003001 Dozer Blade (For 3000mm, Power Angle Power Tilt Blade) (Blade)

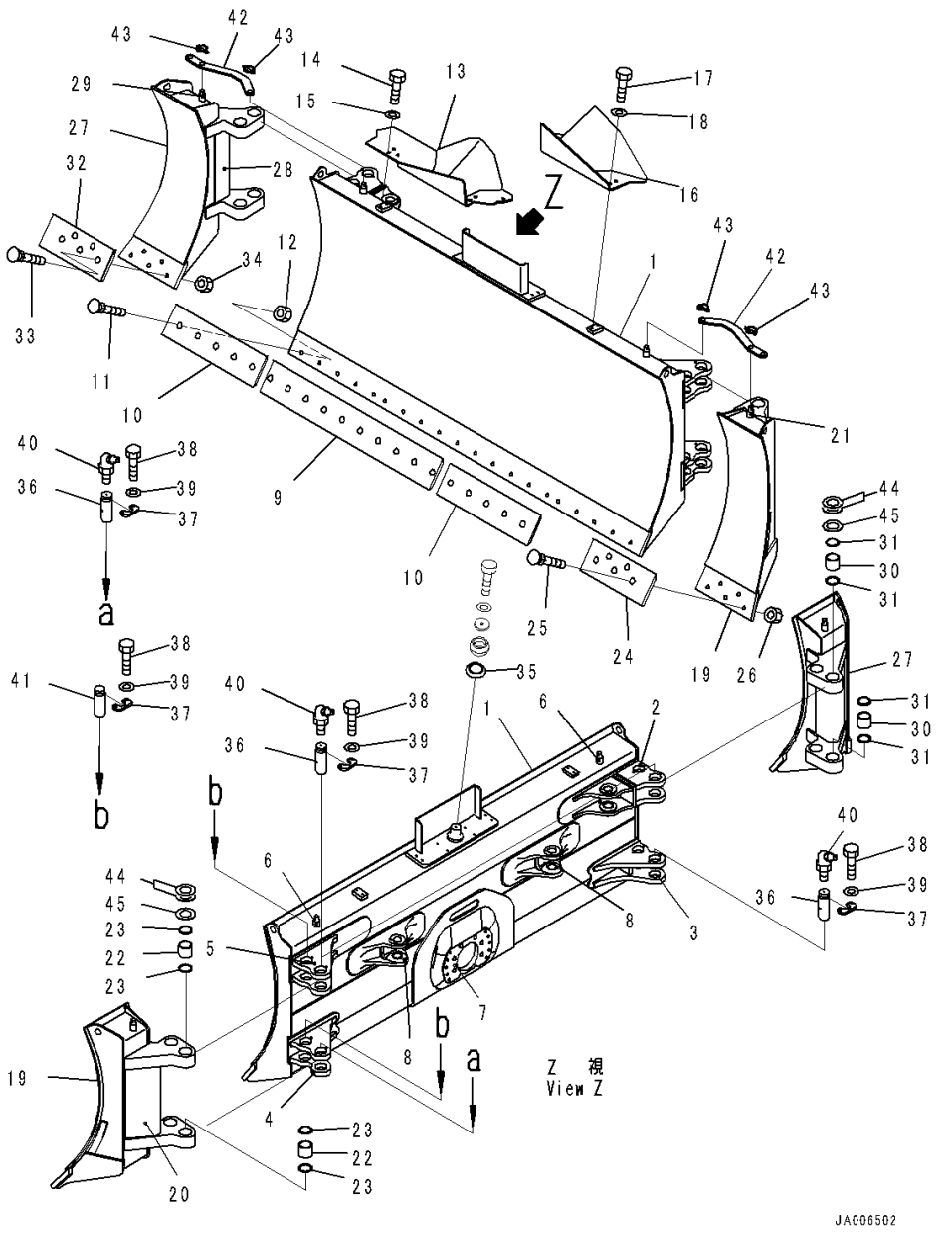

Index	Code	Part Number	Description	Qty	Serial Number
41		14X-72-54470	Pin	4	1001-
42		14X-72-64170	Plate	2	1001-
43		421-46-12740	Pin, Linch	4	1001-
44		21Y-70-14710	Spacer, T=1.0mm	8	1001-
45		21Y-70-14850	Spacer, T=0.20mm	4	1001-

FIG. T2120-002001 Dozer Blade (For Power Angle Power Tilt Dozer, Inside Frame)

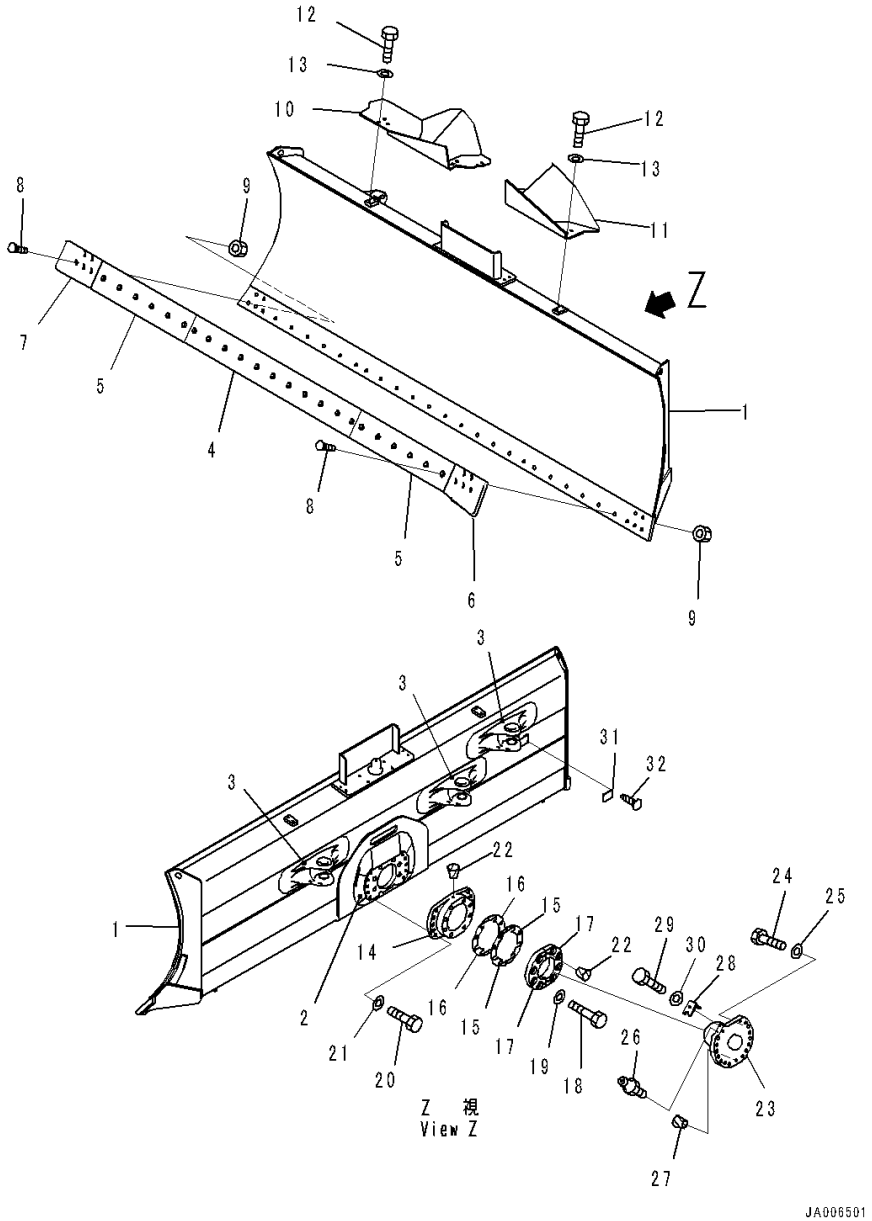

Index	Code	Part Number	Description	Qty	Serial Number
1		14X-72-61501	Blade	1	1001-
2		14X-72-51120	• Plate,Welded	1	1001-
3		14X-72-51131	• Bracket,Welded	3	1001-
4		14X-72-51610	Cutting Edge	1	1001-
5		13G-72-61420	Cutting Edge	2	1001-
6		14Y-71-11330	End Bit,L.H.	1	1001-
7		14Y-71-11340	End Bit,R.H.	1	1001-
8		02090-11270	Bolt	33	1001-
9		02290-11219	Nut	33	1001-
10		14X-72-61150	Cover	1	1001-
11		14X-72-61381	Cover	1	1001-
12		01010-81230	Bolt	8	1001-
13		01643-31232	Washer	8	1001-
14		134-72-62442	Bearing	1	1001-
15		134-72-72450	Shim, T=0.5mm	4	1001-
16		134-72-72460	Shim, T=1.0mm	14	1001-
17		134-72-71151	Cap	2	1001-
18		209-09-51210	Bolt	8	1001-
19		01643-32460	Washer	8	1001-
20		01010-82060	Bolt	10	1001-
21		01643-32060	Washer	10	1001-
22		07049-01215	Plug	6	1001-
23		134-72-62474	Trunnion	1	1001-
24		01010-82075	Bolt	14	1001-
25		01643-32060	Washer	14	1001-
26		07020-00000	Fitting, Grease	1	1001-
27		07049-02228	Plug, Cork	3	1001-
28		14X-72-51530	Bracket	1	1001-
29		01010-81045	Bolt	1	1001-
30		01643-31032	Washer	1	1001-
31	C2	09601-50000	Plate, Name (Limited Supply), EU Regulation	1	1001-
32		04418-13060	Screw	4	1001-

FIG. T2140-002001 Dozer Blade Lift Cylinder (For Power Angle Power Tilt Dozer, Inside Frame) (Inner Parts, Lift Cylinder, L.H.)

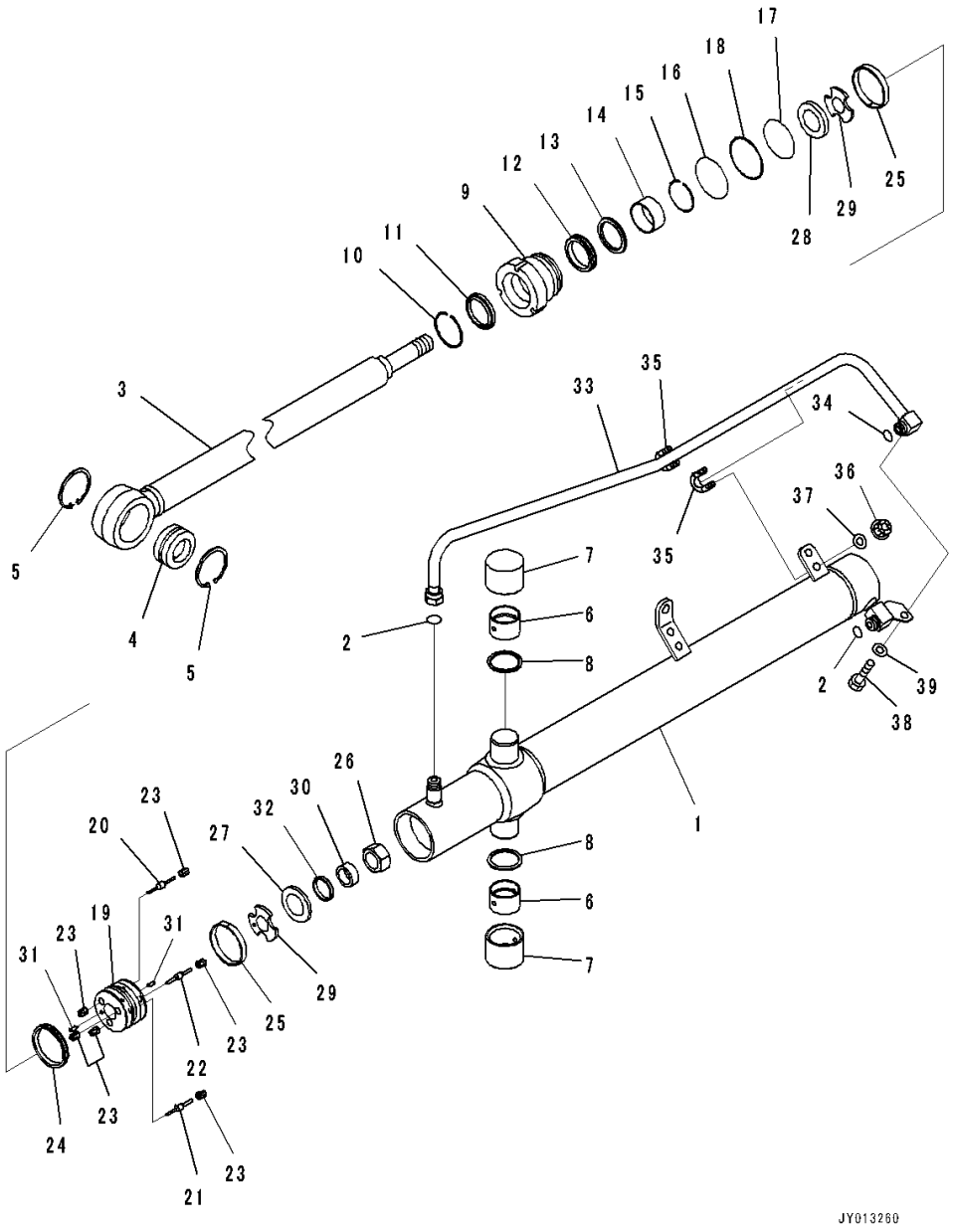

Index	Code	Part Number	Description	Qty	Serial Number
		707-E2-00090	Cylinder Assembly	1	1001-
1		707-12-90280	• Cylinder	1	1001-
2		02896-61015	• O-ring, (Kit : K10)	2	1001-
3		721-58-60780	• Rod, Piston	1	1001-
4		707-46-50020	• Bushing	1	1001-
5		04065-08025	• Ring, Snap	2	1001-
6		144-60-15450	• Bushing	2	1001-
7		144-60-15431	• Bushing	2	1001-
8		07145-00055	• Seal, Dust, (Kit : K10)	2	1001-
9		707-29-10A40	• Head	1	1001-
10		07179-12074	• Ring, Snap	1	1001-
11		707-56-60740	• Seal, Dust, (Kit : K10)	1	1001-
12		707-51-60860	• Packing, Rod, (Kit : K10)	1	1001-
13		707-51-60650	• Ring, Buffer, (Kit : K10)	1	1001-
14		707-52-90351	• Bushing	1	1001-
15		707-75-60110	• Ring, Snap	1	1001-
16		07000-12090	• O-ring, (Kit : K10)	1	1001-
17		07000-B2085	• O-ring, (Kit : K10)	1	1001-
18		707-35-10860	• Ring, Back-up, (Kit : K10)	1	1001-
		707-91-90050	• Piston Assembly	1	1001-
19	C1		• • Piston	1	1001-
20	C1		• • Valve, Piston	1	1001-
21	C1		• • Valve, Piston	1	1001-
22	C1		• • Valve, Piston	1	1001-
23	C1		• • Seat, Valve	6	1001-
24		707-44-90150	• Ring, Piston, (Kit : K10)	1	1001-
25		07156-00912	• Ring, Wear, (Kit : K10)	2	1001-
26		707-67-33040	• Nut	1	1001-
27		707-69-85020	• Slider	1	1001-
28		707-69-85010	• Slider	1	1001-
29		707-40-85020	• Retainer	2	1001-
30		707-88-38850	• Collar	1	1001-
31		130-63-12761	• Pin	2	1001-
32		707-52-90230	• Bushing	1	1001-
33		707-86-55850	Tube	1	1001-
34		02896-61015	O-ring, (Kit : K10)	1	1001-
35		07283-32236	Clip, Pipe	2	1001-
36		01597-01009	Nut	4	1001-
37		01643-31032	Washer	4	1001-

FIG. T2140-002001 Dozer Blade Lift Cylinder (For Power Angle Power Tilt Dozer, Inside Frame) (Inner Parts, Lift Cylinder, L.H.)

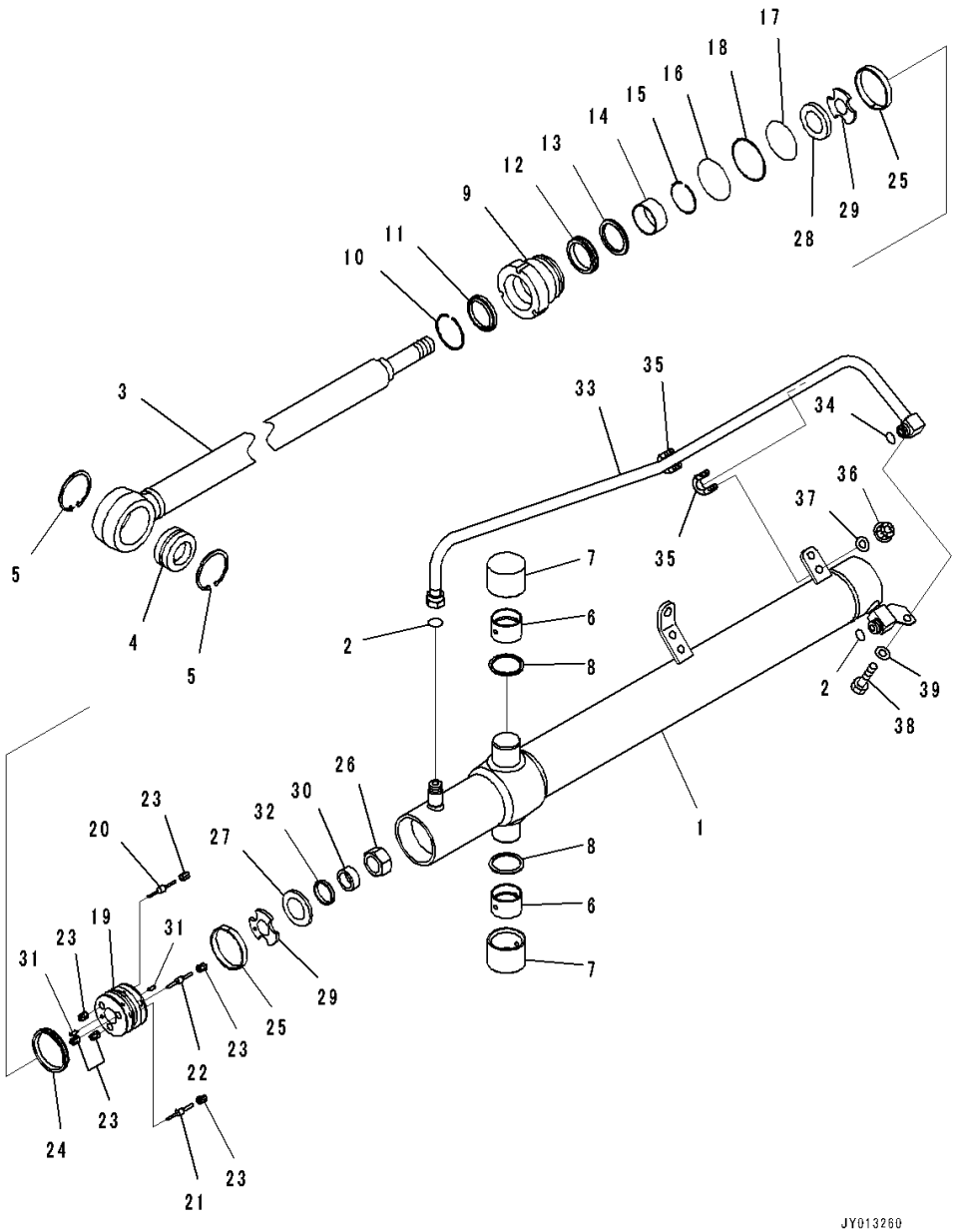

Index	Code	Part Number	Description	Qty	Serial Number
38		01010-81020	Bolt	1	1001-
39		01643-31032	Washer	1	1001-

FIG. T2140-002002 Dozer Blade Lift Cylinder (For Power Angle Power Tilt Dozer, Inside Frame) (Inner Parts, Lift Cylinder, R.H.)

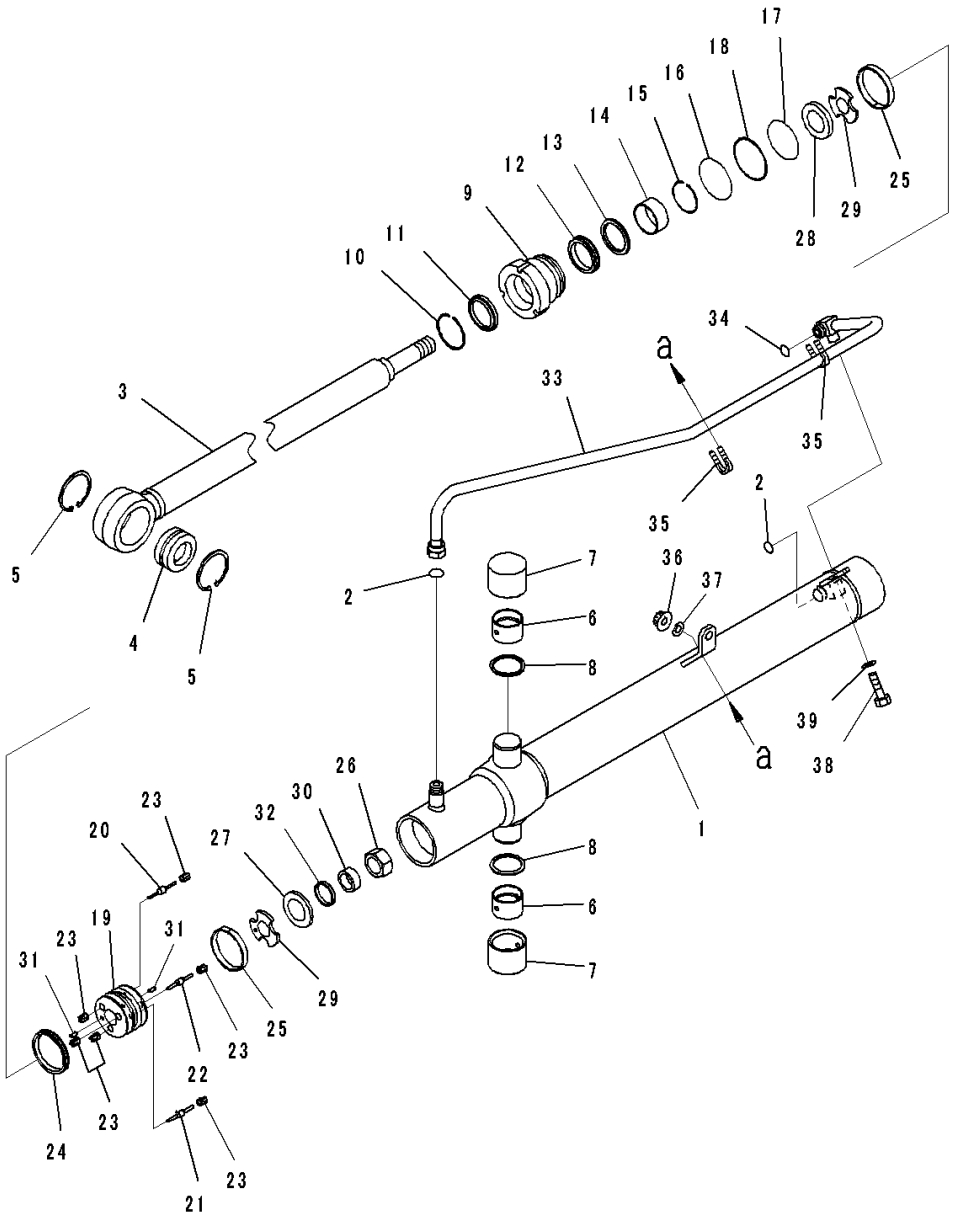

Index	Code	Part Number	Description	Qty	Serial Number
		707-E2-00100	Cylinder Assembly	1	1001-
1		707-12-90290	• Cylinder	1	1001-
2		02896-61015	• O-ring, (Kit : K10)	2	1001-
3		721-58-60780	• Rod, Piston	1	1001-
4		707-46-50020	• Bushing	1	1001-
5		04065-08025	• Ring, Snap	2	1001-
6		144-60-15450	• Bushing	2	1001-
7		144-60-15431	• Bushing	2	1001-
8		07145-00055	• Seal, Dust, (Kit : K10)	2	1001-
9		707-29-10A40	• Head	1	1001-
10		07179-12074	• Ring, Snap	1	1001-
11		707-56-60740	• Seal, Dust, (Kit : K10)	1	1001-
12		707-51-60860	• Packing, Rod, (Kit : K10)	1	1001-
13		707-51-60650	• Ring, Buffer, (Kit : K10)	1	1001-
14		707-52-90351	• Bushing	1	1001-
15		707-75-60110	• Ring, Snap	1	1001-
16		07000-12090	• O-ring, (Kit : K10)	1	1001-
17		07000-B2085	• O-ring, (Kit : K10)	1	1001-
18		707-35-10860	• Ring, Back-up, (Kit : K10)	1	1001-
		707-91-90050	• Piston Assembly	1	1001-
19		707-37-90150	• • Piston	1	1001-
20		707-83-10510	• • Valve, Piston	1	1001-
21		707-83-10520	• • Valve, Piston	1	1001-
22		707-83-10530	• • Valve, Piston	1	1001-
23		707-84-10140	• • Seat, Valve	6	1001-
24		707-44-90150	• Ring, Piston, (Kit : K10)	1	1001-
25		07156-00912	• Ring, Wear, (Kit : K10)	2	1001-
26		707-67-33040	• Nut	1	1001-
27		707-69-85020	• Slider	1	1001-
28		707-69-85010	• Slider	1	1001-
29		707-40-85020	• Retainer	2	1001-
30		707-88-38850	• Collar	1	1001-
31		130-63-12761	• Pin	2	1001-
32		707-52-90230	• Bushing	1	1001-
33		707-86-55860	Tube	1	1001-
34		02896-61015	O-ring, (Kit : K10)	1	1001-
35		07283-32236	Clip, Pipe	2	1001-
36		01597-01009	Nut	4	1001-
37		01643-31032	Washer	4	1001-

FIG. T2140-002002 Dozer Blade Lift Cylinder (For Power Angle Power Tilt Dozer, Inside Frame) (Inner Parts, Lift Cylinder, R.H.)

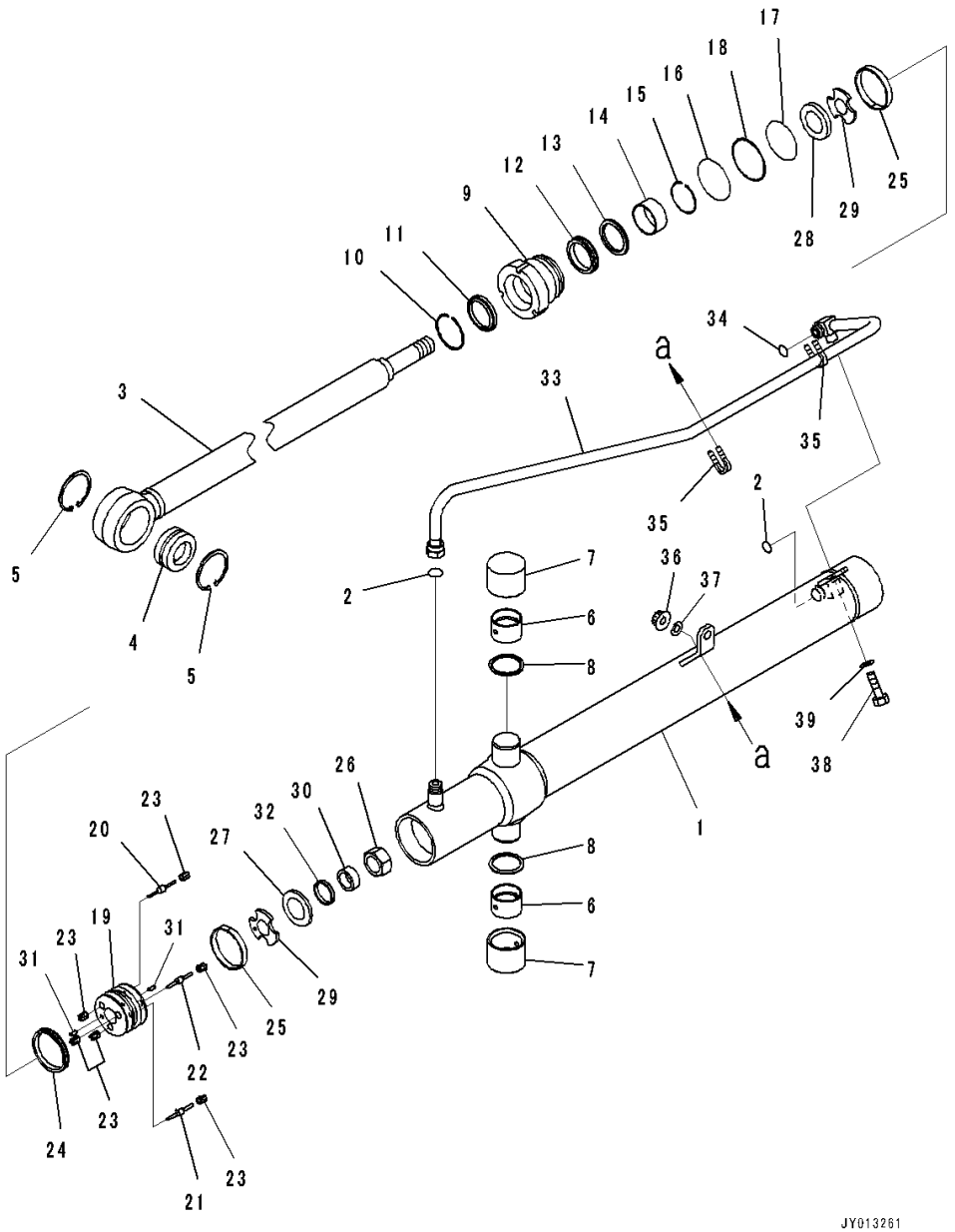

Index	Code	Part Number	Description	Qty	Serial Number
38		01010-81020	Bolt	1	1001-
39		01643-31032	Washer	1	1001-

FIG. T2140-002003 Dozer Blade Lift Cylinder (For Power Angle Power Tilt Dozer, Inside Frame) (Cylinder Fixing Parts)

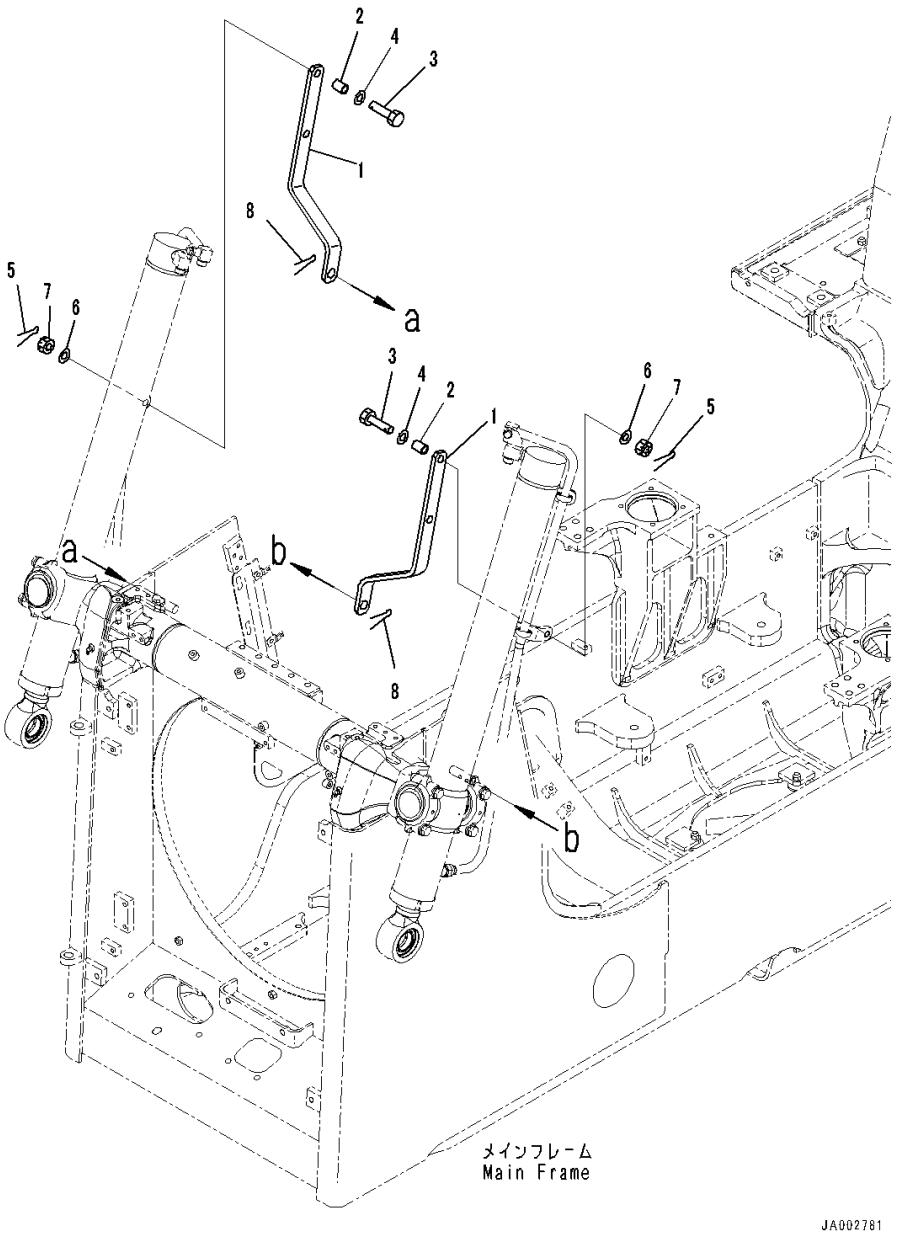

Index	Code	Part Number	Description	Qty	Serial Number
1		14X-54-51291	Plate	2	1001-
2		423-825-1720	Spacer	2	1001-
3		01012-81250	Bolt	2	1001-
4		01643-31232	Washer	2	1001-
5		04050-13022	Pin, Cotter	2	1001-
6		01643-31232	Washer	2	1001-
7		01590-31215	Nut, Slotted	2	1001-
8		04050-18080	Pin, Cotter	4	1001-

FIG. T2140-001001 Dozer Blade Lift Cylinder (Without Power Angle Power Tilt Dozer, Inside Frame) (Inner Parts, Lift Cylinder, L.H.)

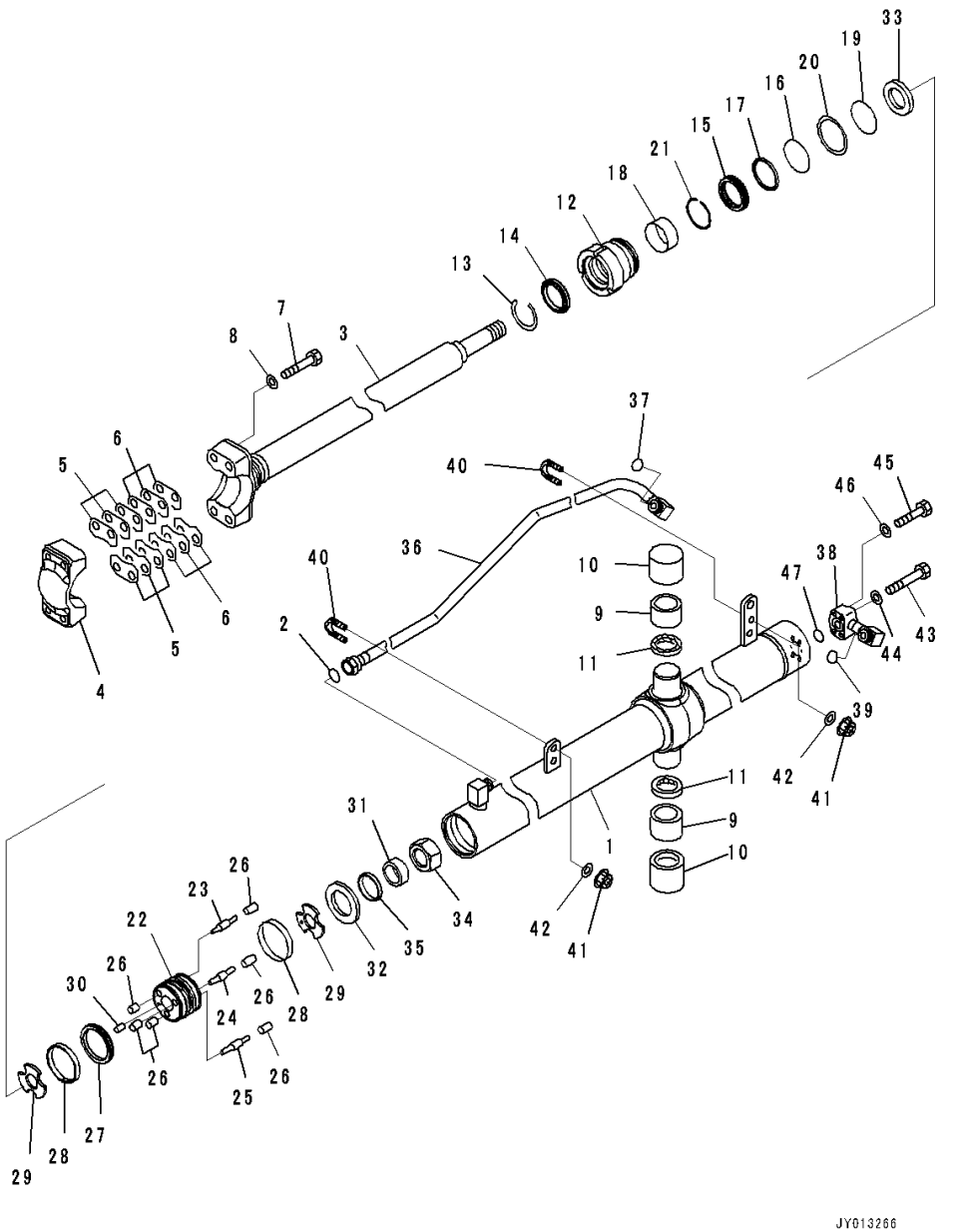

Index	Code	Part Number	Description	Qty	Serial Number
		707-E2-00070	Cylinder Assembly	1	1001-
1		707-12-85030	• Cylinder	1	1001-
2		02896-61015	• O-ring, (Kit : K11)	1	1001-
3		707-60-60040	• Rod	1	1001-
4		707-66-60140	• Cap	1	1001-
5		707-88-11290	• Shim, T=1.0mm	6	1001-
6		707-88-11300	• Shim, T=0.5mm	6	1001-
7		01011-81600	• Bolt	4	1001-
8		01643-51645	• Washer	4	1001-
9		144-60-15450	• Bushing	2	1001-
10		144-60-15431	• Bushing	2	1001-
11		07145-00055	• Seal, Dust, (Kit : K11)	2	1001-
12		707-29-85320	• Head, Cylinder	1	1001-
13		07179-12074	• Ring, Snap	1	1001-
14		707-56-60740	• Seal, Dust, (Kit : K11)	1	1001-
15		707-51-60860	• Packing, Rod, (Kit : K11)	1	1001-
16		07000-12085	• O-ring, (Kit : K11)	1	1001-
17		707-51-60650	• Ring, Buffer, (Kit : K11)	1	1001-
18		707-52-90351	• Bushing	1	1001-
19		07000-B2080	• O-ring, (Kit : K11)	1	1001-
20		707-35-10810	• Ring, Back-up, (Kit : K11)	1	1001-
21		707-75-60110	• Ring, Snap	1	1001-
		707-91-90040	• Piston Assembly	1	1001-
22	C1		• • Piston	1	1001-
23	C1		• • Valve, Piston	1	1001-
24	C1		• • Valve, Piston	1	1001-
25	C1		• • Valve, Piston	1	1001-
26	C1		• • Seat, Valve	6	1001-
27		707-44-85150	• Ring, Piston, (Kit : K11)	1	1001-
28		707-39-85120	• Ring, Wear, (Kit : K11)	2	1001-
29		707-40-85020	• Retainer	2	1001-
30		130-63-12761	• Pin	2	1001-
31		707-88-38850	• Collar	1	1001-
32		707-69-85020	• Slider	1	1001-
33		707-69-85010	• Slider	1	1001-
34		707-67-33040	• Nut	1	1001-
35		707-52-90230	• Bushing	1	1001-
36		707-86-55810	Tube	1	1001-
37		02896-61015	O-ring, (Kit : K11)	1	1001-

FIG. T2140-001001 Dozer Blade Lift Cylinder (Without Power Angle Power Tilt Dozer, Inside Frame) (Inner Parts, Lift Cylinder, L.H.)

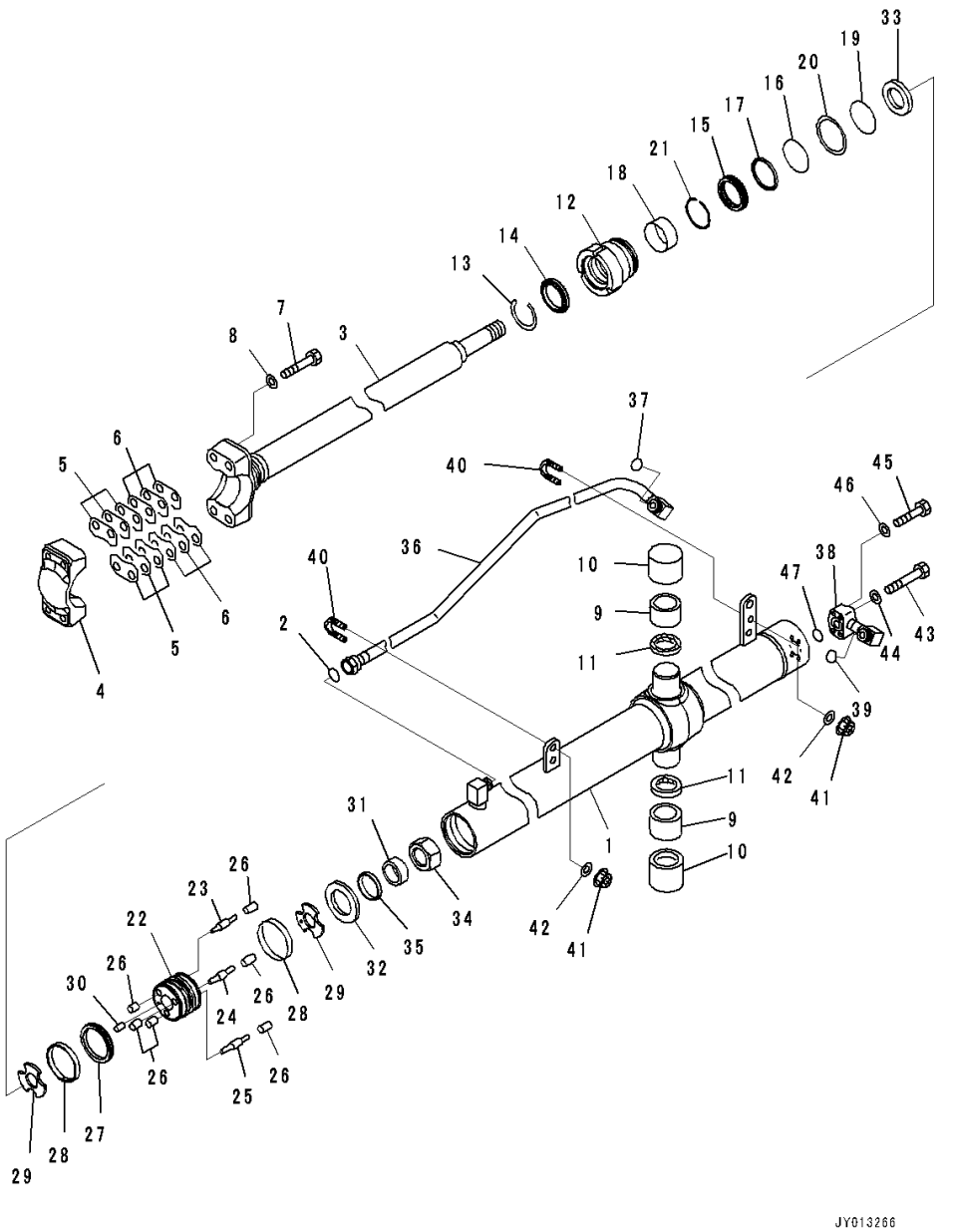

Index	Code	Part Number	Description	Qty	Serial Number
38		707-86-55820	Tube	1	1001-
39		02896-61015	O-ring, (Kit : K11)	1	1001-
40		07283-32236	Clip, Pipe	2	1001-
41		01597-01009	Nut	4	1001-
42		01643-31032	Washer	4	1001-
43		01010-80845	Bolt	2	1001-
44		01643-30823	Washer	2	1001-
45		01010-80840	Bolt	2	1001-
46		01643-30823	Washer	2	1001-
47		07000-B3025	O-ring, (Kit : K11)	1	1001-

FIG. T2140-001002 Dozer Blade Lift Cylinder (Without Power Angle Power Tilt Dozer, Inside Frame) (Inner Parts, Lift Cylinder, R.H.)

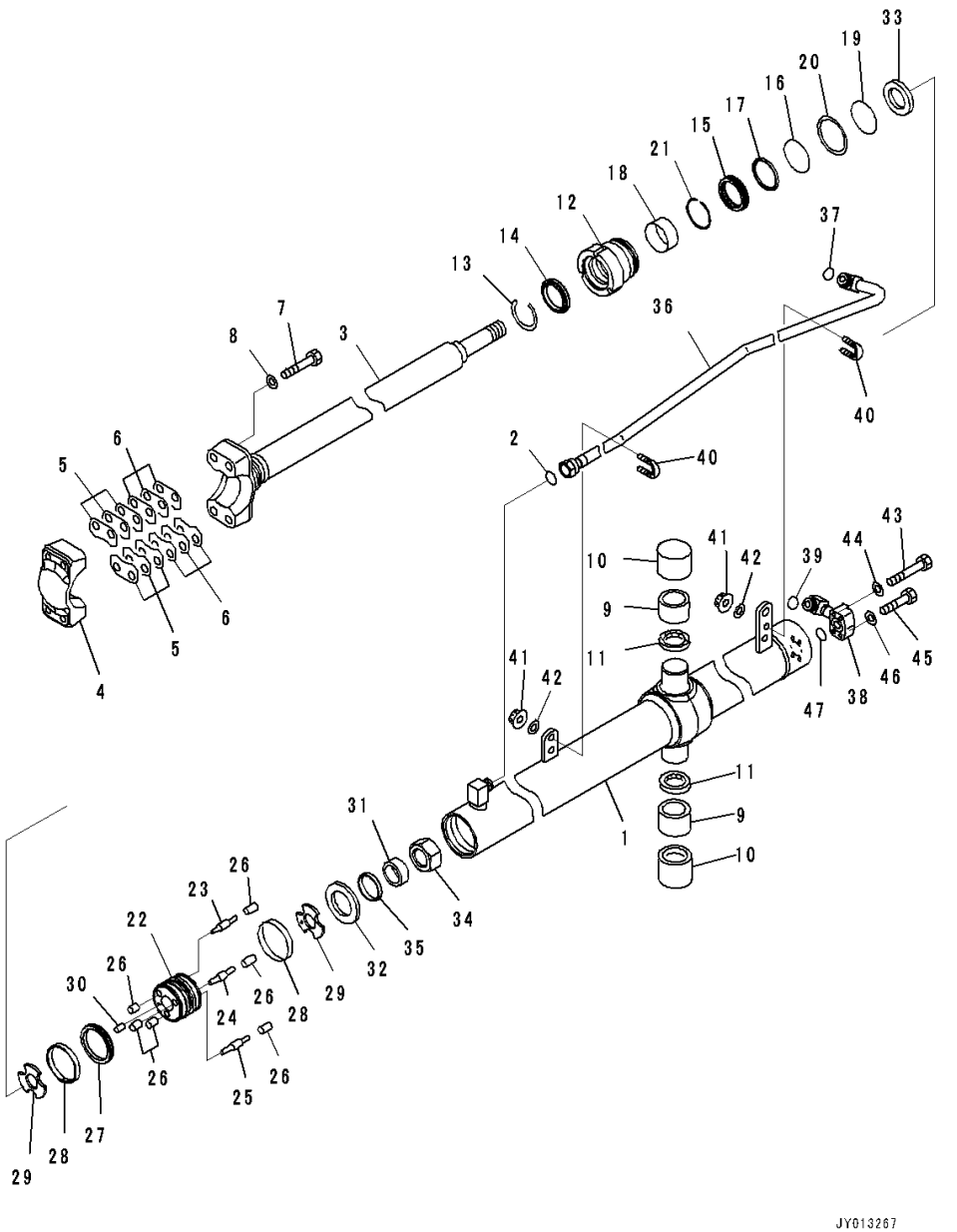

Index	Code	Part Number	Description	Qty	Serial Number
		707-E2-00080	Cylinder Assembly	1	1001-
1		707-12-85040	• Cylinder	1	1001-
2		02896-61015	• O-ring, (Kit : K11)	1	1001-
3		707-60-60040	• Rod	1	1001-
4		707-66-60140	• Cap	1	1001-
5		707-88-11290	• Shim, T=1.0mm	6	1001-
6		707-88-11300	• Shim, T=0.5mm	6	1001-
7		01011-81600	• Bolt	4	1001-
8		01643-51645	• Washer	4	1001-
9		144-60-15450	• Bushing	2	1001-
10		144-60-15431	• Bushing	2	1001-
11		07145-00055	• Seal, Dust, (Kit : K11)	2	1001-
12		707-29-85320	• Head, Cylinder	1	1001-
13		07179-12074	• Ring, Snap	1	1001-
14		707-56-60740	• Seal, Dust, (Kit : K11)	1	1001-
15		707-51-60860	• Packing, Rod, (Kit : K11)	1	1001-
16		07000-12085	• O-ring, (Kit : K11)	1	1001-
17		707-51-60650	• Ring, Buffer, (Kit : K11)	1	1001-
18		707-52-90351	• Bushing	1	1001-
19		07000-B2080	• O-ring, (Kit : K11)	1	1001-
20		707-35-10810	• Ring, Back-up, (Kit : K11)	1	1001-
21		707-75-60110	• Ring, Snap	1	1001-
		707-91-90040	• Piston Assembly	1	1001-
22	C1		• • Piston	1	1001-
23	C1		• • Valve, Piston	1	1001-
24	C1		• • Valve, Piston	1	1001-
25	C1		• • Valve, Piston	1	1001-
26	C1		• • Seat, Valve	6	1001-
27		707-44-85150	• Ring, Piston, (Kit : K11)	1	1001-
28		707-39-85120	• Ring, Wear, (Kit : K11)	2	1001-
29		707-40-85020	• Retainer	2	1001-
30		130-63-12761	• Pin	2	1001-
31		707-88-38850	• Collar	1	1001-
32		707-69-85020	• Slider	1	1001-
33		707-69-85010	• Slider	1	1001-
34		707-67-33040	• Nut	1	1001-
35		707-52-90230	• Bushing	1	1001-
36		707-86-55830	Tube	1	1001-
37		02896-61015	O-ring, (Kit : K11)	1	1001-

FIG. T2140-001002 Dozer Blade Lift Cylinder (Without Power Angle Power Tilt Dozer, Inside Frame) (Inner Parts, Lift Cylinder, R.H.)

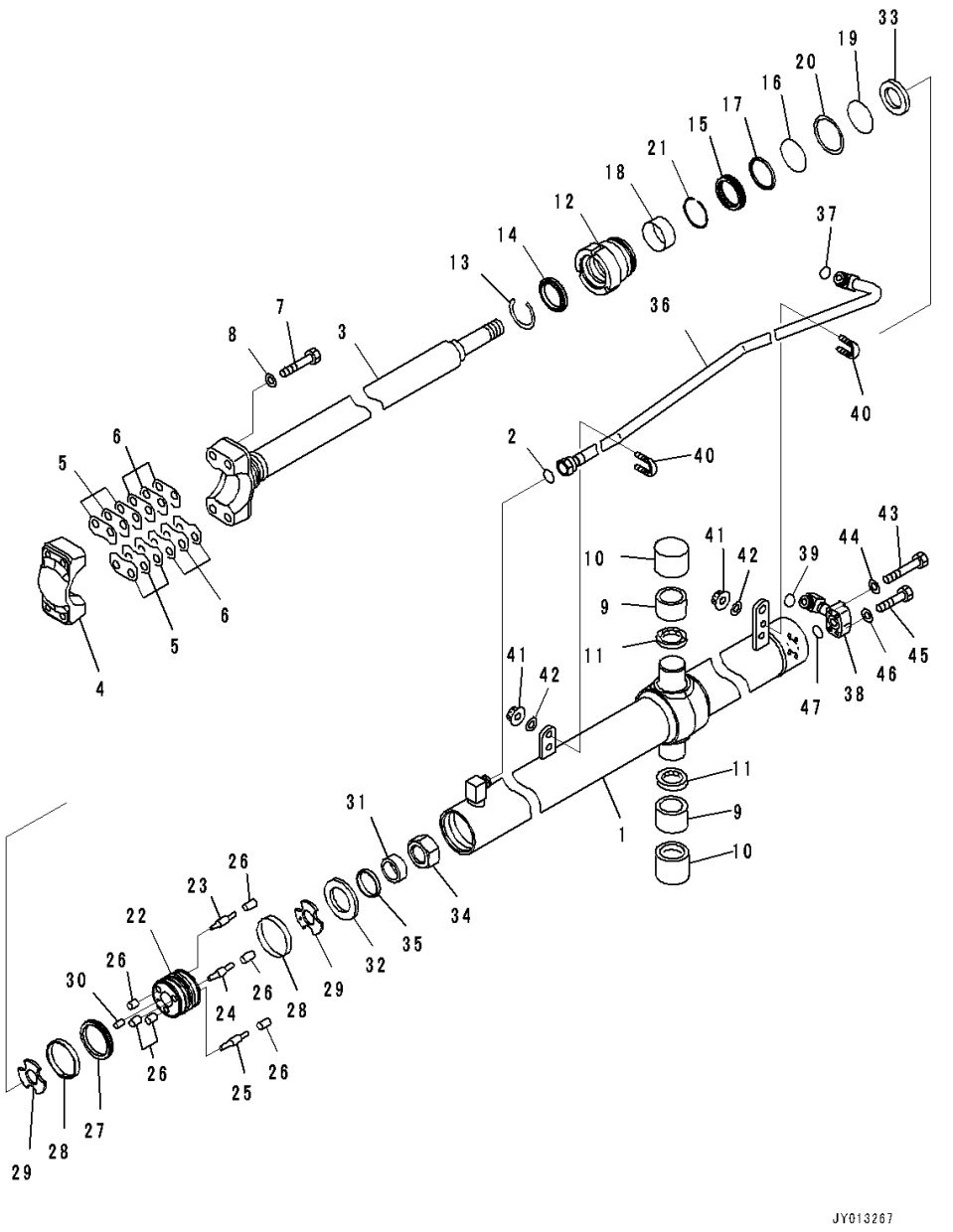

Index	Code	Part Number	Description	Qty	Serial Number
38		707-86-55840	Tube	1	1001-
39		02896-61015	O-ring, (Kit : K11)	1	1001-
40		07283-32236	Clip, Pipe	2	1001-
41		01597-01009	Nut	4	1001-
42		01643-31032	Washer	4	1001-
43		01010-80845	Bolt	2	1001-
44		01643-30823	Washer	2	1001-
45		01010-80840	Bolt	2	1001-
46		01643-30823	Washer	2	1001-
47		07000-B3025	O-ring, (Kit : K11)	1	1001-

FIG. T2140-001003 Dozer Blade Lift Cylinder (Without Power Angle Power Tilt Dozer, Inside Frame) (Cylinder Fixing Parts)

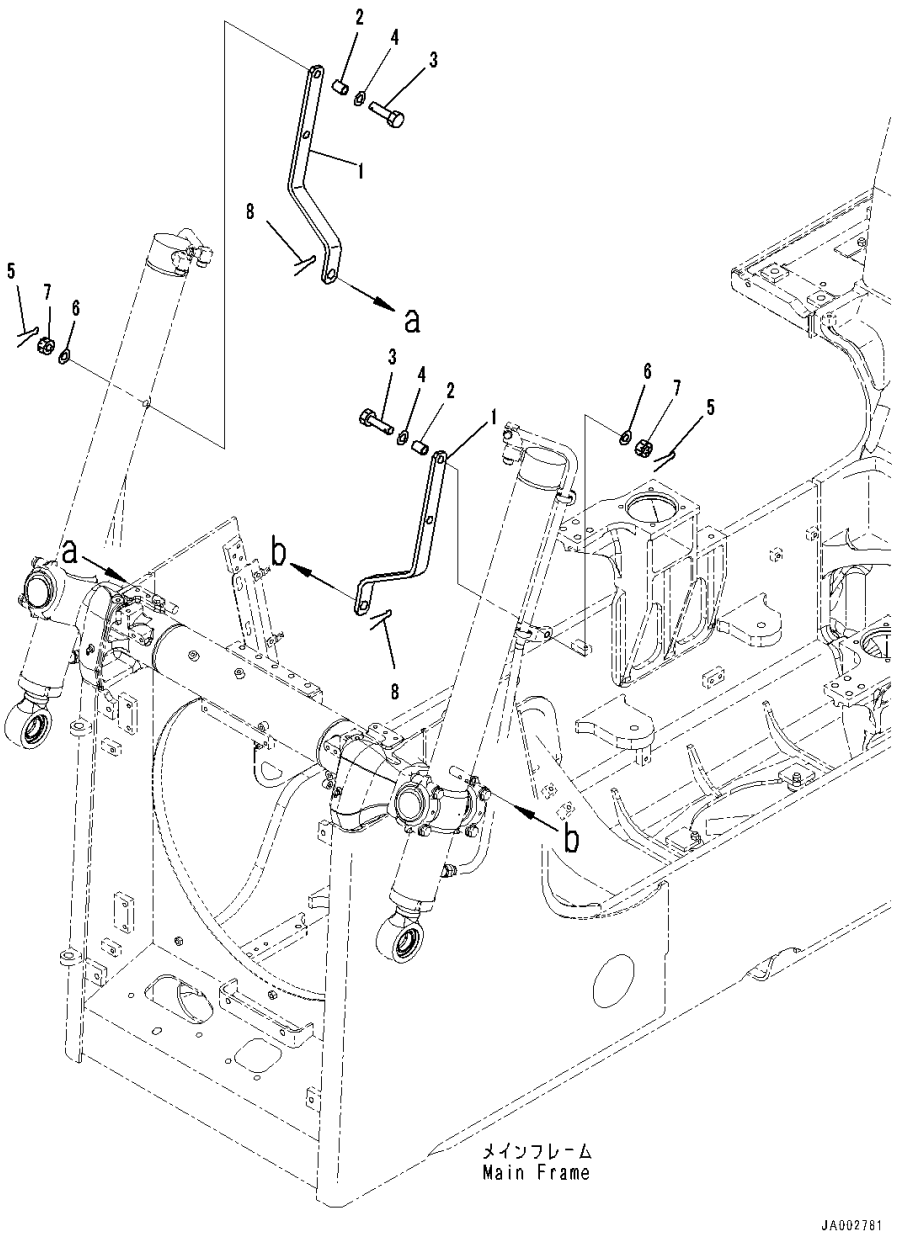

Index	Code	Part Number	Description	Qty	Serial Number
1		14X-54-51280	Plate	2	1001-
2		423-825-1720	Spacer	2	1001-
3		01012-81250	Bolt	2	1001-
4		01643-31232	Washer	2	1001-
5		04050-13022	Pin, Cotter	2	1001-
6		01643-31232	Washer	2	1001-
7		01590-31215	Nut, Slotted	2	1001-
8		04050-18080	Pin, Cotter	4	1001-

FIG. T2150-002001 Dozer Blade Tilt Cylinder (For Power Angle Power Tilt Dozer, Inside Frame) (Inner Parts, Tilt Cylinder)

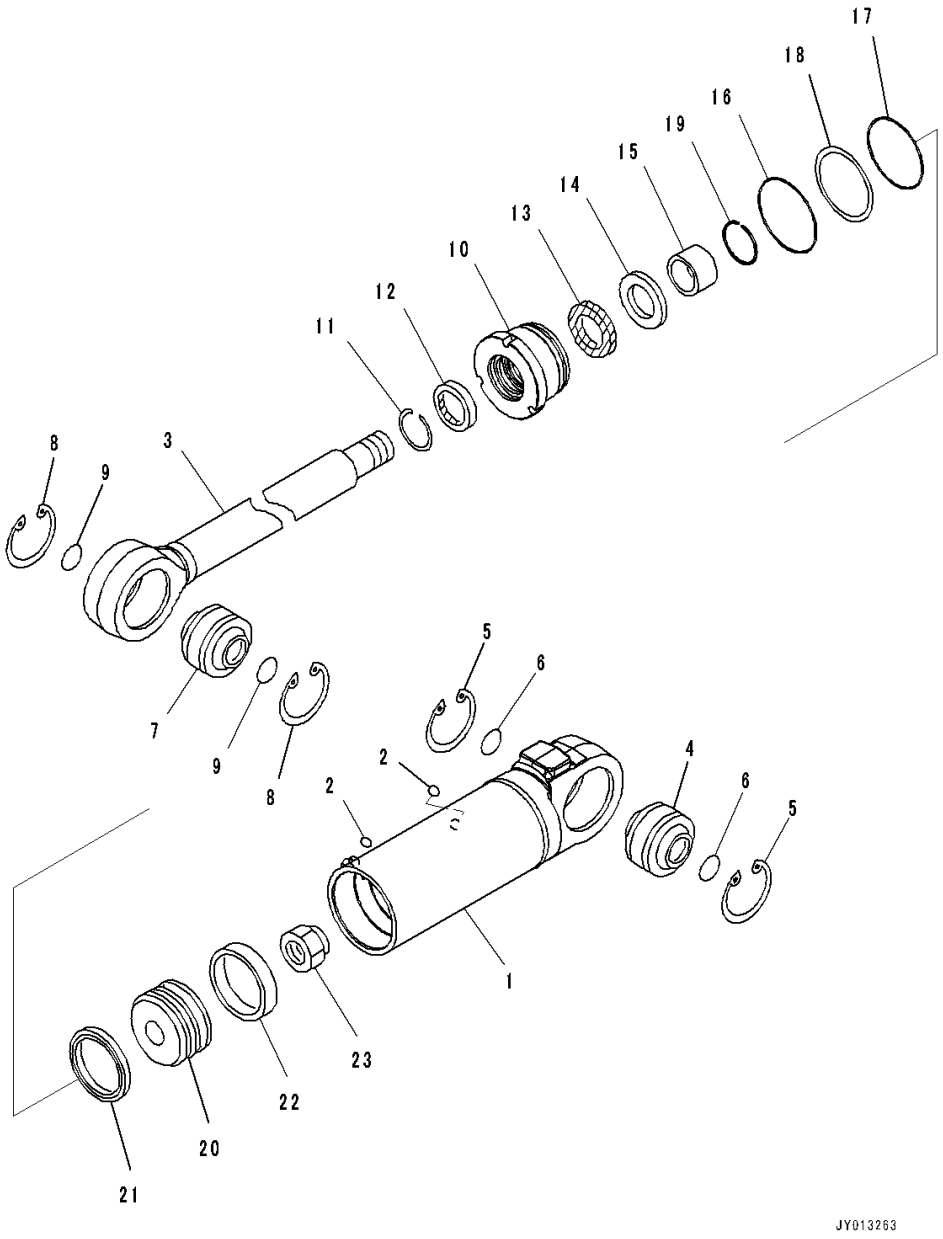

Index	Code	Part Number	Description	Qty	Serial Number
		707-E0-00030	Cylinder Assembly	1	1001-
1		707-11-13861	• Cylinder	1	1001-
2		02896-61009	• O-ring, (Kit : K12)	2	1001-
3		707-58-70A10	• Rod	1	1001-
4		07137-05008	• Bushing	1	1001-
5		04065-01104	• Ring, Snap	2	1001-
6		07000-13050	• O-ring, (Kit : K12)	2	1001-
7		07137-05008	• Bushing	1	1001-
8		04065-01104	• Ring, Snap	2	1001-
9		07000-13050	• O-ring, (Kit : K12)	2	1001-
10		707-29-13280	• Head	1	1001-
11		07179-12084	• Ring, Snap	1	1001-
12		707-56-70740	• Seal, Dust, (Kit : K12)	1	1001-
13		707-51-70860	• Packing, Rod, (Kit : K12)	1	1001-
14		707-51-70650	• Ring, Buffer, (Kit : K12)	1	1001-
15		707-52-90461	• Bushing	1	1001-
16		07000-12130	• O-ring, (Kit : K12)	1	1001-
17		07000-B2125	• O-ring, (Kit : K12)	1	1001-
18		707-35-11260	• Ring, Back-up, (Kit : K12)	1	1001-
19		707-75-70110	• Ring, Snap	1	1001-
20		707-36-13240	• Piston	1	1001-
21		707-44-13150	• Ring, Piston, (Kit : K12)	1	1001-
22		07156-01315	• Ring, Wear, (Kit : K12)	1	1001-
23		707-67-52030	• Nut	1	1001-

FIG. T2150-001001 Dozer Blade Tilt Cylinder (Without Power Angle Power Tilt Dozer, Inside Frame) (Inner Parts, Tilt Cylinder)

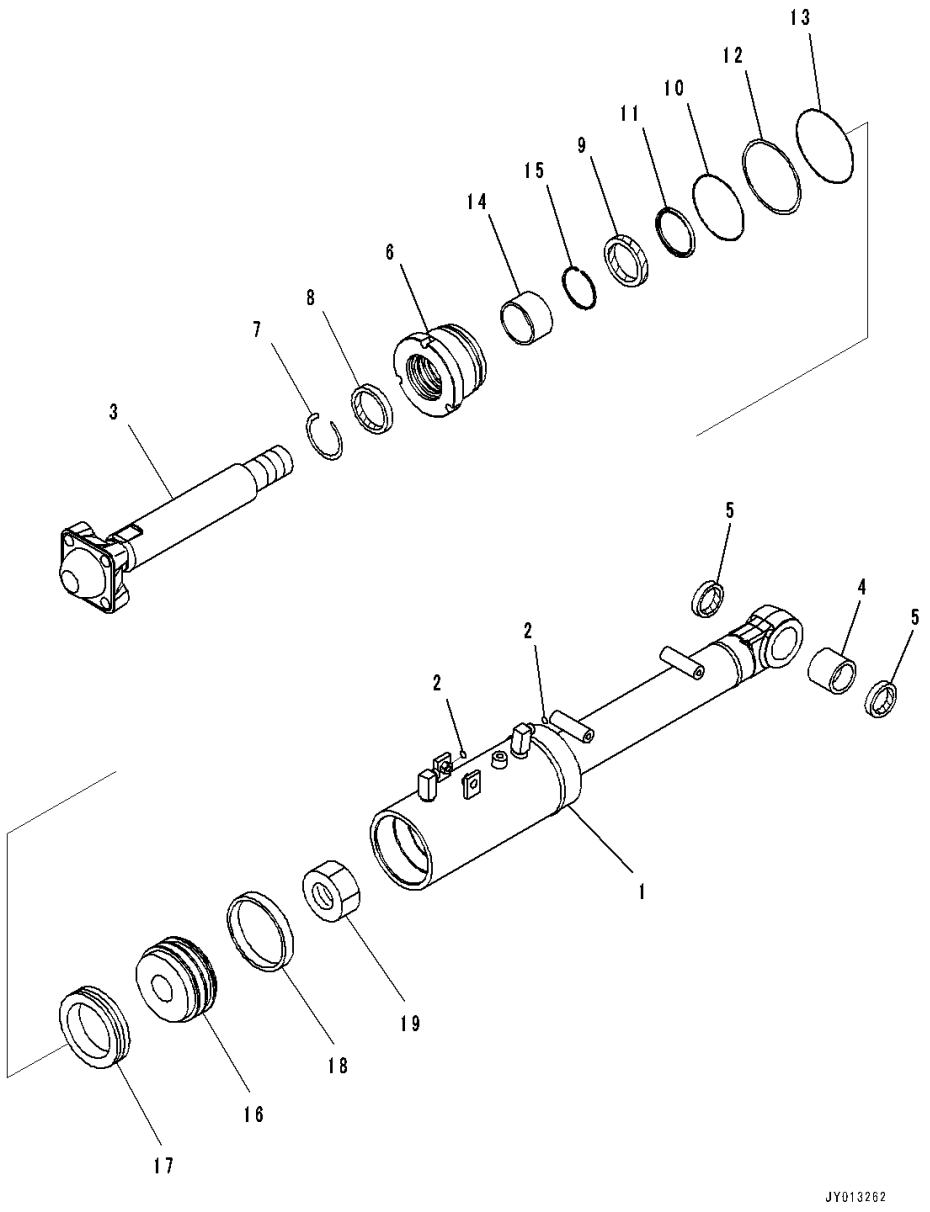

Index	Code	Part Number	Description	Qty	Serial Number
		707-E4-00020	Cylinder Assembly	1	1001-
1		707-11-12A71	• Cylinder	1	1001-
2		02896-61009	• O-ring, (Kit : K13)	2	1001-
3		707-60-70110	• Rod	1	1001-
4		07143-10505	• Bushing	1	1001-
5		07145-00050	• Seal, Dust, (Kit : K13)	2	1001-
6		707-29-12660	• Head, Cylinder	1	1001-
7		07179-12084	• Ring, Snap	1	1001-
8		707-56-70740	• Seal, Dust, (Kit : K13)	1	1001-
9		707-51-70860	• Packing, Rod, (Kit : K13)	1	1001-
10		07000-12125	• O-ring, (Kit : K13)	1	1001-
11		707-51-70650	• Ring, Buffer, (Kit : K13)	1	1001-
12		707-35-11210	• Ring, Back-up, (Kit : K13)	1	1001-
13		07000-B2120	• O-ring, (Kit : K13)	1	1001-
14		707-52-90451	• Bushing	1	1001-
15		707-75-70110	• Ring, Snap	1	1001-
16		707-36-12840	• Piston	1	1001-
17		707-44-12250	• Ring, Piston, (Kit : K13)	1	1001-
18		707-39-12520	• Ring, Wear, (Kit : K13)	1	1001-
19		707-67-52030	• Nut	1	1001-

FIG. T2151-001001 Dozer Blade Pitch Cylinder (Inner Parts, Pitch Cylinder)

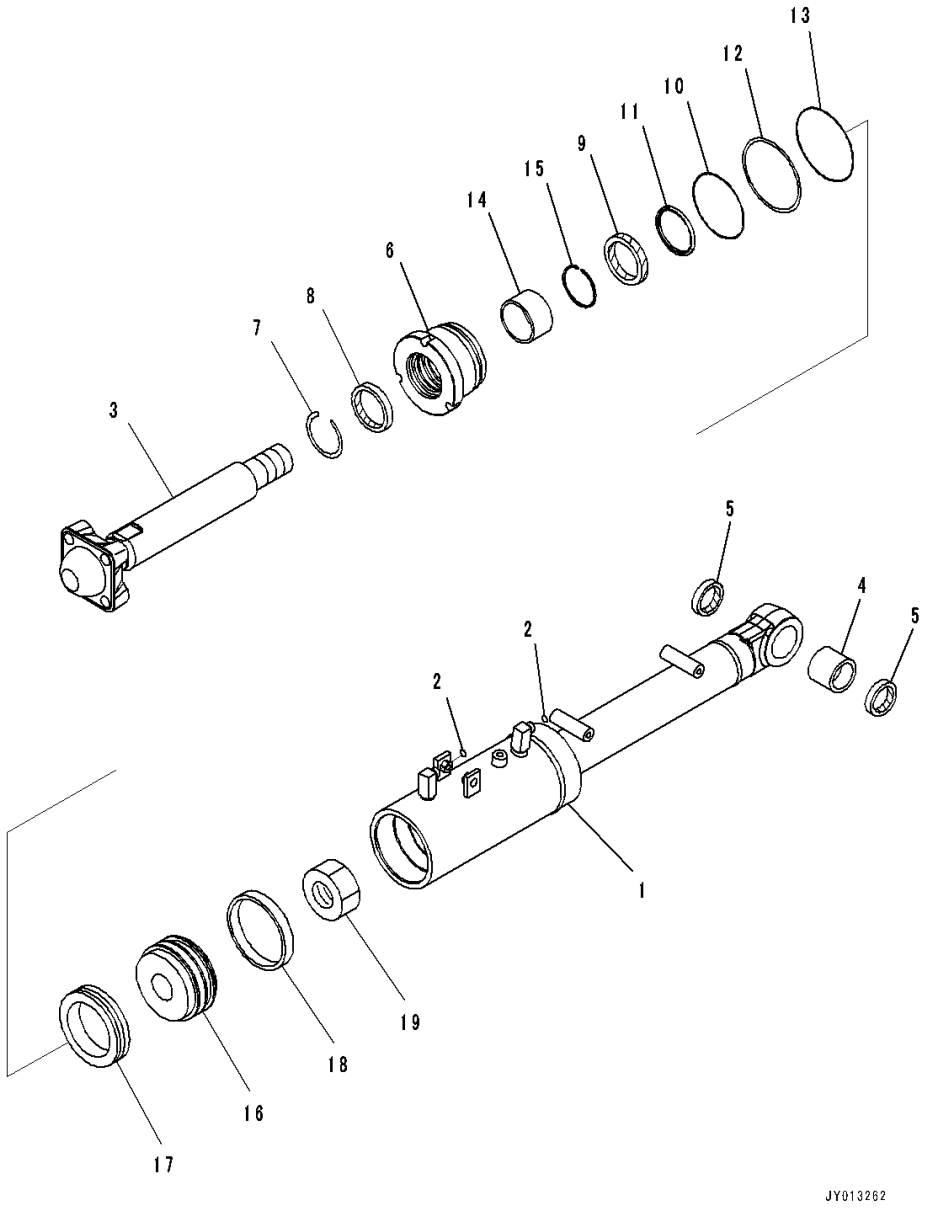

Index	Code	Part Number	Description	Qty	Serial Number
		707-E4-00020	Cylinder Assembly	1	1001-
1		707-11-12A71	• Cylinder	1	1001-
2		02896-61009	• O-ring, (Kit : K13)	2	1001-
3		707-60-70110	• Rod	1	1001-
4		07143-10505	• Bushing	1	1001-
5		07145-00050	• Seal, Dust, (Kit : K13)	2	1001-
6		707-29-12660	• Head, Cylinder	1	1001-
7		07179-12084	• Ring, Snap	1	1001-
8		707-56-70740	• Seal, Dust, (Kit : K13)	1	1001-
9		707-51-70860	• Packing, Rod, (Kit : K13)	1	1001-
10		07000-12125	• O-ring, (Kit : K13)	1	1001-
11		707-51-70650	• Ring, Buffer, (Kit : K13)	1	1001-
12		707-35-11210	• Ring, Back-up, (Kit : K13)	1	1001-
13		07000-B2120	• O-ring, (Kit : K13)	1	1001-
14		707-52-90451	• Bushing	1	1001-
15		707-75-70110	• Ring, Snap	1	1001-
16		707-36-12840	• Piston	1	1001-
17		707-44-12250	• Ring, Piston, (Kit : K13)	1	1001-
18		707-39-12520	• Ring, Wear, (Kit : K13)	1	1001-
19		707-67-52030	• Nut	1	1001-

FIG. T2153-001001 Dozer Blade Angle Cylinder

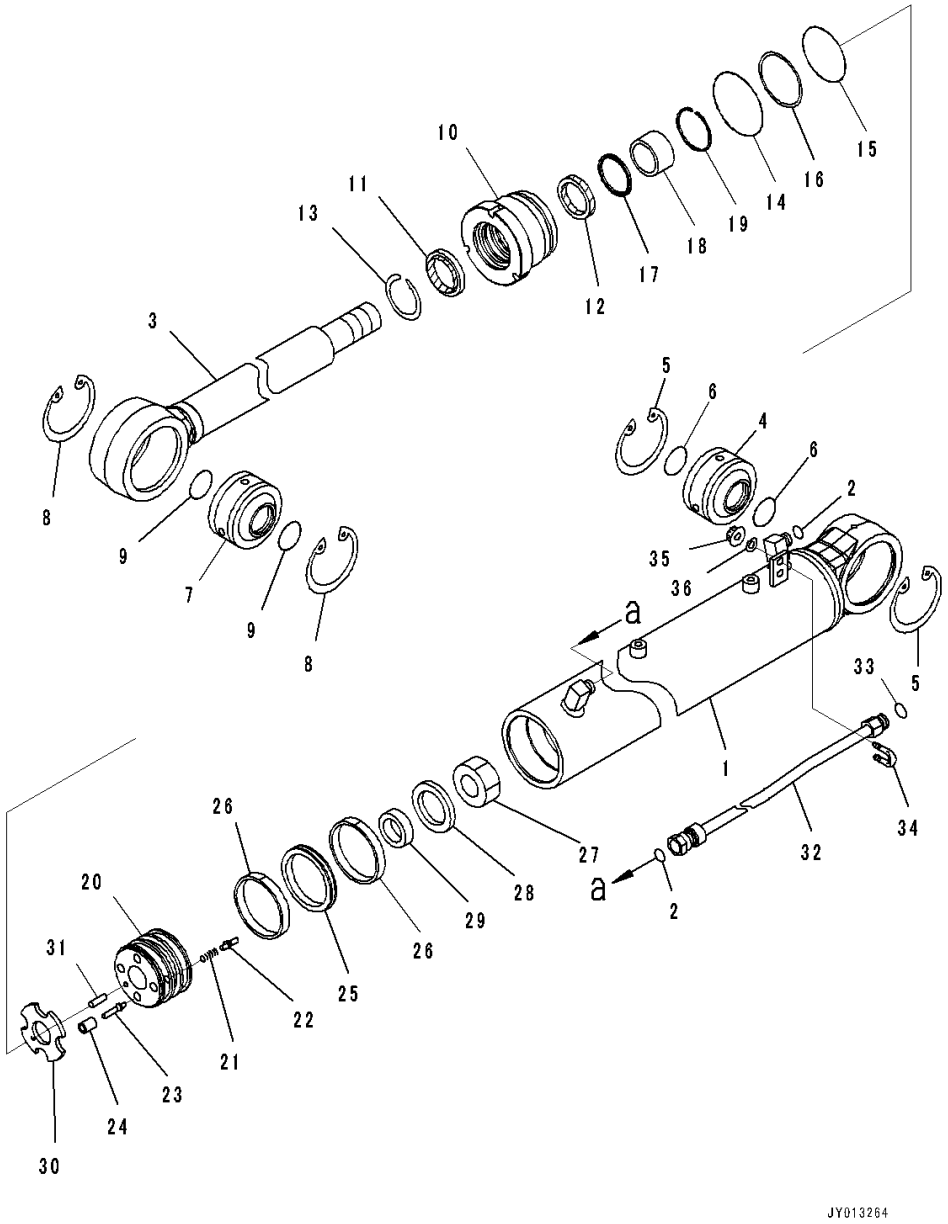

Index	Code	Part Number	Description	Qty	Serial Number
		707-E0-00041	Cylinder Assembly	2	1001-
1		707-11-11F62	• Cylinder	1	1001-
2		02896-61012	• O-ring, (Kit : K14)	2	1001-
3		707-58-65902	• Rod, Piston	1	1001-
4		707-46-05040	• Bushing	1	1001-
5		04065-01104	• Ring, Snap	2	1001-
6		07000-13050	• O-ring, (Kit : K14)	2	1001-
7		07137-05008	• Bushing	1	1001-
8		04065-01104	• Ring, Snap	2	1001-
9		07000-13050	• O-ring, (Kit : K14)	2	1001-
10		707-29-11A00	• Head, Cylinder	1	1001-
11		707-56-65740	• Seal, Dust, (Kit : K14)	1	1001-
12		707-51-65860	• Packing, Rod, (Kit : K14)	1	1001-
13		07179-12079	• Ring, Snap	1	1001-
14		07000-12110	• O-ring, (Kit : K14)	1	1001-
15		07000-B2105	• O-ring, (Kit : K14)	1	1001-
16		707-35-11060	• Ring, Back-up, (Kit : K14)	1	1001-
17		707-51-65650	• Ring, Buffer, (Kit : K14)	1	1001-
18		707-52-90401	• Bushing	1	1001-
19		707-75-65110	• Ring, Snap	1	1001-
		707-91-91111	• Piston	1	1001-
20		707-37-11111	• • Piston	1	1001-
21		707-80-16020	• • Spring	4	1001-
22		707-83-90030	• • Valve	4	1001-
23		707-83-90040	• • Valve	4	1001-
24		707-84-10250	• • Seat	4	1001-
25		707-44-11150	• Ring, Piston, (Kit : K14)	1	1001-
26		07156-01112	• Ring, Wear, (Kit : K14)	2	1001-
27		707-67-48020	• Nut	1	1001-
28		707-69-11011	• Slider	1	1001-
29		707-81-45252	• Collar	1	1001-
30		707-40-11321	• Retainer	1	1001-
31		130-63-12761	• Pin	1	1001-
32		707-86-01070	Tube	2	1001-
33		02896-61012	O-ring, (Kit : K14)	2	1001-
34		07283-31529	Clip, Pipe	2	1001-
35		01596-00807	Nut	4	1001-
36		01643-30823	Washer	4	1001-

FIG. T2160-001001 Dozer Blade Tilt Cylinder Piping (For Straight Tilt Dozer)

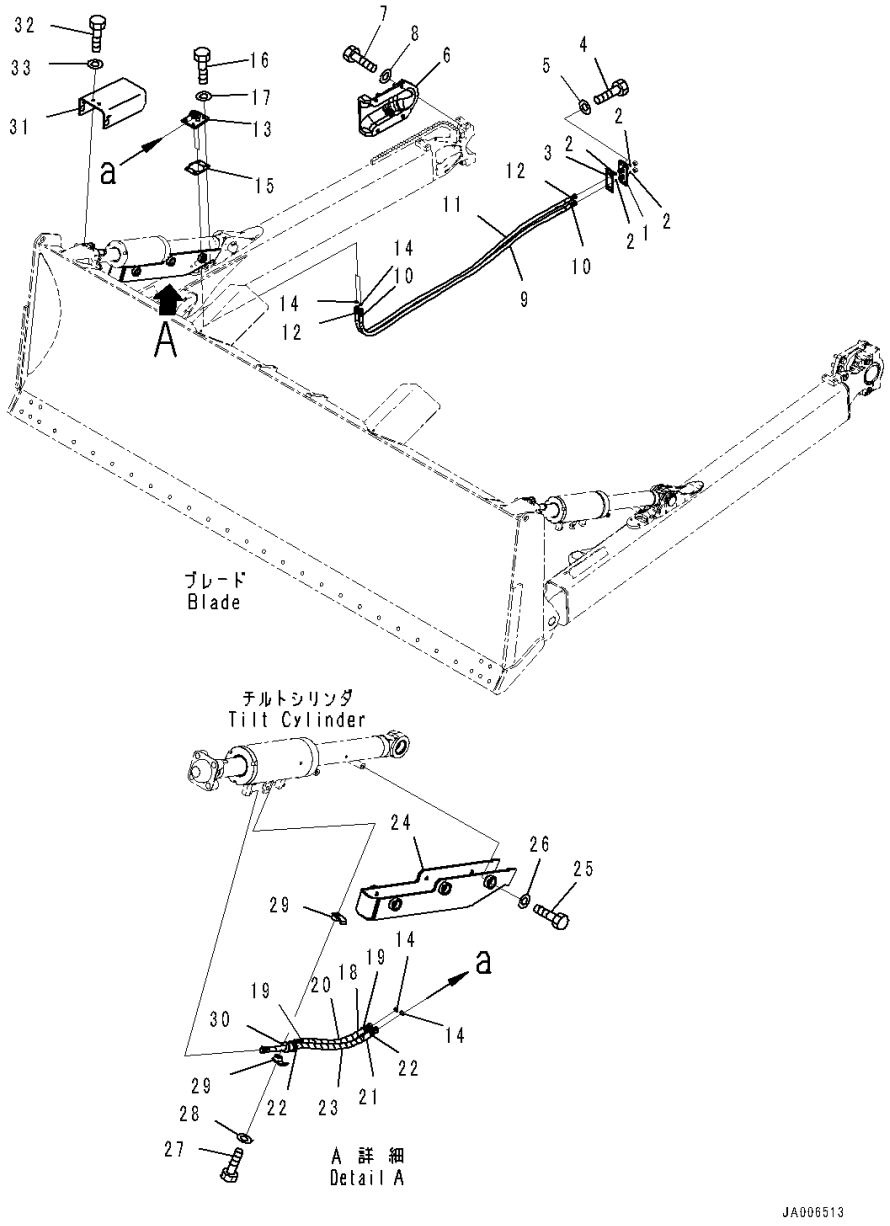

Index	Code	Part Number	Description	Qty	Serial Number
1		14X-62-52291	Bracket	1	1001-
2		02896-11009	O-ring	4	1001-
3		14Y-62-11420	Gasket	1	1001-
4		01010-81225	Bolt	4	1001-
5		01643-31232	Washer	4	1001-
6		14Y-71-12160	Cover	1	1001-
7		01010-81630	Bolt	4	1001-
8		01643-31645	Washer	4	1001-
9		14X-62-53611	Hose	1	1001-
10		21U-62-34760	• Band, Red	2	1001-
11		14X-62-53621	Hose	1	1001-
12		21U-62-34770	• Band, White	2	1001-
13		14Y-62-31431	Bracket	1	1001-
14		02896-11009	O-ring	4	1001-
15		14Y-62-11440	Gasket	1	1001-
16		01010-81225	Bolt	4	1001-
17		01643-31232	Washer	4	1001-
18		14X-62-52161	Hose Assembly	1	1001-
19		21U-62-34770	• Band, White	2	1001-
20		14X-62-54980	• Cover	1	1001-
21		14X-62-52171	Hose Assembly	1	1001-
22		21U-62-34760	• Band, Red	2	1001-
23		14X-62-54980	• Cover	1	1001-
24		14X-62-52182	Cover	1	1001-
25		01010-81230	Bolt	6	1001-
26		01643-31232	Washer	6	1001-
27		01010-81255	Bolt	1	1001-
28		01643-31232	Washer	1	1001-
29		22P-62-13510	Clamp	2	1001-
30		07095-00317	Cushion	1	1001-
31		14X-62-52771	Plate	1	1001-
32		01010-81225	Bolt	4	1001-
33		01643-31232	Washer	4	1001-

FIG. T2160-003001 Dozer Blade Tilt Cylinder Piping (For Power Tilt Pitch Dozer)

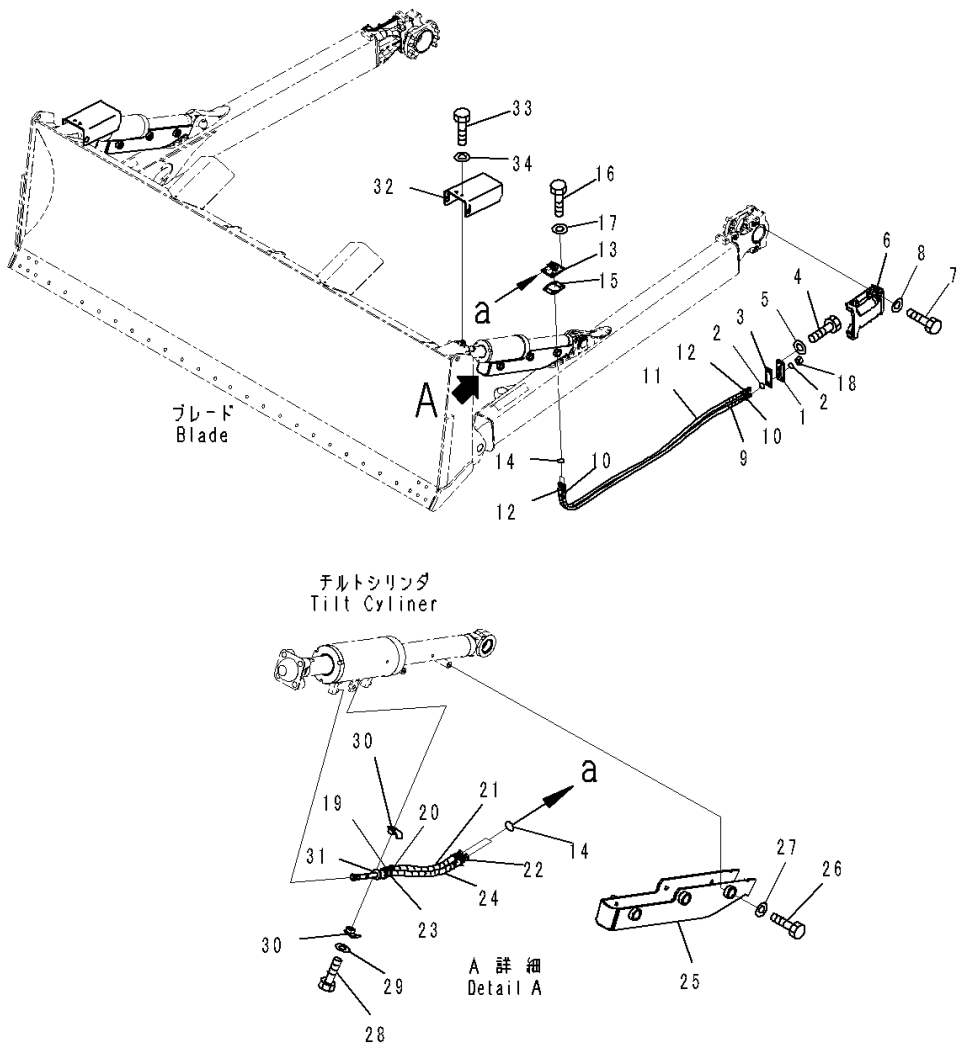

Index	Code	Part Number	Description	Qty	Serial Number
1		14X-62-52291	Bracket	2	1001-
2		02896-11009	O-ring	8	1001-
3		14Y-62-11420	Gasket	2	1001-
4		01010-81225	Bolt	8	1001-
5		01643-31232	Washer	8	1001-
6		14Y-71-12160	Cover	2	1001-
7		01010-81630	Bolt	8	1001-
8		01643-31645	Washer	8	1001-
9		14X-62-53611	Hose	2	1001-
10		21U-62-34760	• Band, Red	2	1001-
11		14X-62-53621	Hose	2	1001-
12		21U-62-34770	• Band, White	2	1001-
13		14Y-62-31431	Bracket	2	1001-
14		02896-11009	O-ring	8	1001-
15		14Y-62-11440	Gasket	2	1001-
16		01010-81225	Bolt	8	1001-
17		01643-31232	Washer	8	1001-
18		02789-00315	Plug	4	1001-
19		14X-62-52161	Hose Assembly	2	1001-
20		21U-62-34770	• Band, White	2	1001-
21		14X-62-54980	• Cover	1	1001-
22		14X-62-52171	Hose Assembly	2	1001-
23		21U-62-34760	• Band, Red	2	1001-
24		14X-62-54980	• Cover	1	1001-
25		14X-62-52182	Cover	2	1001-
26		01010-81230	Bolt	12	1001-
27		01643-31232	Washer	12	1001-
28		01010-81255	Bolt	2	1001-
29		01643-31232	Washer	2	1001-
30		22P-62-13510	Clamp	4	1001-
31		07095-00317	Cushion	2	1001-
32		14X-62-52771	Plate	2	1001-
33		01010-81225	Bolt	8	1001-
34		01643-31232	Washer	8	1001-

FIG. T2160-005001 Dozer Blade Tilt Cylinder Piping (For Power Angle Power Tilt Dozer, Inside Frame) (Angle Cylinder Piping)

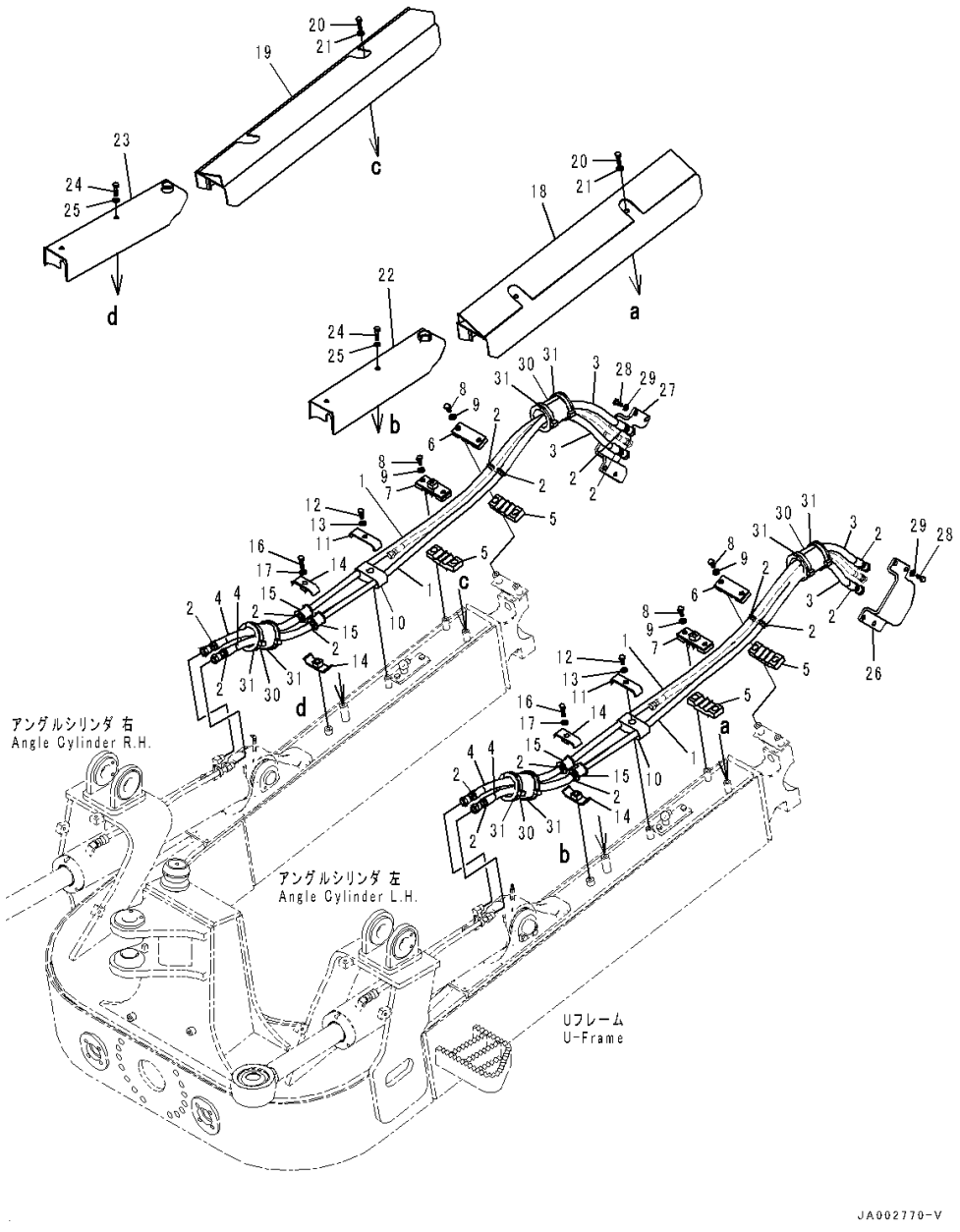

Index	Code	Part Number	Description	Qty	Serial Number
1		14X-62-52741	Hose Assembly	4	1001-
2		08034-20414	• Band	4	1001-
3		14X-62-52710	• Cover	1	1001-
4		14X-62-52690	• Cover	1	1001-
5		14X-62-54850	Cushion	4	1001-
6		14X-62-54840	Clamp	2	1001-
7		14X-62-51871	Clamp	2	1001-
8		01010-81225	Bolt	8	1001-
9		01643-31232	Washer	8	1001-
10		14X-62-51891	Cushion	2	1001-
11		14X-62-51880	Plate	2	1001-
12		01010-81220	Bolt	2	1001-
13		01643-31232	Washer	2	1001-
14		07094-30417	Clamp	4	1001-
15		07095-1042B	Cushion	4	1001-
16		01010-81260	Bolt	2	1001-
17		01643-31232	Washer	2	1001-
18		14X-62-61920	Cover,L.H.	1	1001-
19		14X-62-64920	Cover,R.H.	1	1001-
20		01010-81265	Bolt	4	1001-
21		01643-31232	Washer	4	1001-
22		14X-62-51912	Cover,L.H.	1	1001-
23		14X-62-54910	Cover,R.H.	1	1001-
24		01010-81260	Bolt	4	1001-
25		01643-31232	Washer	4	1001-
26		14X-62-51932	Bracket,L.H.	1	1001-
27		14X-62-52821	Bracket,R.H.	1	1001-
28		01010-81230	Bolt	8	1001-
29		01643-31232	Washer	8	1001-
30		07095-01245	Cushion	4	1001-
31		08034-20876	Band	8	1001-

FIG. T2160-005002 Dozer Blade Tilt Cylinder Piping (For Power Angle Power Tilt Dozer, Inside Frame) (Tilt Cylinder Piping)

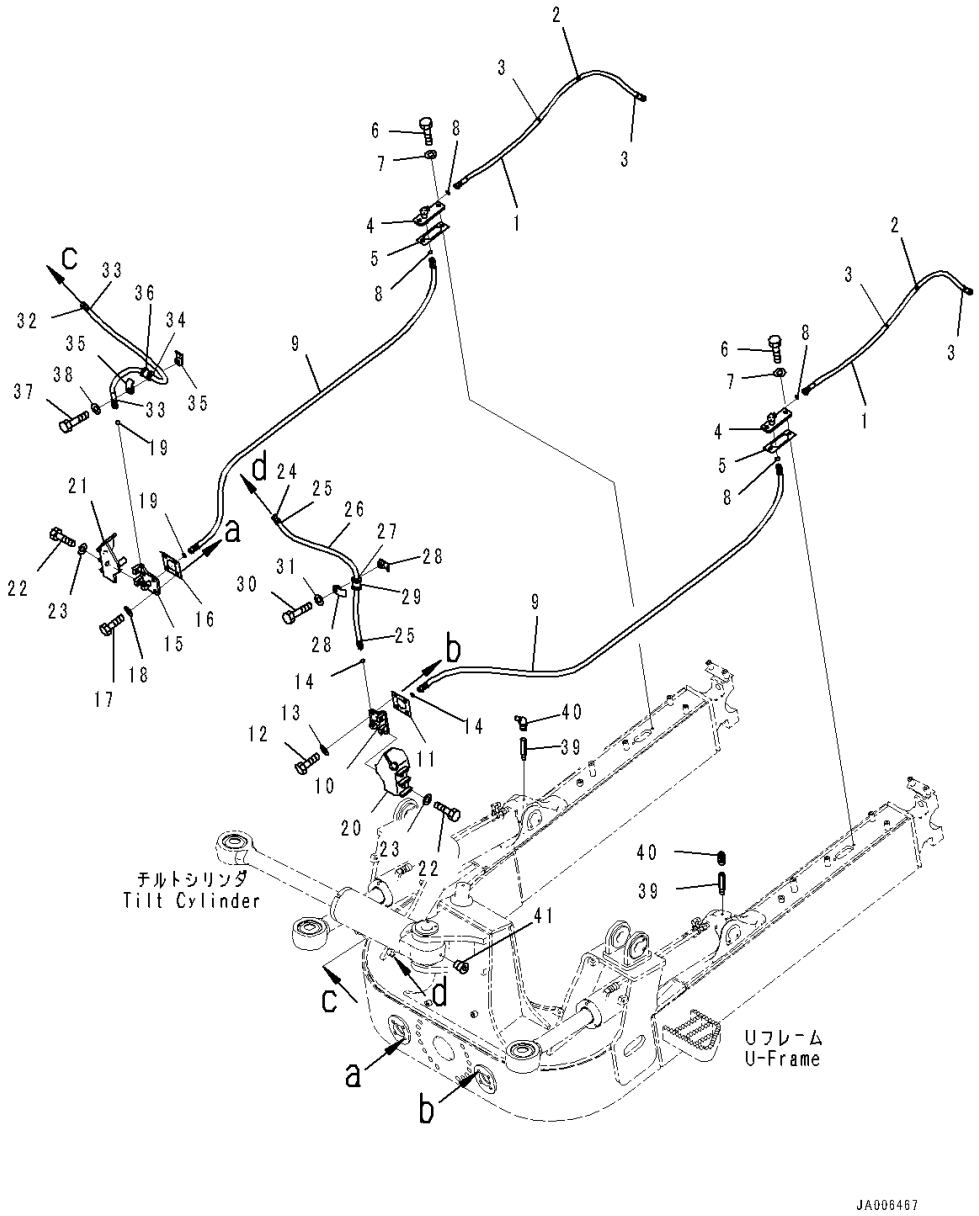

Index	Code	Part Number	Description	Qty	Serial Number
1		14X-62-51561	Hose Assembly	2	1001-
2		08034-20414	• Band	2	1001-
3		14X-62-52680	• Cover	1	1001-
4		14X-62-51860	Bracket	2	1001-
5		14X-62-52790	Gasket	2	1001-
6		01010-81225	Bolt	4	1001-
7		01643-31232	Washer	4	1001-
8		02896-11009	O-ring	4	1001-
9		14X-62-51591	Hose	2	1001-
10		14X-62-51842	Bracket,L.H.	1	1001-
11		14X-62-52781	Gasket	1	1001-
12		01010-81245	Bolt	4	1001-
13		01643-31232	Washer	4	1001-
14		02896-11009	O-ring	2	1001-
15		14X-62-51852	Bracket,R.H.	1	1001-
16		14X-62-52781	Gasket	1	1001-
17		01010-81245	Bolt	4	1001-
18		01643-31232	Washer	4	1001-
19		02896-11009	O-ring	2	1001-
20		14X-62-61830	Bracket	1	1001-
21		14X-62-63860	Bracket	1	1001-
22		01010-81635	Bolt	4	1001-
23		01643-31645	Washer	4	1001-
24		14X-62-51611	Hose	1	1001-
25		21U-62-34770	• Band, White	2	1001-
26		14X-62-52651	• Cover	1	1001-
27		08024-21920	• Tape, White	1	1001-
28		22P-62-13510	Clamp	2	1001-
29		07095-00318	Cushion	1	1001-
30		01010-81255	Bolt	1	1001-
31		01643-31232	Washer	1	1001-
32		14X-62-51811	Hose	1	1001-
33		21U-62-34760	• Band, Red	2	1001-
34		08024-11920	• Tape, Vinyl, Red	1	1001-
35		22P-62-13510	Clamp	2	1001-
36		07095-00318	Cushion	1	1001-
37		01010-81255	Bolt	1	1001-
38		01643-31232	Washer	1	1001-
39		14X-62-52321	Nipple	2	1001-

FIG. T2160-005002 Dozer Blade Tilt Cylinder Piping (For Power Angle Power Tilt Dozer, Inside Frame) (Tilt Cylinder Piping)

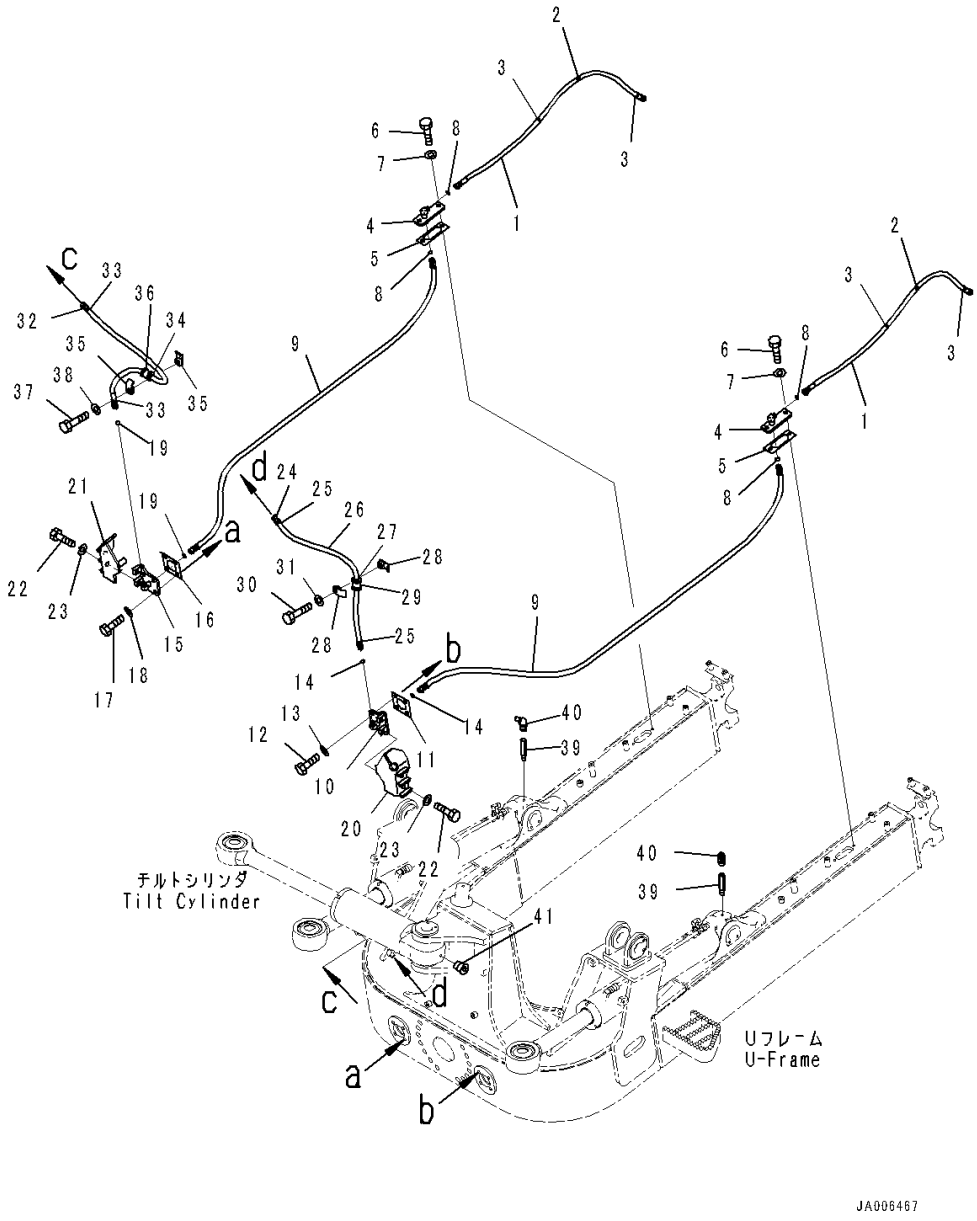

Index	Code	Part Number	Description	Qty	Serial Number
40		07020-00675	Fitting, Grease	2	1001-
41		07043-70108	Plug	1	1001-

FIG. T2810-001001 Drawbar (Rigid Type)

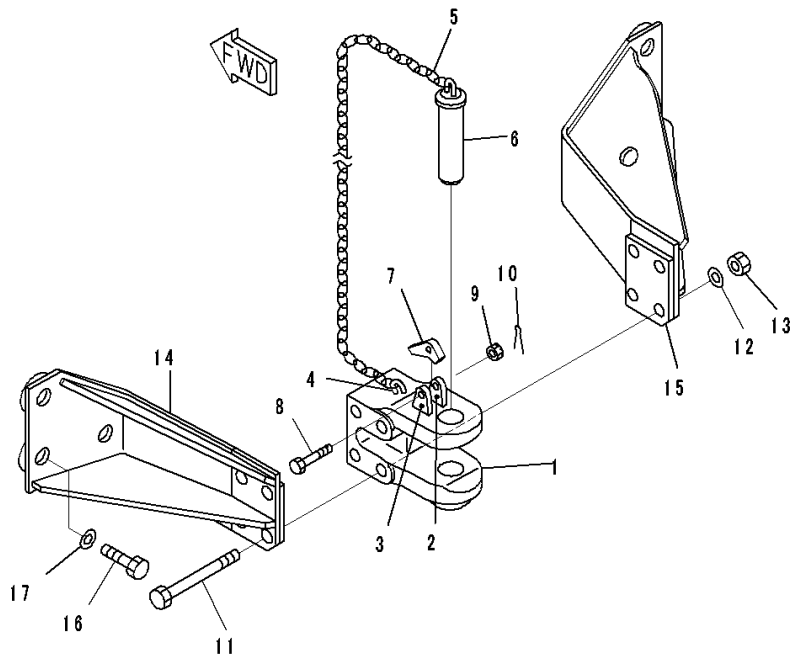

Index	Code	Part Number	Description	Qty	Serial Number
1		144-69-11120	Drawbar Assembly	1	1001-
2		131-69-11120	• Plate,Welded	1	1001-
3		131-69-11130	• Plate,Welded	1	1001-
4		09245-50060	• Hook,Welded	1	1001-
5		09245-24830	• Chain	1	1001-
6		09247-45180	• Pin, Drawbar	1	1001-
7		09249-00016	Latch	1	1001-
8		01052-51260	Bolt	1	1001-
9		01592-11215	Nut, Slotted	1	1001-
10		04050-13022	Pin, Cotter	1	1001-
11		144-69-11161	Bolt	4	1001-
12		01643-32460	Washer	4	1001-
13		01582-12419	Nut	4	1001-
14		14X-69-11110	Bracket	1	1001-
15		14X-69-11120	Bracket	1	1001-
16		01010-83375	Bolt	6	1001-
17		01643-33380	Washer	6	1001-

FIG. T2810-002001 Drawbar (Rigid Type, With Scraper)

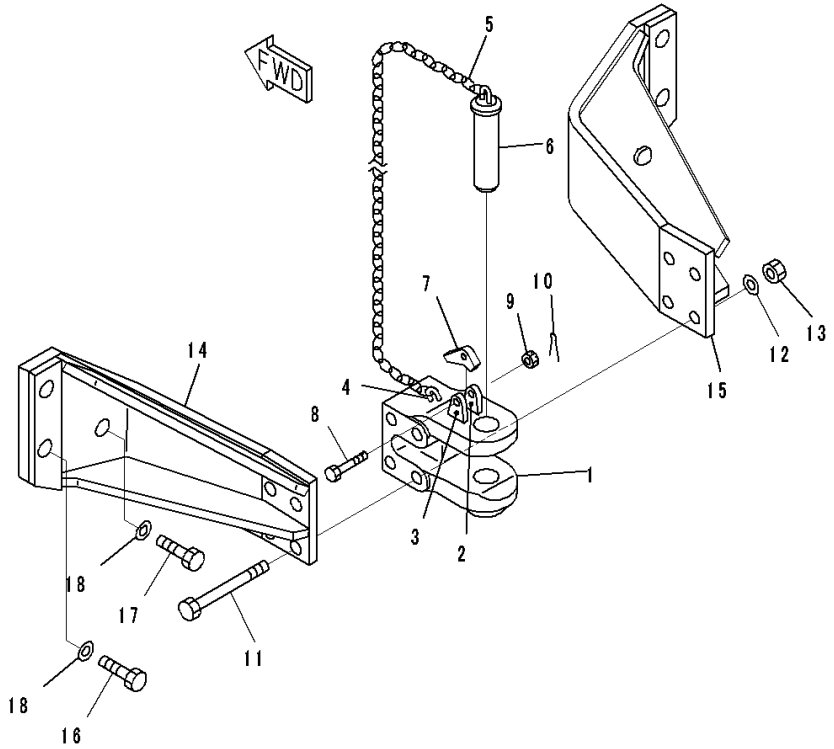

Index	Code	Part Number	Description	Qty	Serial Number
1		144-69-11120	Drawbar Assembly	1	1001-
2		131-69-11120	• Plate,Welded	1	1001-
3		131-69-11130	• Plate,Welded	1	1001-
4		09245-50060	• Hook,Welded	1	1001-
5		09245-24830	• Chain	1	1001-
6		09247-45180	• Pin, Drawbar	1	1001-
7		09249-00016	Latch	1	1001-
8		01052-51260	Bolt	1	1001-
9		01592-11215	Nut, Slotted	1	1001-
10		04050-13022	Pin, Cotter	1	1001-
11		144-69-11161	Bolt	4	1001-
12		01643-32460	Washer	4	1001-
13		01582-12419	Nut	4	1001-
14		14X-69-11210	Bracket	1	1001-
15		14X-69-11220	Bracket	1	1001-
16		01010-83390	Bolt	4	1001-
17		01010-83375	Bolt	2	1001-
18		01643-33380	Washer	6	1001-

FIG. T2810-003001 Drawbar (Hitch)

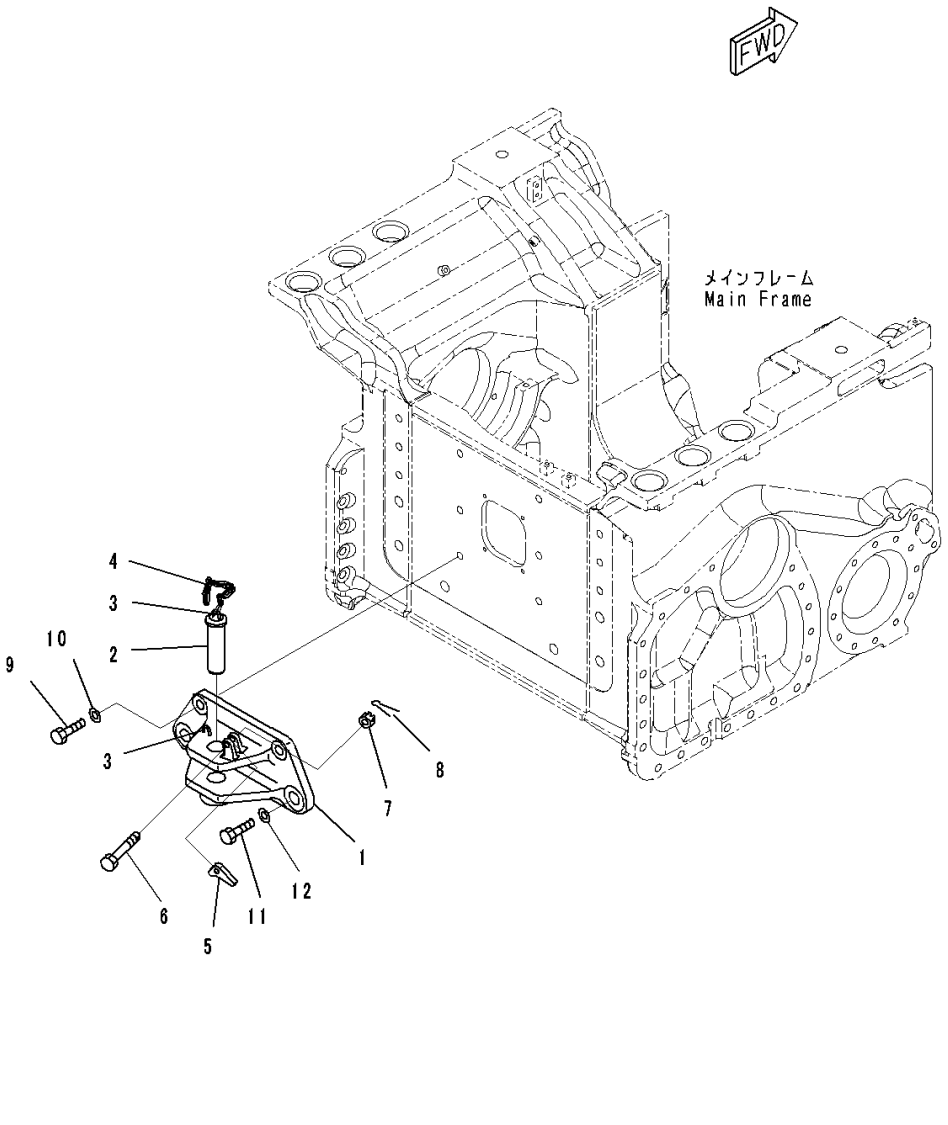

Index	Code	Part Number	Description	Qty	Serial Number
1		14X-69-51101	Bracket	1	1001-
2		130-69-11190	• Pin	1	1001-
3		09245-50060	• Hook,Welded	2	1001-
4		09245-04830	• Chain	1	1001-
5		09249-00016	Latch	1	1001-
6		01052-81265	Bolt	1	1001-
7		01592-31215	Nut, Slotted	1	1001-
8		04050-13025	Pin, Cotter	1	1001-
9		01010-82465	Bolt	2	1001-
10		01643-32460	Washer	2	1001-
11		01010-83380	Bolt	2	1001-
12		01643-33380	Washer	2	1001-

FIG. T2810-006001 Drawbar (Hitch, for EU Spec)

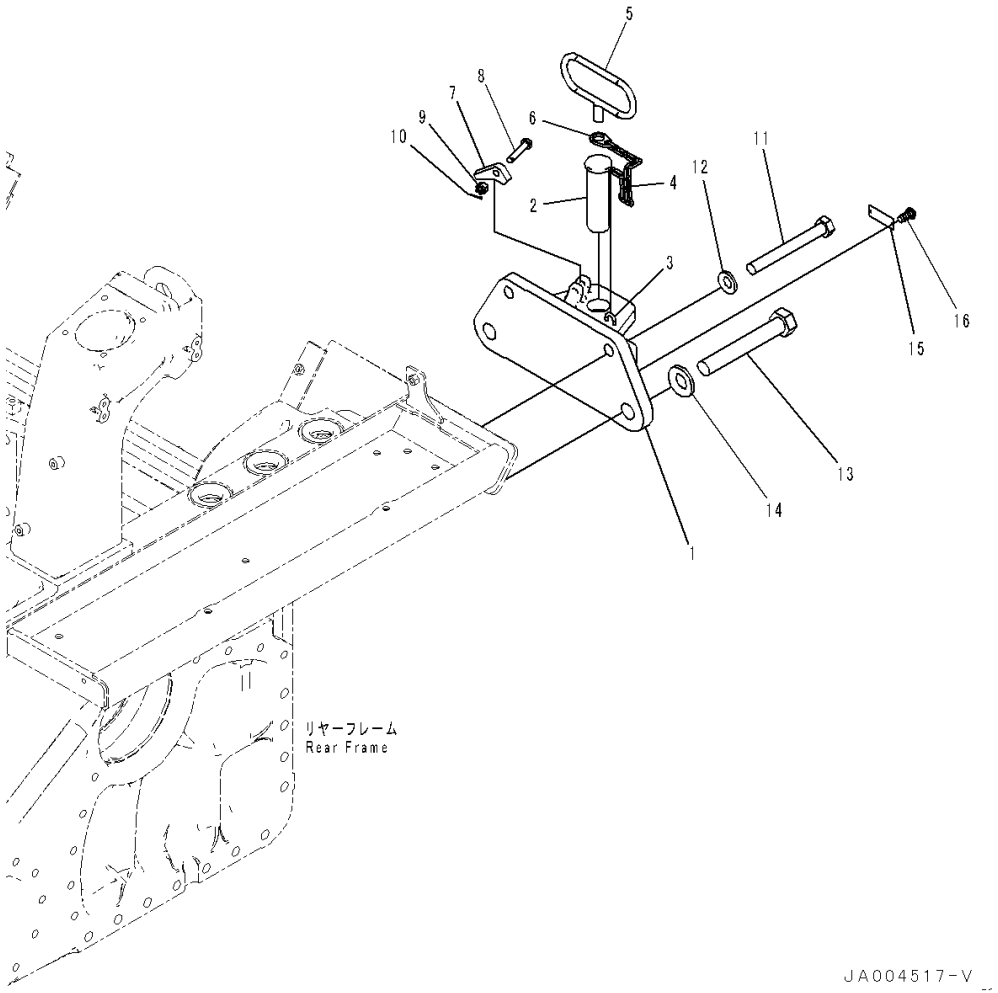

Index	Code	Part Number	Description	Qty	Serial Number
1		14X-69-51201	Bracket	1	1001-
2		130-69-11190	• Pin	1	1001-
3		09245-50060	• Hook,Welded	1	1001-
4		09245-04830	• Chain	1	1001-
5		144-69-11210	• Handle,Welded	1	1001-
6		144-69-11230	• Plate	1	1001-
7		09249-00016	Latch	1	1001-
8		01052-81265	Bolt	1	1001-
9		01592-31215	Nut, Slotted	1	1001-
10		04050-13025	Pin, Cotter	1	1001-
11		01010-82465	Bolt	2	1001-
12		01643-32460	Washer	2	1001-
13		01010-83380	Bolt	2	1001-
14		01643-33380	Washer	2	1001-
15		09823-00001	Plate, Maximum Drawbar Pull and Vertical Load	1	1001-
16		04418-13060	Screw	2	1001-

FIG. T2810-005001 Drawbar (Rigid Type, for EU Spec)

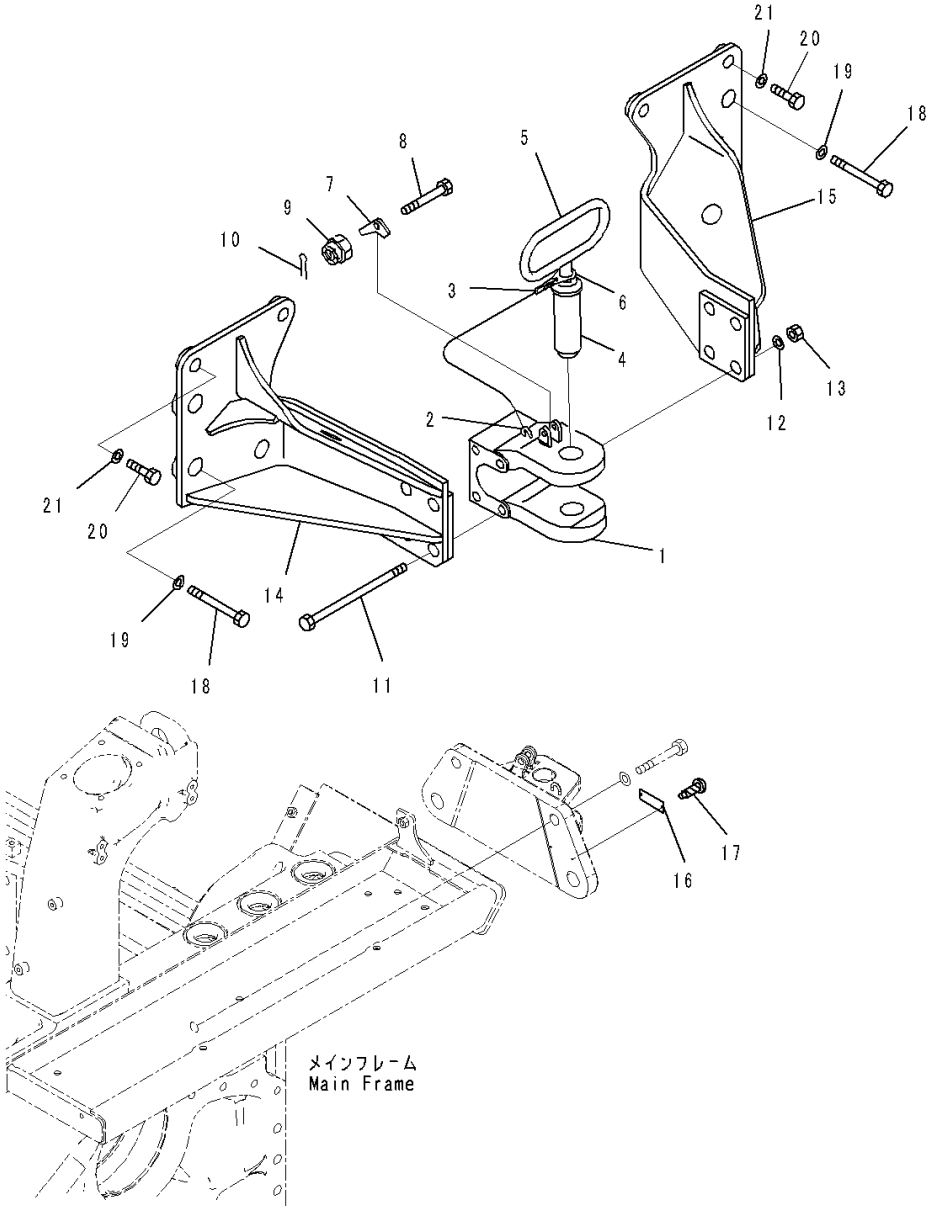

Index	Code	Part Number	Description	Qty	Serial Number
1		134-69-13140	Drawbar Assembly	1	1001-
2		09245-50060	• Hook,Welded	1	1001-
3		09245-04830	• Chain	1	1001-
4		09247-45180	• Pin, Drawbar	1	1001-
5		144-69-11210	• Handle,Welded	1	1001-
6		144-69-11230	• Plate	1	1001-
7		09249-00016	Latch	1	1001-
8		01052-51260	Bolt	1	1001-
9		01592-11215	Nut, Slotted	1	1001-
10		04050-13022	Pin, Cotter	1	1001-
11		144-69-11161	Bolt	4	1001-
12		01643-32460	Washer	4	1001-
13		01582-12419	Nut	4	1001-
14		14X-69-61111	Bracket,L.H.	1	1001-
15		14X-69-61121	Bracket,R.H.	1	1001-
16		09823-00001	Plate, Maximum Drawbar Pull and Vertical Load	1	1001-
17		04418-13060	Screw	2	1001-
18		01010-83375	Bolt	6	1001-
19		01643-33380	Washer	6	1001-
20		01010-82465	Bolt	4	1001-
21		01643-32460	Washer	4	1001-

MARKS AND PLATES

FIG. U0100-008001A Marks and Plates (English, For Power Angle Power Tilt Dozer, Inside Frame, EU New Noise Arrangement 2)

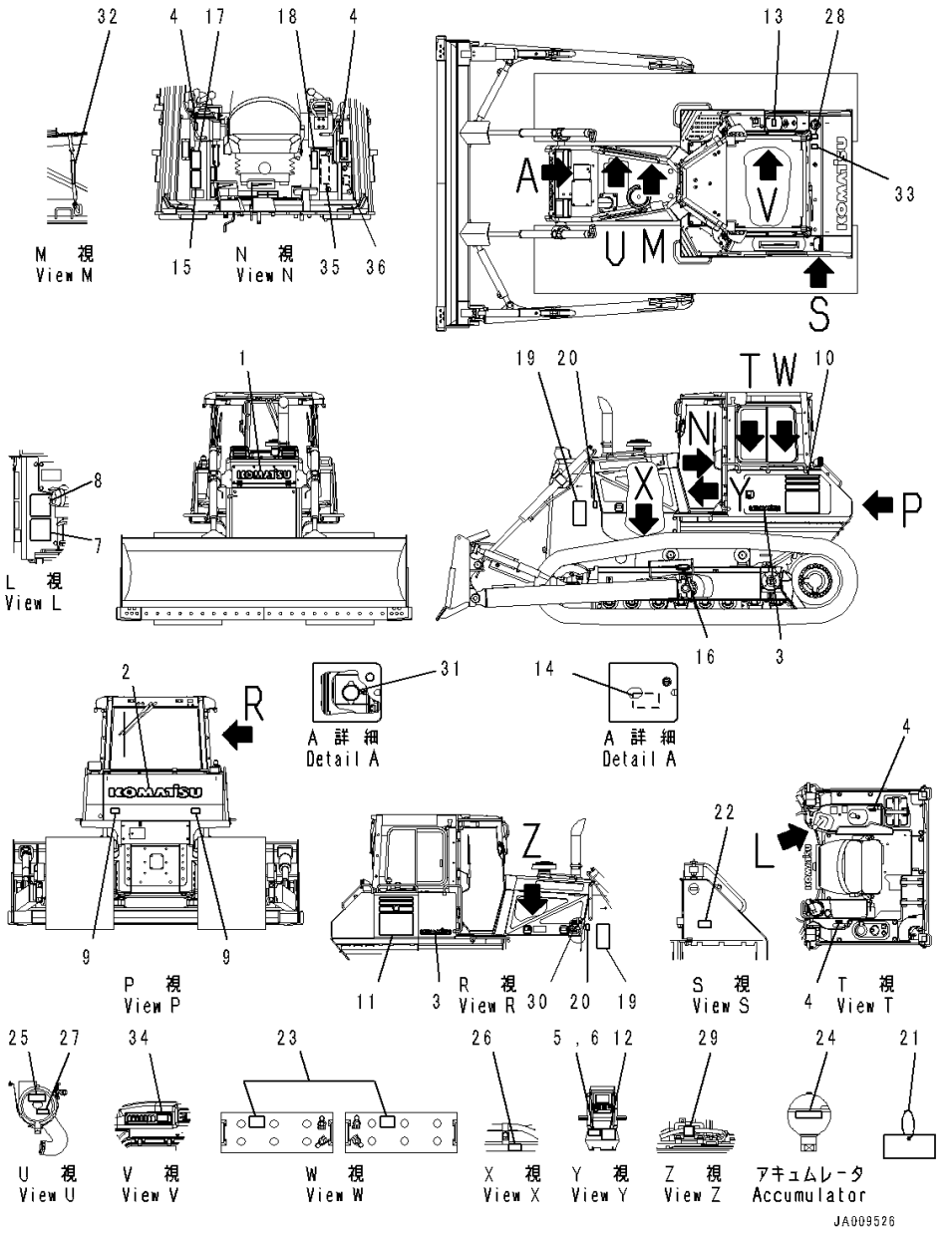

Index	Code	Part Number	Description	Qty	Serial Number
1		09690-F0710	Plate, Komatsu Logo	1	1001-
2		09690-P1250	Plate, Komatsu Logo	1	1001-
3		09690-P0400	Plate, Komatsu Logo	2	1001-
4		14X-98-11170	Plate, Operating, Lock	4	1001-
5	C2	09602-08000	Plate, Name (Limited Supply)	1	1001-
6		04418-13060	Screw	4	1001-
7		09696-50078	Plate, Noise Level, for EU, EU Ope Ear Noise	1	1001-
8		09696-40108	Plate, Noise Level, for EU, EU Around Noise	1	1001-
9		14X-98-35181	Plate, Reflector	2	1001-
10		14X-98-61131	Decal, Machine Model,L.H.	1	1001-
11		14X-98-61231	Decal, Machine Model,R.H.	1	1001-
12		14X-98-61221	Plate, Oil Chart	1	1001-
13		09653-A0481	Plate, Warning, High Temperature	1	1001-
14		09653-A0481	Plate, Warning, High Temperature	1	1001-
15		09654-B0641	Plate, Warning, Before Leaving Seat	1	1001-
16		09657-A0881	Plate, Warning, Track Adjustment	2	1001-
17		09651-A0641	Plate, Warning, Read Manual Before Operating	1	1001-
18		09802-B0640	Plate, Warning, Before Operating and Traveling	1	1001-
19		09806-B1683	Plate, Danger, Keep Away from Machine	2	1001-
20		09667-A0481	Plate, Caution, Rotating Object	2	1001-
21		09963-A1640	Tag, Danger, Do Not Operate	1	1001-
22		09808-A0881	Plate, Warning, Battery Cables	1	1001-
23		09664-60011	Plate, Danger, Battery	2	1001-
24		09659-A057B	Plate, Warning, Explosion Hazard	1	1001-
25		09637-A0640	Plate, Service Instruction, Air Cleaner	1	1001-
26		6217-71-6860	Plate, Caution, Specified Fuel Filter Use	1	1001-
27		6217-71-6860	Plate, Caution, Specified Fuel Filter Use	1	1001-
28		09652-31241	Plate, Caution, Diesel Fuel	1	1001-
29		09842-A0481	Plate, Caution, No Jump Start	1	1001-
30		09642-A0480	Plate, Service Instruction, Engine Coolant AF-NAC	1	1001-
31		23B-53-71190	Plate, Caution, Radiator Cap, Radiator Cap Opening And Shutting Attention	1	1001-
32		154-98-75370	Plate, Warning, Explosion Hazard, Gus Spring High-pressure Attention	2	1001-

FIG. U0100-008001A Marks and Plates (English, For Power Angle Power Tilt Dozer, Inside Frame, EU New Noise Arrangement 2)

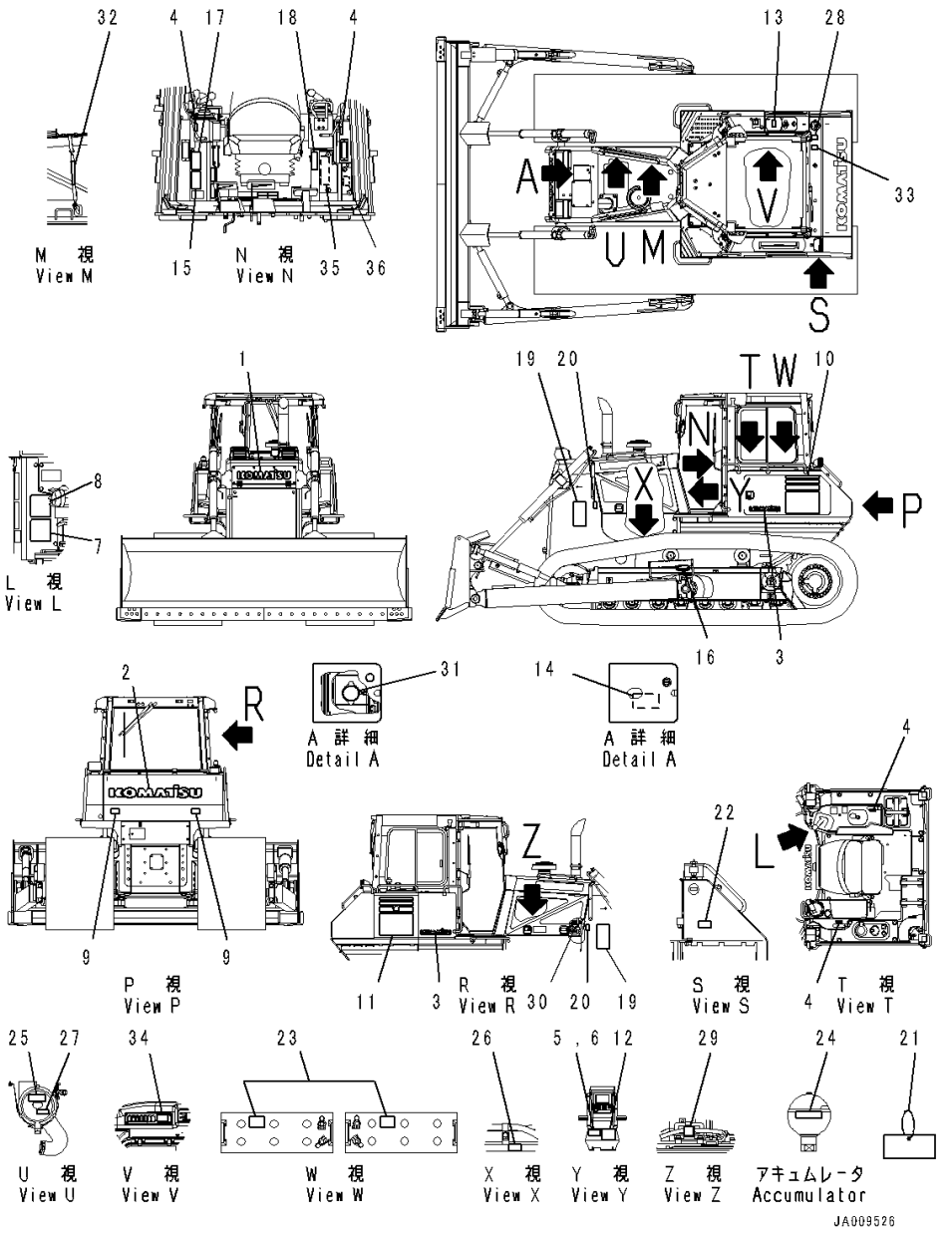

Index	Code	Part Number	Description	Qty	Serial Number
33		09652-61241	Plate	1	1450-
34		14X-98-51260	Plate, Fuse (Cab 6 Poles)	1	1001-
35		14X-98-61270	Plate, Fuse (Floor 15 Poles)	1	1001-
36		14X-98-61290	Plate, Fuse (Floor 6 Poles)	1	1001-

FIG. U0100-007001 Marks and Plates (French, For Quebec Canada, For Power Angle Power Tilt Dozer, Inside Frame)

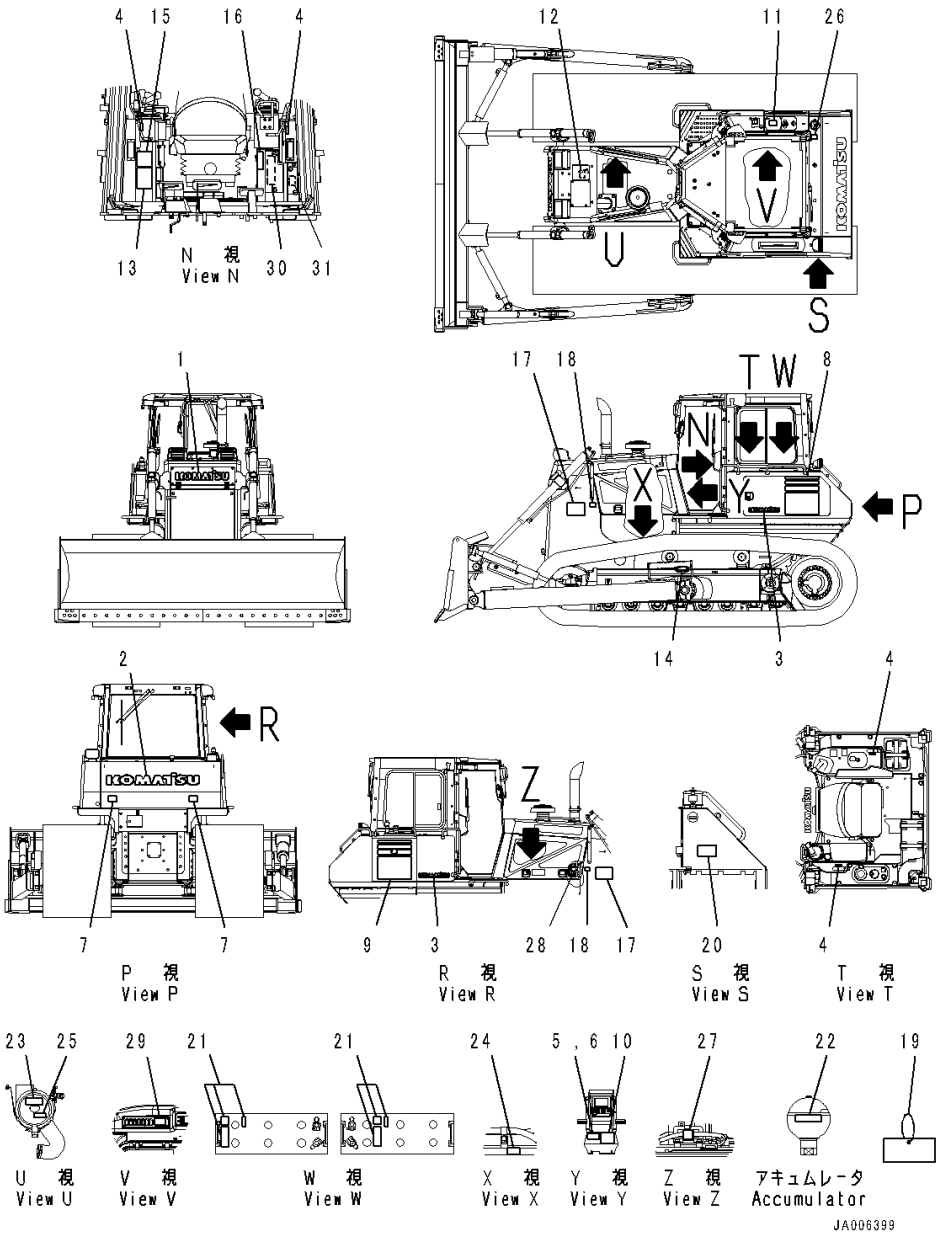

Index	Code	Part Number	Description	Qty	Serial Number
1		09690-F0710	Plate, Komatsu Logo	1	1001-
2		09690-P1250	Plate, Komatsu Logo	1	1001-
3		09690-P0400	Plate, Komatsu Logo	2	1001-
4		14X-98-11170	Plate, Operating, Lock	4	1001-
5	C2	09602-10002	Plate, Name (Limited Supply)	1	1001-
6		04418-13060	Screw	4	1001-
7		14X-98-35181	Plate, Reflector	2	1001-
8		14X-98-61131	Decal, Machine Model,L.H.	1	1001-
9		14X-98-61231	Decal, Machine Model,R.H.	1	1001-
10		14X-98-61221	Plate, Oil Chart	1	1001-
11		09653-05001	Plate, Warning, High Temperature	1	1001-
12		09668-05001	Plate, Warning, Hot Water	1	1001-
13		09654-35001	Plate, Warning, Before Leaving Seat	1	1001-
14		09657-05003	Plate, Warning, Track Adjustment	2	1001-
15		09651-05001	Plate, Warning, Read Manual Before Operating	1	1001-
16		09802-15000	Plate, Warning, Before Operating and Traveling	1	1001-
17		09812-15000	Plate, Danger, Keep a Safe Distance	2	1001-
18		09667-45000	Plate, Caution, Rotating Object	2	1001-
19		09963-05001	Tag, Danger, Do Not Operate	1	1001-
20		09808-05000	Plate, Warning, Battery Cables	1	1001-
21		09664-20011	Plate, Danger, Battery	2	1001-
22		09659-55000	Plate, Warning, Explosion Hazard	1	1001-
23		14X-98-35320	Plate, Air Cleaner Replace	1	1001-
24		6217-71-6490	Plate, Fuel Filter Replace	1	1001-
25		14X-98-35150	Plate, Pre Filter Caution	1	1001-
26		09652-51241	Plate, Caution, Diesel Fuel	1	1001-
27		09842-A0481	Plate, Caution, No Jump Start	1	1001-
28		09642-15000	Plate, Service Instruction, Engine Coolant AF-NAC	1	1001-
29		14X-98-51120	Plate, Fuse Box, Cab 6 Poles, Fuse (Cab 6 Poles)	1	1001-
30		14X-98-61260	Plate, Fuse Box, Floor 15 Poles, Fuse (Floor 15 Poles)	1	1001-
31		14X-98-61280	Plate, Fuse Box, Floor 6 Poles, Fuse (Floor 6 Poles)	1	1001-

FIG. U0100-006001 Marks and Plates (English, USA and Puerto Rico, For Power Angle Power Tilt Dozer, Inside Frame)

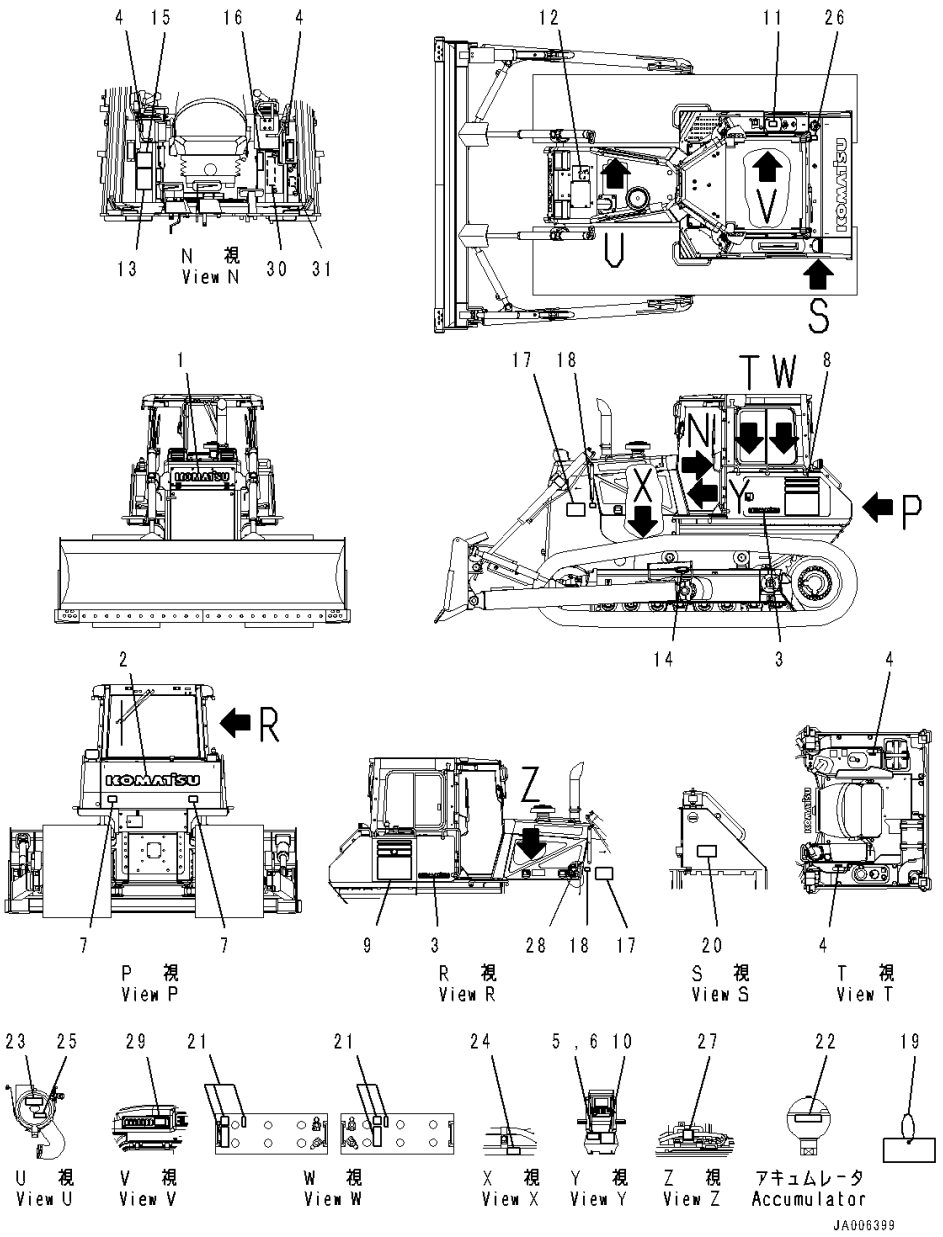

Index	Code	Part Number	Description	Qty	Serial Number
1		09690-F0710	Plate, Komatsu Logo	1	1001-
2		09690-P1250	Plate, Komatsu Logo	1	1001-
3		09690-P0400	Plate, Komatsu Logo	2	1001-
4		14X-98-11170	Plate, Operating, Lock	4	1001-
5	C2	09602-10002	Plate, Name (Limited Supply)	1	1001-
6		04418-13060	Screw	4	1001-
7		14X-98-35181	Plate, Reflector	2	1001-
8		14X-98-61131	Decal, Machine Model,L.H.	1	1001-
9		14X-98-61231	Decal, Machine Model,R.H.	1	1001-
10		14X-98-61221	Plate, Oil Chart	1	1001-
11		09653-03001	Plate, Warning, High Temperature	1	1001-
12		09668-03001	Plate, Warning, Hot Water	1	1001-
13		09654-33001	Plate, Warning, Before Leaving Seat	1	1001-
14		09657-03003	Plate, Warning, Track Adjustment	2	1001-
15		09651-03001	Plate, Warning, Read Manual Before Operating	1	1001-
16		09802-13000	Plate, Warning, Before Operating and Traveling	1	1001-
17		09812-13000	Plate, Danger, Keep a Safe Distance	2	1001-
18		09667-43000	Plate, Caution, Rotating Object	2	1001-
19		09963-03001	Tag, Danger, Do Not Operate	1	1001-
20		09808-03000	Plate, Warning, Battery Cables	1	1001-
21		09664-30011	Plate, Danger, Battery	2	1001-
22		09659-53000	Plate, Warning, Explosion Hazard	1	1001-
23		21W-98-41720	Plate, Air Cleaner Replace	1	1001-
24		6217-71-6470	Plate, Fuel Filter Replace	1	1001-
25		14X-98-35120	Plate, Pre Filter Caution	1	1001-
26		09652-31241	Plate, Caution, Diesel Fuel	1	1001-
27		09842-A0481	Plate, Caution, No Jump Start	1	1001-
28		09642-13000	Plate, Service Instruction, Engine Coolant AF-NAC	1	1001-
29		14X-98-51120	Plate, Fuse Box, Cab 6 Poles, Fuse (Cab 6 Poles)	1	1001-
30		14X-98-61260	Plate, Fuse Box, Floor 15 Poles, Fuse (Floor 15 Poles)	1	1001-
31		14X-98-61280	Plate, Fuse Box, Floor 6 Poles, Fuse (Floor 6 Poles)	1	1001-

FIG. U0100-004001A Marks and Plates (English, For EU New Noise Arrangement 2)

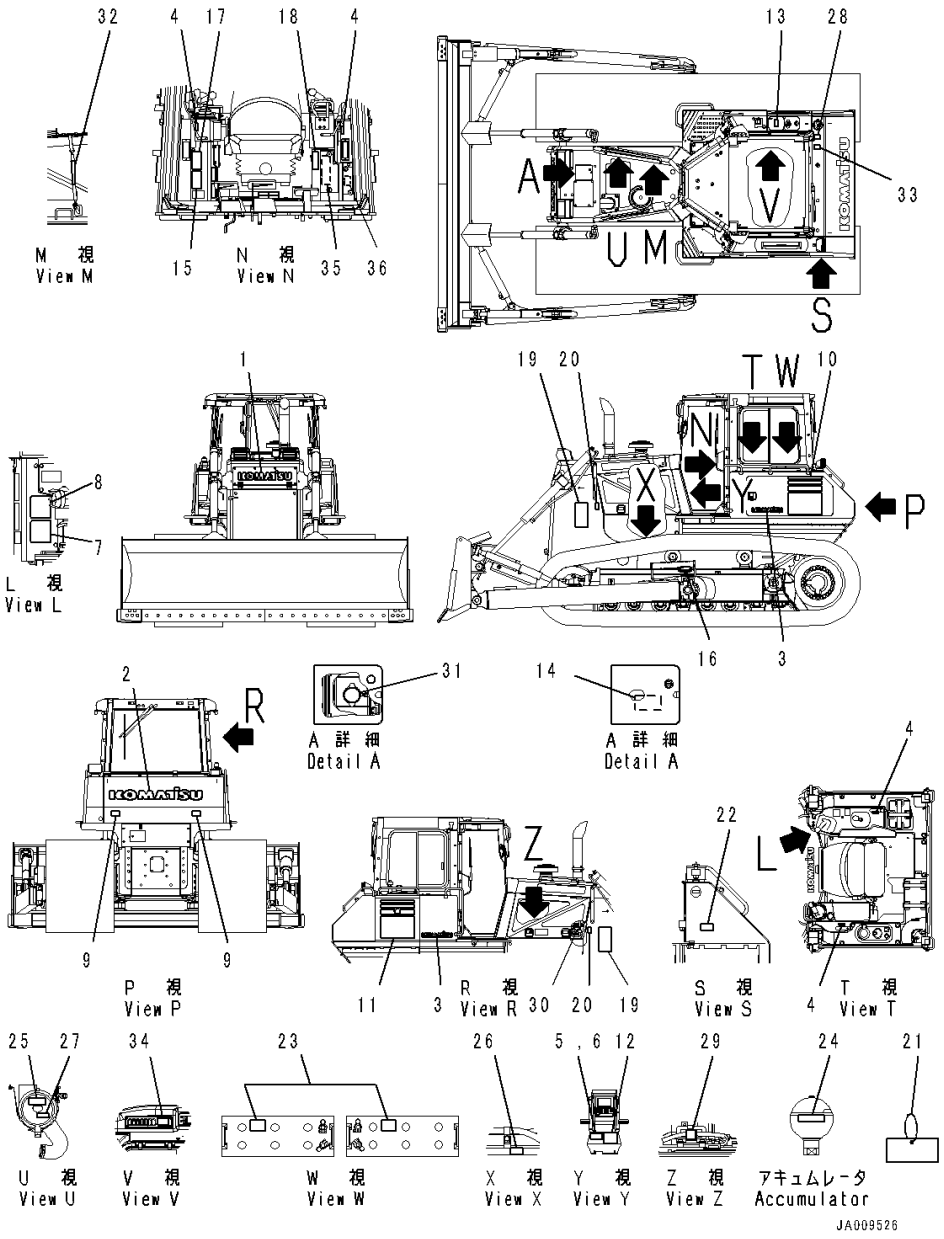

Index	Code	Part Number	Description	Qty	Serial Number
1		09690-F0710	Plate, Komatsu Logo	1	1001-
2		09690-P1250	Plate, Komatsu Logo	1	1001-
3		09690-P0400	Plate, Komatsu Logo	2	1001-
4		14X-98-11170	Plate, Operating, Lock	4	1001-
5	C2	09602-08000	Plate, Name (Limited Supply)	1	1001-
6		04418-13060	Screw	4	1001-
7		09696-50078	Plate, Noise Level, for EU, EU Ope Ear Noise	1	1001-
8		09696-40108	Plate, Noise Level, for EU, EU Around Noise	1	1001-
9		14X-98-35181	Plate, Reflector	2	1001-
10		14X-98-61131	Decal, Machine Model,L.H.	1	1001-
11		14X-98-61231	Decal, Machine Model,R.H.	1	1001-
12		14X-98-61211	Plate, Oil Chart	1	1001-
13		09653-A0481	Plate, Warning, High Temperature	1	1001-
14		09653-A0481	Plate, Warning, High Temperature	1	1001-
15		09654-B0641	Plate, Warning, Before Leaving Seat	1	1001-
16		09657-A0881	Plate, Warning, Track Adjustment	2	1001-
17		09651-A0641	Plate, Warning, Read Manual Before Operating	1	1001-
18		09802-B0640	Plate, Warning, Before Operating and Traveling	1	1001-
19		09806-B1683	Plate, Danger, Keep Away from Machine .	2	1001-
20		09667-A0481	Plate, Caution, Rotating Object	2	1001-
21		09963-A1640	Tag, Danger, Do Not Operate	1	1001-
22		09808-A0881	Plate, Warning, Battery Cables	1	1001-
23		09664-60011	Plate, Danger, Battery	2	1001-
24		09659-A057B	Plate, Warning, Explosion Hazard	1	1001-
25		09637-A0640	Plate, Service Instruction, Air Cleaner	1	1001-
26		6217-71-6860	Plate, Caution, Specified Fuel Filter Use ..	1	1001-
27		6217-71-6860	Plate, Caution, Specified Fuel Filter Use ..	1	1001-
28		09652-31241	Plate, Caution, Diesel Fuel	1	1001-
29		09842-A0481	Plate, Caution, No Jump Start	1	1001-
30		09642-A0480	Plate, Service Instruction, Engine Coolant AF-NAC	1	1001-
31		23B-53-71190	Plate, Caution, Radiator Cap, Radiator Cap Opening And Shutting Attention	1	1001-
32		154-98-75370	Plate, Warning, Explosion Hazard, Gus Spring High-pressure Attention	2	1001-
33		09652-61241	Plate	1	1450-

FIG. U0100-004001A Marks and Plates (English, For EU New Noise Arrangement 2)

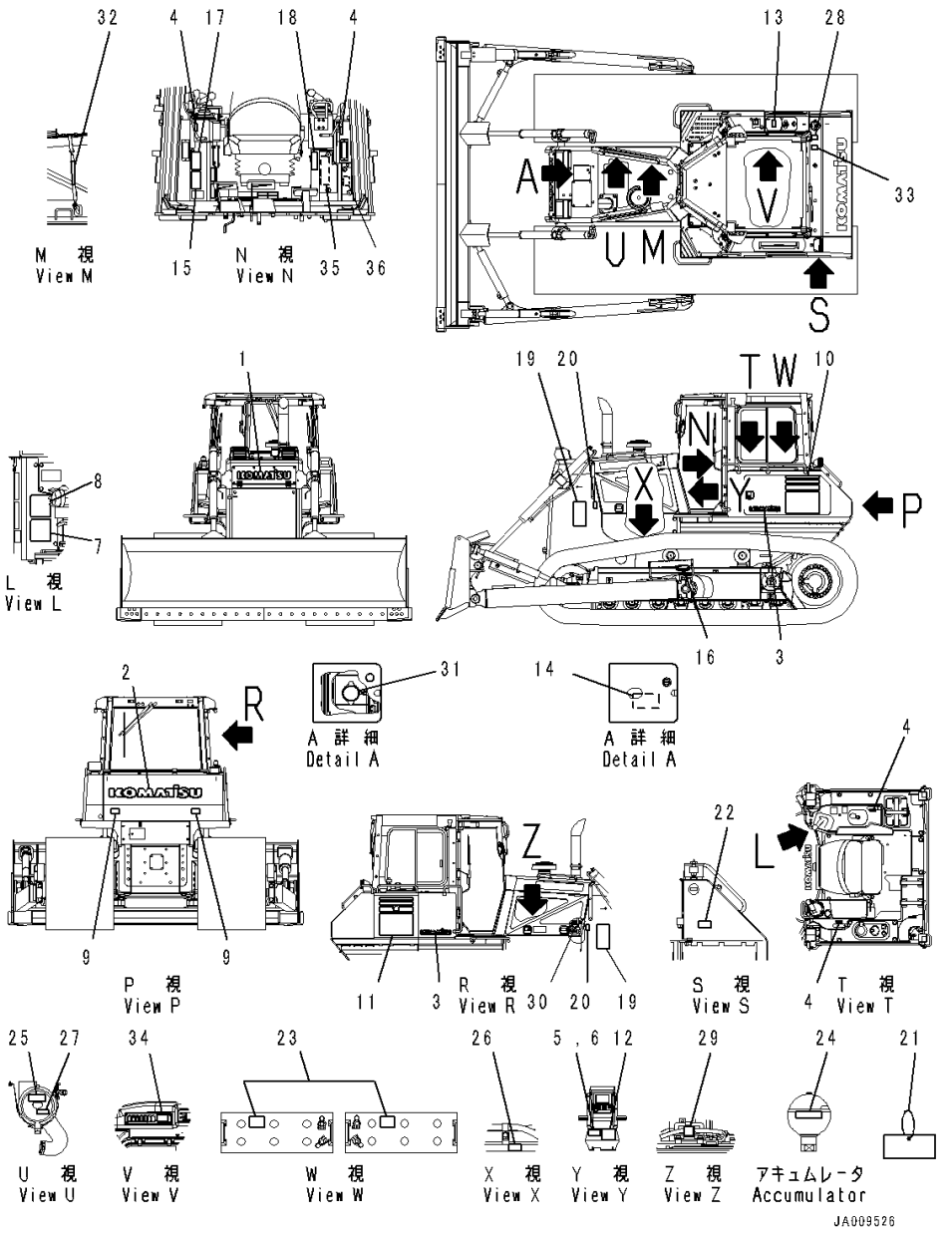

Index	Code	Part Number	Description	Qty	Serial Number
34		14X-98-51260	Plate, Fuse (Cab 6 Poles)	1	1001-
35		14X-98-61270	Plate, Fuse (Floor 15 Poles)	1	1001-
36		14X-98-61290	Plate, Fuse (Floor 6 Poles)	1	1001-

FIG. U0100-003001 Marks and Plates (French, For Quebec Canada)

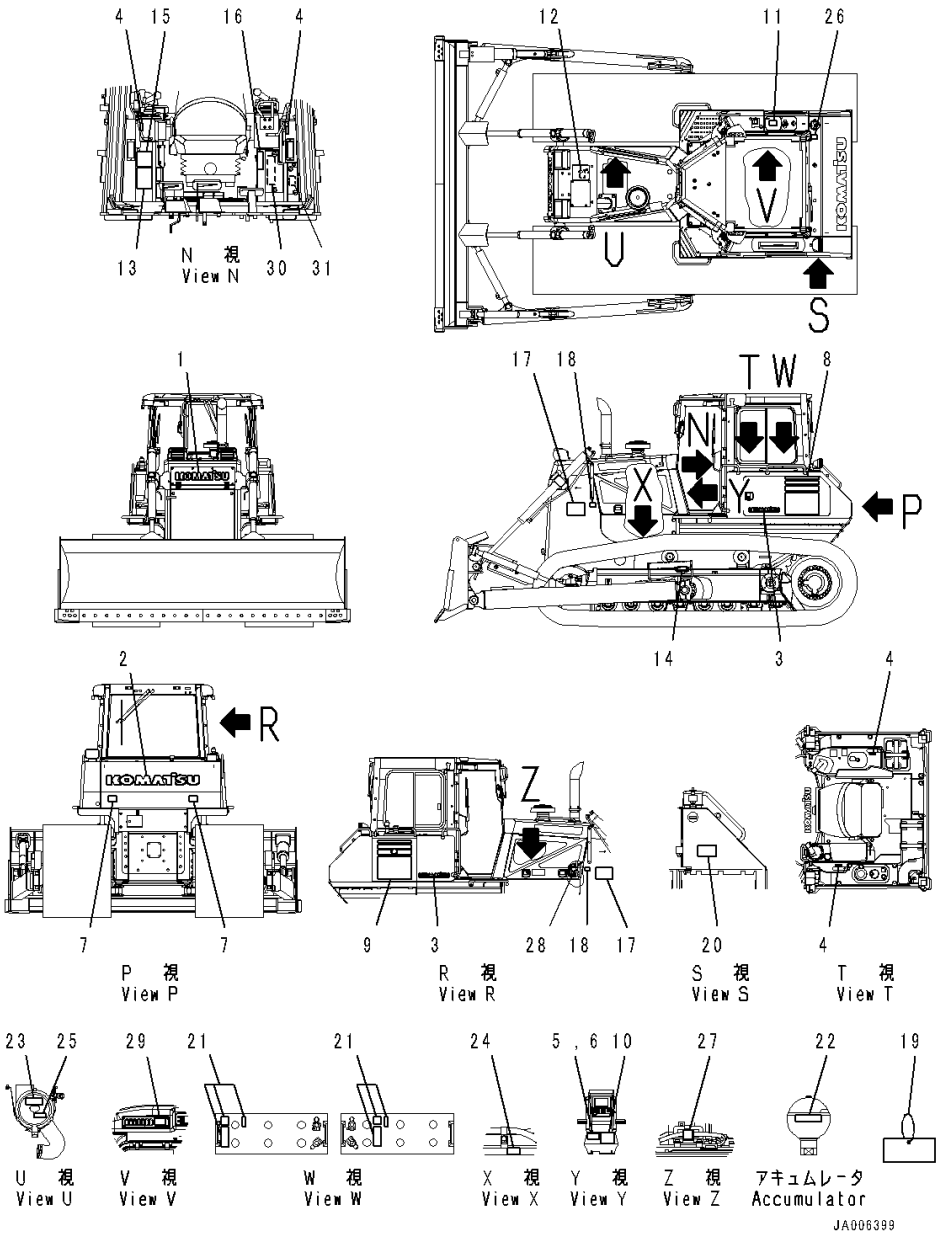

Index	Code	Part Number	Description	Qty	Serial Number
1		09690-F0710	Plate, Komatsu Logo	1	1001-
2		09690-P1250	Plate, Komatsu Logo	1	1001-
3		09690-P0400	Plate, Komatsu Logo	2	1001-
4		14X-98-11170	Plate, Operating, Lock	4	1001-
5	C2	09602-10002	Plate, Name (Limited Supply)	1	1001-
6		04418-13060	Screw	4	1001-
7		14X-98-35181	Plate, Reflector	2	1001-
8		14X-98-61131	Decal, Machine Model,L.H.	1	1001-
9		14X-98-61231	Decal, Machine Model,R.H.	1	1001-
10		14X-98-61211	Plate, Oil Chart	1	1001-
11		09653-05001	Plate, Warning, High Temperature	1	1001-
12		09668-05001	Plate, Warning, Hot Water	1	1001-
13		09654-35001	Plate, Warning, Before Leaving Seat	1	1001-
14		09657-05003	Plate, Warning, Track Adjustment	2	1001-
15		09651-05001	Plate, Warning, Read Manual Before Operating	1	1001-
16		09802-15000	Plate, Warning, Before Operating and Traveling	1	1001-
17		09812-15000	Plate, Danger, Keep a Safe Distance	2	1001-
18		09667-45000	Plate, Caution, Rotating Object	2	1001-
19		09963-05001	Tag, Danger, Do Not Operate	1	1001-
20		09808-05000	Plate, Warning, Battery Cables	1	1001-
21		09664-20011	Plate, Danger, Battery	2	1001-
22		09659-55000	Plate, Warning, Explosion Hazard	1	1001-
23		14X-98-35320	Plate, Air Cleaner Replace	1	1001-
24		6217-71-6490	Plate, Fuel Filter Replace	1	1001-
25		14X-98-35150	Plate, Pre Filter Caution	1	1001-
26		09652-51241	Plate, Caution, Diesel Fuel	1	1001-
27		09842-A0481	Plate, Caution, No Jump Start	1	1001-
28		09642-15000	Plate, Service Instruction, Engine Coolant AF-NAC	1	1001-
29		14X-98-51120	Plate, Fuse Box, Cab 6 Poles, Fuse (Cab 6 Poles)	1	1001-
30		14X-98-61260	Plate, Fuse Box, Floor 15 Poles, Fuse (Floor 15 Poles)	1	1001-
31		14X-98-61280	Plate, Fuse Box, Floor 6 Poles, Fuse (Floor 6 Poles)	1	1001-

FIG. U0100-002001 Marks and Plates (English, USA and Puerto Rico)

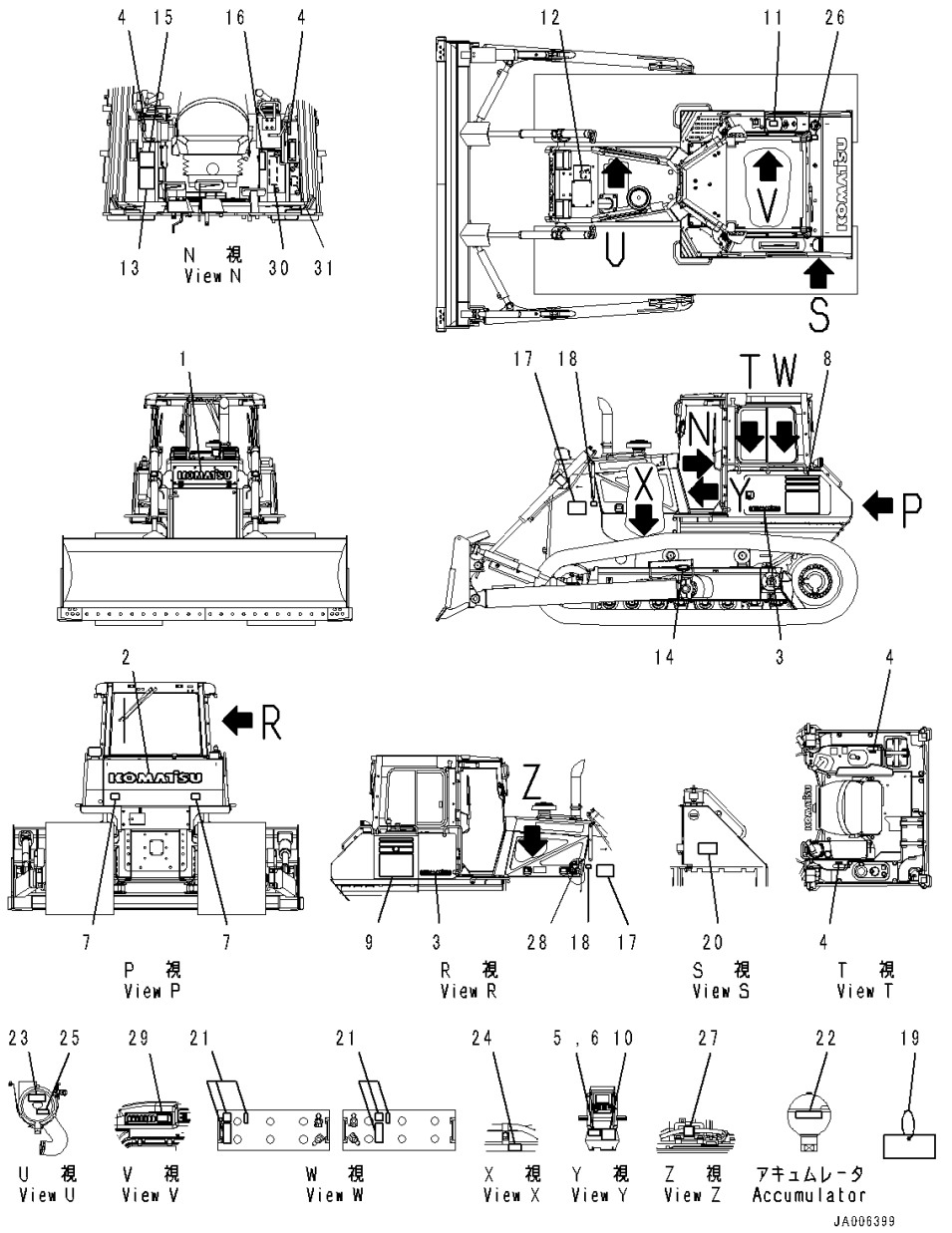

Index	Code	Part Number	Description	Qty	Serial Number
1		09690-F0710	Plate, Komatsu Logo	1	1001-
2		09690-P1250	Plate, Komatsu Logo	1	1001-
3		09690-P0400	Plate, Komatsu Logo	2	1001-
4		14X-98-11170	Plate, Operating, Lock	4	1001-
5	C2	09602-10002	Plate, Name (Limited Supply)	1	1001-
6		04418-13060	Screw	4	1001-
7		14X-98-35181	Plate, Reflector	2	1001-
8		14X-98-61131	Decal, Machine Model,L.H.	1	1001-
9		14X-98-61231	Decal, Machine Model,R.H.	1	1001-
10		14X-98-61211	Plate, Oil Chart	1	1001-
11		09653-03001	Plate, Warning, High Temperature	1	1001-
12		09668-03001	Plate, Warning, Hot Water	1	1001-
13		09654-33001	Plate, Warning, Before Leaving Seat	1	1001-
14		09657-03003	Plate, Warning, Track Adjustment	2	1001-
15		09651-03001	Plate, Warning, Read Manual Before Operating	1	1001-
16		09802-13000	Plate, Warning, Before Operating and Traveling	1	1001-
17		09812-13000	Plate, Danger, Keep a Safe Distance	2	1001-
18		09667-43000	Plate, Caution, Rotating Object	2	1001-
19		09963-03001	Tag, Danger, Do Not Operate	1	1001-
20		09808-03000	Plate, Warning, Battery Cables	1	1001-
21		09664-30011	Plate, Danger, Battery	2	1001-
22		09659-53000	Plate, Warning, Explosion Hazard	1	1001-
23		21W-98-41720	Plate, Air Cleaner Replace	1	1001-
24		6217-71-6470	Plate, Fuel Filter Replace	1	1001-
25		14X-98-35120	Plate, Pre Filter Caution	1	1001-
26		09652-31241	Plate, Caution, Diesel Fuel	1	1001-
27		09842-A0481	Plate, Caution, No Jump Start	1	1001-
28		09642-13000	Plate, Service Instruction, Engine Coolant AF-NAC	1	1001-
29		14X-98-51120	Plate, Fuse Box, Cab 6 Poles, Fuse (Cab 6 Poles)	1	1001-
30		14X-98-61260	Plate, Fuse Box, Floor 15 Poles, Fuse (Floor 15 Poles)	1	1001-
31		14X-98-61280	Plate, Fuse Box, Floor 6 Poles, Fuse (Floor 6 Poles)	1	1001-

FIG. U0205-001001 Caution Plates

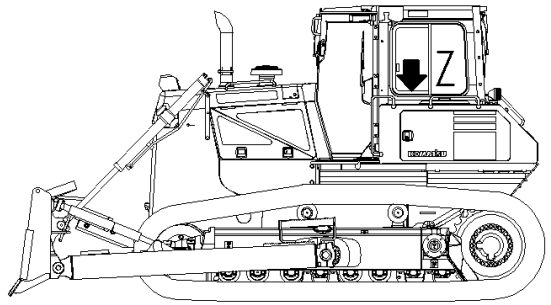

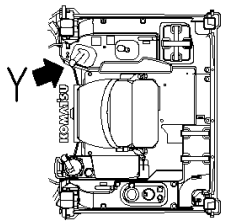

Z 視
View Z

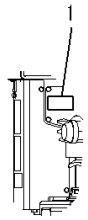

Y 視
View Y

JA006405

Index	Code	Part Number	Description	Qty	Serial Number
1		09845-00480	Plate, Caution, Blast Site	1	1001-

FIG. U0400-001001 Balancing Mark

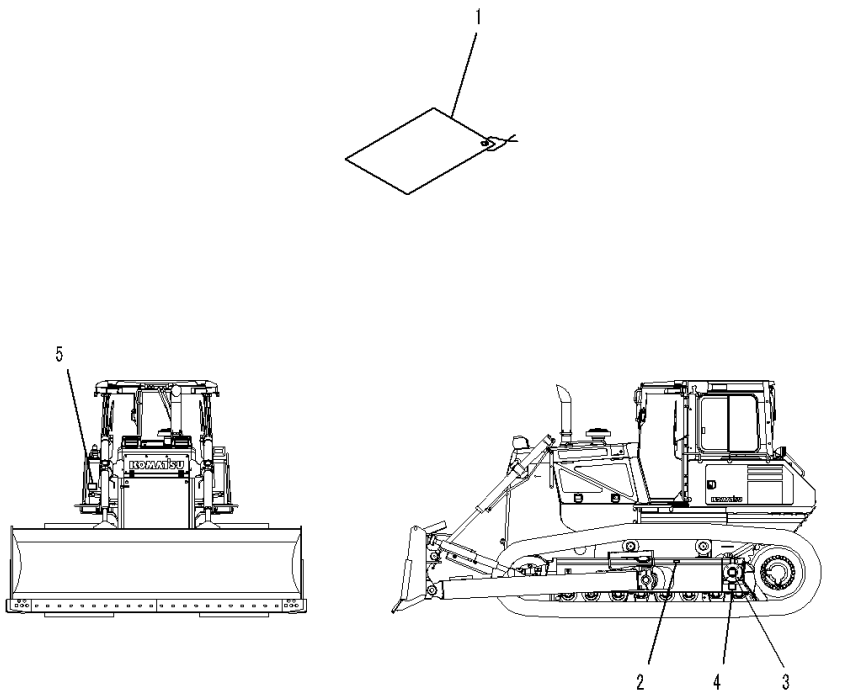

Index	Code	Part Number	Description	Qty	Serial Number
1		130-98-79210	Plate, Location Of Balance	1	1001-
2		09960-00611	Mark, Balancing Position	2	1001-
3		09960-00801	Mark, Lift Point	4	1001-
4		09960-00802	Mark, Tie Down Point	4	1001-
5		17A-98-41510	Plate, Lift Point and Tie Down Point Marks	1	1001-

FIG. U0400-002001 Balancing Mark (For EU New Noise Arrangement 2)

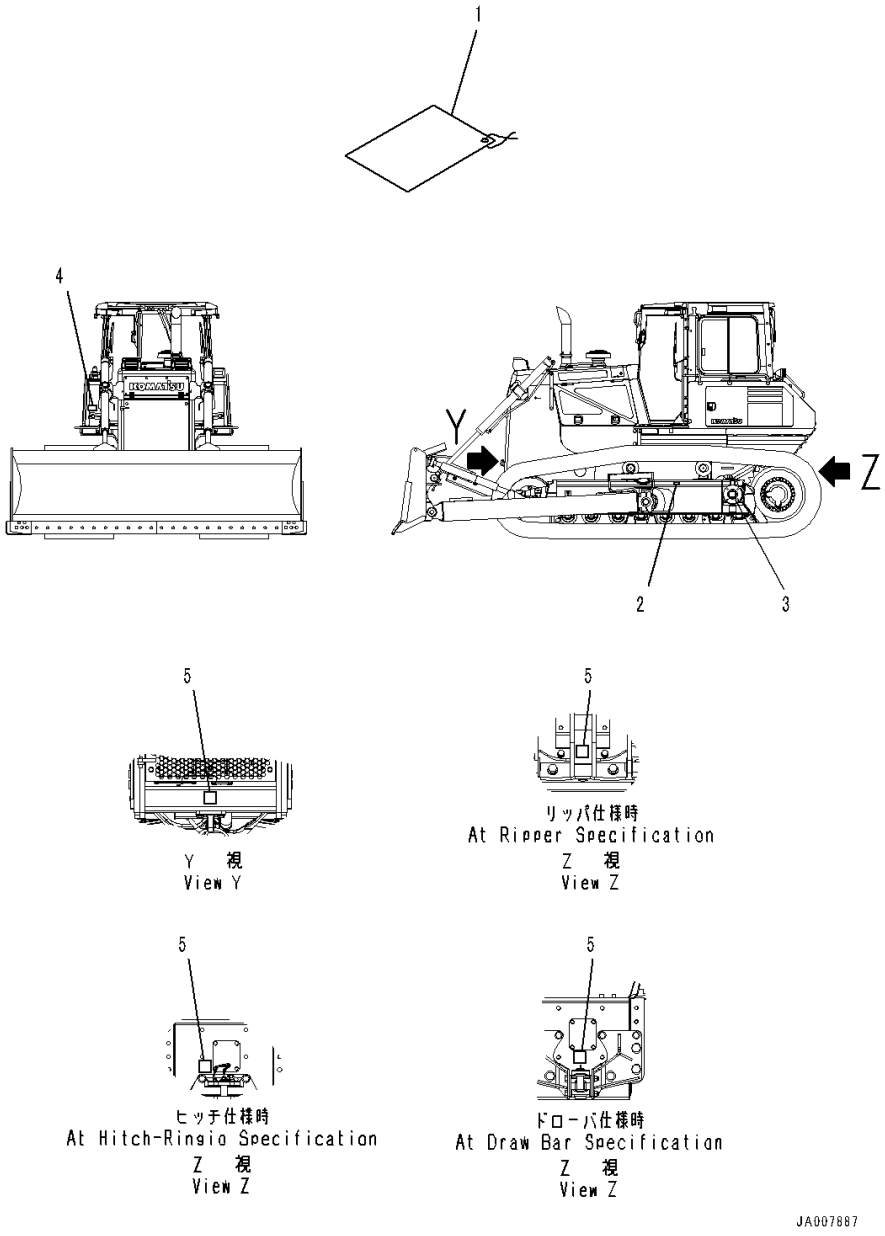

Index	Code	Part Number	Description	Qty	Serial Number
1		130-98-79210	Plate, Location Of Balance	1	1001-
2		09960-00611	Mark, Balancing Position	2	1001-
3		09960-00801	Mark, Lift Point	4	1001-
4		14X-98-61510	Plate, Lift Point and Tie Down Point Marks	1	1001-
5		09960-00802	Mark, Tie Down Point	2	1001-

FIG. U0520-002001 ROPS/FOPS Plate (English)

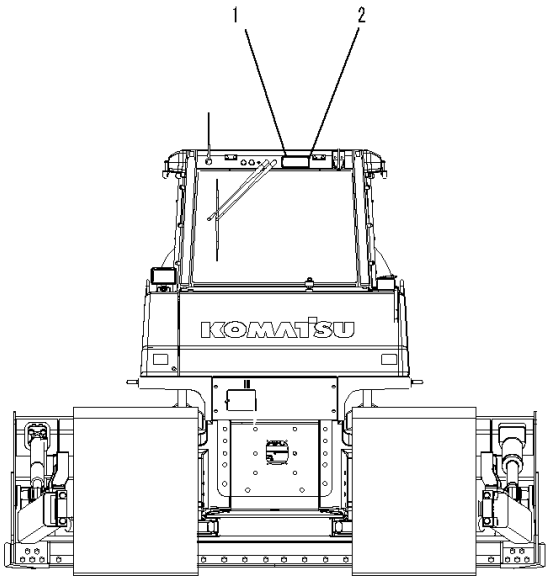

JA006413

Index	Code	Part Number	Description	Qty	Serial Number
1	C2	09620-A2000	Plate, Name, ROPS/FOPS (Limited Supply)	1	1001-
2		04418-13060	Screw	4	1001-

FIG. U0520-003001 ROPS/FOPS Plate (Spanish-English)

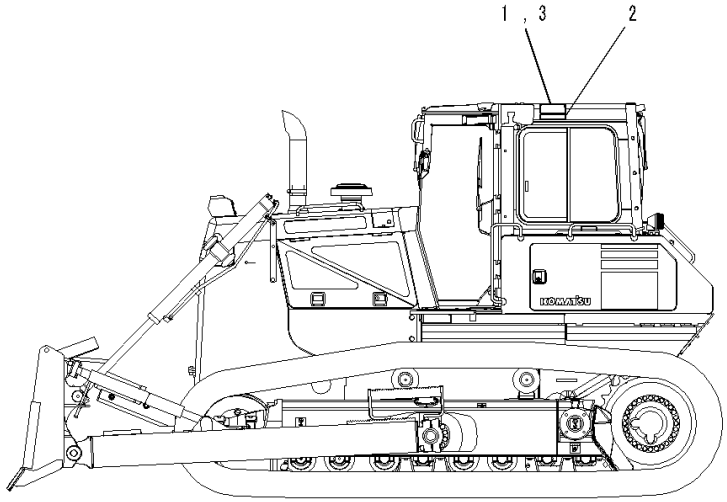

JA006412

Index	Code	Part Number	Description	Qty	Serial Number
1	C2	09620-A2000	Plate, Name, ROPS/FOPS (Limited Supply)	1	1001-
2		09620-A2070	Plate, Warning, ROPS/FOPS	1	1001-
3		04418-13060	Screw	4	1001-

FIG. U0520-004001 ROPS/FOPS Plate (French-English)

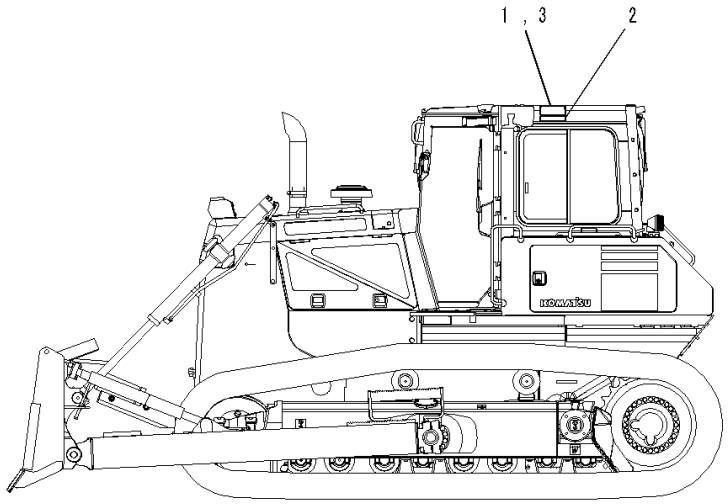

JA006412

Index	Code	Part Number	Description	Qty	Serial Number
1	C2	09620-A2000	Plate, Name, ROPS/FOPS (Limited Supply)	1	1001-
2		09620-A2100	Plate, Warning, ROPS/FOPS	1	1001-
3		04418-13060	Screw	4	1001-

FIG. U0520-005001 ROPS/FOPS Plate (German-English)

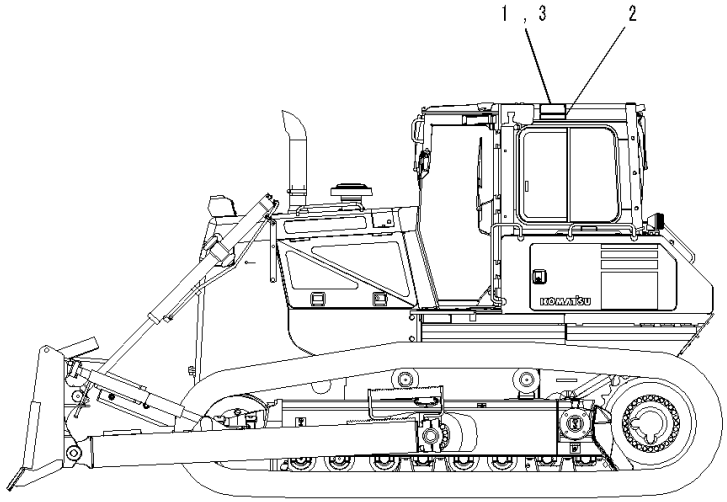

JA006412

Index	Code	Part Number	Description	Qty	Serial Number
1	C2	09620-A2000	Plate, Name, ROPS/FOPS (Limited Supply)	1	1001-
2		09620-A2080	Plate, Warning, ROPS/FOPS	1	1001-
3		04418-13060	Screw	4	1001-

FIG. U0520-006001 ROPS/FOPS Plate (Italian-English)

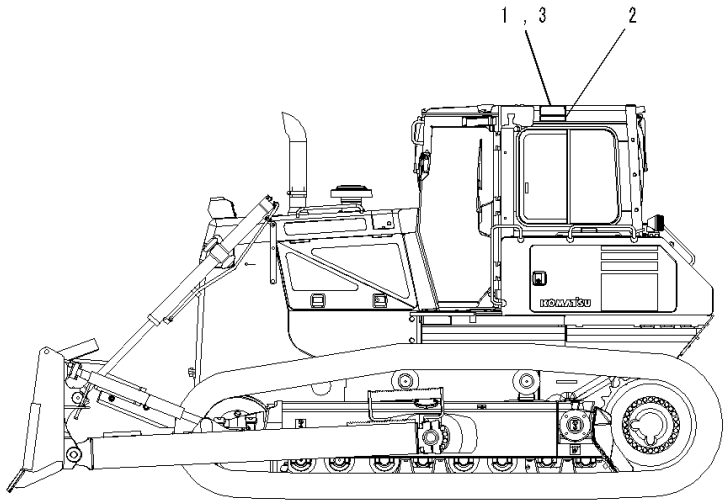

JA006412

Index	Code	Part Number	Description	Qty	Serial Number
1	C2	09620-A2000	Plate, Name, ROPS/FOPS (Limited Supply)	1	1001-
2		09620-A2110	Plate, Warning, ROPS/FOPS	1	1001-
3		04418-13060	Screw	4	1001-

FIG. U0520-007001 ROPS/FOPS Plate (Portuguese-English)

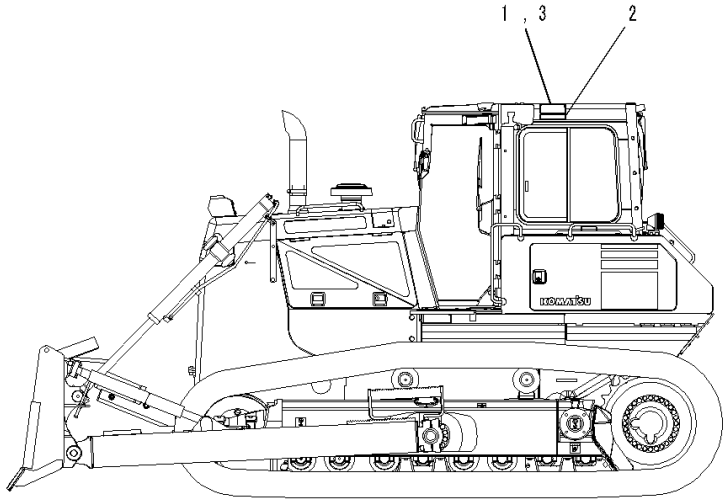

JA006412

Index	Code	Part Number	Description	Qty	Serial Number
1	C2	09620-A2000	Plate, Name, ROPS/FOPS (Limited Supply)	1	1001-
2		09620-A2120	Plate, Warning, ROPS/FOPS	1	1001-
3		04418-13060	Screw	4	1001-

FIG. U0520-008001 ROPS/FOPS Plate (For EU Safety Regulation)

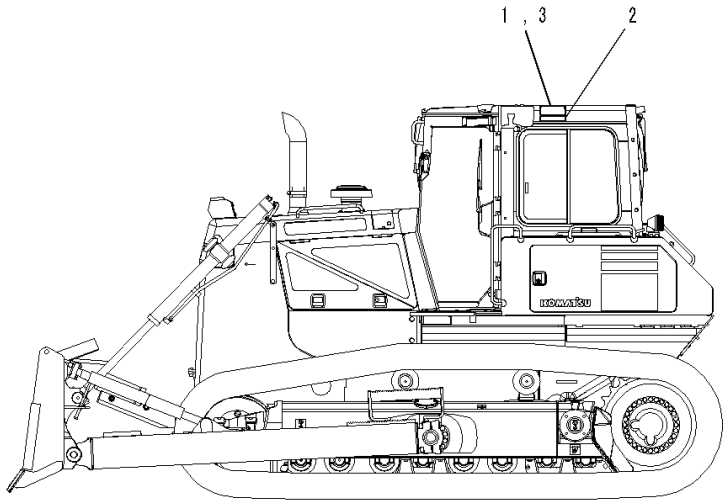

JA006412

Index	Code	Part Number	Description	Qty	Serial Number
1	C2	09620-A2000	Plate, Name, ROPS/FOPS (Limited Supply)	1	1001-
2		09620-A3000	Plate, Warning, ROPS/FOPS	1	1001-
3		04418-13060	Screw	4	1001-

AUXILIARY PARTS AND TOOL

FIG. V0100-001001 Spare Parts

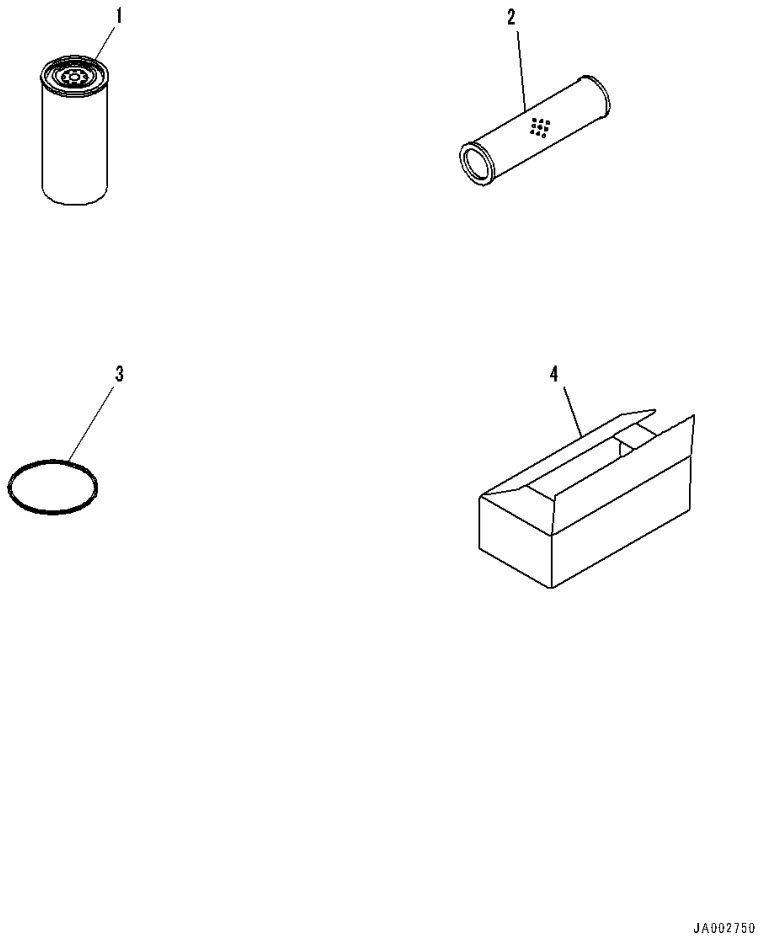

Index	Code	Part Number	Description	Qty	Serial Number
1		14X-49-61410	Cartridge	1	1001-
2		14X-60-31150	Element	1	1001-
3		07000-15195	O-ring	1	1001-
4		09059-00800	Box	1	1001-

FIG. V0200-001001 Cap and Overall

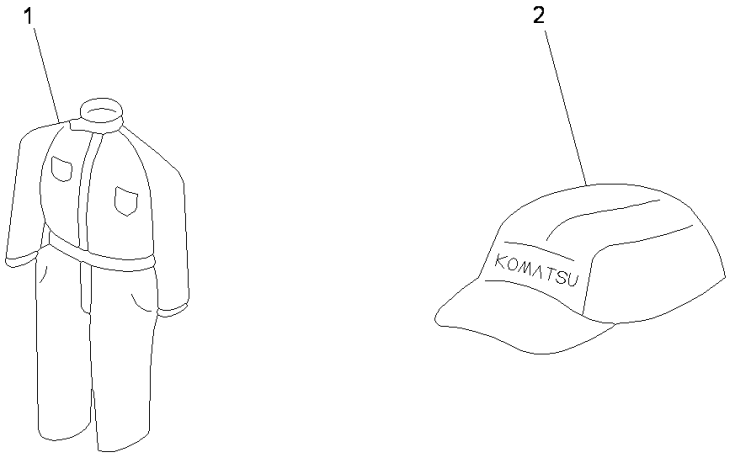

Index	Code	Part Number	Description	Qty	Serial Number
1		09980-10550	Overall	1	1001-
2		09982-10057	Cap	1	1001-

FIG. V0300-001001 Tool

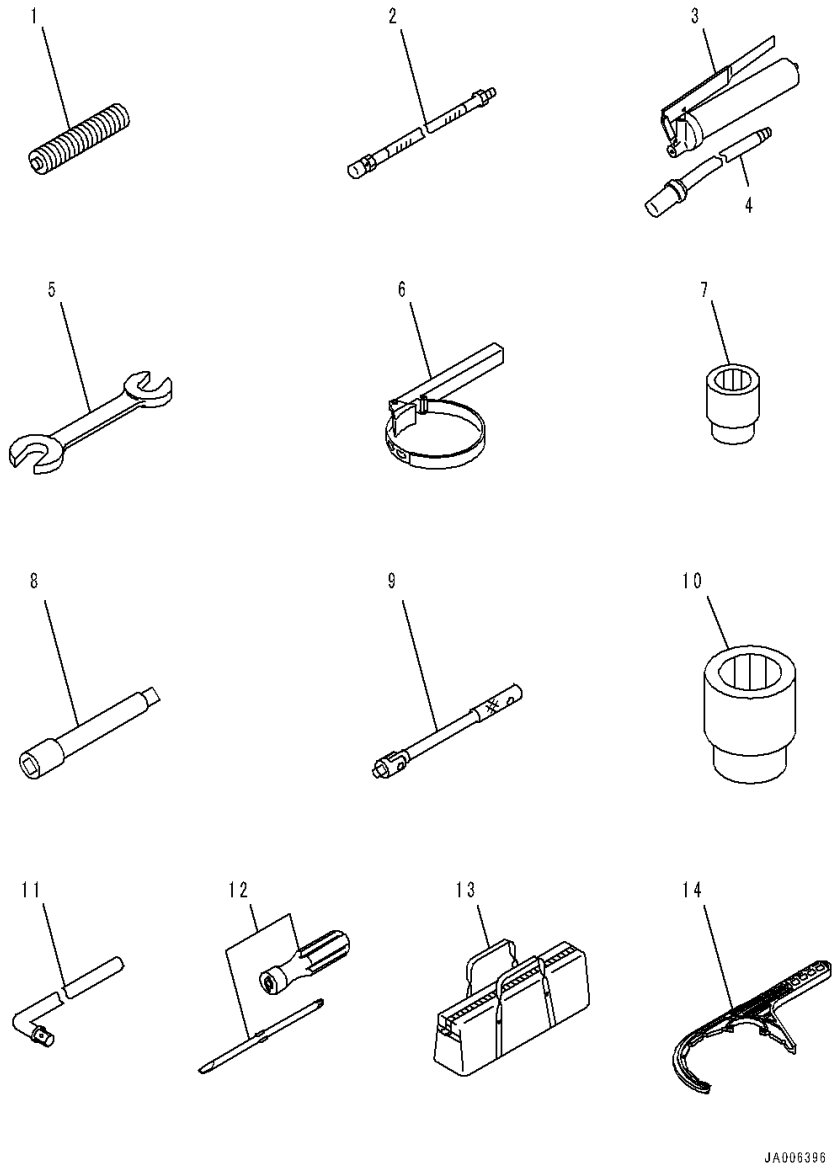

Index	Code	Part Number	Description	Qty	Serial Number
1		07950-90403	Cartridge	1	1001-
2		07951-31400	Nozzle	1	1001-
		07952-70004	Pump Assembly	1	1001-
3		07950-10450	• Pump	1	1001-
4		07951-41017	• Nozzle	1	1001-
5		09002-01317	Wrench, W=13X17mm	1	1001-
		09002-03032	Wrench, W=30X32mm	1	1001-
6		09019-28036	Wrench	1	1001-
7		09021-01725	Socket, W=17mm	1	1001-
		09021-01928	Socket, W=19mm	1	1001-
		09021-02436	Socket, W=24mm	1	1001-
8		09022-00150	Extension	1	1001-
9		09023-00300	Handle	1	1001-
10		09021-03246	Socket, W=32mm	1	1001-
		09021-03653	Socket, W=36mm	1	1001-
11		09024-00300	Handle	1	1001-
12		09033-00190	Driver	1	1001-
13		09056-04613	Bag	1	1001-
14		6212-82-0110	Wrench	1	1001-

OTHER EQUIPMENT

FIG. W1113-001001 Fuel Self Charge Pump

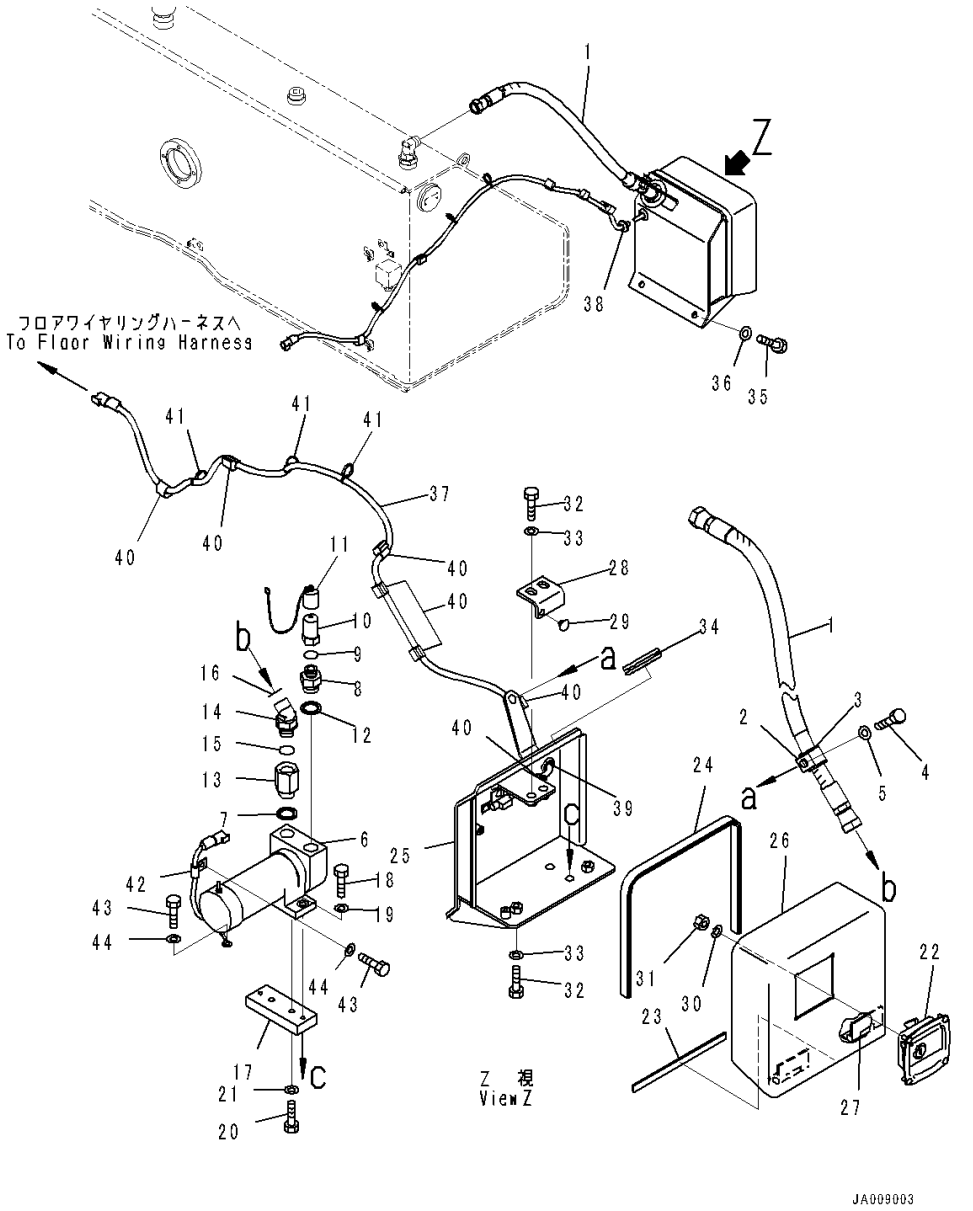

Index	Code	Part Number	Description	Qty	Serial Number
1		14X-04-51620	Hose	1	1001-
2		04434-53212	Clip	1	1001-
3		07095-20523	Cushion	1	1001-
4		01010-81225	Bolt	1	1001-
5		01643-31232	Washer	1	1001-
6		14X-04-31510	Pump	1	1001-
7		205-04-K1370	Washer, Seal	1	1001-
8		14X-04-31530	Union	1	1001-
9		208-38-11590	O-ring	1	1001-
10		134-62-63720	Coupling	1	1001-
11		14X-04-31570	Cap	1	1001-
12		205-04-K1370	Washer, Seal	1	1001-
13		14X-04-51441	Union	1	1001-
14		02783-10522	Elbow	1	1001-
15		07002-12434	O-ring	1	1001-
16		02896-11015	O-ring	1	1001-
17		14X-54-53930	Plate	1	1001-
18		01010-80830	Bolt	2	1001-
19		01643-30823	Washer	2	1001-
20		01010-81225	Bolt	2	1001-
21		01643-31232	Washer	2	1001-
		14X-54-53871	Cover Assembly	1	1001-
22		14X-54-54310	• Lock	1	1001-
23		14X-54-53950	• Sheet	1	1001-
24		14X-54-53940	• Seal	1	1001-
25		14X-54-53891	• Bracket	1	1001-
26	C1		• Cover	1	1001-
27		11Y-54-14220	• • Hinge	2	1001-
28		14X-54-53840	• Plate	1	1001-
29		14X-54-12960	• Stopper	1	1001-
30		01643-30623	• Washer	4	1001-
31		01580-10605	• Nut	4	1001-
32		01010-81230	• Bolt	4	1001-
33		01643-31232	• Washer	4	1001-
34		08037-05016	Grommet	1	1001-
35		01010-81225	Bolt	2	1001-
36		01643-31232	Washer	2	1001-
37		14X-06-62980	Wiring Harness	1	1001-
38		08037-01610	Grommet	1	1001-
39		112-860-1360	Grommet	1	1001-

FIG. W1113-001001 Fuel Self Charge Pump

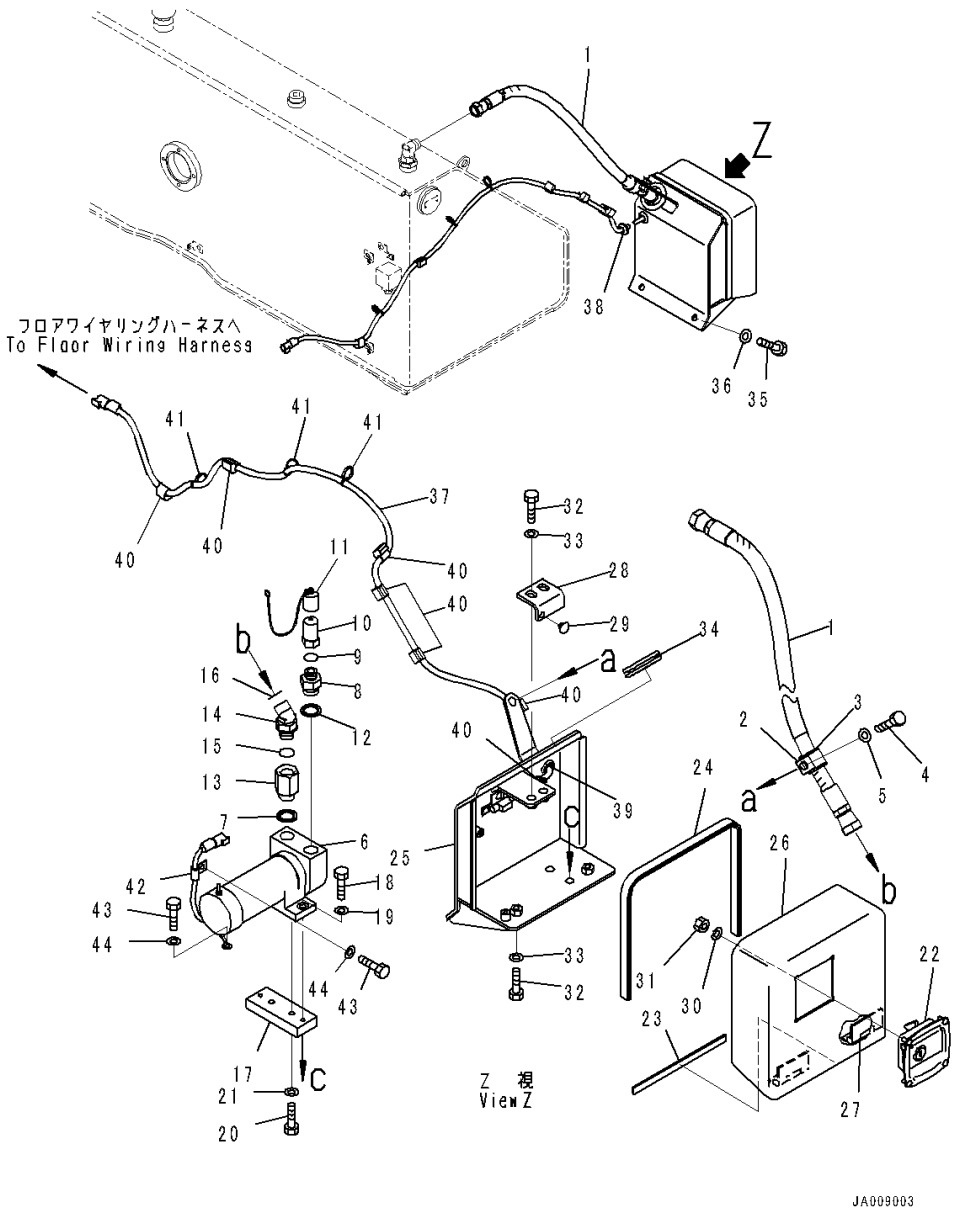

Index	Code	Part Number	Description	Qty	Serial Number
40		08211-00720	Clip	7	1001-
41		08034-40521	Band	3	1001-
42		04434-50808	Clip	1	1001-
43		01010-80816	Bolt	2	1001-
44		01643-30823	Washer	2	1001-

FIG. W9970-001001 Parts For Machine Transportation

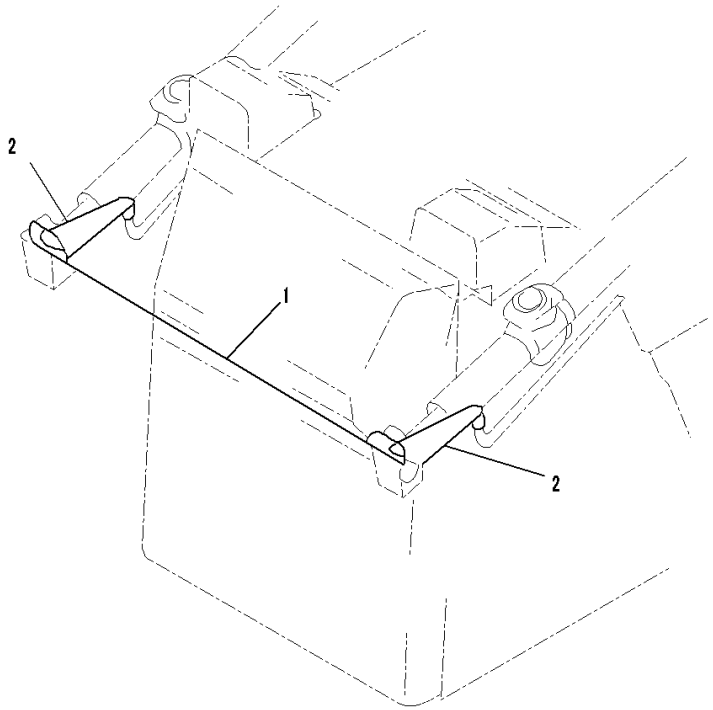

JA002745

Index	Code	Part Number	Description	Qty	Serial Number
1		13F-98-11210	Wire	1	1001-
2		13F-98-11220	Wire	2	1001-

SPECIAL PRODUCT AND ITS RELATED PARTS

FIG. X2000-002001 Main Frame

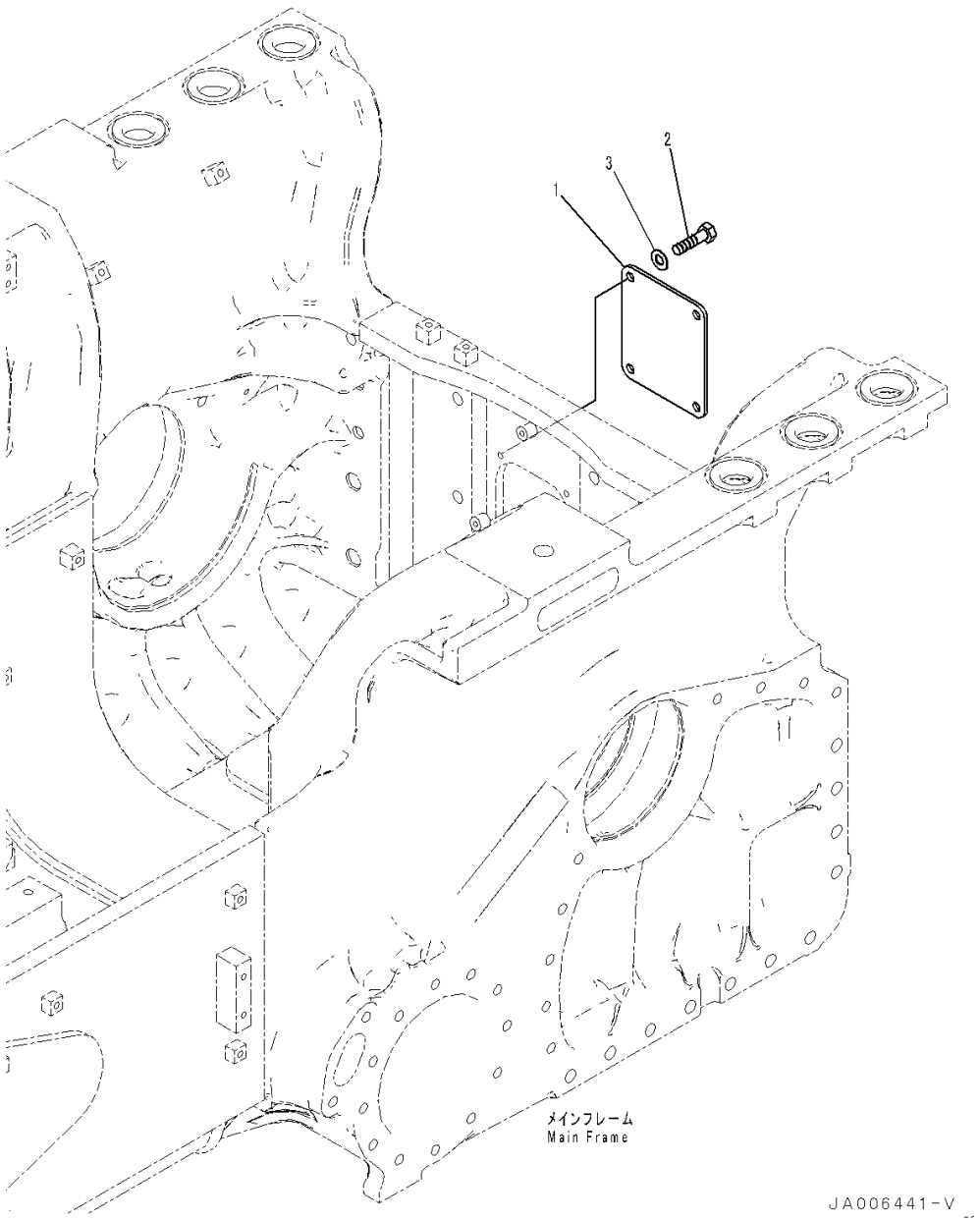

Index	Code	Part Number	Description	Qty	Serial Number
1		14X-21-51350	Cover	1	1001-
2		01010-81225	Bolt	4	1001-
3		01643-31232	Washer	4	1001-

FIELD REPAIR SERVICE PARTS

FIG. KIT Service Kit Parts (1/2)

Index	Code	Part Number	Description	Qty	Serial Number
K01		14X-22-05011	Service Kit, Steering		1001-
		02896-61012	• O-ring	1	-
		02896-61018	• O-ring	2	-
		07000-72018	• O-ring	21	-
		07000-72065	• O-ring	1	-
		07000-72095	• O-ring	1	-
		07000-73022	• O-ring	17	-
		07000-73032	• O-ring	1	-
		07000-75180	• O-ring	2	-
		07000-75365	• O-ring	4	-
		07002-61623	• O-ring	24	-
		07002-62034	• O-ring	1	-
		07002-62434	• O-ring	2	-
		07002-63634	• O-ring	1	-
		14Y-22-23310	• Seal Ring	2	-
		14Y-22-37470	• O-ring	1	-
		232-15-19270	• Seal Ring	2	-
K02		14X-22-05020	Service Kit, Steering Brake		1001-
		07002-32434	• O-ring	2	-
		07002-33034	• O-ring	2	-
		07002-61623	• O-ring	1	-
		07002-61823	• O-ring	1	-
		113-15-29110	• Seal, Oil	2	-
K03		14X-15-05181	Service Kit, Transmission		1001-
		02896-61018	• O-ring	1	-
		07000-72015	• O-ring	13	-
		07000-72018	• O-ring	5	-
		07000-72021	• O-ring	5	-
		07000-73022	• O-ring	2	-
		07000-73025	• O-ring	2	-
		07000-73032	• O-ring	1	-
		07000-73035	• O-ring	5	-
		07000-73045	• O-ring	1	-
		07002-61023	• O-ring	1	-
		07002-62434	• O-ring	4	-
		103-15-12820	• Seal Ring	2	-
		113-15-12870	• Ring	1	-
		124-15-41910	• Seal Ring	3	-
		124-15-41920	• Seal Ring	2	-
		14X-15-19210	• Seal Ring	1	-
		14X-15-29220	• Seal Ring	1	-
		14X-15-29230	• Seal Ring	1	-
		569-15-12860	• Seal Ring	2	-
		714-12-39230	• Seal Ring	2	-
		714-21-19810	• Seal Ring	2	-
K04		14X-15-05190	Service Kit, Transmission Control Valve		1001-
		07000-71007	• O-ring	6	-
		07000-72015	• O-ring	24	-
		07000-73022	• O-ring	2	-
		07000-A2060	• O-ring	1	-
		07002-61023	• O-ring	2	-
		07002-61223	• O-ring	7	-
		07002-61423	• O-ring	5	-
		07002-61823	• O-ring	1	-
K05		14X-15-05210	Service Kit, Transmission Main Relief Valve		1001-
		07000-73030	• O-ring	5	-
		07002-61023	• O-ring	2	-
		07002-63034	• O-ring	4	-
K06		14X-13-05040	Service Kit, Torque Converter		1001-
		02896-61018	• O-ring	1	-
		07000-72070	• O-ring	1	-
		07000-72090	• O-ring	1	-
		07000-72100	• O-ring	1	-
		07000-72110	• O-ring	1	-
		07000-72130	• O-ring	1	-
		07000-73030	• O-ring	2	-
		07000-73032	• O-ring	2	-
		07000-73045	• O-ring	2	-
		07000-75065	• O-ring	1	-
		07000-75210	• O-ring	1	-
		07002-61023	• O-ring	7	-
		07002-62434	• O-ring	2	-
		07005-01212	• Gasket	6	-
		07012-50095	• Seal, Oil	1	-
		426-13-42710	• Seal Ring	1	-
		567-15-12830	• Ring	2	-
		582-15-19240	• Seal Ring	2	-
K07		14X-32-05010	Shoe Bolt and Nut Service Kit		1001-
		154-32-71220	• Nut	30	-

FIG. KIT Service Kit Parts (2/2)

Index	Code	Part Number	Description	Qty	Serial Number
		207-32-71620	• Bolt	30	-
K08		134-32-05010	Shoe Bolt and Nut Kit		1001-
		134-32-61221	• Nut	30	-
		154-32-21323	• Bolt	30	-
K09		13G-32-05010	Shoe Bolt and Nut Kit		1001-
		134-32-61221	• Nut	30	-
		13G-32-61210	• Bolt	30	-
K10		707-99-26730	Seal Kit, Hydraulic Cylinder		1001-
		02896-61015	• O-ring	3	-
		07000-12090	• O-ring	1	-
		07000-B2085	• O-ring	1	-
		07145-00055	• Seal, Dust	2	-
		07156-00912	• Ring, Wear	2	-
		707-35-10860	• Ring, Back-up	1	-
		707-44-90150	• Ring, Piston	1	-
		707-51-60650	• Ring, Buffer	1	-
		707-51-60860	• Packing, Rod	1	-
		707-56-60740	• Seal, Dust	1	-
K11		707-99-27320	Seal Kit, Hydraulic Cylinder		1001-
		02896-61015	• O-ring	3	-
		07000-12085	• O-ring	1	-
		07000-B2080	• O-ring	1	-
		07000-B3025	• O-ring	1	-
		07145-00055	• Seal, Dust	2	-
		707-35-10810	• Ring, Back-up	1	-
		707-39-85120	• Ring, Wear	2	-
		707-44-85150	• Ring, Piston	1	-
		707-51-60650	• Ring, Buffer	1	-
		707-51-60860	• Packing, Rod	1	-
		707-56-60740	• Seal, Dust	1	-
K12		707-99-43740	Seal Kit, Hydraulic Cylinder		1001-
		02896-61009	• O-ring	2	-
		07000-12130	• O-ring	1	-
		07000-13050	• O-ring	4	-
		07000-B2125	• O-ring	1	-
		07156-01315	• Ring, Wear	1	-
		707-35-11260	• Ring, Back-up	1	-
		707-44-13150	• Ring, Piston	1	-
		707-51-70650	• Ring, Buffer	1	-
		707-51-70860	• Packing, Rod	1	-
		707-56-70740	• Seal, Dust	1	-
K13		707-99-43390	Seal Kit, Hydraulic Cylinder		1001-
		02896-61009	• O-ring	2	-
		07000-12125	• O-ring	1	-
		07000-B2120	• O-ring	1	-
		07145-00050	• Seal, Dust	2	-
		707-35-11210	• Ring, Back-up	1	-
		707-39-12520	• Ring, Wear	1	-
		707-44-12250	• Ring, Piston	1	-
		707-51-70650	• Ring, Buffer	1	-
		707-51-70860	• Packing, Rod	1	-
		707-56-70740	• Seal, Dust	1	-
K14		707-99-36720	Seal Kit, Hydraulic Cylinder		1001-
		02896-61012	• O-ring	3	-
		07000-12110	• O-ring	1	-
		07000-13050	• O-ring	4	-
		07000-B2105	• O-ring	1	-
		07156-01112	• Ring, Wear	2	-
		707-35-11060	• Ring, Back-up	1	-
		707-44-11150	• Ring, Piston	1	-
		707-51-65650	• Ring, Buffer	1	-
		707-51-65860	• Packing, Rod	1	-
		707-56-65740	• Seal, Dust	1	-

NUMERICAL INDEX

PartNumber	Page	Index
01010-61460	263	11
01010-61645	239	8
01010-61650	265	1
01010-61660	273	31
01010-61670	239	9
01010-61690	270	15
01010-71225	160	4
	164	3
01010-71235	555	16
	563	13
01010-71285	165	3
01010-80612	175	5
	235	19
	453	31
	666	19
	671	19
01010-80616	231	11
	232	4
	396	15
	401	15
	408	10
	408	14
	414	15
	418	11
	418	16
	428	7
	428	19
	428	22
	429	29
	429	36
	430	5
	430	9
	430	15
	430	20
	430	25
	451	32
	452	6
	454	10
	456	14
	462	2
	480	2
	546	4
	564	11
	564	23
	565	8
	565	18
	666	22
	671	22
01010-80620	242	21
01010-80625	406	24
	407	26
	441	15
	443	14
	461	2
	492	5
01010-80630	492	1
01010-80670	497	11
01010-80816	61	11
	69	17
	69	22
	174	27
	174	29
	224	24
	421	6
	438	17
	546	11
	775	43
01010-80820	61	20
	210	10
	215	8
	220	8
	221	10
	490	19
	492	3
	498	1
	506	1
	512	1
	517	1
	528	1
	558	4
01010-80825	61	8
	174	19
	196	29
	198	37
	546	2
01010-80830	98	2
	213	2
	406	25
	407	14
	441	11
	441	28
	443	10
	443	27
	496	10
	500	10
	505	7
	508	7
	511	10
	513	10
	516	10
	521	10
	527	10
	530	10
	534	10
	536	10
	683	12
	774	18
01010-80840	730	45
	732	45
01010-80845	174	16
	268	23
	730	43
	732	43
01010-80850	502	6
	509	6
	514	6
	522	6
	531	6
01010-80855	268	24
01010-80870	484	1
01010-80880	490	7
01010-81016	176	33
	218	12
	546	7
	715	25
	716	21
	718	40
01010-81020	143	10
	166	2
	171	10
	173	1
	174	13
	175	15
	175	18
	175	25
	175	28
	176	2
	176	6
	176	13
	176	16
	176	19
	176	22
	176	25
	176	29
	176	36
	176	40
	182	13
	182	25
	182	32
	182	36
	183	41
	188	2
	188	11
	191	5
	191	9
	196	20
	198	28
	206	30
	207	30
	208	30
	209	30
	210	6
	210	14
	210	21
	210	24
	210	28
	210	33
	211	38
	212	3
	212	10
	212	13
	212	17
	212	23
	213	5
	213	10
	213	14
	214	3
	214	9
	214	13
	214	16
	214	19
	214	23
	214	27
	215	3
	215	16
	215	29
	215	36
	216	42
	217	7
	218	5
	219	3
	219	11
	219	13
	219	16
	219	20
	219	26
	220	3
	221	6
	221	14
	221	21
	221	24
	221	28
	221	33
	222	38
	230	2
	230	5
	270	6
	272	9
	273	6
	273	12
	273	21
	273	34
	275	20
	275	23
	275	26
	299	2
	299	5
	299	8
	303	9
	307	47
	309	48
	311	46
	313	48
	332	7
	337	4

PartNumber	Page	Index
	396	26
	401	26
	422	2
	422	5
	422	8
	428	13
	432	47
	445	10
	445	13
	446	8
	447	37
	447	41
	448	8
	448	25
	448	29
	450	15
	450	18
	450	21
	450	24
	450	27
	451	30
	451	35
	452	2
	452	4
	452	10
	452	28
	453	35
	457	14
	461	9
	461	12
	464	14
	470	10
	470	13
	471	8
	471	25
	471	29
	476	32
	479	2
	488	2
	488	35
	490	15
	491	10
	491	13
	491	16
	498	19
	498	26
	502	24
	502	28
	502	32
	502	36
	505	13
	506	21
	506	28
	508	13
	509	24
	509	28
	509	32
	509	37
	511	16
	512	23
	512	30
	513	16
	514	24
	514	28
	514	32
	514	36
	516	16
	517	8
	518	20
	519	40
	520	2
	520	11
	520	24
	521	16
	522	25
	522	29
	522	33
	524	20
	525	40
	526	2
	526	11
	526	24
	527	16
	528	8
	529	2
	529	11
	529	24
	530	16
	531	25
	531	29
	531	33
	533	2
	533	11
	533	24
	534	16
	535	2
	535	11
	535	23
	536	16
	537	2
	537	11
	537	23
	546	21
	546	25
	546	28
	546	32
	546	35
	555	19
	560	5
	563	16
	586	2
	606	2
	666	10
	666	32
	667	50
	667	59
	671	10
	671	32
	672	50
	672	59
	683	18
	725	38
	727	38
01010-81025	61	23
	61	35
	143	7
	171	15
	171	19
	171	39
	176	9
	176	31
	180	27
	180	30
	180	34
	182	20
	184	21
	189	13
	193	2
	193	5
	193	8
	193	11
	206	14
	207	14
	208	14
	209	14
	211	43
	212	6
	215	33
	216	39
	216	46
	219	6
	222	43
	245	12
	252	15
	261	12
	261	29
	267	19
	270	2
	271	2
	273	9
	275	17
	280	37
	284	37
	290	37
	294	37
	306	7
	306	13
	308	7
	308	13
	310	7
	310	13
	312	7
	312	13
	326	19
	337	10
	431	21
	431	25
	432	29
	432	32
	432	39
	432	42
	432	50
	433	10
	442	34
	442	37
	444	32
	450	12
	453	41
	484	8
	484	11
	484	14
	490	9
	491	19
	491	22
	491	25
	518	15
	524	15
	546	15
	667	56
	672	56
01010-81030	54	2
	68	38
	68	42
	69	7
	143	2
	175	2
	175	31
	181	3
	188	6
	202	1
	202	14
	236	7
	238	8
	258	3
	273	2
	440	24
	487	5
	490	2
	502	4
	509	4
	514	4
	518	17
	522	4
	524	17
	531	4

PartNumber	Page	Index
	584	2
	584	8
01010-81035	67	33
	245	10
	259	4
	259	10
	259	23
	322	16
	441	5
	443	4
	479	6
01010-81040	190	12
	273	16
01010-81045	180	21
	255	1
	273	19
	716	38
	720	16
	723	29
01010-81050	188	37
	261	14
	335	27
	455	10
01010-81055	184	6
	197	50
	199	58
	255	3
01010-81060	275	14
	432	36
01010-81065	257	1
	333	18
01010-81070	171	2
	273	28
01010-81085	254	21
	272	16
01010-81220	143	5
	162	18
	202	19
	202	25
	223	8
	226	13
	227	13
	228	13
	229	13
	273	24
	336	10
	362	31
	364	35
	393	3
	465	3
	489	41
	582	28
	605	32
	624	43
	624	51
	624	54
	629	45
	629	53
	629	56
	651	38
	657	40
	715	27
	716	17
	718	36
	740	12
01010-81225	162	7
	162	21
	188	16
	192	3
	202	22
	202	33
	202	36
	203	41
	203	44
	206	32
	207	32
	208	32
	209	32
	215	22
	215	26
	217	4
	220	12
	225	3
	225	5
	228	18
	228	20
	229	18
	229	20
	231	3
	231	6
	240	3
	240	6
	270	17
	298	8
	298	11
	298	20
	299	11
	335	8
	336	14
	336	27
	341	32
	342	38
	342	40
	342	43
	348	2
	348	9
	349	4
	349	11
	351	4
	351	11
	351	18
	354	9
	354	13
	358	15
	359	15
	360	15
	361	15
	406	21
	407	23
	445	5
	445	17
	448	33
	470	5
	476	18
	488	5
	488	8
	488	11
	488	14
	488	18
	488	21
	488	25
	488	28
	488	31
	489	44
	489	49
	548	2
	548	7
	549	2
	549	7
	556	26
	558	14
	558	19
	562	4
	562	7
	562	12
	562	15
	564	8
	564	20
	565	5
	565	15
	566	4
	578	10
	582	24
	583	5
	605	28
	624	47
	625	5
	625	8
	629	49
	651	34
	652	7
	657	36
	670	4
	670	14
	670	20
	699	34
	700	34
	701	34
	702	34
	710	14
	713	12
	713	16
	713	24
	713	31
	738	4
	738	16
	738	32
	739	4
	739	16
	739	33
	740	8
	741	6
	774	4
	774	20
	774	35
	778	2
01010-81230	174	10
	175	9
	175	12
	181	16
	182	4
	184	35
	189	2
	189	5
	189	8
	196	24
	198	32
	223	3
	226	3
	226	9
	227	3
	227	9
	228	3
	228	9
	229	3
	229	9
	239	24
	244	16
	336	3
	336	8
	336	16
	336	24
	337	7
	341	3
	341	16
	341	23
	348	6
	348	13
	349	8
	349	15
	351	8
	351	15
	354	32
	354	37
	355	42

PartNumber	Page	Index
	355	45
	356	11
	358	18
	359	18
	359	24
	360	18
	361	18
	361	24
	362	35
	365	39
	538	24
	556	28
	557	2
	560	8
	561	3
	564	27
	565	22
	588	2
	667	44
	667	47
	670	9
	672	44
	672	47
	705	11
	706	11
	713	9
	716	12
	718	14
	718	17
	721	14
	721	17
	723	12
	738	25
	739	26
	740	28
	774	32
01010-81235	61	26
	61	29
	67	24
	178	17
	180	24
	188	14
	190	15
	224	21
	263	6
	263	14
	264	5
	264	13
	264	15
	265	6
	268	2
	268	8
	270	30
	274	37
	280	6
	282	5
	284	6
	286	5
	289	6
	291	5
	293	6
	295	5
	341	26
	350	6
	350	9
	352	6
	352	9
	352	23
	352	26
	354	2
	355	48
	358	12
	359	12
	360	12
	361	12

PartNumber	Page	Index
	547	47
	558	25
	587	6
	670	1
	670	16
	674	6
	675	6
	676	3
	676	6
	677	3
	677	6
	678	6
	678	9
	679	6
	679	9
	683	20
	719	44
	721	38
01010-81240	171	4
	235	12
	235	22
	259	20
	261	20
	332	3
	335	21
	336	30
	578	2
	585	3
	673	11
	708	27
	709	27
01010-81245	67	35
	202	27
	268	12
	268	16
	333	4
	446	5
	448	5
	471	5
	489	38
	621	23
	649	5
	658	5
	659	23
	741	12
	741	17
01010-81250	178	10
	184	26
	280	22
	284	22
	289	22
	293	22
01010-81255	239	5
	363	46
	365	50
	738	27
	739	28
	741	30
	741	37
01010-81260	341	29
	342	35
	351	25
	579	30
	602	34
	620	37
	627	39
	646	37
	655	39
	740	16
	740	24
01010-81265	188	18
	234	5
	268	33
	354	6
	354	16

PartNumber	Page	Index
	711	9
	711	25
	712	9
	712	16
	740	20
01010-81270	61	32
	62	39
	260	36
	298	5
	298	15
	335	12
	336	21
	341	7
	341	13
	356	5
01010-81275	264	19
01010-81280	244	7
	341	9
	341	20
01010-81285	67	27
	175	22
	603	20
	664	20
01010-81295	242	30
	354	34
	354	39
	359	28
	361	28
	364	5
	670	12
01010-81435	190	6
01010-81440	538	10
	538	21
01010-81465	190	9
01010-81630	689	10
	690	10
	738	7
	739	7
01010-81635	587	5
	676	8
	677	8
	678	11
	679	11
	714	11
	715	11
	741	22
01010-81640	362	25
	364	29
	557	6
01010-81645	279	15
	280	18
	281	41
	283	15
	284	18
	285	41
	288	15
	289	18
	290	41
	292	15
	293	18
	294	41
	296	15
	297	15
	670	7
	682	17
01010-81650	169	16
	276	2
	321	1
01010-81660	271	5
01010-81670	552	5
01010-81680	587	3
01010-81840	705	3
	706	3
01010-81845	699	20
	699	27

PartNumber	Page	Index
	700	20
	700	27
	701	20
	701	27
	702	20
	702	27
	703	2
	704	2
01010-81850	699	23
	699	30
	700	23
	700	30
	701	23
	701	30
	702	23
	702	30
01010-81865	686	1
	699	24
	699	31
	700	24
	700	31
	701	24
	701	31
	702	24
	702	31
01010-82035	393	8
	465	8
	715	23
	716	19
	718	38
01010-82040	350	19
	716	15
01010-82055	279	10
	283	10
	288	10
	291	9
	292	10
	295	9
	296	10
	297	10
	325	2
	350	3
	352	3
	352	20
	354	25
	354	29
	362	8
	362	12
	364	12
	364	16
	560	2
01010-82060	716	29
	720	7
	723	20
01010-82065	708	24
	709	24
	710	18
01010-82070	291	7
	295	7
	683	31
01010-82075	362	3
	711	13
	711	29
	712	13
	712	20
	716	33
	720	11
	723	24
01010-82085	689	13
	690	13
01010-82460	538	8
	538	19
	680	2
	683	30
01010-82465	745	9
	746	11
	747	20
01010-83375	743	16
	744	17
	747	18
01010-83380	745	11
	746	13
01010-83390	744	16
01010-D0612	474	14
01010-D0620	481	3
	482	3
01010-D0635	395	39
	400	39
	467	39
01010-D0650	473	7
01010-D0816	224	9
	224	19
	473	9
	474	8
	494	9
01010-D0820	224	7
	224	17
01010-D0825	368	4
	368	7
	368	17
	370	4
	370	7
	370	17
	372	4
	372	7
	372	17
	374	4
	374	7
	374	17
	376	5
	378	5
	380	4
	380	7
	380	17
	382	4
	382	7
	382	17
	384	4
	384	7
	384	17
	386	4
	386	7
	386	17
	388	5
	390	5
	427	7
	427	13
	433	5
	433	8
	434	2
	434	5
	434	12
	434	23
	435	29
	435	32
	435	40
	454	6
	456	10
	456	16
	459	3
	459	8
	459	12
	459	15
	459	18
	459	21
	460	35
	460	40
	460	43
	460	46
	460	49
	495	3
	495	11
	499	3
	504	3
	504	11
	507	3
	539	7
	539	12
01010-D0835	427	4
	427	10
	427	16
01010-D1020	368	12
	370	12
	372	12
	374	12
	380	12
	382	12
	384	12
	386	12
	448	20
	471	20
	474	18
	475	12
	476	2
	476	5
	539	18
	558	22
01010-D1040	404	2
01010-D1230	405	2
	405	5
	458	4
	539	3
01010-D1640	553	7
	554	7
01010-E0816	61	
01010-E0820	61	
01010-E1035	69	
01010-E1080	67	
01011-61035	570	12
01011-61615	239	10
01011-81005	333	16
01011-81010	272	14
01011-81040	490	4
01011-81080	271	9
01011-81205	237	40
01011-81225	577	11
	600	11
	644	11
	663	11
01011-81230	580	20
	661	20
01011-81250	333	6
	350	12
	352	12
	352	29
01011-81600	559	1
	729	7
	731	7
01011-81620	280	32
	284	32
	290	32
	294	32
01011-81640	300	10
	301	10
01011-82025	711	5
	712	5
01011-82055	363	39
	365	43
01011-82060	282	7
	286	7
	287	1
01011-82465	708	5
	708	16
	709	5
	709	16

PartNumber	Page	Index
01011-82480	169	18
	300	1
	301	1
01012-81250	728	3
	733	3
01016-50830	441	7
	443	6
01016-51030	447	44
	448	32
	471	32
01016-51090	490	11
01016-51245	682	22
01020-00616	67	13
01023-10406	558	7
01023-10412	218	8
01023-10416	450	23
01023-10510	553	4
	554	4
01023-10520	414	9
	453	39
01023-10608	558	12
	666	17
	671	17
01023-10620	453	33
01023-20208	477	38
01023-20416	417	1
	417	8
01023-20510	415	2
	463	2
01023-20512	474	10
01023-60410	439	33
01023-60516	436	12
01023-60630	217	2
01023-70412	394	16
	399	16
	406	20
	407	22
	420	39
	466	16
	469	39
01050-31230	132	9
01050-61670	261	24
01052-51260	743	8
	744	8
	747	8
01052-81265	745	6
	746	8
01084-01650	235	6
01099-03417	711	21
01224-70316	411	26
	413	26
01224-70408	438	11
	438	13
01224-70410	438	12
01232-10616	474	16
01240-00620	419	13
	419	21
	468	13
	468	21
01240-01030	495	25
	499	21
	504	25
	507	21
01245-00616	475	7
01245-00620	394	9
	395	29
	395	45
	395	49
	396	5
	396	9
	397	33
	397	36
	398	5
	398	9
	399	9
	399	29
	400	45
	400	49
	401	5
	401	9
	402	33
	402	36
	403	5
	403	9
	414	4
	415	5
	418	7
	419	4
	419	8
	420	36
	420	42
	456	3
	462	5
	462	17
	463	5
	466	9
	466	29
	467	45
	467	49
	468	4
	468	8
	469	36
	480	5
	480	11
	494	2
	495	6
	499	6
	504	6
	507	6
01245-00625	480	21
01245-00630	494	5
01245-00816	422	12
	669	6
	669	13
01245-00820	396	23
	401	23
	419	28
	440	22
	456	7
	468	28
01245-00825	395	42
	400	42
	420	45
	421	3
	467	42
	469	42
01245-01225	472	33
	476	24
01245-01230	393	10
01245-01235	477	36
01252-30625	501	15
01252-60510	85	3
01252-60512	437	2
01252-60616	185	23
	326	9
	568	17
	590	17
	608	17
	631	17
01252-60630	568	18
	590	18
	594	10
	608	18
	612	9
	613	10
	631	18
	635	9
	636	10
01252-60635	320	4
	329	22
	330	3
01252-60645	576	4
	599	4
	618	4
	643	4
01252-60650	330	2
	575	16
	598	16
	617	16
	641	16
01252-60820	572	21
	595	21
	614	21
	638	21
01252-60825	327	18
01252-60835	185	35
01252-60845	185	16
01252-61035	267	16
01252-61040	331	14
01252-61230	316	22
01252-61235	326	11
01252-61255	187	3
01252-61440	317	29
	318	8
01252-61445	315	7
01252-61480	322	20
01252-70414	447	31
	448	16
	471	16
01252-70520	394	3
	399	3
	466	3
01252-70525	394	5
	399	5
	466	5
01252-70545	624	57
	629	59
01252-70650	254	15
01252-70825	438	1
01252-70860	248	47
01252-71250	236	30
01252-80412	440	2
01252-80414	440	3
01252-80510	184	13
	496	3
	500	3
	505	2
	508	2
	511	3
	513	3
	516	3
	521	3
	527	3
	530	3
	534	3
	536	3
01252-80514	411	27
	413	27
01252-90510	254	3
	254	8
01252-A0520	239	22
01252-A0820	206	27
	207	27
	208	27
	209	27
01252-A0825	206	18
	207	18
	208	18
	209	18
01252-A1085	580	17
	603	17
	621	19
	647	17
	659	19
	661	17

PartNumber	Page	Index
	664	17
01252-B0412	439	35
01252-B0430	436	13
01252-B0510	436	15
	436	21
01252-B0512	434	20
	435	34
01252-B0514	439	28
01252-B0516	440	18
01252-B0520	439	30
01252-B0525	421	9
01252-B0530	417	5
01252-B0816	440	19
01253-61200	267	12
01253-61210	266	14
01310-21212	225	7
	228	22
	229	22
	231	5
	549	9
01370-10310	459	6
	460	38
01370-40414	418	19
	419	26
	420	38
	434	17
	468	26
	469	38
	539	15
01434-00820	206	35
	207	35
	208	35
	209	35
01435-00620	431	17
01435-00625	492	7
01435-00816	61	5
	61	14
	61	17
	231	9
	231	17
	232	2
	232	10
01435-00820	51	13
	61	2
	69	20
	72	15
	142	1
01435-00825	71	3
	121	1
01435-00835	71	8
01435-00875	129	16
01435-00885	449	2
01435-01020	129	14
	132	8
01435-01035	69	9
01435-01040	67	19
01435-01045	118	8
01435-01055	118	7
01435-01080	67	31
01435-01240	137	2
01435-41020	505	16
	508	16
	511	19
	513	19
	516	19
	521	19
	527	19
	530	19
	534	19
	536	19
01435-60612	72	6
	86	3
01435-60816	91	5
	95	2
	104	6
	129	17
	129	19
	129	22
	142	7
	142	12
01435-60820	53	16
	58	9
	63	17
	126	2
	129	21
	142	8
	152	5
01435-60825	76	3
	81	9
	96	5
	125	2
01435-60835	50	4
	63	16
01435-60850	53	3
	152	10
01435-61025	116	1
	132	3
01435-61030	110	2
	132	2
01437-00825	100	6
01508-40603	441	20
01508-40805	443	19
01508-41408	446	28
01546-10812	495	22
	499	18
	504	22
	507	18
01580-10605	174	22
	394	19
	399	19
	406	23
	407	25
	441	24
	443	16
	466	19
	495	24
	499	20
	504	24
	507	20
	556	10
	556	23
	666	13
	671	13
	774	31
01580-10806	203	48
	396	18
	401	18
	414	19
	414	24
	441	8
	443	7
	443	21
01580-11008	206	6
	207	6
	208	6
	209	6
	447	43
	448	31
	471	31
	490	12
01580-11210	132	6
	408	4
	408	6
	446	22
	448	14
	471	14
	673	3
	673	6
01580-11411	190	4
01580-11815	705	7
	706	7
01580-12016	711	6
	712	6
01580-31210	165	6
01581-01613	67	23
01582-11210	133	6
	136	4
01582-11411	302	4
	302	6
	446	26
01582-11613	235	7
	682	12
01582-12419	743	13
	744	13
	747	13
01583-11408	502	13
	509	13
	514	13
	522	13
	531	13
01583-12012	188	9
01584-00605	72	11
	84	4
	142	3
	441	17
01584-00806	418	24
01584-01210	137	4
01584-30806	69	26
01590-30809	303	3
01590-31215	728	7
	733	7
01592-11215	743	9
	744	9
	747	9
01592-31215	745	7
	746	9
01593-31411	302	2
	446	23
01594-01008	667	40
	672	40
01596-00807	737	35
01597-01009	54	9
	184	25
	298	23
	724	36
	726	36
	730	41
	732	41
01598-01214	711	10
	711	26
	712	10
	712	17
01601-20410	436	14
01601-20411	440	4
01601-50513	436	16
	436	22
01640-20408	440	5
01640-20508	174	8
01640-20610	174	23
	395	32
	399	32
	406	11
	406	15
	407	11
	407	17
	459	26
	460	31
	467	32
01640-20816	396	19
	401	19
	414	20
	414	25
01640-21016	496	6
	500	6
	505	4

PartNumber	Page	Index
	508	4
	511	6
	513	6
	516	6
	521	6
	527	6
	530	6
	534	6
	536	6
	667	41
	672	41
01640-31223	165	5
01640-50508	434	21
	435	35
01641-20508	394	4
	394	6
	399	4
	399	6
	466	4
	466	6
01641-20608	492	2
	568	19
	590	19
	594	11
	608	19
	612	10
	613	11
	631	19
	635	10
	636	11
01641-20812	100	5
	556	32
01641-21423	446	20
01641-50508	411	28
	413	28
	421	10
01643-11232	160	5
	164	4
	165	4
01643-30623	175	6
	231	12
	232	5
	235	20
	242	22
	396	16
	401	16
	408	11
	408	15
	414	16
	418	12
	418	17
	428	8
	428	20
	428	23
	429	30
	429	37
	430	6
	430	10
	430	16
	430	21
	430	26
	441	16
	441	18
	443	15
	443	17
	451	33
	452	7
	453	32
	454	11
	456	15
	461	3
	462	3
	480	3
	492	6
	495	23
	499	19
	504	23
	507	19
	546	5
	556	11
	556	24
	564	12
	564	24
	565	9
	565	19
	666	14
	666	20
	666	23
	671	14
	671	20
	671	23
	774	30
01643-30823	51	7
	51	10
	61	3
	61	6
	61	9
	61	12
	61	15
	61	18
	61	21
	69	18
	69	23
	69	25
	174	17
	174	20
	174	28
	174	30
	174	31
	196	30
	199	38
	203	47
	206	17
	206	28
	207	17
	207	28
	208	17
	208	28
	209	17
	209	28
	210	11
	213	3
	215	9
	220	9
	221	11
	224	25
	406	5
	406	26
	407	5
	407	15
	421	7
	438	2
	438	18
	441	12
	442	29
	443	11
	443	28
	484	2
	490	8
	490	20
	492	4
	496	11
	498	2
	500	11
	502	7
	505	8
	506	2
	508	8
	509	7
	511	11
	512	2
	513	11
	514	7
	516	11
	517	2
	521	11
	522	7
	527	11
	528	2
	530	11
	531	7
	534	11
	536	11
	546	3
	546	12
	558	5
	683	13
	730	44
	730	46
	732	44
	732	46
	737	36
	774	19
	775	44
01643-31032	54	3
	54	10
	61	24
	62	36
	67	32
	67	34
	68	43
	69	8
	69	10
	143	3
	143	8
	143	11
	166	3
	171	3
	171	11
	171	16
	171	20
	171	40
	173	2
	174	5
	174	14
	175	3
	175	16
	175	19
	175	26
	175	27
	175	29
	175	32
	176	3
	176	7
	176	10
	176	14
	176	17
	176	20
	176	23
	176	26
	176	30
	176	32
	176	34
	176	35
	176	37
	177	41
	180	28
	180	31
	180	35
	181	4
	182	14
	182	21
	182	26
	182	33
	182	37

PartNumber	Page	Index
	183	42
	184	7
	184	22
	184	24
	188	3
	188	7
	188	12
	188	38
	189	14
	190	13
	190	14
	191	6
	191	10
	193	3
	193	6
	193	9
	193	12
	196	21
	197	51
	198	29
	199	59
	202	2
	202	15
	206	7
	206	15
	206	31
	207	7
	207	15
	207	31
	208	7
	208	15
	208	31
	209	7
	209	15
	209	31
	210	7
	210	15
	210	22
	210	25
	210	29
	210	34
	211	39
	211	44
	212	4
	212	7
	212	11
	212	14
	212	18
	212	24
	213	6
	213	11
	213	15
	214	4
	214	10
	214	14
	214	17
	214	20
	214	24
	214	28
	215	4
	215	17
	215	30
	215	34
	215	37
	216	40
	216	43
	216	47
	217	8
	218	6
	218	13
	219	4
	219	7
	219	12
	219	14
	219	17
	219	21
	219	27
	220	4
	221	7
	221	15
	221	22
	221	25
	221	29
	221	34
	222	39
	222	44
	230	3
	230	6
	236	8
	238	9
	245	11
	245	13
	252	16
	254	22
	255	2
	255	4
	257	2
	258	4
	259	5
	259	11
	259	24
	261	13
	261	15
	261	17
	261	30
	270	3
	270	7
	271	3
	271	10
	272	10
	272	15
	272	17
	273	3
	273	7
	273	10
	273	13
	273	17
	273	20
	273	22
	273	29
	273	35
	275	15
	275	18
	275	21
	275	24
	275	27
	281	38
	285	38
	290	38
	294	38
	298	24
	299	3
	299	6
	299	9
	303	10
	306	8
	306	14
	307	48
	308	8
	308	14
	309	49
	310	8
	310	14
	311	47
	312	8
	312	14
	313	49
	326	20
	332	8
	333	17
	333	19
	335	28
	337	5
	337	11
	396	27
	401	27
	422	3
	422	6
	422	9
	428	14
	431	22
	431	26
	432	30
	432	33
	432	37
	432	40
	432	43
	432	48
	432	51
	433	11
	440	25
	441	6
	442	35
	442	38
	443	5
	444	33
	445	11
	445	14
	446	9
	447	38
	447	42
	448	9
	448	26
	448	30
	450	13
	450	16
	450	19
	450	22
	450	25
	450	28
	451	31
	451	36
	452	3
	452	5
	452	11
	453	29
	453	36
	453	42
	455	11
	457	15
	461	10
	461	13
	464	15
	470	11
	470	14
	471	9
	471	26
	471	30
	477	33
	479	3
	479	7
	484	9
	484	12
	484	15
	487	6
	488	3
	488	36
	490	3
	490	5
	490	10
	490	16
	491	11
	491	14
	491	17
	491	20

PartNumber	Page	Index
	491	23
	491	26
	498	20
	498	27
	502	5
	502	25
	502	29
	502	33
	502	37
	505	14
	506	22
	506	29
	508	14
	509	5
	509	25
	509	29
	509	33
	509	38
	511	17
	512	24
	512	31
	513	17
	514	5
	514	25
	514	29
	514	33
	514	37
	516	17
	517	9
	518	16
	518	18
	518	21
	519	41
	520	3
	520	12
	520	25
	521	17
	522	5
	522	26
	522	30
	522	34
	524	16
	524	18
	524	21
	525	41
	526	3
	526	12
	526	25
	527	17
	528	9
	529	3
	529	12
	529	25
	530	17
	531	5
	531	26
	531	30
	531	34
	533	3
	533	12
	533	25
	534	17
	535	3
	535	12
	535	24
	536	17
	537	3
	537	12
	537	24
	546	8
	546	16
	546	22
	546	26
	546	29
	546	33
	546	36
	555	20
	560	6
	563	17
	570	13
	584	3
	584	9
	586	3
	592	17
	606	3
	610	17
	633	17
	666	11
	666	33
	667	51
	667	53
	667	57
	667	60
	671	11
	671	33
	672	51
	672	53
	672	57
	672	60
	683	19
	715	26
	716	22
	716	39
	719	41
	720	17
	723	30
	724	37
	725	39
	726	37
	727	39
	730	42
	732	42
01643-31232	61	27
	61	30
	61	33
	62	40
	67	25
	67	28
	67	36
	132	5
	132	10
	133	5
	136	3
	143	6
	162	8
	162	19
	162	22
	169	8
	169	11
	171	5
	174	11
	175	10
	175	13
	175	23
	178	11
	178	18
	180	25
	181	17
	182	5
	184	27
	184	36
	188	15
	188	17
	189	3
	189	6
	189	9
	190	16
	192	4
	196	25
	198	33
	202	20
	202	23
	202	26
	202	28
	202	34
	202	37
	203	42
	203	45
	206	33
	207	33
	208	33
	209	33
	215	23
	215	27
	217	5
	220	13
	223	4
	223	9
	224	22
	225	4
	225	6
	226	4
	226	10
	226	14
	227	4
	227	10
	227	14
	228	4
	228	10
	228	14
	228	19
	228	21
	229	4
	229	10
	229	14
	229	19
	229	21
	231	4
	231	7
	235	13
	235	23
	236	31
	237	41
	239	6
	239	25
	240	4
	240	7
	242	31
	244	8
	244	17
	259	21
	260	37
	261	21
	263	7
	263	15
	264	6
	264	14
	264	16
	264	20
	265	7
	268	3
	268	9
	268	34
	270	18
	270	31
	273	25
	274	38
	274	39
	280	7
	280	23
	282	6
	284	7
	284	23
	286	6
	289	7

PartNumber	Page	Index
	289	23
	291	6
	293	7
	293	23
	295	6
	298	6
	298	9
	298	12
	298	16
	298	21
	299	12
	332	4
	333	5
	333	7
	335	9
	335	13
	335	22
	336	4
	336	9
	336	11
	336	15
	336	17
	336	22
	336	25
	336	28
	336	31
	337	8
	341	4
	341	8
	341	10
	341	14
	341	17
	341	21
	341	24
	341	27
	341	30
	341	33
	342	36
	342	39
	342	41
	342	44
	348	3
	348	7
	348	10
	348	14
	349	5
	349	9
	349	12
	349	16
	350	7
	350	10
	350	11
	351	5
	351	9
	351	12
	351	16
	351	19
	351	26
	352	7
	352	10
	352	11
	352	24
	352	27
	352	28
	354	3
	354	7
	354	10
	354	14
	354	17
	354	33
	354	35
	354	38
	354	40
	355	43
	355	46
	355	49
	356	6
	356	12
	358	13
	358	16
	358	19
	359	13
	359	16
	359	19
	359	25
	359	29
	360	13
	360	16
	360	19
	361	13
	361	16
	361	19
	361	25
	361	29
	362	32
	362	36
	363	47
	364	6
	364	36
	365	40
	365	51
	393	4
	406	22
	407	24
	445	6
	445	18
	446	6
	448	6
	448	34
	465	4
	470	6
	471	6
	476	19
	488	6
	488	9
	488	12
	488	15
	488	19
	488	22
	488	26
	488	29
	488	32
	489	39
	489	42
	489	45
	489	50
	538	25
	547	48
	548	3
	548	8
	549	3
	549	8
	553	5
	554	5
	556	27
	556	29
	557	3
	558	15
	558	20
	558	26
	560	9
	561	4
	561	5
	562	5
	562	8
	562	13
	562	16
	564	9
	564	21
	564	28
	565	6
	565	16
	565	23
	566	5
	577	12
	578	3
	578	6
	578	11
	579	31
	580	21
	582	25
	582	29
	583	6
	587	7
	588	3
	600	12
	602	35
	603	21
	605	29
	605	33
	620	38
	621	24
	624	44
	624	48
	624	52
	624	55
	625	6
	625	9
	627	40
	629	46
	629	50
	629	54
	629	57
	644	12
	646	38
	649	6
	651	35
	651	39
	652	8
	655	40
	657	37
	657	41
	658	6
	659	24
	661	21
	663	12
	664	21
	667	45
	667	48
	670	2
	670	5
	670	13
	670	15
	670	17
	672	45
	672	48
	673	4
	673	12
	674	7
	675	7
	676	4
	676	7
	677	4
	677	7
	678	7
	678	10
	679	7
	679	10
	682	23
	683	21
	699	35
	700	35
	701	35
	702	35
	705	12

PartNumber	Page	Index
	706	12
	708	28
	709	28
	710	15
	713	10
	713	13
	713	17
	713	25
	713	32
	715	28
	716	13
	716	18
	718	15
	718	18
	718	37
	719	45
	721	15
	721	18
	721	39
	723	13
	728	4
	728	6
	733	4
	733	6
	738	5
	738	17
	738	26
	738	28
	738	33
	739	5
	739	17
	739	27
	739	29
	739	34
	740	9
	740	13
	740	17
	740	21
	740	25
	740	29
	741	7
	741	13
	741	18
	741	31
	741	38
	774	5
	774	21
	774	33
	774	36
	778	3
01643-31445	190	5
	190	7
	190	10
	263	12
	538	11
	538	22
01643-31645	169	17
	197	58
	199	66
	239	11
	261	25
	265	2
	270	16
	271	6
	273	32
	276	3
	279	16
	280	19
	280	33
	281	42
	283	16
	284	19
	284	33
	285	42
	288	16
	289	19
	290	33
	290	42
	292	16
	293	19
	294	33
	294	42
	296	16
	297	16
	300	11
	301	11
	307	50
	309	51
	311	49
	313	51
	321	2
	362	26
	364	30
	552	6
	557	7
	559	2
	587	2
	587	4
	670	8
	676	9
	677	9
	678	12
	679	12
	682	13
	682	18
	714	12
	715	12
	738	8
	739	8
	741	23
01643-31845	241	6
	686	2
	699	21
	699	25
	699	28
	699	32
	700	21
	700	25
	700	28
	700	32
	701	21
	701	25
	701	28
	701	32
	702	21
	702	25
	702	28
	702	32
	703	3
	704	3
	705	4
	705	8
	706	4
	706	8
01643-32060	188	22
	279	11
	282	8
	282	10
	283	11
	286	8
	286	10
	287	2
	287	4
	288	11
	291	8
	291	10
	292	11
	295	8
	295	10
	296	11
	297	11
	325	3
	350	4
	350	20
	352	4
	352	21
	354	24
	354	28
	362	4
	362	9
	362	13
	363	40
	364	4
	364	13
	364	17
	365	44
	393	9
	465	9
	560	3
	683	32
	689	14
	690	14
	708	25
	709	25
	710	19
	711	7
	711	14
	711	30
	712	7
	712	14
	712	21
	715	24
	716	16
	716	20
	716	30
	716	34
	718	39
	720	8
	720	12
	723	21
	723	25
01643-32460	169	19
	300	2
	301	2
	538	9
	538	20
	680	3
	683	29
	708	6
	708	17
	709	6
	709	17
	716	28
	720	6
	723	19
	743	12
	744	12
	745	10
	746	12
	747	12
	747	21
01643-33380	743	17
	744	18
	745	12
	746	14
	747	19
01643-50823	248	48
	268	25
01643-51032	267	17
	267	20
	322	17
	331	15
	333	12
	335	5
	580	18

PartNumber	Page	Index
	603	18
	621	20
	647	18
	659	20
	661	18
	664	18
01643-51232	234	6
	266	15
	267	13
	268	13
	268	17
01643-51645	729	8
	731	8
01643-70623	394	10
	394	12
	394	21
	395	30
	395	35
	395	40
	395	46
	395	50
	396	4
	396	8
	397	34
	397	37
	398	4
	398	8
	399	10
	399	12
	399	21
	399	30
	399	35
	400	40
	400	46
	400	50
	401	4
	401	8
	402	34
	402	37
	403	4
	403	8
	414	3
	415	6
	417	3
	420	41
	456	4
	462	12
	462	21
	463	6
	466	10
	466	12
	466	21
	466	30
	467	35
	467	40
	467	46
	467	50
	473	8
	474	15
	475	8
	480	22
	481	4
	482	4
	494	3
	494	6
	495	5
	499	5
	504	5
	507	5
01643-70823	224	8
	224	10
	224	18
	224	20
	368	5
	368	8
	368	18
	370	5
	370	8
	370	18
	372	5
	372	8
	372	18
	374	5
	374	8
	374	18
	376	6
	378	6
	380	5
	380	8
	380	18
	382	5
	382	8
	382	18
	384	5
	384	8
	384	18
	386	5
	386	8
	386	18
	388	6
	390	6
	394	26
	395	43
	396	22
	399	26
	400	43
	401	22
	419	29
	421	4
	422	13
	427	5
	427	8
	427	11
	427	14
	427	17
	433	6
	433	9
	434	3
	434	6
	434	13
	434	24
	435	30
	435	33
	435	41
	440	20
	440	23
	454	7
	456	8
	456	11
	456	17
	459	4
	459	9
	459	13
	459	16
	459	19
	459	22
	460	36
	460	41
	460	44
	460	47
	460	50
	466	26
	467	43
	468	29
	473	10
	474	9
	494	10
	495	4
	495	12
	499	4
	504	4
	504	12
	507	4
	539	8
	539	13
	669	7
	669	14
01643-71032	368	13
	370	13
	372	13
	374	13
	380	13
	382	13
	384	13
	386	13
	404	3
	448	21
	471	21
	473	11
	474	19
	475	13
	476	3
	476	6
	539	19
	558	23
01643-71232	393	11
	405	3
	405	6
	458	5
	476	25
	477	37
	539	4
01643-71645	408	3
	553	8
	554	8
01803-02228	279	4
	283	4
	288	4
	292	4
	296	4
	297	4
02090-11270	714	17
	715	17
	716	8
	718	11
	718	25
	718	33
	721	11
	721	25
	721	33
	723	8
02290-11219	714	18
	715	18
	716	9
	718	12
	718	26
	718	34
	721	12
	721	26
	721	34
	723	9
02720-40104	236	2
02720-40204	129	5
02753-00615	268	26
02754-00405	270	8
02756-00506	346	1
02761-00206	503	41
	510	42
	515	41
	522	35
	531	35
02762-00203	335	17
02762-002A4	624	38
	629	40
02762-00303	582	21

PartNumber	Page	Index
	605	25
	624	40
	629	42
	650	31
	657	33
02762-00405	199	52
02762-00406	181	15
02763-004A3	270	28
02764-00204	582	20
	605	24
	650	30
	656	32
02764-00205	582	19
	605	23
	650	29
	656	31
02764-002A4	624	39
	629	41
02781-0021D	63	5
	101	9
	498	3
	506	3
	512	3
	520	7
	526	7
	529	7
	533	7
	535	7
	537	7
	622	50
	660	50
02781-00313	63	8
02781-00315	196	11
	198	15
02781-0031D	63	2
	101	6
	128	2
	129	3
02781-00422	245	17
	270	22
02781-00516	340	12
	602	25
	626	30
	654	30
02781-00522	188	28
02781-00628	184	15
	258	5
	268	28
	269	36
	340	21
02782-10210	309	41
	311	41
	313	41
	333	21
	333	40
	580	28
	580	35
	582	12
	582	15
	603	28
	603	35
	605	16
	605	19
	621	30
	622	37
	622	42
	623	18
	623	21
	628	20
	628	23
	649	13
	649	20
	649	25
	650	22
	650	25
	656	24
	656	27
	658	13
	658	20
	658	25
	659	30
	660	37
	660	42
	661	28
	661	35
	662	40
	664	28
	664	35
	665	40
02782-10311	306	32
	308	32
	310	32
	312	32
	354	20
02782-10420	188	31
	202	4
02782-10422	196	8
	196	31
	196	37
	198	12
	199	39
	199	45
	270	25
02782-10425	270	9
02782-10516	340	15
02782-10520	340	18
02782-10522	181	12
	198	22
	306	29
	308	29
	310	29
	312	29
02782-10628	245	14
	270	19
02782-10630	264	25
02782-10632	584	5
02783-10210	622	52
02783-10315	579	20
	602	20
	619	20
	619	25
	626	20
	626	25
	645	20
	654	20
02783-10422	306	35
	308	35
	310	35
	312	35
	645	25
	654	25
02783-10522	356	7
	774	14
02783-10628	579	15
	602	15
	619	15
	626	15
	645	15
	654	15
02789-00315	739	18
02789-00522	356	14
02896-11008	309	43
	311	43
	313	43
	333	23
	333	26
	334	42
	334	45
	498	5
	502	16
	502	19
	502	22
	506	5
	509	16
	509	19
	509	22
	512	5
	514	16
	514	19
	514	22
	518	24
	518	29
	519	34
	520	9
	522	16
	522	19
	522	22
	524	24
	524	29
	525	34
	526	9
	529	9
	531	16
	531	19
	531	22
	533	9
	535	9
	537	9
	579	6
	579	11
	580	27
	580	30
	580	32
	580	37
	581	42
	582	14
	582	17
	602	6
	602	11
	603	27
	603	30
	603	32
	603	37
	604	42
	605	18
	605	21
	619	6
	619	11
	621	29
	621	32
	621	34
	622	39
	622	44
	622	49
	622	54
	623	20
	623	23
	626	6
	626	11
	628	22
	628	25
	645	6
	645	11
	649	12
	649	15
	649	17
	649	22
	649	27
	649	30
	650	24
	650	27
	654	6
	654	11
	656	26
	656	29

PartNumber	Page	Index
	658	12
	658	15
	658	17
	658	22
	658	27
	659	29
	659	32
	659	34
	660	39
	660	44
	660	49
	661	27
	661	30
	661	32
	661	37
	662	42
	664	27
	664	30
	664	32
	664	37
	665	42
02896-11009	109	3
	196	13
	198	17
	306	34
	308	34
	310	34
	312	34
	347	5
	350	2
	350	17
	352	2
	352	17
	352	19
	354	19
	354	21
	354	26
	354	30
	579	22
	580	33
	602	22
	603	33
	619	22
	619	27
	622	35
	626	22
	626	27
	645	22
	649	18
	654	22
	658	18
	659	35
	661	33
	664	33
	738	2
	738	14
	739	2
	739	14
	741	8
	741	14
	741	19
02896-11012	108	3
	181	8
	181	10
	188	33
	196	10
	196	33
	196	39
	198	14
	199	41
	199	47
	202	5
	306	37
	308	37
	310	37

PartNumber	Page	Index
	312	37
	353	10
	354	18
	645	27
	654	27
02896-11015	181	7
	181	13
	188	24
	188	30
	188	35
	198	24
	306	31
	308	31
	310	31
	312	31
	333	36
	335	25
	340	2
	340	4
	340	6
	340	8
	340	10
	340	13
	340	16
	340	19
	343	3
	345	3
	356	8
	356	13
	602	28
	626	33
	654	33
	774	16
02896-11018	307	40
	309	40
	311	40
	313	40
	338	5
	340	22
	579	17
	602	17
	619	17
	626	17
	645	17
	654	17
02896-21008	63	7
02896-21009	63	4
	63	10
	128	4
	129	4
	129	11
02896-21018	584	7
02896-61008	101	11
02896-61009	101	8
	734	2
	735	2
	736	2
	781	
02896-61012	245	19
	270	11
	270	24
	270	27
	737	2
	737	33
	780	
	781	
02896-61015	724	2
	724	34
	726	2
	726	34
	729	2
	729	37
	730	39
	731	2
	731	37

PartNumber	Page	Index
	732	39
	781	
02896-61018	184	17
	184	19
	245	16
	258	6
	264	27
	268	22
	268	30
	269	38
	270	21
	333	29
	333	33
	333	39
	579	14
	602	14
	619	14
	626	14
	645	14
	654	14
	780	
04010-00516	406	16
	407	18
	441	13
	442	30
	443	12
	444	29
04010-00722	188	8
04020-00616	187	2
	330	4
	538	6
	538	17
04020-01024	266	13
	267	2
	267	11
	326	12
04020-01228	246	8
	246	18
	247	7
	247	16
	247	31
	249	33
	265	3
	276	4
	315	5
	316	21
	322	19
04020-01434	239	7
04025-00316	242	8
04050-11610	241	9
04050-11612	303	7
	394	13
	394	23
	395	34
	395	37
	399	13
	399	23
	399	34
	400	37
	406	12
	406	14
	407	12
	407	16
	441	22
	466	13
	466	23
	467	34
	467	37
04050-12012	394	28
	399	28
	466	28
04050-12015	303	4
	443	24
	556	33
04050-13022	302	3

PartNumber	Page	Index
	446	19
	446	24
	728	5
	733	5
	743	10
	744	10
	747	10
04050-13025	745	8
	746	10
04050-14025	553	6
	554	6
	561	6
04050-18080	728	8
	733	8
04064-01010	440	6
04064-01610	447	32
	448	17
	471	17
04064-01812	241	10
04064-03515	262	4
04064-04518	249	27
04064-05020	238	16
04064-05520	238	15
04064-06020	178	5
04064-07025	260	41
04064-07525	237	36
04064-09030	249	25
04065-01030	244	4
	250	36
	713	6
04065-01104	178	4
	734	5
	734	8
	737	5
	737	8
04065-01154	689	11
	690	11
04065-01254	249	26
04065-01610	242	29
04065-02012	332	2
04065-03212	187	17
04065-03515	328	15
04065-04018	266	9
04065-04518	187	10
04065-04818	316	11
	323	35
04065-05220	251	24
04065-05820	236	11
04065-06220	328	10
04065-06825	316	7
04065-07225	262	3
	322	27
04065-07525	249	21
04065-08025	724	5
	726	5
04065-09030	250	39
	362	18
	364	22
04070-00105	236	13
	248	46
	249	12
04071-00140	244	21
04071-00145	247	14
	259	31
04071-00160	259	6
04082-00212	713	15
	713	23
	713	30
04082-00312	362	34
	364	38
04120-21748	490	13
04205-10618	441	21
04205-10622	303	6
	394	11
	399	11
	466	11
04205-10822	443	23
04205-10828	556	31
04205-11442	446	18
04211-20634	441	23
04211-20844	443	20
04221-20634	441	19
04221-20844	443	18
04245-41487	241	11
	302	7
04248-30613	441	25
04248-30838	443	22
04250-80847	303	2
04250-81474	302	1
	446	25
04260-00635	244	14
	244	22
	249	6
	249	18
	251	6
	251	22
	259	33
04260-01270	326	6
04260-01905	282	2
	286	2
	291	2
	295	2
04418-13060	239	3
	252	8
	714	24
	715	30
	717	41
	720	19
	723	32
	746	16
	747	17
	750	6
	752	6
	753	6
	754	6
	756	6
	757	6
	761	2
	762	3
	763	3
	764	3
	765	3
	766	3
	767	3
04434-50608	368	10
	370	10
	372	10
	374	10
	380	10
	382	10
	384	10
	386	10
	392	3
04434-50610	230	4
	272	4
	307	46
	309	47
	311	45
	313	47
	332	6
	368	11
	370	11
	372	11
	374	11
	380	11
	382	11
	384	11
	386	11
04434-50612	583	4
	624	53
	625	4
	629	55
	652	5
04434-50808	368	3
	370	3
	372	3
	374	3
	380	3
	382	3
	384	3
	386	3
	775	42
04434-50810	182	35
	261	11
	303	8
	447	40
	448	28
	461	14
	471	28
04434-50812	225	15
	228	30
	229	30
	231	21
	548	6
	549	6
	625	7
04434-51008	51	8
	51	14
	438	15
04434-51010	218	11
	272	13
	273	5
	273	11
	273	18
	273	27
	273	33
	445	12
	453	40
	470	12
	474	17
	475	17
04434-51012	215	24
	223	7
	225	12
	226	12
	227	12
	228	12
	228	27
	229	12
	229	27
	231	15
	232	8
	273	23
	274	36
04434-51210	275	25
	509	35
04434-51212	582	22
	605	26
	624	46
	629	48
	650	32
	657	34
04434-51310	197	48
	199	56
	452	1
04434-51312	362	29
	364	33
04434-51410	273	4
	432	46
	445	9
	453	34
	461	6
	461	8
	470	9
	475	16

PartNumber	Page	Index
	476	31
	502	23
	505	11
	508	11
	509	23
	511	14
	513	14
	514	23
	516	14
	521	14
	527	14
	530	14
	534	14
	536	14
	539	17
04434-51412	162	20
	476	29
04434-51508	51	11
04434-51510	182	40
	432	49
04434-51610	182	24
	491	24
04434-51708	96	3
	453	45
04434-51710	176	4
	176	38
	210	13
	221	13
	396	25
	401	25
	451	34
	452	9
	453	43
	475	14
	475	15
	502	26
	509	26
	514	26
	519	39
	522	23
	525	39
	531	23
04434-51712	582	26
	605	30
	624	41
	629	43
	651	36
	657	38
04434-51810	214	15
	215	32
	273	15
	502	30
	502	34
	509	30
	509	34
	514	30
	514	34
	522	27
	522	31
	523	42
	531	27
	531	31
	532	41
04434-51910	212	5
	219	5
	272	12
	453	44
	455	9
	455	12
04434-51912	336	13
	488	4
	488	17
	488	27
	489	43
	489	48

PartNumber	Page	Index
04434-52110	182	30
	214	1
04434-52112	215	25
	546	19
	546	23
04434-52310	182	12
	210	12
	211	42
	213	4
	213	9
	221	12
	222	42
	450	14
	450	20
	450	26
04434-52312	202	18
	202	31
	202	35
	202	40
	336	6
04434-52511	171	22
	214	11
	214	25
	275	10
	275	11
	275	19
	299	7
	547	41
04434-52512	547	45
04434-52711	212	1
	212	22
	215	31
	216	38
	219	1
	219	25
	299	1
	452	26
	457	13
	464	13
	520	23
	526	23
	529	23
	533	23
	535	22
	537	22
04434-52712	202	32
	488	16
04434-53211	171	14
	213	12
	215	12
	337	3
04434-53212	336	2
	337	6
	489	46
	774	2
04434-53411	210	26
	214	8
	214	21
	216	44
	221	26
	270	4
	476	4
	479	4
	488	33
04434-53412	202	38
	488	23
04435-50610	188	1
04435-51008	438	16
04435-51210	215	15
	275	22
04435-51410	498	18
	498	25
	506	20
	506	27
	512	22

PartNumber	Page	Index
	512	29
	517	7
	520	10
	526	10
	528	7
	529	10
	533	10
	535	10
	537	10
04435-51710	451	29
04435-52112	202	24
04530-11018	314	6
	315	10
06030-06215	236	34
06030-06309	244	3
	244	10
06030-06921	236	12
06043-06214	260	39
06124-02020	241	5
	441	3
	443	2
	446	10
	448	10
	471	10
06124-03020	446	11
	448	11
	471	11
06300-06212	178	6
06300-06921	249	11
06302-32213	235	3
06330-06822	248	45
06330-06918	249	24
06340-06207	244	19
06340-06208	178	15
06340-06210	238	11
06340-06211	238	12
06340-06311	263	4
07000-02012	580	6
	603	6
	621	6
	647	3
	659	6
	661	6
	664	6
07000-02014	580	7
	603	7
	621	7
	647	4
	659	7
	661	7
	664	7
07000-02018	580	9
	603	9
	621	9
	647	6
	659	9
	661	9
	664	9
07000-02145	362	11
	364	15
07000-11003	592	14
	610	13
	633	13
07000-11005	572	26
	595	26
	614	26
	638	26
07000-11006	518	3
	524	3
07000-11007	569	14
	572	24
	591	14
	595	24
	609	14
	612	25

PartNumber	Page	Index
	614	24
	632	14
	638	24
07000-11008	185	26
	567	6
	572	33
	573	38
	575	6
	575	30
	589	6
	594	23
	595	33
	596	38
	598	6
	598	30
	607	6
	612	22
	613	23
	615	33
	615	38
	617	6
	617	30
	630	6
	635	22
	636	23
	639	33
	639	38
	641	6
	642	30
07000-11009	185	34
	575	13
	598	13
	617	13
	624	56
	629	58
	641	13
07000-12014	574	5
	597	5
	616	5
	640	5
07000-12016	572	14
	574	3
	577	15
	580	8
	595	14
	597	3
	601	15
	603	8
	614	14
	616	3
	621	8
	638	14
	640	3
	644	15
	647	5
	659	8
	661	8
	663	15
	664	8
07000-12018	498	22
	498	24
	506	24
	506	26
	512	26
	512	28
	517	4
	517	6
	526	38
	528	4
	528	6
	533	38
	537	37
07000-12020	567	5
	572	31
	589	5

PartNumber	Page	Index
	594	21
	595	31
	607	5
	612	20
	613	21
	615	31
	630	5
	635	20
	636	21
	639	31
07000-12021	324	4
07000-12075	333	8
07000-12085	196	19
	198	27
	282	3
	286	3
	291	3
	295	3
	729	16
	731	16
	781	
07000-12090	724	16
	726	16
	781	
07000-12105	689	5
	690	5
07000-12110	332	5
	737	14
	781	
07000-12120	567	3
	572	32
	589	3
	594	22
	595	32
	607	3
	612	21
	613	22
	615	32
	630	3
	635	21
	636	22
	639	32
07000-12125	735	10
	736	10
	781	
07000-12130	734	16
	781	
07000-12145	322	18
07000-13024	339	20
	575	27
	598	27
	617	27
	641	27
07000-13025	406	2
	407	2
	578	8
07000-13032	333	13
	339	4
07000-13035	322	15
	333	15
07000-13042	572	20
	595	20
	614	20
	638	20
07000-13045	335	23
07000-13050	734	6
	734	9
	737	6
	737	9
	781	
07000-15105	280	8
	284	8
	287	5
	289	8
	293	8

PartNumber	Page	Index
07000-15150	280	9
	284	9
	289	9
	293	9
07000-15160	306	6
	306	12
	308	6
	308	12
	310	6
	310	12
	312	6
	312	12
	321	3
	325	1
07000-15195	770	3
07000-15360	279	6
	283	6
	288	6
	292	6
	296	6
	297	6
07000-22018	324	2
07000-71007	254	14
	780	
07000-72015	254	13
	255	6
	780	
07000-72018	236	24
	239	13
	239	15
	243	33
	245	4
	251	29
	780	
07000-72021	242	27
	251	28
	780	
07000-72055	265	10
07000-72060	268	11
07000-72065	240	2
	780	
07000-72070	263	9
	780	
07000-72075	265	4
	265	8
07000-72080	268	6
07000-72090	264	4
	780	
07000-72095	239	23
	780	
07000-72100	264	10
	780	
07000-72105	268	1
07000-72110	264	9
	780	
07000-72130	261	32
	780	
07000-73022	236	26
	239	4
	245	9
	252	10
	252	19
	254	20
	780	
07000-73025	252	11
	255	7
	265	12
	780	
07000-73030	257	3
	261	8
	268	21
	780	
07000-73032	243	34
	258	2
	261	9

PartNumber	Page	Index
	265	11
	780	
07000-73035	255	5
	271	7
	780	
07000-73038	268	7
07000-73045	252	17
	264	18
	780	
07000-73048	268	15
07000-75065	261	26
	780	
07000-75180	236	33
	780	
07000-75210	263	16
	780	
07000-75365	236	25
	237	42
	780	
07000-75375	265	5
07000-75460	265	9
07000-A2060	254	19
	780	
07000-A3024	254	18
07000-A5165	315	4
07000-B1006	326	13
	327	4
	327	20
	329	17
07000-B1008	320	7
07000-B1009	314	3
07000-B1010	329	6
07000-B2010	327	14
07000-B2012	314	9
07000-B2030	327	19
07000-B2065	326	18
07000-B2080	729	19
	731	19
	781	
07000-B2085	724	17
	726	17
	781	
07000-B2105	737	15
	781	
07000-B2120	735	13
	736	13
	781	
07000-B2125	734	17
	781	
07000-B2130	327	5
07000-B3025	335	6
	730	47
	732	47
	781	
07000-B3040	330	1
07000-E2012	185	15
07000-E2020	185	13
07000-E2025	185	14
07000-E2110	187	1
07000-E3038	267	21
07000-F2016	185	37
07001-01003	592	15
	610	14
	633	14
07001-01005	572	27
	595	27
	614	27
	638	27
07001-01007	572	25
	595	25
	614	25
	638	25
07001-01008	320	8
07001-02014	574	6
	597	6
	616	6
	640	6
07001-02016	186	38
	572	15
	574	4
	577	16
	595	15
	597	4
	601	16
	614	15
	616	4
	638	15
	640	4
	644	16
	663	16
07001-02018	324	3
07001-02021	324	5
07002-02434	362	15
	364	19
	577	14
	601	14
	644	14
	663	14
07002-10823	202	12
	575	15
	577	6
	580	12
	598	15
	600	6
	603	12
	617	15
	621	12
	641	15
	644	6
	647	12
	659	12
	661	12
	663	6
	664	12
07002-11023	185	29
	188	27
	577	8
	579	8
	600	8
	602	8
	619	8
	626	8
	644	8
	645	8
	654	8
	663	8
07002-11223	570	11
	572	23
	572	29
	592	13
	594	27
	595	23
	595	29
	610	12
	613	27
	614	23
	614	29
	633	12
	635	26
	636	27
	638	23
	639	29
07002-11423	185	33
	306	33
	307	42
	307	44
	308	33
	309	42
	309	45
	310	33
	311	42
	312	33
	313	42
	313	45
	333	22
	333	25
	334	41
	334	44
	339	18
	354	22
	498	4
	502	15
	502	18
	502	21
	506	4
	509	15
	509	18
	509	21
	512	4
	514	15
	514	18
	514	21
	518	23
	518	26
	518	28
	518	31
	518	33
	519	36
	520	8
	522	15
	522	18
	522	21
	524	23
	524	26
	524	28
	524	31
	524	33
	525	36
	526	8
	529	8
	531	15
	531	18
	531	21
	533	8
	535	8
	537	8
	570	7
	575	18
	577	10
	579	5
	579	10
	580	26
	580	29
	580	36
	581	39
	581	41
	582	7
	582	11
	582	13
	582	16
	592	3
	598	18
	600	10
	602	5
	602	10
	603	26
	603	29
	603	36
	604	39
	604	41
	605	7
	605	11
	605	15
	605	17
	605	20

PartNumber	Page	Index
	610	3
	617	18
	619	5
	619	10
	621	13
	621	28
	621	31
	622	38
	622	41
	622	43
	622	48
	622	51
	622	53
	623	7
	623	11
	623	15
	623	17
	623	19
	623	22
	626	5
	626	10
	628	7
	628	11
	628	15
	628	19
	628	21
	628	24
	633	3
	641	18
	644	10
	645	5
	645	10
	649	11
	649	14
	649	21
	649	24
	649	26
	649	29
	650	11
	650	15
	650	19
	650	21
	650	23
	650	26
	654	5
	654	10
	656	11
	656	15
	656	19
	656	23
	656	25
	656	28
	658	11
	658	14
	658	21
	658	24
	658	26
	659	13
	659	28
	659	31
	660	38
	660	41
	660	43
	660	48
	660	51
	661	26
	661	29
	661	36
	661	39
	662	41
	663	10
	664	26
	664	29
	664	36
	665	39
	665	41
07002-11623	202	8
	322	6
	575	29
	580	13
	598	29
	603	13
	617	29
	621	14
	642	29
	647	13
	659	14
	661	13
	664	13
07002-11823	188	32
	202	6
	202	10
07002-12034	181	6
	181	11
	196	9
	196	12
	196	32
	196	35
	196	38
	198	13
	198	16
	199	40
	199	43
	199	46
	306	36
	308	36
	310	36
	312	36
	324	8
	325	5
	339	15
	340	11
	340	14
	340	17
	340	20
	569	13
	570	4
	571	10
	574	10
	579	21
	579	24
	580	16
	580	24
	580	34
	591	13
	592	6
	593	10
	594	29
	597	10
	602	21
	602	24
	602	27
	603	16
	603	24
	603	34
	609	13
	610	6
	611	10
	612	24
	613	29
	616	10
	619	21
	619	24
	619	26
	619	29
	619	31
	621	18
	621	26
	622	36
	626	21
	626	24
	626	26
	626	29
	626	32
	632	13
	633	6
	634	10
	635	28
	637	29
	640	10
	645	21
	645	24
	645	26
	645	29
	645	31
	647	16
	649	9
	649	19
	654	21
	654	24
	654	26
	654	29
	654	32
	658	9
	658	19
	659	18
	659	26
	660	36
	661	16
	661	24
	661	34
	664	16
	664	24
	664	34
07002-12434	181	14
	184	9
	184	16
	186	39
	188	25
	188	29
	198	23
	279	9
	283	9
	288	9
	292	9
	296	9
	297	9
	306	30
	306	39
	308	30
	308	39
	310	30
	310	39
	312	30
	312	39
	322	11
	333	35
	340	23
	356	9
	568	12
	569	3
	570	9
	571	4
	571	6
	572	9
	572	13
	574	2
	575	22
	579	16
	579	19
	590	12
	591	3
	592	10
	593	4
	593	8

PartNumber	Page	Index
	594	18
	595	9
	595	13
	597	2
	598	22
	602	16
	602	19
	608	12
	609	3
	610	9
	611	4
	611	8
	612	17
	613	18
	614	9
	614	13
	616	2
	617	22
	619	16
	619	19
	626	16
	626	19
	631	12
	632	3
	633	9
	634	4
	634	8
	635	17
	636	18
	638	9
	638	13
	640	2
	641	22
	645	16
	645	19
	654	16
	654	19
	774	15
07002-13034	196	15
	198	19
	324	6
07002-13334	306	27
	308	27
	310	27
	312	27
	579	2
	602	2
	619	2
	626	2
	645	2
	654	2
07002-13634	280	3
	284	3
	289	3
	293	3
07002-14234	196	26
	198	34
	339	3
07002-21023	185	3
07002-21423	63	3
	63	6
	128	3
	129	2
	187	23
07002-21823	63	9
	185	8
07002-22434	85	4
07002-23334	584	6
07002-32434	178	9
	242	18
	780	
07002-33034	242	23
	780	
07002-61023	252	14
	254	6
	254	11
	256	3
	261	6
	264	22
	275	29
	314	8
	315	9
	329	20
	331	3
	780	
07002-61223	254	28
	328	22
	780	
07002-61423	101	7
	101	10
	101	13
	254	26
	320	9
	331	8
	780	
07002-61623	236	29
	242	3
	245	2
	327	22
	329	5
	329	11
	780	
07002-61823	242	5
	254	24
	780	
07002-62034	245	18
	270	23
	270	26
	327	9
	333	32
	333	38
	780	
07002-62434	245	15
	252	4
	252	6
	258	7
	264	24
	264	26
	268	29
	269	37
	270	10
	270	20
	314	5
	333	28
	579	13
	602	13
	619	13
	626	13
	645	13
	654	13
	780	
07002-63034	256	5
	256	15
	256	23
	780	
07002-63634	240	9
	780	
07005-01012	162	15
07005-01212	171	33
	261	18
	780	
07012-50085	178	7
07012-50095	261	31
	780	
07013-70080	280	13
	284	13
	289	13
	293	13
07018-10653	235	9
07018-10854	251	26
07018-11805	248	43
	251	25
07020-00000	362	23
	364	27
	442	36
	446	3
	448	3
	471	3
	710	20
	711	22
	713	4
	713	20
	714	19
	714	20
	714	21
	715	19
	715	20
	715	21
	716	35
	720	13
	723	26
07020-00675	358	21
	359	21
	360	21
	361	21
	363	48
	365	52
	552	4
	713	26
	713	33
	719	46
	721	40
	742	40
07020-00900	241	3
	446	14
	683	10
	713	5
	713	27
07030-00252	299	13
07030-10252	178	13
07040-10807	202	11
	259	9
	580	14
	603	14
	621	15
	647	14
	659	15
	661	14
	664	14
07040-11007	185	2
	185	28
	188	26
	252	13
	261	5
	264	21
	329	19
	579	7
	602	7
	619	7
	626	7
	645	7
	654	7
07040-11409	101	12
	307	41
	307	43
	309	44
	313	44
	519	35
	621	16
	623	16
	650	20
	659	16
07040-11612	202	7
07040-11812	202	9
	242	4

PartNumber	Page	Index
	254	23
07040-12012	245	7
	324	7
	325	4
	327	8
	619	30
	645	30
07040-12412	252	3
	264	23
07040-12414	362	14
	364	18
07040-13016	196	14
	198	18
07042-20108	54	7
07043-70108	162	23
	238	5
	244	13
	710	21
	742	41
07043-70211	259	19
	263	8
07043-70312	253	4
	259	18
07044-12412	178	8
	252	5
	279	8
	283	8
	288	8
	292	8
	296	8
	297	8
	314	4
07044-13620	280	2
	284	2
	289	2
	293	2
07049-01012	255	8
	261	4
	321	4
	364	9
07049-01215	239	26
	261	3
	279	7
	280	5
	282	4
	283	7
	284	5
	286	4
	288	7
	289	5
	291	4
	292	7
	293	5
	295	4
	296	7
	297	7
	306	9
	308	9
	310	9
	312	9
	350	21
	352	30
	358	7
	359	7
	359	30
	360	7
	361	7
	361	30
	699	36
	700	36
	701	36
	702	36
	714	22
	715	22
	716	31
	720	9
	723	22
07049-01418	236	32
07049-01620	239	16
	281	39
	285	39
	287	6
	290	39
	294	39
	393	5
	465	5
07049-01822	699	37
	700	37
	701	37
	702	37
07049-02025	358	10
	359	10
	360	10
	361	10
	362	5
	364	8
07049-02228	716	36
	720	14
	723	27
07049-02430	252	2
	358	4
	359	4
	360	4
	361	4
07049-03038	261	2
07049-03342	358	5
	359	5
	360	5
	361	5
07052-31217	682	14
	684	9
	685	9
	687	9
	688	9
07055-30062	306	11
	308	11
	310	11
	312	11
07056-18422	196	3
07056-18425	198	7
07058-00010	196	27
	198	35
07059-11830	691	14
	692	14
	693	11
	694	11
	695	11
	696	14
	697	11
	698	11
07059-20721	691	15
	692	15
	693	12
	694	12
	695	12
	696	15
	697	12
	698	12
07092-01000	306	21
	308	21
	310	21
	312	21
07094-10620	268	31
	298	13
07094-30417	354	4
	740	14
07094-30620	335	11
	341	5
	341	11
	341	18
07095-00314	579	29
	602	33
	619	36
	627	38
	646	36
	655	38
07095-00317	351	24
	738	30
	739	31
07095-00318	741	29
	741	36
07095-00420	354	5
07095-00525	336	19
07095-00526	298	4
	356	4
07095-00628	268	32
	298	14
	335	10
	341	6
	341	12
	341	19
07095-01245	740	30
07095-1042B	740	15
07095-20211	176	5
	176	39
	502	27
	509	27
	514	27
	519	38
	522	24
	525	38
	531	24
	582	27
	605	31
	624	42
	629	44
	651	37
	657	39
07095-20213	502	31
	502	35
	509	31
	509	36
	514	31
	514	35
	522	28
	522	32
	523	43
	531	28
	531	32
	532	42
	546	20
	546	24
07095-20314	172	42
	182	31
	214	2
07095-20318	171	23
	214	12
	214	26
	275	12
	547	42
	547	46
07095-20419	202	30
	212	2
	219	2
	452	27
07095-20522	336	1
	337	2
	489	47
07095-20523	202	39
	774	3
07095-20625	270	5
	488	24
	488	34
07095-20627	210	27
	214	22

PartNumber	Page	Index
	216	45
	221	27
	479	5
07095-40211	96	4
07095-40420	212	21
	219	24
07095-40523	213	13
07137-05008	734	4
	734	7
	737	7
07143-10505	735	4
	736	4
07145-00050	735	5
	736	5
	781	
07145-00055	724	8
	726	8
	729	11
	731	11
	781	
07145-00065	718	23
	718	31
	721	23
	721	31
07156-00912	724	25
	726	25
	781	
07156-01112	737	26
	781	
07156-01315	734	22
	781	
07177-09040	683	2
	683	6
	683	15
07179-12074	724	10
	726	10
	729	13
	731	13
07179-12079	737	13
07179-12084	734	11
	735	7
	736	7
07206-30710	162	13
07206-30812	171	32
	261	10
07260-20922	182	23
07260-23211	298	25
07260-24111	335	18
07260-24713	268	18
07270-01025	197	42
	199	50
07270-01560	184	10
07270-21050	197	46
	199	54
07270-21530	169	20
07280-01920	184	11
07281-00167	197	47
	199	55
07281-00197	90	5
07281-00489	95	6
07283-31529	737	34
07283-32236	724	35
	726	35
	730	40
	732	40
07283-32738	184	23
07283-33442	298	22
07283-37663	54	8
07285-00110	183	44
	191	14
07285-00115	197	43
	199	51
07285-00125	162	11
	202	17
07285-00130	182	29
	182	39
07285-00155	432	45
07285-00180	169	21
07287-00812	202	16
07289-00035	72	4
	72	13
07289-00045	298	26
07289-00055	268	19
	335	19
07289-00070	182	2
	182	7
	182	16
	182	18
07289-00095	333	2
07299-00080	54	6
	184	29
	184	32
07299-00095	184	30
	184	33
07299-00120	162	4
07299-00145	162	5
07371-30640	335	3
07371-31049	333	10
07372-21030	496	5
	500	5
	505	3
	508	3
	511	5
	513	5
	516	5
	521	5
	527	5
	530	5
	534	5
	536	5
07372-21035	333	11
	335	4
07376-70315	350	16
	352	16
07700-40240	197	40
	199	48
07750-01623	242	25
07750-01628	242	26
07950-10450	772	3
07950-90403	772	1
07951-31400	772	2
07951-41017	772	4
07952-70004	772	
08000-00000	206	
	207	
	208	
	209	
08000-00001	206	
	207	
	208	
	209	
08000-32215	207	1
	208	1
08000-3222Z	206	1
	209	1
08007-23549	206	3
	207	3
	208	3
	209	3
08017-31903	197	45
	199	53
08017-71908	182	9
08017-81502	485	12
08017-81505	485	13
08017-81901	171	34
	171	37
08017-81903	485	9
08017-82203	485	6
08017-82209	485	7
08017-A1520	455	2
08017-C1001	498	7
	506	7
	512	7
	520	22
	526	22
	529	22
	533	22
08017-C1316	191	13
08017-C1502	431	6
08017-C1503	431	7
08017-C1511	431	8
08017-C2201	431	11
08017-C2202	431	12
08017-C2203	431	13
08017-C2519	431	2
08017-C2520	431	4
08023-10006	417	4
08024-11920	350	
	352	
	741	34
08024-21920	350	
	352	
	741	27
08028-64020	206	10
	207	10
	208	10
	209	10
08028-ED040	206	21
	207	21
	208	21
	209	21
	214	18
08028-FD040	173	3
08028-GD045	206	8
	207	8
	208	8
	209	8
08034-20414	740	2
	741	2
08034-20519	397	29
	397	39
	402	29
	402	39
	427	2
	427	19
	438	7
	452	8
	452	21
	455	7
	457	16
	461	7
	461	11
	462	32
	464	16
	474	22
	475	10
	477	34
	480	20
	495	8
	499	8
	504	8
	507	8
08034-20536	452	22
	476	7
08034-20876	429	33
	740	31
08034-40521	452	20
	474	20
	490	17
	583	8
	625	12
	652	10
	775	41
08036-93014	491	9
	491	15

PartNumber	Page	Index
08037-01008	455	5
08037-01610	218	14
	774	38
08037-02512	397	38
	402	38
	447	39
	448	27
	471	27
08037-03614	461	15
08037-05016	774	34
08037-12536	455	3
08038-00035	206	23
	207	23
	208	23
	209	23
	213	7
08038-00519	174	7
	175	7
	212	15
	219	18
08038-02027	174	3
	174	6
	214	5
08041-00500	450	2
08041-01000	450	3
08041-01500	450	4
08041-02000	450	5
08041-03000	450	6
08044-00600	450	7
08044-01500	450	8
08057-00810	215	14
08057-12008	215	10
	220	10
08057-12010	212	16
	215	7
	215	18
	219	10
	219	19
	220	7
08057-12012	652	6
08057-14010	546	27
	547	43
08068-00001	206	16
	207	16
	208	16
	209	16
08085-00001	457	6
	464	6
08088-30000	213	1
08103-02460	223	
08155-02400	206	26
	207	26
	208	26
	209	26
08193-20010	107	13
	143	9
	176	27
	206	29
	207	29
	208	29
	209	29
	215	2
	218	4
	220	2
	438	19
	505	15
	508	15
	511	18
	513	18
	516	18
	521	18
	527	18
	530	18
	534	18
	536	18
08193-21012	546	34
	667	49
	672	49
08193-30010	438	20
08210-00604	505	10
	508	10
	510	44
	511	13
	513	13
	515	43
	516	13
	521	13
	527	13
	530	13
	532	36
	534	13
	536	13
08210-00605	502	40
	503	43
	510	41
	515	40
	522	37
08210-00607	503	46
	522	40
08210-01205	427	21
08211-00720	177	42
	196	22
	197	53
	198	30
	199	61
	202	3
	210	16
	212	20
	215	6
	218	3
	218	10
	219	23
	220	6
	221	16
	546	17
	583	3
	625	3
	652	4
	775	40
08211-01020	210	17
	210	30
	210	35
	211	40
	212	19
	215	5
	219	22
	220	5
	221	17
	221	30
	221	35
	222	40
	519	37
	525	37
	546	18
	546	39
	583	2
	625	2
	652	3
08211-01320	210	18
	212	8
	215	13
	219	8
	221	18
	546	30
	652	2
08211-01520	210	19
	210	31
	212	9
	215	11
	219	9
	221	19
	221	31
	546	40
	547	44
08211-01920	210	36
	211	41
	221	36
	222	41
08672-01000	162	9
09002-01317	772	5
09002-03032	772	
09019-28036	772	6
09021-01725	772	7
09021-01928	772	
09021-02436	772	
09021-03246	772	10
09021-03653	772	
09022-00150	772	8
09023-00300	772	9
09024-00300	772	11
09033-00190	772	12
09056-04613	772	13
09059-00800	770	4
09205-18325	705	6
09205-18330	706	6
09241-50160	713	14
09245-04830	745	4
	746	4
	747	3
09245-24830	743	5
	744	5
09245-50060	743	4
	744	4
	745	3
	746	3
	747	2
09247-45180	743	6
	744	6
	747	4
09249-00016	743	7
	744	7
	745	5
	746	7
	747	7
09311-41237	446	21
	448	13
	471	13
	673	5
09415-00506	673	7
09415-00706	393	6
	465	6
09415-01008	393	7
	465	7
09415-02512	452	13
09415-03614	393	12
	452	12
09453-00002	673	2
09460-00000	673	10
09467-00002	674	2
	675	2
09467-00006	555	3
	563	3
	674	3
	675	3
09479-02400	431	18
	462	27
	480	15
	491	3
	491	5
	491	7
09484-00560	491	8
09485-01005	487	1
09495-40010	494	1
09601-50000	714	23
	715	29

PartNumber	Page	Index
	717	40
	720	18
	723	31
09602-08000	750	5
	754	5
09602-10002	752	5
	753	5
	756	5
	757	5
09604-05080	239	2
09608-05080	252	7
09620-A2000	761	1
	762	1
	763	1
	764	1
	765	1
	766	1
	767	1
09620-A2070	762	2
09620-A2080	764	2
09620-A2100	763	2
09620-A2110	765	2
09620-A2120	766	2
09620-A3000	767	2
09637-A0640	750	25
	754	25
09642-13000	753	28
	757	28
09642-15000	752	28
	756	28
09642-A0480	750	30
	754	30
09651-03001	753	15
	757	15
09651-05001	752	15
	756	15
09651-A0641	750	17
	754	17
09652-31241	750	28
	753	26
	754	28
	757	26
09652-51241	752	26
	756	26
09652-61241	751	33
	754	33
09653-03001	753	11
	757	11
09653-05001	752	11
	756	11
09653-A0481	750	13
	750	14
	754	13
	754	14
09654-33001	753	13
	757	13
09654-35001	752	13
	756	13
09654-B0641	750	15
	754	15
09657-03003	753	14
	757	14
09657-05003	752	14
	756	14
09657-A0881	750	16
	754	16
09659-53000	753	22
	757	22
09659-55000	752	22
	756	22
09659-A057B	750	24
	754	24
09664-20011	752	21
	756	21
09664-30011	753	21
	757	21
09664-60011	750	23
	754	23
09667-43000	753	18
	757	18
09667-45000	752	18
	756	18
09667-A0481	750	20
	754	20
09668-03001	753	12
	757	12
09668-05001	752	12
	756	12
09690-F0710	750	1
	752	1
	753	1
	754	1
	756	1
	757	1
09690-P0400	750	3
	752	3
	753	3
	754	3
	756	3
	757	3
09690-P1250	750	2
	752	2
	753	2
	754	2
	756	2
	757	2
09693-00300	404	4
09696-40108	750	8
	754	8
09696-50078	750	7
	754	7
09697-00001	206	25
	207	25
	208	25
	209	25
09802-13000	753	16
	757	16
09802-15000	752	16
	756	16
09802-B0640	750	18
	754	18
09806-B1683	750	19
	754	19
09808-03000	753	20
	757	20
09808-05000	752	20
	756	20
09808-A0881	750	22
	754	22
09812-13000	753	17
	757	17
09812-15000	752	17
	756	17
09823-00001	746	15
	747	16
09842-A0481	750	29
	752	27
	753	27
	754	29
	756	27
	757	27
09845-00480	758	1
09920-00150	76	8
	79	8
	81	15
	84	16
09960-00611	759	2
	760	2
09960-00801	759	3
	760	3
09960-00802	759	4
	760	5
09963-03001	753	19
	757	19
09963-05001	752	19
	756	19
09963-A1640	750	21
	754	21
09980-10550	771	1
09982-10057	771	2
103-15-12820	246	1
	247	24
	780	
103-15-12880	246	7
	247	5
103-15-12890	247	32
103-43-21380	241	7
103-43-21390	241	8
103-49-14280	580	1
	603	1
	621	1
	647	1
	659	1
	661	1
	664	1
104-15-25480	256	19
104-15-25490	256	17
10E-60-16330	342	42
112-860-1360	774	39
113-15-12870	247	29
	780	
113-15-29110	242	20
	780	
113-43-23230	206	36
	207	36
	208	36
	209	36
11Y-06-22150	441	4
	443	3
11Y-06-32540	473	4
	474	5
11Y-06-32550	474	4
11Y-06-32560	474	6
11Y-09-11140	171	38
	182	10
	182	27
11Y-54-13630	564	26
	565	21
11Y-54-14220	774	27
11Y-60-11530	580	5
	603	5
	621	5
	647	2
	659	5
	661	5
	664	5
11Y-62-12210	306	38
	308	38
	310	38
	312	38
11Y-62-12230	579	9
	602	9
	619	9
	626	9
	645	9
	654	9
11Y-62-31921	518	2
	524	2
11Y-62-36160	579	12
	602	12
	619	12
	626	12
	645	12
	654	12
11Y-979-2571	394	2

PartNumber	Page	Index
	399	2
	466	2
120-06-24110	452	15
120-54-42450	587	1
120-X11-1510	485	1
1240101H1	59	2
1241155H1	91	1
124-15-41910	246	12
	247	2
	247	27
	780	
124-15-41920	246	3
	247	25
	780	
124-54-62640	564	13
	564	25
	565	10
	565	20
124-62-61531	275	28
124-A62-1920	555	8
	564	5
	564	17
125-15-15290	256	18
1294859H1	91	4
1295465H92	158	
12H-15-14140	256	21
12R-60-11230	306	16
	308	16
	310	16
	312	16
12Y-06-11640	453	30
12Y-06-26710	453	46
12Y-54-26611	396	1
12Y-54-26621	401	1
12Y-54-28210	415	3
	463	3
12Y-54-28220	415	4
	463	4
12Y-978-1390	413	29
12Y-978-1410	410	
12Y-978-1420	410	1
12Y-978-1450	410	2
	412	2
12Y-978-1460	410	3
	412	3
12Y-978-1470	410	4
	412	4
12Y-978-1480	410	5
	412	5
12Y-978-1490	410	6
	412	6
12Y-978-1510	412	
12Y-978-1520	412	1
12Y-978-1550	410	7
	412	7
12Y-978-1560	410	9
	412	9
12Y-978-1570	410	10
	412	10
12Y-978-1580	410	11
	412	11
12Y-978-1590	410	12
	412	12
12Y-978-1610	410	13
	412	13
12Y-978-1620	410	14
	412	14
12Y-978-1630	410	15
	412	15
12Y-978-1640	410	8
	412	8
12Y-978-1650	410	16
	412	16
12Y-978-2160	454	2
12Y-978-2192	452	18
12Y-978-2431	396	14
12Y-978-2441	401	14
12Y-978-2490	396	17
	401	17
12Y-978-2660	398	3
	398	7
	403	3
	403	7
	418	6
	419	3
	419	7
	419	35
	462	6
	462	13
	462	16
	462	22
	468	3
	468	7
	469	35
	480	6
	480	10
	480	23
12Y-978-2890	481	2
	482	2
12Y-978-3210	394	8
	399	8
	466	8
12Y-978-3261	394	25
12Y-978-3271	399	25
	466	25
12Y-978-3281	394	14
	399	14
	406	19
	407	21
	466	14
12Y-978-3290	394	15
	399	15
	406	18
	407	20
	466	15
12Y-978-3310	394	22
	395	33
	395	36
	399	22
	399	33
	399	36
	466	22
	467	33
	467	36
12Y-978-3360	394	27
	399	27
	466	27
12Y-978-3480	395	41
	400	41
	467	41
12Y-979-1850	453	37
130-09-12370	358	20
	359	20
	360	20
	361	20
130-09-12911	362	20
	364	24
130-30-12170	705	9
	706	9
130-30-12180	705	10
	706	10
130-30-13170	682	11
1304891H1	84	15
130-63-12761	724	31
	726	31
	729	30
	731	30
	737	31
130-69-11190	745	2
	746	2
130-70-13241	708	7
	708	18
	709	7
	709	18
1307596H1	84	11
1307674H1	84	9
1307682H1	59	1
130-98-79210	759	1
	760	1
131-69-11120	743	2
	744	2
131-69-11130	743	3
	744	3
134-01-61840	85	2
	184	12
134-03-61410	182	11
	191	15
134-03-73750	484	3
134-13-64220	263	1
134-22-66140	245	3
134-22-79320	244	5
134-32-05010	781	K08
134-32-61221	693	15
	694	15
	695	15
	781	
134-43-72490	446	12
134-54-78370	456	5
134-62-63720	774	10
134-62-72600	181	9
134-69-13140	747	1
134-72-62442	716	23
	720	1
	723	14
134-72-62474	716	32
	720	10
	723	23
134-72-71151	716	26
	720	4
	723	17
134-72-72450	716	24
	720	2
	723	15
134-72-72460	716	25
	720	3
	723	16
135-03-12110	190	8
135-06-34260	397	40
	402	40
135-12-31230	178	14
135-30-14620	683	17
13F-98-11210	776	1
13F-98-11220	776	2
13F-Z27-5610	711	8
	711	24
	712	8
	712	15
13G-32-05010	781	K09
13G-32-61210	695	14
	781	
13G-72-61410	718	9
	721	9
13G-72-61420	716	5
	723	5
13G-72-63250	718	10
	721	10
140-901-6250	280	24
	284	24
	290	24
	294	24
141-30-00616	689	
	690	
142-43-13180	447	33
	448	18
	471	18

PartNumber	Page	Index
144-10-12180	263	10
144-14-54610	573	35
	575	2
	596	35
	598	2
	615	35
	617	2
	639	35
	641	2
144-15-21191	248	39
144-32-21191	693	8
	694	8
	695	8
	697	8
	698	8
144-43-81620	666	37
	671	37
144-60-15431	724	7
	726	7
	729	10
	731	10
144-60-15450	724	6
	726	6
	729	9
	731	9
144-69-11120	743	1
	744	1
144-69-11161	743	11
	744	11
	747	11
144-69-11210	746	5
	747	5
144-69-11230	746	6
	747	6
144-70-15171	358	2
	359	2
	360	2
	361	2
144-70-15251	552	3
144-817-0670	711	
	712	
144-817-1260	714	9
	715	9
144-817-2280	711	17
144-817-2420	711	3
	711	18
	712	3
144-817-2570	711	4
	712	4
144-874-7470	261	16
144-920-1780	714	10
	715	10
144-920-2122	711	23
145-13-21730	238	13
145-14-11320	246	16
	247	23
	248	36
145-14-11571	248	38
145-14-12780	247	20
145-14-12790	246	6
	246	17
	247	6
14S-27-11270	292	20
14X-01-31630	165	1
14X-01-35180	169	6
14X-01-51131	169	14
14X-01-51141	169	15
	173	4
14X-01-51150	169	7
14X-01-51570	160	3
	164	2
14X-01-51630	162	2
14X-01-61111	169	3
14X-01-61121	169	4
14X-01-61150	169	10
14X-01-61210	67	20
14X-01-61220	67	26
14X-01-61230	67	29
14X-01-61240	67	37
14X-01-61250	68	40
14X-01-61270	68	41
14X-01-61281	67	21
14X-01-61290	67	22
14X-01-61311	169	22
14X-01-61320	61	22
14X-01-61330	61	34
14X-01-61340	61	25
14X-01-61350	61	28
14X-01-61360	62	37
14X-01-61371	61	31
	62	38
14X-01-61411	171	1
14X-01-61421	171	6
14X-01-61431	171	12
14X-01-61470	171	8
	171	17
14X-01-61490	171	21
14X-01-61521	160	2
14X-01-61530	555	18
	563	15
14X-01-61541	164	1
14X-01-61551	162	6
14X-01-61561	162	3
14X-01-61621	184	28
14X-01-61641	162	17
14X-01-61670	162	10
14X-01-61811	171	36
14X-01-61821	171	35
14X-01-61870	172	41
14X-01-65150	169	2
	169	13
	300	4
	301	4
14X-01-65171	169	5
14X-03-35570	484	4
14X-03-35760	191	8
14X-03-51320	188	34
14X-03-51341	192	1
14X-03-51451	189	4
14X-03-51461	189	7
14X-03-51610	190	2
14X-03-51621	180	18
14X-03-51640	180	20
14X-03-51770	180	19
14X-03-51780	191	4
14X-03-61101	180	
14X-03-61111	180	9
14X-03-61121	180	14
14X-03-61131	180	1
14X-03-61141	184	1
14X-03-61160	181	2
14X-03-61172	181	1
14X-03-61180	190	11
14X-03-61191	182	22
14X-03-61201	184	
14X-03-61211	182	1
14X-03-61221	182	15
14X-03-61231	182	6
14X-03-61251	184	31
14X-03-61261	182	8
14X-03-61271	191	12
14X-03-61291	182	19
14X-03-61310	188	13
14X-03-61350	192	2
14X-03-61361	191	3
14X-03-61371	191	7
14X-03-61411	180	26
14X-03-61421	180	29
14X-03-61430	180	32
14X-03-61441	189	1
14X-03-61491	189	10
14X-03-61520	180	11
14X-03-61531	180	13
14X-03-61540	180	15
14X-03-61550	180	16
14X-03-61560	180	17
14X-03-61570	180	2
14X-03-61580	180	3
14X-03-61590	180	4
14X-03-61670	182	3
	184	34
14X-03-61711	184	5
14X-03-61720	182	38
14X-03-61731	166	1
14X-03-61740	180	22
14X-03-61751	180	23
14X-03-61770	182	28
14X-03-61780	182	17
14X-03-61791	182	34
14X-03-61821	184	2
14X-03-61831	184	3
14X-03-61841	184	20
14X-03-61850	193	1
14X-03-61860	193	4
14X-03-61870	193	7
14X-03-61880	193	10
14X-03-61890	180	33
14X-03-61911	180	12
14X-03-61920	180	5
14X-03-61930	180	6
14X-03-61940	180	7
14X-03-61950	358	8
	359	8
	360	8
	361	8
14X-03-61960	358	9
	359	9
	360	9
	361	9
14X-03-61970	189	11
14X-03-61980	189	12
14X-03-61991	183	43
14X-04-21620	196	36
	199	44
14X-04-21660	196	28
	198	36
14X-04-31510	774	6
14X-04-31530	774	8
14X-04-31570	774	11
14X-04-51112	196	1
	198	1
14X-04-51131	196	23
	198	31
14X-04-51170	197	57
	199	65
	307	49
	309	50
	311	48
	313	50
14X-04-51211	202	21
14X-04-51270	197	44
14X-04-51311	108	1
14X-04-51321	109	2
14X-04-51330	197	55
	199	63
14X-04-51420	196	16
	198	20
14X-04-51431	198	21
14X-04-51441	774	13
14X-04-51490	196	17
	198	25
14X-04-51620	774	1
14X-04-61221	202	13
14X-04-61231	200	
14X-04-61241	200	1

PartNumber	Page	Index
14X-04-61251	200	2
14X-04-61281	200	3
14X-04-61450	203	43
14X-04-61460	203	46
14X-06-12270	206	24
	207	24
	208	24
	209	24
14X-06-12280	206	9
	206	11
	207	9
	207	11
	208	9
	208	11
	209	9
	209	11
14X-06-31502	439	31
14X-06-33380	223	5
14X-06-35221	174	2
14X-06-51140	445	8
	470	8
14X-06-51151	438	14
14X-06-51230	197	52
	199	60
14X-06-51271	583	1
14X-06-51311	273	1
14X-06-51321	273	8
14X-06-51341	273	30
14X-06-51370	417	2
14X-06-51431	450	11
14X-06-51490	196	18
	198	26
14X-06-51520	455	6
14X-06-51591	210	32
	221	32
14X-06-51691	464	1
14X-06-51710	414	10
14X-06-51811	625	1
14X-06-51821	624	49
	629	51
14X-06-52171	452	19
14X-06-52191	457	1
14X-06-52461	452	16
14X-06-52491	462	25
	480	13
14X-06-52631	414	11
14X-06-52661	414	13
14X-06-52730	666	
	671	
14X-06-52740	414	12
14X-06-52750	452	23
14X-06-52760	452	24
14X-06-52780	505	12
	508	12
	511	15
	513	15
	516	15
	521	15
	527	15
	530	15
	534	15
	536	15
14X-06-52830	206	22
	207	22
	208	22
	209	22
14X-06-53160	476	20
14X-06-53170	476	26
14X-06-53250	475	6
14X-06-53280	476	10
	476	13
	476	21
14X-06-53290	474	7
	476	22
	476	27

PartNumber	Page	Index
14X-06-53310	476	23
14X-06-53350	476	11
	476	14
	476	28
14X-06-53370	476	1
14X-06-53420	475	2
14X-06-53430	475	3
14X-06-53440	475	4
14X-06-53450	475	5
14X-06-53510	474	3
14X-06-53520	475	18
14X-06-61111	214	29
	272	5
14X-06-61151	454	13
14X-06-61161	474	21
14X-06-61172	475	1
14X-06-61212	210	1
	221	1
14X-06-61222	174	1
14X-06-61241	220	1
14X-06-61261	210	2
	221	2
14X-06-61281	213	8
14X-06-61291	210	3
	221	3
14X-06-61471	505	18
	508	18
14X-06-61561	210	4
14X-06-61571	210	20
	221	20
14X-06-61581	210	23
	221	23
14X-06-61610	210	37
	221	37
14X-06-61621	175	30
14X-06-61631	143	1
14X-06-61641	174	9
14X-06-61651	143	4
14X-06-61671	175	1
14X-06-61681	217	3
14X-06-61721	224	5
	224	15
14X-06-61731	174	4
14X-06-61741	224	6
	224	16
14X-06-61761	224	4
	224	14
14X-06-61781	546	13
14X-06-61851	473	1
14X-06-61911	478	1
14X-06-62111	206	2
	207	2
	208	2
	209	2
14X-06-62121	206	4
	207	4
	208	4
	209	4
14X-06-62241	216	41
14X-06-62251	479	1
14X-06-62261	206	5
	207	5
	208	5
	209	5
14X-06-62270	174	18
14X-06-62482	206	34
	207	34
	208	34
	209	34
14X-06-62591	652	1
14X-06-62811	206	13
	207	13
14X-06-62840	206	19
	207	19
	208	19

PartNumber	Page	Index
	209	19
14X-06-62950	221	4
14X-06-62960	208	13
	209	13
14X-06-62980	774	37
14X-06-62991	218	2
14X-06-63110	549	1
14X-06-63180	476	9
14X-06-63191	175	8
14X-06-63212	175	11
14X-06-63251	176	15
14X-06-63291	143	12
14X-06-63311	477	35
14X-06-63320	476	12
14X-06-63331	476	15
14X-06-63350	476	17
14X-06-63360	476	16
14X-06-63391	473	5
14X-06-63570	450	10
14X-06-63611	218	9
14X-06-63620	176	21
14X-06-63631	176	8
14X-06-63640	174	21
14X-06-63660	231	13
	231	18
	232	6
	232	11
14X-06-63712	215	1
14X-06-63721	215	28
14X-06-63730	215	35
14X-06-63770	454	1
14X-06-63780	459	24
14X-06-63790	459	23
14X-06-63810	459	28
14X-06-63833	473	3
14X-06-63841	474	1
14X-06-63850	473	12
14X-06-63860	473	13
14X-06-65471	174	15
14X-09-51110	279	13
	283	13
	288	13
	292	13
	296	13
	297	13
14X-09-51120	280	29
	284	29
	290	29
	294	29
14X-09-51130	280	14
	284	14
	289	14
	293	14
14X-09-51140	280	16
	284	16
	289	16
	293	16
14X-10-11712	264	1
14X-10-11721	264	3
14X-12-11102	178	1
14X-12-11210	178	2
14X-12-11411	178	3
14X-12-51110	178	16
14X-13-05040	780	K06
14X-13-12550	261	7
14X-13-14241	263	5
14X-13-51001	259	
	261	
	262	
	263	
	264	
14X-13-51120	259	8
14X-13-51212	260	38
14X-13-51240	259	3
14X-13-51351	260	35

PartNumber	Page	Index
14X-13-51360	234	8
	261	22
14X-13-51610	259	
14X-13-52210	259	12
14X-13-52220	259	30
14X-13-52260	259	29
14X-13-52620	259	1
14X-13-53111	261	1
14X-13-53260	261	19
14X-13-53350	261	28
14X-13-54320	263	3
14X-13-54330	262	1
14X-13-54341	263	13
14X-13-54411	259	17
14X-13-57111	259	22
14X-13-57210	259	25
14X-15-05181	780	K03
14X-15-05190	780	K04
14X-15-05210	780	K05
14X-15-12910	247	30
14X-15-12960	251	14
14X-15-15850	256	4
	256	22
14X-15-16210	256	20
14X-15-19210	248	42
	780	
14X-15-22421	251	10
14X-15-22710	246	11
	246	20
	247	9
	247	19
	247	34
14X-15-22740	247	26
14X-15-22750	246	15
	247	3
14X-15-22770	247	28
14X-15-22780	246	10
	246	19
	247	8
	247	18
	247	33
14X-15-29220	247	15
	780	
14X-15-29230	248	37
	780	
14X-15-29410	251	3
14X-15-29440	251	11
14X-15-29510	249	10
14X-15-29520	249	23
	251	8
	251	16
14X-15-29530	249	9
14X-15-29540	249	32
14X-15-29610	249	20
14X-15-51001	246	
	247	
	249	
	251	
	252	
	253	
	254	
	255	
	256	
	257	
	258	
14X-15-51111	252	1
14X-15-51130	246	2
14X-15-51140	246	13
14X-15-51150	247	1
14X-15-51160	247	10
14X-15-51170	247	22
14X-15-51181	248	35
14X-15-52111	253	1
14X-15-52120	253	5
14X-15-52140	249	34

PartNumber	Page	Index
14X-15-52151	249	7
14X-15-52160	250	37
14X-15-52170	248	44
14X-15-52211	249	28
14X-15-52220	249	29
14X-15-52240	249	30
14X-15-52250	249	31
14X-15-52311	249	13
14X-15-52320	249	1
14X-15-52330	251	17
14X-15-52340	251	9
14X-15-52351	251	1
14X-15-52370	248	41
14X-15-52420	249	2
14X-15-52430	251	18
14X-15-52510	249	17
	251	21
14X-15-52520	249	5
14X-15-52550	251	5
14X-15-52560	251	4
14X-15-52610	249	22
14X-15-52620	249	8
14X-15-52630	247	17
14X-15-52640	251	15
14X-15-52651	251	7
14X-15-52660	246	9
14X-15-52710	246	5
14X-15-55501	254	
14X-15-55511	254	1
14X-15-55520	251	27
14X-15-56121	258	1
14X-15-56130	252	9
14X-15-56140	252	12
14X-15-59310	250	35
14X-15-59320	251	23
14X-15-59330	250	38
14X-15-59410	249	3
14X-21-13130	237	37
14X-21-13241	237	38
14X-21-51341	358	11
	359	11
	360	11
	361	11
14X-21-51350	778	1
14X-21-51361	358	17
	359	17
	360	17
	361	17
	588	1
14X-21-51371	358	14
	359	14
	360	14
	361	14
14X-21-51380	300	5
	301	5
14X-21-51450	358	3
	359	3
	360	3
	361	3
14X-21-53170	300	8
14X-21-61104	358	1
14X-21-61700	360	1
14X-21-62204	359	1
14X-21-62400	361	1
14X-22-05011	780	K01
14X-22-05020	780	K02
14X-22-16170	239	12
14X-22-50002	235	
	236	
	238	
	239	
	240	
	241	
	242	
	244	

PartNumber	Page	Index
	245	
	246	
	247	
	249	
	251	
	252	
	253	
	254	
	255	
	256	
	257	
	258	
	259	
	261	
	262	
	263	
	264	
	265	
	266	
	267	
	268	
	270	
	271	
	272	
	273	
	275	
	276	
14X-22-51000	235	
	236	
	238	
	239	
	240	
	241	
	242	
	244	
	245	
14X-22-51111	276	1
14X-27-00051	279	
	283	
	288	
	292	
	296	
	297	
14X-27-00221	279	
	280	
	282	
	288	
	289	
	291	
14X-27-00231	283	
	284	
	286	
	292	
	293	
	295	
14X-27-00260	282	
	289	
	291	
	296	
14X-27-00270	286	
	293	
	295	
	297	
14X-27-00280	288	
	292	
	296	
	297	
14X-27-00390	280	
	284	
	289	
	293	
14X-27-15112	296	2
	297	2
14X-27-15211	279	2
	283	2

PartNumber	Page	Index
	288	2
	292	2
14X-27-51111	280	1
	289	1
14X-27-51121	284	1
	293	1
14X-27-51140	279	1
	283	1
	288	1
	292	1
	296	1
	297	1
14X-27-51150	279	5
	283	5
	288	5
	292	5
	296	5
	297	5
14X-27-51180	282	1
	286	1
	291	1
	295	1
14X-27-51190	280	4
	284	4
	289	4
	293	4
14X-27-51230	280	25
	284	25
	290	25
	294	25
14X-27-51240	280	28
	284	28
	290	28
	294	28
14X-27-51250	280	35
	284	35
	290	35
	294	35
14X-27-51260	280	15
	284	15
	289	15
	293	15
14X-27-51270	280	21
	284	21
	289	21
	293	21
14X-27-51280	280	20
	284	20
	289	20
	293	20
14X-27-51310	280	30
	284	30
	290	30
	294	30
14X-27-51320	279	12
	283	12
	288	12
	292	12
	296	12
	297	12
14X-27-51330	279	14
	283	14
	288	14
	292	14
	296	14
	297	14
14X-27-51350	280	36
	284	36
	290	36
	294	36
14X-27-51420	292	19
14X-27-52211	359	26
	361	26
14X-27-52221	359	27
	361	27

PartNumber	Page	Index
14X-27-52230	282	9
	286	9
	287	3
14X-27-55131	290	34
	294	34
14X-27-55132	280	34
	284	34
14X-27-55160	280	27
	284	27
	290	27
	294	27
14X-30-00127	687	
14X-30-00136	688	
14X-30-00143	690	
14X-30-00431	682	
14X-30-01041	689	
14X-30-01050	684	
14X-30-01060	685	
14X-30-11D52	699	5
	699	6
	699	12
	699	13
	700	5
	700	6
	700	12
	700	13
	701	5
	701	6
	701	12
	701	13
	702	5
	702	6
	702	12
	702	13
14X-30-12164	682	3
14X-30-12181	682	2
14X-30-12232	682	6
	682	8
14X-30-12252	682	16
14X-30-13164	683	14
14X-30-13340	684	2
	685	2
	687	2
	688	2
14X-30-14152	684	3
	685	3
	687	3
	688	3
14X-30-14161	684	8
	685	8
	687	8
	688	8
14X-30-14170	684	10
	685	10
	687	10
	688	10
14X-30-14311	687	1
14X-30-14321	688	1
14X-30-14331	684	4
	685	4
	687	4
	688	4
14X-30-14410	684	1
14X-30-14420	685	1
14X-30-15131	689	4
	690	4
14X-30-15140	689	2
	690	2
14X-30-15212	690	1
14X-30-15222	689	3
	690	3
14X-30-15240	689	6
	690	6
14X-30-15251	689	9
	690	9

PartNumber	Page	Index
14X-30-15310	689	1
14X-30-26230	705	5
14X-30-27230	706	5
14X-30-33170	683	11
14X-30-51131	699	1
	701	1
14X-30-51141	699	10
	701	10
14X-30-51191	364	7
14X-30-51231	700	1
	702	1
14X-30-51241	700	10
	702	10
14X-30-51331	699	2
	699	15
	700	2
	700	15
	701	2
	701	15
	702	2
	702	15
14X-30-51341	699	4
	699	16
	700	4
	700	16
	701	4
	701	16
	702	4
	702	16
14X-30-51380	683	27
14X-30-51390	699	22
	700	22
	701	22
	702	22
14X-30-51410	699	29
	700	29
	701	29
	702	29
14X-30-51420	682	15
14X-30-51440	699	19
	699	26
	700	19
	700	26
14X-30-51470	682	19
14X-30-51490	683	22
14X-30-51511	682	5
14X-30-51521	682	7
14X-30-51531	683	1
14X-30-51551	683	4
14X-30-51561	683	3
14X-30-51580	683	5
14X-30-51621	705	1
14X-30-51631	705	2
14X-30-51650	699	7
	699	14
	700	7
	700	14
	701	7
	701	14
	702	7
	702	14
14X-30-51660	364	3
14X-30-51710	706	1
14X-30-51720	706	2
14X-30-51C71	699	3
	699	11
	700	3
	700	11
	701	3
	701	11
	702	3
	702	11
14X-32-00260	697	
14X-32-00270	698	
14X-32-02830	693	

PartNumber	Page	Index
14X-32-02840	694	
14X-32-02850	695	
14X-32-03331	692	
14X-32-05010	780	K07
14X-32-08010	693	
	694	
	695	
	697	
	698	
14X-32-08020	693	
	694	
	695	
	697	
	698	
14X-32-08210	691	
	692	
	696	
14X-32-08220	691	
	692	
	696	
14X-32-11140	693	9
	694	9
	695	9
	697	9
	698	9
14X-32-11350	693	17
	694	17
	697	13
14X-32-12200	693	7
	694	7
	695	7
	697	7
	698	7
14X-32-13150	693	10
	694	10
	695	10
	697	10
	698	10
14X-32-15310	691	20
	692	20
	696	16
14X-32-15380	692	16
	692	19
14X-32-15500	691	7
	692	7
	696	7
14X-32-15510	691	8
	692	8
	696	8
14X-32-15610	691	1
	692	1
	696	1
14X-32-15630	691	2
	692	2
	696	2
14X-32-15640	691	11
	692	11
	696	11
14X-32-15650	691	12
	692	12
	696	12
14X-32-15680	691	10
	692	10
	696	10
14X-32-15701	691	9
	692	9
	696	9
14X-32-15730	691	13
	692	13
	696	13
14X-32-51110	695	13
	695	16
14X-32-51120	693	13
	693	16
14X-32-52120	693	1

PartNumber	Page	Index
	694	1
	695	1
	697	1
	698	1
14X-32-52130	693	2
	694	2
	695	2
	697	2
	698	2
14X-43-12110	446	1
14X-43-12410	446	27
14X-43-13760	445	7
	448	1
	470	7
	471	1
14X-43-32210	446	13
14X-43-32220	446	16
14X-43-32230	446	17
14X-43-34310	496	4
	500	4
14X-43-48111	495	2
	499	2
	504	2
	507	2
14X-43-51111	271	1
14X-43-51120	303	1
14X-43-51350	496	8
	500	8
	505	5
	508	5
	511	8
	513	8
	516	8
	521	8
	527	8
	530	8
	534	8
	536	8
14X-43-51370	496	9
	500	9
	505	6
	508	6
	511	9
	513	9
	516	9
	521	9
	527	9
	530	9
	534	9
	536	9
14X-43-51421	441	9
14X-43-51431	441	10
14X-43-51461	303	11
	442	33
14X-43-51470	441	2
14X-43-51511	446	2
14X-43-51521	448	2
	471	2
14X-43-51541	445	3
	470	3
14X-43-51551	446	4
14X-43-51561	448	4
	471	4
14X-43-51571	446	7
	448	7
	471	7
14X-43-51581	448	12
	471	12
14X-43-51590	446	15
14X-43-51631	447	34
14X-43-51651	447	35
	448	23
	471	23
14X-43-51661	440	7
14X-43-51681	440	8

PartNumber	Page	Index
14X-43-51721	443	8
14X-43-51741	441	26
14X-43-51791	443	25
14X-43-51810	448	19
	471	19
14X-43-51821	448	22
	471	22
14X-43-51840	443	13
14X-43-51850	445	2
	470	2
14X-43-51860	445	4
	470	4
14X-43-51870	447	36
	448	24
	471	24
14X-43-51911	505	1
	508	1
14X-43-51970	439	29
14X-43-51980	439	34
14X-43-61211	436	1
14X-43-61412	441	1
14X-43-61452	441	27
14X-43-61490	445	15
14X-43-61500	436	
14X-43-61610	445	1
	470	1
14X-43-61711	443	1
14X-43-61730	443	9
14X-43-61750	443	26
14X-43-61990	445	16
14X-43-62120	436	3
14X-43-62130	436	4
14X-43-62140	436	5
14X-43-62150	436	6
14X-43-62510	440	26
14X-43-66121	511	1
	513	1
14X-43-66131	534	1
	536	1
14X-43-66141	516	1
	521	1
14X-43-66151	527	1
	530	1
14X-49-12310	264	7
14X-49-12320	264	11
14X-49-12330	264	8
14X-49-12340	264	12
14X-49-12411	264	2
14X-49-51110	268	10
14X-49-51120	268	14
14X-49-51130	268	20
14X-49-51141	270	1
14X-49-51151	271	4
14X-49-51161	268	35
14X-49-51211	275	1
	299	14
14X-49-51221	275	9
14X-49-51231	275	8
14X-49-51241	275	7
14X-49-51251	275	6
14X-49-51261	298	17
14X-49-51271	275	30
	299	10
14X-49-51311	271	8
14X-49-51320	299	4
14X-49-51330	268	27
14X-49-51512	264	17
14X-49-51520	272	2
14X-49-51601	268	4
14X-49-51611	268	5
14X-49-51880	184	14
14X-49-52170	298	7
14X-49-52180	298	10
14X-49-52211	298	18
14X-49-52231	584	1

PartNumber	Page	Index
14X-49-61400	584	4
14X-49-61410	770	1
14X-49-61420	300	3
	301	3
14X-49-62111	264	28
	298	1
14X-49-62120	298	2
14X-49-62141	184	18
14X-50-00111	364	
14X-50-35140	566	3
14X-50-51121	363	44
	365	48
14X-50-51131	363	45
	365	49
14X-50-51181	363	41
	365	45
14X-50-51241	362	37
	365	41
14X-50-51251	362	38
	365	42
14X-50-51530	362	33
	364	37
14X-50-61291	362	28
	364	32
14X-54-12590	559	3
14X-54-12750	673	8
14X-54-12770	673	9
14X-54-12960	564	7
	564	19
	565	4
	565	14
	667	43
	672	43
	774	29
14X-54-26640	273	26
14X-54-32820	555	17
	563	14
14X-54-36631	440	21
14X-54-51111	554	1
14X-54-51121	553	1
14X-54-51130	553	2
	554	2
14X-54-51280	733	1
14X-54-51291	728	1
14X-54-52251	556	3
	556	16
14X-54-52351	562	2
	562	10
14X-54-52390	556	30
14X-54-52440	556	4
	556	17
14X-54-52470	556	7
	556	20
14X-54-52540	562	3
	562	11
14X-54-52550	555	12
	563	10
14X-54-52931	556	2
	556	14
14X-54-53281	666	31
	671	31
14X-54-53301	668	1
14X-54-53321	298	19
14X-54-53341	666	2
	671	2
14X-54-53360	668	2
14X-54-53380	667	52
	672	52
14X-54-53390	668	5
14X-54-53420	669	5
14X-54-53440	669	12
14X-54-53451	585	1
14X-54-53470	669	2
	669	9
14X-54-53480	669	3
	669	10
14X-54-53511	674	1
14X-54-53521	675	1
14X-54-53530	674	4
	675	4
14X-54-53540	585	2
14X-54-53560	666	3
	671	3
14X-54-53570	666	4
	671	4
14X-54-53580	666	5
	671	5
14X-54-53611	673	1
14X-54-53710	666	6
	671	6
14X-54-53720	666	7
	671	7
14X-54-53740	666	8
	671	8
14X-54-53760	666	38
	671	38
14X-54-53770	668	4
14X-54-53840	667	42
	672	42
	774	28
14X-54-53850	667	46
	672	46
14X-54-53860	666	24
	671	24
14X-54-53871	774	
14X-54-53891	774	25
14X-54-53930	774	17
14X-54-53940	774	24
14X-54-53950	774	23
14X-54-54121	676	2
	677	2
	678	5
	679	5
14X-54-54131	676	5
	677	5
	678	8
	679	8
14X-54-54310	556	8
	556	21
	666	12
	671	12
	774	22
14X-54-54320	556	9
	556	22
14X-54-55130	359	22
	361	22
14X-54-55140	359	23
	361	23
14X-54-56111	538	1
14X-54-56121	538	2
14X-54-56131	538	12
14X-54-56141	538	13
14X-54-56160	457	17
	464	17
14X-54-56191	538	7
	538	18
14X-54-56213	538	23
14X-54-56291	459	1
14X-54-56341	539	5
14X-54-56361	460	33
14X-54-56411	460	42
14X-54-56421	462	1
	480	1
14X-54-56443	459	17
14X-54-56451	460	39
14X-54-56460	539	6
14X-54-56491	459	2
	460	34
14X-54-56591	495	16
	499	12
	504	16
	507	12
14X-54-56661	495	9
	504	9
14X-54-56670	495	10
	504	10
14X-54-56780	538	4
	538	15
14X-54-56891	481	1
14X-54-61212	558	
14X-54-61222	558	1
14X-54-61241	558	21
14X-54-61252	558	17
14X-54-61261	558	18
14X-54-61321	215	21
14X-54-61331	558	24
14X-54-61341	215	19
14X-54-61351	220	11
14X-54-61361	558	10
14X-54-61470	555	5
	563	5
14X-54-61511	555	15
	563	12
14X-54-61630	558	13
14X-54-62103	563	
14X-54-62113	563	1
14X-54-62121	557	1
14X-54-62141	561	2
14X-54-62151	561	1
14X-54-62160	555	9
	563	7
14X-54-62171	555	11
	563	9
14X-54-62181	555	10
	563	8
14X-54-62191	555	6
	563	6
14X-54-62213	556	1
14X-54-62222	556	13
14X-54-62250	556	12
	556	25
14X-54-62331	562	6
14X-54-62341	562	14
14X-54-62371	562	1
14X-54-62381	562	9
14X-54-62412	565	1
14X-54-62422	565	11
14X-54-62431	564	2
	565	2
14X-54-62441	556	5
14X-54-62451	556	18
14X-54-62461	556	19
14X-54-62471	556	6
14X-54-62511	560	1
14X-54-62562	555	13
	563	11
14X-54-62611	560	4
14X-54-62621	555	2
	563	2
14X-54-62661	564	15
	565	12
14X-54-63112	566	1
14X-54-63121	566	2
14X-54-63191	586	1
	606	1
14X-54-63212	666	1
	671	
14X-54-63221	666	9
	671	9
14X-54-63261	670	6
14X-54-63280	667	58
	672	58
14X-54-63401	669	1
14X-54-63490	669	4
	669	11

PartNumber	Page	Index
14X-54-63501	669	8
14X-54-63671	558	8
14X-54-63681	558	9
14X-54-63741	667	55
	672	55
14X-54-63831	564	6
	564	18
	565	3
	565	13
14X-54-63960	671	1
14X-54-63971	667	54
	672	54
14X-54-63981	670	11
14X-54-64111	677	1
14X-54-64211	676	1
14X-54-66320	539	1
14X-54-66361	459	10
14X-54-66380	459	14
14X-54-66430	435	31
14X-54-66441	459	7
14X-54-66470	460	45
14X-54-66620	539	2
14X-54-66891	482	1
14X-54-67110	457	10
	464	10
14X-60-12120	578	7
14X-60-31150	306	2
	308	2
	310	2
	312	2
	770	2
14X-60-51112	306	1
	308	1
	310	1
	312	1
14X-60-51131	306	5
	308	5
	310	5
	312	5
14X-60-51141	306	10
	308	10
	310	10
	312	10
14X-60-51151	306	
	308	
	310	
	312	
14X-60-51161	306	15
	308	15
	310	15
	312	15
14X-60-51171	306	24
	308	24
	310	24
	312	24
14X-60-51211	578	1
14X-60-51230	306	25
	308	25
	310	25
	312	25
14X-62-11460	350	18
14X-62-32540	188	36
	335	26
14X-62-35531	181	5
14X-62-51111	338	3
14X-62-51121	338	4
14X-62-51131	340	1
14X-62-51141	340	5
14X-62-51151	340	3
14X-62-51161	340	7
14X-62-51191	341	31
14X-62-51221	342	37
14X-62-51230	341	28
	342	34
14X-62-51271	341	22

PartNumber	Page	Index
14X-62-51281	353	3
14X-62-51481	353	5
14X-62-51491	354	8
14X-62-51510	348	12
	349	14
14X-62-51520	354	12
14X-62-51530	354	11
14X-62-51541	354	15
14X-62-51551	353	1
14X-62-51561	741	1
14X-62-51571	353	2
14X-62-51581	353	4
14X-62-51591	741	9
14X-62-51611	741	24
14X-62-51621	347	1
14X-62-51631	347	2
14X-62-51651	354	23
14X-62-51661	354	27
14X-62-51670	354	31
14X-62-51680	354	36
14X-62-51722	347	3
14X-62-51732	353	6
14X-62-51742	353	7
14X-62-51752	347	4
14X-62-51762	353	8
14X-62-51772	353	9
14X-62-51780	354	1
14X-62-51790	355	47
14X-62-51811	741	32
14X-62-51842	741	10
14X-62-51852	741	15
14X-62-51860	741	4
14X-62-51871	740	7
14X-62-51880	740	11
14X-62-51891	740	10
14X-62-51912	740	22
14X-62-51932	740	26
14X-62-51941	349	2
	351	2
14X-62-51961	349	1
	351	1
14X-62-51971	350	1
	352	1
14X-62-51980	350	5
	352	5
14X-62-52161	738	18
	739	19
14X-62-52171	738	21
	739	22
14X-62-52182	738	24
	739	25
14X-62-52211	350	13
	352	13
14X-62-52231	350	8
	352	8
14X-62-52291	738	1
	739	1
14X-62-52321	741	39
14X-62-52351	333	1
14X-62-52361	333	3
14X-62-52371	333	9
14X-62-52380	333	14
14X-62-52391	579	26
	602	30
	619	33
	626	35
	645	33
	655	35
14X-62-52410	335	1
14X-62-52421	335	2
14X-62-52431	333	27
14X-62-52441	335	14
14X-62-52451	335	15
14X-62-52471	275	16
14X-62-52480	335	24

PartNumber	Page	Index
14X-62-52491	270	29
14X-62-52511	335	16
14X-62-52521	582	18
	605	22
	650	28
	656	30
14X-62-52541	579	27
	602	31
	619	34
	627	36
	645	34
	655	36
14X-62-52552	335	7
14X-62-52571	333	37
14X-62-52621	341	1
14X-62-52631	348	5
	349	7
	351	7
14X-62-52651	741	26
14X-62-52680	741	3
14X-62-52690	740	4
14X-62-52710	740	3
14X-62-52731	352	25
14X-62-52741	740	1
14X-62-52761	333	31
14X-62-52771	738	31
	739	32
14X-62-52781	741	11
	741	16
14X-62-52790	741	5
14X-62-52810	351	14
14X-62-52821	740	27
14X-62-52870	343	2
	345	2
14X-62-52881	348	1
	349	3
	351	3
14X-62-52890	348	8
	349	10
	351	10
14X-62-52911	348	11
	349	13
	351	13
14X-62-52921	333	34
14X-62-52931	579	23
	602	23
	619	23
	619	28
	626	23
	626	28
	645	23
	645	28
	654	23
	654	28
14X-62-52940	579	25
	602	29
	619	32
	626	34
	645	32
	654	34
14X-62-52951	306	26
	308	26
	310	26
	312	26
14X-62-52960	580	19
	603	19
	661	19
	664	19
14X-62-52971	621	22
	649	7
	658	7
	659	22
14X-62-52981	580	22
	661	22
14X-62-52991	602	26

PartNumber	Page	Index
	626	31
	654	31
14X-62-53101	498	6
14X-62-53151	498	28
	512	32
	517	10
14X-62-53351	498	29
	512	33
	517	11
14X-62-53361	498	30
	512	34
	517	12
14X-62-53510	345	1
14X-62-53531	582	1
	605	1
	623	1
	628	1
14X-62-53541	582	8
	605	8
	605	12
	622	45
	623	8
	623	12
	628	8
	628	12
	628	16
	650	12
	656	12
	656	20
	660	45
14X-62-53551	580	
	603	
	661	
	664	
14X-62-53561	580	2
	603	2
	661	2
	664	2
14X-62-53581	350	14
	352	14
14X-62-53611	738	9
	739	9
14X-62-53621	738	11
	739	11
14X-62-53640	355	41
14X-62-53650	355	44
14X-62-53710	623	25
	628	27
14X-62-53721	623	28
	628	30
14X-62-53751	506	31
	528	11
14X-62-53770	623	32
	628	34
14X-62-53780	623	35
	629	37
14X-62-53820	503	42
	522	36
14X-62-53830	503	45
	522	39
14X-62-53840	350	15
	352	15
14X-62-53931	532	37
	535	15
	537	15
14X-62-53941	520	15
	526	15
14X-62-53950	498	8
	506	8
	506	15
14X-62-53961	529	15
	533	15
14X-62-53980	520	14
	526	14
	529	14
	533	14
	535	14
	537	14
14X-62-54110	623	24
	628	26
14X-62-54121	623	27
	628	29
14X-62-54131	506	6
14X-62-54141	506	30
	528	10
14X-62-54150	623	31
	628	33
14X-62-54160	623	34
	629	36
14X-62-54171	506	14
14X-62-54370	344	1
14X-62-54401	518	1
	524	1
14X-62-54421	518	14
	524	14
14X-62-54431	518	19
	524	19
14X-62-54441	520	26
	526	26
	529	26
	533	26
	535	25
	537	25
14X-62-54451	520	28
	526	28
	535	27
	537	27
14X-62-54461	520	31
	526	31
14X-62-54471	520	34
	526	34
14X-62-54511	498	17
	506	19
	512	21
14X-62-54521	621	
	659	
14X-62-54531	621	2
	659	2
14X-62-54540	621	21
	659	21
14X-62-54551	352	18
14X-62-54560	352	22
14X-62-54580	351	17
14X-62-54681	624	50
	629	52
14X-62-54690	335	20
14X-62-54710	334	43
14X-62-54731	336	26
14X-62-54741	348	4
	349	6
	351	6
14X-62-54750	624	37
	629	39
14X-62-54760	498	13
	506	16
	512	15
14X-62-54781	351	20
14X-62-54791	351	21
14X-62-54810	498	12
14X-62-54820	498	9
	512	8
14X-62-54840	740	6
14X-62-54850	740	5
14X-62-54860	506	32
	528	12
14X-62-54870	579	4
	602	4
	619	4
	626	4
	645	4
	654	4
14X-62-54880	350	22
14X-62-54910	740	23
14X-62-54940	650	1
	650	6
	656	1
	656	6
14X-62-54950	650	16
	656	16
14X-62-54960	582	4
	605	4
	623	4
	628	4
14X-62-54980	738	20
	738	23
	739	21
	739	24
14X-62-54990	350	
	352	
14X-62-55170	520	1
	526	1
	529	1
	533	1
	535	1
	537	1
14X-62-55180	535	30
	537	30
14X-62-55190	535	32
	537	32
14X-62-55210	529	31
	533	31
14X-62-55220	529	33
	533	33
14X-62-55230	529	28
	533	28
14X-62-55290	343	1
14X-62-55320	529	4
	533	4
14X-62-55330	520	5
	526	5
	535	5
	537	5
14X-62-55340	520	6
	526	6
	529	5
	533	5
	535	6
	537	6
14X-62-55350	529	6
	533	6
14X-62-55360	526	36
	533	36
	537	35
14X-62-55410	520	13
	526	13
14X-62-55420	535	13
	537	13
14X-62-55430	529	13
	533	13
14X-62-55440	520	16
	526	16
14X-62-55450	520	17
	526	17
	529	16
	533	16
14X-62-55470	535	16
	537	16
14X-62-55480	535	17
	537	17
14X-62-55490	529	17
	533	17
14X-62-55560	650	
	656	
14X-62-61171	341	25
14X-62-61311	336	18

PartNumber	Page	Index
14X-62-61321	337	1
14X-62-61331	336	5
14X-62-61341	336	12
14X-62-61351	336	23
14X-62-61362	337	9
14X-62-61420	336	29
14X-62-61830	741	20
14X-62-61920	740	18
14X-62-62611	341	15
14X-62-62621	341	2
14X-62-63101	512	6
14X-62-63660	338	1
14X-62-63670	338	2
14X-62-63860	741	21
14X-62-63950	512	9
14X-62-64760	512	16
14X-62-64811	512	14
14X-62-64920	740	19
14X-62-65310	520	4
	526	4
	535	4
	537	4
14X-62-65701	647	
14X-62-65711	647	9
14X-62-65721	649	4
	658	4
14X-62-65741	651	40
	657	42
14X-62-65751	651	41
	657	43
14X-62-65761	651	43
	657	45
14X-62-65771	651	44
	657	46
14X-69-11110	743	14
14X-69-11120	743	15
14X-69-11210	744	14
14X-69-11220	744	15
14X-69-51101	745	1
14X-69-51201	746	1
14X-69-61111	747	14
14X-69-61121	747	15
14X-71-00030	552	
14X-71-11E20	711	16
14X-71-12230	708	11
	708	22
	709	11
	709	22
14X-71-12240	714	13
	715	13
14X-71-13111	711	15
14X-71-51102	714	1
14X-71-51122	714	4
	715	2
14X-71-51132	714	5
	715	3
14X-71-51151	714	6
	715	4
14X-71-51161	714	7
	715	5
14X-71-51171	714	8
	715	6
14X-71-53110	552	1
14X-71-53311	708	1
14X-71-53321	708	12
	709	12
14X-71-53340	708	26
	709	26
14X-71-53611	709	1
14X-71-61101	715	1
14X-72-51120	716	2
	718	2
	721	7
	723	2
14X-72-51131	716	3
	718	3
	721	8
	723	3
14X-72-51161	713	21
	713	29
14X-72-51172	713	22
14X-72-51201	710	1
14X-72-51241	710	6
14X-72-51251	710	2
14X-72-51261	710	3
14X-72-51271	710	4
14X-72-51281	710	5
14X-72-51290	713	18
14X-72-51311	713	1
14X-72-51331	713	8
14X-72-51341	713	11
14X-72-51352	713	3
14X-72-51360	713	19
14X-72-51372	713	2
14X-72-51390	710	16
	718	35
	721	35
14X-72-51530	716	37
	720	15
	723	28
14X-72-51610	716	4
	723	4
14X-72-51731	710	12
14X-72-51741	710	13
14X-72-54101	721	1
14X-72-54131	718	4
	721	2
14X-72-54141	718	5
	721	3
14X-72-54151	718	6
	721	4
14X-72-54161	718	7
	721	5
14X-72-54241	718	28
	721	28
14X-72-54251	718	32
	721	32
14X-72-54340	718	20
	721	20
14X-72-54351	718	24
	721	24
14X-72-54410	719	43
	721	37
14X-72-54420	719	42
	721	36
14X-72-54430	718	22
	718	30
	721	22
	721	30
14X-72-54470	719	47
	722	41
14X-72-54D20	718	8
	718	21
	718	29
	721	6
	721	21
	721	29
14X-72-61150	721	13
	723	10
14X-72-61192	716	10
	718	13
14X-72-61381	716	11
	718	16
	721	16
	723	11
14X-72-61421	710	17
14X-72-61501	723	1
14X-72-61690	716	14
14X-72-64101	718	1
14X-72-64170	719	48
	722	42
14X-72-64201	718	27
	721	27
14X-72-64301	718	19
	721	19
14X-72-64501	716	1
14X-78-11490	502	2
	509	2
	514	2
	522	2
	531	2
14X-78-21180	503	49
	510	49
	515	48
	526	39
	533	39
	537	38
14X-78-51112	502	1
	509	1
	514	1
	522	1
	531	1
14X-78-51131	502	3
	509	3
	514	3
	522	3
	531	3
14X-78-51141	502	8
	509	8
	514	8
	522	8
	531	8
14X-78-51171	356	10
14X-78-51181	356	1
14X-78-51191	356	2
14X-78-51281	502	39
	509	40
	514	39
14X-78-51291	502	12
	509	12
	514	12
	522	12
	531	12
14X-78-51410	502	38
	509	39
	514	38
14X-78-51421	510	46
	515	45
	532	39
14X-78-51431	510	43
	515	42
	532	
14X-911-1690	396	3
	396	7
	401	3
	401	7
14X-911-1761	396	2
	396	6
	401	2
	401	6
14X-911-7670	428	15
	487	2
14X-911-8520	666	29
	671	29
14X-911-8534	490	18
14X-952-5170	714	2
	715	7
14X-952-5370	714	3
	715	8
14X-958-1510	680	1
14X-98-11170	750	4
	752	4
	753	4
	754	4
	756	4

PartNumber	Page	Index
	757	4
14X-98-35120	753	25
	757	25
14X-98-35150	752	25
	756	25
14X-98-35181	750	9
	752	7
	753	7
	754	9
	756	7
	757	7
14X-98-35320	752	23
	756	23
14X-98-51120	752	29
	753	29
	756	29
	757	29
14X-98-51260	751	34
	755	34
14X-98-61131	750	10
	752	8
	753	8
	754	10
	756	8
	757	8
14X-98-61211	754	12
	756	10
	757	10
14X-98-61221	750	12
	752	10
	753	10
14X-98-61231	750	11
	752	9
	753	9
	754	11
	756	9
	757	9
14X-98-61260	752	30
	753	30
	756	30
	757	30
14X-98-61270	751	35
	755	35
14X-98-61280	752	31
	753	31
	756	31
	757	31
14X-98-61290	751	36
	755	36
14X-98-61311	540	1
14X-98-61321	541	1
14X-98-61331	542	1
14X-98-61341	543	1
14X-98-61351	544	1
14X-98-61361	545	1
14X-98-61510	760	4
14X-A62-5440	678	2
	679	4
14X-A62-6113	555	
14X-A62-6123	555	1
14X-A62-6312	564	1
14X-A62-6332	564	14
14X-A62-6411	679	1
14X-A62-6421	678	3
	679	2
14X-A62-6431	679	3
14X-A62-6511	678	1
14X-A62-6520	564	3
14X-A62-6530	564	4
14X-A62-6550	564	16
14X-A62-6560	555	7
14X-A62-6581	555	14
14X-A62-6591	678	4
14X-Y11-1141	429	34
14X-Y11-1151	428	16
14X-Y11-1171	430	7
14X-Y11-1181	430	11
14X-Y11-1191	430	17
14X-Y11-1211	430	22
14X-Y11-1231	487	3
14X-Y11-1241	428	11
14X-Y11-1250	428	17
14X-Y11-1260	430	18
	430	23
14X-Y11-1410	490	6
14X-Y11-1421	491	2
14X-Y11-1490	433	2
14X-Y11-1580	487	4
14X-Y11-1611	434	15
14X-Y11-1681	488	30
14X-Y11-1731	546	14
14X-Y11-1760	484	7
14X-Y11-1790	432	38
14X-Y11-1822	666	25
	671	25
14X-Y11-1931	428	18
14X-Y11-1941	430	8
14X-Y11-2110	546	1
14X-Y11-2121	546	6
14X-Y11-2140	546	37
14X-Y11-2160	546	9
14X-Y11-2170	546	10
14X-Y11-3111	433	1
14X-Y11-3150	488	37
14X-Y11-3221	490	1
14X-Y11-3272	666	26
	671	26
14X-Y11-3351	485	4
14X-Y11-3361	485	8
14X-Y11-3371	485	11
14X-Y11-3431	491	4
14X-Y11-3440	491	12
14X-Y11-3471	666	27
	671	27
14X-Y11-3481	666	28
	671	28
14X-Y11-3630	491	18
14X-Y11-3641	491	21
14X-Y11-3661	488	7
14X-Y11-3671	488	13
14X-Y11-3691	488	20
14X-Y11-3761	484	13
14X-Y11-3920	484	10
14X-Y11-3971	560	7
14X-Y11-3981	488	1
14X-Y11-6210	428	26
14X-Y11-6220	428	27
14X-Y11-6230	428	28
14X-Y11-6240	428	2
14X-Y11-6250	428	3
14X-Y11-6260	428	4
14X-Y11-6270	428	5
14X-Y11-6280	428	6
14X-Y11-6290	430	2
14X-Y11-6310	434	8
14X-Y11-6320	434	26
14X-Y11-6330	434	27
14X-Y11-6340	434	28
14X-Y11-6350	539	10
14X-Y11-6360	539	11
14X-Y11-6370	428	25
14X-Y11-6381	539	9
14X-Y11-6390	434	9
14X-Y11-6410	428	24
14X-Y11-6420	428	1
14X-Y11-6430	430	1
14X-Y11-6440	434	7
14X-Y11-6450	434	25
14X-Y79-1241	462	9
	462	18
14X-Y79-1311	409	1
14X-Y79-1321	409	2
14X-Y79-1340	409	4
14X-Y79-1361	396	10
14X-Y79-1371	401	10
14X-Y79-1380	396	11
	401	11
14X-Y79-1390	396	12
	401	12
14X-Y79-1400	410	
14X-Y79-1410	396	13
	401	13
14X-Y79-1430	410	
14X-Y79-1440	410	17
14X-Y79-1450	412	
14X-Y79-1460	412	17
14X-Y79-1500	412	
14X-Y79-1511	226	1
	227	1
	228	1
	229	1
14X-Y79-1521	226	8
	227	8
	228	8
	229	8
14X-Y79-1531	226	2
	227	2
	228	2
	229	2
14X-Y79-1541	422	1
14X-Y79-1551	422	4
14X-Y79-1561	422	7
14X-Y79-1570	414	22
14X-Y79-1580	414	23
14X-Y79-1611	455	1
14X-Y79-2132	419	27
	468	27
14X-Y79-2151	421	5
14X-Y79-2161	418	13
14X-Y79-2190	420	43
	469	40
14X-Y79-2211	419	30
	468	30
14X-Y79-2222	419	32
	468	32
14X-Y79-2230	430	12
14X-Y79-2241	430	13
14X-Y79-2250	414	1
14X-Y79-2280	452	17
14X-Y79-2290	408	13
14X-Y79-2310	430	27
14X-Y79-2350	418	8
14X-Y79-2621	418	1
14X-Y79-2641	420	40
14X-Y79-2650	418	9
14X-Y79-3130	394	7
	399	7
	466	7
14X-Y79-3220	394	17
14X-Y79-3230	399	17
	466	17
14X-Y79-3240	398	6
14X-Y79-3250	403	6
14X-Y79-3261	398	10
	403	10
14X-Y79-3280	396	21
14X-Y79-3310	395	44
	400	44
	467	44
14X-Y79-3350	398	11
	403	11
14X-Y79-3360	394	18
	399	18
	466	18
14X-Y79-3451	422	10

PartNumber	Page	Index
14X-Y79-3461	422	11
14X-Y79-3472	397	32
14X-Y79-3482	402	32
14X-Y79-3511	406	1
14X-Y79-3521	407	1
14X-Y79-3531	406	7
	407	7
14X-Y79-3551	406	8
	407	8
14X-Y79-3581	406	13
14X-Y79-3591	407	13
14X-Y79-3611	406	17
14X-Y79-3621	407	19
14X-Y79-3631	422	14
14X-Y79-3651	394	24
14X-Y79-3661	399	24
	466	24
14X-Y79-3671	404	1
14X-Y79-3681	406	6
	407	6
14X-Y79-3711	494	4
14X-Y79-3721	494	8
14X-Y79-3731	494	7
14X-Y79-3770	397	35
14X-Y79-3780	402	35
14X-Y79-6111	231	8
	232	1
14X-Y79-6131	418	20
14X-Y79-6140	418	21
14X-Y79-6150	418	22
14X-Y79-6160	418	23
14X-Y79-6170	421	2
14X-Y79-6290	401	21
14X-Y79-6340	452	14
14X-Y79-6410	405	1
14X-Y79-6420	405	4
14X-Y79-6490	408	1
14X-Y79-6790	419	2
	419	6
	468	2
	468	6
14X-Y79-6810	394	1
14X-Y79-6820	395	47
14X-Y79-6830	400	47
	467	47
14X-Y79-6910	399	1
	466	1
14X-Z11-9670	491	1
14Y-21-13160	300	6
	301	6
14Y-21-13171	301	8
14Y-21-13190	300	9
	301	9
14Y-21-13210	300	7
	301	7
14Y-21-23150	237	39
14Y-22-14160	277	2
	278	2
14Y-22-21161	235	11
14Y-22-21170	235	8
14Y-22-21180	235	
14Y-22-21190	235	
14Y-22-22110	238	1
14Y-22-22150	238	2
14Y-22-22161	236	5
14Y-22-22170	244	11
14Y-22-22181	244	20
14Y-22-22221	238	10
14Y-22-22231	244	12
14Y-22-22290	236	1
14Y-22-22311	244	1
14Y-22-22321	244	9
14Y-22-22330	244	18
14Y-22-22340	236	4
14Y-22-22360	238	7
14Y-22-22370	236	3
14Y-22-22380	238	3
14Y-22-23110	236	14
14Y-22-23121	236	6
14Y-22-23130	236	21
14Y-22-23140	236	15
14Y-22-23150	236	16
14Y-22-23160	236	17
14Y-22-23170	236	22
14Y-22-23180	236	23
14Y-22-23310	236	20
	780	
14Y-22-24111	236	9
14Y-22-24130	236	18
14Y-22-24190	236	10
14Y-22-25830	235	21
14Y-22-25840	235	
14Y-22-25850	235	
14Y-22-25880	235	15
14Y-22-26180	239	14
14Y-22-37420	239	21
14Y-22-37440	239	19
14Y-22-37470	239	20
	780	
14Y-22-51122	235	1
14Y-22-51130	235	10
14Y-22-52100	242	
14Y-22-54120	277	1
14Y-22-54130	278	1
14Y-22-54260	244	2
14Y-22-55111	239	1
14Y-22-55120	236	27
14Y-22-55142	241	1
14Y-22-55510	239	17
14Y-22-55522	239	18
14Y-22-55800	235	
14Y-22-56240	245	8
14Y-22-58110	270	12
14Y-22-58140	270	13
14Y-30-00210	362	
	364	
14Y-30-11277	699	33
	700	33
	701	33
	702	33
14Y-30-18111	362	10
	364	14
14Y-30-18121	362	7
	364	11
14Y-30-18130	699	8
	699	17
	700	8
	700	17
	701	8
	701	17
	702	8
	702	17
14Y-30-18140	699	9
	699	18
	700	9
	700	18
	701	9
	701	18
	702	9
	702	18
14Y-30-18150	362	6
	364	10
14Y-30-18160	362	2
	364	2
14Y-30-26140	703	1
14Y-30-27130	701	19
	701	26
	702	19
	702	26
14Y-30-27140	704	1
14Y-32-00301	696	
14Y-32-03001	691	
14Y-32-11360	694	13
	694	16
14Y-32-15340	691	16
	691	19
14Y-49-21110	240	1
14Y-49-21120	240	5
14Y-50-00012	362	
14Y-50-11240	362	22
	364	26
14Y-50-11250	362	17
	364	21
14Y-50-11323	362	21
	364	25
14Y-50-11390	362	24
	364	28
14Y-50-11460	362	19
	364	23
14Y-62-11420	738	3
	739	3
14Y-62-11440	738	15
	739	15
14Y-62-31431	738	13
	739	13
14Y-71-00082	708	
14Y-71-00092	708	
	709	
14Y-71-11210	714	14
	715	14
14Y-71-11330	714	16
	715	16
	716	6
	723	6
14Y-71-11340	714	15
	715	15
	716	7
	723	7
14Y-71-12131	708	2
	708	13
	709	2
	709	13
14Y-71-12160	738	6
	739	6
14Y-71-12170	708	9
	708	20
	709	9
	709	20
14Y-71-13110	711	1
	712	1
14Y-71-13120	711	2
	711	19
	712	2
14Y-71-13181	708	10
	708	21
	709	10
	709	21
14Y-71-13320	552	2
14Y-71-22151	708	4
	708	15
	709	4
	709	15
14Y-71-22280	708	8
	708	19
	709	8
	709	19
14Y-Y79-2290	408	9
14Z-12-31310	178	19
	234	7
14Z-22-15221	242	28
14Z-40-11220	242	19
14Z-40-11320	242	6
14Z-40-11330	242	7
14Z-40-11340	242	9
14Z-40-11350	242	14

PartNumber	Page	Index
14Z-40-11360	242	17
14Z-40-11371	242	13
14Z-40-11380	242	12
14Z-40-12102	242	
14Z-40-12211	242	24
14Z-43-12411	241	4
	302	8
14Z-43-12421	241	2
14Z-71-33212	708	23
	709	23
150-30-13430	683	26
150-30-13442	683	23
150-30-13460	683	25
150-30-13480	683	24
154-03-00050	188	
154-03-13180	188	19
154-03-72270	188	10
154-06-81122	450	1
154-06-81131	457	11
	464	11
154-15-12550	238	6
154-21-71420	358	6
	359	6
	360	6
	361	6
154-22-22280	238	4
154-22-62220	235	18
154-22-65820	235	14
154-22-65860	235	17
154-22-65890	235	16
154-27-12320	279	3
	283	3
	288	3
	292	3
	296	3
	297	3
154-27-72320	280	31
	284	31
	290	31
	294	31
154-27-72331	280	17
	284	17
	289	17
	293	17
154-30-73170	683	8
154-32-21323	693	14
	694	14
	781	
154-32-41412	695	17
	698	13
154-32-71220	691	18
	692	18
	780	
154-43-73531	438	3
154-43-73560	438	4
154-43-73670	440	9
154-43-73680	440	10
154-43-89131	495	13
	499	9
	504	13
	507	9
154-54-89110	456	9
154-54-89121	456	6
154-54-89131	499	1
	507	1
154-54-89140	495	1
	504	1
154-911-7842	493	
154-911-8140	484	6
154-911-8911	431	5
154-911-8921	431	10
154-911-8931	431	9
154-911-8941	431	14
154-911-8950	431	3
154-911-8960	431	1

PartNumber	Page	Index
154-98-75370	750	32
	754	32
154-Z11-8111	393	1
	465	1
155-30-13230	682	20
155-61-15350	214	6
	272	6
156-76-11961	68	39
175-03-42140	670	18
175-15-11230	247	21
175-15-56470	256	24
175-54-27350	188	20
175-54-28770	188	21
175-54-34170	585	4
	670	10
	670	21
176-06-42170	394	20
	399	20
	406	27
	407	27
	466	20
176-911-4160	215	20
17A-03-14111	191	1
17A-03-14120	191	2
17A-04-11191	197	56
	199	64
17A-04-41190	196	
	198	
17A-04-41331	196	34
	199	42
17A-04-41411	196	2
	198	2
17A-06-17931	224	1
	224	11
	225	8
	226	5
	227	5
	228	5
	228	23
	229	5
	229	23
	666	34
	671	34
17A-06-17970	224	2
	224	12
	225	9
	226	6
	227	6
	228	6
	228	24
	229	6
	229	24
	666	35
	671	35
17A-06-17980	224	3
	224	13
	225	10
	226	7
	227	7
	228	7
	228	25
	229	7
	229	25
	666	36
	671	36
17A-06-41981	447	30
	448	15
	471	15
17A-06-42210	414	5
17A-06-42220	414	6
17A-06-42240	223	1
17A-06-51143	461	5
17A-06-51252	231	14
	232	7
17A-06-51262	225	11

PartNumber	Page	Index
	228	26
	229	26
17A-06-51421	226	11
17A-06-51422	227	11
	228	11
	229	11
17A-06-51432	223	6
17A-06-51521	454	3
17A-06-51530	454	4
17A-06-51571	460	29
17A-06-51650	457	2
	464	2
17A-06-51661	457	3
	464	3
17A-06-51721	454	5
17A-06-51780	453	38
17A-06-51950	225	13
	228	28
	229	28
	231	19
	548	4
	549	4
17A-06-51971	223	2
17A-06-52142	396	24
17A-06-52152	401	24
17A-13-24490	262	2
17A-13-46200	254	2
17A-15-22191	237	35
17A-43-24160	302	9
	447	29
17A-43-24170	302	5
17A-43-42240	502	9
	509	9
	514	9
	522	9
	531	9
17A-43-42310	459	11
17A-43-43150	438	5
17A-43-46270	496	7
	500	7
	502	11
	505	20
	508	20
	509	11
	511	7
	513	7
	514	11
	516	7
	521	7
	522	11
	527	7
	530	7
	531	11
	534	7
	536	7
17A-43-46281	495	15
	499	11
	504	15
	507	11
17A-43-46291	495	14
	499	10
	504	14
	507	10
17A-43-46380	495	19
	499	15
	504	19
	507	15
17A-43-46581	458	2
17A-43-46591	458	3
17A-43-46741	505	19
	508	19
	511	4
	513	4
	516	4
	521	4

PartNumber	Page	Index
	527	4
	530	4
	534	4
	536	4
17A-43-46760	438	
17A-43-46810	438	8
17A-43-46831	436	17
17A-43-46860	440	1
17A-43-46870	436	18
17A-43-46880	436	19
17A-43-46890	436	20
17A-43-51840	441	14
17A-49-19940	171	9
	171	18
17A-54-46440	538	5
	538	16
17A-54-51271	459	20
17A-54-51511	456	1
17A-54-51531	456	13
17A-54-51550	456	2
17A-54-51910	495	26
	499	22
	504	26
	507	22
17A-57-51130	368	2
	370	2
	372	2
	374	2
	380	2
	382	2
	384	2
	386	2
17A-57-51171	368	9
	370	9
	372	9
	374	9
	380	9
	382	9
	384	9
	386	9
17A-57-51181	368	6
	370	6
	372	6
	374	6
	380	6
	382	6
	384	6
	386	6
17A-57-51191	368	16
	370	16
	372	16
	374	16
	376	4
	378	4
	380	16
	382	16
	384	16
	386	16
	388	4
	390	4
17A-57-51211	392	1
17A-57-51230	392	2
17A-57-51240	368	14
	370	14
	372	14
	374	14
	376	2
	378	2
	380	14
	382	14
	384	14
	386	14
	388	2
	390	2
17A-57-51250	368	15
	370	15
	372	15
	374	15
	376	3
	378	3
	380	15
	382	15
	384	15
	386	15
	388	3
	390	3
17A-57-52100	372	1
	373	
	384	1
	385	
17A-57-52190	368	19
	370	19
	384	19
	386	19
17A-57-52200	374	1
	375	
	386	1
	387	
17A-57-52300	376	1
	377	
	388	1
	389	
17A-57-52390	388	7
	390	7
17A-57-52400	378	1
	379	
	390	1
	391	
17A-57-52500	368	1
	369	
	380	1
	381	
17A-57-52600	370	1
	371	
	382	1
	383	
17A-911-1671	485	2
17A-911-4421	431	24
	431	28
	489	40
17A-911-4810	486	
17A-911-5211	434	1
17A-911-5221	434	4
17A-911-5261	427	18
17A-911-5331	427	6
17A-911-5411	434	14
17A-911-5421	430	4
17A-911-5431	435	36
17A-911-5471	435	37
17A-911-5481	427	12
17A-911-5550	434	22
17A-911-5561	434	11
17A-911-5591	433	4
17A-911-5611	435	43
17A-911-5641	433	7
17A-911-5651	434	10
17A-911-5660	453	47
17A-911-5670	434	19
17A-911-5682	539	16
17A-911-5721	435	38
17A-911-5731	435	39
17A-911-5740	435	46
17A-979-1420	414	26
17A-979-1611	419	15
	419	23
	468	15
	468	23
17A-979-1760	418	14
17A-979-1930	419	10
	419	18
	468	10
	468	18
17A-979-2850	414	17
17A-979-2870	414	21
17A-979-3131	427	1
17A-979-3140	414	2
17A-979-3320	395	31
17A-979-3330	399	31
	466	31
17A-979-3561	406	10
17A-979-3571	407	10
17A-979-3811	395	48
	400	48
	467	48
17A-979-3890	419	11
	419	19
	468	11
	468	19
17A-979-4120	395	51
	400	51
	467	51
17A-979-5161	231	16
	232	9
17A-979-5171	225	2
	228	16
	229	16
	231	1
17A-979-5190	228	17
	229	17
	231	2
17A-979-5220	548	1
17A-98-41510	759	5
17A-98-51121	460	51
17A-98-51271	409	5
17A-98-51310	435	47
17A-Z11-1610	410	18
	412	18
17A-Z11-1620	410	19
	412	19
17A-Z11-1660	410	20
	412	20
17A-Z11-1810	406	3
	407	3
17A-Z11-2581	396	20
	401	20
17A-Z11-2660	397	30
	402	30
17A-Z11-2941	420	37
	469	37
17A-Z11-3592	408	5
	408	7
17A-Z11-4610	397	31
	402	31
	455	4
17A-Z11-5410	408	8
17A-Z11-5420	408	12
17A-Z11-5430	398	1
	403	1
17A-Z11-5460	418	2
17A-Z11-5511	419	1
	468	1
17A-Z11-5521	419	5
	468	5
17A-Z11-5530	419	9
	468	9
17A-Z11-5540	419	17
	468	17
17A-Z11-5561	462	7
	480	7
17A-Z11-5570	419	34
	469	34
17A-Z11-5580	462	15
	480	9
17A-Z11-5591	418	5
17A-Z11-5631	418	10

PartNumber	Page	Index
17A-Z11-5651	398	2
	403	2
	462	8
	480	8
17A-Z11-5671	409	3
17A-Z11-5750	406	9
	407	9
17A-Z11-5761	462	4
	480	4
17A-Z11-5890	462	11
	462	20
17A-Z11-7161	418	18
	419	25
	434	16
	459	5
	460	37
	468	25
	539	14
17M-22-45471	235	2
17M-43-52430	438	9
17M-911-3530	666	30
	671	30
17M-911-7641	393	13
	465	10
195-03-41380	184	4
	484	5
195-30-14151	683	28
195-30-17960	682	21
195-40-31540	242	10
195-43-43370	495	21
	499	17
	504	21
	507	17
195-43-64411	496	1
	500	1
195-49-31470	336	7
195-54-42550	197	54
	199	62
195-54-42981	670	3
195-54-46180	557	4
195-54-68760	666	39
	672	39
195-54-78790	435	45
	459	27
	460	32
	462	14
	462	23
195-60-51550	306	19
	308	19
	310	19
	312	19
195-Z11-1371	410	
	412	
195-Z11-1381	410	24
	412	24
195-Z11-2180	421	1
195-Z11-3630	410	21
	412	21
195-Z11-3640	410	22
	412	22
195-Z11-3670	411	25
	413	25
195-Z11-3860	410	23
	412	23
195-Z11-4510	400	38
	407	4
	467	38
195-Z11-4520	395	38
	406	4
195-Z11-7250	431	20
	432	31
	488	10
198-49-11460	306	4
	308	4
	310	4
	312	4
198-54-19150	558	11
	666	16
	671	16
198-54-42260	408	2
	538	3
	538	14
198-911-7750	428	12
198-911-9240	414	14
198-Z11-6370	418	4
19M-06-18220	224	23
19M-09-11510	438	22
19M-09-34110	440	11
19M-43-33111	438	21
19M-43-33141	438	
19M-43-33151	438	26
19M-43-33161	439	27
19M-43-33171	438	23
19M-43-33460	438	24
19M-43-33470	438	25
19M-43-33660	438	10
19M-43-33730	436	7
19M-43-33740	436	8
19M-43-33750	436	9
19M-43-33760	436	10
19M-43-34120	440	12
19M-43-34141	440	13
19M-43-34150	440	14
19M-43-34182	440	15
19M-43-34190	440	17
19M-43-34260	440	16
19M-43-34330	436	11
19M-43-38220	496	2
	500	2
	505	21
	508	21
	511	2
	513	2
	516	2
	521	2
	527	2
	530	2
	534	2
	536	2
19N-911-1250	711	20
201-54-13210	474	11
201-60-11390	582	2
	582	5
	582	9
	605	2
	605	5
	605	9
	605	13
	622	46
	623	2
	623	5
	623	9
	623	13
	628	2
	628	5
	628	9
	628	13
	628	17
	650	2
	650	7
	650	13
	650	17
	656	2
	656	7
	656	13
	656	17
	656	21
	660	46
202-62-21430	363	42
	365	46
203-30-42260	683	9
203-43-56450	458	1
203-60-62190	580	11
	603	11
	621	11
	647	8
	659	11
	661	11
	664	11
203-60-62220	518	4
	524	4
	649	1
	658	1
203-62-13520	333	24
203-62-21740	363	43
	365	47
203-62-42920	362	30
	364	34
203-62-44510	603	22
	664	22
203-62-57730	498	23
	506	25
	512	27
	517	5
	528	5
203-62-57910	275	5
203-62-57920	275	4
203-62-57930	275	3
203-62-57940	275	2
205-03-71330	197	49
	199	57
205-03-71331	169	9
205-04-62130	197	41
	199	49
205-04-K1370	774	7
	774	12
205-30-00220	682	
	684	
	685	
	687	
	688	
205-54-51970	666	21
	671	21
205-54-53550	564	10
	564	22
	565	7
	565	17
	666	18
	671	18
205-54-71680	190	1
205-60-51390	580	3
	603	3
	621	3
	647	10
	659	3
	661	3
	664	3
205-60-71220	555	4
	558	2
	563	4
	668	3
	674	5
	675	5
206-03-43331	191	11
206-62-87990	498	10
	506	10
	506	17
	512	10
	512	20
	518	5
	520	21
	520	29
	520	35
	524	5
	526	21

PartNumber	Page	Index
	526	29
	526	35
	529	21
	529	32
	529	34
	533	21
	533	32
	533	34
	535	21
	535	28
	535	31
	537	21
	537	28
	537	31
	623	36
	629	38
207-01-35140	169	1
	169	12
207-27-52270	280	26
	284	26
	290	26
	294	26
207-30-54160	683	7
	683	16
207-32-71620	691	17
	692	17
	781	
207-62-62460	580	38
	603	38
	622	40
	649	23
	658	23
	660	40
	661	38
	664	38
207-62-64740	306	28
	308	28
	310	28
	312	28
	579	3
	602	3
	619	3
	626	3
	645	3
	654	3
208-06-11220	362	27
	364	31
208-06-19170	450	17
208-38-11590	774	9
208-53-11M80	418	15
208-53-12680	428	9
	430	3
	433	3
208-979-7540	427	3
	427	9
	427	15
208-979-7650	431	16
209-09-51210	716	27
	720	5
	723	18
20B-27-11210	322	7
	329	18
	333	30
20K-62-33690	580	31
	603	31
	621	33
	649	16
	658	16
	659	33
	661	31
	664	31
20N-60-11143	306	22
	308	22
	310	22
	312	22

PartNumber	Page	Index
20N-60-11181	306	23
	308	23
	310	23
	312	23
20R-54-11460	553	3
	554	3
20S-70-82230	713	28
20T-43-71190	438	6
	502	10
	509	10
	514	10
	522	10
	531	10
20T-54-74510	206	20
	207	20
	208	20
	209	20
20T-62-81790	579	18
	602	18
	619	18
	626	18
	645	18
	654	18
20U-03-21540	180	10
20U-54-46520	396	28
	401	28
	462	31
	475	9
	480	19
20U-62-41890	580	25
	603	25
	621	27
	649	10
	658	10
	659	27
	661	25
	664	25
20Y-03-11220	432	35
20Y-03-41580	180	8
20Y-04-21580	198	4
20Y-06-23472	462	24
	480	12
20Y-06-23940	505	9
	508	9
	511	12
	513	12
	516	12
	521	12
	527	12
	530	12
	534	12
	536	12
20Y-06-41812	230	1
20Y-06-41990	416	
20Y-06-42180	417	6
20Y-06-42190	414	7
	457	4
	464	4
20Y-30-16330	689	12
	690	12
20Y-43-41491	462	26
	480	14
20Y-43-41750	457	8
	464	8
20Y-43-41790	457	9
	464	9
20Y-53-11380	393	2
	465	2
20Y-53-12221	417	7
20Y-53-12310	428	21
	429	31
	429	35
	430	14
	430	19
	430	24

PartNumber	Page	Index
20Y-53-13361	429	32
20Y-53-13461	428	10
20Y-54-18690	418	3
	419	16
	419	24
	419	31
	419	33
	468	16
	468	24
	468	31
	469	33
20Y-54-29232	666	15
	671	15
20Y-60-21320	306	17
	308	17
	310	17
	312	17
20Y-62-16630	518	25
	524	25
	525	35
20Y-62-19560	582	3
	582	6
	582	10
	605	3
	605	6
	605	10
	605	14
	622	47
	623	3
	623	6
	623	10
	623	14
	628	3
	628	6
	628	10
	628	14
	628	18
	650	3
	650	8
	650	14
	650	18
	656	3
	656	8
	656	14
	656	18
	656	22
	660	47
20Y-62-21940	580	23
	603	23
	621	25
	649	8
	658	8
	659	25
	661	23
	664	23
20Y-62-22790	498	31
	503	47
	506	33
	510	47
	512	35
	515	46
	517	13
	518	6
	523	41
	524	6
	528	13
	532	40
20Y-62-22820	187	24
	498	14
	506	11
	512	11
	512	17
	518	7
	520	18
	520	32

PartNumber	Page	Index
	524	7
	526	18
	526	32
	529	18
	529	29
	533	18
	533	29
	535	18
	535	33
	537	18
	537	33
	623	26
	623	29
	628	28
	628	31
	651	45
	657	47
20Y-62-22830	320	5
	498	15
	506	12
	512	13
	512	18
	520	19
	520	33
	526	19
	526	33
	529	19
	529	30
	533	19
	533	30
	535	19
	535	34
	537	19
	537	34
	623	30
	623	33
	628	32
	628	35
	651	42
	657	44
20Y-62-22850	187	25
	498	11
	498	16
	506	13
	506	18
	512	12
	512	19
	518	8
	520	20
	520	27
	520	30
	524	8
	526	20
	526	27
	526	30
	529	20
	529	27
	529	35
	533	20
	533	27
	533	35
	535	20
	535	26
	535	29
	537	20
	537	26
	537	29
20Y-62-22860	498	32
	503	44
	506	34
	510	45
	512	36
	515	44
	517	14
	522	38
	528	14
	532	38
20Y-979-3120	485	3
20Y-979-3130	431	15
	485	5
20Y-979-3140	485	10
20Y-979-6131	483	
20Y-979-6161	457	5
	464	5
20Y-979-6191	210	5
	221	5
20Y-979-6261	435	42
20Y-979-6281	432	44
20Y-979-6630	434	18
21J-06-11570	206	12
	207	12
	208	12
	209	12
21J-06-13661	174	
	450	9
21K-01-72150	578	5
21K-43-11350	303	5
21K-62-72250	506	9
21M-46-24450	556	15
21T-72-23260	582	23
	605	27
	624	45
	629	47
	650	33
	657	35
21U-62-34760	347	
	350	
	352	
	738	10
	738	22
	739	10
	739	23
	741	33
21U-62-34770	350	
	352	
	738	12
	738	19
	739	12
	739	20
	741	25
21W-60-41170	306	3
	308	3
	310	3
	312	3
21W-60-41310	583	7
	625	11
	652	9
21W-62-42640	579	1
	602	1
	619	1
	626	1
	645	1
	654	1
21W-62-42660	502	20
	509	20
	514	20
	522	20
	531	20
21W-62-43121	340	9
21W-62-43990	502	17
	509	17
	514	17
	522	17
	531	17
21W-62-44510	502	14
	509	14
	514	14
	522	14
	531	14
21W-62-44740	650	4
	650	9
	656	4
	656	9
21W-62-51740	474	2
	475	11
21W-973-3420	650	5
	650	10
	656	5
	656	10
21W-98-41720	753	23
	757	23
21Y-70-14710	719	50
	722	44
21Y-70-14850	719	51
	722	45
22B-46-24180	558	6
22B-54-12291	558	3
22B-54-16461	440	27
22B-54-25190	453	48
22B-60-11160	306	18
	308	18
	310	18
	312	18
22B-62-15840	518	27
	524	27
22D-62-12440	275	13
22L-54-22990	546	38
22L-62-21150	581	40
	604	40
	649	28
22L-62-21171	518	32
	524	32
22L-62-22590	518	22
	524	22
22L-62-24730	518	30
	524	30
22M-43-21470	442	31
	444	30
22M-60-22130	273	14
22M-62-13660	214	7
	272	7
22M-977-1140	432	34
	432	41
22P-62-13510	351	23
	738	29
	739	30
	741	28
	741	35
22P-62-13520	336	20
22P-62-13540	351	22
	579	28
	602	32
	619	35
	627	37
	645	35
	655	37
22P-62-13550	298	3
	356	3
22T-05-13110	225	14
	228	29
	229	29
	231	20
	548	5
	549	5
22U-04-21200	198	
22U-04-21220	198	5
22U-04-21241	198	
22U-54-25581	460	48
22U-60-21330	580	15
	603	15
	621	17
	647	15
	659	17
	661	15
	664	15

PartNumber	Page	Index
22U-60-21520	196	4
	198	8
22W-43-17330	256	13
232-15-11240	248	40
232-15-19270	236	19
	780	
23A-15-15490	245	5
23B-04-31580	270	14
23B-06-61810	455	8
23B-07-61550	175	21
23B-15-11370	252	18
23B-53-71190	750	31
	754	31
23E-15-13350	244	6
	244	15
23S-15-45860	457	7
	464	7
23S-62-25850	546	31
23W-13-12680	260	34
281-01-13180	272	8
287-06-16420	454	12
	474	13
287-15-15360	247	12
287-15-15710	503	48
	510	48
	515	47
2A5-06-11881	421	8
2A5-06-11922	415	1
2A5-06-11932	463	1
2A5-06-11940	462	28
	480	16
2A5-06-12131	462	29
	480	17
2A5-53-12580	462	30
	480	18
2A5-979-1112	423	
	425	
	426	
2A5-979-1121	427	20
361-54-21150	420	44
	469	41
363-54-31450	505	17
	508	17
	511	20
	513	20
	516	20
	521	20
	527	20
	530	20
	534	20
	536	20
415-46-11370	670	19
416-54-21710	558	16
	653	1
416-925-3941	414	18
417-43-28270	442	32
	444	31
417-923-3980	476	8
418-54-35450	495	18
	495	20
	499	14
	499	16
	504	18
	504	20
	507	14
	507	16
418-54-42380	476	30
41E-15-16251	256	11
421-02-31120	165	2
421-06-22910	210	8
	221	8
421-06-22920	210	9
	221	9
421-06-26210	414	8
421-09-31110	188	23
421-20-12690	234	3
421-20-33621	234	1
421-20-34511	234	
421-20-34650	234	4
421-46-12740	719	49
	722	43
421-60-35170	196	5
	198	9
	306	20
	308	20
	310	20
	312	20
421-60-35180	196	6
	198	10
421-60-35190	196	7
	198	11
423-03-31710	188	4
423-06-42420	452	25
423-06-45360	225	1
	226	15
	227	15
	228	15
	229	15
423-06-51130	504	7
	507	7
423-06-5113C	495	7
	499	7
423-15-12441	251	2
423-15-12810	249	19
423-20-32631	234	2
423-43-38170	495	17
	499	13
	504	17
	507	13
423-54-42790	462	10
	462	19
423-825-1720	728	2
	733	2
423-923-4840	453	49
423-925-5851	419	12
	419	20
	468	12
	468	20
423-925-5860	419	14
	419	22
	468	14
	468	22
423-S35-4260	473	2
425-13-32140	259	32
425-15-19440	249	16
	251	12
	251	20
425-15-32520	251	13
425-54-32540	473	6
426-13-42710	259	2
	780	
426-15-15480	256	9
426-15-15490	256	7
426-15-15810	256	14
426-15-16261	256	12
426-15-46001	256	
426-56-21990	191	16
427-15-15910	682	4
	684	7
	685	7
	687	7
	688	7
515-35-13930	625	10
561-06-86280	435	44
	459	25
	460	30
561-43-43390	272	11
562-15-16110	256	8
565-62-11270	242	16
566-01-12350	578	4
566-02-42200	160	1
566-13-13341	281	40
	285	40
	290	40
	294	40
566-35-42430	578	9
566-95-91410	190	3
567-07-15210	491	6
567-15-12830	259	27
	780	
568-13-13351	259	7
568-15-11380	246	4
568-15-11610	178	12
569-06-61960	474	12
569-06-61970	454	9
569-15-12860	246	14
	247	4
	780	
569-15-41310	247	11
569-15-51721	254	16
569-15-51732	254	17
56B-15-16660	256	10
56D-15-29841	261	23
56D-15-35700	254	7
56E-15-17261	249	14
56E-15-19360	249	15
	251	19
575-41-17420	568	10
	590	10
	594	9
	608	10
	612	8
	613	9
	631	10
	635	8
	636	9
581-22-12760	67	30
582-15-12811	259	28
582-15-19240	259	26
	780	
582-35-11170	431	19
	431	23
	431	27
600-051-1100	142	15
	174	24
600-051-1140	174	25
600-051-1180	174	26
600-051-2050	490	14
600-051-2060	174	12
600-051-2100	176	28
600-051-2140	176	12
	176	18
	176	24
600-051-2180	175	17
	175	24
	176	1
	176	11
600-051-2190	212	12
	219	15
600-051-2240	175	14
600-051-2300	217	6
600-051-3190	175	20
600-184-1350	161	6
600-184-1510	161	5
600-184-1570	161	4
600-185-5100	161	
600-185-5110	161	2
600-311-3630	201	3
600-311-3640	201	4
600-311-3660	201	
600-311-3670	201	6
600-311-3690	201	9
600-311-3722	201	
600-319-3602	201	
600-319-3610	167	4

PartNumber	Page	Index
	168	4
	201	
600-319-3750	111	1
	167	2
	168	2
600-331-1950	171	25
600-331-2100	170	1
600-331-2900	170	2
600-480-1000	146	1
600-480-3000	146	2
600-488-1100	146	
600-645-7850	188	5
600-815-2170	175	4
600-861-6110	134	
600-861-9120	135	
600-863-5711	138	
600-863-8112	140	
6127-11-5960	95	4
6130-12-1961	77	3
	81	8
	96	2
6130-12-4581	107	14
6131-81-8820	162	16
6135-85-8190	133	8
	136	2
6136-21-5770	86	1
6136-21-5870	86	2
6136-21-7120	95	1
6136-21-7190	95	3
6136-71-5540	171	31
6144-81-6580	202	29
6150-23-5620	240	8
6155-11-4840	162	1
6156-81-8990	162	14
6162-43-5350	83	1
6206-71-1770	162	12
6207-81-6980	132	4
6212-82-0110	772	14
6215-11-5920	69	5
6215-71-4930	69	16
	69	21
	69	24
6215-81-9510	49	4
	88	15
	110	4
6216-14-6820	81	3
	88	25
6216-74-6180	96	1
6216-74-6190	133	2
6216-74-6220	108	2
6216-84-8710	71	4
6216-94-3450	88	14
6217-71-5770	107	24
6217-71-6470	753	24
	757	24
6217-71-6490	752	24
	756	24
6217-71-6860	750	26
	750	27
	754	26
	754	27
6221-81-6810	137	1
6252-11-2900	170	3
6252-81-7300	161	1
6252-81-7900	218	7
6252-81-9530	56	3
6261-51-2810	90	4
6261-81-1900	152	16
6261-81-2902	152	2
6261-81-2920	79	6
6261-81-6901	152	18
6271-81-2980	155	1
	156	1
6271-81-9201	152	1
6271-81-9220	152	
6271-81-9300	63	21
6301-11-4630	81	7
6520-81-1030	67	14
	67	15
6520-81-1040	67	10
6520-91-1020	69	11
	169	23
6520-91-1030	69	12
	169	24
6524-81-1010	67	6
6524-91-1050	67	11
6524-91-1080	67	12
6524-91-4011	67	16
6525-01-1110	67	
6525-21-1060	67	1
6525-31-1010	67	2
6525-41-1020	67	3
6525-81-1010	67	9
6525-81-1020	67	8
6525-91-1010	67	4
6525-91-1020	67	5
6525-91-4010	67	7
	67	17
6685-81-7503	163	
6685-81-7513	163	3
6685-81-7540	163	2
6685-81-7550	163	1
6731-22-5410	96	
6731-22-5411	96	7
6731-61-2151	100	2
6731-61-2230	90	2
6731-61-4250	63	23
	101	2
	142	2
6731-61-4280	63	24
6731-71-6270	51	9
	51	15
	107	6
	107	8
	107	10
6731-74-5910	113	14
6732-11-1910	49	2
	78	1
	88	21
6732-11-1920	49	3
	81	4
	88	22
	91	3
6732-11-1930	100	7
6732-11-5860	55	5
	63	19
6732-21-1810	88	3
6732-21-1960	49	
	88	
	110	
	113	3
6732-21-3120	95	
	142	
6732-21-3190	89	2
6732-21-3220	89	3
6732-21-4150	81	5
6732-21-4161	81	6
6732-21-4171	81	14
6732-21-4180	79	7
	112	12
	142	11
	152	7
6732-21-4220	81	2
6732-21-4290	81	13
6732-21-5160	76	
	96	
	125	
6732-21-5170	84	6
6732-21-5530	96	6
6732-21-6120	88	10
6732-21-6630	52	3
	84	3
	107	2
	110	7
	142	10
6732-21-6910	128	
6732-31-4140	83	2
6732-41-1260	147	1
6732-41-4520	49	7
	49	9
6732-51-5130	66	1
6732-61-3110	107	4
	107	15
	142	9
6732-61-3131	118	9
6732-61-3140	66	2
	113	7
	117	1
6732-61-3260	120	2
6732-61-3410	118	5
6732-61-3420	118	4
6732-61-3430	118	3
6732-61-3440	118	6
6732-61-3450	118	2
6732-61-4120	105	8
6732-61-6140	50	
	63	
6732-62-3410	118	
6732-62-3470	118	1
6732-71-3210	51	6
	142	4
	142	5
	152	4
6732-71-3220	53	
	58	
	63	
	126	
	129	
	142	
	152	
6732-71-5620	113	12
6732-71-6510	112	2
	112	7
	113	5
	113	9
6732-81-2810	80	1
6732-81-6840	133	3
6732-81-6880	133	4
6732-82-3430	124	1
	167	3
6733-61-3150	64	9
6733-71-5680	72	
	86	
6734-71-5170	58	5
6734-71-5520	152	8
6735-21-1910	88	
6735-21-1920	88	17
6735-21-1930	88	18
6735-21-1970	49	5
	88	16
	110	5
	129	10
6735-21-4160	109	1
6735-21-5530	88	24
	89	1
6735-21-5680	73	4
6735-21-7160	143	13
6735-51-1120	98	
6735-61-2120	152	6
6735-61-3810	110	
	132	
6735-71-3220	116	
	132	
6735-71-5190	51	3
	84	2

PartNumber	Page	Index
6736-11-4460	88	13
6736-21-3210	53	
	152	
6736-21-3360	129	6
6736-21-4221	81	12
6736-21-5310	91	
	104	
	129	
	142	
6736-21-5320	84	7
6736-39-1130	158	
6736-39-1160	158	5
6736-39-1170	158	6
6736-81-5110	56	4
6736-81-6170	105	3
6736-81-6190	63	12
6737-11-4910	53	11
6738-11-4370	57	4
6738-54-8110	72	10
6741-21-1130	88	7
6741-21-1140	88	6
6741-21-2210	88	26
6741-21-3520	76	
6741-21-3530	76	5
6741-21-3541	76	6
6741-21-3810	79	4
6741-21-3820	79	3
6741-31-4180	82	1
6741-39-1110	158	2
6741-39-1120	158	3
6741-39-1130	158	4
6741-39-1220	158	1
6741-61-1520	122	2
6741-61-2120	105	1
6741-61-6110	100	16
6741-61-6130	126	3
6741-81-6510	132	7
6741-81-6520	132	1
6741-81-8830	57	3
6742-01-0310	84	8
6742-01-0530	76	2
6742-01-0540	79	2
6742-01-0950	76	4
6742-01-1080	100	14
6742-01-1360	88	1
6742-01-1370	88	2
6742-01-1380	88	23
	91	2
6742-01-1420	88	4
6742-01-1470	88	11
6742-01-1480	88	19
6742-01-1520	88	27
6742-01-2441	100	15
6742-01-2492	100	3
6742-01-2500	100	4
6742-01-2630	84	1
	151	5
6742-01-2690	84	5
6742-01-3320	76	7
6742-01-3620	48	1
6742-01-3770	142	6
6742-01-3780	105	7
	128	6
	129	7
6742-01-4080	88	20
6742-01-4220	100	10
6742-01-4540	99	1
	167	1
	168	1
6742-01-5047	105	5
6742-01-5053	81	
6742-01-5117	100	11
6742-01-5159	88	
6742-01-5160	88	5
6742-01-5195	77	1
	121	2
6742-01-5199	92	
	158	
6742-01-5202	100	8
6742-01-5233	158	
6742-01-5240	158	
6742-01-5287	158	
6742-01-5288	158	
6742-01-5307	84	13
6742-01-5309	94	5
6742-01-5507	105	4
6742-21-8500	92	
6743-11-1610	49	13
6743-21-4190	81	11
6743-31-3121	94	6
6743-31-3210	94	9
6743-51-4430	100	12
6743-51-5550	84	14
6743-61-2150	100	9
6743-61-3610	133	9
6743-81-6310	81	10
	137	3
6744-41-1010	148	1
6744-41-3020	64	3
6744-41-4031	49	11
6744-41-4050	49	12
6744-41-4080	49	6
6744-41-5010	64	1
6744-41-5030	64	2
6744-81-4010	152	17
6745-11-4230	59	3
6745-11-5811	55	4
6745-11-7810	64	10
6745-11-8160	50	3
6745-11-8170	50	5
6745-11-8250	51	5
6745-11-8310	50	
6745-11-8320	50	2
6745-11-8810	50	1
6745-21-1130	72	2
6745-21-1190	88	
6745-21-1311	65	1
6745-21-1330	65	2
6745-21-5130	84	10
6745-21-5310	84	
6745-21-5311	84	12
6745-21-7110	51	
6745-21-7120	51	1
6745-21-7130	51	2
6745-21-7240	129	8
6745-22-3110	79	1
6745-22-3120	79	
6745-22-3130	76	1
6745-22-3140	79	5
6745-31-2140	94	4
6745-31-4200	82	
6745-31-8130	93	2
6745-39-1100	158	
6745-39-1200	158	
6745-39-1300	158	
6745-39-1400	158	
6745-41-1110	149	1
6745-41-1130	149	2
6745-41-2100	87	
6745-41-2110	87	1
6745-41-2120	87	2
6745-41-2130	87	3
6745-41-2140	87	4
6745-41-2151	88	8
6745-41-3100	64	7
6745-41-4210	158	31
6745-41-4220	158	30
6745-41-5110	64	6
6745-41-5201	64	5
6745-41-5401	64	4
6745-51-1110	98	1
6745-61-1120	119	1
6745-61-2111	100	13
6745-61-3220	66	3
6745-61-6120	101	1
6745-61-8160	58	2
6745-71-1130	104	2
	106	1
	112	4
	112	8
	113	6
	113	10
	113	15
	144	1
6745-71-1210	105	6
6745-71-1821	112	10
6745-71-1830	112	11
6745-71-1860	112	13
6745-71-2110	106	4
6745-71-3210	105	2
6745-71-5160	104	7
	144	5
6745-71-5311	112	1
6745-71-5391	112	5
6745-71-5410	112	6
6745-71-5430	112	9
6745-71-5470	113	11
6745-71-5610	113	1
6745-71-5690	144	2
6745-71-5860	112	3
6745-71-6130	104	1
	106	2
	144	3
6745-71-6251	110	1
6745-71-7203	201	
6745-71-7211	201	1
6745-81-6120	136	1
6745-81-9390	142	13
6745-81-9430	58	18
6745-81-9440	152	3
6745-81-9560	152	9
6745-81-9580	113	2
6745-81-9640	63	13
6745-81-9710	142	16
6745-81-9790	142	17
6746-11-1180	49	14
6746-11-1210	49	
6746-11-3100	151	1
6746-11-4110	54	4
6746-11-4120	54	5
6746-11-4130	54	1
6746-11-4140	52	1
6746-11-4150	52	2
6746-11-4160	53	
6746-11-4161	53	1
6746-11-4170	53	2
6746-11-4190	52	4
6746-11-4210	53	5
6746-11-4230	53	9
6746-11-4240	53	4
	53	10
6746-11-4250	53	
6746-11-4251	53	14
6746-11-4260	53	15
6746-11-5230	61	19
6746-11-5240	61	4
6746-11-5251	61	7
6746-11-5261	61	10
6746-11-5270	61	1
6746-11-5280	67	18
6746-11-5290	69	13
6746-11-5310	69	15
6746-11-5320	69	19
6746-11-5330	69	4
6746-11-5350	69	

PartNumber	Page	Index
6746-11-5360	69	1
6746-11-5370	69	2
6746-11-5380	69	6
6746-11-5520	55	1
6746-11-5540	55	2
6746-11-5550	55	
	57	5
6746-11-5551	55	7
6746-11-5570	55	3
6746-11-5580	56	1
6746-11-5590	101	3
6746-11-7110	64	8
6746-11-9110	71	1
6746-11-9120	71	6
6746-11-9130	63	15
6746-11-9150	71	9
6746-11-9170	63	22
6746-11-9180	63	20
6746-11-9230	71	5
6746-11-9270	71	7
6746-21-1290	88	
6746-21-1610	88	12
6746-21-4120	81	1
6746-21-5110	85	1
	184	8
6746-21-5130	96	8
6746-21-7150	171	7
	171	13
6746-21-7160	171	24
6746-21-7170	90	1
6746-21-7180	90	3
6746-21-7270	129	1
6746-21-7320	51	4
6746-21-7330	51	12
6746-21-7350	95	5
6746-21-7420	171	26
6746-21-7430	171	27
6746-21-7440	171	28
6746-21-7450	171	29
6746-21-7460	171	30
6746-31-1120	92	
6746-31-2010	94	
6746-31-2110	150	1
6746-31-3100	94	
6746-31-3130	94	8
6746-31-3310	94	10
6746-31-8210	93	1
6746-41-4110	49	10
6746-41-4120	49	8
6746-51-8110	58	4
6746-51-8150	58	1
6746-51-8160	58	
6746-51-8170	58	8
6746-51-8180	58	3
6746-51-8250	58	16
6746-51-9100	128	
6746-51-9120	129	13
6746-51-9130	129	15
6746-51-9140	129	20
6746-51-9210	129	9
6746-51-9220	129	12
6746-61-1100	122	1
6746-61-2110	100	1
6746-61-3150	93	3
6746-61-3710	123	1
	168	3
6746-61-6130	125	1
6746-61-6150	126	1
6746-61-6230	127	2
6746-61-6240	127	
6746-61-6650	91	6
6746-61-7120	72	
6746-61-7130	72	5
6746-61-7140	72	
6746-61-7150	72	3
6746-61-7160	72	7
6746-61-7170	72	8
6746-61-7180	72	9
6746-61-7190	72	
6746-61-7210	72	
6746-61-7220	72	12
6746-61-7230	72	14
6746-61-8110	101	15
6746-61-8130	58	13
6746-61-8140	101	16
6746-61-8150	58	11
6746-61-8180	101	
6746-61-8260	58	12
6746-61-8270	58	15
6746-71-1100	106	
6746-71-1210	107	16
6746-71-1270	107	18
6746-71-1280	107	17
6746-71-1980	107	19
6746-71-4110	107	1
6746-71-4120	107	
6746-71-4121	107	3
6746-71-4130	107	5
6746-71-4140	107	7
6746-71-4150	107	9
6746-71-4160	107	11
6746-71-4170	107	
6746-71-4171	107	12
6746-71-5310	113	8
6746-71-5420	113	4
6746-71-5520	107	20
6746-71-5630	104	3
6746-71-5640	144	4
6746-71-5660	104	4
6746-71-5680	104	5
6746-81-2540	70	1
	154	1
6746-81-2700	152	
6746-81-5110	142	22
6746-81-5120	142	23
6746-81-5130	56	
6746-81-5160	129	18
6746-81-5280	53	12
6746-81-5290	53	13
6746-81-6120	133	7
6746-81-6130	133	1
6746-81-8130	57	
6746-81-8131	57	1
6746-81-8150	61	16
6746-81-8160	61	13
6746-81-8710	60	1
6746-81-8720	60	2
6746-81-9190	152	11
6746-81-9210	142	14
6746-81-9220	142	19
6746-81-9240	142	21
6746-81-9290	142	20
6746-81-9520	152	15
6751-71-6340	101	4
6754-11-3130	151	2
6754-11-3140	151	3
6754-11-4120	53	6
	53	8
6754-11-5141	73	2
6754-11-5150	55	6
	63	18
6754-22-9110	128	5
6754-51-8121	58	10
6754-61-4111	120	1
6754-71-5380	77	2
6754-71-5430	113	13
6754-71-5541	107	21
6754-71-6360	110	6
6754-71-6370	110	
6754-71-9710	107	23
6754-81-2710	152	20
6754-81-5110	53	7
6754-81-9110	152	12
6754-81-9130	152	13
6754-81-9180	152	14
6755-11-3110	151	4
6755-11-5130	69	14
6755-11-5140	69	3
6755-11-9110	63	11
6755-11-9220	71	2
6755-11-9260	73	3
6755-21-7110	57	6
6755-41-9100	63	1
6755-41-9200	63	
6755-51-8220	58	17
6755-61-7100	73	1
6755-61-7120	101	14
6755-61-8140	57	2
	101	17
6755-61-8170	58	14
6755-61-8190	101	18
6755-81-9130	71	10
6755-81-9140	63	14
6755-81-9320	142	18
6930-21-4120	557	5
700-11-31940	254	12
700-11-31980	254	29
700-22-11410	518	9
	524	9
	571	2
	571	7
	574	8
	593	2
	593	6
	597	8
	611	2
	611	6
	616	8
	634	2
	634	6
	640	8
	649	2
	658	2
700-25-11120	592	16
700-80-51390	247	13
700-80-61260	185	18
	572	6
	595	6
	614	6
	638	6
700-80-61430	572	7
	595	7
	614	7
	638	7
700-80-64220	571	3
	571	8
	574	9
	593	3
	593	7
	597	9
	611	3
	611	7
	616	9
	634	3
	634	7
	640	9
700-85-11111	610	16
	633	16
702-16-01230	501	
702-16-02290	437	1
702-16-06270	497	1
702-16-51140	501	3
702-16-51240	497	6
702-16-51270	501	8
702-16-52420	245	6

PartNumber	Page	Index
702-16-53170	501	7
702-16-53240	498	21
	506	23
	512	25
	517	3
	526	37
	528	3
	533	37
	537	36
702-16-54550	501	4
702-16-54560	501	6
702-16-54571	501	5
702-16-54580	501	9
702-16-54590	501	10
702-16-54641	501	14
702-16-54650	501	17
702-16-54660	501	16
702-16-54670	501	
702-16-55270	576	5
	599	5
	618	5
	643	5
702-16-57270	331	2
702-16-59330	437	3
702-16-61270	437	6
702-16-62730	437	4
702-16-62740	437	5
702-16-71131	497	4
702-16-71141	497	5
702-16-71150	497	2
702-16-71260	497	9
702-16-71270	497	8
702-16-71280	497	3
702-16-72810	497	10
702-16-73140	518	10
	524	10
702-16-73150	518	11
	524	11
702-16-75810	497	7
702-21-07610	576	3
	599	3
	618	3
	643	3
	648	1
702-21-07620	518	12
	524	12
702-21-11700	339	
702-21-37520	327	12
702-21-39450	518	13
	524	13
	649	3
	658	3
702-21-53120	327	10
	577	2
	600	2
	644	2
	663	2
702-21-54180	185	25
702-21-55420	577	3
	600	3
	644	3
	663	3
702-21-55450	575	12
	598	12
	617	12
	641	12
702-21-55620	331	7
	339	17
	570	6
	575	17
	577	9
	592	2
	598	17
	600	9
	610	2
	617	17
	633	2
	641	17
	644	9
	663	9
702-21-56220	185	21
702-21-56241	185	17
702-21-61500	320	1
	329	21
702-21-81560	339	9
702-21-81570	339	12
702-21-81580	339	13
702-21-81610	339	5
702-21-81620	339	16
702-21-81630	339	19
702-75-03102	324	1
702-75-11520	573	37
	575	5
	596	37
	598	5
	615	37
	617	5
	639	37
	641	5
705-11-33240	266	
705-11-33540	267	
705-17-02011	266	1
705-17-02122	267	3
705-17-02221	266	2
705-17-02330	267	14
705-17-02353	266	
	267	
705-17-02360	266	6
	267	7
	267	15
705-17-02430	266	4
	267	5
705-17-02460	266	5
	267	6
705-17-02510	267	1
705-17-02612	266	3
	267	4
705-17-02830	266	8
705-17-02870	266	7
705-17-02881	267	18
705-17-33012	266	10
	267	8
705-17-33430	266	11
705-17-33450	267	9
705-17-33512	266	12
	267	10
705-29-03310	332	1
705-51-20830	266	
	267	
706-73-40890	328	3
706-73-72420	322	8
706-7G-11291	322	25
707-11-11F62	737	1
707-11-12A71	735	1
	736	1
707-11-13861	734	1
707-12-85030	729	1
707-12-85040	731	1
707-12-90280	724	1
707-12-90290	726	1
707-29-10A40	724	9
	726	9
707-29-11A00	737	10
707-29-12660	735	6
	736	6
707-29-13280	734	10
707-29-85320	729	12
	731	12
707-35-10810	729	20
	731	20
	781	
707-35-10860	724	18
	726	18
	781	
707-35-11060	737	16
	781	
707-35-11210	735	12
	736	12
	781	
707-35-11260	734	18
	781	
707-36-12840	735	16
	736	16
707-36-13240	734	20
707-37-11111	737	20
707-37-90150	726	19
707-39-12520	735	18
	736	18
	781	
707-39-85120	729	28
	731	28
	781	
707-40-11321	737	30
707-40-85020	724	29
	726	29
	729	29
	731	29
707-44-11150	737	25
	781	
707-44-12250	735	17
	736	17
	781	
707-44-13150	734	21
	781	
707-44-85150	729	27
	731	27
	781	
707-44-90150	724	24
	726	24
	781	
707-46-05040	737	4
707-46-06020	713	7
707-46-50020	724	4
	726	4
707-51-60650	724	13
	726	13
	729	17
	731	17
	781	
707-51-60860	724	12
	726	12
	729	15
	731	15
	781	
707-51-65650	737	17
	781	
707-51-65860	737	12
	781	
707-51-70650	734	14
	735	11
	736	11
	781	
707-51-70860	734	13
	735	9
	736	9
	781	
707-52-90230	724	32
	726	32
	729	35
	731	35
707-52-90351	724	14
	726	14
	729	18
	731	18
707-52-90401	737	18

PartNumber	Page	Index
707-52-90451	735	14
	736	14
707-52-90461	734	15
707-56-60740	724	11
	726	11
	729	14
	731	14
	781	
707-56-65740	737	11
	781	
707-56-70740	734	12
	735	8
	736	8
	781	
707-58-65902	737	3
707-58-70A10	734	3
707-60-60040	729	3
	731	3
707-60-70110	735	3
	736	3
707-66-60140	729	4
	731	4
707-67-33040	724	26
	726	26
	729	34
	731	34
707-67-48020	737	27
707-67-52030	734	23
	735	19
	736	19
707-69-11011	737	28
707-69-85010	724	28
	726	28
	729	33
	731	33
707-69-85020	724	27
	726	27
	729	32
	731	32
707-75-60110	724	15
	726	15
	729	21
	731	21
707-75-65110	737	19
707-75-70110	734	19
	735	15
	736	15
707-80-16020	737	21
707-81-45252	737	29
707-83-10510	726	20
707-83-10520	726	21
707-83-10530	726	22
707-83-90030	737	22
707-83-90040	737	23
707-84-10140	726	23
707-84-10250	737	24
707-86-01070	737	32
707-86-55810	729	36
707-86-55820	730	38
707-86-55830	731	36
707-86-55840	732	38
707-86-55850	724	33
707-86-55860	726	33
707-88-11290	729	5
	731	5
707-88-11300	729	6
	731	6
707-88-38850	724	30
	726	30
	729	31
	731	31
707-91-90040	729	
	731	
707-91-90050	724	
	726	

PartNumber	Page	Index
707-91-91111	737	
707-99-26730	781	K10
707-99-27320	781	K11
707-99-36720	781	K14
707-99-43390	781	K13
707-99-43740	781	K12
707-E0-00030	734	
707-E0-00041	737	
707-E2-00070	729	
707-E2-00080	731	
707-E2-00090	724	
707-E2-00100	726	
707-E4-00020	735	
	736	
708-1L-00740	314	
	315	
	316	
	317	
	318	
	319	
	320	
708-1L-01740	314	
	315	
	316	
	317	
	318	
708-1L-04161	314	
708-1L-04170	315	
708-1L-04840	318	
708-1L-04880	317	
708-1L-29340	314	10
708-1L-32340	316	1
708-1S-00460	326	
	327	
	328	
	329	
	330	
	331	
708-1S-01460	326	
	327	
	328	
	329	
	330	
708-1S-03480	329	
708-1S-04330	326	
708-1S-04510	327	
708-1S-11370	327	11
708-1S-11890	187	9
708-1S-12260	328	2
708-1S-12280	328	5
708-1S-12320	328	1
708-1S-12330	328	6
708-1S-12340	328	7
708-1S-12350	328	9
708-1S-13130	328	11
708-1S-13320	328	19
708-1S-13360	328	18
708-1S-13370	328	16
708-1S-13380	328	17
708-1S-13420	326	8
708-1S-13460	328	12
708-1S-14241	328	24
708-1S-17110	327	17
708-1S-18180	185	31
708-1S-19710	326	16
708-1S-19950	326	17
708-1T-33432	326	10
708-21-12541	185	22
708-21-12970	328	8
708-25-12790	316	4
708-2E-05040	316	3
708-2E-12160	316	
708-2E-12170	316	
708-2E-12180	316	
708-2E-12190	316	

PartNumber	Page	Index
708-2H-03620	319	
708-2L-06470	316	
708-2L-06630	316	
708-2L-22160	316	6
708-2L-23131	316	12
	322	32
708-2L-23351	316	15
	323	36
708-2L-23360	187	14
	316	16
	322	31
708-2L-25480	315	6
	326	15
	327	7
708-2L-25490	185	24
	326	14
	327	6
708-2L-29460	185	30
708-2L-32150	316	2
708-2L-32260	315	3
708-2L-32460	316	5
708-2L-33160	316	13
708-2L-33350	323	37
708-2L-33361	316	17
708-2L-33430	316	18
708-2L-34120	317	1
708-2L-35941	320	6
708-3S-13160	328	13
708-3S-13430	328	14
708-3S-13480	326	5
708-3S-14141	326	7
708-3S-14240	328	20
708-3S-14261	328	21
708-3S-14290	328	23
708-3T-11310	326	21
708-7L-00070	322	
	324	
708-7L-04180	322	
708-7L-05010	322	24
708-7L-11130	322	1
708-7L-12111	322	21
708-7L-12140	322	23
708-7L-13111	322	28
708-7L-13140	316	14
	323	34
708-7L-13160	323	33
708-7L-13220	322	29
708-7L-13410	323	39
708-7L-16211	322	12
708-7L-16220	322	13
708-7L-16311	322	14
708-7L-16510	322	9
708-7R-11210	185	5
708-7R-11220	254	27
	570	10
708-7R-18230	185	32
708-7S-00680	185	
	187	
708-7S-01151	185	
708-7S-01241	185	
708-7S-05110	187	7
708-7S-11790	185	1
708-7S-12140	187	5
708-7S-12220	187	6
708-7S-12330	187	4
708-7S-13130	187	11
708-7S-13250	187	12
708-7S-13350	187	20
708-7S-13360	187	19
708-7S-13420	187	21
708-7S-13530	187	15
708-7S-13550	187	18
708-7S-13560	187	16
708-7S-18120	185	10
708-7S-18310	185	11

PartNumber	Page	Index
708-7S-18320	185	12
708-7T-02271	185	36
708-7T-05020	328	4
708-7T-12330	187	8
708-8E-16150	254	5
	254	10
	256	2
	314	7
	315	8
708-8E-16160	577	7
	600	7
	644	7
	663	7
708-8F-12151	322	22
708-8F-12230	322	26
708-8F-16170	322	10
708-8F-33310	323	38
708-8K-16280	322	5
709-25-11390	576	2
	599	2
	618	2
	643	2
709-26-11450	568	15
	590	15
	594	7
	608	15
	613	7
	631	15
	636	7
709-32-12861	185	7
711-47-11770	260	40
711-49-14230	263	2
711-53-11370	261	27
712-85-12560	249	4
714-12-12930	238	14
714-12-39230	253	2
	780	
714-21-19810	253	3
	780	
714-23-15690	254	4
	254	9
714-24-25190	254	25
720-2M-11550	339	14
720-2M-15820	327	13
720-68-19610	187	13
	316	10
	322	30
	327	3
721-58-60780	724	3
	726	3
722-10-91130	185	6
722-12-12063	580	4
	603	4
	621	4
	647	11
	659	4
	661	4
	664	4
723-11-14390	592	8
	610	7
	633	7
723-11-15110	236	28
	242	2
	245	1
723-11-18430	185	27
723-11-19130	592	9
	610	8
	633	8
723-11-19970	570	3
	592	5
	610	5
	633	5
723-11-27280	575	14
	598	14
	617	14
	641	14
723-11-38620	592	11
	610	10
	633	10
723-20-63100	574	7
	597	7
	616	7
	640	7
723-20-66500	571	1
	593	1
	611	1
	634	1
723-20-66600	593	5
	611	5
	634	5
723-20-70600	574	1
	597	1
	616	1
	640	1
723-20-80100	571	9
	593	9
	594	28
	611	9
	613	28
	634	9
	635	27
	636	28
723-21-08200	635	
723-21-08300	594	
	613	
	636	
723-21-08400	612	
723-23-10800	567	
	568	
	569	
	570	
	571	
	572	
	574	
	575	
	576	
	577	
723-24-11700	589	
	590	
	591	
	592	
	593	
	594	
	595	
	597	
	598	
	599	
	600	
	663	
723-25-11200	630	
	631	
	632	
	633	
	634	
	635	
	636	
	638	
	640	
	641	
	643	
	644	
723-25-11300	600	
	607	
	608	
	609	
	610	
	611	
	612	
	613	
	614	
	616	
	617	
	618	
723-26-14150	594	26
	613	26
	635	25
	636	26
723-26-14220	569	10
	591	10
	609	10
	632	10
723-26-14230	569	9
	591	9
	594	15
	609	9
	612	14
	613	15
	632	9
	635	14
	636	15
723-26-14240	569	11
	591	11
	609	11
	632	11
723-26-14470	572	11
	595	11
	614	11
	638	11
723-26-14560	568	13
	590	13
	608	13
723-26-14570	568	14
	590	14
	608	14
723-26-14580	568	16
	590	16
	594	6
	608	16
	612	6
	613	6
	631	16
	636	6
723-26-14590	572	4
	595	4
	614	4
	638	4
723-26-14660	631	13
723-26-14670	631	14
723-26-14680	635	6
723-26-15110	568	9
	590	9
	594	8
	608	9
	612	7
	613	8
	631	9
	635	7
	636	8
723-26-15121	568	5
	590	5
	594	5
	608	5
	612	5
	613	5
	631	5
	635	5
	636	5
723-26-15210	635	23
723-26-15220	572	28
	594	25
	595	28
	613	25
	614	28
	635	24
	636	25

PartNumber	Page	Index
	638	28
723-26-15230	569	1
	570	8
	572	8
	575	21
	591	1
	594	17
	595	8
	598	21
	609	1
	612	16
	613	17
	614	8
	617	21
	632	1
	635	16
	636	17
	638	8
	641	21
723-26-15310	569	12
	591	12
	609	12
	612	23
	632	12
723-26-15370	569	2
	591	2
	594	16
	609	2
	612	15
	613	16
	632	2
	635	15
	636	16
723-26-15830	567	4
	589	4
	594	20
	607	4
	612	19
	613	20
	630	4
	635	19
	636	20
723-26-15840	567	7
	572	34
	589	7
	594	19
	595	34
	607	7
	612	18
	613	19
	615	34
	630	7
	635	18
	636	19
	639	34
723-26-15851	572	5
	595	5
	614	5
	638	5
723-26-15861	572	3
	595	3
	614	3
	638	3
723-26-16760	568	8
	590	8
	608	8
	631	8
723-26-16770	568	6
	590	6
	608	6
	631	6
723-26-16780	568	7
	590	7
	608	7
	631	7

PartNumber	Page	Index
723-26-16790	568	11
	590	11
	608	11
	631	11
723-26-16990	592	12
	610	11
	633	11
723-26-17210	570	2
	592	4
	610	4
	633	4
723-36-14120	575	9
	598	9
	617	9
	641	9
723-36-15250	572	19
	595	19
	614	19
	638	19
723-36-15340	572	17
	595	17
	614	17
	638	17
723-36-41930	339	6
723-40-72200	331	
723-40-85100	576	1
	599	1
	618	1
	643	1
723-46-15240	571	5
723-50-02801	595	
723-56-31211	575	8
	598	8
	617	8
	641	8
723-56-31510	575	10
	598	10
	617	10
	641	10
723-56-31630	327	21
	329	10
723-56-31640	575	28
	598	28
	617	28
	641	28
723-56-31720	575	3
	598	3
	617	3
	641	3
723-56-31730	573	36
	575	4
	596	36
	598	4
	615	36
	617	4
	639	36
	641	4
723-56-31980	327	16
723-56-31990	327	15
723-56-32820	575	11
	598	11
	617	11
	641	11
723-56-33960	577	5
	600	5
	644	5
	663	5
723-56-41710	575	20
	598	20
	617	20
	641	20
723-56-41730	575	25
	598	25
	617	25
	641	25

PartNumber	Page	Index
723-56-41970	575	26
	598	26
	617	26
	641	26
723-60-21102	577	13
	601	13
	644	13
	663	13
723-60-21900	572	12
	595	12
	614	12
	638	12
729-11-41000	187	22
7825-30-1441	439	32
7826-25-3000	461	1
7830-74-5002	449	1
7831-69-7102	456	12
7835-33-2000	231	10
	232	3
7861-74-5100	454	8
7861-93-1430	218	1
7861-93-1812	333	20
7861-93-1850	272	1
7861-93-3320	272	3
	307	45
	309	46
	311	44
	313	46
7861-93-5390	217	1
8233-06-3350	457	12
	464	12
8288-43-1120	242	32
8A13-10-2100	461	4
AS167554	369	17
	371	17
	373	15
	375	15
	377	14
	379	14
	381	17
	383	17
	385	15
	387	15
	389	14
	391	14
AS170373	369	18
	371	18
	373	16
	375	16
	377	15
	379	15
	381	18
	383	18
	385	16
	387	16
	389	15
	391	15
AS196440	369	22
	371	22
	381	22
	383	22
AS198304	373	14
	375	14
	377	13
	379	13
	385	14
	387	14
	389	13
	391	13
AS198316	369	15
	371	15
	381	15
	383	15
AS202486	369	21
	371	21

PartNumber	Page	Index
	381	21
	383	21
AS202487	369	14
	371	14
	381	14
	383	14
AS202810	369	2
	371	2
	373	2
	375	2
	381	2
	383	2
	385	2
	387	2
AS203500	371	
	375	
	383	
	387	
AS203503	379	
	391	
AS203504	369	
	373	
	381	
	385	
AS203505	377	
	389	
AS203510	371	1
	375	1
	383	1
	387	1
AS203511	379	1
	391	1
AS203512	369	1
	373	1
	381	1
	385	1
AS203513	377	1
	389	1
AS203514	369	4
	371	4
	373	4
	375	4
	381	4
	383	4
	385	4
	387	4
AS203515	377	3
	379	3
	389	3
	391	3
AS203518	371	3
	375	3
	379	2
	383	3
	387	3
	391	2
AS203519	369	3
	373	3
	377	2
	381	3
	385	3
	389	2
AS203521	369	5
	371	5
	373	5
	375	5
	377	4
	379	4
	381	5
	383	5
	385	5
	387	5
	389	4
	391	4
AS203523	371	6
	375	6
	379	5
	383	6
	387	6
	391	5
AS203525	369	6
	373	6
	377	5
	381	6
	385	6
	389	5
AS203527	369	10
	371	10
	373	10
	375	10
	377	9
	379	9
	381	10
	383	10
	385	10
	387	10
	389	9
	391	9
AS203528	369	9
	371	9
	373	9
	375	9
	377	8
	379	8
	381	9
	383	9
	385	9
	387	9
	389	8
	391	8
AS203532	369	8
	371	8
	373	8
	375	8
	377	7
	379	7
	381	8
	383	8
	385	8
	387	8
	389	7
	391	7
AS203536	369	12
	371	12
	381	12
	383	12
AS203537	373	12
	375	12
	377	11
	379	11
	385	12
	387	12
	389	11
	391	11
AS203538	369	11
	371	11
	373	11
	375	11
	377	10
	379	10
	381	11
	383	11
	385	11
	387	11
	389	10
	391	10
AS203541	369	13
	371	13
	373	13
	375	13
	377	12
	379	12
	381	13
	383	13
	385	13
	387	13
	389	12
	391	12
AS203542	369	20
	371	20
	373	17
	375	17
	377	16
	379	16
	381	20
	383	20
	385	17
	387	17
	389	16
	391	16
AS203544	369	19
	371	19
	381	19
	383	19
AS203545	369	16
	371	16
	381	16
	383	16
AS203547	373	18
	375	18
	377	17
	379	17
	385	18
	387	18
	389	17
	391	17
AS203549	369	7
	371	7
	373	7
	375	7
	377	6
	379	6
	381	7
	383	7
	385	7
	387	7
	389	6
	391	6
KD0-0020-05062	140	39
KD0-0055-05082	139	48
	140	37
KD0-0055-05122	135	28
KD0-0080-06142	135	22
KD0-0083-08802	135	13
KD0-0270-06402	139	43
KD0-0270-06602	141	43
KD0-0274-06202	138	17
	140	15
KD0-0275-06802	134	12
KD0-0276-08402	140	32
KD0-0280-16022	134	17
KD0-0290-20022	135	34
KD0-0291-08010	135	27
KD0-09001-4380	140	30
KD0-09001-4580	138	30
KD0-09006-0660	139	49
	141	47
KD0-09006-0670	139	50
	141	48
KD0-09011-3140	140	27
KD0-09057-0110	140	33
KD0-09057-0190	140	38
KD0-09057-0220	134	29
KD0-09170-2501	134	21
KD0-09201-0760	135	9

PartNumber	Page	Index
KD0-09201-0770	135	4
KD0-09201-0850	140	12
KD0-09201-0980	134	4
KD0-09201-1140	134	7
KD0-09271-3620	138	22
	140	21
KD0-09275-1430	139	52
	141	50
KD0-23100-0251	138	20
KD0-23100-0430	140	18
KD0-23120-0180	140	8
KD0-23200-0331	138	23
KD0-23200-0671	140	20
KD0-23303-0020	140	5
KD0-23310-1730	138	6
KD0-23310-1740	140	9
KD0-23320-0220	138	9
KD0-23500-0970	138	7
KD0-23600-0410	140	13
KD0-23600-0460	138	12
KD0-23611-0690	138	13
KD0-23611-1101	140	14
KD0-23700-0130	138	32
KD0-23710-0221	140	29
KD0-23740-0250	138	26
KD0-23740-0351	140	23
KD0-23750-0250	138	27
KD0-23750-0490	140	24
KD0-23901-0170	139	40
KD0-23904-0070	138	1
KD0-23921-0230	138	15
KD0-23927-0071	138	2
KD0-23951-0301	138	8
KD0-23951-0331	138	11
KD0-25000-8332	139	47
KD0-25000-8521	141	42
KD0-33902-0080	135	18
KD0-33902-0090	135	17
KD0-33902-0100	135	24
KD0-35100-0300	134	1
KD0-35100-0310	135	1
KD0-35120-0250	135	11
KD0-35120-0290	134	18
KD0-35200-0320	135	12
KD0-35200-0460	134	5
KD0-35300-0200	135	5
KD0-35300-0350	134	6
KD0-35411-0640	134	13
KD0-35411-0650	135	31
KD0-35421-0190	135	32
KD0-35421-0240	134	14
KD0-35700-0950	134	
KD0-35700-0970	135	
KD0-35710-1150	134	19
KD0-35710-1190	135	14
KD0-35730-0162	135	15
KD0-35730-0700	134	20
KD0-35761-0190	135	29
KD0-35761-0250	134	31
KD0-35784-0210	134	27
KD0-35784-0290	134	28
KD0-35923-0130	134	23
KD0-35926-0070	134	8
KD0-35926-0080	135	6
KD0-35926-0090	134	10
KD0-35943-0100	135	23
KD0-35943-0140	134	25
KD0-35943-0150	134	22
KD0-35943-0160	134	24
KD0-35943-0170	134	26
KD0-35943-0210	135	16
KD0-35951-0060	134	9
KD0-35951-0080	135	7
KD0-47100-4651	140	19
KD0-47100-4800	138	21
KD0-47761-2671	139	45
	141	45
KD0-47761-2681	139	46
	140	25
KD0-47761-2691	138	24
	140	26
KD0-47927-1390	141	44
KD1-0020-06452	135	19
KD1-0240-06305	138	33
	141	41
KD1-0240-08405	138	37
KD1-0330-06012	135	20
	139	42
KD1-0330-08022	138	39
	140	3
KD1-0330-16012	134	15
KD1-0331-08020	135	26
KD1-0335-06002	135	21
	139	41
KD1-0335-08002	135	25
	138	38
	140	2
KD1-0335-16002	134	16
KD1-0335-20002	135	33
KD1-0345-05001	141	40
KD1-0345-08001	140	4
KD1-0400-20100	138	19
KD1-0400-30100	140	17
KD1-0454-60067	138	10
KD1-0454-62007	138	31
KD1-0454-62047	138	16
KD1-0505-00601	138	28
KD1-09211-0081	140	28
KD1-09211-0980	138	14
KD1-09211-0981	141	46
KD1-09211-1120	140	22
KD1-09257-0050	139	51
	141	49
KD1-09279-0090	140	1
KD1-23111-0160	138	5
KD1-23181-0020	138	4
	140	7
KD1-23320-0290	140	11
KD1-23500-0970	140	10
KD1-23913-0040	138	25
KD1-23914-0020	138	3
	140	6
KD1-23921-0130	138	34
	140	36
KD1-23921-0140	138	35
	140	35
KD1-23941-0040	138	36
	140	34
KD1-23951-0020	138	18
KD1-23951-0051	140	16
KD1-33923-0790	134	2
KD1-33923-0890	135	2
KD1-33926-0660	135	8
KD1-33926-0730	134	11
KD1-33926-0790	135	10
KD1-35921-0010	135	35
KD1-35923-0030	135	3
KD1-35923-0160	134	3
KD1-47921-0790	138	29
	140	31
KD1-47927-1250	139	44
KD7-35719-0181	135	30
KD7-35719-0211	134	30
ND017321-4600	425	3
ND017661-3560	425	12
ND047372-0660	486	6
	493	6
ND047410-1570	486	4
	493	4
ND047410-1580	493	
ND047761-2760	483	3
ND047762-0540	483	4
ND047762-3000	483	5
ND047764-0021	483	7
ND047765-0020	483	8
ND047782-3720	483	11
ND063600-4580	425	6
ND063800-0300	424	27
ND077500-5650	425	11
ND077800-1040	425	5
ND100775-8400	423	18
ND113104-2260	426	3
ND116242-7000	425	1
ND116242-7010	425	2
ND116360-0030	425	4
ND116420-7450	423	17
ND116577-0970	423	4
ND116577-0981	423	25
ND116577-0990	424	26
ND116662-8530	425	7
ND116740-4980	423	20
ND116740-4990	423	21
ND116740-5000	425	9
ND116780-5651	423	24
ND116782-6690	423	22
ND116782-6700	423	23
ND116782-6720	425	8
ND117300-2600	425	
ND146636-7450	423	9
ND146636-7460	423	15
ND146636-7530	425	14
ND146636-7540	425	15
ND146636-7550	425	16
ND146636-7560	424	29
ND146691-4470	486	12
	493	12
ND147310-0110	486	2
ND147310-1750	493	2
ND147350-1640	486	3
	493	3
ND147410-1580	486	
ND245450-8520	423	1
ND245450-8530	423	2
ND245450-8540	423	3
ND246470-8152	426	2
ND246790-2060	423	19
ND247300-1070	486	
ND247300-4152	493	
ND443120-1961	423	
ND445013-0521	483	10
ND445013-0811	483	9
ND445021-0060	483	12
ND445021-0070	483	13
ND445021-3941	423	16
ND446010-5360	423	
ND446260-2160	423	10
ND447220-4780	486	1
ND447220-4781	493	1
ND447500-3750	423	8
ND447610-0630	423	5
ND7922-571450	483	2
ND7930-591100	483	1
ND7935-163610	483	6
ND91310-05081	486	11
	493	11
ND949001-1730	424	28
	425	13
ND949008-0330	425	10
	426	1
ND949013-7480	486	9
	493	9
ND949013-7500	486	
	493	
ND949013-7510	486	
	493	

PartNumber	Page	Index
ND949046-3100	423	14
ND949046-3610	423	13
ND949047-2950	486	5
	493	5
ND949048-0430	486	10
	493	10
ND949070-0640	486	8
	493	8
ND949070-1360	486	7
	493	7
ND949142-0020	423	6
	423	11
ND949142-0030	423	7
	423	12
REU419B-418-C	416	15
RFU419B-418-A	416	1
RFU419B-418-B	416	6
RFU419B-418-C	416	7
RFU419B-418-D	416	3
RFU419B-418-E	416	4
RFU419B-418-F	416	16

PartNumber	Page	Index

PartNumber	Page	Index

D65PX-17 Bulldozer
Form No. FEN02252-00

©2012 KOMATSU
All Rights Reserved
Printed in Japan 03-12