JANEIRO 2010

EEPC008100

RUTHZIL TRATOR COMERCIAL DE PEÇAS LTDA 11 97083-6812 ROLANDO CITRANGULO

PARTS BOOK

D65WX-16
Serial No. 80062 and up

SAA6D114E-3E
Serial No. 26858351 and up

FOREWORD

When ordering a spare part, specify the part number, part name, and quantity required, and also specify your machine model code, machine serial number, engine serial number and the service meter reading.

This Parts Book describes not only standard items but also optional equipment and attachments. To order a part, please contact your nearest Komatsu distributor.

This Parts Book contains the information and special codes as follows:

ILLUSTRATION AND PARTS LIST

When you open this Parts Book, you will find an illustration following its figure number (FIG.) Each individual part in the illustration is given an index number. Following the illustration, the component parts of the unit are listed in the order of the index numbers shown in the illustration. The part number, part name, quantity and applicable serial number are given for each part as a parts list.

FIGURE NUMBER (FIG.)

The figure number (FIG.) is the number which shows the figure of the page. It is not the spare part number. The numbers are not always continuous.

PARTS LIST

Spare parts information are listed in the parts list page as follows:

Index:

This is the same as the index number in the illustration. The parts are listed in index number order.

Code:

Codes are used in this column and represent as follows:

A1 This part and the part specified in the line immediately above are interchangeable.

A2 The part specified in the line above can be used instead of this part.

A3 This part can be used instead of the part specified in the line immediately above.

A4 The part specified in the description column can be used instead of this part if it is used as a set.

B1 This shows discontinued part. The part specified in the above line is supplied instead.

B2 This shows a discontinued part. The part specified in the description column is supplied instead as a set.

C1 This part cannot be supplied as an individual part. It is supplied as an assembly.

C2 This part is supplied for authorized Komatsu distributors only. It cannot be supplied as an individual part. It is supplied as an assembly.

C3 This indicates a part supplied as semi-finished. It requires additional work before installation.

Part Number:

The number given in the part number column is the part number for the part shown. It is the identification code used when ordering that part. It is important that there be no mistake in this code number when ordering.

Description:

This gives the name of part that has the part number listed. The mark "•" is put in front of the component part name of an assembly part and the item is entered following the assembly. If a part marked with "•" is a sub assembly, its components are marked with "••".

Example: Tank Assembly
- •Tank
- •Cap
- ••Packing

Furthermore, the following marks and abbreviations are used in this column.

Kit	This indicates kit parts. For kit parts, refer to the section FIELD REPAIR SERVICE PARTS in this Parts Book.
D	Diameter
L	Length
LHS	Left-hand side
RHS	Right-hand side
T	Thickness
W	Width

Quantity (Qty):

This specifies the number of pieces used for one machine. However, if a part is included in the assembly and/or component, the quantity per such assembly and/or component is specified.
Code AR (as required) shall be used in the Quantity column if the part cannot be specified numbers requires per machine and/or component. In such case, any number of quantities may be ordered depend on the field service requirement.

Serial Numbers:

Applicable engine serial number is indicated for the engine volume. In the chassis volume, this indicates the machine serial number in which the part is used.

If the serial number is enclosed in parenthesis, it shows that it is the applicable serial number for exclusive use of the equipment of figure number (FIG.)

AVANT-PROPOS

Lorsque vous passez une commande d'une pièce de rechange, vous êtes prié de spécifier le numéro de la pièce, la désignation de la pièce et la quantité requise et d'indiquer également le code du modèle de la machine, le numéro de série de la machine, le numéro de série du moteur et la lecture du compteur de service du véhicule.

Sur le présent catalogue des pièces figurent non seulement les équipements standard, mais également les équipements et accessoires en option. Si vous désirez un équipement ou une pièce quelconque, vous êtes prié de prendre contact avec le concessionnaire Komatsu le plus proche.

Ce catalogue des pièces comprend les informations et codes spéciaux de la manière suivante:

FIGURES ET LISTES DES PIÈCES

Lorsque vous ouvrez le présent catalogue, vous pouvez rechercher les figures en fonction du numéro de figure (FIG.). Chaque pièce individuelle dans la figure est fournie d'un numéro de référence. D'après la figure, les éléments de l'unité sont énumérés dans l'ordre des numéros de référence montrés sur la figure. Le numéro de la pièce, la désignation de la pièce, la quantité et le numéro de série utilisés sont indiqués pour chaque pièce comme liste des pièces.

NUMÉRO DE FIGURE (FIG.)

Le numéro de figure (FIG.) est un numéro qui permet d'identifier une figure sur une page. Il ne représente pas le numéro de la pièce de rechange. Les numéros ne sont pas toujours séquentiels.

LISTE DES PIÈCES DE RECHANGE

Les informations des pièces de rechange sont données dans la page de la liste des pièces comme ci-après:

Numéro de référence (Index):

Les numéros de référence correspondent aux numéros de référence notés sur la figure et sont énumérés dans l'ordre des numéros de référence.

Codification (Code):

Les codes sont utilisés dans cette colonne et représentent comme ci-après:

A1 Cette pièce et la pièce qui figure sur la ligne juste au-dessus sont interchangeables.

A2 La pièce indiquée sur la ligne au-dessus peut être utilisée au lieu de cette pièce.

A3 Cette pièce peut être utilisée au lieu de la pièce indiquée sur la ligne juste au-dessus.

A4 La pièce indiquée dans la colonne de description peut être utilisée au lieu de cette pièce si elle est utilisée comme ensemble.

B1 Ceci montre la pièce dont la production est interrompue. La pièce indiquée dans la ligne au-dessus est fournie à sa place.

B2 Ceci montre la pièce dont la production est interrompue. La pièce indiquée dans la colonne de description est fournie à sa place comme ensemble.

C1 Cette pièce ne peut pas être fournie comme pièce individuelle. Elle est fournie en tant qu'ensemble.

C2 Cette pièce est fournie pour les distributeurs autorisés de Komatsu seulement. Elle ne peut pas être fournie comme pièce individuelle. Elle est fournie en tant qu'ensemble.

C3 Ceci indique une pièce fournie à l'état semi-fini. Ceci exige un travail additionnel avant l'installation.

Numéros de pièce (Part Number):

Les numéros indiqués dans cette colonne correspondent aux numéros des pièces représentées et constituent les codes à spécifier pour toute commande de pièce. Il est important de ne pas faire d'erreur avec ce code au moment de la commande.

Description (Description):

Ceci indique le nom de la pièce qui montre le numéro de la pièce énumérée. La marque "•" est placée devant le nom de la pièce du composant d'une pièce d'ensemble et l'item est introduit suivant l'ensemble. Si une pièce marquée avec "•" est un sous-ensemble, ses composants sont marqués avec "• •".
Exemple: Tank Assembly (Ensemble de réservoir)
• Tank
• Cap
• • Packing

En outre, les marques et abréviations suivantes sont utilisées dans cette colonne.

Kit Ceci indique les pièces de kit. Pour les pièces de kit, se référer à la Section FIELD REPAIR SERVICE PARTS de ce Catalogue des Pièces.
D Diamètre
L Longueur
LHS Côté gauche
RHS Côté droit
T Épaisseur
W Largeur

Quantité (Qty):

Ceci spécifie le nombre de pièces nécessaires pour l'équipement en question. S'il s'agit de pièces comprises dans un ensemble et/ou composant, et la quantité indiquée est le nombre de pièces nécessaires pour l'ensemble et/ou le composant en question.
Le code AR (comme requis) sera utilisé dans la colonne de Quantité si la pièce ne peut pas se présenter en nombres indiqués comme requis par machine et/ou composant. Dans ce cas, tout nombre de quantités peut être commandé selon la condition de service de champ.

Numéros de série (Serial Numbers):

Le numéro de série du moteur applicable est indiqué pour le volume du moteur. Dans le volume de la carrosserie, ceci indique le numéro de série de l'équipement sur lequel la pièce est utilisée.

Si le numéro de série est placé entre parenthèses, cela signifie qu'il s'agit d'un numéro de série destiné exclusivement à l'utilisation de l'équipement mentionné dans le numéro de figure (FIG.).

PREFAZIONE

Quando fate un ordinazione di una parte di ricambio, siete pregati di precisare il numero della parte, la designazione della parte e la quantità necessaria ed indicare anche il codice del modello della macchina, il numero di serie della macchina, il numero di serie del motore e la lettura dell'indicatore di servizio del veicolo.

Sul presente catalogo delle parti appaiono non solo le attrezzature standard, ma anche le attrezzature ed accessori in opzione. Se desiderate un'attrezzatura o una parte qualunque, siete pregati di prendere contatto con il concessionario Komatsu più vicino.

Questo catalogo delle parti comprende le informazioni ed i codici speciali nel modo seguente:

ILLUSTRAZIONI ED ELENCO DELLE PARTI

Quando aprite il presente catalogo, troverete una figura secondo il suo numero di figura (FIG.). Ogni parte individuale nella figura è fornita di un numero di riferimento. Secondo la figura, gli elementi dell'unità sono enumerati nell'ordine dei numeri di riferimento mostrati sulla figura. Il numero della parte, la designazione della parte, la quantità ed il numero di serie utilizzati sono indicati per ogni parte come elenco delle parti.

NUMERO DI FIGURA (FIG.)

Il numero di figura (FIG.) è il numero che indica la figura della pagina. Non rappresenta il numero della parte di ricambio. I numeri non sono sempre continui.

ELENCO DELLE PARTI DI RICAMBIO

Le informazioni dei pezzi di ricambio sono elencate nella pagina dell'elenco dei pezzi come segue:

Numero di riferimento (Index):

I numeri di riferimento corrispondono ai numeri di riferimento notati sulla figura e sono enumerati nell'ordine dei numeri di riferimento.

Codice (Code):

I codici sono usati in questa colonna e rappresentano come segue:

A1 Questa parte ed la parte specificata nella linea immediatamente sopra sono intercambiabili.

A2 La parte specificata nella linea sopra può essere usata anziché questa parte.

A3 Questa parte può essere usata anziché la parte specificata nella linea immediatamente sopra.

A4 La parte specificata nella colonna di descrizione può essere usata anziché questa parte se è usata come insieme.

B1 Ciò mostra la parte non più in produzione. La parte specificata nella suddetta linea è invece fornita.

B2 Ciò mostra una parte non più in produzione. La parte specificata nella colonna di descrizione è fornita invece come insieme.

C1 Questa parte non può essere fornita come pezzo individuale. È fornita come insieme.

C2 Questa parte è destinata solo ai distributori autorizzati Komatsu. Non può essere fornita come parte individuale. È fornita come insieme.

C3 Ciò indica una parte fornita come semifinito. Richiede un lavoro supplementare prima dell'installazione.

Numeri di parte (Part Number):

I numeri indicati in questa colonna corrispondono ai numeri delle parti rappresentate e costituiscono i codici da precisare per qualsiasi ordinazione di parte. È importante non fare un errore con questo codice al momento dell'ordinazione.

Descrizione (Description):

Ciò dà il nome della parte che presenta il numero di parte elencato. Il contrassegno "•" è messo davanti al nome della parte componente di una parte di gruppo e l'articolo è inserito dopo il gruppo. Se un pezzo segnato con "•" è un sotto-gruppo, i suoi componenti sono segnati con "• •".

Esempio: Tank Assembly
- • Tank
- • Cap
- • • Packing

Inoltre, i seguenti contrassegni ed abbreviazioni sono usati in questa colonna.

Kit Ciò indica le parti di kit. Per le parti di kit, riferirsi alla sezione PARTI DI RICAMBIO PER SERVIZIO DI RIPARAZIONE IN SEDE in questo Catalogo delle Parti.
D Diametro
L Lunghezza
LHS Lato a sinistra
RHS Lato a destra
T Spessore
W Larghezza

Quantità (Qty):

Questo precisa il numero di parti necessarie per l'attrezzatura in questione. Se si tratta di parti comprese in un insieme e/o componente, e la quantità indicata è il numero di parti necessarie per l'insieme e/o il componente in questione.
Il codice AR (come richiesto) sarà utilizzato nella colonna di Quantità se la parte non può presentarsi in numeri indicati come richiesto per macchina e/o componente. In questo caso, qualsiasi numero di quantità può essere ordinato secondo la condizione di servizio di campo.

Numeri di serie (Serial Numbers):

Il numero di serie del motore applicabile è indicato per il volume del motore. Nel volume della carrozzeria, questo indica il numero di serie dell'attrezzatura sulla quale la parte è utilizzata.

Se il numero seriale è racchiuso tra parentesi, indica che è il numero di serie applicabile per uso esclusivo dell'attrezzatura del numero di figura (FIG.)

Bei der Bestellung von Teilen bitte die Teilenummer, die Teilebezeichnung und die Menge des jeweiligen Teils sowie die Modellnummer, die Seriennummer der Maschine, die Seriennummer des Motors und den Stand des Betriebsstundenzählers angeben.

In dieser Ersatzteilliste ist nicht nur das Standardzubehör aufgeführt, sondern auch als Sonderausstattung erhältliche Teile und Einrichtungen. Bestellungen nimmt Ihr zuständiger Komatsu-Händler entgegen.

Die folgenden Informationen und Kodes sind in der Ersatzteilliste enthalten:

Bilder und Ersatzteilliste

Beim Aufschlagen des Ersatzteilkatalogs finden Sie nach der Bildnummer (BILD) geordnete Bilder. Jedes Einzelteil einer Baugruppe ist mit einer Kennzahl versehen. Ausgehend von den Bildern sind die Bauteile der Baugruppe aufgeführt, und zwar geordnet nach den in den Bildern angegebenen Kennzahlen. Jedes Einzelteil wird mit Teilenummer, Teilebezeichnung und entsprechender Seriennummer angegeben.

Bildnummer (BILD)

Mit der Bildnummer (BILD) können Bilder auf einer Seite identifiziert werden. Es handelt sich dabei nicht um die Nummer des Lieferteils. Auch sind die Bilder nicht fortlaufend nummeriert.

Ersatzteilliste

Angaben zu den Ersatzteilen sind auf der Auflistungsseite wie folgt dargestellt::

Kennzahl (Index):

Hierbei handelt es sich um die Kennzahlen aus den Bildern. Die Bauteile sind nach diesen Kennzahlen geordnet aufgeführt.

Kode (Code):

In dieser Spalte werden Kodes mit den folgenden Bedeutungen benutzt:

A1 Dieses Teil ist mit dem in der vorangegangenen Zeile aufgeführten Teil austauschbar.

A2 Das in der vorangegangen Zeile aufgeführte Teil kann anstelle dieses Teils verwendet werden.

A3 Dieses Teil kann anstelle des in der vorangegangenen Zeile aufgeführten Teils verwendet werden.

A4 Anstelle dieses Teils kann das in der Spalte „Beschreibung“ aufgeführte Teil verwendet werden, wenn das Teil zusammen mit anderen Teilen als ein Bauteilsatz verwendet wird.

B1 Dieses Teil kann nicht mehr geliefert werden. Stattdessen wird das in der vorangegangenen Zeile aufgeführte Teil geliefert.

B2 Dieses Teil kann nicht mehr geliefert werden. Stattdessen wird das in der Spalte „Beschreibung“ aufgeführte Teil als ein Bauteilsatz geliefert.

C1 Dieses Teil kann nicht als Einzelteil, sondern nur als Baugruppe geliefert werden.

C2 Dieses Teil wird nur an autorisierte Komatsu-Händler geliefert. Es kann nicht als Einzelteil, sondern nur als Baugruppe geliefert werden.

C3 Hiermit werden Teile gekennzeichnet, die in vorbearbeitetem Zustand geliefert werden und für den Einbau nachbearbeitet werden müssen.

Teilenummer (Part Number):

Die in der Spalte „Teilenummer“ aufgeführte Nummer entspricht der Teilenummer für das betreffende Teil. Diese Nummer dient zur Identifizierung des Teils bei einer Bestellung. Deshalb sollte bei der Bestellung stets auf die genaue Angabe der Teilenummer geachtet werden.

Beschreibung (Description):

Hierunter wird die Bezeichnung des Teils mit der aufgeführten Teilenummer angegeben. Jedes Baugruppen-Bauteil ist mit dem vorangestellten Symbol „•“ gekennzeichnet und wird hinter der entsprechenden Baugruppe aufgeführt. Handelt es sich bei dem mit „•“ gekennzeichneten Bauteil um eine Baugruppe, sind die Bauteile dieser Baugruppe mit „• •“ gekennzeichnet.
Beispiel: Tank Assembly
• Tank
• Cap
• • Packing

Zusätzlich werden die folgenden Zeichen und Abkürzungen in dieser Spalte verwendet:

Kit Hiermit werden Teile gekennzeichnet, die nur als Satz erhältlich sind. Siehe dazu den Abschnitt „FIELD REPAIR SERVICE PARTS“ dieses Ersatzteilkatalogs.
D Durchmesser
L Länge
LHS linke Seite
RHS Rechte Seite
T Dicke
W Breite

Menge (Qty):

Hierunter wird die Anzahl der Bauteile für eine Maschine angegeben. Im Falle einer Baugruppe oder eines Aggregats wird allerdings die Anzahl der Teile pro Baugruppe angegeben.
Der Kode AR (nach Bedarf) wird in dieser Spalte dann benutzt, wenn keine genaue Angabe darüber möglich ist, wie groß der Mengenbedarf pro Maschine und/oder Baugruppe ist. In diesem Fall kann eine beliebige Menge je nach Bedarf bestellt werden.

Serial Numbers (Seriennummern):

Im Ersatzteilkatalog für den Motor versteht man hierunter die Seriennummer des Motors, in den das betreffende Teil eingebaut ist. Im Ersatzteilkatalog für die Maschine versteht man hierunter die Seriennummer der Maschine, in die das entsprechende Teil eingebaut ist.
Wenn die Seriennummer in Klammern angegeben ist, ist diese Seriennummer ausschließlich für das in der Bildnummer (BILD) angegebene Zubehör bestimmt.

Ao solicitar uma peça, informe o número, nome e quantidade da peça necessária, bem como o código de modelo da máquina e seu número de série, o número do motor e a leitura do medidor de serviço.

Este catálogo de peças não somente especifica os acessórios padrões mas também as peças opcionais e aditamentos. Para pedir uma peça, entre em contato com o revendedor Komatsu mais próximo.

Este catálogo de peças contém as seguintes informações e códigos especiais:

LISTA DE PEÇAS E ILUSTRAÇÕES

Ao abrir este catálogo de peças, encontrar-se-á uma ilustração seguida do número da figura (FIG.). A cada peça individual na ilustração corresponde um número de índice. Seguindo a ilustração, as peças componentes da unidade são listadas na ordem dos números de índice nela indicados. O número, nome, quantidade e número de série aplicável da peça são aprsentados como uma lista de peças.

NÚMERO DA FIGURA (FIG.)

O número da figura (FIG.) é o número que mostra a ilustração da página. Não é um número para fornecimento de peças sobressalentes. Os números nem sempre são contínuos.ebene Zubehör bestimmt.

LISTA DE PEÇAS

As informações das peças sobressalentes são relacionadas na página com a lista de peças de acordo com o seguinte:

Índice (Index):

Este é o mesmo que o número de índice na ilustração. As peças são relacionadas na ordem dos números de índice.

Código (Code):

Códigos são utilizados nesta coluna e significam o seguinte:

A1 Esta peça e a peça especificada na linha imediatamente acima são intercambiáveis.

A2 A peça especificada na linha acima pode ser utilizada no lugar desta peça.

A3 Esta peça pode ser utilizada no lugar da peça especificada na linha imediatamente acima.

A4 A peça especificada na coluna “Descrição” pode ser utilizada no lugar desta peça se usada como um conjunto.

B1 Indica peça descontinuada. A peça especificada na linha acima é fornecida em seu lugar.

B2 Indica peça descontinuada. A peça especificada na coluna “Descrição” é fornecida em seu lugar como um conjunto.

C1 Esta peça não pode ser fornecida como peça individual. Ela é fornecida como um conjunto.

C2 Esta peça é fornecida somente para revendedores Komatsu autorizados. Não pode ser fornecida como peça individual. Ela é fornecida como um conjunto.

C3 Indica peça fornecida em condição semiacabada. Requer trabalho adicional antes da instalação.

Número da peça (Part Number):

O número indicado na coluna de números de peça corresponde ao número da peça exibida. É o código de identificação usado para o pedido da peça. É importante não enganar-se de número de código ao pedir a peça.

Descrição (Description):

Indica o nome da peça que tem o seu número de peça relacionado. O símbolo "•" é colocado na frente do nome peça do componente de uma peça de conjunto, e o item é lançado seguindo o conjunto. Se uma peça indicada com "•" é um subconjunto, os seus componentes são indicados por "• •".

Exemplo: Tank Assembly
- • Tank
- • Cap
- • • Packing

Além disso, os seguintes símbolos e abreviações são usados nesta coluna.

Kit Indica peças de um jogo. Para peças de jogo, referir-se à seção "FIELD REPAIR SERVICE PARTS" neste catálogo de peças.

D Diâmetro
L Comprimento
LHS Lado esquerdo
RHS Lado direito
T Espessura
W Largura

Quantidade (Qty):

Indica o número de peças utilizadas em uma máquina. Contudo, se uma peça é incluída no conjunto e/ou componente, a quantidade por conjunto e/ou componente é especificada.
O código AR (como requerido) usar-se-á na coluna "Quantitade" caso o número de peças por máquina e/ou componente não possa ser especificado. Em tal caso, qualquer número de peças pode ser pedido dependendo dos requisitos de serviço em campo.

Números de série (Serial Numbers):

O número de série do motor aplicável é indicado para o volume do motor. No volume da carroceria, indica o número de série da máquina na qual a peça é utilizada.

Se o número de série está entre parêntesis, mostra que é o número de série aplicável para uso exclusivo do equipamento do número da figura (FIG.)

订购零件时，请注明需要零件的货号、品名、数量以及使用机器的车辆编号、发动机型号和系列号、工作时数。

此零件明细表上不仅记载了标准装备零件，还记载了选购零件、附件零件。如果您需要订货，请与最近的小松代理店联系。

为了清楚明了，零件手册中有如下规定：

图表

打开此零件清单后，可以看到附带图号（FIG.）的零件明细表图示。在图示上标有各种零件的索引号码。除图之外，还按索引号码的顺序列表表示货号、品名、数量、适用机型。

图号（FIG.）

图号表示该页图的号码。它不是补充零件用的货号。此号码不一定是连续号码。

零件表

从左栏开始按以下顺序显示零件的明细。

索引 (Index):

与图的索引号码一致，按索引号码顺序编制为表格形式。

代号 (Code):

此栏使用的代号如下所示：

A1　此行零件可与紧挨着的上一行零件互换使用。

A2　上一行的零件可取代此行零件来使用。

A3　此行零件可代替紧挨着的上一行零件使用。

A4　品名栏内的零件配套后，可取代此行零件来使用。

B1　该行零件已停止供应，用上一行的零件代替使用。

B2　该行零件已停止供应，品名栏内的零件配套后代替此行零件供应。

C1　此行零件拟成套供应，不以单一零件供应。

C2　此行零件主要面向特定的代理。不以单一零件供应，只拟成套供应。

C3　此行零件以半成品的形式供应，使用前必需再加工。

货号 (Part Number):

此栏所示的编号是图示零件的货号。它是在订货时需要标明的特定代号，是非常重要的。

品名 (Description):

表示相当于货号的零件名称。构成组装品的零件，在品名的前面有 “·”标记，记载在组装品之后。另外，如果标记 “·”的零件是组装品，则该构成零件的品名前标有 “· ·”标记。

例： TANK ASSEMBLY
· TANK
· CAP
· · PACKING

另外，说明栏可能显示以下代号。

Kit 表示修理包。关于修理包构件详情，请参考此零件清单中 “现场修理服务零件”部分的内容。
D 直径
L 全长
LHS 左侧
RHS 右侧
T 厚度
W 全宽

数量 (Qty):

表示一台机器中需要使用的该零件数量。但是，如果是组装零件的构成零件时，表示其组装件的件数。如果不能指定每个机器以及（或者）组装零件中必须的零件数量时，可以在零件数量栏中使用代码 AR。此时，数量由现场的服务要件决定，然后进行定购。

适用机型 (Serial Numbers):

发动机篇中表示该使用零件的发动机型号，在机体篇中表示该使用零件的车辆号码。

如果适用机型位于括号中，表明该适用机型专门用于图号 (FIG.) 中所指的设备。

ПРЕДИСЛОВИЕ

При заказе запчасти укажите номер части, наименование части и нужное количество; кроме того, укажите код модели вашей машины, серийный номер машины, серийный номер двигателя и показания счетчика мото-часов.

В Каталоге приведены не только стандартные изделия, но и дополнительное оборудование и принадлежности. Для заказа запчасти пожалуйста обратитесь к ближайшему дилеру "Комацу".

Содержащаяся в Каталоге информация и специальные коды разъясняются ниже:

РИСУНОК И ПЕРЕЧЕНЬ ЧАСТЕЙ

Раскрыв Каталог, вы увидите рисунок после номера рисунка (ПОЗ). Каждой отдельной части на рисунке присвоен позиционный номер. За рисунком следует перечень составных частей устройства в порядке номеров позиций рисунка. Перечень частей указывает для каждой части ее номер, наименование, количество и применимый серийный номер.

НОМЕР РИСУНКА (ПОЗ)

Номер рисунка (ПОЗ) – это номер, который указывает рисунок на странице. Он не является номером запчасти. Последовательность номеров не обязательно непрерывна.

ПЕРЕЧЕНЬ ЧАСТЕЙ

Данные запасных частей приведены на странице перечня частей следующим образом:

Индекс (Index):

То же, что номер позиции на рисунке. Части перечислены в порядке их позиционных номеров.

Код: (Code):

В этой колонке находятся коды, обозначающие следующее:

A1 Данная часть и часть, указанная в предыдущей строке, взаимозаменяемы.

A2 Вместо данной части можно использовать часть, указанную в предыдущей строке.

A3 Данную часть можно использовать вместо части, указанной в предыдущей строке.

A4 В комплекте, вместо данной части можно использовать указанную в колонке описания.

B1 Поставки этой части прекращены. Взамен поставляется часть, указанная в предыдущей строке.

B2 Поставки этой части прекращены. Взамен комплектом поставляется часть, указанная в колонке описания.

C1 Данная часть отдельно не поставляется. Она поставляется с узлом.

C2 Данная часть поставляется лишь уполномоченным дилерам "Комацу". Отдельно не поставляется. Поставляется с узлом.

C3 Обозначает часть, поставляемую без доводки. Требует предустановочной подготовки.

Номер части (Part Number):

Приведенный в колонке номеров частей номер является номером изображенной части. Это код-идентификатор для заказа данной части. Важно, чтобы при заказе этот кодовый номер был указан без ошибок.

Описание (Description):

Здесь приводится наименование части, обозначенной номером в перечне. Значок "·" ставится перед наименованием детали компонента, причем деталь записана после узла. Если помеченная "·" часть является подсборкой узла, то ее составные части обозначаются значком "··".

Пример: Tank Assembly
·Tank
·Cap
··Packing

Далее, в этой колонке используются следующие обозначения и сокращения.

Kit	Указывает на элементы комплекта. Элементы комплекта смотри в разделе ЗАПАСНЫЕ ЧАСТИ ДЛЯ РЕМОНТА В УСЛОВИЯХ ЭКСПЛУАТАЦИИ данного Каталога.
D	Диаметр
L	Длина
LHS	Левая сторона
RHS	Правая сторона
T	Толщина
W	Ширина

Количество (Qty):

Указывает общее число изделий в одной машине. Если же изделие является частью узла и/или устройства, то указывается количество в таком узле и/или устройстве.
При невозможности указать количество частей на машину и/или устройство, в колонке Количество проставляется код AR (по потребности). В таком случае можно заказывать любые количества в зависимости от потребностей обслуживания на месте.

Серийные номера (Serial Numbers):

В книге по двигателю приводится соответствующий серийный номер двигателя. В книге по шасси указывает на серийный номер машины, где используется данная часть.

Серийный номер, заключенный в круглые скобки означает, что он применяется только для оборудования с номером рисунка (ПОЗ.)

. رقم القطعة (Part Number)

الرقم الوارد في عمود رقم القطعة هو رقم القطعة الخاص بالقطعة المبينة. وهو الرمز المستخدم لطلب تلك القطعة. ومن الضروري عدم ارتكاب اي خطأ في تحديد هذا الرقم عند طلب القطع.

. الوصف (Description)

يعطي اسم القطعة المدرج رقهما في القائمة. توضع العلامة "٠" امام اسم المكون لمجموعة ما ويدرج البند بعد المجموعة. اذا كانت القطعة المشار اليها بالعلامة "٠" هي نفسها عبارة عن مجموعة مكونات, فان كلا من مكوناتها يشار اليها بالعلامة "٠٠".

مثال

Tank Assembly
٠Tank
٠Cap
٠٠Packing

بالاضافة الى ذلك, العلامات والمختصرات التالية تستخدم في هذا العمود.

Kit	هذا يشير الى قطع الطقم. حول قطع الطقم, راجع قسم "قطع غيار خدمة الإصلاح الميداني" في كتاب القطع هذا.
D	قطر
L	طول
LHS	جانب اليد اليسارى
RHS	جانب اليد اليمنى
T	السمك
W	العرض

. الكمية (Qty)

هذا هو عدد القطع المستخدمة لآلية واحدة. اما بالنسبة لمجموعات المكونات ومجموعات القطع فانه يتم تحديد عدد القطع لكل مجموعة.
الرمز AR (حسب الطلب) سوف يستخدم في عمود الكمية اذا لم يتم تحديد عدد القطع المطلوبة لكل مانكة و/او للمجموعة. في مثل هذه الحالة, فان اي عدد من الكميات ربما يتم طلبه بشكل يعتمد على متطلبات مجال الخدمة.

. الرقم التسلسلي (Serial Numbers)

في كتاب قطع المحرك يشير هذا الرقم الى الرقم التسلسلي للمحرك الذي تستخدم فيه القطعة. قي كتاب قطع الآلية, يشير هذا الرقم الى الرقم التسلسلي للآلية التي تستخدم فيها القطع.

في حالة وضع الرقم التسلسلي بين الأقواس، فهذا يعني أن هذا هو الرقم التسلسلي الساري للاستخدام الحصري للقطعة الموضحة بالشكل.

عند طلب القطع, يرجى تحديد رقم القطعة واسم القطعة والكمية المطلوبة من القطعة, مع تحديد رقم الموديل والرقم التسلسلي وقراءة عداد الخدمة.

قائمة القطع هذه لا تقتصر على الكميات القياسية فقط بل تشمل ايضاً القطع والملحقات الاختيارية. لطلب القطع, يرجى الاتصال باقرب موزع لمنتجات كوماتسو.

كتاب القطع هذا يحتوي على المعلومات ورموز التخصيص وكما مبين ادناه:

الشكل والقائمة

عندما تفتح كتاب القطع هذا, سوف تجد رسومًا توضيحية تتضمن رقم الشكل (الشكل). كل قطعة مفردة في الرسم يعطى لها رقم فهرس. في الرسم التالي, قطع المجموعة للوحدة تم ادراجها حسب ترتيب ارقام الفهرس المبينة في الرسم.. رقم القطعة, اسم القطعة, الكمية والرقم التسلسلي المطابق يعطى لكل قطعة حسب تسلسل القطع في القائمة.

رقم الشكل (الشكل)

رقم الشكل (الشكل) هو الرقم الذي يميز شكل ما داخل الصفحة. إنه ليس رقم القطعة. وليست الأرقام متتابعة دائمًا.

قائمة القطع

معلومات قطع الغيار مثبتة في صفحة قائمة القطع وكلاتي:

. الفهرست (Index)

هذا الرقم هو نفس رقم الفهرس الوارد في الشكل التوضيحي. تدرج القطع في القائمة مرتبة تبعاً لارقام الفهرس.

. الرمز (Code)

الرموز تستخدم في هذا العمود وتوصف كلاتي:

A1 هذه القطعة والقطعة المذكورة في السطر السابق مباشرة يمكن لكل منهما ان تحل محل الاخرى.

A2 القطعة المذكورة في السطر السابق يمكن استعمالها بدلاً من هذه القطعة.

A3 هذه القطعة يمكن استعمالها بدلاً من القطعة المذكورة في السطر السابق مباشرة.

A4 القطعة المذكورة في عمود الوصف يمكن استعمالها بدلاً من هذه القطعة اذا استخدمت كطقم.

B1 هذه القطعة توقف توريدها. يتم توريد القطعة المذكورة في السطر السابق بدلاً منها.

B2 هذه القطعة توقف توريدها. يتم توريد القطعة المذكورة في عمود "الوصف" بدلاً منها كطقم.

C1 هذه القطعة لا يمكن توريدها كقطعة منفردة. يتم توريدها كمجموعة.

C2 هذه القطعة يتم تجهيزها من قبل موزعين كوماتسو المرخصين فقط. لا يمكن تجهيزها كقطعة مفردة. يتم تجهيزها كمجموعة.

C3 هذا يشير الى قطعة موردة شبه مكتملة التصنيع. تتطلب استكمال تصنيعها قبل الاستعمال.

CONTENTS

	FIG No.	PAGE
FOREWORD		1
ENGINE CYLINDER HEAD AND ITS RELATED PARTS		
Cylinder Head	(X16-0A90280)	
	A1009-001001	46
Cover	(VC 9248)	
	AVC00-001001	47
Coolant Piping	(RP 9097)	
	ARP00-001001	48
Breather	(BR 9338)	
	ABR00-001001	49
Air Intake Manifold	(IM 9081)	
	AIM00-001001	50
Air Intake Connector	(IC 9467)	
	AIC00-001001	51
Air Intake Connector Mounts	(IC 9426)	
	AIC20-001001	52
Air Intake Heater	(AH 9155)	
	AAH00-001001	53
Air Pipe	(X16-0A11210)	
	A1310-001001	54
Exhaust Manifold	(TB913-17)	
	ATB30-001001	55
Turbocharger	(X16-0A90640)	
	A1539-001001	56
Turbocharger Exhaust Gas Connector	(XS -9258)	
	AXS00-001001	57
Turbocharger Oil Pipe Related Parts	(X16-0A11120)	
	A1510-001001	58
Turbocharger Oil Piping	(TP973-87)	
	ATP00-001001	59
Exhaust Muffler	(X16-0A11310)	
	A1610-001001	60
Exhaust Connection	(IT 9039)	
	AIT00-001001	61
Heat Shield, For 60Amp. Alternator	(X16-0A11240)	
	A1570-001001	62
Heat Shield, For 90Amp. Alternator	(X16-0A11250)	
	A1570-002001	63
Rocker Arm Housing And Rocker Arm	(RL 9753)	
	ARL00-001001	64
Engine Lifting	(X16-0A11141)	
	A1010-001001	65
Engine Lifting Bolt	(LA 9119)	
	ALA10-001001	66
ENGINE CYLINDER BLOCK AND ITS RELATED PARTS		
Camshaft	(X16-0A90490)	
	A2419-001001	68
Tappet	(BB 9080)	
	ABB00-001001	69
Front Gear Train Cover	(DF 9706)	
	ADF10-001001	70
Front Cover	(X16-0A11330)	
	A2049-001001	71

Accessory Drive Pulley ..... (PA 9001)
APA00-001001 72
Flywheel Housing ..... (X16-0A90570)
A2219-001001 73
Flywheel ..... (FW90289)
AFW00-001001 74
Flywheel Mounts ..... (FW90290)
AFW10-001001 75
Engine Oil Pan ..... (X16-0A11270)
A2119-001001 76
Engine Oil Level Sensor ..... (SD 9057)
ASD00-001001 77
Cylinder Block ..... (X16-0A90310)
A2019-001001 78
Breather Hose ..... (X16-0A10590)
A2080-001001 79
Cabin Heater Plug ..... (HC 9045)
AHC00-001001 80
Crankshaft ..... (X16-0A90340)
A2319-001001 81
Damper ..... (DA 9728)
ADA00-001001 82
Piston and Connecting Rod ..... (X16-0A90630)
A2359-001001 83
Engine Oil Filler ..... (OB 9528)
AOB10-001001 84
Oil Level Gauge ..... (LG90408)
ALG00-001001 85

ENGINE LUBRICATING SYSTEM

Engine Oil Pump ..... (LP 9724)
ALP00-001001 88
Engine Oil Filter ..... (LF 9102)
ALF00-001001 89
Engine Oil Cooler ..... (LC 9275)
ALC00-001001 90

ENGINE FUEL SYSTEM

Fuel Injection Pump ..... (X16-0A90360)
Inner Parts A4019-001001 92
Mounts A4019-001002 93
Fuel Supply Pump Support ..... (FP90238)
AFP20-001001 94
Fuel Injector ..... (X16-0A90550)
A4219-001001 95
Fuel Injection Piping ..... (PP98356)
APP50-001001 96
Fuel Piping ..... (FT 9378)
AFT00-001001 97
Fuel Return Fitting ..... (X16-0A11360)
A4230-001001 98
Fuel Filter Plumbing ..... (FF 9581)
AFF20-001001 99
Fuel Filter Cartridge ..... (X16-0B90200)
A4119-001001 100
Fuel Filter ..... (FF 9692)
AFF10-001001 101
Pre Filter ..... (X16-0A10970)
B9999-503001 102

Fuel System Accessory ..... (FS 9907) AFS20-001001 103
Fuel Transfer Pump ..... (FS 9746) AFS00-001001 104
Fuel Inlet Fitting ..... (X16-0A11350) A4110-001001 105
ENGINE COOLING SYSTEM
Cooling Fan Drive Mounts ..... (FA 9739) AFA20-001001 108
Cooling Fan Drive Pulley ..... (FA 9536) AFA10-001001 109
Cooling Fan Belt Tensioner ..... (WP 9144) AWP20-001001 110
Water Pump ..... (X16-0A90210) A5019-001001 111
Water Pump Drive Belt, For 60Amp. Alternator ..... (WP 9055) AWP10-001001 112
Water Pump Drive Belt, For 90Amp. Alternator ..... (WP 9056) AWP10-002001 113
Water Outlet Connector ..... (WO 9089) AWO00-001001 114
Water Inlet Connector ..... (WI 9267) AWI10-001001 115
Thermostat ..... (EC 9041) AEC00-001001 116
Plug, Torque Converter Cooling ..... (TK 90-22) ATK00-001001 117
Corrosion Piping ..... (WF 9136) AWF00-001001 118
ENGINE ELECTRICAL SYSTEM
Alternator Mounts ..... (EH 9502) AEH20-001001 120
Alternator, 60Amp. ..... (EE 9186) AEE00-001001 121
Alternator, 90Amp. ..... (EE 9194) AEE00-002001 122
Alternator Cover, For 60Amp. Alternator ..... (X16-0A10730) A6010-001001 123
Alternator Cover, For 90Amp. Alternator ..... (X16-0A10980) A6010-002001 124
Starting Motor Mounts ..... (SM 9785) ASM00-001001 125
Starting Motor, 7.5KW ..... (ST 9199) AST00-001001 126
Starting Motor, 11KW ..... (ST 9259) AST00-002001 128
Electric Wiring ..... (WR 9536) AWR00-001001 130
Electric Controller ..... (X16-0A90650) A4719-001001 131
Electric Controller Piping ..... (PH 9164) APH10-001001 132
Electric Controller Mounts ..... (PH90K923) APH00-001001 133
ENGINE AUXILIARY PARTS AND TOOL
Spare Parts, For 60Amp. Alternator ..... (X16-0A02110) B9999-501001 136

Spare Parts, For 90Amp. Alternator ..... (X16-0A02120)
B9999-502001 137
ENGINE MARKS AND PLATES
Caution Plates ..... (X16-0A80010)
A9810-001001 140
FIELD REPAIR SERVICE PARTS
Repair Service Parts ..... (X16-0A90560)
A8110-001001 142
ENGINE RELATED PARTS
Air Cleaner, With Pre-cleaner ..... (X22-1050111)
Cap A1470-501001 144
Air Cleaner A1470-501002 145
Mounts A1470-501003 146
Air Cleaner, With Air Intake Rain Cap ..... (X22-1052671)
Pre-Cleaner A1470-502001 147
Mounts (1/2) A1470-502002 148
Air Cleaner A1470-501002 145
Mounts (2/2) A1470-501003 146
Exhaust Pipe ..... (X22-1057400)
A1610-501001 149
Guard ..... (X22-1059470)
A6910-501001 150
Spare Parts ..... (X22-0909070)
A9020-501001 151
Spare Parts, For 90Amp. Alternator ..... (X22-1130420)
A9020-502001 152
Engine Mounts ..... (X22-1050131)
B0100-001001 153
Engine Wiring Harness ..... (X22-1050141)
Earth B0500-001001 154
Wiring Harness (1/3) B0500-001002 155
Wiring Harness (2/3) B0500-001003 156
Wiring Harness (3/3) B0500-001004 157
Damper ..... (X22-1050152)
B0600-001001 158
COOLING SYSTEM
Radiator ..... (X22-1050162)
Radiator Core And After Cooler C0100-001001 160
Frame C0100-001002 161
Piping C0100-001003 162
Oil Cooler C0100-001004 163
Cooling Fan Motor (1/2) C0100-001005 164
Cooling Fan Motor (2/2) C0100-001006 166
Motor Mounting C0100-001007 167
Baffle C0100-001008 169
Mounts C0100-001009 170
Window Washer Tank C0100-001010 171
Fan Net C0100-001011 172
FUEL SYSTEM
Fuel Tank, With Refuel Pump ..... (X22-1173550)
D0100-002001 174
Fuel Supply Piping ..... (X22-1050181)
Piping D0200-001001 176
Pre Filter Bracket D0200-001002 177
Fuel Tank ..... (X22-1050172)
D0100-001001 179
ELECTRICAL SYSTEM

Battery, Large Capacity (X22-1050191)
E0100-001001 182
Battery (X22-1055341)
E0100-002001 183
Battery, For EU Noise Reguration (X22-1058120)
E0100-003001 184
Battery, Large Capacity, For EU Noise Reguration (X22-1058130)
E0100-004001 185
Battery, With Refuel Pump, For Large Capacity Battery (X22-1173490)
E0100-006001 186
Battery, With Refuel Pump (X22-1173480)
E0100-005001 187
Electric Wiring (X22-1050201)
Wiring Harness (1/2) E0200-001001 188
Bracket E0200-001002 190
Holder E0200-001003 191
Mounts E0200-001004 192
Wiring Harness (2/2) E0200-001005 193
Sensor E0200-001006 194
Electric Wiring, For ROPS Canopy (X22-1172570)
Wiring Harness (1/2) E0200-002001 195
Bracket E0200-002002 197
Holder E0200-002003 198
Mounts E0200-002004 199
Wiring Harness (2/2) E0200-002005 200
Sensor E0200-002006 201
Electric Wiring, With Refuel Pump (X22-1173470)
Wiring Harness (1/2) E0200-003001 202
Bracket E0200-003002 204
Holder E0200-002003 198
Mounts E0200-003004 205
Wiring Harness (2/2) E0200-002005 200
Sensor E0200-002006 201
Beacon Lamp, For ROPS Canopy (X22-1172850)
E0201-002001 206
Beacon Lamp (X22-1053712)
E0201-001001 207
Front Working Lamp (X22-1050221)
E0300-001001 208
Front Working Lamp and Rear side Working Lamp (X22-1054392)
E0310-001001 209
Additional Working Lamp, With Additional Front Working Lamp (X22-1059600)
E0310-002001 210
Additional Rear side Working Lamp, With Additional Rear Working Lamp (X22-1059610)
E0310-003001 211
Additional Rear side Working Lamp, With Additional Rear Working Lamp, For ROPS Canopy (X22-1172890)
E0310-006001 212
Front Working Lamp and Rear side Working Lamp, For ROPS Canopy (X22-1172870)
E0310-004001 213
Front Working Lamp and Rear side Working Lamp, With Additional Front Working Lamp, For ROPS Canopy (X22-1172880)
E0310-005001 214
Back-up Alarm, For Cab Configuration (X22-1052151)
E0420-001001 215
POWER TRANSMITTING SYSTEM
Universal Joint (X22-1050230)
F2200-001001 218

Power Train, Without Power Angle Power Tilt Dozer ..... (X22-1050241)
Bevel Gear and Shaft F2300-001001 219
Brake F2300-001002 220
Carrier F2300-001003 222
Steering Case (1/2) F2300-001004 223
Steering Case (2/2) F2300-001005 224
Steering Case Cover and Steering Valve Control Lever F2300-001006 225
Steering Valve F2300-001007 226
H.S.S. Gear F2300-001008 228
Steering Case Cover Related Parts F2300-001009 229
1st Housing F2300-001010 230
2nd Housing, 3rd Housing, Foward Housing and Reverse Housing F2300-001011 231
Transmission Carrier (1/2) F2300-001012 233
Transmission Carrier (2/2) F2300-001013 235
Transmission Case F2300-001014 236
Input and Output Shaft F2300-001015 237
Transmission E.C.M.V. Valve F2300-001016 238
Transmission E.C.M.V. Valve Mounts F2300-001017 239
Relief Valve F2300-001018 240
Relief Valve Mounting F2300-001019 241
Block F2300-001020 242
Pump and Turbine F2300-001021 243
Torque Converter Case F2300-001022 245
Scavenging Pump Mounts F2300-001023 246
Power takeoff Gear F2300-001024 247
Strainer F2300-001025 248
Mounts (1/2) F2300-001026 249
Gear Pump, SAL (2) 45+ 45 (1/2) F2300-001027 250
Gear Pump, SAL (2) 45+ 45 (2/2) F2300-001028 251
Power Train to Hydrostatic Tank Piping (1/2) F2300-001029 252
Power Train to Hydrostatic Tank Piping (2/2) F2300-001030 254
Oil Filler F2300-001031 255
Wiring Harness F2300-001032 256
Wire Harness Clamp F2300-001033 257
Piping F2300-001034 259
Mounts (2/2) F2300-001035 260
Final Drive, Torque Shaft F2300-001036 261
Power Train, With Power Angle Power Tilt Dozer ..... (X22-1053321)
Bevel Gear and Shaft F2300-001001 219
Brake F2300-001002 220
Carrier F2300-001003 222
Steering Case (1/2) F2300-001004 223
Steering Case (2/2) F2300-001005 224
Steering Case Cover and Steering Valve Control Lever F2300-001006 225
Steering Valve F2300-001007 226
H.S.S. Gear F2300-001008 228
Steering Case Cover Related Parts F2300-001009 229
1st Housing F2300-001010 230
2nd Housing, 3rd Housing, Foward Housing and Reverse Housing F2300-001011 231
Transmission Carrier (1/2) F2300-001012 233
Transmission Carrier (2/2) F2300-001013 235
Transmission Case F2300-001014 236
Input and Output Shaft F2300-001015 237
Transmission E.C.M.V. Valve F2300-001016 238
Transmission E.C.M.V. Valve Mounts F2300-001017 239
Relief Valve F2300-001018 240
Relief Valve Mounting F2300-001019 241

Block F2300-001020 242
Pump and Turbine F2300-001021 243
Torque Converter Case F2300-001022 245
Scavenging Pump Mounts F2300-001023 246
Power takeoff Gear F2300-001024 247
Strainer F2300-001025 248
Mounts (1/2) F2300-001026 249
Gear Pump, SAL (2) 45+ 45 (1/2) F2300-001027 250
Gear Pump, SAL (2) 45+ 45 (2/2) F2300-001028 251
Power Train to Hydrostatic Tank Piping (1/2) F2300-001029 252
Power Train to Hydrostatic Tank Piping (2/2) F2300-001030 254
Oil Filler F2300-001031 255
Wiring Harness F2300-001032 256
Wire Harness Clamp F2300-001033 257
Piping F2300-001034 259
Mounts (2/2) F2300-001035 260
Final Drive, Torque Shaft F2300-002036 262
Final Drive, Segmented, For Machine With Power Angle Power Tilt Dozer ..... (X22-0852030)
Pinion And Gear, LHS F2380-001001 263
Carrier, LHS F2380-001002 265
Sprocket Hub, LHS F2380-001003 267
Pinion And Gear, RHS F2380-001004 268
Carrier, RHS F2380-001005 270
Sprocket Hub, RHS F2380-001006 272
Mounts F2380-001007 273
Final Drive, Segmented, With Rotary Type Rubber Shoe, For Machine With Power Angle Power Tilt Dozer ..... (X22-0872850)
Pinion And Gear, LHS F2380-001001 263
Carrier, LHS F2380-001002 265
Sprocket Hub, LHS F2380-002003 274
Pinion And Gear, RHS F2380-001004 268
Carrier, RHS F2380-001005 270
Sprocket Hub, RHS F2380-002006 275
Mounts F2380-001007 273
Final Drive, Segmented, With Power Angle Power Tilt Dozer, With Rotary Type Rubber Shoe ..... (X22-1058090)
Pinion And Gear, LHS F2380-001001 263
Carrier, LHS F2380-001002 265
Sprocket Hub, LHS F2380-001003 267
Pinion And Gear, RHS F2380-001004 268
Carrier, RHS F2380-001005 270
Sprocket Hub, RHS F2380-001006 272
Mounts F2380-003007 276
Final Drive, Segmented, With Power Angle Power Tilt Dozer ..... (X22-1058110)
Pinion And Gear, LHS F2380-001001 263
Carrier, LHS F2380-001002 265
Sprocket Hub, LHS F2380-002003 274
Pinion And Gear, RHS F2380-001004 268
Carrier, RHS F2380-001005 270
Sprocket Hub, RHS F2380-002006 275
Mounts F2380-003007 276
Power Train Piping, Without Power Angle Power Tilt Dozer ..... (X22-1050261)
Piping F2730-001001 277
Bracket F2730-001002 278
Mounts F2730-001003 279
Power Train Piping, For Machine With Power Angle Power Tilt Dozer ..... (X22-1059100)
Piping F2730-001001 277
Bracket F2730-001002 278

Mounts F2730-002003 280
Steering Control Related Parts ..... (X22-1050270)
Rod F2820-001001 281
Parking Brake Control Cable F2820-001002 282
HYDRAULIC SYSTEM
Hydraulic Oil Tank ..... (X22-1050282)
H0110-001001 284
Hydraulic Oil Tank, For Machine With Rear Actuator ..... (X22-1058140)
H0110-002001 286
Hydraulic Oil Pump and Motor ..... (X22-1050291)
Inner Parts (1/7) H0210-001001 288
Inner Parts (2/7) H0210-001002 289
Inner Parts (3/7) H0210-001003 290
Inner Parts (4/7) H0210-001004 291
Inner Parts (5/7) H0210-001005 292
Inner Parts (6/7) H0210-001006 293
Inner Parts (7/7) H0210-001007 294
Pump Mounts (1/2) H0210-001008 295
HSS Motor (1/2) H0210-001009 296
HSS Motor (2/2) H0210-001010 298
Motor Mounting H0210-001011 299
Cooling Fan Pump (1/5) H0210-001012 300
Cooling Fan Pump (2/5) H0210-001013 302
Cooling Fan Pump (3/5) H0210-001014 303
Cooling Fan Pump (4/5) H0210-001015 304
Cooling Fan Pump (5/5) H0210-001016 305
Pump Mounts (2/2) H0210-001017 306
Hydraulic Oil Pump Piping ..... (X22-1050301)
Suction Piping and Delivery Piping H0310-001001 307
HSS Motor Piping H0310-001002 309
Fan Motor Related Parts H0310-001003 310
Fan Motor Piping H0310-001004 311
Dozer Blade Lift Piping, Without Power Angle Power Tilt Dozer ..... (X22-1050322)
Piping (1/3) H2210-001001 312
Valve H2210-001002 313
Piping (2/3) H2210-001003 314
Clamp H2210-001004 315
Piping (3/3) H2210-001005 317
Dozer Blade Lift Piping, For Machine With Power Angle Power Tilt Dozer ..... (X22-1050752)
Piping (1/3) H2210-001001 312
Valve H2210-001002 313
Piping (2/3) H2210-001003 314
Clamp H2210-001004 315
Piping (3/3) H2210-002005 318
Dozer Blade Lift Piping, With Blade Cylinder Wired Hose ..... (X22-1172240)
Piping (1/3) H2210-001001 312
Valve H2210-001002 313
Piping (2/3) H2210-001003 314
Clamp H2210-001004 315
Piping (3/3) H2210-003005 319
Dozer Blade Lift Piping, Power Angle Power Tilt Dozer, Inside Frame, With Blade Cylinder Wired Hose ..... (X22-1172250)
Piping (1/3) H2210-001001 312
Valve H2210-001002 313
Piping (2/3) H2210-001003 314
Clamp H2210-001004 315
Piping (3/3) H2210-004005 320

Dozer Blade Tilt Piping, With Power Angle Power Tilt Dozer ..... (X22-1050761)
H2220-001001 321
Clamp H2220-001002 322
Dozer Blade Tilt Piping ..... (X22-1052611)
H2220-002001 323
Track Frame Cover H2220-002002 324
Dozer Blade Tilt Piping, With Power Tilt Pitch Dozer ..... (X22-1057720)
H2220-003001 325
Track Frame Cover H2220-003002 326
Dozer Blade Angle Piping ..... (X22-1050771)
H2230-001001 327
Clamp H2230-001002 328
Rear Hydraulic Piping ..... (X22-1052161)
H2250-001001 330
FRAME AND ITS RELATED PARTS
Main Frame ..... (X22-1050342)
J2100-001001 332
Main Frame, With Power Angle Power Tilt Dozer ..... (X22-1057470)
J2100-002001 333
Main Frame, With Power Angle Power Tilt Dozer, Inside Frame, Refuel Pump ..... (X22-1173540)
J2100-004001 334
Main Frame, With Refuel Pump ..... (X22-1173520)
J2100-003001 335
Equalizer Bar And Pivot Shaft, With Power Angle Power Tilt Dozer ..... (X22-1050791)
J2700-001001 336
Equalizer Bar And Pivot Shaft ..... (X22-1052681)
J2700-002001 338
Equalizer Bar And Pivot Shaft ..... (X22-1059520)
J2700-003001 340
OPERATOR'S COMPARTMENT AND CONTROL SYSTEM
Operator's Seat, Suspension Type, Fabric Type, Reclining Type ..... (X22-1054411)
K0110-001001 344
Operator's Seat, Suspension Type, Fabric Type, Operator's Seat Turn Type, Reclining Type ..... (X22-1058380)
K0110-007001 345
Operator's Seat, Air Suspension Type, Fabric Type, Operator's Seat Turn Type ..... (X22-1058400)
K0110-009001 346
Operator's Seat, Suspension Type, Operator's Seat Turn Type, Reclining Type ..... (X22-1058390)
K0110-008001 347
Operator's Seat, Suspension Type, Reclining Type, Hi-Back Type Operator's Seat ..... (X22-1058370)
K0110-006001 348
Operator's Seat, Suspension Type, Reclining Type ..... (X22-1058340)
K0110-003001 349
Operator's Seat, Suspension Type, Reclining Type, Hi-Back Type Operator's Seat, Fabric Type ..... (X22-1058350)
K0110-004001 350
Operator's Seat, Suspension Type, Fabric Type, Reclining Type, Hi-Back Type Operator's Seat, Operator's Seat Turn Type, With Headrest ..... (X22-1058360)
K0110-005001 351
Operator's Seat, Suspension Type, Fabric Type, Reclining Type, Operator's Seat Turn Type ..... (X22-1058330)
K0110-002001 352
Operator's Seat, Suspension Type, Fabric Type, Hi-Back Type Operator's Seat, Reclining Type ..... (X22-1171760)
K0110-010001 353
Operator's Seat, Air Suspension Type, Operator's Seat Turn Type, Hi-Back Type Operator's Seat, With Headrest ..... (X22-1171770)
K0110-011001 354
Operator's Seat, Suspension Type, Fabric, Turn Type, Reclining, Headrest ..... (X22-1173900)
K0110-012001 355

Seat Belt, Suspension Type, With Belt Retractor ..... (X21-1308500)
K0160-001001 356
ROPS Cab, With AM-FM Stereo Radio For North America, TH300 Type KOMTRAX ..... (X22-1058420)
Cab Body K0210-001001 357
Door and Latch, LHS K0210-001002 358
Door Dumper, Window and Wiper LHS K0210-001003 360
Door Cover, LHS K0210-001004 362
Door and Latch, RHS K0210-001005 363
Door Dumper, Window and Wiper, RHS K0210-001006 365
Door Cover, RHS K0210-001007 367
Door Hinge K0210-001008 368
Door Open Lock (1/2) K0210-001009 369
Door Open Lock, LHS K0210-001010 370
Door Open Lock, RHS K0210-001011 372
Door Open Lock (2/2) K0210-001012 374
Glass Windows, Front and Rear K0210-001013 375
Sash type Glass Windows, LHS K0210-001014 376
Sash type Glass Windows, RHS K0210-001015 378
Wiper and Room Lamp K0210-001016 380
Radio K0210-001017 382
Rubber Antenna K0210-001018 383
Rubber Antenna Mounts K0210-001019 384
Roof Cover (1/2) K0210-001020 385
Roof Cover (2/2) K0210-001021 386
Rearview Mirror K0210-001022 388
Outside Cover K0210-001023 389
Air Conditioner Unit K0210-001024 390
Air Conditioner Unit Mounting K0210-001025 392
Air Conditioner Duct (1/3) K0210-001026 393
Air Conditioner Piping K0210-001027 395
Air Conditioner Duct (2/3) K0210-001028 397
Air Conditioner Duct (3/3) K0210-001029 398
Console Box K0210-001030 400
Travel Control Lever (1/2) K0210-001031 401
Travel Control Lever (2/2) K0210-001032 402
Console Slider K0210-001033 404
Parking Brake Lever K0210-001034 406
Work Equipment Lock Lever K0210-001035 408
Floor Frame Inside Cover K0210-001036 410
Brake Pedal K0210-001037 411
Decelerator Pedal K0210-001038 413
Controller and Relay K0210-001039 415
Floor, Harness (1/3) K0210-001040 416
Floor, Harness (2/3) K0210-001041 418
Floor, Harness (3/3) K0210-001042 420
Window Washer Piping K0210-001043 421
Dashboard Cover (1/2) K0210-001044 422
Floor, Switch K0210-001045 423
Foot Rest K0210-001046 424
Dashboard Cover (2/2) K0210-001047 425
Floor Cover K0210-001048 426
KOMTRAX Controller K0210-001049 428
Decal K0210-001050 429
Related Parts K0210-001051A 430
ROPS Cab, Provision For Radio Installation, TH300 Type KOMTRAX ..... (X22-1058431)
Cab Body K0210-001001 357
Door and Latch, LHS K0210-001002 358

Door Dumper, Window and Wiper LHS ... K0210-001003 360
Door Cover, LHS ... K0210-001004 362
Door and Latch, RHS ... K0210-001005 363
Door Dumper, Window and Wiper, RHS ... K0210-001006 365
Door Cover, RHS ... K0210-001007 367
Door Hinge ... K0210-001008 368
Door Open Lock (1/2) ... K0210-001009 369
Door Open Lock, LHS ... K0210-001010 370
Door Open Lock, RHS ... K0210-001011 372
Door Open Lock (2/2) ... K0210-001012 374
Glass Windows, Front and Rear ... K0210-001013 375
Sash type Glass Windows, LHS ... K0210-001014 376
Sash type Glass Windows, RHS ... K0210-001015 378
Wiper and Room Lamp ... K0210-001016 380
Cover ... K0210-002017 432
Rubber Antenna ... K0210-001018 383
Rubber Antenna Mounts ... K0210-001019 384
Roof Cover (1/2) ... K0210-001020 385
Roof Cover (2/2) ... K0210-001021 386
Rearview Mirror ... K0210-001022 388
Outside Cover ... K0210-001023 389
Air Conditioner Unit ... K0210-001024 390
Air Conditioner Unit Mounting ... K0210-001025 392
Air Conditioner Duct (1/3) ... K0210-001026 393
Air Conditioner Piping ... K0210-001027 395
Air Conditioner Duct (2/3) ... K0210-001028 397
Air Conditioner Duct (3/3) ... K0210-001029 398
Console Box ... K0210-001030 400
Travel Control Lever (1/2) ... K0210-001031 401
Travel Control Lever (2/2) ... K0210-001032 402
Console Slider ... K0210-001033 404
Parking Brake Lever ... K0210-001034 406
Work Equipment Lock Lever ... K0210-001035 408
Floor Frame Inside Cover ... K0210-001036 410
Brake Pedal ... K0210-001037 411
Decelerator Pedal ... K0210-001038 413
Controller and Relay ... K0210-001039 415
Floor, Harness (1/3) ... K0210-001040 416
Floor, Harness (2/3) ... K0210-001041 418
Floor, Harness (3/3) ... K0210-001042 420
Window Washer Piping ... K0210-001043 421
Dashboard Cover (1/2) ... K0210-001044 422
Floor, Switch ... K0210-001045 423
Foot Rest ... K0210-001046 424
Dashboard Cover (2/2) ... K0210-001047 425
Floor Cover ... K0210-001048 426
KOMTRAX Controller ... K0210-001049 428
Decal ... K0210-001050 429
Related Parts ... K0210-001051A 430
ROPS Cab, EU Regulation Guard Level 2, With AM-FM Stereo Radio With Cassette, TH300 Type KOMTRAX ... (X22-1058440)
Cab Body ... K0210-001001 357
Door and Latch, LHS ... K0210-001002 358
Door Dumper, Window and Wiper LHS ... K0210-001003 360
Door Cover, LHS ... K0210-001004 362
Door and Latch, RHS ... K0210-001005 363
Door Dumper, Window and Wiper, RHS ... K0210-001006 365

Door Cover, RHS....K0210-001007 367
Door Hinge....K0210-001008 368
Door Open Lock (1/2)....K0210-001009 369
Door Open Lock, LHS....K0210-001010 370
Door Open Lock, RHS....K0210-001011 372
Door Open Lock (2/2)....K0210-001012 374
Glass Windows, Front and Rear....K0210-001013 375
Sash type Glass Windows, LHS....K0210-001014 376
Sash type Glass Windows, RHS....K0210-001015 378
Wiper and Room Lamp....K0210-001016 380
Radio....K0210-003017 433
Rubber Antenna....K0210-001018 383
Rubber Antenna Mounts....K0210-001019 384
Roof Cover (1/2)....K0210-001020 385
Roof Cover (2/2)....K0210-001021 386
Rearview Mirror....K0210-001022 388
Outside Cover....K0210-001023 389
Air Conditioner Unit....K0210-003024 434
Air Conditioner Unit Mounting....K0210-001025 392
Air Conditioner Duct (1/3)....K0210-001026 393
Air Conditioner Piping....K0210-001027 395
Air Conditioner Duct (2/3)....K0210-001028 397
Air Conditioner Duct (3/3)....K0210-001029 398
Console Box....K0210-001030 400
Travel Control Lever (1/2)....K0210-001031 401
Travel Control Lever (2/2)....K0210-001032 402
Console Slider....K0210-001033 404
Parking Brake Lever....K0210-001034 406
Work Equipment Lock Lever....K0210-001035 408
Floor Frame Inside Cover....K0210-001036 410
Brake Pedal....K0210-001037 411
Decelerator Pedal....K0210-001038 413
Controller and Relay....K0210-003039 436
Floor, Harness (1/3)....K0210-003040 437
Floor, Harness (2/3)....K0210-001041 418
Floor, Harness (3/3)....K0210-001042 420
Window Washer Piping....K0210-001043 421
Dashboard Cover (1/2)....K0210-001044 422
Floor, Switch....K0210-003045 439
Foot Rest....K0210-001046 424
Dashboard Cover (2/2)....K0210-001047 425
Floor Cover....K0210-001048 426
KOMTRAX Controller....K0210-001049 428
Decal....K0210-003050 440
Related Parts....K0210-001051A 430
ROPS Cab, EU Regulation Guard Level 2, Provision For Radio Installation, TH300 Type KOMTRAX....(X22-1058451)
Cab Body....K0210-001001 357
Door and Latch, LHS....K0210-001002 358
Door Dumper, Window and Wiper LHS....K0210-001003 360
Door Cover, LHS....K0210-001004 362
Door and Latch, RHS....K0210-001005 363
Door Dumper, Window and Wiper, RHS....K0210-001006 365
Door Cover, RHS....K0210-001007 367
Door Hinge....K0210-001008 368
Door Open Lock (1/2)....K0210-001009 369
Door Open Lock, LHS....K0210-001010 370

Door Open Lock, RHS K0210-001011 372
Door Open Lock (2/2) K0210-001012 374
Glass Windows, Front and Rear K0210-001013 375
Sash type Glass Windows, LHS K0210-001014 376
Sash type Glass Windows, RHS K0210-001015 378
Wiper and Room Lamp K0210-001016 380
Cover K0210-002017 432
Rubber Antenna K0210-001018 383
Rubber Antenna Mounts K0210-001019 384
Roof Cover (1/2) K0210-001020 385
Roof Cover (2/2) K0210-001021 386
Rearview Mirror K0210-001022 388
Outside Cover K0210-001023 389
Air Conditioner Unit K0210-001024 390
Air Conditioner Unit Mounting K0210-001025 392
Air Conditioner Duct (1/3) K0210-001026 393
Air Conditioner Piping K0210-001027 395
Air Conditioner Duct (2/3) K0210-001028 397
Air Conditioner Duct (3/3) K0210-001029 398
Console Box K0210-001030 400
Travel Control Lever (1/2) K0210-001031 401
Travel Control Lever (2/2) K0210-001032 402
Console Slider K0210-001033 404
Parking Brake Lever K0210-001034 406
Work Equipment Lock Lever K0210-001035 408
Floor Frame Inside Cover K0210-001036 410
Brake Pedal K0210-001037 411
Decelerator Pedal K0210-001038 413
Controller and Relay K0210-003039 436
Floor, Harness (1/3) K0210-003040 437
Floor, Harness (2/3) K0210-001041 418
Floor, Harness (3/3) K0210-001042 420
Window Washer Piping K0210-001043 421
Dashboard Cover (1/2) K0210-001044 422
Floor, Switch K0210-003045 439
Foot Rest K0210-001046 424
Dashboard Cover (2/2) K0210-001047 425
Floor Cover K0210-001048 426
KOMTRAX Controller K0210-001049 428
Decal K0210-003050 440
Related Parts K0210-001051A 430
ROPS Cab, With Rear View Monitoring System, With AM-FM Stereo Radio For North America, TH300 Type KOMTRAX ..... (X22-1172920)
Cab Body K0210-005001 441
Door and Latch, LHS K0210-001002 358
Door Dumper, Window and Wiper LHS K0210-001003 360
Door Cover, LHS K0210-001004 362
Door and Latch, RHS K0210-001005 363
Door Dumper, Window and Wiper, RHS K0210-001006 365
Door Cover, RHS K0210-001007 367
Door Hinge K0210-001008 368
Door Open Lock (1/2) K0210-001009 369
Door Open Lock, LHS K0210-001010 370
Door Open Lock, RHS K0210-001011 372
Door Open Lock (2/2) K0210-001012 374
Glass Windows, Front and Rear K0210-001013 375
Sash type Glass Windows, LHS K0210-001014 376

Sash type Glass Windows, RHS K0210-001015 378
Wiper and Room Lamp K0210-001016 380
Radio K0210-005017 442
Rubber Antenna K0210-001018 383
Rubber Antenna Mounts K0210-001019 384
Roof Cover (1/2) K0210-001020 385
Roof Cover (2/2) K0210-001021 386
Rearview Mirror K0210-001022 388
Outside Cover K0210-001023 389
Air Conditioner Unit K0210-001024 390
Air Conditioner Unit Mounting K0210-001025 392
Air Conditioner Duct (1/3) K0210-001026 393
Air Conditioner Piping K0210-001027 395
Air Conditioner Duct (2/3) K0210-001028 397
Air Conditioner Duct (3/3) K0210-001029 398
Console Box K0210-001030 400
Travel Control Lever (1/2) K0210-001031 401
Travel Control Lever (2/2) K0210-001032 402
Console Slider K0210-001033 404
Parking Brake Lever K0210-001034 406
Work Equipment Lock Lever K0210-001035 408
Floor Frame Inside Cover K0210-001036 410
Brake Pedal K0210-001037 411
Decelerator Pedal K0210-001038 413
Controller and Relay K0210-005039 443
Floor, Harness (1/3) K0210-003040 437
Floor, Harness (2/3) K0210-001041 418
Floor, Harness (3/3) K0210-001042 420
Window Washer Piping K0210-001043 421
Dashboard Cover (1/2) K0210-005044 444
Floor, Switch K0210-001045 423
Foot Rest K0210-001046 424
Dashboard Cover (2/2) K0210-001047 425
Floor Cover K0210-001048 426
KOMTRAX Controller K0210-001049 428
Wiring K0210-005050 445
Decal K0210-001050 429
Related Parts K0210-001051A 430
Rear Camera K0210-005053 446
ROPS Cab, With Rear View Monitoring System, Provision For Radio Installation, TH300 Type KOMTRAX ..... (X22-1172930)
Cab Body K0210-005001 441
Door and Latch, LHS K0210-001002 358
Door Dumper, Window and Wiper LHS K0210-001003 360
Door Cover, LHS K0210-001004 362
Door and Latch, RHS K0210-001005 363
Door Dumper, Window and Wiper, RHS K0210-001006 365
Door Cover, RHS K0210-001007 367
Door Hinge K0210-001008 368
Door Open Lock (1/2) K0210-001009 369
Door Open Lock, LHS K0210-001010 370
Door Open Lock, RHS K0210-001011 372
Door Open Lock (2/2) K0210-001012 374
Glass Windows, Front and Rear K0210-001013 375
Sash type Glass Windows, LHS K0210-001014 376
Sash type Glass Windows, RHS K0210-001015 378
Wiper and Room Lamp K0210-001016 380

Cover K0210-002017 432
Rubber Antenna K0210-001018 383
Rubber Antenna Mounts K0210-001019 384
Roof Cover (1/2) K0210-001020 385
Roof Cover (2/2) K0210-001021 386
Rearview Mirror K0210-001022 388
Outside Cover K0210-001023 389
Air Conditioner Unit K0210-001024 390
Air Conditioner Unit Mounting K0210-001025 392
Air Conditioner Duct (1/3) K0210-001026 393
Air Conditioner Piping K0210-001027 395
Air Conditioner Duct (2/3) K0210-001028 397
Air Conditioner Duct (3/3) K0210-001029 398
Console Box K0210-001030 400
Travel Control Lever (1/2) K0210-001031 401
Travel Control Lever (2/2) K0210-001032 402
Console Slider K0210-001033 404
Parking Brake Lever K0210-001034 406
Work Equipment Lock Lever K0210-001035 408
Floor Frame Inside Cover K0210-001036 410
Brake Pedal K0210-001037 411
Decelerator Pedal K0210-001038 413
Controller and Relay K0210-005039 443
Floor, Harness (1/3) K0210-003040 437
Floor, Harness (2/3) K0210-001041 418
Floor, Harness (3/3) K0210-001042 420
Window Washer Piping K0210-001043 421
Dashboard Cover (1/2) K0210-005044 444
Floor, Switch K0210-001045 423
Foot Rest K0210-001046 424
Dashboard Cover (2/2) K0210-001047 425
Floor Cover K0210-001048 426
KOMTRAX Controller K0210-001049 428
Wiring K0210-005050 445
Decal K0210-001050 429
Related Parts K0210-001051A 430
Rear Camera K0210-005053 446
ROPS Cab, EU Regulation Guard Level 2, With Rear View Monitoring System, With AM-FM Stereo Radio For North America, TH300 Type KOMTRAX ..... (X22-1172940)
Cab Body K0210-005001 441
Door and Latch, LHS K0210-001002 358
Door Dumper, Window and Wiper LHS K0210-001003 360
Door Cover, LHS K0210-001004 362
Door and Latch, RHS K0210-001005 363
Door Dumper, Window and Wiper, RHS K0210-001006 365
Door Cover, RHS K0210-001007 367
Door Hinge K0210-001008 368
Door Open Lock (1/2) K0210-001009 369
Door Open Lock, LHS K0210-001010 370
Door Open Lock, RHS K0210-001011 372
Door Open Lock (2/2) K0210-001012 374
Glass Windows, Front and Rear K0210-001013 375
Sash type Glass Windows, LHS K0210-001014 376
Sash type Glass Windows, RHS K0210-001015 378
Wiper and Room Lamp K0210-001016 380
Radio K0210-007017 448
Rubber Antenna K0210-001018 383

Rubber Antenna Mounts....K0210-001019 384
Roof Cover (1/2)....K0210-001020 385
Roof Cover (2/2)....K0210-001021 386
Rearview Mirror....K0210-001022 388
Outside Cover....K0210-001023 389
Air Conditioner Unit....K0210-001024 390
Air Conditioner Unit Mounting....K0210-001025 392
Air Conditioner Duct (1/3)....K0210-001026 393
Air Conditioner Piping....K0210-001027 395
Air Conditioner Duct (2/3)....K0210-001028 397
Air Conditioner Duct (3/3)....K0210-001029 398
Console Box....K0210-001030 400
Travel Control Lever (1/2)....K0210-001031 401
Travel Control Lever (2/2)....K0210-001032 402
Console Slider....K0210-001033 404
Parking Brake Lever....K0210-001034 406
Work Equipment Lock Lever....K0210-001035 408
Floor Frame Inside Cover....K0210-001036 410
Brake Pedal....K0210-001037 411
Decelerator Pedal....K0210-001038 413
Controller and Relay....K0210-005039 443
Floor, Harness (1/3)....K0210-003040 437
Floor, Harness (2/3)....K0210-001041 418
Floor, Harness (3/3)....K0210-001042 420
Window Washer Piping....K0210-001043 421
Dashboard Cover (1/2)....K0210-005044 444
Floor, Switch....K0210-003045 439
Foot Rest....K0210-001046 424
Dashboard Cover (2/2)....K0210-001047 425
Floor Cover....K0210-001048 426
KOMTRAX Controller....K0210-001049 428
Wiring....K0210-005050 445
Decal....K0210-003050 440
Related Parts....K0210-001051A 430
Rear Camera....K0210-005053 446
ROPS Cab, EU Regulation Guard Level 2, With Rear View Monitoring System, With AM-FM Stereo Radio For North America, TH300 Type KOMTRAX....(X22-1172950)
Cab Body....K0210-005001 441
Door and Latch, LHS....K0210-001002 358
Door Dumper, Window and Wiper LHS....K0210-001003 360
Door Cover, LHS....K0210-001004 362
Door and Latch, RHS....K0210-001005 363
Door Dumper, Window and Wiper, RHS....K0210-001006 365
Door Cover, RHS....K0210-001007 367
Door Hinge....K0210-001008 368
Door Open Lock (1/2)....K0210-001009 369
Door Open Lock, LHS....K0210-001010 370
Door Open Lock, RHS....K0210-001011 372
Door Open Lock (2/2)....K0210-001012 374
Glass Windows, Front and Rear....K0210-001013 375
Sash type Glass Windows, LHS....K0210-001014 376
Sash type Glass Windows, RHS....K0210-001015 378
Wiper and Room Lamp....K0210-001016 380
Cover....K0210-002017 432
Rubber Antenna....K0210-001018 383
Rubber Antenna Mounts....K0210-001019 384
Roof Cover (1/2)....K0210-001020 385

Roof Cover (2/2) K0210-001021 386
Rearview Mirror K0210-001022 388
Outside Cover K0210-001023 389
Air Conditioner Unit K0210-001024 390
Air Conditioner Unit Mounting K0210-001025 392
Air Conditioner Duct (1/3) K0210-001026 393
Air Conditioner Piping K0210-001027 395
Air Conditioner Duct (2/3) K0210-001028 397
Air Conditioner Duct (3/3) K0210-001029 398
Console Box K0210-001030 400
Travel Control Lever (1/2) K0210-001031 401
Travel Control Lever (2/2) K0210-001032 402
Console Slider K0210-001033 404
Parking Brake Lever K0210-001034 406
Work Equipment Lock Lever K0210-001035 408
Floor Frame Inside Cover K0210-001036 410
Brake Pedal K0210-001037 411
Decelerator Pedal K0210-001038 413
Controller and Relay K0210-005039 443
Floor, Harness (1/3) K0210-003040 437
Floor, Harness (2/3) K0210-001041 418
Floor, Harness (3/3) K0210-001042 420
Window Washer Piping K0210-001043 421
Dashboard Cover (1/2) K0210-005044 444
Floor, Switch K0210-003045 439
Foot Rest K0210-001046 424
Dashboard Cover (2/2) K0210-001047 425
Floor Cover K0210-001048 426
KOMTRAX Controller K0210-001049 428
Wiring K0210-005050 445
Decal K0210-003050 440
Related Parts K0210-001051A 430
Rear Camera K0210-005053 446
Floor Mat ..... (X22-1053572)
K0310-001001 449
ROPS Canopy ..... (X22-1172750)
Canopy K0410-001001 450
Roof Cover K0410-001002 451
Rearview Mirror K0410-001003 452
Cover K0410-001004 453
Console Box K0410-001005 454
Travel Control Lever (1/2) K0410-001006 455
Travel Control Lever (2/2) K0410-001007 456
Console Slider K0410-001008 458
Parking Brake Lever K0410-001009 459
Work Equipment Lock Lever K0410-001010 460
Floor Frame Inside Cover K0410-001011 461
Brake Pedal K0410-001012 462
Decelerator Pedal K0410-001013 464
Controller and Relay K0410-001014 465
Floor, Harness (1/2) K0410-001015 466
Monitor (1/2) K0410-001016 467
Floor, Harness (2/2) K0410-001017 468
Dashboard Cover K0410-001018 469
Monitor (2/2) K0410-001019 470
Floor, Switch K0410-001020 471
Protector K0410-001021 472

Floor Cover K0410-001022 473
KOMTRAX Controller K0410-001023 475
Related Parts K0410-001024 476
Air Conditioner Unit, Without Hardened Pulley ..... (X22-1050361)
Air Conditioner Condenser Unit K0710-001001 477
Air Conditioner Condenser Unit Mounting K0710-001002 478
Piping (1/2) K0710-001003 479
Compressor K0710-001004 480
Duct K0710-001005 481
Piping (2/2) K0710-001006 482
Air Conditioner Unit Mounting K0710-001007 484
Heater Unit Mounting K0710-001008 485
Bolt K0710-001009 486
Air Conditioner Unit, With Hardened Pulley ..... (X22-1172140)
Air Conditioner Condenser Unit K0710-001001 477
Air Conditioner Condenser Unit Mounting K0710-001002 478
Piping (1/2) K0710-001003 479
Compressor K0710-002004 487
Duct K0710-001005 481
Piping (2/2) K0710-001006 482
Air Conditioner Unit Mounting K0710-001007 484
Heater Unit Mounting K0710-001008 485
Bolt K0710-001009 486
Parts For Less Air Conditioner, Without Air Conditioner ..... (X22-1172510)
K0710-003001 488
Fire Extinguisher ..... (X22-1058530)
K0830-001001 489
Fire Extinguisher, For ROPS Canopy ..... (X22-1173280)
K0830-002001 490
Cup Holder ..... (X22-1173450)
K0860-002001 491
Lunch Box Holder ..... (X22-1173460)
K0890-002001 492
Dozer Control, For Machine Without Rear Actuator ..... (X22-1058461)
Armrest K2110-001001 493
Lever K2110-001002 494
PPC Valve For Blade K2110-001003 495
Hose K2110-001004 497
Dozer Control, With Power Angle Power Tilt Dozer, For Machine With Rear Actuator ..... (X22-1058511)
Armrest K2110-006001 498
Lever K2110-006002 499
PPC Valve For Pat (1/2) K2110-006003 500
PPC Valve For Pat (2/2) K2110-006004 501
Hose K2110-006005 503
PPC Valve For Ripper K2110-006006 504
Attachment Lever K2110-006007 505
Dozer Control, With Power Angle Power Tilt Dozer ..... (X22-1058501)
Armrest K2110-005001 507
Lever K2110-006002 499
PPC Valve For Pat (1/2) K2110-006003 500
PPC Valve For Pat (2/2) K2110-006004 501
Hose K2110-006005 503
Dozer Control, With Power Tilt Pitch Dozer, For Machine With Rear Actuator ..... (X22-1058491)
Armrest K2110-006001 498
Lever K2110-004002 508
PPC Valve For Blade K2110-001003 495
Hose K2110-004004 509

PPC Valve For Ripper K2110-006006 504
Attachment Lever K2110-004006 510
Dozer Control, With Power Tilt Pitch Dozer ..... (X22-1058481)
Armrest K2110-005001 507
Lever K2110-004002 508
PPC Valve For Blade K2110-001003 495
Hose K2110-003004 512
Dozer Control, For Machine With Rear Actuator ..... (X22-1058471)
Armrest K2110-006001 498
Lever K2110-001002 494
PPC Valve For Blade K2110-001003 495
Hose K2110-002004 513
PPC Valve For Ripper K2110-006006 504
Attachment Lever K2110-002006 514
Dozer Control, With Power Angle Power Tilt Dozer, ROPS Canopy ..... (X22-1172810)
Armrest K2110-011001 516
Lever K2110-011002 517
PPC Valve For Pat (1/2) K2110-011003 518
PPC Valve For Pat (2/2) K2110-011004 519
Hose K2110-011005 521
Dozer Control, With Power Angle Power Tilt Dozer, For Machine With Rear Actuator, ROPS Canopy ..... (X22-1172820)
Armrest K2110-012001 523
Lever K2110-011002 517
PPC Valve For Pat (1/2) K2110-011003 518
PPC Valve For Pat (2/2) K2110-011004 519
Hose K2110-011005 521
PPC Valve For Ripper K2110-012006 524
Attachment Lever K2110-012007 525
Dozer Control, With Power Tilt Pitch Dozer, ROPS Canopy ..... (X22-1172790)
Armrest K2110-011001 516
Lever K2110-009002 527
PPC Valve For Blade K2110-009003 528
Hose K2110-009004 530
Dozer Control, With Power Tilt Pitch Dozer, For Machine With Rear Actuator, ROPS Canopy ..... (X22-1172800)
Armrest K2110-012001 523
Lever K2110-009002 527
PPC Valve For Blade K2110-009003 528
Hose K2110-009004 530
PPC Valve For Ripper K2110-012006 524
Attachment Lever K2110-010006 531
Dozer Control, For Machine Without Rear Actuator, ROPS Canopy ..... (X22-1172770)
Armrest K2110-011001 516
Lever K2110-007002 533
PPC Valve For Blade K2110-009003 528
Hose K2110-007004 534
Dozer Control, For Machine With Rear Actuator, ROPS Canopy ..... (X22-1172780)
Armrest K2110-012001 523
Lever K2110-007002 533
PPC Valve For Blade K2110-009003 528
Hose K2110-007004 534
PPC Valve For Ripper K2110-012006 524
Attachment Lever K2110-008006 535
Floor Frame Mounts ..... (X22-1054351)
K2120-001001 537
Floor Frame Cover, Operator's Seat Turn Type ..... (X22-1053581)
K2130-001001 538

Floor Frame Cover ..... (X22-1053862)
K2130-002001 539
Windshield Washer Tank ..... (X22-1050371)
K2910-001001 540
Electric Harness ..... (X22-1172590)
K2910-002001 542
GUARDS AND COVERS
Dozer Blade Lift Cylinder Support ..... (X22-1050380)
M2111-001001 544
Radiator Mask, Hinged, Strengthened ..... (X22-1050392)
M2120-001001 545
Radiator Mask, Hinged ..... (X22-1051631)
M2120-002001 546
Front Guard Group, Engine Hood And Side Cover ..... (X22-1050401)
Hood M2140-001001 547
Hood Side Cover M2140-001002 548
Hood Support, Front Side M2140-001003 549
Radiator Cover M2140-001004 550
Hood Mounts M2140-001005 551
Hood Support, Rear Side M2140-001006 552
Hood Side Cover Lock M2140-001007 553
Hood Support Rear Side Cover M2140-001008 554
Tool Box M2140-001009 555
Front Guard Group, Engine Hood And Side Cover, EU Regulation Guard Level 2 ..... (X22-1051151)
Hood M2140-002001 556
M2140-002002 557
Hood Support, Front Side M2140-001003 549
Radiator Cover M2140-002004 559
Hood Mounts M2140-001005 551
Hood Support, Rear Side M2140-001006 552
Hood Side Cover Lock M2140-001007 553
Hood Support Rear Side Cover M2140-001008 554
Tool Box M2140-001009 555
Engine Side Cover, For Engine Hood And Sides ..... (X22-1050411)
M2142-001001 560
Engine Side Cover, For Engine Hood And Sides, EU Regulation Guard Level 2 ..... (X22-1052871)
M2142-002001 561
Fender Group, For Machine With 3-spool Valve Hydraulics ..... (X22-1050421)
Fender M2210-001001 562
Inner Parts (1/10) M2210-001002 563
Inner Parts (2/10) M2210-001003 564
Inner Parts (3/10) M2210-001004 565
Inner Parts (4/10) M2210-001005 566
Inner Parts (5/10) M2210-001006 567
Inner Parts (6/10) M2210-001007 568
Inner Parts (7/10) M2210-001008 570
Inner Parts (8/10) M2210-001009 571
Inner Parts (9/10) M2210-001010 572
Inner Parts (10/10) M2210-001011 573
Control Valve Mounts M2210-001012 574
Hydraulic Piping M2210-001013 575
PPC Lock Solenoid Valve With Accumulator M2210-001014 576
Control Valve Steering Piping M2210-001015 578
Control Valve Wire Harness M2210-001016 579
Filter M2210-001017 580
Handrail M2210-001018 581
Grease Pump Holder M2210-001019 582

Mounts M2210-001020 583
Under Cover M2210-001021 584
Fender Group, For Machine With 4-spool Valve Hydraulics, For Machine With Ripper ..... (X22-1055731)
Fender M2210-001001 562
Inner Parts (1/11) M2210-002002 585
Inner Parts (2/11) M2210-002003 586
Inner Parts (3/11) M2210-002004 587
Inner Parts (4/11) M2210-002005 588
Inner Parts (5/11) M2210-002006 589
Inner Parts (6/11) M2210-002007 590
Inner Parts (7/11) M2210-002008 591
Inner Parts (8/11) M2210-002009 593
Inner Parts (9/11) M2210-002010 594
Inner Parts (10/11) M2210-002011 595
Inner Parts (11/11) M2210-002012 596
Control Valve Mounts M2210-001012 574
Hydraulic Piping M2210-002014 597
PPC Lock Solenoid Valve With Accumulator M2210-002015 598
Control Valve Steering Piping M2210-002016 600
Control Valve Wire Harness M2210-001016 579
Filter M2210-001017 580
Handrail M2210-001018 581
Grease Pump Holder M2210-001019 582
Mounts M2210-001020 583
Under Cover M2210-001021 584
Fender Group, For Machine With 5-spool Valve Hydraulics, With Power Tilt Pitch Dozer, For Machine With Ripper ..... (X22-1057910)
Fender M2210-001001 562
Inner Parts (1/12) M2210-005002 601
Inner Parts (2/12) M2210-005003 602
Inner Parts (3/12) M2210-005004 603
Inner Parts (4/12) M2210-005005 604
Inner Parts (5/12) M2210-005006 605
Inner Parts (6/12) M2210-005007 606
Inner Parts (7/12) M2210-005008 607
Inner Parts (8/12) M2210-005009 608
Inner Parts (9/12) M2210-005010 610
Inner Parts (10/12) M2210-005011 611
Inner Parts (11/12) M2210-005012 612
Inner Parts (12/12) M2210-005013 613
Control Valve Mounts M2210-001012 574
Hydraulic Piping M2210-005015 614
PPC Lock Solenoid Valve With Accumulator M2210-005016 616
Control Valve Steering Piping M2210-005017 618
Control Valve Wire Harness M2210-005018 620
Filter M2210-001017 580
Handrail M2210-001018 581
Grease Pump Holder M2210-001019 582
Mounts M2210-001020 583
Under Cover M2210-001021 584
Fender Group, For Machine With 5-spool Valve Hydraulics, With Power Angle Power Tilt Dozer, For Machine With Ripper ..... (X22-1057920)
Fender M2210-001001 562
Inner Parts (1/12) M2210-006002 621
Inner Parts (2/12) M2210-006003 622
Inner Parts (3/12) M2210-006004 623
Inner Parts (4/12) M2210-006005 624

Inner Parts (5/12) M2210-006006 625
Inner Parts (6/12) M2210-006007 626
Inner Parts (7/12) M2210-006008 627
Inner Parts (8/12) M2210-006009 628
Inner Parts (9/12) M2210-006010 630
Inner Parts (10/12) M2210-006011 631
Inner Parts (11/12) M2210-006012 632
Inner Parts (12/12) M2210-006013 633
Control Valve Mounts M2210-001012 574
Hydraulic Piping M2210-006015 634
PPC Lock Solenoid Valve With Accumulator M2210-006016 636
Control Valve Steering Piping M2210-006017 638
Control Valve Wire Harness M2210-001016 579
Filter M2210-001017 580
Handrail M2210-006020 640
Grease Pump Holder M2210-001019 582
Mounts M2210-001020 583
Under Cover M2210-001021 584
Fender Group, For Machine With 5-spool Valve Hydraulics, With Power Tilt Pitch Dozer ..... (X22-1057900)
Fender M2210-001001 562
Inner Parts (1/12) M2210-005002 601
Inner Parts (2/12) M2210-005003 602
Inner Parts (3/12) M2210-005004 603
Inner Parts (4/12) M2210-005005 604
Inner Parts (5/12) M2210-005006 605
Inner Parts (6/12) M2210-005007 606
Inner Parts (7/12) M2210-005008 607
Inner Parts (8/12) M2210-005009 608
Inner Parts (9/12) M2210-005010 610
Inner Parts (10/12) M2210-005011 611
Inner Parts (11/12) M2210-005012 612
Inner Parts (12/12) M2210-005013 613
Control Valve Mounts M2210-001012 574
Hydraulic Piping M2210-004015 641
PPC Lock Solenoid Valve With Accumulator M2210-005016 616
Control Valve Steering Piping M2210-004017 642
Control Valve Wire Harness M2210-005018 620
Filter M2210-001017 580
Handrail M2210-001018 581
Grease Pump Holder M2210-001019 582
Mounts M2210-001020 583
Under Cover M2210-001021 584
Fender Group, For Machine With 5-spool Valve Hydraulics, With Power Angle Power Tilt Dozer ..... (X22-1055741)
Fender M2210-001001 562
Inner Parts (1/12) M2210-006002 621
Inner Parts (2/12) M2210-006003 622
Inner Parts (3/12) M2210-006004 623
Inner Parts (4/12) M2210-006005 624
Inner Parts (5/12) M2210-006006 625
Inner Parts (6/12) M2210-006007 626
Inner Parts (7/12) M2210-006008 627
Inner Parts (8/12) M2210-006009 628
Inner Parts (9/12) M2210-006010 630
Inner Parts (10/12) M2210-006011 631
Inner Parts (11/12) M2210-006012 632
Inner Parts (12/12) M2210-006013 633
Control Valve Mounts M2210-001012 574

Hydraulic Piping M2210-003015 644
PPC Lock Solenoid Valve With Accumulator M2210-006016 636
Control Valve Steering Piping M2210-003017 645
Control Valve Wire Harness M2210-001016 579
Filter M2210-001017 580
Handrail M2210-006020 640
Grease Pump Holder M2210-001019 582
Mounts M2210-001020 583
Under Cover M2210-001021 584
Fender Cover, Handrail, Operator's Seat ..... (X22-1050432)
Battery Box Cover M2211-001001 646
Valve Cover M2211-001002 648
Step M2211-001003 649
Mounts M2211-001004 650
Fender Cover, With Handrail, Operator's Seat, ROPS Canopy ..... (X22-1172550)
Battery Box Cover M2211-002001 651
Valve Cover M2211-002002 653
Step M2211-001003 649
Mounts M2211-001004 650
Fender Cover, With Handrail, Operator's Seat, Refuel Pump ..... (X22-1173510)
Battery Box Cover M2211-003001 654
Valve Cover M2211-002002 653
Step M2211-001003 649
Mounts M2211-001004 650
Shovel Holder ..... (X22-1056561)
M2214-001001 656
Rear Cover, Strengthened ..... (X22-1050441)
M2240-001001 657
Rear Cover, Strengthened, For Machine With Ripper ..... (X22-1053441)
M2240-002001 658
Under Guard, Strengthened ..... (X22-1050451)
M2810-001001 659
Under Guard, Hinged ..... (X22-1052050)
M2810-002001 660
Under Guard ..... (X22-1056970)
M2810-003001 661
Under Guard ..... (X22-1057500)
M2810-004001 662
Front Pull Hook ..... (X22-1053520)
M2811-001001 663
UNDERCARRIAGE
Front Idler ..... (X22-1050461)
R0110-001001 666
Idler Cushion ..... (X22-1050471)
R0120-001001 667
Track Roller, Plus Type ..... (X21-1459160)
(1/3) R0200-001001 668
(2/3) R0200-001002 669
(3/3) R0200-001003 670
Track Roller ..... (X22-0220741)
(1/3) R0200-002001 671
(2/3) R0200-002002 672
(3/3) R0200-002003 673
Carrier Roller, Plus Type ..... (X21-1361990)
R0300-001001 674
Carrier Roller ..... (X22-0220751)
R0300-002001 675

Track Link Assembly, Heavy Duty, Supply Parts ..... (X21-1459030)
R0500-008001 676
Track Shoe Assembly, Single Grouser, 660mm Wide ..... (X21-1363580)
R0500-001001 677
Track Shoe Assembly, Single Grouser, 510mm Width ..... (X21-1457120)
R0500-003001 678
Track Shoe Assembly, Single Grouser, 560mm Width ..... (X21-1457130)
R0500-004001 679
Track Shoe Assembly, Single Grouser, 610mm Width ..... (X21-1457140)
R0500-005001 680
Track Shoe Assembly, Single Grouser, 760mm Width ..... (X21-1457150)
R0500-006001 681
Track Shoe Assembly, Single Grouser, 760mm Width, Heavy Duty ..... (X21-1458020)
R0500-007001 682
Track Link Assembly, Supply Parts ..... (X21-1369570)
R0500-002001 683
Track Frame ..... (X22-1050652)
R2100-001001 684
Track Frame, With Power Angle Power Tilt Dozer ..... (X22-1050802)
R2100-002001 685
Track Frame, With Power Angle Power Tilt Dozer, Plus Type ..... (X22-1059340)
R2100-004001 686
Track Frame, Plus Type ..... (X22-1059330)
R2100-003001 687
Track Roller Guard ..... (X22-0762570)
R2200-001001 688
Track Roller Guard, Full Roller Guard, Plus Type ..... (X22-1057690)
R2200-003001 689
Track Roller Guard, Plus Type ..... (X22-1058230)
R2200-004001 690
Track Roller Guard, Full Roller Guard ..... (X22-1054921)
R2200-002001 691
WORK EQUIPMENT
Dozer Frame ..... (X22-1050721)
T2110-001001 694
Dozer Frame, With Power Tilt Pitch Dozer ..... (X22-1056201)
T2110-002001 695
Dozer Frame, With Power Angle Power Tilt Dozer ..... (X22-1056081)
T2110-004001 696
Dozer Arm And Brace ..... (X22-0220770)
T2115-001001 697
Dozer Arm And Brace, With Power Tilt Pitch Dozer ..... (X22-0229030)
T2115-002001 698
Dozer Arm And Brace, With Power Angle Power Tilt Dozer ..... (X22-1050821)
T2115-003001 699
Dozer Blade, With SIGMADOZER ..... (X22-1050731)
T2120-001001 700
Dozer Blade, With Power Angle Power Tilt Dozer ..... (X22-1050911)
T2120-002001 701
Dozer Blade, With 3000mm, Power Angle Power Tilt Blade ..... (X22-1174300)
T2120-003001 702
Dozer Blade Lift Cylinder ..... (X22-1050551)
Inner Parts, LHS T2140-001001 704
Inner Parts, Reduction Gear T2140-001002 706
T2140-001003 708
Dozer Blade Lift Cylinder, With Power Angle Power Tilt Dozer ..... (X22-1050841)
Inner Parts, LHS T2140-002001 709

Inner Parts, Reduction Gear T2140-002002 711
T2140-002003 713
Dozer Blade Tilt Cylinder ..... (X22-1050561)
Inner Parts T2150-001001 714
Dozer Blade Tilt Cylinder, With Power Angle Power Tilt Dozer ..... (X22-1050851)
Inner Parts T2150-002001 715
Dozer Frame Related Parts ..... (X22-1058250)
Inner Parts T2151-001001 716
Dozer Blade Angle Cylinder, With Power Angle Power Tilt Dozer ..... (X22-1050861)
Inner Parts T2153-001001 717
Dozer Blade Tilt Cylinder Circuit ..... (X22-1057780)
T2160-002001 718
Dozer Blade Tilt Cylinder Circuit, With Power Tilt Pitch Dozer ..... (X22-1057820)
T2160-003001 719
Dozer Blade Tilt Cylinder Piping ..... (X22-1050871)
(1/2) T2160-004001 720
(2/2) T2160-004002 721
Ripper Group ..... (X22-1050581)
T2400-001001 723
Ripper Lift Cylinder ..... (X22-1050591)
Inner Parts T2460-001001 724
Shipping Parts T2460-001002 725
Drawbar, Rigid Type ..... (X22-0221680)
T2810-001001 726
Drawbar ..... (X22-1050931)
T2810-003001 727
Drawbar, Rigid Type, With Scraper ..... (X22-0221690)
T2810-002001 728
Drawbar, Counter Weight ..... (X22-1057190)
T2810-004001 729
Drawbar, EU Regulation Guard Level 2 ..... (X22-1058550)
T2810-005001 730
Drawbar, Counter Weight, EU Regulation Guard Level 2 ..... (X22-1059580)
T2810-007001 731
Drawbar, Rigid Type ..... (X22-1058640)
T2810-006001 732
Drawbar, For EU Safety Regulation ..... (X22-1173750)
T2810-008001 733
Drawbar, With Additional Counter Weight, For EU Safety Regulation ..... (X22-1173770)
T2810-009001 734
Drawbar, Rigid Type, For EU Safety Regulation ..... (X22-1173780)
T2810-010001 735
Counterweight ..... (X22-1057200)
T2820-002001 736
Counterweight ..... (X22-1059590)
T2820-003001 737
MARKS AND PLATES
Marks And Plates, English, With Power Tilt Pitch Dozer ..... (X22-1057990)
U0100-001001 740
Marks And Plates, English, Text Type, For North America ..... (X22-1170750)
U0100-003001 742
Marks And Plates, English, Text Type ..... (X22-1170760)
U0100-004001 743
Marks And Plates, Spanish, Text Type ..... (X22-1170770)
U0100-005001 744
Marks And Plates, French, Text Type ..... (X22-1170780)
U0100-006001 745

Marks And Plates, English, Text Type, With Power Tilt Pitch Dozer.....(X22-1170870)
U0100-015001 746
Marks And Plates, Spanish, Text Type, With Power Tilt Pitch Dozer.....(X22-1170880)
U0100-016001 747
Marks And Plates, French, Text Type, With Power Tilt Pitch Dozer .....(X22-1170890)
U0100-017001 748
Marks And Plates, English, For North America, Text Type, With Power Angle Power Tilt Dozer.....(X22-1170980)
U0100-026001 749
Marks And Plates, English, Text Type, With Power Angle Power Tilt Dozer .....(X22-1170990)
U0100-027001 750
Marks And Plates, Spanish, Text Type, With Power Angle Power Tilt Dozer .....(X22-1171000)
U0100-028001 751
Marks And Plates, French, Text Type, With Power Angle Power Tilt Dozer.....(X22-1171010)
U0100-029001 752
Marks And Plates, English.....(X22-1170740)
U0100-002001 753
Marks And Plates, English, EU Regulation Guard Level 2.....(X22-1170790)
U0100-007001 754
Marks And Plates, Spanish, EU Regulation Guard Level 2.....(X22-1170800)
U0100-008001 755
Marks And Plates, French, EU Regulation Guard Level 2 .....(X22-1170810)
U0100-009001 756
Marks And Plates, Germany, EU Regulation Guard Level 2.....(X22-1170820)
U0100-010001 757
Marks And Plates, Italian, EU Regulation Guard Level 2.....(X22-1170830)
U0100-011001 758
Marks And Plates, Portuguese, EU Regulation Guard Level 2 .....(X22-1170840)
U0100-012001 759
Marks And Plates, Turkish, EU Regulation Guard Level 2.....(X22-1170850)
U0100-013001 760
Marks And Plates, English, With Power Tilt Pitch Dozer.....(X22-1170860)
U0100-014001 761
Marks And Plates, English, EU Regulation Guard Level 2, With Power Angle Power Tilt Dozer.....(X22-1170900)
U0100-018001 762
Marks And Plates, Spanish, EU Regulation Guard Level 2, With Power Angle Power Tilt Dozer .....(X22-1170910)
U0100-019001 763
Marks And Plates, French, EU Regulation Guard Level 2, With Power Angle Power Tilt Dozer .....(X22-1170920)
U0100-020001 764
Marks And Plates, Germany, EU Regulation Guard Level 2, With Power Angle Power Tilt Dozer.....(X22-1170930)
U0100-021001 765
Marks And Plates, Italian, EU Regulation Guard Level 2, With Power Angle Power Tilt Dozer.....(X22-1170940)
U0100-022001 766
Marks And Plates, Portuguese, EU Regulation Guard Level 2, With Power Angle Power Tilt Dozer....(X22-1170950)
U0100-023001 767
Marks And Plates, Turkish, EU Regulation Guard Level 2, With Power Angle Power Tilt Dozer.....(X22-1170960)
U0100-024001 768
Marks And Plates, English, With Power Tilt Pitch Dozer.....(X22-1170970)
U0100-025001 769
Marks And Plates, English, EU Regulation Guard Level 2, With Power Angle Power Tilt Dozer.....(X22-1171020)
U0100-030001 770
Marks And Plates, Spanish, EU Regulation Guard Level 2, With Power Angle Power Tilt Dozer .....(X22-1171030)
U0100-031001 771
Marks And Plates, French, EU Regulation Guard Level 2, With Power Angle Power Tilt Dozer .....(X22-1171040)
U0100-032001 772
Marks And Plates, Germany, EU Regulation Guard Level 2, With Power Angle Power Tilt Dozer.....(X22-1171050)
U0100-033001 773

Marks And Plates, Italian, EU Regulation Guard Level 2, With Power Angle Power Tilt Dozer.....(X22-1171060)
U0100-034001 774
Marks And Plates, Portuguese, EU Regulation Guard Level 2, With Power Angle Power Tilt Dozer....(X22-1171070)
U0100-035001 775
Marks And Plates, Turkish, EU Regulation Guard Level 2, With Power Angle Power Tilt Dozer .....(X22-1171080)
U0100-036001 776
Marks And Plates, Italian .....(X22-1171670)
U0100-037001 777
Marks And Plates, Italian, With Power Tilt Pitch Dozer.....(X22-1171680)
U0100-038001 778
Marks And Plates, Italian, With Power Angle Power Tilt Dozer .....(X22-1171690)
U0100-039001 779
Marks And Plates, Portuguese.....(X22-1171700)
U0100-040001 780
Marks And Plates, Portuguese, With Power Tilt Pitch Dozer.....(X22-1171710)
U0100-041001 781
Marks And Plates, Portuguese, With Power Angle Power Tilt Dozer.....(X22-1171720)
U0100-042001 782
Marks And Plates, With Power Tilt Pitch Dozer, For EU Safety Regulation.....(X22-1173880)
U0100-045001 783
Marks And Plates, For EU Safety Regulation, Power Angle Power Tilt Dozer, Inside Frame .....(X22-1173890)
U0100-046001 785
Marks And Plates, For EU Safety Regulation .....(X22-1173870)
U0100-044001 787
Balancing Mark .....(X22-0514220)
U0400-001001 788
ROPS/FOPS Plate, English .....(X22-1058040)
U0520-001001 789
ROPS/FOPS Plate, Spanish .....(X22-1171230)
U0520-002001 790
ROPS/FOPS Plate, French.....(X22-1171240)
U0520-003001 791
ROPS/FOPS Plate, Germany .....(X22-1171250)
U0520-004001 792
ROPS/FOPS Plate, Turkish .....(X22-1171260)
U0520-005001 793
ROPS/FOPS Plate, Italian .....(X22-1171270)
U0520-006001 794
ROPS/FOPS Plate, Portuguese.....(X22-1171280)
U0520-007001 795
ROPS/FOPS Plate, For EU Safety Regulation .....(X22-1173700)
U0520-008001 796
AUXILIARY PARTS AND TOOL
Spare Parts .....(X22-1059130)
V0100-001001 798
Cap And Overall.....(X22-0016710)
V0200-001001 799
Tool .....(X22-1055381)
V0300-001001 800
OTHER EQUIPMENT
Fuel Self Charge Pump.....(X22-1173400)
W1113-001001 802
Parts For Machine Transportation.....(X22-0227680)
W9970-001001 804
FIELD REPAIR SERVICE PARTS
Service Kit Parts.....(Y99-0000002)
KIT 806

ENGINE CYLINDER HEAD AND ITS RELATED PARTS

FIG. A1009-001001 Cylinder Head

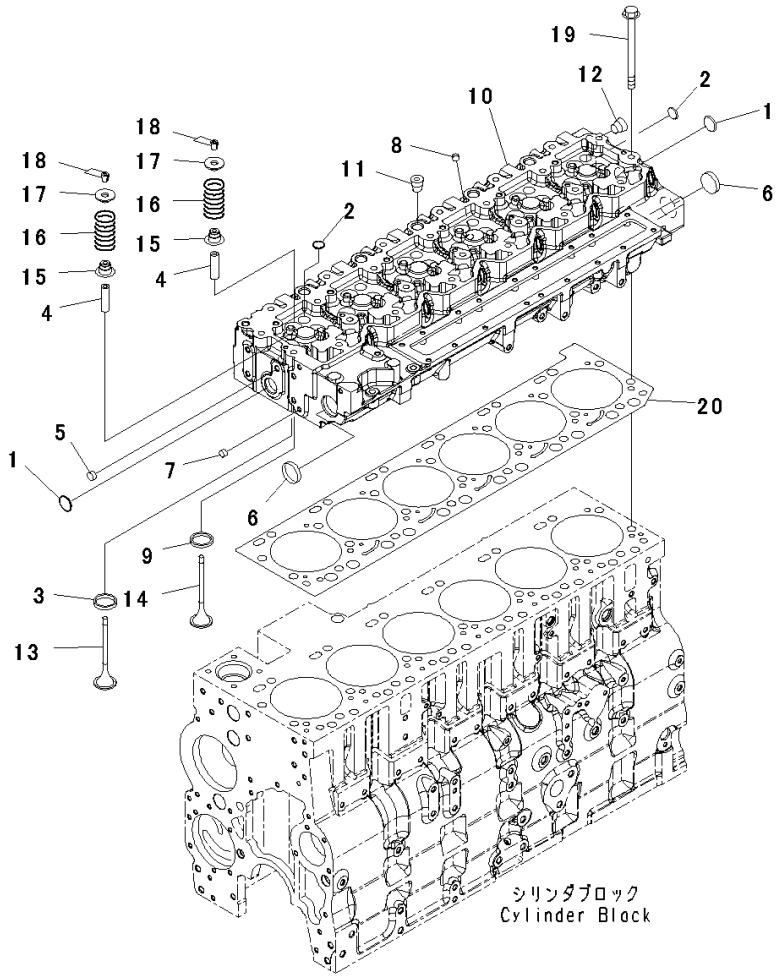

Index	Code	Part Number	Description	Qty	Serial Number
		6745-11-1190	Head Assembly	1	26858351-
		6745-11-1121	• Head Assembly, Cylinder	1	26858351-
1		6742-01-2920	•• Plug	2	26858351-
2		6735-21-5530	•• Plug	18	26858351-
3	C1		•• Insert, Exhaust	12	26858351-
4	C1		•• Guide	24	26858351-
5		6744-41-4110	•• Plug	1	26858351-
6		6744-11-1070	•• Plug	2	26858351-
7		6744-41-4120	•• Plug	1	26858351-
8		6754-11-1160	•• Plug	6	26858351-
9	C1		•• Insert	12	26858351-
10		6745-11-1131	•• Head, Cylinder	1	26858351-
11		6732-11-1910	• Plug	5	26858351-
12		6732-11-1920	• Plug	1	26858351-
		6732-21-1960	• Plug Assembly, (Not Shwon)	1	26858351-
13		6745-41-4161	Valve, Intake	12	26858351-
14		6745-41-4151	Valve, Exhaust	12	26858351-
15		6744-41-4080	Seal	24	26858351-
16		6744-41-4031	Spring	24	26858351-
17		6744-41-4050	Retainer	24	26858351-
18		6732-41-4520	Collet	48	26858351-
19		6743-11-1610	Bolt	26	26858351-
20		6745-11-1811	Gasket	1	26858351-

FIG. AVC00-001001 Cover

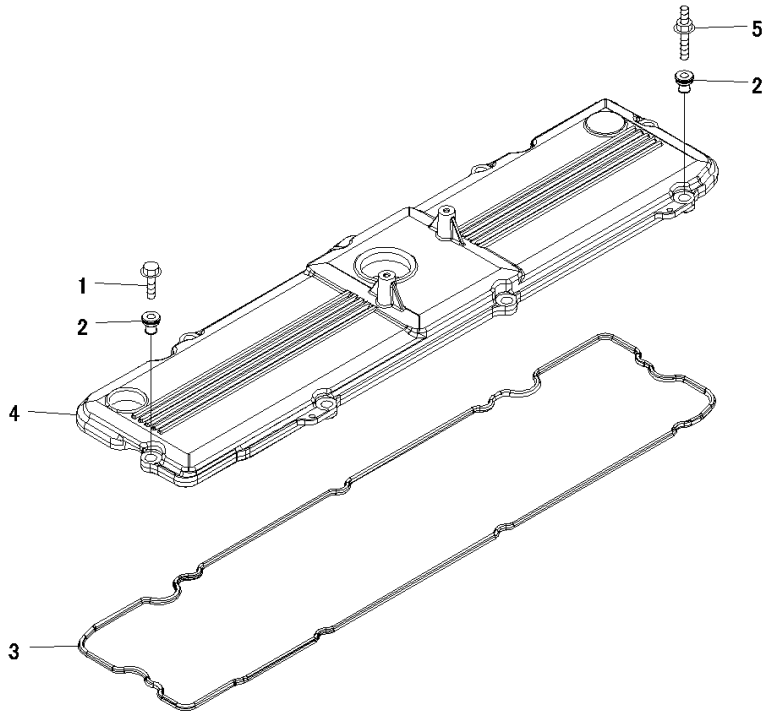

Index	Code	Part Number	Description	Qty	Serial Number
1		6732-61-6140	Bolt	7	26858351-
2		6745-11-8160	Isolator	8	26858351-
		6745-11-8310	Cover	1	26858351-
3		6745-11-8810	• Gasket	1	26858351-
4		6745-11-8320	• Cover	1	26858351-
5		6745-11-8170	Screw	1	26858351-

FIG. ARP00-001001 Coolant Piping

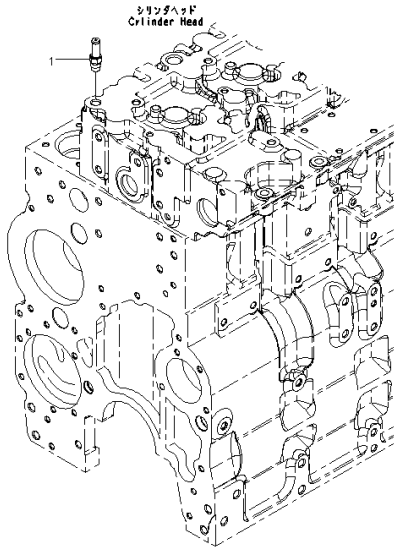

Index	Code	Part Number	Description	Qty	Serial Number
1		6745-61-6120	Fitting	1	26858351-

FIG. ABR00-001001 Breather

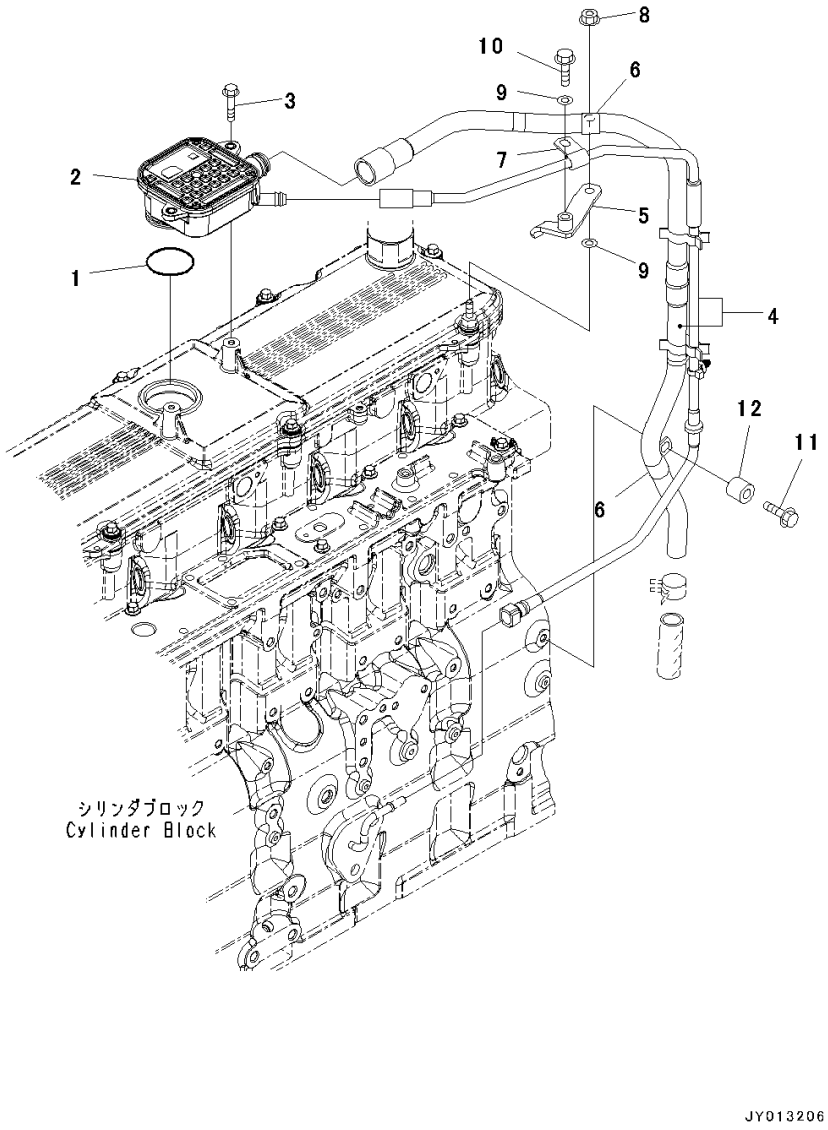

Index	Code	Part Number	Description	Qty	Serial Number
		6745-21-7110	Housing Assembly	1	26858351-
1		6745-21-7120	• O-ring	1	26858351-
2		6745-21-7130	• Housing	1	26858351-
3		6735-71-5190	Bolt	2	26858351-
4		6745-21-7180	Tube	1	26858351-
5		6745-11-8250	Brace	1	26858351-
6		6216-24-5730	Clip	2	26858351-
7		04434-51008	Clip	1	26858351-
8		6732-71-3210	Nut	1	26858351-
9		01643-30823	Washer	2	26858351-
10		6731-71-6270	Screw	1	26858351-
11		6732-61-6140	Bolt	1	26858351-
12		6152-11-4970	Spacer	1	26858351-

FIG. AIM00-001001 Air Intake Manifold

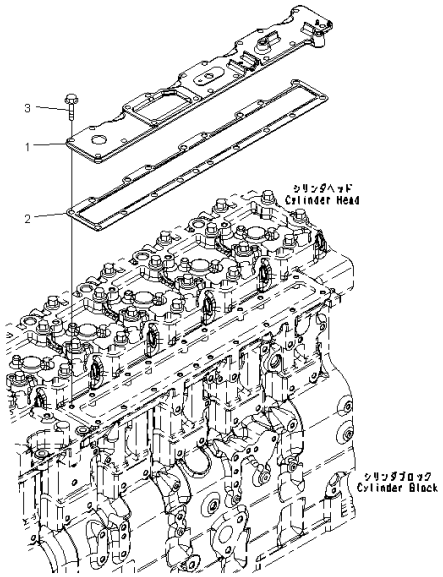

Index	Code	Part Number	Description	Qty	Serial Number
1		6745-11-4110	Cover	1	26858351-
2		6745-11-4120	Gasket	1	26858351-
3		6732-21-6630	Screw	9	26858351-

FIG. AIC00-001001 Air Intake Connector

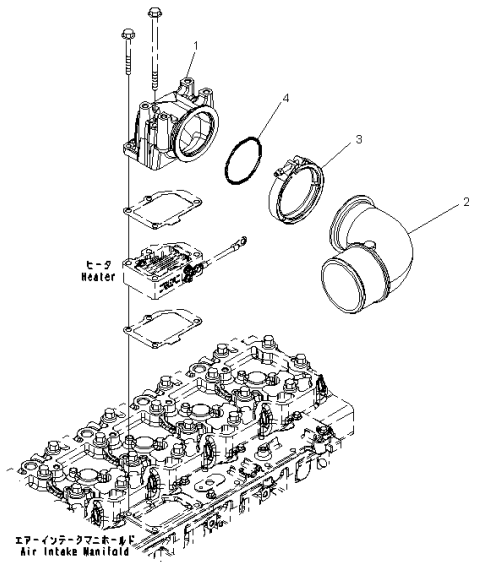

Index	Code	Part Number	Description	Qty	Serial Number
1		6745-11-4190	Connector	1	26858351-
2		6745-11-4140	Connector	1	26858351-
3		6745-11-4150	Clamp	1	26858351-
4		6745-11-4161	O-ring	1	26858351-

FIG. AIC20-001001 Air Intake Connector Mounts

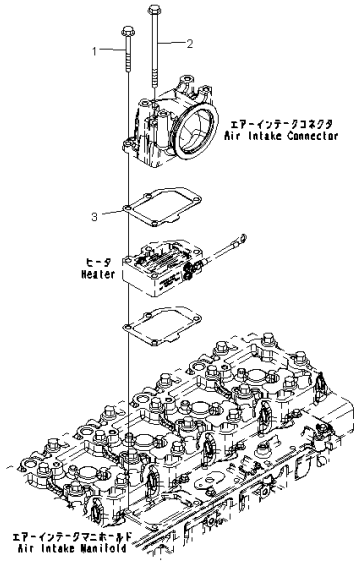

Index	Code	Part Number	Description	Qty	Serial Number
1		6736-81-8730	Bolt	2	26858351-
2		6745-11-4180	Bolt	2	26858351-
3		6745-81-4120	Gasket	1	26858351-

FIG. AAH00-001001 Air Intake Heater

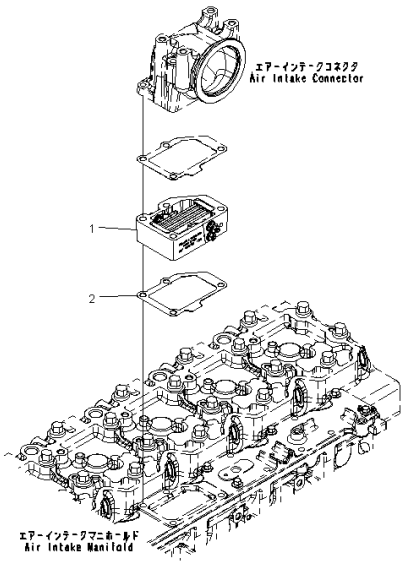

Index	Code	Part Number	Description	Qty	Serial Number
1		6745-81-4111	Heater	1	26858351-
2		6745-81-4120	Gasket	1	26858351-

FIG. A1310-001001 Air Pipe

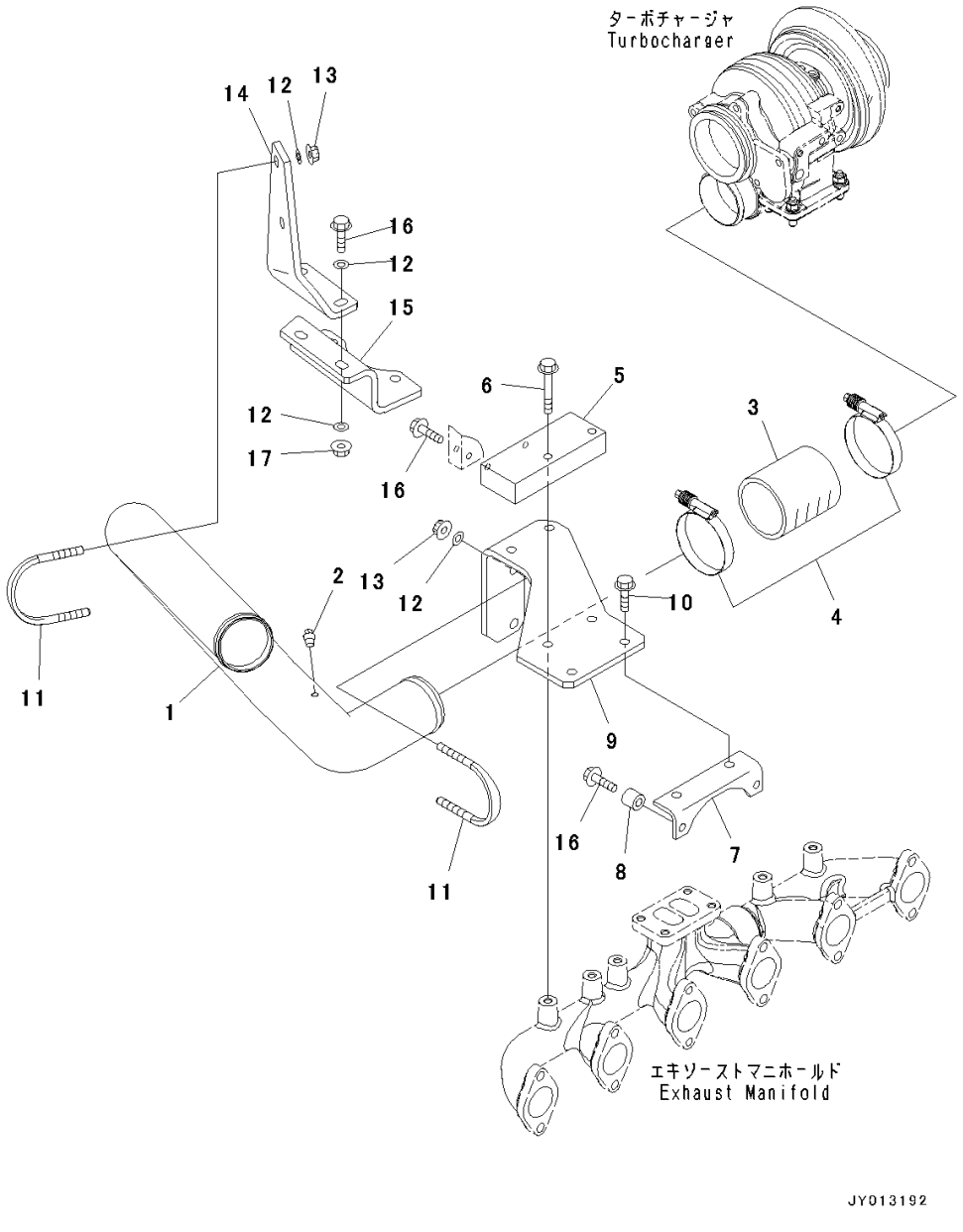

Index	Code	Part Number	Description	Qty	Serial Number
1		6745-81-7290	Tube	1	26858351-
2		07042-20108	Plug	1	26858351-
3		6933-11-4410	Hose	1	26858351-
4		07299-00080	Clamp	2	26858351-
5		6745-11-6220	Plate	1	26858351-
6		01435-01065	Bolt	2	26858351-
7		6745-11-5250	Bracket	1	26858351-
8		6152-11-4970	Spacer	2	26858351-
9		6745-11-6230	Bracket	1	26858351-
10		01435-01025	Bolt	2	26858351-
11		07283-37663	Clip	2	26858351-
12		01643-31032	Washer	8	26858351-
13		01595-01008	Nut	4	26858351-
14		6745-81-7280	Bracket	1	26858351-
15		6745-81-7250	Bracket	1	26858351-
16		01435-01040	Bolt	6	26858351-
17		01584-01008	Nut	2	26858351-

FIG. ATB30-001001 Exhaust Manifold

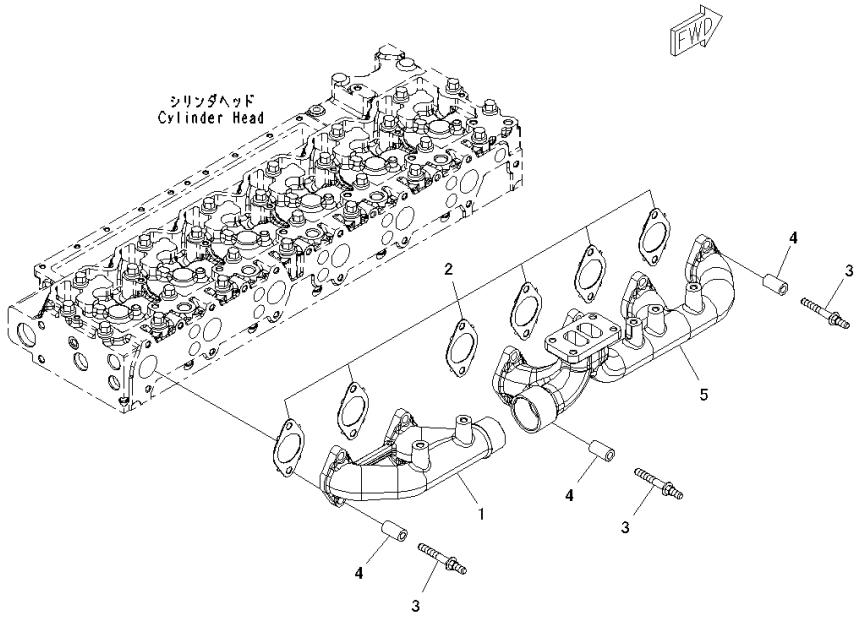

Index	Code	Part Number	Description	Qty	Serial Number
1		6745-11-5110	Manifold	1	26858351-
2		6745-11-5811	Gasket	6	26858351-
3		6745-11-5170	Bolt.....	12	26858351-
4		6754-11-5150	Spacer	12	26858351-
5		6745-11-5210	Manifold	1	26858351-

FIG. A1539-001001 Turbocharger

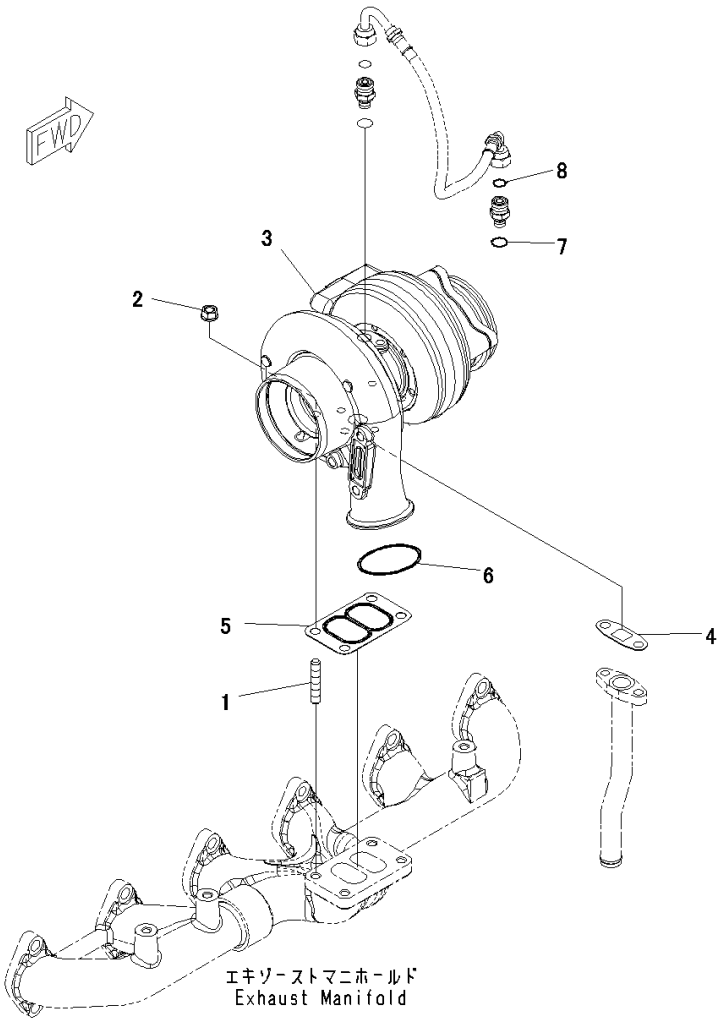

Index	Code	Part Number	Description	Qty	Serial Number
1		6732-81-8810	Stud	4	26858351-
2		6732-81-8820	Nut	4	26858351-
		6745-81-8080	Turbocharger	1	26858351-
3	C1		• Turbocharger	1	26858351-
4		6207-51-7690	• Gasket	1	26858351-
5		6732-81-8830	• Gasket	1	26858351-
6		6738-11-4370	• O-ring	1	26858351-
7		6736-51-8710	• O-ring	1	26858351-
8		6732-81-8860	• O-ring	1	26858351-

FIG. AXS00-001001 Turbocharger Exhaust Gas Connector

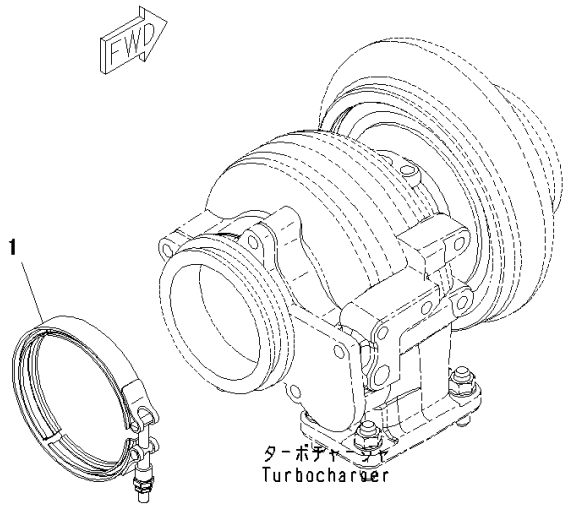

JY013215

Index	Code	Part Number	Description	Qty	Serial Number
1		6742-01-3620	Clamp	1	26858351-

FIG. A1510-001001 Turbocharger Oil Pipe Related Parts

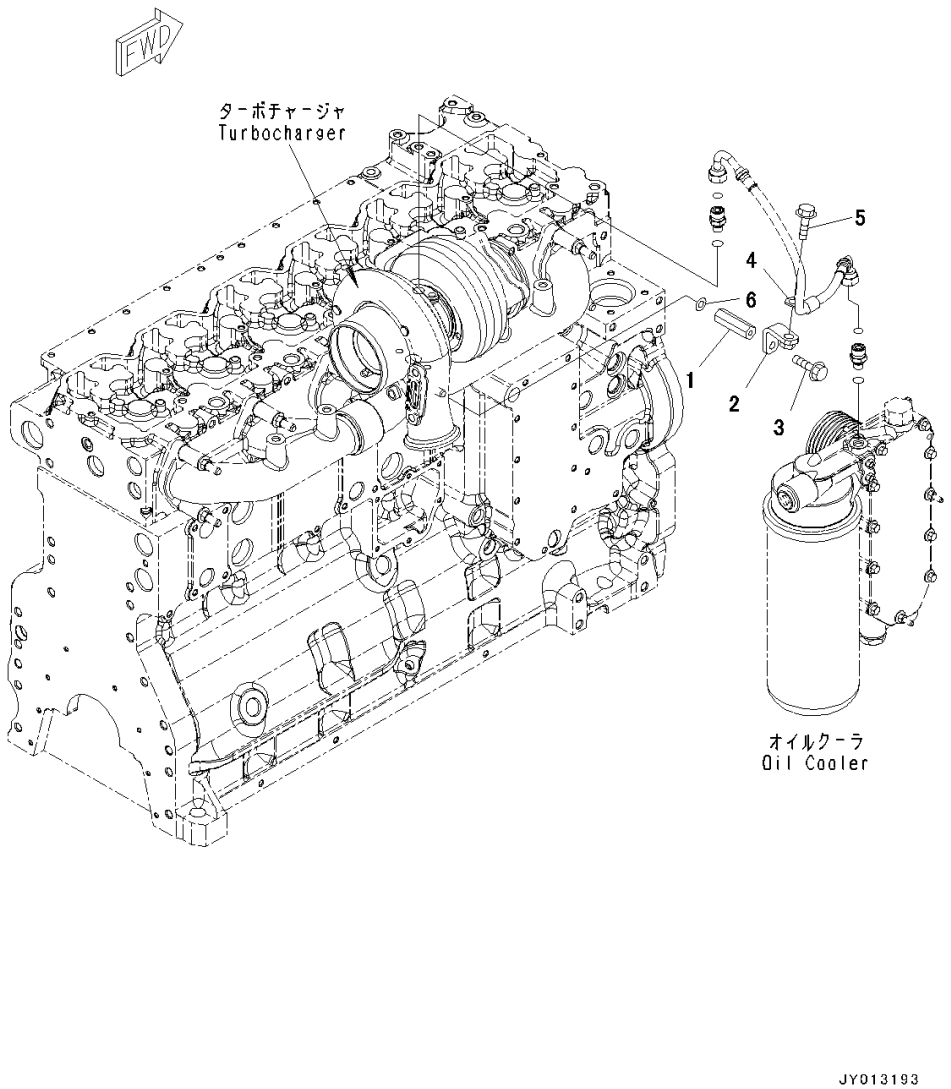

Index	Code	Part Number	Description	Qty	Serial Number
1		6745-51-8520	Nut	1	26858351-
2		6745-51-8510	Brace	1	26858351-
3		01435-00820	Bolt	1	26858351-
4		6151-53-8280	Clip	1	26858351-
5		01435-01020	Bolt	1	26858351-
6		01643-31032	Washer	1	26858351-

FIG. ATP00-001001 Turbocharger Oil Piping

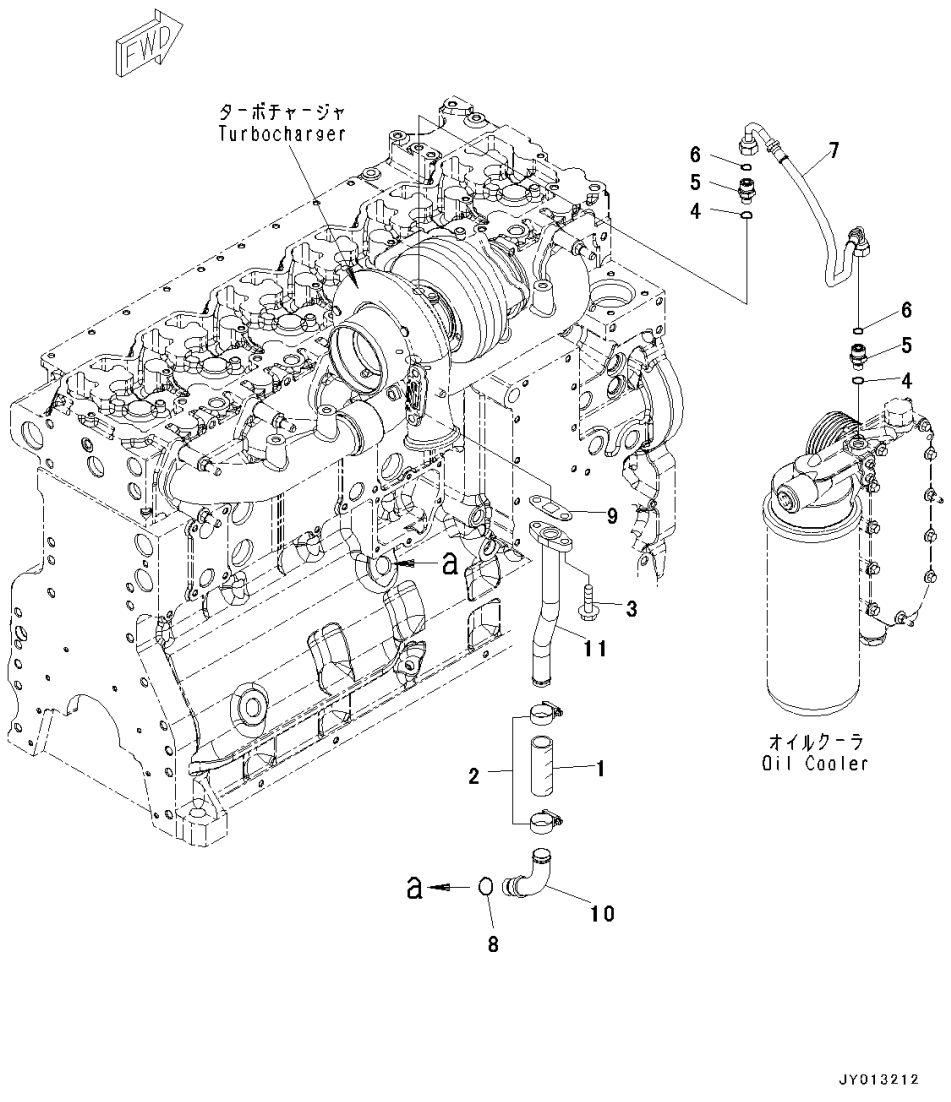

Index	Code	Part Number	Description	Qty	Serial Number
1		6732-51-8370	Hose	1	26858351-
2		07281-00359	Clamp	2	26858351-
3		6732-71-3220	Bolt	2	26858351-
		6732-51-8180	Connector Assembly	2	26858351-
4		6736-51-8710	• O-ring	1	26858351-
5		6732-81-8850	• Connector	1	26858351-
6		6732-81-8860	• O-ring	1	26858351-
7		6735-51-8230	Hose	1	26858351-
8		6731-51-8150	O-ring	1	26858351-
9		6207-51-7690	Gasket	1	26858351-
10		6745-51-8110	Tube	1	26858351-
11		6745-51-8150	Tube	1	26858351-

FIG. A1610-001001 Exhaust Muffler

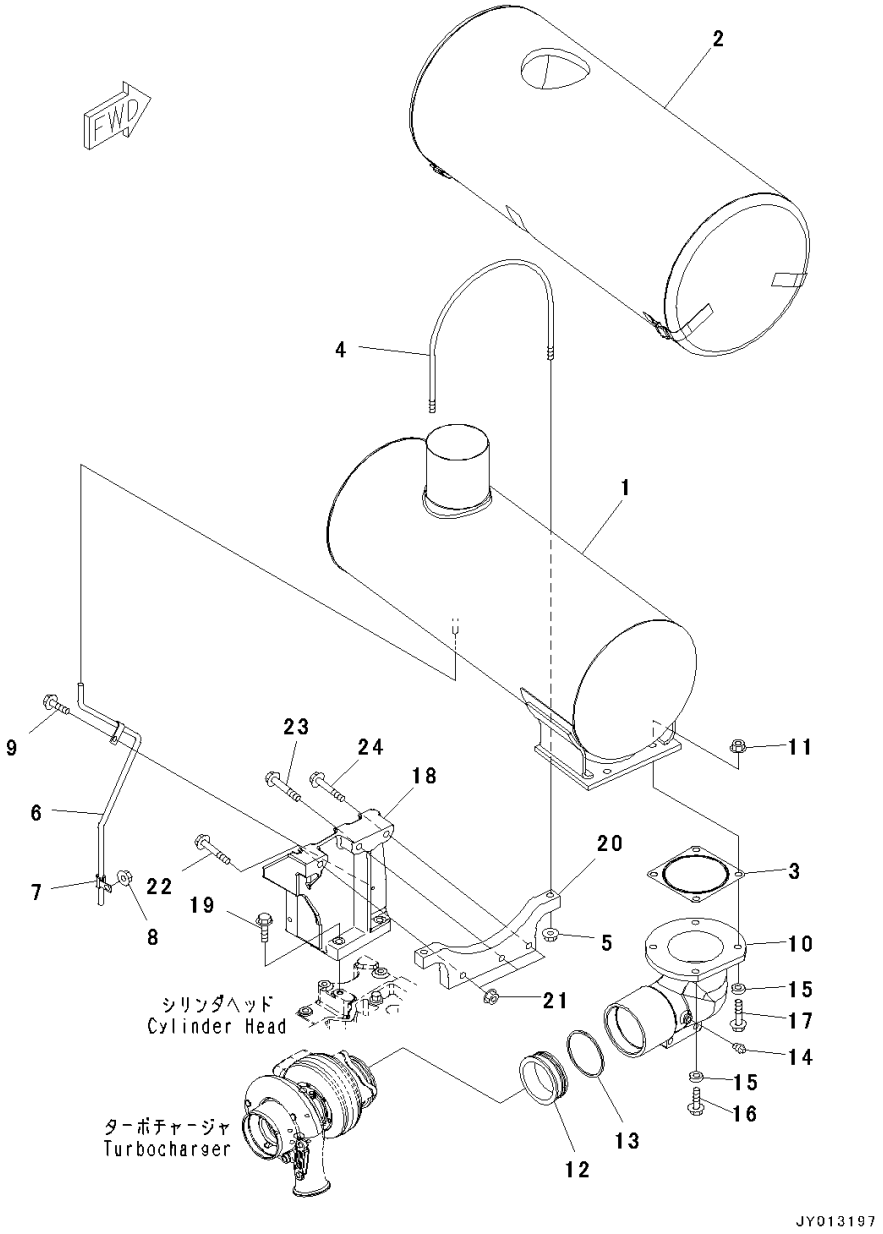

Index	Code	Part Number	Description	Qty	Serial Number
1		6745-11-5380	Muffler	1	26858351-
2		6745-11-5190	Cover	1	26858351-
3		6211-11-5490	Gasket	1	26858351-
4		6222-11-5940	U-bolt	1	26858351-
5		01594-01008	Nut	2	26858351-
6		6745-11-5820	Tube	1	26858351-
7		6151-53-8190	Clip	1	26858351-
8		01584-30806	Nut	1	26858351-
9		01435-00816	Bolt	1	26858351-
10		6745-11-5131	Elbow	1	26858351-
11		01584-01210	Nut	4	26858351-
12		207-01-68170	Tube	1	26858351-
13		6151-11-5280	Seal Ring	1	26858351-
14		07042-20108	Plug	1	26858351-
15		6127-11-5180	Washer	4	26858351-
16		01435-01245	Bolt	2	26858351-
17		01435-01255	Bolt	2	26858351-
18		6745-11-5180	Bracket	1	26858351-
19		01435-01040	Bolt	3	26858351-
20		6745-11-6210	Bracket	1	26858351-
21		01584-01008	Nut	3	26858351-
22		01435-01085	Bolt	1	26858351-
23		01435-01095	Bolt	1	26858351-
24		01436-01005	Bolt	1	26858351-

FIG. AIT00-001001 Exhaust Connection

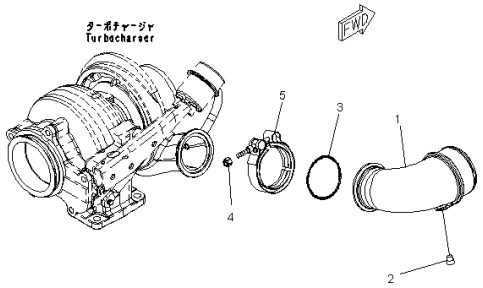

Index	Code	Part Number	Description	Qty	Serial Number
1		1307682H1	Pipe	1	26858351-
2		1240101H1	Plug	1	26858351-
3		6738-11-4370	O-ring	1	26858351-
4		6738-11-4390	Nut	1	26858351-
5		6738-11-4380	Clamp	1	26858351-

FIG. A1570-001001 Heat Shield, For 60Amp. Alternator

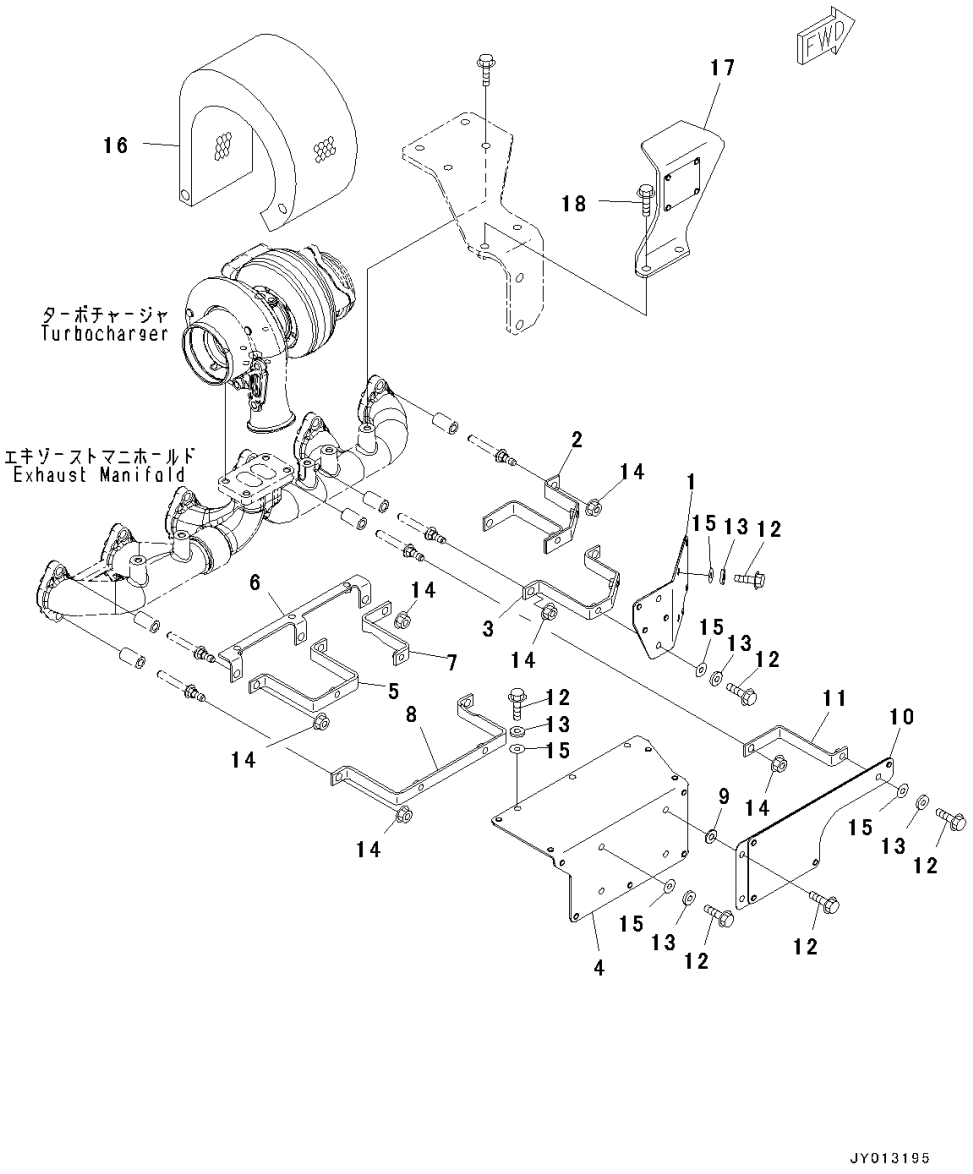

Index	Code	Part Number	Description	Qty	Serial Number
1		6745-81-8471	Cover	1	26858351-
2		6745-81-8420	Bracket	1	26858351-
3		6745-81-8410	Bracket	1	26858351-
4		6745-81-8481	Cover	1	26858351-
5		6745-81-8490	Bracket	1	26858351-
6		6745-81-8510	Bracket	1	26858351-
7		6745-81-8520	Bracket	1	26858351-
8		6745-81-8531	Bracket	1	26858351-
9		154-61-16570	Washer	2	26858351-
10		6745-81-8540	Cover	1	26858351-
11		6745-81-8550	Bracket	1	26858351-
12		01435-00820	Bolt	12	26858351-
13		6201-81-6560	Spacer	10	26858351-
14		01584-01008	Nut	10	26858351-
15		01643-31032	Washer	10	26858351-
16		6745-81-8562	Cover	1	26858351-
17		6745-11-6170	Plate	1	26858351-
18		01435-01025	Bolt	2	26858351-

FIG. A1570-002001 Heat Shield, For 90Amp. Alternator

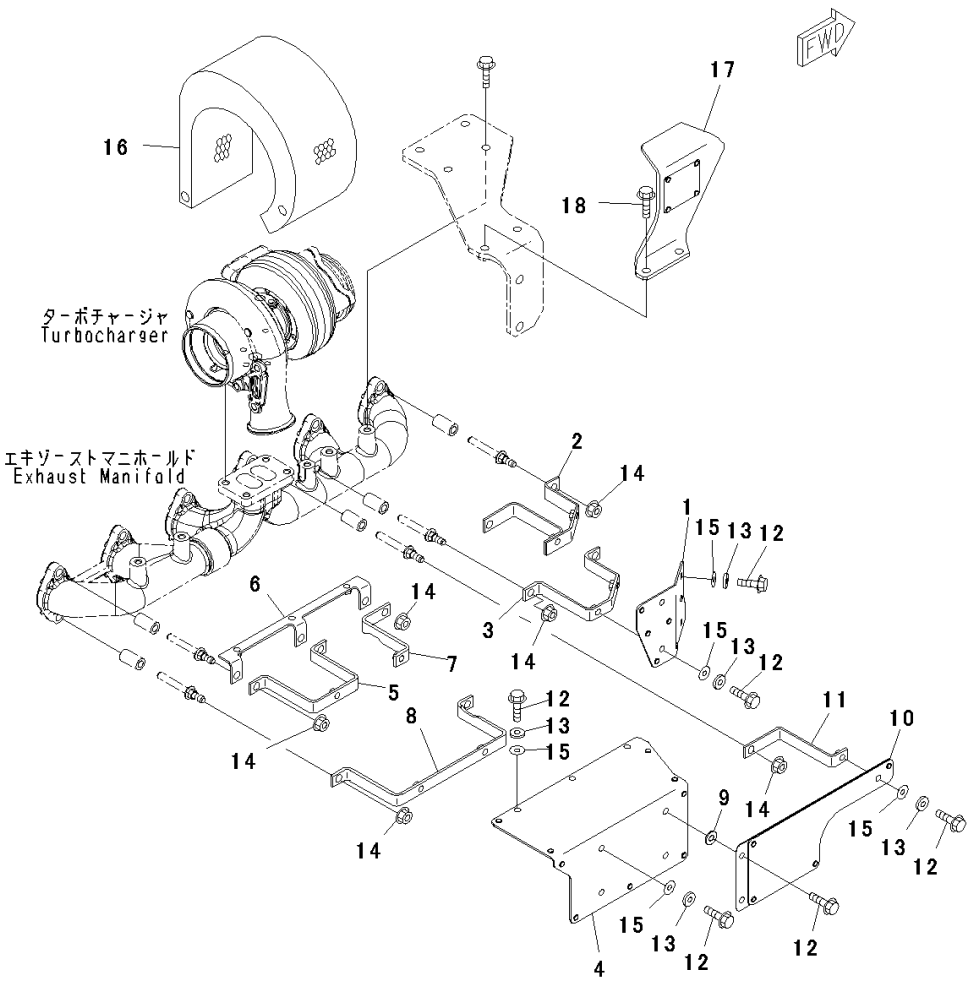

Index	Code	Part Number	Description	Qty	Serial Number
1		6745-81-8570	Cover	1	26858351-
2		6745-81-8420	Bracket	1	26858351-
3		6745-81-8410	Bracket	1	26858351-
4		6745-81-8481	Cover	1	26858351-
5		6745-81-8490	Bracket	1	26858351-
6		6745-81-8510	Bracket	1	26858351-
7		6745-81-8520	Bracket	1	26858351-
8		6745-81-8531	Bracket	1	26858351-
9		154-61-16570	Washer	2	26858351-
10		6745-81-8540	Cover	1	26858351-
11		6745-81-8550	Bracket	1	26858351-
12		01435-00820	Bolt	12	26858351-
13		6201-81-6560	Spacer	10	26858351-
14		01584-01008	Nut	10	26858351-
15		01643-31032	Washer	10	26858351-
16		6745-81-8562	Cover	1	26858351-
17		6745-11-6170	Plate	1	26858351-
18		01435-01025	Bolt	2	26858351-

FIG. ARL00-001001 Rocker Arm Housing And Rocker Arm

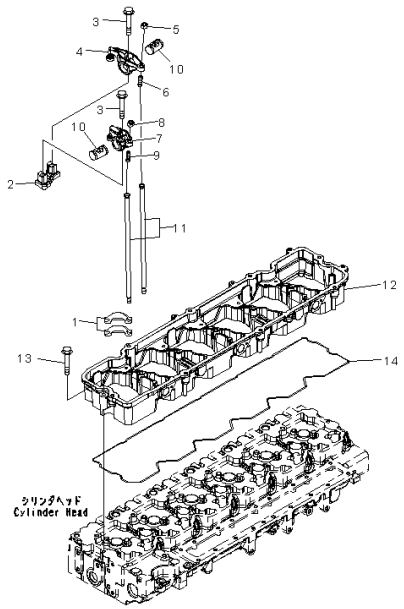

Index	Code	Part Number	Description	Qty	Serial Number
1		6744-41-5010	Crosshead	12	26858351-
		6745-41-5100	Lever Assembly	6	26858351-
2		6744-41-5030	• Support	1	26858351-
3		6744-41-3020	• Bolt	2	26858351-
4		6745-41-5400	• Lever Assembly	1	26858351-
5		6732-41-5430	•• Nut	1	26858351-
6		6745-41-5430	•• Screw	1	26858351-
7		6745-41-5200	• Lever Assembly	1	26858351-
8		6732-41-5430	•• Nut	1	26858351-
9		6745-41-5430	•• Screw	1	26858351-
10		6745-41-5110	• Shaft	2	26858351-
11		6745-41-3100	Rod	12	26858351-
12		6745-11-7111	Housing	1	26858351-
13		6733-61-3150	Bolt	7	26858351-
14		6745-11-7810	Gasket	1	26858351-

FIG. A1010-001001 Engine Lifting

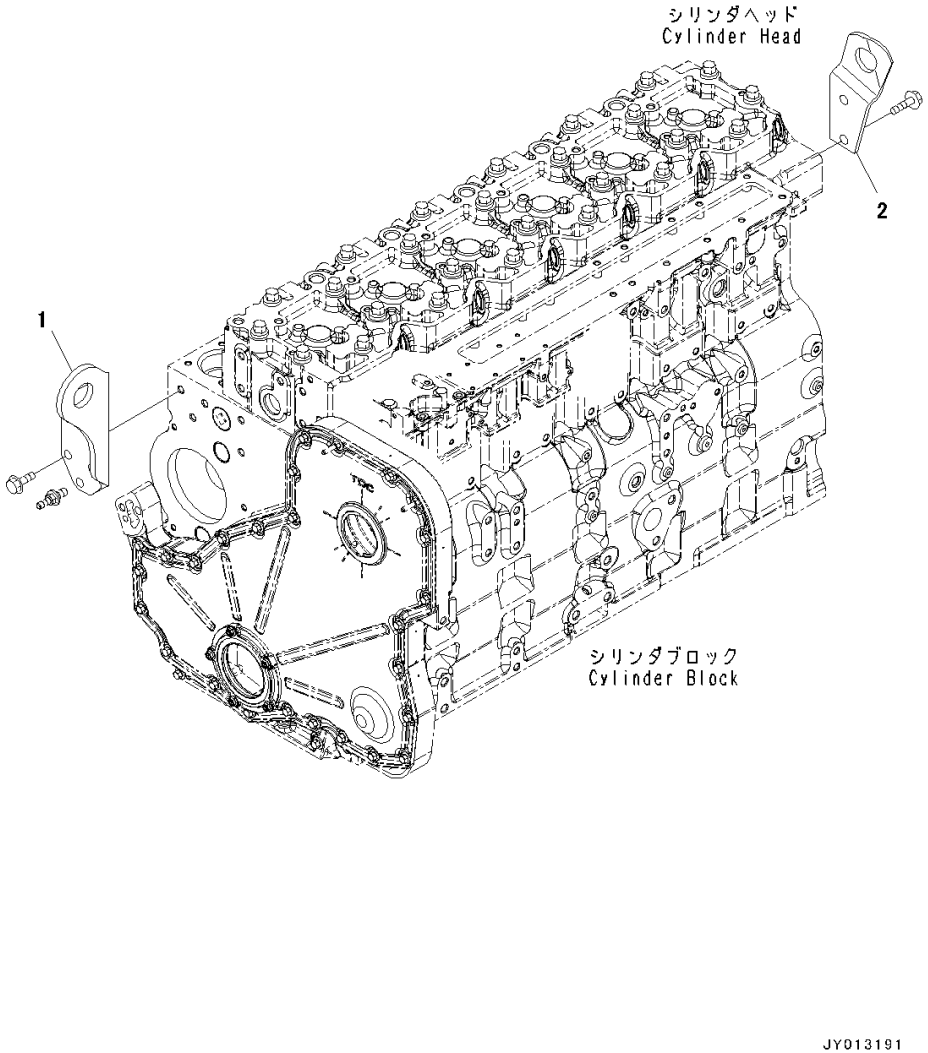

Index	Code	Part Number	Description	Qty	Serial Number
1		6745-11-5162	Bracket.....	1	26858351-
2		6745-21-1330	Bracket.....	1	26858351-

FIG. ALA10-001001 Engine Lifting Bolt

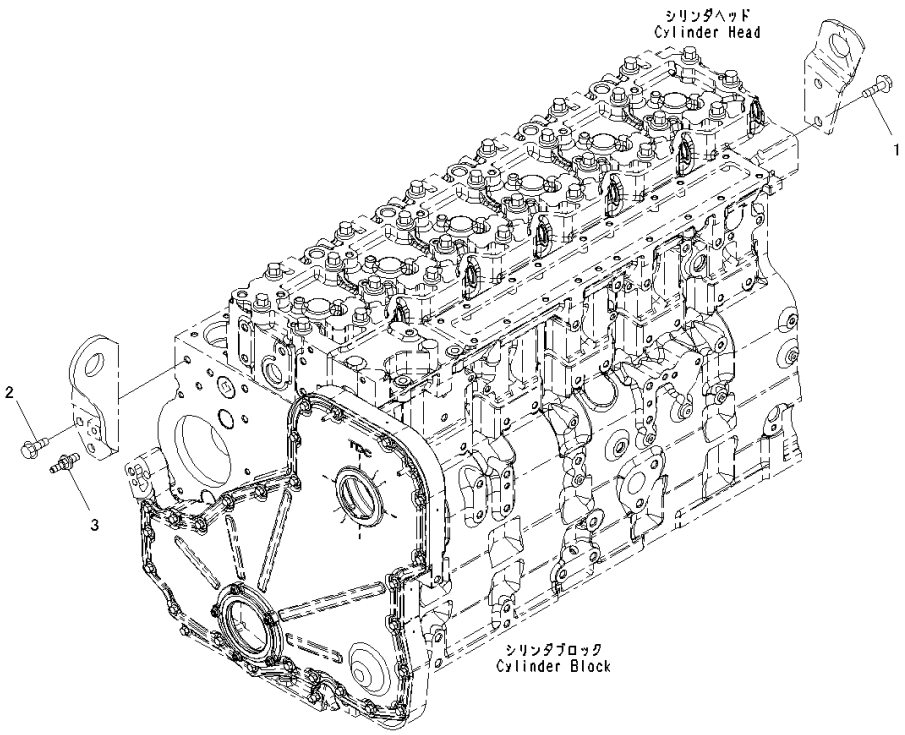

Index	Code	Part Number	Description	Qty	Serial Number
1		6732-51-5130	Bolt.....	2	26858351-
2		6732-61-3140	Bolt.....	2	26858351-
3		6745-61-3220	Bolt.....	1	26858351-

ENGINE CYLINDER BLOCK AND ITS RELATED PARTS

FIG. A2419-001001 Camshaft

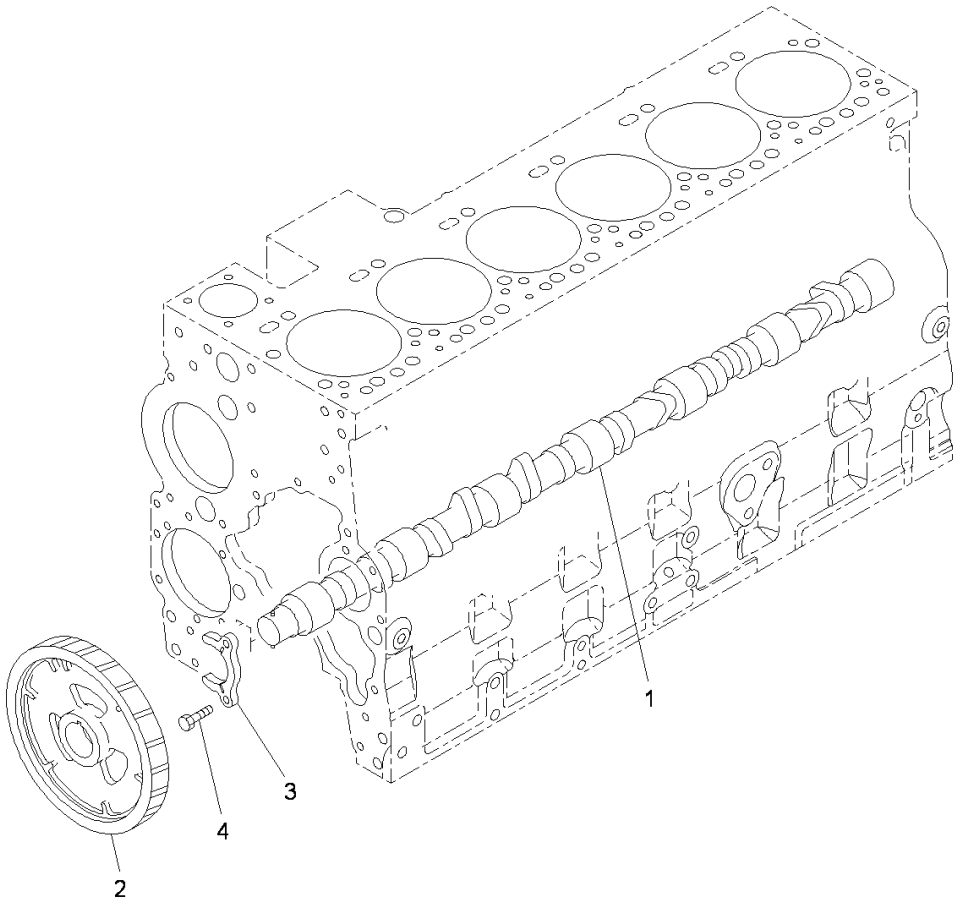

Index	Code	Part Number	Description	Qty	Serial Number
1		6745-41-1110	Camshaft Assembly	1	26858351-
2		6745-41-1130	Gear	1	26858351-
3		6744-41-1010	Support	1	26858351-
4		6732-41-1260	Bolt	2	26858351-

FIG. ABB00-001001 Tappet

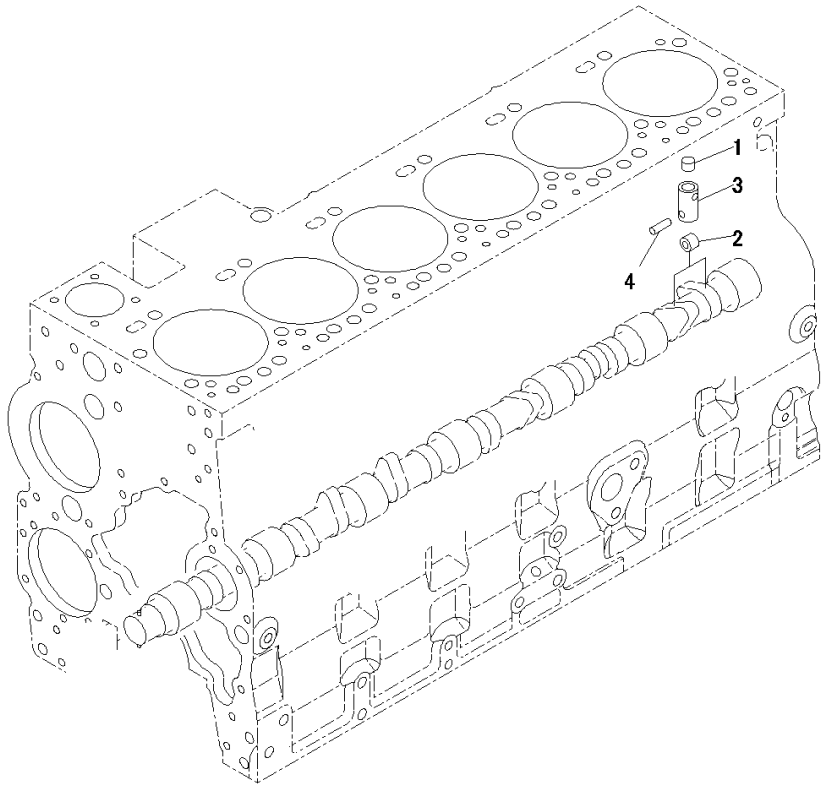

Index	Code	Part Number	Description	Qty	Serial Number
		6745-41-2100	Tappet Assembly	12	26858351-
1		6745-41-2110	• Socket	1	26858351-
2		6745-41-2120	• Roller	1	26858351-
3		6745-41-2130	• Tappet	1	26858351-
4		6745-41-2140	• Pin	1	26858351-

FIG. ADF10-001001 Front Gear Train Cover

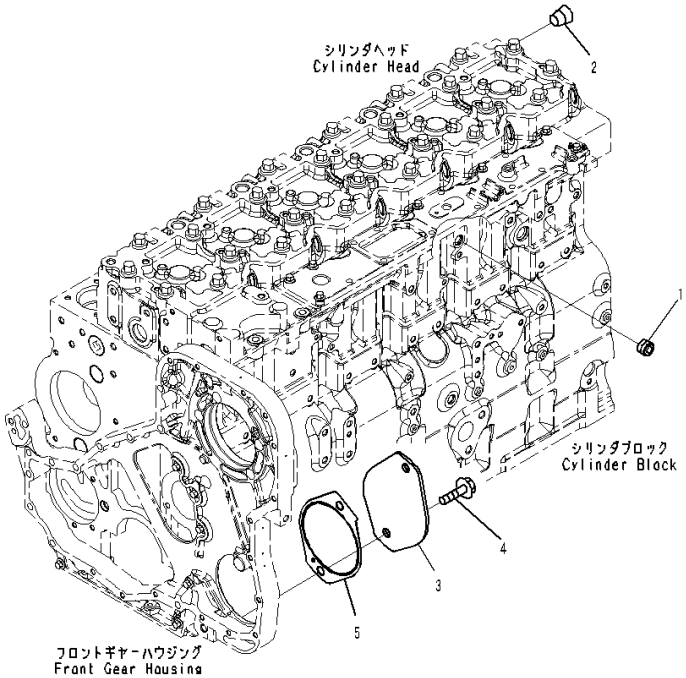

Index	Code	Part Number	Description	Qty	Serial Number
1		6732-11-1910	Plug	2	26858351-
2		6732-11-1920	Plug	1	26858351-
3		6741-21-3320	Plate	1	26858351-
4		6732-51-5130	Bolt	2	26858351-
5		6741-21-3330	Gasket	1	26858351-

FIG. A2049-001001 Front Cover

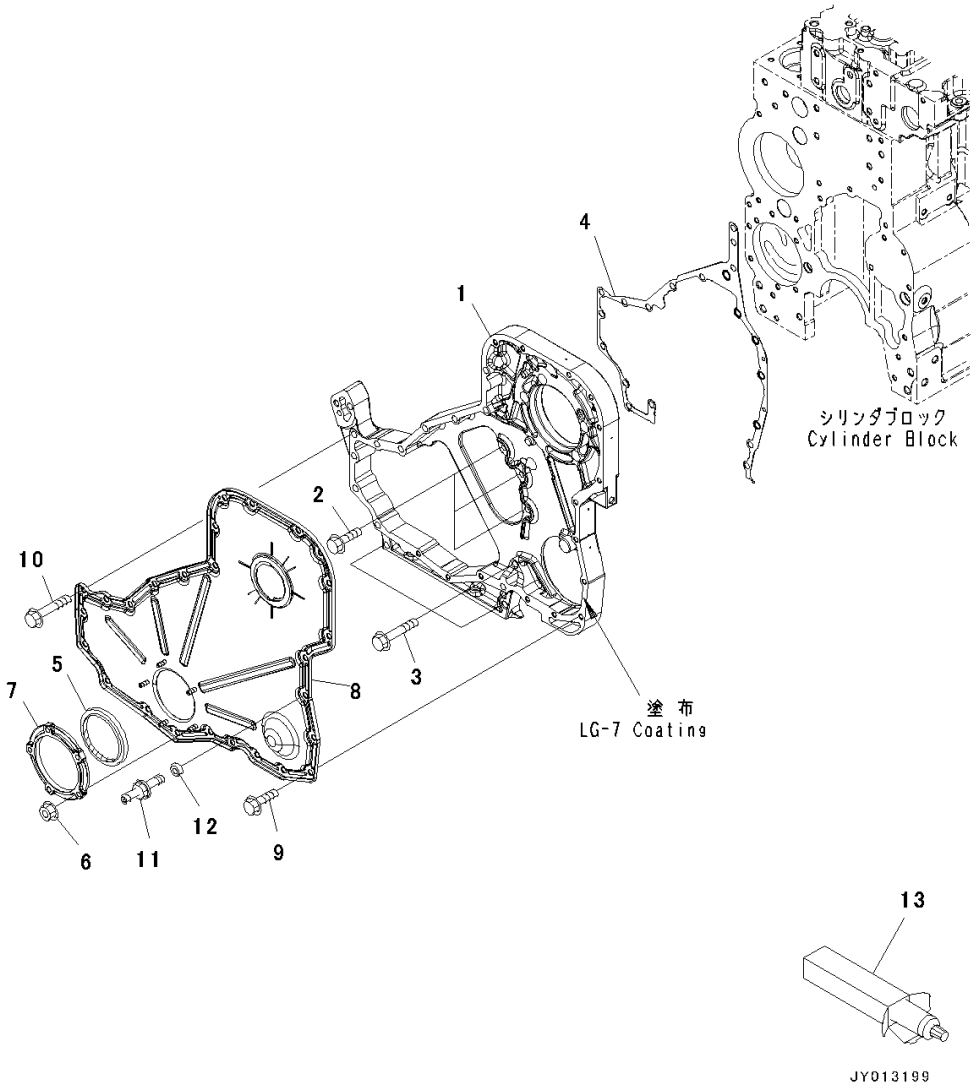

Index	Code	Part Number	Description	Qty	Serial Number
1		6745-21-3111	Housing	1	26858351-
2		6742-01-0540	Bolt	3	26858351-
3		6741-21-3820	Bolt	3	26858351-
4		6741-21-3810	Gasket	1	26858351-
		6742-01-0550	Seal Kit	1	26858351-
5		6742-01-0950	• Seal	1	26858351-
6		6741-21-3541	• Nut	5	26858351-
7		6741-21-3530	Carrier	1	26858351-
8		6745-21-3210	Cover	1	26858351-
9		6736-21-5310	Bolt	14	26858351-
10		6742-01-0530	Bolt	11	26858351-
11		6732-21-3990	Bolt	1	26858351-
12		6130-12-1961	Spacer	1	26858351-
13		09920-00150	Liquid gasket	AR	26858351-

FIG. APA00-001001 Accessory Drive Pulley

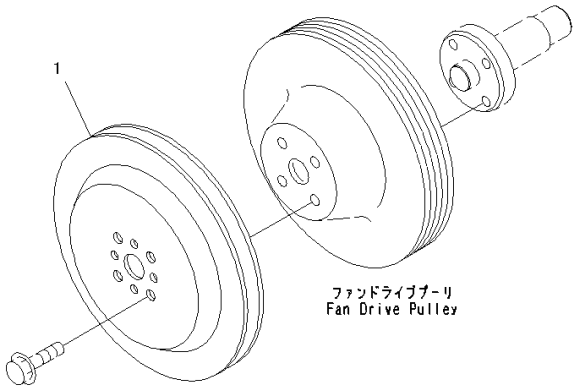

Index	Code	Part Number	Description	Qty	Serial Number
1		6732-81-2810	Pulley	1	26858351-

FIG. A2219-001001 Flywheel Housing

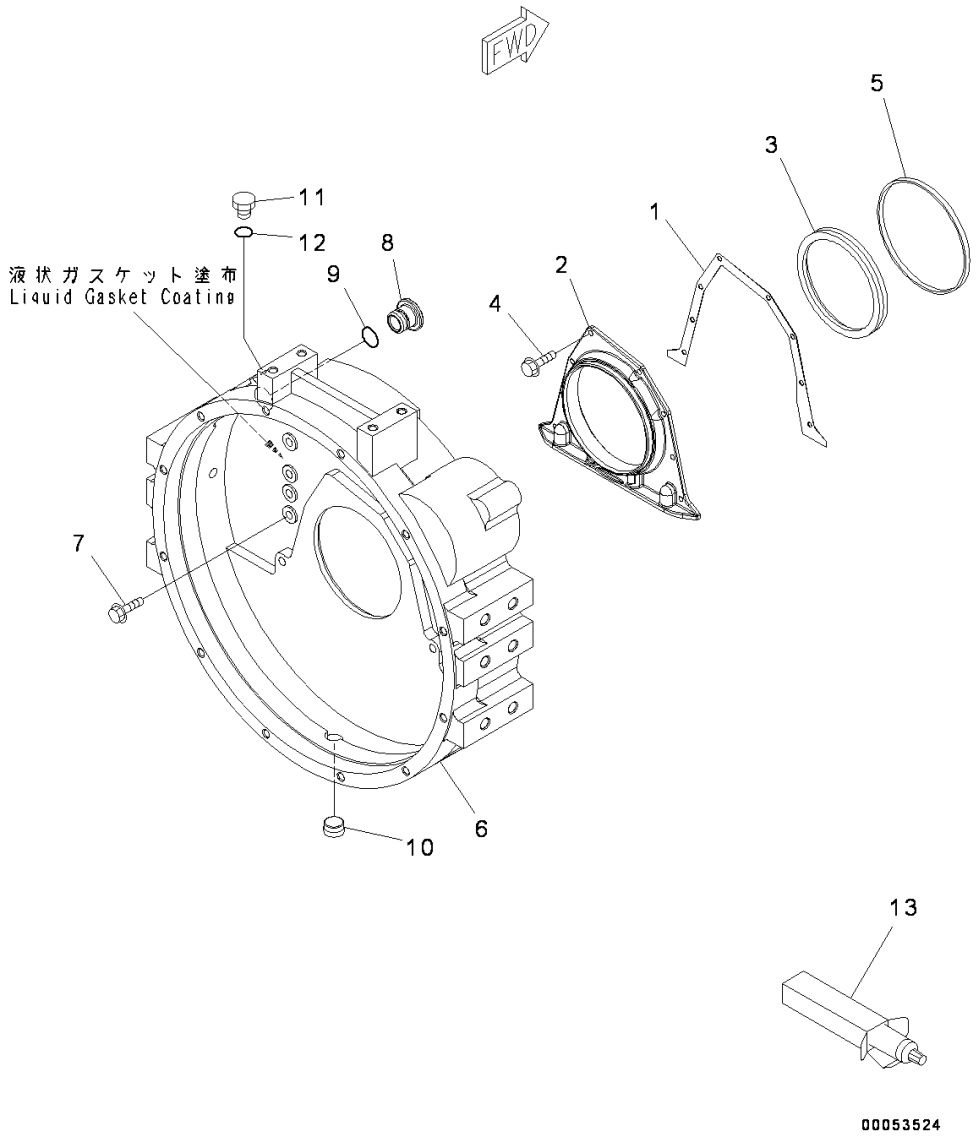

Index	Code	Part Number	Description	Qty	Serial Number
1		6743-21-4190	Gasket	1	26858351-
2		6742-01-5053	Cover	1	26858351-
3		6732-21-1311	Seal	1	26858351-
4		6732-21-4290	Bolt	8	26858351-
5		6732-21-4171	Seal Ring	1	26858351-
6		6741-21-4110	Housing	1	26858351-
7		6732-21-4220	Bolt	12	26858351-
8		6732-21-4150	Plug	1	26858351-
9		6732-21-4161	O-ring	1	26858351-
10		6732-11-1920	Plug	1	26858351-
11		6215-81-9530	Plug	1	26858351-
12		6215-81-9730	O-ring	1	26858351-
13		09920-00150	Liquid gasket	AR	26858351-

FIG. AFW00-001001 Flywheel

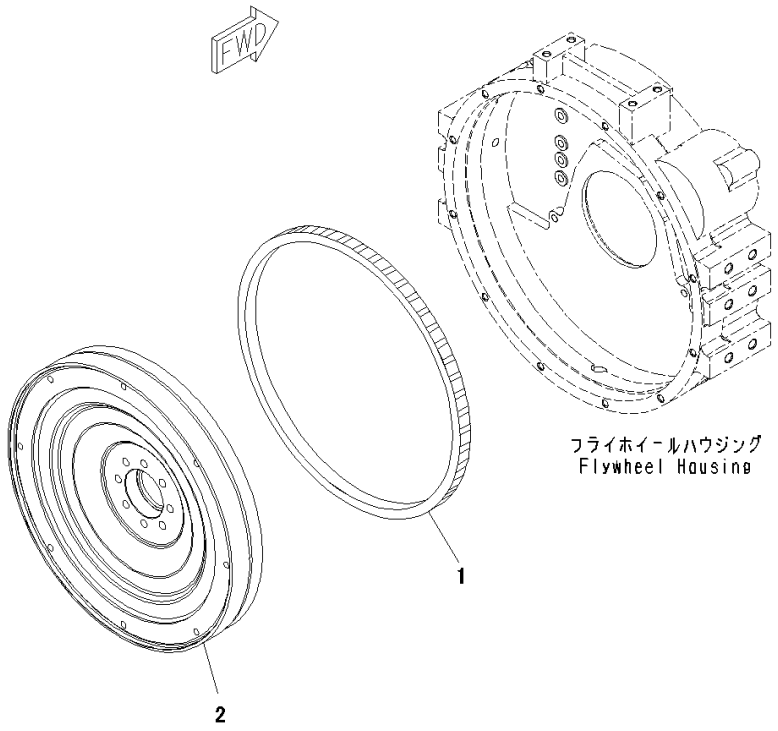

Index	Code	Part Number	Description	Qty	Serial Number
		6745-31-4200	Flywheel.....	1	26858351-
1		6741-31-4180	• Gear, Ring.....	1	26858351-
2		6745-31-4210	• Flywheel	1	26858351-

FIG. AFW10-001001 Flywheel Mounts

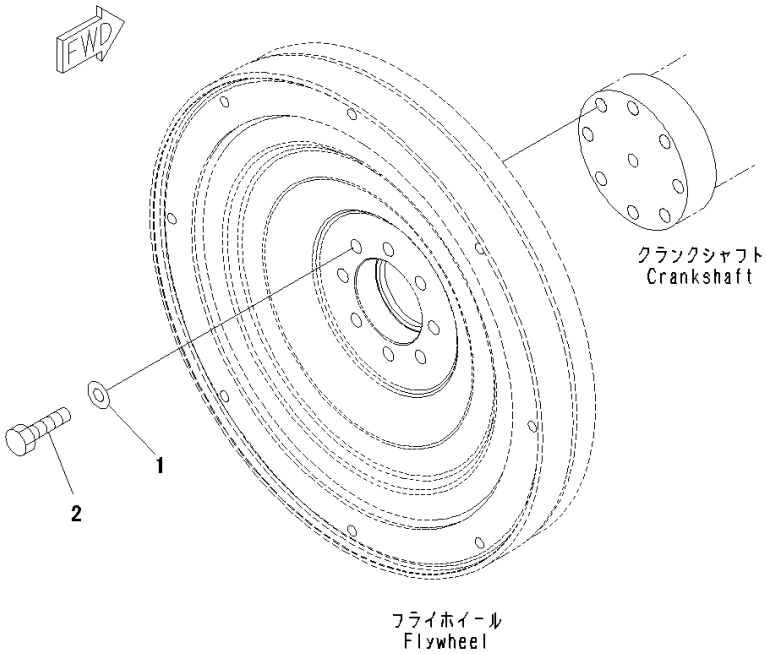

Index	Code	Part Number	Description	Qty	Serial Number
1		6162-43-5350	Washer	8	26858351-
2		6732-31-4140	Bolt.....	8	26858351-

FIG. A2119-001001 Engine Oil Pan

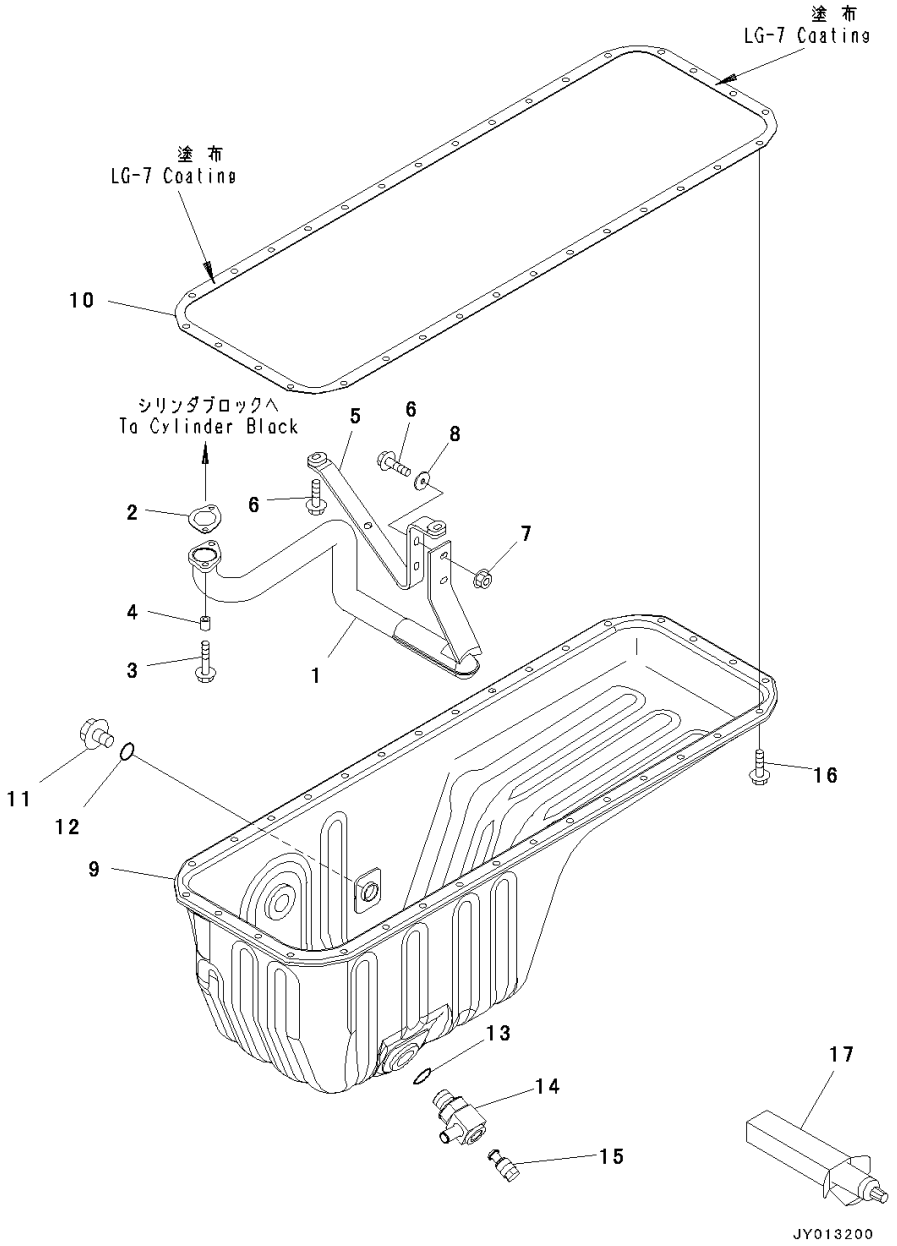

Index	Code	Part Number	Description	Qty	Serial Number
1		6745-51-2110	Connection	1	26858351-
2		6743-51-5550	Gasket	1	26858351-
3		6742-01-2630	Bolt	2	26858351-
4		6742-01-0310	Spacer	2	26858351-
5		6745-51-2120	Brace	1	26858351-
6		6735-71-5190	Bolt	4	26858351-
7		01584-00605	Nut	2	26858351-
8		6742-01-2690	Washer	2	26858351-
9		6745-21-5310	Pan	1	26858351-
10		6745-21-5130	Gasket	1	26858351-
11		6736-21-5320	Plug	1	26858351-
12		6732-21-5170	Gasket	1	26858351-
13		07002-22434	O-ring	1	26858351-
14		14X-01-35161	Elbow	1	26858351-
15		134-01-61840	Plug	1	26858351-
16		6732-21-5160	Bolt	32	26858351-
17		09920-00150	Liquid gasket	AR	26858351-

FIG. ASD00-001001 Engine Oil Level Sensor

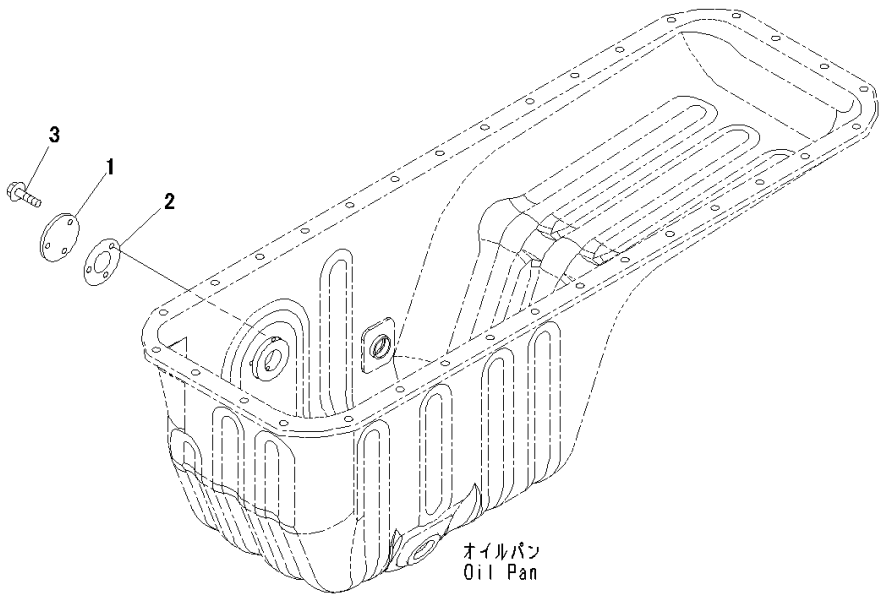

JY013211

Index	Code	Part Number	Description	Qty	Serial Number
1		6136-21-5770	Plate	1	26858351-
2		6136-21-5870	Gasket	1	26858351-
3		6733-71-5680	Bolt	3	26858351-

FIG. A2019-001001 Cylinder Block

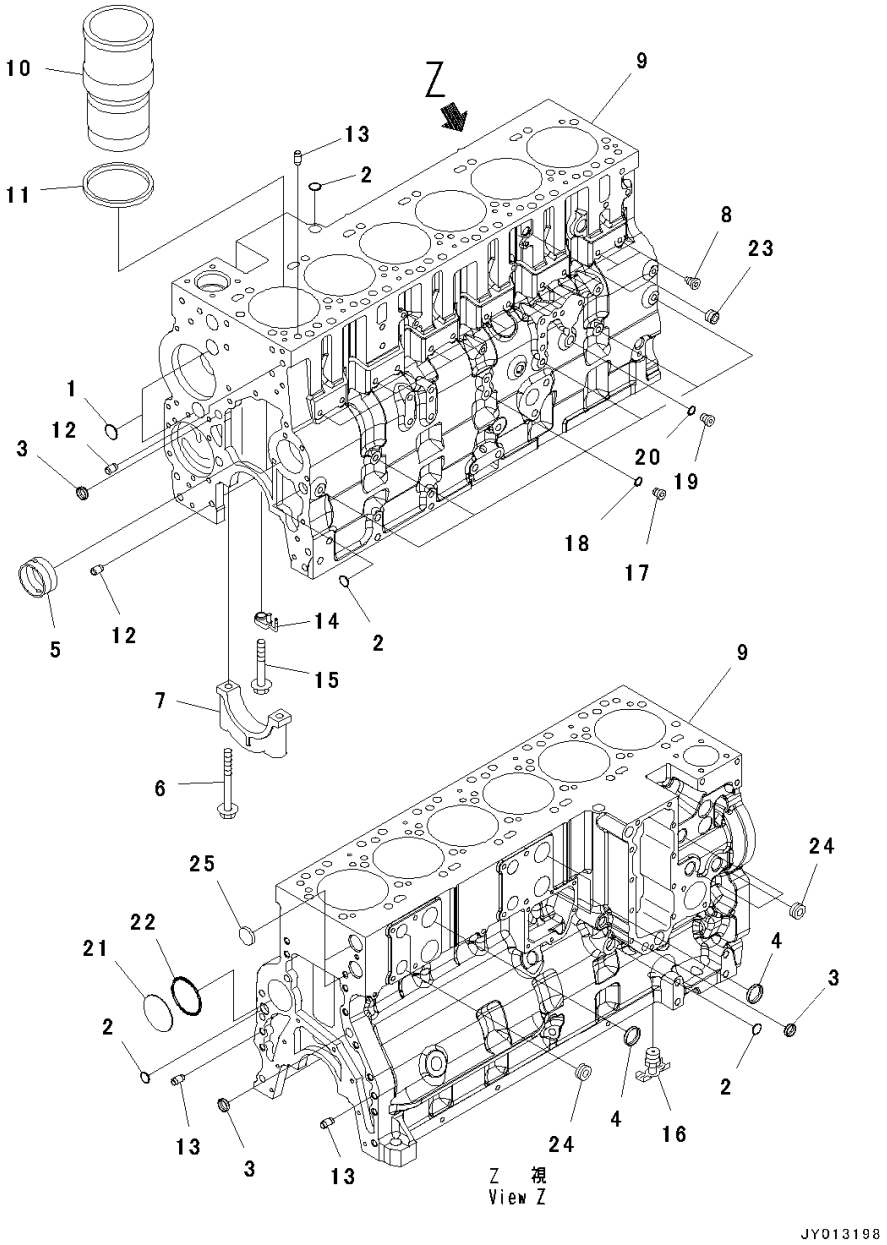

Index	Code	Part Number	Description	Qty	Serial Number
		6745-21-1190	Cylinder Block	1	26858351-
	C1		• Block, Cylinder	1	26858351-
1		6742-01-1360	•• Plug	3	26858351-
2		6742-01-1370	•• Plug	4	26858351-
3		6732-21-1810	•• Plug	3	26858351-
4		6742-01-1420	•• Plug	3	26858351-
5		6742-01-5160	•• Bushing	7	26858351-
6		6741-21-1140	•• Bolt	14	26858351-
7	C3	6741-21-1130	•• Cap	7	26858351-
8		6745-41-2151	•• Guide	12	26858351-
9	C1		•• Block, Cylinder	1	26858351-
		6742-01-5159	Liner Kit	6	26858351-
10		6741-21-2210	• Liner	1	26858351-
11		6742-01-1520	• Seal	1	26858351-
		6745-21-1290	Cylinder Block	1	26858351-
12		6732-21-6120	• Pin, Dowel	2	26858351-
13		6742-01-1470	• Pin	4	26858351-
14		6745-21-1611	• Nozzle	6	26858351-
15		6736-11-4460	• Bolt	6	26858351-
16		6216-94-3450	• Cock	1	26858351-
		6732-21-1960	• Plug Assembly	6	26858351-
17		6215-81-9510	•• Plug	1	26858351-
18		6215-81-9710	•• O-ring	1	26858351-
		6735-21-1910	• Plug Assembly	2	26858351-
19		6735-21-1920	•• Plug	1	26858351-
20		6735-21-1930	•• O-ring	1	26858351-
21		6742-01-1480	• Plug	1	26858351-
22		6742-01-4080	• O-ring	1	26858351-
23		6732-11-1910	• Plug	1	26858351-
24		6732-11-1920	• Plug	7	26858351-
25		6742-01-1380	• Plug	2	26858351-

FIG. A2080-001001 Breather Hose

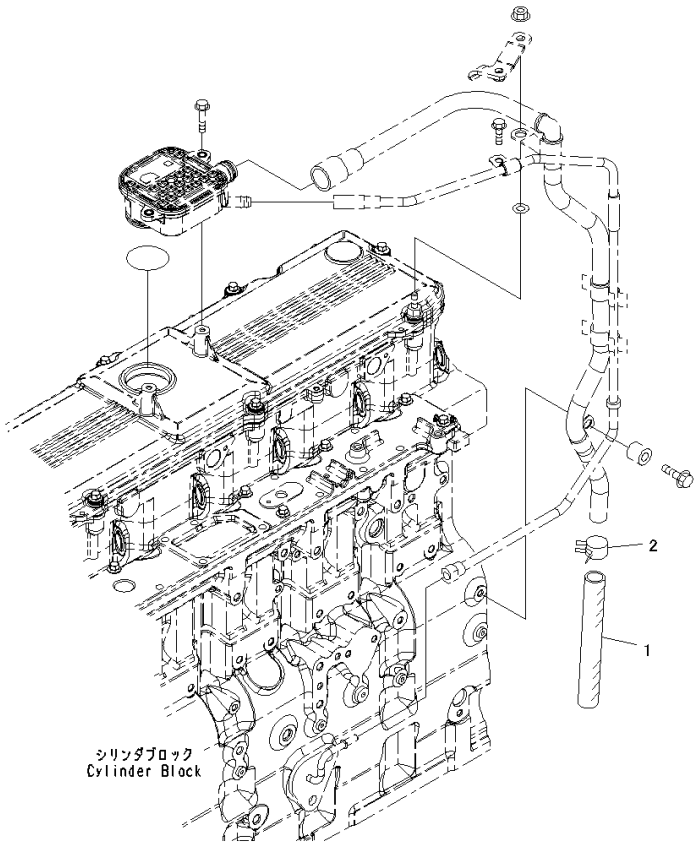

Index	Code	Part Number	Description	Qty	Serial Number
1		07286-01918	Hose	1	26858351-
2		07285-00220	Clip.....	1	26858351-

FIG. AHC00-001001 Cabin Heater Plug

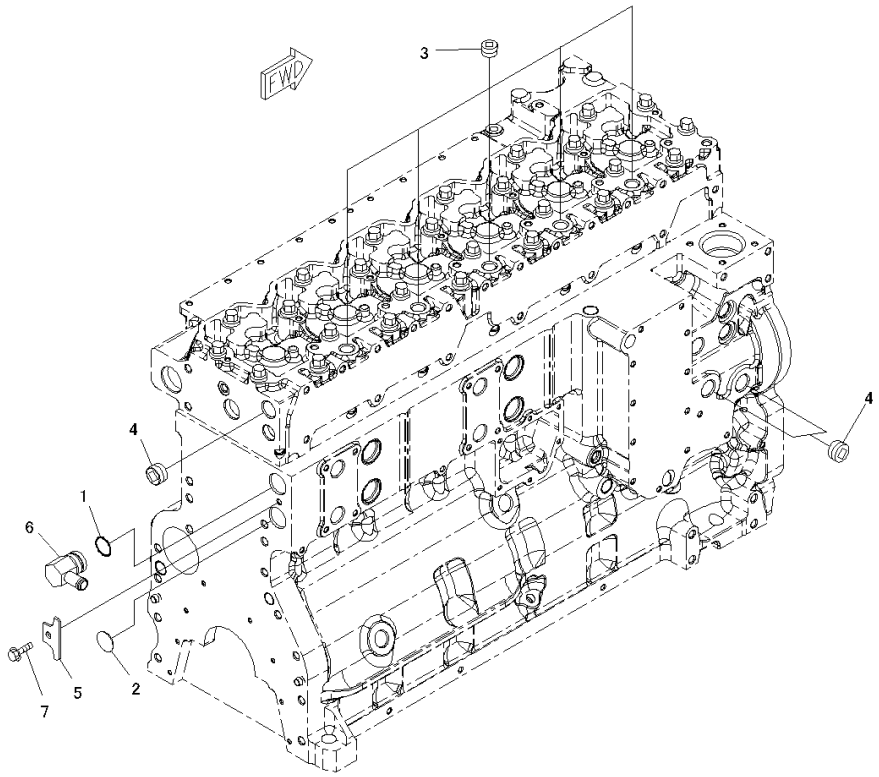

Index	Code	Part Number	Description	Qty	Serial Number
1		1241155H1	O-ring	1	26858351-
2		6742-01-1380	Plug	1	26858351-
3		6732-11-1910	Plug	5	26858351-
4		6732-11-1920	Plug	3	26858351-
5		1294859H1	Plate	1	26858351-
6		6741-61-7110	Connector	1	26858351-
7		6736-21-5310	Bolt	1	26858351-

FIG. A2319-001001 Crankshaft

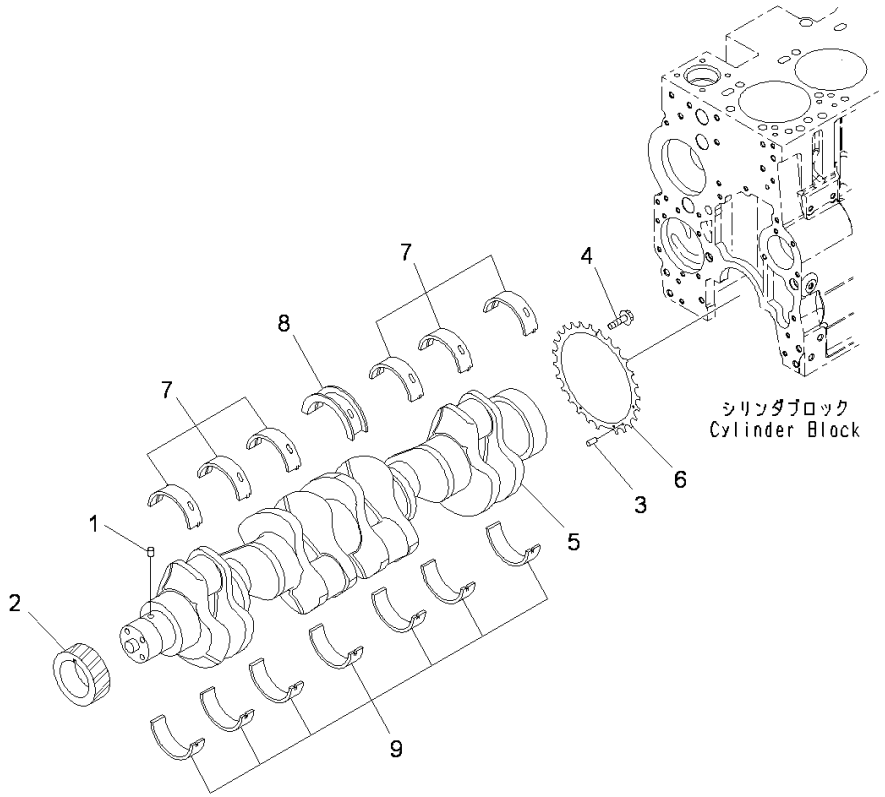

Index	Code	Part Number	Description	Qty	Serial Number
		6745-31-1120	Crankshaft	1	26858351-
1	C1		• Pin, Dowel	1	26858351-
2	C1		• Gear	1	26858351-
	C1		• Crankshaft Assembly	1	26858351-
3	C1		•• Pin, Dowel	1	26858351-
4	C1		•• Bolt	4	26858351-
5	C1		•• Crankshaft	1	26858351-
6	C1		•• Ring	1	26858351-
		6742-01-5199	Main Metal Assembly	1	26858351-
7	C1		• Metal	6	26858351-
8	C1		• Metal	1	26858351-
9	C1		• Metal	7	26858351-
		6742-21-8500	Thrust Metal Assembly	1	26858351-
	C1		• Metal	1	26858351-
	C1		• Metal	1	26858351-

FIG. ADA00-001001 Damper

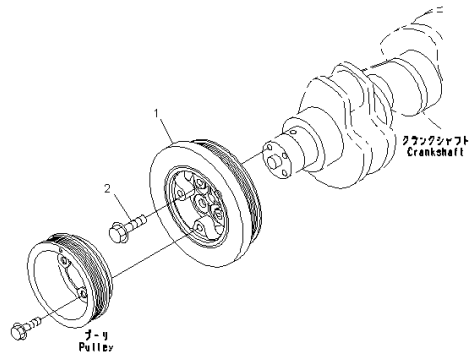

Index	Code	Part Number	Description	Qty	Serial Number
1		6742-01-5289	Damper	1	26858351-
2		6742-01-1890	Bolt	4	26858351-

FIG. A2359-001001 Piston and Connecting Rod

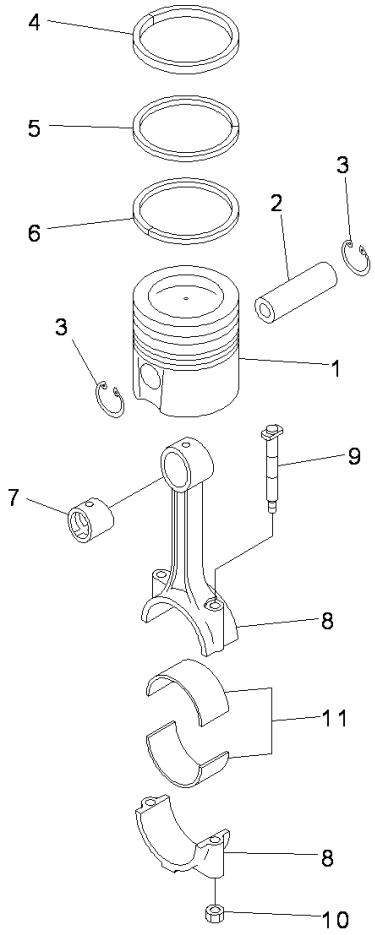

00049566

Index	Code	Part Number	Description	Qty	Serial Number
1		6745-31-2150	Piston	6	26858351-
2		6745-31-2140	Pin	6	26858351-
3		6742-01-5309	Ring, Snap	12	26858351-
		6745-31-2020	Piston Ring Assembly	6	26858351-
4	C1		• Ring	1	26858351-
5	C1		• Ring	1	26858351-
6	C1		• Ring	1	26858351-
		6743-31-3101	Rod Assembly	6	26858351-
7		6743-31-3121	• Bushing	1	26858351-
8	C1		• Rod	1	26858351-
9		1304869H1	• Bolt	2	26858351-
10		6742-01-4340	• Nut	2	26858351-
11		6743-31-3210	Metal	12	26858351-

FIG. AOB10-001001 Engine Oil Filler

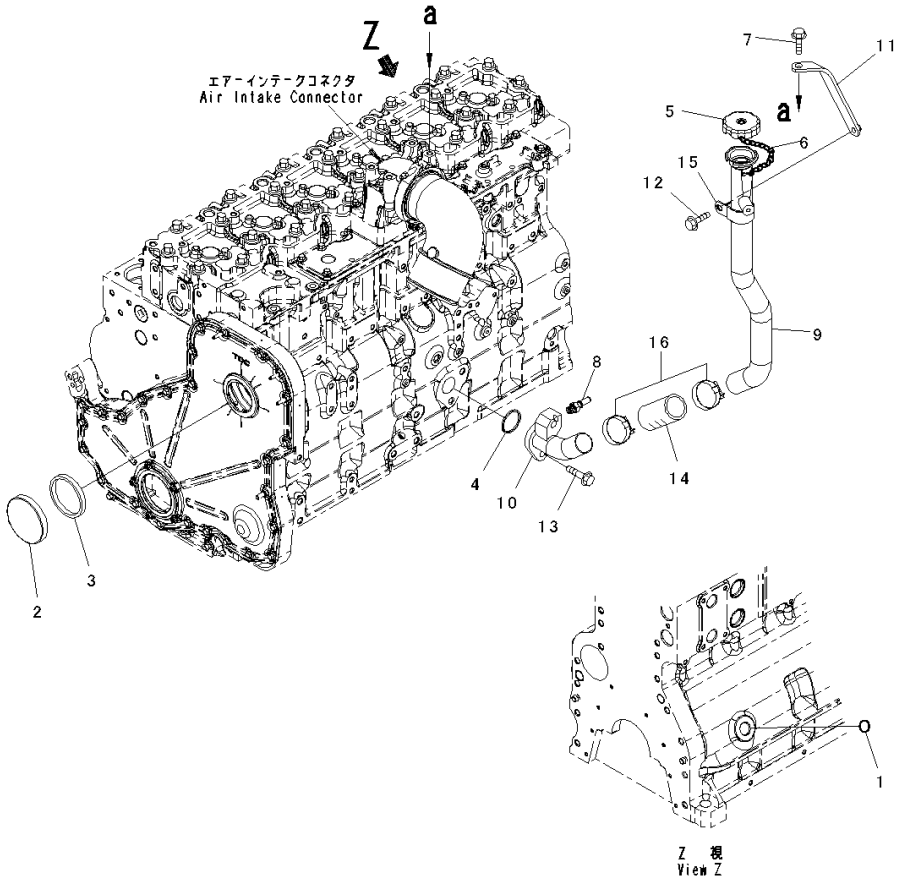

Index	Code	Part Number	Description	Qty	Serial Number
1		6735-21-5530	Plug	1	26858351-
2		6732-21-3190	Cover	1	26858351-
3		6732-21-3220	Seal Ring	1	26858351-
4		6736-21-3360	Seal Ring	1	26858351-
5		6136-21-7120	Cap Assembly	1	26858351-
6		6136-21-7190	Chain	1	26858351-
7		6732-61-3140	Bolt	1	26858351-
8		6745-21-7240	Connector	1	26858351-
9		6745-21-7160	Tube	1	26858351-
10		6745-21-7150	Tube	1	26858351-
11		6745-21-7171	Brace	1	26858351-
12		01435-00816	Bolt	1	26858351-
13		01435-01235	Bolt	2	26858351-
14		6127-11-5960	Hose	1	26858351-
15		6217-21-7150	Clip	1	26858351-
16		07281-00489	Clamp, Hose	2	26858351-

FIG. ALG00-001001 Oil Level Gauge

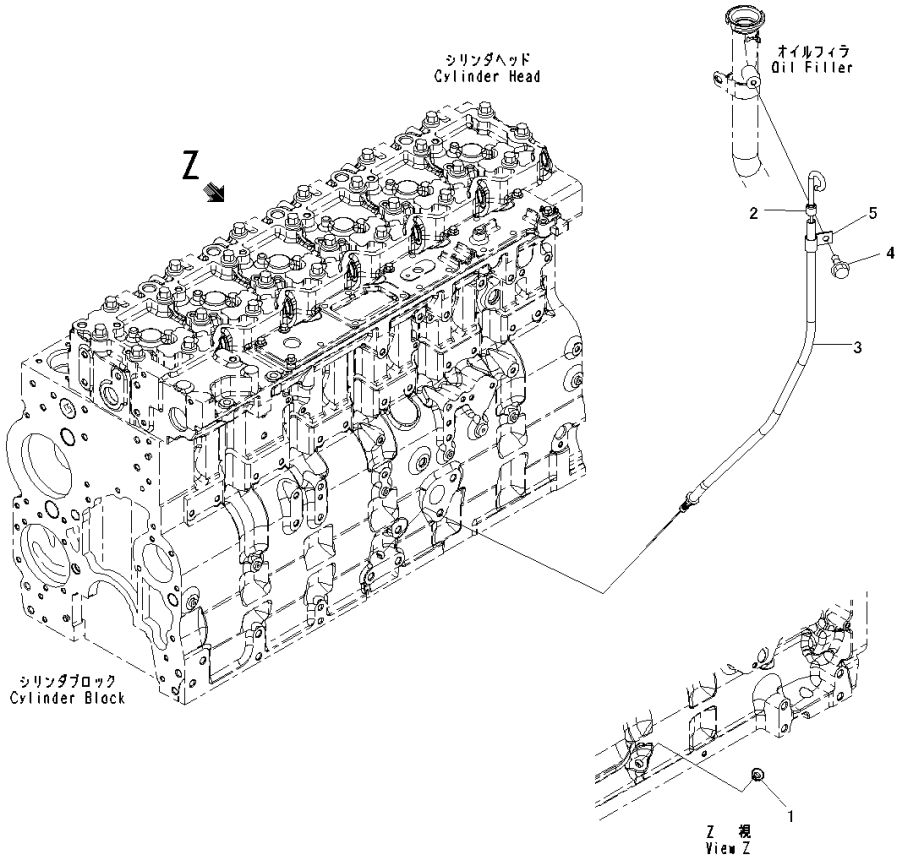

Index	Code	Part Number	Description	Qty	Serial Number
1		6743-22-5110	Plug	1	26858351-
2		6745-21-5220	Gauge	1	26858351-
3		6731-22-5410	Tube	1	26858351-
4		01435-00812	Bolt	1	26858351-
5		04434-51208	Clip	1	26858351-

ENGINE LUBRICATING SYSTEM

FIG. ALP00-001001 Engine Oil Pump

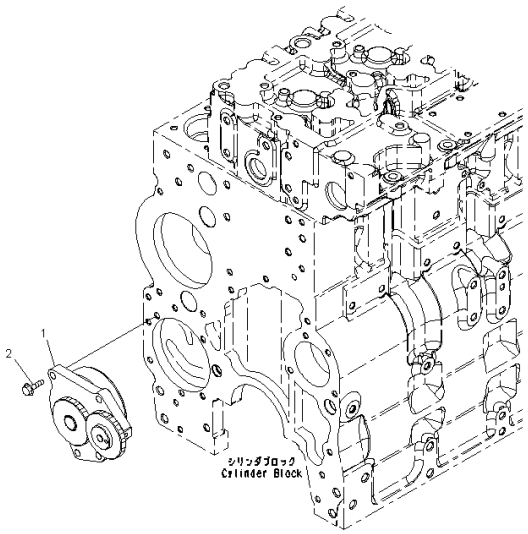

Index	Code	Part Number	Description	Qty	Serial Number
1		6745-51-1110	Pump Assembly	1	26858351-
2		6735-51-1120	Bolt	4	26858351-

FIG. ALF00-001001 Engine Oil Filter

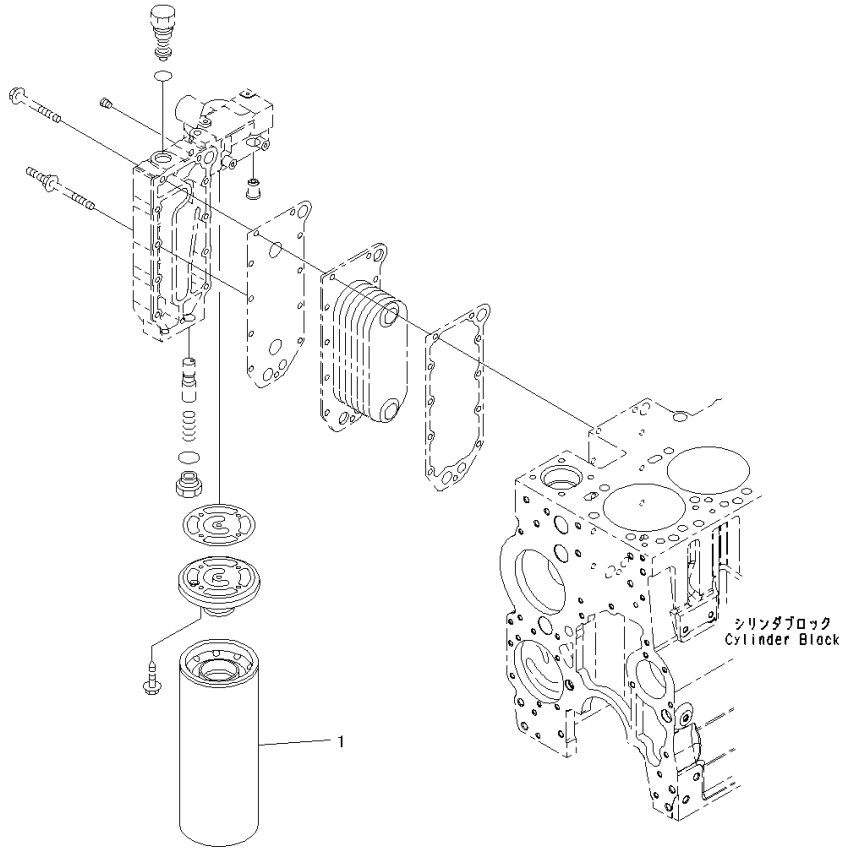

Index	Code	Part Number	Description	Qty	Serial Number
1		6742-01-4540	Cartridge	1	26858351-

FIG. ALC00-001001 Engine Oil Cooler

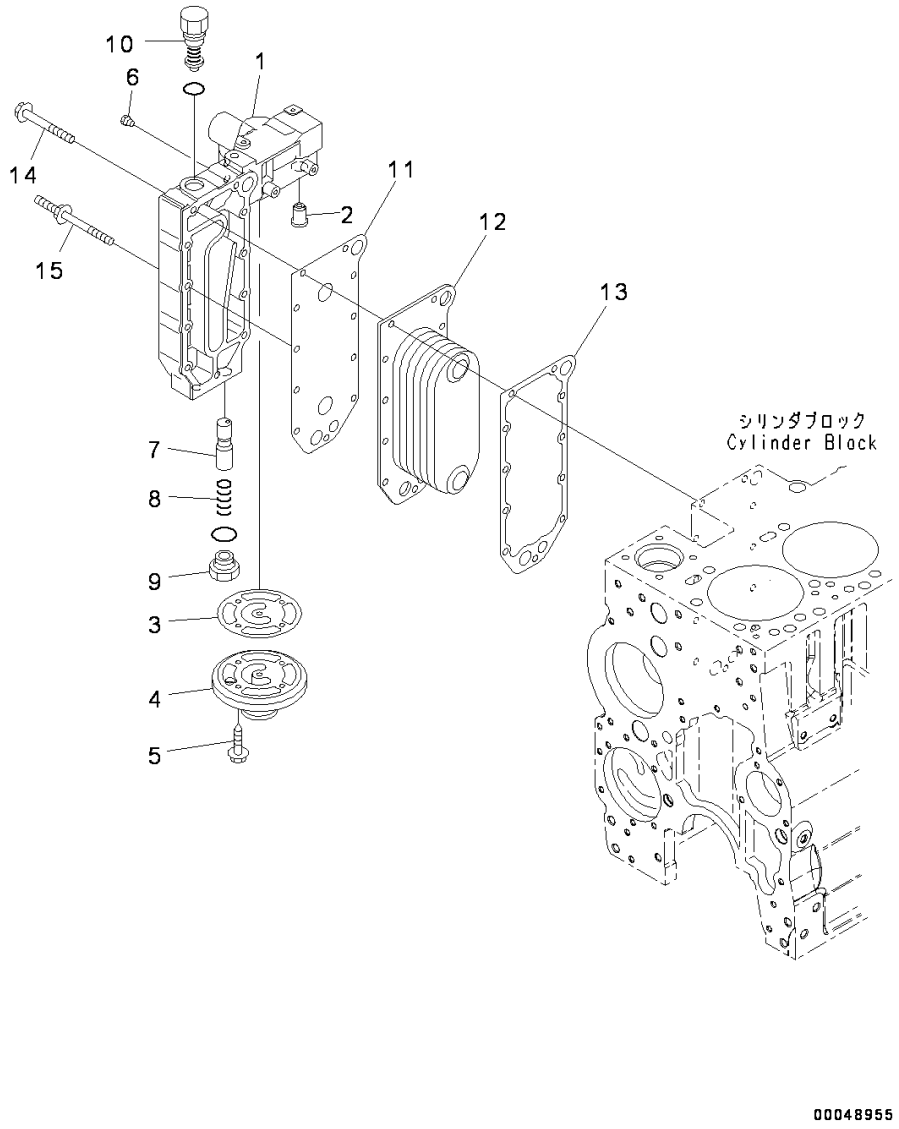

Index	Code	Part Number	Description	Qty	Serial Number
1		6743-61-2112	Cover	1	26858351-
2		6731-61-2151	Valve	1	26858351-
3		6742-01-2491	Gasket	1	26858351-
4		6742-01-2500	Head	1	26858351-
5		6732-21-6610	Bolt	4	26858351-
6		6732-11-1930	Plug	2	26858351-
7		6742-01-5202	Plunger	1	26858351-
8		6743-61-2150	Spring	1	26858351-
9		6742-01-4220	Plug	1	26858351-
10		6742-01-5117	Valve	1	26858351-
11		6743-51-4430	Gasket	1	26858351-
12		6743-61-2210	Core	1	26858351-
13		6742-01-1080	Gasket	1	26858351-
14		6742-01-2441	Bolt	9	26858351-
15		6741-61-6110	Screw	2	26858351-

ENGINE FUEL SYSTEM

FIG. A4019-001001 Fuel Injection Pump, Inner Parts

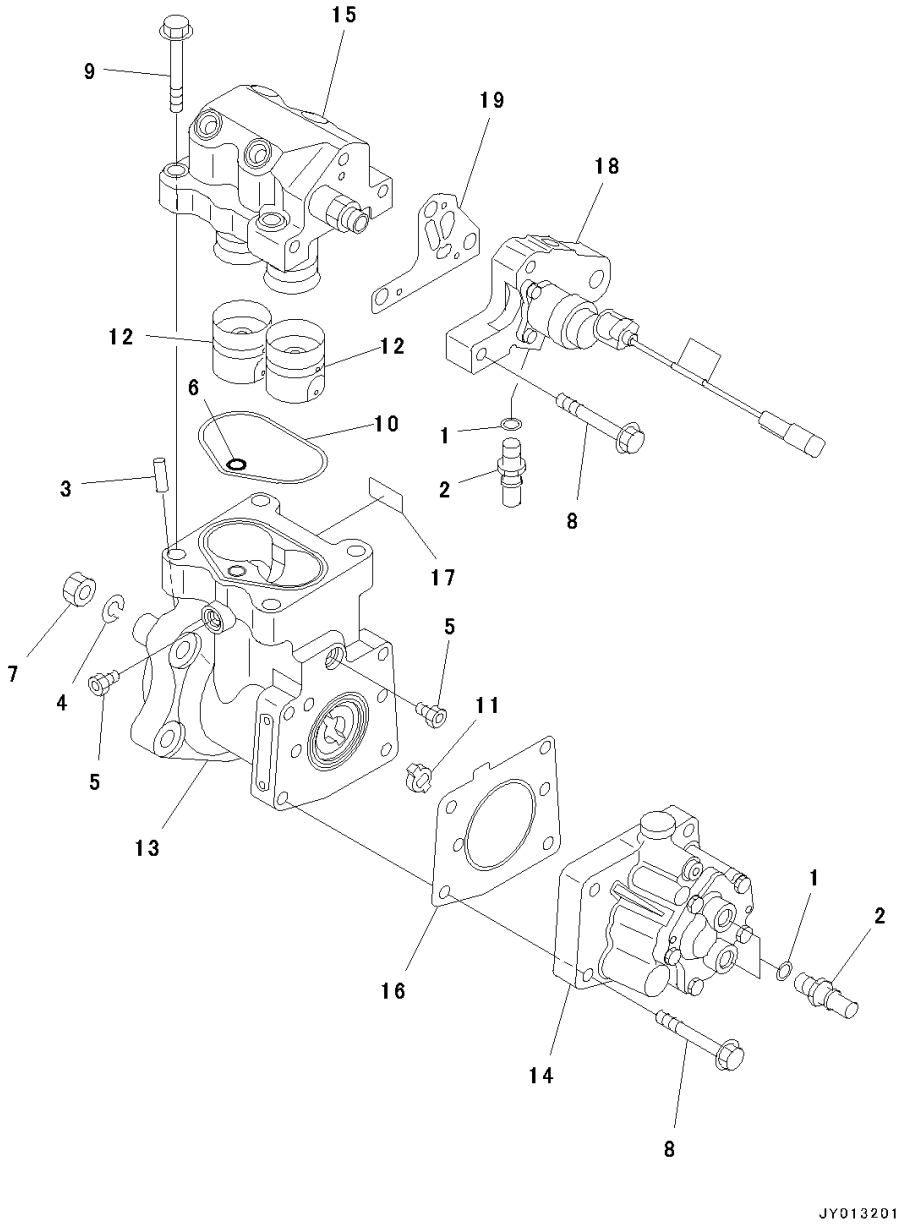

Index	Code	Part Number	Description	Qty	Serial Number
1		6745-71-1130	Washer	3	26858351-
2		6745-71-6130	Connector	3	26858351-
		6745-71-1170	Pump Assembly	1	26858351-
3		6744-71-1020	• Pin, Dowel	1	26858351-
4		6744-71-1040	• Washer, Spring	1	26858351-
5		6732-21-1960	• Plug Assembly	2	26858351-
6		6560-81-4530	• O-ring	1	26858351-
7		6744-71-1250	• Nut	1	26858351-
8		6732-61-3170	• Bolt	7	26858351-
9		6745-71-1220	• Bolt	4	26858351-
10		6745-71-1230	• Seal	1	26858351-
11	C1		• Hub	1	26858351-
12	C1		• Tappet	2	26858351-
13	C1		• Body	1	26858351-
14		6745-71-1180	• Pump, Fuel	1	26858351-
15		6745-71-1240	• Head	1	26858351-
16		6745-71-1250	• Gasket	1	26858351-
17	C1		• Tag	1	26858351-
18	C1		• Adapter	1	26858351-
19		6745-71-1260	• Gasket	1	26858351-

FIG. A4019-001002 Fuel Injection Pump, Mounts

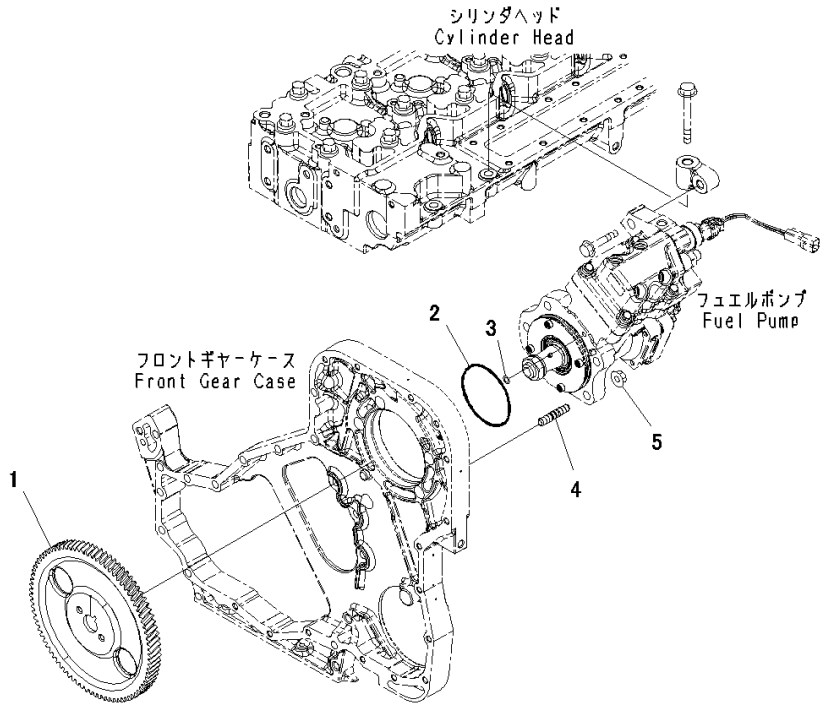

Index	Code	Part Number	Description	Qty	Serial Number
1		6745-71-3210	Gear	1	26858351-
2		6741-61-2120	O-ring	1	26858351-
3		6742-01-5507	Seal	1	26858351-
4		6734-71-5270	Stud	4	26858351-
5		6736-81-6170	Nut	4	26858351-

FIG. AFP20-001001 Fuel Supply Pump Support

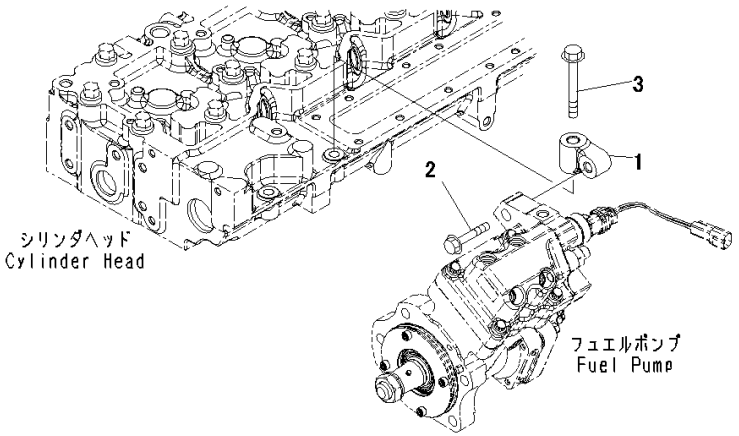

Index	Code	Part Number	Description	Qty	Serial Number
1		6745-71-1210	Support	1	26858351-
2		6742-01-3780	Bolt	1	26858351-
3		6732-61-4120	Bolt	1	26858351-

FIG. A4219-001001 Fuel Injector

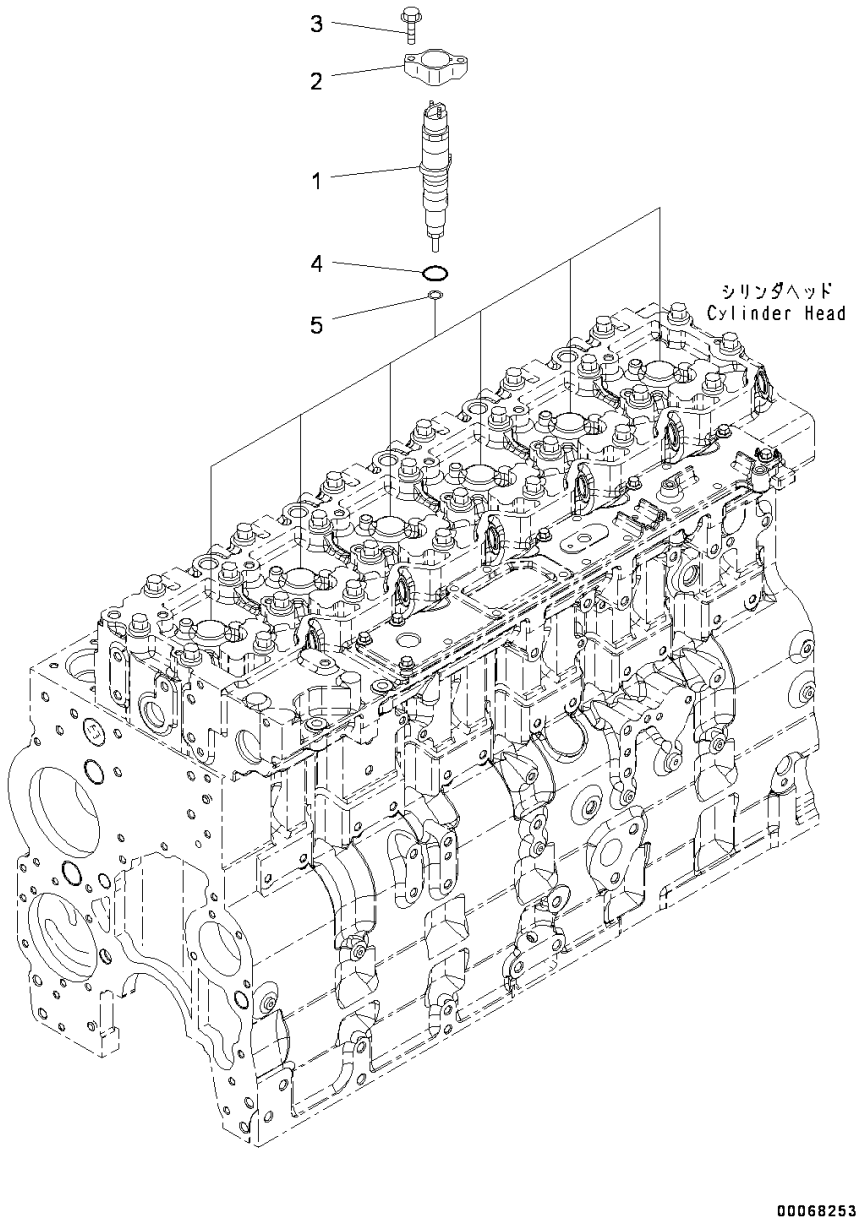

Index	Code	Part Number	Description	Qty	Serial Number
1		6745-11-3102	Injector	6	26858351-
2		6745-11-3110	Clamp	6	26858351-
3		6745-11-3150	Bolt	12	26858351-
4		6754-11-3120	O-ring	1	26858351-
5		6743-11-3230	Gasket	1	26858351-

FIG. APP50-001001 Fuel Injection Piping

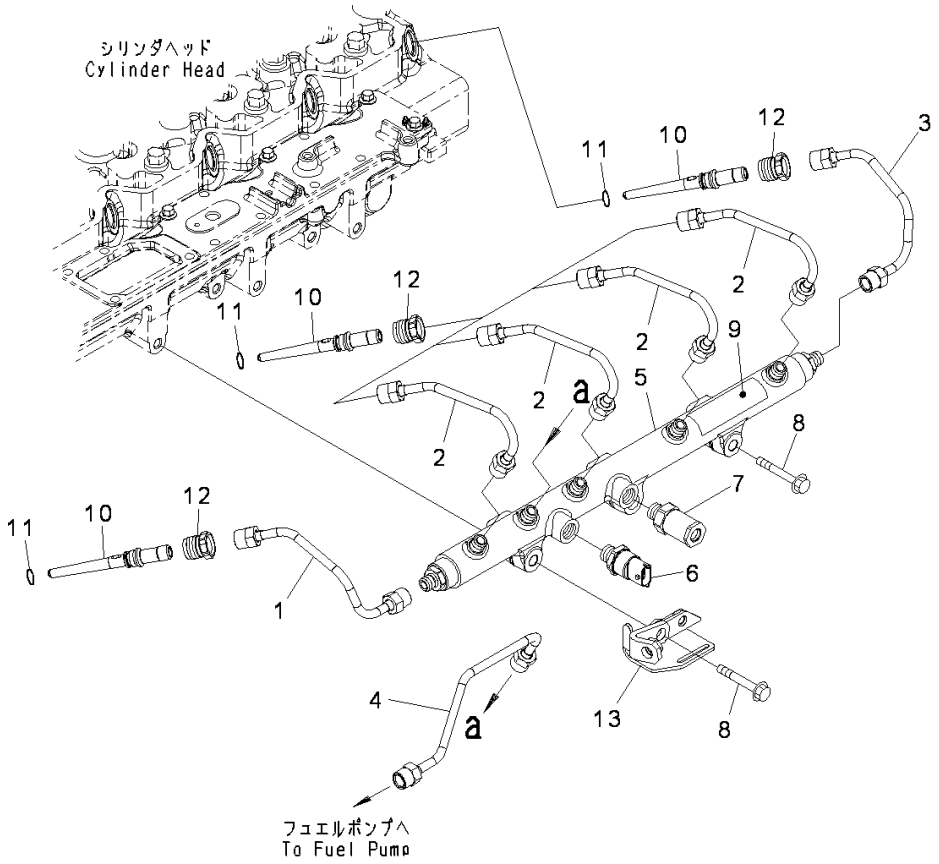

Index	Code	Part Number	Description	Qty	Serial Number
1		6745-71-4110	Tube	1	26858351-
2		6745-71-4120	Tube	4	26858351-
3		6745-71-4140	Tube	1	26858351-
4		6745-71-4150	Tube	1	26858351-
5		6745-71-4310	Manifold Assembly	1	26858351-
6		6745-71-4320	• Sensor, Pressure	1	26858351-
7		6745-71-4330	• Valve, Relief	1	26858351-
8		6732-61-4120	Bolt	3	26858351-
9		6754-71-1991	Decal	2	26858351-
		6745-71-5540	Connector Assembly	6	26858351-
10	C1		• Connector	1	26858351-
11		6745-71-5550	• O-ring	1	26858351-
12		6754-71-5540	Retainer	6	26858351-
13		6745-81-9380	Brace	1	26858351-

FIG. AFT00-001001 Fuel Piping

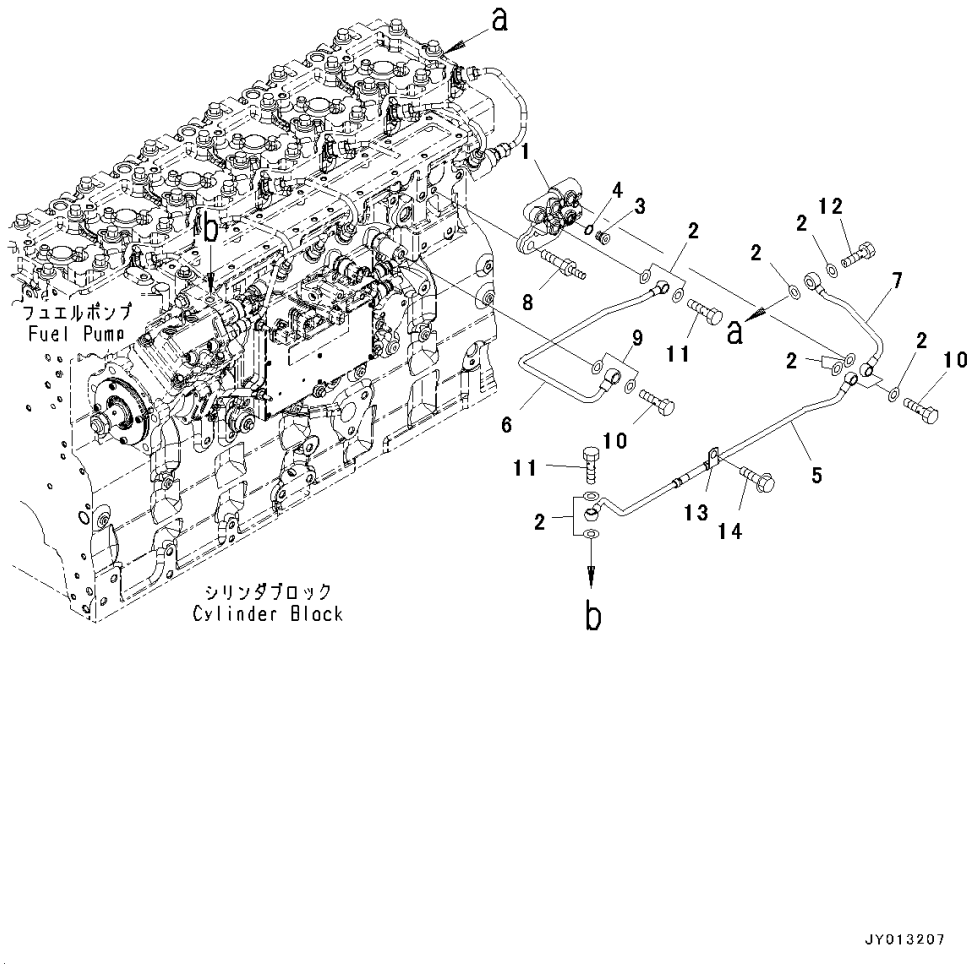

Index	Code	Part Number	Description	Qty	Serial Number
1		6745-71-5610	Connector	1	26858351-
2		6745-71-1130	Washer	9	26858351-
		6732-21-1960	Plug Assembly	1	26858351-
3		6215-81-9510	• Plug	1	26858351-
4		6215-81-9710	• O-ring	1	26858351-
5		6745-71-5440	Tube	1	26858351-
6		6745-71-5460	Tube	1	26858351-
7		6745-71-5470	Tube	1	26858351-
8		6745-81-9580	Bolt	2	26858351-
9		6731-74-5910	Washer	3	26858351-
10		6732-71-5620	Connector	1	26858351-
11		6732-71-6510	Bolt	4	26858351-
12		6754-71-5430	Valve, Check	1	26858351-
13		6745-71-5450	Clip	1	26858351-
14		6732-61-3140	Bolt	1	26858351-

FIG. A4230-001001 Fuel Return Fitting

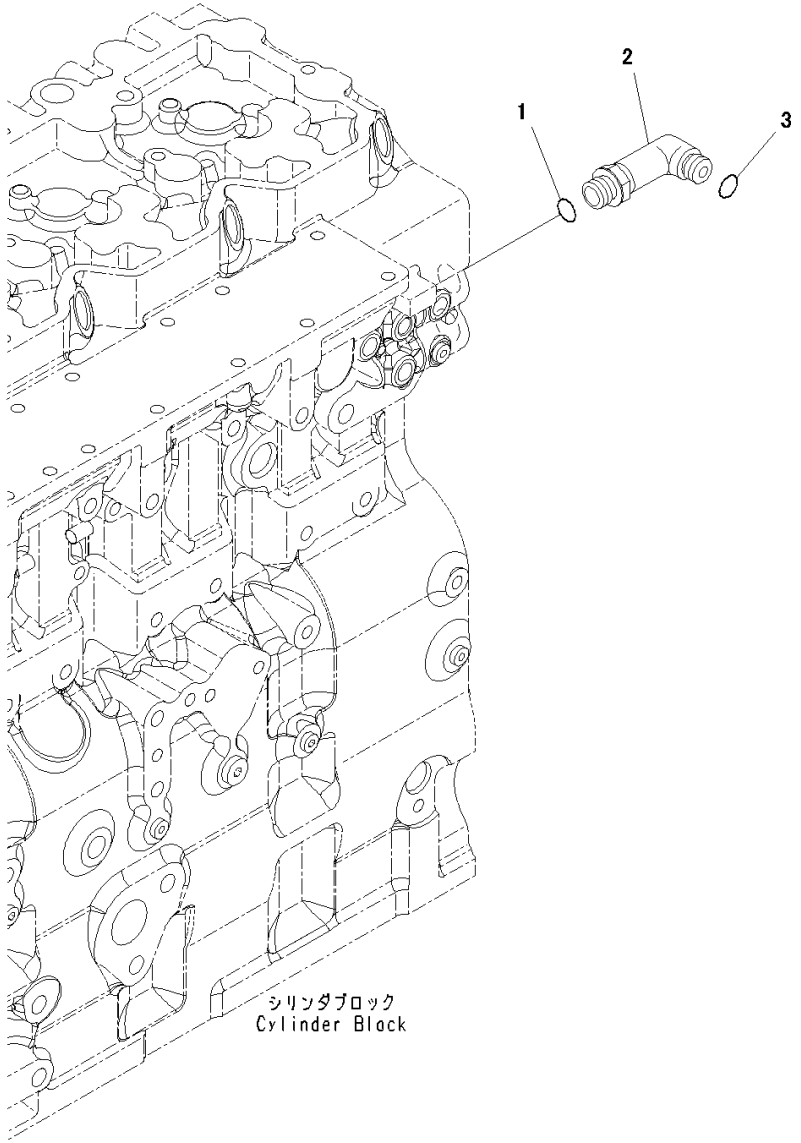

Index	Code	Part Number	Description	Qty	Serial Number
1		6735-21-4160	O-ring	1	26858351-
2		14X-04-51321	Elbow	1	26858351-
3		02896-11009	O-ring	1	26858351-

FIG. AFF20-001001 Fuel Filter Plumbing

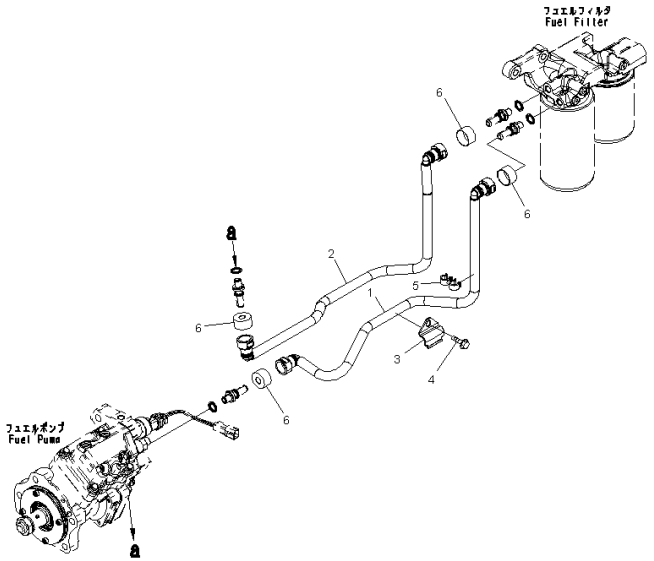

Index	Code	Part Number	Description	Qty	Serial Number
1		6745-71-5110	Tube	1	26858351-
2		6745-71-5120	Tube	1	26858351-
3		6745-71-5210	Brace	1	26858351-
4		6736-21-5310	Bolt	1	26858351-
5		6745-71-5220	Clamp	1	26858351-
6		6745-71-5160	Cover	4	26858351-

FIG. A4119-001001 Fuel Filter Cartridge

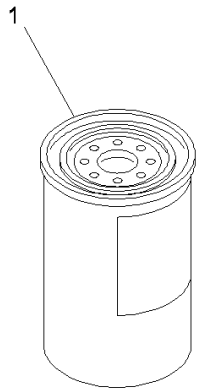

00060578

Index	Code	Part Number	Description	Qty	Serial Number
1		6754-79-6140	Cartridge	1	26858351-

FIG. AFF10-001001 Fuel Filter

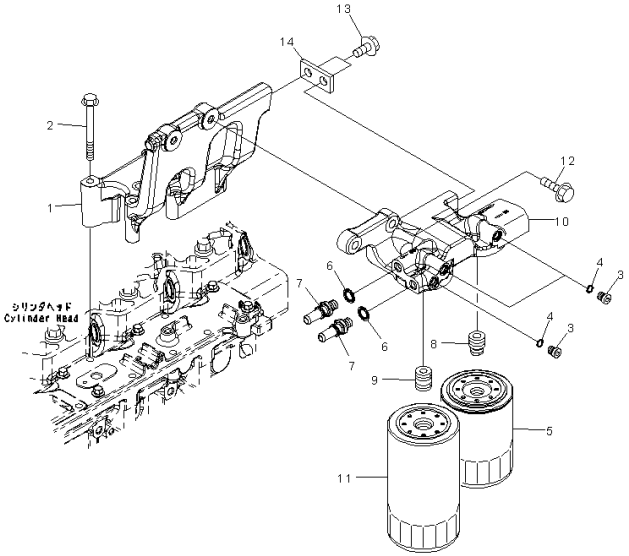

Index	Code	Part Number	Description	Qty	Serial Number
1		6745-71-6240	Support	1	26858351-
2		6732-11-4150	Bolt	5	26858351-
		6745-71-6110	Head Assembly	1	26858351-
		6732-21-1960	• Plug Assembly	3	26858351-
3		6215-81-9510	•• Plug	1	26858351-
4		6215-81-9710	•• O-ring	1	26858351-
5		600-411-1191	• Cartridge	1	26858351-
6		6745-71-1130	• Washer	2	26858351-
7		6745-71-6130	• Connector	2	26858351-
8		6745-71-6170	• Adapter	1	26858351-
9		6754-71-6330	• Adapter	1	26858351-
10		6745-71-6150	• Head	1	26858351-
11		6754-71-6140	• Filter	1	26858351-
12		6732-22-3110	Bolt	2	26858351-
13		6731-61-4250	Bolt	2	26858351-
14		6745-71-6230	Brace	1	26858351-

FIG. B9999-503001 Pre Filter

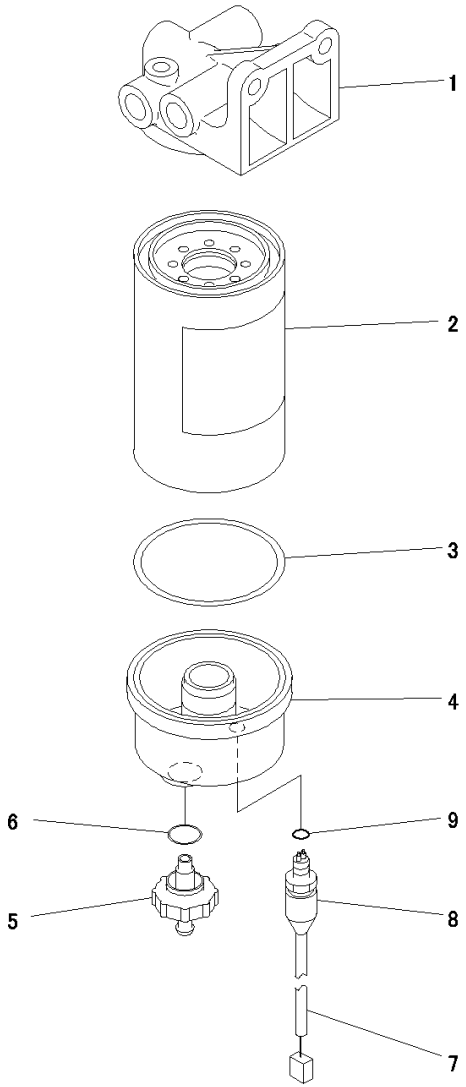

JY013216

Index	Code	Part Number	Description	Qty	Serial Number
		6745-71-7203	Filter Assembly	1	26858351-
1		6745-71-7211	• Head	1	26858351-
		600-319-3602	• Filter Assembly	1	26858351-
		600-319-3610	•• Cartridge Assembly	1	26858351-
2	C1		••• Cartridge	1	26858351-
3		600-311-3630	••• Seal	1	26858351-
4		600-311-3640	•• Bowl	1	26858351-
		600-311-3660	•• Valve Assembly	1	26858351-
5	C1		••• Valve	1	26858351-
6		600-311-3670	••• Seal	1	26858351-
		600-311-3722	•• Sensor	1	26858351-
7	C1		••• Tube	1	26858351-
8	C1		••• Sensor	1	26858351-
9		600-311-3690	••• O-ring	1	26858351-

FIG. AFS20-001001 Fuel System Accessory

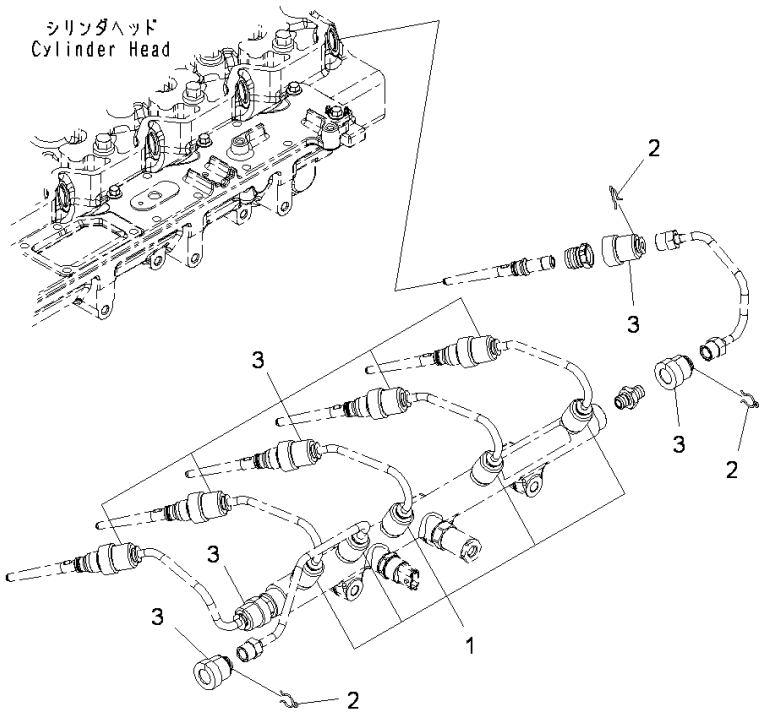

Index	Code	Part Number	Description	Qty	Serial Number
1		6754-71-9710	Cover	9	26858351-
2		6217-71-5770	Clamp	14	26858351-
3		6745-71-9710	Cover	5	26858351-

FIG. AFS00-001001 Fuel Transfer Pump

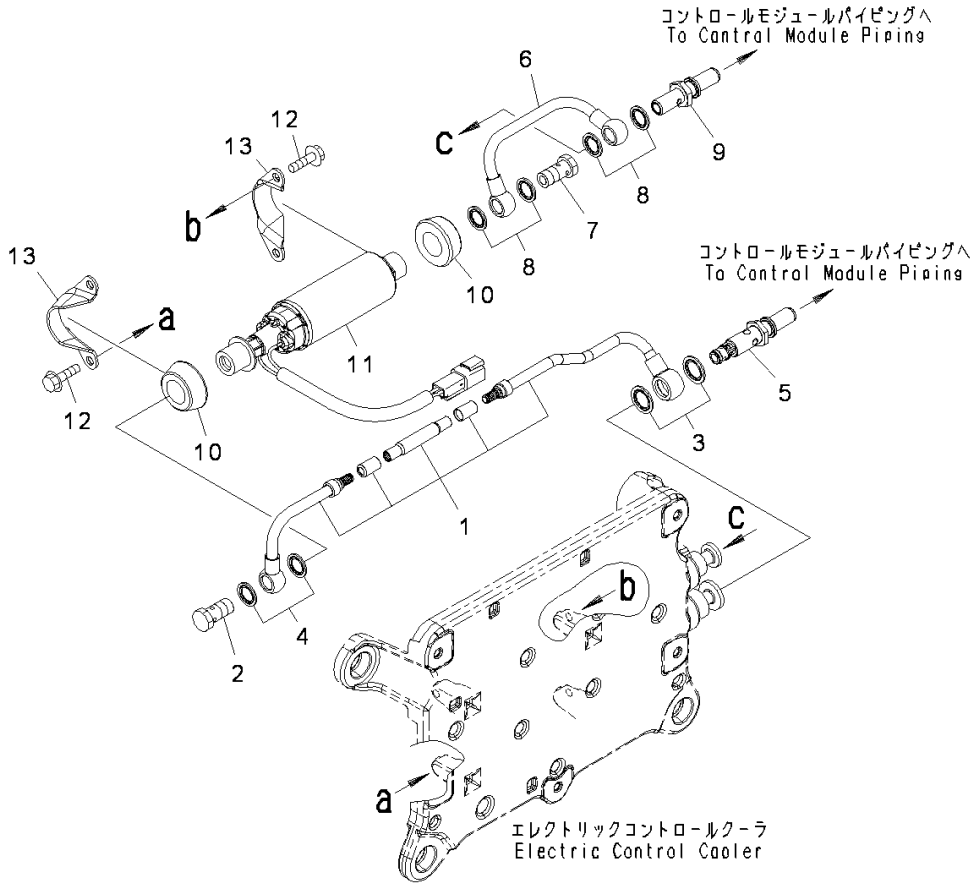

Index	Code	Part Number	Description	Qty	Serial Number
1		6745-71-5311	Tube	1	26858351-
2		6732-71-6510	Bolt	1	26858351-
3		6745-71-5860	Seal, Washer	2	26858351-
4		6745-71-1130	Washer	2	26858351-
5		6745-71-5391	Valve, Check	1	26858351-
6		6745-71-5410	Tube	1	26858351-
7		6732-71-6510	Bolt	1	26858351-
8		6745-71-1130	Washer	4	26858351-
9		6745-71-5430	Connector	1	26858351-
		6745-71-1820	Pump Assembly, Fuel	1	26858351-
10		6745-71-1830	• Isolator	2	26858351-
11		6745-71-1840	• Pump, Fuel	1	26858351-
12		6732-21-4180	Bolt	4	26858351-
13		6745-71-1860	Bracket	2	26858351-

FIG. A4110-001001 Fuel Inlet Fitting

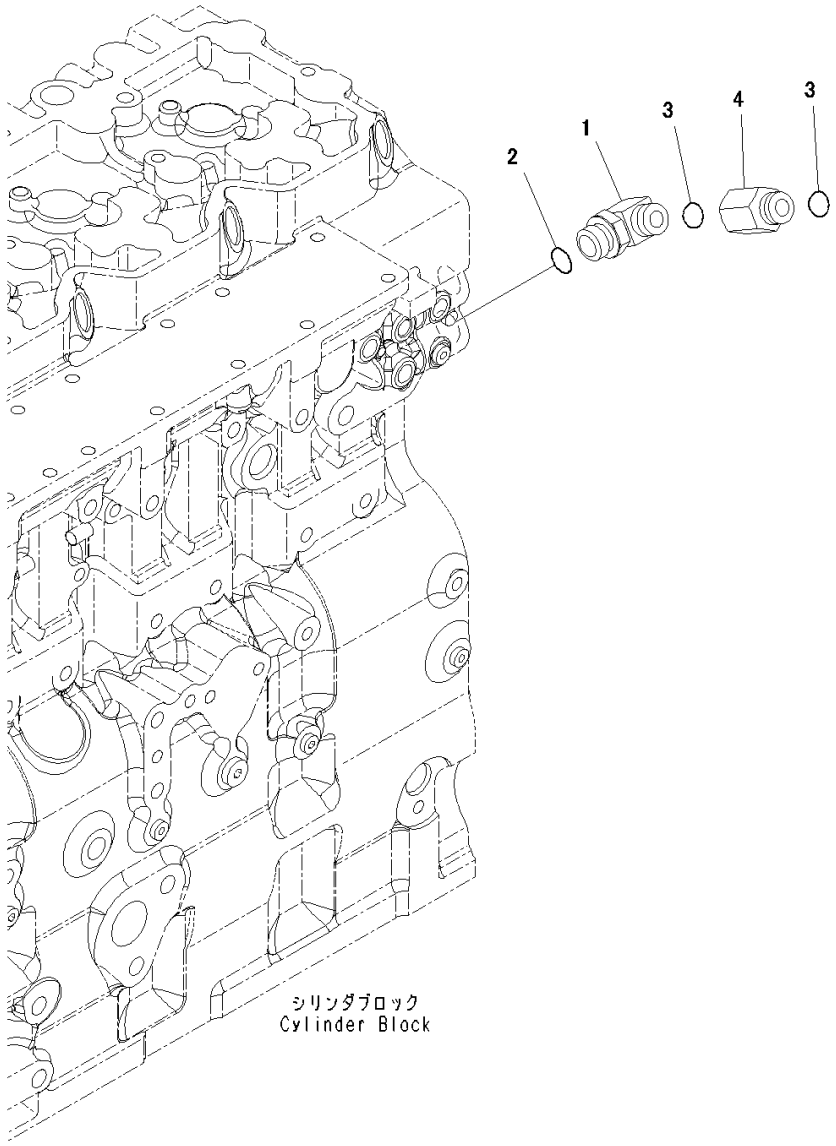

Index	Code	Part Number	Description	Qty	Serial Number
1		14X-04-51311	Elbow	1	26858351-
2		6216-74-6220	O-ring	1	26858351-
3		02896-11012	O-ring	2	26858351-
4		14X-04-51340	Joint	1	26858351-

ENGINE COOLING SYSTEM

FIG. AFA20-001001 Cooling Fan Drive Mounts

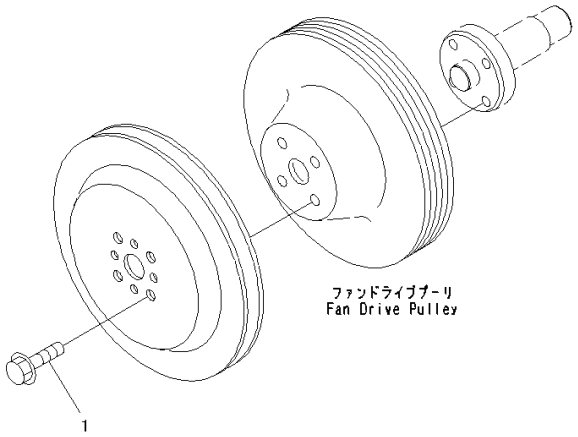

Index	Code	Part Number	Description	Qty	Serial Number
1		6732-61-3140	Bolt.....	4	26858351-

FIG. AFA10-001001 Cooling Fan Drive Pulley

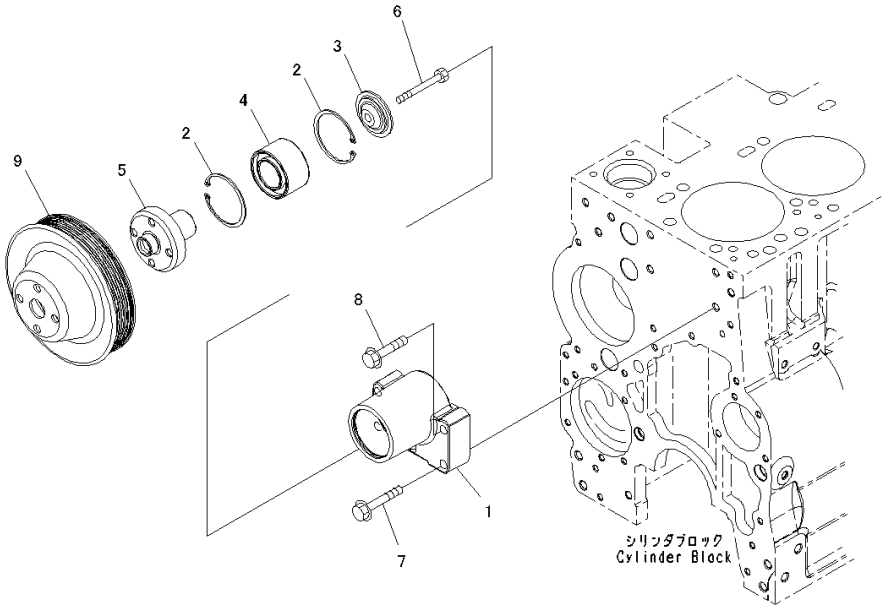

Index	Code	Part Number	Description	Qty	Serial Number
		6732-62-3410	Support Assembly	1	26858351-
1		6732-62-3470	• Support	1	26858351-
2		6732-61-3450	• Ring, Snap	2	26858351-
3		6732-61-3430	• Retainer	1	26858351-
4		6732-61-3420	• Bearing, Ball	1	26858351-
5		6732-61-3410	• Hub	1	26858351-
6		6732-61-3440	• Bolt	1	26858351-
7		01435-01055	Bolt	3	26858351-
8		01435-01045	Bolt	1	26858351-
9		6742-01-5472	Pulley	1	26858351-

FIG. AWP20-001001 Cooling Fan Belt Tensioner

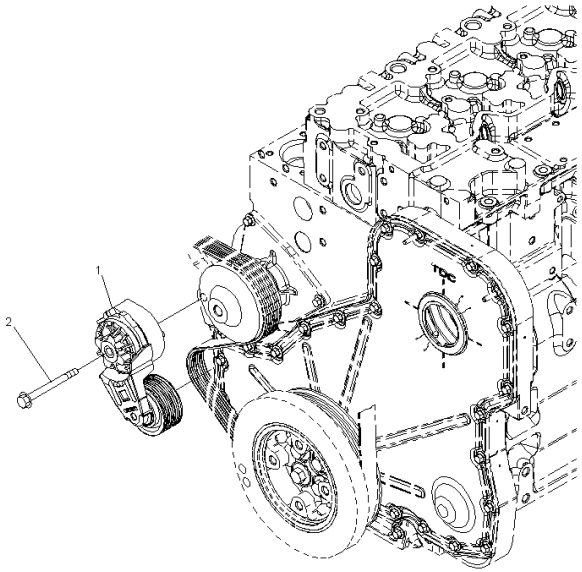

Index	Code	Part Number	Description	Qty	Serial Number
1		6743-61-4120	Tensioner	1	26858351-
2		6732-61-3260	Bolt	1	26858351-

FIG. A5019-001001 Water Pump

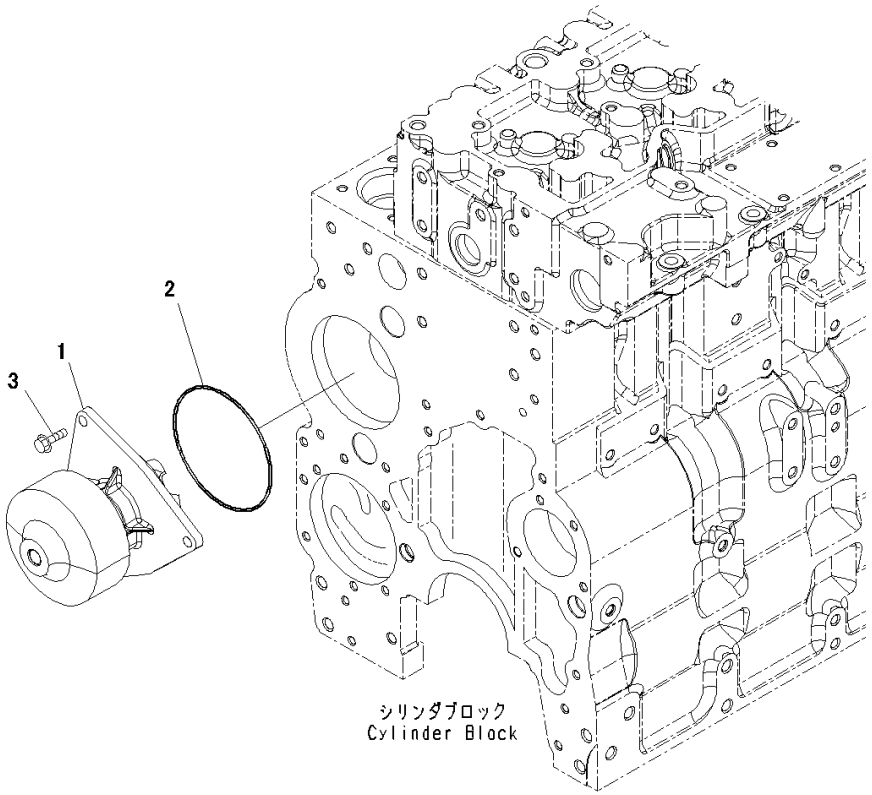

Index	Code	Part Number	Description	Qty	Serial Number
		6743-61-1531	Water Pump Assembly	1	26858351-
1		6743-61-1501	• Pump	1	26858351-
2		6741-61-1520	• Seal	1	26858351-
3		01435-00825	Bolt.....	3	26858351-

FIG. AWP10-001001 Water Pump Drive Belt, For 60Amp. Alternator

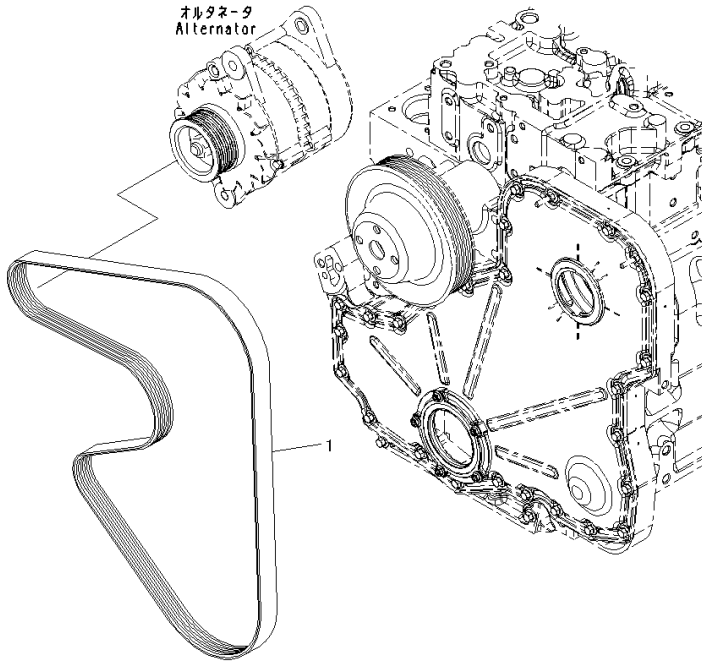

Index	Code	Part Number	Description	Qty	Serial Number
1		6741-61-1621	Belt.....	1	26858351-

FIG. AWP10-002001 Water Pump Drive Belt, For 90Amp. Alternator

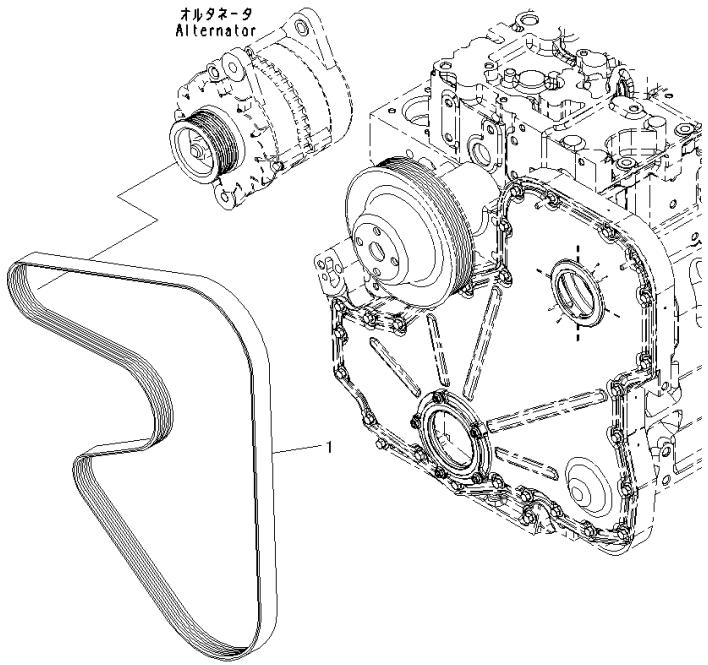

Index	Code	Part Number	Description	Qty	Serial Number
1		6743-61-1411	Belt.....	1	26858351-

FIG. AWO00-001001 Water Outlet Connector

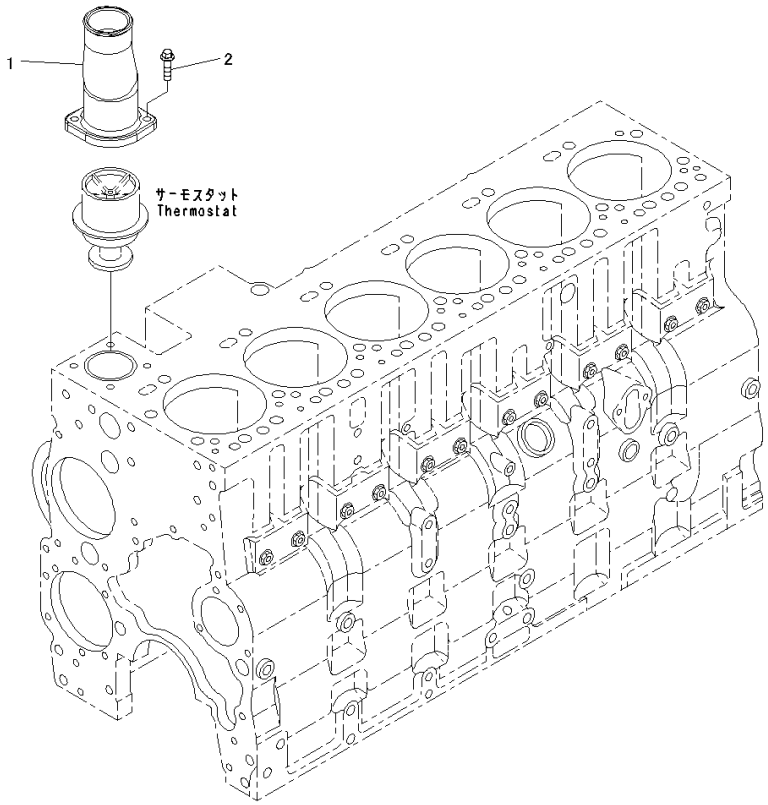

Index	Code	Part Number	Description	Qty	Serial Number
1		6745-61-6210	Connector	1	26858351-
2		6732-21-5160	Bolt	2	26858351-

FIG. AWI10-001001 Water Inlet Connector

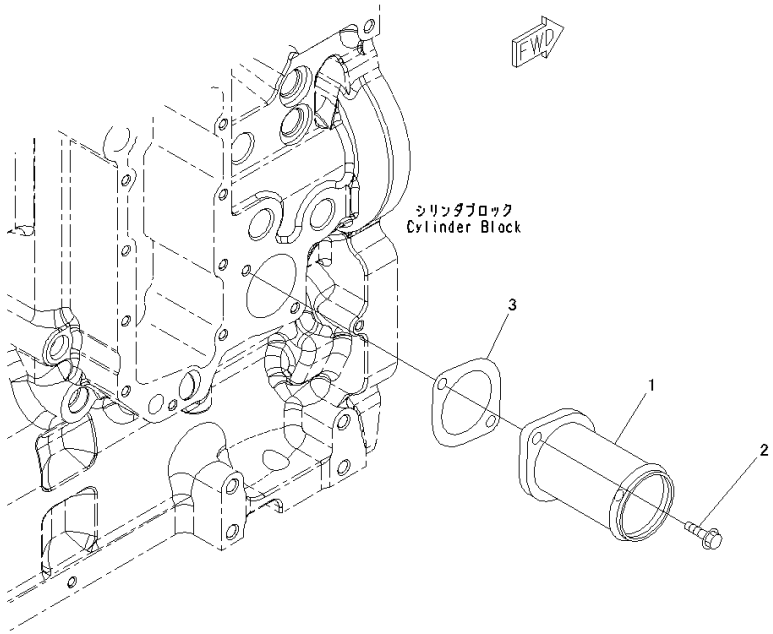

Index	Code	Part Number	Description	Qty	Serial Number
1		6745-61-6110	Connector	1	26858351-
2		6732-71-3220	Bolt.....	2	26858351-
3		6741-61-6130	Gasket	1	26858351-

FIG. AEC00-001001 Thermostat

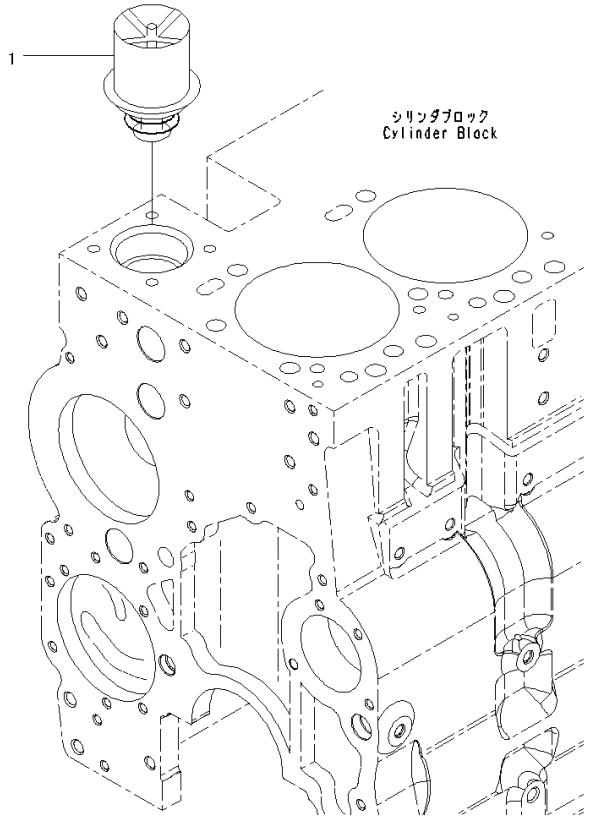

Index	Code	Part Number	Description	Qty	Serial Number
1		6745-61-1110	Thermostat.....	1	26858351-

FIG. ATK00-001001 Plug, Torque Converter Cooling

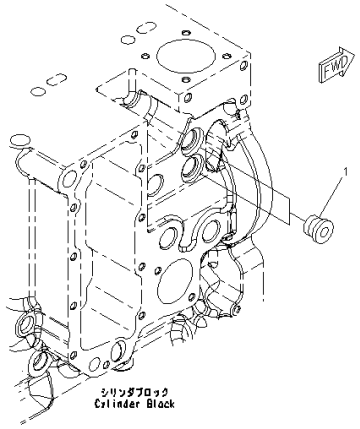

Index	Code	Part Number	Description	Qty	Serial Number
1		6216-14-6820	Plug Assembly	2	26858351-

FIG. AWF00-001001 Corrosion Piping

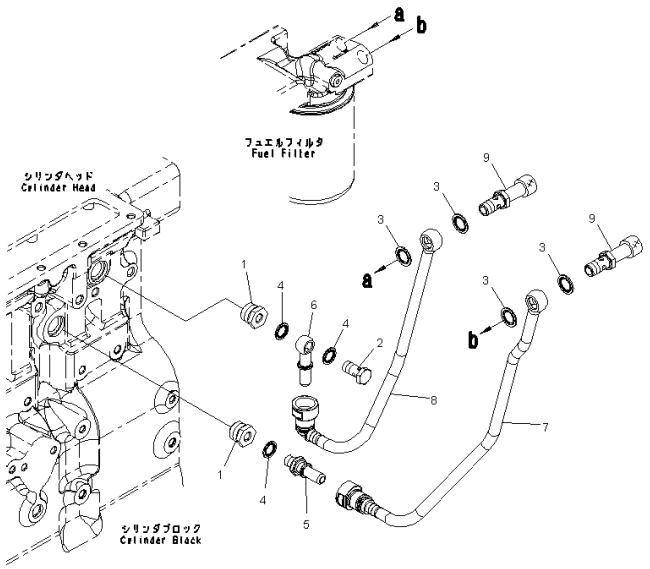

Index	Code	Part Number	Description	Qty	Serial Number
1		6745-61-8110	Union	2	26858351-
2		6732-71-6510	Bolt	1	26858351-
3		6731-74-5910	Washer	4	26858351-
4		6745-71-1130	Washer	3	26858351-
5		6745-71-6130	Connector	1	26858351-
6		6745-61-8120	Connector	1	26858351-
7		6745-61-8130	Tube	1	26858351-
8		6745-61-8140	Tube	1	26858351-
9		6745-61-8151	Valve	2	26858351-

ENGINE ELECTRICAL SYSTEM

FIG. AEH20-001001 Alternator Mounts

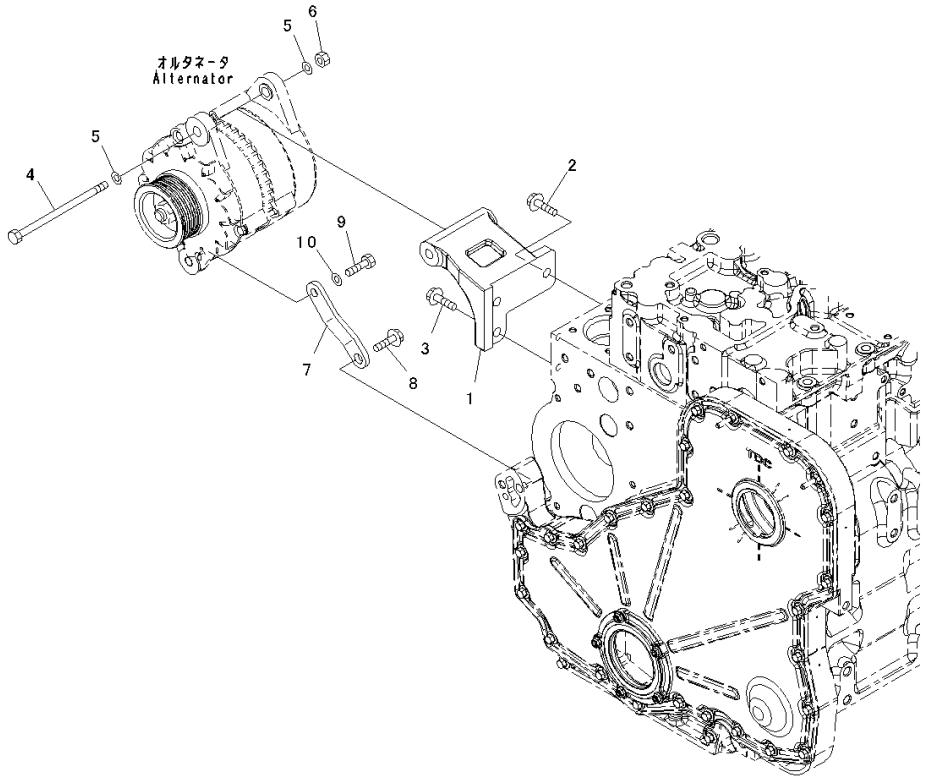

Index	Code	Part Number	Description	Qty	Serial Number
1		6741-81-6520	Bracket	1	26858351-
2		6735-61-3810	Bolt	2	26858351-
3		6735-71-3220	Bolt	1	26858351-
4		6207-81-6980	Bolt	1	26858351-
5		01643-31232	Washer	2	26858351-
6		01580-11210	Nut	1	26858351-
7		6741-81-6510	Brace	1	26858351-
8		01435-01020	Bolt	1	26858351-
9		01050-31230	Bolt	1	26858351-
10		01643-31232	Washer	1	26858351-

FIG. AEE00-001001 Alternator, 60Amp.

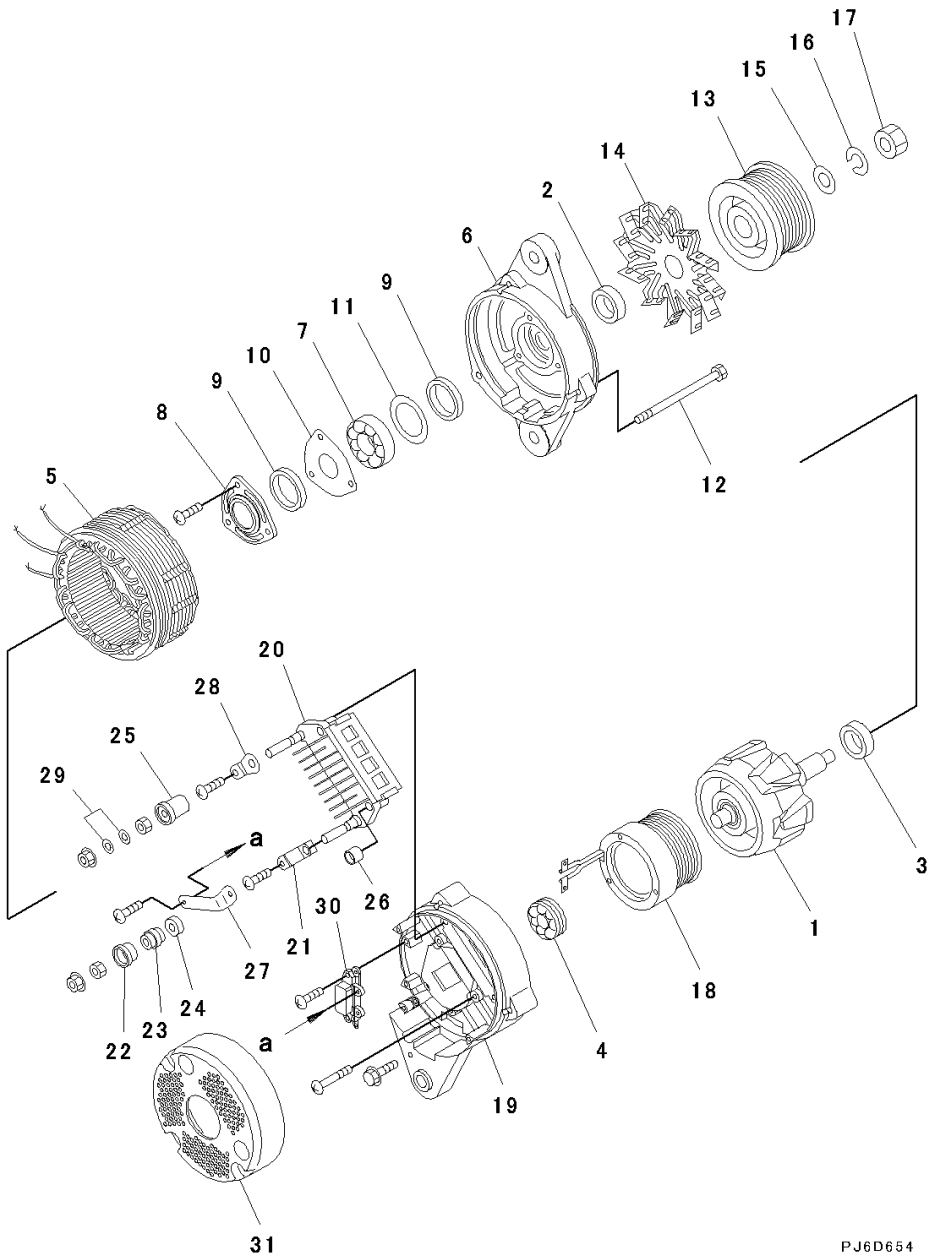

Index	Code	Part Number	Description	Qty	Serial Number
		600-861-6110	Alternator, 60Amp.	1	26858351-
1		KD0-35100-0300	• Rotor Assembly	1	26858351-
2		KD1-33923-0790	• Collar	1	26858351-
3		KD1-35923-0160	• Collar	1	26858351-
4		KD0-09201-0980	• Bearing, Ball	1	26858351-
5		KD0-35200-0460	• Stator Assembly	1	26858351-
6		KD0-35300-0350	• Bracket Assembly	1	26858351-
7		KD0-09201-1140	•• Bearing, Ball	1	26858351-
8		KD0-35926-0070	•• Retainer	1	26858351-
9		KD0-35951-0060	•• Packing	2	26858351-
10		KD0-35926-0090	•• Retainer	1	26858351-
11		KD1-33926-0730	•• Retainer	1	26858351-
12		KD0-0275-06802	• Bolt	3	26858351-
13		KD0-35411-0640	• Pulley	1	26858351-
14		KD0-35421-0240	• Fan	1	26858351-
15		KD1-0330-16012	• Washer	1	26858351-
16		KD1-0335-16002	• Washer, Spring	1	26858351-
17		KD0-0280-16022	• Nut	1	26858351-
18		KD0-35120-0290	• Coil, Field	1	26858351-
		KD0-35700-0950	• Bracket Assembly	1	26858351-
19		KD0-35710-1150	•• Bracket	1	26858351-
20		KD0-35730-0700	•• Rectifier Assembly	1	26858351-
21		KD0-09170-2501	•• Condenser	1	26858351-
22		KD0-35943-0150	•• Bushing, Insulate	1	26858351-
23		KD0-35923-0130	•• Collar	1	26858351-
24		KD0-35943-0160	•• Bushing, Insulate	1	26858351-
25		KD0-35943-0140	•• Bushing, Insulate	1	26858351-
26		KD0-35943-0170	•• Bushing, Insulate	2	26858351-
27		KD0-35784-0210	•• Bar, Connect	1	26858351-
28		KD0-35784-0290	•• Bar, Plate	1	26858351-
29		KD0-09057-0220	•• Washer	2	26858351-
30		KD7-35719-0211	•• Regulator Assembly	1	26858351-
31		KD0-35761-0250	• Cover	1	26858351-

FIG. AEE00-002001 Alternator, 90Amp.

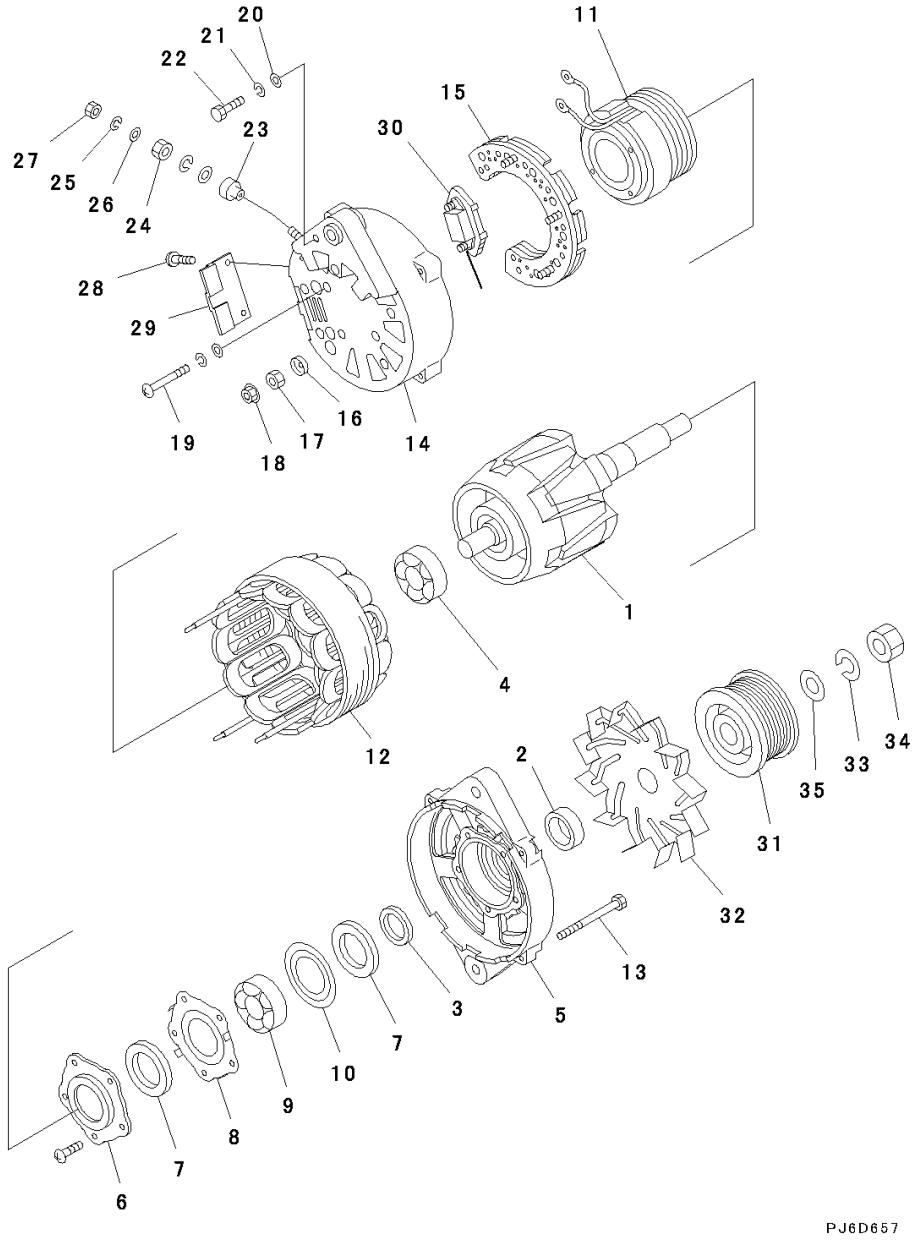

Index	Code	Part Number	Description	Qty	Serial Number
		600-861-9120	Alternator Assembly, 90Amp.	1	26858351-
1		KD0-35100-0310	• Rotor Assembly	1	26858351-
2		KD1-33923-0890	• Collar	1	26858351-
3		KD1-35923-0030	• Collar	1	26858351-
4		KD0-09201-0770	• Bearing, Ball	1	26858351-
5		KD0-35300-0200	• Bracket Assembly	1	26858351-
6		KD0-35926-0080	• Retainer	1	26858351-
7		KD0-35951-0080	• Packing	2	26858351-
8		KD1-33926-0660	• Retainer	1	26858351-
9		KD0-09201-0760	• Bearing, Ball	1	26858351-
10		KD1-33926-0790	• Retainer	1	26858351-
11		KD0-35120-0250	• Coil Assembly, Field	1	26858351-
12		KD0-35200-0320	• Stator Assembly	1	26858351-
13		KD0-0083-08802	• Bolt	4	26858351-
		KD0-35700-0970	• Bracket Assembly	1	26858351-
14		KD0-35710-1190	•• Bracket	1	26858351-
15		KD0-35730-0162	•• Rectifier Assembly	1	26858351-
16		KD0-35943-0210	•• Bushing	1	26858351-
17		KD0-33902-0090	•• Nut	1	26858351-
18		KD0-33902-0080	•• Nut	6	26858351-
19		KD1-0020-06452	•• Screw	4	26858351-
20		KD1-0330-06012	•• Washer	5	26858351-
21		KD1-0335-06002	•• Washer, Spring	5	26858351-
22		KD0-0080-06142	•• Bolt	1	26858351-
23		KD0-35943-0100	•• Bushing	1	26858351-
24		KD0-33902-0100	•• Nut	1	26858351-
25		KD1-0335-08002	•• Washer, Spring	2	26858351-
26		KD1-0331-08020	•• Washer	2	26858351-
27		KD0-0291-08010	•• Nut	1	26858351-
28		KD0-0055-05122	•• Screw	2	26858351-
29		KD0-35761-0190	•• Cover	1	26858351-
30		KD7-35719-0181	•• Regulator Assembly	1	26858351-
31		KD0-35411-0650	• Pulley	1	26858351-
32		KD0-35421-0190	• Fan	1	26858351-
33		KD1-0335-20002	• Washer, Spring	1	26858351-
34		KD0-0290-20022	• Nut	1	26858351-
35		KD1-35921-0010	• Washer	1	26858351-

FIG. A6010-001001 Alternator Cover, For 60Amp. Alternator

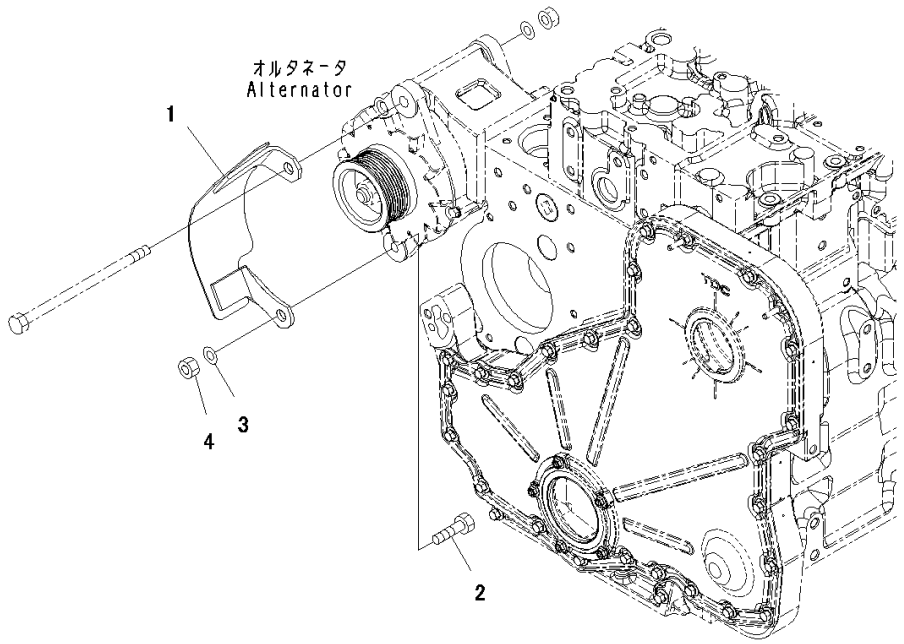

Index	Code	Part Number	Description	Qty	Serial Number
1		6745-81-6120	Cover	1	26858351-
2		6135-85-8190	Bolt	1	26858351-
3		01643-31232	Washer	1	26858351-
4		01582-11210	Nut	1	26858351-

FIG. A6010-002001 Alternator Cover, For 90Amp. Alternator

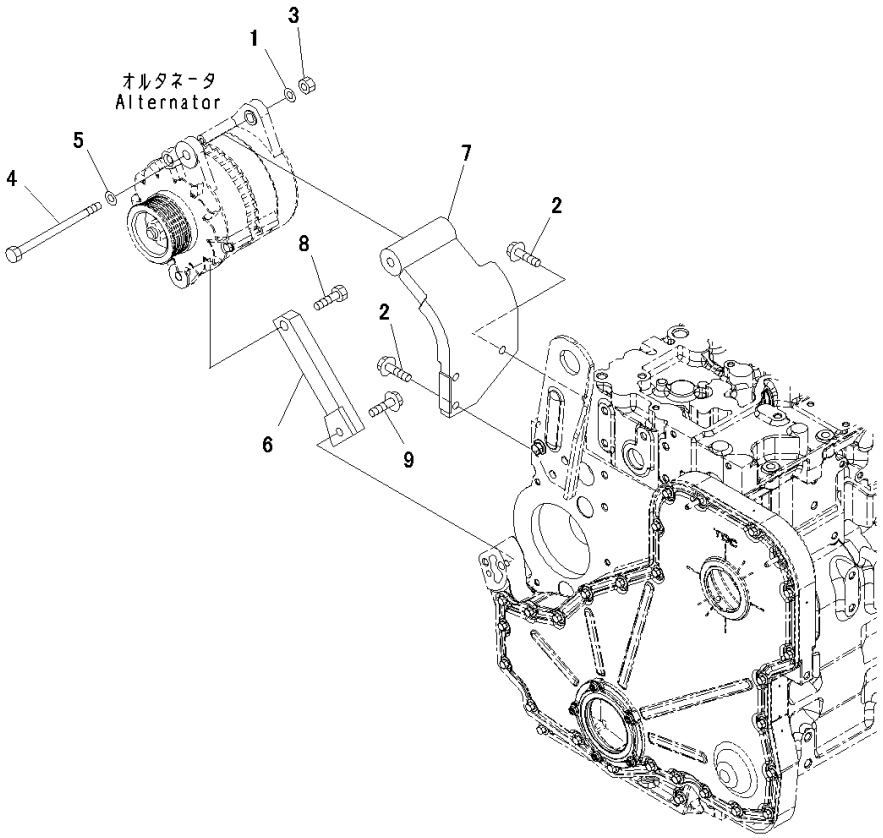

Index	Code	Part Number	Description	Qty	Serial Number
1		01643-31232	Washer	1	26858351-
2		6216-74-6190	Bolt	3	26858351-
3		01582-11210	Nut	1	26858351-
4		6732-81-6840	Bolt	1	26858351-
5		6732-81-6880	Washer	1	26858351-
6		6745-81-8150	Bracket	1	26858351-
7		6745-81-8140	Bracket	1	26858351-
8		6135-85-8190	Bolt	1	26858351-
9		6745-61-4230	Bolt	1	26858351-

FIG. ASM00-001001 Starting Motor Mounts

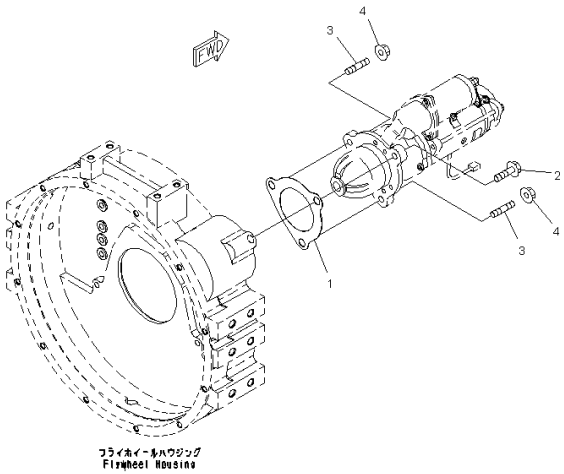

Index	Code	Part Number	Description	Qty	Serial Number
1		6221-81-6810	Gasket	1	26858351-
2		01435-01240	Bolt	1	26858351-
3		6743-81-6310	Stud	2	26858351-
4		01584-01210	Nut	2	26858351-

FIG. AST00-001001 Starting Motor, 7.5KW

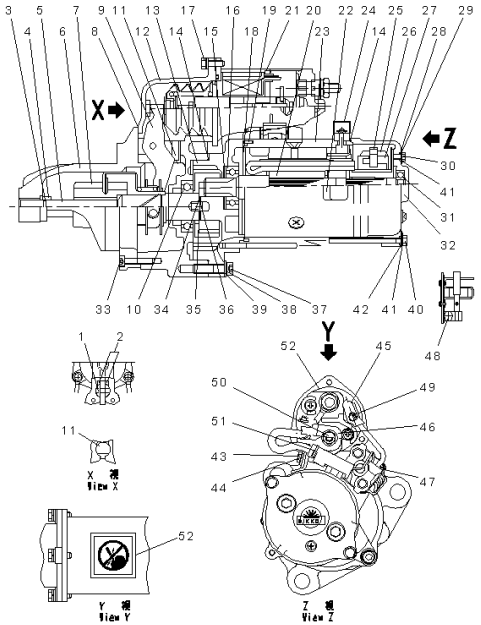

Index	Code	Part Number	Description	Qty	Serial Number
		600-863-5711	Starting Motor Assembly, 7.5Kw	1	26858351-
1		KD0-23904-0070	• Pin	1	26858351-
2		KD0-23927-0071	• Holder	2	26858351-
3		KD1-23914-0020	• Ring	1	26858351-
4		KD1-23181-0020	• Stopper	1	26858351-
5		KD1-23111-0160	• Shaft	1	26858351-
6		KD0-23310-1730	• Bracket	1	26858351-
7		KD0-23500-0970	• Clutch Assembly	1	26858351-
8		KD0-23951-0301	• Packing	1	26858351-
9		KD0-23320-0220	• Lever Assembly	1	26858351-
10		KD1-0454-60067	• Bearing, Ball	1	26858351-
11		KD0-23951-0331	• Packing	1	26858351-
12		KD0-23600-0460	• Bracket Assembly	1	26858351-
13		KD0-23611-0690	• Bracket	1	26858351-
14		KD1-09211-0980	• O-ring	2	26858351-
15		KD0-23921-0230	• Washer	1	26858351-
16		KD1-0454-62047	• Bearing, Ball	1	26858351-
17		KD0-0274-06202	• Bolt	3	26858351-
18		KD1-23951-0020	• Packing	1	26858351-
19		KD1-0400-20100	• Pin	1	26858351-
20		KD0-23100-0251	• Armature Assembly	1	26858351-
21		KD0-47100-4800	• Switch Assembly, Magnetic	1	26858351-
22		KD0-09271-3620	• Name Plate	1	26858351-
23		KD0-23200-0331	• Yoke Assembly	1	26858351-
24		KD0-47761-2691	• Cover	1	26858351-
25		KD1-23913-0040	• Spring	4	26858351-
26		KD0-23740-0250	• Brush Assembly	4	26858351-
27		KD0-23750-0250	• Holder Assembly, Brush	1	26858351-
28		KD1-0505-00601	• O-ring	2	26858351-
29		KD1-47921-0790	• Washer	2	26858351-
30		KD0-09001-4580	• Bolt	2	26858351-
31		KD1-0454-62007	• Bearing, Ball	1	26858351-
32		KD0-23700-0130	• Bracket Assembly	1	26858351-
33		KD1-0240-06305	• Bolt	6	26858351-
34		KD1-23921-0130	• Washer	1	26858351-
35		KD1-23921-0140	• Washer	1	26858351-
36		KD1-23941-0040	• Washer, Insulate	1	26858351-
37		KD1-0240-08405	• Bolt	3	26858351-
38		KD1-0335-08002	• Washer, Spring	3	26858351-

FIG. AST00-001001 Starting Motor, 7.5KW

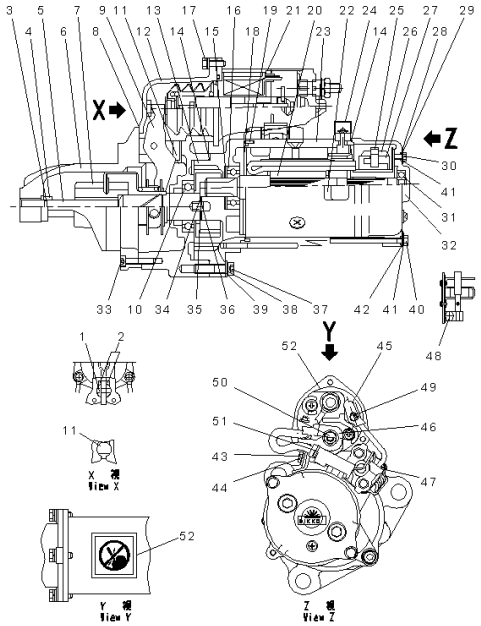

Index	Code	Part Number	Description	Qty	Serial Number
39		KD1-0330-08022	• Washer	3	26858351-
40		KD0-23901-0170	• Bolt	2	26858351-
41		KD1-0335-06002	• Washer, Spring	4	26858351-
42		KD1-0330-06012	• Washer	2	26858351-
43		KD0-0270-06402	• Bolt	1	26858351-
44		KD1-47927-1250	• Holder	1	26858351-
45		KD0-47761-2671	• Cover	1	26858351-
46		KD0-47761-2681	• Cover	1	26858351-
47		KD0-25000-8332	• Switch Assembly	1	26858351-
48		KD0-0055-05082	• Screw	4	26858351-
49		KD0-09006-0660	• Nut	1	26858351-
50		KD0-09006-0670	• Nut	1	26858351-
51		KD1-09257-0050	• Band	1	26858351-
52		KD0-09275-1430	• Plate, Caution	1	26858351-

FIG. AST00-002001 Starting Motor, 11KW

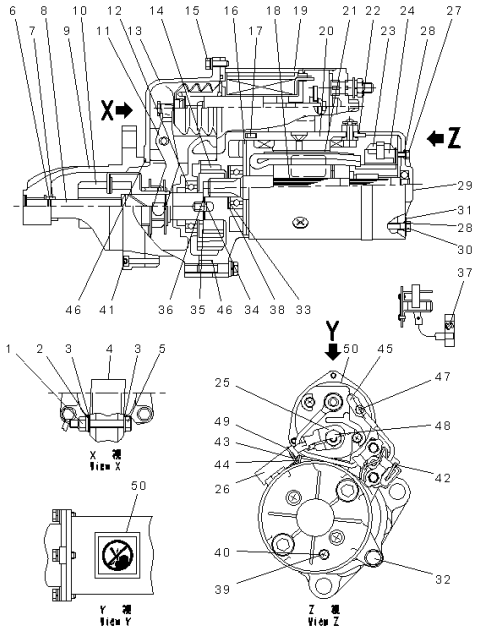

Index	Code	Part Number	Description	Qty	Serial Number
		600-863-8112	Starting Motor Assembly, 11Kw	1	26858351-
1		KD1-09279-0090	• Nut, Seal	1	26858351-
2		KD1-0335-08002	• Washer, Spring	4	26858351-
3		KD1-0330-08022	• Washer	5	26858351-
4		KD1-0345-08001	• Washer, Seal	2	26858351-
5		KD0-23303-0020	• Pin	1	26858351-
6		KD1-23914-0020	• Ring	1	26858351-
7		KD1-23181-0020	• Stopper	1	26858351-
8		KD0-23120-0180	• Shaft Assembly	1	26858351-
9		KD0-23310-1740	• Bracket Assembly	1	26858351-
10		KD1-23500-0970	• Clutch Assembly	1	26858351-
11		KD1-23320-0290	• Lever Assembly	1	26858351-
12		KD0-09201-0850	• Bearing, Ball	1	26858351-
13		KD0-23600-0410	• Bracket Assembly	1	26858351-
14		KD0-23611-1101	• Bracket	1	26858351-
15		KD0-0274-06202	• Bolt	3	26858351-
16		KD1-23951-0051	• Packing	1	26858351-
17		KD1-0400-30100	• Pin	1	26858351-
18		KD0-23100-0430	• Armature Assembly	1	26858351-
19		KD0-47100-4651	• Switch Assembly	1	26858351-
20		KD0-23200-0671	• Yoke Assembly	1	26858351-
21		KD0-09271-3620	• Name Plate	1	26858351-
22		KD1-09211-1120	• O-ring	1	26858351-
23		KD0-23740-0351	• Brush Assembly	2	26858351-
24		KD0-23750-0490	• Holder Assembly	1	26858351-
25		KD0-47761-2681	• Cover	1	26858351-
26		KD0-47761-2691	• Cover	1	26858351-
27		KD0-09011-3140	• Screw	2	26858351-
28		KD1-09211-0081	• O-ring	4	26858351-
29		KD0-23710-0221	• Bracket	1	26858351-
30		KD0-09001-4380	• Bolt	2	26858351-
31		KD1-47921-0790	• Washer	2	26858351-
32		KD0-0276-08402	• Bolt	3	26858351-
33		KD0-09057-0110	• Washer	1	26858351-
34		KD1-23941-0040	• Washer, Insulate	1	26858351-
35		KD1-23921-0140	• Washer	1	26858351-
36		KD1-23921-0130	• Washer	1	26858351-
37		KD0-0055-05082	• Screw	2	26858351-
38		KD0-09057-0190	• Washer	1	26858351-

FIG. AST00-002001 Starting Motor, 11KW

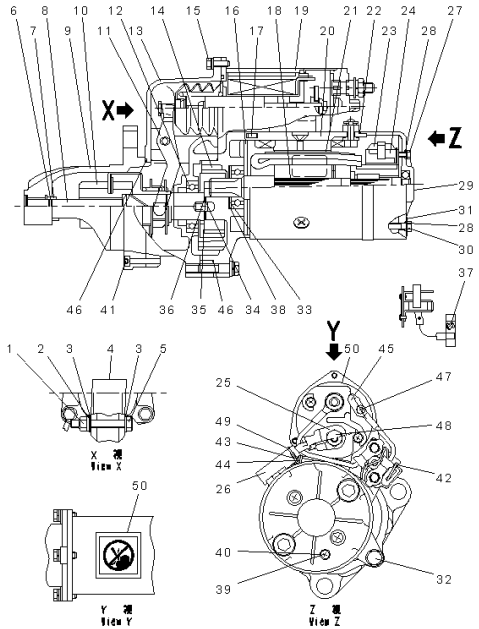

Index	Code	Part Number	Description	Qty	Serial Number
39		KD0-0020-05062	• Screw	1	26858351-
40		KD1-0345-05001	• Washer, Seal	1	26858351-
41		KD1-0240-06305	• Bolt	6	26858351-
42		KD0-25000-8521	• Switch Assembly	1	26858351-
43		KD0-0270-06602	• Bolt	1	26858351-
44		KD0-47927-1390	• Holder	1	26858351-
45		KD0-47761-2671	• Cover	1	26858351-
46		KD1-09211-0981	• O-ring	2	26858351-
47		KD0-09006-0660	• Nut	1	26858351-
48		KD0-09006-0670	• Nut	1	26858351-
49		KD1-09257-0050	• Band	1	26858351-
50		KD0-09275-1430	• Plate, Caution	1	26858351-

FIG. AWR00-001001 Electric Wiring

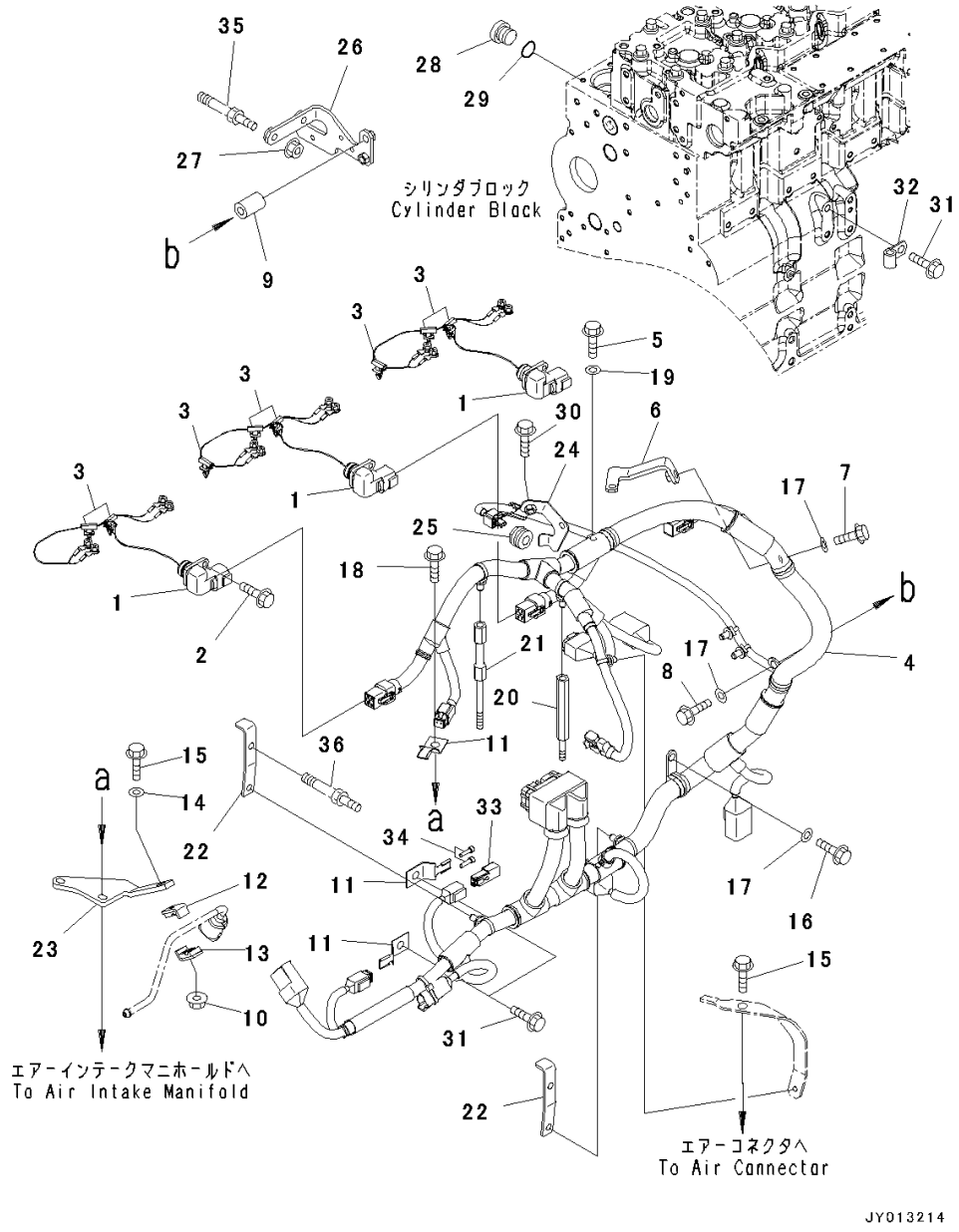

Index	Code	Part Number	Description	Qty	Serial Number
1		6745-81-9240	Wire Harness	3	26858351-
2		6732-21-4180	Bolt	3	26858351-
3		6745-81-9390	Clip	8	26858351-
4		6745-81-9230	Wire Harness	1	26858351-
5		6742-01-3770	Bolt	1	26858351-
6		6745-81-9710	Bracket	1	26858351-
7		6732-71-3220	Bolt	1	26858351-
8		6736-21-3210	Bolt	1	26858351-
9		6144-11-5630	Spacer	1	26858351-
10		01584-00605	Nut	1	26858351-
11		08193-20010	Clip	3	26858351-
12		6155-71-5810	Clamp	1	26858351-
13		6155-71-5820	Clamp	1	26858351-
14		01643-30623	Washer	1	26858351-
15		6745-81-9430	Bolt	1	26858351-
16		6732-21-3120	Bolt	1	26858351-
17		01640-20816	Washer	3	26858351-
18		6732-61-6140	Bolt	2	26858351-
19		01640-20716	Washer	1	26858351-
20		6745-81-9720	Spacer	1	26858351-
21		6745-81-9730	Spacer	1	26858351-
22		6745-81-9740	Bracket	2	26858351-
23		6745-81-9750	Brace	1	26858351-
24		6745-81-9810	Bracket	1	26858351-
25		6745-81-9770	Bushing	1	26858351-
26		6745-81-9790	Brace	1	26858351-
27		6732-71-3210	Nut	2	26858351-
		6735-21-1910	Plug Assembly	1	26858351-
28		6735-21-1920	• Plug	1	26858351-
29		6735-21-1930	• O-ring	1	26858351-
30		6216-74-6180	Bolt	1	26858351-
31		6216-54-7320	Bolt	3	26858351-
32		04434-51010	Clip	1	26858351-
33		08192-12100	Connector Assembly	1	26858351-
34		08191-00770	Plug, Connector	2	26858351-
35		(6745-81-9580)	Bolt(Refer to Page 97)		-
36		(6745-81-9560)	Bolt(Refer to Page 133)		-

FIG. A4719-001001 Electric Controller

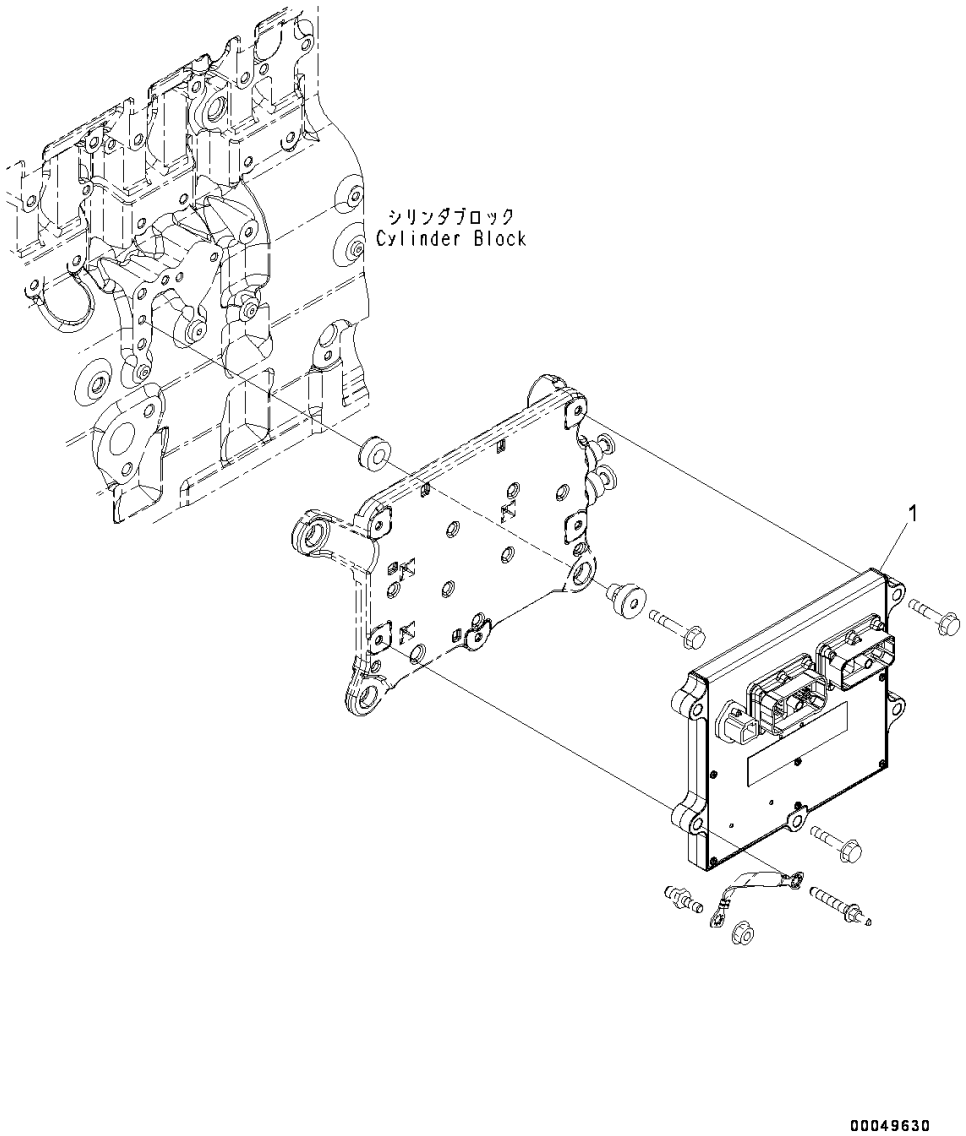

Index	Code	Part Number	Description	Qty	Serial Number
1		600-468-1600	Controller Assembly.....	1	26858351-

FIG. APH10-001001 Electric Controller Piping

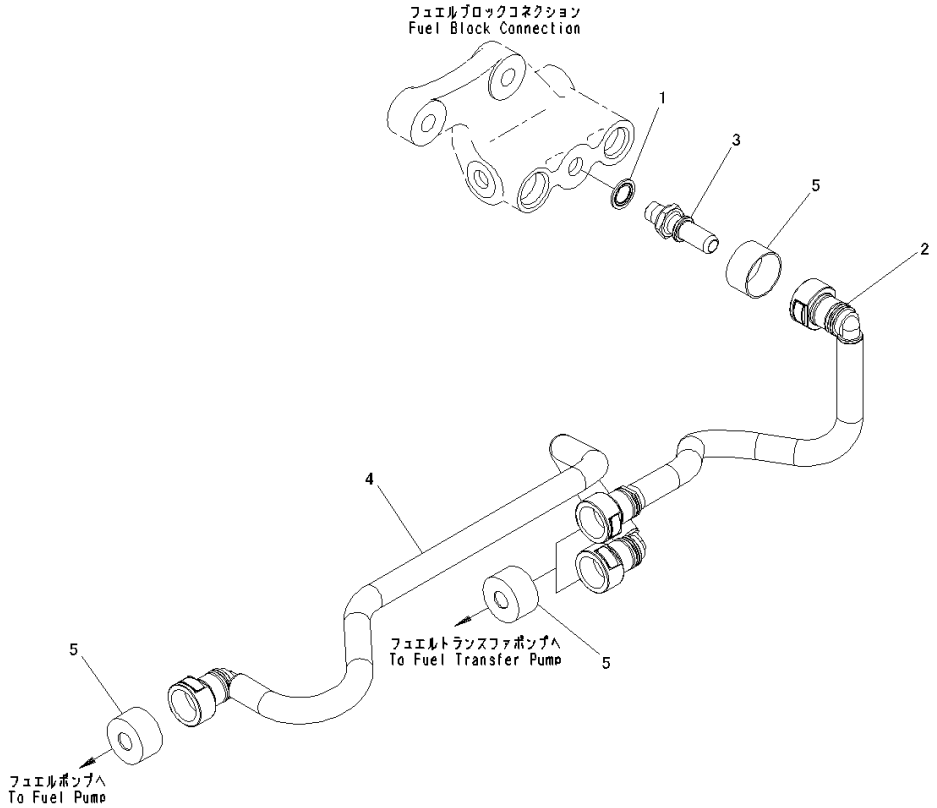

Index	Code	Part Number	Description	Qty	Serial Number
1		6745-71-1130	Washer	1	26858351-
2		6745-71-5690	Tube	1	26858351-
3		6745-71-6130	Connector	1	26858351-
4		6745-71-5230	Tube	1	26858351-
5		6745-71-5160	Cover	4	26858351-

FIG. APH00-001001 Electric Controller Mounts

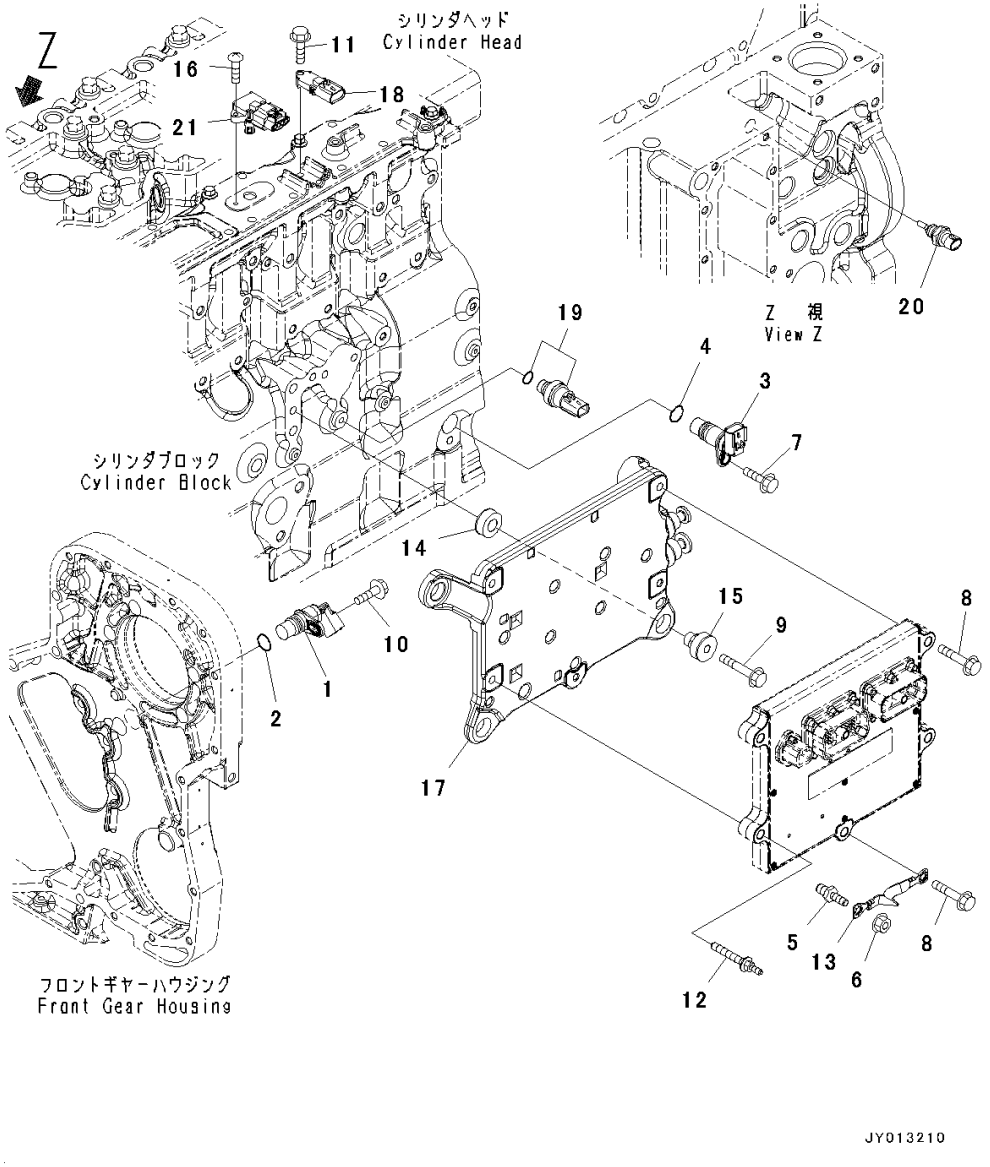

Index	Code	Part Number	Description	Qty	Serial Number
		6271-81-9200	Sensor Assembly	1	26858351-
1		6754-81-9410	• Sensor Assembly	1	26858351-
2		6271-81-9220	• O-ring	1	26858351-
		6261-81-2901	Sensor Assembly	1	26858351-
3		6261-81-2911	• Sensor	1	26858351-
4		6271-81-9220	• O-ring	1	26858351-
5		6745-81-9440	Bolt	1	26858351-
6		6732-71-3210	Nut	1	26858351-
7		6732-71-3220	Bolt	1	26858351-
8		6732-61-3110	Bolt	2	26858351-
9		6735-61-2120	Bolt	4	26858351-
10		6732-21-4180	Bolt	1	26858351-
11		6734-71-5520	Bolt	1	26858351-
12		6745-81-9560	Bolt	3	26858351-
13		6754-81-9170	Wire	1	26858351-
14		6754-81-9110	Isolator	4	26858351-
15		6754-81-9130	Isolator	4	26858351-
16		6754-81-9180	Screw	1	26858351-
17		6745-81-9511	Cooler	1	26858351-
18		6261-81-1900	Sensor	1	26858351-
19		6744-81-4010	Switch, Pressure	1	26858351-
20		6261-81-6901	Sensor Assembly	1	26858351-
21		6754-81-2701	Sensor, Temperature	1	26858351-

ENGINE AUXILIARY PARTS AND TOOL

FIG. B9999-501001 Spare Parts, For 60Amp. Alternator

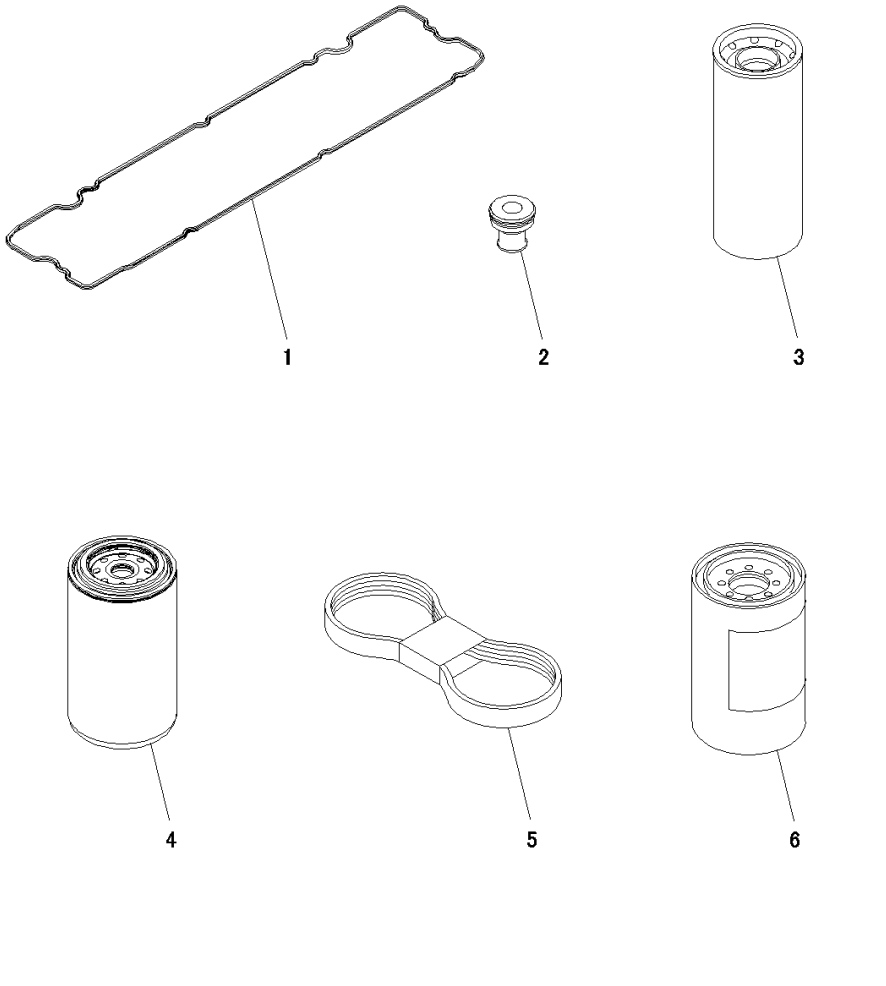

Index	Code	Part Number	Description	Qty	Serial Number
1		6745-11-8810	Gasket	1	26858351-
2		6745-11-8160	Isolator	8	26858351-
3		6742-01-4540	Cartridge	1	26858351-
4		6754-79-6140	Cartridge	1	26858351-
5		6741-61-1621	Belt	1	26858351-
6		600-319-3610	Cartridge Assembly	1	26858351-

FIG. B9999-502001 Spare Parts, For 90Amp. Alternator

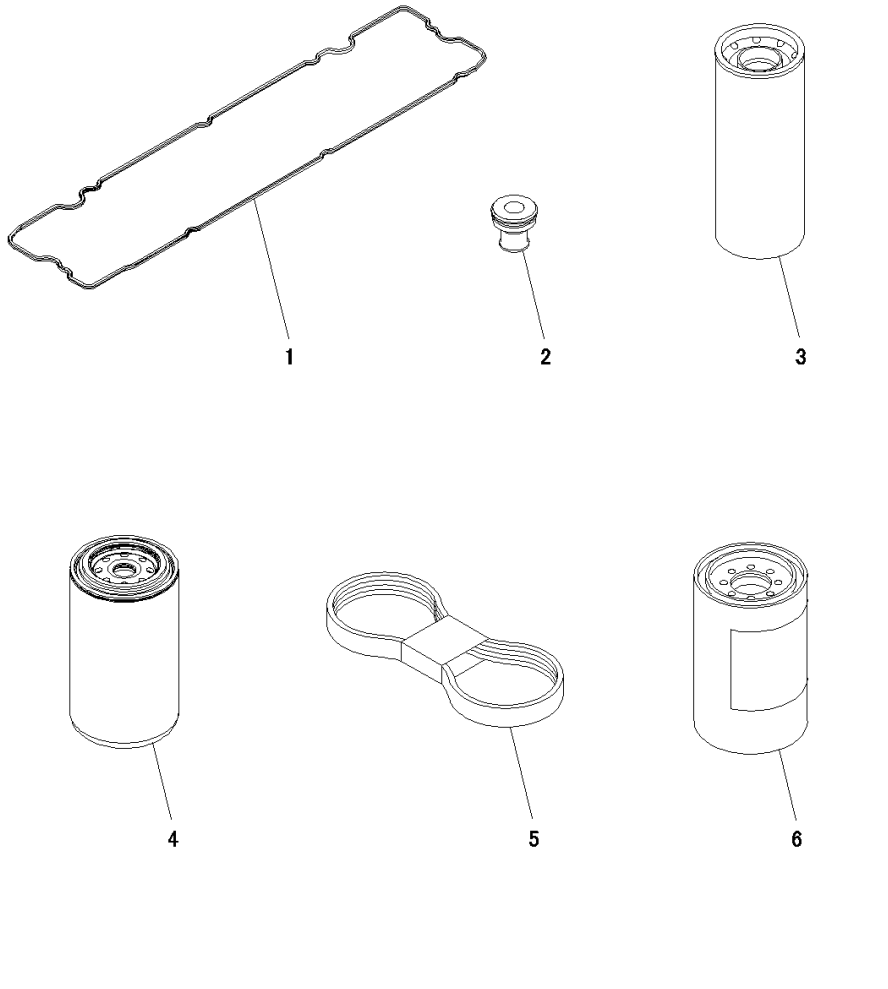

Index	Code	Part Number	Description	Qty	Serial Number
1		6745-11-8810	Gasket	1	26858351-
2		6745-11-8160	Isolator	8	26858351-
3		6742-01-4540	Cartridge	1	26858351-
4		6754-79-6140	Cartridge	1	26858351-
5		6743-61-1411	Belt	1	26858351-
6		600-319-3610	Cartridge Assembly	1	26858351-

ENGINE MARKS AND PLATES

FIG. A9810-001001 Caution Plates

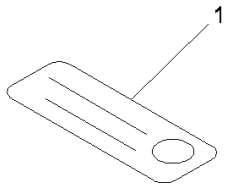

00059246

Index	Code	Part Number	Description	Qty	Serial Number
1		600-021-2060	Decal.....	1	26858351-

FIELD REPAIR SERVICE PARTS

FIG. A8110-001001 Repair Service Parts (1/1)

Index	Code	Part Number	Description	Qty	Serial Number
		12954-65-H92	Seal Assembly	1	26858351-
1		6741-39-1220	• Tool	1	26858351-
2		6741-39-1110	• Seal	1	26858351-
3		6741-39-1120	• Sleeve	1	26858351-
4		6741-39-1130	• Shield	1	26858351-
		6736-39-1140	Sleeve	1	26858351-
5		6736-39-1150	• Sleeve	1	26858351-
6		6736-39-1160	• Sleeve	1	26858351-
		6742-01-5199	Main Metal Assembly	1	26858351-
7	C1		• Metal	7	26858351-
8	C1		• Metal	6	26858351-
9	C1		• Metal	1	26858351-
		6742-01-5233	Main Metal Assembly, Undersized, 0.25mm	1	26858351-
10	C1		• Metal	7	26858351-
11	C1		• Metal	6	26858351-
12	C1		• Metal	1	26858351-
		6742-01-5240	Main Metal Assembly, Undersized, 0.50mm	1	26858351-
13	C1		• Metal	7	26858351-
14	C1		• Metal	6	26858351-
15	C1		• Metal	1	26858351-
		6742-01-5287	Main Metal Assembly, Undersized, 0.75mm	1	26858351-
16	C1		• Metal	7	26858351-
17	C1		• Metal	6	26858351-
18	C1		• Metal	1	26858351-
		6742-01-5288	Main Metal Assembly, Undersized, 1.00mm	1	26858351-
19	C1		• Metal	7	26858351-
20	C1		• Metal	6	26858351-
21	C1		• Metal	1	26858351-
22		6745-41-4220	Insert	12	26858351-
		6745-39-1100	Metal Assembly, Undersized, 0.25mm	6	26858351-
23	C1		• Metal	1	26858351-
24	C1		• Metal	1	26858351-
		6745-39-1200	Metal Assembly	6	26858351-
25	C1		• Metal	1	26858351-
26	C1		• Metal	1	26858351-
		6745-39-1300	Metal Assembly, Undersized, 0.75mm	6	26858351-
27	C1		• Metal	1	26858351-
28	C1		• Metal	1	26858351-
		6745-39-1400	Metal Assembly, Undersized, 1.00mm	6	26858351-
29	C1		• Metal	1	26858351-
30	C1		• Metal	1	26858351-

ENGINE RELATED PARTS

FIG. A1470-501001 Air Cleaner, With Pre-cleaner, Cap

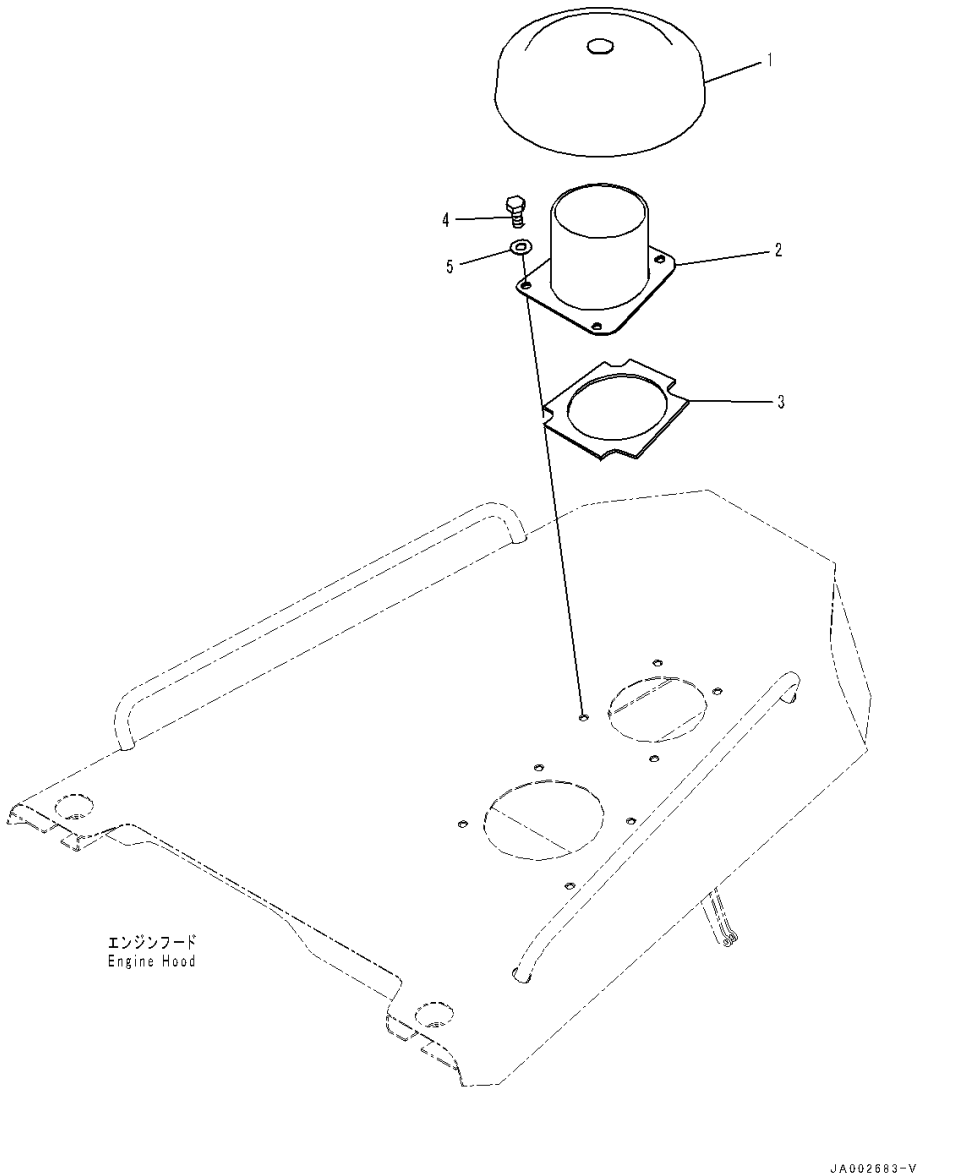

Index	Code	Part Number	Description	Qty	Serial Number
1		566-02-42200	Cap Assembly	1	80001-
2		14X-01-51521	Pipe	1	80001-
3		14X-01-51570	• Seal	1	80001-
4		01010-71225	Bolt	4	80001-
5		01643-11232	Washer	4	80001-

FIG. A1470-501002 Air Cleaner, Air Cleaner

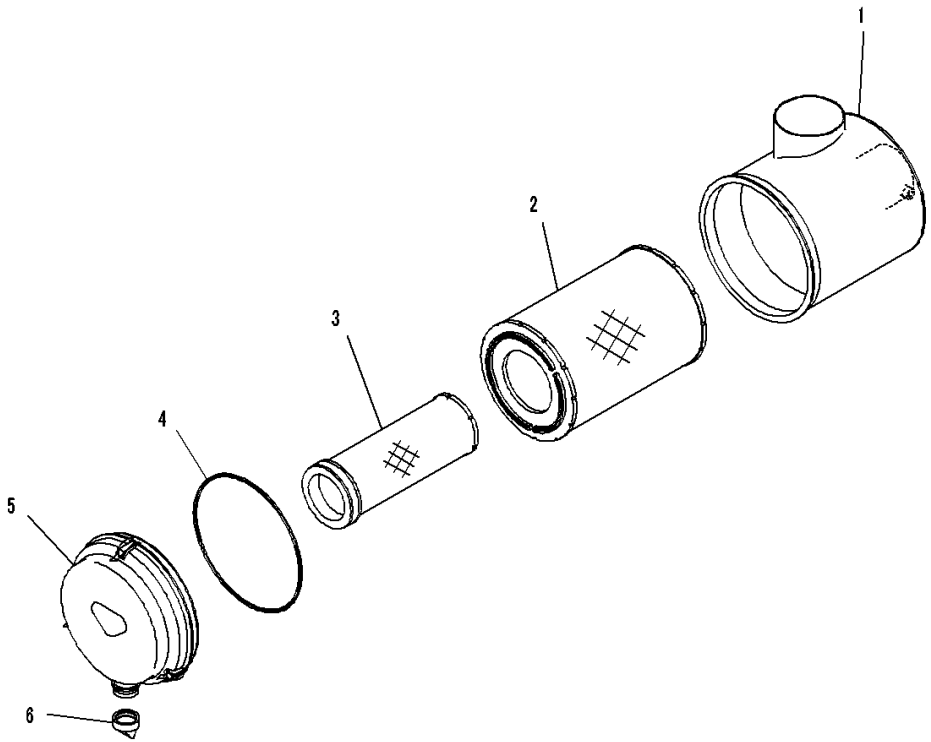

Index	Code	Part Number	Description	Qty	Serial Number
		Note: This list covers following specifications.			
		With Pre-cleaner			
		With Air Intake Rain Cap			
		6155-81-7100	Air Cleaner.....	1	80001-
1		6155-81-7110	• Body	1	80001-
		600-185-5100	• Element Assembly.....	1	80001-
2		600-185-5110	•• Element,Outer.....	1	80001-
3	C1		•• Element,Inner	1	80001-
4		600-184-1570	•• O-ring.....	1	80001-
5		600-184-1510	• Cover Assembly	1	80001-
6		600-184-1350	• Valve	1	80001-

FIG. A1470-501003 Air Cleaner, Mounts

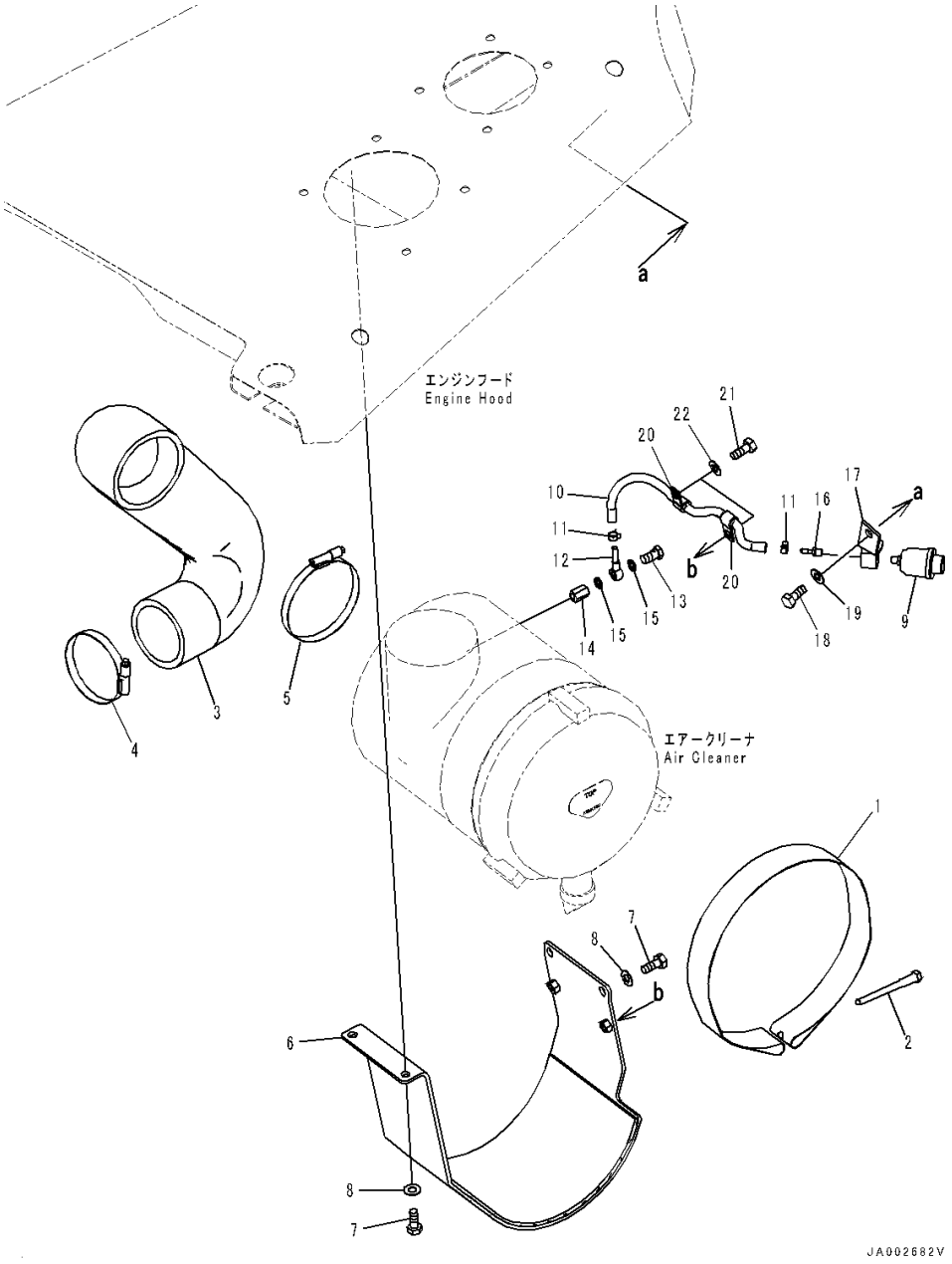

Index	Code	Part Number	Description	Qty	Serial Number
		Note: This list covers following specifications.			
		With Pre-cleaner			
		With Air Intake Rain Cap			
1		6155-11-4840	Band	1	80001-
2		14X-01-51630	Bolt	1	80001-
3		14X-01-51561	Hose	1	80001-
4		07299-00120	Clamp	1	80001-
5		07299-00145	Clamp	1	80001-
6		14X-01-51551	Bracket	1	80001-
7		01010-81225	Bolt	4	80001-
8		01643-31232	Washer	4	80001-
9		08672-01000	Indicator, Dust	1	80001-
10		6156-81-7930	Hose	1	80001-
11		07285-00125	Clip	2	80001-
12		6206-71-1770	Joint	1	80001-
13		07206-30710	Bolt, Joint	1	80001-
14		6156-81-8990	Nipple	1	80001-
15		07005-01012	Seal	2	80001-
16		6131-81-8820	Nipple	1	80001-
17		14X-01-51640	Block	1	80001-
18		01010-81225	Bolt	1	80001-
19		01643-31232	Washer	1	80001-
20		04434-51412	Clip	2	80001-
21		01010-81225	Bolt	2	80001-
22		01643-31232	Washer	2	80001-

FIG. A1470-502001 Air Cleaner, With Air Intake Rain Cap, Pre-Cleaner

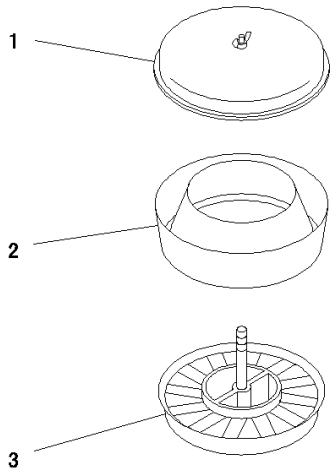

00000923

Index	Code	Part Number	Description	Qty	Serial Number
		6685-81-7503	Pre Cleaner	1	80001-
1		6685-81-7550	• Cover	1	80001-
2		6685-81-7540	• Body	1	80001-
3		6685-81-7513	• Sleeve	1	80001-

FIG. A1470-502002 Air Cleaner, With Air Intake Rain Cap, Mounts (1/2)

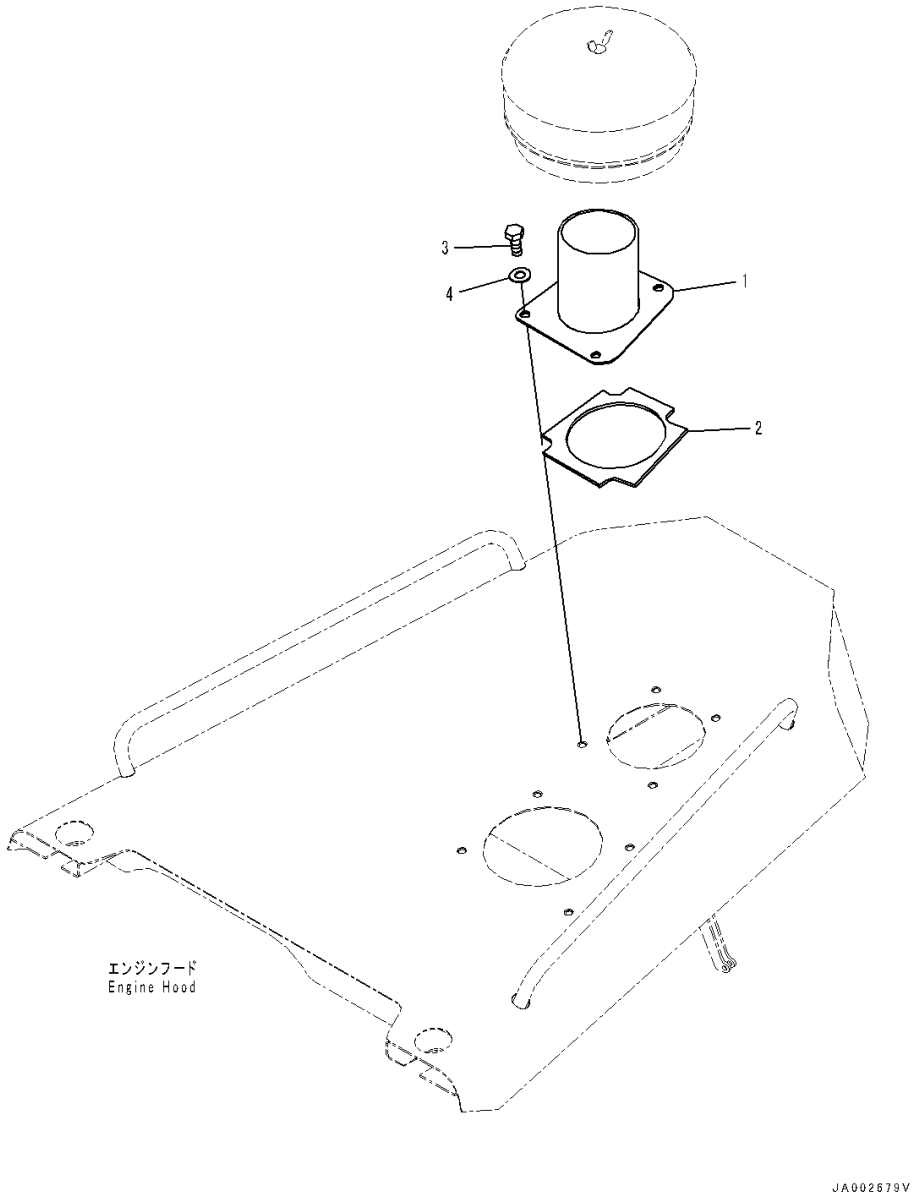

Index	Code	Part Number	Description	Qty	Serial Number
1		14X-01-51540	Pipe	1	80001-
2		14X-01-51570	• Seal	1	80001-
3		01010-71225	Bolt	4	80001-
4		01643-11232	Washer	4	80001-

FIG. A1610-501001 Exhaust Pipe

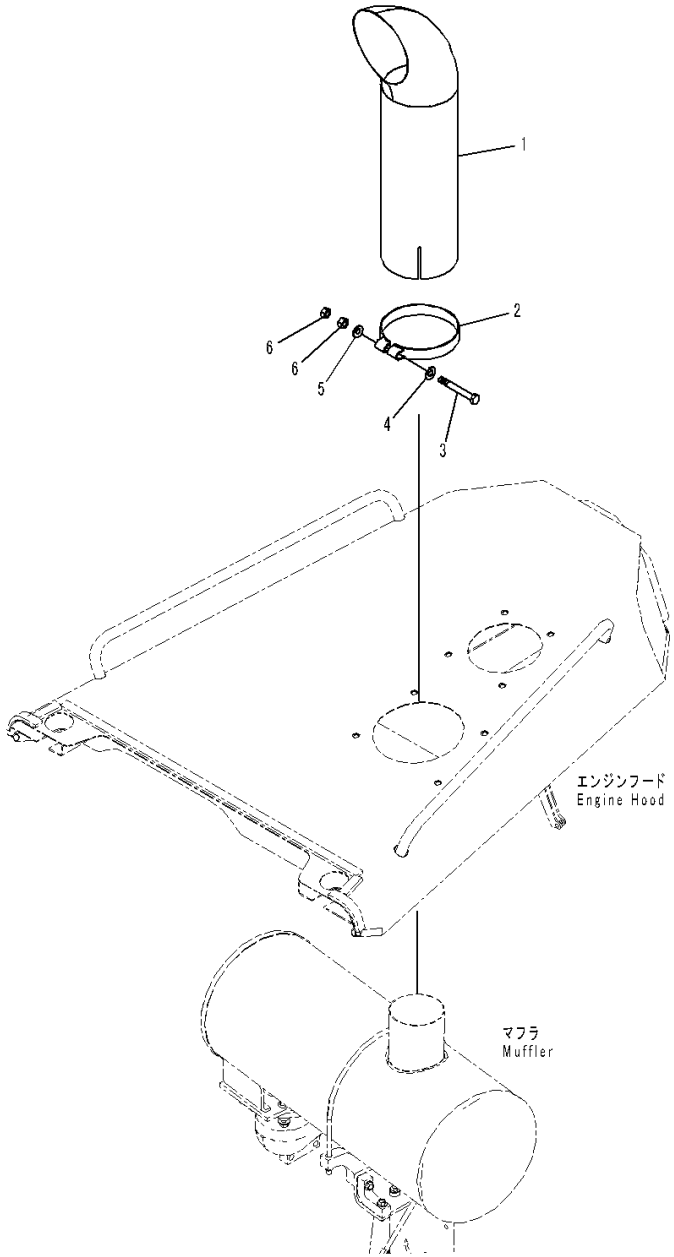

Index	Code	Part Number	Description	Qty	Serial Number
1		14X-01-51650	Pipe	1	80001-
2		14X-01-51660	Clamp	1	80001-
3		01010-71285	Bolt	1	80001-
4		01643-11232	Washer	1	80001-
5		01640-31223	Washer, Flat	1	80001-
6		01580-31210	Nut	2	80001-

FIG. A6910-501001 Guard

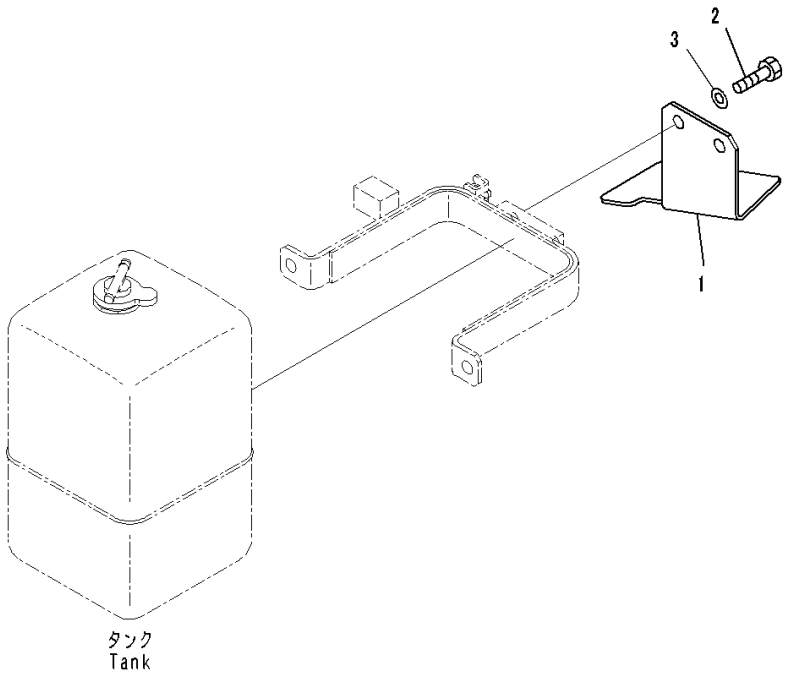

Index	Code	Part Number	Description	Qty	Serial Number
1		14X-03-51730	Cover	1	80001-
2		01010-81020	Bolt.....	2	80001-
3		01643-31032	Washer	2	80001-

FIG. A9020-501001 Spare Parts

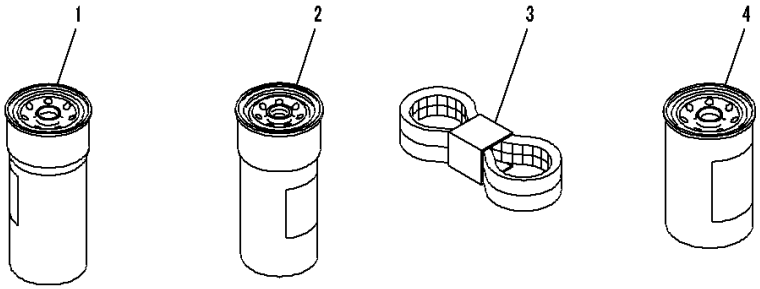

Index	Code	Part Number	Description	Qty	Serial Number
1		6742-01-4540	Cartridge	1	80001-
2		6754-79-6140	Cartridge	1	80001-
3		6741-61-1621	Belt.....	1	80001-
4		600-319-3610	Cartridge Assembly.....	1	80001-

FIG. A9020-502001 Spare Parts, For 90Amp. Alternator

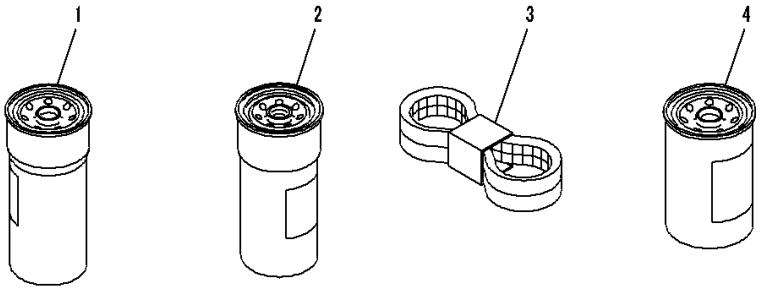

Index	Code	Part Number	Description	Qty	Serial Number
1		6742-01-4540	Cartridge	1	80017-
2		6754-79-6140	Cartridge	1	80017-
3		6743-61-1411	Belt.....	1	80017-
4		600-319-3610	Cartridge Assembly.....	1	80017-

FIG. B0100-001001 Engine Mounts

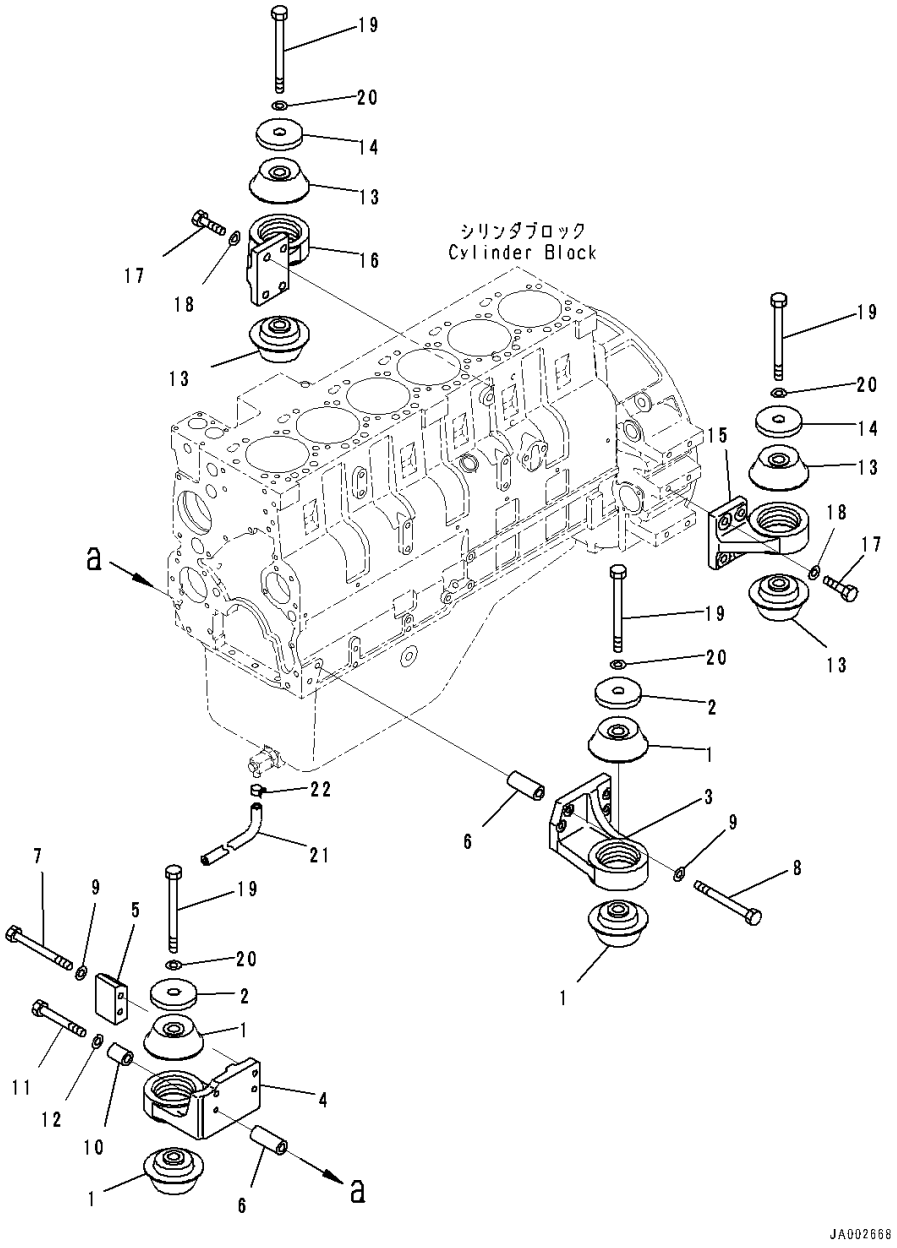

Index	Code	Part Number	Description	Qty	Serial Number
1		207-01-35140	Cushion	4	80001-
2		14X-01-35150	Washer	2	80001-
3		14X-01-51111	Bracket,LHS	1	80001-
4		14X-01-51121	Bracket,RHS	1	80001-
5		14X-01-35171	Spacer	1	80001-
6		14X-01-35180	Spacer	4	80001-
7		01011-81205	Bolt	2	80001-
8		14X-01-51150	Bolt	4	80001-
9		01643-31232	Washer	6	80001-
10		205-03-71331	Collar	2	80001-
11		01010-81290	Bolt	2	80001-
12		01643-31232	Washer	2	80001-
13		207-01-35140	Cushion	4	80001-
14		14X-01-35150	Washer	2	80001-
15		14X-01-51131	Bracket,LHS	1	80001-
16		14X-01-51141	Bracket,RHS	1	80001-
17		01010-81650	Bolt	8	80001-
18		01643-31645	Washer	8	80001-
19		01011-82480	Bolt	4	80001-
20		01643-32460	Washer	4	80001-
21		07270-21530	Tube	1	80001-
22		07285-00180	Clip	1	80001-

FIG. B0500-001001 Engine Wiring Harness, Earth

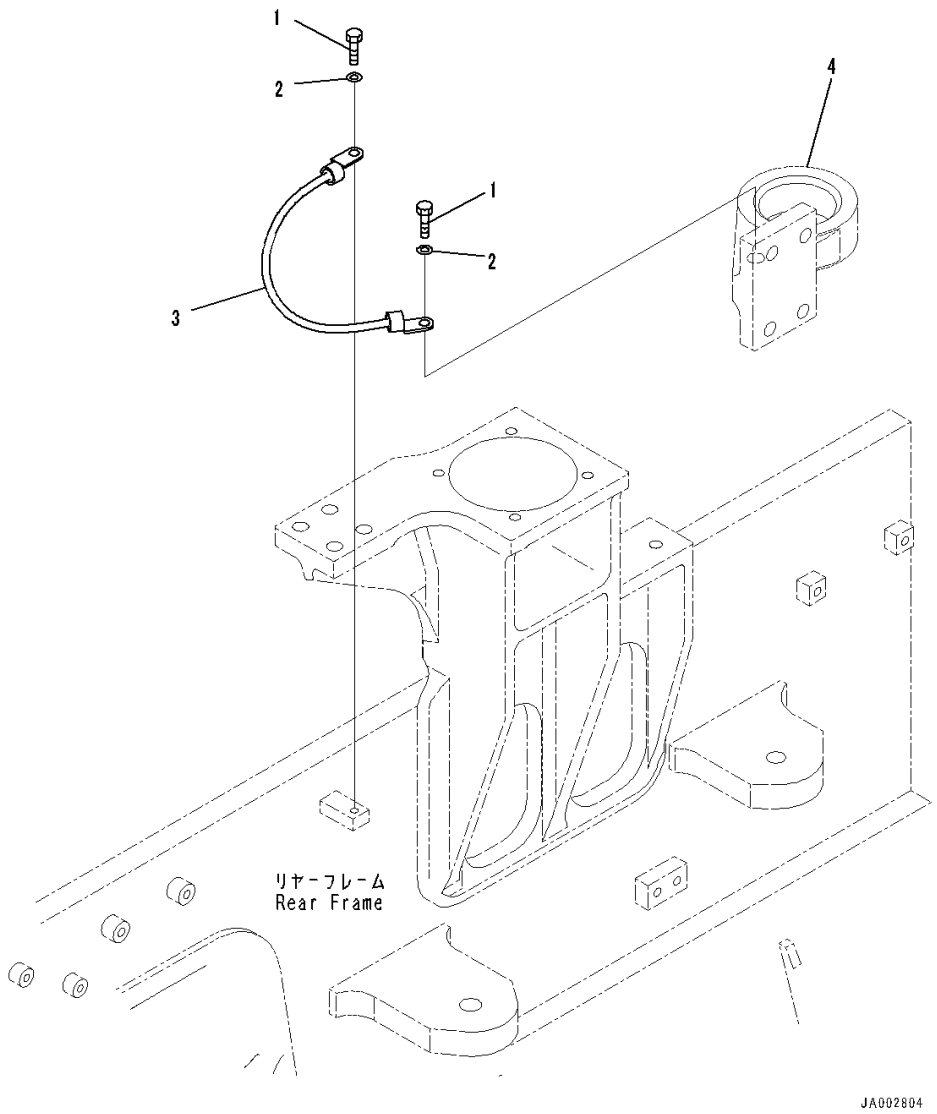

Index	Code	Part Number	Description	Qty	Serial Number
1		01010-81020	Bolt	2	80001-
2		01643-31032	Washer	2	80001-
3		08028-FD040	Cable, Ground	1	80001-
4		(14X-01-51141)	Bracket(Refer to Page 153)		-

FIG. B0500-001002 Engine Wiring Harness, Wiring Harness (1/3)

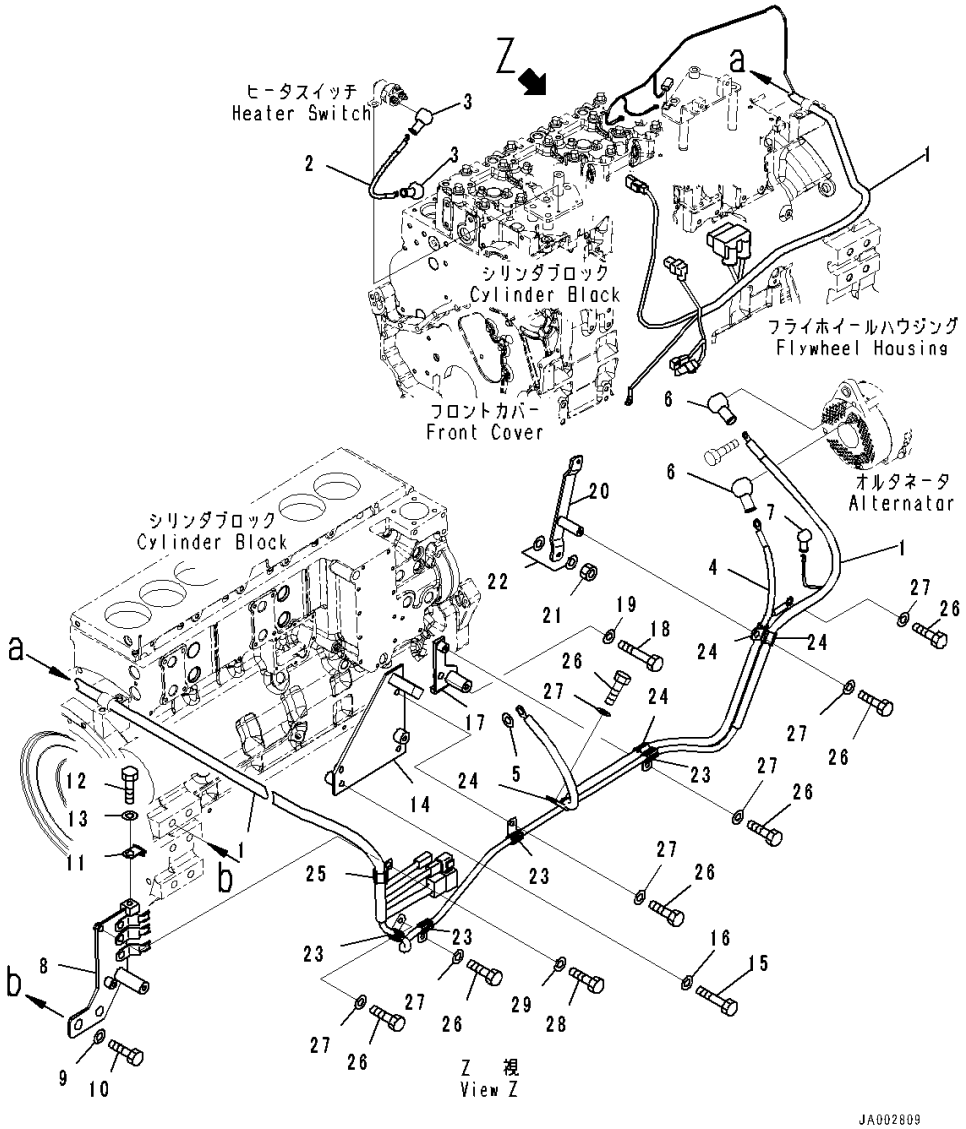

Index	Code	Part Number	Description	Qty	Serial Number
1		14X-06-51221	Wire Harness	1	80001-
		21J-06-13661	• Diode	2	80001-
2		14X-06-35221	Cable	1	80001-
3		08038-02027	Cap	2	80001-
4		14X-06-51730	Cable	1	80001-
5		01643-31032	Washer	1	80001-
6		08038-02027	Cap	2	80001-
7		08038-00519	Cap	1	80001-
8		14X-06-51641	Bracket	1	80001-
9		01643-31645	Washer	2	80001-
10		01010-81625	Bolt	2	80001-
11		600-051-2060	Clip	1	80001-
12		01010-81020	Bolt	1	80001-
13		01643-31032	Washer	1	80001-
14		14X-06-35471	Bracket	1	80001-
15		01010-80845	Bolt	2	80001-
16		01643-30823	Washer	2	80001-
17		14X-06-52270	Bracket	1	80001-
18		01010-80825	Bolt	1	80001-
19		01643-30823	Washer	1	80001-
20		14X-06-35491	Bracket	1	80001-
21		01580-10605	Nut	2	80001-
22		01640-20610	Washer	4	80001-
23		600-051-1100	Clip	4	80001-
24		600-051-2140	Clip	4	80001-
25		600-051-2180	Clip	1	80001-
26		01010-80816	Bolt	7	80001-
27		01643-30823	Washer	7	80001-
28		01010-80820	Bolt	1	80001-
29		01643-30823	Washer	1	80001-

FIG. B0500-001003 Engine Wiring Harness, Wiring Harness (2/3)

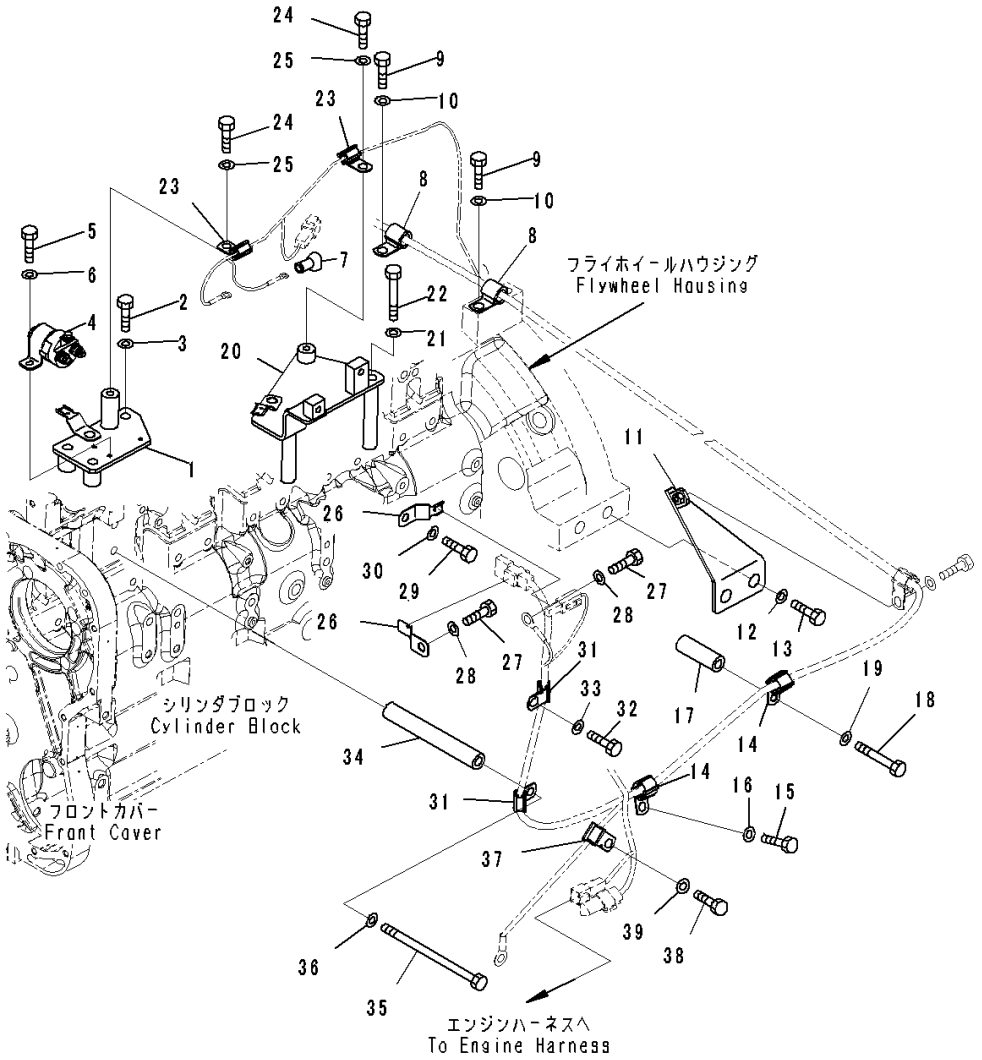

Index	Code	Part Number	Description	Qty	Serial Number
1		14X-06-51671	Bracket	1	80001-
2		01010-81050	Bolt	3	80001-
3		01643-31032	Washer	3	80001-
4		600-815-2170	Switch, Heater	1	80001-
5		01010-80612	Bolt	3	80001-
6		01643-30623	Washer	3	80001-
7		08038-00519	Cap	1	80001-
8		600-051-3160	Clip	2	80001-
9		01010-81220	Bolt	2	80001-
10		01643-31232	Washer	2	80001-
11		14X-06-52130	Bracket	1	80001-
12		01643-31645	Washer	2	80001-
13		01010-81625	Bolt	2	80001-
14		600-051-2180	Clip	2	80001-
15		01010-80820	Bolt	1	80001-
16		01643-30823	Washer	1	80001-
17		561-43-43390	Spacer	1	80001-
18		01010-80880	Bolt	1	80001-
19		01643-30823	Washer	1	80001-
20		14X-06-51661	Bracket	1	80001-
21		01643-31032	Washer	2	80001-
22		01011-81020	Bolt	2	80001-
23		600-051-2100	Clip	2	80001-
24		01010-81020	Bolt	2	80001-
25		01643-31032	Washer	2	80001-
26		08193-20010	Clip	2	80001-
27		01010-81016	Bolt	2	80001-
28		01643-31032	Washer	2	80001-
29		01010-81025	Bolt	1	80001-
30		01643-31032	Washer	1	80001-
31		600-051-2100	Clip	2	80001-
32		01010-81020	Bolt	1	80001-
33		01643-31032	Washer	1	80001-
34		56B-15-15910	Spacer	1	80001-
35		01011-81080	Bolt	1	80001-
36		01643-31032	Washer	1	80001-
37		600-051-2140	Clip	1	80001-
38		01010-80820	Bolt	1	80001-
39		01643-30823	Washer	1	80001-

FIG. B0500-001004 Engine Wiring Harness, Wiring Harness (3/3)

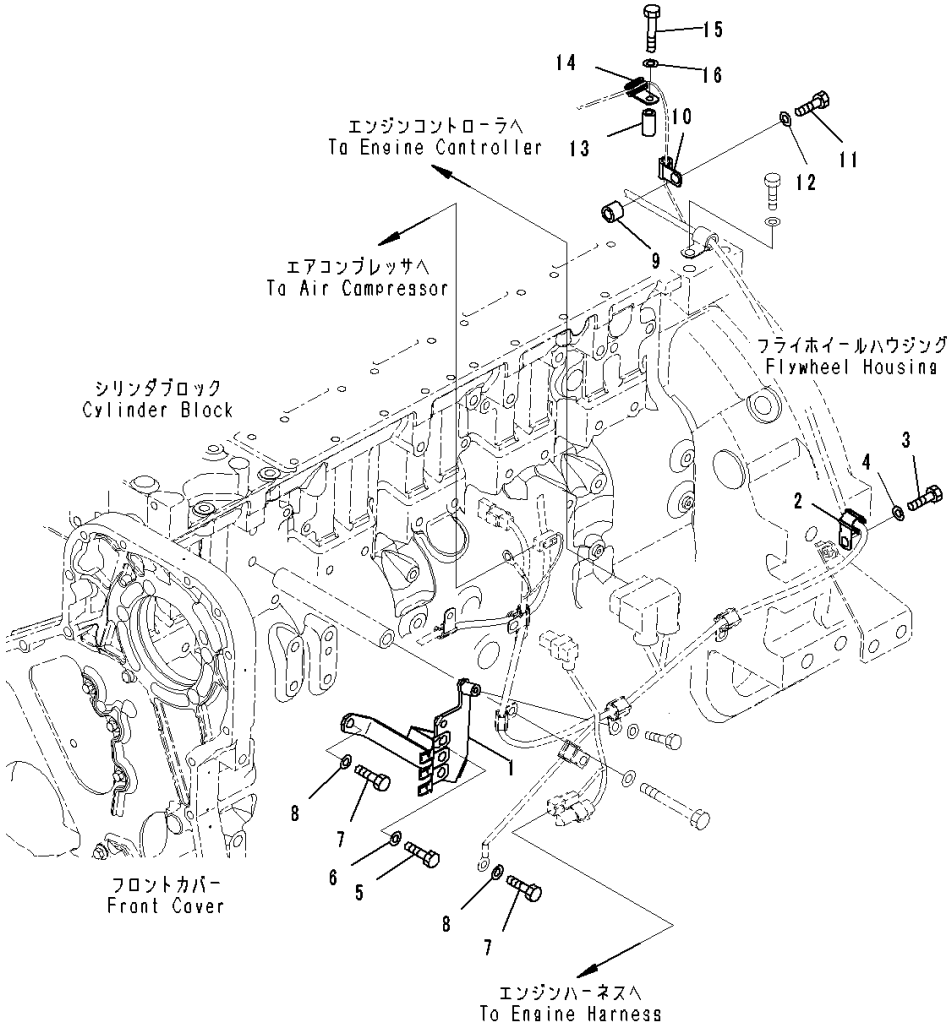

Index	Code	Part Number	Description	Qty	Serial Number
1		14X-06-51651	Bracket	1	80001-
2		600-051-2180	Clip	1	80001-
3		01010-80820	Bolt	1	80001-
4		01643-30823	Washer	1	80001-
5		01010-81220	Bolt	1	80001-
6		01643-31232	Washer	1	80001-
7		01010-81020	Bolt	2	80001-
8		01643-31032	Washer	2	80001-
9		22M-60-22130	Collar	1	80001-
10		600-051-3100	Clip	1	80001-
11		01010-81245	Bolt	1	80001-
12		01643-31232	Washer	1	80001-
13		207-62-32890	Collar	1	80001-
14		600-051-1100	Clip	1	80001-
15		01010-80645	Bolt	1	80001-
16		01643-30623	Washer	1	80001-

FIG. B0600-001001 Damper

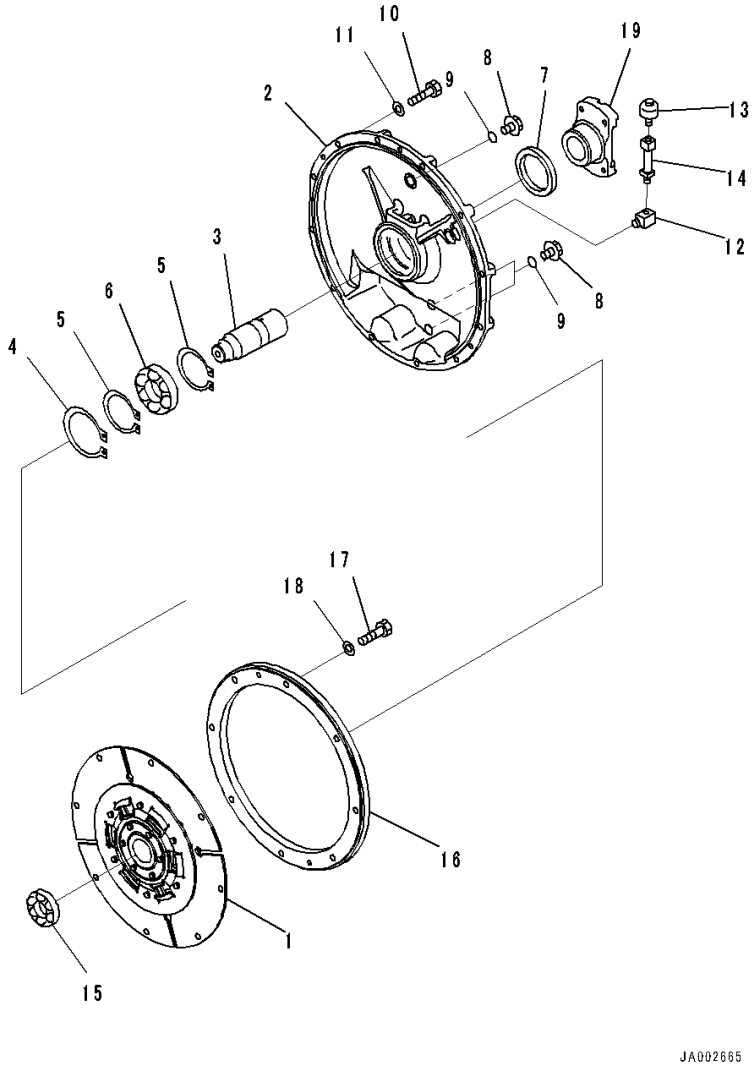

Index	Code	Part Number	Description	Qty	Serial Number
1		14X-12-51100	Damper Disc Assembly	1	80001-
2		14X-12-11210	Cover	1	80001-
3		14X-12-11411	Shaft	1	80001-
4		04065-01104	Ring, Snap	1	80001-
5		04064-06020	Ring, Snap	2	80001-
6		06300-06212	Bearing	1	80001-
7		07012-50085	Seal, Oil	1	80001-
8		07044-12412	Plug	3	80001-
9		07002-32434	O-ring	3	80001-
10		01010-81250	Bolt	12	80001-
11		01643-31232	Washer	12	80001-
12		568-15-11610	Elbow	1	80001-
13		07030-10252	Breather	1	80001-
14		135-12-31230	Tube	1	80001-
15		06340-06208	Bearing	1	80001-
16		14X-12-51110	Weight	1	80001-
17		01010-81235	Bolt	8	80001-
18		01643-31232	Washer	8	80001-
19		14Z-12-31310	Coupling	1	80001-

COOLING SYSTEM

FIG. C0100-001001 Radiator, Radiator Core And After Cooler

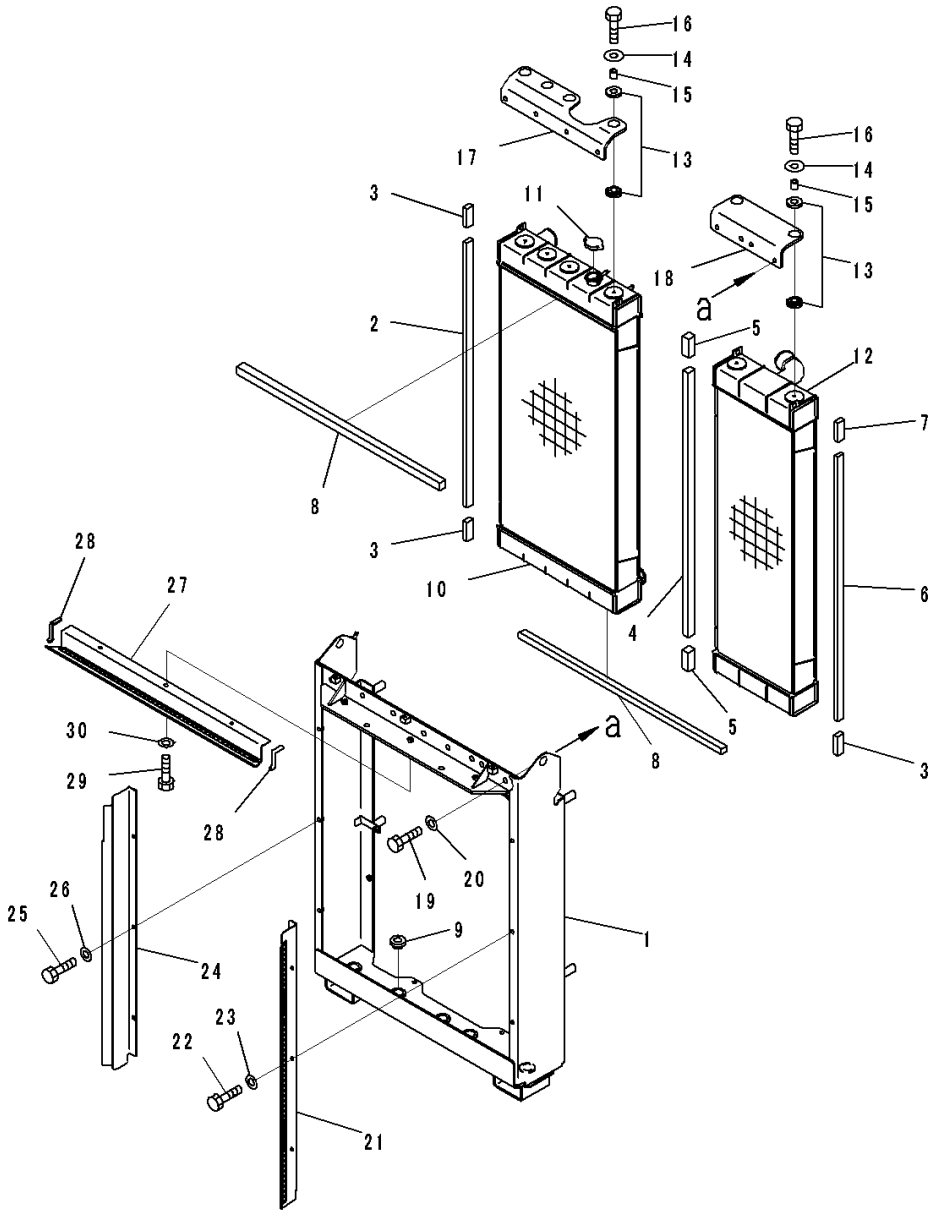

Index	Code	Part Number	Description	Qty	Serial Number
1		14X-03-51131	Frame	1	80001-
2		14X-03-51510	Seal,Bonded	1	80001-
3		14X-03-51520	Seal,Bonded	3	80001-
4		14X-03-51530	Seal,Bonded	1	80001-
5		14X-03-51540	Seal,Bonded	2	80001-
6		14X-03-51650	Seal,Bonded	1	80001-
7		14X-03-51660	Seal,Bonded	1	80001-
8		14X-03-51590	Seal,Bonded	2	80001-
9		20Y-03-41580	Cushion	5	80001-
10		14X-03-51111	Radiator Core Assembly	1	80001-
11		20U-03-21540	Cap	1	80001-
12		14X-03-51121	After Cooler Assembly	1	80001-
13		14X-03-51621	Cushion	12	80001-
14		14X-03-51770	Washer	6	80001-
15		14X-03-51640	Spacer	6	80001-
16		01010-81045	Bolt	6	80001-
17		14X-03-51740	Bracket	1	80001-
18		14X-03-51750	Bracket	1	80001-
19		01010-81235	Bolt	8	80001-
20		01643-31232	Washer	8	80001-
21		14X-03-51411	Baffle	1	80001-
22		01010-81025	Bolt	3	80001-
23		01643-31032	Washer	3	80001-
24		14X-03-51421	Baffle	1	80001-
25		01010-81025	Bolt	3	80001-
26		01643-31032	Washer	3	80001-
27		14X-03-51431	Baffle	1	80001-
28		14X-03-51570	• Seal	2	80001-
29		01010-81025	Bolt	3	80001-
30		01643-31032	Washer	3	80001-

FIG. C0100-001002 Radiator, Frame

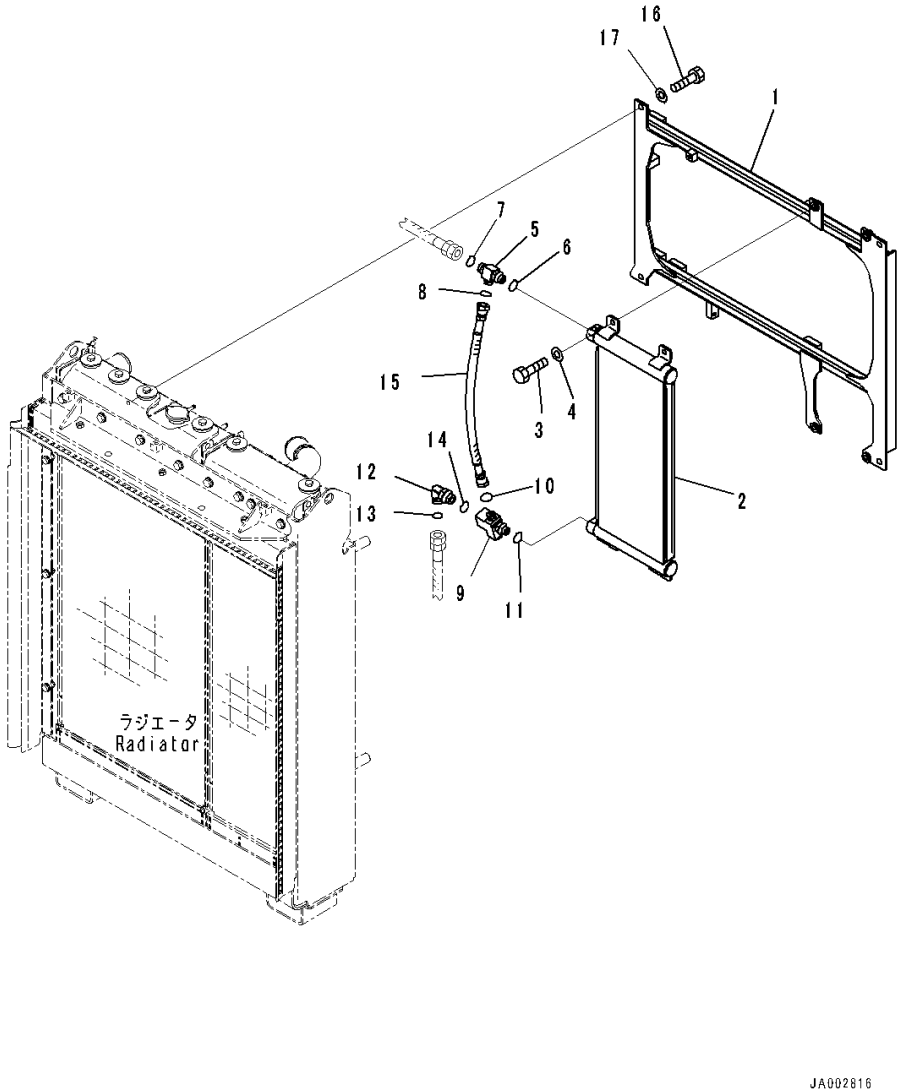

Index	Code	Part Number	Description	Qty	Serial Number
1		14X-03-51171	Frame	1	80001-
2		14X-03-51161	Oil Cooler	1	80001-
3		01010-81030	Bolt	4	80001-
4		01643-31032	Washer	4	80001-
5		14X-62-35531	Tee	1	80001-
6		07002-12034	O-ring	1	80001-
7		02896-11015	O-ring	1	80001-
8		02896-11012	O-ring	1	80001-
9		134-62-72600	Block Assembly	1	80001-
10		02896-11012	O-ring	1	80001-
11		07002-12034	O-ring	1	80001-
12		02782-10522	Elbow	1	80001-
13		02896-11015	O-ring	1	80001-
14		07002-12434	O-ring	1	80001-
15		02762-004A5	Hose, Face Seal Type	1	80001-
16		01010-81230	Bolt	4	80001-
17		01643-31232	Washer	4	80001-

FIG. C0100-001003 Radiator, Piping

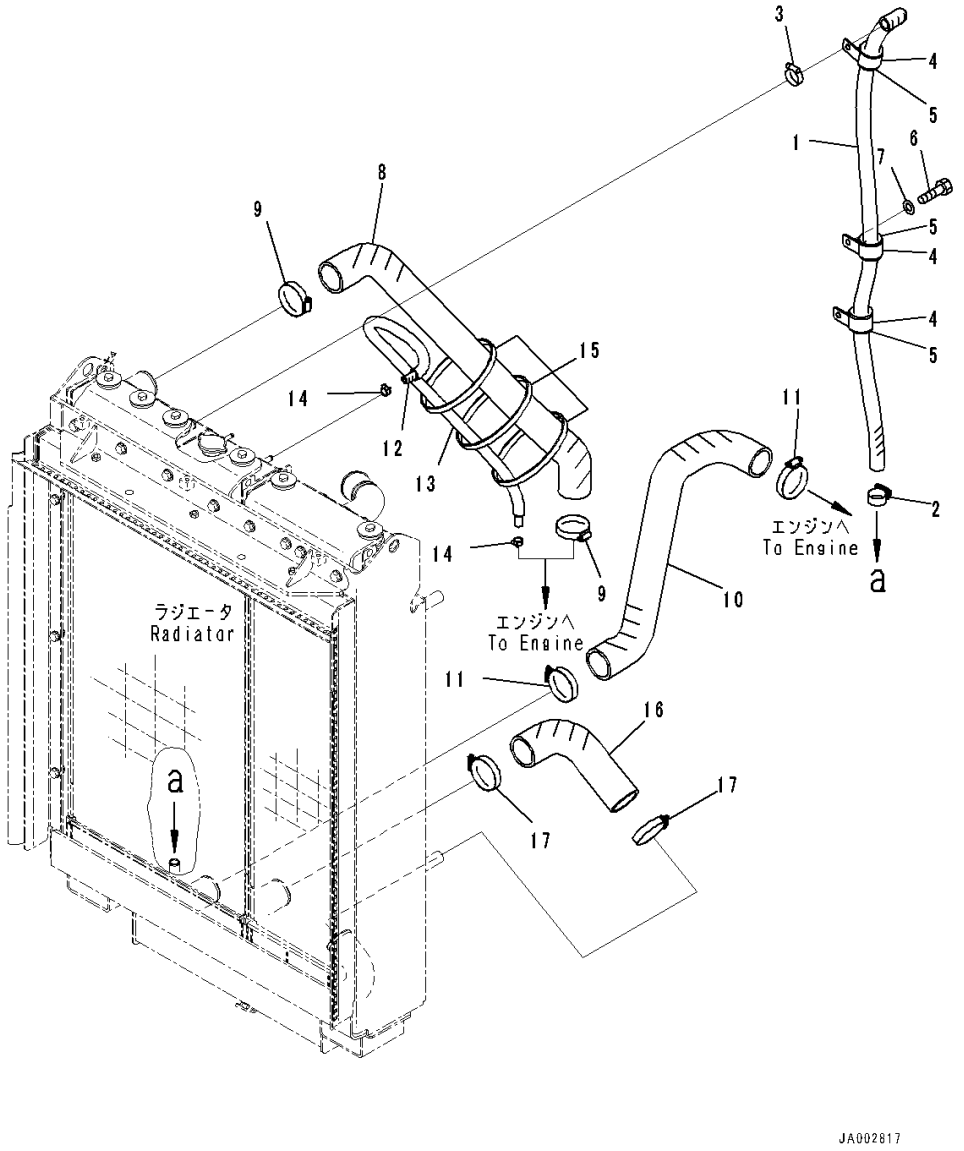

Index	Code	Part Number	Description	Qty	Serial Number
1		14X-03-51190	Hose	1	80001-
2		07289-00035	Clamp	1	80001-
3		07281-00359	Clamp	1	80001-
4		23T-62-12160	Clip	3	80001-
5		07095-00630	Cushion	3	80001-
6		01010-81020	Bolt	3	80001-
7		01643-31032	Washer	3	80001-
8		14X-03-51211	Hose	1	80001-
9		07289-00070	Clamp	2	80001-
10		14X-03-51231	Hose	1	80001-
11		07289-00070	Clamp	2	80001-
12		14X-03-51260	Hose Assembly	1	80001-
13		08017-81910	• Conduit	1	80001-
14		11Y-09-11140	Clip	2	80001-
15		134-03-61410	Band	3	80001-
16		14X-03-51220	Hose	1	80001-
17		07289-00070	Clamp	2	80001-

FIG. C0100-001004 Radiator, Oil Cooler

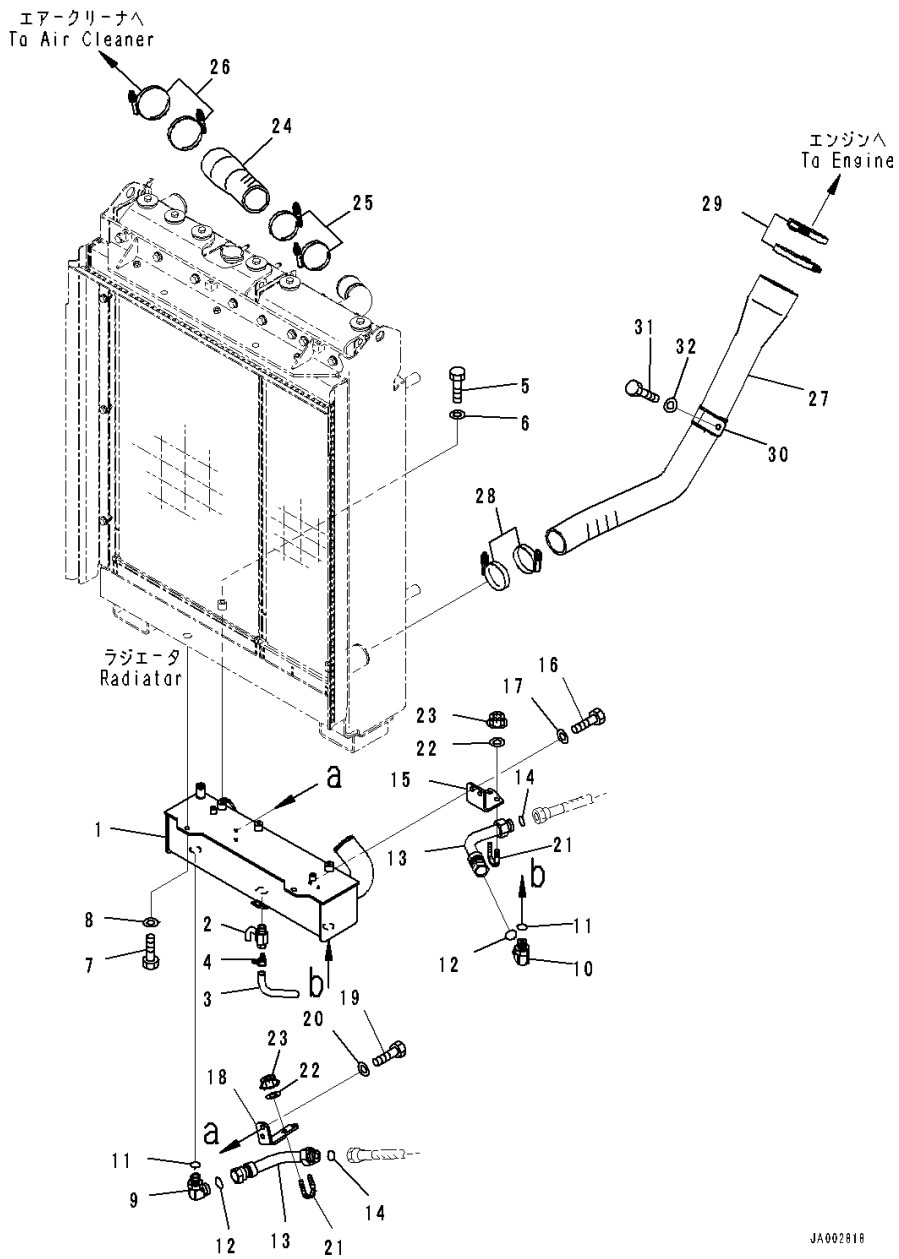

Index	Code	Part Number	Description	Qty	Serial Number
1		14X-03-51141	Oil Cooler, Power Line	1	80001-
2		07730-40004	Valve, Coolant Drain	1	80001-
3		07270-01520	Tube	1	80001-
4		07280-01920	Clamp, Hose	1	80001-
5		01010-81045	Bolt	2	80001-
6		01643-31032	Washer	2	80001-
7		01010-81025	Bolt	2	80001-
8		01643-31032	Washer	2	80001-
9		02782-10628	Elbow	1	80001-
10		14X-49-51880	Elbow	1	80001-
11		07002-12434	O-ring	2	80001-
12		02896-61018	O-ring	2	80001-
13		14X-49-52141	Tube	2	80001-
14		02896-61018	O-ring	2	80001-
15		14X-49-52151	Plate	1	80001-
16		01010-81020	Bolt	2	80001-
17		01643-31032	Washer	2	80001-
18		14X-49-52161	Plate	1	80001-
19		01010-81020	Bolt	2	80001-
20		01643-31032	Washer	2	80001-
21		07283-32738	Clip	2	80001-
22		01643-31032	Washer	4	80001-
23		01597-01009	Nut	4	80001-
24		14X-01-51620	Hose	1	80001-
25		07299-00080	Clamp	2	80001-
26		07299-00095	Clamp, Hose	2	80001-
27		14X-03-51251	Hose	1	80001-
28		07299-00080	Clamp	2	80001-
29		07299-00120	Clamp	2	80001-
30		14X-01-35650	Clip	1	80001-
31		01010-81230	Bolt	1	80001-
32		01643-31232	Washer	1	80001-

FIG. C0100-001005 Radiator, Cooling Fan Motor (1/2)

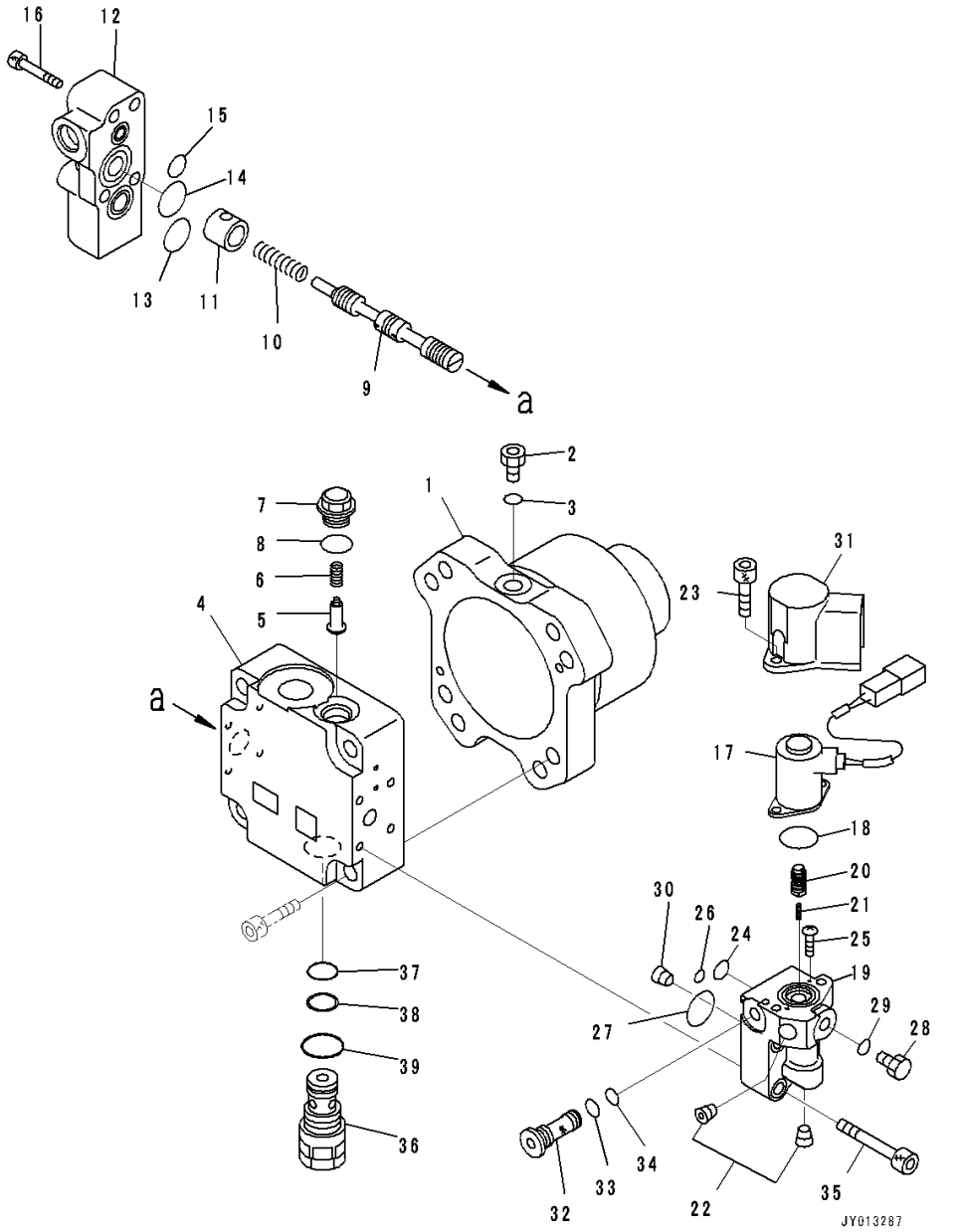

Index	Code	Part Number	Description	Qty	Serial Number
		708-7S-00352	Motor Assembly	1	80001-
1	C2	708-7S-11740	• Case	1	80001-
2		07040-11007	• Plug	1	80001-
3		07002-21023	• O-ring	1	80001-
	C2	708-7S-01241	• Cover Subassembly	1	80001-
4	C1		•• Cover, End	1	80001-
5	C2	708-7R-11210	•• Valve	1	80001-
6	C2	722-10-91130	•• Spring	1	80001-
7	C2	709-32-12861	•• Plug	1	80001-
8		07002-21823	•• O-ring	1	80001-
9	C1		•• Spool	1	80001-
10	C2	708-7S-18120	•• Spring	1	80001-
11	C2	708-7S-18310	•• Spacer	1	80001-
12	C2	708-7S-18320	•• Cover	1	80001-
13		07000-E2020	•• O-ring	1	80001-
14		07000-E2025	•• O-ring	1	80001-
15		07000-E2012	•• O-ring	1	80001-
16		01252-60845	•• Bolt	4	80001-
	C2	708-7S-01151	•• Valve Assembly, Pilot	1	80001-
17	C2	702-21-56241	••• Solenoid	1	80001-
18	C2	700-80-61260	••• O-ring	1	80001-
19	C1		••• Case	1	80001-
20	C1		••• Spool	1	80001-
21	C2	702-21-56220	••• Spring	1	80001-
22	C2	708-21-12541	••• Plug	2	80001-
23		01252-60616	••• Bolt	2	80001-
24	C2	708-2L-25490	••• O-ring	1	80001-
25	C2	702-21-54180	••• Screw	2	80001-
26		07000-11008	••• O-ring	1	80001-
27	C2	723-11-18430	••• O-ring	1	80001-
28		07040-11007	••• Plug	1	80001-
29		07002-11023	••• O-ring	1	80001-
30		708-2L-29460	••• Orifice	1	80001-
31	C2	708-1S-18180	••• Cover	1	80001-
32	C2	708-7R-18230	••• Filter	1	80001-
33	C2	07002-11423	••• O-ring	1	80001-
34	C2	07000-11009	••• O-ring	1	80001-
35		01252-60835	•• Bolt	4	80001-
36		708-7T-02271	•• Valve Assembly	1	80001-

FIG. C0100-001005 Radiator, Cooling Fan Motor (1/2)

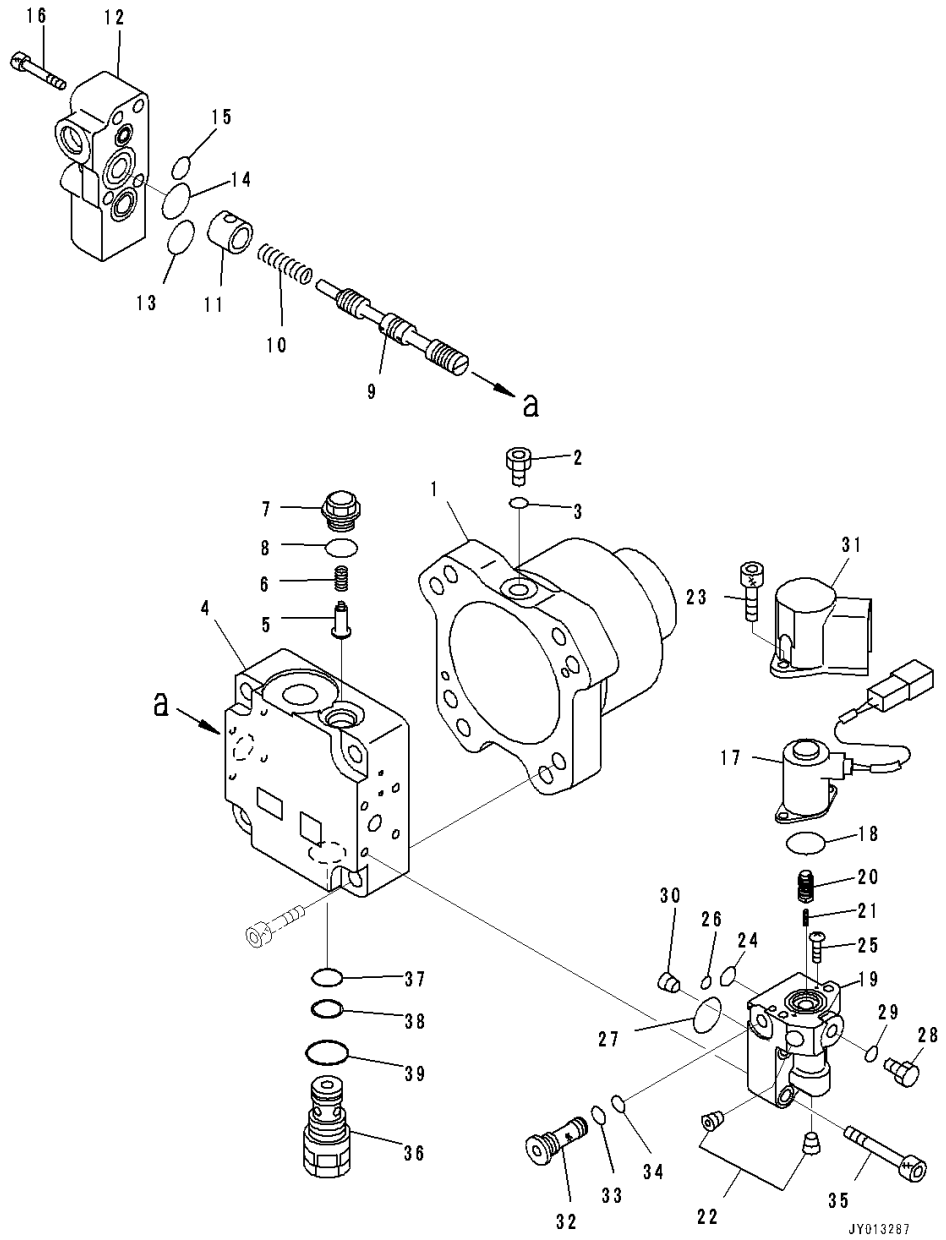

Index	Code	Part Number	Description	Qty	Serial Number
37		07000-F2016	••• O-ring	1	80001-
38		07001-02016	••• Ring, Back-up	1	80001-
39		07002-12434	••• O-ring	1	80001-

FIG. C0100-001006 Radiator, Cooling Fan Motor (2/2)

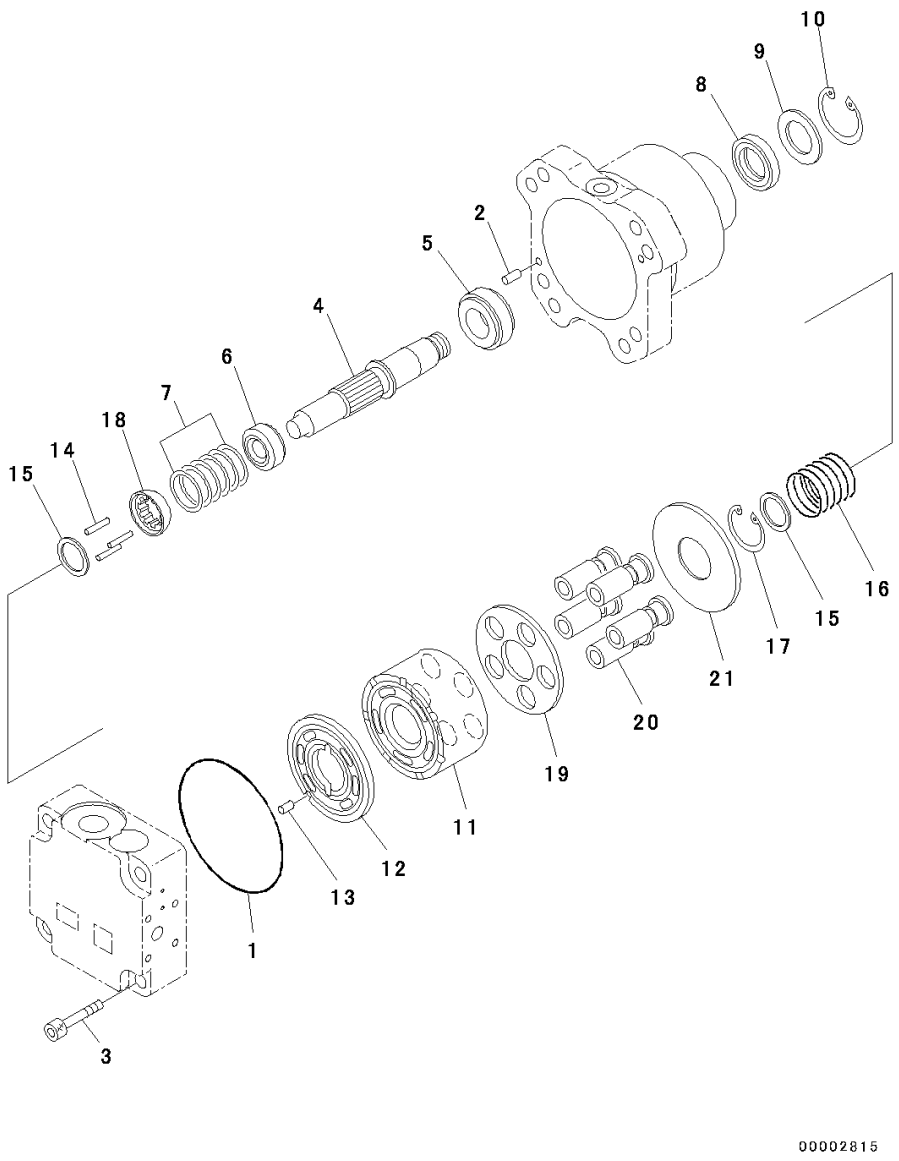

Index	Code	Part Number	Description	Qty	Serial Number
		708-7S-00352	Motor Assembly	1	80001-
1		07000-E2110	• O-ring	1	80001-
2		04020-00616	• Pin, Dowel	2	80001-
3		01252-61255	• Bolt, Hexagon Socket Head	4	80001-
4	C2	708-7S-12330	• Shaft	1	80001-
5	C2	708-7S-12140	• Bearing	1	80001-
6	C2	708-7S-12220	• Bearing	1	80001-
7	C2	708-7S-05110	• Shim Kit	1	80001-
	C1		•• Shim, T=0.85mm	1	80001-
	C1		•• Shim, T=1.05mm	1	80001-
	C1		•• Shim, T=1.25mm	1	80001-
	C1		•• Shim, T=0.75mm	1	80001-
	C1		•• Shim, T=0.95mm	1	80001-
	C1		•• Shim, T=1.15mm	1	80001-
8	C2	708-7T-12330	• Seal, Oil	1	80001-
9	C2	708-1S-11890	• Spacer	1	80001-
10		04065-04518	• Ring, Snap	1	80001-
11	C2	708-7S-13120	• Block	1	80001-
12	C2	708-7S-13250	• Plate, Valve	1	80001-
13	C2	720-68-19610	• Pin	1	80001-
14	C2	708-2L-23360	• Pin	3	80001-
15	C2	708-7S-13530	• Spacer	2	80001-
16	C2	708-7S-13560	• Spring	1	80001-
17		04065-03212	• Ring	1	80001-
18	C2	708-7S-13550	• Guide, Retainer	1	80001-
19	C2	708-7S-13360	• Retainer, Shoe	1	80001-
20	C2	708-7S-13350	• Piston Subassembly	5	80001-
21	C2	708-7S-13420	• Plate, Thrust	1	80001-

FIG. C0100-001007 Radiator, Motor Mounting

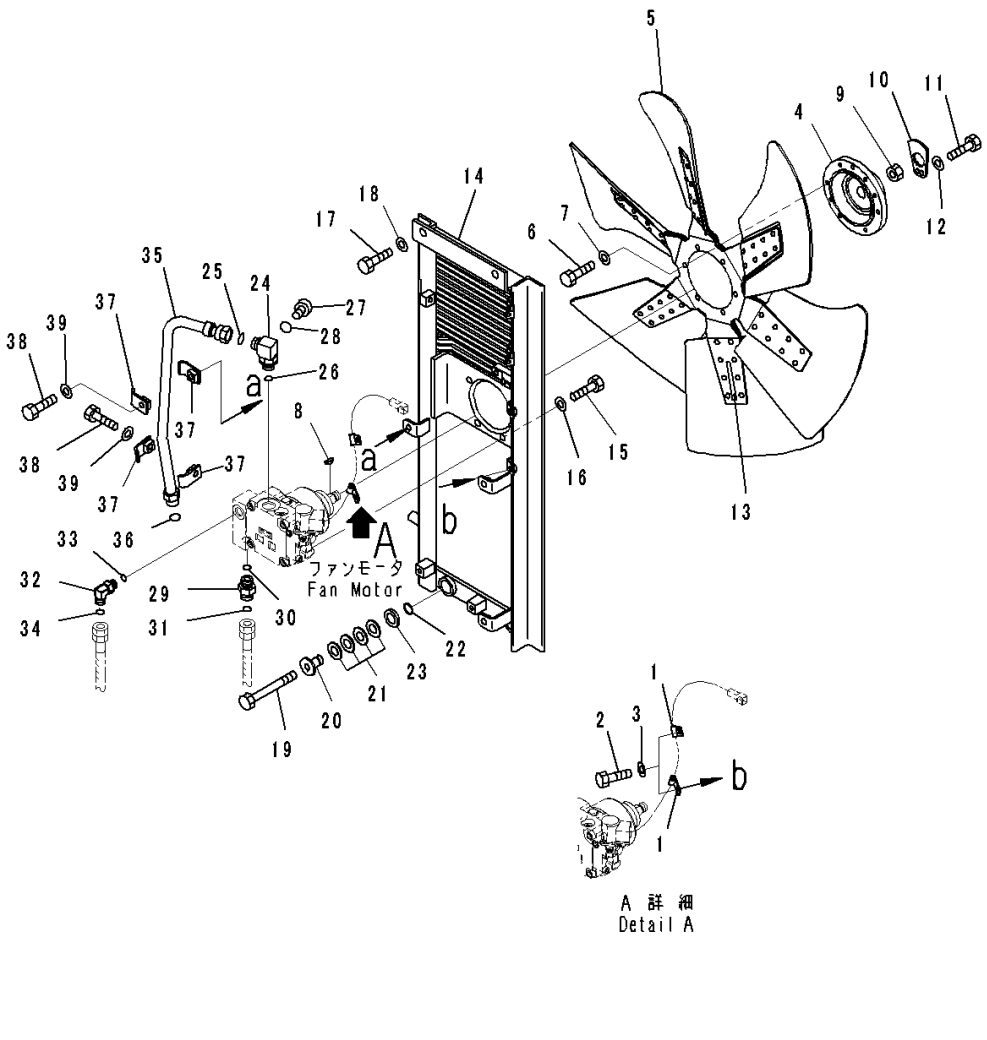

Index	Code	Part Number	Description	Qty	Serial Number
1		04434-50610	Clip	2	80001-
2		01010-81020	Bolt	2	80001-
3		01643-31032	Washer	2	80001-
4		154-03-72261	Boss	1	80001-
5		600-645-7850	Fan	1	80001-
6		01010-81030	Bolt	6	80001-
7		01643-31032	Washer	6	80001-
8		04010-00722	Key	1	80001-
9		01583-12012	Nut	1	80001-
10		154-03-72270	Lock	1	80001-
11		01010-81020	Bolt	1	80001-
12		01643-31032	Washer	1	80001-
13		799-203-8500	Tape	1	80001-
14		14X-03-51311	Bracket	1	80001-
15		01010-81235	Bolt	4	80001-
16		01643-31232	Washer	4	80001-
17		01010-81225	Bolt	2	80001-
18		01643-31232	Washer	2	80001-
19		01010-81265	Bolt	2	80001-
		154-03-00050	Spring Assembly	2	80001-
20		154-03-13180	• Spacer	1	80001-
21		175-54-27350	• Spring	4	80001-
22		175-54-28770	• Ring	1	80001-
23		01643-32060	• Washer	1	80001-
24		421-09-31110	Elbow	1	80001-
25		02896-11015	O-ring	1	80001-
26		07002-12434	O-ring	1	80001-
27		07040-11007	Plug	1	80001-
28		07002-11023	O-ring	1	80001-
29		02781-00522	Union	1	80001-
30		07002-12434	O-ring	1	80001-
31		02896-11015	O-ring	1	80001-
32		02782-10420	Elbow	1	80001-
33		07002-11823	O-ring	1	80001-
34		02896-11012	O-ring	1	80001-
35		14X-03-51320	Tube	1	80001-
36		02896-11015	O-ring	1	80001-
37		14X-62-32540	Clamp	4	80001-
38		01010-81050	Bolt	2	80001-

FIG. C0100-001007 Radiator, Motor Mounting

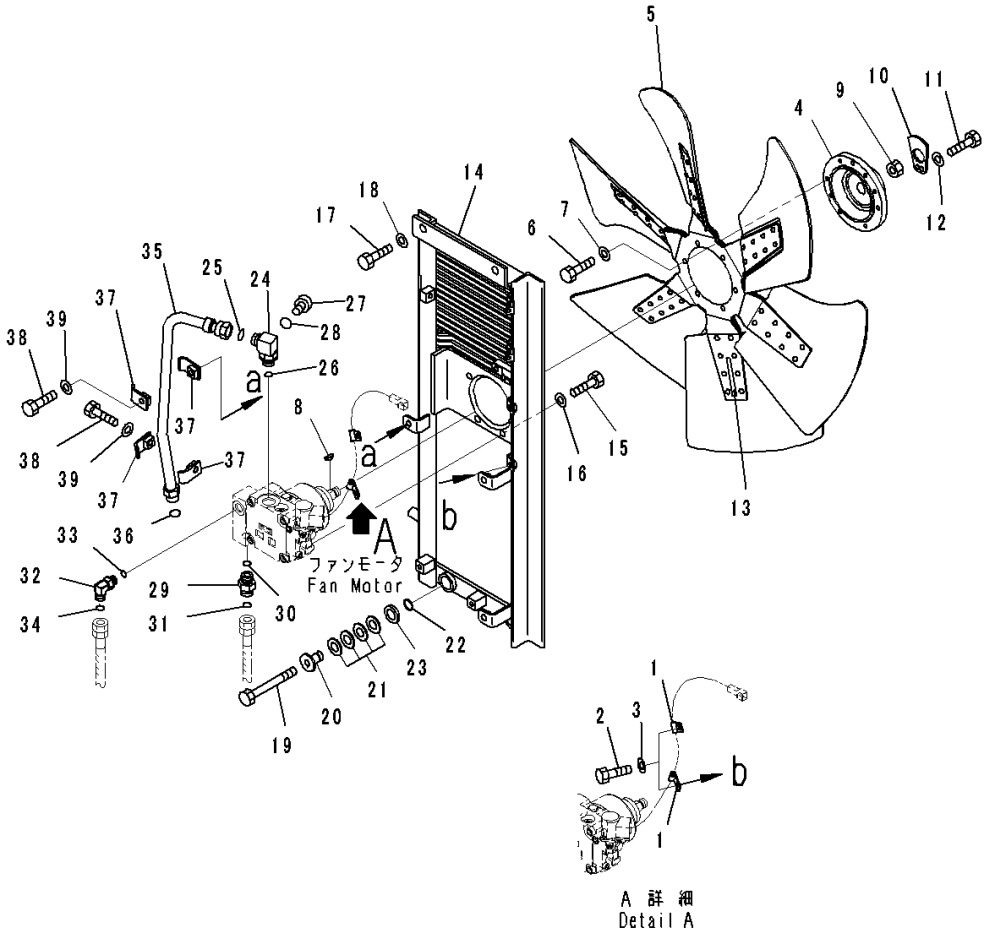

Index	Code	Part Number	Description	Qty	Serial Number
39		01643-31032	Washer	2	80001-

FIG. C0100-001008 Radiator, Baffle

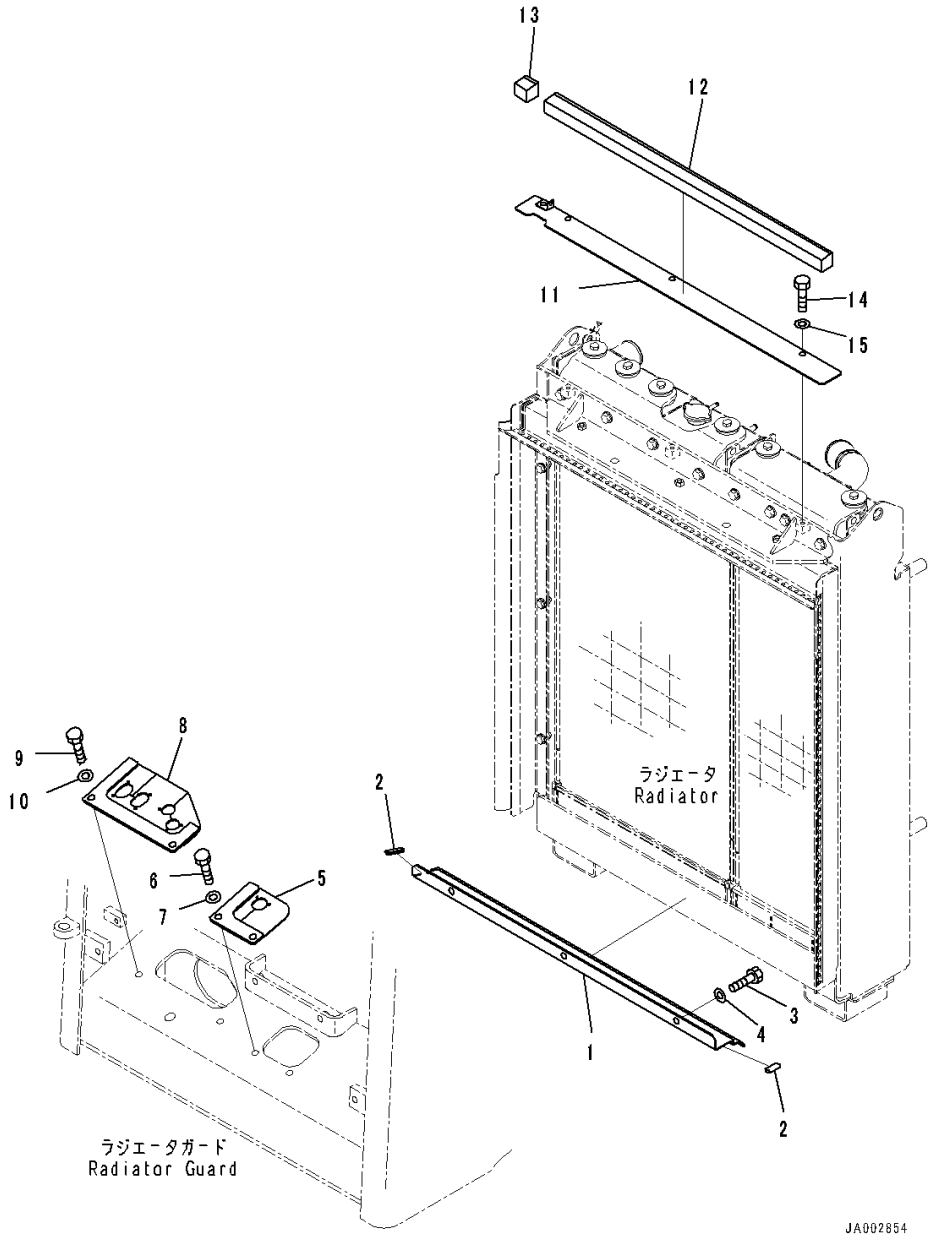

Index	Code	Part Number	Description	Qty	Serial Number
1		14X-03-51441	Baffle	1	80001-
2		14X-03-51580	• Seal	2	80001-
3		01010-81230	Bolt	3	80001-
4		01643-31232	Washer	3	80001-
5		14X-03-51451	Cover	1	80001-
6		01010-81230	Bolt	2	80001-
7		01643-31232	Washer	2	80001-
8		14X-03-51461	Cover	1	80001-
9		01010-81230	Bolt	2	80001-
10		01643-31232	Washer	2	80001-
11		14X-03-51491	Seal	1	80001-
12		14X-03-51551	• Seal,Bonded	1	80001-
13		14X-03-51561	• Seal,Bonded	1	80001-
14		01010-81025	Bolt	3	80001-
15		01643-31032	Washer	3	80001-

FIG. C0100-001009 Radiator, Mounts

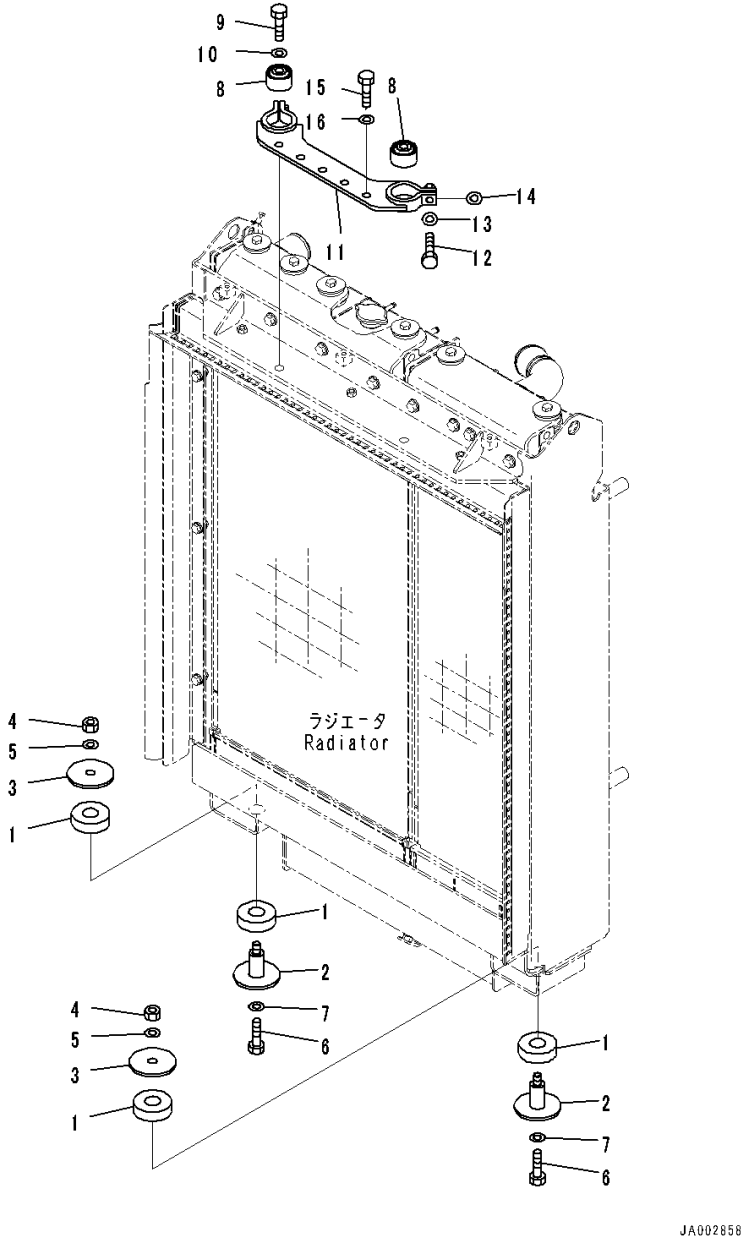

Index	Code	Part Number	Description	Qty	Serial Number
1		205-54-71680	Cushion	4	80001-
2		14X-03-51610	Boss	2	80001-
3		566-95-91410	Plate	2	80001-
4		01580-11411	Nut	2	80001-
5		01643-31445	Washer	2	80001-
6		01010-81435	Bolt	2	80001-
7		01643-31445	Washer	2	80001-
8		135-03-12110	Damper	2	80001-
9		01010-81465	Bolt	2	80001-
10		01643-31445	Washer	2	80001-
11		14X-03-51180	Bracket	1	80001-
12		01010-81040	Bolt	2	80001-
13		01643-31032	Washer	2	80001-
14		01643-31032	Washer	2	80001-
15		01010-81235	Bolt	5	80001-
16		01643-31232	Washer	5	80001-

FIG. C0100-001010 Radiator, Window Washer Tank

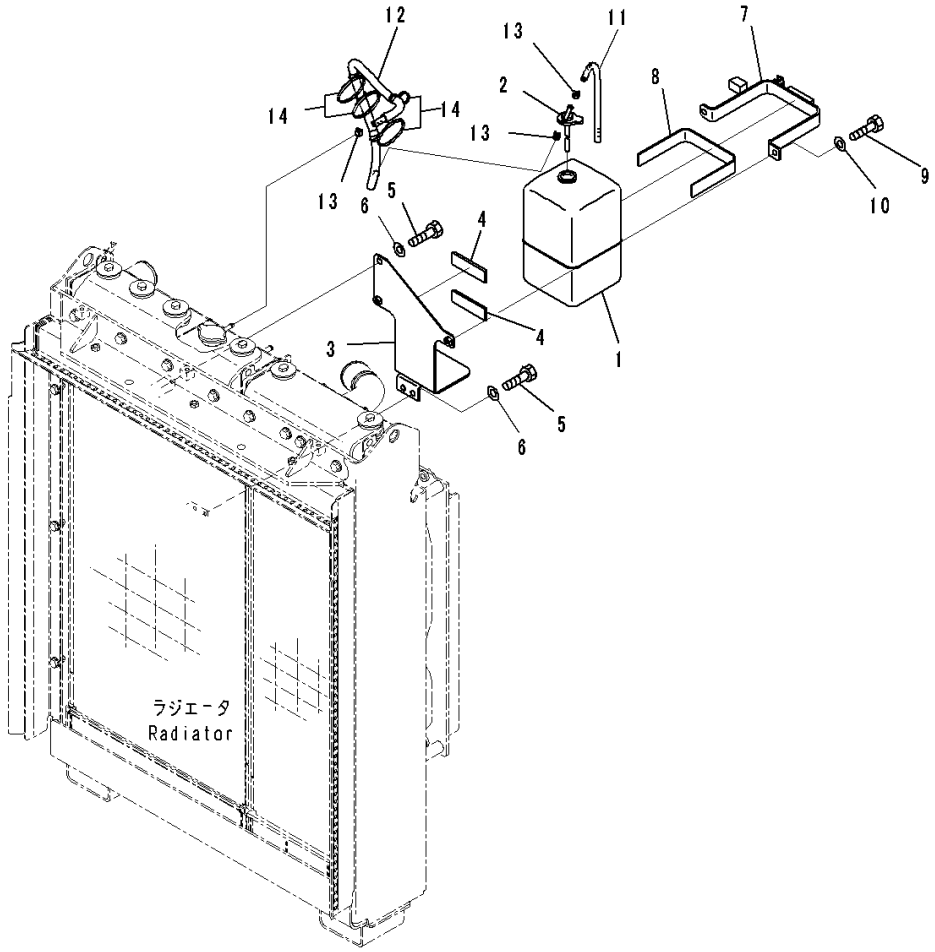

Index	Code	Part Number	Description	Qty	Serial Number
1		17A-03-14111	Tank	1	80001-
2		17A-03-14120	• Cap	1	80001-
3		14X-03-51361	Bracket	1	80001-
4		14X-03-51780	• Sheet	2	80020-
5		01010-81020	Bolt	3	80001-
6		01643-31032	Washer	3	80001-
7		14X-03-51371	Band	1	80001-
8		14X-03-35760	• Sheet,Bonded	1	80001-
9		01010-81020	Bolt	2	80001-
10		01643-31032	Washer	2	80001-
11		206-03-43331	Hose	1	80001-
12		14X-03-51270	Hose	1	80001-
13		07285-00110	Clip, Hose	3	80001-
14		134-03-61410	Band	4	80001-

FIG. C0100-001011 Radiator, Fan Net

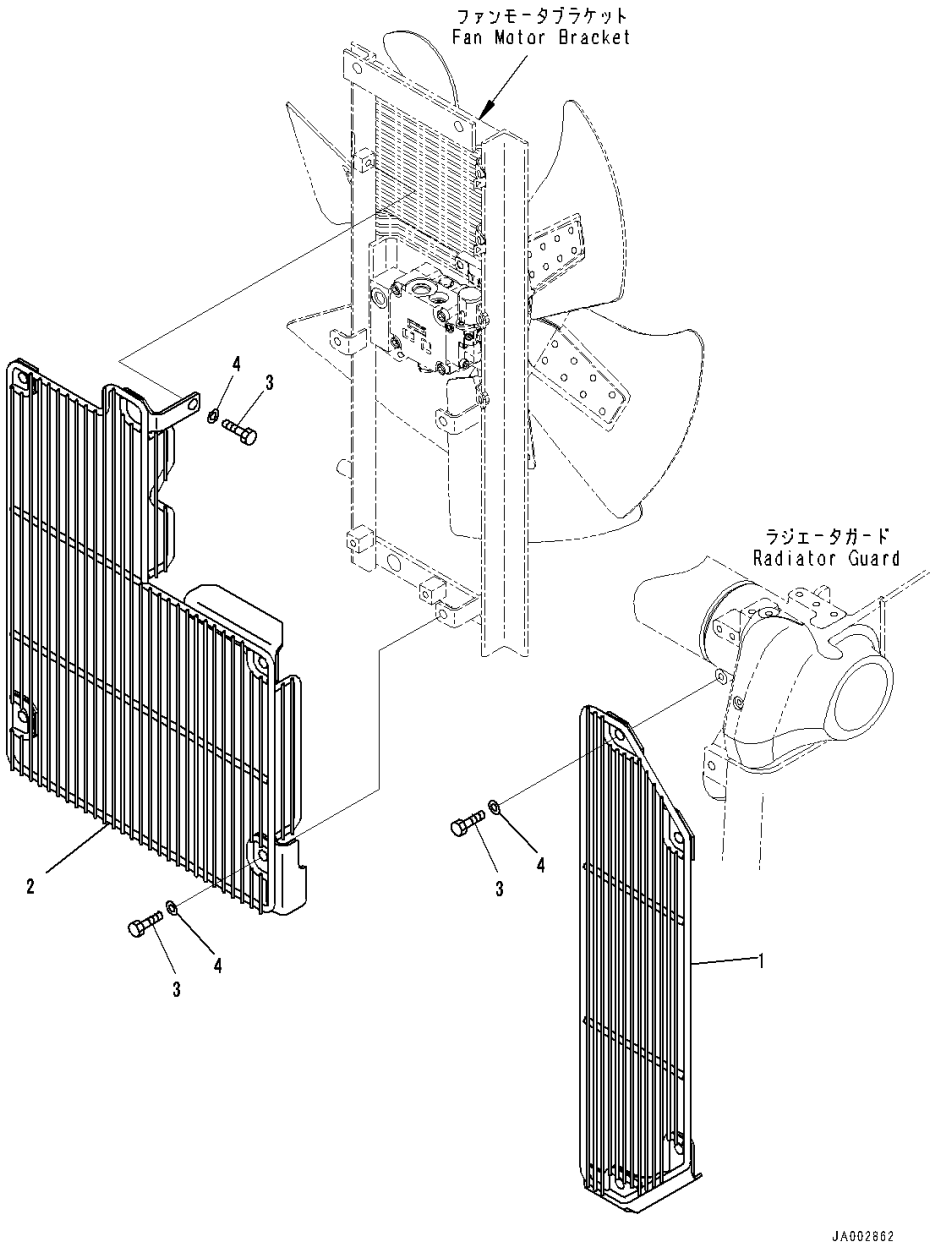

Index	Code	Part Number	Description	Qty	Serial Number
1		14X-03-51341	Net,LHS	1	80001-
2		14X-03-51351	Neck,RHS	1	80001-
3		01010-81225	Bolt	9	80001-
4		01643-31232	Washer	9	80001-

FUEL SYSTEM

FIG. D0100-002001 Fuel Tank, With Refuel Pump

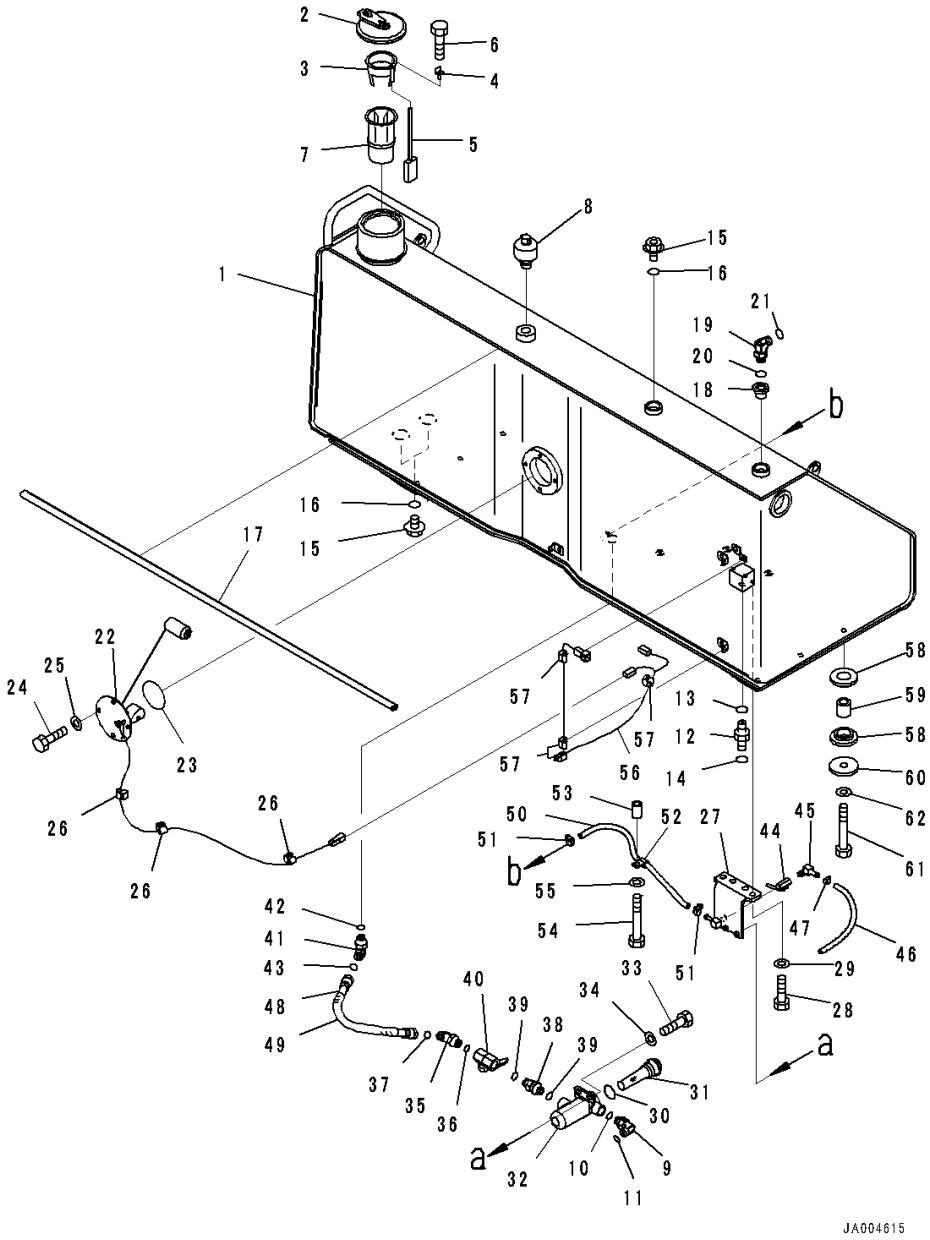

Index	Code	Part Number	Description	Qty	Serial Number
1		14X-04-51112	Tank Assembly, Fuel	1	80059-
2		17A-04-41411	Cap	1	80059-
		22U-04-21241	Strainer Assembly	1	80059-
		22U-04-21200	• Float Assembly	1	80059-
3	C1		•• Guide	1	80059-
4		20Y-04-21580	•• Cap	1	80059-
5		22U-04-21220	•• Float	1	80059-
6	C1		•• Screw	1	80059-
7		07056-18425	• Strainer	1	80059-
8		22U-60-21520	Breather	1	80059-
9		02782-10422	Elbow	1	80059-
10		07002-12034	O-ring	1	80059-
11		02896-11012	O-ring	1	80059-
12		02781-00315	Union	1	80059-
13		07002-12034	O-ring	1	80059-
14		02896-11009	O-ring	1	80059-
15		07040-13016	Plug	3	80059-
16		07002-13034	O-ring	4	80059-
17		14X-04-51420	Seal	1	80059-
18		14X-04-51431	Sleeve	1	80059-
19		02782-10522	Elbow	1	80059-
20		07002-12434	O-ring	1	80059-
21		02896-11015	O-ring	1	80059-
22		14X-06-51490	Sensor, FUEL	1	80059-
23		07000-12085	O-ring	1	80059-
24		01010-81020	Bolt	4	80059-
25		01643-31032	Washer	4	80059-
26		08211-00720	Clip	3	80059-
27		14X-04-51131	Bracket	1	80059-
28		01010-81230	Bolt	4	80059-
29		01643-31232	Washer	4	80059-
		17A-04-41190	Filter Assembly	1	80059-
30		07002-14234	• O-ring	1	80059-
31		07058-00010	• Element Assembly	1	80059-
32		14X-04-21660	• Case	1	80059-
33		01010-80825	Bolt	2	80059-
34		01643-30823	Washer	2	80059-
35		02782-10422	Elbow	1	80059-
36		07002-12034	O-ring	1	80059-

FIG. D0100-002001 Fuel Tank, With Refuel Pump

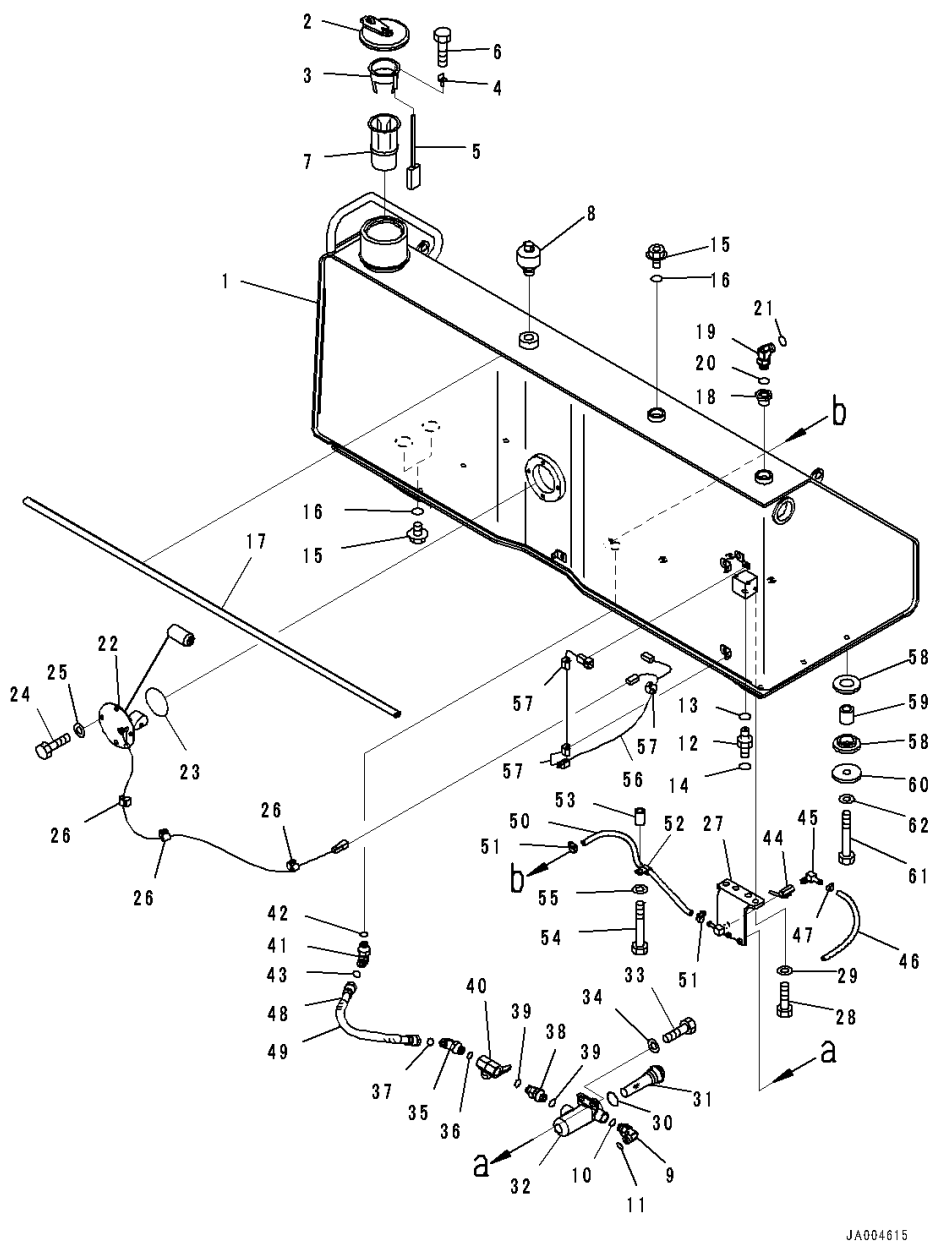

Index	Code	Part Number	Description	Qty	Serial Number
37		02896-11012	O-ring	1	80059-
38		17A-04-41331	Connector	1	80059-
39		07002-12034	O-ring	2	80059-
40		14X-04-21620	Valve	1	80059-
41		02782-10422	Elbow	1	80059-
42		07002-12034	O-ring	1	80059-
43		02896-11012	O-ring	1	80059-
44		07700-40240	Valve	1	80059-
45		205-04-62130	Elbow	1	80059-
46		07270-01025	Tube	1	80059-
47		07285-00115	Clip	1	80059-
48		02762-00405	Hose, Face Seal Type	1	80059-
49		08017-31903	Conduit	1	80059-
50		07270-21050	Tube	1	80059-
51		07281-00167	Clamp	2	80059-
52		04434-51310	Clip	1	80059-
53		205-03-71330	Collar	1	80059-
54		01010-81055	Bolt	1	80059-
55		01643-31032	Washer	1	80059-
56		14X-06-51230	Wire Harness	1	80059-
57		08211-00720	Clip	4	80059-
58		195-54-42550	Cushion	12	80059-
59		14X-04-51330	Boss	6	80059-
60		17A-04-11191	Plate	6	80059-
61		14X-04-51170	Bolt	6	80059-
62		01643-31645	Washer	6	80059-

FIG. D0200-001001 Fuel Supply Piping, Piping

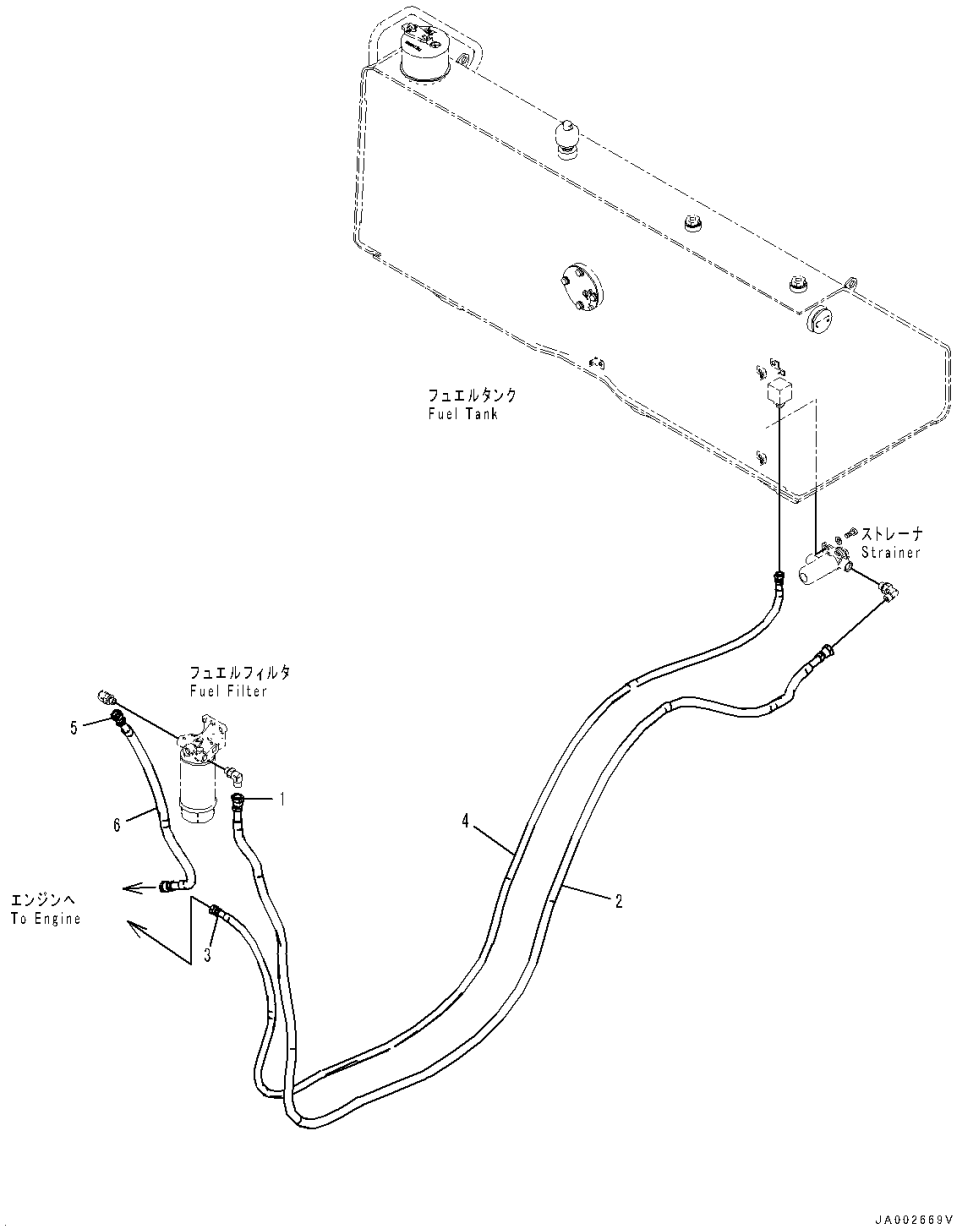

Index	Code	Part Number	Description	Qty	Serial Number
		14X-04-51231	Hose Assembly	1	80001-
1		14X-04-51240	• Hose Assembly	1	80001-
2		08017-31935	•• Conduit	1	80001-
3		14X-04-51251	• Hose Assembly	1	80001-
4		08017-31529	•• Conduit	1	80001-
5		14X-04-51281	Hose Assembly	1	80001-
6		08017-31906	• Conduit	1	80001-

FIG. D0200-001002 Fuel Supply Piping, Pre Filter Bracket

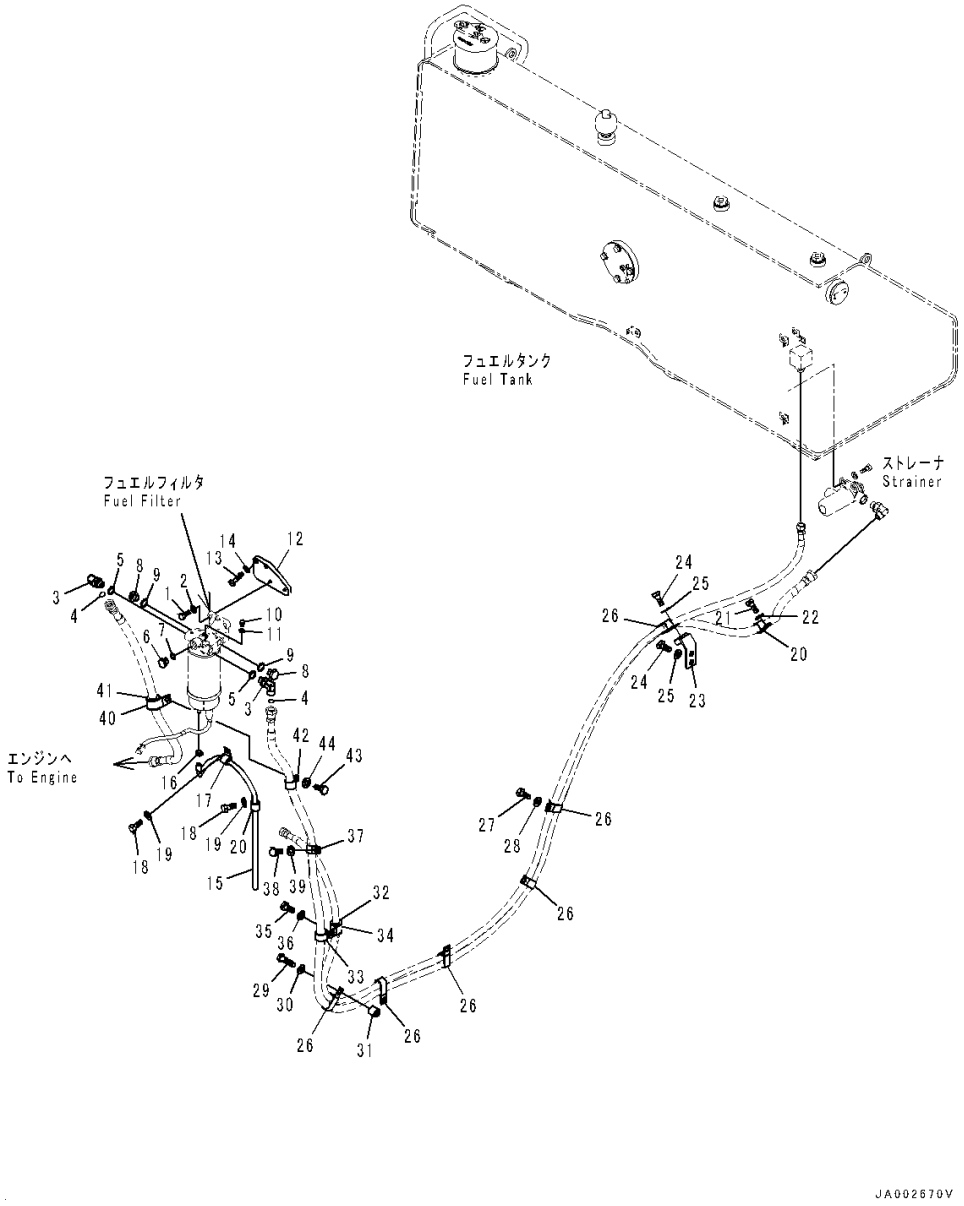

Index	Code	Part Number	Description	Qty	Serial Number
1		01010-81030	Bolt	2	80001-
2		01643-31032	Washer	2	80001-
3		02782-10420	Elbow	2	80001-
4		02896-11012	O-ring	2	80001-
5		07002-11823	O-ring	2	80001-
6		07040-11612	Plug	1	80001-
7		07002-11623	O-ring	1	80001-
8		07040-11812	Plug	2	80001-
9		07002-11823	O-ring	2	80001-
10		07040-10807	Plug	1	80001-
11		07002-10823	O-ring	1	80001-
12		14X-04-51221	Plate	1	80001-
13		01010-81035	Bolt	2	80001-
14		01643-31032	Washer	2	80001-
15		07286-00875	Hose	1	80001-
16		07285-00125	Clip	1	80001-
17		04434-51712	Clip	2	80001-
18		01010-81220	Bolt	2	80001-
19		01643-31232	Washer	2	80001-
20		04434-52312	Clip	1	80001-
21		01010-81220	Bolt	1	80001-
22		01643-31232	Washer	1	80001-
23		14X-04-51211	Bracket	1	80001-
24		01010-81225	Bolt	3	80001-
25		01643-31232	Washer	3	80001-
26		04435-52112	Clip	6	80001-
27		01010-81220	Bolt	4	80001-
28		01643-31232	Washer	4	80001-
29		01010-81245	Bolt	1	80001-
30		01643-31232	Washer	1	80001-
31		6144-81-6580	Spacer	1	80001-
32		07095-20419	Cushion	1	80001-
33		04434-52312	Clip	1	80001-
34		04434-52712	Clip	1	80007-
35		01010-81225	Bolt	1	80001-
36		01643-31232	Washer	1	80001-
37		04434-52312	Clip	1	80001-
38		01010-81225	Bolt	1	80001-
39		01643-31232	Washer	1	80001-

FIG. D0200-001002 Fuel Supply Piping, Pre Filter Bracket

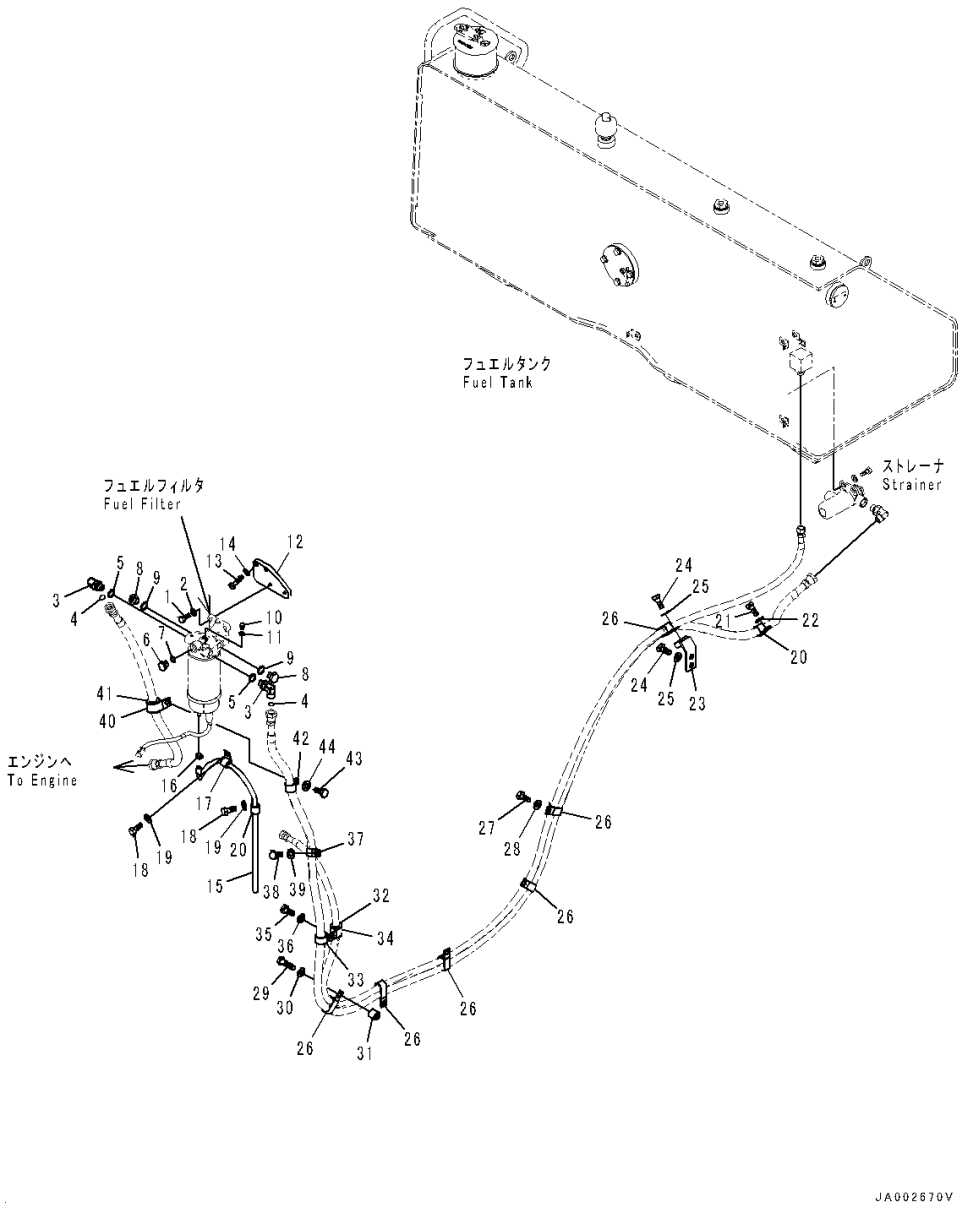

Index	Code	Part Number	Description	Qty	Serial Number
40		04434-53412	Clip	1	80001-
41		07095-20523	Cushion	1	80001-
42		04434-52312	Clip	1	80001-
43		01010-81225	Bolt	1	80001-
44		01643-31232	Washer	1	80001-

FIG. D0100-001001 Fuel Tank

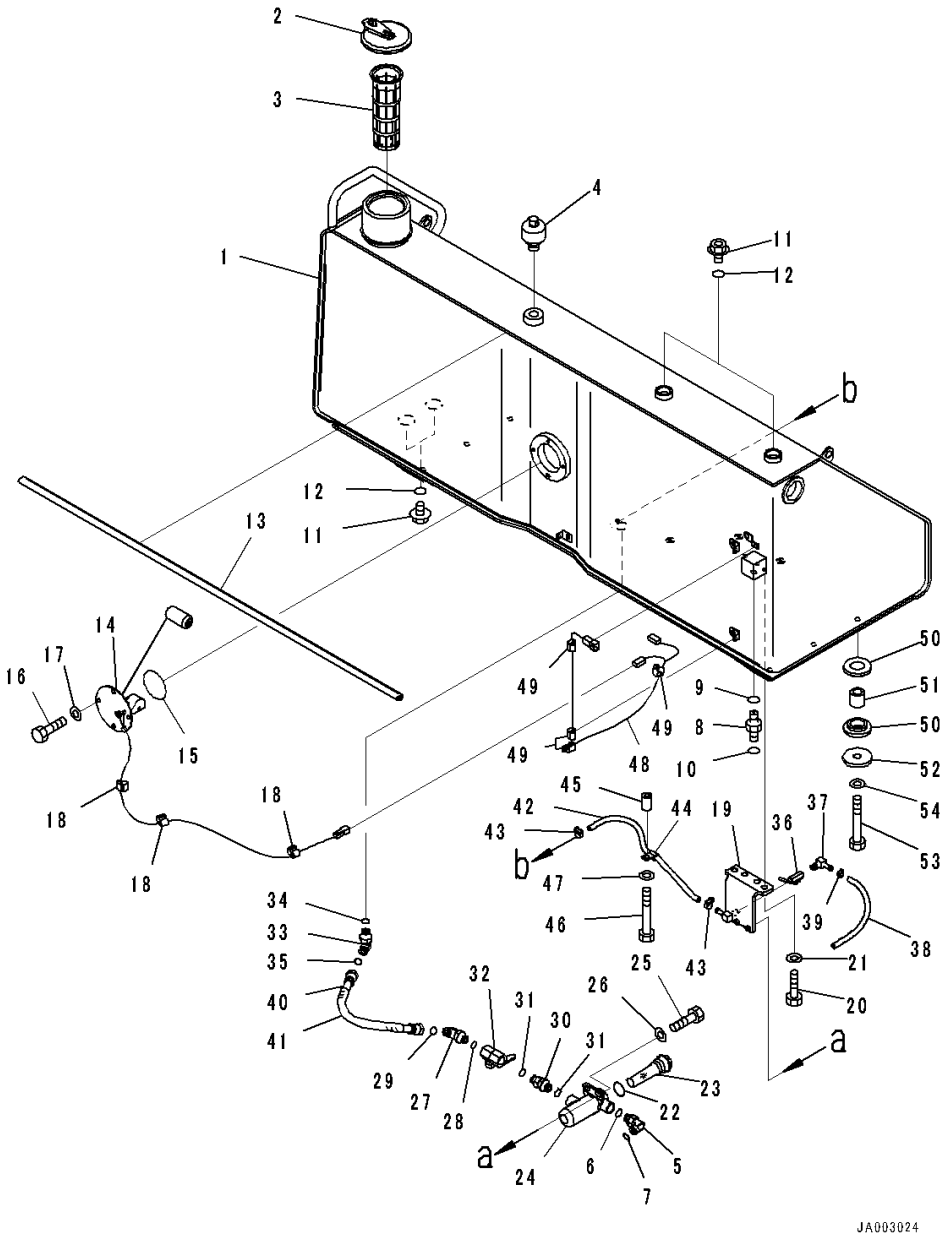

Index	Code	Part Number	Description	Qty	Serial Number
1		14X-04-51111	Tank, FUEL	1	80001-
2		17A-04-41411	Cap	1	80001-
3		07056-18422	Strainer	1	80001-
4		22U-60-21520	Breather	1	80001-
5		02782-10422	Elbow	1	80001-
6		07002-12034	O-ring	1	80001-
7		02896-11012	O-ring	1	80001-
8		02781-00315	Union	1	80001-
9		07002-12034	O-ring	1	80001-
10		02896-11009	O-ring	1	80001-
11		07040-13016	Plug	4	80007-
12		07002-13034	O-ring	4	80001-
13		14X-04-51420	Seal	1	80001-
14		14X-06-51490	Sensor, FUEL	1	80001-
15		07000-12085	O-ring	1	80001-
16		01010-81020	Bolt	4	80001-
17		01643-31032	Washer	4	80001-
18		08211-00720	Clip	3	80001-
19		14X-04-51131	Bracket	1	80001-
20		01010-81230	Bolt	4	80001-
21		01643-31232	Washer	4	80001-
		17A-04-41190	Filter Assembly	1	80001-
22		07002-14234	• O-ring	1	80001-
23		07058-00010	• Element Assembly	1	80001-
24		14X-04-21660	• Case	1	80001-
25		01010-80825	Bolt	2	80001-
26		01643-30823	Washer	2	80001-
27		02782-10422	Elbow	1	80001-
28		07002-12034	O-ring	1	80001-
29		02896-11012	O-ring	1	80001-
30		17A-04-41331	Connector	1	80001-
31		07002-12034	O-ring	2	80001-
32		14X-04-21620	Valve	1	80001-
33		02782-10422	Elbow	1	80001-
34		07002-12034	O-ring	1	80001-
35		02896-11012	O-ring	1	80001-
36		07700-40240	Valve	1	80001-
37		205-04-62130	Elbow	1	80001-
38		07270-01025	Tube	1	80001-

FIG. D0100-001001 Fuel Tank

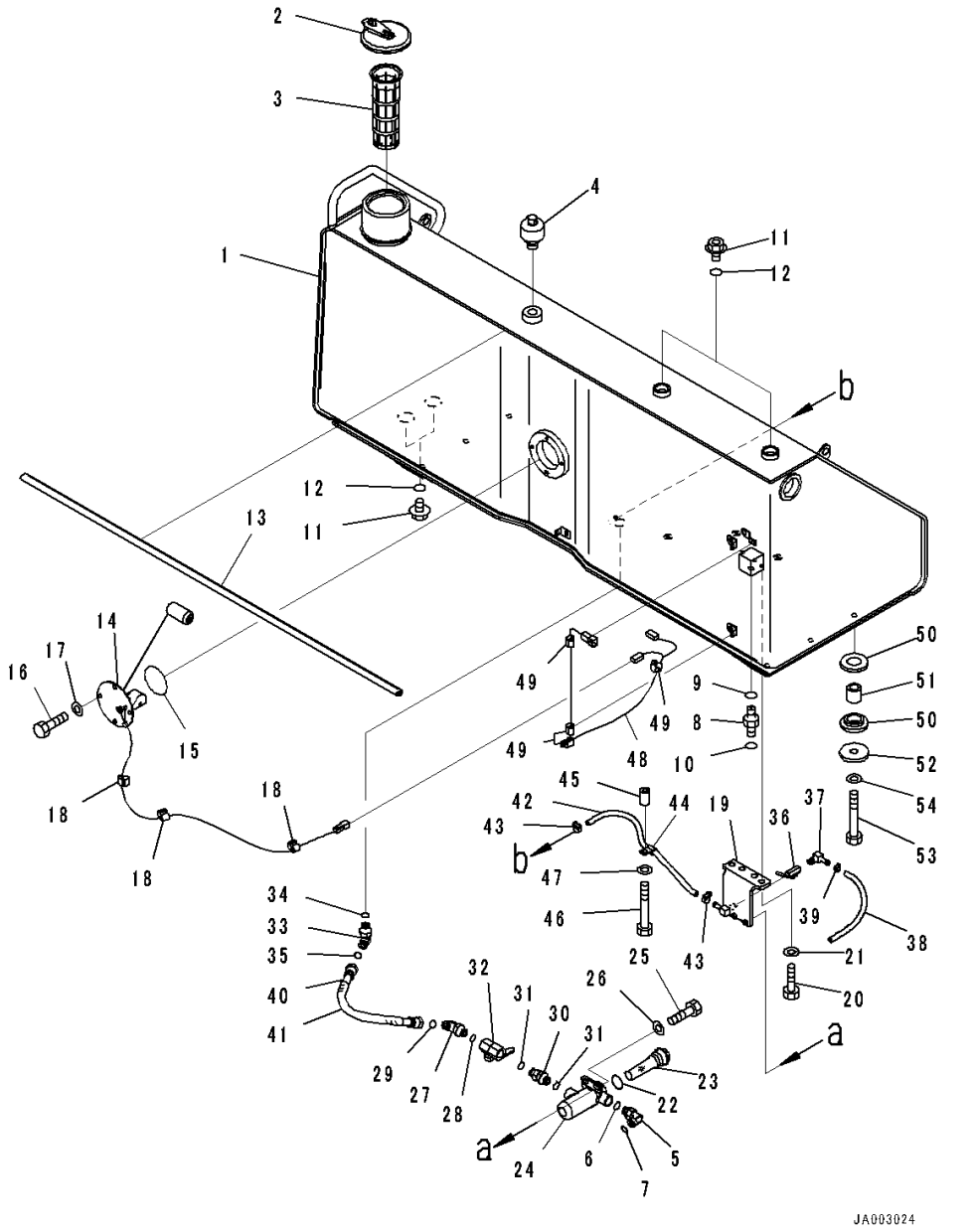

Index	Code	Part Number	Description	Qty	Serial Number
39		07285-00115	Clip	1	80001-
40		02762-00405	Hose, Face Seal Type	1	80001-
41		08017-31903	Conduit	1	80001-
42		07270-21050	Tube	1	80001-
43		07281-00167	Clamp	2	80001-
44		04434-51310	Clip	1	80001-
45		205-03-71330	Collar	1	80001-
46		01010-81055	Bolt	1	80001-
47		01643-31032	Washer	1	80001-
48		14X-06-51230	Wire Harness	1	80001-
49		08211-00720	Clip	4	80001-
50		195-54-42550	Cushion	12	80001-
51		14X-04-51330	Boss	6	80001-
52		17A-04-11191	Plate	6	80001-
53		14X-04-51170	Bolt	6	80001-
54		01643-31645	Washer	6	80001-

ELECTRICAL SYSTEM

FIG. E0100-001001 Battery, Large Capacity

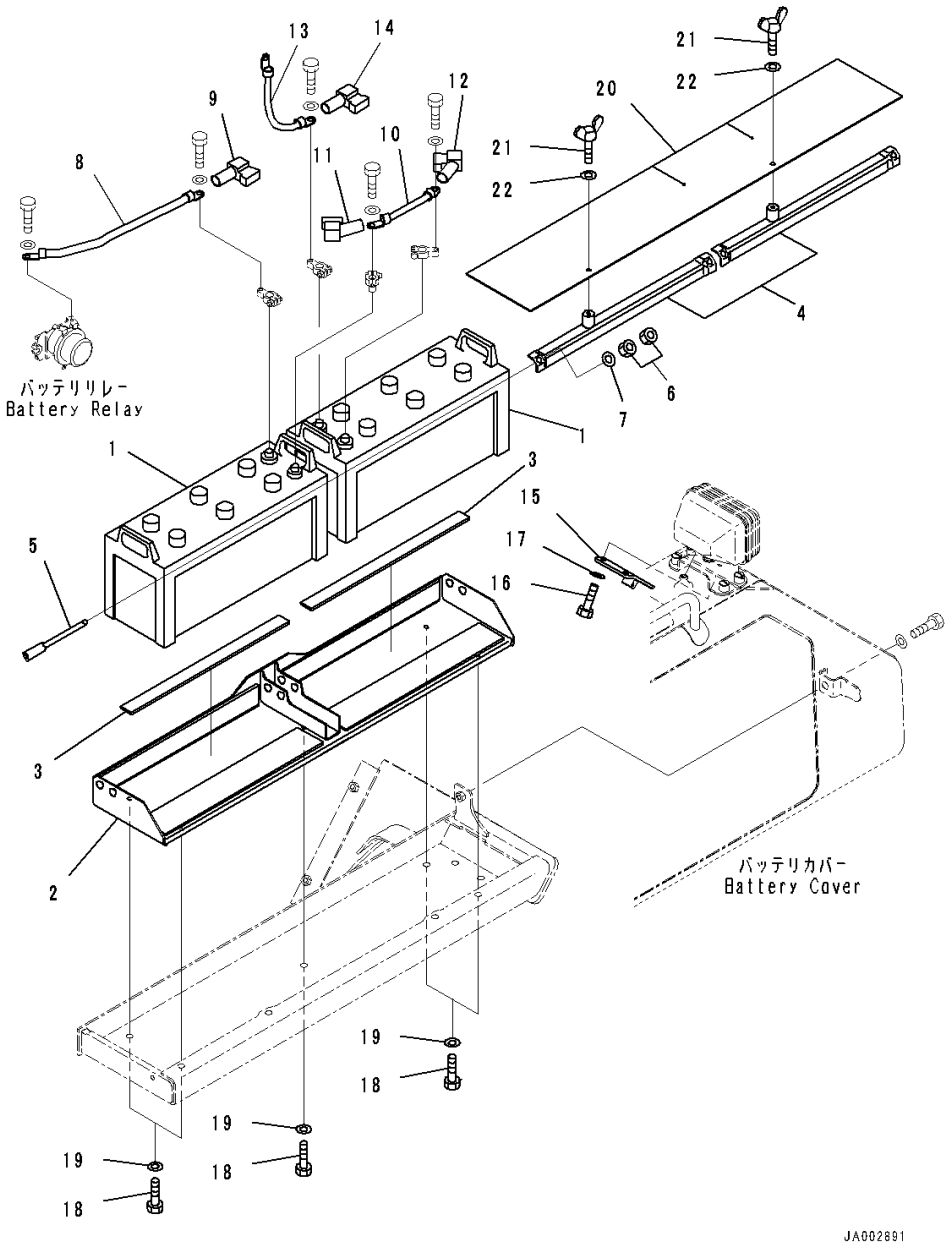

Index	Code	Part Number	Description	Qty	Serial Number
1		08000-32215	Battery, Wet, 145F51	2	80001-
		08000-00000	• Terminal, (+)	1	80001-
		08000-00001	• Terminal, (-)	1	80001-
2		14X-06-52111	Bracket	1	80001-
3		08007-23549	• Cushion, Battery	2	80001-
4		14X-06-52121	Holder	2	80001-
5		08006-40255	Rod	4	80001-
6		01580-11008	Nut	8	80001-
7		01643-31032	Washer	4	80001-
8		08028-GD045	Cable, Ground	1	80001-
9		14X-06-12280	Cover	1	80001-
10		08028-64020	Cable, Ground	1	80001-
11		14X-06-12280	Cover	1	80001-
12		21J-06-11570	Cover	1	80001-
13		08028-ED030	Cable, Ground	1	80001-
14		14X-06-12260	Cover	1	80001-
15		14X-06-52890	Bracket	1	80001-
16		01010-81025	Bolt	2	80001-
17		01643-31032	Washer	2	80001-
18		01010-81225	Bolt	5	80001-
19		01643-31232	Washer	5	80001-
20		14X-06-52470	Sheet	1	80001-
21		01434-00820	Bolt, Wing	2	80001-
22		113-43-23230	Washer	2	80001-

FIG. E0100-002001 Battery

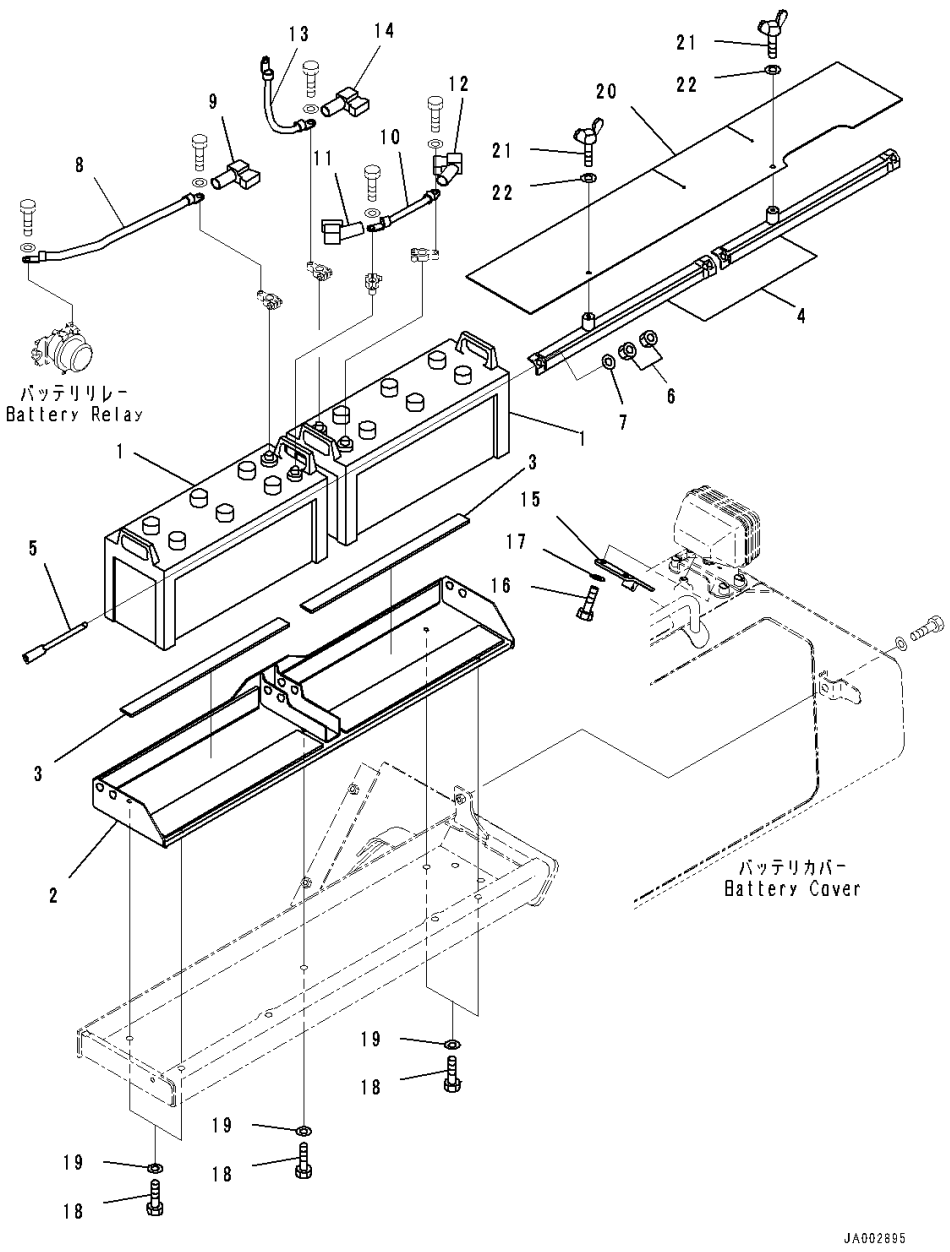

Index	Code	Part Number	Description	Qty	Serial Number
1		08000-3222Z	Battery, Wet, 195G51	2	80001-
		08000-00000	• Terminal, (+)	1	80001-
		08000-00001	• Terminal, (-)	1	80001-
2		14X-06-52111	Bracket	1	80001-
3		08007-23549	• Cushion, Battery	2	80001-
4		14X-06-52121	Holder	2	80001-
5		08006-40255	Rod	4	80001-
6		01580-11008	Nut	8	80001-
7		01643-31032	Washer	4	80001-
8		08028-GD045	Cable, Ground	1	80001-
9		14X-06-12280	Cover	1	80001-
10		08028-64020	Cable, Ground	1	80001-
11		14X-06-12280	Cover	1	80001-
12		21J-06-11570	Cover	1	80001-
13		08028-ED030	Cable, Ground	1	80001-
14		14X-06-12260	Cover	1	80001-
15		14X-06-52890	Bracket	1	80001-
16		01010-81025	Bolt	2	80001-
17		01643-31032	Washer	2	80001-
18		01010-81225	Bolt	5	80001-
19		01643-31232	Washer	5	80001-
20		14X-06-52480	Sheet	1	80001-
21		01434-00820	Bolt, Wing	2	80001-
22		113-43-23230	Washer	2	80001-

FIG. E0100-003001 Battery, For EU Noise Reguration

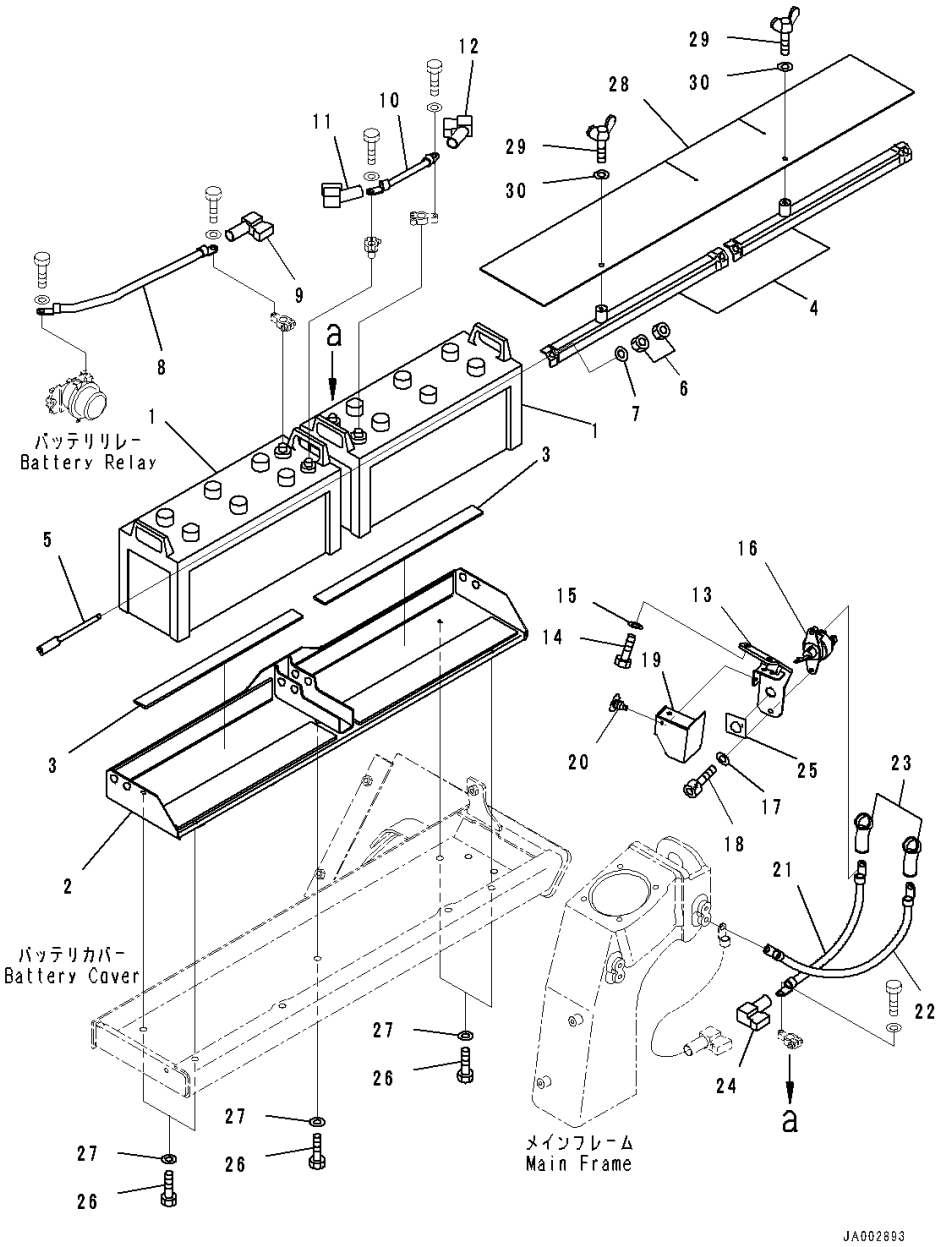

Index	Code	Part Number	Description	Qty	Serial Number
1		08000-32215	Battery, Wet, 145F51	2	80001-
		08000-00000	• Terminal, (+)	1	80001-
		08000-00001	• Terminal, (-)	1	80001-
2		14X-06-52111	Bracket	1	80001-
3		08007-23549	• Cushion, Battery	2	80001-
4		14X-06-52121	Holder	2	80001-
5		08006-40255	Rod	4	80001-
6		01580-11008	Nut	8	80001-
7		01643-31032	Washer	4	80001-
8		08028-GD045	Cable, Ground	1	80001-
9		14X-06-12280	Cover	1	80001-
10		08028-64020	Cable, Ground	1	80001-
11		14X-06-12280	Cover	1	80001-
12		21J-06-11570	Cover	1	80001-
13		14X-06-52811	Bracket	1	80001-
14		01010-81025	Bolt	2	80001-
15		01643-31032	Washer	2	80001-
16		08068-00001	Switch, Battery	1	80001-
17		01643-30823	Washer	2	80001-
18		01252-70825	Bolt	2	80001-
19		14X-06-52840	Cover	1	80001-
20		20T-54-74510	Cap	2	80001-
21		08028-ED040	Cable, Ground	1	80001-
22		14X-06-52830	Cable	1	80001-
23		08038-00035	Cap	2	80001-
24		14X-06-12270	Cover	1	80001-
25		09697-00001	Decal, Battery Disconnect Switch	1	80001-
26		01010-81225	Bolt	5	80001-
27		01643-31232	Washer	5	80001-
28		14X-06-52470	Sheet	1	80001-
29		01434-00820	Bolt, Wing	2	80001-
30		113-43-23230	Washer	2	80001-

FIG. E0100-004001 Battery, Large Capacity, For EU Noise Reguration

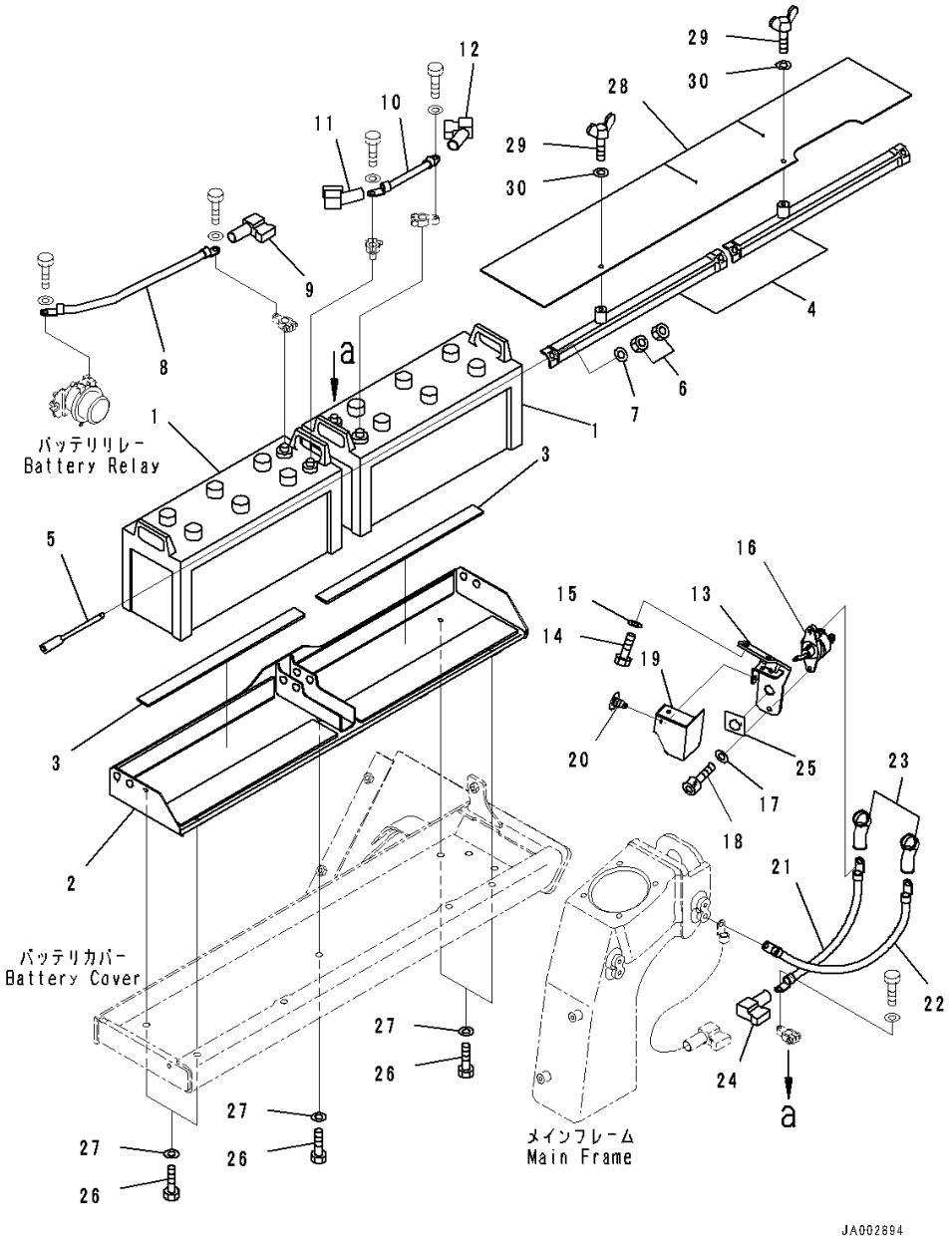

Index	Code	Part Number	Description	Qty	Serial Number
1		08000-3222Z	Battery, Wet, 195G51	2	80005-
		08000-00000	• Terminal, (+)	1	80005-
		08000-00001	• Terminal, (-)	1	80005-
2		14X-06-52111	Bracket	1	80005-
3		08007-23549	• Cushion, Battery	2	80005-
4		14X-06-52121	Holder	2	80005-
5		08006-40255	Rod	4	80005-
6		01580-11008	Nut	8	80005-
7		01643-31032	Washer	4	80005-
8		08028-GD045	Cable, Ground	1	80005-
9		14X-06-12280	Cover	1	80005-
10		08028-64020	Cable, Ground	1	80005-
11		14X-06-12280	Cover	1	80005-
12		21J-06-11570	Cover	1	80005-
13		14X-06-52811	Bracket	1	80005-
14		01010-81025	Bolt	2	80005-
15		01643-31032	Washer	2	80005-
16		08068-00001	Switch, Battery	1	80005-
17		01643-30823	Washer	2	80005-
18		01252-70825	Bolt	2	80005-
19		14X-06-52840	Cover	1	80005-
20		20T-54-74510	Cap	2	80005-
21		08028-ED040	Cable, Ground	1	80005-
22		14X-06-52830	Cable	1	80005-
23		08038-00035	Cap	2	80005-
24		14X-06-12270	Cover	1	80005-
25		09697-00001	Decal, Battery Disconnect Switch	1	80005-
26		01010-81225	Bolt	5	80005-
27		01643-31232	Washer	5	80005-
28		14X-06-52480	Sheet	1	80005-
29		01434-00820	Bolt, Wing	2	80005-
30		113-43-23230	Washer	2	80005-

FIG. E0100-006001 Battery, With Refuel Pump, For Large Capacity Battery

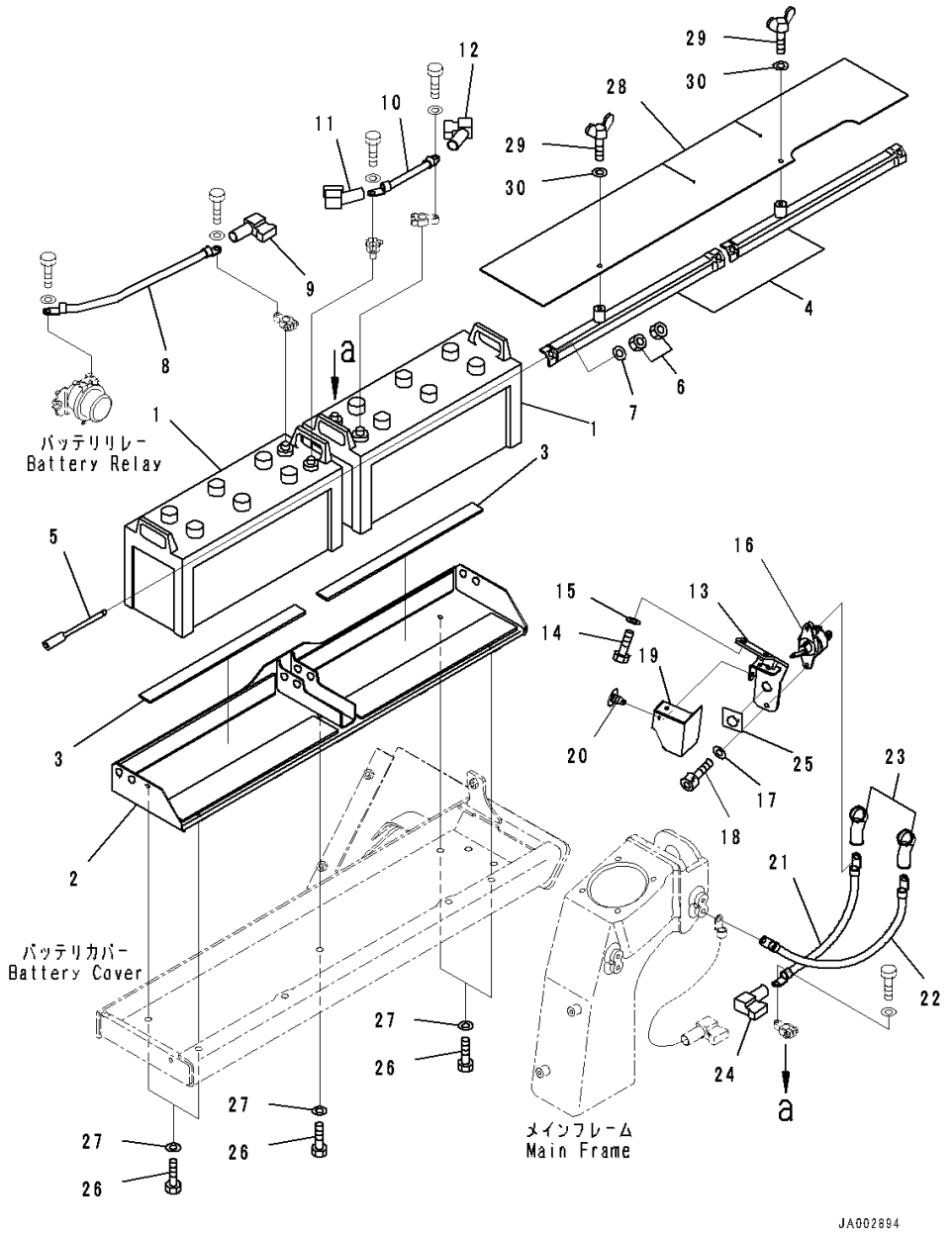

Index	Code	Part Number	Description	Qty	Serial Number
1		08000-3222Z	Battery, Wet, 195G51	2	80059-
2		08000-3222Z	• Battery, Wet, 195G51	1	80059-
		08000-00000	• Terminal, (+)	1	80059-
		08000-00001	• Terminal, (-)	1	80059-
3		14X-06-52111	Bracket	1	80059-
4		14X-06-52121	Holder	2	80059-
5		08006-40255	Rod	4	80059-
6		01580-11008	Nut	8	80059-
7		01643-31032	Washer	4	80059-
8		08028-GD045	Cable, Ground	1	80059-
9		14X-06-12280	Cover	1	80059-
10		08028-64020	Cable, Ground	1	80059-
11		14X-06-12280	Cover	1	80059-
12		21J-06-11570	Cover	1	80059-
13		14X-06-52960	Bracket	1	80059-
14		01010-81025	Bolt	2	80059-
15		01643-31032	Washer	2	80059-
16		08068-00001	Switch, Battery	1	80059-
17		01643-30823	Washer	2	80059-
18		01252-70825	Bolt	2	80059-
19		14X-06-52840	Cover	1	80059-
20		20T-54-74510	Cap	2	80059-
21		08028-ED040	Cable, Ground	1	80059-
22		14X-06-52830	Cable	1	80059-
23		08038-00035	Cap	2	80059-
24		14X-06-12270	Cover	1	80059-
25		09697-00001	Decal, Battery Disconnect Switch	1	80059-
26		01010-81225	Bolt	5	80059-
27		01643-31232	Washer	5	80059-
28		14X-06-52480	Sheet	1	80059-
29		01434-00820	Bolt, Wing	2	80059-
30		113-43-23230	Washer	2	80059-

FIG. E0100-005001 Battery, With Refuel Pump

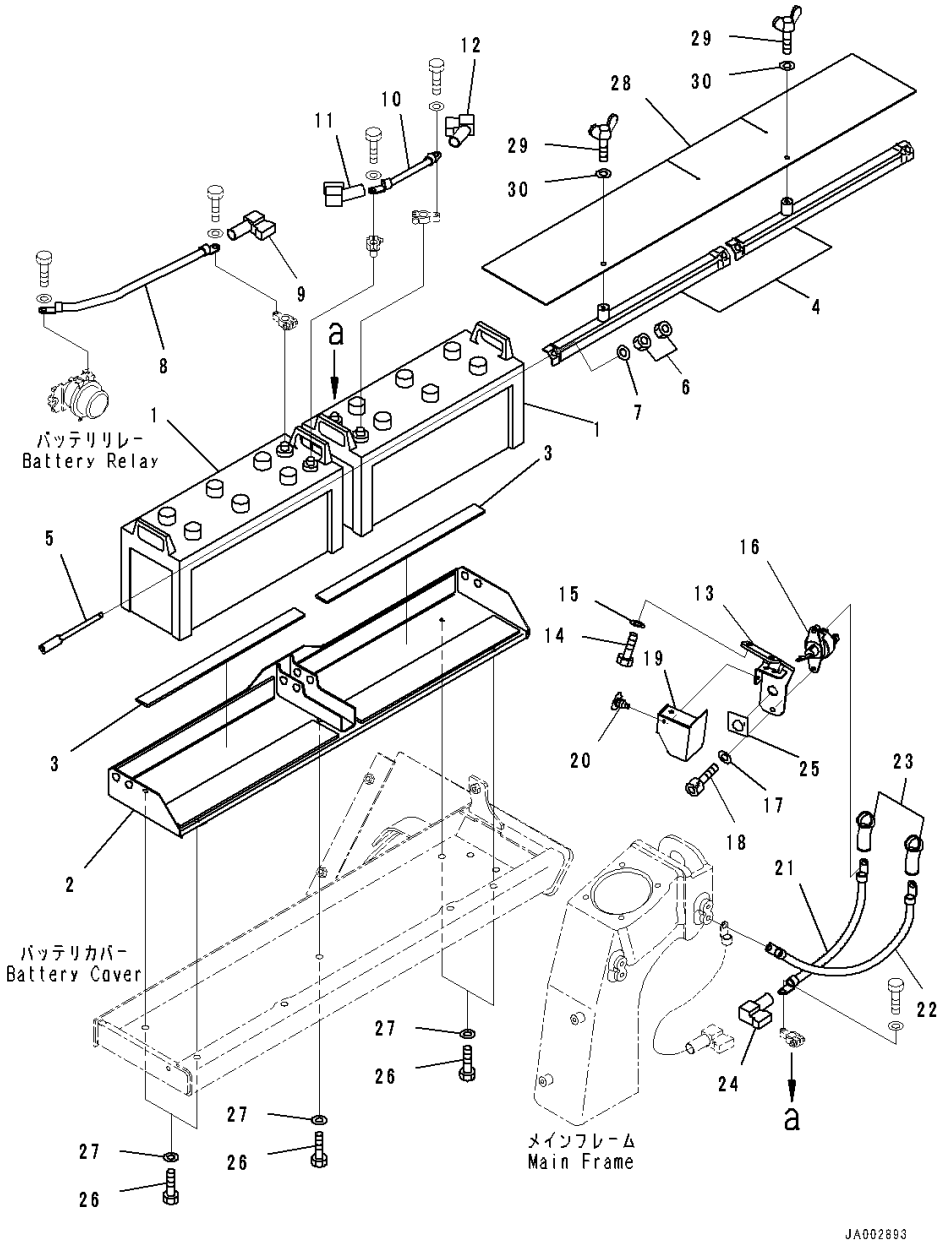

Index	Code	Part Number	Description	Qty	Serial Number
1		08000-32215	Battery, Wet, 145F51	2	80059-
2		08000-32215	• Battery, Wet, 145F51	1	80059-
		08000-00000	• Terminal, (+)	1	80059-
		08000-00001	• Terminal, (-)	1	80059-
3		14X-06-52111	Bracket	1	80059-
4		14X-06-52121	Holder	2	80059-
5		08006-40255	Rod	4	80059-
6		01580-11008	Nut	8	80059-
7		01643-31032	Washer	4	80059-
8		08028-GD045	Cable, Ground	1	80059-
9		14X-06-12280	Cover	1	80059-
10		08028-64020	Cable, Ground	1	80059-
11		14X-06-12280	Cover	1	80059-
12		21J-06-11570	Cover	1	80059-
13		14X-06-52960	Bracket	1	80059-
14		01010-81025	Bolt	2	80059-
15		01643-31032	Washer	2	80059-
16		08068-00001	Switch, Battery	1	80059-
17		01643-30823	Washer	2	80059-
18		01252-70825	Bolt	2	80059-
19		14X-06-52840	Cover	1	80059-
20		20T-54-74510	Cap	2	80059-
21		08028-ED040	Cable, Ground	1	80059-
22		14X-06-52830	Cable	1	80059-
23		08038-00035	Cap	2	80059-
24		14X-06-12270	Cover	1	80059-
25		09697-00001	Decal, Battery Disconnect Switch	1	80059-
26		01010-81225	Bolt	5	80059-
27		01643-31232	Washer	5	80059-
28		14X-06-52470	Sheet	1	80059-
29		01434-00820	Bolt, Wing	2	80059-
30		113-43-23230	Washer	2	80059-

FIG. E0200-001001 Electric Wiring, Wiring Harness (1/2)

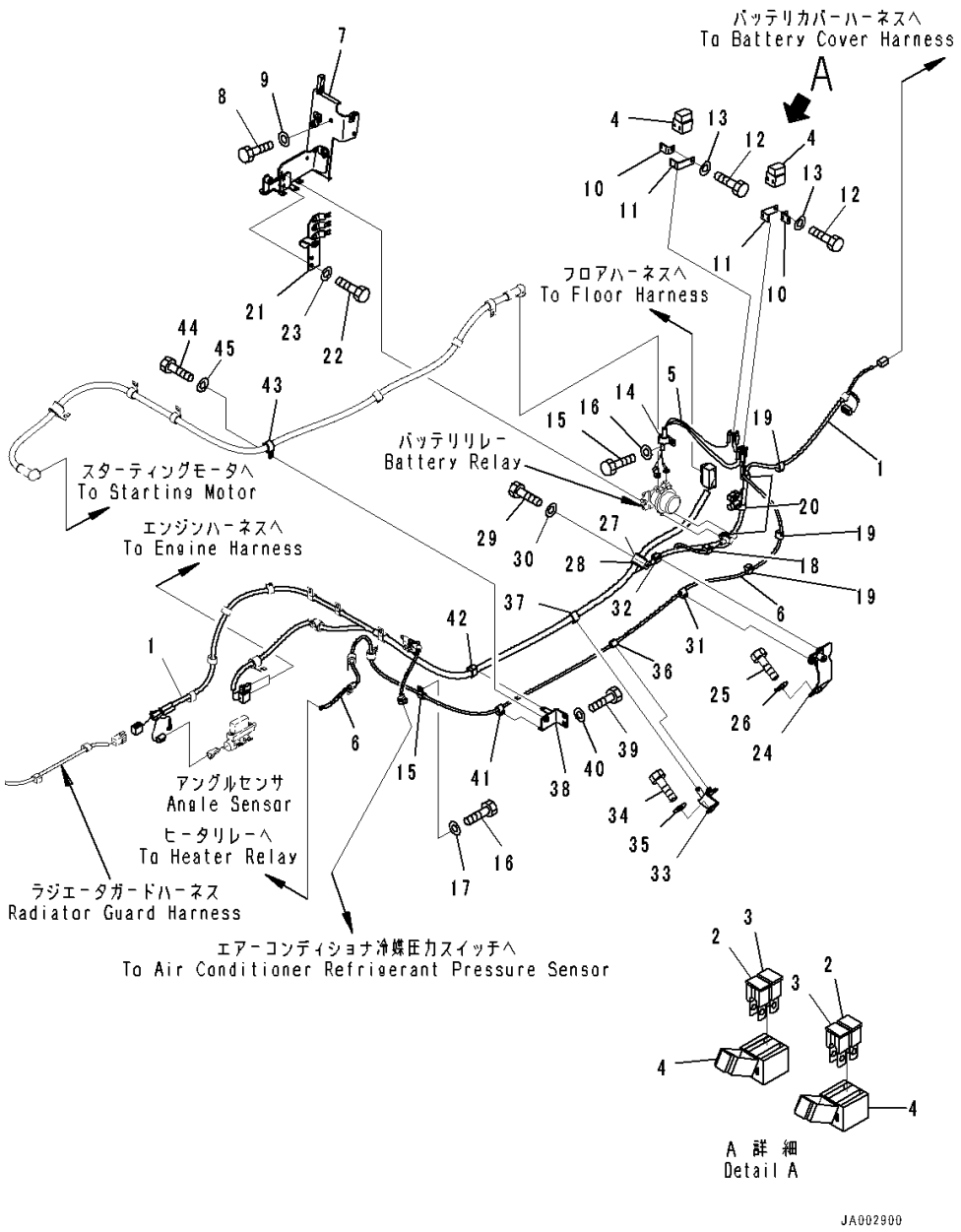

Index	Code	Part Number	Description	Qty	Serial Number
1		14X-06-51212	Wire Harness	1	80001-
2		14X-06-51610	• Fuse, 50Amp.	2	80001-
3		421-06-22830	• Fuse, 120Amp.	2	80001-
4		421-06-22880	• Holder	2	80001-
5		14X-06-51261	Wire Harness	1	80001-
6		14X-06-51291	Cable	1	80001-
7		14X-06-51561	Bracket	1	80001-
8		01010-81020	Bolt	2	80001-
9		01643-31032	Washer	2	80001-
10		421-06-22910	Bracket	2	80001-
11		421-06-22920	Bracket	2	80001-
12		01010-80820	Bolt	2	80001-
13		01643-30823	Washer	2	80001-
14		04434-52310	Clip	1	80001-
15		04434-51410	Clip	1	80001-
16		01010-81020	Bolt	2	80001-
17		01643-31032	Washer	2	80001-
18		08211-00720	Clip	1	80001-
19		08211-01020	Clip	3	80001-
20		08211-01320	Clip	3	80001-
21		14X-06-51571	Bracket	1	80001-
22		01010-81020	Bolt	2	80001-
23		01643-31032	Washer	2	80001-
24		14X-06-51581	Bracket	1	80001-
25		01010-81020	Bolt	2	80001-
26		01643-31032	Washer	2	80001-
27		04434-53211	Clip	1	80001-
28		07095-20523	Cushion	1	80001-
29		01010-81020	Bolt	1	80001-
30		01643-31032	Washer	1	80001-
31		08211-01020	Clip	1	80001-
32		08211-01320	Clip	1	80001-
33		14X-06-51591	Bracket	1	80001-
34		01010-81020	Bolt	2	80001-
35		01643-31032	Washer	2	80001-
36		08211-01020	Clip	1	80001-
37		08211-01920	Clip	1	80001-
38		14X-06-51621	Bracket	1	80001-
39		01010-81020	Bolt	2	80001-

FIG. E0200-001001 Electric Wiring, Wiring Harness (1/2)

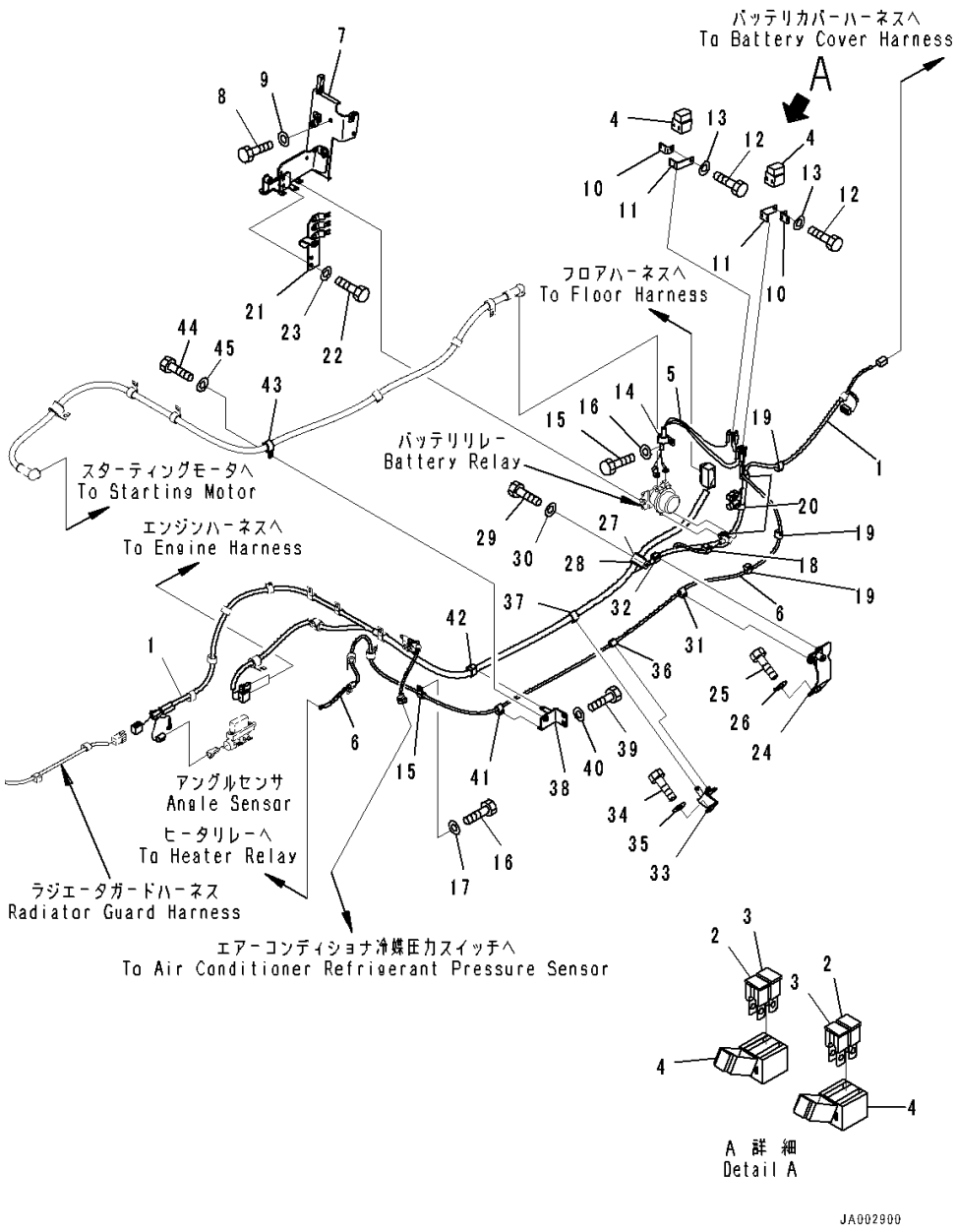

Index	Code	Part Number	Description	Qty	Serial Number
40		01643-31032	Washer	2	80001-
41		08211-01020	Clip	1	80001-
42		08211-01920	Clip	1	80001-
43		04434-52310	Clip	1	80001-
44		01010-81020	Bolt	1	80001-
45		01643-31032	Washer	1	80001-

FIG. E0200-001002 Electric Wiring, Bracket

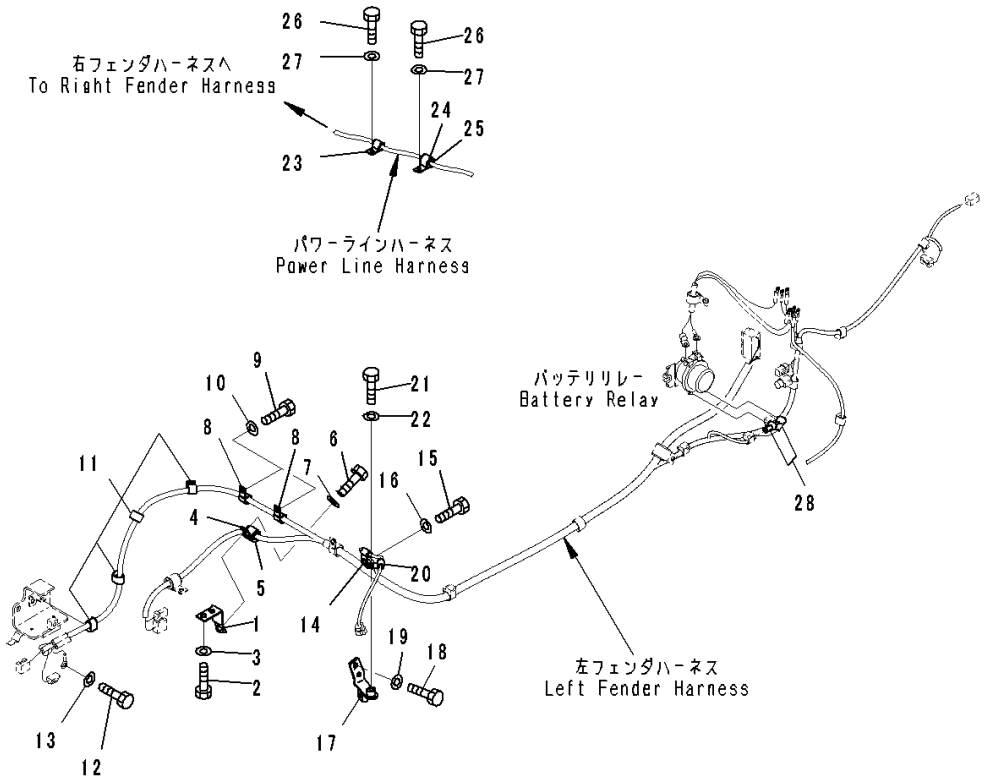

Index	Code	Part Number	Description	Qty	Serial Number
1		14X-06-51791	Bracket	1	80001-
2		01010-81225	Bolt	2	80001-
3		01643-31232	Washer	2	80001-
4		04434-52511	Clip	1	80001-
5		07095-20318	Cushion	1	80001-
6		01010-81020	Bolt	1	80001-
7		01643-31032	Washer	1	80001-
8		04434-51710	Clip	2	80001-
9		01010-81025	Bolt	2	80001-
10		01643-31032	Washer	2	80001-
11		08211-01320	Clip	4	80001-
12		01010-81020	Bolt	1	80001-
13		01643-31032	Washer	1	80001-
14		04434-51010	Clip	1	80001-
15		01010-81030	Bolt	1	80001-
16		01643-31032	Washer	1	80001-
17		14X-06-51771	Bracket	1	80001-
18		01010-81020	Bolt	2	80001-
19		01643-31032	Washer	2	80001-
20		04434-51010	Clip	1	80001-
21		01010-81020	Bolt	1	80001-
22		01643-31032	Washer	1	80001-
23		04434-51410	Clip	1	80001-
24		04434-52110	Clip	1	80001-
25		07095-20314	Cushion	1	80001-
26		01010-81020	Bolt	2	80001-
27		01643-31032	Washer	2	80001-
28		08038-00519	Cap	2	80001-

FIG. E0200-001003 Electric Wiring, Holder

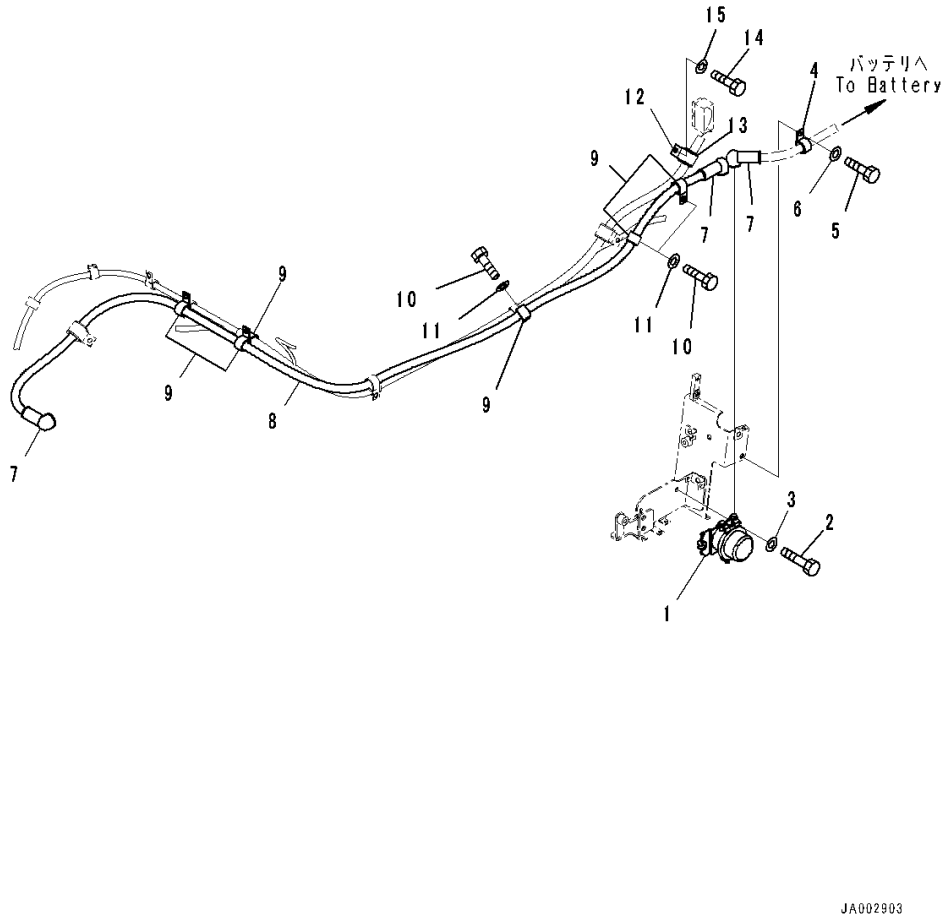

Index	Code	Part Number	Description	Qty	Serial Number
1		08088-30000	Switch	1	80001-
2		01010-80830	Bolt	2	80001-
3		01643-30823	Washer	2	80001-
4		04434-52310	Clip	1	80001-
5		01010-81020	Bolt	2	80001-
6		01643-31032	Washer	2	80001-
7		08038-00035	Cap	3	80001-
8		14X-06-51281	Cable	1	80001-
9		04434-52310	Clip	6	80001-
10		01010-81020	Bolt	4	80001-
11		01643-31032	Washer	4	80001-
12		04434-53211	Clip	1	80001-
13		07095-20523	Cushion	1	80001-
14		01010-81020	Bolt	1	80001-
15		01643-31032	Washer	1	80001-

FIG. E0200-001004 Electric Wiring, Mounts

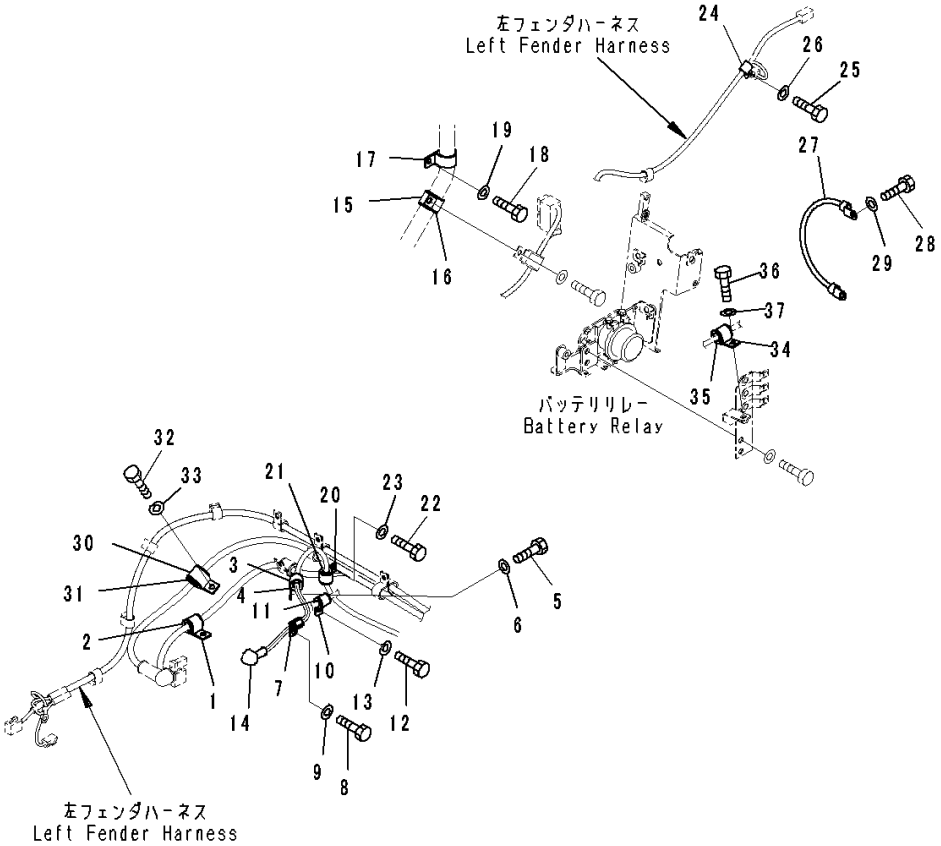

Index	Code	Part Number	Description	Qty	Serial Number
1		04434-52511	Clip	1	80001-
2		07095-20318	Cushion	1	80001-
3		04434-52110	Clip	1	80001-
4		07095-20314	Cushion	1	80001-
5		01010-81020	Bolt	1	80001-
6		01643-31032	Washer	1	80001-
7		600-051-2140	Clip	1	80001-
8		01010-81020	Bolt	1	80001-
9		01643-31032	Washer	1	80001-
10		04434-51610	Clip	1	80001-
11		07095-20211	Cushion	1	80001-
12		01010-81020	Bolt	1	80001-
13		01643-31032	Washer	1	80001-
14		08038-02027	Cap	1	80001-
15		155-61-15350	Clip	1	80001-
16		22M-62-13660	Cushion	1	80001-
17		04434-53411	Clip	1	80001-
18		01010-81020	Bolt	1	80001-
19		01643-31032	Washer	1	80001-
20		04434-52110	Clip	1	80001-
21		07095-20314	Cushion	1	80001-
22		01010-81020	Bolt	1	80001-
23		01643-31032	Washer	1	80001-
24		04434-51410	Clip	1	80001-
25		01010-81020	Bolt	1	80001-
26		01643-31032	Washer	1	80001-
27		08028-ED040	Cable, Ground	1	80001-
28		01010-81020	Bolt	2	80001-
29		01643-31032	Washer	2	80001-
30		04434-53211	Clip	1	80001-
31		07095-20523	Cushion	1	80001-
32		01010-81025	Bolt	1	80001-
33		01643-31032	Washer	1	80001-
34		04434-52511	Clip	1	80001-
35		07095-20318	Cushion	1	80001-
36		01010-81020	Bolt	1	80001-
37		01643-31032	Washer	1	80001-

FIG. E0200-001005 Electric Wiring, Wiring Harness (2/2)

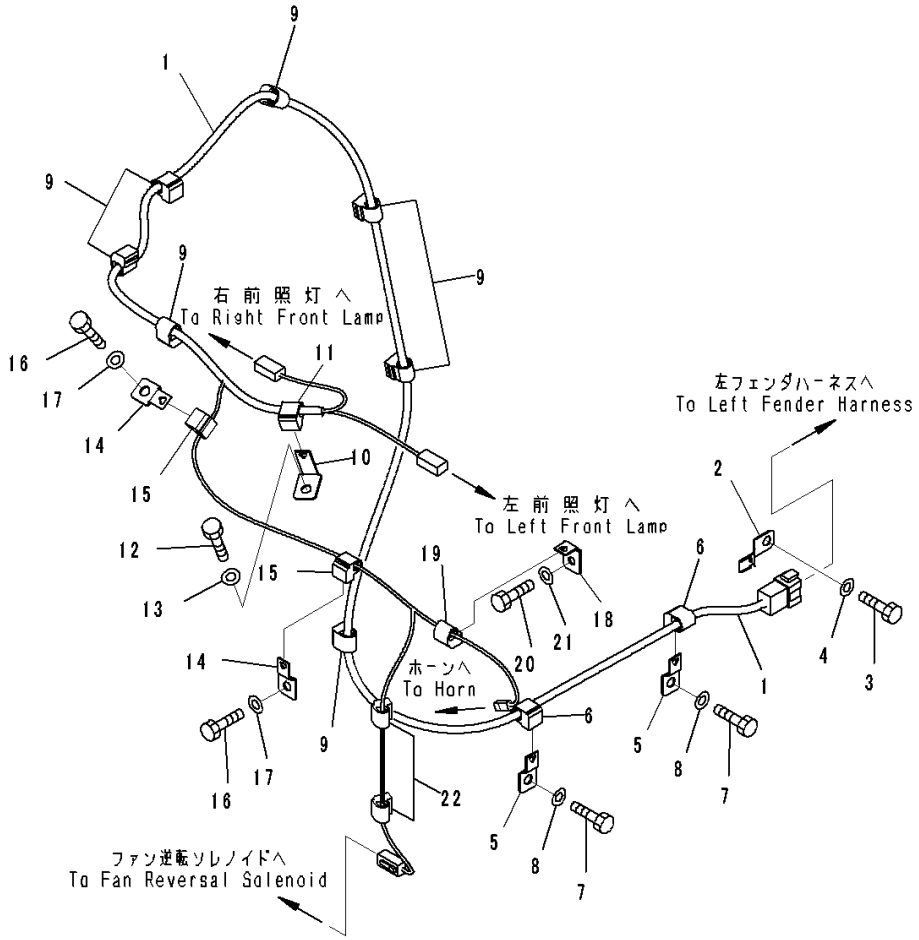

Index	Code	Part Number	Description	Qty	Serial Number
1		14X-06-51241	Wire Harness	1	80001-
2		08193-30010	Clip	1	80001-
3		01010-81020	Bolt	1	80001-
4		01643-31032	Washer	1	80001-
5		08057-00810	Clip	2	80001-
6		08211-01020	Clip	2	80001-
7		01010-81020	Bolt	2	80001-
8		01643-31032	Washer	2	80001-
9		08211-01020	Clip	7	80001-
10		08057-14010	Clip	1	80001-
11		08211-01020	Clip	1	80001-
12		01010-81020	Bolt	1	80001-
13		01643-31032	Washer	1	80001-
14		08057-00810	Clip	2	80001-
15		08211-00720	Clip	2	80001-
16		01010-81020	Bolt	2	80001-
17		01643-31032	Washer	2	80001-
18		08057-12008	Clip	1	80001-
19		08211-00720	Clip	1	80001-
20		01010-80820	Bolt	1	80001-
21		01643-30823	Washer	1	80001-
22		08211-00720	Clip	2	80001-

FIG. E0200-001006 Electric Wiring, Sensor

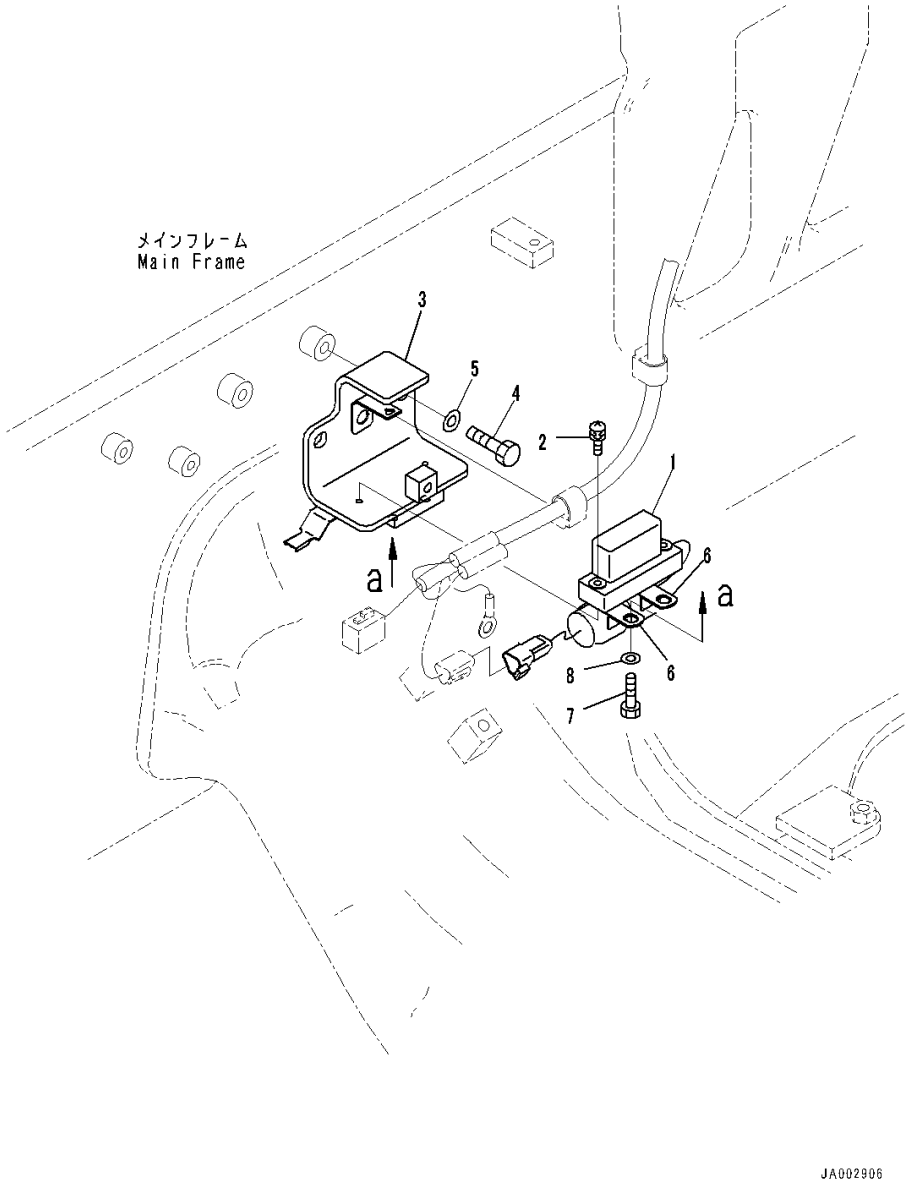

Index	Code	Part Number	Description	Qty	Serial Number
1		7861-93-5390	Sensor, Angle	1	80001-
2		01023-60630	Screw	2	80001-
3		14X-06-51681	Bracket	1	80001-
4		01010-81225	Bolt	2	80001-
5		01643-31232	Washer	2	80001-
6		600-051-2300	Clip	2	80001-
7		01010-81020	Bolt	2	80001-
8		01643-31032	Washer	2	80001-

FIG. E0200-002001 Electric Wiring, For ROPS Canopy, Wiring Harness (1/2)

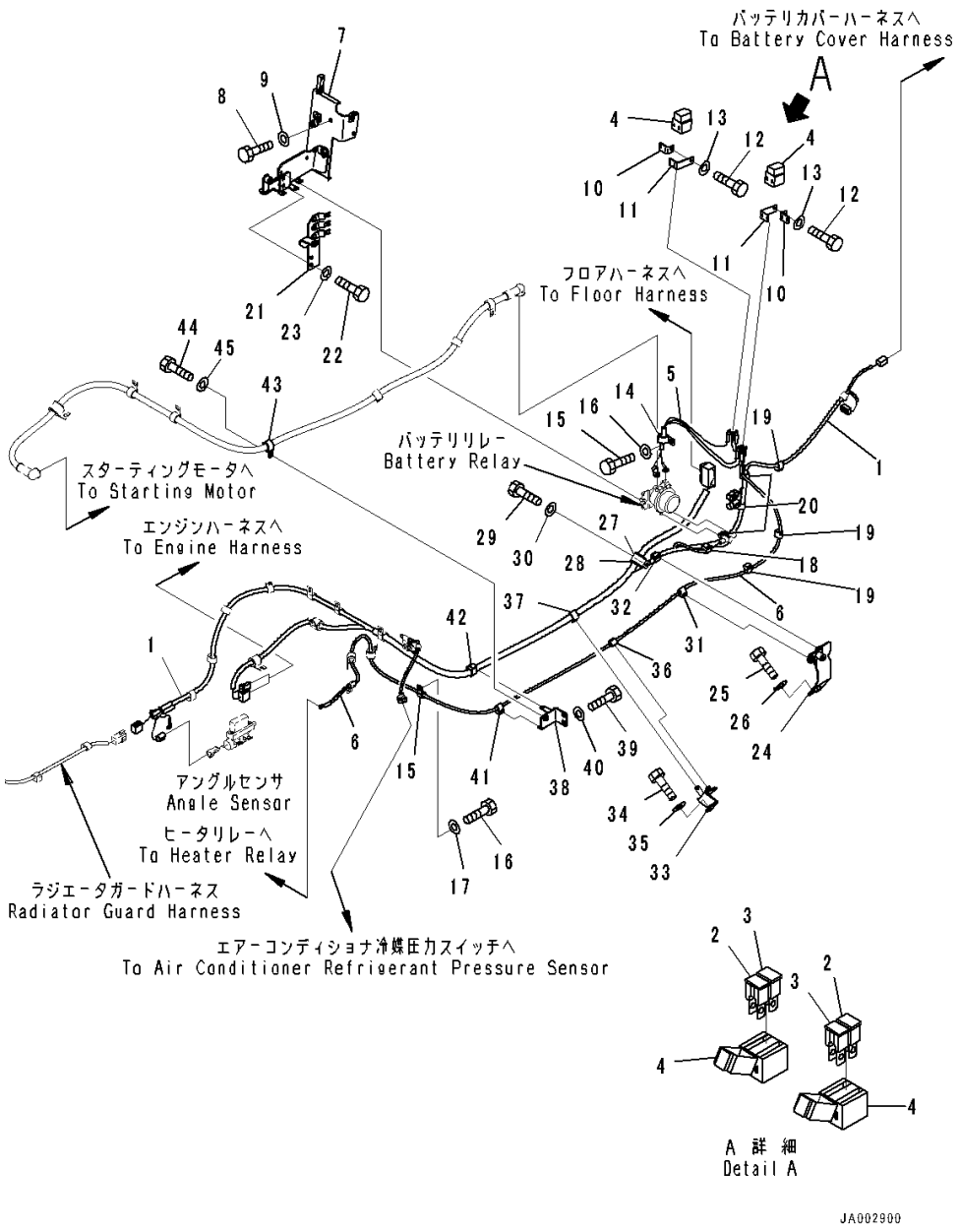

Index	Code	Part Number	Description	Qty	Serial Number
1		14X-06-54110	Wire Harness	1	80001-
2		14X-06-51610	• Fuse, 50Amp.	1	80001-
3		421-06-22830	• Fuse, 120Amp.	2	80001-
4		421-06-22880	• Holder	2	80001-
5		14X-06-51261	Wire Harness	1	80001-
6		14X-06-51291	Cable	1	80001-
7		14X-06-51561	Bracket	1	80001-
8		01010-81020	Bolt	2	80001-
9		01643-31032	Washer	2	80001-
10		421-06-22910	Bracket	2	80001-
11		421-06-22920	Bracket	2	80001-
12		01010-80820	Bolt	2	80001-
13		01643-30823	Washer	2	80001-
14		04434-52310	Clip	1	80001-
15		04434-51410	Clip	1	80001-
16		01010-81020	Bolt	2	80001-
17		01643-31032	Washer	2	80001-
18		08211-00720	Clip	1	80001-
19		08211-01020	Clip	3	80001-
20		08211-01320	Clip	3	80001-
21		14X-06-51571	Bracket	1	80001-
22		01010-81020	Bolt	2	80001-
23		01643-31032	Washer	2	80001-
24		14X-06-51581	Bracket	1	80001-
25		01010-81020	Bolt	2	80001-
26		01643-31032	Washer	2	80001-
27		04434-53211	Clip	1	80001-
28		07095-20523	Cushion	1	80001-
29		01010-81020	Bolt	1	80001-
30		01643-31032	Washer	1	80001-
31		08211-01020	Clip	1	80001-
32		08211-01320	Clip	1	80001-
33		14X-06-51591	Bracket	1	80001-
34		01010-81020	Bolt	2	80001-
35		01643-31032	Washer	2	80001-
36		08211-01020	Clip	1	80001-
37		08211-01920	Clip	1	80001-
38		14X-06-51621	Bracket	1	80001-
39		01010-81020	Bolt	2	80001-

FIG. E0200-002001 Electric Wiring, For ROPS Canopy, Wiring Harness (1/2)

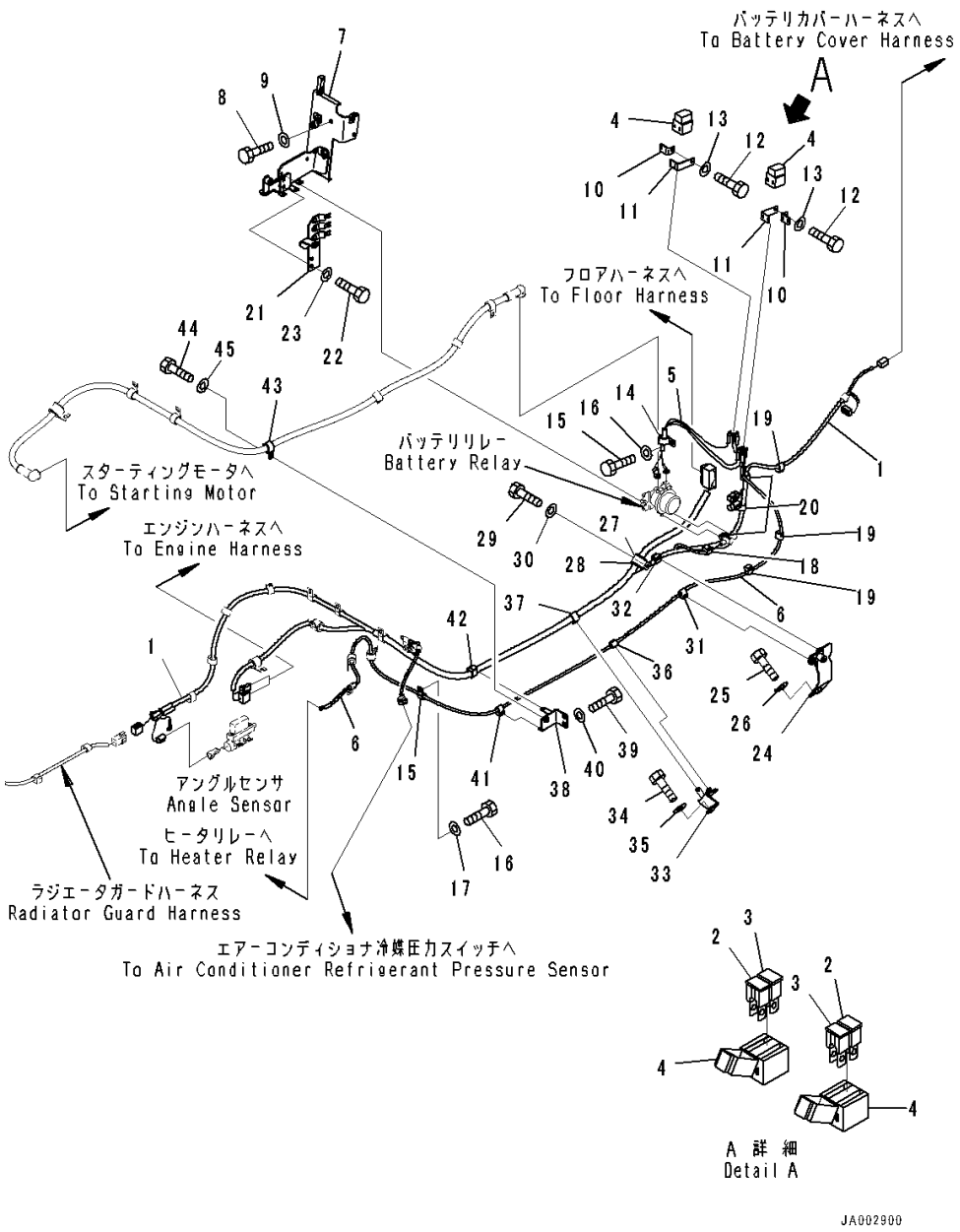

Index	Code	Part Number	Description	Qty	Serial Number
40		01643-31032	Washer	2	80001-
41		08211-01020	Clip	1	80001-
42		08211-01920	Clip	1	80001-
43		04434-52310	Clip	1	80001-
44		01010-81020	Bolt	1	80001-
45		01643-31032	Washer	1	80001-

FIG. E0200-002002 Electric Wiring, For ROPS Canopy, Bracket

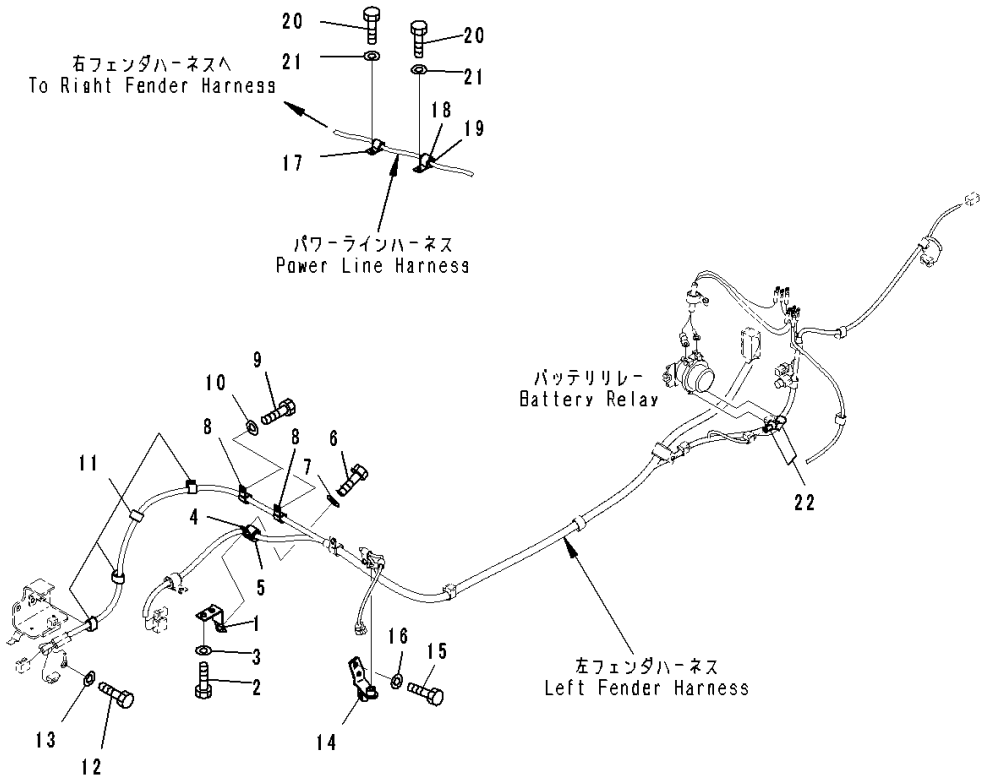

Index	Code	Part Number	Description	Qty	Serial Number
1		14X-06-51791	Bracket	1	80001-
2		01010-81225	Bolt	2	80001-
3		01643-31232	Washer	2	80001-
4		04434-52511	Clip	1	80001-
5		07095-20318	Cushion	1	80001-
6		01010-81020	Bolt	1	80001-
7		01643-31032	Washer	1	80001-
8		04434-51710	Clip	2	80001-
9		01010-81025	Bolt	2	80001-
10		01643-31032	Washer	2	80001-
11		08211-01320	Clip	4	80001-
12		01010-81020	Bolt	1	80001-
13		01643-31032	Washer	1	80001-
14		14X-06-51771	Bracket	1	80001-
15		01010-81020	Bolt	2	80001-
16		01643-31032	Washer	2	80001-
17		04434-51410	Clip	1	80001-
18		04434-52110	Clip	1	80001-
19		07095-20314	Cushion	1	80001-
20		01010-81020	Bolt	2	80001-
21		01643-31032	Washer	2	80001-
22		08038-00519	Cap	2	80001-

FIG. E0200-002003 Electric Wiring, Holder

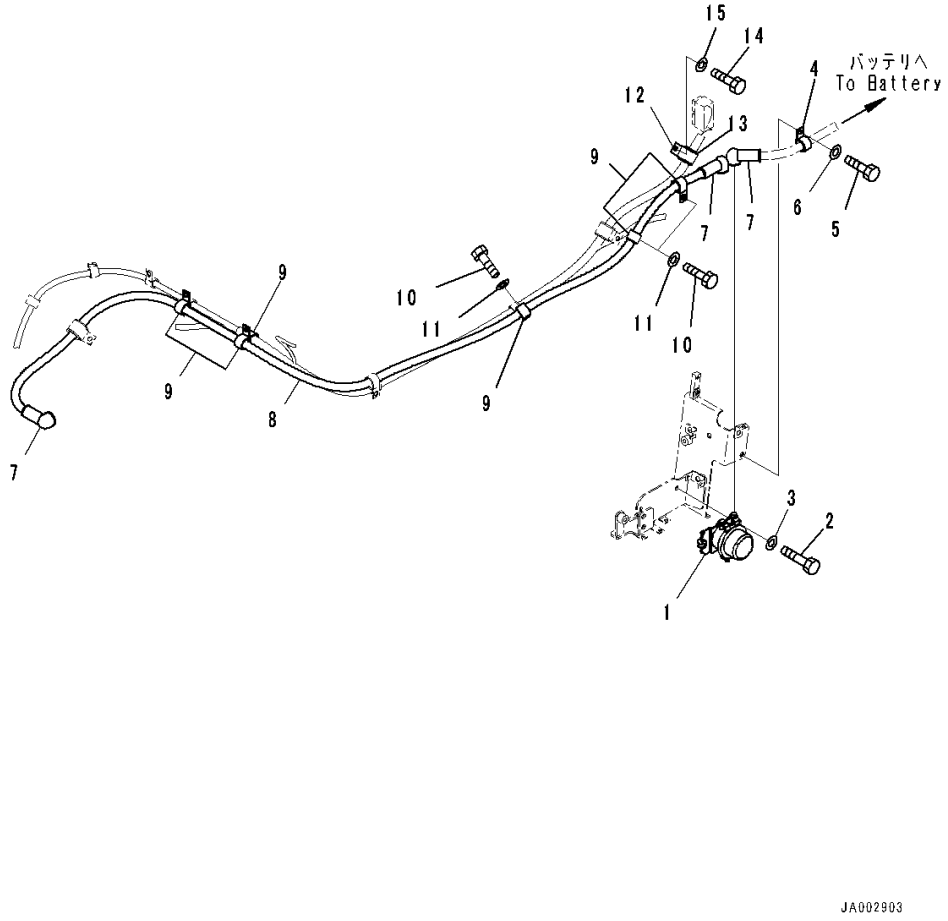

Index	Code	Part Number	Description	Qty	Serial Number
		Note: This list covers following specifications.			
		For ROPS Canopy			
		With Refuel Pump			
1		08088-30000	Switch	1	80001-
2		01010-80830	Bolt	2	80001-
3		01643-30823	Washer	2	80001-
4		04434-52310	Clip	1	80001-
5		01010-81020	Bolt	2	80001-
6		01643-31032	Washer	2	80001-
7		08038-00035	Cap	3	80001-
8		14X-06-51281	Cable	1	80001-
9		04434-52310	Clip	6	80001-
10		01010-81020	Bolt	4	80001-
11		01643-31032	Washer	4	80001-
12		04434-53211	Clip	1	80001-
13		07095-20523	Cushion	1	80001-
14		01010-81020	Bolt	1	80001-
15		01643-31032	Washer	1	80001-

FIG. E0200-002004 Electric Wiring, For ROPS Canopy, Mounts

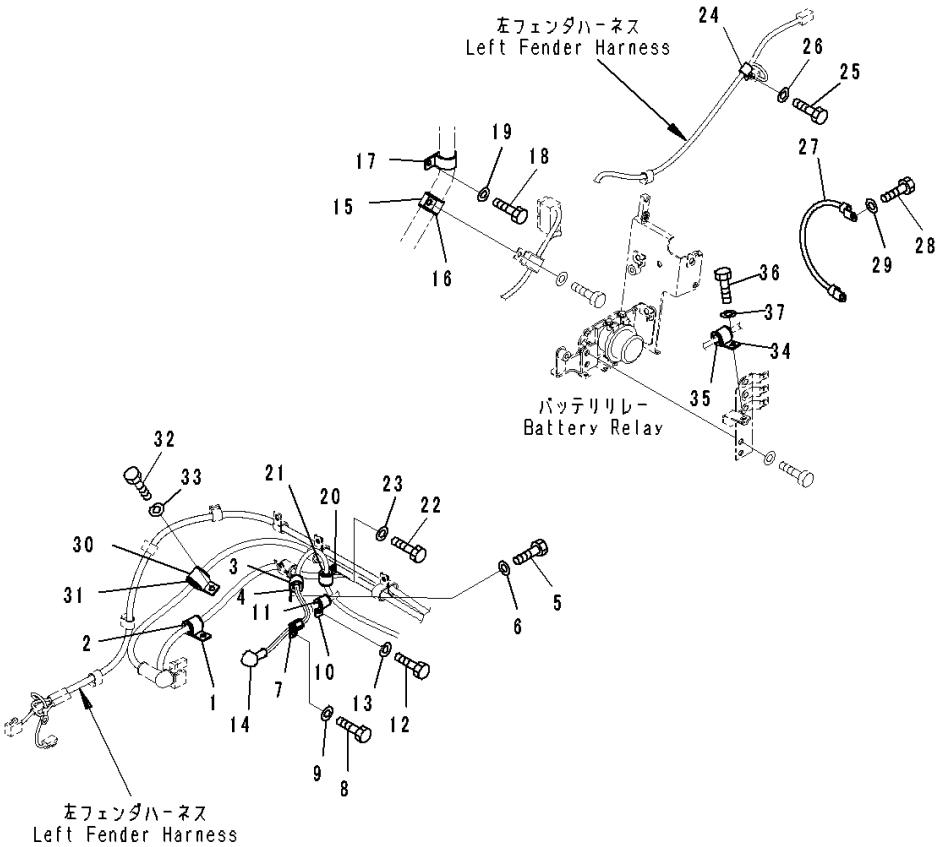

Index	Code	Part Number	Description	Qty	Serial Number
1		04434-52511	Clip	1	80001-
2		07095-20318	Cushion	1	80001-
3		04434-52110	Clip	1	80001-
4		07095-20314	Cushion	1	80001-
5		01010-81020	Bolt	1	80001-
6		01643-31032	Washer	1	80001-
7		600-051-2140	Clip	1	80001-
8		01010-81020	Bolt	1	80001-
9		01643-31032	Washer	1	80001-
10		04434-51610	Clip	1	80001-
11		07095-20211	Cushion	1	80001-
12		01010-81020	Bolt	1	80001-
13		01643-31032	Washer	1	80001-
14		08038-02027	Cap	1	80001-
15		155-61-15350	Clip	1	80001-
16		22M-62-13660	Cushion	1	80001-
17		04434-53411	Clip	1	80001-
18		01010-81020	Bolt	1	80001-
19		01643-31032	Washer	1	80001-
20		04434-52110	Clip	1	80001-
21		07095-20314	Cushion	1	80001-
22		01010-81020	Bolt	1	80001-
23		01643-31032	Washer	1	80001-
24		04434-51410	Clip	1	80001-
25		01010-81020	Bolt	1	80001-
26		01643-31032	Washer	1	80001-
27		08028-ED040	Cable, Ground	1	80001-
28		01010-81020	Bolt	2	80001-
29		01643-31032	Washer	2	80001-
30		04434-53211	Clip	1	80001-
31		07095-20523	Cushion	1	80001-
32		01010-81025	Bolt	1	80001-
33		01643-31032	Washer	1	80001-
34		04434-52511	Clip	1	80001-
35		07095-20318	Cushion	1	80001-
36		01010-81020	Bolt	1	80001-
37		01643-31032	Washer	1	80001-

FIG. E0200-002005 Electric Wiring, Wiring Harness (2/2)

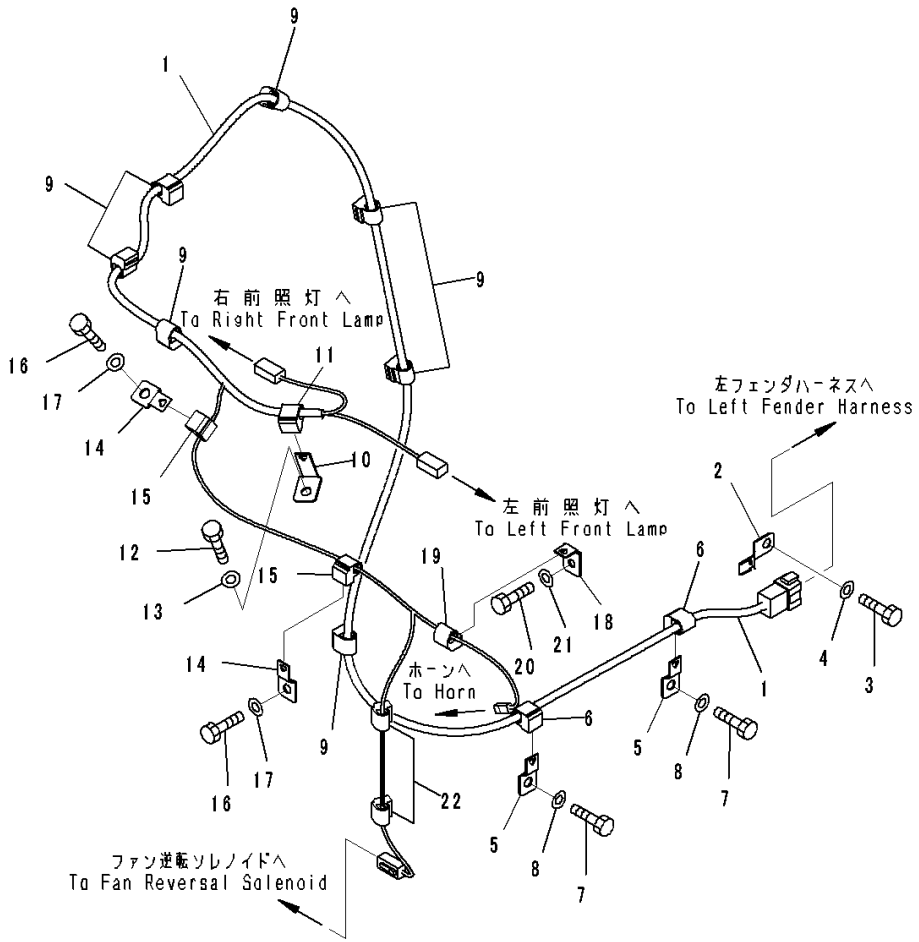

Index	Code	Part Number	Description	Qty	Serial Number
		Note: This list covers following specifications.			
		For ROPS Canopy			
		With Refuel Pump			
1		14X-06-51241	Wire Harness	1	80001-
2		08193-30010	Clip	1	80001-
3		01010-81020	Bolt	1	80001-
4		01643-31032	Washer	1	80001-
5		08057-00810	Clip	2	80001-
6		08211-01020	Clip	2	80001-
7		01010-81020	Bolt	2	80001-
8		01643-31032	Washer	2	80001-
9		08211-01020	Clip	7	80001-
10		08057-14010	Clip	1	80001-
11		08211-01020	Clip	1	80001-
12		01010-81020	Bolt	1	80001-
13		01643-31032	Washer	1	80001-
14		08057-00810	Clip	2	80001-
15		08211-00720	Clip	2	80001-
16		01010-81020	Bolt	2	80001-
17		01643-31032	Washer	2	80001-
18		08057-12008	Clip	1	80001-
19		08211-00720	Clip	1	80001-
20		01010-80820	Bolt	1	80001-
21		01643-30823	Washer	1	80001-
22		08211-00720	Clip	2	80001-

FIG. E0200-002006 Electric Wiring, Sensor

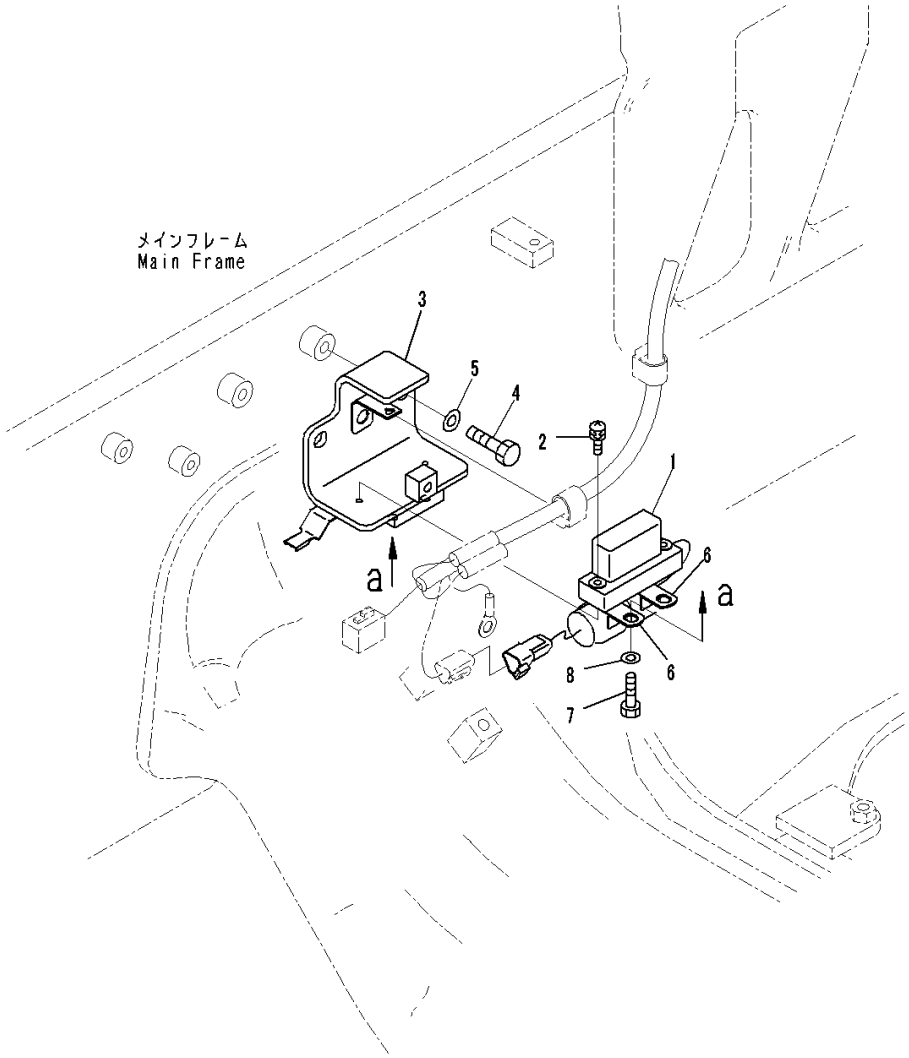

Index	Code	Part Number	Description	Qty	Serial Number
		Note: This list covers following specifications.			
		For ROPS Canopy			
		With Refuel Pump			
1		7861-93-5390	Sensor, Angle	1	80001-
2		01023-60630	Screw	2	80001-
3		14X-06-51681	Bracket	1	80001-
4		01010-81225	Bolt	2	80001-
5		01643-31232	Washer	2	80001-
6		600-051-2300	Clip	2	80001-
7		01010-81020	Bolt	2	80001-
8		01643-31032	Washer	2	80001-

FIG. E0200-003001 Electric Wiring, With Refuel Pump, Wiring Harness (1/2)

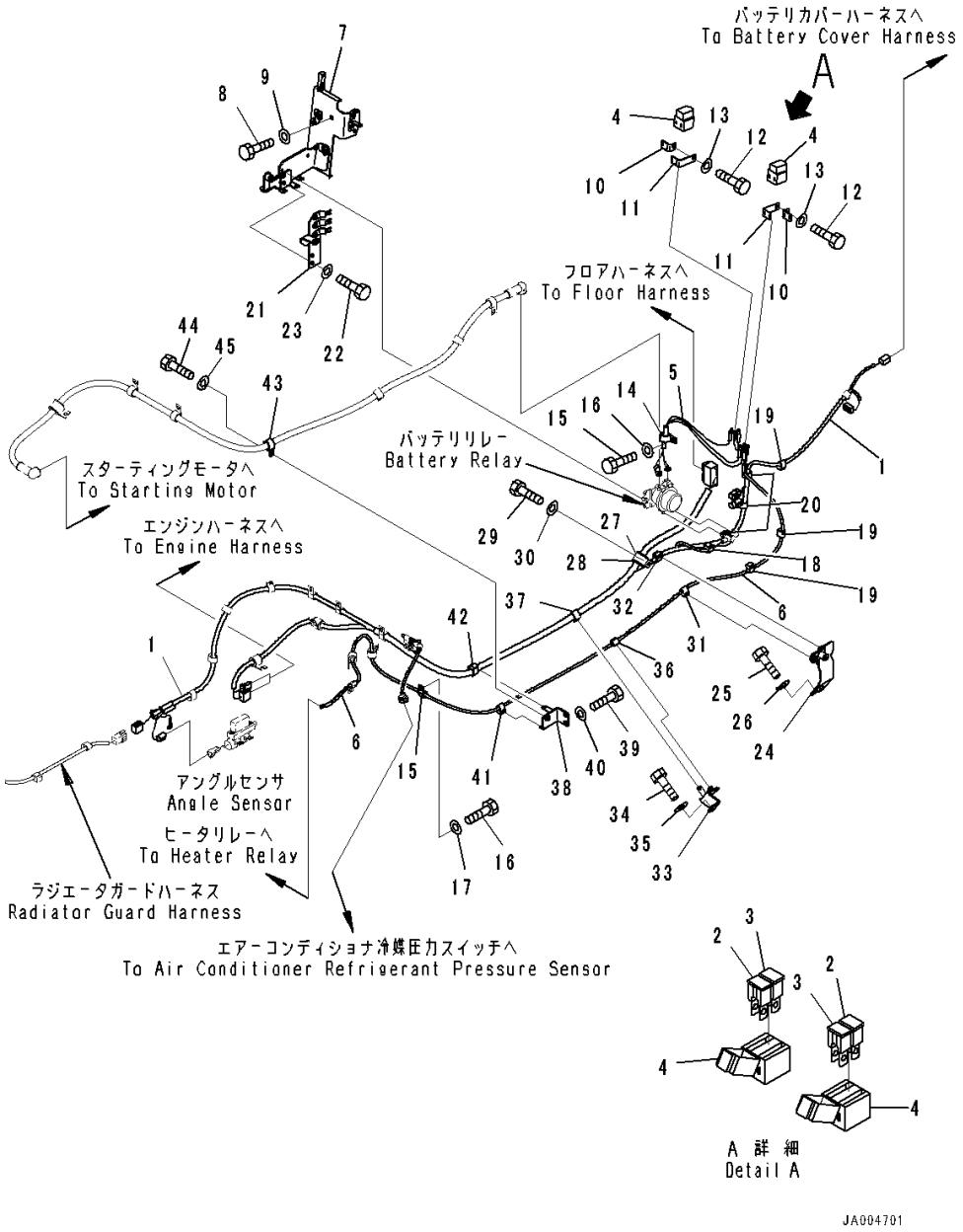

Index	Code	Part Number	Description	Qty	Serial Number
1		14X-06-51212	Wire Harness	1	80001-
2		14X-06-51610	• Fuse, 50Amp.	2	80001-
3		421-06-22830	• Fuse, 120Amp.	2	80001-
4		421-06-22880	• Holder	2	80001-
5		14X-06-51261	Wire Harness	1	80001-
6		14X-06-51291	Cable	1	80001-
7		14X-06-52950	Bracket	1	80001-
8		01010-81020	Bolt	2	80001-
9		01643-31032	Washer	2	80001-
10		421-06-22910	Bracket	2	80001-
11		421-06-22920	Bracket	2	80001-
12		01010-80820	Bolt	2	80001-
13		01643-30823	Washer	2	80001-
14		04434-52310	Clip	1	80001-
15		04434-51410	Clip	1	80001-
16		01010-81020	Bolt	2	80001-
17		01643-31032	Washer	2	80001-
18		08211-00720	Clip	1	80001-
19		08211-01020	Clip	3	80001-
20		08211-01320	Clip	3	80001-
21		14X-06-51571	Bracket	1	80001-
22		01010-81020	Bolt	2	80001-
23		01643-31032	Washer	2	80001-
24		14X-06-51581	Bracket	1	80001-
25		01010-81020	Bolt	2	80001-
26		01643-31032	Washer	2	80001-
27		04434-53211	Clip	1	80001-
28		07095-20523	Cushion	1	80001-
29		01010-81020	Bolt	1	80001-
30		01643-31032	Washer	1	80001-
31		08211-01020	Clip	1	80001-
32		08211-01320	Clip	1	80001-
33		14X-06-51591	Bracket	1	80001-
34		01010-81020	Bolt	2	80001-
35		01643-31032	Washer	2	80001-
36		08211-01020	Clip	1	80001-
37		08211-01920	Clip	1	80001-
38		14X-06-51621	Bracket	1	80001-
39		01010-81020	Bolt	2	80001-

FIG. E0200-003001 Electric Wiring, With Refuel Pump, Wiring Harness (1/2)

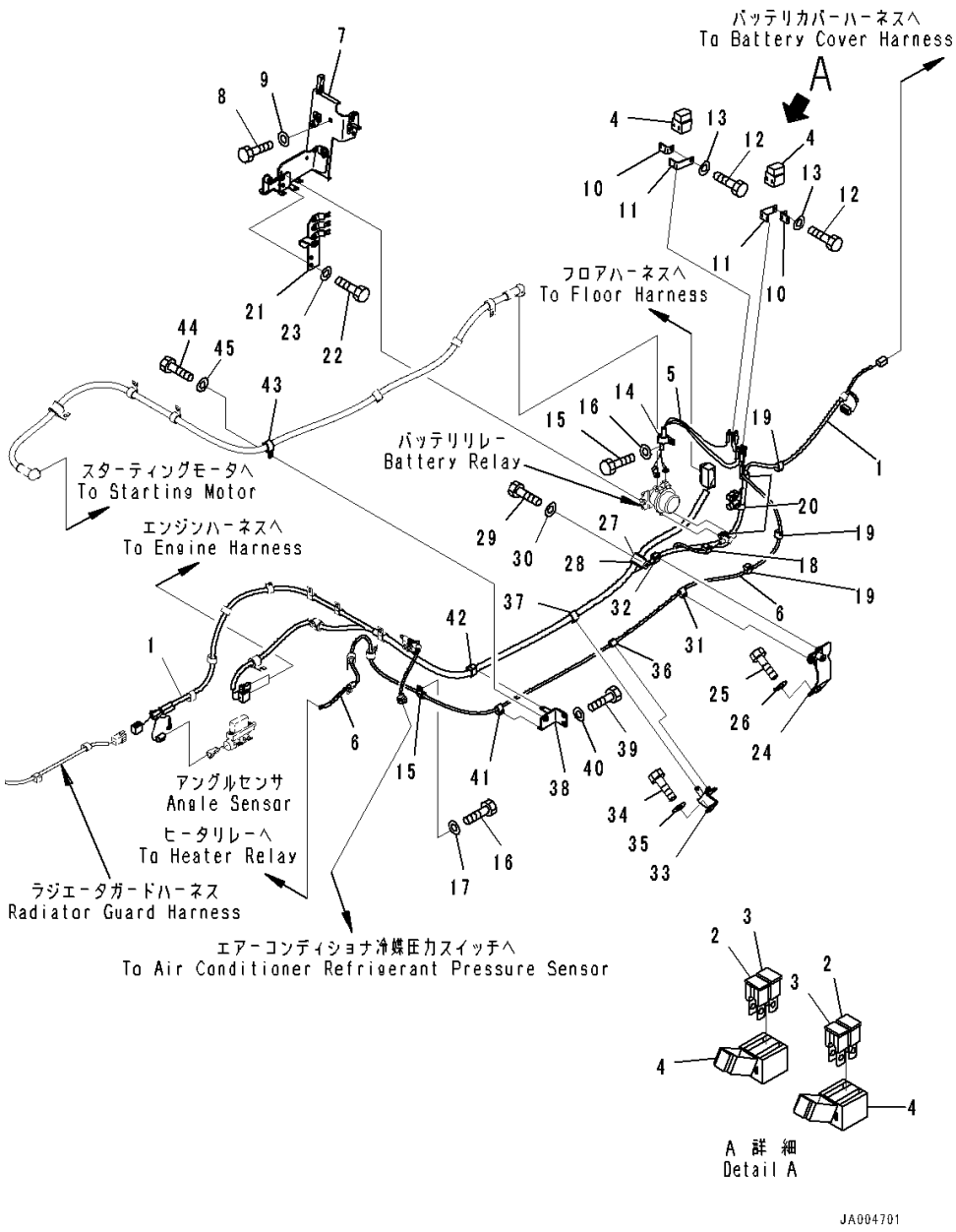

Index	Code	Part Number	Description	Qty	Serial Number
40		01643-31032	Washer	2	80001-
41		08211-01020	Clip	1	80001-
42		08211-01920	Clip	1	80001-
43		04434-52310	Clip	1	80001-
44		01010-81020	Bolt	1	80001-
45		01643-31032	Washer	1	80001-

FIG. E0200-003002 Electric Wiring, With Refuel Pump, Bracket

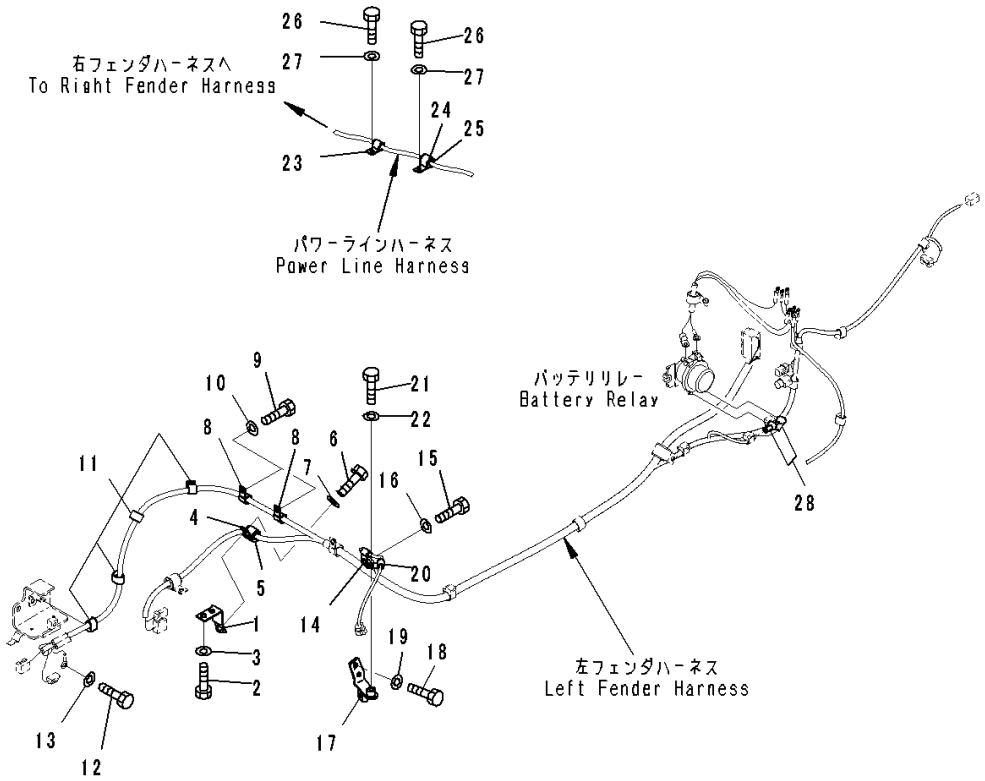

Index	Code	Part Number	Description	Qty	Serial Number
1		14X-06-51791	Bracket	1	80001-
2		01010-81225	Bolt	2	80001-
3		01643-31232	Washer	2	80001-
4		04434-52511	Clip	1	80001-
5		07095-20318	Cushion	1	80001-
6		01010-81020	Bolt	1	80001-
7		01643-31032	Washer	1	80001-
8		04434-51710	Clip	2	80001-
9		01010-81025	Bolt	2	80001-
10		01643-31032	Washer	2	80001-
11		08211-01320	Clip	4	80001-
12		01010-81020	Bolt	1	80001-
13		01643-31032	Washer	1	80001-
14		04434-51010	Clip	1	80001-
15		01010-81030	Bolt	1	80001-
16		01643-31032	Washer	1	80001-
17		14X-06-51771	Bracket	1	80001-
18		01010-81020	Bolt	2	80001-
19		01643-31032	Washer	2	80001-
20		04434-51010	Clip	1	80001-
21		01010-81020	Bolt	1	80001-
22		01643-31032	Washer	1	80001-
23		04434-51410	Clip	1	80001-
24		04434-52110	Clip	1	80001-
25		07095-20314	Cushion	1	80001-
26		01010-81020	Bolt	2	80001-
27		01643-31032	Washer	2	80001-
28		08038-00519	Cap	2	80001-

FIG. E0200-003004 Electric Wiring, With Refuel Pump, Mounts

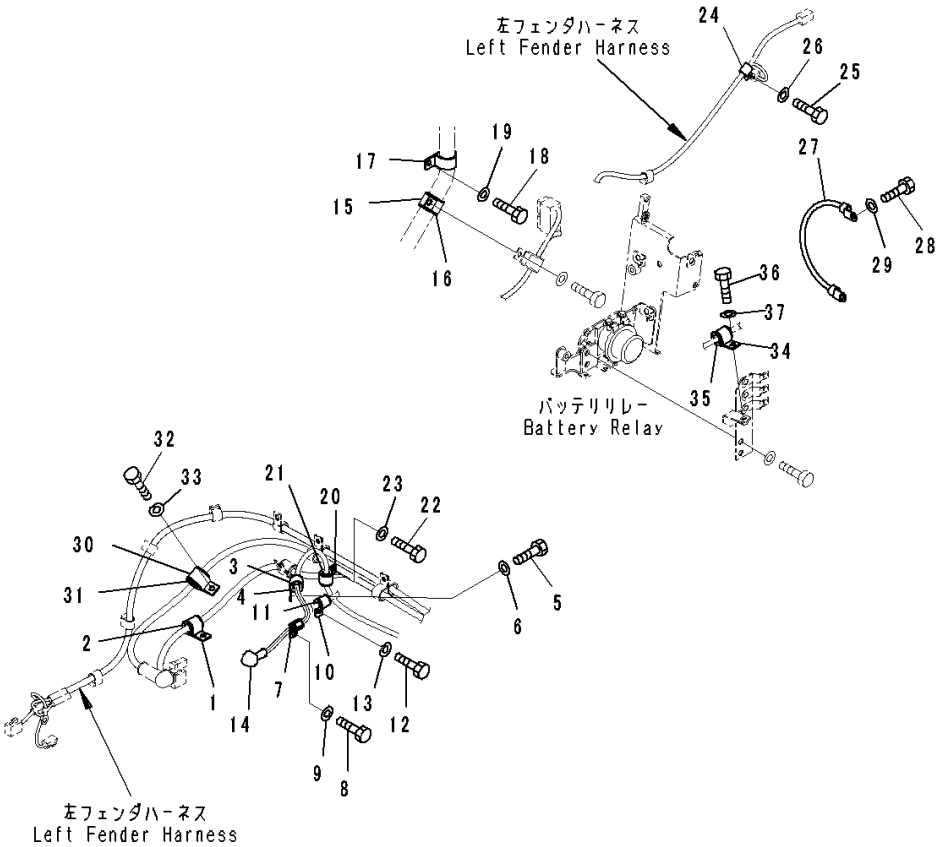

Index	Code	Part Number	Description	Qty	Serial Number
1		04434-52511	Clip	1	80001-
2		07095-20318	Cushion	1	80001-
3		04434-52110	Clip	1	80001-
4		07095-20314	Cushion	1	80001-
5		01010-81020	Bolt	1	80001-
6		01643-31032	Washer	1	80001-
7		600-051-2140	Clip	1	80001-
8		01010-81020	Bolt	1	80001-
9		01643-31032	Washer	1	80001-
10		04434-51610	Clip	1	80001-
11		07095-20211	Cushion	1	80001-
12		01010-81020	Bolt	1	80001-
13		01643-31032	Washer	1	80001-
14		08038-02027	Cap	1	80001-
15		155-61-15350	Clip	1	80001-
16		22M-62-13660	Cushion	1	80001-
17		04434-53411	Clip	1	80001-
18		01010-81020	Bolt	1	80001-
19		01643-31032	Washer	1	80001-
20		04434-52110	Clip	1	80001-
21		07095-20314	Cushion	1	80001-
22		01010-81020	Bolt	1	80001-
23		01643-31032	Washer	1	80001-
24		04434-51410	Clip	1	80001-
25		01010-81020	Bolt	1	80001-
26		01643-31032	Washer	1	80001-
27		08028-ED040	Cable, Ground	1	80001-
28		01010-81020	Bolt	2	80001-
29		01643-31032	Washer	2	80001-
30		04434-53211	Clip	1	80001-
31		07095-20523	Cushion	1	80001-
32		01010-81025	Bolt	1	80001-
33		01643-31032	Washer	1	80001-
34		04434-52511	Clip	1	80001-
35		07095-20318	Cushion	1	80001-
36		01010-81020	Bolt	1	80001-
37		01643-31032	Washer	1	80001-

FIG. E0201-002001 Beacon Lamp, For ROPS Canopy

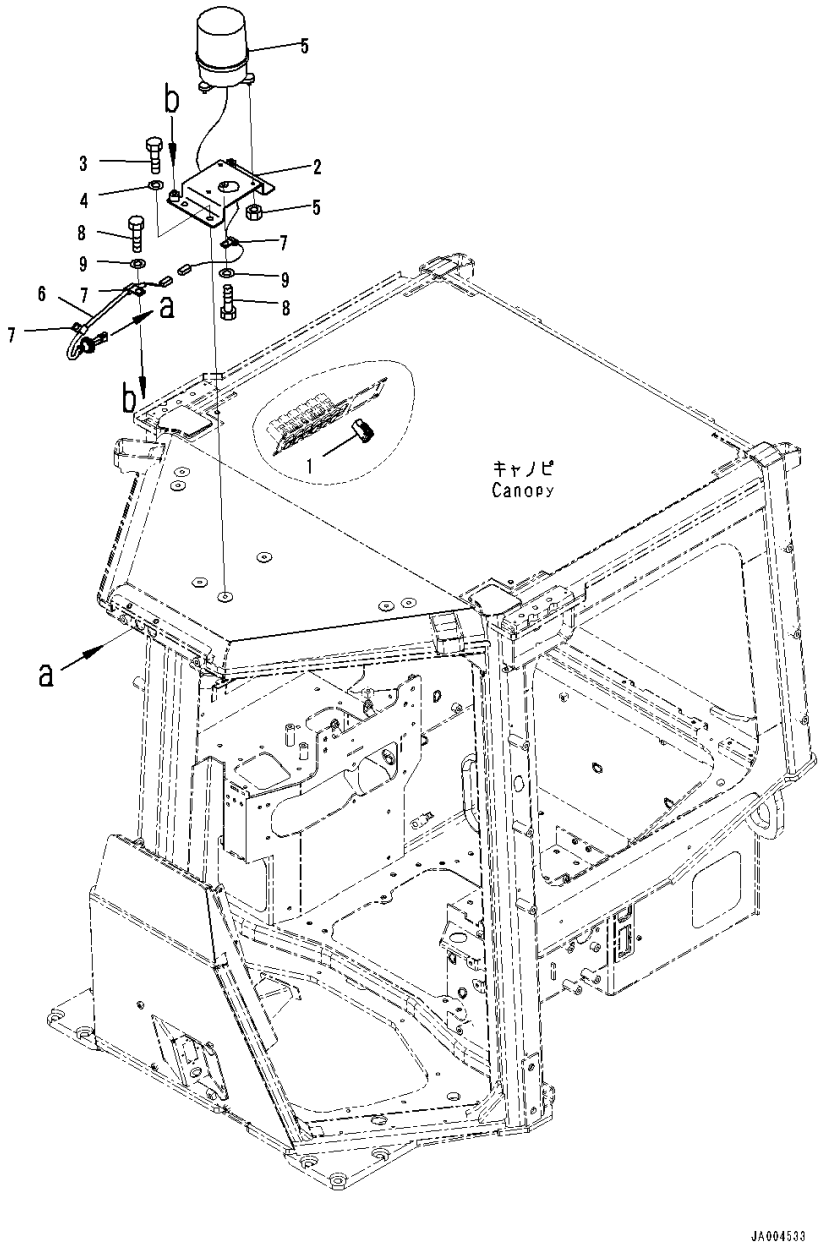

Index	Code	Part Number	Description	Qty	Serial Number
1		14X-06-53560	Switch	1	80054-
2		14X-06-51551	Bracket	1	80054-
3		01010-81220	Bolt	3	80054-
4		01643-31232	Washer	3	80054-
5		14X-06-33380	Beacon lamp	1	80054-
6		14X-06-52151	Wire Harness	1	80054-
7		04434-51012	Clip	3	80054-
8		01010-81220	Bolt	3	80054-
9		01643-31232	Washer	3	80054-

FIG. E0201-001001 Beacon Lamp

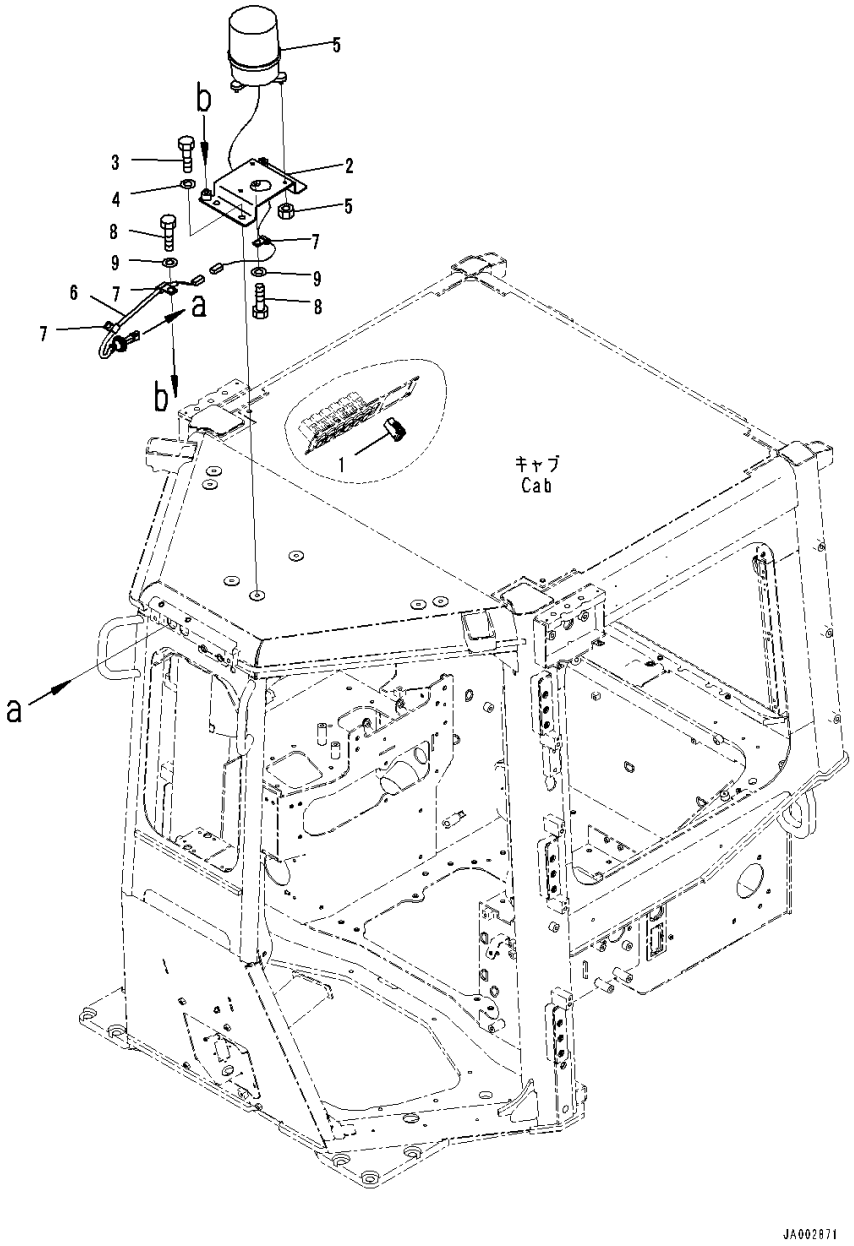

Index	Code	Part Number	Description	Qty	Serial Number
1		17A-06-42240	Switch	1	80001-
2		14X-06-51551	Bracket	1	80001-
3		01010-81220	Bolt	3	80001-
4		01643-31232	Washer	3	80001-
5		14X-06-33380	Beacon lamp	1	80001-
		08103-02460	• Bulb, 35watt	1	80001-
6		14X-06-52151	Wire Harness	1	80001-
7		04434-51012	Clip	3	80001-
8		01010-81220	Bolt	3	80001-
9		01643-31232	Washer	3	80001-

FIG. E0300-001001 Front Working Lamp

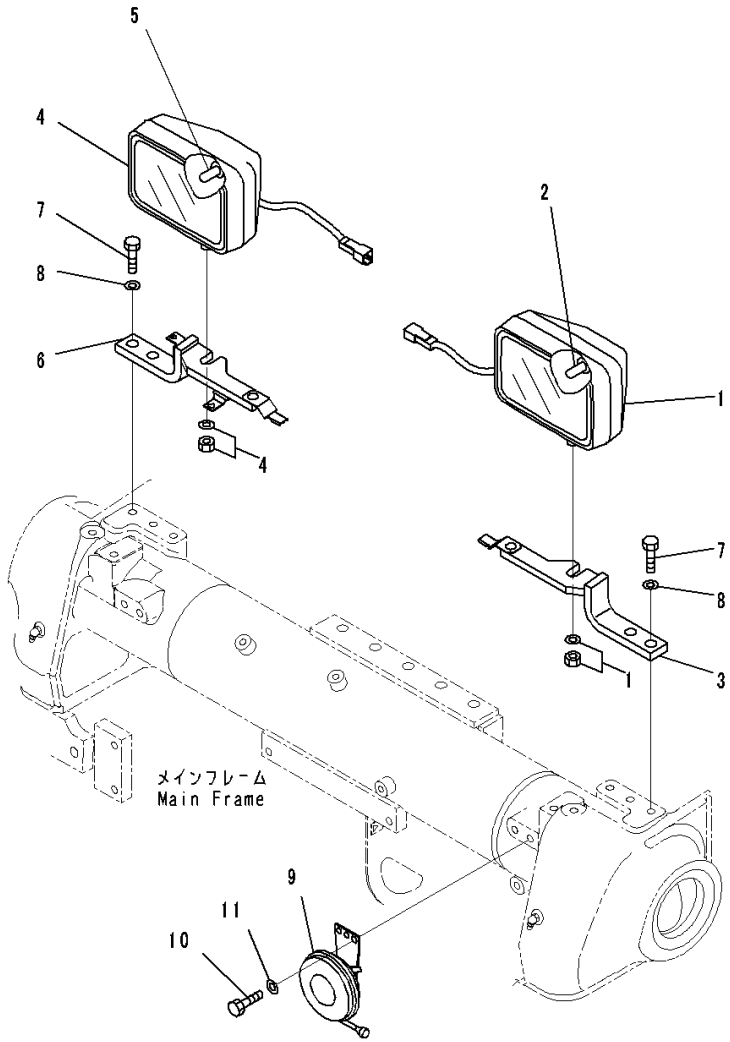

Index	Code	Part Number	Description	Qty	Serial Number
1		22B-06-11690	Light Assembly, Working,LHS	1	80001-
2		421-06-23330	• Bulb, 70watt, 24volt	1	80001-
3		14X-06-51451	Bracket,LHS	1	80001-
4		22B-06-11690	Light Assembly, Working,RHS	1	80001-
5		421-06-23330	• Bulb, 70watt, 24volt	1	80001-
6		14X-06-51461	Bracket,RHS	1	80001-
7		01010-81235	Bolt	4	80001-
8		01643-31232	Washer	4	80001-
9		19M-06-18220	Horn	1	80001-
10		01010-80816	Bolt	2	80001-
11		01643-30823	Washer	2	80001-

FIG. E0310-001001 Front Working Lamp and Rear side Working Lamp

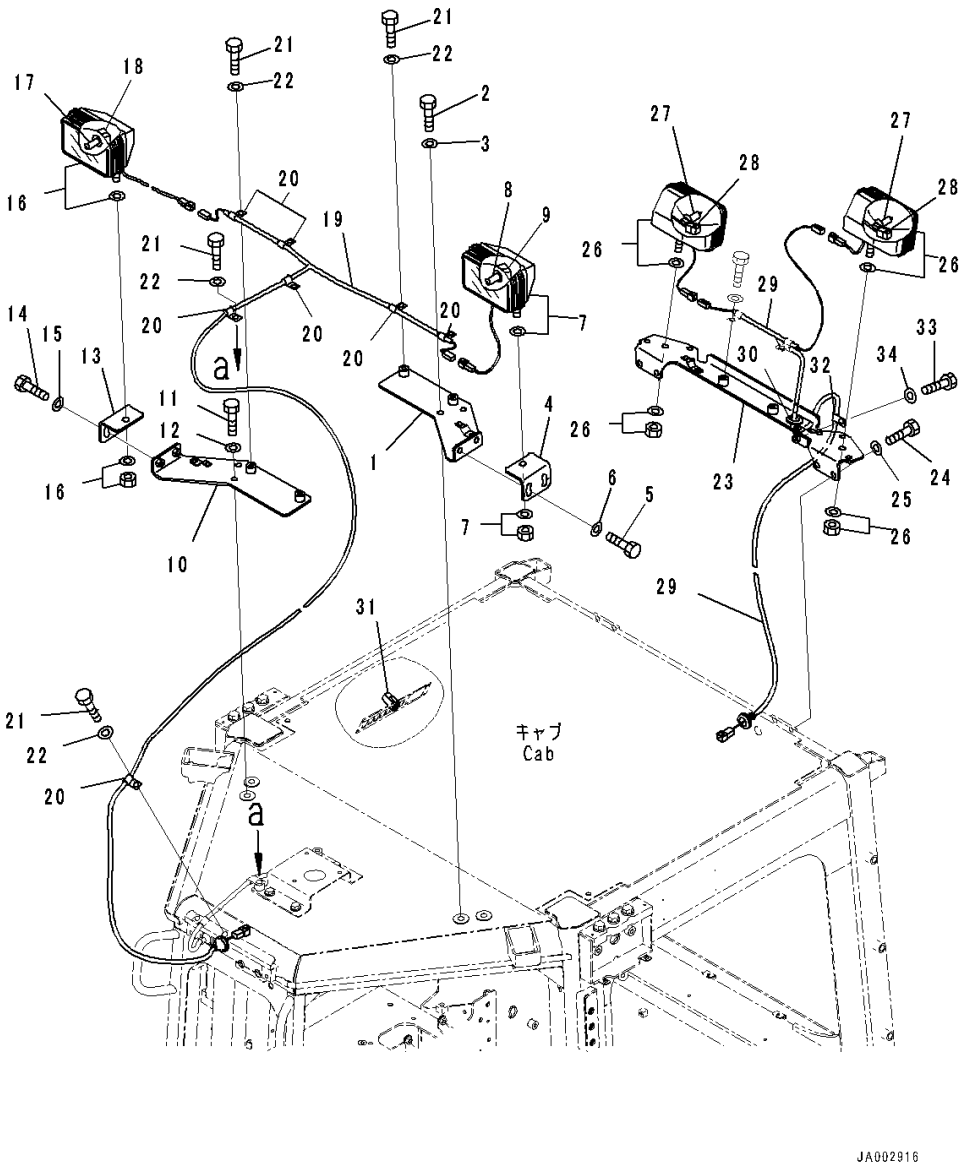

Index	Code	Part Number	Description	Qty	Serial Number
1		14X-Y79-1511	Plate	1	80001-
2		01010-81230	Bolt	2	80001-
3		01643-31232	Washer	2	80001-
4		14X-Y79-1521	Plate	1	80001-
5		01010-81230	Bolt	2	80001-
6		01643-31232	Washer	2	80001-
7		17A-06-17931	Lamp Assembly, Working	1	80001-
8		17A-06-17970	• Bulb, 70watt	1	80001-
9		17A-06-17980	• Sleeve	1	80001-
10		14X-Y79-1531	Plate	1	80001-
11		01010-81230	Bolt	2	80001-
12		01643-31232	Washer	2	80001-
13		14X-Y79-1521	Plate	1	80001-
14		01010-81230	Bolt	2	80001-
15		01643-31232	Washer	2	80001-
16		17A-06-17931	Lamp Assembly, Working	1	80001-
17		17A-06-17970	• Bulb, 70watt	1	80001-
18		17A-06-17980	• Sleeve	1	80001-
19		14X-06-51981	Wire Harness	1	80001-
20		04434-51012	Clip	4	80001-
21		01010-81220	Bolt	2	80001-
22		01643-31232	Washer	2	80001-
23		14X-06-51881	Bracket	1	80001-
24		01010-81225	Bolt	4	80001-
25		01643-31232	Washer	4	80001-
26		17A-06-17931	Lamp Assembly, Working	2	80001-
27		17A-06-17970	• Bulb, 70watt	1	80001-
28		17A-06-17980	• Sleeve	1	80001-
29		14X-06-51991	Wire Harness	1	80001-
30		205-977-7310	Grommet	1	80001-
31		17A-06-42230	Switch, Additional Light	1	80001-
32		04434-51012	Clip	1	80001-
33		01010-81220	Bolt	1	80001-
34		01643-31232	Washer	1	80001-

FIG. E0310-002001 Additional Working Lamp, With Additional Front Working Lamp

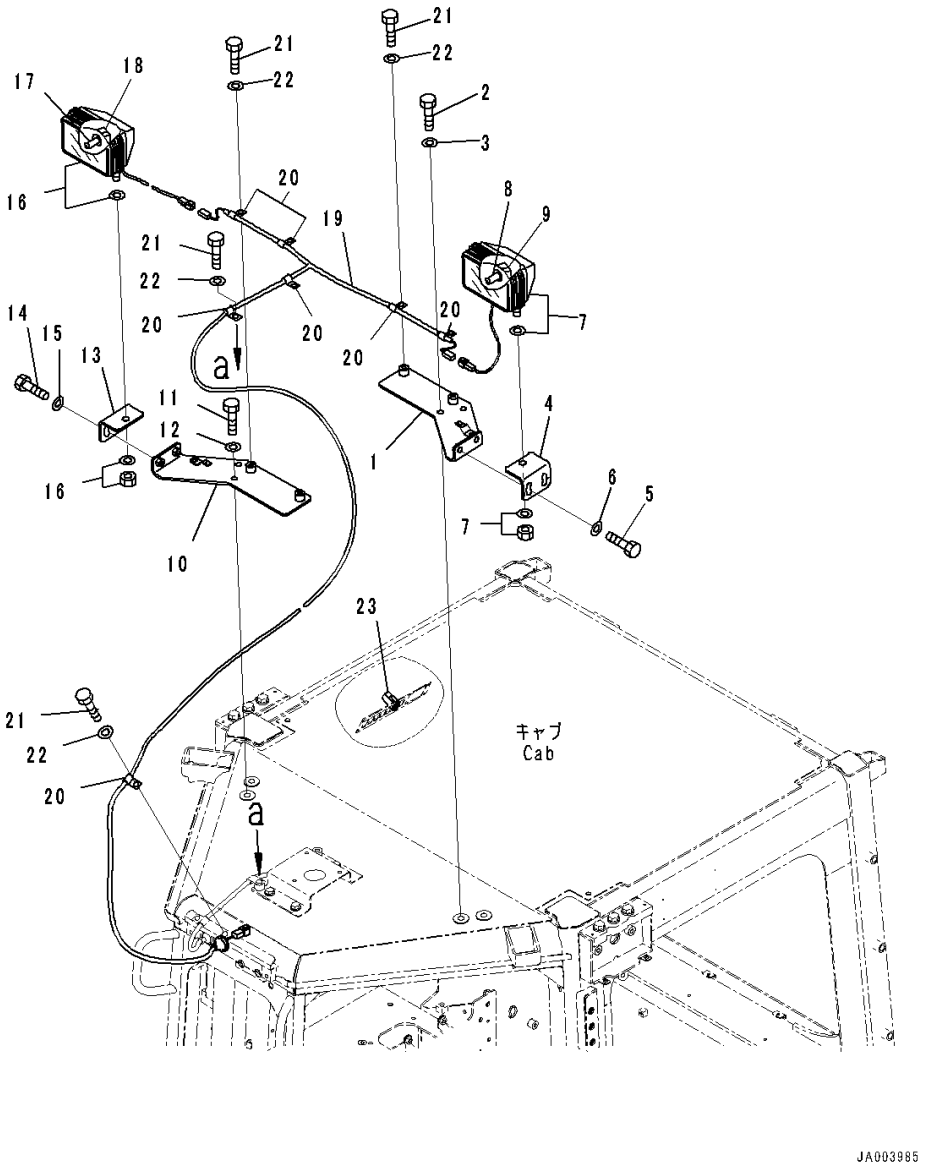

Index	Code	Part Number	Description	Qty	Serial Number
1		14X-Y79-1511	Plate	1	80001-
2		01010-81230	Bolt	2	80001-
3		01643-31232	Washer	2	80001-
4		14X-Y79-1521	Plate	1	80001-
5		01010-81230	Bolt	2	80001-
6		01643-31232	Washer	2	80001-
7		17A-06-17931	Lamp Assembly, Working	1	80001-
8		17A-06-17970	• Bulb, 70watt	1	80001-
9		17A-06-17980	• Sleeve	1	80001-
10		14X-Y79-1531	Plate	1	80001-
11		01010-81230	Bolt	2	80001-
12		01643-31232	Washer	2	80001-
13		14X-Y79-1521	Plate	1	80001-
14		01010-81230	Bolt	2	80001-
15		01643-31232	Washer	2	80001-
16		17A-06-17931	Lamp Assembly, Working	1	80001-
17		17A-06-17970	• Bulb, 70watt	1	80001-
18		17A-06-17980	• Sleeve	1	80001-
19		14X-06-51981	Wire Harness	1	80001-
20		04434-51012	Clip	7	80001-
21		01010-81220	Bolt	7	80001-
22		01643-31232	Washer	7	80001-
23		17A-06-42230	Switch	1	80001-

FIG. E0310-003001 Additional Rear side Working Lamp, With Additional Rear Working Lamp

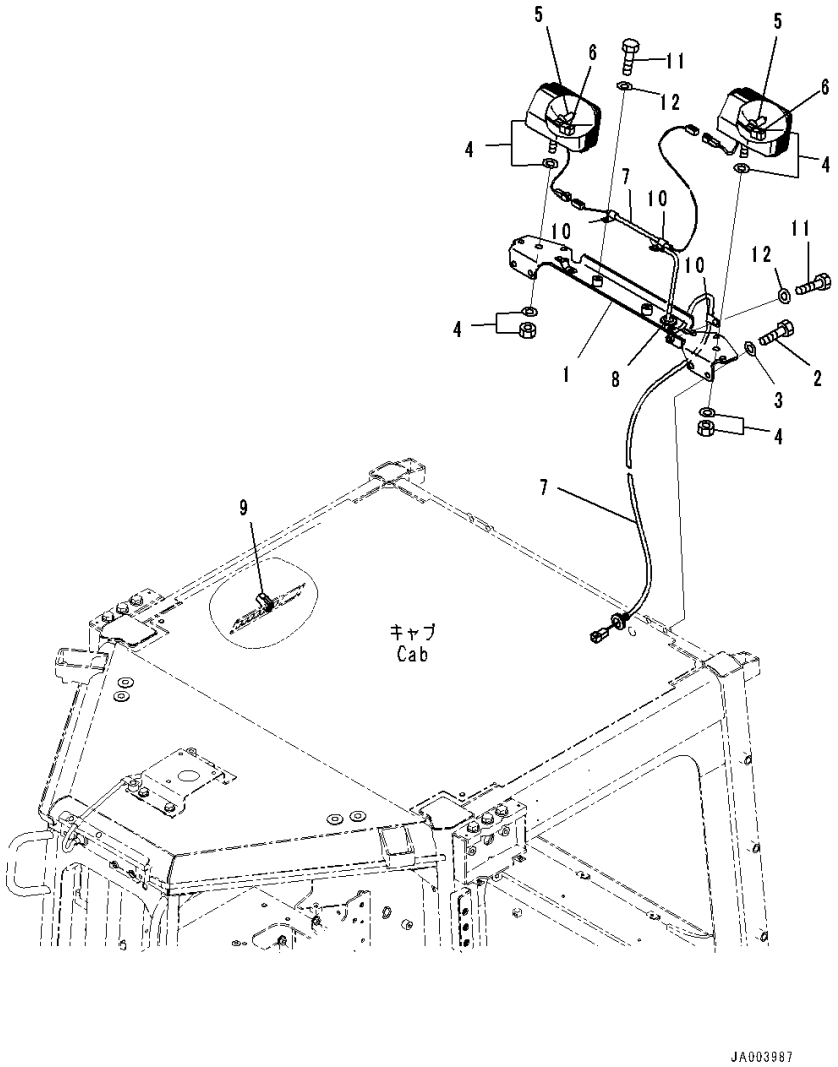

Index	Code	Part Number	Description	Qty	Serial Number
1		14X-06-51881	Bracket	1	80001-
2		01010-81225	Bolt	4	80001-
3		01643-31232	Washer	4	80001-
4		17A-06-17931	Lamp Assembly, Working	2	80001-
5		17A-06-17970	• Bulb, 70watt	1	80001-
6		17A-06-17980	• Sleeve	1	80001-
7		14X-06-51991	Wire Harness	1	80001-
8		205-977-7310	Grommet	1	80001-
9		17A-06-42230	Switch	1	80001-
10		04434-51012	Clip	4	80001-
11		01010-81225	Bolt	3	80001-
12		01643-31232	Washer	3	80001-

FIG. E0310-006001 Additional Rear side Working Lamp, With Additional Rear Working Lamp, For ROPS Canopy

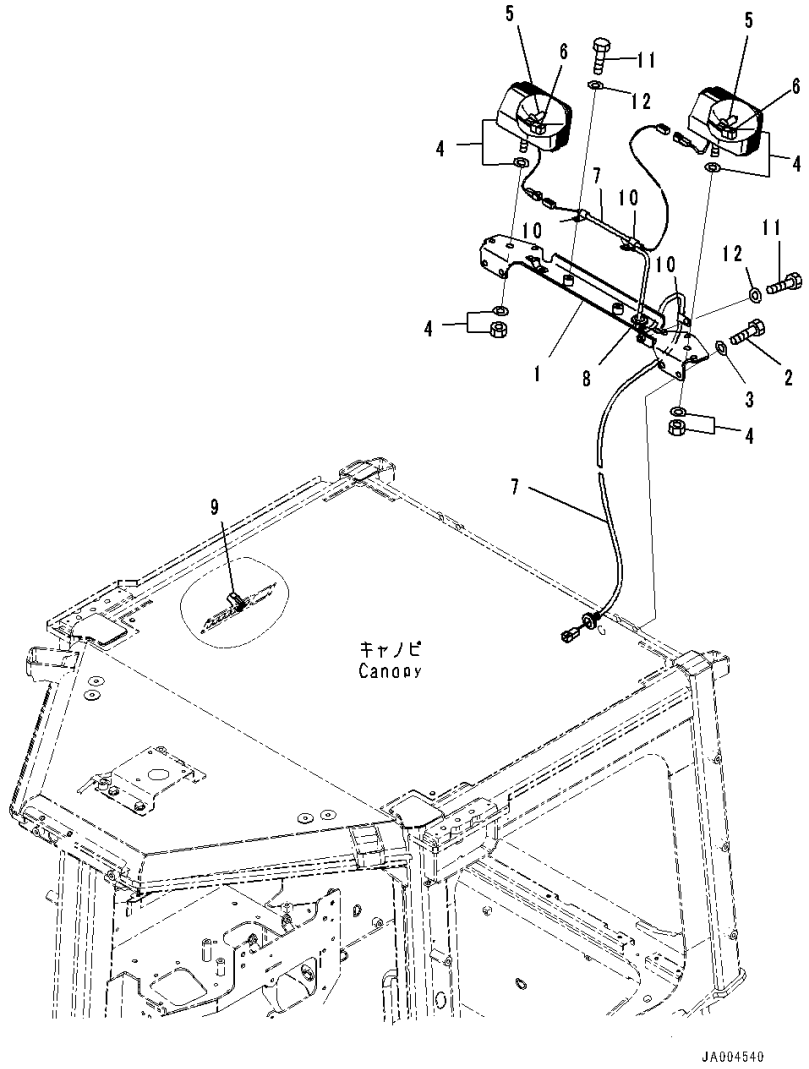

Index	Code	Part Number	Description	Qty	Serial Number
1		14X-06-51881	Bracket	1	80054-
2		01010-81225	Bolt	4	80054-
3		01643-31232	Washer	4	80054-
4		17A-06-17931	Lamp Assembly, Working	2	80054-
5		17A-06-17970	• Bulb, 70watt	1	80054-
6		17A-06-17980	• Sleeve	1	80054-
7		14X-06-51991	Wire Harness	1	80054-
8		205-977-7310	Grommet	1	80054-
9		14X-06-53550	Switch	1	80054-
10		04434-51012	Clip	4	80054-
11		01010-81225	Bolt	3	80054-
12		01643-31232	Washer	3	80054-

FIG. E0310-004001 Front Working Lamp and Rear side Working Lamp, For ROPS Canopy

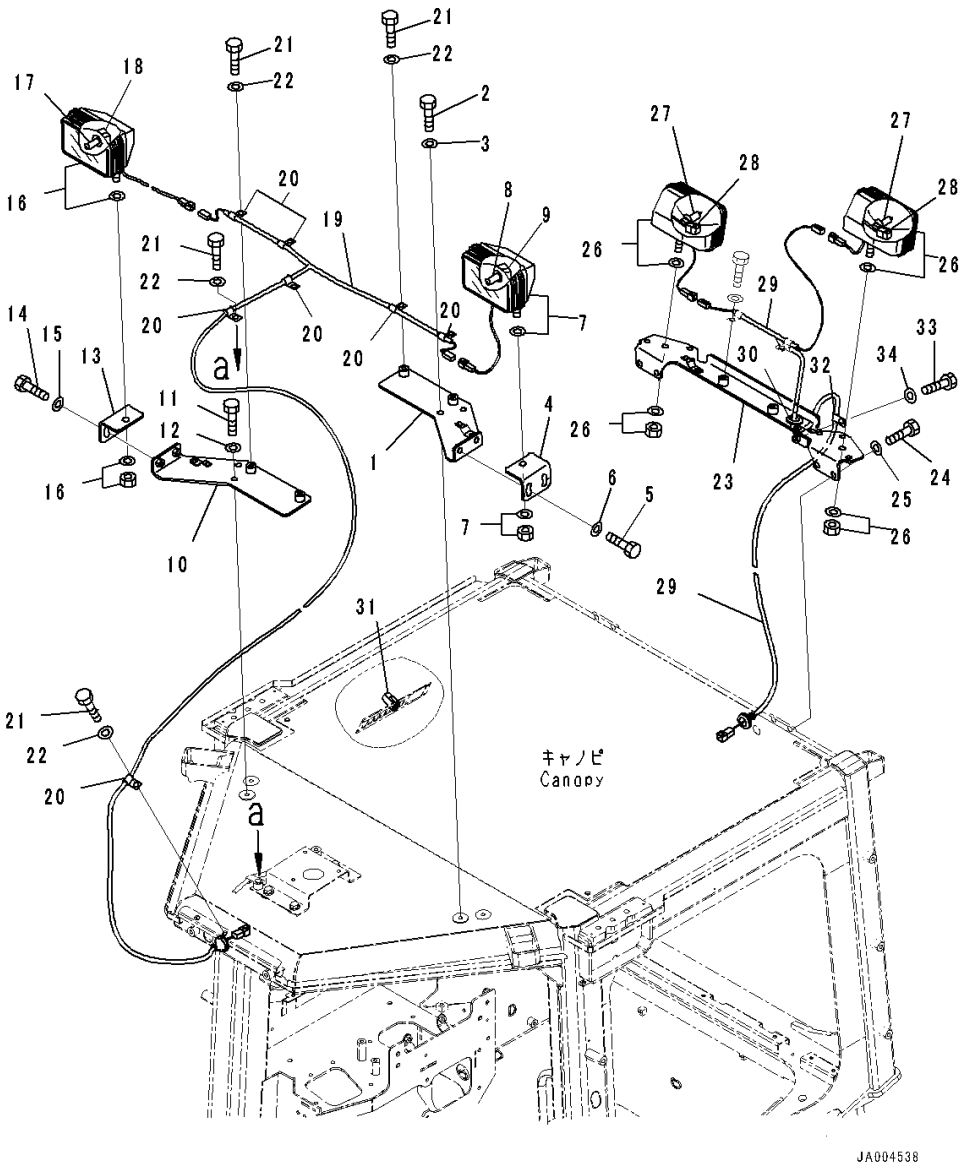

Index	Code	Part Number	Description	Qty	Serial Number
1		14X-Y79-1511	Plate	1	80054-
2		01010-81230	Bolt	2	80054-
3		01643-31232	Washer	2	80054-
4		14X-Y79-1521	Plate	1	80054-
5		01010-81230	Bolt	2	80054-
6		01643-31232	Washer	2	80054-
7		17A-06-17931	Lamp Assembly, Working	1	80054-
8		17A-06-17970	• Bulb, 70watt	1	80054-
9		17A-06-17980	• Sleeve	1	80054-
10		14X-Y79-1531	Plate	1	80054-
11		01010-81230	Bolt	2	80054-
12		01643-31232	Washer	2	80054-
13		14X-Y79-1521	Plate	1	80054-
14		01010-81230	Bolt	2	80054-
15		01643-31232	Washer	2	80054-
16		17A-06-17931	Lamp Assembly, Working	1	80054-
17		17A-06-17970	• Bulb, 70watt	1	80054-
18		17A-06-17980	• Sleeve	1	80054-
19		14X-06-51981	Wire Harness	1	80054-
20		04434-51012	Clip	7	80054-
21		01010-81220	Bolt	7	80054-
22		01643-31232	Washer	7	80054-
23		14X-06-51881	Bracket	1	80054-
24		01010-81225	Bolt	4	80054-
25		01643-31232	Washer	4	80054-
26		17A-06-17931	Lamp Assembly, Working	2	80054-
27		17A-06-17970	• Bulb, 70watt	1	80054-
28		17A-06-17980	• Sleeve	1	80054-
29		14X-06-51991	Wire Harness	1	80054-
30		205-977-7310	Grommet	1	80054-
31		14X-06-53550	Switch	1	80054-
32		04434-51012	Clip	4	80054-
33		01010-81225	Bolt	3	80054-
34		01643-31232	Washer	3	80054-

FIG. E0310-005001 Front Working Lamp and Rear side Working Lamp, With Additional Front Working Lamp, For ROPS Canopy

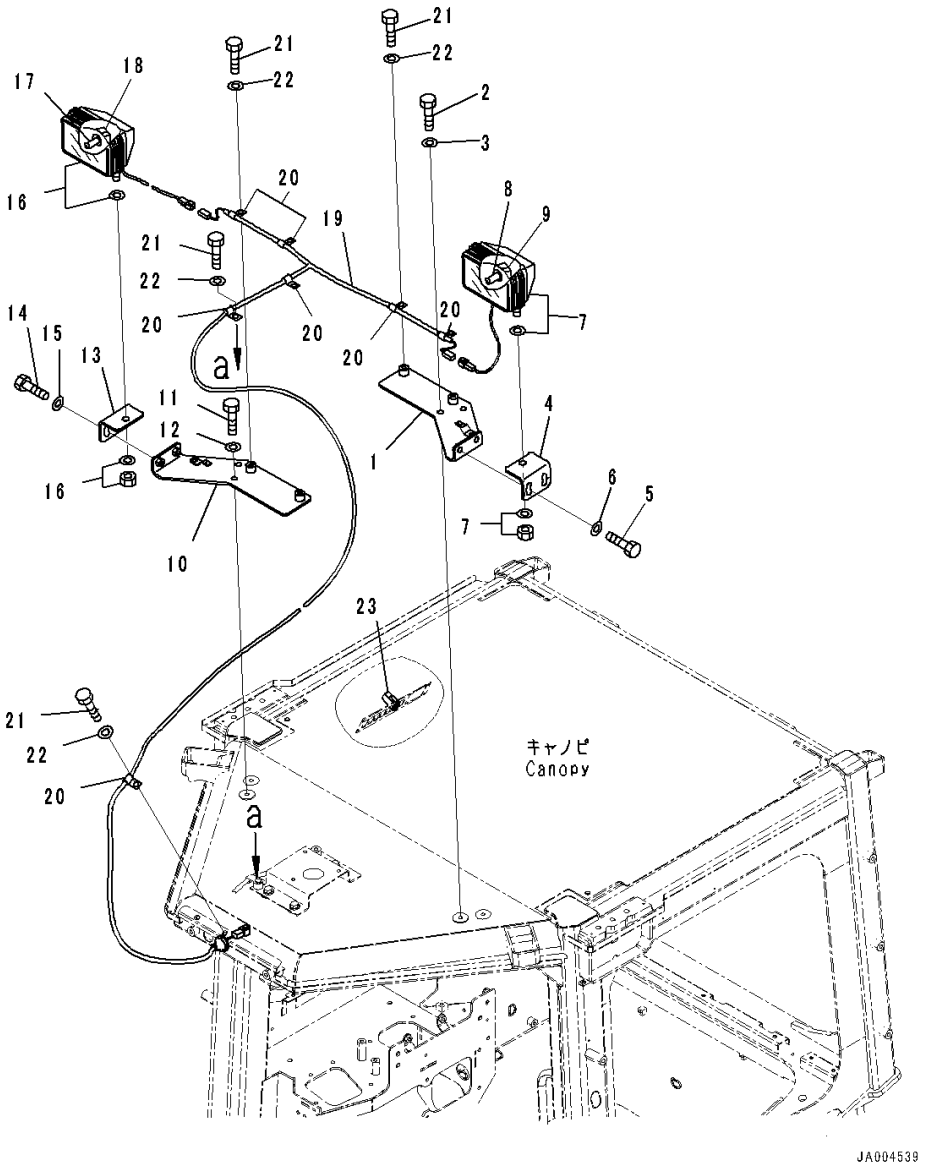

Index	Code	Part Number	Description	Qty	Serial Number
1		14X-Y79-1511	Plate	1	80054-
2		01010-81230	Bolt	2	80054-
3		01643-31232	Washer	2	80054-
4		14X-Y79-1521	Plate	1	80054-
5		01010-81230	Bolt	2	80054-
6		01643-31232	Washer	2	80054-
7		17A-06-17931	Lamp Assembly, Working	1	80054-
8		17A-06-17970	• Bulb, 70watt	1	80054-
9		17A-06-17980	• Sleeve	1	80054-
10		14X-Y79-1531	Plate	1	80054-
11		01010-81230	Bolt	2	80054-
12		01643-31232	Washer	2	80054-
13		14X-Y79-1521	Plate	1	80054-
14		01010-81230	Bolt	2	80054-
15		01643-31232	Washer	2	80054-
16		17A-06-17931	Lamp Assembly, Working	1	80054-
17		17A-06-17970	• Bulb, 70watt	1	80054-
18		17A-06-17980	• Sleeve	1	80054-
19		14X-06-51981	Wire Harness	1	80054-
20		04434-51012	Clip	7	80054-
21		01010-81220	Bolt	7	80054-
22		01643-31232	Washer	7	80054-
23		14X-06-53550	Switch	1	80054-

FIG. E0420-001001 Back-up Alarm, For Cab Configuration

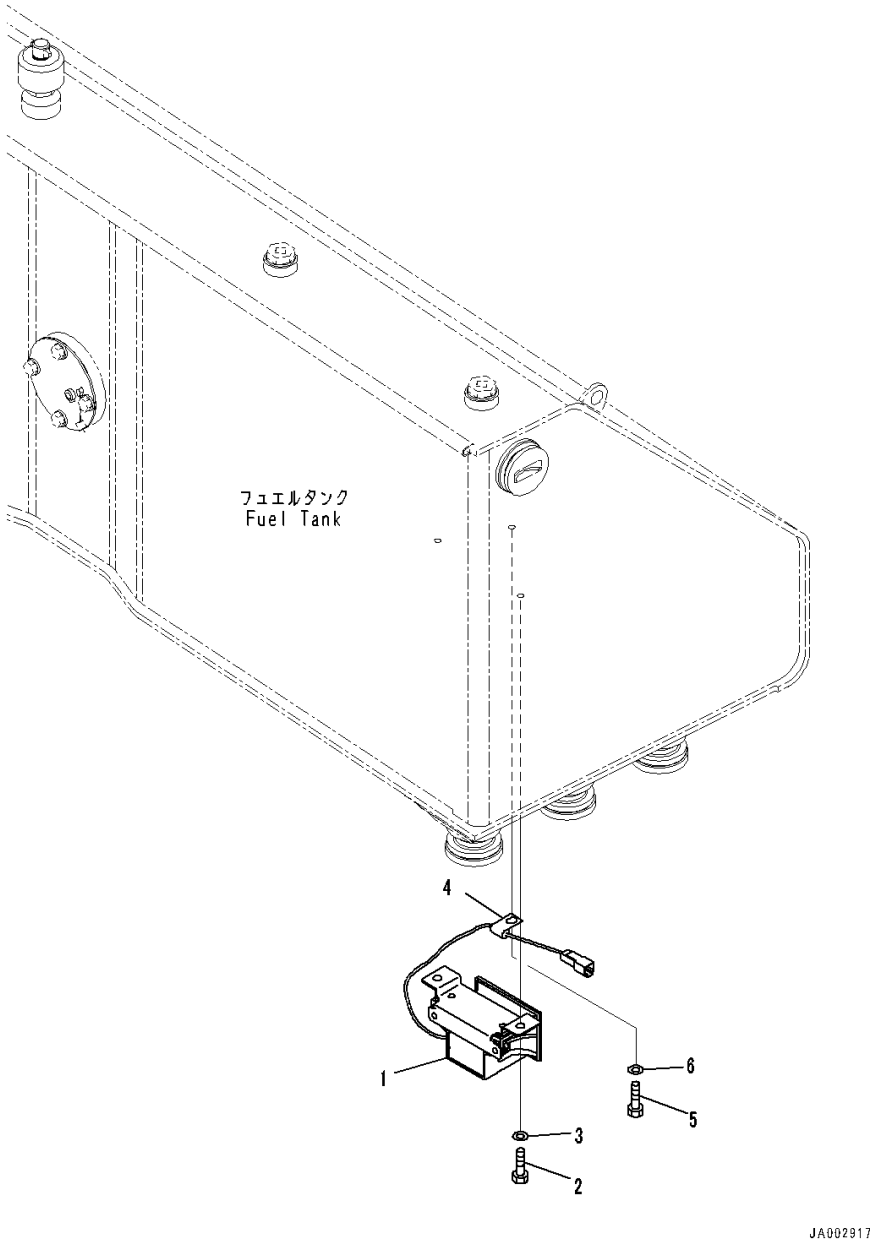

Index	Code	Part Number	Description	Qty	Serial Number
1		20Y-06-41812	Alarm, Back-up	1	80001-
2		01010-81020	Bolt	2	80001-
3		01643-31032	Washer	2	80001-
4		04434-50610	Clip	1	80001-
5		01010-81020	Bolt	1	80001-
6		01643-31032	Washer	1	80001-

POWER TRANSMITTING SYSTEM

FIG. F2200-001001 Universal Joint

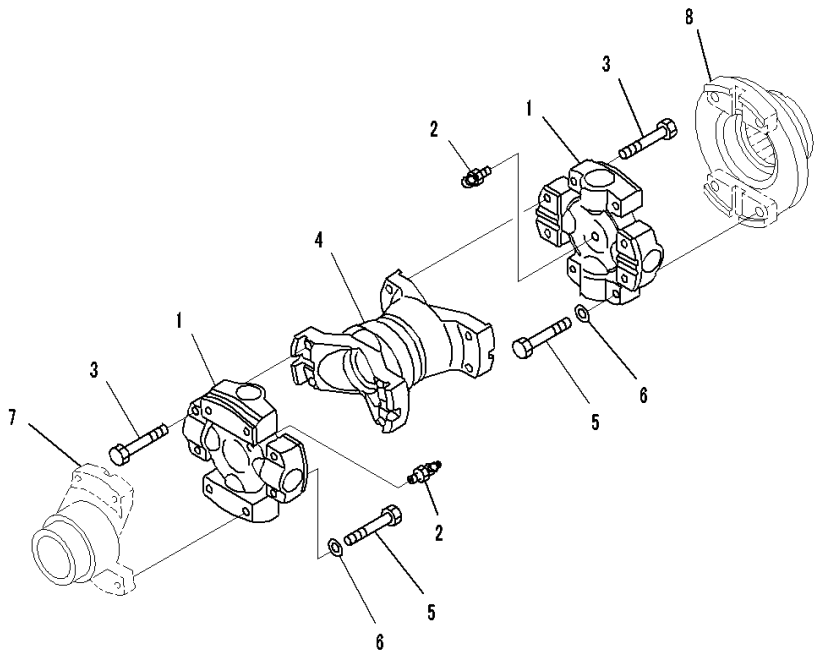

Index	Code	Part Number	Description	Qty	Serial Number
		421-20-34511	Shaft Assembly	1	80001-
1		421-20-33621	• Spider Assembly	2	80001-
2		423-20-32631	•• Fitting	1	80001-
3		421-20-12690	• Bolt	8	80001-
4		421-20-34650	• Yoke	1	80001-
5		01010-81265	Bolt	8	80001-
6		01643-51232	Washer	8	80001-
7		(14Z-12-31310)	Coupling(Refer to Page 158)		-
8		(711-53-11370)	Bearing(Refer to Page 245)		-

FIG. F2300-001001 Power Train, Bevel Gear and Shaft

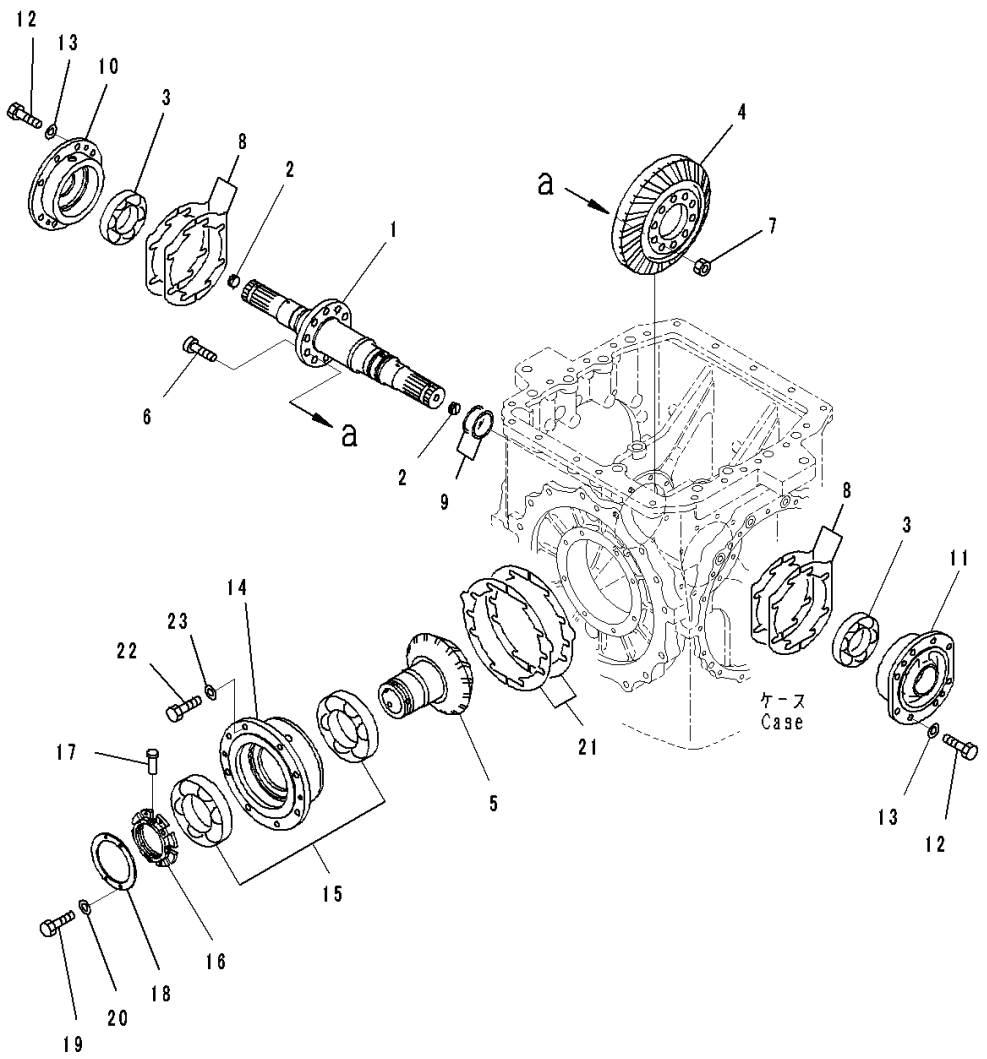

Index	Code	Part Number	Description	Qty	Serial Number
		Note: This list covers following specifications.			
		Without Power Angle Power Tilt Dozer			
		With Power Angle Power Tilt Dozer			
		14X-22-50000	Power Train Assembly	1	80001-
		14X-22-51000	• Steering Assembly	1	80001-
1		14Y-22-51121	•• Shaft	1	80001-
2		17M-22-45471	•• Orifice	2	80001-
3		06302-32213	•• Bearing	2	80001-
		14Y-22-55800	•• Gear Assembly	1	80001-
4	C1		••• Gear, Bevel	1	80001-
5	C1		••• Pinion	1	80001-
6		01084-01650	•• Bolt	10	80001-
7		01582-11613	•• Nut	10	80001-
8		14Y-22-21170	•• Shim, T=0.3mm	8	80001-
		14Y-22-21180	•• Shim, T=0.2mm	8	80001-
		14Y-22-21190	•• Shim, T=0.5mm	4	80001-
9		07018-10653	•• Ring	2	80001-
10		14Y-22-51130	•• Cage	1	80001-
11		14Y-22-21161	•• Cage	1	80001-
12		01010-81240	•• Bolt	16	80001-
13		01643-31232	•• Washer	16	80001-
14		154-22-65820	•• Cage	1	80001-
15		14Y-22-25880	•• Bearing	1	80001-
16		154-22-65890	•• Nut	1	80001-
17		154-22-65860	•• Pin	1	80001-
18		154-22-62220	•• Plate	1	80001-
19		01010-80612	•• Bolt	4	80001-
20		01643-30623	•• Washer	4	80001-
21		14Y-22-25830	•• Shim, T=0.2mm	6	80001-
		14Y-22-25840	•• Shim, T=0.3mm	4	80001-
		14Y-22-25850	•• Shim, T=0.4mm	2	80001-
22		01010-81240	•• Bolt	8	80001-
23		01643-31232	•• Washer	8	80001-

FIG. F2300-001002 Power Train, Brake

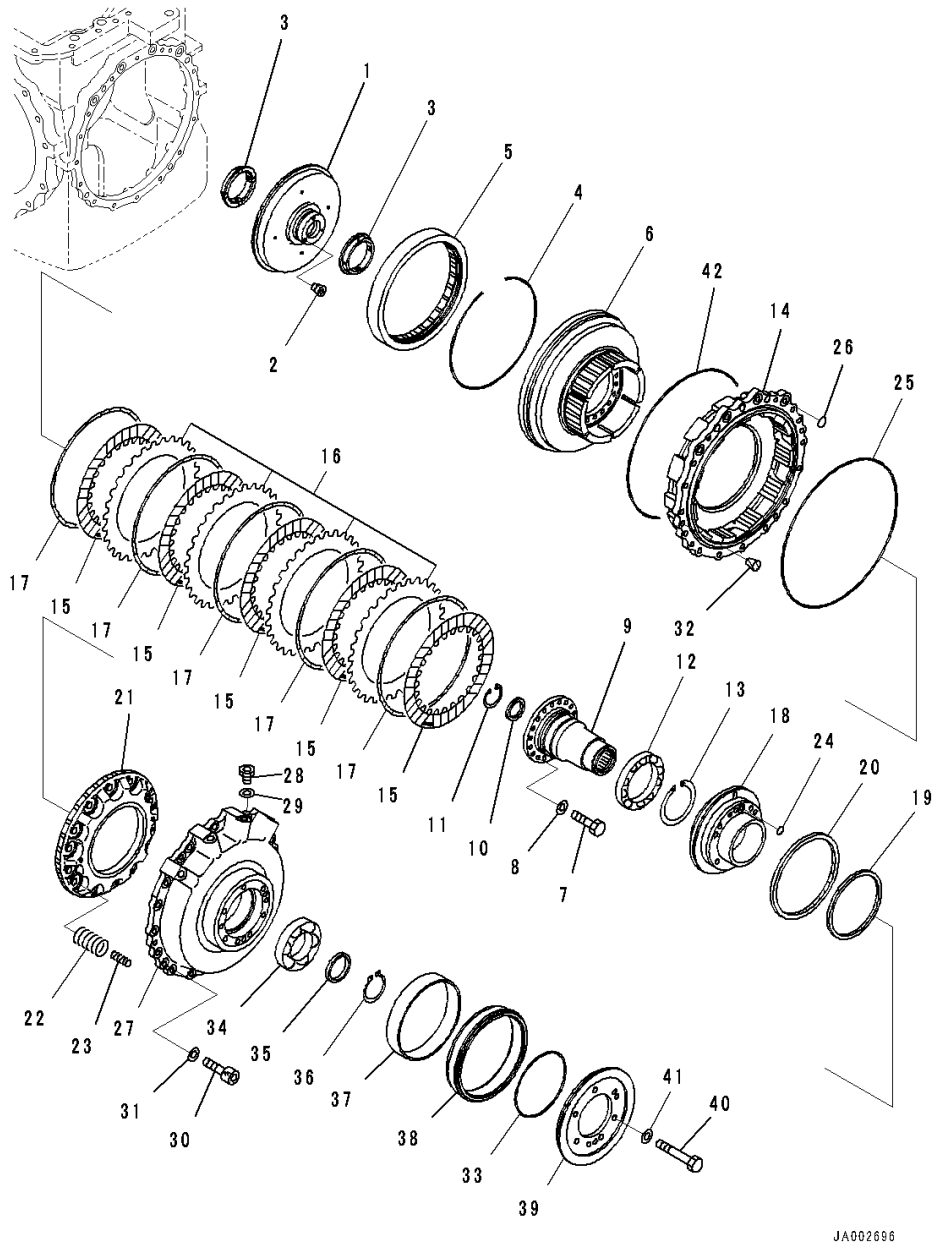

Index	Code	Part Number	Description	Qty	Serial Number
		Note: This list covers following specifications.			
		Without Power Angle Power Tilt Dozer			
		With Power Angle Power Tilt Dozer			
		14X-22-50000	Power Train Assembly	1	80001-
		14X-22-51000	• Steering Assembly	1	80001-
1		14Y-22-22290	•• Gear	2	80001-
2		02720-40104	•• Plug	6	80001-
3		14Y-22-22370	•• Bushing	4	80001-
4		14Y-22-22340	•• Ring, Snap	2	80001-
5		14Y-22-22161	•• Gear	2	80001-
6		14Y-22-23121	•• Hub	2	80001-
7		01010-81030	•• Bolt	40	80001-
8		01643-31032	•• Washer	40	80001-
9		14Y-22-24111	•• Hub	2	80001-
10		14Y-22-24190	•• Spacer	2	80001-
11		04065-05820	•• Ring, Snap	2	80001-
12		06030-06921	•• Bearing	2	80001-
13		04070-00105	•• Ring, Snap	2	80001-
14		14Y-22-23110	•• Drum	2	80001-
15		14Y-22-23140	•• Disc	10	80001-
16		14Y-22-23150	•• Plate	8	80001-
17		14Y-22-23160	•• Spring	10	80001-
18		14Y-22-24130	•• Cage	2	80001-
19		232-15-19270	•• Ring, (Kit : K05)	2	80001-
20		14Y-22-23310	•• Seal Ring, (Kit : K05)	2	80001-
21		14Y-22-23130	•• Piston	2	80001-
22		14Y-22-23170	•• Spring	28	80001-
23		14Y-22-23180	•• Spring	28	80001-
24		07000-72018	•• O-ring, (Kit : K05)	2	80001-
25		07000-75365	•• O-ring, (Kit : K05)	2	80001-
26		07000-73022	•• O-ring, (Kit : K05)	8	80001-
27		14Y-22-55120	•• Cover	2	80001-
28		723-11-15110	•• Plug	8	80001-
29		07002-61623	•• O-ring, (Kit : K05)	8	80001-
30		01252-71250	•• Bolt	8	80001-
31		01643-31232	•• Washer	8	80001-
32		07049-01215	•• Plug	4	80001-
33		07000-75180	•• O-ring, (Kit : K05)	2	80001-
34		06030-06215	•• Bearing	2	80001-

FIG. F2300-001002 Power Train, Brake

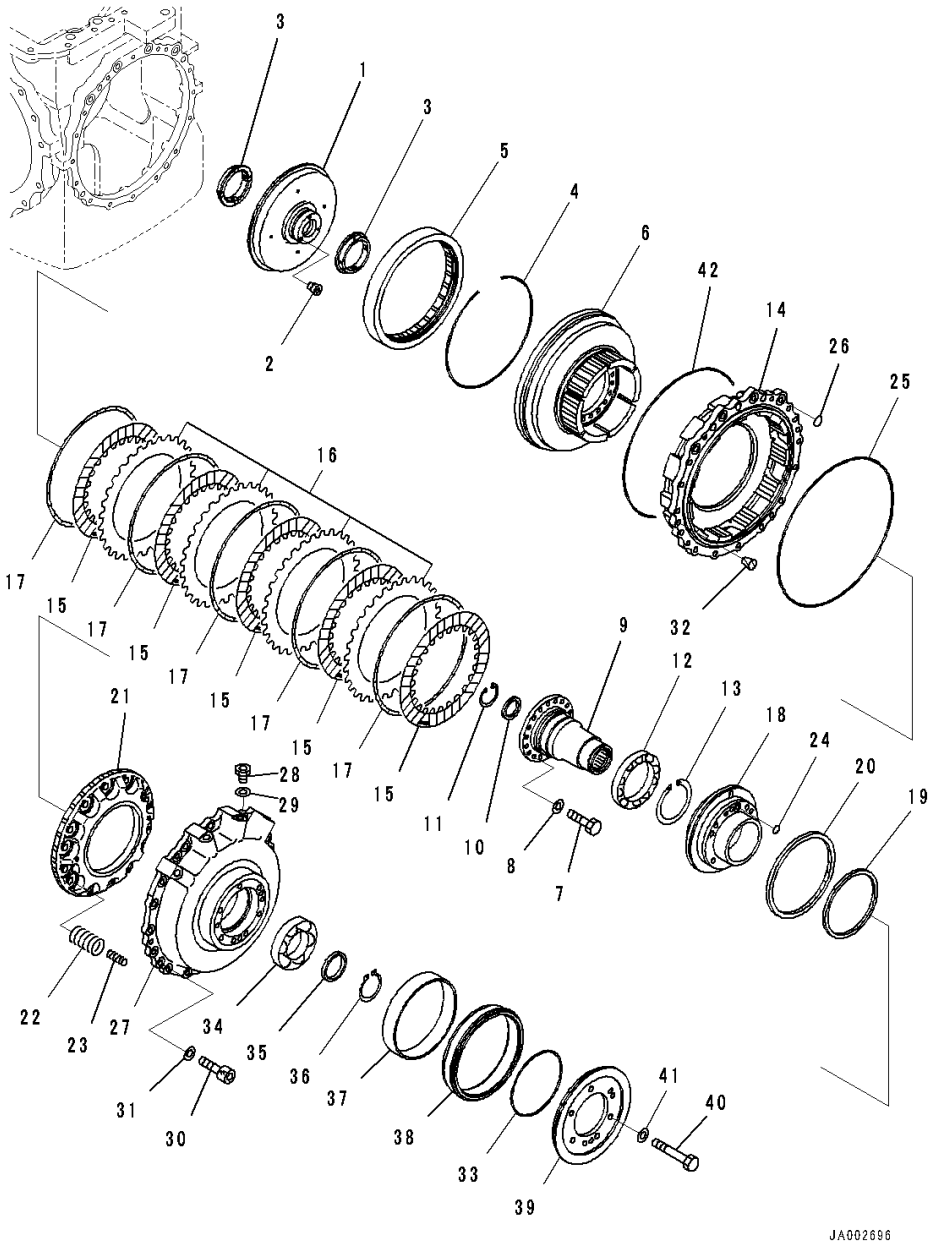

Index	Code	Part Number	Description	Qty	Serial Number
35		17A-15-22191	•• Spacer	2	80001-
36		04064-07525	•• Ring, Snap	2	80001-
37		14X-21-13130	•• Bushing	2	80001-
38		14X-21-13240	•• Collar	2	80001-
39		14Y-21-23150	•• Flange	2	80001-
40		01011-81205	•• Bolt	12	80001-
41		01643-31232	•• Washer	12	80001-
42		07000-75365	•• O-ring, (Kit : K05)	2	80001-

FIG. F2300-001003 Power Train, Carrier

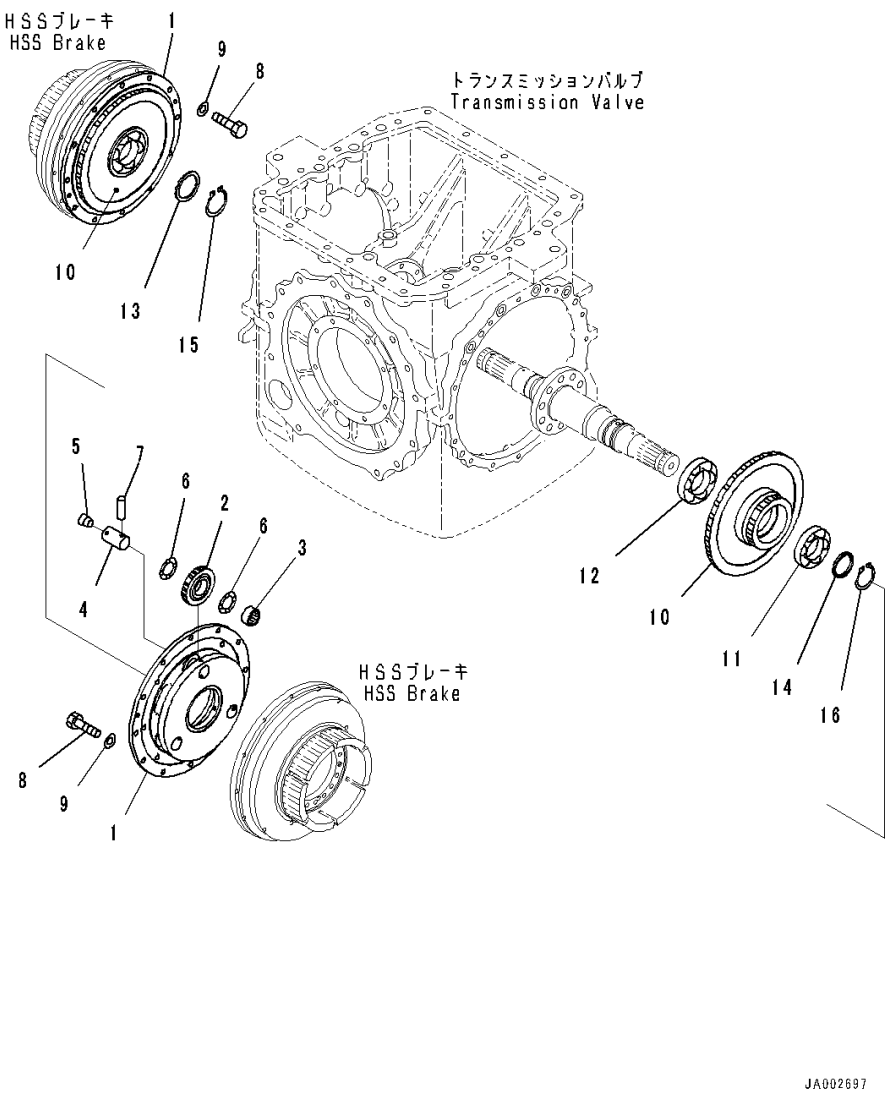

Index	Code	Part Number	Description	Qty	Serial Number
		Note: This list covers following specifications.			
		Without Power Angle Power Tilt Dozer			
		With Power Angle Power Tilt Dozer			
		14X-22-50000	Power Train Assembly	1	80001-
		14X-22-51000	• Steering Assembly	1	80001-
1		14Y-22-22110	•• Carrier	2	80001-
2		14Y-22-22150	•• Gear	6	80001-
3		14Y-22-22380	•• Bearing	6	80001-
4		154-22-22280	•• Shaft	6	80001-
5		07043-70108	•• Plug	6	80001-
6		154-15-12550	•• Washer, Thrust	12	80001-
7		14Y-22-22360	•• Pin	6	80001-
8		01010-81030	•• Bolt	24	80001-
9		01643-31032	•• Washer	24	80001-
10		14Y-22-22221	•• Gear	2	80001-
11		06340-06210	•• Bearing	2	80001-
12		06340-06211	•• Bearing	2	80001-
13		145-13-21730	•• Spacer	1	80001-
14		714-12-12930	•• Spacer	2	80001-
15		04064-05520	•• Ring, Snap	1	80001-
16		04064-05020	•• Ring, Snap	2	80001-

FIG. F2300-001004 Power Train, Steering Case (1/2)

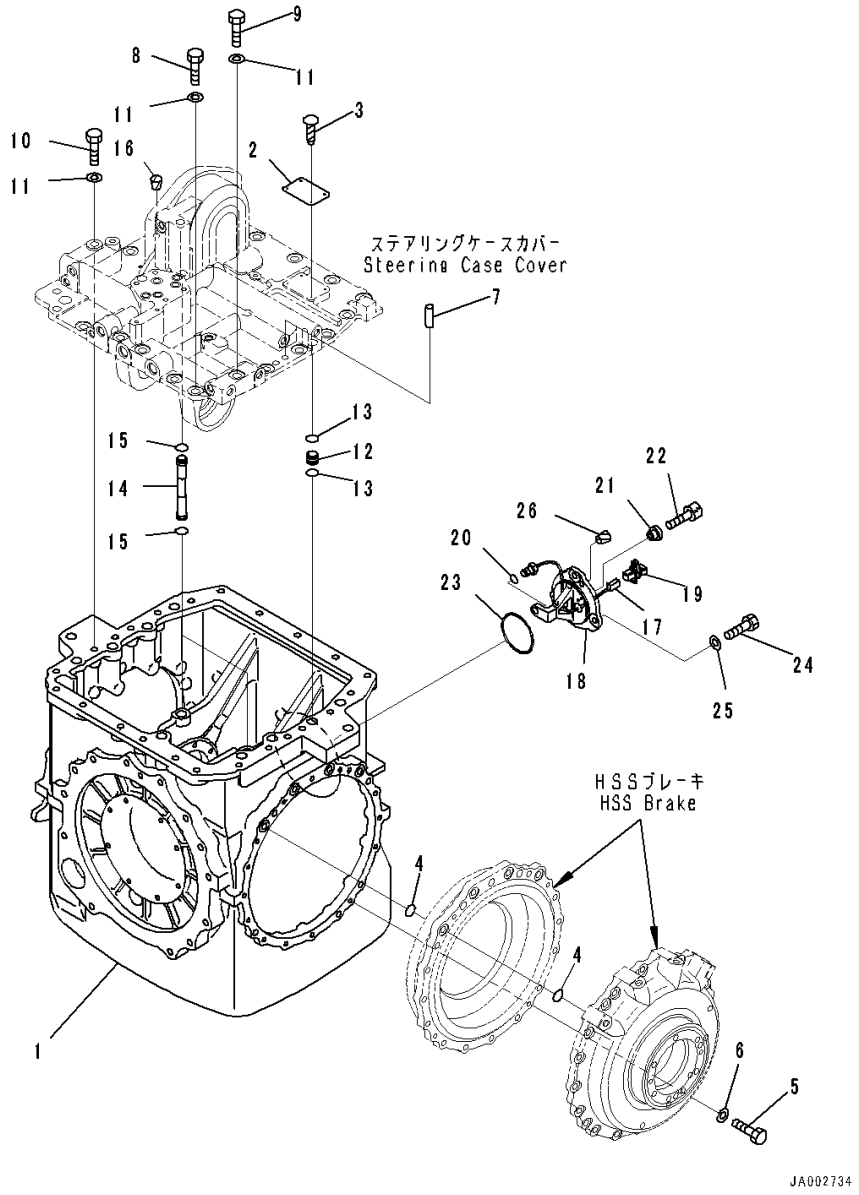

Index	Code	Part Number	Description	Qty	Serial Number
		Note: This list covers following specifications.			
		Without Power Angle Power Tilt Dozer			
		With Power Angle Power Tilt Dozer			
		14X-22-50000	Power Train Assembly	1	80001-
		14X-22-51000	• Steering Assembly	1	80001-
1		14Y-22-55110	•• Case	1	80001-
2	C2	09604-05080	•• Plate	1	80001-
3		04418-13060	•• Screw	4	80001-
4		07000-73022	•• O-ring, (Kit : K05)	8	80001-
5		01010-81255	•• Bolt	32	80001-
6		01643-31232	•• Washer	32	80001-
7		04020-01434	•• Pin, Dowel	2	80001-
8		01010-61645	•• Bolt	15	80001-
9		01010-61670	•• Bolt	3	80001-
10		01011-61615	•• Bolt	1	80001-
11		01643-31645	•• Washer	19	80001-
12		14X-22-16170	•• Sleeve	5	80001-
13		07000-72018	•• O-ring, (Kit : K05)	10	80001-
14		14Y-22-26180	•• Tube	2	80001-
15		07000-72018	•• O-ring, (Kit : K05)	4	80001-
16		07049-01620	•• Plug	2	80001-
17		14Y-22-55510	•• Sensor	1	80001-
18		14Y-22-55522	•• Bracket	1	80001-
19		14Y-22-37440	•• Connector	1	80001-
20		14Y-22-37470	•• O-ring, (Kit : K05)	1	80001-
21		14Y-22-37420	•• Collar	1	80001-
22		01252-70520	•• Bolt	1	80001-
23		07000-72095	•• O-ring, (Kit : K05)	1	80001-
24		01010-81230	•• Bolt	3	80001-
25		01643-31232	•• Washer	3	80001-
26		07049-01215	•• Plug	2	80001-

FIG. F2300-001005 Power Train, Steering Case (2/2)

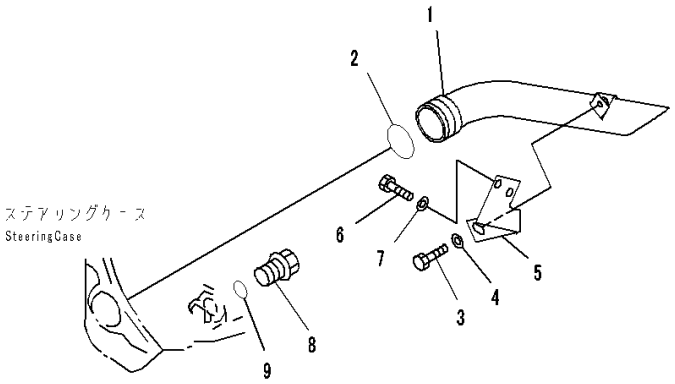

PJ0B953

Index	Code	Part Number	Description	Qty	Serial Number
		Note: This list covers following specifications.			
		Without Power Angle Power Tilt Dozer			
		With Power Angle Power Tilt Dozer			
		14X-22-50000	Power Train Assembly	1	80001-
		14X-22-51000	• Steering Assembly	1	80001-
1		14Y-49-21110	•• Tube	1	80001-
2		07000-72065	•• O-ring, (Kit : K05)	1	80001-
3		01010-81225	•• Bolt	1	80001-
4		01643-31232	•• Washer	1	80001-
5		14Y-49-21120	•• Plate	1	80001-
6		01010-81225	•• Bolt	2	80001-
7		01643-31232	•• Washer	2	80001-
8		6150-23-5620	•• Plug	1	80001-
9		07002-23634	•• O-ring, (Kit : K05)	1	80001-

FIG. F2300-001006 Power Train, Steering Case Cover and Steering Valve Control Lever

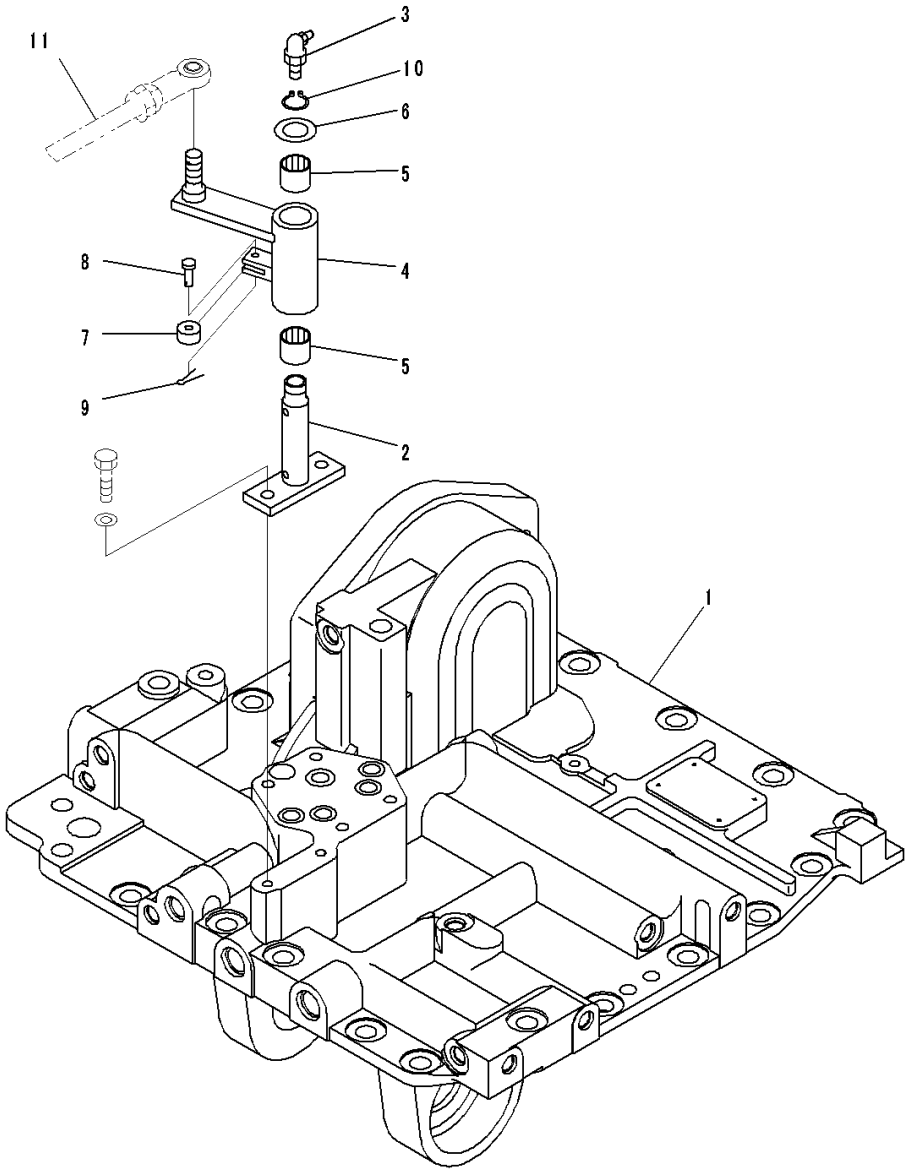

Index	Code	Part Number	Description	Qty	Serial Number
		Note: This list covers following specifications.			
		Without Power Angle Power Tilt Dozer			
		With Power Angle Power Tilt Dozer			
		14X-22-50000	Power Train Assembly	1	80001-
		14X-22-51000	• Steering Assembly	1	80001-
1		14Y-22-55142	•• Cover	1	80001-
2		14Z-43-12421	•• Shaft	1	80001-
3		07020-00900	•• Fitting, Grease	1	80001-
4		14Z-43-12411	•• Lever	1	80001-
5		06124-02020	•• Bearing	2	80001-
6		01643-31845	•• Washer	1	80001-
7		103-43-21380	•• Roller	1	80001-
8		103-43-21390	•• Pin	1	80001-
9		04050-11610	•• Pin, Cotter	1	80001-
10		04064-01812	•• Ring, Snap, for Shaft Side	1	80001-
11		(04250-81474)	End(Refer to Page 281)		-

FIG. F2300-001007 Power Train, Steering Valve

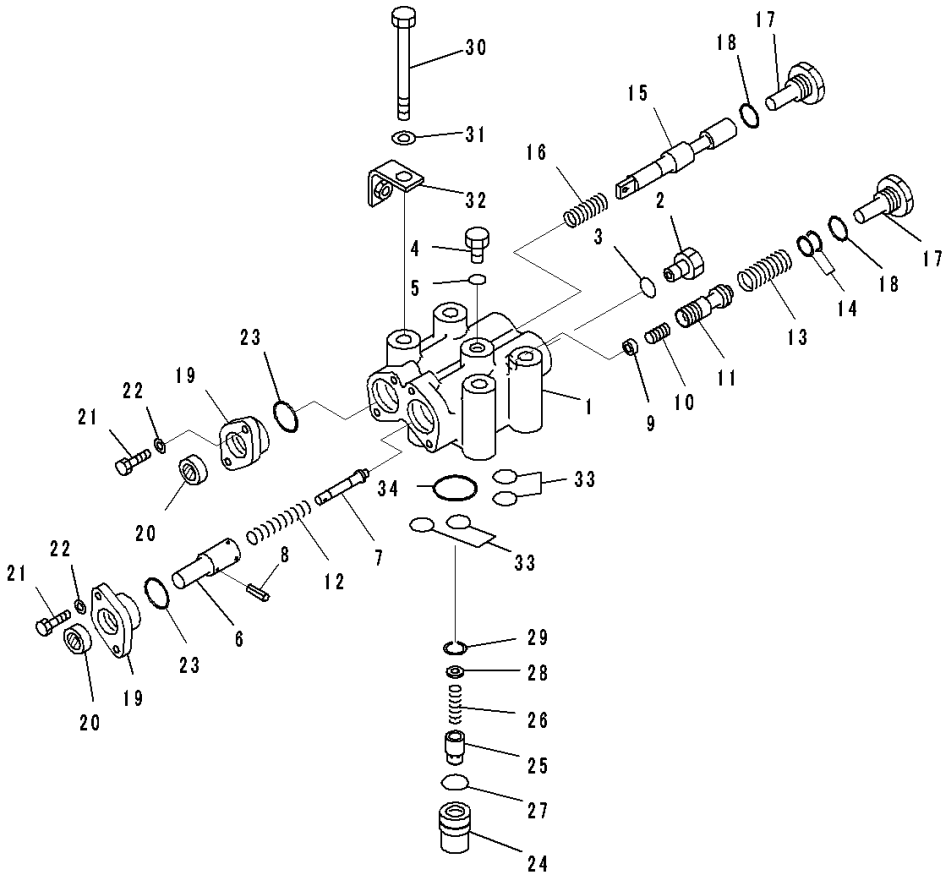

Index	Code	Part Number	Description	Qty	Serial Number
		Note: This list covers following specifications.			
		Without Power Angle Power Tilt Dozer			
		With Power Angle Power Tilt Dozer			
		14X-22-50000	Power Train Assembly	1	80001-
		14X-22-51000	• Steering Assembly	1	80001-
		14Y-22-52100	•• Valve Assembly	1	80001-
1	C1		••• Body	1	80001-
2		723-11-15110	••• Plug	1	80001-
3		07002-61623	••• O-ring, (Kit : K06)	1	80001-
4		07040-11812	••• Plug	1	80001-
5		07002-61823	••• O-ring, (Kit : K06)	1	80001-
6		14Z-40-11320	••• Guide	1	80001-
7		14Z-40-11330	••• Shaft	1	80001-
8		04025-00316	••• Pin, Spring	1	80001-
9		14Z-40-11340	••• Guide	1	80001-
10		195-40-31540	••• Piston	1	80001-
11	C1		••• Valve	1	80001-
12		14Z-40-11380	••• Spring	1	80001-
13		14Z-40-11371	••• Spring	1	80001-
14		14Z-40-11350	••• Shim, T=0.05mm	5	80001-
15	C1		••• Spool	1	80001-
16		565-62-11270	••• Spring	1	80001-
17		14Z-40-11360	••• Plug	2	80001-
18		07002-32434	••• O-ring, (Kit : K06)	2	80001-
19		14Z-40-11220	••• Cover	2	80001-
20		113-15-29110	••• Seal, Oil, (Kit : K06)	2	80001-
21		01010-80620	••• Bolt	4	80001-
22		01643-30623	••• Washer	4	80001-
23		07002-33034	••• O-ring, (Kit : K06)	2	80001-
		14Z-40-12101	•• Valve Assembly	1	80001-
24		14Z-40-12210	••• Body	1	80001-
25		07750-01623	••• Valve	1	80001-
26		07750-01628	••• Spring	1	80001-
27		07000-72021	••• O-ring	1	80001-
28		14Z-22-15220	••• Spacer	1	80001-
29		04065-01610	••• Ring, Snap	1	80001-
30		01010-81295	•• Bolt	4	80001-
31		01643-31232	•• Washer	4	80001-
32		8288-43-1120	•• Bracket	1	80001-

FIG. F2300-001007 Power Train, Steering Valve

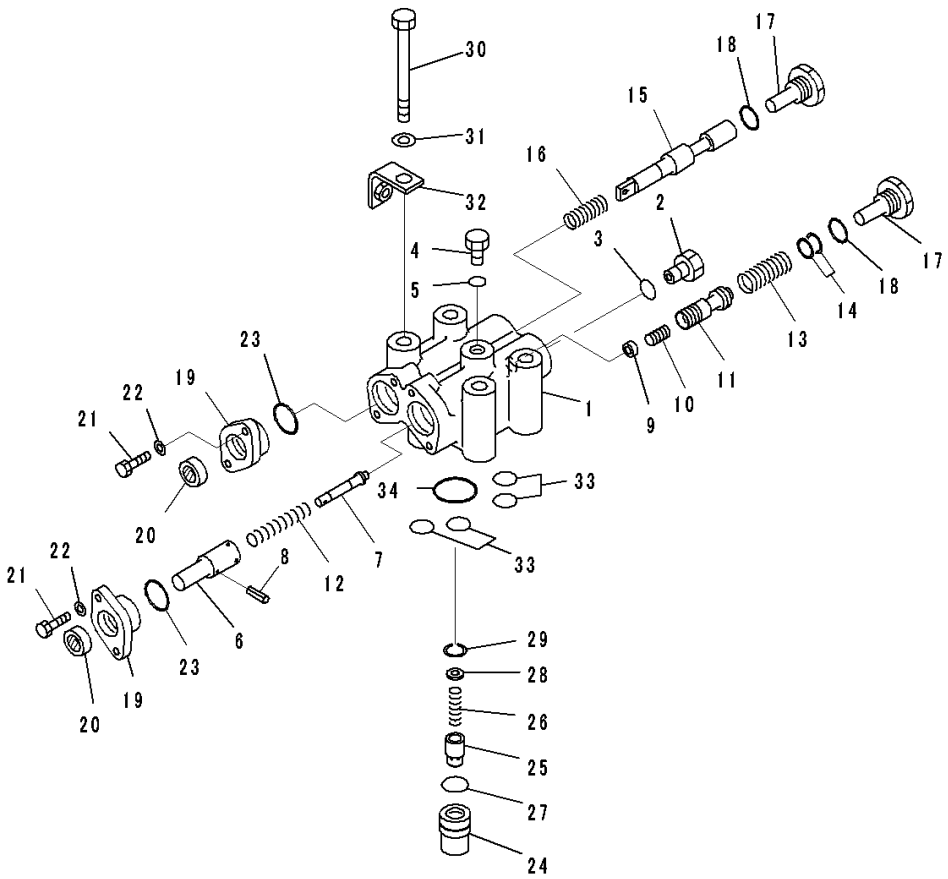

Index	Code	Part Number	Description	Qty	Serial Number
33		07000-72018	•• O-ring, (Kit : K05).....	4	80001-
34		07000-73032	•• O-ring, (Kit : K05).....	1	80001-

FIG. F2300-001008 Power Train, H.S.S. Gear

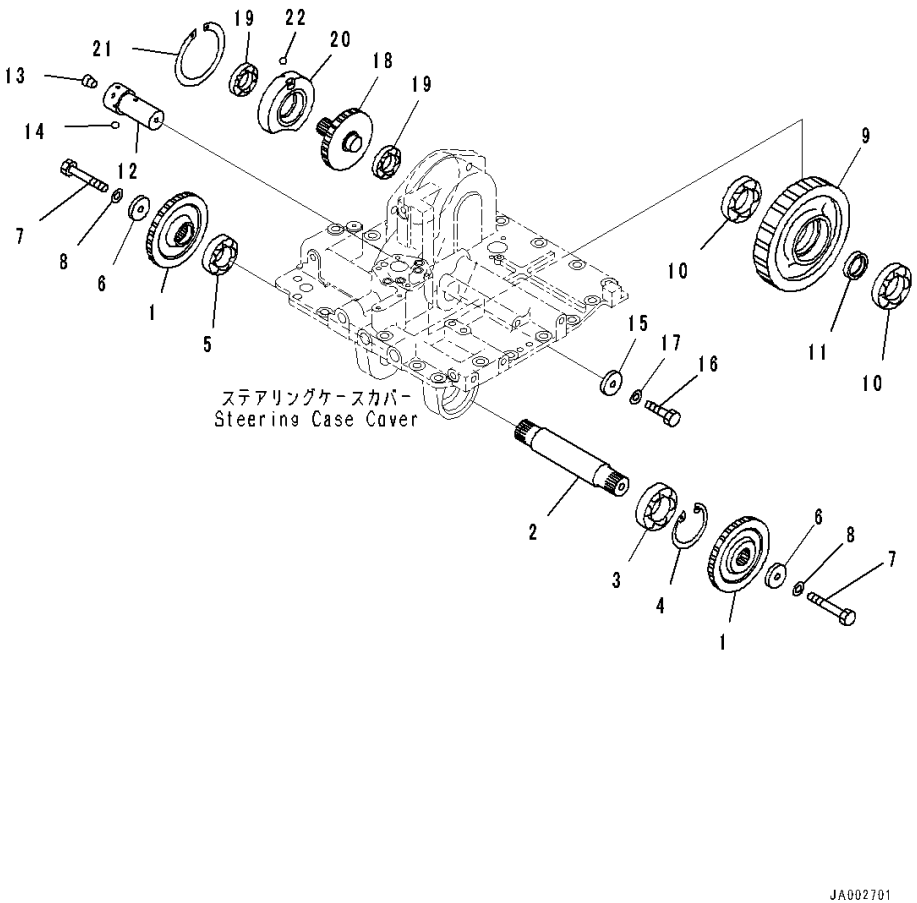

Index	Code	Part Number	Description	Qty	Serial Number
		Note: This list covers following specifications.			
		Without Power Angle Power Tilt Dozer			
		With Power Angle Power Tilt Dozer			
		14X-22-50000	Power Train Assembly	1	80001-
		14X-22-51000	• Steering Assembly	1	80001-
1		14Y-22-22311	•• Gear	2	80001-
2		14Y-22-54260	•• Shaft	1	80001-
3		06030-06309	•• Bearing	1	80001-
4		04065-01030	•• Ring, Snap	1	80001-
5		134-22-79320	•• Bearing	1	80001-
6		23E-15-13350	•• Holder	2	80001-
7		01010-81280	•• Bolt	2	80001-
8		01643-31232	•• Washer	2	80001-
9		14Y-22-22321	•• Gear	1	80001-
10		06030-06309	•• Bearing	2	80001-
11		14Y-22-22170	•• Collar	1	80001-
12		14Y-22-22231	•• Shaft	1	80001-
13		07043-70108	•• Plug	1	80001-
14		04260-00635	•• Ball, Steel	1	80001-
15		23E-15-13350	•• Holder	1	80001-
16		01010-81230	•• Bolt	1	80001-
17		01643-31232	•• Washer	1	80001-
18		14Y-22-22330	•• Gear	1	80001-
19		06340-06207	•• Bearing	2	80001-
20		14Y-22-22181	•• Cage	1	80001-
21		04071-00140	•• Ring, Snap	1	80001-
22		04260-00635	•• Ball, Steel	1	80001-

FIG. F2300-001009 Power Train, Steering Case Cover Related Parts

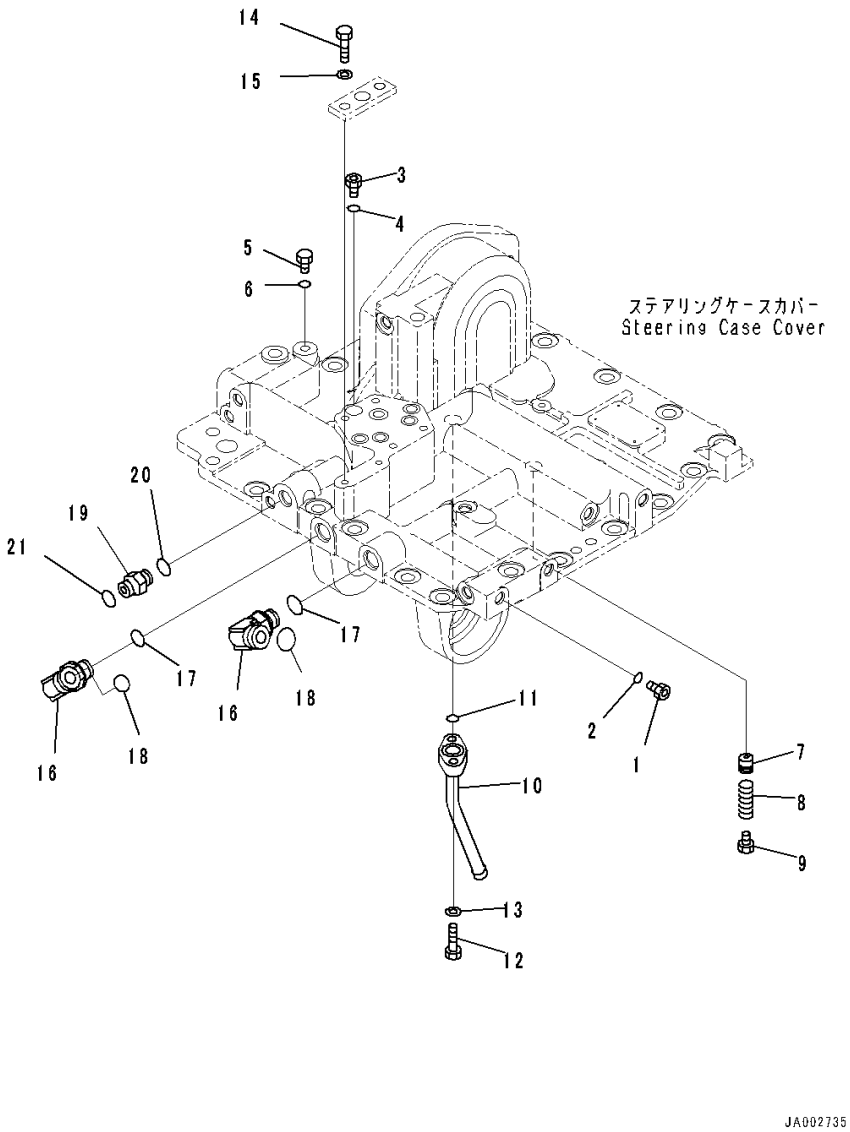

Index	Code	Part Number	Description	Qty	Serial Number
		Note: This list covers following specifications.			
		Without Power Angle Power Tilt Dozer			
		With Power Angle Power Tilt Dozer			
		14X-22-50000	Power Train Assembly	1	80001-
		14X-22-51000	• Steering Assembly	1	80001-
1		723-11-15110	•• Plug	16	80001-
2		07002-61623	•• O-ring, (Kit : K05)	16	80001-
3		134-22-66140	•• Sleeve	1	80001-
4		07000-72018	•• O-ring, (Kit : K05)	1	80001-
5		708-8E-16150	•• Plug	1	80001-
6		07002-61023	•• O-ring	1	80001-
7		23A-15-15490	•• Valve	1	80001-
8		702-16-52420	•• Spring	1	80001-
9		07040-12012	•• Plug	1	80001-
10		14Y-22-56240	•• Tube	1	80001-
11		07000-73022	•• O-ring, (Kit : K05)	1	80001-
12		01010-81035	•• Bolt	2	80001-
13		01643-31032	•• Washer	2	80001-
14		01010-81025	•• Bolt	2	80001-
15		01643-31032	•• Washer	2	80001-
16		02782-10628	•• Elbow	2	80001-
17		07002-62434	•• O-ring, (Kit : K05)	2	80001-
18		02896-61018	•• O-ring, (Kit : K05)	2	80001-
19		02781-00422	•• Union	1	80001-
20		07002-62034	•• O-ring, (Kit : K05)	1	80001-
21		02896-61012	•• O-ring, (Kit : K05)	1	80001-

FIG. F2300-001010 Power Train, 1st Housing

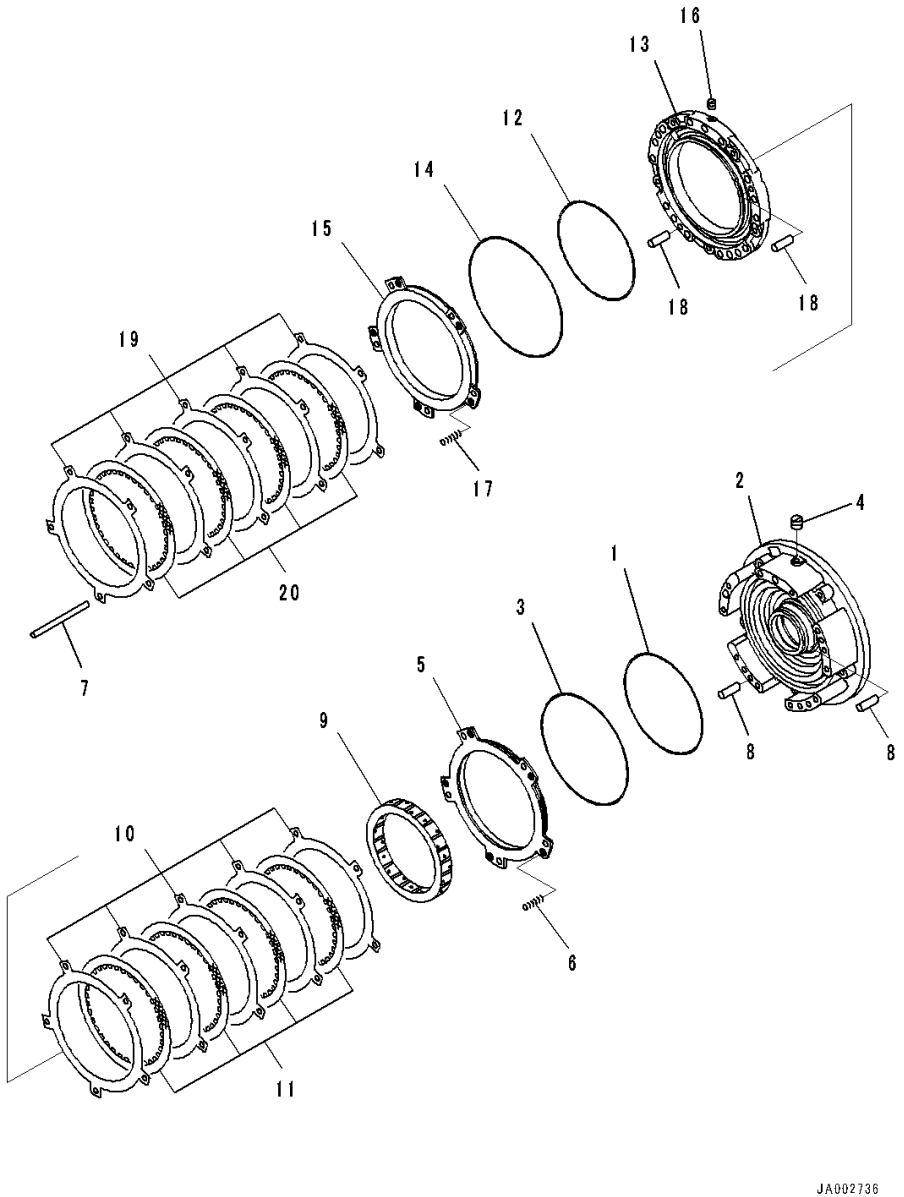

Index	Code	Part Number	Description	Qty	Serial Number
		Note: This list covers following specifications.			
		Without Power Angle Power Tilt Dozer			
		With Power Angle Power Tilt Dozer			
		14X-22-50000	Power Train Assembly	1	80001-
		14X-15-51000	• Transmission Assembly	1	80001-
1		103-15-12820	•• Seal Ring, (Kit : K15)	1	80001-
2		14X-15-51130	•• Housing	1	80001-
3		124-15-41920	•• Seal Ring, (Kit : K15)	1	80001-
4		568-15-11380	•• Plug	1	80001-
5		14X-15-52710	•• Piston	1	80001-
6		145-14-12790	•• Spring, L=59mm	5	80001-
7		103-15-12880	•• Pin	5	80001-
8		04020-01228	•• Pin, Dowel	2	80001-
9		14X-15-52660	•• Gear, Ring	1	80001-
10		14X-15-22780	•• Plate	5	80001-
11		14X-15-22710	•• Disc	4	80001-
12		124-15-41910	•• Seal Ring, (Kit : K15)	1	80001-
13		14X-15-51140	•• Housing	1	80001-
14		569-15-12860	•• Seal Ring, (Kit : K15)	1	80001-
15		14X-15-22750	•• Piston	1	80001-
16		145-14-11320	•• Plug	1	80001-
17		145-14-12790	•• Spring, L=59mm	5	80001-
18		04020-01228	•• Pin, Dowel	2	80001-
19		14X-15-22780	•• Plate	5	80001-
20		14X-15-22710	•• Disc	4	80001-

FIG. F2300-001011 Power Train, 2nd Housing, 3rd Housing, Foward Housing and Reverse Housing

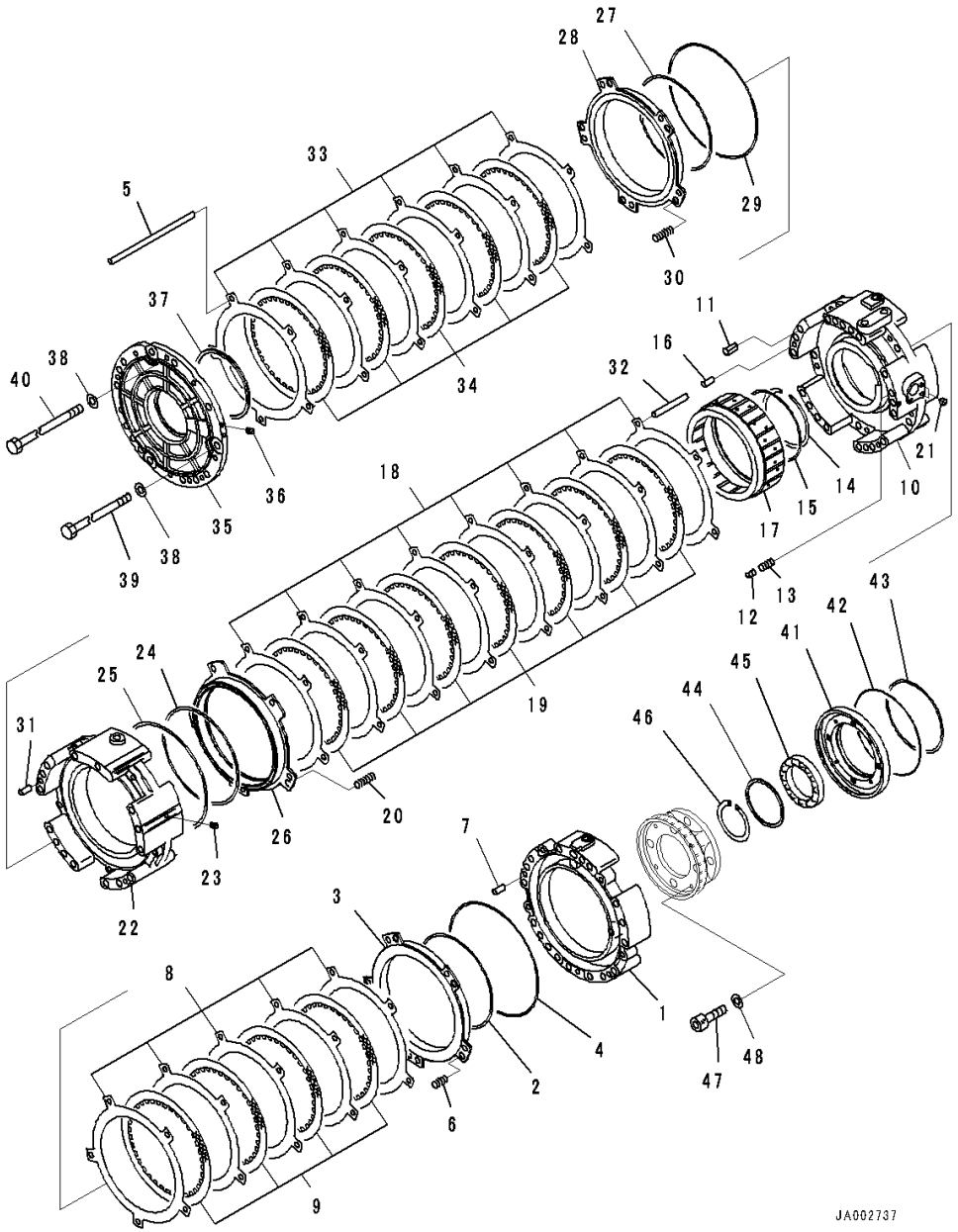

Index	Code	Part Number	Description	Qty	Serial Number
		Note: This list covers following specifications.			
		Without Power Angle Power Tilt Dozer			
		With Power Angle Power Tilt Dozer			
		14X-22-50000	Power Train Assembly	1	80001-
		14X-15-51000	• Transmission Assembly	1	80001-
1		14X-15-51150	•• Housing	1	80001-
2		124-15-41910	•• Seal Ring, (Kit : K15)	1	80001-
3		14X-15-22750	•• Piston	1	80001-
4		569-15-12860	•• Seal Ring, (Kit : K15)	1	80001-
5		103-15-12880	•• Pin	5	80001-
6		145-14-12790	•• Spring, L=59mm	5	80001-
7		04020-01228	•• Pin, Dowel	2	80001-
8		14X-15-22780	•• Plate	5	80001-
9		14X-15-22710	•• Disc	4	80001-
10		14X-15-51160	•• Housing	1	80001-
11		569-15-41310	•• Sleeve	14	80001-
12		287-15-15360	•• Piston	1	80001-
13		700-80-51390	•• Spring	1	80001-
14		04071-00145	•• Ring, Snap, for Hole Side	1	80001-
15		14X-15-29220	•• Seal Ring, (Kit : K15)	1	80001-
16		04020-01228	•• Pin, Dowel	2	80001-
17		14X-15-52630	•• Gear, Ring	1	80001-
18		14X-15-22780	•• Plate	8	80001-
19		14X-15-22710	•• Disc	7	80001-
20		145-14-12780	•• Spring	5	80001-
21		175-15-11230	•• Plug	2	80001-
22		14X-15-51170	•• Housing	1	80001-
23		145-14-11320	•• Plug	1	80001-
24		103-15-12820	•• Seal Ring, (Kit : K15)	1	80001-
25		124-15-41920	•• Seal Ring, (Kit : K15)	1	80001-
26		14X-15-22740	•• Piston	1	80001-
27		124-15-41910	•• Seal Ring, (Kit : K15)	1	80001-
28		14X-15-22770	•• Piston	1	80001-
29		113-15-12870	•• Ring, (Kit : K15)	1	80001-
30		14X-15-12910	•• Spring	5	80001-
31		04020-01228	•• Pin, Dowel	2	80001-
32		103-15-12890	•• Pin	5	80001-
33		14X-15-22780	•• Plate	6	80001-
34		14X-15-22710	•• Disc	5	80001-

FIG. F2300-001011 Power Train, 2nd Housing, 3rd Housing, Foward Housing and Reverse Housing

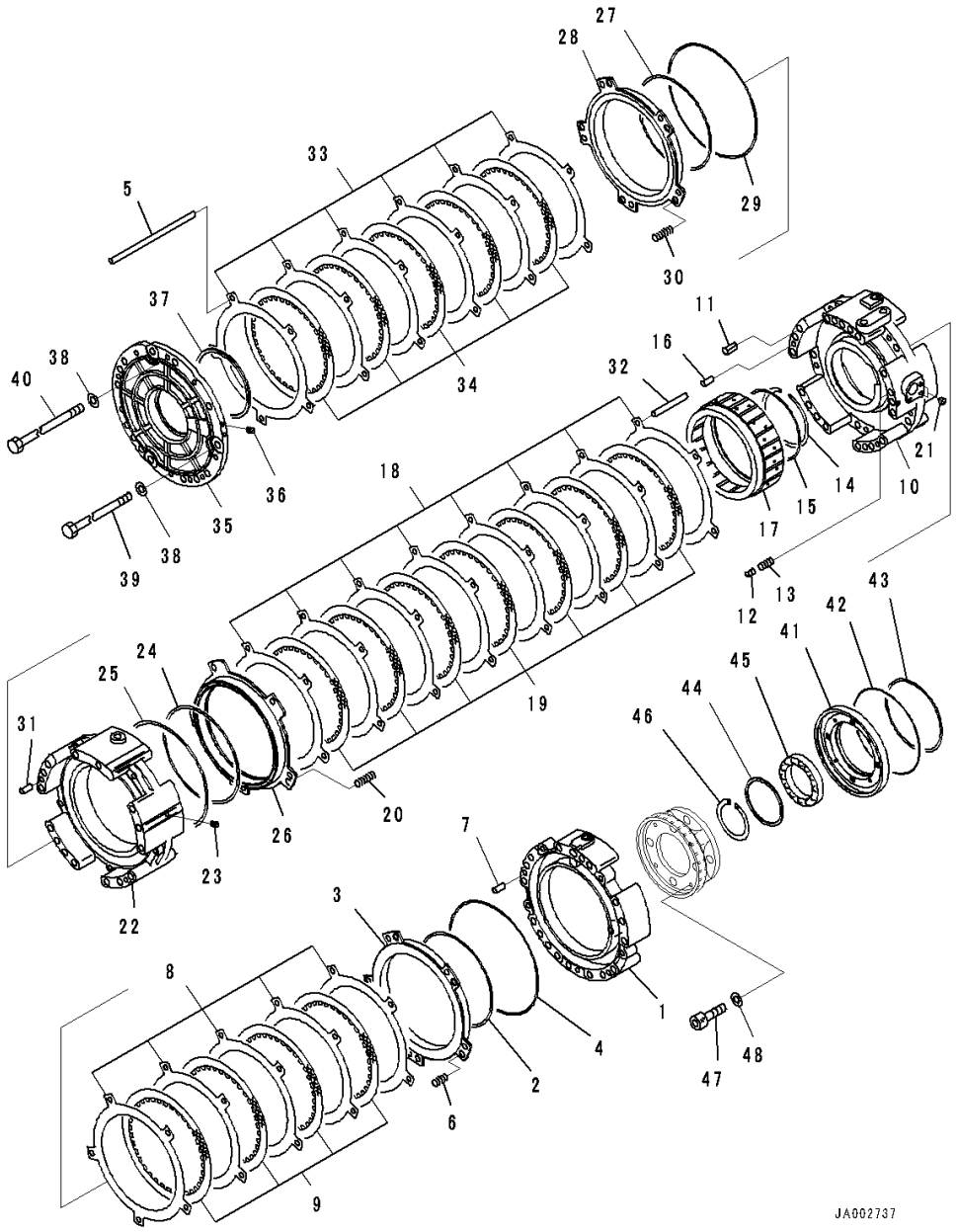

Index	Code	Part Number	Description	Qty	Serial Number
35		14X-15-51181	•• Housing	1	80001-
36		145-14-11320	•• Plug	2	80001-
37		14X-15-29230	•• Seal Ring, (Kit : K15)	1	80001-
38		145-14-11571	•• Washer	14	80001-
39		144-15-21191	•• Bolt	3	80001-
40		232-15-11240	•• Bolt	11	80001-
41		14X-15-52370	•• Cover	1	80001-
42		14X-15-19210	•• Seal Ring, (Kit : K15)	1	80001-
43		07018-11805	•• Seal Ring	1	80001-
44		14X-15-52170	•• Spacer	1	80001-
45		06330-06822	•• Bearing	1	80001-
46		04070-00105	•• Ring, Snap	1	80001-
47		01252-70860	•• Bolt, Hexagon Socket Head	4	80001-
48		01643-50823	•• Washer	4	80001-

FIG. F2300-001012 Power Train, Transmission Carrier (1/2)

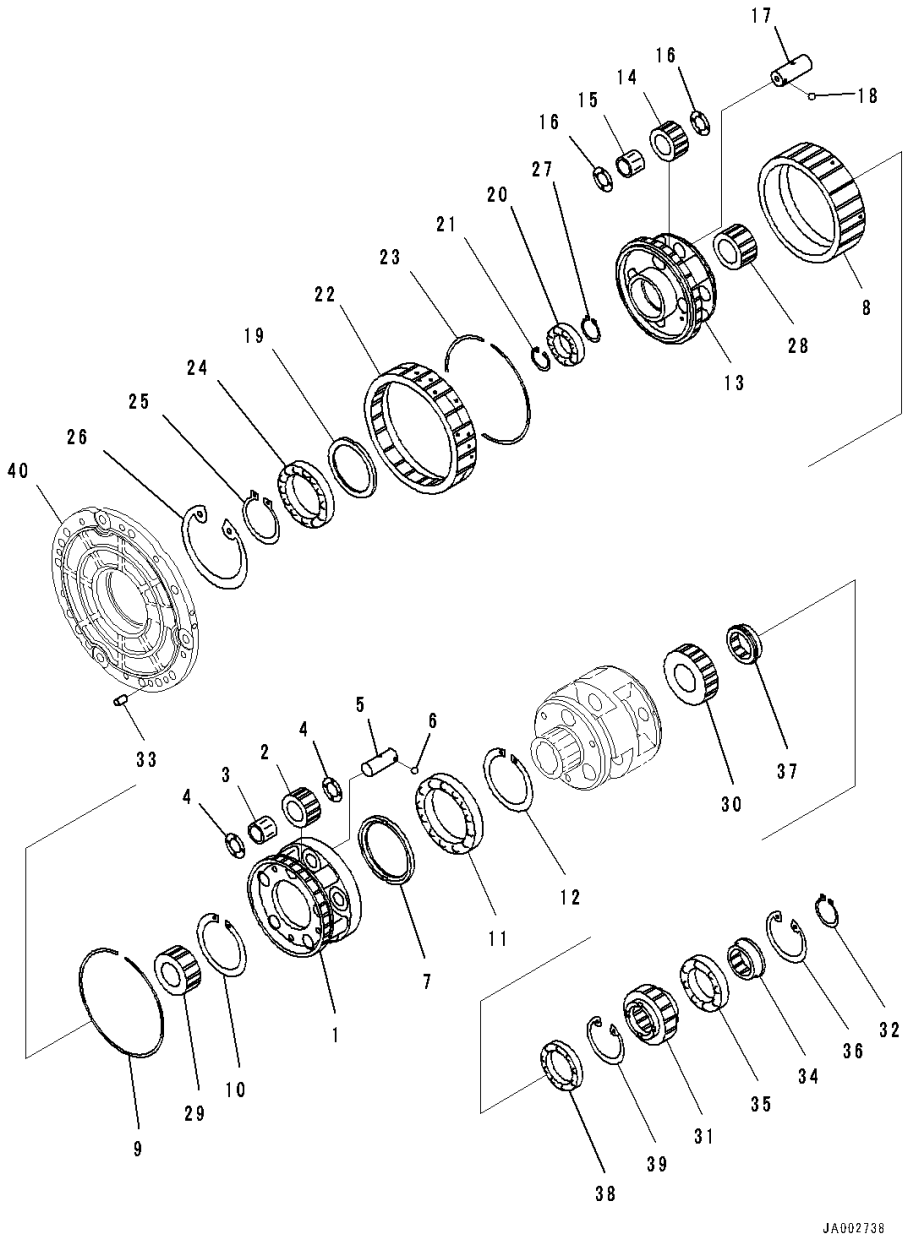

Index	Code	Part Number	Description	Qty	Serial Number
		Note: This list covers following specifications.			
		Without Power Angle Power Tilt Dozer			
		With Power Angle Power Tilt Dozer			
		14X-22-50000	Power Train Assembly	1	80001-
		14X-15-51000	• Transmission Assembly	1	80001-
1		14X-15-52320	•• Carrier	1	80001-
2		14X-15-52420	•• Gear	5	80001-
3		14X-15-59410	•• Bearing	5	80001-
4		712-85-12560	•• Washer, Thrust	10	80001-
5		14X-15-52520	•• Shaft	5	80001-
6		04260-00635	•• Ball, Steel	5	80001-
7		14X-15-52151	•• Spacer	1	80001-
8		14X-15-52620	•• Gear, Ring	1	80001-
9		14X-15-29530	•• Ring, Snap	1	80001-
10		14X-15-29510	•• Ring, Snap	1	80001-
11		06300-06921	•• Bearing	1	80001-
12		04070-00105	•• Ring, Snap	1	80001-
13		14X-15-52311	•• Carrier	1	80001-
14		56E-15-17261	•• Gear	4	80001-
15		56E-15-19360	•• Bearing, Needle	4	80001-
16		425-15-19440	•• Washer	8	80001-
17		14X-15-52510	•• Shaft	4	80001-
18		04260-00635	•• Ball, Steel	4	80001-
19		423-15-12810	•• Spacer	1	80001-
20		14X-15-29610	•• Bearing	1	80001-
21		04065-07525	•• Ring, Snap, for Hole Side	1	80001-
22		14X-15-52610	•• Gear, Ring	1	80001-
23		14X-15-29520	•• Ring, Snap	1	80001-
24		06330-06918	•• Bearing	1	80001-
25		04064-09030	•• Ring, Snap	1	80001-
26		04065-01254	•• Ring, Snap	1	80001-
27		04064-04518	•• Ring, Snap	5	80001-
28		14X-15-52211	•• Gear	1	80001-
29		14X-15-52220	•• Gear	1	80001-
30		14X-15-52240	•• Gear	1	80001-
31		14X-15-52250	•• Gear	1	80001-
32		14X-15-29540	•• Ring	2	80001-
33		04020-01228	•• Pin, Dowel	2	80001-
34		14X-15-52140	•• Spacer	1	80001-

FIG. F2300-001012 Power Train, Transmission Carrier (1/2)

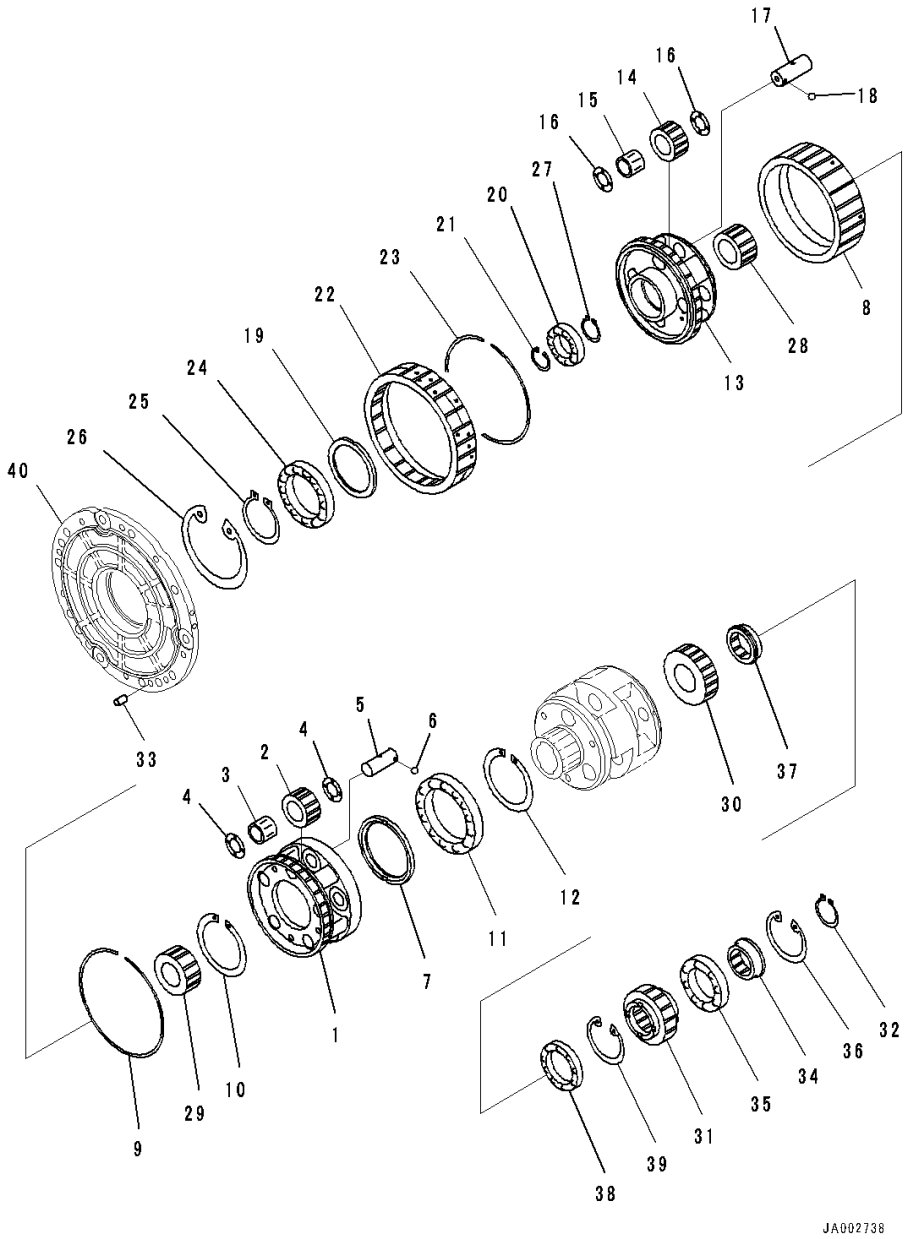

Index	Code	Part Number	Description	Qty	Serial Number
35		14X-15-59310	•• Bearing	1	80001-
36		04065-01030	•• Ring, Snap	1	80001-
37		14X-15-52160	•• Spacer	1	80001-
38		14X-15-59330	•• Bearing	1	80001-
39		04065-09030	•• Ring, Snap	1	80001-
40		(14X-15-51181)	Housing(Refer to Page 231)		-

FIG. F2300-001013 Power Train, Transmission Carrier (2/2)

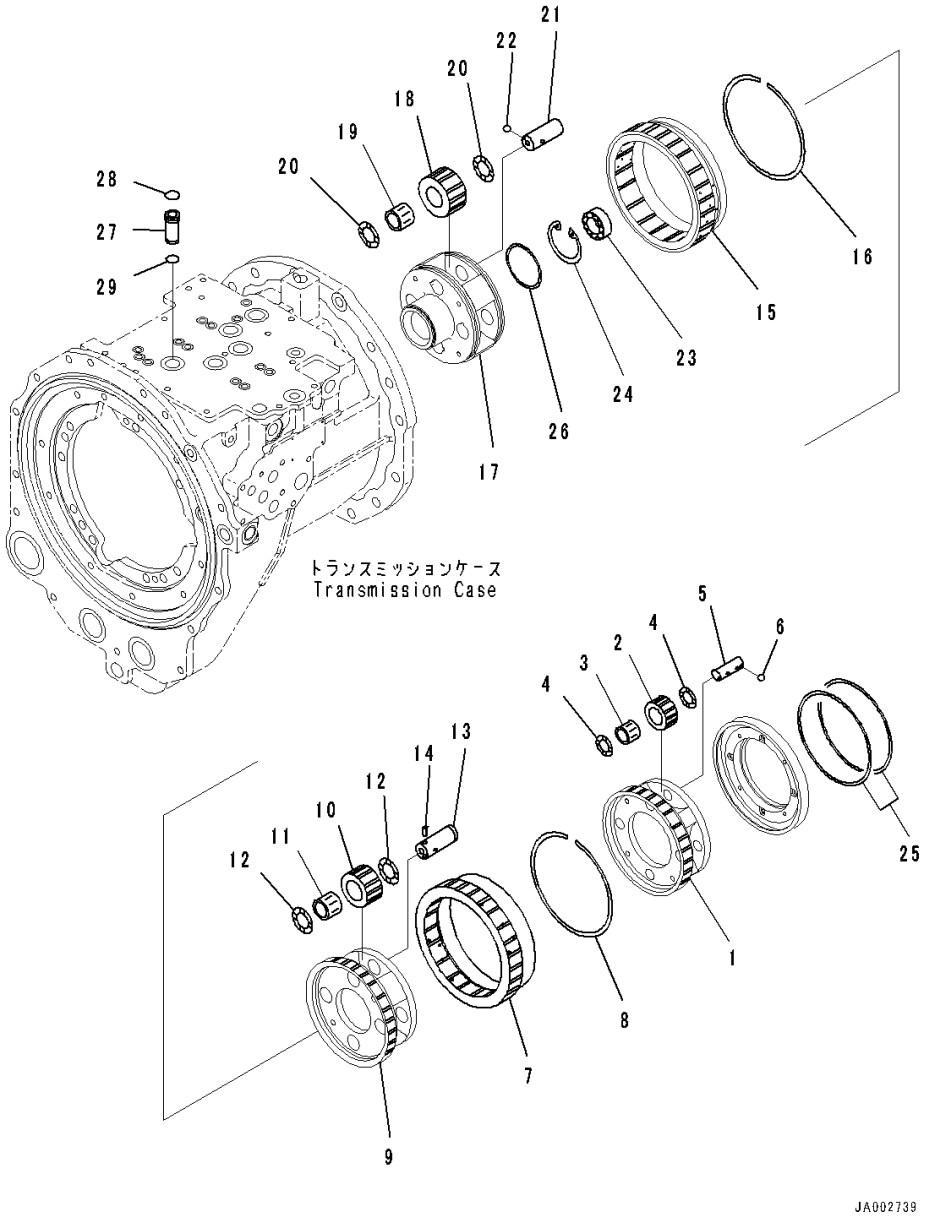

Index	Code	Part Number	Description	Qty	Serial Number
		Note: This list covers following specifications.			
		Without Power Angle Power Tilt Dozer			
		With Power Angle Power Tilt Dozer			
		14X-22-50000	Power Train Assembly	1	80001-
		14X-15-51000	• Transmission Assembly	1	80001-
1		14X-15-52350	•• Carrier	1	80001-
2		423-15-12441	•• Gear	4	80001-
3		14X-15-29410	•• Bearing	4	80001-
4		14X-15-52560	•• Washer, Thrust	8	80001-
5		14X-15-52550	•• Shaft	4	80001-
6		04260-00635	•• Ball, Steel	4	80001-
7		14X-15-52650	•• Gear, Ring	1	80001-
8		14X-15-29520	•• Ring, Snap	1	80001-
9		14X-15-52340	•• Carrier	1	80001-
10		14X-15-22421	•• Gear	4	80001-
11		14X-15-29440	•• Bearing	4	80001-
12		425-15-19440	•• Washer	8	80001-
13		425-15-32520	•• Shaft	4	80001-
14		14X-15-12960	•• Pin	4	80001-
15		14X-15-52640	•• Gear, Ring	1	80001-
16		14X-15-29520	•• Ring, Snap	1	80001-
17		14X-15-52330	•• Carrier	1	80001-
18		14X-15-52430	•• Gear	4	80001-
19		56E-15-19360	•• Bearing, Needle	4	80001-
20		425-15-19440	•• Washer	8	80001-
21		14X-15-52510	•• Shaft	4	80001-
22		04260-00635	•• Ball, Steel	4	80001-
23		14X-15-59320	•• Bearing	1	80001-
24		04065-05220	•• Ring, Snap	1	80001-
25		07018-11805	•• Seal Ring	2	80001-
26		07018-10854	•• Seal Ring	1	80001-
27		14X-15-55520	•• Sleeve	5	80001-
28		07000-72021	•• O-ring, (Kit : K15)	5	80001-
29		07000-72018	•• O-ring, (Kit : K15)	5	80001-

FIG. F2300-001014 Power Train, Transmission Case

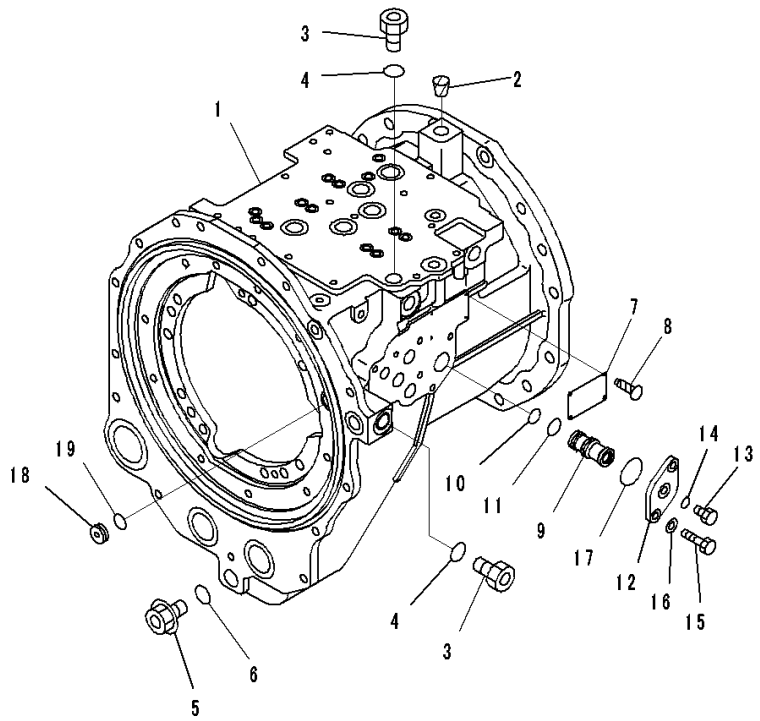

Index	Code	Part Number	Description	Qty	Serial Number
		Note: This list covers following specifications.			
		Without Power Angle Power Tilt Dozer			
		With Power Angle Power Tilt Dozer			
		14X-22-50000	Power Train Assembly	1	80001-
		14X-15-51000	• Transmission Assembly	1	80001-
1		14X-15-51111	•• Case	1	80001-
2		07049-02430	•• Plug	1	80001-
3		07040-12412	•• Plug	2	80001-
4		07002-62434	•• O-ring, (Kit : K15)	2	80001-
5		07044-12412	•• Plug	1	80001-
6		07002-12434	•• O-ring, (Kit : K15)	1	80001-
7	C2	09608-05080	•• Plate, Name (Limited Supply)	1	80001-
8		04418-13060	•• Screw	4	80001-
9		14X-15-56130	•• Sleeve	1	80001-
10		07000-73022	•• O-ring, (Kit : K15)	1	80001-
11		07000-73025	•• O-ring, (Kit : K15)	1	80001-
12		14X-15-56140	•• Flange	1	80001-
13		07040-11007	•• Plug	1	80001-
14		07002-61023	•• O-ring, (Kit : K15)	1	80001-
15		01010-81025	•• Bolt	2	80001-
16		01643-31032	•• Washer	2	80001-
17		07000-73045	•• O-ring, (Kit : K15)	1	80001-
18		23B-15-11370	•• Stopper	1	80001-
19		07000-73022	•• O-ring, (Kit : K15)	1	80001-

FIG. F2300-001015 Power Train, Input and Output Shaft

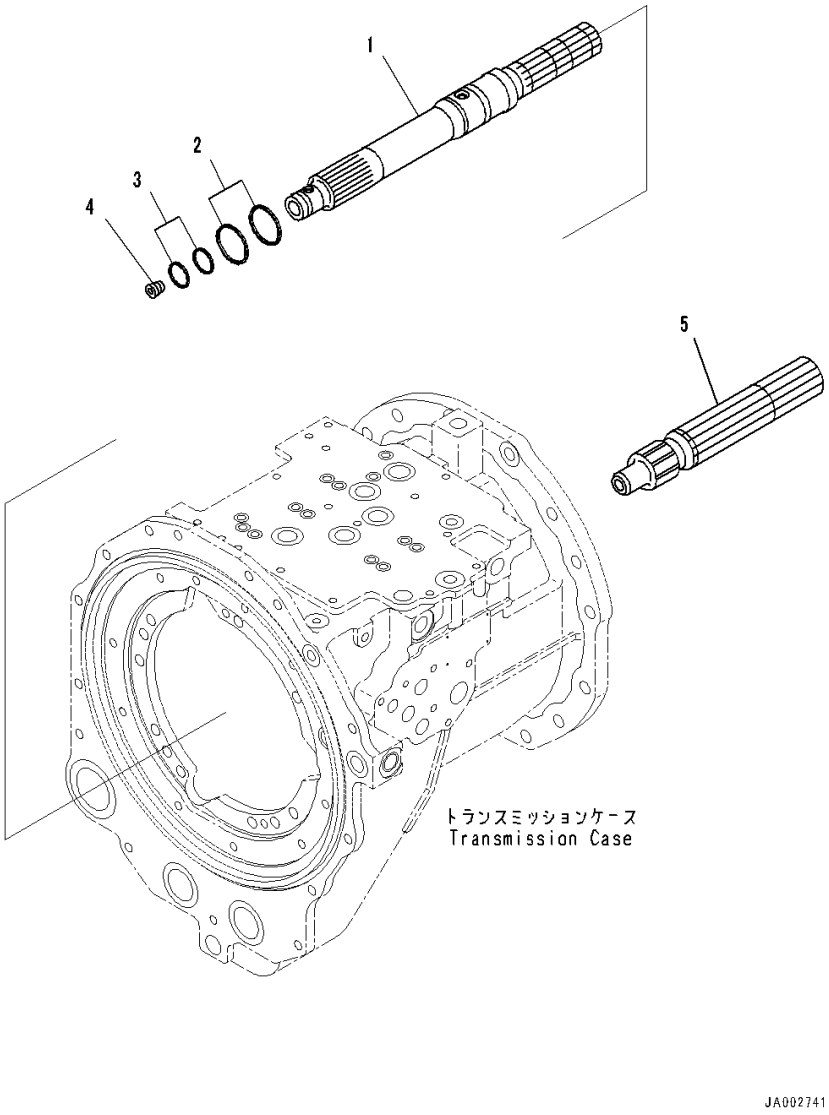

Index	Code	Part Number	Description	Qty	Serial Number
		Note: This list covers following specifications.			
		Without Power Angle Power Tilt Dozer			
		With Power Angle Power Tilt Dozer			
		14X-22-50000	Power Train Assembly	1	80001-
		14X-15-51000	• Transmission Assembly	1	80001-
1		14X-15-52111	•• Shaft	1	80001-
2		714-12-39230	•• Seal Ring, (Kit : K15)	2	80001-
3		714-21-19810	•• Seal Ring, (Kit : K15)	2	80001-
4		07043-70312	•• Plug	1	80001-
5		14X-15-52120	•• Shaft	1	80001-

FIG. F2300-001016 Power Train, Transmission E.C.M.V. Valve

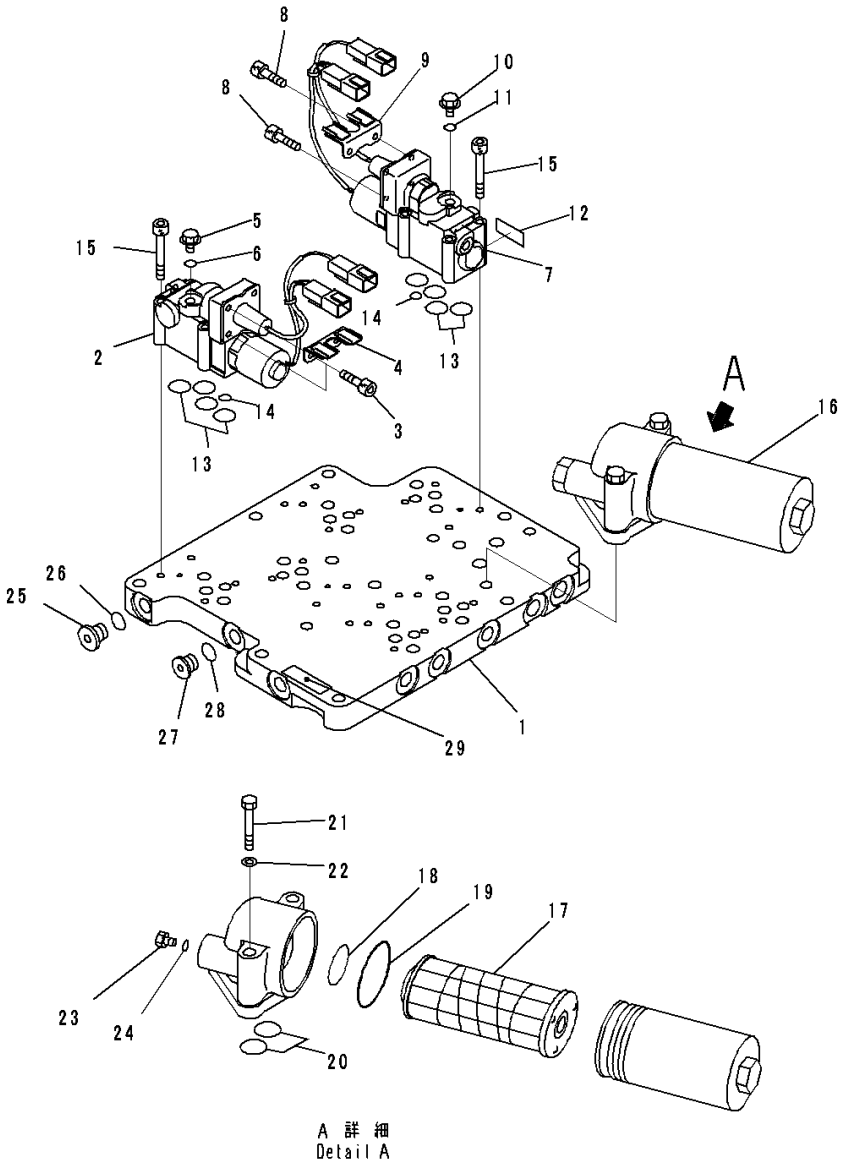

Index	Code	Part Number	Description	Qty	Serial Number
		Note: This list covers following specifications.			
		Without Power Angle Power Tilt Dozer			
		With Power Angle Power Tilt Dozer			
		14X-22-50000	Power Train Assembly	1	80001-
		14X-15-51000	• Transmission Assembly	1	80001-
		14X-15-55500	•• Valve Assembly	1	80001-
1		14X-15-55511	••• Seat, Valve	1	80001-
2		14X-15-55600	••• ECMV Assembly	1	80001-
3		01252-60510	•••• Bolt	4	80001-
4		714-23-15690	•••• Bracket	1	80001-
5		708-8E-16150	•••• Plug	1	80001-
6		07002-61023	•••• O-ring, (Kit : K03)	1	80001-
7		714-07-45500	••• ECMV Group	5	80001-
8		01252-60510	•••• Bolt	4	80001-
9		714-23-15690	•••• Bracket	1	80001-
10		708-8E-16150	•••• Plug	1	80001-
11		07002-61023	•••• O-ring, (Kit : K03)	1	80001-
12	C2	700-11-31940	•••• Plate, Name (Limited Supply)	1	80001-
13		07000-72015	••• O-ring, (Kit : K03)	24	80001-
14		07000-71007	••• O-ring, (Kit : K03)	6	80001-
15		01252-70650	••• Bolt	24	80001-
16		569-15-51721	••• Filter Assembly	1	80001-
17		569-15-51732	•••• Element Assembly	1	80001-
18		07000-A3024	••••• O-ring	1	80001-
19		07000-A2060	•••• O-ring, (Kit : K03)	1	80001-
20		07000-73022	••• O-ring, (Kit : K03)	2	80001-
21		01010-81085	••• Bolt	2	80001-
22		01643-31032	••• Washer	2	80001-
23		07040-11812	••• Plug	1	80001-
24		07002-61823	••• O-ring, (Kit : K03)	1	80001-
25		702-21-55620	••• Plug	5	80001-
26		07002-61423	••• O-ring, (Kit : K03)	5	80001-
27		708-7R-11220	••• Plug	7	80001-
28		07002-61223	••• O-ring, (Kit : K03)	7	80001-
29	C2	700-11-31980	••• Plate, Name (Limited Supply)	1	80001-

FIG. F2300-001017 Power Train, Transmission E.C.M.V. Valve Mounts

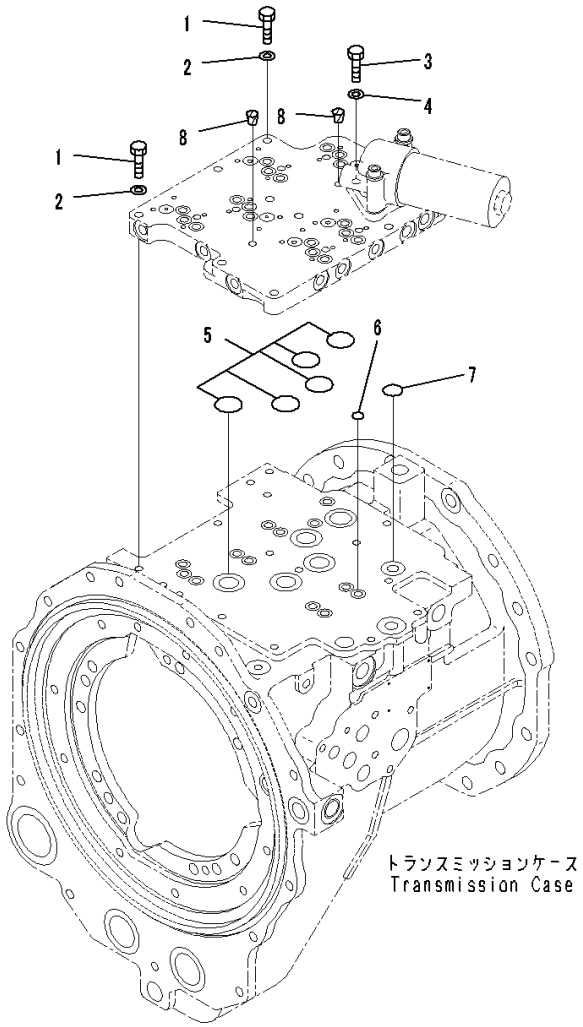

Index	Code	Part Number	Description	Qty	Serial Number
		Note: This list covers following specifications.			
		Without Power Angle Power Tilt Dozer			
		With Power Angle Power Tilt Dozer			
		14X-22-50000	Power Train Assembly	1	80001-
		14X-15-51000	• Transmission Assembly	1	80001-
1		01010-81045	•• Bolt	2	80001-
2		01643-31032	•• Washer	2	80001-
3		01010-81055	•• Bolt	1	80001-
4		01643-31032	•• Washer	1	80001-
5		07000-73035	•• O-ring, (Kit : K15)	5	80001-
6		07000-72015	•• O-ring, (Kit : K15)	13	80001-
7		07000-73025	•• O-ring, (Kit : K15)	1	80001-
8		07049-01012	•• Plug	2	80001-

FIG. F2300-001018 Power Train, Relief Valve

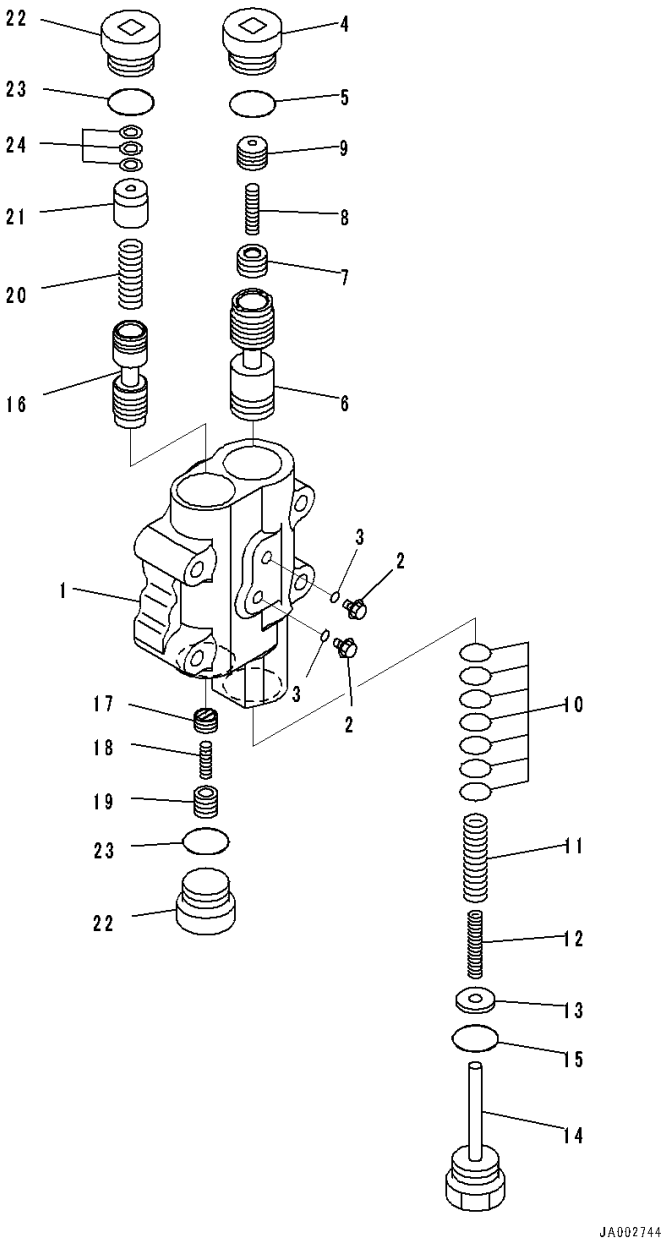

Index	Code	Part Number	Description	Qty	Serial Number
		Note: This list covers following specifications.			
		Without Power Angle Power Tilt Dozer			
		With Power Angle Power Tilt Dozer			
		14X-22-50000	Power Train Assembly	1	80001-
		14X-15-51000	• Transmission Assembly	1	80001-
		426-15-46001	•• Valve Assembly	1	80001-
1	C1		••• Valve Body	1	80001-
2		708-8E-16150	••• Plug	2	80001-
3		07002-61023	••• O-ring, (Kit : K04)	2	80001-
4		14X-15-15850	••• Plug	1	80001-
5		07002-63034	••• O-ring, (Kit : K04)	1	80001-
6	C1		••• Valve	1	80001-
7		426-15-15490	••• Valve	1	80001-
8		562-15-16110	••• Spring	1	80001-
9		426-15-15480	••• Valve	1	80001-
10		56B-15-16660	••• Shim, T=0.50mm	7	80001-
11		41E-15-16251	••• Spring, L=128mm	1	80001-
12		426-15-16261	••• Spring, L=108.0mm	1	80001-
13		22W-43-17330	••• Washer	1	80001-
14		426-15-15810	••• Plug	1	80001-
15		07002-63034	••• O-ring, (Kit : K04)	1	80001-
16	C1		••• Spool	1	80001-
17		104-15-25490	••• Valve	1	80001-
18		125-15-15290	••• Spring	1	80001-
19		104-15-25480	••• Valve	1	80001-
20		14X-15-16210	••• Spring	1	80001-
21		12H-15-14140	••• Guide	1	80001-
22		14X-15-15850	••• Plug	2	80001-
23		07002-63034	••• O-ring, (Kit : K04)	2	80001-
24		175-15-56470	••• Shim, T=0.50mm	3	80001-

FIG. F2300-001019 Power Train, Relief Valve Mounting

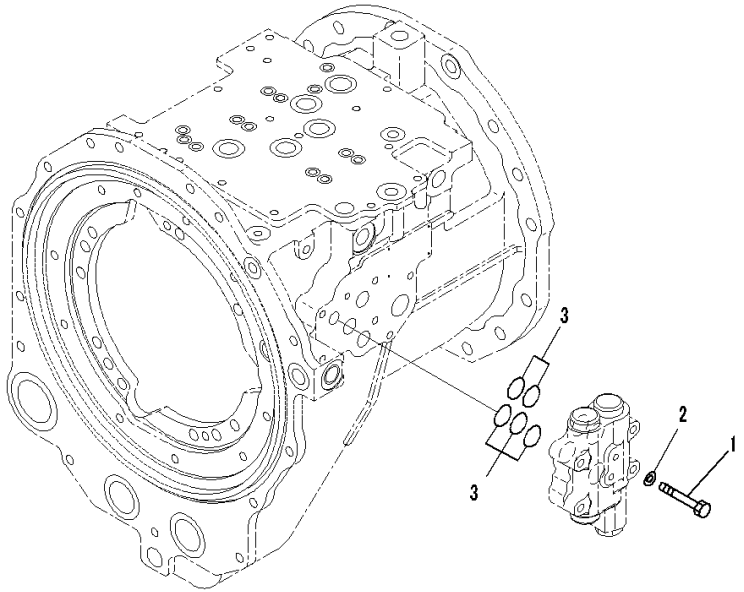

Index	Code	Part Number	Description	Qty	Serial Number
		Note: This list covers following specifications.			
		Without Power Angle Power Tilt Dozer			
		With Power Angle Power Tilt Dozer			
		14X-22-50000	Power Train Assembly	1	80001-
		14X-15-51000	• Transmission Assembly	1	80001-
1		01010-81065	•• Bolt	4	80001-
2		01643-31032	•• Washer	4	80001-
3		07000-73030	•• O-ring, (Kit : K04)	5	80001-

FIG. F2300-001020 Power Train, Block

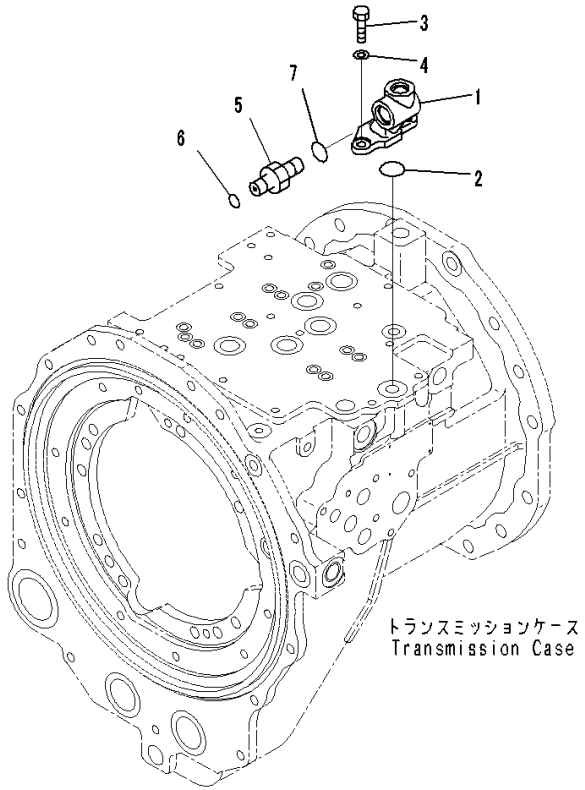

Index	Code	Part Number	Description	Qty	Serial Number
		Note: This list covers following specifications.			
		Without Power Angle Power Tilt Dozer			
		With Power Angle Power Tilt Dozer			
		14X-22-50000	Power Train Assembly	1	80001-
		14X-15-51000	• Transmission Assembly	1	80001-
1		14X-15-56121	•• Block	1	80001-
2		07000-73032	•• O-ring, (Kit : K15)	1	80001-
3		01010-81030	•• Bolt	2	80001-
4		01643-31032	•• Washer	2	80001-
5		02781-00628	•• Union	1	80001-
6		02896-61018	•• O-ring, (Kit : K15)	1	80001-
7		07002-62434	•• O-ring, (Kit : K15)	1	80001-

FIG. F2300-001021 Power Train, Pump and Turbine

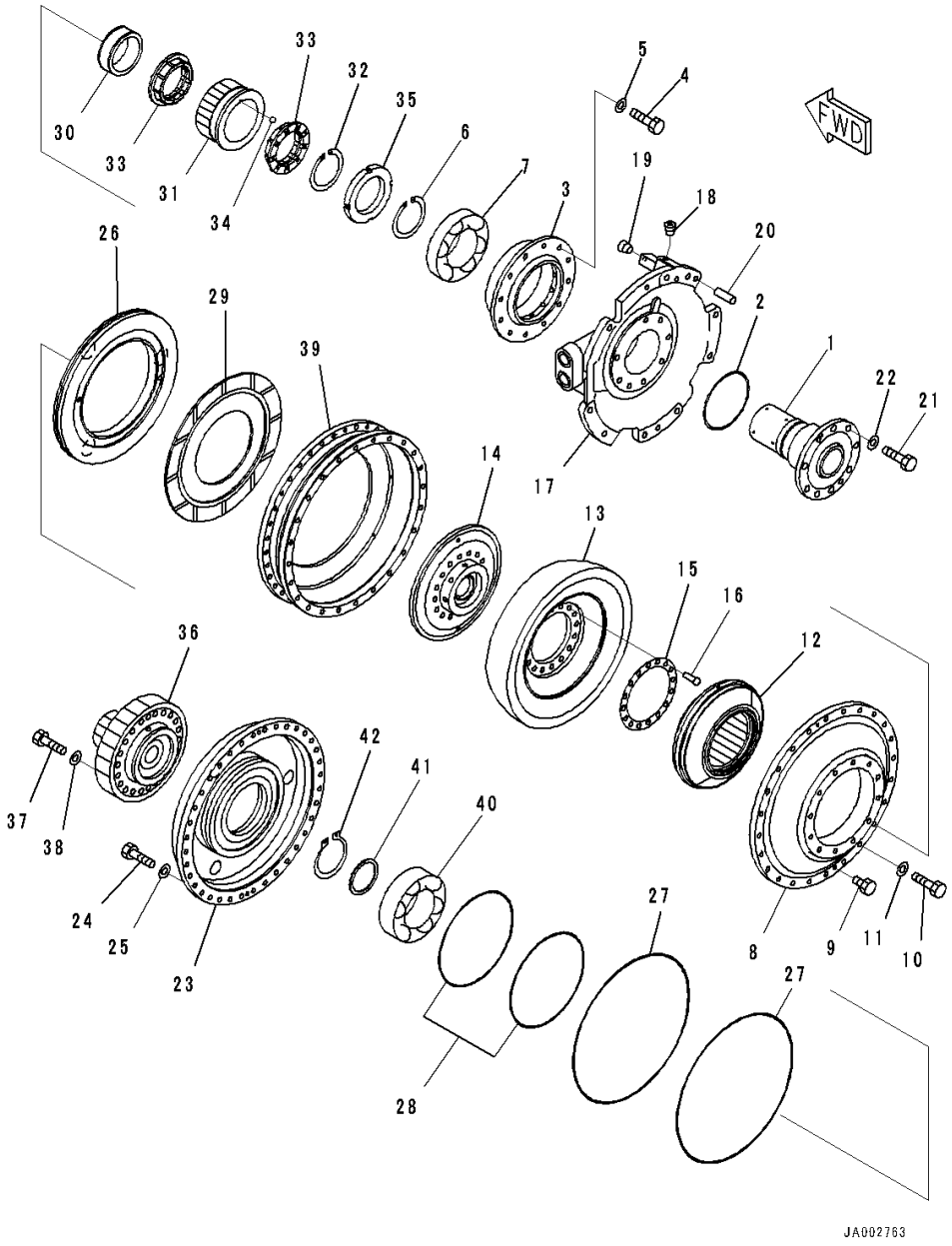

Index	Code	Part Number	Description	Qty	Serial Number
		Note: This list covers following specifications.			
		Without Power Angle Power Tilt Dozer			
		With Power Angle Power Tilt Dozer			
		14X-22-50000	Power Train Assembly	1	80001-
		14X-13-51000	• Torque Converter Assembly	1	80001-
1		14X-13-52620	•• Shaft	1	80001-
2		426-13-42710	•• Seal Ring, (Kit : K01)	1	80001-
3		14X-13-51240	•• Retainer	1	80001-
4		01010-81035	•• Bolt	12	80001-
5		01643-31032	•• Washer	12	80001-
6		04071-00160	•• Ring, Snap, for Hole Side	1	80001-
7		568-13-13351	•• Bearing	1	80001-
8		14X-13-51120	•• Pump	1	80001-
9		07040-10807	•• Plug	2	80001-
10		01010-81035	•• Bolt	24	80001-
11		01643-31032	•• Washer	24	80001-
12		14X-13-52210	•• Stator	1	80001-
		14X-13-51610	•• Turbine	1	80001-
13	C1		••• Turbine	1	80001-
14	C1		••• Boss	1	80001-
15	C1		••• Plate	1	80001-
16	C1		••• Rivet	16	80001-
17		14X-13-54411	•• Housing	1	80001-
18		07043-70312	•• Plug	1	80001-
19		07043-70211	•• Plug	1	80001-
20		04020-01228	•• Pin, Dowel	1	80001-
21		01010-81240	•• Bolt	8	80001-
22		01643-31232	•• Washer	8	80001-
23		14X-13-57111	•• Housing	1	80001-
24		01010-81035	•• Bolt	36	80001-
25		01643-31032	•• Washer	36	80001-
26		14X-13-57210	•• Piston	1	80001-
27		582-15-19240	•• Seal Ring, (Kit : K01)	2	80001-
28		567-15-12830	•• Ring, (Kit : K01)	2	80001-
29		582-15-12811	•• Disc	1	80001-
30		14X-13-52260	•• Free Wheel	1	80001-
31		14X-13-52220	•• Race,Outer	1	80001-
32		04071-00145	•• Ring, Snap, for Hole Side	1	80001-
33		425-13-32140	•• Bushing	2	80001-

FIG. F2300-001021 Power Train, Pump and Turbine

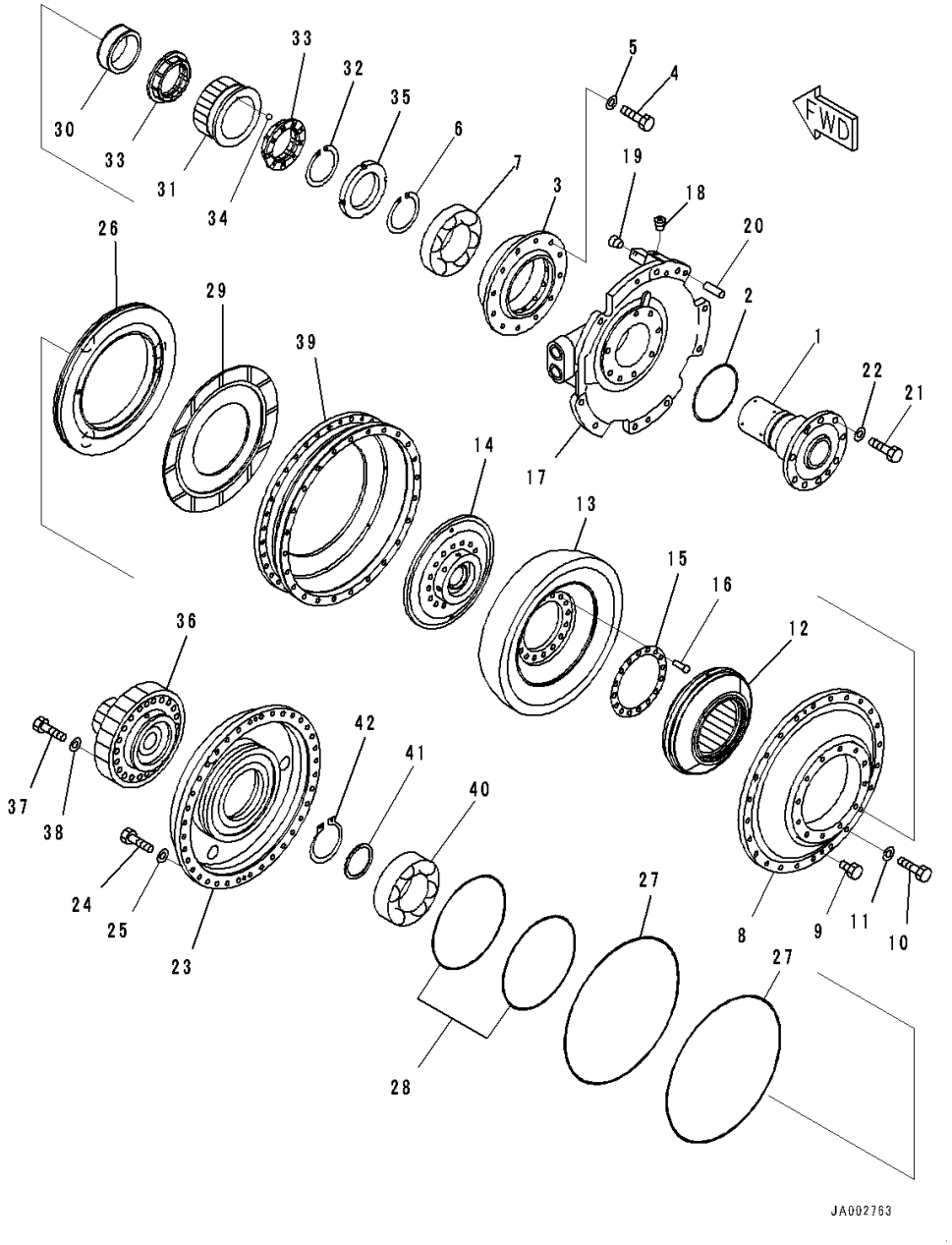

Index	Code	Part Number	Description	Qty	Serial Number
34		04260-00635	•• Ball, Steel	2	80001-
35		23W-13-12680	•• Nut	1	80001-
36		14X-13-51351	•• Shaft	1	80001-
37		01010-81270	•• Bolt	20	80001-
38		01643-31232	•• Washer	20	80001-
39		14X-13-51212	•• Case	1	80001-
40		06043-06214	•• Bearing	1	80001-
41		711-47-11770	•• Plate	1	80001-
42		04064-07025	•• Ring	1	80001-

FIG. F2300-001022 Power Train, Torque Converter Case

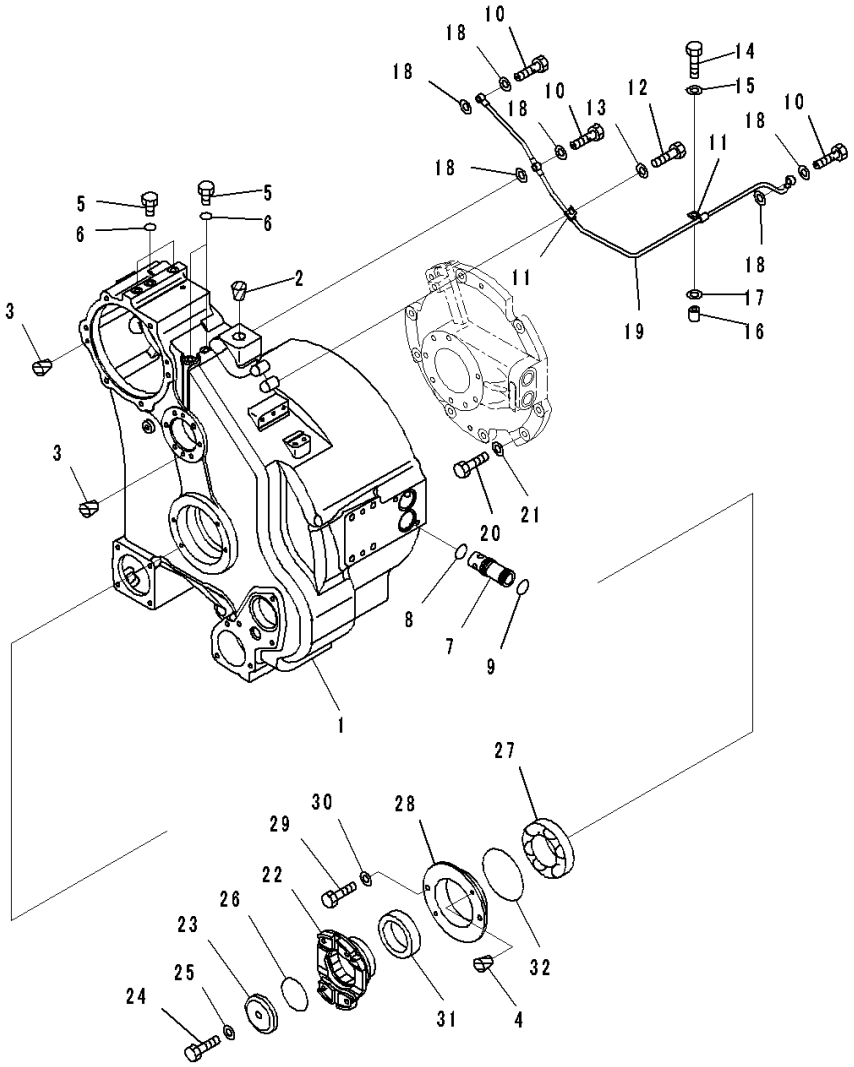

Index	Code	Part Number	Description	Qty	Serial Number
		Note: This list covers following specifications.			
			Without Power Angle Power Tilt Dozer		
			With Power Angle Power Tilt Dozer		
		14X-22-50000	Power Train Assembly	1	80001-
		14X-13-51000	• Torque Converter Assembly	1	80001-
1		14X-13-53111	•• Case	1	80001-
2		07049-03038	•• Plug	1	80001-
3		07049-01215	•• Plug	4	80001-
4		07049-01012	•• Plug	2	80001-
5		07040-11007	•• Plug	5	80001-
6		07002-61023	•• O-ring, (Kit : K01)	5	80001-
7		14X-13-12550	•• Sleeve	2	80001-
8		07000-73030	•• O-ring, (Kit : K01)	2	80001-
9		07000-73032	•• O-ring, (Kit : K01)	2	80001-
10		07206-30812	•• Bolt, Joint	3	80001-
11		04434-50810	•• Clip	2	80001-
12		01010-81025	•• Bolt	1	80001-
13		01643-31032	•• Washer	1	80001-
14		01010-81050	•• Bolt	1	80001-
15		01643-31032	•• Washer	1	80001-
16		144-874-7470	•• Boss	1	80001-
17		01643-31032	•• Washer	1	80001-
18		07005-01212	•• Gasket, (Kit : K01)	6	80001-
19		14X-13-53260	•• Tube	1	80001-
20		01010-81240	•• Bolt	9	80001-
21		01643-31232	•• Washer	9	80001-
22		14X-13-51360	•• Coupling	1	80001-
23		56D-15-29841	•• Holder	1	80001-
24		01050-61670	•• Bolt	1	80001-
25		01643-31645	•• Washer	1	80001-
26		07000-75065	•• O-ring, (Kit : K01)	1	80001-
27		711-53-11370	•• Bearing	1	80001-
28		14X-13-53350	•• Retainer	1	80001-
29		01010-81025	•• Bolt	2	80001-
30		01643-31032	•• Washer	2	80001-
31		07012-50095	•• Seal, Oil, (Kit : K01)	1	80001-
32		07000-72130	•• O-ring, (Kit : K01)	1	80001-

FIG. F2300-001023 Power Train, Scavenging Pump Mounts

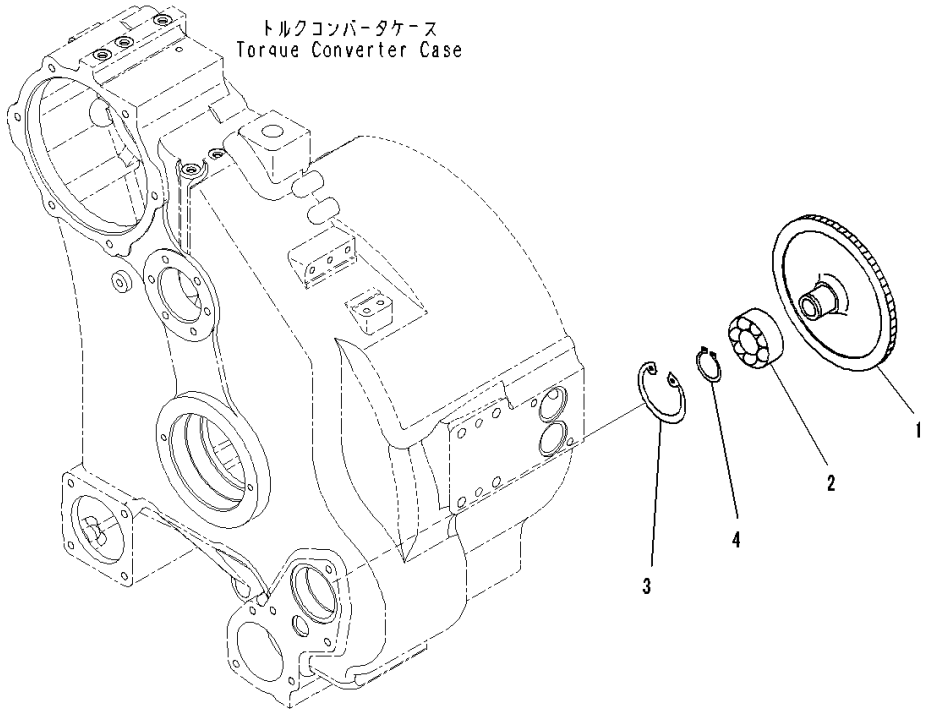

Index	Code	Part Number	Description	Qty	Serial Number
		Note: This list covers following specifications.			
		Without Power Angle Power Tilt Dozer			
		With Power Angle Power Tilt Dozer			
		14X-22-50000	Power Train Assembly	1	80001-
		14X-13-51000	• Torque Converter Assembly	1	80001-
1		14X-13-54330	•• Gear	1	80001-
2		17A-13-24490	•• Bearing	1	80001-
3		04065-07225	•• Ring, Snap	1	80001-
4		04064-03515	•• Ring	1	80001-

FIG. F2300-001024 Power Train, Power takeoff Gear

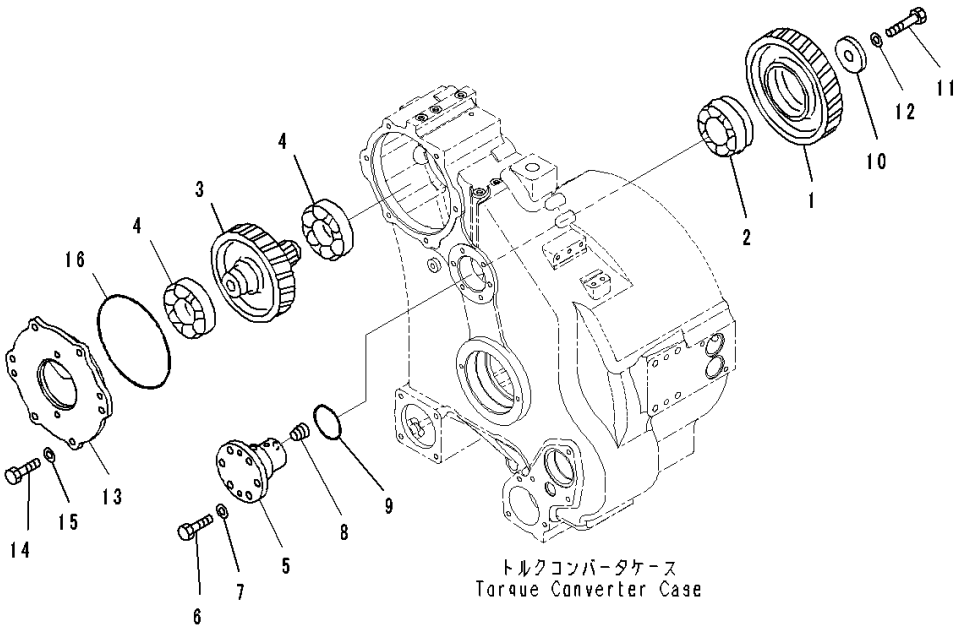

Index	Code	Part Number	Description	Qty	Serial Number
		Note: This list covers following specifications.			
		Without Power Angle Power Tilt Dozer			
		With Power Angle Power Tilt Dozer			
		14X-22-50000	Power Train Assembly	1	80001-
		14X-13-51000	• Torque Converter Assembly	1	80001-
1		14X-13-14220	•• Gear	1	80001-
2		711-49-14230	•• Bearing	1	80001-
3		14X-13-54320	•• Gear	1	80001-
4		06340-06311	•• Bearing	2	80001-
5		14X-13-14241	•• Shaft	1	80001-
6		01010-81235	•• Bolt	6	80001-
7		01643-31232	•• Washer	6	80001-
8		07043-70211	•• Plug	1	80001-
9		07000-72070	•• O-ring, (Kit : K01)	1	80001-
10		144-10-12180	•• Holder	1	80001-
11		01010-61460	•• Bolt	1	80001-
12		01643-31445	•• Washer	1	80001-
13		14X-13-54341	•• Cover	1	80001-
14		01010-81235	•• Bolt	4	80001-
15		01643-31232	•• Washer	4	80001-
16		07000-75210	•• O-ring, (Kit : K01)	1	80001-

FIG. F2300-001025 Power Train, Strainer

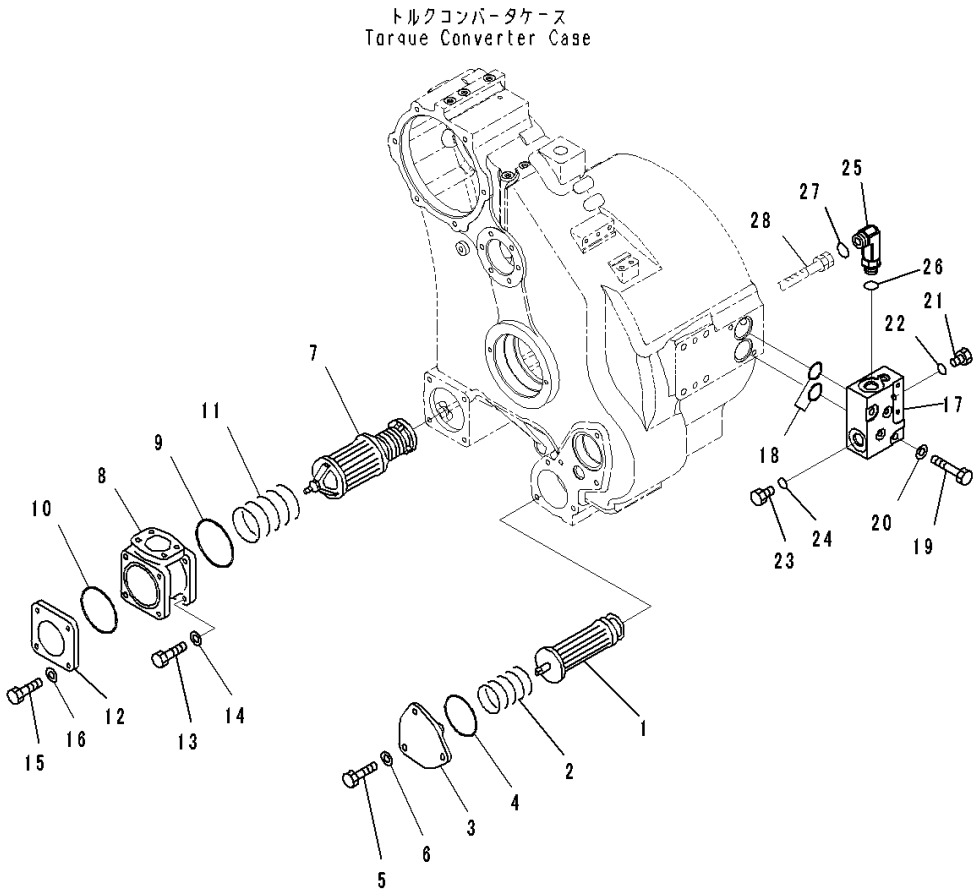

Index	Code	Part Number	Description	Qty	Serial Number
		Note: This list covers following specifications.			
		Without Power Angle Power Tilt Dozer			
		With Power Angle Power Tilt Dozer			
		14X-22-50000	Power Train Assembly	1	80001-
		14X-13-51000	• Torque Converter Assembly	1	80001-
1		14X-10-11712	•• Strainer	1	80001-
2		14X-49-12411	•• Spring	1	80001-
3		14X-10-11721	•• Cover	1	80001-
4		07000-72090	•• O-ring, (Kit : K01)	1	80001-
5		01010-81235	•• Bolt	3	80001-
6		01643-31232	•• Washer	3	80001-
7		14X-49-12310	•• Magnet Assembly	1	80001-
8		14X-49-12330	•• Head	1	80001-
9		07000-72110	•• O-ring, (Kit : K01)	1	80001-
10		07000-72100	•• O-ring, (Kit : K01)	1	80001-
11		14X-49-12320	•• Spring	1	80001-
12		14X-49-12340	•• Cover	1	80001-
13		01010-81235	•• Bolt	4	80001-
14		01643-31232	•• Washer	4	80001-
15		01010-81235	•• Bolt	4	80001-
16		01643-31232	•• Washer	4	80001-
17		14X-49-51512	•• Block	1	80001-
18		07000-73045	•• O-ring, (Kit : K01)	2	80001-
19		01010-81275	•• Bolt	2	80001-
20		01643-31232	•• Washer	2	80001-
21		07040-11007	•• Plug	2	80001-
22		07002-61023	•• O-ring, (Kit : K01)	2	80001-
23		07040-12412	•• Plug	1	80001-
24		07002-62434	•• O-ring, (Kit : K01)	1	80001-
25		02782-10630	•• Elbow	1	80001-
26		07002-62434	•• O-ring, (Kit : K01)	1	80001-
27		02896-61018	•• O-ring, (Kit : K01)	1	80001-
28		(14X-49-52111)	Hose(Refer to Page 277)		-

FIG. F2300-001026 Power Train, Mounts (1/2)

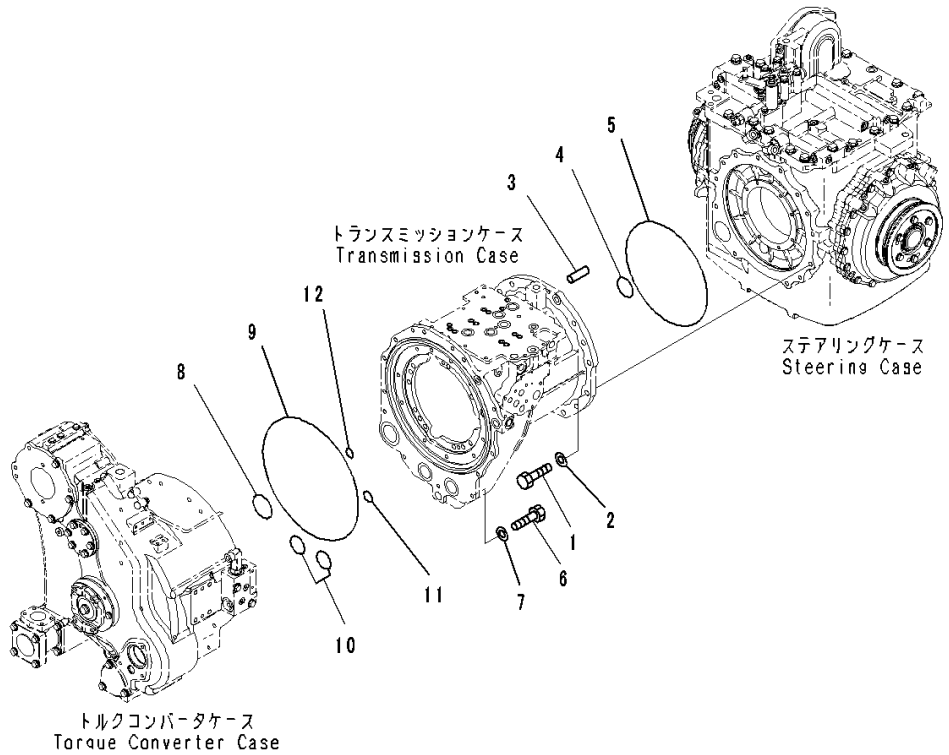

Index	Code	Part Number	Description	Qty	Serial Number
		Note: This list covers following specifications.			
		Without Power Angle Power Tilt Dozer			
		With Power Angle Power Tilt Dozer			
		14X-22-50000	Power Train Assembly	1	80001-
1		01010-61650	• Bolt	13	80001-
2		01643-31645	• Washer	13	80001-
3		04020-01228	• Pin, Dowel	1	80001-
4		07000-72075	• O-ring	1	80001-
5		07000-75375	• O-ring	1	80001-
6		01010-81235	• Bolt	14	80001-
7		01643-31232	• Washer	14	80001-
8		07000-72075	• O-ring	1	80001-
9		07000-75460	• O-ring	1	80001-
10		07000-72055	• O-ring	2	80001-
11		07000-73032	• O-ring	1	80001-
12		07000-73025	• O-ring	1	80001-

FIG. F2300-001027 Power Train, Gear Pump, SAL (2) 45+ 45 (1/2)

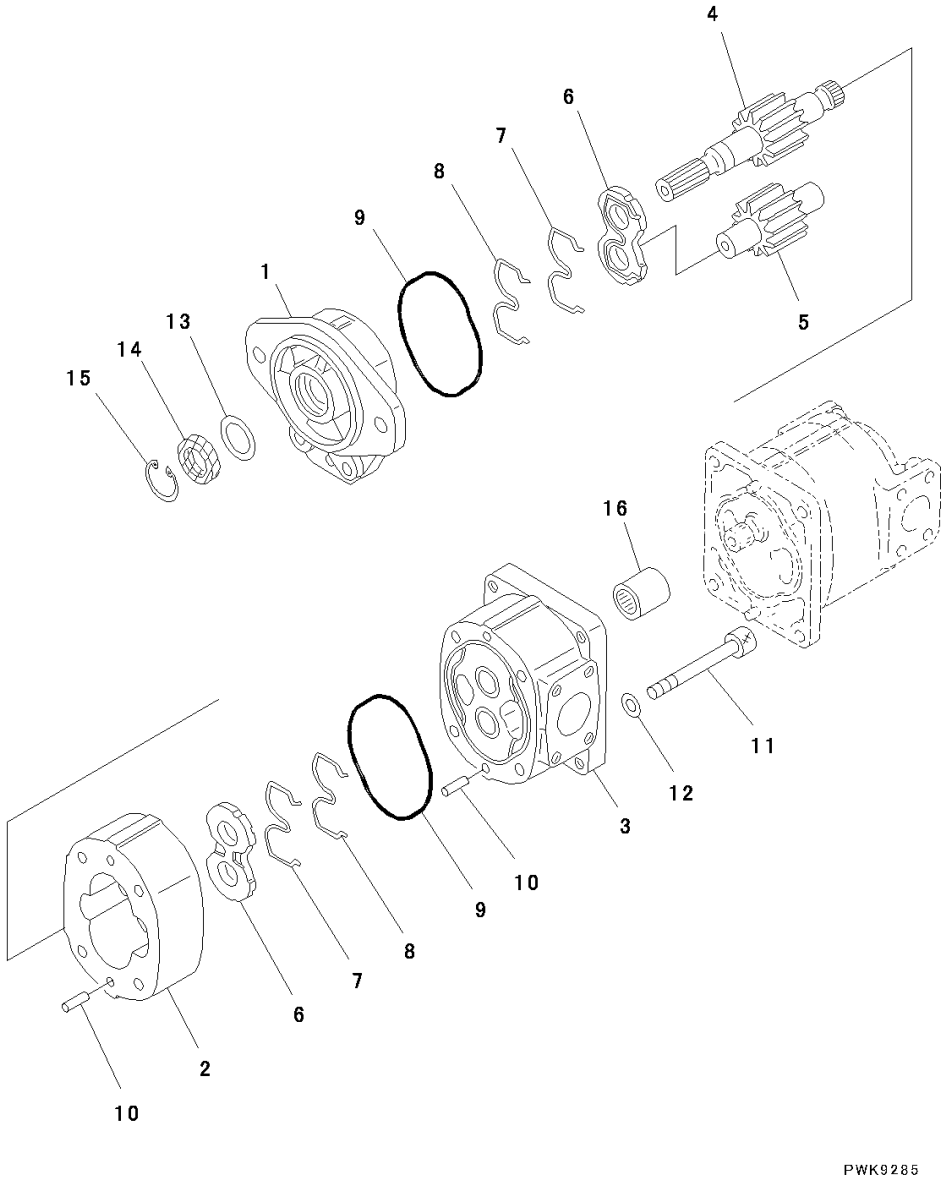

Index	Code	Part Number	Description	Qty	Serial Number
		Note: This list covers following specifications.			
		Without Power Angle Power Tilt Dozer			
		With Power Angle Power Tilt Dozer			
		14X-22-50000	Power Train Assembly	1	80001-
		705-51-20830	• Pump Assembly	1	80001-
		705-11-33240	•• Pump Assembly, SAL (2) 45	1	80001-
1	C2	705-17-02011	••• Bracket Assembly	1	80001-
	C2	705-17-02353	•••• Bushing	2	80001-
2	C2	705-17-33012	••• Case	1	80001-
3	C2	705-17-02221	••• Carrier Assembly	1	80001-
	C2	705-17-02353	•••• Bushing	2	80001-
4	C2	705-17-33430	••• Gear, Drive	1	80001-
5	C2	705-17-33512	••• Gear, Driven	1	80001-
6	C2	705-17-02612	••• Plate	2	80001-
7	C2	705-17-02430	••• Ring, Back-up	2	80001-
8	C2	705-17-02460	••• Seal Ring	2	80001-
9	C2	705-17-02360	••• O-ring	2	80001-
10	C2	04020-01024	••• Pin, Dowel	4	80001-
11	C2	01253-61210	••• Bolt, Hexagon Socket Head	4	80001-
12	C2	01643-51232	••• Washer	1	80001-
13		705-17-02870	••• Plate	1	80001-
14		705-17-02830	••• Seal, Oil	1	80001-
15		04065-04018	••• Ring, Snap	1	80001-
16		705-17-02330	••• Coupling Assembly	1	80001-

FIG. F2300-001028 Power Train, Gear Pump, SAL (2) 45+ 45 (2/2)

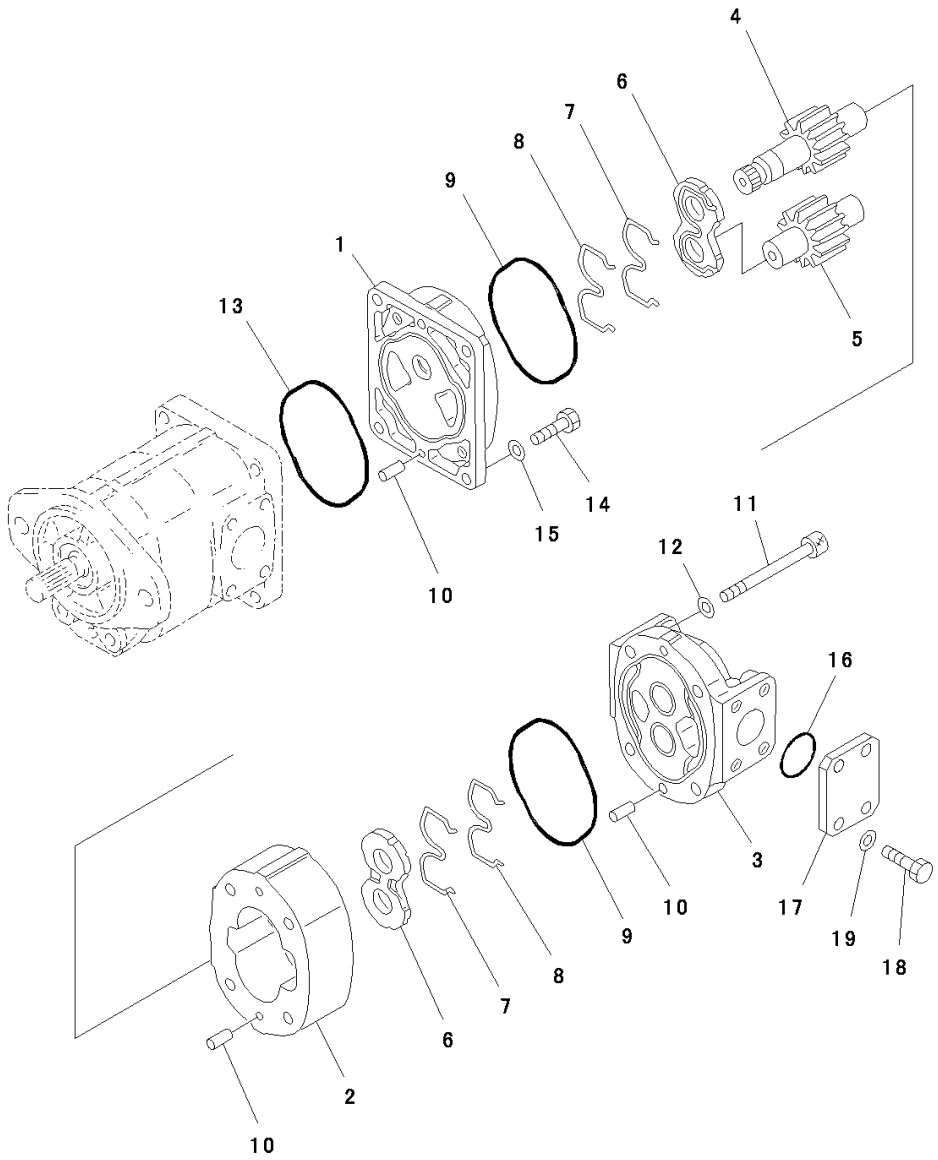

Index	Code	Part Number	Description	Qty	Serial Number
		Note: This list covers following specifications.			
		Without Power Angle Power Tilt Dozer			
		With Power Angle Power Tilt Dozer			
		14X-22-50000	Power Train Assembly	1	80001-
		705-51-20830	• Pump Assembly	1	80001-
		705-11-33540	•• Pump Assembly, SAL (2) 45	1	80001-
1	C2	705-17-02510	••• Bracket Assembly	1	80001-
	C2	705-17-02353	•••• Bushing	2	80001-
2	C2	705-17-33012	••• Case	1	80001-
3	C2	705-17-02122	••• Cover Assembly	1	80001-
	C2	705-17-02353	•••• Bushing	2	80001-
4	C2	705-17-33450	••• Gear, Drive	1	80001-
5	C2	705-17-33512	••• Gear, Driven	1	80001-
6	C2	705-17-02612	••• Plate	2	80001-
7	C2	705-17-02430	••• Ring, Back-up	2	80001-
8	C2	705-17-02460	••• Seal Ring	2	80001-
9	C2	705-17-02360	••• O-ring	2	80001-
10	C2	04020-01024	••• Pin, Dowel	6	80001-
11	C2	01253-61200	••• Bolt	4	80001-
12	C2	01643-51232	••• Washer	4	80001-
13	C2	705-17-02420	••• O-ring	1	80001-
14	C2	01252-61035	••• Bolt	4	80001-
15	C2	01643-51032	••• Washer	4	80001-
16	C2	07000-03038	••• O-ring	1	80001-
17		705-17-02881	••• Plate	1	80001-
18		01010-81025	••• Bolt	4	80001-
19		01643-51032	••• Washer	4	80001-

FIG. F2300-001029 Power Train, Power Train to Hydrostatic Tank Piping (1/2)

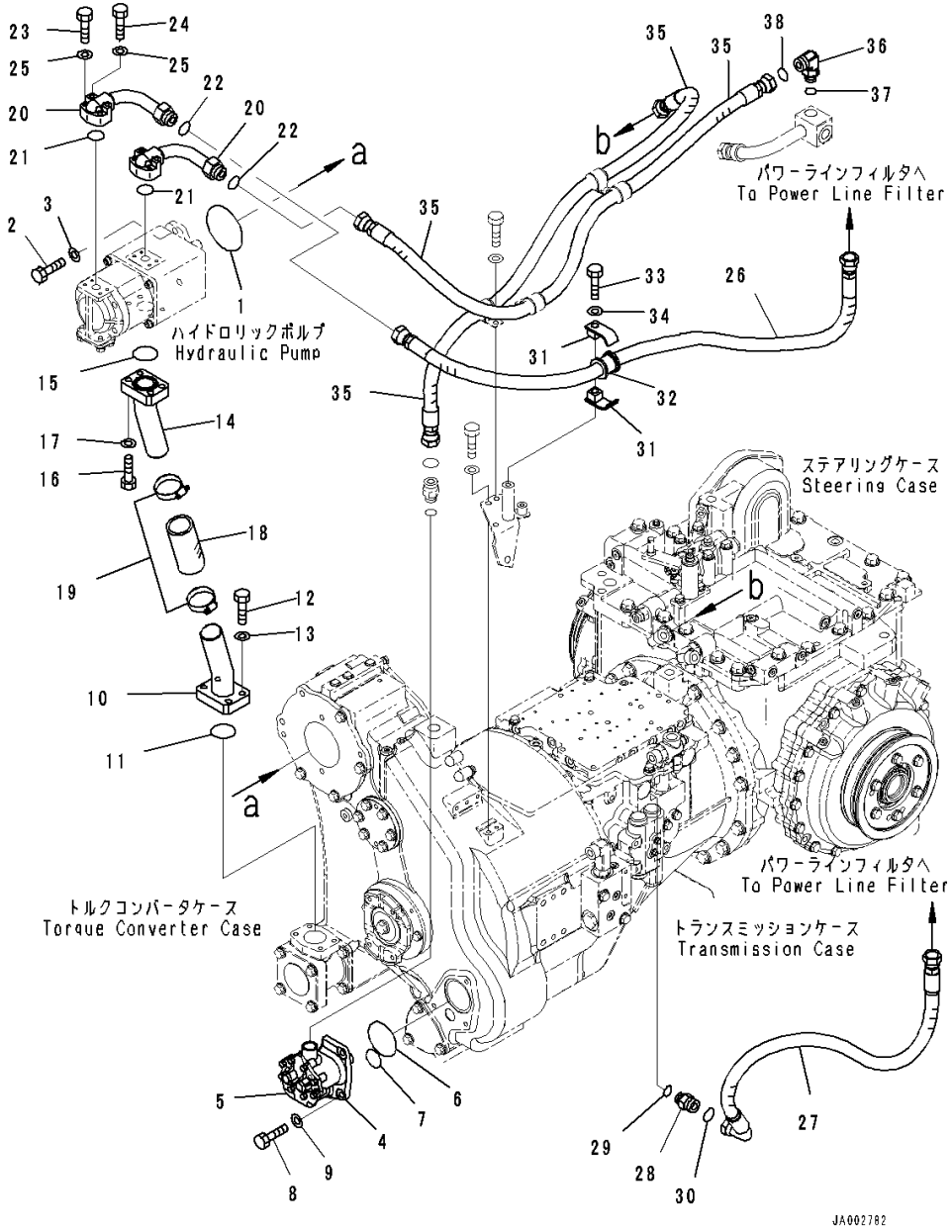

Index	Code	Part Number	Description	Qty	Serial Number
		Note: This list covers following specifications.			
		Without Power Angle Power Tilt Dozer			
		With Power Angle Power Tilt Dozer			
		14X-22-50000	Power Train Assembly	1	80001-
1		07000-72105	• O-ring	1	80001-
2		01010-81235	• Bolt	2	80001-
3		01643-31232	• Washer	2	80001-
4		14X-49-51601	• Pump Assembly	1	80001-
5		14X-49-51611	•• Cover	1	80001-
6		07000-72080	• O-ring	1	80001-
7		07000-73038	• O-ring	1	80001-
8		01010-81235	• Bolt	3	80001-
9		01643-31232	• Washer	3	80001-
10		14X-49-51110	• Tube	1	80001-
11		07000-72060	• O-ring	1	80001-
12		01010-81245	• Bolt	4	80001-
13		01643-51232	• Washer	4	80001-
14		14X-49-51120	• Tube	1	80001-
15		07000-73048	• O-ring	1	80001-
16		01010-81245	• Bolt	4	80001-
17		01643-51232	• Washer	4	80001-
18		07260-24713	• Hose	1	80001-
19		07289-00055	• Clamp	2	80001-
20		14X-49-51130	• Tube	2	80001-
21		07000-73030	• O-ring	2	80001-
22		02896-61018	• O-ring	2	80001-
23		01010-80845	• Bolt	4	80001-
24		01010-80855	• Bolt	4	80001-
25		01643-50823	• Washer	8	80001-
26		14X-49-51171	• Hose	1	80001-
27		14X-49-51330	• Hose	1	80001-
28		02781-00628	• Union	1	80001-
29		07002-62434	• O-ring	1	80001-
30		02896-61018	• O-ring	1	80001-
31		07094-10620	• Clamp	2	80001-
32		07095-00628	• Cushion	1	80001-
33		01010-81265	• Bolt	1	80001-
34		01643-31232	• Washer	1	80001-
35		14X-49-51161	• Hose	2	80001-

FIG. F2300-001029 Power Train, Power Train to Hydrostatic Tank Piping (1/2)

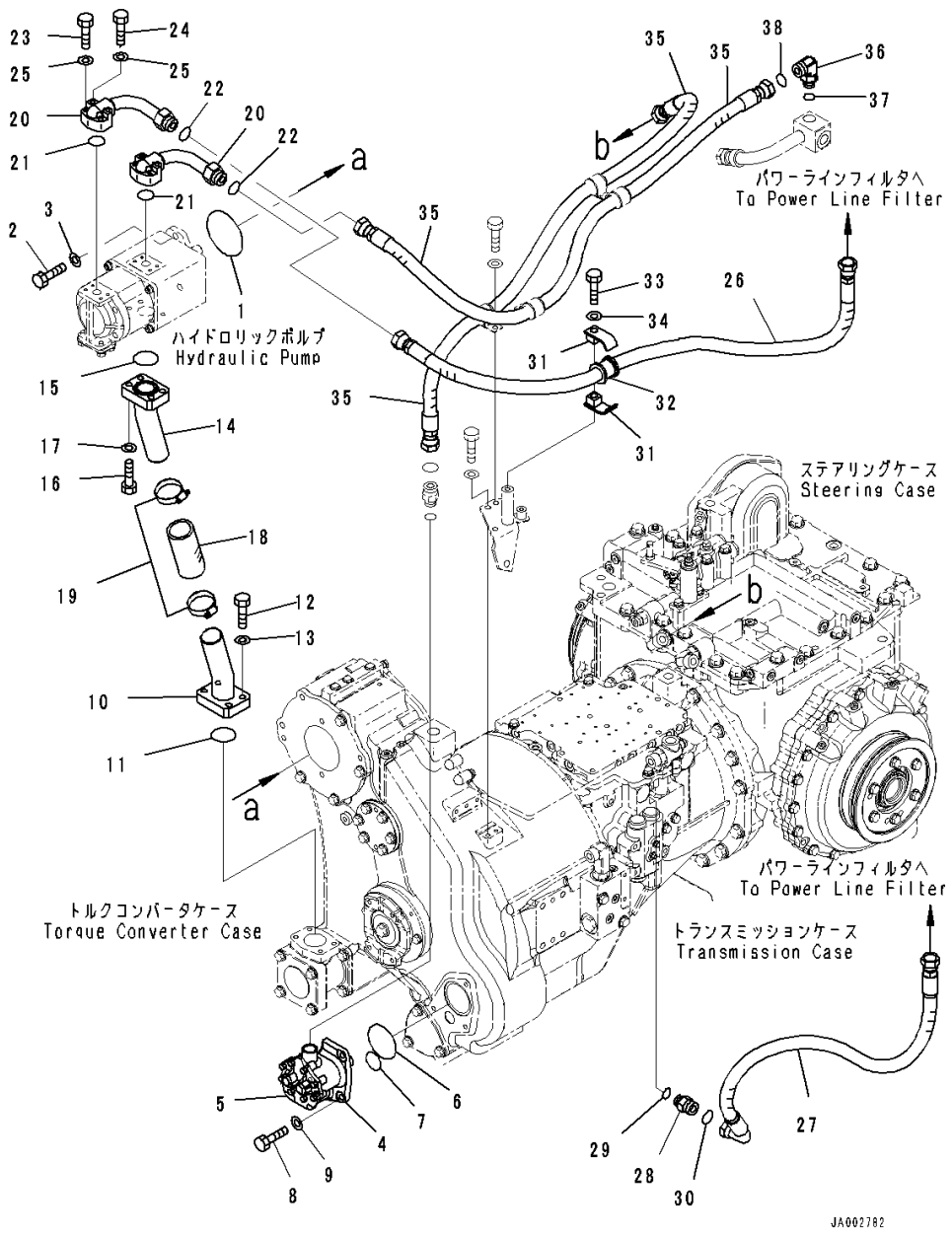

Index	Code	Part Number	Description	Qty	Serial Number
36		02781-00628	• Union	1	80001-
37		07002-62434	• O-ring	1	80001-
38		02896-61018	• O-ring	1	80001-

FIG. F2300-001030 Power Train, Power Train to Hydrostatic Tank Piping (2/2)

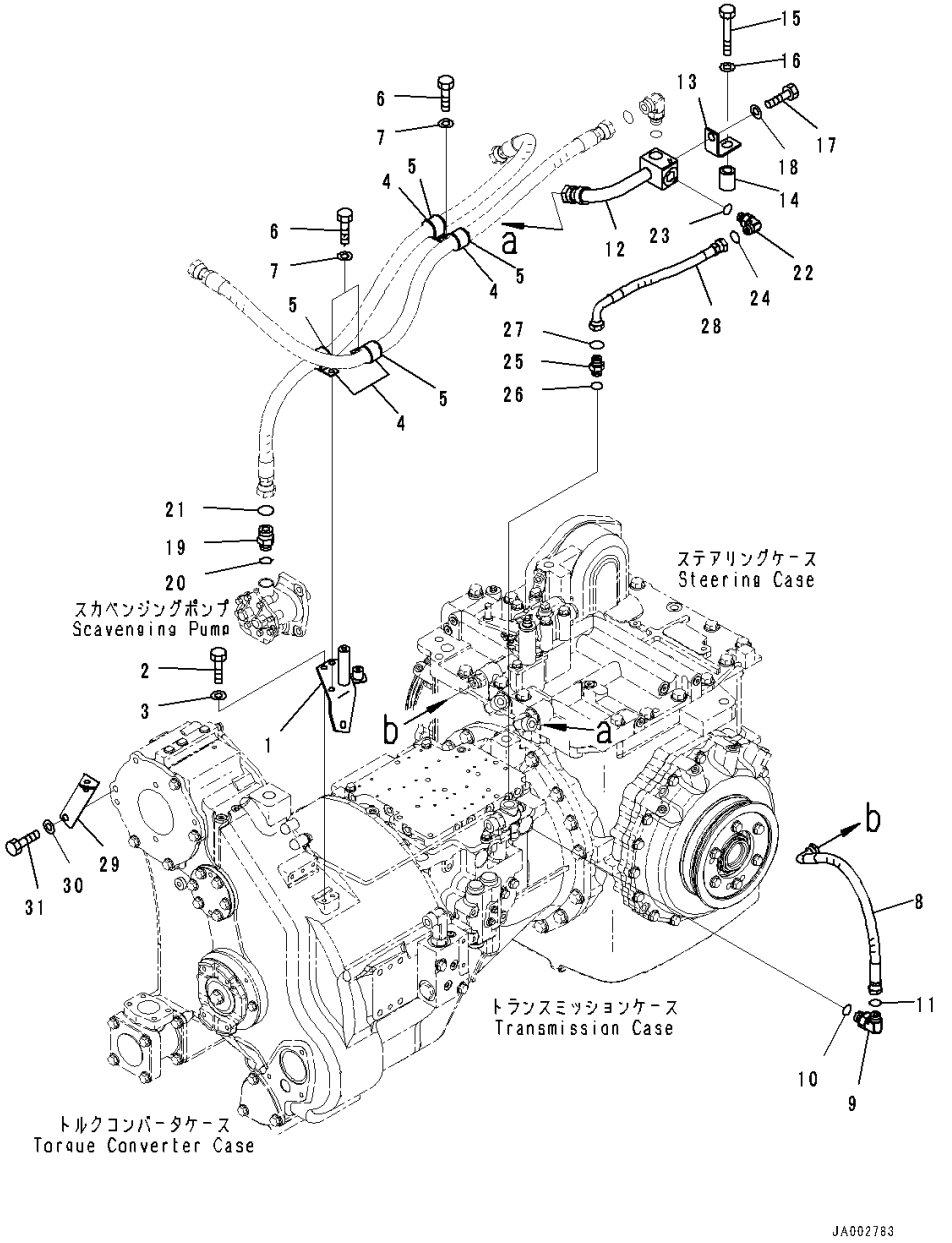

Index	Code	Part Number	Description	Qty	Serial Number
		Note: This list covers following specifications.			
		Without Power Angle Power Tilt Dozer			
		With Power Angle Power Tilt Dozer			
		14X-22-50000	Power Train Assembly	1	80001-
1		14X-49-51141	• Bracket	1	80001-
2		01010-81025	• Bolt	2	80001-
3		01643-31032	• Washer	2	80001-
4		04434-53411	• Clip	4	80001-
5		07095-20625	• Cushion	4	80001-
6		01010-81020	• Bolt	3	80001-
7		01643-31032	• Washer	3	80001-
8		02754-00405	• Hose, Face Seal Type, L=500mm	1	80001-
9		02782-10425	• Elbow	1	80001-
10		07002-62034	• O-ring	1	80001-
11		02896-61012	• O-ring	1	80001-
12		14Y-22-58110	• Tube	1	80001-
13		14Y-22-58140	• Bracket	1	80001-
14		23B-04-31580	• Spacer	1	80001-
15		01010-61690	• Bolt	1	80001-
16		01643-31645	• Washer	1	80001-
17		01010-81225	• Bolt	1	80001-
18		01643-31232	• Washer	1	80001-
19		02782-10628	• Elbow	1	80001-
20		07002-62434	• O-ring	1	80001-
21		02896-61018	• O-ring	1	80001-
22		02781-00422	• Union	1	80001-
23		07002-62034	• O-ring	1	80001-
24		02896-61012	• O-ring	1	80001-
25		02782-10422	• Elbow	1	80001-
26		07002-62034	• O-ring	1	80001-
27		02896-61012	• O-ring	1	80001-
28		02763-004A3	• Hose, Face Seal Type	1	80001-
29		14X-62-52491	• Bracket	1	80001-
30		01010-81235	• Bolt	2	80001-
31		01643-31232	• Washer	2	80001-

FIG. F2300-001031 Power Train, Oil Filler

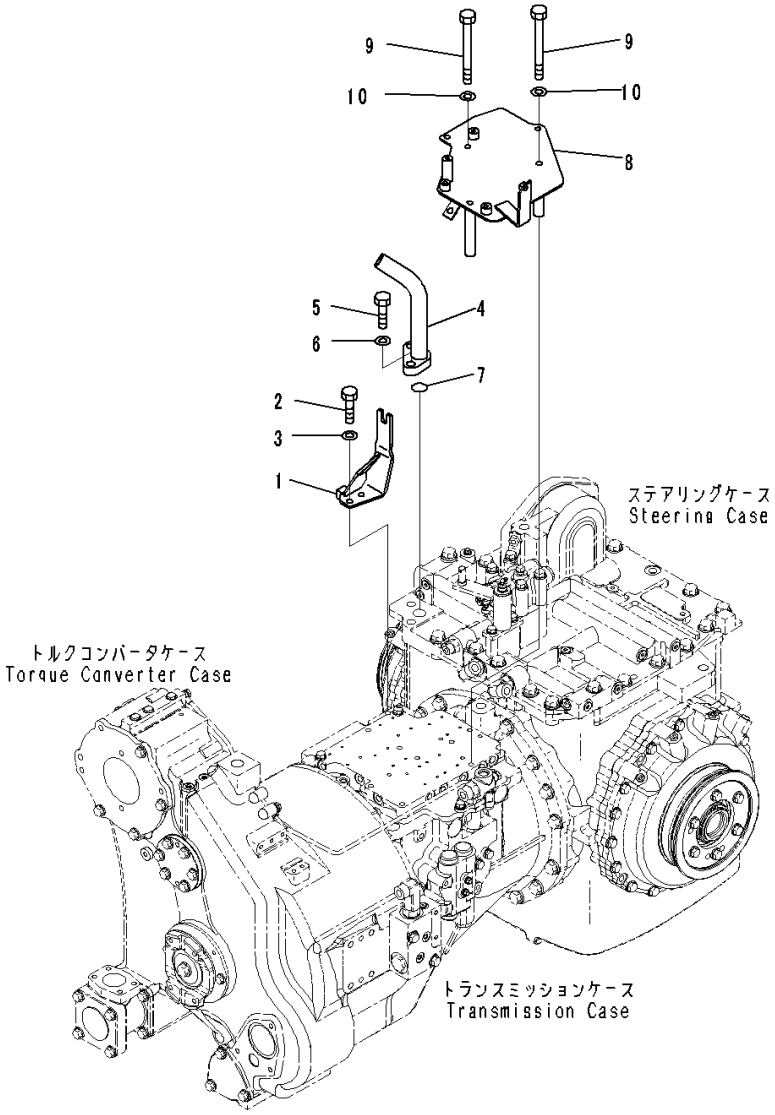

Index	Code	Part Number	Description	Qty	Serial Number
		Note: This list covers following specifications.			
		Without Power Angle Power Tilt Dozer			
		With Power Angle Power Tilt Dozer			
		14X-22-50000	Power Train Assembly	1	80001-
1		14X-43-51111	• Bracket	1	80001-
2		01010-81025	• Bolt	2	80001-
3		01643-31032	• Washer	2	80001-
4		14X-49-51151	• Filler	1	80001-
5		01010-81660	• Bolt	2	80001-
6		01643-31645	• Washer	2	80001-
7		07000-73035	• O-ring	1	80001-
8		14X-49-51311	• Cover	1	80001-
9		01011-81080	• Bolt	4	80001-
10		01643-31032	• Washer	4	80001-

FIG. F2300-001032 Power Train, Wiring Harness

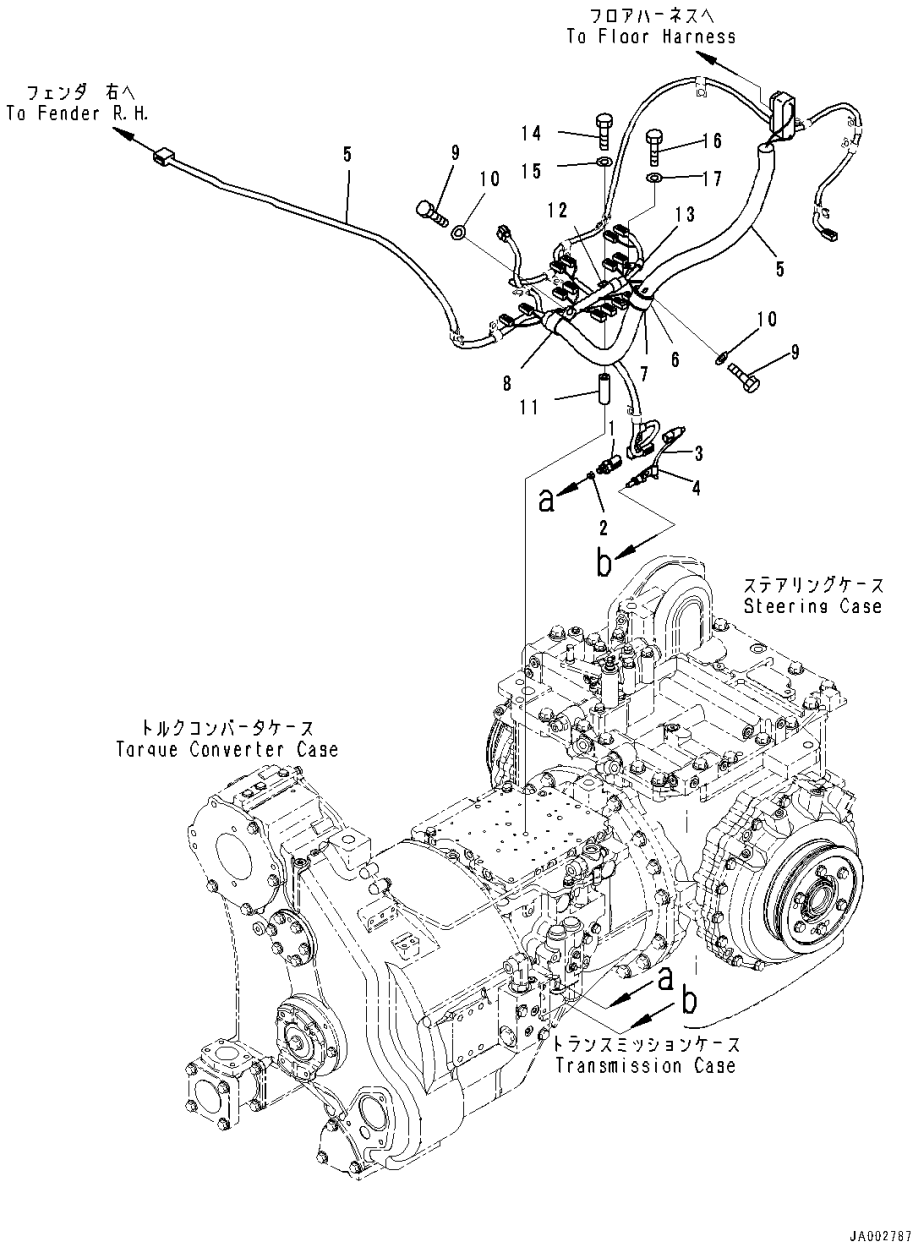

Index	Code	Part Number	Description	Qty	Serial Number
		Note: This list covers following specifications.			
		Without Power Angle Power Tilt Dozer			
		With Power Angle Power Tilt Dozer			
		14X-22-50000	Power Train Assembly	1	80001-
1		7861-93-1850	• Sensor	1	80001-
2		14X-49-51520	• Orifice	1	80001-
3		7861-93-3320	• Sensor	1	80001-
4		04434-50610	• Clip	1	80001-
5		14X-06-51111	• Wire Harness	1	80001-
6		155-61-15350	• Clip	1	80001-
7		22M-62-13660	• Cushion	1	80001-
8		281-01-13180	• Clip	1	80001-
9		01010-81020	• Bolt	2	80001-
10		01643-31032	• Washer	2	80001-
11		561-43-43390	• Spacer	3	80001-
12		04434-51910	• Clip	2	80001-
13		04434-51010	• Clip	1	80001-
14		01011-81010	• Bolt	2	80001-
15		01643-31032	• Washer	2	80001-
16		01010-81085	• Bolt	1	80001-
17		01643-31032	• Washer	1	80001-

FIG. F2300-001033 Power Train, Wire Harness Clamp

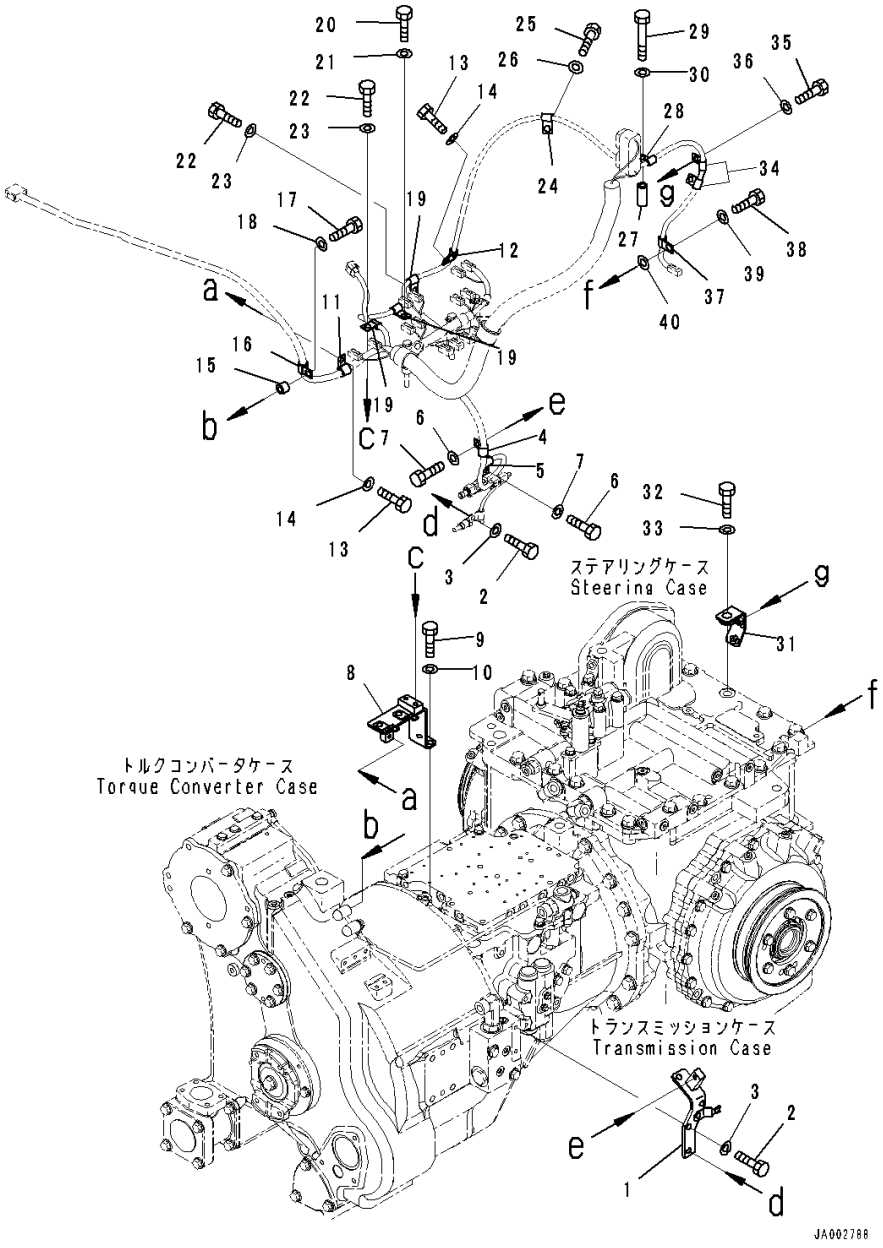

Index	Code	Part Number	Description	Qty	Serial Number
		Note: This list covers following specifications.			
		Without Power Angle Power Tilt Dozer			
		With Power Angle Power Tilt Dozer			
		14X-22-50000	Power Train Assembly	1	80001-
1		14X-06-51311	• Bracket	1	80001-
2		01010-81030	• Bolt	2	80001-
3		01643-31032	• Washer	2	80001-
4		04434-51410	• Clip	1	80001-
5		04434-51010	• Clip	1	80001-
6		01010-81020	• Bolt	2	80001-
7		01643-31032	• Washer	2	80001-
8		14X-06-51321	• Bracket	1	80001-
9		01010-81025	• Bolt	2	80001-
10		01643-31032	• Washer	2	80001-
11		04434-51410	• Clip	1	80001-
12		04434-51010	• Clip	1	80001-
13		01010-81020	• Bolt	2	80001-
14		01643-31032	• Washer	2	80001-
15		22M-60-22130	• Collar	1	80001-
16		04434-51410	• Clip	1	80001-
17		01010-81035	• Bolt	1	80001-
18		01643-31032	• Washer	1	80001-
19		04434-51010	• Clip	3	80001-
20		01010-81045	• Bolt	1	80001-
21		01643-31032	• Washer	1	80001-
22		01010-81020	• Bolt	2	80001-
23		01643-31032	• Washer	2	80001-
24		04434-51012	• Clip	1	80001-
25		01010-81220	• Bolt	1	80001-
26		01643-31232	• Washer	1	80001-
27		14X-54-26640	• Collar	1	80001-
28		04434-51010	• Clip	1	80001-
29		01010-81070	• Bolt	1	80001-
30		01643-31032	• Washer	1	80001-
31		14X-06-51341	• Bracket	1	80001-
32		01010-61660	• Bolt	1	80001-
33		01643-31645	• Washer	1	80001-
34		04434-51010	• Clip	2	80001-
35		01010-81020	• Bolt	2	80001-

FIG. F2300-001033 Power Train, Wire Harness Clamp

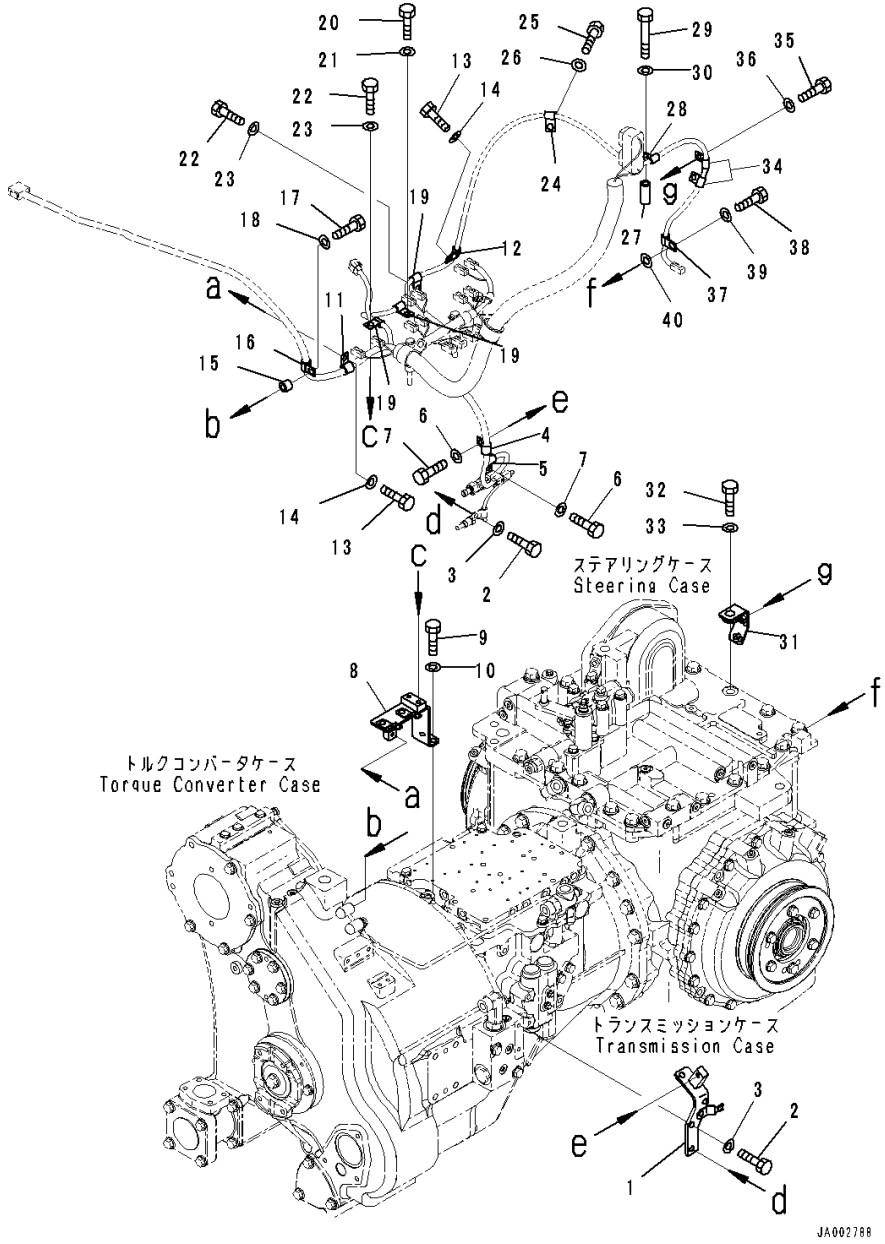

Index	Code	Part Number	Description	Qty	Serial Number
36		01643-31032	• Washer	2	80001-
37		04434-51012	• Clip	1	80001-
38		01010-81235	• Bolt	1	80001-
39		01643-31232	• Washer	1	80001-
40		01643-31232	• Washer	1	80001-

FIG. F2300-001034 Power Train, Piping

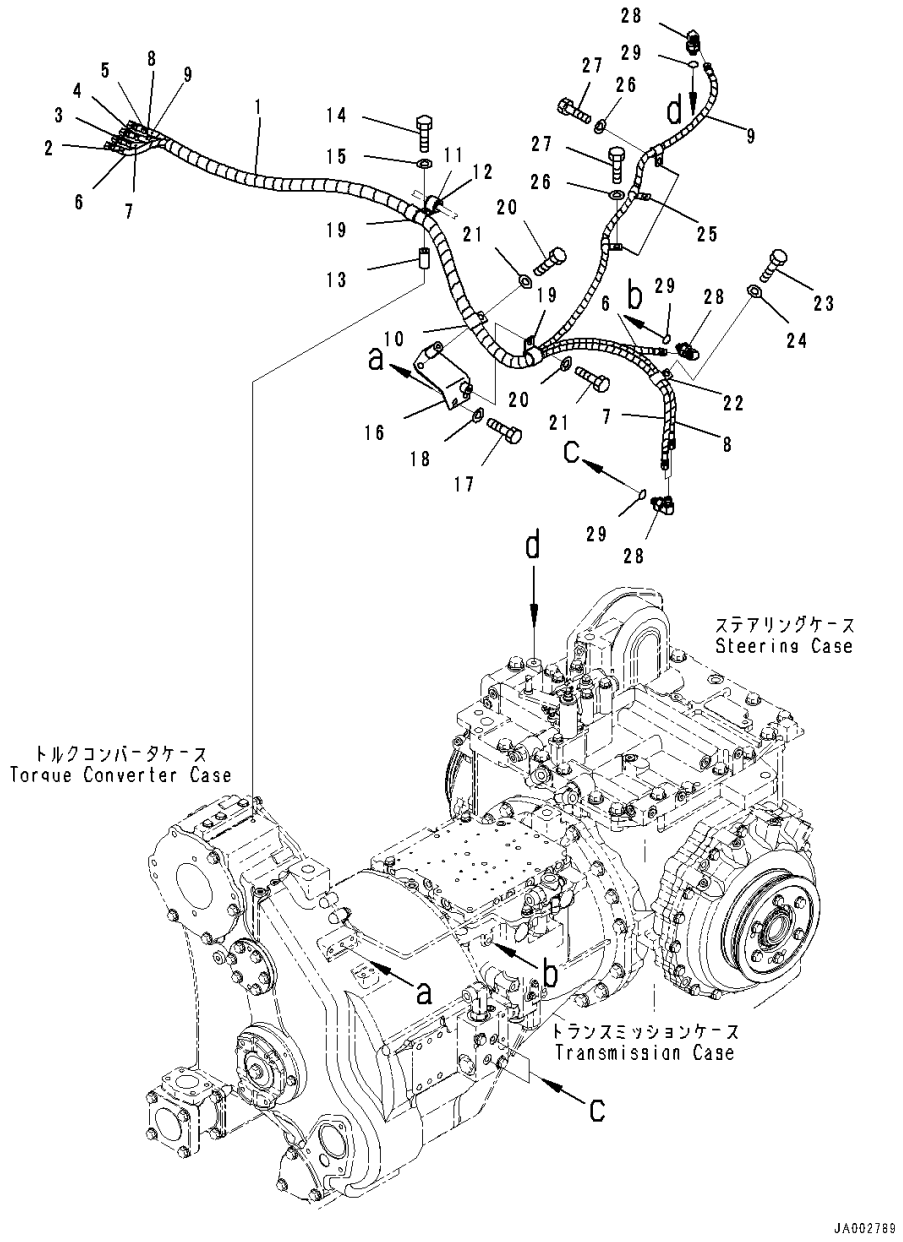

Index	Code	Part Number	Description	Qty	Serial Number
		Note: This list covers following specifications.			
		Without Power Angle Power Tilt Dozer			
		With Power Angle Power Tilt Dozer			
		14X-22-50000	Power Train Assembly	1	80001-
1		14X-49-51211	• Hose Assembly	1	80001-
2		203-62-57940	•• Decal, Mark, 4	2	80001-
3		203-62-57930	•• Decal, Mark, 3	2	80001-
4		203-62-57920	•• Decal, Mark, 2	2	80001-
5		203-62-57910	•• Mark, 1	2	80001-
6		14X-49-51251	•• Hose	1	80001-
7		14X-49-51241	•• Hose	1	80001-
8		14X-49-51231	•• Hose	1	80001-
9		14X-49-51221	•• Hose	1	80001-
10		04434-52511	• Clip	1	80001-
11		04434-52110	• Clip	1	80001-
12		07095-20314	• Cushion	1	80001-
13		22D-62-12440	• Spacer	1	80001-
14		01010-81060	• Bolt	1	80001-
15		01643-31032	• Washer	1	80001-
16		14X-62-52471	• Bracket	1	80001-
17		01010-81025	• Bolt	2	80001-
18		01643-31032	• Washer	2	80001-
19		04434-52511	• Clip	2	80001-
20		01010-81020	• Bolt	2	80001-
21		01643-31032	• Washer	2	80001-
22		04435-51210	• Clip	1	80001-
23		01010-81020	• Bolt	1	80001-
24		01643-31032	• Washer	1	80001-
25		04434-51210	• Clip	3	80001-
26		01010-81020	• Bolt	3	80001-
27		01643-31032	• Washer	3	80001-
28		124-62-61531	• Elbow	4	80001-
29		07002-11023	• O-ring	4	80001-

FIG. F2300-001035 Power Train, Mounts (2/2)

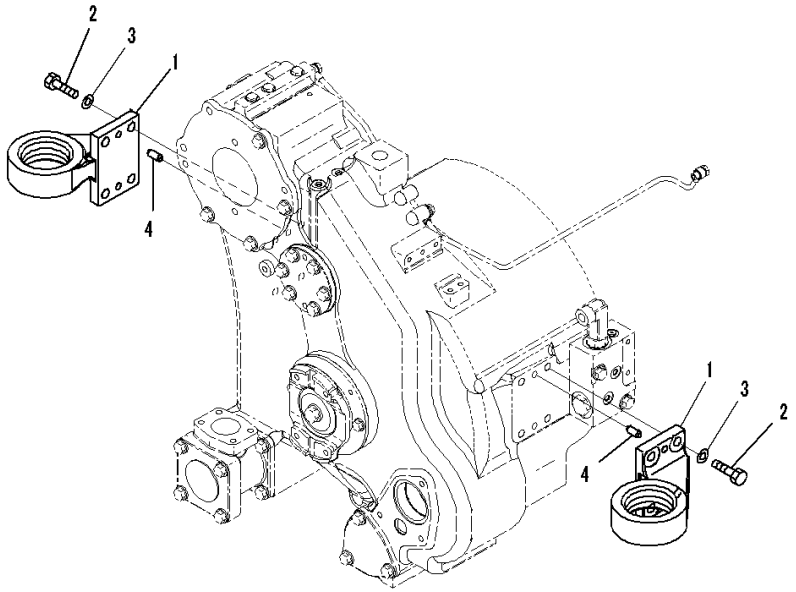

Index	Code	Part Number	Description	Qty	Serial Number
		Note: This list covers following specifications.			
		Without Power Angle Power Tilt Dozer			
		With Power Angle Power Tilt Dozer			
		14X-22-50000	Power Train Assembly	1	80001-
1		14X-22-51111	• Bracket	2	80001-
2		01010-81650	• Bolt	8	80001-
3		01643-31645	• Washer	8	80001-
4		04020-01228	• Pin, Dowel	4	80001-

FIG. F2300-001036 Power Train, Without Power Angle Power Tilt Dozer, Final Drive, Torque Shaft

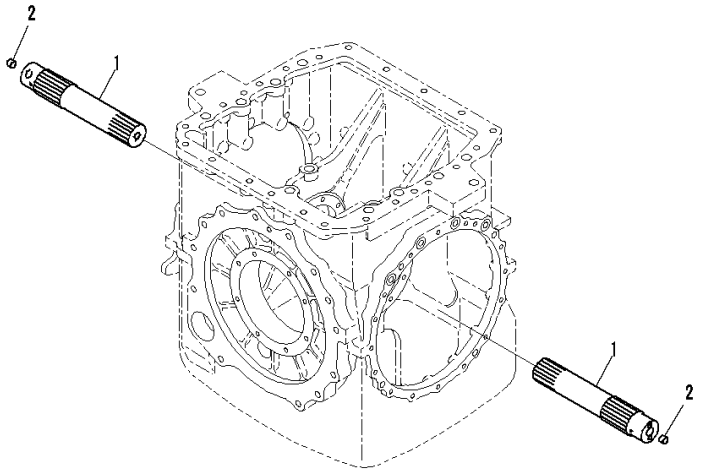

Index	Code	Part Number	Description	Qty	Serial Number
1		14Y-22-54120	Shaft	2	80001-
2		14Y-22-14160	Button	2	80001-

FIG. F2300-002036 Power Train, With Power Angle Power Tilt Dozer, Final Drive, Torque Shaft

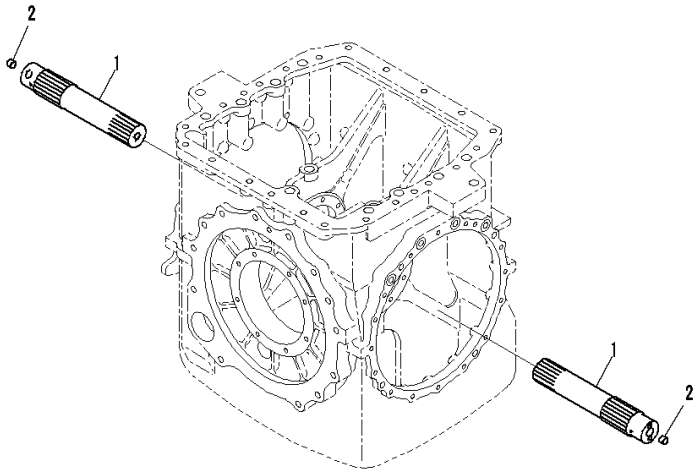

Index	Code	Part Number	Description	Qty	Serial Number
1		14Y-22-54130	Shaft	2	80001-
2		14Y-22-14160	Button	2	80001-

FIG. F2380-001001 Final Drive, Pinion And Gear, LHS

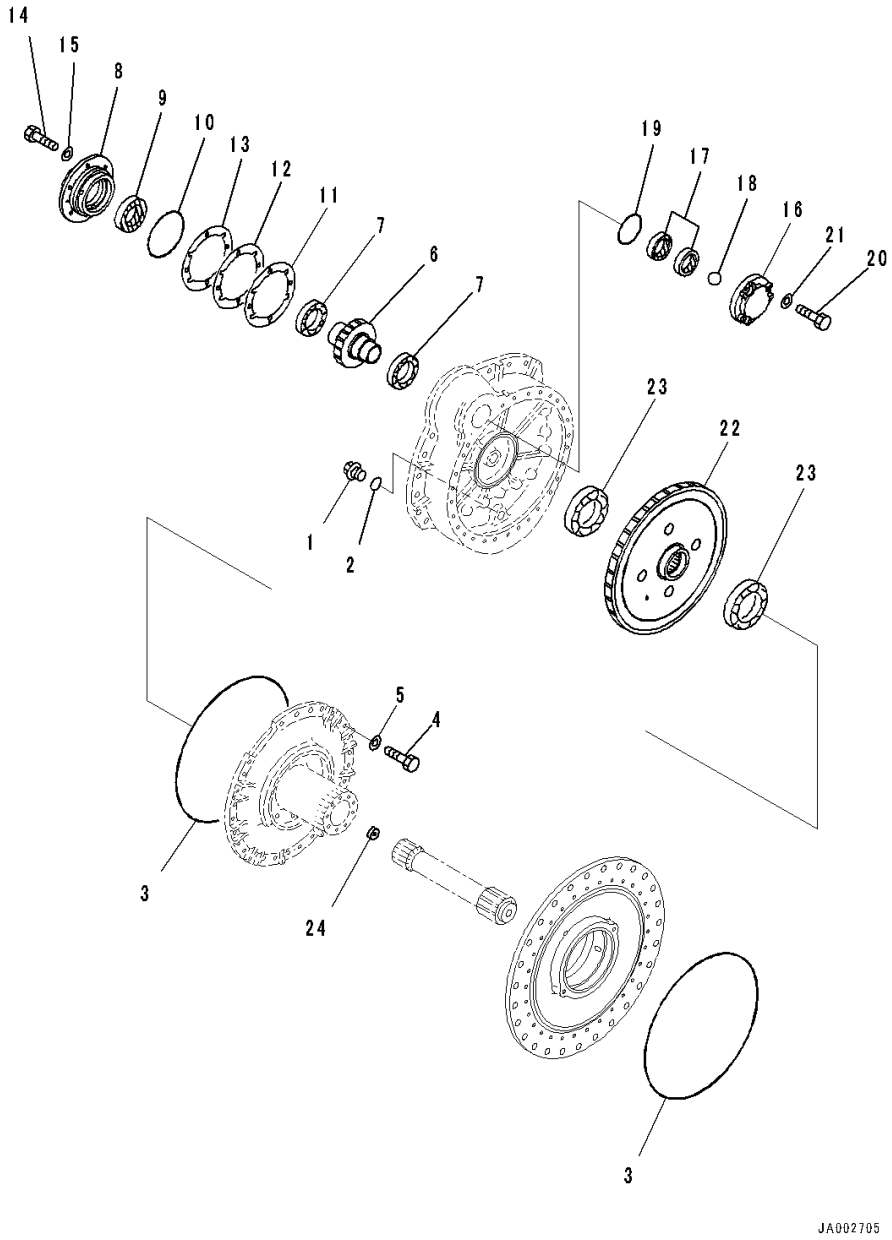

Index	Code	Part Number	Description	Qty	Serial Number
		Note: This list covers following specifications.			
			Segmented, For Machine With Power Angle Power Tilt Dozer		
			Segmented, With Rotary Type Rubber Shoe, For Machine With Power Angle Power Tilt Dozer		
			Segmented, With Power Angle Power Tilt Dozer, With Rotary Type Rubber Shoe		
			Segmented, With Power Angle Power Tilt Dozer		
		14Y-27-00310	Final Drive Assembly ..... Segmented, For Machine With Power Angle Power Tilt Dozer	1	80001-
		14Y-27-00410	Final Drive Assembly ..... Segmented, With Rotary Type Rubber Shoe, For Machine With Power Angle Power Tilt Dozer	1	80001-
		14Y-27-00310	Final Drive Assembly ..... Segmented, With Power Angle Power Tilt Dozer, With Rotary Type Rubber Shoe	1	80001-
		14Y-27-00410	Final Drive Assembly ..... Segmented, With Power Angle Power Tilt Dozer	1	80001-
1		07044-13620	• Plug	1	80001-
2		07002-03634	• O-ring	1	80001-
3		14X-27-11170	• O-ring	2	80001-
4		01010-81645	• Bolt	28	80001-
5		01643-31645	• Washer	28	80001-
6		14X-27-31210	• Pinion	1	80001-
7		14X-27-11231	• Bearing	2	80001-
8		14X-27-11220	• Cage	1	80001-
9		07013-10080	• Seal, Oil	1	80001-
10		07000-05165	• O-ring	1	80001-
		14X-27-05010	• Shim Kit	1	80001-
11	C1		• Shim, T=0.2mm	6	80001-
12	C1		• Shim, T=0.3mm	4	80001-
13	C1		• Shim, T=1.0mm	2	80001-
14		01010-81235	• Bolt	6	80001-
15		01643-31232	• Washer	6	80001-
16		14X-27-11243	• Cover	1	80001-
17		209-03-12270	• Seal, Oil	2	80001-

FIG. F2380-001001 Final Drive, Pinion And Gear, LHS

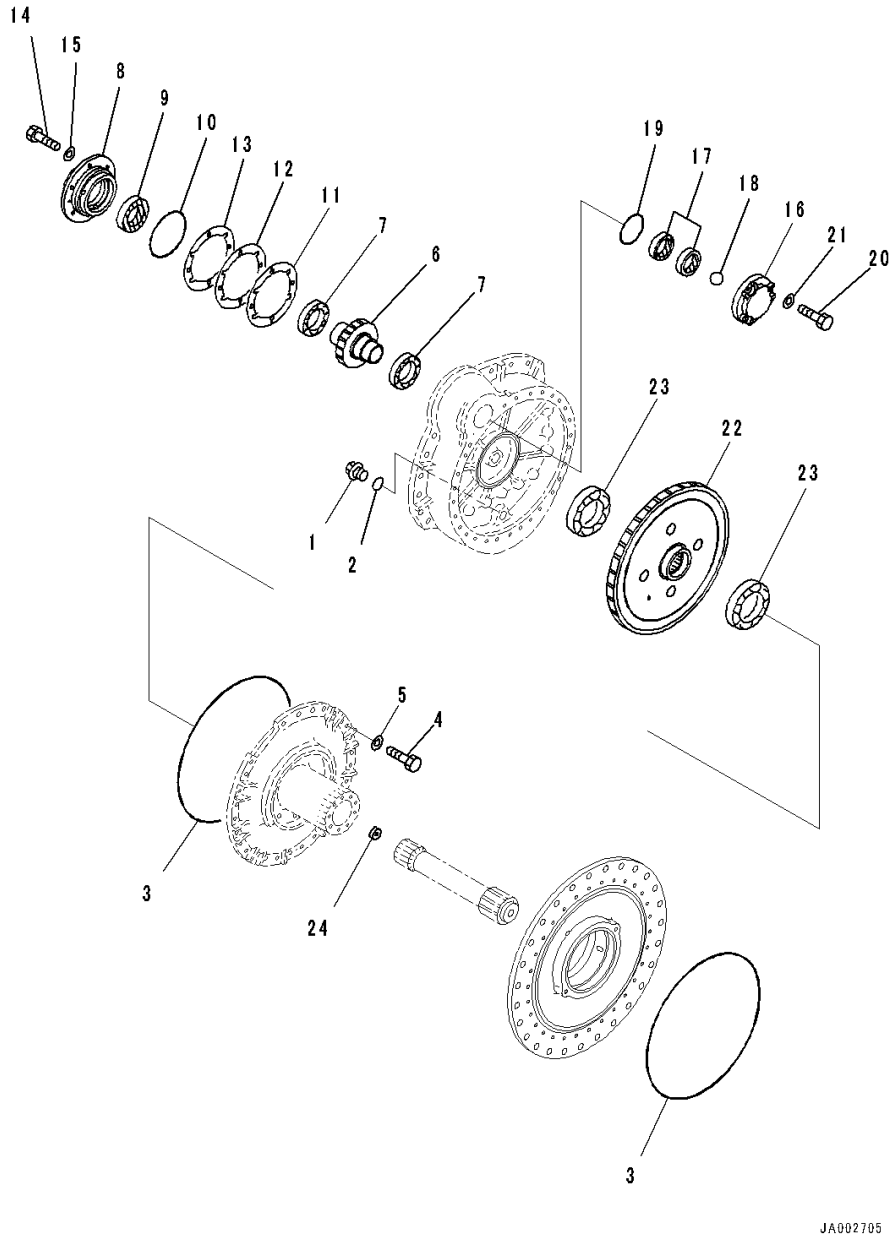

Index	Code	Part Number	Description	Qty	Serial Number
18		04260-01905	• Ball	1	80001-
19		07000-02110	• O-ring	1	80001-
20		01010-81245	• Bolt	3	80001-
21		01643-31232	• Washer	3	80001-
22		14X-27-11312	• Gear	1	80001-
23		06040-06024	• Bearing	2	80001-
24		14X-27-11420	• Collar	1	80001-

FIG. F2380-001002 Final Drive, Carrier, LHS

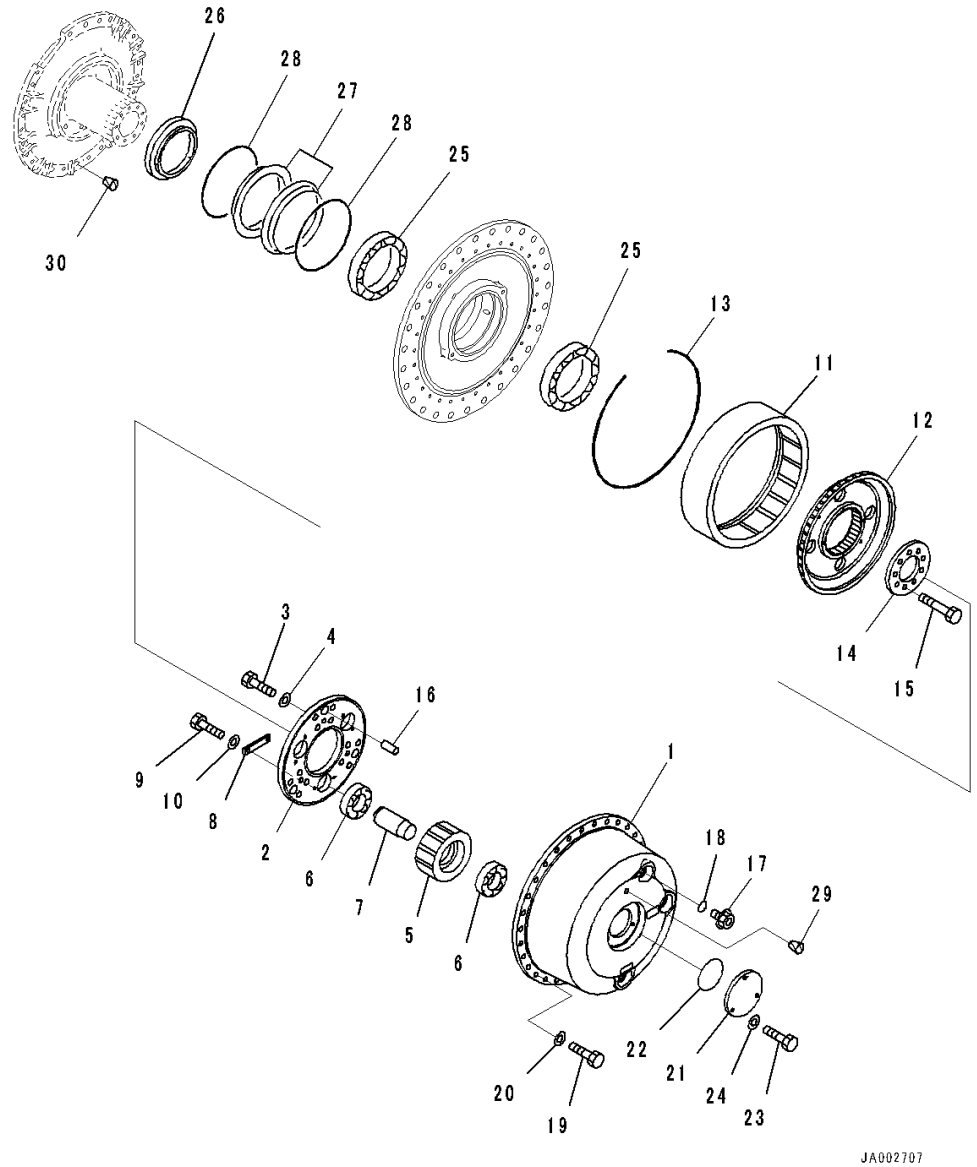

Index	Code	Part Number	Description	Qty	Serial Number
		Note: This list covers following specifications.			
			Segmented, For Machine With Power Angle Power Tilt Dozer		
			Segmented, With Rotary Type Rubber Shoe, For Machine With Power Angle Power Tilt Dozer		
			Segmented, With Power Angle Power Tilt Dozer, With Rotary Type Rubber Shoe		
			Segmented, With Power Angle Power Tilt Dozer		
		14Y-27-00310	Final Drive Assembly ..... Segmented, For Machine With Power Angle Power Tilt Dozer	1	80001-
		14Y-27-00410	Final Drive Assembly ..... Segmented, With Rotary Type Rubber Shoe, For Machine With Power Angle Power Tilt Dozer	1	80001-
		14Y-27-00310	Final Drive Assembly ..... Segmented, With Power Angle Power Tilt Dozer, With Rotary Type Rubber Shoe	1	80001-
		14Y-27-00410	Final Drive Assembly ..... Segmented, With Power Angle Power Tilt Dozer	1	80001-
		14X-27-11502	• Carrier Assembly.....	1	80001-
1		14X-27-11512	•• Carrier.....	1	80001-
2		14X-27-11552	•• Plate.....	1	80001-
3		01010-82055	•• Bolt.....	6	80001-
4		01643-32060	•• Washer	6	80001-
5		14X-27-11522	• Gear	3	80001-
6		14X-27-11531	• Bearing	6	80001-
7		14X-27-11542	• Shaft.....	3	80001-
8		14X-27-11560	• Lock.....	3	80001-
9		01010-81235	• Bolt	6	80001-
10		01643-31232	• Washer	6	80001-
11		14X-27-11612	• Gear	1	80001-
12		14X-27-11622	• Hub.....	1	80001-
13		14X-27-11640	• Ring, Snap.....	1	80001-
14		14X-27-11633	• Holder.....	1	80001-
15		01011-61600	• Bolt	9	80001-
16		195-27-11140	• Pin, Dowel	3	80001-
17		07041-13612	• Plug	3	80001-

FIG. F2380-001002 Final Drive, Carrier, LHS

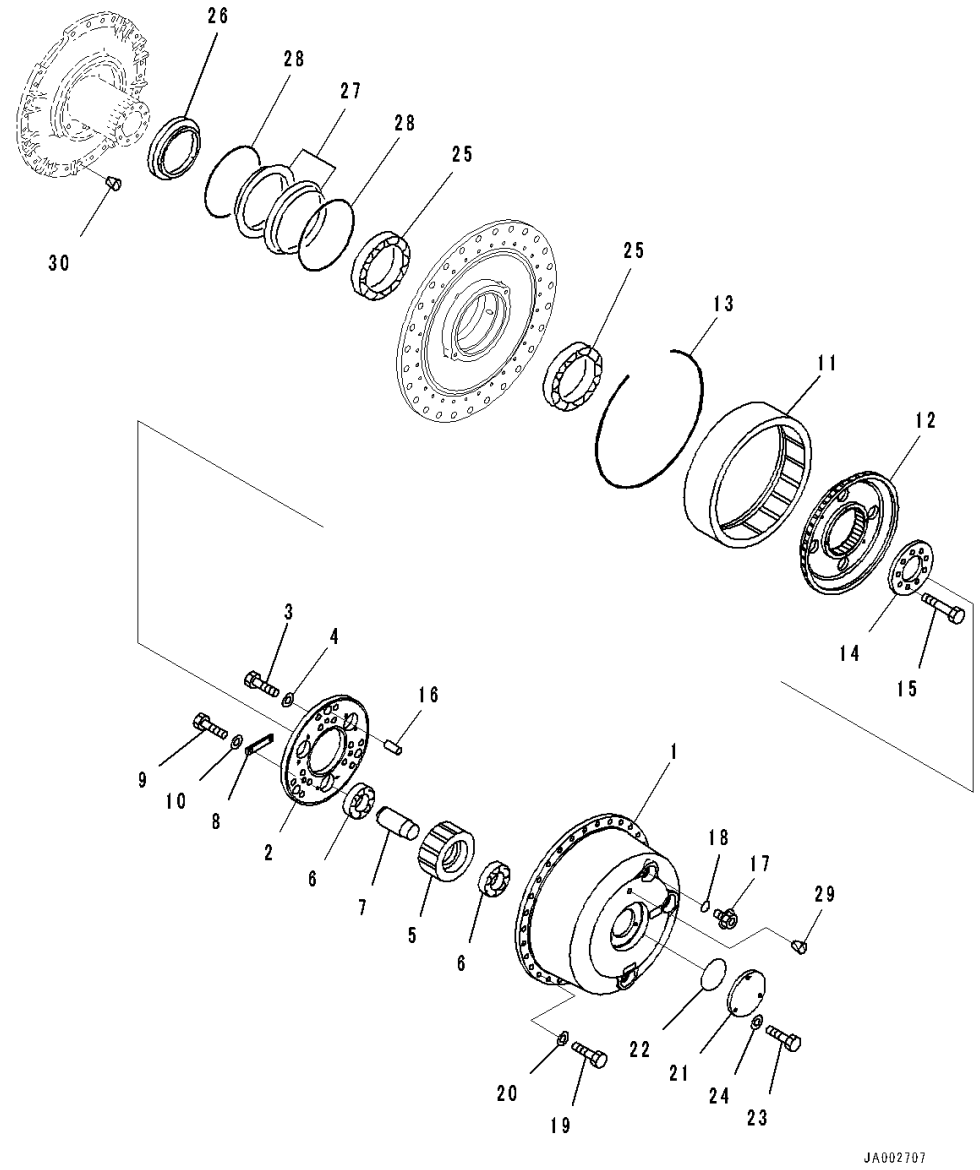

Index	Code	Part Number	Description	Qty	Serial Number
18		07002-03634	• O-ring	3	80001-
19		01010-81645	• Bolt	30	80001-
20		01643-31645	• Washer	30	80001-
21		14X-27-11431	• Cover	1	80001-
22		07000-02115	• O-ring	1	80001-
23		01010-81235	• Bolt	3	80001-
24		01643-31232	• Washer	3	80001-
25		14X-27-11721	• Bearing	2	80001-
26		14X-27-11751	• Collar	1	80001-
		14X-27-00101	• Floating Seal Assembly	1	80001-
27	C1		•• Seal	2	80001-
28	C1		•• O-ring	2	80001-
29		07049-02025	• Plug	1	80001-
30		07049-01620	• Plug	1	80001-

FIG. F2380-001003 Final Drive, Sprocket Hub, LHS

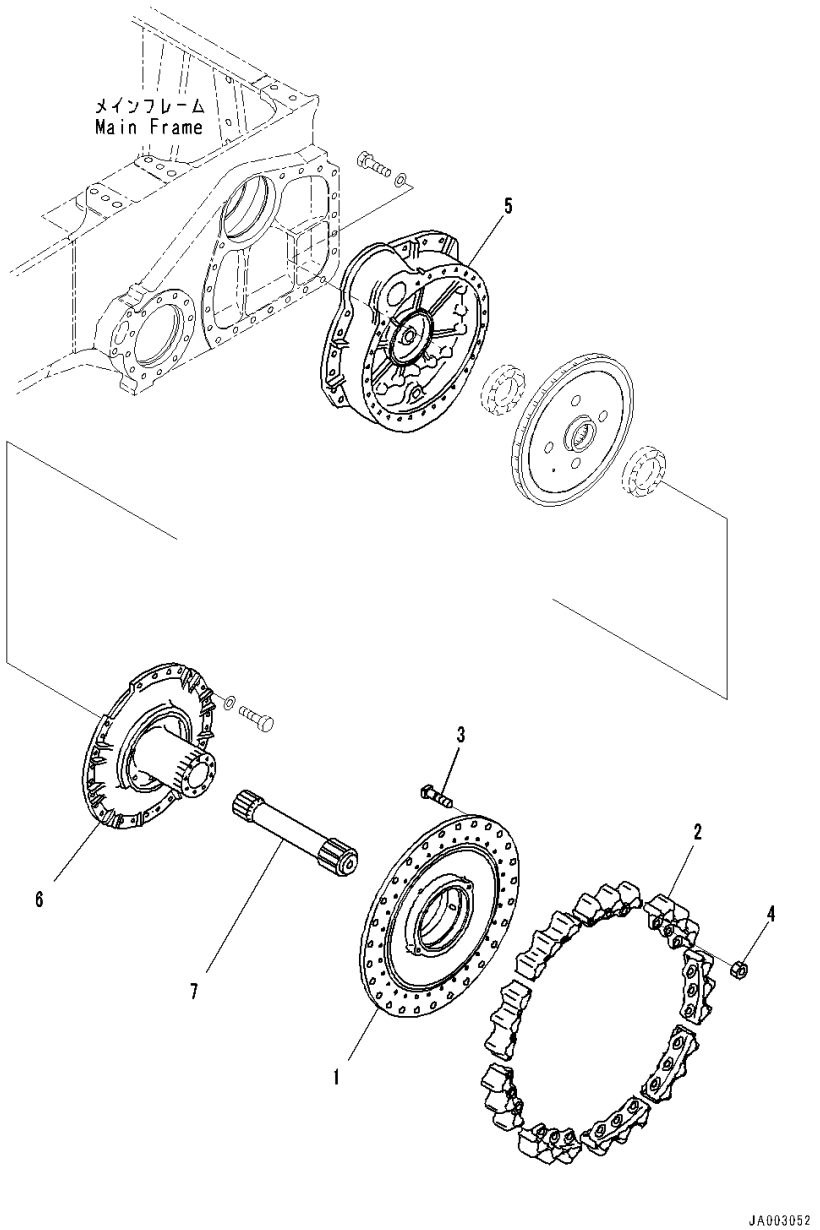

Index	Code	Part Number	Description	Qty	Serial Number
		Note: This list covers following specifications.			
		Segmented, For Machine With Power Angle Power Tilt Dozer			
		Segmented, With Power Angle Power Tilt Dozer, With Rotary Type Rubber Shoe			
		14Y-27-00310	Final Drive Assembly	1	80001-
1		14X-27-31710	• Hub	1	80001-
2		14X-27-15112	• Teeth	9	80001-
3		154-27-12320	• Bolt	27	80001-
4		01803-02228	• Nut	27	80001-
5		14X-27-31110	• Case	1	80001-
6		14Y-27-31150	• Cover	1	80001-
7		14Y-27-11412	• Pinion	1	80001-

FIG. F2380-001004 Final Drive, Pinion And Gear, RHS

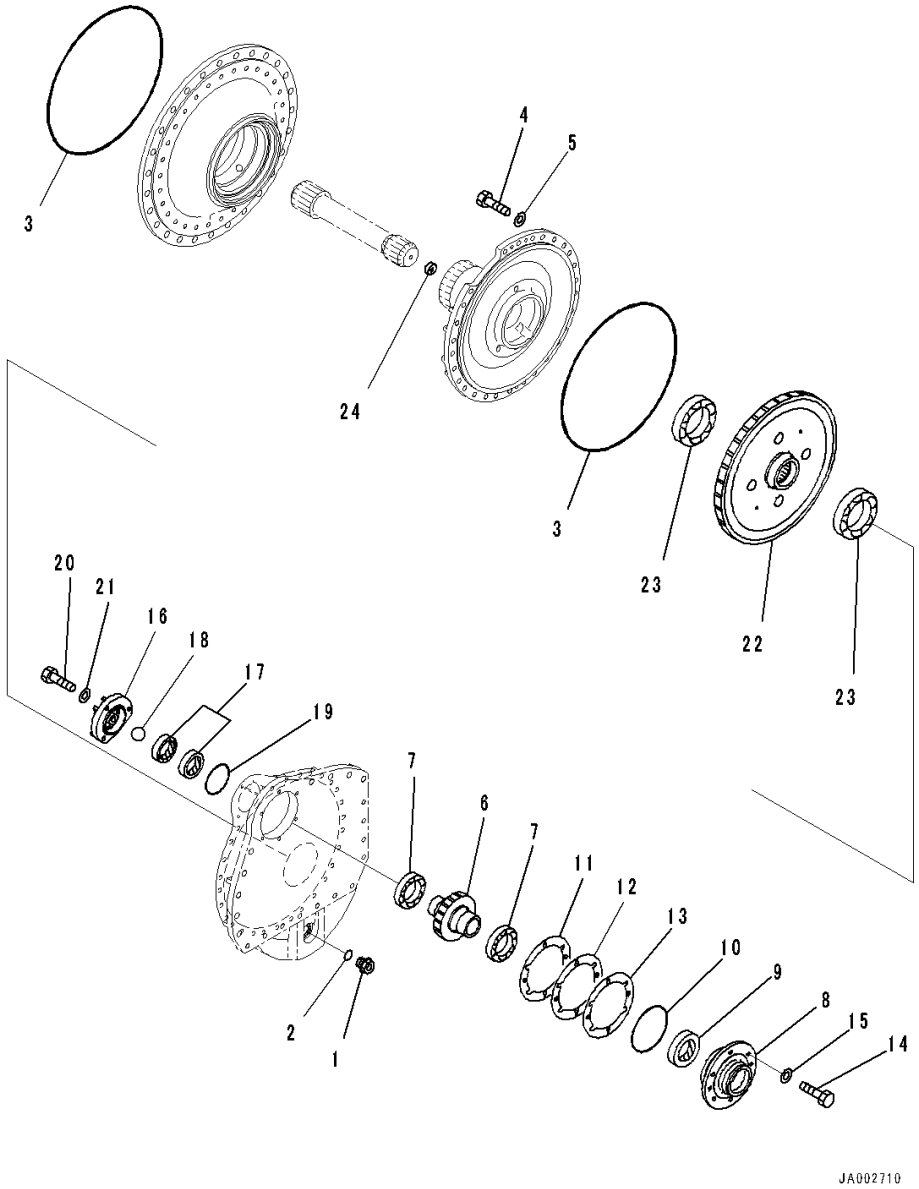

Index	Code	Part Number	Description	Qty	Serial Number
		Note: This list covers following specifications.			
			Segmented, For Machine With Power Angle Power Tilt Dozer		
			Segmented, With Rotary Type Rubber Shoe, For Machine With Power Angle Power Tilt Dozer		
			Segmented, With Power Angle Power Tilt Dozer, With Rotary Type Rubber Shoe		
			Segmented, With Power Angle Power Tilt Dozer		
		14Y-27-00320	Final Drive Assembly ..... Segmented, For Machine With Power Angle Power Tilt Dozer	1	80001-
		14Y-27-00420	Final Drive Assembly ..... Segmented, With Rotary Type Rubber Shoe, For Machine With Power Angle Power Tilt Dozer	1	80001-
		14Y-27-00320	Final Drive Assembly ..... Segmented, With Power Angle Power Tilt Dozer, With Rotary Type Rubber Shoe	1	80001-
		14Y-27-00420	Final Drive Assembly ..... Segmented, With Power Angle Power Tilt Dozer	1	80001-
1		07044-13620	• Plug	1	80001-
2		07002-03634	• O-ring	1	80001-
3		14X-27-11170	• O-ring	2	80001-
4		01010-81645	• Bolt	28	80001-
5		01643-31645	• Washer	28	80001-
6		14X-27-31210	• Pinion	1	80001-
7		14X-27-11231	• Bearing	2	80001-
8		14X-27-11220	• Cage	1	80001-
9		07013-10080	• Seal, Oil	1	80001-
10		07000-05165	• O-ring	1	80001-
		14X-27-05010	• Shim Kit	1	80001-
11	C1		• Shim, T=0.2mm	6	80001-
12	C1		• Shim, T=0.3mm	4	80001-
13	C1		• Shim, T=1.0mm	2	80001-
14		01010-81235	• Bolt	6	80001-
15		01643-31232	• Washer	6	80001-
16		14X-27-11243	• Cover	1	80001-
17		209-03-12270	• Seal, Oil	2	80001-

FIG. F2380-001004 Final Drive, Pinion And Gear, RHS

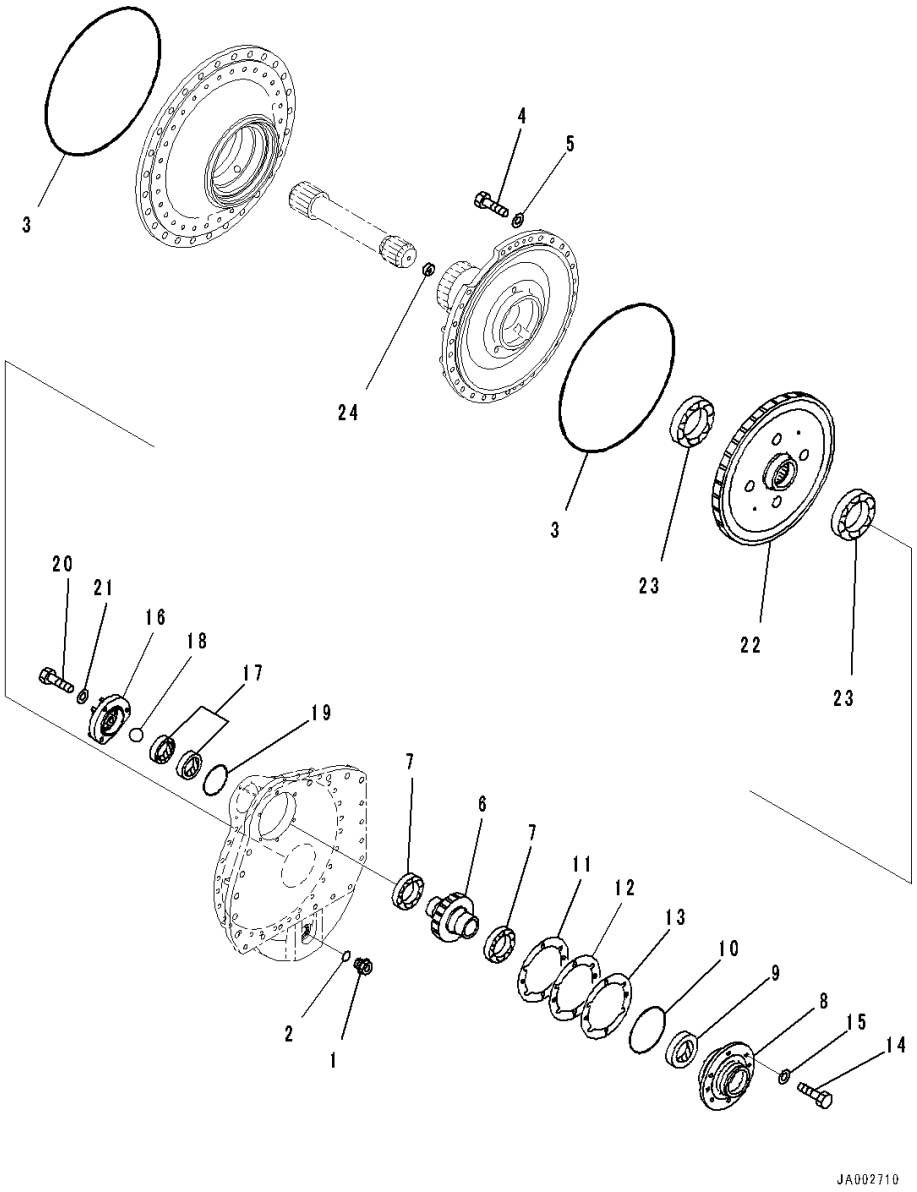

Index	Code	Part Number	Description	Qty	Serial Number
18		04260-01905	• Ball	1	80001-
19		07000-02110	• O-ring	1	80001-
20		01010-81245	• Bolt	3	80001-
21		01643-31232	• Washer	3	80001-
22		14X-27-11312	• Gear	1	80001-
23		06040-06024	• Bearing	2	80001-
24		14X-27-11420	• Collar	1	80001-

FIG. F2380-001005 Final Drive, Carrier, RHS

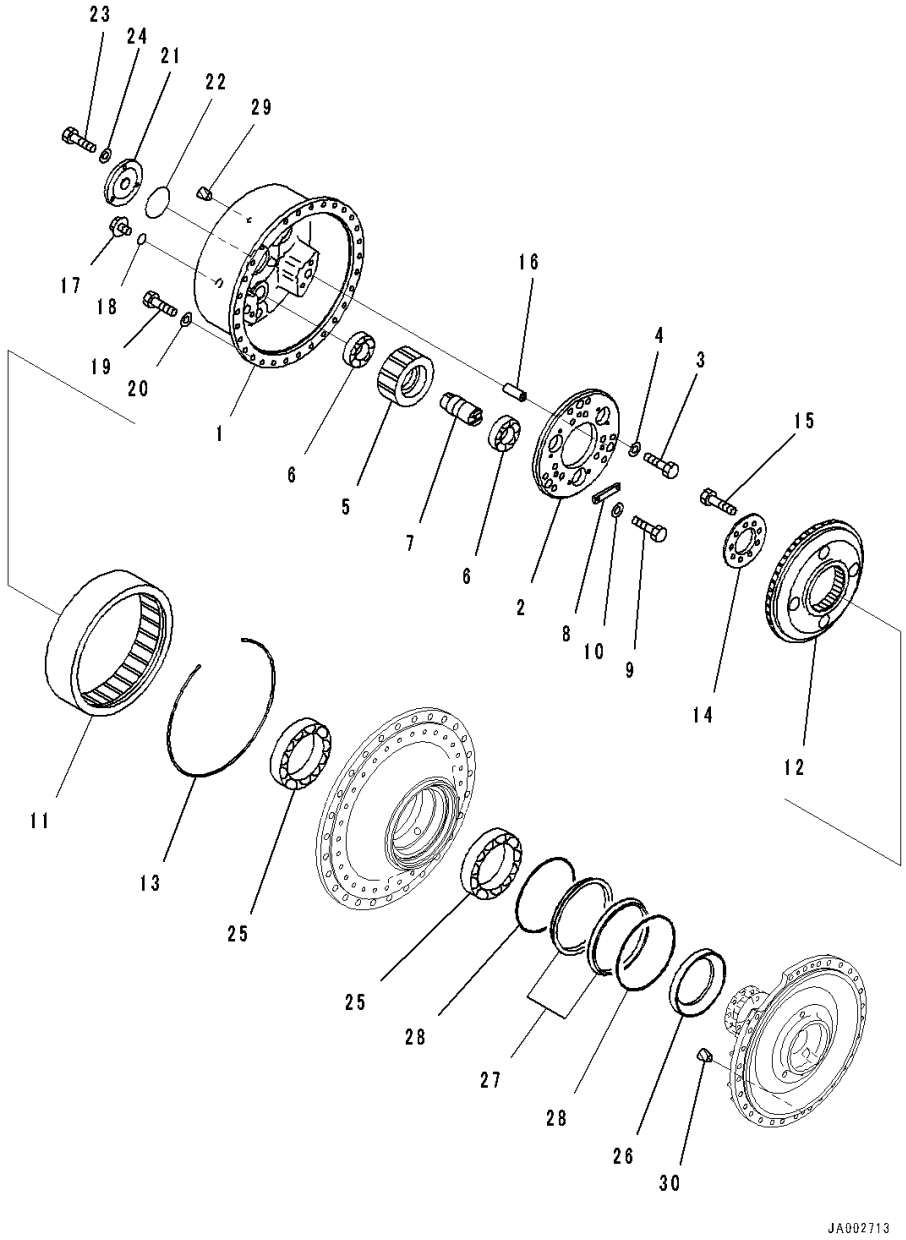

Index	Code	Part Number	Description	Qty	Serial Number
		Note: This list covers following specifications.			
			Segmented, For Machine With Power Angle Power Tilt Dozer		
			Segmented, With Rotary Type Rubber Shoe, For Machine With Power Angle Power Tilt Dozer		
			Segmented, With Power Angle Power Tilt Dozer, With Rotary Type Rubber Shoe		
			Segmented, With Power Angle Power Tilt Dozer		
		14Y-27-00320	Final Drive Assembly	1	80001-
			Segmented, For Machine With Power Angle Power Tilt Dozer		
		14Y-27-00420	Final Drive Assembly	1	80001-
			Segmented, With Rotary Type Rubber Shoe, For Machine With Power Angle Power Tilt Dozer		
		14Y-27-00320	Final Drive Assembly	1	80001-
			Segmented, With Power Angle Power Tilt Dozer, With Rotary Type Rubber Shoe		
		14Y-27-00420	Final Drive Assembly	1	80001-
			Segmented, With Power Angle Power Tilt Dozer		
		14X-27-11502	• Carrier Assembly	1	80001-
1		14X-27-11512	•• Carrier	1	80001-
2		14X-27-11552	•• Plate	1	80001-
3		01010-82055	•• Bolt	6	80001-
4		01643-32060	•• Washer	6	80001-
5		14X-27-11522	• Gear	3	80001-
6		14X-27-11531	• Bearing	6	80001-
7		14X-27-11542	• Shaft	3	80001-
8		14X-27-11560	• Lock	3	80001-
9		01010-81235	• Bolt	6	80001-
10		01643-31232	• Washer	6	80001-
11		14X-27-11612	• Gear	1	80001-
12		14X-27-11622	• Hub	1	80001-
13		14X-27-11640	• Ring, Snap	1	80001-
14		14X-27-11633	• Holder	1	80001-
15		01011-61600	• Bolt	9	80001-
16		195-27-11140	• Pin, Dowel	3	80001-
17		07041-13612	• Plug	3	80001-

FIG. F2380-001005 Final Drive, Carrier, RHS

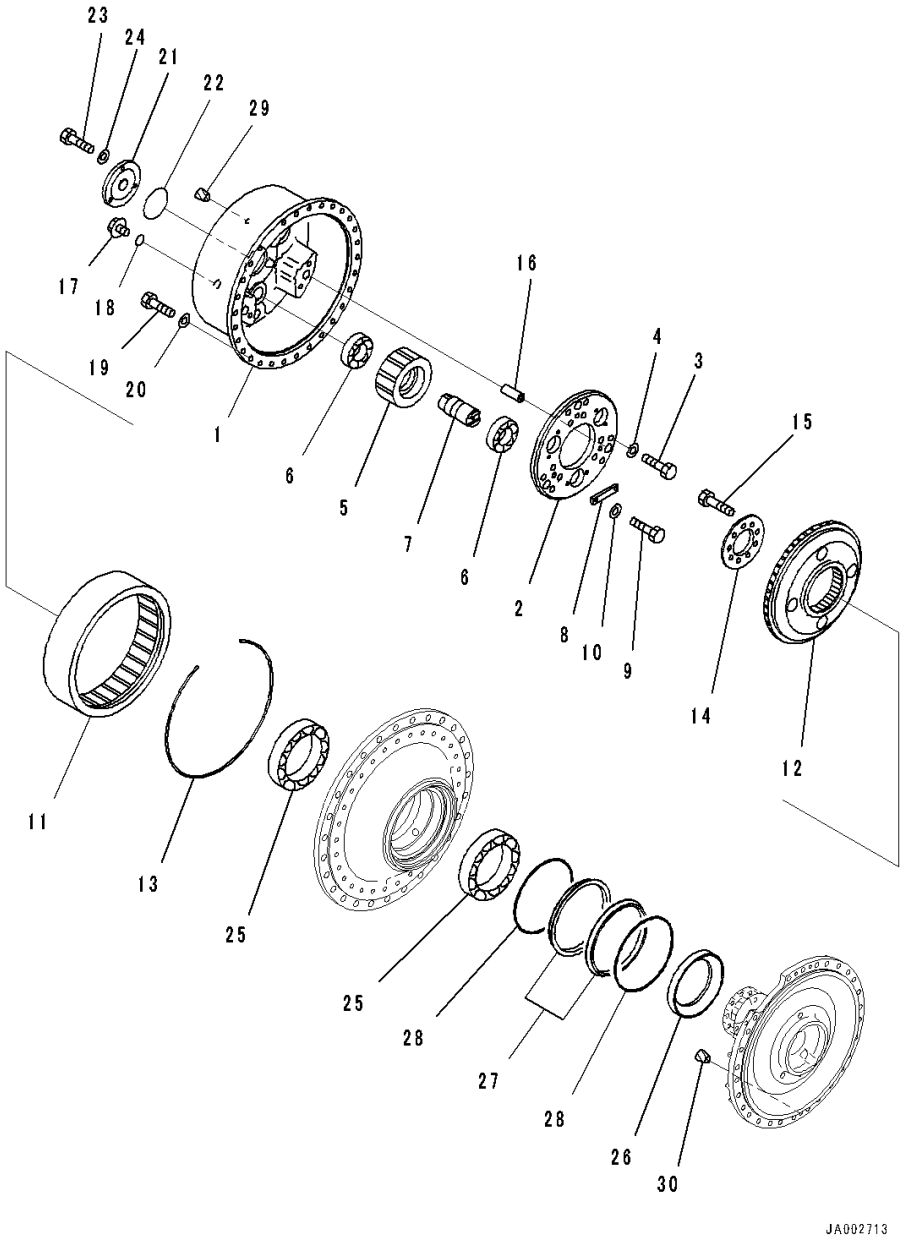

Index	Code	Part Number	Description	Qty	Serial Number
18		07002-03634	• O-ring	3	80001-
19		01010-81645	• Bolt	30	80001-
20		01643-31645	• Washer	30	80001-
21		14X-27-11431	• Cover	1	80001-
22		07000-02115	• O-ring	1	80001-
23		01010-81235	• Bolt	3	80001-
24		01643-31232	• Washer	3	80001-
25		14X-27-11721	• Bearing	2	80001-
26		14X-27-11751	• Collar	1	80001-
		14X-27-00101	• Floating Seal Assembly	1	80001-
27	C1		•• Seal	2	80001-
28	C1		•• O-ring	2	80001-
29		07049-02025	• Plug	1	80001-
30		07049-01620	• Plug	1	80001-

FIG. F2380-001006 Final Drive, Sprocket Hub, RHS

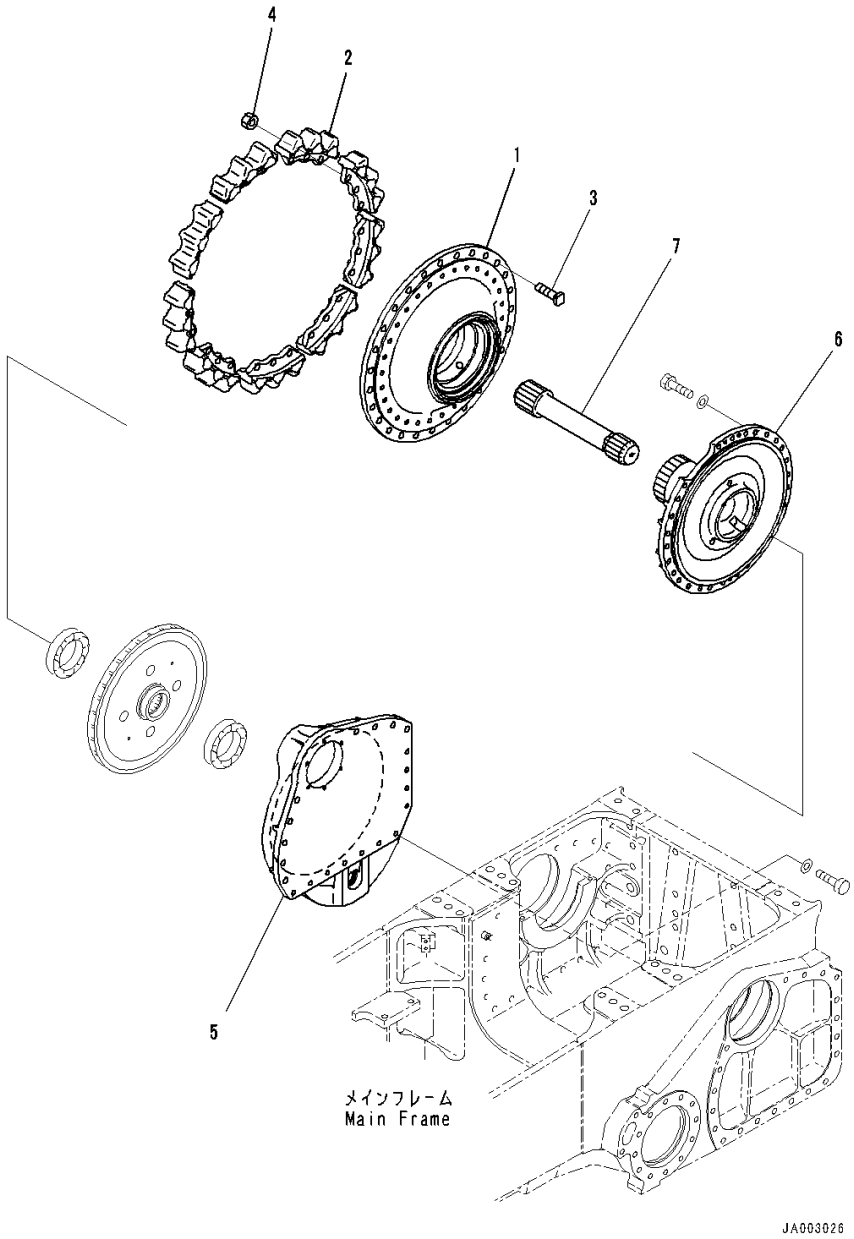

Index	Code	Part Number	Description	Qty	Serial Number
		Note: This list covers following specifications.			
		Segmented, For Machine With Power Angle Power Tilt Dozer			
		Segmented, With Power Angle Power Tilt Dozer, With Rotary Type Rubber Shoe			
		14Y-27-00320	Final Drive Assembly	1	80001-
1		14X-27-31710	• Hub	1	80001-
2		14X-27-15112	• Teeth	9	80001-
3		154-27-12320	• Bolt	27	80001-
4		01803-02228	• Nut	27	80001-
5		14X-27-31120	• Case	1	80001-
6		14Y-27-31160	• Cover	1	80001-
7		14Y-27-11412	• Pinion	1	80001-

FIG. F2380-001007 Final Drive, Mounts

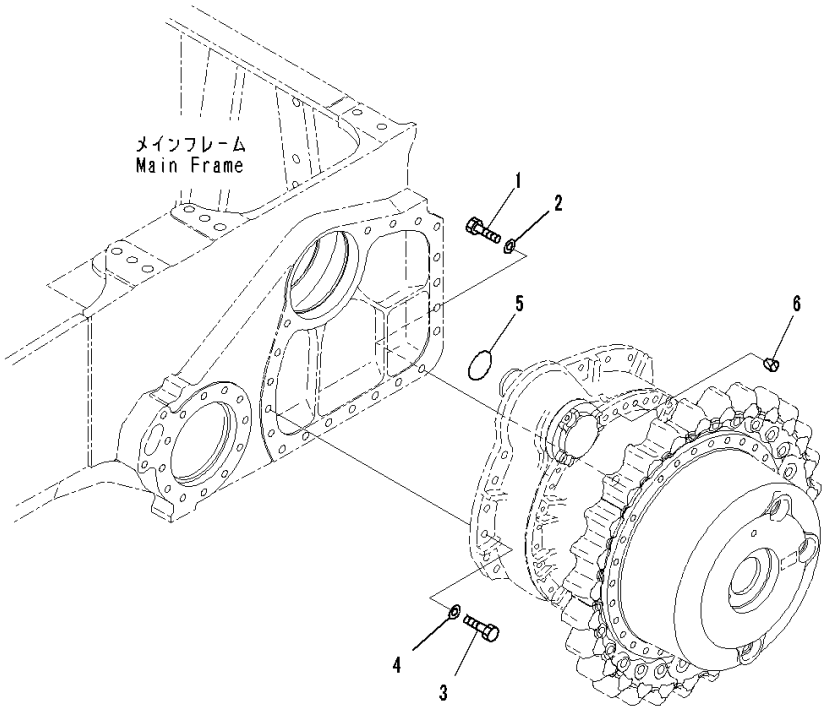

Index	Code	Part Number	Description	Qty	Serial Number
		Note: This list covers following specifications.			
		Segmented, For Machine With Power Angle Power Tilt Dozer			
		Segmented, With Rotary Type Rubber Shoe, For Machine With Power Angle Power Tilt Dozer			
1		01010-82070	Bolt	22	80001-
2		01643-32060	Washer	22	80001-
3		01010-82055	Bolt	18	80001-
4		01643-32060	Washer	18	80001-
5		07000-05105	O-ring	2	80001-
6		07049-01620	Plug	4	80001-

FIG. F2380-002003 Final Drive, Sprocket Hub, LHS

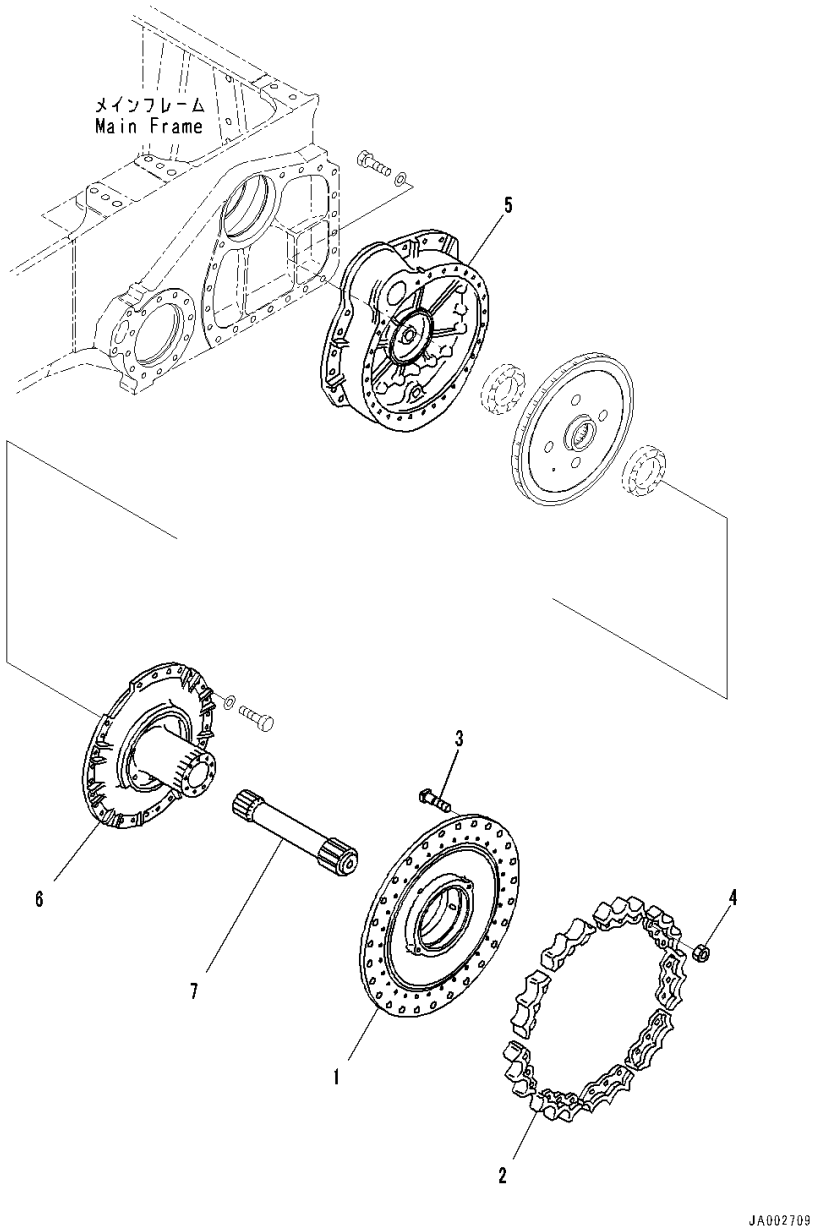

Index	Code	Part Number	Description	Qty	Serial Number
		Note: This list covers following specifications.			
		Segmented, With Rotary Type Rubber Shoe, For Machine With Power Angle Power Tilt Dozer			
		Segmented, With Power Angle Power Tilt Dozer			
		14Y-27-00410	Final Drive Assembly	1	80001-
1		14X-27-31710	• Hub	1	80001-
2		14X-27-15211	• Teeth	9	80001-
3		154-27-12320	• Bolt	27	80001-
4		01803-02228	• Nut	27	80001-
5		14X-27-31110	• Case	1	80001-
6		14Y-27-31150	• Cover	1	80001-
7		14Y-27-11412	• Pinion	1	80001-

FIG. F2380-002006 Final Drive, Sprocket Hub, RHS

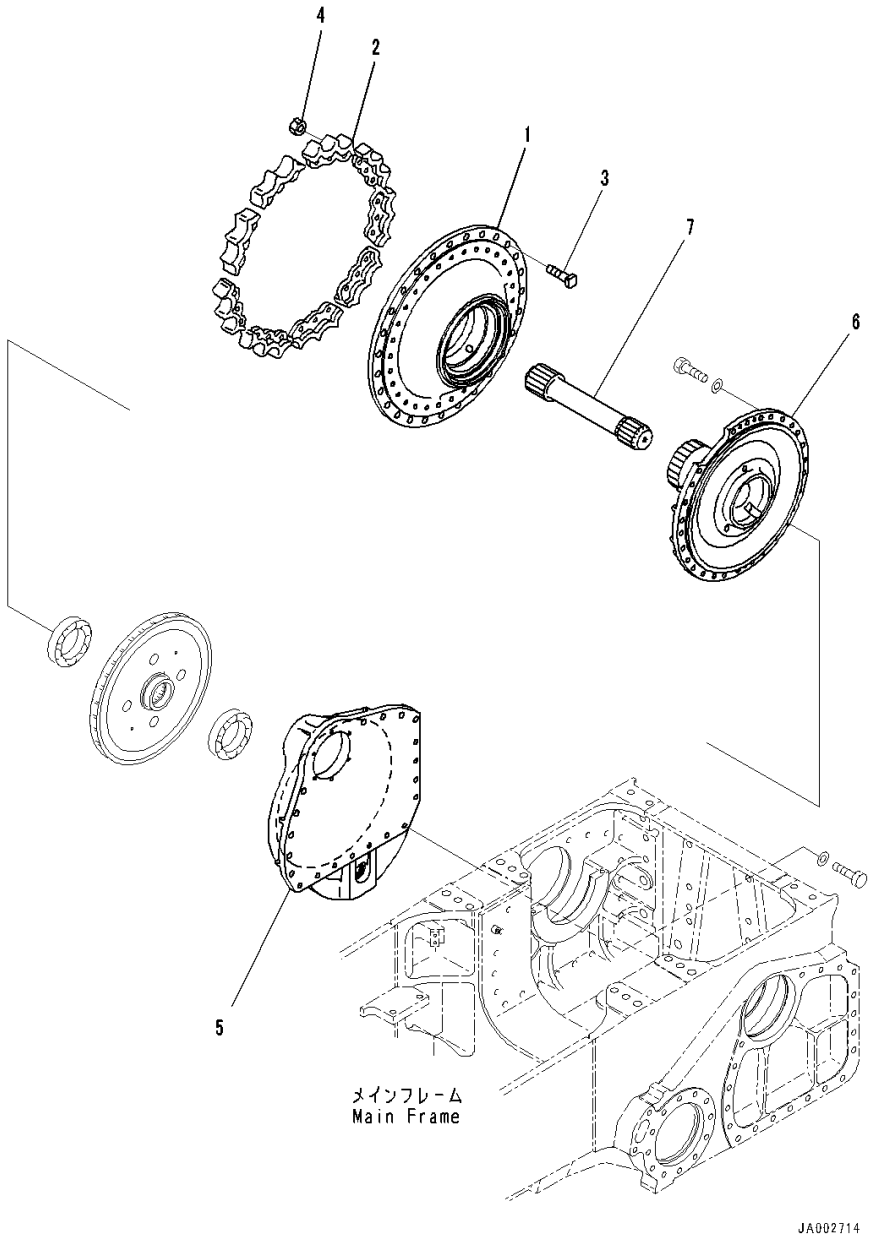

Index	Code	Part Number	Description	Qty	Serial Number
		Note: This list covers following specifications.			
			Segmented, With Rotary Type Rubber Shoe, For Machine With Power Angle Power Tilt Dozer		
			Segmented, With Power Angle Power Tilt Dozer		
		14Y-27-00420	Final Drive Assembly	1	80001-
1		14X-27-31710	• Hub	1	80001-
2		14X-27-15211	• Teeth	9	80001-
3		154-27-12320	• Bolt	27	80001-
4		01803-02228	• Nut	27	80001-
5		14X-27-31120	• Case	1	80001-
6		14Y-27-31160	• Cover	1	80001-
7		14Y-27-11412	• Pinion	1	80001-

FIG. F2380-003007 Final Drive, Mounts

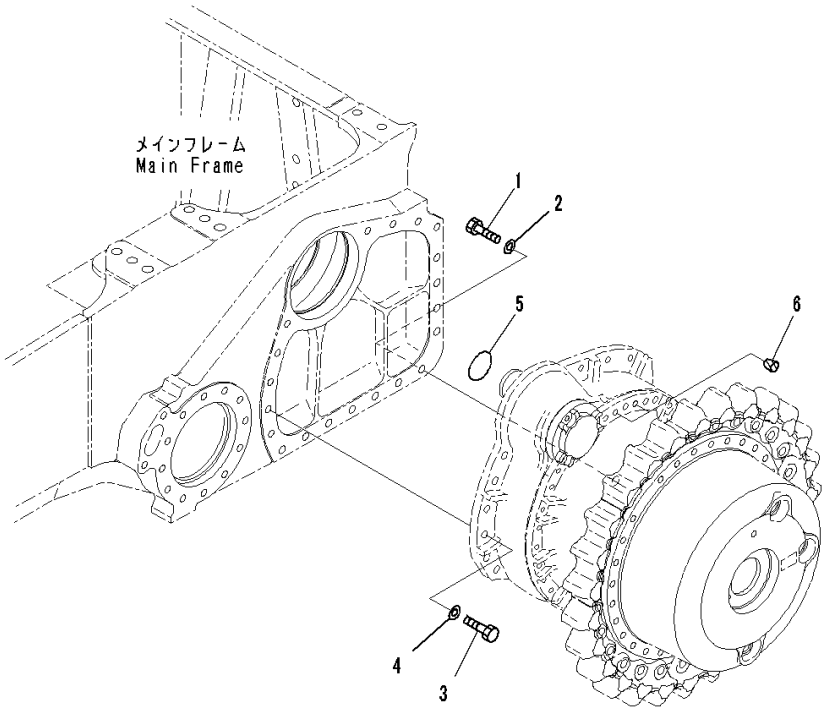

Index	Code	Part Number	Description	Qty	Serial Number
		Note: This list covers following specifications.			
		Segmented, With Power Angle Power Tilt Dozer, With Rotary Type Rubber Shoe			
		Segmented, With Power Angle Power Tilt Dozer			
1		01011-82060	Bolt	22	80001-
2		01643-32060	Washer	22	80001-
3		14X-27-52230	Bolt	18	80001-
4		01643-32060	Washer	18	80001-
5		07000-05105	O-ring	2	80001-
6		07049-01620	Plug	4	80001-

FIG. F2730-001001 Power Train Piping, Piping

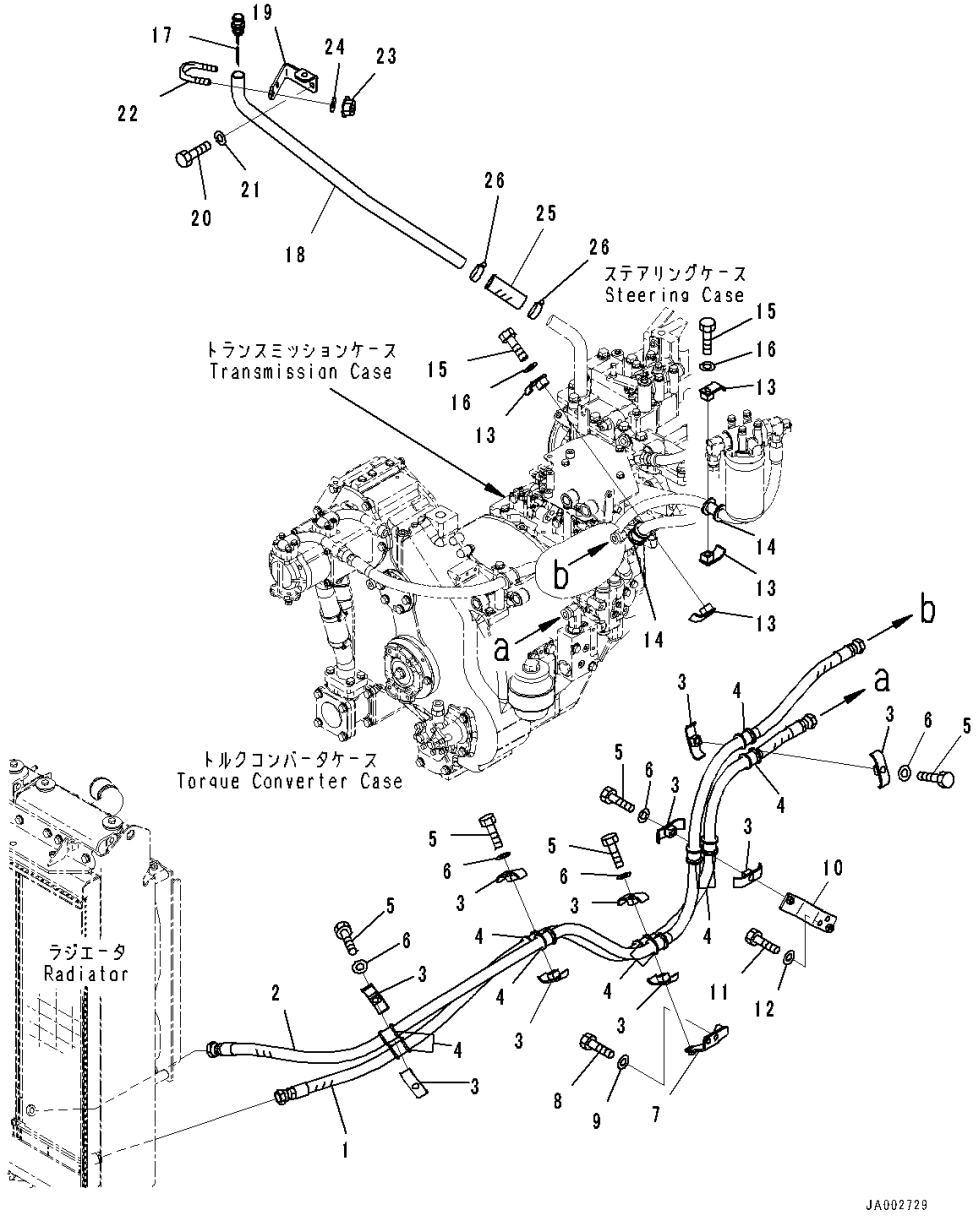

Index	Code	Part Number	Description	Qty	Serial Number
		Note: This list covers following specifications.			
		Without Power Angle Power Tilt Dozer			
		For Machine With Power Angle Power Tilt Dozer			
1		14X-49-52111	Hose	1	80001-
2		14X-49-52121	Hose	1	80001-
3		22P-62-13550	Clamp	10	80001-
4		07095-00526	Cushion	10	80001-
5		01010-81270	Bolt	5	80001-
6		01643-31232	Washer	5	80001-
7		14X-49-52170	Bracket	1	80001-
8		01010-81225	Bolt	2	80001-
9		01643-31232	Washer	2	80001-
10		14X-49-52180	Bracket	1	80001-
11		01010-81225	Bolt	2	80001-
12		01643-31232	Washer	2	80001-
13		07094-10620	Clamp	4	80001-
14		07095-00628	Cushion	2	80001-
15		01010-81270	Bolt	2	80001-
16		01643-31232	Washer	2	80001-
17		14X-49-51261	Gauge	1	80001-
18		14X-49-52211	Filler	1	80001-
19		14X-54-53321	Bracket	1	80001-
20		01010-81225	Bolt	2	80001-
21		01643-31232	Washer	2	80001-
22		07283-33442	Clip	1	80001-
23		01597-01009	Nut	2	80001-
24		01643-31032	Washer	2	80001-
25		07260-23211	Hose	1	80001-
26		07289-00045	Clamp, Hose	2	80001-

FIG. F2730-001002 Power Train Piping, Bracket

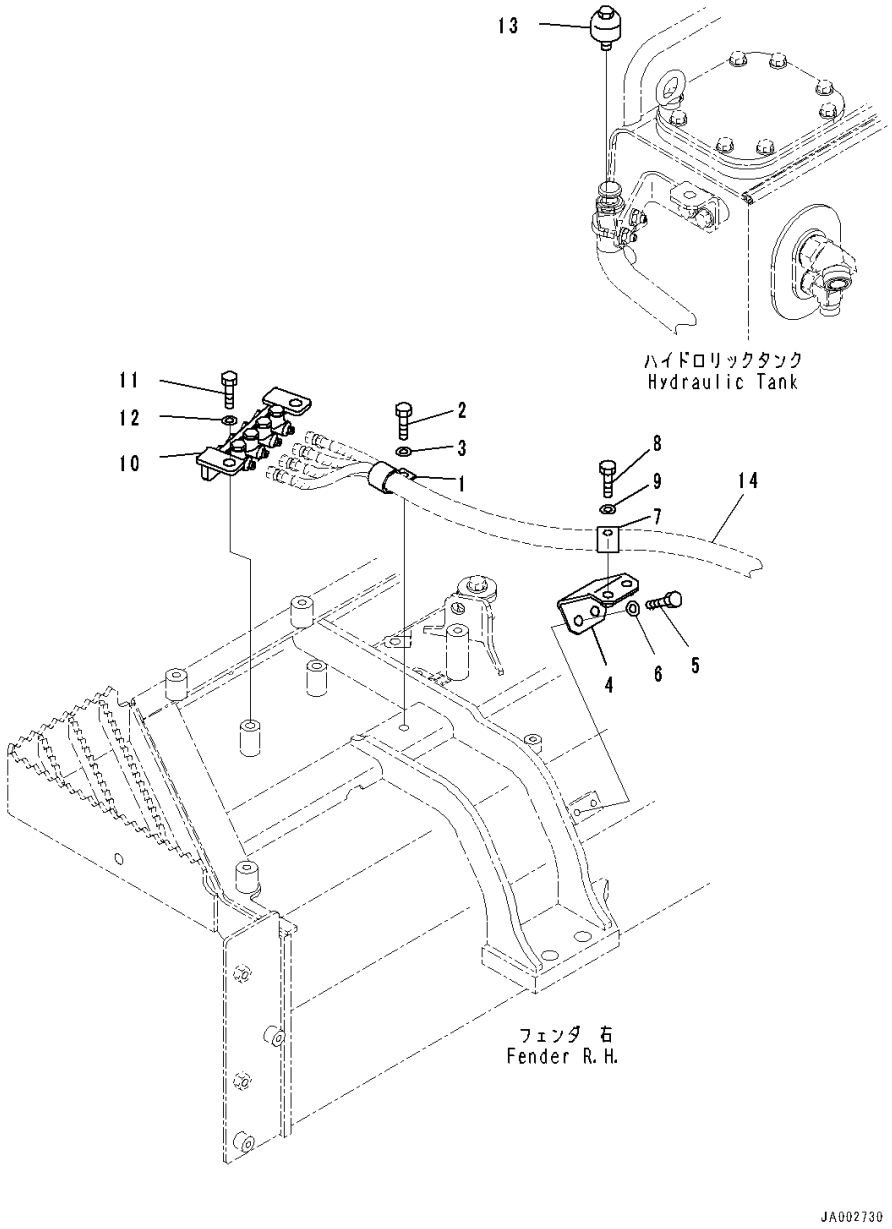

Index	Code	Part Number	Description	Qty	Serial Number
		Note: This list covers following specifications.			
		Without Power Angle Power Tilt Dozer			
		For Machine With Power Angle Power Tilt Dozer			
1		04434-52711	Clip	1	80001-
2		01010-81020	Bolt	1	80001-
3		01643-31032	Washer	1	80001-
4		14X-49-51320	Bracket	1	80001-
5		01010-81020	Bolt	2	80001-
6		01643-31032	Washer	2	80001-
7		04434-52511	Clip	1	80001-
8		01010-81020	Bolt	1	80001-
9		01643-31032	Washer	1	80001-
10		14X-49-51271	Joint Assembly	1	80001-
11		01010-81225	Bolt	2	80001-
12		01643-31232	Washer	2	80001-
13		07030-00252	Breather	1	80001-
14		(14X-49-51211)	Hose Assembly(Refer to Page 259)		-

FIG. F2730-001003 Power Train Piping, Without Power Angle Power Tilt Dozer, Mounts

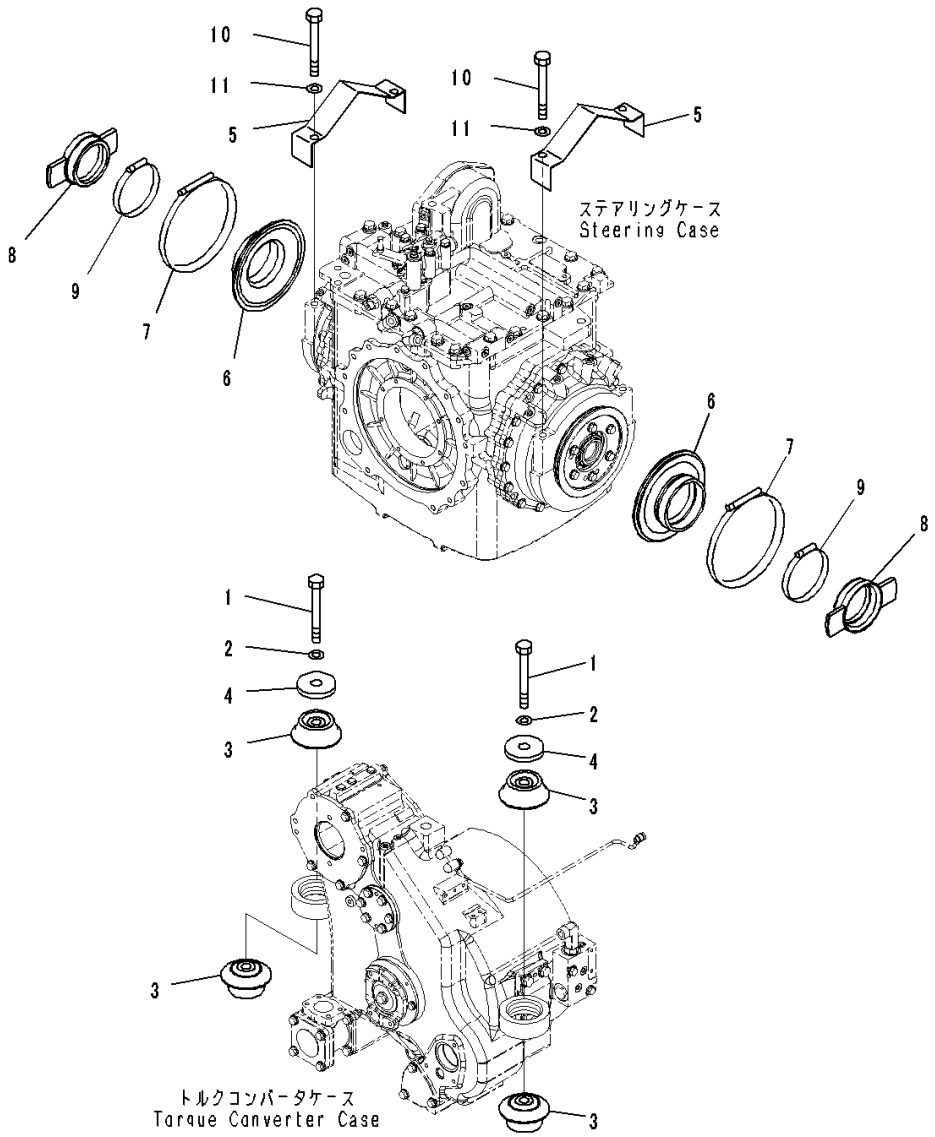

Index	Code	Part Number	Description	Qty	Serial Number
1		01011-82480	Bolt	2	80001-
2		01643-32460	Washer	2	80001-
3		207-01-35140	Cushion	4	80001-
4		14X-01-35150	Washer	2	80001-
5		14X-21-51380	Cover	2	80001-
6		14Y-21-13160	Seal	2	80001-
7		14Y-21-13210	Coupling	2	80001-
8		14Y-21-13171	Cage	2	80001-
9		14Y-21-13190	Clamp	2	80001-
10		01011-81640	Bolt	4	80001-
11		01643-31645	Washer	4	80001-

FIG. F2730-002003 Power Train Piping, For Machine With Power Angle Power Tilt Dozer, Mounts

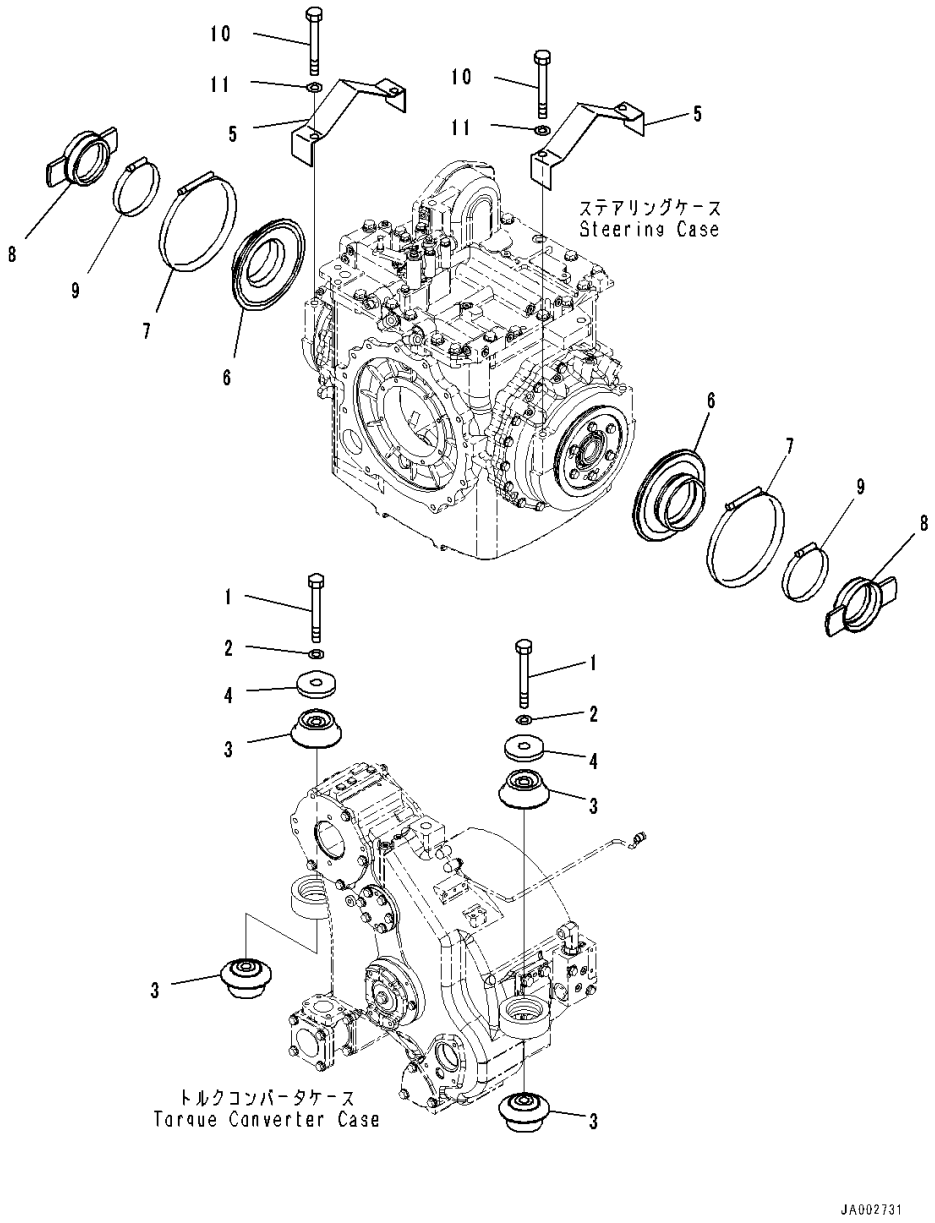

Index	Code	Part Number	Description	Qty	Serial Number
1		01011-82480	Bolt	2	80001-
2		01643-32460	Washer	2	80001-
3		207-01-35140	Cushion	4	80001-
4		14X-01-35150	Washer	2	80001-
5		14X-21-51380	Cover	2	80001-
6		14Y-21-13160	Seal	2	80001-
7		14Y-21-13210	Coupling	2	80001-
8		14X-21-53170	Cage	2	80001-
9		14Y-21-13190	Clamp	2	80001-
10		01011-81640	Bolt	4	80001-
11		01643-31645	Washer	4	80001-

FIG. F2820-001001 Steering Control Related Parts, Rod

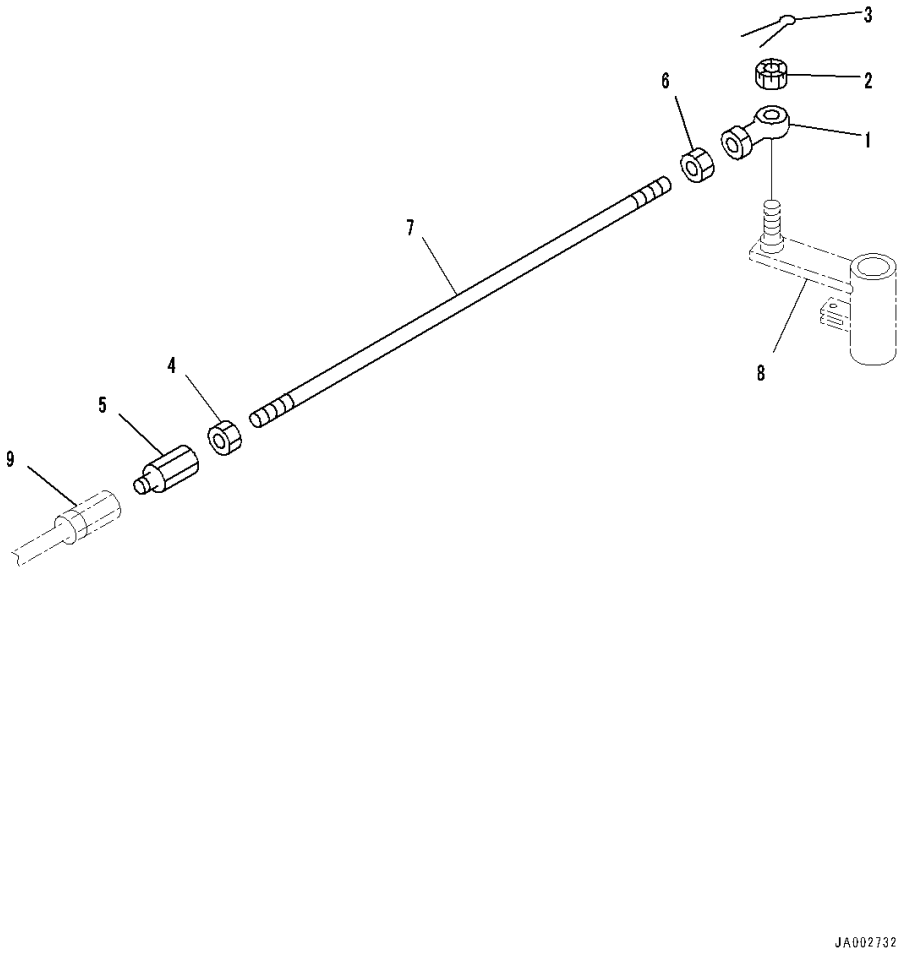

Index	Code	Part Number	Description	Qty	Serial Number
1		04250-81474	End	1	80001-
2		01593-31411	Nut	1	80001-
3		04050-13022	Pin, Cotter	1	80001-
4		01582-11411	Nut	1	80001-
5		17A-43-24170	Joint	1	80001-
6		01582-11411	Nut	1	80001-
7		04245-41487	Rod	1	80001-
8		(14Z-43-12411)	Lever(Refer to Page 225)		-
9		(17A-43-24160)	Joint(Refer to Page 411)		-

FIG. F2820-001002 Steering Control Related Parts, Parking Brake Control Cable

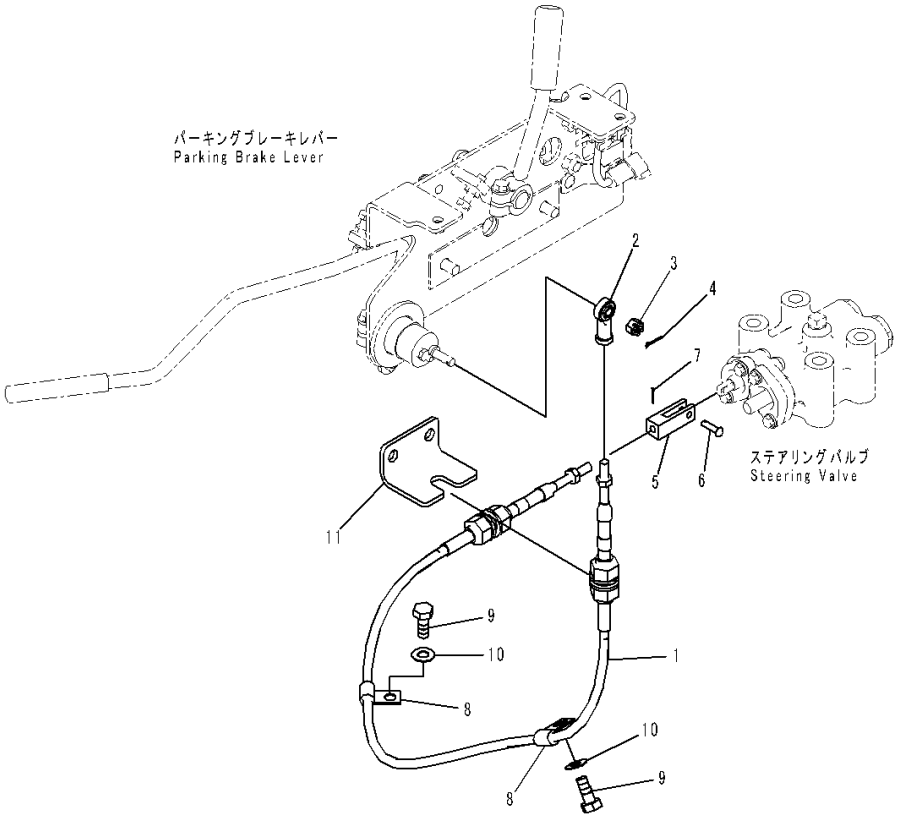

Index	Code	Part Number	Description	Qty	Serial Number
1		14X-43-51120	Cable	1	80001-
2		04250-80847	Rod End	1	80001-
3		01590-30809	Nut	1	80001-
4		04050-12015	Pin, Cotter	1	80001-
5		21K-43-11350	Yoke	1	80001-
6		04205-10622	Pin	1	80001-
7		04050-11612	Pin, Cotter	1	80001-
8		04434-50810	Clip	2	80001-
9		01010-81020	Bolt	2	80001-
10		01643-31032	Washer	2	80001-
11		(14X-43-51461)	Bracket(Refer to Page 406)		-

HYDRAULIC SYSTEM

FIG. H0110-001001 Hydraulic Oil Tank

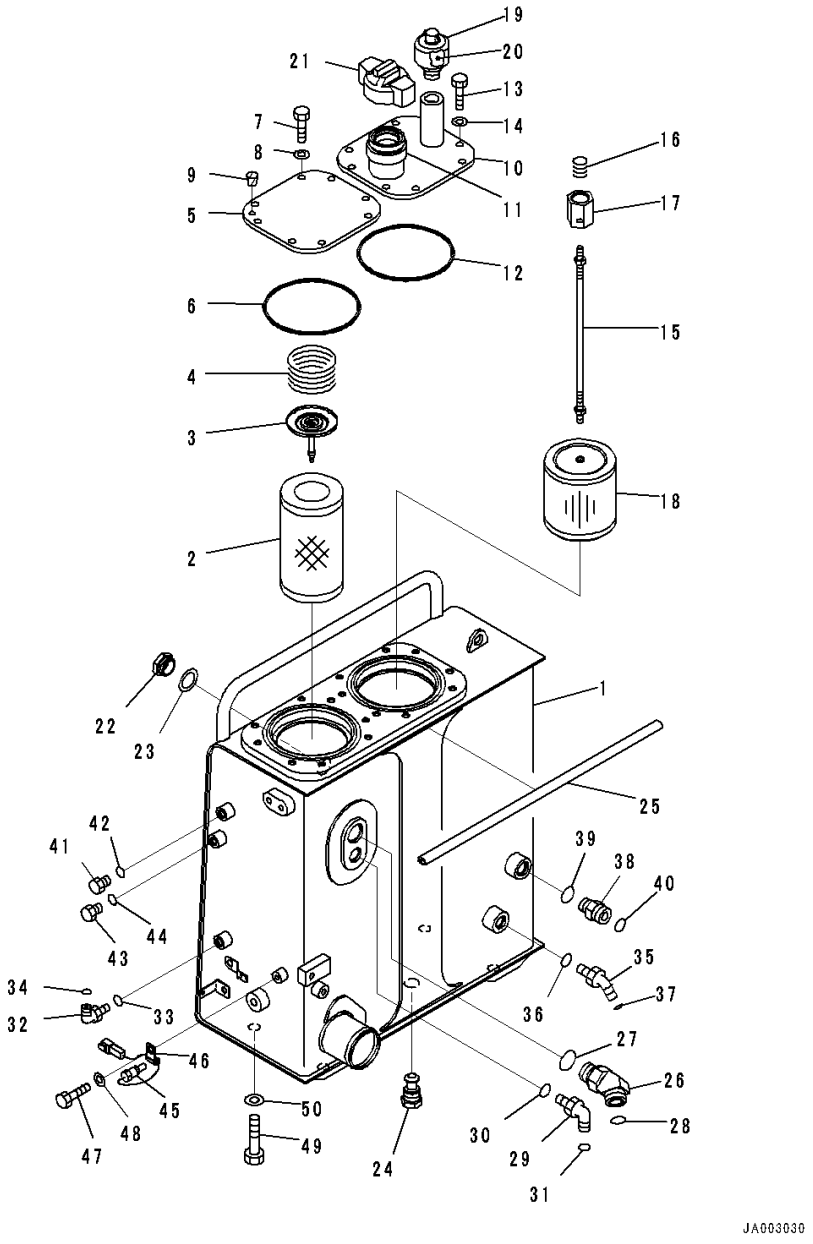

Index	Code	Part Number	Description	Qty	Serial Number
1		14X-60-51112	Tank	1	80001-
2		14X-60-31150	Element	1	80001-
3		21W-60-41170	Valve Assembly	1	80001-
4		198-49-11460	Spring	1	80001-
5		14X-60-51131	Plate	1	80001-
6		07000-15160	O-ring	1	80001-
7		01010-81025	Bolt	8	80001-
8		01643-31032	Washer	8	80001-
9		07049-01215	Plug	1	80001-
10		14X-60-51141	Cover	1	80001-
11		07055-30062	• Filler	1	80001-
12		07000-15160	O-ring	1	80001-
13		01010-81025	Bolt	8	80001-
14		01643-31032	Washer	8	80001-
		14X-60-51151	Strainer Assembly	1	80001-
15		14X-60-51161	• Rod Assembly	1	80001-
16		12R-60-11230	•• Spring	1	80001-
17		20Y-60-21320	•• Holder	1	80001-
18		22B-60-11160	• Strainer	1	80001-
19		195-60-51550	Breather	1	80001-
20		421-60-35170	• Element	1	80001-
21		07051-00005	Gasket	1	80001-
22		20N-60-11143	Gauge	1	80001-
23		20N-60-11181	• Gasket	1	80001-
24		14X-60-51171	Plug	1	80001-
25		14X-60-51230	Seal	1	80001-
26		14X-62-52951	Elbow	1	80001-
27		07002-13334	O-ring	1	80001-
28		207-62-64740	O-ring	1	80001-
29		02782-10522	Elbow	1	80001-
30		07002-12434	O-ring	1	80001-
31		02896-11015	O-ring	1	80001-
32		02782-10311	Elbow	1	80001-
33		07002-11423	O-ring	1	80001-
34		02896-11009	O-ring	1	80001-
35		02783-10422	Elbow	1	80001-
36		07002-12034	O-ring	1	80001-
37		02896-11012	O-ring	1	80001-
38		11Y-62-12210	Nipple	1	80001-

FIG. H0110-001001 Hydraulic Oil Tank

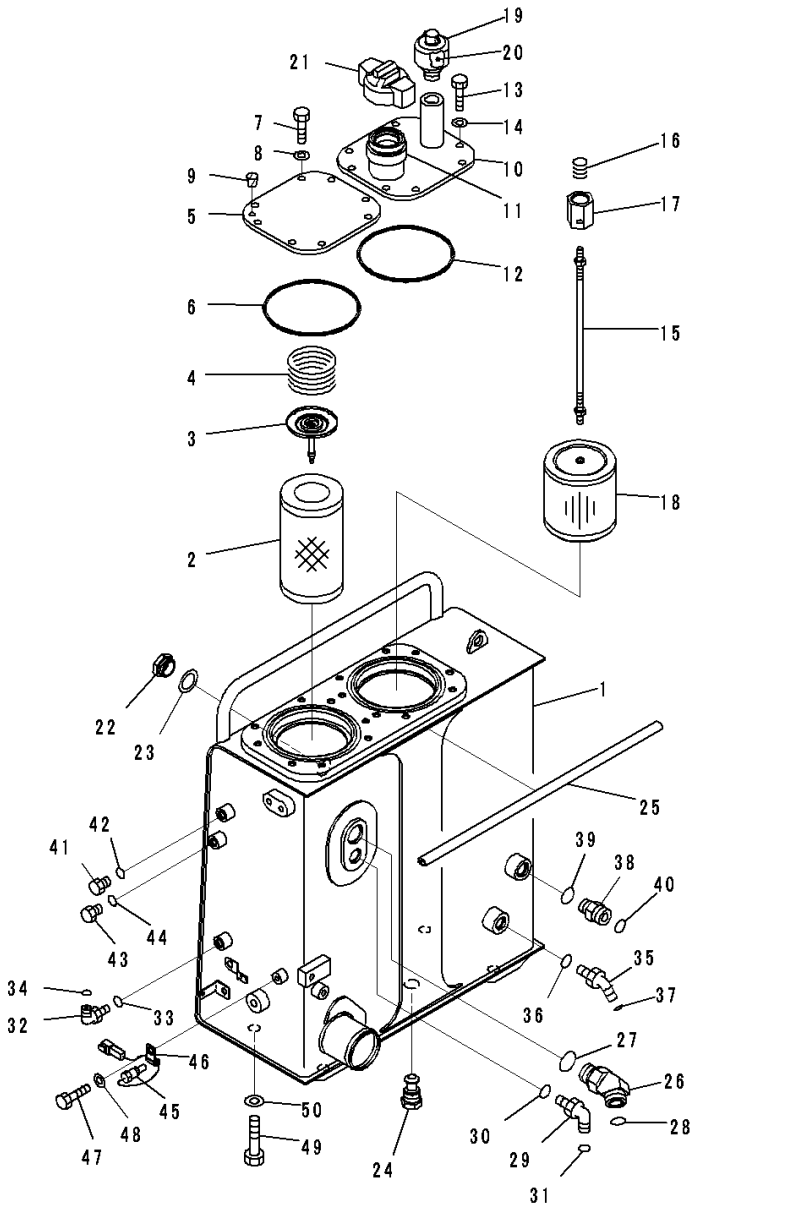

Index	Code	Part Number	Description	Qty	Serial Number
39		07002-12434	O-ring	1	80001-
40		02896-11018	O-ring	1	80001-
41		07040-11409	Plug	1	80001-
42		07002-11423	O-ring	1	80001-
43		07040-11409	Plug	1	80001-
44		07002-11423	O-ring	1	80001-
45		7861-93-3320	Sensor	1	80001-
46		04434-50610	Clip	1	80001-
47		01010-81020	Bolt	1	80001-
48		01643-31032	Washer	1	80001-
49		14X-04-51170	Bolt	4	80001-
50		01643-31645	Washer	4	80001-

FIG. H0110-002001 Hydraulic Oil Tank, For Machine With Rear Actuator

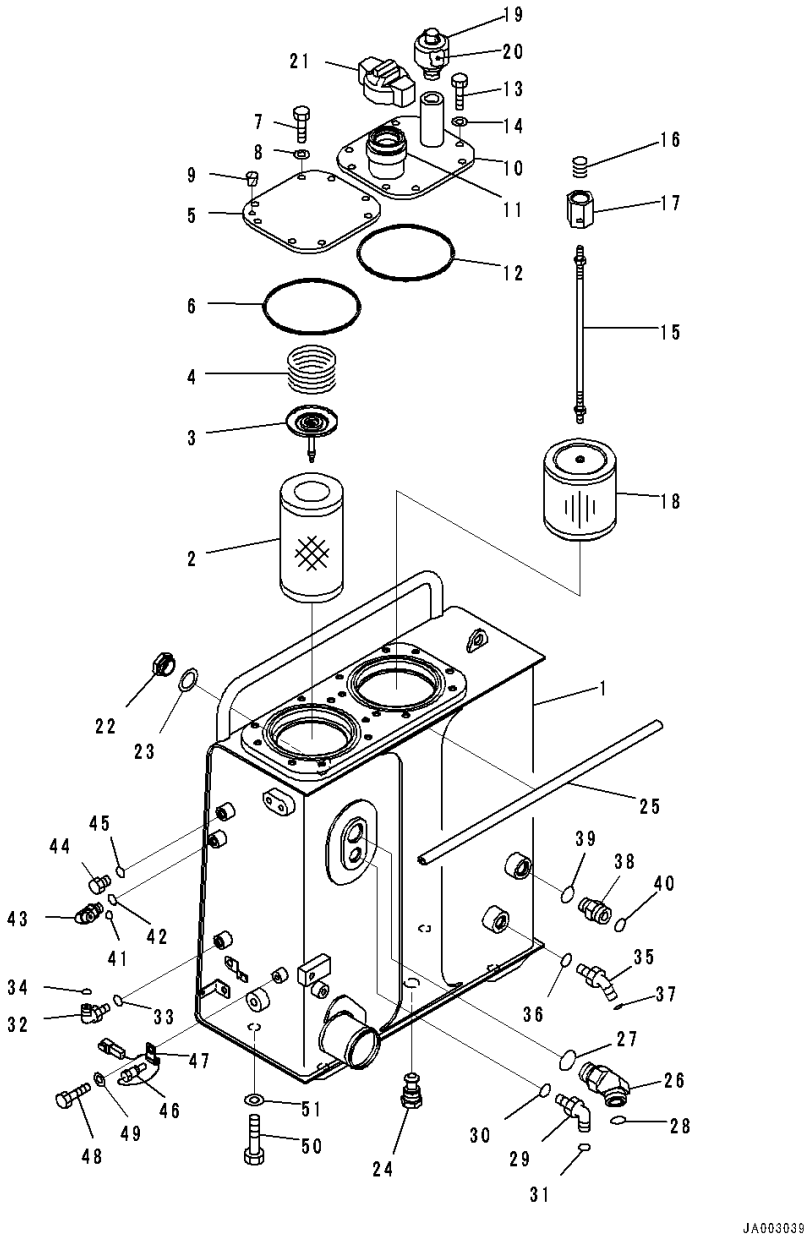

Index	Code	Part Number	Description	Qty	Serial Number
1		14X-60-51112	Tank	1	80001-
2		14X-60-31150	Element	1	80001-
3		21W-60-41170	Valve Assembly	1	80001-
4		198-49-11460	Spring	1	80001-
5		14X-60-51131	Plate	1	80001-
6		07000-15160	O-ring	1	80001-
7		01010-81025	Bolt	8	80001-
8		01643-31032	Washer	8	80001-
9		07049-01215	Plug	1	80001-
10		14X-60-51141	Cover	1	80001-
11		07055-30062	• Filler	1	80001-
12		07000-15160	O-ring	1	80001-
13		01010-81025	Bolt	8	80001-
14		01643-31032	Washer	8	80001-
		14X-60-51151	Strainer Assembly	1	80001-
15		14X-60-51161	• Rod Assembly	1	80001-
16		12R-60-11230	•• Spring	1	80001-
17		20Y-60-21320	•• Holder	1	80001-
18		22B-60-11160	• Strainer	1	80001-
19		195-60-51550	Breather	1	80001-
20		421-60-35170	• Element	1	80001-
21		07051-00005	Gasket	1	80001-
22		20N-60-11143	Gauge	1	80001-
23		20N-60-11181	• Gasket	1	80001-
24		14X-60-51171	Plug	1	80001-
25		14X-60-51230	Seal	1	80001-
26		14X-62-52951	Elbow	1	80001-
27		07002-13334	O-ring	1	80001-
28		207-62-64740	O-ring	1	80001-
29		02782-10522	Elbow	1	80001-
30		07002-12434	O-ring	1	80001-
31		02896-11015	O-ring	1	80001-
32		02782-10311	Elbow	1	80001-
33		07002-11423	O-ring	1	80001-
34		02896-11009	O-ring	1	80001-
35		02783-10422	Elbow	1	80001-
36		07002-12034	O-ring	1	80001-
37		02896-11012	O-ring	1	80001-
38		11Y-62-12210	Nipple	1	80001-

FIG. H0110-002001 Hydraulic Oil Tank, For Machine With Rear Actuator

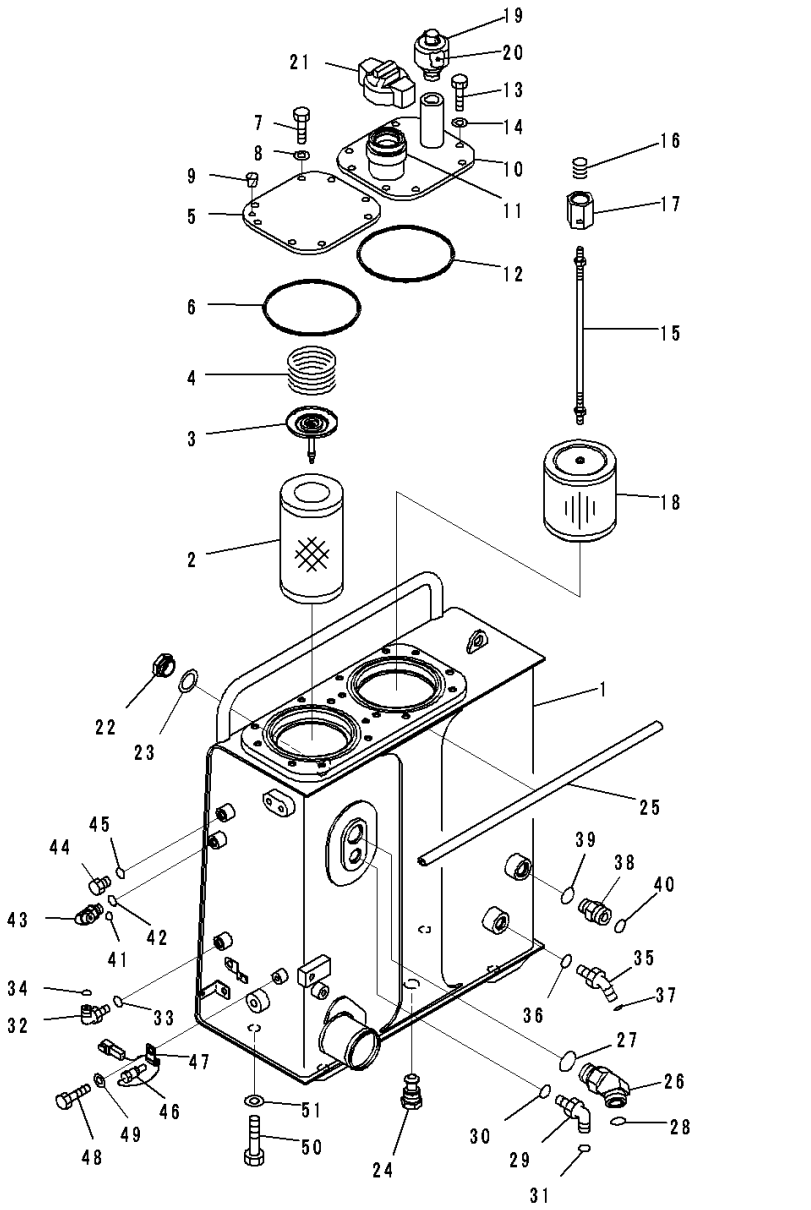

Index	Code	Part Number	Description	Qty	Serial Number
39		07002-12434	O-ring	1	80001-
40		02896-11018	O-ring	1	80001-
41		02782-10210	Elbow	1	80001-
42		07002-11423	O-ring	1	80001-
43		02896-11008	O-ring	1	80001-
44		07040-11409	Plug	1	80001-
45		07002-11423	O-ring	1	80001-
46		7861-93-3320	Sensor	1	80001-
47		04434-50610	Clip	1	80001-
48		01010-81020	Bolt	1	80001-
49		01643-31032	Washer	1	80001-
50		14X-04-51170	Bolt	4	80001-
51		01643-31645	Washer	4	80001-

FIG. H0210-001001 Hydraulic Oil Pump and Motor, Inner Parts (1/7)

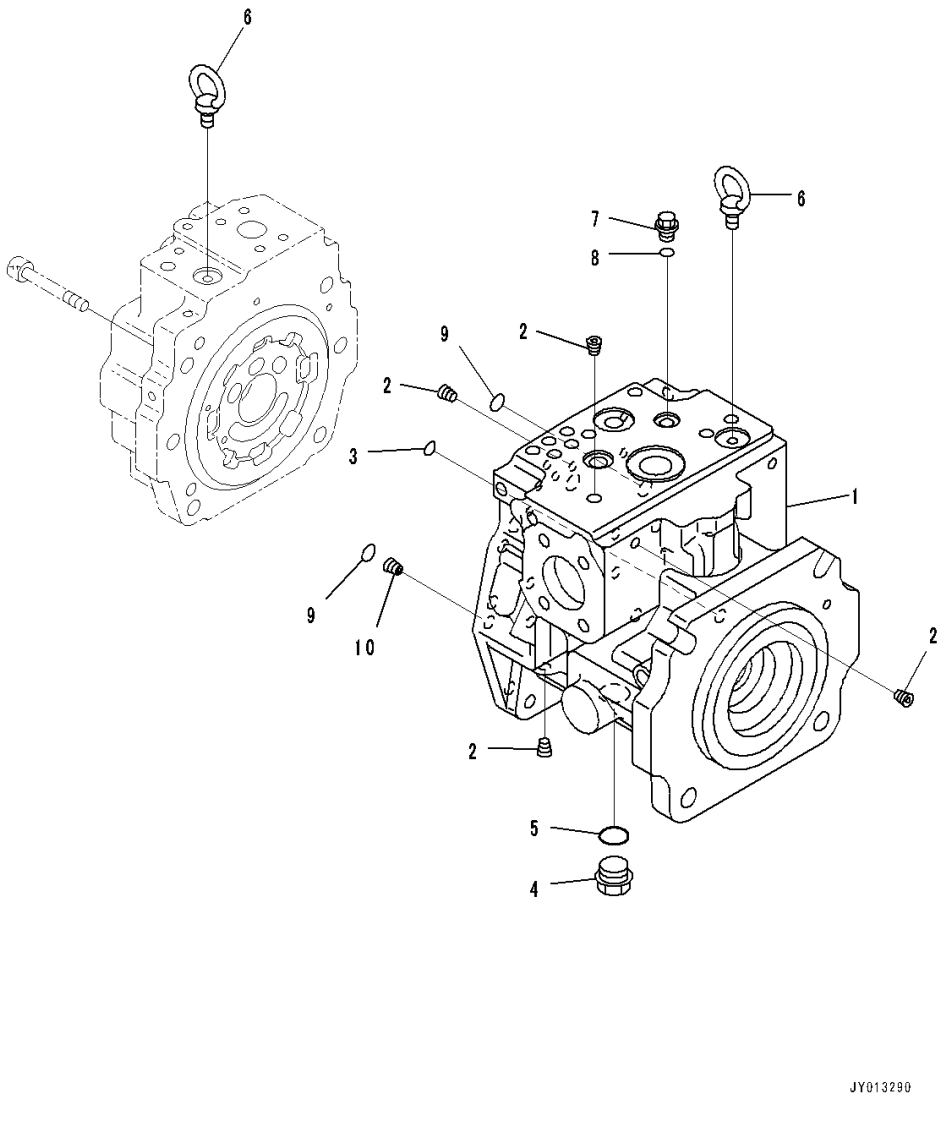

Index	Code	Part Number	Description	Qty	Serial Number
		708-1L-00680	Pump Subassembly	1	80001-
		708-1L-01680	• Pump Subassembly	1	80001-
	C1		•• Case Assembly,Front	1	80001-
1	C1		••• Case,Front	1	80001-
2	C1		••• Plug	26	80001-
3	C1		•• O-ring	1	80001-
4		07044-12412	•• Plug	1	80001-
5		07002-62434	•• O-ring	1	80001-
6		04530-11018	•• Bolt, Eye	1	80001-
7		708-8E-16150	•• Plug	2	80001-
8		07002-61023	•• O-ring	2	80001-
9	C1		•• O-ring	3	80001-
10	C1		•• Orifice	1	80001-

FIG. H0210-001002 Hydraulic Oil Pump and Motor, Inner Parts (2/7)

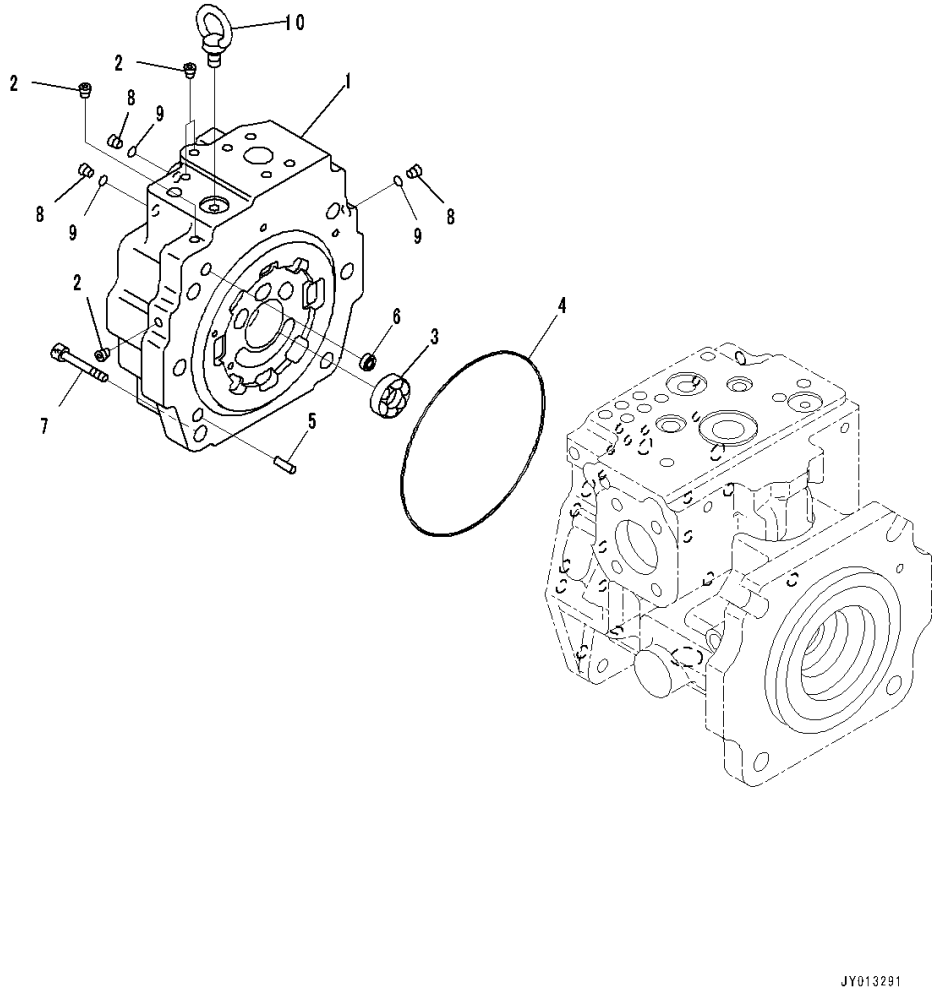

Index	Code	Part Number	Description	Qty	Serial Number
		708-1L-00680	Pump Subassembly	1	80001-
		708-1L-01680	• Pump Subassembly	1	80001-
	C1		•• Cap Assembly, End	1	80001-
1	C1		••• Cap, End	1	80001-
2	C1		••• Plug	4	80001-
3	C1		•• Bearing	1	80001-
4	C1		•• O-ring	1	80001-
5	C1		•• Pin, Dowel	1	80001-
6	C1		•• Filter	1	80001-
7	C1		•• Bolt	6	80001-
8		708-8E-16150	•• Plug	3	80001-
9		07002-61023	•• O-ring	3	80001-
10		04530-11018	•• Bolt, Eye	1	80001-

FIG. H0210-001003 Hydraulic Oil Pump and Motor, Inner Parts (3/7)

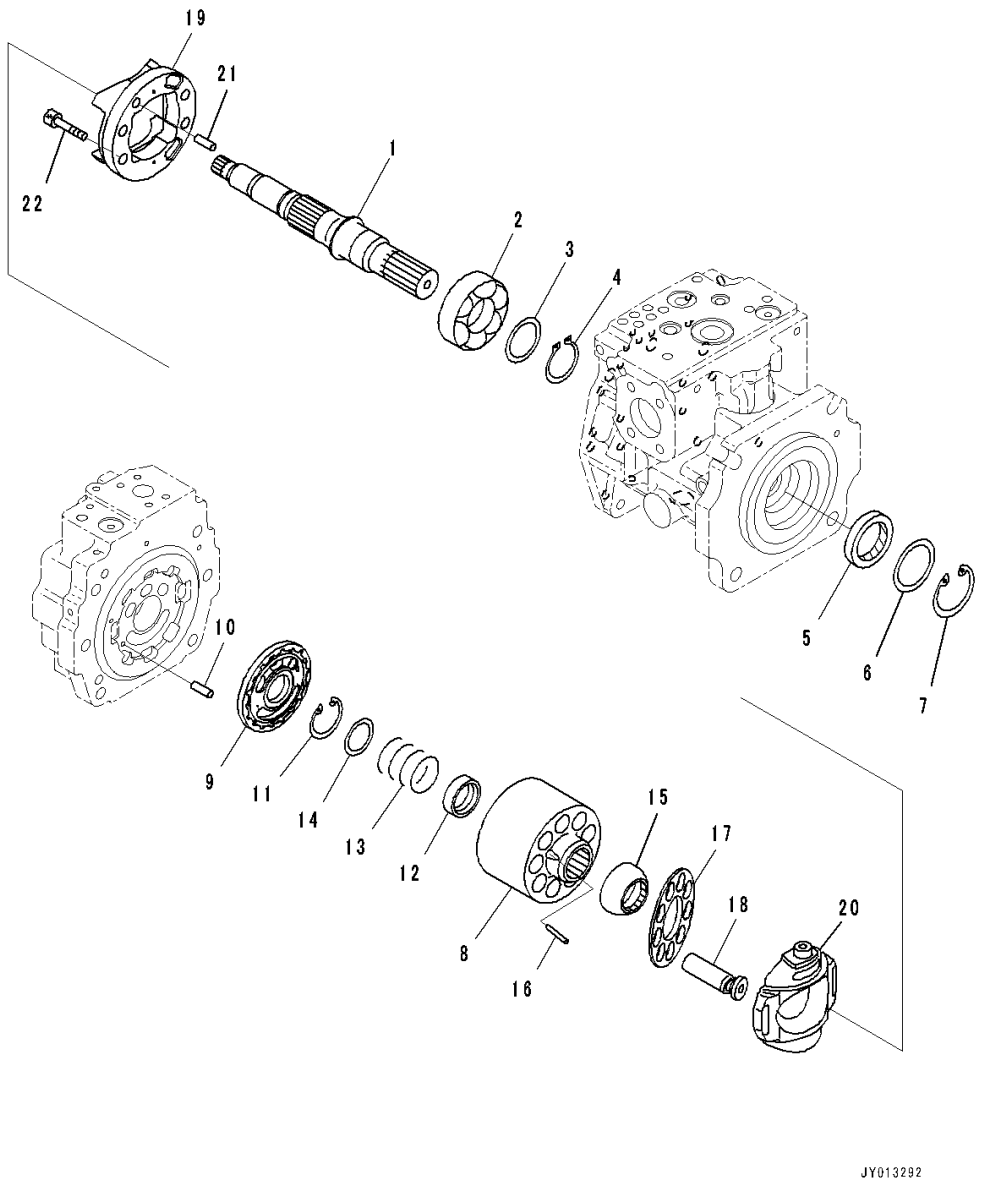

Index	Code	Part Number	Description	Qty	Serial Number
		708-1L-00680	Pump Subassembly	1	80001-
		708-1L-01680	• Pump Subassembly	1	80001-
1	C1		•• Shaft	1	80001-
2	C1		•• Bearing	1	80001-
3	C1		•• Washer Kit	1	80001-
	C1		••• Washer, T=3.1mm	1	80001-
	C1		••• Washer, T=3.0mm	1	80001-
	C1		••• Washer, T=2.9mm	1	80001-
	C1		••• Washer, T=2.8mm	1	80001-
4	C1		•• Ring, Snap	1	80001-
5		708-25-52861	•• Seal, Oil	1	80001-
6		708-2L-22160	•• Spacer	1	80001-
7		04065-06825	•• Ring, Snap	1	80001-
	C1		•• Block Assembly	1	80001-
8	C1		••• Block, Cylinder	1	80001-
9	C1		••• Plate	1	80001-
10	C1		•• Pin	1	80001-
11	C1		•• Ring, Snap	1	80001-
12	C1		•• Seat	1	80001-
13	C1		•• Spring	1	80001-
14	C1		•• Seat	1	80001-
15	C1		•• Guide	1	80001-
16	C1		•• Pin	3	80001-
17	C1		•• Retainer	1	80001-
18	C1		•• Piston Subassembly	9	80001-
	C1		•• Cradle Assembly	1	80001-
19	C1		••• Cradle	1	80001-
20	C1		••• Cam	1	80001-
21	C1		•• Pin, Dowel	1	80001-
22	C1		•• Bolt	4	80001-

FIG. H0210-001004 Hydraulic Oil Pump and Motor, Inner Parts (4/7)

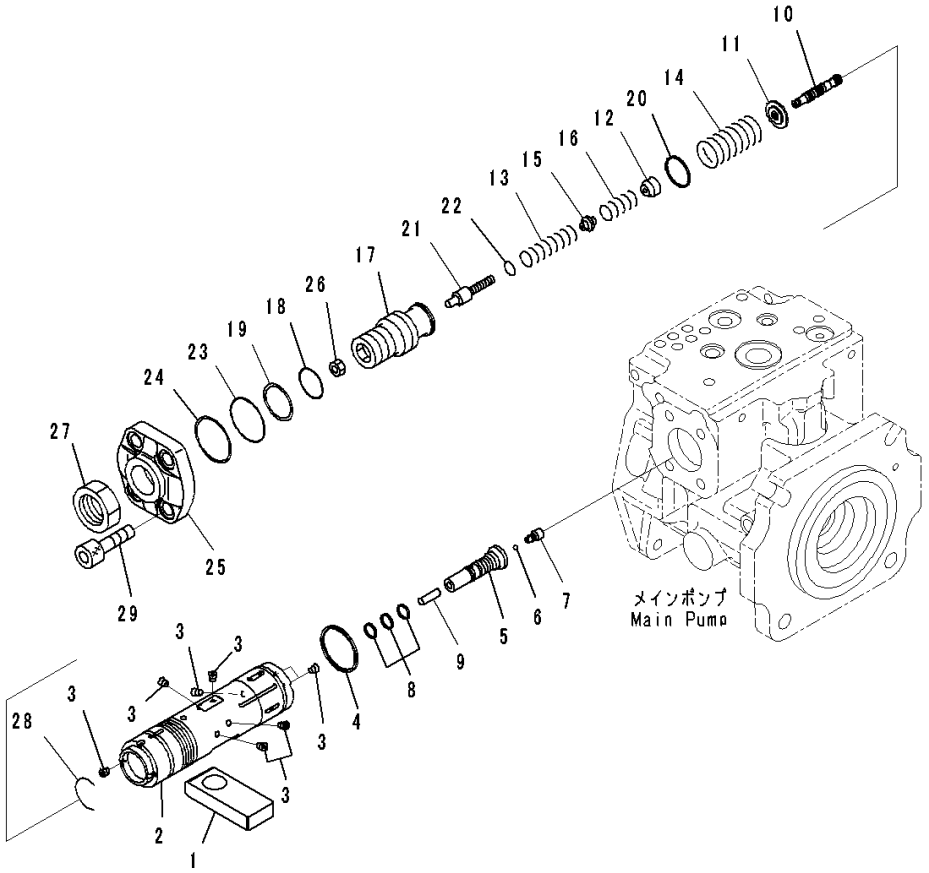

Index	Code	Part Number	Description	Qty	Serial Number
		708-1L-00680	Pump Subassembly	1	80001-
		708-1L-01680	• Pump Subassembly	1	80001-
1	C1		•• Slider	1	80001-
	C1		•• Valve Assembly, Pc	1	80001-
	C1		••• Piston Assembly, Servo	1	80001-
2	C1		•••• Piston, Servo	1	80001-
3	C1		•••• Screw	7	80001-
4	C1		••• Seal	1	80001-
5	C1		••• Plug	1	80001-
6	C1		••• Ball	1	80001-
7	C1		••• Plug	1	80001-
8	C1		••• Seal	3	80001-
9	C1		••• Pin	1	80001-
10	C1		••• Spool	1	80001-
11	C1		••• Retainer	1	80001-
12	C1		••• Seat	1	80001-
13	C1		••• Spring	1	80001-
14	C1		••• Spring	1	80001-
15	C1		••• Seat	1	80001-
16	C1		••• Spring	1	80001-
17	C1		••• Screw	1	80001-
18	C1		••• O-ring	1	80001-
19	C1		••• Ring, Back-up	1	80001-
20	C1		••• Seal	1	80001-
21	C1		••• Plug	1	80001-
22	C1		••• O-ring	1	80001-
23	C1		••• O-ring	1	80001-
24	C1		••• Ring	1	80001-
25	C1		••• Cover	1	80001-
26	C1		••• Nut	1	80001-
27	C1		••• Nut	1	80001-
28	C1		••• Ring	1	80001-
29	C1		•• Bolt, Hexagon Socket Head	4	80001-

FIG. H0210-001005 Hydraulic Oil Pump and Motor, Inner Parts (5/7)

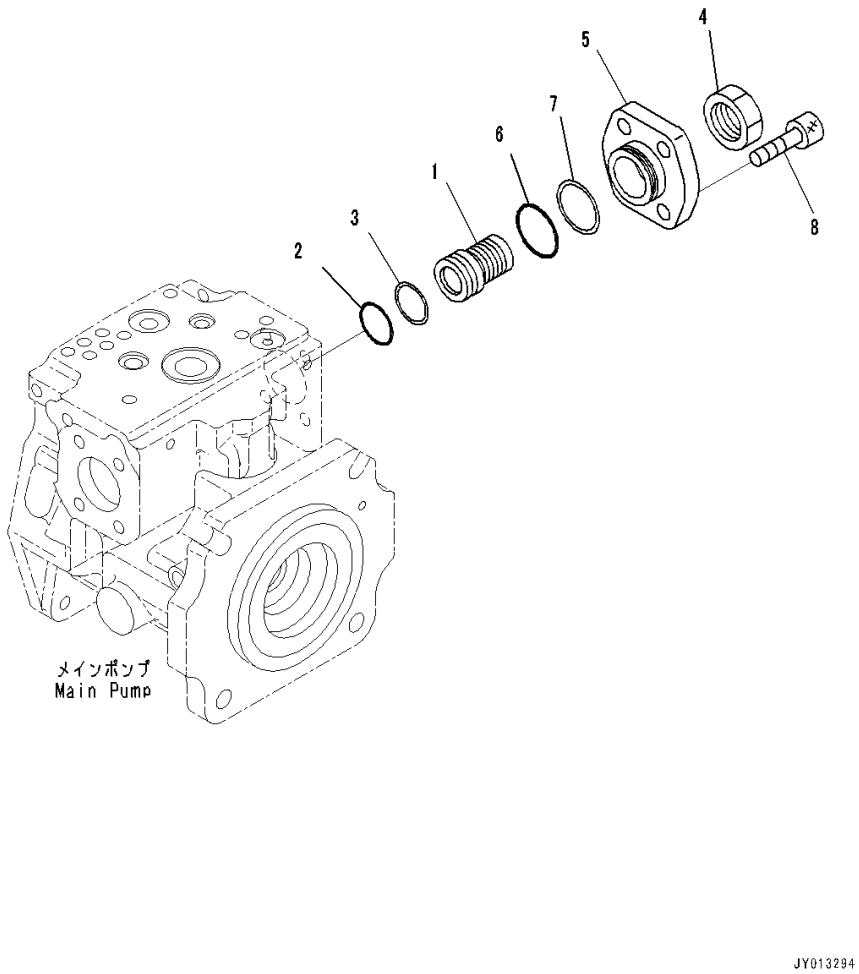

Index	Code	Part Number	Description	Qty	Serial Number
		708-1L-00680	Pump Subassembly	1	80001-
		708-1L-01680	• Pump Subassembly	1	80001-
	C1		•• Cover Assembly	1	80001-
1	C1		••• Screw	1	80001-
2	C1		••• O-ring	1	80001-
3	C1		••• Ring, Back-up	1	80001-
4	C1		••• Nut	1	80001-
5	C1		••• Cover	1	80001-
6	C1		••• O-ring	1	80001-
7	C1		••• Ring	1	80001-
8	C1		•• Bolt, Hexagon Socket Head	4	80001-

FIG. H0210-001006 Hydraulic Oil Pump and Motor, Inner Parts (6/7)

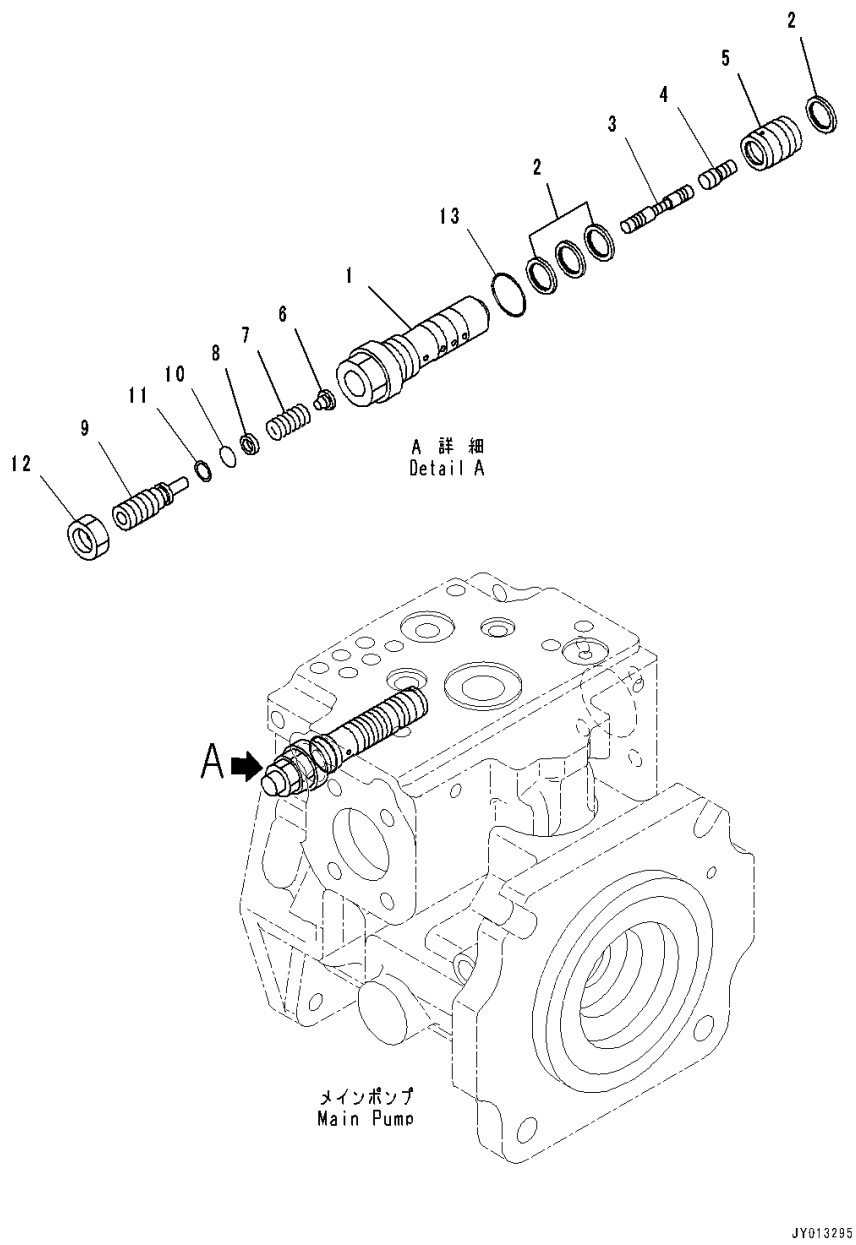

Index	Code	Part Number	Description	Qty	Serial Number
		708-1L-00680	Pump Subassembly	1	80001-
		708-2H-03620	• Valve Assembly, Ls	1	80001-
1	C1		•• Sleeve	1	80001-
2	C1		•• Seal	4	80001-
3	C1		•• Spool	1	80001-
4	C1		•• Piston	1	80001-
5	C1		•• Sleeve	1	80001-
6	C1		•• Seat	1	80001-
7	C1		•• Spring	1	80001-
8	C1		•• Seat	1	80001-
9	C1		•• Plug	1	80001-
10	C1		•• O-ring	1	80001-
11	C1		•• Ring, Back-up	1	80001-
12	C1		•• Nut	1	80001-
13	C1		•• O-ring	1	80001-

FIG. H0210-001007 Hydraulic Oil Pump and Motor, Inner Parts (7/7)

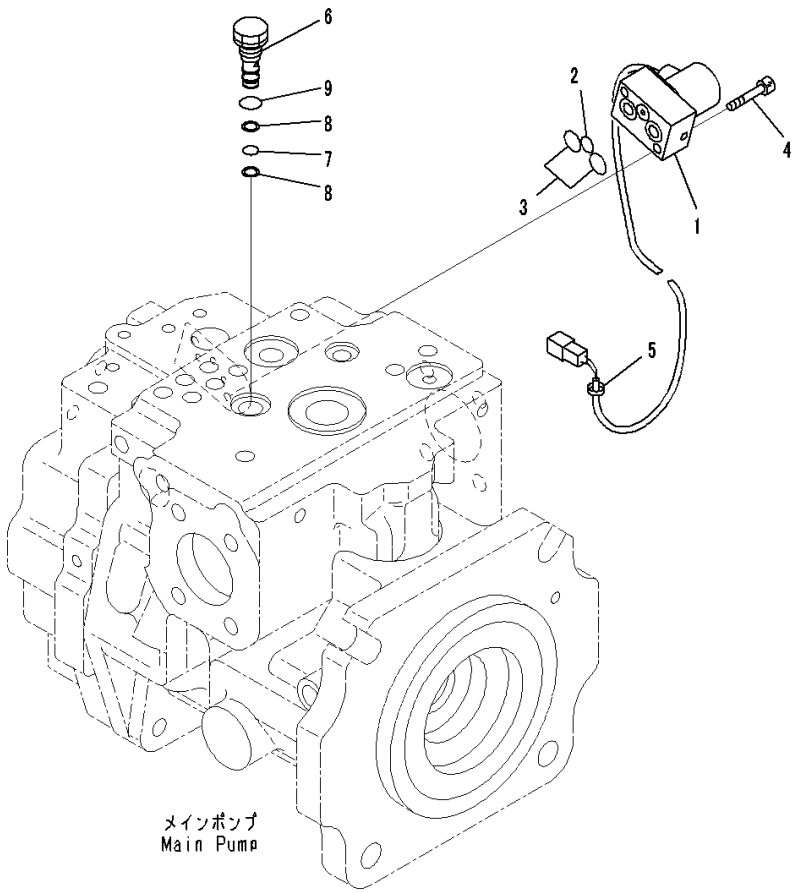

Index	Code	Part Number	Description	Qty	Serial Number
		708-1L-00680	Pump Subassembly	1	80001-
1	C1		• Valve, Pilot	1	80001-
2	C1		•• O-ring	1	80001-
3	C1		•• O-ring	2	80001-
4	C1		• Bolt	2	80001-
5	C1		• Band, White	1	80001-
6	C1		• Plug	1	80001-
7	C1		• O-ring	1	80001-
8	C1		• Ring	2	80001-
9	C1		• O-ring	1	80001-

FIG. H0210-001008 Hydraulic Oil Pump and Motor, Pump Mounts (1/2)

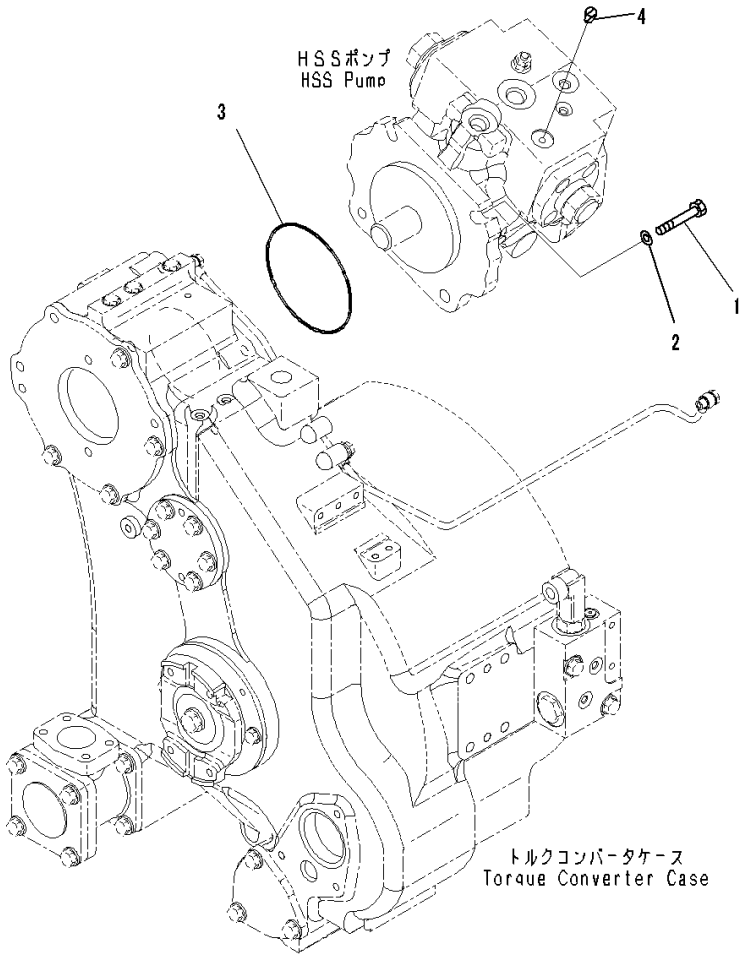

Index	Code	Part Number	Description	Qty	Serial Number
1		01010-81650	Bolt	4	80001-
2		01643-31645	Washer	4	80001-
3		07000-15160	O-ring	1	80001-
4		07049-01012	Plug	2	80007-

FIG. H0210-001009 Hydraulic Oil Pump and Motor, HSS Motor (1/2)

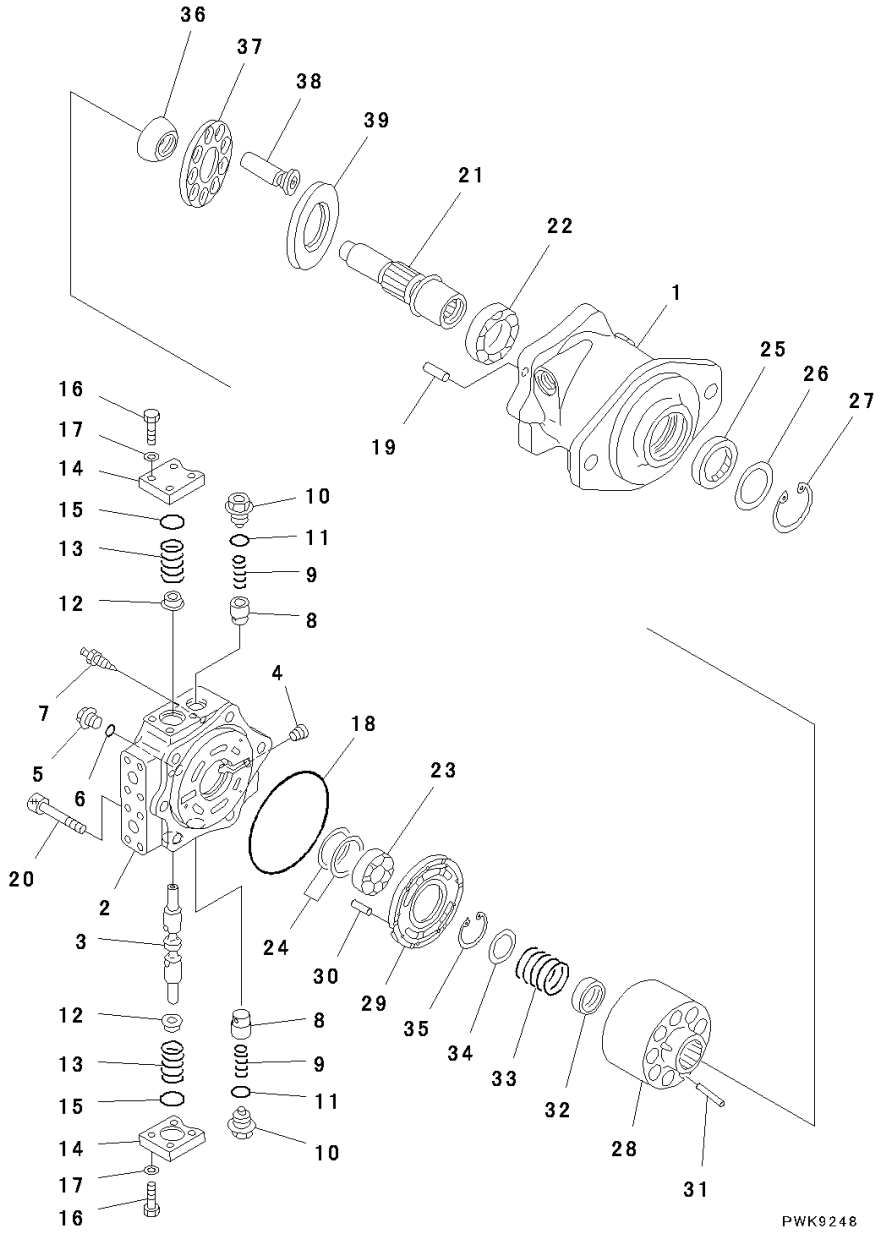

Index	Code	Part Number	Description	Qty	Serial Number
		708-7L-00070	Motor Assembly	1	80001-
1		708-7L-11130	• Case, Motor	1	80001-
	C2	708-7L-04180	• Cover Subassembly, End	1	80001-
2		708-7L-11514	•• Cover, End	1	80001-
3	C1		•• Spool	1	80001-
4		708-21-12541	•• Plug	1	80001-
5		708-8K-16280	• Plug	3	80001-
6		07002-11623	• O-ring	3	80001-
7		20B-27-11210	• Bleeder	1	80001-
8		706-73-72420	• Valve	2	80001-
9		708-7L-16510	• Spring	2	80001-
10		708-8F-16170	• Plug	2	80001-
11		07002-12434	• O-ring	2	80001-
12		708-7L-16211	• Retainer	2	80001-
13		708-7L-16220	• Spring	2	80001-
14		708-7L-16311	• Cover	2	80001-
15		07000-13035	• O-ring	2	80001-
16		01010-81035	• Bolt	8	80001-
17		01643-51032	• Washer	8	80001-
18		07000-12145	• O-ring	1	80001-
19		04020-01228	• Pin, Dowel	1	80001-
20		01252-61480	• Bolt	6	80001-
21		708-7L-12111	• Shaft	1	80001-
22		708-8F-12151	• Bearing	1	80001-
23		708-7L-12140	• Bearing	1	80001-
24		708-7L-05010	• Spacer Kit	1	80001-
		708-7L-12220	•• Spacer, T=1.5mm	1	80001-
		708-7L-12230	•• Spacer, T=1.6mm	1	80001-
		708-7L-12240	•• Spacer, T=1.7mm	1	80001-
		708-7L-12250	•• Spacer, T=1.8mm	1	80001-
		708-7L-12260	•• Spacer, T=1.9mm	1	80001-
		708-7L-12270	•• Spacer, T=2.0mm	1	80001-
25		706-7G-11291	• Seal, Oil	1	80001-
26		708-8F-12230	• Spacer, T=3.2mm	1	80001-
27		04065-07225	• Ring, Snap	1	80001-
28		708-7L-13111	• Cylinder Block	1	80001-
29	C2	708-7L-13220	• Plate, Valve	1	80001-
30		720-68-19610	• Pin	1	80001-
31		708-2L-23360	• Pin	3	80001-

FIG. H0210-001009 Hydraulic Oil Pump and Motor, HSS Motor (1/2)

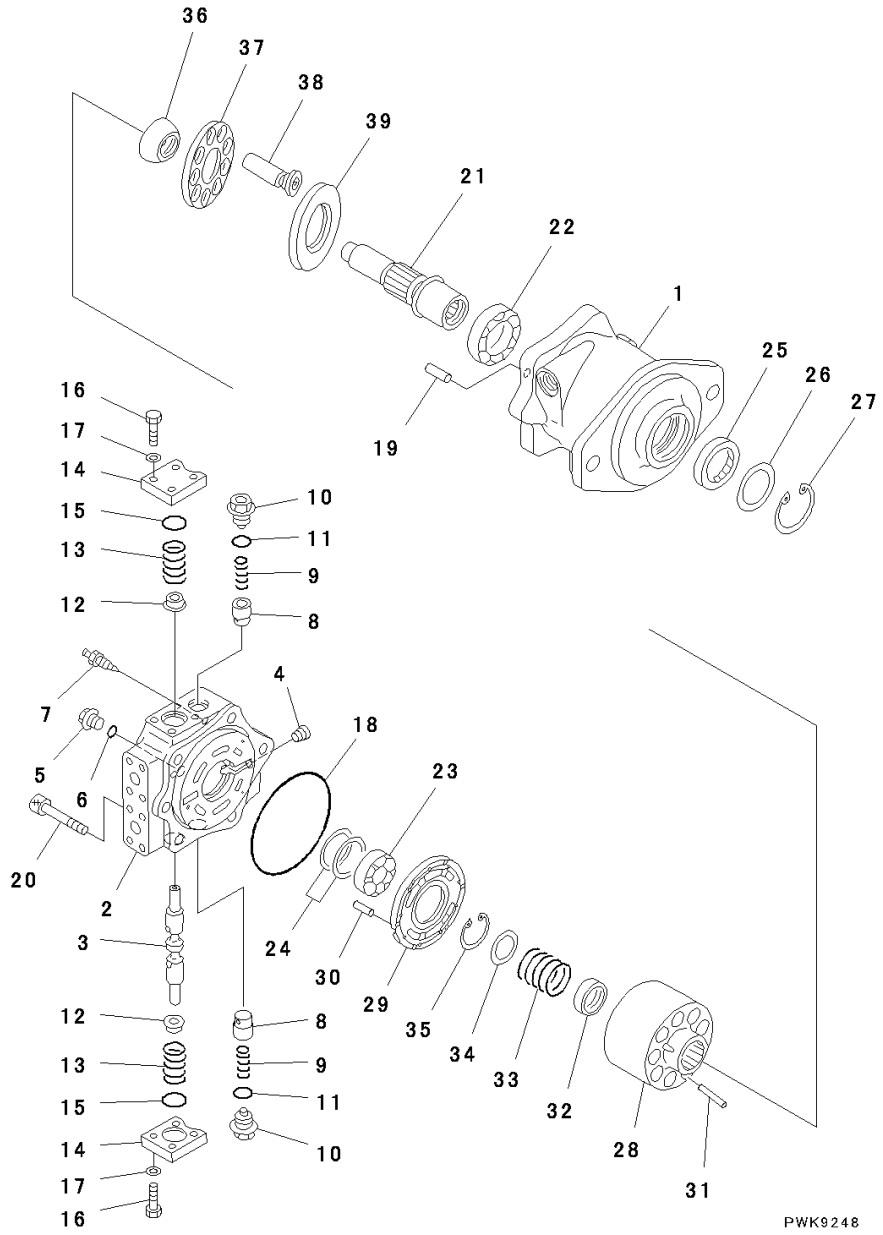

Index	Code	Part Number	Description	Qty	Serial Number
32		708-2L-23131	• Seat	1	80001-
33	C2	708-7L-13160	• Spring	1	80001-
34		708-7L-13140	• Seat	1	80001-
35		04065-04818	• Ring, Snap	1	80001-
36		708-2L-23351	• Guide	1	80001-
37		708-2L-33350	• Retainer	1	80001-
38		708-8F-33310	• Piston Subassembly	9	80001-
39	C2	708-7L-13410	• Plate, Thrust	1	80001-

FIG. H0210-001010 Hydraulic Oil Pump and Motor, HSS Motor (2/2)

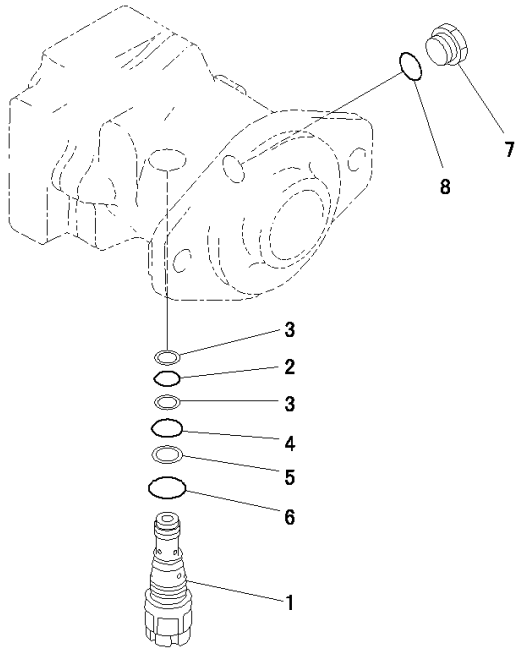

00001785

Index	Code	Part Number	Description	Qty	Serial Number
		708-7L-00070	Motor Assembly	1	80001-
1		702-75-03102	• Valve Assembly, Relief	1	80001-
2		07000-22018	•• O-ring	1	80001-
3		07001-02018	•• Ring, Back-up	2	80001-
4		07000-12021	•• O-ring	1	80001-
5		07001-02021	•• Ring	1	80001-
6		07002-13034	•• O-ring	1	80001-
7		07040-12012	• Plug	1	80001-
8		07002-12034	• O-ring	1	80001-

FIG. H0210-001011 Hydraulic Oil Pump and Motor, Motor Mounting

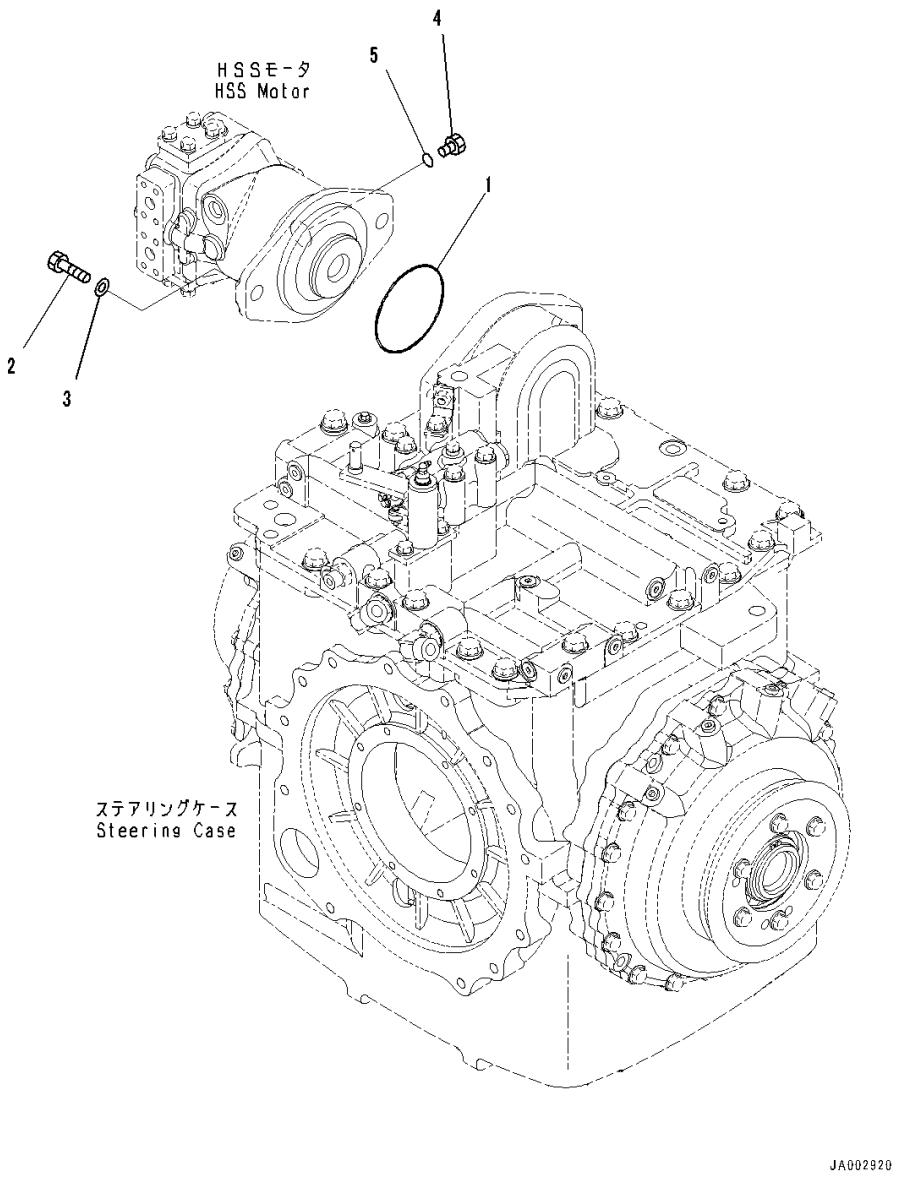

Index	Code	Part Number	Description	Qty	Serial Number
1		07000-15160	O-ring	1	80001-
2		01010-82055	Bolt	2	80001-
3		01643-32060	Washer	2	80001-
4		07040-12012	Plug	1	80001-
5		07002-12034	O-ring	1	80001-

FIG. H0210-001012 Hydraulic Oil Pump and Motor, Cooling Fan Pump (1/5)

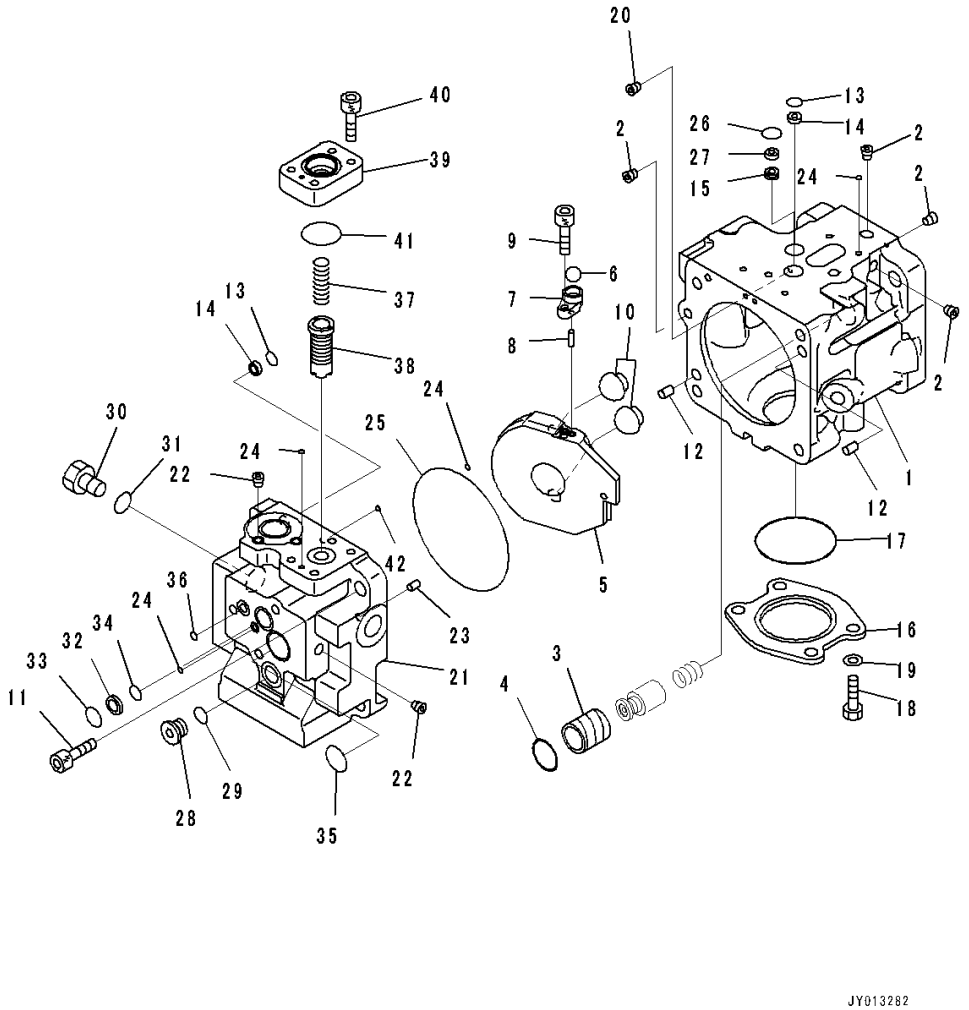

Index	Code	Part Number	Description	Qty	Serial Number
		708-1S-00290	Pump Assembly	1	80001-
	C1		• Pump Subassembly	1	80001-
		708-1S-04330	•• Case Subassembly	1	80001-
1	C1		••• Case, Pump	1	80001-
2	C1		••• Plug	8	80001-
3	C1		••• Sleeve	1	80001-
4	C1		••• Ring	1	80001-
5	C1		•• Cam	1	80001-
6	C1		•• Ball	1	80001-
7	C1		•• Spacer	1	80001-
8	C1		•• Pin	2	80001-
9	C1		•• Bolt	1	80001-
10	C1		•• Ball	2	80001-
11	C1		•• Bolt	4	80001-
12	C1		•• Pin, Dowel	2	80001-
13	C1		•• O-ring	2	80001-
14	C1		•• Filter	2	80001-
15	C1		•• Orifice	1	80001-
16		708-1S-19920	•• Plate	1	80001-
17		07000-12065	•• O-ring	1	80001-
18		01010-81025	•• Bolt	4	80001-
19		01643-31032	•• Washer	4	80001-
20	C1		•• Orifice	1	80001-
	C1		•• Cap Subassembly	1	80001-
21	C1		••• Cap, End	1	80001-
22	C1		••• Plug	5	80001-
23	C1		•• Pin	1	80001-
24	C1		•• O-ring	3	80001-
25	C1		•• O-ring	1	80001-
26	C1		•• O-ring	1	80001-
27	C1		•• Filter	1	80001-
28		723-56-31630	•• Plug	1	80001-
29		07002-11623	•• O-ring	1	80001-
30		07040-12012	•• Plug	1	80001-
31		07002-12034	•• O-ring	1	80001-
32		702-21-53120	•• Filter	1	80001-
33		702-21-55520	•• O-ring	1	80001-
34		702-21-55420	•• O-ring	1	80001-
35		702-21-55440	•• O-ring	1	80001-

FIG. H0210-001012 Hydraulic Oil Pump and Motor, Cooling Fan Pump (1/5)

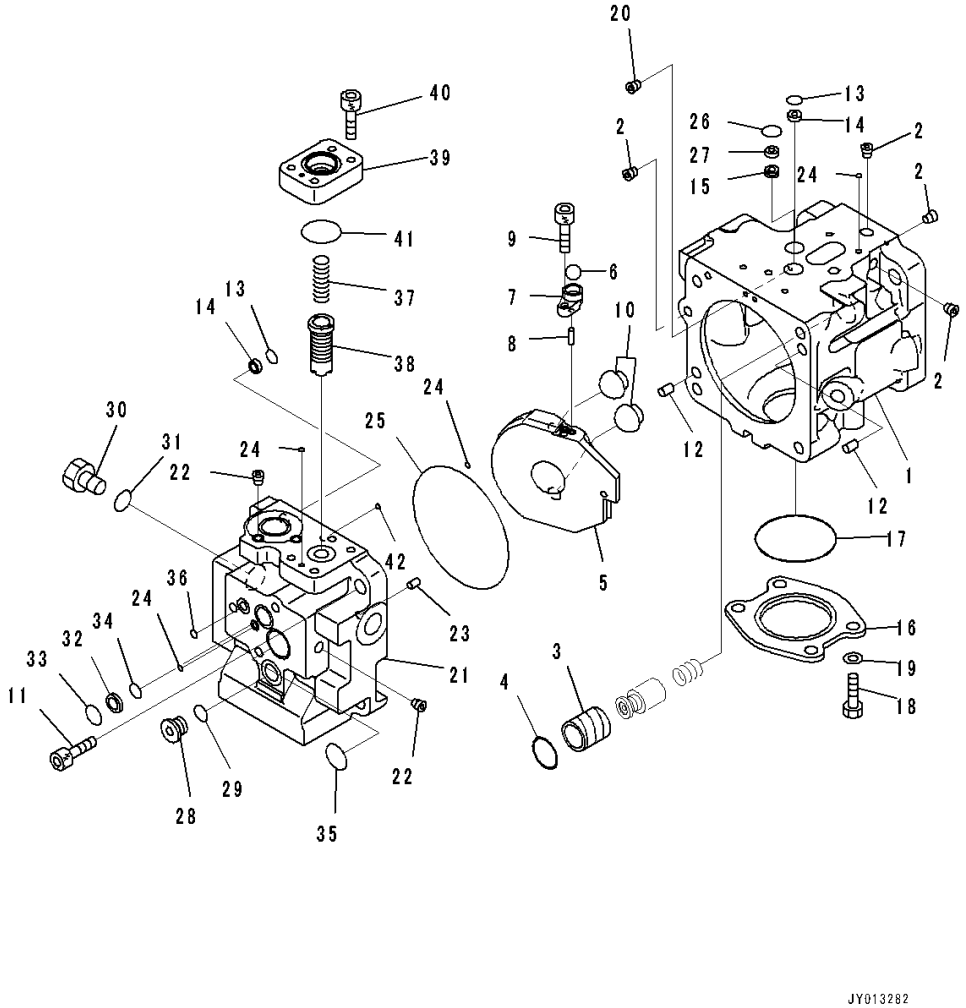

Index	Code	Part Number	Description	Qty	Serial Number
36		07000-12010	•• O-ring	1	80001-
37	C1		•• Spring	1	80001-
38		723-56-31980	•• Valve	1	80001-
39		708-1S-17110	•• Cover	1	80001-
40		01252-60825	•• Bolt	4	80001-
41		07000-12030	•• O-ring	1	80001-
42		07000-11006	•• O-ring	1	80001-

FIG. H0210-001013 Hydraulic Oil Pump and Motor, Cooling Fan Pump (2/5)

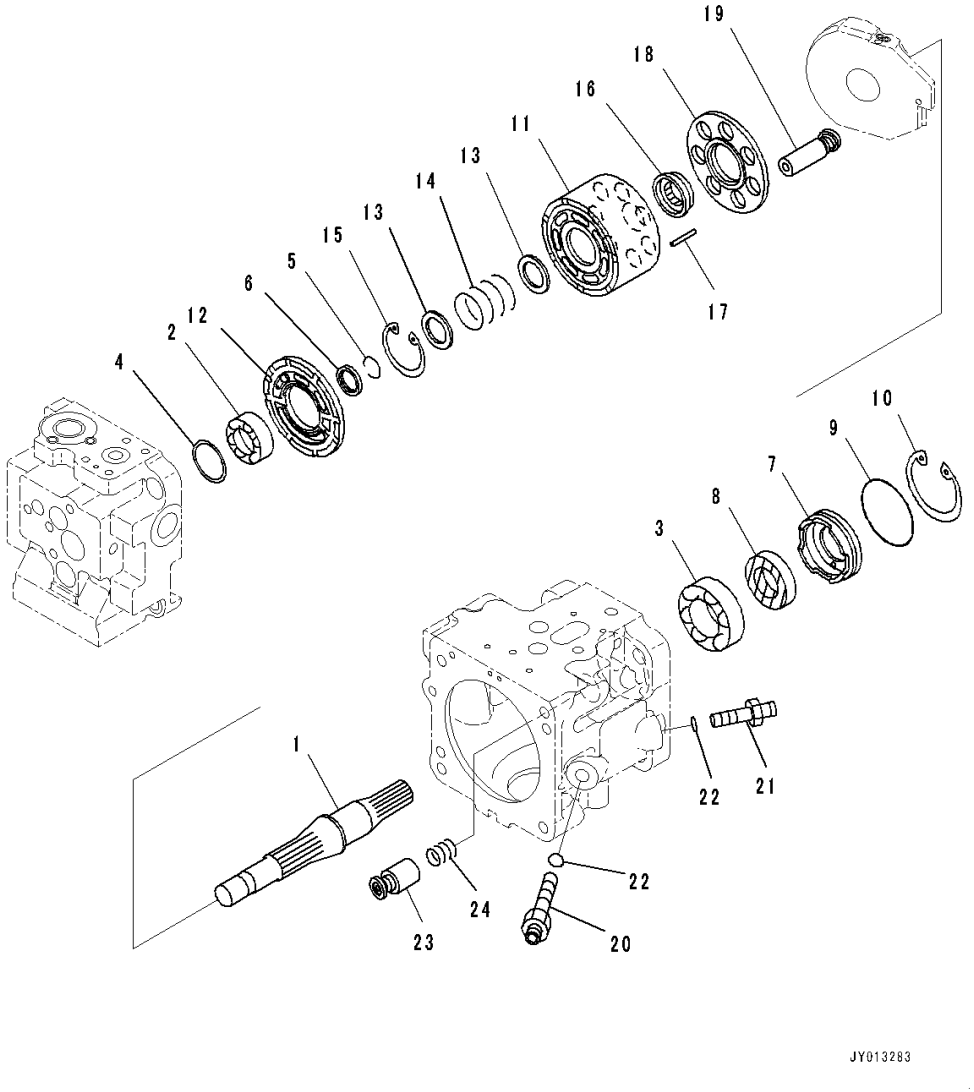

Index	Code	Part Number	Description	Qty	Serial Number
		708-1S-00290	Pump Assembly	1	80001-
	C1		• Pump Subassembly	1	80001-
1	C1		•• Shaft	1	80001-
2	C1		•• Bearing	1	80001-
3	C1		•• Bearing	1	80001-
4	C1		•• Spacer Kit	1	80001-
	C1		••• Spacer, T=1.6mm	1	80001-
	C1		••• Spacer, T=1.7mm	1	80001-
	C1		••• Spacer, T=1.8mm	1	80001-
	C1		••• Spacer, T=1.9mm	1	80001-
	C1		••• Spacer, T=2.0mm	1	80001-
	C1		••• Spacer, T=2.1mm	1	80001-
	C1		••• Spacer, T=2.2mm	1	80001-
5	C1		•• Ring, Wear	1	80001-
6		708-1S-12330	•• Retainer	1	80001-
7		708-1S-12340	•• Case	1	80001-
8		708-21-12970	•• Seal, Oil	1	80001-
9		708-1S-12350	•• O-ring	1	80001-
10		04065-06220	•• Ring, Snap	1	80001-
11	C1		•• Block, Cylinder	1	80001-
12	C1		•• Plate, Valve	1	80001-
13	C1		•• Washer	2	80001-
14	C1		•• Spring	1	80001-
15	C1		•• Ring, Snap	1	80001-
16	C1		•• Guide	1	80001-
17	C1		•• Pin	3	80001-
18	C1		•• Retainer	1	80001-
19	C1		•• Piston Subassembly	7	80001-
20	C1		•• Plug	1	80001-
21	C1		•• Plug	1	80001-
22	C1		•• O-ring	2	80001-
23	C1		•• Piston Subassembly	1	80001-
24	C1		•• Spring	1	80001-

FIG. H0210-001014 Hydraulic Oil Pump and Motor, Cooling Fan Pump (3/5)

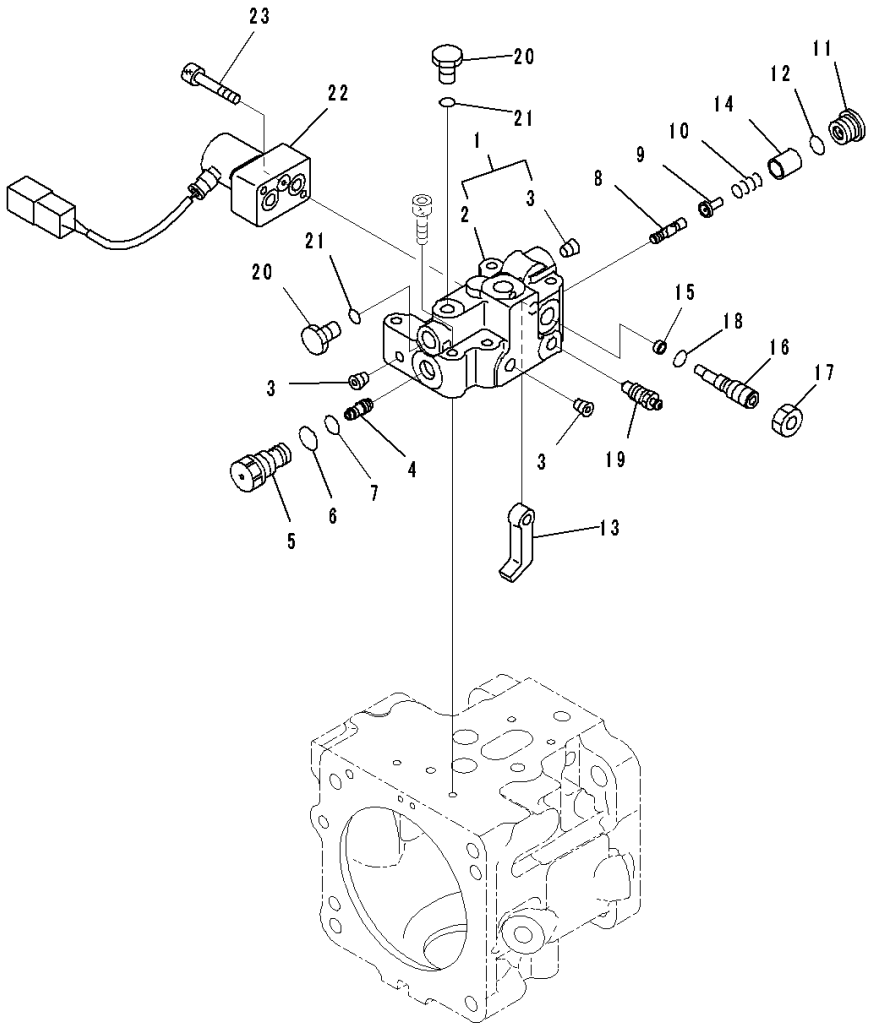

Index	Code	Part Number	Description	Qty	Serial Number
		708-1S-00290	Pump Assembly	1	80001-
	C1		• Pump Subassembly	1	80001-
		708-1S-03390	•• Valve Assembly	1	80001-
1		708-1S-04360	••• Body Subassembly	1	80001-
2	C1		•••• Body	1	80001-
3	C1		•••• Plug	3	80001-
4	C1		••• Piston	1	80001-
5	C1		••• Sleeve	1	80001-
6		07002-21623	••• O-ring	1	80001-
7		07000-B1010	••• O-ring	1	80001-
8	C1		••• Spool	1	80001-
9	C1		••• Seat	1	80001-
10	C1		••• Spring	1	80001-
11		723-56-31630	••• Plug	1	80001-
12		07002-21623	••• O-ring	1	80001-
13	C1		••• Lever	1	80001-
14	C1		••• Retainer	1	80001-
15	C1		••• Spacer	1	80001-
16	C1		••• Plug	1	80001-
17	C1		••• Nut	1	80001-
18	C1		••• O-ring	1	80001-
19		20B-27-11210	••• Bleeder	1	80001-
20		07040-11007	••• Plug	3	80001-
21		07002-21023	••• O-ring	3	80001-
22	C2	702-21-57700	••• Valve, Pilot	1	80001-
23		01252-60635	••• Bolt	2	80001-

FIG. H0210-001015 Hydraulic Oil Pump and Motor, Cooling Fan Pump (4/5)

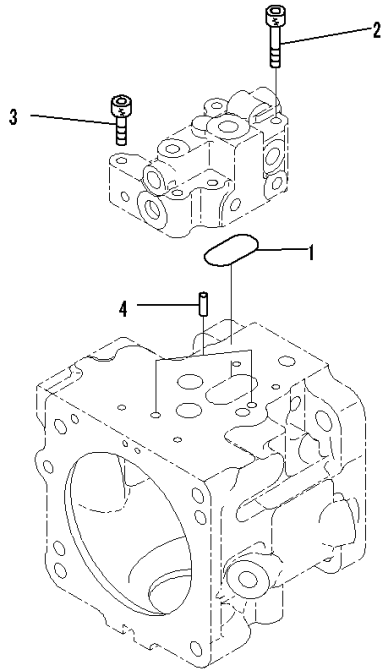

JY013285

Index	Code	Part Number	Description	Qty	Serial Number
		708-1S-00290	Pump Assembly	1	80001-
	C1		• Pump Subassembly	1	80001-
1		07000-13040	•• O-ring	1	80001-
2		01252-60650	•• Bolt	1	80001-
3		01252-60635	•• Bolt	3	80001-
4		04020-00616	•• Pin, Dowel	2	80001-

FIG. H0210-001016 Hydraulic Oil Pump and Motor, Cooling Fan Pump (5/5)

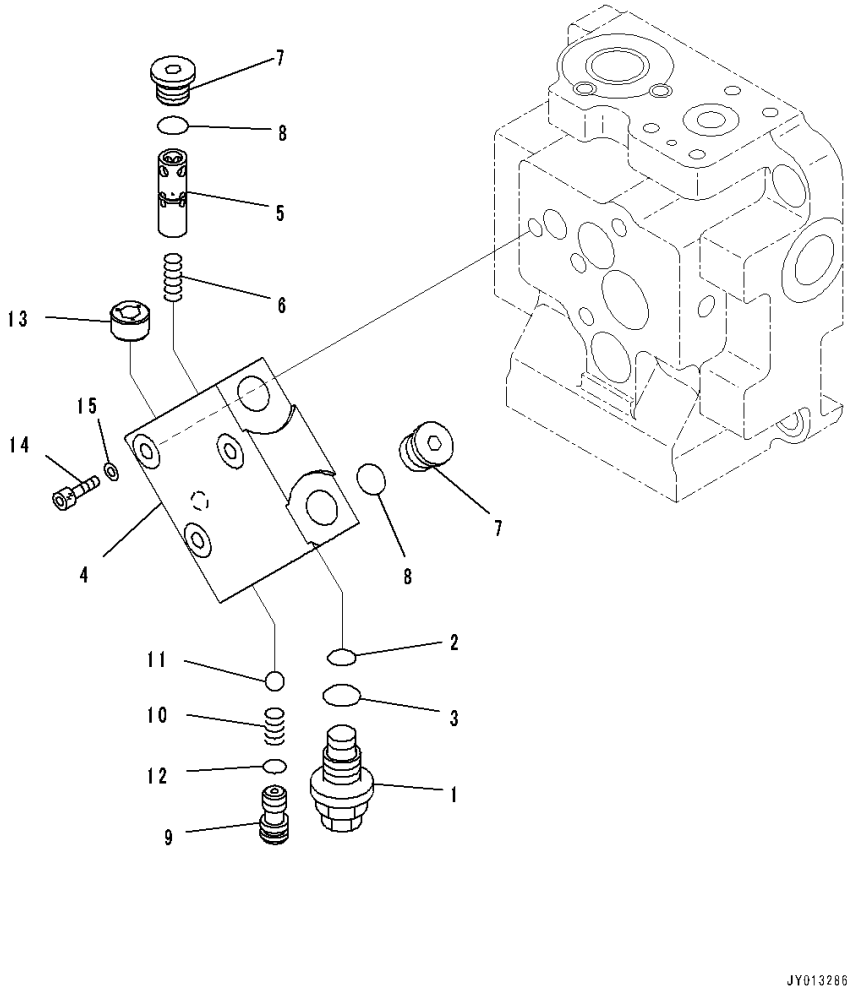

Index	Code	Part Number	Description	Qty	Serial Number
		708-1S-00290	Pump Assembly	1	80001-
	C1		• Valve Assembly	1	80001-
1		723-60-27200	•• Valve Assembly, Relief	1	80001-
2	C1		••• O-ring	1	80001-
3	C1		••• O-ring	1	80001-
4	C1		•• Block	1	80001-
5	C1		•• Spool	1	80001-
6	C1		•• Spring	1	80001-
7		702-21-55620	•• Plug	2	80001-
8		07002-11423	•• O-ring	2	80001-
9	C1		•• Seat	1	80001-
10	C1		•• Spring	1	80001-
11	C1		•• Ball	1	80001-
12	C1		•• O-ring	1	80001-
13		708-21-12541	•• Plug	2	80001-
14		01252-61040	• Bolt	3	80001-
15		01643-51032	• Washer	3	80001-

FIG. H0210-001017 Hydraulic Oil Pump and Motor, Pump Mounts (2/2)

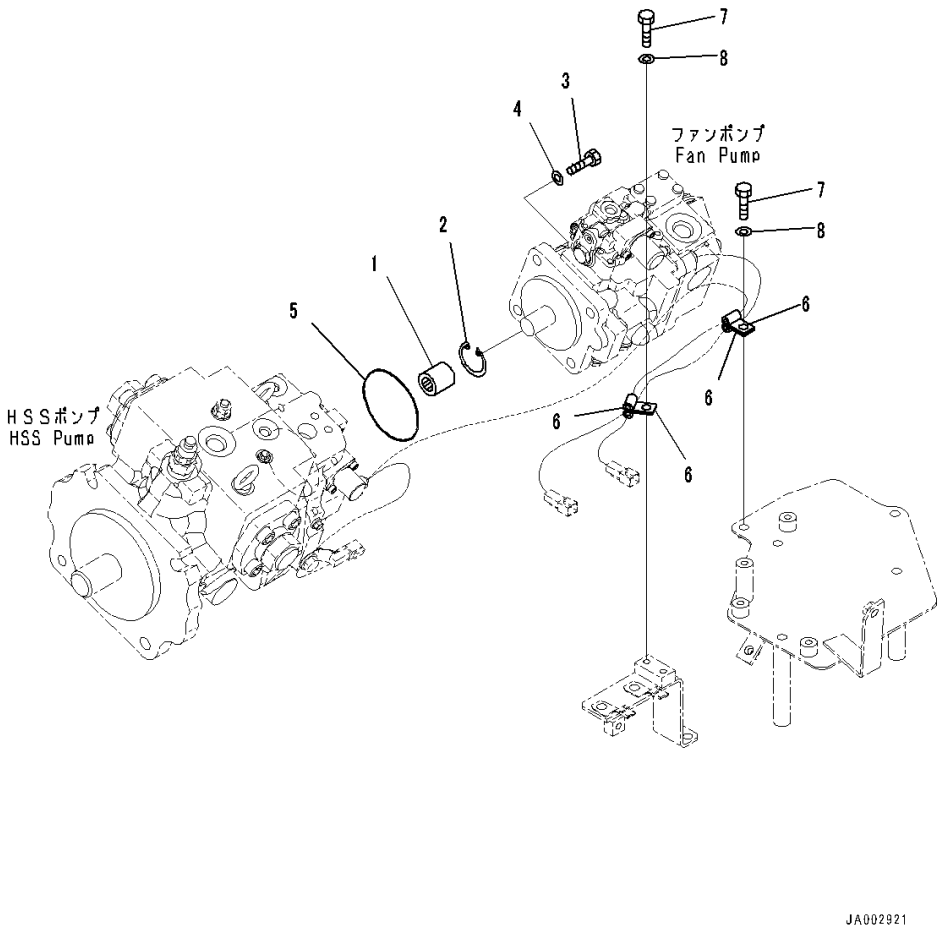

Index	Code	Part Number	Description	Qty	Serial Number
1		705-29-03310	Coupling Assembly	1	80001-
2		04065-02012	• Ring, Snap	1	80001-
3		01010-81240	Bolt	4	80001-
4		01643-31232	Washer	4	80001-
5		07000-12110	O-ring	1	80001-
6		04434-50610	Clip	4	80001-
7		01010-81020	Bolt	2	80001-
8		01643-31032	Washer	2	80001-

FIG. H0310-001001 Hydraulic Oil Pump Piping, Suction Piping and Delivery Piping

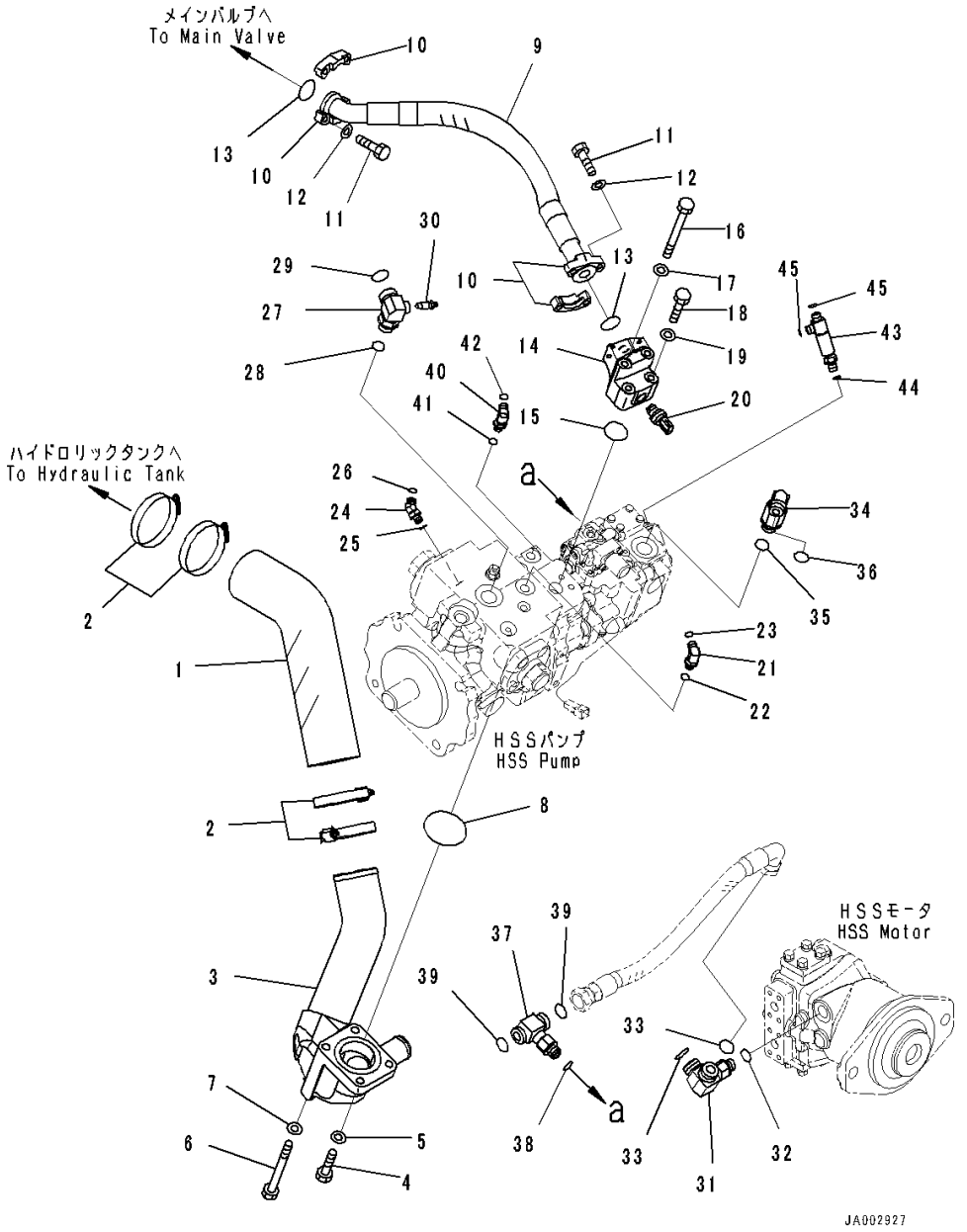

Index	Code	Part Number	Description	Qty	Serial Number
1		14X-62-52351	Hose	1	80001-
2		07289-00095	Clamp	4	80001-
3		14X-62-52361	Tube	1	80001-
4		01010-81245	Bolt	2	80001-
5		01643-31232	Washer	2	80001-
6		01011-81250	Bolt	2	80001-
7		01643-31232	Washer	2	80001-
8		07000-12075	O-ring	1	80001-
9		14X-62-52371	Hose	1	80001-
10		07371-31049	Flange, Split	4	80001-
11		07372-21035	Bolt	8	80001-
12		01643-51032	Washer	8	80001-
13		07000-13032	O-ring	2	80001-
14		14X-62-52380	Block	1	80001-
15		07000-13035	O-ring	1	80001-
16		01011-81005	Bolt	2	80001-
17		01643-31032	Washer	2	80001-
18		01010-81065	Bolt	2	80001-
19		01643-31032	Washer	2	80001-
20		7861-93-1811	Sensor	1	80001-
21		02782-10210	Elbow	1	80001-
22		07002-11423	O-ring	1	80001-
23		02896-11008	O-ring	1	80001-
24		203-62-13520	Elbow	1	80001-
25		07002-11423	O-ring	1	80001-
26		02896-11008	O-ring	1	80001-
27		14X-62-52431	Elbow	1	80001-
28		07002-62434	O-ring	1	80001-
29		02896-61018	O-ring	1	80001-
30		20B-27-11210	Bleeder	1	80001-
31		14X-62-52761	Tee	1	80001-
32		07002-62034	O-ring	1	80001-
33		02896-61018	O-ring	2	80001-
34		14X-62-52921	Elbow	1	80001-
35		07002-12434	O-ring	1	80001-
36		02896-11015	O-ring	1	80001-
37		14X-62-52571	Tee	1	80001-
38		07002-62034	O-ring	1	80001-
39		02896-61018	O-ring	2	80001-

FIG. H0310-001001 Hydraulic Oil Pump Piping, Suction Piping and Delivery Piping

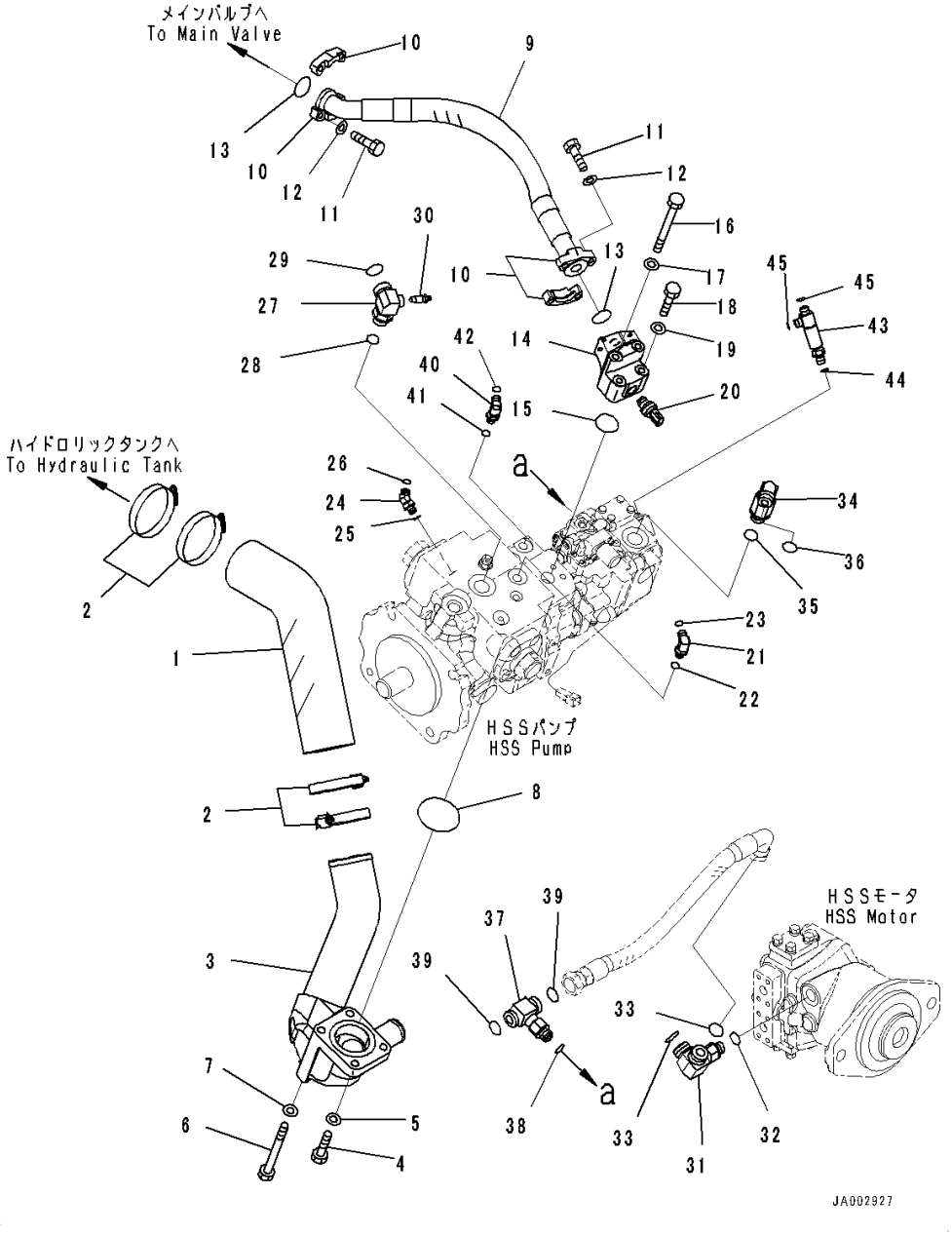

Index	Code	Part Number	Description	Qty	Serial Number
40		02782-10210	Elbow	1	80001-
41		07002-11423	O-ring	1	80001-
42		02896-11008	O-ring	1	80001-
43		14X-62-54710	Tee	1	80001-
44		07002-11423	O-ring	1	80001-
45		02896-11008	O-ring	2	80001-

FIG. H0310-001002 Hydraulic Oil Pump Piping, HSS Motor Piping

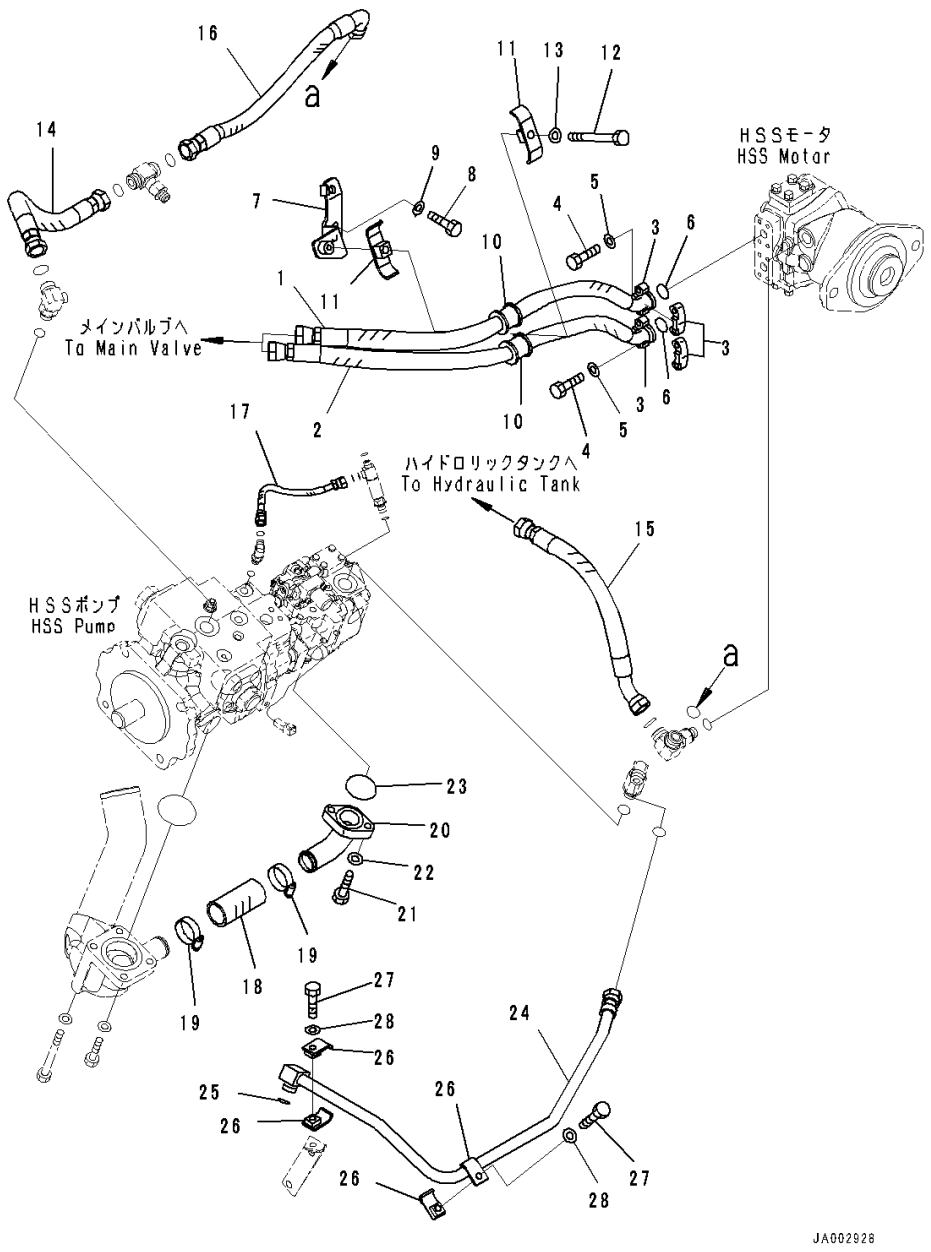

Index	Code	Part Number	Description	Qty	Serial Number
1		14X-62-52410	Hose	1	80001-
2		14X-62-52421	Hose	1	80001-
3		07371-30640	Flange, Split	4	80001-
4		07372-21035	Bolt	8	80001-
5		01643-51032	Washer	8	80001-
6		07000-B3025	O-ring	2	80001-
7		14X-62-52552	Bracket	1	80001-
8		01010-81225	Bolt	2	80001-
9		01643-31232	Washer	2	80001-
10		07095-00628	Cushion	2	80001-
11		07094-30620	Clamp	2	80001-
12		01010-81270	Bolt	1	80001-
13		01643-31232	Washer	1	80001-
14		14X-62-52441	Hose, D=470mm	1	80001-
15		14X-62-52451	Hose	1	80001-
16		14X-62-52511	Hose	1	80001-
17		02762-00203	Hose, Face Seal Type	1	80001-
18		07260-24111	Hose	1	80001-
19		07289-00055	Clamp	2	80001-
20		14X-62-54690	Tube	1	80001-
21		01010-81240	Bolt	2	80001-
22		01643-31232	Washer	2	80001-
23		07000-13045	O-ring	1	80001-
24		14X-62-52480	Tube	1	80001-
25		02896-11015	O-ring	1	80001-
26		14X-62-32540	Clamp	4	80001-
27		01010-81050	Bolt	2	80001-
28		01643-31032	Washer	2	80001-

FIG. H0310-001003 Hydraulic Oil Pump Piping, Fan Motor Related Parts

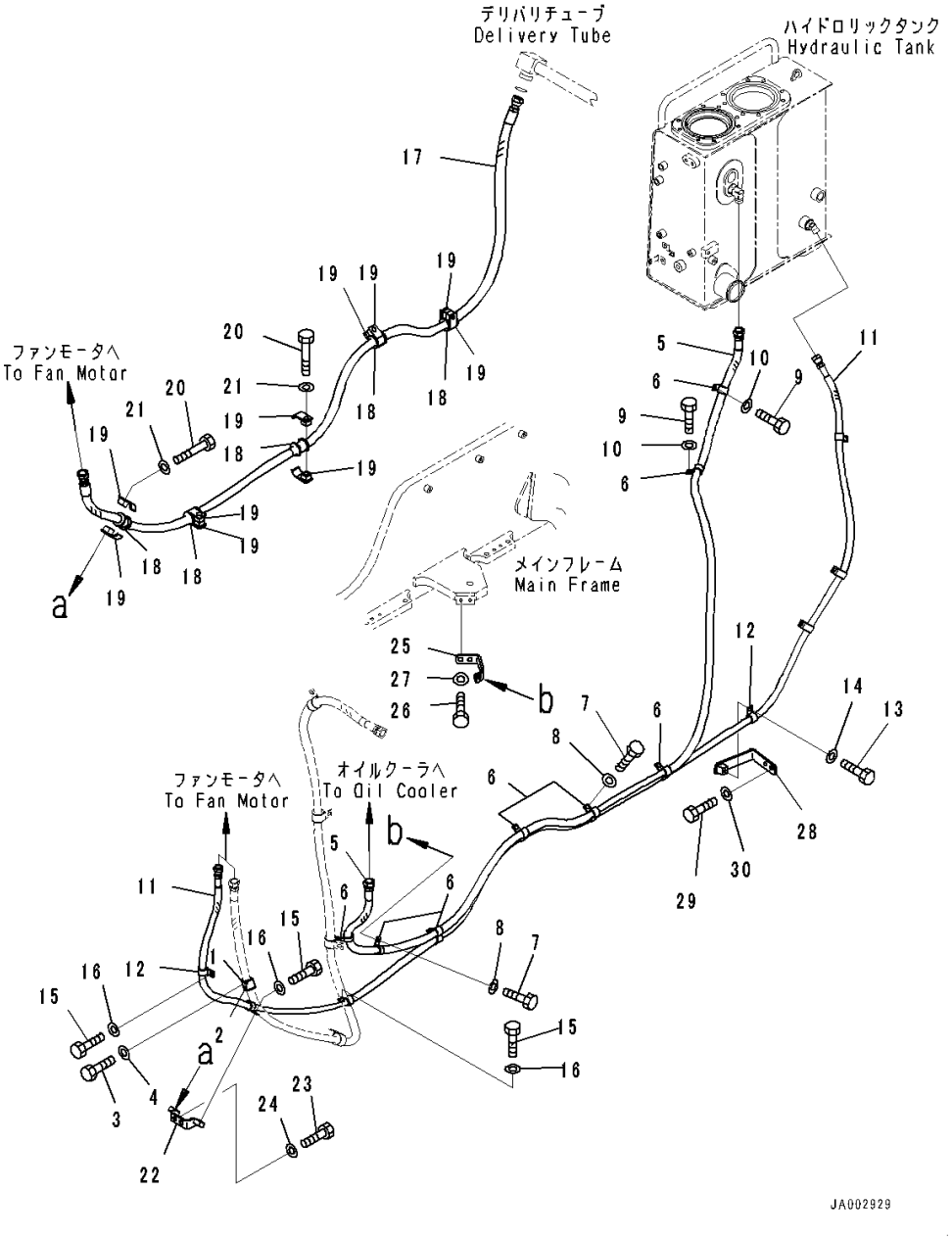

Index	Code	Part Number	Description	Qty	Serial Number
1		07095-20522	Cushion	1	80001-
2		04434-53212	Clip	1	80001-
3		01010-81230	Bolt	1	80001-
4		01643-31232	Washer	1	80001-
5		14X-62-51331	Hose Assembly	1	80001-
6		04434-52312	Clip	8	80001-
7		01010-81230	Bolt	6	80001-
8		01643-31232	Washer	6	80001-
9		01010-81220	Bolt	2	80001-
10		01643-31232	Washer	2	80001-
11		14X-62-51341	Hose Assembly	1	80001-
12		04434-51912	Clip	11	80007-
13		01010-81225	Bolt	4	80001-
14		01643-31232	Washer	4	80001-
15		01010-81230	Bolt	3	80001-
16		01643-31232	Washer	3	80001-
17		14X-62-51311	Hose Assembly	1	80001-
18		07095-00525	Cushion	5	80001-
19		22P-62-13520	Clamp	10	80001-
20		01010-81270	Bolt	5	80001-
21		01643-31232	Washer	5	80001-
22		14X-62-51351	Bracket	1	80001-
23		01010-81230	Bolt	2	80001-
24		01643-31232	Washer	2	80001-
25		14X-62-51241	Bracket	1	80001-
26		01010-81225	Bolt	2	80001-
27		01643-31232	Washer	2	80001-
28		14X-62-54731	Bracket	1	80001-
29		01010-81225	Bolt	2	80001-
30		01643-31232	Washer	2	80001-

FIG. H0310-001004 Hydraulic Oil Pump Piping, Fan Motor Piping

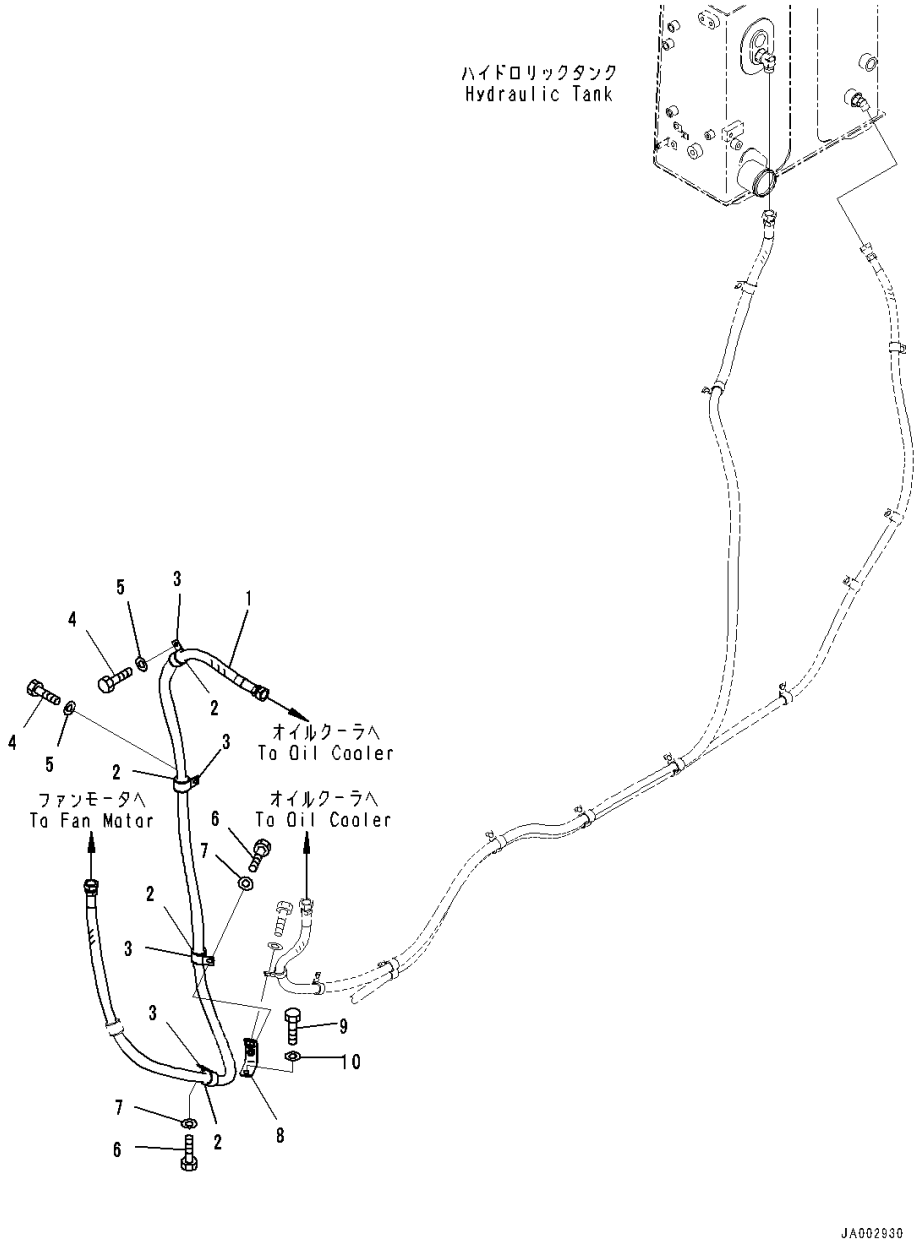

Index	Code	Part Number	Description	Qty	Serial Number
1		14X-62-51321	Hose Assembly	1	80001-
2		07095-20522	Cushion	4	80001-
3		04434-53211	Clip	4	80001-
4		01010-81020	Bolt	2	80001-
5		01643-31032	Washer	2	80001-
6		01010-81025	Bolt	2	80001-
7		01643-31032	Washer	2	80001-
8		14X-62-51360	Bracket	1	80001-
9		01010-81025	Bolt	1	80001-
10		01643-31032	Washer	1	80001-

FIG. H2210-001001 Dozer Blade Lift Piping, Piping (1/3)

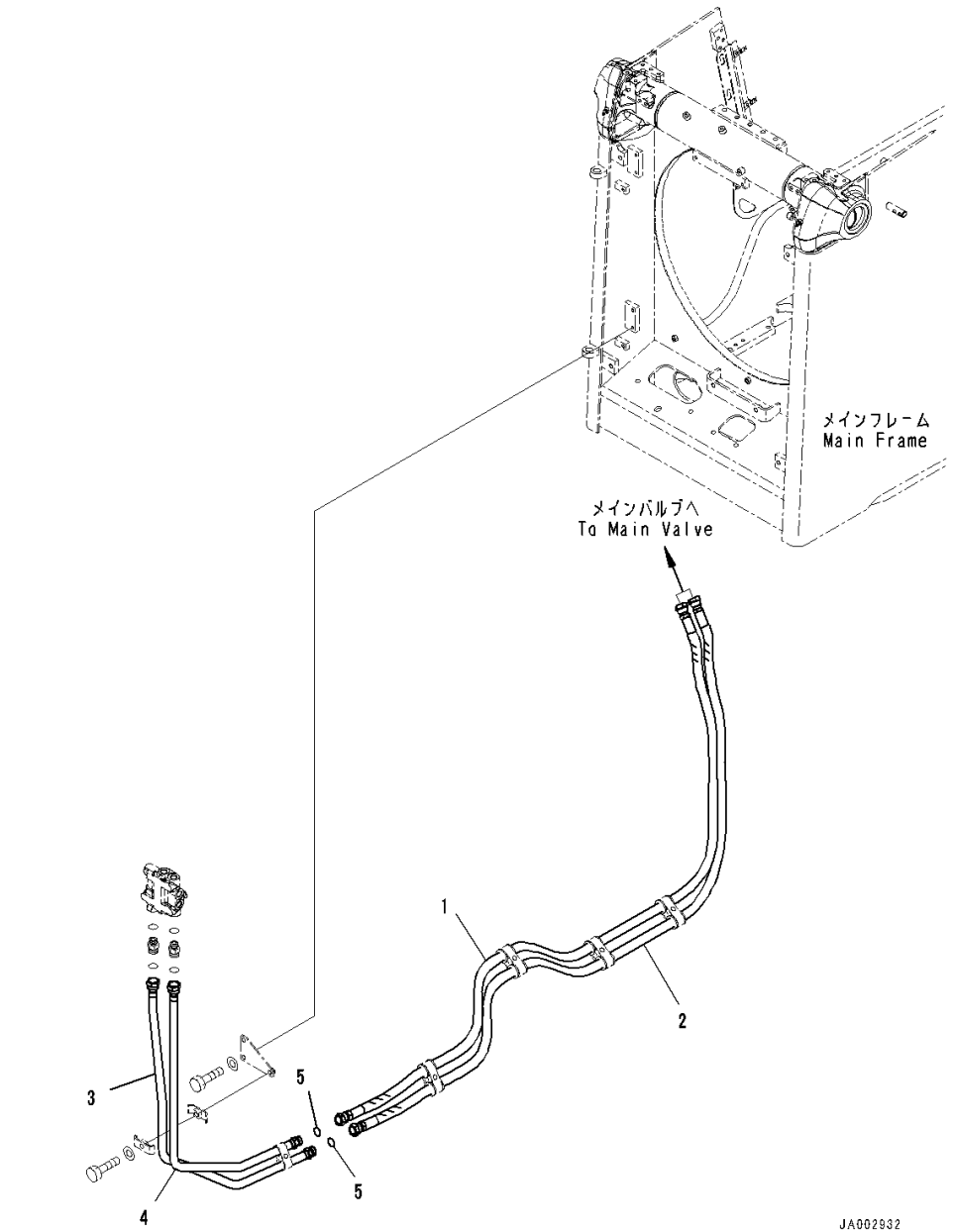

Index	Code	Part Number	Description	Qty	Serial Number
		Note: This list covers following specifications.			
		Without Power Angle Power Tilt Dozer			
		For Machine With Power Angle Power Tilt Dozer			
		With Blade Cylinder Wired Hose			
		Power Angle Power Tilt Dozer, Inside Frame, With Blade Cylinder Wired Hose			
1		14X-62-53661	Hose Assembly	1	80001-
2		14X-62-53671	Hose Assembly	1	80001-
3		14X-62-51111	Tube	1	80001-
4		14X-62-51121	Tube	1	80001-
5		02896-11018	O-ring	2	80001-

FIG. H2210-001002 Dozer Blade Lift Piping, Valve

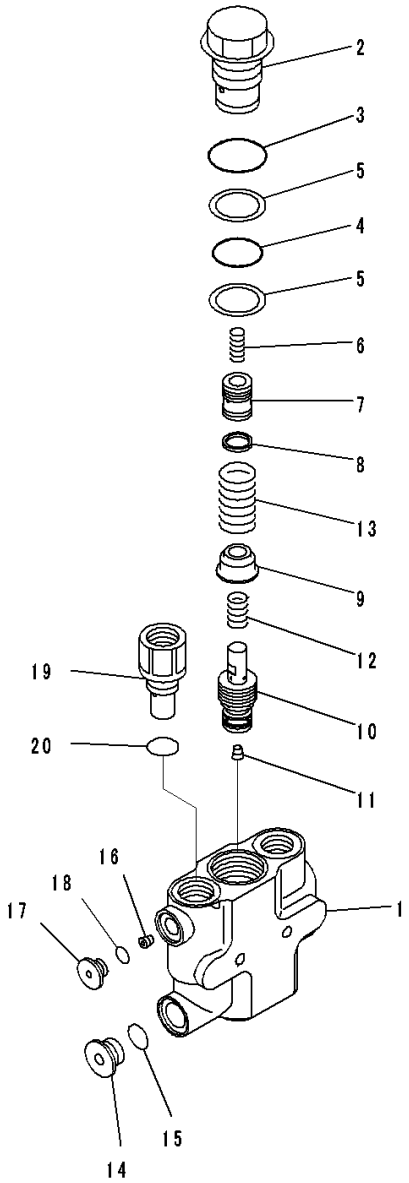

JY013288

Index	Code	Part Number	Description	Qty	Serial Number
		Note: This list covers following specifications.			
		Without Power Angle Power Tilt Dozer			
		For Machine With Power Angle Power Tilt Dozer			
		With Blade Cylinder Wired Hose			
		Power Angle Power Tilt Dozer, Inside Frame, With Blade Cylinder Wired Hose			
		702-21-11700	Valve Assembly	1	80001-
1		702-21-81130	• Body	1	80001-
2		702-21-81540	• Plug	1	80001-
3		07002-14234	• O-ring	1	80001-
4		07000-13032	• O-ring	1	80001-
5		702-21-81610	• Ring	2	80001-
6		723-36-41930	• Spring	1	80001-
7		702-21-81550	• Piston	1	80001-
8		702-21-35130	• Seal	1	80001-
9		702-21-81560	• Retainer	1	80001-
10		702-21-81330	• Valve	1	80001-
11		02720-10104	• Plug, Tapered	1	80001-
12		702-21-81570	• Spring	1	80001-
13		702-21-81580	• Spring	1	80001-
14		720-2M-11550	• Plug	1	80001-
15		07002-12034	• O-ring	1	80001-
16		702-21-81620	• Orifice	1	80001-
17		702-21-55620	• Plug	1	80001-
18		07002-11423	• O-ring	1	80001-
19		702-21-81630	• Plug	1	80001-
20		07000-13024	• O-ring	1	80001-

FIG. H2210-001003 Dozer Blade Lift Piping, Piping (2/3)

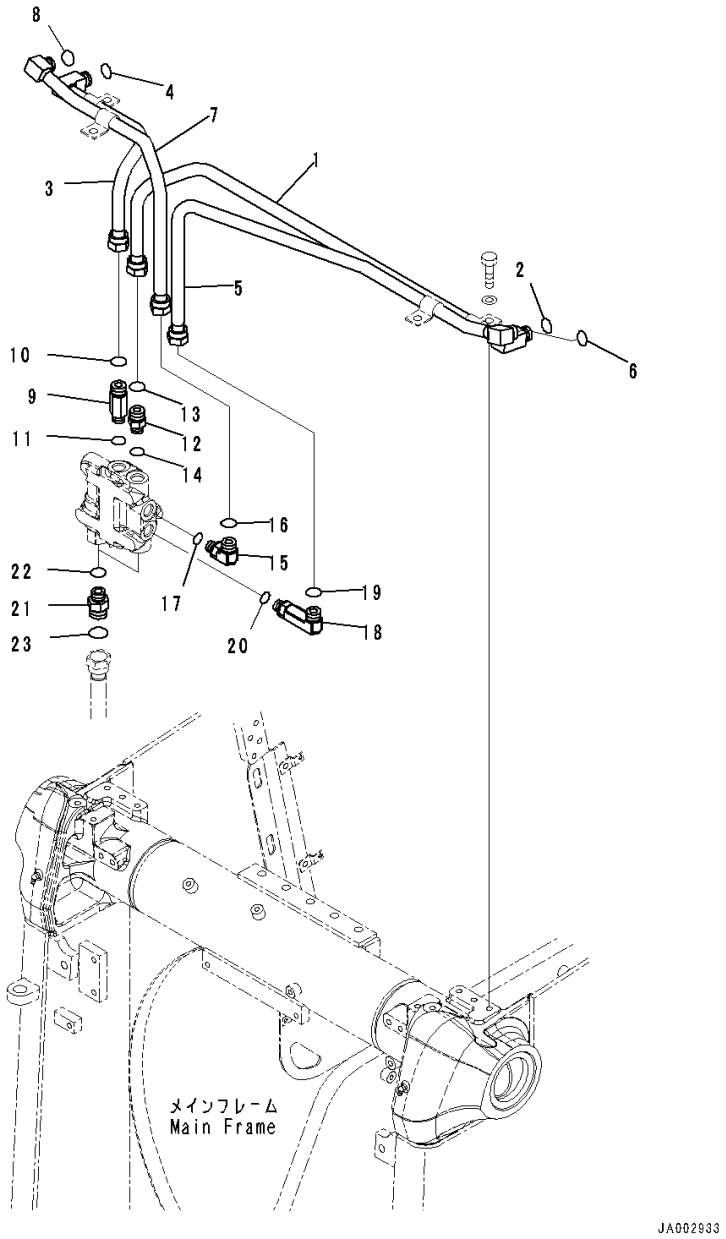

Index	Code	Part Number	Description	Qty	Serial Number
		Note: This list covers following specifications.			
		Without Power Angle Power Tilt Dozer			
		For Machine With Power Angle Power Tilt Dozer			
		With Blade Cylinder Wired Hose			
		Power Angle Power Tilt Dozer, Inside Frame, With Blade Cylinder Wired Hose			
1		14X-62-51131	Tube	1	80001-
2		02896-11015	O-ring	1	80001-
3		14X-62-51151	Tube	1	80001-
4		02896-11015	O-ring	1	80001-
5		14X-62-51141	Tube	1	80001-
6		02896-11015	O-ring	1	80001-
7		14X-62-51161	Tube	1	80001-
8		02896-11015	O-ring	1	80001-
9		21W-62-43121	Nipple	1	80001-
10		02896-11015	O-ring	1	80001-
11		07002-12034	O-ring	1	80001-
12		02781-00516	Union	1	80001-
13		02896-11015	O-ring	1	80001-
14		07002-12034	O-ring	1	80001-
15		02782-10516	Elbow	1	80001-
16		02896-11015	O-ring	1	80001-
17		07002-12034	O-ring	1	80001-
18		02782-10520	Elbow	1	80001-
19		02896-11015	O-ring	1	80001-
20		07002-12034	O-ring	1	80001-
21		02781-00628	Union	2	80001-
22		02896-11018	O-ring	2	80001-
23		07002-12434	O-ring	2	80001-

FIG. H2210-001004 Dozer Blade Lift Piping, Clamp

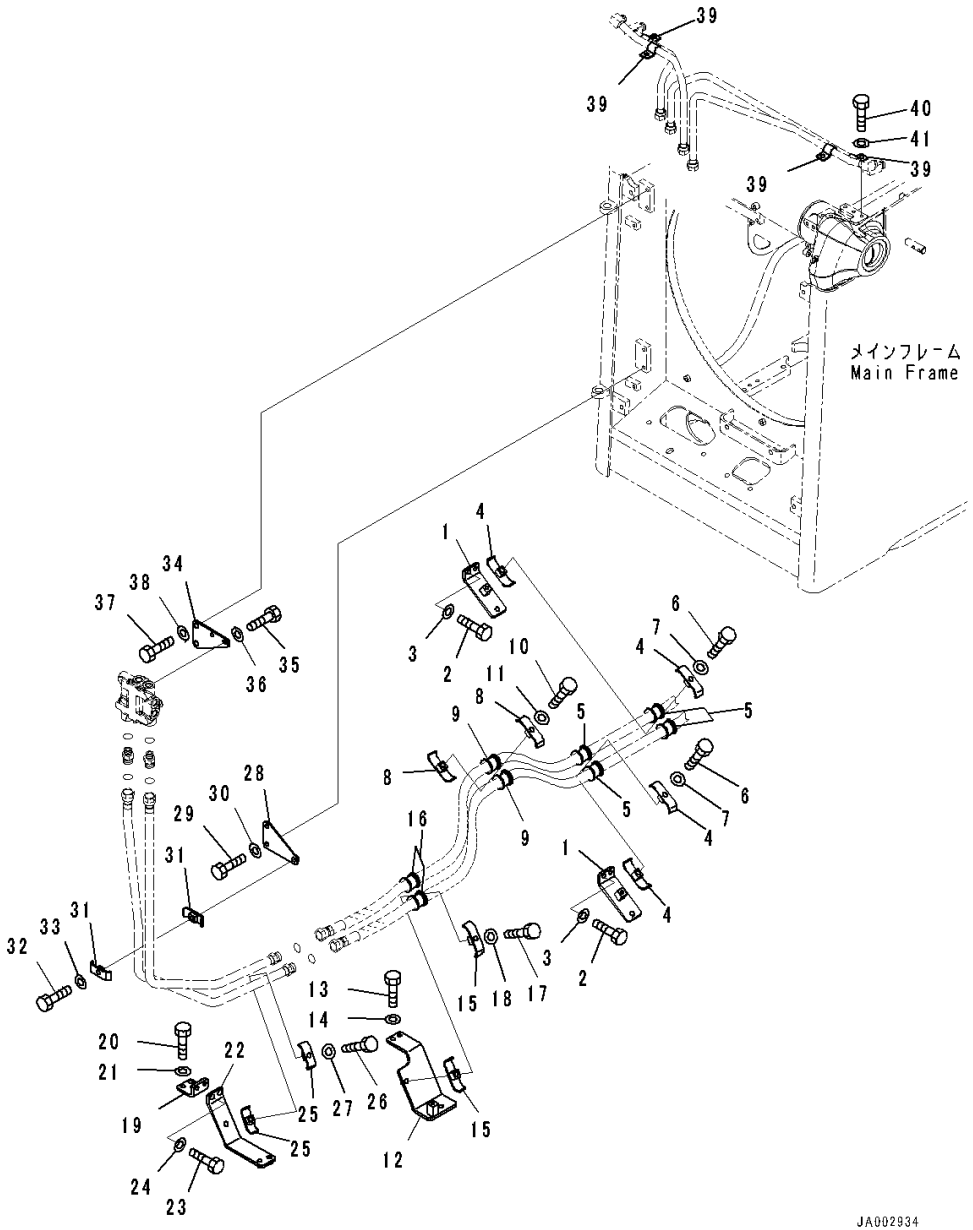

Index	Code	Part Number	Description	Qty	Serial Number
		Note: This list covers following specifications.			
		Without Power Angle Power Tilt Dozer			
		For Machine With Power Angle Power Tilt Dozer			
		With Blade Cylinder Wired Hose			
		Power Angle Power Tilt Dozer, Inside Frame, With Blade Cylinder Wired Hose			
1		14X-62-52621	Bracket	2	80001-
2		01010-81230	Bolt	4	80001-
3		01643-31232	Washer	4	80001-
4		07094-30620	Clamp	4	80001-
5		07095-00628	Cushion	4	80001-
6		01010-81270	Bolt	2	80001-
7		01643-31232	Washer	2	80001-
8		07094-30620	Clamp	2	80001-
9		07095-00628	Cushion	2	80001-
10		01010-81270	Bolt	1	80001-
11		01643-31232	Washer	1	80001-
12		14X-62-52611	Bracket	1	80001-
13		01010-81230	Bolt	2	80001-
14		01643-31232	Washer	2	80001-
15		07094-30620	Clamp	2	80001-
16		07095-00628	Cushion	2	80001-
17		01010-81280	Bolt	1	80001-
18		01643-31232	Washer	1	80001-
19		14X-62-51271	Bracket	1	80001-
20		01010-81230	Bolt	2	80001-
21		01643-31232	Washer	2	80001-
22		14X-62-51171	Bracket	1	80001-
23		01010-81235	Bolt	2	80001-
24		01643-31232	Washer	2	80001-
25		14X-62-51230	Clamp	2	80001-
26		01010-81260	Bolt	1	80001-
27		01643-31232	Washer	1	80001-
28		14X-62-51191	Bracket	1	80001-
29		01010-81225	Bolt	2	80001-
30		01643-31232	Washer	2	80001-
31		14X-62-51230	Clamp	2	80001-
32		01010-81260	Bolt	1	80001-
33		01643-31232	Washer	1	80001-

FIG. H2210-001004 Dozer Blade Lift Piping, Clamp

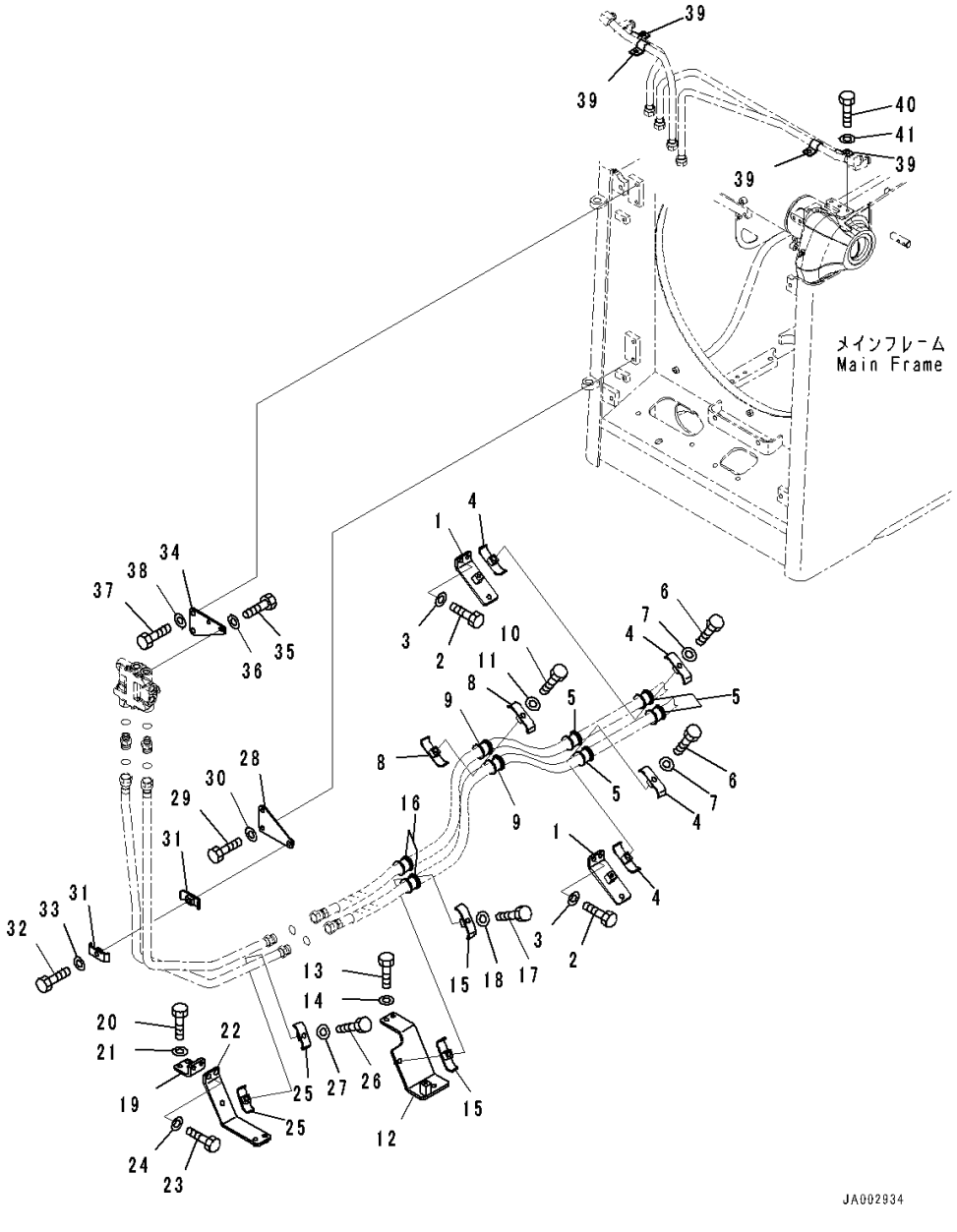

Index	Code	Part Number	Description	Qty	Serial Number
34		14X-62-51221	Bracket	1	80001-
35		01010-81225	Bolt	2	80001-
36		01643-31232	Washer	2	80001-
37		01010-81225	Bolt	2	80001-
38		01643-31232	Washer	2	80001-
39		10E-60-16330	Clip	4	80001-
40		01010-81225	Bolt	4	80001-
41		01643-31232	Washer	4	80001-

FIG. H2210-001005 Dozer Blade Lift Piping, Without Power Angle Power Tilt Dozer, Piping (3/3)

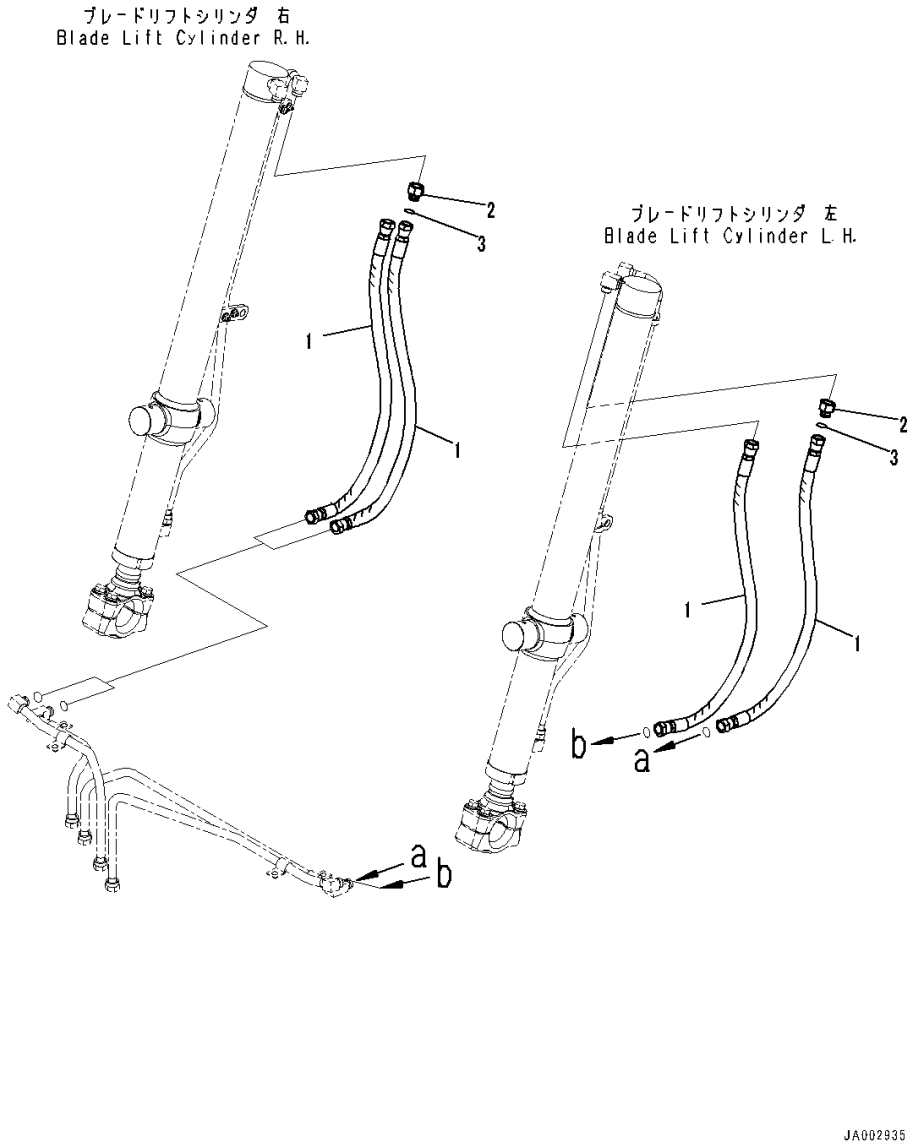

Index	Code	Part Number	Description	Qty	Serial Number
1		02756-00510	Hose, Face Seal Type	4	80001-
2		14X-62-51371	Nipple	2	80001-
3		02896-11015	O-ring	2	80001-

FIG. H2210-002005 Dozer Blade Lift Piping, For Machine With Power Angle Power Tilt Dozer, Piping (3/3)

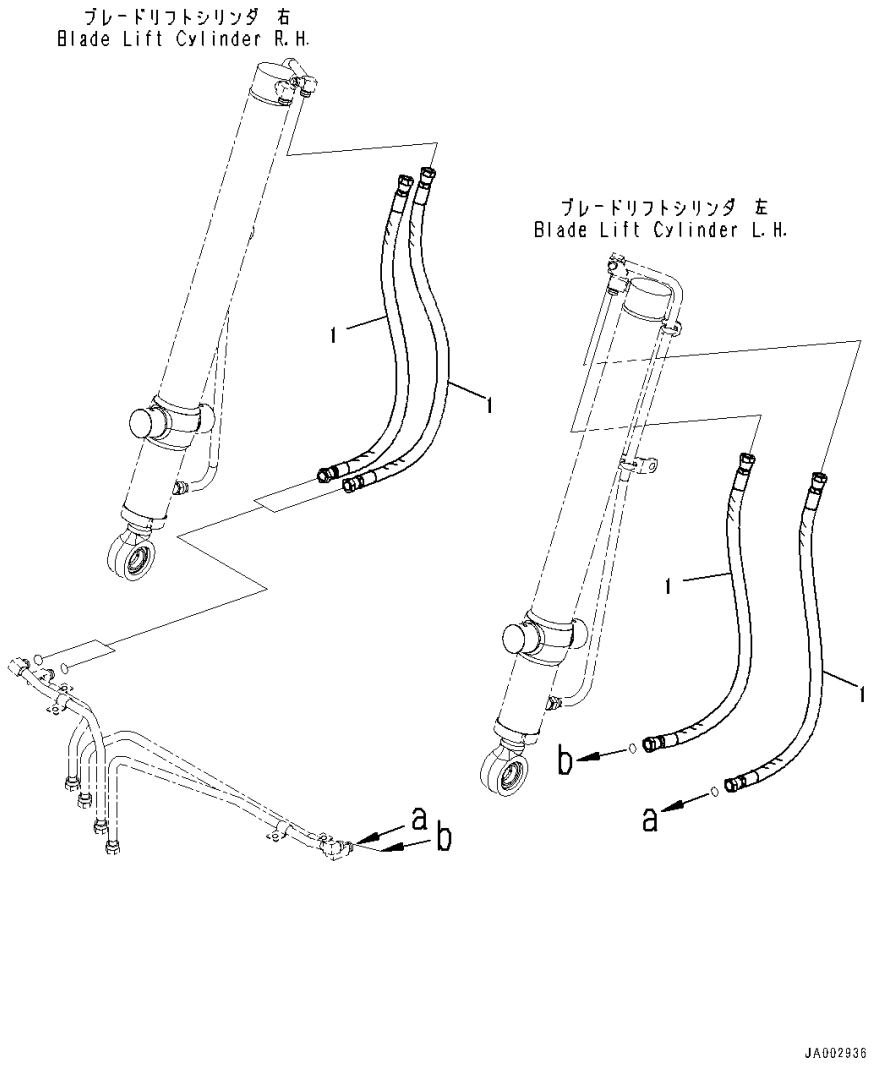

Index	Code	Part Number	Description	Qty	Serial Number
1		14X-62-53510	Hose	4	80001-

FIG. H2210-003005 Dozer Blade Lift Piping, With Blade Cylinder Wired Hose, Piping (3/3)

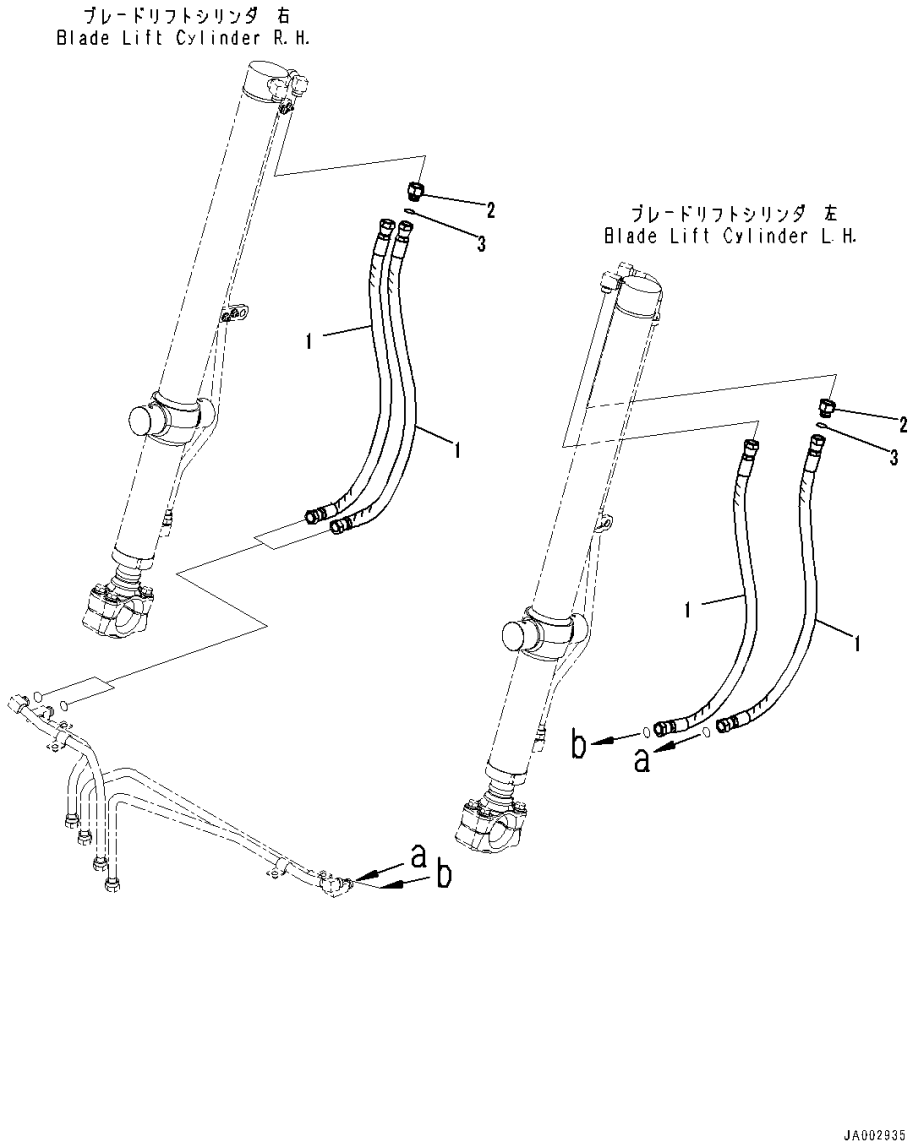

Index	Code	Part Number	Description	Qty	Serial Number
1		14X-62-55280	Hose	4	80001-
2		14X-62-51371	Nipple	2	80001-
3		02896-11015	O-ring	2	80001-

FIG. H2210-004005 Dozer Blade Lift Piping, Power Angle Power Tilt Dozer, Inside Frame, With Blade Cylinder Wired Hose, Piping (3/3)

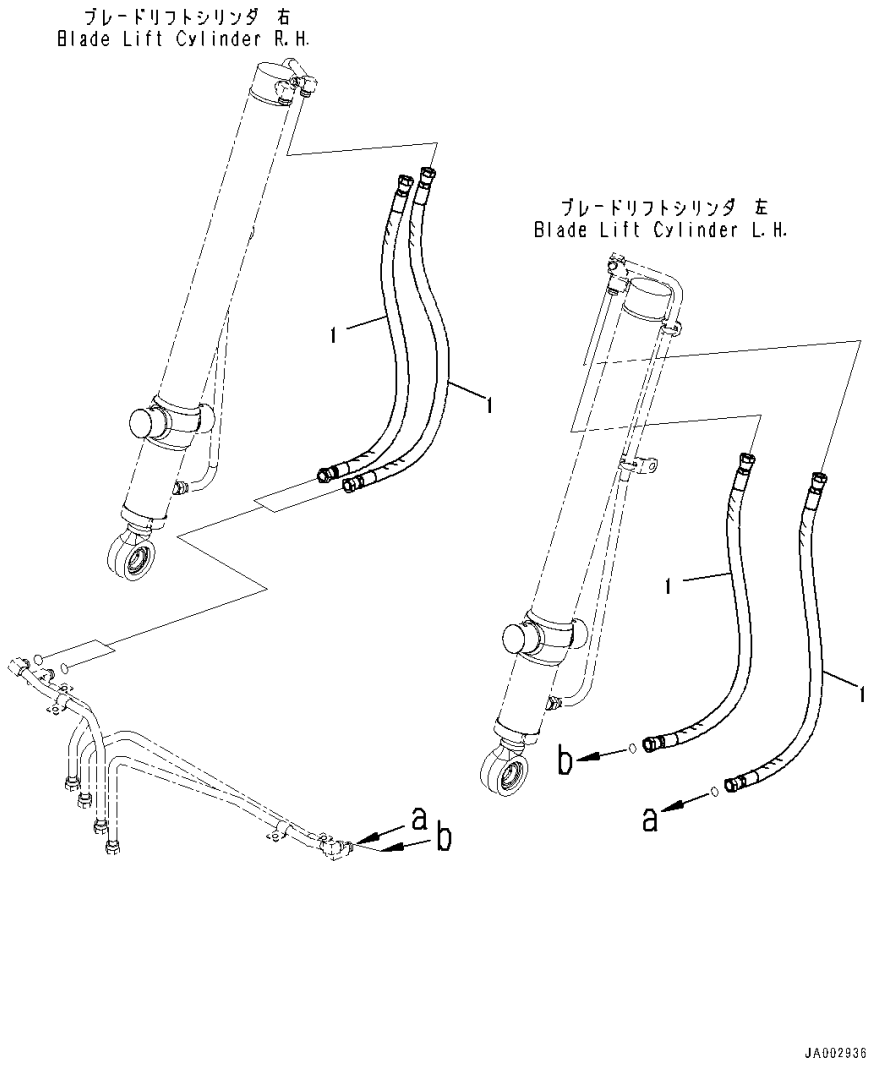

Index	Code	Part Number	Description	Qty	Serial Number
1		14X-62-55290	Hose	4	80001-

FIG. H2220-001001 Dozer Blade Tilt Piping, With Power Angle Power Tilt Dozer

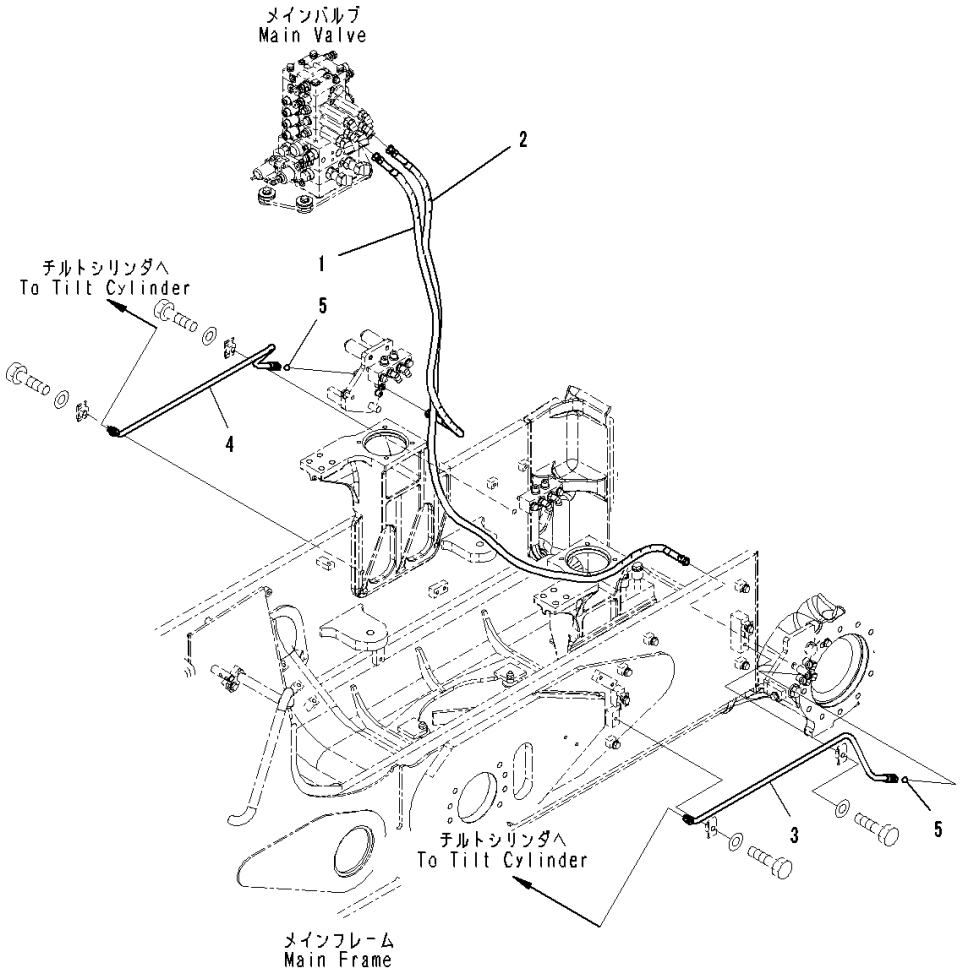

Index	Code	Part Number	Description	Qty	Serial Number
1		14X-62-51621	Hose Assembly	1	80001-
2		14X-62-51631	Hose Assembly	1	80001-
3		14X-62-51722	Tube,LHS	1	80001-
4		14X-62-51752	Tube,RHS	1	80001-
5		02896-11009	O-ring	2	80001-

FIG. H2220-001002 Dozer Blade Tilt Piping, With Power Angle Power Tilt Dozer, Clamp

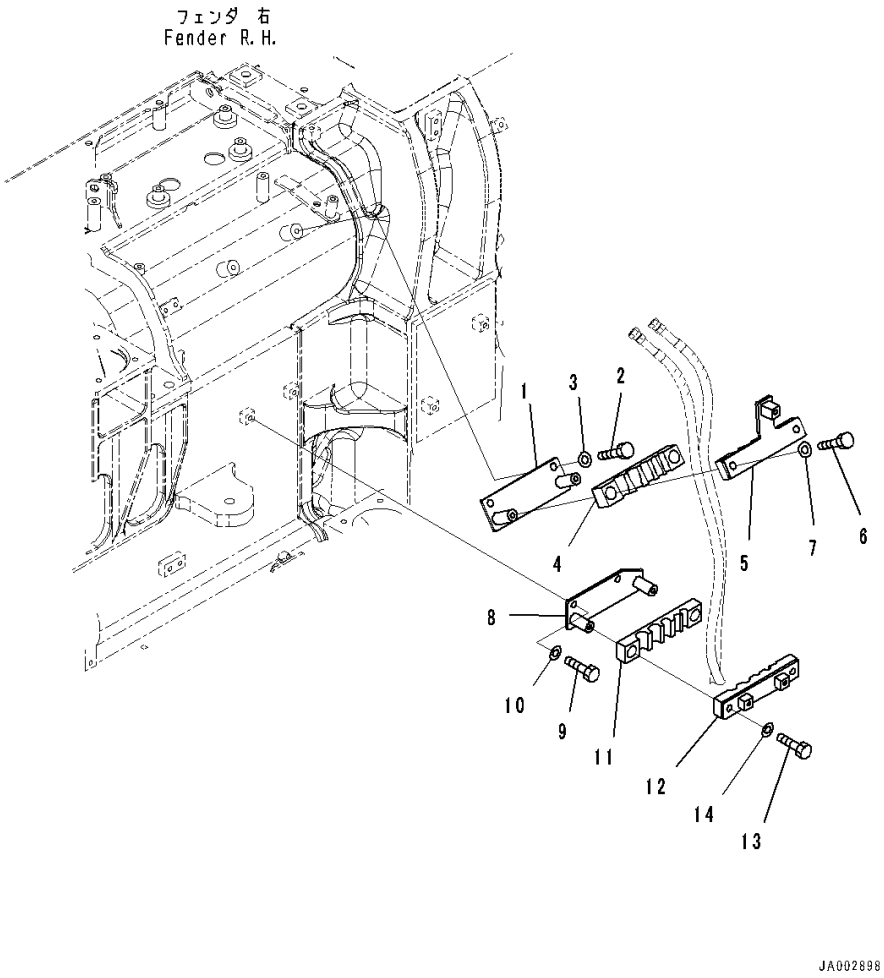

Index	Code	Part Number	Description	Qty	Serial Number
1		14X-62-52881	Plate	1	80001-
2		01010-81225	Bolt	2	80001-
3		01643-31232	Washer	2	80001-
4		14X-62-54741	Rubber	1	80001-
5		14X-62-52631	Clamp	1	80001-
6		01010-81230	Bolt	2	80001-
7		01643-31232	Washer	2	80001-
8		14X-62-52890	Plate	1	80001-
9		01010-81225	Bolt	2	80001-
10		01643-31232	Washer	2	80001-
11		14X-62-52911	Rubber	1	80001-
12		14X-62-51510	Bracket	1	80001-
13		01010-81230	Bolt	2	80001-
14		01643-31232	Washer	2	80001-

FIG. H2220-002001 Dozer Blade Tilt Piping

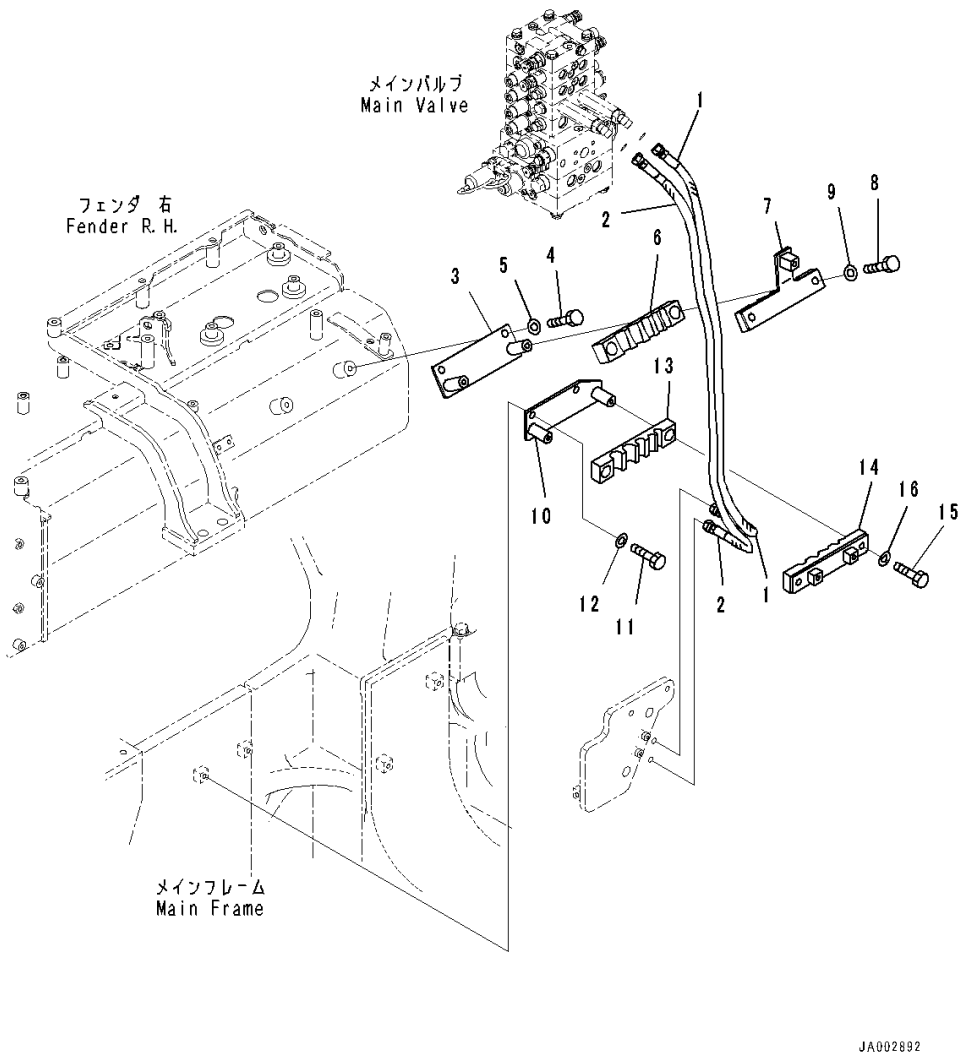

Index	Code	Part Number	Description	Qty	Serial Number
1		14X-62-51961	Hose Assembly	1	80001-
2		14X-62-51941	Hose Assembly	1	80001-
3		14X-62-52881	Plate	1	80001-
4		01010-81225	Bolt	2	80001-
5		01643-31232	Washer	2	80001-
6		14X-62-54741	Rubber	1	80001-
7		14X-62-52631	Clamp	1	80001-
8		01010-81230	Bolt	2	80001-
9		01643-31232	Washer	2	80001-
10		14X-62-52890	Plate	1	80001-
11		01010-81225	Bolt	2	80001-
12		01643-31232	Washer	2	80001-
13		14X-62-52911	Rubber	1	80001-
14		14X-62-51510	Bracket	1	80001-
15		01010-81230	Bolt	2	80001-
16		01643-31232	Washer	2	80001-

FIG. H2220-002002 Dozer Blade Tilt Piping, Track Frame Cover

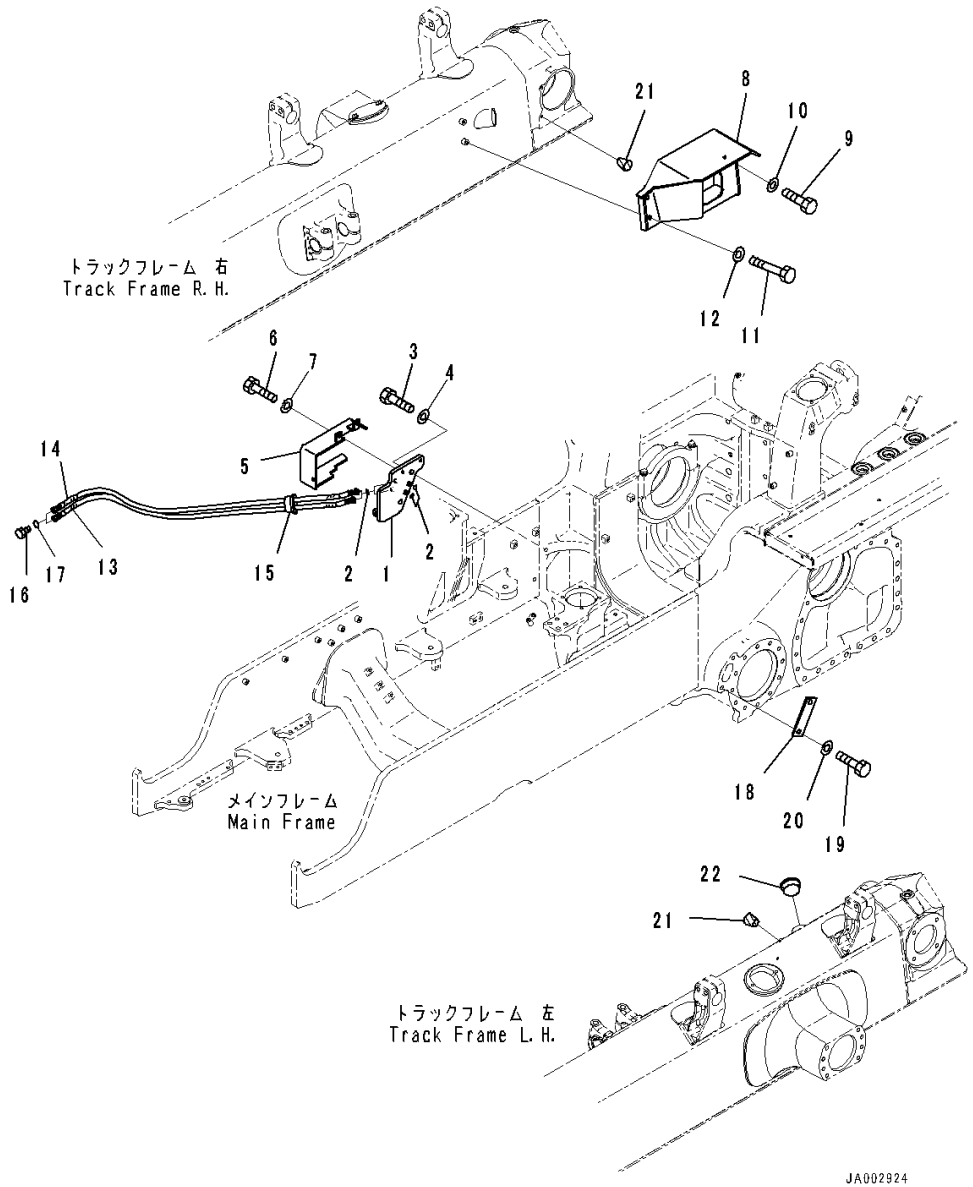

Index	Code	Part Number	Description	Qty	Serial Number
1		14X-62-51971	Bracket	1	80001-
2		02896-11009	O-ring	4	80001-
3		01010-82055	Bolt	2	80001-
4		01643-32060	Washer	2	80001-
5		14X-62-51980	Cover	1	80001-
6		01010-81235	Bolt	3	80001-
7		01643-31232	Washer	3	80001-
8		14X-62-54590	Cover,RHS	1	80001-
9		01010-81235	Bolt	1	80001-
10		01643-31232	Washer	1	80001-
11		01010-81230	Bolt	2	80001-
12		01643-31232	Washer	2	80001-
13		14X-62-52241	Hose Assembly	1	80001-
		21U-62-34760	• Band, Red	2	80001-
		14X-62-55110	• Cover	1	80001-
		14X-62-52250	• Hose	1	80001-
		08024-11920	• Tape, Vinyl, Red	1	80001-
14		14X-62-53591	Hose Assembly	1	80001-
		21U-62-34770	• Band, White	2	80001-
		14X-62-55110	• Cover	1	80001-
		14X-62-52250	• Hose	1	80001-
		08024-21920	• Tape, White	1	80001-
15		14X-62-53840	Rubber	1	80001-
16		07376-70315	Plug	2	80001-
17		02896-11009	O-ring	2	80001-
18		14X-62-11460	Plate	1	80001-
19		01010-82040	Bolt	2	80001-
20		01643-32060	Washer	2	80001-
21		07049-01215	Plug	5	80001-
22		14X-62-54880	Rubber	1	80001-

FIG. H2220-003001 Dozer Blade Tilt Piping, With Power Tilt Pitch Dozer

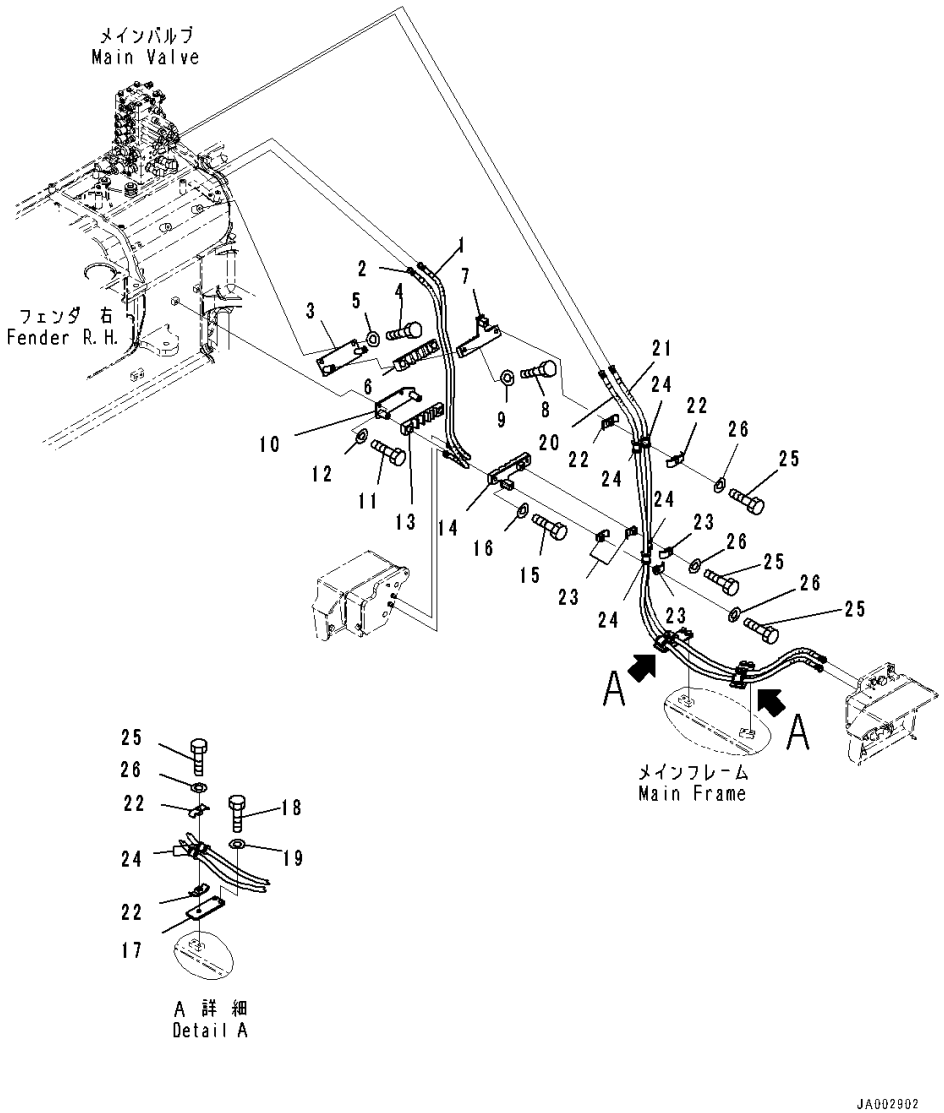

Index	Code	Part Number	Description	Qty	Serial Number
1		14X-62-51961	Hose Assembly	1	80001-
2		14X-62-51941	Hose Assembly	1	80001-
3		14X-62-52881	Plate	1	80001-
4		01010-81225	Bolt	2	80001-
5		01643-31232	Washer	2	80001-
6		14X-62-54741	Rubber	1	80001-
7		14X-62-52631	Clamp	1	80001-
8		01010-81230	Bolt	2	80001-
9		01643-31232	Washer	2	80001-
10		14X-62-52890	Plate	1	80001-
11		01010-81225	Bolt	2	80001-
12		01643-31232	Washer	2	80001-
13		14X-62-52911	Rubber	1	80001-
14		14X-62-52810	Clamp	1	80001-
15		01010-81230	Bolt	2	80001-
16		01643-31232	Washer	2	80001-
17		14X-62-54580	Bracket	2	80001-
18		01010-81225	Bolt	4	80001-
19		01643-31232	Washer	4	80001-
20		14X-62-54781	Hose Assembly	1	80001-
21		14X-62-54791	Hose Assembly	1	80001-
22		22P-62-13540	Clamp	6	80001-
23		22P-62-13510	Clamp	4	80001-
24		07095-00317	Cushion	8	80001-
25		01010-81260	Bolt	5	80001-
26		01643-31232	Washer	5	80001-

FIG. H2220-003002 Dozer Blade Tilt Piping, With Power Tilt Pitch Dozer, Track Frame Cover

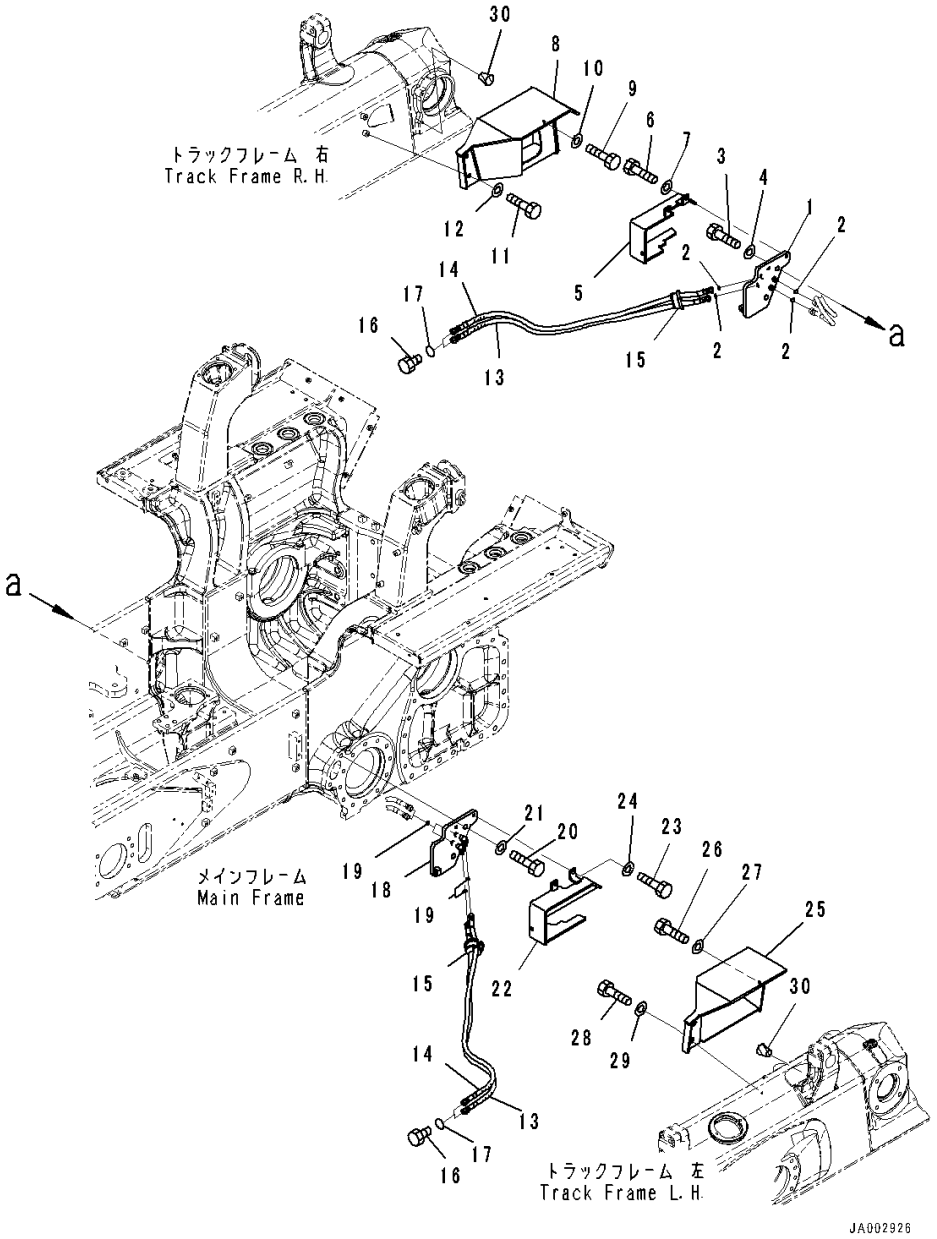

Index	Code	Part Number	Description	Qty	Serial Number
1		14X-62-51971	Bracket	1	80001-
2		02896-11009	O-ring	4	80001-
3		01010-82055	Bolt	2	80001-
4		01643-32060	Washer	2	80001-
5		14X-62-51980	Cover	1	80001-
6		01010-81235	Bolt	3	80001-
7		01643-31232	Washer	3	80001-
8		14X-62-54590	Cover	1	80001-
9		01010-81235	Bolt	1	80001-
10		01643-31232	Washer	1	80001-
11		01010-81230	Bolt	2	80001-
12		01643-31232	Washer	2	80001-
13		14X-62-52241	Hose Assembly	2	80001-
		21U-62-34760	• Band, Red	2	80001-
		14X-62-55110	• Cover	1	80001-
		14X-62-52250	• Hose	1	80001-
		08024-11920	• Tape, Vinyl, Red	1	80001-
14		14X-62-53591	Hose Assembly	2	80001-
		21U-62-34770	• Band, White	2	80001-
		14X-62-55110	• Cover	1	80001-
		14X-62-52250	• Hose	1	80001-
		08024-21920	• Tape, White	1	80001-
15		14X-62-53840	Rubber	2	80001-
16		07376-70315	Plug	4	80001-
17		02896-11009	O-ring	4	80001-
18		14X-62-54551	Bracket	1	80001-
19		02896-11009	O-ring	4	80001-
20		01010-82055	Bolt	2	80001-
21		01643-32060	Washer	2	80001-
22		14X-62-54560	Cover	1	80001-
23		01010-81235	Bolt	3	80001-
24		01643-31232	Washer	3	80001-
25		14X-62-54890	Cover,LHS	1	80001-
26		01010-81235	Bolt	1	80001-
27		01643-31232	Washer	1	80001-
28		01010-81230	Bolt	2	80001-
29		01643-31232	Washer	2	80001-
30		07049-01215	Plug	2	80001-

FIG. H2230-001001 Dozer Blade Angle Piping

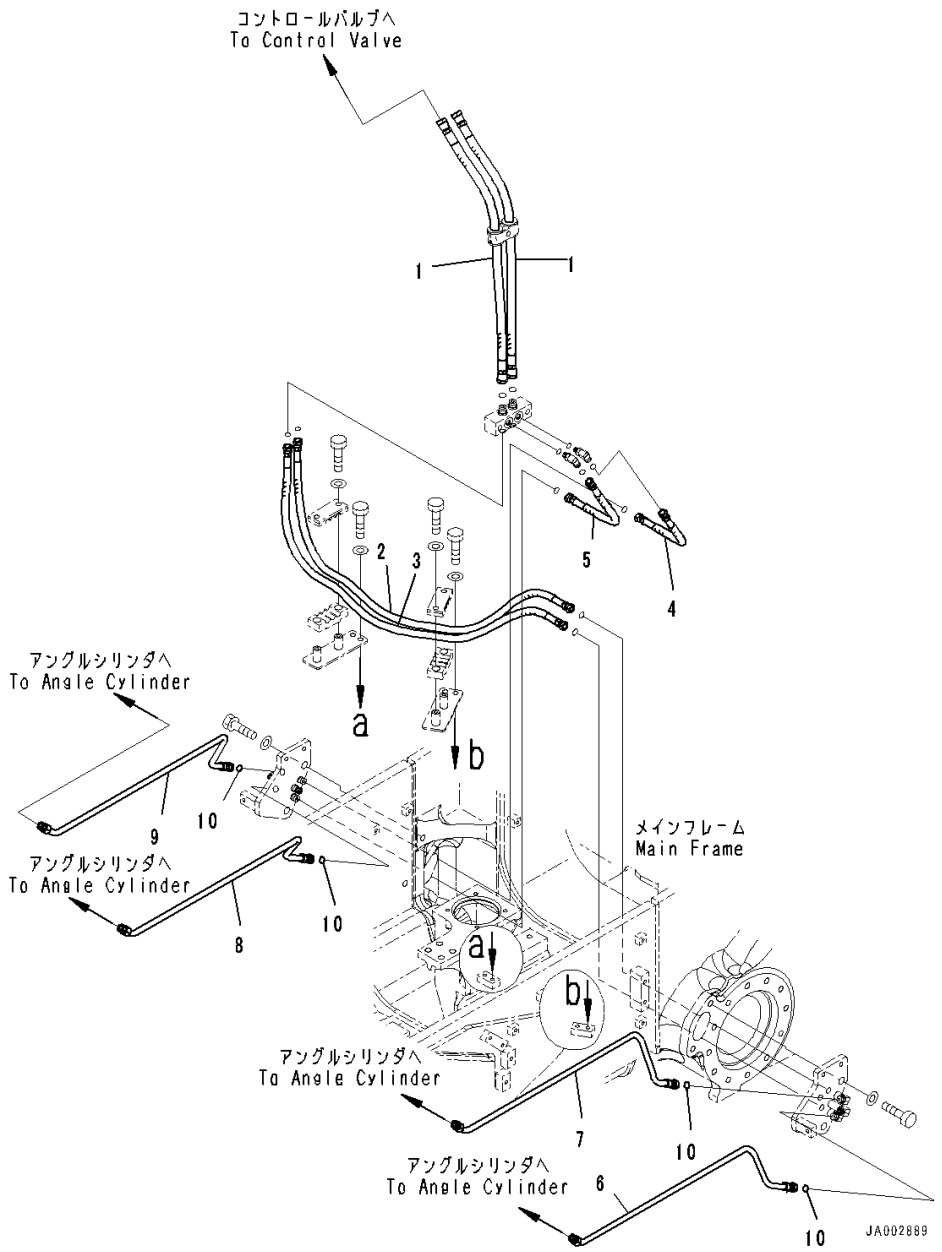

Index	Code	Part Number	Description	Qty	Serial Number
1		14X-62-51551	Hose Assembly	2	80001-
2		14X-62-51571	Hose Assembly	1	80001-
3		14X-62-51281	Hose Assembly	1	80001-
4		14X-62-51581	Hose Assembly	1	80001-
5		14X-62-51481	Hose Assembly, D=500mm	1	80001-
6		14X-62-51732	Tube,LHS	1	80001-
7		14X-62-51742	Tube,LHS	1	80001-
8		14X-62-51762	Tube,RHS	1	80001-
9		14X-62-51772	Tube,RHS	1	80001-
10		02896-11012	O-ring	4	80001-

FIG. H2230-001002 Dozer Blade Angle Piping, Clamp

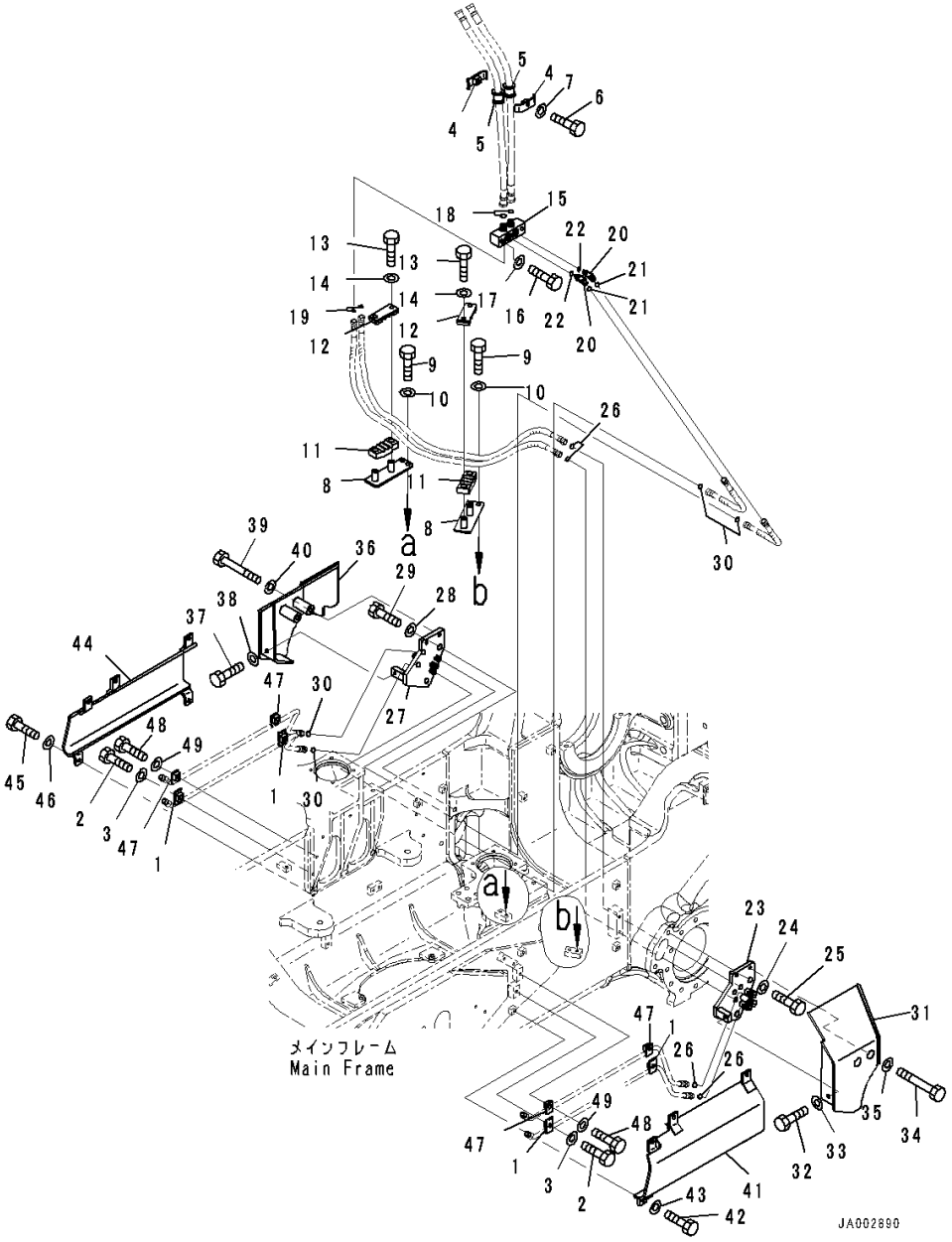

Index	Code	Part Number	Description	Qty	Serial Number
1		14X-62-51780	Clamp	4	80001-
2		01010-81235	Bolt	4	80001-
3		01643-31232	Washer	4	80001-
4		07094-30417	Clamp	2	80001-
5		07095-00420	Cushion	2	80001-
6		01010-81265	Bolt	1	80001-
7		01643-31232	Washer	1	80001-
8		14X-62-51491	Bracket	2	80001-
9		01010-81225	Bolt	4	80001-
10		01643-31232	Washer	4	80001-
11		14X-62-51530	Cushion	2	80001-
12		14X-62-51520	Bracket	2	80001-
13		01010-81225	Bolt	4	80001-
14		01643-31232	Washer	4	80001-
15		14X-62-51541	Block	1	80001-
16		01010-81265	Bolt	2	80001-
17		01643-31232	Washer	2	80001-
18		02896-11012	O-ring	2	80001-
19		02896-11009	O-ring	2	80001-
20		02782-10311	Elbow	2	80001-
21		02896-11009	O-ring	2	80001-
22		07002-11423	O-ring	2	80001-
23		14X-62-51651	Bracket	1	80001-
24		01643-32060	Washer	2	80001-
25		01010-82055	Bolt	2	80001-
26		02896-11009	O-ring	6	80001-
27		14X-62-51661	Bracket	1	80001-
28		01643-32060	Washer	2	80001-
29		01010-82055	Bolt	2	80001-
30		02896-11009	O-ring	6	80001-
31		14X-62-51670	Cover,LHS	1	80001-
32		01010-81230	Bolt	1	80001-
33		01643-31232	Washer	1	80001-
34		01010-81295	Bolt	2	80001-
35		01643-31232	Washer	2	80001-
36		14X-62-51680	Cover,RHS	1	80001-
37		01010-81230	Bolt	1	80001-
38		01643-31232	Washer	1	80001-
39		01010-81295	Bolt	2	80001-

FIG. H2230-001002 Dozer Blade Angle Piping, Clamp

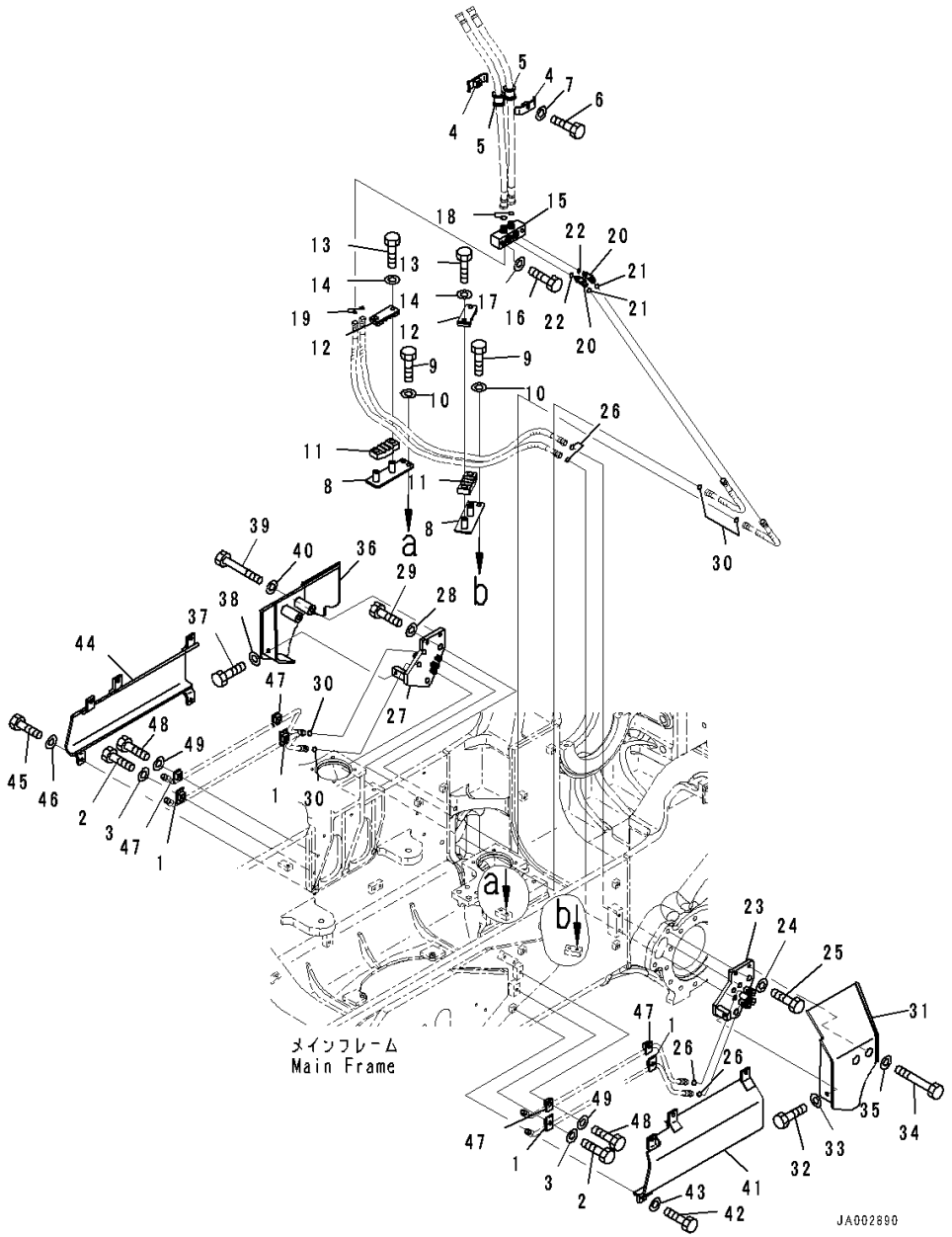

Index	Code	Part Number	Description	Qty	Serial Number
40		01643-31232	Washer	2	80001-
41		14X-62-53640	Cover,LHS	1	80001-
42		01010-81230	Bolt	5	80001-
43		01643-31232	Washer	5	80001-
44		14X-62-53650	Cover,RHS	1	80001-
45		01010-81230	Bolt	5	80001-
46		01643-31232	Washer	5	80001-
47		14X-62-51790	Clamp	4	80001-
48		01010-81235	Bolt	4	80001-
49		01643-31232	Washer	4	80001-

FIG. H2250-001001 Rear Hydraulic Piping

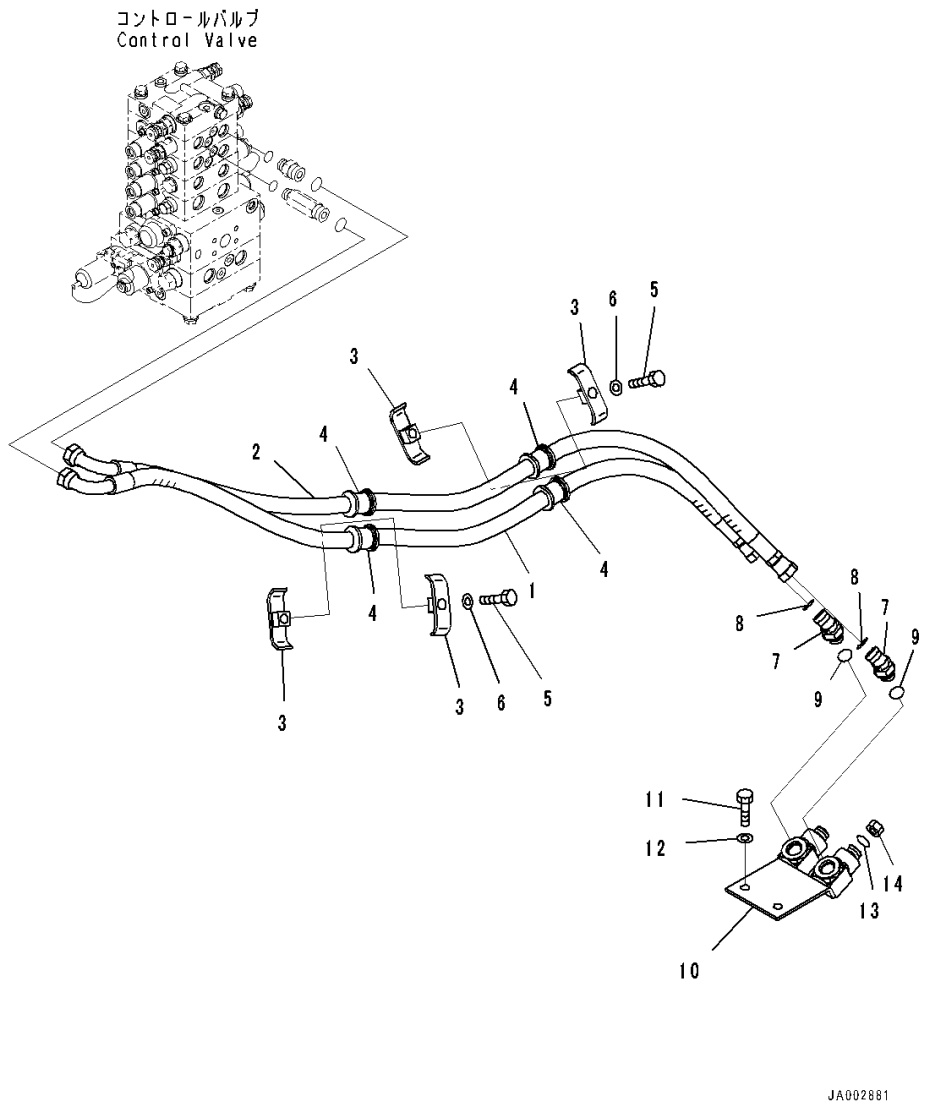

Index	Code	Part Number	Description	Qty	Serial Number
1		14X-78-51181	Hose Assembly	1	80001-
2		14X-78-51191	Hose Assembly	1	80001-
3		22P-62-13550	Clamp	4	80001-
4		07095-00526	Cushion	4	80001-
5		01010-81270	Bolt	2	80001-
6		01643-31232	Washer	2	80001-
7		02783-10522	Elbow	2	80001-
8		02896-11015	O-ring	2	80001-
9		07002-12434	O-ring	2	80001-
10		14X-78-51171	Block	1	80001-
11		01010-81230	Bolt	2	80001-
12		01643-31232	Washer	2	80001-
13		02896-11015	O-ring	2	80001-
14		02789-00522	Plug, Face Seal Type	2	80001-

FRAME AND ITS RELATED PARTS

FIG. J2100-001001 Main Frame

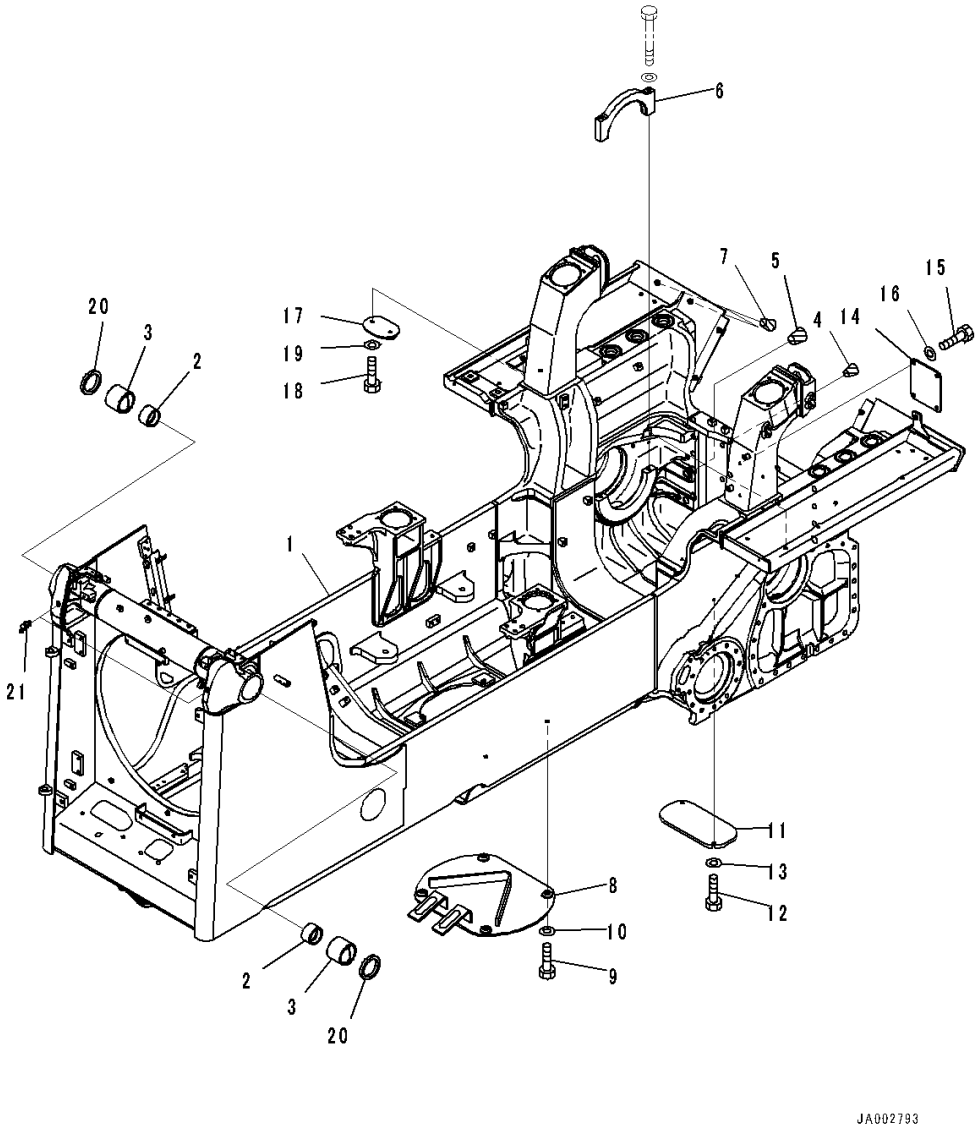

Index	Code	Part Number	Description	Qty	Serial Number
1		14X-21-51101	Frame Assembly	1	80001-
2		144-70-15171	• Bushing	2	80001-
3		14X-21-51450	• Bushing	2	80001-
4		07049-02430	Plug	24	80001-
5		07049-03342	Plug, Cork	6	80001-
6		154-21-71420	Cap	2	80001-
7		07049-01215	Plug	2	80001-
8		14X-21-51341	Cover	1	80001-
9		01010-81235	Bolt	4	80001-
10		01643-31232	Washer	4	80001-
11		14X-21-51371	Cover	1	80001-
12		01010-81225	Bolt	2	80001-
13		01643-31232	Washer	2	80001-
14		14X-21-51350	Cover	1	80001-80016
15		01010-81225	Bolt	4	80001-80016
16		01643-31232	Washer	4	80001-80016
17		14X-21-51361	Cover	1	80001-
18		01010-81230	Bolt	2	80001-
19		01643-31232	Washer	2	80001-
20		130-09-12370	Seal	2	80001-
21		07020-00675	Fitting, Grease	2	80001-

FIG. J2100-002001 Main Frame, With Power Angle Power Tilt Dozer

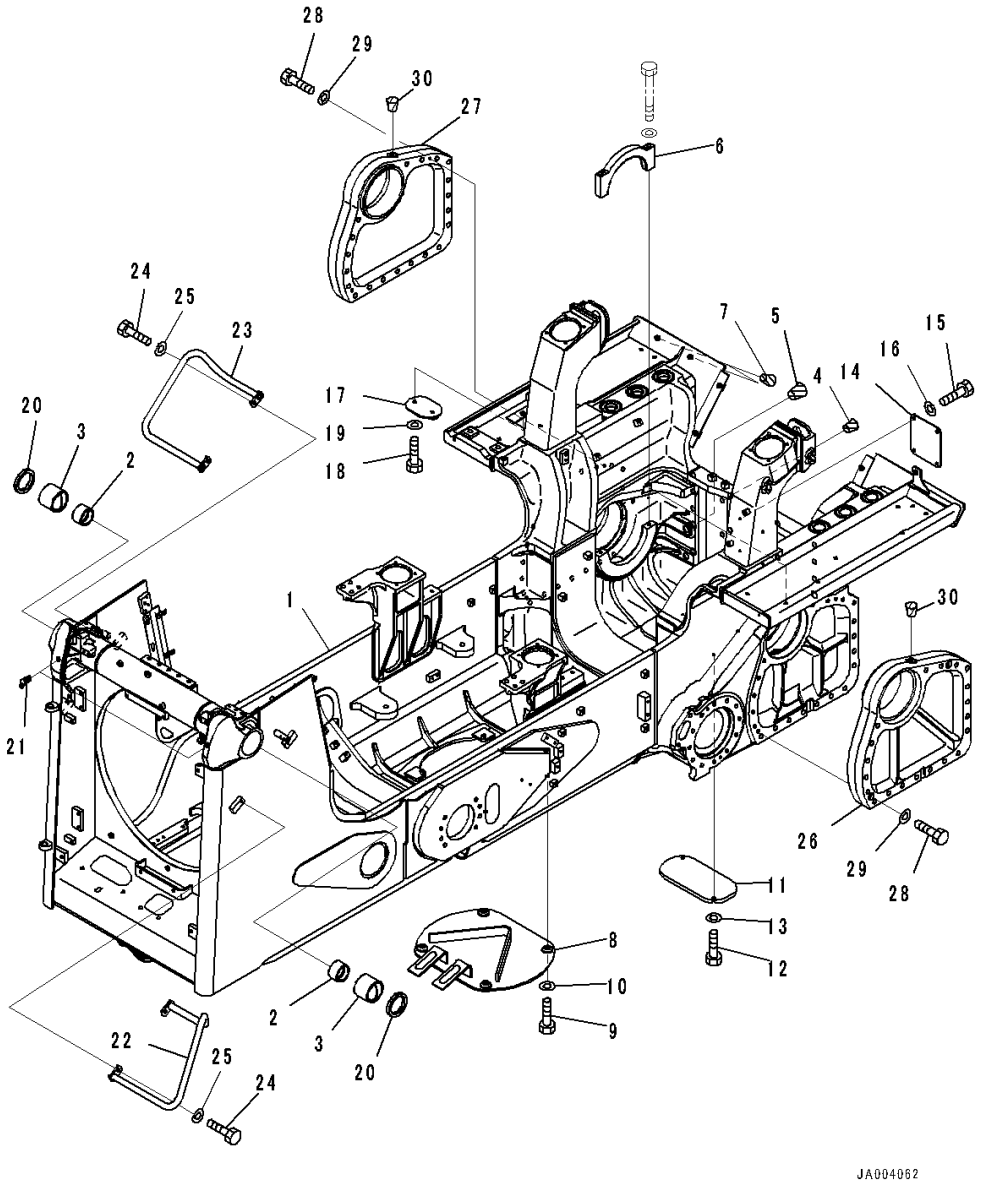

Index	Code	Part Number	Description	Qty	Serial Number
1		14X-21-52200	Frame Assembly	1	80001-
2		144-70-15171	• Bushing	2	80001-
3		14X-21-51450	• Bushing	2	80059-
4		07049-02430	Plug	24	80001-
5		07049-03342	Plug, Cork	6	80001-
6		154-21-71420	Cap	2	80001-
7		07049-01215	Plug	2	80001-
8		14X-21-51341	Cover	1	80001-
9		01010-81235	Bolt	4	80001-
10		01643-31232	Washer	4	80001-
11		14X-21-51371	Cover	1	80001-
12		01010-81225	Bolt	2	80001-
13		01643-31232	Washer	2	80001-
14		14X-21-51350	Cover	1	80001-80016
15		01010-81225	Bolt	4	80001-80016
16		01643-31232	Washer	4	80001-80016
17		14X-21-51361	Cover	1	80001-
18		01010-81230	Bolt	2	80001-
19		01643-31232	Washer	2	80001-
20		130-09-12370	Seal	2	80001-
21		07020-00675	Fitting, Grease	2	80001-
22		14X-54-55130	Handle	1	80001-
23		14X-54-55140	Handle	1	80001-
24		01010-81230	Bolt	4	80001-
25		01643-31232	Washer	4	80001-
26		14X-27-52211	Spacer,LHS	1	80001-
27		14X-27-52221	Spacer,RHS	1	80001-
28		01010-81295	Bolt	4	80001-
29		01643-31232	Washer	4	80001-
30		07049-01215	Plug	2	80013-

FIG. J2100-004001 Main Frame, With Power Angle Power Tilt Dozer, Inside Frame, Refuel Pump

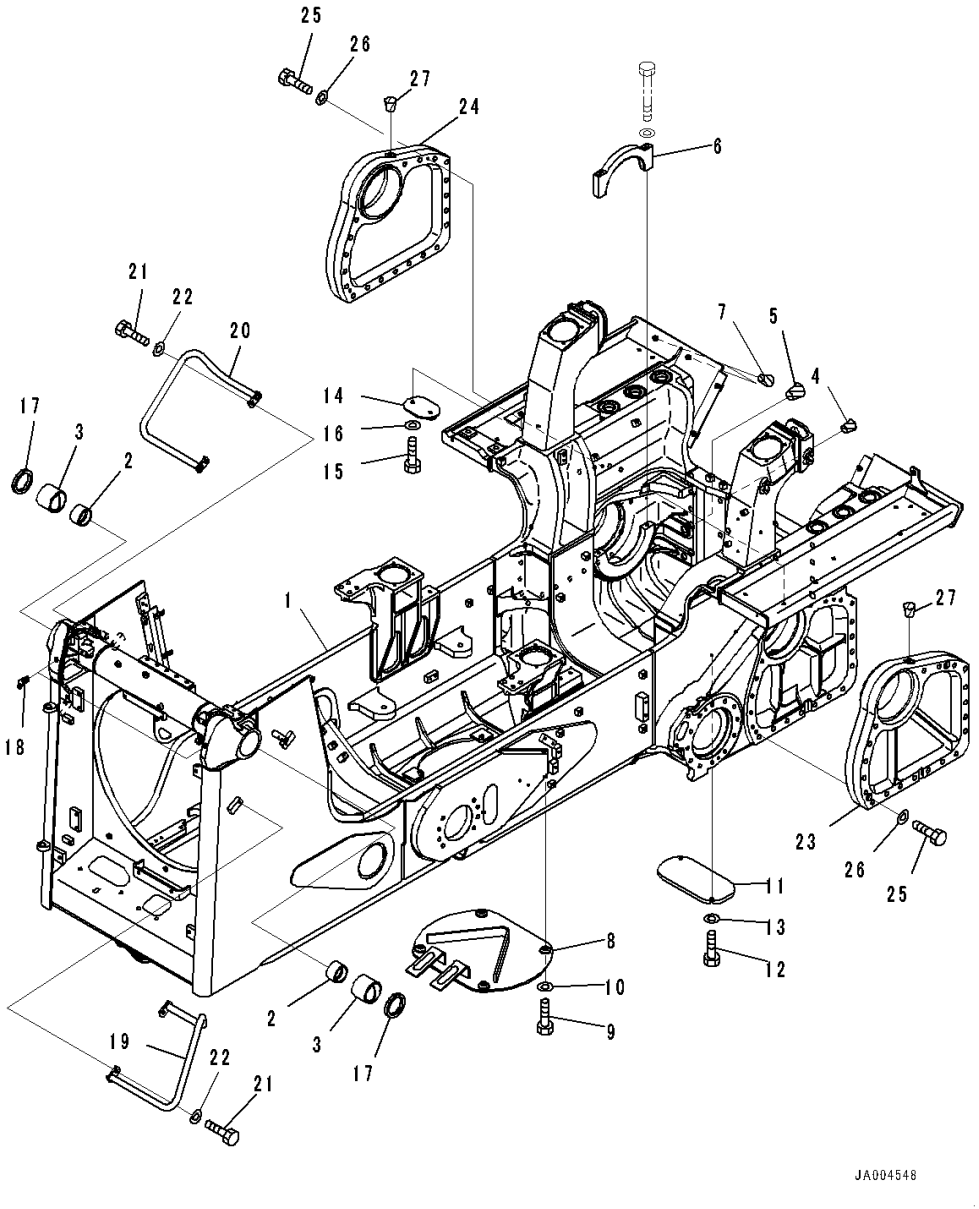

Index	Code	Part Number	Description	Qty	Serial Number
1		14X-21-52400	Frame Assembly	1	80001-
2		144-70-15171	• Bushing	2	80001-
3		14X-21-51450	• Bushing	2	80001-
4		07049-02430	Plug	24	80001-
5		07049-03342	Plug, Cork	6	80001-
6		154-21-71420	Cap	2	80001-
7		07049-01215	Plug	2	80001-
8		14X-21-51341	Cover	1	80001-
9		01010-81235	Bolt	4	80001-
10		01643-31232	Washer	4	80001-
11		14X-21-51371	Cover	1	80001-
12		01010-81225	Bolt	2	80001-
13		01643-31232	Washer	2	80001-
14		14X-21-51361	Cover	1	80001-
15		01010-81230	Bolt	2	80001-
16		01643-31232	Washer	2	80001-
17		130-09-12370	Seal	2	80001-
18		07020-00675	Fitting, Grease	2	80001-
19		14X-54-55130	Handle	1	80001-
20		14X-54-55140	Handle	1	80001-
21		01010-81230	Bolt	4	80001-
22		01643-31232	Washer	4	80001-
23		14X-27-52211	Spacer	1	80001-
24		14X-27-52221	Spacer	1	80001-
25		01010-81295	Bolt	4	80001-
26		01643-31232	Washer	4	80001-
27		07049-01215	Plug	2	80001-

FIG. J2100-003001 Main Frame, With Refuel Pump

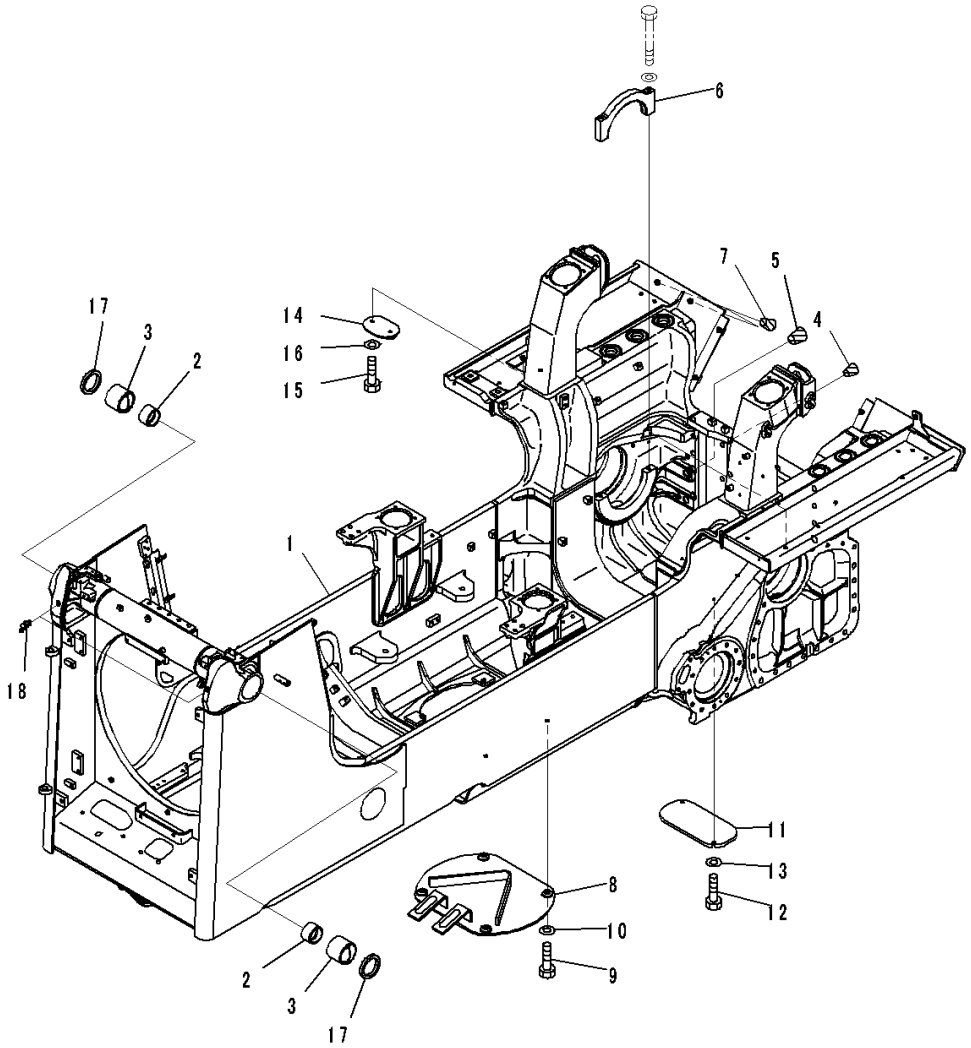

Index	Code	Part Number	Description	Qty	Serial Number
1		14X-21-51700	Frame Assembly	1	80001-
2		144-70-15171	• Bushing	2	80001-
3		14X-21-51450	• Bushing	2	80001-
4		07049-02430	Plug	24	80001-
5		07049-03342	Plug, Cork	6	80001-
6		154-21-71420	Cap	2	80001-
7		07049-01215	Plug	2	80001-
8		14X-21-51341	Cover	1	80001-
9		01010-81235	Bolt	4	80001-
10		01643-31232	Washer	4	80001-
11		14X-21-51371	Cover	1	80001-
12		01010-81225	Bolt	2	80001-
13		01643-31232	Washer	2	80001-
14		14X-21-51361	Cover	1	80001-
15		01010-81230	Bolt	2	80001-
16		01643-31232	Washer	2	80001-
17		130-09-12370	Seal	2	80001-
18		07020-00675	Fitting, Grease	2	80001-

FIG. J2700-001001 Equalizer Bar And Pivot Shaft, With Power Angle Power Tilt Dozer

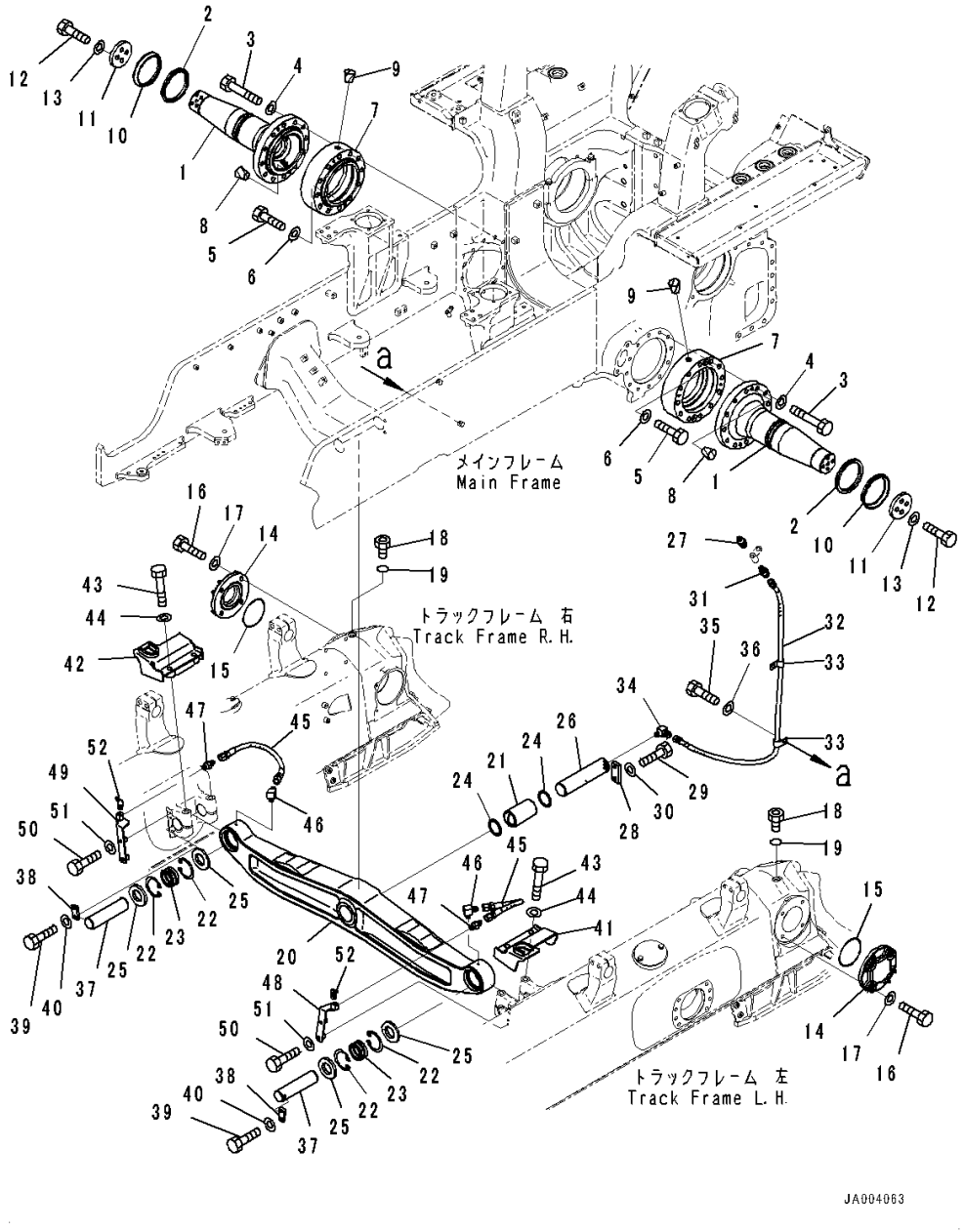

Index	Code	Part Number	Description	Qty	Serial Number
		14Y-30-00210	Pivot Shaft Assembly	2	80001-
1		14Y-30-17111	• Shaft	1	80001-
2		14Y-30-18160	Ring	2	80001-
3		14X-30-51660	Bolt	24	80001-
4		01643-32060	Washer	24	80001-
5		01010-81295	Bolt	4	80001-
6		01643-31232	Washer	4	80001-
7		14X-30-51191	Spacer	2	80001-
8		07049-02025	Plug	4	80001-
9		07049-01012	Plug	2	80001-
10		14Y-30-18150	Seal	2	80001-
11		14Y-30-18121	Spacer	2	80001-
12		01010-82055	Bolt	8	80001-
13		01643-32060	Washer	8	80001-
14		14Y-30-18111	Cover	2	80001-
15		07000-02145	O-ring	2	80001-
16		01010-82055	Bolt	8	80001-
17		01643-32060	Washer	8	80001-
18		07040-12414	Plug	2	80001-
19		07002-02434	O-ring	2	80001-
		14X-50-00111	Equalizer Bar Assembly	1	80001-
20		14X-50-51111	• Equalizer Bar	1	80001-
21		14Y-50-11250	• Bushing	1	80001-
22		04065-09030	• Ring, Snap	4	80001-
23		14Y-50-11460	• Bushing	2	80001-
24		130-09-12911	Seal, DUST	2	80001-
25		14Y-50-11323	Seal	4	80001-
26		14Y-50-11240	Pin	1	80001-
27		07020-00000	Fitting, Grease	1	80001-
28		14Y-50-11390	Lock	1	80001-
29		01010-81640	Bolt	2	80001-
30		01643-31645	Washer	2	80001-
31		208-06-11220	Nipple	1	80001-
32		14X-50-51290	Hose Assembly	1	80001-
33		04434-51312	Clip	2	80001-
34		203-62-42920	Elbow	1	80001-
35		01010-81220	Bolt	2	80001-
36		01643-31232	Washer	2	80001-
37		14X-50-51530	Pin	2	80001-

FIG. J2700-001001 Equalizer Bar And Pivot Shaft, With Power Angle Power Tilt Dozer

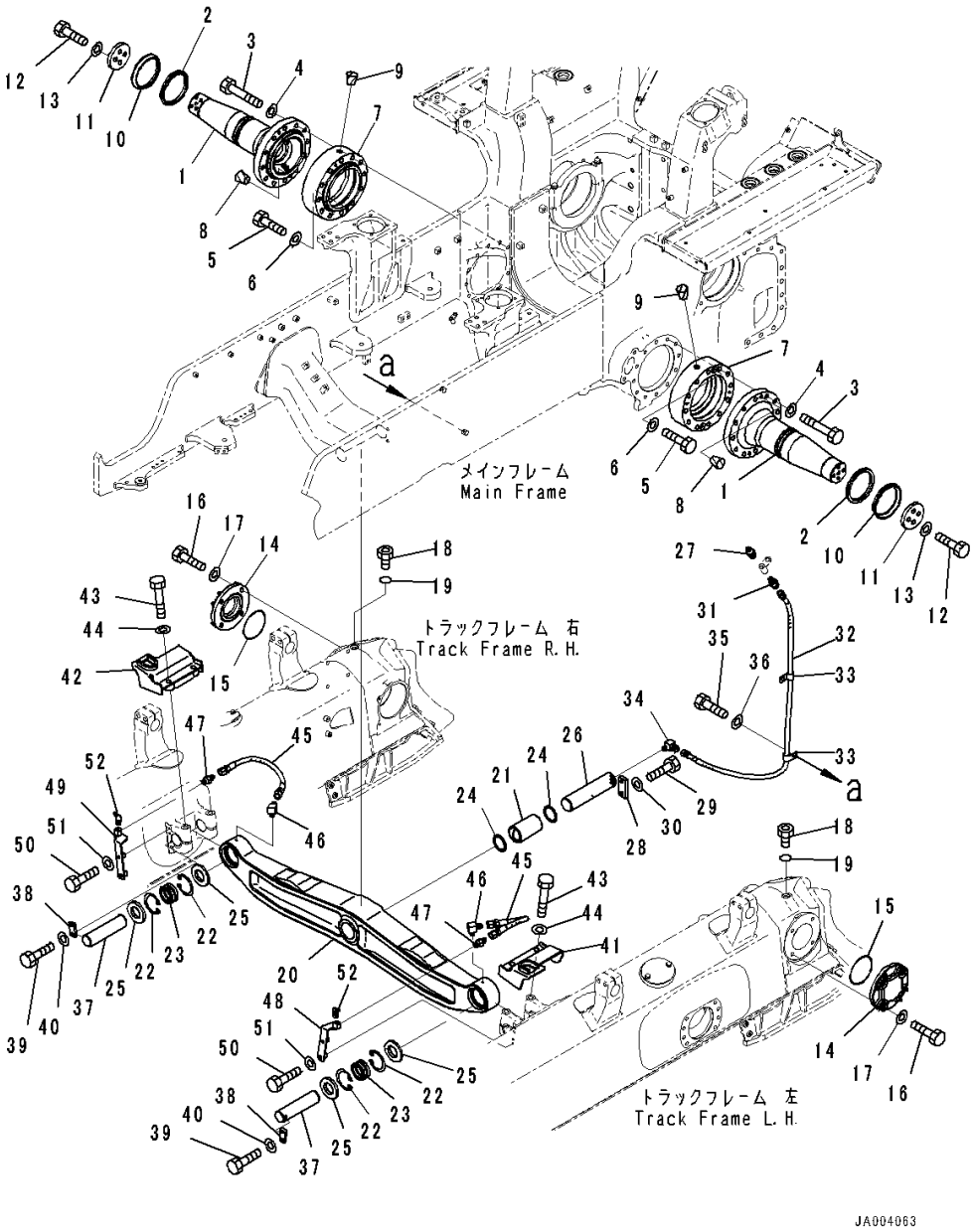

Index	Code	Part Number	Description	Qty	Serial Number
38		04082-00312	Lock	2	80001-
39		01010-81230	Bolt	4	80001-
40		01643-31232	Washer	4	80001-
41		14X-50-51241	Cover	1	80001-
42		14X-50-51251	Cover	1	80001-
43		01011-82055	Bolt	4	80001-
44		01643-32060	Washer	4	80001-
45		14X-50-51181	Hose	2	80001-
46		202-62-21430	Elbow	2	80001-
47		203-62-21740	Nipple	2	80001-
48		14X-50-51121	Bracket	1	80001-
49		14X-50-51131	Bracket	1	80001-
50		01010-81255	Bolt	4	80001-
51		01643-31232	Washer	4	80001-
52		07020-00675	Fitting, Grease	2	80001-

FIG. J2700-002001 Equalizer Bar And Pivot Shaft

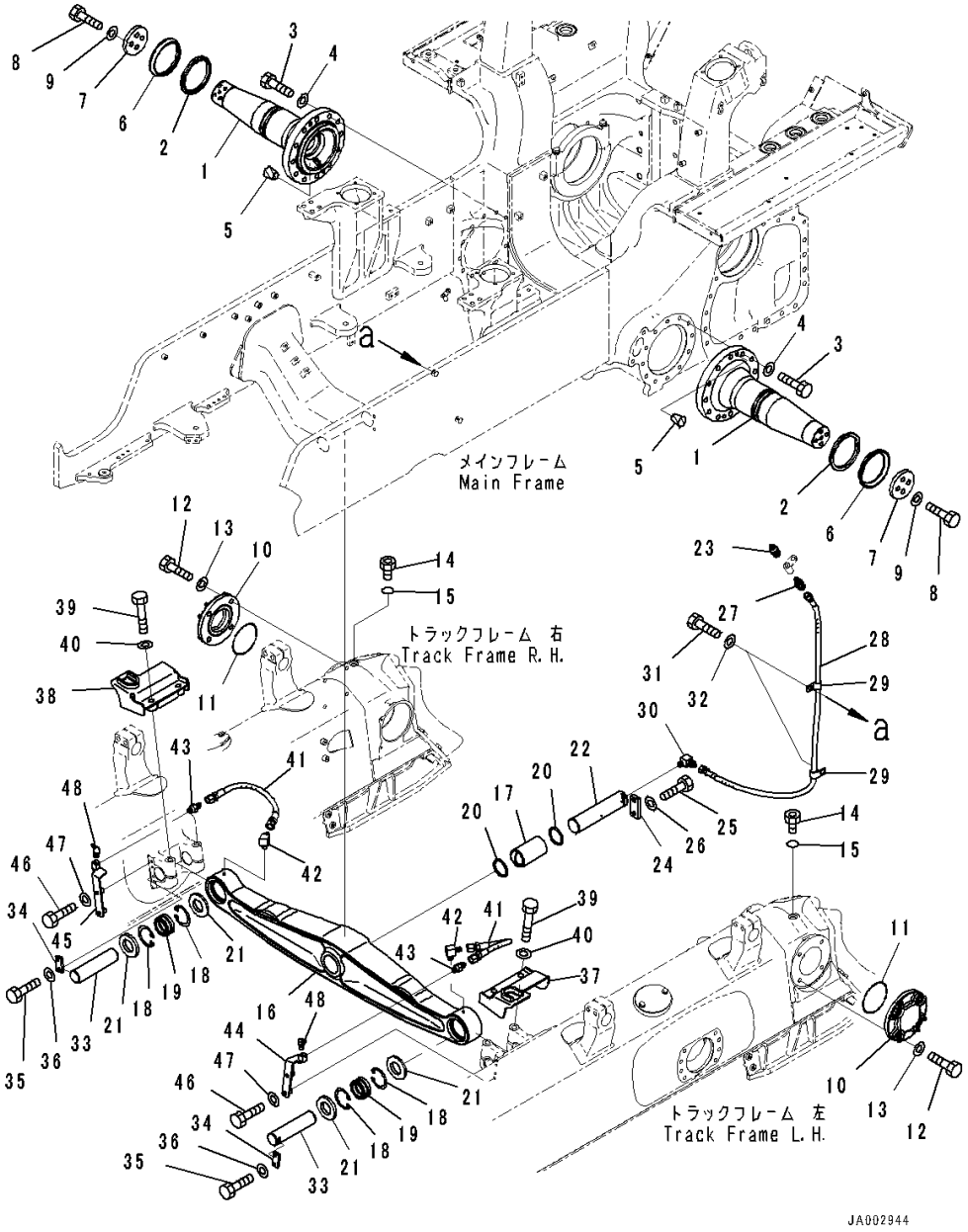

Index	Code	Part Number	Description	Qty	Serial Number
		14Y-30-00210	Pivot Shaft Assembly	2	80001-
1		14Y-30-17111	• Shaft	1	80001-
2		14Y-30-18160	Ring	2	80001-
3		01010-82075	Bolt	24	80001-
4		01643-32060	Washer	24	80001-
5		07049-02025	Plug	4	80001-
6		14Y-30-18150	Seal	2	80001-
7		14Y-30-18121	Spacer	2	80001-
8		01010-82055	Bolt	8	80001-
9		01643-32060	Washer	8	80001-
10		14Y-30-18111	Cover	2	80001-
11		07000-02145	O-ring	2	80001-
12		01010-82055	Bolt	8	80001-
13		01643-32060	Washer	8	80001-
14		07040-12414	Plug	2	80001-
15		07002-02434	O-ring	2	80001-
		14Y-50-00012	Equalizer Bar Assembly	1	80001-
16		14Y-50-11110	• Equalizer Bar	1	80001-
17		14Y-50-11250	• Bushing	1	80001-
18		04065-09030	• Ring, Snap	4	80001-
19		14Y-50-11460	• Bushing	2	80001-
20		130-09-12911	Seal, DUST	2	80001-
21		14Y-50-11323	Seal	4	80001-
22		14Y-50-11240	Pin	1	80001-
23		07020-00000	Fitting, Grease	1	80001-
24		14Y-50-11390	Lock	1	80001-
25		01010-81640	Bolt	2	80001-
26		01643-31645	Washer	2	80001-
27		208-06-11220	Nipple	1	80001-
28		14X-50-51290	Hose Assembly	1	80001-
29		04434-51312	Clip	2	80001-
30		203-62-42920	Elbow	1	80001-
31		01010-81220	Bolt	2	80001-
32		01643-31232	Washer	2	80001-
33		14X-50-51530	Pin	2	80001-
34		04082-00312	Lock	2	80001-
35		01010-81230	Bolt	4	80001-
36		01643-31232	Washer	4	80001-
37		14X-50-51241	Cover,LHS	1	80001-

FIG. J2700-002001 Equalizer Bar And Pivot Shaft

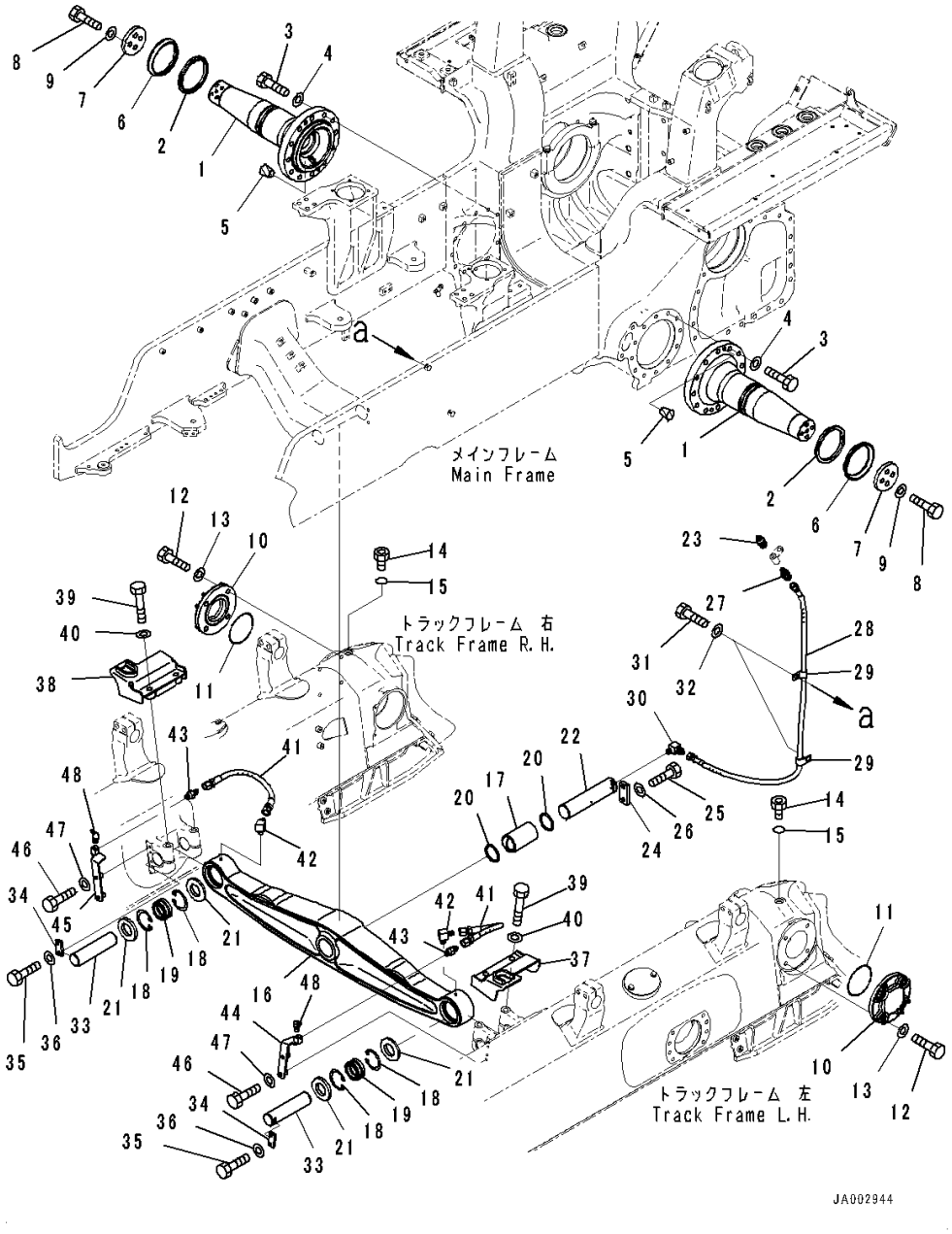

Index	Code	Part Number	Description	Qty	Serial Number
38		14X-50-51251	Cover,RHS	1	80001-
39		01011-82055	Bolt	4	80001-
40		01643-32060	Washer	4	80001-
41		14X-50-51181	Hose	2	80001-
42		202-62-21430	Elbow	2	80001-
43		203-62-21740	Nipple	2	80001-
44		14X-50-51121	Bracket	1	80001-
45		14X-50-51131	Bracket	1	80001-
46		01010-81255	Bolt	4	80001-
47		01643-31232	Washer	4	80001-
48		07020-00675	Fitting, Grease	2	80001-

FIG. J2700-003001 Equalizer Bar And Pivot Shaft

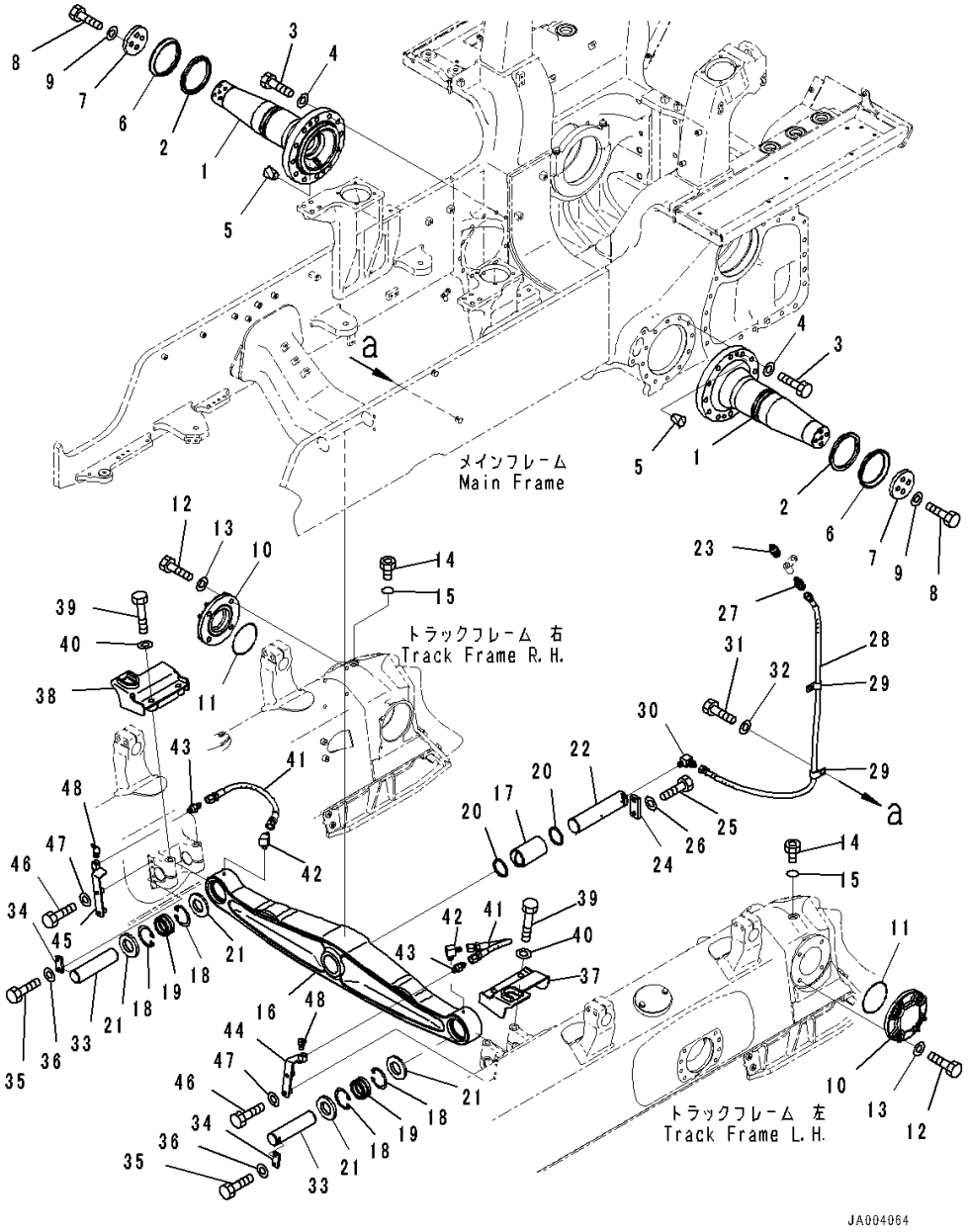

Index	Code	Part Number	Description	Qty	Serial Number
		14Y-30-00210	Pivot Shaft Assembly	2	80001-
1		14Y-30-17111	• Shaft	1	80001-
2		14Y-30-18160	Ring	2	80001-
3		01010-82075	Bolt	24	80001-
4		01643-32060	Washer	24	80001-
5		07049-02025	Plug	4	80001-
6		14Y-30-18150	Seal	2	80001-
7		14Y-30-18121	Spacer	2	80001-
8		01010-82055	Bolt	8	80001-
9		01643-32060	Washer	8	80001-
10		14Y-30-18111	Cover	2	80001-
11		07000-02145	O-ring	2	80001-
12		01010-82055	Bolt	8	80001-
13		01643-32060	Washer	8	80001-
14		07040-12414	Plug	2	80001-
15		07002-02434	O-ring	2	80001-
		14Y-50-00012	Equalizer Bar Assembly	1	80001-
16		14Y-50-11110	• Equalizer Bar	1	80001-
17		14Y-50-11250	• Bushing	1	80001-
18		04065-09030	• Ring, Snap	4	80001-
19		14Y-50-11460	• Bushing	2	80001-
20		130-09-12911	Seal, DUST	2	80001-
21		14Y-50-11323	Seal	4	80001-
22		14Y-50-11240	Pin	1	80001-
23		07020-00000	Fitting, Grease	1	80001-
24		14Y-50-11390	Lock	1	80001-
25		01010-81640	Bolt	2	80001-
26		01643-31645	Washer	2	80001-
27		208-06-11220	Nipple	1	80001-
28		14X-50-51290	Hose Assembly	1	80001-
29		04434-51312	Clip	2	80001-
30		203-62-42920	Elbow	1	80001-
31		01010-81220	Bolt	1	80001-
32		01643-31232	Washer	1	80001-
33		14X-50-51530	Pin	2	80001-
34		04082-00312	Lock	2	80001-
35		01010-81230	Bolt	4	80001-
36		01643-31232	Washer	4	80001-
37		14X-50-51141	Cover	1	80001-

FIG. J2700-003001 Equalizer Bar And Pivot Shaft

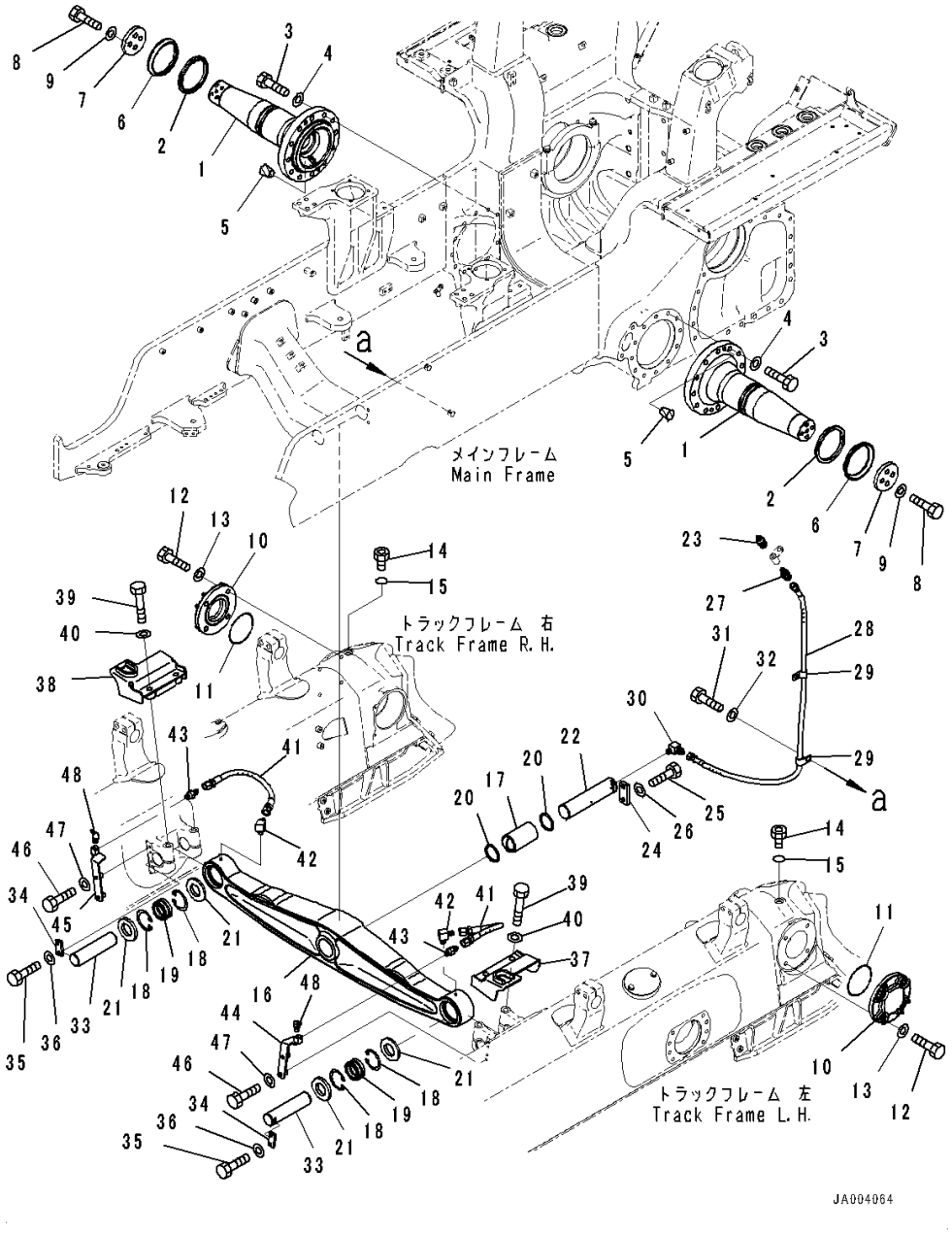

Index	Code	Part Number	Description	Qty	Serial Number
38		14X-50-51151	Cover	1	80001-
39		01011-82055	Bolt	4	80001-
40		01643-32060	Washer	4	80001-
41		14X-50-51181	Hose	2	80001-
42		202-62-21430	Elbow	2	80001-
43		203-62-21740	Nipple	2	80001-
44		14X-50-51121	Bracket	1	80001-
45		14X-50-51131	Bracket	1	80001-
46		01010-81255	Bolt	4	80001-
47		01643-31232	Washer	4	80001-
48		07020-00675	Fitting, Grease	2	80001-

OPERATOR'S COMPARTMENT AND CONTROL SYSTEM

FIG. K0110-001001 Operator's Seat, Suspension Type, Fabric Type, Reclining Type

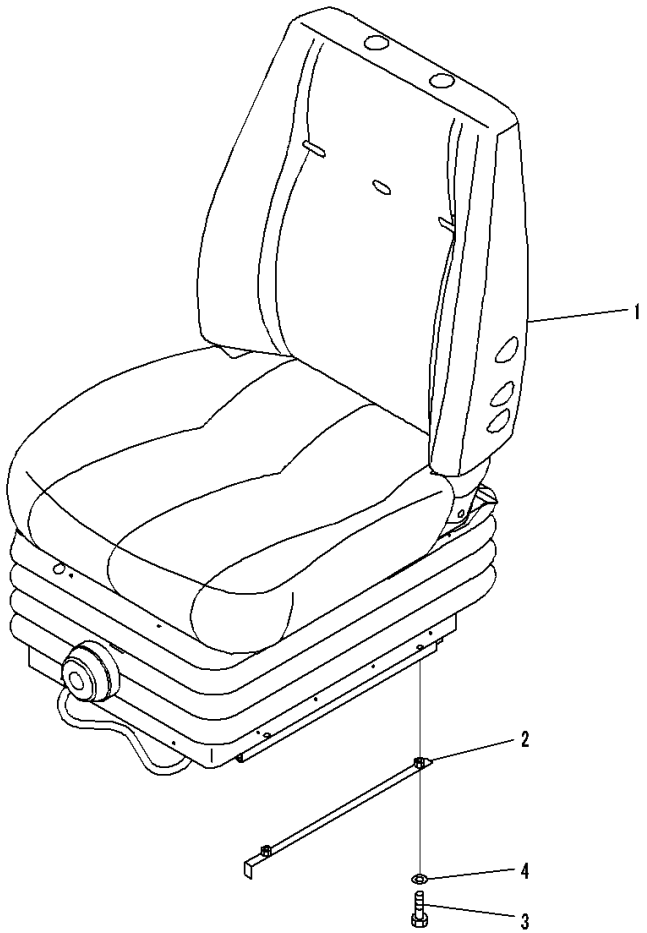

Index	Code	Part Number	Description	Qty	Serial Number
1		14X-57-51710	Seat Assembly	1	80001-
2		134-57-61150	Bracket	2	80001-
3		01010-80820	Bolt	4	80001-
4		01643-30823	Washer	4	80001-

FIG. K0110-007001 Operator's Seat, Suspension Type, Fabric Type, Operator's Seat Turn Type, Reclining Type

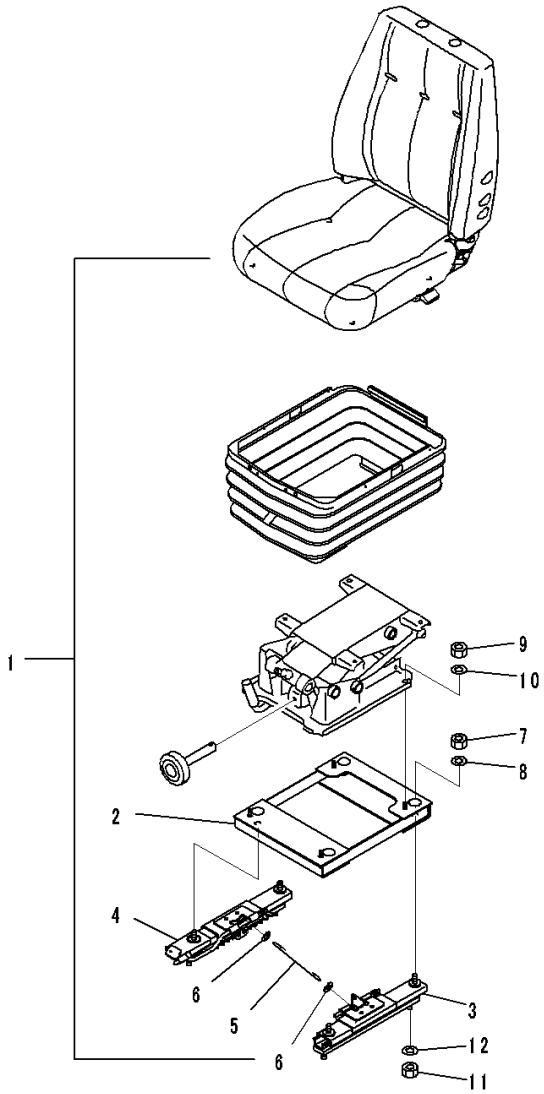

Index	Code	Part Number	Description	Qty	Serial Number
1		14X-57-51211	Seat Assembly	1	80001-
		14X-57-51110	Adjuster Assembly	1	80001-
2		14X-57-51140	• Bracket	1	80001-
3		14X-57-51120	• Adjuster,LHS	1	80001-
4		14X-57-51130	• Adjuster,RHS	1	80001-
5		17A-57-23270	• Wire	1	80001-
6		01640-20816	• Washer	2	80001-
7		01582-11210	• Nut	4	80001-
8		01643-51232	• Washer	4	80001-
9		01580-10806	Nut	4	80001-
10		01643-50823	Washer	4	80001-
11		01582-11210	Nut	4	80001-
12		01643-31232	Washer	4	80001-

FIG. K0110-009001 Operator's Seat, Air Suspension Type, Fabric Type, Operator's Seat Turn Type

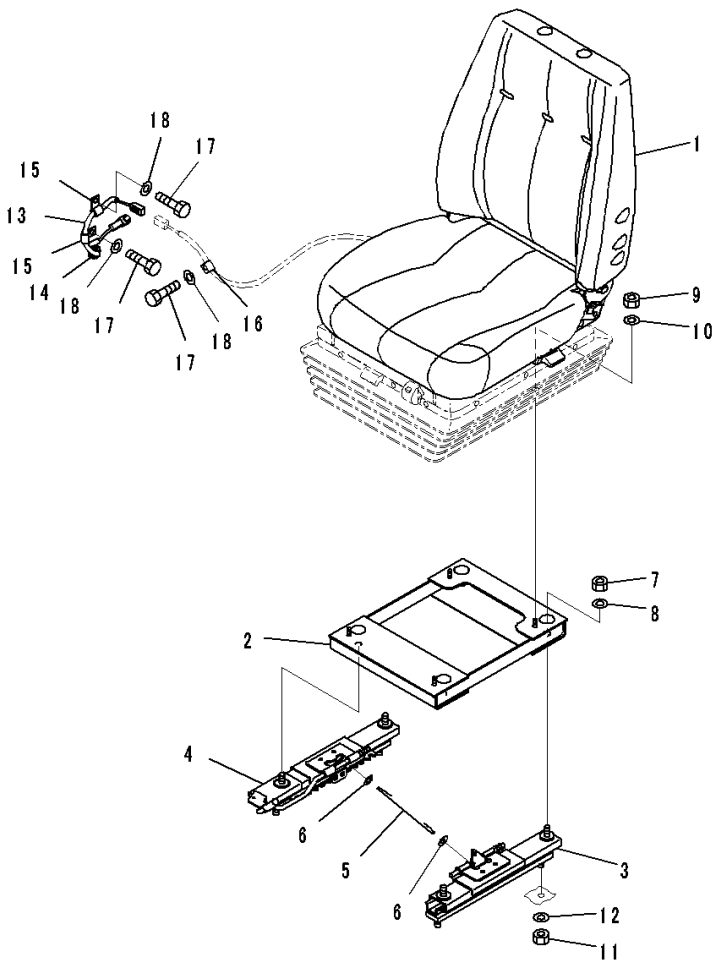

Index	Code	Part Number	Description	Qty	Serial Number
1		14X-57-51411	Seat Assembly	1	80001-
		14X-57-51110	Adjuster Assembly	1	80001-
2		14X-57-51140	• Bracket	1	80001-
3		14X-57-51120	• Adjuster,LHS	1	80001-
4		14X-57-51130	• Adjuster,RHS	1	80001-
5		17A-57-23270	• Wire	1	80001-
6		01640-20816	• Washer	2	80001-
7		01582-11210	• Nut	4	80001-
8		01643-51232	• Washer	4	80001-
9		01580-10806	Nut	4	80001-
10		01643-50823	Washer	4	80001-
11		01582-11210	Nut	4	80001-
12		01643-31232	Washer	4	80001-
13		17A-57-41150	Wire Harness	1	80001-
14		08037-01610	• Grommet	1	80001-
15		04434-51010	Clip	2	80001-
16		04434-50810	Clip	1	80001-
17		01010-D1020	Bolt	3	80001-
18		01643-71032	Washer	3	80001-

FIG. K0110-008001 Operator's Seat, Suspension Type, Operator's Seat Turn Type, Reclining Type

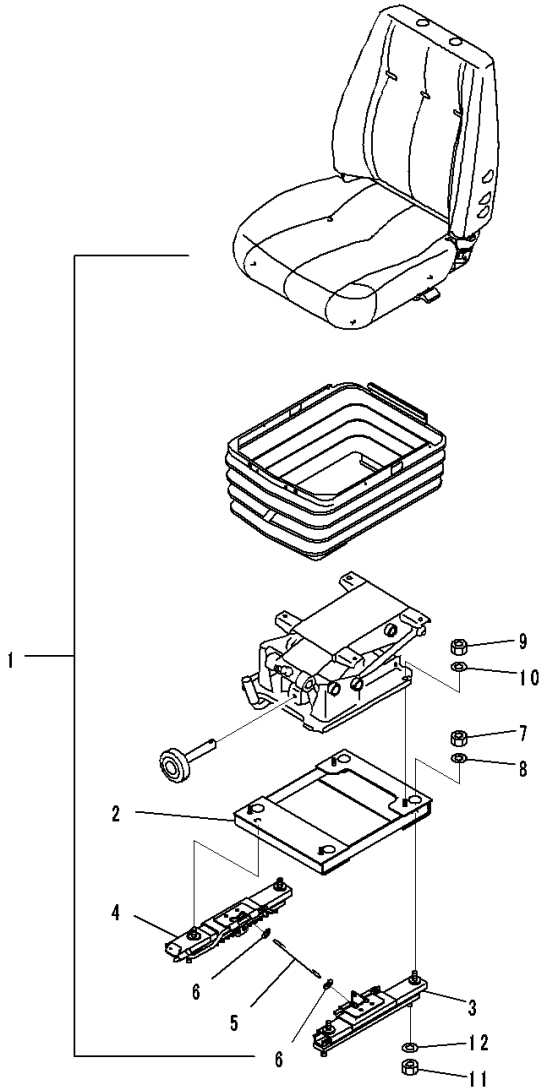

Index	Code	Part Number	Description	Qty	Serial Number
1		14X-57-51311	Seat Assembly	1	80001-
		14X-57-51110	Adjuster Assembly	1	80001-
2		14X-57-51140	• Bracket	1	80001-
3		14X-57-51120	• Adjuster,LHS	1	80001-
4		14X-57-51130	• Adjuster,RHS	1	80001-
5		17A-57-23270	• Wire	1	80001-
6		01640-20816	• Washer	2	80001-
7		01582-11210	• Nut	4	80001-
8		01643-51232	• Washer	4	80001-
9		01580-10806	Nut	4	80001-
10		01643-50823	Washer	4	80001-
11		01582-11210	Nut	4	80001-
12		01643-31232	Washer	4	80001-

FIG. K0110-006001 Operator's Seat, Suspension Type, Reclining Type, Hi-Back Type Operator's Seat

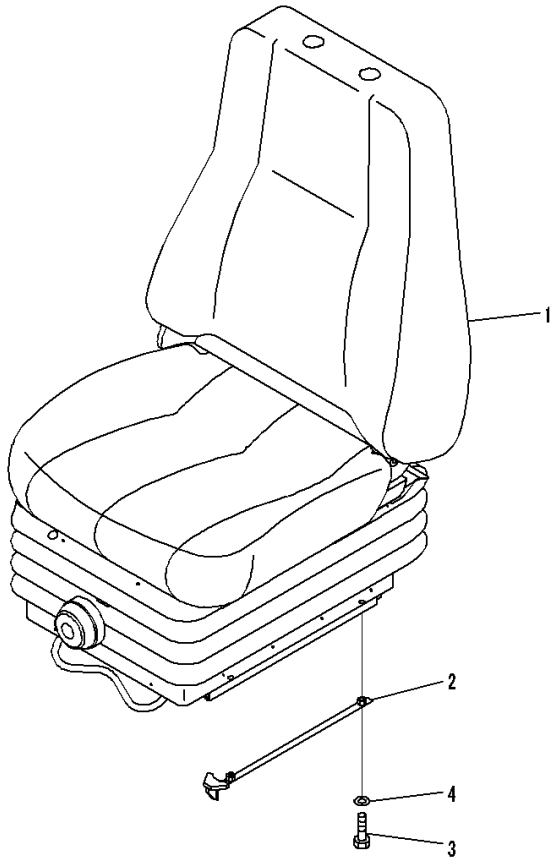

Index	Code	Part Number	Description	Qty	Serial Number
1		14X-57-52110	Seat Assembly	1	80001-
2		134-57-61170	Bracket	2	80001-
3		01010-80820	Bolt	4	80001-
4		01643-30823	Washer	4	80001-

FIG. K0110-003001 Operator's Seat, Suspension Type, Reclining Type

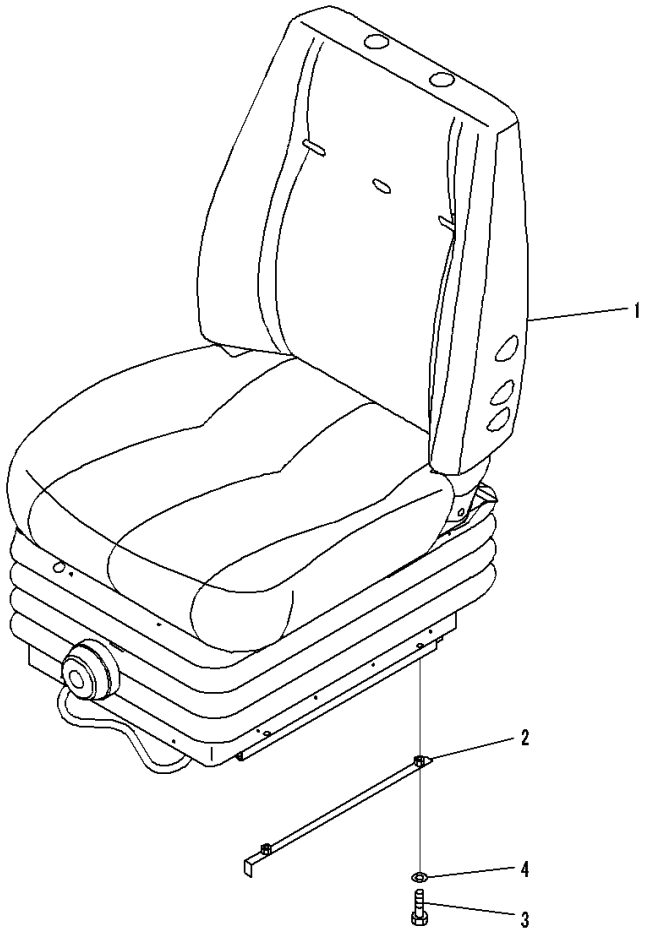

Index	Code	Part Number	Description	Qty	Serial Number
1		14X-57-51810	Seat Assembly	1	80001-
2		134-57-61150	Bracket	2	80001-
3		01010-80820	Bolt	4	80001-
4		01643-30823	Washer	4	80001-

FIG. K0110-004001 Operator's Seat, Suspension Type, Reclining Type, Hi-Back Type Operator's Seat, Fabric Type

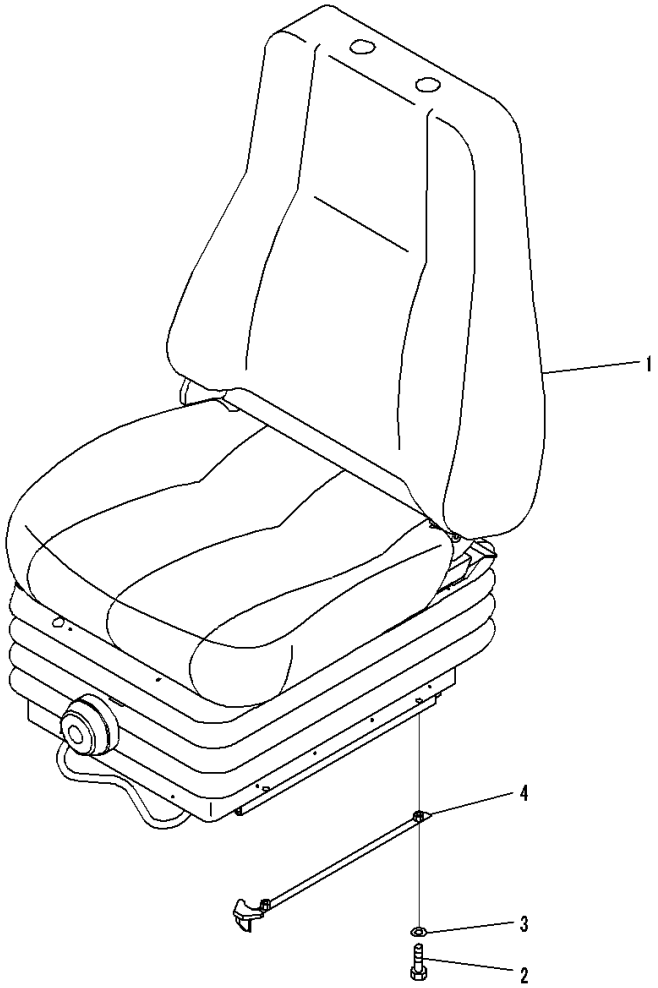

Index	Code	Part Number	Description	Qty	Serial Number
1		14X-57-51910	Seat Assembly	1	80001-
2		01010-80820	Bolt	4	80001-
3		01643-30823	Washer	4	80001-
4		134-57-61170	Bracket	2	80001-

FIG. K0110-005001 Operator's Seat, Suspension Type, Fabric Type, Reclining Type, Hi-Back Type Operator's Seat, Operator's Seat Turn Type, With Headrest

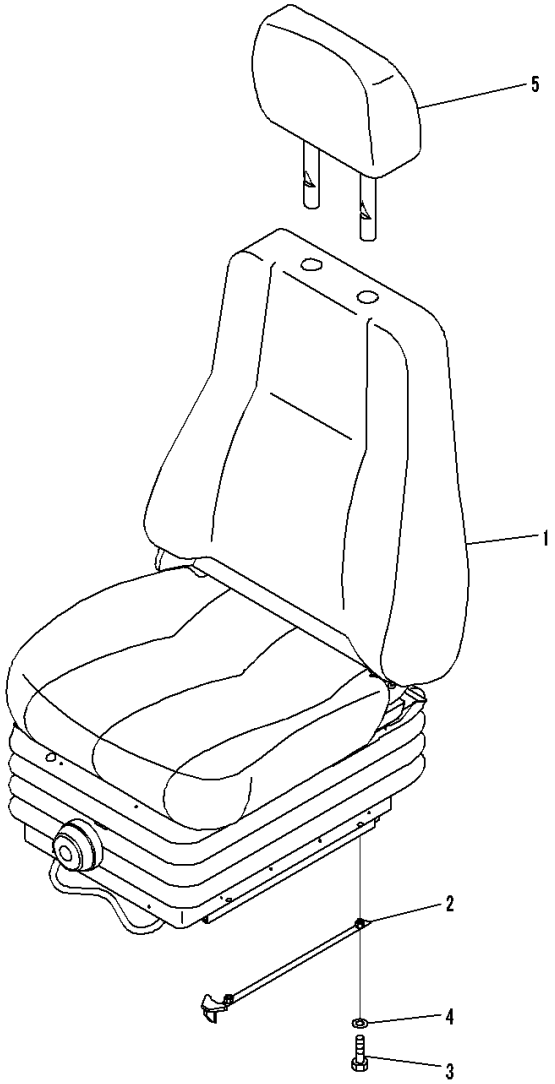

JA003009

Index	Code	Part Number	Description	Qty	Serial Number
1		14X-57-51910	Seat Assembly	1	80001-
2		134-57-61170	Bracket	2	80001-
3		01010-80820	Bolt	4	80001-
4		01643-30823	Washer	4	80001-
5		17A-57-23520	Head Assembly	1	80001-

FIG. K0110-002001 Operator's Seat, Suspension Type, Fabric Type, Reclining Type, Operator's Seat Turn Type

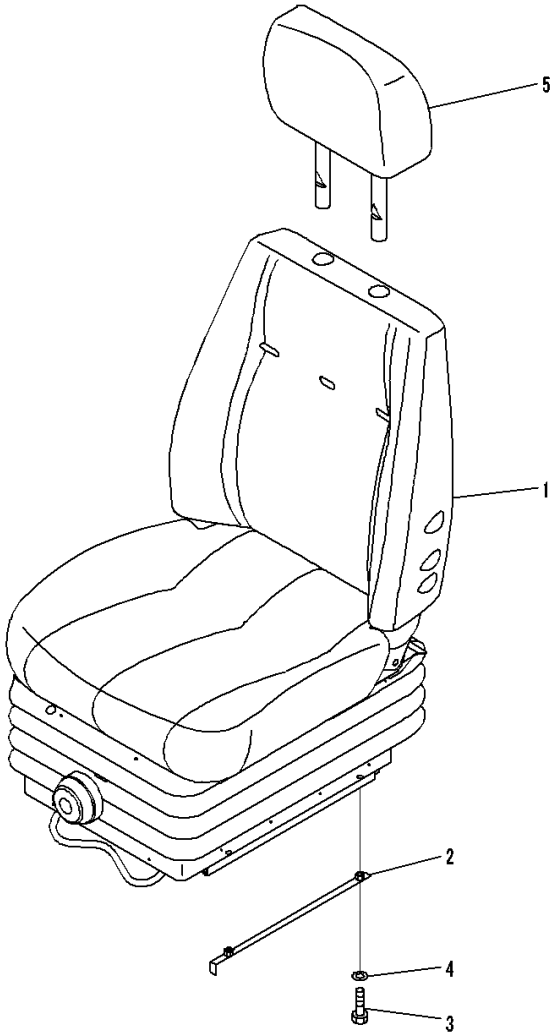

Index	Code	Part Number	Description	Qty	Serial Number
1		14X-57-51710	Seat Assembly	1	80001-
2		134-57-61150	Bracket	2	80001-
3		01010-80820	Bolt	4	80001-
4		01643-30823	Washer	4	80001-
5		17A-57-21170	Head Assembly	1	80001-

FIG. K0110-010001 Operator's Seat, Suspension Type, Fabric Type, Hi-Back Type Operator's Seat, Reclining Type

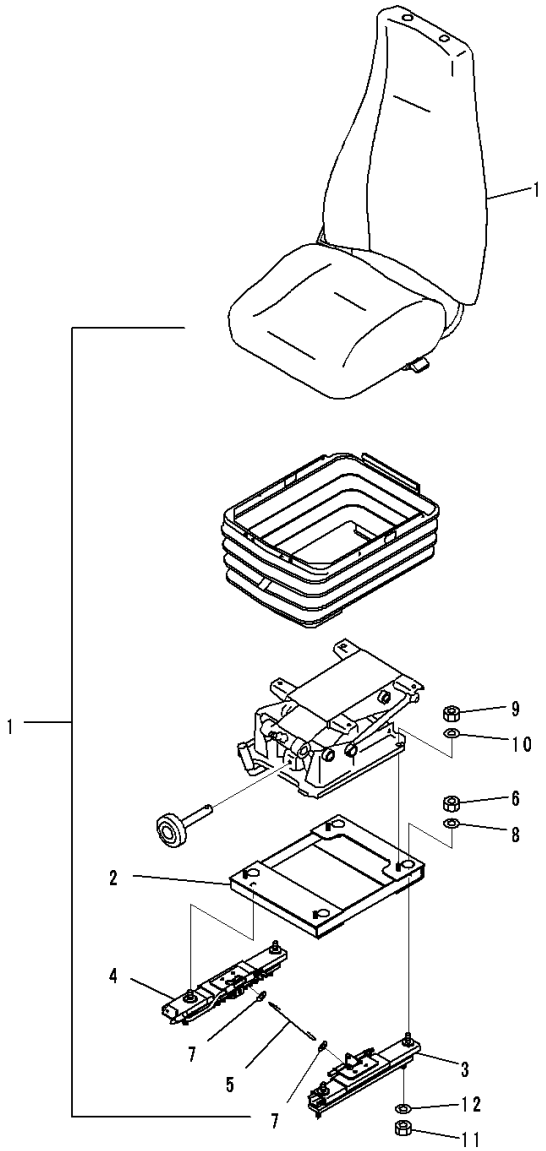

JA003990

Index	Code	Part Number	Description	Qty	Serial Number
1		14X-57-51511	Seat Assembly	1	80008-
		14X-57-51200	Adjuster Assembly	1	80008-
2		14X-57-51140	• Bracket	1	80008-
3		14X-57-51220	• Adjuster,LHS	1	80008-
4		14X-57-51230	• Adjuster,RHS	1	80008-
5		17A-57-23270	• Wire	1	80008-
6		01582-11210	• Nut	4	80008-
7		01640-20816	• Washer	2	80008-
8		01643-51232	• Washer	4	80008-
9		01580-10806	Nut	4	80008-
10		01643-50823	Washer	4	80008-
11		01582-11210	Nut	4	80008-
12		01643-31232	Washer	4	80008-

FIG. K0110-011001 Operator's Seat, Air Suspension Type, Operator's Seat Turn Type, Hi-Back Type Operator's Seat, With Headrest

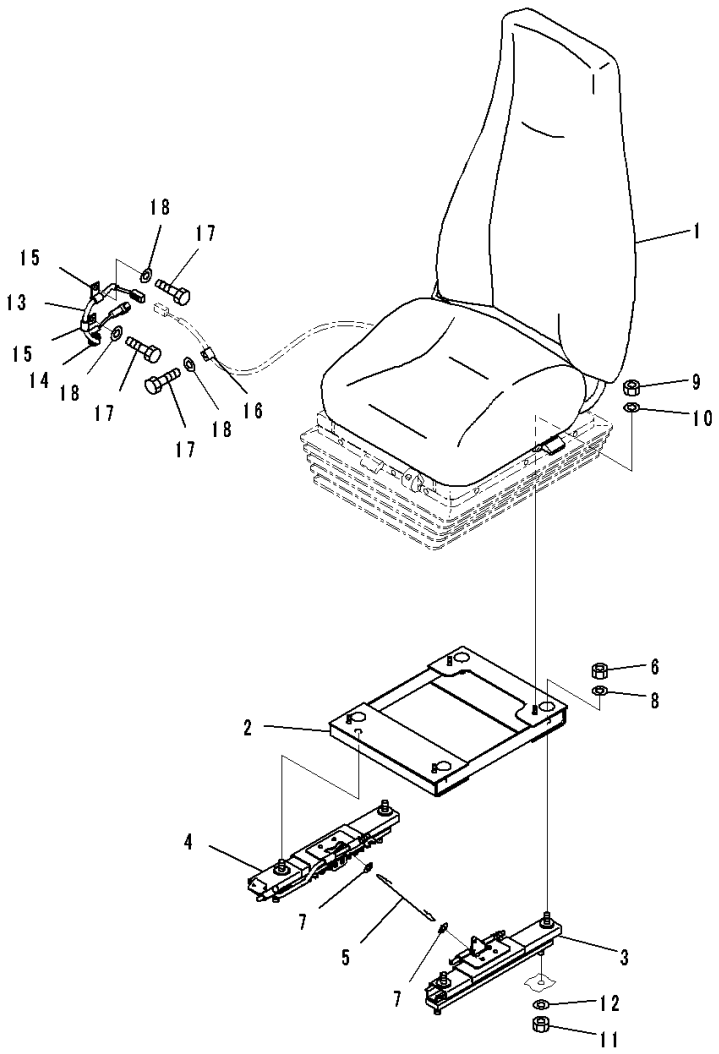

Index	Code	Part Number	Description	Qty	Serial Number
1		14X-57-52210	Seat Assembly	1	80008-
		14X-57-51200	Adjuster Assembly	1	80008-
2		14X-57-51140	• Bracket	1	80008-
3		14X-57-51220	• Adjuster,LHS	1	80008-
4		14X-57-51230	• Adjuster,RHS	1	80008-
5		17A-57-23270	• Wire	1	80008-
6		01582-11210	• Nut	4	80008-
7		01640-20816	• Washer	2	80008-
8		01643-51232	• Washer	4	80008-
9		01580-10806	Nut	4	80008-
10		01643-50823	Washer	4	80008-
11		01582-11210	Nut	4	80008-
12		01643-31232	Washer	4	80008-
13		17A-57-41150	Wire Harness	1	80008-
14		08037-01610	• Grommet	1	80008-
15		04434-51010	Clip	2	80008-
16		04434-50810	Clip	1	80008-
17		01010-D1020	Bolt	3	80008-
18		01643-71032	Washer	3	80008-

FIG. K0110-012001 Operator's Seat, Suspension Type, Fabric, Turn Type, Reclining, Headrest

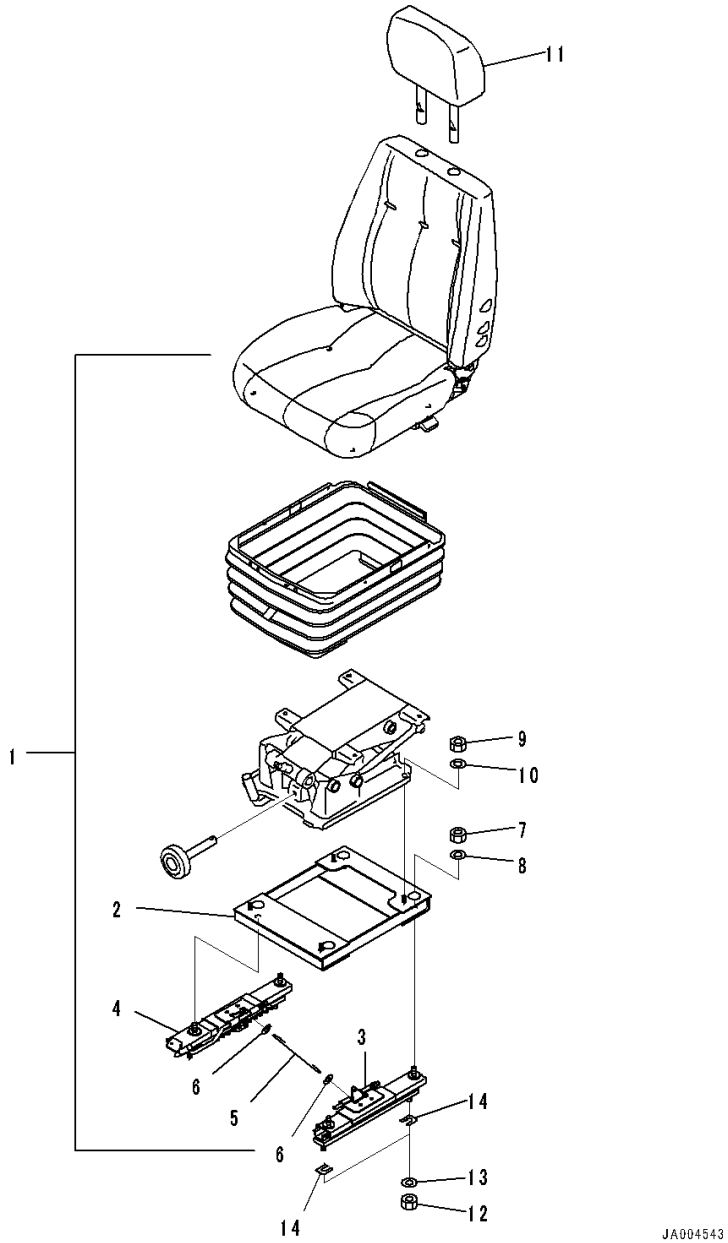

Index	Code	Part Number	Description	Qty	Serial Number
1		14X-57-51211	Seat Assembly	1	80062-
		14X-57-51110	Adjuster Assembly	1	80062-
2		14X-57-51140	• Bracket	1	80062-
3		14X-57-51120	• Adjuster,LHS	1	80062-
4		14X-57-51130	• Adjuster,RHS	1	80062-
5		17A-57-23270	• Wire	1	80062-
6		01640-20816	• Washer	2	80062-
7		01582-11210	• Nut	4	80062-
8		01643-51232	• Washer	4	80062-
9		01580-10806	Nut	4	80062-
10		01643-50823	Washer	4	80062-
11		17A-57-21170	Head Assembly	1	80062-
12		01582-11210	Nut	4	80062-
13		01643-31232	Washer	4	80062-
14		14X-57-51150	Plate	2	80062-

FIG. K0160-001001 Seat Belt, Suspension Type, With Belt Retractor

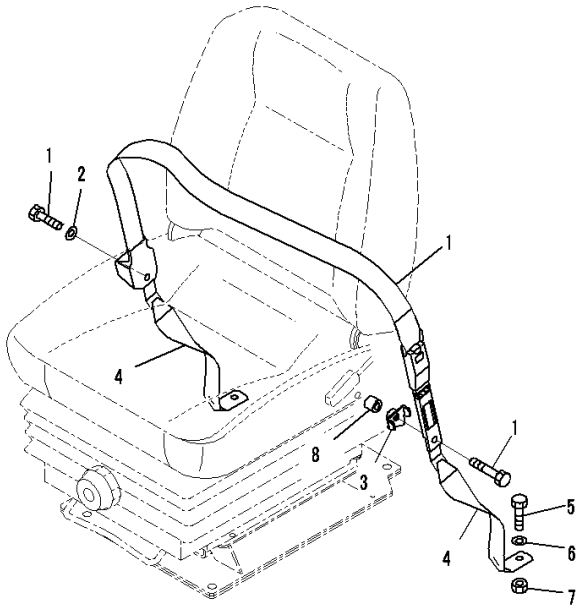

00061639

Index	Code	Part Number	Description	Qty	Serial Number
1		12Y-57-11211	Seat Belt Assembly	1	80001-
2		01643-51232	• Washer	1	80001-
3		12Y-57-11220	• Bracket	1	80001-
4		09409-20000	Belt, Tether	2	80001-
5		09409-00001	• Bolt	2	80001-
6		09409-00002	• Washer	2	80001-
7		09409-00003	• Nut	2	80001-
8		104-890-5610	Collar	1	80001-

FIG. K0210-001001 ROPS Cab, Cab Body

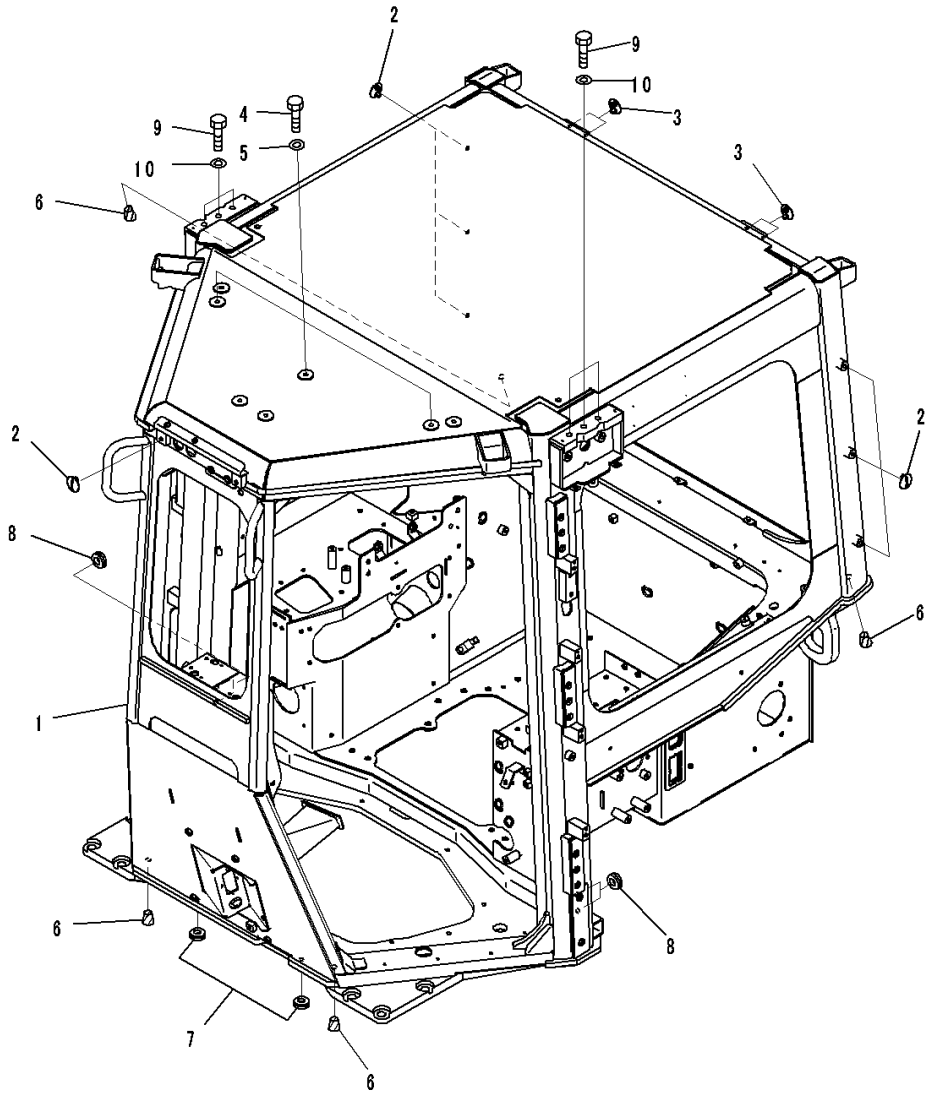

Index	Code	Part Number	Description	Qty	Serial Number
		Note: This list covers following specifications.			
		With AM-FM Stereo Radio For North America, TH300 Type KOMTRAX			
		Provision For Radio Installation, TH300 Type KOMTRAX			
		EU Regulation Guard Level 2, With AM-FM Stereo Radio With Cassette, TH300 Type KOMTRAX			
		EU Regulation Guard Level 2, Provision For Radio Installation, TH300 Type KOMTRAX			
1		14X-Y79-1111	Cab Assembly	1	80001-
2		20Y-53-11380	Cap	6	80001-
3		20Y-53-11390	Cap	4	80001-
4		01010-81220	Bolt	9	80009-
5		01643-31232	Washer	9	80009-
6		07049-01620	Plug	4	80001-
7		09415-00706	Cap	2	80001-
8		09415-01008	Cap	4	80001-
9		01010-81625	Bolt	6	80001-
10		01643-71645	Washer	6	80001-

FIG. K0210-001002 ROPS Cab, Door and Latch, LHS

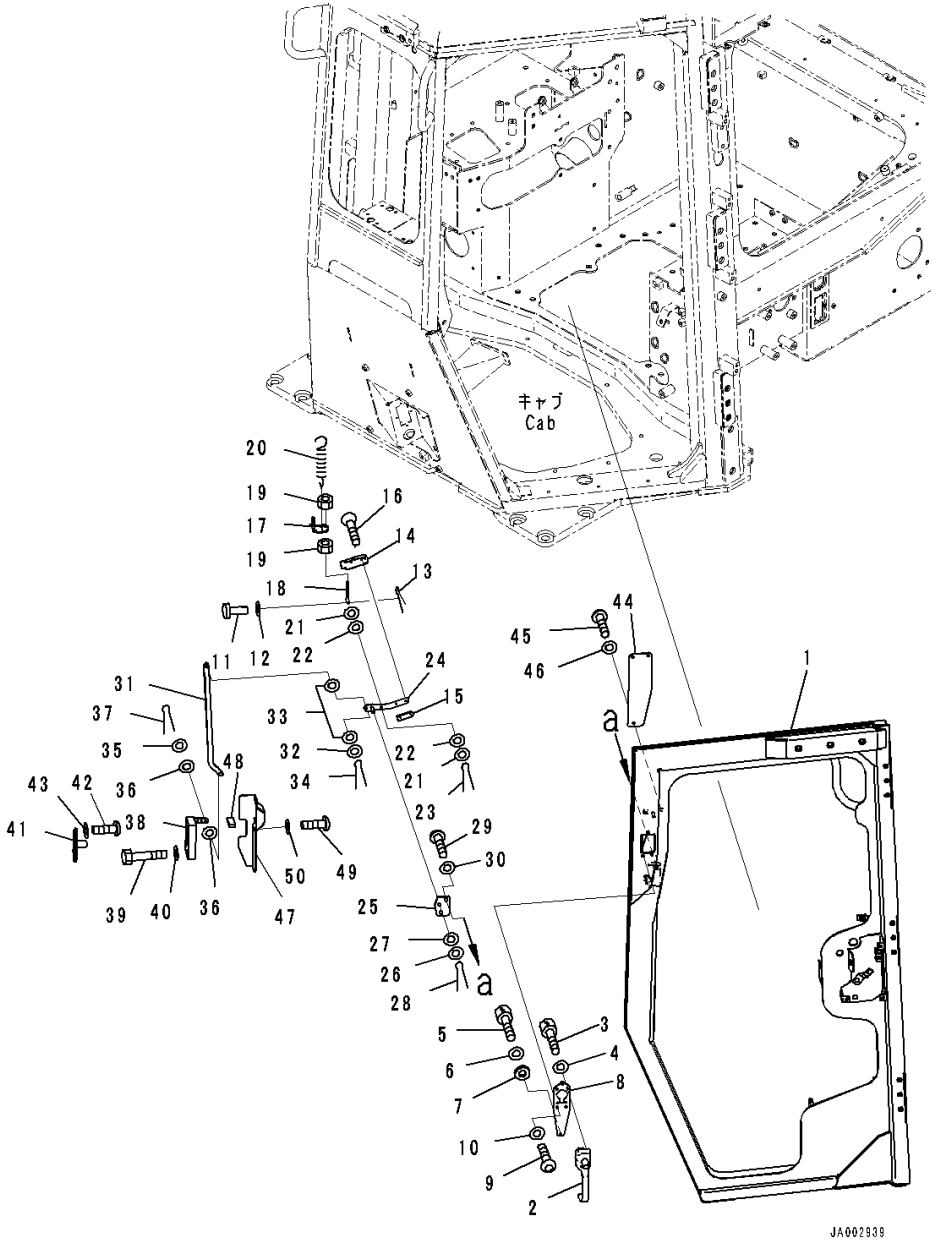

Index	Code	Part Number	Description	Qty	Serial Number
		Note: This list covers following specifications.			
		With AM-FM Stereo Radio For North America, TH300 Type KOMTRAX			
		Provision For Radio Installation, TH300 Type KOMTRAX			
		EU Regulation Guard Level 2, With AM-FM Stereo Radio With Cassette, TH300 Type KOMTRAX			
		EU Regulation Guard Level 2, Provision For Radio Installation, TH300 Type KOMTRAX			
		With Rear View Monitoring System, With AM-FM Stereo Radio For North America, TH300 Type KOMTRAX			
		With Rear View Monitoring System, Provision For Radio Installation, TH300 Type KOMTRAX			
		EU Regulation Guard Level 2, With Rear View Monitoring System, With AM-FM Stereo Radio For North America, TH300 Type KOMTRAX			
		EU Regulation Guard Level 2, With Rear View Monitoring System, With AM-FM Stereo Radio For North America, TH300 Type KOMTRAX			
1		14X-Y79-3111	Door Assembly	1	80001-
2		198-Z11-3710	Handle Assembly	1	80001-
3		01252-70520	Bolt	4	80001-
4		01640-20508	Washer	4	80001-
5		01252-70525	Bolt, Hexagon Socket Head	1	80001-
6		01640-20508	Washer	1	80001-
7		14X-Y79-3130	Spacer	1	80001-
8		12Y-978-3210	Plate	1	80001-
9		01245-00620	Screw	3	80001-
10		01643-70623	Washer	3	80001-
11		04205-10622	Pin	1	80001-
12		01643-70623	Washer	4	80001-
13		04050-11612	Pin, Cotter	1	80001-
14		12Y-978-3281	Knob	1	80001-
15		12Y-978-3290	Plate	1	80001-
16		01023-70412	Screw	2	80001-
17		14X-Y79-3220	Plate	1	80001-
18		14X-Y79-3360	Rod	1	80001-
19		01580-00605	Nut	2	80001-
20		176-06-42170	Spring	1	80001-
21		01643-70623	Washer	2	80001-
22		12Y-978-3310	Rubber	2	80001-

FIG. K0210-001002 ROPS Cab, Door and Latch, LHS

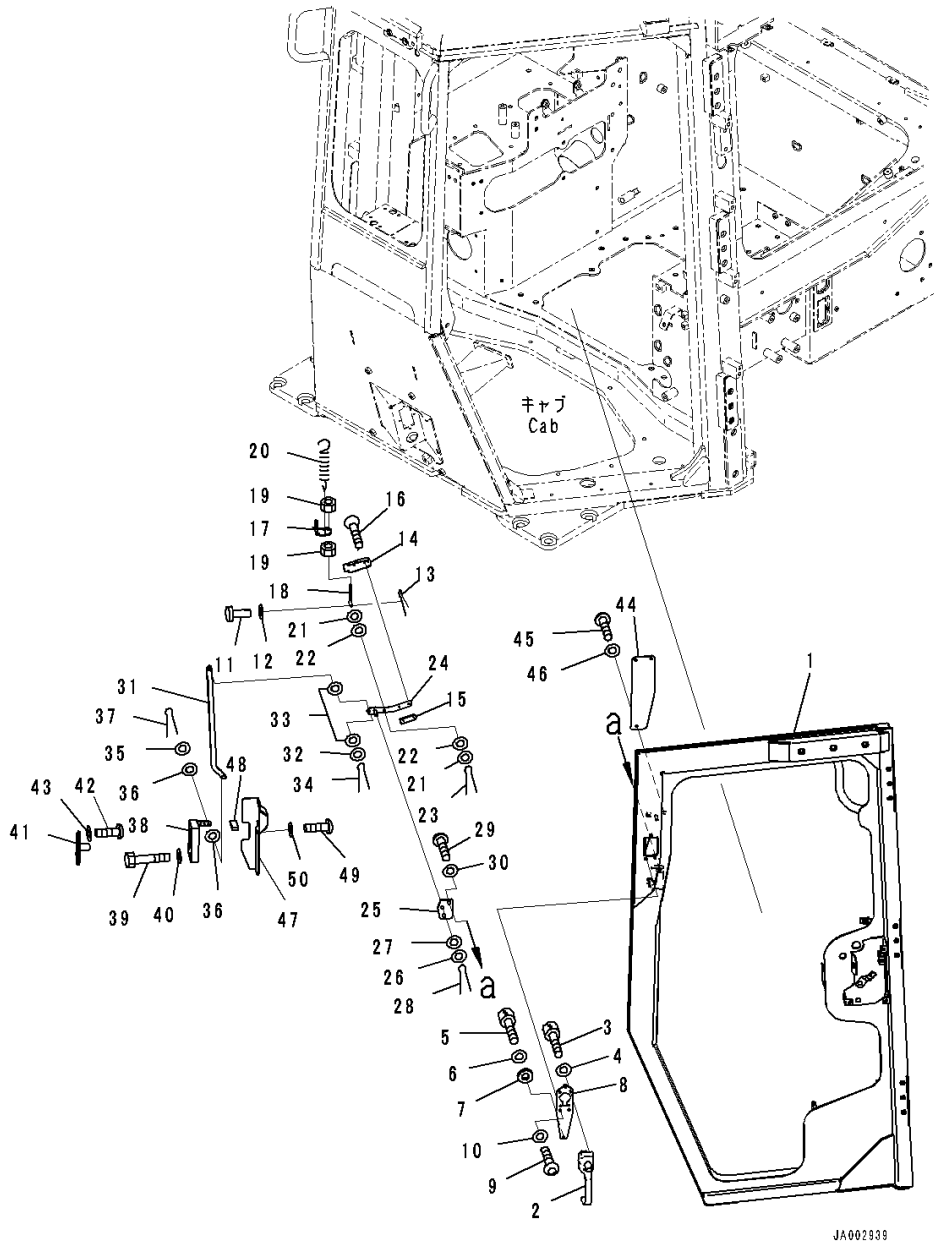

Index	Code	Part Number	Description	Qty	Serial Number
23		04050-11612	Pin, Cotter	1	80001-
24		14X-Y79-3651	Plate	1	80001-
25		12Y-978-3261	Plate	1	80001-
26		01643-70823	Washer	1	80001-
27		12Y-978-3360	Rubber	1	80001-
28		04050-12012	Pin, Cotter	1	80001-
29		01245-00620	Screw	2	80001-
30		01643-70623	Washer	2	80001-
31		17A-979-3320	Plate	1	80001-
32		01640-20610	Washer	1	80001-
33		12Y-978-3310	Rubber	2	80001-
34		04050-11612	Pin, Cotter	1	80001-
35		01643-70623	Washer	1	80001-
36		12Y-978-3310	Rubber	2	80001-
37		04050-11612	Pin, Cotter	1	80001-
38		195-Z11-4520	Lock	1	80001-
39		01010-D0635	Bolt	4	80001-
40		01643-70623	Washer	4	80001-
41		12Y-978-3480	Striker	1	80001-
42		01245-00825	Screw	4	80001-
43		01643-70823	Washer	4	80001-
44		14X-Y79-3310	Plate	1	80001-
45		01245-00620	Screw	3	80001-
46		01643-70623	Washer	3	80001-
47		14X-Y79-3321	Cover	1	80001-
48		17A-979-3811	• Sheet,Bonded	1	80001-
49		01245-00620	Screw	2	80001-
50		01643-70623	Washer	2	80001-

FIG. K0210-001003 ROPS Cab, Door Dumper, Window and Wiper LHS

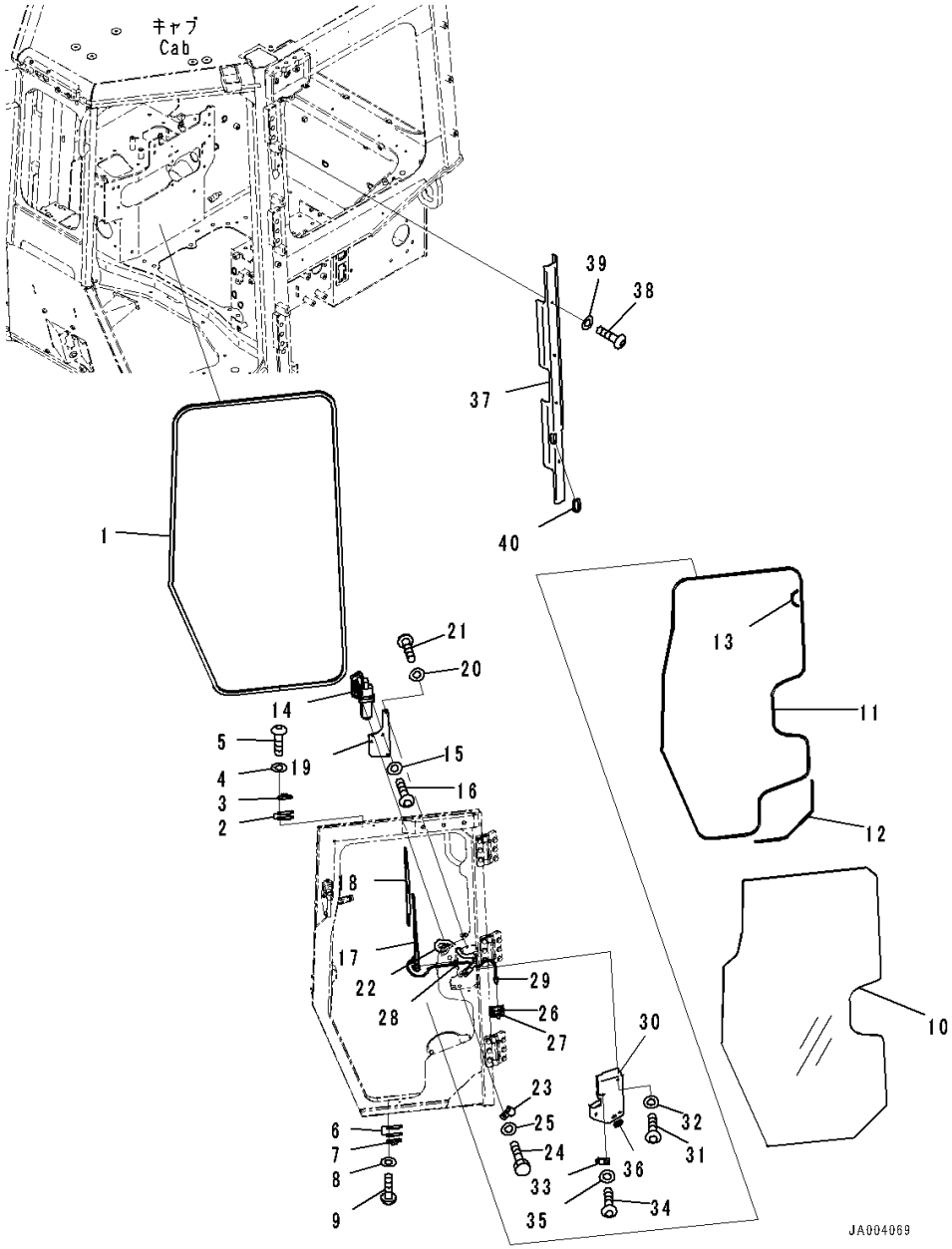

Index	Code	Part Number	Description	Qty	Serial Number
		Note: This list covers following specifications.			
		With AM-FM Stereo Radio For North America, TH300 Type KOMTRAX			
		Provision For Radio Installation, TH300 Type KOMTRAX			
		EU Regulation Guard Level 2, With AM-FM Stereo Radio With Cassette, TH300 Type KOMTRAX			
		EU Regulation Guard Level 2, Provision For Radio Installation, TH300 Type KOMTRAX			
		With Rear View Monitoring System, With AM-FM Stereo Radio For North America, TH300 Type KOMTRAX			
		With Rear View Monitoring System, Provision For Radio Installation, TH300 Type KOMTRAX			
		EU Regulation Guard Level 2, With Rear View Monitoring System, With AM-FM Stereo Radio For North America, TH300 Type KOMTRAX			
		EU Regulation Guard Level 2, With Rear View Monitoring System, With AM-FM Stereo Radio For North America, TH300 Type KOMTRAX			
1		12Y-978-3370	Seal	1	80001-
2		14X-911-1761	Shim, T=1.2mm	2	80001-
3		14X-911-1690	Damper	1	80001-
4		01643-70623	Washer	2	80001-
5		01245-00620	Screw	2	80001-
6		14X-911-1761	Shim, T=1.2mm	2	80001-
7		14X-911-1690	Damper	1	80001-
8		01643-70623	Washer	2	80001-
9		01245-00620	Screw	2	80001-
10		14X-Y79-1361	Glass	1	80001-
11		14X-Y79-1380	Seal,Bonded	1	80001-
12		14X-Y79-1390	Seal,Bonded	1	80001-
13		14X-Y79-1410	Seal,Bonded	1	80001-
14		12Y-978-2431	Wiper Motor	1	80001-
15		01643-70623	Washer	2	80001-
16		01245-00616	Screw, Hexagon Socket Head	2	80001-
17		12Y-978-2490	Arm, Wiper	1	80001-
18		17A-Z11-2581	Wiper Blade	1	80001-
19		14X-Y79-3280	Plate	1	80001-
20		01643-70823	Washer	3	80001-
21		01245-00820	Screw	3	80001-
22		14X-06-51181	Wire Harness	1	80001-

FIG. K0210-001003 ROPS Cab, Door Dumper, Window and Wiper LHS

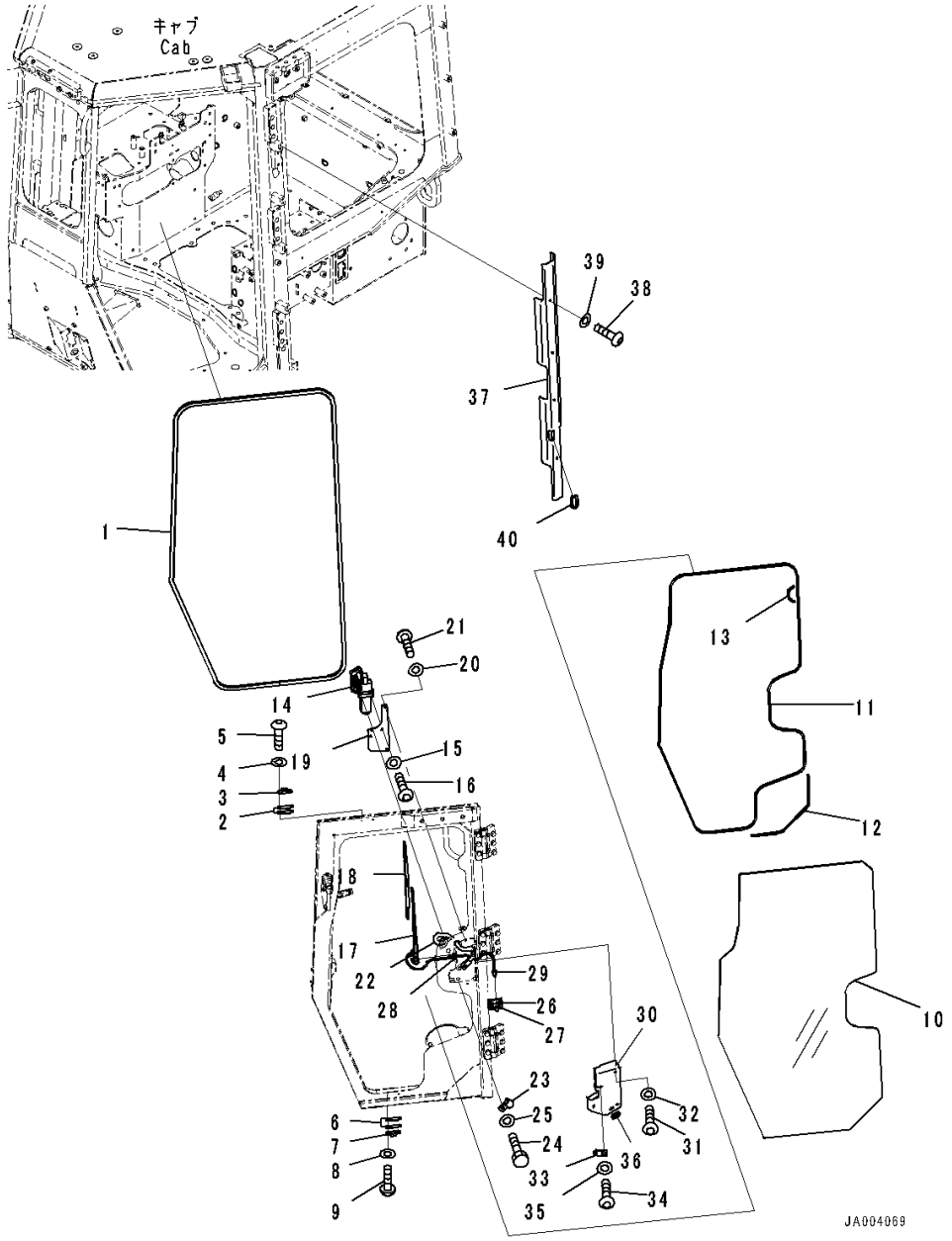

Index	Code	Part Number	Description	Qty	Serial Number
23		04434-51710	Clip	1	80001-
24		01010-81020	Bolt	1	80001-
25		01643-31032	Washer	1	80001-
26		20U-54-46520	Hook, Sticker Type	1	80001-
27		08034-20519	Band	1	80001-
28		17A-Z11-2660	Cap	1	80001-
29		17A-Z11-4610	Valve	1	80001-
30		14X-Y79-3472	Cover	1	80005-
31		01245-00620	Screw	3	80001-
32		01643-70623	Washer	3	80001-
33		14X-Y79-3770	Bracket	1	80005-
34		01245-00620	Screw	1	80005-
35		01643-70623	Washer	1	80005-
36		08037-02512	Grommet	1	80001-
37		14X-Y79-3451	Cover	1	80001-
38		01245-00816	Screw	4	80001-
39		01643-70823	Washer	4	80001-
40		14X-Y79-3631	Seal	1	80001-

FIG. K0210-001004 ROPS Cab, Door Cover, LHS

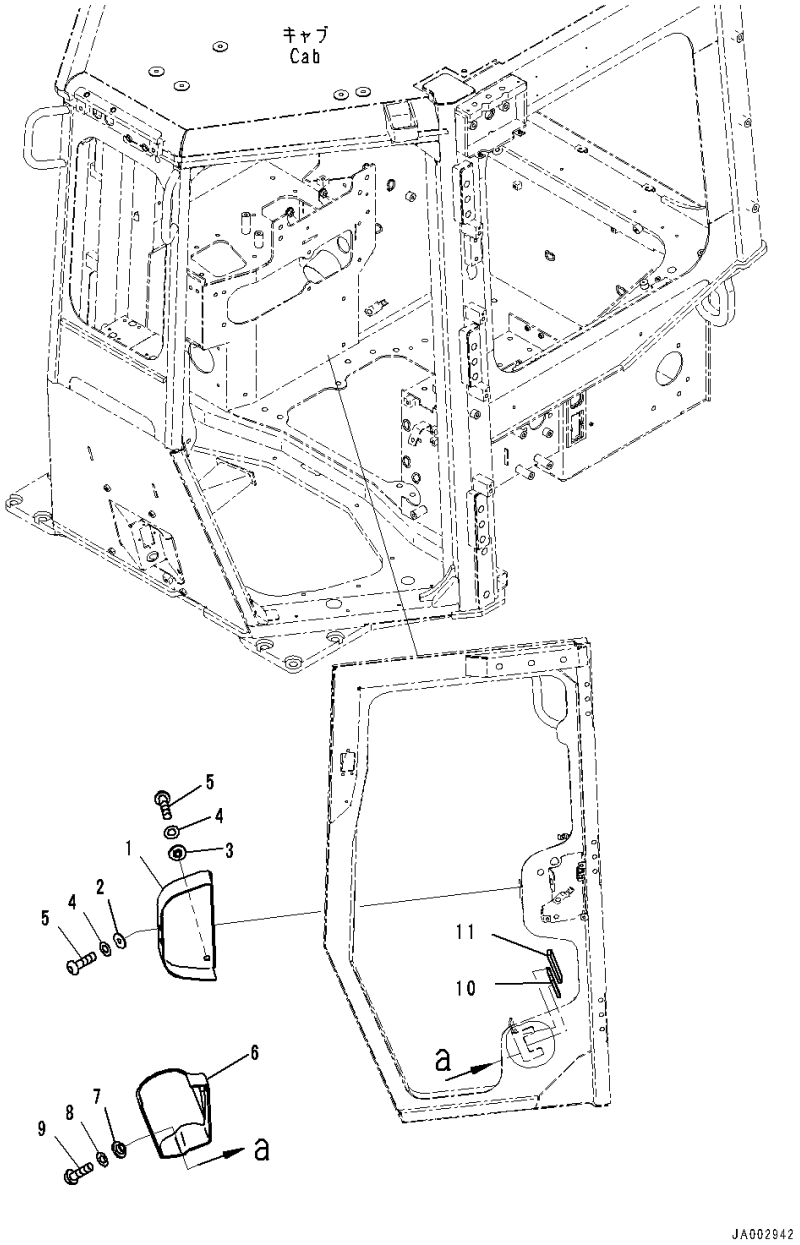

Index	Code	Part Number	Description	Qty	Serial Number
		Note: This list covers following specifications.			
		With AM-FM Stereo Radio For North America, TH300 Type KOMTRAX			
		Provision For Radio Installation, TH300 Type KOMTRAX			
		EU Regulation Guard Level 2, With AM-FM Stereo Radio With Cassette, TH300 Type KOMTRAX			
		EU Regulation Guard Level 2, Provision For Radio Installation, TH300 Type KOMTRAX			
		With Rear View Monitoring System, With AM-FM Stereo Radio For North America, TH300 Type KOMTRAX			
		With Rear View Monitoring System, Provision For Radio Installation, TH300 Type KOMTRAX			
		EU Regulation Guard Level 2, With Rear View Monitoring System, With AM-FM Stereo Radio For North America, TH300 Type KOMTRAX			
		EU Regulation Guard Level 2, With Rear View Monitoring System, With AM-FM Stereo Radio For North America, TH300 Type KOMTRAX			
1		14X-Y79-3270	Cover	1	80001-
2		12Y-978-2660	Collar	2	80001-
3		17A-979-1620	Collar	2	80001-
4		01643-70623	Washer	4	80001-
5		01245-00616	Screw, Hexagon Socket Head	4	80001-
6		14X-Y79-3241	Cover	1	80001-
7		12Y-978-2660	Collar	3	80001-
8		01643-70623	Washer	3	80001-
9		01245-00620	Screw	3	80001-
10		14X-Y79-3261	Rubber,Bonded	1	80001-
11		14X-Y79-3350	Rubber,Bonded	1	80001-

FIG. K0210-001005 ROPS Cab, Door and Latch, RHS

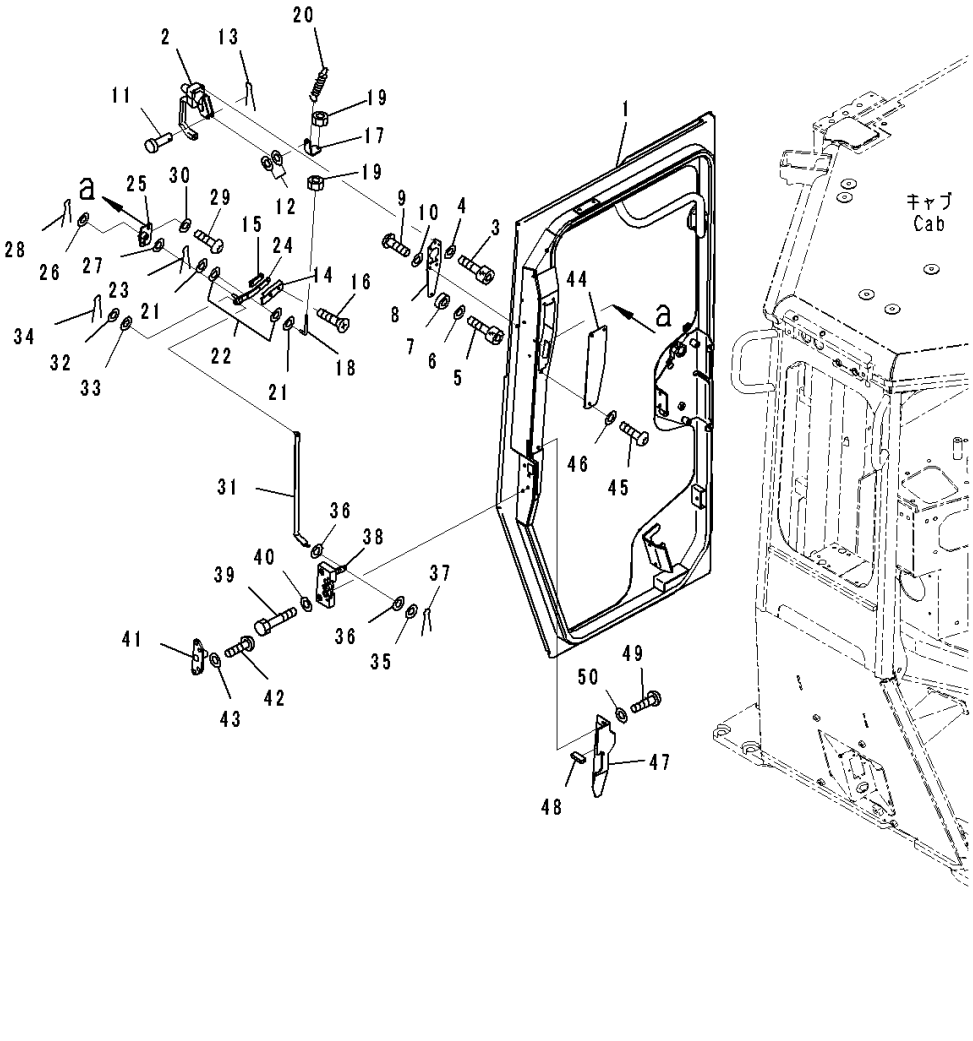

Index	Code	Part Number	Description	Qty	Serial Number
		Note: This list covers following specifications.			
		With AM-FM Stereo Radio For North America, TH300 Type KOMTRAX			
		Provision For Radio Installation, TH300 Type KOMTRAX			
		EU Regulation Guard Level 2, With AM-FM Stereo Radio With Cassette, TH300 Type KOMTRAX			
		EU Regulation Guard Level 2, Provision For Radio Installation, TH300 Type KOMTRAX			
		With Rear View Monitoring System, With AM-FM Stereo Radio For North America, TH300 Type KOMTRAX			
		With Rear View Monitoring System, Provision For Radio Installation, TH300 Type KOMTRAX			
		EU Regulation Guard Level 2, With Rear View Monitoring System, With AM-FM Stereo Radio For North America, TH300 Type KOMTRAX			
		EU Regulation Guard Level 2, With Rear View Monitoring System, With AM-FM Stereo Radio For North America, TH300 Type KOMTRAX			
1		14X-Y79-3121	Door Assembly	1	80001-
2		198-Z11-3710	Handle Assembly	1	80001-
3		01252-70520	Bolt	4	80001-
4		01640-20508	Washer	4	80001-
5		01252-70525	Bolt, Hexagon Socket Head	1	80001-
6		01640-20508	Washer	1	80001-
7		14X-Y79-3130	Spacer	1	80001-
8		12Y-978-3210	Plate	1	80001-
9		01245-00620	Screw	3	80001-
10		01643-70623	Washer	3	80001-
11		04205-10622	Pin	1	80001-
12		01643-70623	Washer	4	80001-
13		04050-11612	Pin, Cotter	1	80001-
14		12Y-978-3281	Knob	1	80001-
15		12Y-978-3290	Plate	1	80001-
16		01023-70412	Screw	2	80001-
17		14X-Y79-3230	Plate	1	80001-
18		14X-Y79-3360	Rod	1	80001-
19		01580-00605	Nut	2	80001-
20		176-06-42170	Spring	1	80001-
21		01643-70623	Washer	2	80001-
22		12Y-978-3310	Rubber	2	80001-

FIG. K0210-001005 ROPS Cab, Door and Latch, RHS

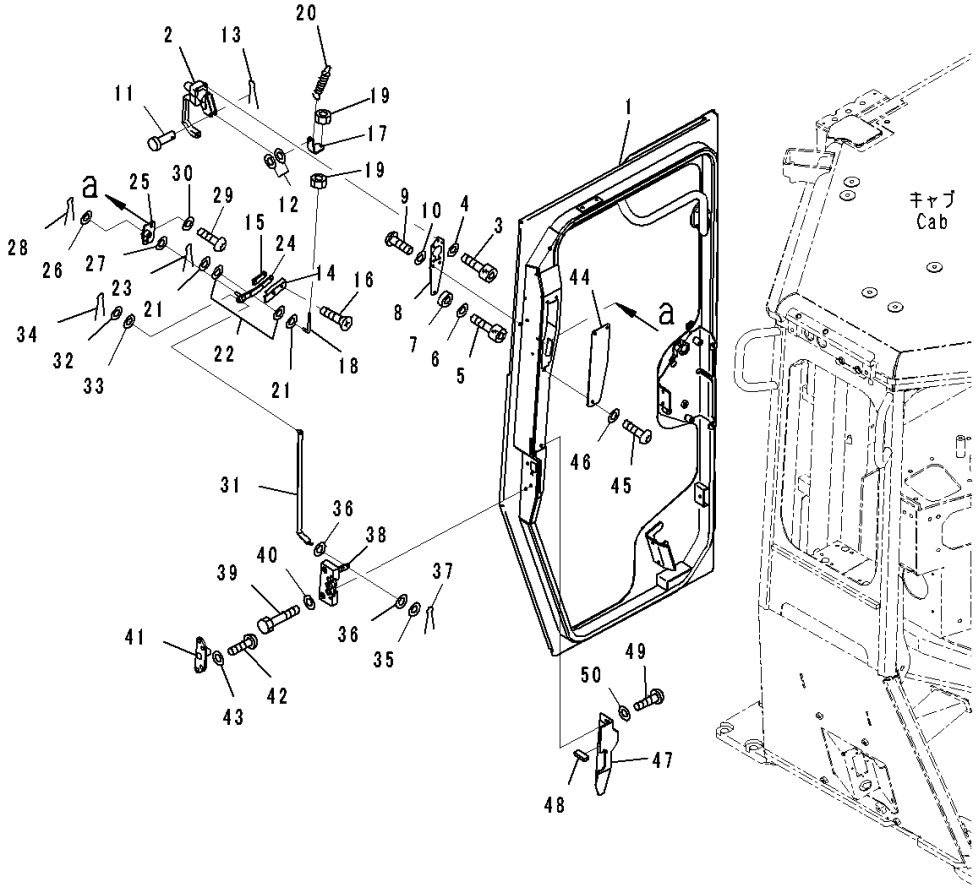

Index	Code	Part Number	Description	Qty	Serial Number
23		04050-11612	Pin, Cotter	1	80001-
24		14X-Y79-3661	Plate	1	80001-
25		12Y-978-3271	Plate	1	80001-
26		01643-70823	Washer	1	80001-
27		12Y-978-3360	Rubber	1	80001-
28		04050-12012	Pin, Cotter	1	80001-
29		01245-00620	Screw	2	80001-
30		01643-70623	Washer	2	80001-
31		17A-979-3330	Plate	1	80001-
32		01640-20610	Washer	1	80001-
33		12Y-978-3310	Rubber	2	80001-
34		04050-11612	Pin, Cotter	1	80001-
35		01643-70623	Washer	1	80001-
36		12Y-978-3310	Rubber	2	80001-
37		04050-11612	Pin, Cotter	1	80001-
38		195-Z11-4510	Lock	1	80001-
39		01010-D0635	Bolt	4	80001-
40		01643-70623	Washer	4	80001-
41		12Y-978-3480	Striker	1	80001-
42		01245-00825	Screw	4	80001-
43		01643-70823	Washer	4	80001-
44		14X-Y79-3310	Plate	1	80001-
45		01245-00620	Screw	3	80001-
46		01643-70623	Washer	3	80001-
47		14X-Y79-3331	Cover	1	80001-
48		17A-979-3811	• Sheet	1	80001-
49		01245-00620	Screw	2	80001-
50		01643-70623	Washer	2	80001-

FIG. K0210-001006 ROPS Cab, Door Dumper, Window and Wiper, RHS

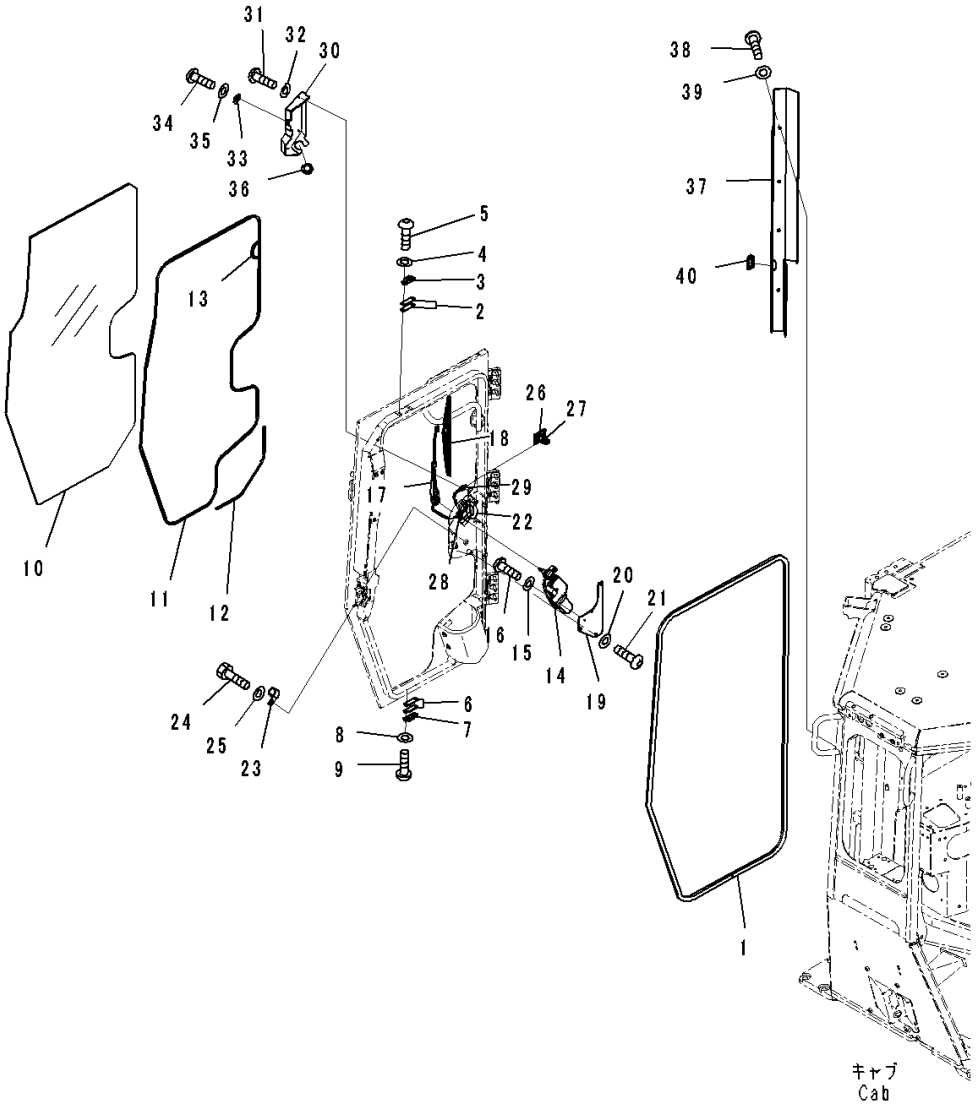

Index	Code	Part Number	Description	Qty	Serial Number
		Note: This list covers following specifications.			
			With AM-FM Stereo Radio For North America, TH300 Type KOMTRAX		
			Provision For Radio Installation, TH300 Type KOMTRAX		
			EU Regulation Guard Level 2, With AM-FM Stereo Radio With Cassette, TH300 Type KOMTRAX		
			EU Regulation Guard Level 2, Provision For Radio Installation, TH300 Type KOMTRAX		
			With Rear View Monitoring System, With AM-FM Stereo Radio For North America, TH300 Type KOMTRAX		
			With Rear View Monitoring System, Provision For Radio Installation, TH300 Type KOMTRAX		
			EU Regulation Guard Level 2, With Rear View Monitoring System, With AM-FM Stereo Radio For North America, TH300 Type KOMTRAX		
			EU Regulation Guard Level 2, With Rear View Monitoring System, With AM-FM Stereo Radio For North America, TH300 Type KOMTRAX		
1		12Y-978-3370	Seal	1	80001-
2		14X-911-1761	Shim, T=1.2mm	2	80001-
3		14X-911-1690	Damper	1	80001-
4		01643-70623	Washer	2	80001-
5		01245-00620	Screw	2	80001-
6		14X-911-1761	Shim, T=1.2mm	2	80001-
7		14X-911-1690	Damper	1	80001-
8		01643-70623	Washer	2	80001-
9		01245-00620	Screw	2	80001-
10		14X-Y79-1371	Glass	1	80001-
11		14X-Y79-1380	Seal	1	80001-
12		14X-Y79-1390	Seal	1	80001-
13		14X-Y79-1410	Seal	1	80001-
14		12Y-978-2441	Wiper Motor	1	80001-
15		01643-70623	Washer	2	80001-
16		01245-00616	Screw, Hexagon Socket Head	2	80001-
17		12Y-978-2490	Arm, Wiper	1	80001-
18		17A-Z11-2581	Wiper Blade	1	80001-
19		14X-Y79-3290	Plate	1	80001-
20		01643-70823	Washer	3	80001-
21		01245-00820	Screw	3	80001-
22		14X-06-51181	Wire Harness	1	80001-

FIG. K0210-001006 ROPS Cab, Door Dumper, Window and Wiper, RHS

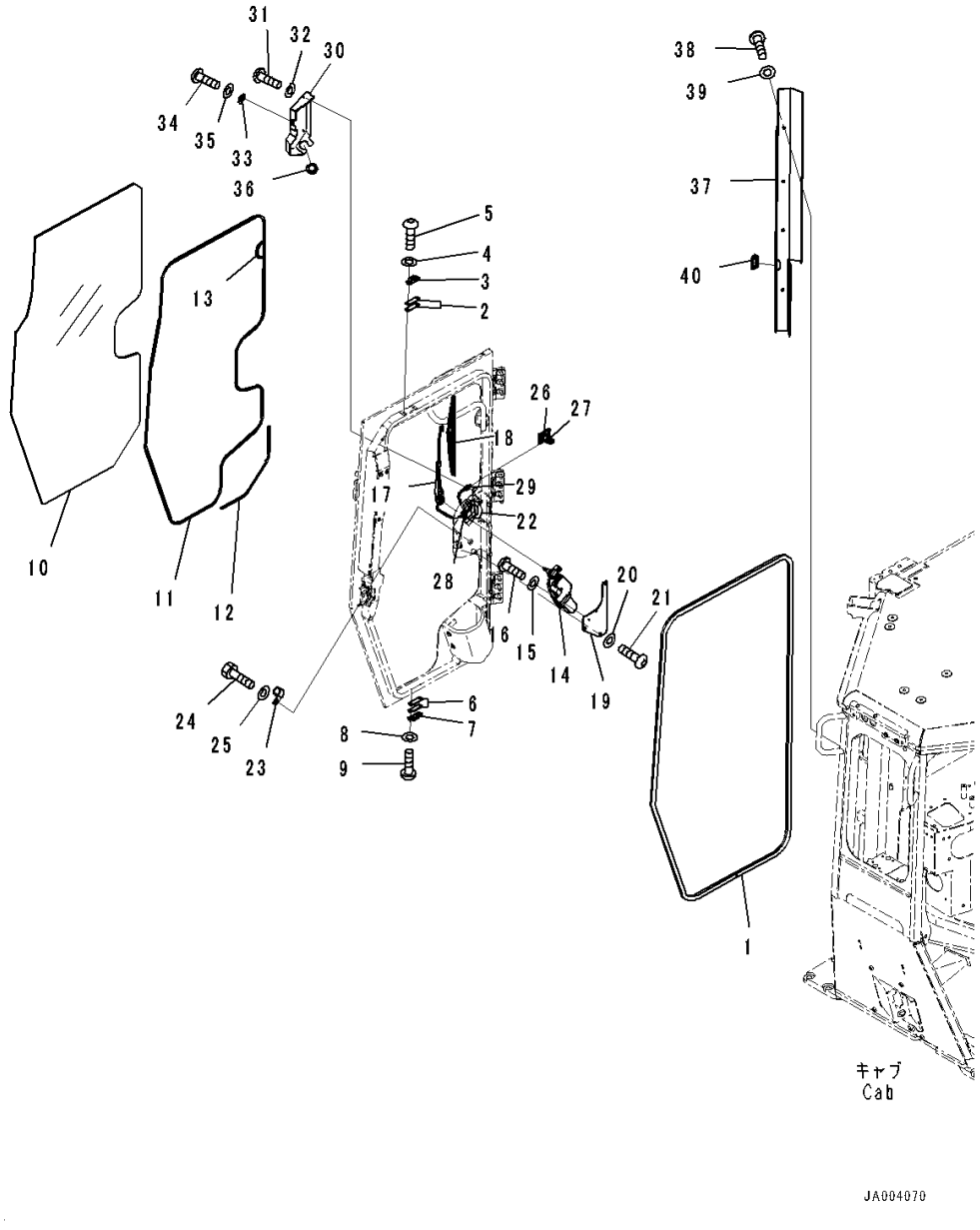

Index	Code	Part Number	Description	Qty	Serial Number
23		04434-51710	Clip	1	80001-
24		01010-81020	Bolt	1	80001-
25		01643-31032	Washer	1	80001-
26		20U-54-46520	Hook, Sticker Type	1	80001-
27		08034-20519	Band	1	80001-
28		17A-Z11-2660	Cap	1	80001-
29		17A-Z11-4610	Valve	1	80001-
30		14X-Y79-3482	Cover	1	80005-
31		01245-00620	Screw	3	80001-
32		01643-70623	Washer	3	80001-
33		14X-Y79-3780	Bracket	1	80005-
34		01245-00620	Screw	1	80005-
35		01643-70623	Washer	1	80005-
36		08037-02512	Grommet	1	80001-
37		14X-Y79-3461	Cover	1	80001-
38		01245-00816	Screw	4	80001-
39		01643-70823	Washer	4	80001-
40		14X-Y79-3631	Seal	1	80001-

FIG. K0210-001007 ROPS Cab, Door Cover, RHS

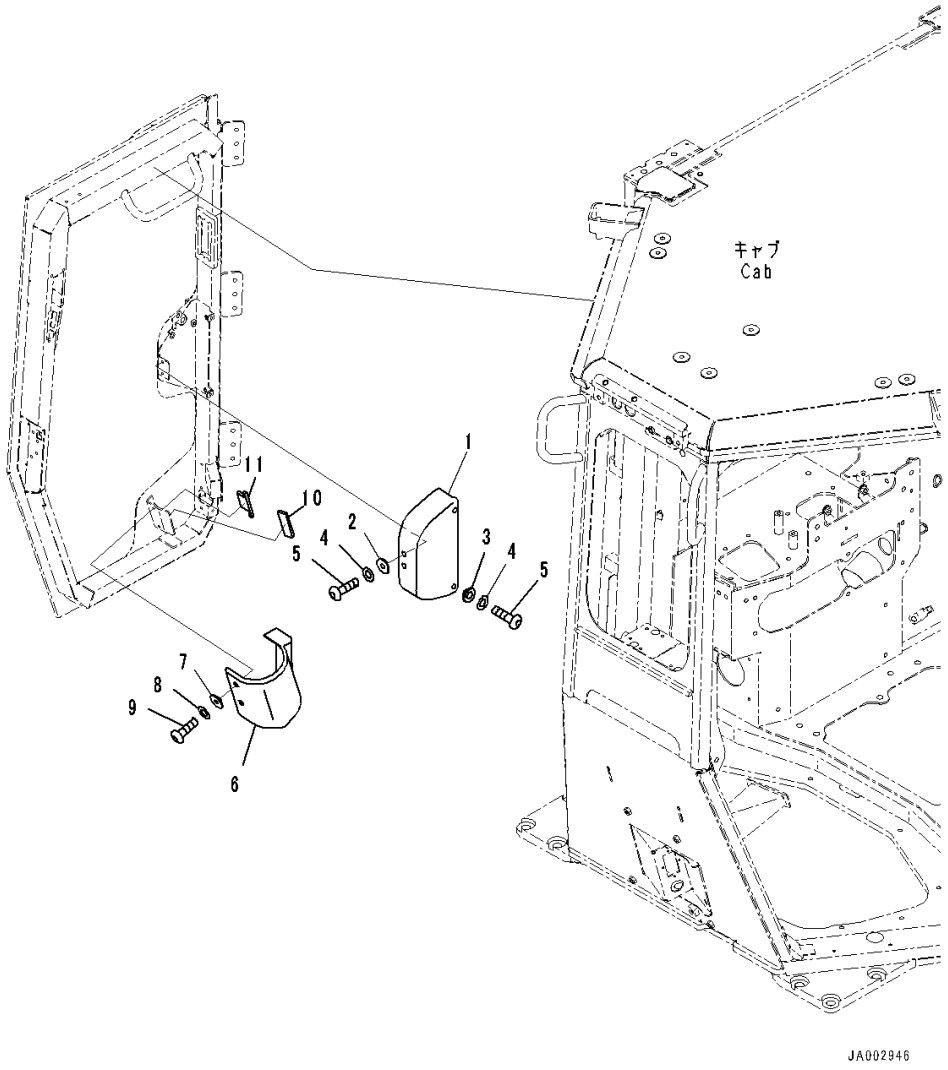

Index	Code	Part Number	Description	Qty	Serial Number
		Note: This list covers following specifications.			
		With AM-FM Stereo Radio For North America, TH300 Type KOMTRAX			
		Provision For Radio Installation, TH300 Type KOMTRAX			
		EU Regulation Guard Level 2, With AM-FM Stereo Radio With Cassette, TH300 Type KOMTRAX			
		EU Regulation Guard Level 2, Provision For Radio Installation, TH300 Type KOMTRAX			
		With Rear View Monitoring System, With AM-FM Stereo Radio For North America, TH300 Type KOMTRAX			
		With Rear View Monitoring System, Provision For Radio Installation, TH300 Type KOMTRAX			
		EU Regulation Guard Level 2, With Rear View Monitoring System, With AM-FM Stereo Radio For North America, TH300 Type KOMTRAX			
		EU Regulation Guard Level 2, With Rear View Monitoring System, With AM-FM Stereo Radio For North America, TH300 Type KOMTRAX			
1		14X-Y79-3270	Cover	1	80001-
2		12Y-978-2660	Collar	2	80001-
3		17A-979-1620	Collar	2	80001-
4		01643-70623	Washer	4	80001-
5		01245-00616	Screw, Hexagon Socket Head	4	80001-
6		14X-Y79-3251	Cover	1	80001-
7		12Y-978-2660	Collar	3	80001-
8		01643-70623	Washer	3	80001-
9		01245-00620	Screw	3	80001-
10		14X-Y79-3261	Rubber	1	80001-
11		14X-Y79-3350	Rubber	1	80001-

FIG. K0210-001008 ROPS Cab, Door Hinge

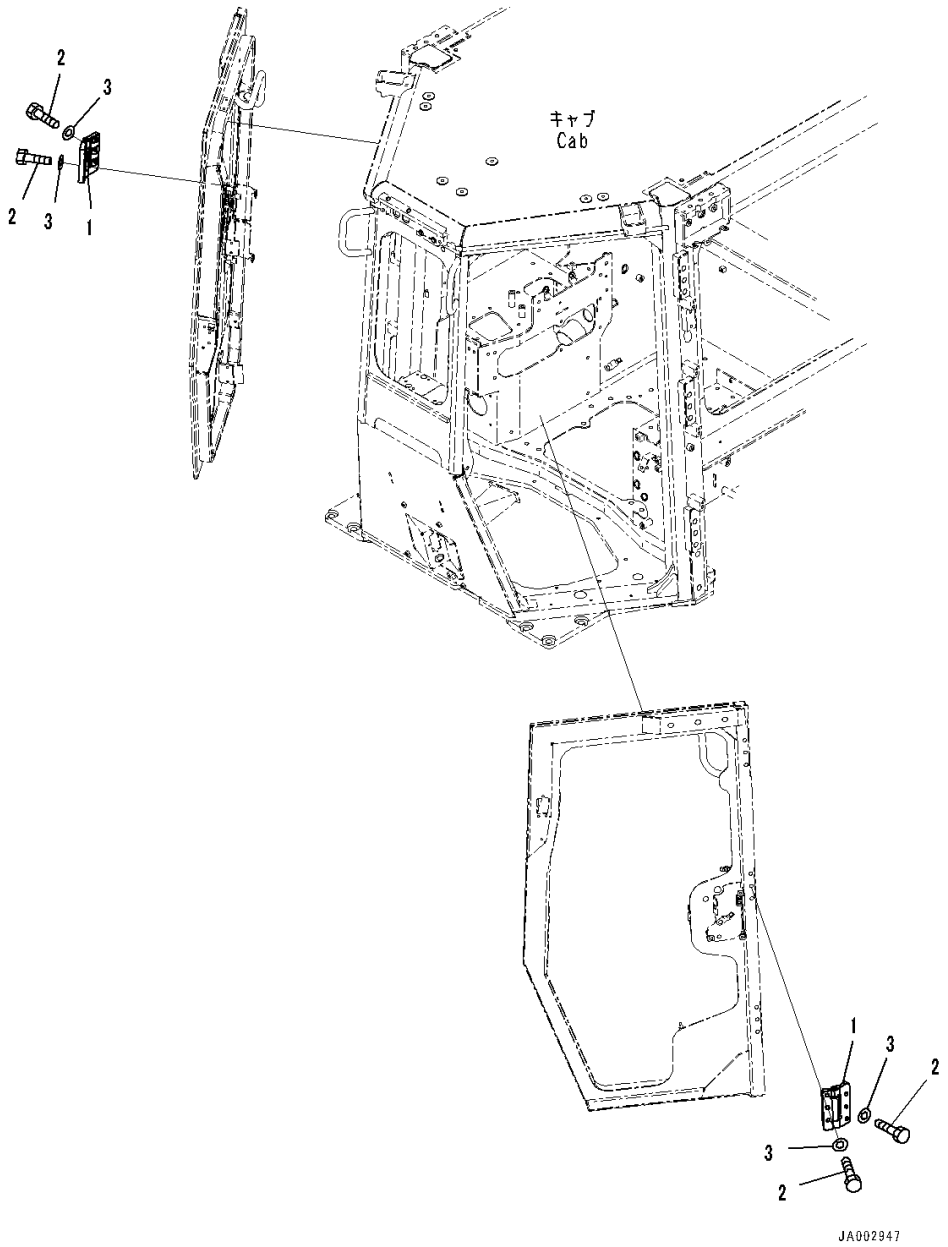

Index	Code	Part Number	Description	Qty	Serial Number
		Note: This list covers following specifications.			
		With AM-FM Stereo Radio For North America, TH300 Type KOMTRAX			
		Provision For Radio Installation, TH300 Type KOMTRAX			
		EU Regulation Guard Level 2, With AM-FM Stereo Radio With Cassette, TH300 Type KOMTRAX			
		EU Regulation Guard Level 2, Provision For Radio Installation, TH300 Type KOMTRAX			
		With Rear View Monitoring System, With AM-FM Stereo Radio For North America, TH300 Type KOMTRAX			
		With Rear View Monitoring System, Provision For Radio Installation, TH300 Type KOMTRAX			
		EU Regulation Guard Level 2, With Rear View Monitoring System, With AM-FM Stereo Radio For North America, TH300 Type KOMTRAX			
		EU Regulation Guard Level 2, With Rear View Monitoring System, With AM-FM Stereo Radio For North America, TH300 Type KOMTRAX			
1		14X-Y79-3671	Hinge	6	80001-
2		01010-D1040	Bolt	36	80001-
3		01643-71032	Washer	36	80001-

FIG. K0210-001009 ROPS Cab, Door Open Lock (1/2)

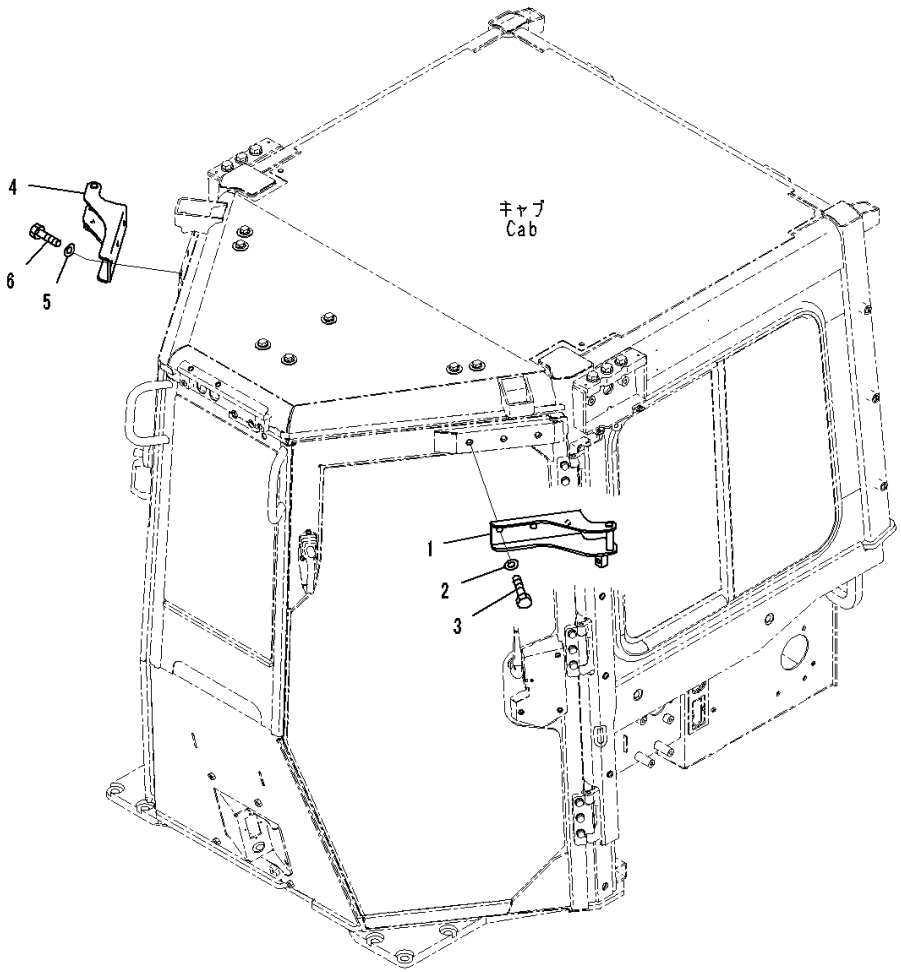

Index	Code	Part Number	Description	Qty	Serial Number
		Note: This list covers following specifications.			
		With AM-FM Stereo Radio For North America, TH300 Type KOMTRAX			
		Provision For Radio Installation, TH300 Type KOMTRAX			
		EU Regulation Guard Level 2, With AM-FM Stereo Radio With Cassette, TH300 Type KOMTRAX			
		EU Regulation Guard Level 2, Provision For Radio Installation, TH300 Type KOMTRAX			
		With Rear View Monitoring System, With AM-FM Stereo Radio For North America, TH300 Type KOMTRAX			
		With Rear View Monitoring System, Provision For Radio Installation, TH300 Type KOMTRAX			
		EU Regulation Guard Level 2, With Rear View Monitoring System, With AM-FM Stereo Radio For North America, TH300 Type KOMTRAX			
		EU Regulation Guard Level 2, With Rear View Monitoring System, With AM-FM Stereo Radio For North America, TH300 Type KOMTRAX			
1		14X-Y79-3411	Striker	1	80001-
2		01643-71232	Washer	3	80001-
3		01010-D1230	Bolt	3	80001-
4		14X-Y79-3421	Striker	1	80001-
5		01643-71232	Washer	3	80001-
6		01010-D1230	Bolt	3	80001-

FIG. K0210-001010 ROPS Cab, Door Open Lock, LHS

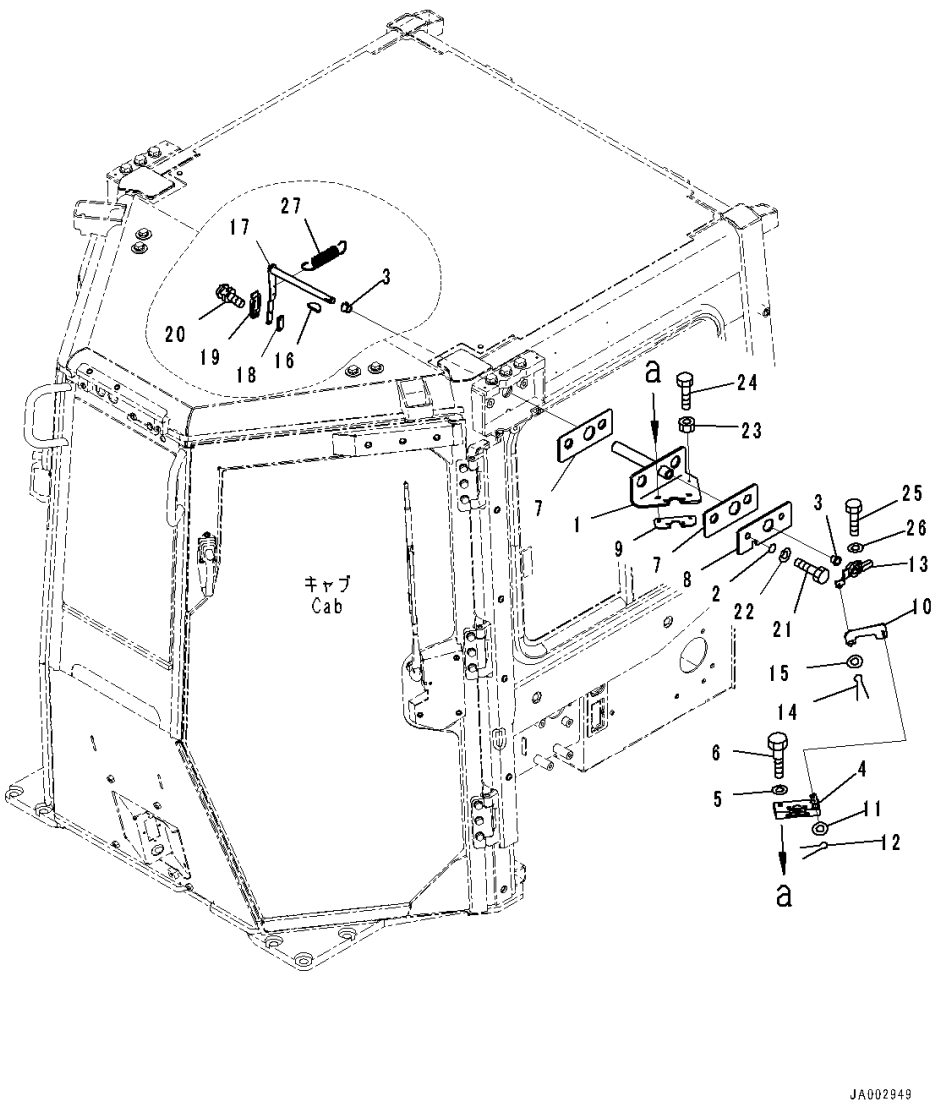

Index	Code	Part Number	Description	Qty	Serial Number
		Note: This list covers following specifications.			
		With AM-FM Stereo Radio For North America, TH300 Type KOMTRAX			
		Provision For Radio Installation, TH300 Type KOMTRAX			
		EU Regulation Guard Level 2, With AM-FM Stereo Radio With Cassette, TH300 Type KOMTRAX			
		EU Regulation Guard Level 2, Provision For Radio Installation, TH300 Type KOMTRAX			
		With Rear View Monitoring System, With AM-FM Stereo Radio For North America, TH300 Type KOMTRAX			
		With Rear View Monitoring System, Provision For Radio Installation, TH300 Type KOMTRAX			
		EU Regulation Guard Level 2, With Rear View Monitoring System, With AM-FM Stereo Radio For North America, TH300 Type KOMTRAX			
		EU Regulation Guard Level 2, With Rear View Monitoring System, With AM-FM Stereo Radio For North America, TH300 Type KOMTRAX			
1		14X-Y79-3511	Bracket	1	80001-
2		07000-13025	O-ring	2	80001-
3		17A-Z11-1810	Bushing	2	80001-
4		195-Z11-4520	Lock	1	80001-
5		01643-30823	Washer	4	80001-
6		14X-Y79-3681	Bolt	4	80001-
7		14X-Y79-3531	Rubber	2	80001-
8		14X-Y79-3551	Plate	1	80001-
9		14X-Y79-3760	Plate	1	80001-
10		17A-979-3561	Plate	1	80001-
11		01640-20610	Washer	1	80001-
12		04050-11612	Pin, Cotter	1	80001-
13		14X-Y79-3581	Lever	1	80001-
14		04050-11612	Pin, Cotter	1	80001-
15		01640-20610	Washer	1	80001-
16		04010-00516	Key	1	80001-
17		14X-Y79-3611	Lever	1	80001-
18		12Y-978-3290	Plate	1	80001-
19		12Y-978-3281	Knob	1	80001-
20		01023-70412	Screw	2	80001-
21		01010-81225	Bolt	2	80001-
22		01643-31232	Washer	2	80001-

FIG. K0210-001010 ROPS Cab, Door Open Lock, LHS

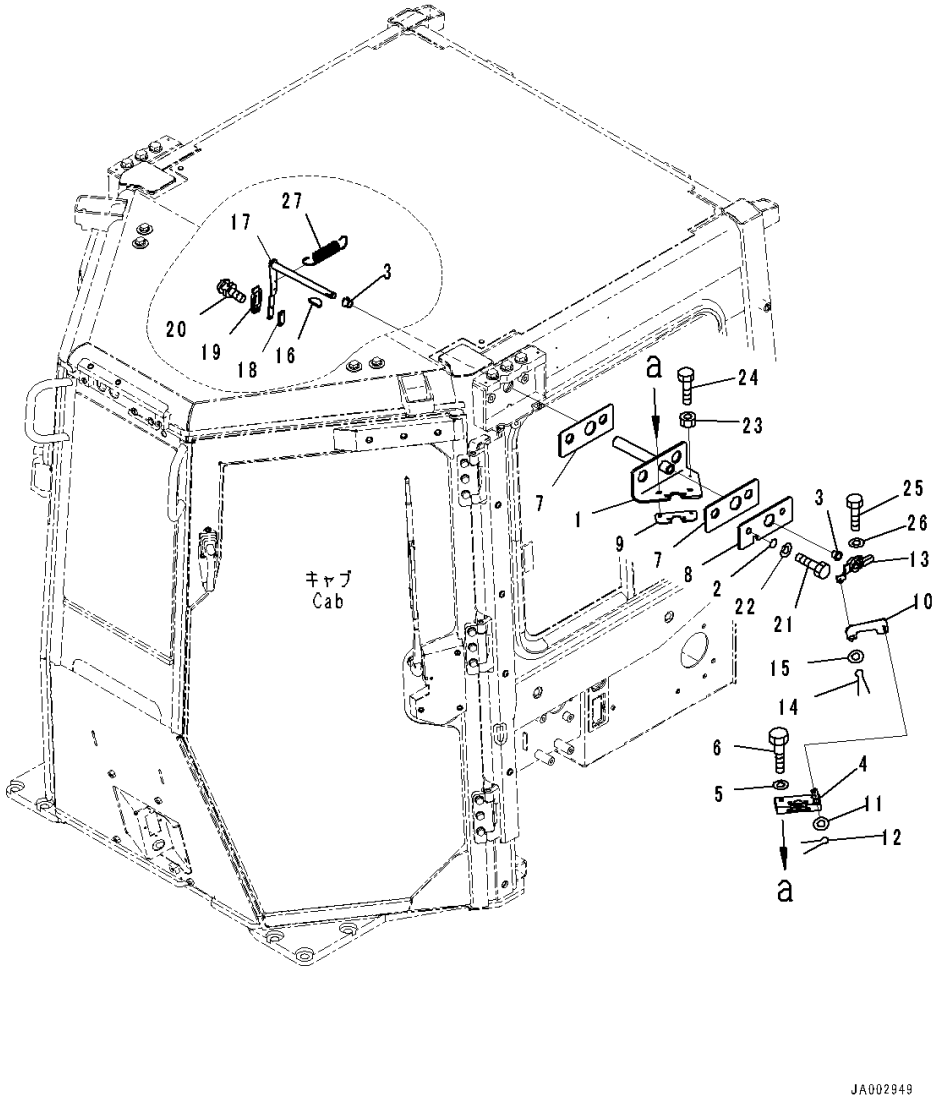

Index	Code	Part Number	Description	Qty	Serial Number
23		01580-10605	Nut	1	80001-
24		01010-80625	Bolt	1	80001-
25		01010-80825	Bolt	1	80001-
26		01643-30823	Washer	1	80001-
27		176-06-42170	Spring	1	80001-

FIG. K0210-001011 ROPS Cab, Door Open Lock, RHS

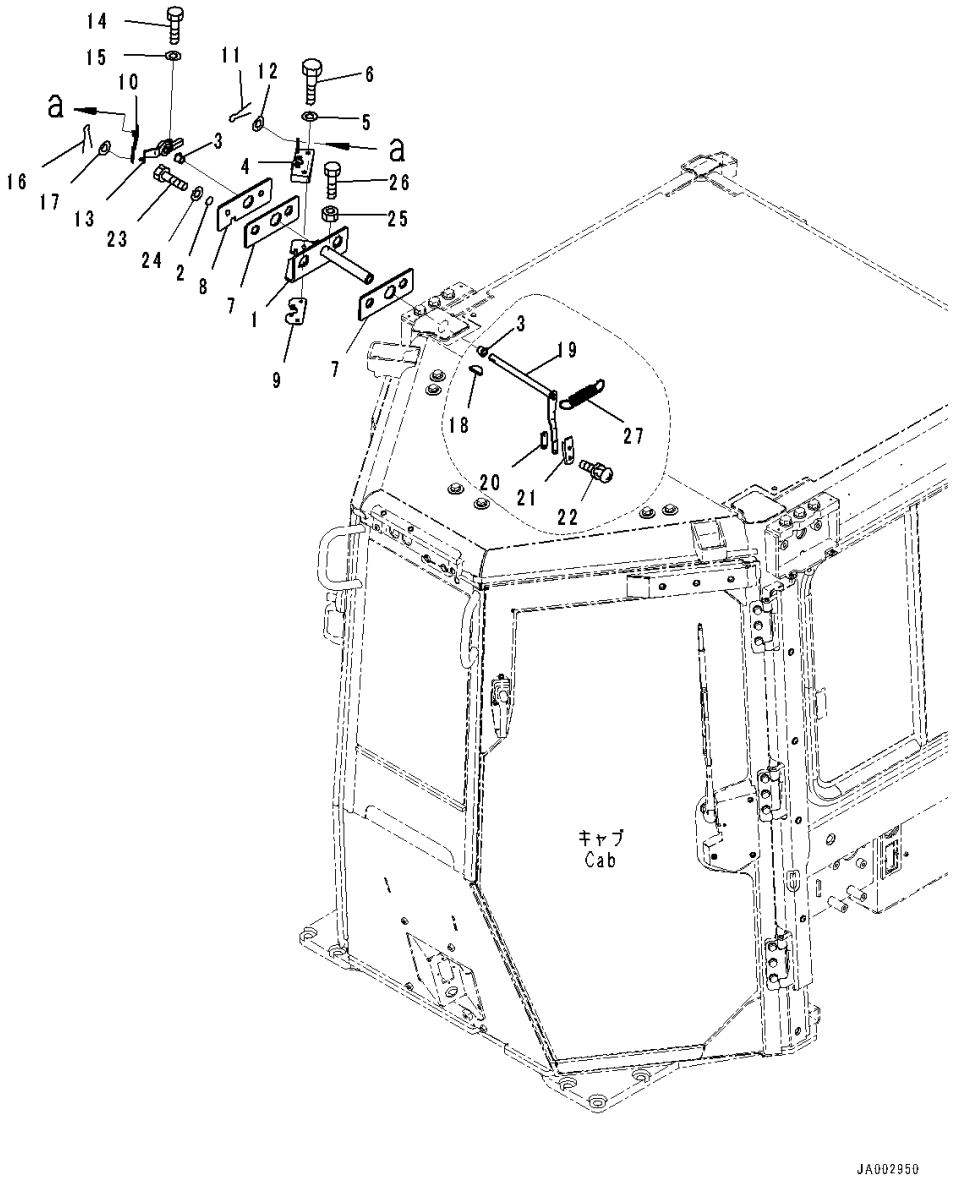

Index	Code	Part Number	Description	Qty	Serial Number
		Note: This list covers following specifications.			
		With AM-FM Stereo Radio For North America, TH300 Type KOMTRAX			
		Provision For Radio Installation, TH300 Type KOMTRAX			
		EU Regulation Guard Level 2, With AM-FM Stereo Radio With Cassette, TH300 Type KOMTRAX			
		EU Regulation Guard Level 2, Provision For Radio Installation, TH300 Type KOMTRAX			
		With Rear View Monitoring System, With AM-FM Stereo Radio For North America, TH300 Type KOMTRAX			
		With Rear View Monitoring System, Provision For Radio Installation, TH300 Type KOMTRAX			
		EU Regulation Guard Level 2, With Rear View Monitoring System, With AM-FM Stereo Radio For North America, TH300 Type KOMTRAX			
		EU Regulation Guard Level 2, With Rear View Monitoring System, With AM-FM Stereo Radio For North America, TH300 Type KOMTRAX			
1		14X-Y79-3521	Bracket	1	80001-
2		07000-13025	O-ring	2	80001-
3		17A-Z11-1810	Bushing	2	80001-
4		195-Z11-4510	Lock	1	80001-
5		01643-30823	Washer	4	80001-
6		14X-Y79-3681	Bolt	4	80001-
7		14X-Y79-3531	Rubber	2	80001-
8		14X-Y79-3551	Plate	1	80001-
9		14X-Y79-3760	Plate	1	80001-
10		17A-979-3571	Plate	1	80001-
11		01640-20610	Washer	1	80001-
12		04050-11612	Pin, Cotter	1	80001-
13		14X-Y79-3591	Lever	1	80001-
14		01010-80825	Bolt	1	80001-
15		01643-30823	Washer	1	80001-
16		04050-11612	Pin, Cotter	1	80001-
17		01640-20610	Washer	1	80001-
18		04010-00516	Key	1	80001-
19		14X-Y79-3621	Lever	1	80001-
20		12Y-978-3290	Plate	1	80001-
21		12Y-978-3281	Knob	1	80001-
22		01023-70412	Screw	2	80001-

FIG. K0210-001011 ROPS Cab, Door Open Lock, RHS

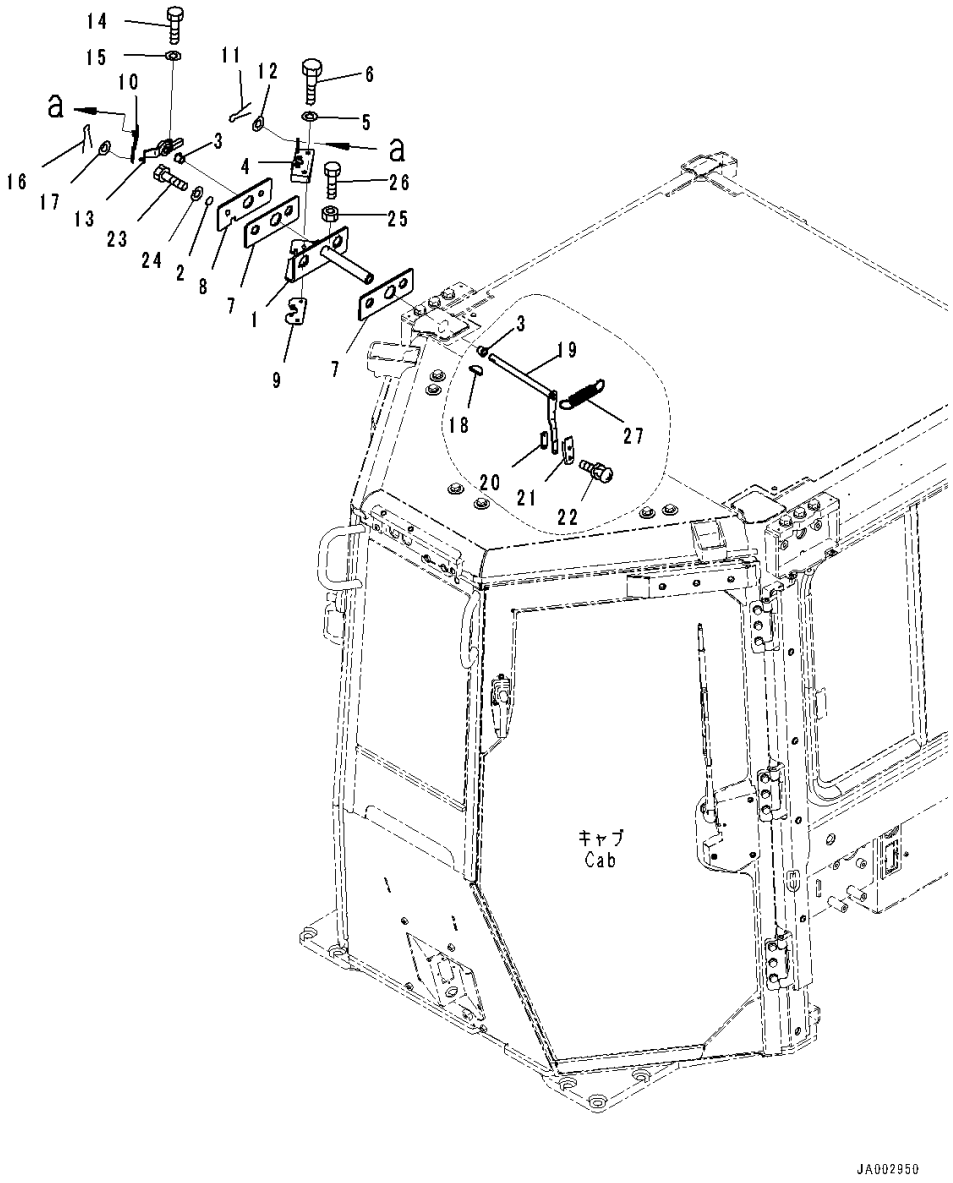

Index	Code	Part Number	Description	Qty	Serial Number
23		01010-81225	Bolt	2	80001-
24		01643-31232	Washer	2	80001-
25		01580-10605	Nut	1	80001-
26		01010-80625	Bolt	1	80001-
27		176-06-42170	Spring	1	80001-

FIG. K0210-001012 ROPS Cab, Door Open Lock (2/2)

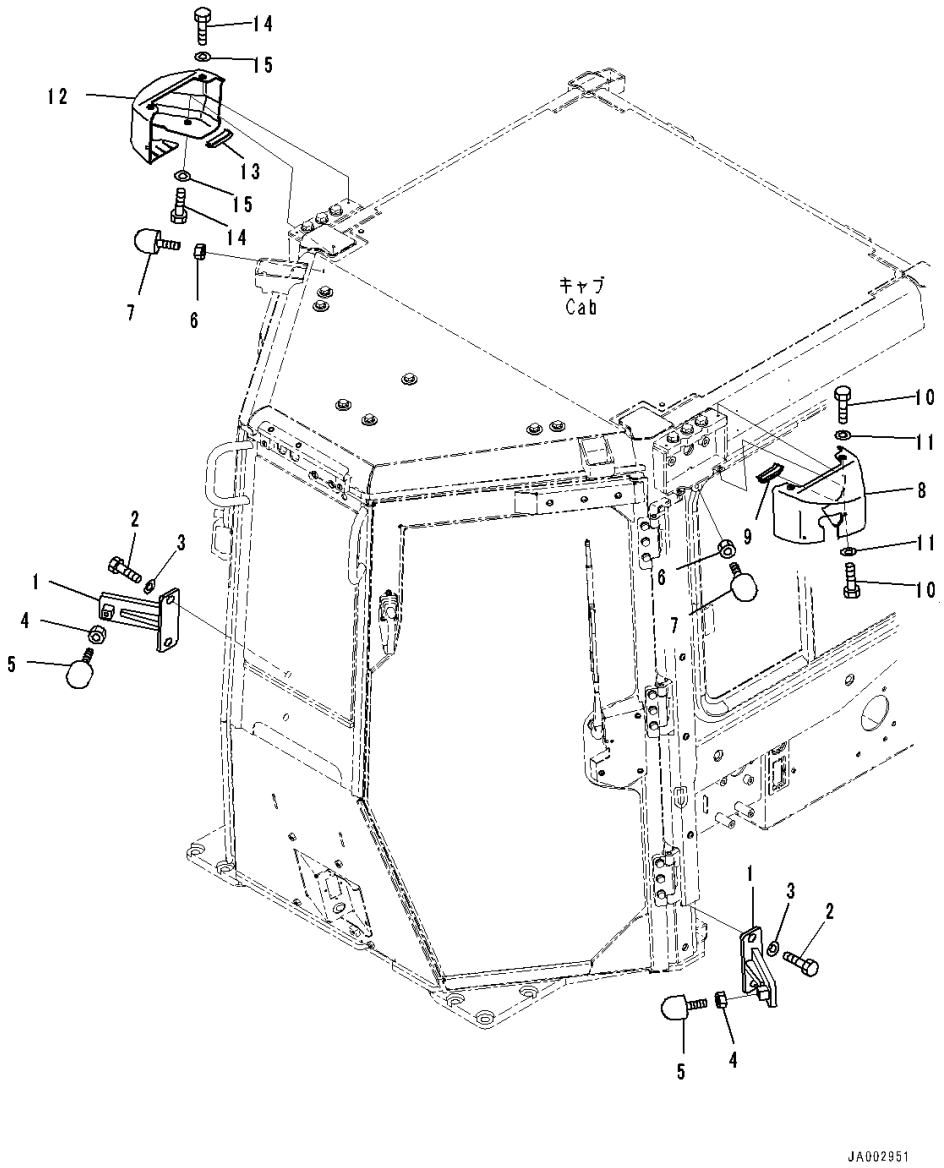

Index	Code	Part Number	Description	Qty	Serial Number
		Note: This list covers following specifications.			
		With AM-FM Stereo Radio For North America, TH300 Type KOMTRAX			
		Provision For Radio Installation, TH300 Type KOMTRAX			
		EU Regulation Guard Level 2, With AM-FM Stereo Radio With Cassette, TH300 Type KOMTRAX			
		EU Regulation Guard Level 2, Provision For Radio Installation, TH300 Type KOMTRAX			
		With Rear View Monitoring System, With AM-FM Stereo Radio For North America, TH300 Type KOMTRAX			
		With Rear View Monitoring System, Provision For Radio Installation, TH300 Type KOMTRAX			
		EU Regulation Guard Level 2, With Rear View Monitoring System, With AM-FM Stereo Radio For North America, TH300 Type KOMTRAX			
		EU Regulation Guard Level 2, With Rear View Monitoring System, With AM-FM Stereo Radio For North America, TH300 Type KOMTRAX			
1		14X-Y79-3491	Bracket	2	80001-
2		198-54-42260	Bolt	4	80001-
3		01643-71645	Washer	4	80001-
4		01580-11210	Nut	2	80001-
5		17A-Z11-3592	Stopper	2	80001-
6		01580-11210	Nut	2	80001-
7		17A-Z11-3592	Stopper	2	80001-
8		14X-Y79-3431	Cover	1	80001-
9		14X-Y79-2290	• Trim	1	80001-
10		01010-80616	Bolt	4	80001-
11		01643-30623	Washer	4	80001-
12		14X-Y79-3441	Cover	1	80001-
13		14X-Y79-2290	• Trim	1	80001-
14		01010-80616	Bolt	4	80001-
15		01643-30623	Washer	4	80001-

FIG. K0210-001013 ROPS Cab, Glass Windows, Front and Rear

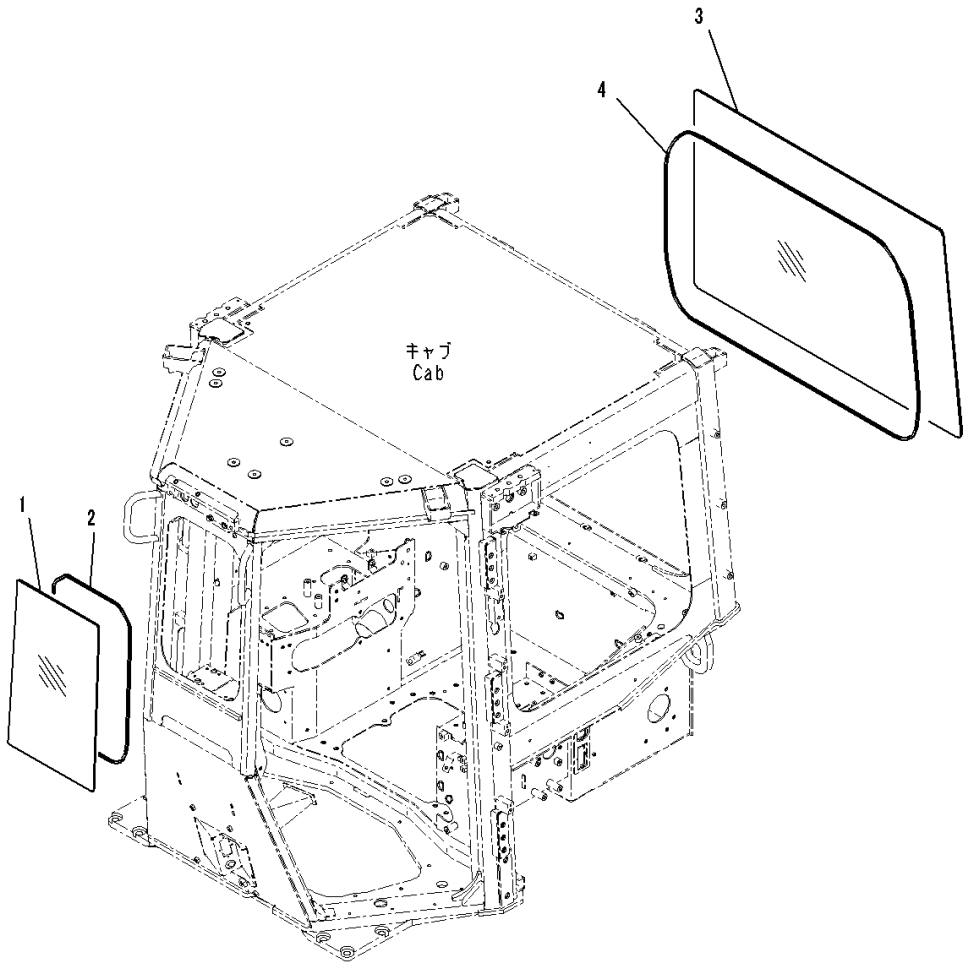

Index	Code	Part Number	Description	Qty	Serial Number
		Note: This list covers following specifications.			
		With AM-FM Stereo Radio For North America, TH300 Type KOMTRAX			
		Provision For Radio Installation, TH300 Type KOMTRAX			
		EU Regulation Guard Level 2, With AM-FM Stereo Radio With Cassette, TH300 Type KOMTRAX			
		EU Regulation Guard Level 2, Provision For Radio Installation, TH300 Type KOMTRAX			
		With Rear View Monitoring System, With AM-FM Stereo Radio For North America, TH300 Type KOMTRAX			
		With Rear View Monitoring System, Provision For Radio Installation, TH300 Type KOMTRAX			
		EU Regulation Guard Level 2, With Rear View Monitoring System, With AM-FM Stereo Radio For North America, TH300 Type KOMTRAX			
		EU Regulation Guard Level 2, With Rear View Monitoring System, With AM-FM Stereo Radio For North America, TH300 Type KOMTRAX			
1		14X-Y79-1311	Glass	1	80001-
2		14X-Y79-1321	Seal,Bonded	1	80001-
3		14X-Y79-1331	Glass	1	80001-
4		14X-Y79-1340	Seal,Bonded	1	80001-

FIG. K0210-001014 ROPS Cab, Sash type Glass Windows, LHS

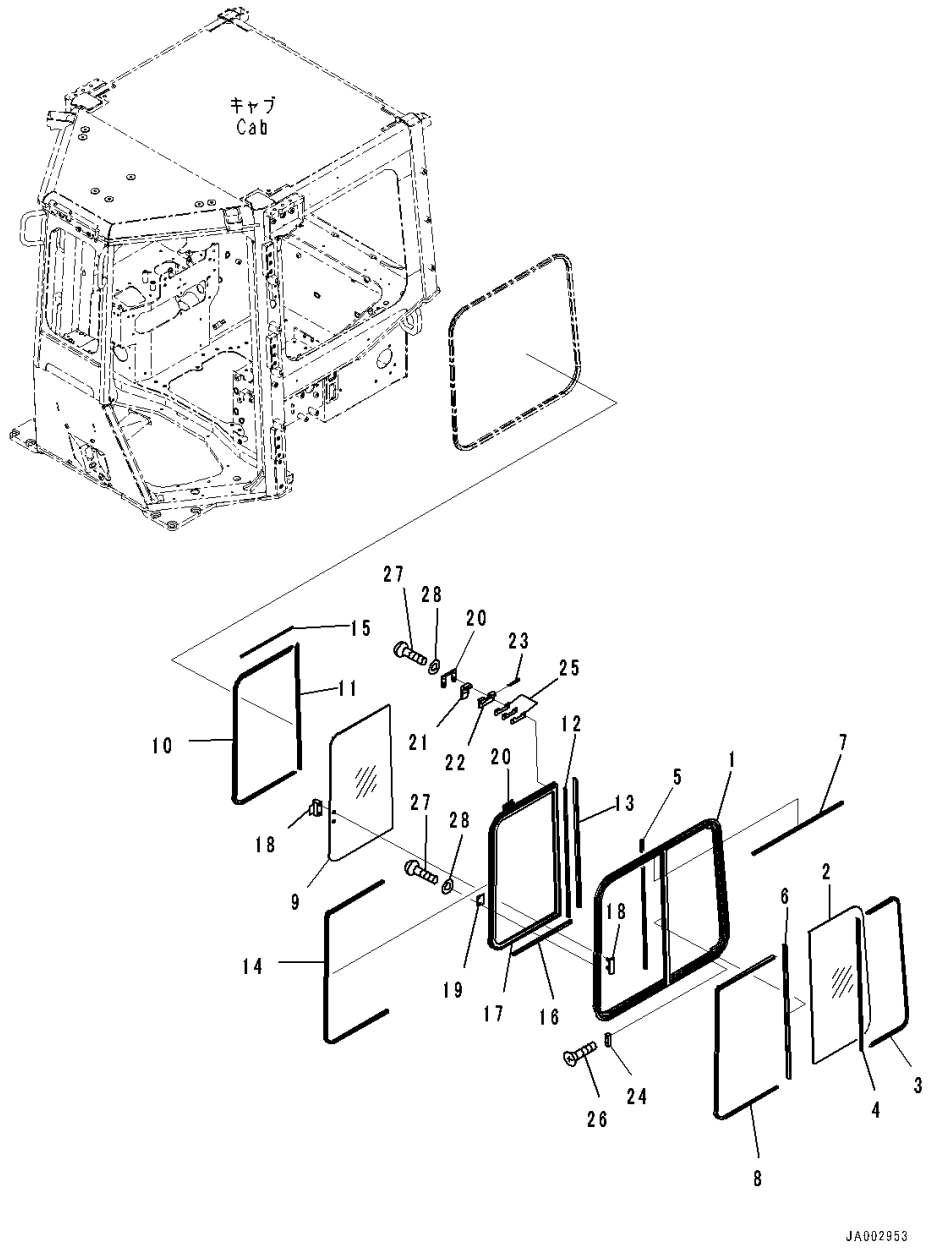

Index	Code	Part Number	Description	Qty	Serial Number
		Note: This list covers following specifications.			
		With AM-FM Stereo Radio For North America, TH300 Type KOMTRAX			
		Provision For Radio Installation, TH300 Type KOMTRAX			
		EU Regulation Guard Level 2, With AM-FM Stereo Radio With Cassette, TH300 Type KOMTRAX			
		EU Regulation Guard Level 2, Provision For Radio Installation, TH300 Type KOMTRAX			
		With Rear View Monitoring System, With AM-FM Stereo Radio For North America, TH300 Type KOMTRAX			
		With Rear View Monitoring System, Provision For Radio Installation, TH300 Type KOMTRAX			
		EU Regulation Guard Level 2, With Rear View Monitoring System, With AM-FM Stereo Radio For North America, TH300 Type KOMTRAX			
		EU Regulation Guard Level 2, With Rear View Monitoring System, With AM-FM Stereo Radio For North America, TH300 Type KOMTRAX			
		14X-Y79-1400	Sash Assembly	1	80001-
		12Y-978-1410	• Sash Assembly	1	80001-
1		12Y-978-1420	•• Frame	1	80001-
2		12Y-978-1450	•• Glass	1	80001-
3		12Y-978-1460	•• Seal	1	80001-
4		12Y-978-1470	•• Seal	1	80001-
5		12Y-978-1480	•• Seal,Bonded	1	80001-
6		12Y-978-1490	•• Seal	1	80001-
7		12Y-978-1550	•• Seal,Bonded	1	80001-
8		12Y-978-1640	• Seal	1	80001-
		14X-Y79-1430	• Sash Assembly	1	80001-
9		12Y-978-1560	•• Glass	1	80001-
10		12Y-978-1570	•• Seal	1	80001-
11		12Y-978-1580	•• Seal	1	80001-
12		12Y-978-1590	•• Seal,Bonded	1	80001-
13		12Y-978-1610	•• Seal	1	80001-
14		12Y-978-1620	•• Run Channel	1	80001-
15		12Y-978-1630	•• Seal,Bonded	1	80001-
16		12Y-978-1650	•• Seal	1	80001-
17		14X-Y79-1440	•• Frame	1	80001-
18		17A-Z11-1610	• Lock Assembly	1	80001-
19		17A-Z11-1620	• Striker	1	80001-

FIG. K0210-001014 ROPS Cab, Sash type Glass Windows, LHS

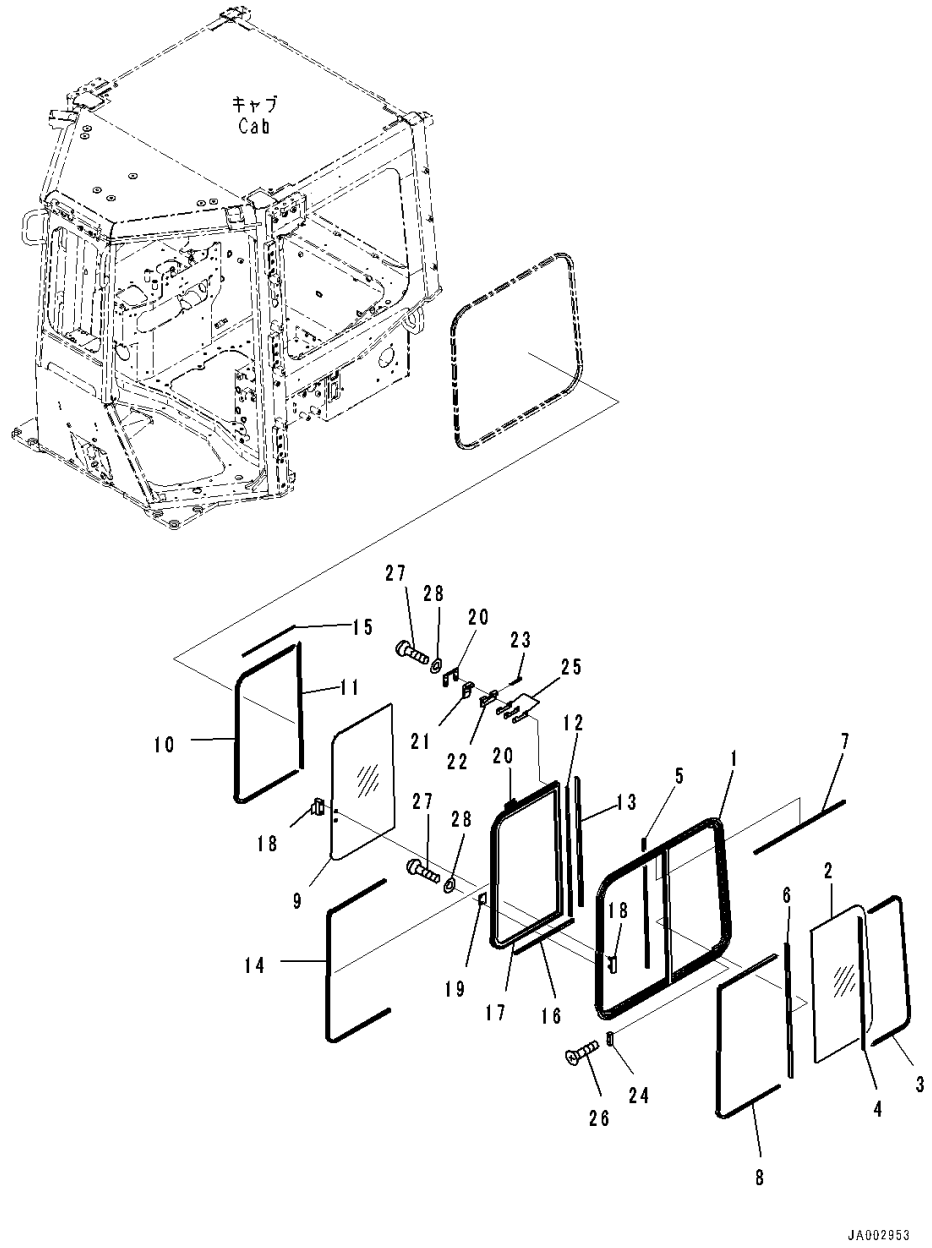

Index	Code	Part Number	Description	Qty	Serial Number
20		17A-Z11-1660	• Plate	2	80001-
		195-Z11-1371	• Lock Assembly	2	80001-
21		195-Z11-3630	•• Lever	1	80001-
22		195-Z11-3640	•• Plate	1	80001-
23		195-Z11-3860	•• Pin, Spring	1	80001-
24		195-Z11-1381	• Stopper	1	80001-
25		195-Z11-3670	• Shim, T=0.5mm	6	80001-
26		01224-70316	• Screw	2	80001-
27		01252-80514	• Bolt	6	80001-
28		01641-50508	• Washer, Flat	6	80001-

FIG. K0210-001015 ROPS Cab, Sash type Glass Windows, RHS

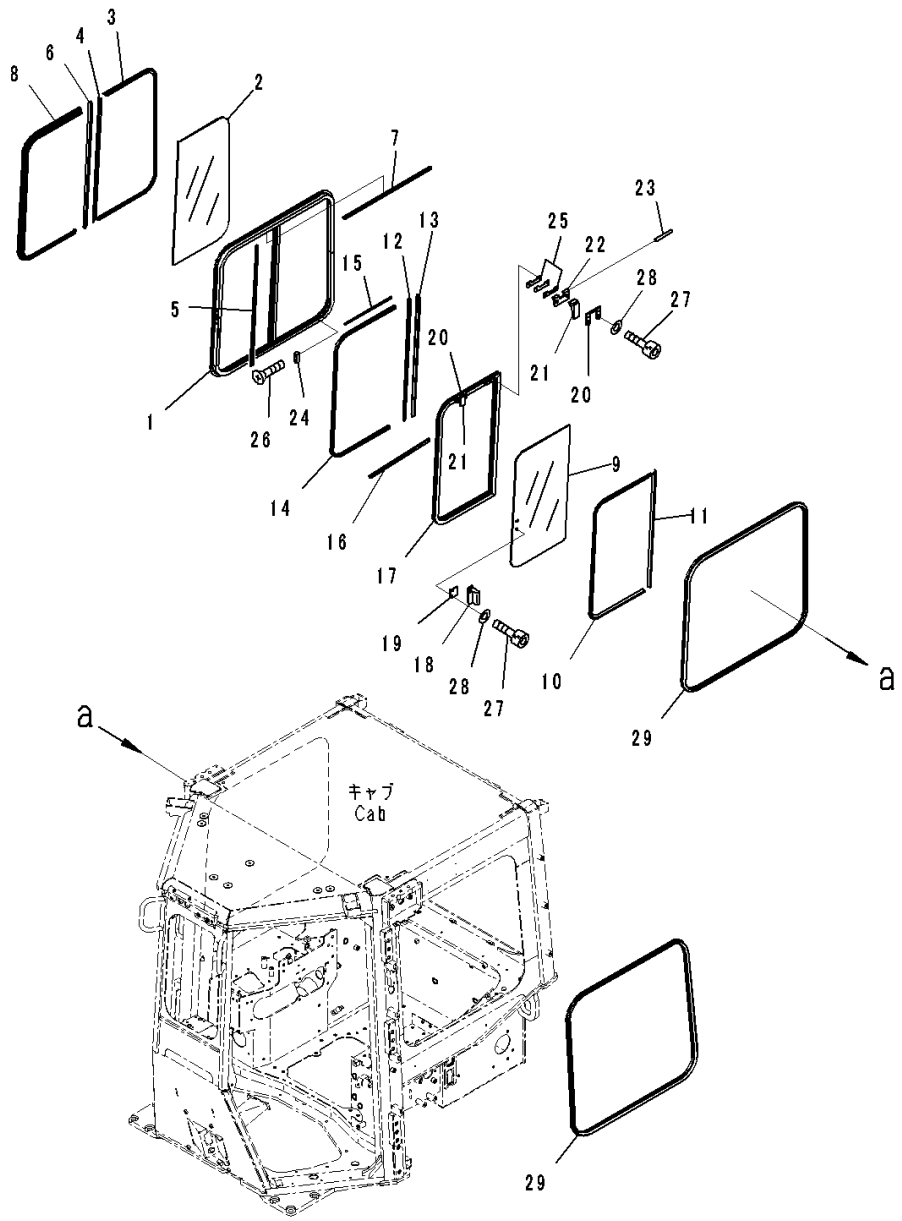

Index	Code	Part Number	Description	Qty	Serial Number
		Note: This list covers following specifications.			
		With AM-FM Stereo Radio For North America, TH300 Type KOMTRAX			
		Provision For Radio Installation, TH300 Type KOMTRAX			
		EU Regulation Guard Level 2, With AM-FM Stereo Radio With Cassette, TH300 Type KOMTRAX			
		EU Regulation Guard Level 2, Provision For Radio Installation, TH300 Type KOMTRAX			
		With Rear View Monitoring System, With AM-FM Stereo Radio For North America, TH300 Type KOMTRAX			
		With Rear View Monitoring System, Provision For Radio Installation, TH300 Type KOMTRAX			
		EU Regulation Guard Level 2, With Rear View Monitoring System, With AM-FM Stereo Radio For North America, TH300 Type KOMTRAX			
		EU Regulation Guard Level 2, With Rear View Monitoring System, With AM-FM Stereo Radio For North America, TH300 Type KOMTRAX			
		14X-Y79-1500	Sash Assembly	1	80001-
		12Y-978-1510	• Sash Assembly	1	80001-
1		12Y-978-1520	•• Frame	1	80001-
2		12Y-978-1450	•• Glass	1	80001-
3		12Y-978-1460	•• Seal	1	80001-
4		12Y-978-1470	•• Seal	1	80001-
5		12Y-978-1480	•• Seal,Bonded	1	80001-
6		12Y-978-1490	•• Seal	1	80001-
7		12Y-978-1550	•• Seal,Bonded	1	80001-
8		12Y-978-1640	• Seal	1	80001-
		14X-Y79-1450	• Sash Assembly	1	80001-
9		12Y-978-1560	•• Glass	1	80001-
10		12Y-978-1570	•• Seal	1	80001-
11		12Y-978-1580	•• Seal	1	80001-
12		12Y-978-1590	•• Seal,Bonded	1	80001-
13		12Y-978-1610	•• Seal	1	80001-
14		12Y-978-1620	•• Run Channel	1	80001-
15		12Y-978-1630	•• Seal,Bonded	1	80001-
16		12Y-978-1650	•• Seal	1	80001-
17		14X-Y79-1460	•• Frame	1	80001-
18		17A-Z11-1610	• Lock Assembly	1	80001-
19		17A-Z11-1620	• Striker	1	80001-

FIG. K0210-001015 ROPS Cab, Sash type Glass Windows, RHS

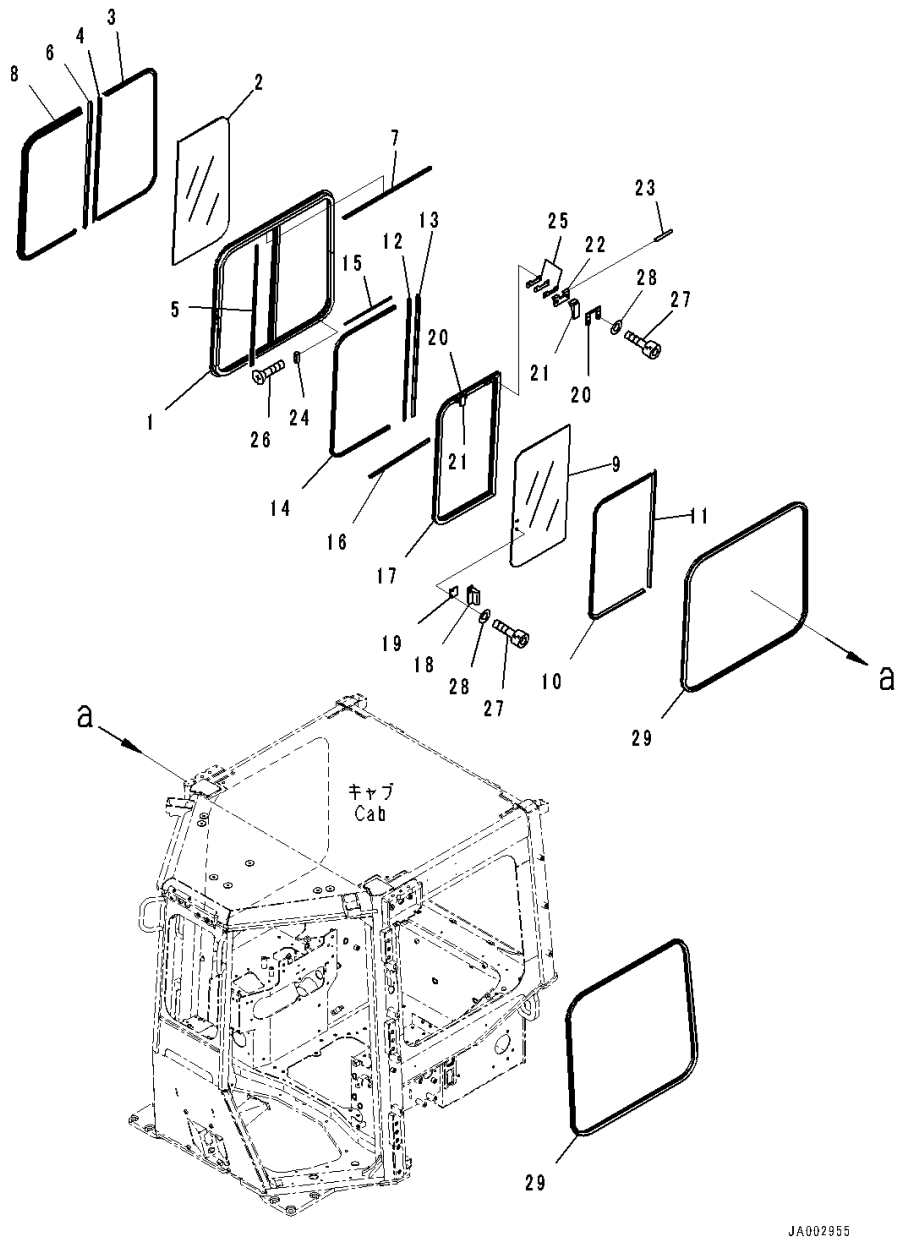

Index	Code	Part Number	Description	Qty	Serial Number
20		17A-Z11-1660	• Plate	2	80001-
		195-Z11-1371	• Lock Assembly	2	80001-
21		195-Z11-3630	•• Lever	1	80001-
22		195-Z11-3640	•• Plate	1	80001-
23		195-Z11-3860	•• Pin, Spring	1	80001-
24		195-Z11-1381	• Stopper	1	80001-
25		195-Z11-3670	• Shim, T=0.5mm	6	80001-
26		01224-70316	• Screw	2	80001-
27		01252-80514	• Bolt	6	80001-
28		01641-50508	• Washer, Flat	6	80001-
29		12Y-978-1390	Weather Strip	2	80001-

FIG. K0210-001016 ROPS Cab, Wiper and Room Lamp

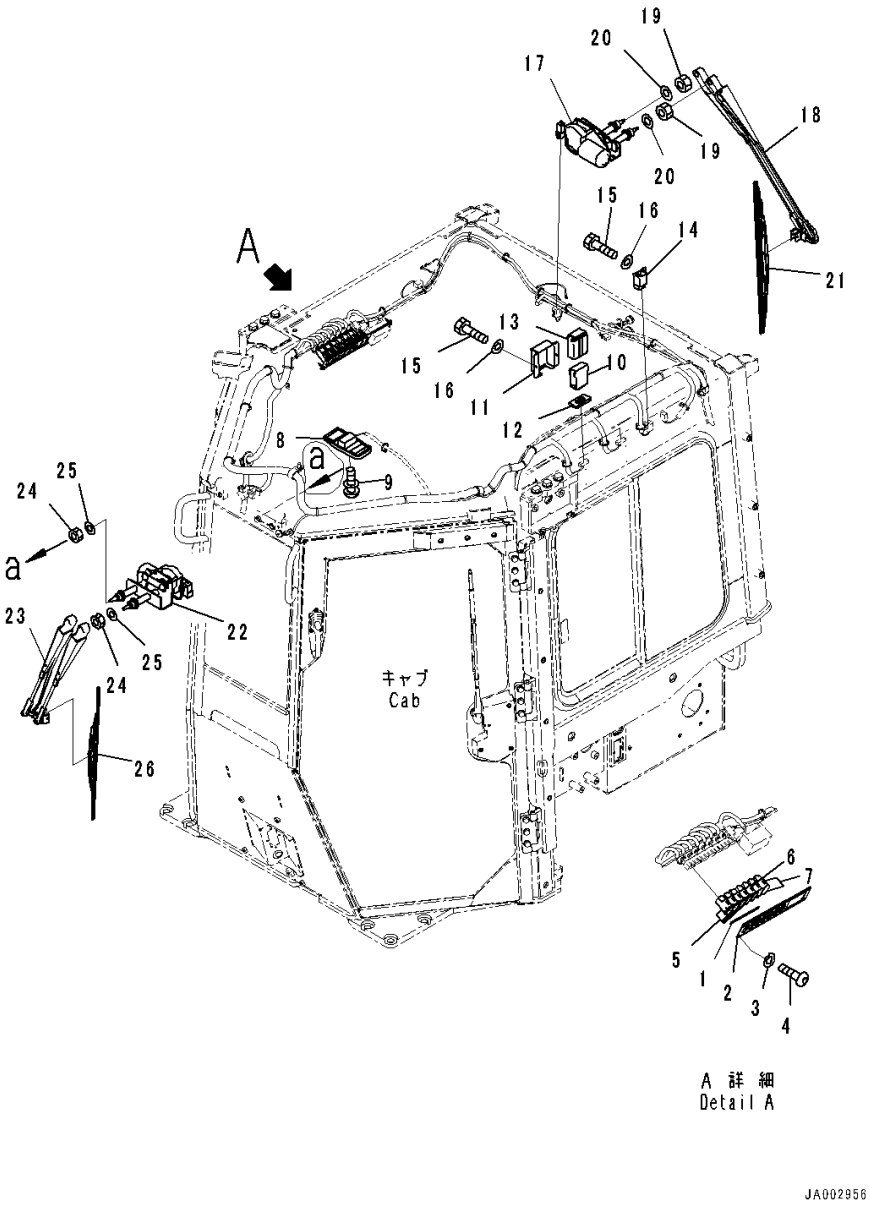

Index	Code	Part Number	Description	Qty	Serial Number
		Note: This list covers following specifications.			
		With AM-FM Stereo Radio For North America, TH300 Type KOMTRAX			
		Provision For Radio Installation, TH300 Type KOMTRAX			
		EU Regulation Guard Level 2, With AM-FM Stereo Radio With Cassette, TH300 Type KOMTRAX			
		EU Regulation Guard Level 2, Provision For Radio Installation, TH300 Type KOMTRAX			
		With Rear View Monitoring System, With AM-FM Stereo Radio For North America, TH300 Type KOMTRAX			
		With Rear View Monitoring System, Provision For Radio Installation, TH300 Type KOMTRAX			
		EU Regulation Guard Level 2, With Rear View Monitoring System, With AM-FM Stereo Radio For North America, TH300 Type KOMTRAX			
		EU Regulation Guard Level 2, With Rear View Monitoring System, With AM-FM Stereo Radio For North America, TH300 Type KOMTRAX			
1		14X-Y79-2250	Panel	1	80001-
2		17A-979-3140	Cover	1	80001-
3		01643-70623	Washer	4	80001-
4		01245-00620	Screw	4	80001-
5		17A-06-42210	Switch	4	80001-
6		17A-06-42220	Switch	1	80001-
7		20Y-06-42190	Cover	2	80001-
8		421-06-26210	Lamp Assembly, Working	1	80001-
9		01023-10520	Screw	2	80001-
10		14X-06-51710	Relay	2	80001-
11		14X-06-52631	Bracket	2	80001-
12		14X-06-52740	Sheet	2	80001-
13		14X-06-52661	Sheet	2	80001-
14		198-911-9240	Relay Assembly	1	80001-
15		01010-80616	Bolt	5	80001-
16		01643-70623	Washer	5	80001-
17		17A-979-2850	Wiper Motor	1	80001-
18		416-925-3941	Arm, Wiper	1	80005-
19		01580-10806	Nut	2	80001-
20		01640-20816	Washer	2	80001-
21		17A-979-2870	Wiper Blade	1	80001-
22		14X-Y79-1570	Wiper Motor	1	80001-

FIG. K0210-001016 ROPS Cab, Wiper and Room Lamp

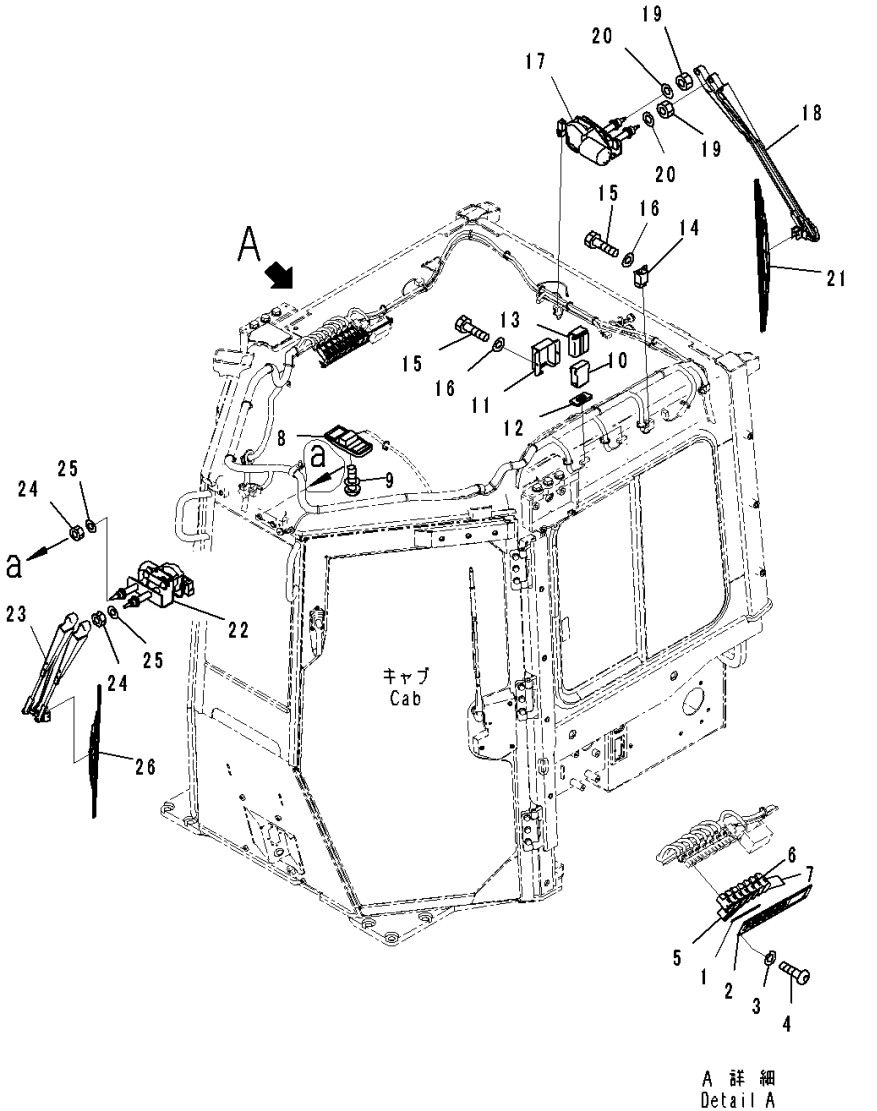

Index	Code	Part Number	Description	Qty	Serial Number
23		14X-Y79-1580	Arm, Wiper	1	80001-
24		01580-10806	Nut	2	80001-
25		01640-20816	Washer	2	80001-
26		17A-979-1420	Wiper Blade	1	80001-

FIG. K0210-001017 ROPS Cab, With AM-FM Stereo Radio For North America, TH300 Type KOMTRAX, Radio

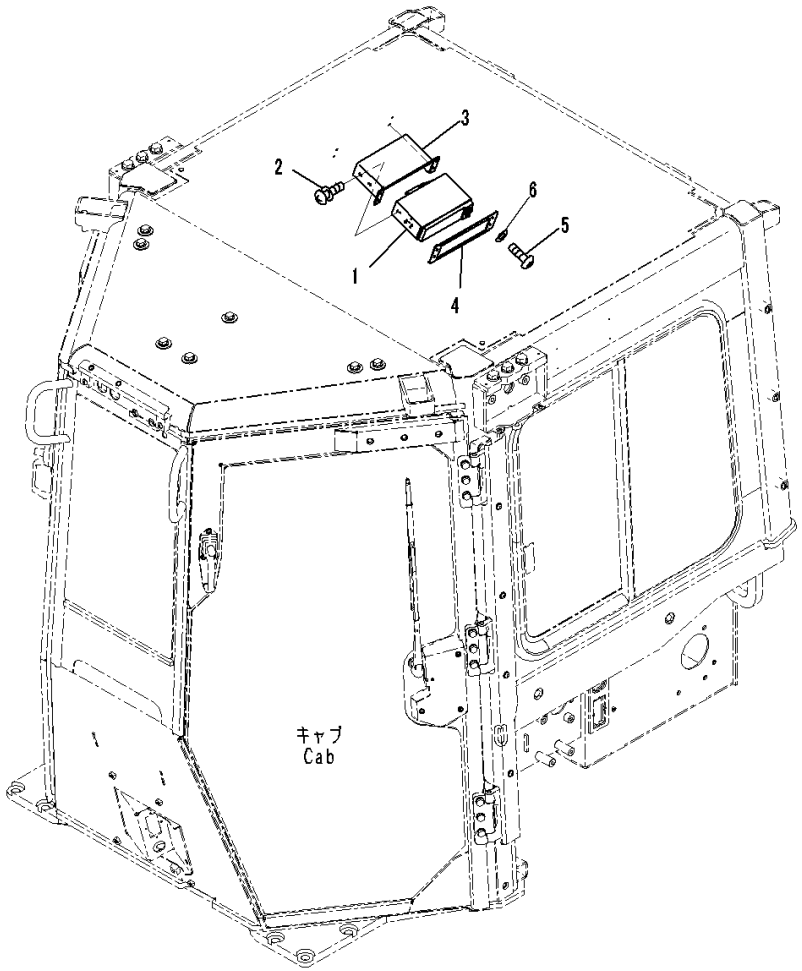

Index	Code	Part Number	Description	Qty	Serial Number
1		207-06-71723	Radio	1	80017-
2		01023-20510	Screw	4	80001-
3		14X-Y79-1590	Bracket	1	80001-
4		12Y-978-2280	Plate	1	80001-
5		01245-00620	Screw	4	80001-
6		01643-70623	Washer	4	80001-

FIG. K0210-001018 ROPS Cab, Rubber Antenna

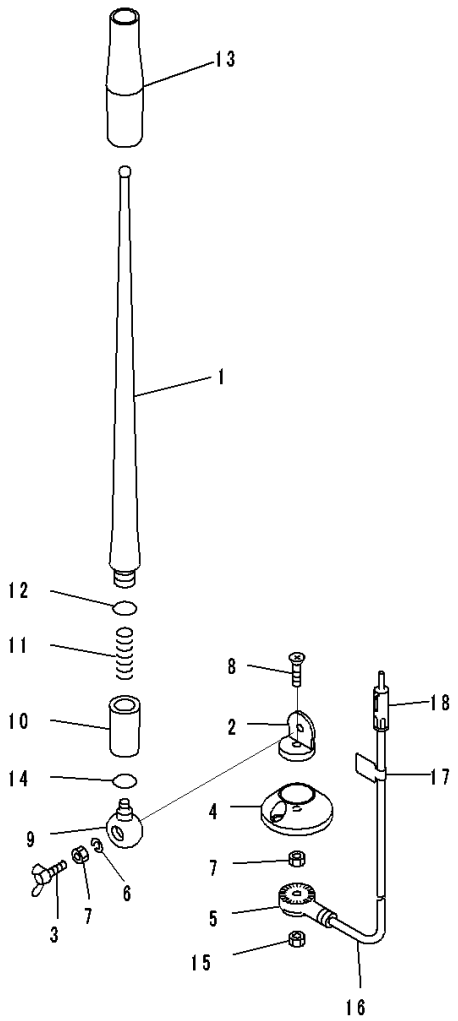

Index	Code	Part Number	Description	Qty	Serial Number
		Note: This list covers following specifications.			
		With AM-FM Stereo Radio For North America, TH300 Type KOMTRAX			
		Provision For Radio Installation, TH300 Type KOMTRAX			
		EU Regulation Guard Level 2, With AM-FM Stereo Radio With Cassette, TH300 Type KOMTRAX			
		EU Regulation Guard Level 2, Provision For Radio Installation, TH300 Type KOMTRAX			
		With Rear View Monitoring System, With AM-FM Stereo Radio For North America, TH300 Type KOMTRAX			
		With Rear View Monitoring System, Provision For Radio Installation, TH300 Type KOMTRAX			
		EU Regulation Guard Level 2, With Rear View Monitoring System, With AM-FM Stereo Radio For North America, TH300 Type KOMTRAX			
		EU Regulation Guard Level 2, With Rear View Monitoring System, With AM-FM Stereo Radio For North America, TH300 Type KOMTRAX			
		20Y-06-41990	Rubber Antenna	1	80001-
1		RFU419B-418-A	• Rod	1	80001-
2	C1		• Holder	1	80001-
3		RFU419B-418-D	• Bolt, Wing	1	80001-
4		RFU419B-418-E	• Base	1	80001-
5	C1		• Holder	1	80001-
6		RFU419B-418-B	• Washer, Spring	1	80001-
7		RFU419B-418-C	• Nut	2	80001-
8	C1		• Screw	1	80001-
9	C1		• Holder	1	80001-
10	C1		• Holder Assembly	1	80001-
11	C1		• Spring	1	80001-
12	C1		• O-ring	1	80001-
13	C1		• Tube	1	80001-
14	C1		• O-ring	1	80001-
15		REU419B-418-C	• Nut	1	80001-
16		RFU419B-418-F	• Cable	1	80001-
17	C1		• Plate	1	80001-
18	C1		• Plug	1	80001-

FIG. K0210-001019 ROPS Cab, Rubber Antenna Mounts

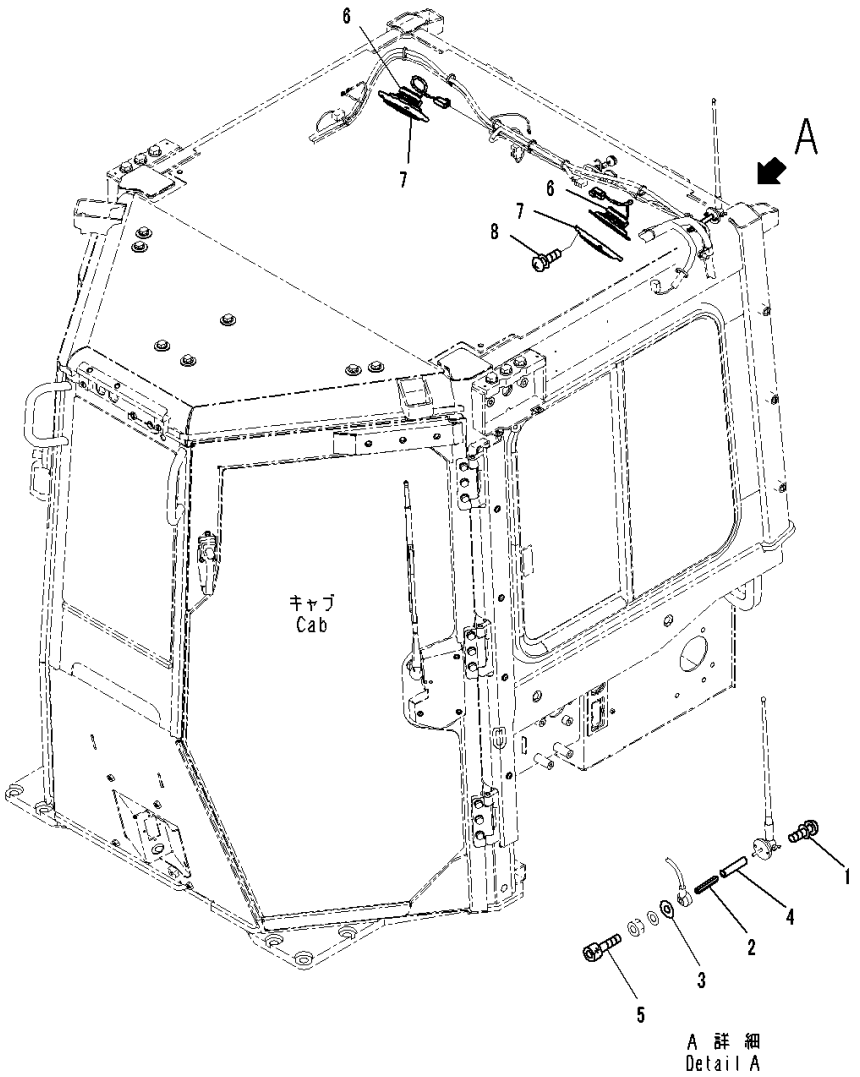

Index	Code	Part Number	Description	Qty	Serial Number
		Note: This list covers following specifications.			
		With AM-FM Stereo Radio For North America, TH300 Type KOMTRAX			
		Provision For Radio Installation, TH300 Type KOMTRAX			
		EU Regulation Guard Level 2, With AM-FM Stereo Radio With Cassette, TH300 Type KOMTRAX			
		EU Regulation Guard Level 2, Provision For Radio Installation, TH300 Type KOMTRAX			
		With Rear View Monitoring System, With AM-FM Stereo Radio For North America, TH300 Type KOMTRAX			
		With Rear View Monitoring System, Provision For Radio Installation, TH300 Type KOMTRAX			
		EU Regulation Guard Level 2, With Rear View Monitoring System, With AM-FM Stereo Radio For North America, TH300 Type KOMTRAX			
		EU Regulation Guard Level 2, With Rear View Monitoring System, With AM-FM Stereo Radio For North America, TH300 Type KOMTRAX			
1		01023-20416	Screw	2	80001-
2		14X-06-51370	Bar	1	80001-
3		01643-70623	Washer	1	80001-
4		08023-10006	Tube	1	80001-
5		01252-70530	Bolt, Hexagon Socket Head	1	80001-
6		20Y-06-42180	Speaker	2	80001-
7		20Y-53-12221	Cover	2	80001-
8		01023-20425	Screw	8	80001-

FIG. K0210-001020 ROPS Cab, Roof Cover (1/2)

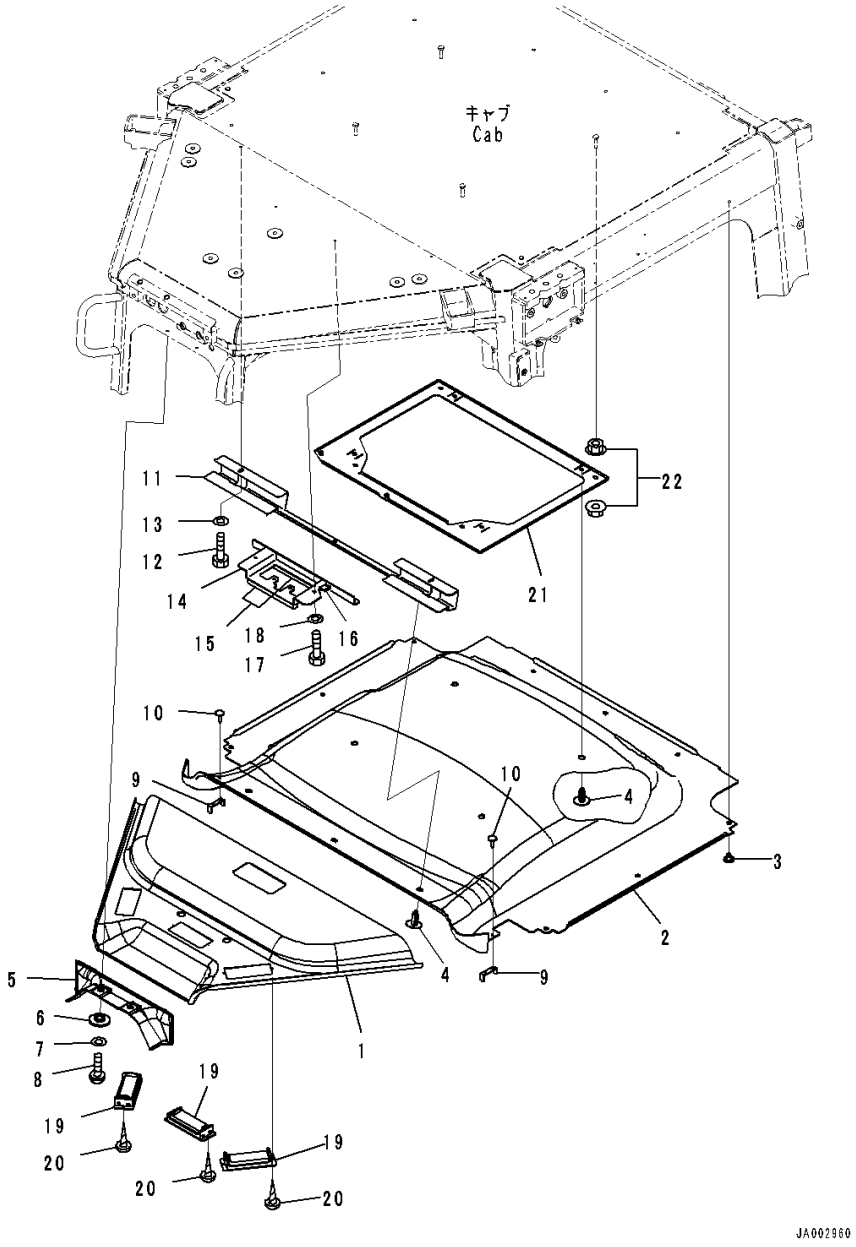

Index	Code	Part Number	Description	Qty	Serial Number
		Note: This list covers following specifications.			
		With AM-FM Stereo Radio For North America, TH300 Type KOMTRAX			
		Provision For Radio Installation, TH300 Type KOMTRAX			
		EU Regulation Guard Level 2, With AM-FM Stereo Radio With Cassette, TH300 Type KOMTRAX			
		EU Regulation Guard Level 2, Provision For Radio Installation, TH300 Type KOMTRAX			
		With Rear View Monitoring System, With AM-FM Stereo Radio For North America, TH300 Type KOMTRAX			
		With Rear View Monitoring System, Provision For Radio Installation, TH300 Type KOMTRAX			
		EU Regulation Guard Level 2, With Rear View Monitoring System, With AM-FM Stereo Radio For North America, TH300 Type KOMTRAX			
		EU Regulation Guard Level 2, With Rear View Monitoring System, With AM-FM Stereo Radio For North America, TH300 Type KOMTRAX			
1		14X-Y79-2621	Cover	1	80001-
2		14X-Y79-2611	Cover	1	80001-
3		20Y-54-18690	Rivet	9	80001-
4		198-Z11-6370	Clip	7	80001-
5		14X-Y79-2631	Cover	1	80001-
6		17A-979-1620	Collar	2	80001-
7		01643-70623	Washer	2	80001-
8		01245-00620	Screw	2	80001-
9		14X-Y79-2350	Plate	2	80001-
10		14X-Y79-2650	Clip	4	80001-
11		14X-Y79-2141	Bracket	1	80001-
12		01010-80616	Bolt	2	80001-
13		01643-30623	Washer	2	80001-
14		14X-Y79-2161	Bracket	1	80001-
15		17A-979-1760	• Sheet,Bonded	2	80001-
16		208-53-11M80	• Ring	1	80001-
17		01010-80616	Bolt	2	80001-
18		01643-30623	Washer	2	80001-
19		17A-Z11-7161	Louver	3	80001-
20		01370-40414	Screw	6	80001-
21		14X-Y79-1291	Bracket	1	80001-
22		01584-00806	Nut	8	80001-

FIG. K0210-001021 ROPS Cab, Roof Cover (2/2)

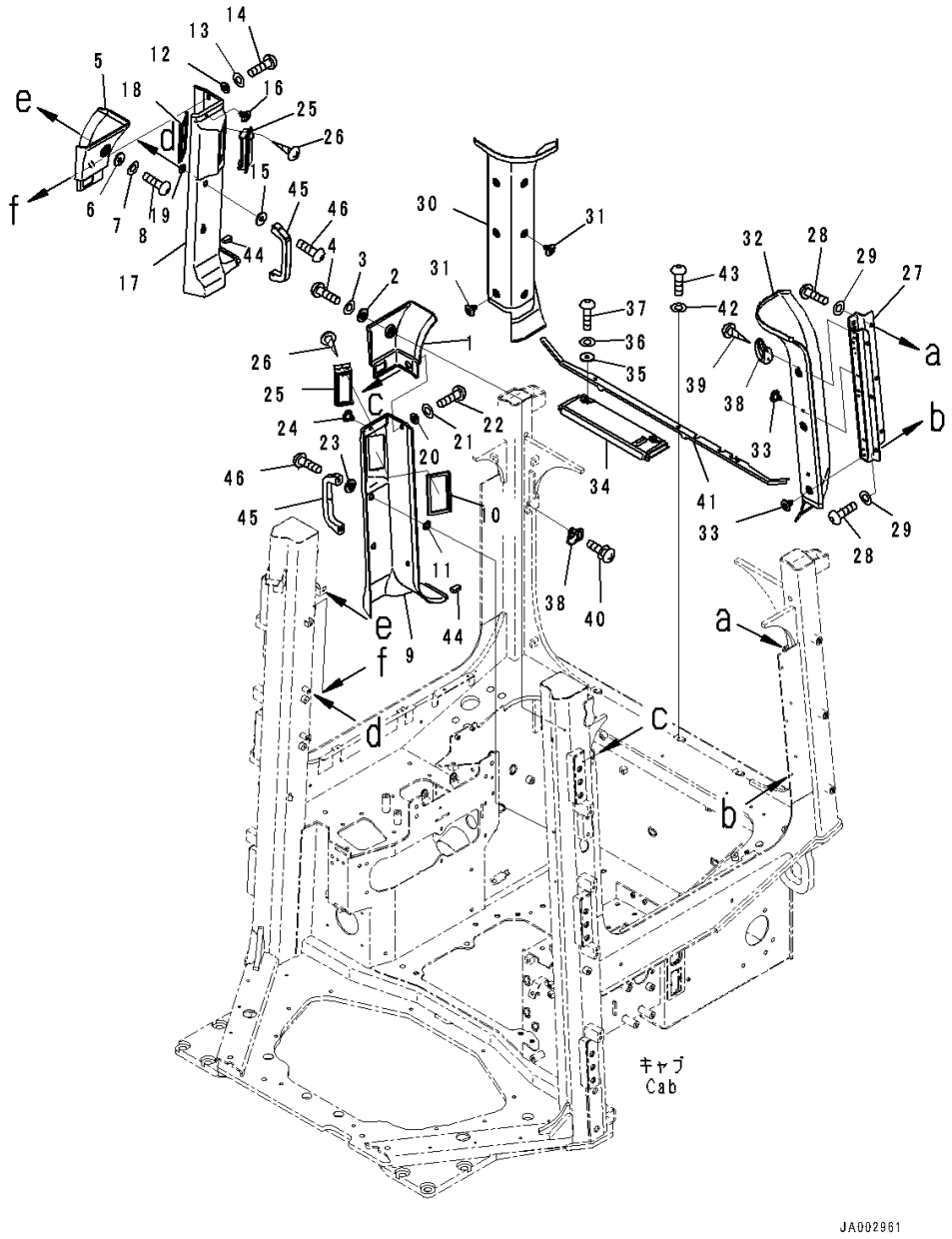

Index	Code	Part Number	Description	Qty	Serial Number
		Note: This list covers following specifications.			
		With AM-FM Stereo Radio For North America, TH300 Type KOMTRAX			
		Provision For Radio Installation, TH300 Type KOMTRAX			
		EU Regulation Guard Level 2, With AM-FM Stereo Radio With Cassette, TH300 Type KOMTRAX			
		EU Regulation Guard Level 2, Provision For Radio Installation, TH300 Type KOMTRAX			
		With Rear View Monitoring System, With AM-FM Stereo Radio For North America, TH300 Type KOMTRAX			
		With Rear View Monitoring System, Provision For Radio Installation, TH300 Type KOMTRAX			
		EU Regulation Guard Level 2, With Rear View Monitoring System, With AM-FM Stereo Radio For North America, TH300 Type KOMTRAX			
		EU Regulation Guard Level 2, With Rear View Monitoring System, With AM-FM Stereo Radio For North America, TH300 Type KOMTRAX			
1		14X-Y79-2261	Cover Assembly	1	80001-
2		17A-979-1620	Collar	1	80001-
3		01643-70623	Washer	1	80001-
4		01245-00620	Screw	1	80001-
5		14X-Y79-2271	Cover Assembly	1	80001-
6		17A-979-1620	Collar	1	80001-
7		01643-70623	Washer	1	80001-
8		01245-00620	Screw	1	80001-
9		14X-Y79-2101	Cover Assembly	1	80001-
10		17A-979-1930	• Seal,Bonded	1	80001-
11		17A-979-3890	• Plate,Bonded	2	80001-
12		17A-979-1620	Collar	2	80001-
13		01643-70623	Washer	2	80001-
14		01245-00620	Screw	2	80001-
15		17A-979-1611	Collar	2	80001-
16		20Y-54-18690	Rivet	1	80001-
17		14X-Y79-2201	Cover Assembly	1	80001-
18		17A-979-1930	• Seal,Bonded	1	80001-
19		17A-979-3890	• Plate,Bonded	2	80001-
20		17A-979-1620	Collar	2	80001-
21		01643-70623	Washer	2	80001-
22		01245-00620	Screw	2	80001-

FIG. K0210-001021 ROPS Cab, Roof Cover (2/2)

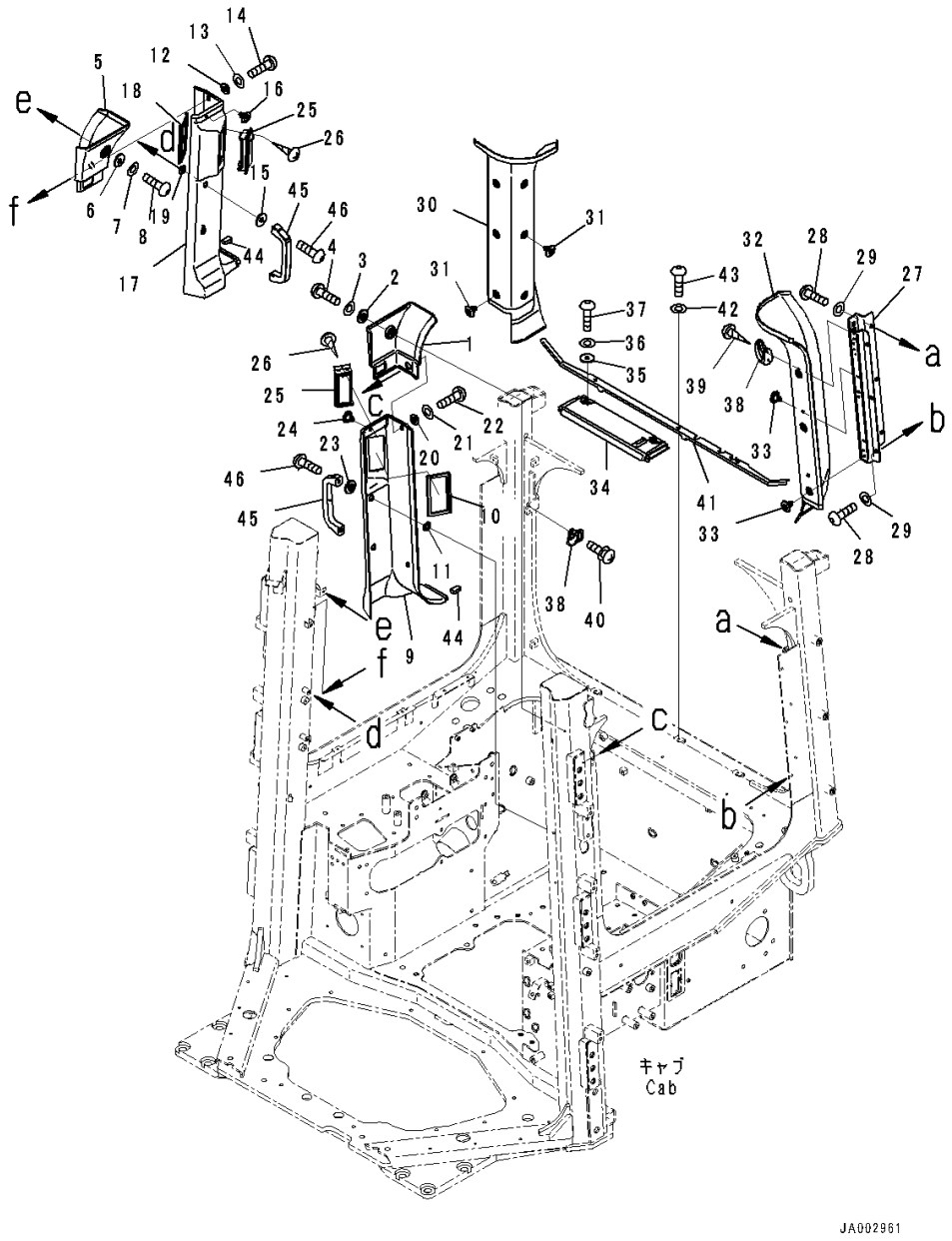

Index	Code	Part Number	Description	Qty	Serial Number
23		17A-979-1611	Collar	2	80001-
24		20Y-54-18690	Rivet	1	80001-
25		17A-Z11-7161	Louver	2	80001-
26		01370-30412	Screw	4	80001-
27		14X-Y79-2131	Bracket	1	80001-
28		01245-00820	Screw	6	80001-
29		01643-70823	Washer	6	80001-
30		14X-Y79-2211	Cover	1	80001-
31		20Y-54-18690	Rivet	6	80001-
32		14X-Y79-2221	Cover	1	80001-
33		20Y-54-18690	Rivet	5	80001-
34		14X-Y79-2380	Cover	1	80001-
35		12Y-978-2660	Collar	2	80001-
36		01643-70623	Washer	2	80001-
37		01245-00620	Screw	2	80001-
38		17A-Z11-2940	Hook	2	80001-
39		01370-40412	Screw	2	80001-
40		01023-70412	Screw	2	80001-
41		14X-Y79-2641	Cover	1	80001-
42		01643-70623	Washer	3	80001-
43		01245-00620	Screw	3	80001-
44		14X-Y79-2190	Seal,Bonded	2	80001-
45		361-54-21150	Handle	2	80001-
46		01245-00825	Screw	4	80001-

FIG. K0210-001022 ROPS Cab, Rearview Mirror

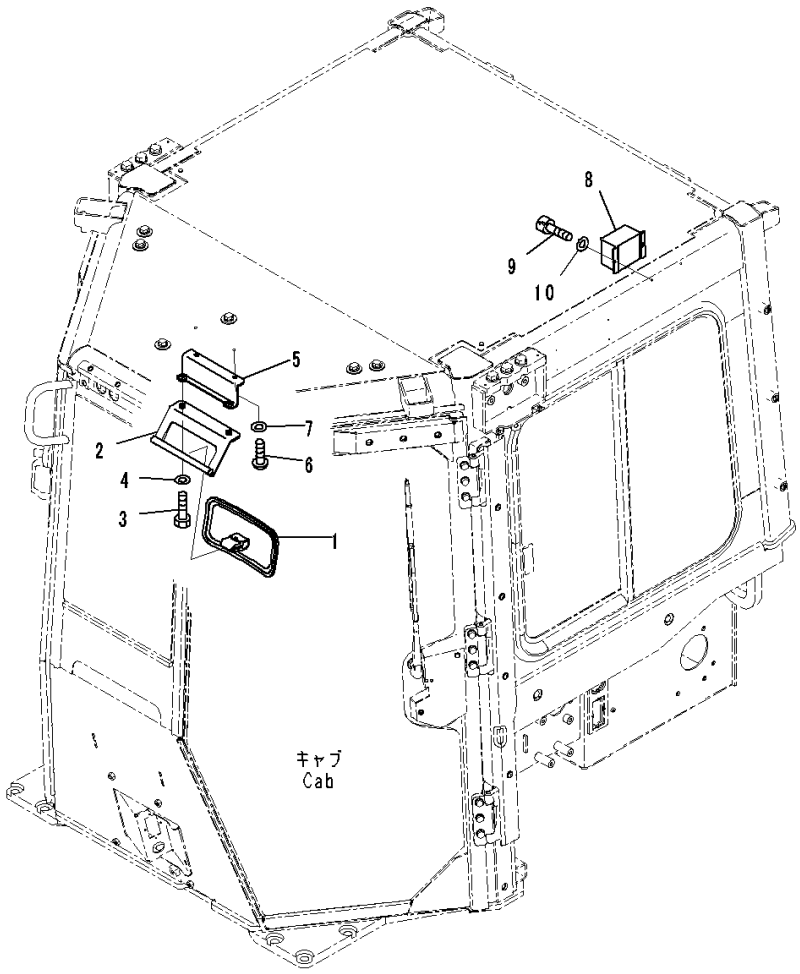

Index	Code	Part Number	Description	Qty	Serial Number
		Note: This list covers following specifications.			
		With AM-FM Stereo Radio For North America, TH300 Type KOMTRAX			
		Provision For Radio Installation, TH300 Type KOMTRAX			
		EU Regulation Guard Level 2, With AM-FM Stereo Radio With Cassette, TH300 Type KOMTRAX			
		EU Regulation Guard Level 2, Provision For Radio Installation, TH300 Type KOMTRAX			
		With Rear View Monitoring System, With AM-FM Stereo Radio For North America, TH300 Type KOMTRAX			
		With Rear View Monitoring System, Provision For Radio Installation, TH300 Type KOMTRAX			
		EU Regulation Guard Level 2, With Rear View Monitoring System, With AM-FM Stereo Radio For North America, TH300 Type KOMTRAX			
		EU Regulation Guard Level 2, With Rear View Monitoring System, With AM-FM Stereo Radio For North America, TH300 Type KOMTRAX			
1		195-Z11-2180	Mirror	1	80001-
2		14X-Y79-2171	Bracket	1	80001-
3		01245-00825	Screw	2	80001-
4		01643-70823	Washer	2	80001-
5		14X-Y79-2151	Bracket	1	80001-
6		01010-D0816	Bolt	2	80001-
7		01643-70823	Washer	2	80001-
8		12Y-06-11650	Converter	1	80001-
9		01252-80514	Bolt	2	80001-
10		01641-50508	Washer, Flat	2	80001-

FIG. K0210-001023 ROPS Cab, Outside Cover

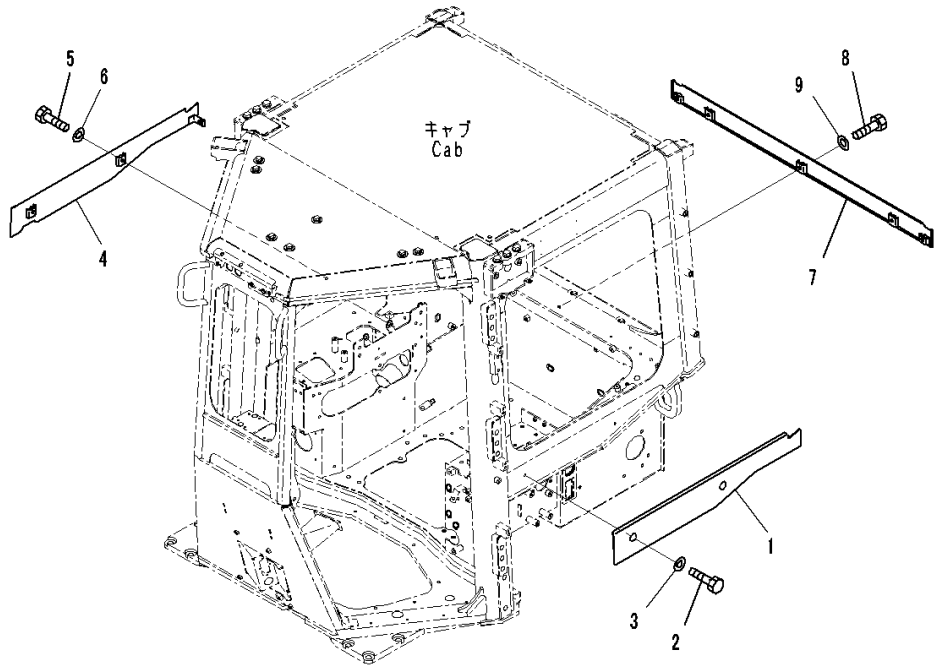

Index	Code	Part Number	Description	Qty	Serial Number
		Note: This list covers following specifications.			
		With AM-FM Stereo Radio For North America, TH300 Type KOMTRAX			
		Provision For Radio Installation, TH300 Type KOMTRAX			
		EU Regulation Guard Level 2, With AM-FM Stereo Radio With Cassette, TH300 Type KOMTRAX			
		EU Regulation Guard Level 2, Provision For Radio Installation, TH300 Type KOMTRAX			
		With Rear View Monitoring System, With AM-FM Stereo Radio For North America, TH300 Type KOMTRAX			
		With Rear View Monitoring System, Provision For Radio Installation, TH300 Type KOMTRAX			
		EU Regulation Guard Level 2, With Rear View Monitoring System, With AM-FM Stereo Radio For North America, TH300 Type KOMTRAX			
		EU Regulation Guard Level 2, With Rear View Monitoring System, With AM-FM Stereo Radio For North America, TH300 Type KOMTRAX			
1		14X-Y79-1541	Plate	1	80001-
2		01010-81020	Bolt	2	80001-
3		01643-31032	Washer	2	80001-
4		14X-Y79-1551	Plate	1	80001-
5		01010-81020	Bolt	2	80001-
6		01643-31032	Washer	2	80001-
7		14X-Y79-1561	Plate	1	80001-
8		01010-81020	Bolt	5	80001-
9		01643-31032	Washer	5	80001-

FIG. K0210-001024 ROPS Cab, Air Conditioner Unit

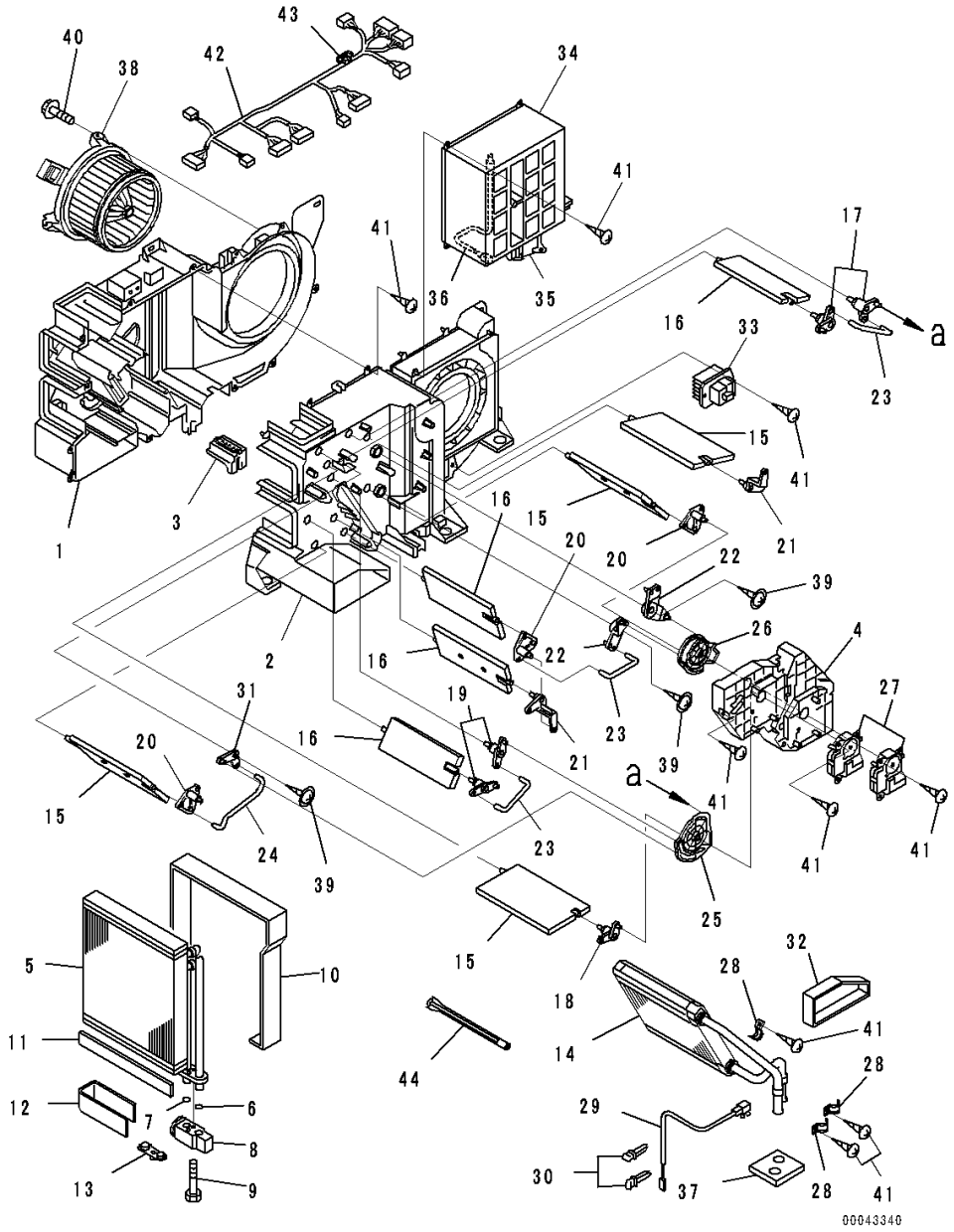

Index	Code	Part Number	Description	Qty	Serial Number
		Note: This list covers following specifications.			
		With AM-FM Stereo Radio For North America, TH300 Type KOMTRAX			
		Provision For Radio Installation, TH300 Type KOMTRAX			
		EU Regulation Guard Level 2, Provision For Radio Installation, TH300 Type KOMTRAX			
		With Rear View Monitoring System, With AM-FM Stereo Radio For North America, TH300 Type KOMTRAX			
		With Rear View Monitoring System, Provision For Radio Installation, TH300 Type KOMTRAX			
		EU Regulation Guard Level 2, With Rear View Monitoring System, With AM-FM Stereo Radio For North America, TH300 Type KOMTRAX			
		EU Regulation Guard Level 2, With Rear View Monitoring System, With AM-FM Stereo Radio For North America, TH300 Type KOMTRAX			
		20Y-810-1211	Air Conditioner Assembly.....	1	80001-
1		ND245450-5831	• Case, Cooling.....	1	80001-
2		ND245450-5840	• Case, Cooling.....	1	80001-
3		ND116576-3810	• Plate	1	80001-
4		ND116576-3820	• Plate	1	80001-
		ND446010-3132	• Evaporator.....	1	80001-
5		ND446600-0991	•• Evaporator Assembly.....	1	80001-
6		ND949142-0020	•• O-ring.....	1	80001-
7		ND949142-0030	•• O-ring.....	1	80001-
8		ND447500-2750	•• Valve.....	1	80001-
9		ND949046-3100	•• Bolt.....	2	80001-
10		ND146657-8841	•• Packing.....	1	80001-
11		ND146657-9811	•• Packing.....	3	80001-
12		ND146657-8850	•• Packing.....	1	80001-
13		ND445021-3941	•• Plug.....	1	80001-
14		ND116140-0050	• Core Subassembly, Heater	1	80001-
15		ND116660-7570	• Door Assembly.....	4	80001-
16		ND116650-6850	• Door Assembly.....	4	80001-
17		ND116780-2481	• Lever Subassembly, Link	2	80001-
18		ND116780-2491	• Lever Subassembly, Link	1	80001-
19		ND116780-2501	• Lever Subassembly, Link	2	80001-
20		ND116780-2510	• Lever Subassembly, Link	3	80001-
21		ND116781-3000	• Lever	2	80001-
22		ND116780-3130	• Lever Subassembly, Link	2	80001-

FIG. K0210-001024 ROPS Cab, Air Conditioner Unit

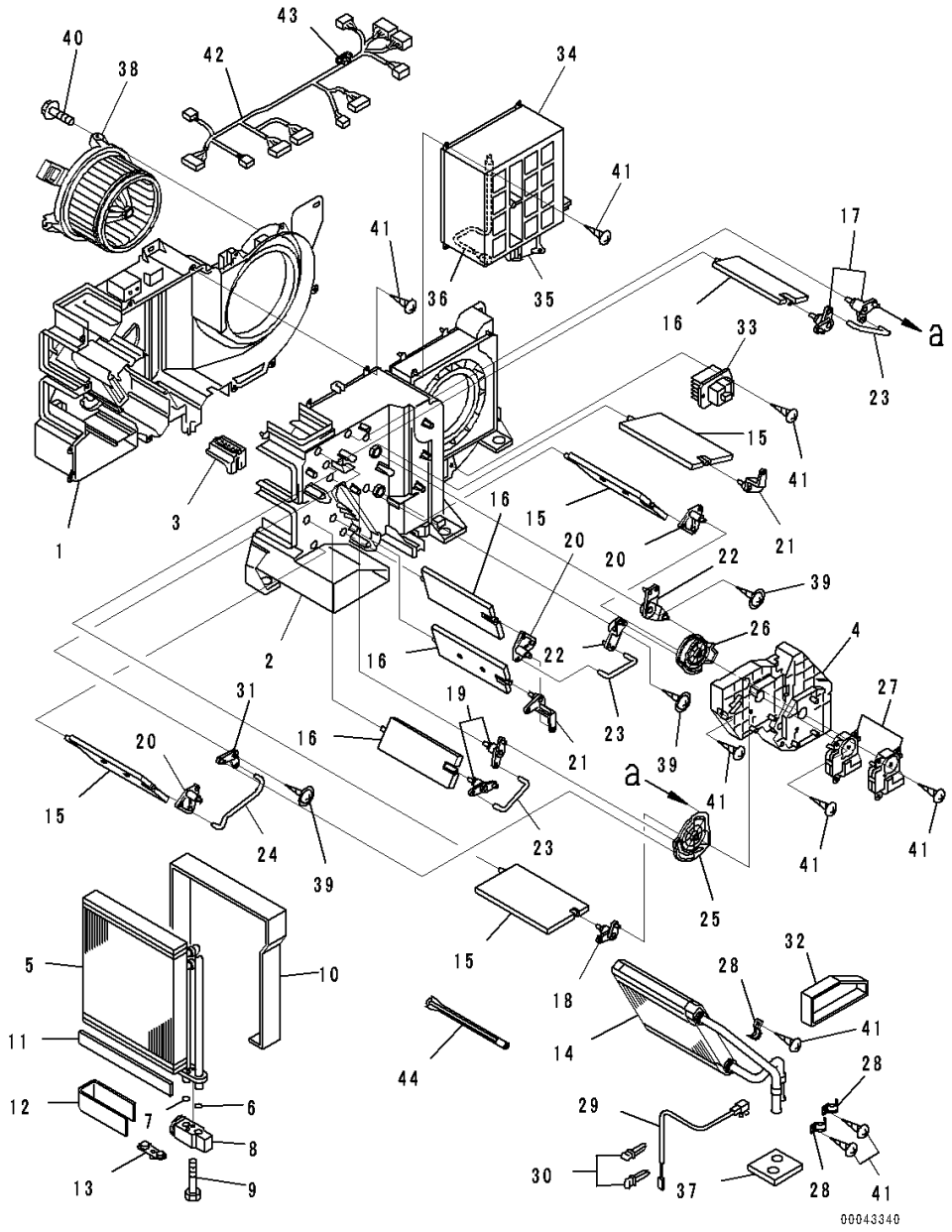

Index	Code	Part Number	Description	Qty	Serial Number
23		ND116662-7670	• Shaft	3	80001-
24		ND116662-7681	• Shaft	1	80001-
25		ND116576-3852	• Plate	1	80001-
26		ND116576-3862	• Plate	1	80001-
27		ND063800-0300	• Servo Motor Assembly	1	80001-
28		ND017231-0700	• Clamp	3	80001-
29		ND077500-5890	• Thermistor Assembly	1	80001-
30		ND246790-2060	• Clamp	2	80001-
31		ND116780-3920	• Lever Subassembly, Link	1	80001-
32		ND146667-0440	• Packing	1	80001-
33		ND077800-0750	• Transistor	1	80001-
34		ND146340-0560	• Box Assembly	1	80001-
35		ND063600-4580	•• Servo Motor Assembly	1	80001-
36		ND077500-5650	•• Thermistor Assembly	1	80001-
37		ND146657-8860	• Packing	1	80001-
38		ND116340-7350	• Motor Assembly, Fan	1	80001-
39		ND949008-0460	• Screw, Tapping	3	80001-
40		ND949008-0330	• Screw, Tapping	3	80001-
41		ND949001-1730	• Screw, Tapping	32	80001-
42		ND246470-4311	• Wire Harness Assembly	1	80001-
43		ND93950-05003	•• Fuse	1	80001-
44		ND116662-8320	• Shaft	1	80001-

FIG. K0210-001025 ROPS Cab, Air Conditioner Unit Mounting

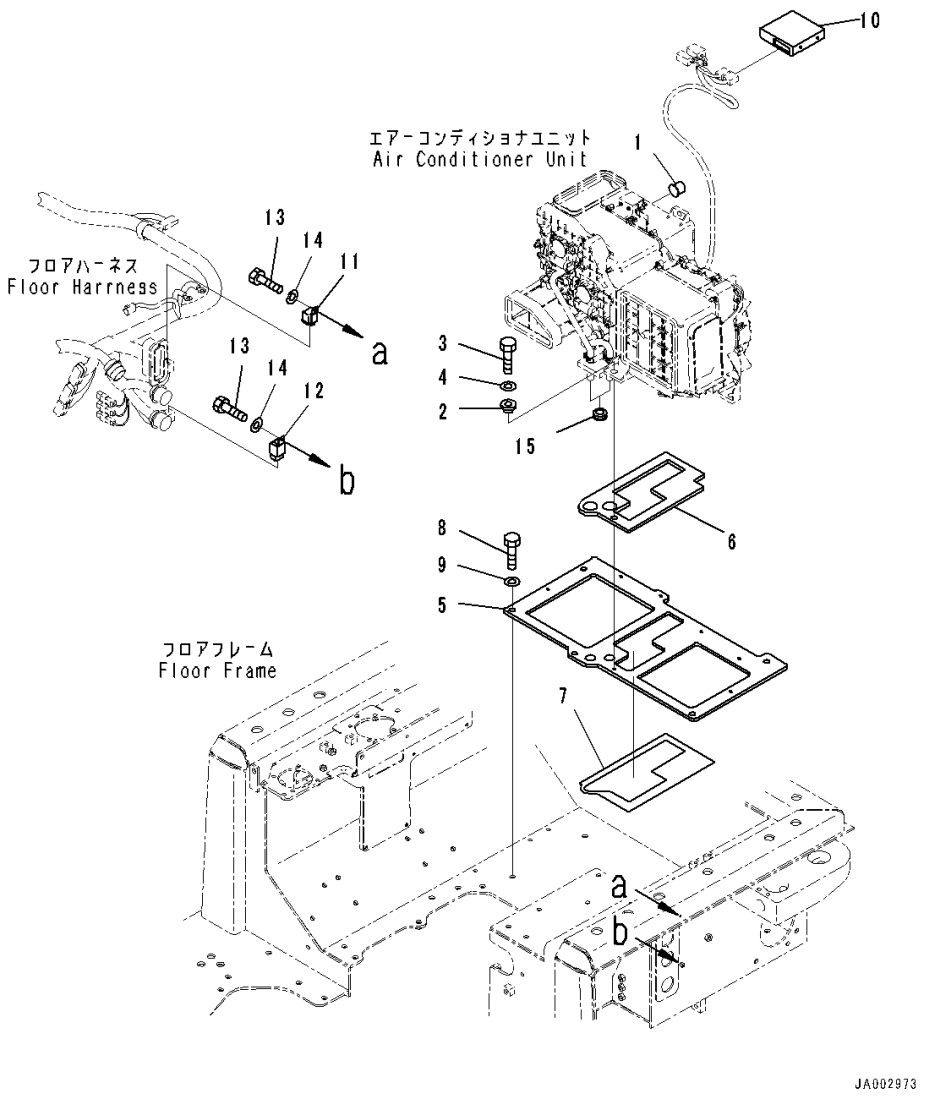

Index	Code	Part Number	Description	Qty	Serial Number
		Note: This list covers following specifications.			
		With AM-FM Stereo Radio For North America, TH300 Type KOMTRAX			
		Provision For Radio Installation, TH300 Type KOMTRAX			
		EU Regulation Guard Level 2, With AM-FM Stereo Radio With Cassette, TH300 Type KOMTRAX			
		EU Regulation Guard Level 2, Provision For Radio Installation, TH300 Type KOMTRAX			
		With Rear View Monitoring System, With AM-FM Stereo Radio For North America, TH300 Type KOMTRAX			
		With Rear View Monitoring System, Provision For Radio Installation, TH300 Type KOMTRAX			
		EU Regulation Guard Level 2, With Rear View Monitoring System, With AM-FM Stereo Radio For North America, TH300 Type KOMTRAX			
		EU Regulation Guard Level 2, With Rear View Monitoring System, With AM-FM Stereo Radio For North America, TH300 Type KOMTRAX			
1		17A-979-3131	Cap	1	80001-
2		208-979-7540	Collar	7	80001-
3		01010-D0825	Bolt	7	80001-
4		01643-70823	Washer	7	80001-
5		14X-Y11-2181	Plate	1	80001-
6		14X-Y11-2211	• Sheet,Bonded	1	80001-
7		17A-979-2330	• Sheet,Bonded	1	80001-
8		01010-81230	Bolt	4	80001-
9		01643-31232	Washer	4	80001-
10		17A-979-3180	Controller	1	80001-
11		20Y-979-6771	Relay	1	80001-
12		421-07-31270	Relay	1	80001-
13		01010-80616	Bolt	2	80001-
14		01643-30623	Washer	2	80001-
15		112-06-12150	Grommet	2	80001-

FIG. K0210-001026 ROPS Cab, Air Conditioner Duct (1/3)

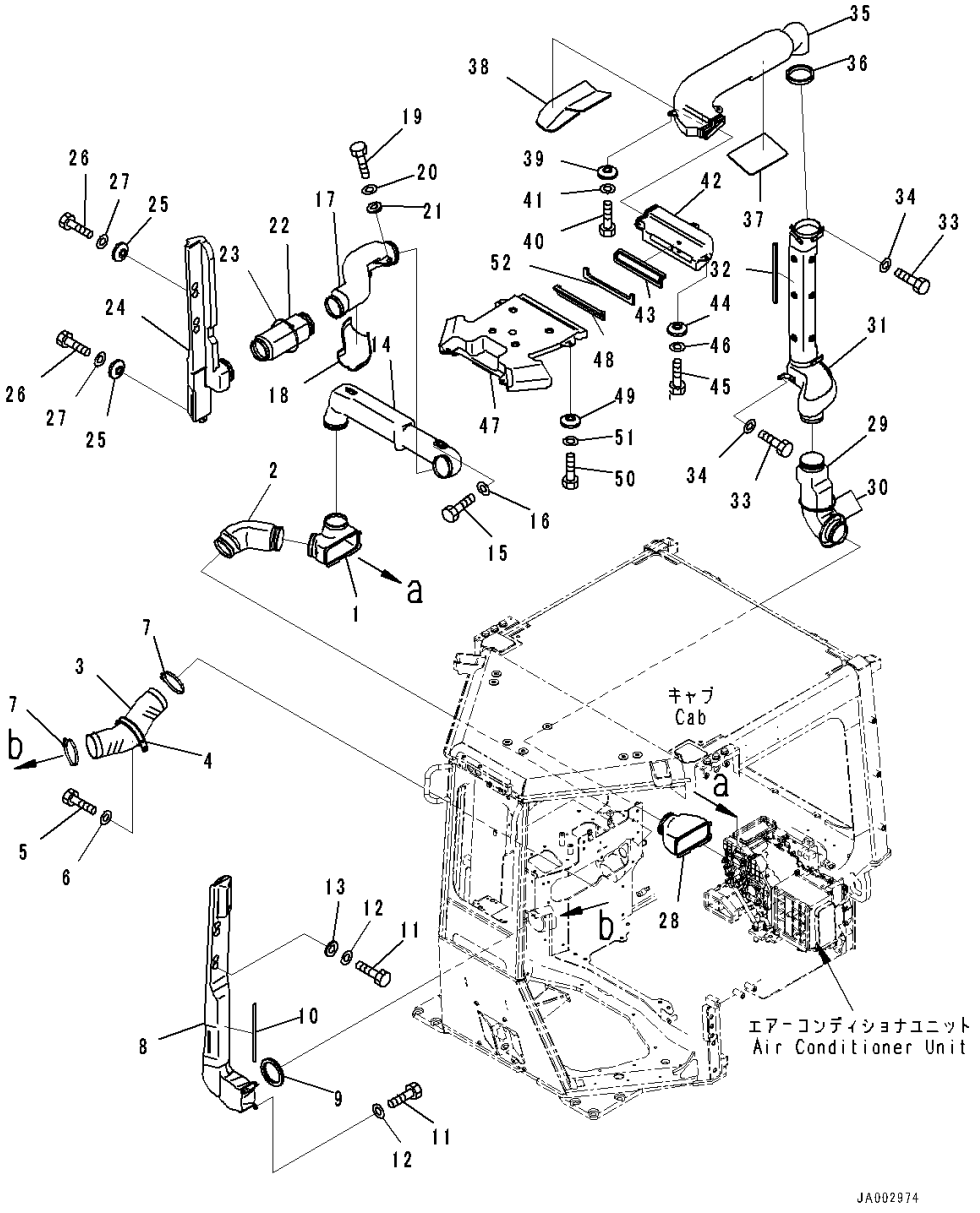

Index	Code	Part Number	Description	Qty	Serial Number
		Note: This list covers following specifications.			
		With AM-FM Stereo Radio For North America, TH300 Type KOMTRAX			
		Provision For Radio Installation, TH300 Type KOMTRAX			
		EU Regulation Guard Level 2, With AM-FM Stereo Radio With Cassette, TH300 Type KOMTRAX			
		EU Regulation Guard Level 2, Provision For Radio Installation, TH300 Type KOMTRAX			
		With Rear View Monitoring System, With AM-FM Stereo Radio For North America, TH300 Type KOMTRAX			
		With Rear View Monitoring System, Provision For Radio Installation, TH300 Type KOMTRAX			
		EU Regulation Guard Level 2, With Rear View Monitoring System, With AM-FM Stereo Radio For North America, TH300 Type KOMTRAX			
		EU Regulation Guard Level 2, With Rear View Monitoring System, With AM-FM Stereo Radio For North America, TH300 Type KOMTRAX			
1		14X-Y11-1110	Duct	1	80001-
2		20Y-53-13361	Duct	1	80001-
3		14X-Y11-1241	Hose	1	80001-
4		198-911-7750	Clip	1	80001-
5		01010-81020	Bolt	1	80001-
6		01643-31032	Washer	1	80001-
7		14X-911-7670	Clamp	2	80001-
8		14X-Y11-1151	Duct	1	80001-
9		14X-Y11-1250	• Seal,Bonded	1	80001-
10		14X-Y11-1930	• Seal,Bonded	1	80001-
11		01010-80616	Bolt	5	80001-
12		01643-30623	Washer	5	80001-
13		20Y-53-12310	Collar	2	80001-
14		14X-Y11-1121	Duct	1	80001-
15		01010-80616	Bolt	2	80001-
16		01643-30623	Washer	2	80001-
17		14X-Y11-1131	Duct	1	80001-
18		14X-Y11-2260	• Sheet,Bonded	1	80001-
19		01010-80616	Bolt	3	80001-
20		01643-30623	Washer	3	80001-
21		20Y-53-12310	Collar	1	80001-
22		20Y-53-13361	Duct	1	80001-

FIG. K0210-001026 ROPS Cab, Air Conditioner Duct (1/3)

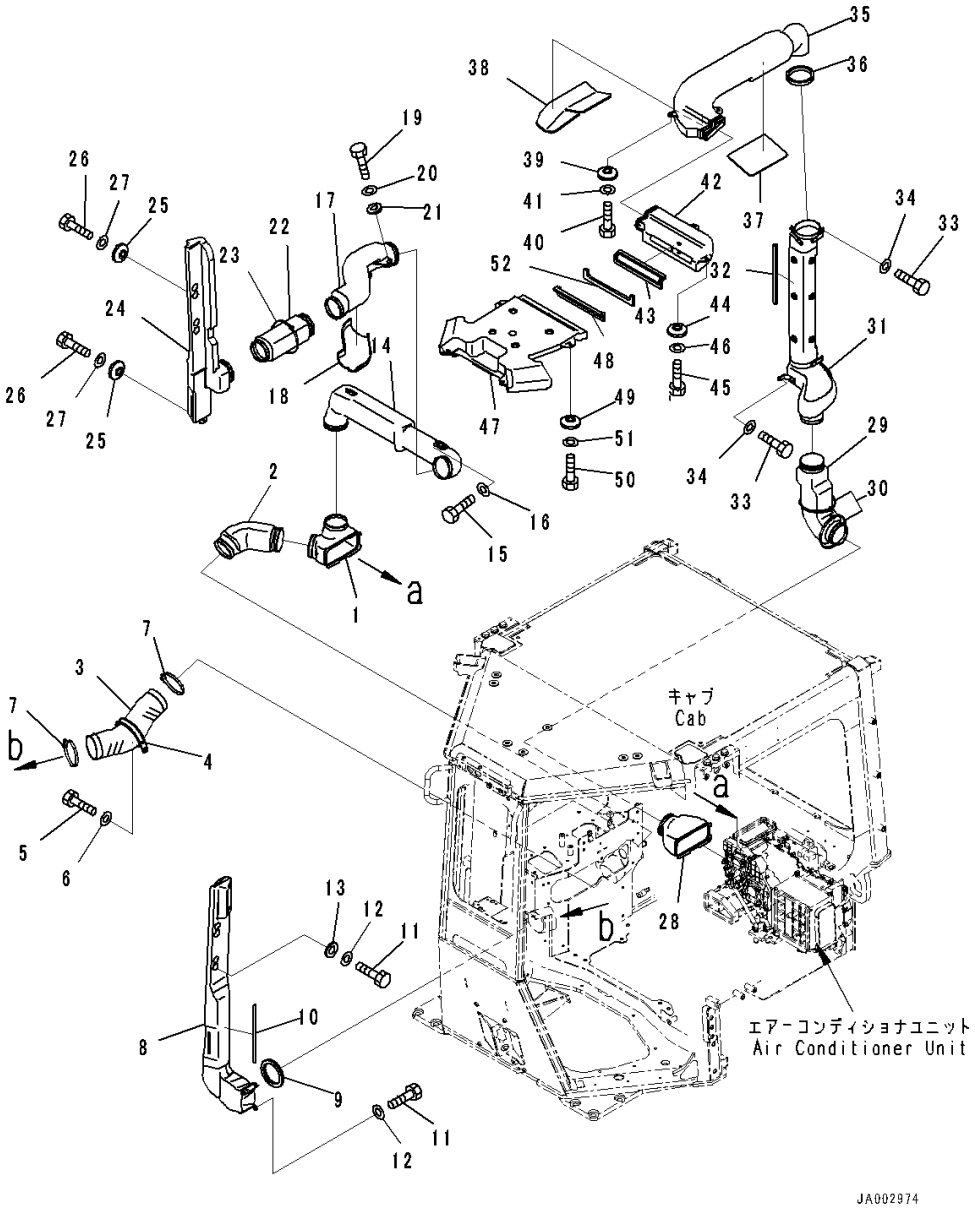

Index	Code	Part Number	Description	Qty	Serial Number
23		08034-20876	Band	1	80001-
24		14X-Y11-1141	Duct	1	80001-
25		20Y-53-12310	Collar	2	80001-
26		01010-80616	Bolt	3	80001-
27		01643-30623	Washer	3	80001-
28		14X-Y11-1160	Duct	1	80001-
29		208-53-12220	Duct	1	80001-
30		08034-20876	Band	2	80001-
31		14X-Y11-1171	Duct	1	80001-
32		14X-Y11-1940	• Seal,Bonded	1	80001-
33		01010-80616	Bolt	4	80001-
34		01643-30623	Washer	4	80001-
35		14X-Y11-1181	Duct	1	80001-
36		14X-Y11-1280	• Seal,Bonded	1	80001-
37		14X-Y79-2230	• Sheet,Bonded	1	80001-
38		14X-Y79-2241	• Sheet,Bonded	1	80001-
39		20Y-53-12310	Collar	3	80001-
40		01010-80616	Bolt	3	80001-
41		01643-30623	Washer	3	80001-
42		14X-Y11-1191	Duct	1	80001-
43		14X-Y11-1260	• Seal,Bonded	1	80001-
44		20Y-53-12310	Collar	3	80001-
45		01010-80616	Bolt	3	80001-
46		01643-30623	Washer	3	80001-
47		14X-Y11-1211	Duct	1	80001-
48		14X-Y11-1260	• Seal,Bonded	1	80001-
49		20Y-53-12310	Collar	4	80001-
50		01010-80616	Bolt	4	80001-
51		01643-30623	Washer	4	80001-
52		14X-Y79-2310	Sheet,Bonded	1	80001-

FIG. K0210-001027 ROPS Cab, Air Conditioner Piping

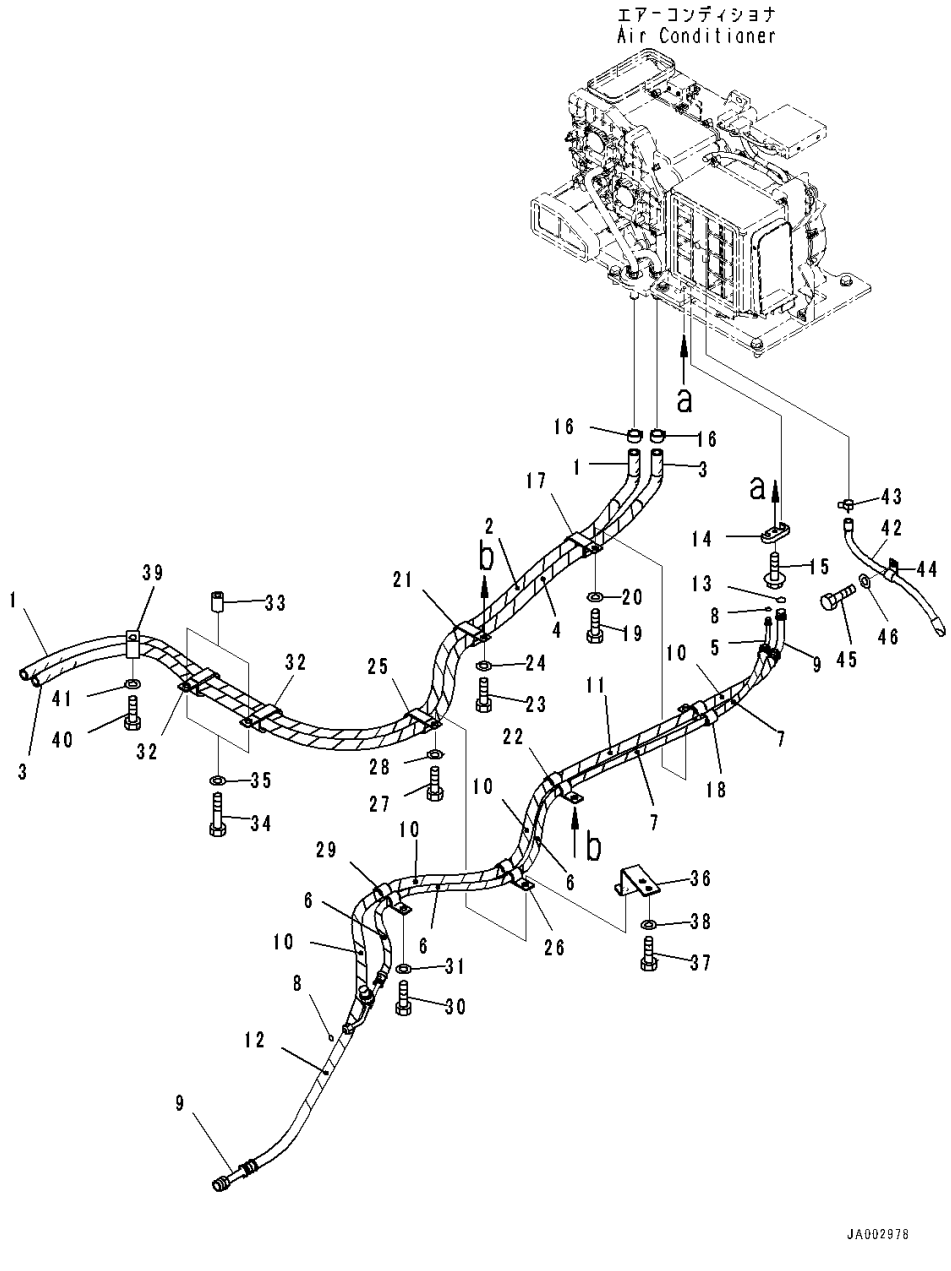

Index	Code	Part Number	Description	Qty	Serial Number
		Note: This list covers following specifications.			
		With AM-FM Stereo Radio For North America, TH300 Type KOMTRAX			
		Provision For Radio Installation, TH300 Type KOMTRAX			
		EU Regulation Guard Level 2, With AM-FM Stereo Radio With Cassette, TH300 Type KOMTRAX			
		EU Regulation Guard Level 2, Provision For Radio Installation, TH300 Type KOMTRAX			
		With Rear View Monitoring System, With AM-FM Stereo Radio For North America, TH300 Type KOMTRAX			
		With Rear View Monitoring System, Provision For Radio Installation, TH300 Type KOMTRAX			
		EU Regulation Guard Level 2, With Rear View Monitoring System, With AM-FM Stereo Radio For North America, TH300 Type KOMTRAX			
		EU Regulation Guard Level 2, With Rear View Monitoring System, With AM-FM Stereo Radio For North America, TH300 Type KOMTRAX			
1		14X-Y11-1871	Hose	1	80001-
2		08017-C2518	• Conduit	1	80001-
3		14X-Y11-1881	Hose	1	80001-
4		08017-C2519	• Conduit	1	80001-
5		14X-Y11-1891	Hose Assembly	1	80001-
6		08017-C1502	• Conduit	3	80001-
7		08017-C1503	• Conduit	2	80001-
		418-07-21210	• Switch, Pressure	1	80001-
		ND949142-0040	•• O-ring	1	80001-
8		20Y-979-3150	• O-ring	2	80001-
9		14X-Y11-1911	Hose Assembly	1	80001-
10		08017-C2202	• Conduit	4	80001-
11		08017-C2203	• Conduit	1	80001-
12		08017-C2204	• Conduit	1	80001-
13		20Y-979-3130	• O-ring	1	80001-
14		208-979-7650	Connector	1	80001-
15		01435-00620	Bolt	1	80001-
16		09479-02400	Clamp	2	80001-
17		582-35-11170	Clip	1	80001-
18		195-Z11-7250	Clip	1	80001-
19		01010-81025	Bolt	1	80001-
20		01643-31032	Washer	1	80001-

FIG. K0210-001027 ROPS Cab, Air Conditioner Piping

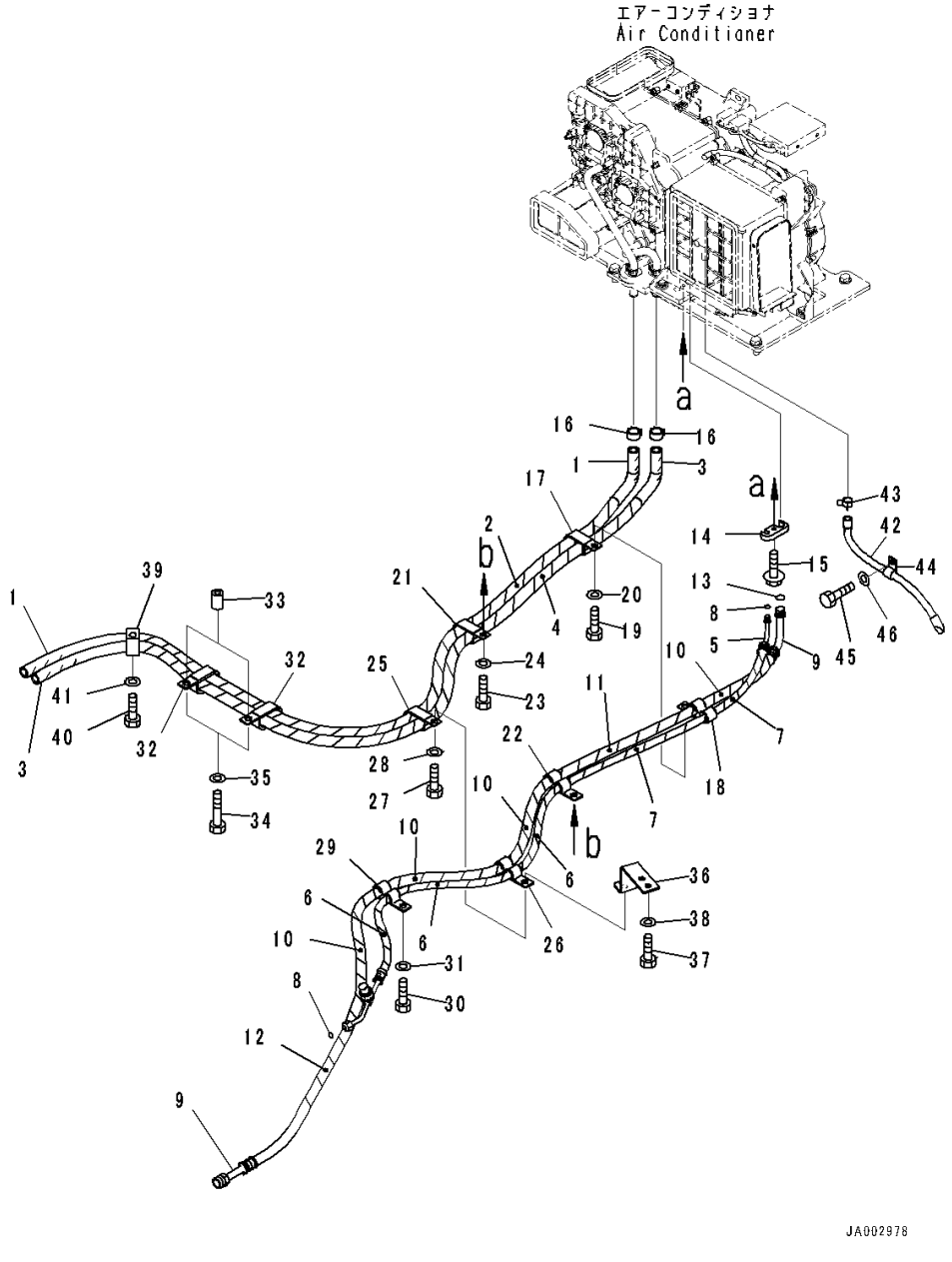

Index	Code	Part Number	Description	Qty	Serial Number
21		582-35-11170	Clip	1	80001-
22		17A-911-4421	Clip	1	80001-
23		01010-81025	Bolt	1	80001-
24		01643-31032	Washer	1	80001-
25		582-35-11170	Clip	1	80001-
26		17A-911-4421	Clip	1	80001-
27		01010-81025	Bolt	1	80001-
28		01643-31032	Washer	1	80001-
29		195-Z11-7250	Clip	1	80007-
30		01010-81025	Bolt	1	80001-
31		01643-31032	Washer	1	80001-
32		22M-977-1140	Clip	2	80001-
33		20Y-03-11220	Collar	2	80001-
34		01010-81060	Bolt	2	80001-
35		01643-31032	Washer	2	80001-
36		14X-Y11-1790	Bracket	1	80001-
37		01010-81025	Bolt	2	80001-
38		01643-31032	Washer	2	80001-
39		22M-977-1140	Clip	1	80001-
40		01010-81025	Bolt	1	80001-
41		01643-31032	Washer	1	80001-
42		20Y-979-6281	Hose	1	80001-
43		07285-00155	Clip	1	80001-
44		04434-51410	Clip	1	80001-
45		01010-D0825	Bolt	1	80001-
46		01643-70823	Washer	1	80001-

FIG. K0210-001028 ROPS Cab, Air Conditioner Duct (2/3)

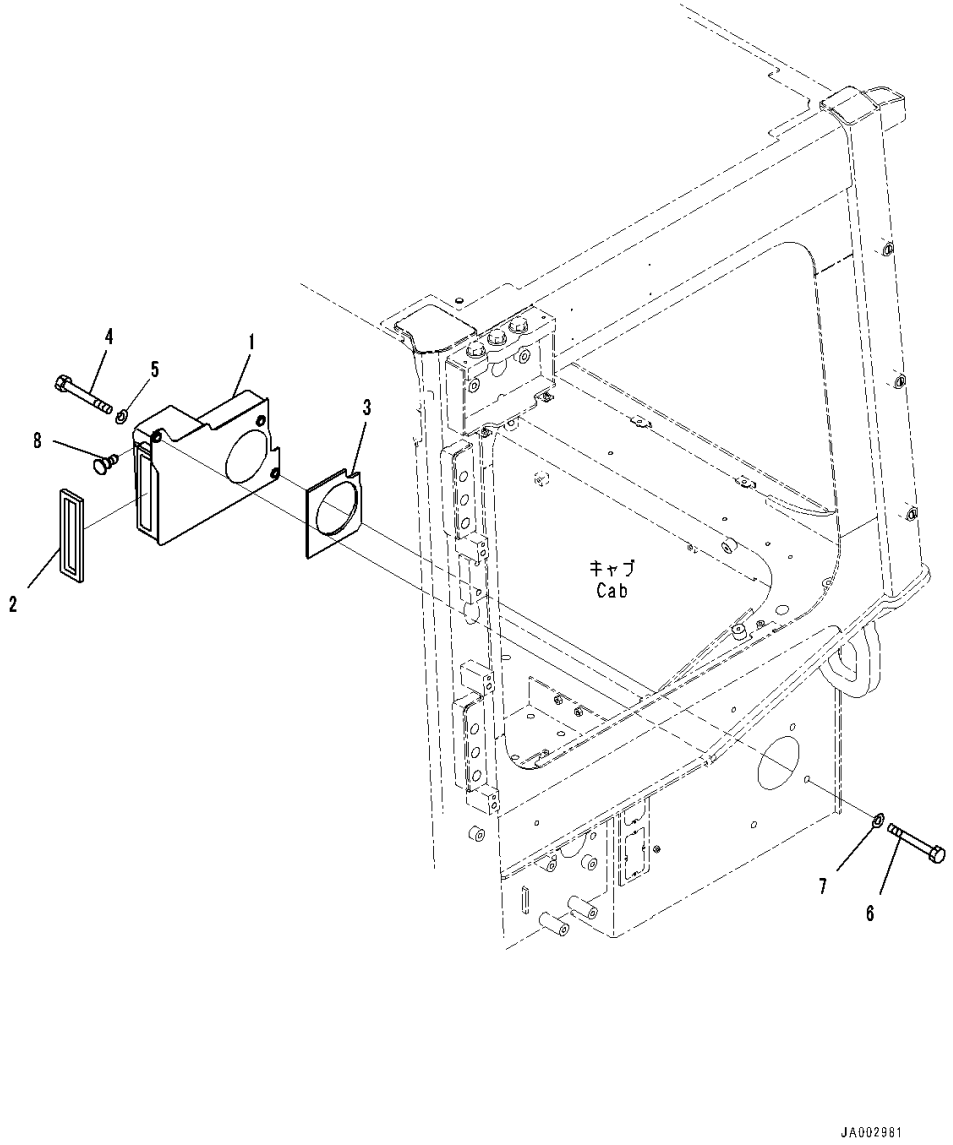

Index	Code	Part Number	Description	Qty	Serial Number
		Note: This list covers following specifications.			
		With AM-FM Stereo Radio For North America, TH300 Type KOMTRAX			
		Provision For Radio Installation, TH300 Type KOMTRAX			
		EU Regulation Guard Level 2, With AM-FM Stereo Radio With Cassette, TH300 Type KOMTRAX			
		EU Regulation Guard Level 2, Provision For Radio Installation, TH300 Type KOMTRAX			
		With Rear View Monitoring System, With AM-FM Stereo Radio For North America, TH300 Type KOMTRAX			
		With Rear View Monitoring System, Provision For Radio Installation, TH300 Type KOMTRAX			
		EU Regulation Guard Level 2, With Rear View Monitoring System, With AM-FM Stereo Radio For North America, TH300 Type KOMTRAX			
		EU Regulation Guard Level 2, With Rear View Monitoring System, With AM-FM Stereo Radio For North America, TH300 Type KOMTRAX			
1		14X-Y11-1222	Duct	1	80001-
2		14X-Y11-1471	• Seal,Bonded	1	80001-
3		14X-Y11-1490	• Sheet,Bonded	1	80001-
4		01010-81020	Bolt	1	80001-
5		01643-31032	Washer	1	80001-
6		01010-81030	Bolt	1	80001-
7		01643-31032	Washer	1	80001-
8		208-53-12680	Clip	1	80001-

FIG. K0210-001029 ROPS Cab, Air Conditioner Duct (3/3)

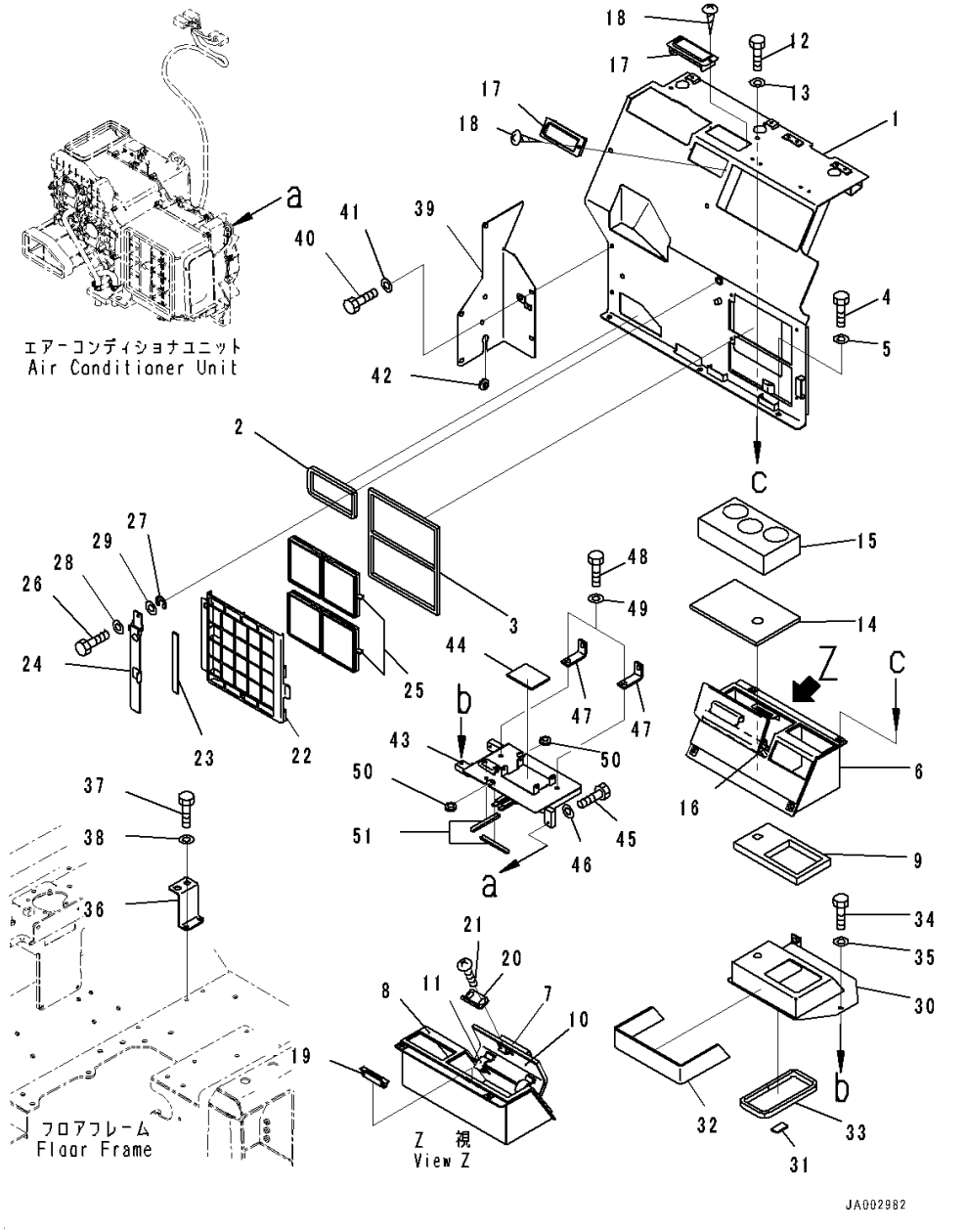

Index	Code	Part Number	Description	Qty	Serial Number
		Note: This list covers following specifications.			
		With AM-FM Stereo Radio For North America, TH300 Type KOMTRAX			
		Provision For Radio Installation, TH300 Type KOMTRAX			
		EU Regulation Guard Level 2, With AM-FM Stereo Radio With Cassette, TH300 Type KOMTRAX			
		EU Regulation Guard Level 2, Provision For Radio Installation, TH300 Type KOMTRAX			
		With Rear View Monitoring System, With AM-FM Stereo Radio For North America, TH300 Type KOMTRAX			
		With Rear View Monitoring System, Provision For Radio Installation, TH300 Type KOMTRAX			
		EU Regulation Guard Level 2, With Rear View Monitoring System, With AM-FM Stereo Radio For North America, TH300 Type KOMTRAX			
		EU Regulation Guard Level 2, With Rear View Monitoring System, With AM-FM Stereo Radio For North America, TH300 Type KOMTRAX			
1		14X-Y11-1441	Cover	1	80001-
2		17A-979-2251	Seal,Bonded	1	80001-
3		17A-979-2430	Seal,Bonded	1	80001-
4		01010-D0825	Bolt	6	80001-
5		01643-70823	Washer	6	80001-
6		14X-Y11-1511	Duct	1	80001-
7		14X-Y11-1521	• Plate	1	80001-
8		14X-Y11-1531	• Sheet,Bonded	1	80001-
9		14X-Y11-1540	• Sheet,Bonded	1	80001-
10		14X-Y11-1590	• Sheet,Bonded	1	80001-
11		17A-979-2390	• Hinge,Welded	2	80001-
12		01010-D0825	Bolt	4	80001-
13		01643-70823	Washer	4	80001-
14		14X-Y11-1561	Cushion	1	80001-
15		14X-Y11-1550	Cushion	1	80001-
16		14X-Y11-1611	Plate,Bonded	1	80001-
17		17A-Z11-7161	Louver	2	80001-
18		01370-10310	Screw	4	80001-
19		20Y-979-6630	Catcher	1	80001-
20		17A-54-46961	Plate	1	80001-
21		01023-10508	Screw	2	80001-
22		17A-979-2422	Cover	1	80001-

FIG. K0210-001029 ROPS Cab, Air Conditioner Duct (3/3)

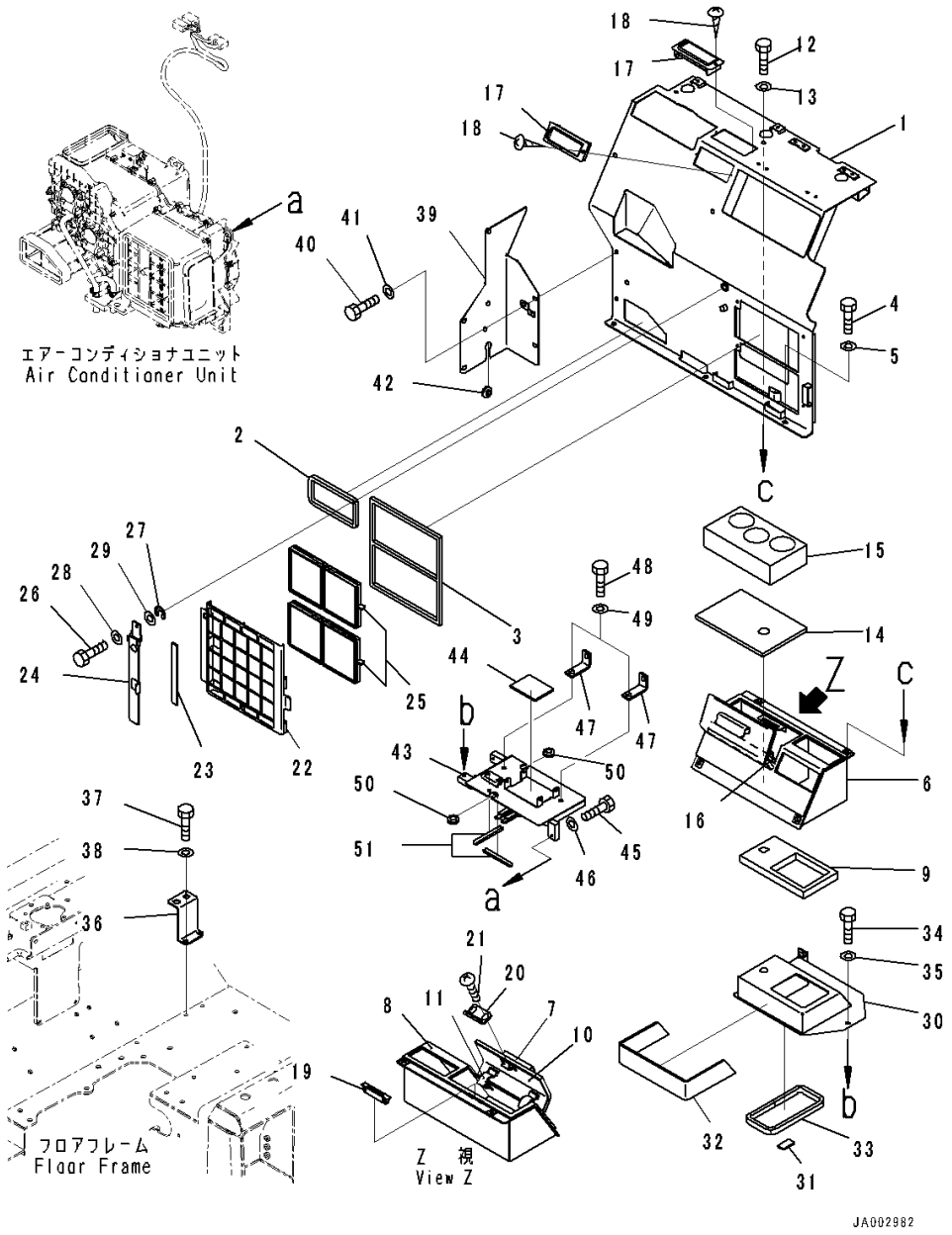

Index	Code	Part Number	Description	Qty	Serial Number
23		17A-43-42340	• Seal,Bonded	1	80001-
24		14X-54-56151	Bracket	1	80001-
25		20Y-979-6261	Filter	2	80001-
26		01232-10616	Screw, Knurled Head	1	80001-
27		195-54-78790	Ring, Snap	1	80001-
28		01643-70623	Washer	1	80001-
29		01640-20610	Washer	1	80001-
30		14X-Y11-1451	Duct	1	80001-
31		14X-Y11-1620	• Seal,Bonded	1	80001-
32		14X-Y11-2250	• Sheet,Bonded	1	80001-
33		17A-979-2141	• Seal,Bonded	1	80001-
34		01010-D0825	Bolt	2	80001-
35		01643-70823	Washer	2	80001-
36		14X-Y11-1291	Bracket	1	80001-
37		01010-D0825	Bolt	2	80001-
38		01643-70823	Washer	2	80001-
39		14X-54-56431	Cover	1	80001-
40		01010-80825	Bolt	5	80001-
41		01643-30823	Washer	5	80001-
42		09415-01610	Cap	1	80001-
43		14X-Y11-1461	Bracket	1	80001-
44		17A-979-2360	• Seal,Bonded	1	80001-
45		01010-D0825	Bolt	2	80001-
46		01643-70823	Washer	2	80001-
47		14X-Y11-1570	Bracket	2	80001-
48		01010-D0825	Bolt	4	80001-
49		01643-70823	Washer	4	80001-
50		08037-01610	Grommet	2	80001-
51		14X-Y11-1990	Trim	2	80001-

FIG. K0210-001030 ROPS Cab, Console Box

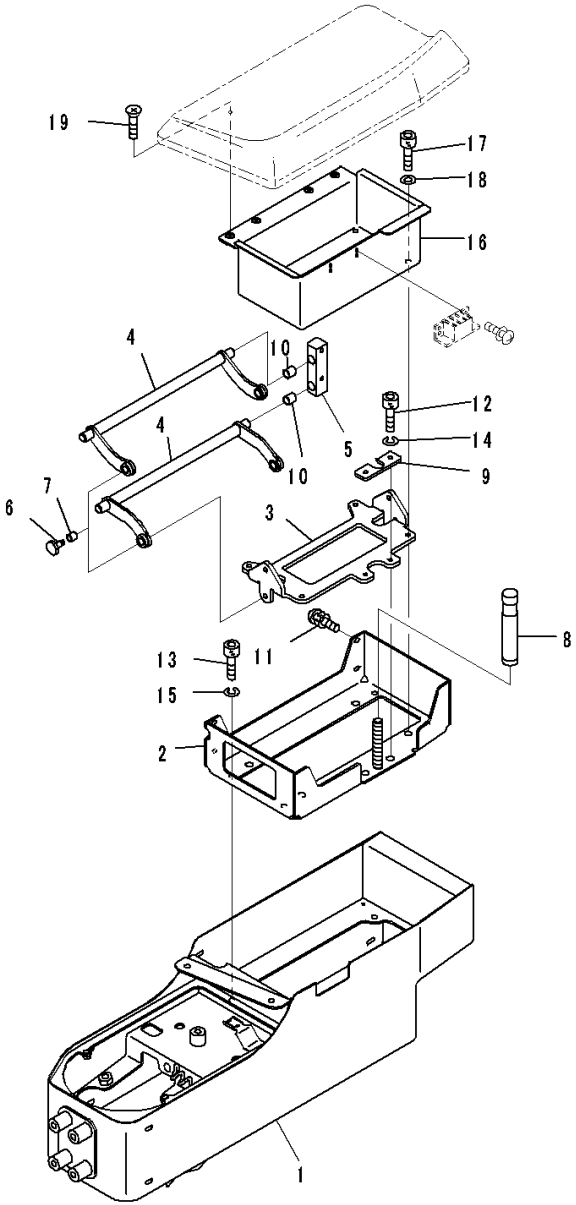

Index	Code	Part Number	Description	Qty	Serial Number
		Note: This list covers following specifications.			
		With AM-FM Stereo Radio For North America, TH300 Type KOMTRAX			
		Provision For Radio Installation, TH300 Type KOMTRAX			
		EU Regulation Guard Level 2, With AM-FM Stereo Radio With Cassette, TH300 Type KOMTRAX			
		EU Regulation Guard Level 2, Provision For Radio Installation, TH300 Type KOMTRAX			
		With Rear View Monitoring System, With AM-FM Stereo Radio For North America, TH300 Type KOMTRAX			
		With Rear View Monitoring System, Provision For Radio Installation, TH300 Type KOMTRAX			
		EU Regulation Guard Level 2, With Rear View Monitoring System, With AM-FM Stereo Radio For North America, TH300 Type KOMTRAX			
		EU Regulation Guard Level 2, With Rear View Monitoring System, With AM-FM Stereo Radio For North America, TH300 Type KOMTRAX			
1		14X-43-51211	Box, Console	1	80001-
		14X-43-51501	Bracket Assembly	1	80001-
2	C1		• Bracket	1	80001-
3		19M-43-33720	• Bracket	1	80001-
4		19M-43-33730	• Arm	2	80001-
5		19M-43-33740	• Block	2	80001-
6		19M-43-33750	• Pin	4	80001-
7		19M-43-33760	• Bushing	4	80001-
8		19M-43-33770	• Knob	1	80001-
9		19M-43-33780	• Plate	1	80001-
10		19M-43-34330	• Bushing	4	80001-
11		01023-60516	• Screw	4	80001-
12		01252-80410	• Bolt, Hexagon Socket Head	2	80001-
13		01252-80510	• Bolt	4	80001-
14		01601-20410	• Washer	2	80001-
15		01601-20512	• Washer	4	80001-
16		14X-43-51691	Bracket	1	80001-
17		01252-80510	Bolt	4	80001-
18		01601-50513	Washer, Spring	4	80001-
19		01224-70408	Screw, Philips Head	4	80001-

FIG. K0210-001031 ROPS Cab, Travel Control Lever (1/2)

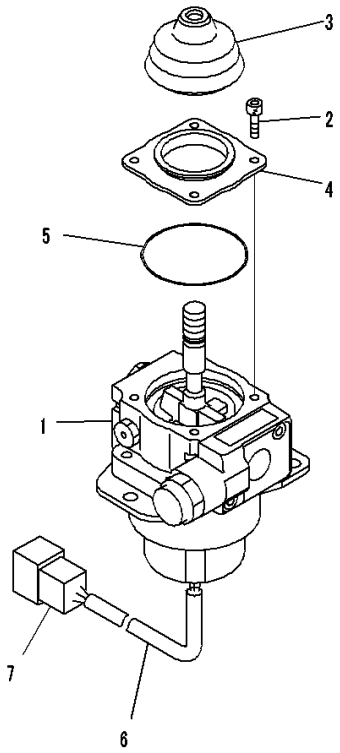

JY013289

Index	Code	Part Number	Description	Qty	Serial Number
		Note: This list covers following specifications.			
		With AM-FM Stereo Radio For North America, TH300 Type KOMTRAX			
		Provision For Radio Installation, TH300 Type KOMTRAX			
		EU Regulation Guard Level 2, With AM-FM Stereo Radio With Cassette, TH300 Type KOMTRAX			
		EU Regulation Guard Level 2, Provision For Radio Installation, TH300 Type KOMTRAX			
		With Rear View Monitoring System, With AM-FM Stereo Radio For North America, TH300 Type KOMTRAX			
		With Rear View Monitoring System, Provision For Radio Installation, TH300 Type KOMTRAX			
		EU Regulation Guard Level 2, With Rear View Monitoring System, With AM-FM Stereo Radio For North America, TH300 Type KOMTRAX			
		EU Regulation Guard Level 2, With Rear View Monitoring System, With AM-FM Stereo Radio For North America, TH300 Type KOMTRAX			
1		702-16-02290	Lever Assembly	1	80001-
2		01252-60512	• Bolt	4	80001-
3		702-16-59330	• Boot	1	80001-
4		702-16-62730	• Cover	1	80001-
5		702-16-62740	• O-ring	1	80001-
6		702-16-61270	• Tube	1	80001-
7		08192-28812	• Connector	1	80001-

FIG. K0210-001032 ROPS Cab, Travel Control Lever (2/2)

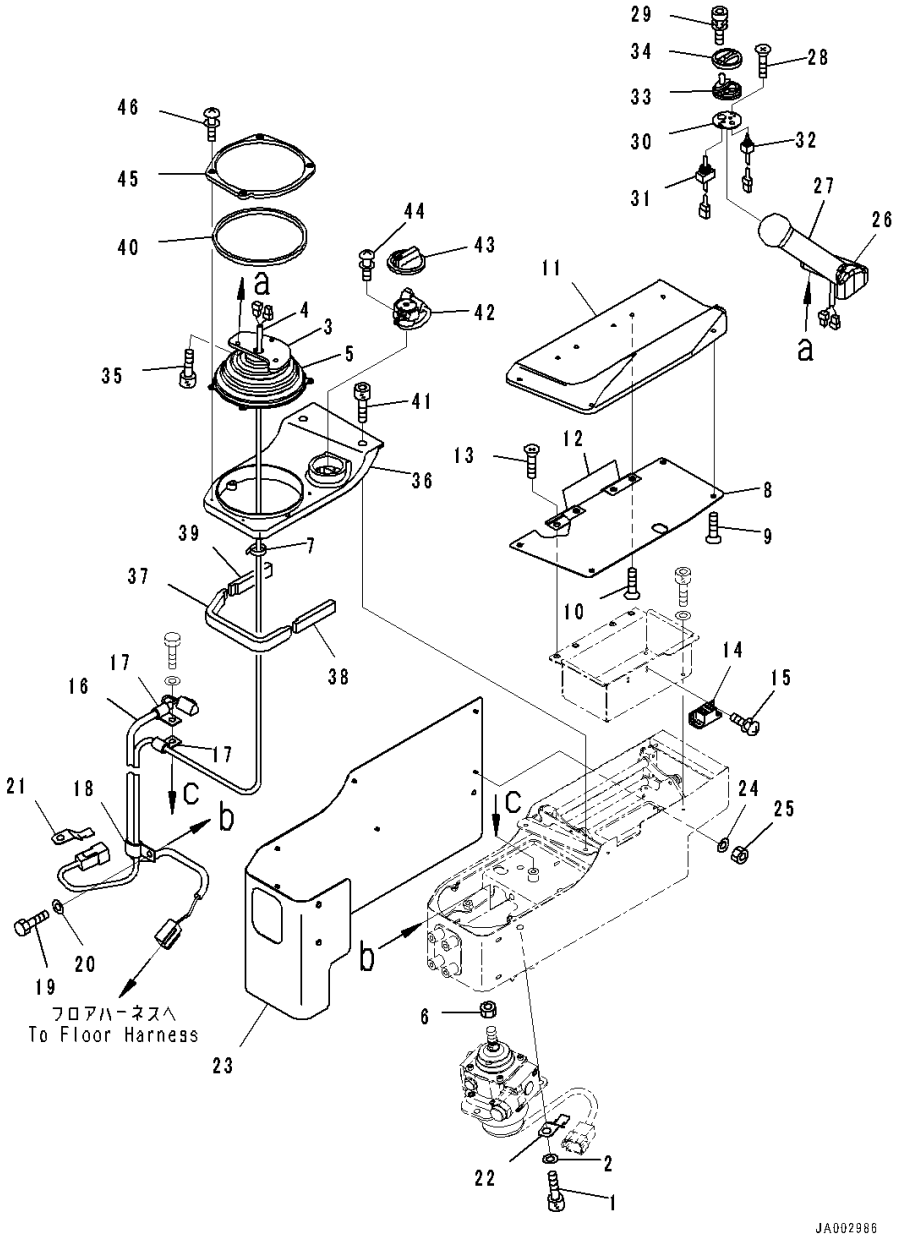

Index	Code	Part Number	Description	Qty	Serial Number
		Note: This list covers following specifications.			
		With AM-FM Stereo Radio For North America, TH300 Type KOMTRAX			
		Provision For Radio Installation, TH300 Type KOMTRAX			
		EU Regulation Guard Level 2, With AM-FM Stereo Radio With Cassette, TH300 Type KOMTRAX			
		EU Regulation Guard Level 2, Provision For Radio Installation, TH300 Type KOMTRAX			
		With Rear View Monitoring System, With AM-FM Stereo Radio For North America, TH300 Type KOMTRAX			
		With Rear View Monitoring System, Provision For Radio Installation, TH300 Type KOMTRAX			
		EU Regulation Guard Level 2, With Rear View Monitoring System, With AM-FM Stereo Radio For North America, TH300 Type KOMTRAX			
		EU Regulation Guard Level 2, With Rear View Monitoring System, With AM-FM Stereo Radio For North America, TH300 Type KOMTRAX			
1		01252-70825	Bolt	3	80001-
2		01643-30823	Washer	3	80001-
		14X-06-31311	Wire Harness	1	80001-
3		154-43-73531	• Bracket	1	80001-
4		154-43-73560	• Wire Harness	1	80001-
5		14X-43-34331	• Boot	1	80001-
6		20T-43-71190	Nut	1	80001-
7		08034-20519	Band	2	80001-
8		14X-43-52110	Pad	1	80001-
9		01224-70408	• Screw, Philips Head	4	80001-
10		01224-70410	• Screw, Philips Head	4	80001-
11		19M-43-33630	• Pad	1	80001-
		19M-43-33630	•• Pad	1	80001-
		19M-43-33630	•• Pad	1	80001-
		19M-43-33630	•• Pad	1	80001-
		19M-43-33630	•• Pad	10	80001-
12		19M-43-33660	• Hinge	2	80001-
13		01224-70408	Screw, Philips Head	4	80001-
14		154-43-73651	Magnet	1	80001-
15		01023-10308	Screw	4	80001-
16		14X-06-51151	Wire Harness	1	80001-
17		04434-51008	Clip	2	80001-

FIG. K0210-001032 ROPS Cab, Travel Control Lever (2/2)

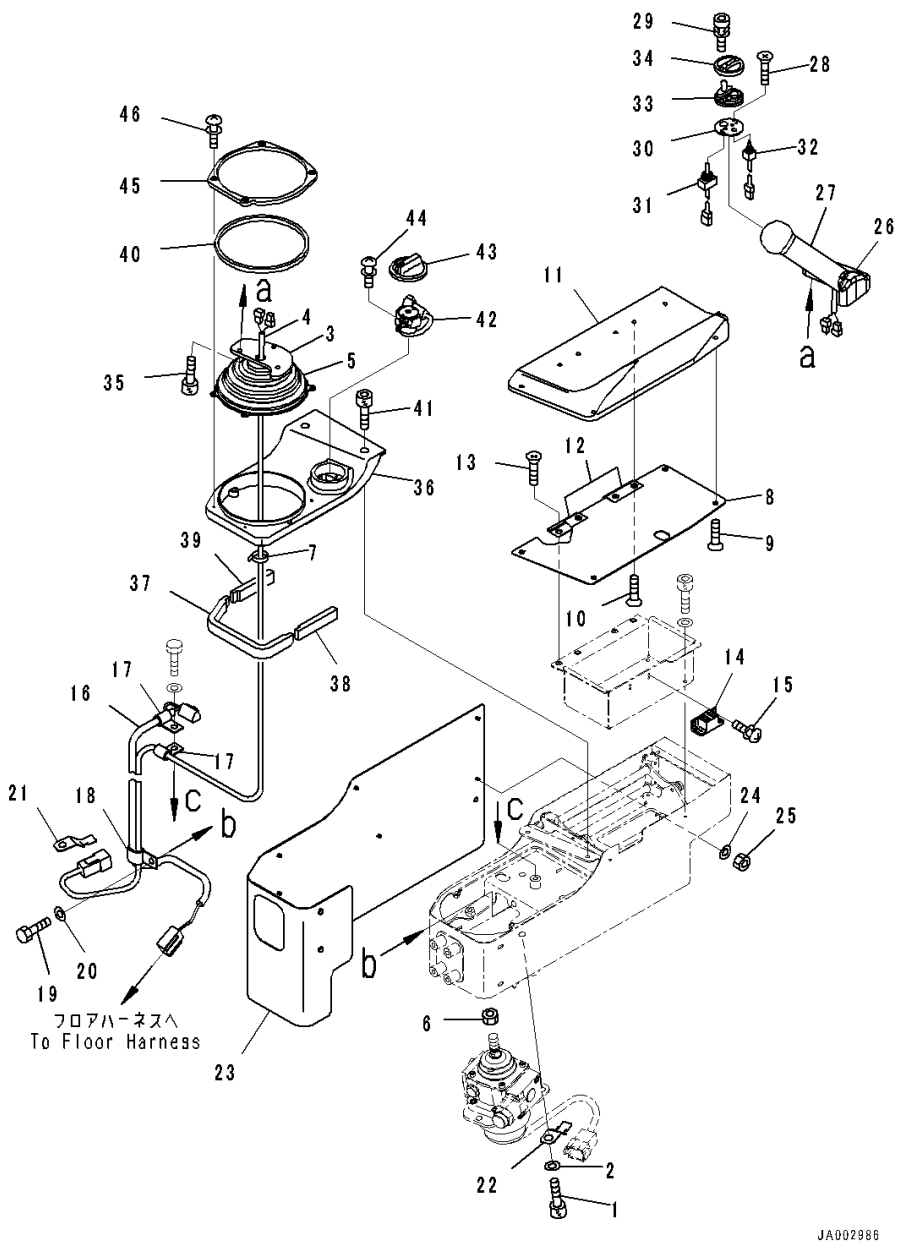

Index	Code	Part Number	Description	Qty	Serial Number
18		04435-51008	Clip	1	80001-
19		01010-80816	Bolt	2	80001-
20		01643-30823	Washer	2	80001-
21		08193-20010	Clip	1	80001-
22		08193-31012	Clip	1	80001-
23		14X-43-51221	Pad	1	80001-
24		01640-20408	Washer, Flat	8	80001-
25		01580-20403	Nut	8	80001-
		19M-43-33110	Knob Assembly	1	80001-
26	C1		• Knob Assembly	1	80001-
27	C1		• Knob Assembly	1	80001-
28	C1		• Knob Assembly	2	80001-
29		19M-09-11510	• Bolt	2	80001-
		19M-43-33140	• Switch Assembly	1	80001-
30		19M-43-33170	•• Plate	1	80001-
31		19M-43-33460	•• Switch	1	80001-
32		19M-43-33470	•• Switch	1	80001-
33		19M-43-33150	• Rubber	1	80001-
34		19M-43-33160	• Cover	1	80001-
35		01252-80514	Bolt	3	80001-
36		14X-43-51960	Finisher Assembly	1	80001-
37		14X-54-38310	• Sheet,Bonded	1	80001-
38		14X-54-38320	• Sheet,Bonded	1	80001-
39		14X-54-38330	• Sheet,Bonded	1	80001-
40		14X-54-38350	• Sheet,Bonded	1	80001-
41		01252-70520	Bolt	4	80001-
42		14X-06-31501	Dial	1	80001-
43		7825-30-1441	• Knob	1	80001-
44		01023-60410	Screw	2	80001-
45		14X-43-51980	Cover	1	80001-
46		01023-70414	Screw	4	80001-

FIG. K0210-001033 ROPS Cab, Console Slider

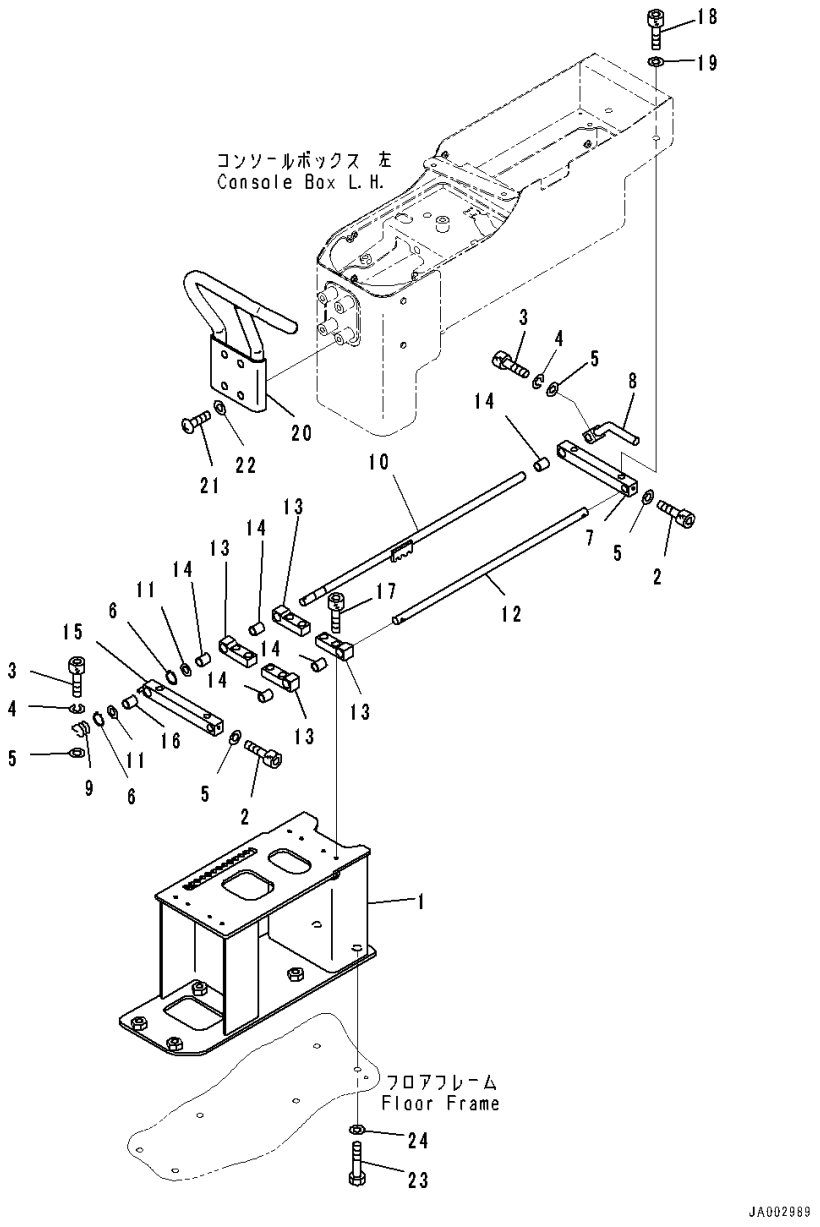

Index	Code	Part Number	Description	Qty	Serial Number
		Note: This list covers following specifications.			
		With AM-FM Stereo Radio For North America, TH300 Type KOMTRAX			
		Provision For Radio Installation, TH300 Type KOMTRAX			
		EU Regulation Guard Level 2, With AM-FM Stereo Radio With Cassette, TH300 Type KOMTRAX			
		EU Regulation Guard Level 2, Provision For Radio Installation, TH300 Type KOMTRAX			
		With Rear View Monitoring System, With AM-FM Stereo Radio For North America, TH300 Type KOMTRAX			
		With Rear View Monitoring System, Provision For Radio Installation, TH300 Type KOMTRAX			
		EU Regulation Guard Level 2, With Rear View Monitoring System, With AM-FM Stereo Radio For North America, TH300 Type KOMTRAX			
		EU Regulation Guard Level 2, With Rear View Monitoring System, With AM-FM Stereo Radio For North America, TH300 Type KOMTRAX			
1		14X-43-51252	Bracket	1	80001-
		14X-43-51402	Slider Assembly	1	80001-
2		01252-80412	• Bolt	2	80001-
3		01252-80414	• Bolt	2	80001-
4		01601-20411	• Washer	2	80001-
5		01640-20408	• Washer, Flat	4	80001-
6		04064-01010	• Ring, Snap	2	80001-
7		14X-43-51661	• Guide	1	80001-
8		14X-43-51681	• Lever	1	80001-
9		154-43-73670	• Spring	1	80001-
10		154-43-73680	• Shaft	1	80001-
11		19M-09-34110	• Washer	2	80001-
12		19M-43-34120	• Shaft	1	80001-
13		19M-43-34141	• Guide	4	80001-
14		19M-43-34150	• Bushing	5	80001-
15		19M-43-34182	• Guide	1	80001-
16		19M-43-34190	• Bushing	1	80001-
17		01252-80516	Bolt	8	80001-
18		01252-70816	Bolt	4	80001-
19		01643-30823	Washer	4	80001-
20		14X-54-36631	Handle	1	80001-
21		01245-00820	Screw	4	80001-

FIG. K0210-001033 ROPS Cab, Console Slider

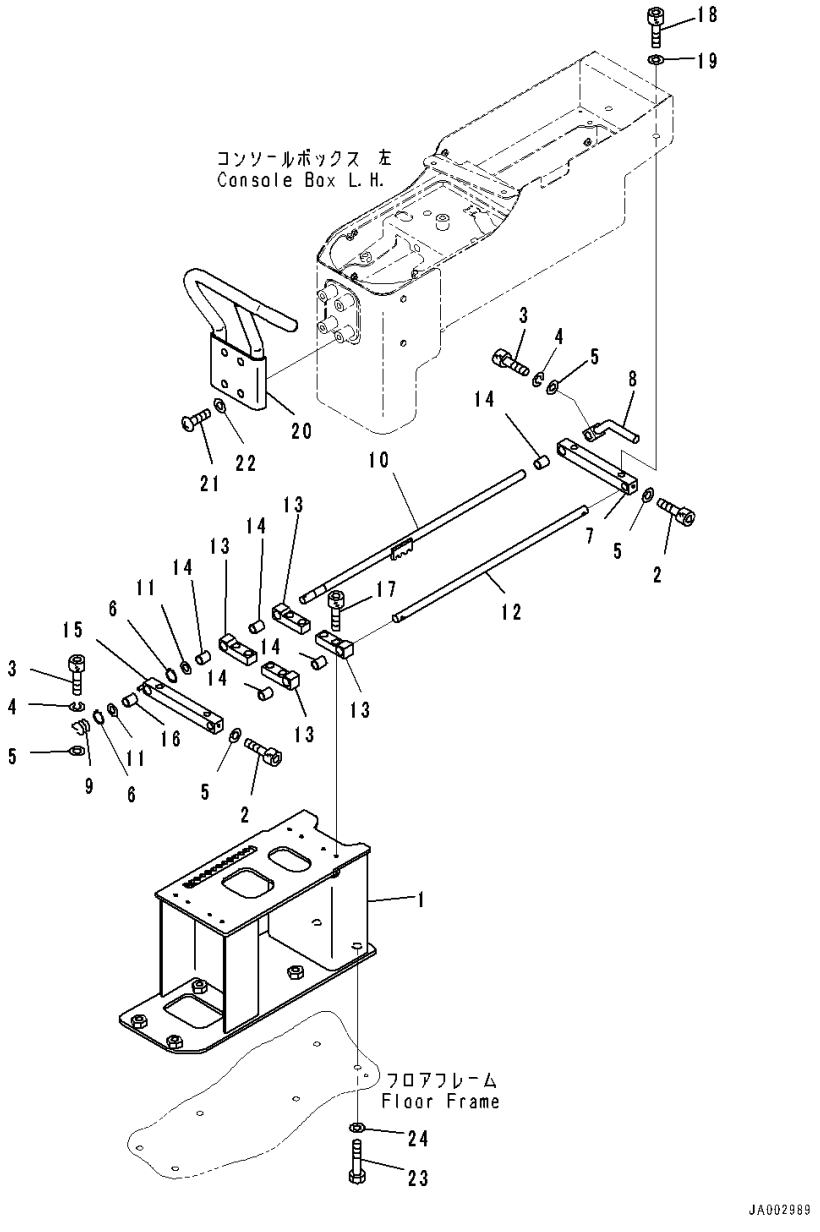

Index	Code	Part Number	Description	Qty	Serial Number
22		01643-70823	Washer	4	80001-
23		01010-81030	Bolt	6	80001-
24		01643-31032	Washer	6	80001-

FIG. K0210-001034 ROPS Cab, Parking Brake Lever

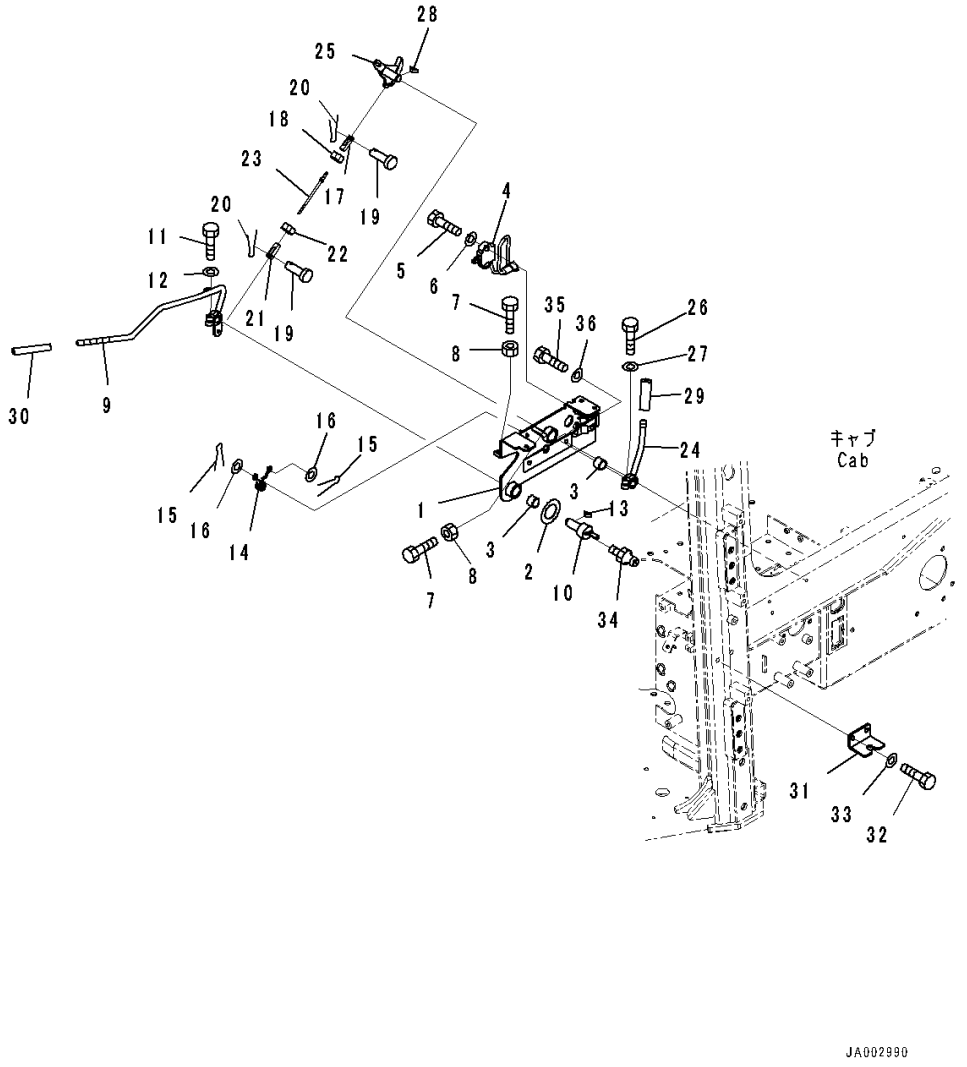

Index	Code	Part Number	Description	Qty	Serial Number
		Note: This list covers following specifications.			
		With AM-FM Stereo Radio For North America, TH300 Type KOMTRAX			
		Provision For Radio Installation, TH300 Type KOMTRAX			
		EU Regulation Guard Level 2, With AM-FM Stereo Radio With Cassette, TH300 Type KOMTRAX			
		EU Regulation Guard Level 2, Provision For Radio Installation, TH300 Type KOMTRAX			
		With Rear View Monitoring System, With AM-FM Stereo Radio For North America, TH300 Type KOMTRAX			
		With Rear View Monitoring System, Provision For Radio Installation, TH300 Type KOMTRAX			
		EU Regulation Guard Level 2, With Rear View Monitoring System, With AM-FM Stereo Radio For North America, TH300 Type KOMTRAX			
		EU Regulation Guard Level 2, With Rear View Monitoring System, With AM-FM Stereo Radio For North America, TH300 Type KOMTRAX			
1		14X-43-51412	Bracket	1	80001-
2		14X-43-51470	• Sheet,Bonded	1	80001-
3		06124-02020	Bearing	2	80001-
4		11Y-06-22150	Switch	1	80001-
5		01010-81035	Bolt	2	80001-
6		01643-31032	Washer	2	80001-
7		01016-50830	Bolt	2	80001-
8		01580-10806	Nut	2	80001-
9		14X-43-51421	Lever	1	80001-
10		14X-43-51431	Lever	1	80001-
11		01010-80830	Bolt	1	80001-
12		01643-30823	Washer	1	80001-
13		04010-00516	Key	1	80001-
14		14X-43-51840	Spring	1	80001-
15		04050-11612	Pin, Cotter	2	80001-
16		01640-20610	Washer	2	80001-
17		04221-20634	Yoke	1	80001-
18		01508-40603	Nut, Left-handed	1	80001-
19		04205-10618	Pin	2	80001-
20		04050-11612	Pin, Cotter	2	80001-
21		04211-20634	Yoke	1	80001-
22		01580-10605	Nut	1	80001-

FIG. K0210-001034 ROPS Cab, Parking Brake Lever

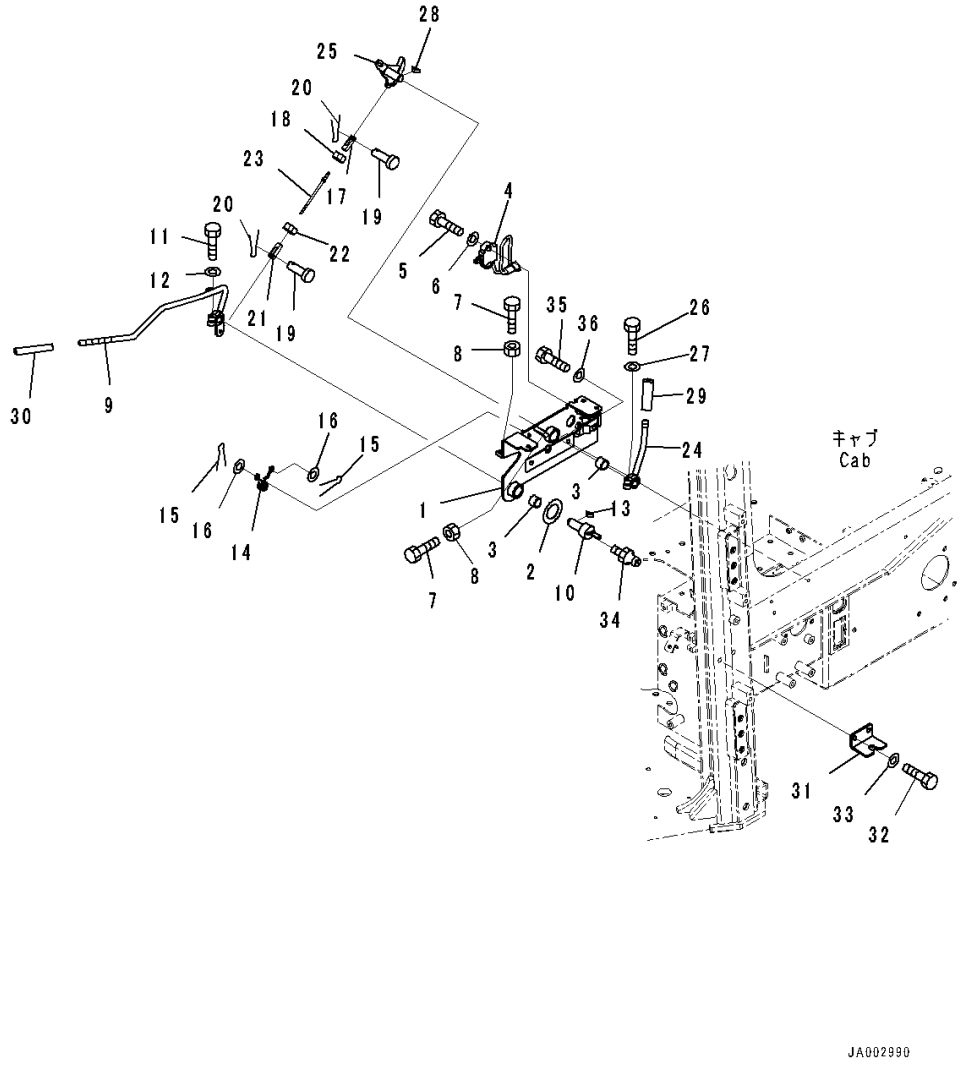

Index	Code	Part Number	Description	Qty	Serial Number
23		04248-30613	Rod	1	80001-
24		14X-43-51741	Lever	1	80001-
25		14X-43-51451	Lever	1	80001-
26		01010-80830	Bolt	1	80001-
27		01643-30823	Washer	1	80001-
28		04010-00516	Key	1	80001-
29		22M-43-21470	Knob	1	80001-
30		417-43-28270	Cap	1	80001-
31		14X-43-51461	Bracket	1	80001-
32		01010-81025	Bolt	2	80001-
33		01643-31032	Washer	2	80001-
34		07020-00000	Fitting, Grease	1	80001-
35		01010-81025	Bolt	2	80001-
36		01643-31032	Washer	2	80001-

FIG. K0210-001035 ROPS Cab, Work Equipment Lock Lever

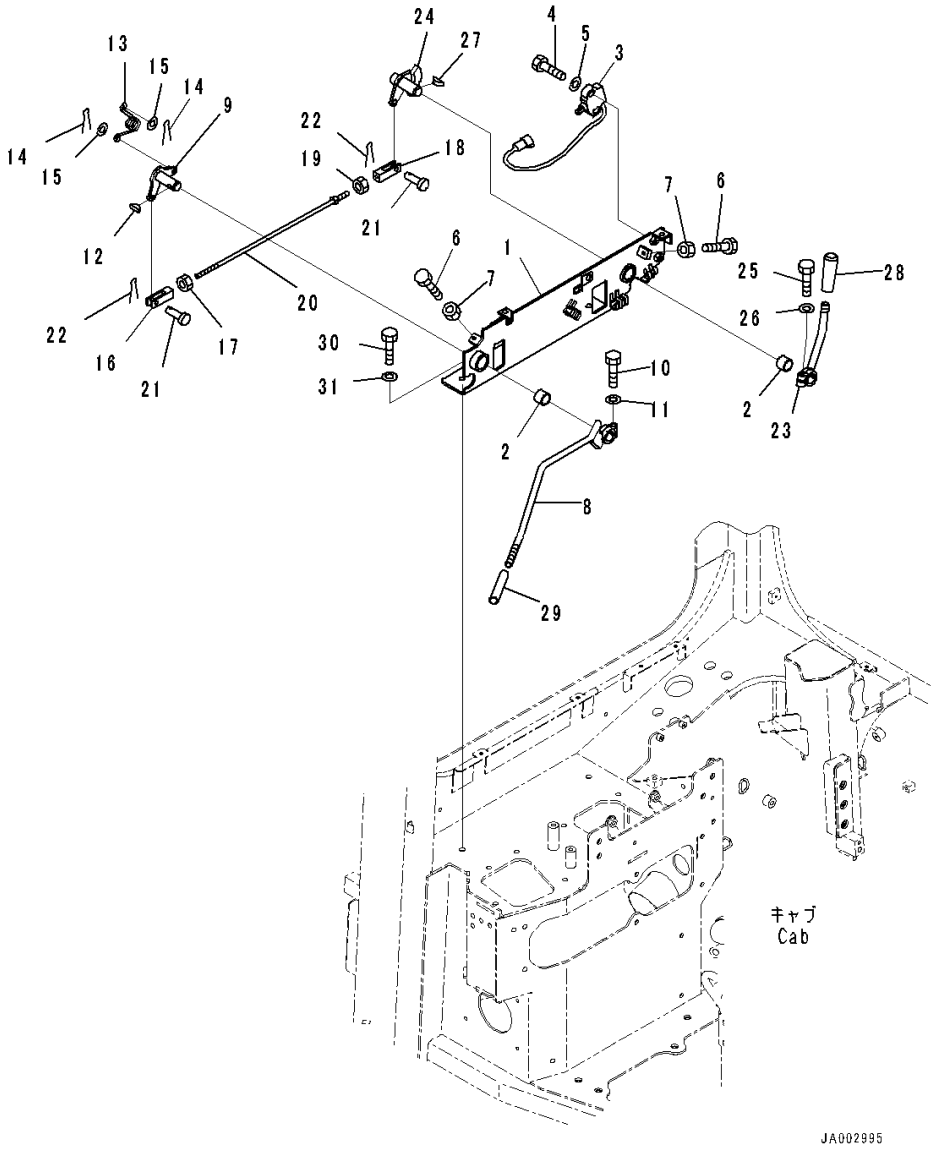

Index	Code	Part Number	Description	Qty	Serial Number
		Note: This list covers following specifications.			
		With AM-FM Stereo Radio For North America, TH300 Type KOMTRAX			
		Provision For Radio Installation, TH300 Type KOMTRAX			
		EU Regulation Guard Level 2, With AM-FM Stereo Radio With Cassette, TH300 Type KOMTRAX			
		EU Regulation Guard Level 2, Provision For Radio Installation, TH300 Type KOMTRAX			
		With Rear View Monitoring System, With AM-FM Stereo Radio For North America, TH300 Type KOMTRAX			
		With Rear View Monitoring System, Provision For Radio Installation, TH300 Type KOMTRAX			
		EU Regulation Guard Level 2, With Rear View Monitoring System, With AM-FM Stereo Radio For North America, TH300 Type KOMTRAX			
		EU Regulation Guard Level 2, With Rear View Monitoring System, With AM-FM Stereo Radio For North America, TH300 Type KOMTRAX			
1		14X-43-51711	Bracket	1	80001-
2		06124-02020	Bearing	2	80001-
3		11Y-06-22150	Switch	1	80001-
4		01010-81035	Bolt	2	80001-
5		01643-31032	Washer	2	80001-
6		01016-50830	Bolt	2	80001-
7		01580-10806	Nut	2	80001-
8		14X-43-51721	Lever	1	80001-
9		14X-43-51731	Lever	1	80001-
10		01010-80830	Bolt	1	80001-
11		01643-30823	Washer	1	80001-
12		04010-00516	Key	1	80001-
13		14X-43-51840	Spring	1	80001-
14		04050-11612	Pin, Cotter	2	80001-
15		01640-20610	Washer	2	80001-
16		04221-20844	York, Left-handed Thread	1	80001-
17		01508-40805	Nut	1	80001-
18		04211-20844	Yoke	1	80001-
19		01580-10806	Nut	1	80001-
20		04248-30838	Rod	1	80001-
21		04205-10822	Pin	2	80001-
22		04050-12015	Pin, Cotter	2	80001-

FIG. K0210-001035 ROPS Cab, Work Equipment Lock Lever

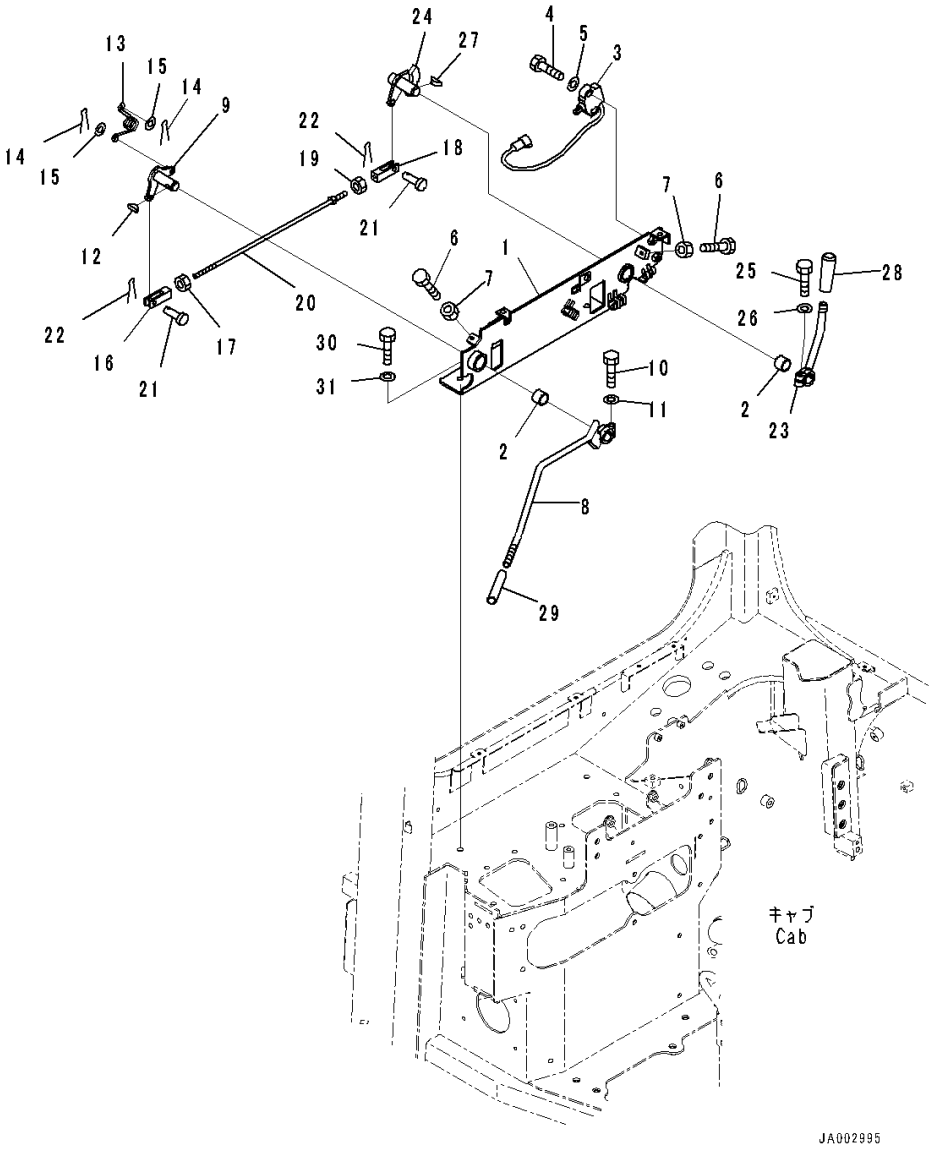

Index	Code	Part Number	Description	Qty	Serial Number
23		14X-43-51791	Lever	1	80001-
24		14X-43-51751	Lever	1	80001-
25		01010-80830	Bolt	1	80001-
26		01643-30823	Washer	1	80001-
27		04010-00516	Key	1	80001-
28		22M-43-21470	Knob	1	80001-
29		417-43-28270	Cap	1	80001-
30		01010-81025	Bolt	2	80001-
31		01643-31032	Washer	2	80001-

FIG. K0210-001036 ROPS Cab, Floor Frame Inside Cover

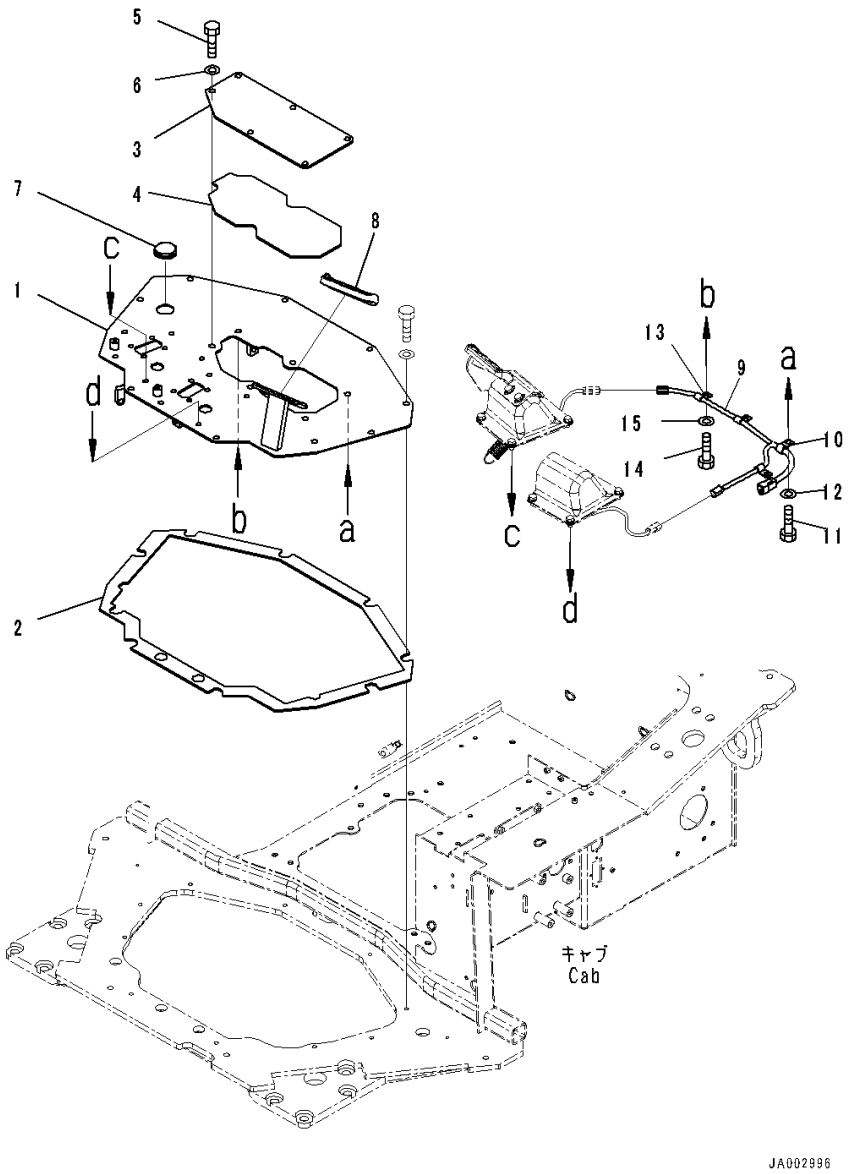

Index	Code	Part Number	Description	Qty	Serial Number
		Note: This list covers following specifications.			
		With AM-FM Stereo Radio For North America, TH300 Type KOMTRAX			
		Provision For Radio Installation, TH300 Type KOMTRAX			
		EU Regulation Guard Level 2, With AM-FM Stereo Radio With Cassette, TH300 Type KOMTRAX			
		EU Regulation Guard Level 2, Provision For Radio Installation, TH300 Type KOMTRAX			
		With Rear View Monitoring System, With AM-FM Stereo Radio For North America, TH300 Type KOMTRAX			
		With Rear View Monitoring System, Provision For Radio Installation, TH300 Type KOMTRAX			
		EU Regulation Guard Level 2, With Rear View Monitoring System, With AM-FM Stereo Radio For North America, TH300 Type KOMTRAX			
		EU Regulation Guard Level 2, With Rear View Monitoring System, With AM-FM Stereo Radio For North America, TH300 Type KOMTRAX			
1		14X-43-51611	Floor	1	80001-
2		14X-43-51850	Sheet,Bonded	1	80001-
3		14X-43-51541	Cover	1	80001-
4		14X-43-51860	• Sheet,Bonded	1	80001-
5		01010-81225	Bolt	6	80001-
6		01643-31232	Washer	6	80001-
7		09415-03614	Cap	1	80001-
8		14X-43-13760	Cap	1	80001-
9		14X-06-51140	Wire Harness	1	80001-
10		04434-51410	Clip	1	80001-
11		01010-81020	Bolt	1	80001-
12		01643-31032	Washer	1	80001-
13		04434-51010	Clip	3	80001-
14		01010-81020	Bolt	3	80001-
15		01643-31032	Washer	3	80001-

FIG. K0210-001037 ROPS Cab, Brake Pedal

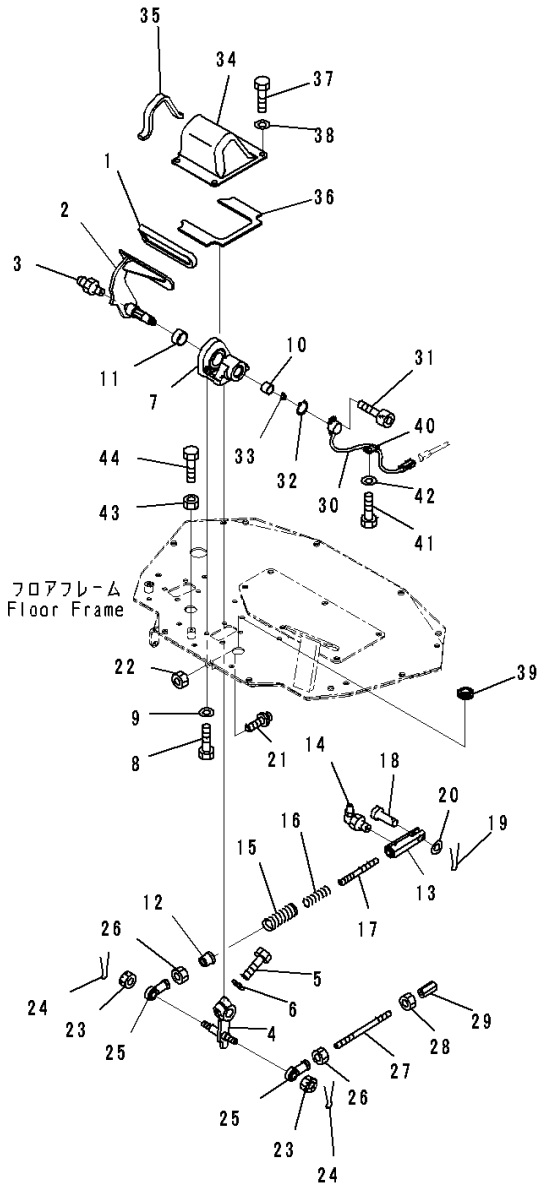

Index	Code	Part Number	Description	Qty	Serial Number
		Note: This list covers following specifications.			
			With AM-FM Stereo Radio For North America, TH300 Type KOMTRAX		
			Provision For Radio Installation, TH300 Type KOMTRAX		
			EU Regulation Guard Level 2, With AM-FM Stereo Radio With Cassette, TH300 Type KOMTRAX		
			EU Regulation Guard Level 2, Provision For Radio Installation, TH300 Type KOMTRAX		
			With Rear View Monitoring System, With AM-FM Stereo Radio For North America, TH300 Type KOMTRAX		
			With Rear View Monitoring System, Provision For Radio Installation, TH300 Type KOMTRAX		
			EU Regulation Guard Level 2, With Rear View Monitoring System, With AM-FM Stereo Radio For North America, TH300 Type KOMTRAX		
			EU Regulation Guard Level 2, With Rear View Monitoring System, With AM-FM Stereo Radio For North America, TH300 Type KOMTRAX		
1		14X-43-12110	Pedal	1	80001-
2		14X-43-51511	Pedal	1	80001-
3		07020-00000	Fitting, Grease	1	80001-
4		14X-43-51551	Lever	1	80001-
5		01010-81245	Bolt	1	80001-
6		01643-31232	Washer	1	80001-
7		14X-43-51571	Bracket	1	80001-
8		01010-81020	Bolt	4	80001-
9		01643-31032	Washer	4	80001-
10		06124-02020	Bearing	1	80001-
11		06124-03020	Bearing	1	80001-
12		134-43-72490	Guide	1	80001-
13		14X-43-32210	Yoke	1	80001-
14		07020-00900	Fitting, Grease	1	80001-
15		14X-43-51590	Spring	1	80001-
16		14X-43-32220	Spring	1	80001-
17		14X-43-32230	Rod	1	80001-
18		04205-11442	Pin	1	80001-
19		04050-13022	Pin, Cotter	1	80001-
20		01641-21423	Washer, Flat	1	80001-
21		09311-41237	Bumper, Pedal	1	80001-
22		01580-11210	Nut	1	80001-

FIG. K0210-001037 ROPS Cab, Brake Pedal

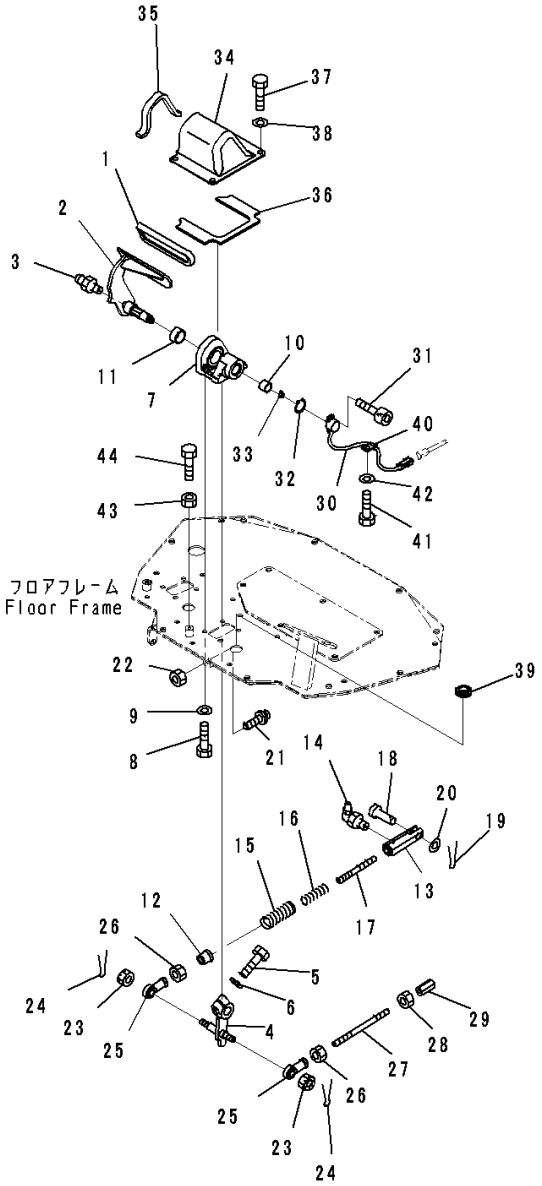

Index	Code	Part Number	Description	Qty	Serial Number
23		01593-31411	Nut	2	80001-
24		04050-13022	Pin, Cotter	2	80001-
25		04250-81474	End	2	80001-
26		01582-11411	Nut	2	80001-
27		14X-43-12410	Rod	1	80001-
28		01508-41408	Nut	1	80001-
29		17A-43-24160	Joint	1	80001-
30		17A-06-41981	Sensor	1	80001-
31		01252-70414	Bolt	2	80001-
32		04064-01610	Ring, Snap	1	80001-
33		142-43-13180	Spring	1	80001-
34		14X-43-51631	Cover	1	80001-
35		14X-43-51651	• Sheet,Bonded	1	80001-
36		14X-43-51870	• Sheet,Bonded	1	80001-
37		01010-81020	Bolt	4	80001-
38		01643-31032	Washer	4	80001-
39		08037-02512	Grommet	1	80001-
40		04434-50810	Clip	1	80001-
41		01010-81020	Bolt	1	80001-
42		01643-31032	Washer	1	80001-
43		01580-11008	Nut	1	80001-
44		01016-51030	Bolt	1	80001-

FIG. K0210-001038 ROPS Cab, Decelerator Pedal

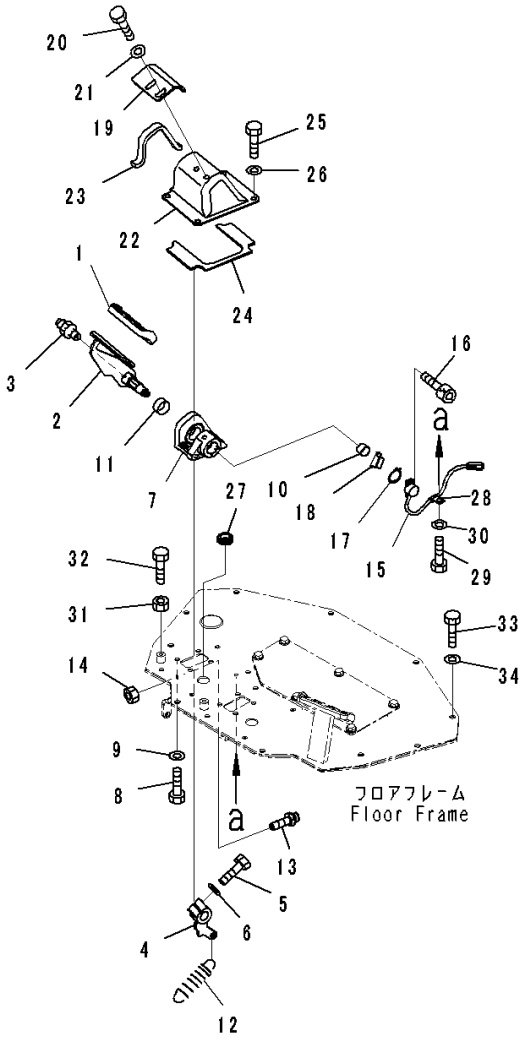

JA003000

Index	Code	Part Number	Description	Qty	Serial Number
		Note: This list covers following specifications.			
		With AM-FM Stereo Radio For North America, TH300 Type KOMTRAX			
		Provision For Radio Installation, TH300 Type KOMTRAX			
		EU Regulation Guard Level 2, With AM-FM Stereo Radio With Cassette, TH300 Type KOMTRAX			
		EU Regulation Guard Level 2, Provision For Radio Installation, TH300 Type KOMTRAX			
		With Rear View Monitoring System, With AM-FM Stereo Radio For North America, TH300 Type KOMTRAX			
		With Rear View Monitoring System, Provision For Radio Installation, TH300 Type KOMTRAX			
		EU Regulation Guard Level 2, With Rear View Monitoring System, With AM-FM Stereo Radio For North America, TH300 Type KOMTRAX			
		EU Regulation Guard Level 2, With Rear View Monitoring System, With AM-FM Stereo Radio For North America, TH300 Type KOMTRAX			
1		14X-43-13760	Cap	1	80001-
2		14X-43-51521	Pedal	1	80001-
3		07020-00000	Fitting, Grease	1	80001-
4		14X-43-51561	Lever	1	80001-
5		01010-81245	Bolt	1	80001-
6		01643-31232	Washer	1	80001-
7		14X-43-51571	Bracket	1	80001-
8		01010-81020	Bolt	4	80001-
9		01643-31032	Washer	4	80001-
10		06124-02020	Bearing	1	80001-
11		06124-03020	Bearing	1	80001-
12		14X-43-51581	Spring	1	80001-
13		09311-41237	Bumper, Pedal	1	80001-
14		01580-11210	Nut	1	80001-
15		17A-06-41981	Sensor	1	80001-
16		01252-70414	Bolt	2	80001-
17		04064-01610	Ring, Snap	1	80001-
18		142-43-13180	Spring	1	80001-
19		14X-43-51810	Bracket	1	80001-
20		01010-D1020	Bolt	2	80001-
21		01643-71032	Washer	2	80001-
22		14X-43-51821	Cover	1	80001-

FIG. K0210-001038 ROPS Cab, Decelerator Pedal

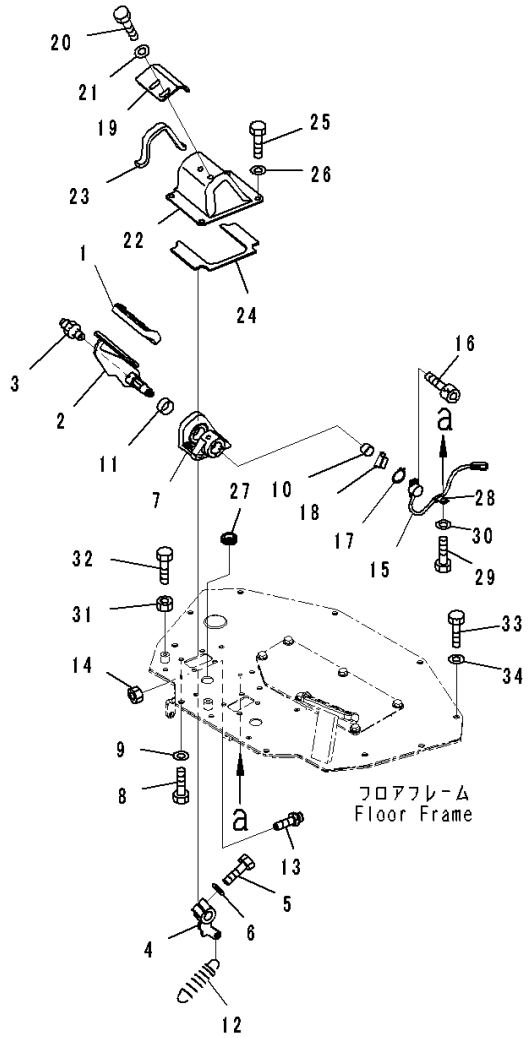

Index	Code	Part Number	Description	Qty	Serial Number
23		14X-43-51651	• Sheet,Bonded	1	80001-
24		14X-43-51870	• Sheet,Bonded	1	80001-
25		01010-81020	Bolt	4	80001-
26		01643-31032	Washer	4	80001-
27		08037-02512	Grommet	1	80001-
28		04434-50810	Clip	1	80001-
29		01010-81020	Bolt	1	80001-
30		01643-31032	Washer	1	80001-
31		01580-11008	Nut	1	80001-
32		01016-51030	Bolt	1	80001-
33		01010-81225	Bolt	10	80001-
34		01643-31232	Washer	10	80001-

FIG. K0210-001039 ROPS Cab, Controller and Relay

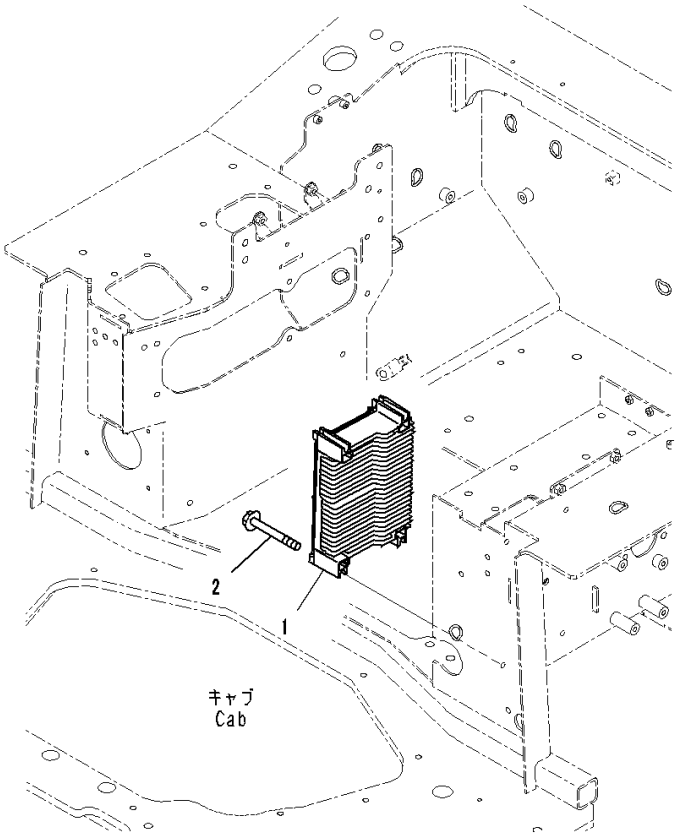

JA003001

Index	Code	Part Number	Description	Qty	Serial Number
		Note: This list covers following specifications.			
		With AM-FM Stereo Radio For North America, TH300 Type KOMTRAX			
		Provision For Radio Installation, TH300 Type KOMTRAX			
1		7830-74-4000	Controller	1	80007-
2		01435-00885	Bolt	4	80001-

FIG. K0210-001040 ROPS Cab, Floor, Harness (1/3)

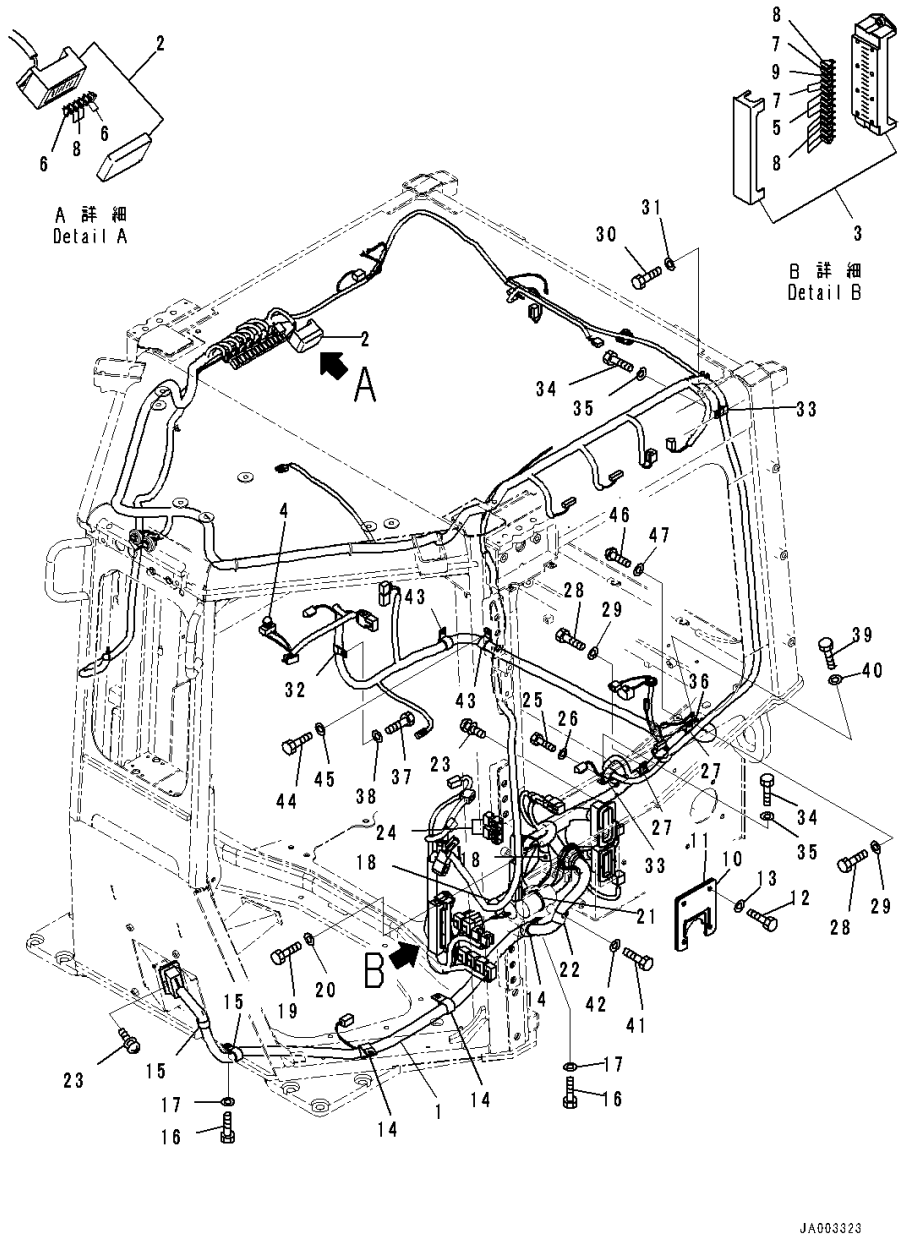

Index	Code	Part Number	Description	Qty	Serial Number
		Note: This list covers following specifications.			
		With AM-FM Stereo Radio For North America, TH300 Type KOMTRAX			
		Provision For Radio Installation, TH300 Type KOMTRAX			
1		14X-06-51124	Wire Harness	1	80065-
	A2	14X-06-51122	Wire Harness	1	80001-80064
2		08044-00600	• Box Assembly, Fuse	1	80001-
3		08044-01500	• Box, Fuse	1	80001-
4		08064-10000	• Switch, Horn	1	80001-
5		08041-00500	• Fuse, 5Amp.	4	80001-
6		08041-01000	• Fuse, 10Amp.	4	80007-
7		08041-01500	• Fuse, 15Amp.	4	80001-
8		08041-02000	• Fuse, 20Amp.	11	80007-
9		08041-03000	• Fuse, 30Amp.	2	80001-
10		14X-06-51351	Bracket	1	80001-
11		14X-06-51431	• Sheet	1	80001-
12		01010-81025	Bolt	4	80001-
13		01643-31032	Washer	4	80001-
14		04434-52711	Clip	3	80001-
15		04434-52310	Clip	2	80001-
16		01010-81020	Bolt	5	80001-
17		01643-31032	Washer	5	80001-
18		208-06-19170	Clip	2	80001-
19		01010-81020	Bolt	2	80001-
20		01643-31032	Washer	2	80001-
21		08034-20519	Band	39	80001-
22		04434-52711	Clip	1	80001-
23		01023-10416	Screw	12	80001-
24		8233-06-3350	Diode	2	80001-
25		01010-81020	Bolt	2	80001-
26		01643-31032	Washer	2	80001-
27		04434-52310	Clip	3	80001-
28		01010-81020	Bolt	3	80001-
29		01643-31032	Washer	3	80001-
30		01010-80616	Bolt	1	80001-
31		01643-30623	Washer	1	80001-
32		04434-51910	Clip	1	80001-
33		04434-51710	Clip	2	80001-
34		01010-81020	Bolt	2	80001-

FIG. K0210-001040 ROPS Cab, Floor, Harness (1/3)

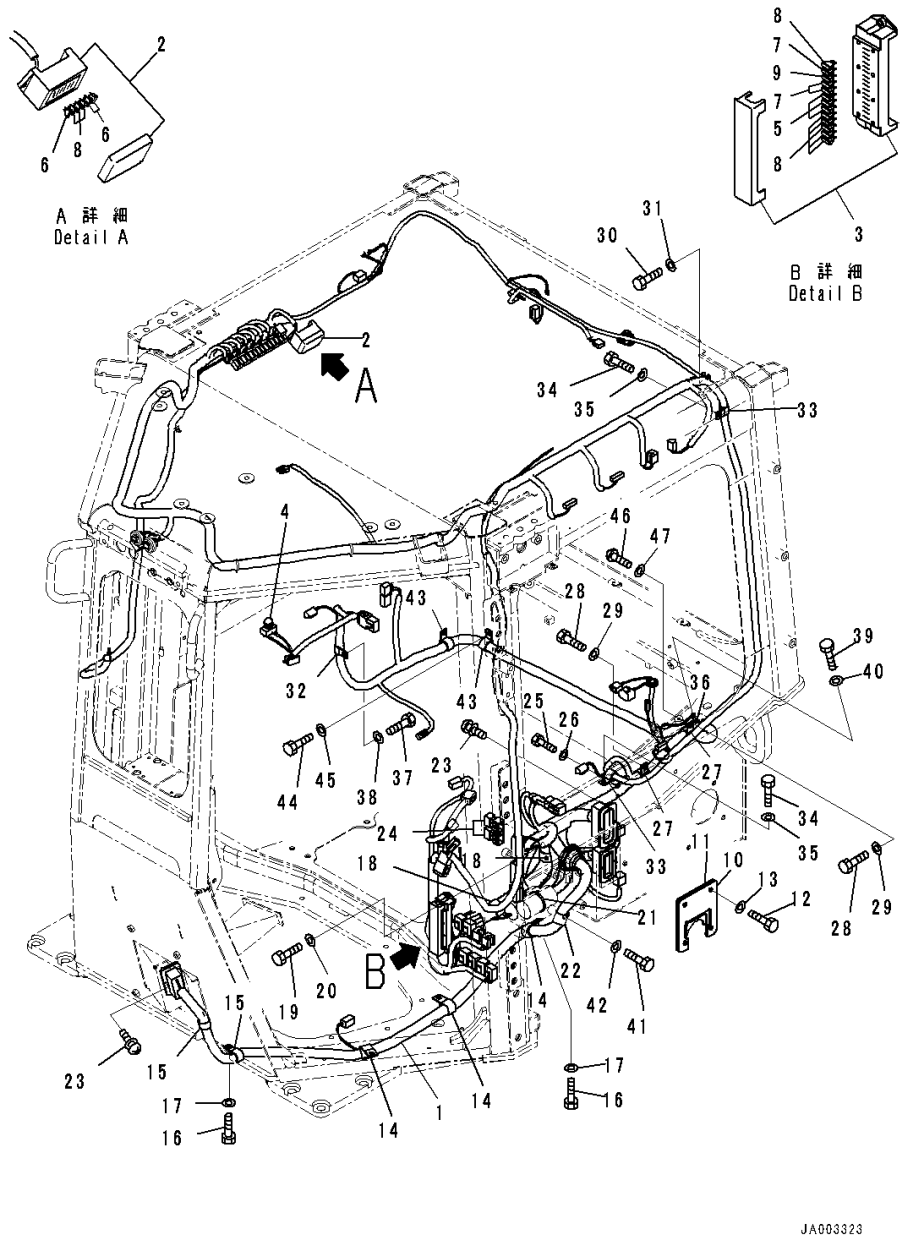

Index	Code	Part Number	Description	Qty	Serial Number
35		01643-31032	Washer	2	80001-
36		04434-52310	Clip	2	80001-
37		01010-81020	Bolt	3	80001-
38		01643-31032	Washer	3	80001-
39		01010-80612	Bolt	1	80001-
40		01643-30623	Washer	1	80001-
41		01010-81025	Bolt	1	80001-
42		01643-31032	Washer	1	80001-
43		04434-52310	Clip	2	80001-
44		01010-81020	Bolt	2	80001-
45		01643-31032	Washer	2	80001-
46		01245-01020	Screw	1	80001-
47		01643-71032	Washer	1	80001-

FIG. K0210-001041 ROPS Cab, Floor, Harness (2/3)

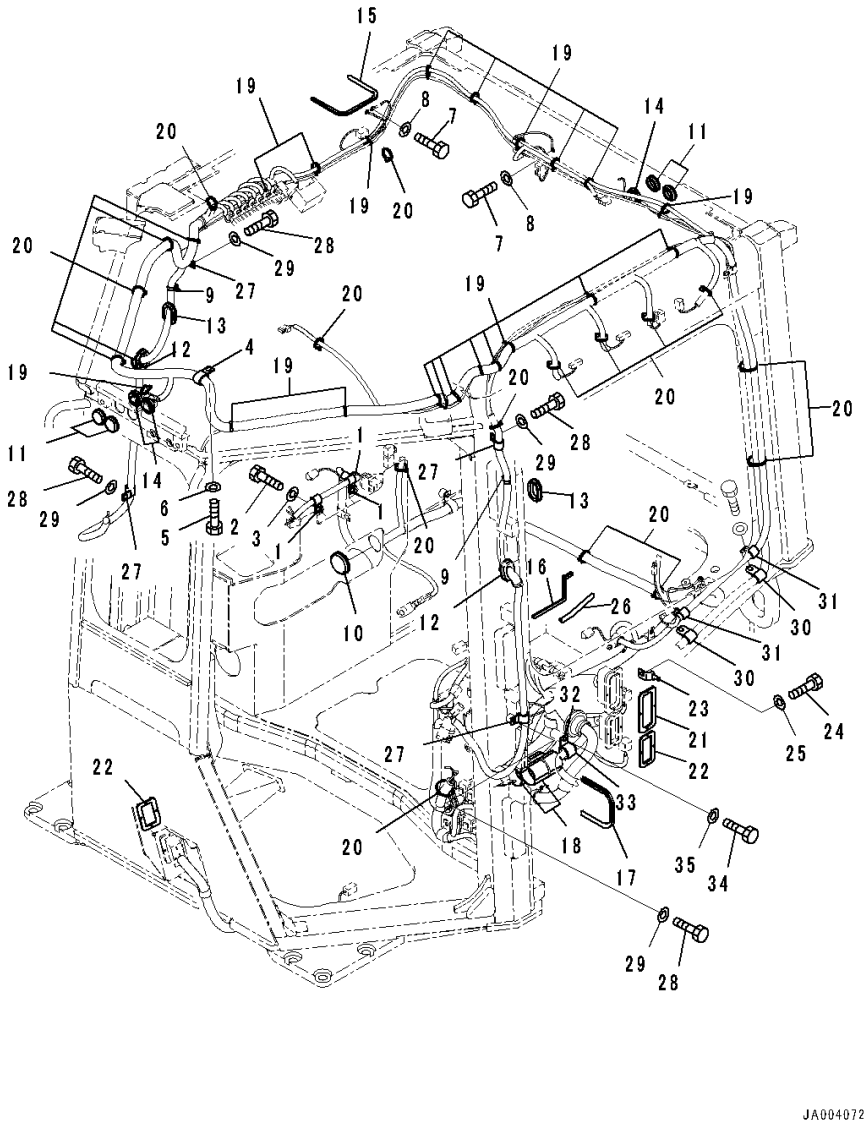

Index	Code	Part Number	Description	Qty	Serial Number
		Note: This list covers following specifications.			
		With AM-FM Stereo Radio For North America, TH300 Type KOMTRAX			
		Provision For Radio Installation, TH300 Type KOMTRAX			
		EU Regulation Guard Level 2, With AM-FM Stereo Radio With Cassette, TH300 Type KOMTRAX			
		EU Regulation Guard Level 2, Provision For Radio Installation, TH300 Type KOMTRAX			
		With Rear View Monitoring System, With AM-FM Stereo Radio For North America, TH300 Type KOMTRAX			
		With Rear View Monitoring System, Provision For Radio Installation, TH300 Type KOMTRAX			
		EU Regulation Guard Level 2, With Rear View Monitoring System, With AM-FM Stereo Radio For North America, TH300 Type KOMTRAX			
		EU Regulation Guard Level 2, With Rear View Monitoring System, With AM-FM Stereo Radio For North America, TH300 Type KOMTRAX			
1		04434-51310	Clip	3	80001-
2		01010-81020	Bolt	3	80001-
3		01643-31032	Washer	3	80001-
4		04434-52310	Clip	1	80001-
5		01010-81020	Bolt	1	80001-
6		01643-31032	Washer	1	80001-
7		01010-80616	Bolt	3	80001-
8		01643-30623	Washer	3	80001-
9		08059-00413	Clip	2	80001-
10		09415-03614	Cap	1	80001-
11		09415-02512	Cap	4	80001-
12		14X-Y79-3341	Grommet	2	80001-
13		120-06-24110	Grommet	2	80001-
14		14X-06-52461	Cap	3	80001-
15		14X-Y79-2280	Seal	1	80001-
16		12Y-978-2192	Seal	1	80001-
17		14X-06-52171	Trim	1	80001-
18		14X-06-52160	Sheet	2	80001-
19		08034-40521	Band	17	80001-
20		08034-20519	Band	20	80001-
21		14X-06-52750	Gasket	1	80001-
22		14X-06-52760	Gasket	2	80001-

FIG. K0210-001041 ROPS Cab, Floor, Harness (2/3)

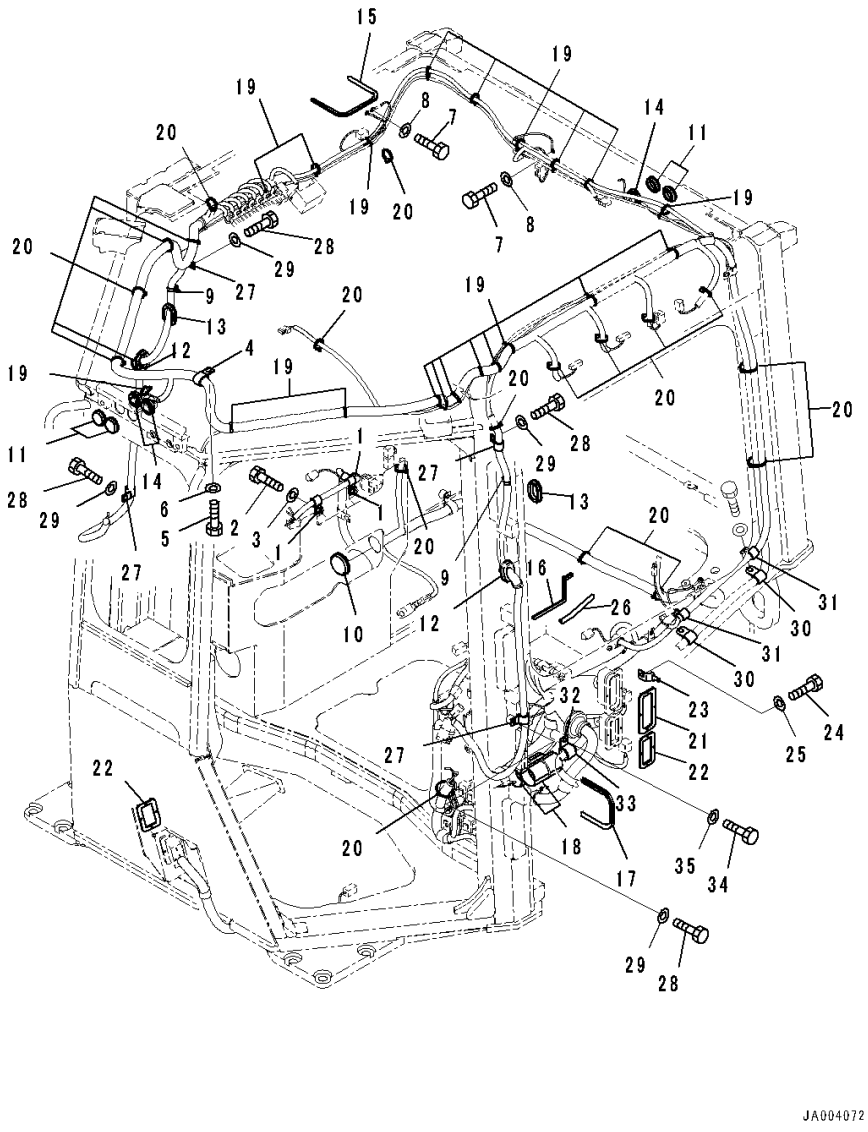

Index	Code	Part Number	Description	Qty	Serial Number
23		08053-00910	Clip	1	80001-
24		01010-81020	Bolt	1	80001-
25		01643-31032	Washer	1	80001-
26		423-06-42420	Finisher	1	80001-
27		04434-51710	Clip	4	80001-
28		01010-81020	Bolt	4	80001-
29		01643-31032	Washer	4	80001-
30		04434-51910	Clip	2	80001-
31		04434-51710	Clip	2	80001-
32		04434-52511	Clip	1	80007-
33		07095-20318	Cushion	1	80007-
34		01010-81020	Bolt	1	80007-
35		01643-31032	Washer	1	80007-

FIG. K0210-001042 ROPS Cab, Floor, Harness (3/3)

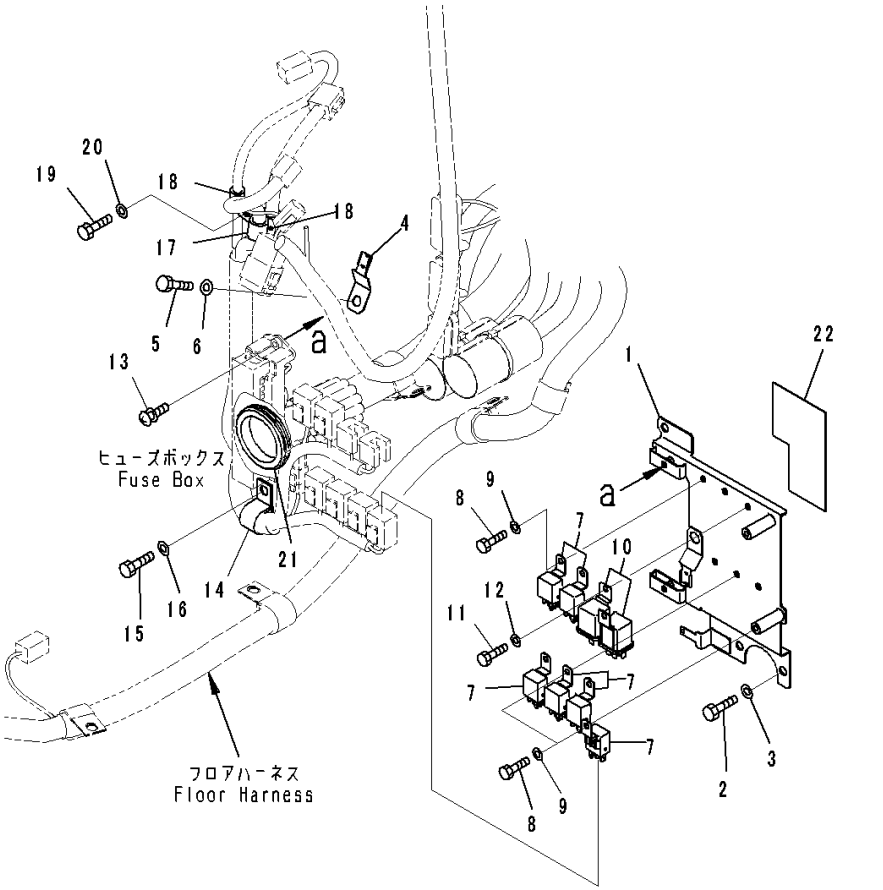

Index	Code	Part Number	Description	Qty	Serial Number
		Note: This list covers following specifications.			
		With AM-FM Stereo Radio For North America, TH300 Type KOMTRAX			
		Provision For Radio Installation, TH300 Type KOMTRAX			
		EU Regulation Guard Level 2, With AM-FM Stereo Radio With Cassette, TH300 Type KOMTRAX			
		EU Regulation Guard Level 2, Provision For Radio Installation, TH300 Type KOMTRAX			
		With Rear View Monitoring System, With AM-FM Stereo Radio For North America, TH300 Type KOMTRAX			
		With Rear View Monitoring System, Provision For Radio Installation, TH300 Type KOMTRAX			
		EU Regulation Guard Level 2, With Rear View Monitoring System, With AM-FM Stereo Radio For North America, TH300 Type KOMTRAX			
		EU Regulation Guard Level 2, With Rear View Monitoring System, With AM-FM Stereo Radio For North America, TH300 Type KOMTRAX			
1		14X-06-51361	Bracket	1	80001-
2		01010-80820	Bolt	3	80001-
3		01643-30823	Washer	3	80001-
4		08193-20010	Clip	1	80001-
5		01010-80820	Bolt	1	80001-
6		01643-30823	Washer	1	80001-
7		7861-74-5100	Relay	6	80001-
8		01010-80616	Bolt	6	80001-
9		01643-30623	Washer	6	80001-
10		569-06-61960	Relay	2	80001-
11		01010-80616	Bolt	2	80001-
12		01643-30623	Washer	2	80001-
13		01023-10620	Screw	2	80001-
14		04434-52310	Clip	1	80001-
15		01010-81020	Bolt	1	80001-
16		01643-31032	Washer	1	80001-
17		04434-51010	Clip	1	80001-
18		04434-51410	Clip	2	80001-
19		01010-81020	Bolt	1	80001-
20		01643-31032	Washer	1	80001-
21		14X-06-51750	Grommet	1	80001-
22		14X-06-52290	Sheet,Bonded	1	80001-

FIG. K0210-001043 ROPS Cab, Window Washer Piping

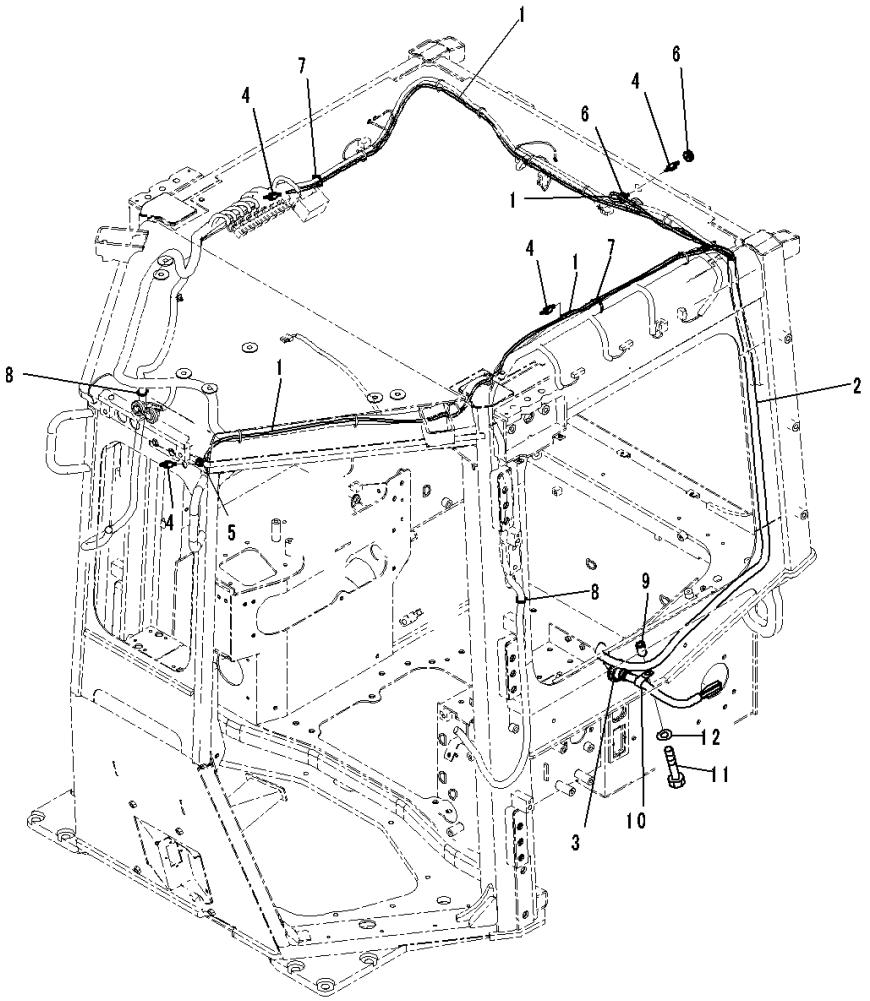

Index	Code	Part Number	Description	Qty	Serial Number
		Note: This list covers following specifications.			
		With AM-FM Stereo Radio For North America, TH300 Type KOMTRAX			
		Provision For Radio Installation, TH300 Type KOMTRAX			
		EU Regulation Guard Level 2, With AM-FM Stereo Radio With Cassette, TH300 Type KOMTRAX			
		EU Regulation Guard Level 2, Provision For Radio Installation, TH300 Type KOMTRAX			
		With Rear View Monitoring System, With AM-FM Stereo Radio For North America, TH300 Type KOMTRAX			
		With Rear View Monitoring System, Provision For Radio Installation, TH300 Type KOMTRAX			
		EU Regulation Guard Level 2, With Rear View Monitoring System, With AM-FM Stereo Radio For North America, TH300 Type KOMTRAX			
		EU Regulation Guard Level 2, With Rear View Monitoring System, With AM-FM Stereo Radio For North America, TH300 Type KOMTRAX			
1		14X-Y79-1611	Hose Assembly	1	80001-
2		08017-A1520	• Conduit	1	80001-
3		08037-12536	• Grommet	1	80001-
4		17A-Z11-4610	• Valve	4	80001-
5		08037-01008	Grommet	1	80001-
6		14X-06-51520	Grommet	2	80001-
7		08034-40521	Band	2	80001-
8		08034-20519	Band	1	80001-
9		23B-06-61810	Spacer	1	80001-
10		04434-51910	Clip	1	80001-
11		01010-81050	Bolt	1	80001-
12		01643-31032	Washer	1	80001-

FIG. K0210-001044 ROPS Cab, Dashboard Cover (1/2)

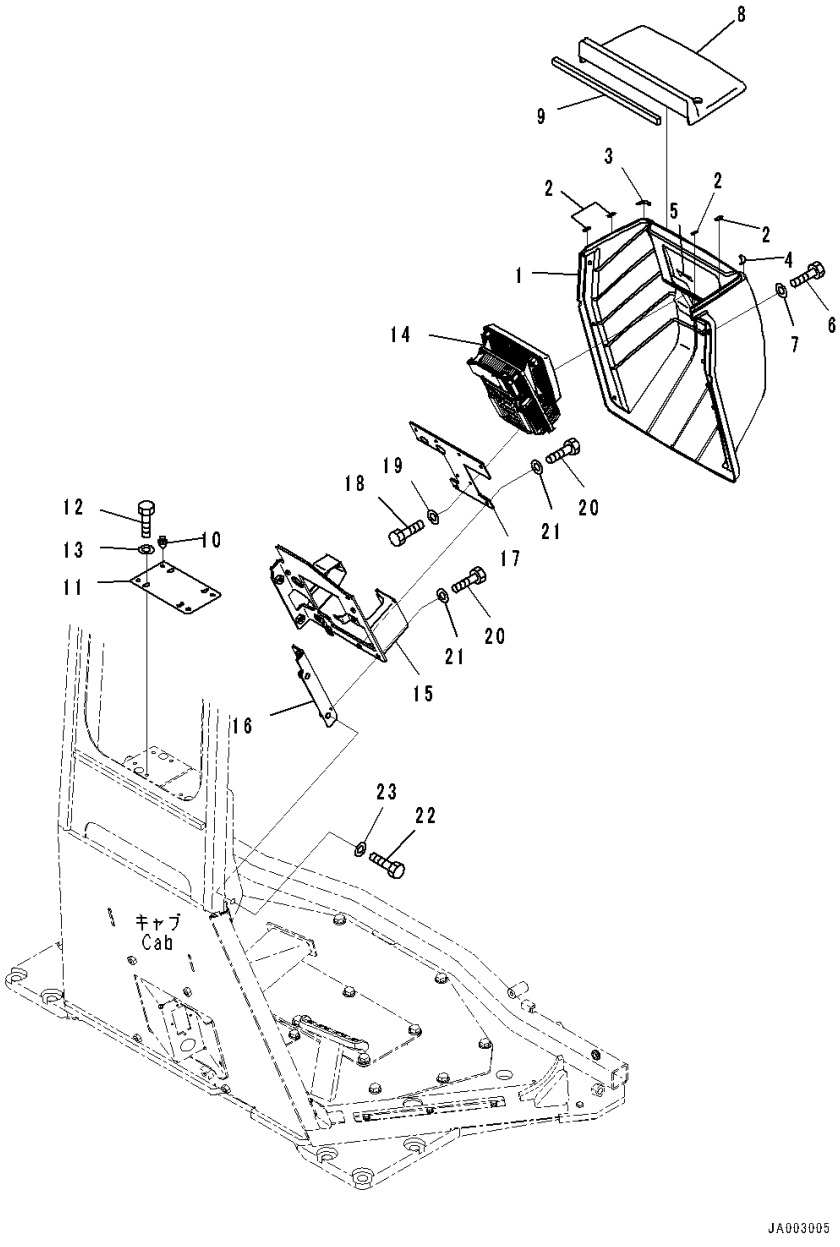

Index	Code	Part Number	Description	Qty	Serial Number
		Note: This list covers following specifications.			
		With AM-FM Stereo Radio For North America, TH300 Type KOMTRAX			
		Provision For Radio Installation, TH300 Type KOMTRAX			
		EU Regulation Guard Level 2, With AM-FM Stereo Radio With Cassette, TH300 Type KOMTRAX			
		EU Regulation Guard Level 2, Provision For Radio Installation, TH300 Type KOMTRAX			
1		14X-54-56812	Cover	1	80017-
2		14X-54-56941	• Sheet	4	80017-
3		14X-54-56951	• Sheet	1	80017-
4		14X-54-56961	• Sheet	1	80017-
5		14X-54-56970	• Seal,Bonded	1	80001-
6		01010-D0820	Bolt	6	80001-
7		01643-70823	Washer	6	80001-
8		14X-54-56821	Cover	1	80001-
9		14X-54-56921	• Seal,Bonded	1	80001-
10		22U-54-25340	Clip	4	80001-
11		14X-54-56751	Plate	1	80001-
12		01010-80616	Bolt	4	80001-
13		01643-30623	Washer	4	80001-
14		7831-69-5000	Monitor	1	80001-
15		14X-54-56721	Bracket	1	80001-
16		14X-54-56731	Plate	1	80001-
17		14X-54-56741	Plate	1	80001-
18		01010-80616	Bolt	4	80001-
19		01643-30623	Washer	4	80001-
20		01010-80620	Bolt	6	80001-
21		01643-30623	Washer	6	80001-
22		01010-81025	Bolt	4	80001-
23		01643-31032	Washer	4	80001-

FIG. K0210-001045 ROPS Cab, Floor, Switch

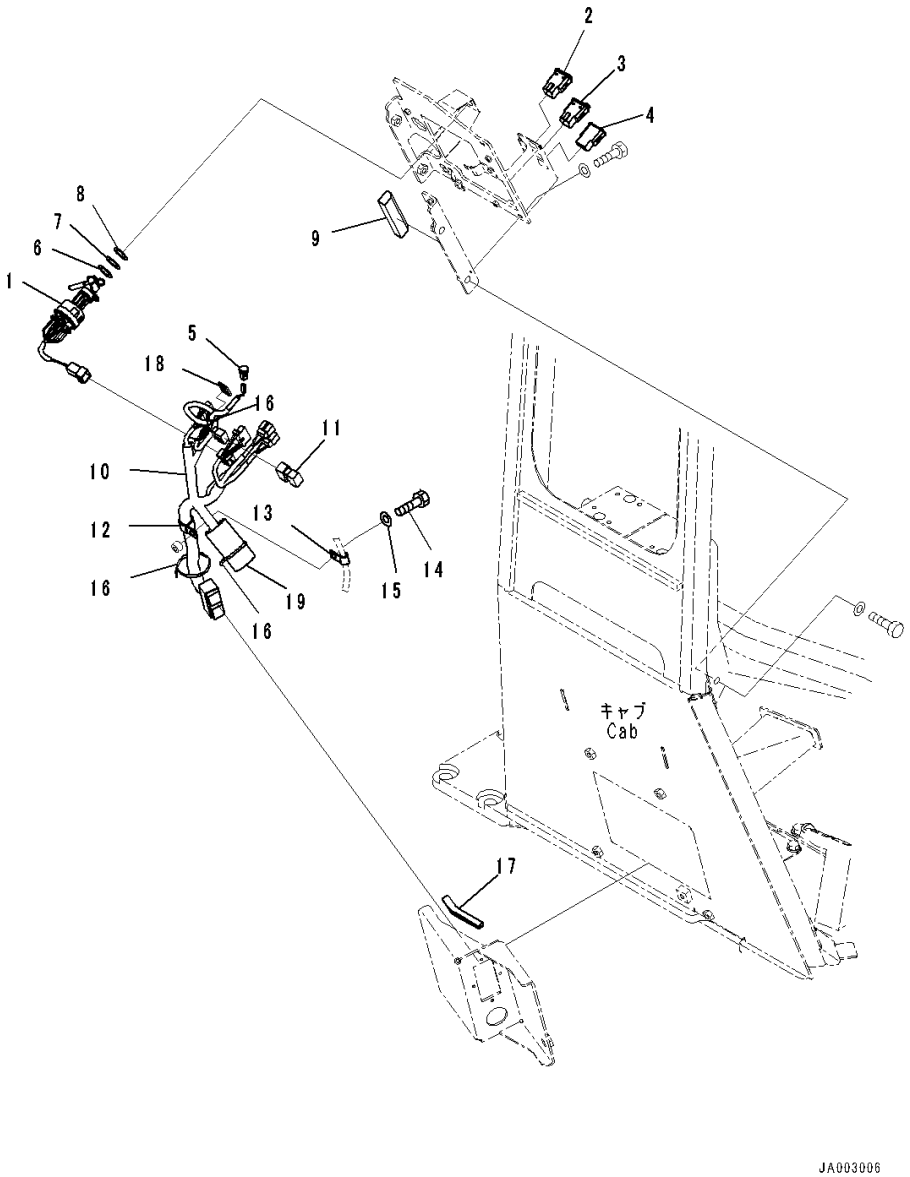

Index	Code	Part Number	Description	Qty	Serial Number
		Note: This list covers following specifications.			
		With AM-FM Stereo Radio For North America, TH300 Type KOMTRAX			
		Provision For Radio Installation, TH300 Type KOMTRAX			
		With Rear View Monitoring System, With AM-FM Stereo Radio For North America, TH300 Type KOMTRAX			
		With Rear View Monitoring System, Provision For Radio Installation, TH300 Type KOMTRAX			
1		14X-06-52191	Switch, Key	1	80001-
2		17A-06-42250	Switch, Light, Front	1	80001-
3		17A-06-42260	Switch, Light, Rear	1	80001-
4		20Y-06-42190	Cover	1	80001-
5		20Y-979-6161	Sensor	1	80001-
6		23S-15-45860	Shim, T=0.5mm	2	80001-
7		20Y-43-41750	Washer	2	80001-
8		20Y-43-41790	Washer	2	80001-
9		14X-54-56770	Seal,Bonded	1	80001-
10		14X-06-51132	Wire Harness	1	80001-
11		8233-06-3350	Diode	1	80001-
12		04434-52310	Clip	1	80001-
13		04434-51010	Clip	1	80001-
14		01010-81020	Bolt	1	80001-
15		01643-31032	Washer	1	80001-
16		08034-20519	Band	3	80001-
17		14X-54-56160	Seal	1	80001-
18		20U-54-46520	Hook, Sticker Type	1	80001-
19		14X-06-52160	Sheet,Bonded	1	80001-

FIG. K0210-001046 ROPS Cab, Foot Rest

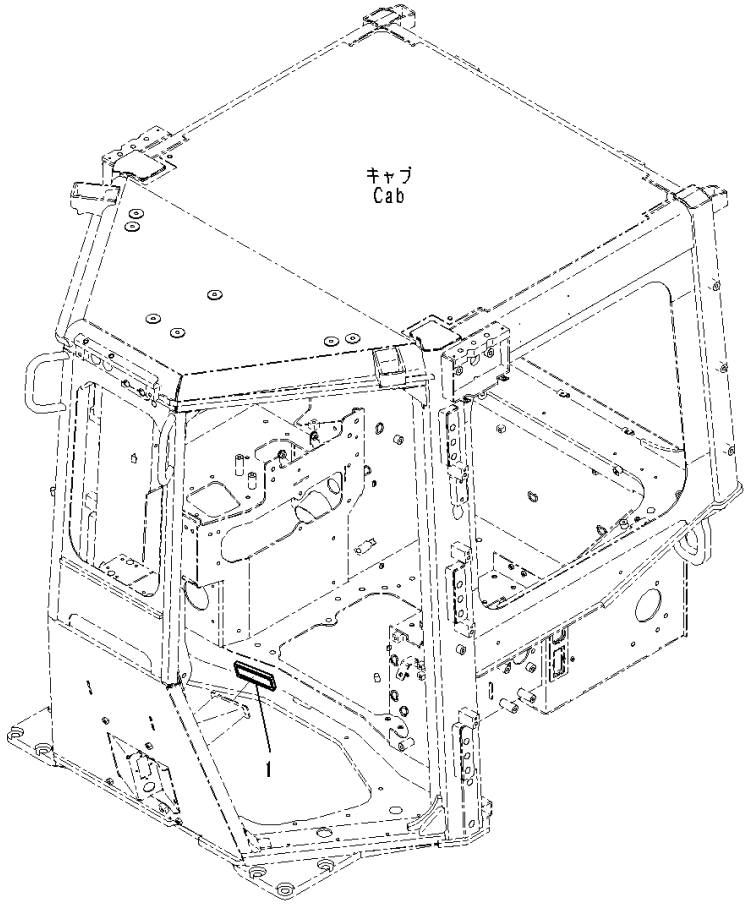

Index	Code	Part Number	Description	Qty	Serial Number
		Note: This list covers following specifications.			
		With AM-FM Stereo Radio For North America, TH300 Type KOMTRAX			
		Provision For Radio Installation, TH300 Type KOMTRAX			
		EU Regulation Guard Level 2, With AM-FM Stereo Radio With Cassette, TH300 Type KOMTRAX			
		EU Regulation Guard Level 2, Provision For Radio Installation, TH300 Type KOMTRAX			
		With Rear View Monitoring System, With AM-FM Stereo Radio For North America, TH300 Type KOMTRAX			
		With Rear View Monitoring System, Provision For Radio Installation, TH300 Type KOMTRAX			
		EU Regulation Guard Level 2, With Rear View Monitoring System, With AM-FM Stereo Radio For North America, TH300 Type KOMTRAX			
		EU Regulation Guard Level 2, With Rear View Monitoring System, With AM-FM Stereo Radio For North America, TH300 Type KOMTRAX			
1		203-43-56450	Cap,Bonded.....	2	80001-

FIG. K0210-001047 ROPS Cab, Dashboard Cover (2/2)

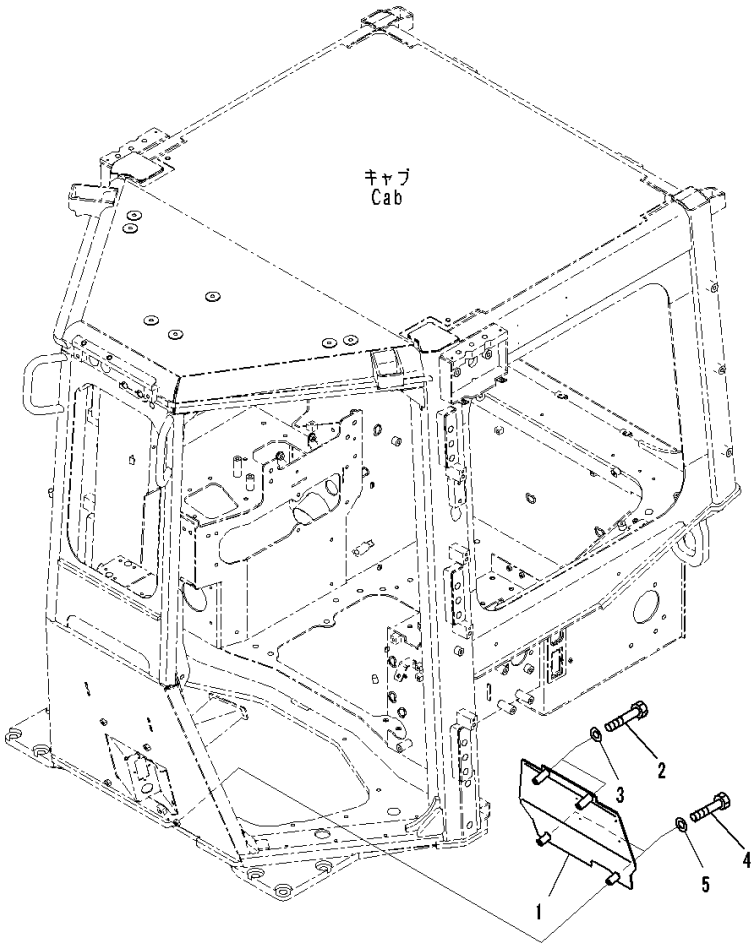

Index	Code	Part Number	Description	Qty	Serial Number
		Note: This list covers following specifications.			
		With AM-FM Stereo Radio For North America, TH300 Type KOMTRAX			
		Provision For Radio Installation, TH300 Type KOMTRAX			
		EU Regulation Guard Level 2, With AM-FM Stereo Radio With Cassette, TH300 Type KOMTRAX			
		EU Regulation Guard Level 2, Provision For Radio Installation, TH300 Type KOMTRAX			
		With Rear View Monitoring System, With AM-FM Stereo Radio For North America, TH300 Type KOMTRAX			
		With Rear View Monitoring System, Provision For Radio Installation, TH300 Type KOMTRAX			
		EU Regulation Guard Level 2, With Rear View Monitoring System, With AM-FM Stereo Radio For North America, TH300 Type KOMTRAX			
		EU Regulation Guard Level 2, With Rear View Monitoring System, With AM-FM Stereo Radio For North America, TH300 Type KOMTRAX			
1		14X-54-56711	Plate	1	80001-
2		01010-D1070	Bolt	2	80001-
3		01643-71032	Washer	2	80001-
4		01010-D1055	Bolt	2	80001-
5		01643-71032	Washer	2	80001-

FIG. K0210-001048 ROPS Cab, Floor Cover

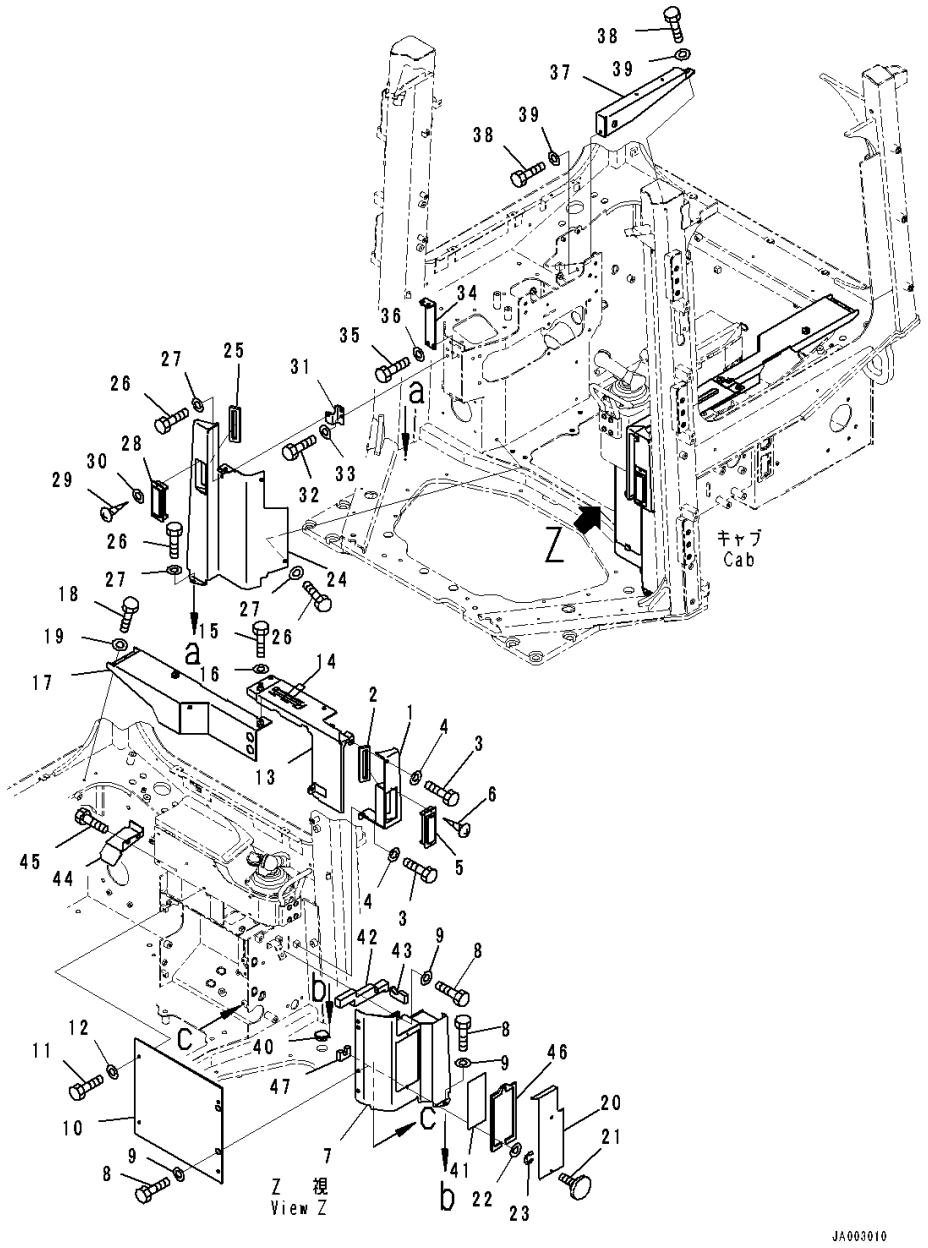

Index	Code	Part Number	Description	Qty	Serial Number
		Note: This list covers following specifications.			
		With AM-FM Stereo Radio For North America, TH300 Type KOMTRAX			
		Provision For Radio Installation, TH300 Type KOMTRAX			
		EU Regulation Guard Level 2, With AM-FM Stereo Radio With Cassette, TH300 Type KOMTRAX			
		EU Regulation Guard Level 2, Provision For Radio Installation, TH300 Type KOMTRAX			
		With Rear View Monitoring System, With AM-FM Stereo Radio For North America, TH300 Type KOMTRAX			
		With Rear View Monitoring System, Provision For Radio Installation, TH300 Type KOMTRAX			
		EU Regulation Guard Level 2, With Rear View Monitoring System, With AM-FM Stereo Radio For North America, TH300 Type KOMTRAX			
		EU Regulation Guard Level 2, With Rear View Monitoring System, With AM-FM Stereo Radio For North America, TH300 Type KOMTRAX			
1		14X-54-56291	Cover	1	80001-
2		14X-54-56491	• Sheet,Bonded	1	80001-
3		01010-D0825	Bolt	2	80001-
4		01643-70823	Washer	2	80001-
5		17A-Z11-7161	Louver	1	80001-
6		01370-10310	Screw	2	80001-
7		14X-54-56352	Cover	1	80001-
8		01010-D0825	Bolt	4	80001-
9		01643-70823	Washer	4	80001-
10		14X-54-56372	Cover	1	80017-
11		01010-D0825	Bolt	4	80001-
12		01643-70823	Washer	4	80001-
13		14X-54-56381	Cover	1	80001-
14		14X-43-48110	• Awning,Bonded	2	80001-
15		01010-D0825	Bolt	2	80001-
16		01643-70823	Washer	2	80001-
17		14X-54-56442	Cover	1	80001-
18		01010-D0825	Bolt	3	80001-
19		01643-70823	Washer	3	80001-
20		14X-54-56481	Plate	1	80001-
21		01232-10616	Screw, Knurled Head	2	80001-
22		01643-70623	Washer	2	80001-

FIG. K0210-001048 ROPS Cab, Floor Cover

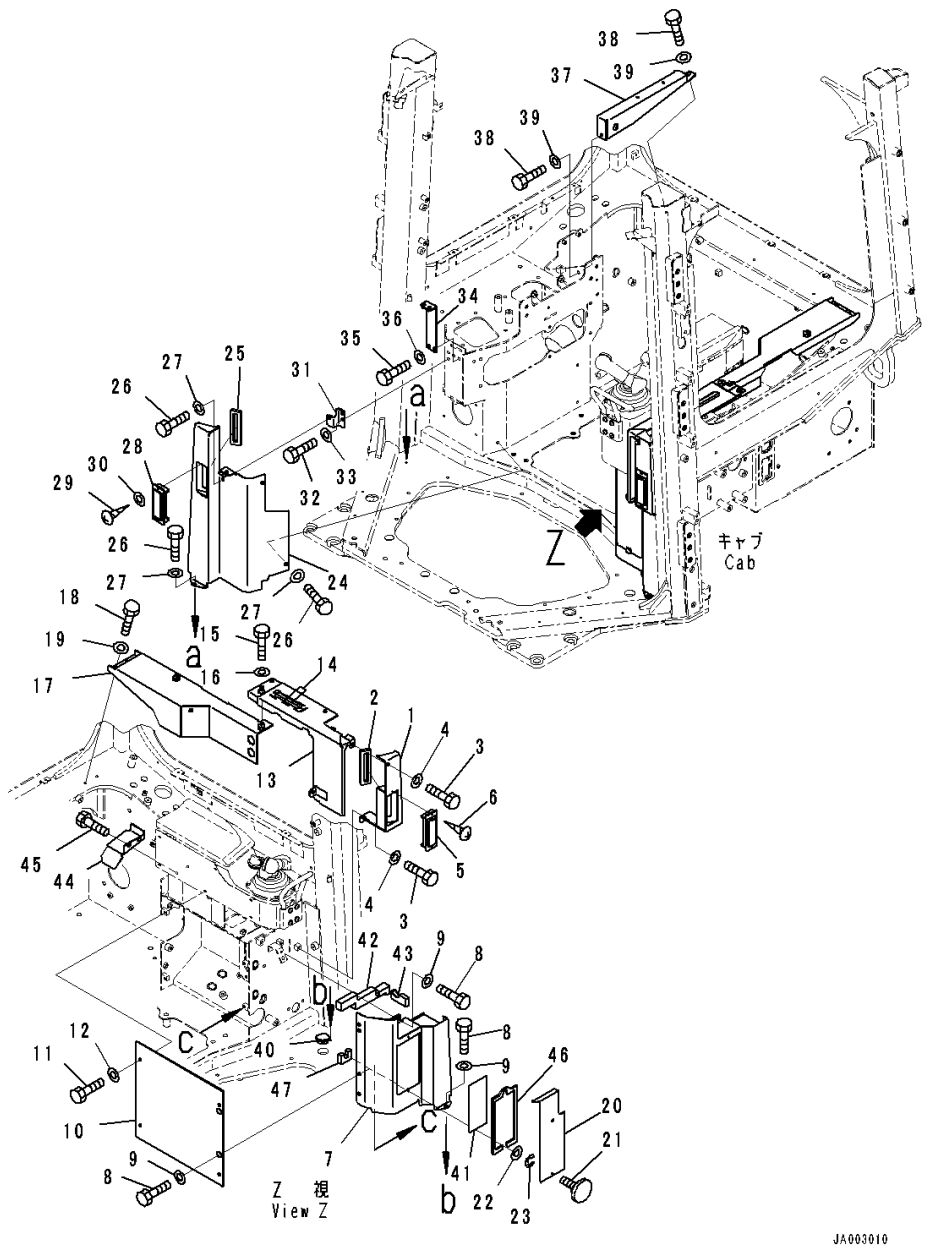

Index	Code	Part Number	Description	Qty	Serial Number
23		195-54-78790	Ring, Snap	2	80001-
24		14X-54-56361	Cover	1	80001-
25		14X-54-56491	• Sheet,Bonded	1	80001-
26		01010-D0825	Bolt	5	80001-
27		01643-70823	Washer	5	80001-
28		17A-Z11-7161	Louver	1	80001-
29		01370-10310	Screw	2	80001-
30		01643-70623	Washer	2	80001-
31		14X-54-56451	Bracket	1	80001-
32		01010-D0825	Bolt	2	80001-
33		01643-70823	Washer	2	80001-
34		14X-54-56411	Bracket	1	80001-
35		01010-D0825	Bolt	2	80001-
36		01643-70823	Washer	2	80001-
37		14X-54-56471	Bracket	1	80001-
38		01010-D0825	Bolt	2	80001-
39		01643-70823	Washer	2	80001-
40		22U-54-25581	Grommet	1	80001-
41		14X-98-51161	Plate	1	80001-80064
42		14X-54-56240	Seal,Bonded	1	80001-
43		14X-54-56260	Seal,Bonded	1	80001-
44		14X-54-56270	Cover	1	80001-
45		01010-D0825	Bolt	2	80001-
46		14X-54-56760	Seal,Bonded	1	80001-
47		14X-54-56981	Seal,Bonded	1	80001-

FIG. K0210-001049 ROPS Cab, KOMTRAX Controller

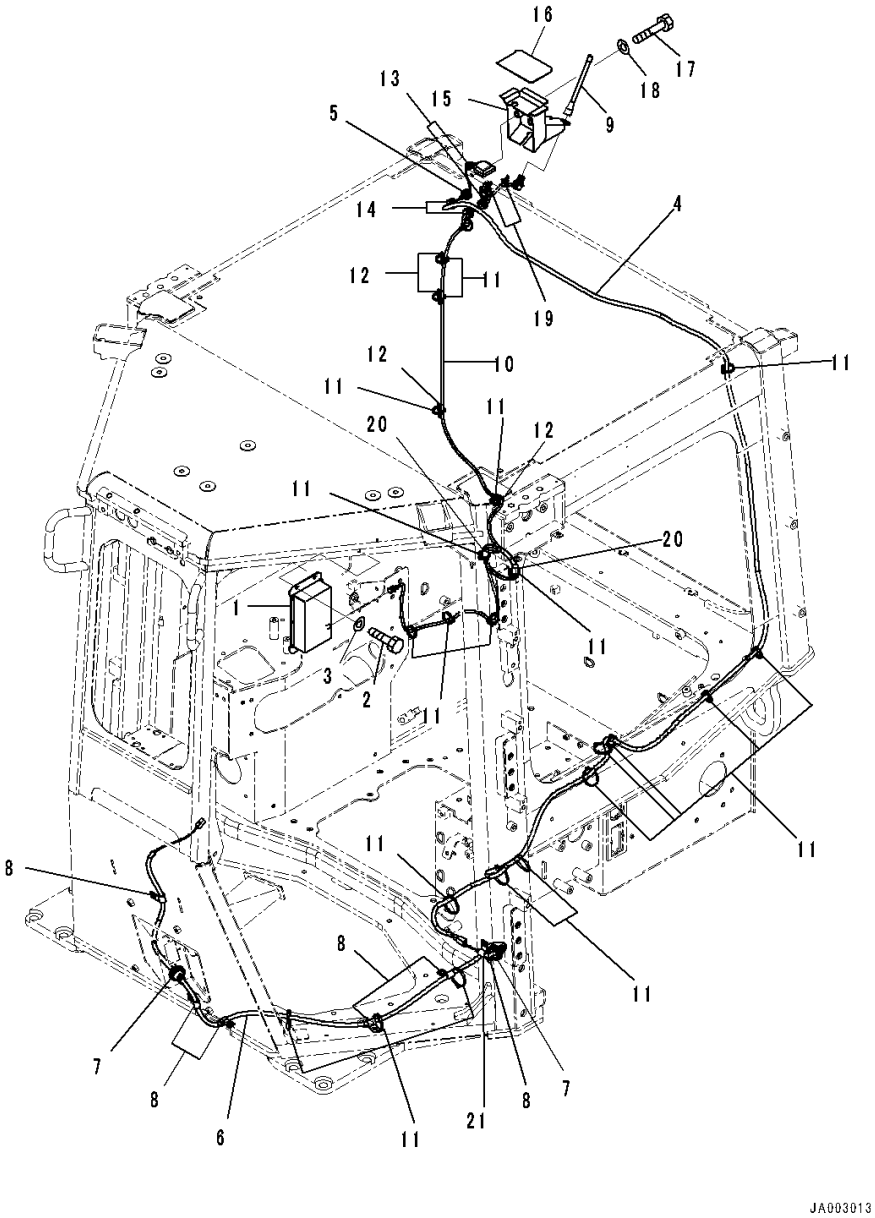

Index	Code	Part Number	Description	Qty	Serial Number
		Note: This list covers following specifications.			
		With AM-FM Stereo Radio For North America, TH300 Type KOMTRAX			
		Provision For Radio Installation, TH300 Type KOMTRAX			
		EU Regulation Guard Level 2, With AM-FM Stereo Radio With Cassette, TH300 Type KOMTRAX			
		EU Regulation Guard Level 2, Provision For Radio Installation, TH300 Type KOMTRAX			
		With Rear View Monitoring System, With AM-FM Stereo Radio For North America, TH300 Type KOMTRAX			
		With Rear View Monitoring System, Provision For Radio Installation, TH300 Type KOMTRAX			
		EU Regulation Guard Level 2, With Rear View Monitoring System, With AM-FM Stereo Radio For North America, TH300 Type KOMTRAX			
		EU Regulation Guard Level 2, With Rear View Monitoring System, With AM-FM Stereo Radio For North America, TH300 Type KOMTRAX			
1		7826-23-3011	Controller	1	80001-
2		01010-80616	Bolt	4	80001-
3		01643-30623	Washer	4	80001-
4		14X-06-51161	Cable Assembly	1	80001-
5		14X-06-51530	Grommet	1	80001-
6		14X-06-51171	Cable Assembly	1	80001-
7		08037-11025	Grommet	2	80001-
8		04434-51010	Clip	6	80001-
9		8A13-10-2100	Antenna	1	80001-
10		14X-06-51190	Cable Assembly	1	80001-
11		08034-20519	Band	22	80001-
12		20U-54-46520	Hook, Sticker Type	3	80001-
13		175-06-81610	Grommet	2	80001-
14		14X-06-51520	Grommet	2	80001-
15		14X-06-51831	Bracket	1	80001-
16		14X-06-51840	Plate	1	80001-
17		01010-80850	Bolt	2	80001-
18		01643-30823	Washer	2	80001-
19		08059-00413	Clip	2	80001-
20		22B-54-28990	Sheet,Bonded	2	80001-
21		04434-51010	Clip	1	80001-

FIG. K0210-001050 ROPS Cab, Decal

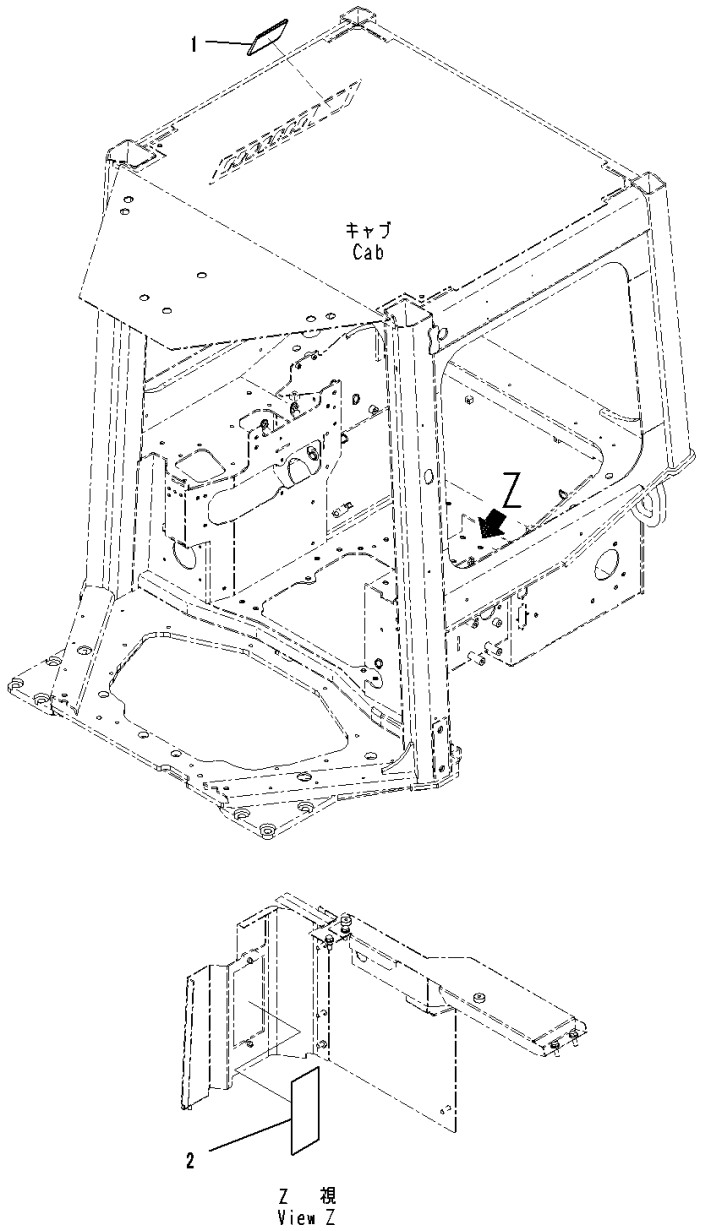

Index	Code	Part Number	Description	Qty	Serial Number
		Note: This list covers following specifications.			
		With AM-FM Stereo Radio For North America, TH300 Type KOMTRAX			
		Provision For Radio Installation, TH300 Type KOMTRAX			
		With Rear View Monitoring System, With AM-FM Stereo Radio For North America, TH300 Type KOMTRAX			
		With Rear View Monitoring System, Provision For Radio Installation, TH300 Type KOMTRAX			
1		14X-98-51120	Plate	1	80065-
2		14X-98-51161	Plate	1	80065-

FIG. K0210-001051A ROPS Cab, Related Parts

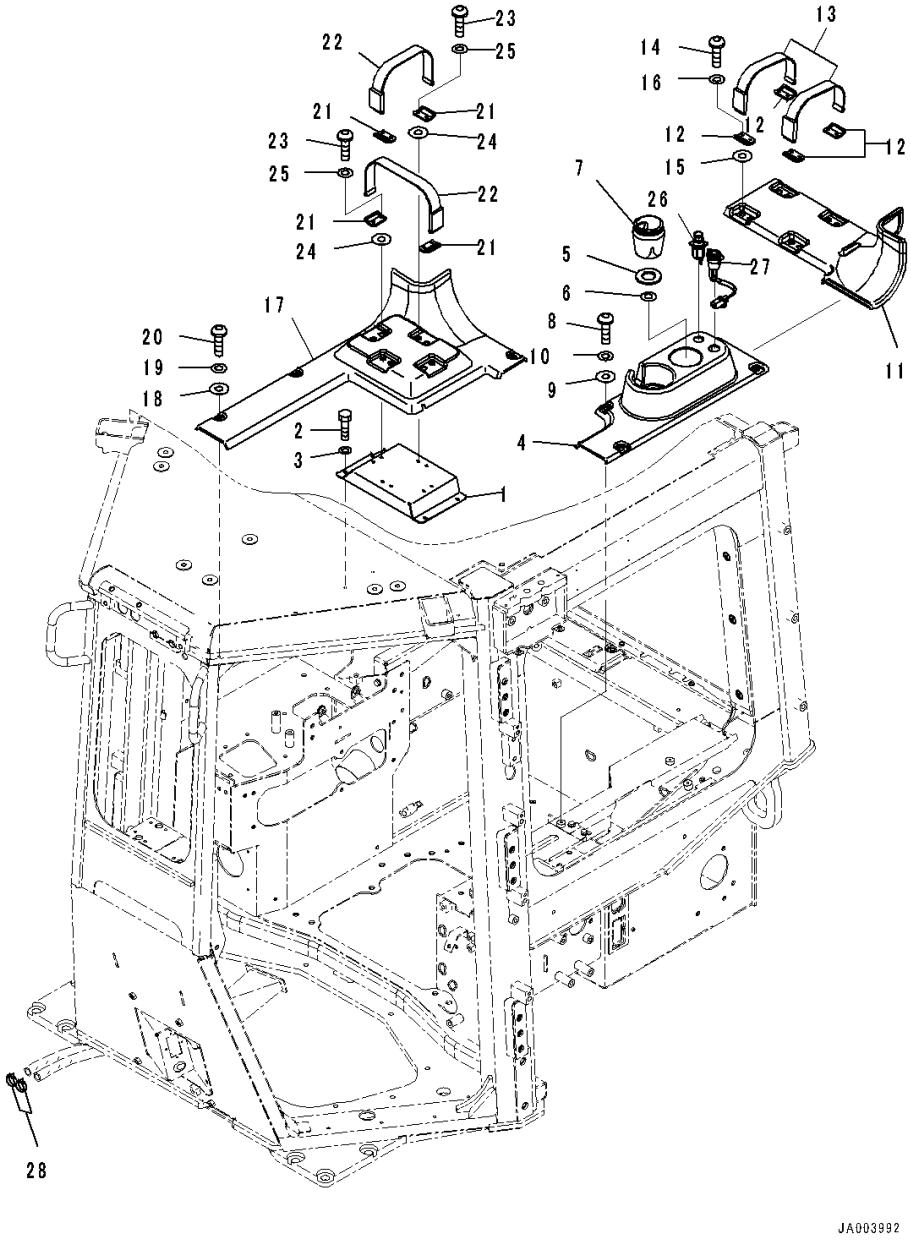

Index	Code	Part Number	Description	Qty	Serial Number
		Note: This list covers following specifications.			
		With AM-FM Stereo Radio For North America, TH300 Type KOMTRAX			
		Provision For Radio Installation, TH300 Type KOMTRAX			
		EU Regulation Guard Level 2, With AM-FM Stereo Radio With Cassette, TH300 Type KOMTRAX			
		EU Regulation Guard Level 2, Provision For Radio Installation, TH300 Type KOMTRAX			
		With Rear View Monitoring System, With AM-FM Stereo Radio For North America, TH300 Type KOMTRAX			
		With Rear View Monitoring System, Provision For Radio Installation, TH300 Type KOMTRAX			
		EU Regulation Guard Level 2, With Rear View Monitoring System, With AM-FM Stereo Radio For North America, TH300 Type KOMTRAX			
		EU Regulation Guard Level 2, With Rear View Monitoring System, With AM-FM Stereo Radio For North America, TH300 Type KOMTRAX			
1		14X-54-56421	Bracket	1	80001-
2		01010-80616	Bolt	4	80001-
3		01643-30623	Washer	4	80001-
4		14X-Y79-2181	Cover	1	80017-
5		20Y-43-41970	Sheet	3	80017-
6		14X-Y79-2361	Sheet	2	80017-
7		20Y-43-41491	Ashtray	1	80017-
8		01245-00625	Screw	4	80001-
9		12Y-978-2660	Collar	4	80001-
10		01643-70623	Washer	4	80001-
11		14X-Y79-2320	Cover	1	80001-
12		14X-Y79-1241	Plate	4	80001-
13		423-54-42790	Band	2	80001-
14		01245-00625	Screw	8	80001-
15		12Y-978-2660	Collar	8	80001-
16		01643-70623	Washer	8	80001-
17		14X-Y79-2330	Cover	1	80001-
18		12Y-978-2660	Collar	3	80001-
19		01643-70623	Washer	3	80001-
20		01245-00625	Screw	3	80001-
21		14X-Y79-1241	Plate	4	80001-
22		423-54-42790	Band	2	80001-

FIG. K0210-001051A ROPS Cab, Related Parts

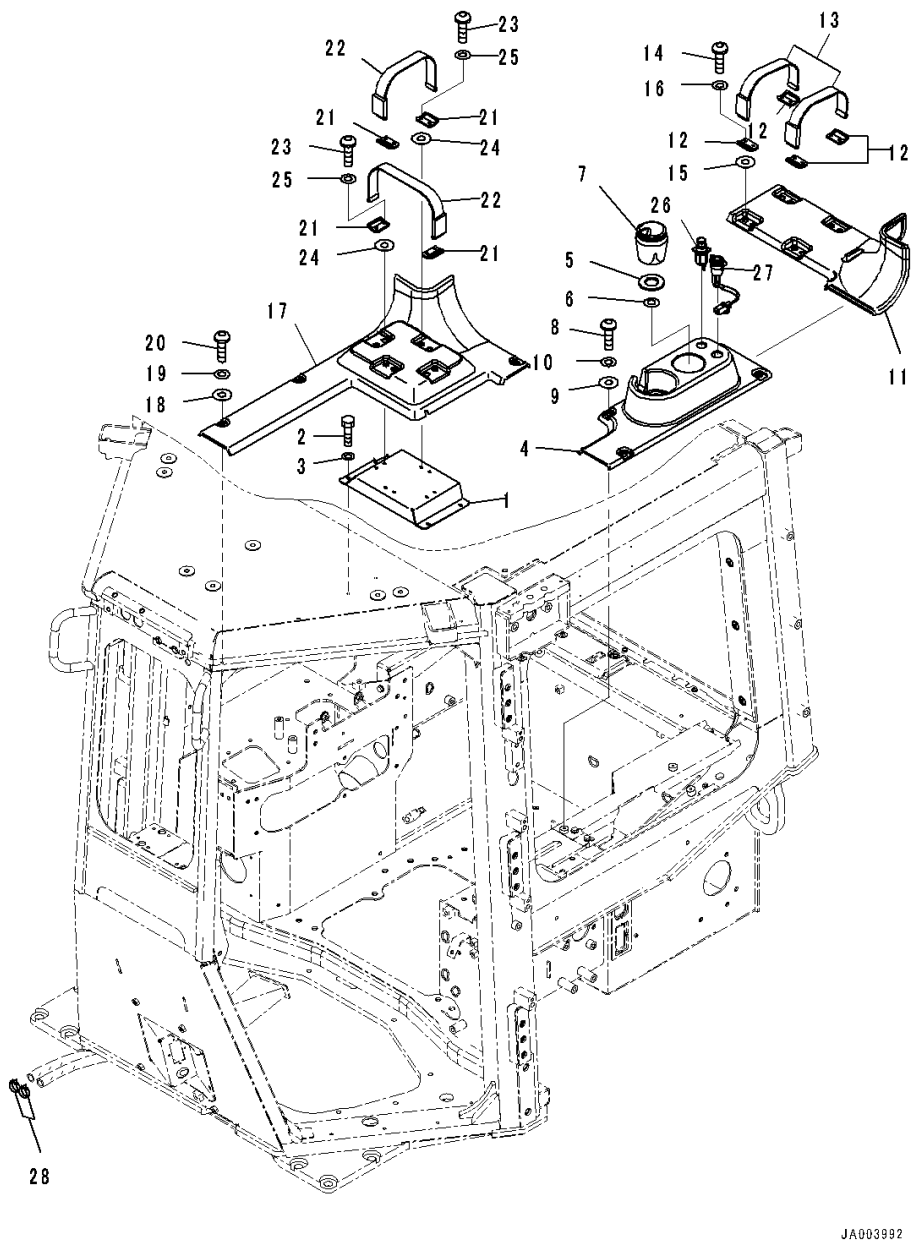

Index	Code	Part Number	Description	Qty	Serial Number
23		01245-00625	Screw	8	80001-
24		12Y-978-2660	Collar	8	80001-
25		01643-70623	Washer	8	80001-
26		20Y-06-23472	Cigarette Lighter	1	80001-
27		14X-06-52491	Socket Assembly	1	80001-
28		09479-02400	Clamp	2	80001-

FIG. K0210-002017 ROPS Cab, Cover

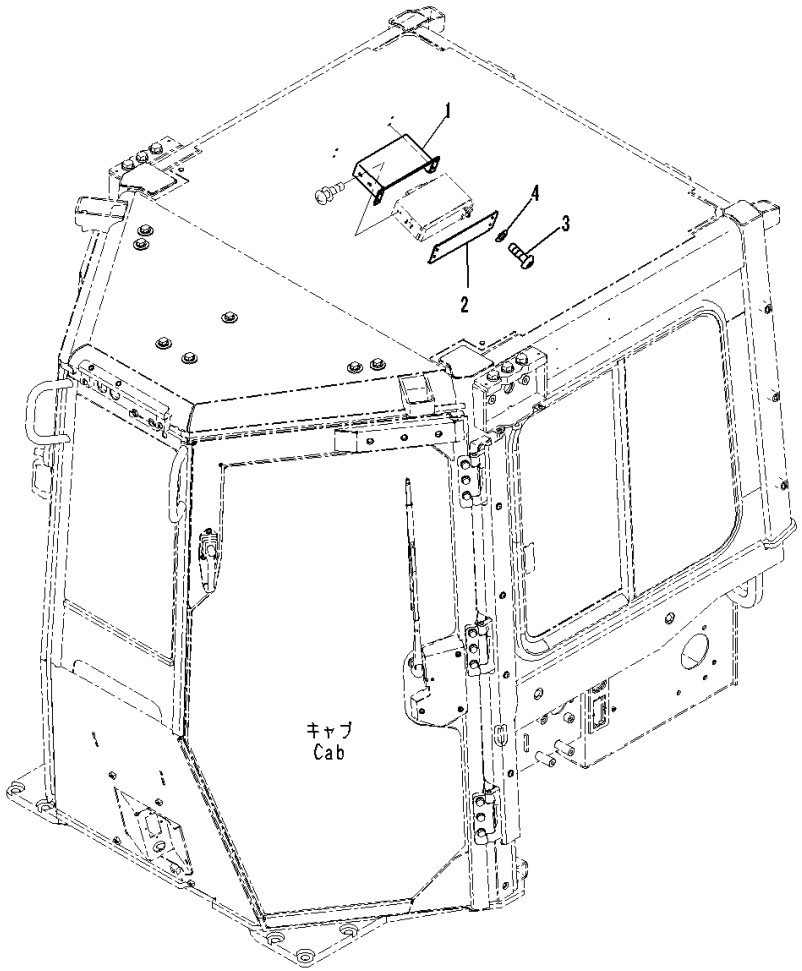

Index	Code	Part Number	Description	Qty	Serial Number
		Note: This list covers following specifications.			
			Provision For Radio Installation, TH300 Type KOMTRAX		
			EU Regulation Guard Level 2, Provision For Radio Installation, TH300 Type KOMTRAX		
			With Rear View Monitoring System, Provision For Radio Installation, TH300 Type KOMTRAX		
			EU Regulation Guard Level 2, With Rear View Monitoring System, With AM-FM Stereo Radio For North America, TH300 Type KOMTRAX		
1		14X-Y79-1590	Bracket	1	80001-
2		17A-Z11-2240	Plate	1	80001-
3		01245-00620	Screw	4	80001-
4		01643-70623	Washer	4	80001-

FIG. K0210-003017 ROPS Cab, EU Regulation Guard Level 2, With AM-FM Stereo Radio With Cassette, TH300 Type KOMTRAX, Radio

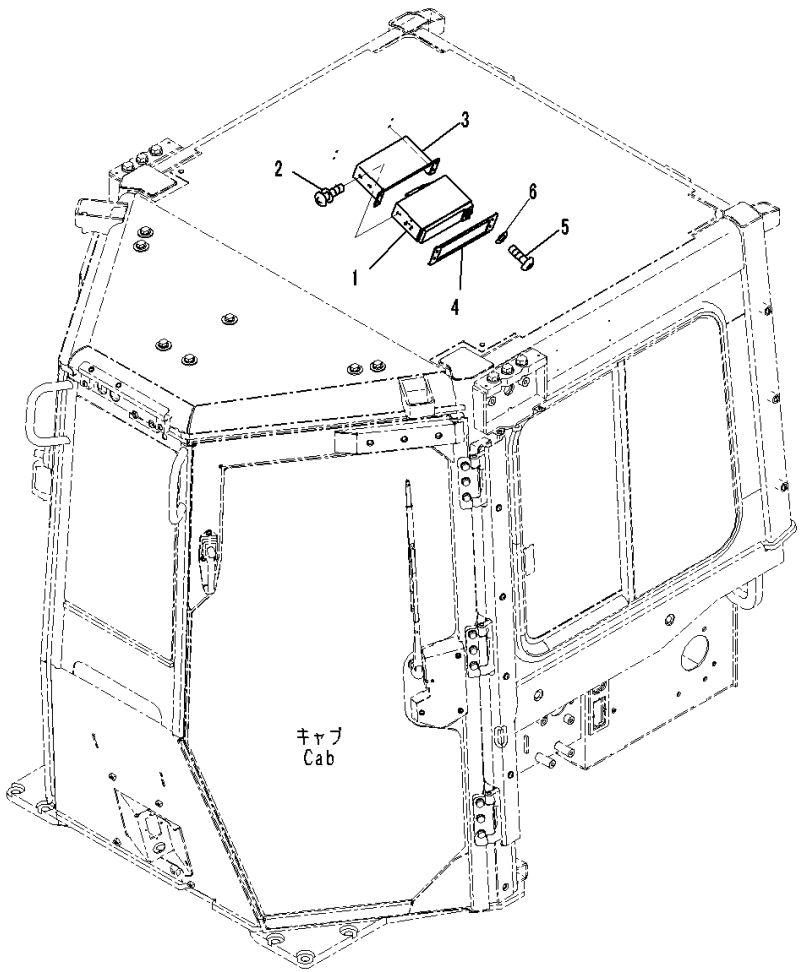

Index	Code	Part Number	Description	Qty	Serial Number
1		207-06-71734	Radio	1	80017-
2		01023-20510	Screw	4	80001-
3		14X-Y79-1590	Bracket	1	80001-
4		12Y-978-2280	Plate	1	80001-
5		01245-00620	Screw	4	80001-
6		01643-70623	Washer	4	80001-

FIG. K0210-003024 ROPS Cab, EU Regulation Guard Level 2, With AM-FM Stereo Radio With Cassette, TH300 Type KOMTRAX, Air Conditioner Unit

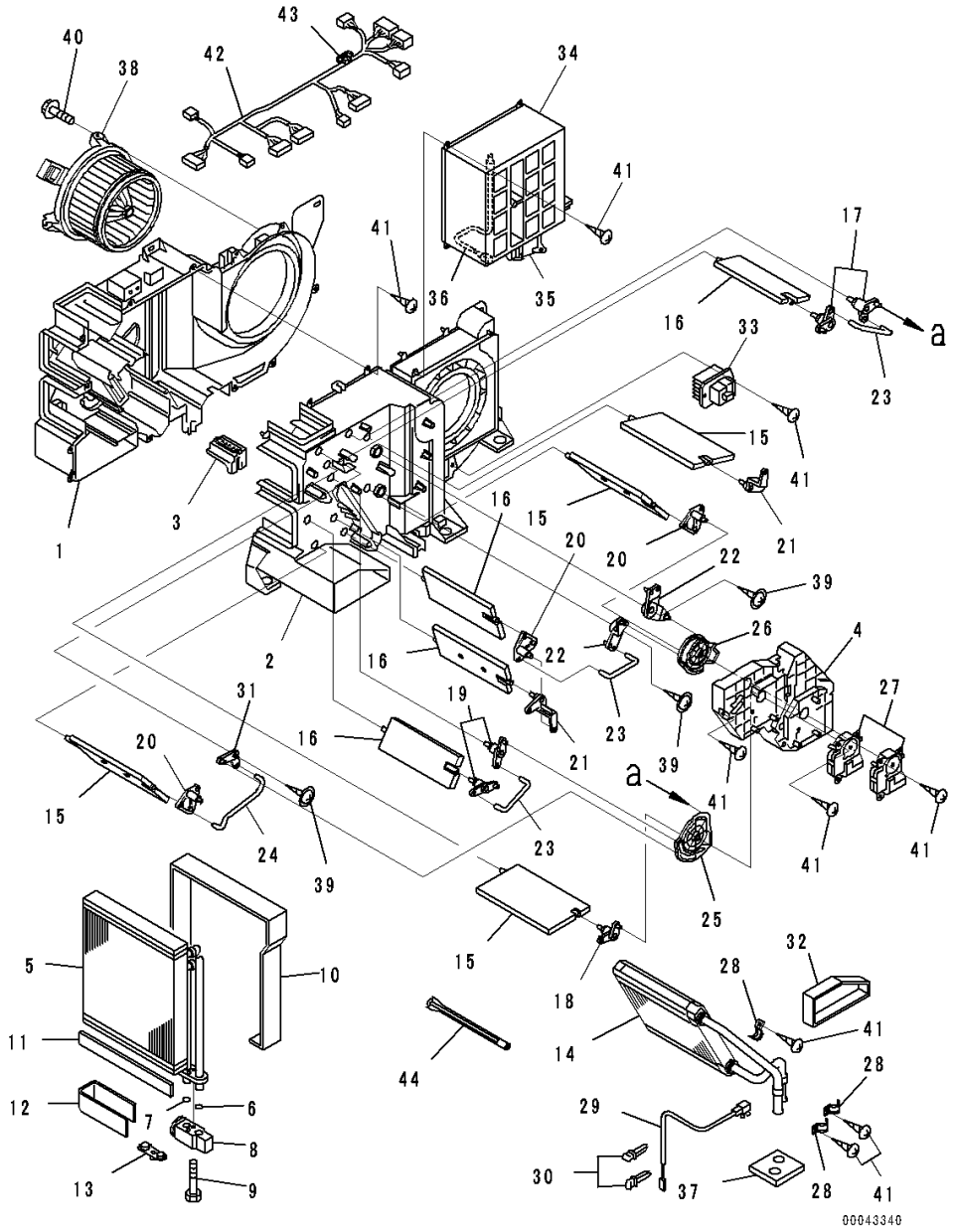

Index	Code	Part Number	Description	Qty	Serial Number
		20Y-810-1211	Air Conditioner Assembly	1	80001-
1		ND245450-5831	• Case, Cooling	1	80001-
2		ND245450-5840	• Case, Cooling	1	80001-
3		ND116576-3810	• Plate	1	80001-
4		ND116576-3820	• Plate	1	80001-
		ND446010-3132	• Evaporator	1	80001-
5		ND446600-0991	•• Evaporator Assembly	1	80001-
6		ND949142-0020	•• O-ring	1	80001-
7		ND949142-0030	•• O-ring	1	80001-
8		ND447500-2750	•• Valve	1	80001-
9		ND949046-3100	•• Bolt	2	80001-
10		ND146657-8841	•• Packing	1	80001-
11		ND146657-9811	•• Packing	3	80001-
12		ND146657-8850	•• Packing	1	80001-
13		ND445021-3941	•• Plug	1	80001-
14		ND116140-0050	• Core Subassembly, Heater	1	80001-
15		ND116660-7570	• Door Assembly	4	80001-
16		ND116650-6850	• Door Assembly	4	80001-
17		ND116780-2481	• Lever Subassembly, Link	2	80001-
18		ND116780-2491	• Lever Subassembly, Link	1	80001-
19		ND116780-2501	• Lever Subassembly, Link	2	80001-
20		ND116780-2510	• Lever Subassembly, Link	3	80001-
21		ND116781-3000	• Lever	2	80001-
22		ND116780-3130	• Lever Subassembly, Link	2	80001-
23		ND116662-7670	• Shaft	3	80001-
24		ND116662-7681	• Shaft	1	80001-
25		ND116576-3852	• Plate	1	80001-
26		ND116576-3862	• Plate	1	80001-
27		ND063800-0300	• Servo Motor Assembly	2	80001-
28		ND017231-0700	• Clamp	3	80001-
29		ND077500-5890	• Thermistor Assembly	1	80001-
30		ND246790-2060	• Clamp	2	80001-
31		ND116780-3920	• Lever Subassembly, Link	1	80001-
32		ND146667-0440	• Packing	1	80001-
33		ND077800-0750	• Transistor	1	80001-
34		ND146340-0560	• Box Assembly	1	80001-
35		ND063600-4580	•• Servo Motor Assembly	1	80001-
36		ND077500-5650	•• Thermistor Assembly	1	80001-
37		ND146657-8860	• Packing	1	80001-

FIG. K0210-003024 ROPS Cab, EU Regulation Guard Level 2, With AM-FM Stereo Radio With Cassette, TH300 Type KOMTRAX, Air Conditioner Unit

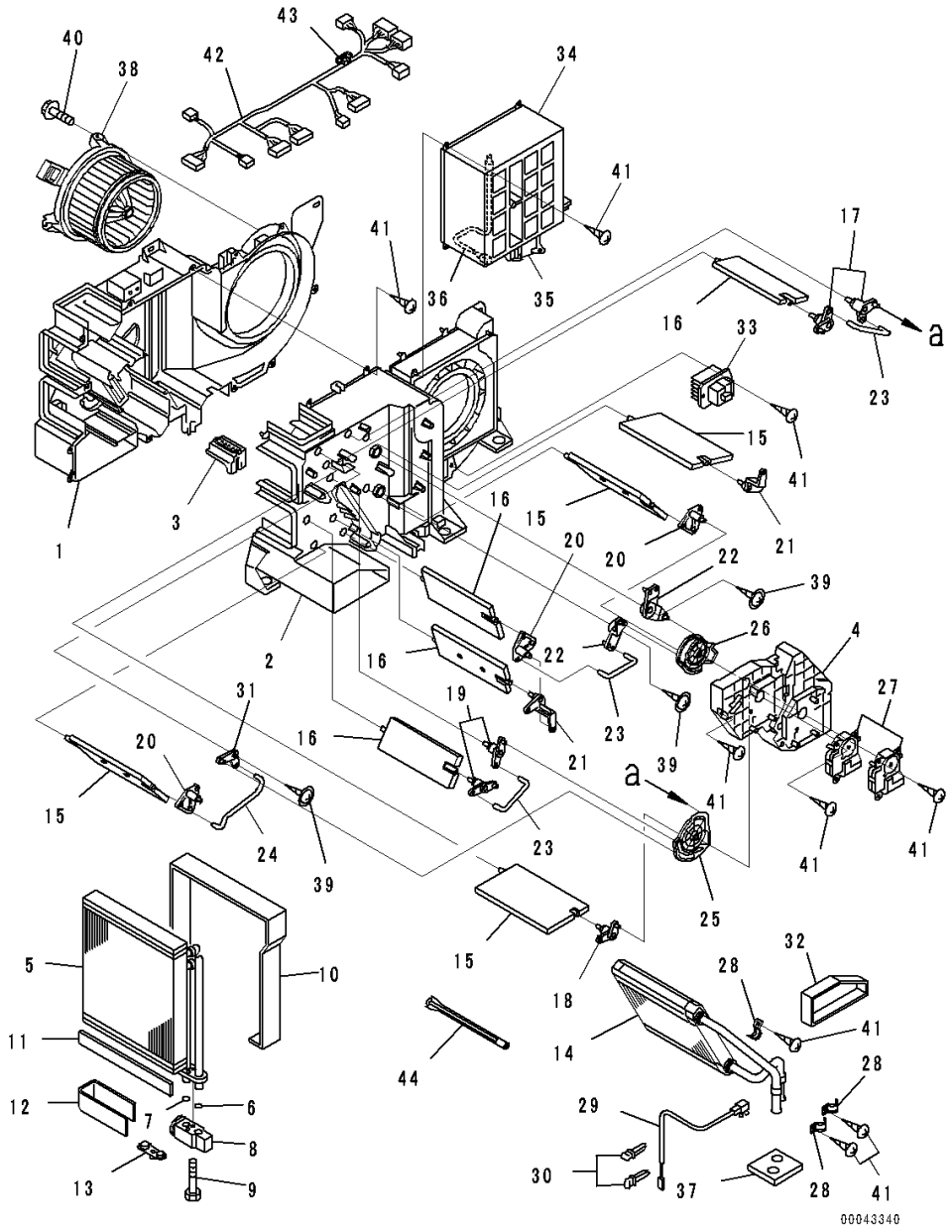

Index	Code	Part Number	Description	Qty	Serial Number
38		ND116340-7350	• Motor Assembly, Fan	1	80001-
39		ND949008-0460	• Screw, Tapping	3	80001-
40		ND949008-0330	• Screw, Tapping	3	80001-
41		ND949001-1730	• Screw, Tapping	32	80001-
42		ND246470-4311	• Wire Harness Assembly	1	80001-
43		ND93950-05003	•• Fuse	1	80001-
44		ND116662-8320	• Shaft	1	80001-

FIG. K0210-003039 ROPS Cab, Controller and Relay

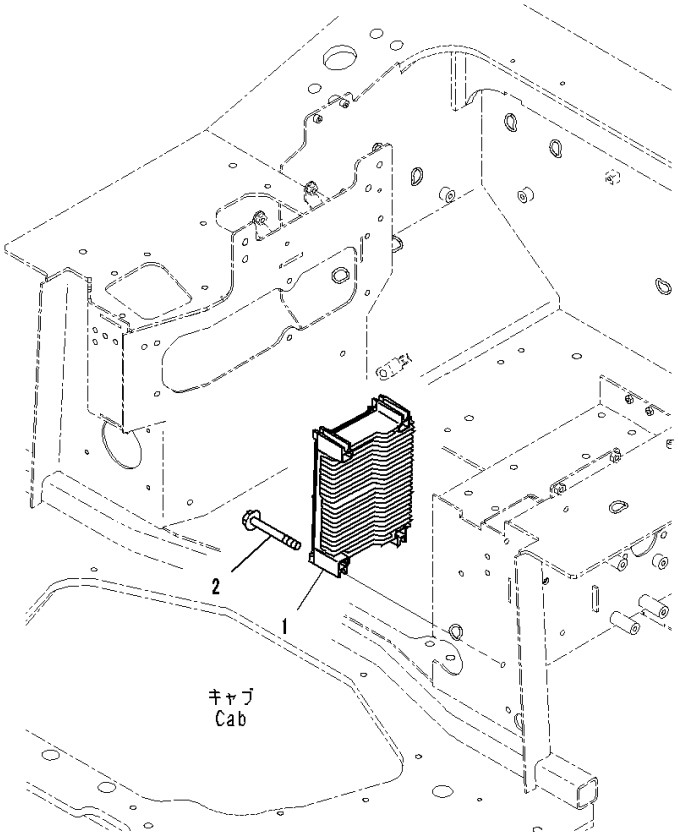

JA003001

Index	Code	Part Number	Description	Qty	Serial Number
		Note: This list covers following specifications.			
		EU Regulation Guard Level 2, With AM-FM Stereo Radio With Cassette, TH300 Type KOMTRAX			
		EU Regulation Guard Level 2, Provision For Radio Installation, TH300 Type KOMTRAX			
1		7830-74-4000	Controller	1	80007-
2		01435-00885	Bolt	4	80001-

FIG. K0210-003040 ROPS Cab, Floor, Harness (1/3)

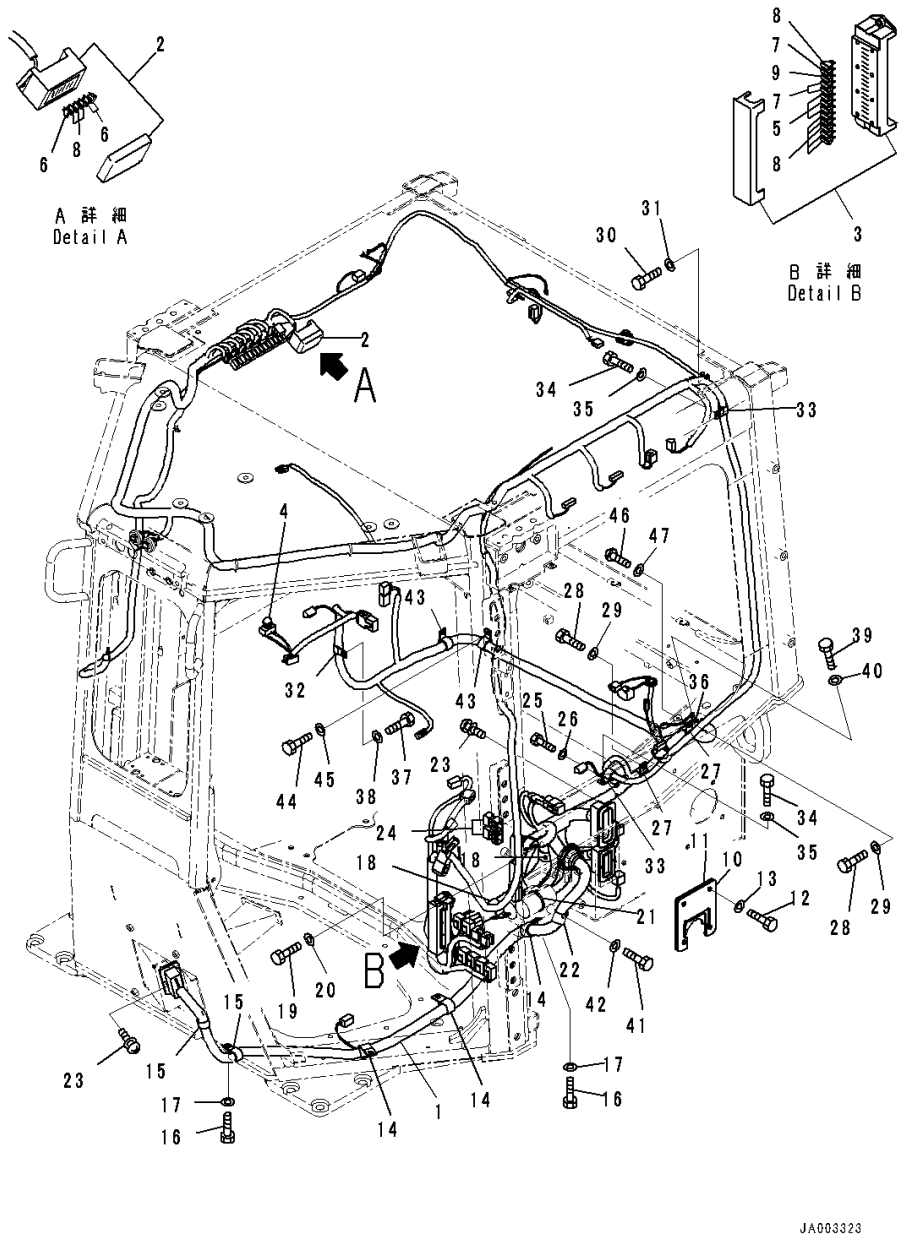

Index	Code	Part Number	Description	Qty	Serial Number
		Note: This list covers following specifications.			
		EU Regulation Guard Level 2, With AM-FM Stereo Radio With Cassette, TH300 Type KOMTRAX			
		EU Regulation Guard Level 2, Provision For Radio Installation, TH300 Type KOMTRAX			
		With Rear View Monitoring System, With AM-FM Stereo Radio For North America, TH300 Type KOMTRAX			
		With Rear View Monitoring System, Provision For Radio Installation, TH300 Type KOMTRAX			
		EU Regulation Guard Level 2, With Rear View Monitoring System, With AM-FM Stereo Radio For North America, TH300 Type KOMTRAX			
		EU Regulation Guard Level 2, With Rear View Monitoring System, With AM-FM Stereo Radio For North America, TH300 Type KOMTRAX			
1		14X-06-51124	Wire Harness	1	80065-
		14X-06-51122	Wire Harness	1	80001-80064
2		08044-00600	• Box Assembly, Fuse	1	80001-
3		08044-01500	• Box, Fuse	1	80001-
4		08064-10000	• Switch, Horn	1	80001-
5		08041-00500	• Fuse, 5Amp.	4	80001-
6		08041-01000	• Fuse, 10Amp.	4	80001-
7		08041-01500	• Fuse, 15Amp.	4	80001-
8		08041-02000	• Fuse, 20Amp.	11	80001-
9		08041-03000	• Fuse, 30Amp.	2	80001-
10		14X-06-51351	Bracket	1	80001-
11		14X-06-51431	• Sheet	1	80001-
12		01010-81025	Bolt	4	80001-
13		01643-31032	Washer	4	80001-
14		04434-52711	Clip	3	80001-
15		04434-52310	Clip	2	80001-
16		01010-81020	Bolt	5	80001-
17		01643-31032	Washer	5	80001-
18		208-06-19170	Clip	2	80001-
19		01010-81020	Bolt	2	80001-
20		01643-31032	Washer	2	80001-
21		08034-20519	Band	39	80001-
22		04434-52711	Clip	1	80001-
23		01023-10416	Screw	12	80001-
24		8233-06-3350	Diode	2	80001-

FIG. K0210-003040 ROPS Cab, Floor, Harness (1/3)

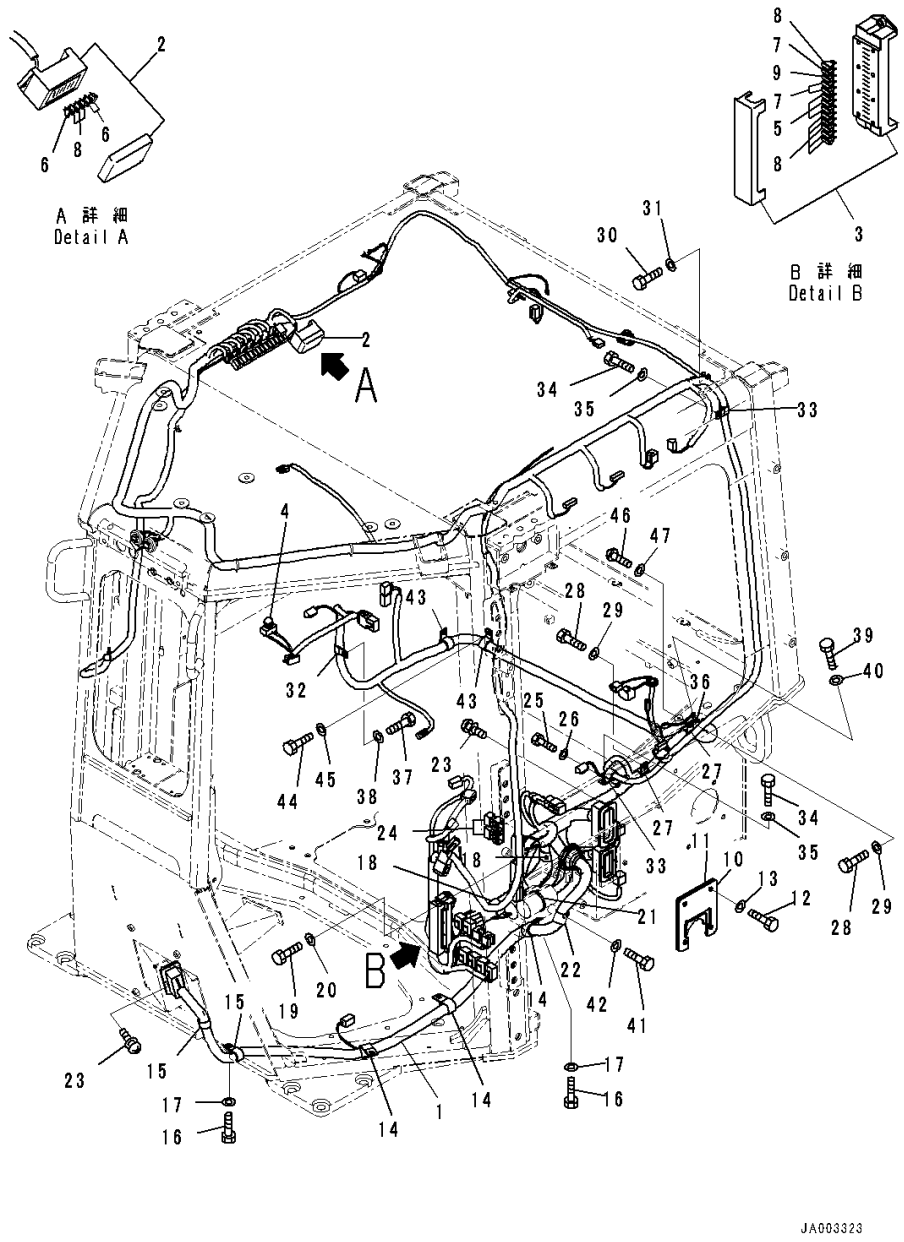

Index	Code	Part Number	Description	Qty	Serial Number
25		01010-81020	Bolt	2	80001-
26		01643-31032	Washer	2	80001-
27		04434-52310	Clip	3	80001-
28		01010-81020	Bolt	3	80001-
29		01643-31032	Washer	3	80001-
30		01010-80616	Bolt	1	80001-
31		01643-30623	Washer	1	80001-
32		04434-51910	Clip	1	80001-
33		04434-51710	Clip	2	80001-
34		01010-81020	Bolt	2	80001-
35		01643-31032	Washer	2	80001-
36		04434-52310	Clip	2	80001-
37		01010-81020	Bolt	3	80001-
38		01643-31032	Washer	3	80001-
39		01010-80612	• Bolt	1	80001-
40		01643-30623	• Washer	1	80001-
41		01010-81025	• Bolt	1	80001-
42		01643-31032	• Washer	1	80001-
43		04434-52310	• Clip	2	80001-
44		01010-81020	• Bolt	2	80001-
45		01643-31032	• Washer	2	80001-
46		01245-01020	• Screw	1	80001-
47		01643-71032	• Washer	1	80001-

FIG. K0210-003045 ROPS Cab, Floor, Switch

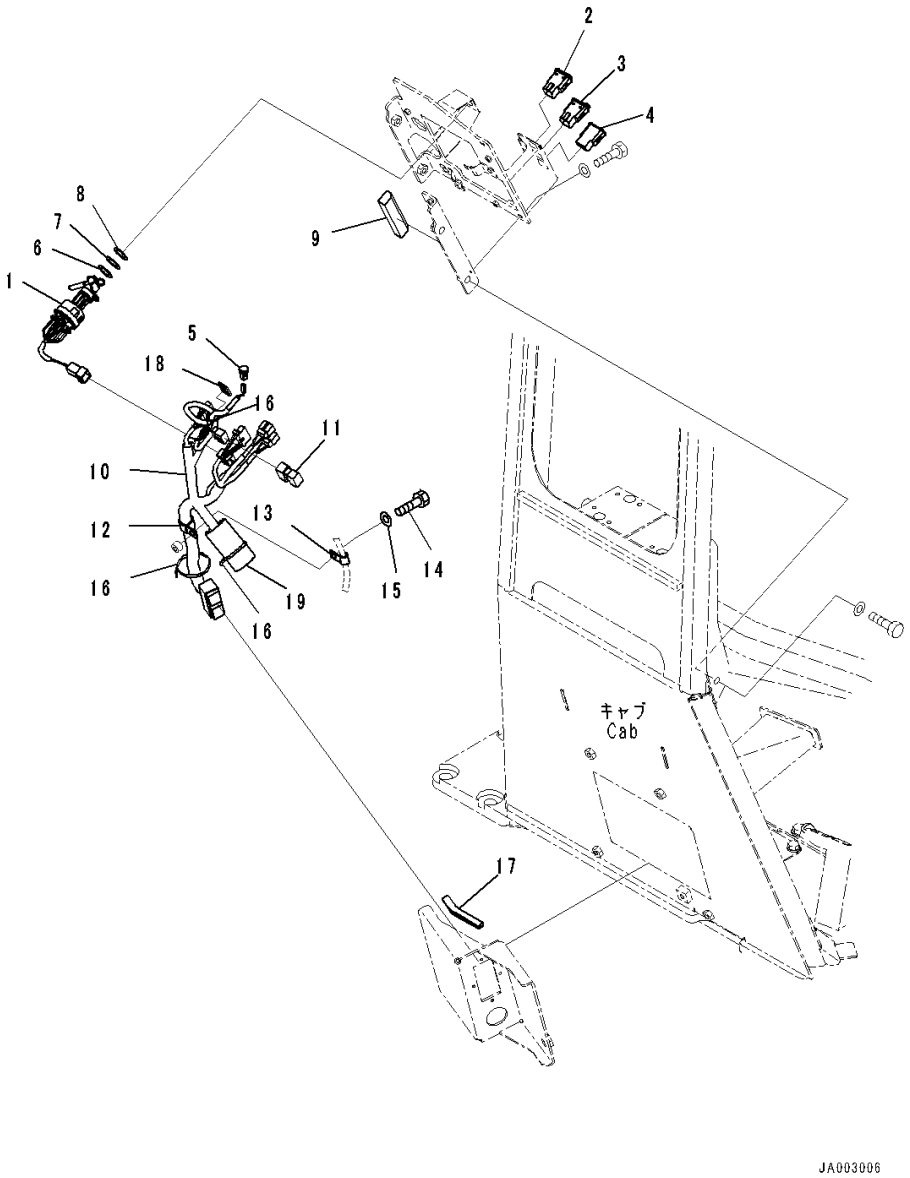

Index	Code	Part Number	Description	Qty	Serial Number
		Note: This list covers following specifications.			
		EU Regulation Guard Level 2, With AM-FM Stereo Radio With Cassette, TH300 Type KOMTRAX			
		EU Regulation Guard Level 2, Provision For Radio Installation, TH300 Type KOMTRAX			
		EU Regulation Guard Level 2, With Rear View Monitoring System, With AM-FM Stereo Radio For North America, TH300 Type KOMTRAX			
		EU Regulation Guard Level 2, With Rear View Monitoring System, With AM-FM Stereo Radio For North America, TH300 Type KOMTRAX			
1		14X-06-51691	Switch, Key	1	80001-
2		17A-06-42250	Switch, Light, Front	1	80001-
3		17A-06-42260	Switch, Light, Rear	1	80001-
4		20Y-06-42190	Cover	1	80001-
5		20Y-979-6161	Sensor	1	80001-
6		23S-15-45860	Shim, T=0.5mm	2	80001-
7		20Y-43-41750	Washer	2	80001-
8		20Y-43-41790	Washer	2	80001-
9		14X-54-56770	Seal,Bonded	1	80001-
10		14X-06-51132	Wire Harness	1	80001-
11		8233-06-3350	Diode	1	80001-
12		04434-52310	Clip	1	80001-
13		04434-51010	Clip	1	80001-
14		01010-81020	Bolt	1	80001-
15		01643-31032	Washer	1	80001-
16		08034-20519	Band	3	80001-
17		14X-54-56160	Seal	1	80001-
18		20U-54-46520	Hook, Sticker Type	1	80001-
19		14X-06-52160	Sheet,Bonded	1	80001-

FIG. K0210-003050 ROPS Cab, Decal

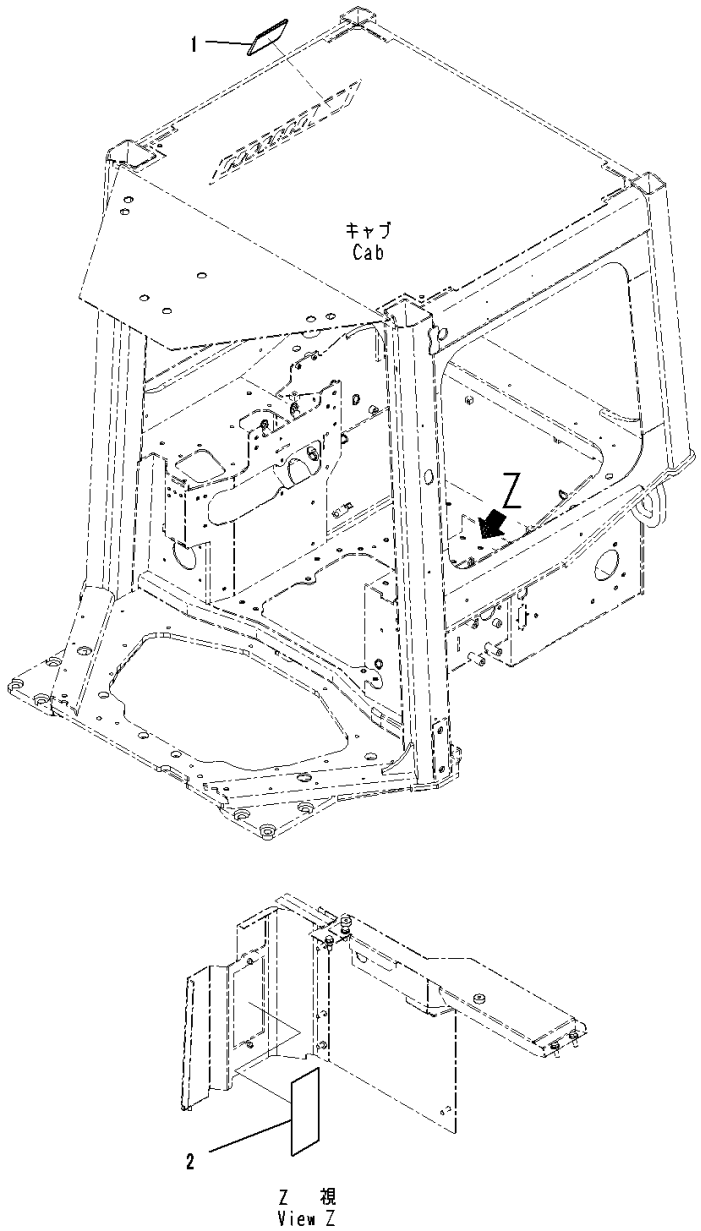

Index	Code	Part Number	Description	Qty	Serial Number
		Note: This list covers following specifications.			
		EU Regulation Guard Level 2, With AM-FM Stereo Radio With Cassette, TH300 Type KOMTRAX			
		EU Regulation Guard Level 2, Provision For Radio Installation, TH300 Type KOMTRAX			
		EU Regulation Guard Level 2, With Rear View Monitoring System, With AM-FM Stereo Radio For North America, TH300 Type KOMTRAX			
		EU Regulation Guard Level 2, With Rear View Monitoring System, With AM-FM Stereo Radio For North America, TH300 Type KOMTRAX			
1		14X-98-51260	Plate.....	1	80065-
2		14X-98-51270	Plate.....	1	80065-

FIG. K0210-005001 ROPS Cab, Cab Body

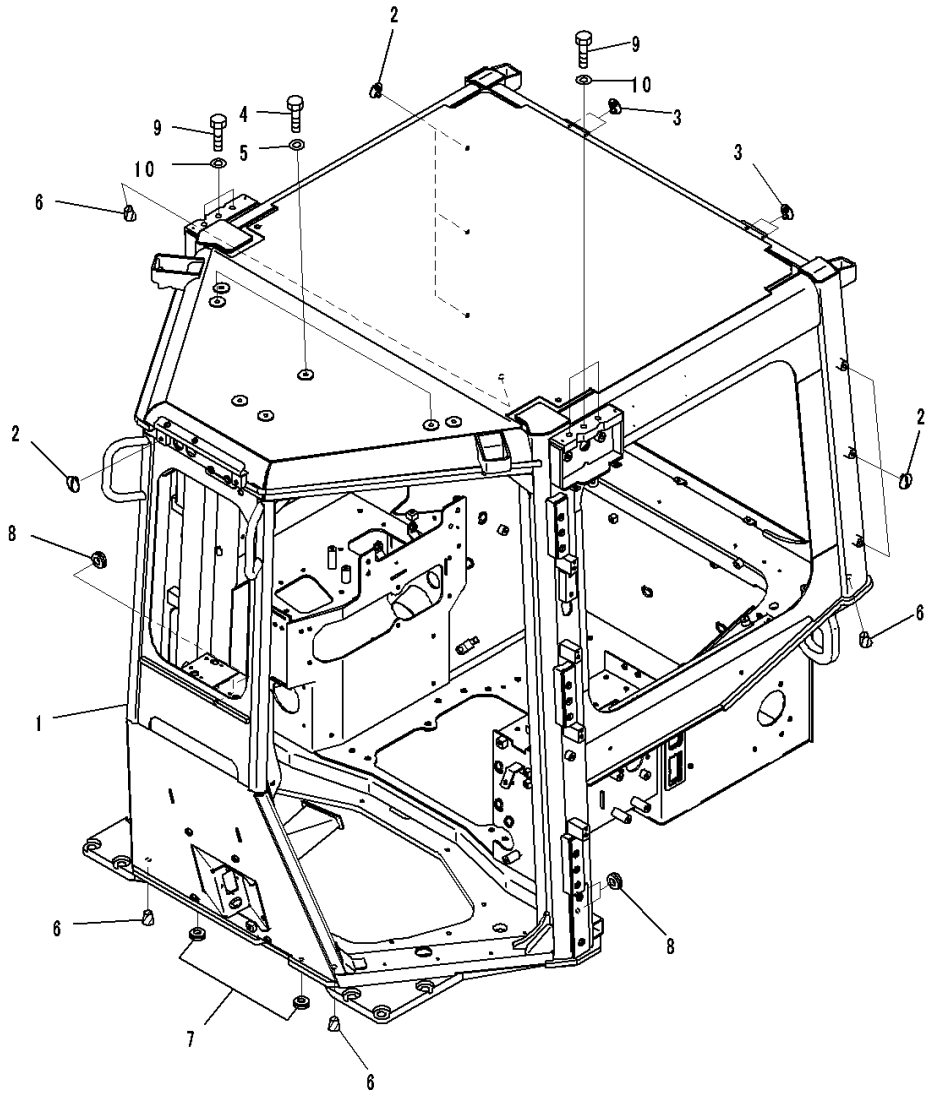

Index	Code	Part Number	Description	Qty	Serial Number
		Note: This list covers following specifications.			
		With Rear View Monitoring System, With AM-FM Stereo Radio For North America, TH300 Type KOMTRAX			
		With Rear View Monitoring System, Provision For Radio Installation, TH300 Type KOMTRAX			
		EU Regulation Guard Level 2, With Rear View Monitoring System, With AM-FM Stereo Radio For North America, TH300 Type KOMTRAX			
		EU Regulation Guard Level 2, With Rear View Monitoring System, With AM-FM Stereo Radio For North America, TH300 Type KOMTRAX			
1		14X-Y79-1112	Cab Assembly	1	80001-
2		20Y-53-11380	Cap	6	80001-
3		20Y-53-11390	Cap	4	80001-
4		01010-81220	Bolt	9	80001-
5		01643-31232	Washer	9	80001-
6		07049-01620	Plug	4	80001-
7		09415-00706	Cap	2	80001-
8		09415-01008	Cap	4	80001-
9		01010-81625	Bolt	6	80001-
10		01643-71645	Washer	6	80001-

FIG. K0210-005017 ROPS Cab, With Rear View Monitoring System, With AM-FM Stereo Radio For North America, TH300 Type KOMTRAX, Radio

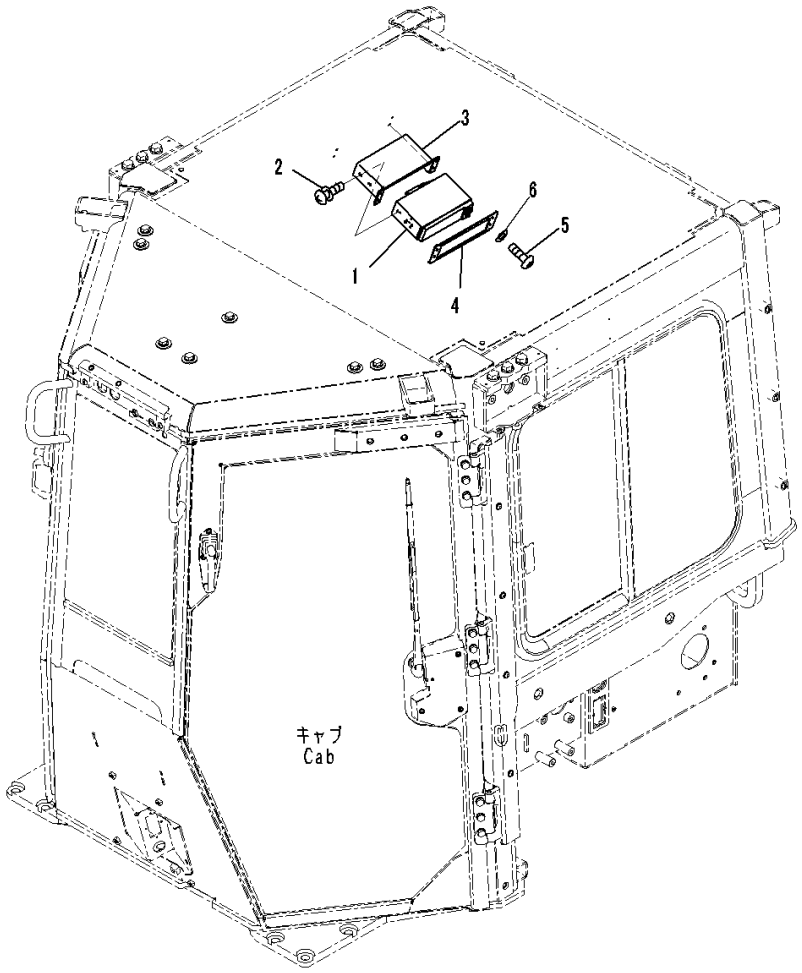

Index	Code	Part Number	Description	Qty	Serial Number
1		207-06-71723	Radio	1	80001-
2		01023-20510	Screw	4	80001-
3		14X-Y79-1590	Bracket	1	80001-
4		12Y-978-2280	Plate	1	80001-
5		01245-00620	Screw	4	80001-
6		01643-70623	Washer	4	80001-

FIG. K0210-005039 ROPS Cab, Controller and Relay

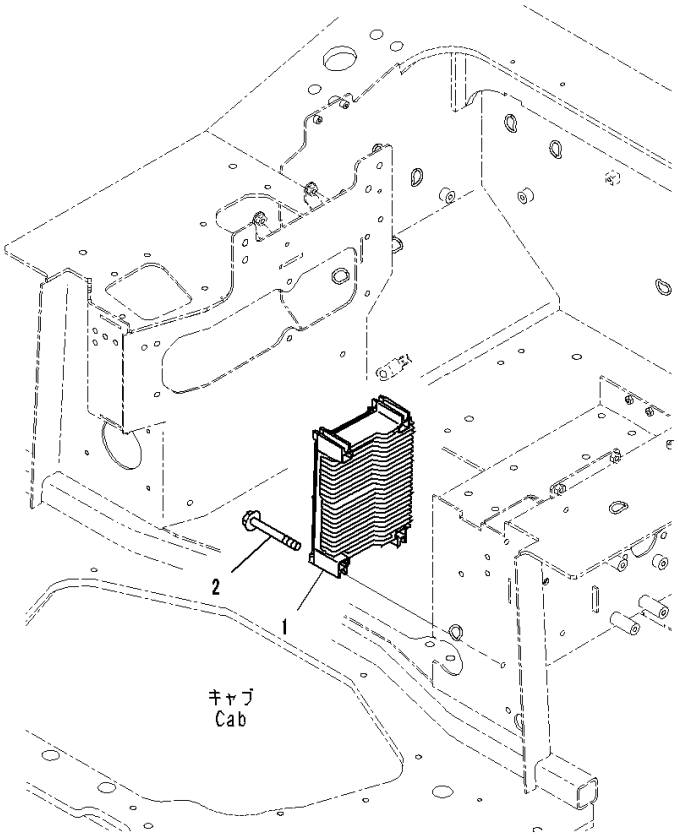

JA003001

Index	Code	Part Number	Description	Qty	Serial Number
		Note: This list covers following specifications.			
		With Rear View Monitoring System, With AM-FM Stereo Radio For North America, TH300 Type KOMTRAX			
		With Rear View Monitoring System, Provision For Radio Installation, TH300 Type KOMTRAX			
		EU Regulation Guard Level 2, With Rear View Monitoring System, With AM-FM Stereo Radio For North America, TH300 Type KOMTRAX			
		EU Regulation Guard Level 2, With Rear View Monitoring System, With AM-FM Stereo Radio For North America, TH300 Type KOMTRAX			
1		7830-74-4000	Controller	1	80001-
2		01435-00885	Bolt	4	80001-

FIG. K0210-005044 ROPS Cab, Dashboard Cover (1/2)

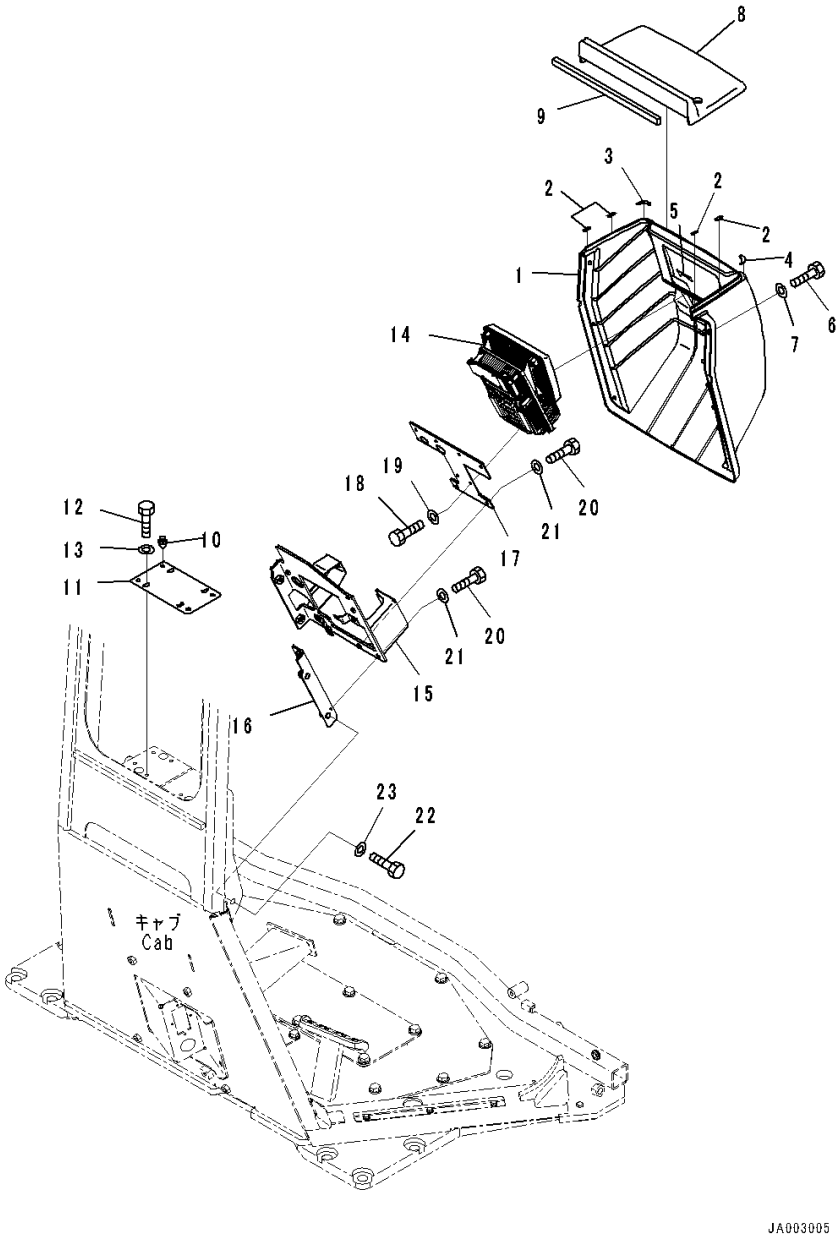

Index	Code	Part Number	Description	Qty	Serial Number
		Note: This list covers following specifications.			
		With Rear View Monitoring System, With AM-FM Stereo Radio For North America, TH300 Type KOMTRAX			
		With Rear View Monitoring System, Provision For Radio Installation, TH300 Type KOMTRAX			
		EU Regulation Guard Level 2, With Rear View Monitoring System, With AM-FM Stereo Radio For North America, TH300 Type KOMTRAX			
		EU Regulation Guard Level 2, With Rear View Monitoring System, With AM-FM Stereo Radio For North America, TH300 Type KOMTRAX			
1		14X-54-56812	Cover	1	80001-
2		14X-54-56941	• Sheet	4	80001-
3		14X-54-56951	• Sheet	1	80001-
4		14X-54-56961	• Sheet	1	80001-
5		14X-54-56970	• Seal,Bonded	1	80001-
6		01010-D0820	Bolt	6	80001-
7		01643-70823	Washer	6	80001-
8		14X-54-56821	Cover	1	80001-
9		14X-54-56921	• Seal,Bonded	1	80001-
10		22U-54-25340	Clip	4	80001-
11		14X-54-56751	Plate	1	80001-
12		01010-80616	Bolt	4	80001-
13		01643-30623	Washer	4	80001-
14		7831-69-5000	Monitor	1	80001-
15		14X-54-56721	Bracket	1	80001-
16		14X-54-56731	Plate	1	80001-
17		14X-54-56741	Plate	1	80001-
18		01010-80616	Bolt	4	80001-
19		01643-30623	Washer	4	80001-
20		01010-80620	Bolt	6	80001-
21		01643-30623	Washer	6	80001-
22		01010-81025	Bolt	4	80001-
23		01643-31032	Washer	4	80001-

FIG. K0210-005050 ROPS Cab, Wiring

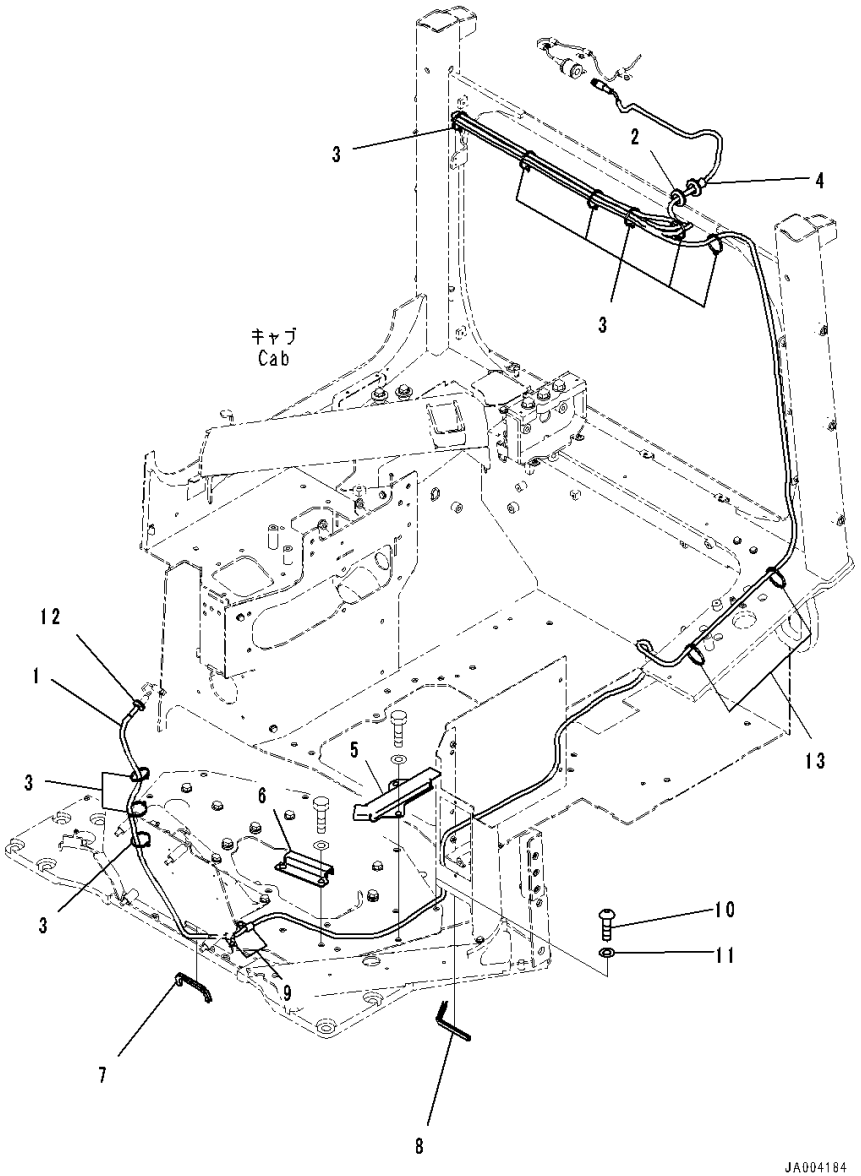

Index	Code	Part Number	Description	Qty	Serial Number
		Note: This list covers following specifications.			
		With Rear View Monitoring System, With AM-FM Stereo Radio For North America, TH300 Type KOMTRAX			
		With Rear View Monitoring System, Provision For Radio Installation, TH300 Type KOMTRAX			
		EU Regulation Guard Level 2, With Rear View Monitoring System, With AM-FM Stereo Radio For North America, TH300 Type KOMTRAX			
		EU Regulation Guard Level 2, With Rear View Monitoring System, With AM-FM Stereo Radio For North America, TH300 Type KOMTRAX			
1		7835-33-8100	Cable Assembly	1	80001-
2		08037-02512	Grommet	1	80001-
3		08034-20519	Band	9	80001-
4		08037-11425	Grommet	1	80001-
5		14X-06-53160	Cover	1	80001-
6		14X-06-53170	Plate	1	80001-
7		418-54-42380	Finisher	1	80001-
8		417-923-3980	Finisher	1	80001-
9		04434-51012	Clip	2	80001-
10		01245-01225	Screw, Hexagon Socket Head	1	80001-
11		01643-71232	Washer	1	80001-
12		08037-01610	Grommet	1	80001-
13		08034-20519	Band	4	80001-

FIG. K0210-005053 ROPS Cab, Rear Camera

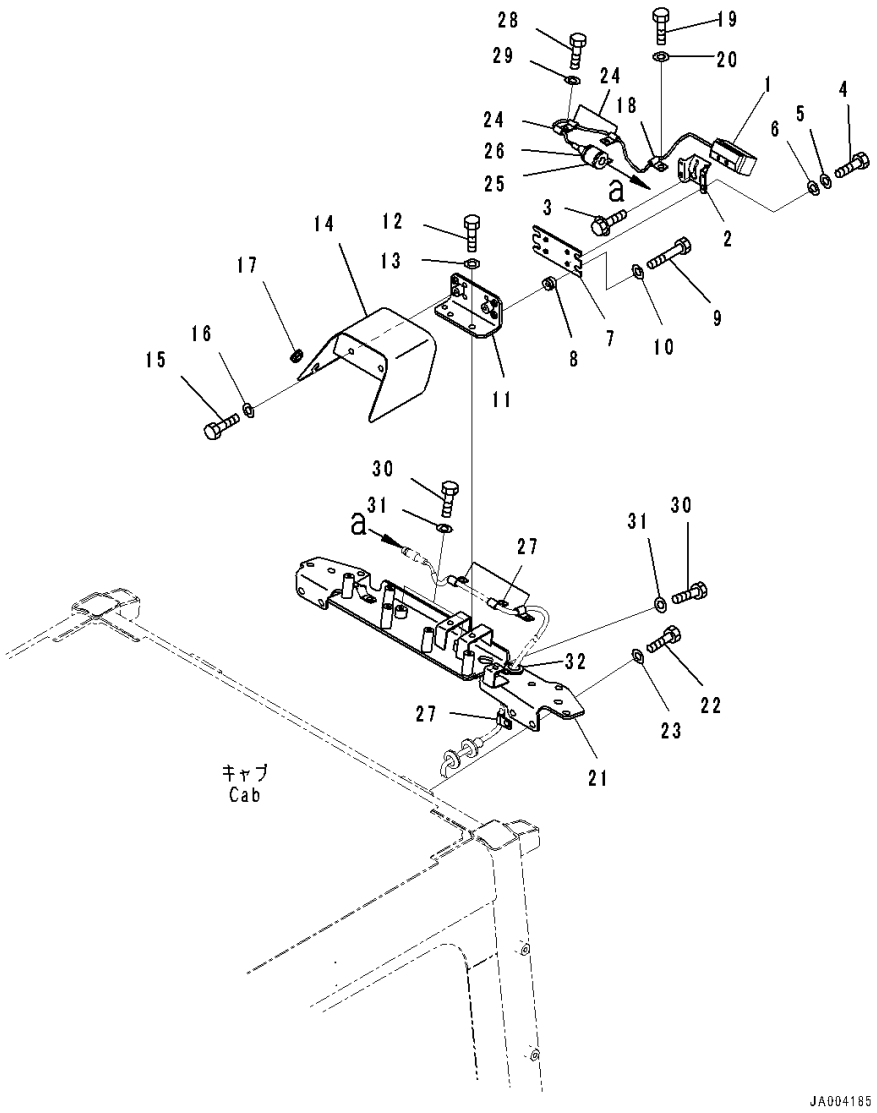

Index	Code	Part Number	Description	Qty	Serial Number
		Note: This list covers following specifications.			
		With Rear View Monitoring System, With AM-FM Stereo Radio For North America, TH300 Type KOMTRAX			
		With Rear View Monitoring System, Provision For Radio Installation, TH300 Type KOMTRAX			
		EU Regulation Guard Level 2, With Rear View Monitoring System, With AM-FM Stereo Radio For North America, TH300 Type KOMTRAX			
		EU Regulation Guard Level 2, With Rear View Monitoring System, With AM-FM Stereo Radio For North America, TH300 Type KOMTRAX			
		7835-33-1001	Camera Assembly	1	80001-
1		7835-33-1100	• Camera	1	80001-
2		7835-33-1201	• Bracket	1	80001-
		7835-33-1300	• Bolt	1	80001-
3		7835-33-1310	•• Bolt	2	80001-
4		7835-33-1320	•• Bolt	4	80001-
5		7835-33-1330	•• Washer	4	80001-
6		7835-33-1340	•• Washer	4	80001-
7		20Y-06-41670	Bracket	1	80001-
8		20Y-810-1240	Cushion	4	80001-
9		01010-D0835	Bolt	4	80001-
10		01643-70823	Washer	4	80001-
11		14X-06-53390	Bracket	1	80001-
12		01010-D1025	Bolt	2	80001-
13		01643-71032	Washer	2	80001-
14		14X-06-53221	Cover	1	80001-
15		01010-D1020	Bolt	2	80001-
16		01643-71032	Washer	2	80001-
17		201-54-13210	Grommet	1	80001-
18		04434-50610	Clip	1	80001-
19		01010-D1025	Bolt	1	80001-
20		01643-71032	Washer	1	80001-
21		14X-06-52390	Bracket	1	80001-
22		01010-81225	Bolt	4	80001-
23		01643-31232	Washer	4	80001-
24		04434-50610	Clip	3	80001-
25		04434-53211	Clip	1	80001-
26		07095-00317	Cushion	1	80001-
27		04434-51010	Clip	4	80001-

FIG. K0210-005053 ROPS Cab, Rear Camera

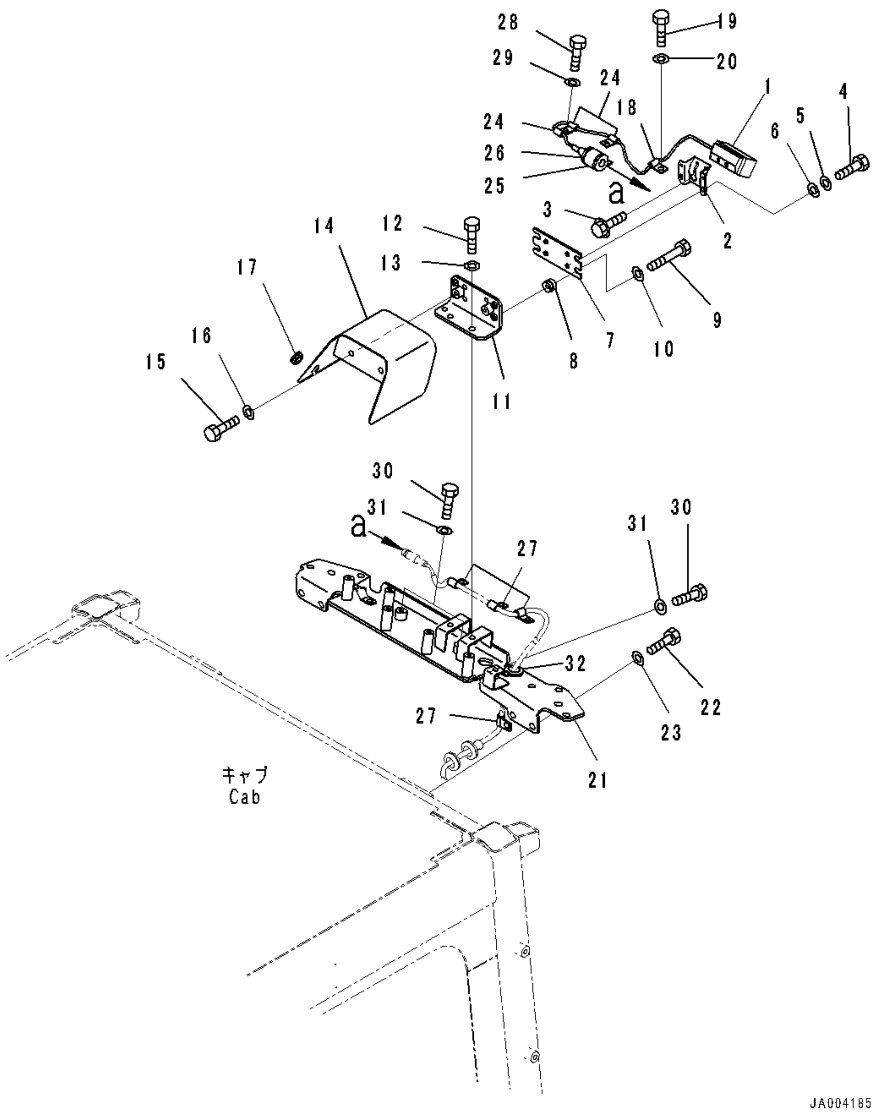

Index	Code	Part Number	Description	Qty	Serial Number
28		01010-81020	Bolt	7	80001-
29		01643-31032	Washer	7	80001-
30		01010-81220	Bolt	3	80001-
31		01643-31232	Washer	3	80001-
32		205-977-7310	Grommet	1	80001-

FIG. K0210-007017 ROPS Cab, EU Regulation Guard Level 2, With Rear View Monitoring System, With AM-FM Stereo Radio For North America, TH300 Type KOMTRAX, Radio

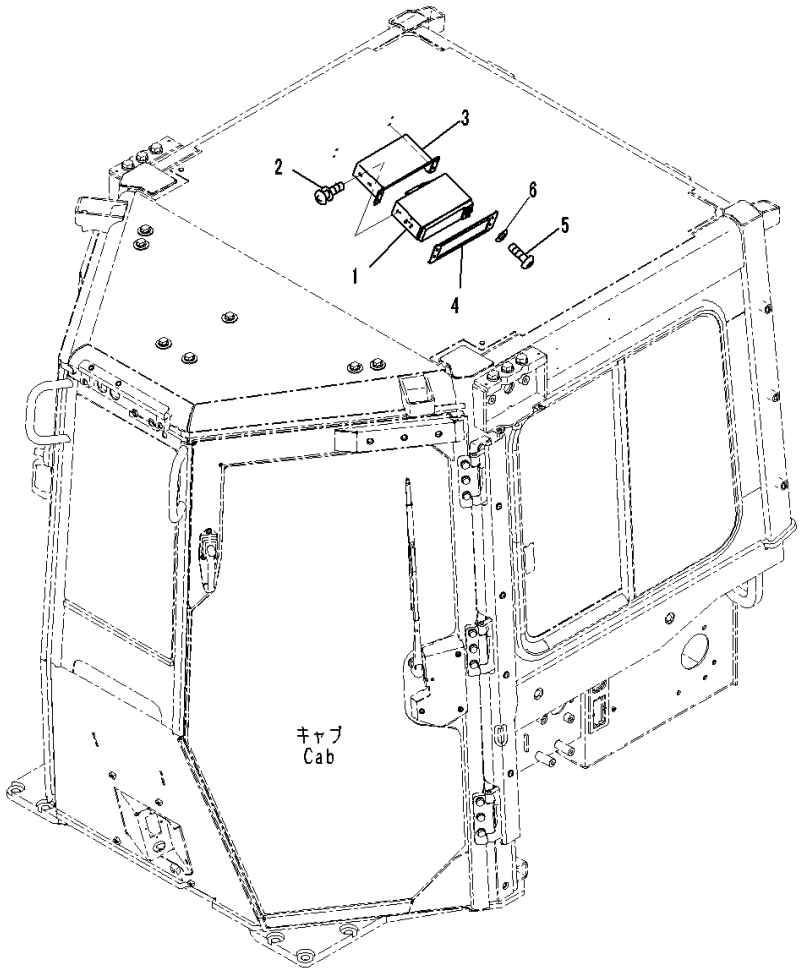

Index	Code	Part Number	Description	Qty	Serial Number
1		207-06-71734	Radio	1	80001-
2		01023-20510	Screw	4	80001-
3		14X-Y79-1590	Bracket	1	80001-
4		12Y-978-2280	Plate	1	80001-
5		01245-00620	Screw	4	80001-
6		01643-70623	Washer	4	80001-

FIG. K0310-001001 Floor Mat

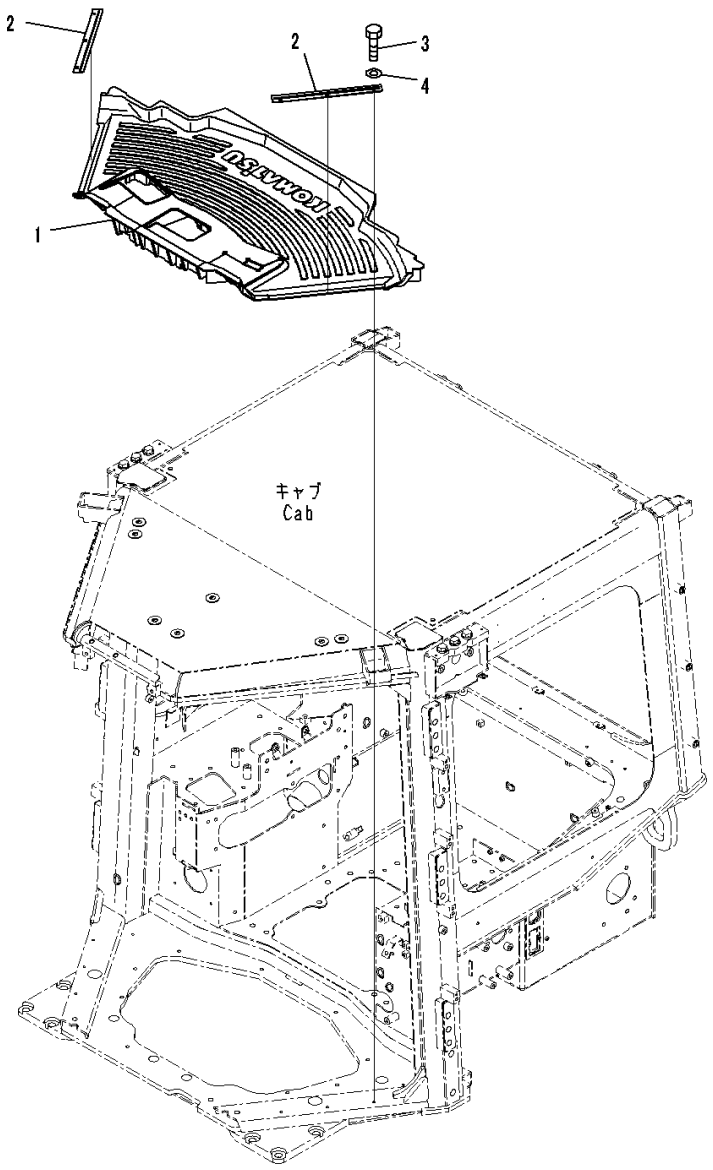

Index	Code	Part Number	Description	Qty	Serial Number
1		14X-54-56891	Mat	1	80001-
2		12Y-978-2890	Plate	2	80001-
3		01010-D0620	Bolt	6	80001-
4		01643-70623	Washer	6	80001-

FIG. K0410-001001 ROPS Canopy, Canopy

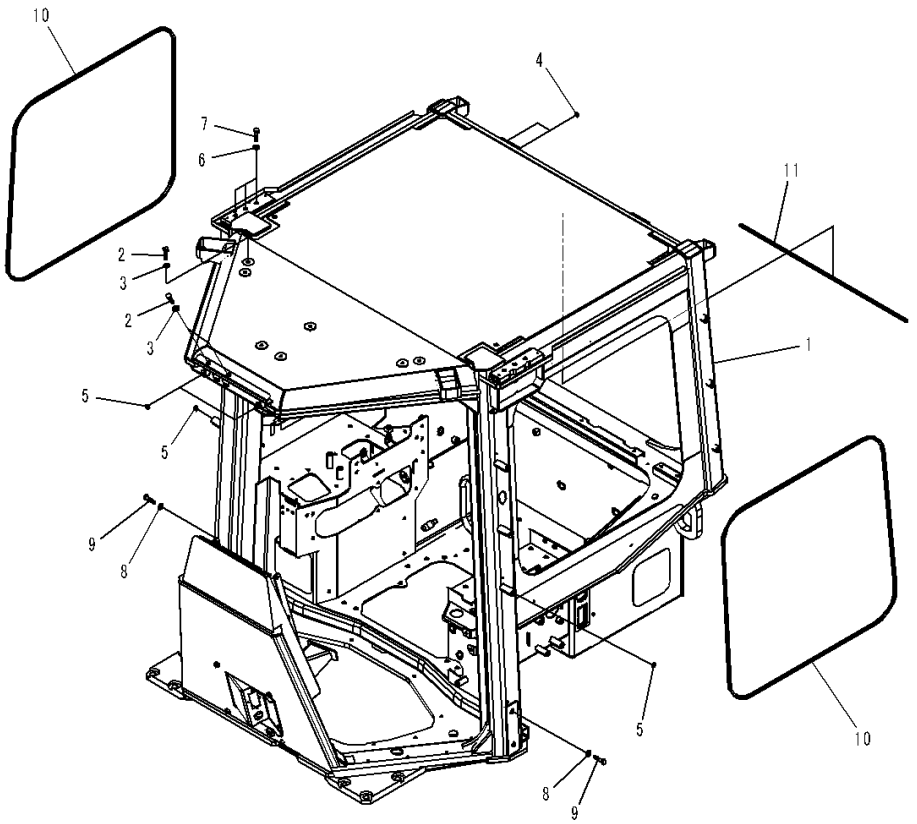

JA004552-V

Index	Code	Part Number	Description	Qty	Serial Number
1		14X-Y79-4111	Frame	1	80054-
2		01010-81220	Bolt	9	80054-
3		01643-31232	Washer	9	80054-
4		20Y-53-11390	Cap	4	80054-
5		20Y-53-11380	Cap	14	80054-
6		01643-31645	Washer	6	80054-
7		01010-81625	Bolt	6	80054-
8		01643-71645	Washer	4	80054-
9		01010-D1625	Bolt	4	80054-
10		14X-Y79-4351	Trim	2	80054-
11		14X-Y79-4340	Trim	1	80054-

FIG. K0410-001002 ROPS Canopy, Roof Cover

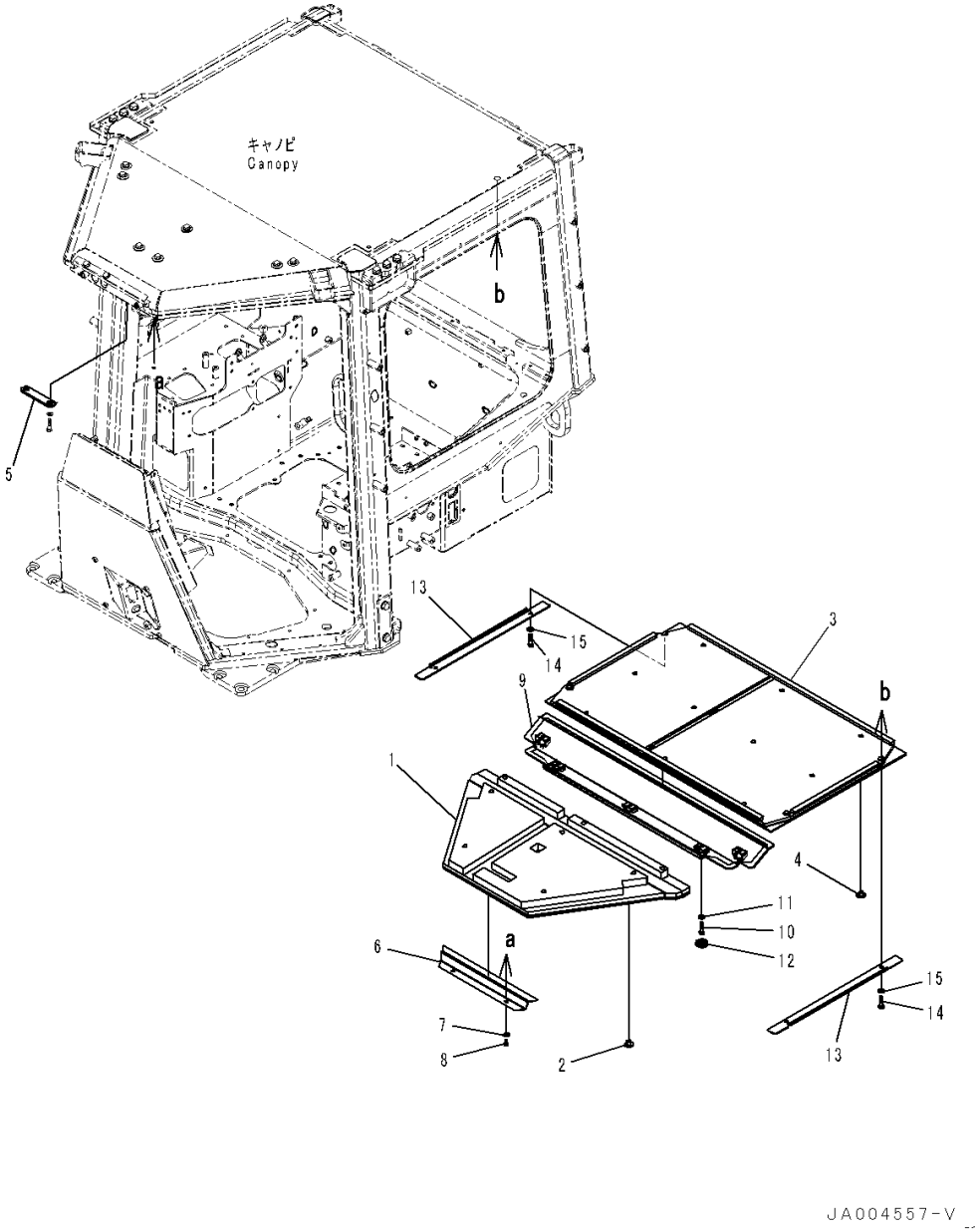

Index	Code	Part Number	Description	Qty	Serial Number
1		14X-Y79-4611	Roof Lining	1	80054-
2		14X-978-1660	Button	8	80054-
3		14X-Y79-4621	Roof Lining	1	80054-
4		14X-978-1660	Button	10	80054-
5		12Y-978-4670	Sheet	1	80054-
6		14X-54-58280	Plate	1	80054-
7		01643-70823	Washer	2	80054-
8		01245-00816	Screw	2	80054-
9		14X-54-58781	Cover	1	80054-
10		01010-D0825	Bolt	5	80054-
11		01643-70823	Washer	5	80054-
12		09415-02512	Cap	5	80054-
13		14X-54-58790	Cover	2	80054-
14		01010-D0825	Bolt	4	80054-
15		01643-70823	Washer	4	80054-

FIG. K0410-001003 ROPS Canopy, Rearview Mirror

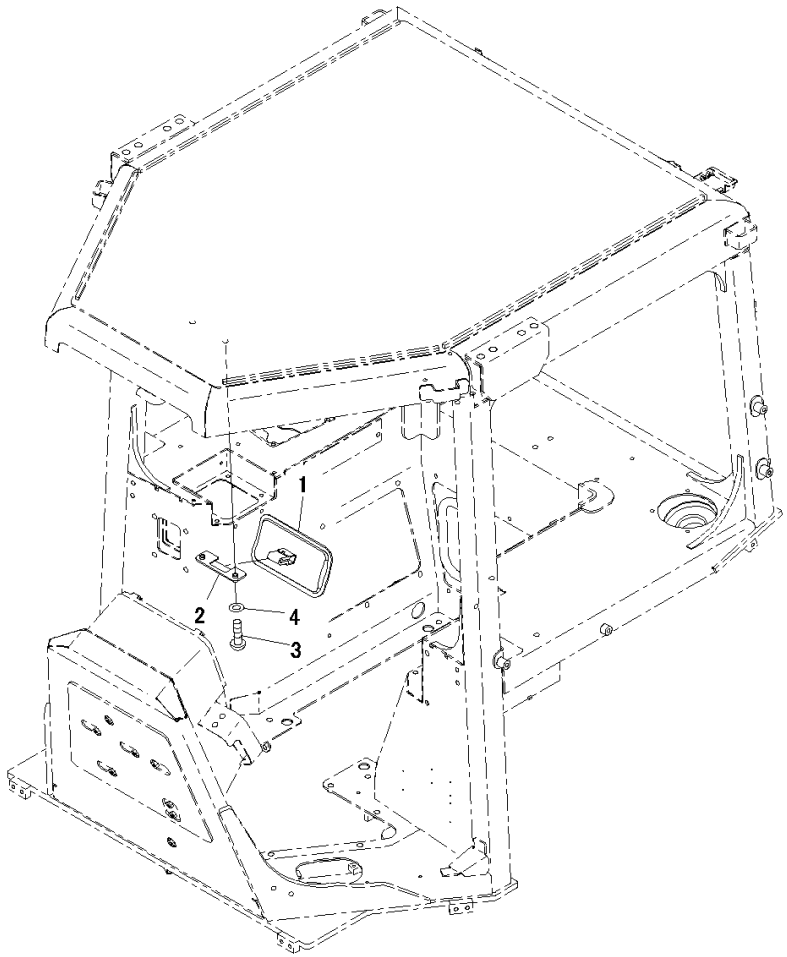

JA000298

Index	Code	Part Number	Description	Qty	Serial Number
1		195-Z11-2180	Mirror	1	80054-
2		12Y-978-2220	Bracket	1	80054-
3		01245-00825	Screw	2	80054-
4		01643-70823	Washer	2	80054-

FIG. K0410-001004 ROPS Canopy, Cover

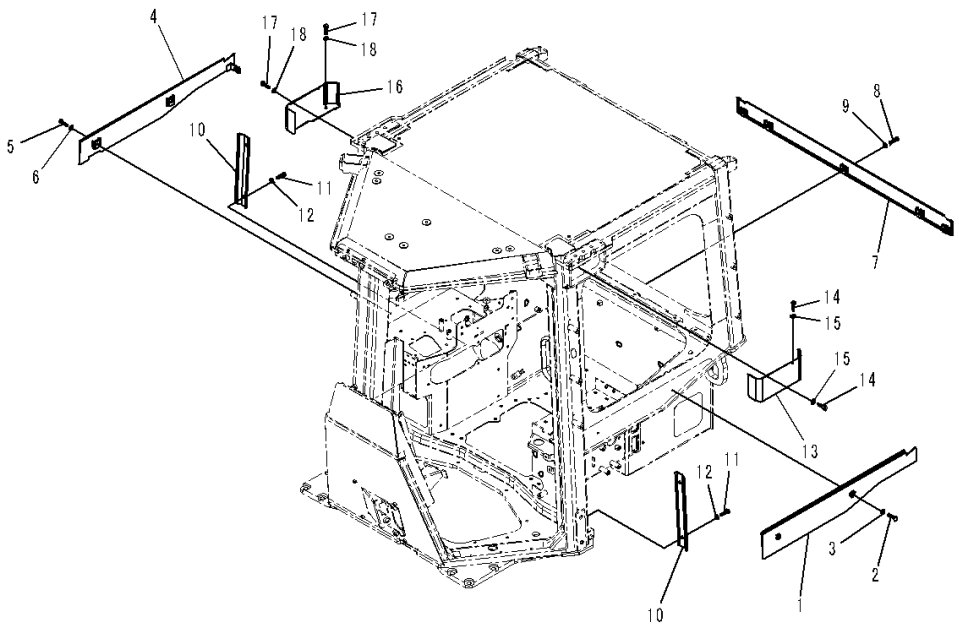

Index	Code	Part Number	Description	Qty	Serial Number
1		14X-Y79-1541	Plate	1	80054-
2		01010-81020	Bolt	2	80054-
3		01643-31032	Washer	2	80054-
4		14X-Y79-1551	Plate	1	80054-
5		01010-81020	Bolt	2	80054-
6		01643-31032	Washer	2	80054-
7		14X-Y79-1561	Plate	1	80054-
8		01010-81020	Bolt	5	80054-
9		01643-31032	Washer	5	80054-
10		14X-54-58290	Cover	2	80054-
11		01010-81020	Bolt	4	80054-
12		01643-31032	Washer	4	80054-
13		14X-54-58950	Cover,LHS	1	80054-
14		01010-80616	Bolt	4	80054-
15		01643-30623	Washer	4	80054-
16		14X-54-58960	Cover,RHS	1	80054-
17		01010-80616	Bolt	4	80054-
18		01643-30623	Washer	4	80054-

FIG. K0410-001005 ROPS Canopy, Console Box

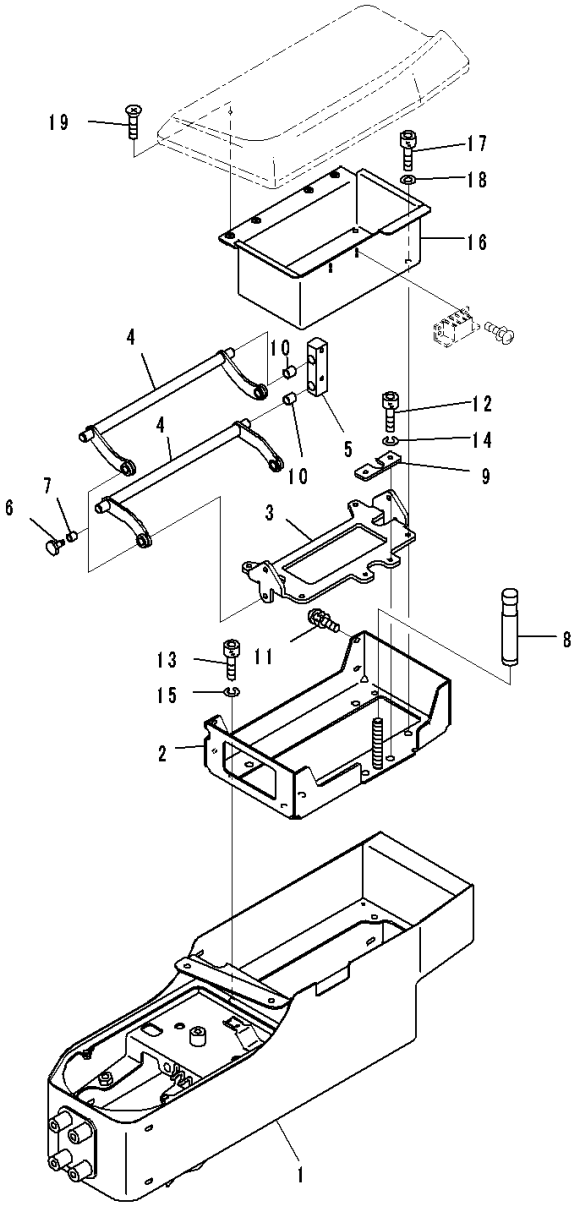

Index	Code	Part Number	Description	Qty	Serial Number
1		14X-43-51211	Box, Console	1	80054-
		14X-43-51501	Bracket Assembly	1	80054-
2	C1		• Bracket	1	80054-
3		19M-43-33720	• Bracket	1	80054-
4		19M-43-33730	• Arm	2	80054-
5		19M-43-33740	• Block	2	80054-
6		19M-43-33750	• Pin	4	80054-
7		19M-43-33760	• Bushing	4	80054-
8		19M-43-33770	• Knob	1	80054-
9		19M-43-33780	• Plate	1	80054-
10		19M-43-34330	• Bushing	4	80054-
11		01023-60516	• Screw	4	80054-
12		01252-80410	• Bolt, Hexagon Socket Head	2	80054-
13		01252-80510	• Bolt	4	80054-
14		01601-20410	• Washer	2	80054-
15		01601-20512	• Washer	4	80054-
16		14X-43-51691	Bracket	1	80054-
17		01252-80510	Bolt	4	80054-
18		01601-50513	Washer, Spring	4	80054-
19		01224-70408	Screw, Philips Head	4	80054-

FIG. K0410-001006 ROPS Canopy, Travel Control Lever (1/2)

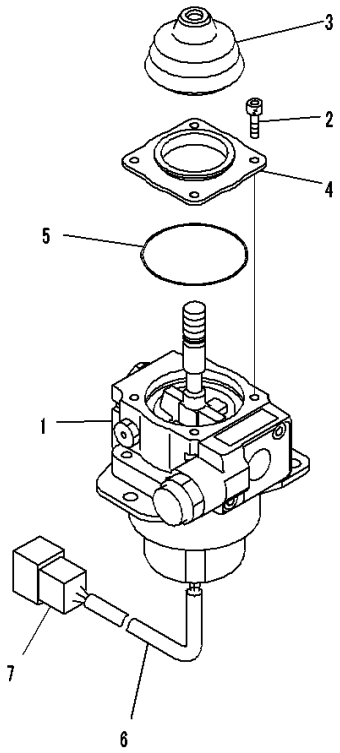

JY013289

Index	Code	Part Number	Description	Qty	Serial Number
1		702-16-02290	Lever Assembly	1	80054-
2		01252-60512	• Bolt	4	80054-
3		702-16-59330	• Boot	1	80054-
4		702-16-62730	• Cover	1	80054-
5		702-16-62740	• O-ring	1	80054-
6		702-16-61270	• Tube	1	80054-
7		08192-28812	• Connector	1	80054-

FIG. K0410-001007 ROPS Canopy, Travel Control Lever (2/2)

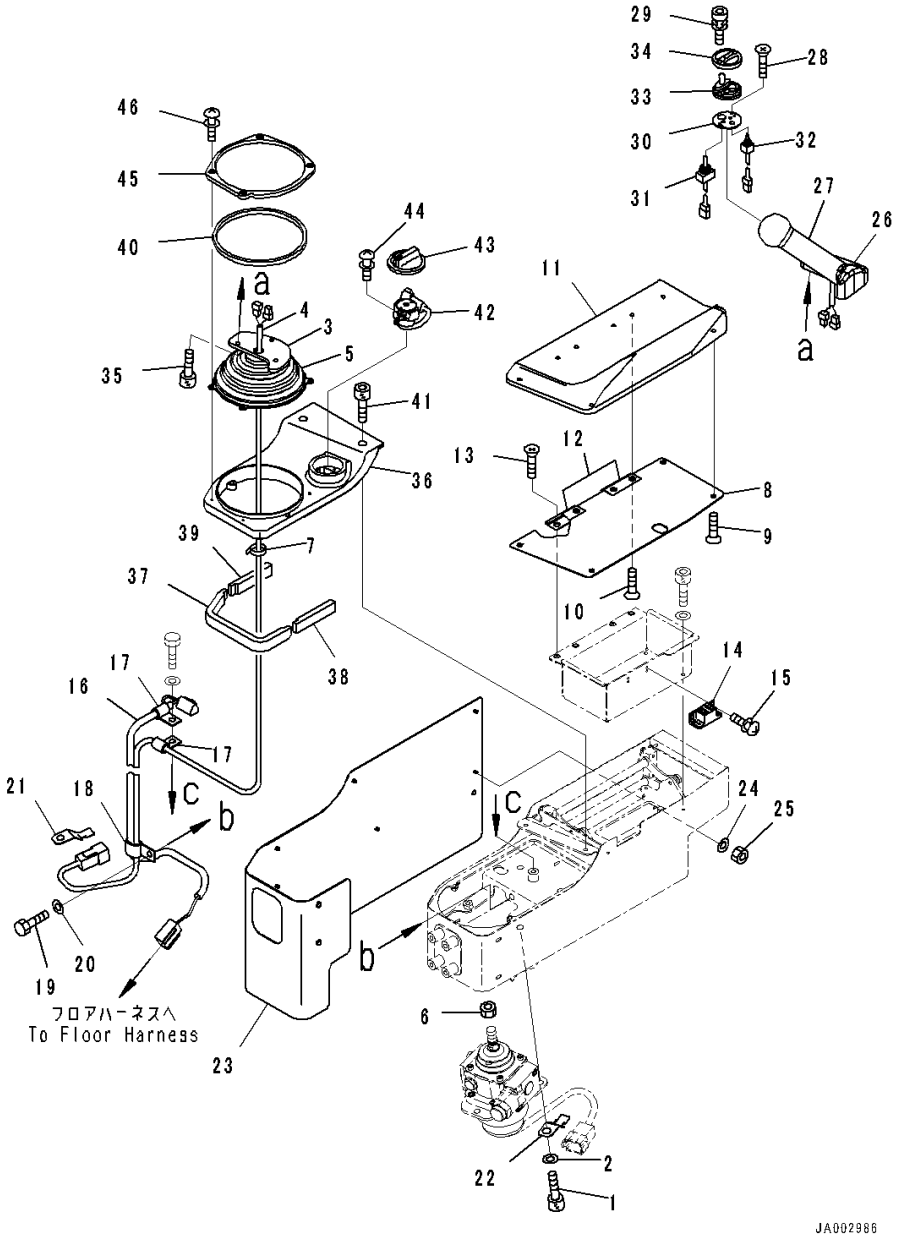

Index	Code	Part Number	Description	Qty	Serial Number
1		01252-70825	Bolt	3	80054-
2		01643-30823	Washer	3	80054-
		14X-06-31311	Wire Harness	1	80054-
3		154-43-73531	• Bracket	1	80054-
4		154-43-73560	• Wire Harness	1	80054-
5		14X-43-34331	• Boot	1	80054-
6		20T-43-71190	Nut	1	80054-
7		08034-20519	Band	2	80054-
8		14X-43-52110	Pad	1	80054-
9		01224-70408	• Screw, Philips Head	4	80054-
10		01224-70410	• Screw, Philips Head	4	80054-
11		19M-43-33630	• Pad	1	80054-
12		19M-43-33660	• Hinge	2	80054-
13		01224-70408	Screw, Philips Head	4	80054-
14		154-43-73651	Magnet	1	80054-
15		01023-10308	Screw	4	80054-
16		14X-06-51151	Wire Harness	1	80054-
17		04434-51008	Clip	2	80054-
18		04435-51008	Clip	1	80054-
19		01010-80816	Bolt	2	80054-
20		01643-30823	Washer	2	80054-
21		08193-20010	Clip	1	80054-
22		08193-31012	Clip	1	80054-
23		14X-43-51221	Pad	1	80054-
24		01640-20408	Washer, Flat	8	80054-
25		01580-20403	Nut	8	80054-
		19M-43-33110	Knob Assembly	1	80054-
26	C1		• Knob Assembly	1	80054-
27	C1		• Knob Assembly	1	80054-
28	C1		• Knob Assembly	2	80054-
29		19M-09-11510	• Bolt	2	80054-
		19M-43-33140	• Switch Assembly	1	80054-
30		19M-43-33170	•• Plate	1	80054-
31		19M-43-33460	•• Switch	1	80054-
32		19M-43-33470	•• Switch	1	80054-
33		19M-43-33150	• Rubber	1	80054-
34		19M-43-33160	• Cover	1	80054-
35		01252-80514	Bolt	3	80054-
36		14X-43-51960	Finisher Assembly	1	80054-

FIG. K0410-001007 ROPS Canopy, Travel Control Lever (2/2)

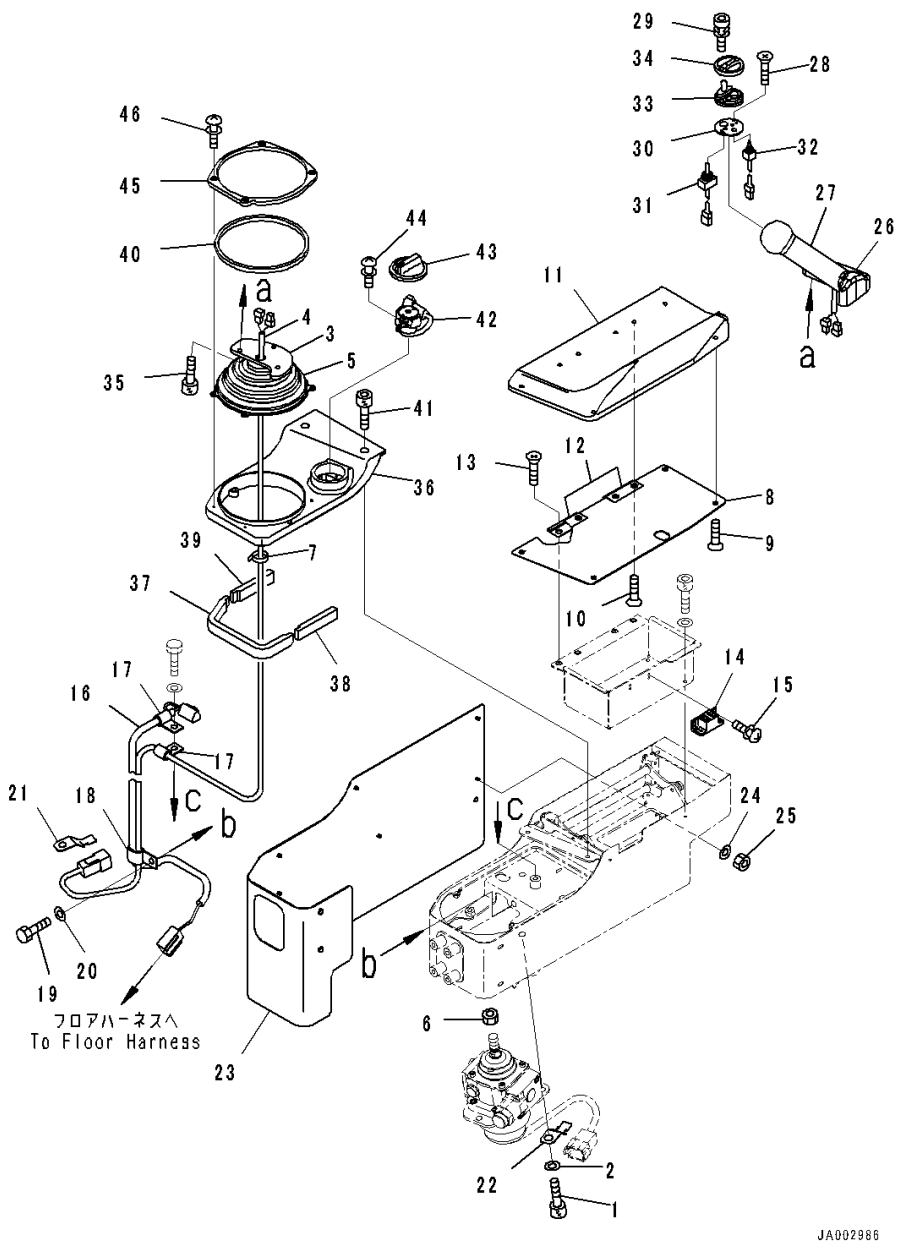

Index	Code	Part Number	Description	Qty	Serial Number
37		14X-54-38310	• Sheet,Bonded	1	80054-
38		14X-54-38320	• Sheet,Bonded	1	80054-
39		14X-54-38330	• Sheet,Bonded	1	80054-
40		14X-54-38350	• Sheet,Bonded	1	80054-
41		01252-70520	Bolt	4	80054-
42		14X-06-31501	Dial	1	80054-
43		7825-30-1441	• Knob	1	80054-
44		01023-60410	Screw	2	80054-
45		14X-43-51980	Cover	1	80054-
46		01023-70414	Screw	4	80054-

FIG. K0410-001008 ROPS Canopy, Console Slider

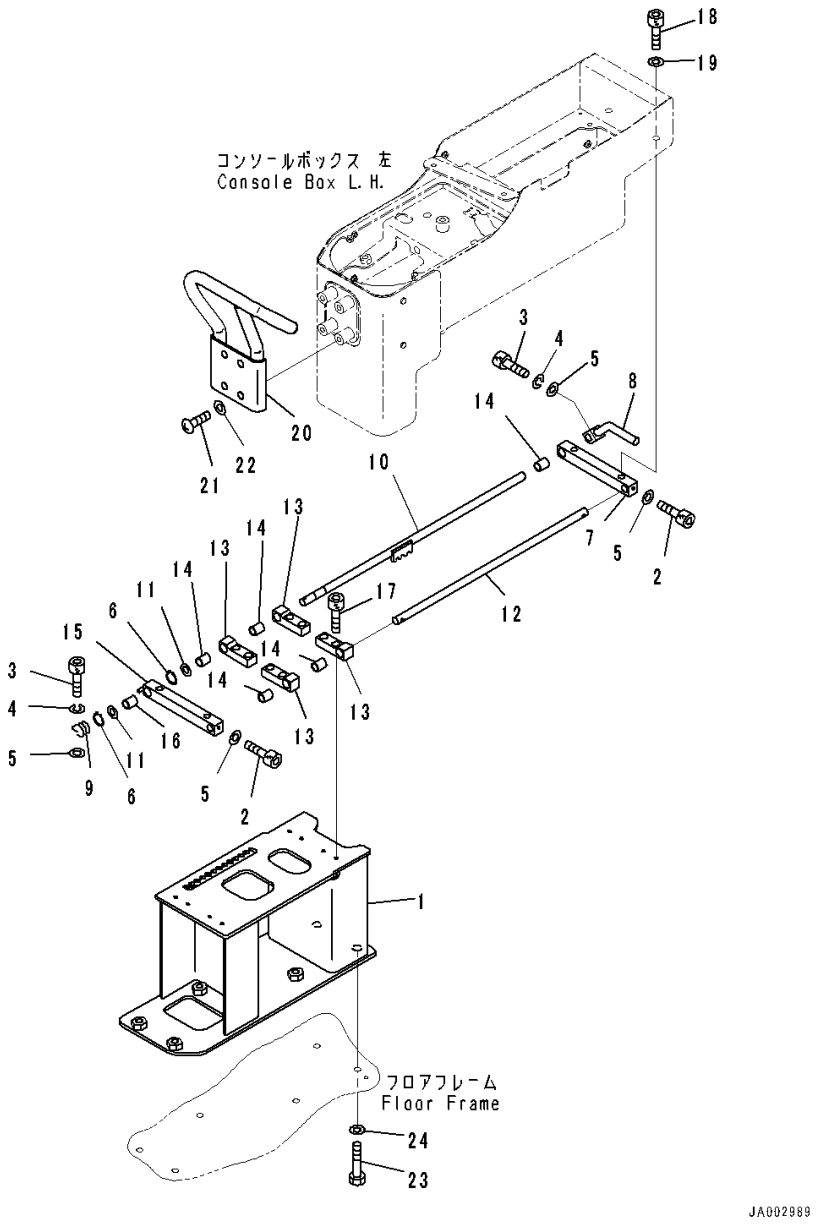

Index	Code	Part Number	Description	Qty	Serial Number
1		14X-43-51252	Bracket	1	80054-
		14X-43-51402	Slider Assembly	1	80054-
2		01252-80412	• Bolt	2	80054-
3		01252-80414	• Bolt	2	80054-
4		01601-20411	• Washer	2	80054-
5		01640-20408	• Washer, Flat	4	80054-
6		04064-01010	• Ring, Snap	2	80054-
7		14X-43-51661	• Guide	1	80054-
8		14X-43-51681	• Lever	1	80054-
9		154-43-73670	• Spring	1	80054-
10		154-43-73680	• Shaft	1	80054-
11		19M-09-34110	• Washer	2	80054-
12		19M-43-34120	• Shaft	1	80054-
13		19M-43-34141	• Guide	4	80054-
14		19M-43-34150	• Bushing	5	80054-
15		19M-43-34182	• Guide	1	80054-
16		19M-43-34190	• Bushing	1	80054-
17		01252-80516	Bolt	8	80054-
18		01252-70816	Bolt	4	80054-
19		01643-30823	Washer	4	80054-
20		14X-54-36631	Handle	1	80054-
21		01245-00820	Screw	4	80054-
22		01643-70823	Washer	4	80054-
23		01010-81030	Bolt	6	80054-
24		01643-31032	Washer	6	80054-

FIG. K0410-001009 ROPS Canopy, Parking Brake Lever

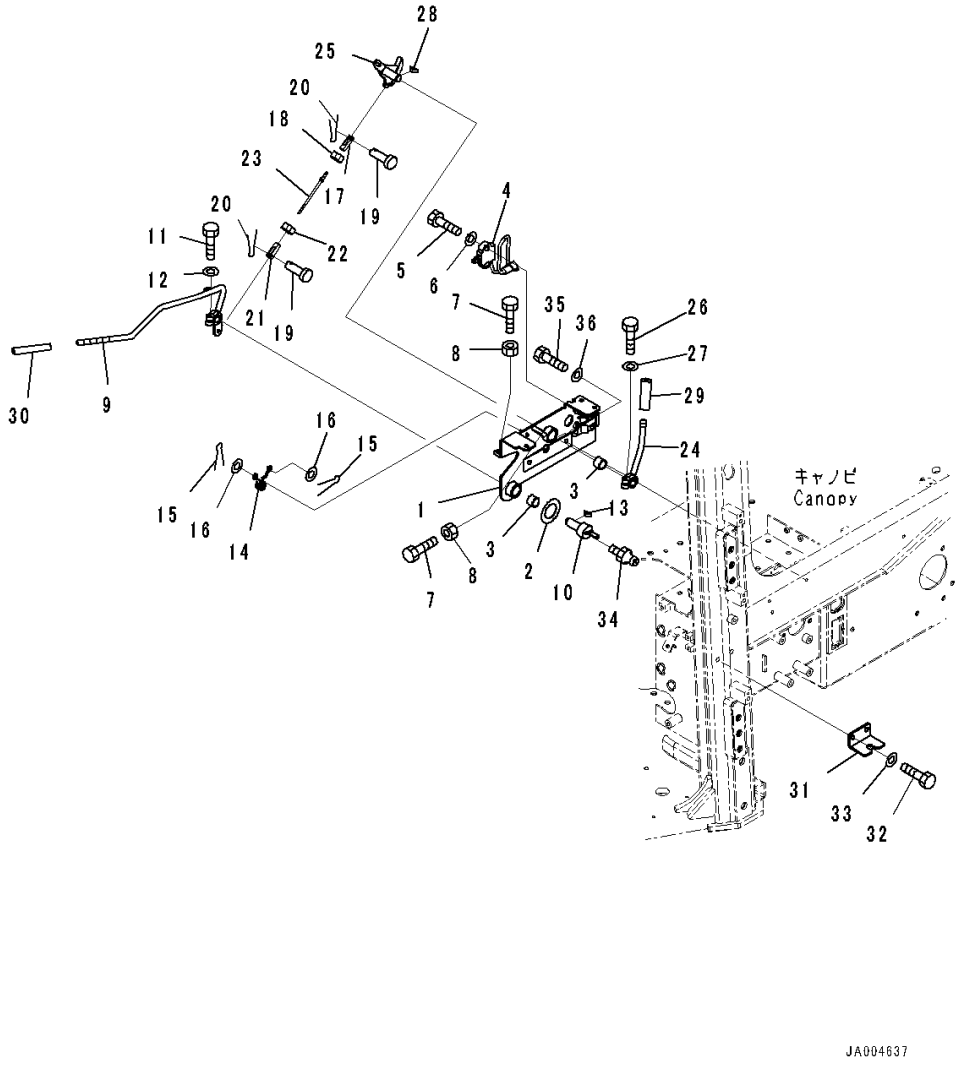

Index	Code	Part Number	Description	Qty	Serial Number
1		14X-43-51412	Bracket	1	80054-
2		14X-43-51470	• Sheet,Bonded	1	80054-
3		06124-02020	Bearing	2	80054-
4		11Y-06-22150	Switch	1	80054-
5		01010-81035	Bolt	2	80054-
6		01643-31032	Washer	2	80054-
7		01016-50830	Bolt	2	80054-
8		01580-10806	Nut	2	80054-
9		14X-43-51421	Lever	1	80054-
10		14X-43-51431	Lever	1	80054-
11		01010-80830	Bolt	1	80054-
12		01643-30823	Washer	1	80054-
13		04010-00516	Key	1	80054-
14		14X-43-51840	Spring	1	80054-
15		04050-11612	Pin, Cotter	2	80054-
16		01640-20610	Washer	2	80054-
17		04221-20634	Yoke	1	80054-
18		01508-40603	Nut, Left-handed	1	80054-
19		04205-10618	Pin	2	80054-
20		04050-11612	Pin, Cotter	2	80054-
21		04211-20634	Yoke	1	80054-
22		01580-10605	Nut	1	80054-
23		04248-30613	Rod	1	80054-
24		14X-43-51741	Lever	1	80054-
25		14X-43-51451	Lever	1	80054-
26		01010-80830	Bolt	1	80054-
27		01643-30823	Washer	1	80054-
28		04010-00516	Key	1	80054-
29		22M-43-21470	Knob	1	80054-
30		417-43-28270	Cap	1	80054-
31		14X-43-51461	Bracket	1	80054-
32		01010-81025	Bolt	2	80054-
33		01643-31032	Washer	2	80054-
34		07020-00000	Fitting, Grease	1	80054-
35		01010-81025	Bolt	2	80054-
36		01643-31032	Washer	2	80054-

FIG. K0410-001010 ROPS Canopy, Work Equipment Lock Lever

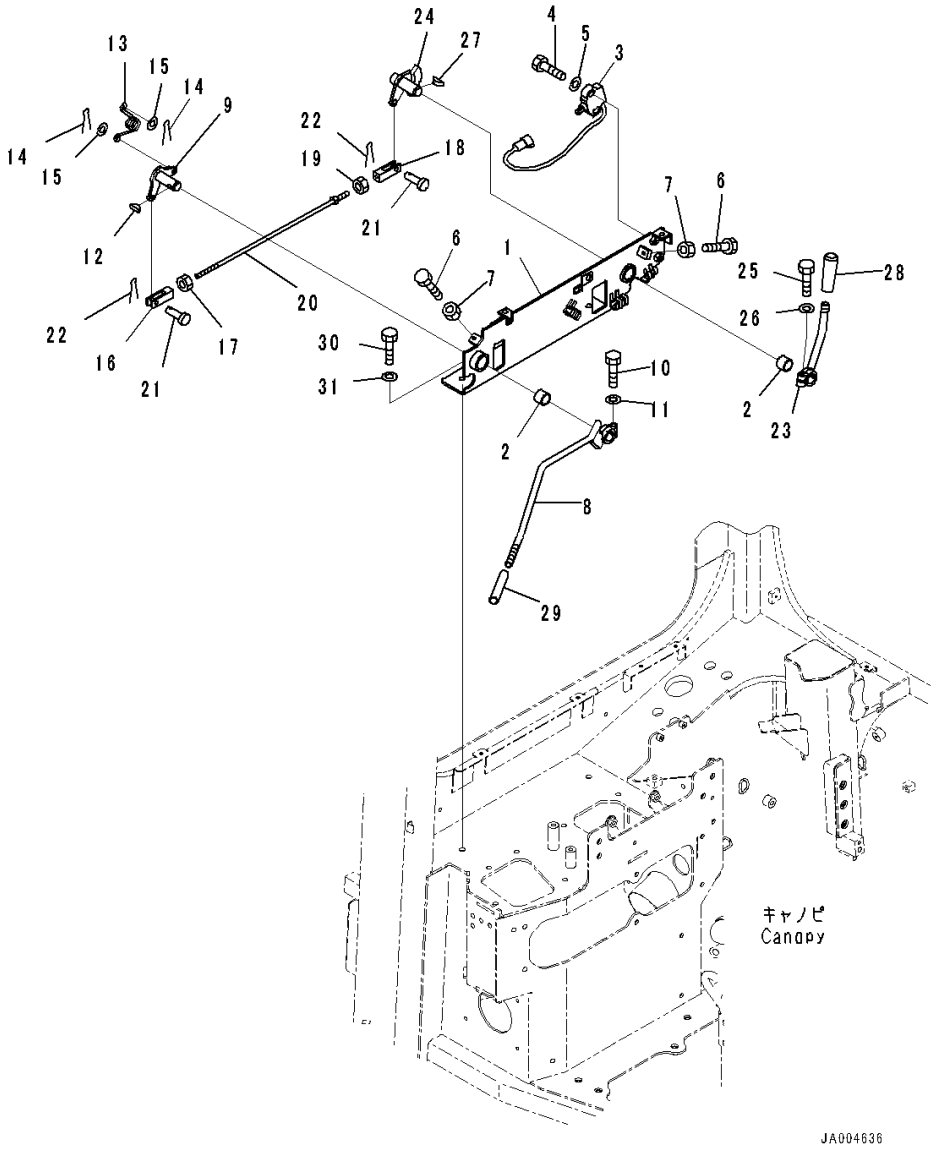

Index	Code	Part Number	Description	Qty	Serial Number
1		14X-43-51711	Bracket	1	80054-
2		06124-02020	Bearing	2	80054-
3		11Y-06-22150	Switch	1	80054-
4		01010-81035	Bolt	2	80054-
5		01643-31032	Washer	2	80054-
6		01016-50830	Bolt	2	80054-
7		01580-10806	Nut	2	80054-
8		14X-43-51721	Lever	1	80054-
9		14X-43-51731	Lever	1	80054-
10		01010-80830	Bolt	1	80054-
11		01643-30823	Washer	1	80054-
12		04010-00516	Key	1	80054-
13		14X-43-51840	Spring	1	80054-
14		04050-11612	Pin, Cotter	2	80054-
15		01640-20610	Washer	2	80054-
16		04221-20844	York, Left-handed Thread	1	80054-
17		01508-40805	Nut	1	80054-
18		04211-20844	Yoke	1	80054-
19		01580-10806	Nut	1	80054-
20		04248-30838	Rod	1	80054-
21		04205-10822	Pin	2	80054-
22		04050-12015	Pin, Cotter	2	80054-
23		14X-43-51791	Lever	1	80054-
24		14X-43-51751	Lever	1	80054-
25		01010-80830	Bolt	1	80054-
26		01643-30823	Washer	1	80054-
27		04010-00516	Key	1	80054-
28		22M-43-21470	Knob	1	80054-
29		417-43-28270	Cap	1	80054-
30		01010-81025	Bolt	2	80054-
31		01643-31032	Washer	2	80054-

FIG. K0410-001011 ROPS Canopy, Floor Frame Inside Cover

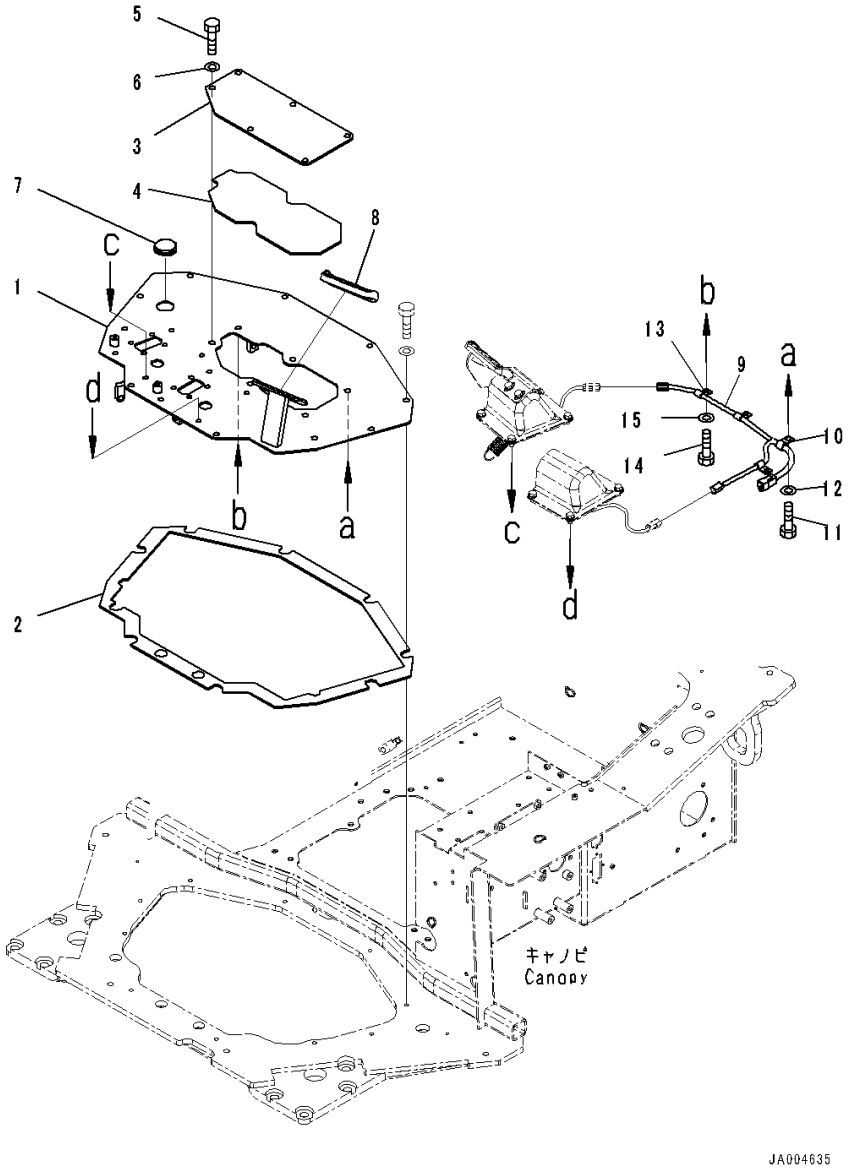

Index	Code	Part Number	Description	Qty	Serial Number
1		14X-43-51612	Floor	1	80054-
2		14X-43-51850	• Sheet	1	80054-
3		14X-43-51541	Cover	1	80054-
4		14X-43-51860	• Sheet,Bonded	1	80054-
5		01010-81225	Bolt	14	80054-
6		01643-31232	Washer	14	80054-
7		09415-03614	Cap	1	80054-
8		14X-43-13760	Cap	1	80054-
9		14X-06-51140	Wire Harness	1	80054-
10		04434-51410	Clip	1	80054-
11		01010-81020	Bolt	1	80054-
12		01643-31032	Washer	1	80054-
13		04434-51010	Clip	3	80054-
14		01010-81020	Bolt	3	80054-
15		01643-31032	Washer	3	80054-

FIG. K0410-001012 ROPS Canopy, Brake Pedal

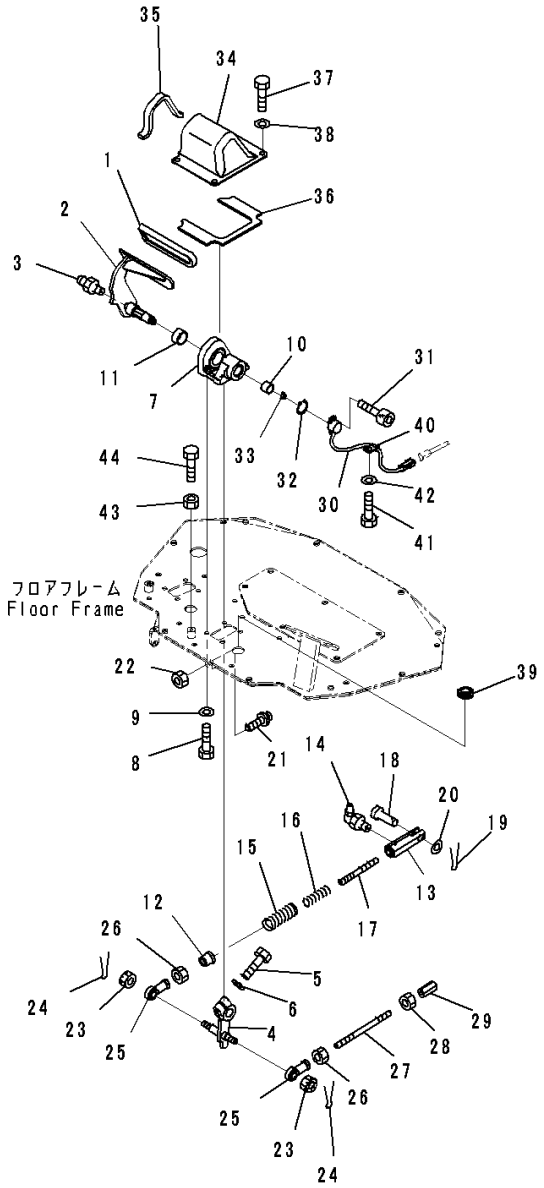

Index	Code	Part Number	Description	Qty	Serial Number
1		14X-43-12110	Pedal	1	80054-
2		14X-43-51511	Pedal	1	80054-
3		07020-00000	Fitting, Grease	1	80054-
4		14X-43-51551	Lever	1	80054-
5		01010-81245	Bolt	1	80054-
6		01643-31232	Washer	1	80054-
7		14X-43-51571	Bracket	1	80054-
8		01010-81020	Bolt	4	80054-
9		01643-31032	Washer	4	80054-
10		06124-02020	Bearing	1	80054-
11		06124-03020	Bearing	1	80054-
12		134-43-72490	Guide	1	80054-
13		14X-43-32210	Yoke	1	80054-
14		07020-00900	Fitting, Grease	1	80054-
15		14X-43-51590	Spring	1	80054-
16		14X-43-32220	Spring	1	80054-
17		14X-43-32230	Rod	1	80054-
18		04205-11442	Pin	1	80054-
19		04050-13022	Pin, Cotter	1	80054-
20		01641-21423	Washer, Flat	1	80054-
21		09311-41237	Bumper, Pedal	1	80054-
22		01580-11210	Nut	1	80054-
23		01593-31411	Nut	2	80054-
24		04050-13022	Pin, Cotter	2	80054-
25		04250-81474	End	2	80054-
26		01582-11411	Nut	2	80054-
27		14X-43-12410	Rod	1	80054-
28		01508-41408	Nut	1	80054-
29		17A-43-24160	Joint	1	80054-
30		17A-06-41981	Sensor	1	80054-
31		01252-70414	Bolt	2	80054-
32		04064-01610	Ring, Snap	1	80054-
33		142-43-13180	Spring	1	80054-
34		14X-43-51631	Cover	1	80054-
35		14X-43-51651	• Sheet,Bonded	1	80054-
36		14X-43-51870	• Sheet,Bonded	1	80054-
37		01010-81020	Bolt	4	80054-
38		01643-31032	Washer	4	80054-
39		08037-02512	Grommet	1	80054-

FIG. K0410-001012 ROPS Canopy, Brake Pedal

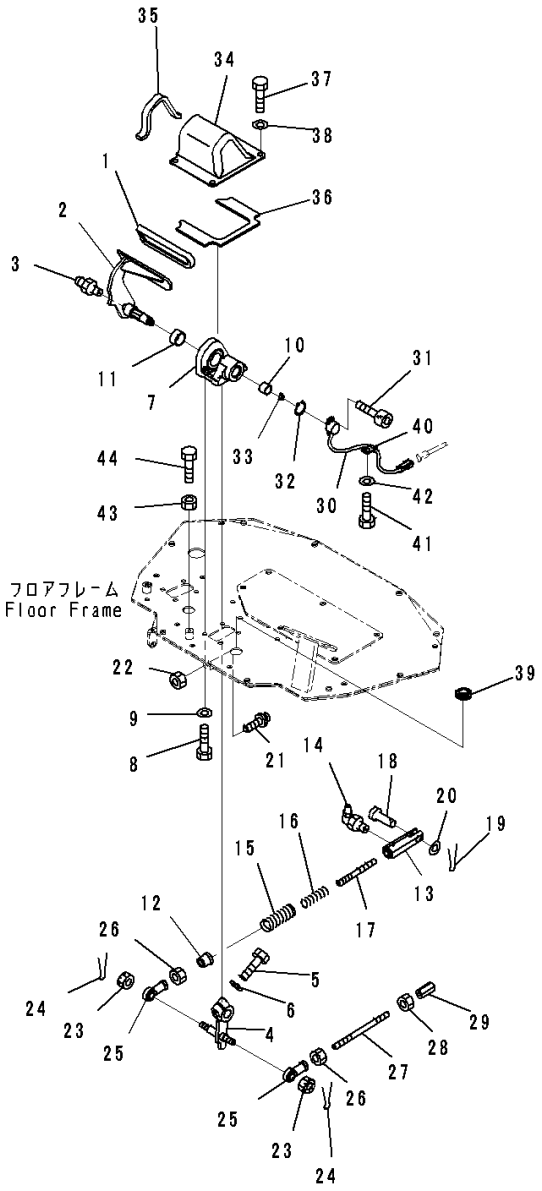

JA002999

Index	Code	Part Number	Description	Qty	Serial Number
40		04434-50810	Clip	1	80054-
41		01010-81020	Bolt	1	80054-
42		01643-31032	Washer	1	80054-
43		01580-11008	Nut	1	80054-
44		01016-51030	Bolt	1	80054-

FIG. K0410-001013 ROPS Canopy, Decelerator Pedal

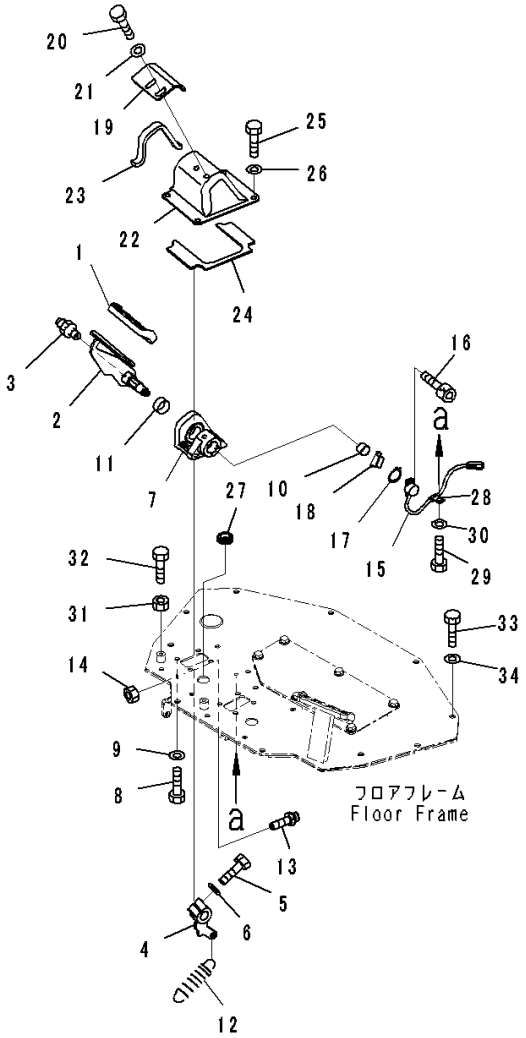

Index	Code	Part Number	Description	Qty	Serial Number
1		14X-43-13760	Cap	1	80054-
2		14X-43-51521	Pedal	1	80054-
3		07020-00000	Fitting, Grease	1	80054-
4		14X-43-51561	Lever	1	80054-
5		01010-81245	Bolt	1	80054-
6		01643-31232	Washer	1	80054-
7		14X-43-51571	Bracket	1	80054-
8		01010-81020	Bolt	4	80054-
9		01643-31032	Washer	4	80054-
10		06124-02020	Bearing	1	80054-
11		06124-03020	Bearing	1	80054-
12		14X-43-51581	Spring	1	80054-
13		09311-41237	Bumper, Pedal	1	80054-
14		01580-11210	Nut	1	80054-
15		17A-06-41981	Sensor	1	80054-
16		01252-70414	Bolt	2	80054-
17		04064-01610	Ring, Snap	1	80054-
18		142-43-13180	Spring	1	80054-
19		14X-43-51810	Bracket	1	80054-
20		01010-D1020	Bolt	2	80054-
21		01643-71032	Washer	2	80054-
22		14X-43-51821	Cover	1	80054-
23		14X-43-51651	• Sheet,Bonded	1	80054-
24		14X-43-51870	• Sheet,Bonded	1	80054-
25		01010-81020	Bolt	4	80054-
26		01643-31032	Washer	4	80054-
27		08037-02512	Grommet	1	80054-
28		04434-50810	Clip	1	80054-
29		01010-81020	Bolt	1	80054-
30		01643-31032	Washer	1	80054-
31		01580-11008	Nut	1	80054-
32		01016-51030	Bolt	1	80054-
33		01010-81225	Bolt	10	80054-
34		01643-31232	Washer	10	80054-

FIG. K0410-001014 ROPS Canopy, Controller and Relay

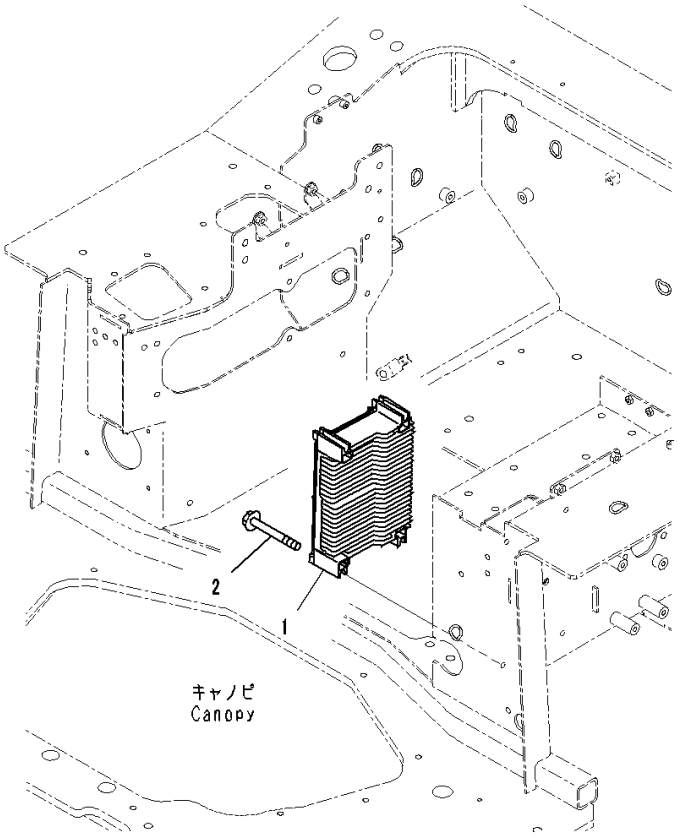

JA004634

Index	Code	Part Number	Description	Qty	Serial Number
1		7830-74-4000	Controller	1	80054-
2		01435-00885	Bolt.....	4	80054-

FIG. K0410-001015 ROPS Canopy, Floor, Harness (1/2)

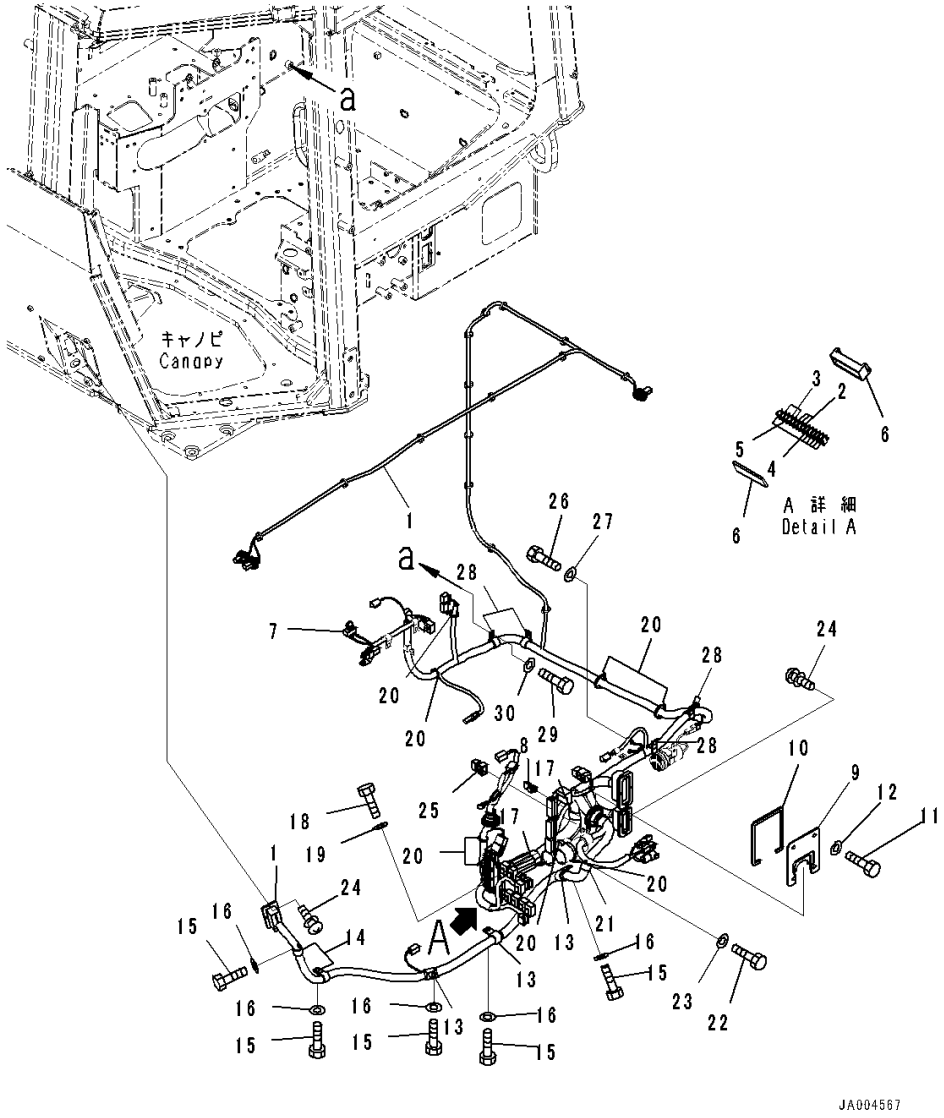

Index	Code	Part Number	Description	Qty	Serial Number
1		14X-06-52311	Wire Harness	1	80054-
2		08041-00500	• Fuse, 5Amp.	4	80054-
3		08041-01500	• Fuse, 15Amp.	4	80054-
4		08041-02000	• Fuse, 20Amp.	8	80054-
5		08041-03000	• Fuse, 30Amp.	2	80054-
6		08044-01500	• Box, Fuse	1	80054-
7		134-06-72200	• Switch Assembly	1	80054-
8		21J-06-13661	• Diode	1	80054-
9		14X-06-51351	Bracket	1	80054-
10		14X-06-51431	• Sheet	1	80054-
11		01010-81025	Bolt	4	80054-
12		01643-31032	Washer	4	80054-
13		04434-52711	Clip	3	80054-
14		04434-52310	Clip	2	80054-
15		01010-81020	Bolt	5	80054-
16		01643-31032	Washer	5	80054-
17		208-06-19170	Clip	2	80054-
18		01010-81020	Bolt	2	80054-
19		01643-31032	Washer	2	80054-
20		08034-20519	Band	8	80054-
21		04434-52711	Clip	1	80054-
22		01010-81020	Bolt	1	80054-
23		01643-31032	Washer	1	80054-
24		01023-10420	Screw	12	80054-
25		8233-06-3350	Diode	1	80054-
26		01010-81020	Bolt	2	80054-
27		01643-31032	Washer	2	80054-
28		04434-52310	Clip	5	80054-
29		01010-81020	Bolt	5	80054-
30		01643-31032	Washer	5	80054-

FIG. K0410-001016 ROPS Canopy, Monitor (1/2)

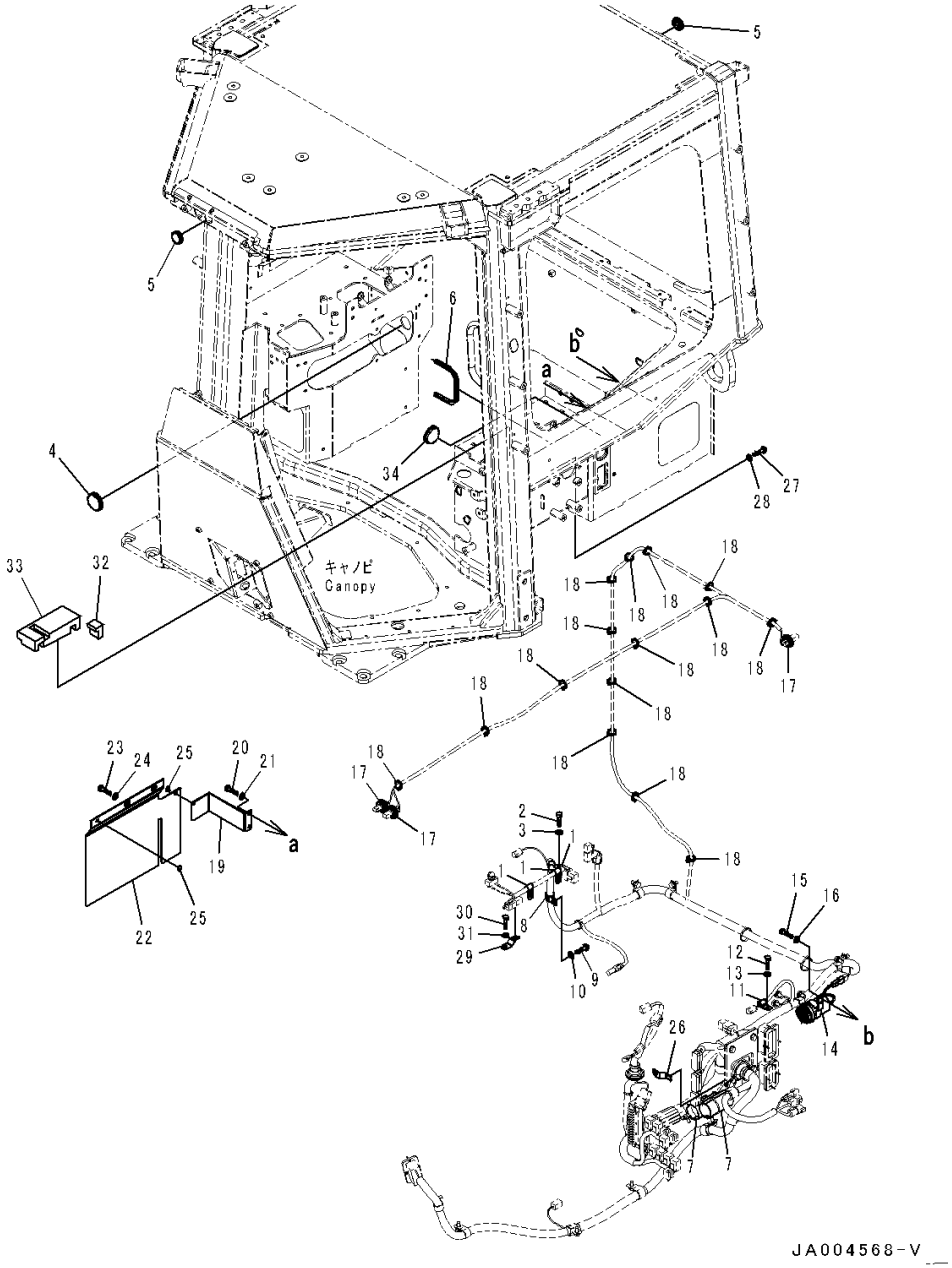

Index	Code	Part Number	Description	Qty	Serial Number
1		04434-51310	Clip	3	80054-
2		01010-81020	Bolt	3	80054-
3		01643-31032	Washer	3	80054-
4		09415-03614	Cap	1	80054-
5		09415-02512	Cap	4	80054-
6		14X-06-52171	Trim	1	80054-
7		14X-06-52160	Sheet	2	80054-
8		04434-51910	Clip	1	80054-
9		01010-81020	Bolt	1	80054-
10		01643-31032	Washer	1	80054-
11		04434-51010	Clip	1	80054-
12		01010-81020	Bolt	1	80054-
13		01643-31032	Washer	1	80054-
14		17A-06-43210	Buzzer	1	80054-
15		01010-80616	Bolt	2	80054-
16		01643-30623	Washer	2	80054-
17		14X-06-52461	Cap	3	80054-
18		08034-20519	Band	15	80054-
19		14X-54-58890	Plate	1	80054-
20		01010-80816	Bolt	2	80054-
21		01643-30823	Washer	2	80054-
22		14X-54-58880	Cover	1	80054-
23		01010-D0825	Bolt	2	80054-
24		01643-70823	Washer	2	80054-
25		421-09-21210	Button	2	80054-
26		08053-00910	Clip	1	80054-
27		01010-81020	Bolt	1	80054-
28		01643-31032	Washer	1	80054-
29		08193-20010	Clip	1	80054-
30		01010-81020	Bolt	1	80054-
31		01643-31032	Washer	1	80054-
32		14X-54-58760	Sheet	1	80054-
33		14X-54-58770	Sheet	1	80054-
34		09415-03614	Cap	1	80054-

FIG. K0410-001017 ROPS Canopy, Floor, Harness (2/2)

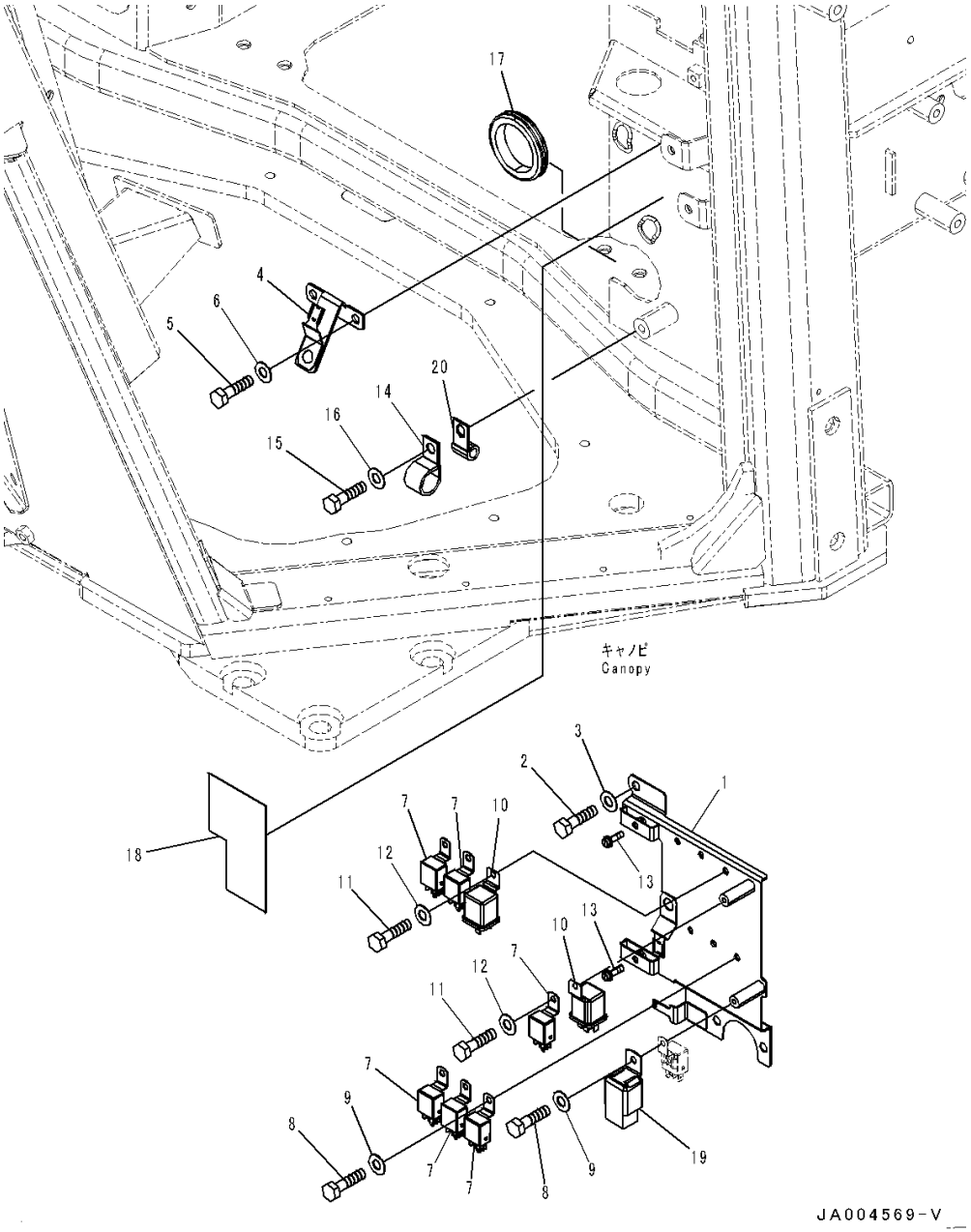

Index	Code	Part Number	Description	Qty	Serial Number
1		14X-06-51361	Bracket	1	80054-
2		01010-80820	Bolt	3	80054-
3		01643-30823	Washer	3	80054-
4		14X-06-51441	Bracket	1	80054-
5		01010-80816	Bolt	2	80054-
6		01643-30823	Washer	2	80054-
7		7861-74-5100	Relay	6	80054-
8		01010-80616	Bolt	6	80054-
9		01643-30623	Washer	6	80054-
10		569-06-61960	Relay	2	80054-
11		01010-80616	Bolt	2	80054-
12		01643-30623	Washer	2	80054-
13		01023-10620	Screw	2	80054-
14		04434-52310	Clip	1	80054-
15		01010-81020	Bolt	1	80054-
16		01643-31032	Washer	1	80054-
17		14X-06-51750	Grommet	1	80054-
18		14X-06-52290	Sheet,Bonded	1	80054-
19		198-911-9240	Relay Assembly	1	80054-
20		7861-74-5100	Relay	1	80054-

FIG. K0410-001018 ROPS Canopy, Dashboard Cover

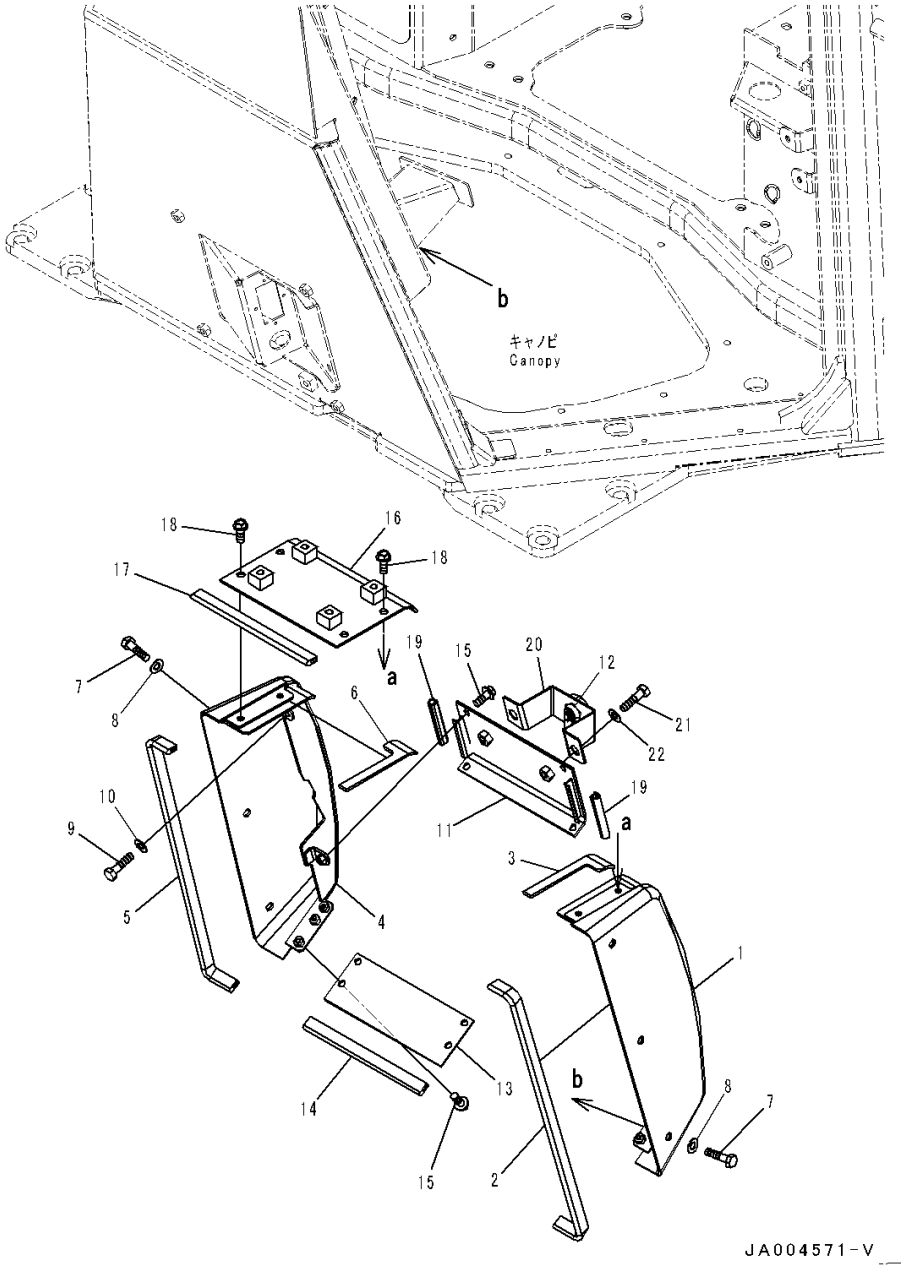

Index	Code	Part Number	Description	Qty	Serial Number
1		14X-54-58111	Cover,LHS	1	80054-
2		14X-54-58170	• Seal	1	80054-
3		14X-54-58930	• Sheet	1	80054-
4		14X-54-58121	Cover,RHS	1	80054-
5		14X-54-58170	• Seal	1	80054-
6		14X-54-58940	• Sheet	1	80054-
7		01010-D1025	Bolt	6	80054-
8		01643-71032	Washer	6	80054-
9		01010-80816	Bolt	2	80054-
10		01643-30823	Washer	2	80054-
11		14X-54-58860	Cover	1	80054-
12		205-60-71220	Lock Assembly	1	80054-
13		14X-54-58150	Cover	1	80054-
14		17A-54-48560	• Seal	1	80054-
15		01435-40820	Bolt	8	80054-
16		14X-54-58130	Cover	1	80054-
17		17A-54-48560	• Seal	1	80054-
18		01435-40820	Bolt	4	80054-
19		17A-54-46771	Sheet	2	80054-
20		14X-54-58870	Bracket	1	80054-
21		01010-D1225	Bolt	2	80054-
22		01643-71232	Washer	2	80054-

FIG. K0410-001019 ROPS Canopy, Monitor (2/2)

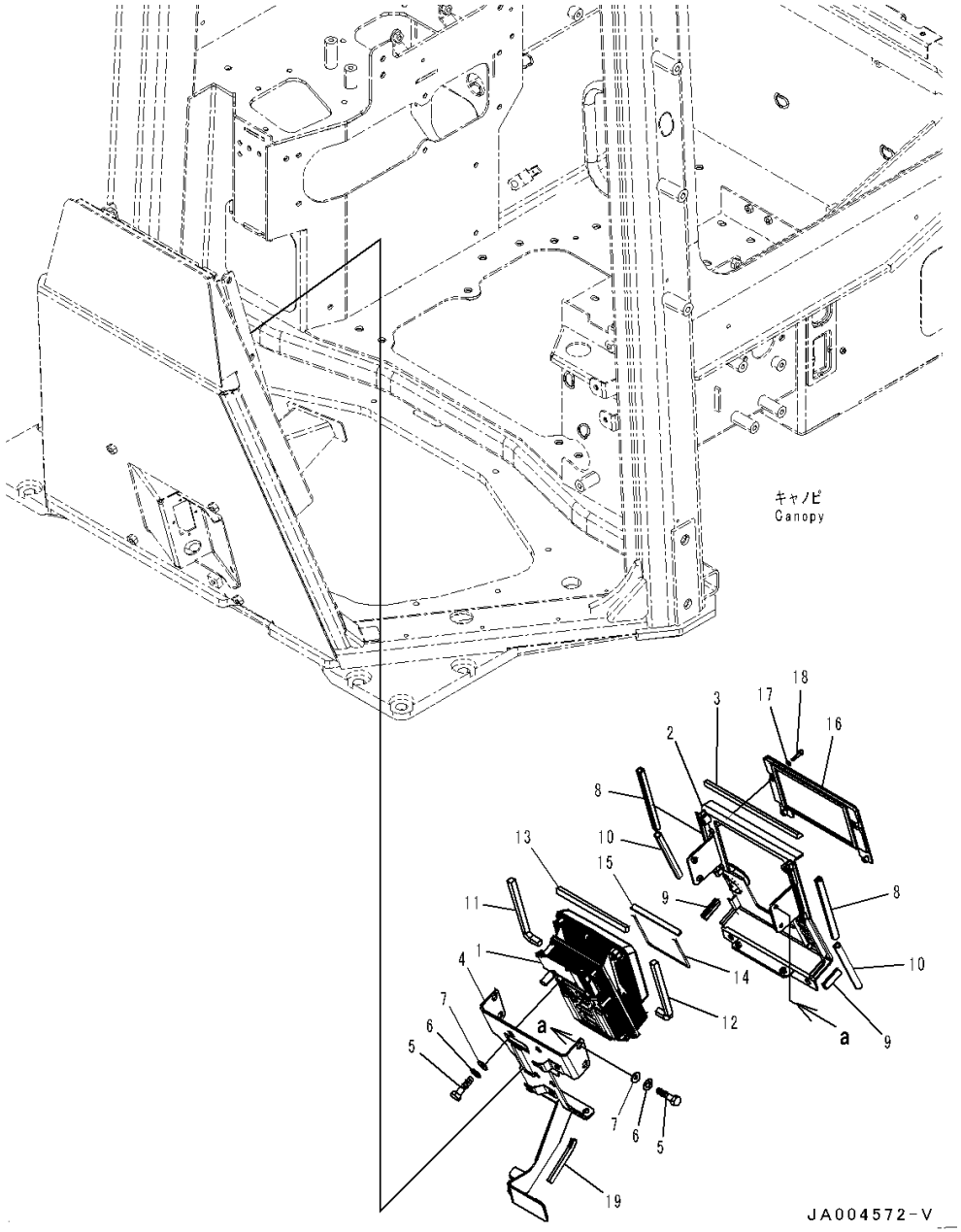

Index	Code	Part Number	Description	Qty	Serial Number
1		7831-69-5021	Monitor	1	80054-
2		14X-54-58140	Cover	1	80054-
3		17A-54-48580	• Seal	1	80054-
4		14X-54-58161	Bracket	1	80054-
5		01010-80616	Bolt	10	80054-
6		01643-30623	Washer	10	80054-
7		17A-Z11-2813	Plate	10	80054-
8		14X-54-58190	Seal	2	80054-
9		17A-54-46761	Seal	2	80054-
10		14X-54-58210	Seal	2	80054-
11		14X-54-58241	Sheet	1	80054-
12		14X-54-58340	Sheet	1	80054-
13		17A-54-46820	Seal	1	80054-
14		14X-54-58250	Sheet	1	80054-
15		14X-54-58260	Sheet	1	80054-
16		14X-54-58231	Cover	1	80054-
17		01641-50508	Washer, Flat	4	80054-
18		01252-80520	Bolt, Hexagon Socket Head	4	80054-
19		423-944-4720	Finisher	1	80054-

FIG. K0410-001020 ROPS Canopy, Floor, Switch

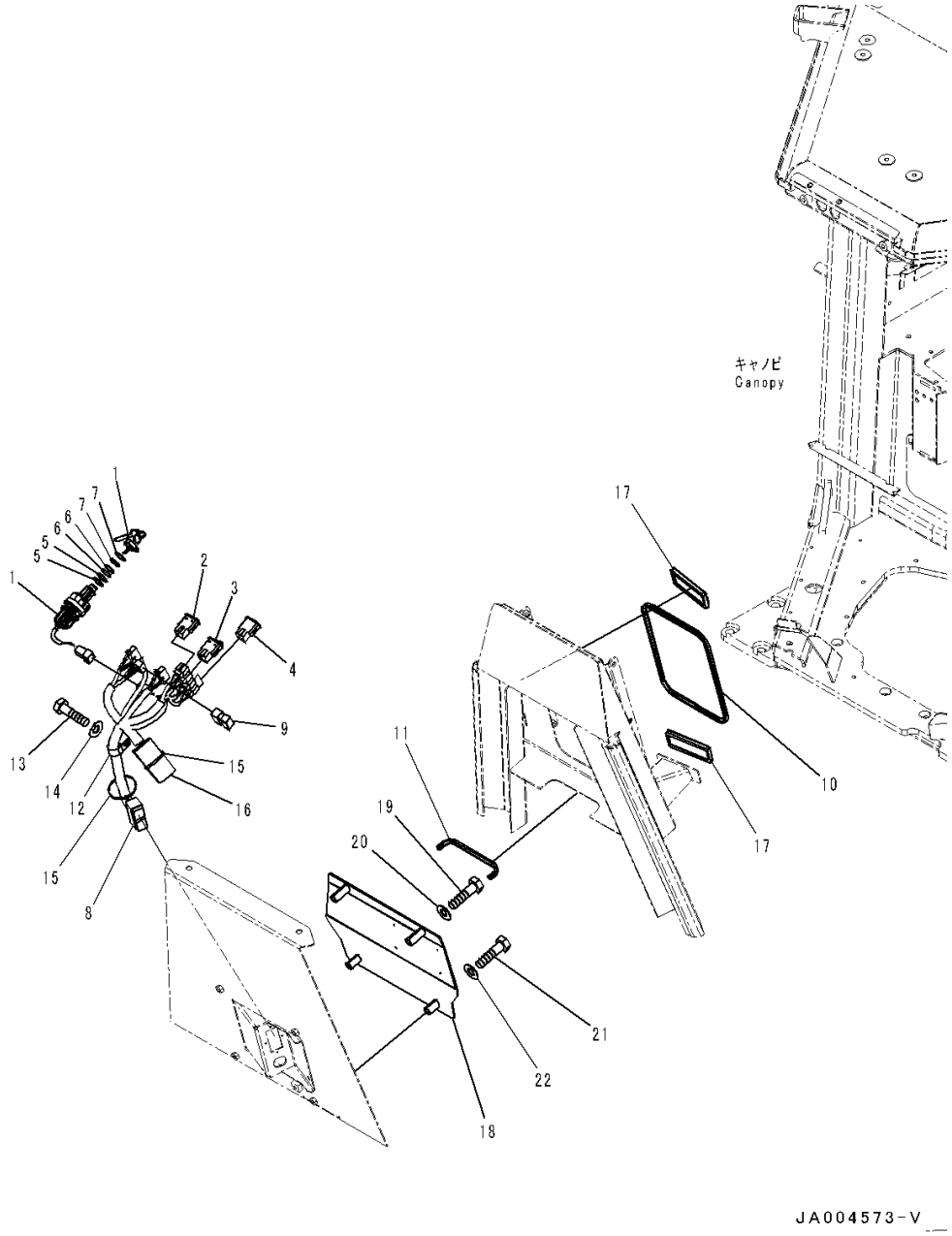

Index	Code	Part Number	Description	Qty	Serial Number
1		14X-06-52191	Switch, Key	1	80054-
2		17A-06-42250	Switch, Light, Front	1	80054-
3		17A-06-42260	Switch, Light, Rear	1	80054-
4		20Y-06-42190	Cover	2	80054-
5		23S-15-45860	Shim, T=0.5mm	2	80054-
6		20Y-43-41750	Washer	2	80054-
7		20Y-43-41790	Washer	2	80054-
8		14X-06-52340	Wire Harness	1	80054-
9		8233-06-3350	Diode	1	80054-
10		14X-Y79-4310	Trim	1	80054-
11		14X-Y79-4320	Trim	1	80054-
12		04434-52310	Clip	1	80054-
13		01010-81020	Bolt	1	80054-
14		01643-31032	Washer	1	80054-
15		08034-20519	Band	2	80054-
16		14X-06-52160	Sheet,Bonded	1	80054-
17		203-43-56450	Cap	2	80054-
18		14X-54-58221	Plate	1	80054-
19		01010-D1070	Bolt	2	80054-
20		01643-71032	Washer	2	80054-
21		01010-D1055	Bolt	2	80054-
22		01643-71032	Washer	2	80054-

FIG. K0410-001021 ROPS Canopy, Protector

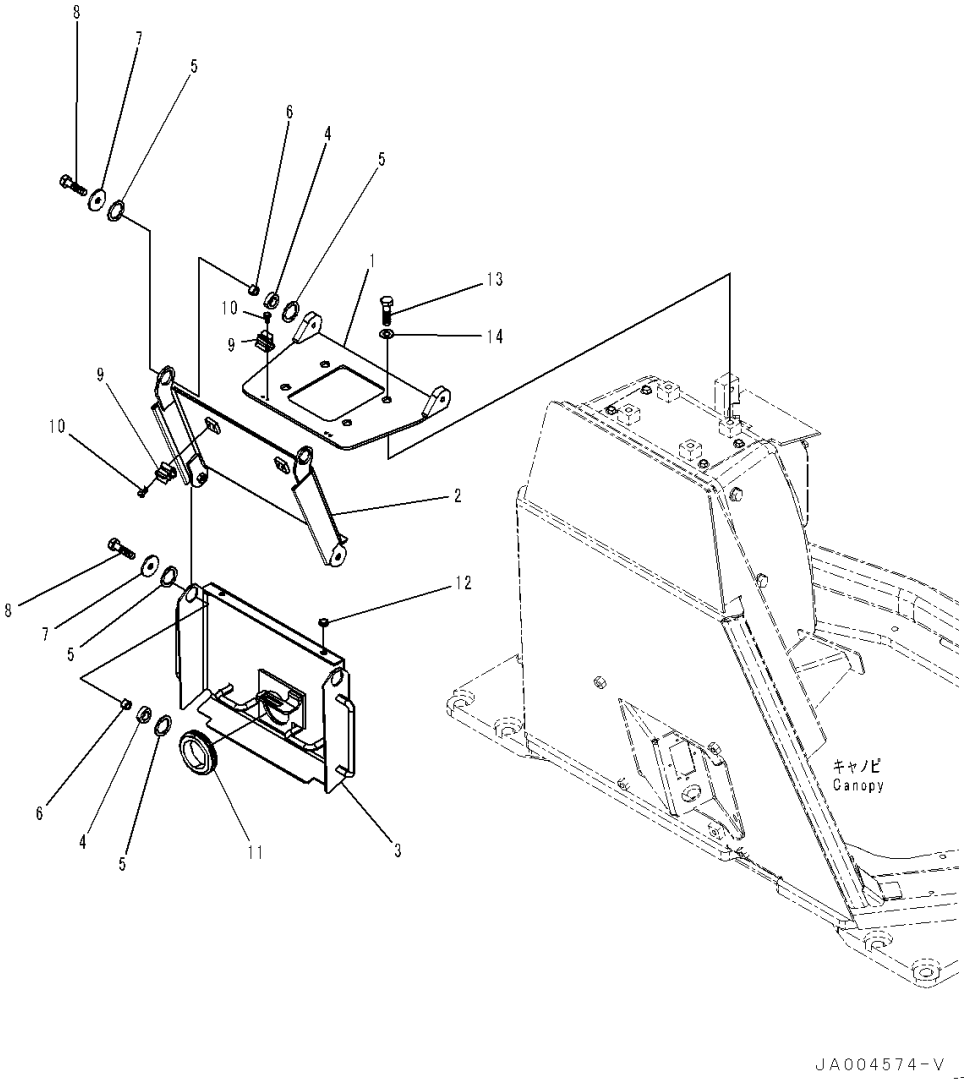

Index	Code	Part Number	Description	Qty	Serial Number
1		14X-54-58410	Cover	1	80054-
2		14X-54-58910	Cover	1	80054-
3		14X-54-58921	Cover	1	80054-
4		134-54-69130	Collar	4	80054-
5		134-54-69140	Collar	10	80054-
6		134-54-69190	Collar	4	80054-
7		154-54-22830	Washer	4	80054-
8		01010-D0825	Bolt	4	80054-
9		20R-54-11460	Spring	4	80054-
10		01220-70406	Screw, Philips Head	8	80054-
11		08037-05016	Grommet	1	80054-
12		09415-00506	Cap	2	80054-
13		01010-D1225	Bolt	4	80054-
14		01643-71232	Washer	4	80054-

FIG. K0410-001022 ROPS Canopy, Floor Cover

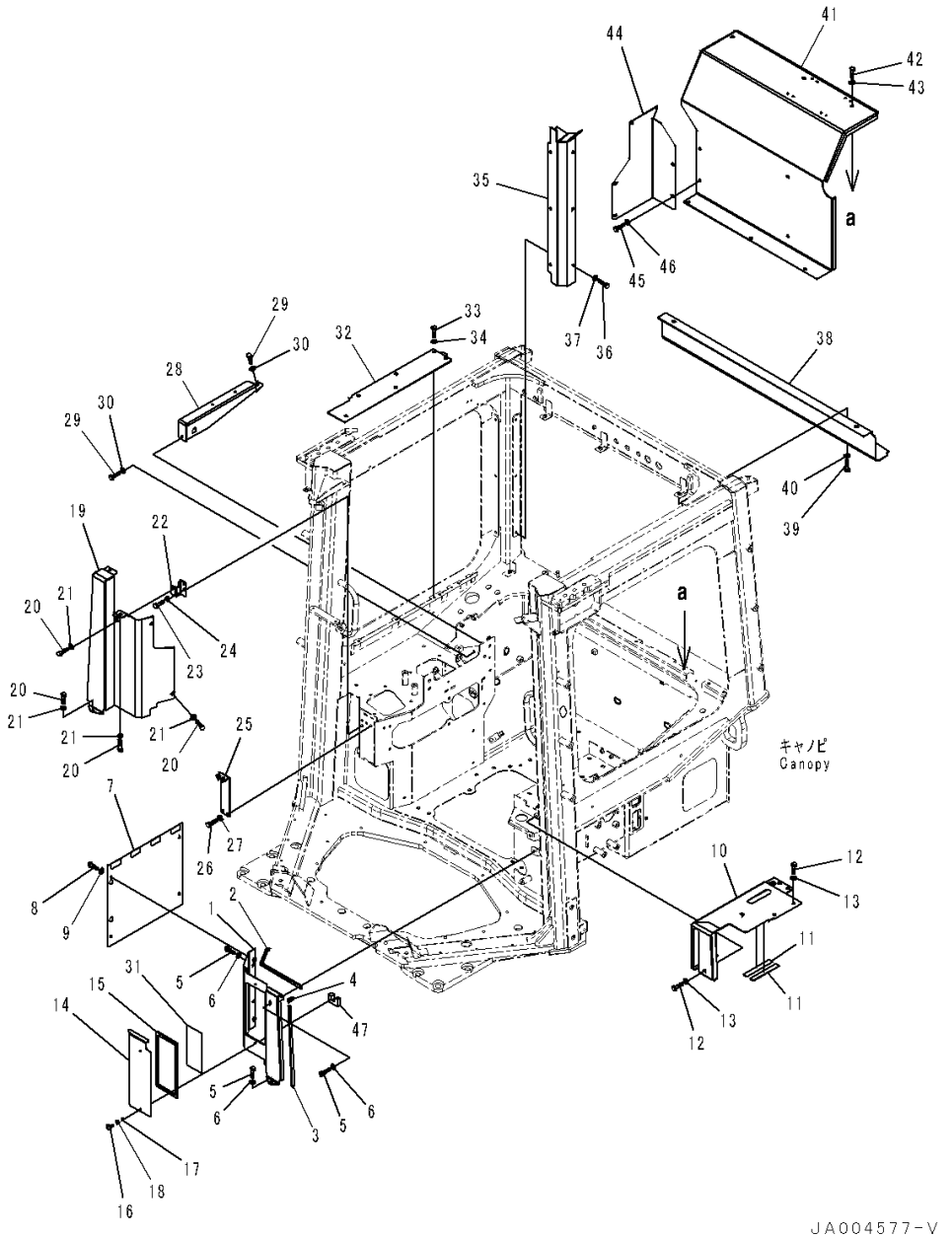

Index	Code	Part Number	Description	Qty	Serial Number
1		14X-54-58541	Cover	1	80054-
2		14X-54-58551	• Seal	1	80054-
3		14X-54-58561	• Seal	1	80054-
4		14X-54-58720	• Seal	1	80054-
5		01010-D0825	Bolt	4	80054-
6		01643-70823	Washer	4	80054-
7		14X-54-56372	Cover	1	80054-
8		01010-D0825	Bolt	2	80054-
9		01643-70823	Washer	2	80054-
10		14X-54-58511	Cover	1	80054-
11		14X-43-48110	• Awning,Bonded	2	80054-
12		01010-D0825	Bolt	5	80054-
13		01643-70823	Washer	5	80054-
14		14X-54-58520	Plate	1	80054-
15		14X-54-58530	• Seal	1	80054-
16		01232-10616	Screw, Knurled Head	2	80054-
17		195-54-78790	Ring, Snap	2	80054-
18		01643-70623	Washer	2	80054-
19		14X-54-58590	Cover	1	80054-
20		01010-D0825	Bolt	5	80054-
21		01643-70823	Washer	5	80054-
22		14X-54-56451	Bracket	1	80054-
23		01010-D0825	Bolt	2	80054-
24		01643-70823	Washer	2	80054-
25		14X-54-56411	Bracket	1	80054-
26		01010-D0825	Bolt	2	80054-
27		01643-70823	Washer	2	80054-
28		14X-54-56471	Bracket	1	80054-
29		01010-D0825	Bolt	2	80054-
30		01643-70823	Washer	2	80054-
31		14X-98-51170	Plate, Fuse Box	1	80054-
32		14X-54-58611	Cover	1	80054-
33		01010-D0825	Bolt	6	80054-
34		01643-70823	Washer	6	80054-
35		14X-54-58631	Cover	1	80054-
36		01010-D0825	Bolt	6	80054-
37		01643-70823	Washer	6	80054-
38		14X-54-58641	Cover	1	80054-
39		01010-D0825	Bolt	5	80054-

FIG. K0410-001022 ROPS Canopy, Floor Cover

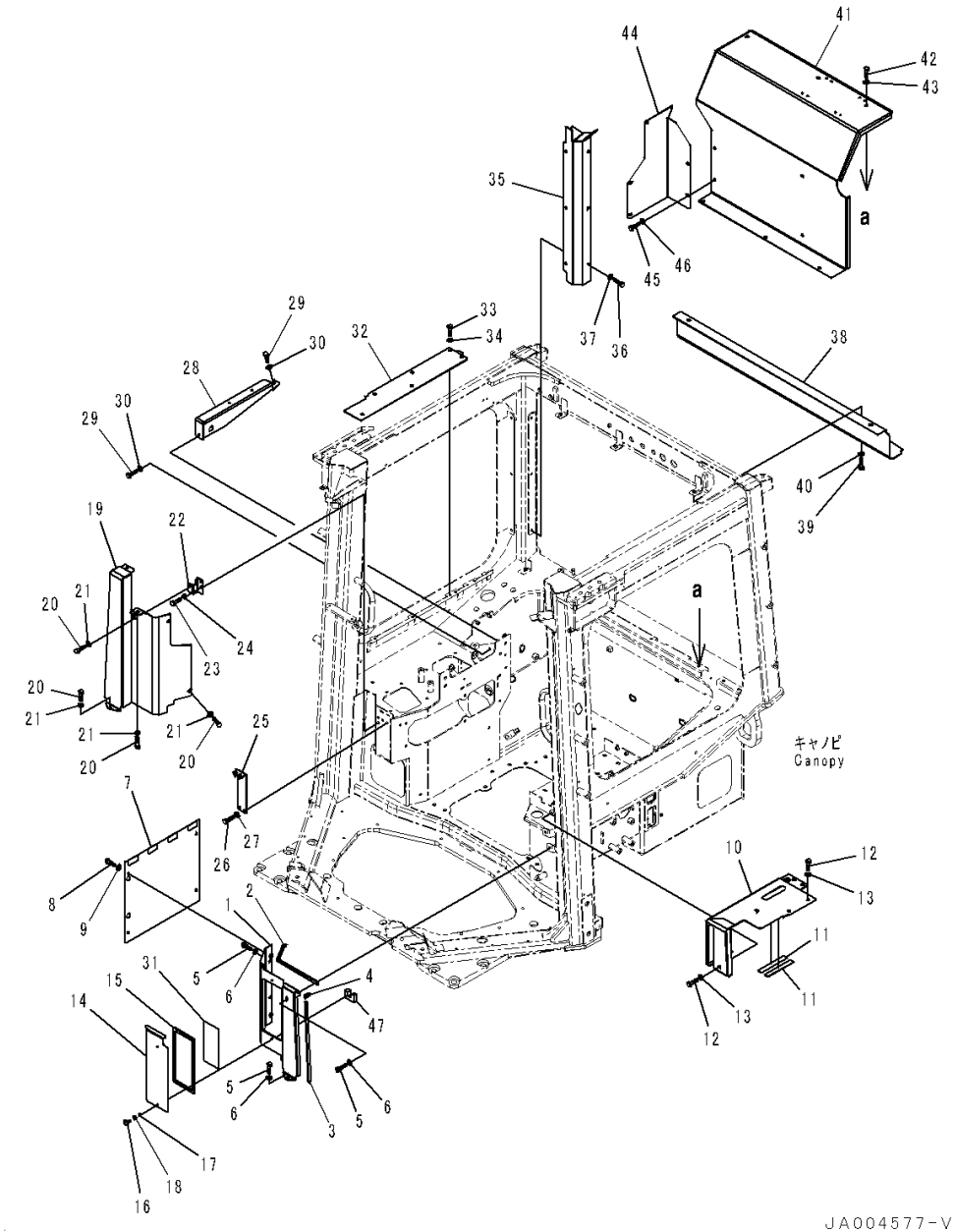

Index	Code	Part Number	Description	Qty	Serial Number
40		01643-70823	Washer	5	80054-
41		14X-54-58650	Cover	1	80054-
42		01010-D0825	Bolt	6	80054-
43		01643-70823	Washer	6	80054-
44		14X-54-58660	Cover	1	80054-
45		01010-D0825	Bolt	5	80054-
46		01643-70823	Washer	5	80054-
47		14X-54-56981	Seal,Bonded	1	80054-

FIG. K0410-001023 ROPS Canopy, KOMTRAX Controller

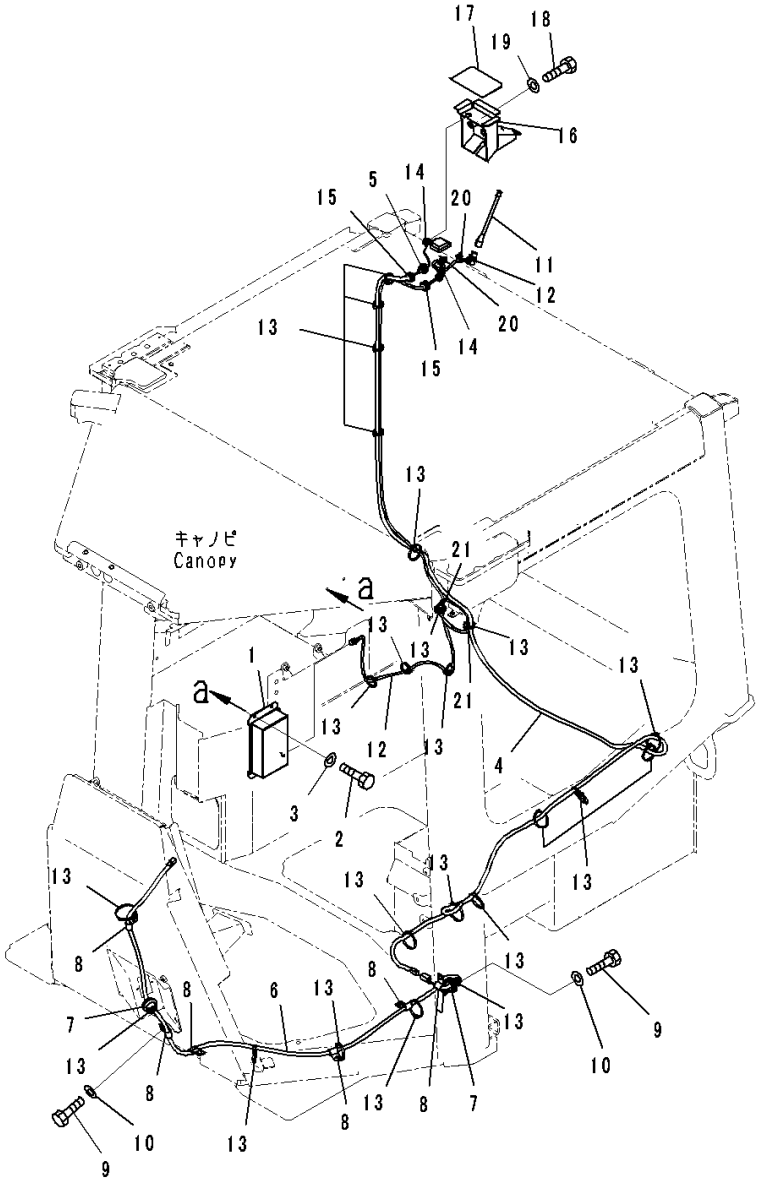

Index	Code	Part Number	Description	Qty	Serial Number
1		7826-23-3011	Controller	1	80054-
2		01010-80616	Bolt	4	80054-
3		01643-30623	Washer	4	80054-
4		14X-06-51161	Cable Assembly	1	80054-
5		14X-06-51530	Grommet	1	80054-
6		14X-06-51171	Cable Assembly	1	80054-
7		08037-11025	Grommet	2	80054-
8		04434-51010	Clip	7	80054-
9		01010-81020	Bolt	2	80054-
10		01643-31032	Washer	2	80054-
11		8A13-10-2100	Antenna	1	80054-
12		14X-06-51190	Cable Assembly	1	80054-
13		08034-20519	Band	23	80054-
14		175-06-81610	Grommet	2	80054-
15		14X-06-51520	Grommet	2	80054-
16		14X-06-51831	Bracket	1	80054-
17		14X-06-51840	Plate	1	80054-
18		01010-80850	Bolt	2	80054-
19		01643-30823	Washer	2	80054-
20		08059-00413	Clip	2	80054-
21		22B-54-28990	Sheet,Bonded	2	80054-

FIG. K0410-001024 ROPS Canopy, Related Parts

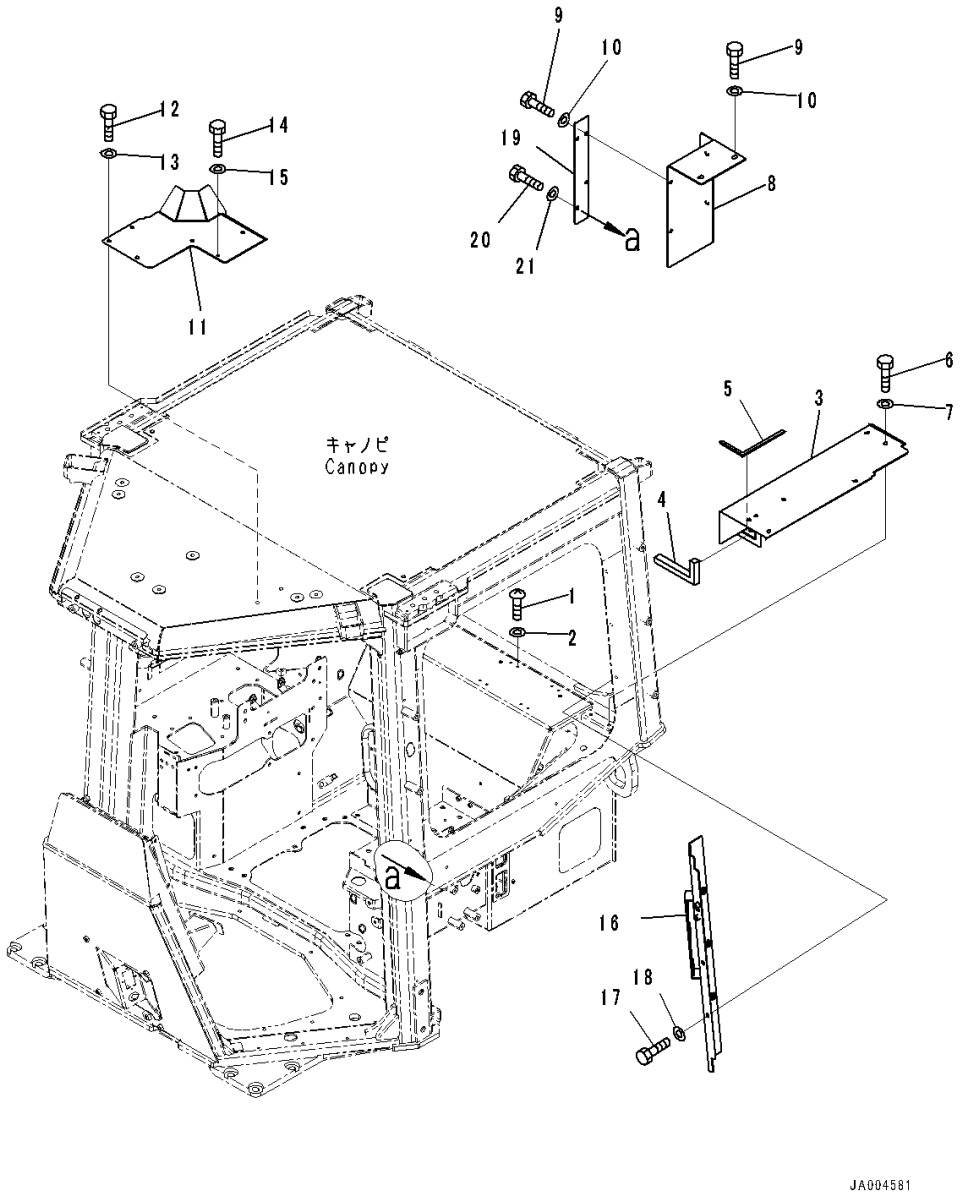

Index	Code	Part Number	Description	Qty	Serial Number
1		01245-00620	Screw	8	80054-
2		01643-70623	Washer	8	80054-
3		14X-54-58571	Plate	1	80054-
4		14X-54-58740	• Sheet	1	80054-
5		14X-54-58750	• Sheet	1	80054-
6		01010-D0825	Bolt	7	80054-
7		01643-70823	Washer	7	80054-
8		14X-54-58581	Plate	1	80054-
9		01010-D0825	Bolt	6	80054-
10		01643-70823	Washer	6	80054-
11		14X-54-58621	Plate	1	80054-
12		01010-D0825	Bolt	5	80054-
13		01643-70823	Washer	5	80054-
14		01010-D0620	Bolt	1	80054-
15		01643-70623	Washer	1	80054-
16		14X-54-58710	Bracket	1	80054-
17		01010-D0825	Bolt	6	80054-
18		01643-70823	Washer	6	80054-
19		14X-54-58730	Plate	1	80054-
20		01010-D0825	Bolt	2	80054-
21		01643-70823	Washer	2	80054-

FIG. K0710-001001 Air Conditioner Unit, Air Conditioner Condenser Unit

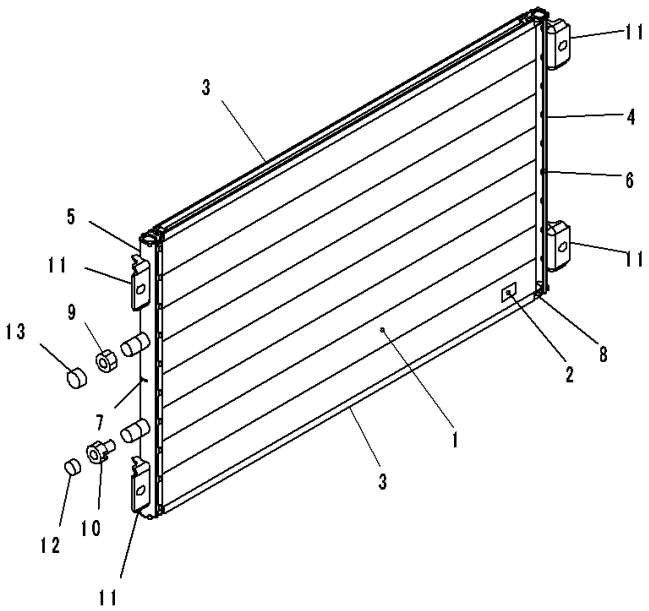

00071634

Index	Code	Part Number	Description	Qty	Serial Number
		Note: This list covers following specifications.			
		Without Hardened Pulley			
		With Hardened Pulley			
		20Y-979-6131	Condenser Assembly.....	1	80001-
1		ND7930-591100	• Tube	36	80001-
2		ND7922-571450	• Fin	37	80001-
3		ND047761-2760	• Plate	2	80001-
4		ND047762-0540	• Tank	1	80001-
5		ND047762-3000	• Tank	1	80001-
6		ND7935-163610	• Plate	2	80001-
7		ND047764-0021	• Plate	1	80001-
8		ND047765-0020	• Cap.....	4	80001-
9		ND445013-0811	• Union	1	80001-
10		ND445013-0521	• Union	1	80001-
11		ND047782-3720	• Bracket	4	80001-
12		ND445021-0060	• Plug	1	80001-
13		ND445021-0070	• Plug	1	80001-

FIG. K0710-001002 Air Conditioner Unit, Air Conditioner Condenser Unit Mounting

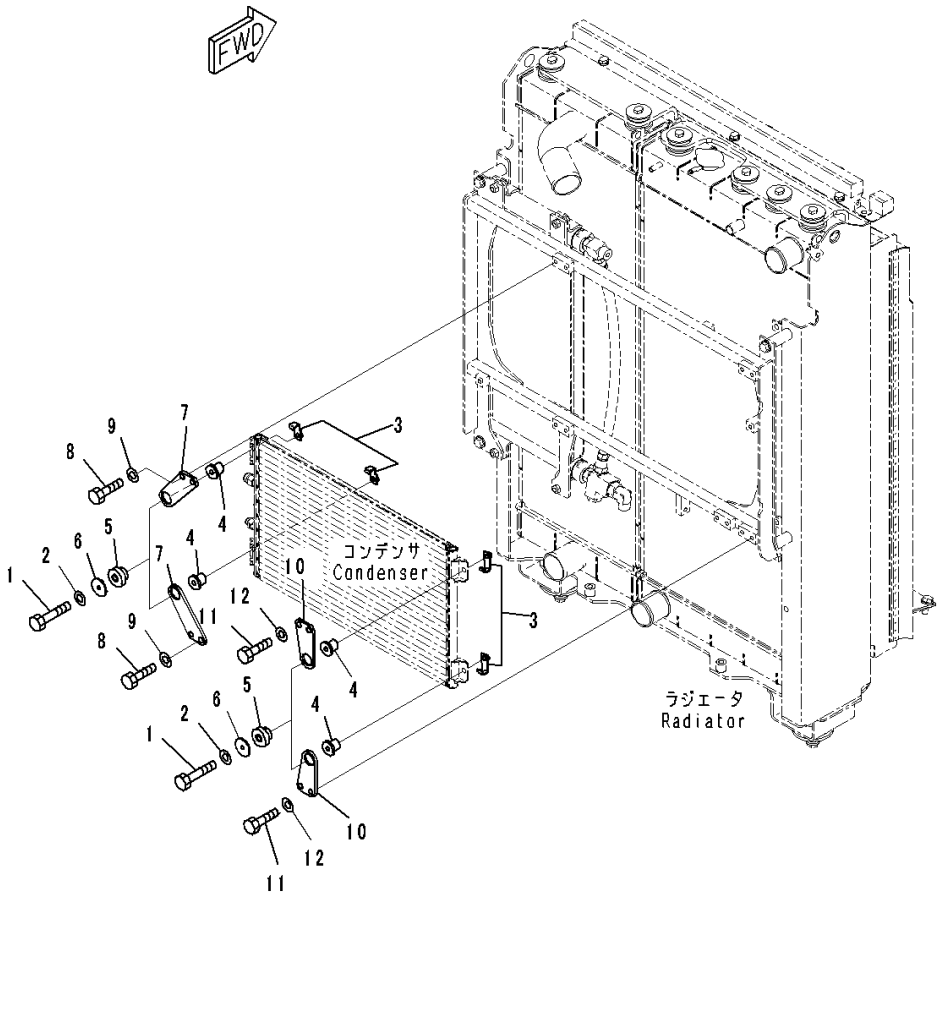

Index	Code	Part Number	Description	Qty	Serial Number
		Note: This list covers following specifications.			
		Without Hardened Pulley			
		With Hardened Pulley			
1		01010-80865	Bolt	4	80001-
2		01643-30823	Washer	4	80001-
3		134-03-73750	Bracket	4	80001-
4		14X-03-35570	Collar	4	80001-
5		195-03-41380	Cushion	4	80001-
6		154-911-8140	Collar	4	80001-
7		14X-Y11-1760	Plate	2	80001-
8		01010-81020	Bolt	4	80001-
9		01643-31032	Washer	4	80001-
10		14X-Y11-1920	Plate	2	80001-
11		01010-81020	Bolt	4	80001-
12		01643-31032	Washer	4	80001-

FIG. K0710-001003 Air Conditioner Unit, Piping (1/2)

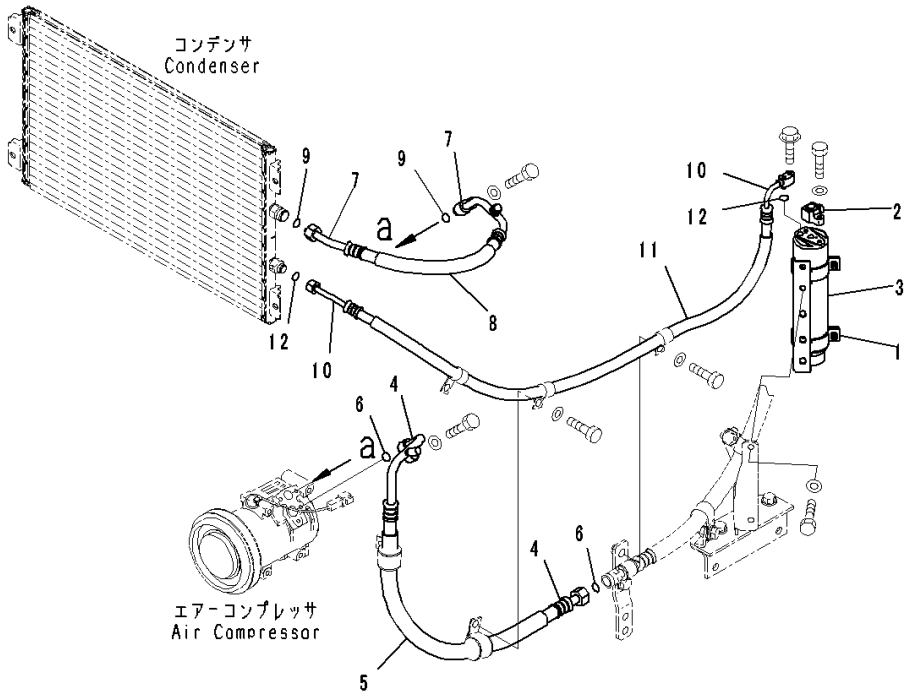

Index	Code	Part Number	Description	Qty	Serial Number
		Note: This list covers following specifications.			
		Without Hardened Pulley			
		With Hardened Pulley			
1		120-X11-1510	Holder	1	80001-
2		17A-911-1671	Joint	1	80001-
3		20Y-979-3120	Tank	1	80001-
4		14X-Y11-1351	Hose Assembly	1	80001-
5		08017-32206	• Conduit	1	80001-
6		20Y-979-3130	• O-ring	2	80001-
7		14X-Y11-1361	Hose Assembly	1	80001-
8		08017-31903	• Conduit	1	80001-
9		20Y-979-3140	• O-ring	2	80001-
10		14X-Y11-1371	Hose Assembly	1	80001-
11		08017-31511	• Conduit	1	80001-
12		20Y-979-3150	• O-ring	2	80001-

FIG. K0710-001004 Air Conditioner Unit, Without Hardened Pulley, Compressor

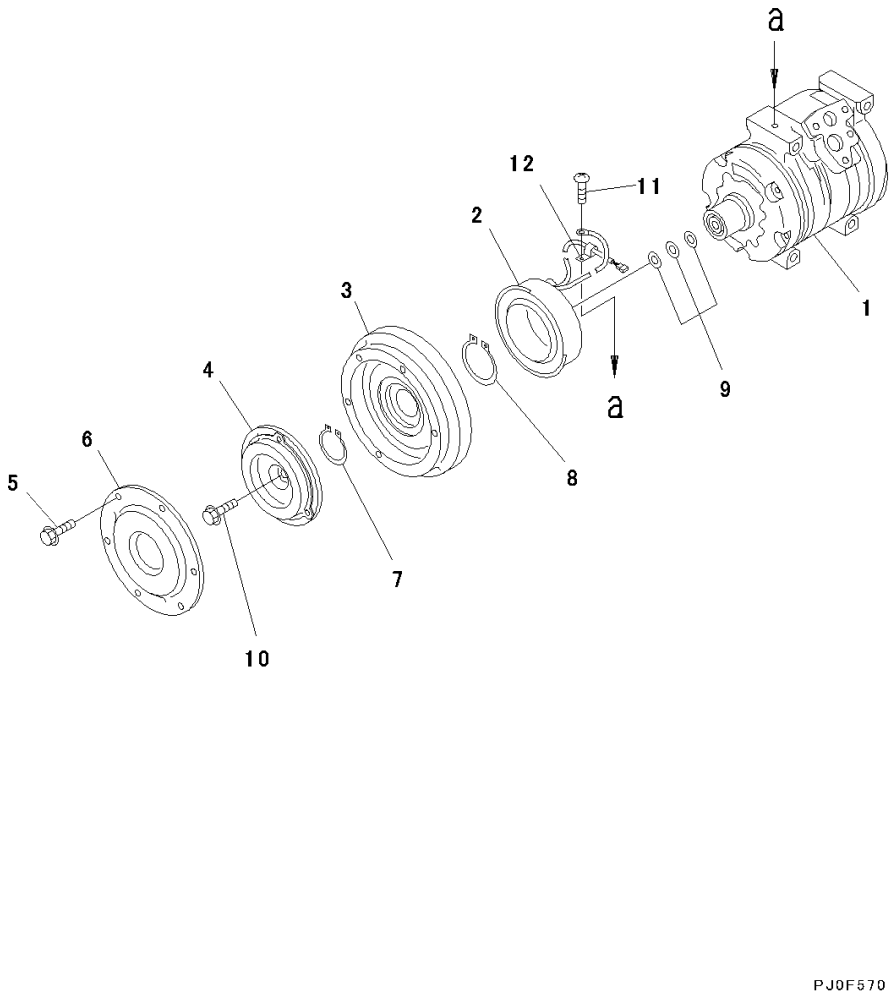

Index	Code	Part Number	Description	Qty	Serial Number
		17A-911-4810	Compressor Assembly	1	80001-
1		ND447220-4781	• Compressor Assembly	1	80001-
		ND247300-5320	• Clutch Assembly, Magnetic	1	80001-
2		ND147310-0110	•• Stator	1	80001-
3		ND147350-1640	•• Rotor	1	80001-
4		ND047410-1570	•• Hub	10	80001-
		ND047410-1580	•• Hub	10	80001-
5		ND949047-2950	•• Bolt and Washer	6	80001-
6		ND047372-0660	•• Dust Cover	1	80001-
7		ND949070-1360	• Ring, Snap	1	80001-
8		ND949070-0640	• Ring, Snap	1	80001-
9		ND949013-7480	• Washer, T=0.1mm	1	80001-
		ND949013-7500	• Washer, T=0.3mm	1	80001-
		ND949013-7510	• Washer, T=0.5mm	1	80001-
10		ND949048-0430	• Bolt	1	80001-
11		ND913100-5081	• Screw	1	80001-
12		ND146691-4470	• Clamp	1	80001-

FIG. K0710-001005 Air Conditioner Unit, Duct

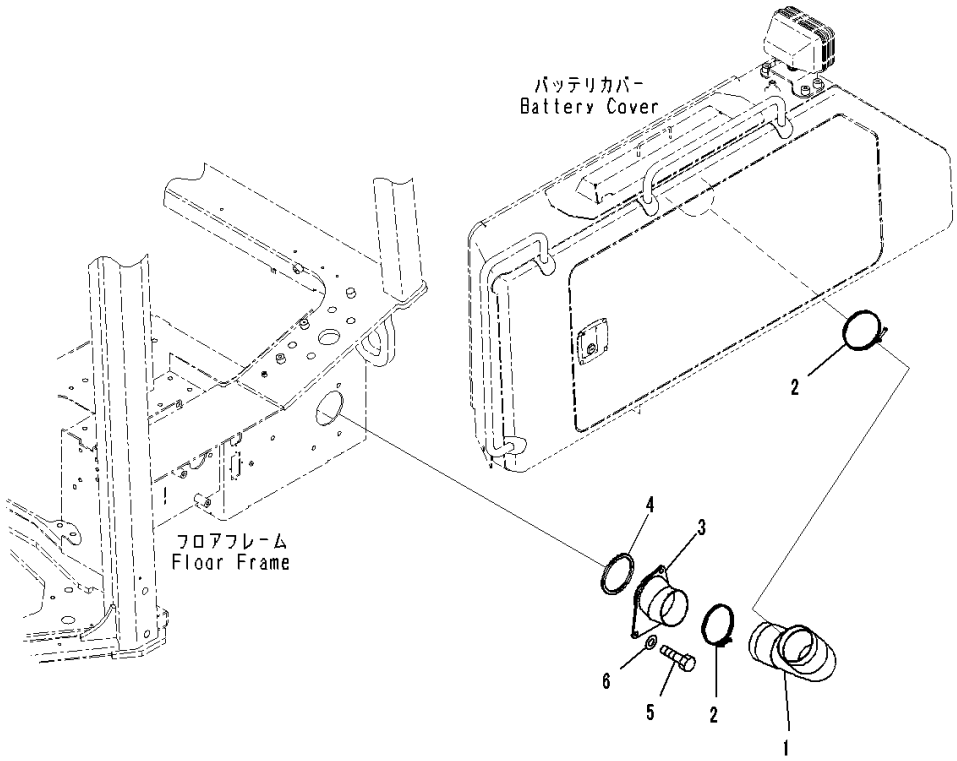

Index	Code	Part Number	Description	Qty	Serial Number
		Note: This list covers following specifications.			
		Without Hardened Pulley			
		With Hardened Pulley			
1		09485-01005	Hose, Air	1	80001-
2		14X-911-7670	Clamp	2	80001-
3		14X-Y11-1231	Duct	1	80001-
4		14X-Y11-1580	• Seal,Bonded	1	80001-
5		01010-81030	Bolt	3	80001-
6		01643-31032	Washer	3	80001-

FIG. K0710-001006 Air Conditioner Unit, Piping (2/2)

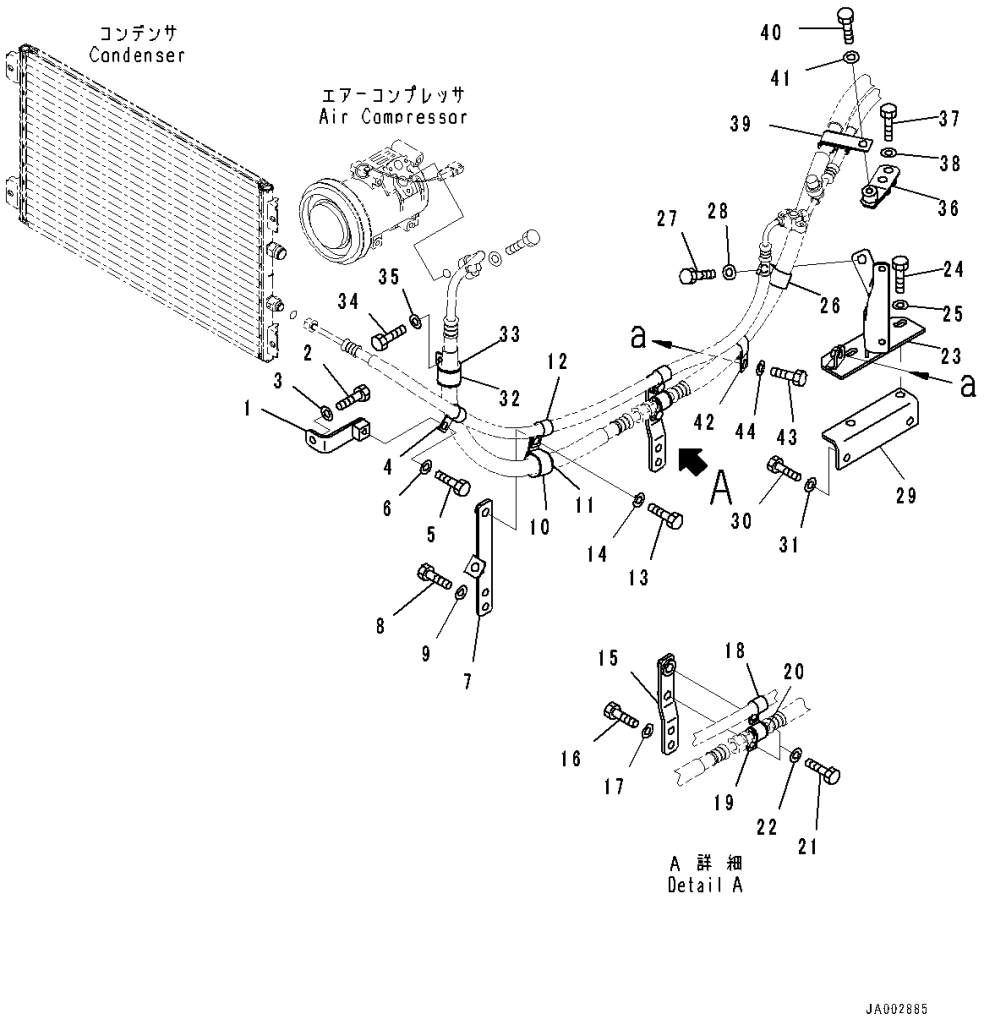

Index	Code	Part Number	Description	Qty	Serial Number
		Note: This list covers following specifications.			
		Without Hardened Pulley			
		With Hardened Pulley			
1		14X-Y11-1981	Bracket	1	80001-
2		01010-81020	Bolt	1	80001-
3		01643-31032	Washer	1	80001-
4		04434-51912	Clip	1	80001-
5		01010-81225	Bolt	1	80001-
6		01643-31232	Washer	1	80001-
7		14X-Y11-1661	Plate	1	80001-
8		01010-81225	Bolt	2	80001-
9		01643-31232	Washer	2	80001-
10		04434-53412	Clip	1	80001-
11		07095-20625	Cushion	1	80001-
12		04434-51912	Clip	1	80001-
13		01010-81225	Bolt	1	80001-
14		01643-31232	Washer	1	80001-
15		14X-Y11-1671	Bracket	1	80001-
16		01010-81225	Bolt	2	80001-
17		01643-31232	Washer	2	80001-
18		04434-51912	Clip	1	80001-
19		04434-52112	Clip	1	80001-
20		07095-20314	Cushion	1	80001-
21		01010-81225	Bolt	2	80001-
22		01643-31232	Washer	2	80001-
23		14X-Y11-1691	Bracket	1	80001-
24		01010-81225	Bolt	2	80001-
25		01643-31232	Washer	2	80001-
26		04434-52712	Clip	1	80001-
27		01010-81225	Bolt	1	80001-
28		01643-31232	Washer	1	80001-
29		14X-Y11-1681	Bracket	1	80001-
30		01010-81225	Bolt	2	80001-
31		01643-31232	Washer	2	80001-
32		04434-53411	Clip	1	80001-
33		07095-20625	Cushion	1	80001-
34		01010-81020	Bolt	1	80001-
35		01643-31032	Washer	1	80001-
36		14X-Y11-2150	Bracket	1	80001-

FIG. K0710-001006 Air Conditioner Unit, Piping (2/2)

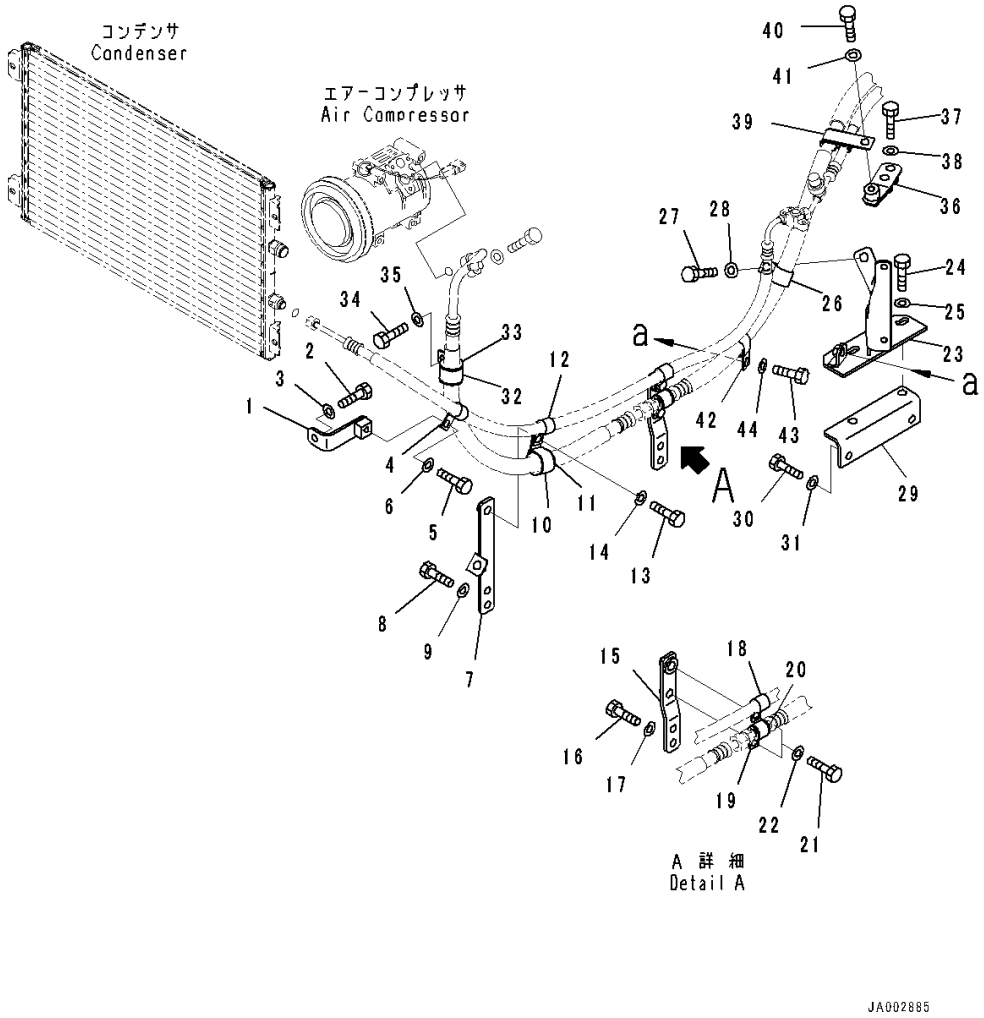

Index	Code	Part Number	Description	Qty	Serial Number
37		01010-81245	Bolt	2	80001-
38		01643-31232	Washer	2	80001-
39		17A-911-4421	Clip	1	80001-
40		01010-81220	Bolt	1	80001-
41		01643-31232	Washer	1	80001-
42		04434-52712	Clip	1	80001-
43		01010-81225	Bolt	1	80001-
44		01643-31232	Washer	1	80001-

FIG. K0710-001007 Air Conditioner Unit, Air Conditioner Unit Mounting

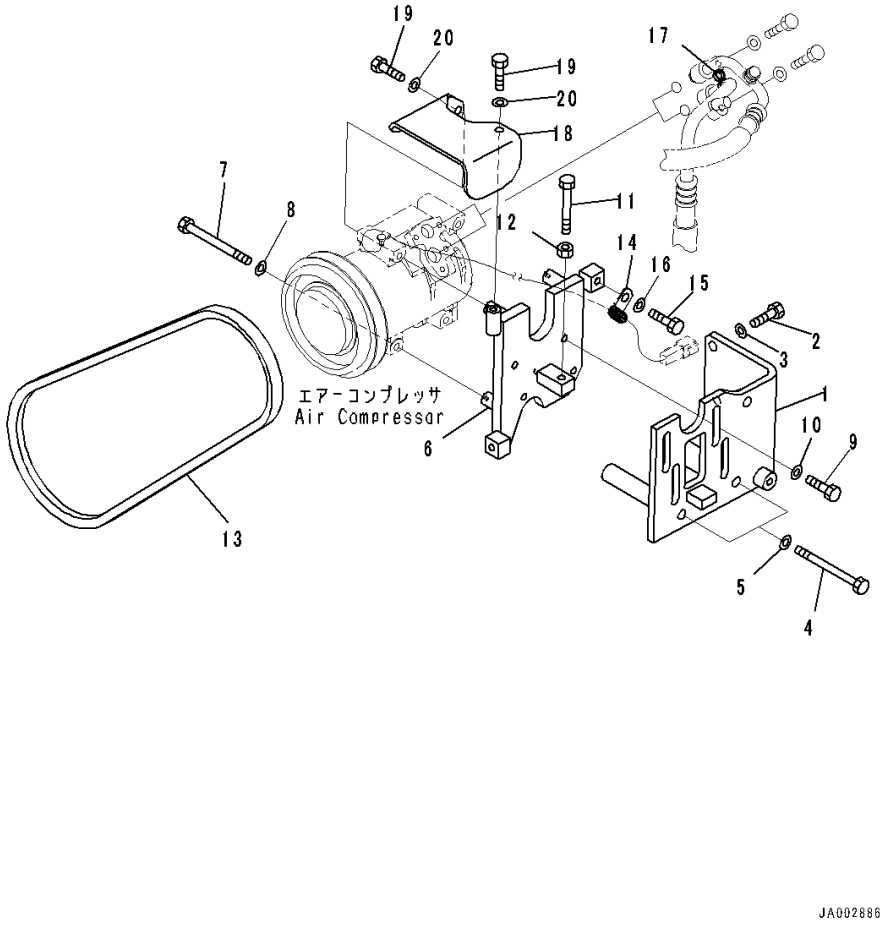

Index	Code	Part Number	Description	Qty	Serial Number
		Note: This list covers following specifications.			
		Without Hardened Pulley			
		With Hardened Pulley			
1		14X-Z11-9221	Bracket	1	80001-
2		01010-81030	Bolt	2	80001-
3		01643-31032	Washer	2	80001-
4		01011-81040	Bolt	2	80001-
5		01643-31032	Washer	2	80001-
6		14X-Y11-1410	Bracket	1	80001-
7		01010-80880	Bolt	4	80001-
8		01643-30823	Washer	4	80001-
9		01010-81025	Bolt	4	80001-
10		01643-31032	Washer	4	80001-
11		01016-51090	Bolt	1	80001-
12		01580-11008	Nut	1	80001-
13		04120-21748	V-belt	1	80001-
14		600-051-2050	Clip	1	80001-
15		01010-81020	Bolt	1	80001-
16		01643-31032	Washer	1	80001-
17		08034-40521	Band	1	80001-
18		14X-911-8534	Cover	1	80065-
	A2	14X-911-8533	Cover	1	80001-80064
19		01010-80820	Bolt	2	80001-
20		01643-30823	Washer	2	80001-

FIG. K0710-001008 Air Conditioner Unit, Heater Unit Mounting

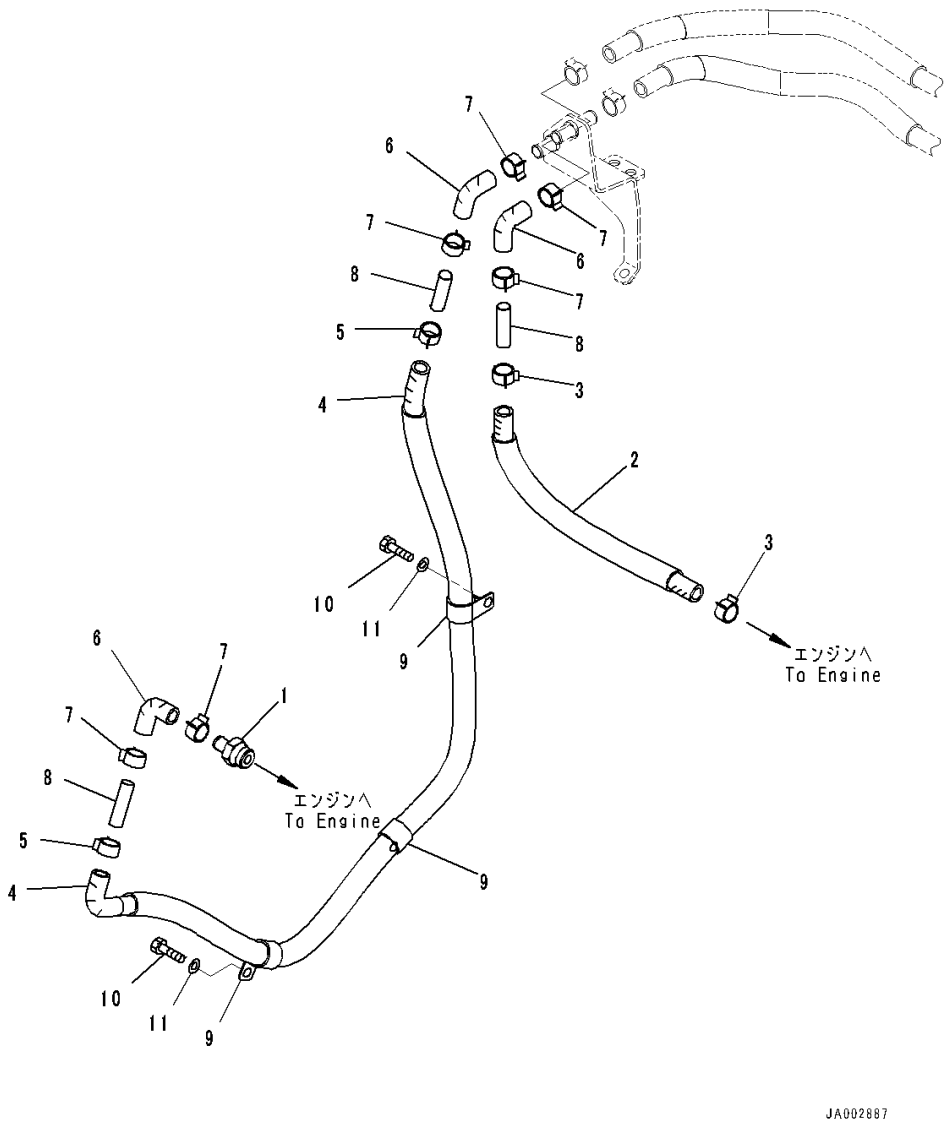

Index	Code	Part Number	Description	Qty	Serial Number
		Note: This list covers following specifications.			
		Without Hardened Pulley			
		With Hardened Pulley			
1		14X-Z11-9670	Nipple	1	80001-
2		14X-Y11-1421	Hose	1	80001-
3		09479-02400	Clamp	2	80001-
4		14X-Y11-1431	Hose	1	80001-
5		09479-02400	Clamp	2	80001-
6		567-07-15210	Hose	3	80001-
7		09479-02400	Clamp	6	80001-
8		09484-00560	Connector	3	80001-
9		08036-93014	Clip	3	80001-
10		01010-81020	Bolt	3	80001-
11		01643-31032	Washer	3	80001-

FIG. K0710-001009 Air Conditioner Unit, Bolt

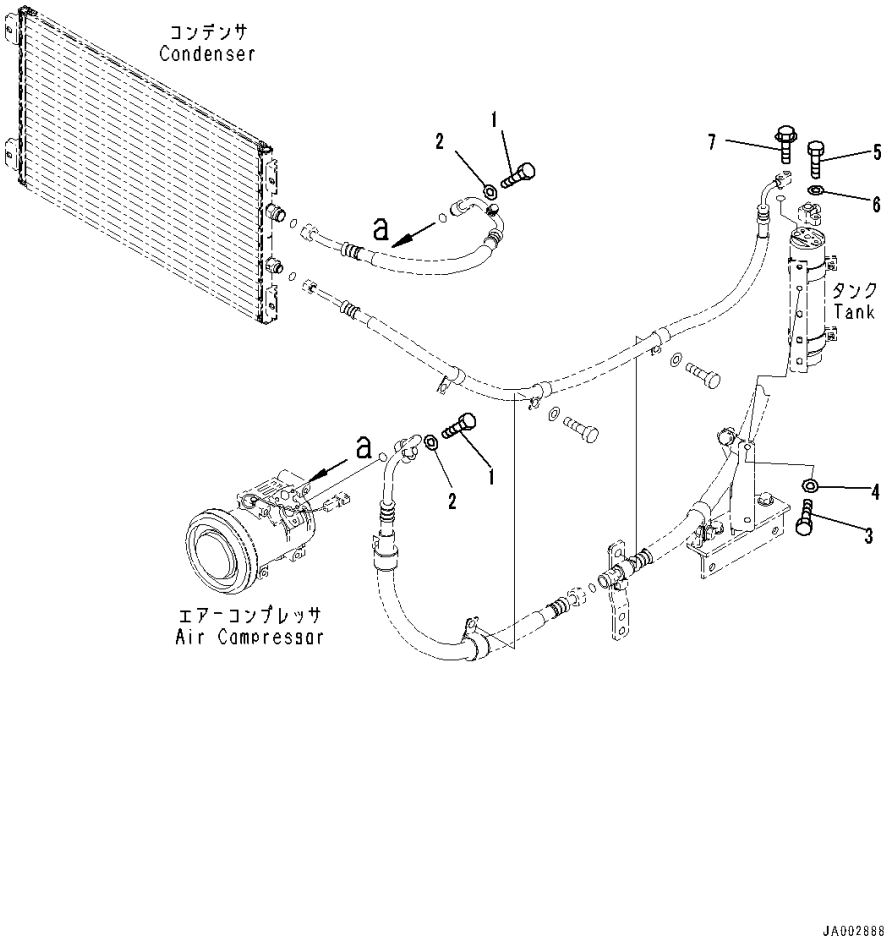

Index	Code	Part Number	Description	Qty	Serial Number
		Note: This list covers following specifications.			
		Without Hardened Pulley			
		With Hardened Pulley			
1		01010-80630	Bolt	2	80001-
2		01641-20608	Washer	2	80001-
3		01010-80820	Bolt	2	80001-
4		01643-30823	Washer	2	80001-
5		01010-80625	Bolt	1	80001-
6		01643-30623	Washer	1	80001-
7		01435-00625	Bolt	1	80001-

FIG. K0710-002004 Air Conditioner Unit, With Hardened Pulley, Compressor

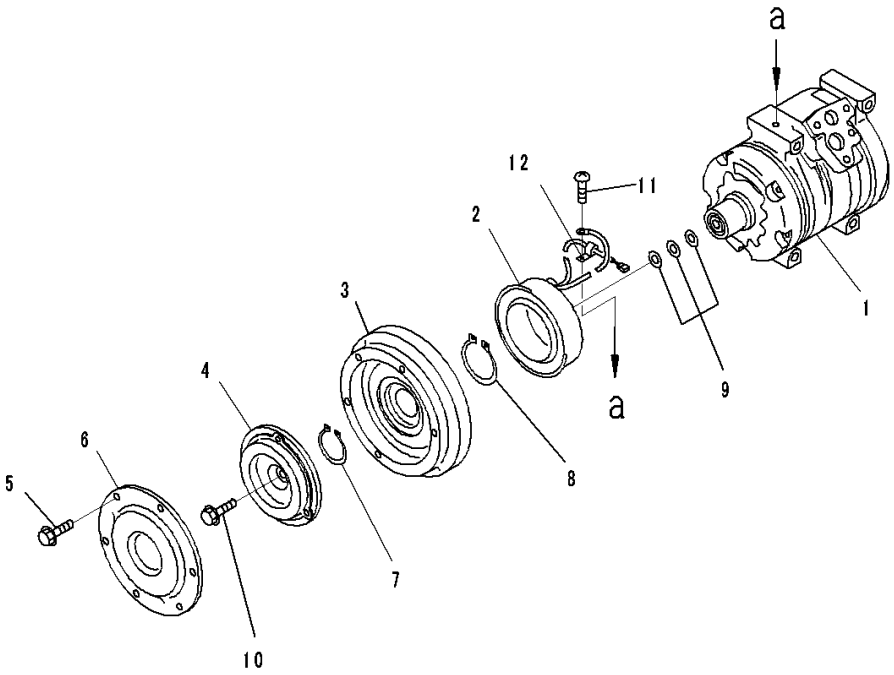

Index	Code	Part Number	Description	Qty	Serial Number
		154-911-7842	Compressor Assembly	1	80001-
1		ND447220-4781	• Compressor Assembly	1	80001-
		ND247300-4152	• Clutch Assembly, Magnetic	1	80001-
2		ND147310-1750	•• Stator	1	80001-
3		ND147350-1640	•• Rotor	1	80001-
4		ND047410-1570	•• Hub	10	80001-
		ND047410-1580	•• Hub	10	80001-
5		ND949047-2950	•• Bolt and Washer	6	80001-
6		ND047372-0660	•• Dust Cover	1	80001-
7		ND949070-1360	• Ring, Snap	1	80001-
8		ND949070-0640	• Ring, Snap	1	80001-
9		ND949013-7480	• Washer, T=0.1mm	1	80001-
		ND949013-7500	• Washer, T=0.3mm	1	80001-
		ND949013-7510	• Washer, T=0.5mm	1	80001-
10		ND949048-0430	• Bolt	1	80001-
11		ND91310-05081	• Screw	1	80001-
12		ND146691-4470	• Clamp	1	80001-

FIG. K0710-003001 Parts For Less Air Conditioner, Without Air Conditioner

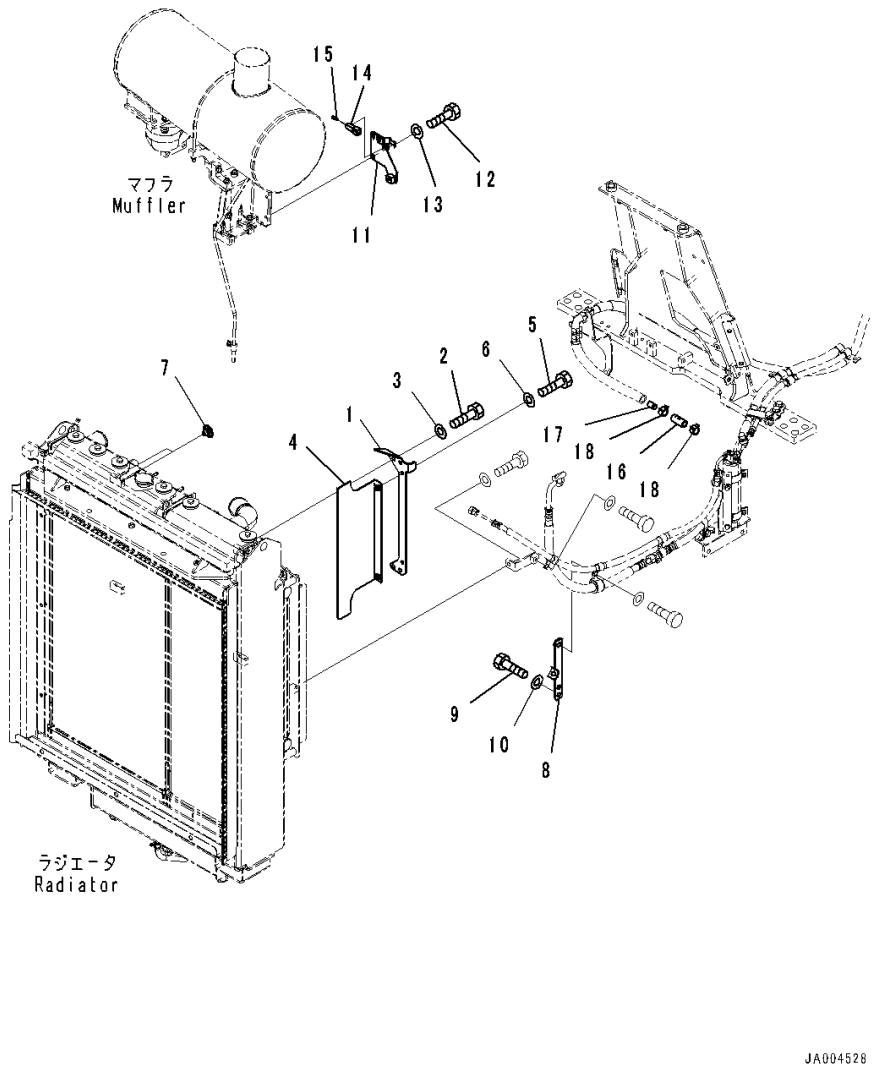

Index	Code	Part Number	Description	Qty	Serial Number
1		14X-03-51670	Plate	1	80054-
2		01010-81020	Bolt	4	80054-
3		01643-31032	Washer	4	80054-
4		14X-03-51680	Baffle	1	80054-
5		01010-81020	Bolt	2	80054-
6		01643-31032	Washer	2	80054-
7		426-56-21990	Plug	4	80054-
8		14X-Y11-1661	Plate	1	80054-
9		01010-81225	Bolt	2	80054-
10		01643-31232	Washer	2	80054-
11		14X-06-52881	Bracket	1	80054-
12		01010-81020	Bolt	2	80054-
13		01643-31032	Washer	2	80054-
14		08192-22100	Connector Body	1	80054-
15		08191-00770	Plug, Connector	2	80054-
16		195-979-4841	Hose	1	80054-
17		144-Z79-2840	Plug	1	80054-
18		09479-02400	Clamp	2	80054-

FIG. K0830-001001 Fire Extinguisher

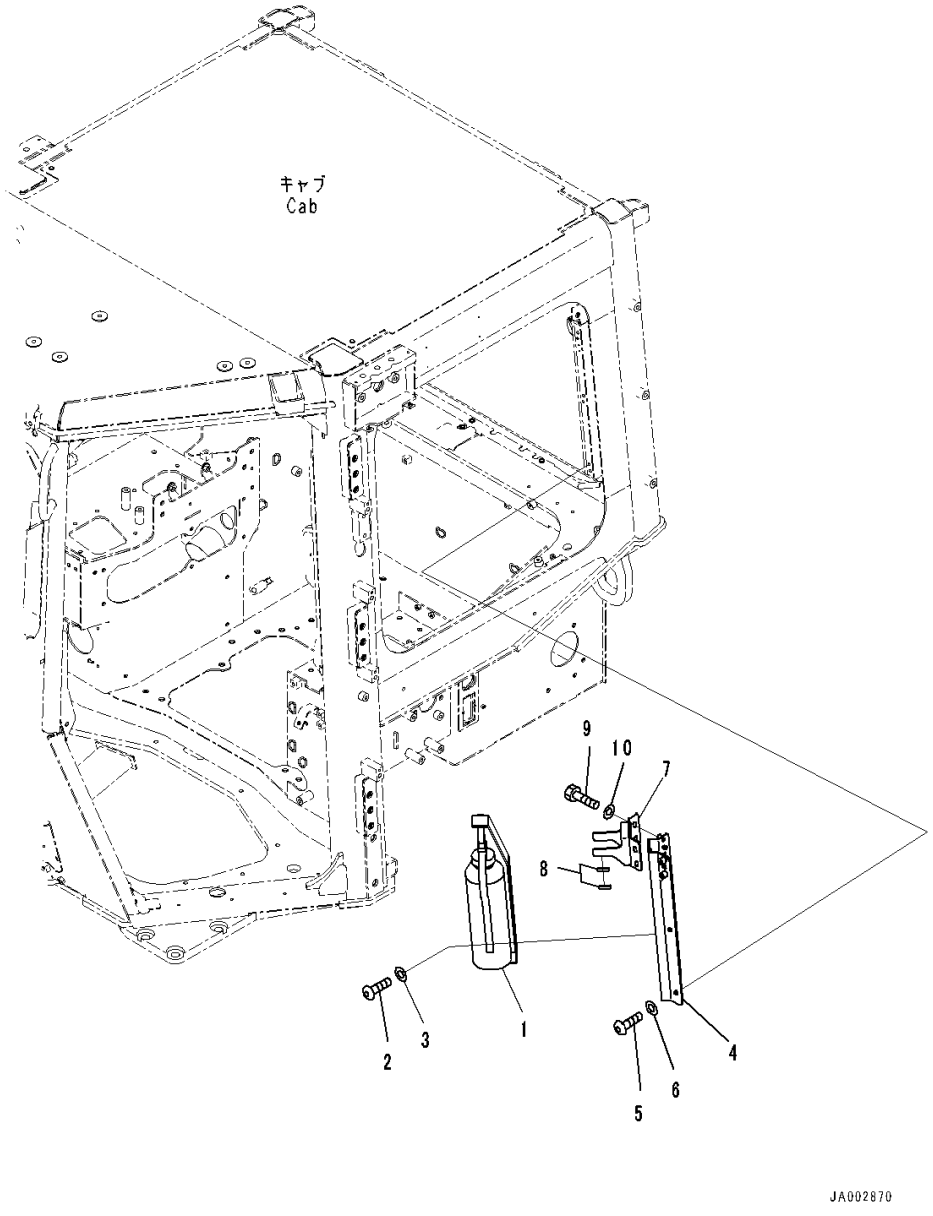

Index	Code	Part Number	Description	Qty	Serial Number
1		09495-40010	Fire Extinguisher, English	1	80001-
2		01245-00620	Screw	6	80001-
3		01643-70623	Washer	6	80001-
4		14X-Y79-3711	Bracket	1	80001-
5		01245-00630	Screw, Hexagon Socket Head	6	80001-
6		01643-70623	Washer	6	80001-
7		14X-Y79-3731	Bracket	1	80001-
8		14X-Y79-3721	• Trim	2	80001-
9		01010-D0816	Bolt	4	80001-
10		01643-70823	Washer	4	80001-

FIG. K0830-002001 Fire Extinguisher, For ROPS Canopy

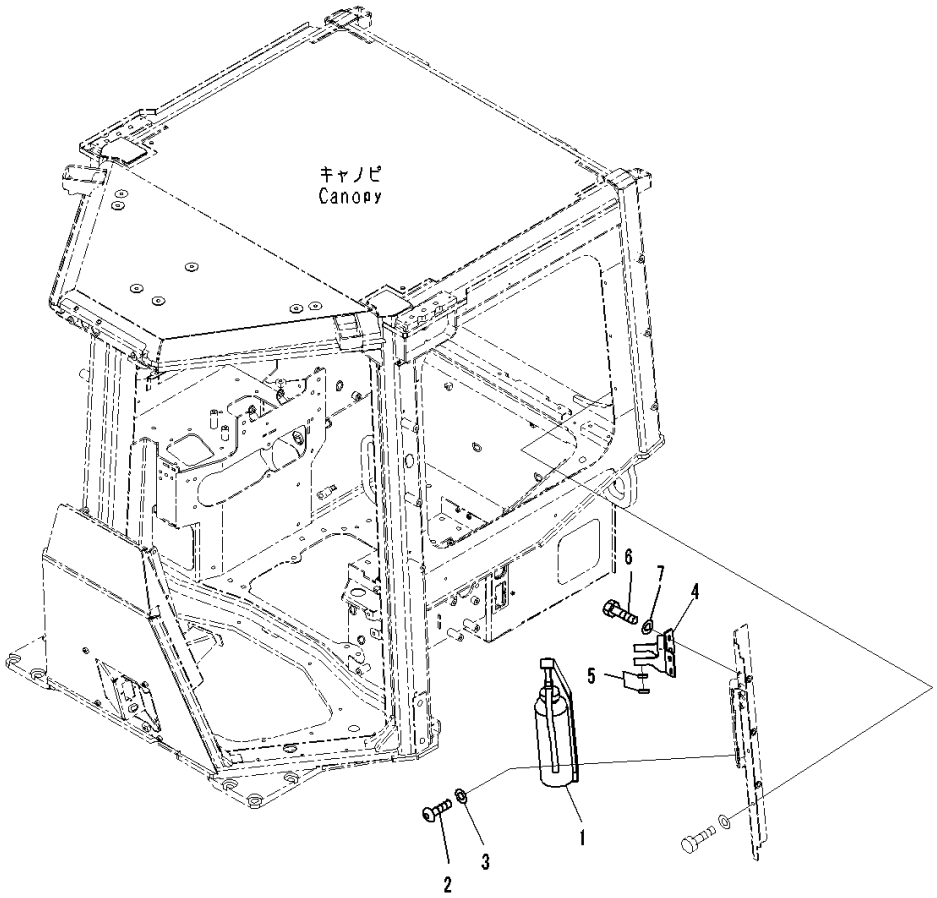

Index	Code	Part Number	Description	Qty	Serial Number
1		09495-40010	Fire Extinguisher, English	1	80054-
2		01245-00620	Screw	6	80054-
3		01643-70623	Washer	6	80054-
4		14X-Y79-3731	Bracket	1	80054-
5		14X-Y79-3721	• Trim	2	80054-
6		01010-D0816	Bolt	4	80054-
7		01643-70823	Washer	4	80054-

FIG. K0860-002001 Cup Holder

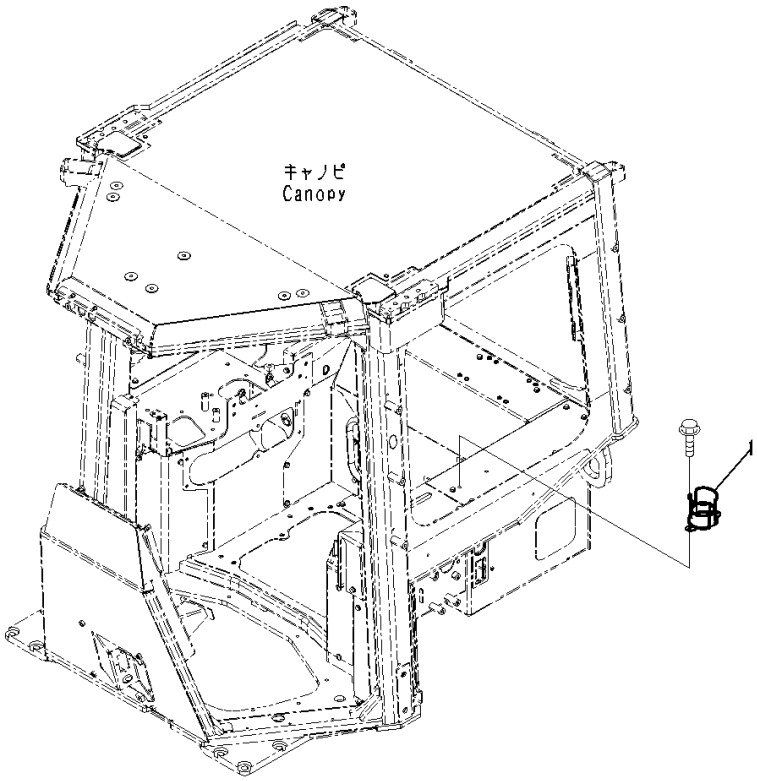

Index	Code	Part Number	Description	Qty	Serial Number
1		14X-911-6180	Bracket.....	1	80054-

FIG. K0890-002001 Lunch Box Holder

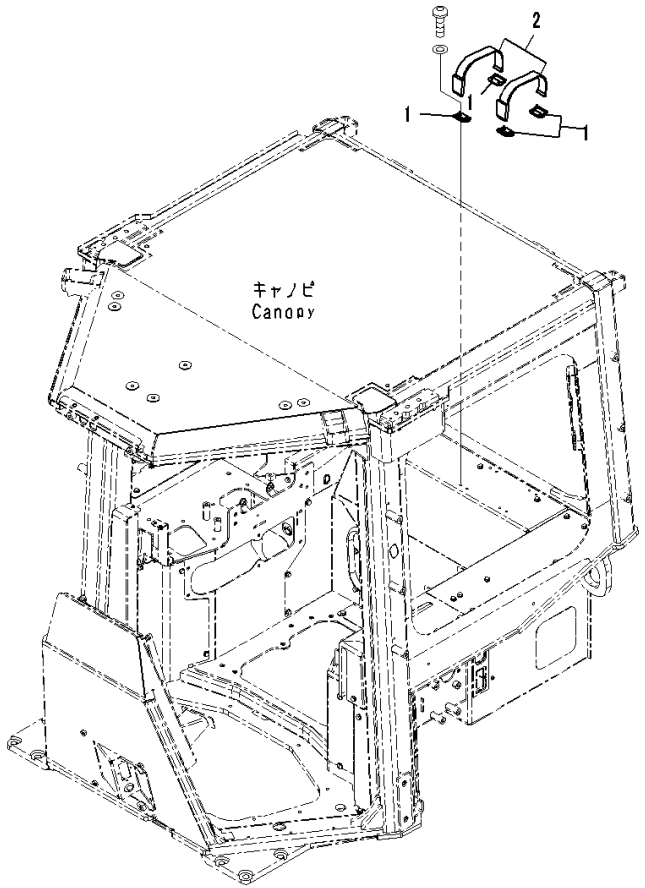

Index	Code	Part Number	Description	Qty	Serial Number
1		14X-Y79-1241	Plate	4	80054-
2		423-54-42790	Band	2	80054-

FIG. K2110-001001 Dozer Control, For Machine Without Rear Actuator, Armrest

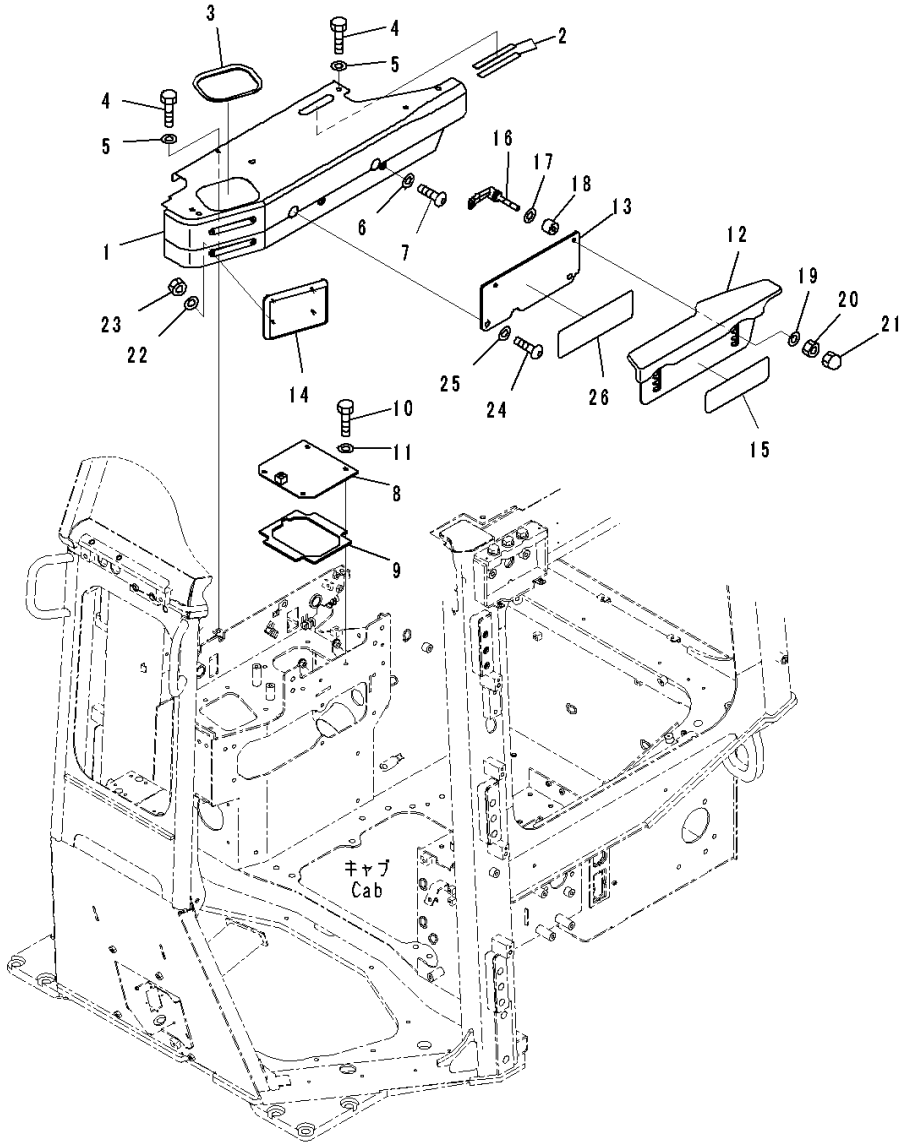

Index	Code	Part Number	Description	Qty	Serial Number
1		14X-54-56631	Cover	1	80001-
2		14X-43-48110	• Awning	2	80001-
3		14X-54-16490	• Plate	1	80001-
4		01010-D0825	Bolt	4	80001-
5		01643-70823	Washer	4	80001-
6		01643-70623	Washer	2	80001-
7		01245-00620	Screw	2	80001-
8		14X-54-56661	Cover	1	80001-
9		14X-54-56670	• Seal,Bonded	1	80001-
10		01010-D0825	Bolt	4	80001-
11		01643-70823	Washer	4	80001-
12		14X-54-56531	Armrest Assembly	1	80001-
13		14X-54-56542	Plate	1	80017-
14		14X-54-56910	Pad	1	80001-
15		14X-54-56591	Plate,Bonded	1	80001-
16		423-43-38170	Lever	2	80001-
17		418-54-35450	Washer	2	80001-
18		17A-43-46380	Spacer	2	80001-
19		418-54-35450	Washer	2	80001-
20		195-43-43370	Nut	2	80001-
21		01546-10812	Nut	2	80001-
22		01643-30623	Washer	4	80001-
23		01580-00605	Nut	4	80001-
24		01245-01030	Screw	2	80001-
25		01643-71032	Washer	2	80001-
26		134-54-66190	Plate	1	80001-

FIG. K2110-001002 Dozer Control, Lever

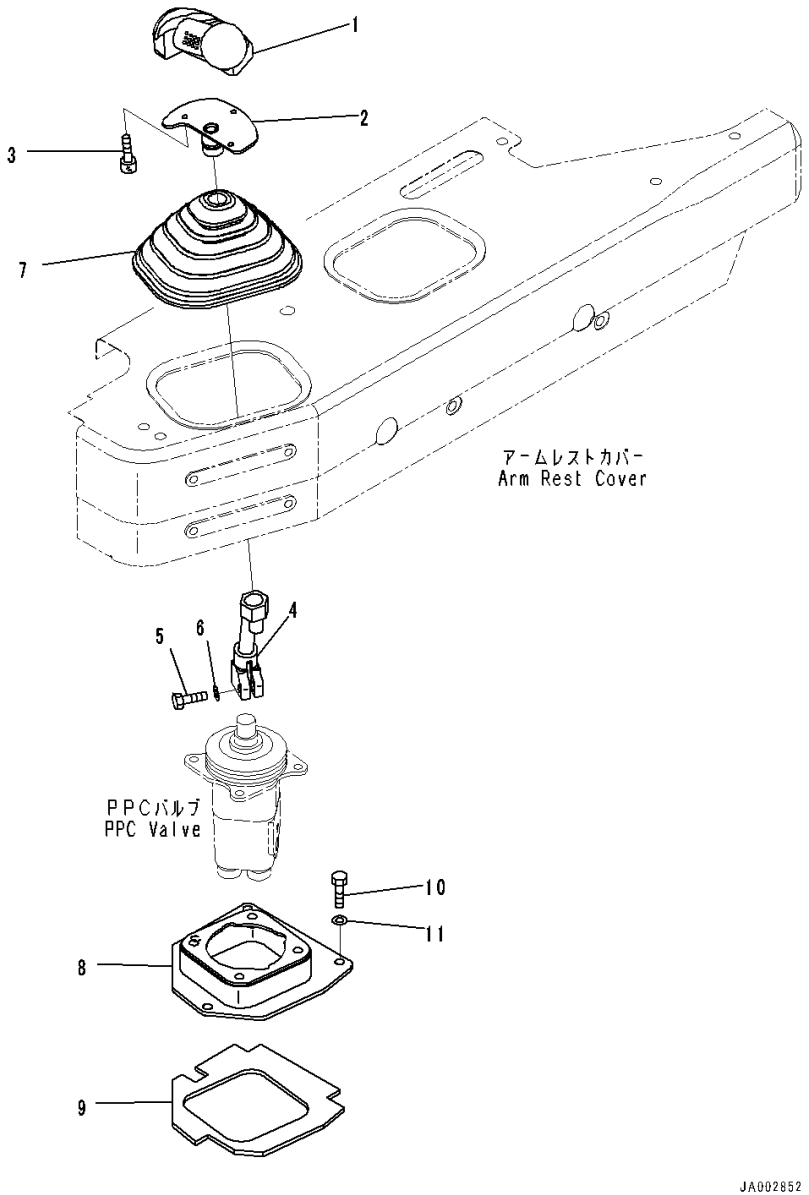

Index	Code	Part Number	Description	Qty	Serial Number
		Note: This list covers following specifications.			
		For Machine Without Rear Actuator			
		For Machine With Rear Actuator			
1		195-43-64411	Knob Assembly	1	80001-
2		19M-43-38220	Bracket	1	80001-
3		01252-80510	Bolt	3	80001-
4		14X-43-34310	Lever	1	80001-
5		07372-21030	Bolt	1	80001-
6		01640-21016	Washer	1	80001-
7		11Y-43-11181	Boot	1	80001-
8		14X-43-51350	Bracket	1	80001-
9		14X-43-51370	• Seal,Bonded	1	80001-
10		01010-80830	Bolt	4	80001-
11		01643-30823	Washer	4	80001-

FIG. K2110-001003 Dozer Control, PPC Valve For Blade

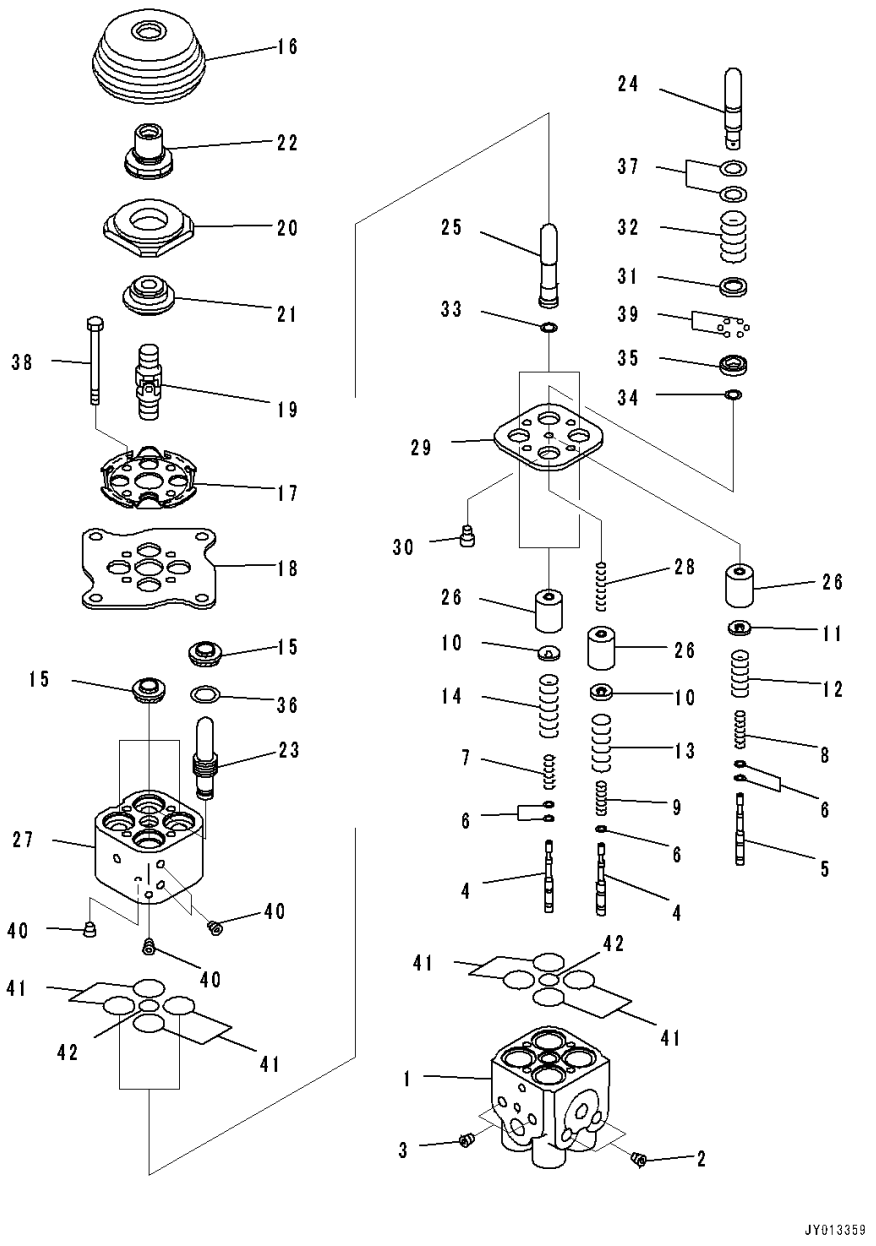

Index	Code	Part Number	Description	Qty	Serial Number
		Note: This list covers following specifications.			
		For Machine Without Rear Actuator			
		With Power Tilt Pitch Dozer, For Machine With Rear Actuator			
		With Power Tilt Pitch Dozer			
		For Machine With Rear Actuator			
		702-16-06270	Valve, Pilot	1	80001-
1	C1		• Body	1	80001-
2	C1		• Plug	2	80001-
3	C1		• Plug	2	80001-
4	C1		• Valve	3	80001-
5	C1		• Valve	1	80001-
6	C1		• Shim, T=0.30mm	4	80001-
	C1		• Shim, T=0.20mm	5	80001-
7	C1		• Spring	2	80001-
8	C1		• Spring	1	80001-
9	C1		• Spring	1	80001-
10	C1		• Retainer	3	80001-
11	C1		• Retainer	3	80001-
12	C1		• Spring	1	80001-
13	C1		• Spring	1	80001-
14	C1		• Spring	2	80001-
15		702-16-71150	• Seal	4	80001-
16		702-16-71280	• Boot	1	80001-
17	C1		• Plate	1	80001-
18	C1		• Plate	1	80001-
19		702-16-51240	• Universal Joint	1	80001-
20	C1		• Disc	1	80001-
21	C1		• Nut	1	80001-
22	C1		• Nut	1	80001-
23	C1		• Piston	1	80001-
24	C1		• Piston	1	80001-
25	C1		• Piston	2	80001-
26	C1		• Piston	4	80001-
27	C1		• Body	1	80001-
28	C1		• Spring	1	80001-
29	C1		• Plate	1	80001-
30	C1		• Orifice	1	80001-
31	C1		• Collar	1	80001-

FIG. K2110-001003 Dozer Control, PPC Valve For Blade

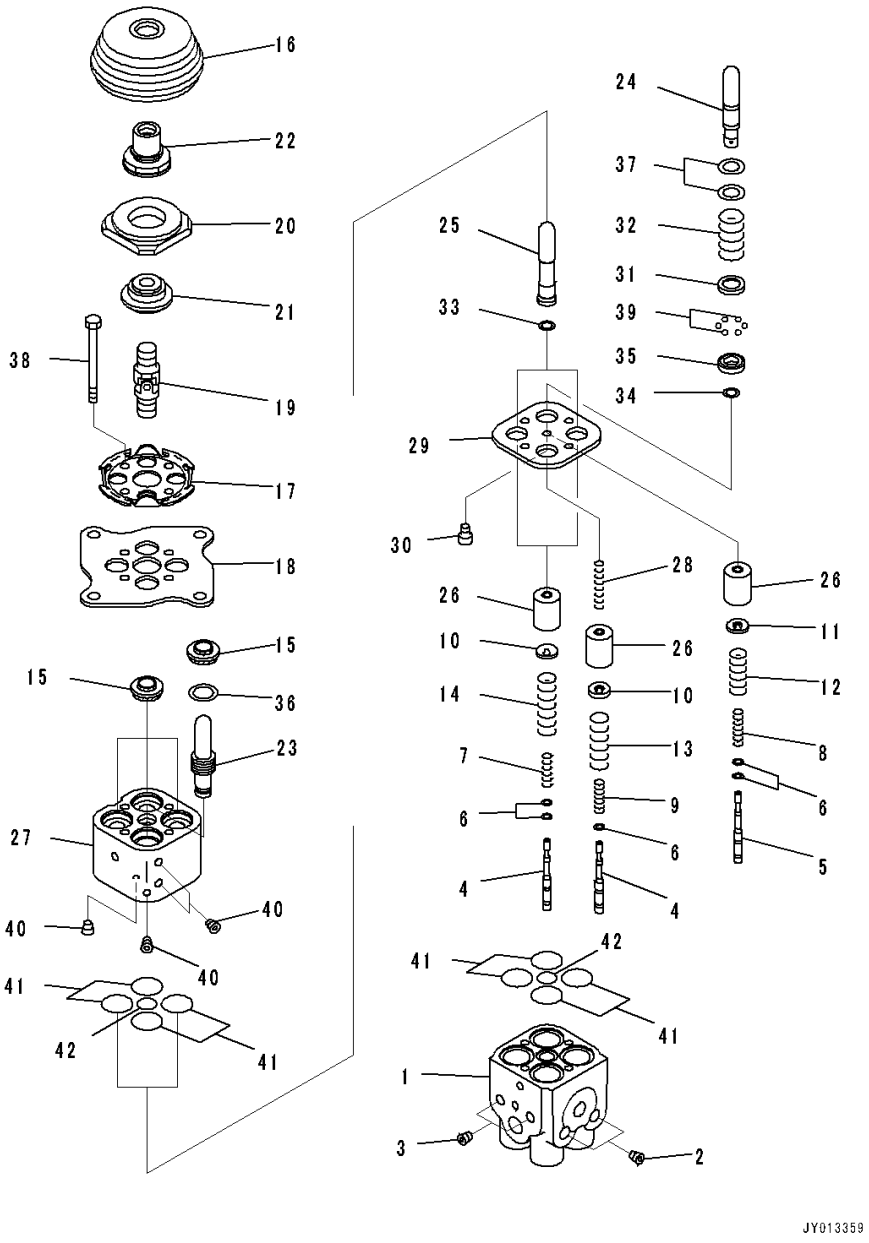

Index	Code	Part Number	Description	Qty	Serial Number
32	C1		• Spring	1	80001-
33	C1		• Shim	2	80001-
34	C1		• Shim	1	80001-
	C1		• Shim	1	80001-
	C1		• Shim	1	80001-
35	C1		• Retainer	1	80001-
36		702-16-72810	• Seat	1	80001-
37	C1		• Spacer	4	80001-
38		01010-80670	• Bolt	4	80001-
39	C1		• Ball	13	80001-
40	C1		• Screw	4	80001-
41	C1		• O-ring	8	80001-
42	C1		• O-ring	2	80001-

FIG. K2110-001004 Dozer Control, For Machine Without Rear Actuator, Hose

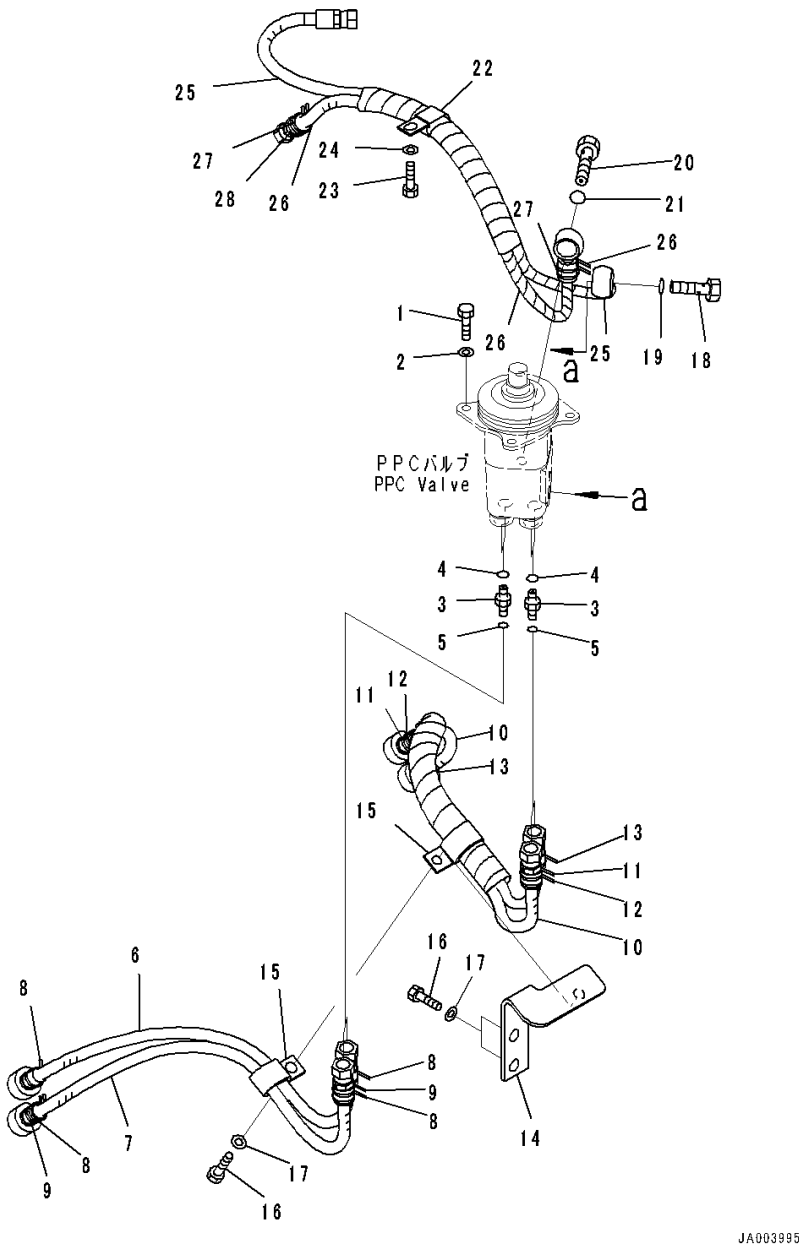

Index	Code	Part Number	Description	Qty	Serial Number
1		01010-80820	Bolt	4	80001-
2		01643-30823	Washer	4	80001-
3		02781-0021D	Union	4	80001-
4		07002-11423	O-ring	4	80001-
5		02896-11008	O-ring	4	80001-
		14X-62-53101	Hose Assembly	1	80001-
6		14X-62-53950	• Hose	1	80001-
7		14X-62-54820	• Hose	1	80001-
8		206-62-87990	• Band, Orange	4	80001-
9		20Y-62-22850	• Band, Green	2	80001-
		14X-62-54810	Hose Assembly	1	80001-
10		14X-62-54760	• Hose	2	80001-
11		20Y-62-22820	• Band, Blue	2	80001-
12		20Y-62-22830	• Band, White	2	80001-
13		20Y-62-22850	• Band, Green	2	80001-
14		14X-62-54511	Bracket	1	80001-
15		04435-51410	Clip	2	80001-
16		01010-81020	Bolt	3	80001-
17		01643-31032	Washer	3	80001-
18		702-16-53240	Plug	1	80001-
19		07000-12018	O-ring	1	80017-
20		203-62-57730	Bolt, Eye	1	80001-
21		07000-12018	O-ring	1	80017-
22		04435-51410	Clip	1	80001-
23		01010-81020	Bolt	1	80001-
24		01643-31032	Washer	1	80001-
		14X-62-53151	Hose Assembly	1	80001-
25		14X-62-53351	• Hose	1	80001-
26		14X-62-53361	• Hose	1	80001-
27		20Y-62-22790	• Band, Red	2	80001-
28		20Y-62-22860	• Band, Brown	2	80001-

FIG. K2110-006001 Dozer Control, Armrest

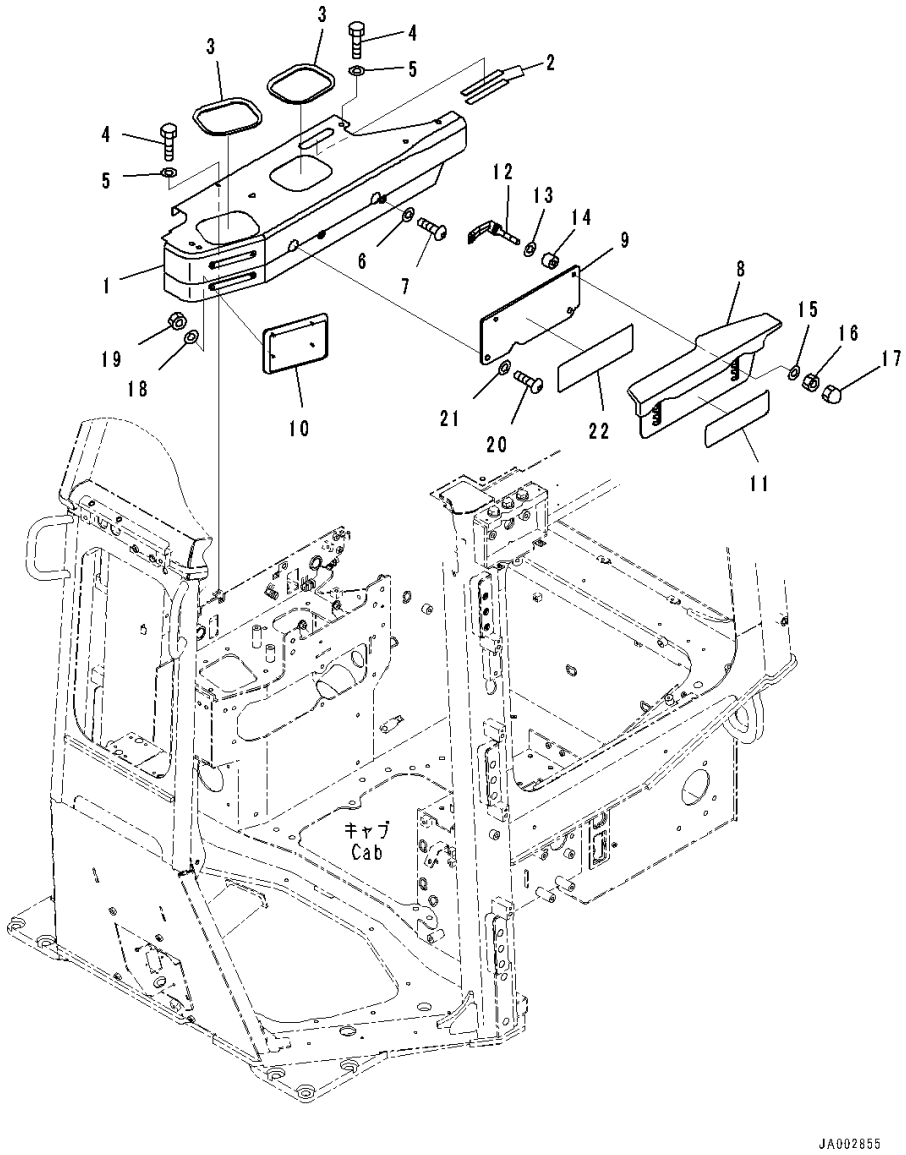

Index	Code	Part Number	Description	Qty	Serial Number
		Note: This list covers following specifications.			
		With Power Angle Power Tilt Dozer, For Machine With Rear Actuator			
		With Power Tilt Pitch Dozer, For Machine With Rear Actuator			
		For Machine With Rear Actuator			
1		14X-54-56391	Cover	1	80001-
2		14X-43-48110	• Awning	2	80001-
3		14X-54-16490	• Plate	2	80001-
4		01010-D0825	Bolt	4	80001-
5		01643-70823	Washer	4	80001-
6		01643-70623	Washer	2	80001-
7		01245-00620	Screw	2	80001-
8		14X-54-56531	Armrest Assembly	1	80001-
9		14X-54-56541	Plate	1	80001-
10		14X-54-56910	Pad	1	80001-
11		14X-54-56591	Plate,Bonded	1	80001-
12		423-43-38170	Lever	2	80001-
13		418-54-35450	Washer	2	80001-
14		17A-43-46380	Spacer	2	80001-
15		418-54-35450	Washer	2	80001-
16		195-43-43370	Nut	2	80001-
17		01546-10812	Nut	2	80001-
18		01643-30623	Washer	4	80001-
19		01580-00605	Nut	4	80001-
20		01245-01030	Screw	2	80001-
21		01643-71032	Washer	2	80001-
22		134-54-66190	Plate	1	80001-

FIG. K2110-006002 Dozer Control, Lever

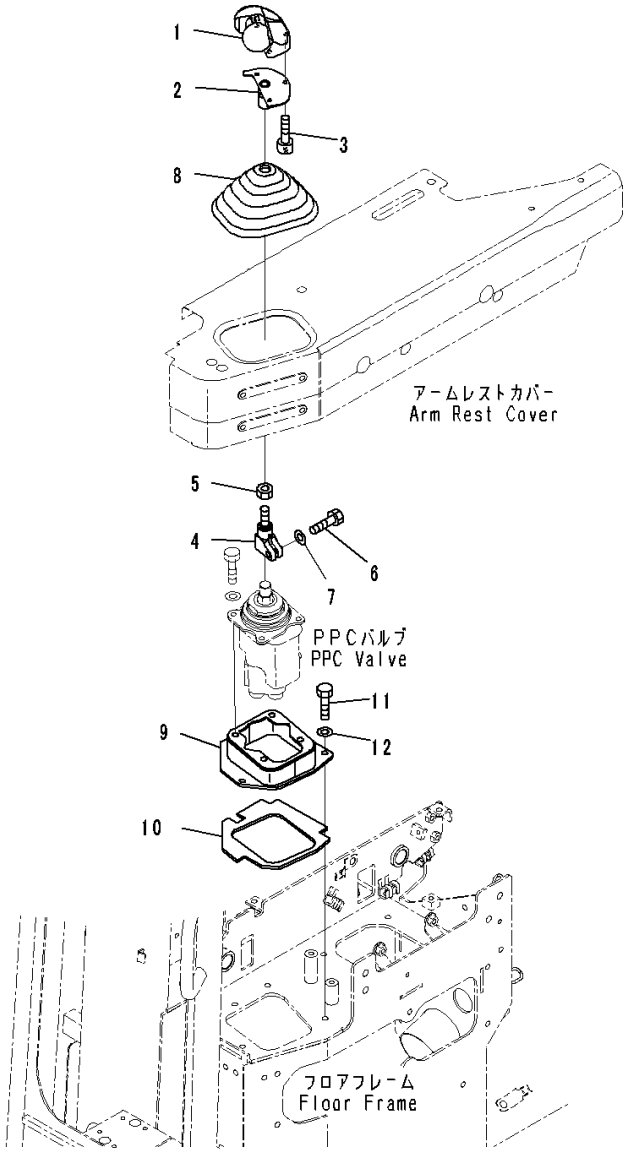

Index	Code	Part Number	Description	Qty	Serial Number
		Note: This list covers following specifications.			
		With Power Angle Power Tilt Dozer, For Machine With Rear Actuator			
		With Power Angle Power Tilt Dozer			
1		195-43-64411	Knob Assembly	1	80001-
2		14X-43-51340	Bracket	1	80001-
3		01252-80510	Bolt	3	80001-
4		11Y-43-12710	Lever	1	80001-
5		20T-43-71190	Nut	1	80001-
6		07372-21030	Bolt	1	80001-
7		01640-21016	Washer	1	80001-
8		11Y-43-11181	Boot	1	80001-
9		14X-43-51311	Bracket	1	80001-
10		14X-43-51330	• Seal	1	80001-
11		01010-80830	Bolt	4	80001-
12		01643-30823	Washer	4	80001-

FIG. K2110-006003 Dozer Control, PPC Valve For Pat (1/2)

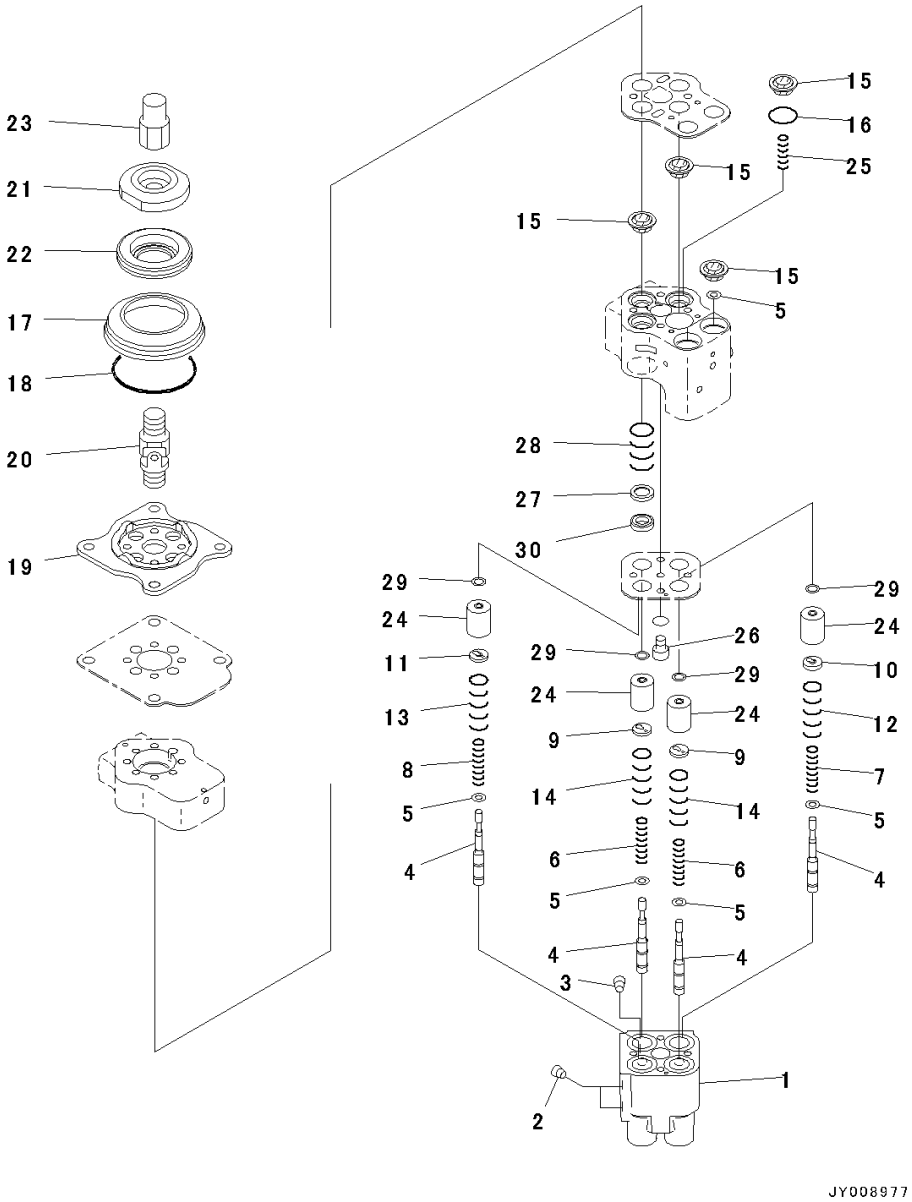

Index	Code	Part Number	Description	Qty	Serial Number
		Note: This list covers following specifications.			
		With Power Angle Power Tilt Dozer, For Machine With Rear Actuator			
		With Power Angle Power Tilt Dozer			
		702-16-06280	Valve, PPC	1	80001-
1	C1		• Valve Body	1	80001-
2	C1		• Plug	2	80001-
3	C1		• Plug	2	80001-
4	C1		• Valve	4	80001-
5	C1		• Shim, T=0.30mm	6	80001-
6	C1		• Spring	2	80001-
7	C1		• Spring	1	80001-
8	C1		• Spring	1	80001-
9	C1		• Retainer	2	80001-
10	C1		• Retainer	1	80001-
11	C1		• Retainer	1	80001-
12	C1		• Spring	1	80001-
13	C1		• Spring	1	80001-
14	C1		• Spring	2	80001-
15	C1		• Seal	6	80001-
16	C1		• O-ring	3	80001-
17		702-16-58820	• Boot	1	80001-
18		07000-12070	• O-ring	1	80001-
19	C1		• Plate	1	80001-
20		702-16-51240	• Universal Joint	1	80001-
21	C1		• Plug	1	80001-
22	C1		• Disc	1	80001-
23		702-16-59670	• Cap	1	80001-
24	C1		• Piston	4	80001-
25	C1		• Spring	1	80001-
26	C1		• Orifice	1	80001-
27	C1		• Collar	1	80001-
28	C1		• Spring	1	80001-
29	C1		• Shim	4	80001-
30	C1		• Retainer	1	80001-

FIG. K2110-006004 Dozer Control, PPC Valve For Pat (2/2)

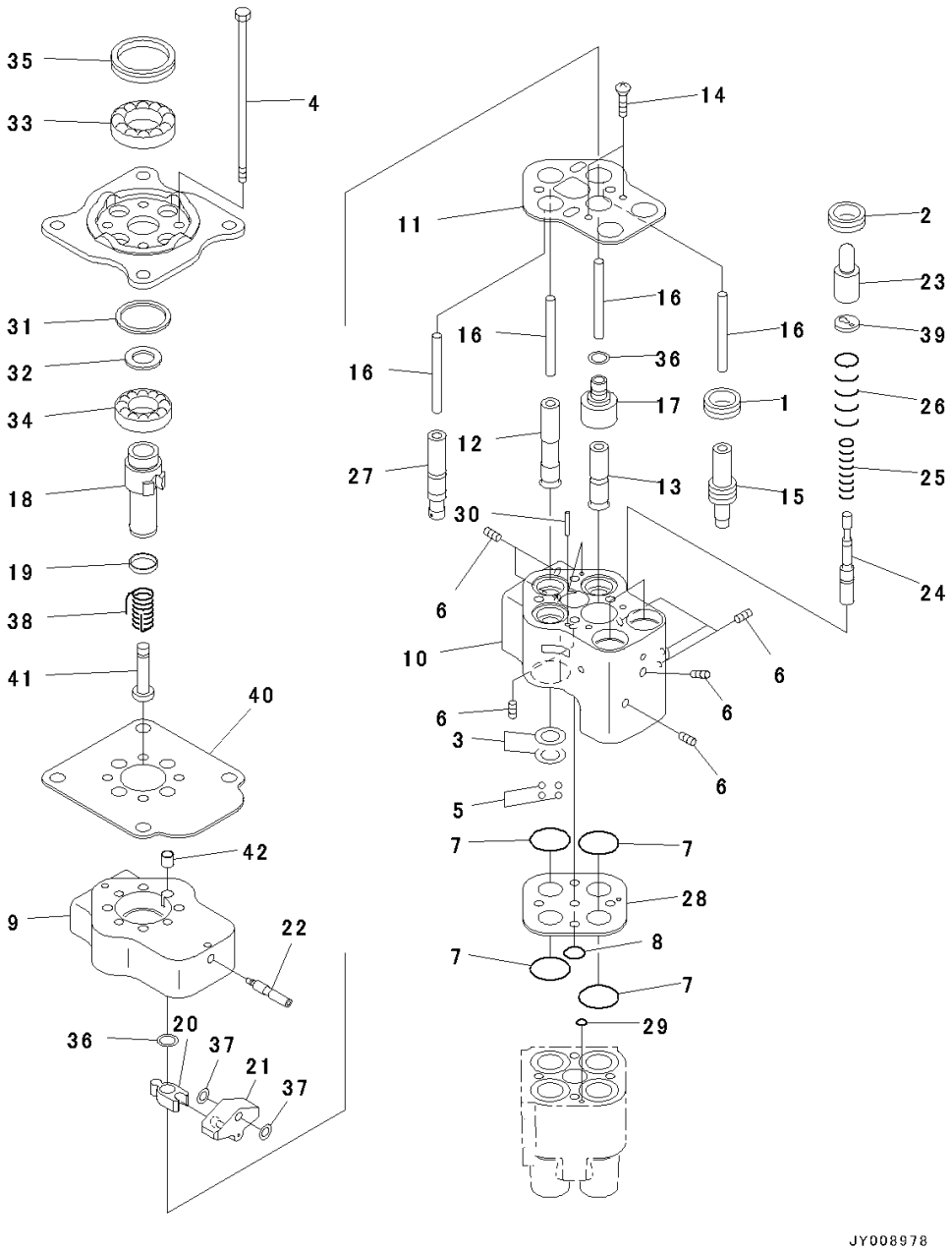

Index	Code	Part Number	Description	Qty	Serial Number
		Note: This list covers following specifications.			
		With Power Angle Power Tilt Dozer, For Machine With Rear Actuator			
		With Power Angle Power Tilt Dozer			
		702-16-06280	Valve, PPC	1	80001-
1	C1		• Collar	1	80001-
2	C1		• Collar	2	80001-
3	C1		• Spacer	4	80001-
4	C1		• Bolt	4	80001-
5	C1		• Ball	13	80001-
6	C1		• Screw	8	80001-
7	C1		• O-ring	8	80001-
8	C1		• O-ring	2	80001-
9	C1		• Block	1	80001-
10	C1		• Block	1	80001-
11	C1		• Plate	1	80001-
12	C1		• Rod	1	80001-
13	C1		• Rod	1	80001-
14	C1		• Bolt, Hexagon Socket Head	2	80001-
15	C1		• Piston	1	80001-
16	C1		• Rod	4	80001-
17	C1		• Sleeve	1	80001-
18	C1		• Shaft	1	80001-
19	C1		• Bushing	1	80001-
20	C1		• Lever	1	80001-
21	C1		• Lever	1	80001-
22	C1		• Shaft	1	80001-
23	C1		• Piston	2	80001-
24	C1		• Spool	2	80001-
25	C1		• Spring	2	80001-
26	C1		• Spring	2	80001-
27	C1		• Piston	1	80001-
28	C1		• Plate	1	80001-
29	C1		• O-ring	2	80001-
30	C1		• Pin	2	80001-
31	C1		• Washer	1	80001-
32	C1		• Washer	1	80001-
33	C1		• Bearing	1	80001-
34	C1		• Bearing	1	80001-

FIG. K2110-006004 Dozer Control, PPC Valve For Pat (2/2)

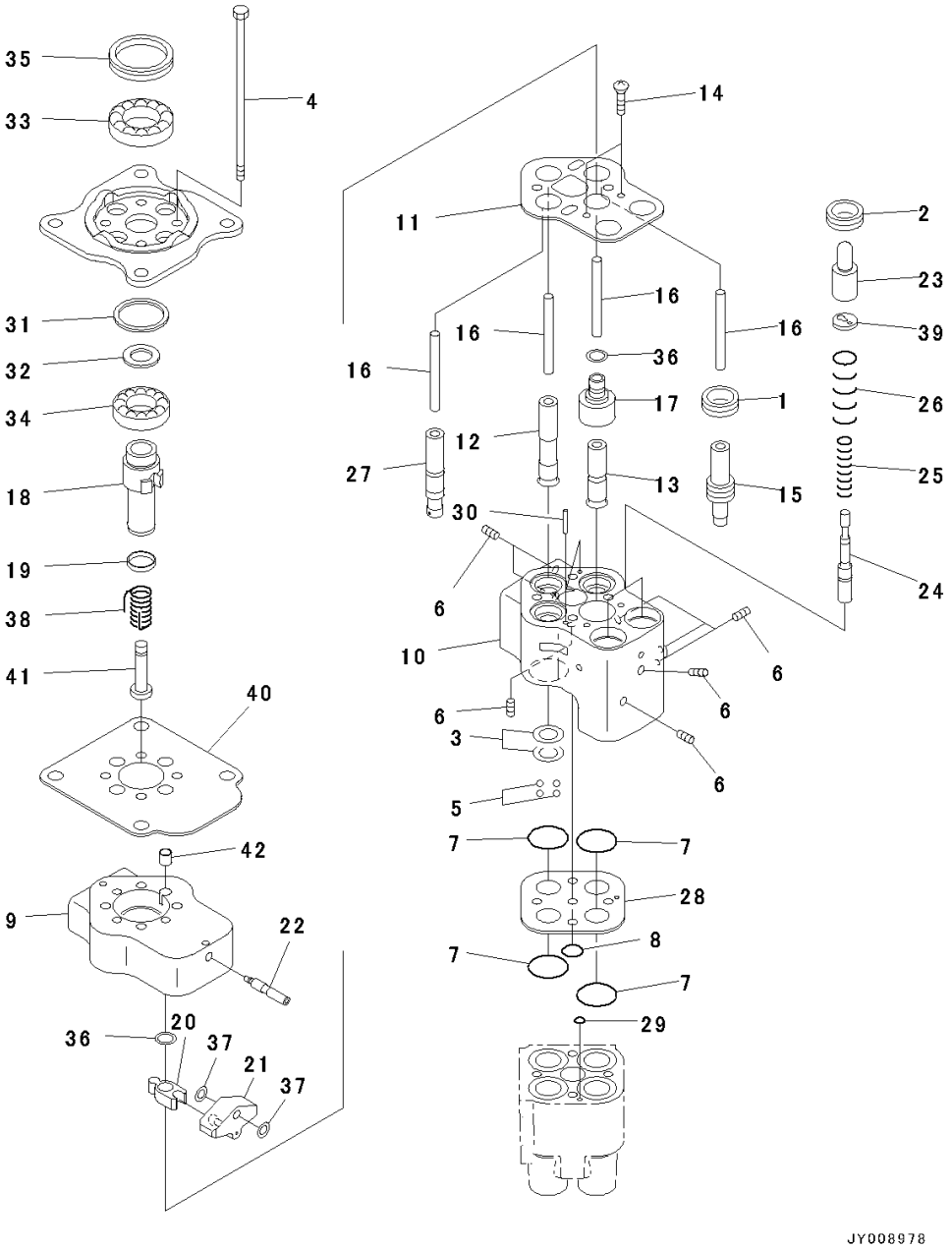

Index	Code	Part Number	Description	Qty	Serial Number
35	C1		• Seal	1	80001-
36	C1		• Shim	2	80001-
37	C1		• Shim	2	80001-
38	C1		• Spring	1	80001-
39	C1		• Retainer	2	80001-
40	C1		• Plate	1	80001-
41	C1		• Boss	1	80001-
42	C1		• Bushing	1	80001-

FIG. K2110-006005 Dozer Control, Hose

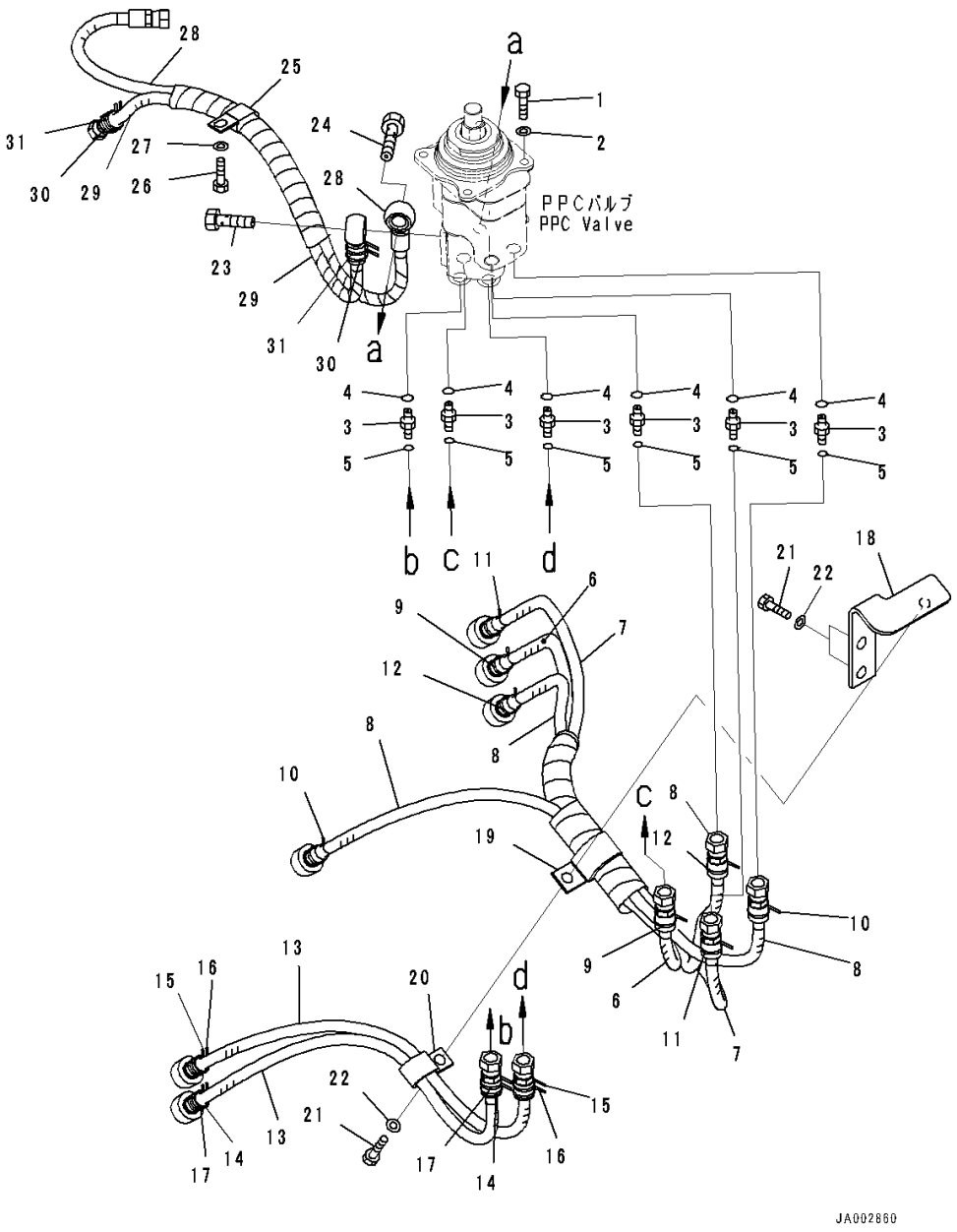

Index	Code	Part Number	Description	Qty	Serial Number
		Note: This list covers following specifications.			
		With Power Angle Power Tilt Dozer, For Machine With Rear Actuator			
		With Power Angle Power Tilt Dozer			
1		01010-80820	Bolt	4	80001-
2		01643-30823	Washer	4	80001-
3		02781-0021D	Union	6	80001-
4		07002-11423	O-ring	6	80001-
5		02896-11008	O-ring	6	80001-
		14X-62-53201	Hose Assembly	1	80001-
6		14X-62-53411	• Hose	1	80001-
7		14X-62-53691	• Hose	1	80001-
8		14X-62-54760	• Hose	2	80001-
9		206-62-87990	• Band, Orange	2	80001-
10		20Y-62-22820	• Band, Blue	2	80001-
11		20Y-62-22830	• Band, White	2	80001-
12		20Y-62-22850	• Band, Green	2	80001-
		14X-62-54831	Hose Assembly	1	80001-
13		14X-62-54820	• Hose	2	80001-
14		206-62-87990	• Band, Orange	2	80001-
15		20Y-62-22820	• Band, Blue	2	80001-
16		20Y-62-22830	• Band, White	2	80001-
17		20Y-62-22850	• Band, Green	2	80001-
18		14X-62-54511	Bracket	1	80001-
19		04435-51410	Clip	1	80001-
20		04434-52712	Clip	1	80009-
21		01010-81020	Bolt	3	80001-
22		01643-31032	Washer	3	80001-
23		702-16-53240	Plug	1	80001-
24		203-62-57730	Bolt, Eye	1	80001-
25		04435-51410	Clip	1	80001-
26		01010-81020	Bolt	1	80001-
27		01643-31032	Washer	1	80001-
		14X-62-53151	Hose Assembly	1	80001-
28		14X-62-53351	• Hose	1	80001-
29		14X-62-53361	• Hose	1	80001-
30		20Y-62-22790	• Band, Red	2	80001-
31		20Y-62-22860	• Band, Brown	2	80001-

FIG. K2110-006006 Dozer Control, PPC Valve For Ripper

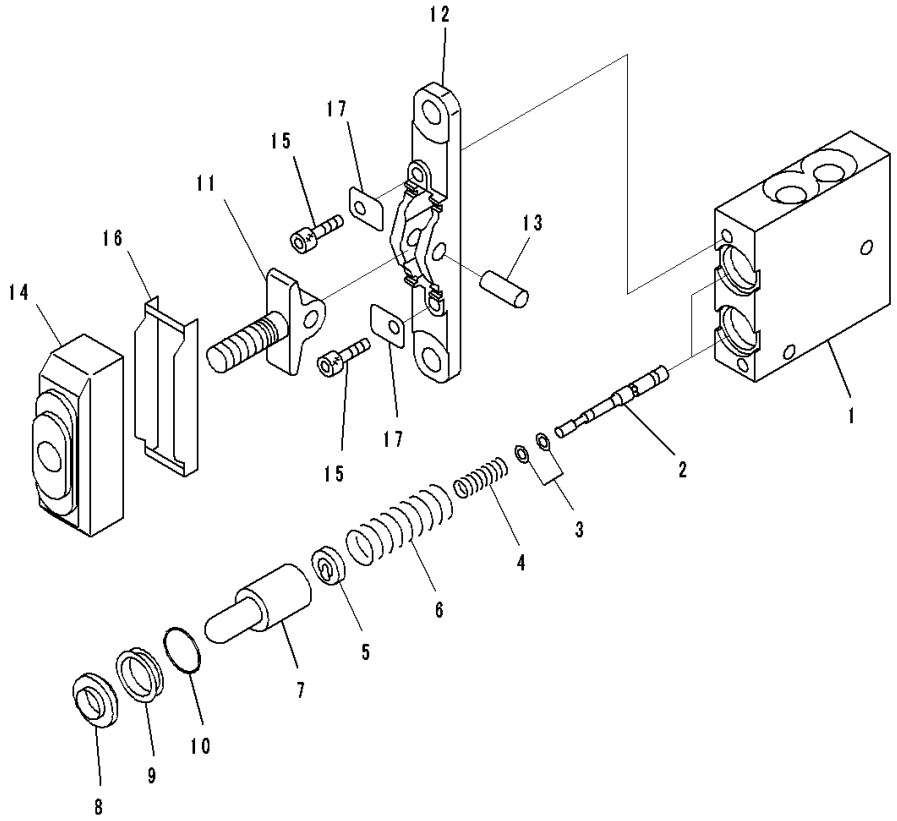

Index	Code	Part Number	Description	Qty	Serial Number
		Note: This list covers following specifications.			
		With Power Angle Power Tilt Dozer, For Machine With Rear Actuator			
		With Power Tilt Pitch Dozer, For Machine With Rear Actuator			
		For Machine With Rear Actuator			
		702-16-01230	Valve, Pilot	1	80001-
1		702-16-54540	• Body	1	80001-
2		702-16-53120	• Valve	2	80001-
3		702-16-51140	• Shim, T=0.30mm	2	80001-
		702-16-54670	• Shim, T=0.20mm	4	80001-
4		702-16-54550	• Spring	2	80001-
5		702-16-54571	• Retainer	2	80001-
6		702-16-54560	• Spring	2	80001-
7		702-16-53170	• Piston	2	80001-
8		702-16-51270	• Seal	2	80001-
9		702-16-54580	• Collar	2	80001-
10		702-16-54590	• O-ring	2	80001-
11		702-16-54610	• Lever	1	80001-
12		702-16-54620	• Plate	1	80001-
13		702-16-54630	• Shaft	1	80001-
14		702-16-54641	• Boot	1	80001-
15		01252-30625	• Bolt	2	80001-
16		702-16-54660	• Plate	1	80001-
17		702-16-54650	• Plate	2	80001-

FIG. K2110-006007 Dozer Control, With Power Angle Power Tilt Dozer, For Machine With Rear Actuator, Attachment Lever

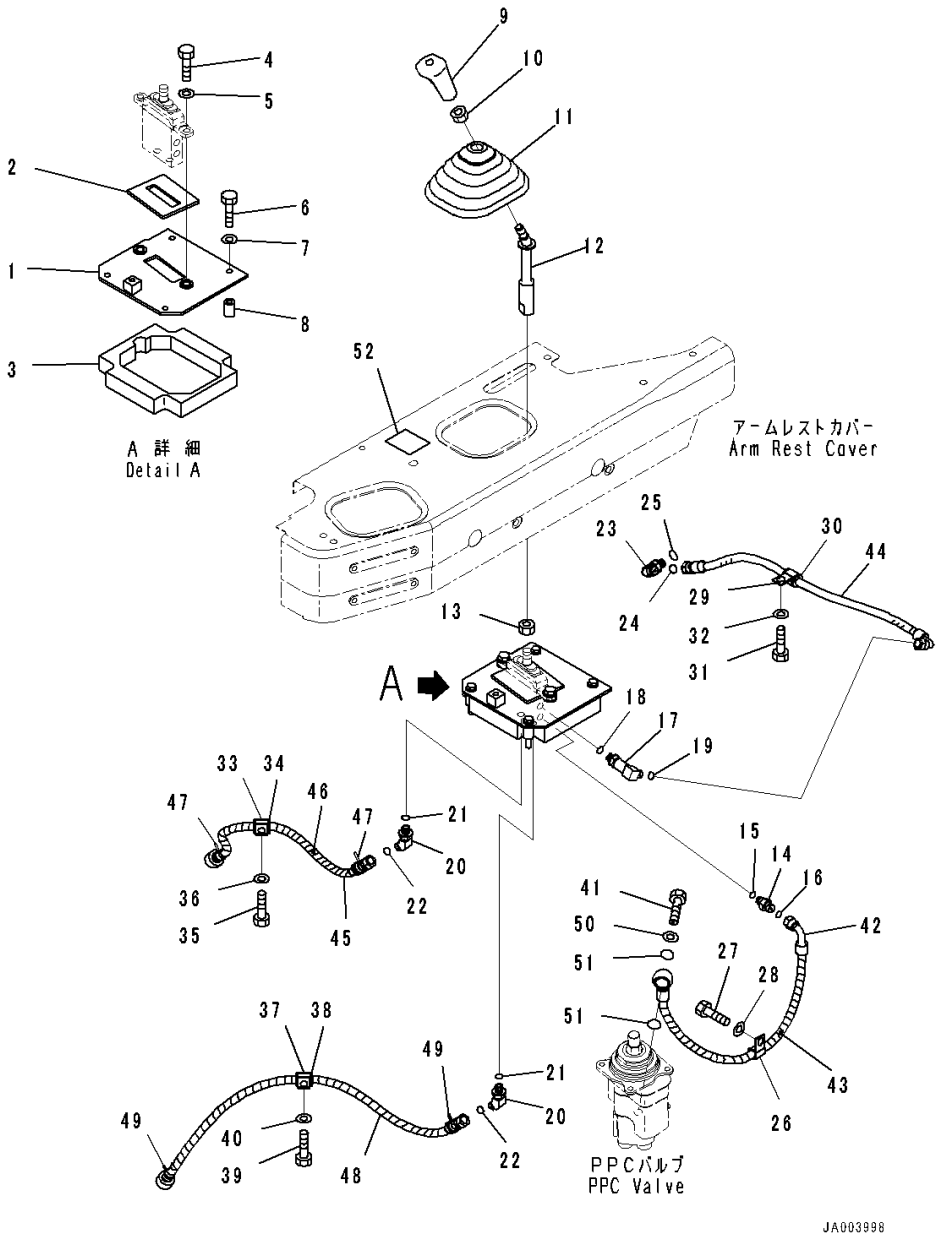

Index	Code	Part Number	Description	Qty	Serial Number
1		14X-78-51112	Bracket	1	80001-
2		14X-78-11490	• Seal,Bonded	1	80001-
3		14X-78-51131	• Seal,Bonded	1	80001-
4		01010-81030	Bolt	2	80001-
5		01643-31032	Washer	2	80001-
6		01010-80855	Bolt	4	80001-
7		01643-30823	Washer	4	80001-
8		14X-78-51141	Spacer	4	80001-
9		17A-43-42240	Knob	1	80001-
10		20T-43-71190	Nut	1	80001-
11		11Y-43-11181	Boot	1	80001-
12		14X-78-51291	Lever	1	80001-
13		01583-11408	Nut	1	80001-
14		21W-62-44510	Nipple	1	80001-
15		07002-11423	O-ring	1	80001-
16		02896-11008	O-ring	1	80001-
17		21W-62-43990	Elbow	1	80001-
18		07002-11423	O-ring	1	80001-
19		02896-11008	O-ring	1	80001-
20		21W-62-42660	Elbow	2	80001-
21		07002-11423	O-ring	2	80001-
22		02896-11008	O-ring	2	80001-
23		02782-10210	Elbow	1	80001-80008
24		07002-11423	O-ring	1	80001-80008
25		02896-11008	O-ring	1	80001-80008
26		04434-51410	Clip	1	80001-
27		01010-81020	Bolt	1	80001-
28		01643-31032	Washer	1	80001-
29		04434-51710	Clip	1	80001-
30		07095-20211	Cushion	1	80001-
31		01010-81020	Bolt	1	80001-
32		01643-31032	Washer	1	80001-
33		04434-51810	Clip	1	80001-
34		07095-20213	Cushion	1	80001-
35		01010-81020	Bolt	1	80001-
36		01643-31032	Washer	1	80001-
37		04434-51810	Clip	1	80001-
38		07095-20213	Cushion	1	80001-
39		01010-81020	Bolt	1	80001-

FIG. K2110-006007 Dozer Control, With Power Angle Power Tilt Dozer, For Machine With Rear Actuator, Attachment Lever

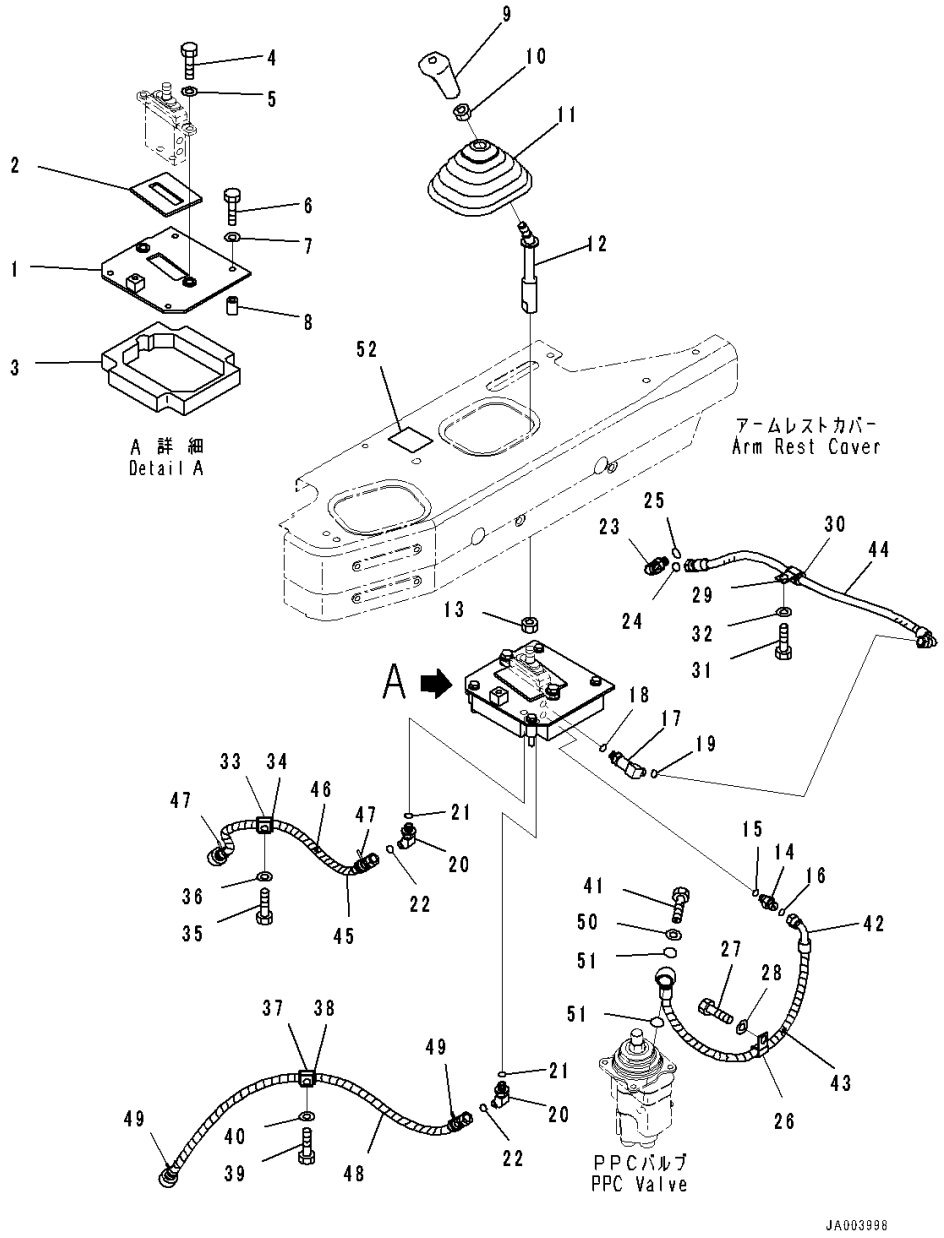

Index	Code	Part Number	Description	Qty	Serial Number
40		01643-31032	Washer	1	80001-
41		14X-78-51410	Bolt, Eye	1	80001-
42		14X-78-51450	Hose Assembly	1	80001-
43		08210-00605	• Tube, Spiral	1	80001-
44		02761-00206	Hose, Face Seal Type	1	80001-
45		14X-78-51431	Hose Assembly	1	80001-
46		08210-00604	• Tube, Spiral	1	80001-
47		20Y-62-22860	• Band, Brown	2	80001-
48		14X-78-51421	Hose Assembly	1	80001-
49		20Y-62-22790	• Band, Red	2	80001-
50		287-15-15710	Shim, T=0.5mm	1	80001-
51		07000-12018	O-ring	2	80017-
52		14X-78-11180	Plate, Operating	1	80005-

FIG. K2110-005001 Dozer Control, Armrest

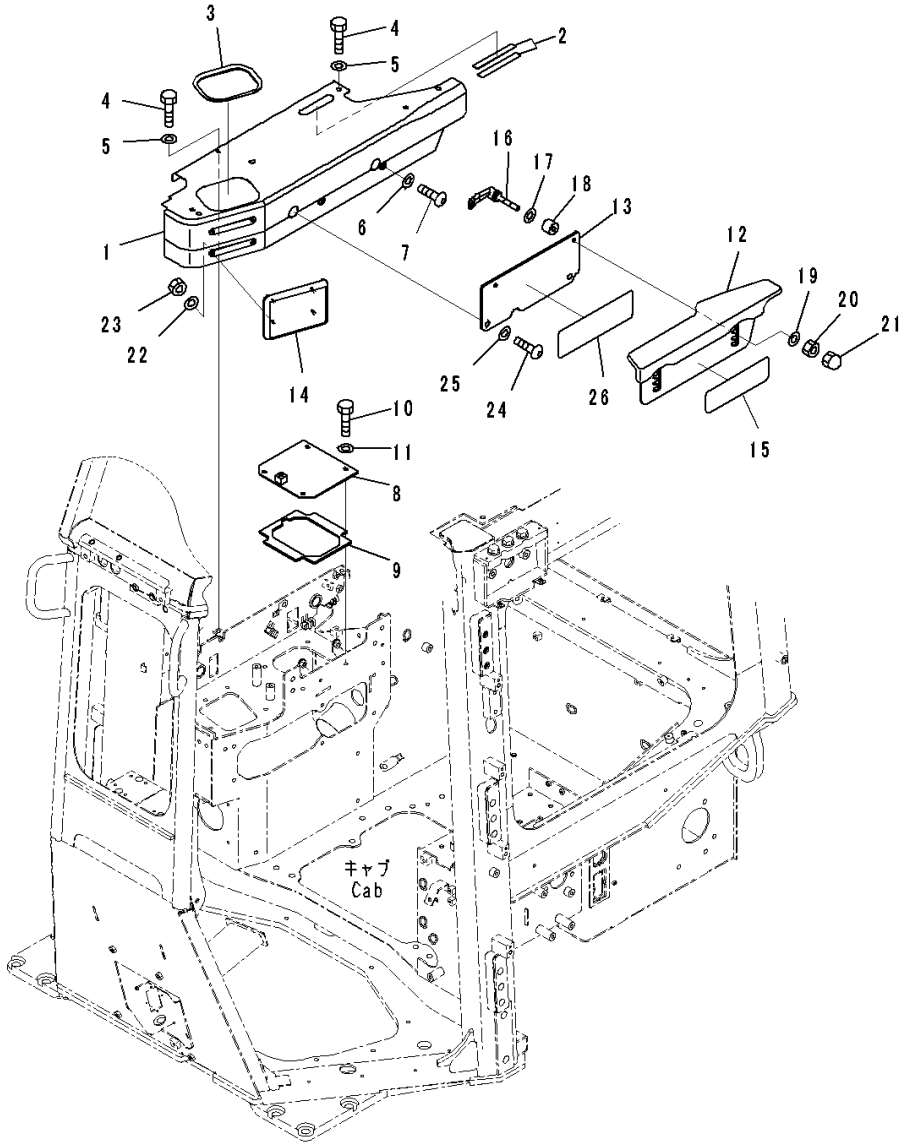

Index	Code	Part Number	Description	Qty	Serial Number
		Note: This list covers following specifications.			
		With Power Angle Power Tilt Dozer			
		With Power Tilt Pitch Dozer			
1		14X-54-56631	Cover	1	80001-
2		14X-43-48110	• Awning	2	80001-
3		14X-54-16490	• Plate	1	80001-
4		01010-D0825	Bolt	4	80001-
5		01643-70823	Washer	4	80001-
6		01643-70623	Washer	2	80001-
7		01245-00620	Screw	2	80001-
8		14X-54-56661	Cover	1	80001-
9		14X-54-56670	• Seal,Bonded	1	80001-
10		01010-D0825	Bolt	4	80001-
11		01643-70823	Washer	4	80001-
12		14X-54-56531	Armrest Assembly	1	80001-
13		14X-54-56541	Plate	1	80001-
14		14X-54-56910	Pad	1	80001-
15		14X-54-56591	Plate,Bonded	1	80001-
16		423-43-38170	Lever	2	80001-
17		418-54-35450	Washer	2	80001-
18		17A-43-46380	Spacer	2	80001-
19		418-54-35450	Washer	2	80001-
20		195-43-43370	Nut	2	80001-
21		01546-10812	Nut	2	80001-
22		01643-30623	Washer	4	80001-
23		01580-00605	Nut	4	80001-
24		01245-01030	Screw	2	80001-
25		01643-71032	Washer	2	80001-
26		134-54-66190	Plate	1	80001-

FIG. K2110-004002 Dozer Control, Lever

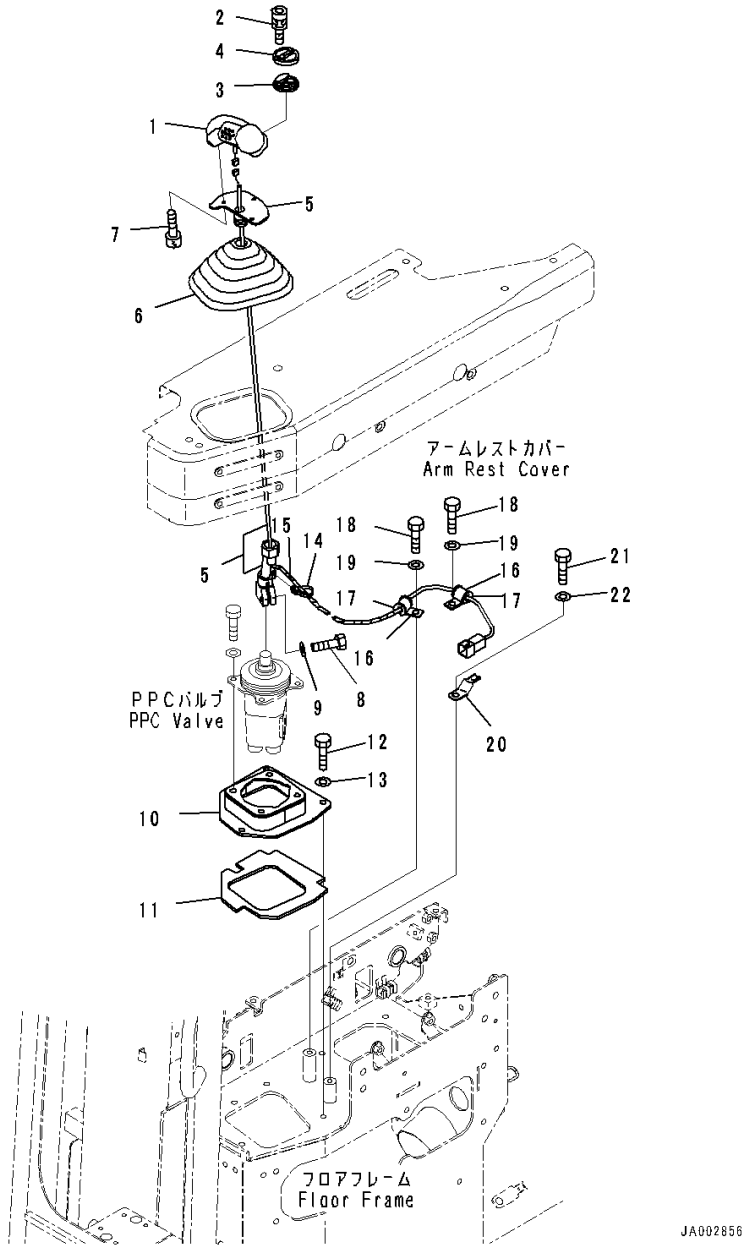

Index	Code	Part Number	Description	Qty	Serial Number
		Note: This list covers following specifications.			
		With Power Tilt Pitch Dozer, For Machine With Rear Actuator			
		With Power Tilt Pitch Dozer			
1		14X-43-51911	Knob Assembly	1	80001-
2		19M-09-11510	• Bolt	2	80001-
3		17A-43-42430	• Rubber	1	80001-
4		14X-43-51921	• Cover	1	80001-
5		14X-43-51901	Lever Assembly	1	80001-
6		11Y-43-11181	• Boot	1	80001-
7		01252-80510	Bolt	3	80001-
8		07372-21030	Bolt	1	80001-
9		01640-21016	Washer	1	80001-
10		14X-43-51350	Bracket	1	80001-
11		14X-43-51370	• Seal,Bonded	1	80001-
12		01010-80830	Bolt	4	80001-
13		01643-30823	Washer	4	80001-
14		20Y-06-23940	Band	1	80001-
15		08210-00604	Tube, Spiral	1	80001-
16		04434-51410	Clip	2	80001-
17		14X-06-52780	Cushion	2	80001-
18		01010-81020	Bolt	2	80001-
19		01643-31032	Washer	2	80001-
20		08193-20010	Clip	1	80001-
21		01010-81020	Bolt	1	80001-
22		01643-31032	Washer	1	80001-

FIG. K2110-004004 Dozer Control, With Power Tilt Pitch Dozer, For Machine With Rear Actuator, Hose

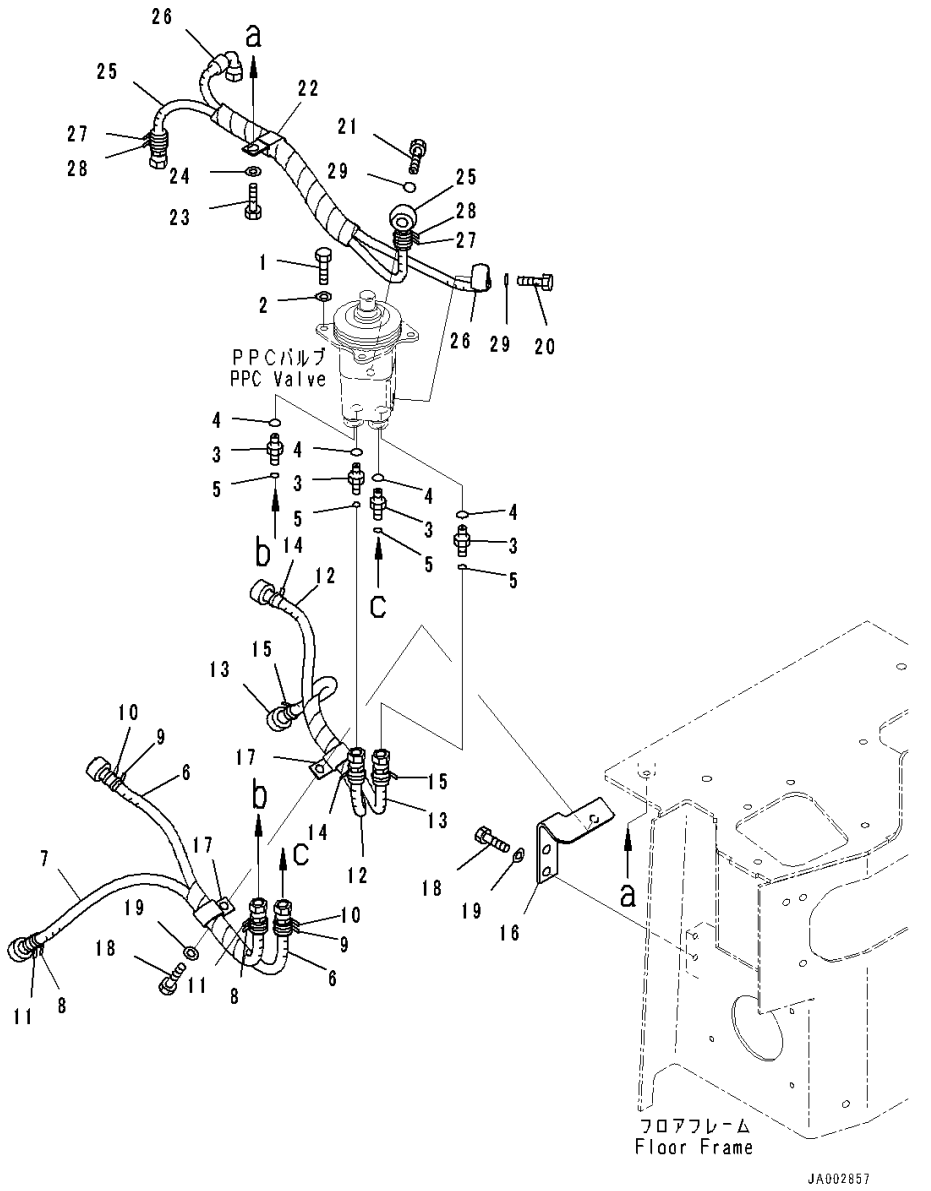

Index	Code	Part Number	Description	Qty	Serial Number
1		01010-80820	Bolt	4	80001-
2		01643-30823	Washer	4	80001-
3		02781-0021D	Union	4	80001-
4		07002-11423	O-ring	4	80001-
5		02896-11008	O-ring	4	80001-
		14X-62-54131	Hose Assembly	1	80001-
6		14X-62-53950	• Hose	1	80001-
7		21K-62-72250	• Hose	1	80001-
8		206-62-87990	• Band, Orange	2	80001-
9		20Y-62-22820	• Band, Blue	2	80001-
10		20Y-62-22830	• Band, White	2	80001-
11		20Y-62-22850	• Band, Green	2	80001-
		14X-62-54171	Hose Assembly	1	80001-
12		14X-62-53950	• Hose	1	80001-
13		14X-62-54760	• Hose	1	80001-
14		206-62-87990	• Band, Orange	2	80001-
15		20Y-62-22850	• Band, Green	2	80001-
16		14X-62-54511	Bracket	1	80001-
17		04435-51410	Clip	2	80001-
18		01010-81020	Bolt	3	80001-
19		01643-31032	Washer	3	80001-
20		702-16-53240	Plug	1	80001-
21		203-62-57730	Bolt, Eye	1	80001-
22		04435-51410	Clip	1	80001-
23		01010-81020	Bolt	1	80001-
24		01643-31032	Washer	1	80001-
		14X-62-54141	Hose Assembly	1	80001-
25		14X-62-53751	• Hose	1	80001-
26		14X-62-54860	• Hose	1	80001-
27		20Y-62-22790	• Band, Red	2	80001-
28		20Y-62-22860	• Band, Brown	2	80001-
29		07000-12018	O-ring	2	80001-

FIG. K2110-004006 Dozer Control, With Power Tilt Pitch Dozer, For Machine With Rear Actuator, Attachment Lever

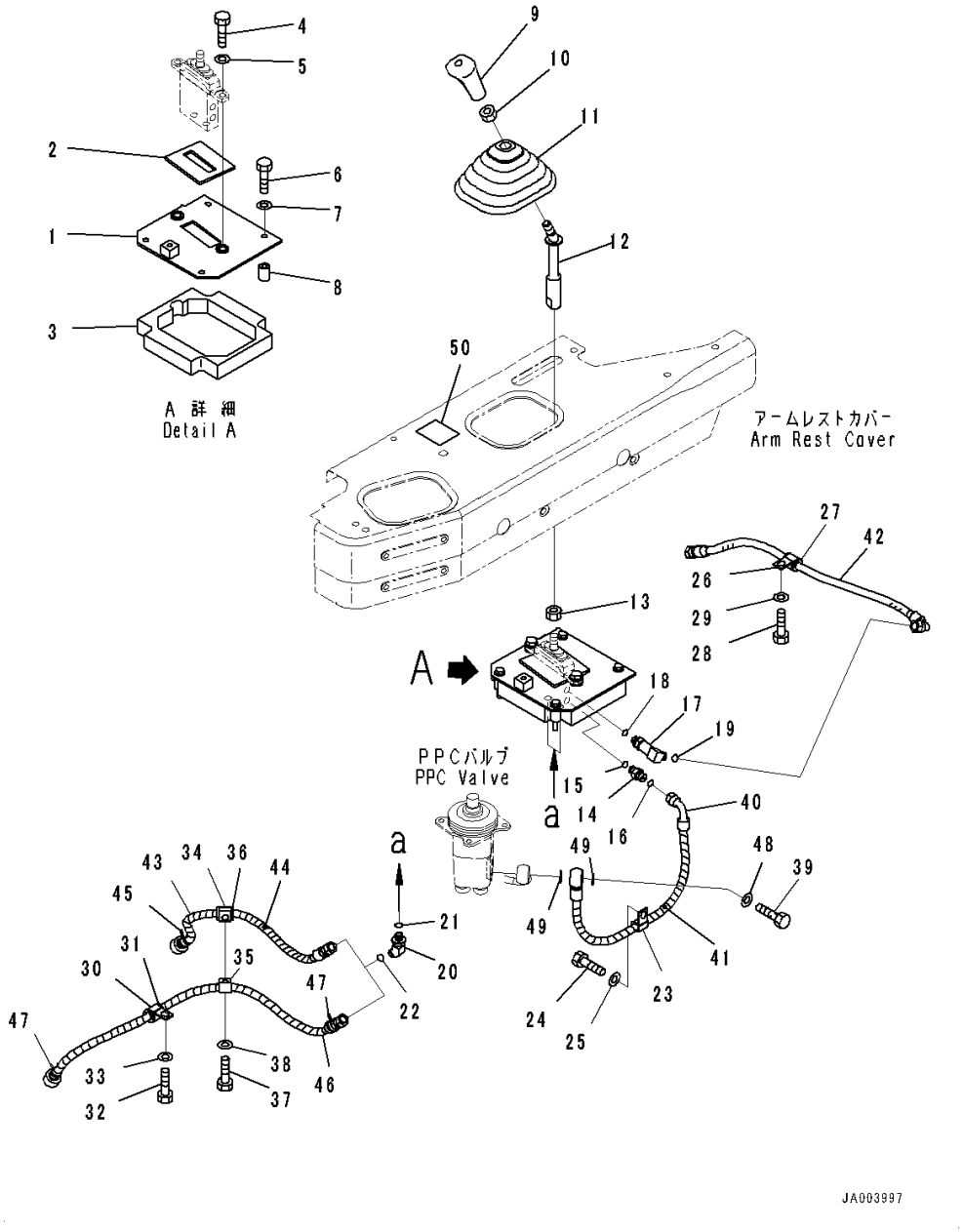

Index	Code	Part Number	Description	Qty	Serial Number
1		14X-78-51112	Bracket	1	80001-
2		14X-78-11490	• Seal,Bonded	1	80001-
3		14X-78-51131	• Seal,Bonded	1	80001-
4		01010-81030	Bolt	2	80001-
5		01643-31032	Washer	2	80001-
6		01010-80855	Bolt	4	80001-
7		01643-30823	Washer	4	80001-
8		14X-78-51141	Spacer	4	80001-
9		17A-43-42240	Knob	1	80001-
10		20T-43-71190	Nut	1	80001-
11		11Y-43-11181	Boot	1	80001-
12		14X-78-51291	Lever	1	80001-
13		01583-11408	Nut	1	80001-
14		21W-62-44510	Nipple	1	80001-
15		07002-11423	O-ring	1	80001-
16		02896-11008	O-ring	1	80001-
17		21W-62-43990	Elbow	1	80001-
18		07002-11423	O-ring	1	80001-
19		02896-11008	O-ring	1	80001-
20		21W-62-42660	Elbow	2	80001-
21		07002-11423	O-ring	2	80001-
22		02896-11008	O-ring	2	80001-
23		04434-51410	Clip	1	80001-
24		01010-81020	Bolt	1	80001-
25		01643-31032	Washer	1	80001-
26		04434-51710	Clip	1	80001-
27		07095-20211	Cushion	1	80001-
28		01010-81020	Bolt	1	80001-
29		01643-31032	Washer	1	80001-
30		04434-51810	Clip	1	80001-
31		07095-20213	Cushion	1	80001-
32		01010-81020	Bolt	1	80001-
33		01643-31032	Washer	1	80001-
34		04434-51810	Clip	1	80001-
35		04434-51210	Clip	1	80017-
36		07095-20213	Cushion	1	80001-
37		01010-81020	Bolt	1	80001-
38		01643-31032	Washer	1	80001-
39		14X-78-51410	Bolt, Eye	1	80001-

FIG. K2110-004006 Dozer Control, With Power Tilt Pitch Dozer, For Machine With Rear Actuator, Attachment Lever

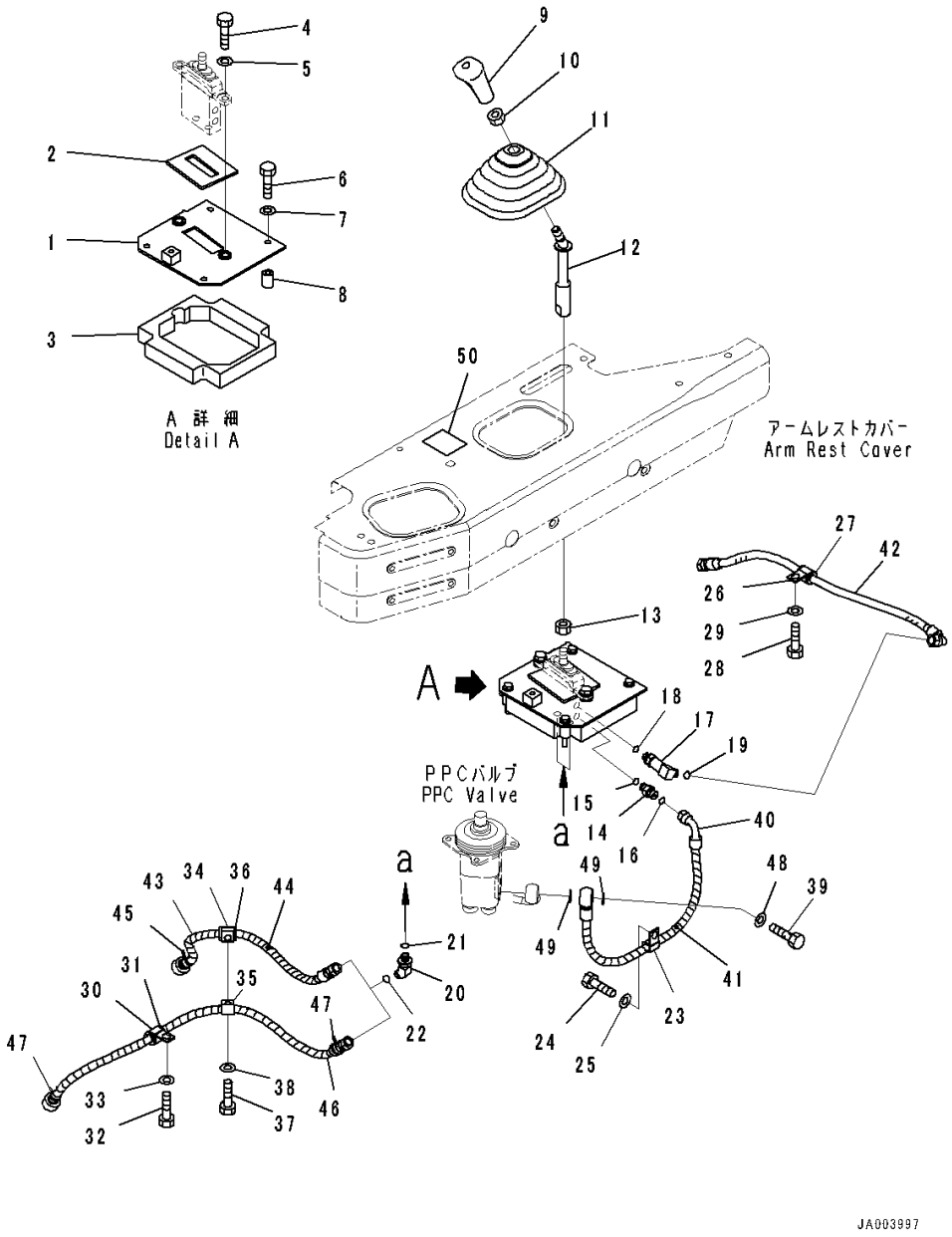

Index	Code	Part Number	Description	Qty	Serial Number
40		14X-78-51281	Hose Assembly	1	80001-
41		08210-00605	• Tube, Spiral	1	80001-
42		02761-00206	Hose, Face Seal Type	1	80001-
43		14X-78-51431	Hose Assembly	1	80001-
44		08210-00604	• Tube, Spiral	1	80001-
45		20Y-62-22860	• Band, Brown	2	80001-
46		14X-78-51421	Hose Assembly	1	80001-
47		20Y-62-22790	• Band, Red	2	80001-
48		287-15-15710	Shim, T=0.5mm	1	80001-
49		07000-12018	O-ring	2	80017-
50		14X-78-11180	Plate, Operating	1	80005-

FIG. K2110-003004 Dozer Control, With Power Tilt Pitch Dozer, Hose

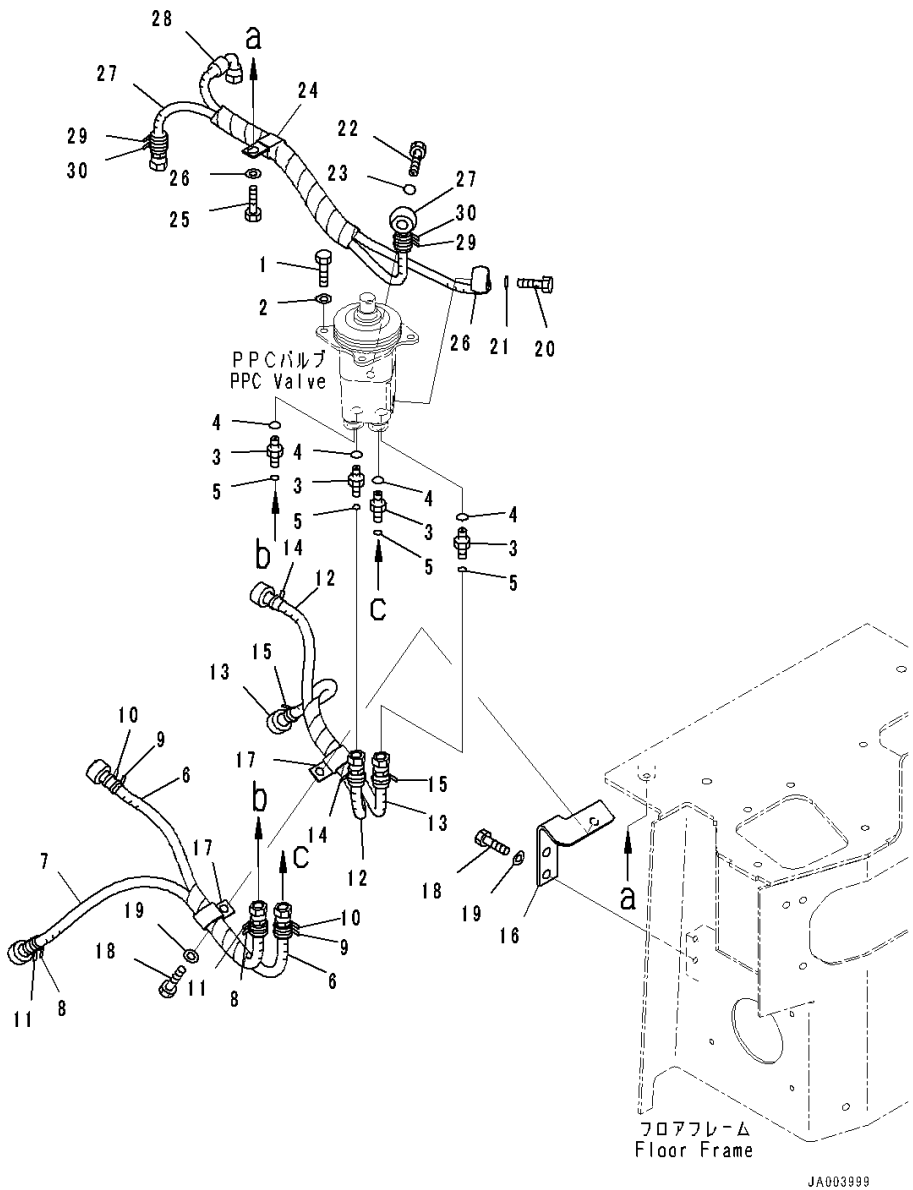

Index	Code	Part Number	Description	Qty	Serial Number
1		01010-80820	Bolt	4	80001-
2		01643-30823	Washer	4	80001-
3		02781-0021D	Union	4	80001-
4		07002-11423	O-ring	4	80001-
5		02896-11008	O-ring	4	80001-
		14X-62-54131	Hose Assembly	1	80001-
6		14X-62-53950	• Hose	1	80001-
7		21K-62-72250	• Hose	1	80001-
8		206-62-87990	• Band, Orange	2	80001-
9		20Y-62-22820	• Band, Blue	2	80001-
10		20Y-62-22830	• Band, White	2	80001-
11		20Y-62-22850	• Band, Green	2	80001-
		14X-62-54171	Hose Assembly	1	80001-
12		14X-62-53950	• Hose	1	80001-
13		14X-62-54760	• Hose	1	80001-
14		206-62-87990	• Band, Orange	2	80001-
15		20Y-62-22850	• Band, Green	2	80001-
16		14X-62-54511	Bracket	1	80001-
17		04435-51410	Clip	2	80001-
18		01010-81020	Bolt	3	80001-
19		01643-31032	Washer	3	80001-
20		702-16-53240	Plug	1	80001-
21		07000-12018	O-ring	1	80017-
22		203-62-57730	Bolt, Eye	1	80001-
23		07000-12018	O-ring	1	80017-
24		04435-51410	Clip	1	80001-
25		01010-81020	Bolt	1	80001-
26		01643-31032	Washer	1	80001-
		14X-62-54141	Hose Assembly	1	80001-
27		14X-62-53751	• Hose	1	80001-
28		14X-62-54860	• Hose	1	80001-
29		20Y-62-22790	• Band, Red	2	80001-
30		20Y-62-22860	• Band, Brown	2	80001-

FIG. K2110-002004 Dozer Control, For Machine With Rear Actuator, Hose

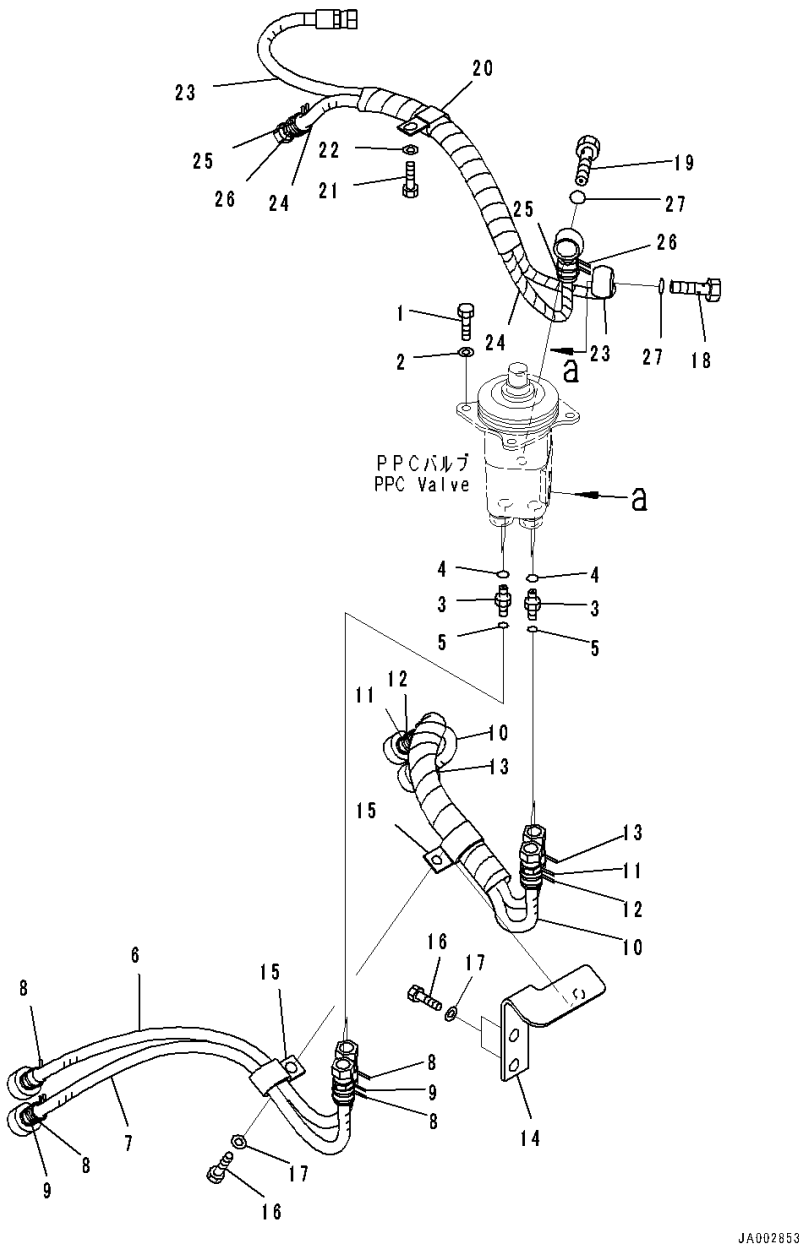

Index	Code	Part Number	Description	Qty	Serial Number
1		01010-80820	Bolt	4	80001-
2		01643-30823	Washer	4	80001-
3		02781-0021D	Union	4	80001-
4		07002-11423	O-ring	4	80001-
5		02896-11008	O-ring	4	80001-
		14X-62-53101	Hose Assembly	1	80001-
6		14X-62-53950	• Hose	1	80001-
7		14X-62-54820	• Hose	1	80001-
8		206-62-87990	• Band, Orange	4	80001-
9		20Y-62-22850	• Band, Green	2	80001-
		14X-62-54810	Hose Assembly	1	80001-
10		14X-62-54760	• Hose	2	80001-
11		20Y-62-22820	• Band, Blue	2	80001-
12		20Y-62-22830	• Band, White	2	80001-
13		20Y-62-22850	• Band, Green	2	80001-
14		14X-62-54511	Bracket	1	80001-
15		04435-51410	Clip	2	80001-
16		01010-81020	Bolt	3	80001-
17		01643-31032	Washer	3	80001-
18		702-16-53240	Plug	1	80001-
19		203-62-57730	Bolt, Eye	1	80001-
20		04435-51410	Clip	1	80001-
21		01010-81020	Bolt	1	80001-
22		01643-31032	Washer	1	80001-
		14X-62-53151	Hose Assembly	1	80001-
23		14X-62-53351	• Hose	1	80001-
24		14X-62-53361	• Hose	1	80001-
25		20Y-62-22790	• Band, Red	2	80001-
26		20Y-62-22860	• Band, Brown	2	80001-
27		07000-12018	O-ring	2	80001-

FIG. K2110-002006 Dozer Control, For Machine With Rear Actuator, Attachment Lever

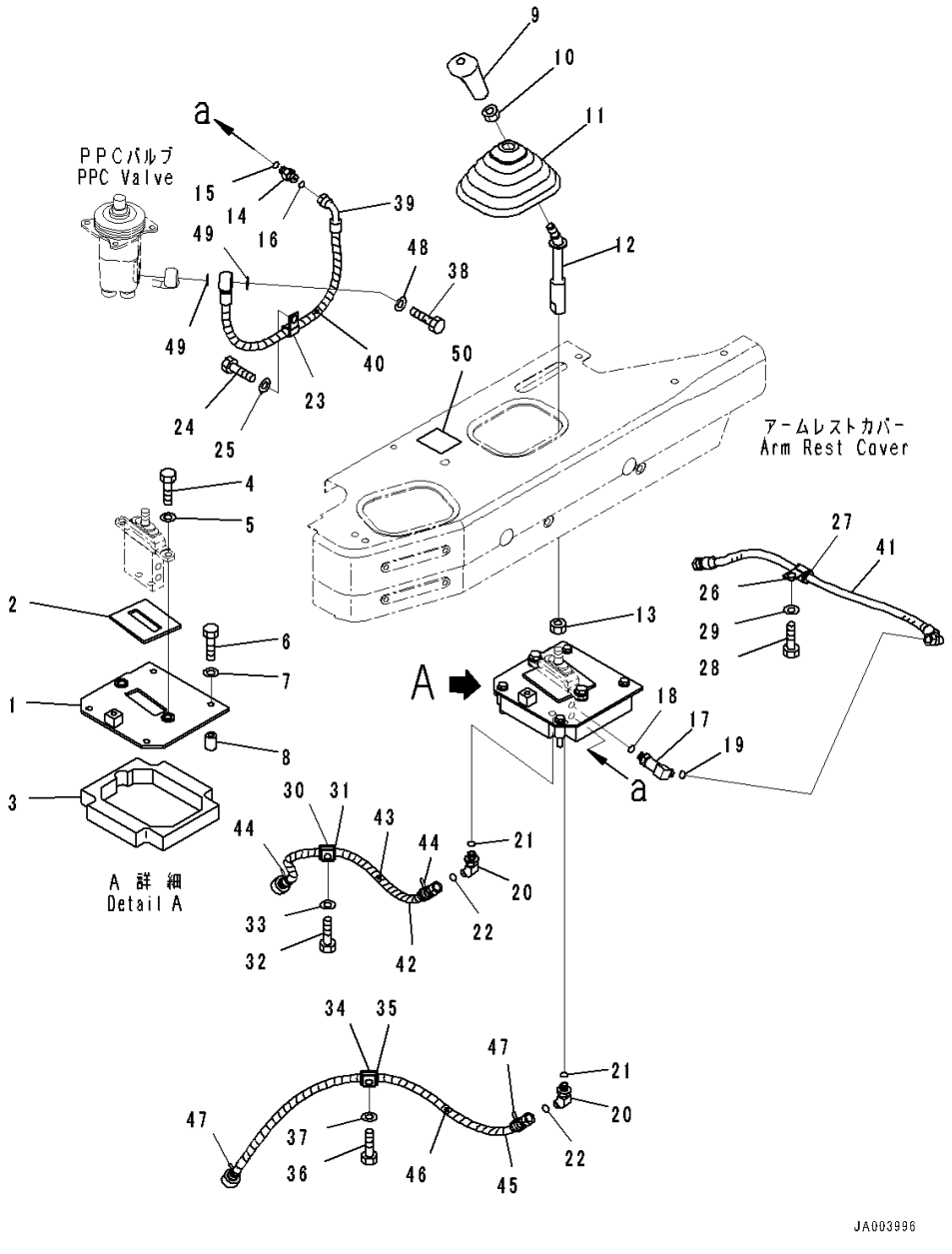

Index	Code	Part Number	Description	Qty	Serial Number
1		14X-78-51112	Bracket	1	80001-
2		14X-78-11490	• Seal,Bonded	1	80001-
3		14X-78-51131	• Seal,Bonded	1	80001-
4		01010-81030	Bolt	2	80001-
5		01643-31032	Washer	2	80001-
6		01010-80855	Bolt	4	80001-
7		01643-30823	Washer	4	80001-
8		14X-78-51141	Spacer	4	80001-
9		17A-43-42240	Knob	1	80001-
10		20T-43-71190	Nut	1	80001-
11		11Y-43-11181	Boot	1	80001-
12		14X-78-51291	Lever	1	80001-
13		01583-11408	Nut	1	80001-
14		21W-62-44510	Nipple	1	80001-
15		07002-11423	O-ring	1	80001-
16		02896-11008	O-ring	1	80001-
17		21W-62-43990	Elbow	1	80001-
18		07002-11423	O-ring	1	80001-
19		02896-11008	O-ring	1	80001-
20		21W-62-42660	Elbow	2	80001-
21		07002-11423	O-ring	2	80001-
22		02896-11008	O-ring	2	80001-
23		04434-51410	Clip	1	80001-
24		01010-81020	Bolt	1	80001-
25		01643-31032	Washer	1	80001-
26		04434-51710	Clip	1	80001-
27		07095-20211	Cushion	1	80001-
28		01010-81020	Bolt	1	80001-
29		01643-31032	Washer	1	80001-
30		04434-51810	Clip	1	80001-
31		07095-20213	Cushion	1	80001-
32		01010-81020	Bolt	1	80001-
33		01643-31032	Washer	1	80001-
34		04434-51810	Clip	1	80001-
35		07095-20213	Cushion	1	80001-
36		01010-81020	Bolt	1	80001-
37		01643-31032	Washer	1	80001-
38		14X-78-51410	Bolt, Eye	1	80001-
39		14X-78-51281	Hose Assembly	1	80001-

FIG. K2110-002006 Dozer Control, For Machine With Rear Actuator, Attachment Lever

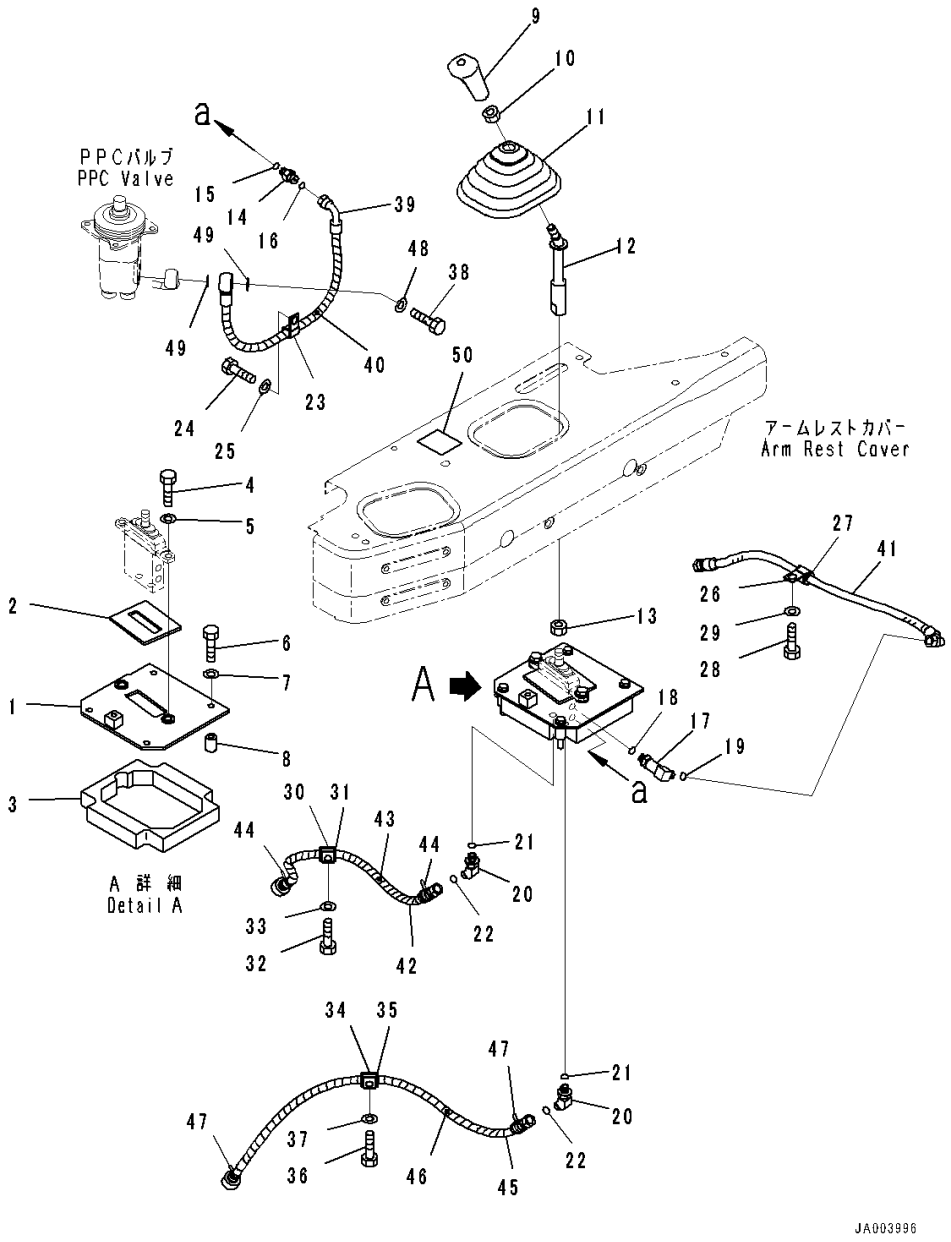

Index	Code	Part Number	Description	Qty	Serial Number
40		08210-00605	• Tube, Spiral	1	80001-
41		02761-00206	Hose, Face Seal Type	1	80001-
42		14X-62-53820	Hose	1	80001-
43		08210-00605	• Tube, Spiral	1	80001-
44		20Y-62-22860	• Band, Brown	2	80001-
45		14X-62-53830	Hose	1	80001-
46		08210-00607	• Tube, Spiral	1	80001-
47		20Y-62-22790	• Band, Red	2	80001-
48		287-15-15710	Shim, T=0.5mm	1	80001-
49		07000-12018	O-ring	2	80017-
50		14X-78-11180	Plate, Operating	1	80005-

FIG. K2110-011001 Dozer Control, Armrest

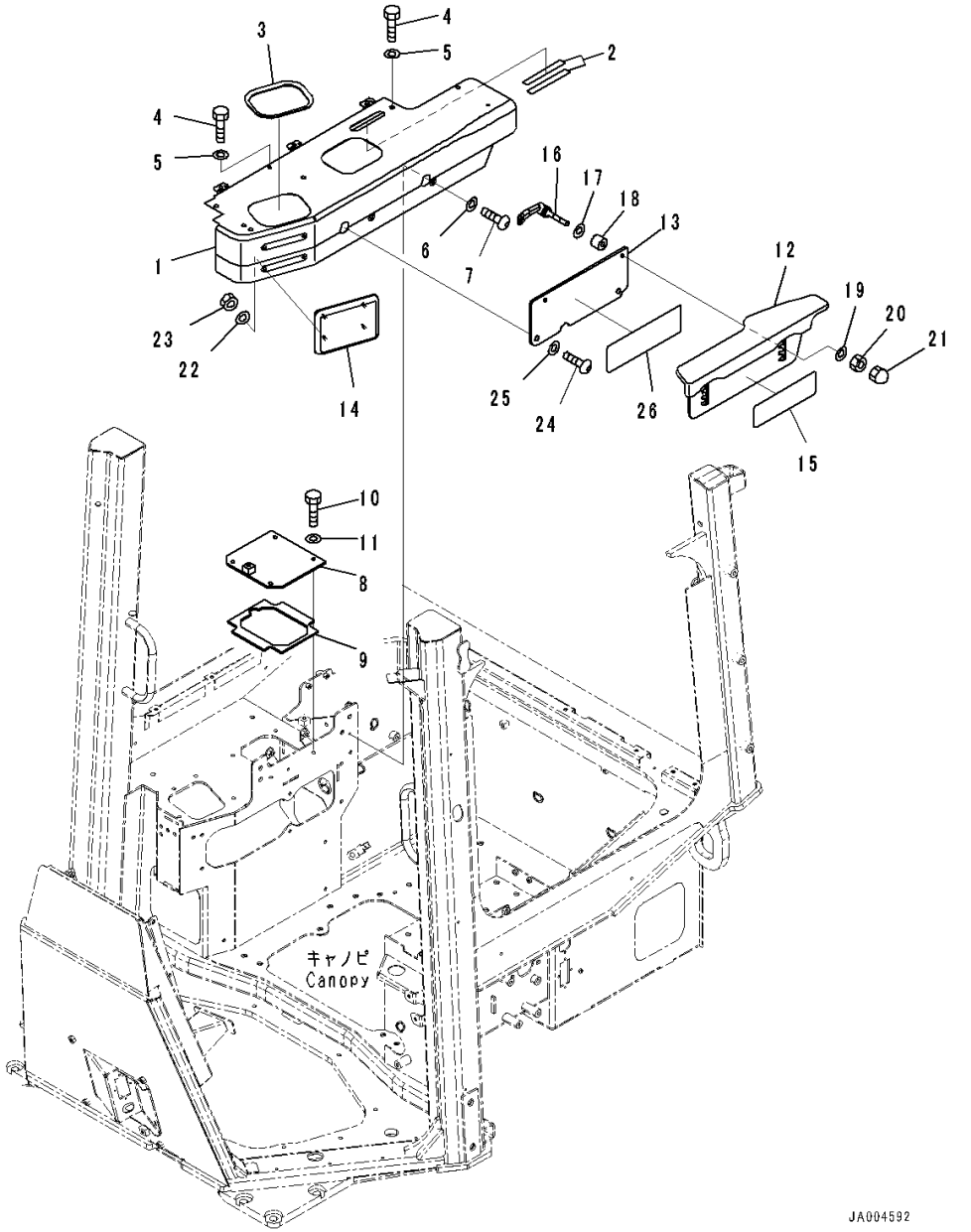

Index	Code	Part Number	Description	Qty	Serial Number
		Note: This list covers following specifications.			
		With Power Angle Power Tilt Dozer, ROPS Canopy			
		With Power Tilt Pitch Dozer, ROPS Canopy			
		For Machine Without Rear Actuator, ROPS Canopy			
1		14X-54-58360	Cover	1	80054-
2		14X-43-48110	• Awning	2	80054-
3		14X-54-16490	• Plate	1	80054-
4		01010-D0825	Bolt	4	80054-
5		01643-70823	Washer	4	80054-
6		01643-70623	Washer	2	80054-
7		01245-00620	Screw	2	80054-
8		14X-54-56661	Cover	1	80054-
9		14X-54-56670	• Seal,Bonded	1	80054-
10		01010-D0825	Bolt	4	80054-
11		01643-70823	Washer	4	80054-
12		14X-54-56531	Armrest Assembly	1	80054-
13		14X-54-56542	Plate	1	80054-
14		14X-54-56910	Pad	1	80054-
15		14X-54-56591	Plate,Bonded	1	80054-
16		423-43-38170	Lever	2	80054-
17		418-54-35450	Washer	2	80054-
18		17A-43-46380	Spacer	2	80054-
19		418-54-35450	Washer	2	80054-
20		195-43-43370	Nut	2	80054-
21		01546-10812	Nut	2	80054-
22		01643-30623	Washer	4	80054-
23		01580-00605	Nut	4	80054-
24		01245-01030	Screw	2	80054-
25		01643-71032	Washer	2	80054-
26		134-54-66190	Plate	1	80054-

FIG. K2110-011002 Dozer Control, Lever

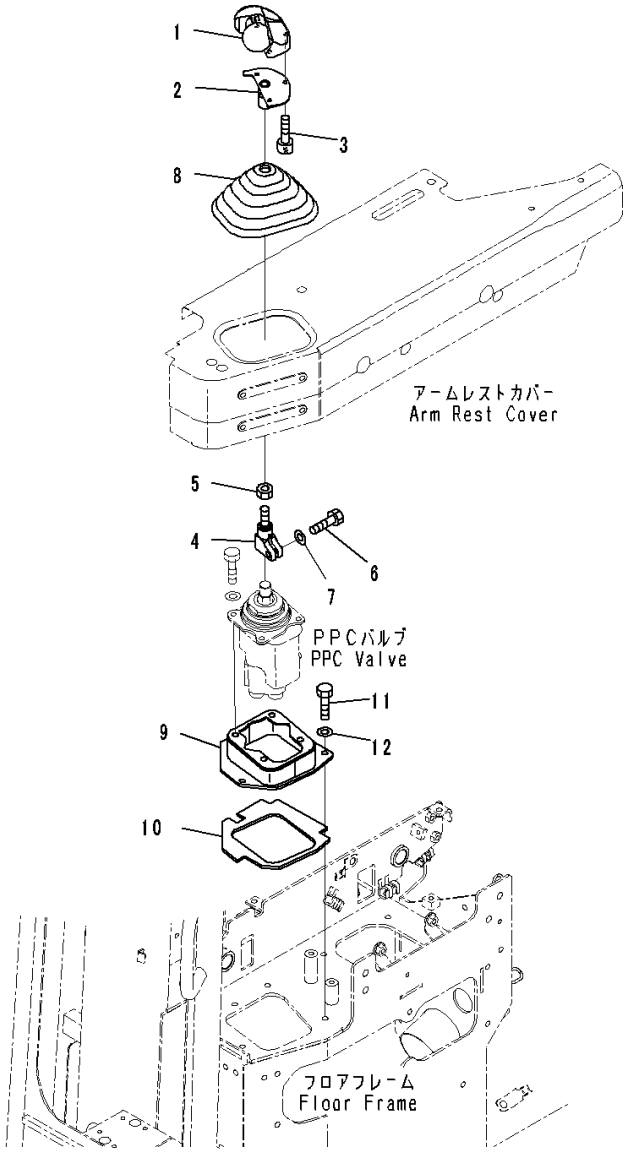

JA002859

Index	Code	Part Number	Description	Qty	Serial Number
		Note: This list covers following specifications.			
		With Power Angle Power Tilt Dozer, ROPS Canopy			
		With Power Angle Power Tilt Dozer, For Machine With Rear Actuator, ROPS Canopy			
1		195-43-64411	Knob Assembly	1	80054-
2		14X-43-51340	Bracket	1	80054-
3		01252-80510	Bolt	3	80054-
4		11Y-43-12710	Lever	1	80054-
5		20T-43-71190	Nut	1	80054-
6		07372-21030	Bolt	1	80054-
7		01640-21016	Washer	1	80054-
8		11Y-43-11181	Boot	1	80054-
9		14X-43-51311	Bracket	1	80054-
10		14X-43-51330	• Seal,Bonded	1	80054-
11		01010-80830	Bolt	4	80054-
12		01643-30823	Washer	4	80054-

FIG. K2110-011003 Dozer Control, PPC Valve For Pat (1/2)

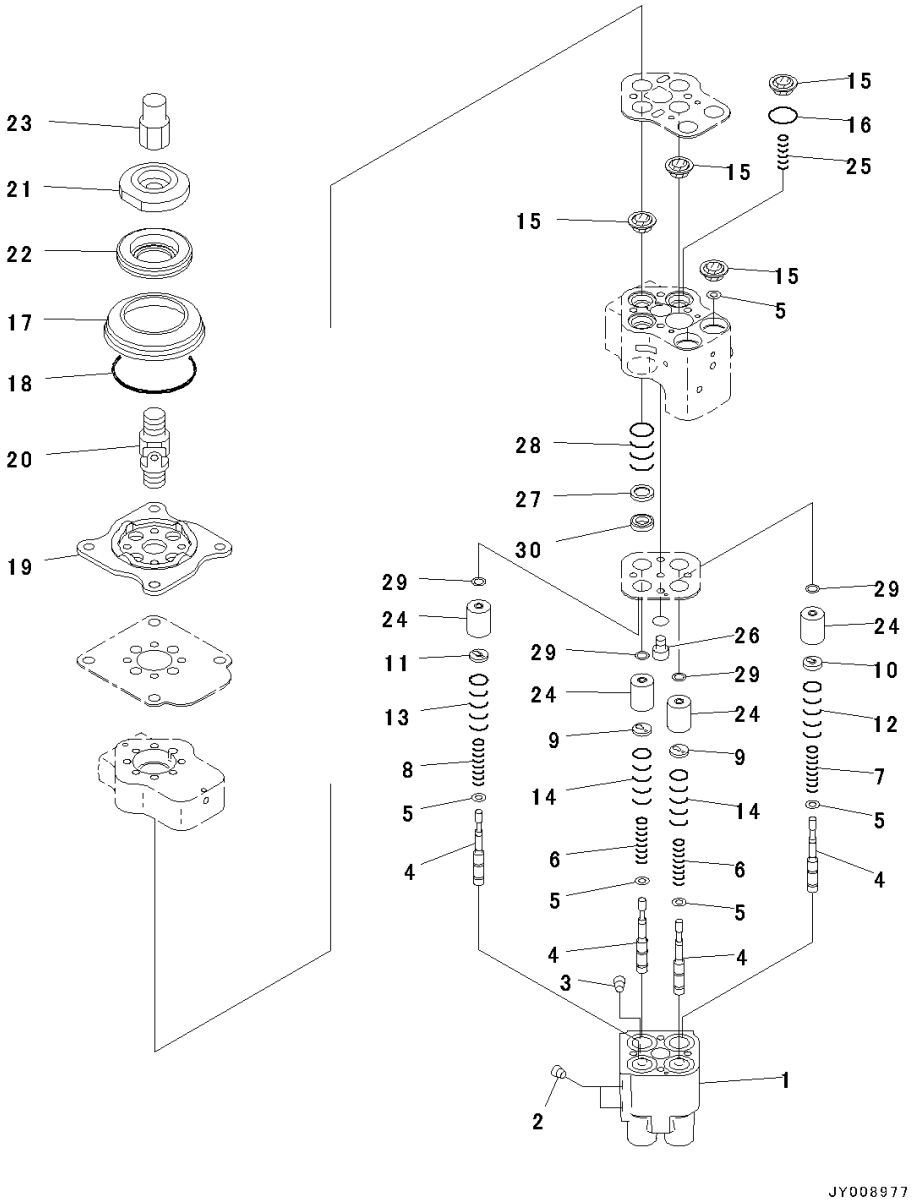

Index	Code	Part Number	Description	Qty	Serial Number
		Note: This list covers following specifications.			
		With Power Angle Power Tilt Dozer, ROPS Canopy			
		With Power Angle Power Tilt Dozer, For Machine With Rear Actuator, ROPS Canopy			
		702-16-06280	Valve, PPC	1	80054-
1	C1		• Valve Body	1	80054-
2	C1		• Plug	2	80054-
3	C1		• Plug	2	80054-
4	C1		• Valve	4	80054-
5	C1		• Shim, T=0.30mm	6	80054-
6	C1		• Spring	2	80054-
7	C1		• Spring	1	80054-
8	C1		• Spring	1	80054-
9	C1		• Retainer	2	80054-
10	C1		• Retainer	1	80054-
11	C1		• Retainer	1	80054-
12	C1		• Spring	1	80054-
13	C1		• Spring	1	80054-
14	C1		• Spring	2	80054-
15	C1		• Seal	6	80054-
16	C1		• O-ring	3	80054-
17		702-16-58820	• Boot	1	80054-
18		07000-12070	• O-ring	1	80054-
19	C1		• Plate	1	80054-
20		702-16-51240	• Universal Joint	1	80054-
21	C1		• Plug	1	80054-
22	C1		• Disc	1	80054-
23		702-16-59670	• Cap	1	80054-
24	C1		• Piston	4	80054-
25	C1		• Spring	1	80054-
26	C1		• Orifice	1	80054-
27	C1		• Collar	1	80054-
28	C1		• Spring	1	80054-
29	C1		• Shim	4	80054-
30	C1		• Retainer	1	80054-

FIG. K2110-011004 Dozer Control, PPC Valve For Pat (2/2)

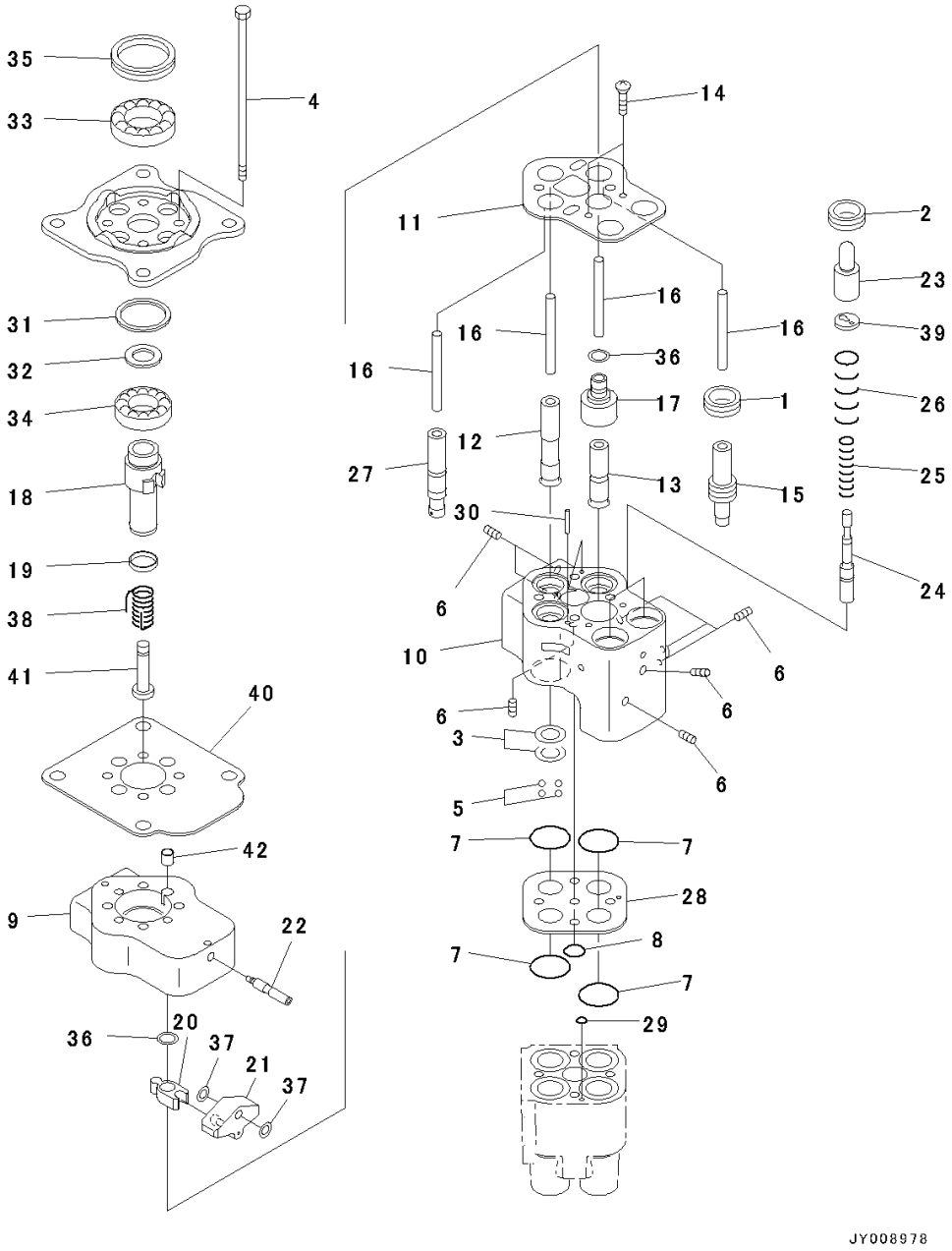

Index	Code	Part Number	Description	Qty	Serial Number
		Note: This list covers following specifications.			
		With Power Angle Power Tilt Dozer, ROPS Canopy			
		With Power Angle Power Tilt Dozer, For Machine With Rear Actuator, ROPS Canopy			
		702-16-06280	Valve, PPC	1	80054-
1	C1		• Collar	1	80054-
2	C1		• Collar	2	80054-
3	C1		• Spacer	4	80054-
4	C1		• Bolt	4	80054-
5	C1		• Ball	13	80054-
6	C1		• Screw	8	80054-
7	C1		• O-ring	8	80054-
8	C1		• O-ring	2	80054-
9	C1		• Block	1	80054-
10	C1		• Block	1	80054-
11	C1		• Plate	1	80054-
12	C1		• Rod	1	80054-
13	C1		• Rod	1	80054-
14	C1		• Bolt, Hexagon Socket Head	2	80054-
15	C1		• Piston	1	80054-
16	C1		• Rod	4	80054-
17	C1		• Sleeve	1	80054-
18	C1		• Shaft	1	80054-
19	C1		• Bushing	1	80054-
20	C1		• Lever	1	80054-
21	C1		• Lever	1	80054-
22	C1		• Shaft	1	80054-
23	C1		• Piston	2	80054-
24	C1		• Spool	2	80054-
25	C1		• Spring	2	80054-
26	C1		• Spring	2	80054-
27	C1		• Piston	1	80054-
28	C1		• Plate	1	80054-
29	C1		• O-ring	2	80054-
30	C1		• Pin	2	80054-
31	C1		• Washer	1	80054-
32	C1		• Washer	1	80054-
33	C1		• Bearing	1	80054-
34	C1		• Bearing	1	80054-

FIG. K2110-011004 Dozer Control, PPC Valve For Pat (2/2)

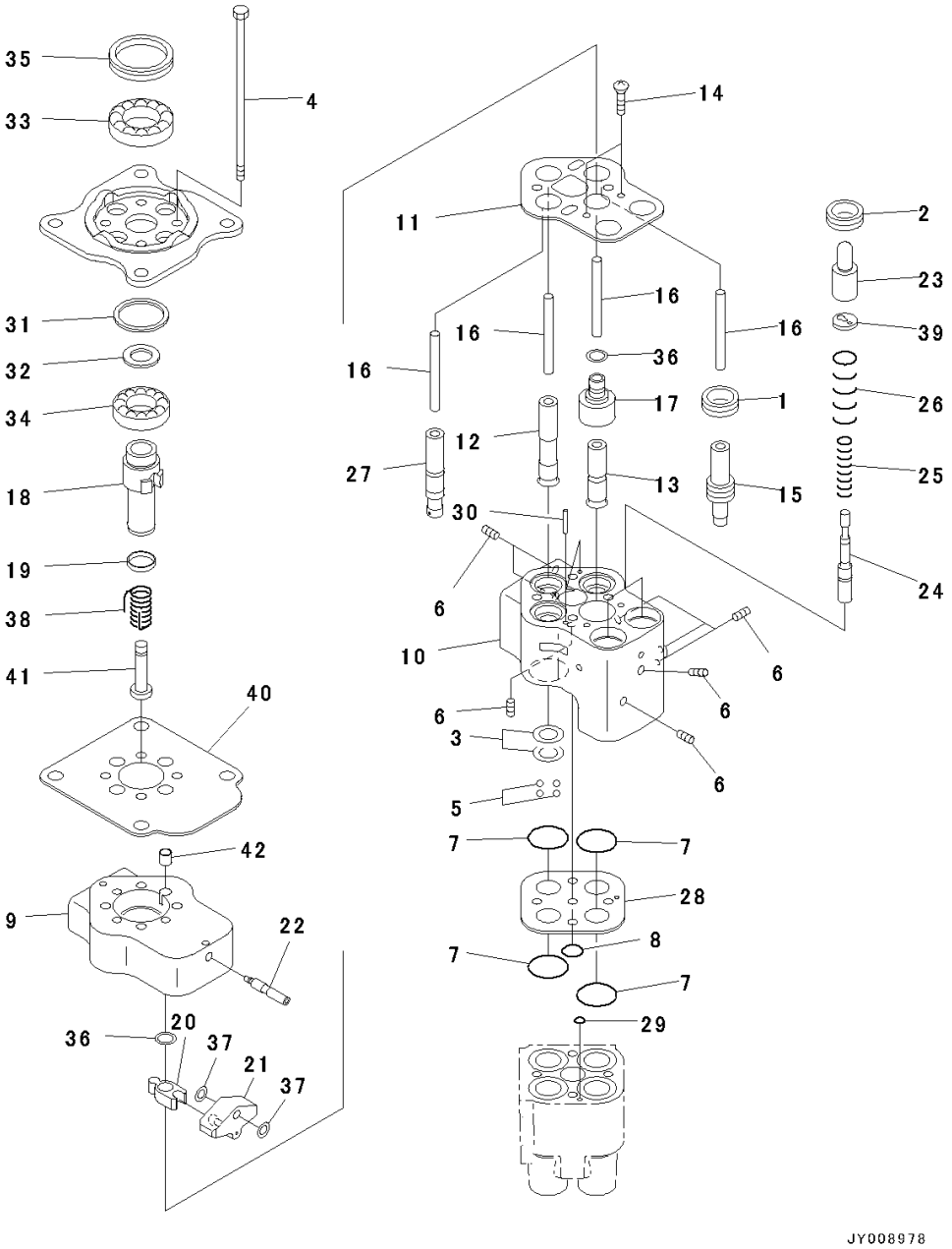

Index	Code	Part Number	Description	Qty	Serial Number
35	C1		• Seal	1	80054-
36	C1		• Shim	2	80054-
37	C1		• Shim	2	80054-
38	C1		• Spring	1	80054-
39	C1		• Retainer	2	80054-
40	C1		• Plate	1	80054-
41	C1		• Boss	1	80054-
42	C1		• Bushing	1	80054-

FIG. K2110-011005 Dozer Control, Hose

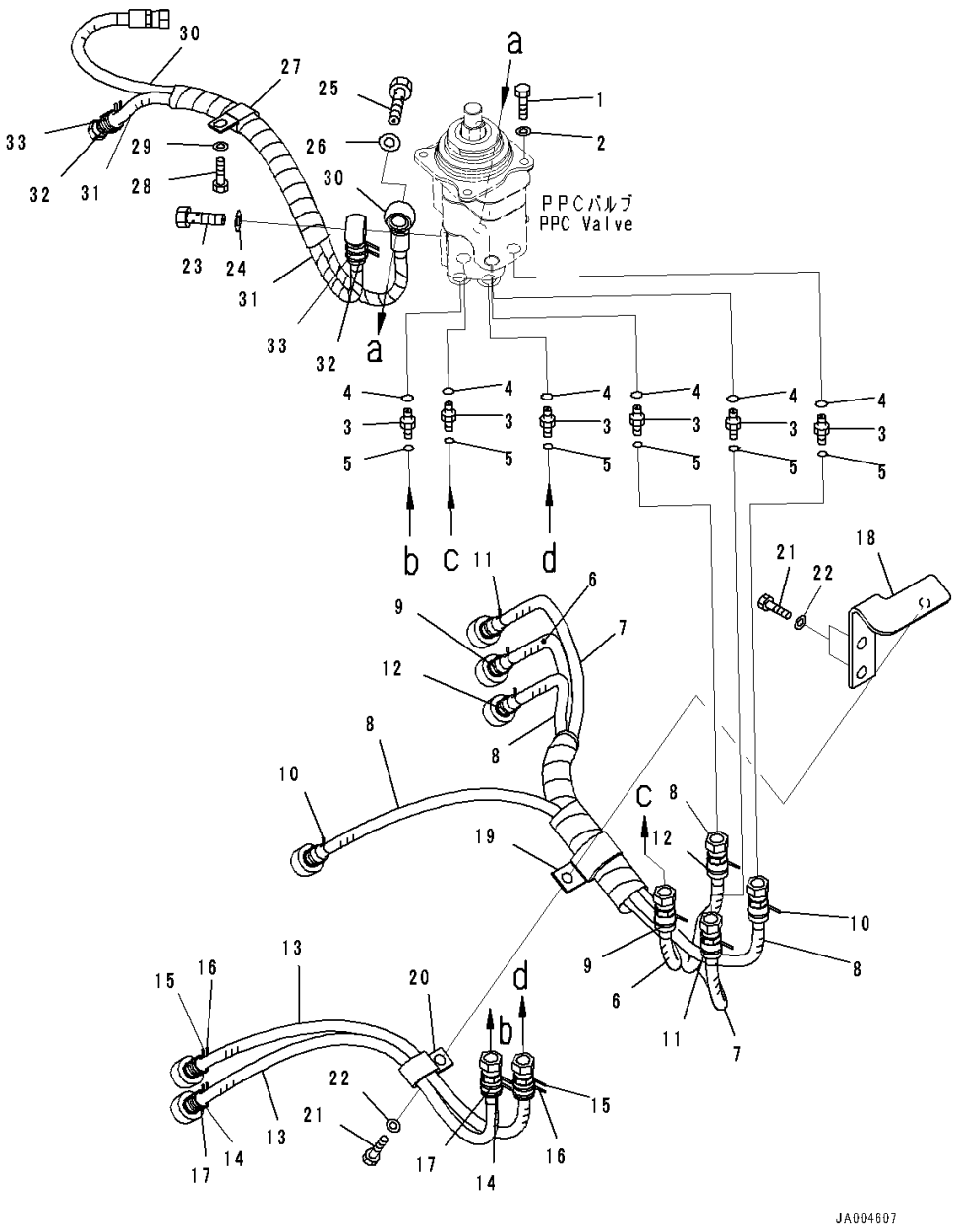

Index	Code	Part Number	Description	Qty	Serial Number
		Note: This list covers following specifications.			
		With Power Angle Power Tilt Dozer, ROPS Canopy			
		With Power Angle Power Tilt Dozer, For Machine With Rear Actuator, ROPS Canopy			
1		01010-80820	Bolt	4	80054-
2		01643-30823	Washer	4	80054-
3		02781-0021D	Union	6	80054-
4		07002-11423	O-ring	6	80054-
5		02896-11008	O-ring	6	80054-
		14X-62-53201	Hose Assembly	1	80054-
6		14X-62-53411	• Hose	1	80054-
7		14X-62-53691	• Hose	1	80054-
8		14X-62-54760	• Hose	2	80054-
9		206-62-87990	• Band, Orange	2	80054-
10		20Y-62-22820	• Band, Blue	2	80054-
11		20Y-62-22830	• Band, White	2	80054-
12		20Y-62-22850	• Band, Green	2	80054-
		14X-62-54831	Hose Assembly	1	80054-
13		14X-62-54820	• Hose	2	80054-
14		206-62-87990	• Band, Orange	2	80054-
15		20Y-62-22820	• Band, Blue	2	80054-
16		20Y-62-22830	• Band, White	2	80054-
17		20Y-62-22850	• Band, Green	2	80054-
18		14X-62-54511	Bracket	1	80054-
19		04435-51410	Clip	1	80054-
20		04434-52712	Clip	1	80054-
21		01010-81020	Bolt	3	80054-
22		01643-31032	Washer	3	80054-
23		702-16-53240	Plug	1	80054-
24		07000-12018	O-ring	1	80054-
25		203-62-57730	Bolt, Eye	1	80054-
26		07000-12018	O-ring	1	80054-
27		04435-51410	Clip	1	80054-
28		01010-81020	Bolt	1	80054-
29		01643-31032	Washer	1	80054-
		14X-62-53151	Hose Assembly	1	80054-
30		14X-62-53351	• Hose	1	80054-
31		14X-62-53361	• Hose	1	80054-
32		20Y-62-22790	• Band, Red	2	80054-

FIG. K2110-011005 Dozer Control, Hose

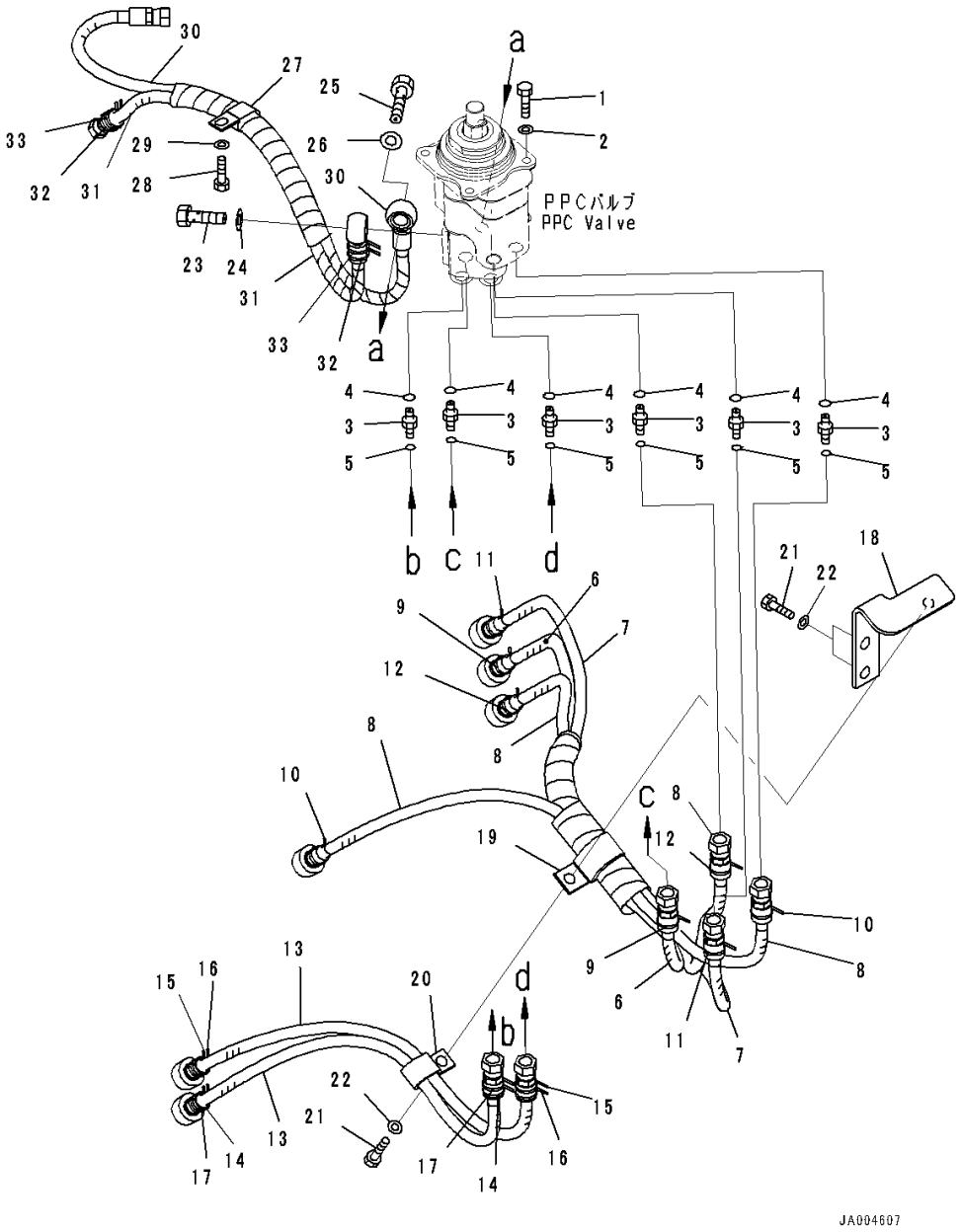

Index	Code	Part Number	Description	Qty	Serial Number
33		20Y-62-22860	• Band, Brown.....	2	80054-

FIG. K2110-012001 Dozer Control, Armrest

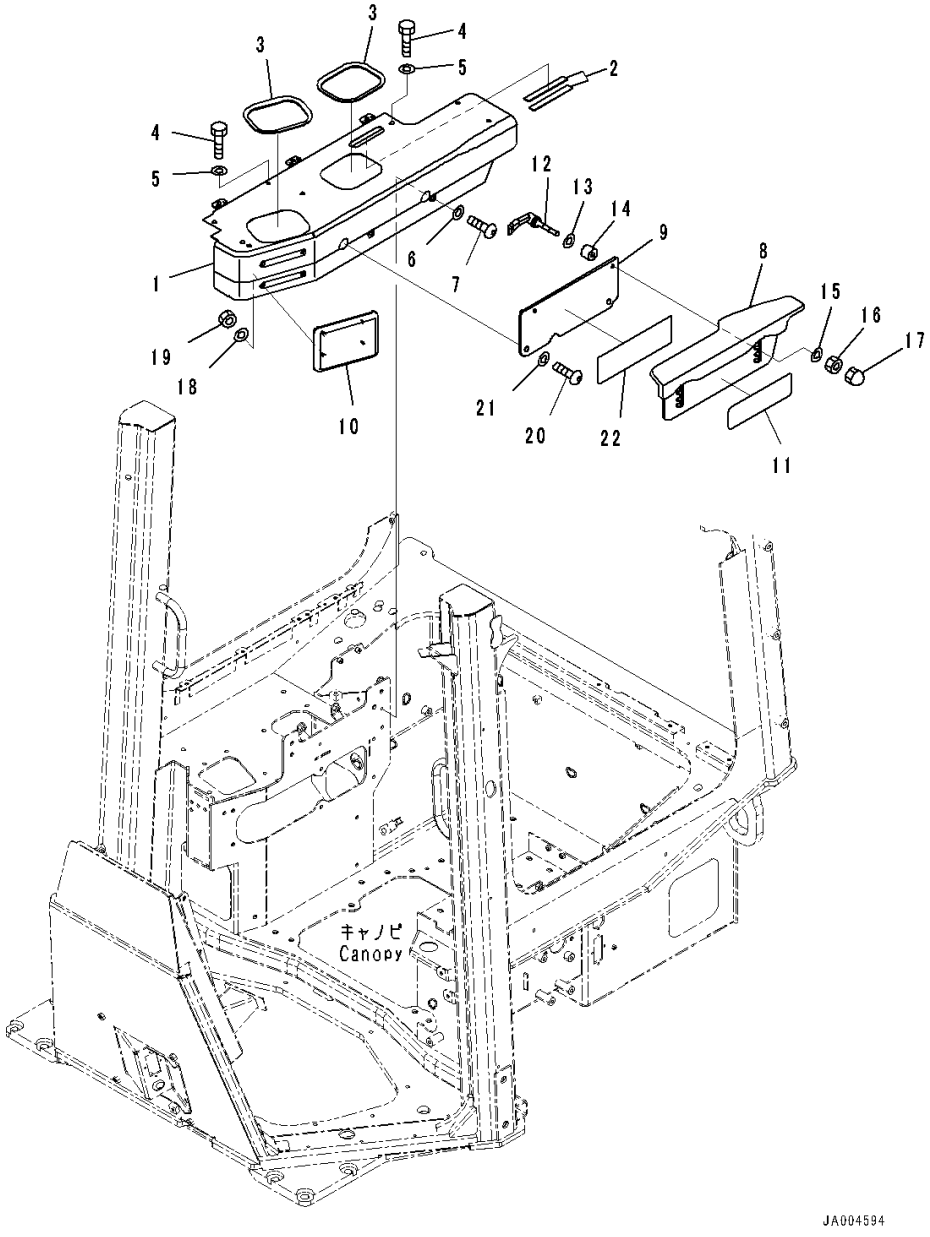

Index	Code	Part Number	Description	Qty	Serial Number
		Note: This list covers following specifications.			
		With Power Angle Power Tilt Dozer, For Machine With Rear Actuator, ROPS Canopy			
		With Power Tilt Pitch Dozer, For Machine With Rear Actuator, ROPS Canopy			
		For Machine With Rear Actuator, ROPS Canopy			
1		14X-54-58671	Cover	1	80054-
2		14X-43-48110	• Awning	2	80054-
3		14X-54-16490	• Plate	2	80054-
4		01010-D0825	Bolt	4	80054-
5		01643-70823	Washer	4	80054-
6		01643-70623	Washer	2	80054-
7		01245-00620	Screw	2	80054-
8		14X-54-56531	Armrest Assembly	1	80054-
9		14X-54-56542	Plate	1	80054-
10		14X-54-56910	Pad	1	80054-
11		14X-54-56591	Plate,Bonded	1	80054-
12		423-43-38170	Lever	2	80054-
13		418-54-35450	Washer	2	80054-
14		17A-43-46380	Spacer	2	80054-
15		418-54-35450	Washer	2	80054-
16		195-43-43370	Nut	2	80054-
17		01546-10812	Nut	2	80054-
18		01643-30623	Washer	4	80054-
19		01580-00605	Nut	4	80054-
20		01245-01030	Screw	2	80054-
21		01643-71032	Washer	2	80054-
22		134-54-66190	Plate	1	80054-

FIG. K2110-012006 Dozer Control, PPC Valve For Ripper

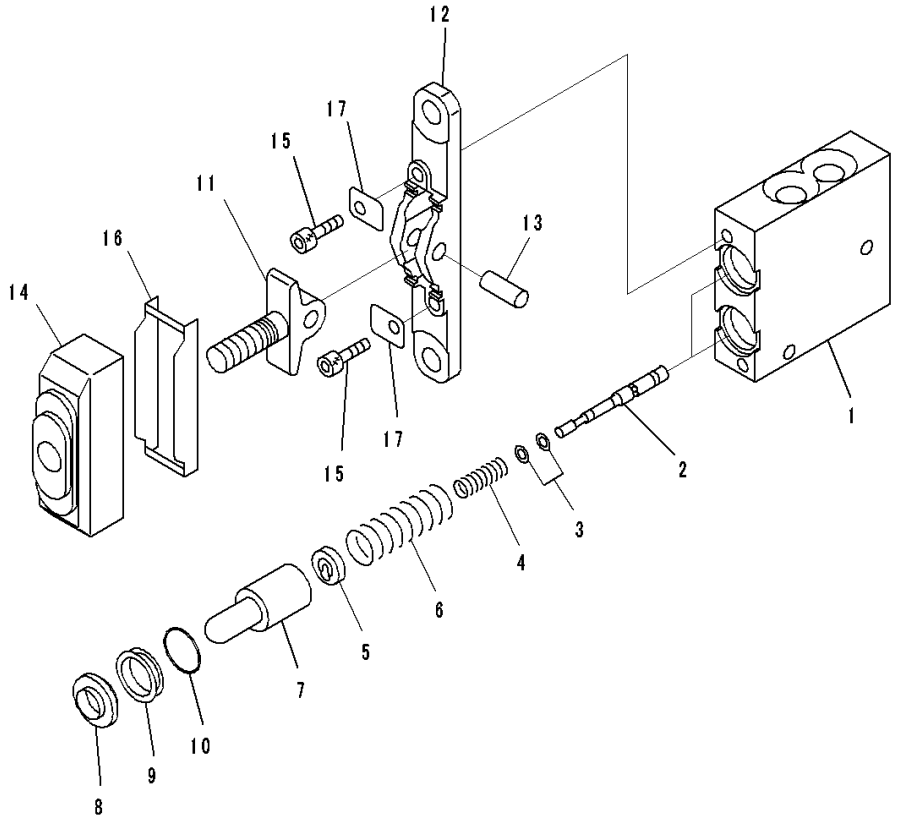

Index	Code	Part Number	Description	Qty	Serial Number
		Note: This list covers following specifications.			
		With Power Angle Power Tilt Dozer, For Machine With Rear Actuator, ROPS Canopy			
		With Power Tilt Pitch Dozer, For Machine With Rear Actuator, ROPS Canopy			
		For Machine With Rear Actuator, ROPS Canopy			
		702-16-01230	Valve, Pilot	1	80054-
1		702-16-54540	• Body	1	80054-
2		702-16-53120	• Valve	2	80054-
3		702-16-51140	• Shim, T=0.30mm	2	80054-
		702-16-54670	• Shim, T=0.20mm	4	80054-
4		702-16-54550	• Spring	2	80054-
5		702-16-54571	• Retainer	2	80054-
6		702-16-54560	• Spring	2	80054-
7		702-16-53170	• Piston	2	80054-
8		702-16-51270	• Seal	2	80054-
9		702-16-54580	• Collar	2	80054-
10		702-16-54590	• O-ring	2	80054-
11		702-16-54610	• Lever	1	80054-
12		702-16-54620	• Plate	1	80054-
13		702-16-54630	• Shaft	1	80054-
14		702-16-54641	• Boot	1	80054-
15		01252-30625	• Bolt	2	80054-
16		702-16-54660	• Plate	1	80054-
17		702-16-54650	• Plate	2	80054-

FIG. K2110-012007 Dozer Control, With Power Angle Power Tilt Dozer, For Machine With Rear Actuator, ROPS Canopy, Attachment Lever

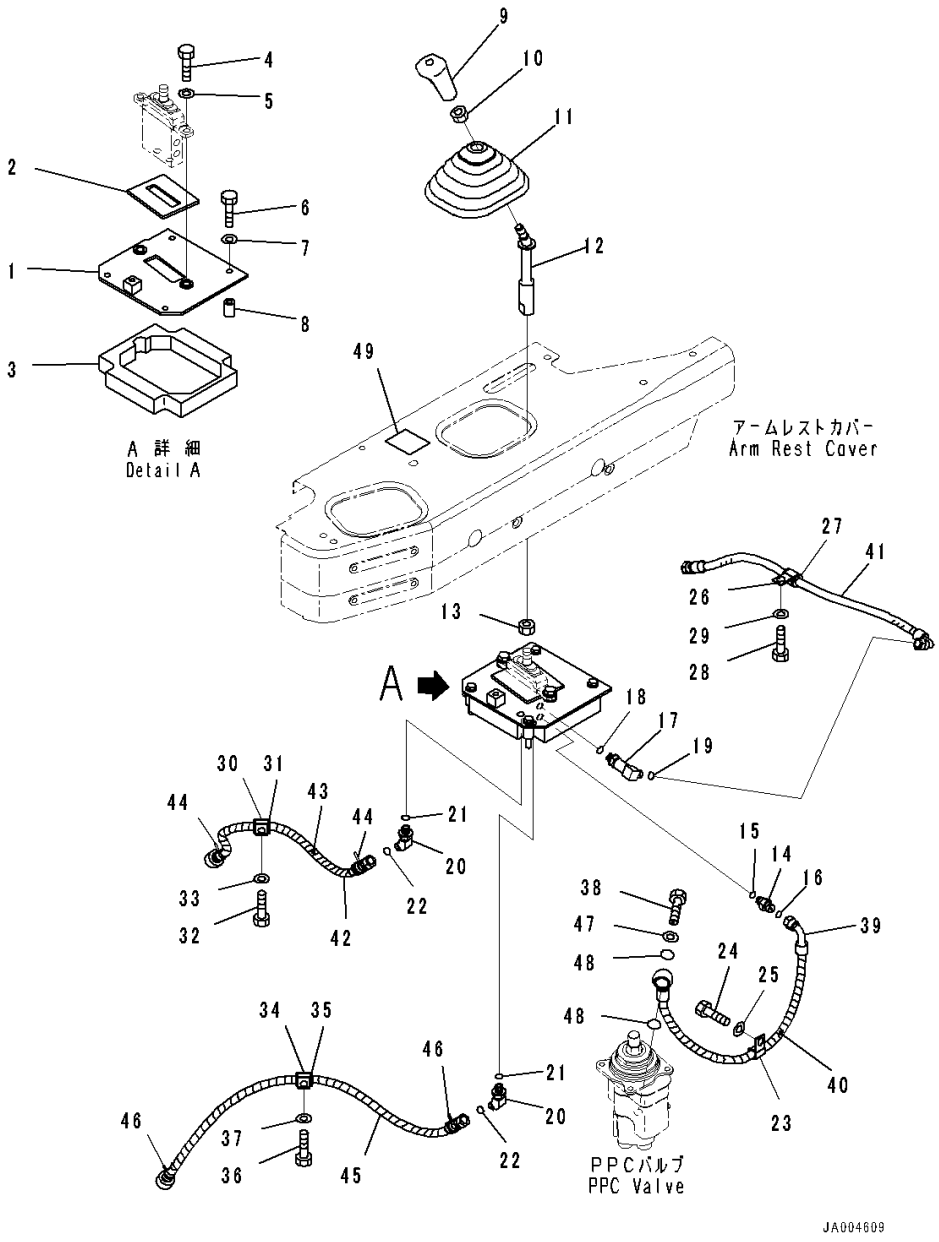

Index	Code	Part Number	Description	Qty	Serial Number
1		14X-78-51112	Bracket	1	80054-
2		14X-78-11490	• Seal,Bonded	1	80054-
3		14X-78-51131	• Seal,Bonded	1	80054-
4		01010-81030	Bolt	2	80054-
5		01643-31032	Washer	2	80054-
6		01010-80855	Bolt	4	80054-
7		01643-30823	Washer	4	80054-
8		14X-78-51141	Spacer	4	80054-
9		17A-43-42240	Knob	1	80054-
10		20T-43-71190	Nut	1	80054-
11		11Y-43-11181	Boot	1	80054-
12		14X-78-51291	Lever	1	80054-
13		01583-11408	Nut	1	80054-
14		21W-62-44510	Nipple	1	80054-
15		07002-11423	O-ring	1	80054-
16		02896-11008	O-ring	1	80054-
17		21W-62-43990	Elbow	1	80054-
18		07002-11423	O-ring	1	80054-
19		02896-11008	O-ring	1	80054-
20		21W-62-42660	Elbow	2	80054-
21		07002-11423	O-ring	2	80054-
22		02896-11008	O-ring	2	80054-
23		04434-51410	Clip	1	80054-
24		01010-81020	Bolt	1	80054-
25		01643-31032	Washer	1	80054-
26		04434-51710	Clip	1	80054-
27		07095-20211	Cushion	1	80054-
28		01010-81020	Bolt	1	80054-
29		01643-31032	Washer	1	80054-
30		04434-51810	Clip	1	80054-
31		07095-20213	Cushion	1	80054-
32		01010-81020	Bolt	1	80054-
33		01643-31032	Washer	1	80054-
34		04434-51810	Clip	1	80054-
35		07095-20213	Cushion	1	80054-
36		01010-81020	Bolt	1	80054-
37		01643-31032	Washer	1	80054-
38		14X-78-51410	Bolt, Eye	1	80054-
39		14X-78-51450	Hose Assembly	1	80054-

FIG. K2110-012007 Dozer Control, With Power Angle Power Tilt Dozer, For Machine With Rear Actuator, ROPS Canopy, Attachment Lever

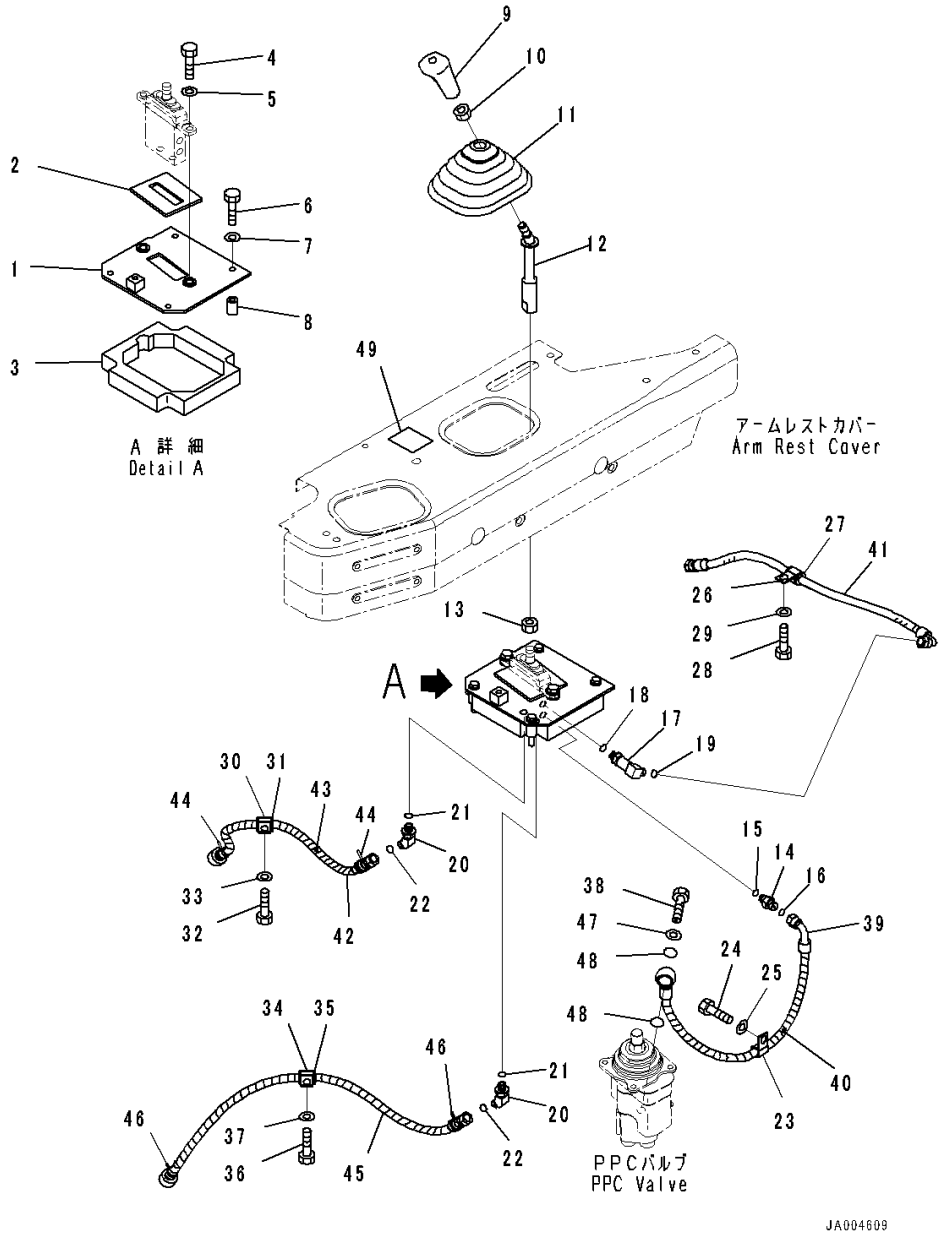

Index	Code	Part Number	Description	Qty	Serial Number
40		08210-00605	• Tube, Spiral	1	80054-
41		02761-00206	Hose, Face Seal Type	1	80054-
42		14X-78-51431	Hose Assembly	1	80054-
43		08210-00604	• Tube, Spiral	1	80054-
44		20Y-62-22860	• Band, Brown	2	80054-
45		14X-78-51421	Hose Assembly	1	80054-
46		20Y-62-22790	• Band, Red	2	80054-
47		287-15-15710	Shim, T=0.5mm	1	80054-
48		07000-12018	O-ring	2	80054-
49		14X-78-11180	Plate, Operating	1	80054-

FIG. K2110-009002 Dozer Control, Lever

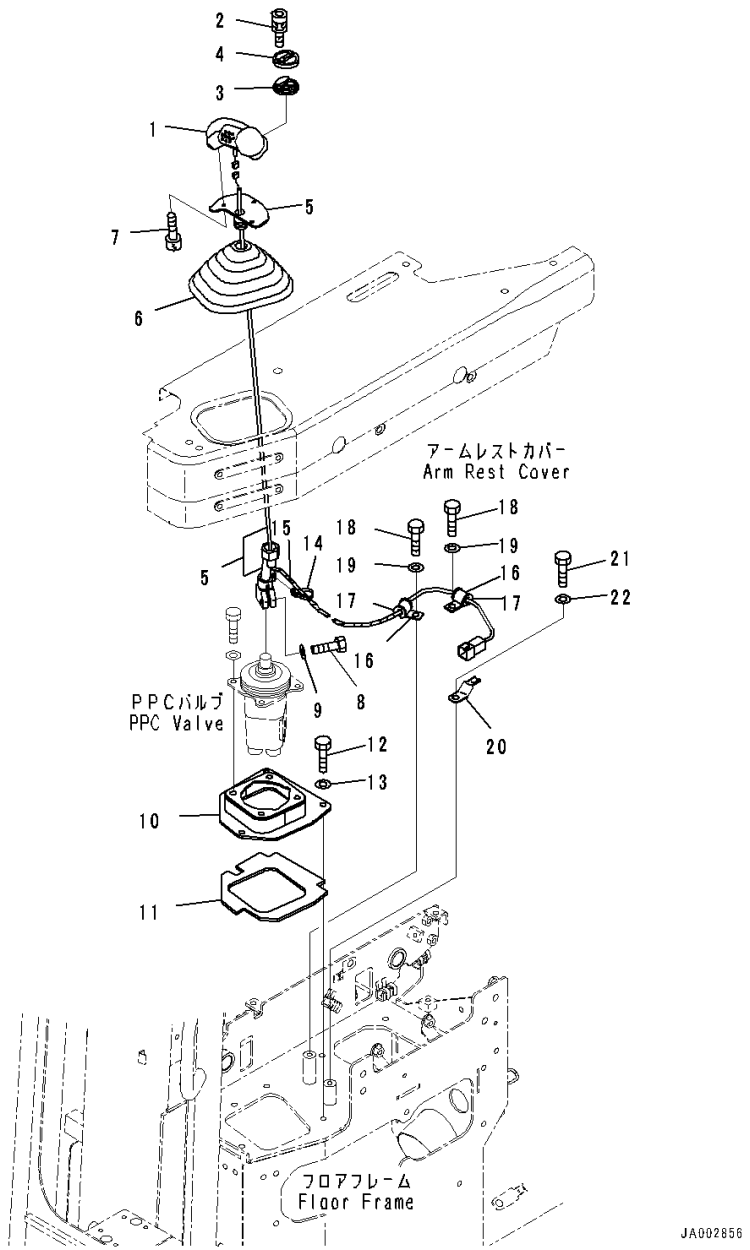

Index	Code	Part Number	Description	Qty	Serial Number
		Note: This list covers following specifications.			
		With Power Tilt Pitch Dozer, ROPS Canopy			
		With Power Tilt Pitch Dozer, For Machine With Rear Actuator, ROPS Canopy			
1		14X-43-51911	Knob Assembly	1	80054-
2		19M-09-11510	• Bolt	2	80054-
3		17A-43-42430	• Rubber	1	80054-
4		14X-43-51921	• Cover	1	80054-
5		14X-43-51901	Lever Assembly	1	80054-
6		11Y-43-11181	• Boot	1	80054-
7		01252-80510	Bolt	3	80054-
8		07372-21030	Bolt	1	80054-
9		01640-21016	Washer	1	80054-
10		14X-43-51350	Bracket	1	80054-
11		14X-43-51370	• Seal,Bonded	1	80054-
12		01010-80830	Bolt	4	80054-
13		01643-30823	Washer	4	80054-
14		20Y-06-23940	Band	1	80054-
15		08210-00604	Tube, Spiral	1	80054-
16		04434-51410	Clip	2	80054-
17		14X-06-52780	Cushion	2	80054-
18		01010-81020	Bolt	2	80054-
19		01643-31032	Washer	2	80054-
20		08193-20010	Clip	1	80054-
21		01010-81020	Bolt	1	80054-
22		01643-31032	Washer	1	80054-

FIG. K2110-009003 Dozer Control, PPC Valve For Blade

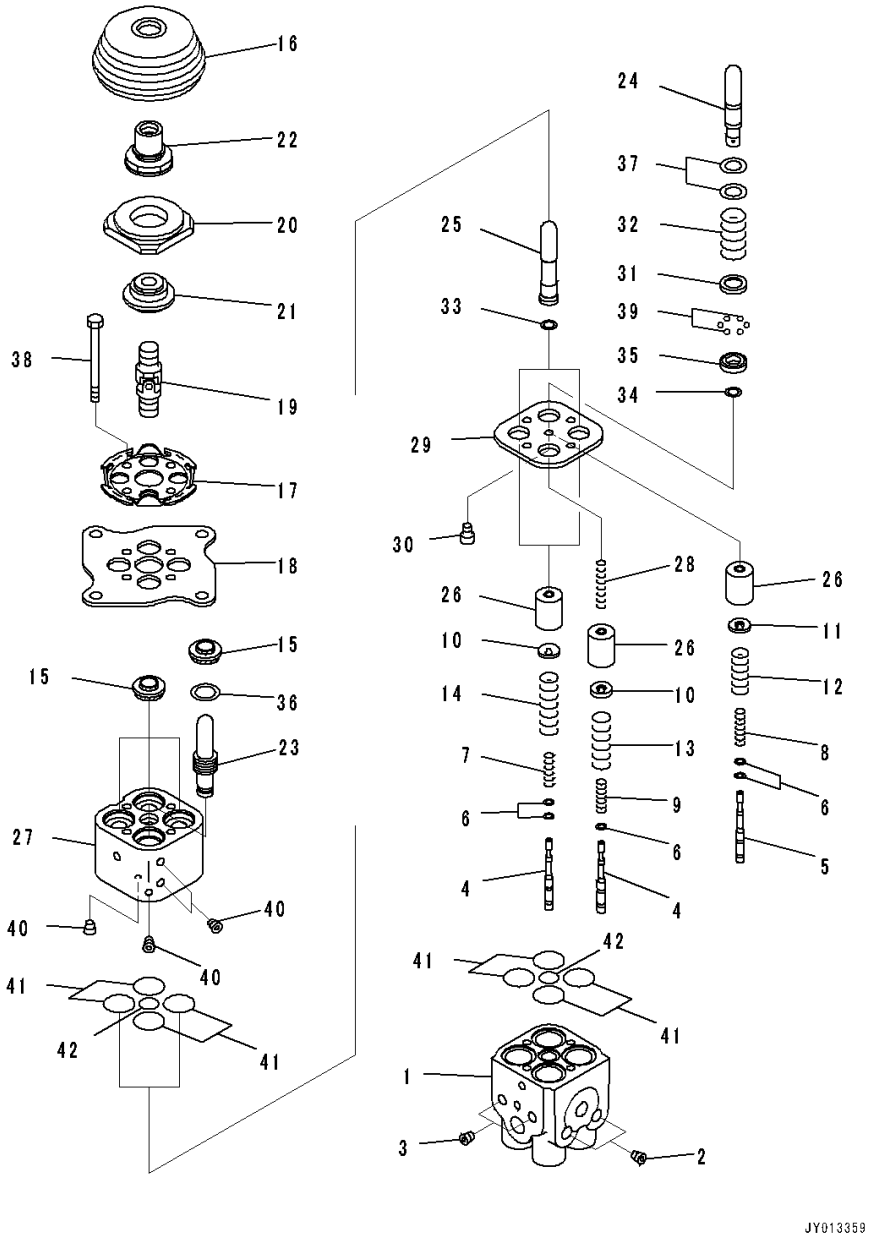

Index	Code	Part Number	Description	Qty	Serial Number
		Note: This list covers following specifications.			
			With Power Tilt Pitch Dozer, ROPS Canopy		
			With Power Tilt Pitch Dozer, For Machine With Rear Actuator, ROPS Canopy		
			For Machine Without Rear Actuator, ROPS Canopy		
			For Machine With Rear Actuator, ROPS Canopy		
		702-16-06270	Valve, Pilot	1	80054-
1	C1		• Body	1	80054-
2	C1		• Plug	2	80054-
3	C1		• Plug	2	80054-
4	C1		• Valve	3	80054-
5	C1		• Valve	1	80054-
6	C1		• Shim, T=0.30mm	4	80054-
	C1		• Shim, T=0.20mm	5	80054-
7	C1		• Spring	2	80054-
8	C1		• Spring	1	80054-
9	C1		• Spring	1	80054-
10	C1		• Retainer	3	80054-
11	C1		• Retainer	3	80054-
12	C1		• Spring	1	80054-
13	C1		• Spring	1	80054-
14	C1		• Spring	2	80054-
15		702-16-71150	• Seal	4	80054-
16		702-16-71280	• Boot	1	80054-
17	C1		• Plate	1	80054-
18	C1		• Plate	1	80054-
19		702-16-51240	• Universal Joint	1	80054-
20	C1		• Disc	1	80054-
21	C1		• Nut	1	80054-
22	C1		• Nut	1	80054-
23	C1		• Piston	1	80054-
24	C1		• Piston	1	80054-
25	C1		• Piston	2	80054-
26	C1		• Piston	4	80054-
27	C1		• Body	1	80054-
28	C1		• Spring	1	80054-
29	C1		• Plate	1	80054-
30	C1		• Orifice	1	80054-
31	C1		• Collar	1	80054-

FIG. K2110-009003 Dozer Control, PPC Valve For Blade

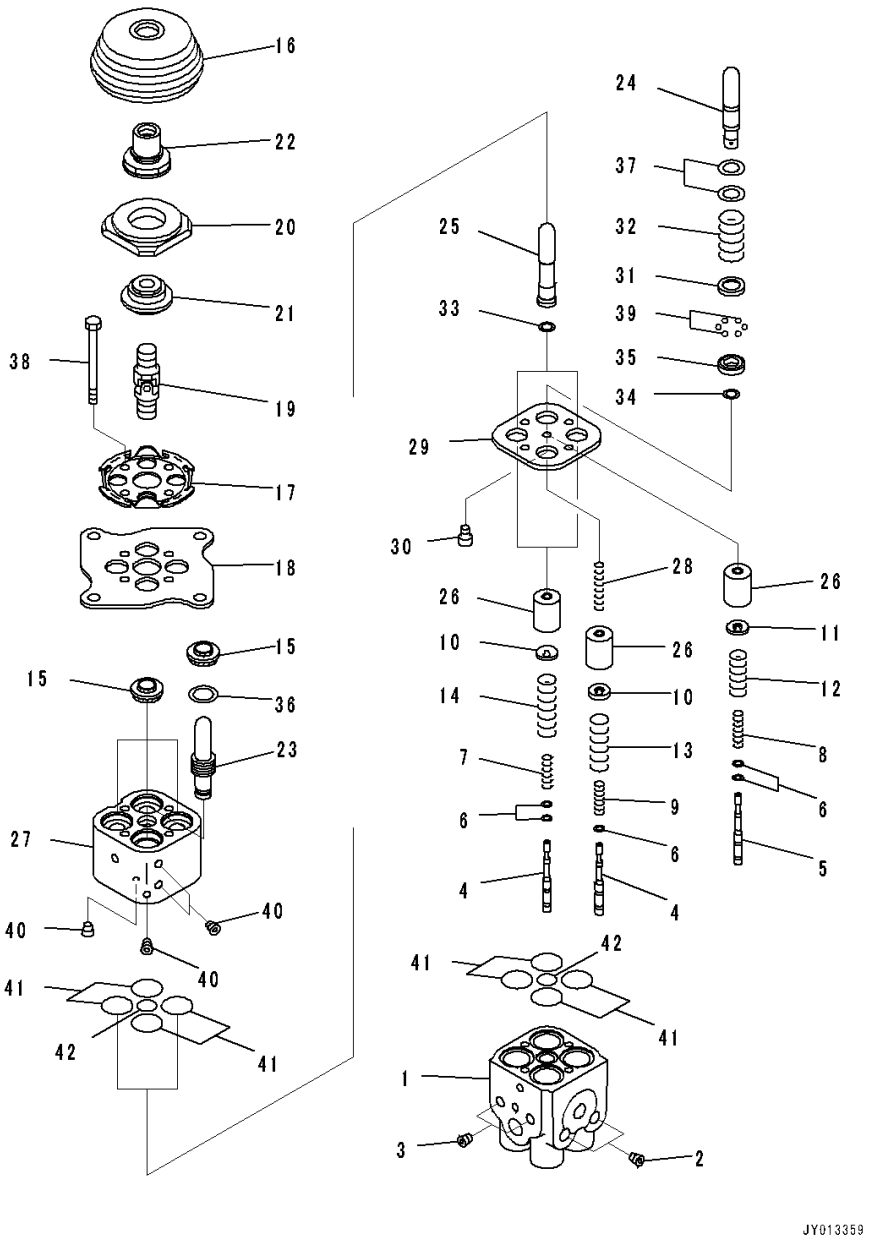

Index	Code	Part Number	Description	Qty	Serial Number
32	C1		• Spring	1	80054-
33	C1		• Shim	2	80054-
34	C1		• Shim	1	80054-
	C1		• Shim	1	80054-
	C1		• Shim	1	80054-
35	C1		• Retainer	1	80054-
36		702-16-72810	• Seat	1	80054-
37	C1		• Spacer	4	80054-
38		01010-80670	• Bolt	4	80054-
39	C1		• Ball	13	80054-
40	C1		• Screw	4	80054-
41	C1		• O-ring	8	80054-
42	C1		• O-ring	2	80054-

FIG. K2110-009004 Dozer Control, Hose

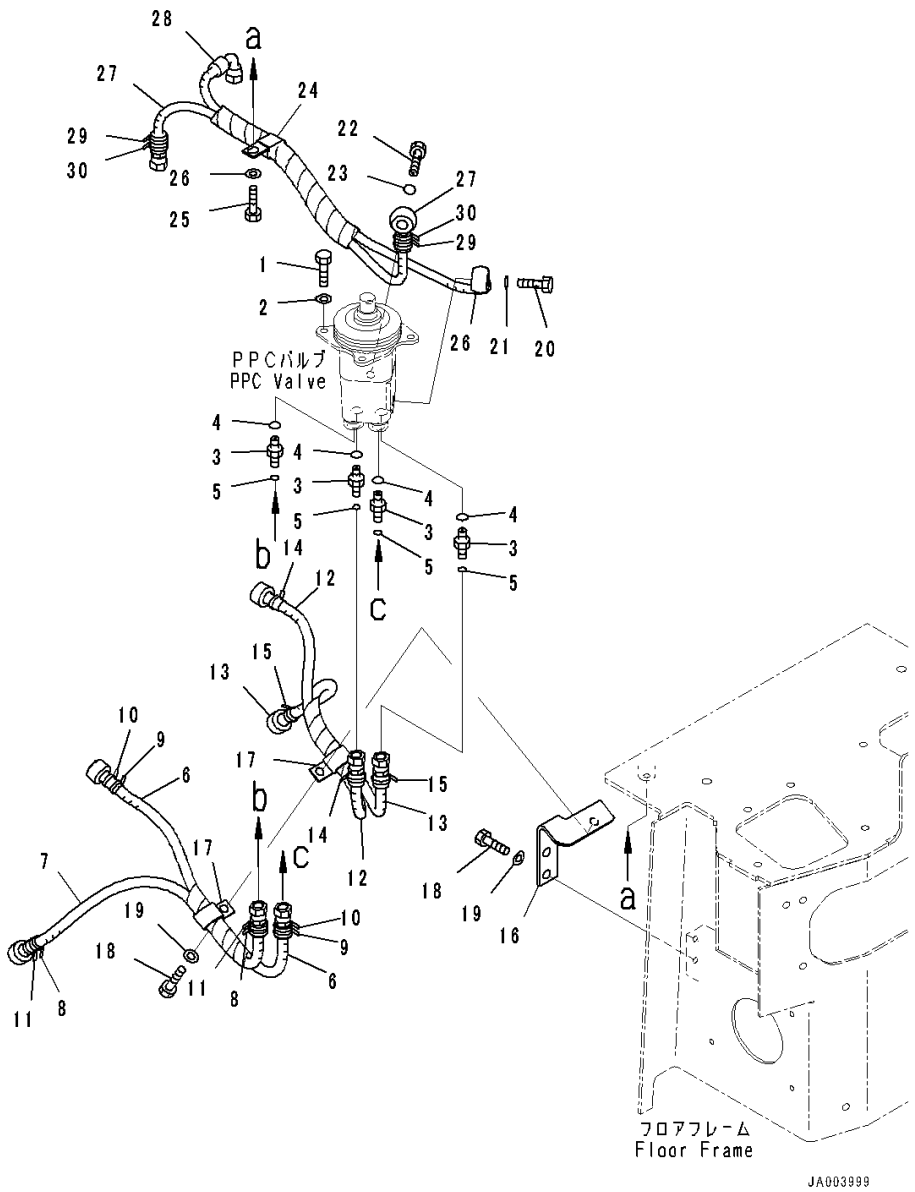

Index	Code	Part Number	Description	Qty	Serial Number
		Note: This list covers following specifications.			
		With Power Tilt Pitch Dozer, ROPS Canopy			
		With Power Tilt Pitch Dozer, For Machine With Rear Actuator, ROPS Canopy			
1		01010-80820	Bolt	4	80054-
2		01643-30823	Washer	4	80054-
3		02781-0021D	Union	4	80054-
4		07002-11423	O-ring	4	80054-
5		02896-11008	O-ring	4	80054-
		14X-62-54131	Hose Assembly	1	80054-
6		14X-62-53950	• Hose	1	80054-
7		21K-62-72250	• Hose	1	80054-
8		206-62-87990	• Band, Orange	2	80054-
9		20Y-62-22820	• Band, Blue	2	80054-
10		20Y-62-22830	• Band, White	2	80054-
11		20Y-62-22850	• Band, Green	2	80054-
		14X-62-54171	Hose Assembly	1	80054-
12		14X-62-53950	• Hose	1	80054-
13		14X-62-54760	• Hose	1	80054-
14		206-62-87990	• Band, Orange	2	80054-
15		20Y-62-22850	• Band, Green	2	80054-
16		14X-62-54511	Bracket	1	80054-
17		04435-51410	Clip	2	80054-
18		01010-81020	Bolt	3	80054-
19		01643-31032	Washer	3	80054-
20		702-16-53240	Plug	1	80054-
21		07000-12018	O-ring	1	80054-
22		203-62-57730	Bolt, Eye	1	80054-
23		07000-12018	O-ring	1	80054-
24		04435-51410	Clip	1	80054-
25		01010-81020	Bolt	1	80054-
26		01643-31032	Washer	1	80054-
		14X-62-54141	Hose Assembly	1	80054-
27		14X-62-53751	• Hose	1	80054-
28		14X-62-54860	• Hose	1	80054-
29		20Y-62-22790	• Band, Red	2	80054-
30		20Y-62-22860	• Band, Brown	2	80054-

FIG. K2110-010006 Dozer Control, With Power Tilt Pitch Dozer, For Machine With Rear Actuator, ROPS Canopy, Attachment Lever

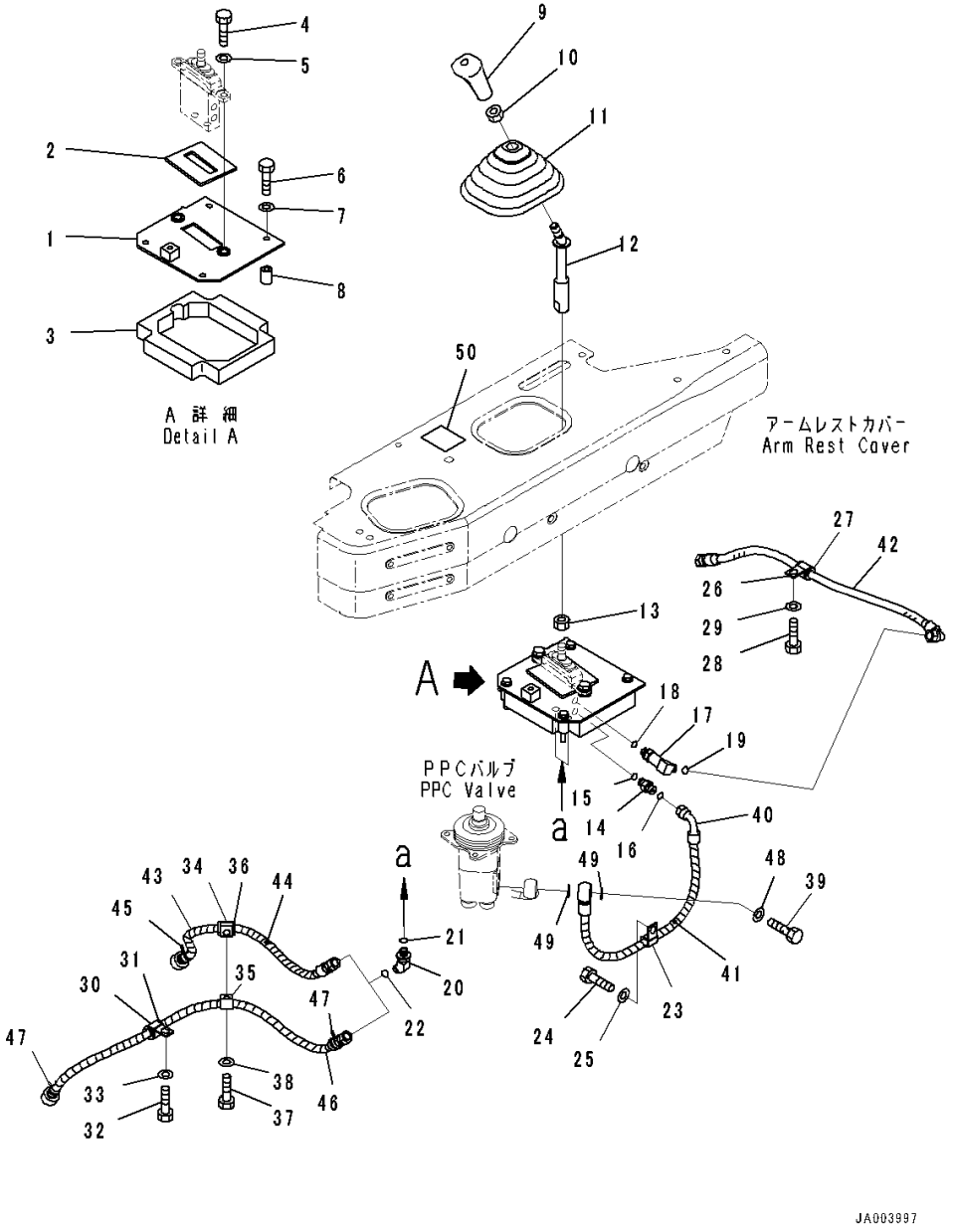

Index	Code	Part Number	Description	Qty	Serial Number
1		14X-78-51112	Bracket	1	80054-
2		14X-78-11490	• Seal,Bonded	1	80054-
3		14X-78-51131	• Seal,Bonded	1	80054-
4		01010-81030	Bolt	2	80054-
5		01643-31032	Washer	2	80054-
6		01010-80855	Bolt	4	80054-
7		01643-30823	Washer	4	80054-
8		14X-78-51141	Spacer	4	80054-
9		17A-43-42240	Knob	1	80054-
10		20T-43-71190	Nut	1	80054-
11		11Y-43-11181	Boot	1	80054-
12		14X-78-51291	Lever	1	80054-
13		01583-11408	Nut	1	80054-
14		21W-62-44510	Nipple	1	80054-
15		07002-11423	O-ring	1	80054-
16		02896-11008	O-ring	1	80054-
17		21W-62-43990	Elbow	1	80054-
18		07002-11423	O-ring	1	80054-
19		02896-11008	O-ring	1	80054-
20		21W-62-42660	Elbow	2	80054-
21		07002-11423	O-ring	2	80054-
22		02896-11008	O-ring	2	80054-
23		04434-51410	Clip	1	80054-
24		01010-81020	Bolt	1	80054-
25		01643-31032	Washer	1	80054-
26		04434-51710	Clip	1	80054-
27		07095-20211	Cushion	1	80054-
28		01010-81020	Bolt	1	80054-
29		01643-31032	Washer	1	80054-
30		04434-51810	Clip	1	80054-
31		07095-20213	Cushion	1	80054-
32		01010-81020	Bolt	1	80054-
33		01643-31032	Washer	1	80054-
34		04434-51810	Clip	1	80054-
35		04434-51210	Clip	1	80054-
36		07095-20213	Cushion	1	80054-
37		01010-81020	Bolt	1	80054-
38		01643-31032	Washer	1	80054-
39		14X-78-51410	Bolt, Eye	1	80054-

FIG. K2110-010006 Dozer Control, With Power Tilt Pitch Dozer, For Machine With Rear Actuator, ROPS Canopy, Attachment Lever

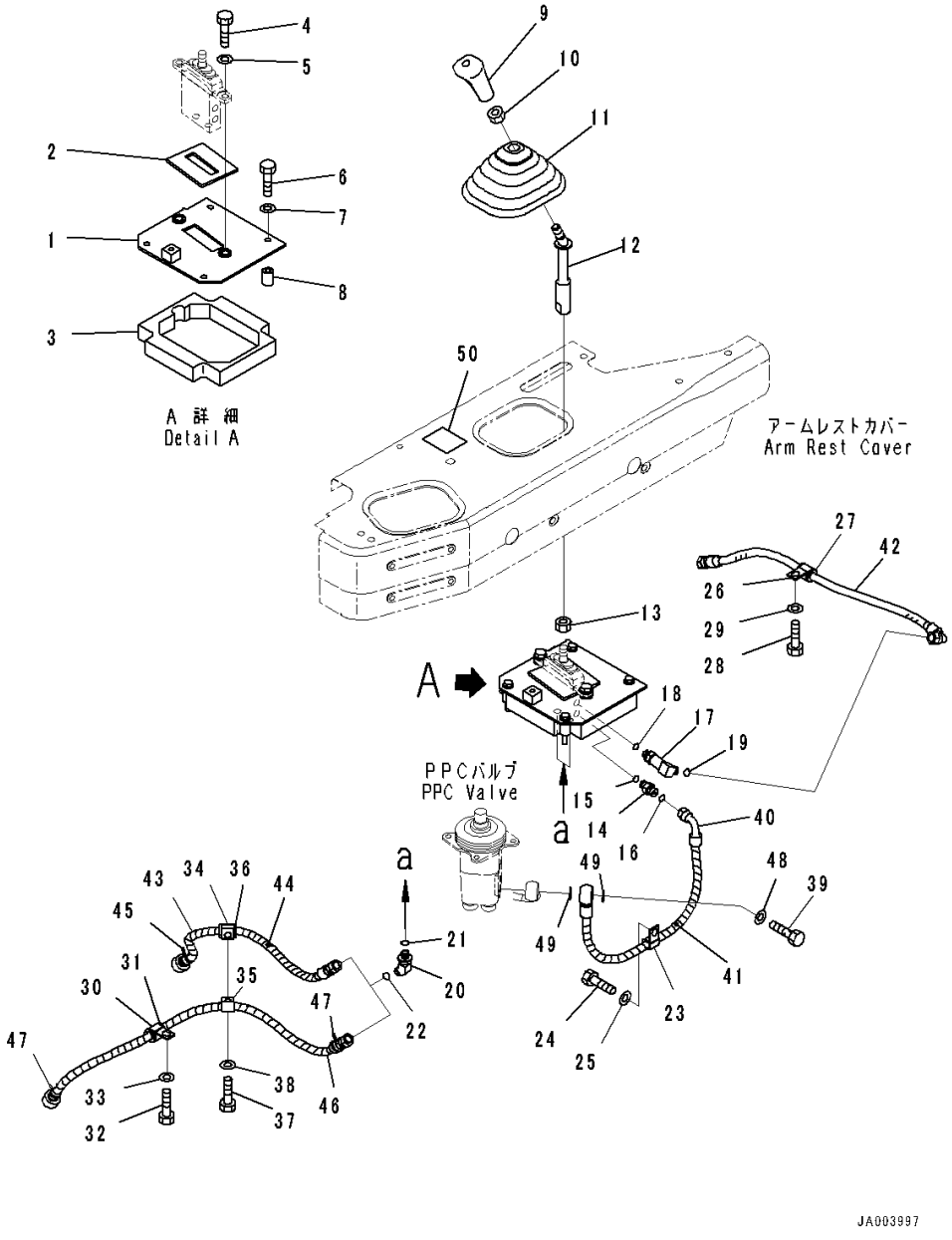

Index	Code	Part Number	Description	Qty	Serial Number
40		14X-78-51281	Hose Assembly	1	80054-
41		08210-00605	• Tube, Spiral	1	80054-
42		02761-00206	Hose, Face Seal Type	1	80054-
43		14X-78-51431	Hose Assembly	1	80054-
44		08210-00604	• Tube, Spiral	1	80054-
45		20Y-62-22860	• Band, Brown	2	80054-
46		14X-78-51421	Hose Assembly	1	80054-
47		20Y-62-22790	• Band, Red	2	80054-
48		287-15-15710	Shim, T=0.5mm	1	80054-
49		07000-12018	O-ring	2	80054-
50		14X-78-11180	Plate, Operating	1	80054-

FIG. K2110-007002 Dozer Control, Lever

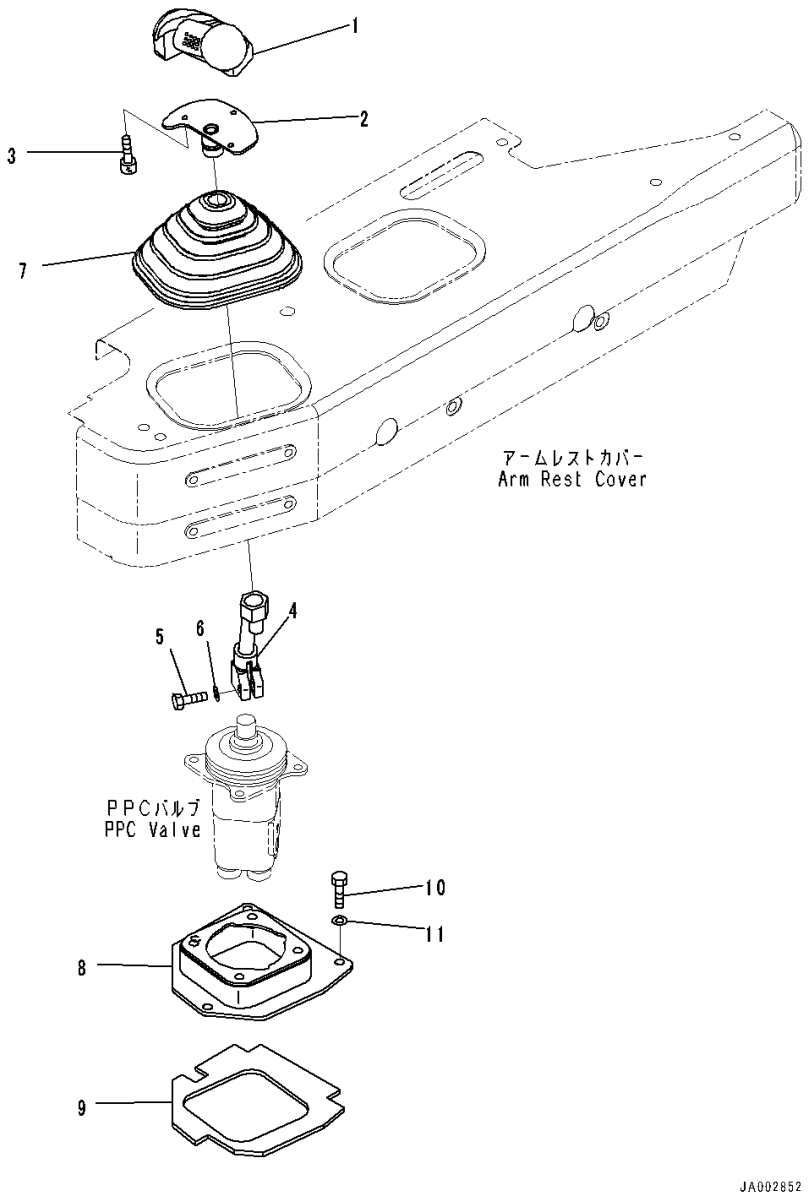

Index	Code	Part Number	Description	Qty	Serial Number
		Note: This list covers following specifications.			
		For Machine Without Rear Actuator, ROPS Canopy			
		For Machine With Rear Actuator, ROPS Canopy			
1		195-43-64411	Knob Assembly	1	80054-
2		19M-43-38220	Bracket	1	80054-
3		01252-80510	Bolt	3	80054-
4		14X-43-34310	Lever	1	80054-
5		07372-21030	Bolt	1	80054-
6		01640-21016	Washer	1	80054-
7		11Y-43-11181	Boot	1	80054-
8		14X-43-51350	Bracket	1	80054-
9		14X-43-51370	• Seal,Bonded	1	80054-
10		01010-80830	Bolt	4	80054-
11		01643-30823	Washer	4	80054-

FIG. K2110-007004 Dozer Control, Hose

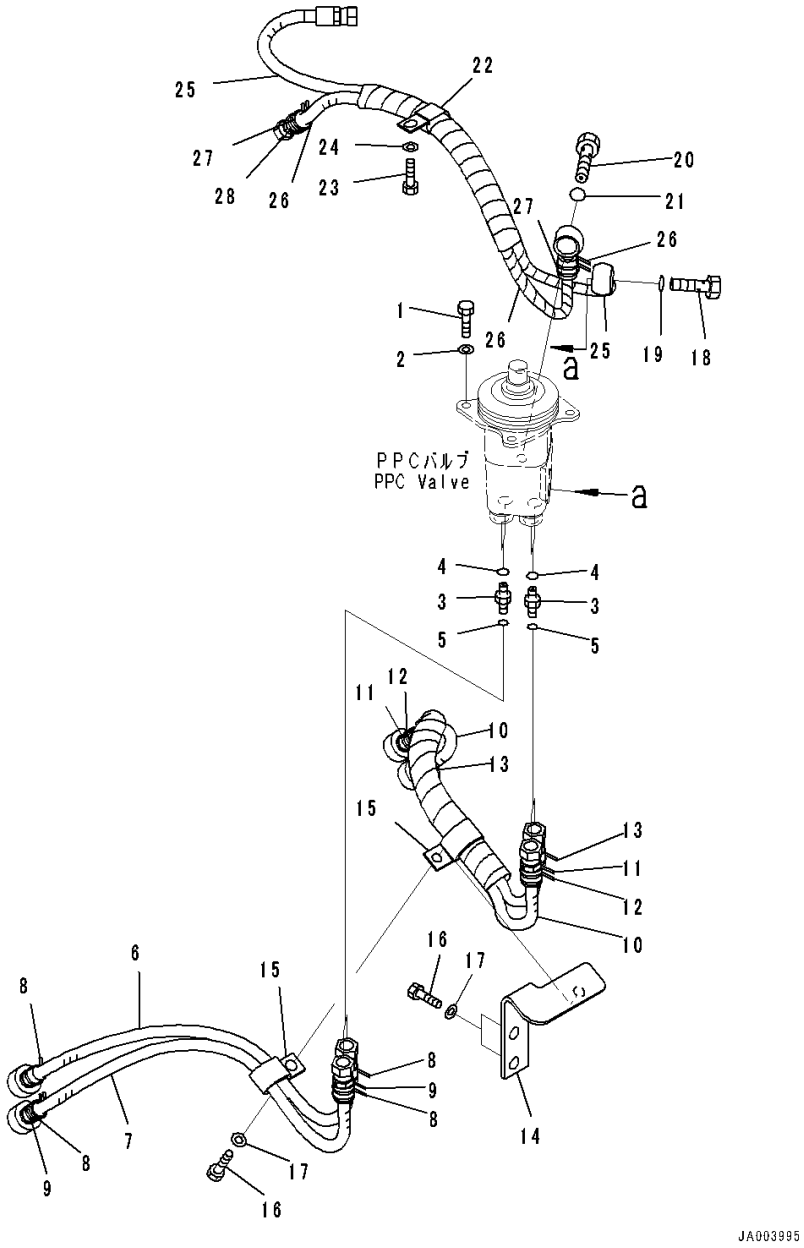

Index	Code	Part Number	Description	Qty	Serial Number
		Note: This list covers following specifications.			
		For Machine Without Rear Actuator, ROPS Canopy			
		For Machine With Rear Actuator, ROPS Canopy			
1		01010-80820	Bolt	4	80054-
2		01643-30823	Washer	4	80054-
3		02781-0021D	Union	4	80054-
4		07002-11423	O-ring	4	80054-
5		02896-11008	O-ring	4	80054-
		14X-62-53101	Hose Assembly	1	80054-
6		14X-62-53950	• Hose	1	80054-
7		14X-62-54820	• Hose	1	80054-
8		206-62-87990	• Band, Orange	4	80054-
9		20Y-62-22850	• Band, Green	2	80054-
		14X-62-54810	Hose Assembly	1	80054-
10		14X-62-54760	• Hose	2	80054-
11		20Y-62-22820	• Band, Blue	2	80054-
12		20Y-62-22830	• Band, White	2	80054-
13		20Y-62-22850	• Band, Green	2	80054-
14		14X-62-54511	Bracket	1	80054-
15		04435-51410	Clip	2	80054-
16		01010-81020	Bolt	3	80054-
17		01643-31032	Washer	3	80054-
18		702-16-53240	Plug	1	80054-
19		07000-12018	O-ring	1	80054-
20		203-62-57730	Bolt, Eye	1	80054-
21		07000-12018	O-ring	1	80054-
22		04435-51410	Clip	1	80054-
23		01010-81020	Bolt	1	80054-
24		01643-31032	Washer	1	80054-
		14X-62-53151	Hose Assembly	1	80054-
25		14X-62-53351	• Hose	1	80054-
26		14X-62-53361	• Hose	1	80054-
27		20Y-62-22790	• Band, Red	2	80054-
28		20Y-62-22860	• Band, Brown	2	80054-

FIG. K2110-008006 Dozer Control, For Machine With Rear Actuator, ROPS Canopy, Attachment Lever

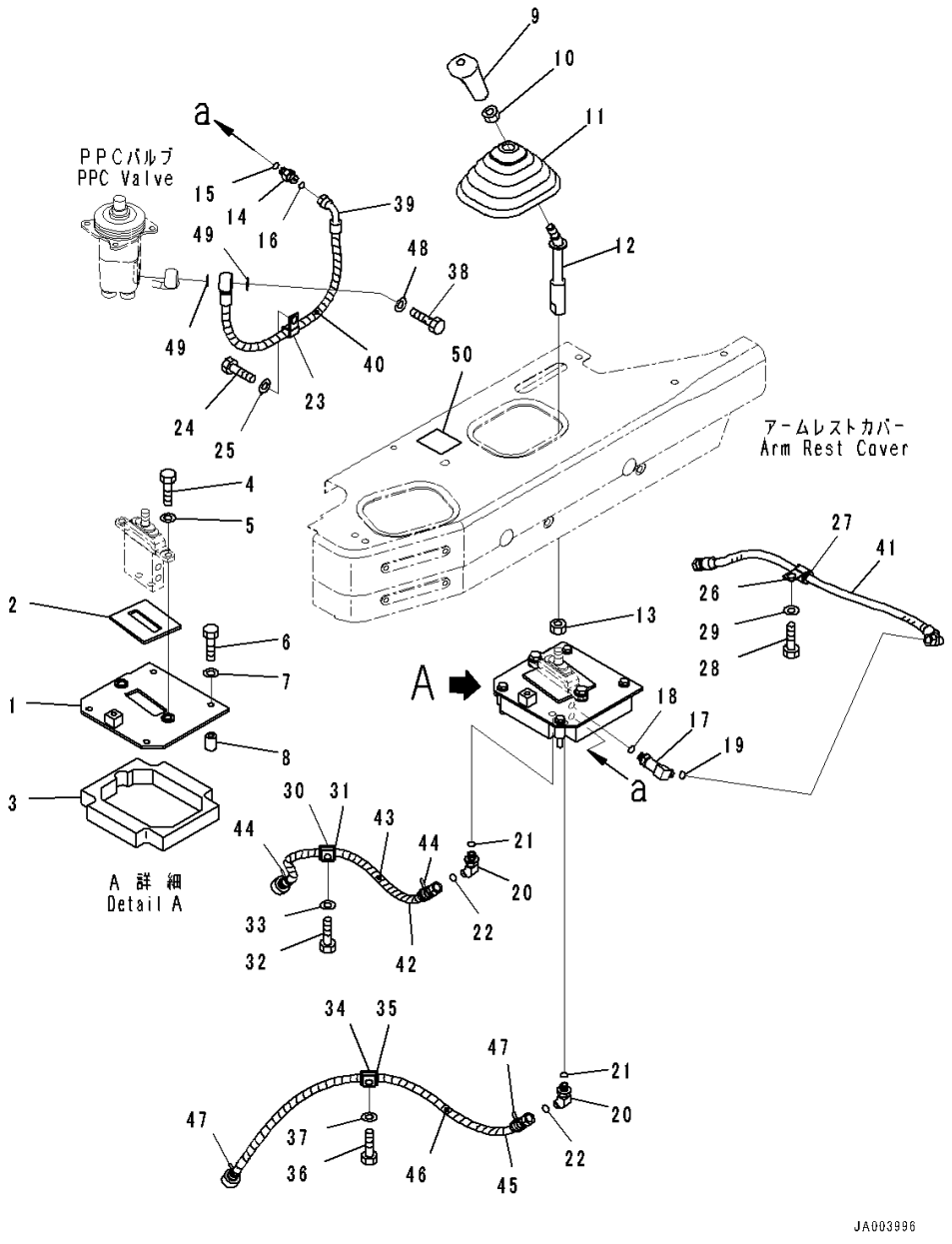

Index	Code	Part Number	Description	Qty	Serial Number
1		14X-78-51112	Bracket	1	80054-
2		14X-78-11490	• Seal,Bonded	1	80054-
3		14X-78-51131	• Seal,Bonded	1	80054-
4		01010-81030	Bolt	2	80054-
5		01643-31032	Washer	2	80054-
6		01010-80855	Bolt	4	80054-
7		01643-30823	Washer	4	80054-
8		14X-78-51141	Spacer	4	80054-
9		17A-43-42240	Knob	1	80054-
10		20T-43-71190	Nut	1	80054-
11		11Y-43-11181	Boot	1	80054-
12		14X-78-51291	Lever	1	80054-
13		01583-11408	Nut	1	80054-
14		21W-62-44510	Nipple	1	80054-
15		07002-11423	O-ring	1	80054-
16		02896-11008	O-ring	1	80054-
17		21W-62-43990	Elbow	1	80054-
18		07002-11423	O-ring	1	80054-
19		02896-11008	O-ring	1	80054-
20		21W-62-42660	Elbow	2	80054-
21		07002-11423	O-ring	2	80054-
22		02896-11008	O-ring	2	80054-
23		04434-51410	Clip	1	80054-
24		01010-81020	Bolt	1	80054-
25		01643-31032	Washer	1	80054-
26		04434-51710	Clip	1	80054-
27		07095-20211	Cushion	1	80054-
28		01010-81020	Bolt	1	80054-
29		01643-31032	Washer	1	80054-
30		04434-51810	Clip	1	80054-
31		07095-20213	Cushion	1	80054-
32		01010-81020	Bolt	1	80054-
33		01643-31032	Washer	1	80054-
34		04434-51810	Clip	1	80054-
35		07095-20213	Cushion	1	80054-
36		01010-81020	Bolt	1	80054-
37		01643-31032	Washer	1	80054-
38		14X-78-51410	Bolt, Eye	1	80054-
39		14X-78-51281	Hose Assembly	1	80054-

FIG. K2110-008006 Dozer Control, For Machine With Rear Actuator, ROPS Canopy, Attachment Lever

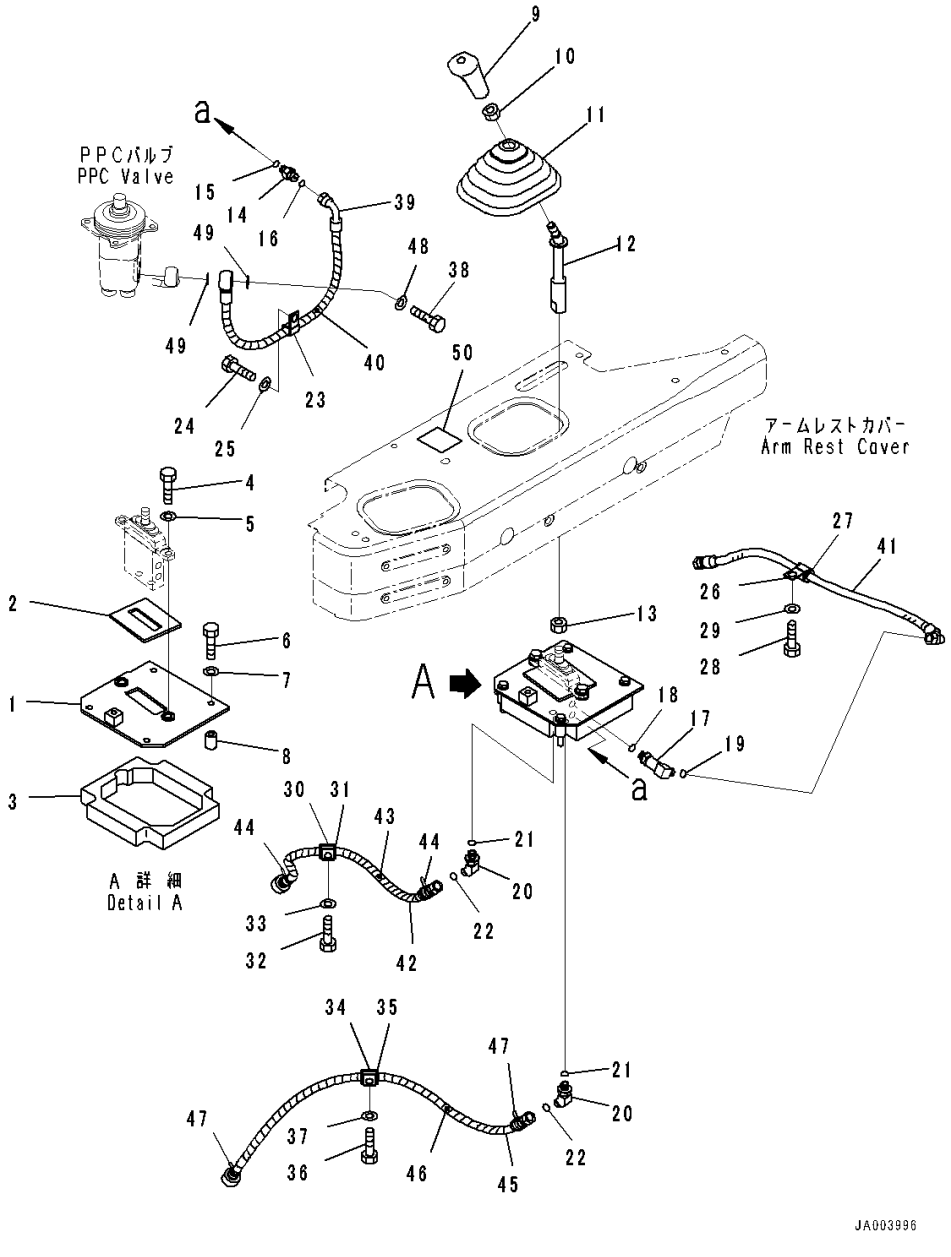

Index	Code	Part Number	Description	Qty	Serial Number
40		08210-00605	• Tube, Spiral	1	80054-
41		02761-00206	Hose, Face Seal Type	1	80054-
42		14X-62-53820	Hose	1	80054-
43		08210-00605	• Tube, Spiral	1	80054-
44		20Y-62-22860	• Band, Brown	2	80054-
45		14X-62-53830	Hose	1	80054-
46		08210-00607	• Tube, Spiral	1	80054-
47		20Y-62-22790	• Band, Red	2	80054-
48		287-15-15710	Shim, T=0.5mm	1	80054-
49		07000-12018	O-ring	2	80054-
50		14X-78-11180	Plate, Operating	1	80054-

FIG. K2120-001001 Floor Frame Mounts

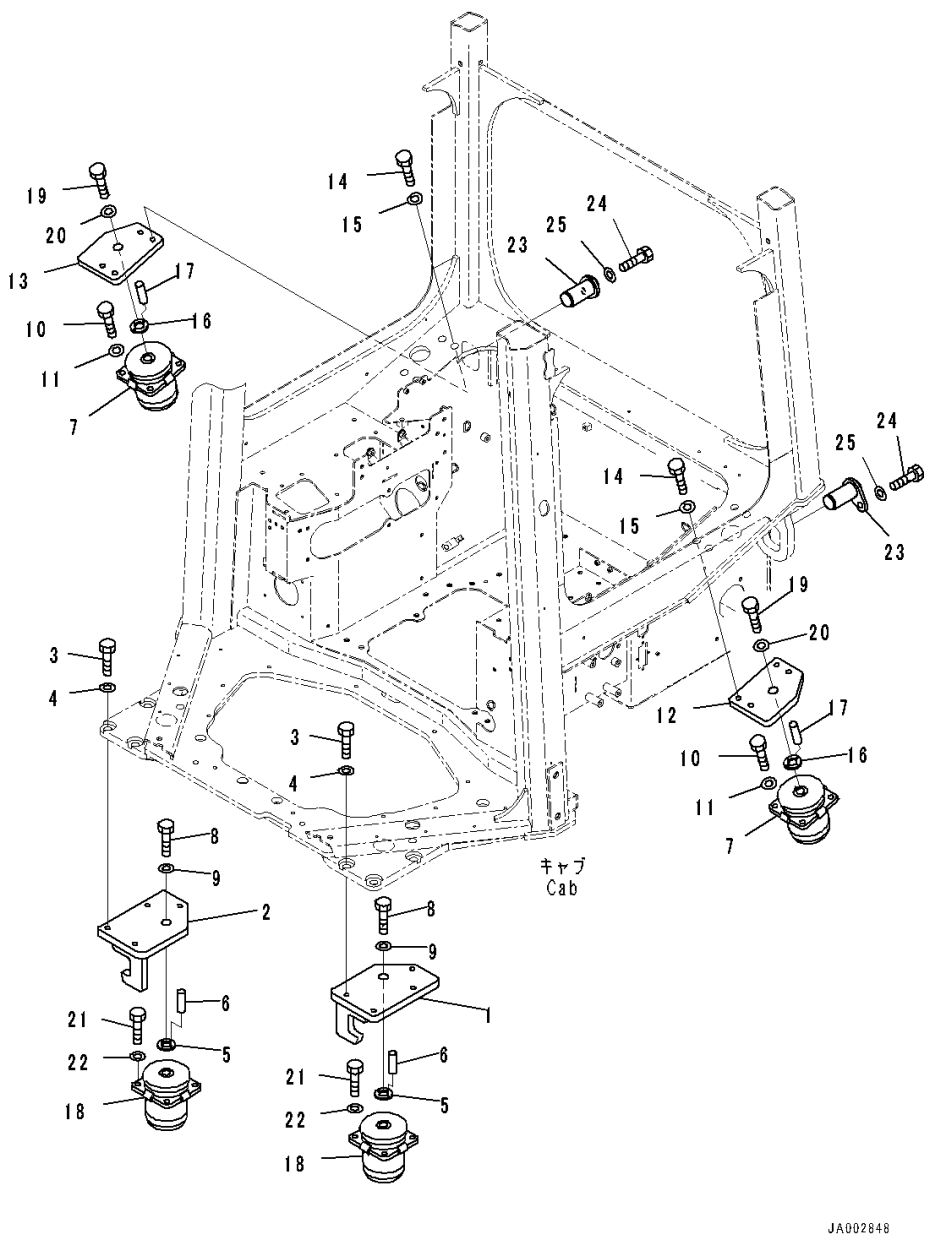

Index	Code	Part Number	Description	Qty	Serial Number
1		14X-54-56111	Bracket	1	80001-
2		14X-54-56121	Bracket	1	80001-
3		198-54-42260	Bolt	8	80001-
4		14X-54-56780	Washer	8	80001-
5		17A-54-46440	Plate	2	80001-
6		04020-00616	Pin, Dowel	4	80001-
7		14X-54-56191	Cushion	2	80001-
8		01010-82460	Bolt	2	80001-
9		01643-32460	Washer	2	80001-
10		01010-81440	Bolt	8	80001-
11		01643-31445	Washer	8	80001-
12		14X-54-56131	Plate	1	80001-
13		14X-54-56141	Plate	1	80001-
14		198-54-42260	Bolt	8	80001-
15		14X-54-56780	Washer	8	80001-
16		17A-54-46440	Plate	2	80001-
17		04020-00616	Pin, Dowel	4	80001-
18		14X-54-56191	Cushion	2	80001-
19		01010-82460	Bolt	2	80001-
20		01643-32460	Washer	2	80001-
21		01010-81440	Bolt	8	80001-
22		01643-31445	Washer	8	80001-
23		14X-54-56213	Pin	2	80001-
24		01010-81230	Bolt	2	80001-
25		01643-31232	Washer	2	80001-

FIG. K2130-001001 Floor Frame Cover, Operator's Seat Turn Type

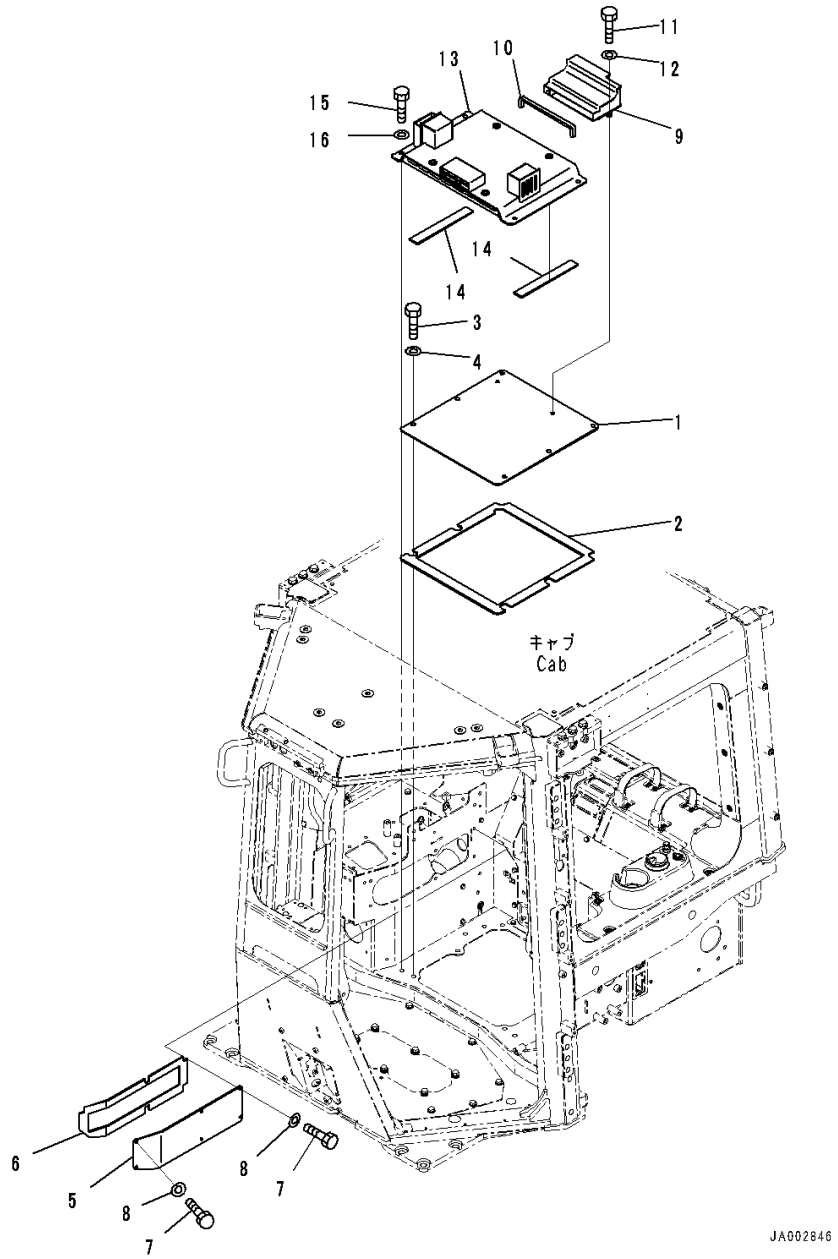

Index	Code	Part Number	Description	Qty	Serial Number
1		14X-54-56321	Cover	1	80001-
2		14X-54-56620	• Sheet,Bonded	1	80001-
3		01010-81230	Bolt	6	80001-
4		01643-31232	Washer	6	80001-
5		14X-54-56341	Cover	1	80001-
6		14X-54-56460	• Seal,Bonded	1	80001-
7		01010-D0825	Bolt	6	80001-
8		01643-70823	Washer	6	80001-
9		14X-54-56230	Duct	1	80001-
10		17A-57-41131	• Seal,Bonded	1	80001-
11		01010-D0825	Bolt	2	80001-
12		01643-70823	Washer	2	80001-
13		14X-54-56511	Bracket	1	80001-
14		17A-57-41170	• Sheet,Bonded	2	80001-
15		01010-D1230	Bolt	4	80001-
16		01643-71232	Washer	4	80001-

FIG. K2130-002001 Floor Frame Cover

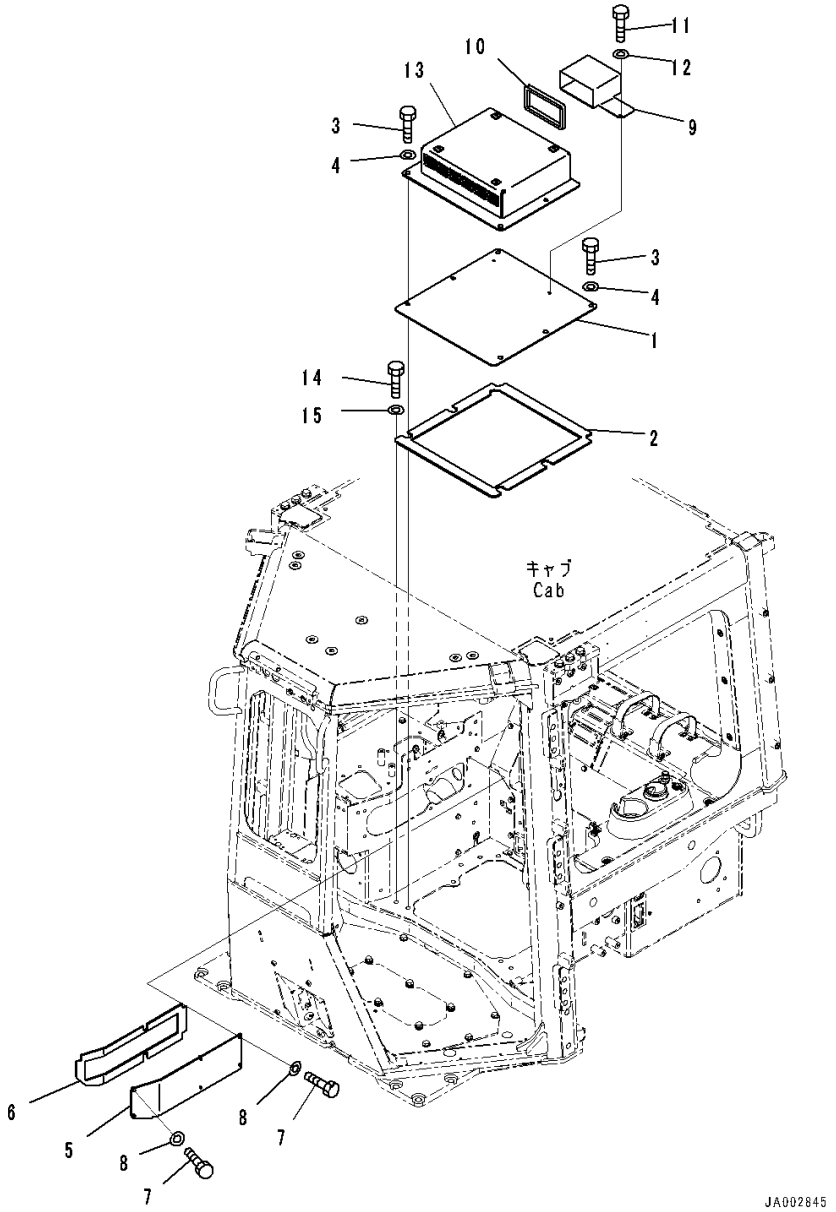

Index	Code	Part Number	Description	Qty	Serial Number
1		14X-54-56321	Cover	1	80001-
2		14X-54-56620	• Sheet,Bonded	1	80001-
3		01010-81230	Bolt	6	80001-
4		01643-31232	Washer	6	80001-
5		14X-54-56341	Cover	1	80001-
6		14X-54-56460	• Seal,Bonded	1	80001-
7		01010-D0825	Bolt	6	80001-
8		01643-70823	Washer	6	80001-
9		14X-54-56571	Duct	1	80001-
10		14X-54-56640	• Sheet,Bonded	1	80001-
11		01010-D0825	Bolt	2	80001-
12		01643-70823	Washer	2	80001-
13		14X-54-56561	Bracket	1	80001-
14		01010-D1220	Bolt	4	80001-
15		01643-71232	Washer	4	80001-

FIG. K2910-001001 Windshield Washer Tank

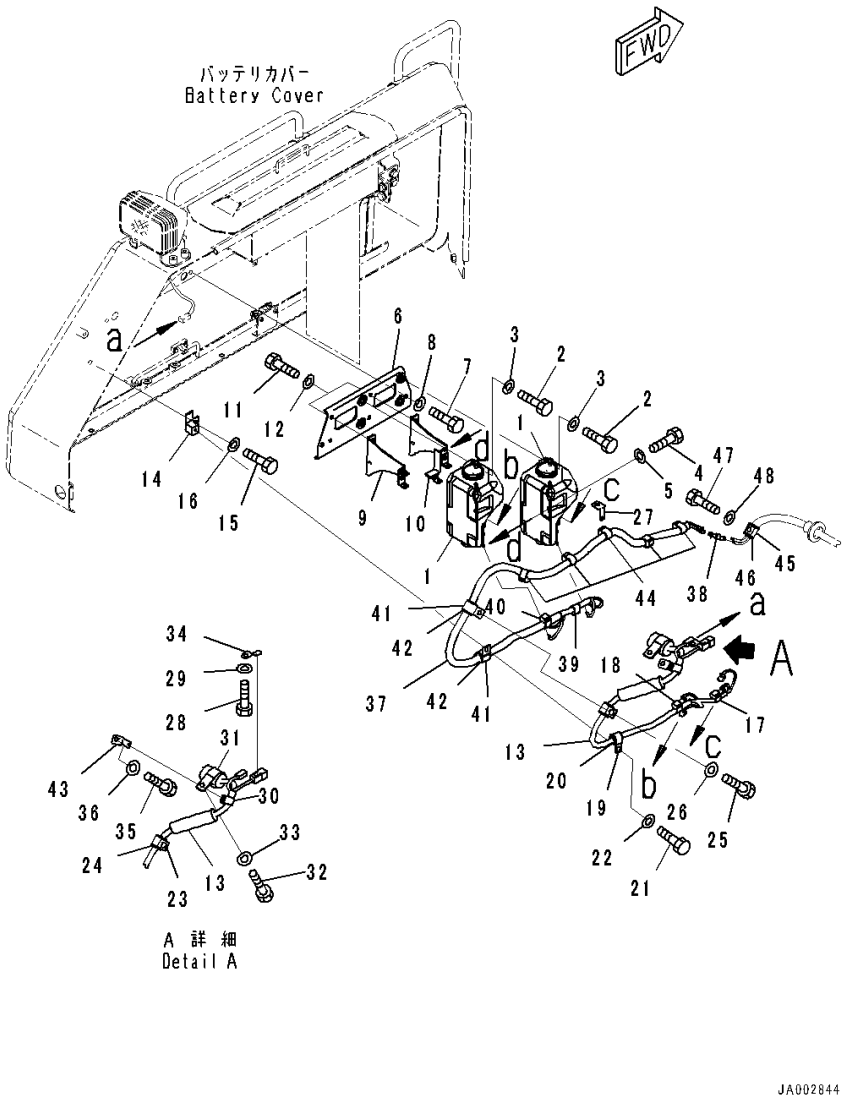

Index	Code	Part Number	Description	Qty	Serial Number
1		14X-Y11-2110	Tank Assembly	2	80001-
2		01010-80825	Bolt	4	80001-
3		01643-30823	Washer	4	80001-
4		01010-80616	Bolt	2	80001-
5		01643-30623	Washer	2	80001-
6		14X-Y11-2121	Bracket	1	80001-
7		01010-81016	Bolt	2	80001-
8		01643-31032	Washer	2	80001-
9		14X-Y11-2160	Bracket	1	80001-
10		14X-Y11-2170	Bracket	1	80001-
11		01010-80816	Bolt	4	80001-
12		01643-30823	Washer	4	80001-
13		14X-06-51783	Wire Harness	1	80001-
14		14X-Y11-1731	Bracket	1	80001-
15		01010-81025	Bolt	1	80001-
16		01643-31032	Washer	1	80001-
17		08211-00720	Clip	1	80001-
18		08211-01020	Clip	1	80001-
19		04434-52112	Clip	1	80001-
20		07095-20213	Cushion	1	80001-
21		01010-81020	Bolt	1	80001-
22		01643-31032	Washer	1	80001-
23		04434-52112	Clip	1	80007-
24		07095-20213	Cushion	1	80007-
25		01010-81020	Bolt	1	80001-
26		01643-31032	Washer	1	80001-
27		08057-14010	Clip	1	80001-
28		01010-81020	Bolt	1	80001-
29		01643-31032	Washer	1	80001-
30		08211-01320	Clip	1	80001-
31		23S-62-25850	Clip	1	80001-
32		01010-81020	Bolt	1	80001-
33		01643-31032	Washer	1	80001-
34		08193-21012	Clip	1	80001-
35		01010-81020	Bolt	1	80001-
36		01643-31032	Washer	1	80001-
37		14X-Y11-2140	Hose Assembly	1	80001-
38		22L-54-22990	• Joint	4	80001-
39		08211-01020	Clip	1	80001-

FIG. K2910-001001 Windshield Washer Tank

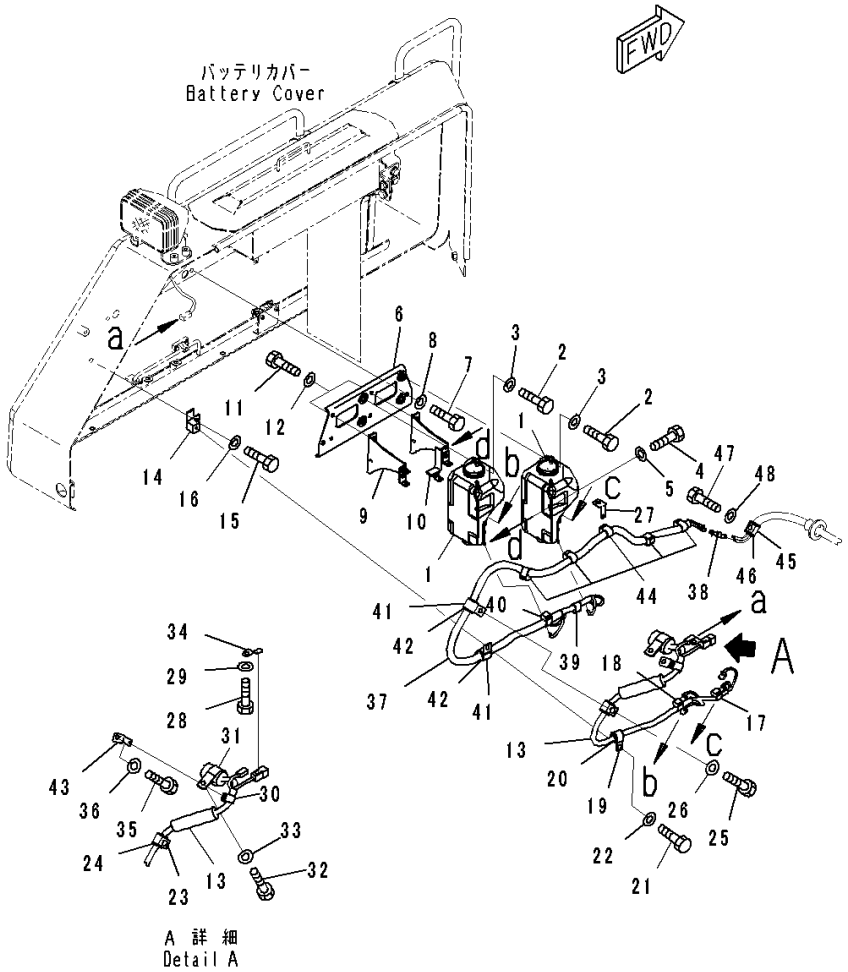

Index	Code	Part Number	Description	Qty	Serial Number
40		08211-01520	Clip	1	80001-
41		04434-52511	Clip	2	80001-
42		07095-20318	Cushion	2	80001-
43		08057-14010	Clip	1	80001-
44		08211-01520	Clip	5	80001-
45		04434-52512	Clip	1	80001-
46		07095-20318	Cushion	1	80001-
47		01010-81225	Bolt	1	80001-
48		01643-31232	Washer	1	80001-

FIG. K2910-002001 Electric Harness

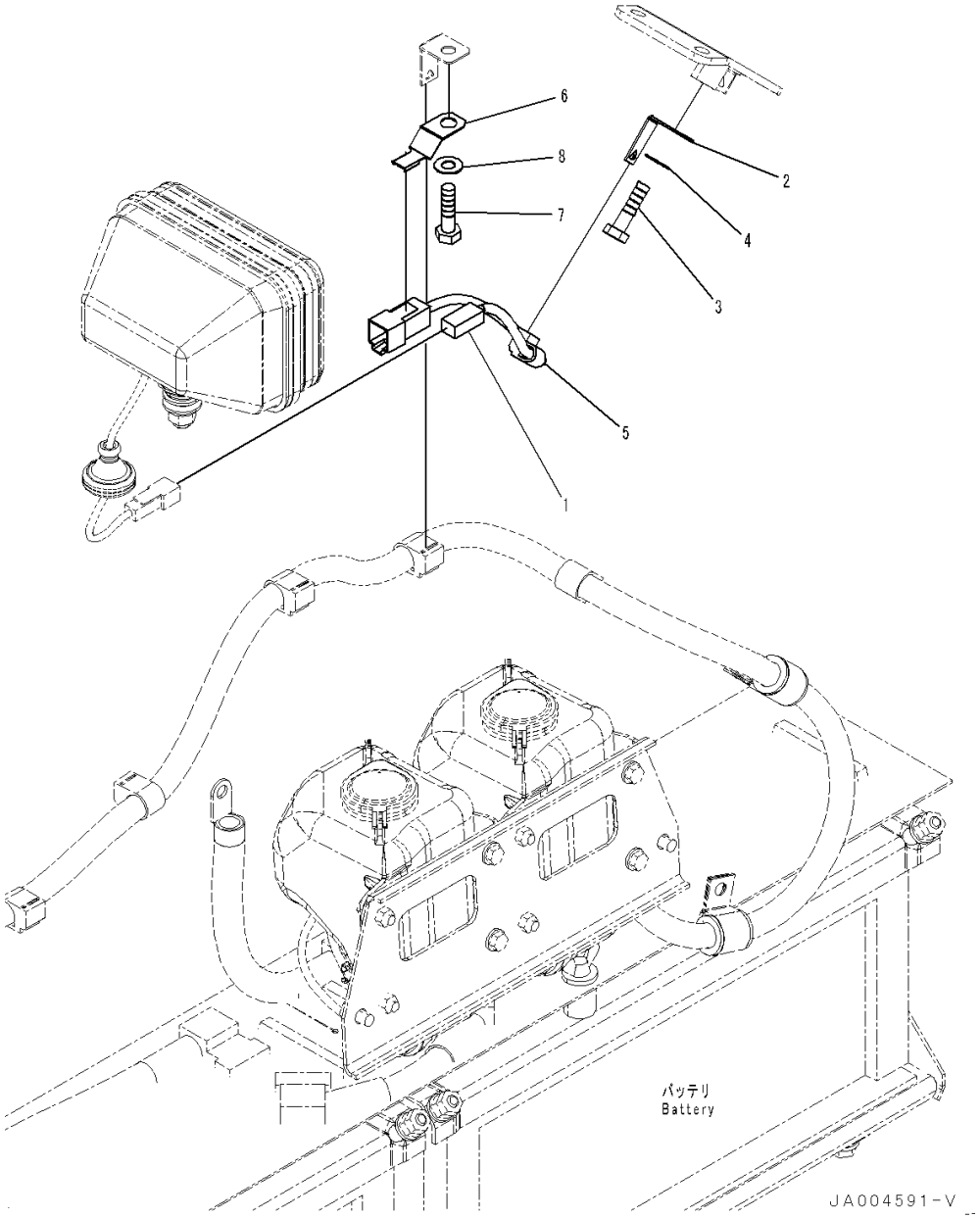

Index	Code	Part Number	Description	Qty	Serial Number
1		14X-06-51481	Wire Harness	1	80054-
2		08057-14010	Clip	1	80054-
3		01010-81020	Bolt	1	80054-
4		01643-31032	Washer	1	80054-
5		08211-00720	Clip	1	80054-
6		08193-21012	Clip	1	80054-
7		01010-81020	Bolt	1	80054-
8		01643-31032	Washer	1	80054-

GUARDS AND COVERS

FIG. M2111-001001 Dozer Blade Lift Cylinder Support

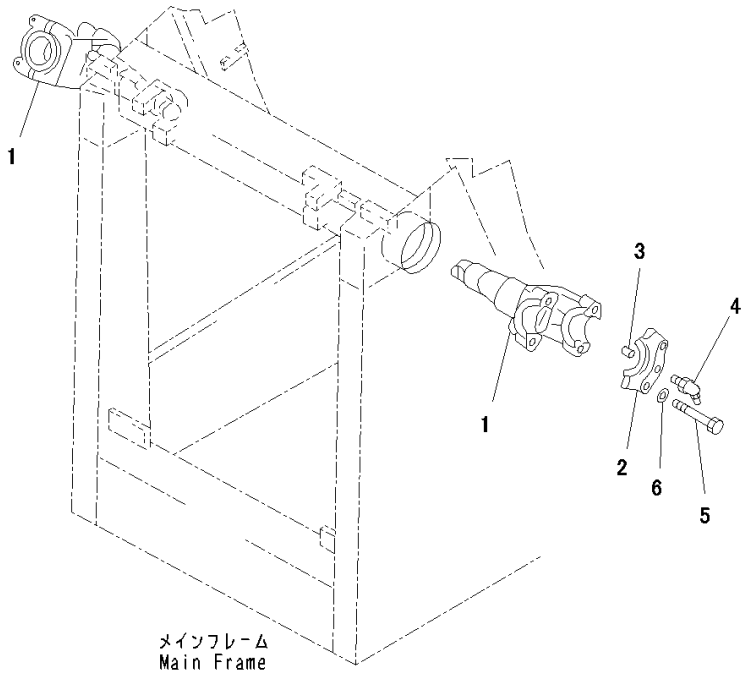

P4A1983

Index	Code	Part Number	Description	Qty	Serial Number
		14X-71-00030	Yoke Assembly	1	80001-
1		14X-71-53110	• Yoke	2	80001-
2		14Y-71-13320	• Cap	4	80001-
3		144-70-15251	• Pin, Dowel	4	80001-
4		07020-00675	• Fitting, Grease	4	80001-
5		01010-81670	Bolt	8	80001-
6		01643-31645	Washer	8	80001-

FIG. M2120-001001 Radiator Mask, Hinged, Strengthened

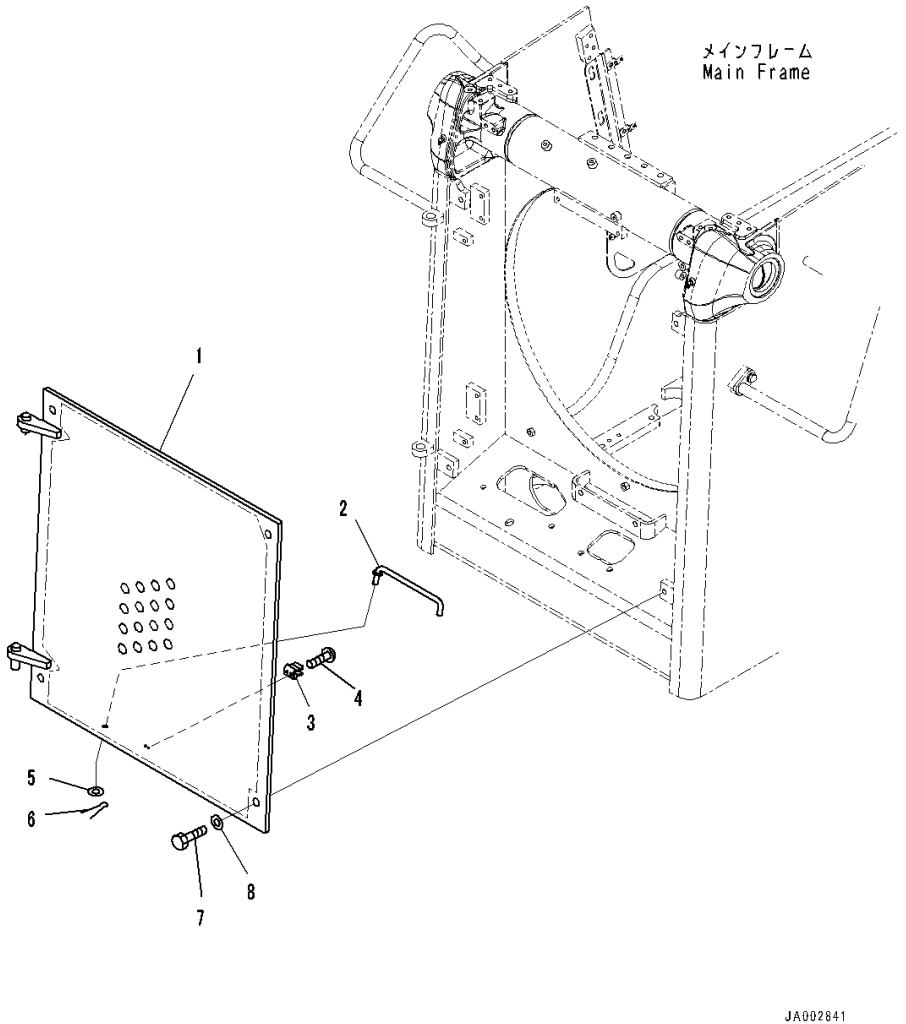

Index	Code	Part Number	Description	Qty	Serial Number
1		14X-54-51111	Mask	1	80001-
2		14X-54-51130	Bar	1	80001-
3		20R-54-11460	Spring	1	80001-
4		01023-10510	Screw	2	80001-
5		01643-31232	Washer	1	80001-
6		04050-14025	Pin, Cotter	1	80001-
7		01010-81640	Bolt	4	80001-
8		01643-31645	Washer	4	80001-

FIG. M2120-002001 Radiator Mask, Hinged

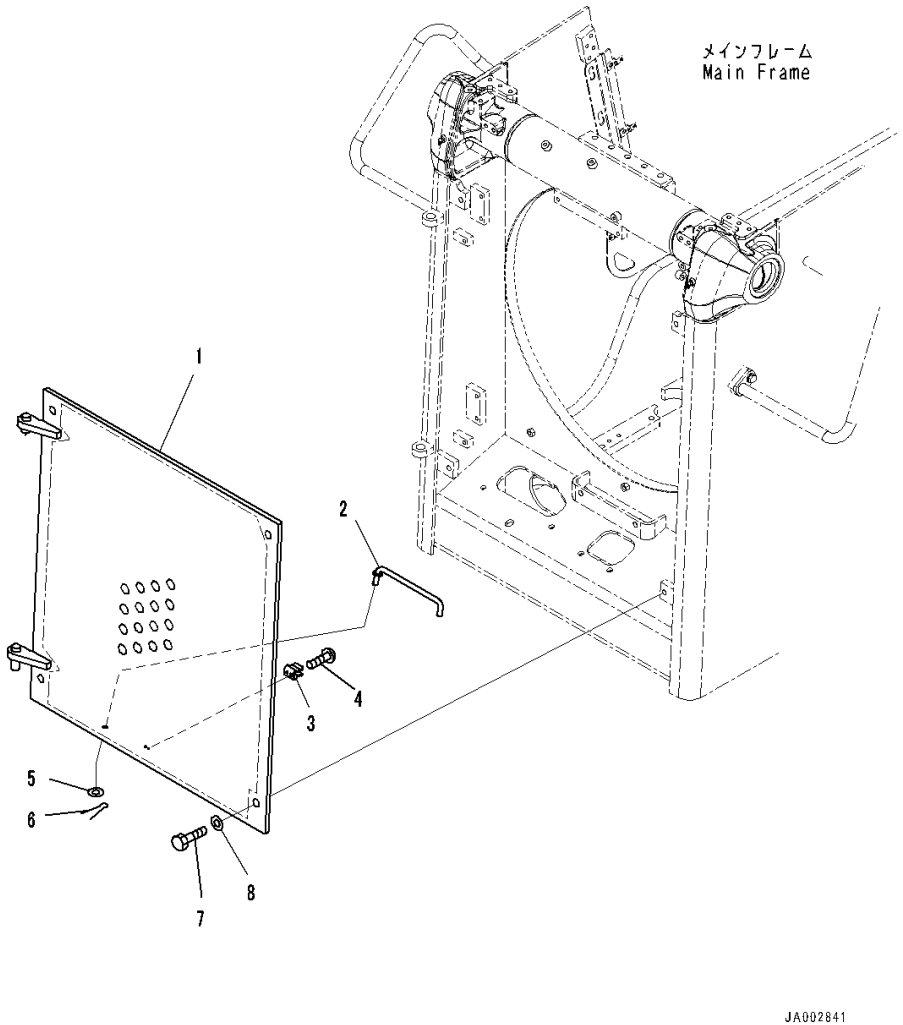

Index	Code	Part Number	Description	Qty	Serial Number
1		14X-54-51121	Mask	1	80001-
2		14X-54-51130	Bar	1	80001-
3		20R-54-11460	Spring	1	80001-
4		01023-10510	Screw	2	80001-
5		01643-31232	Washer	1	80001-
6		04050-14025	Pin, Cotter	1	80001-
7		01010-81640	Bolt	4	80001-
8		01643-31645	Washer	4	80001-

FIG. M2140-001001 Front Guard Group, Engine Hood And Side Cover, Hood

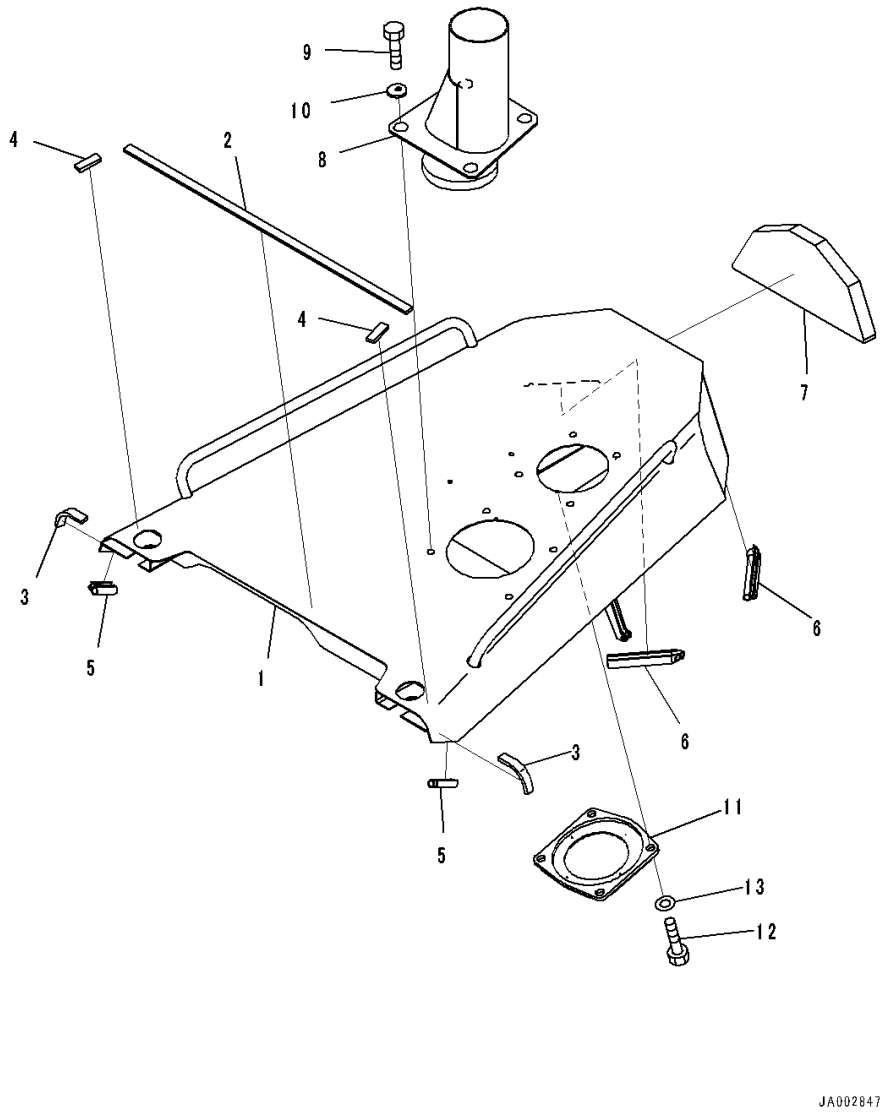

Index	Code	Part Number	Description	Qty	Serial Number
1		14X-54-52100	Hood Assembly	1	80001-
2		14X-54-52161	• Sheet,Bonded	1	80001-
3		14X-54-52171	• Sheet,Bonded	2	80001-
4		14X-54-52570	• Sheet,Bonded	2	80001-
5		14X-54-52470	• Seal,Bonded	2	80001-
6		14X-54-52550	• Seal,Bonded	2	80001-
7		14X-54-52561	• Seal,Bonded	1	80001-
8		14X-01-51511	Pipe	1	80001-
9		01010-71230	Bolt	4	80001-
10		14X-54-32820	Washer	4	80001-
11		14X-01-51530	Cover	1	80001-
12		01010-81020	Bolt	4	80001-
13		01643-31032	Washer	4	80001-

FIG. M2140-001002 Front Guard Group, Engine Hood And Side Cover, Hood Side Cover

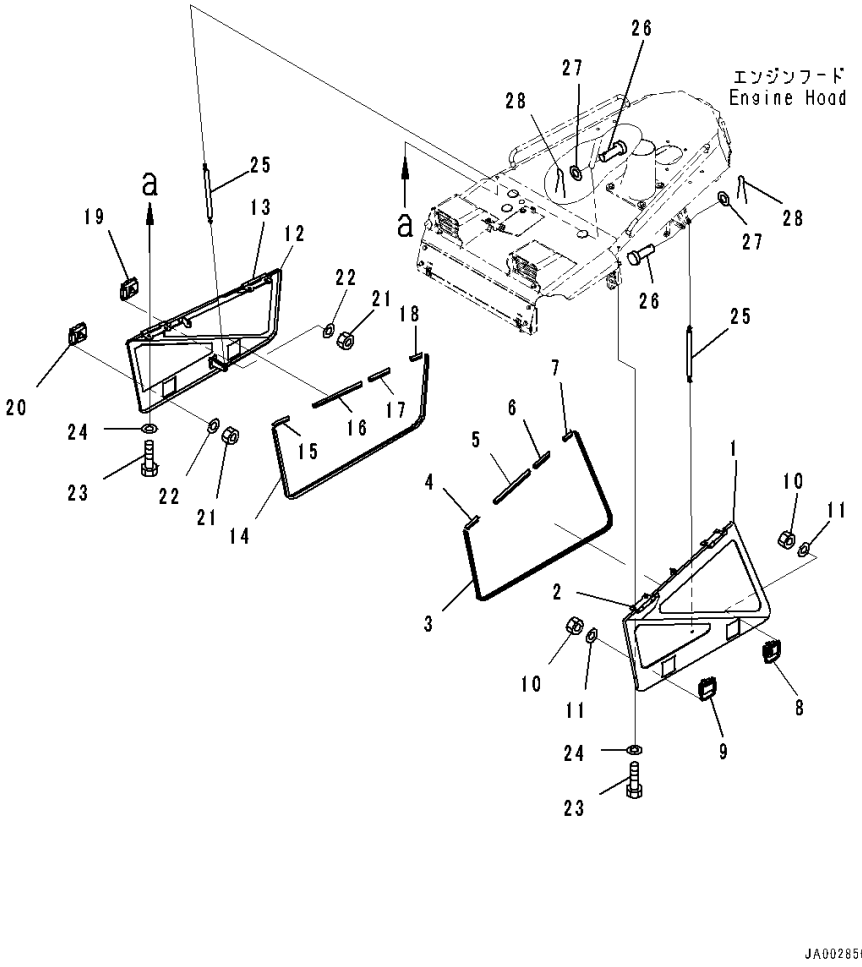

Index	Code	Part Number	Description	Qty	Serial Number
1		14X-54-52211	Side Cover Assembly,LHS	1	80001-
2		14X-54-52931	• Hinge,Welded	2	80001-
3		14X-54-52251	• Seal,Bonded	1	80001-
4		14X-54-52440	• Seal,Bonded	1	80001-
5		14X-54-52450	• Seal,Bonded	1	80001-
6		14X-54-52460	• Seal,Bonded	1	80001-
7		14X-54-52470	• Seal,Bonded	1	80001-
8		14X-54-54310	• Lock	1	80020-
9		14X-54-54320	• Lock	1	80020-
10		01580-10605	• Nut	8	80001-
11		01643-10623	• Washer	8	80001-
12		14X-54-52221	Side Cover Assembly,RHS	1	80001-
13		14X-54-52931	• Hinge,Welded	2	80001-
14		14X-54-52251	• Seal,Bonded	1	80001-
15		14X-54-52440	• Seal,Bonded	1	80001-
16		14X-54-52450	• Seal,Bonded	1	80001-
17		14X-54-52460	• Seal,Bonded	1	80001-
18		14X-54-52470	• Seal,Bonded	1	80001-
19		14X-54-54310	• Lock	1	80020-
20		14X-54-54320	• Lock	1	80020-
21		01580-10605	• Nut	8	80001-
22		01643-10623	• Washer	8	80001-
23		01010-81225	Bolt	8	80001-
24		01643-31232	Washer	8	80001-
25		14X-54-52390	Dumper	2	80001-
26		04205-10828	Pin	4	80001-
27		01641-20812	Washer	4	80001-
28		04050-12015	Pin, Cotter	4	80001-

FIG. M2140-001003 Front Guard Group, Hood Support, Front Side

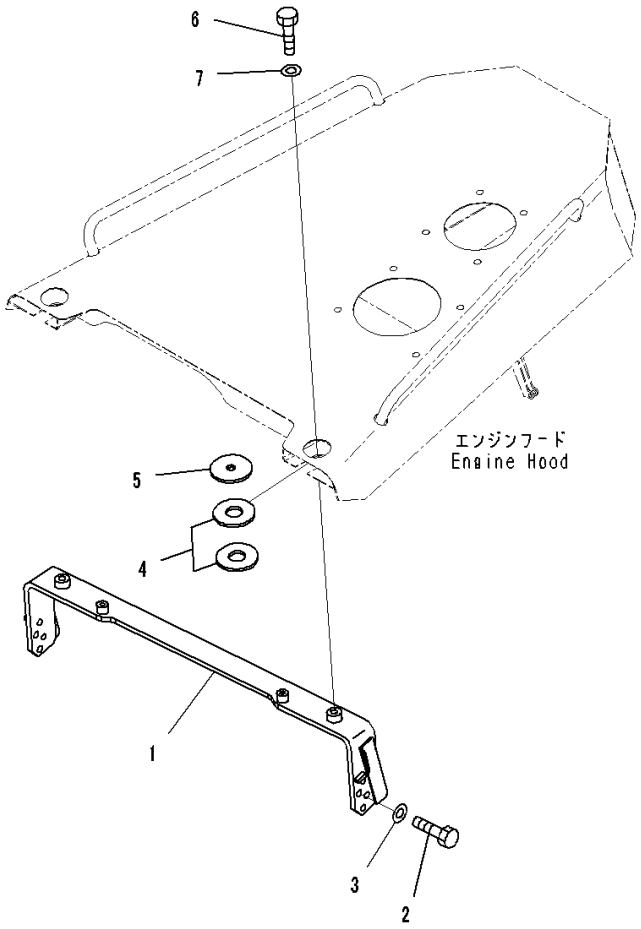

Index	Code	Part Number	Description	Qty	Serial Number
		Note: This list covers following specifications.			
		Engine Hood And Side Cover			
		Engine Hood And Side Cover, EU Regulation Guard Level 2			
1		14X-54-52121	Bracket	1	80001-
2		01010-81230	Bolt	8	80001-
3		01643-31232	Washer	8	80001-
4		195-54-46180	Plate	4	80001-
5		6930-21-4120	Plate	2	80001-
6		01010-81640	Bolt	2	80001-
7		01643-31645	Washer	2	80001-

FIG. M2140-001004 Front Guard Group, Engine Hood And Side Cover, Radiator Cover

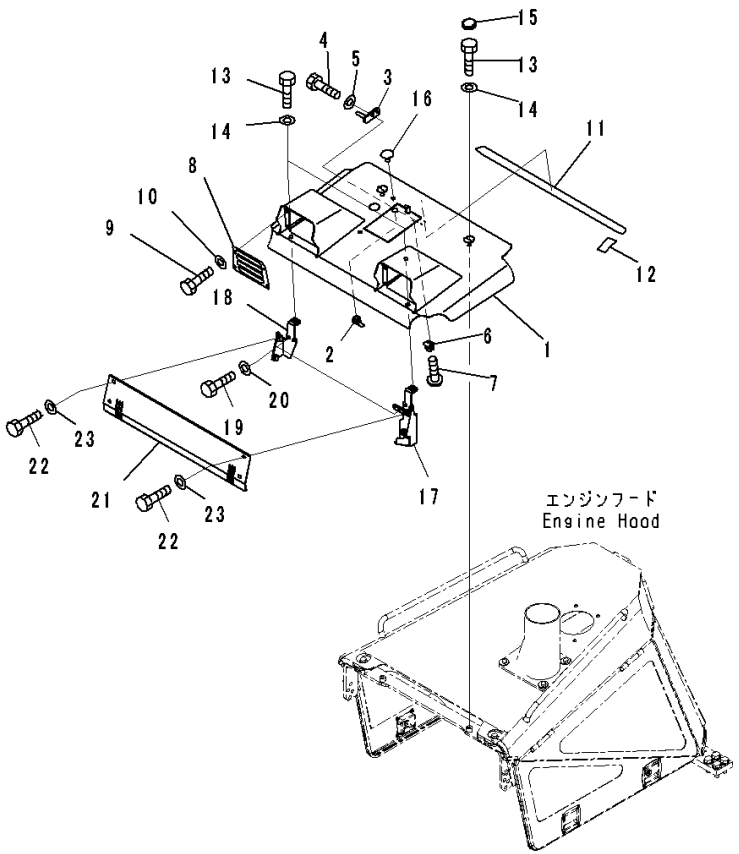

Index	Code	Part Number	Description	Qty	Serial Number
		14X-54-51210	Cover Assembly	1	80001-
1		14X-54-51221	• Cover	1	80001-
2		205-60-71220	• Lock Assembly	1	80001-
3		22B-54-12291	• Bracket	1	80001-
4		01010-80820	• Bolt	2	80001-
5		01643-30823	• Washer	2	80001-
6		22B-46-24180	• Spring	1	80001-
7		01023-10406	• Screw	2	80009-
8		14X-54-51230	• Cover	2	80001-
9		01010-D0820	• Bolt	8	80001-
10		01643-70823	• Washer	8	80001-
11		14X-54-53670	• Plate	1	80001-
12		14X-54-53680	• Plate	2	80001-
13		01010-81225	Bolt	4	80001-
14		01643-31232	Washer	4	80001-
15		14X-54-32310	Cap	3	80001-
16		416-54-21710	Plug	3	80001-
17		14X-54-51251	Bracket	1	80001-
18		14X-54-51261	Bracket	1	80001-
19		01010-81225	Bolt	4	80001-
20		01643-31232	Washer	4	80001-
21		14X-54-51241	Plate	1	80001-
22		01010-D1020	Bolt	4	80001-
23		01643-71032	Washer	4	80001-

FIG. M2140-001005 Front Guard Group, Hood Mounts

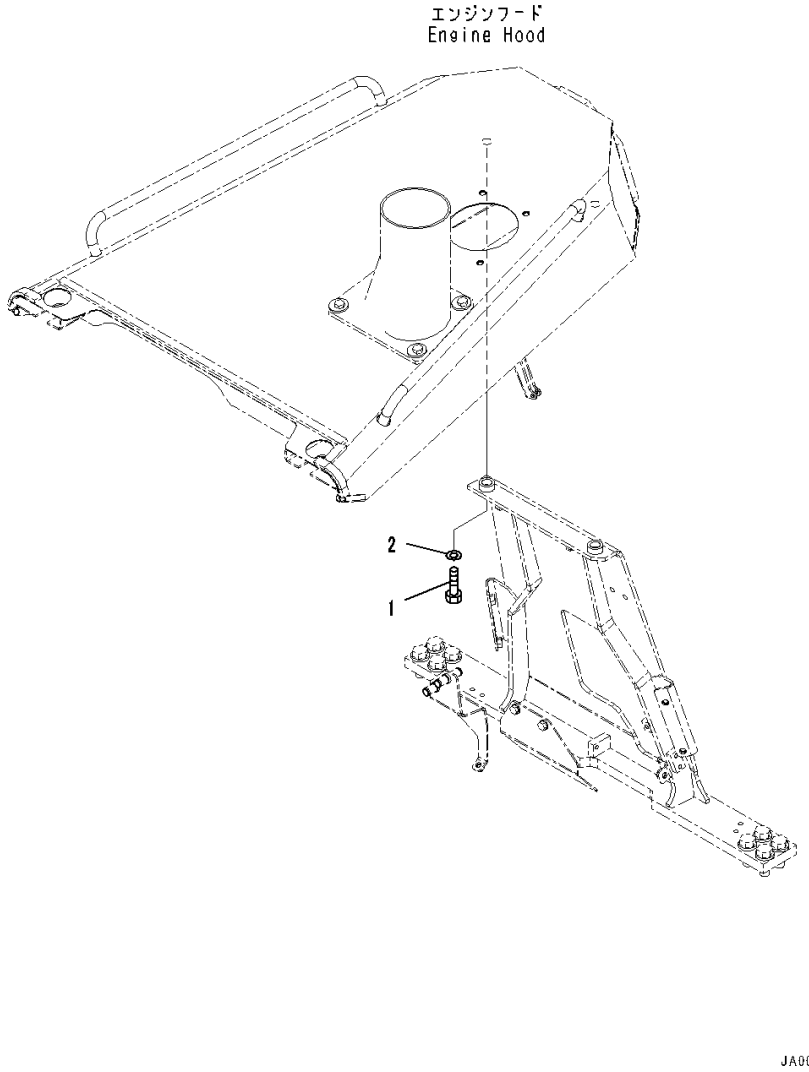

Index	Code	Part Number	Description	Qty	Serial Number
		Note: This list covers following specifications.			
		Engine Hood And Side Cover			
		Engine Hood And Side Cover, EU Regulation Guard Level 2			
1		01010-81650	Bolt.....	2	80001-
2		01643-31645	Washer	2	80001-

FIG. M2140-001006 Front Guard Group, Hood Support, Rear Side

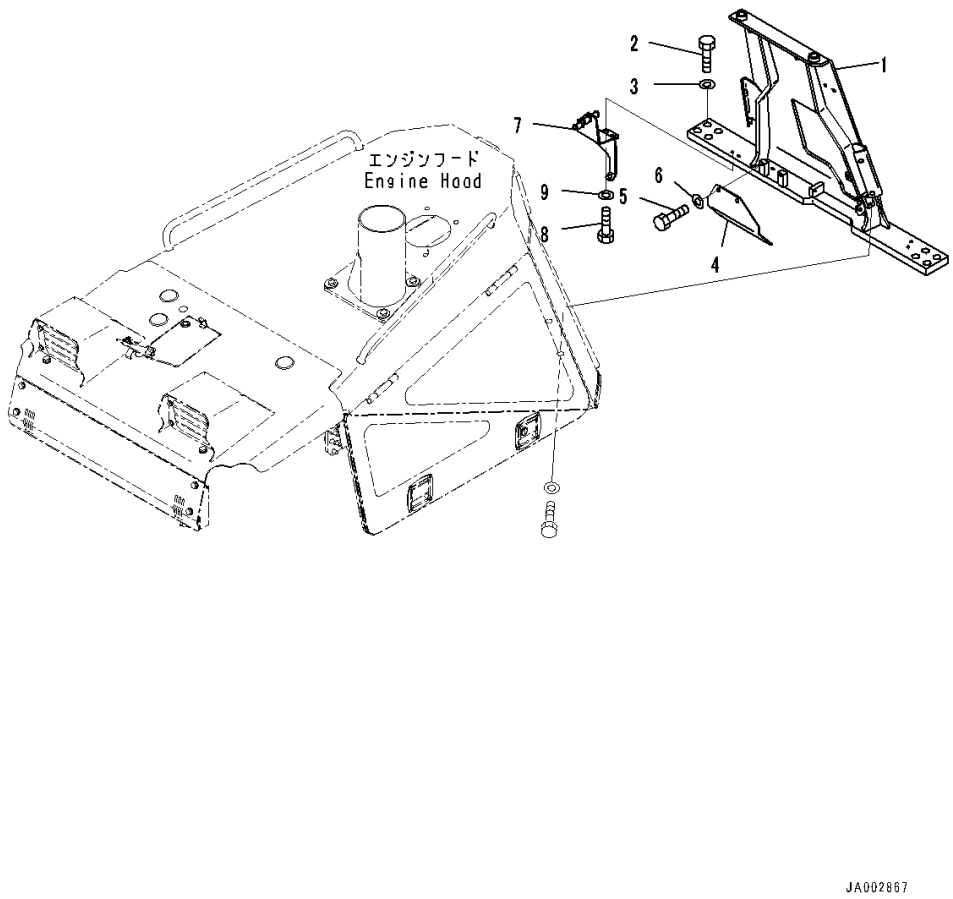

Index	Code	Part Number	Description	Qty	Serial Number
		Note: This list covers following specifications.			
		Engine Hood And Side Cover			
		Engine Hood And Side Cover, EU Regulation Guard Level 2			
1		14X-54-52511	Bracket	1	80001-
2		01010-82055	Bolt	8	80001-
3		01643-32060	Washer	8	80001-
4		14X-54-52610	Plate	1	80001-
5		01010-81016	Bolt	2	80001-
6		01643-31032	Washer	2	80001-
7		14X-Y11-1971	Bracket	1	80001-
8		01010-81230	Bolt	2	80001-
9		01643-31232	Washer	2	80001-

FIG. M2140-001007 Front Guard Group, Hood Side Cover Lock

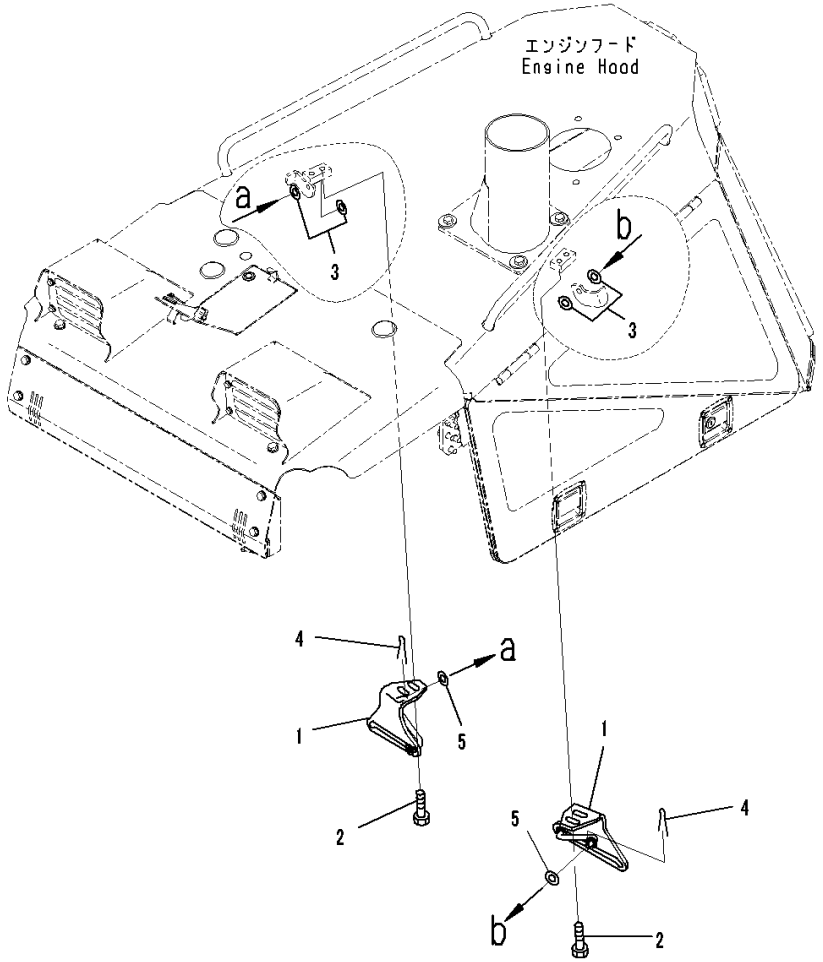

Index	Code	Part Number	Description	Qty	Serial Number
		Note: This list covers following specifications.			
		Engine Hood And Side Cover			
		Engine Hood And Side Cover, EU Regulation Guard Level 2			
1		14X-54-52151	Bracket	2	80001-
2		01010-81230	Bolt	4	80001-
3		01643-31232	Washer	4	80001-
4		04050-13020	Pin, Cotter	2	80001-
5		01643-31232	Washer	2	80007-

FIG. M2140-001008 Front Guard Group, Hood Support Rear Side Cover

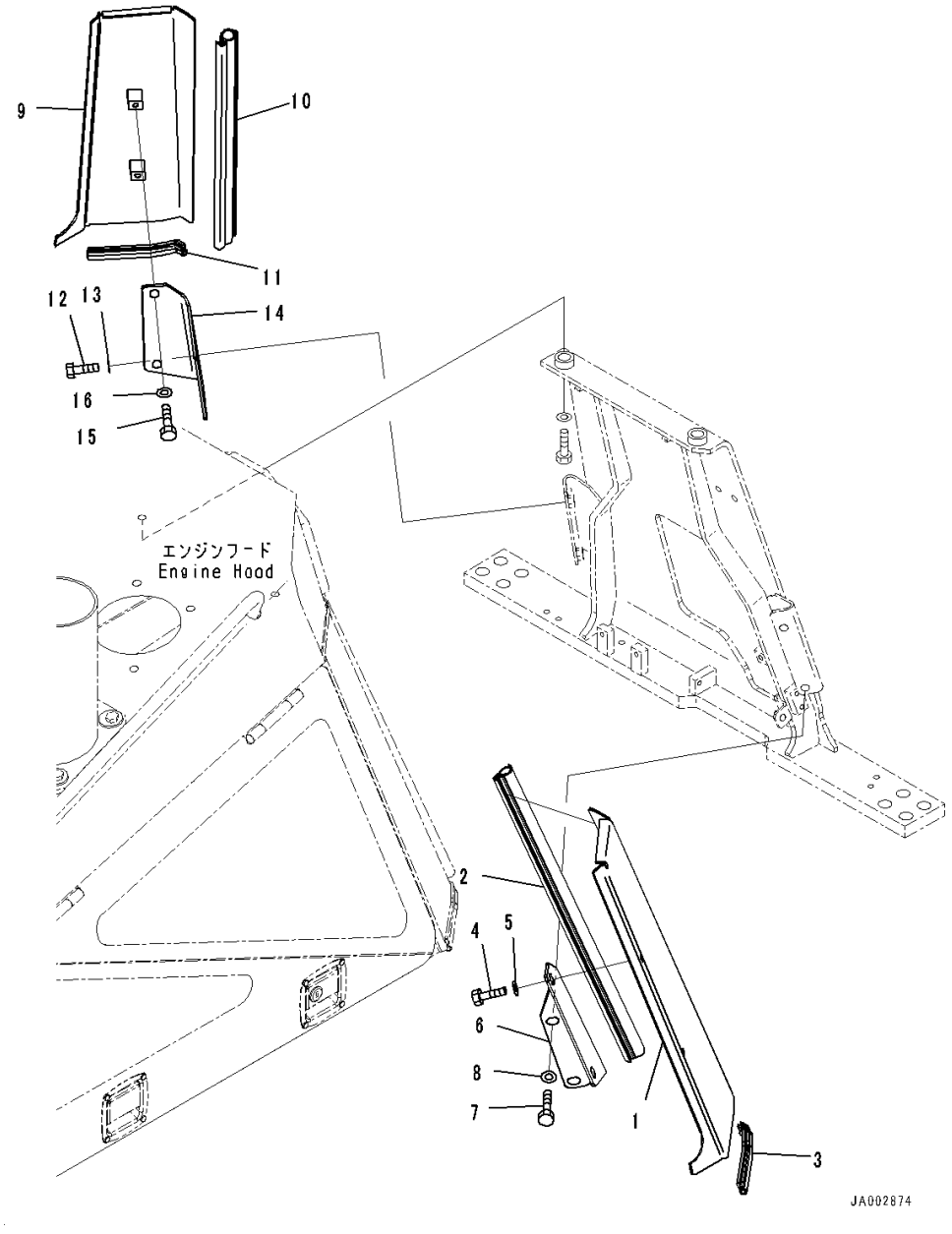

Index	Code	Part Number	Description	Qty	Serial Number
		Note: This list covers following specifications.			
		Engine Hood And Side Cover			
		Engine Hood And Side Cover, EU Regulation Guard Level 2			
1		14X-54-52371	Cover Assembly,LHS	1	80001-
2		14X-54-52351	• Seal,Bonded	1	80001-
3		14X-54-52540	• Seal,Bonded	1	80001-
4		01010-81225	Bolt	2	80001-
5		01643-31232	Washer	2	80001-
6		14X-54-52331	Bracket	1	80001-
7		01010-81225	Bolt	2	80001-
8		01643-31232	Washer	2	80001-
9		14X-54-52381	Cover Assembly,RHS	1	80001-
10		14X-54-52351	• Seal,Bonded	1	80001-
11		14X-54-52540	• Seal,Bonded	1	80001-
12		01010-81225	Bolt	2	80001-
13		01643-31232	Washer	2	80001-
14		14X-54-52341	Bracket	1	80001-
15		01010-81225	Bolt	2	80001-
16		01643-31232	Washer	2	80001-

FIG. M2140-001009 Front Guard Group, Tool Box

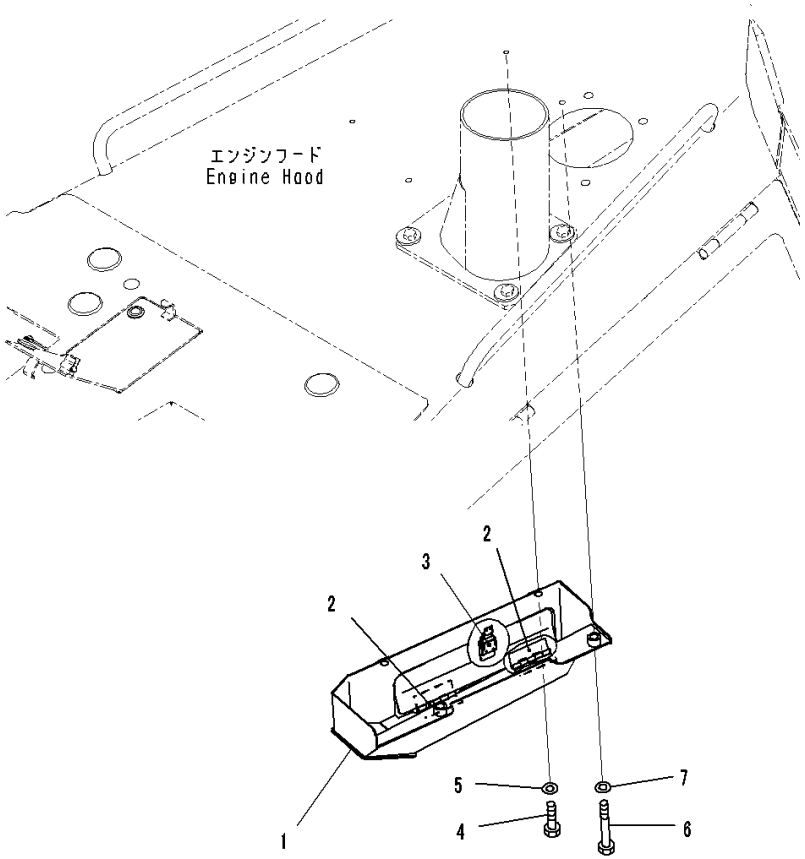

Index	Code	Part Number	Description	Qty	Serial Number
		Note: This list covers following specifications.			
		Engine Hood And Side Cover			
		Engine Hood And Side Cover, EU Regulation Guard Level 2			
1		14X-54-52191	Bracket	1	80001-
2		09455-13016	• Hinge,Welded	2	80001-
3		23F-54-15570	• Catcher,Welded	1	80001-
4		01010-81020	Bolt	2	80001-
5		01643-31032	Washer	2	80001-
6		01010-81035	Bolt	2	80001-
7		01643-31032	Washer	2	80001-

FIG. M2140-002001 Front Guard Group, Engine Hood And Side Cover, EU Regulation Guard Level 2, Hood

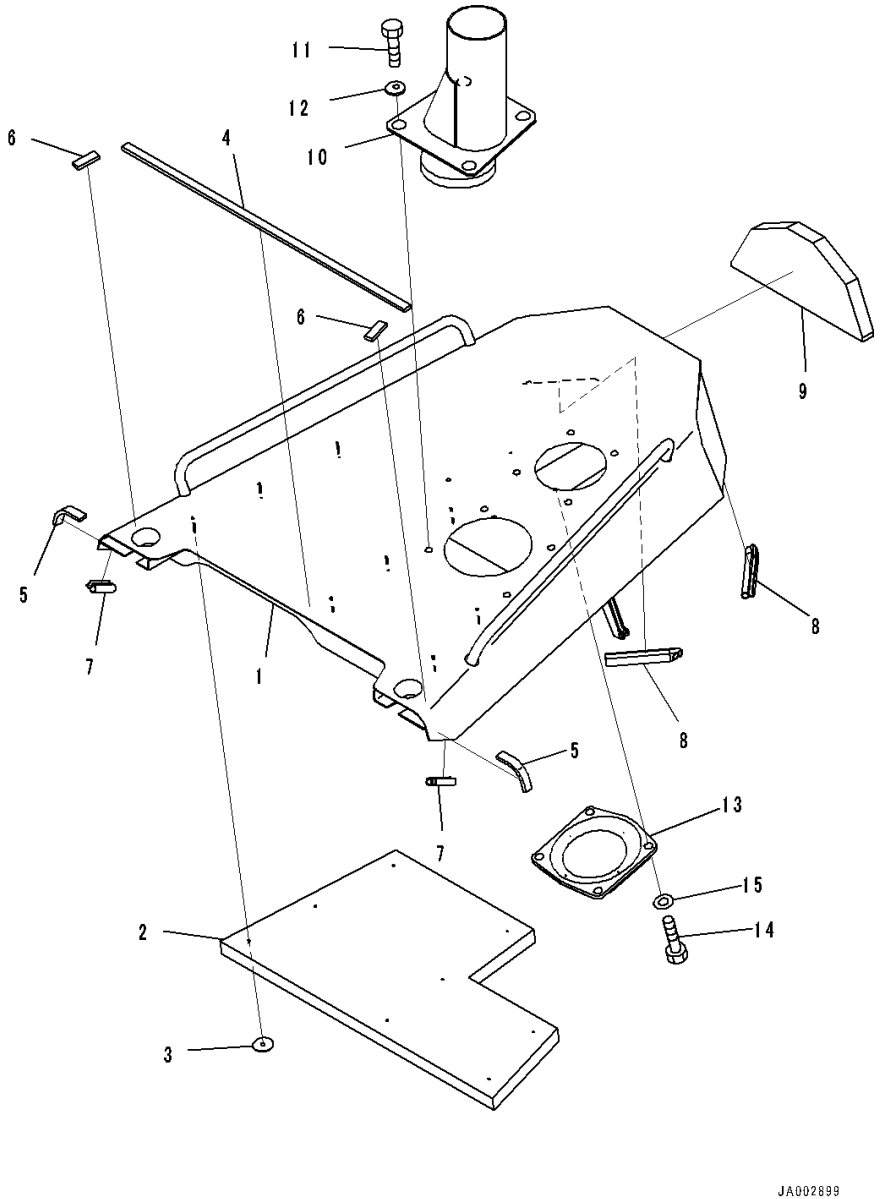

Index	Code	Part Number	Description	Qty	Serial Number
1		14X-A62-5111	Hood Assembly	1	80001-
2		14X-A62-5560	• Sheet	1	80001-
3		124-A62-1920	• Cap	8	80020-
4		14X-54-52161	• Sheet,Bonded	1	80001-
5		14X-54-52171	• Sheet,Bonded	2	80001-
6		14X-54-52570	• Sheet,Bonded	2	80001-
7		14X-54-52470	• Seal,Bonded	2	80001-
8		14X-54-52550	• Seal,Bonded	2	80001-
9		14X-54-52561	• Seal,Bonded	1	80001-
10		14X-01-51511	Pipe	1	80001-
11		01010-71230	Bolt	4	80001-
12		14X-54-32820	Washer	4	80001-
13		14X-01-51530	Cover	1	80001-
14		01010-81020	Bolt	4	80001-
15		01643-31032	Washer	4	80001-

FIG. M2140-002002 Front Guard Group, Engine Hood And Side Cover, EU Regulation Guard Level 2

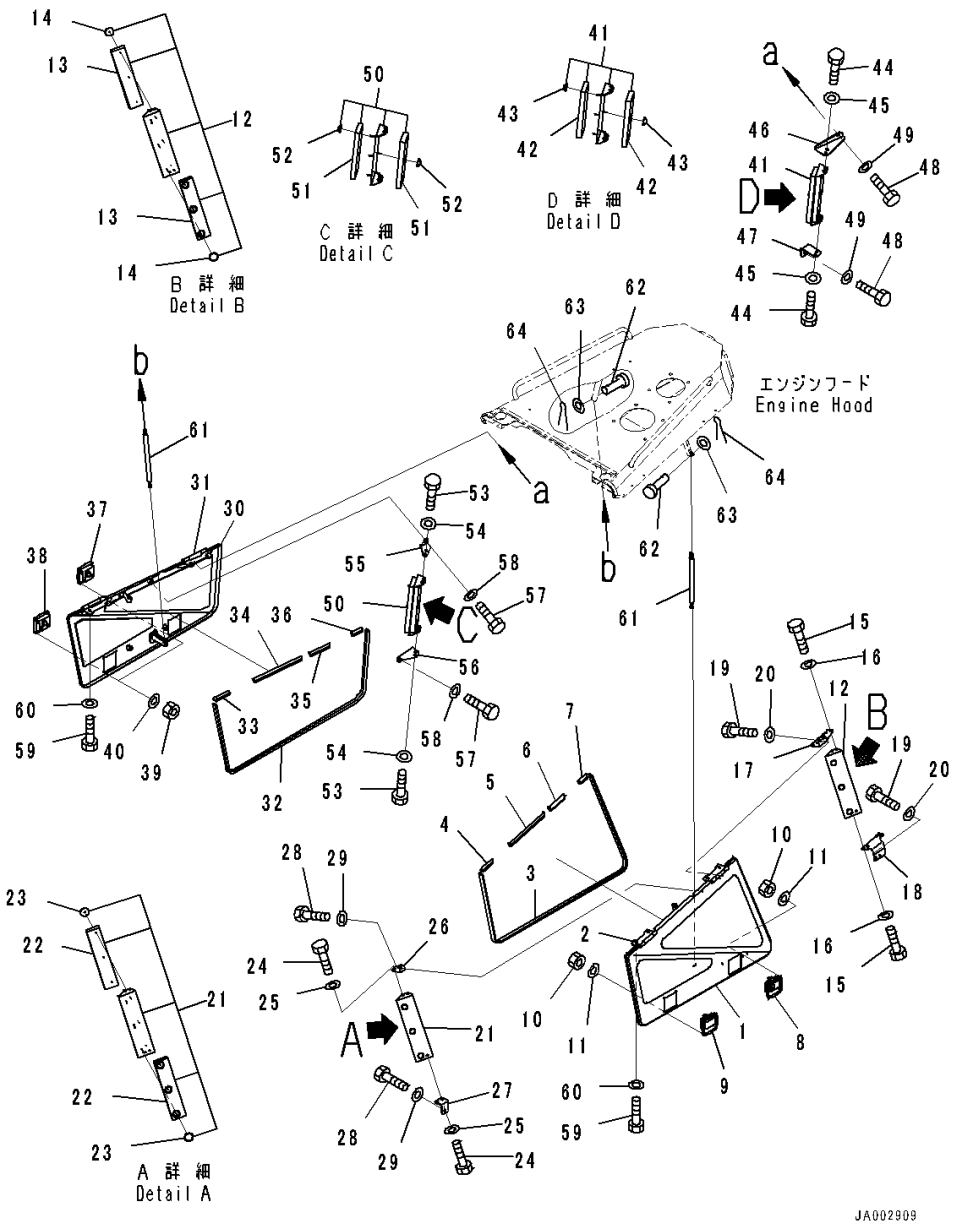

Index	Code	Part Number	Description	Qty	Serial Number
1		14X-A62-5211	Side Cover Assembly,LHS	1	80001-
2		14X-54-52931	• Hinge	2	80001-
3		14X-54-52251	• Seal	1	80001-
4		14X-54-52440	• Seal	1	80001-
5		14X-54-52450	• Seal	1	80001-
6		14X-54-52460	• Seal	1	80001-
7		14X-54-52470	• Seal	1	80001-
8		14X-54-54310	• Lock	1	80020-
9		14X-54-54320	• Lock	1	80020-
10		01580-10605	• Nut	8	80001-
11		01643-10623	• Washer	8	80001-
12		14X-A62-5611	Plate Assembly	2	80001-
13		14X-A62-5630	• Sheet,Bonded	2	80001-
14		124-A62-1920	• Cap	6	80001-
15		01010-81020	Bolt	8	80001-
16		01643-31032	Washer	8	80001-
17		14X-A62-5651	Plate	1	80001-
18		14X-A62-5661	Plate	1	80001-
19		01010-81020	Bolt	4	80001-
20		01643-31032	Washer	4	80001-
21		14X-A62-5611	Plate Assembly	1	80001-
22		14X-A62-5630	• Sheet,Bonded	2	80001-
23		124-A62-1920	• Cap	6	80001-
24		01010-81020	Bolt	4	80001-
25		01643-31032	Washer	4	80001-
26		14X-A62-5671	Plate	1	80001-
27		14X-A62-5681	Plate	1	80001-
28		01010-81020	Bolt	2	80001-
29		01643-31032	Washer	2	80001-
30		14X-A62-5231	Side Cover Assembly,RHS	1	80001-
31		14X-54-52931	• Hinge	2	80001-
32		14X-54-52251	• Seal	1	80001-
33		14X-54-52440	• Seal	1	80001-
34		14X-54-52450	• Seal	1	80001-
35		14X-54-52460	• Seal	1	80001-
36		14X-54-52470	• Seal	1	80001-
37		14X-54-54310	• Lock	1	80020-
38		14X-54-54320	• Lock	1	80020-
39		01580-10605	• Nut	8	80001-

FIG. M2140-002002 Front Guard Group, Engine Hood And Side Cover, EU Regulation Guard Level 2

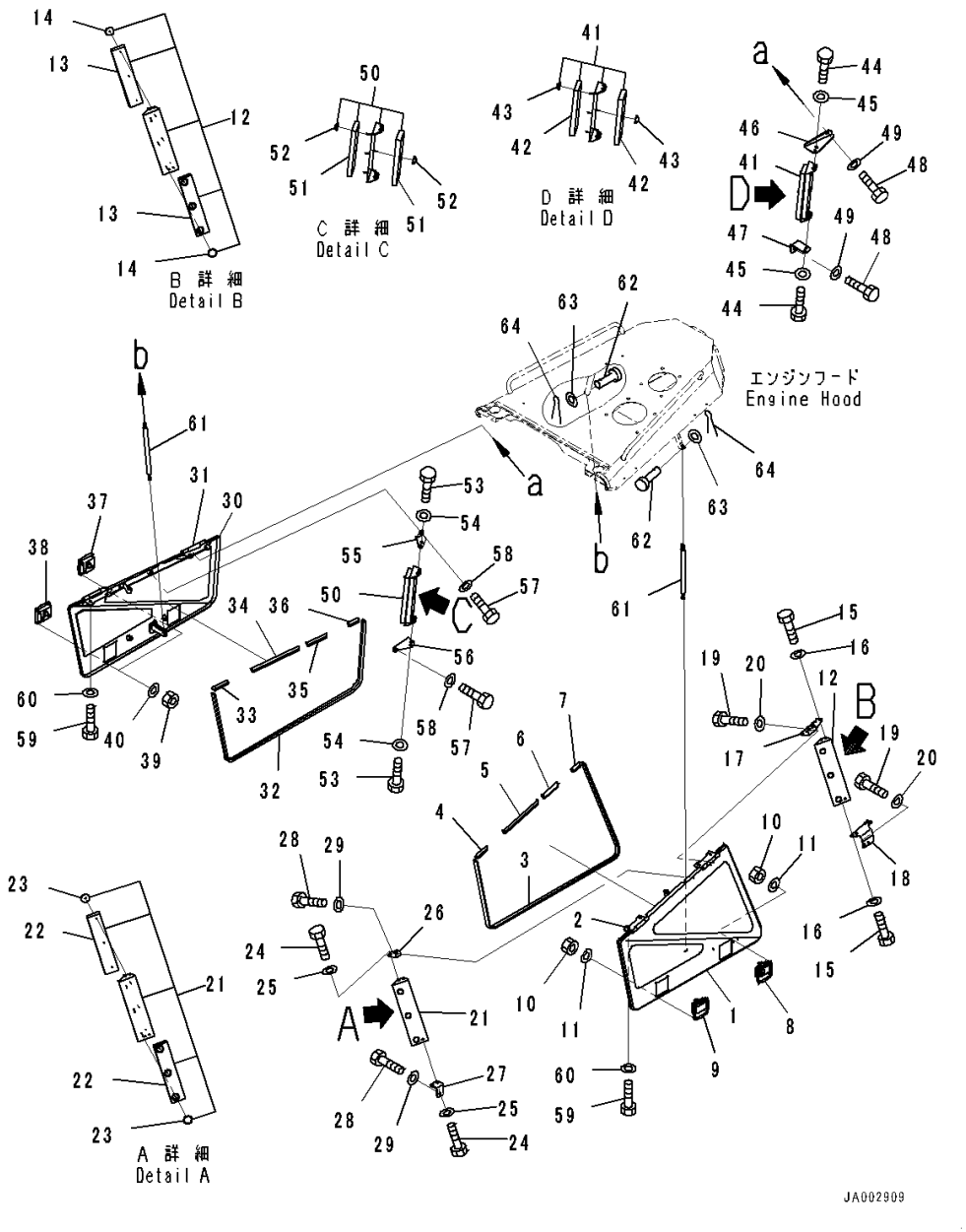

Index	Code	Part Number	Description	Qty	Serial Number
40		01643-10623	• Washer	8	80001-
41		14X-A62-5611	Plate Assembly	1	80001-
42		14X-A62-5630	• Sheet,Bonded	2	80001-
43		124-A62-1920	• Cap	6	80001-
44		01010-81020	Bolt	4	80001-
45		01643-31032	Washer	4	80001-
46		14X-A62-5730	Plate	1	80001-
47		14X-A62-5711	Plate	1	80001-
48		01010-81020	Bolt	2	80001-
49		01643-31032	Washer	2	80001-
50		14X-A62-5611	Plate Assembly	1	80001-
51		14X-A62-5630	• Sheet,Bonded	2	80001-
52		124-A62-1920	• Cap	6	80001-
53		01010-81020	Bolt	4	80001-
54		01643-31032	Washer	4	80001-
55		14X-A62-5691	Plate	1	80001-
56		14X-A62-5720	Plate	1	80001-
57		01010-81020	Bolt	2	80001-
58		01643-31032	Washer	2	80001-
59		01010-81225	Bolt	8	80001-
60		01643-31232	Washer	8	80001-
61		14X-54-52390	Dumper	2	80001-
62		04205-10828	Pin	4	80001-
63		01641-20812	Washer	4	80001-
64		04050-12015	Pin, Cotter	4	80001-

FIG. M2140-002004 Front Guard Group, Engine Hood And Side Cover, EU Regulation Guard Level 2, Radiator Cover

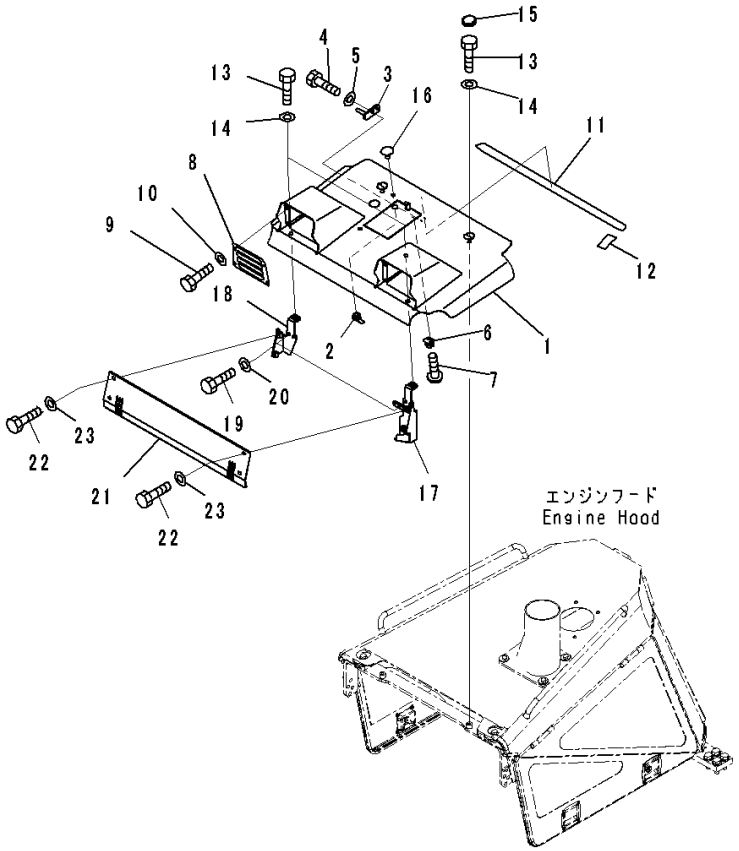

Index	Code	Part Number	Description	Qty	Serial Number
		14X-54-51210	Cover Assembly	1	80001-
1		14X-54-51221	• Cover	1	80001-
2		205-60-71220	• Lock Assembly	1	80001-
3		22B-54-12291	• Bracket	1	80001-
4		01010-80820	• Bolt	2	80001-
5		01643-30823	• Washer	2	80001-
6		22B-46-24180	• Spring	1	80001-
7		01023-10416	• Screw	2	80001-80008
8		14X-54-51230	• Cover	2	80001-
9		01010-D0820	• Bolt	8	80001-
10		01643-70823	• Washer	8	80001-
11		14X-54-53670	• Plate	1	80001-
12		14X-54-53680	• Plate	2	80001-
13		01010-81225	Bolt	4	80001-
14		01643-31232	Washer	4	80001-
15		14X-54-32310	Cap	3	80001-
16		416-54-21710	Plug	3	80001-
17		14X-54-51251	Bracket	1	80001-
18		14X-54-51261	Bracket	1	80001-
19		01010-81225	Bolt	4	80001-
20		01643-31232	Washer	4	80001-
21		14X-54-51241	Plate	1	80001-
22		01010-D1020	Bolt	4	80001-
23		01643-71032	Washer	4	80001-

FIG. M2142-001001 Engine Side Cover, For Engine Hood And Sides

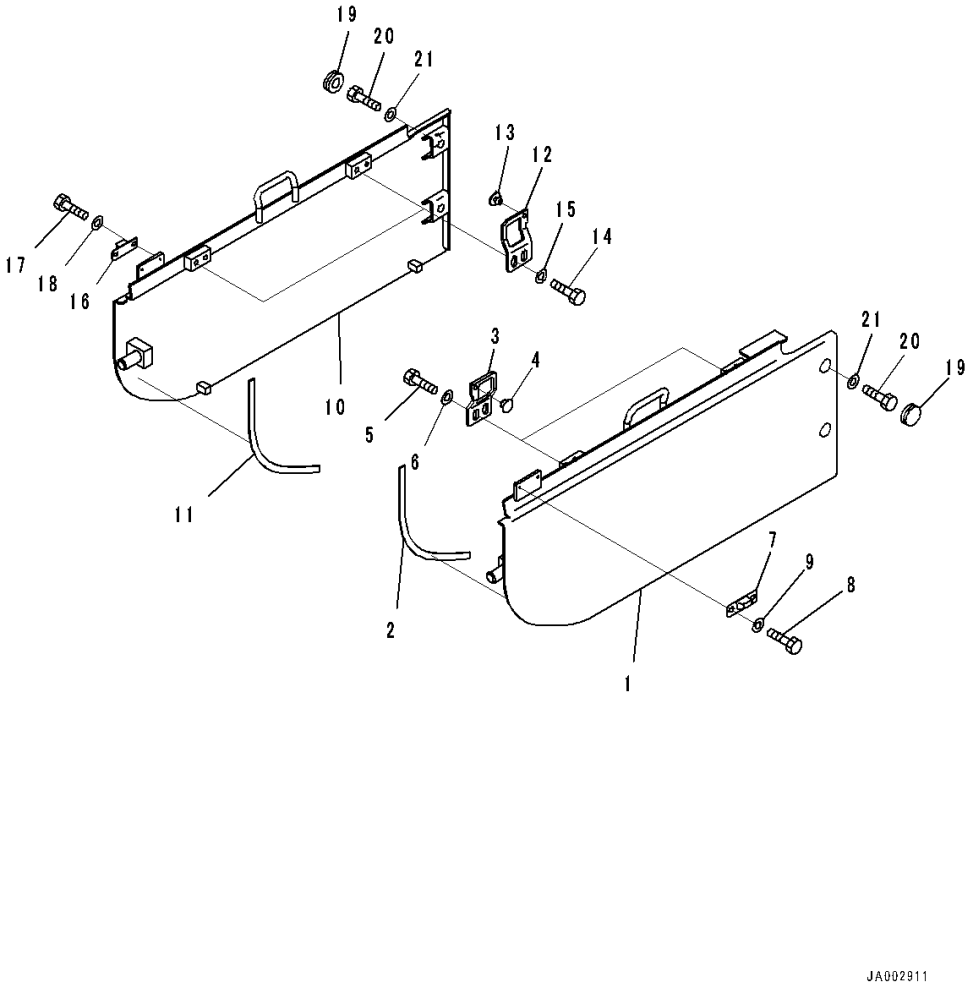

Index	Code	Part Number	Description	Qty	Serial Number
1		14X-54-52411	Cover,LHS	1	80001-
2		14X-54-52430	• Cushion,Bonded	1	80001-
3		14X-54-53830	Plate	2	80001-
4		14X-54-12960	Stopper	2	80001-
5		01010-81225	Bolt	4	80001-
6		01643-31232	Washer	4	80001-
7		205-54-53550	Dovetail	1	80001-
8		01010-80612	Bolt	2	80001-
9		01643-30623	Washer	2	80001-
10		14X-54-52421	Cover,RHS	1	80001-
11		14X-54-52430	• Cushion,Bonded	1	80001-
12		14X-54-53830	Plate	2	80001-
13		14X-54-12960	Stopper	2	80001-
14		01010-81225	Bolt	4	80001-
15		01643-31232	Washer	4	80001-
16		205-54-53550	Dovetail	1	80001-
17		01010-80612	Bolt	2	80001-
18		01643-30623	Washer	2	80001-
19		11Y-54-13630	Cap	4	80001-
20		01010-81230	Bolt	4	80001-
21		01643-31232	Washer	4	80001-

FIG. M2142-002001 Engine Side Cover, For Engine Hood And Sides, EU Regulation Guard Level 2

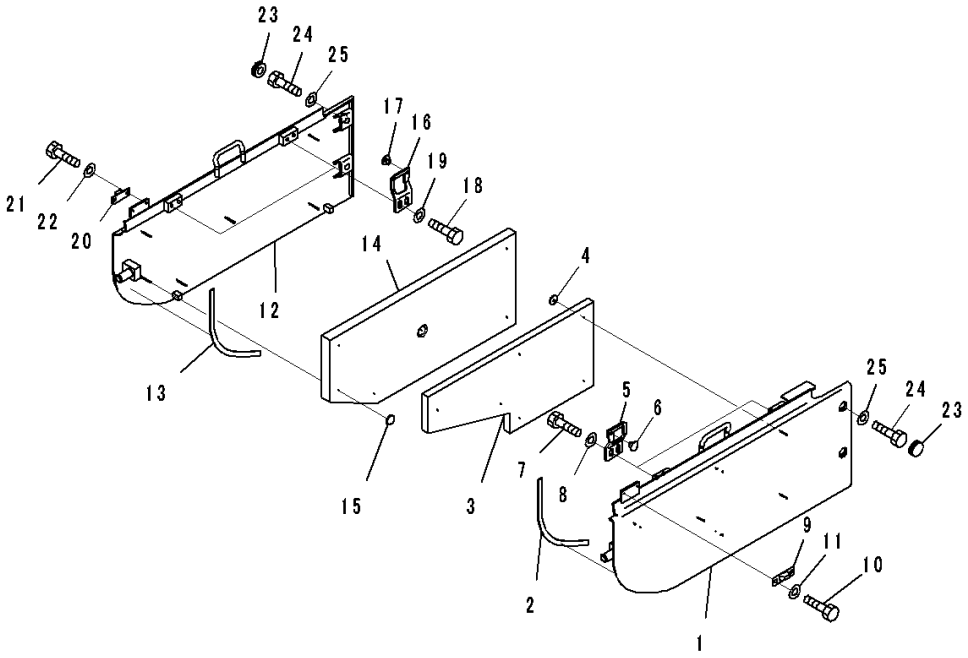

Index	Code	Part Number	Description	Qty	Serial Number
1		14X-A62-5311	Cover Assembly,LHS	1	80001-
2		14X-54-52430	• Cushion	1	80001-
3		14X-A62-5521	• Sheet,Bonded	1	80001-
4		124-A62-1920	• Cap	6	80001-
5		14X-54-53830	Plate	2	80001-
6		14X-54-12960	Stopper	2	80001-
7		01010-81225	Bolt	4	80001-
8		01643-31232	Washer	4	80001-
9		205-54-53550	Dovetail	1	80001-
10		01010-80612	Bolt	2	80001-
11		01643-30623	Washer	2	80001-
12		14X-A62-5331	Cover Assembly,RHS	1	80001-
13		14X-54-52430	• Cushion	1	80001-
14		14X-A62-5551	• Sheet,Bonded	1	80001-
15		124-A62-1920	• Cap	6	80001-
16		14X-54-53830	Plate	2	80001-
17		14X-54-12960	Stopper	2	80001-
18		01010-81225	Bolt	4	80001-
19		01643-31232	Washer	4	80001-
20		205-54-53550	Dovetail	1	80001-
21		01010-80612	Bolt	2	80001-
22		01643-30623	Washer	2	80001-
23		11Y-54-13630	Cap	4	80001-
24		01010-81230	Bolt	4	80001-
25		01643-31232	Washer	4	80001-

FIG. M2210-001001 Fender Group, Fender

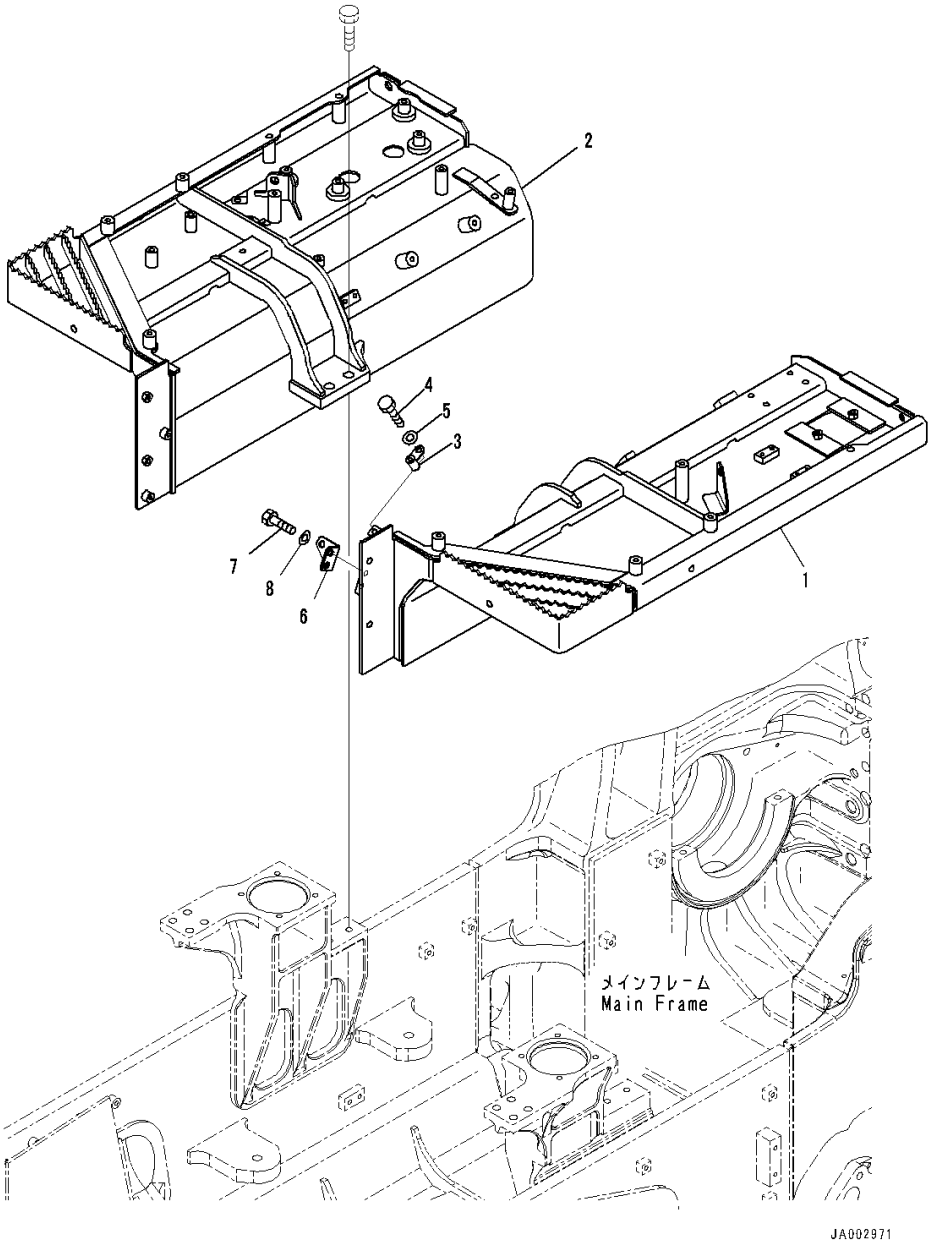

Index	Code	Part Number	Description	Qty	Serial Number
		Note: This list covers following specifications.			
		For Machine With 3-spool Valve Hydraulics			
		For Machine With 4-spool Valve Hydraulics, For Machine With Ripper			
		For Machine With 5-spool Valve Hydraulics, With Power Tilt Pitch Dozer, For Machine With Ripper			
		For Machine With 5-spool Valve Hydraulics, With Power Angle Power Tilt Dozer, For Machine With Ripper			
		For Machine With 5-spool Valve Hydraulics, With Power Tilt Pitch Dozer			
		For Machine With 5-spool Valve Hydraulics, With Power Angle Power Tilt Dozer			
1		14X-54-53112	Fender	1	80005-
2		14X-54-53122	Fender	1	80005-
3		14X-50-35140	Bracket	1	80001-
4		01010-81225	Bolt	1	80001-
5		01643-31232	Washer	1	80001-
6		14X-04-51350	Bracket	1	80001-
7		01010-81225	Bolt	2	80001-
8		01643-31232	Washer	2	80001-

FIG. M2210-001002 Fender Group, For Machine With 3-spool Valve Hydraulics, Inner Parts (1/10)

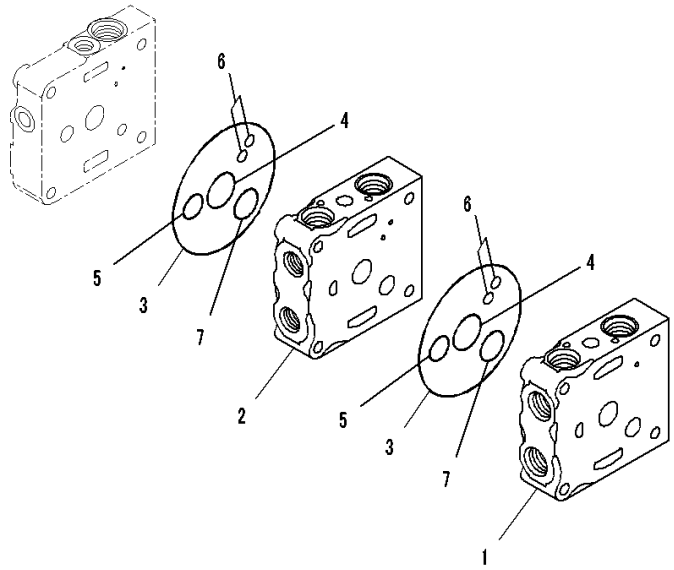

JY013360

Index	Code	Part Number	Description	Qty	Serial Number
		723-23-10700	Valve, Control	1	80001-
	C1		• Body Group	1	80001-
1		723-26-21250	•• Valve Body	1	80001-
2		723-26-21360	•• Valve Body	1	80001-
3		07000-12120	•• O-ring	2	80001-
4		723-26-15830	•• O-ring	2	80001-
5		07000-12020	•• O-ring	2	80001-
6		07000-11008	•• O-ring	4	80001-
7		723-26-15840	•• O-ring	2	80001-

FIG. M2210-001003 Fender Group, For Machine With 3-spool Valve Hydraulics, Inner Parts (2/10)

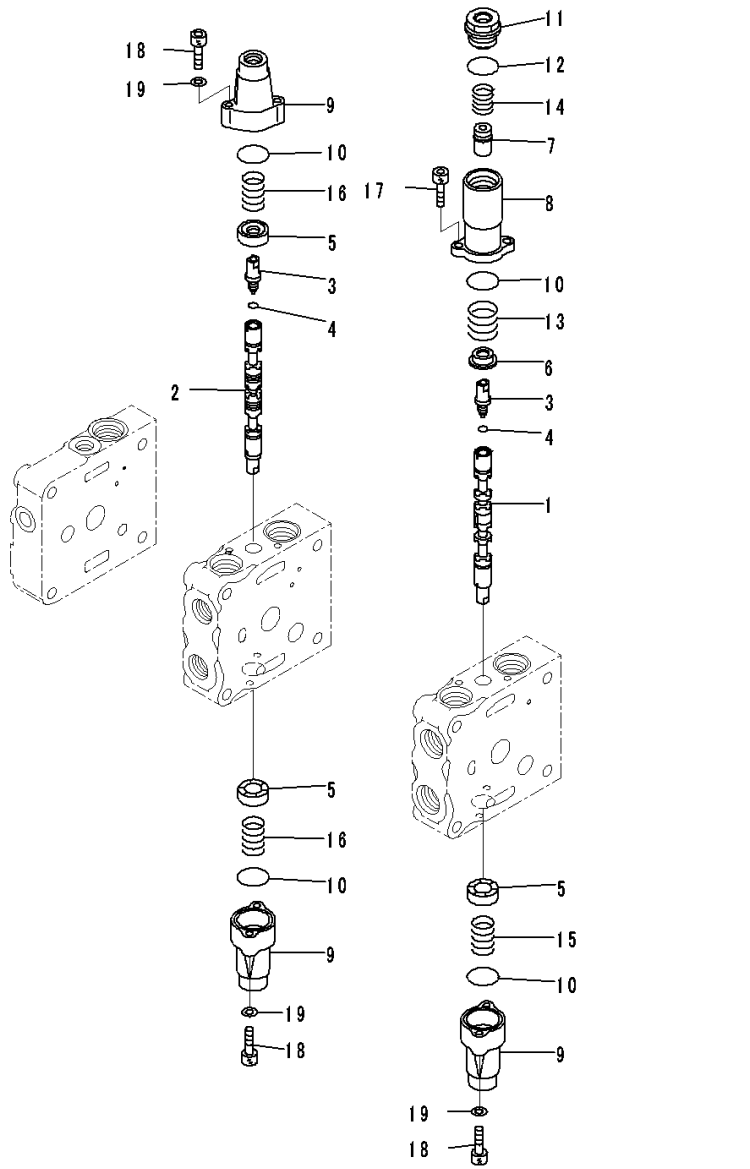

Index	Code	Part Number	Description	Qty	Serial Number
		723-23-10700	Valve, Control	1	80001-
	C1		• Body Group	1	80001-
1		723-26-22830	•• Spool	1	80001-
2		723-26-22840	•• Spool	1	80001-
3		723-26-15130	•• Plug	2	80001-
4		07002-10823	•• O-ring	2	80001-
5		723-26-15121	•• Retainer	3	80001-
6		723-26-16770	•• Retainer	1	80001-
7		723-26-16780	•• Retainer	1	80001-
8		723-26-16760	•• Case	1	80001-
9		723-26-15110	•• Case	3	80001-
10		575-41-17420	•• O-ring	4	80001-
11		723-26-16790	•• Plug	1	80001-
12		07002-12434	•• O-ring	1	80001-
13		723-26-14560	•• Spring	1	80001-
14		723-26-14570	•• Spring	1	80001-
15		709-26-11450	•• Spring	1	80001-
16		723-26-14580	•• Spring	2	80001-
17		01252-60616	•• Bolt	2	80001-
18		01252-60630	•• Bolt, Hexagon Socket Head	6	80001-
19		01641-20608	•• Washer	6	80001-

FIG. M2210-001004 Fender Group, For Machine With 3-spool Valve Hydraulics, Inner Parts (3/10)

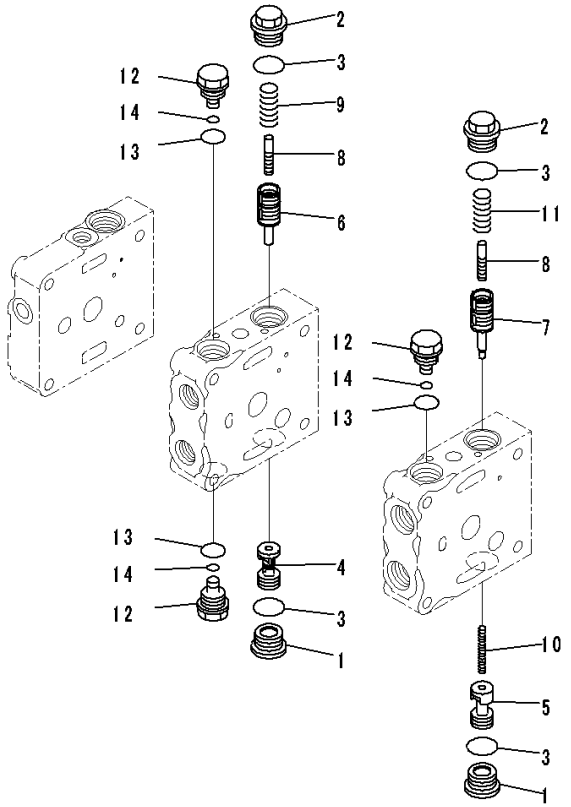

Index	Code	Part Number	Description	Qty	Serial Number
		723-23-10700	Valve, Control	1	80001-
	C1		• Body Group	1	80001-
1		723-26-15230	•• Plug	2	80001-
2		723-26-15370	•• Plug	2	80001-
3		07002-12434	•• O-ring	4	80001-
4		723-26-41160	•• Valve	1	80001-
5		723-26-41210	•• Valve	1	80001-
6		723-26-51240	•• Valve	1	80001-
7		723-26-51510	•• Valve	1	80001-
8		723-26-51250	•• Piston	2	80001-
9		723-26-14230	•• Spring	1	80001-
10		723-26-14220	•• Spring	1	80001-
11		723-26-14240	•• Spring	1	80001-
12		723-26-15310	•• Plug	3	80001-
13		07002-12034	•• O-ring	3	80001-
14		07000-11007	•• O-ring	3	80001-

FIG. M2210-001005 Fender Group, For Machine With 3-spool Valve Hydraulics, Inner Parts (4/10)

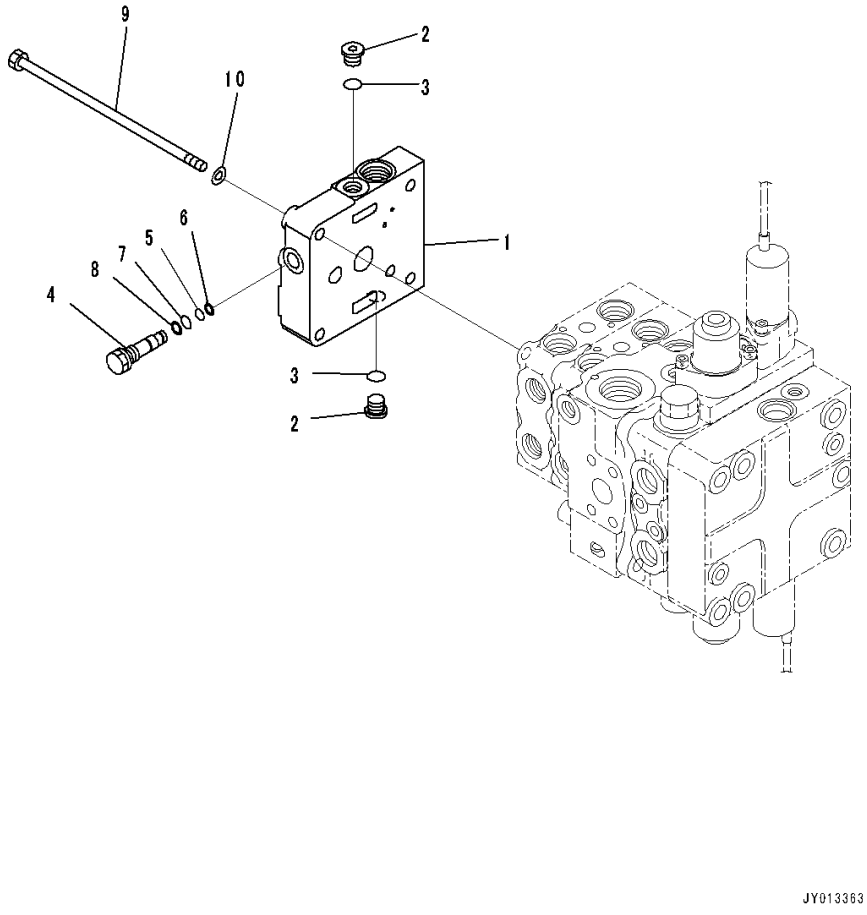

Index	Code	Part Number	Description	Qty	Serial Number
		723-23-10700	Valve, Control	1	80001-
1		723-26-21750	• Cover	1	80001-
2		702-21-55620	• Plug	2	80001-
3		07002-11423	• O-ring	2	80001-
4		723-26-15190	• Plug	1	80001-
5		07000-11007	• O-ring	1	80001-
6		07001-01007	• Ring, Back-up	1	80001-
7		07000-11009	• O-ring	1	80001-
8		07001-01009	• Ring, Back-up	1	80001-
9		01011-61035	• Bolt	4	80001-
10		01643-31032	• Washer	4	80001-

FIG. M2210-001006 Fender Group, For Machine With 3-spool Valve Hydraulics, Inner Parts (5/10)

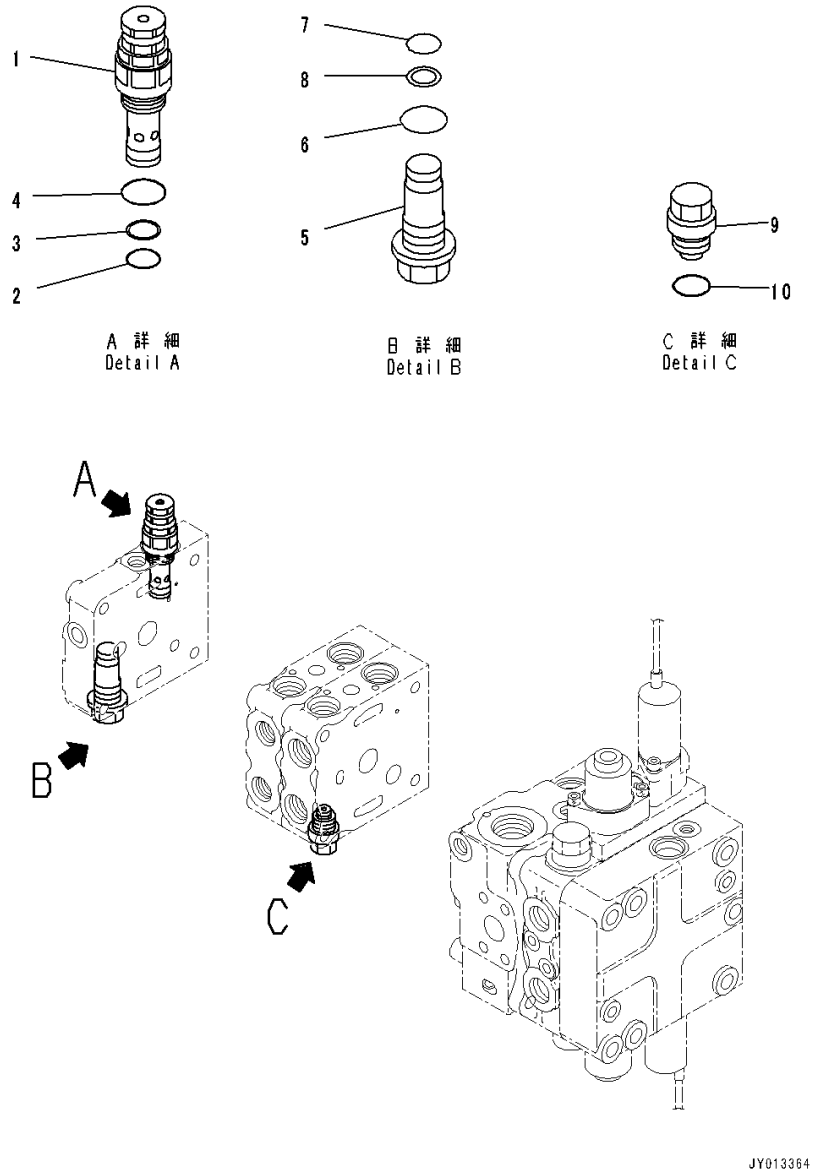

Index	Code	Part Number	Description	Qty	Serial Number
		723-23-10700	Valve, Control	1	80001-
1		723-20-66500	• Valve, Relief	1	80001-
2		700-22-11410	•• O-ring	1	80001-
3		700-80-64220	•• Ring	1	80001-
4		07002-12434	•• O-ring	1	80001-
5		723-46-15240	• Plug	1	80001-
6		07002-12434	• O-ring	1	80001-
7		700-22-11410	• O-ring	1	80001-
8		700-80-64220	• Ring	1	80001-
9		723-20-80100	• Valve Assembly, Suction	1	80001-
10		07002-12034	•• O-ring	1	80001-

FIG. M2210-001007 Fender Group, For Machine With 3-spool Valve Hydraulics, Inner Parts (6/10)

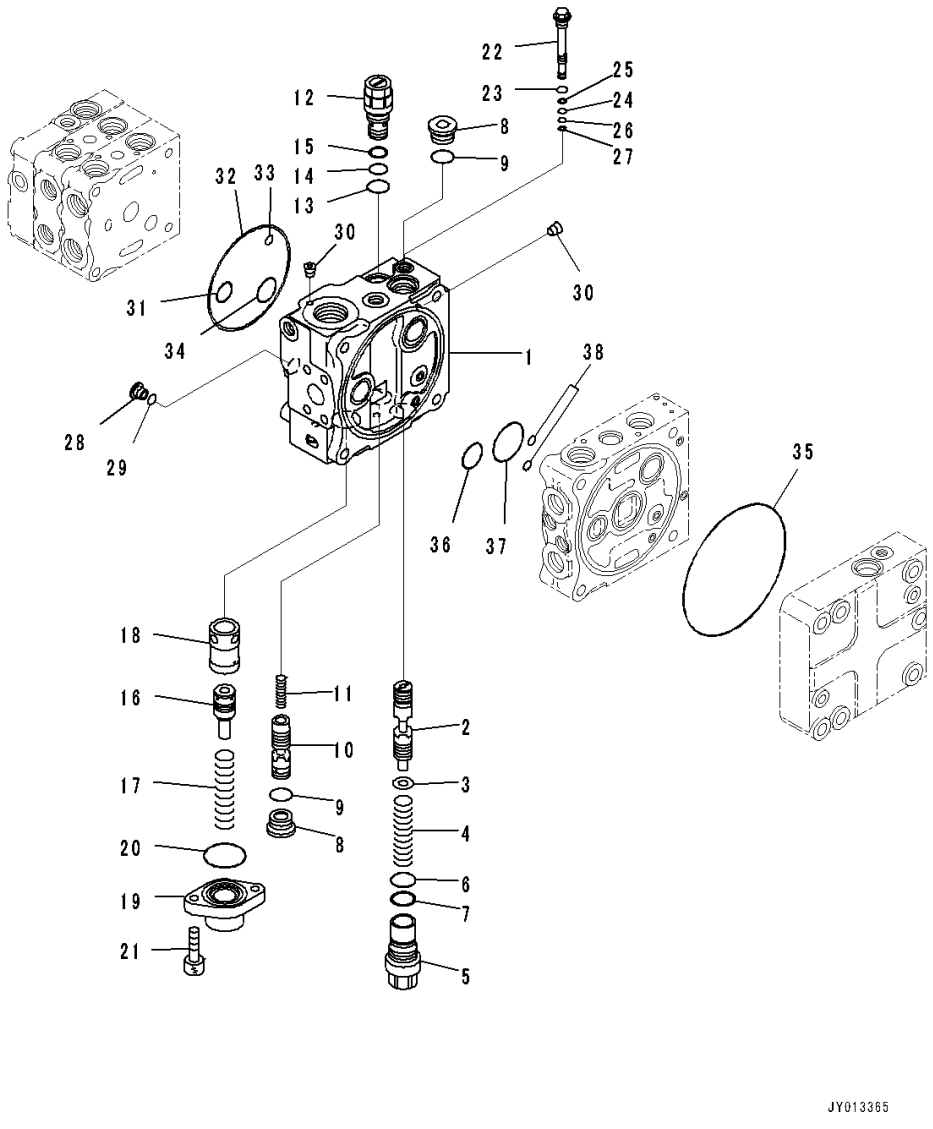

Index	Code	Part Number	Description	Qty	Serial Number
		723-23-10700	Valve, Control	1	80001-
		723-50-02800	• Block Subassembly	1	80001-
1		723-26-21160	•• Block	1	80001-
2		723-26-22850	•• Spool	1	80001-
3		723-26-15860	•• Washer	1	80001-
4		723-26-14590	•• Spring	1	80001-
5		723-26-15850	•• Plug	1	80001-
6		700-80-61260	•• O-ring	1	80001-
7		700-80-61430	•• Ring	1	80001-
8		723-26-15230	•• Plug	2	80001-
9		07002-12434	•• O-ring	2	80001-
10		723-26-22860	•• Spool	1	80001-
11		723-26-14470	•• Spring	1	80001-
12		723-60-21900	•• Valve, Relief	1	80001-
13		07002-12434	••• O-ring	1	80001-
14		07000-12016	••• O-ring	1	80001-
15		07001-02016	••• Ring, Back-up	1	80001-
16		723-36-15230	•• Piston	1	80001-
17		723-36-15340	•• Spring	1	80001-
18		723-36-15210	•• Sleeve	1	80001-
19		723-36-15250	•• Case	1	80001-
20		07000-13042	•• O-ring	1	80001-
21		01252-60820	•• Bolt	2	80001-
22	C1		•• Valve Assembly	1	80001-
23		07002-11223	••• O-ring	1	80001-
24		07000-11007	••• O-ring	1	80001-
25		07001-01007	••• Ring, Back-up	1	80001-
26		07000-11005	••• O-ring	1	80001-
27		07001-01005	••• Ring, Back-up	1	80001-
28		723-26-15220	•• Plug	1	80001-
29		07002-11223	•• O-ring	1	80001-
30		708-21-12541	•• Plug	5	80001-
31		07000-12020	•• O-ring	1	80001-
32		07000-12120	•• O-ring	1	80001-
33		07000-11008	•• O-ring	1	80001-
34		723-26-15840	•• O-ring	1	80001-
35		144-14-54610	•• O-ring	1	80001-
36		723-56-31730	•• O-ring	1	80001-
37		702-75-11520	•• O-ring	1	80001-

FIG. M2210-001007 Fender Group, For Machine With 3-spool Valve Hydraulics, Inner Parts (6/10)

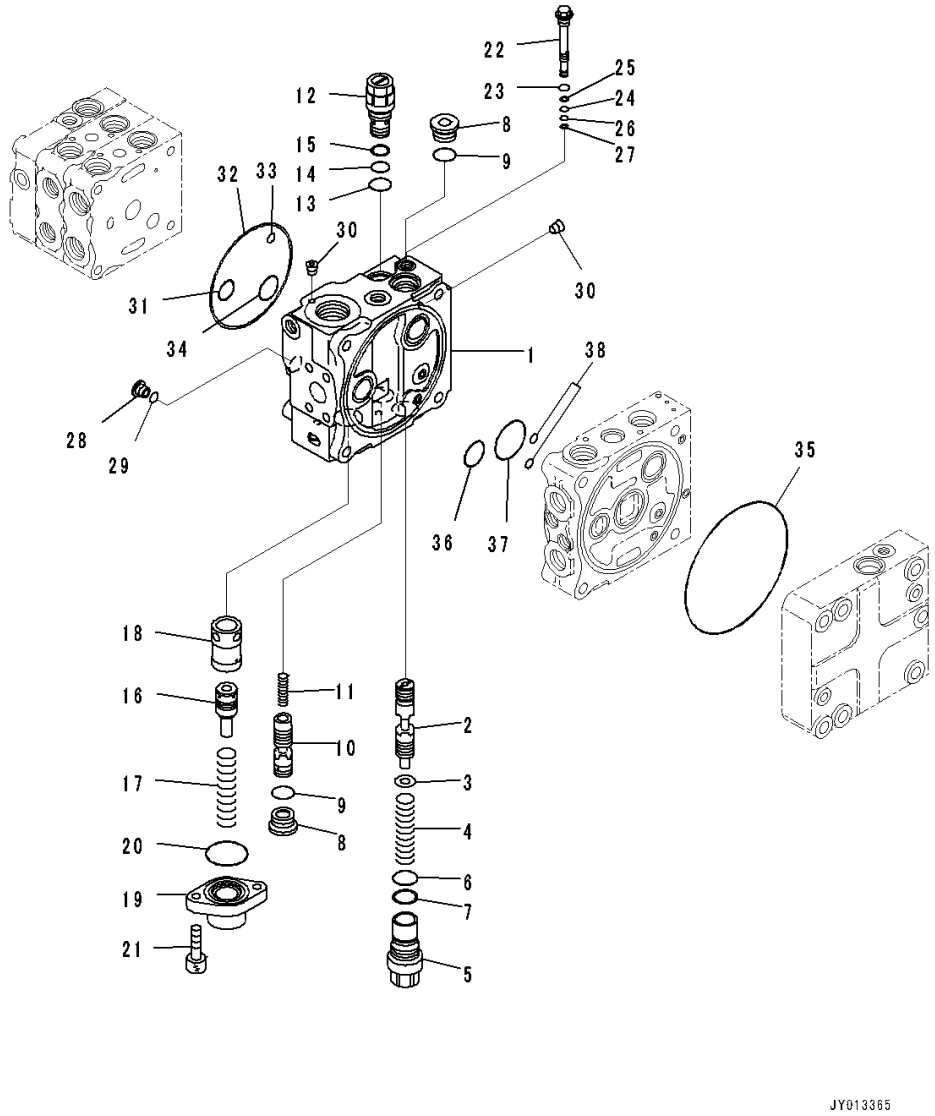

Index	Code	Part Number	Description	Qty	Serial Number
38		07000-11008	•• O-ring	2	80001-

FIG. M2210-001008 Fender Group, For Machine With 3-spool Valve Hydraulics, Inner Parts (7/10)

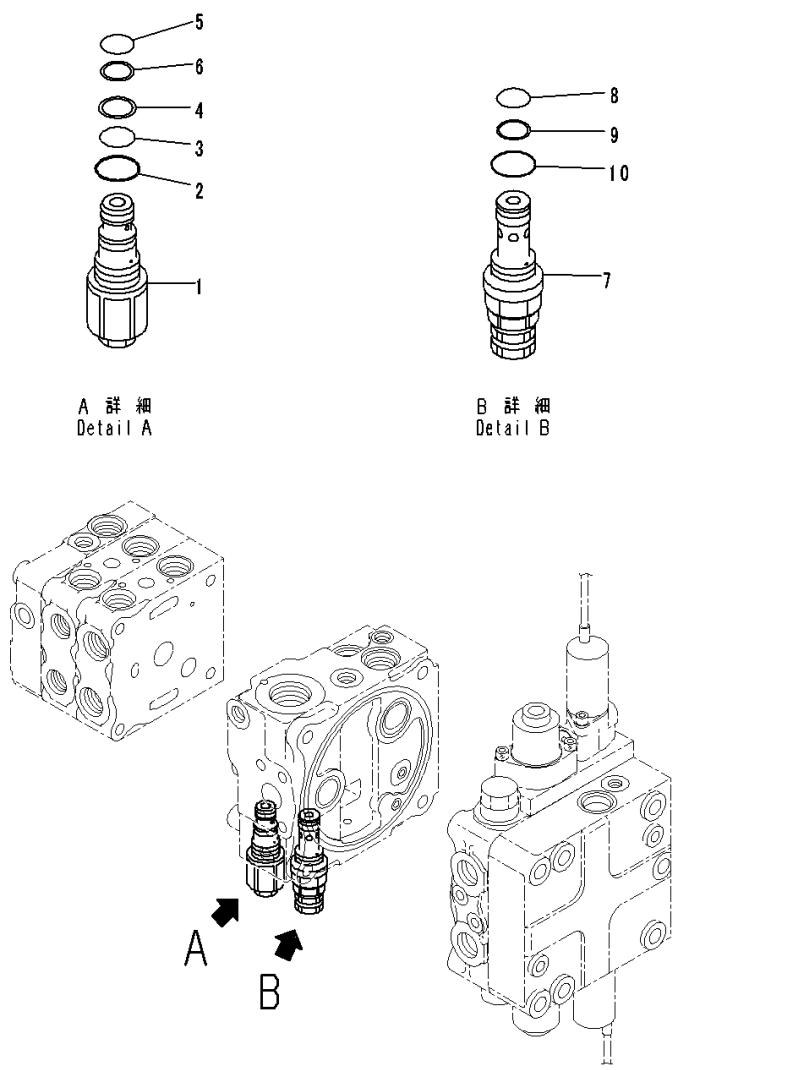

Index	Code	Part Number	Description	Qty	Serial Number
		723-23-10700	Valve, Control	1	80001-
1		723-20-70600	• Valve Assembly	1	80001-
2		07002-12434	•• O-ring	1	80001-
3		07000-12016	•• O-ring	1	80001-
4		07001-02016	•• Ring, Back-up	1	80001-
5		07000-12014	•• O-ring	1	80001-
6		07001-02014	•• Ring, Back-up	1	80001-
7		723-20-63100	• Valve, Relief	1	80001-
8		700-22-11410	•• O-ring	1	80001-
9		700-80-64220	•• Ring	1	80001-
10		07002-12034	•• O-ring	1	80001-

FIG. M2210-001009 Fender Group, For Machine With 3-spool Valve Hydraulics, Inner Parts (8/10)

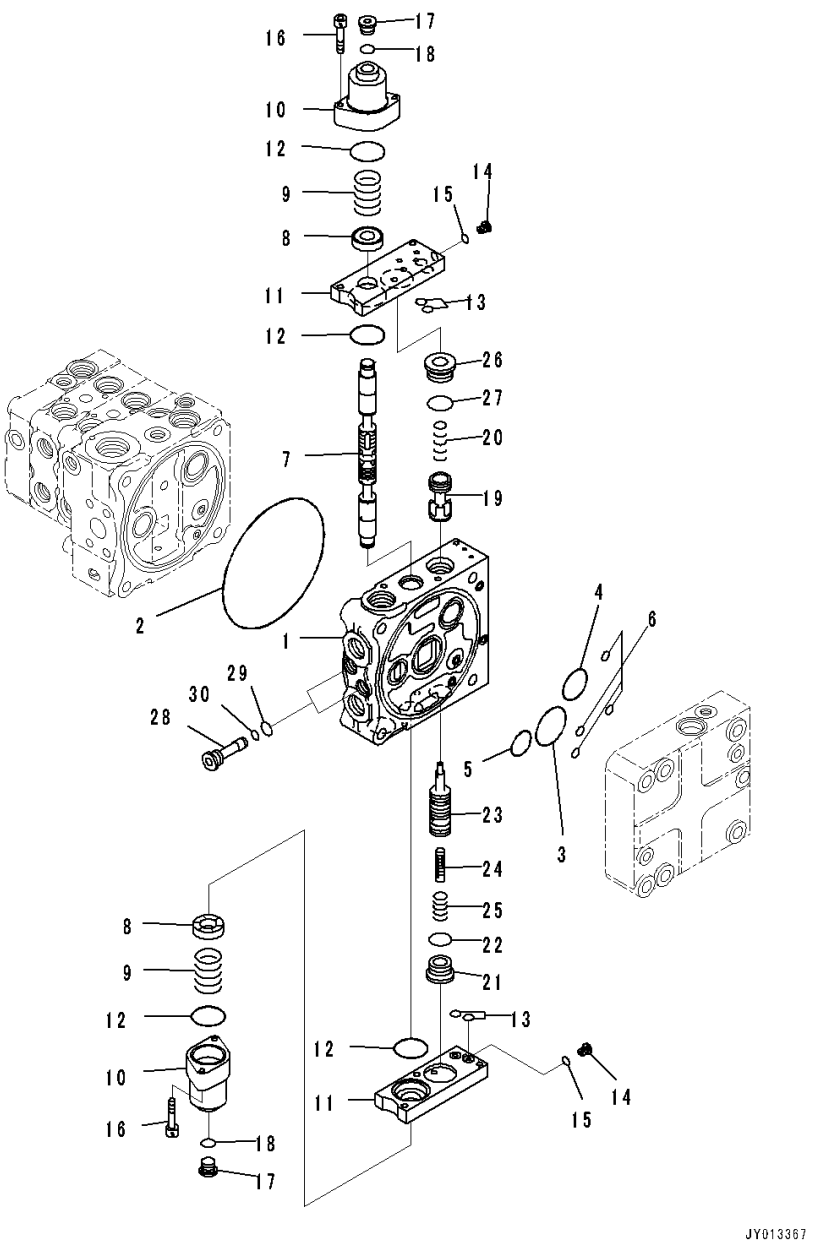

Index	Code	Part Number	Description	Qty	Serial Number
		723-23-10700	Valve, Control	1	80001-
		723-51-06500	• Valve Assembly	1	80001-
1	C1		•• Valve Body	1	80001-
2		144-14-54610	•• O-ring	1	80001-
3		723-56-31720	•• O-ring	1	80001-
4		723-56-31730	•• O-ring	1	80001-
5		702-75-11520	•• O-ring	1	80001-
6		07000-11008	•• O-ring	4	80001-
7		723-56-22170	•• Spool	1	80001-
8		723-56-31211	•• Retainer	2	80001-
9		723-36-14120	•• Spring	2	80001-
10		723-56-31510	•• Case	2	80001-
11		723-56-32820	•• Plate	2	80001-
12		702-21-55450	•• O-ring	4	80001-
13		07000-11009	•• O-ring	4	80001-
14		723-11-27280	•• Plug	2	80001-
15		07002-10823	•• O-ring	2	80001-
16		01252-60650	•• Bolt	4	80001-
17		702-21-55620	•• Plug	2	80001-
18		07002-11423	•• O-ring	2	80001-
19		723-56-42150	•• Valve	1	80001-
20		723-56-41710	•• Spring	1	80001-
21		723-26-15230	•• Plug	1	80001-
22		07002-12434	•• O-ring	1	80001-
23		723-56-42330	•• Valve	1	80001-
24		723-56-41590	•• Piston	1	80001-
25		723-56-41730	•• Spring	1	80001-
26		723-56-41970	•• Plug	1	80001-
27		07000-13024	•• O-ring	1	80001-
28		723-56-31640	•• Plug	2	80001-
29		07002-11623	•• O-ring	2	80001-
30		07000-11008	•• O-ring	2	80001-

FIG. M2210-001010 Fender Group, For Machine With 3-spool Valve Hydraulics, Inner Parts (9/10)

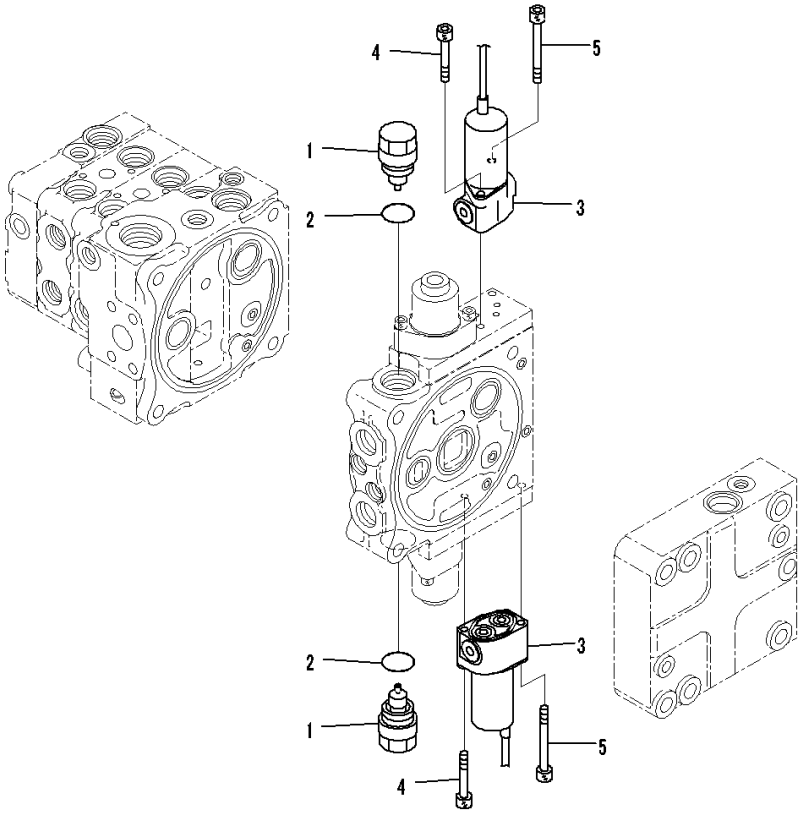

Index	Code	Part Number	Description	Qty	Serial Number
		723-23-10700	Valve, Control	1	80001-
		723-51-06500	• Valve Assembly	1	80001-
		723-40-85100	•• Valve Assembly, Suction	2	80001-
1		723-40-85110	••• Sleeve	1	80001-
2		709-25-11390	••• O-ring	1	80001-
3		702-21-07610	•• Valve, Solenoid	2	80001-
4		01252-60645	•• Bolt, Hexagon Socket Head	2	80001-
5		702-16-55270	•• Bolt	2	80001-

FIG. M2210-001011 Fender Group, For Machine With 3-spool Valve Hydraulics, Inner Parts (10/10)

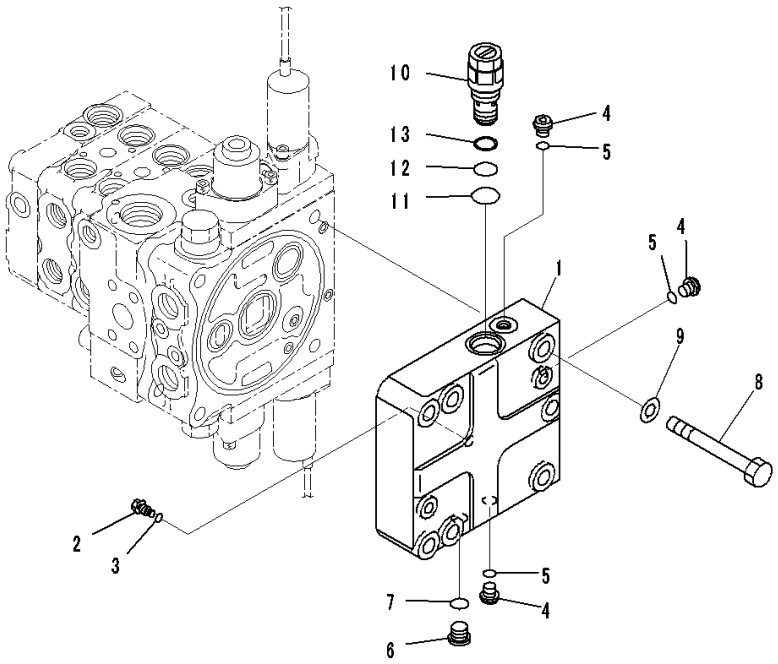

Index	Code	Part Number	Description	Qty	Serial Number
		723-23-10700	Valve, Control	1	80001-
1		723-56-12210	• Cover	1	80001-
2		723-56-33940	• Plug	1	80001-
3		07002-10823	• O-ring	1	80001-
4		708-8E-16160	• Plug	3	80001-
5		07002-11023	• O-ring	3	80001-
6		702-21-55620	• Plug	1	80001-
7		07002-11423	• O-ring	1	80001-
8		01011-81225	• Bolt	4	80001-
9		01643-31232	• Washer	4	80001-
10		723-60-21102	• Valve, Relief	1	80001-
11		07002-02434	•• O-ring	1	80001-
12		07000-12016	•• O-ring	1	80001-
13		07001-02016	•• Ring, Back-up	1	80001-

FIG. M2210-001012 Fender Group, Control Valve Mounts

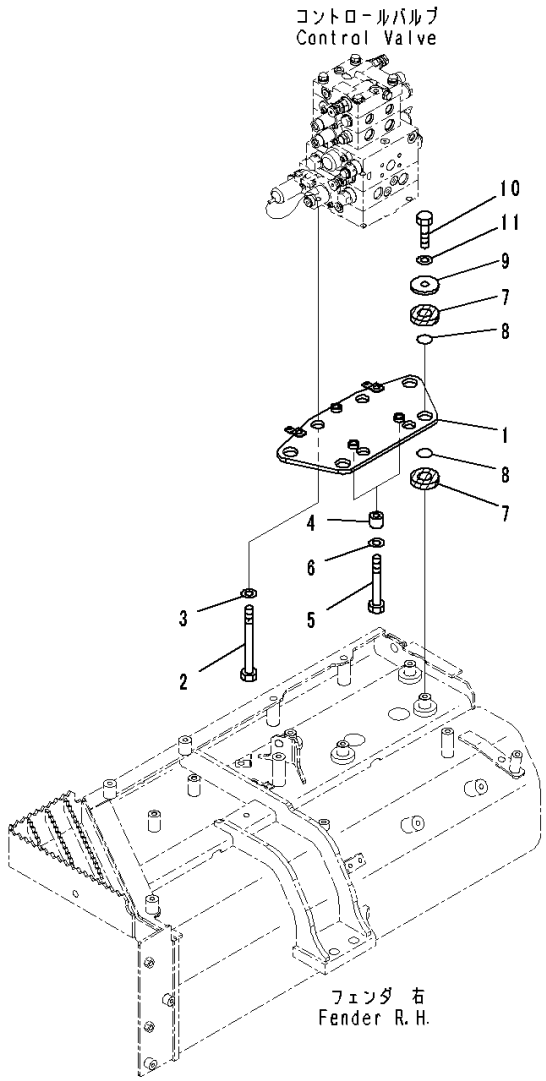

Index	Code	Part Number	Description	Qty	Serial Number
		Note: This list covers following specifications.			
		For Machine With 3-spool Valve Hydraulics			
		For Machine With 4-spool Valve Hydraulics, For Machine With Ripper			
		For Machine With 5-spool Valve Hydraulics, With Power Tilt Pitch Dozer, For Machine With Ripper			
		For Machine With 5-spool Valve Hydraulics, With Power Angle Power Tilt Dozer, For Machine With Ripper			
		For Machine With 5-spool Valve Hydraulics, With Power Tilt Pitch Dozer			
		For Machine With 5-spool Valve Hydraulics, With Power Angle Power Tilt Dozer			
1		14X-60-51211	Plate	1	80001-
2		01010-81240	Bolt	1	80001-
3		01643-31232	Washer	1	80001-
4		566-01-12350	Boss	2	80001-
5		21K-01-72150	Bolt	2	80001-
6		01643-31232	Washer	2	80001-
7		14X-60-12120	Cushion	8	80001-
8		07000-13025	O-ring	8	80001-
9		566-35-42430	Plate	4	80001-
10		01010-81225	Bolt	4	80001-
11		01643-31232	Washer	4	80001-

FIG. M2210-001013 Fender Group, For Machine With 3-spool Valve Hydraulics, Hydraulic Piping

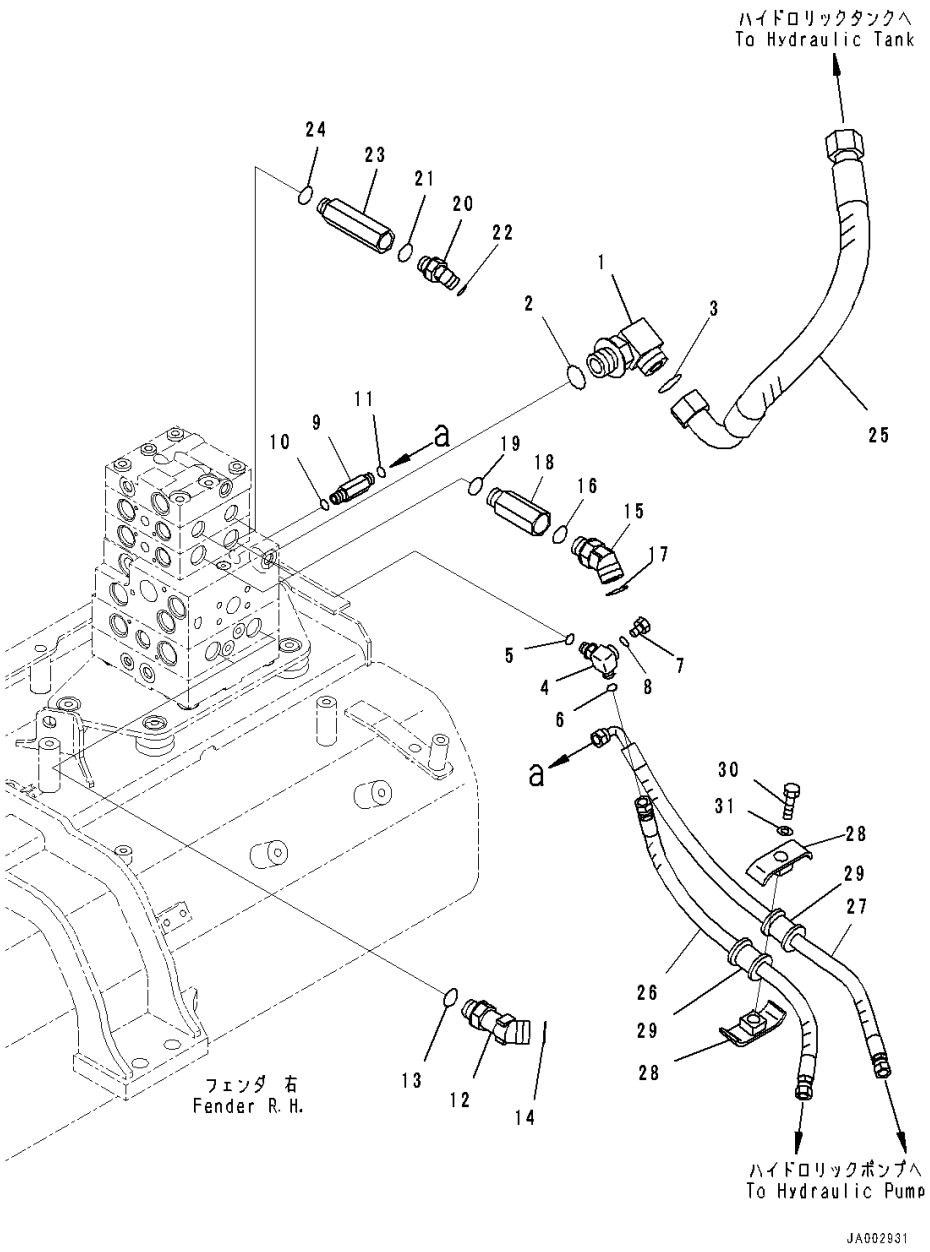

Index	Code	Part Number	Description	Qty	Serial Number
1		21W-62-42640	Elbow	1	80001-
2		07002-13334	O-ring	1	80001-
3		207-62-64740	O-ring	1	80001-
4		14X-62-54870	Tee	1	80001-
5		07002-11423	O-ring	1	80001-
6		02896-11008	O-ring	1	80001-
7		07040-11007	Plug	1	80001-
8		07002-11023	O-ring	1	80001-
9		11Y-62-12230	Union	1	80001-
10		07002-11423	O-ring	1	80001-
11		02896-11008	O-ring	1	80001-
12		11Y-62-36160	Elbow	2	80001-
13		07002-62434	O-ring	2	80001-
14		02896-61018	O-ring	2	80001-
15		02783-10628	Elbow	2	80001-
16		07002-12434	O-ring	2	80001-
17		02896-11018	O-ring	2	80001-
18		20T-62-81790	Joint	2	80001-
19		07002-12434	O-ring	2	80001-
20		02783-10315	Elbow	2	80001-
21		07002-12034	O-ring	2	80001-
22		02896-11009	O-ring	2	80001-
23		14X-62-52931	Joint	2	80001-
24		07002-12034	O-ring	2	80001-
25		14X-62-52940	Hose	1	80001-
26		14X-62-52391	Hose	1	80001-
27		14X-62-52541	Hose	1	80001-
28		22P-62-13540	Clamp	2	80001-
29		07095-00314	Cushion	2	80001-
30		01010-81260	Bolt	1	80001-
31		01643-31232	Washer	1	80001-

FIG. M2210-001014 Fender Group, For Machine With 3-spool Valve Hydraulics, PPC Lock Solenoid Valve With Accumulator

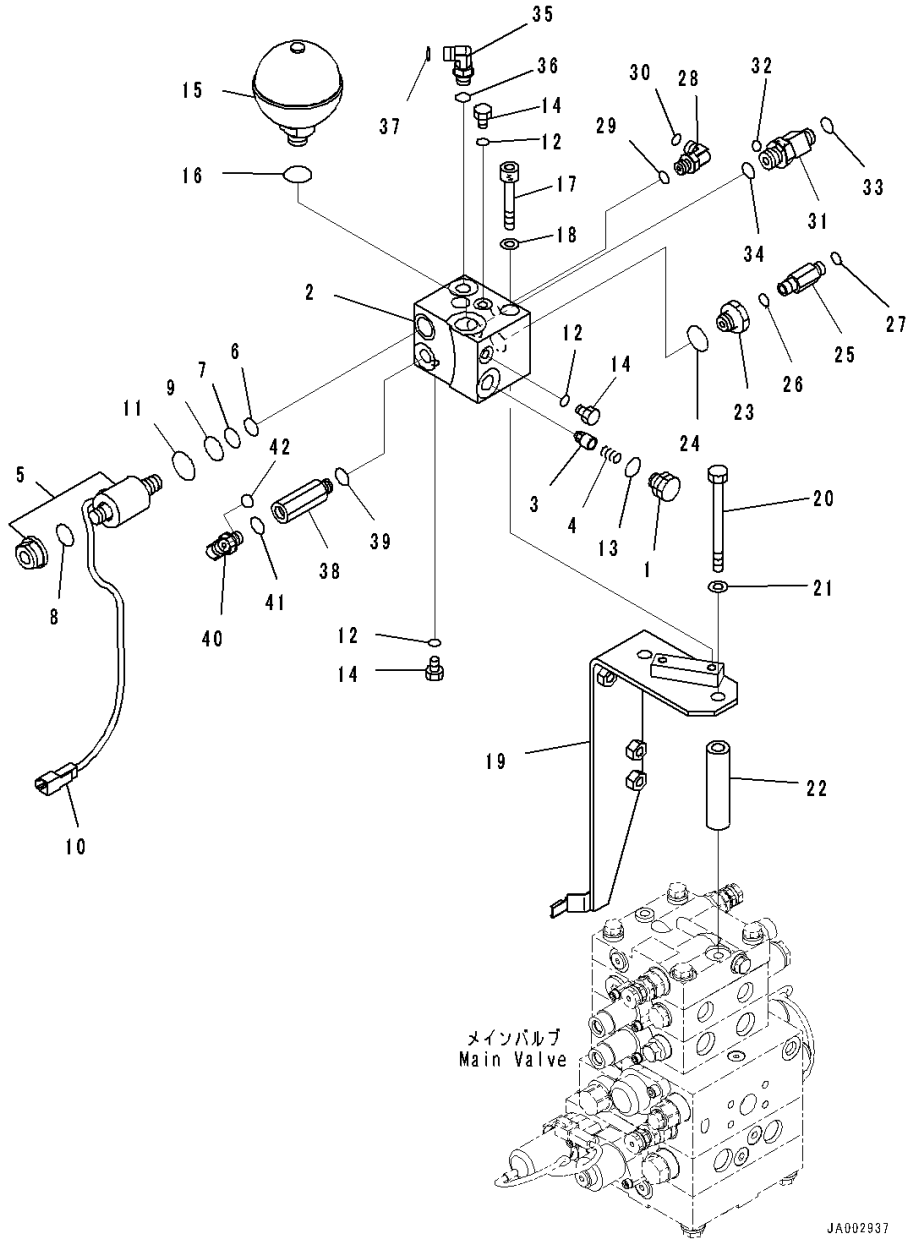

Index	Code	Part Number	Description	Qty	Serial Number
		14X-62-53551	Block Assembly	1	80001-
1		103-49-14280	• Plug	1	80001-
2		14X-62-53561	• Block	1	80001-
3		205-60-51390	• Poppet	1	80001-
4		722-12-12063	• Spring	1	80001-
5		11Y-60-11530	• Valve, Solenoid	1	80001-
6		07000-02012	•• O-ring	1	80001-
7		07000-02014	•• O-ring	1	80001-
8		07000-12016	•• O-ring	1	80001-
9		07000-02018	•• O-ring	1	80001-
10		08192-22830	•• Connector	1	80001-
11		203-60-62190	•• O-ring	1	80001-
12		07002-10823	• O-ring	3	80001-
13		07002-11623	• O-ring	1	80001-
14		07040-10807	• Plug	3	80001-
15		22U-60-21330	Accumulator	1	80001-
16		07002-12034	O-ring	1	80001-
17		01252-A1085	Bolt, Hexagon Socket Head	2	80001-
18		01643-51032	Washer	2	80001-
19		14X-62-52960	Bracket	1	80001-
20		01011-81230	Bolt	2	80001-
21		01643-31232	Washer	2	80001-
22		14X-62-52981	Spacer	2	80001-
23		20Y-62-21940	Filter Assembly	1	80001-
24		07002-12034	O-ring	1	80001-
25		20U-62-41890	Nipple	1	80001-
26		07002-11423	O-ring	1	80001-
27		02896-11008	O-ring	1	80001-
28		02782-10210	Elbow	1	80001-
29		07002-11423	O-ring	1	80001-
30		02896-11008	O-ring	1	80001-
31		20K-62-33690	Tee	1	80001-
32		02896-11008	• O-ring	1	80001-
33		02896-11009	• O-ring	1	80001-
34		07002-12034	O-ring	1	80001-
35		02782-10210	Elbow	1	80001-
36		07002-11423	O-ring	1	80001-
37		02896-11008	O-ring	1	80001-
38		207-62-62460	Adapter	1	80001-

FIG. M2210-001014 Fender Group, For Machine With 3-spool Valve Hydraulics, PPC Lock Solenoid Valve With Accumulator

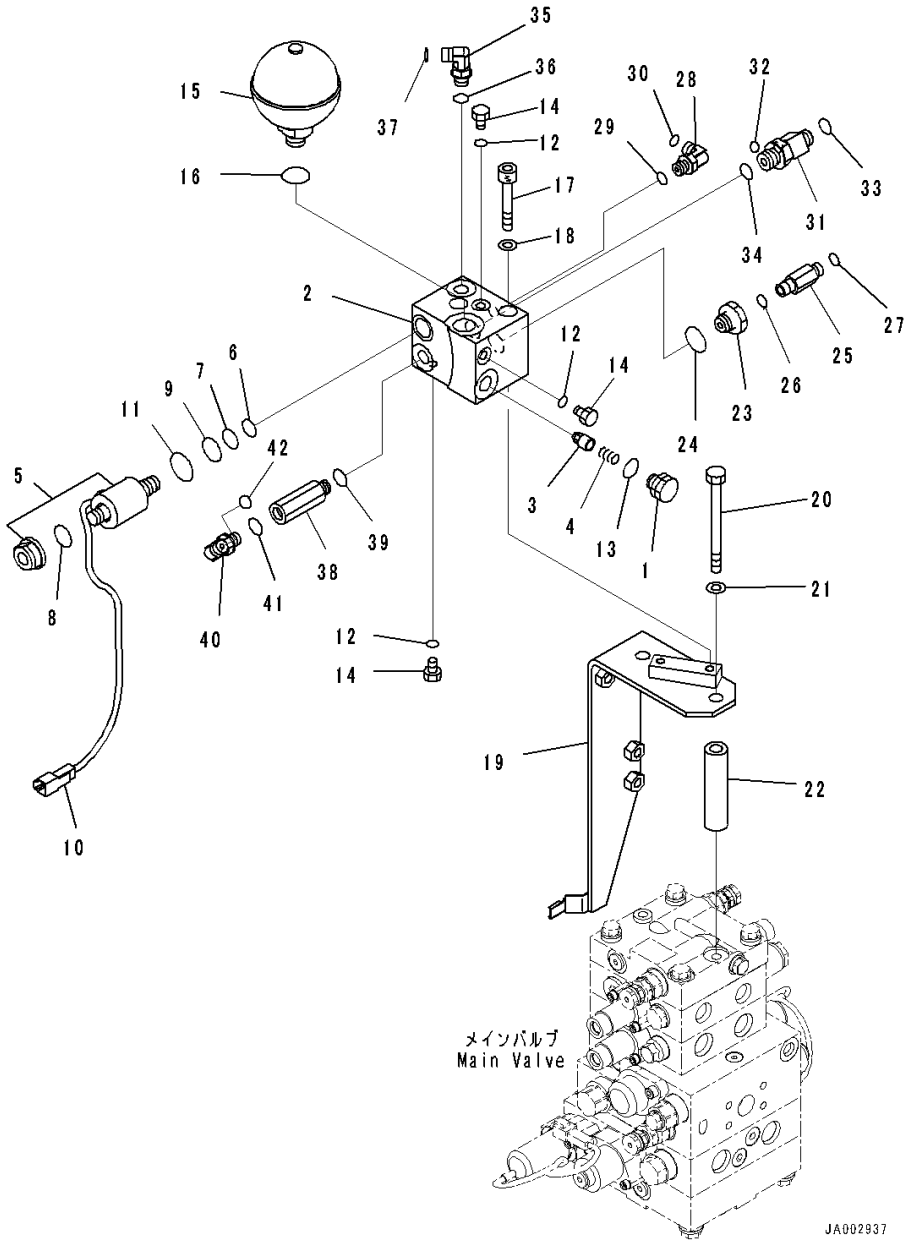

Index	Code	Part Number	Description	Qty	Serial Number
39		07002-11423	O-ring	1	80001-
40		02782-10210	Elbow	1	80001-
41		07002-11423	O-ring	1	80001-
42		02896-11008	O-ring	1	80001-

FIG. M2210-001015 Fender Group, For Machine With 3-spool Valve Hydraulics, Control Valve Steering Piping

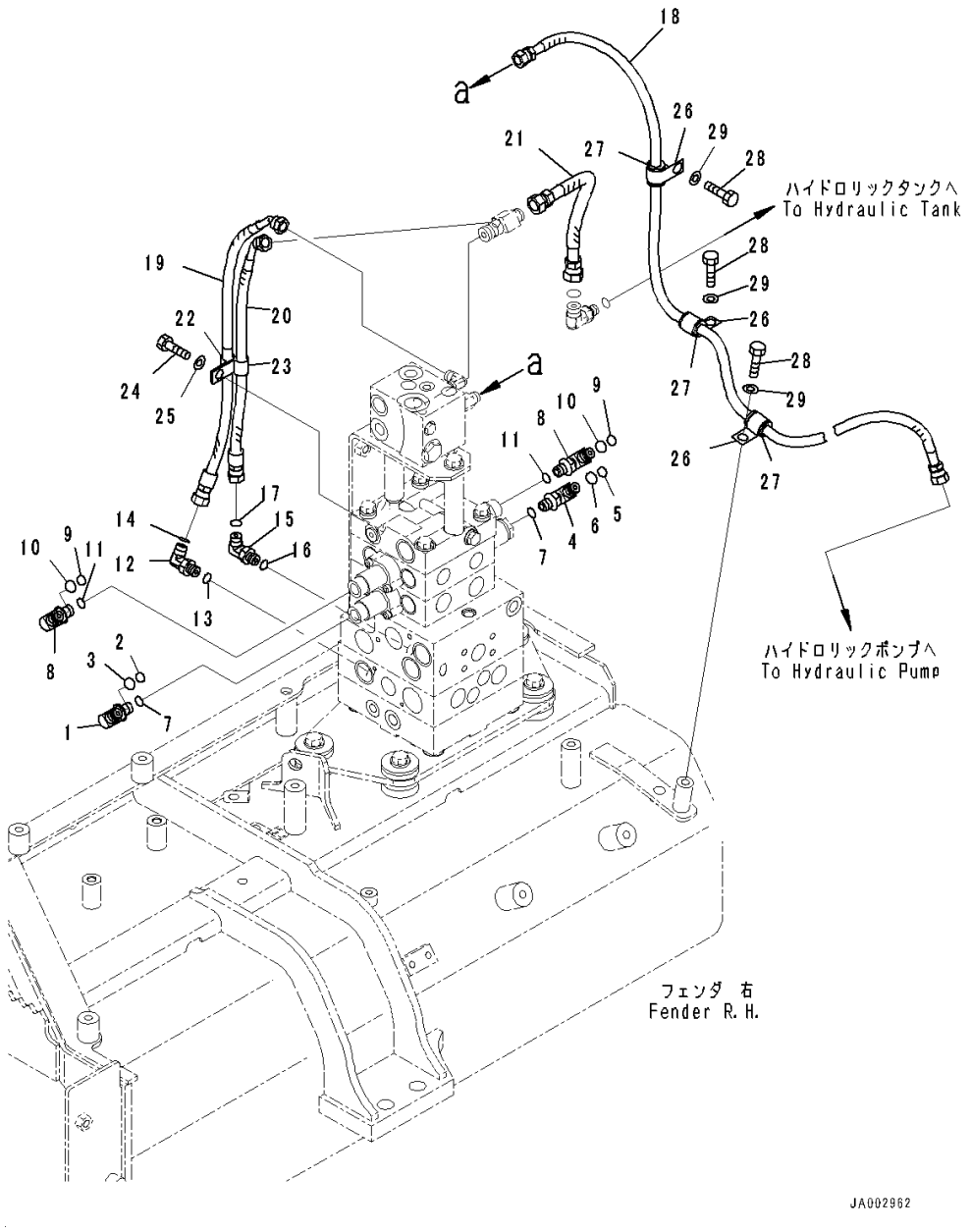

Index	Code	Part Number	Description	Qty	Serial Number
1		14X-62-53531	Elbow	1	80001-
2		201-60-11390	• O-ring	1	80001-
3		20Y-62-19560	• O-ring	1	80001-
4		14X-62-54960	Elbow	1	80001-
5		201-60-11390	• O-ring	1	80001-
6		20Y-62-19560	• O-ring	1	80001-
7		07002-11423	O-ring	2	80001-
8		14X-62-53541	Elbow	2	80001-
9		201-60-11390	• O-ring	1	80001-
10		20Y-62-19560	• O-ring	1	80001-
11		07002-11423	O-ring	2	80001-
12		02782-10210	Elbow	1	80001-
13		07002-11423	O-ring	1	80001-
14		02896-11008	O-ring	1	80001-
15		02782-10210	Elbow	1	80001-
16		07002-11423	O-ring	1	80001-
17		02896-11008	O-ring	1	80001-
18		14X-62-52521	Hose	1	80001-
19		02764-00205	Hose, Face Seal Type	1	80001-
20		02764-00204	Hose, Face Seal Type	1	80001-
21		02762-00303	Hose, Face Seal Type	1	80001-
22		04434-51212	Clip	1	80001-
23		21T-72-23260	Clip	1	80001-
24		01010-81225	Bolt	1	80001-
25		01643-31232	Washer	1	80001-
26		04434-51712	Clip	3	80001-
27		07095-20211	Cushion	3	80001-
28		01010-81220	Bolt	3	80001-
29		01643-31232	Washer	3	80001-

FIG. M2210-001016 Fender Group, Control Valve Wire Harness

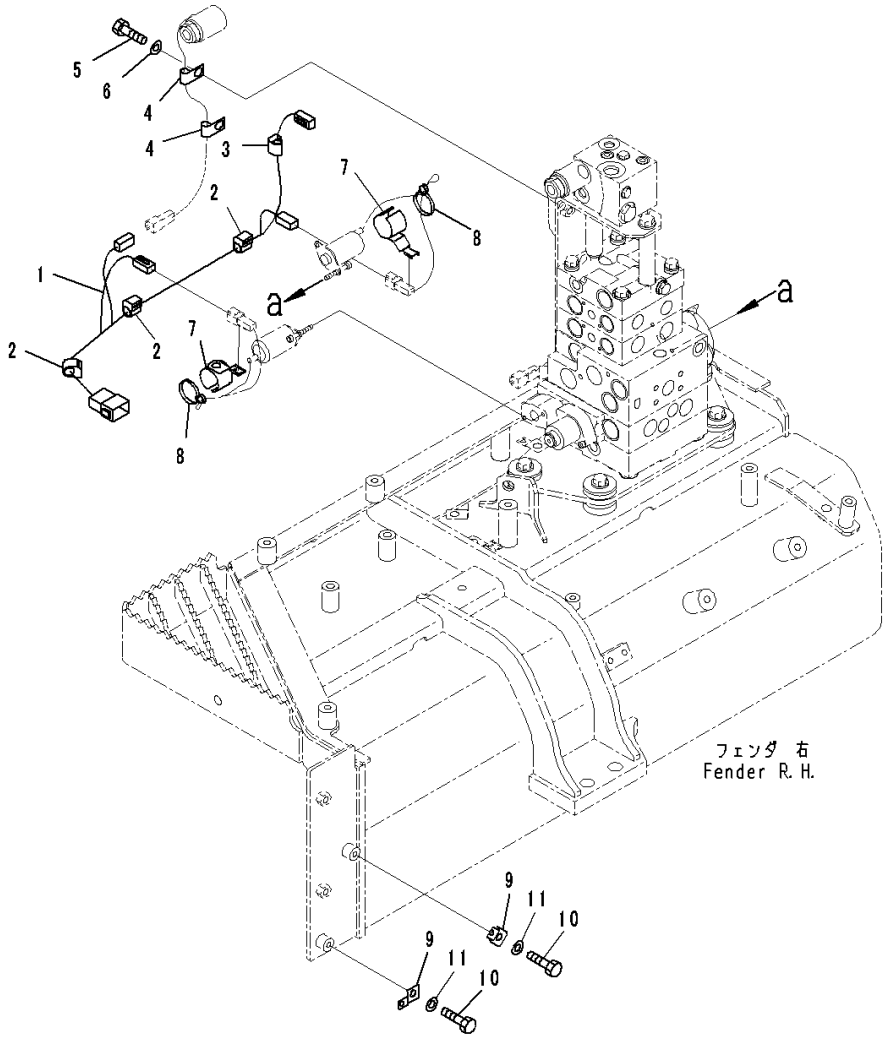

Index	Code	Part Number	Description	Qty	Serial Number
		Note: This list covers following specifications.			
		For Machine With 3-spool Valve Hydraulics			
		For Machine With 4-spool Valve Hydraulics, For Machine With Ripper			
		For Machine With 5-spool Valve Hydraulics, With Power Angle Power Tilt Dozer, For Machine With Ripper			
		For Machine With 5-spool Valve Hydraulics, With Power Angle Power Tilt Dozer			
1		14X-06-51271	Wire Harness	1	80001-
2		08211-01020	Clip	3	80001-
3		08211-00720	Clip	1	80001-
4		04434-50612	Clip	2	80001-
5		01010-81225	Bolt	2	80001-
6		01643-31232	Washer	2	80001-
7		21W-60-41310	Clip	2	80001-
8		08034-40521	Band	2	80001-
9		08057-00810	Clip	2	80001-
10		01010-81020	Bolt	2	80001-
11		01643-31032	Washer	2	80001-

FIG. M2210-001017 Fender Group, Filter

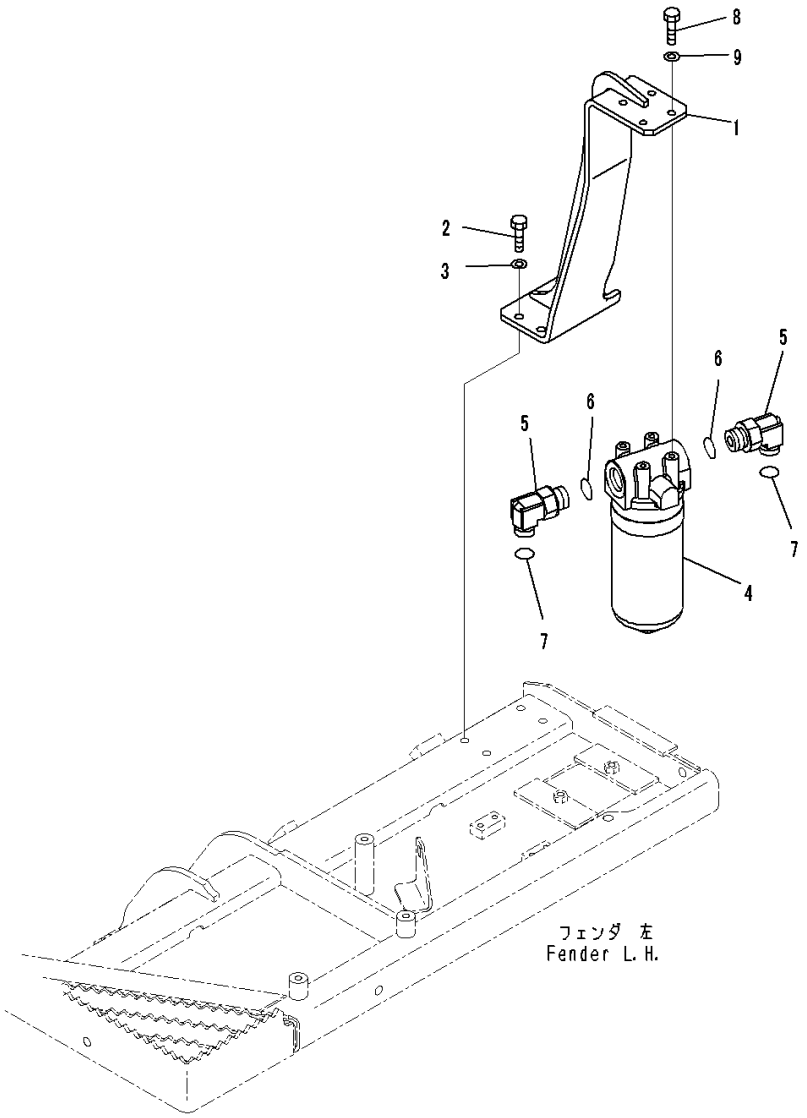

Index	Code	Part Number	Description	Qty	Serial Number
		Note: This list covers following specifications.			
		For Machine With 3-spool Valve Hydraulics			
		For Machine With 4-spool Valve Hydraulics, For Machine With Ripper			
		For Machine With 5-spool Valve Hydraulics, With Power Tilt Pitch Dozer, For Machine With Ripper			
		For Machine With 5-spool Valve Hydraulics, With Power Angle Power Tilt Dozer, For Machine With Ripper			
		For Machine With 5-spool Valve Hydraulics, With Power Tilt Pitch Dozer			
		For Machine With 5-spool Valve Hydraulics, With Power Angle Power Tilt Dozer			
1		14X-49-52231	Bracket	1	80001-
2		01010-81030	Bolt	4	80001-
3		01643-31032	Washer	4	80001-
4		714-07-28703	Filter Assembly	1	80001-
		714-07-28713	• Cartridge	1	80001-
5		02782-10632	Elbow	2	80001-
6		07002-23334	O-ring	2	80001-
7		02896-21018	O-ring	2	80001-
8		01010-81030	Bolt	4	80001-
9		01643-31032	Washer	4	80001-

FIG. M2210-001018 Fender Group, Handrail

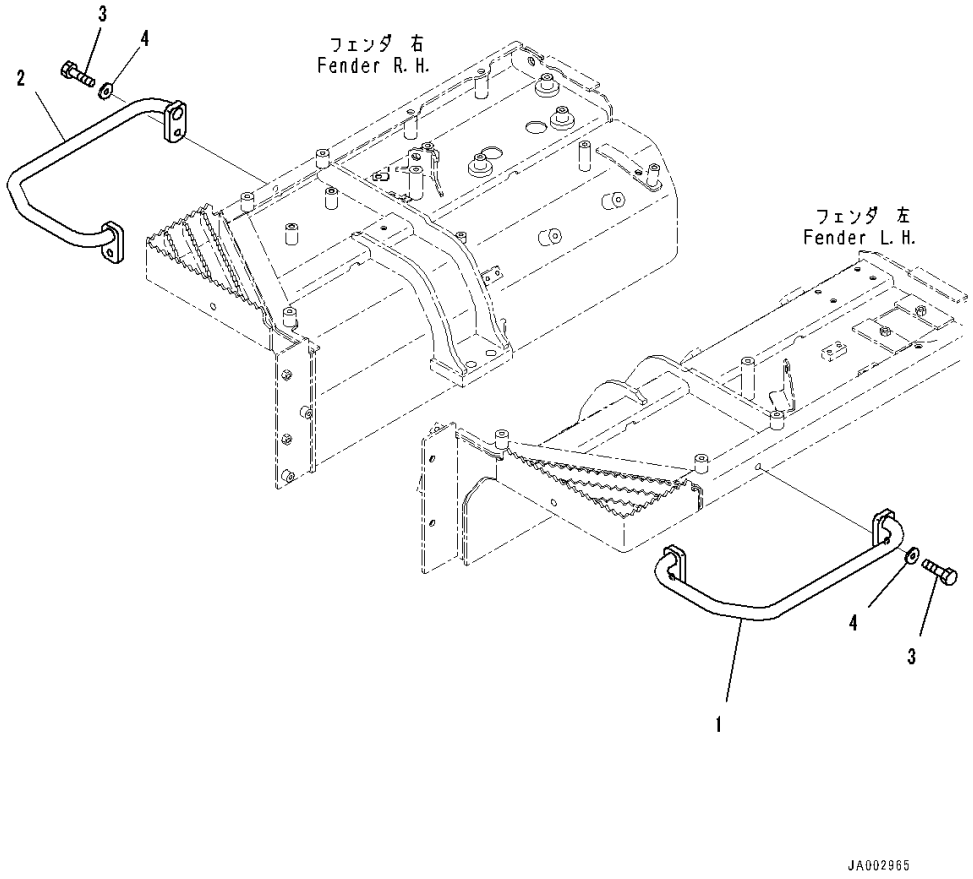

Index	Code	Part Number	Description	Qty	Serial Number
		Note: This list covers following specifications.			
		For Machine With 3-spool Valve Hydraulics			
		For Machine With 4-spool Valve Hydraulics, For Machine With Ripper			
		For Machine With 5-spool Valve Hydraulics, With Power Tilt Pitch Dozer, For Machine With Ripper			
		For Machine With 5-spool Valve Hydraulics, With Power Tilt Pitch Dozer			
1		14X-54-53451	Handle,LHS	1	80001-
2		14X-54-53540	Handle,RHS	1	80001-
3		01010-81240	Bolt	4	80001-
4		175-54-34170	Washer	4	80001-

FIG. M2210-001019 Fender Group, Grease Pump Holder

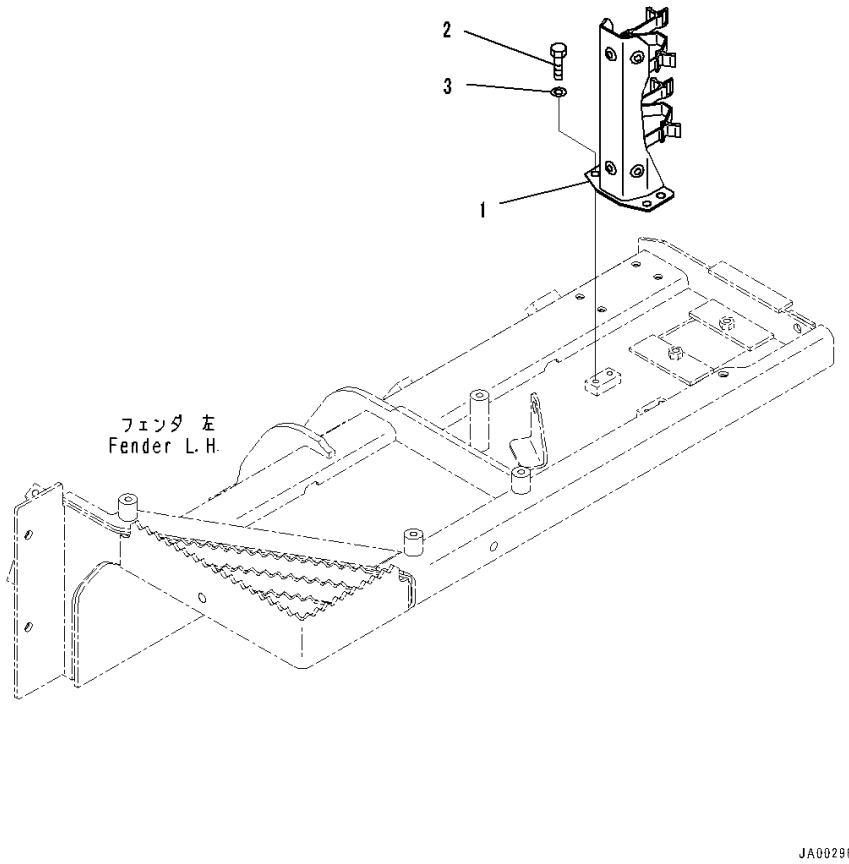

Index	Code	Part Number	Description	Qty	Serial Number
		Note: This list covers following specifications.			
		For Machine With 3-spool Valve Hydraulics			
		For Machine With 4-spool Valve Hydraulics, For Machine With Ripper			
		For Machine With 5-spool Valve Hydraulics, With Power Tilt Pitch Dozer, For Machine With Ripper			
		For Machine With 5-spool Valve Hydraulics, With Power Angle Power Tilt Dozer, For Machine With Ripper			
		For Machine With 5-spool Valve Hydraulics, With Power Tilt Pitch Dozer			
		For Machine With 5-spool Valve Hydraulics, With Power Angle Power Tilt Dozer			
1		14X-54-53191	Bracket.....	1	80001-
2		01010-81020	Bolt.....	4	80001-
3		01643-31032	Washer	4	80001-

FIG. M2210-001020 Fender Group, Mounts

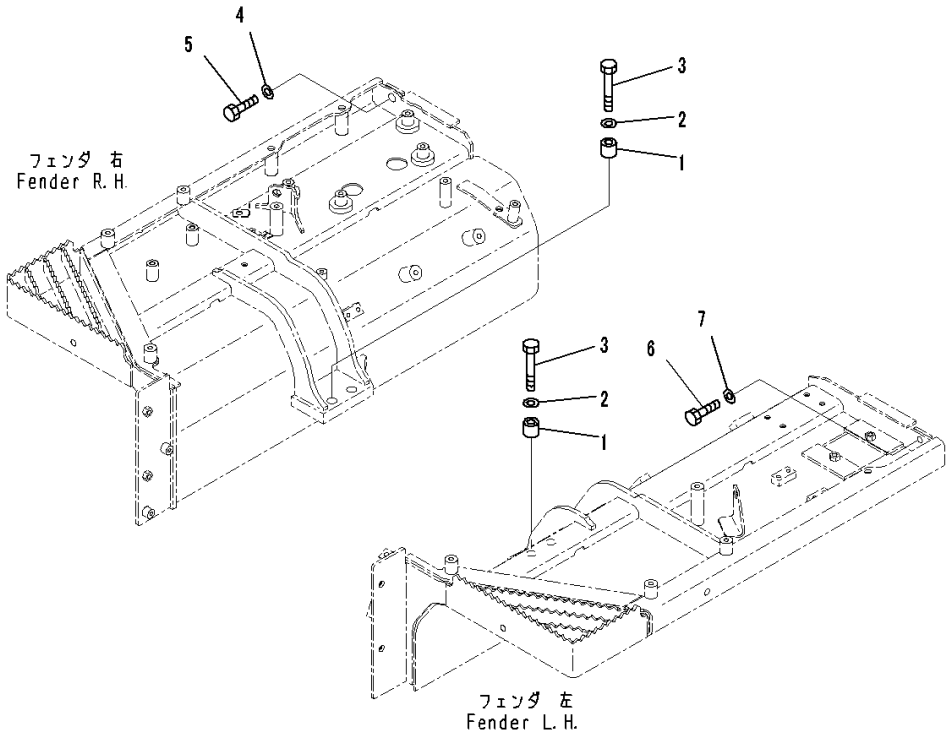

Index	Code	Part Number	Description	Qty	Serial Number
		Note: This list covers following specifications.			
		For Machine With 3-spool Valve Hydraulics			
		For Machine With 4-spool Valve Hydraulics, For Machine With Ripper			
		For Machine With 5-spool Valve Hydraulics, With Power Tilt Pitch Dozer, For Machine With Ripper			
		For Machine With 5-spool Valve Hydraulics, With Power Angle Power Tilt Dozer, For Machine With Ripper			
		For Machine With 5-spool Valve Hydraulics, With Power Tilt Pitch Dozer			
		For Machine With 5-spool Valve Hydraulics, With Power Angle Power Tilt Dozer			
1		120-54-42450	Spacer	4	80001-
2		01643-31645	Washer	4	80001-
3		01010-81680	Bolt	4	80001-
4		01643-31645	Washer	1	80001-
5		01010-81635	Bolt	1	80001-
6		01010-81235	Bolt	1	80001-
7		01643-31232	Washer	1	80001-

FIG. M2210-001021 Fender Group, Under Cover

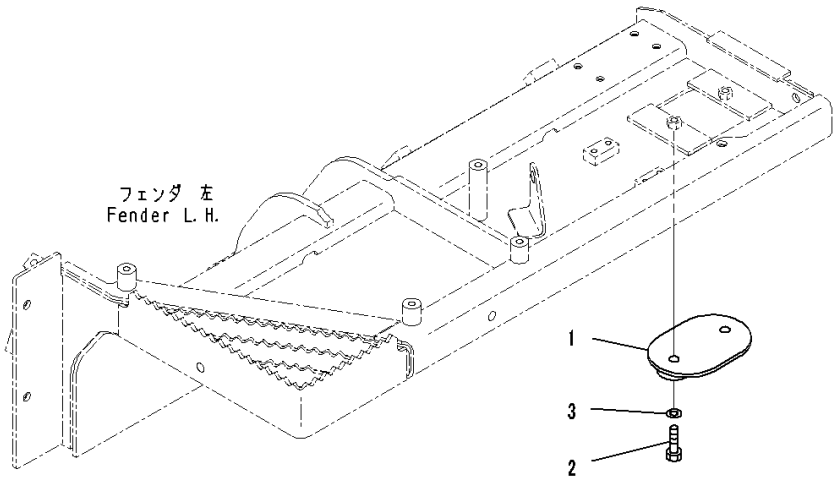

Index	Code	Part Number	Description	Qty	Serial Number
		Note: This list covers following specifications.			
		For Machine With 3-spool Valve Hydraulics			
		For Machine With 4-spool Valve Hydraulics, For Machine With Ripper			
		For Machine With 5-spool Valve Hydraulics, With Power Tilt Pitch Dozer, For Machine With Ripper			
		For Machine With 5-spool Valve Hydraulics, With Power Angle Power Tilt Dozer, For Machine With Ripper			
		For Machine With 5-spool Valve Hydraulics, With Power Tilt Pitch Dozer			
		For Machine With 5-spool Valve Hydraulics, With Power Angle Power Tilt Dozer			
1		14X-21-51361	Cover	1	80001-
2		01010-81230	Bolt	2	80001-
3		01643-31232	Washer	2	80001-

FIG. M2210-002002 Fender Group, For Machine With 4-spool Valve Hydraulics, For Machine With Ripper, Inner Parts (1/11)

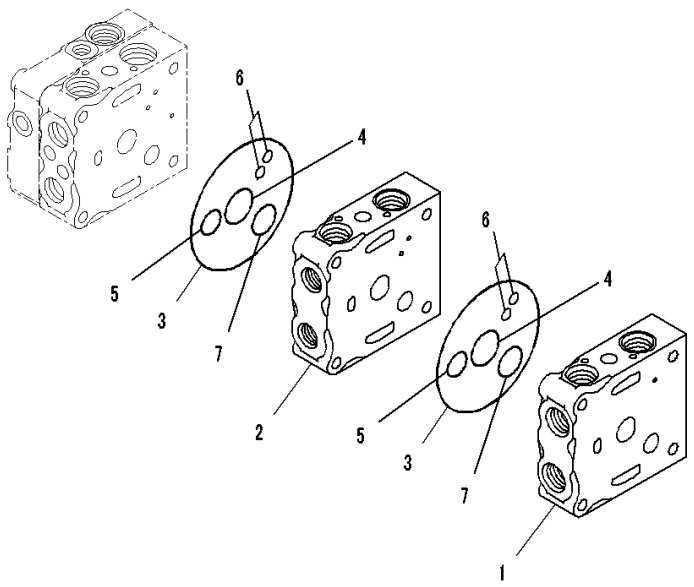

JY013370

Index	Code	Part Number	Description	Qty	Serial Number
		723-24-11500	Valve, Control	1	80001-
	C1		• Body Group	1	80001-
1		723-26-21250	•• Valve Body	1	80001-
2		723-26-21360	•• Valve Body	1	80001-
3		07000-12120	•• O-ring	2	80001-
4		723-26-15830	•• O-ring	2	80001-
5		07000-12020	•• O-ring	2	80001-
6		07000-11008	•• O-ring	4	80001-
7		723-26-15840	•• O-ring	2	80001-

FIG. M2210-002003 Fender Group, For Machine With 4-spool Valve Hydraulics, For Machine With Ripper, Inner Parts (2/11)

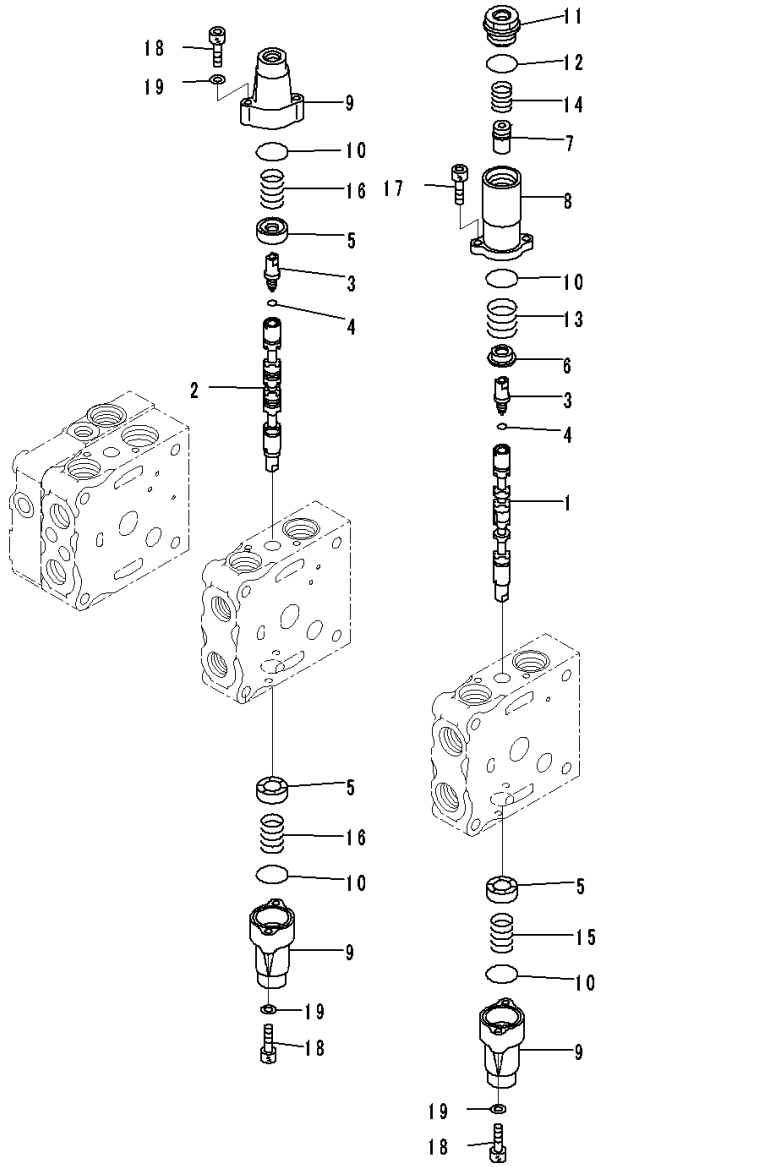

Index	Code	Part Number	Description	Qty	Serial Number
		723-24-11500	Valve, Control	1	80001-
	C1		• Body Group	1	80001-
1		723-26-22830	•• Spool	1	80001-
2		723-26-22840	•• Spool	1	80001-
3		723-26-15130	•• Plug	2	80001-
4		07002-10823	•• O-ring	2	80001-
5		723-26-15121	•• Retainer	3	80001-
6		723-26-16770	•• Retainer	1	80001-
7		723-26-16780	•• Retainer	1	80001-
8		723-26-16760	•• Case	1	80001-
9		723-26-15110	•• Case	3	80001-
10		575-41-17420	•• O-ring	4	80001-
11		723-26-16790	•• Plug	1	80001-
12		07002-12434	•• O-ring	1	80001-
13		723-26-14560	•• Spring	1	80001-
14		723-26-14570	•• Spring	1	80001-
15		709-26-11450	•• Spring	1	80001-
16		723-26-14580	•• Spring	2	80001-
17		01252-60616	•• Bolt	2	80001-
18		01252-60630	•• Bolt, Hexagon Socket Head	6	80001-
19		01641-20608	•• Washer	6	80001-

FIG. M2210-002004 Fender Group, For Machine With 4-spool Valve Hydraulics, For Machine With Ripper, Inner Parts (3/11)

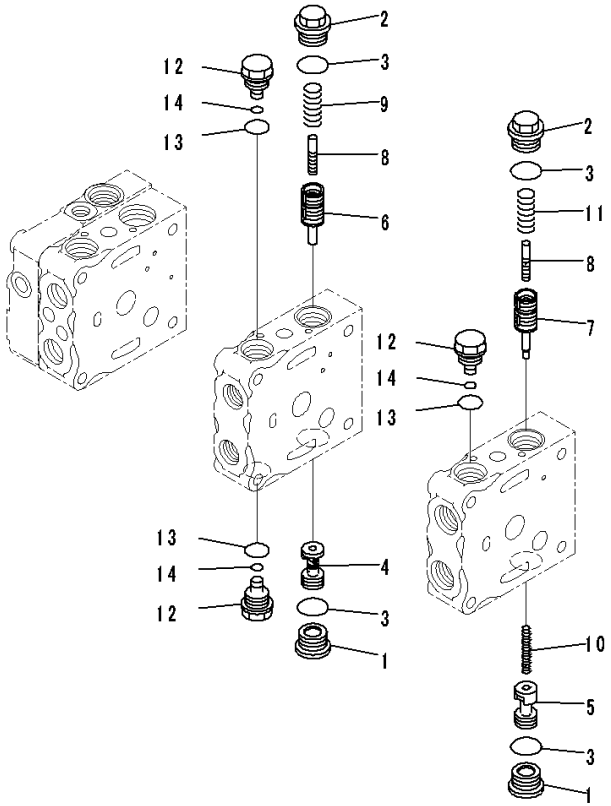

Index	Code	Part Number	Description	Qty	Serial Number
		723-24-11500	Valve, Control	1	80001-
	C1		• Body Group	1	80001-
1		723-26-15230	•• Plug	2	80001-
2		723-26-15370	•• Plug	2	80001-
3		07002-12434	•• O-ring	4	80001-
4		723-26-41160	•• Valve	1	80001-
5		723-26-41210	•• Valve	1	80001-
6		723-26-51240	•• Valve	1	80001-
7		723-26-51510	•• Valve	1	80001-
8		723-26-51250	•• Piston	2	80001-
9		723-26-14230	•• Spring	1	80001-
10		723-26-14220	•• Spring	1	80001-
11		723-26-14240	•• Spring	1	80001-
12		723-26-15310	•• Plug	3	80001-
13		07002-12034	•• O-ring	3	80001-
14		07000-11007	•• O-ring	3	80001-

FIG. M2210-002005 Fender Group, For Machine With 4-spool Valve Hydraulics, For Machine With Ripper, Inner Parts (4/11)

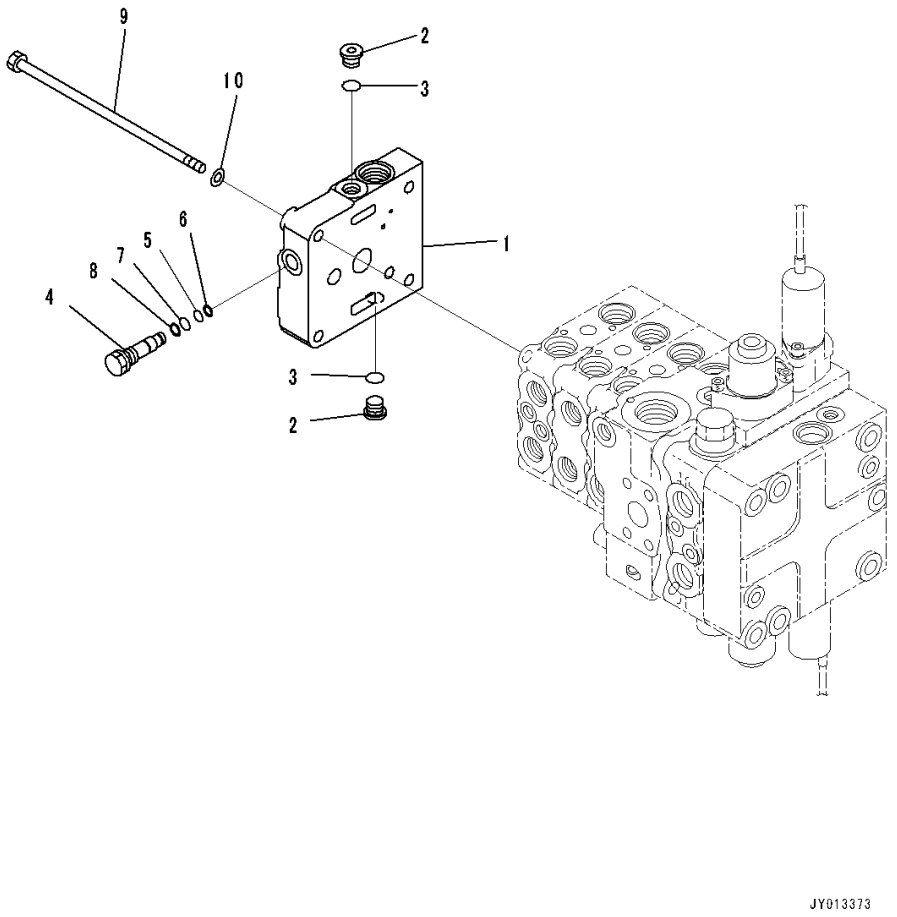

Index	Code	Part Number	Description	Qty	Serial Number
		723-24-11500	Valve, Control	1	80001-
1	C1		• Cover	1	80001-
2		702-21-55620	• Plug	2	80001-
3		07002-11423	• O-ring	2	80001-
4		723-26-15190	• Plug	1	80001-
5		07000-11007	• O-ring	1	80001-
6		07001-01007	• Ring, Back-up	1	80001-
7		07000-11009	• O-ring	1	80001-
8		07001-01009	• Ring, Back-up	1	80001-
9		700-25-11120	• Bolt	4	80001-
10		01643-31032	• Washer	4	80001-

FIG. M2210-002006 Fender Group, For Machine With 4-spool Valve Hydraulics, For Machine With Ripper, Inner Parts (5/11)

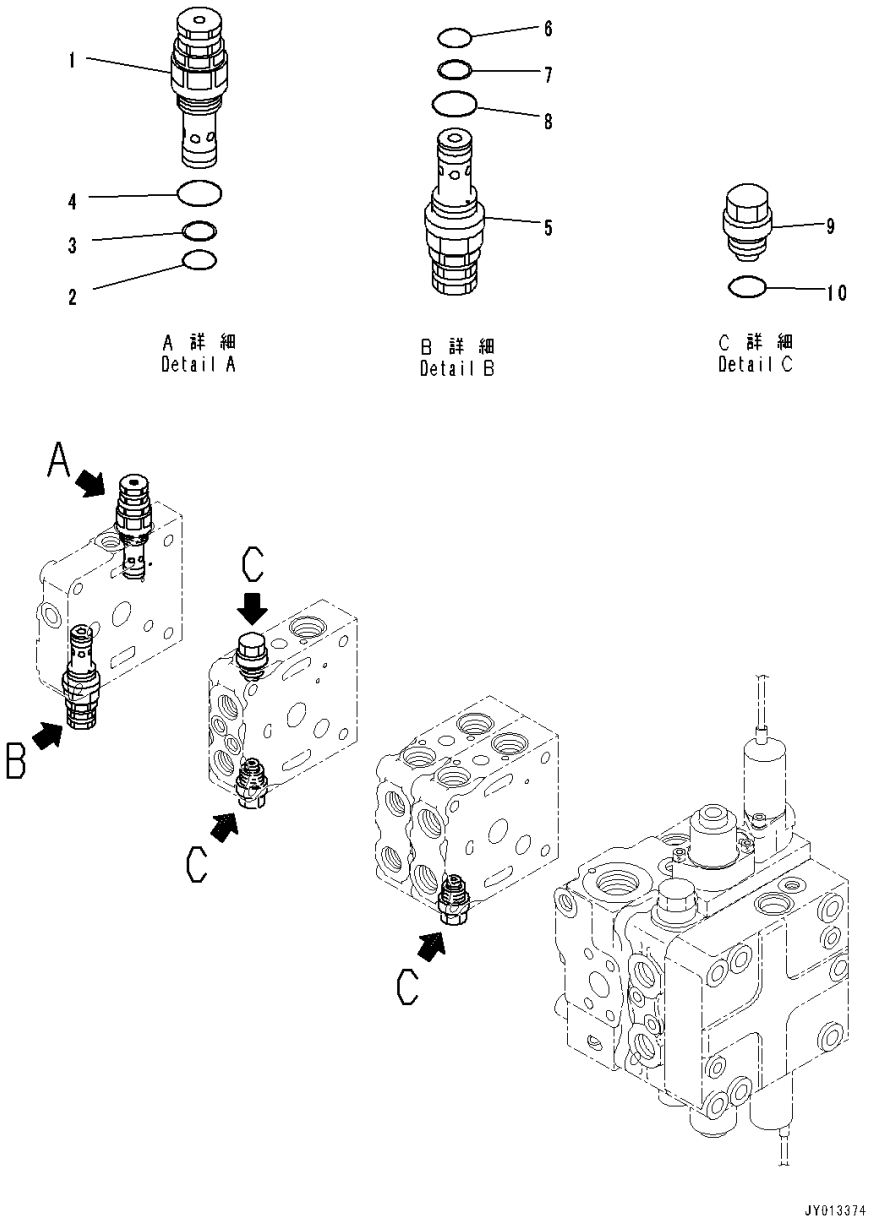

Index	Code	Part Number	Description	Qty	Serial Number
		723-24-11500	Valve, Control	1	80001-
1		723-20-66500	• Valve, Relief	1	80001-
2		700-22-11410	•• O-ring	1	80001-
3		700-80-64220	•• Ring	1	80001-
4		07002-12434	•• O-ring	1	80001-
5		723-20-66600	• Valve, Relief	1	80001-
6		700-22-11410	•• O-ring	1	80001-
7		700-80-64220	•• Ring	1	80001-
8		07002-12434	•• O-ring	1	80001-
9		723-20-80100	• Valve Assembly, Suction	1	80001-
10		07002-12034	•• O-ring	1	80001-

FIG. M2210-002007 Fender Group, For Machine With 4-spool Valve Hydraulics, For Machine With Ripper, Inner Parts (6/11)

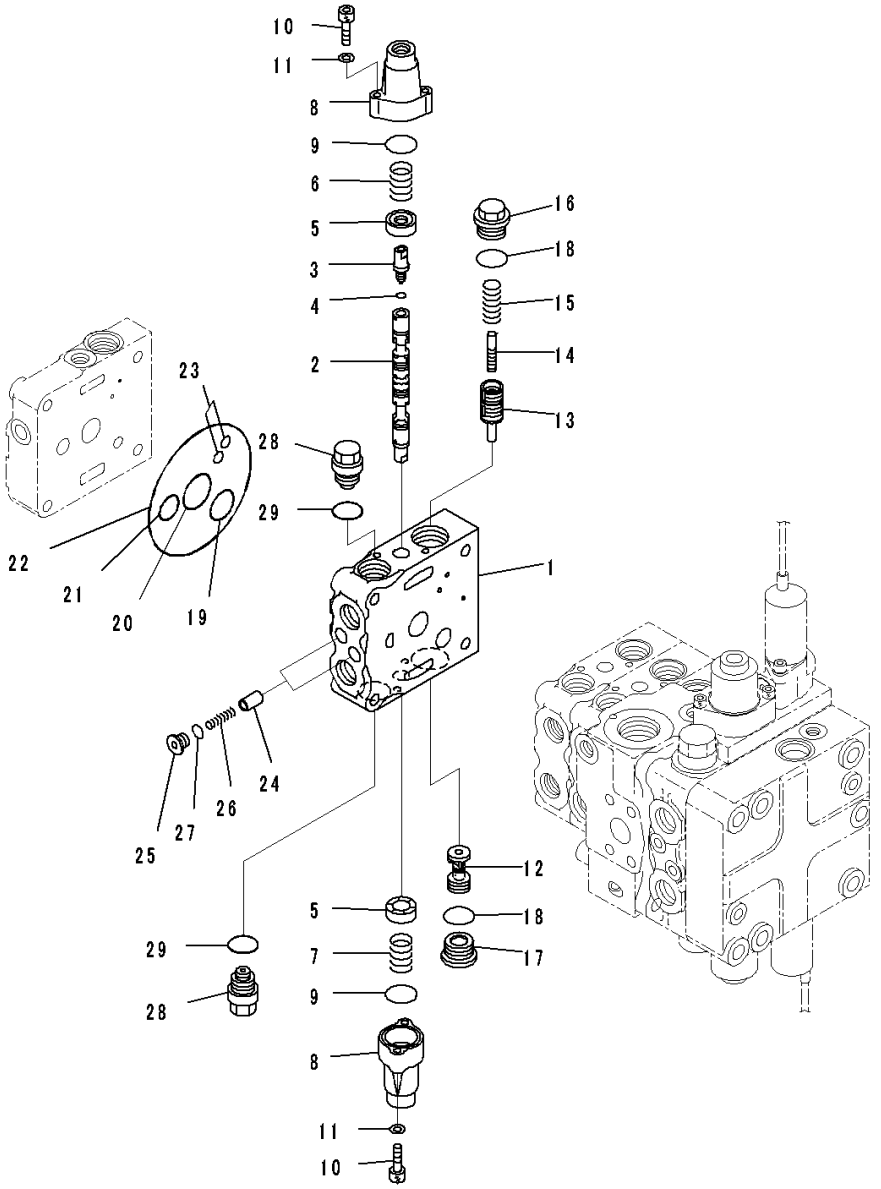

Index	Code	Part Number	Description	Qty	Serial Number
		723-24-11500	Valve, Control	1	80001-
		723-21-08300	• Valve Subassembly	1	80001-
1		723-26-21420	•• Valve Body	1	80001-
2		723-26-22270	•• Spool	1	80001-
3		723-26-15130	•• Plug	1	80001-
4		07002-10823	•• O-ring	1	80001-
5		723-26-15121	•• Retainer	2	80001-
6		723-26-14580	•• Spring	1	80001-
7		709-26-11450	•• Spring	1	80001-
8		723-26-15110	•• Case	2	80001-
9		575-41-17420	•• O-ring	2	80001-
10		01252-60630	•• Bolt, Hexagon Socket Head	4	80001-
11		01641-20608	•• Washer	4	80001-
12		723-26-41160	•• Valve	1	80001-
13		723-26-51610	•• Valve	1	80001-
14		723-26-51250	•• Piston	1	80001-
15		723-26-14230	•• Spring	1	80001-
16		723-26-15370	•• Plug	1	80001-
17		723-26-15230	•• Plug	1	80001-
18		07002-12434	•• O-ring	2	80001-
19		723-26-15840	•• O-ring	1	80001-
20		723-26-15830	•• O-ring	1	80001-
21		07000-12020	•• O-ring	1	80001-
22		07000-12120	•• O-ring	1	80001-
23		07000-11008	•• O-ring	2	80001-
24		723-26-15210	•• Valve	2	80001-
25		723-26-15220	•• Plug	2	80001-
26		723-26-14150	•• Spring	2	80001-
27		07002-11223	•• O-ring	2	80001-
28		723-20-80100	•• Valve Assembly, Suction	2	80001-
29		07002-12034	••• O-ring	1	80001-

FIG. M2210-002008 Fender Group, For Machine With 4-spool Valve Hydraulics, For Machine With Ripper, Inner Parts (7/11)

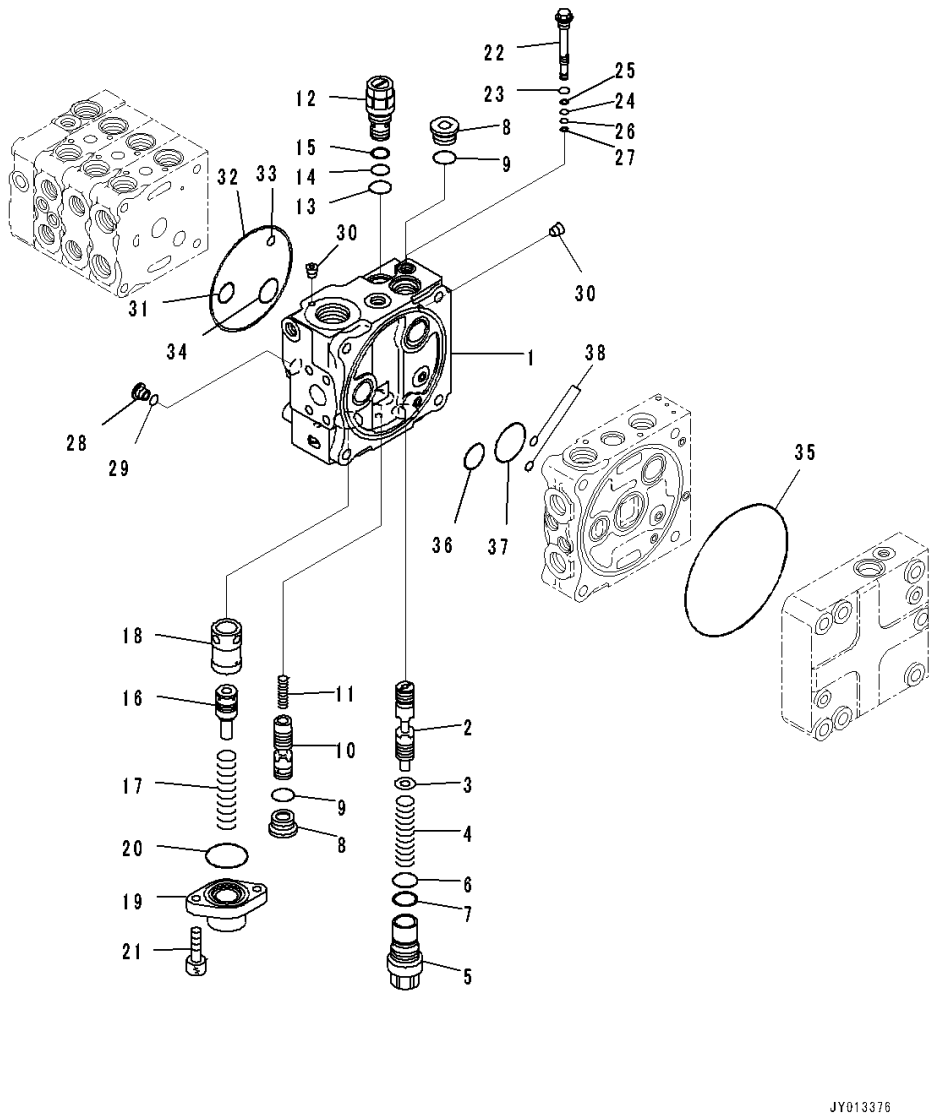

Index	Code	Part Number	Description	Qty	Serial Number
		723-24-11500	Valve, Control	1	80001-
	C1		• Block Subassembly	1	80001-
1		723-26-21160	•• Block	1	80001-
2		723-26-22850	•• Spool	1	80001-
3		723-26-15860	•• Washer	1	80001-
4		723-26-14590	•• Spring	1	80001-
5		723-26-15850	•• Plug	1	80001-
6		700-80-61260	•• O-ring	1	80001-
7		700-80-61430	•• Ring	1	80001-
8		723-26-15230	•• Plug	2	80001-
9		07002-12434	•• O-ring	2	80001-
10		723-26-22860	•• Spool	1	80001-
11		723-26-14470	•• Spring	1	80001-
12		723-60-21900	•• Valve, Relief	1	80001-
13		07002-12434	••• O-ring	1	80001-
14		07000-12016	••• O-ring	1	80001-
15		07001-02016	••• Ring, Back-up	1	80001-
16		723-36-15230	•• Piston	1	80001-
17		723-36-15340	•• Spring	1	80001-
18		723-36-15210	•• Sleeve	1	80001-
19		723-36-15250	•• Case	1	80001-
20		07000-13042	•• O-ring	1	80001-
21		01252-60820	•• Bolt	2	80001-
22	C1		•• Valve Assembly	1	80001-
23		07002-11223	••• O-ring	1	80001-
24		07000-11007	••• O-ring	1	80001-
25		07001-01007	••• Ring, Back-up	1	80001-
26		07000-11005	••• O-ring	1	80001-
27		07001-01005	••• Ring, Back-up	1	80001-
28		723-26-15220	•• Plug	1	80001-
29		07002-11223	•• O-ring	1	80001-
30		708-21-12541	•• Plug	5	80001-
31		07000-12020	•• O-ring	1	80001-
32		07000-12120	•• O-ring	1	80001-
33		07000-11008	•• O-ring	1	80001-
34		723-26-15840	•• O-ring	1	80001-
35		144-14-54610	•• O-ring	1	80001-
36		723-56-31730	•• O-ring	1	80001-
37		702-75-11520	•• O-ring	1	80001-

FIG. M2210-002008 Fender Group, For Machine With 4-spool Valve Hydraulics, For Machine With Ripper, Inner Parts (7/11)

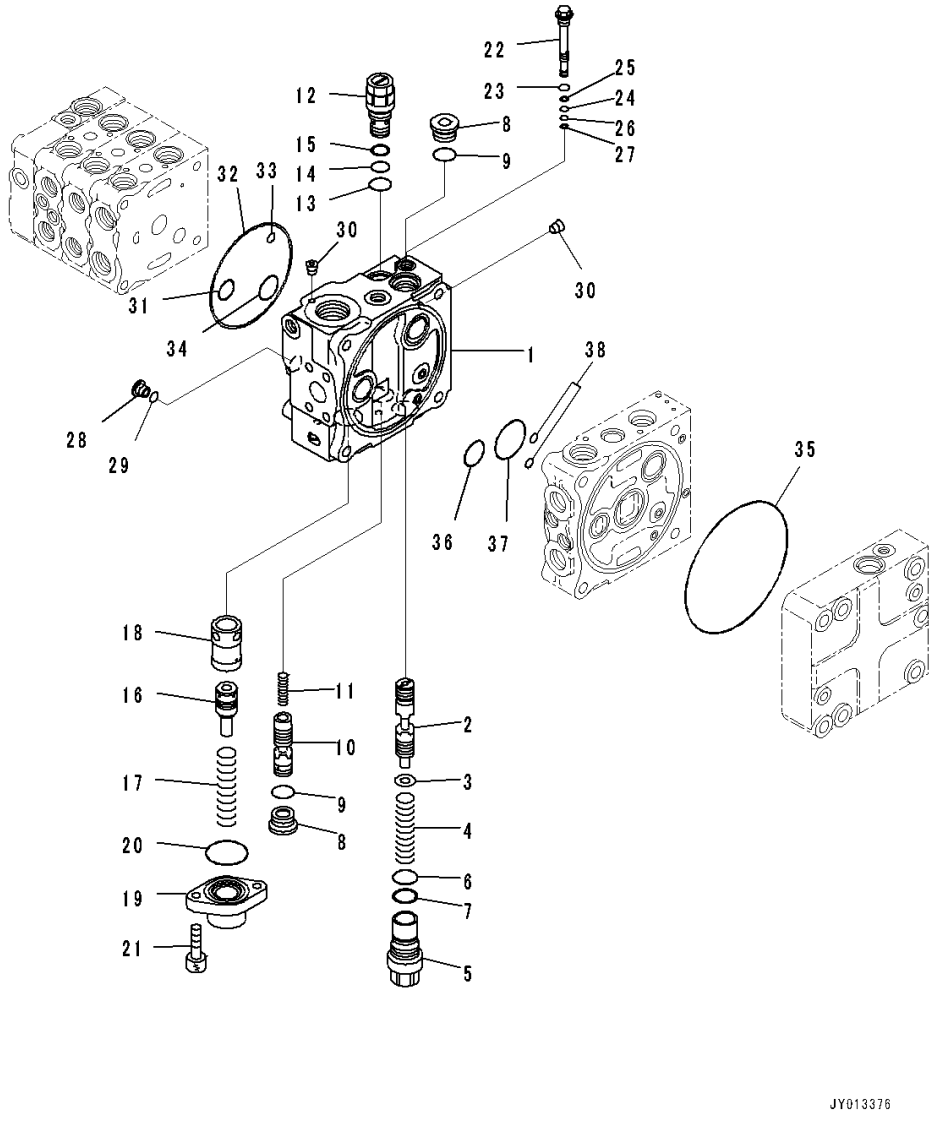

Index	Code	Part Number	Description	Qty	Serial Number
38		07000-11008	•• O-ring	2	80001-

FIG. M2210-002009 Fender Group, For Machine With 4-spool Valve Hydraulics, For Machine With Ripper, Inner Parts (8/11)

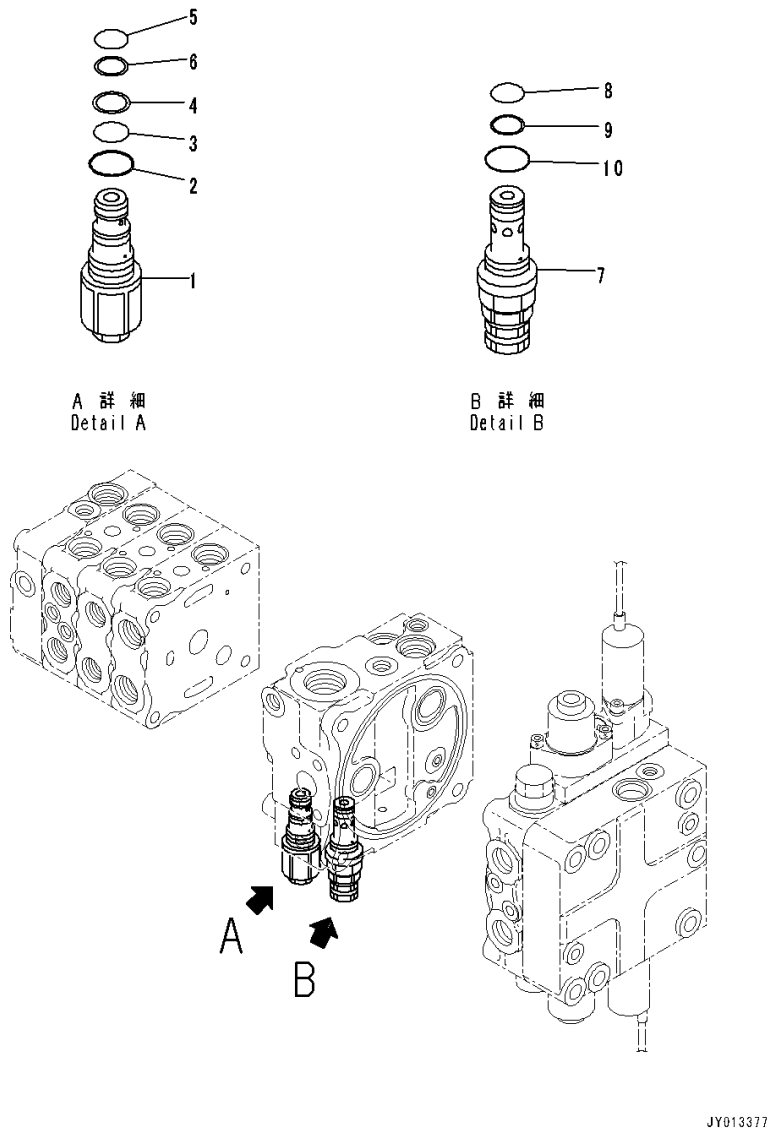

Index	Code	Part Number	Description	Qty	Serial Number
		723-24-11500	Valve, Control	1	80001-
1		723-20-70600	• Valve Assembly	1	80001-
2		07002-12434	•• O-ring	1	80001-
3		07000-12016	•• O-ring	1	80001-
4		07001-02016	•• Ring, Back-up	1	80001-
5		07000-12014	•• O-ring	1	80001-
6		07001-02014	•• Ring, Back-up	1	80001-
7		723-20-63100	• Valve, Relief	1	80001-
8		700-22-11410	•• O-ring	1	80001-
9		700-80-64220	•• Ring	1	80001-
10		07002-12034	•• O-ring	1	80001-

FIG. M2210-002010 Fender Group, For Machine With 4-spool Valve Hydraulics, For Machine With Ripper, Inner Parts (9/11)

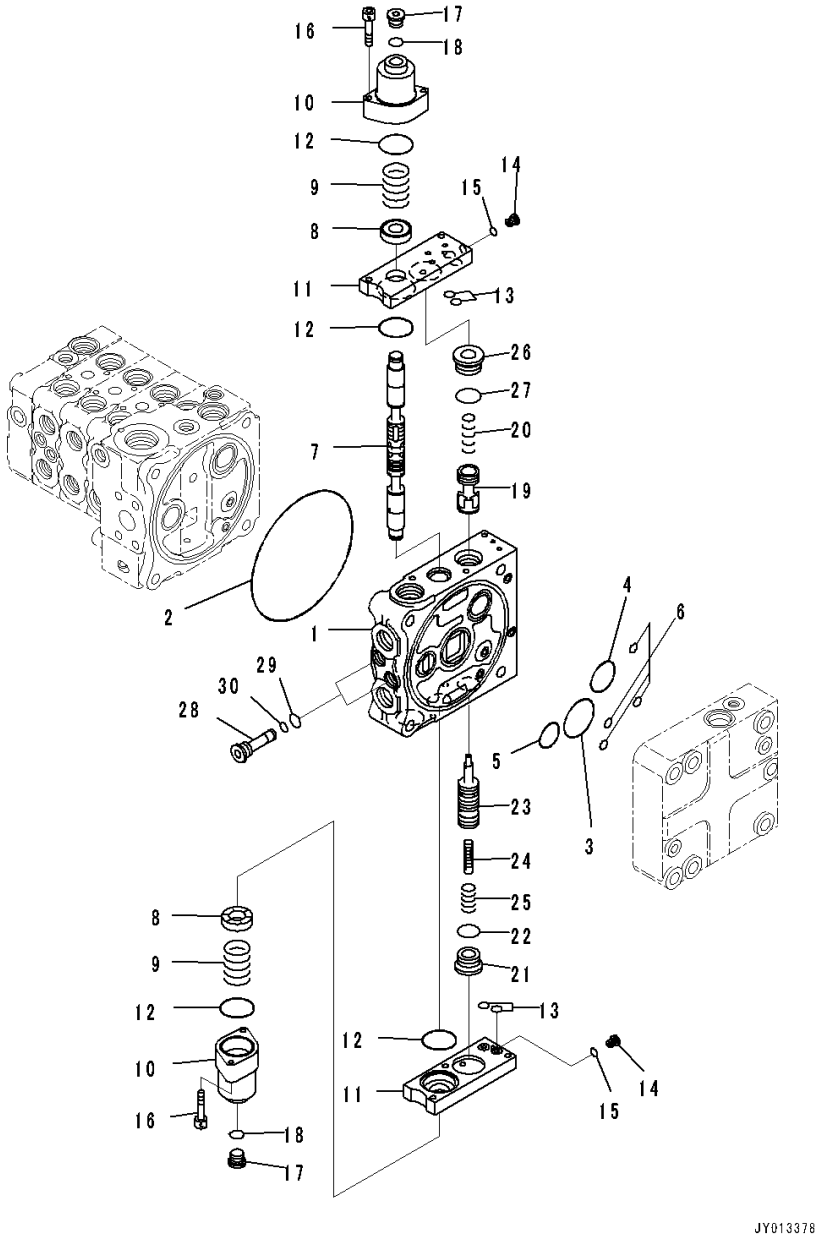

Index	Code	Part Number	Description	Qty	Serial Number
		723-24-11500	Valve, Control	1	80001-
		723-51-06500	• Valve Assembly	1	80001-
1	C1		•• Valve Body	1	80001-
2		144-14-54610	•• O-ring	1	80001-
3		723-56-31720	•• O-ring	1	80001-
4		723-56-31730	•• O-ring	1	80001-
5		702-75-11520	•• O-ring	1	80001-
6		07000-11008	•• O-ring	4	80001-
7		723-56-22170	•• Spool	1	80001-
8		723-56-31211	•• Retainer	2	80001-
9		723-36-14120	•• Spring	2	80001-
10		723-56-31510	•• Case	2	80001-
11		723-56-32820	•• Plate	2	80001-
12		702-21-55450	•• O-ring	4	80001-
13		07000-11009	•• O-ring	4	80001-
14		723-11-27280	•• Plug	2	80001-
15		07002-10823	•• O-ring	2	80001-
16		01252-60650	•• Bolt	4	80001-
17		702-21-55620	•• Plug	2	80001-
18		07002-11423	•• O-ring	2	80001-
19		723-56-42150	•• Valve	1	80001-
20		723-56-41710	•• Spring	1	80001-
21		723-26-15230	•• Plug	1	80001-
22		07002-12434	•• O-ring	1	80001-
23		723-56-42330	•• Valve	1	80001-
24		723-56-41590	•• Piston	1	80001-
25		723-56-41730	•• Spring	1	80001-
26		723-56-41970	•• Plug	1	80001-
27		07000-13024	•• O-ring	1	80001-
28		723-56-31640	•• Plug	2	80001-
29		07002-11623	•• O-ring	2	80001-
30		07000-11008	•• O-ring	2	80001-

FIG. M2210-002011 Fender Group, For Machine With 4-spool Valve Hydraulics, For Machine With Ripper, Inner Parts (10/11)

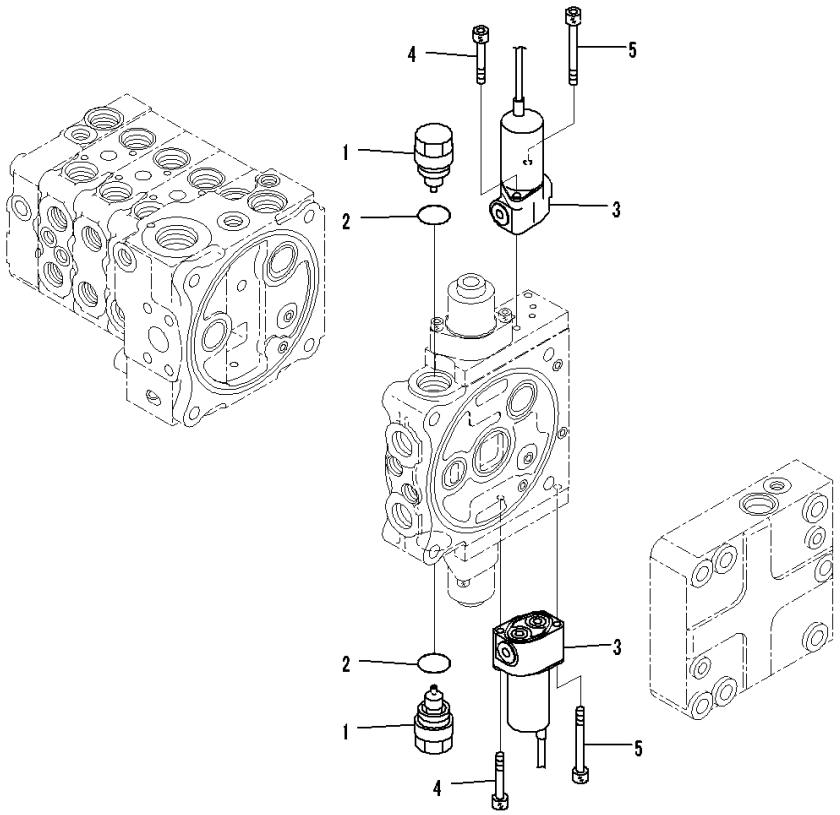

Index	Code	Part Number	Description	Qty	Serial Number
		723-24-11500	Valve, Control	1	80001-
		723-51-06500	• Valve Assembly	1	80001-
		723-40-85100	•• Valve Assembly, Suction	2	80001-
1		723-40-85110	••• Sleeve	1	80001-
2		709-25-11390	••• O-ring	1	80001-
3		702-21-07610	•• Valve, Solenoid	2	80001-
4		01252-60645	•• Bolt, Hexagon Socket Head	2	80001-
5		702-16-55270	•• Bolt	2	80001-

FIG. M2210-002012 Fender Group, For Machine With 4-spool Valve Hydraulics, For Machine With Ripper, Inner Parts (11/11)

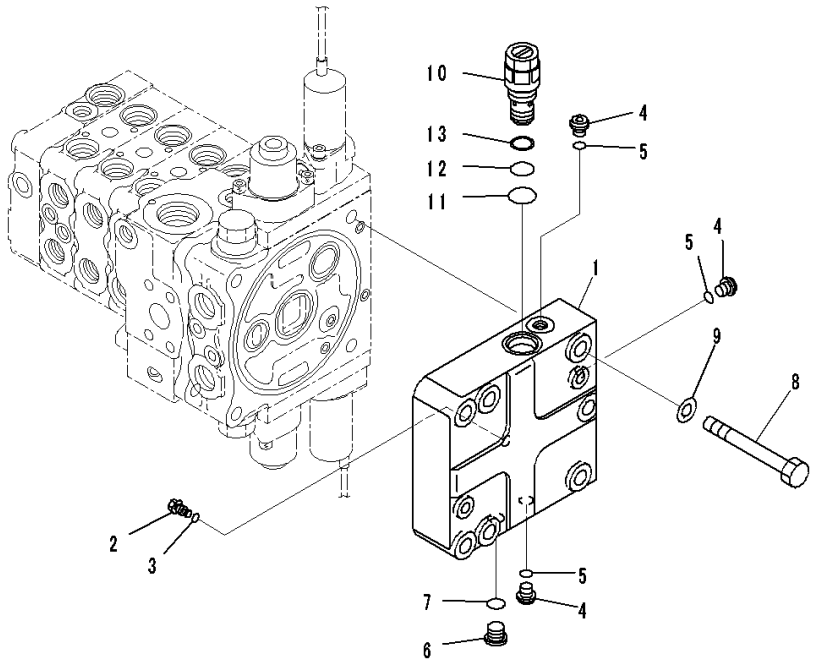

Index	Code	Part Number	Description	Qty	Serial Number
		723-24-11500	Valve, Control	1	80001-
1		723-56-12210	• Cover	1	80001-
2		723-56-33940	• Plug	1	80001-
3		07002-10823	• O-ring	1	80001-
4		708-8E-16160	• Plug	3	80001-
5		07002-11023	• O-ring	3	80001-
6		702-21-55620	• Plug	1	80001-
7		07002-11423	• O-ring	1	80001-
8		01011-81225	• Bolt	4	80001-
9		01643-31232	• Washer	4	80001-
10		723-60-21102	• Valve, Relief	1	80001-
11		07002-02434	•• O-ring	1	80001-
12		07000-12016	•• O-ring	1	80001-
13		07001-02016	•• Ring, Back-up	1	80001-

FIG. M2210-002014 Fender Group, For Machine With 4-spool Valve Hydraulics, For Machine With Ripper, Hydraulic Piping

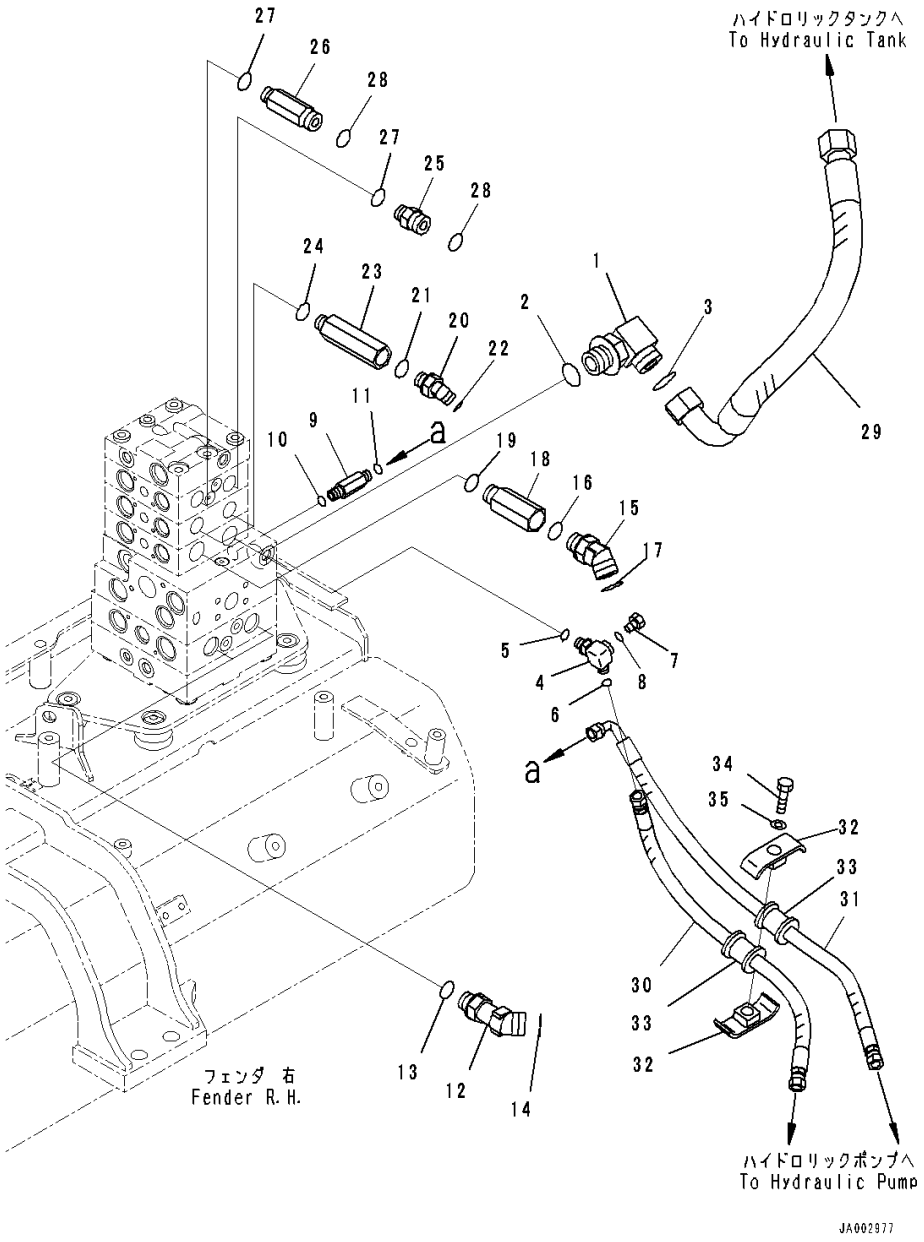

Index	Code	Part Number	Description	Qty	Serial Number
1		21W-62-42640	Elbow	1	80001-
2		07002-13334	O-ring	1	80001-
3		207-62-64740	O-ring	1	80001-
4		14X-62-54870	Tee	1	80001-
5		07002-11423	O-ring	1	80001-
6		02896-11008	O-ring	1	80001-
7		07040-11007	Plug	1	80001-
8		07002-11023	O-ring	1	80001-
9		11Y-62-12230	Union	1	80001-
10		07002-11423	O-ring	1	80001-
11		02896-11008	O-ring	1	80001-
12		11Y-62-36160	Elbow	2	80001-
13		07002-62434	O-ring	2	80001-
14		02896-61018	O-ring	2	80001-
15		02783-10628	Elbow	2	80001-
16		07002-12434	O-ring	2	80001-
17		02896-11018	O-ring	2	80001-
18		20T-62-81790	Joint	2	80001-
19		07002-12434	O-ring	2	80001-
20		02783-10315	Elbow	2	80001-
21		07002-12034	O-ring	2	80001-
22		02896-11009	O-ring	2	80001-
23		14X-62-52931	Joint	2	80001-
24		07002-12034	O-ring	2	80001-
25		02781-00516	Union	1	80001-
26		14X-62-52991	Nipple	1	80001-
27		07002-12034	O-ring	2	80001-
28		02896-11015	O-ring	2	80001-
29		14X-62-52940	Hose	1	80001-
30		14X-62-52391	Hose	1	80001-
31		14X-62-52541	Hose	1	80001-
32		22P-62-13540	Clamp	2	80001-
33		07095-00314	Cushion	2	80001-
34		01010-81260	Bolt	1	80001-
35		01643-31232	Washer	1	80001-

FIG. M2210-002015 Fender Group, For Machine With 4-spool Valve Hydraulics, For Machine With Ripper, PPC Lock Solenoid Valve With Accumulator

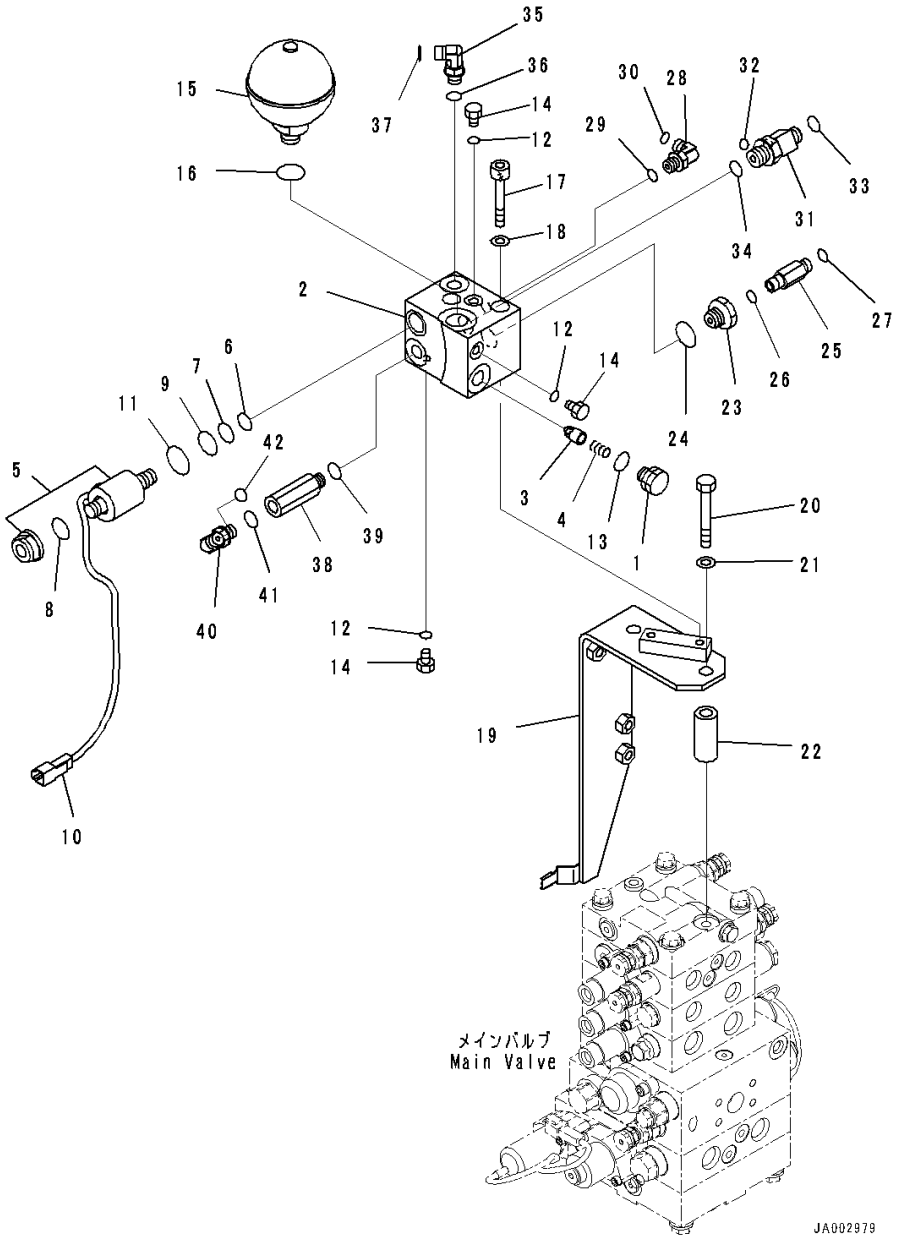

Index	Code	Part Number	Description	Qty	Serial Number
		14X-62-53551	Block Assembly	1	80001-
1		103-49-14280	• Plug	1	80001-
2		14X-62-53561	• Block	1	80001-
3		205-60-51390	• Poppet	1	80001-
4		722-12-12063	• Spring	1	80001-
5		11Y-60-11530	• Valve, Solenoid	1	80001-
6		07000-02012	•• O-ring	1	80001-
7		07000-02014	•• O-ring	1	80001-
8		07000-12016	•• O-ring	1	80001-
9		07000-02018	•• O-ring	1	80001-
10		08192-22830	•• Connector	1	80001-
11		203-60-62190	•• O-ring	1	80001-
12		07002-10823	• O-ring	3	80001-
13		07002-11623	• O-ring	1	80001-
14		07040-10807	• Plug	3	80001-
15		22U-60-21330	Accumulator	1	80001-
16		07002-12034	O-ring	1	80001-
17		01252-A1085	Bolt, Hexagon Socket Head	2	80001-
18		01643-51032	Washer	2	80001-
19		14X-62-52960	Bracket	1	80001-
20		01010-81285	Bolt	2	80001-
21		01643-31232	Washer	2	80001-
22		203-62-44510	Spacer	2	80001-
23		20Y-62-21940	Filter Assembly	1	80001-
24		07002-12034	O-ring	1	80001-
25		20U-62-41890	Nipple	1	80001-
26		07002-11423	O-ring	1	80001-
27		02896-11008	O-ring	1	80001-
28		02782-10210	Elbow	1	80001-
29		07002-11423	O-ring	1	80001-
30		02896-11008	O-ring	1	80001-
31		20K-62-33690	Tee	1	80001-
32		02896-11008	• O-ring	1	80001-
33		02896-11009	• O-ring	1	80001-
34		07002-12034	O-ring	1	80001-
35		02782-10210	Elbow	1	80001-
36		07002-11423	O-ring	1	80001-
37		02896-11008	O-ring	1	80001-
38		207-62-62460	Adapter	1	80001-

FIG. M2210-002015 Fender Group, For Machine With 4-spool Valve Hydraulics, For Machine With Ripper, PPC Lock Solenoid Valve With Accumulator

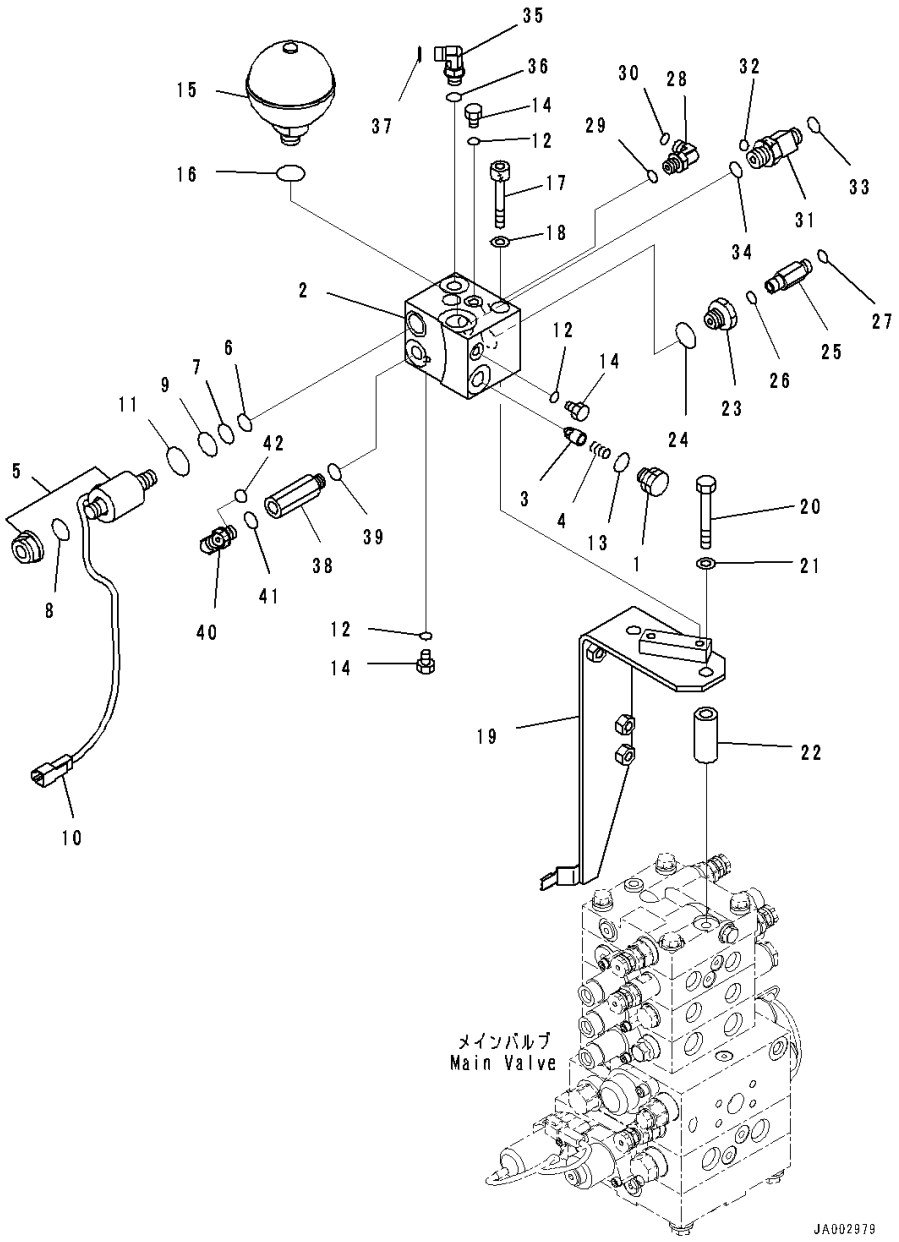

Index	Code	Part Number	Description	Qty	Serial Number
39		07002-11423	O-ring	1	80001-
40		02782-10210	Elbow	1	80001-
41		07002-11423	O-ring	1	80001-
42		02896-11008	O-ring	1	80001-

FIG. M2210-002016 Fender Group, For Machine With 4-spool Valve Hydraulics, For Machine With Ripper, Control Valve Steering Piping

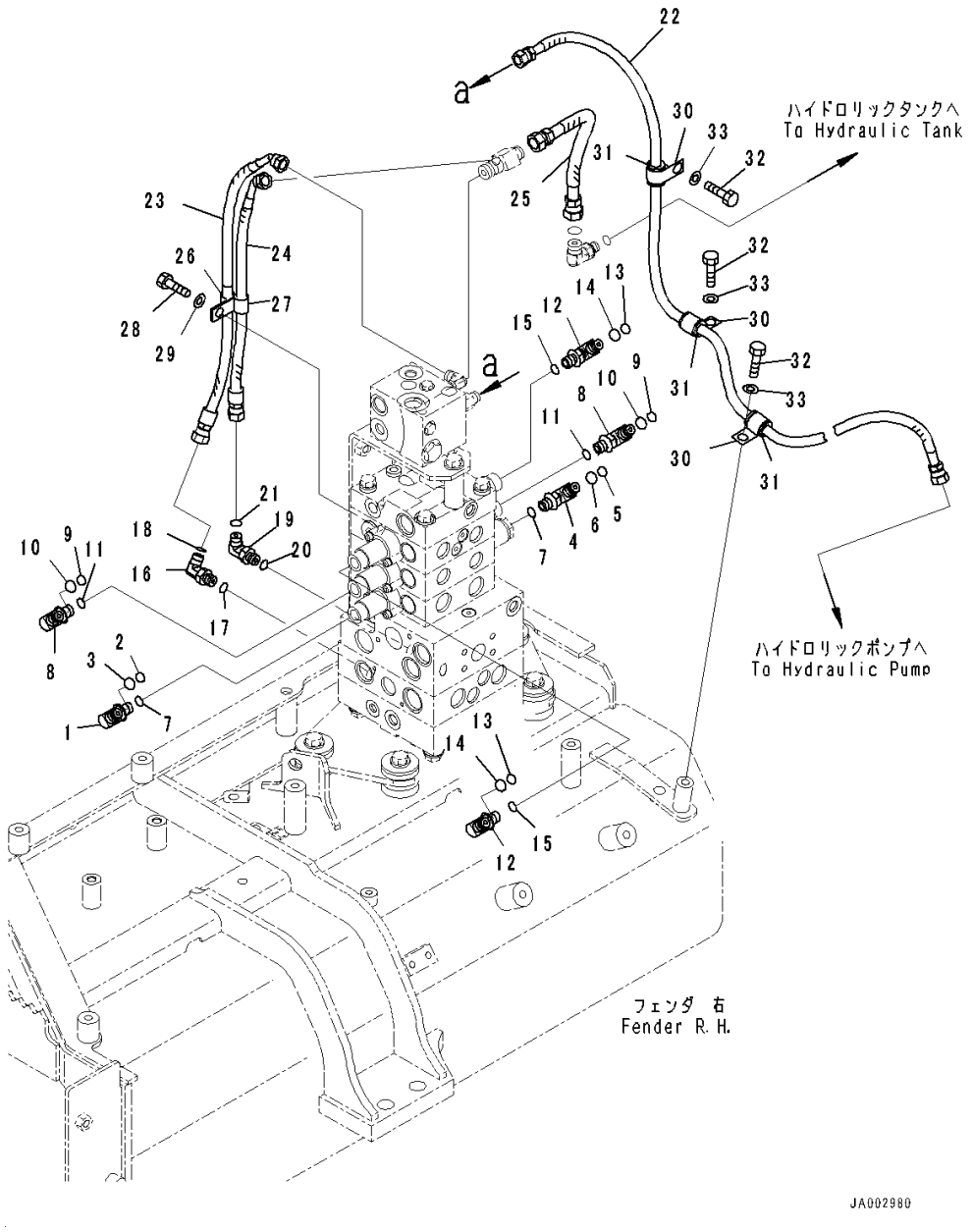

Index	Code	Part Number	Description	Qty	Serial Number
1		14X-62-53531	Elbow	1	80001-
2		201-60-11390	• O-ring	1	80001-
3		20Y-62-19560	• O-ring	1	80001-
4		14X-62-54960	Elbow	1	80001-
5		201-60-11390	• O-ring	1	80001-
6		20Y-62-19560	• O-ring	1	80001-
7		07002-11423	O-ring	2	80001-
8		14X-62-53541	Elbow	2	80001-
9		201-60-11390	• O-ring	1	80001-
10		20Y-62-19560	• O-ring	1	80001-
11		07002-11423	O-ring	2	80001-
12		14X-62-53541	Elbow	2	80001-
13		201-60-11390	• O-ring	1	80001-
14		20Y-62-19560	• O-ring	1	80001-
15		07002-11423	O-ring	2	80001-
16		02782-10210	Elbow	1	80001-
17		07002-11423	O-ring	1	80001-
18		02896-11008	O-ring	1	80001-
19		02782-10210	Elbow	1	80001-
20		07002-11423	O-ring	1	80001-
21		02896-11008	O-ring	1	80001-
22		14X-62-52521	Hose	1	80001-
23		02764-00205	Hose, Face Seal Type	1	80001-
24		02764-00204	Hose, Face Seal Type	1	80001-
25		02762-00303	Hose, Face Seal Type	1	80001-
26		04434-51212	Clip	1	80001-
27		21T-72-23260	Clip	1	80001-
28		01010-81225	Bolt	1	80001-
29		01643-31232	Washer	1	80001-
30		04434-51712	Clip	3	80001-
31		07095-20211	Cushion	3	80001-
32		01010-81220	Bolt	3	80001-
33		01643-31232	Washer	3	80001-

FIG. M2210-005002 Fender Group, Inner Parts (1/12)

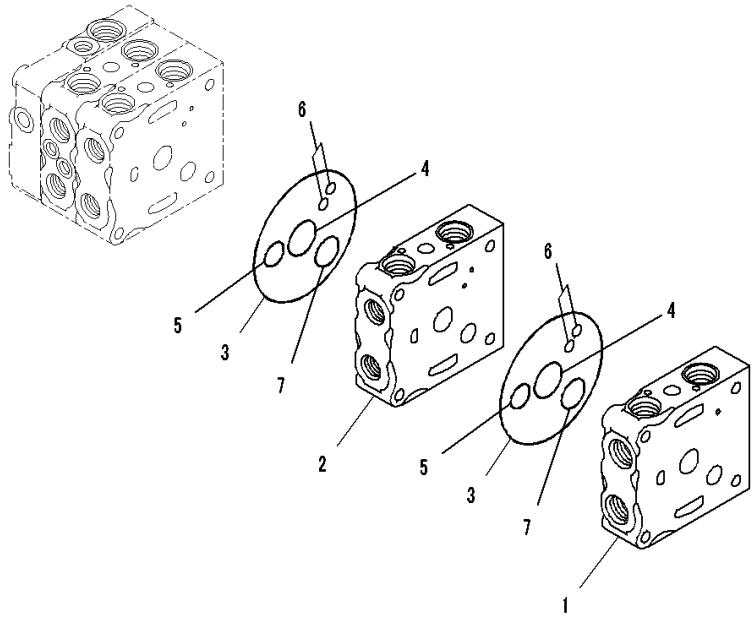

Index	Code	Part Number	Description	Qty	Serial Number
		Note: This list covers following specifications.			
		For Machine With 5-spool Valve Hydraulics, With Power Tilt Pitch Dozer, For Machine With Ripper			
		For Machine With 5-spool Valve Hydraulics, With Power Tilt Pitch Dozer			
		723-25-10900	Valve, Control	1	80001-
	C1		• Body Group	1	80001-
1		723-26-21250	•• Valve Body	1	80001-
2		723-26-21360	•• Valve Body	1	80001-
3		07000-12120	•• O-ring	2	80001-
4		723-26-15830	•• O-ring	2	80001-
5		07000-12020	•• O-ring	2	80001-
6		07000-11008	•• O-ring	4	80001-
7		723-26-15840	•• O-ring	2	80001-

FIG. M2210-005003 Fender Group, Inner Parts (2/12)

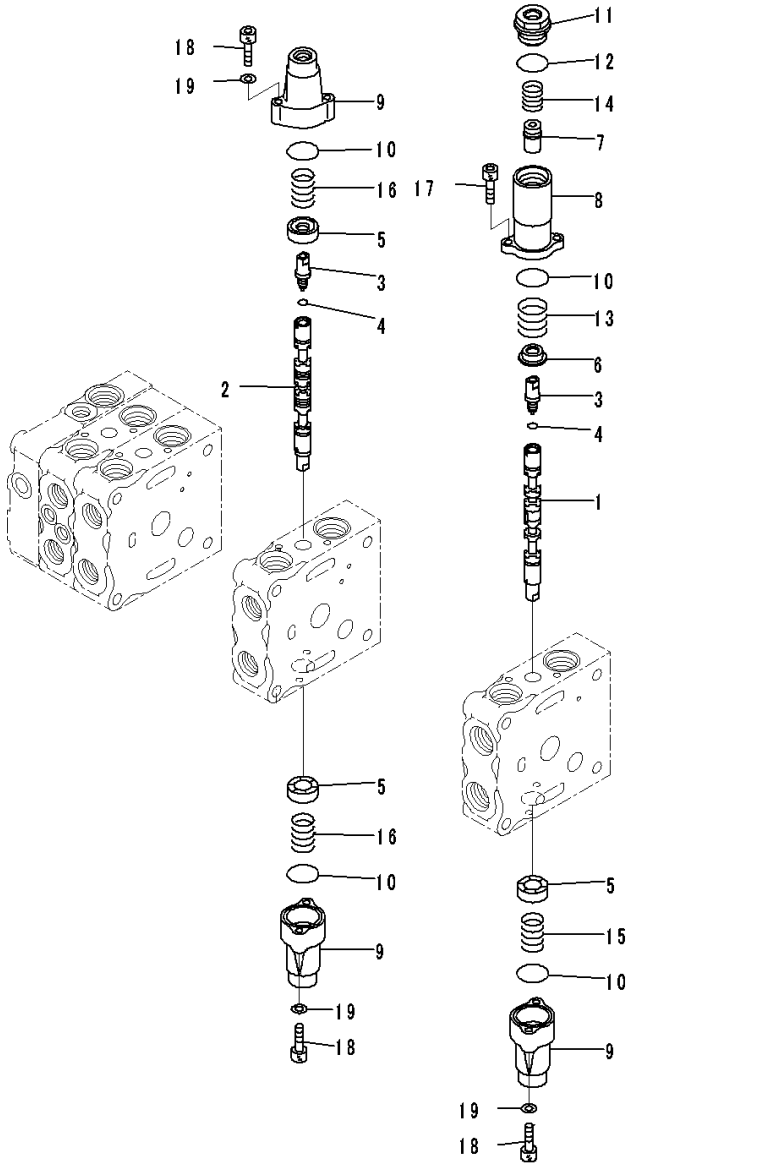

Index	Code	Part Number	Description	Qty	Serial Number
		Note: This list covers following specifications.			
		For Machine With 5-spool Valve Hydraulics, With Power Tilt Pitch Dozer, For Machine With Ripper			
		For Machine With 5-spool Valve Hydraulics, With Power Tilt Pitch Dozer			
		723-25-10900	Valve, Control	1	80001-
	C1		• Body Group	1	80001-
1		723-26-22830	•• Spool	1	80001-
2		723-26-22840	•• Spool	1	80001-
3		723-26-15130	•• Plug	2	80001-
4		07002-10823	•• O-ring	2	80001-
5		723-26-15121	•• Retainer	3	80001-
6		723-26-16770	•• Retainer	1	80001-
7		723-26-16780	•• Retainer	1	80001-
8		723-26-16760	•• Case	1	80001-
9		723-26-15110	•• Case	3	80001-
10		575-41-17420	•• O-ring	4	80001-
11		723-26-16790	•• Plug	1	80001-
12		07002-12434	•• O-ring	1	80001-
13		723-26-14560	•• Spring	1	80001-
14		723-26-14570	•• Spring	1	80001-
15		709-26-11450	•• Spring	1	80001-
16		723-26-14580	•• Spring	2	80001-
17		01252-60616	•• Bolt	2	80001-
18		01252-60630	•• Bolt, Hexagon Socket Head	6	80001-
19		01641-20608	•• Washer	6	80001-

FIG. M2210-005004 Fender Group, Inner Parts (3/12)

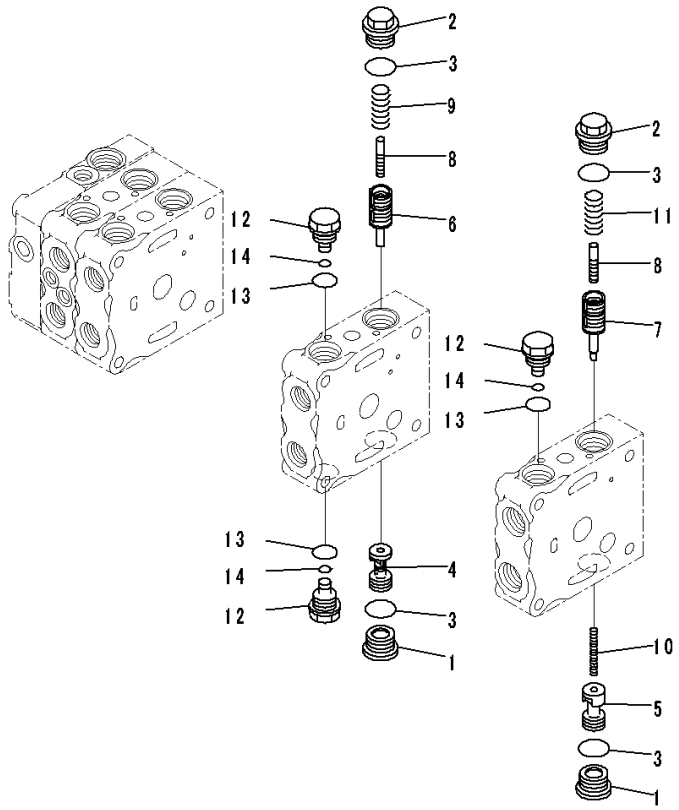

Index	Code	Part Number	Description	Qty	Serial Number
		Note: This list covers following specifications.			
		For Machine With 5-spool Valve Hydraulics, With Power Tilt Pitch Dozer, For Machine With Ripper			
		For Machine With 5-spool Valve Hydraulics, With Power Tilt Pitch Dozer			
		723-25-10900	Valve, Control	1	80001-
	C1		• Body Group	1	80001-
1		723-26-15230	•• Plug	2	80001-
2		723-26-15370	•• Plug	2	80001-
3		07002-12434	•• O-ring	4	80001-
4		723-26-41160	•• Valve	1	80001-
5		723-26-41210	•• Valve	1	80001-
6		723-26-51240	•• Valve	1	80001-
7		723-26-51510	•• Valve	1	80001-
8		723-26-51250	•• Piston	2	80001-
9		723-26-14230	•• Spring	1	80001-
10		723-26-14220	•• Spring	1	80001-
11		723-26-14240	•• Spring	1	80001-
12		723-26-15310	•• Plug	3	80001-
13		07002-12034	•• O-ring	3	80001-
14		07000-11007	•• O-ring	3	80001-

FIG. M2210-005005 Fender Group, Inner Parts (4/12)

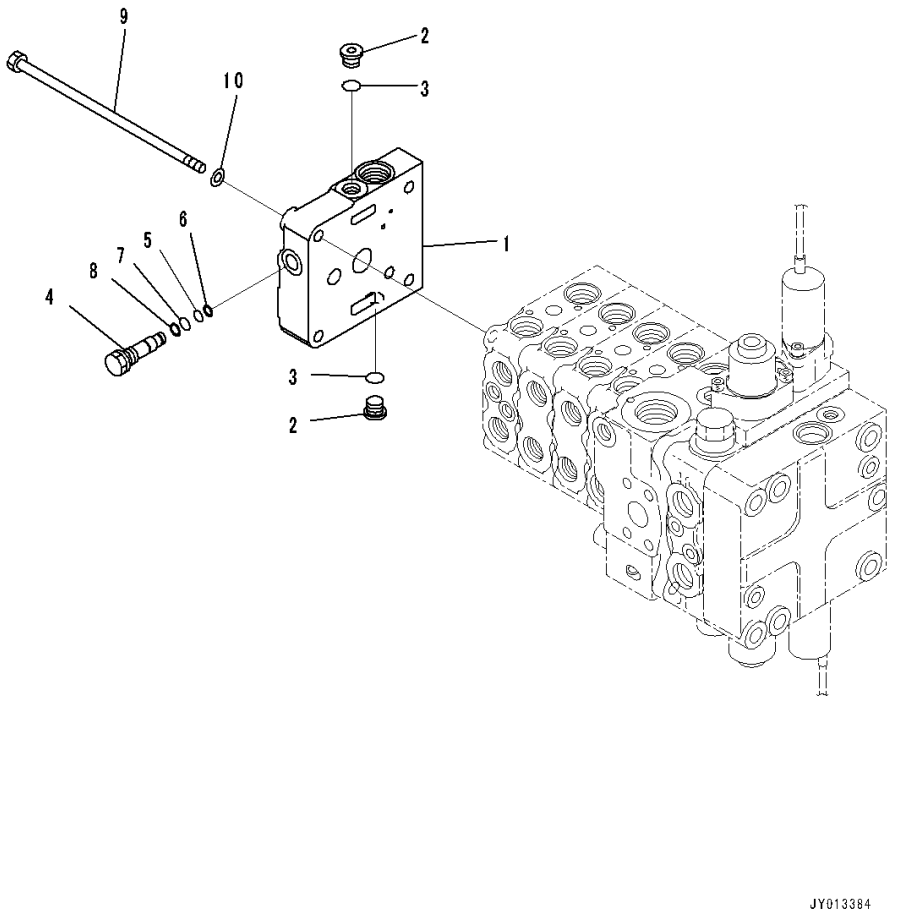

Index	Code	Part Number	Description	Qty	Serial Number
		Note: This list covers following specifications.			
		For Machine With 5-spool Valve Hydraulics, With Power Tilt Pitch Dozer, For Machine With Ripper			
		For Machine With 5-spool Valve Hydraulics, With Power Tilt Pitch Dozer			
		723-25-10900	Valve, Control	1	80001-
1		723-26-21750	• Cover	1	80001-
2		702-21-55620	• Plug	2	80001-
3		07002-11423	• O-ring	2	80001-
4		723-26-15190	• Plug	1	80001-
5		07000-11007	• O-ring	1	80001-
6		07001-01007	• Ring, Back-up	1	80001-
7		07000-11009	• O-ring	1	80001-
8		07001-01009	• Ring, Back-up	1	80001-
9		700-85-11111	• Bolt	4	80001-
10		01643-31032	• Washer	4	80001-

FIG. M2210-005006 Fender Group, Inner Parts (5/12)

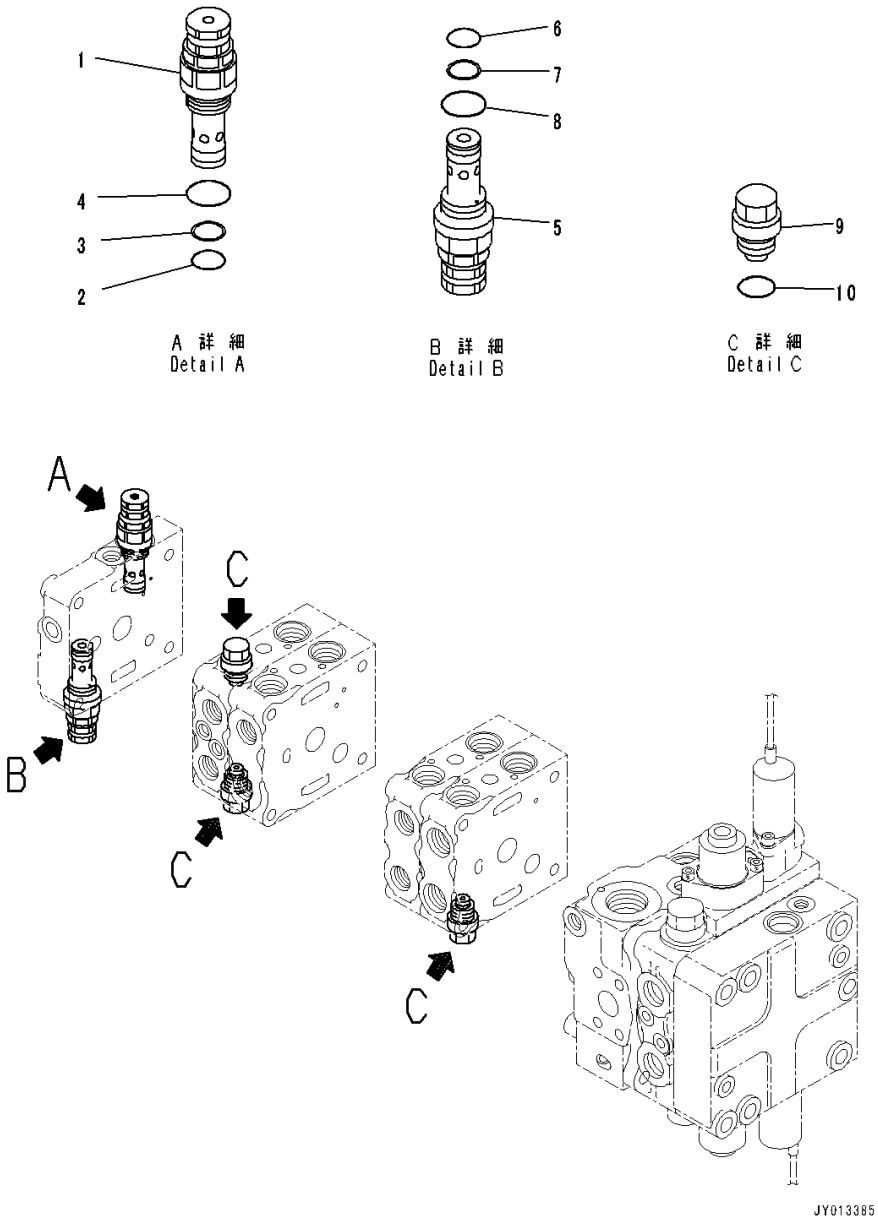

Index	Code	Part Number	Description	Qty	Serial Number
		Note: This list covers following specifications.			
		For Machine With 5-spool Valve Hydraulics, With Power Tilt Pitch Dozer, For Machine With Ripper			
		For Machine With 5-spool Valve Hydraulics, With Power Tilt Pitch Dozer			
		723-25-10900	Valve, Control	1	80001-
1		723-20-66500	• Valve, Relief	1	80001-
2		700-22-11410	•• O-ring	1	80001-
3		700-80-64220	•• Ring	1	80001-
4		07002-12434	•• O-ring	1	80001-
5		723-20-66600	• Valve, Relief	1	80001-
6		700-22-11410	•• O-ring	1	80001-
7		700-80-64220	•• Ring	1	80001-
8		07002-12434	•• O-ring	1	80001-
9		723-20-80100	• Valve Assembly, Suction	1	80001-
10		07002-12034	•• O-ring	1	80001-

FIG. M2210-005007 Fender Group, Inner Parts (6/12)

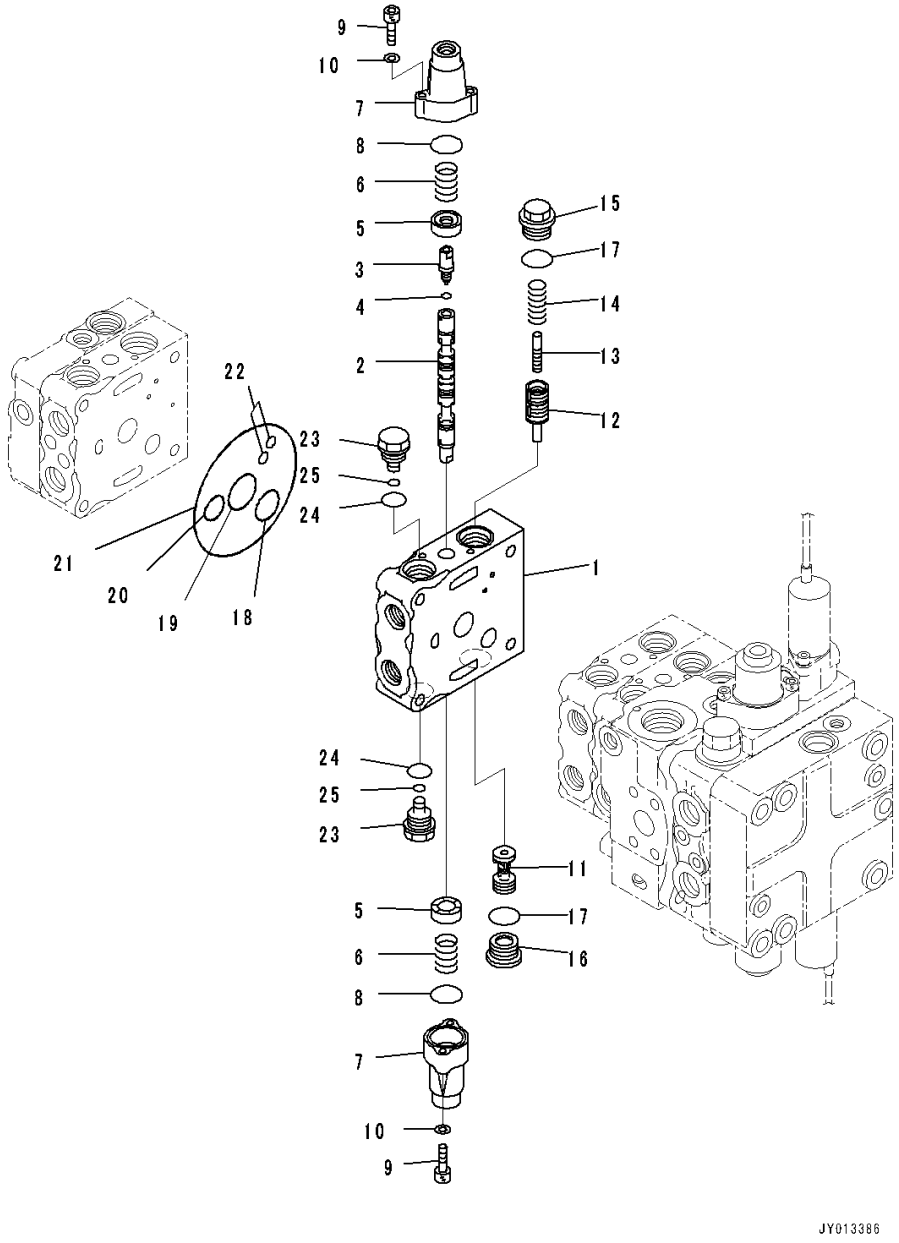

Index	Code	Part Number	Description	Qty	Serial Number
		Note: This list covers following specifications.			
		For Machine With 5-spool Valve Hydraulics, With Power Tilt Pitch Dozer, For Machine With Ripper			
		For Machine With 5-spool Valve Hydraulics, With Power Tilt Pitch Dozer			
		723-25-10900	Valve, Control	1	80001-
		723-21-08400	• Valve Subassembly	1	80001-
1		723-26-21360	•• Valve Body	1	80001-
2		723-26-22840	•• Spool	1	80001-
3		723-26-15130	•• Plug	1	80001-
4		07002-10823	•• O-ring	1	80001-
5		723-26-15121	•• Retainer	2	80001-
6		723-26-14580	•• Spring	2	80001-
7		723-26-15110	•• Case	2	80001-
8		575-41-17420	•• O-ring	2	80001-
9		01252-60630	•• Bolt, Hexagon Socket Head	4	80001-
10		01641-20608	•• Washer	4	80001-
11		723-26-41160	•• Valve	1	80001-
12		723-26-51240	•• Valve	1	80001-
13		723-26-51250	•• Piston	1	80001-
14		723-26-14230	•• Spring	1	80001-
15		723-26-15370	•• Plug	1	80001-
16		723-26-15230	•• Plug	1	80001-
17		07002-12434	•• O-ring	2	80001-
18		723-26-15840	•• O-ring	1	80001-
19		723-26-15830	•• O-ring	1	80001-
20		07000-12020	•• O-ring	1	80001-
21		07000-12120	•• O-ring	1	80001-
22		07000-11008	•• O-ring	2	80001-
23		723-26-15310	•• Plug	2	80001-
24		07002-12034	•• O-ring	2	80001-
25		07000-11007	•• O-ring	2	80001-

FIG. M2210-005008 Fender Group, Inner Parts (7/12)

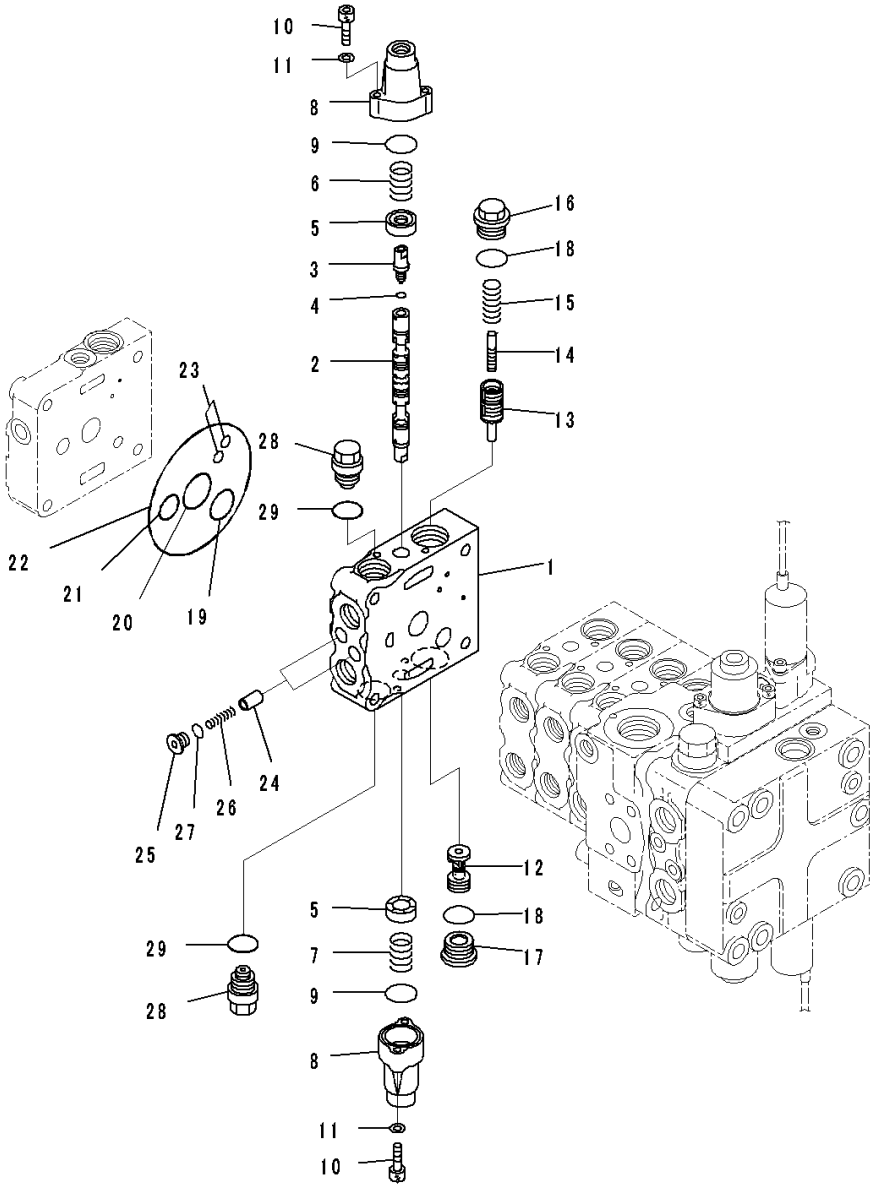

Index	Code	Part Number	Description	Qty	Serial Number
		Note: This list covers following specifications.			
		For Machine With 5-spool Valve Hydraulics, With Power Tilt Pitch Dozer, For Machine With Ripper			
		For Machine With 5-spool Valve Hydraulics, With Power Tilt Pitch Dozer			
		723-25-10900	Valve, Control	1	80001-
		723-21-08300	• Valve Subassembly	1	80001-
1		723-26-21420	•• Valve Body	1	80001-
2		723-26-22270	•• Spool	1	80001-
3		723-26-15130	•• Plug	1	80001-
4		07002-10823	•• O-ring	1	80001-
5		723-26-15121	•• Retainer	2	80001-
6		723-26-14580	•• Spring	1	80001-
7		709-26-11450	•• Spring	1	80001-
8		723-26-15110	•• Case	2	80001-
9		575-41-17420	•• O-ring	2	80001-
10		01252-60630	•• Bolt, Hexagon Socket Head	4	80001-
11		01641-20608	•• Washer	4	80001-
12		723-26-41160	•• Valve	1	80001-
13		723-26-51610	•• Valve	1	80001-
14		723-26-51250	•• Piston	1	80001-
15		723-26-14230	•• Spring	1	80001-
16		723-26-15370	•• Plug	1	80001-
17		723-26-15230	•• Plug	1	80001-
18		07002-12434	•• O-ring	2	80001-
19		723-26-15840	•• O-ring	1	80001-
20		723-26-15830	•• O-ring	1	80001-
21		07000-12020	•• O-ring	1	80001-
22		07000-12120	•• O-ring	1	80001-
23		07000-11008	•• O-ring	2	80001-
24		723-26-15210	•• Valve	2	80001-
25		723-26-15220	•• Plug	2	80001-
26		723-26-14150	•• Spring	2	80001-
27		07002-11223	•• O-ring	2	80001-
28		723-20-80100	•• Valve Assembly, Suction	2	80001-
29		07002-12034	••• O-ring	1	80001-

FIG. M2210-005009 Fender Group, Inner Parts (8/12)

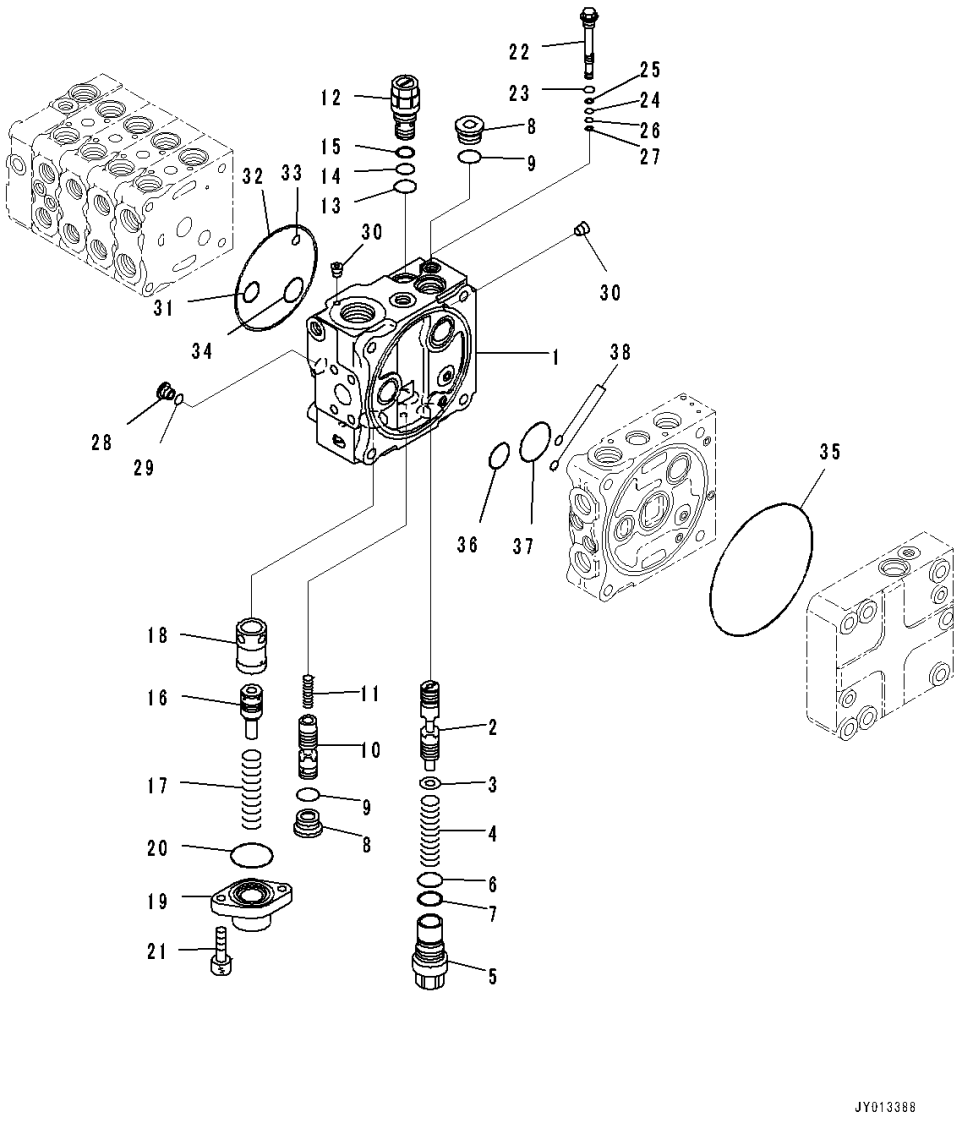

Index	Code	Part Number	Description	Qty	Serial Number
		Note: This list covers following specifications.			
		For Machine With 5-spool Valve Hydraulics, With Power Tilt Pitch Dozer, For Machine With Ripper			
		For Machine With 5-spool Valve Hydraulics, With Power Tilt Pitch Dozer			
		723-25-10900	Valve, Control	1	80001-
	C1		• Block Subassembly	1	80001-
1		723-26-21160	•• Block	1	80001-
2		723-26-22850	•• Spool	1	80001-
3		723-26-15860	•• Washer	1	80001-
4		723-26-14590	•• Spring	1	80001-
5		723-26-15850	•• Plug	1	80001-
6		700-80-61260	•• O-ring	1	80001-
7		700-80-61430	•• Ring	1	80001-
8		723-26-15230	•• Plug	2	80001-
9		07002-12434	•• O-ring	2	80001-
10		723-26-22860	•• Spool	1	80001-
11		723-26-14470	•• Spring	1	80001-
12		723-60-21900	•• Valve, Relief	1	80001-
13		07002-12434	••• O-ring	1	80001-
14		07000-12016	••• O-ring	1	80001-
15		07001-02016	••• Ring, Back-up	1	80001-
16		723-36-15230	•• Piston	1	80001-
17		723-36-15340	•• Spring	1	80001-
18		723-36-15210	•• Sleeve	1	80001-
19		723-36-15250	•• Case	1	80001-
20		07000-13042	•• O-ring	1	80001-
21		01252-60820	•• Bolt	2	80001-
22	C1		•• Valve Assembly	1	80001-
23		07002-11223	••• O-ring	1	80001-
24		07000-11007	••• O-ring	1	80001-
25		07001-01007	••• Ring, Back-up	1	80001-
26		07000-11005	••• O-ring	1	80001-
27		07001-01005	••• Ring, Back-up	1	80001-
28		723-26-15220	•• Plug	1	80001-
29		07002-11223	•• O-ring	1	80001-
30		708-21-12541	•• Plug	5	80001-
31		07000-12020	•• O-ring	1	80001-
32		07000-12120	•• O-ring	1	80001-

FIG. M2210-005009 Fender Group, Inner Parts (8/12)

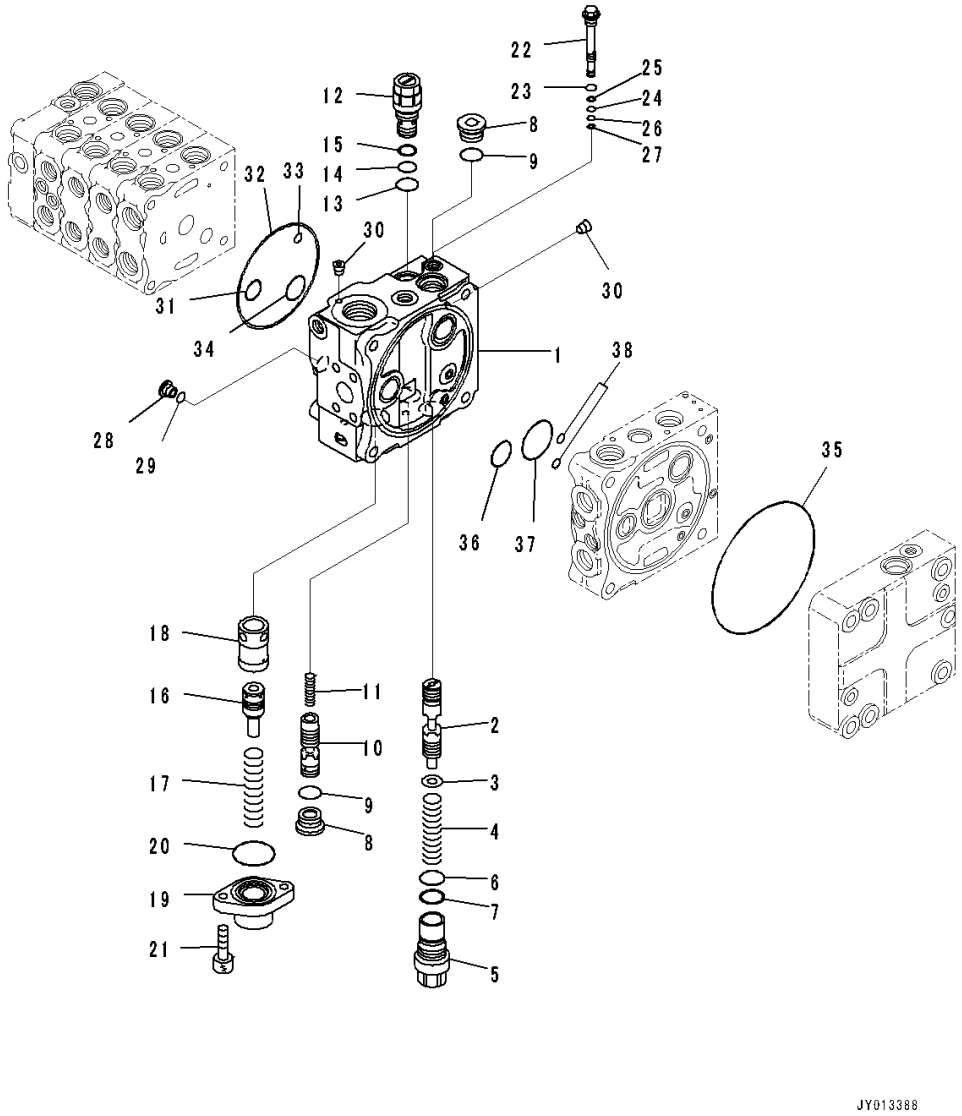

Index	Code	Part Number	Description	Qty	Serial Number
33		07000-11008	•• O-ring	1	80001-
34		723-26-15840	•• O-ring	1	80001-
35		144-14-54610	•• O-ring	1	80001-
36		723-56-31730	•• O-ring	1	80001-
37		702-75-11520	•• O-ring	1	80001-
38		07000-11008	•• O-ring	2	80001-

FIG. M2210-005010 Fender Group, Inner Parts (9/12)

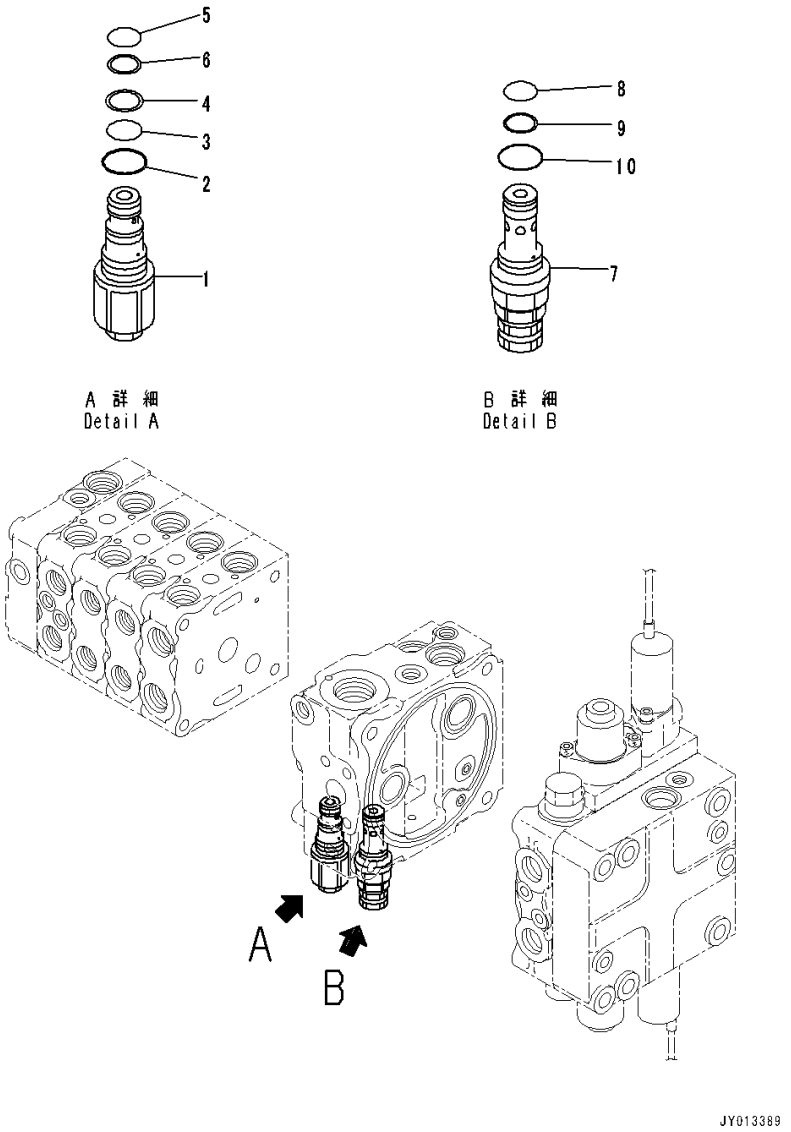

Index	Code	Part Number	Description	Qty	Serial Number
		Note: This list covers following specifications.			
		For Machine With 5-spool Valve Hydraulics, With Power Tilt Pitch Dozer, For Machine With Ripper			
		For Machine With 5-spool Valve Hydraulics, With Power Tilt Pitch Dozer			
		723-25-10900	Valve, Control	1	80001-
1		723-20-70600	• Valve Assembly	1	80001-
2		07002-12434	•• O-ring	1	80001-
3		07000-12016	•• O-ring	1	80001-
4		07001-02016	•• Ring, Back-up	1	80001-
5		07000-12014	•• O-ring	1	80001-
6		07001-02014	•• Ring, Back-up	1	80001-
7		723-20-63100	• Valve, Relief	1	80001-
8		700-22-11410	•• O-ring	1	80001-
9		700-80-64220	•• Ring	1	80001-
10		07002-12034	•• O-ring	1	80001-

FIG. M2210-005011 Fender Group, Inner Parts (10/12)

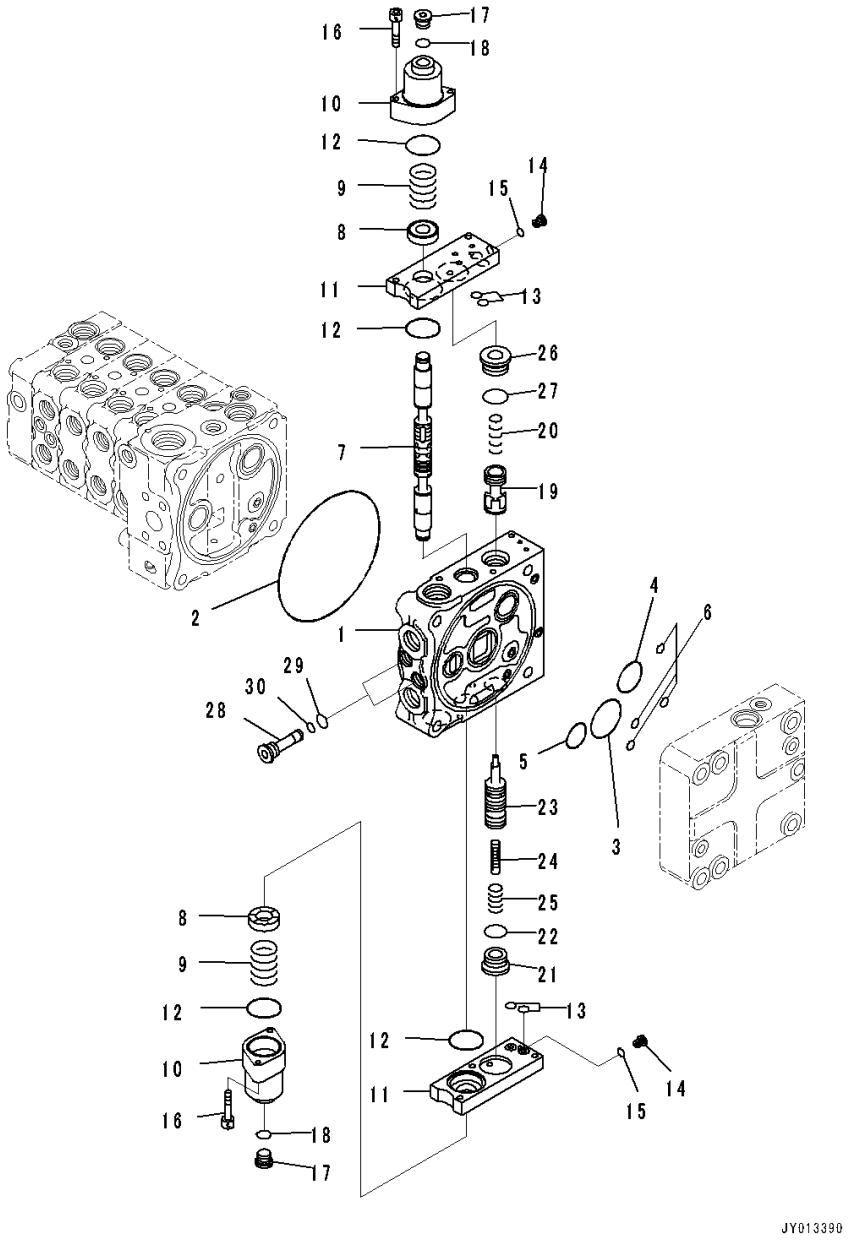

Index	Code	Part Number	Description	Qty	Serial Number
		Note: This list covers following specifications.			
		For Machine With 5-spool Valve Hydraulics, With Power Tilt Pitch Dozer, For Machine With Ripper			
		For Machine With 5-spool Valve Hydraulics, With Power Tilt Pitch Dozer			
		723-25-10900	Valve, Control	1	80001-
		723-51-06500	• Valve Assembly	1	80001-
1	C1		•• Valve Body	1	80001-
2		144-14-54610	•• O-ring	1	80001-
3		723-56-31720	•• O-ring	1	80001-
4		723-56-31730	•• O-ring	1	80001-
5		702-75-11520	•• O-ring	1	80001-
6		07000-11008	•• O-ring	4	80001-
7		723-56-22170	•• Spool	1	80001-
8		723-56-31211	•• Retainer	2	80001-
9		723-36-14120	•• Spring	2	80001-
10		723-56-31510	•• Case	2	80001-
11		723-56-32820	•• Plate	2	80001-
12		702-21-55450	•• O-ring	4	80001-
13		07000-11009	•• O-ring	4	80001-
14		723-11-27280	•• Plug	2	80001-
15		07002-10823	•• O-ring	2	80001-
16		01252-60650	•• Bolt	4	80001-
17		702-21-55620	•• Plug	2	80001-
18		07002-11423	•• O-ring	2	80001-
19		723-56-42150	•• Valve	1	80001-
20		723-56-41710	•• Spring	1	80001-
21		723-26-15230	•• Plug	1	80001-
22		07002-12434	•• O-ring	1	80001-
23		723-56-42330	•• Valve	1	80001-
24		723-56-41590	•• Piston	1	80001-
25		723-56-41730	•• Spring	1	80001-
26		723-56-41970	•• Plug	1	80001-
27		07000-13024	•• O-ring	1	80001-
28		723-56-31640	•• Plug	2	80001-
29		07002-11623	•• O-ring	2	80001-
30		07000-11008	•• O-ring	2	80001-

FIG. M2210-005012 Fender Group, Inner Parts (11/12)

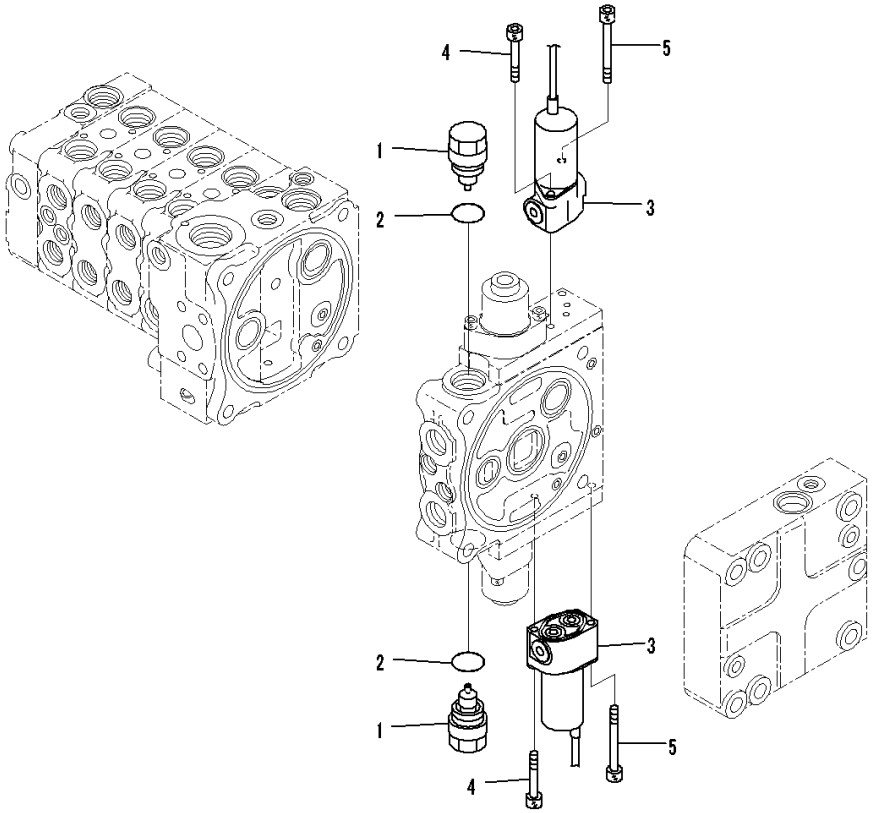

Index	Code	Part Number	Description	Qty	Serial Number
		Note: This list covers following specifications.			
		For Machine With 5-spool Valve Hydraulics, With Power Tilt Pitch Dozer, For Machine With Ripper			
		For Machine With 5-spool Valve Hydraulics, With Power Tilt Pitch Dozer			
		723-25-10900	Valve, Control	1	80001-
		723-51-06500	• Valve Assembly	1	80001-
		723-40-85100	•• Valve Assembly, Suction	2	80001-
1		723-40-85110	••• Sleeve	1	80001-
2		709-25-11390	••• O-ring	1	80001-
3		702-21-07610	•• Valve, Solenoid	2	80001-
4		01252-60645	•• Bolt, Hexagon Socket Head	2	80001-
5		702-16-55270	•• Bolt	2	80001-

FIG. M2210-005013 Fender Group, Inner Parts (12/12)

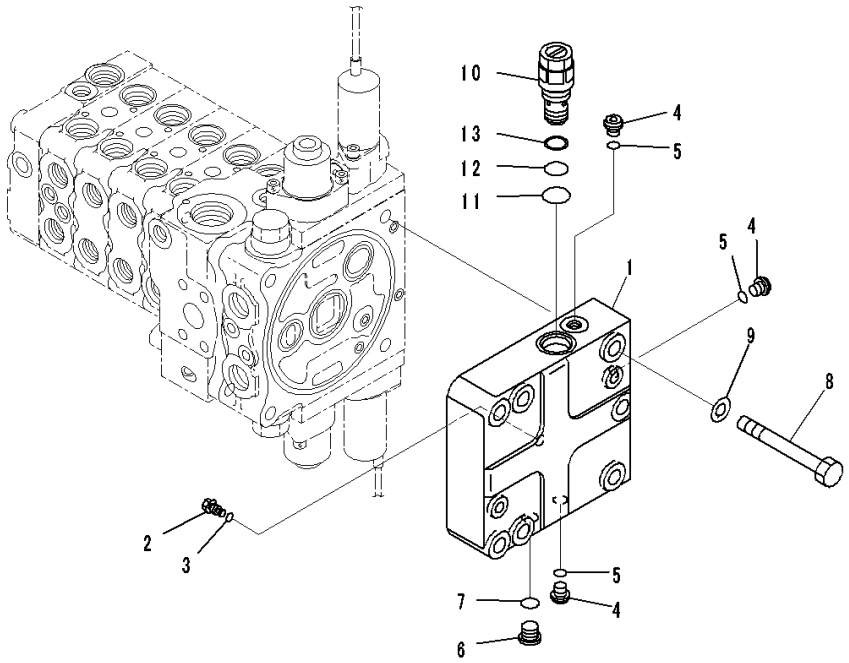

Index	Code	Part Number	Description	Qty	Serial Number
		Note: This list covers following specifications.			
		For Machine With 5-spool Valve Hydraulics, With Power Tilt Pitch Dozer, For Machine With Ripper			
		For Machine With 5-spool Valve Hydraulics, With Power Tilt Pitch Dozer			
		723-25-10900	Valve, Control	1	80001-
1		723-56-12210	• Cover	1	80001-
2		723-56-33940	• Plug	1	80001-
3		07002-10823	• O-ring	1	80001-
4		708-8E-16160	• Plug	3	80001-
5		07002-11023	• O-ring	3	80001-
6		702-21-55620	• Plug	1	80001-
7		07002-11423	• O-ring	1	80001-
8		01011-81225	• Bolt	4	80001-
9		01643-31232	• Washer	4	80001-
10		723-60-21102	• Valve, Relief	1	80001-
11		07002-02434	•• O-ring	1	80001-
12		07000-12016	•• O-ring	1	80001-
13		07001-02016	•• Ring, Back-up	1	80001-

FIG. M2210-005015 Fender Group, For Machine With 5-spool Valve Hydraulics, With Power Tilt Pitch Dozer, For Machine With Ripper, Hydraulic Piping

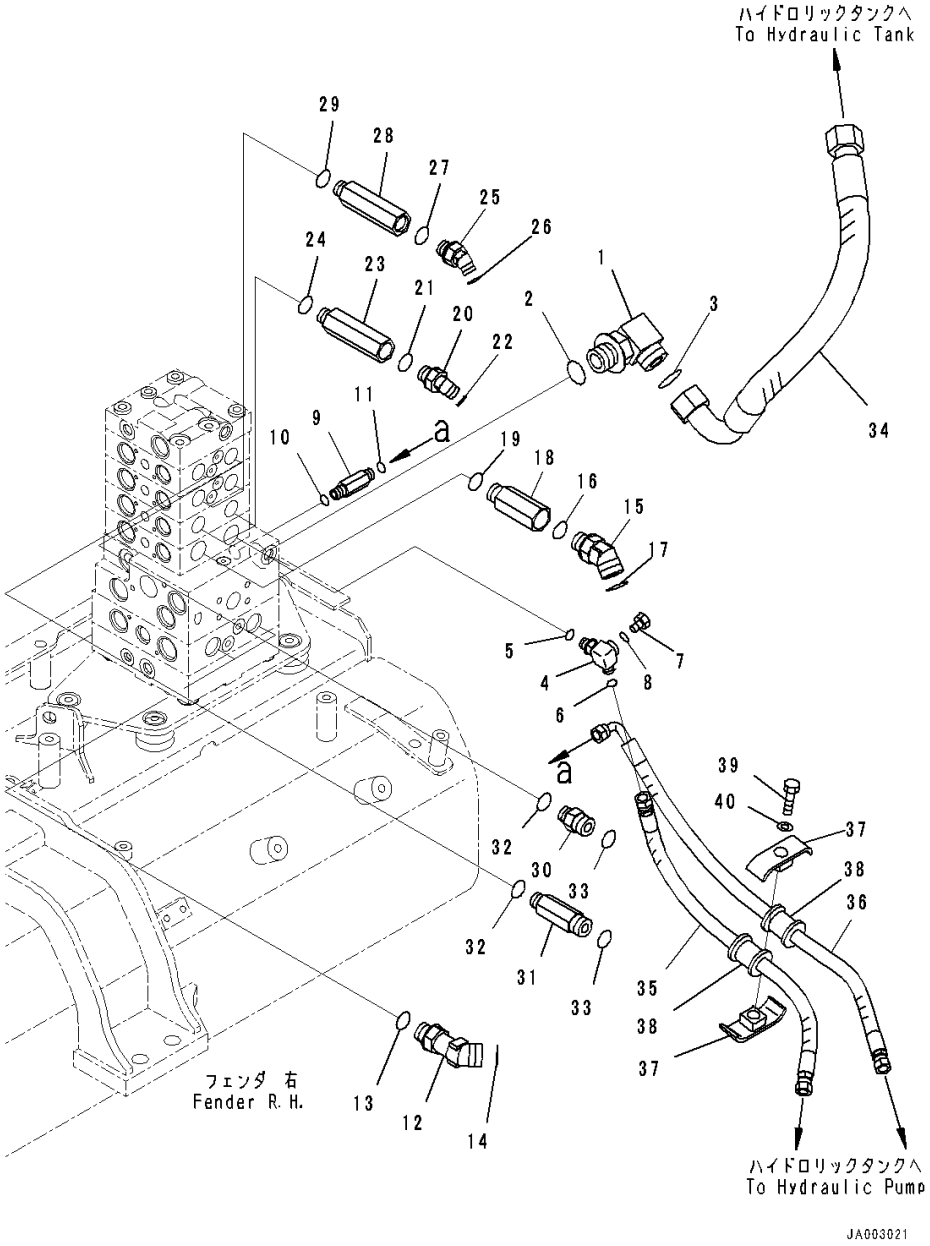

Index	Code	Part Number	Description	Qty	Serial Number
1		21W-62-42640	Elbow	1	80001-
2		07002-13334	O-ring	1	80001-
3		207-62-64740	O-ring	1	80001-
4		14X-62-54870	Tee	1	80001-
5		07002-11423	O-ring	1	80001-
6		02896-11008	O-ring	1	80001-
7		07040-11007	Plug	1	80001-
8		07002-11023	O-ring	1	80001-
9		11Y-62-12230	Union	1	80001-
10		07002-11423	O-ring	1	80001-
11		02896-11008	O-ring	1	80001-
12		11Y-62-36160	Elbow	2	80001-
13		07002-62434	O-ring	2	80001-
14		02896-61018	O-ring	2	80001-
15		02783-10628	Elbow	2	80001-
16		07002-12434	O-ring	2	80001-
17		02896-11018	O-ring	2	80001-
18		20T-62-81790	Joint	2	80001-
19		07002-12434	O-ring	2	80001-
20		02783-10315	Elbow	2	80001-
21		07002-12034	O-ring	2	80001-
22		02896-11009	O-ring	2	80001-
23		14X-62-52931	Joint	2	80001-
24		07002-12034	O-ring	2	80001-
25		02783-10315	Elbow	2	80001-
26		07002-12034	O-ring	2	80001-
27		02896-11009	O-ring	2	80001-
28		14X-62-52931	Joint	2	80001-
29		07002-12034	O-ring	2	80001-
30		02781-00516	Union	1	80001-
31		14X-62-52991	Nipple	1	80001-
32		07002-12034	O-ring	2	80001-
33		02896-11015	O-ring	2	80001-
34		14X-62-52940	Hose	1	80001-
35		14X-62-52391	Hose	1	80001-
36		14X-62-52541	Hose	1	80001-
37		22P-62-13540	Clamp	2	80001-
38		07095-00314	Cushion	2	80001-
39		01010-81260	Bolt	1	80001-

FIG. M2210-005015 Fender Group, For Machine With 5-spool Valve Hydraulics, With Power Tilt Pitch Dozer, For Machine With Ripper, Hydraulic Piping

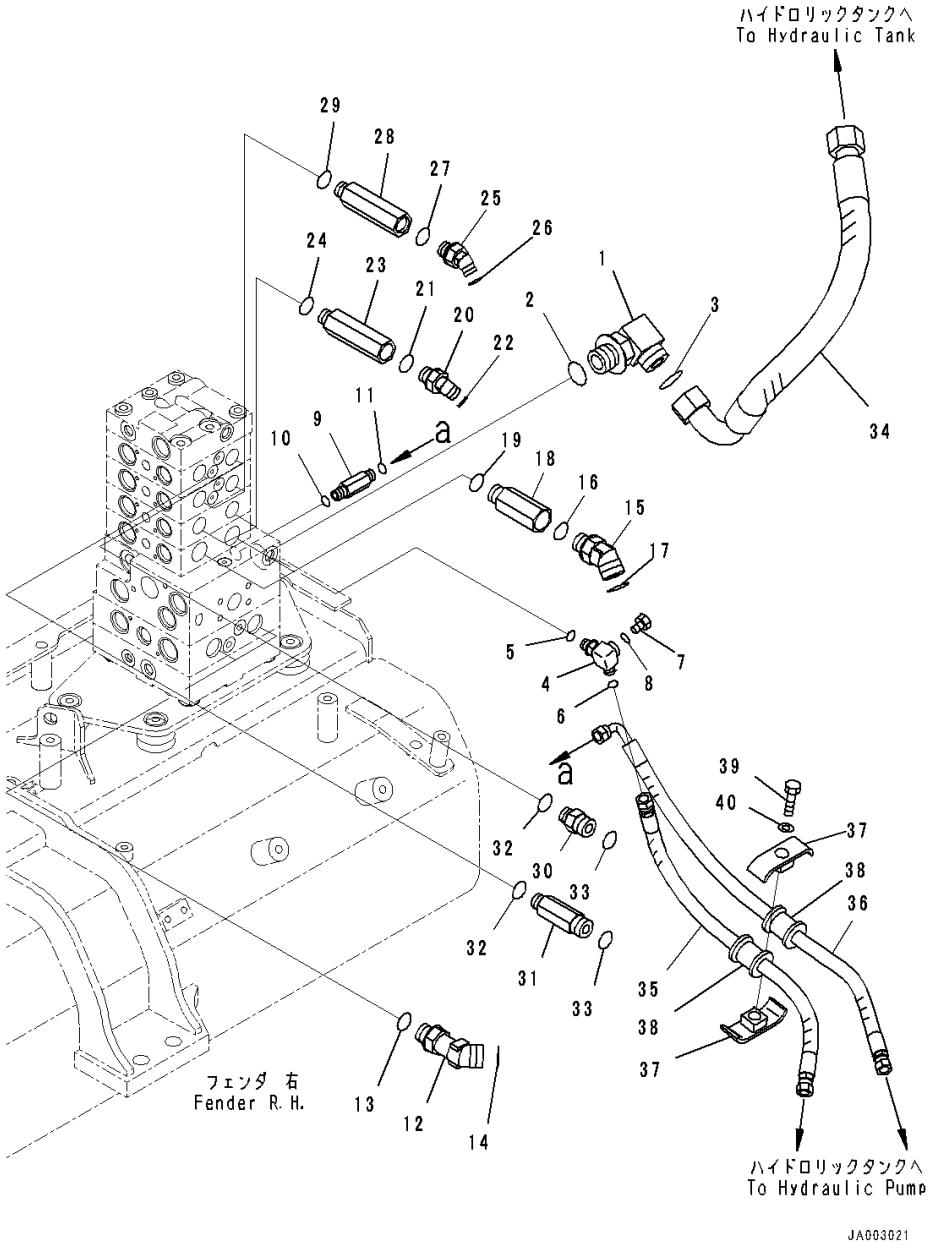

Index	Code	Part Number	Description	Qty	Serial Number
40		01643-31232	Washer	1	80001-

FIG. M2210-005016 Fender Group, PPC Lock Solenoid Valve With Accumulator

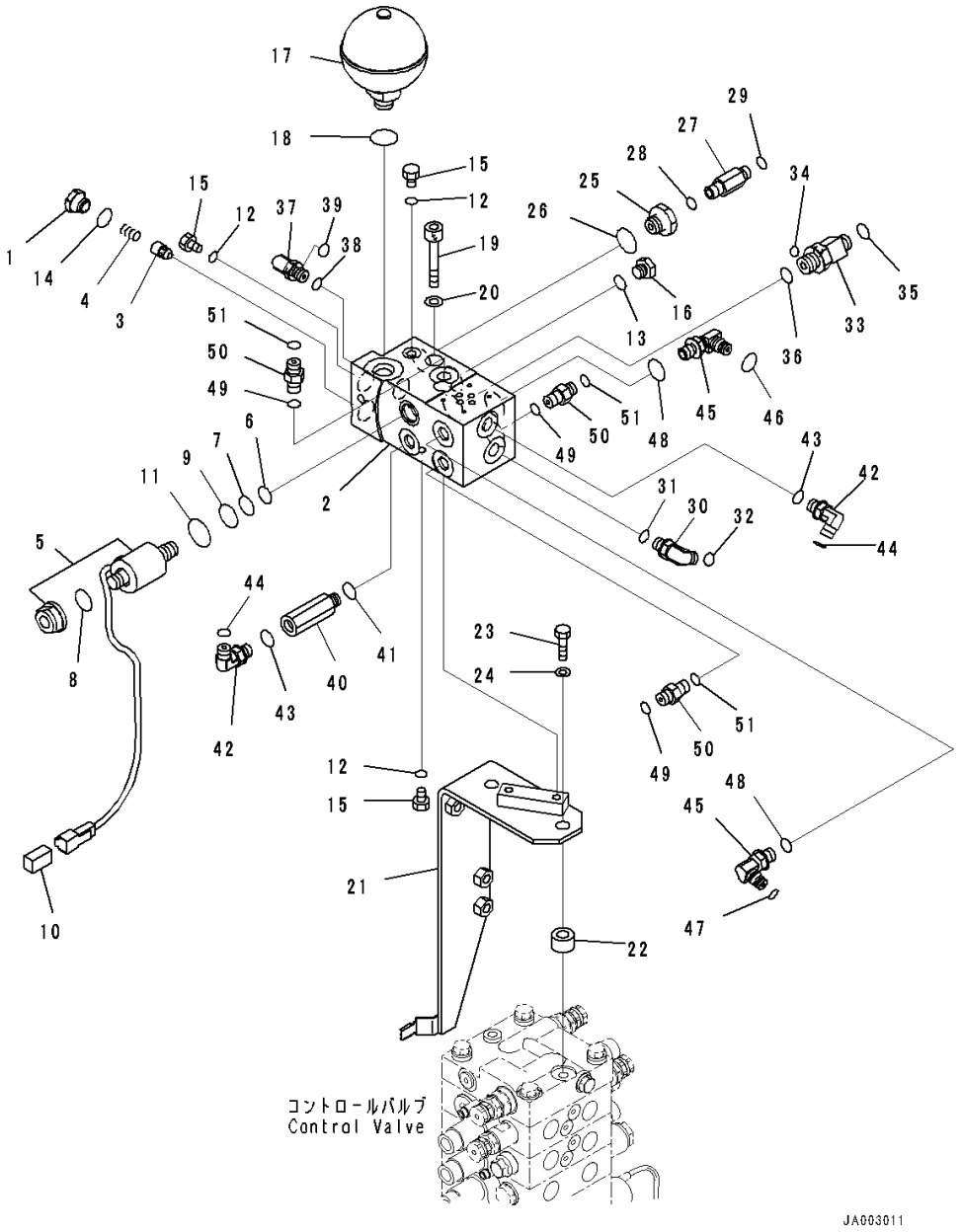

Index	Code	Part Number	Description	Qty	Serial Number
		Note: This list covers following specifications.			
		For Machine With 5-spool Valve Hydraulics, With Power Tilt Pitch Dozer, For Machine With Ripper			
		For Machine With 5-spool Valve Hydraulics, With Power Tilt Pitch Dozer			
		14X-62-54521	Block Assembly	1	80001-
1		103-49-14280	• Plug	1	80001-
2		14X-62-54531	• Block	1	80001-
3		205-60-51390	• Poppet	1	80001-
4		722-12-12063	• Spring	1	80001-
5		11Y-60-11530	• Valve, Solenoid	1	80001-
6		07000-02012	•• O-ring	1	80001-
7		07000-02014	•• O-ring	1	80001-
8		07000-12016	•• O-ring	1	80001-
9		07000-02018	•• O-ring	1	80001-
10		08192-22830	•• Connector	1	80001-
11		203-60-62190	•• O-ring	1	80001-
12		07002-10823	• O-ring	4	80001-
13		07002-11423	• O-ring	1	80001-
14		07002-11623	• O-ring	1	80001-
15		07040-10807	• Plug	4	80001-
16		07040-11409	• Plug	1	80001-
17		22U-60-21330	Accumulator	1	80001-
18		07002-12034	O-ring	1	80001-
19		01252-A1085	Bolt, Hexagon Socket Head	2	80001-
20		01643-51032	Washer	2	80001-
21		14X-62-54540	Bracket	1	80001-
22		14X-62-52971	Spacer	2	80001-
23		01010-81245	Bolt	2	80001-
24		01643-31232	Washer	2	80001-
25		20Y-62-21940	Filter Assembly	1	80001-
26		07002-12034	O-ring	1	80001-
27		20U-62-41890	Nipple	1	80001-
28		07002-11423	O-ring	1	80001-
29		02896-11008	O-ring	1	80001-
30		02782-10210	Elbow	1	80001-
31		07002-11423	O-ring	1	80001-
32		02896-11008	O-ring	1	80001-
33		20K-62-33690	Tee	1	80001-

FIG. M2210-005016 Fender Group, PPC Lock Solenoid Valve With Accumulator

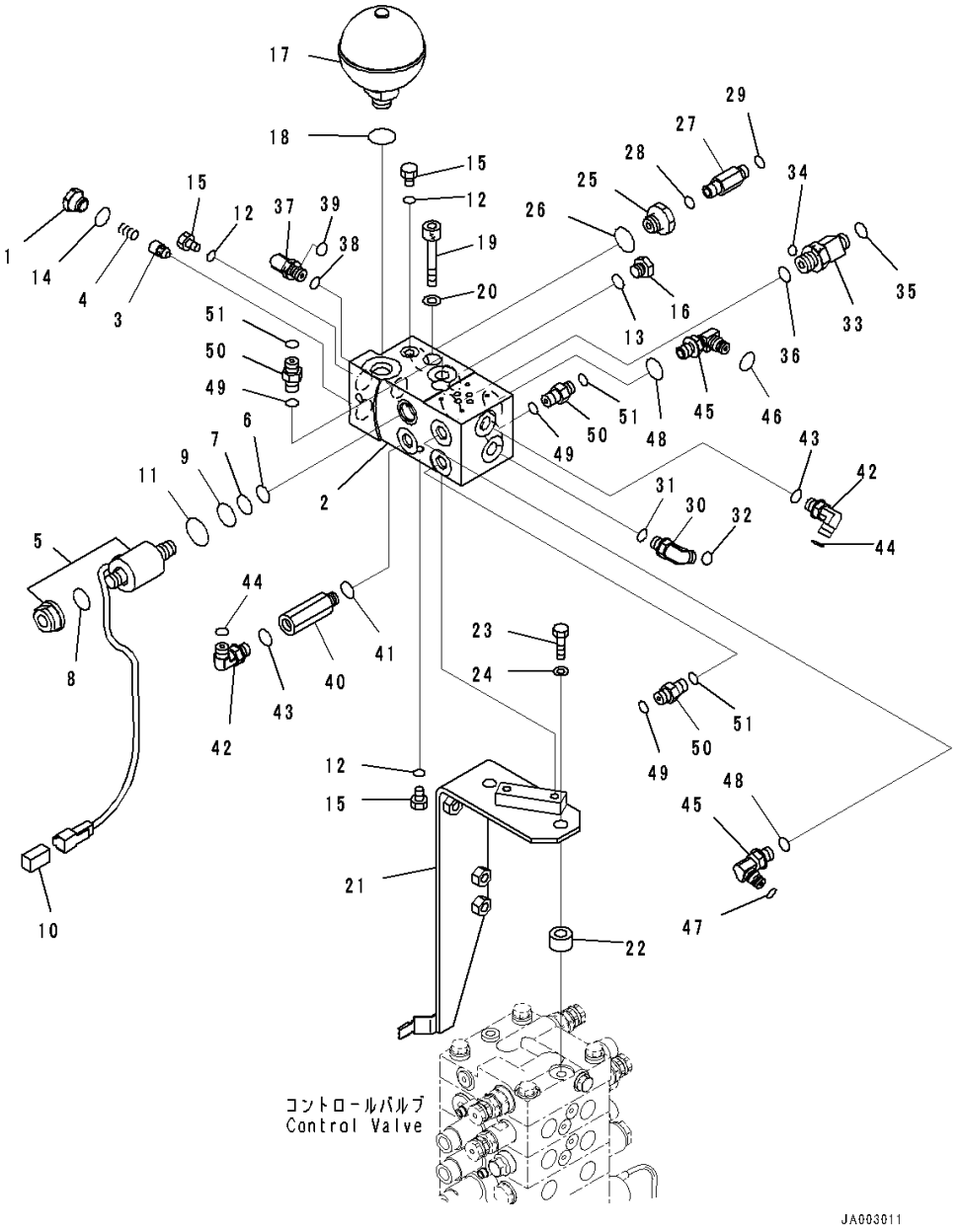

Index	Code	Part Number	Description	Qty	Serial Number
34		02896-11008	• O-ring	1	80001-
35		02896-11009	• O-ring	1	80001-
36		07002-12034	O-ring	1	80001-
37		02782-10210	Elbow	1	80001-
38		07002-11423	O-ring	1	80001-
39		02896-11008	O-ring	1	80001-
40		207-62-62460	Adapter	1	80001-
41		07002-11423	O-ring	1	80001-
42		02782-10210	Elbow	2	80001-
43		07002-11423	O-ring	2	80001-
44		02896-11008	O-ring	2	80001-
45		14X-62-53541	Elbow	2	80001-
46		201-60-11390	• O-ring	1	80001-
47		20Y-62-19560	• O-ring	1	80001-
48		07002-11423	O-ring	2	80001-
49		02896-11008	O-ring	3	80001-
50		02781-0021D	Union	3	80001-
51		07002-11423	O-ring	3	80001-

FIG. M2210-005017 Fender Group, For Machine With 5-spool Valve Hydraulics, With Power Tilt Pitch Dozer, For Machine With Ripper, Control Valve Steering Piping

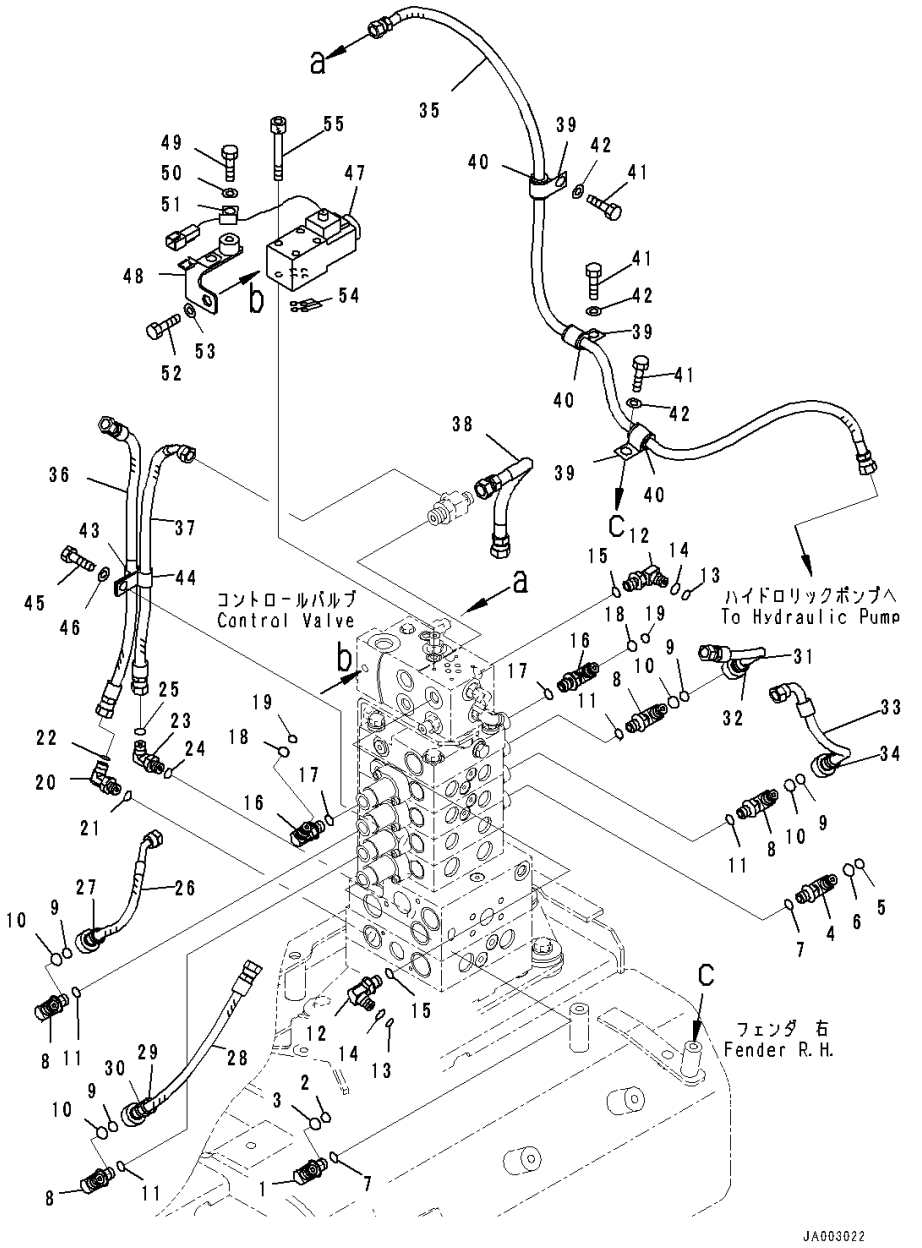

Index	Code	Part Number	Description	Qty	Serial Number
1		14X-62-53531	Elbow	1	80001-
2		201-60-11390	• O-ring	1	80001-
3		20Y-62-19560	• O-ring	1	80001-
4		14X-62-54960	Elbow	1	80001-
5		201-60-11390	• O-ring	1	80001-
6		20Y-62-19560	• O-ring	1	80001-
7		07002-11423	O-ring	2	80001-
8		14X-62-53541	Elbow	2	80001-
9		201-60-11390	• O-ring	1	80001-
10		20Y-62-19560	• O-ring	1	80001-
11		07002-11423	O-ring	2	80001-
12		14X-62-53541	Elbow	2	80001-
13		201-60-11390	• O-ring	1	80001-
14		20Y-62-19560	• O-ring	1	80001-
15		07002-11423	O-ring	2	80001-
16		14X-62-53541	Elbow	2	80001-
17		201-60-11390	• O-ring	1	80001-
18		20Y-62-19560	• O-ring	1	80001-
19		07002-11423	O-ring	2	80001-
20		02782-10210	Elbow	1	80001-
21		07002-11423	O-ring	1	80001-
22		02896-11008	O-ring	1	80001-
23		02782-10210	Elbow	1	80001-
24		07002-11423	O-ring	1	80001-
25		02896-11008	O-ring	1	80001-
26		14X-62-54110	Hose Assembly	1	80001-
27		20Y-62-22820	• Band, Blue	1	80001-
28		14X-62-54121	Hose Assembly	1	80001-
29		20Y-62-22820	• Band, Blue	2	80001-
30		20Y-62-22830	• Band, White	2	80001-
31		14X-62-54150	Hose Assembly	1	80001-
32		20Y-62-22830	• Band, White	2	80001-
33		14X-62-54160	Hose Assembly	1	80001-
34		206-62-87990	• Band, Orange	2	80001-
35		14X-62-54750	Hose	1	80001-
36		02762-002A4	Hose	1	80001-
37		02764-002A4	Hose, Face Seal Type	1	80001-
38		02762-00303	Hose, Face Seal Type	1	80001-
39		04434-51712	Clip	3	80001-

FIG. M2210-005017 Fender Group, For Machine With 5-spool Valve Hydraulics, With Power Tilt Pitch Dozer, For Machine With Ripper, Control Valve Steering Piping

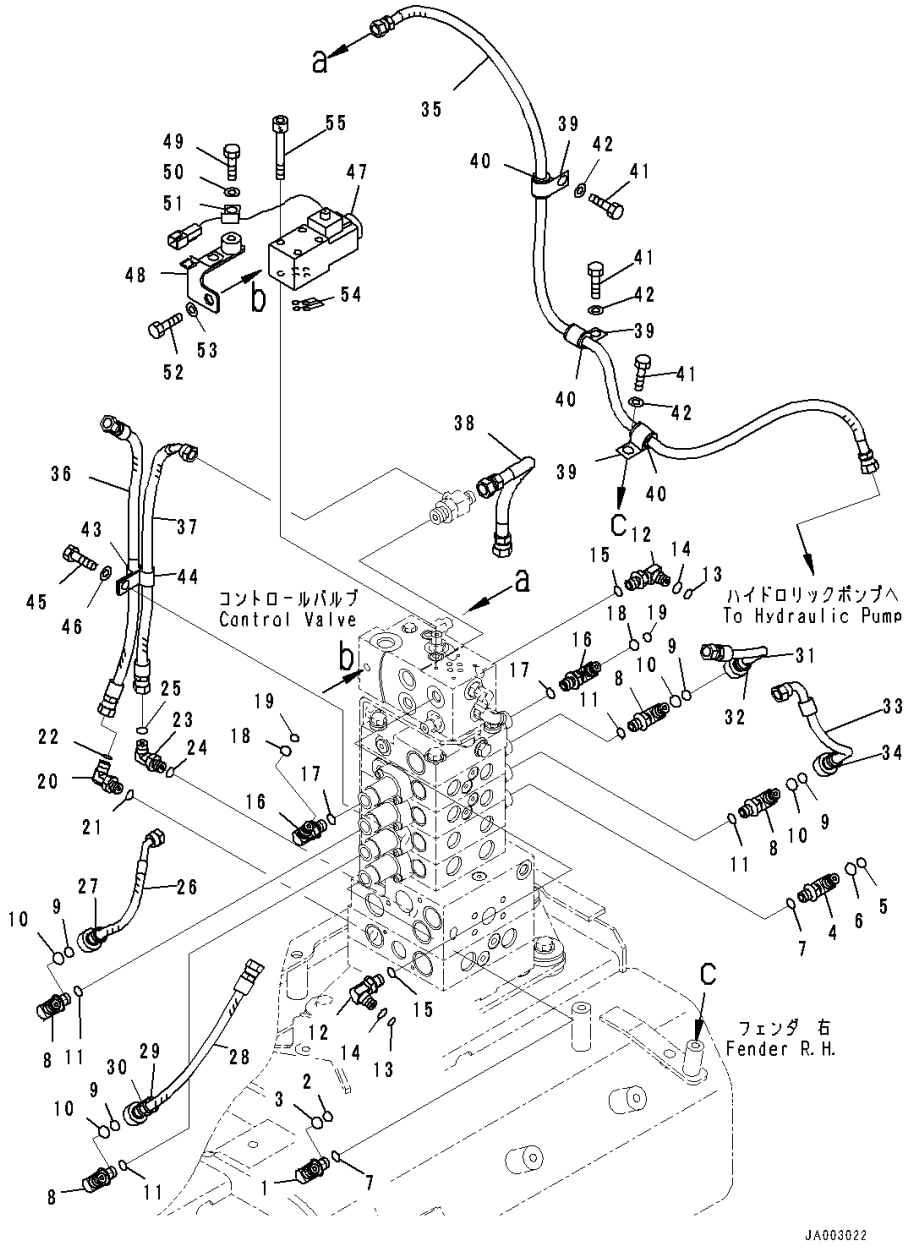

Index	Code	Part Number	Description	Qty	Serial Number
40		07095-20211	Cushion	3	80001-
41		01010-81220	Bolt	3	80001-
42		01643-31232	Washer	3	80001-
43		21T-72-23260	Clip	1	80001-
44		04434-51212	Clip	1	80001-
45		01010-81225	Bolt	1	80001-
46		01643-31232	Washer	1	80001-
47		14X-06-51821	Valve	1	80001-
48		14X-62-54681	Bracket	1	80001-
49		01010-81220	Bolt	1	80001-
50		01643-31232	Washer	1	80001-
51		04434-50612	Clip	1	80001-
52		01010-81220	Bolt	1	80001-
53		01643-31232	Washer	1	80001-
54		07000-11009	O-ring	4	80001-
55		01252-70545	Bolt, Hexagon Socket Head	4	80001-

FIG. M2210-005018 Fender Group, Control Valve Wire Harness

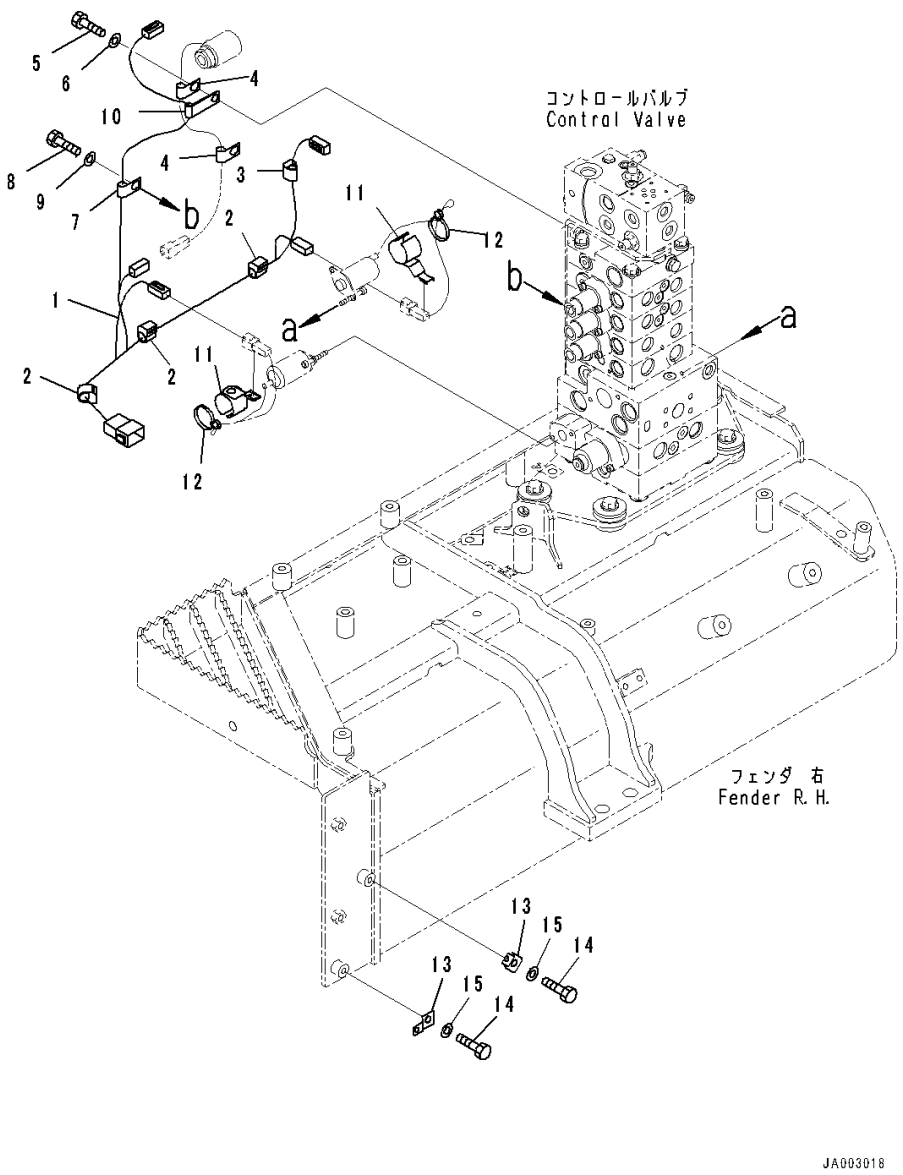

Index	Code	Part Number	Description	Qty	Serial Number
		Note: This list covers following specifications.			
		For Machine With 5-spool Valve Hydraulics, With Power Tilt Pitch Dozer, For Machine With Ripper			
		For Machine With 5-spool Valve Hydraulics, With Power Tilt Pitch Dozer			
1		14X-06-51811	Wire Harness	1	80001-
2		08211-01020	Clip	3	80001-
3		08211-00720	Clip	1	80001-
4		04434-50612	Clip	2	80001-
5		01010-81225	Bolt	2	80001-
6		01643-31232	Washer	2	80001-
7		04434-50812	Clip	1	80001-
8		01010-81225	Bolt	1	80001-
9		01643-31232	Washer	1	80001-
10		515-35-13930	Clip	1	80001-
11		21W-60-41310	Clip	2	80001-
12		08034-40521	Band	2	80001-
13		08057-00810	Clip	2	80001-
14		01010-81020	Bolt	2	80001-
15		01643-31032	Washer	2	80001-

FIG. M2210-006002 Fender Group, Inner Parts (1/12)

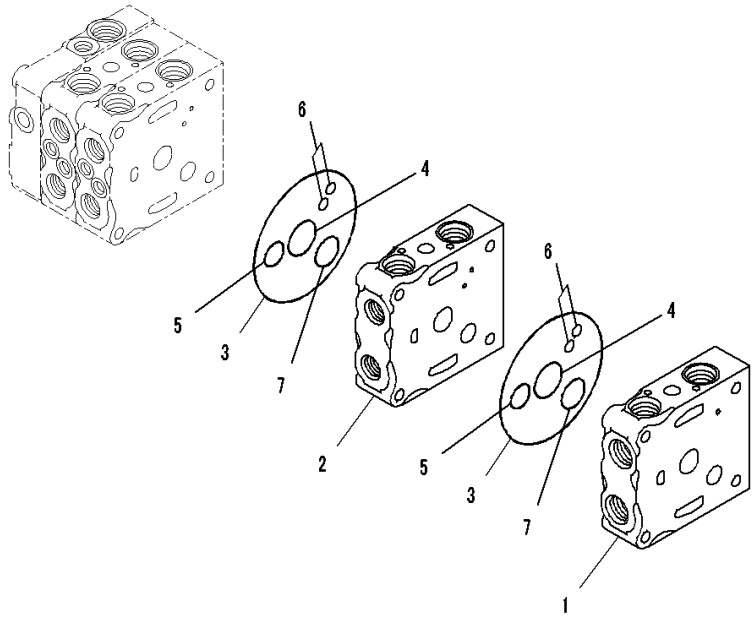

Index	Code	Part Number	Description	Qty	Serial Number
		Note: This list covers following specifications.			
			For Machine With 5-spool Valve Hydraulics, With Power Angle Power Tilt Dozer, For Machine With Ripper		
			For Machine With 5-spool Valve Hydraulics, With Power Angle Power Tilt Dozer		
		723-25-11100	Valve, Control	1	80001-
	C1		• Body Group	1	80001-
1		723-26-21250	•• Valve Body	1	80001-
2		723-26-21360	•• Valve Body	1	80001-
3		07000-12120	•• O-ring	2	80001-
4		723-26-15830	•• O-ring	2	80001-
5		07000-12020	•• O-ring	2	80001-
6		07000-11008	•• O-ring	4	80001-
7		723-26-15840	•• O-ring	2	80001-

FIG. M2210-006003 Fender Group, Inner Parts (2/12)

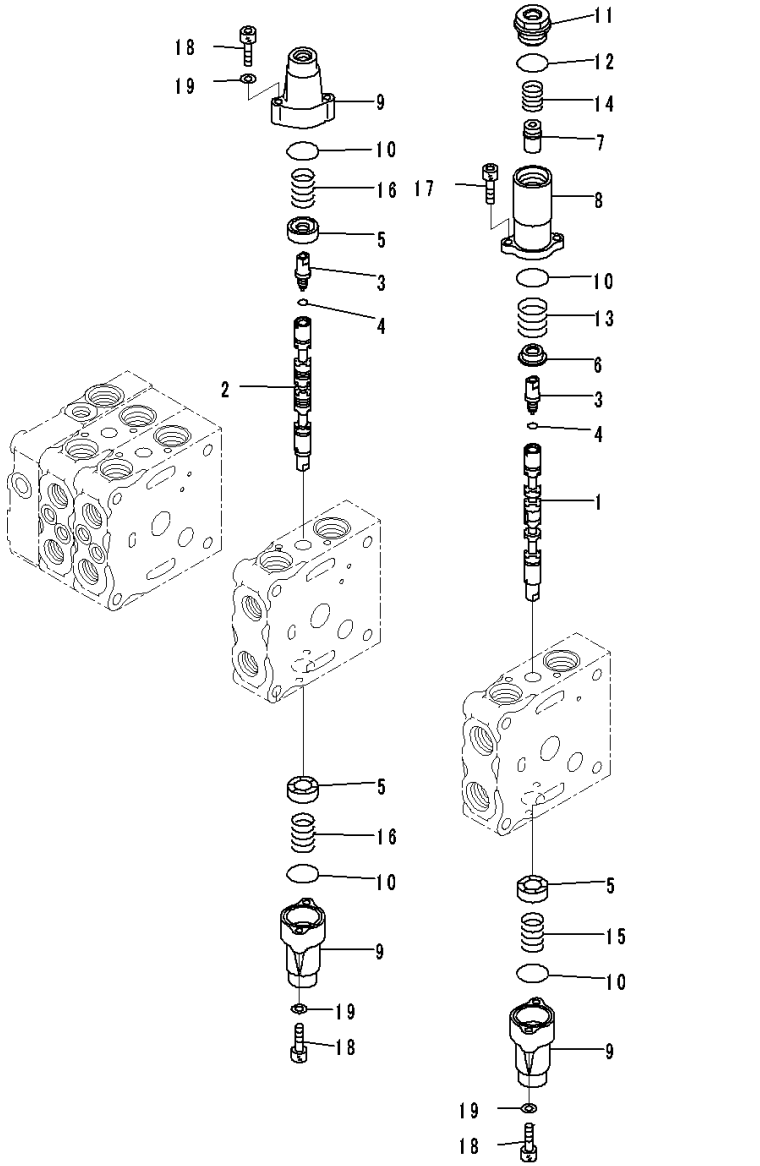

Index	Code	Part Number	Description	Qty	Serial Number
		Note: This list covers following specifications.			
		For Machine With 5-spool Valve Hydraulics, With Power Angle Power Tilt Dozer, For Machine With Ripper			
		For Machine With 5-spool Valve Hydraulics, With Power Angle Power Tilt Dozer			
		723-25-11100	Valve, Control	1	80001-
	C1		• Body Group	1	80001-
1		723-26-22830	•• Spool	1	80001-
2		723-26-22840	•• Spool	1	80001-
3		723-26-15130	•• Plug	2	80001-
4		07002-10823	•• O-ring	2	80001-
5		723-26-15121	•• Retainer	3	80001-
6		723-26-16770	•• Retainer	1	80001-
7		723-26-16780	•• Retainer	1	80001-
8		723-26-16760	•• Case	1	80001-
9		723-26-15110	•• Case	3	80001-
10		575-41-17420	•• O-ring	4	80001-
11		723-26-16790	•• Plug	1	80001-
12		07002-12434	•• O-ring	1	80001-
13		723-26-14660	•• Spring	1	80001-
14		723-26-14670	•• Spring	1	80001-
15		709-26-11450	•• Spring	1	80001-
16		723-26-14580	•• Spring	2	80001-
17		01252-60616	•• Bolt	2	80001-
18		01252-60630	•• Bolt, Hexagon Socket Head	6	80001-
19		01641-20608	•• Washer	6	80001-

FIG. M2210-006004 Fender Group, Inner Parts (3/12)

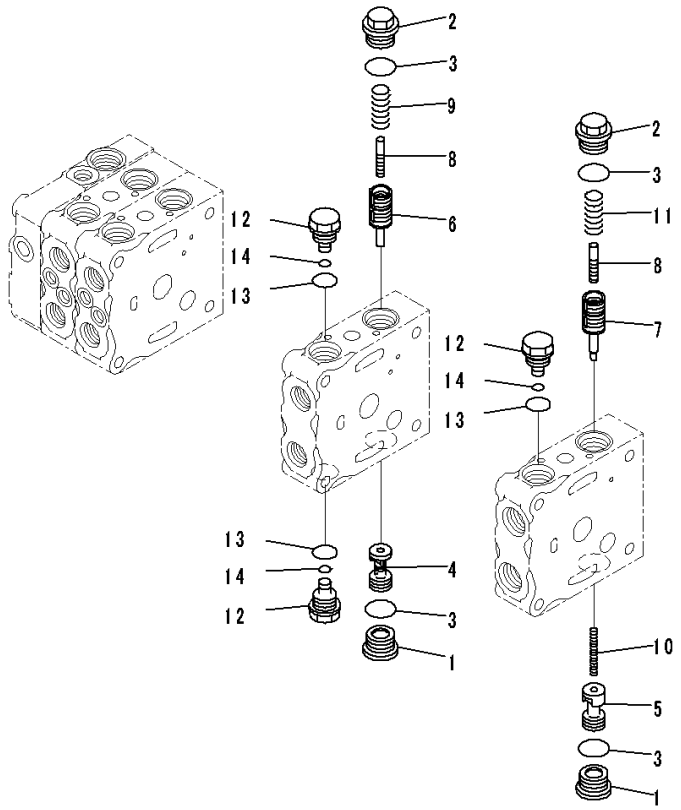

Index	Code	Part Number	Description	Qty	Serial Number
		Note: This list covers following specifications.			
		For Machine With 5-spool Valve Hydraulics, With Power Angle Power Tilt Dozer, For Machine With Ripper			
		For Machine With 5-spool Valve Hydraulics, With Power Angle Power Tilt Dozer			
		723-25-11100	Valve, Control	1	80001-
	C1		• Body Group	1	80001-
1		723-26-15230	•• Plug	2	80001-
2		723-26-15370	•• Plug	2	80001-
3		07002-12434	•• O-ring	4	80001-
4		723-26-41160	•• Valve	1	80001-
5		723-26-41210	•• Valve	1	80001-
6		723-26-51240	•• Valve	1	80001-
7		723-26-51510	•• Valve	1	80001-
8		723-26-51250	•• Piston	2	80001-
9		723-26-14230	•• Spring	1	80001-
10		723-26-14220	•• Spring	1	80001-
11		723-26-14240	•• Spring	1	80001-
12		723-26-15310	•• Plug	3	80001-
13		07002-12034	•• O-ring	3	80001-
14		07000-11007	•• O-ring	3	80001-

FIG. M2210-006005 Fender Group, Inner Parts (4/12)

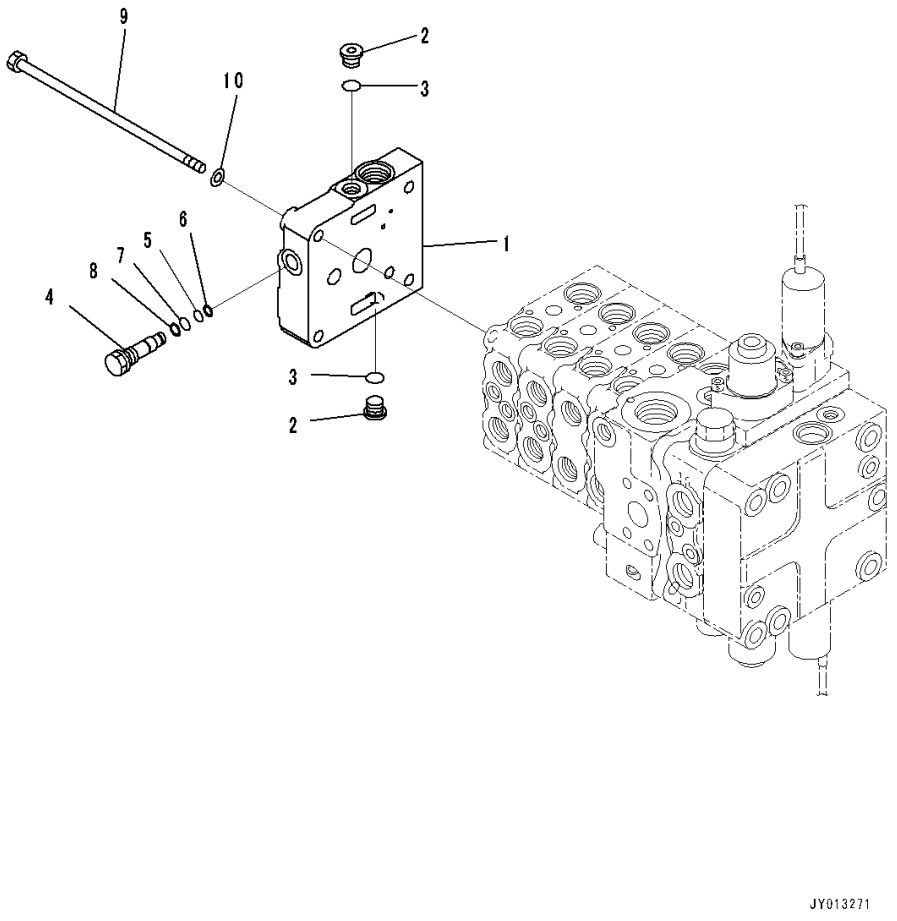

Index	Code	Part Number	Description	Qty	Serial Number
		Note: This list covers following specifications.			
		For Machine With 5-spool Valve Hydraulics, With Power Angle Power Tilt Dozer, For Machine With Ripper			
		For Machine With 5-spool Valve Hydraulics, With Power Angle Power Tilt Dozer			
		723-25-11100	Valve, Control	1	80001-
1		723-26-21750	• Cover	1	80001-
2		702-21-55620	• Plug	2	80001-
3		07002-11423	• O-ring	2	80001-
4		723-26-15190	• Plug	1	80001-
5		07000-11007	• O-ring	1	80001-
6		07001-01007	• Ring, Back-up	1	80001-
7		07000-11009	• O-ring	1	80001-
8		07001-01009	• Ring, Back-up	1	80001-
9		700-85-11111	• Bolt	4	80001-
10		01643-31032	• Washer	4	80001-

FIG. M2210-006006 Fender Group, Inner Parts (5/12)

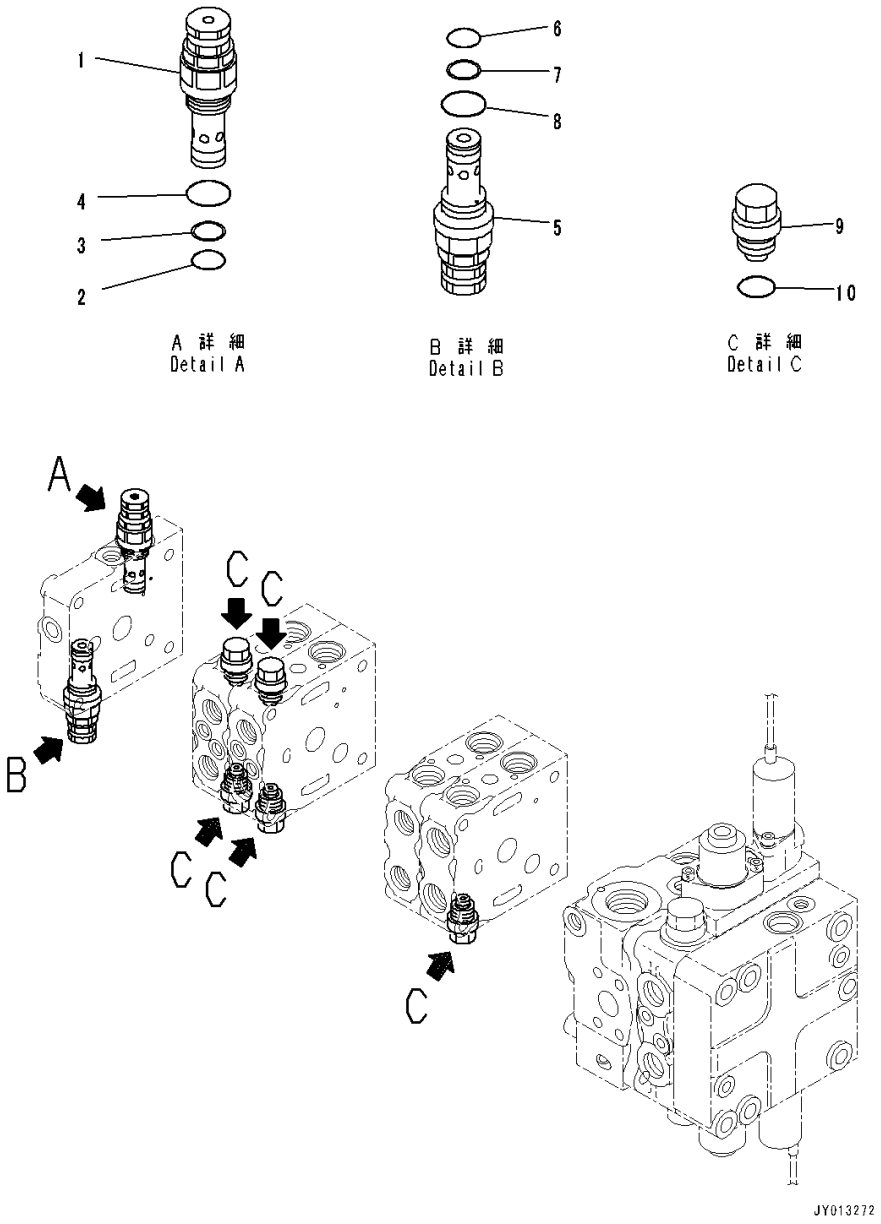

Index	Code	Part Number	Description	Qty	Serial Number
		Note: This list covers following specifications.			
		For Machine With 5-spool Valve Hydraulics, With Power Angle Power Tilt Dozer, For Machine With Ripper			
		For Machine With 5-spool Valve Hydraulics, With Power Angle Power Tilt Dozer			
		723-25-11100	Valve, Control	1	80001-
1		723-20-66500	• Valve, Relief	1	80001-
2		700-22-11410	•• O-ring	1	80001-
3		700-80-64220	•• Ring	1	80001-
4		07002-12434	•• O-ring	1	80001-
5		723-20-66600	• Valve, Relief	1	80001-
6		700-22-11410	•• O-ring	1	80001-
7		700-80-64220	•• Ring	1	80001-
8		07002-12434	•• O-ring	1	80001-
9		723-20-80100	• Valve Assembly, Suction	1	80001-
10		07002-12034	•• O-ring	1	80001-

FIG. M2210-006007 Fender Group, Inner Parts (6/12)

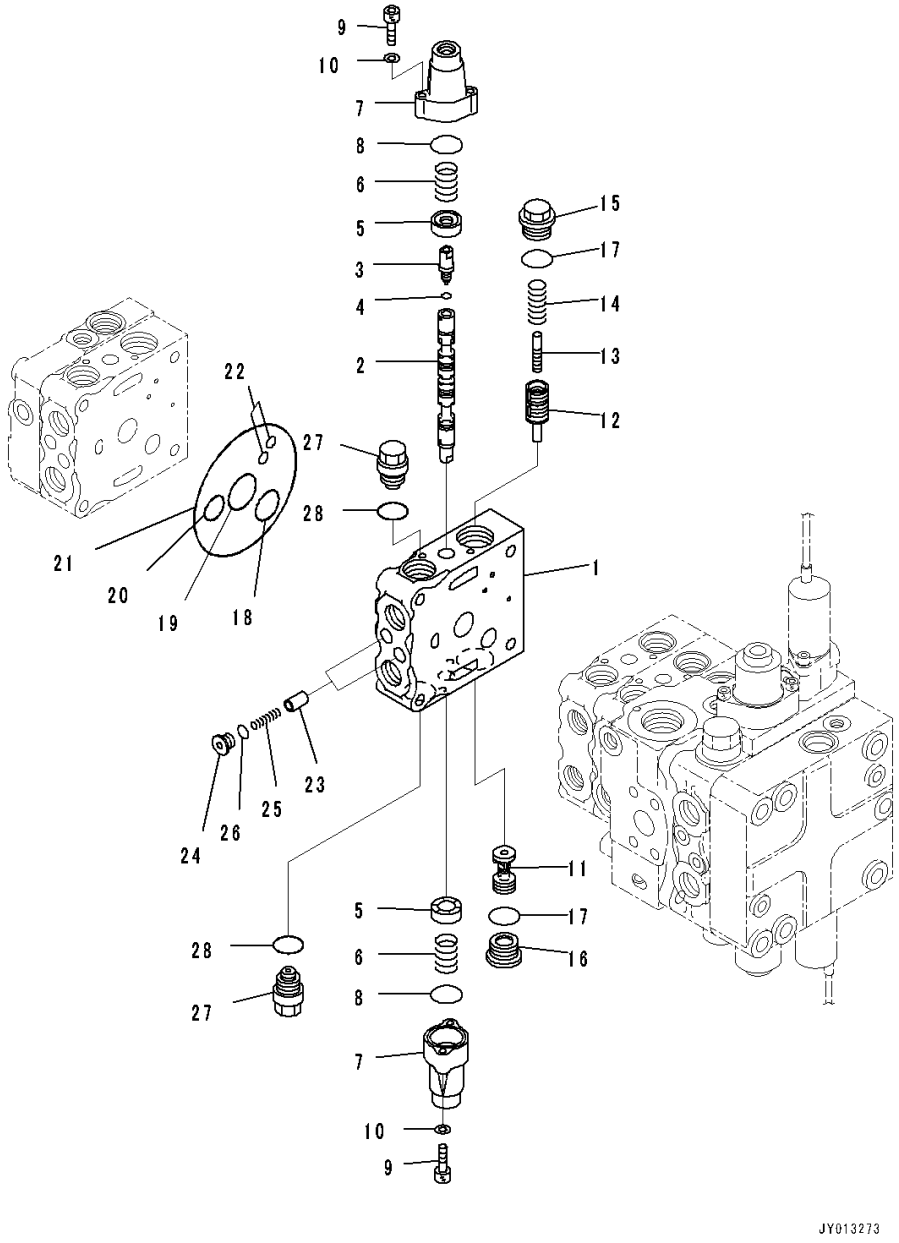

Index	Code	Part Number	Description	Qty	Serial Number
		Note: This list covers following specifications.			
		For Machine With 5-spool Valve Hydraulics, With Power Angle Power Tilt Dozer, For Machine With Ripper			
		For Machine With 5-spool Valve Hydraulics, With Power Angle Power Tilt Dozer			
		723-25-11100	Valve, Control	1	80001-
		723-21-08200	• Valve Subassembly	1	80001-
1		723-26-21420	•• Valve Body	1	80001-
2		723-26-22270	•• Spool	1	80001-
3		723-26-15130	•• Plug	1	80001-
4		07002-10823	•• O-ring	1	80001-
5		723-26-15121	•• Retainer	2	80001-
6		723-26-14680	•• Spring	2	80001-
7		723-26-15110	•• Case	2	80001-
8		575-41-17420	•• O-ring	2	80001-
9		01252-60630	•• Bolt, Hexagon Socket Head	4	80001-
10		01641-20608	•• Washer	4	80001-
11		723-26-41160	•• Valve	1	80001-
12		723-26-51610	•• Valve	1	80001-
13		723-26-51250	•• Piston	1	80001-
14		723-26-14230	•• Spring	1	80001-
15		723-26-15370	•• Plug	1	80001-
16		723-26-15230	•• Plug	1	80001-
17		07002-12434	•• O-ring	2	80001-
18		723-26-15840	•• O-ring	1	80001-
19		723-26-15830	•• O-ring	1	80001-
20		07000-12020	•• O-ring	1	80001-
21		07000-12120	•• O-ring	1	80001-
22		07000-11008	•• O-ring	2	80001-
23		723-26-15210	•• Valve	2	80001-
24		723-26-15220	•• Plug	2	80001-
25		723-26-14150	•• Spring	2	80001-
26		07002-11223	•• O-ring	2	80001-
27		723-20-80100	•• Valve Assembly, Suction	2	80001-
28		07002-12034	••• O-ring	1	80001-

FIG. M2210-006008 Fender Group, Inner Parts (7/12)

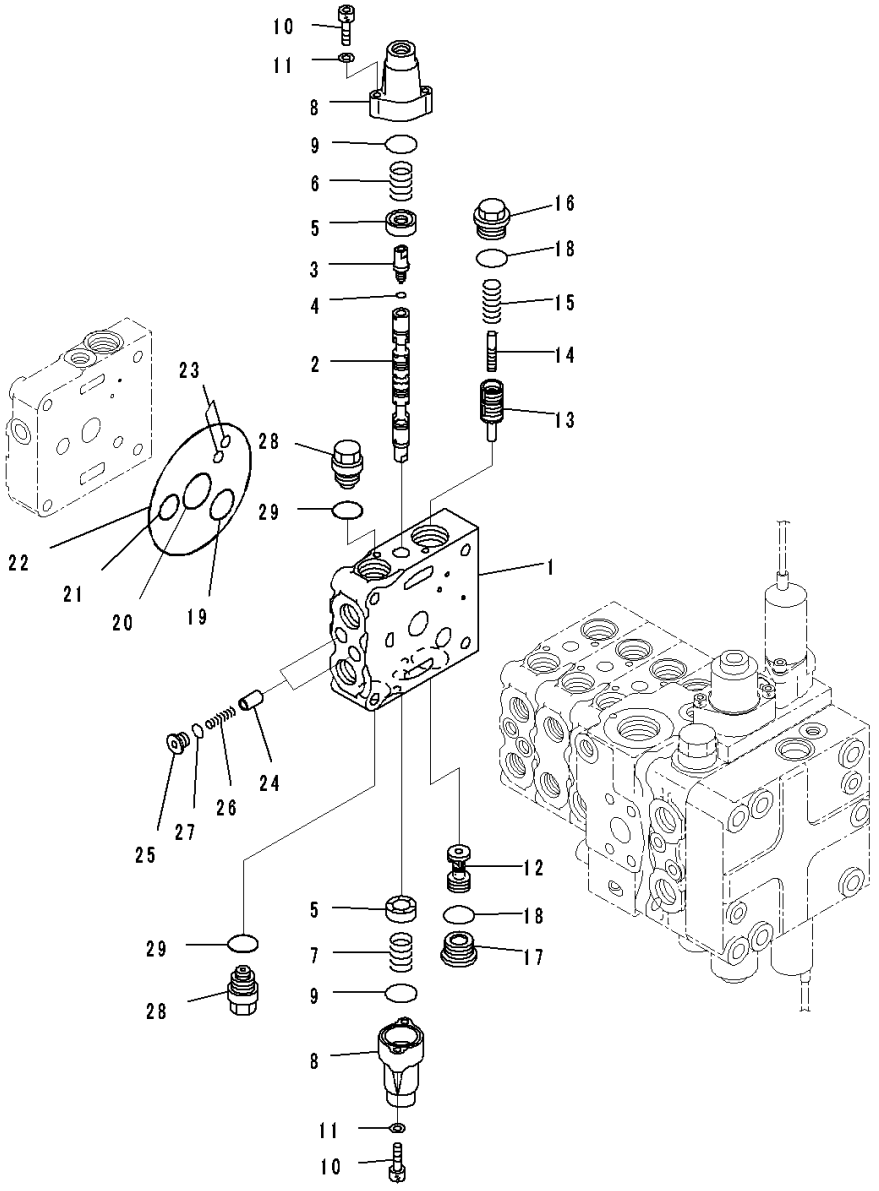

Index	Code	Part Number	Description	Qty	Serial Number
		Note: This list covers following specifications.			
		For Machine With 5-spool Valve Hydraulics, With Power Angle Power Tilt Dozer, For Machine With Ripper			
		For Machine With 5-spool Valve Hydraulics, With Power Angle Power Tilt Dozer			
		723-25-11100	Valve, Control	1	80001-
		723-21-08300	• Valve Subassembly	1	80001-
1		723-26-21420	•• Valve Body	1	80001-
2		723-26-22270	•• Spool	1	80001-
3		723-26-15130	•• Plug	1	80001-
4		07002-10823	•• O-ring	1	80001-
5		723-26-15121	•• Retainer	2	80001-
6		723-26-14580	•• Spring	1	80001-
7		709-26-11450	•• Spring	1	80001-
8		723-26-15110	•• Case	2	80001-
9		575-41-17420	•• O-ring	2	80001-
10		01252-60630	•• Bolt, Hexagon Socket Head	4	80001-
11		01641-20608	•• Washer	4	80001-
12		723-26-41160	•• Valve	1	80001-
13		723-26-51610	•• Valve	1	80001-
14		723-26-51250	•• Piston	1	80001-
15		723-26-14230	•• Spring	1	80001-
16		723-26-15370	•• Plug	1	80001-
17		723-26-15230	•• Plug	1	80001-
18		07002-12434	•• O-ring	2	80001-
19		723-26-15840	•• O-ring	1	80001-
20		723-26-15830	•• O-ring	1	80001-
21		07000-12020	•• O-ring	1	80001-
22		07000-12120	•• O-ring	1	80001-
23		07000-11008	•• O-ring	2	80001-
24		723-26-15210	•• Valve	2	80001-
25		723-26-15220	•• Plug	2	80001-
26		723-26-14150	•• Spring	2	80001-
27		07002-11223	•• O-ring	2	80001-
28		723-20-80100	•• Valve Assembly, Suction	2	80001-
29		07002-12034	••• O-ring	1	80001-

FIG. M2210-006009 Fender Group, Inner Parts (8/12)

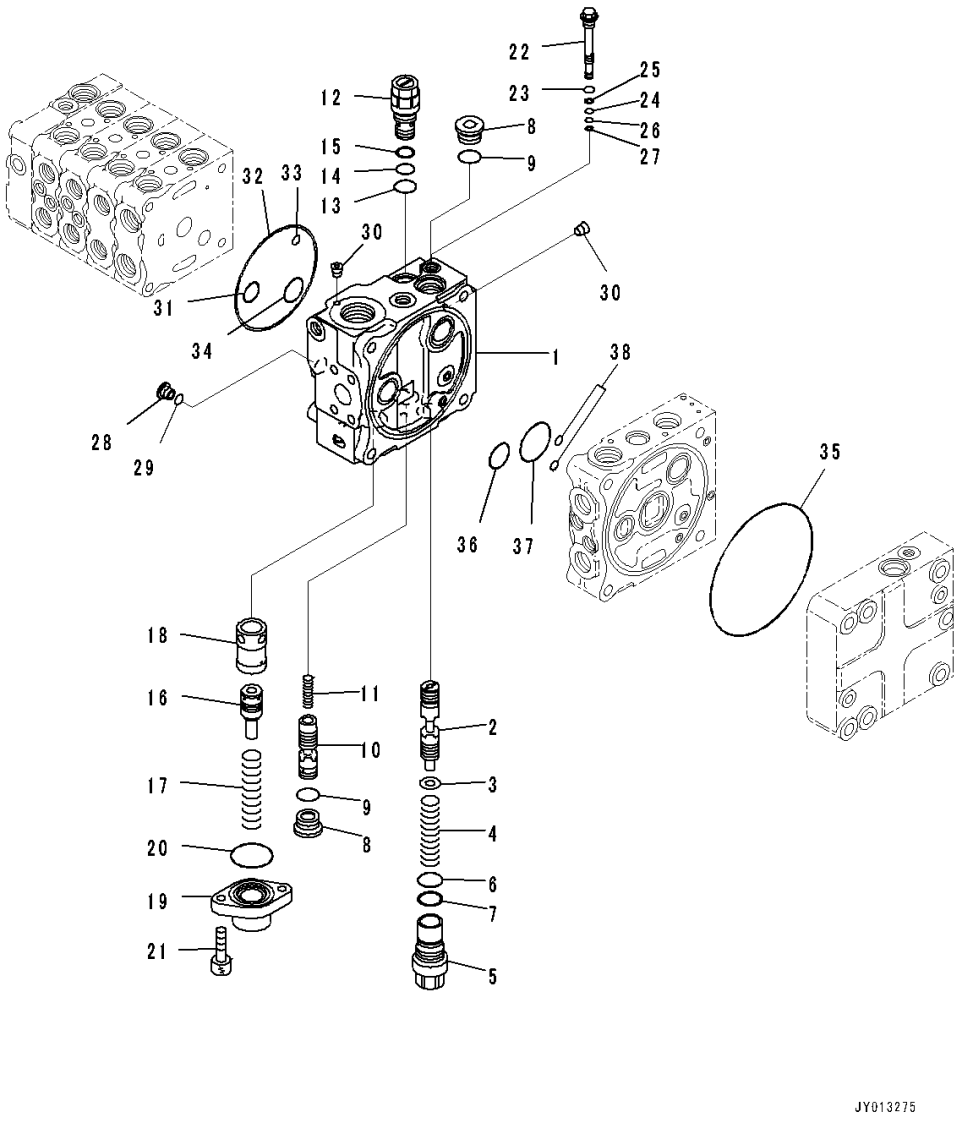

Index	Code	Part Number	Description	Qty	Serial Number
		Note: This list covers following specifications.			
		For Machine With 5-spool Valve Hydraulics, With Power Angle Power Tilt Dozer, For Machine With Ripper			
		For Machine With 5-spool Valve Hydraulics, With Power Angle Power Tilt Dozer			
		723-25-11100	Valve, Control	1	80001-
	C1		• Block Subassembly	1	80001-
1		723-26-21160	•• Block	1	80001-
2		723-26-22850	•• Spool	1	80001-
3		723-26-15860	•• Washer	1	80001-
4		723-26-14590	•• Spring	1	80001-
5		723-26-15850	•• Plug	1	80001-
6		700-80-61260	•• O-ring	1	80001-
7		700-80-61430	•• Ring	1	80001-
8		723-26-15230	•• Plug	2	80001-
9		07002-12434	•• O-ring	2	80001-
10		723-26-22860	•• Spool	1	80001-
11		723-26-14470	•• Spring	1	80001-
12		723-60-21900	•• Valve, Relief	1	80001-
13		07002-12434	••• O-ring	1	80001-
14		07000-12016	••• O-ring	1	80001-
15		07001-02016	••• Ring, Back-up	1	80001-
16		723-36-15230	•• Piston	1	80001-
17		723-36-15340	•• Spring	1	80001-
18		723-36-15210	•• Sleeve	1	80001-
19		723-36-15250	•• Case	1	80001-
20		07000-13042	•• O-ring	1	80001-
21		01252-60820	•• Bolt	2	80001-
22	C1		•• Valve Assembly	1	80001-
23		07002-11223	••• O-ring	1	80001-
24		07000-11007	••• O-ring	1	80001-
25		07001-01007	••• Ring, Back-up	1	80001-
26		07000-11005	••• O-ring	1	80001-
27		07001-01005	••• Ring, Back-up	1	80001-
28		723-26-15220	•• Plug	1	80001-
29		07002-11223	•• O-ring	1	80001-
30		708-21-12541	•• Plug	5	80001-
31		07000-12020	•• O-ring	1	80001-
32		07000-12120	•• O-ring	1	80001-

FIG. M2210-006009 Fender Group, Inner Parts (8/12)

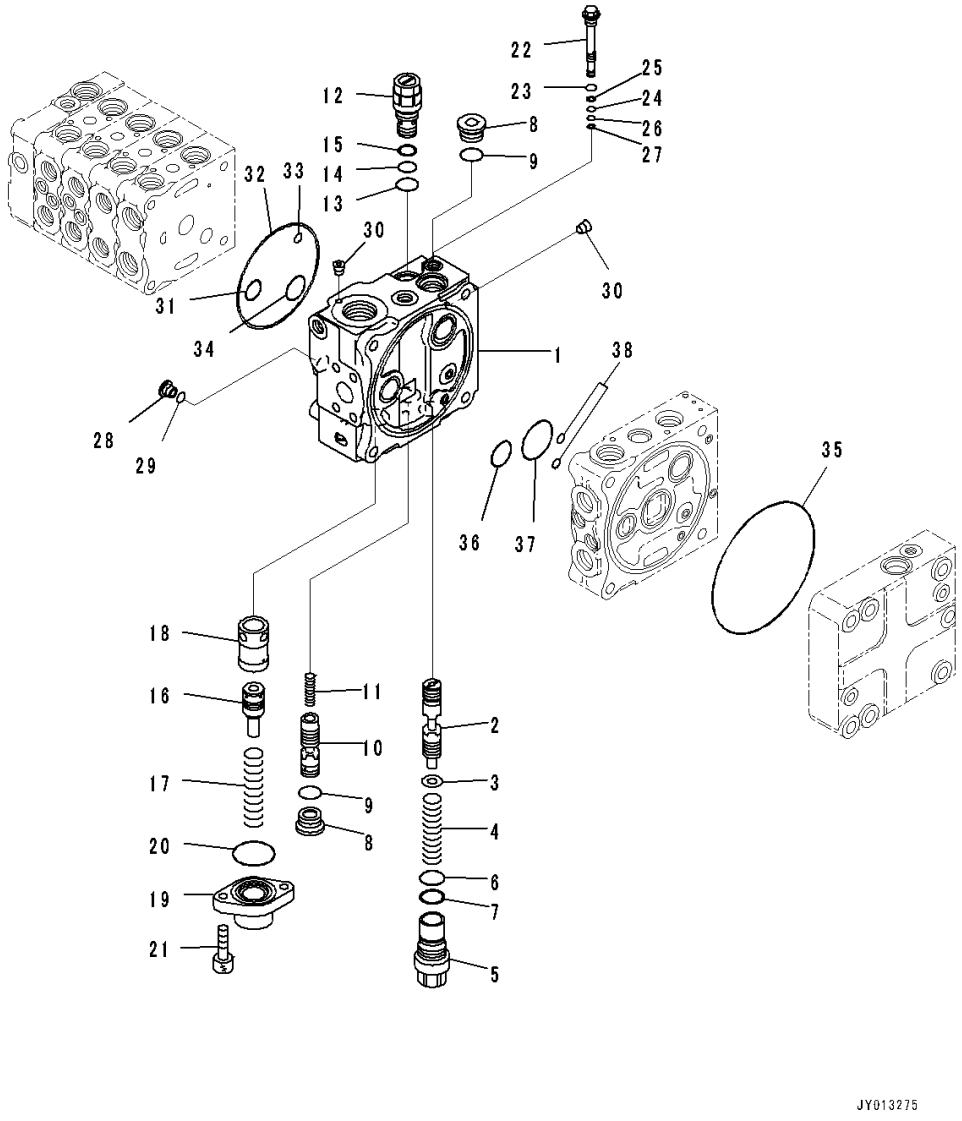

Index	Code	Part Number	Description	Qty	Serial Number
33		07000-11008	•• O-ring	1	80001-
34		723-26-15840	•• O-ring	1	80001-
35		144-14-54610	•• O-ring	1	80001-
36		723-56-31730	•• O-ring	1	80001-
37		702-75-11520	•• O-ring	1	80001-
38		07000-11008	•• O-ring	2	80001-

FIG. M2210-006010 Fender Group, Inner Parts (9/12)

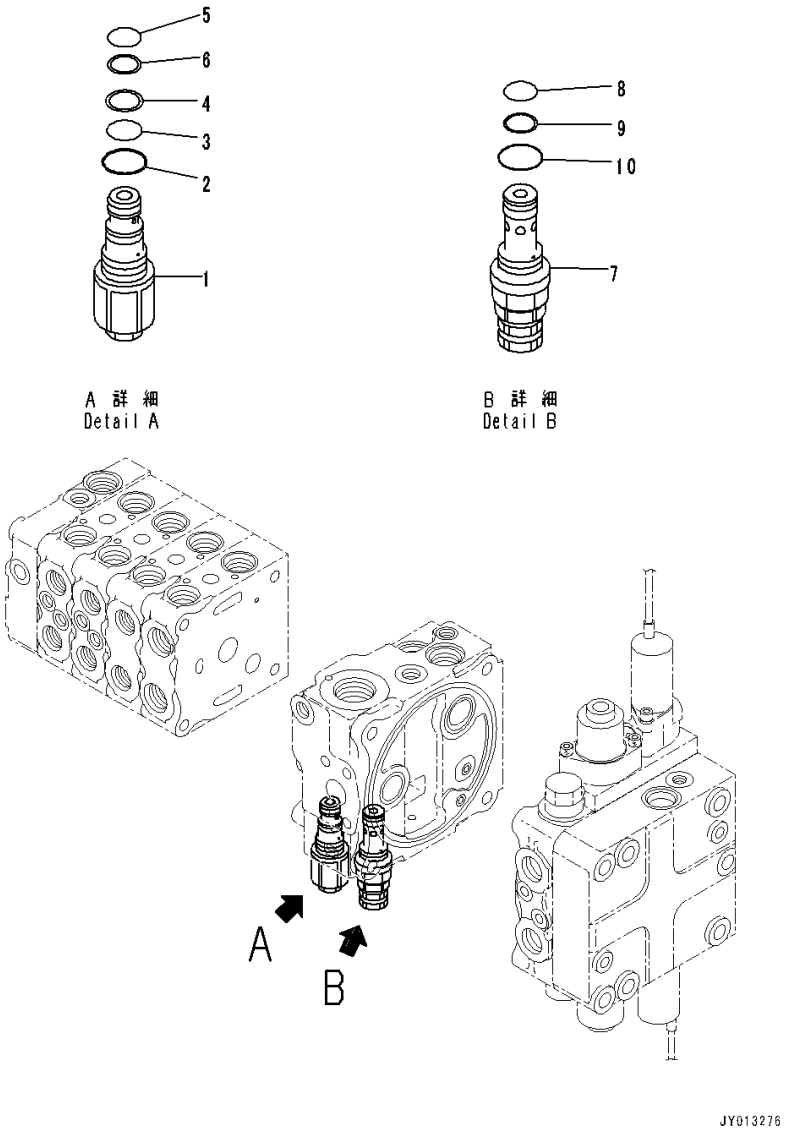

Index	Code	Part Number	Description	Qty	Serial Number
		Note: This list covers following specifications.			
		For Machine With 5-spool Valve Hydraulics, With Power Angle Power Tilt Dozer, For Machine With Ripper			
		For Machine With 5-spool Valve Hydraulics, With Power Angle Power Tilt Dozer			
		723-25-11100	Valve, Control	1	80001-
1		723-20-70600	• Valve Assembly	1	80001-
2		07002-12434	•• O-ring	1	80001-
3		07000-12016	•• O-ring	1	80001-
4		07001-02016	•• Ring, Back-up	1	80001-
5		07000-12014	•• O-ring	1	80001-
6		07001-02014	•• Ring, Back-up	1	80001-
7		723-20-63100	• Valve, Relief	1	80001-
8		700-22-11410	•• O-ring	1	80001-
9		700-80-64220	•• Ring	1	80001-
10		07002-12034	•• O-ring	1	80001-

FIG. M2210-006011 Fender Group, Inner Parts (10/12)

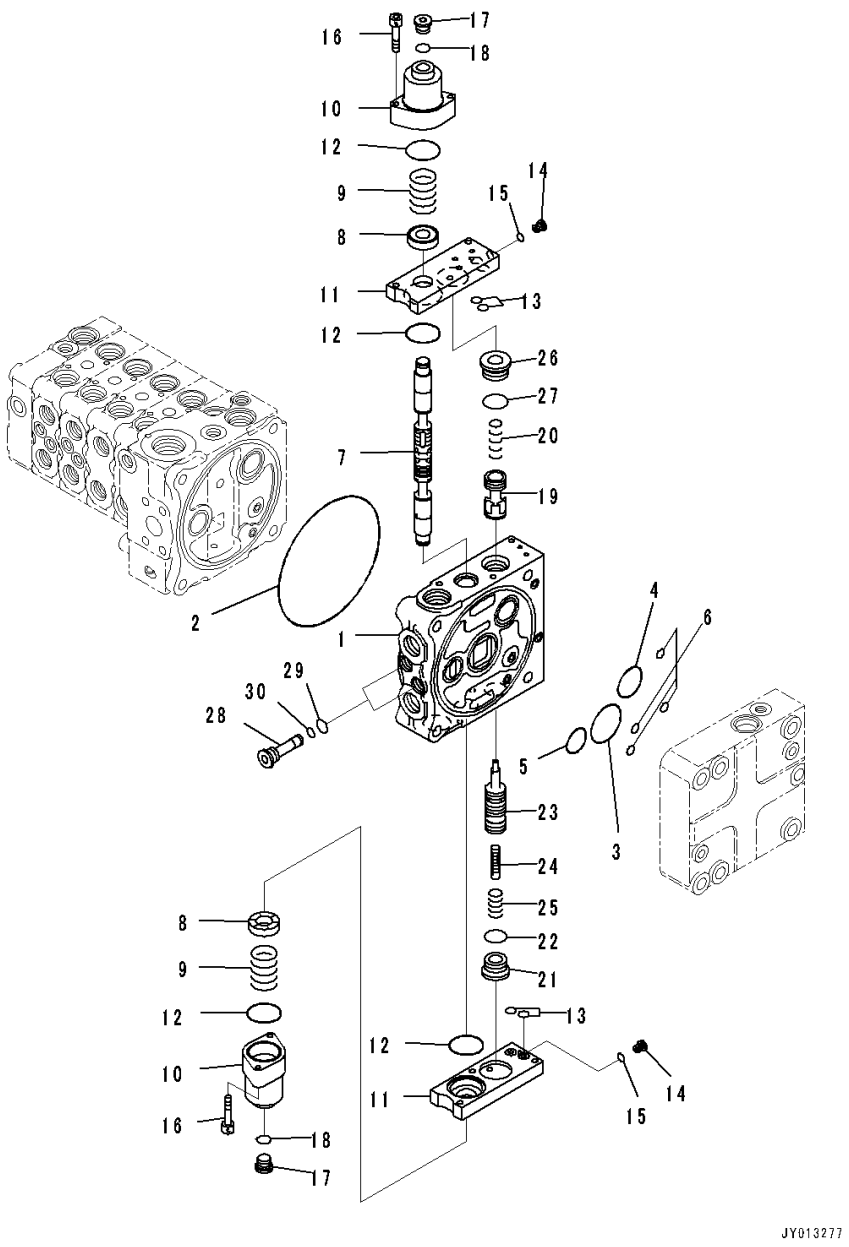

Index	Code	Part Number	Description	Qty	Serial Number
		Note: This list covers following specifications.			
		For Machine With 5-spool Valve Hydraulics, With Power Angle Power Tilt Dozer, For Machine With Ripper			
		For Machine With 5-spool Valve Hydraulics, With Power Angle Power Tilt Dozer			
		723-25-11100	Valve, Control	1	80001-
		723-51-06500	• Valve Assembly	1	80001-
1	C1		•• Valve Body	1	80001-
2		144-14-54610	•• O-ring	1	80001-
3		723-56-31720	•• O-ring	1	80001-
4		723-56-31730	•• O-ring	1	80001-
5		702-75-11520	•• O-ring	1	80001-
6		07000-11008	•• O-ring	4	80001-
7		723-56-22170	•• Spool	1	80001-
8		723-56-31211	•• Retainer	2	80001-
9		723-36-14120	•• Spring	2	80001-
10		723-56-31510	•• Case	2	80001-
11		723-56-32820	•• Plate	2	80001-
12		702-21-55450	•• O-ring	4	80001-
13		07000-11009	•• O-ring	4	80001-
14		723-11-27280	•• Plug	2	80001-
15		07002-10823	•• O-ring	2	80001-
16		01252-60650	•• Bolt	4	80001-
17		702-21-55620	•• Plug	2	80001-
18		07002-11423	•• O-ring	2	80001-
19		723-56-42150	•• Valve	1	80001-
20		723-56-41710	•• Spring	1	80001-
21		723-26-15230	•• Plug	1	80001-
22		07002-12434	•• O-ring	1	80001-
23		723-56-42330	•• Valve	1	80001-
24		723-56-41590	•• Piston	1	80001-
25		723-56-41730	•• Spring	1	80001-
26		723-56-41970	•• Plug	1	80001-
27		07000-13024	•• O-ring	1	80001-
28		723-56-31640	•• Plug	2	80001-
29		07002-11623	•• O-ring	2	80001-
30		07000-11008	•• O-ring	2	80001-

FIG. M2210-006012 Fender Group, Inner Parts (11/12)

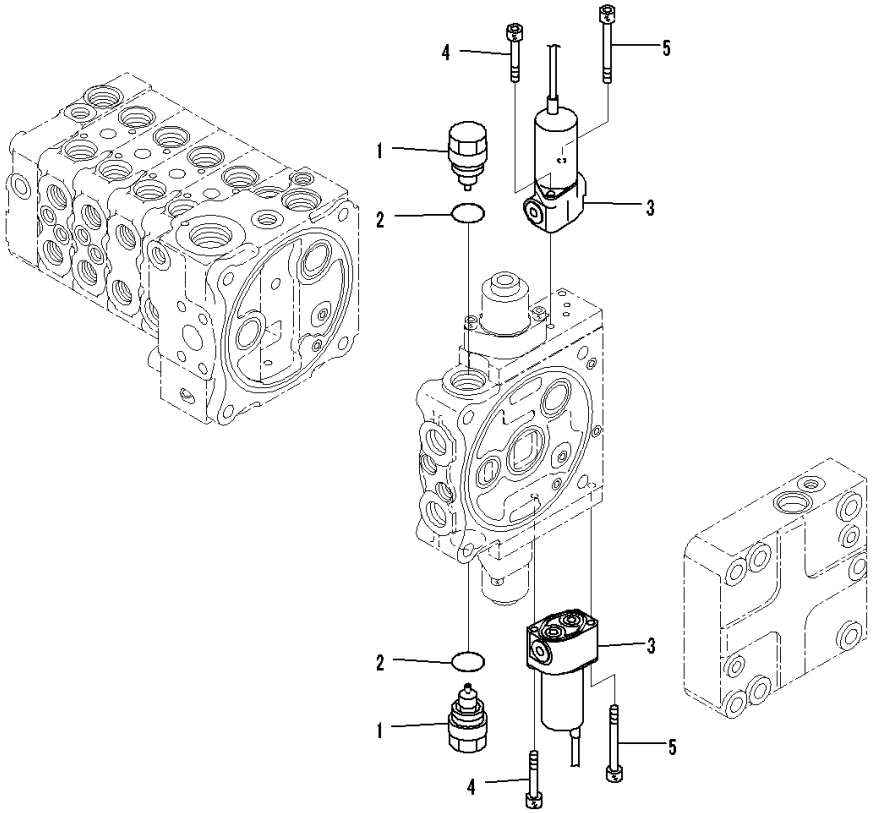

Index	Code	Part Number	Description	Qty	Serial Number
		Note: This list covers following specifications.			
		For Machine With 5-spool Valve Hydraulics, With Power Angle Power Tilt Dozer, For Machine With Ripper			
		For Machine With 5-spool Valve Hydraulics, With Power Angle Power Tilt Dozer			
		723-25-11100	Valve, Control	1	80001-
		723-51-06500	• Valve Assembly	1	80001-
		723-40-85100	•• Valve Assembly, Suction	2	80001-
1		723-40-85110	••• Sleeve	1	80001-
2		709-25-11390	••• O-ring	1	80001-
3		702-21-07610	•• Valve, Solenoid	2	80001-
4		01252-60645	•• Bolt, Hexagon Socket Head	2	80001-
5		702-16-55270	•• Bolt	2	80001-

FIG. M2210-006013 Fender Group, Inner Parts (12/12)

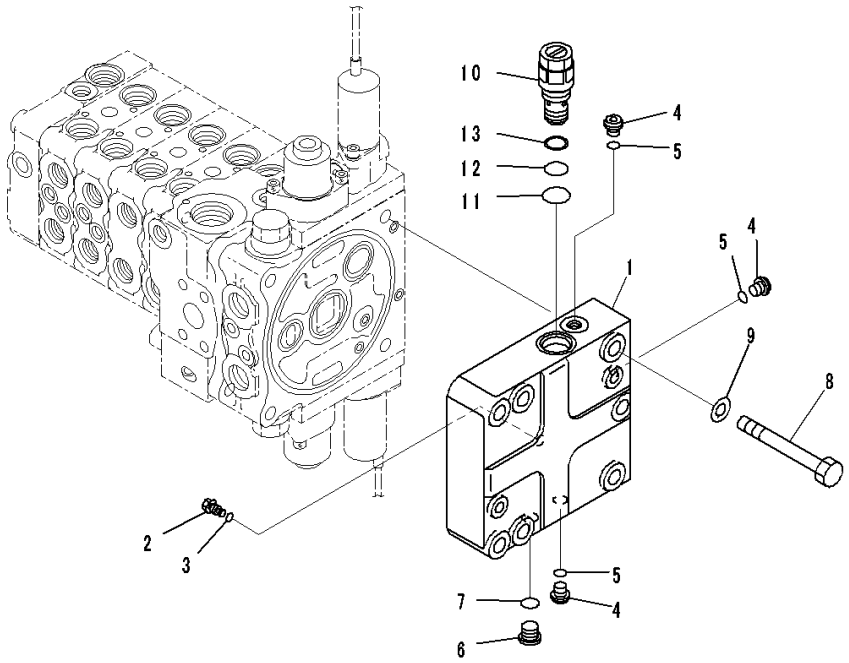

Index	Code	Part Number	Description	Qty	Serial Number
		Note: This list covers following specifications.			
		For Machine With 5-spool Valve Hydraulics, With Power Angle Power Tilt Dozer, For Machine With Ripper			
		For Machine With 5-spool Valve Hydraulics, With Power Angle Power Tilt Dozer			
		723-25-11100	Valve, Control	1	80001-
1		723-56-12210	• Cover	1	80001-
2		723-56-33940	• Plug	1	80001-
3		07002-10823	• O-ring	1	80001-
4		708-8E-16160	• Plug	3	80001-
5		07002-11023	• O-ring	3	80001-
6		702-21-55620	• Plug	1	80001-
7		07002-11423	• O-ring	1	80001-
8		01011-81225	• Bolt	4	80001-
9		01643-31232	• Washer	4	80001-
10		723-60-21102	• Valve, Relief	1	80001-
11		07002-02434	•• O-ring	1	80001-
12		07000-12016	•• O-ring	1	80001-
13		07001-02016	•• Ring, Back-up	1	80001-

FIG. M2210-006015 Fender Group, For Machine With 5-spool Valve Hydraulics, With Power Angle Power Tilt Dozer, For Machine With Ripper, Hydraulic Piping

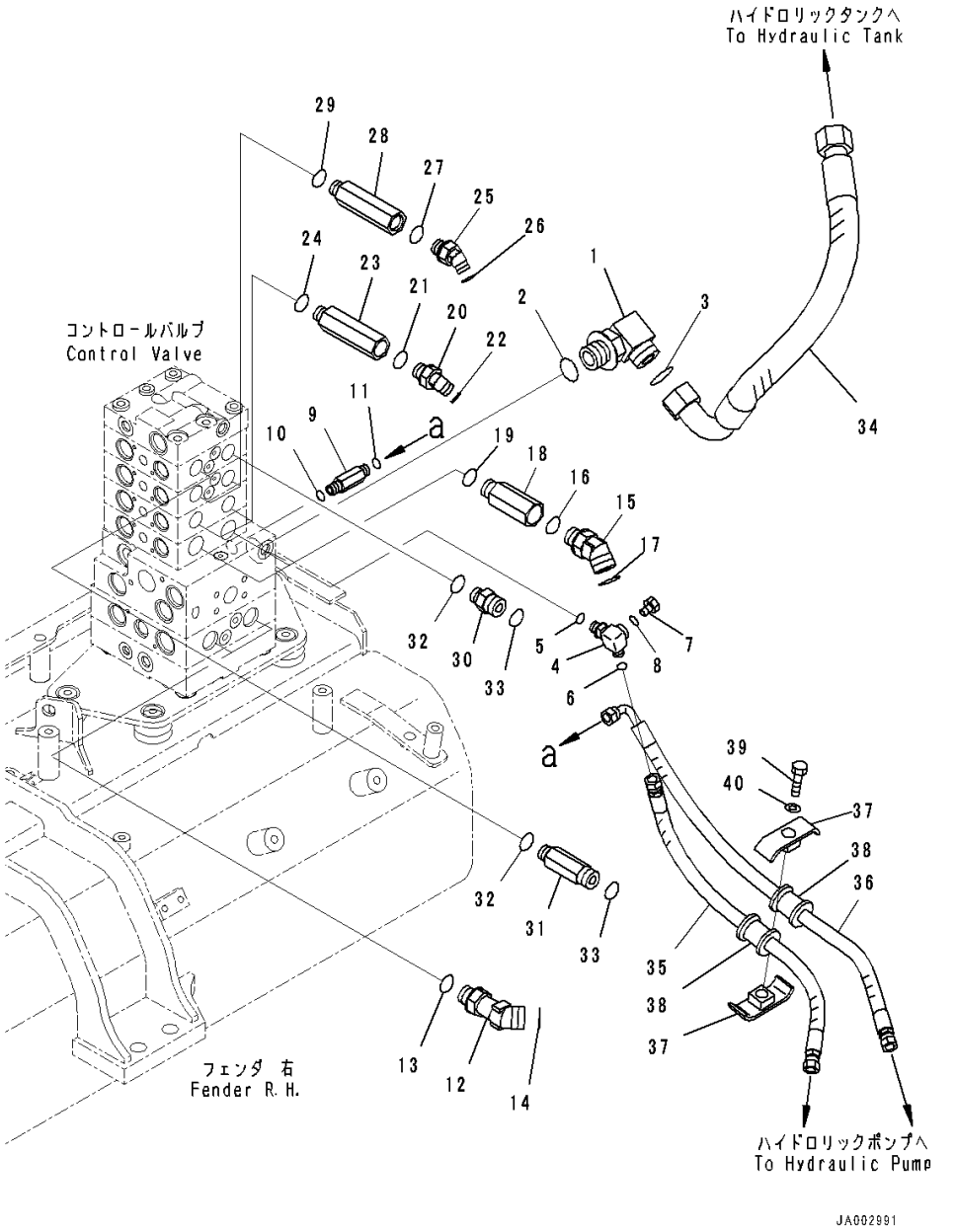

Index	Code	Part Number	Description	Qty	Serial Number
1		21W-62-42640	Elbow	1	80001-
2		07002-13334	O-ring	1	80001-
3		207-62-64740	O-ring	1	80001-
4		14X-62-54870	Tee	1	80001-
5		07002-11423	O-ring	1	80001-
6		02896-11008	O-ring	1	80001-
7		07040-11007	Plug	1	80001-
8		07002-11023	O-ring	1	80001-
9		11Y-62-12230	Union	1	80001-
10		07002-11423	O-ring	1	80001-
11		02896-11008	O-ring	1	80001-
12		11Y-62-36160	Elbow	2	80001-
13		07002-62434	O-ring	2	80001-
14		02896-61018	O-ring	2	80001-
15		02783-10628	Elbow	2	80001-
16		07002-12434	O-ring	2	80001-
17		02896-11018	O-ring	2	80001-
18		20T-62-81790	Joint	2	80001-
19		07002-12434	O-ring	2	80001-
20		02783-10315	Elbow	2	80001-
21		07002-12034	O-ring	2	80001-
22		02896-11009	O-ring	2	80001-
23		14X-62-52931	Joint	2	80001-
24		07002-12034	O-ring	2	80001-
25		02783-10422	Elbow	2	80001-
26		07002-12034	O-ring	2	80001-
27		02896-11012	O-ring	2	80001-
28		14X-62-52931	Joint	2	80001-
29		07002-12034	O-ring	2	80001-
30		02781-00516	Union	1	80001-
31		14X-62-52991	Nipple	1	80001-
32		07002-12034	O-ring	2	80001-
33		02896-11015	O-ring	2	80001-
34		14X-62-52940	Hose	1	80001-
35		14X-62-52391	Hose	1	80001-
36		14X-62-52541	Hose	1	80001-
37		22P-62-13540	Clamp	2	80001-
38		07095-00314	Cushion	2	80001-
39		01010-81260	Bolt	1	80001-

FIG. M2210-006015 Fender Group, For Machine With 5-spool Valve Hydraulics, With Power Angle Power Tilt Dozer, For Machine With Ripper, Hydraulic Piping

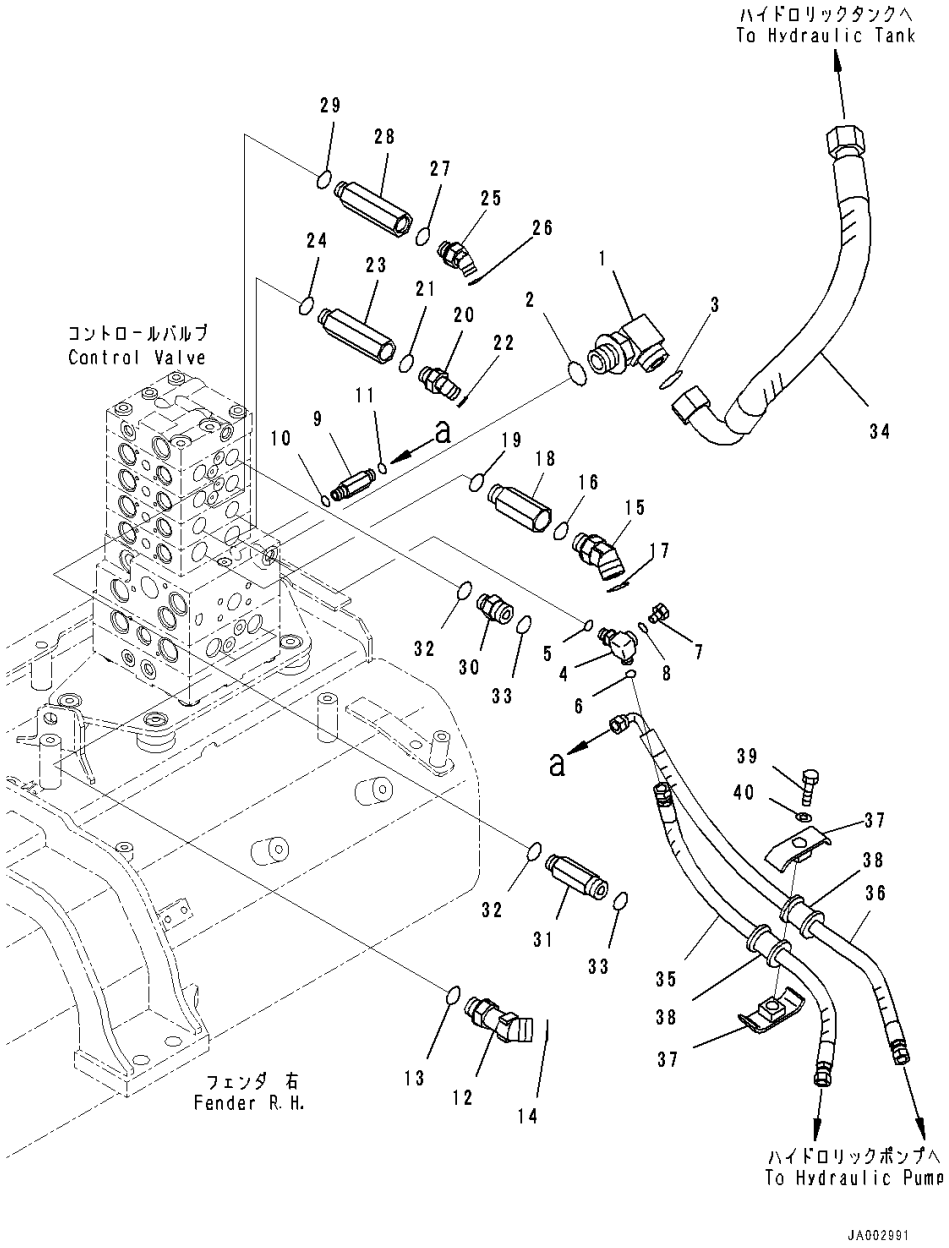

Index	Code	Part Number	Description	Qty	Serial Number
40		01643-31232	Washer	1	80001-

FIG. M2210-006016 Fender Group, PPC Lock Solenoid Valve With Accumulator

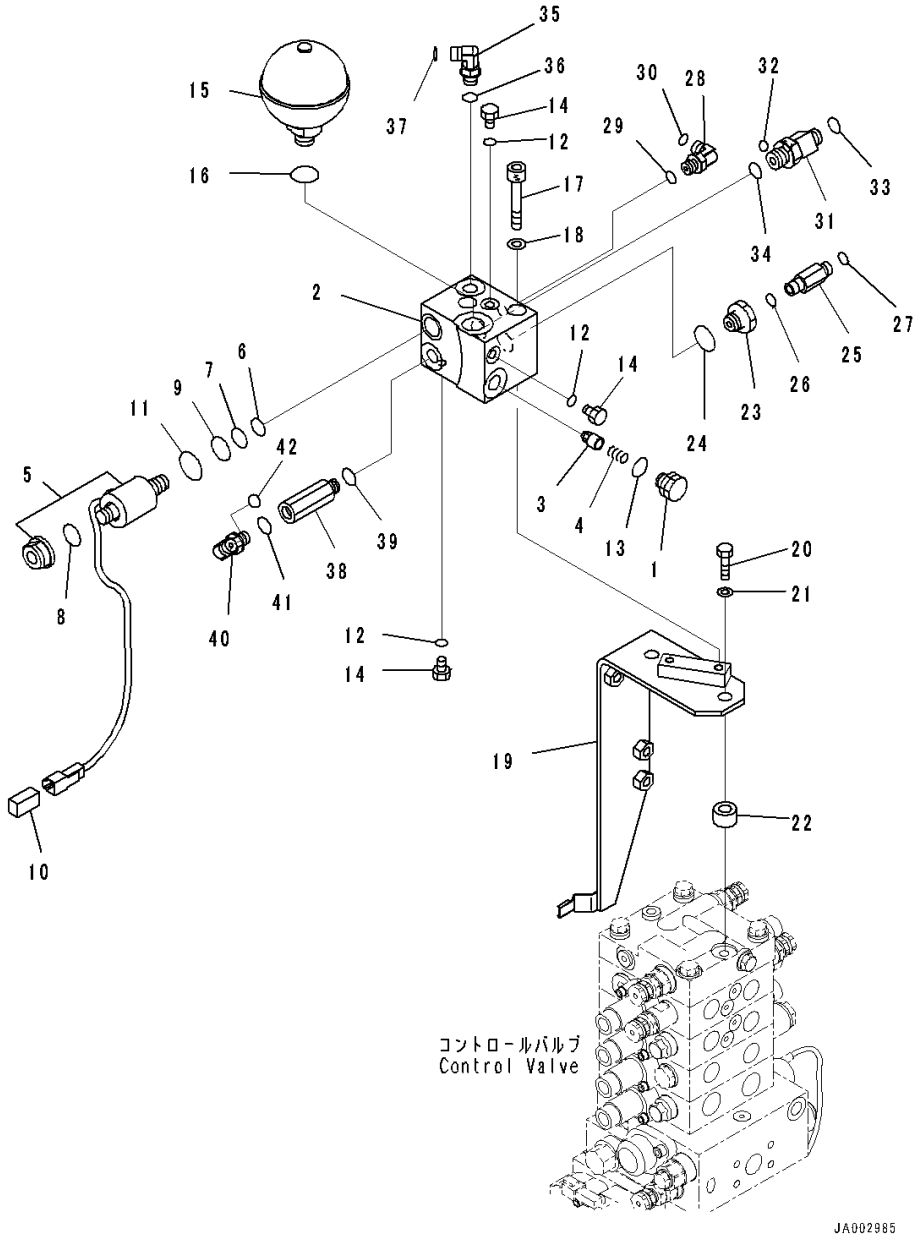

Index	Code	Part Number	Description	Qty	Serial Number
		Note: This list covers following specifications.			
		For Machine With 5-spool Valve Hydraulics, With Power Angle Power Tilt Dozer, For Machine With Ripper			
		For Machine With 5-spool Valve Hydraulics, With Power Angle Power Tilt Dozer			
		14X-62-53551	Block Assembly	1	80001-
1		103-49-14280	• Plug	1	80001-
2		14X-62-53561	• Block	1	80001-
3		205-60-51390	• Poppet	1	80001-
4		722-12-12063	• Spring	1	80001-
5		11Y-60-11530	• Valve, Solenoid	1	80001-
6		07000-02012	•• O-ring	1	80001-
7		07000-02014	•• O-ring	1	80001-
8		07000-12016	•• O-ring	1	80001-
9		07000-02018	•• O-ring	1	80001-
10		08192-22830	•• Connector	1	80001-
11		203-60-62190	•• O-ring	1	80001-
12		07002-10823	• O-ring	3	80001-
13		07002-11623	• O-ring	1	80001-
14		07040-10807	• Plug	3	80001-
15		22U-60-21330	Accumulator	1	80001-
16		07002-12034	O-ring	1	80001-
17		01252-A1085	Bolt, Hexagon Socket Head	2	80001-
18		01643-51032	Washer	2	80001-
19		14X-62-52960	Bracket	1	80001-
20		01010-81245	Bolt	2	80001-
21		01643-31232	Washer	2	80001-
22		14X-62-52971	Spacer	2	80001-
23		20Y-62-21940	Filter Assembly	1	80001-
24		07002-12034	O-ring	1	80001-
25		20U-62-41890	Nipple	1	80001-
26		07002-11423	O-ring	1	80001-
27		02896-11008	O-ring	1	80001-
28		02782-10210	Elbow	1	80001-
29		07002-11423	O-ring	1	80001-
30		02896-11008	O-ring	1	80001-
31		20K-62-33690	Tee	1	80001-
32		02896-11008	• O-ring	1	80001-
33		02896-11009	• O-ring	1	80001-

FIG. M2210-006016 Fender Group, PPC Lock Solenoid Valve With Accumulator

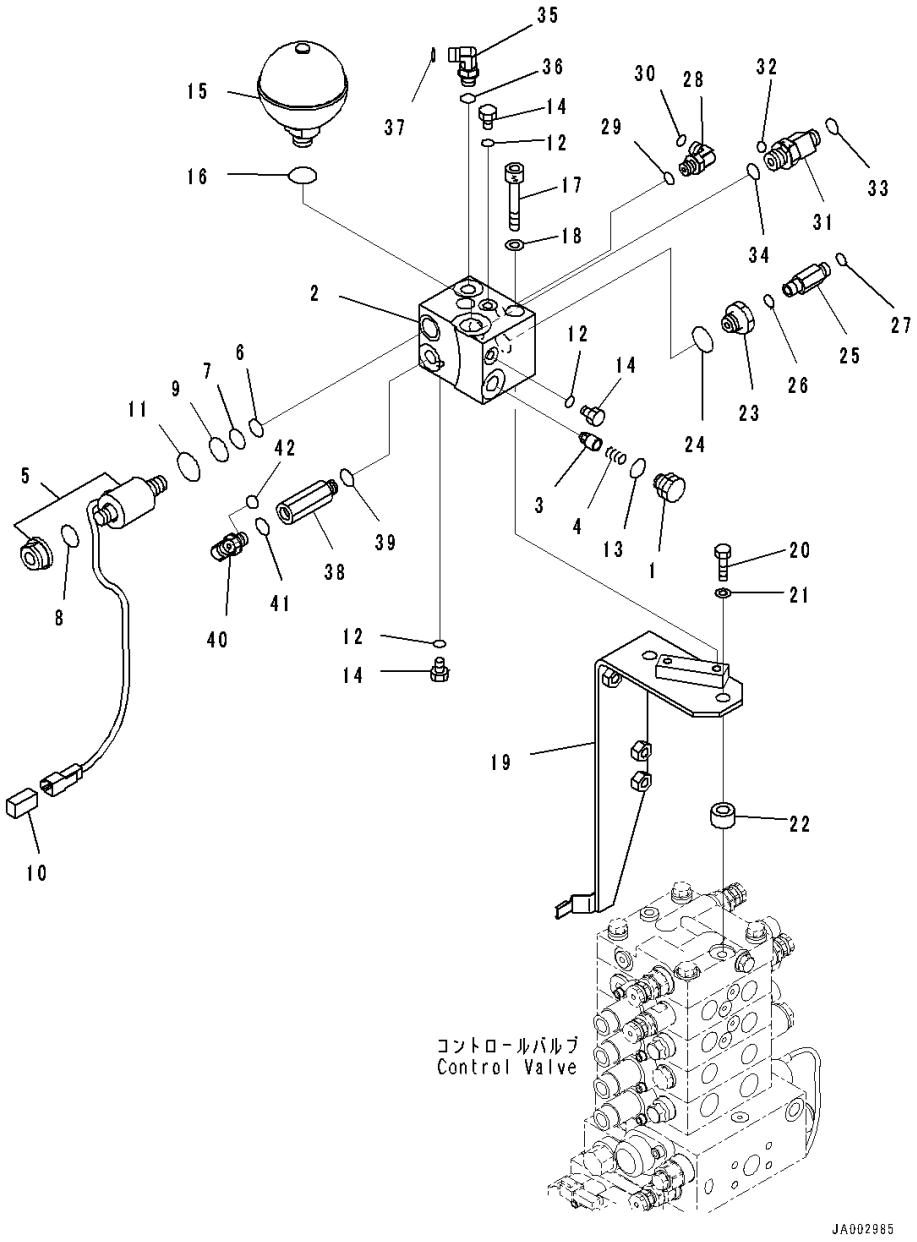

Index	Code	Part Number	Description	Qty	Serial Number
34		07002-12034	O-ring	1	80001-
35		02782-10210	Elbow	1	80001-
36		07002-11423	O-ring	1	80001-
37		02896-11008	O-ring	1	80001-
38		207-62-62460	Adapter	1	80001-
39		07002-11423	O-ring	1	80001-
40		02782-10210	Elbow	1	80001-
41		07002-11423	O-ring	1	80001-
42		02896-11008	O-ring	1	80001-

FIG. M2210-006017 Fender Group, For Machine With 5-spool Valve Hydraulics, With Power Angle Power Tilt Dozer, For Machine With Ripper, Control Valve Steering Piping

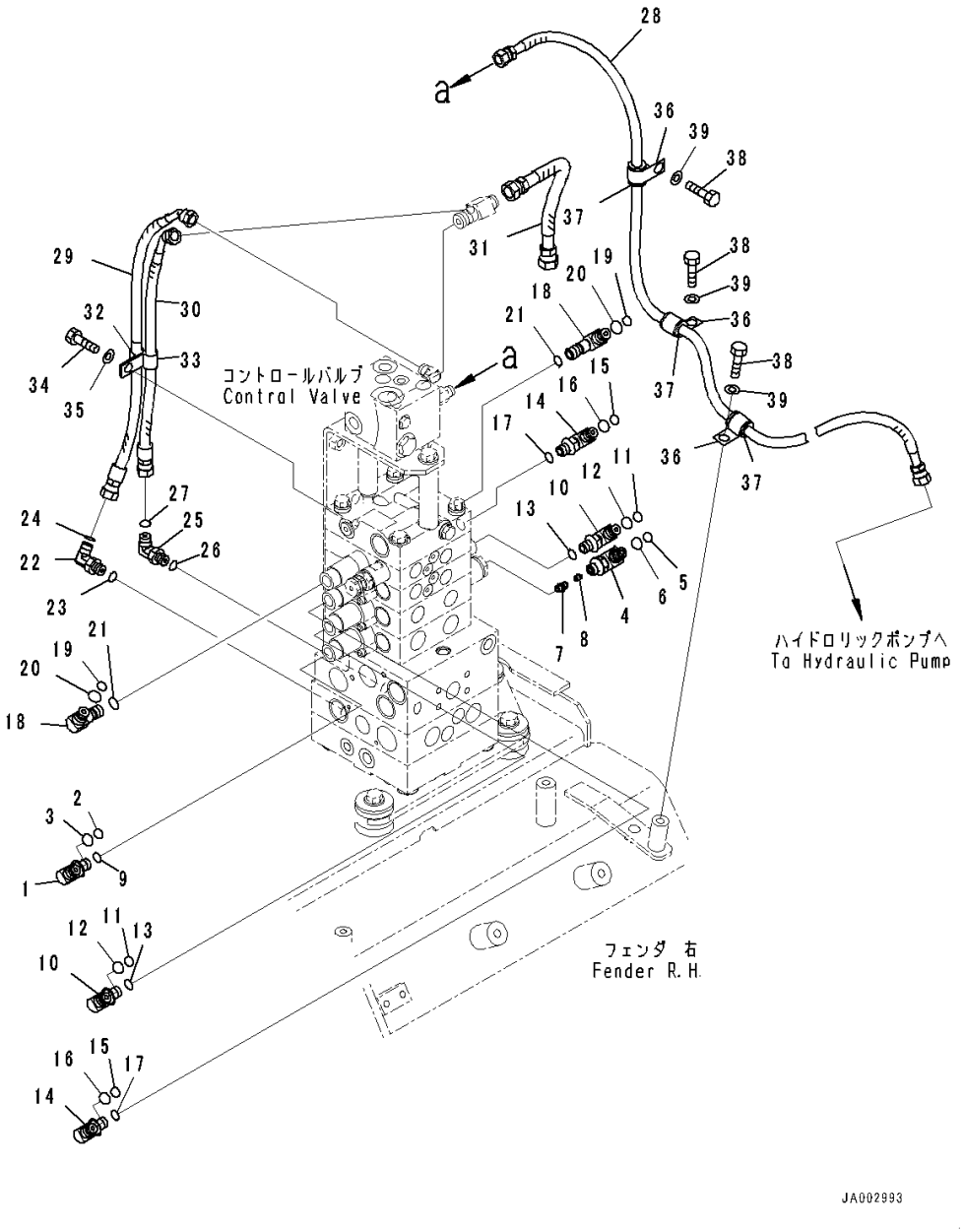

Index	Code	Part Number	Description	Qty	Serial Number
1		14X-62-53531	Elbow	1	80001-
2		201-60-11390	• O-ring	1	80001-
3		20Y-62-19560	• O-ring	1	80001-
		14X-62-54930	Valve Assembly	1	80001-
4		14X-62-54940	• Elbow	1	80001-
5		201-60-11390	•• O-ring	1	80001-
6		20Y-62-19560	•• O-ring	1	80001-
7		21W-62-44740	• Plug	1	80001-
8		21W-62-99926	• Poppet	1	80001-
9		07002-11423	O-ring	2	80001-
10		14X-62-53541	Elbow	2	80001-
11		201-60-11390	• O-ring	1	80001-
12		20Y-62-19560	• O-ring	1	80001-
13		07002-11423	O-ring	2	80001-
14		14X-62-54950	Elbow	2	80001-
15		201-60-11390	• O-ring	1	80001-
16		20Y-62-19560	• O-ring	1	80001-
17		07002-11423	O-ring	2	80001-
18		14X-62-53541	Elbow	2	80001-
19		201-60-11390	• O-ring	1	80001-
20		20Y-62-19560	• O-ring	1	80001-
21		07002-11423	O-ring	2	80001-
22		02782-10210	Elbow	1	80001-
23		07002-11423	O-ring	1	80001-
24		02896-11008	O-ring	1	80001-
25		02782-10210	Elbow	1	80001-
26		07002-11423	O-ring	1	80001-
27		02896-11008	O-ring	1	80001-
28		14X-62-52521	Hose	1	80001-
29		02764-00205	Hose, Face Seal Type	1	80001-
30		02764-00204	Hose, Face Seal Type	1	80001-
31		02762-00303	Hose, Face Seal Type	1	80001-
32		04434-51212	Clip	1	80001-
33		21T-72-23260	Clip	1	80001-
34		01010-81225	Bolt	1	80001-
35		01643-31232	Washer	1	80001-
36		04434-51712	Clip	3	80001-
37		07095-20211	Cushion	3	80001-
38		01010-81220	Bolt	3	80001-

FIG. M2210-006017 Fender Group, For Machine With 5-spool Valve Hydraulics, With Power Angle Power Tilt Dozer, For Machine With Ripper, Control Valve Steering Piping

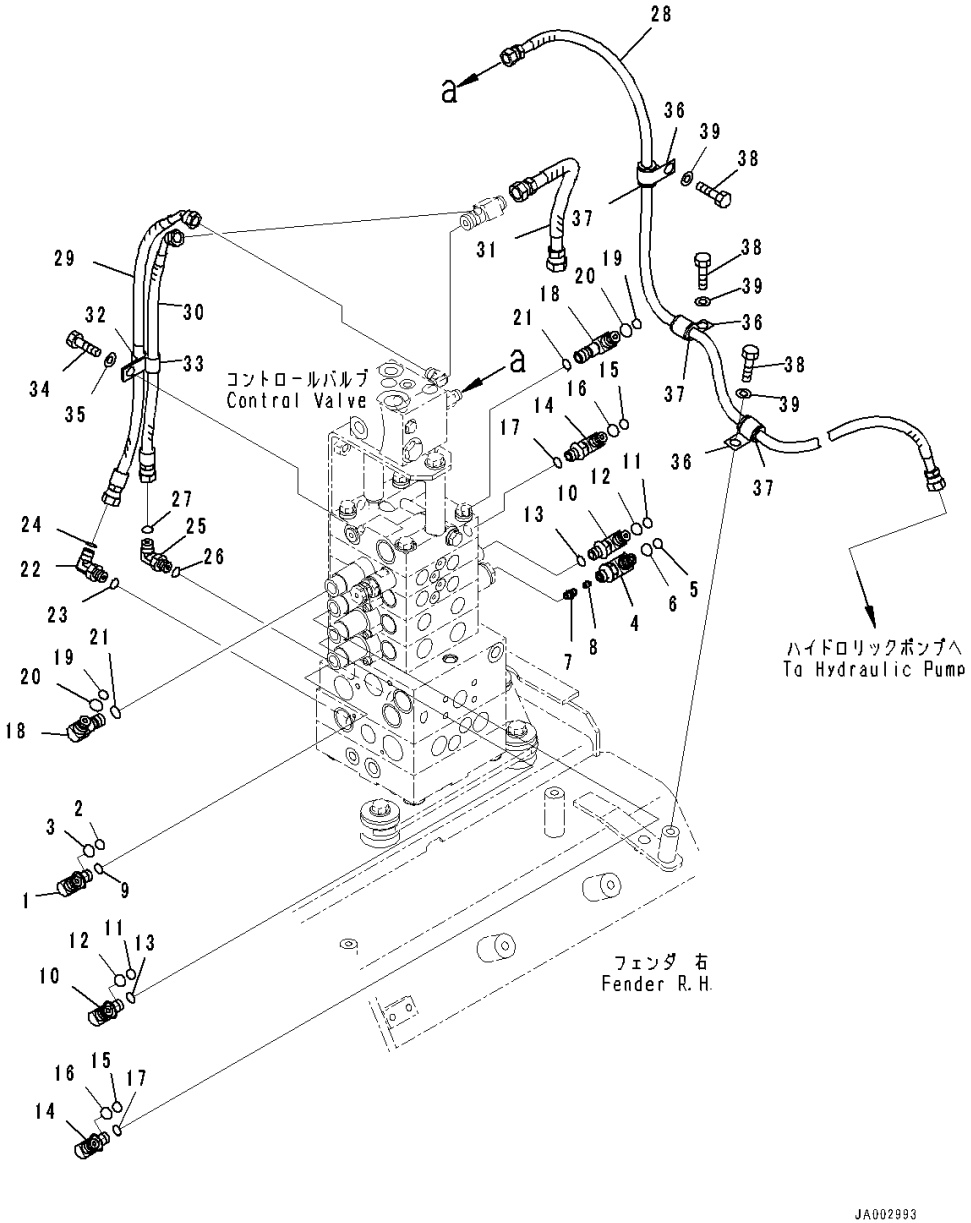

Index	Code	Part Number	Description	Qty	Serial Number
39		01643-31232	Washer	3	80001-

FIG. M2210-006020 Fender Group, Handrail

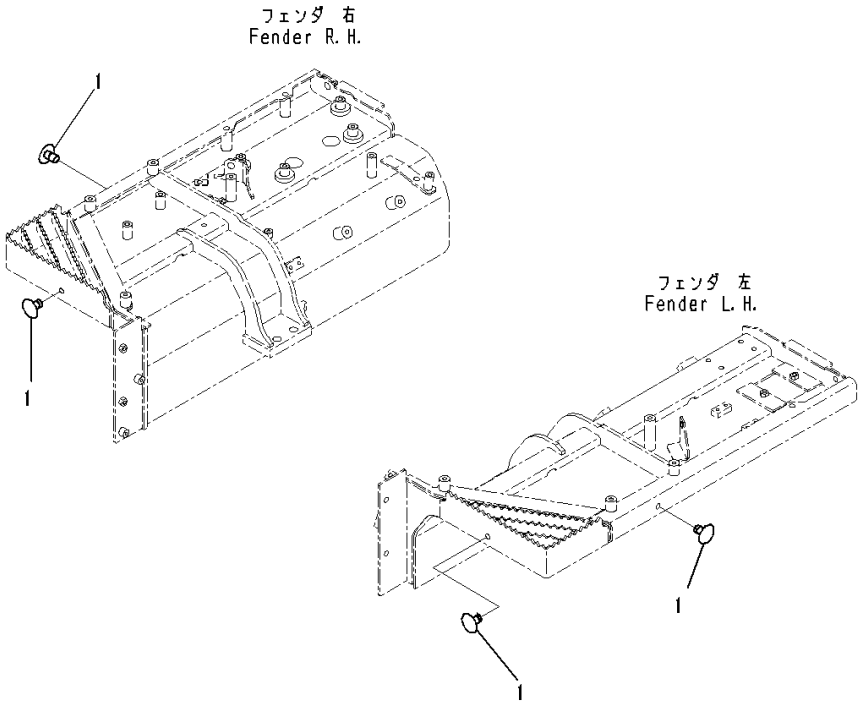

Index	Code	Part Number	Description	Qty	Serial Number
		Note: This list covers following specifications.			
		For Machine With 5-spool Valve Hydraulics, With Power Angle Power Tilt Dozer, For Machine With Ripper			
		For Machine With 5-spool Valve Hydraulics, With Power Angle Power Tilt Dozer			
1		416-54-21710	Plug.....	4	80001-

FIG. M2210-004015 Fender Group, For Machine With 5-spool Valve Hydraulics, With Power Tilt Pitch Dozer, Hydraulic Piping

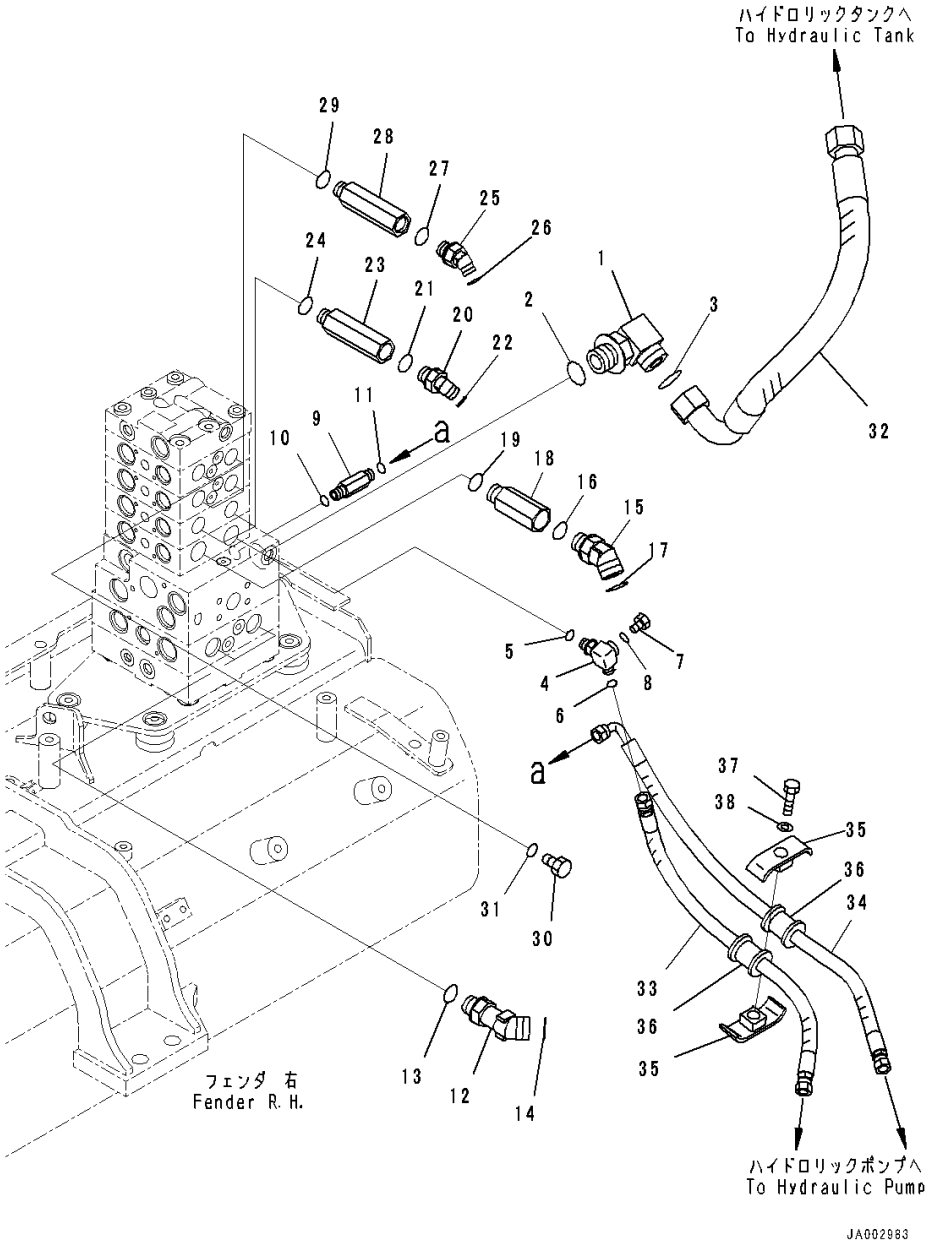

Index	Code	Part Number	Description	Qty	Serial Number
1		21W-62-42640	Elbow	1	80001-
2		07002-13334	O-ring	1	80001-
3		207-62-64740	O-ring	1	80001-
4		14X-62-54870	Tee	1	80001-
5		07002-11423	O-ring	1	80001-
6		02896-11008	O-ring	1	80001-
7		07040-11007	Plug	1	80001-
8		07002-11023	O-ring	1	80001-
9		11Y-62-12230	Union	1	80001-
10		07002-11423	O-ring	1	80001-
11		02896-11008	O-ring	1	80001-
12		11Y-62-36160	Elbow	2	80001-
13		07002-62434	O-ring	2	80001-
14		02896-61018	O-ring	2	80001-
15		02783-10628	Elbow	2	80001-
16		07002-12434	O-ring	2	80001-
17		02896-11018	O-ring	2	80001-
18		20T-62-81790	Joint	2	80001-
19		07002-12434	O-ring	2	80001-
20		02783-10315	Elbow	2	80001-
21		07002-12034	O-ring	2	80001-
22		02896-11009	O-ring	2	80001-
23		14X-62-52931	Joint	2	80001-
24		07002-12034	O-ring	2	80001-
25		02783-10315	Elbow	2	80001-
26		07002-12034	O-ring	2	80001-
27		02896-11009	O-ring	2	80001-
28		14X-62-52931	Joint	2	80001-
29		07002-12034	O-ring	2	80001-
30		07040-12012	Plug	2	80001-
31		07002-12034	O-ring	2	80001-
32		14X-62-52940	Hose	1	80001-
33		14X-62-52391	Hose	1	80001-
34		14X-62-52541	Hose	1	80001-
35		22P-62-13540	Clamp	2	80001-
36		07095-00314	Cushion	2	80001-
37		01010-81260	Bolt	1	80001-
38		01643-31232	Washer	1	80001-

FIG. M2210-004017 Fender Group, For Machine With 5-spool Valve Hydraulics, With Power Tilt Pitch Dozer, Control Valve Steering Piping

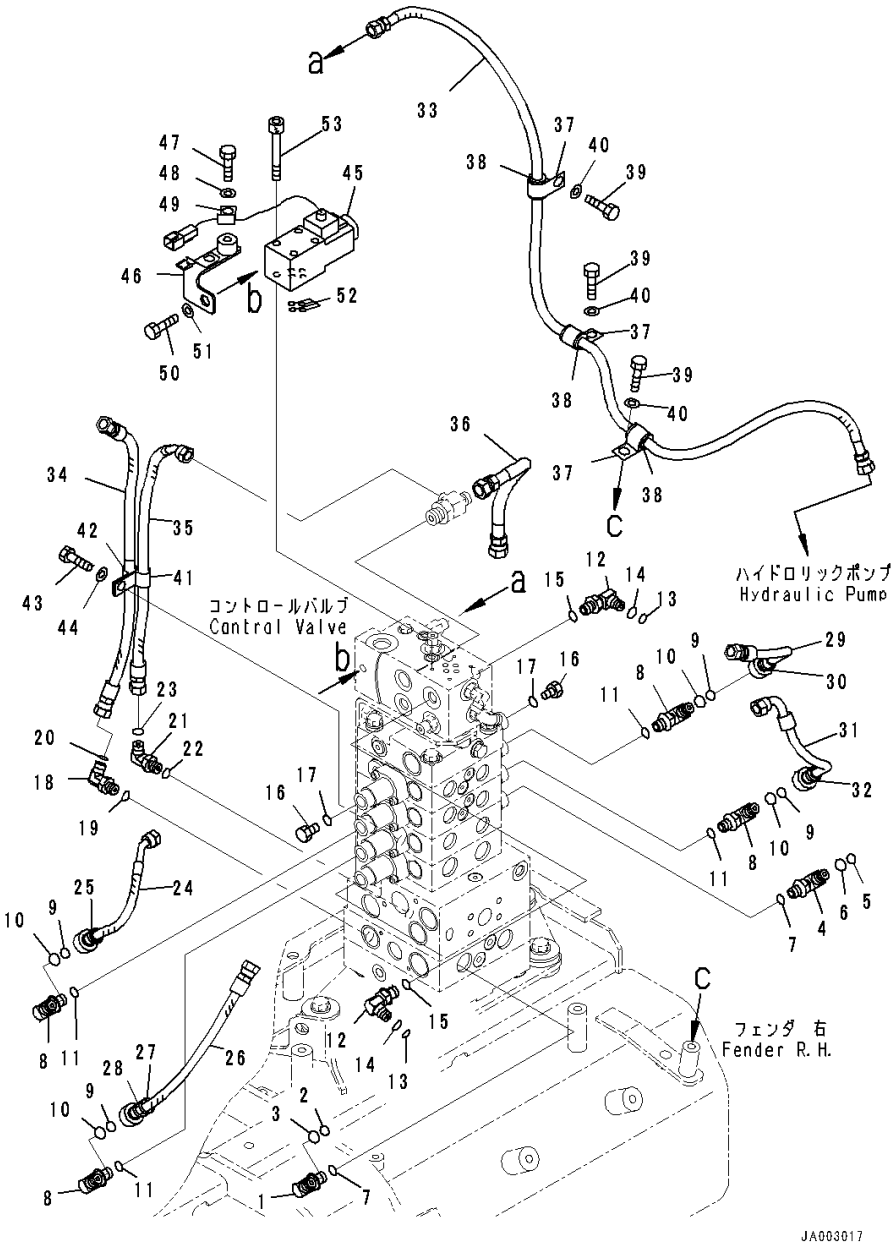

Index	Code	Part Number	Description	Qty	Serial Number
1		14X-62-53531	Elbow	1	80001-
2		201-60-11390	• O-ring	1	80001-
3		20Y-62-19560	• O-ring	1	80001-
4		14X-62-54960	Elbow	1	80001-
5		201-60-11390	• O-ring	1	80001-
6		20Y-62-19560	• O-ring	1	80001-
7		07002-11423	O-ring	2	80001-
8		14X-62-53541	Elbow	2	80001-
9		201-60-11390	• O-ring	1	80001-
10		20Y-62-19560	• O-ring	1	80001-
11		07002-11423	O-ring	2	80001-
12		14X-62-53541	Elbow	2	80001-
13		201-60-11390	• O-ring	1	80001-
14		20Y-62-19560	• O-ring	1	80001-
15		07002-11423	O-ring	2	80001-
16		07040-11409	Plug	2	80001-
17		07002-11423	O-ring	2	80001-
18		02782-10210	Elbow	1	80001-
19		07002-11423	O-ring	1	80001-
20		02896-11008	O-ring	1	80001-
21		02782-10210	Elbow	1	80001-
22		07002-11423	O-ring	1	80001-
23		02896-11008	O-ring	1	80001-
24		14X-62-54110	Hose Assembly	1	80001-
25		20Y-62-22820	• Band, Blue	1	80001-
26		14X-62-54121	Hose Assembly	1	80001-
27		20Y-62-22820	• Band, Blue	2	80001-
28		20Y-62-22830	• Band, White	2	80001-
29		14X-62-54150	Hose Assembly	1	80001-
30		20Y-62-22830	• Band, White	2	80001-
31		14X-62-54160	Hose Assembly	1	80001-
32		206-62-87990	• Band, Orange	2	80001-
33		14X-62-54750	Hose	1	80001-
34		02762-002A4	Hose	1	80001-
35		02764-002A4	Hose, Face Seal Type	1	80001-
36		02762-00303	Hose, Face Seal Type	1	80001-
37		04434-51712	Clip	3	80001-
38		07095-20211	Cushion	3	80001-
39		01010-81220	Bolt	3	80001-

FIG. M2210-004017 Fender Group, For Machine With 5-spool Valve Hydraulics, With Power Tilt Pitch Dozer, Control Valve Steering Piping

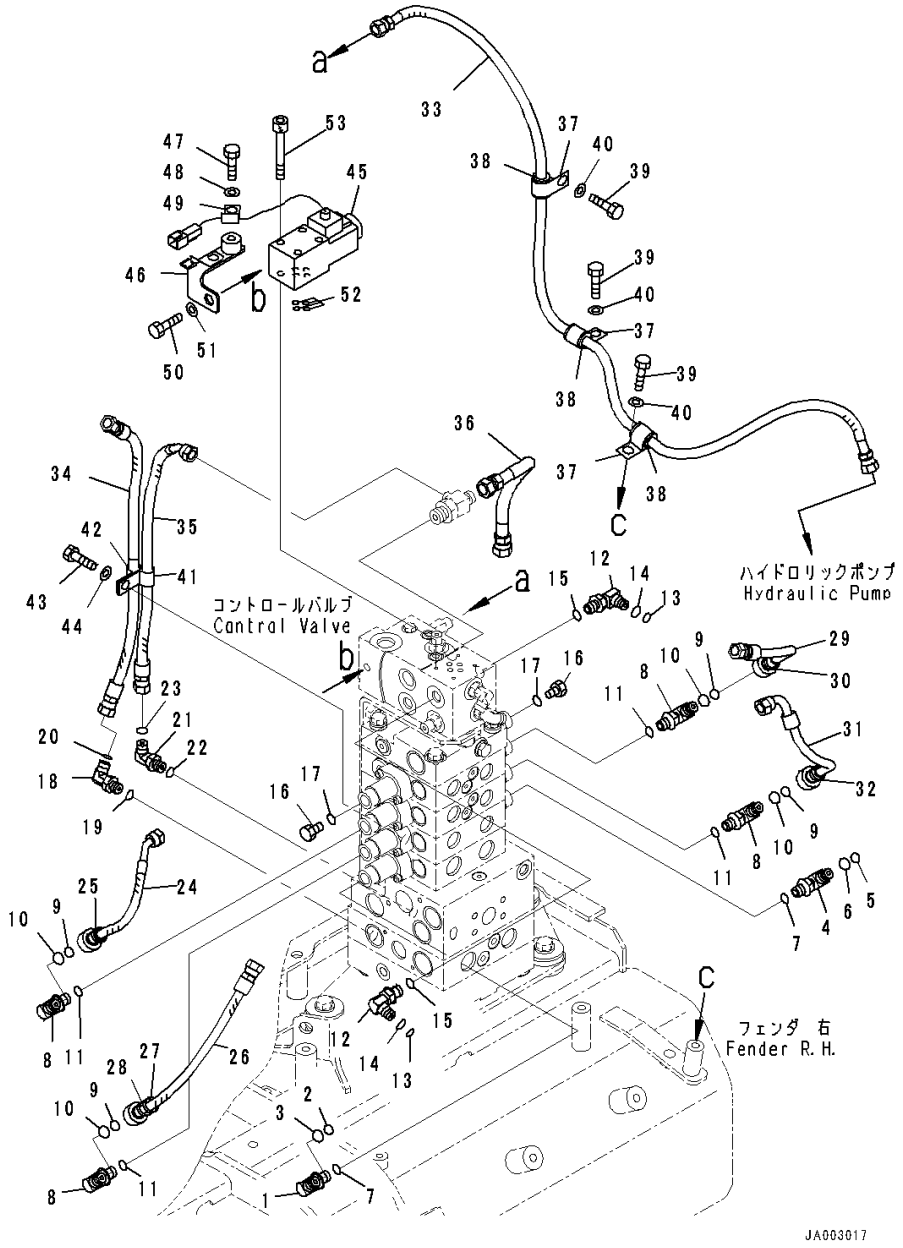

Index	Code	Part Number	Description	Qty	Serial Number
40		01643-31232	Washer	3	80001-
41		21T-72-23260	Clip	1	80001-
42		04434-51212	Clip	1	80001-
43		01010-81225	Bolt	1	80001-
44		01643-31232	Washer	1	80001-
45		14X-06-51821	Valve	1	80001-
46		14X-62-54681	Bracket	1	80001-
47		01010-81220	Bolt	1	80001-
48		01643-31232	Washer	1	80001-
49		04434-50612	Clip	1	80001-
50		01010-81220	Bolt	1	80001-
51		01643-31232	Washer	1	80001-
52		07000-11009	O-ring	4	80001-
53		01252-70545	Bolt, Hexagon Socket Head	4	80001-

FIG. M2210-003015 Fender Group, For Machine With 5-spool Valve Hydraulics, With Power Angle Power Tilt Dozer, Hydraulic Piping

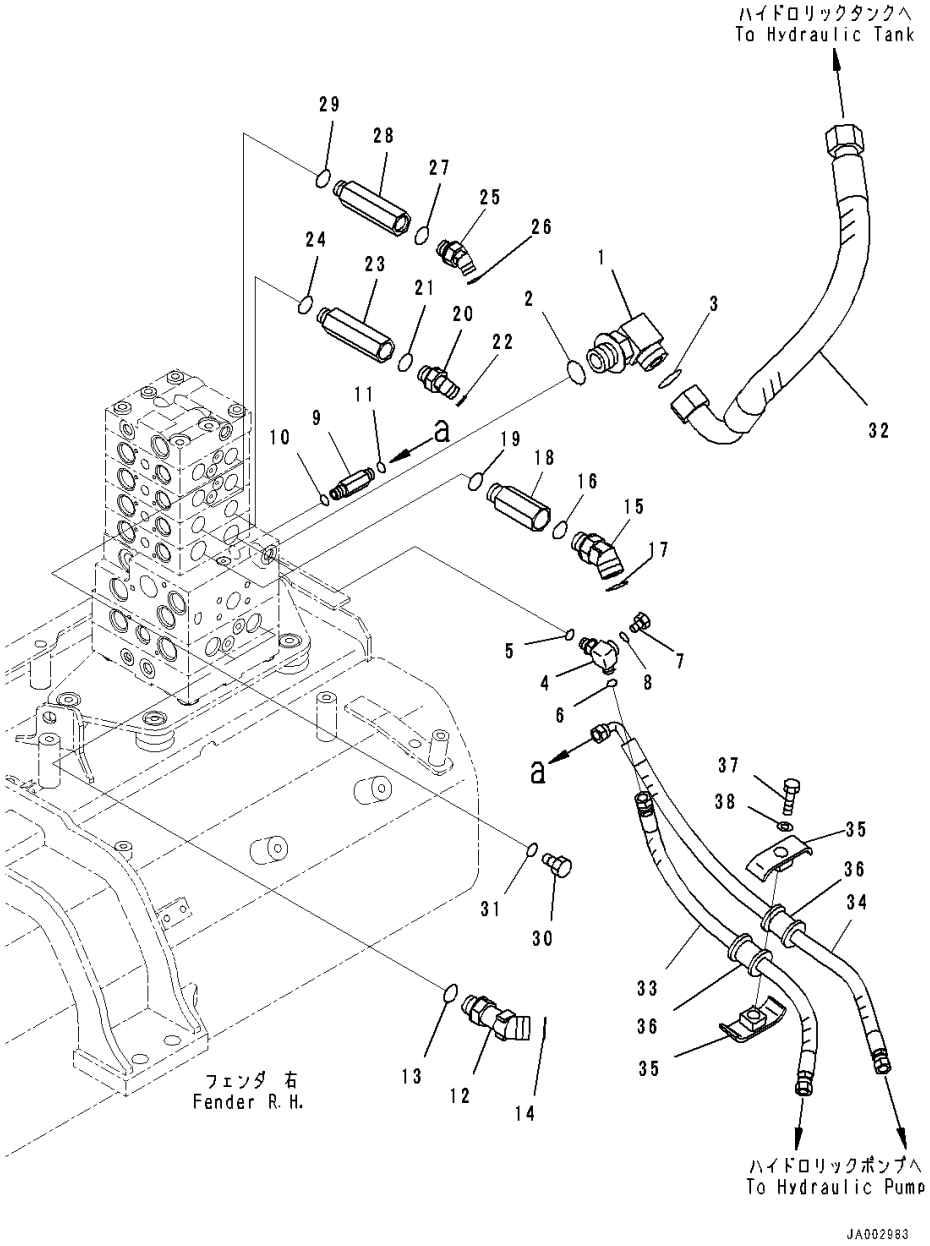

Index	Code	Part Number	Description	Qty	Serial Number
1		21W-62-42640	Elbow	1	80001-
2		07002-13334	O-ring	1	80001-
3		207-62-64740	O-ring	1	80001-
4		14X-62-54870	Tee	1	80001-
5		07002-11423	O-ring	1	80001-
6		02896-11008	O-ring	1	80001-
7		07040-11007	Plug	1	80001-
8		07002-11023	O-ring	1	80001-
9		11Y-62-12230	Union	1	80001-
10		07002-11423	O-ring	1	80001-
11		02896-11008	O-ring	1	80001-
12		11Y-62-36160	Elbow	2	80001-
13		07002-62434	O-ring	2	80001-
14		02896-61018	O-ring	2	80001-
15		02783-10628	Elbow	2	80001-
16		07002-12434	O-ring	2	80001-
17		02896-11018	O-ring	2	80001-
18		20T-62-81790	Joint	2	80001-
19		07002-12434	O-ring	2	80001-
20		02783-10315	Elbow	2	80001-
21		07002-12034	O-ring	2	80001-
22		02896-11009	O-ring	2	80001-
23		14X-62-52931	Joint	2	80001-
24		07002-12034	O-ring	2	80001-
25		02783-10422	Elbow	2	80001-
26		07002-12034	O-ring	2	80001-
27		02896-11012	O-ring	2	80001-
28		14X-62-52931	Joint	2	80001-
29		07002-12034	O-ring	2	80001-
30		07040-12012	Plug	2	80001-
31		07002-12034	O-ring	2	80001-
32		14X-62-52940	Hose	1	80001-
33		14X-62-52391	Hose	1	80001-
34		14X-62-52541	Hose	1	80001-
35		22P-62-13540	Clamp	2	80001-
36		07095-00314	Cushion	2	80001-
37		01010-81260	Bolt	1	80001-
38		01643-31232	Washer	1	80001-

FIG. M2210-003017 Fender Group, For Machine With 5-spool Valve Hydraulics, With Power Angle Power Tilt Dozer, Control Valve Steering Piping

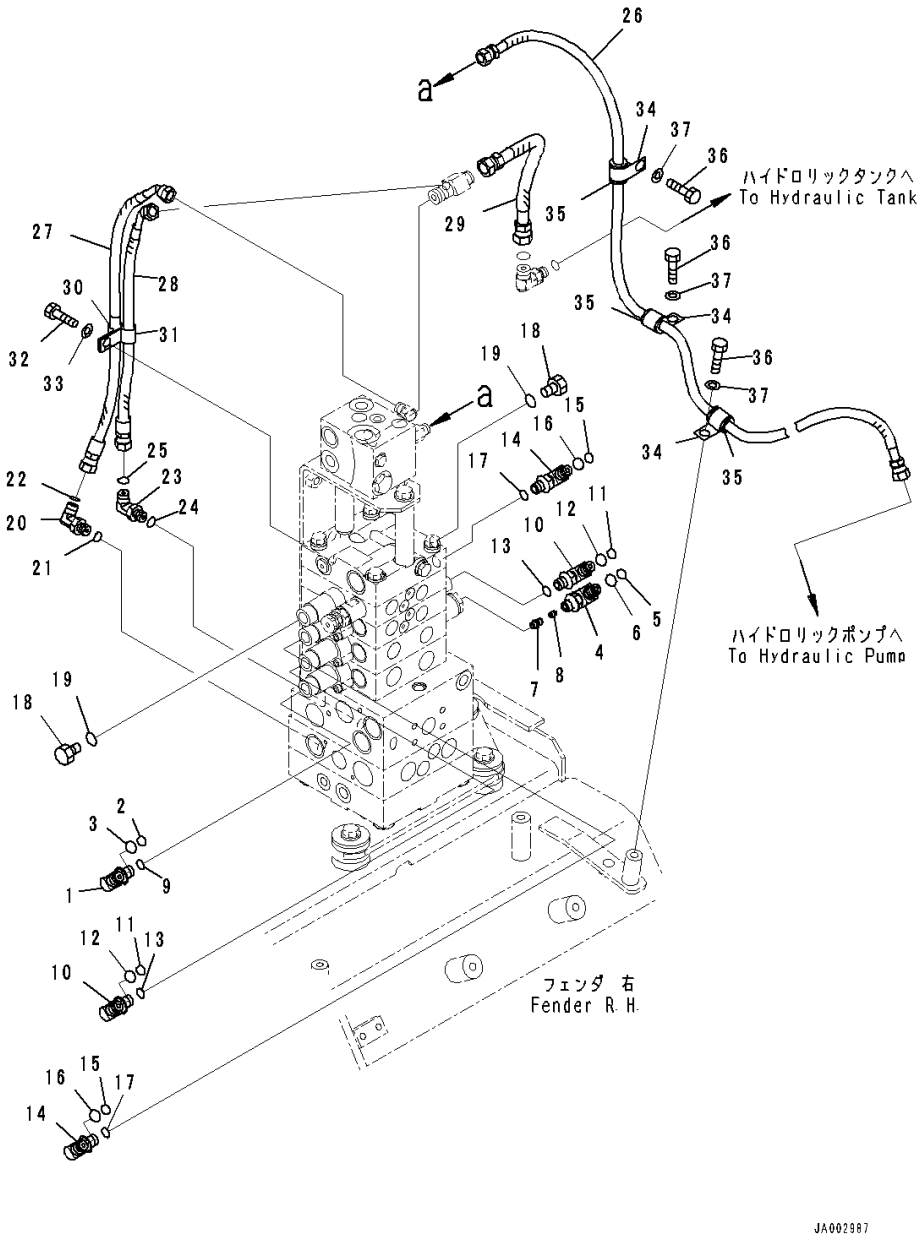

Index	Code	Part Number	Description	Qty	Serial Number
1		14X-62-53531	Elbow	1	80001-
2		201-60-11390	• O-ring	1	80001-
3		20Y-62-19560	• O-ring	1	80001-
		14X-62-54930	Valve Assembly	1	80001-
4		14X-62-54940	• Elbow	1	80001-
5		201-60-11390	•• O-ring	1	80001-
6		20Y-62-19560	•• O-ring	1	80001-
7		21W-62-44740	• Plug	1	80001-
8		21W-62-99926	• Poppet	1	80001-
9		07002-11423	O-ring	2	80001-
10		14X-62-53541	Elbow	2	80001-
11		201-60-11390	• O-ring	1	80001-
12		20Y-62-19560	• O-ring	1	80001-
13		07002-11423	O-ring	2	80001-
14		14X-62-54950	Elbow	2	80001-
15		201-60-11390	• O-ring	1	80001-
16		20Y-62-19560	• O-ring	1	80001-
17		07002-11423	O-ring	2	80001-
18		07040-11409	Plug	2	80001-
19		07002-11423	O-ring	2	80001-
20		02782-10210	Elbow	1	80001-
21		07002-11423	O-ring	1	80001-
22		02896-11008	O-ring	1	80001-
23		02782-10210	Elbow	1	80001-
24		07002-11423	O-ring	1	80001-
25		02896-11008	O-ring	1	80001-
26		14X-62-52521	Hose	1	80001-
27		02764-00205	Hose, Face Seal Type	1	80001-
28		02764-00204	Hose, Face Seal Type	1	80001-
29		02762-00303	Hose, Face Seal Type	1	80001-
30		04434-51212	Clip	1	80001-
31		21T-72-23260	Clip	1	80001-
32		01010-81225	Bolt	1	80001-
33		01643-31232	Washer	1	80001-
34		04434-51712	Clip	3	80001-
35		07095-20211	Cushion	3	80001-
36		01010-81220	Bolt	3	80001-
37		01643-31232	Washer	3	80001-

FIG. M2211-001001 Fender Cover, Handrail, Operator's Seat, Battery Box Cover

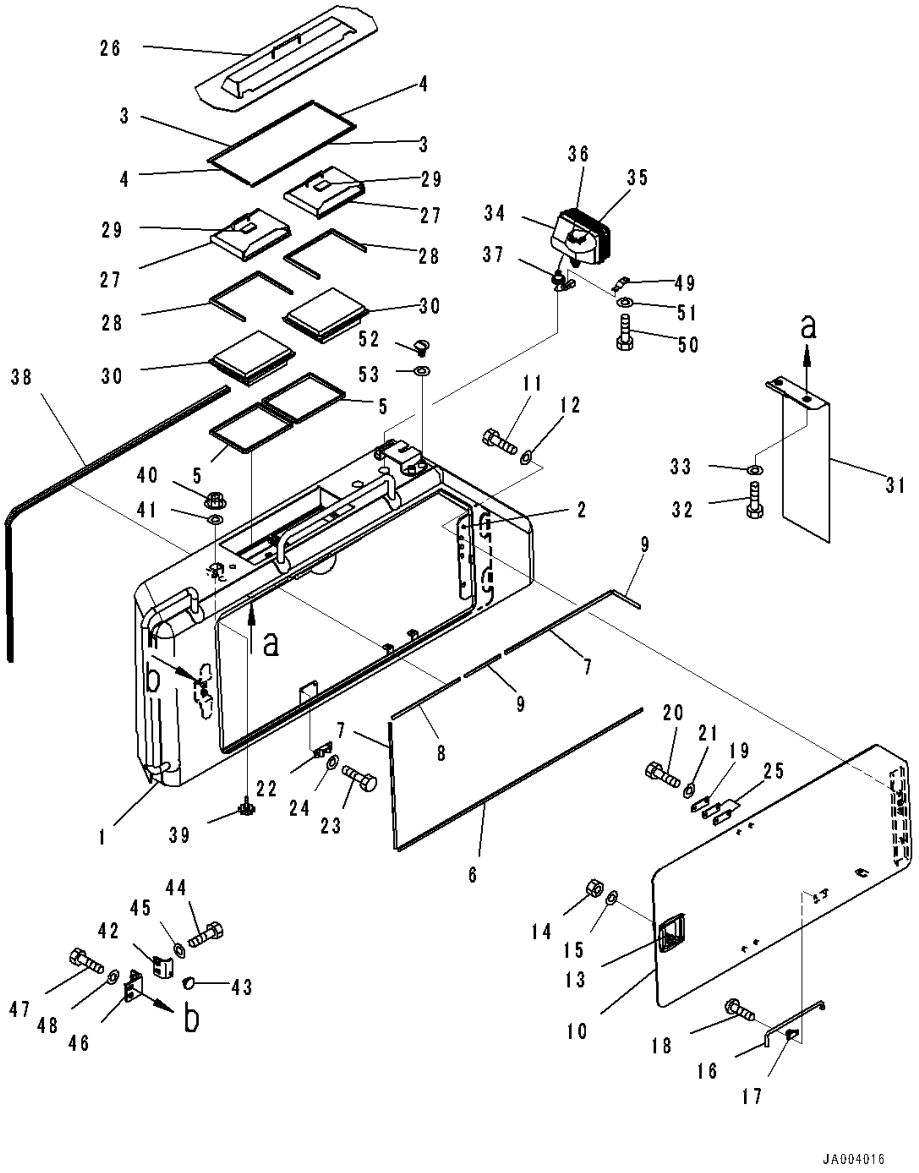

Index	Code	Part Number	Description	Qty	Serial Number
1		14X-54-53212	Cover	1	80005-
2		14X-54-53341	• Hinge	1	80001-
3		14X-54-53560	• Sheet,Bonded	2	80001-
4		14X-54-53570	• Sheet,Bonded	2	80001-
5		14X-54-53580	• Seal,Bonded	2	80001-
6		14X-54-53710	• Sheet,Bonded	1	80001-
7		14X-54-53720	• Sheet,Bonded	2	80001-
8		14X-54-53730	• Sheet,Bonded	1	80001-
9		14X-54-53740	• Sheet,Bonded	2	80001-
10		14X-54-53222	Cover	1	80005-
11		01010-81020	Bolt	3	80001-
12		01643-31032	Washer	3	80001-
13		14X-54-54310	Lock	1	80005-
14		01580-10605	Nut	4	80001-
15		01643-30623	Washer	4	80001-
16		20Y-54-29232	Bar	1	80001-
17		198-54-19150	Spring	1	80005-
18		01023-10608	Screw	2	80001-
19		205-54-53550	Dovetail	2	80001-
20		01010-80612	Bolt	4	80001-
21		01643-30623	Washer	4	80001-
22		205-54-51970	Dovetail	2	80001-
23		01010-80616	Bolt	4	80001-
24		01643-30623	Washer	4	80001-
25		14X-54-53860	Shim	4	80001-
26		14X-Y11-1822	Cover	1	80001-
27		14X-Y11-2270	Cover Assembly	2	80001-
28		134-X11-1630	• Seal	1	80001-
29		14X-911-8520	• Seal	1	80001-
30		17M-911-3530	Element	2	80001-
31		14X-54-53281	Plate	1	80001-
32		01010-81020	Bolt	2	80001-
33		01643-31032	Washer	2	80001-
		14X-06-52730	Lamp Assembly, Working	1	80001-
34		17A-06-17931	• Lamp Assembly, Working	1	80001-
35		17A-06-17970	•• Bulb, 70watt	1	80001-
36		17A-06-17980	•• Sleeve	1	80001-
37		144-43-81620	• Grommet	1	80001-
38		14X-54-53760	Seal	1	80005-

FIG. M2211-001001 Fender Cover, Handrail, Operator's Seat, Battery Box Cover

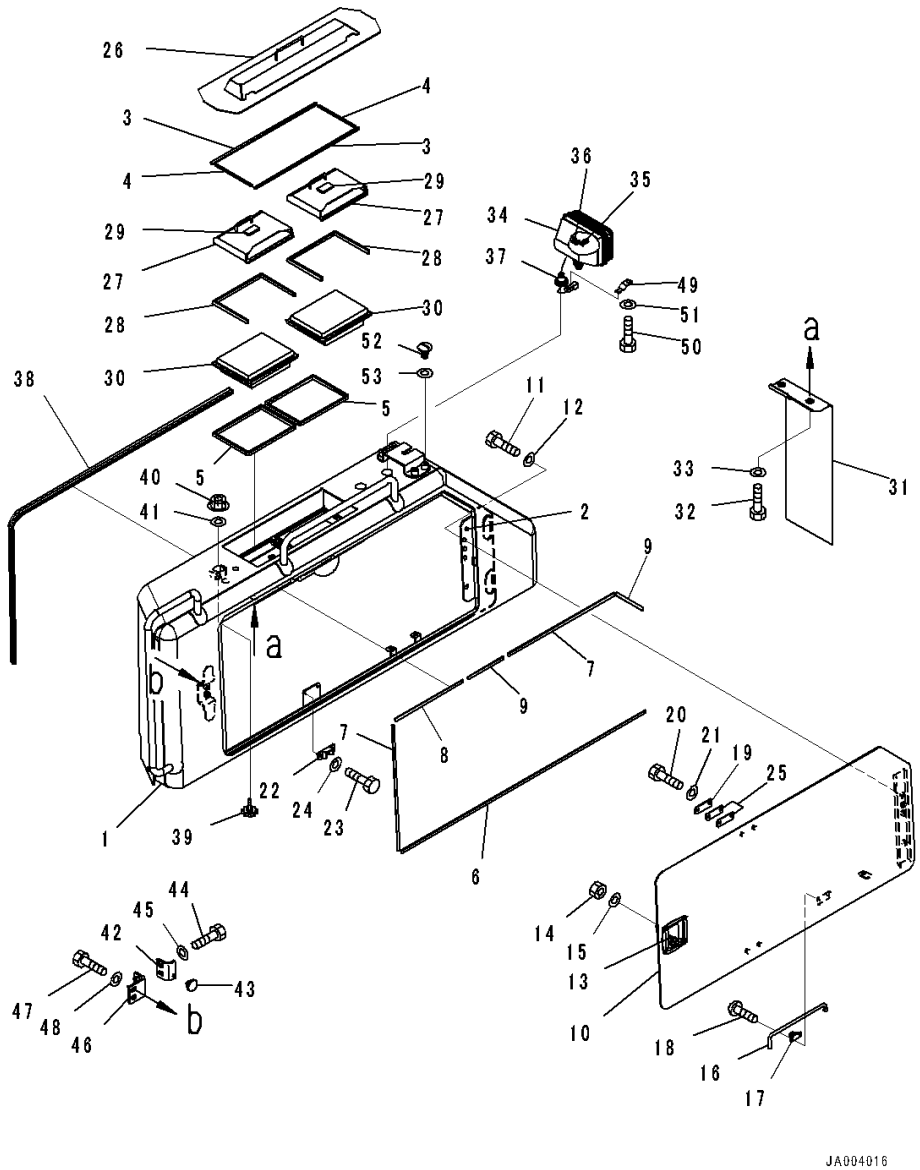

Index	Code	Part Number	Description	Qty	Serial Number
39		195-54-68760	Knob	2	80001-
40		01594-01008	Nut	2	80001-
41		01640-21016	Washer	2	80001-
42		14X-54-53840	Plate	1	80001-
43		14X-54-12960	Stopper	1	80001-
44		01010-81230	Bolt	2	80001-
45		01643-31232	Washer	2	80001-
46		14X-54-53850	Plate	1	80001-
47		01010-81230	Bolt	2	80001-
48		01643-31232	Washer	2	80001-
49		08193-21012	Clip	1	80001-
50		01010-81020	Bolt	1	80001-
51		01643-31032	Washer	1	80001-
52		14X-54-53380	Cap	4	80005-
53		01643-31032	Washer	4	80005-

FIG. M2211-001002 Fender Cover, Handrail, Operator's Seat, Valve Cover

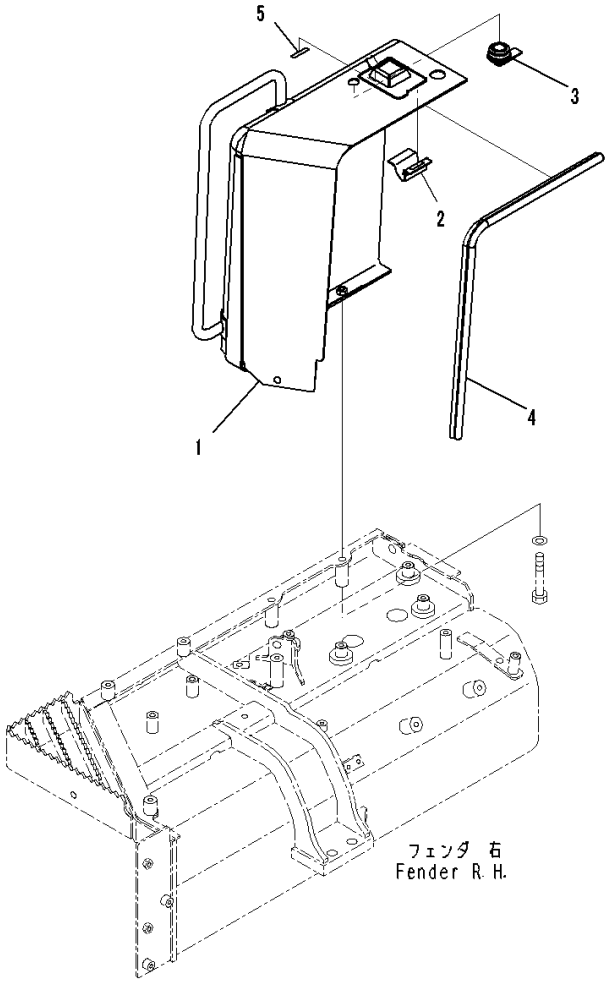

Index	Code	Part Number	Description	Qty	Serial Number
1		14X-54-53301	Cover Assembly,RHS	1	80007-
2		14X-54-53360	• Hinge	1	80001-
3		205-60-71220	• Lock Assembly	1	80001-
4		14X-54-53770	• Seal	1	80001-
5		14X-54-53390	• Plate	1	80007-

FIG. M2211-001003 Fender Cover, Step

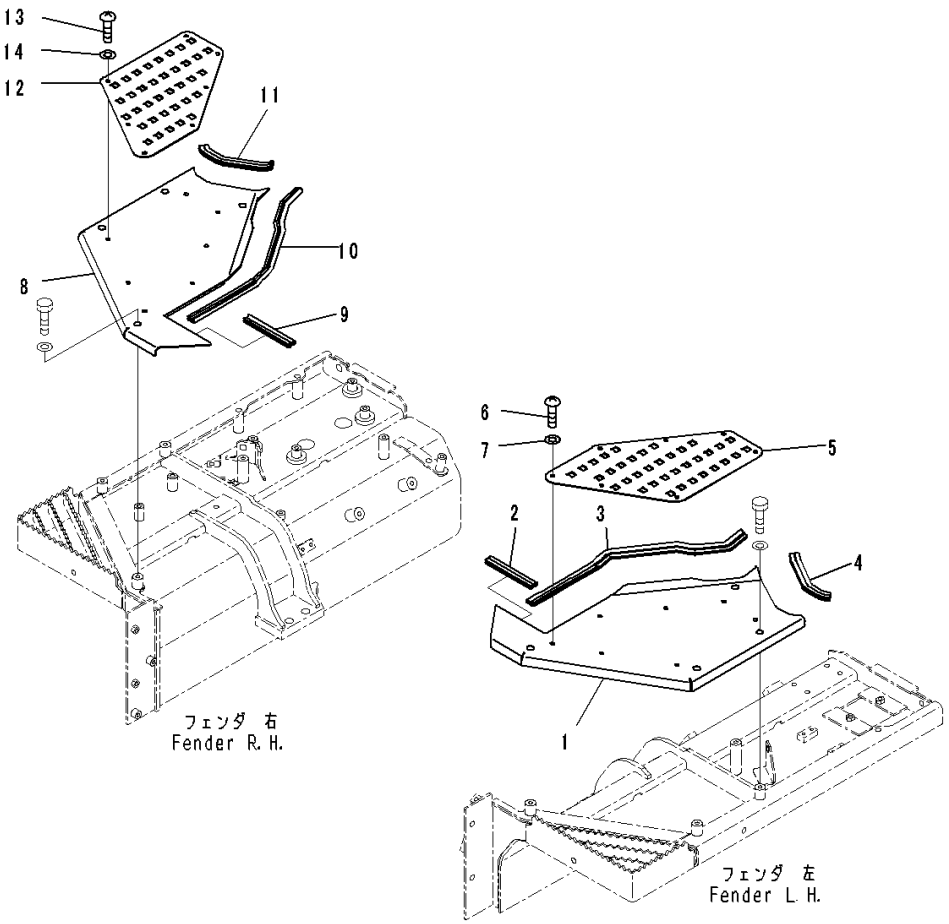

Index	Code	Part Number	Description	Qty	Serial Number
		Note: This list covers following specifications.			
		Handrail, Operator's Seat			
		With Handrail, Operator's Seat, ROPS Canopy			
		With Handrail, Operator's Seat, Refuel Pump			
1		14X-54-53400	Cover Assembly,LHS	1	80001-
2		14X-54-53470	• Seal	1	80001-
3		14X-54-53480	• Seal	1	80001-
4		14X-54-53490	• Seal	1	80001-
5		14X-54-53420	Plate	1	80001-
6		01245-00816	Screw	7	80001-
7		01643-70823	Washer	7	80001-
8		14X-54-53500	Cover Assembly,RHS	1	80001-
9		14X-54-53470	• Seal	1	80001-
10		14X-54-53480	• Seal	1	80001-
11		14X-54-53490	• Seal	1	80001-
12		14X-54-53440	Plate	1	80001-
13		01245-00816	Screw	7	80001-
14		01643-70823	Washer	7	80001-

FIG. M2211-001004 Fender Cover, Mounts

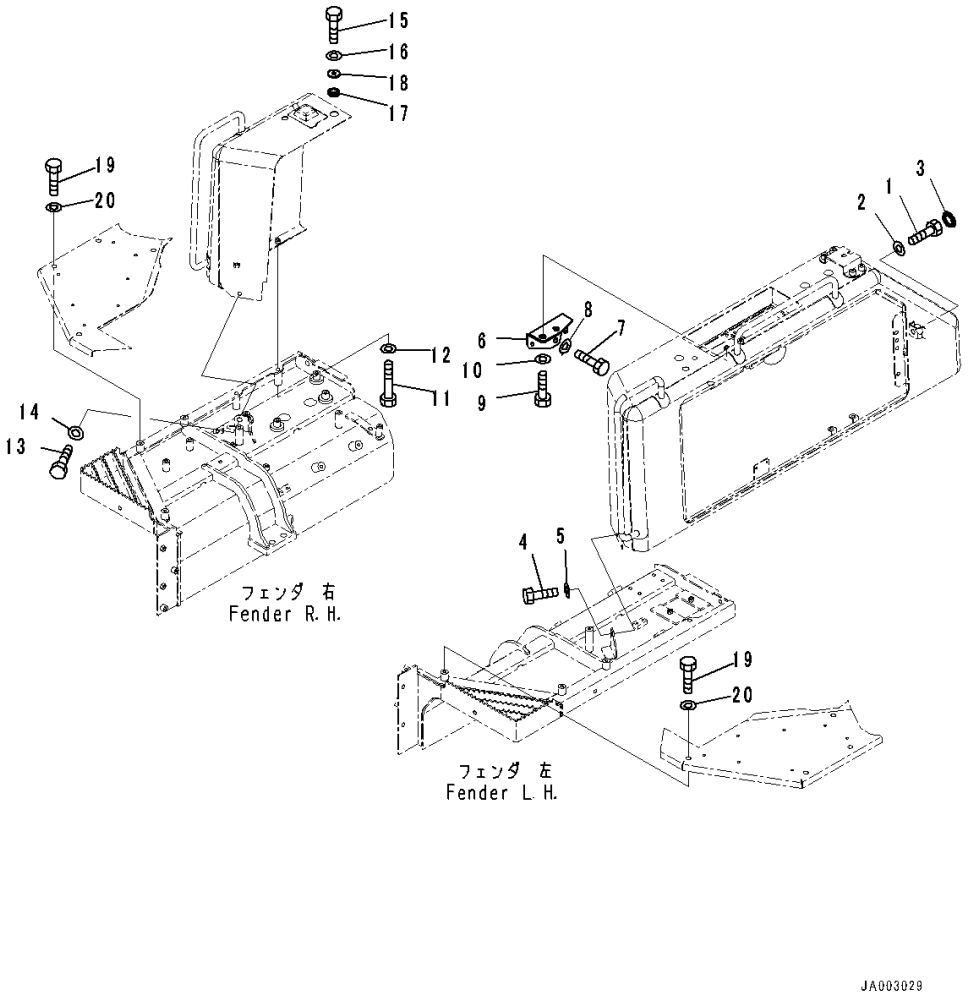

Index	Code	Part Number	Description	Qty	Serial Number
		Note: This list covers following specifications.			
		Handrail, Operator's Seat			
		With Handrail, Operator's Seat, ROPS Canopy			
		With Handrail, Operator's Seat, Refuel Pump			
1		01010-81235	Bolt	4	80001-
2		01643-31232	Washer	4	80001-
3		195-54-42981	Cap	1	80001-
4		01010-81225	Bolt	1	80001-
5		01643-31232	Washer	1	80001-
6		14X-54-53261	Bracket	1	80001-
7		01010-81225	Bolt	2	80001-
8		01643-31232	Washer	2	80001-
9		01010-81225	Bolt	2	80001-
10		175-54-34170	Washer	2	80001-
11		01010-81295	Bolt	2	80001-
12		01643-31232	Washer	2	80001-
13		01010-81225	Bolt	1	80001-
14		01643-31232	Washer	1	80001-
15		01010-81235	Bolt	1	80001-
16		01643-31232	Washer	1	80001-
17		175-03-42140	Rubber	1	80001-
18		415-46-11370	Spacer	1	80001-
19		01010-81225	Bolt	8	80001-
20		175-54-34170	Washer	8	80001-

FIG. M2211-002001 Fender Cover, With Handrail, Operator's Seat, ROPS Canopy, Battery Box Cover

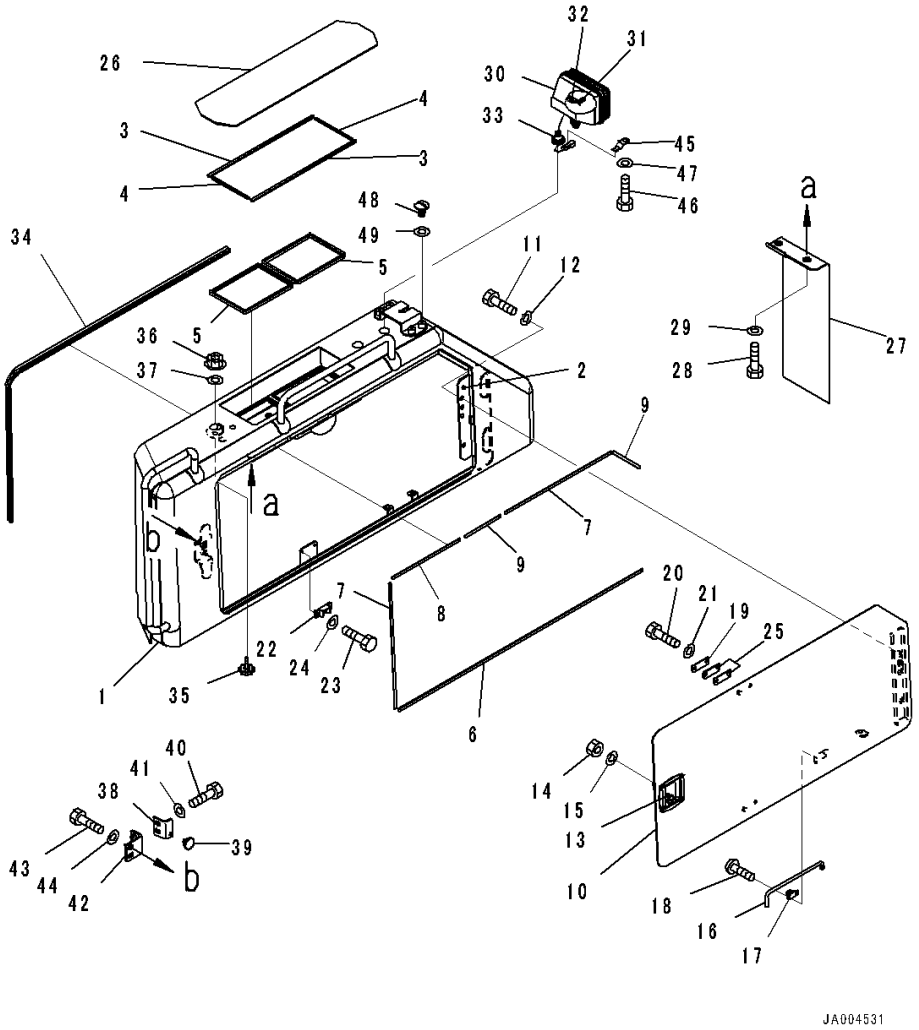

Index	Code	Part Number	Description	Qty	Serial Number
1		14X-54-53212	Cover	1	80001-
2		14X-54-53341	• Hinge	1	80001-
3		14X-54-53560	• Sheet,Bonded	2	80001-
4		14X-54-53570	• Sheet,Bonded	2	80001-
5		14X-54-53580	• Seal,Bonded	2	80001-
6		14X-54-53710	• Sheet,Bonded	1	80001-
7		14X-54-53720	• Sheet,Bonded	2	80001-
8		14X-54-53730	• Sheet,Bonded	1	80001-
9		14X-54-53740	• Sheet,Bonded	2	80001-
10		14X-54-53222	Cover	1	80001-
11		01010-81020	Bolt	4	80001-
12		01643-31032	Washer	4	80001-
13		14X-54-54310	Lock	1	80001-
14		01580-10605	Nut	4	80001-
15		01643-30623	Washer	4	80001-
16		20Y-54-29232	Bar	1	80001-
17		198-54-19150	Spring	1	80001-
18		01023-10608	Screw	2	80001-
19		205-54-53550	Dovetail	2	80001-
20		01010-80612	Bolt	4	80001-
21		01643-30623	Washer	4	80001-
22		205-54-51970	Dovetail	2	80001-
23		01010-80616	Bolt	4	80001-
24		01643-30623	Washer	4	80001-
25		14X-54-53860	Shim	4	80001-
26		14X-Y11-2241	Cover	1	80001-
27		14X-54-53281	Plate	1	80001-
28		01010-81020	Bolt	2	80001-
29		01643-31032	Washer	2	80001-
		14X-06-52730	Lamp Assembly, Working	1	80001-
30		17A-06-17931	• Lamp Assembly, Working	1	80001-
31		17A-06-17970	•• Bulb, 70watt	1	80001-
32		17A-06-17980	•• Sleeve	1	80001-
33		144-43-81620	• Grommet	1	80001-
34		14X-54-53760	Seal	1	80001-
35		195-54-68760	Knob	2	80001-
36		01594-01008	Nut	2	80001-
37		01640-21016	Washer	2	80001-
38		14X-54-53840	Plate	1	80001-

FIG. M2211-002001 Fender Cover, With Handrail, Operator's Seat, ROPS Canopy, Battery Box Cover

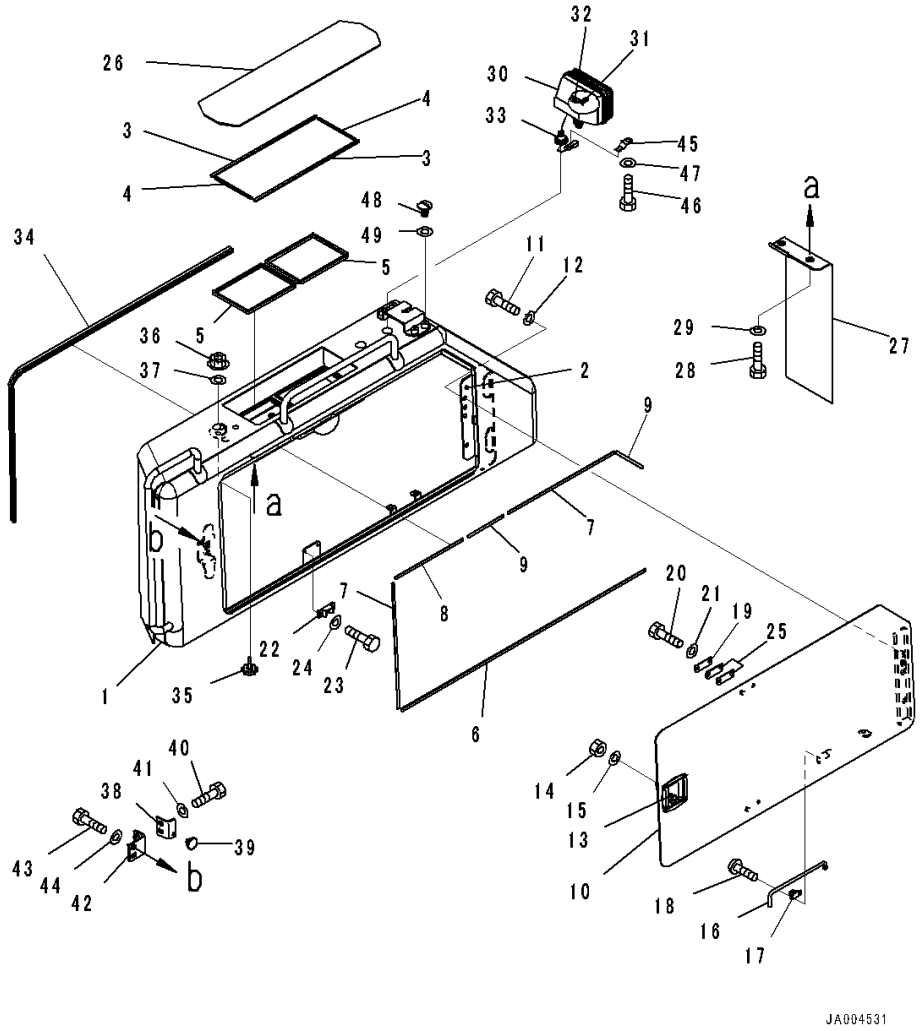

Index	Code	Part Number	Description	Qty	Serial Number
39		14X-54-12960	Stopper	1	80001-
40		01010-81230	Bolt	2	80001-
41		01643-31232	Washer	2	80001-
42		14X-54-53850	Plate	1	80001-
43		01010-81230	Bolt	2	80001-
44		01643-31232	Washer	2	80001-
45		08193-21012	Clip	1	80001-
46		01010-81020	Bolt	1	80001-
47		01643-31032	Washer	1	80001-
48		14X-54-53380	Cap	4	80001-
49		01643-31032	Washer	4	80001-

FIG. M2211-002002 Fender Cover, Valve Cover

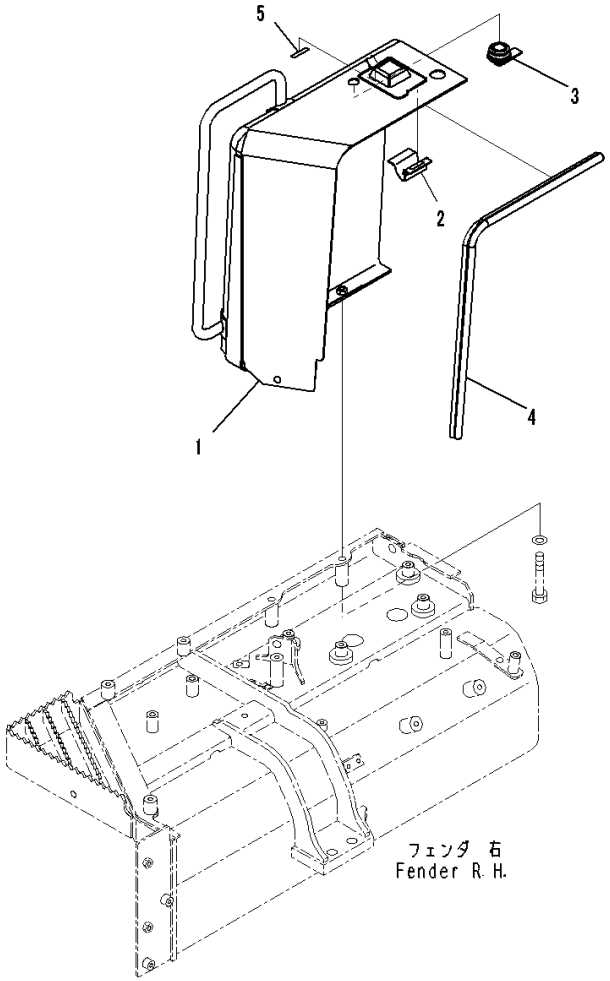

Index	Code	Part Number	Description	Qty	Serial Number
		Note: This list covers following specifications.			
		With Handrail, Operator's Seat, ROPS Canopy			
		With Handrail, Operator's Seat, Refuel Pump			
1		14X-54-53301	Cover Assembly,RHS	1	80001-
2		14X-54-53360	• Hinge	1	80001-
3		205-60-71220	• Lock Assembly	1	80001-
4		14X-54-53770	• Seal	1	80001-
5		14X-54-53390	• Plate	1	80001-

FIG. M2211-003001 Fender Cover, With Handrail, Operator's Seat, Refuel Pump, Battery Box Cover

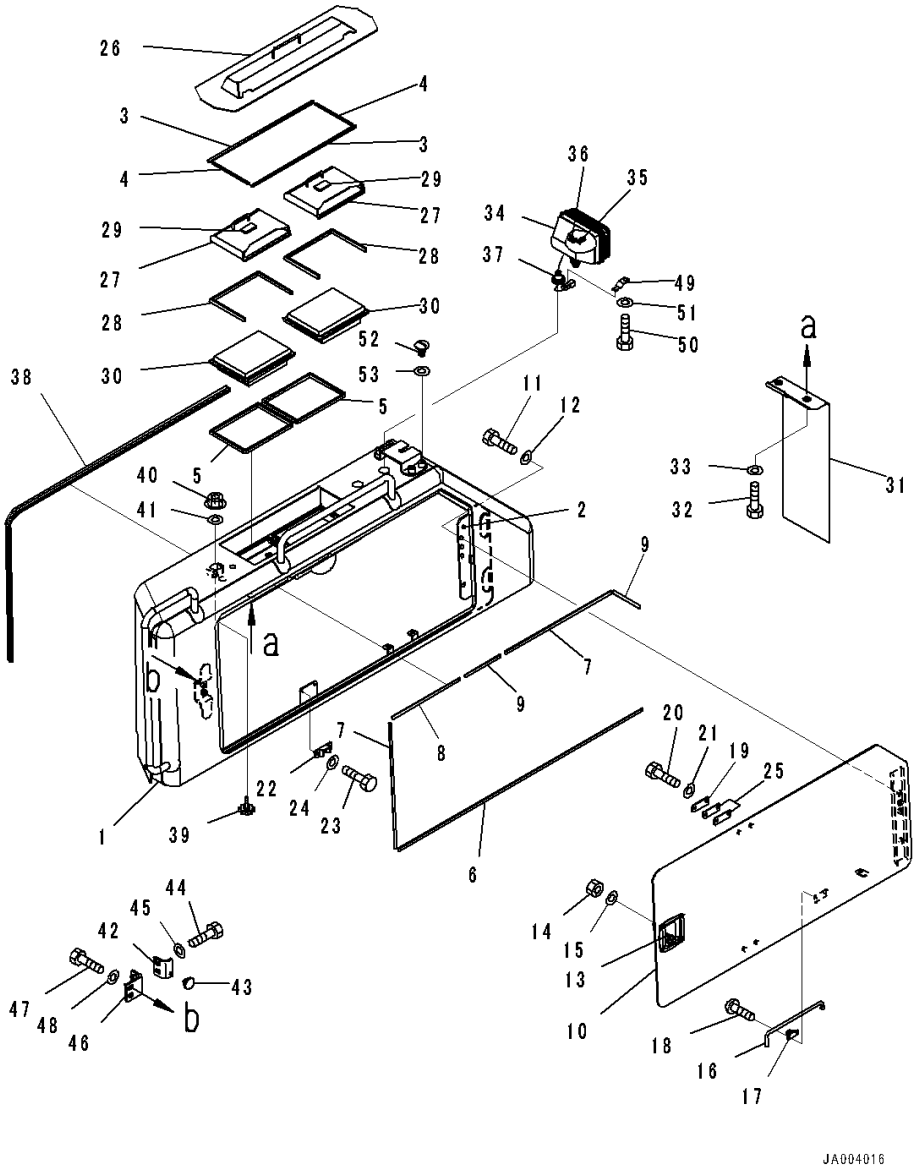

Index	Code	Part Number	Description	Qty	Serial Number
1		14X-54-53960	Cover,LHS	1	80001-
2		14X-54-53341	• Hinge	1	80001-
3		14X-54-53560	• Sheet	2	80001-
4		14X-54-53570	• Sheet	2	80001-
5		14X-54-53580	• Seal	2	80001-
6		14X-54-53710	• Sheet	1	80001-
7		14X-54-53720	• Sheet	2	80001-
8		14X-54-53730	• Sheet	1	80001-
9		14X-54-53740	• Sheet	2	80001-
10		14X-54-53222	Cover	1	80001-
11		01010-81020	Bolt	3	80001-
12		01643-31032	Washer	3	80001-
13		14X-54-54310	Lock	1	80001-
14		01580-10605	Nut	4	80001-
15		01643-30623	Washer	4	80001-
16		20Y-54-29232	Bar	1	80001-
17		198-54-19150	Spring	1	80001-
18		01023-10608	Screw	2	80001-
19		205-54-53550	Dovetail	2	80001-
20		01010-80612	Bolt	4	80001-
21		01643-30623	Washer	4	80001-
22		205-54-51970	Dovetail	2	80001-
23		01010-80616	Bolt	4	80001-
24		01643-30623	Washer	4	80001-
25		14X-54-53860	Shim	4	80001-
26		14X-Y11-1822	Cover	1	80001-
27		14X-Y11-2270	Cover Assembly	2	80001-
28		134-X11-1630	• Seal	1	80001-
29		14X-911-8520	• Seal	1	80001-
30		17M-911-3530	Element	2	80001-
31		14X-54-53281	Plate	1	80001-
32		01010-81020	Bolt	2	80001-
33		01643-31032	Washer	2	80001-
		14X-06-52730	Lamp Assembly, Working	1	80001-
34		17A-06-17931	• Lamp Assembly, Working	1	80001-
35		17A-06-17970	•• Bulb, 70watt	1	80001-
36		17A-06-17980	•• Sleeve	1	80001-
37		144-43-81620	• Grommet	1	80001-
38		14X-54-53760	Seal	1	80001-

FIG. M2211-003001 Fender Cover, With Handrail, Operator's Seat, Refuel Pump, Battery Box Cover

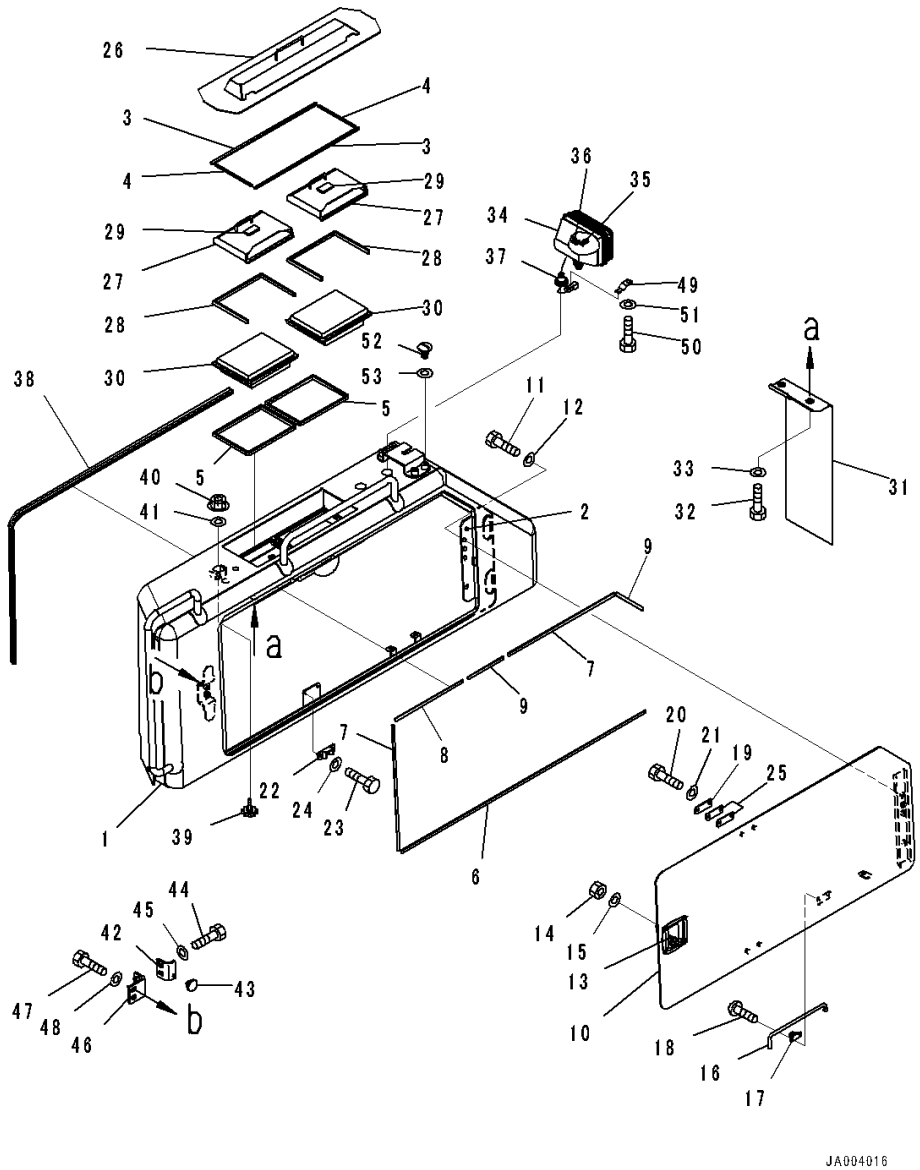

Index	Code	Part Number	Description	Qty	Serial Number
39		195-54-68760	Knob	2	80001-
40		01594-01008	Nut	2	80001-
41		01640-21016	Washer	2	80001-
42		14X-54-53840	Plate	1	80001-
43		14X-54-12960	Stopper	1	80001-
44		01010-81230	Bolt	2	80001-
45		01643-31232	Washer	2	80001-
46		14X-54-53850	Plate	1	80001-
47		01010-81230	Bolt	2	80001-
48		01643-31232	Washer	2	80001-
49		08193-21012	Clip	1	80001-
50		01010-81020	Bolt	1	80001-
51		01643-31032	Washer	1	80001-
52		14X-54-53380	Cap	4	80001-
53		01643-31032	Washer	4	80001-

FIG. M2214-001001 Shovel Holder

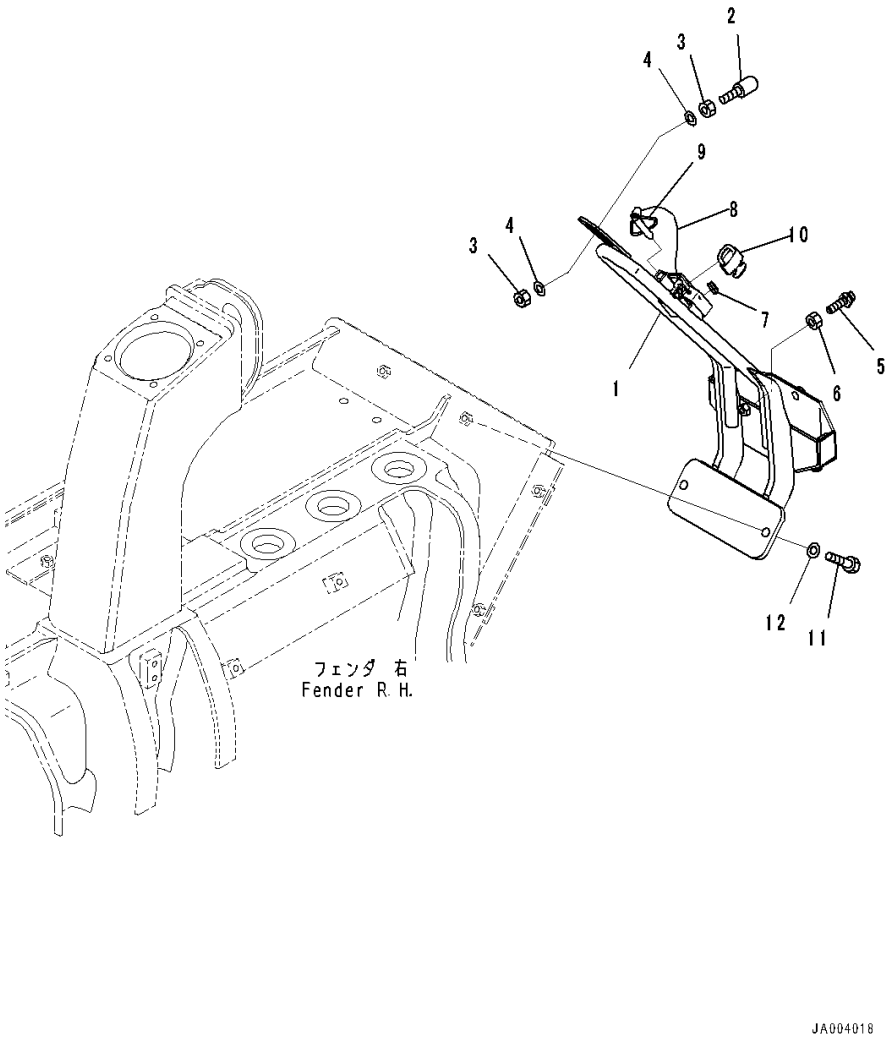

Index	Code	Part Number	Description	Qty	Serial Number
1		14X-54-53611	Holder	1	80001-
2		09453-00002	Stopper	1	80001-
3		01580-11210	Nut	2	80001-
4		01643-31232	Washer	2	80001-
5		09311-41237	Bumper, Pedal	3	80001-
6		01580-11210	Nut	3	80020-
7		09415-00506	Cap	1	80001-
8		14X-54-12750	Holder	1	80001-
9		14X-54-12770	Holder	1	80001-
10		09460-00000	Lock	1	80001-
11		01010-81240	Bolt	2	80001-
12		01643-31232	Washer	2	80001-

FIG. M2240-001001 Rear Cover, Strengthened

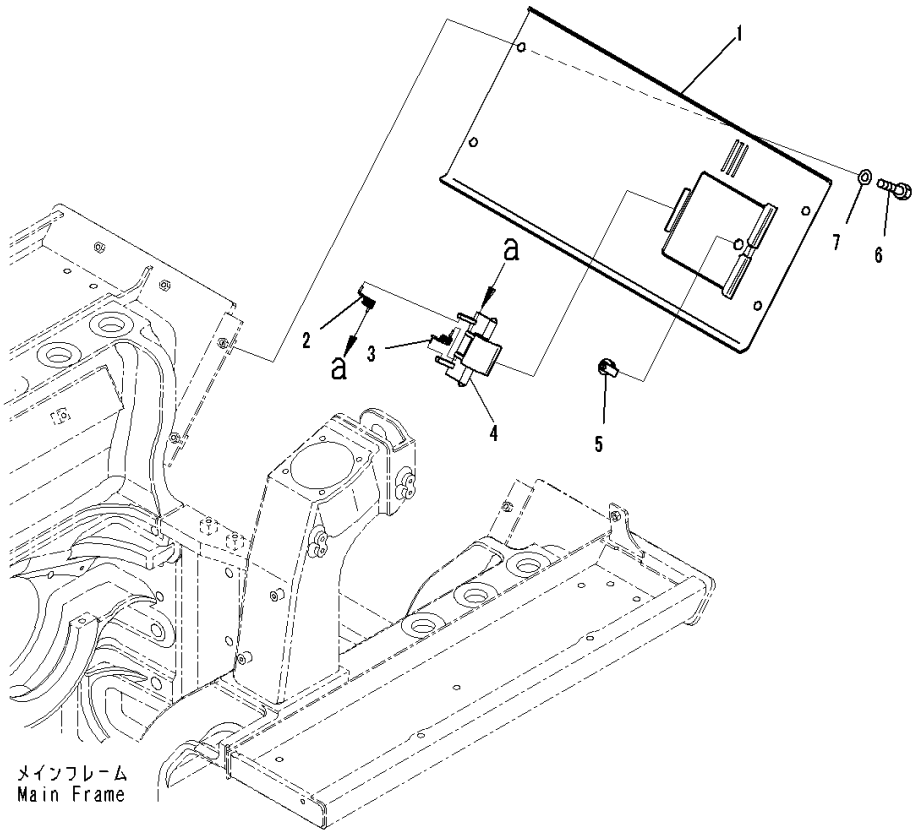

Index	Code	Part Number	Description	Qty	Serial Number
1		14X-54-53511	Cover	1	80001-
2		09467-00002	• Spring	1	80001-
3		09467-00006	• Spring	1	80001-
4		14X-54-53530	• Bracket	1	80001-
5		205-60-71220	• Lock Assembly	1	80001-
6		01010-81235	Bolt	4	80001-
7		01643-31232	Washer	4	80001-

FIG. M2240-002001 Rear Cover, Strengthened, For Machine With Ripper

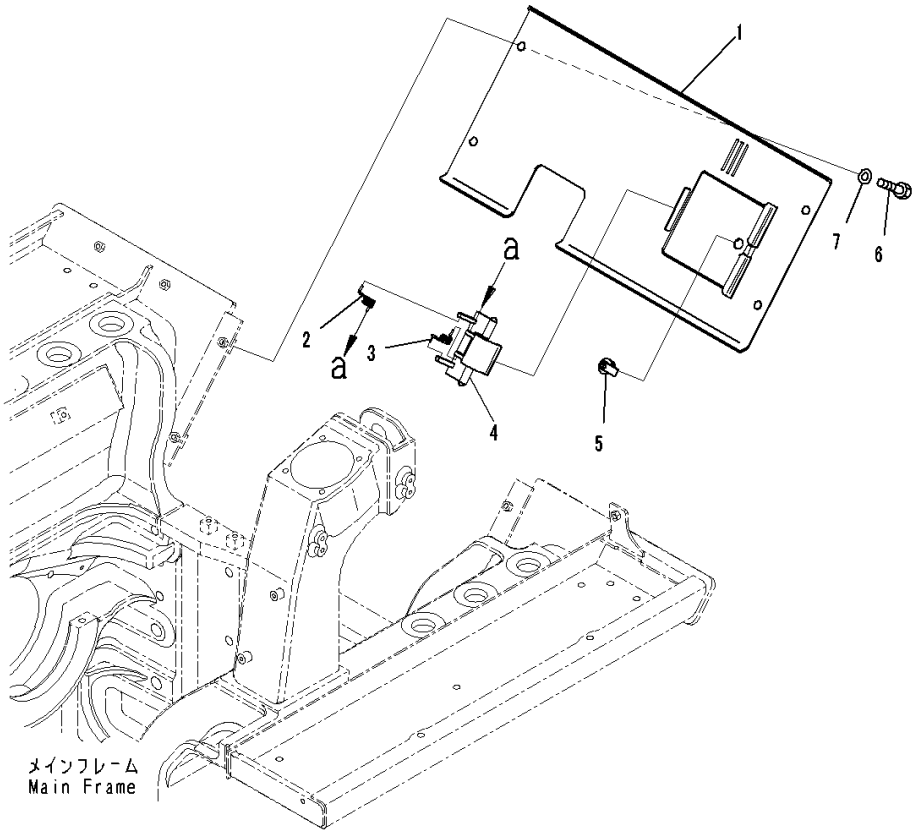

Index	Code	Part Number	Description	Qty	Serial Number
1		14X-54-53521	Cover	1	80001-
2		09467-00002	• Spring	1	80001-
3		09467-00006	• Spring	1	80001-
4		14X-54-53530	• Bracket	1	80001-
5		205-60-71220	• Lock Assembly	1	80001-
6		01010-81235	Bolt	4	80001-
7		01643-31232	Washer	4	80001-

FIG. M2810-001001 Under Guard, Strengthened

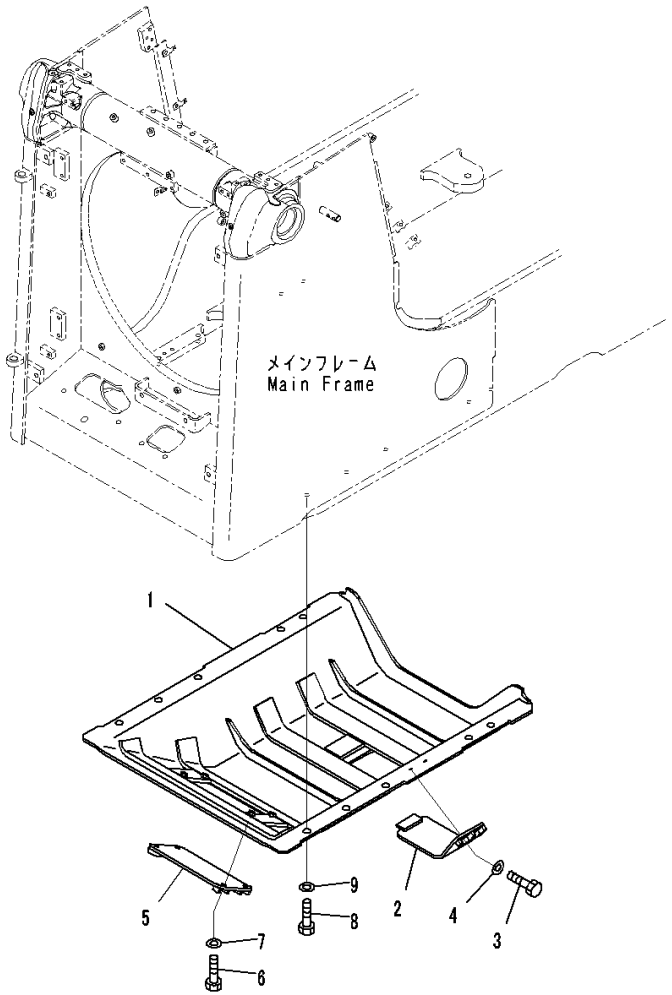

Index	Code	Part Number	Description	Qty	Serial Number
1		14X-54-54111	Cover	1	80001-
2		14X-54-54121	Cover	1	80001-
3		01010-81235	Bolt	2	80001-
4		01643-31232	Washer	2	80001-
5		14X-54-54131	Cover	1	80001-
6		01010-81235	Bolt	4	80001-
7		01643-31232	Washer	4	80001-
8		01010-81635	Bolt	10	80001-
9		01643-31645	Washer	10	80001-

FIG. M2810-002001 Under Guard, Hinged

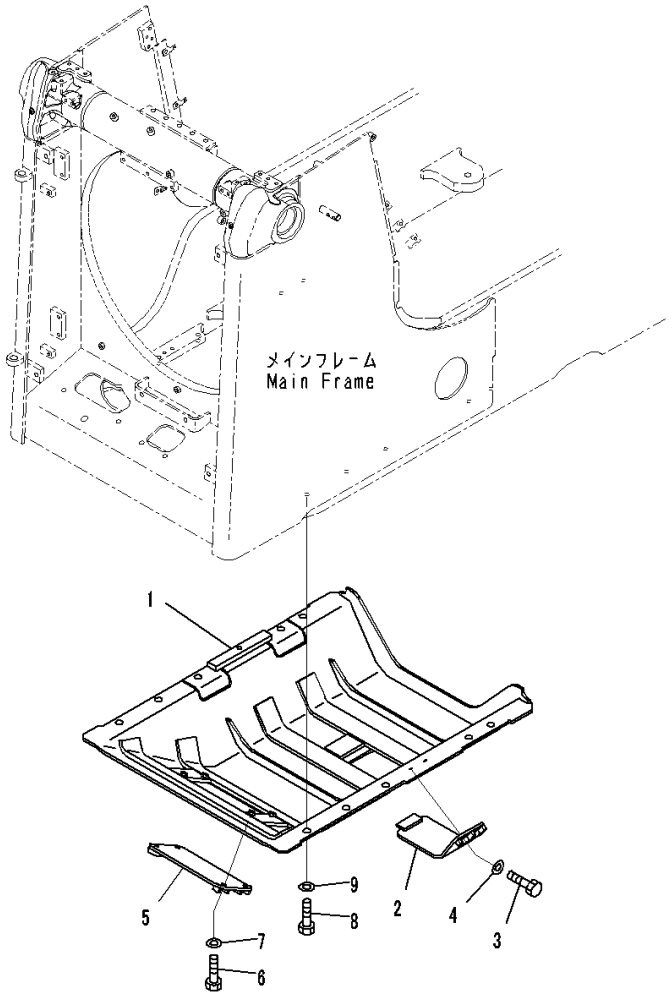

Index	Code	Part Number	Description	Qty	Serial Number
1		14X-54-54211	Guard	1	80001-
2		14X-54-54121	Cover	1	80001-
3		01010-81235	Bolt	2	80001-
4		01643-31232	Washer	2	80001-
5		14X-54-54131	Cover	1	80001-
6		01010-81235	Bolt	4	80001-
7		01643-31232	Washer	4	80001-
8		01010-81635	Bolt	11	80001-
9		01643-31645	Washer	11	80001-

FIG. M2810-003001 Under Guard

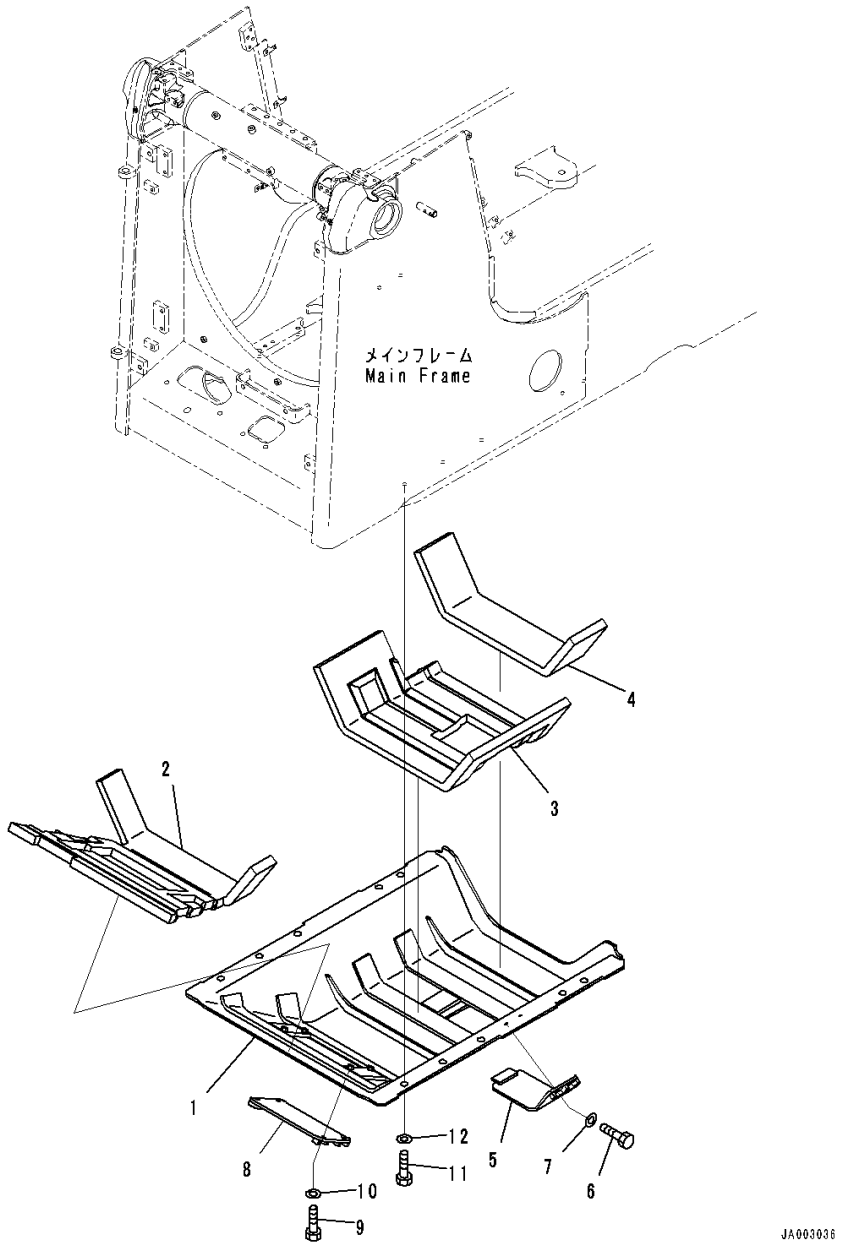

Index	Code	Part Number	Description	Qty	Serial Number
1		14X-A62-5410	Guard	1	80001-
2		14X-A62-5420	• Sheet,Bonded	1	80001-
3		14X-A62-5430	• Sheet,Bonded	1	80001-
4		14X-A62-5440	• Sheet,Bonded	1	80001-
5		14X-54-54121	Cover	1	80001-
6		01010-81235	Bolt	2	80001-
7		01643-31232	Washer	2	80001-
8		14X-54-54131	Cover	1	80001-
9		01010-81235	Bolt	4	80001-
10		01643-31232	Washer	4	80001-
11		01010-81635	Bolt	10	80001-
12		01643-31645	Washer	10	80001-

FIG. M2810-004001 Under Guard

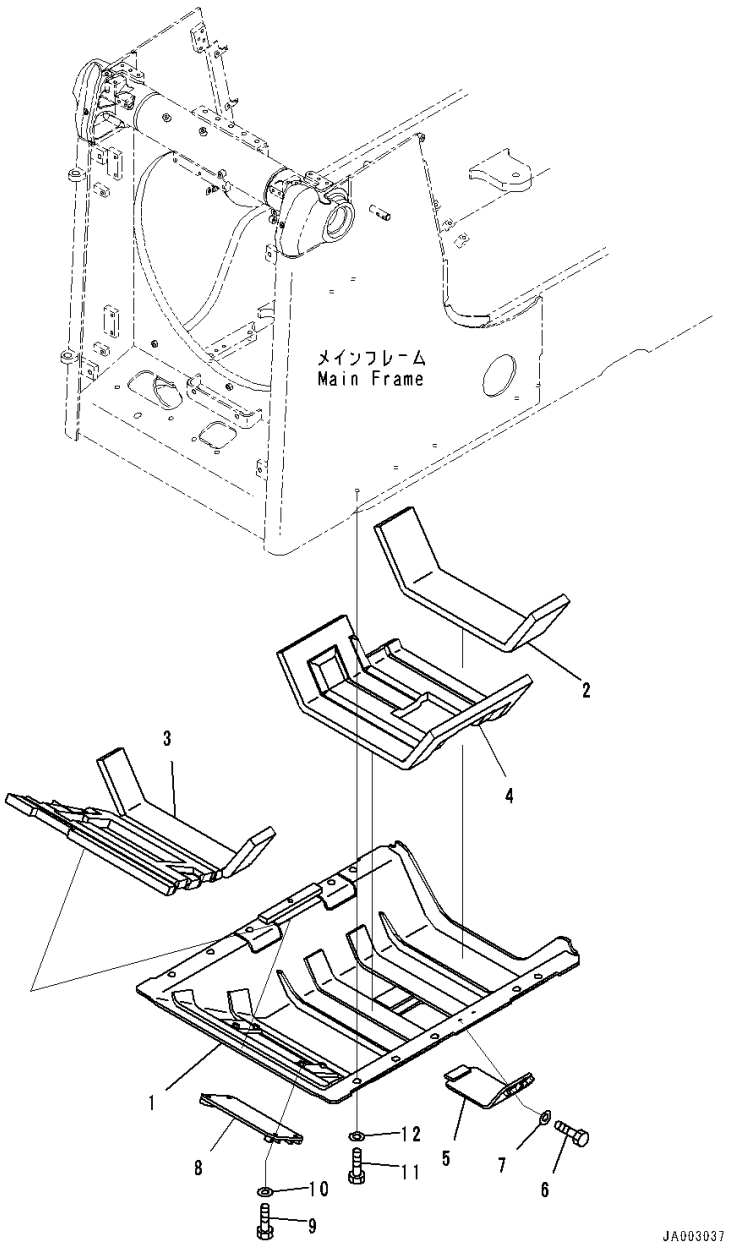

Index	Code	Part Number	Description	Qty	Serial Number
1		14X-A62-5511	Guard	1	80001-
2		14X-A62-5440	• Sheet,Bonded	1	80001-
3		14X-A62-5581	• Sheet,Bonded	1	80001-
4		14X-A62-5590	• Sheet,Bonded	1	80001-
5		14X-54-54121	Cover	1	80001-
6		01010-81235	Bolt	2	80001-
7		01643-31232	Washer	2	80001-
8		14X-54-54131	Cover	1	80001-
9		01010-81235	Bolt	4	80001-
10		01643-31232	Washer	4	80001-
11		01010-81635	Bolt	11	80001-
12		01643-31645	Washer	11	80001-

FIG. M2811-001001 Front Pull Hook

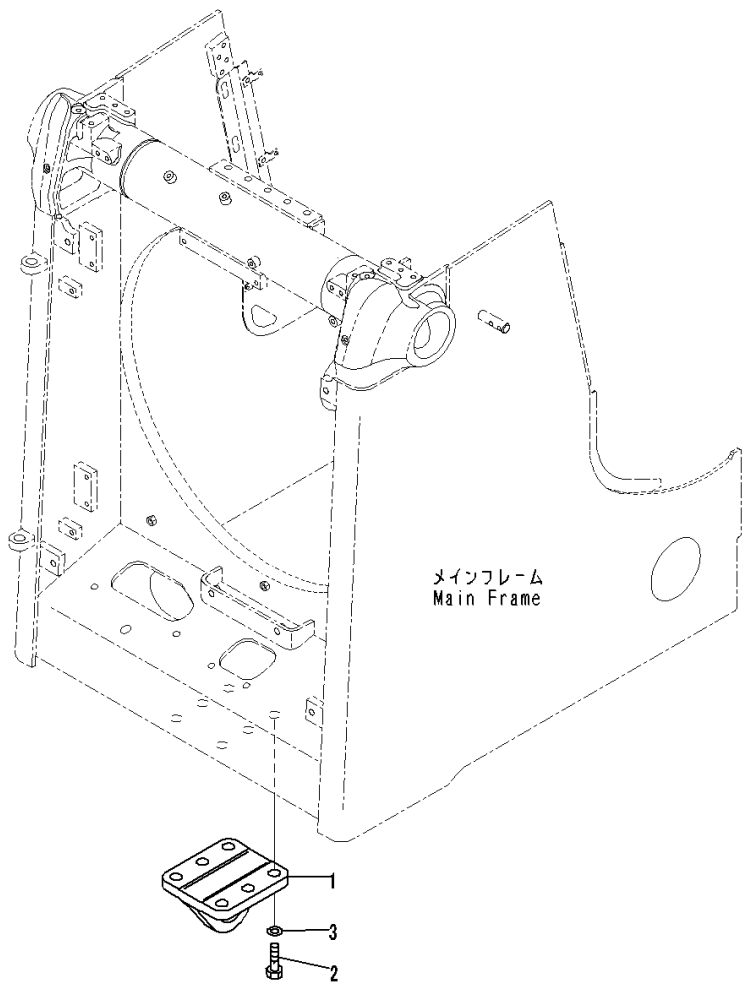

Index	Code	Part Number	Description	Qty	Serial Number
1		14X-958-1510	Hook	1	80001-
2		01010-82460	Bolt.....	6	80001-
3		01643-32460	Washer	6	80001-

UNDERCARRIAGE

FIG. R0110-001001 Front Idler

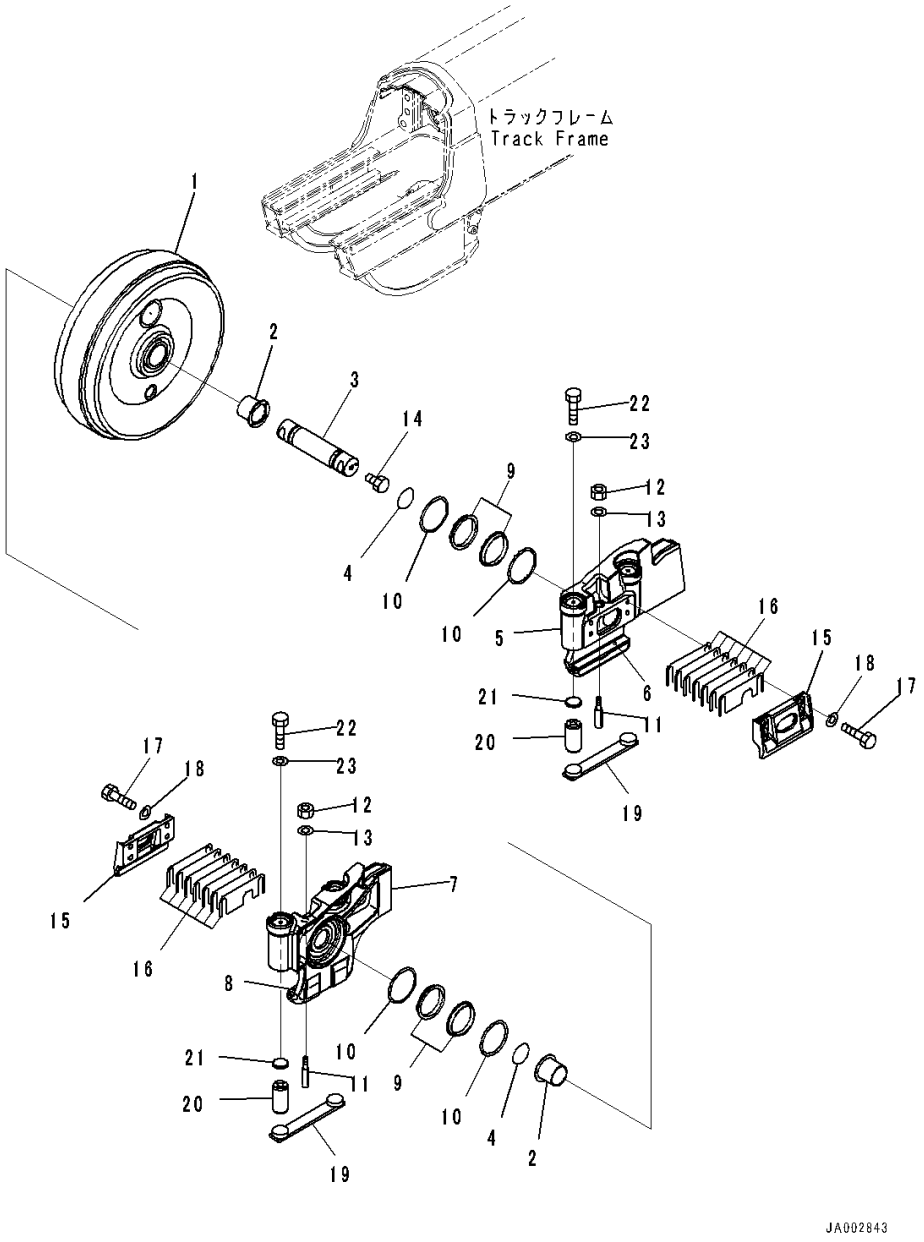

Index	Code	Part Number	Description	Qty	Serial Number
		14X-30-00431	Idler Assembly	2	80001-
1		14X-30-12115	• Idler	1	80001-
2		14X-30-12181	• Bushing	2	80001-
3		14X-30-12164	• Shaft	1	80001-
4		427-15-15910	• O-ring	2	80001-
5		14X-30-51511	• Support,LHS	1	80001-
6		14X-30-12232	•• Plate,Welded	1	80001-
7		14X-30-51521	• Support,RHS	1	80001-
8		14X-30-12232	•• Plate,Welded	1	80001-
		205-30-00220	• Floating Seal Assembly	2	80001-
9	C1		•• Seal	2	80001-
10	C1		•• O-ring	2	80001-
11		130-30-13170	• Bolt	2	80001-
12		01582-11613	• Nut	2	80001-
13		01643-31645	• Washer	2	80001-
14		07052-31217	• Plug	1	80001-
15		14X-30-51420	Cover	4	80001-
16		14X-30-12252	Shim, T=1.0mm	28	80001-
17		01010-81645	Bolt	16	80001-
18		01643-31645	Washer	16	80001-
19		14X-30-51470	Plate Assembly	4	80001-
20		155-30-13230	Spring	8	80001-
21		195-30-17960	Plate	8	80001-
22		01016-51245	Bolt	8	80001-
23		01643-31232	Washer	8	80001-

FIG. R0120-001001 Idler Cushion

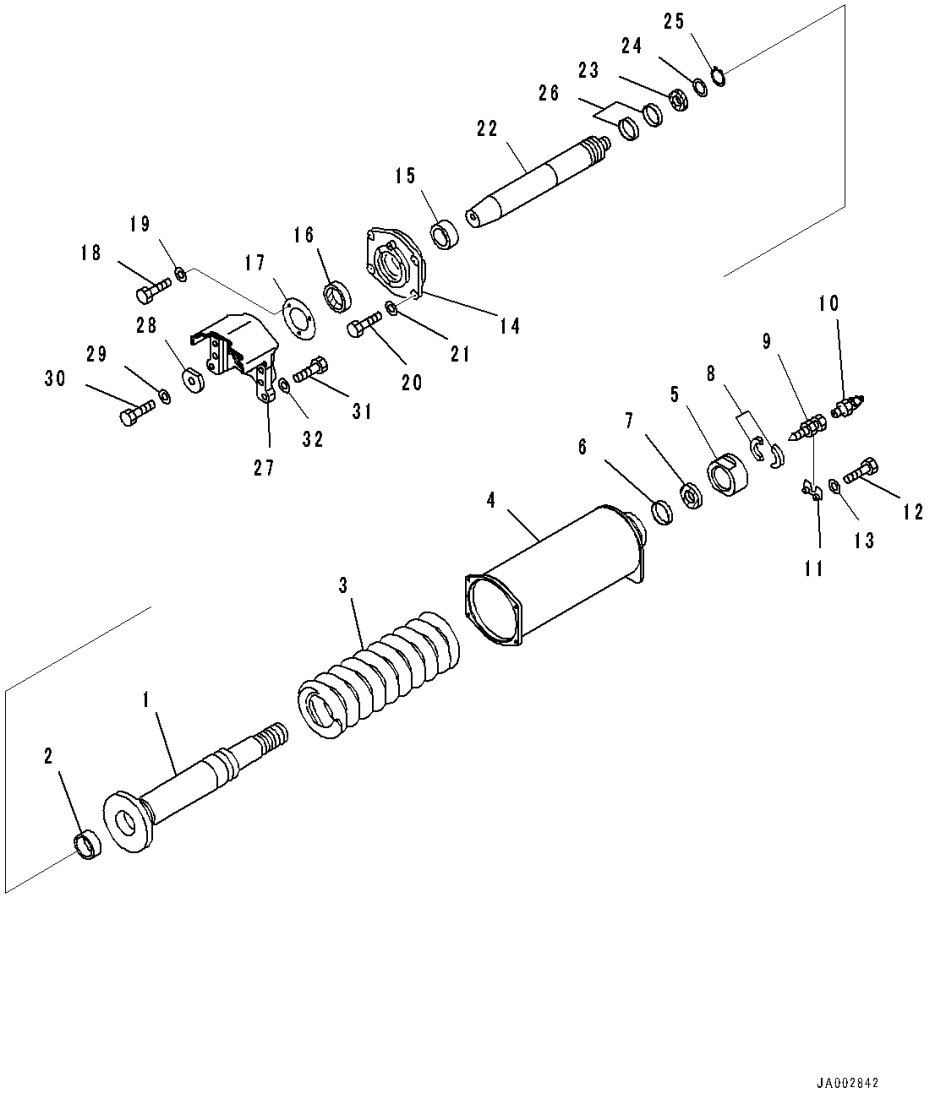

Index	Code	Part Number	Description	Qty	Serial Number
1		14X-30-51531	Cylinder	2	80001-
2		07177-09040	Bushing	2	80001-
3		14X-30-51561	Spring	2	80001-
4		14X-30-51551	Cab	2	80001-
5		14X-30-51580	Nut	2	80001-
6		07177-09040	Bushing	2	80001-
7		207-30-54160	Seal	2	80001-
8		154-30-73170	Spacer	4	80001-
9		203-30-42260	Valve	2	80001-
10		07020-00900	Fitting, Grease	2	80001-
11		14X-30-33170	Plate	2	80001-
12		01010-80830	Bolt	4	80001-
13		01643-30823	Washer	4	80001-
14		14X-30-13164	Holder	2	80001-
15		07177-09040	Bushing	2	80001-
16		207-30-54160	Seal	2	80001-
17		135-30-14620	Cover	2	80001-
18		01010-81020	Bolt	6	80001-
19		01643-31032	Washer	6	80001-
20		01010-81235	Bolt	8	80001-
21		01643-31232	Washer	8	80001-
22		14X-30-51490	Piston	2	80001-
23		150-30-13442	Packing	2	80001-
24		150-30-13480	Ring	2	80001-
25		150-30-13460	Ring	2	80001-
26		150-30-13430	Ring	4	80001-
27		14X-30-51380	Yoke	2	80001-
28		195-30-14151	Washer	2	80001-
29		01643-32460	Washer	2	80001-
30		01010-82460	Bolt	2	80001-
31		01010-82070	Bolt	12	80001-
32		01643-32060	Washer	12	80001-

FIG. R0200-001001 Track Roller, Plus Type, (1/3)

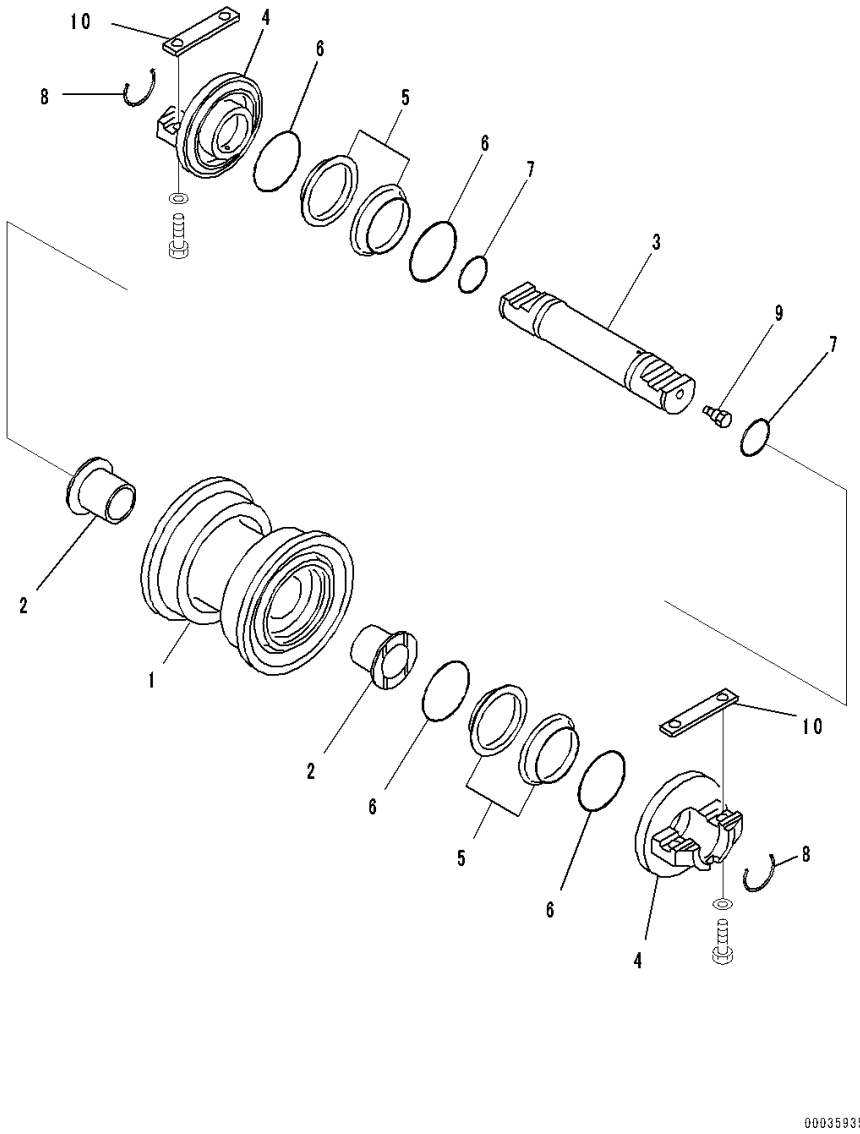

Index	Code	Part Number	Description	Qty	Serial Number
		14X-30-01050	Roller Assembly, Track, Single Flange	10	80001-
1		14X-30-14410	• Roller	1	80001-
2		14X-30-13340	• Bushing	2	80001-
3		14X-30-14152	• Shaft	1	80001-
4		14X-30-14331	• Collar	2	80001-
		205-30-00220	• Floating Seal Assembly	2	80001-
5	C1		•• Seal	2	80001-
6	C1		•• O-ring	2	80001-
7		427-15-15910	• O-ring	2	80001-
8		14X-30-14161	• Lock	2	80001-
9		07052-31217	• Plug	1	80001-
10		14X-30-14170	Key	20	80001-

FIG. R0200-001002 Track Roller, Plus Type, (2/3)

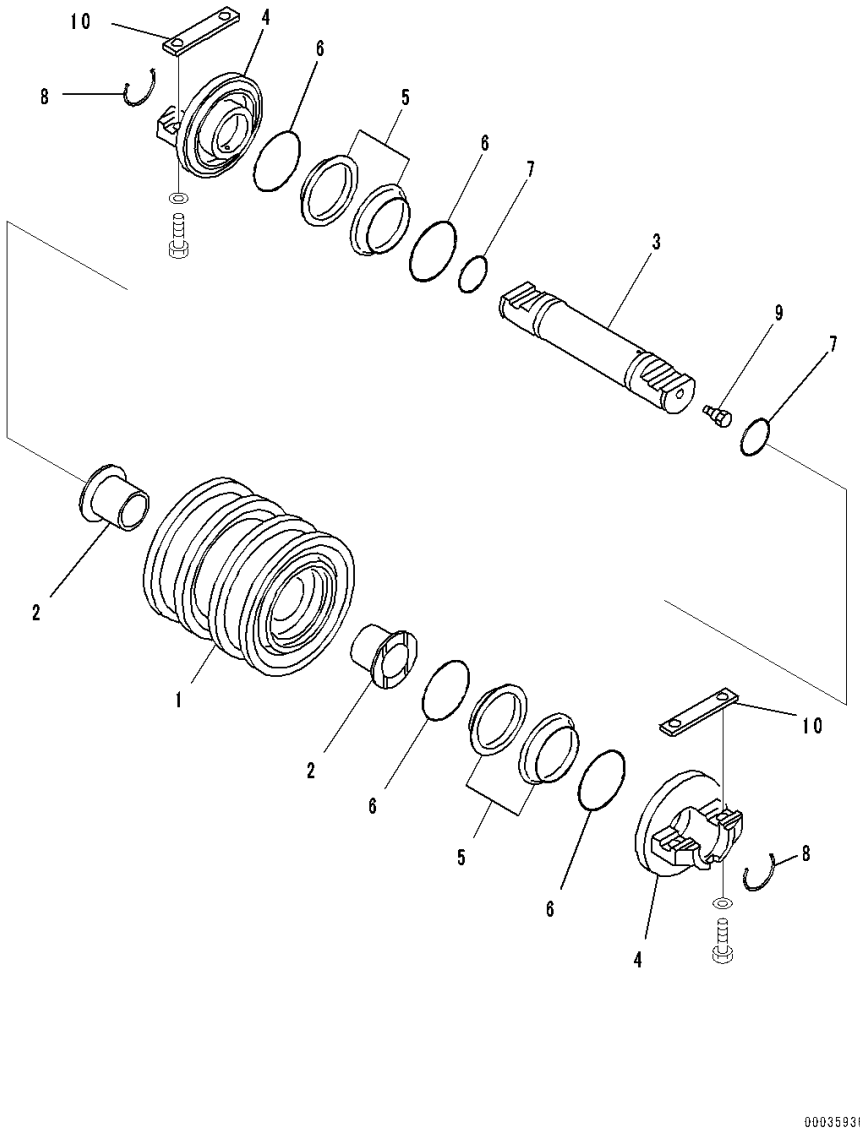

Index	Code	Part Number	Description	Qty	Serial Number
		14X-30-01060	Roller Assembly, Track, Double Flange..	4	80001-
1		14X-30-14420	• Roller	1	80001-
2		14X-30-13340	• Bushing	2	80001-
3		14X-30-14152	• Shaft	1	80001-
4		14X-30-14331	• Collar	2	80001-
		205-30-00220	• Floating Seal Assembly	2	80001-
5	C1		•• Seal	2	80001-
6	C1		•• O-ring	2	80001-
7		427-15-15910	• O-ring	2	80001-
8		14X-30-14161	• Lock	2	80001-
9		07052-31217	• Plug	1	80001-
10		14X-30-14170	Key	8	80001-

FIG. R0200-001003 Track Roller, Plus Type, (3/3)

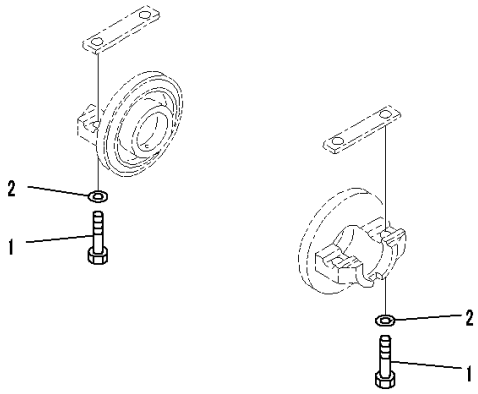

00035937

Index	Code	Part Number	Description	Qty	Serial Number
1		01010-81865	Bolt.....	56	80001-
2		01643-31845	Washer	56	80001-

FIG. R0200-002001 Track Roller, (1/3)

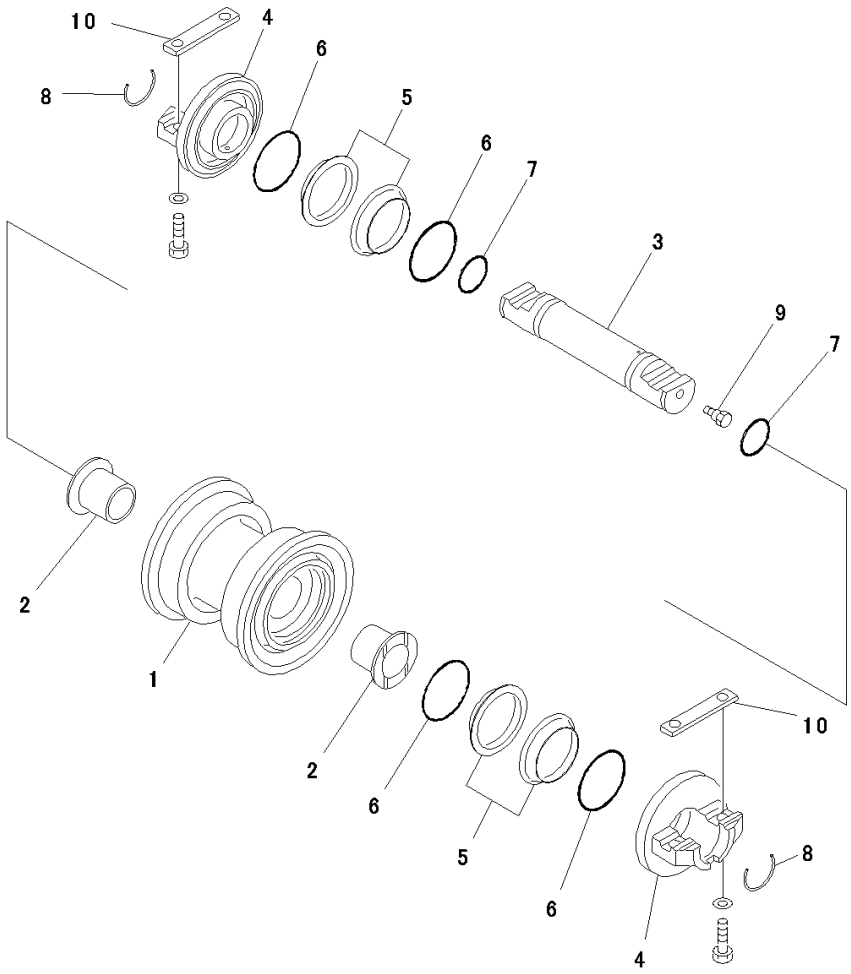

Index	Code	Part Number	Description	Qty	Serial Number
		14X-30-00127	Track Roller Assembly	10	80009-
1		14X-30-14311	• Roller, Track, Single Flanged	1	80009-
2		14X-30-13340	• Bushing	2	80009-
3		14X-30-14152	• Shaft	1	80009-
4		14X-30-14331	• Collar	2	80009-
		205-30-00220	• Floating Seal Assembly	2	80009-
5	C1		•• Seal	2	80009-
6	C1		•• O-ring	2	80009-
7		427-15-15910	• O-ring	2	80009-
8		14X-30-14161	• Lock	2	80009-
9		07052-31217	• Plug	1	80009-
10		14X-30-14170	Key	20	80009-

FIG. R0200-002002 Track Roller, (2/3)

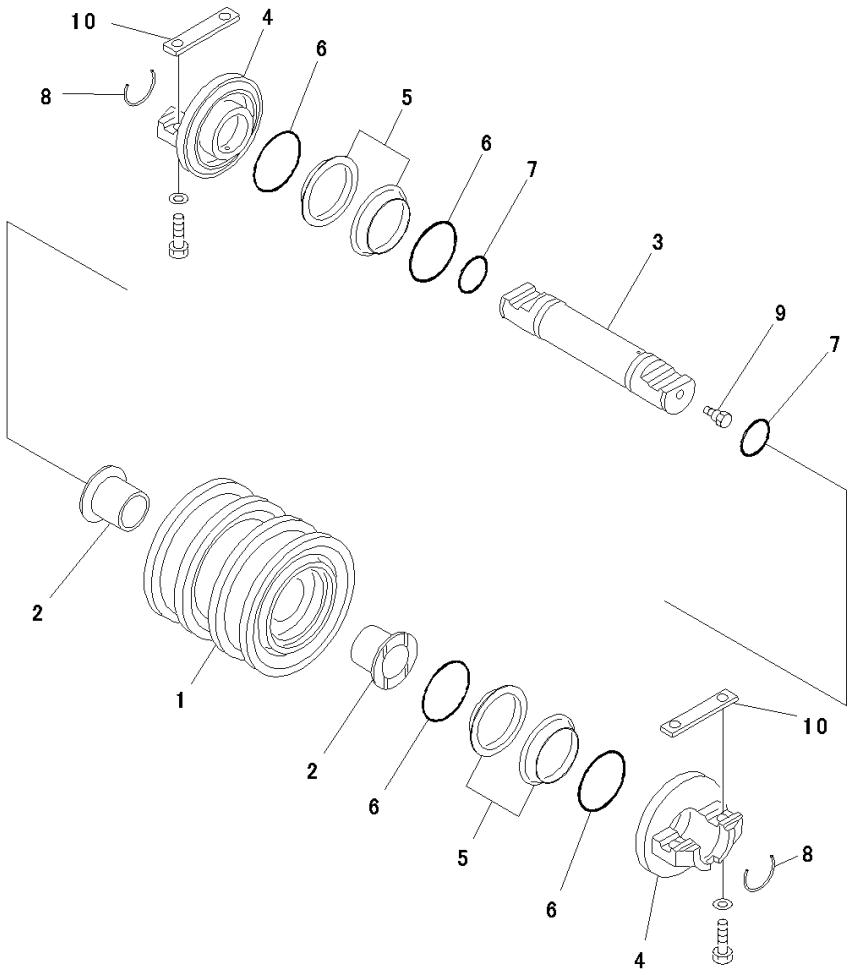

Index	Code	Part Number	Description	Qty	Serial Number
		14X-30-00136	Track Roller Assembly	4	80009-
1		14X-30-14321	• Roller, Track, Double Flanged	1	80009-
2		14X-30-13340	• Bushing	2	80009-
3		14X-30-14152	• Shaft	1	80009-
4		14X-30-14331	• Collar	2	80009-
		205-30-00220	• Floating Seal Assembly	2	80009-
5	C1		•• Seal	2	80009-
6	C1		•• O-ring	2	80009-
7		427-15-15910	• O-ring	2	80009-
8		14X-30-14161	• Lock	2	80009-
9		07052-31217	• Plug	1	80009-
10		14X-30-14170	Key	8	80009-

FIG. R0200-002003 Track Roller, (3/3)

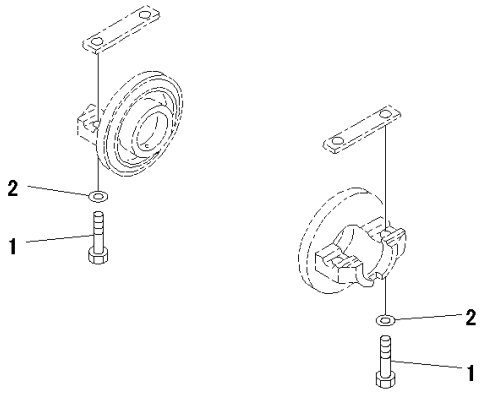

00035937

Index	Code	Part Number	Description	Qty	Serial Number
1		01010-81865	Bolt.....	56	80009-
2		01643-31845	Washer	56	80009-

FIG. R0300-001001 Carrier Roller, Plus Type

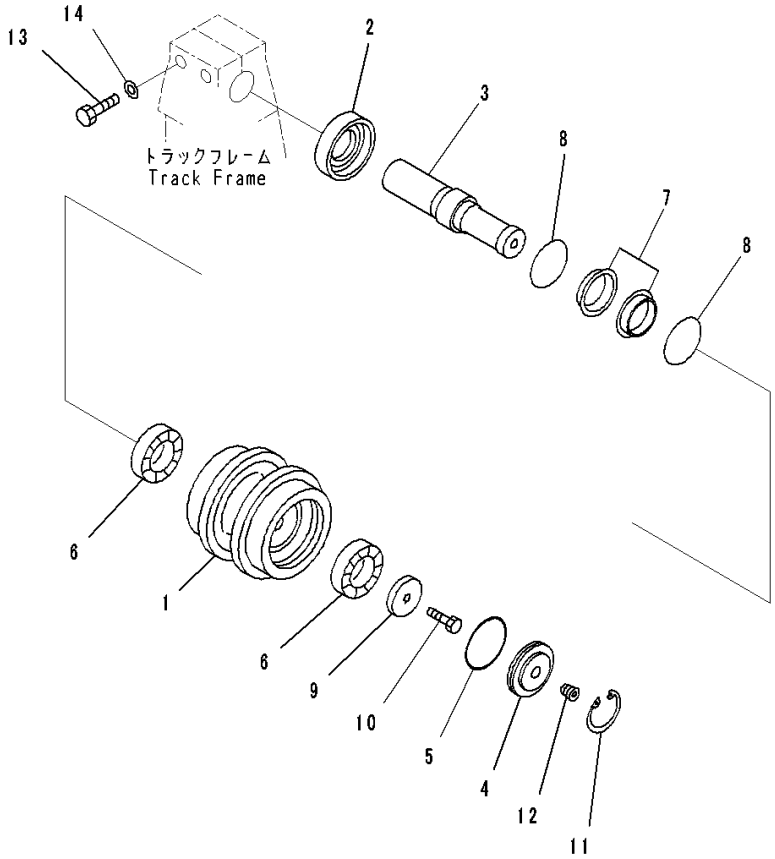

Index	Code	Part Number	Description	Qty	Serial Number
		14X-30-01041	Carrier Assembly	4	80001-
1		14X-30-15310	• Roller	1	80001-
2		14X-30-15140	• Ring	1	80001-
3		14X-30-15222	• Shaft	1	80001-
4		14X-30-15131	• Cover	1	80001-
5		07000-12105	• O-ring	1	80001-
6		14X-30-15240	• Bearing	2	80001-
		141-30-00616	• Floating Seal Assembly	1	80001-
7	C1		•• Seal	2	80001-
8	C1		•• O-ring	2	80001-
9		14X-30-15251	• Holder	1	80001-
10		01010-81630	• Bolt	1	80020-
11		04065-01154	• Ring	1	80001-
12		20Y-30-16330	• Plug	1	80001-
13		01010-82085	Bolt	8	80001-
14		01643-32060	Washer	8	80001-

FIG. R0300-002001 Carrier Roller

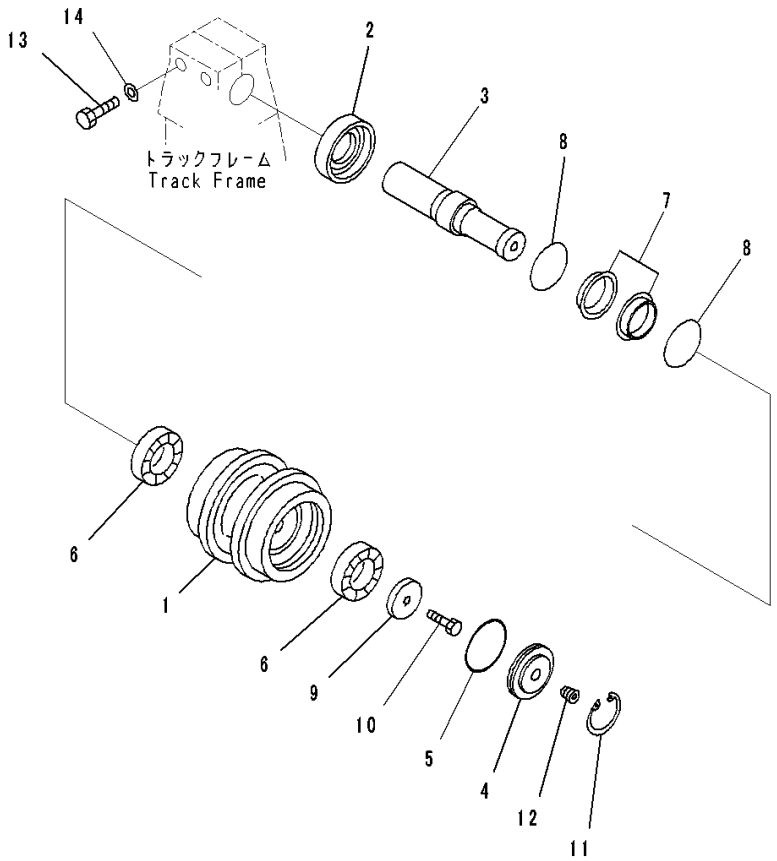

Index	Code	Part Number	Description	Qty	Serial Number
		14X-30-00143	Carrier Assembly	4	80001-
1		14X-30-15212	• Roller	1	80001-
2		14X-30-15140	• Ring	1	80001-
3		14X-30-15222	• Shaft	1	80001-
4		14X-30-15131	• Cover	1	80001-
5		07000-12105	• O-ring	1	80001-
6		14X-30-15240	• Bearing	2	80001-
		141-30-00616	• Floating Seal Assembly	1	80001-
7	C1		•• Seal	2	80001-
8	C1		•• O-ring	2	80001-
9		14X-30-15251	• Holder	1	80001-
10		01010-81630	• Bolt	1	80020-
11		04065-01154	• Ring	1	80001-
12		20Y-30-16330	• Plug	1	80001-
13		01010-82085	Bolt	8	80001-
14		01643-32060	Washer	8	80001-

FIG. R0500-008001 Track Link Assembly, Heavy Duty, Supply Parts

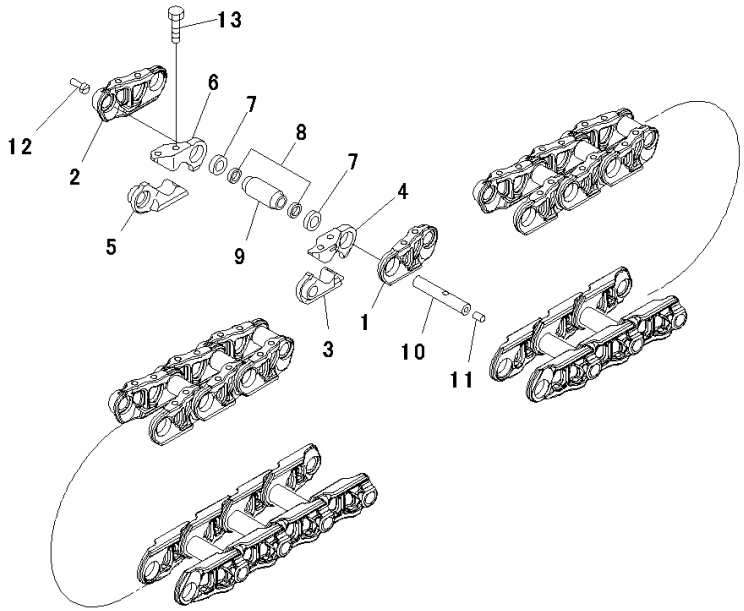

JH002832

Index	Code	Part Number	Description	Qty	Serial Number
		14X-32-00250	Track Link Assembly	1	80001-
1		14X-32-52120	• Link,LHS	82	80001-
2		14X-32-52130	• Link,RHS	82	80001-
		14X-32-08010	• Link Kit, Master,LHS	2	80001-
3	C1		•• Link, Master	1	80001-
4	C1		•• Link, Master	1	80001-
		14X-32-08020	• Link Kit, Master,RHS	2	80001-
5	C1		•• Link, Master	1	80001-
6	C1		•• Link, Master	1	80001-
7		14X-32-12200	• Seal Assembly	168	80001-
8		144-32-21191	• Spacer	168	80001-
9		14X-32-11140	• Bushing	84	80001-
10		14X-32-13150	• Pin	84	80001-
11		07059-11830	• Plug, Large	84	80001-
12		07059-20721	• Plug, Small	84	80001-
13		14X-32-11350	• Bolt, Master Track Shoe	8	80001-

FIG. R0500-001001 Track Shoe Assembly, Single Grouser, 660mm Wide

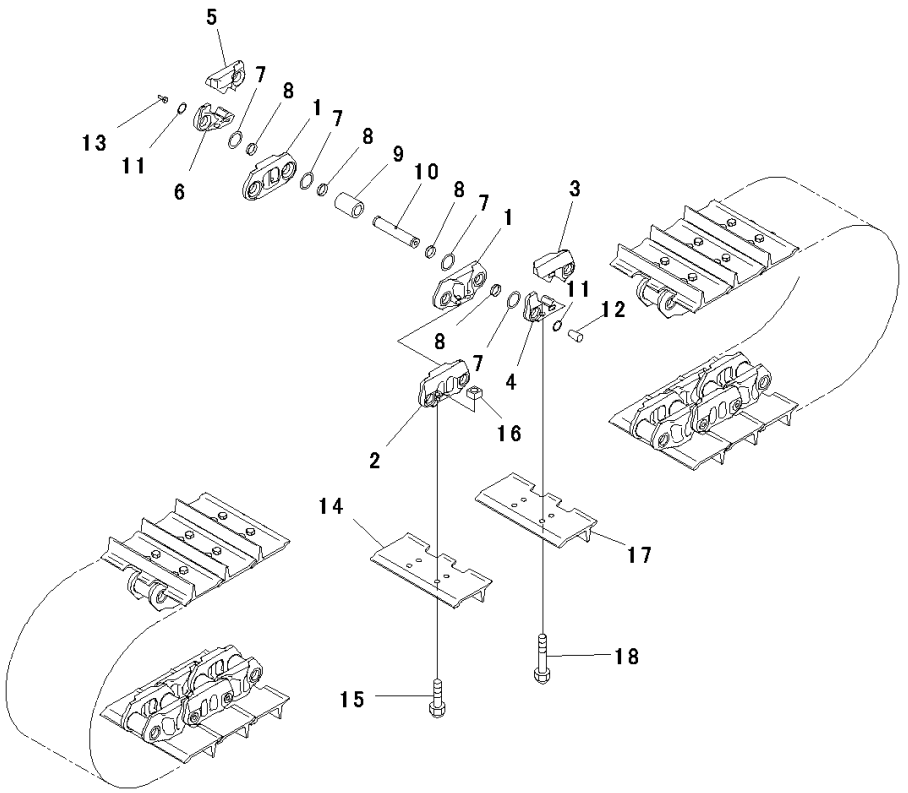

Index	Code	Part Number	Description	Qty	Serial Number
		14X-32-03110	Track Shoe Assembly	1	80001-
1		14X-32-15610	• Link,Inner	84	80001-
2		14X-32-15630	• Link,Outer	80	80001-
		14X-32-08210	• Link Kit, Master,LHS	2	80001-
3	C1		•• Link, Master	1	80001-
4	C1		•• Link, Master	1	80001-
		14X-32-08220	• Link Kit, Master,RHS	2	80001-
5	C1		•• Link, Master	1	80001-
6	C1		•• Link, Master	1	80001-
7		14X-32-15700	• Seal Assembly	336	80001-
8		14X-32-15680	• Spacer	336	80001-
9		14X-32-15640	• Bushing	84	80001-
10		14X-32-15650	• Pin	84	80001-
11		14X-32-15730	• Ring	168	80001-
12		07059-11830	• Plug, Large	84	80001-
13		07059-20721	• Plug, Small	84	80001-
14		14X-32-15360	• Shoe	82	80001-
15		207-32-71620	• Bolt, (Kit : K07)	328	80001-
16		154-32-71220	• Nut, (Kit : K07)	328	80001-
17		14X-32-15360	• Shoe	2	80001-
18		14X-32-15310	• Bolt, Master Track Shoe	8	80001-

FIG. R0500-003001 Track Shoe Assembly, Single Grouser, 510mm Width

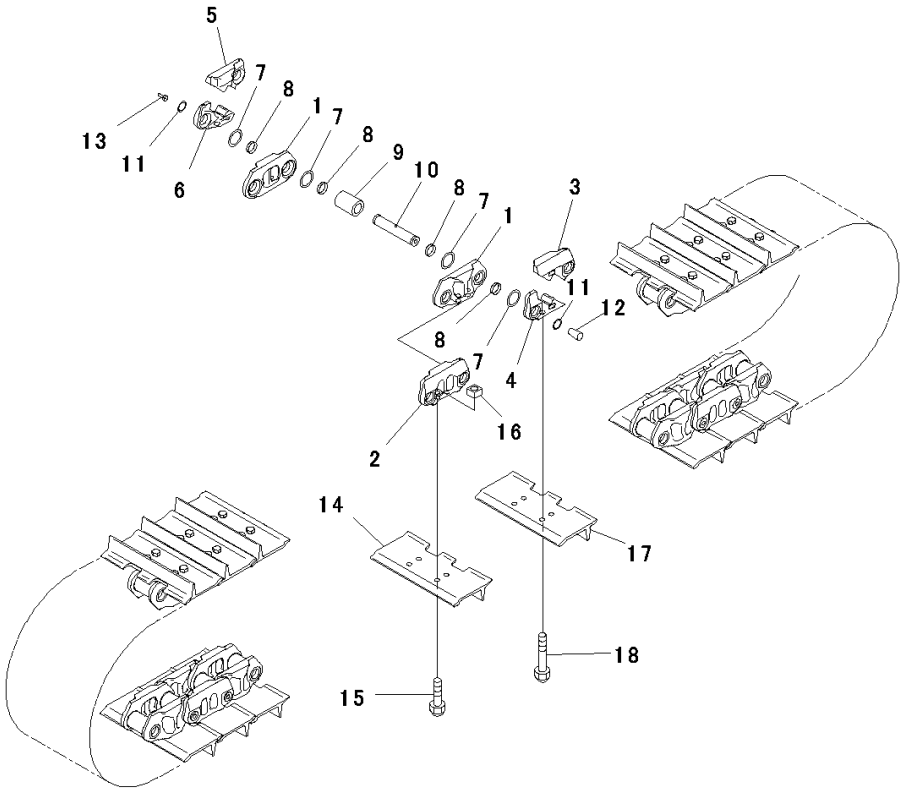

Index	Code	Part Number	Description	Qty	Serial Number
		14X-32-03100	Track Shoe Assembly	1	80001-
1		14X-32-15610	• Link,Inner	84	80001-
2		14X-32-15630	• Link,Outer	80	80001-
		14X-32-08210	• Link Kit, Master,LHS	2	80001-
3	C1		•• Link, Master	1	80001-
4	C1		•• Link, Master	1	80001-
		14X-32-08220	• Link Kit, Master,RHS	2	80001-
5	C1		•• Link, Master	1	80001-
6	C1		•• Link, Master	1	80001-
7		14X-32-15700	• Seal Assembly	336	80001-
8		14X-32-15680	• Spacer	336	80001-
9		14X-32-15640	• Bushing	84	80001-
10		14X-32-15650	• Pin	84	80001-
11		14X-32-15730	• Ring	168	80001-
12		07059-11830	• Plug, Large	84	80001-
13		07059-20721	• Plug, Small	84	80001-
14		14X-32-15110	• Shoe	82	80001-
15		207-32-71620	• Bolt, (Kit : K07)	328	80001-
16		154-32-71220	• Nut, (Kit : K07)	328	80001-
17		14X-32-15110	• Shoe	2	80001-
18		14X-32-15310	• Bolt, Master Track Shoe	8	80001-

FIG. R0500-004001 Track Shoe Assembly, Single Grouser, 560mm Width

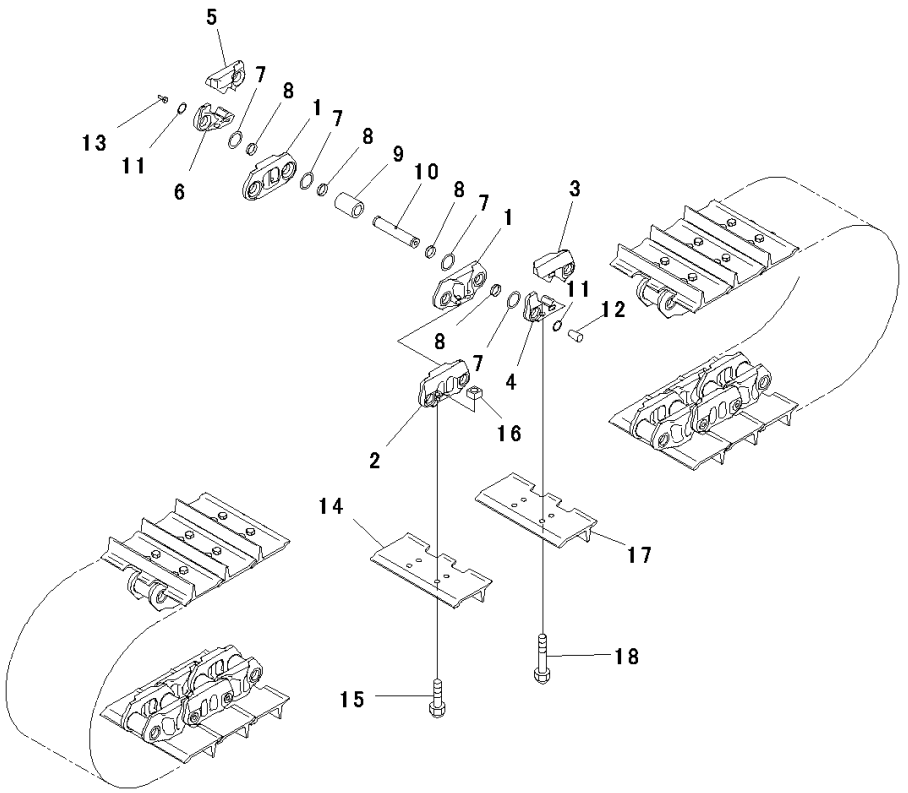

Index	Code	Part Number	Description	Qty	Serial Number
		14X-32-03120	Track Shoe Assembly	1	80001-
1		14X-32-15610	• Link,Inner	84	80001-
2		14X-32-15630	• Link,Outer	80	80001-
		14X-32-08210	• Link Kit, Master,LHS	2	80001-
3	C1		•• Link, Master	1	80001-
4	C1		•• Link, Master	1	80001-
		14X-32-08220	• Link Kit, Master,RHS	2	80001-
5	C1		•• Link, Master	1	80001-
6	C1		•• Link, Master	1	80001-
7		14X-32-15700	• Seal Assembly	336	80001-
8		14X-32-15680	• Spacer	336	80001-
9		14X-32-15640	• Bushing	84	80001-
10		14X-32-15650	• Pin	84	80001-
11		14X-32-15730	• Ring	168	80001-
12		07059-11830	• Plug, Large	84	80001-
13		07059-20721	• Plug, Small	84	80001-
14		14X-32-15340	• Shoe	82	80001-
15		207-32-71620	• Bolt, (Kit : K07)	328	80001-
16		154-32-71220	• Nut, (Kit : K07)	328	80001-
17		14X-32-15340	• Shoe	2	80001-
18		14X-32-15310	• Bolt, Master Track Shoe	8	80001-

FIG. R0500-005001 Track Shoe Assembly, Single Grouser, 610mm Width

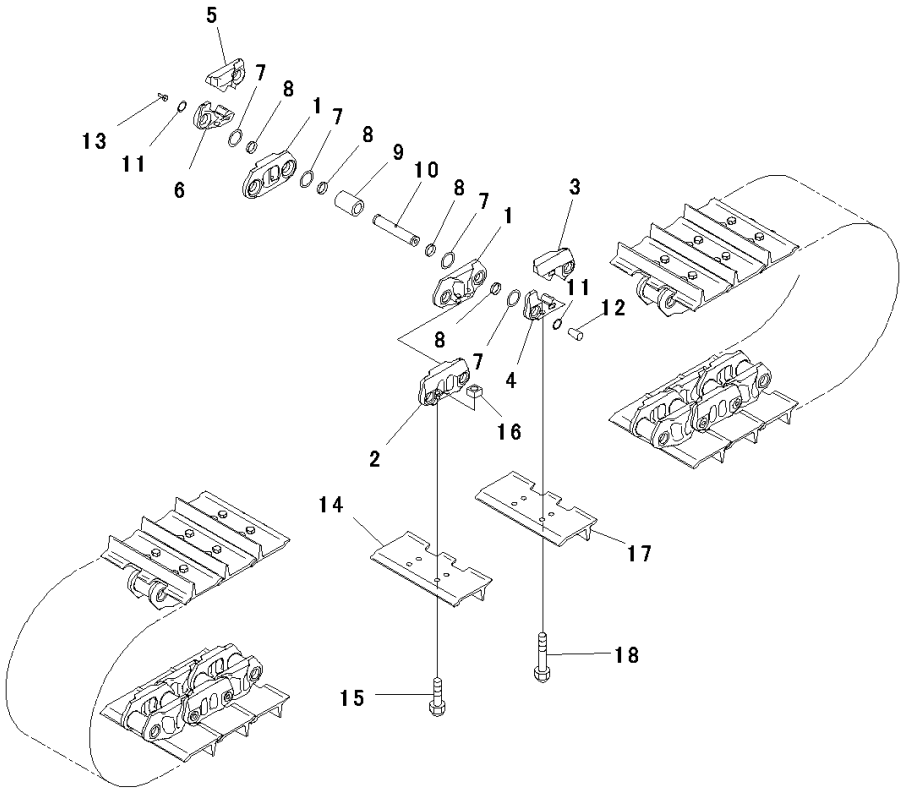

Index	Code	Part Number	Description	Qty	Serial Number
		14X-32-03130	Track Shoe Assembly	1	80001-
1		14X-32-15610	• Link,Inner	84	80001-
2		14X-32-15630	• Link,Outer	80	80001-
		14X-32-08210	• Link Kit, Master,LHS	2	80001-
3	C1		•• Link, Master	1	80001-
4	C1		•• Link, Master	1	80001-
		14X-32-08220	• Link Kit, Master,RHS	2	80001-
5	C1		•• Link, Master	1	80001-
6	C1		•• Link, Master	1	80001-
7		14X-32-15700	• Seal Assembly	336	80001-
8		14X-32-15680	• Spacer	336	80001-
9		14X-32-15640	• Bushing	84	80001-
10		14X-32-15650	• Pin	84	80001-
11		14X-32-15730	• Ring	168	80001-
12		07059-11830	• Plug, Large	84	80001-
13		07059-20721	• Plug, Small	84	80001-
14		14X-32-15350	• Shoe	82	80001-
15		207-32-71620	• Bolt, (Kit : K07)	328	80001-
16		154-32-71220	• Nut, (Kit : K07)	328	80001-
17		14X-32-15350	• Shoe	2	80001-
18		14X-32-15310	• Bolt, Master Track Shoe	8	80001-

FIG. R0500-006001 Track Shoe Assembly, Single Grouser, 760mm Width

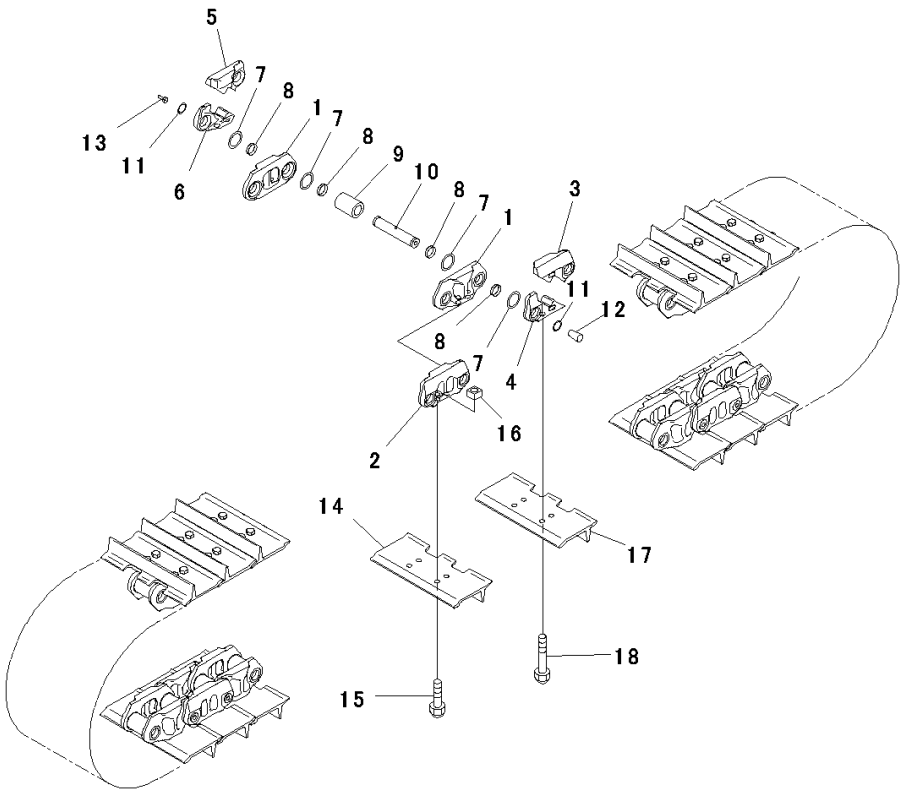

Index	Code	Part Number	Description	Qty	Serial Number
		14X-32-03140	Track Shoe Assembly	1	80001-
1		14X-32-15610	• Link,Inner	84	80001-
2		14X-32-15630	• Link,Outer	80	80001-
		14X-32-08210	• Link Kit, Master,LHS	2	80001-
3	C1		•• Link, Master	1	80001-
4	C1		•• Link, Master	1	80001-
		14X-32-08220	• Link Kit, Master,RHS	2	80001-
5	C1		•• Link, Master	1	80001-
6	C1		•• Link, Master	1	80001-
7		14X-32-15700	• Seal Assembly	336	80001-
8		14X-32-15680	• Spacer	336	80001-
9		14X-32-15640	• Bushing	84	80001-
10		14X-32-15650	• Pin	84	80001-
11		14X-32-15730	• Ring	168	80001-
12		07059-11830	• Plug, Large	84	80001-
13		07059-20721	• Plug, Small	84	80001-
14		14X-32-15380	• Shoe	82	80001-
15		207-32-71620	• Bolt, (Kit : K07)	328	80001-
16		154-32-71220	• Nut, (Kit : K07)	328	80001-
17		14X-32-15380	• Shoe	2	80001-
18		14X-32-15310	• Bolt, Master Track Shoe	8	80001-

FIG. R0500-007001 Track Shoe Assembly, Single Grouser, 760mm Width, Heavy Duty

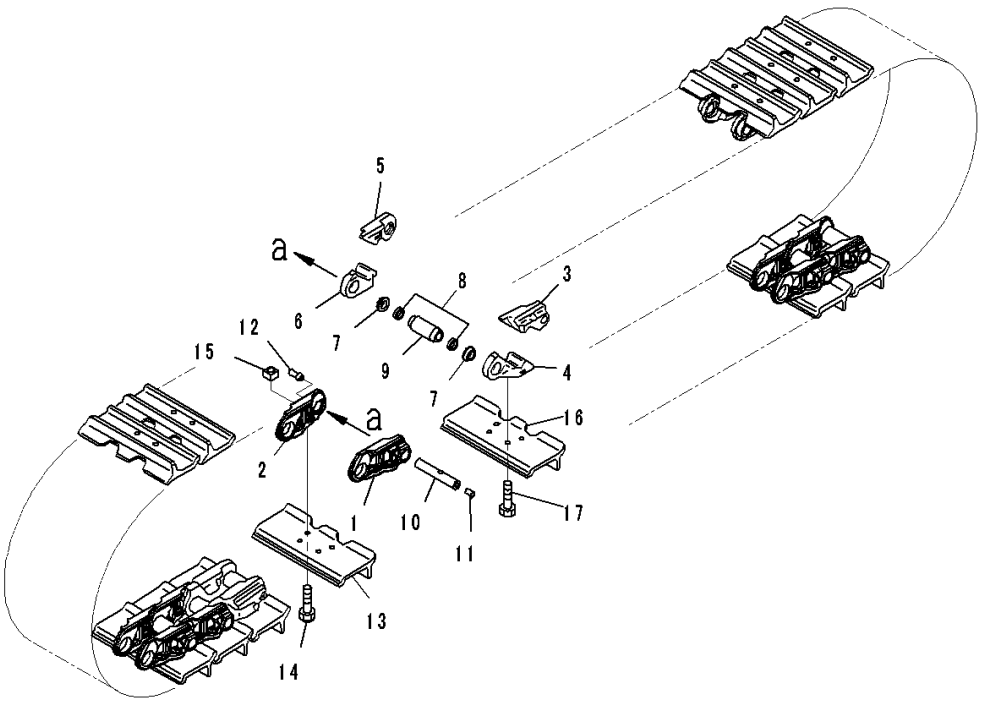

Index	Code	Part Number	Description	Qty	Serial Number
		14X-32-02730	Track Shoe Assembly	1	80001-
1		14X-32-52120	• Link,LHS	82	80001-
2		14X-32-52130	• Link,RHS	82	80001-
		14X-32-08010	• Link Kit, Master,LHS	2	80001-
3	C1		•• Link, Master	1	80001-
4	C1		•• Link, Master	1	80001-
		14X-32-08020	• Link Kit, Master,RHS	2	80001-
5	C1		•• Link, Master	1	80001-
6	C1		•• Link, Master	1	80001-
7		14X-32-12200	• Seal Assembly	168	80001-
8		144-32-21191	• Spacer	168	80001-
9		14X-32-11140	• Bushing	84	80001-
10		14X-32-13150	• Pin	84	80001-
11		07059-11830	• Plug, Large	84	80001-
12		07059-20721	• Plug, Small	84	80001-
13		14X-32-51120	• Shoe	82	80001-
14		154-32-21323	• Bolt, (Kit : K08)	328	80001-
15		134-32-61221	• Nut, (Kit : K08)	328	80001-
16		14X-32-51120	• Shoe	2	80001-
17		14X-32-11350	• Bolt, Master Track Shoe	8	80001-

FIG. R0500-002001 Track Link Assembly, Supply Parts

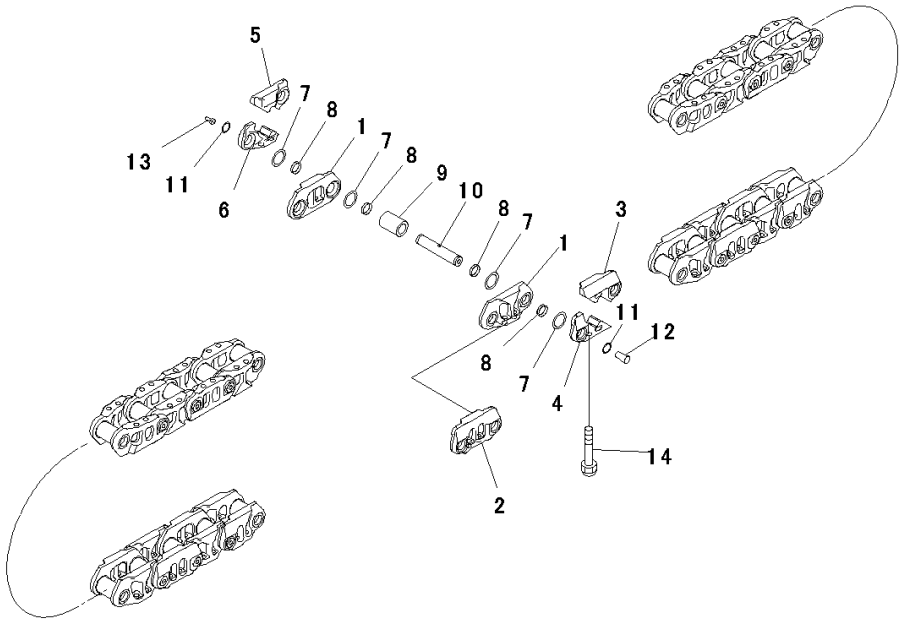

Index	Code	Part Number	Description	Qty	Serial Number
		14X-32-00310	Track Link Assembly	1	80001-
1		14X-32-15610	• Link,Inner	84	80001-
2		14X-32-15630	• Link,Outer	80	80001-
		14X-32-08210	• Link Kit, Master,LHS	2	80001-
3	C1		•• Link, Master	1	80001-
4	C1		•• Link, Master	1	80001-
		14X-32-08220	• Link Kit, Master,RHS	2	80001-
5	C1		•• Link, Master	1	80001-
6	C1		•• Link, Master	1	80001-
7		14X-32-15700	• Seal Assembly	336	80001-
8		14X-32-15680	• Spacer	336	80001-
9		14X-32-15640	• Bushing	84	80001-
10		14X-32-15650	• Pin	84	80001-
11		14X-32-15730	• Ring	168	80001-
12		07059-11830	• Plug, Large	84	80001-
13		07059-20721	• Plug, Small	84	80001-
14		14X-32-15310	• Bolt, Master Track Shoe	8	80001-

FIG. R2100-001001 Track Frame

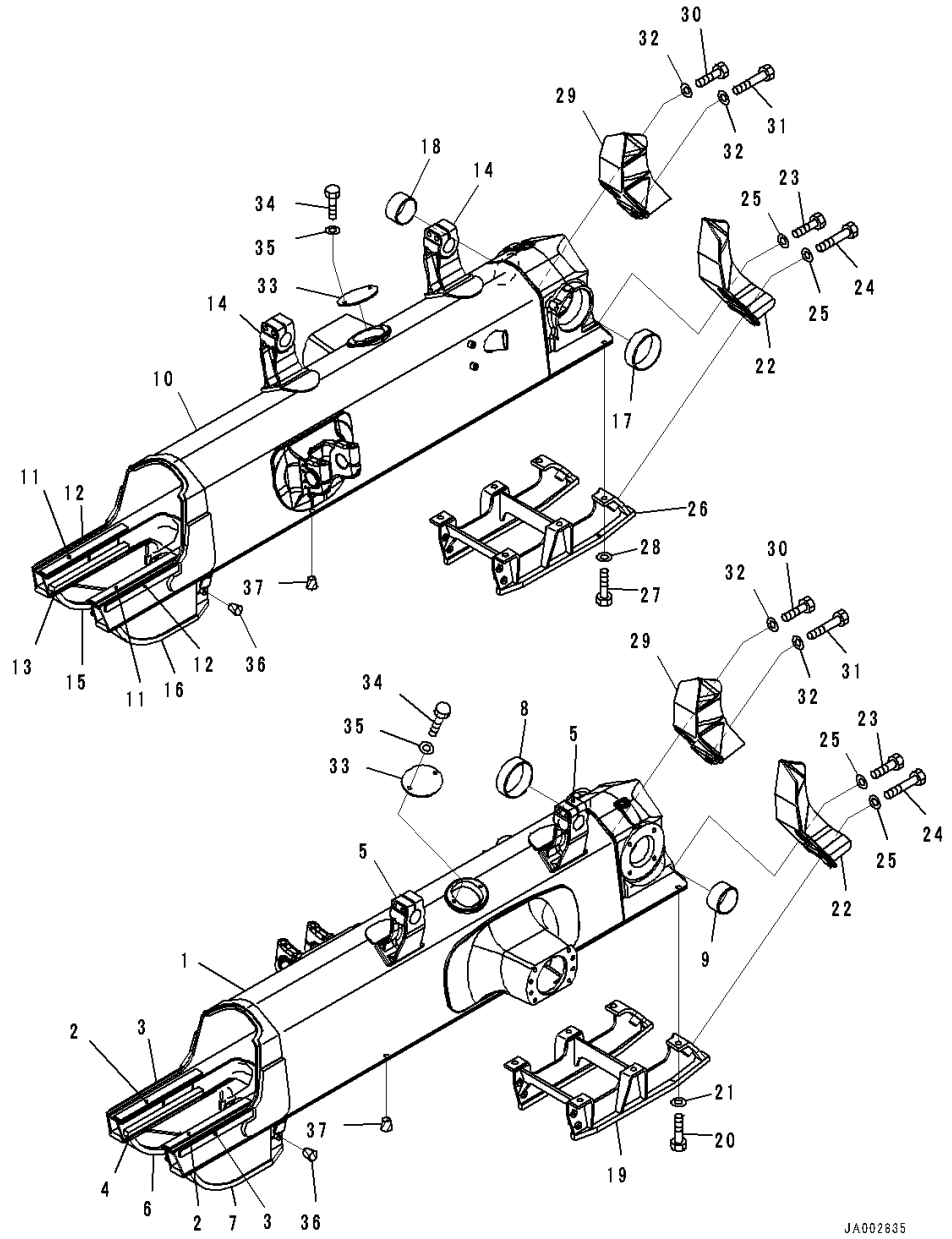

Index	Code	Part Number	Description	Qty	Serial Number
1		14X-30-51151	Frame,LHS	1	80001-
2		14X-30-51C71	• Plate,Welded	2	80001-
3		14X-30-11D52	• Plate,Welded	2	80001-
4		14X-30-11D52	• Plate,Welded	2	80001-
5		14X-30-51650	• Bracket,Welded	2	80001-
6		14X-30-51331	• Guard,Welded	1	80001-
7		14X-30-51341	• Guard,Welded	1	80001-
8		14Y-30-18130	Bushing	1	80001-
9		14Y-30-18140	Bushing	1	80001-
10		14X-30-51161	Frame,RHS	1	80001-
11		14X-30-51C71	• Plate,Welded	2	80001-
12		14X-30-11D52	• Plate,Welded	2	80001-
13		14X-30-11D52	• Plate,Welded	2	80001-
14		14X-30-51650	• Bracket,Welded	2	80001-
15		14X-30-51331	• Guard,Welded	1	80001-
16		14X-30-51341	• Guard,Welded	1	80001-
17		14Y-30-18130	Bushing	1	80001-
18		14Y-30-18140	Bushing	1	80001-
19		14X-30-51440	Guard	1	80001-
20		01010-81845	Bolt	6	80001-
21		01643-31845	Washer	6	80001-
22		14X-30-51390	Bracket	2	80001-
23		01010-81850	Bolt	4	80001-
24		01010-81865	Bolt	4	80001-
25		01643-31845	Washer	8	80001-
26		14X-30-51440	Guard	1	80001-
27		01010-81845	Bolt	6	80001-
28		01643-31845	Washer	6	80001-
29		14X-30-51410	Bracket	2	80001-
30		01010-81850	Bolt	4	80001-
31		01010-81865	Bolt	4	80001-
32		01643-31845	Washer	8	80001-
33		14Y-30-11277	Cover	2	80001-
34		01010-81225	Bolt	4	80001-
35		01643-31232	Washer	4	80001-
36		07049-01215	Plug	16	80001-
37		07049-01822	Plug	16	80001-

FIG. R2100-002001 Track Frame, With Power Angle Power Tilt Dozer

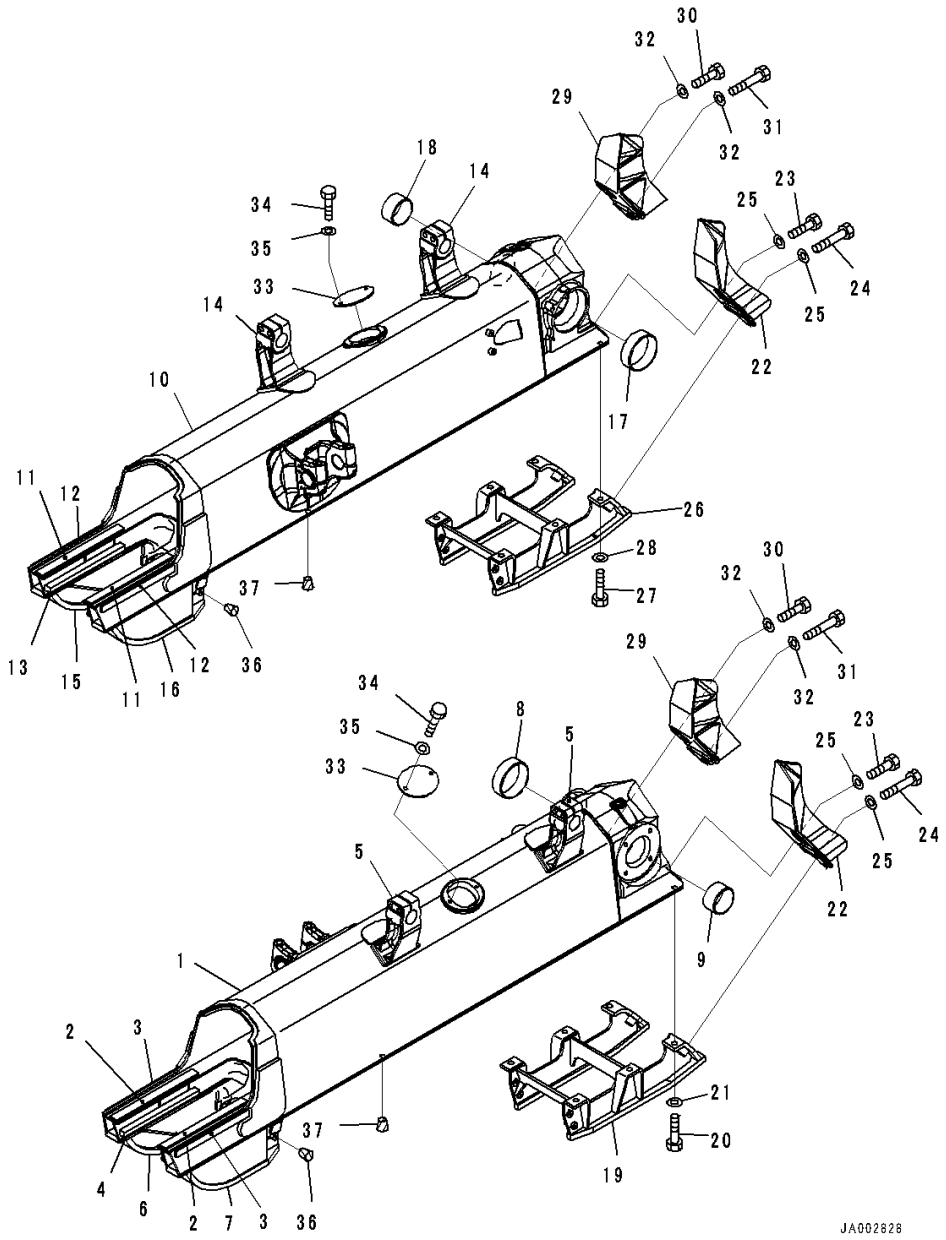

Index	Code	Part Number	Description	Qty	Serial Number
1		14X-30-51211	Frame,LHS	1	80001-
2		14X-30-51C71	• Plate,Welded	2	80001-
3		14X-30-11D52	• Plate,Welded	2	80001-
4		14X-30-11D52	• Plate,Welded	2	80001-
5		14X-30-51650	• Bracket,Welded	2	80001-
6		14X-30-51331	• Guard,Welded	1	80001-
7		14X-30-51341	• Guard,Welded	1	80001-
8		14Y-30-18130	Bushing	1	80001-
9		14Y-30-18140	Bushing	1	80001-
10		14X-30-51221	Frame,RHS	1	80001-
11		14X-30-51C71	• Plate,Welded	2	80001-
12		14X-30-11D52	• Plate,Welded	2	80001-
13		14X-30-11D52	• Plate,Welded	2	80001-
14		14X-30-51650	• Bracket,Welded	2	80001-
15		14X-30-51331	• Guard,Welded	1	80001-
16		14X-30-51341	• Guard,Welded	1	80001-
17		14Y-30-18130	Bushing	1	80001-
18		14Y-30-18140	Bushing	1	80001-
19		14X-30-51440	Guard	1	80001-
20		01010-81845	Bolt	6	80001-
21		01643-31845	Washer	6	80001-
22		14X-30-51390	Bracket	2	80001-
23		01010-81850	Bolt	4	80001-
24		01010-81865	Bolt	4	80001-
25		01643-31845	Washer	8	80001-
26		14X-30-51440	Guard	1	80001-
27		01010-81845	Bolt	6	80001-
28		01643-31845	Washer	6	80001-
29		14X-30-51410	Bracket	2	80001-
30		01010-81850	Bolt	4	80001-
31		01010-81865	Bolt	4	80001-
32		01643-31845	Washer	8	80001-
33		14Y-30-11277	Cover	2	80001-
34		01010-81225	Bolt	4	80001-
35		01643-31232	Washer	4	80001-
36		07049-01215	Plug	16	80001-
37		07049-01822	Plug	16	80001-

FIG. R2100-004001 Track Frame, With Power Angle Power Tilt Dozer, Plus Type

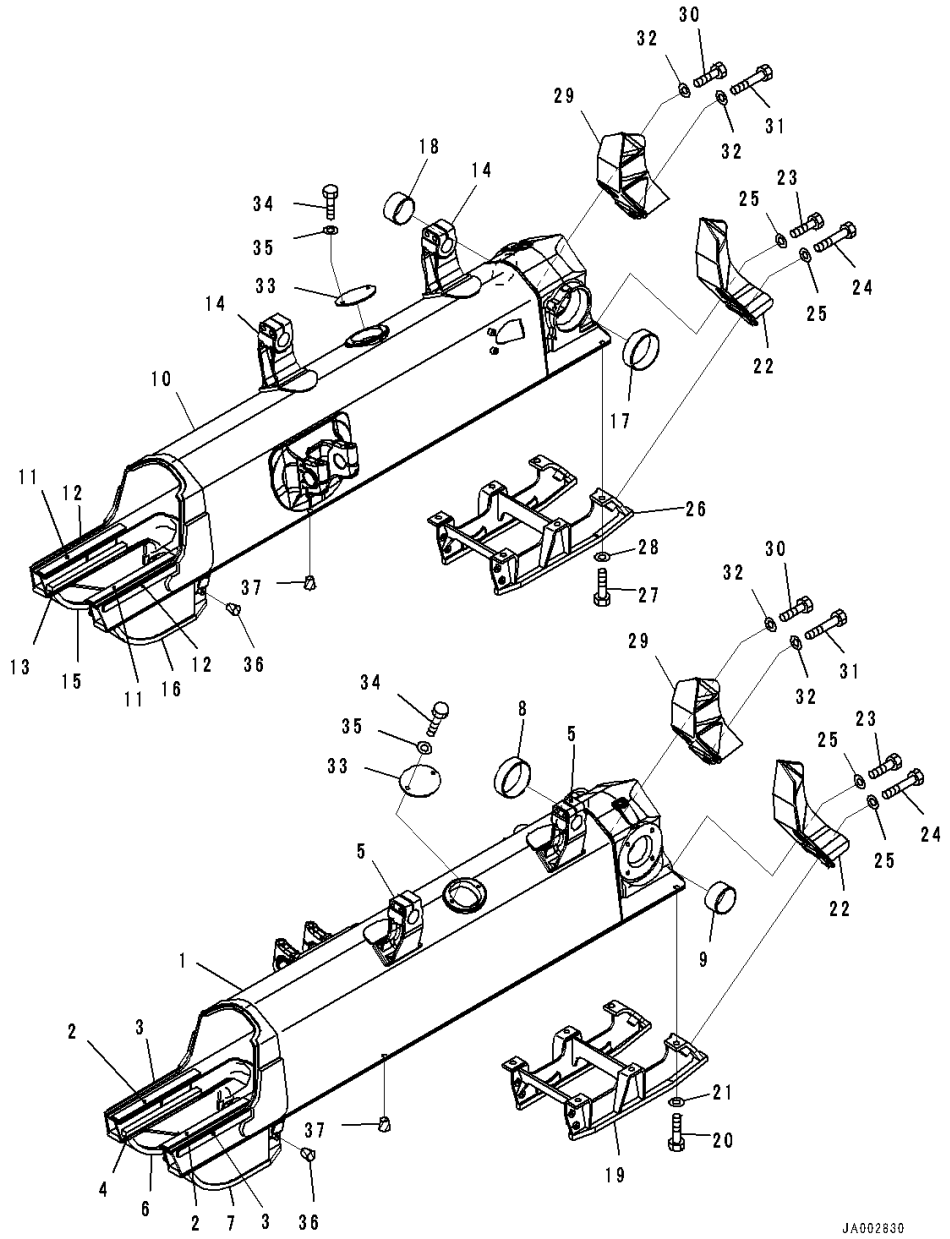

Index	Code	Part Number	Description	Qty	Serial Number
1		14X-30-51211	Frame,LHS	1	80001-
2		14X-30-51C71	• Plate,Welded	2	80001-
3		14X-30-11D52	• Plate,Welded	2	80001-
4		14X-30-11D52	• Plate,Welded	2	80001-
5		14X-30-51650	• Bracket,Welded	2	80001-
6		14X-30-51331	• Guard,Welded	1	80001-
7		14X-30-51341	• Guard,Welded	1	80001-
8		14Y-30-18130	Bushing	1	80001-
9		14Y-30-18140	Bushing	1	80001-
10		14X-30-51221	Frame,RHS	1	80001-
11		14X-30-51C71	• Plate,Welded	2	80001-
12		14X-30-11D52	• Plate,Welded	2	80001-
13		14X-30-11D52	• Plate,Welded	2	80001-
14		14X-30-51650	• Bracket,Welded	2	80001-
15		14X-30-51331	• Guard,Welded	1	80001-
16		14X-30-51341	• Guard	1	80001-
17		14Y-30-18130	Bushing	1	80001-
18		14Y-30-18140	Bushing	1	80001-
19		14Y-30-27130	Guard	1	80001-
20		01010-81845	Bolt	6	80001-
21		01643-31845	Washer	6	80001-
22		14X-30-51390	Bracket	2	80001-
23		01010-81850	Bolt	4	80001-
24		01010-81865	Bolt	4	80001-
25		01643-31845	Washer	8	80001-
26		14Y-30-27130	Guard	1	80001-
27		01010-81845	Bolt	6	80001-
28		01643-31845	Washer	6	80001-
29		14X-30-51410	Bracket	2	80001-
30		01010-81850	Bolt	4	80001-
31		01010-81865	Bolt	4	80001-
32		01643-31845	Washer	8	80001-
33		14Y-30-11277	Cover	2	80001-
34		01010-81225	Bolt	4	80001-
35		01643-31232	Washer	4	80001-
36		07049-01215	Plug	16	80001-
37		07049-01822	Plug	16	80001-

FIG. R2100-003001 Track Frame, Plus Type

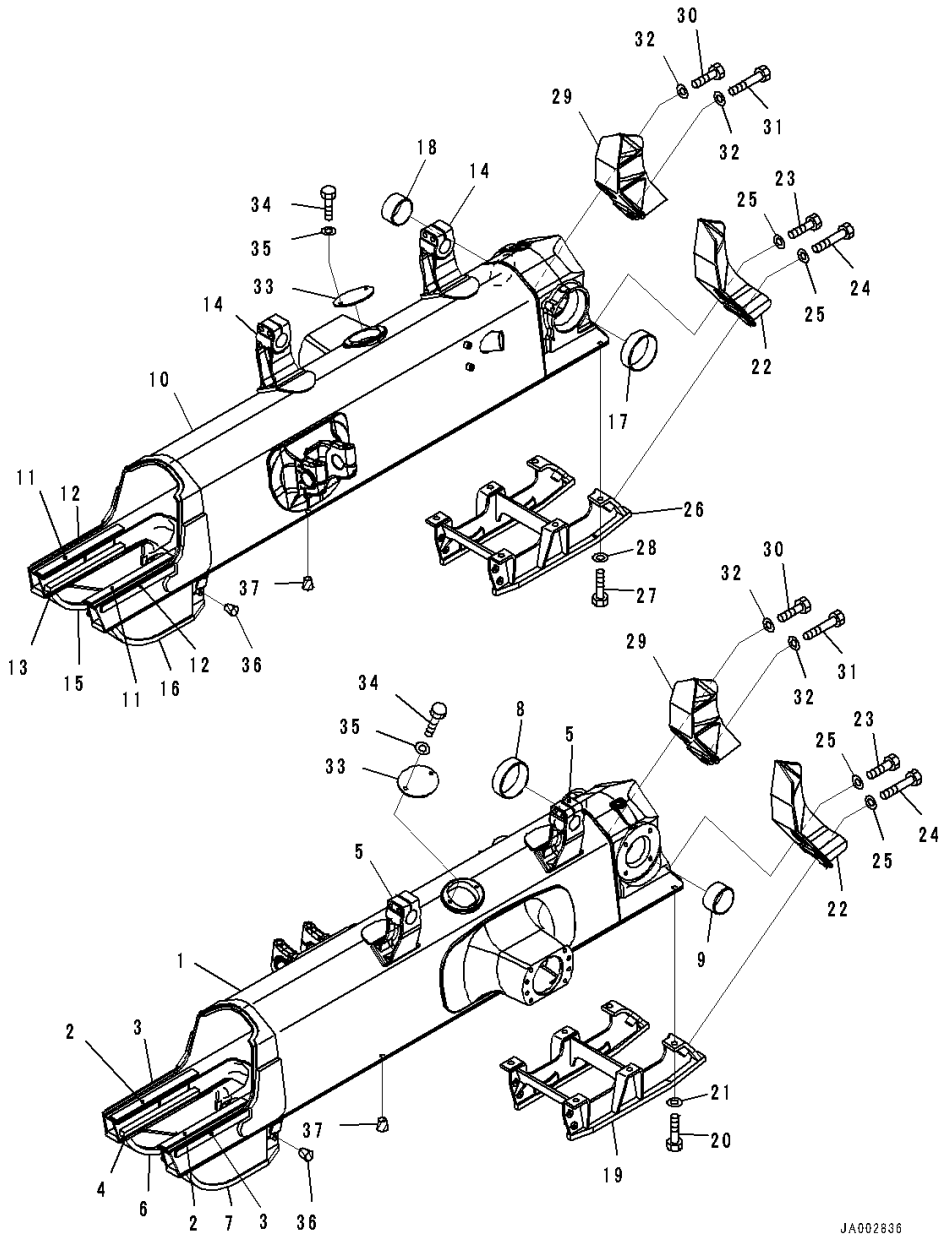

Index	Code	Part Number	Description	Qty	Serial Number
1		14X-30-51151	Frame,LHS	1	80001-
2		14X-30-51C71	• Plate,Welded	2	80001-
3		14X-30-11D52	• Plate,Welded	2	80001-
4		14X-30-11D52	• Plate,Welded	2	80001-
5		14X-30-51650	• Bracket,Welded	2	80001-
6		14X-30-51331	• Guard,Welded	1	80001-
7		14X-30-51341	• Guard,Welded	1	80001-
8		14Y-30-18130	Bushing	1	80001-
9		14Y-30-18140	Bushing	1	80001-
10		14X-30-51161	Frame,RHS	1	80001-
11		14X-30-51C71	• Plate,Welded	2	80001-
12		14X-30-11D52	• Plate,Welded	2	80001-
13		14X-30-11D52	• Plate,Welded	2	80001-
14		14X-30-51650	• Bracket,Welded	2	80001-
15		14X-30-51331	• Guard,Welded	1	80001-
16		14X-30-51341	• Guard,Welded	1	80001-
17		14Y-30-18130	Bushing	1	80001-
18		14Y-30-18140	Bushing	1	80001-
19		14Y-30-27130	Guard	1	80001-
20		01010-81845	Bolt	6	80001-
21		01643-31845	Washer	6	80001-
22		14X-30-51390	Bracket	2	80001-
23		01010-81850	Bolt	4	80001-
24		01010-81865	Bolt	4	80001-
25		01643-31845	Washer	8	80001-
26		14Y-30-27130	Guard	1	80001-
27		01010-81845	Bolt	6	80001-
28		01643-31845	Washer	6	80001-
29		14X-30-51410	Bracket	2	80001-
30		01010-81850	Bolt	4	80001-
31		01010-81865	Bolt	4	80001-
32		01643-31845	Washer	8	80001-
33		14Y-30-11277	Cover	2	80001-
34		01010-81225	Bolt	4	80001-
35		01643-31232	Washer	4	80001-
36		07049-01215	Plug	16	80001-
37		07049-01822	Plug	16	80001-

FIG. R2200-001001 Track Roller Guard

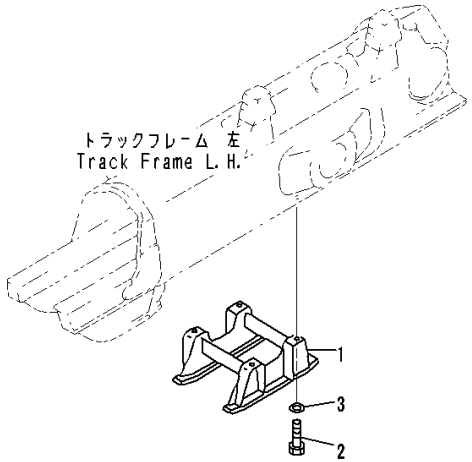

PWA6429

Index	Code	Part Number	Description	Qty	Serial Number
1		14Y-30-26140	Guard	2	80001-
2		01010-81845	Bolt	8	80001-
3		01643-31845	Washer	8	80001-

FIG. R2200-003001 Track Roller Guard, Full Roller Guard, Plus Type

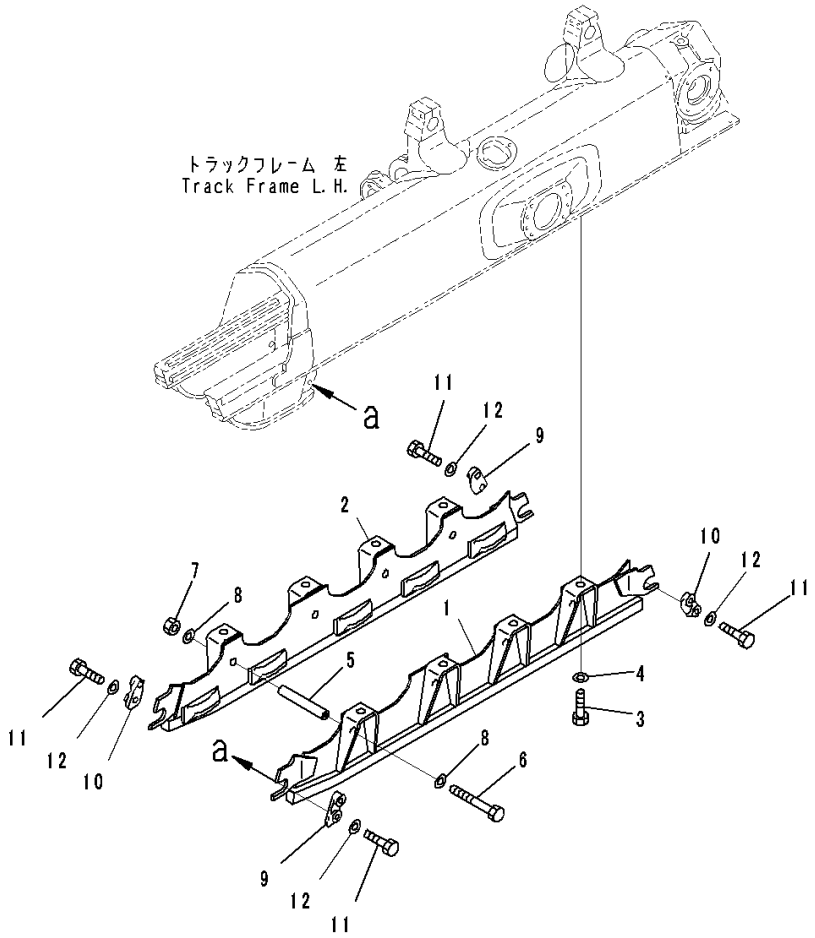

Index	Code	Part Number	Description	Qty	Serial Number
1		14X-30-51680	Guard,LHS	2	80001-
2		14X-30-51690	Guard,RHS	2	80001-
3		01010-81840	Bolt	16	80001-
4		01643-31845	Washer	16	80001-
5		14X-30-27230	Collar	8	80001-
6		09205-18330	Bolt	8	80001-
7		01580-11815	Nut	8	80001-
8		01643-31845	Washer	16	80001-
9		130-30-12170	Plate	4	80001-
10		130-30-12180	Plate	4	80001-
11		01010-81230	Bolt	16	80001-
12		01643-31232	Washer	16	80001-

FIG. R2200-004001 Track Roller Guard, Plus Type

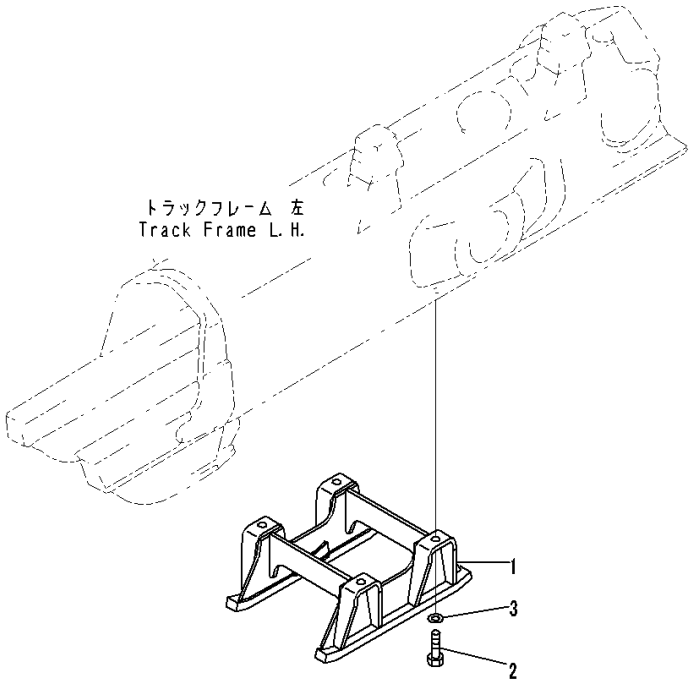

Index	Code	Part Number	Description	Qty	Serial Number
1		14X-30-51640	Guard	2	80001-
2		01010-81845	Bolt	8	80001-
3		01643-31845	Washer	8	80001-

FIG. R2200-002001 Track Roller Guard, Full Roller Guard

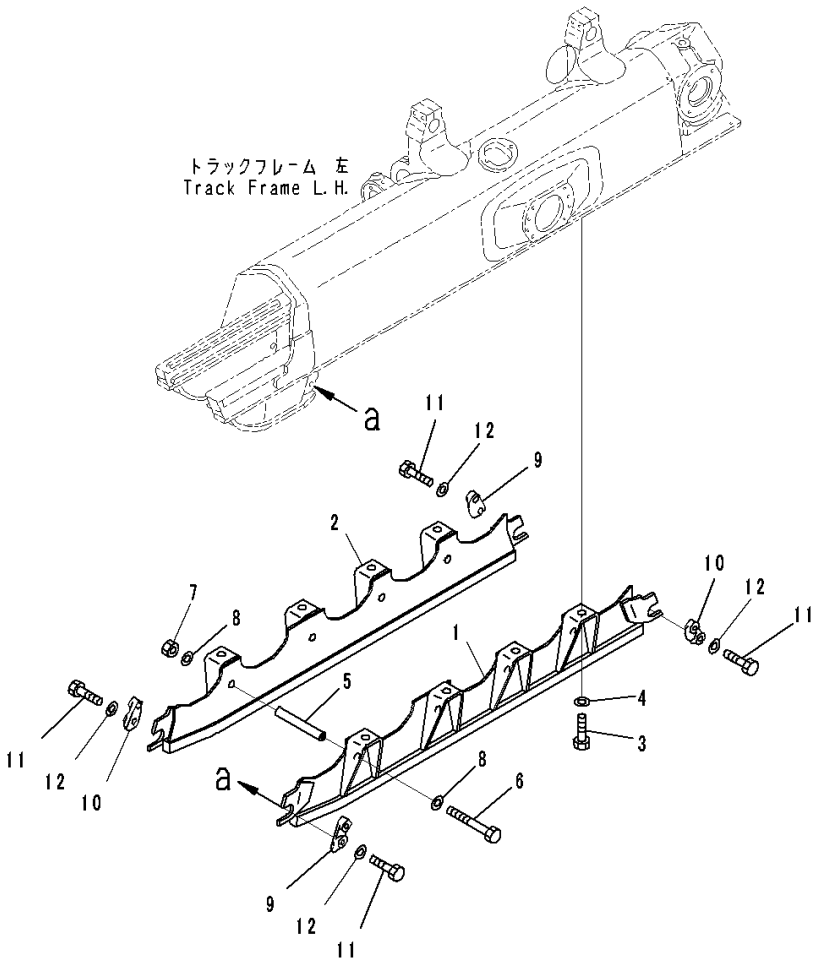

Index	Code	Part Number	Description	Qty	Serial Number
1		14X-30-51591	Guard,LHS	2	80001-
2		14X-30-51611	Guard,RHS	2	80001-
3		01010-81840	Bolt	16	80001-
4		01643-31845	Washer	16	80001-
5		14X-30-26230	Collar	8	80001-
6		09205-18325	Bolt	8	80001-
7		01580-11815	Nut	8	80001-
8		01643-31845	Washer	16	80001-
9		130-30-12170	Plate	4	80001-
10		130-30-12180	Plate	4	80001-
11		01010-81230	Bolt	16	80001-
12		01643-31232	Washer	16	80001-

WORK EQUIPMENT

FIG. T2110-001001 Dozer Frame

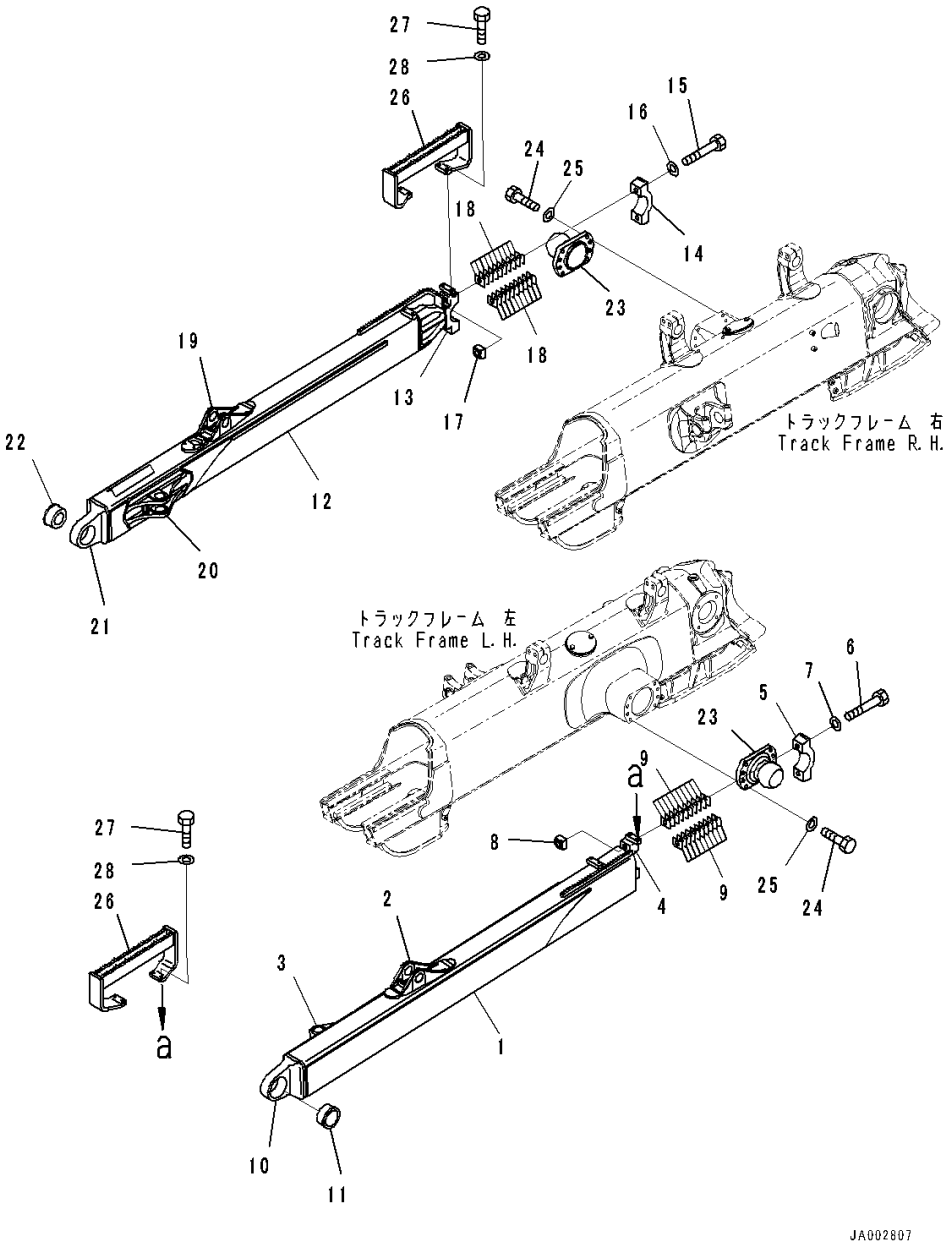

Index	Code	Part Number	Description	Qty	Serial Number
1		14X-952-5411	Frame,LHS	1	80001-
2		14Y-71-12170	• Bracket,Welded	1	80001-
3		14Y-71-13181	• Bracket,Welded	1	80001-
		14Y-71-00081	• Pivot Assembly	1	80001-
4	C1		•• Bearing	1	80001-
5		14Y-71-22150	•• Cap	1	80001-
6		01011-82465	•• Bolt	2	80001-
7		01643-32460	•• Washer	2	80001-
8		130-70-13241	•• Nut	2	80001-
9		14Y-71-22280	•• Shim, T=1.0mm	20	80001-
10		14X-952-1390	• Joint,Welded	1	80001-
11		14X-71-12230	Bearing	1	80001-
12		14X-952-5421	Frame,RHS	1	80001-
13	C1		• Bearing	1	80001-
14	C1		• Cap	1	80001-
15	C1		• Bolt	2	80001-
16	C1		• Washer	2	80001-
17	C1		• Nut	2	80001-
18	C1		• Shim, T=1.0mm	20	80001-
19		14Y-71-12170	• Bracket,Welded	1	80001-
20		14Y-71-13181	• Bracket,Welded	1	80001-
21		14X-952-1390	• Joint,Welded	1	80001-
22		14X-71-12230	Bearing	1	80001-
23		14Z-71-33212	Trunnion	2	80001-
24		01010-82065	Bolt	16	80001-
25		01643-32060	Washer	16	80001-
26		14X-71-53340	Step	2	80001-
27		01010-81240	Bolt	8	80001-
28		01643-31232	Washer	8	80001-

FIG. T2110-002001 Dozer Frame, With Power Tilt Pitch Dozer

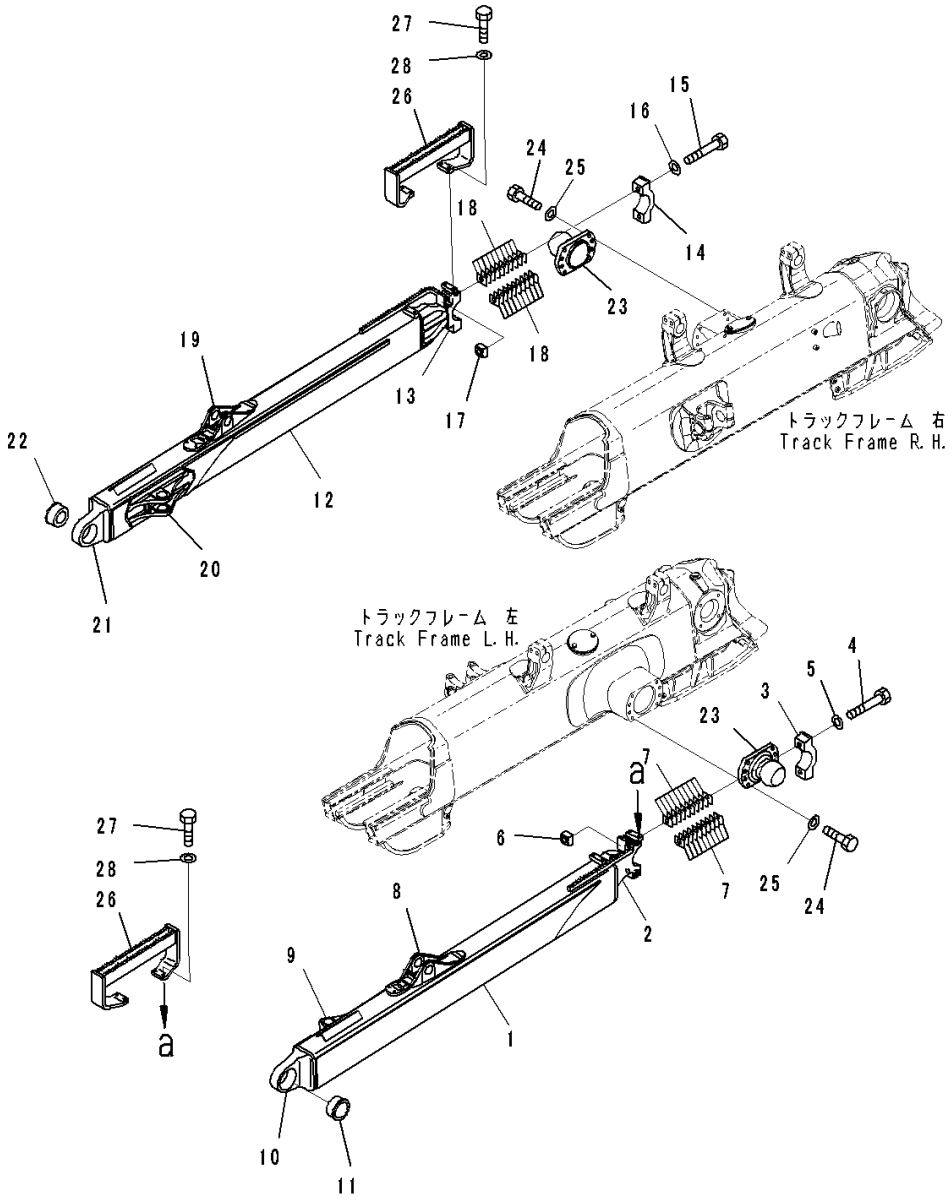

Index	Code	Part Number	Description	Qty	Serial Number
1		14X-952-5431	Frame,LHS	1	80001-
2	C1		• Bearing	1	80001-
3	C1		• Cap	1	80001-
4	C1		• Bolt	2	80001-
5	C1		• Washer	2	80001-
6	C1		• Nut	2	80001-
7	C1		• Shim, T=1.0mm	20	80001-
8		14Y-71-12170	• Bracket,Welded	1	80001-
9		14Y-71-13181	• Bracket,Welded	1	80001-
10		14X-952-1390	• Joint,Welded	1	80001-
11		14X-71-12230	Bearing	1	80001-
12		14X-952-5421	Frame,RHS	1	80001-
13	C1		• Bearing	1	80001-
14	C1		• Cap	1	80001-
15	C1		• Bolt	2	80001-
16	C1		• Washer	2	80001-
17	C1		• Nut	2	80001-
18	C1		• Shim, T=1.0mm	20	80001-
19		14Y-71-12170	• Bracket,Welded	1	80001-
20		14Y-71-13181	• Bracket,Welded	1	80001-
21		14X-952-1390	• Joint,Welded	1	80001-
22		14X-71-12230	Bearing	1	80001-
23		14Z-71-33212	Trunnion	2	80001-
24		01010-82065	Bolt	16	80001-
25		01643-32060	Washer	16	80001-
26		14X-71-53340	Step	2	80001-
27		01010-81240	Bolt	8	80001-
28		01643-31232	Washer	8	80001-

FIG. T2110-004001 Dozer Frame, With Power Angle Power Tilt Dozer

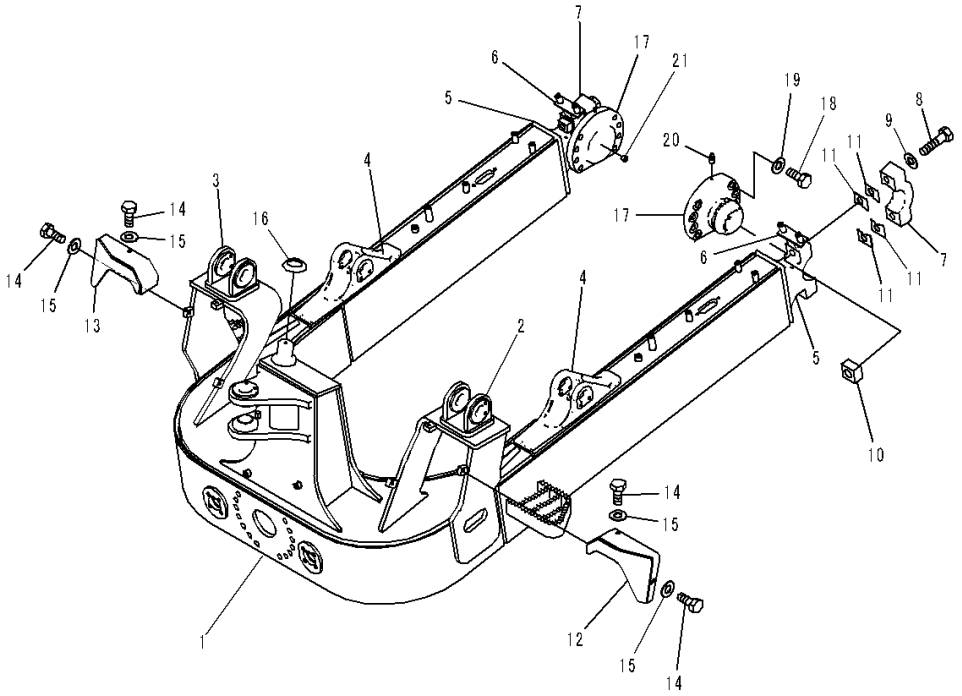

Index	Code	Part Number	Description	Qty	Serial Number
1		14X-72-51901	Frame Assembly	1	80001-
2		14X-72-51251	• Bracket,LHS,Welded	1	80001-
3		14X-72-51261	• Bracket,RHS,Welded	1	80001-
4		14X-72-51271	• Bracket,Welded	2	80001-
5		14X-72-51281	• Bearing,Welded	2	80001-
6		14X-72-51241	• Bracket,Welded	2	80001-
7	C1		• Cap	2	80001-
8	C1		• Bolt	4	80001-
9	C1		• Washer	4	80001-
10	C1		• Nut	4	80001-
11	C1		• Shim	40	80001-
12		14X-72-51731	Cover,LHS	1	80001-
13		14X-72-51741	Cover,RHS	1	80001-
14		01010-81225	Bolt	6	80001-
15		01643-31232	Washer	6	80001-
16		14X-72-51390	Spacer	1	80001-
17		14X-72-51421	Trunnion	2	80001-
18		01010-82065	Bolt	16	80009-
19		01643-32060	Washer	16	80009-
20		07020-00000	Fitting, Grease	2	80001-
21		07043-70108	Plug	2	80002-

FIG. T2115-001001 Dozer Arm And Brace

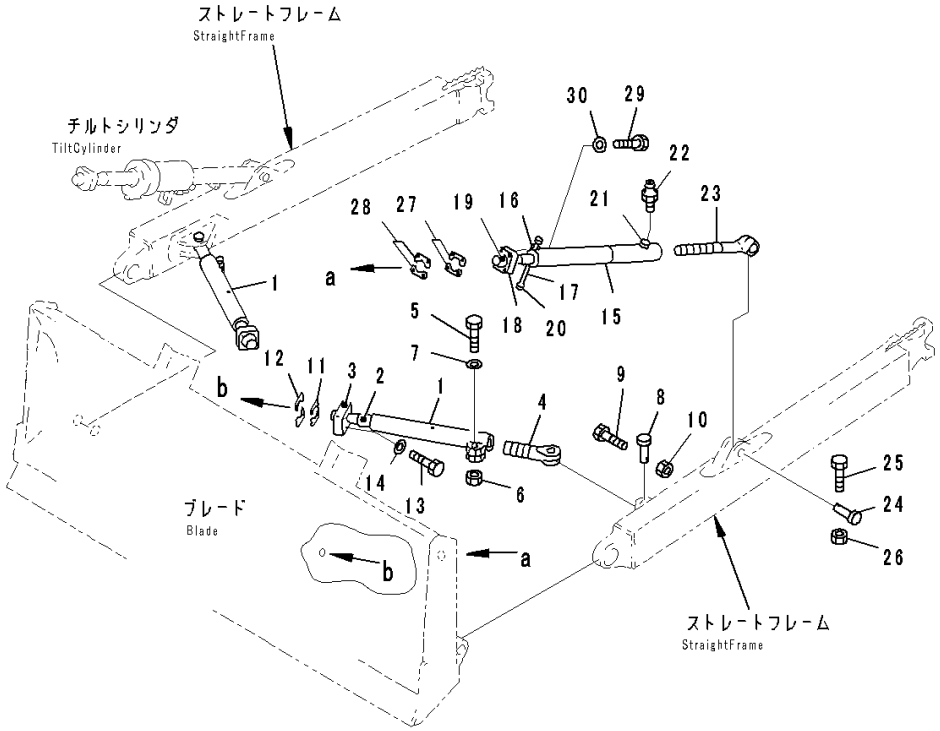

Index	Code	Part Number	Description	Qty	Serial Number
1		14Y-71-13110	Brace	2	80001-
2		14Y-71-13120	• Shaft,Welded	1	80001-
3		144-817-2420	• Retainer	1	80001-
4		144-817-2570	Joint	2	80001-
5		01011-82025	Bolt	2	80001-
6		01580-12016	Nut	2	80001-
7		01643-32060	Washer	2	80001-
8		13F-Z27-5610	Pin	2	80001-
9		01010-81265	Bolt	2	80001-
10		01598-01214	Nut	2	80001-
		144-817-0670	Shim Kit	2	80001-
11	C1		• Shim, T=1.0mm	12	80001-
12	C1		• Shim, T=0.5mm	4	80001-
13		01010-82075	Bolt	8	80001-
14		01643-32060	Washer	8	80001-
15		14X-71-13111	Brace	1	80001-
16		14X-71-11E20	• Plate,Welded	1	80001-
17		144-817-2280	• Rod	1	80001-
18		144-817-2420	• Retainer	1	80001-
19		14Y-71-13120	• Shaft,Welded	1	80001-
20		19N-911-1250	• Spacer,Welded	1	80001-
21		01099-03417	• Protector,Welded	1	80001-
22		07020-00000	Fitting, Grease	1	80001-
23		144-920-2122	Joint	1	80001-
24		13F-Z27-5610	Pin	2	80001-
25		01010-81265	Bolt	2	80001-
26		01598-01214	Nut	2	80001-
		144-817-0670	Shim Kit	2	80001-
27	C1		• Shim, T=1.0mm	12	80001-
28	C1		• Shim, T=0.5mm	4	80001-
29		01010-82075	Bolt	8	80001-
30		01643-32060	Washer	8	80001-

FIG. T2115-002001 Dozer Arm And Brace, With Power Tilt Pitch Dozer

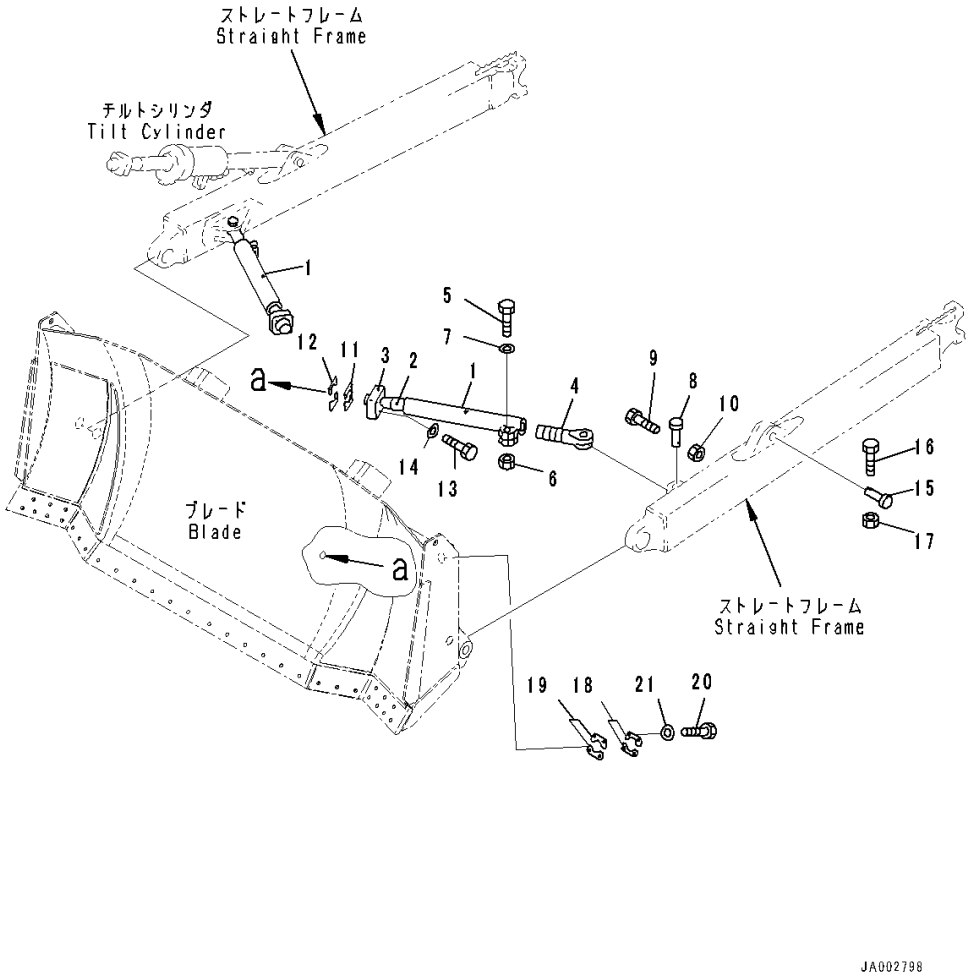

Index	Code	Part Number	Description	Qty	Serial Number
1		14Y-71-13110	Brace	2	80001-
2		14Y-71-13120	• Shaft,Welded	1	80001-
3		144-817-2420	• Retainer	1	80001-
4		144-817-2570	Joint	2	80001-
5		01011-82025	Bolt	2	80001-
6		01580-12016	Nut	2	80001-
7		01643-32060	Washer	2	80001-
8		13F-Z27-5610	Pin	2	80001-
9		01010-81265	Bolt	2	80001-
10		01598-01214	Nut	2	80001-
		144-817-0670	Shim Kit	2	80001-
11	C1		• Shim, T=1.0mm	12	80001-
12	C1		• Shim, T=0.5mm	4	80001-
13		01010-82075	Bolt	8	80001-
14		01643-32060	Washer	8	80001-
15		13F-Z27-5610	Pin	2	80001-
16		01010-81265	Bolt	2	80001-
17		01598-01214	Nut	2	80001-
		144-817-0670	Shim Kit	2	80001-
18	C1		• Shim, T=1.0mm	12	80001-
19	C1		• Shim, T=0.5mm	4	80001-
20		01010-82075	Bolt	8	80001-
21		01643-32060	Washer	8	80001-

FIG. T2115-003001 Dozer Arm And Brace, With Power Angle Power Tilt Dozer

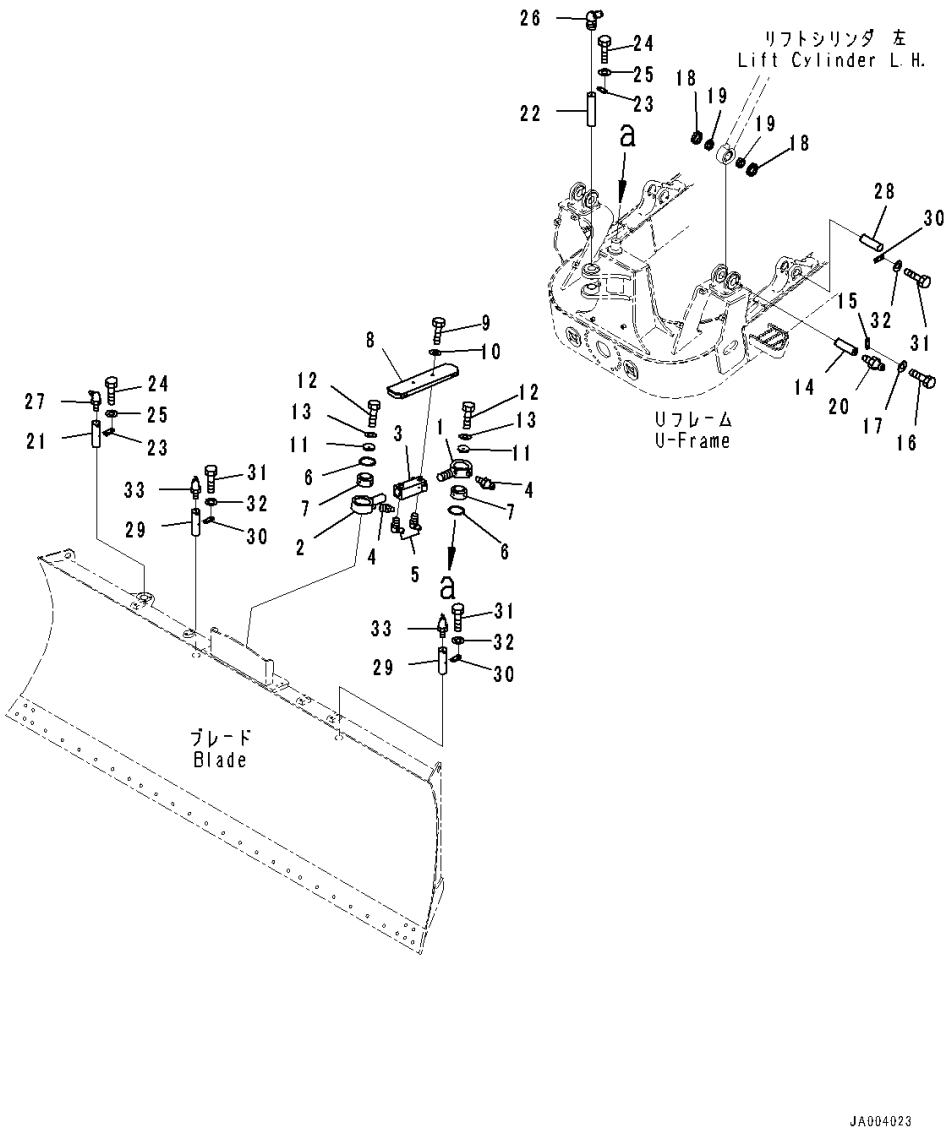

Index	Code	Part Number	Description	Qty	Serial Number
1		14X-72-51311	Rod	1	80001-
2		14X-72-51372	Rod	1	80001-
3		14X-72-51352	Bar	1	80001-
4		07020-00000	Fitting, Grease	2	80001-
5		07020-00900	Fitting, Grease	2	80001-
6		04065-01030	Ring, Snap	2	80001-
7		707-46-06020	Bushing	2	80001-
8		14X-72-51331	Cover	1	80001-
9		01010-81230	Bolt	2	80001-
10		01643-31232	Washer	2	80001-
11		14X-72-51341	Washer	2	80001-
12		01010-81225	Bolt	2	80001-
13		01643-31232	Washer	2	80001-
14		09241-50160	Pin	2	80001-
15		04082-00212	Lock	2	80001-
16		01010-81225	Bolt	4	80001-
17		01643-31232	Washer	4	80001-
18		14X-72-51290	Cushion	4	80001-
19		14X-72-51360	Spacer	4	80001-
20		07020-00000	Fitting, Grease	2	80001-
21		14X-72-51161	Pin	1	80001-
22		14X-72-51172	Pin	1	80001-
23		04082-00212	Lock	2	80001-
24		01010-81225	Bolt	4	80001-
25		01643-31232	Washer	4	80001-
26		07020-00675	Fitting, Grease	1	80001-
27		07020-00900	Fitting, Grease	1	80001-
28		20S-70-82230	Pin	2	80001-
29		14X-72-51161	Pin	2	80001-
30		04082-00212	Lock	4	80001-
31		01010-81225	Bolt	8	80001-
32		01643-31232	Washer	8	80001-
33		07020-00675	Fitting, Grease	2	80001-

FIG. T2120-001001 Dozer Blade, With SIGMADOZER

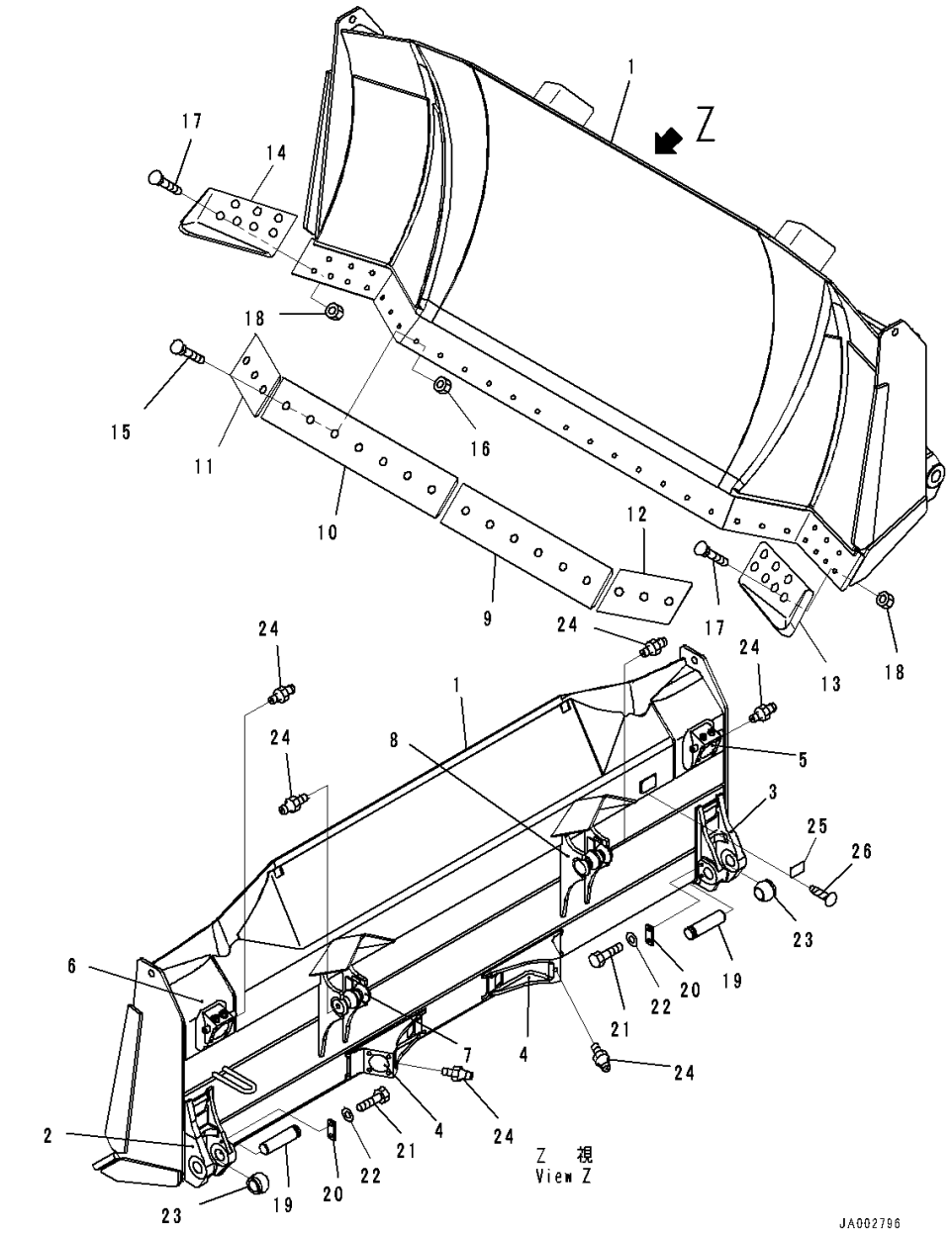

Index	Code	Part Number	Description	Qty	Serial Number
1		14X-952-5311	Blade Assembly	1	80001-
2		14X-71-51122	• Bracket,LHS,Welded	1	80001-
3		14X-71-51132	• Bracket,RHS,Welded	1	80001-
4		14X-71-51151	• Bracket,Welded	2	80001-
5		14X-952-5151	• Bracket,RHS,Welded	1	80001-
6		14X-952-5161	• Bracket,LHS,Welded	1	80001-
7		14X-952-5170	• Bracket,LHS,Welded	1	80001-
8		14X-952-5370	• Bracket,RHS,Welded	1	80001-
9		14X-952-5180	Cutting Edge,LHS	1	80001-
10		14X-952-5381	Cutting Edge,RHS	1	80001-
11		14X-952-5190	Cutting Edge,RHS	1	80001-
12		14X-952-5210	Cutting Edge,LHS	1	80001-
13		14X-952-5550	End Bit,LHS	1	80001-
14		14X-952-5560	End Bit,RHS	1	80001-
15		02090-11270	Bolt	19	80001-
16		02290-11219	Nut	19	80001-
17		02090-11270	Bolt	14	80001-
18		02290-11219	Nut	14	80001-
19		144-817-1260	Shaft	2	80001-
20		144-920-1780	Lock	2	80001-
21		01010-81635	Bolt	4	80001-
22		01643-31645	Washer	4	80001-
23		14X-71-12240	Cap	2	80001-
24		07020-00000	Fitting, Grease	6	80001-
25	C2	09601-50000	Plate, Name (Limited Supply)	1	80001-
26		04418-13060	Screw	4	80001-

FIG. T2120-002001 Dozer Blade, With Power Angle Power Tilt Dozer

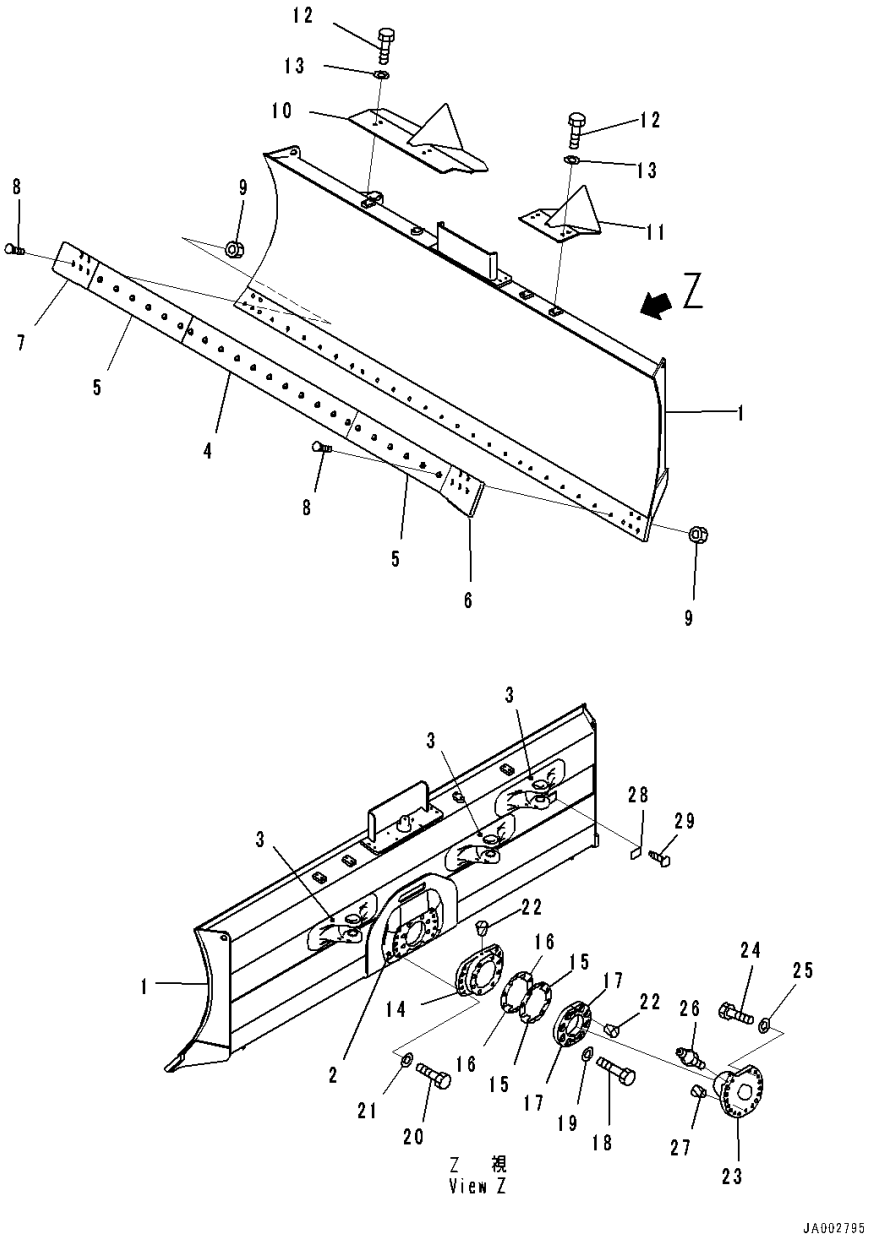

Index	Code	Part Number	Description	Qty	Serial Number
1		14X-72-51502	Blade Assembly	1	80001-
2		14X-72-51120	• Plate,Welded	1	80001-
3		14X-72-51131	• Bracket,Welded	3	80001-
4		14X-72-51610	Cutting Edge	1	80001-
5		13G-72-61420	Cutting Edge	2	80001-
6		14Y-71-11330	End Bit,LHS	1	80001-
7		14Y-71-11340	End Bit,RHS	1	80001-
8		02090-11270	Bolt	33	80001-
9		02290-11219	Nut	33	80001-
10		14X-72-51192	Cover	1	80001-
11		14X-72-51382	Cover	1	80001-
12		01010-81230	Bolt	8	80001-
13		01643-31232	Washer	8	80001-
14		134-72-62442	Bearing	1	80001-
15		134-72-72450	Shim, T=0.5mm	4	80001-
16		134-72-72460	Shim, T=1.0mm	14	80001-
17		134-72-71151	Cap	2	80001-
18		209-09-51210	Bolt	8	80001-
19		01643-32460	Washer	8	80001-
20		01010-82060	Bolt	10	80001-
21		01643-32060	Washer	10	80001-
22		07049-01215	Plug	6	80001-
23		134-72-62474	Trunnion	1	80001-
24		01010-82075	Bolt	14	80001-
25		01643-32060	Washer	14	80001-
26		07020-00000	Fitting, Grease	1	80001-
27		07049-02228	Plug, Cork	3	80001-
28	C2	09601-50000	Plate, Name (Limited Supply)	1	80001-
29		04418-13060	Screw	4	80001-

FIG. T2120-003001 Dozer Blade, With 3000mm, Power Angle Power Tilt Blade

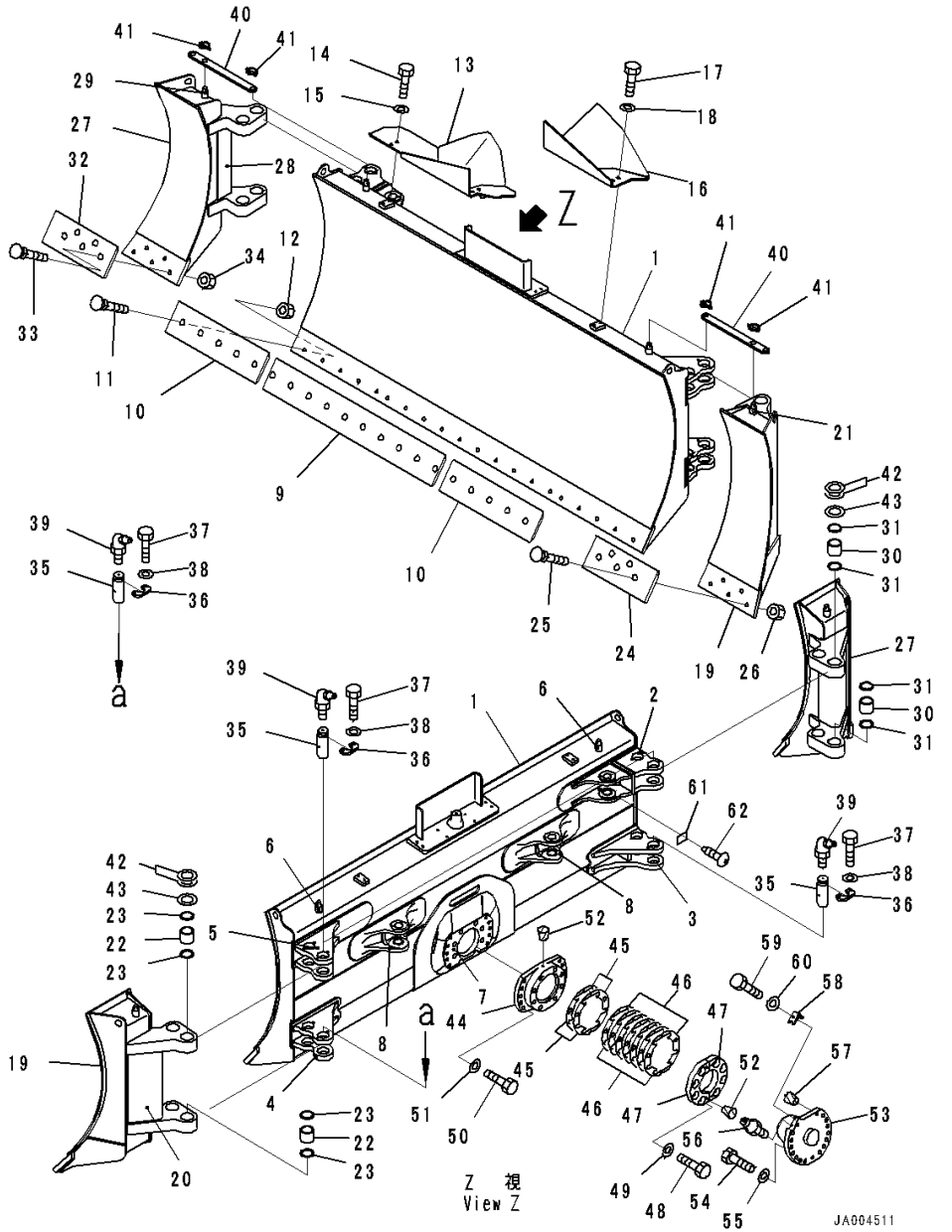

Index	Code	Part Number	Description	Qty	Serial Number
1		14X-72-54101	Blade Assembly	1	80001-
2		14X-72-54131	• Bracket,Welded	1	80001-
3		14X-72-54141	• Bracket,Welded	1	80001-
4		14X-72-54151	• Bracket,Welded	1	80001-
5		14X-72-54161	• Bracket,Welded	1	80001-
6		14X-72-54D20	• Pin,Welded	2	80001-
7		14X-72-51120	• Plate,Welded	1	80001-
8		14X-72-51131	• Bracket,Welded	2	80001-
9		13G-72-61410	Cutting Edge	1	80001-
10		13G-72-63250	Cutting Edge	2	80001-
11		02090-11270	Bolt	20	80001-
12		02290-11219	Nut	20	80001-
13		14X-72-51192	Cover	1	80001-
14		01010-81230	Bolt	4	80001-
15		01643-31232	Washer	4	80001-
16		14X-72-51382	Cover	1	80001-
17		01010-81230	Bolt	4	80001-
18		01643-31232	Washer	4	80001-
19		14X-72-54301	Blade	1	80001-
20		14X-72-54340	• Bracket,Welded	1	80001-
21		14X-72-54D20	• Pin,Welded	1	80001-
22		14X-72-54430	Bushing	4	80001-
23		07145-00065	Seal, Dust	8	80001-
24		14X-72-54351	End Bit	1	80001-
25		02090-11270	Bolt	5	80001-
26		02290-11219	Nut	5	80001-
27		14X-72-54201	Blade	1	80001-
28		14X-72-54241	• Bracket,Welded	1	80001-
29		14X-72-54D20	• Pin,Welded	1	80001-
30		14X-72-54430	Bushing	4	80001-
31		07145-00065	Seal, Dust	8	80001-
32		14X-72-54251	End Bit	1	80001-
33		02090-11270	Bolt	5	80001-
34		02290-11219	Nut	5	80001-
35		14X-72-54420	Pin	8	80001-
36		14X-72-54410	Plate	8	80001-
37		01010-81235	Bolt	16	80001-
38		01643-31232	Washer	16	80001-
39		07020-00675	Fitting, Grease	8	80001-

FIG. T2120-003001 Dozer Blade, With 3000mm, Power Angle Power Tilt Blade

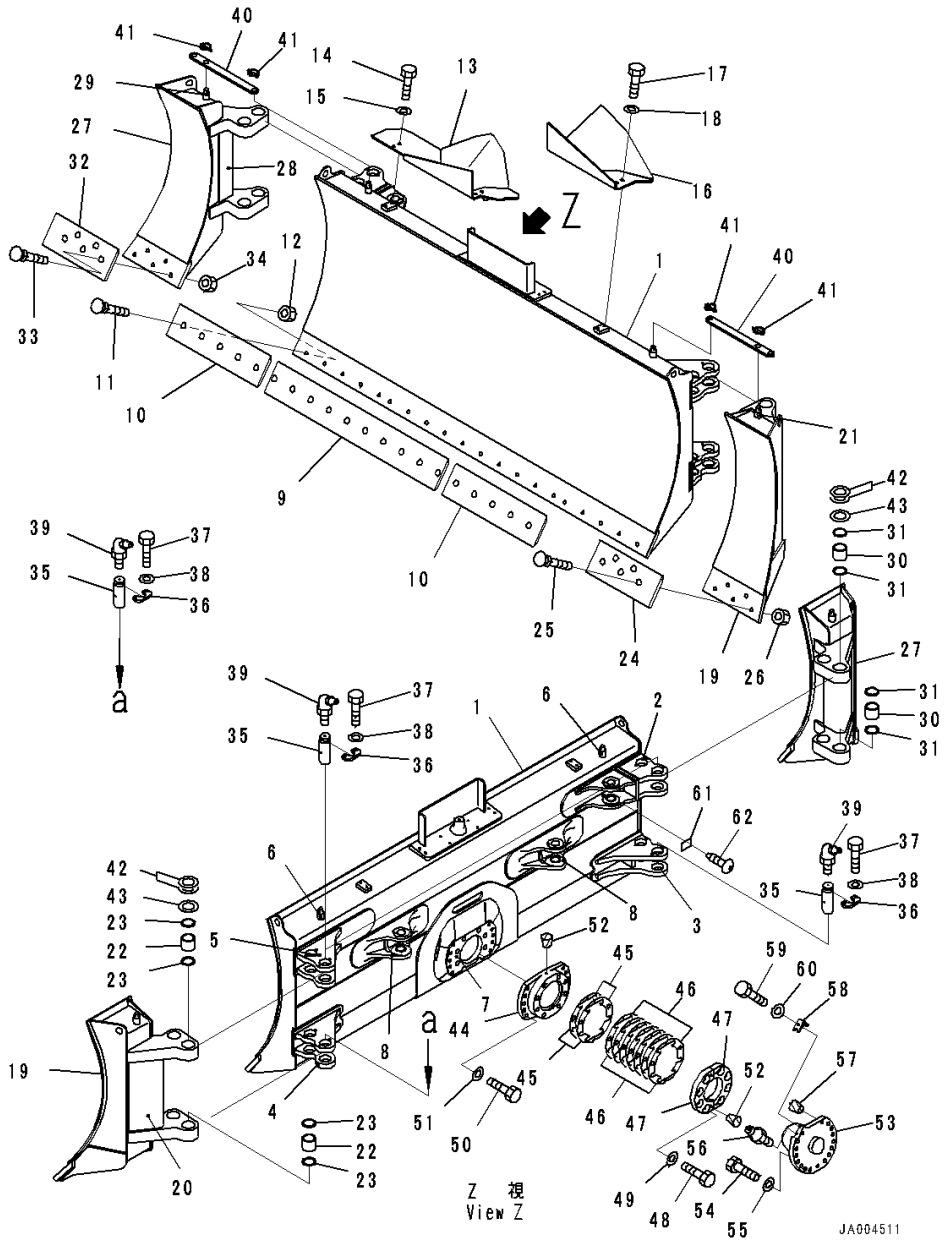

Index	Code	Part Number	Description	Qty	Serial Number
40		14X-72-54170	Plate	2	80001-
41		421-46-12740	Pin, Linch	4	80001-
42		21Y-70-14710	Spacer, T=1.0mm	8	80001-
43		21Y-70-14850	Spacer, T=2.0mm	4	80001-
44		134-72-62442	Bearing	1	80001-
45		134-72-72450	Shim, T=0.5mm	4	80001-
46		134-72-72460	Shim, T=1.0mm	14	80001-
47		134-72-71151	Cap	2	80001-
48		209-09-51210	Bolt	8	80001-
49		01643-32460	Washer	8	80001-
50		01010-82060	Bolt	10	80001-
51		01643-32060	Washer	10	80001-
52		07049-01215	Plug	6	80001-
53		134-72-62474	Trunnion	1	80001-
54		01010-82075	Bolt	14	80001-
55		01643-32060	Washer	14	80001-
56		07020-00000	Fitting, Grease	1	80001-
57		07049-02228	Plug, Cork	3	80001-
58		14X-72-51530	Bracket	1	80001-
59		01010-81045	Bolt	1	80001-
60		01643-31032	Washer	1	80001-
61	C2	09601-50000	Plate, Name (Limited Supply)	1	80001-
62		04418-13060	Screw	4	80001-

FIG. T2140-001001 Dozer Blade Lift Cylinder, Inner Parts, LHS

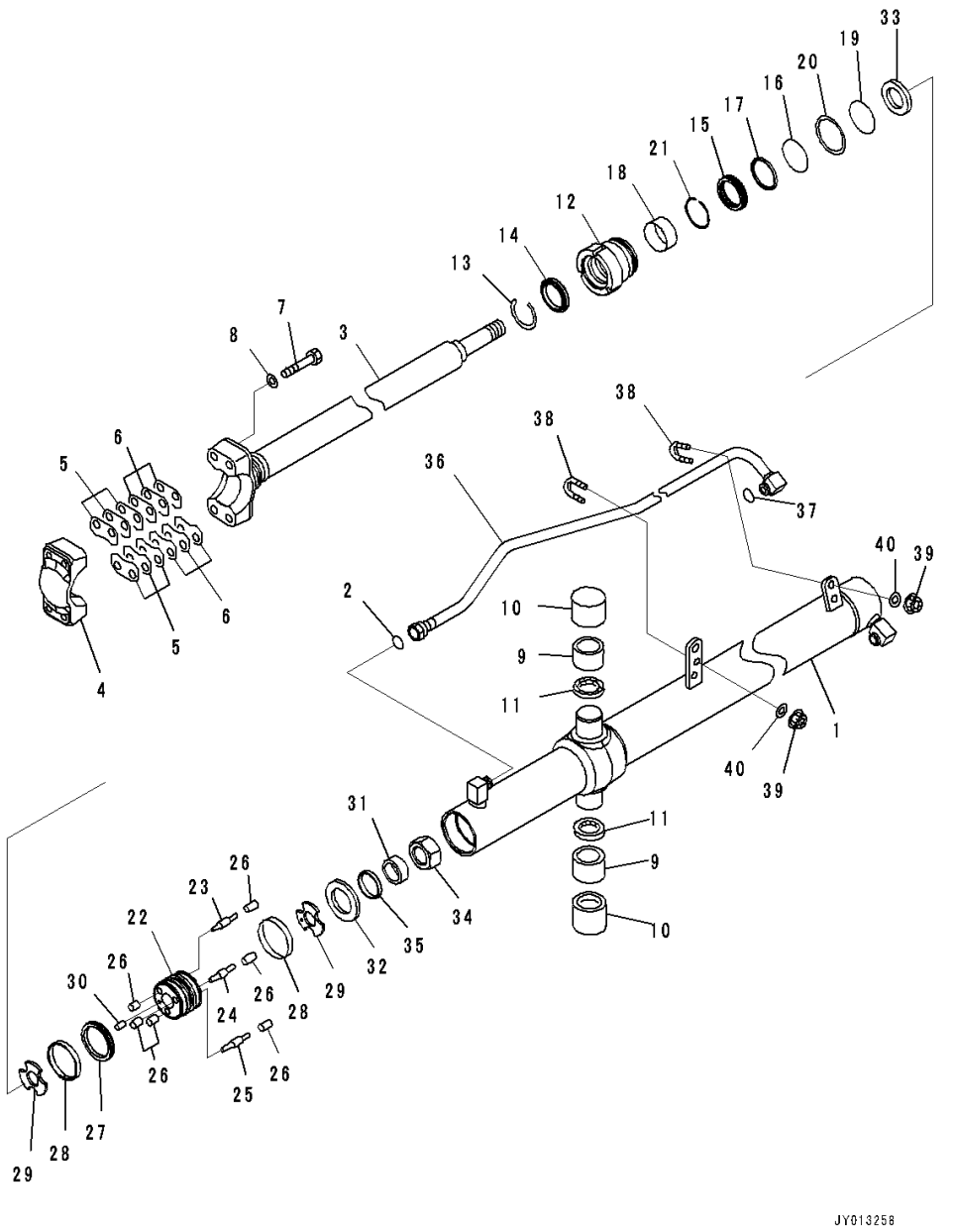

Index	Code	Part Number	Description	Qty	Serial Number
		707-02-00930	Cylinder Assembly	1	80001-
1		707-12-85010	• Cylinder	1	80001-
2		02896-11015	• O-ring, (Kit : K09)	2	80001-
3		707-60-60030	• Rod	1	80001-
4		707-66-60140	• Cap	1	80001-
5		707-88-11290	• Shim, T=1.0mm	6	80001-
6		707-88-11300	• Shim	6	80001-
7		01011-81600	• Bolt	4	80001-
8		01643-51645	• Washer	4	80001-
9		144-60-15450	• Bushing	2	80001-
10		144-60-15431	• Bushing	2	80001-
11		07145-00055	• Seal, Dust	2	80001-
12		707-29-85320	• Head, Cylinder	1	80001-
13		07179-12074	• Ring, Snap	1	80001-
14		707-56-60740	• Seal, Dust, (Kit : K09)	1	80001-
15		707-51-60030	• Packing, Rod, (Kit : K09)	1	80001-
16		07000-12085	• O-ring, (Kit : K09)	1	80001-
17		707-51-60650	• Ring, Buffer, (Kit : K09)	1	80001-
18		707-52-90351	• Bushing	1	80001-
19		07000-12080	• O-ring, (Kit : K09)	1	80001-
20		707-35-52770	• Ring, Back-up, (Kit : K09)	1	80001-
21		707-75-60110	• Ring, Snap	1	80001-
		707-91-90040	• Piston Assembly	1	80001-
22		707-37-85010	•• Piston	1	80001-
23	C1		•• Valve, Piston	1	80001-
24	C1		•• Valve, Piston	1	80001-
25	C1		•• Valve, Piston	1	80001-
26	C1		•• Seat, Valve	6	80001-
27		707-44-85150	• Ring, Piston, (Kit : K09)	1	80001-
28		707-39-85120	• Ring, Wear, (Kit : K09)	2	80001-
29		707-40-85020	• Retainer	2	80001-
30		130-63-12761	• Pin	2	80001-
31		707-88-38850	• Collar	1	80001-
32		707-69-85020	• Slider	1	80001-
33		707-69-85010	• Slider	1	80001-
34		707-67-33040	• Nut	1	80001-
35		707-52-90230	• Bushing	1	80001-
36		707-86-55790	Tube	1	80001-
37		02896-11015	O-ring, (Kit : K09)	1	80001-

FIG. T2140-001001 Dozer Blade Lift Cylinder, Inner Parts, LHS

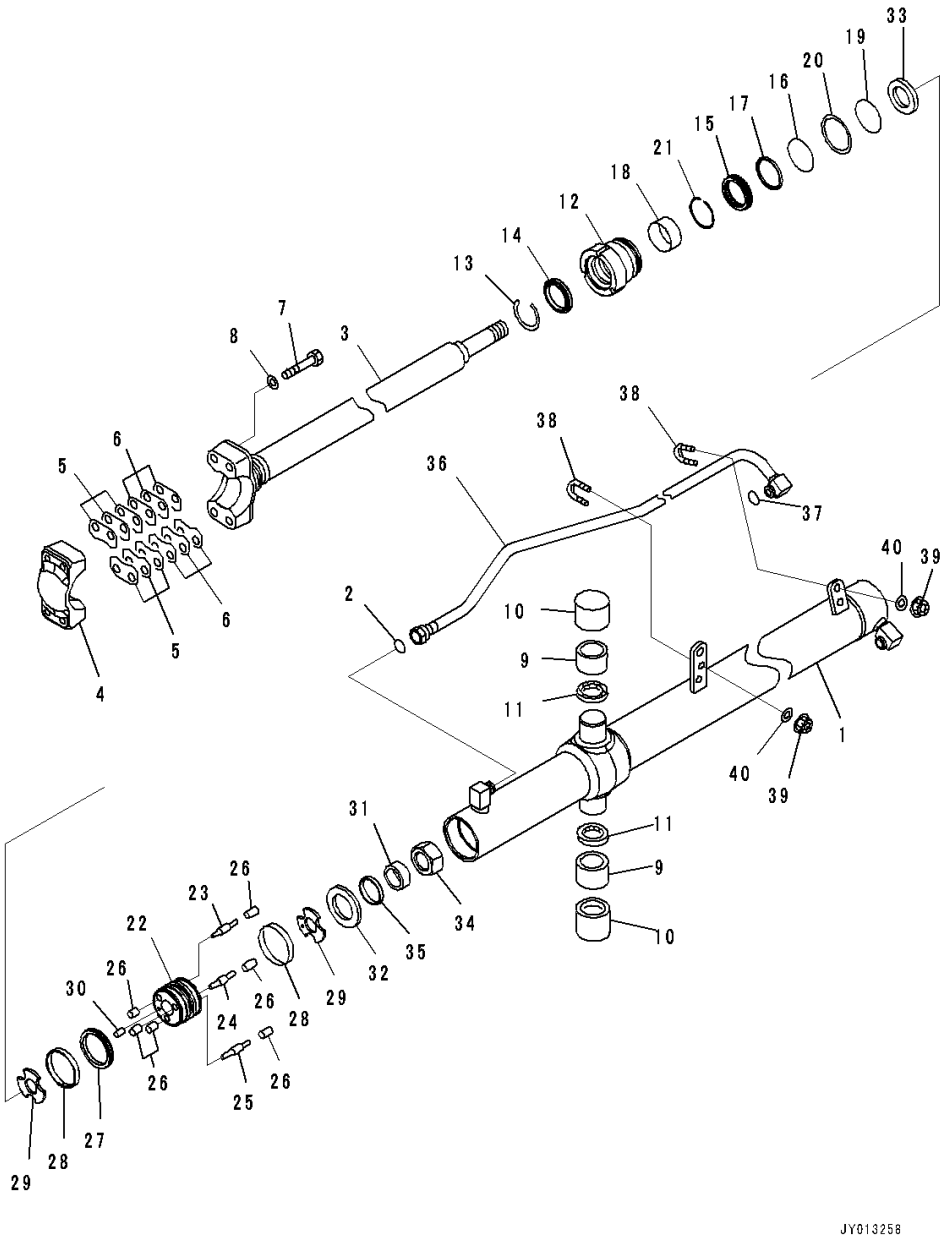

Index	Code	Part Number	Description	Qty	Serial Number
38		07283-32236	Clip, Pipe	2	80001-
39		01597-01009	Nut	4	80001-
40		01643-31032	Washer	4	80001-

FIG. T2140-001002 Dozer Blade Lift Cylinder, Inner Parts, Reduction Gear

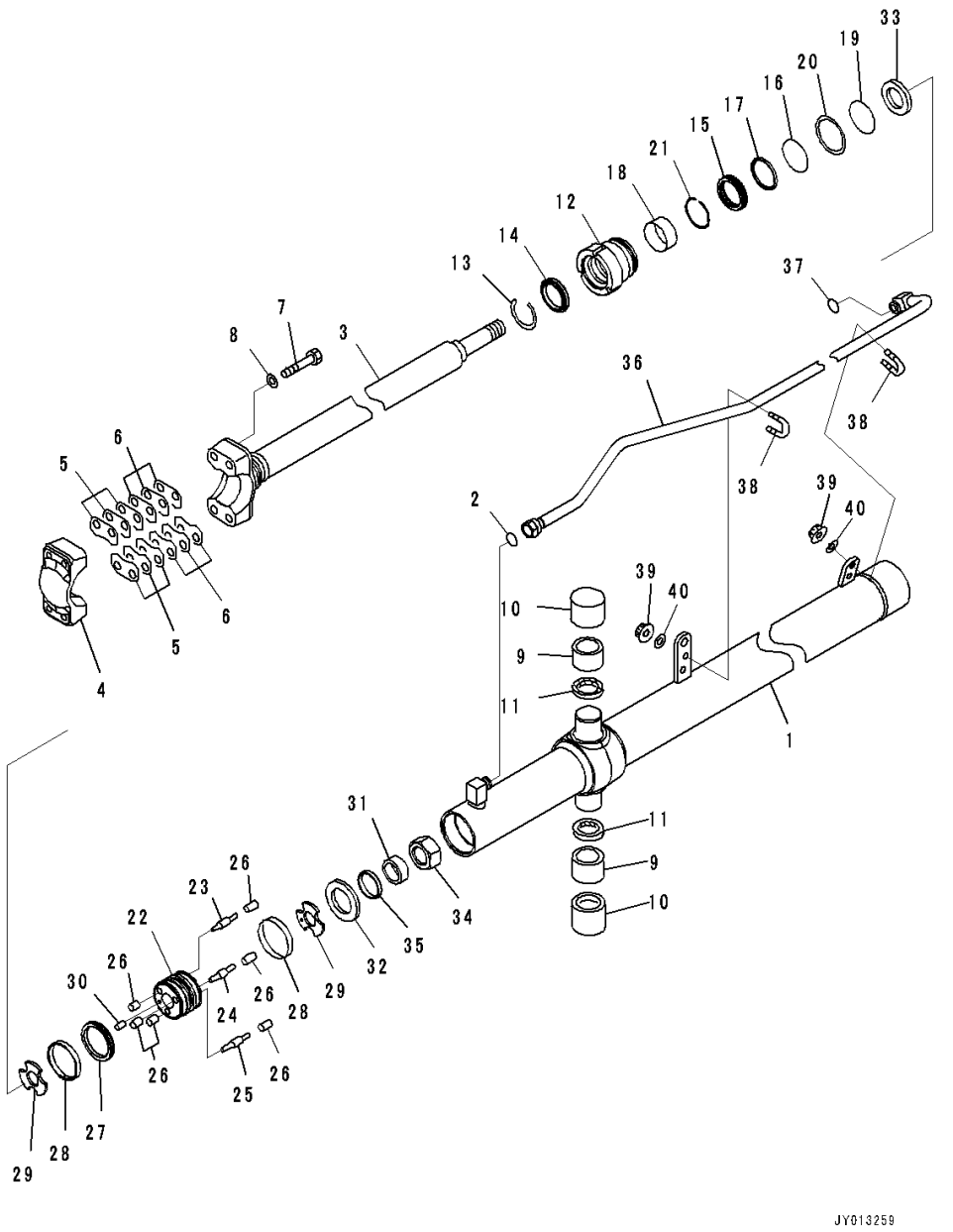

Index	Code	Part Number	Description	Qty	Serial Number
		707-02-00940	Cylinder Assembly	1	80001-
1		707-12-85020	• Cylinder	1	80001-
2		02896-11015	• O-ring, (Kit : K09)	2	80001-
3		707-60-60030	• Rod	1	80001-
4		707-66-60140	• Cap	1	80001-
5		707-88-11290	• Shim, T=1.0mm	6	80001-
6		707-88-11300	• Shim	6	80001-
7		01011-81600	• Bolt	4	80001-
8		01643-51645	• Washer	4	80001-
9		144-60-15450	• Bushing	2	80001-
10		144-60-15431	• Bushing	2	80001-
11		07145-00055	• Seal, Dust	2	80001-
12		707-29-85320	• Head, Cylinder	1	80001-
13		07179-12074	• Ring, Snap	1	80001-
14		707-56-60740	• Seal, Dust, (Kit : K09)	1	80001-
15		707-51-60030	• Packing, Rod, (Kit : K09)	1	80001-
16		07000-12085	• O-ring, (Kit : K09)	1	80001-
17		707-51-60650	• Ring, Buffer, (Kit : K09)	1	80001-
18		707-52-90351	• Bushing	1	80001-
19		07000-12080	• O-ring, (Kit : K09)	1	80001-
20		707-35-52770	• Ring, Back-up, (Kit : K09)	1	80001-
21		707-75-60110	• Ring, Snap	1	80001-
		707-91-90040	• Piston Assembly	1	80001-
22		707-37-85010	•• Piston	1	80001-
23	C1		•• Valve, Piston	1	80001-
24	C1		•• Valve, Piston	1	80001-
25	C1		•• Valve, Piston	1	80001-
26	C1		•• Seat, Valve	6	80001-
27		707-44-85150	• Ring, Piston, (Kit : K09)	1	80001-
28		707-39-85120	• Ring, Wear, (Kit : K09)	2	80001-
29		707-40-85020	• Retainer	2	80001-
30		130-63-12761	• Pin	2	80001-
31		707-88-38850	• Collar	1	80001-
32		707-69-85020	• Slider	1	80001-
33		707-69-85010	• Slider	1	80001-
34		707-67-33040	• Nut	1	80001-
35		707-52-90230	• Bushing	1	80001-
36		707-86-55800	Tube	1	80001-
37		02896-11015	O-ring, (Kit : K09)	1	80001-

FIG. T2140-001002 Dozer Blade Lift Cylinder, Inner Parts, Reduction Gear

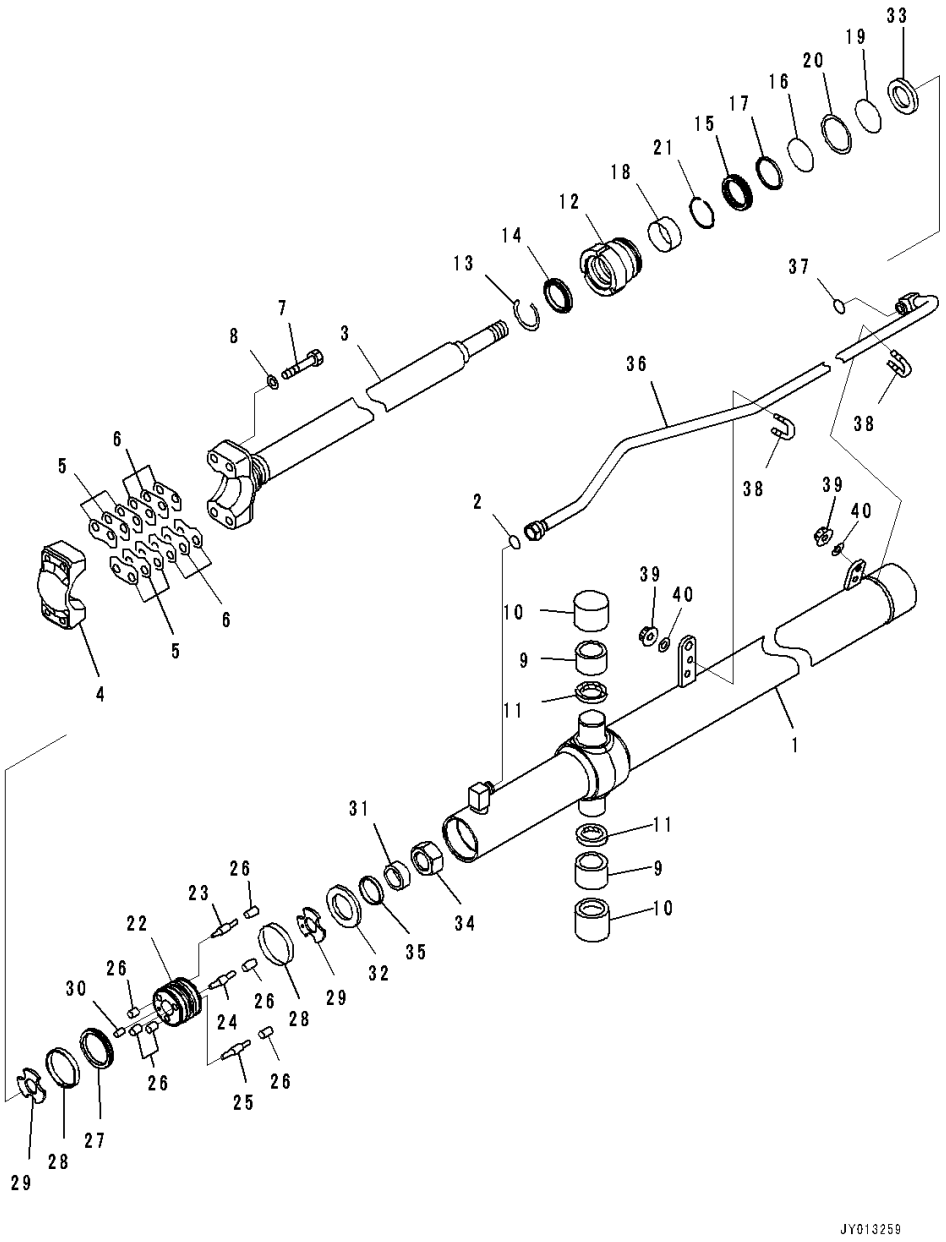

Index	Code	Part Number	Description	Qty	Serial Number
38		07283-32236	Clip, Pipe	2	80001-
39		01597-01009	Nut	4	80001-
40		01643-31032	Washer	4	80001-

FIG. T2140-001003 Dozer Blade Lift Cylinder

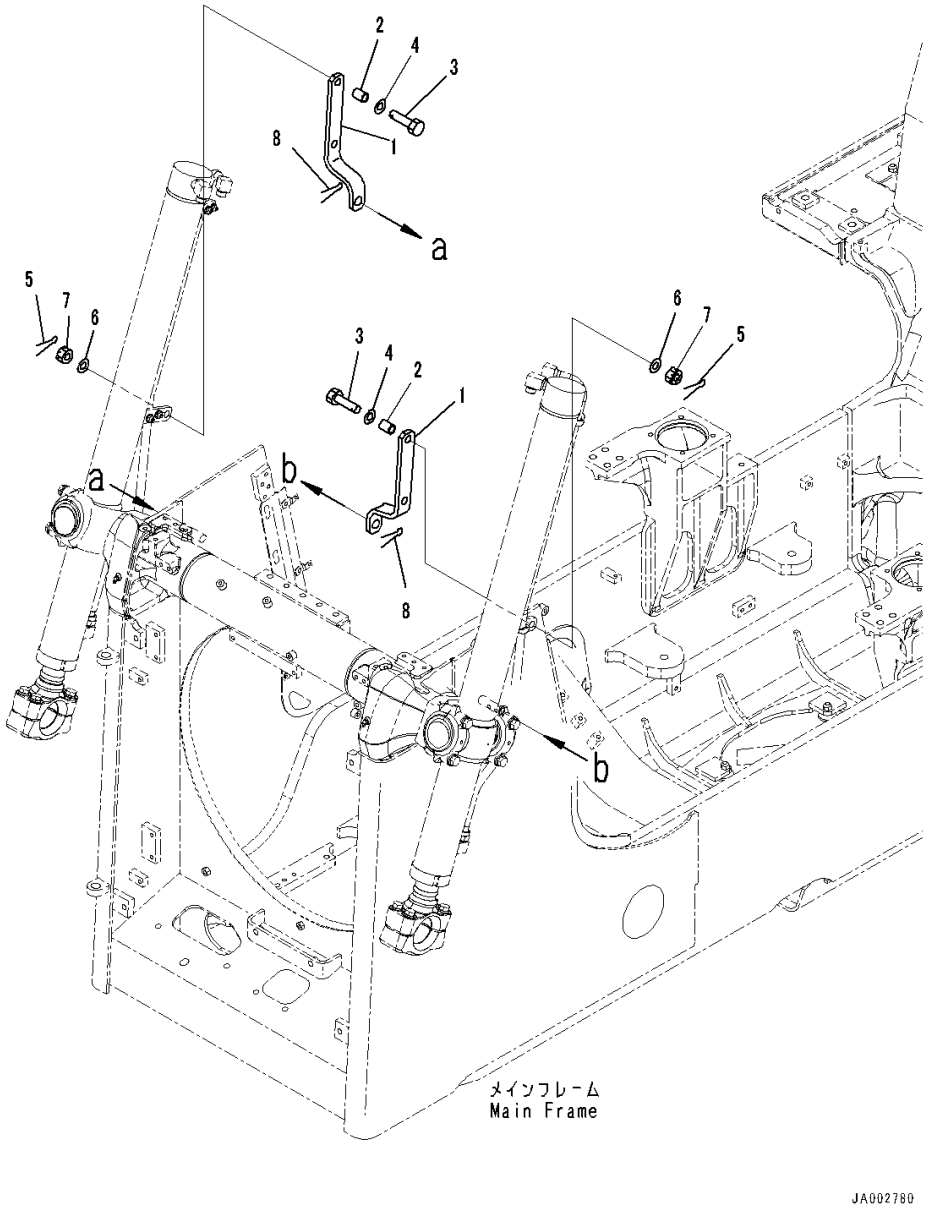

Index	Code	Part Number	Description	Qty	Serial Number
1		14X-54-51271	Bracket	2	80005-
2		423-825-1720	Spacer	2	80001-
3		01012-81250	Bolt	2	80001-
4		01643-31232	Washer	2	80001-
5		04050-13022	Pin, Cotter	2	80001-
6		01643-31232	Washer	2	80001-
7		01590-31215	Nut, Slotted	2	80001-
8		04050-18080	Pin, Cotter	4	80001-

FIG. T2140-002001 Dozer Blade Lift Cylinder, With Power Angle Power Tilt Dozer, Inner Parts, LHS

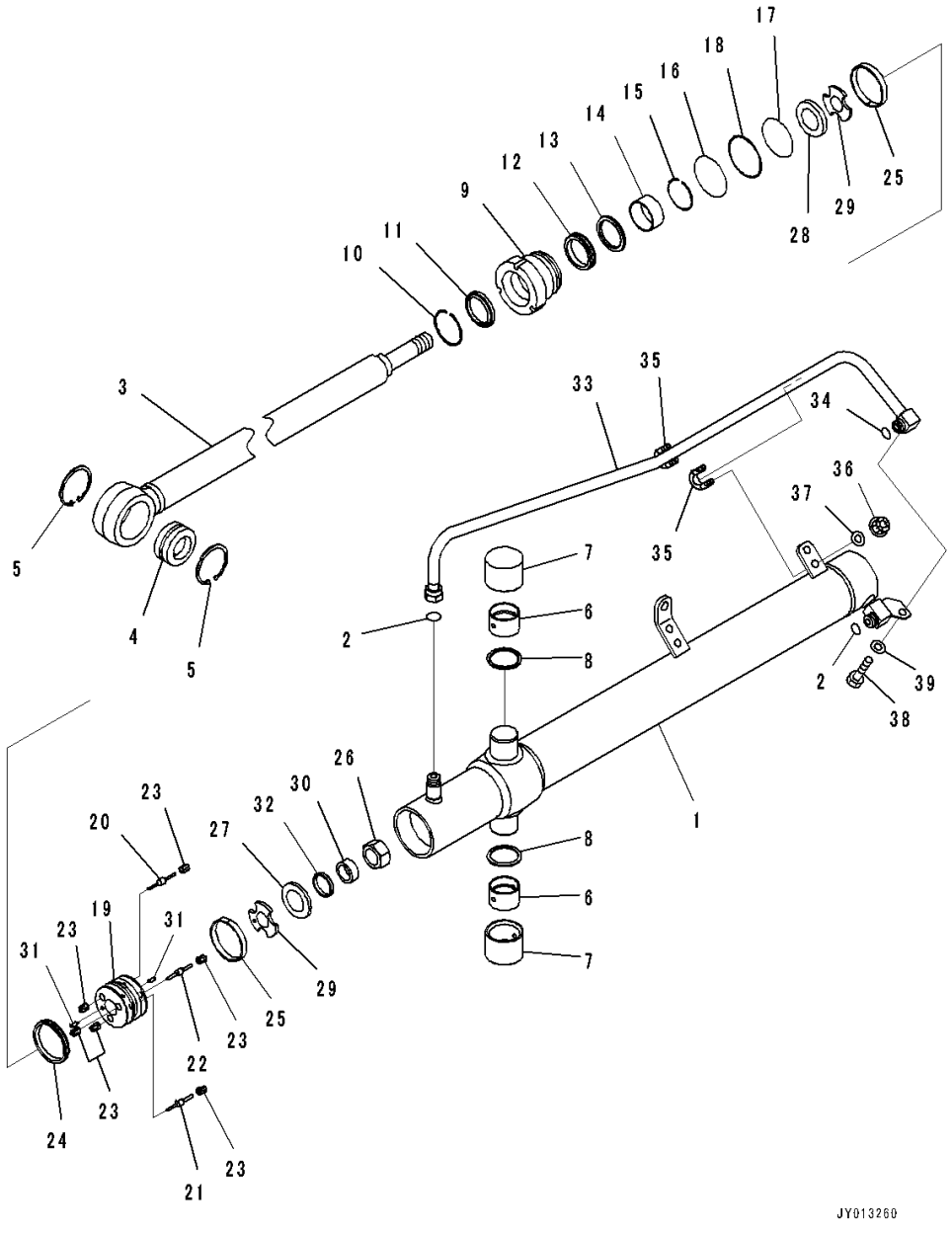

Index	Code	Part Number	Description	Qty	Serial Number
		707-02-00970	Cylinder Assembly	1	80001-
1		707-12-90280	• Cylinder	1	80001-
2		02896-11015	• O-ring, (Kit : K10)	2	80001-
3		721-58-60780	• Rod, Piston	1	80001-
4		707-46-50020	• Bushing	1	80001-
5		04065-08025	• Ring, Snap	2	80001-
6		144-60-15450	• Bushing	2	80001-
7		144-60-15431	• Bushing	2	80001-
8		07145-00055	• Seal, Dust, (Kit : K10)	2	80001-
9		707-29-10A40	• Head	1	80001-
10		07179-12074	• Ring, Snap	1	80001-
11		707-56-60740	• Seal, Dust, (Kit : K10)	1	80001-
12		707-51-60030	• Packing, Rod, (Kit : K10)	1	80001-
13		707-51-60650	• Ring, Buffer, (Kit : K10)	1	80001-
14		707-52-90351	• Bushing	1	80001-
15		707-75-60110	• Ring, Snap	1	80001-
16		07000-12090	• O-ring, (Kit : K10)	1	80001-
17		07000-12085	• O-ring, (Kit : K10)	1	80001-
18		07146-02086	• Ring, Back-up, (Kit : K10)	1	80001-
		707-91-90050	• Piston Assembly	1	80001-
19		707-37-90150	•• Piston	1	80001-
20	C1		•• Valve, Piston	1	80001-
21	C1		•• Valve, Piston	1	80001-
22	C1		•• Valve, Piston	1	80001-
23	C1		•• Seat, Valve	6	80001-
24		707-44-90150	• Ring, Piston, (Kit : K10)	1	80001-
25		07156-00912	• Ring, Wear, (Kit : K10)	2	80001-
26		707-67-33040	• Nut	1	80001-
27		707-69-85020	• Slider	1	80001-
28		707-69-85010	• Slider	1	80001-
29		707-40-85020	• Retainer	2	80001-
30		707-88-38850	• Collar	1	80001-
31		130-63-12761	• Pin	2	80001-
32		707-52-90230	• Bushing	1	80001-
33		707-86-55850	Tube	1	80001-
34		02896-11015	O-ring, (Kit : K10)	1	80001-
35		07283-32236	Clip, Pipe	2	80001-
36		01597-01009	Nut	4	80001-
37		01643-31032	Washer	4	80001-

FIG. T2140-002001 Dozer Blade Lift Cylinder, With Power Angle Power Tilt Dozer, Inner Parts, LHS

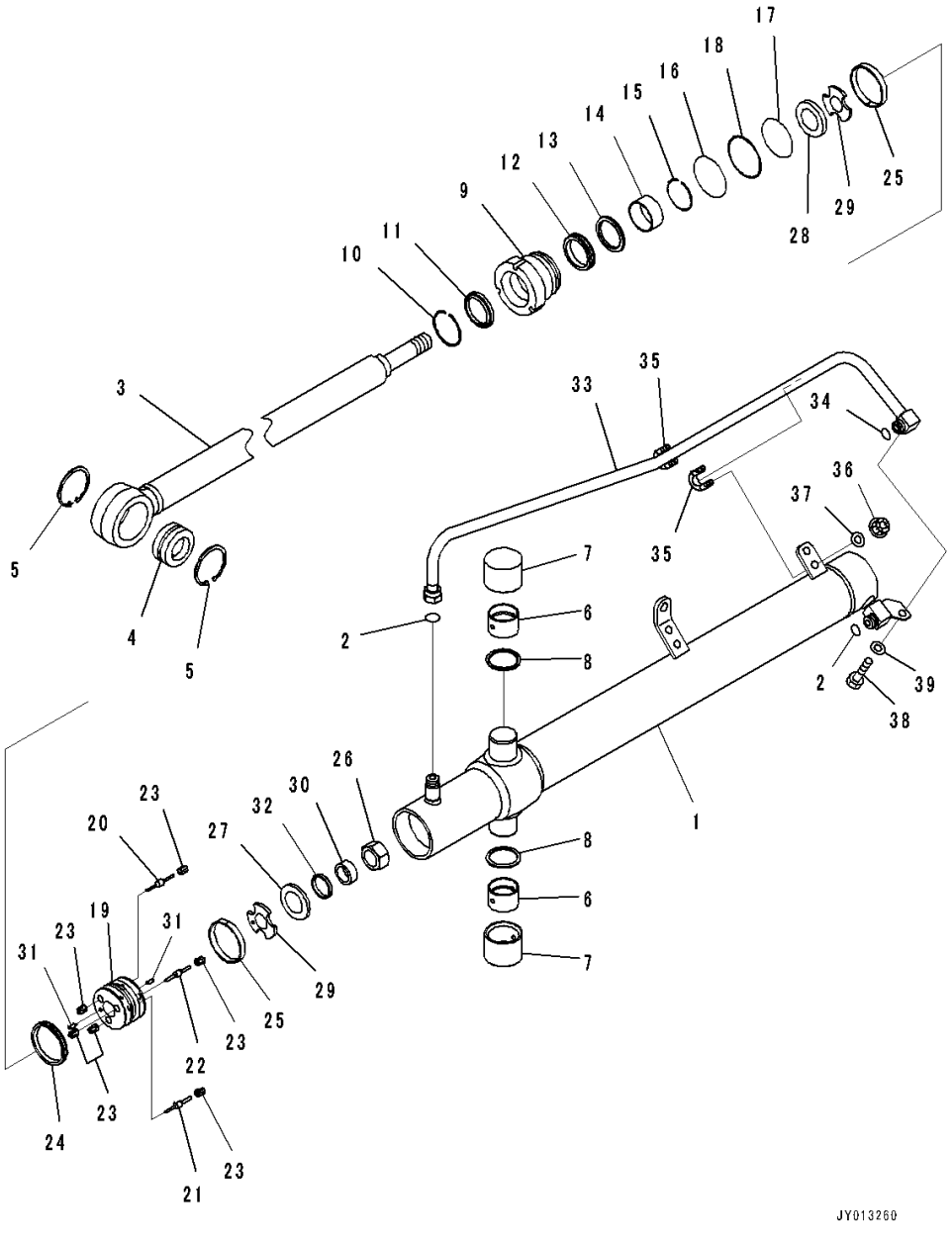

Index	Code	Part Number	Description	Qty	Serial Number
38		01010-81020	Bolt.....	1	80001-
39		01643-31032	Washer	1	80001-

FIG. T2140-002002 Dozer Blade Lift Cylinder, With Power Angle Power Tilt Dozer, Inner Parts, Reduction Gear

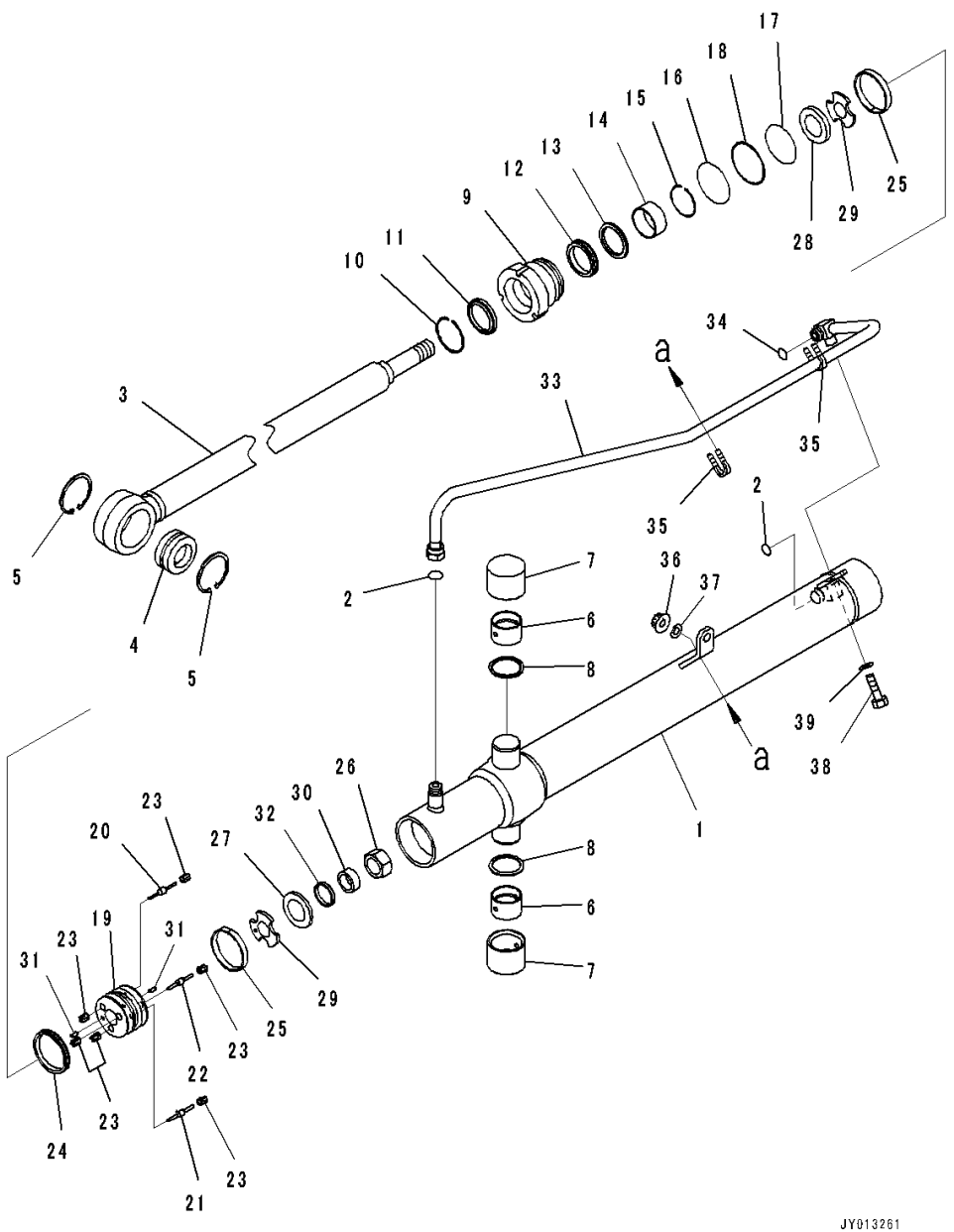

Index	Code	Part Number	Description	Qty	Serial Number
		707-02-00980	Cylinder Assembly	1	80001-
1		707-12-90290	• Cylinder	1	80001-
2		02896-11015	• O-ring, (Kit : K10)	2	80001-
3		721-58-60780	• Rod, Piston	1	80001-
4		707-46-50020	• Bushing	1	80001-
5		04065-08025	• Ring, Snap	2	80001-
6		144-60-15450	• Bushing	2	80001-
7		144-60-15431	• Bushing	2	80001-
8		07145-00055	• Seal, Dust, (Kit : K10)	2	80001-
9		707-29-10A40	• Head	1	80001-
10		07179-12074	• Ring, Snap	1	80001-
11		707-56-60740	• Seal, Dust, (Kit : K10)	1	80001-
12		707-51-60030	• Packing, Rod, (Kit : K10)	1	80001-
13		707-51-60650	• Ring, Buffer, (Kit : K10)	1	80001-
14		707-52-90351	• Bushing	1	80001-
15		707-75-60110	• Ring, Snap	1	80001-
16		07000-12090	• O-ring, (Kit : K10)	1	80001-
17		07000-12085	• O-ring, (Kit : K10)	1	80001-
18		07146-02086	• Ring, Back-up, (Kit : K10)	1	80001-
		707-91-90050	• Piston Assembly	1	80001-
19		707-37-90150	•• Piston	1	80001-
20	C1		•• Valve, Piston	1	80001-
21	C1		•• Valve, Piston	1	80001-
22	C1		•• Valve, Piston	1	80001-
23	C1		•• Seat, Valve	6	80001-
24		707-44-90150	• Ring, Piston, (Kit : K10)	1	80001-
25		07156-00912	• Ring, Wear, (Kit : K10)	2	80001-
26		707-67-33040	• Nut	1	80001-
27		707-69-85020	• Slider	1	80001-
28		707-69-85010	• Slider	1	80001-
29		707-40-85020	• Retainer	2	80001-
30		707-88-38850	• Collar	1	80001-
31		130-63-12761	• Pin	2	80001-
32		707-52-90230	• Bushing	1	80001-
33		707-86-55860	Tube	1	80001-
34		02896-11015	O-ring, (Kit : K10)	1	80001-
35		07283-32236	Clip, Pipe	2	80001-
36		01597-01009	Nut	4	80001-
37		01643-31032	Washer	4	80001-

FIG. T2140-002002 Dozer Blade Lift Cylinder, With Power Angle Power Tilt Dozer, Inner Parts, Reduction Gear

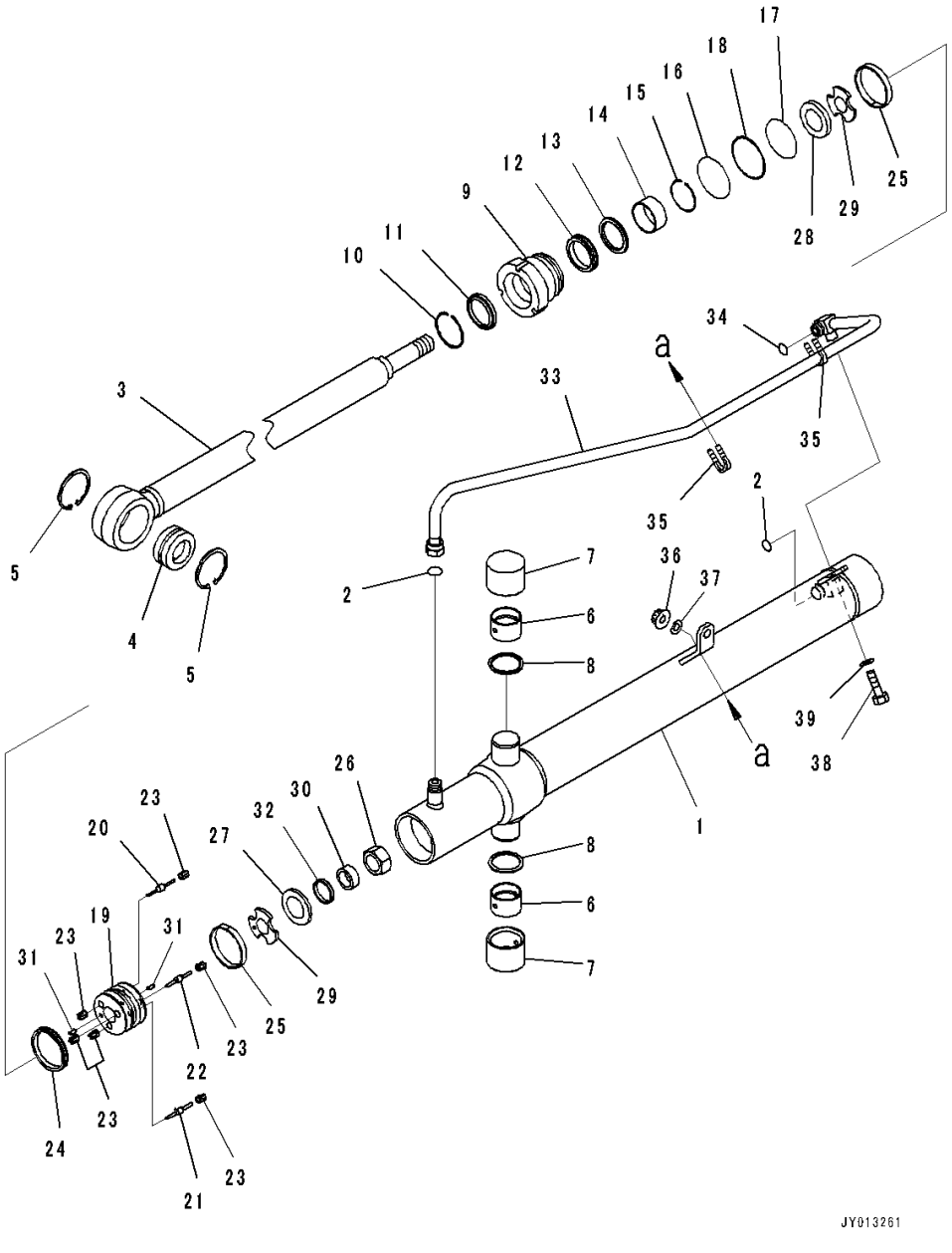

Index	Code	Part Number	Description	Qty	Serial Number
38		01010-81020	Bolt.....	1	80001-
39		01643-31032	Washer	1	80001-

FIG. T2140-002003 Dozer Blade Lift Cylinder, With Power Angle Power Tilt Dozer

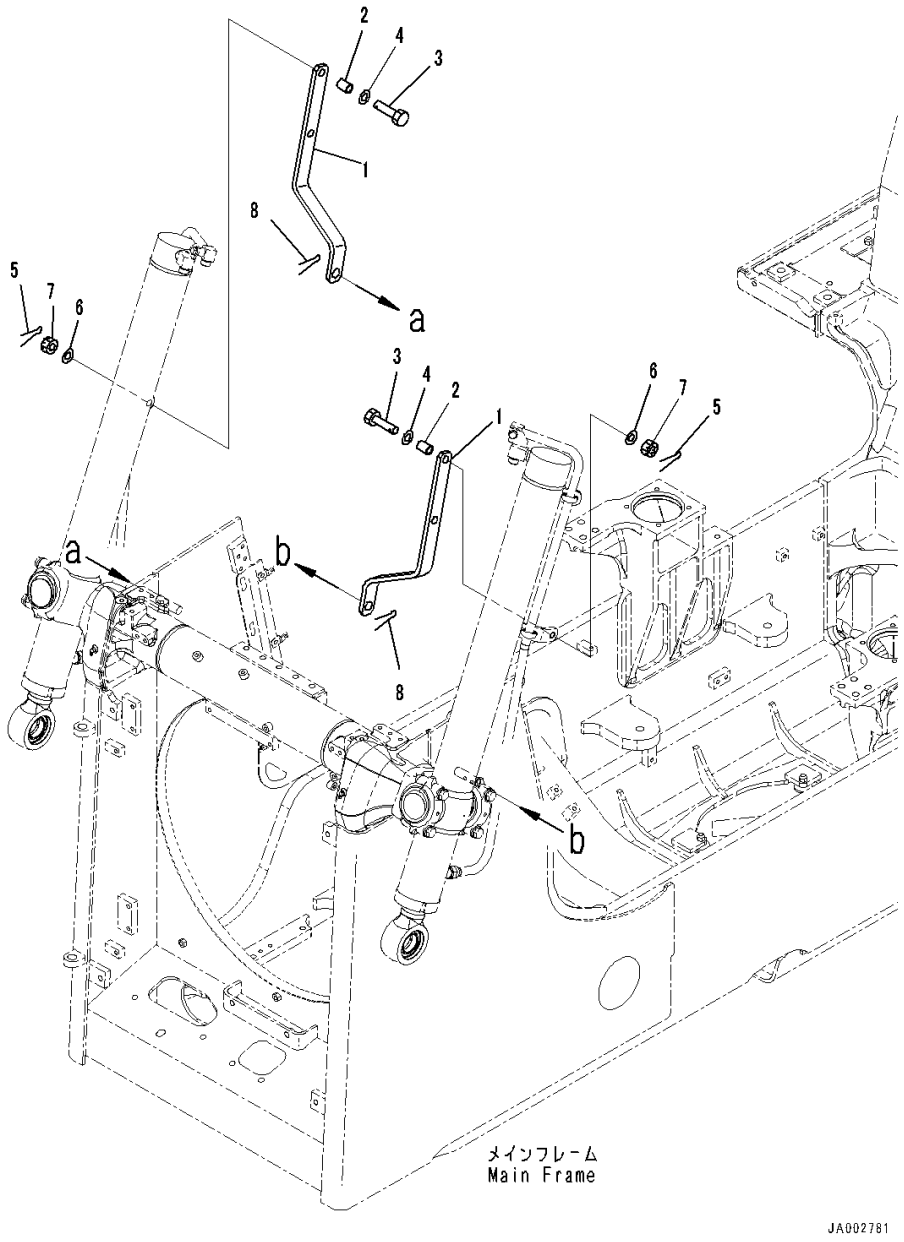

Index	Code	Part Number	Description	Qty	Serial Number
1		14X-54-51291	Plate	2	80009-
2		423-825-1720	Spacer	2	80001-
3		01012-81250	Bolt	2	80001-
4		01643-31232	Washer	2	80001-
5		04050-13022	Pin, Cotter	2	80001-
6		01643-31232	Washer	2	80001-
7		01590-31215	Nut, Slotted	2	80001-
8		04050-18080	Pin, Cotter	4	80001-

FIG. T2150-001001 Dozer Blade Tilt Cylinder, Inner Parts

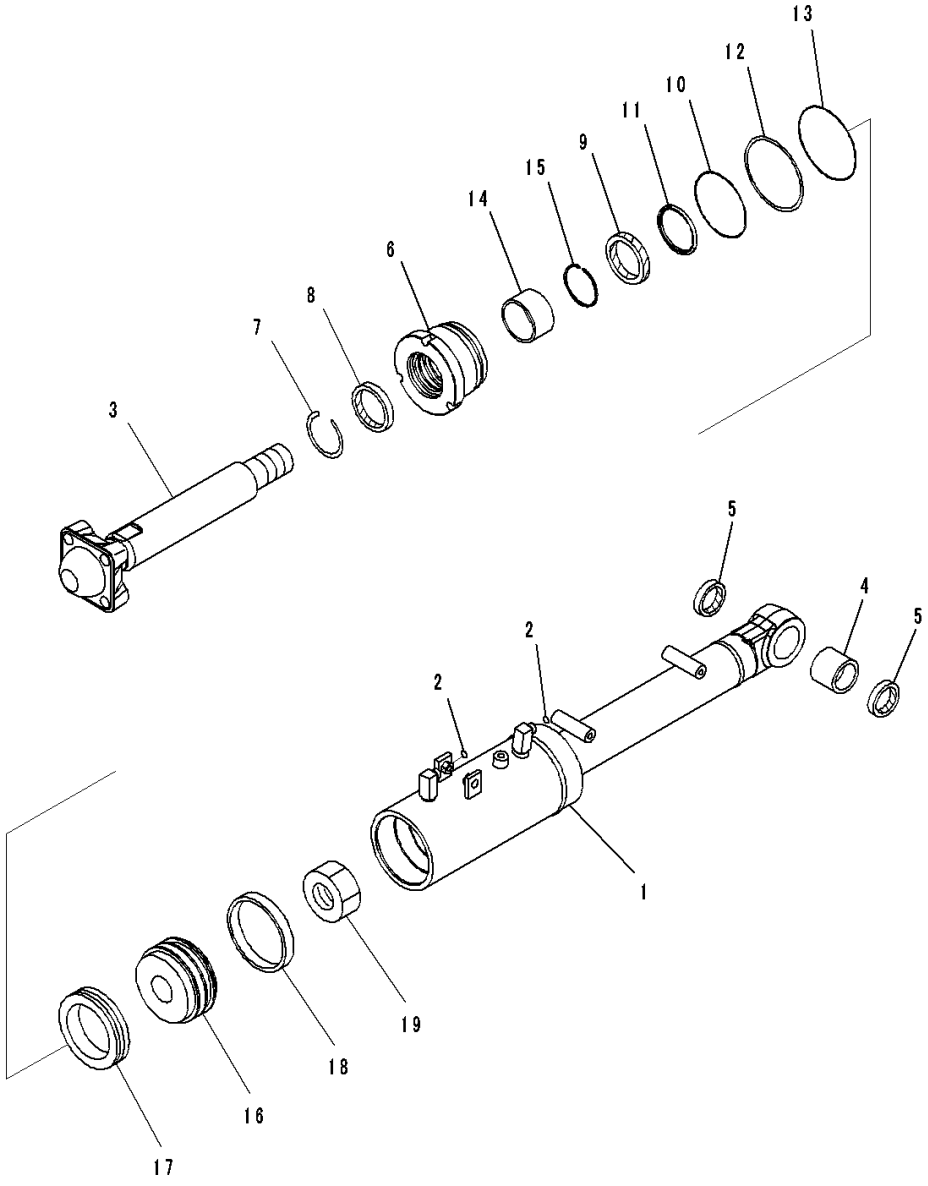

Index	Code	Part Number	Description	Qty	Serial Number
		707-04-00270	Cylinder Assembly	1	80001-
1		707-11-12A70	• Cylinder	1	80001-
2		02896-11009	• O-ring, (Kit : K11)	2	80001-
3		707-60-70110	• Rod	1	80001-
4		07143-10505	• Bushing	1	80001-
5		07145-00050	• Seal, Dust, (Kit : K11)	2	80001-
6		707-29-12660	• Head	1	80001-
7		07179-12084	• Ring, Snap	1	80001-
8		707-56-70740	• Seal, Dust, (Kit : K11)	1	80001-
9		707-51-70030	• Packing, Rod, (Kit : K11)	1	80001-
10		07000-12125	• O-ring, (Kit : K11)	1	80001-
11		707-51-70650	• Ring, Buffer, (Kit : K11)	1	80001-
12		707-35-91510	• Ring, Back-up, (Kit : K11)	1	80001-
13		07000-12120	• O-ring, (Kit : K11)	1	80001-
14		707-52-90451	• Bushing	1	80001-
15		707-75-70110	• Ring, Snap	1	80001-
16		707-36-12840	• Piston	1	80001-
17		707-44-12250	• Ring, Piston, (Kit : K11)	1	80001-
18		707-39-12520	• Ring, Wear, (Kit : K11)	1	80001-
19		707-67-52030	• Nut	1	80001-

FIG. T2150-002001 Dozer Blade Tilt Cylinder, With Power Angle Power Tilt Dozer, Inner Parts

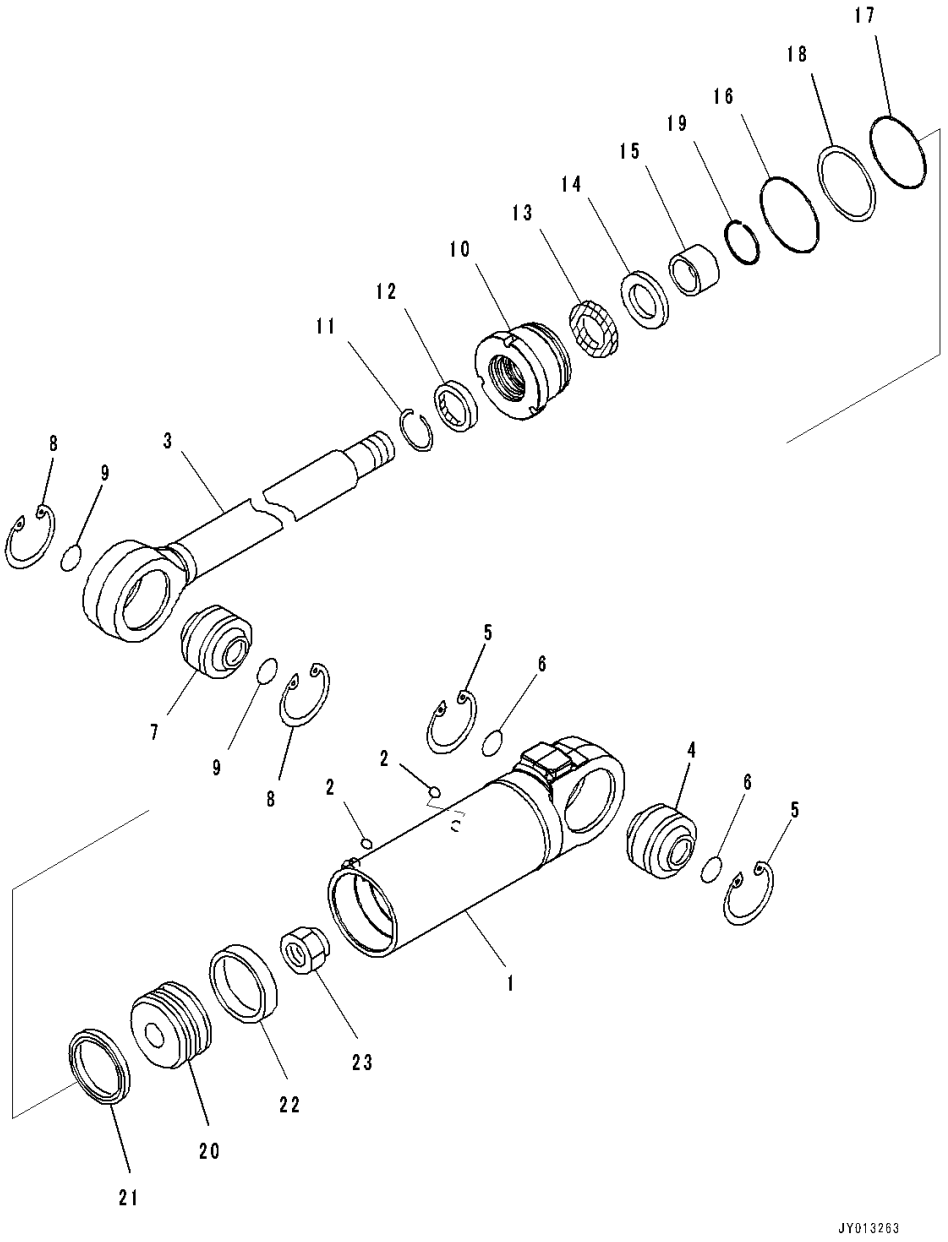

Index	Code	Part Number	Description	Qty	Serial Number
		707-00-0H990	Cylinder Assembly	1	80001-
1		707-11-13860	• Cylinder	1	80001-
2		02896-11009	• O-ring, (Kit : K12)	2	80001-
3		707-58-70A10	• Rod	1	80001-
4		707-46-05040	• Bushing	1	80001-
5		04065-01104	• Ring, Snap	2	80001-
6		07000-13050	• O-ring, (Kit : K12)	2	80001-
7		07137-05008	• Bushing	1	80001-
8		04065-01104	• Ring, Snap	2	80001-
9		07000-13050	• O-ring, (Kit : K12)	2	80001-
10		707-29-13280	• Head	1	80001-
11		07179-12084	• Ring, Snap	1	80001-
12		707-56-70740	• Seal, Dust, (Kit : K12)	1	80001-
13		707-51-70030	• Packing, Rod, (Kit : K12)	1	80001-
14		707-51-70650	• Ring, Buffer, (Kit : K12)	1	80001-
15		707-52-90461	• Bushing	1	80001-
16		07000-12130	• O-ring, (Kit : K12)	1	80001-
17		07000-12125	• O-ring, (Kit : K12)	1	80001-
18		07146-02126	• Ring, Back-up, (Kit : K12)	1	80001-
19		707-75-70110	• Ring, Snap	1	80001-
20		707-36-13240	• Piston	1	80001-
21		707-44-13150	• Ring, Piston, (Kit : K12)	1	80001-
22		07156-01315	• Ring, Wear, (Kit : K12)	1	80001-
23		707-67-52030	• Nut	1	80001-

FIG. T2151-001001 Dozer Frame Related Parts, Inner Parts

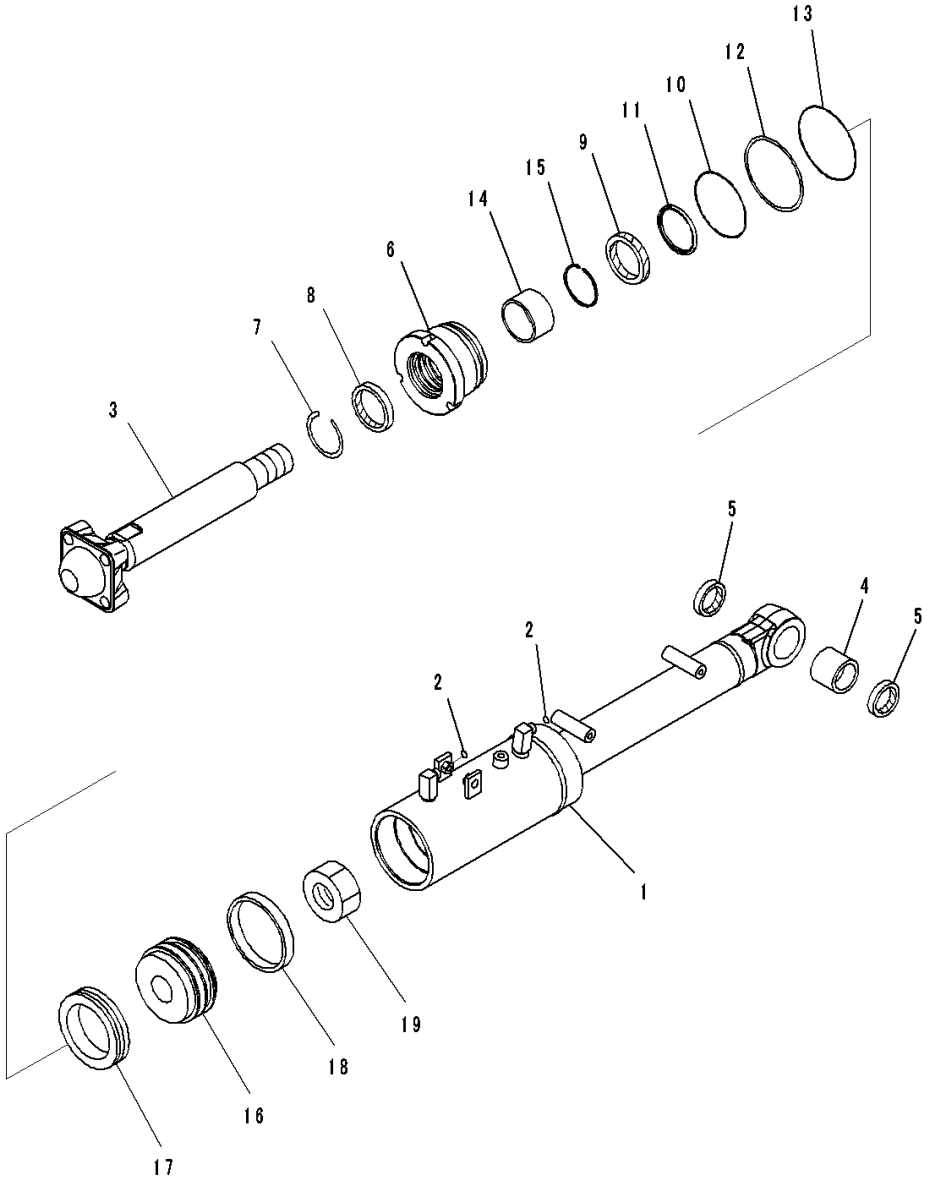

Index	Code	Part Number	Description	Qty	Serial Number
		707-04-00270	Cylinder Assembly	1	80001-
1		707-11-12A70	• Cylinder	1	80001-
2		02896-11009	• O-ring, (Kit : K11)	2	80001-
3		707-60-70110	• Rod	1	80001-
4		07143-10505	• Bushing	1	80001-
5		07145-00050	• Seal, Dust, (Kit : K11)	2	80001-
6		707-29-12660	• Head	1	80001-
7		07179-12084	• Ring, Snap	1	80001-
8		707-56-70740	• Seal, Dust, (Kit : K11)	1	80001-
9		707-51-70030	• Packing, Rod, (Kit : K11)	1	80001-
10		07000-12125	• O-ring, (Kit : K11)	1	80001-
11		707-51-70650	• Ring, Buffer, (Kit : K11)	1	80001-
12		707-35-91510	• Ring, Back-up, (Kit : K11)	1	80001-
13		07000-12120	• O-ring, (Kit : K11)	1	80001-
14		707-52-90451	• Bushing	1	80001-
15		707-75-70110	• Ring, Snap	1	80001-
16		707-36-12840	• Piston	1	80001-
17		707-44-12250	• Ring, Piston, (Kit : K11)	1	80001-
18		707-39-12520	• Ring, Wear, (Kit : K11)	1	80001-
19		707-67-52030	• Nut	1	80001-

FIG. T2153-001001 Dozer Blade Angle Cylinder, With Power Angle Power Tilt Dozer, Inner Parts

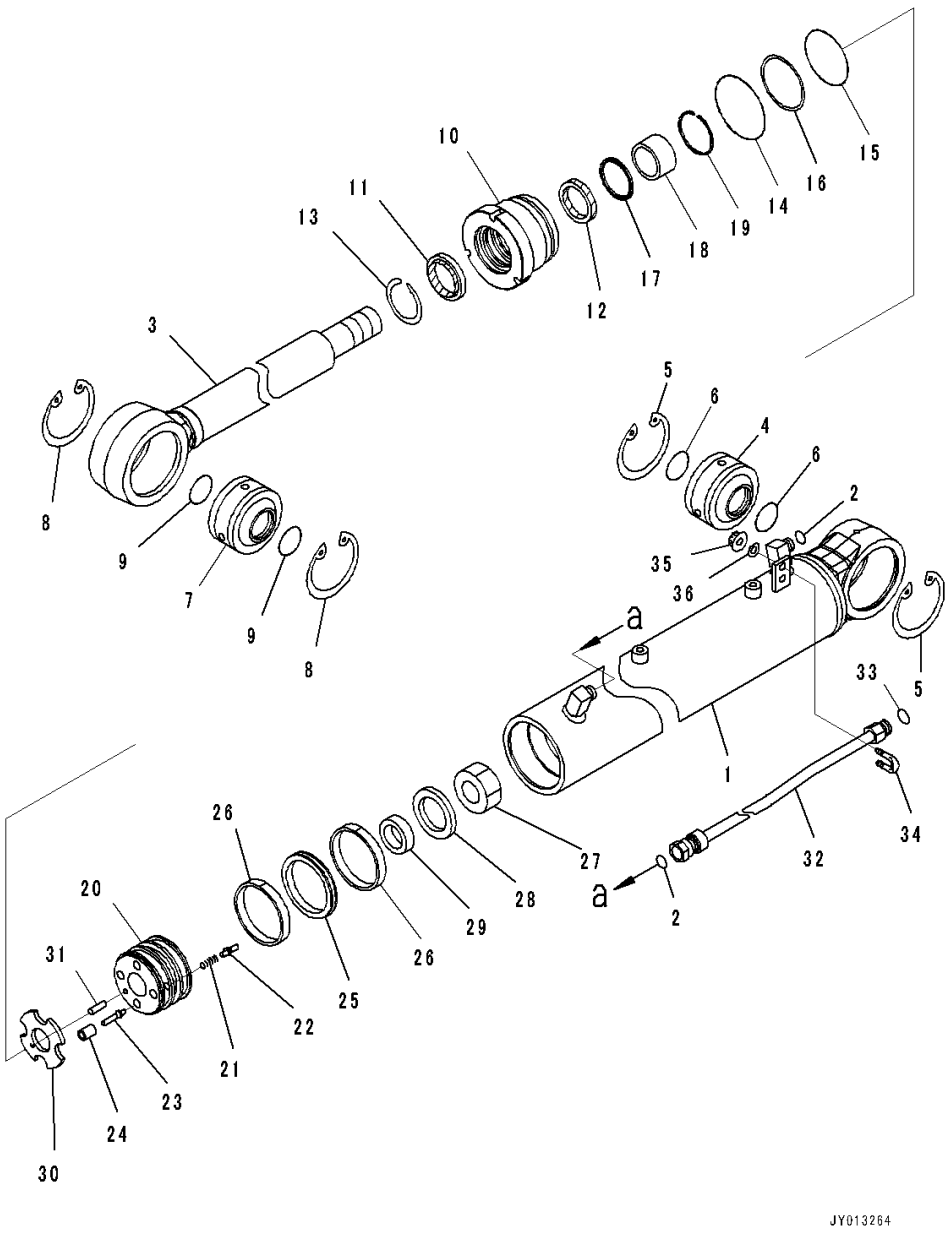

Index	Code	Part Number	Description	Qty	Serial Number
		707-00-0J361	Cylinder Assembly	2	80001-
1		707-11-11F61	• Cylinder	1	80001-
2		02896-11012	• O-ring, (Kit : K13)	2	80001-
3		707-58-65901	• Rod	1	80001-
4		707-46-05040	• Bushing	1	80001-
5		04065-01104	• Ring, Snap	2	80001-
6		07000-13050	• O-ring, (Kit : K13)	2	80001-
7		07137-05008	• Bushing	1	80001-
8		04065-01104	• Ring, Snap	2	80001-
9		07000-13050	• O-ring, (Kit : K13)	2	80001-
10		707-29-11A00	• Head	1	80001-
11		707-56-65740	• Seal, Dust, (Kit : K13)	1	80001-
12		707-51-65030	• Packing, Rod, (Kit : K13)	1	80001-
13		07179-12079	• Ring, Snap	1	80001-
14		07000-12110	• O-ring, (Kit : K13)	1	80001-
15		07000-12105	• O-ring, (Kit : K13)	1	80001-
16		07146-02106	• Ring, Back-up, (Kit : K13)	1	80001-
17		707-51-65650	• Ring, Buffer, (Kit : K13)	1	80001-
18		707-52-90401	• Bushing	1	80001-
19		707-75-65110	• Ring, Snap	1	80001-
		707-91-91111	• Piston	1	80001-
20		707-37-11111	•• Piston	1	80001-
21		707-80-16020	•• Spring	4	80001-
22	C1		•• Valve	4	80001-
23	C1		•• Valve	4	80001-
24	C1		•• Seat	4	80001-
25		707-44-11150	• Ring, Piston, (Kit : K13)	1	80001-
26		07156-01112	• Ring, Wear, (Kit : K13)	2	80001-
27		707-67-48020	• Nut	1	80001-
28		707-69-11011	• Slider	1	80001-
29		707-81-45251	• Collar	1	80001-
30		707-40-11321	• Retainer	1	80001-
31		130-63-12761	• Pin	1	80001-
32		707-86-01070	Tube	2	80001-
33		02896-11012	O-ring, (Kit : K13)	2	80001-
34		07283-31529	Clip, Pipe	2	80001-
35		01596-00807	Nut	4	80001-
36		01643-30823	Washer	4	80001-

FIG. T2160-002001 Dozer Blade Tilt Cylinder Circuit

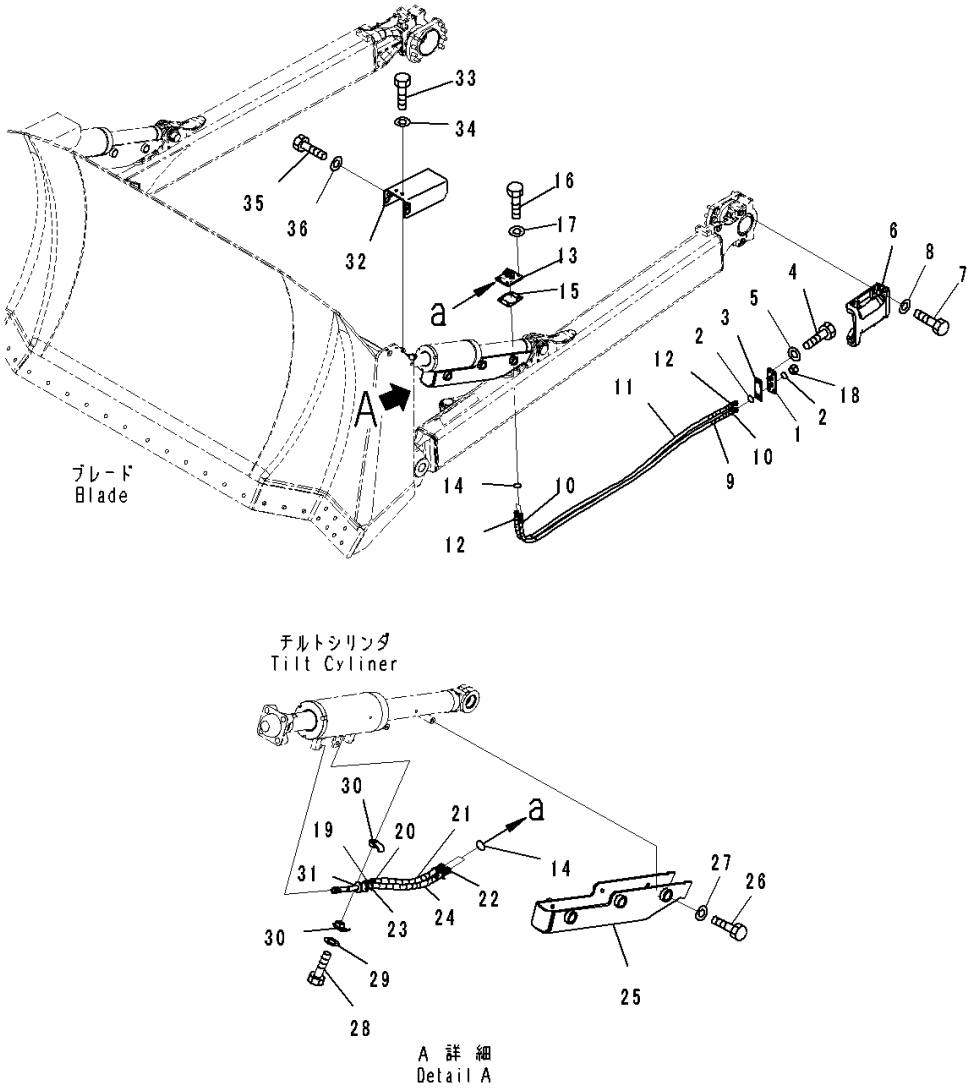

Index	Code	Part Number	Description	Qty	Serial Number
1		14X-62-52291	Bracket	1	80001-
2		02896-11009	O-ring	4	80001-
3		14Y-62-11420	Gasket	1	80001-
4		01010-81225	Bolt	4	80001-
5		01643-31232	Washer	4	80001-
6		14Y-71-12160	Cover	1	80001-
7		01010-81630	Bolt	4	80001-
8		01643-31645	Washer	4	80001-
9		14X-62-53611	Hose	1	80001-
10		21U-62-34760	• Band, Red	2	80001-
11		14X-62-53621	Hose	1	80001-
12		21U-62-34770	• Band, White	2	80001-
13		14Y-62-31431	Bracket	1	80001-
14		02896-11009	O-ring	4	80001-
15		14Y-62-11440	Gasket	1	80001-
16		01010-81225	Bolt	4	80001-
17		01643-31232	Washer	4	80001-
18		02789-00315	Plug	2	80001-
19		14X-62-52161	Hose Assembly	1	80001-
20		21U-62-34770	• Band, White	2	80001-
21		14X-62-54980	• Cover	1	80001-
22		14X-62-52171	Hose Assembly	1	80001-
23		21U-62-34760	• Band, Red	2	80001-
24		14X-62-54980	• Cover	1	80001-
25		14X-62-52182	Cover	1	80006-
26		01010-81230	Bolt	6	80001-
27		01643-31232	Washer	6	80001-
28		01010-81255	Bolt	1	80001-
29		01643-31232	Washer	1	80001-
30		22P-62-13510	Clamp	2	80001-
31		07095-00317	Cushion	1	80001-
32		14X-62-52330	Cover	1	80001-
33		01010-81225	Bolt	2	80001-
34		01643-31232	Washer	2	80001-
35		01010-81240	Bolt	2	80001-
36		01643-31232	Washer	2	80001-

FIG. T2160-003001 Dozer Blade Tilt Cylinder Circuit, With Power Tilt Pitch Dozer

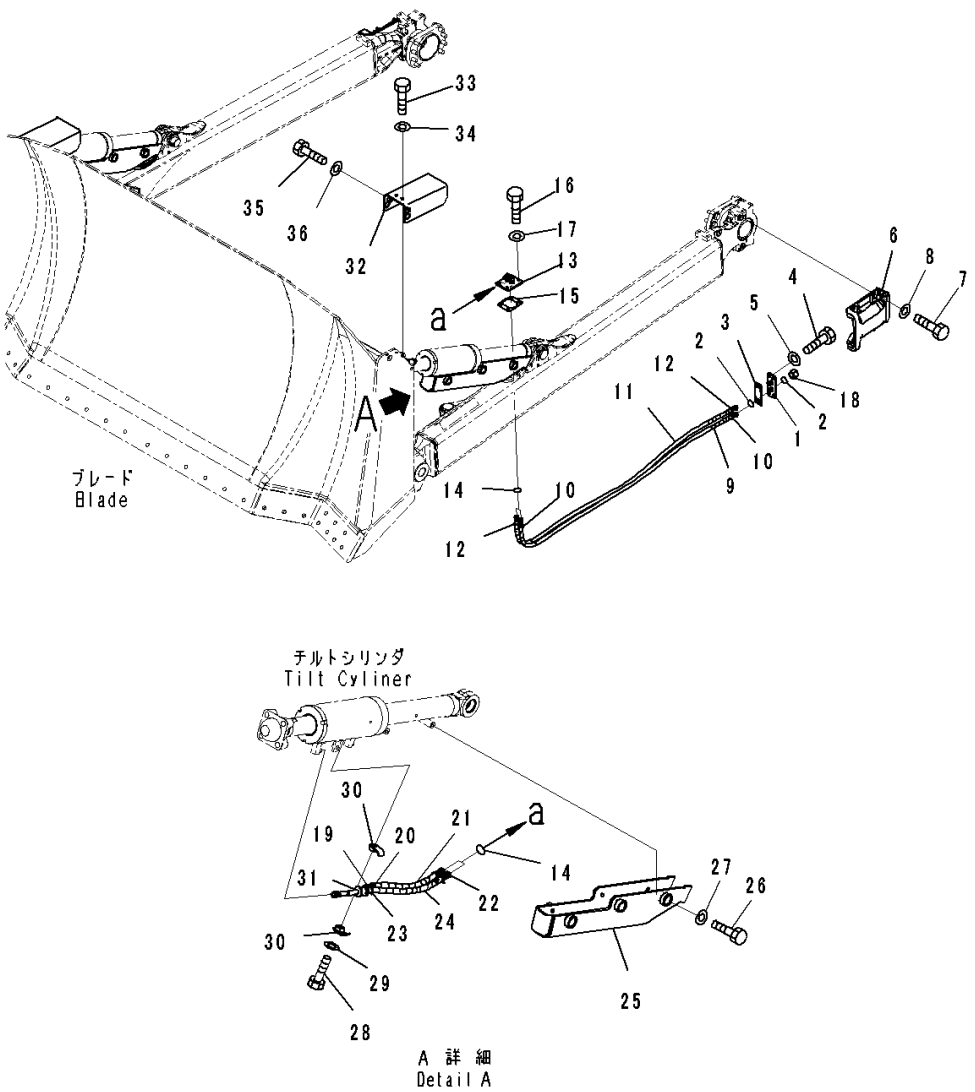

Index	Code	Part Number	Description	Qty	Serial Number
1		14X-62-52291	Bracket	2	80001-
2		02896-11009	O-ring	8	80001-
3		14Y-62-11420	Gasket	2	80001-
4		01010-81225	Bolt	8	80001-
5		01643-31232	Washer	8	80001-
6		14Y-71-12160	Cover	2	80001-
7		01010-81630	Bolt	8	80001-
8		01643-31645	Washer	8	80001-
9		14X-62-53611	Hose	2	80001-
10		21U-62-34760	• Band, Red	2	80001-
11		14X-62-53621	Hose	2	80001-
12		21U-62-34770	• Band, White	2	80001-
13		14Y-62-31431	Bracket	2	80001-
14		02896-11009	O-ring	8	80001-
15		14Y-62-11440	Gasket	2	80001-
16		01010-81225	Bolt	8	80001-
17		01643-31232	Washer	8	80001-
18		02789-00315	Plug	4	80001-
19		14X-62-52161	Hose Assembly	2	80001-
20		21U-62-34770	• Band, White	2	80001-
21		14X-62-54980	• Cover	1	80001-
22		14X-62-52171	Hose Assembly	2	80001-
23		21U-62-34760	• Band, Red	2	80001-
24		14X-62-54980	• Cover	1	80001-
25		14X-62-52182	Cover	2	80006-
26		01010-81230	Bolt	12	80001-
27		01643-31232	Washer	12	80001-
28		01010-81255	Bolt	2	80001-
29		01643-31232	Washer	2	80001-
30		22P-62-13510	Clamp	4	80001-
31		07095-00317	Cushion	2	80001-
32		14X-62-52330	Cover	2	80001-
33		01010-81225	Bolt	4	80001-
34		01643-31232	Washer	4	80001-
35		01010-81240	Bolt	4	80001-
36		01643-31232	Washer	4	80001-

FIG. T2160-004001 Dozer Blade Tilt Cylinder Piping, (1/2)

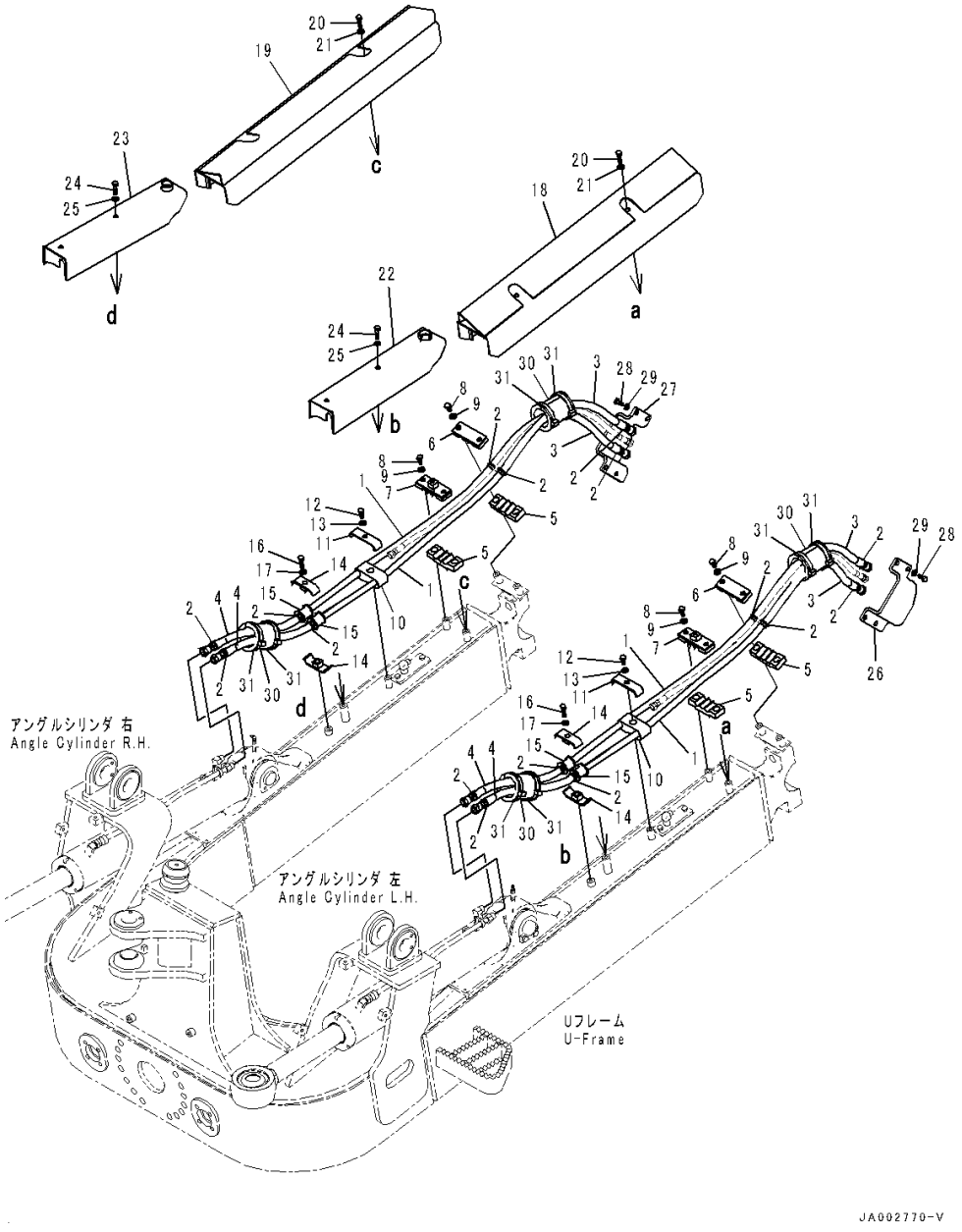

Index	Code	Part Number	Description	Qty	Serial Number
1		14X-62-52741	Hose Assembly	4	80001-
2		08034-20414	• Band	4	80001-
3		14X-62-52710	• Cover	1	80001-
4		14X-62-52690	• Cover	1	80001-
5		14X-62-54850	Cushion	4	80001-
6		14X-62-54840	Clamp	2	80001-
7		14X-62-51871	Clamp	2	80001-80000
8		01010-81225	Bolt	8	80001-
9		01643-31232	Washer	8	80001-
10		14X-62-51891	Cushion	2	80001-
11		14X-62-51880	Plate	2	80001-
12		01010-81220	Bolt	2	80001-
13		01643-31232	Washer	2	80001-
14		07094-30417	Clamp	4	80001-
15		07095-1042B	Cushion	4	80001-
16		01010-81260	Bolt	2	80001-
17		01643-31232	Washer	2	80001-
18		14X-62-51922	Cover,LHS	1	80001-
19		14X-62-54920	Cover,RHS	1	80001-
20		01010-81265	Bolt	4	80001-
21		01643-31232	Washer	4	80001-
22		14X-62-51912	Cover,LHS	1	80001-
23		14X-62-54910	Cover,RHS	1	80001-
24		01010-81260	Bolt	4	80001-
25		01643-31232	Washer	4	80001-
26		14X-62-51932	Bracket,LHS	1	80001-
27		14X-62-52821	Bracket,RHS	1	80001-
28		01010-81230	Bolt	8	80001-
29		01643-31232	Washer	8	80001-
30		07095-01245	Cushion	4	80001-
31		08034-20876	Band	8	80001-

FIG. T2160-004002 Dozer Blade Tilt Cylinder Piping, (2/2)

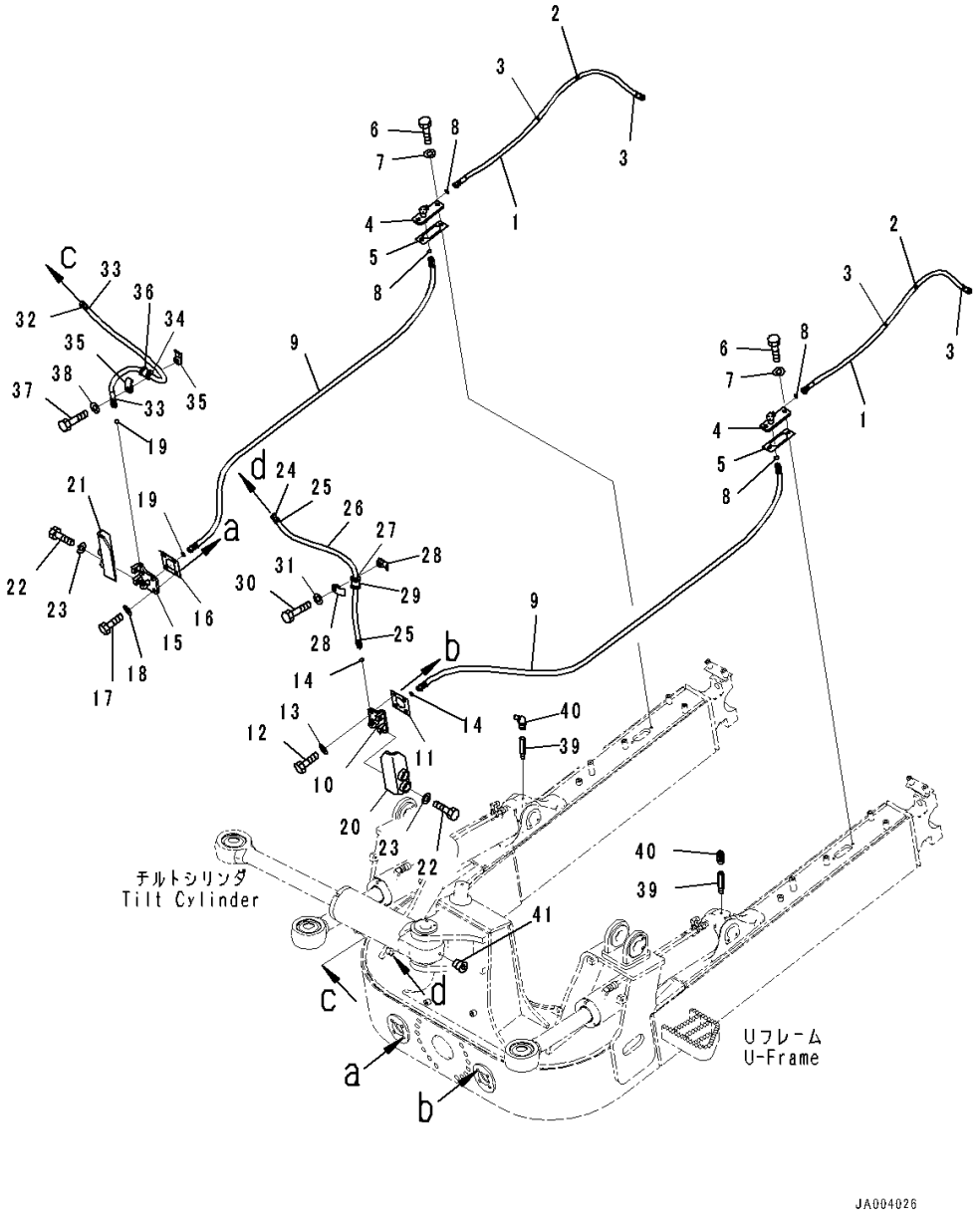

Index	Code	Part Number	Description	Qty	Serial Number
1		14X-62-51561	Hose Assembly	2	80001-
2		08034-20414	• Band	2	80001-
3		14X-62-52680	• Cover	1	80001-
4		14X-62-51860	Bracket	2	80001-
5		14X-62-52790	Gasket	2	80001-
6		01010-81225	Bolt	4	80001-
7		01643-31232	Washer	4	80001-
8		02896-11009	O-ring	4	80001-
9		14X-62-51591	Hose	2	80001-
10		14X-62-51842	Bracket,LHS	1	80001-
11		14X-62-52781	Gasket	1	80001-
12		01010-81245	Bolt	4	80009-
13		01643-31232	Washer	4	80001-
14		02896-11009	O-ring	2	80001-
15		14X-62-51852	Bracket,RHS	1	80001-
16		14X-62-52781	Gasket	1	80001-
17		01010-81245	Bolt	4	80009-
18		01643-31232	Washer	4	80001-
19		02896-11009	O-ring	2	80001-
20		14X-62-51832	Bracket	1	80001-
21		14X-62-53861	Bracket	1	80001-
22		01010-81635	Bolt	4	80001-
23		01643-31645	Washer	4	80001-
24		14X-62-51611	Hose	1	80001-
25		21U-62-34770	• Band, White	2	80001-
26		14X-62-52651	• Cover	1	80001-
27		08024-21920	• Tape, White	1	80001-
28		22P-62-13510	Clamp	2	80001-
29		07095-00318	Cushion	1	80001-
30		01010-81255	Bolt	1	80001-
31		01643-31232	Washer	1	80001-
32		14X-62-51811	Hose	1	80001-
33		21U-62-34760	• Band, Red	2	80001-
34		08024-11920	• Tape, Vinyl, Red	1	80001-
35		22P-62-13510	Clamp	2	80001-
36		07095-00318	Cushion	1	80001-
37		01010-81255	Bolt	1	80001-
38		01643-31232	Washer	1	80001-
39		14X-62-52321	Nipple	2	80001-

FIG. T2160-004002 Dozer Blade Tilt Cylinder Piping, (2/2)

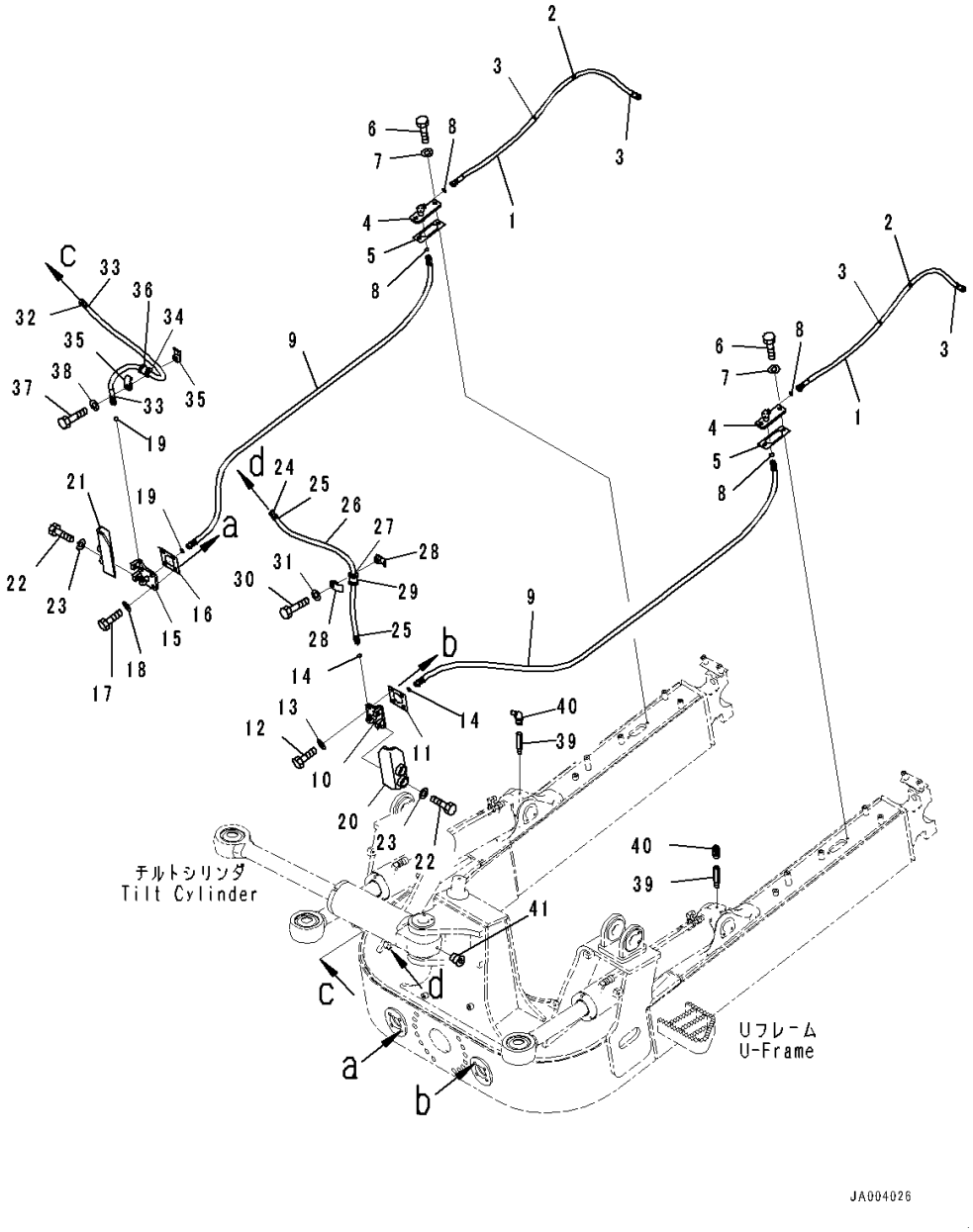

Index	Code	Part Number	Description	Qty	Serial Number
40		07020-00675	Fitting, Grease	2	80001-
41		07043-70108	Plug.....	1	80001-

FIG. T2400-001001 Ripper Group

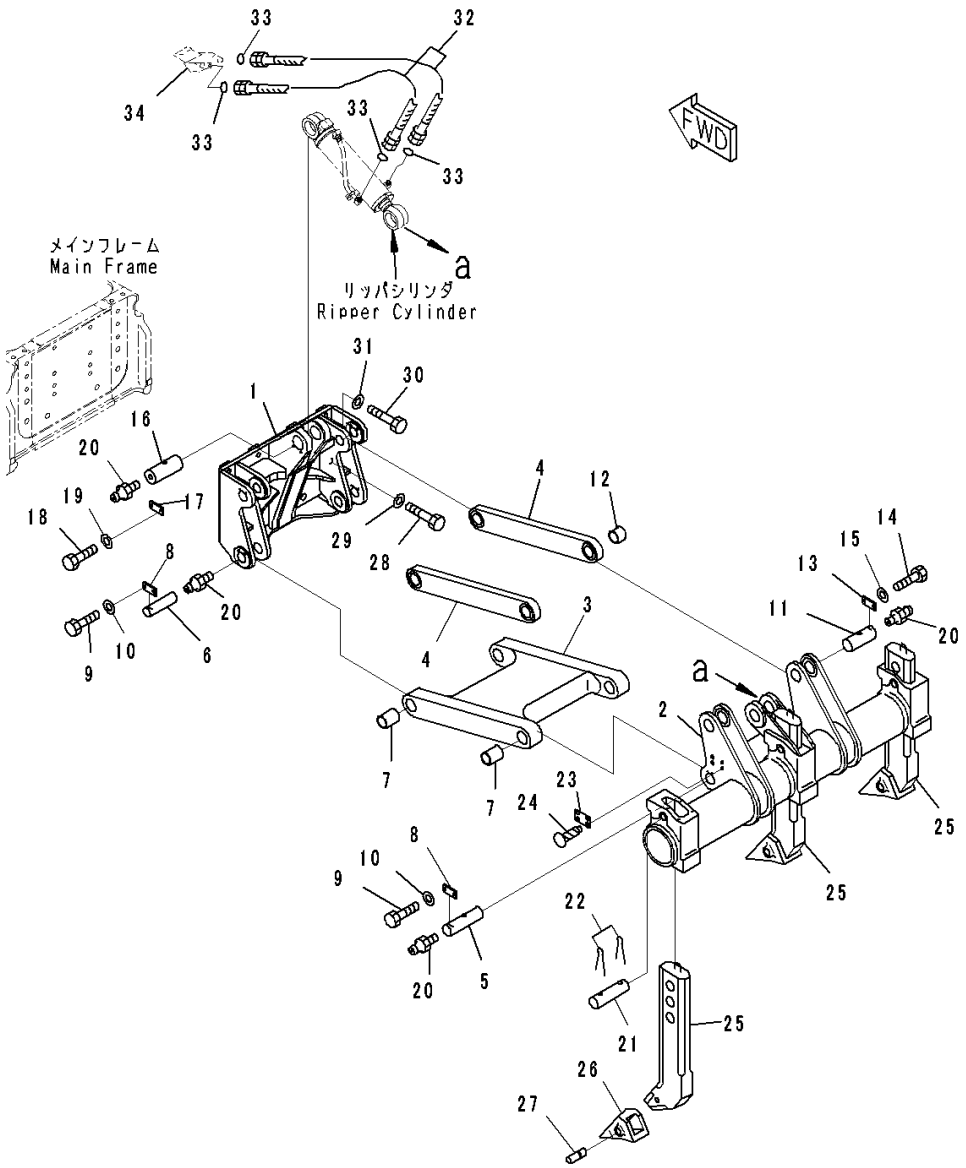

Index	Code	Part Number	Description	Qty	Serial Number
1		14X-78-52111	Support	1	80001-
2		144-78-11511	Beam	1	80001-
3		144-78-11174	Link	1	80001-
4		144-78-11162	Link	2	80001-
5		144-874-8470	Pin	2	80001-
6		14X-78-11310	Pin	2	80001-
7		141-78-11321	Bushing	4	80001-
8		04082-00212	Lock	4	80001-
9		01010-81235	Bolt	8	80001-
10		01643-31232	Washer	8	80001-
11		144-874-8480	Pin	4	80001-
12		141-78-11311	Bushing	4	80001-
13		04082-00212	Lock	4	80001-
14		01010-81235	Bolt	8	80001-
15		01643-31232	Washer	8	80001-
16		144-874-8491	Pin	2	80001-
17		04082-00514	Lock	2	80001-
18		01010-81435	Bolt	4	80001-
19		01643-31445	Washer	4	80001-
20		07020-00000	Fitting, Grease	10	80001-
21		144-78-11570	Pin	3	80001-
22		04050-10060	Pin, Cotter	6	80001-
23	C2	09601-50000	Plate, Name (Limited Supply)	1	80001-
24		04418-13060	Screw	4	80001-
25		144-78-11245	Shank	3	80001-
26		141-78-11253	Point	3	80001-
27		09244-02508	Pin	3	80001-
28		01010-83390	Bolt	6	80001-
29		01643-33380	Washer	6	80001-
30		01010-82480	Bolt	10	80001-
31		01643-32460	Washer	10	80001-
32		02756-20511	Hose, Face Seal Type	2	80001-
33		02896-11015	O-ring	4	80001-
34		(14X-78-51171)	Block(Refer to Page 330)		-

FIG. T2460-001001 Ripper Lift Cylinder, Inner Parts

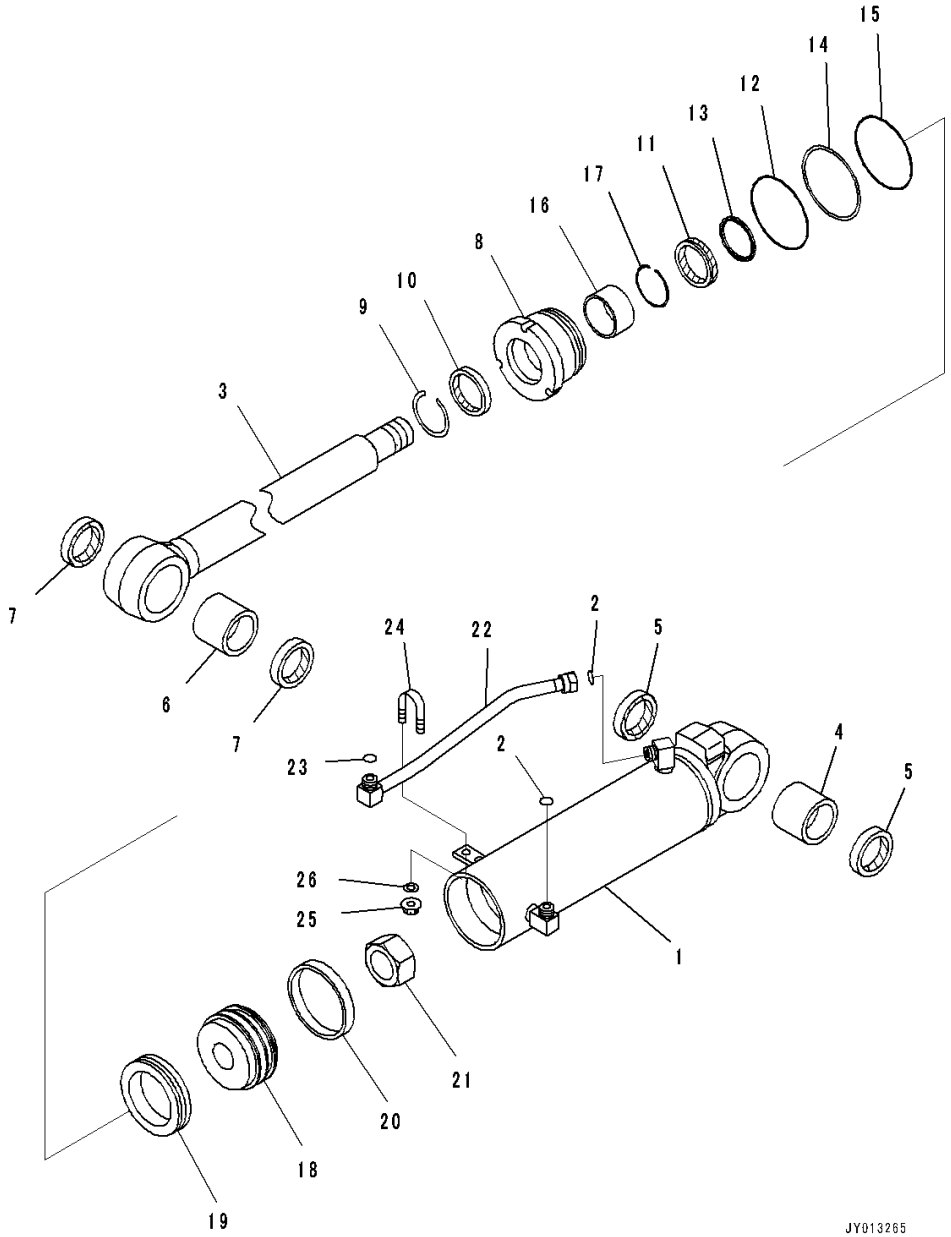

Index	Code	Part Number	Description	Qty	Serial Number
		707-00-0J370	Cylinder Assembly	1	80001-
1		707-11-12A80	• Cylinder	1	80001-
2		02896-11015	• O-ring, (Kit : K14)	2	80001-
3		707-58-70A20	• Rod	1	80001-
4		07143-10707	• Bushing	1	80001-
5		07145-00075	• Seal, Dust, (Kit : K14)	2	80001-
6		07143-10707	• Bushing	1	80001-
7		07145-00075	• Seal, Dust, (Kit : K14)	2	80001-
8		707-29-12660	• Head	1	80001-
9		07179-12084	• Ring, Snap	1	80001-
10		707-56-70740	• Seal, Dust, (Kit : K14)	1	80001-
11		707-51-70030	• Packing, Rod, (Kit : K14)	1	80001-
12		07000-12125	• O-ring, (Kit : K14)	1	80001-
13		707-51-70650	• Ring, Buffer, (Kit : K14)	1	80001-
14		707-35-91510	• Ring, Back-up, (Kit : K14)	1	80001-
15		07000-12120	• O-ring, (Kit : K14)	1	80001-
16		707-52-90451	• Bushing	1	80001-
17		707-75-70110	• Ring, Snap	1	80001-
18		707-36-12840	• Piston	1	80001-
19		707-44-12250	• Ring, Piston, (Kit : K14)	1	80001-
20		707-39-12520	• Ring, Wear, (Kit : K14)	1	80001-
21		707-67-52030	• Nut	1	80001-
22		707-86-55780	Tube	1	80001-
23		02896-11015	O-ring, (Kit : K14)	1	80001-
24		07283-32236	Clip, Pipe	1	80001-
25		01597-01009	Nut	2	80001-
26		01643-31032	Washer	2	80001-

FIG. T2460-001002 Ripper Lift Cylinder, Shipping Parts

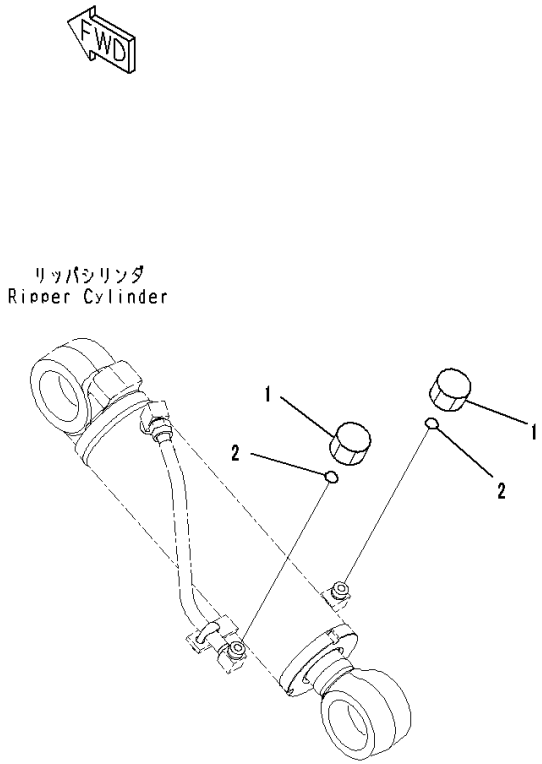

Index	Code	Part Number	Description	Qty	Serial Number
1		02789-00522	Plug, Face Seal Type	2	80001-
2		02896-11015	O-ring.....	2	80001-

FIG. T2810-001001 Drawbar, Rigid Type

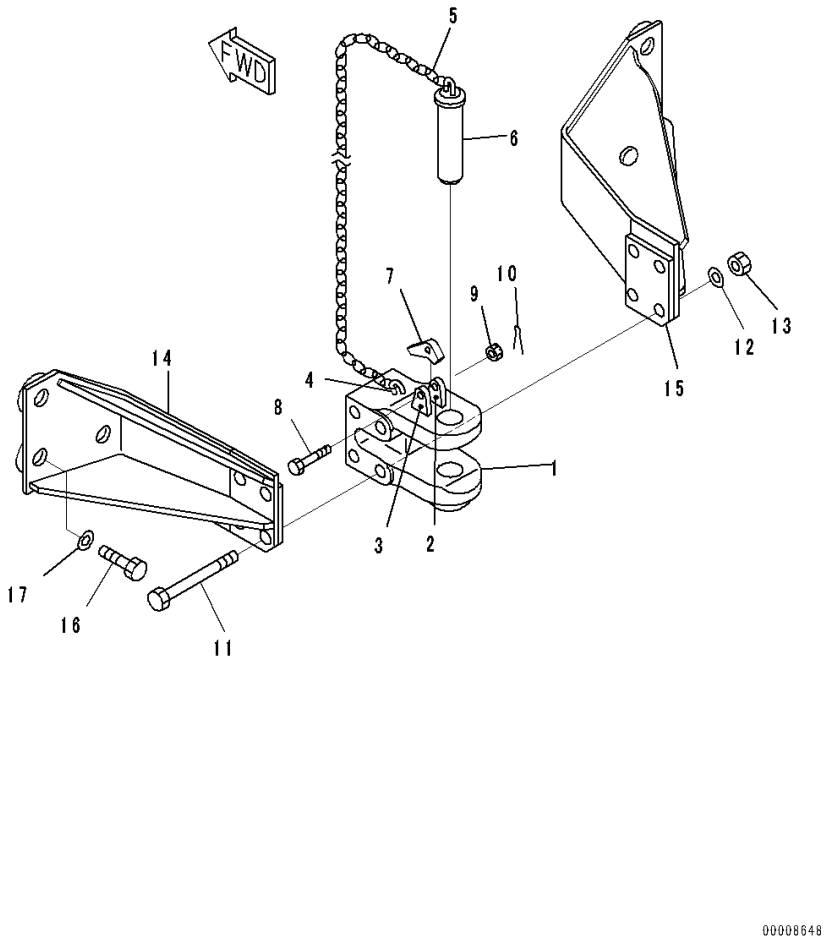

Index	Code	Part Number	Description	Qty	Serial Number
1		144-69-11120	Drawbar Assembly	1	80001-
2		131-69-11120	• Plate	1	80001-
3		131-69-11130	• Plate	1	80001-
4		09245-50060	• Hook	1	80001-
5		09245-24830	• Chain	1	80001-
6		09247-45180	• Pin, Drawbar	1	80001-
7		09249-00016	Latch	1	80001-
8		01052-51260	Bolt	1	80001-
9		01592-11215	Nut, Slotted	1	80001-
10		04050-13022	Pin, Cotter	1	80001-
11		144-69-11161	Bolt	4	80001-
12		01643-32460	Washer	4	80001-
13		01582-12419	Nut	4	80001-
14		14X-69-11110	Bracket	1	80001-
15		14X-69-11120	Bracket	1	80001-
16		01010-83375	Bolt	6	80001-
17		01643-33380	Washer	6	80001-

FIG. T2810-003001 Drawbar

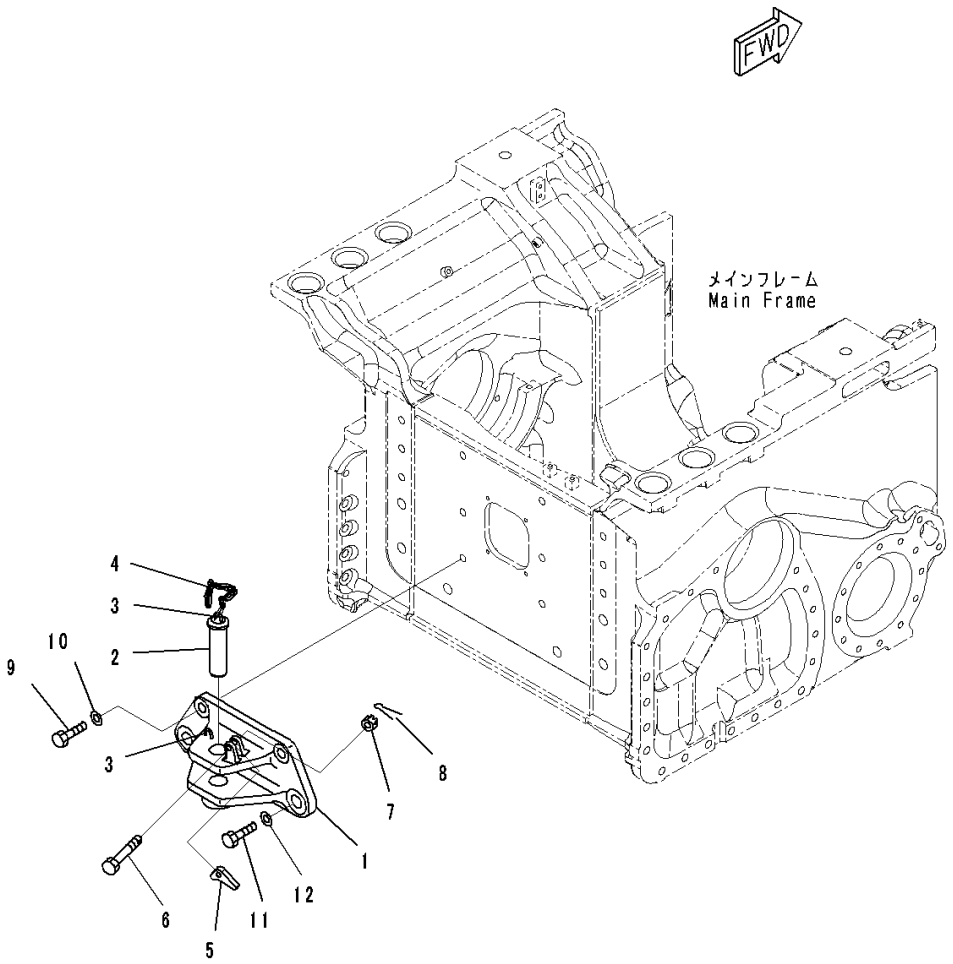

Index	Code	Part Number	Description	Qty	Serial Number
1		14X-69-51101	Bracket	1	80001-
2		130-69-11190	• Pin	1	80001-
3		09245-50060	• Hook	2	80001-
4		09245-04830	• Chain	1	80001-
5		09249-00016	Latch	1	80001-
6		01052-81265	Bolt	1	80001-
7		01592-31215	Nut, Slotted	1	80001-
8		04050-13025	Pin, Cotter	1	80001-
9		01010-82465	Bolt	2	80001-
10		01643-32460	Washer	2	80001-
11		01010-83380	Bolt	2	80001-
12		01643-33380	Washer	2	80001-

FIG. T2810-002001 Drawbar, Rigid Type, With Scraper

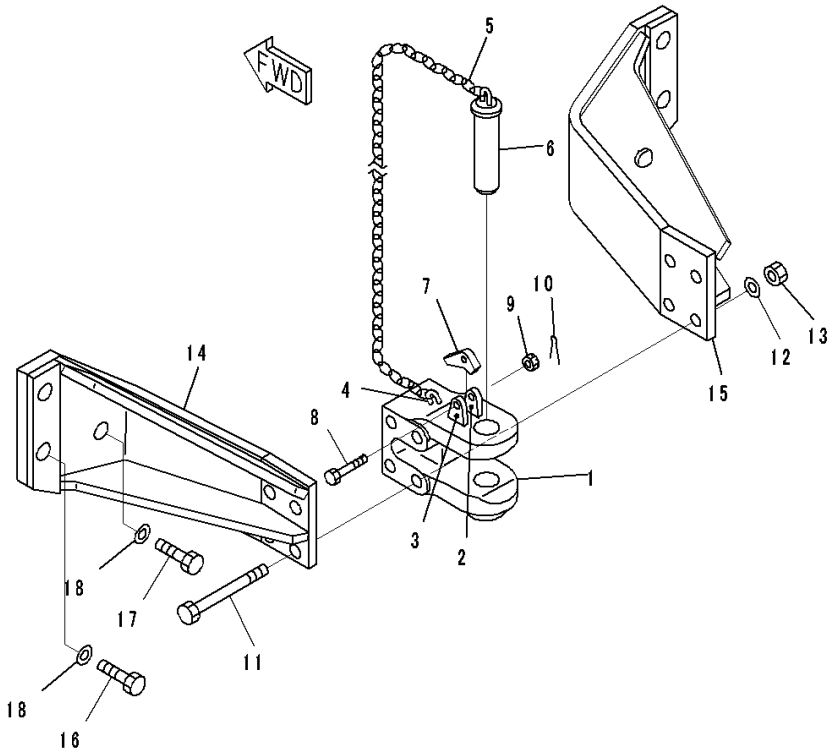

Index	Code	Part Number	Description	Qty	Serial Number
1		144-69-11120	Drawbar Assembly	1	80001-
2		131-69-11120	• Plate	1	80001-
3		131-69-11130	• Plate	1	80001-
4		09245-50060	• Hook	1	80001-
5		09245-24830	• Chain	1	80001-
6		09247-45180	• Pin, Drawbar	1	80001-
7		09249-00016	Latch	1	80001-
8		01052-51260	Bolt	1	80001-
9		01592-11215	Nut, Slotted	1	80001-
10		04050-13022	Pin, Cotter	1	80001-
11		144-69-11161	Bolt	4	80001-
12		01643-32460	Washer	4	80001-
13		01582-12419	Nut	4	80001-
14		14X-69-11210	Bracket	1	80001-
15		14X-69-11220	Bracket	1	80001-
16		01010-83390	Bolt	4	80001-
17		01010-83375	Bolt	2	80001-
18		01643-33380	Washer	6	80001-

FIG. T2810-004001 Drawbar, Counter Weight

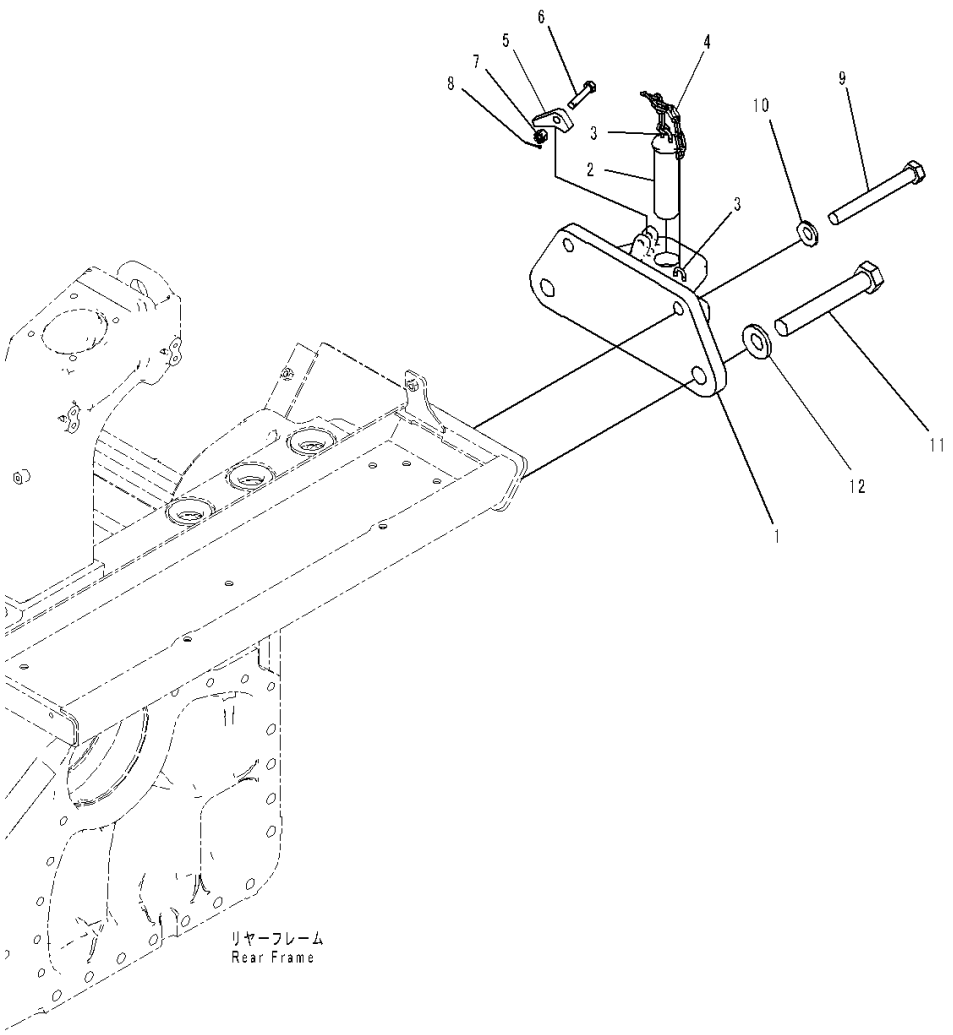

Index	Code	Part Number	Description	Qty	Serial Number
1		14X-69-51101	Bracket	1	80005-
2		130-69-11190	• Pin	1	80005-
3		09245-50060	• Hook	2	80005-
4		09245-04830	• Chain	1	80005-
5		09249-00016	Latch	1	80005-
6		01052-81265	Bolt	1	80005-
7		01592-31215	Nut, Slotted	1	80005-
8		04050-13025	Pin, Cotter	1	80005-
9		145-Z23-4130	Bolt	2	80005-
10		01643-32460	Washer	2	80005-
11		150-74-11140	Bolt	2	80005-
12		01643-33380	Washer	2	80005-

FIG. T2810-005001 Drawbar, EU Regulation Guard Level 2

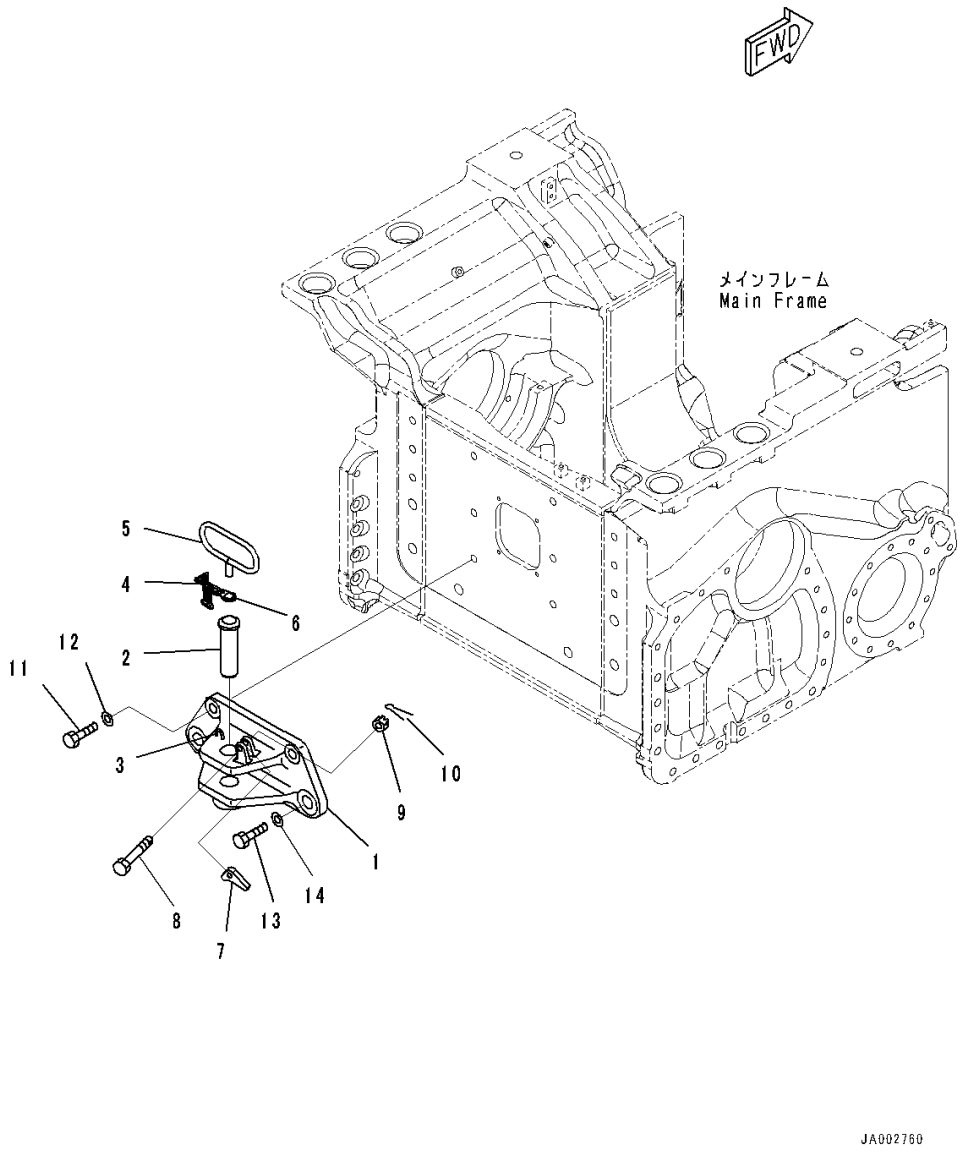

Index	Code	Part Number	Description	Qty	Serial Number
1		14X-69-51200	Bracket	1	80001-
2		130-69-11190	• Pin	1	80001-
3		09245-50060	• Hook	1	80001-
4		09245-04830	• Chain	1	80001-
5		144-69-11210	• Handle	1	80001-
6		144-69-11230	• Plate	1	80001-
7		09249-00016	Latch	1	80001-
8		01052-81265	Bolt	1	80001-
9		01592-31215	Nut, Slotted	1	80001-
10		04050-13025	Pin, Cotter	1	80001-
11		01010-82465	Bolt	2	80001-
12		01643-32460	Washer	2	80001-
13		01010-83380	Bolt	2	80001-
14		01643-33380	Washer	2	80001-

FIG. T2810-007001 Drawbar, Counter Weight, EU Regulation Guard Level 2

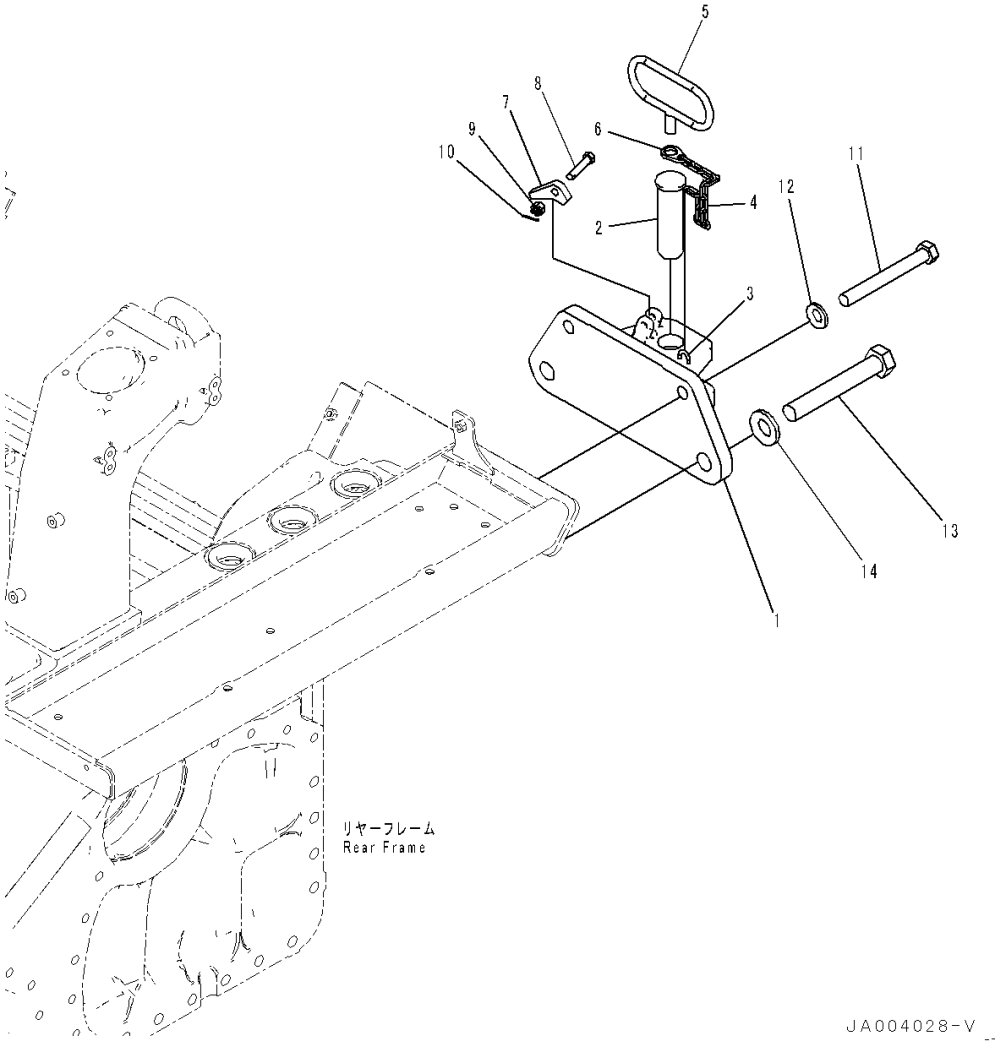

Index	Code	Part Number	Description	Qty	Serial Number
1		14X-69-51200	Bracket	1	80012-
2		130-69-11190	• Pin	1	80012-
3		09245-50060	• Hook	1	80012-
4		09245-04830	• Chain	1	80012-
5		144-69-11210	• Handle	1	80012-
6		144-69-11230	• Plate	1	80012-
7		09249-00016	Latch	1	80012-
8		01052-81265	Bolt	1	80012-
9		01592-31215	Nut, Slotted	1	80012-
10		04050-13025	Pin, Cotter	1	80012-
11		145-Z23-4130	Bolt	2	80012-
12		01643-32460	Washer	2	80012-
13		150-74-11140	Bolt	2	80012-
14		01643-33380	Washer	2	80012-

FIG. T2810-006001 Drawbar, Rigid Type

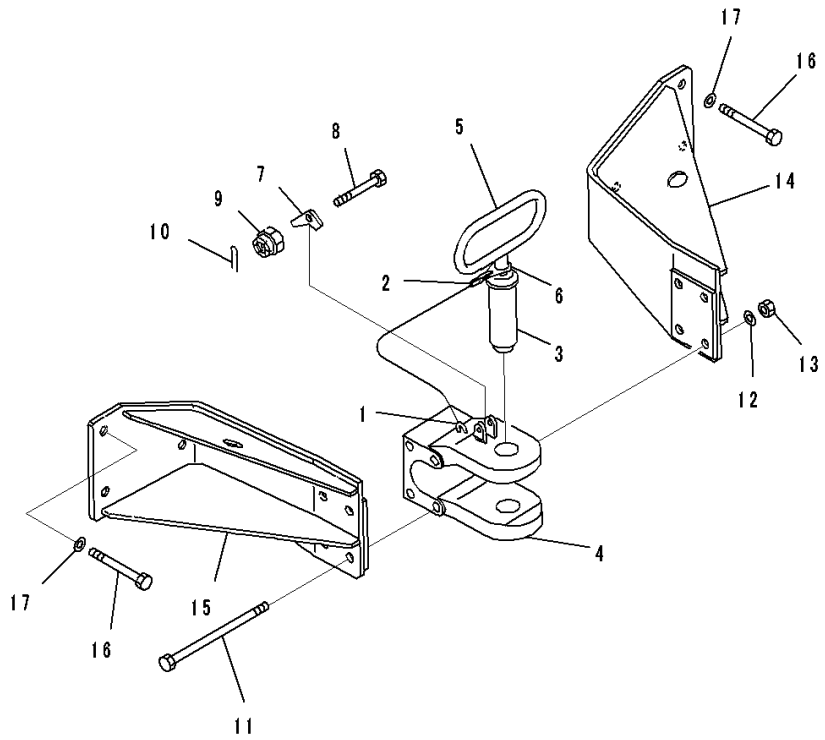

Index	Code	Part Number	Description	Qty	Serial Number
		144-69-11170	Drawbar Assembly	1	80001-
1		09245-50060	• Hook	1	80001-
2		09245-04830	• Chain	1	80001-
3		09247-45180	• Pin, Drawbar	1	80001-
4		144-69-11130	• Drawbar	1	80001-
5		144-69-11210	• Handle	1	80001-
6		144-69-11230	• Plate	1	80001-
7		09249-00016	Latch	1	80001-
8		01052-51260	Bolt	1	80001-
9		01592-11215	Nut, Slotted	1	80001-
10		04050-13022	Pin, Cotter	1	80001-
11		144-69-11161	Bolt	4	80001-
12		01643-32460	Washer	4	80001-
13		01582-12419	Nut	4	80001-
14		14X-69-11110	Bracket	1	80001-
15		14X-69-11120	Bracket	1	80001-
16		01010-83375	Bolt	6	80001-
17		01643-33380	Washer	6	80001-

FIG. T2810-008001 Drawbar, For EU Safety Regulation

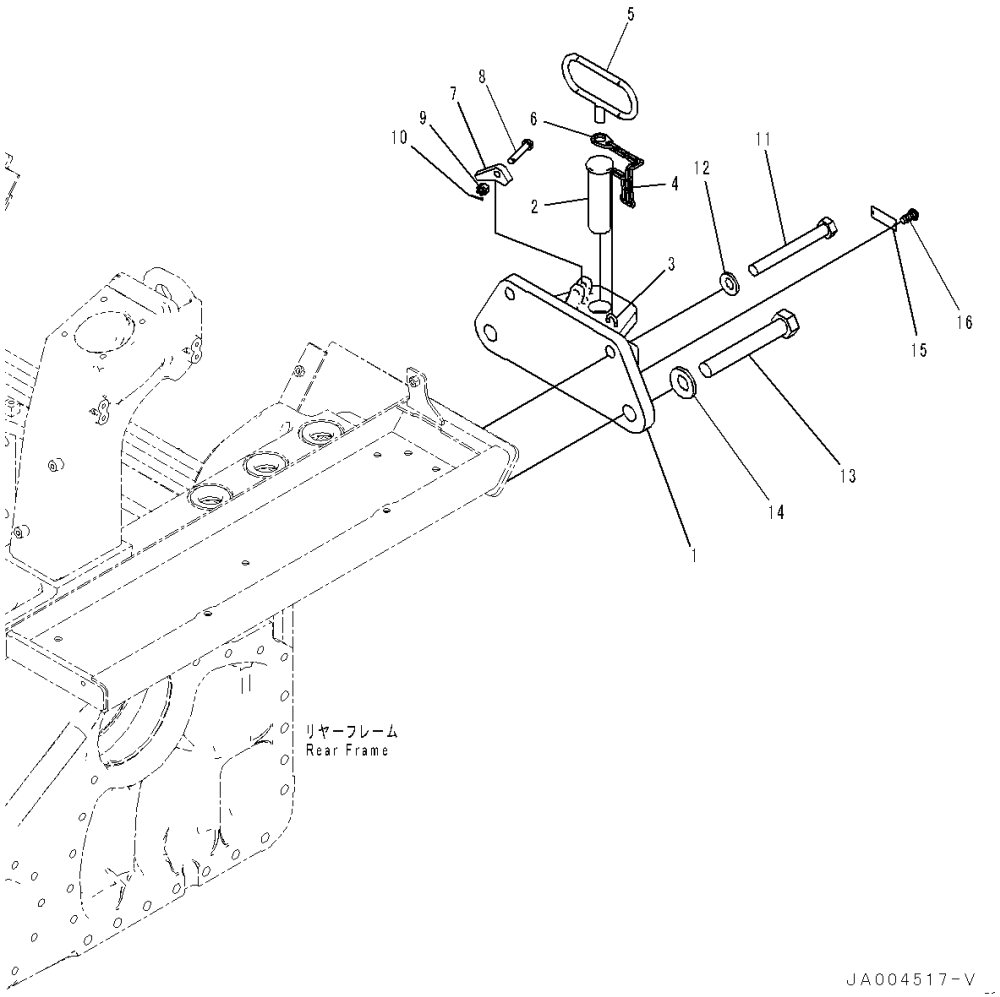

Index	Code	Part Number	Description	Qty	Serial Number
1		14X-69-51201	Bracket	1	80062-
2		130-69-11190	• Pin	1	80062-
3		09245-50060	• Hook	1	80062-
4		09245-04830	• Chain	1	80062-
5		144-69-11210	• Handle	1	80062-
6		144-69-11230	• Plate	1	80062-
7		09249-00016	Latch	1	80062-
8		01052-81265	Bolt	1	80062-
9		01592-31215	Nut, Slotted	1	80062-
10		04050-13025	Pin, Cotter	1	80062-
11		01010-82465	Bolt	2	80062-
12		01643-32460	Washer	2	80062-
13		01010-83380	Bolt	2	80062-
14		01643-33380	Washer	2	80062-
15		09823-00001	Plate, Maximum Drawbar Pull and Vertical Load	1	80062-
16		04418-13060	Screw	2	80062-

FIG. T2810-009001 Drawbar, With Additional Counter Weight, For EU Safety Regulation

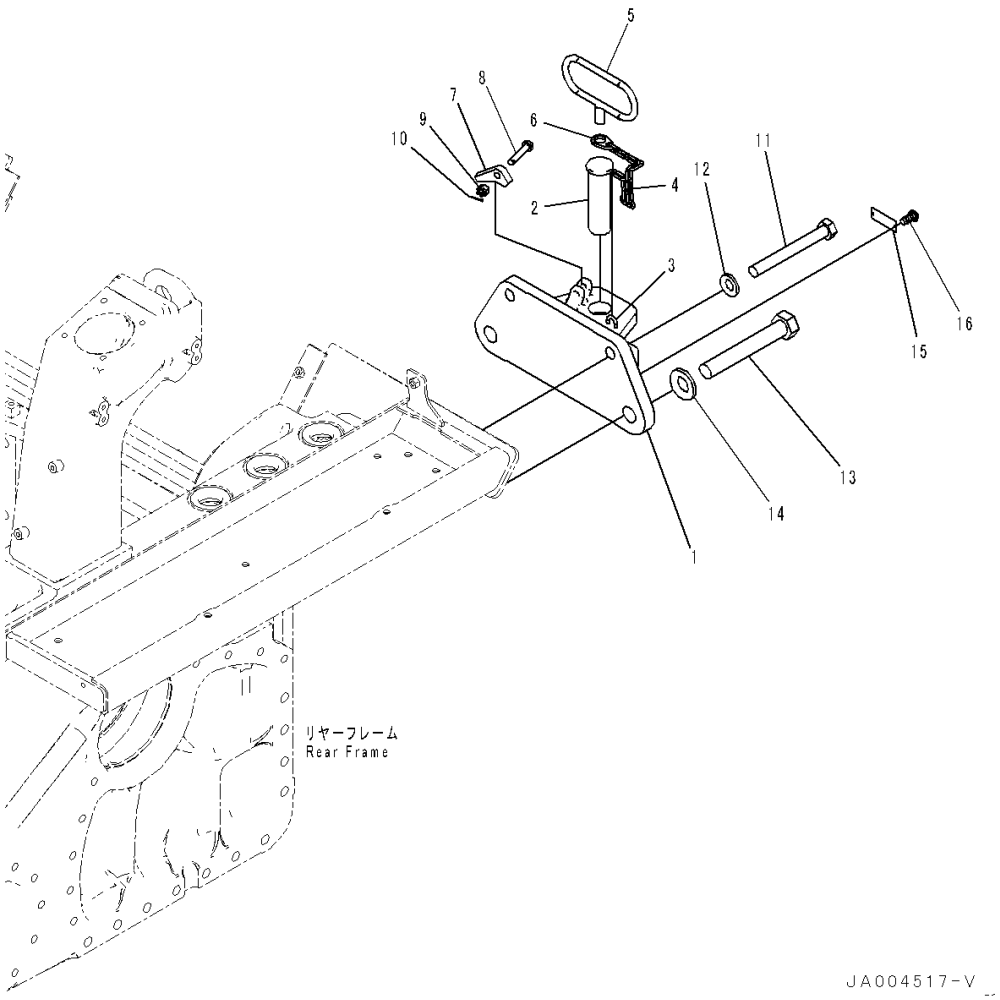

Index	Code	Part Number	Description	Qty	Serial Number
1		14X-69-51201	Bracket	1	80062-
2		130-69-11190	• Pin	1	80062-
3		09245-50060	• Hook	1	80062-
4		09245-04830	• Chain	1	80062-
5		144-69-11210	• Handle	1	80062-
6		144-69-11230	• Plate	1	80062-
7		09249-00016	Latch	1	80062-
8		01052-81265	Bolt	1	80062-
9		01592-31215	Nut, Slotted	1	80062-
10		04050-13025	Pin, Cotter	1	80062-
11		145-Z23-4130	Bolt	2	80062-
12		01643-32460	Washer	2	80062-
13		150-74-11140	Bolt	2	80062-
14		01643-33380	Washer	2	80062-
15		09823-00001	Plate, Maximum Drawbar Pull and Vertical Load	1	80062-
16		04418-13060	Screw	2	80062-

FIG. T2810-010001 Drawbar, Rigid Type, For EU Safety Regulation

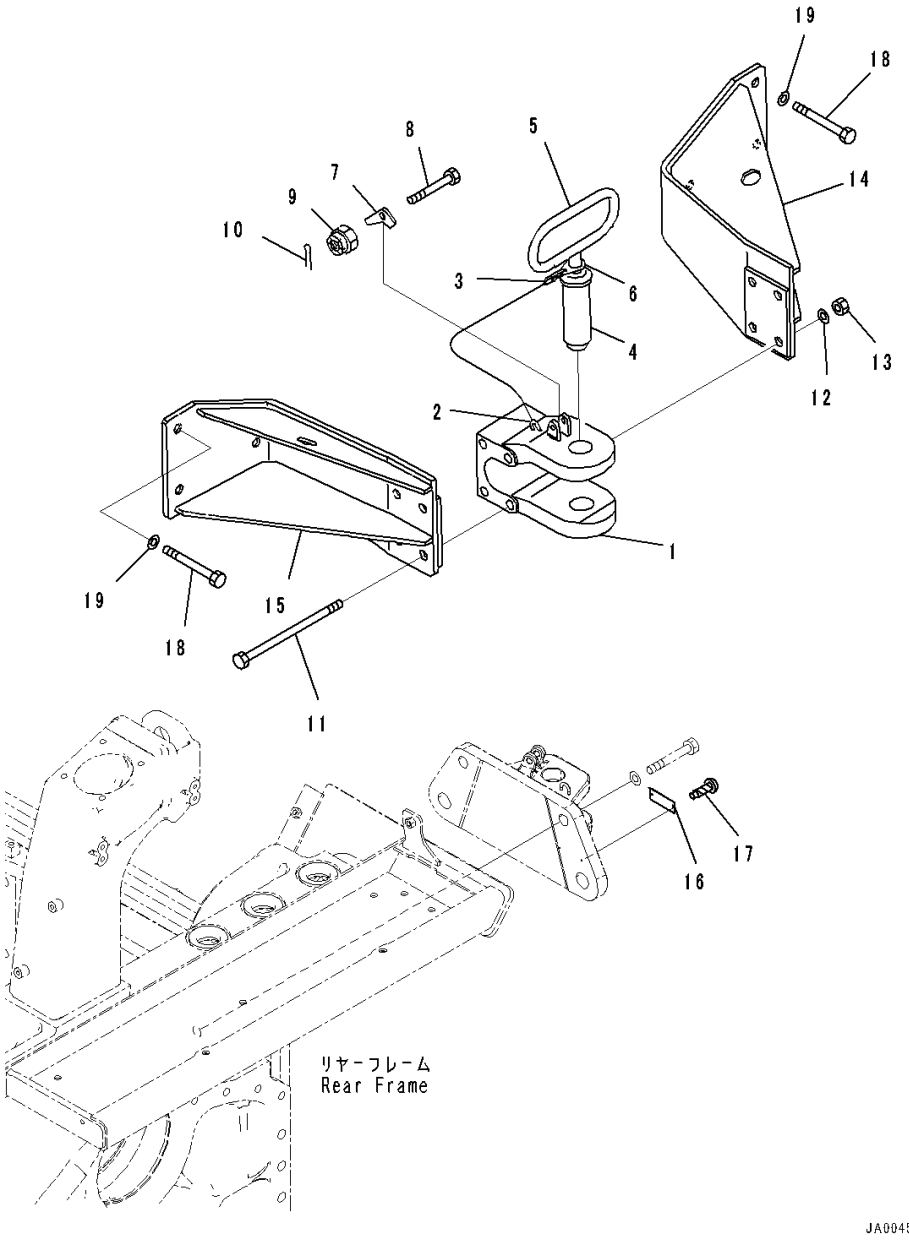

Index	Code	Part Number	Description	Qty	Serial Number
1		134-69-13140	Drawbar Assembly	1	80062-
2		09245-50060	• Hook	1	80062-
3		09245-04830	• Chain	1	80062-
4		09247-45180	• Pin, Drawbar	1	80062-
5		144-69-11210	• Handle	1	80062-
6		144-69-11230	• Plate	1	80062-
7		09249-00016	Latch	1	80062-
8		01052-51260	Bolt	1	80062-
9		01592-11215	Nut, Slotted	1	80062-
10		04050-13022	Pin, Cotter	1	80062-
11		144-69-11161	Bolt	4	80062-
12		01643-32460	Washer	4	80062-
13		01582-12419	Nut	4	80062-
14		14X-69-11110	Bracket	1	80062-
15		14X-69-11120	Bracket	1	80062-
16		09823-00001	Plate, Maximum Drawbar Pull and Vertical Load	1	80062-
17		04418-13060	Screw	2	80062-
18		01010-83375	Bolt	6	80062-
19		01643-33380	Washer	6	80062-

FIG. T2820-002001 Counterweight

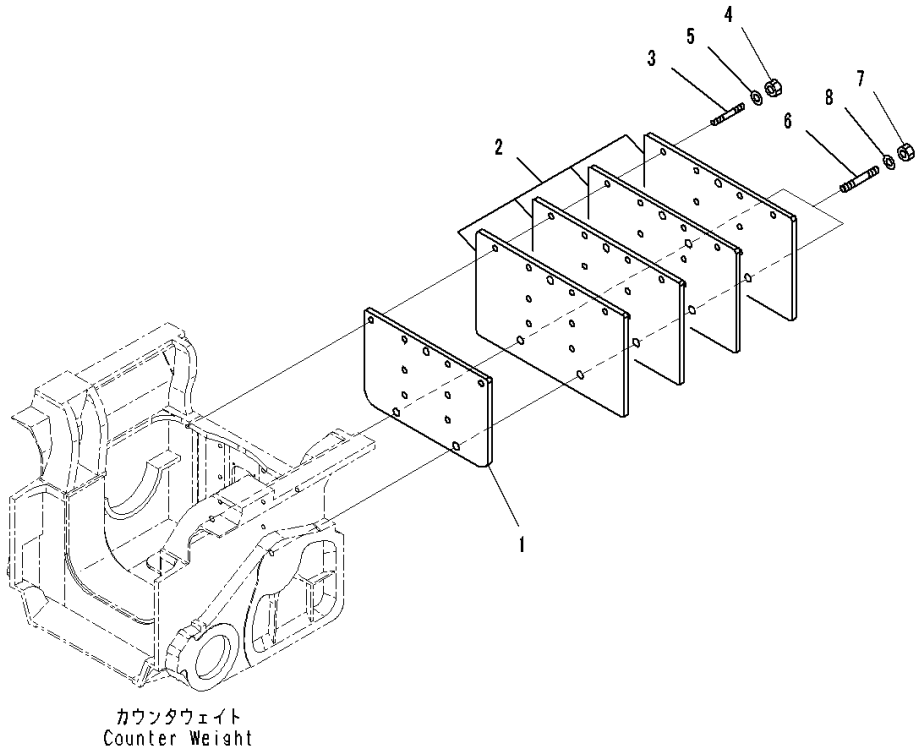

カウンタウェイト
Counter Weight

Index	Code	Part Number	Description	Qty	Serial Number
1		14X-69-51121	Weight	1	80001-
2		14X-69-51131	Weight	4	80001-
3		145-Z23-4120	Stud	8	80001-
4		01580-12419	Nut	8	80001-
5		01643-32460	Washer	8	80001-
6		145-Z23-4140	Stud	2	80001-
7		01580-13326	Nut	2	80001-
8		01643-33380	Washer	2	80001-

FIG. T2820-003001 Counterweight

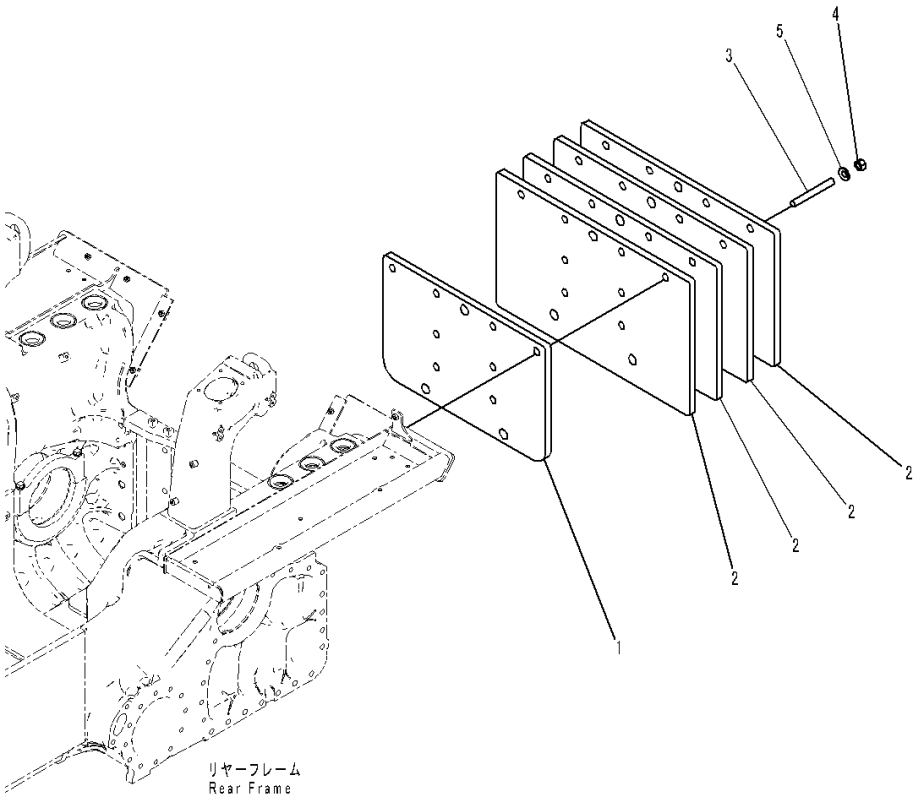

Index	Code	Part Number	Description	Qty	Serial Number
1		14X-69-51121	Weight.....	1	80009-
2		14X-69-51131	Weight.....	4	80009-
3		145-Z23-4120	Stud	6	80009-
4		01580-12419	Nut	6	80009-
5		01643-32460	Washer	6	80009-

MARKS AND PLATES

FIG. U0100-001001 Marks And Plates, English, With Power Tilt Pitch Dozer

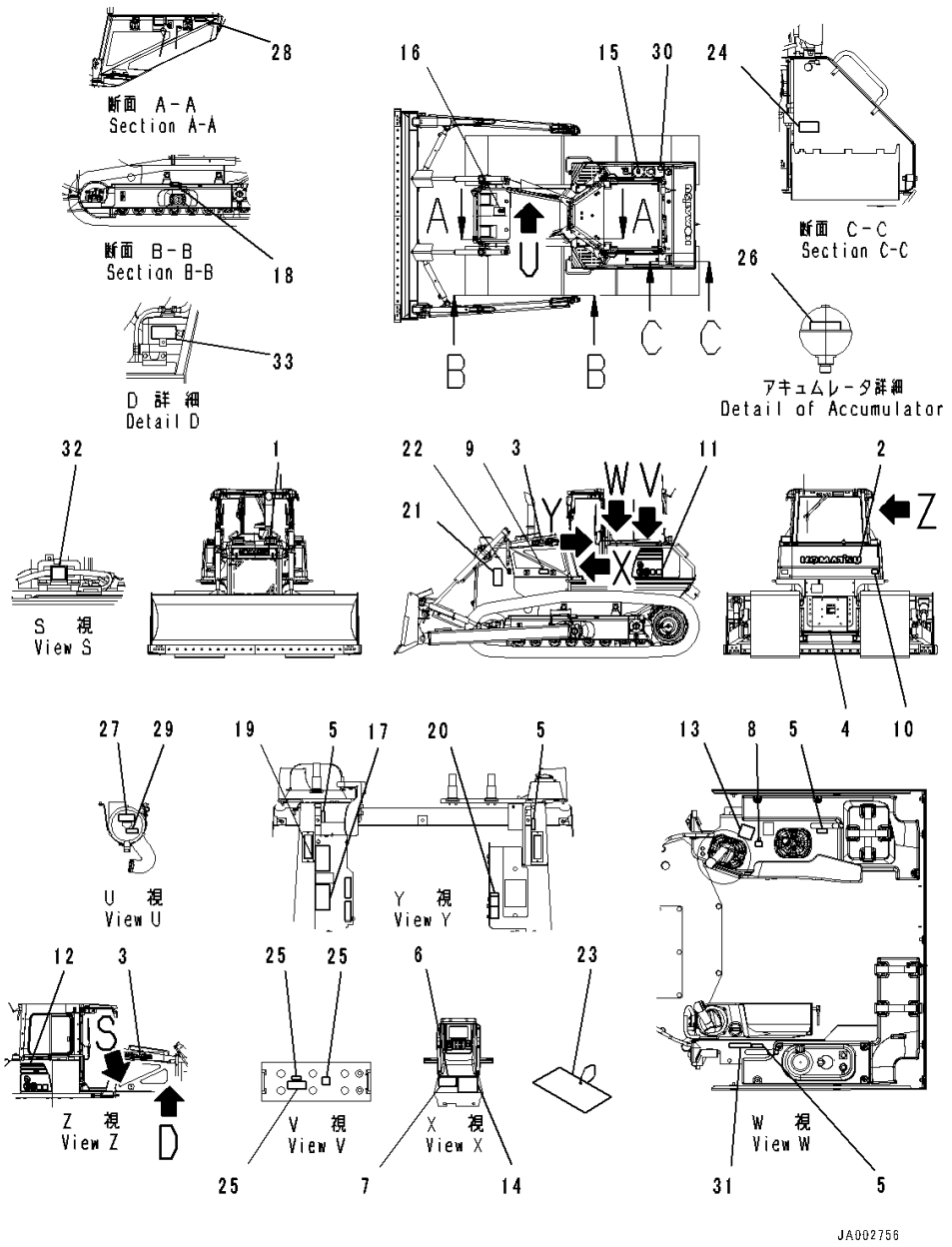

Index	Code	Part Number	Description	Qty	Serial Number
1		09690-F0560	Plate, Mark,Front	1	80001-
2		09690-P1120	Plate, Mark,Rear	1	80001-
3		09690-F0500	Decal, Komatsu Logo,Side	2	80001-
4		09690-M0063	Plate, Mark, Anti-Restamp	1	80001-
5		14X-98-11170	Plate, Operating, Lock	4	80001-
6	C2	09602-10001	Plate, Name (Limited Supply), Aluminum Plate	1	80001-
7		04418-13060	Screw	4	80001-
8		17A-98-11180	Plate, Horn	1	80001-
9		20Y-00-41530	Plate, Symbol, Ecot3	1	80001-
10		14X-98-35181	Plate, Reflector, Rear Reflecter	2	80001-
11		14X-98-51150	Decal, Machine Model,LHS	1	80001-
12		14X-98-51250	Decal, Machine Model,RHS	1	80001-
13		14X-98-11270	Plate, Work Equipment For PATP	1	80001-
14		14X-98-51211	Oil Chart	1	80001-
15		09653-03001	Plate, Warning, High Temperature, Operating Oil Tank	1	80001-
16		09668-03001	Plate, Warning, High Temperature, Radiator	1	80001-
17		09654-33001	Plate, After Operating	1	80001-
18		09657-03003	Plate, Warning, Adjustment Of Track Tension	2	80001-
19		09651-03001	Plate, Warning, Read Manual Before Operating, Before Operating	1	80001-
20		09802-13000	Plate, Safety Confirm Of Rear	1	80001-
21		09812-13000	Plate, Danger, Keep Off, Danger Keep Away	2	80001-
22		09667-03001	Plate, Caution, Rotating Object, While Engine Is Running,Don't Open Cover	2	80001-
23		09963-03001	Tag, Danger, Do Not Operate, Check And Equipment	1	80001-
24		09808-03000	Plate, Warning, Battery Cables, Battery Cables	1	80001-
25		09664-30011	Decal, Danger, Battery, Battery Maker And Its Address	2	80001-
26		09659-53000	Plate, Warning, Accumulator, Accumlator	1	80001-
27		21W-98-41720	Plate, Air Cleaner, Air Cleaner Replance	1	80001-
28		6217-71-6470	Plate, Fuel Filter Replance	1	80001-
29		14X-98-35120	Plate, Pre Filter Cation	1	80001-
30		09652-31221	Plate, Caution, Diesel Fuel	1	80001-
31		09649-03012	Plate, Engine Stop	1	80001-

FIG. U0100-001001 Marks And Plates, English, With Power Tilt Pitch Dozer

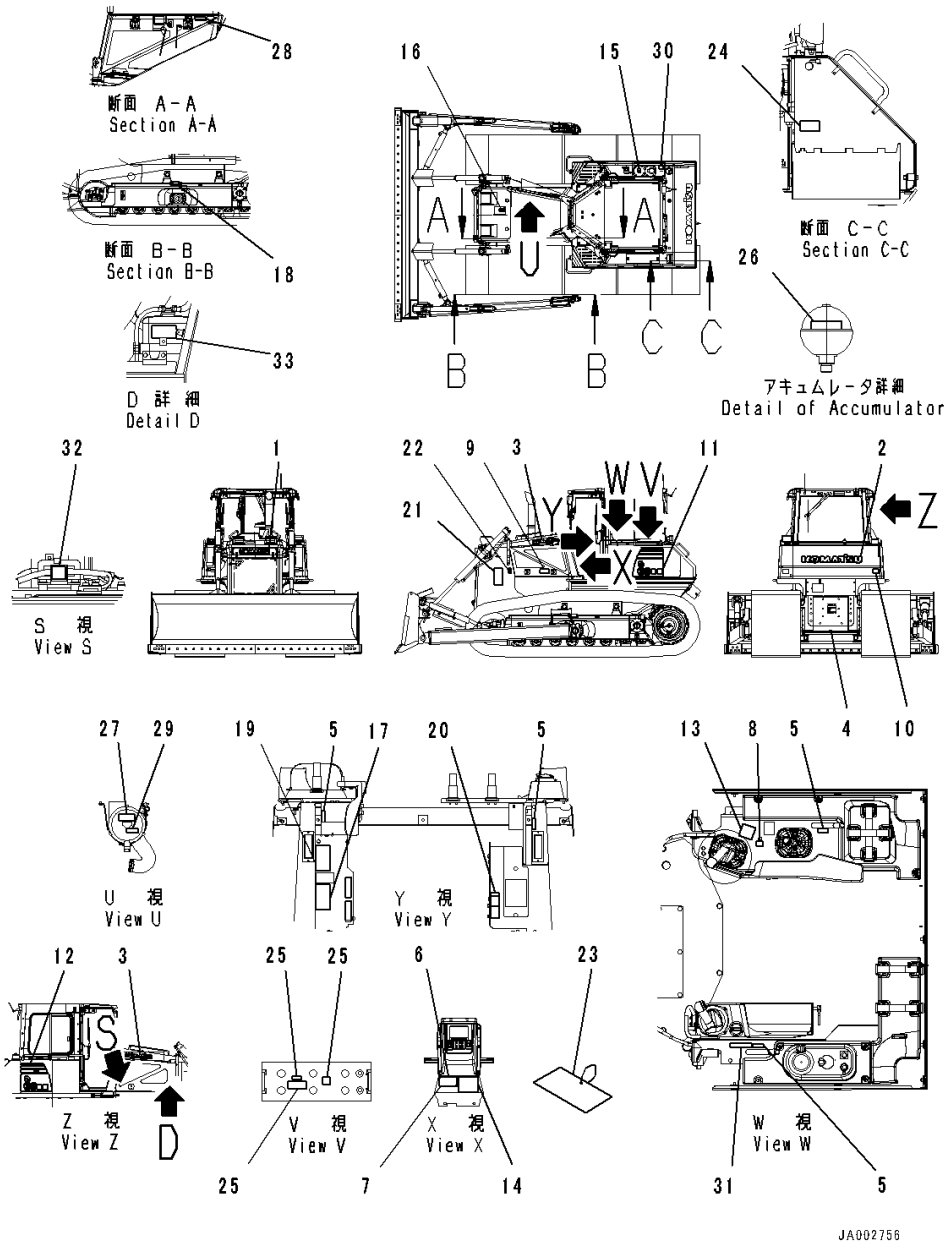

Index	Code	Part Number	Description	Qty	Serial Number
32		09842-A0481	Plate, Caution, No Jump Start, Jumpstart Ban	1	80001-
33		09642-13000	Plate, Specify Coolant, Specift Coolant ..	1	80001-

FIG. U0100-003001 Marks And Plates, English, Text Type, For North America

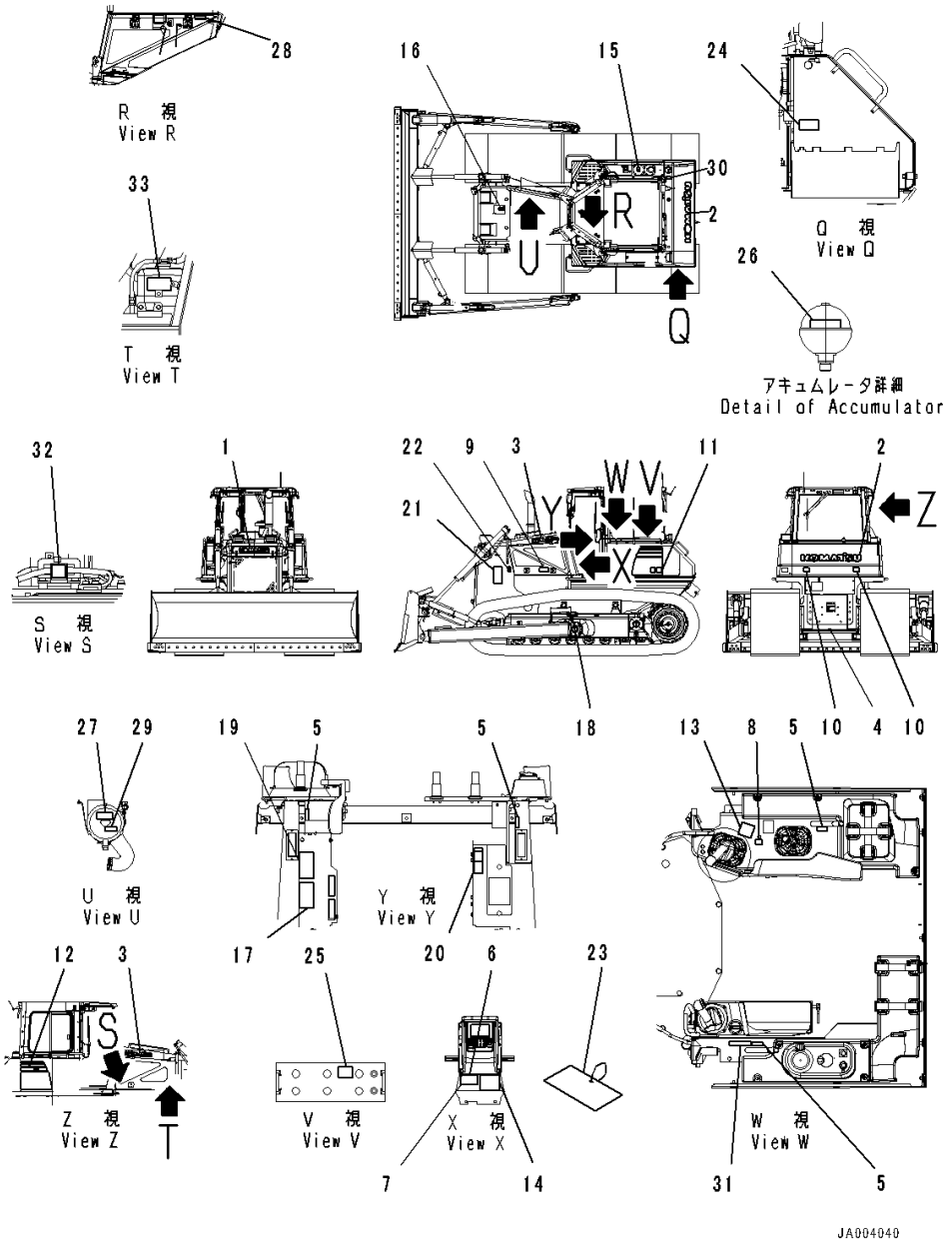

Index	Code	Part Number	Description	Qty	Serial Number
1		09690-F0560	Plate, Mark,Front	1	80001-
2		09690-P1120	Plate, Mark,Rear	1	80001-
3		09690-F0500	Decal, Komatsu Logo,Side	2	80001-
4		09690-M0063	Plate, Mark, Anti-Restamp	1	80001-
5		14X-98-11170	Plate, Operating, Lock	4	80001-
6	C2	09602-10001	Plate, Name (Limited Supply)	1	80001-
7		04418-13060	Screw	4	80001-
8		17A-98-11180	Plate, Horn	1	80001-
9		20Y-00-41530	Plate, Symbol, Ecot3	1	80001-
10		14X-98-35181	Plate, Reflector, Rear Reflecter	2	80001-
11		14X-98-51150	Decal, Machine Model,LHS	1	80001-
12		14X-98-51250	Decal, Machine Model,RHS	1	80001-
13		14X-98-11250	Plate, Work Equipment	1	80001-
14		14X-98-51211	Oil Chart	1	80001-
15		09653-03001	Plate, Warning, High Temperature, Operating Oil Tank	1	80001-
16		09668-03001	Plate, Warning, High Temperature, Radiator	1	80001-
17		09654-33001	Plate	1	80001-
18		09657-03003	Plate, Warning	2	80001-
19		09651-03001	Plate, Warning, Read Manual Before Operating	1	80001-
20		09802-13000	Plate, Safety Confirm Of Rear	1	80001-
21		09812-13000	Plate, Danger, Keep Off, Danger Keep Away	2	80001-
22		09667-03001	Plate, Caution, Rotating Object, While Engine Is Running, Don't Open Cover	2	80001-
23		09963-03001	Tag, Danger, Do Not Operate	1	80001-
24		09808-03000	Plate, Warning, Battery Cables	1	80001-
25		09664-30011	Decal, Danger, Battery	2	80001-
26		09659-53000	Plate, Warning, Accumulator	1	80001-
27		21W-98-41720	Plate, Air Cleaner, Air Cleaner Replace..	1	80001-
28		6217-71-6470	Plate, Fuel Filter Replace	1	80001-
29		14X-98-35120	Plate, Pre Filter Caution	1	80001-
30		09652-31221	Plate, Caution, Diesel Fuel	1	80001-
31		09649-03012	Plate	1	80001-
32		09842-A0481	Plate, Caution, No Jump Start	1	80001-
33		09642-13000	Plate, Specify Coolant	1	80001-

FIG. U0100-004001 Marks And Plates, English, Text Type

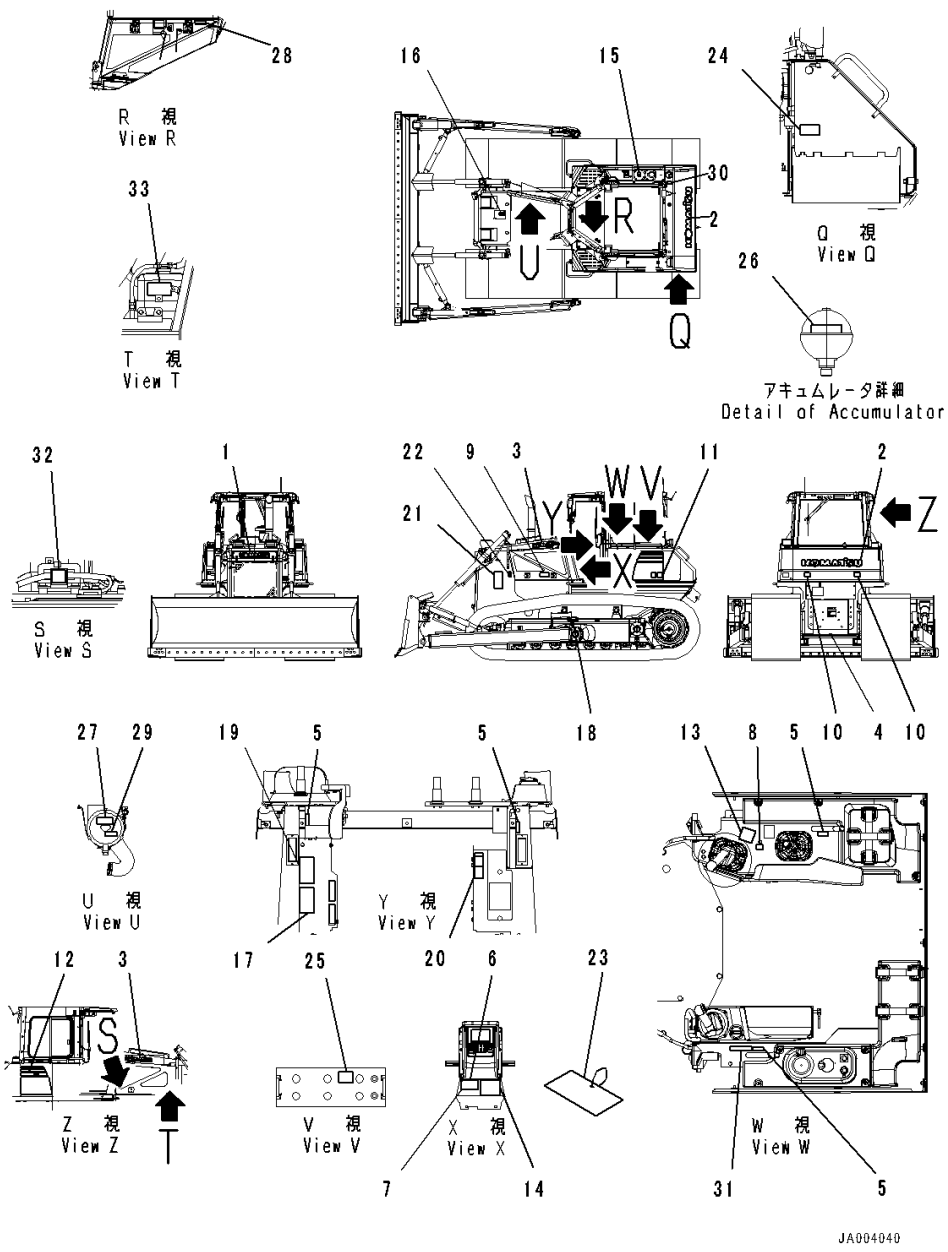

Index	Code	Part Number	Description	Qty	Serial Number
1		09690-F0560	Plate, Mark,Front	1	80001-
2		09690-P1120	Plate, Mark,Rear	1	80001-
3		09690-F0500	Decal, Komatsu Logo,Side	2	80001-
4		09690-M0063	Plate, Mark, Anti-Restamp	1	80001-
5		14X-98-11170	Plate, Operating, Lock	4	80001-
6	C2	09602-10001	Plate, Name (Limited Supply)	1	80001-
7		04418-13060	Screw	4	80001-
8		17A-98-11180	Plate, Horn	1	80001-
9		20Y-00-41530	Plate, Symbol, Ecot3	1	80001-
10		14X-98-35181	Plate, Reflector, Rear Reflecter	2	80001-
11		14X-98-51150	Decal, Machine Model,LHS	1	80001-
12		14X-98-51250	Decal, Machine Model,RHS	1	80001-
13		14X-98-11250	Plate, Work Equipment	1	80001-
14		14X-98-51211	Oil Chart	1	80001-
15		09653-03001	Plate, Warning, High Temperature, Operating Oil Tank	1	80001-
16		09668-03001	Plate, Warning, High Temperature, Radiator	1	80001-
17		09654-33001	Plate	1	80001-
18		09657-03003	Plate, Warning	2	80001-
19		09651-03001	Plate, Warning, Read Manual Before Operating	1	80001-
20		09802-13000	Plate, Safety Confirm Of Rear	1	80001-
21		09812-13000	Plate, Danger, Keep Off, Danger Keep Away	2	80001-
22		09667-03001	Plate, Caution, Rotating Object, While Engine Is Running, Don't Open Cover	2	80001-
23		09963-03001	Tag, Danger, Do Not Operate	1	80001-
24		09808-03000	Plate, Warning, Battery Cables	1	80001-
25		09664-40011	Decal, Danger, Battery	2	80001-
26		09659-53000	Plate, Warning, Accumulator	1	80001-
27		21W-98-41720	Plate, Air Cleaner, Air Cleaner Replace..	1	80001-
28		6217-71-6470	Plate, Fuel Filter Replace	1	80001-
29		14X-98-35120	Plate, Pre Filter Caution	1	80001-
30		09652-31221	Plate, Caution, Diesel Fuel	1	80001-
31		09649-03012	Plate	1	80001-
32		09842-A0481	Plate, Caution, No Jump Start	1	80001-
33		09642-13000	Plate, Specify Coolant	1	80001-

FIG. U0100-005001 Marks And Plates, Spanish, Text Type

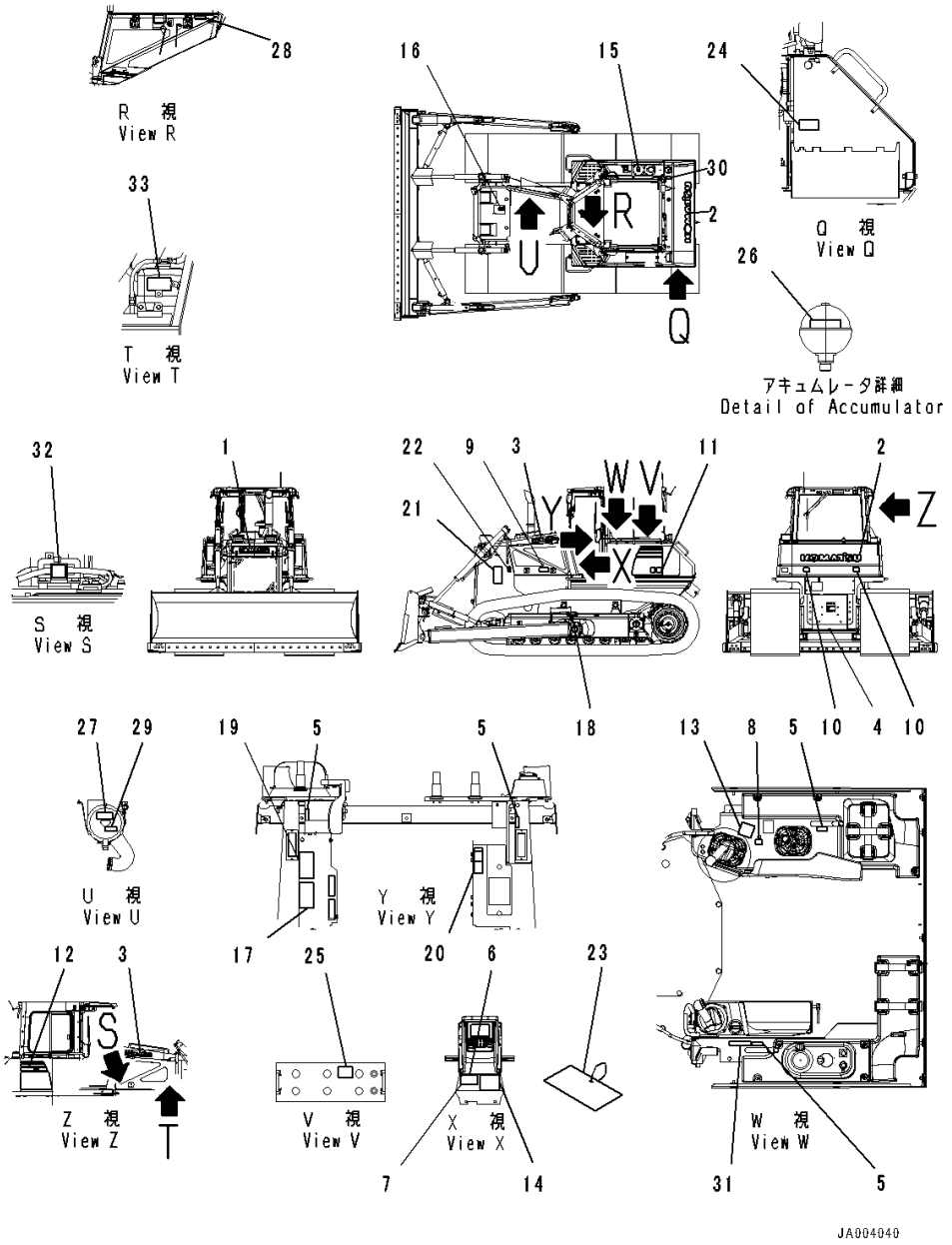

Index	Code	Part Number	Description	Qty	Serial Number
1		09690-F0560	Plate, Mark,Front	1	80001-
2		09690-P1120	Plate, Mark,Rear	1	80001-
3		09690-F0500	Decal, Komatsu Logo,Side	2	80001-
4		09690-M0063	Plate, Mark	1	80001-
5		14X-98-11170	Plate, Operating, Lock	4	80001-
6	C2	09602-10001	Plate, Name (Limited Supply)	1	80001-
7		04418-13060	Screw	4	80001-
8		17A-98-11180	Plate, Horn	1	80001-
9		20Y-00-41530	Plate, Symbol, Ecot3	1	80001-
10		14X-98-35181	Plate, Reflector, Rear Reflecter	2	80001-
11		14X-98-51150	Decal, Machine Model,LHS	1	80001-
12		14X-98-51250	Decal, Machine Model,RHS	1	80001-
13		14X-98-11250	Plate, Work Equipment	1	80001-
14		14X-98-51211	Oil Chart	1	80001-
15		09653-01001	Plate, Warning, High Temperature, Operating Oil Tank	1	80001-
16		09668-01001	Plate, Warning, High Temperature, Radiator	1	80001-
17		09654-31001	Plate, After Operating	1	80001-
18		09657-01004	Plate, Adustment Of Track Tension	2	80001-
19		09651-01001	Plate, Warning, Read Manual Before Operating, Befor Operating	1	80001-
20		09802-11000	Plate, Safety Confirm Of Rear	1	80001-
21		09812-11000	Plate, Danger, Keep Off, Danger Keep Away	2	80001-
22		09667-01001	Plate, Caution, Rotating Object, While Engine Is Running, Don't Open Cover	2	80001-
23		09963-01001	Tag, Danger, Do Not Operate	1	80001-
24		09808-01000	Plate, Warning, Battery Cables	1	80001-
25		09664-40111	Decal, Danger, Battery	2	80001-
26		09659-51000	Plate, Warning, Accumulator	1	80001-
27		21W-98-41940	Plate, Air Cleaner Replace	1	80001-
28		6217-71-6510	Plate, Fuel Filter Repalce	1	80001-
29		14X-98-35130	Plate, Pre Filter Caution	1	80001-
30		09669-0000E	Plate, Caution, Diesel Fuel	1	80001-
31		09649-01012	Plate, Engine Stop	1	80001-
32		09842-A0481	Plate, Caution, No Jump Start	1	80001-
33		09642-11000	Plate, Specify Coolant	1	80001-

FIG. U0100-006001 Marks And Plates, French, Text Type

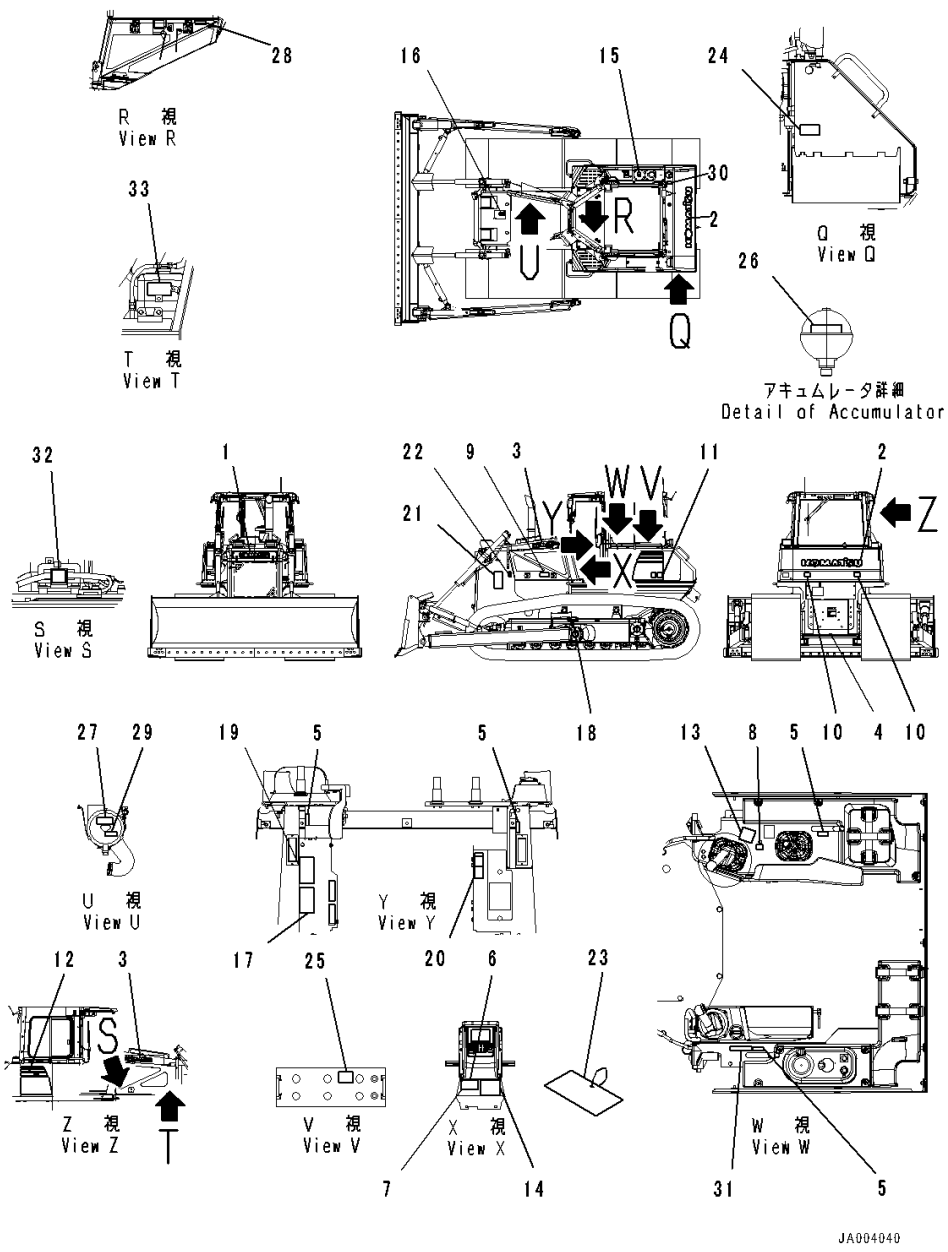

Index	Code	Part Number	Description	Qty	Serial Number
1		09690-F0560	Plate, Mark,Front	1	80001-
2		09690-P1120	Plate, Mark,Rear	1	80001-
3		09690-F0500	Decal, Komatsu Logo,Side	2	80001-
4		09690-M0063	Plate, Mark, Anti-Restamp	1	80001-
5		14X-98-11170	Plate, Operating, Lock	4	80001-
6	C2	09602-10001	Plate, Name (Limited Supply)	1	80001-
7		04418-13060	Screw	4	80001-
8		17A-98-11180	Plate, Horn	1	80001-
9		20Y-00-41530	Plate, Symbol, Ecot3	1	80001-
10		14X-98-35181	Plate, Reflector, Rear Reflecter	2	80001-
11		14X-98-51150	Decal, Machine Model,LHS	1	80001-
12		14X-98-51250	Decal, Machine Model,RHS	1	80001-
13		14X-98-11250	Plate, Work Equipment	1	80001-
14		14X-98-51211	Oil Chart	1	80001-
15		09653-05001	Decal, Warning, High Temperature	1	80001-
16		09668-05001	Decal, Warning, Hot Water	1	80001-
17		09654-35001	Decal, Warning, Before Leaving Seat	1	80001-
18		09657-05003	Decal, Warning, Track Adjustment	2	80001-
19		09651-05001	Plate, Before Operating	1	80001-
20		09802-15000	Plate	1	80001-
21		09812-15000	Decal, Danger, Keep a Safe Distance	2	80001-
22		09667-05001	Plate, Caution, Rotating Object	2	80001-
23		09963-05001	Tag, Danger, Do Not Operate	1	80001-
24		09808-05000	Decal, Warning, Battery Cables	1	80001-
25		09664-20011	Decal, Danger, Battery	2	80001-
26		09659-55000	Decal, Warning, Explosive Hazard	1	80001-
27		14X-98-35320	Plate, Air Cleaner Replace	1	80001-
28		6217-71-6490	Plate, Fuel Filter Replace	1	80001-
29		14X-98-35150	Plate, Pre Filter Caution	1	80001-
30		09652-51221	Decal, Caution, Fuel Tank Drain	1	80001-
31		09649-05012	Plate	1	80001-
32		09842-A0481	Plate, Caution, No Jump Start	1	80001-
33		09642-15000	Plate, Specify Coolant	1	80001-

FIG. U0100-015001 Marks And Plates, English, Text Type, With Power Tilt Pitch Dozer

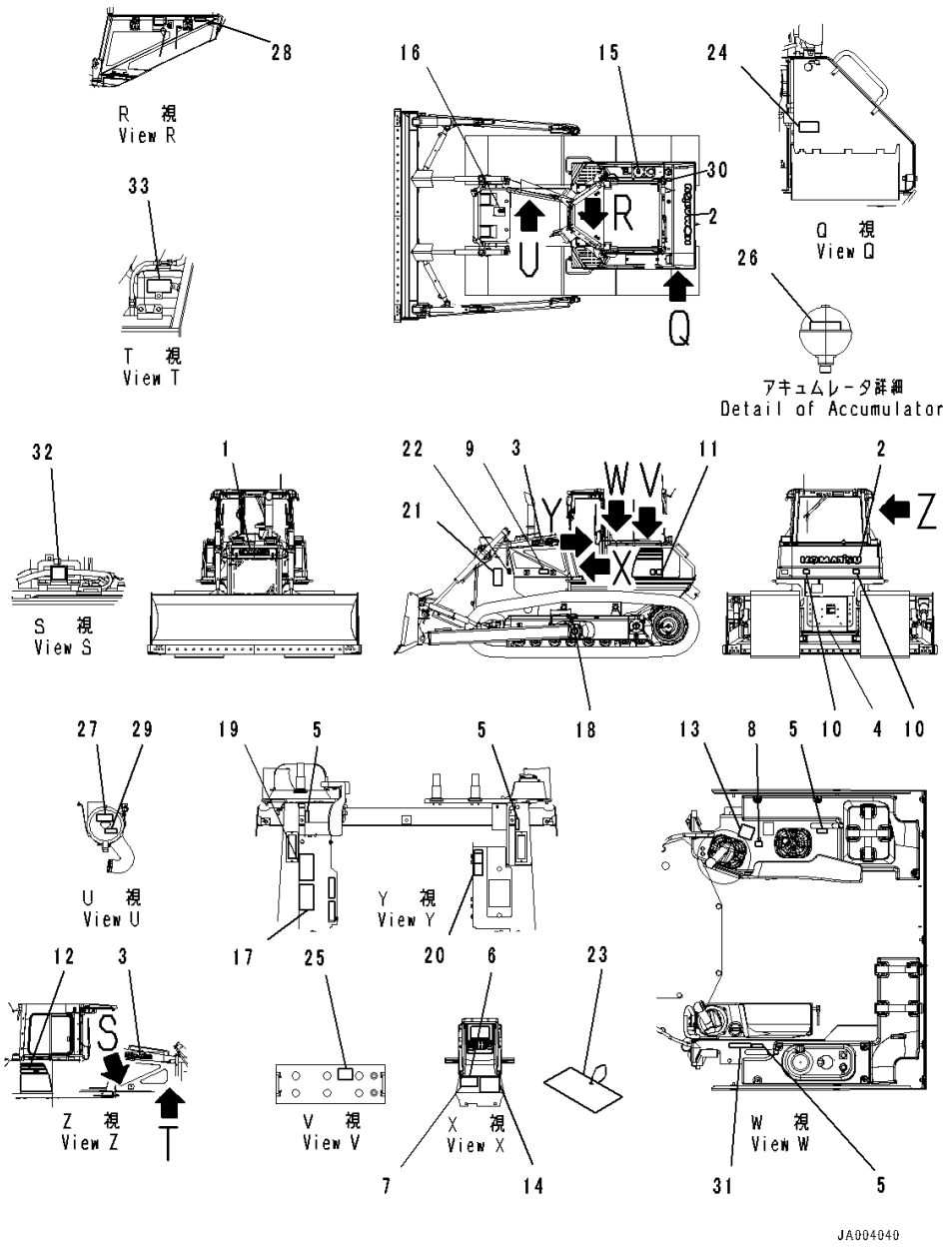

Index	Code	Part Number	Description	Qty	Serial Number
1		09690-F0560	Plate, Mark,Front	1	80001-
2		09690-P1120	Plate, Mark,Rear	1	80001-
3		09690-F0500	Decal, Komatsu Logo,Side	2	80001-
4		09690-M0063	Plate, Mark, Anti-Restamp	1	80001-
5		14X-98-11170	Plate, Operating, Lock	4	80001-
6	C2	09602-10001	Plate, Name (Limited Supply)	1	80001-
7		04418-13060	Screw	4	80001-
8		17A-98-11180	Plate, Horn	1	80001-
9		20Y-00-41530	Plate, Symbol, Ecot3	1	80001-
10		14X-98-35181	Plate, Reflector, Rear Reflecter	2	80001-
11		14X-98-51150	Decal, Machine Model,LHS	1	80001-
12		14X-98-51250	Decal, Machine Model,RHS	1	80001-
13		14X-98-11270	Plate, Work Equipment	1	80001-
14		14X-98-51211	Oil Chart	1	80001-
15		09653-03001	Plate, Warning, High Temperature, Operating Oil Tank	1	80001-
16		09668-03001	Plate, Warning, High Temperature, Radiator	1	80001-
17		09654-33001	Plate	1	80001-
18		09657-03003	Plate, Warning	2	80001-
19		09651-03001	Plate, Warning, Read Manual Before Operating	1	80001-
20		09802-13000	Plate, Safety Confirm Of Rear	1	80001-
21		09812-13000	Plate, Danger, Keep Off, Dnager Keep Away	2	80001-
22		09667-03001	Plate, Caution, Rotating Object, While Engine Is Running, Don't Open Cover	2	80001-
23		09963-03001	Tag, Danger, Do Not Operate	1	80001-
24		09808-03000	Plate, Warning, Battery Cables	1	80001-
25		09664-40011	Decal, Danger, Battery	2	80001-
26		09659-53000	Plate, Warning, Accumulator	1	80001-
27		21W-98-41720	Plate, Air Cleaner, Air Cleaner Replace..	1	80001-
28		6217-71-6470	Plate, Fuel Filter Replace	1	80001-
29		14X-98-35120	Plate, Pre Filter Caution	1	80001-
30		09652-31221	Plate, Caution, Diesel Fuel	1	80001-
31		09649-03012	Plate	1	80001-
32		09842-A0481	Plate, Caution, No Jump Start	1	80001-
33		09642-13000	Plate, Specify Coolant	1	80001-

FIG. U0100-016001 Marks And Plates, Spanish, Text Type, With Power Tilt Pitch Dozer

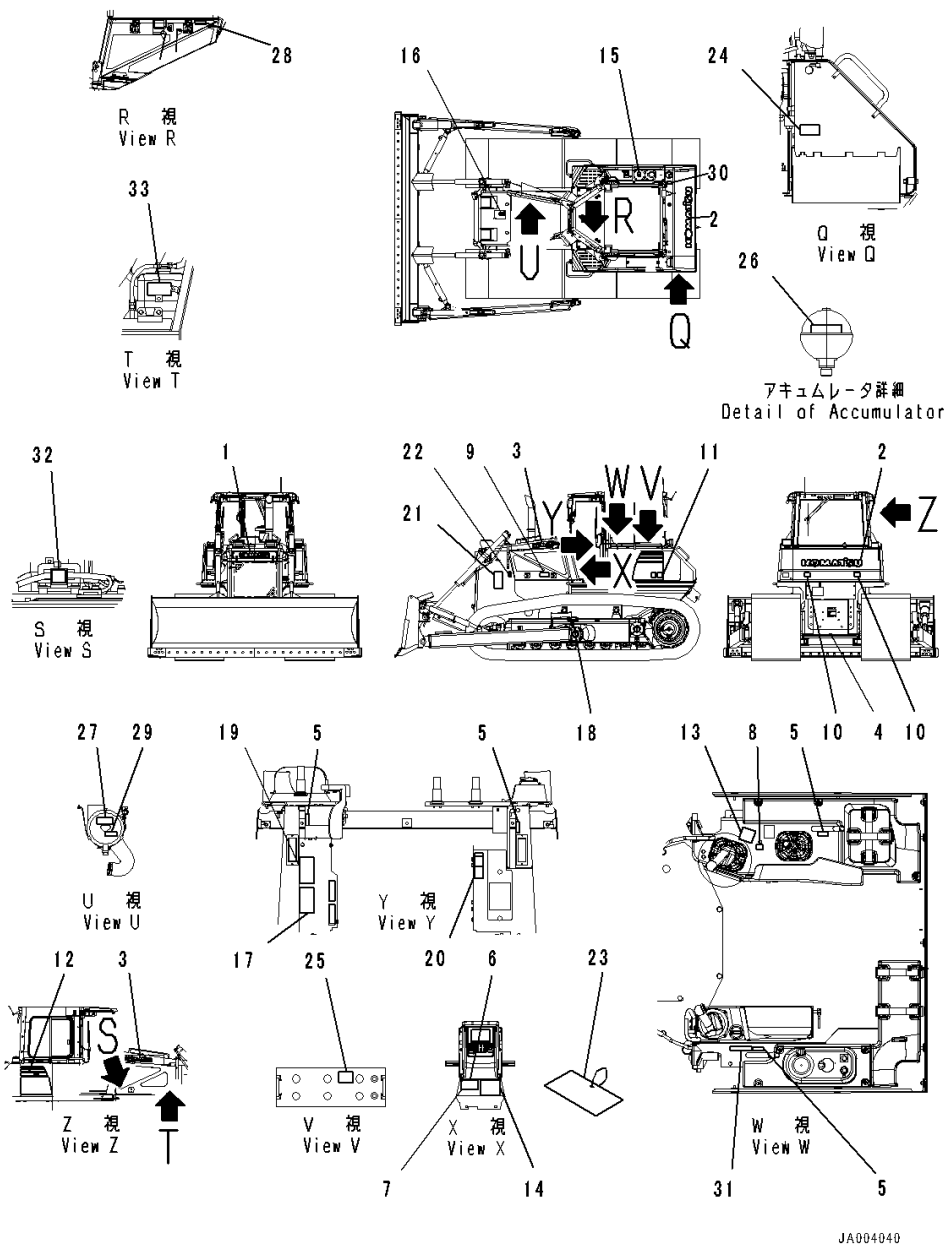

Index	Code	Part Number	Description	Qty	Serial Number
1		09690-F0560	Plate, Mark,Front	1	80001-
2		09690-P1120	Plate, Mark,Rear	1	80001-
3		09690-F0500	Decal, Komatsu Logo,Side	2	80001-
4		09690-M0063	Plate, Mark, Anti-Restamp	1	80001-
5		14X-98-11170	Plate, Operating, Lock	4	80001-
6	C2	09602-10001	Plate, Name (Limited Supply)	1	80001-
7		04418-13060	Screw	4	80001-
8		17A-98-11180	Plate, Horn	1	80001-
9		20Y-00-41530	Plate, Symbol, Ecot3	1	80001-
10		14X-98-35181	Plate, Reflector, Rear Reflecter	2	80001-
11		14X-98-51150	Decal, Machine Model,LHS	1	80001-
12		14X-98-51250	Decal, Machine Model,RHS	1	80001-
13		14X-98-11270	Plate, Work Equipment	1	80001-
14		14X-98-51211	Oil Chart	1	80001-
15		09653-01001	Plate, Warning, High Temperature, Operating Oil Tank	1	80001-
16		09668-01001	Plate, Warning, High Temperature, Radiator	1	80001-
17		09654-31001	Plate, After Operating	1	80001-
18		09657-01004	Plate, Adjustment Of Track Tension	2	80001-
19		09651-01001	Plate, Warning, Read Manual Before Operating, Before Operating	1	80001-
20		09802-11000	Plate, Safety Confirm Of Raer	1	80001-
21		09812-11000	Plate, Danger, Keep Off, Danger Keep Away	2	80001-
22		09667-01001	Plate, Caution, Rotating Object, While Engine Is Running, Don't Open Cover	2	80001-
23		09963-01001	Tag, Danger, Do Not Operate	1	80001-
24		09808-01000	Plate, Warning, Battery Cables	1	80001-
25		09664-40111	Decal, Danger, Battery	2	80001-
26		09659-51000	Plate, Warning, Accumulator	1	80001-
27		21W-98-41940	Plate, Air Cleaner Repalce	1	80001-
28		6217-71-6510	Plate, Fuel Filter Replace	1	80001-
29		14X-98-35130	Plate, Pre Filter Caution	1	80001-
30		09669-0000E	Plate, Caution, Diesel Fuel	1	80001-
31		09649-01012	Plate, Engine Stop	1	80001-
32		09842-A0481	Plate, Caution, No Jump Start	1	80001-
33		09642-11000	Plate, Specify Coolant	1	80001-

FIG. U0100-017001 Marks And Plates, French, Text Type, With Power Tilt Pitch Dozer

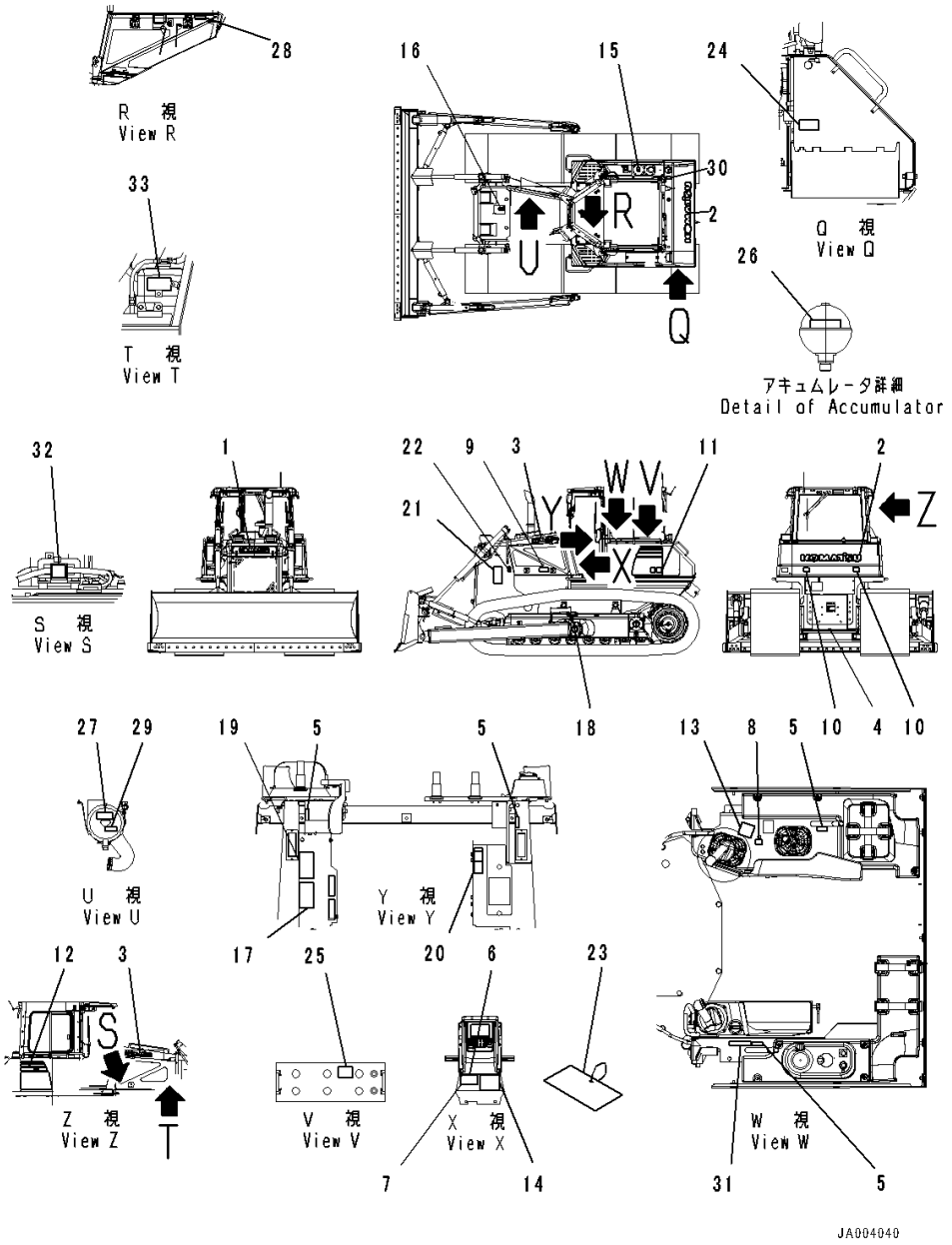

Index	Code	Part Number	Description	Qty	Serial Number
1		09690-F0560	Plate, Mark,Front	1	80001-
2		09690-P1120	Plate, Mark,Rear	1	80001-
3		09690-F0500	Decal, Komatsu Logo,Side	2	80001-
4		09690-M0063	Plate, Mark, Anti-Restamp	1	80001-
5		14X-98-11170	Plate, Operating, Lock	4	80001-
6	C2	09602-10001	Plate, Name (Limited Supply)	1	80001-
7		04418-13060	Screw	4	80001-
8		17A-98-11180	Plate, Horn	1	80001-
9		20Y-00-41530	Plate, Symbol, Ecot3	1	80001-
10		14X-98-35181	Plate, Reflector, Rear Reflecter	2	80001-
11		14X-98-51150	Decal, Machine Model,LHS	1	80001-
12		14X-98-51250	Decal, Machine Model,RHS	1	80001-
13		14X-98-11270	Plate, Work Equipment	1	80001-
14		14X-98-51211	Oil Chart	1	80001-
15		09653-05001	Decal, Warning, High Temperature	1	80001-
16		09668-05001	Decal, Warning, Hot Water	1	80001-
17		09654-35001	Decal, Warning, Before Leaving Seat	1	80001-
18		09657-05003	Decal, Warning, Track Adjustment	2	80001-
19		09651-05001	Plate, Before Operating	1	80001-
20		09802-15000	Plate	1	80001-
21		09812-15000	Decal, Danger, Keep a Safe Distance	2	80001-
22		09667-05001	Plate, Caution, Rotating Object	2	80001-
23		09963-05001	Tag, Danger, Do Not Operate	1	80001-
24		09808-05000	Decal, Warning, Battery Cables	1	80001-
25		09664-20011	Decal, Danger, Battery	2	80001-
26		09659-55000	Decal, Warning, Explosive Hazard	1	80001-
27		14X-98-35320	Plate, Air Cleaner Replace	1	80001-
28		6217-71-6490	Plate, Fuel Filter Replace	1	80001-
29		14X-98-35150	Plate, Pre Filter Caution	1	80001-
30		09652-51221	Decal, Caution, Fuel Tank Drain	1	80001-
31		09649-05012	Plate	1	80001-
32		09842-A0481	Plate, Caution, No Jump Start	1	80001-
33		09642-15000	Plate, Specify Coolant	1	80001-

FIG. U0100-026001 Marks And Plates, English, For North America, Text Type, With Power Angle Power Tilt Dozer

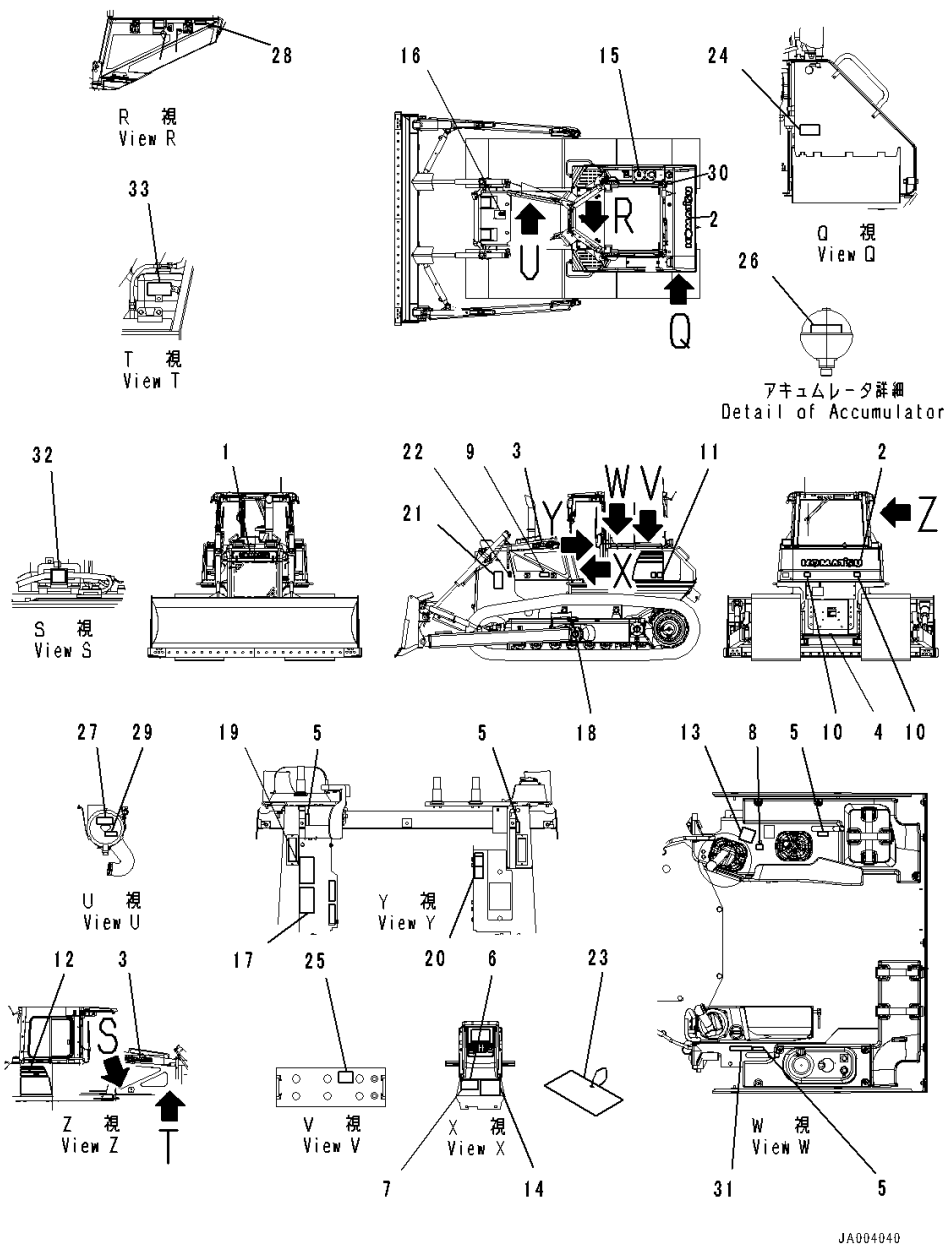

Index	Code	Part Number	Description	Qty	Serial Number
1		09690-F0560	Plate, Mark,Front	1	80001-
2		09690-P1120	Plate, Mark,Rear	1	80001-
3		09690-F0500	Decal, Komatsu Logo,Side	2	80001-
4		09690-M0063	Plate, Mark, Anti-Restamp	1	80001-
5		14X-98-11170	Plate, Operating, Lock	4	80001-
6	C2	09602-10001	Plate, Name (Limited Supply)	1	80001-
7		04418-13060	Screw	4	80001-
8		17A-98-11180	Plate, Horn	1	80001-
9		20Y-00-41530	Plate, Symbol, Ecot3	1	80001-
10		14X-98-35181	Plate, Reflector, Rear Reflecter	2	80001-
11		14X-98-51150	Decal, Machine Model,LHS	1	80001-
12		14X-98-51250	Decal, Machine Model,RHS	1	80001-
13		124-98-51140	Plate, Work Equipment	1	80001-
14		14X-98-51221	Oil Chart	1	80001-
15		09653-03001	Plate, Warning, High Temperature, Operating Oil Tank	1	80001-
16		09668-03001	Plate, Warning, High Temperature, Radiator	1	80001-
17		09654-33001	Plate	1	80001-
18		09657-03003	Plate, Warning	2	80001-
19		09651-03001	Plate, Warning, Read Manual Before Operating	1	80001-
20		09802-13000	Plate, Safety Confirm Of Rear	1	80001-
21		09812-13000	Plate, Danger, Keep Off, Danger Keep Away	2	80001-
22		09667-03001	Plate, Caution, Rotating Object, While Engine Is Running, Don't Open Cover	2	80001-
23		09963-03001	Tag, Danger, Do Not Operate	1	80001-
24		09808-03000	Plate, Warning, Battery Cables	1	80001-
25		09664-30011	Decal, Danger, Battery	2	80001-
26		09659-53000	Plate, Warning, Accumulator	1	80001-
27		21W-98-41720	Plate, Air Cleaner, Air Cleaner Replace..	1	80001-
28		6217-71-6470	Plate, Fuel Filter Replace	1	80001-
29		14X-98-35120	Plate, Pre Filter Caution	1	80001-
30		09652-31221	Plate, Caution, Diesel Fuel	1	80001-
31		09649-03012	Plate	1	80001-
32		09842-A0481	Plate, Caution, No Jump Start	1	80001-
33		09642-13000	Plate, Specify Coolant	1	80001-

FIG. U0100-027001 Marks And Plates, English, Text Type, With Power Angle Power Tilt Dozer

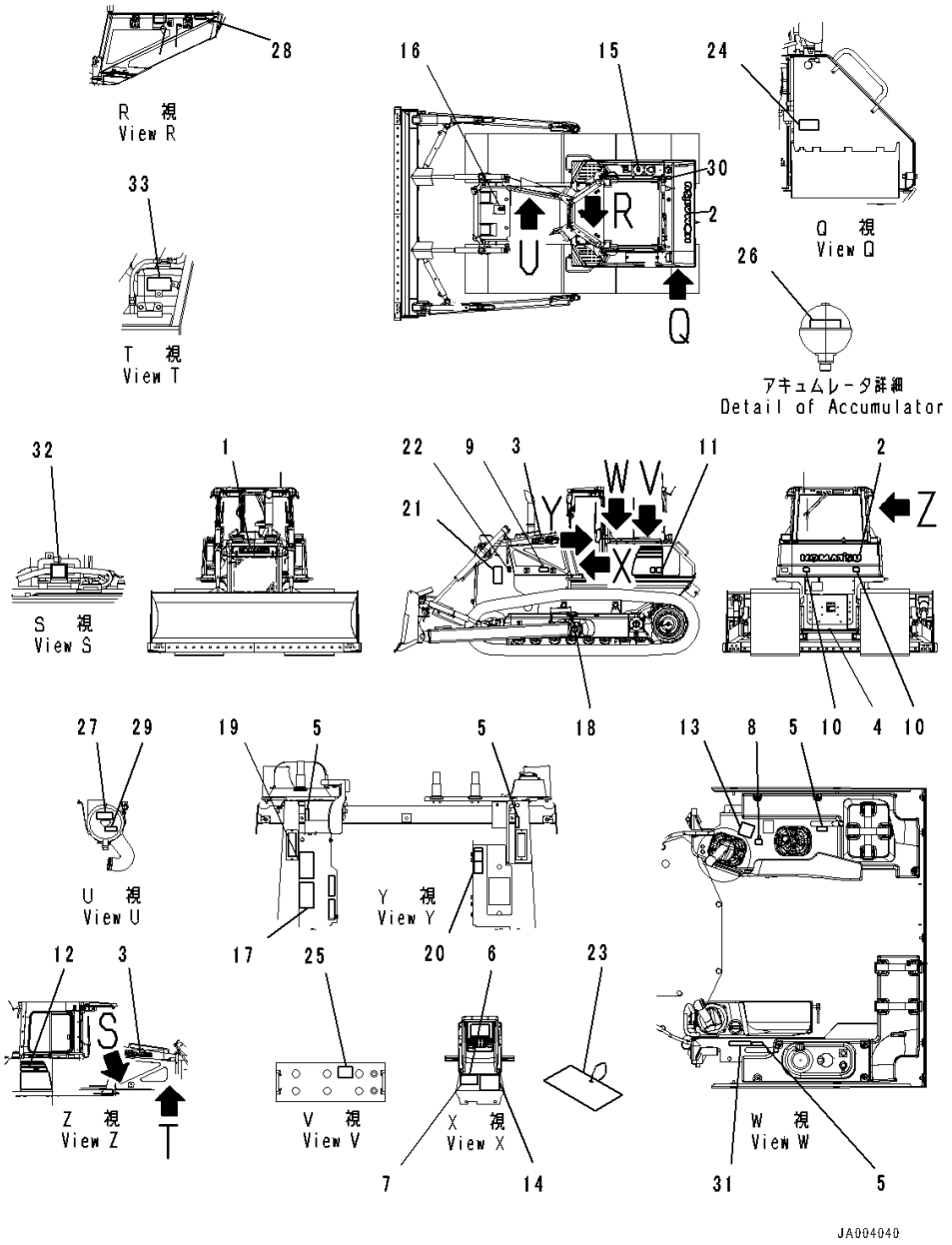

Index	Code	Part Number	Description	Qty	Serial Number
1		09690-F0560	Plate, Mark,Front	1	80001-
2		09690-P1120	Plate, Mark,Rear	1	80001-
3		09690-F0500	Decal, Komatsu Logo,Side	2	80001-
4		09690-M0063	Plate, Mark, Anti-Restamp	1	80001-
5		14X-98-11170	Plate, Operating, Lock	4	80001-
6	C2	09602-10001	Plate, Name (Limited Supply)	1	80001-
7		04418-13060	Screw	4	80001-
8		17A-98-11180	Plate, Horn	1	80001-
9		20Y-00-41530	Plate, Symbol, Ecot3	1	80001-
10		14X-98-35181	Plate, Reflector, Rear Reflecter	2	80001-
11		14X-98-51150	Decal, Machine Model,LHS	1	80001-
12		14X-98-51250	Decal, Machine Model,RHS	1	80001-
13		124-98-51140	Plate, Work Equipment	1	80001-
14		14X-98-51221	Oil Chart	1	80001-
15		09653-03001	Plate, Warning, High Temperature, Operating Oil Tank	1	80001-
16		09668-03001	Plate, Warning, High Temperature, Radiator	1	80001-
17		09654-33001	Plate	1	80001-
18		09657-03003	Plate, Warning	2	80001-
19		09651-03001	Plate, Warning, Read Manual Before Operating	1	80001-
20		09802-13000	Plate, Safety Confirm Of Rear	1	80001-
21		09812-13000	Plate, Danger, Keep Off	2	80001-
22		09667-03001	Plate, Caution, Rotating Object, While Engine Is Running, Don't Open Cover	2	80001-
23		09963-03001	Tag, Danger, Do Not Operate	1	80001-
24		09808-03000	Plate, Warning, Battery Cables	1	80001-
25		09664-40011	Decal, Danger, Battery	2	80001-
26		09659-53000	Plate, Warning, Accumulator	1	80001-
27		21W-98-41720	Plate, Air Cleaner, Air Cleaner Replace	1	80001-
28		6217-71-6470	Plate, Fuel Filter Replace	1	80001-
29		14X-98-35120	Plate, Pre Filter Caution	1	80001-
30		09652-31221	Plate, Caution, Diesel Fuel	1	80001-
31		09649-03012	Plate	1	80001-
32		09842-A0481	Plate, Caution, No Jump Start	1	80001-
33		09642-13000	Plate, Specify Coolant	1	80001-

FIG. U0100-028001 Marks And Plates, Spanish, Text Type, With Power Angle Power Tilt Dozer

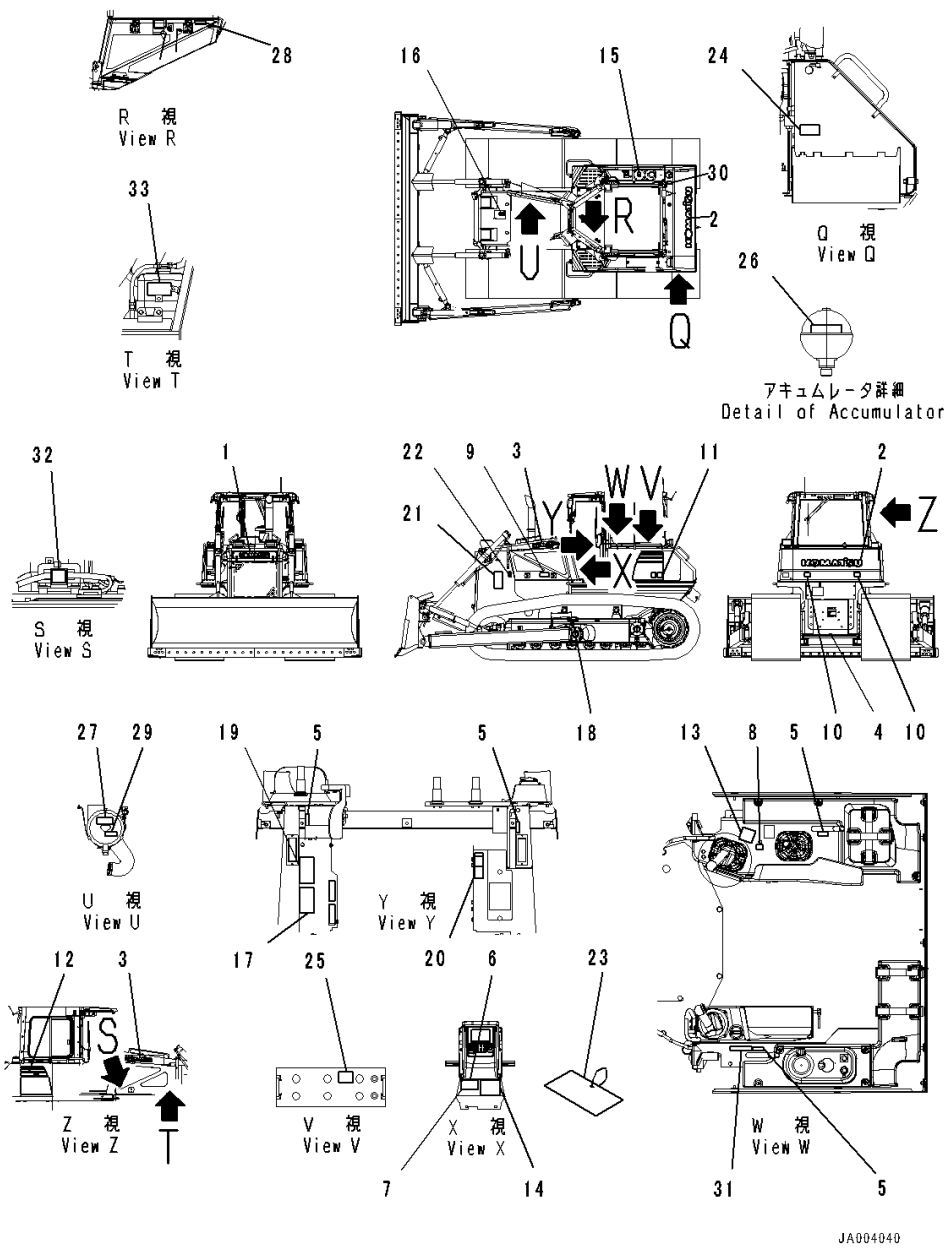

Index	Code	Part Number	Description	Qty	Serial Number
1		09690-F0560	Plate, Mark,Front	1	80001-
2		09690-P1120	Plate, Mark,Rear	1	80001-
3		09690-F0500	Decal, Komatsu Logo,Side	2	80001-
4		09690-M0063	Plate, Mark, Anti-Restamp	1	80001-
5		14X-98-11170	Plate, Operating, Lock	4	80001-
6	C2	09602-10001	Plate, Name (Limited Supply)	1	80001-
7		04418-13060	Screw	4	80001-
8		17A-98-11180	Plate, Horn	1	80001-
9		20Y-00-41530	Plate, Symbol, Ecot3	1	80001-
10		14X-98-35181	Plate, Reflector, Rear Reflecter	2	80001-
11		14X-98-51150	Decal, Machine Model,LHS	1	80001-
12		14X-98-51250	Decal, Machine Model,RHS	1	80001-
13		124-98-51140	Plate, Work Equipment	1	80001-
14		14X-98-51221	Oil Chart	1	80001-
15		09653-01001	Plate, Warning, High Temperature, Operating Oil Tank	1	80001-
16		09668-01001	Plate, Warning, High Temperature, Radiator	1	80001-
17		09654-31001	Plate, After Operating	1	80001-
18		09657-01004	Plate, Adustment Of Track Tension	2	80001-
19		09651-01001	Plate, Warning, Read Manual Before Operating, Before Operating	1	80001-
20		09802-11000	Plate, Safety Confirm Of Rear	1	80001-
21		09812-11000	Plate, Danger, Keep Off, Danger Keep Away	2	80001-
22		09667-01001	Plate, Caution, Rotating Object, While Engine Is Running, Don't Open Cover	2	80001-
23		09963-01001	Tag, Danger, Do Not Operate	1	80001-
24		09808-01000	Plate, Warning, Battery Cables	1	80001-
25		09664-40111	Decal, Danger, Battery	2	80001-
26		09659-51000	Plate, Warning, Accumulator	1	80001-
27		21W-98-41940	Plate, Air Cleaner Replace	1	80001-
28		6217-71-6510	Plate, Fuel Filter Replace	1	80001-
29		14X-98-35130	Plate, Pre Filter Caution	1	80001-
30		09669-0000E	Plate, Caution, Diesel Fuel	1	80001-
31		09649-01012	Plate, Engine Stop	1	80001-
32		09842-A0481	Plate, Caution, No Jump Start	1	80001-
33		09642-11000	Plate, Specify Coolant	1	80001-

FIG. U0100-029001 Marks And Plates, French, Text Type, With Power Angle Power Tilt Dozer

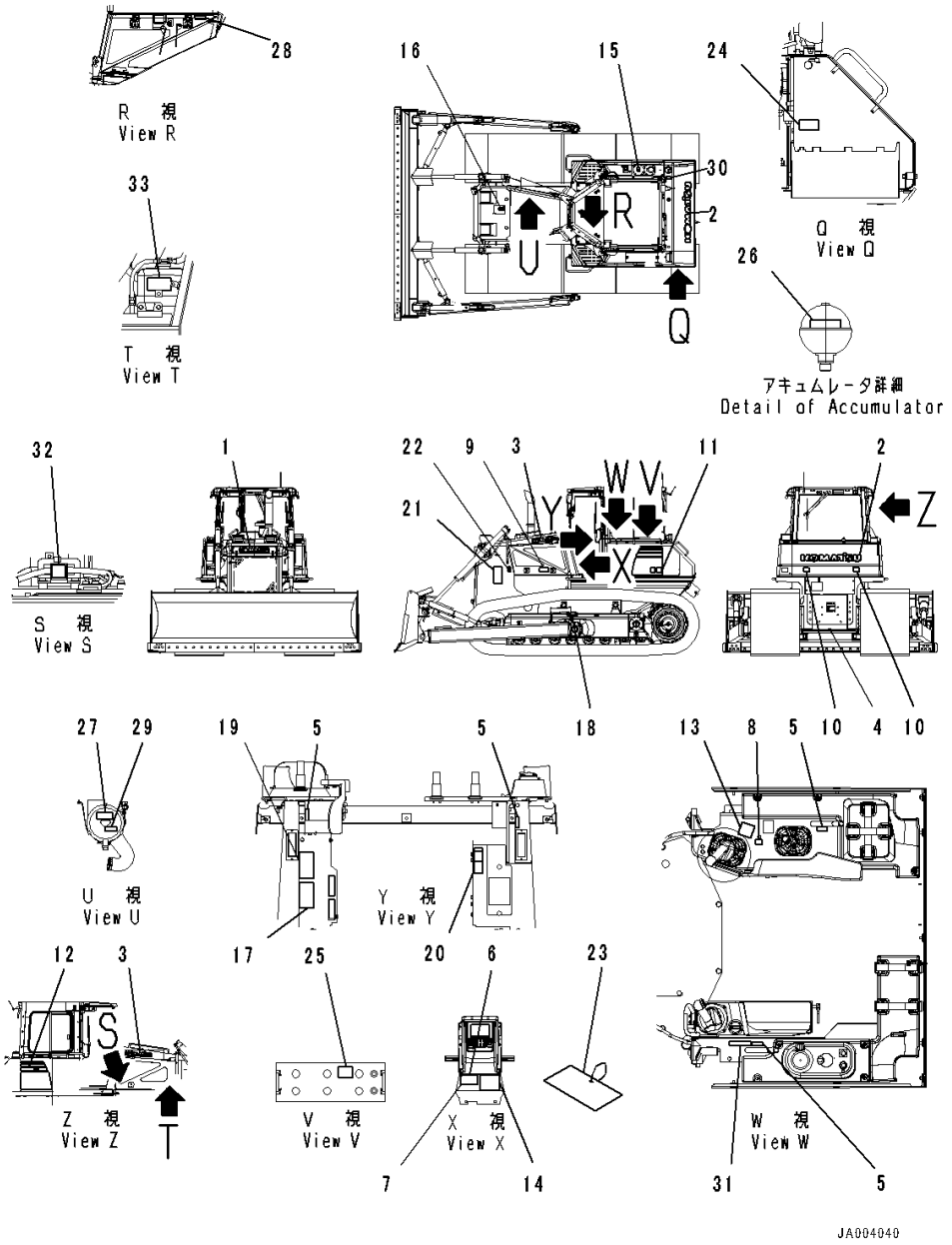

Index	Code	Part Number	Description	Qty	Serial Number
1		09690-F0560	Plate, Mark,Front	1	80001-
2		09690-P1120	Plate, Mark,Rear	1	80001-
3		09690-F0500	Decal, Komatsu Logo,Side	2	80001-
4		09690-M0063	Plate, Mark, Anti-Restamp	1	80001-
5		14X-98-11170	Plate, Operating, Lock	4	80001-
6	C2	09602-10001	Plate, Name (Limited Supply)	1	80001-
7		04418-13060	Screw	4	80001-
8		17A-98-11180	Plate, Horn	1	80001-
9		20Y-00-41530	Plate, Symbol, Ecot3	1	80001-
10		14X-98-35181	Plate, Reflector, Rear Reflecter	2	80001-
11		14X-98-51150	Decal, Machine Model,LHS	1	80001-
12		14X-98-51250	Decal, Machine Model,RHS	1	80001-
13		124-98-51140	Plate, Work Equipment	1	80001-
14		14X-98-51221	Oil Chart	1	80001-
15		09653-05001	Decal, Warning, High Temperature	1	80001-
16		09668-05001	Decal, Warning, Hot Water	1	80001-
17		09654-35001	Decal, Warning, Before Leaving Seat	1	80001-
18		09657-05003	Decal, Warning, Track Adjustment	2	80001-
19		09651-05001	Plate, Before Operating	1	80001-
20		09802-15000	Plate	1	80001-
21		09812-15000	Decal, Danger, Keep a Safe Distance	2	80001-
22		09667-05001	Plate, Caution, Rotating Object	2	80001-
23		09963-05001	Tag, Danger, Do Not Operate	1	80001-
24		09808-05000	Decal, Warning, Battery Cables	1	80001-
25		09664-20011	Decal, Danger, Battery	2	80001-
26		09659-55000	Decal, Warning, Explosive Hazard	1	80001-
27		14X-98-35320	Plate, Air Cleaner Replace	1	80001-
28		6217-71-6490	Plate, Fuel Filter Replace	1	80001-
29		14X-98-35150	Plate, Pre Filter Caution	1	80001-
30		09652-51221	Decal, Caution, Fuel Tank Drain	1	80001-
31		09649-05012	Plate	1	80001-
32		09842-A0481	Plate, Caution, No Jump Start	1	80001-
33		09642-15000	Plate, Specify Coolant	1	80001-

FIG. U0100-002001 Marks And Plates, English

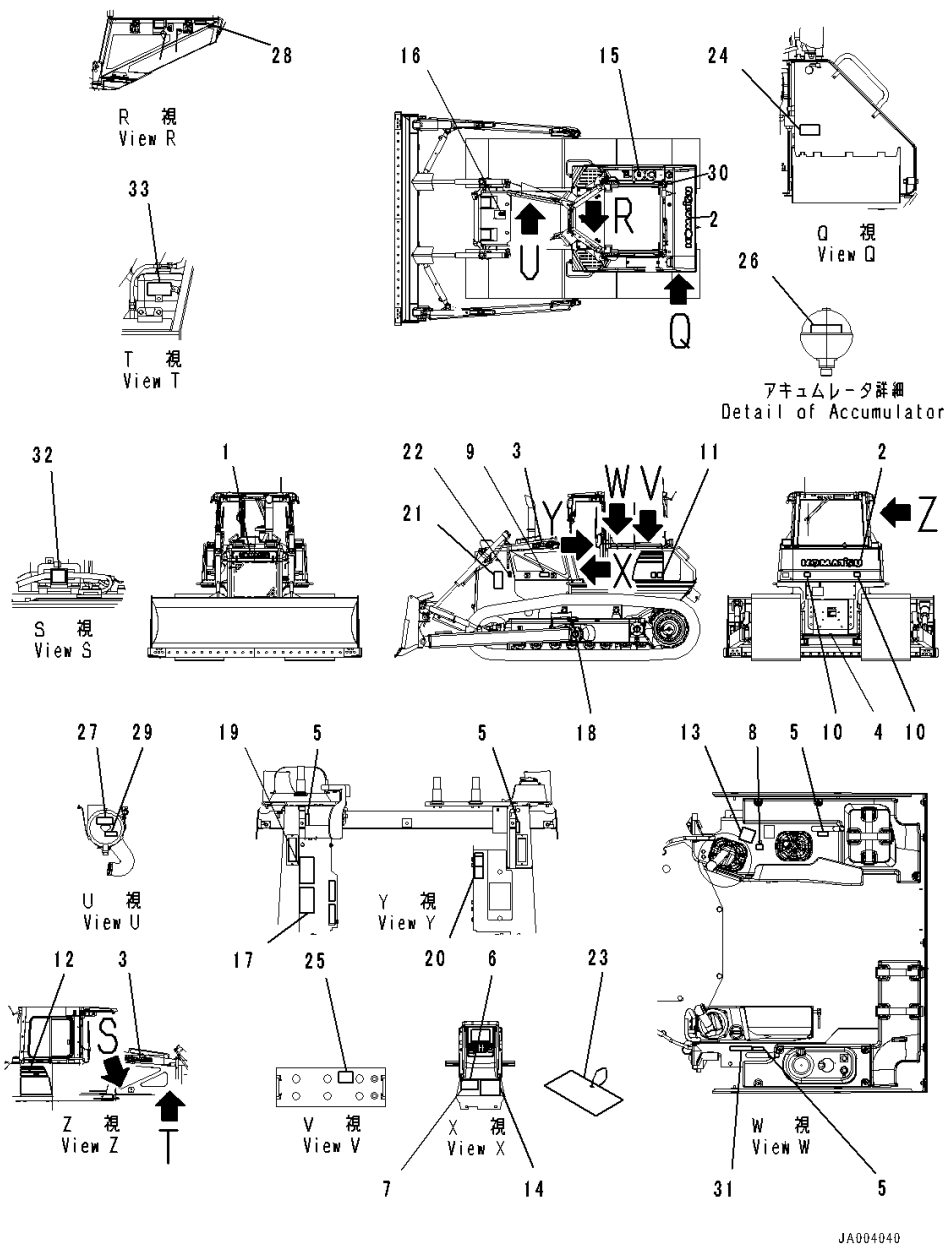

Index	Code	Part Number	Description	Qty	Serial Number
1		09690-F0560	Plate, Mark,Front	1	80001-
2		09690-P1120	Plate, Mark,Rear	1	80001-
3		09690-F0500	Decal, Komatsu Logo,Side	2	80001-
4		09690-M0063	Plate, Mark, Anti-Restamp	1	80001-
5		14X-98-11170	Plate, Operating, Lock	4	80001-
6	C2	09602-10001	Plate, Name (Limited Supply)	1	80001-
7		04418-13060	Screw	4	80001-
8		17A-98-11180	Plate, Horn	1	80001-
9		20Y-00-41530	Plate, Symbol, Ecot3	1	80001-
10		14X-98-35181	Plate, Reflector, Rear Reflecter	2	80001-
11		14X-98-51150	Decal, Machine Model,LHS	1	80001-
12		14X-98-51250	Decal, Machine Model,RHS	1	80001-
13		14X-98-11250	Plate, Work Equipment	1	80001-
14		14X-98-51211	Oil Chart	1	80001-
15		09653-A0481	Plate, Warning, High Temperature, Operating Oil Tank	1	80001-
16		09653-A0481	Plate, Warning, High Temperature, Radiator	1	80001-
17		09654-B0641	Plate	1	80001-
18		09657-A0881	Plate	2	80001-
19		09651-A0641	Plate	1	80001-
20		09802-13000	Plate, Safety Confirm Of Rear	1	80001-
21		09806-B1683	Plate	2	80001-
22		09667-A0481	Plate, Caution, Rotating Object, While Engine Is Running, Don't Open Cover	2	80001-
23		09963-A1640	Tag, Danger, Do Not Operate	1	80001-
24		09808-A0881	Plate	1	80001-
25		09664-70001	Decal, Danger, Battery	2	80001-
26		09659-A057B	Plate, Warning, Accumulator	1	80001-
27		21W-98-41720	Plate, Air Cleaner, Air Cleaner Replace..	1	80001-
28		6217-71-6470	Plate, Fuel Filter Replace	1	80001-
29		14X-98-35120	Plate, Pre Filter Caution	1	80001-
30		09669-0000E	Plate, Caution, Diesel Fuel	1	80001-
31		09649-03012	Plate	1	80001-
32		09842-A0481	Plate, Caution, No Jump Start	1	80001-
33		09642-13000	Plate, Specify Coolant	1	80001-

FIG. U0100-007001 Marks And Plates, English, EU Regulation Guard Level 2

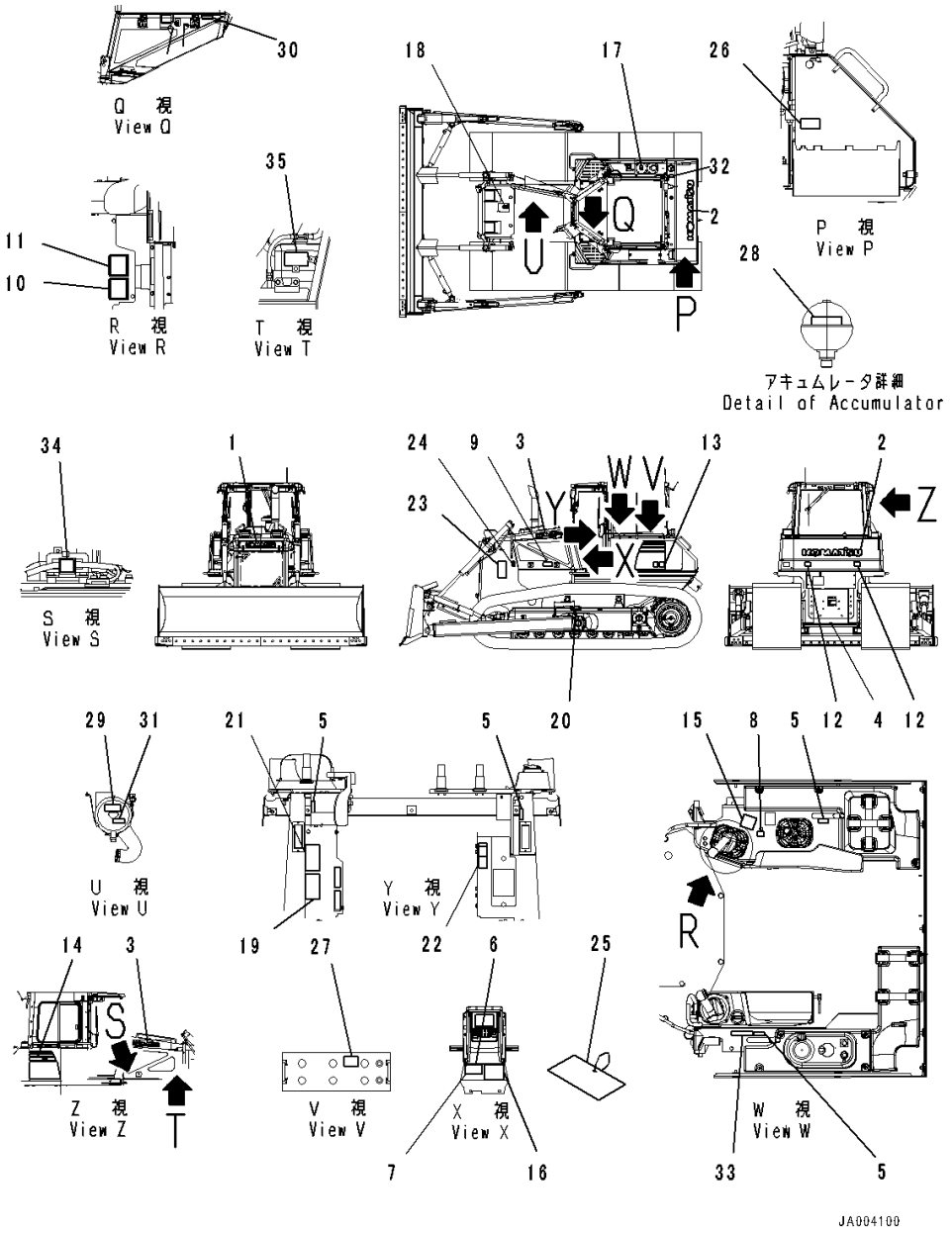

Index	Code	Part Number	Description	Qty	Serial Number
1		09690-F0560	Plate, Mark,Front	1	80001-
2		09690-P1120	Plate, Mark,Rear	1	80001-
3		09690-F0500	Decal, Komatsu Logo,Side	2	80001-
4		09690-M0063	Plate, Mark, Anti-Restamp	1	80001-
5		14X-98-11170	Plate, Operating, Lock	4	80001-
6	C2	09602-00001	Plate, Name (Limited Supply)	1	80001-
7		04418-13060	Screw	4	80001-
8		17A-98-11180	Plate, Horn	1	80001-
9		20Y-00-41530	Plate, Symbol, Ecot3	1	80001-
10		09696-50078	Plate, EU Ope Ear Noise	1	80001-
11		09696-40108	Plate, EU Around Noise	1	80001-
12		14X-98-35181	Plate, Reflector, Rear Reflecter	2	80001-
13		14X-98-51150	Decal, Machine Model,LHS	1	80001-
14		14X-98-51250	Decal, Machine Model,RHS	1	80001-
15		14X-98-11250	Plate, Work Equipment	1	80001-
16		14X-98-51211	Oil Chart	1	80001-
17		09653-A0481	Plate, Warning, High Temperature, Operating Oil Tank	1	80001-
18		09653-A0481	Plate, Warning, High Temperature, Radiator	1	80001-
19		09654-B0641	Plate	1	80001-
20		09657-A0881	Plate	2	80001-
21		09651-A0641	Plate	1	80001-
22		09802-13000	Plate, Safety Confirm Of Rear	1	80001-
23		09806-B1683	Plate	2	80001-
24		09667-A0481	Plate, Caution, Rotating Object, While Engine Is Running, Don't Open Cover	2	80001-
25		09963-A1640	Tag, Danger, Do Not Operate	1	80001-
26		09808-A0881	Plate	1	80001-
27		09664-60000	Decal, Danger, Battery	2	80001-
28		09659-A057B	Plate, Warning, Accumulator	1	80001-
29		21W-98-41720	Plate, Air Cleaner, Air Cleaner Replace..	1	80001-
30		6217-71-6470	Plate, Fuel Filter Replace	1	80001-
31		14X-98-35120	Plate, Pre Filter Caution	1	80001-
32		09669-0000E	Plate, Caution, Diesel Fuel	1	80001-
33		09649-03012	Plate	1	80001-
34		09842-A0481	Plate, Caution, No Jump Start	1	80001-
35		09642-13000	Plate, Specify Coolant	1	80001-

FIG. U0100-008001 Marks And Plates, Spanish, EU Regulation Guard Level 2

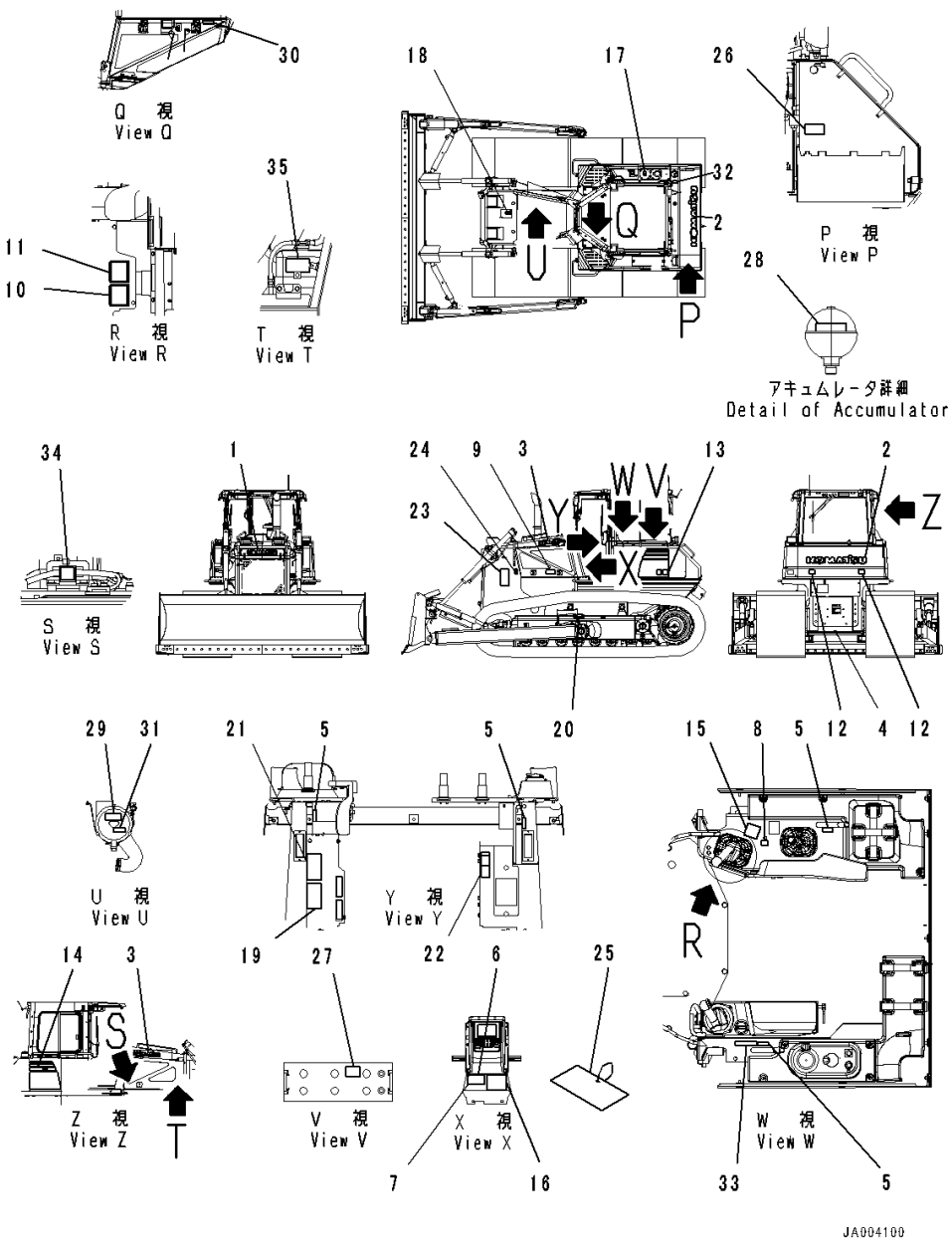

Index	Code	Part Number	Description	Qty	Serial Number
1		09690-F0560	Plate, Mark,Front	1	80001-
2		09690-P1120	Plate, Mark,Rear	1	80001-
3		09690-F0500	Decal, Komatsu Logo,Side	2	80001-
4		09690-M0063	Plate, Mark, Anti-Restamp	1	80001-
5		14X-98-11170	Plate, Operating, Lock	4	80001-
6	C2	09602-00001	Plate, Name (Limited Supply)	1	80001-
7		04418-13060	Screw	4	80001-
8		17A-98-11180	Plate, Horn	1	80001-
9		20Y-00-41530	Plate, Symbol, Ecot3	1	80001-
10		09696-50078	Plate, EU Ope Ear Noise	1	80001-
11		09696-40108	Plate, EU Around Noise	1	80001-
12		14X-98-35181	Plate, Reflector, Rear Reflecter	2	80001-
13		14X-98-51150	Decal, Machine Model,LHS	1	80001-
14		14X-98-51250	Decal, Machine Model,RHS	1	80001-
15		14X-98-11250	Plate, Work Equipment	1	80001-
16		14X-98-51211	Oil Chart	1	80001-
17		09653-A0481	Plate, Warning, High Temperature, Operating Oil Tank	1	80001-
18		09653-A0481	Plate, Warning, High Temperature, Radiator	1	80001-
19		09654-B0641	Plate	1	80001-
20		09657-A0881	Plate	2	80001-
21		09651-A0641	Plate	1	80001-
22		09802-11000	Plate, Safety Confirm Of Rear	1	80001-
23		09806-B1683	Plate	2	80001-
24		09667-A0481	Plate, Caution, Rotating Object, While Engine Is Running. Don't Open Cover	2	80001-
25		09963-A1640	Tag, Danger, Do Not Operate	1	80001-
26		09808-A0881	Plate	1	80001-
27		09664-60000	Decal, Danger, Battery	2	80001-
28		09659-A057B	Plate, Warning, Accumulator	1	80001-
29		21W-98-41940	Plate, Air Cleaner Replace	1	80001-
30		6217-71-6510	Plate, Fuel Filter Replace	1	80001-
31		14X-98-35130	Plate, Pre Filter Caution	1	80001-
32		09669-0000E	Plate, Caution, Diesel Fuel	1	80001-
33		09649-01012	Plate, Engine Stop	1	80001-
34		09842-A0481	Plate, Caution, No Jump Start	1	80001-
35		09642-11000	Plate, Specify Coolant	1	80001-

FIG. U0100-009001 Marks And Plates, French, EU Regulation Guard Level 2

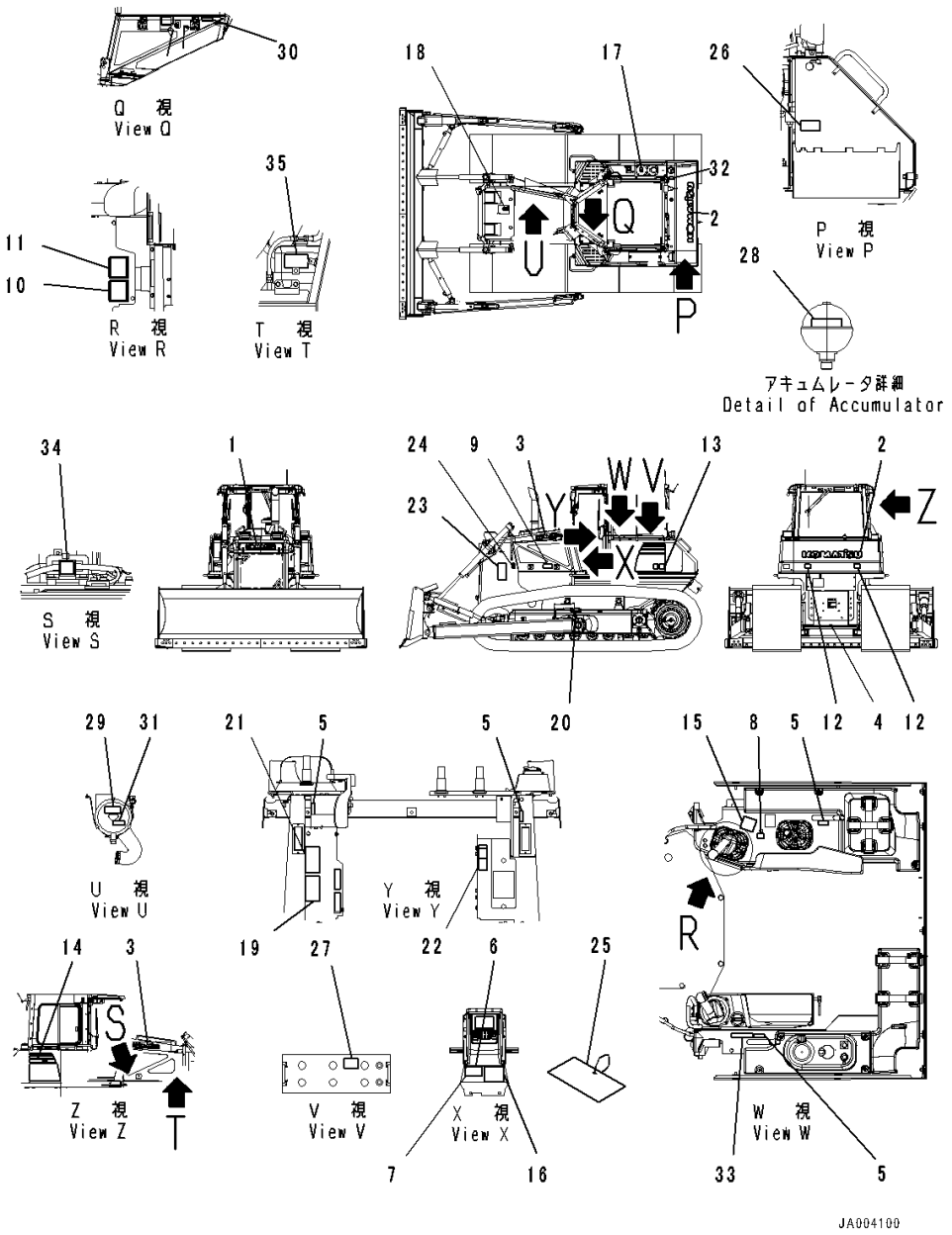

Index	Code	Part Number	Description	Qty	Serial Number
1		09690-F0560	Plate, Mark,Front	1	80001-
2		09690-P1120	Plate, Mark,Rear	1	80001-
3		09690-F0500	Decal, Komatsu Logo,Side	2	80001-
4		09690-M0063	Plate, Mark, Anti-Restamp	1	80001-
5		14X-98-11170	Plate, Operating, Lock	4	80001-
6	C2	09602-00001	Plate, Name (Limited Supply)	1	80001-
7		04418-13060	Screw	4	80001-
8		17A-98-11180	Plate, Horn	1	80001-
9		20Y-00-41530	Plate, Symbol, Ecot3	1	80001-
10		09696-50078	Plate, EU Ope Ear Noise	1	80001-
11		09696-40108	Plate, EU Around Noise	1	80001-
12		14X-98-35181	Plate, Reflector, Rear Reflecter	2	80001-
13		14X-98-51150	Decal, Machine Model,LHS	1	80001-
14		14X-98-51250	Decal, Machine Model,RHS	1	80001-
15		14X-98-11250	Plate, Work Equipment	1	80001-
16		14X-98-51211	Oil Chart	1	80001-
17		09653-A0481	Plate, Warning, High Temperature, Operating Oil Tank	1	80001-
18		09653-A0481	Plate, Warning, High Temperature, Radiator	1	80001-
19		09654-B0641	Plate	1	80001-
20		09657-A0881	Plate	2	80001-
21		09651-A0641	Plate	1	80001-
22		09802-15000	Plate	1	80001-
23		09806-B1683	Plate	2	80001-
24		09667-A0481	Plate, Caution, Rotating Object, While Engine Is Running. Don't Open Cover	2	80001-
25		09963-A1640	Tag, Danger, Do Not Operate	1	80001-
26		09808-A0881	Plate	1	80001-
27		09664-60000	Decal, Danger, Battery	2	80001-
28		09659-A057B	Plate, Warning, Accumulator	1	80001-
29		14X-98-35320	Plate, Air Cleaner Replace	1	80001-
30		6217-71-6490	Plate, Fuel Filter Replace	1	80001-
31		14X-98-35150	Plate, Pre Filter Caution	1	80001-
32		09669-0000E	Plate, Caution, Diesel Fuel	1	80001-
33		09649-05012	Plate	1	80001-
34		09842-A0481	Plate, Caution, No Jump Start	1	80001-
35		09642-15000	Plate, Specify Coolant	1	80001-

FIG. U0100-010001 Marks And Plates, Germany, EU Regulation Guard Level 2

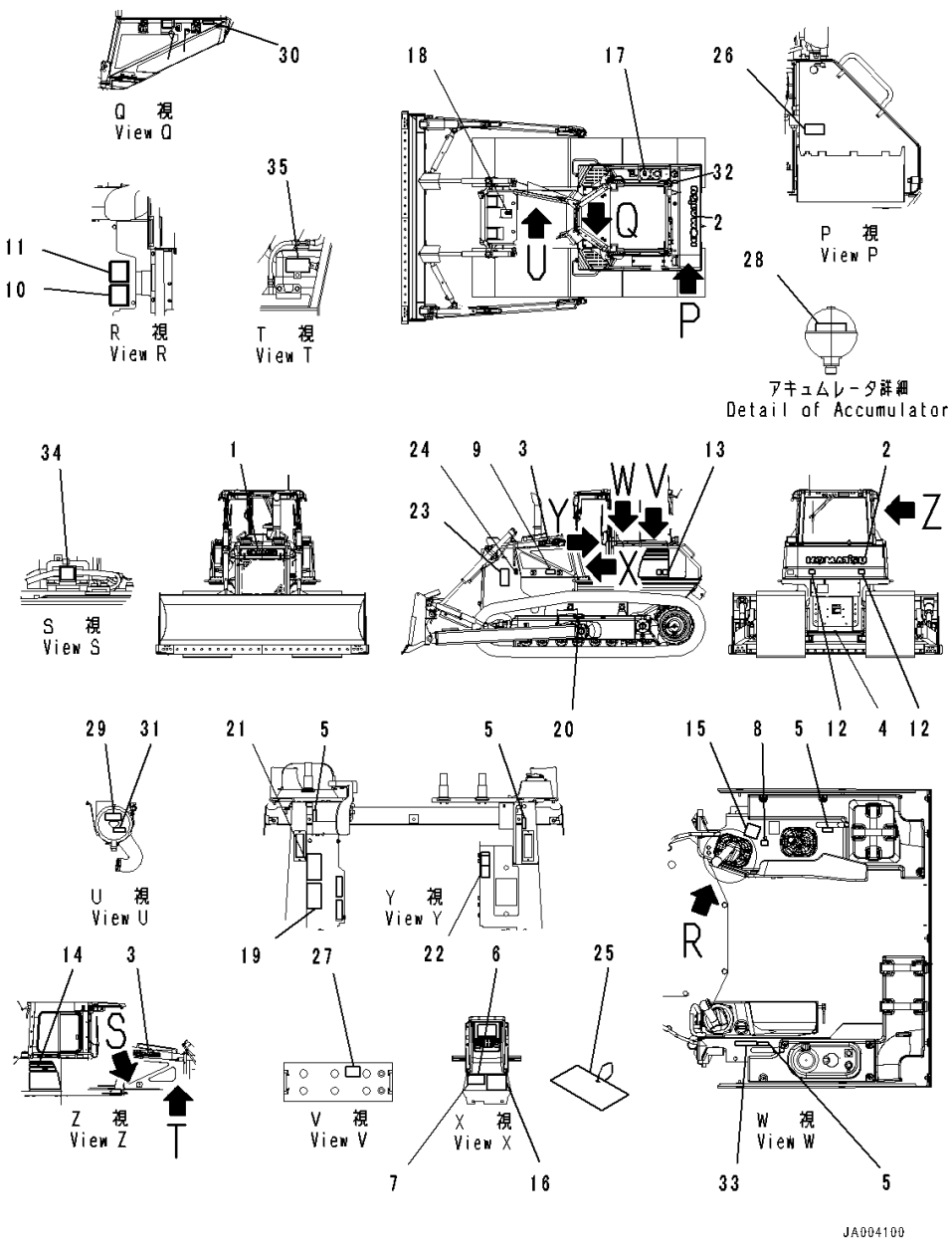

Index	Code	Part Number	Description	Qty	Serial Number
1		09690-F0560	Plate, Mark,Front	1	80001-
2		09690-P1120	Plate, Mark,Rear	1	80001-
3		09690-F0500	Decal, Komatsu Logo,Side	2	80001-
4		09690-M0063	Plate, Mark, Anti-Restamp	1	80001-
5		14X-98-11170	Plate, Operating, Lock	4	80001-
6	C2	09602-00001	Plate, Name (Limited Supply)	1	80001-
7		04418-13060	Screw	4	80001-
8		17A-98-11180	Plate, Horn	1	80001-
9		20Y-00-41530	Plate, Symbol, Ecot3	1	80001-
10		09696-50078	Plate, EU Ope Ear Noise	1	80001-
11		09696-40108	Plate, EU Around Noise	1	80001-
12		14X-98-35181	Plate, Reflector, Rear Reflecter	2	80001-
13		14X-98-51150	Decal, Machine Model,LHS	1	80001-
14		14X-98-51250	Decal, Machine Model,RHS	1	80001-
15		14X-98-11250	Plate, Work Equipment	1	80001-
16		14X-98-51211	Oil Chart	1	80001-
17		09653-A0481	Plate, Warning, High Temperature, Operating Oil Tank	1	80001-
18		09653-A0481	Plate, Warning, High Temperature, Radiator	1	80001-
19		09654-B0641	Plate	1	80001-
20		09657-A0881	Plate	2	80001-
21		09651-A0641	Plate	1	80001-
22		09802-12000	Plate	1	80001-
23		09806-B1683	Plate	2	80001-
24		09667-A0481	Plate, Caution, Rotating Object, While Engine Is Running. Don't Open Cover	2	80001-
25		09963-A1640	Tag, Danger, Do Not Operate	1	80001-
26		09808-A0881	Plate	1	80001-
27		09664-60000	Decal, Danger, Battery	2	80001-
28		09659-A057B	Plate, Warning, Accumulator	1	80001-
29		14X-98-35310	Plate, Air Cleaner Replace	1	80001-
30		6217-71-6480	Plate, Fuel Filter Replace	1	80001-
31		14X-98-35140	Plate, Pre Filter Caution	1	80001-
32		09669-0000E	Plate, Caution, Diesel Fuel	1	80001-
33		09649-02012	Plate	1	80001-
34		09842-A0481	Plate, Caution, No Jump Start	1	80001-
35		09642-12000	Plate, Coolant	1	80001-

FIG. U0100-011001 Marks And Plates, Italian, EU Regulation Guard Level 2

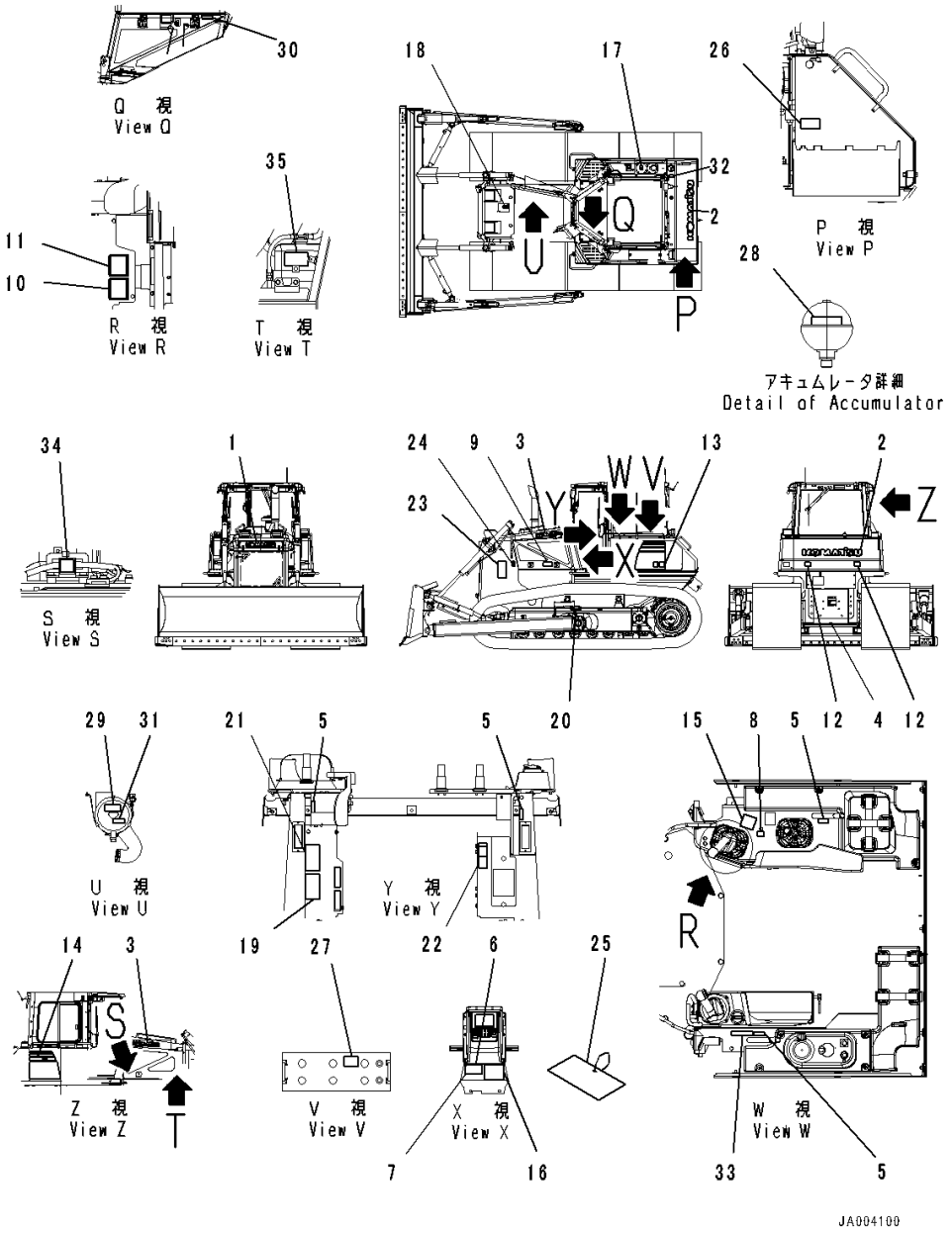

Index	Code	Part Number	Description	Qty	Serial Number
1		09690-F0560	Plate, Mark,Front	1	80001-
2		09690-P1120	Plate, Mark,Rear	1	80001-
3		09690-F0500	Decal, Komatsu Logo,Side	2	80001-
4		09690-M0063	Plate, Mark, Anti-Restamp	1	80001-
5		14X-98-11170	Plate, Operating, Lock	4	80001-
6	C2	09602-00001	Plate, Name (Limited Supply)	1	80001-
7		04418-13060	Screw	4	80001-
8		17A-98-11180	Plate, Horn	1	80001-
9		20Y-00-41530	Plate, Symbol, Ecot3	1	80001-
10		09696-50078	Plate, EU Ope Ear Noise	1	80001-
11		09696-40108	Plate, EU Around Noise	1	80001-
12		14X-98-35181	Plate, Reflector, Rear Reflecter	2	80001-
13		14X-98-51150	Decal, Machine Model,LHS	1	80001-
14		14X-98-51250	Decal, Machine Model,RHS	1	80001-
15		14X-98-11250	Plate, Work Equipment	1	80001-
16		14X-98-51211	Oil Chart	1	80001-
17		09653-A0481	Plate, Warning, High Temperature, Operating Oil Tank	1	80001-
18		09653-A0481	Plate, Warning, High Temperature, Radiator	1	80001-
19		09654-B0641	Plate	1	80001-
20		09657-A0881	Plate	2	80001-
21		09651-A0641	Plate	1	80001-
22		09802-16000	Plate	1	80001-
23		09806-B1683	Plate	2	80001-
24		09667-A0481	Plate, Caution, Rotating Object, While Engine Is Runing. Don't Open Cover	2	80001-
25		09963-A1640	Tag, Danger, Do Not Operate	1	80001-
26		09808-A0881	Plate	1	80001-
27		09664-60000	Decal, Danger, Battery	2	80001-
28		09659-A057B	Plate, Warning, Accumulator	1	80001-
29		14X-98-35420	Plate, Air Cleaner Replace	1	80001-
30		6217-71-6550	Plate	1	80001-
31		14X-98-35250	Plate, Pre Filter Replace	1	80001-
32		09669-0000E	Plate, Caution, Diesel Fuel	1	80001-
33		09649-06012	Plate, Engine Stop	1	80001-
34		09842-A0481	Plate, Caution, No Jump Start	1	80001-
35		09642-16000	Plate, Specify Coolant	1	80001-

FIG. U0100-012001 Marks And Plates, Portuguese, EU Regulation Guard Level 2

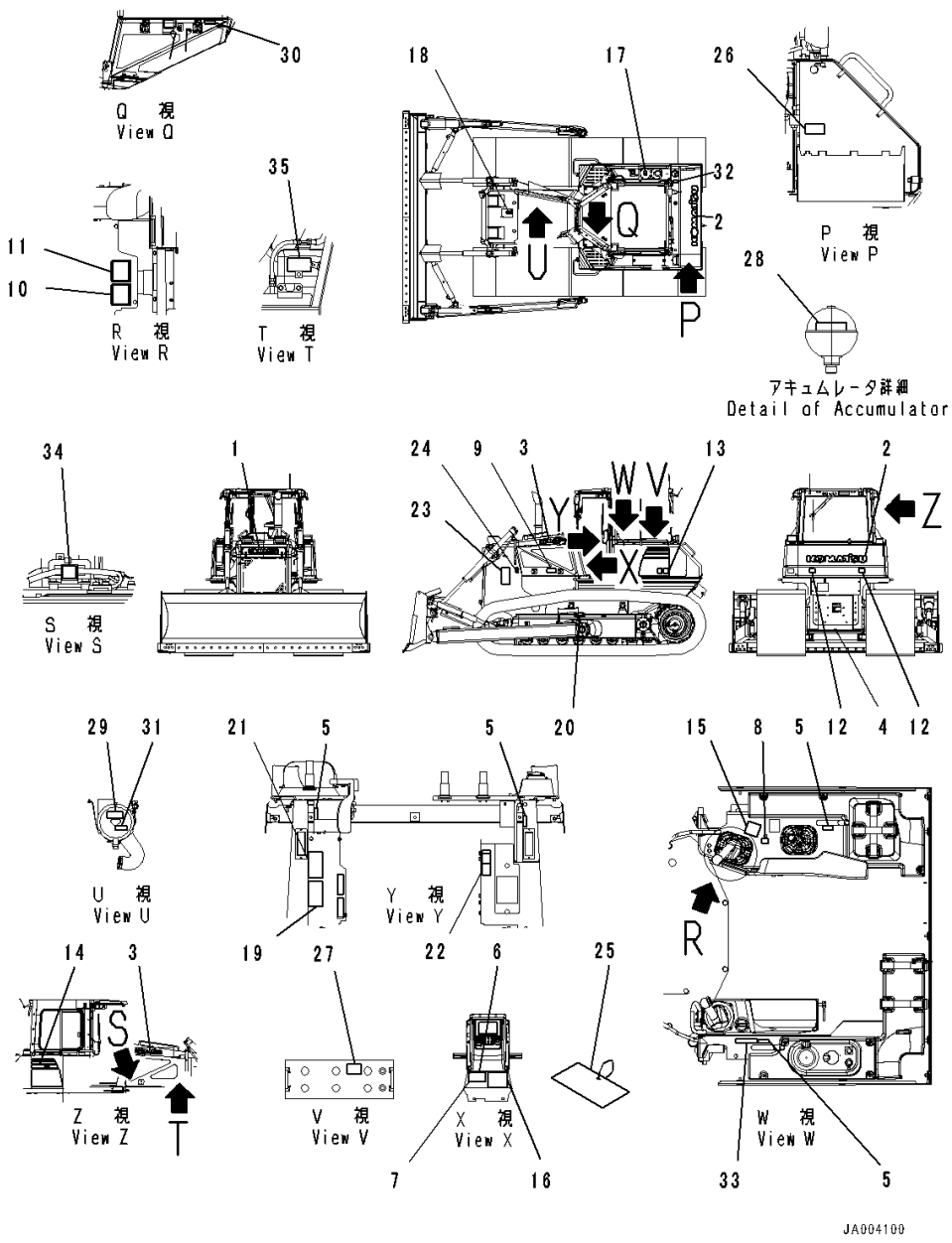

Index	Code	Part Number	Description	Qty	Serial Number
1		09690-F0560	Plate, Mark,Front	1	80001-
2		09690-P1120	Plate, Mark,Rear	1	80001-
3		09690-F0500	Decal, Komatsu Logo,Side	2	80001-
4		09690-M0063	Plate, Mark, Anti-Restamp	1	80001-
5		14X-98-11170	Plate, Operating, Lock	4	80001-
6	C2	09602-00001	Plate, Name (Limited Supply)	1	80001-
7		04418-13060	Screw	4	80001-
8		17A-98-11180	Plate, Horn	1	80001-
9		20Y-00-41530	Plate, Symbol, Ecot3	1	80001-
10		09696-50078	Plate, EU Ope Ear Noise	1	80001-
11		09696-40108	Plate, EU Around Noise	1	80001-
12		14X-98-35181	Plate, Reflector, Rear Reflecter	2	80001-
13		14X-98-51150	Decal, Machine Model,LHS	1	80001-
14		14X-98-51250	Decal, Machine Model,RHS	1	80001-
15		14X-98-11250	Plate, Work Equipment	1	80001-
16		14X-98-51211	Oil Chart	1	80001-
17		09653-A0481	Plate, Warning, High Temperature, Operating Oil Tank	1	80001-
18		09653-A0481	Plate, Warning, High Temperature, Radiator	1	80001-
19		09654-B0641	Plate	1	80001-
20		09657-A0881	Plate	2	80001-
21		09651-A0641	Plate	1	80001-
22		09802-17000	Plate, Safety Confirm Of Rear	1	80001-
23		09806-B1683	Plate	2	80001-
24		09667-A0481	Plate, Caution, Rotating Object, While Engine Is Running. Don't Open Cover	2	80001-
25		09963-A1640	Tag, Danger, Do Not Operate	1	80001-
26		09808-A0881	Plate	1	80001-
27		09664-60000	Decal, Danger, Battery	2	80001-
28		09659-A057B	Plate, Warning, Accumulator	1	80001-
29		14X-98-35330	Plate, Air Cleaner Replace	1	80001-
30		6217-71-6610	Plate, Fuel Filter Replace	1	80001-
31		14X-98-35160	Plate, Pre Filter Caution	1	80001-
32		09669-0000E	Plate, Caution, Diesel Fuel	1	80001-
33		09649-07012	Plate, Service Instruction	1	80001-
34		09842-A0481	Plate, Caution, No Jump Start	1	80001-
35		09642-17000	Plate, Specify Coolant	1	80001-

FIG. U0100-013001 Marks And Plates, Turkish, EU Regulation Guard Level 2

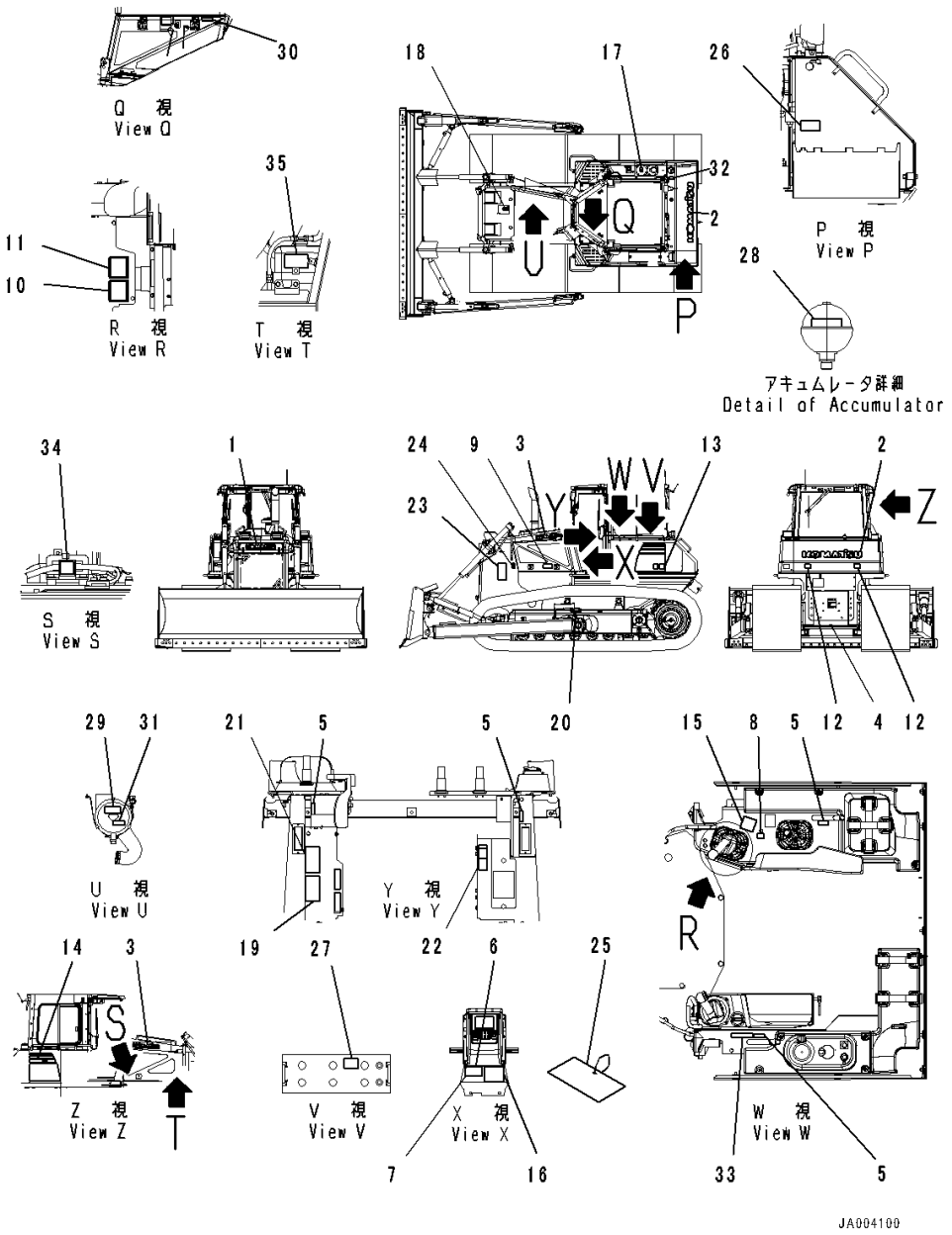

Index	Code	Part Number	Description	Qty	Serial Number
1		09690-F0560	Plate, Mark,Front	1	80001-
2		09690-P1120	Plate, Mark,Rear	1	80001-
3		09690-F0500	Decal, Komatsu Logo,Side	2	80001-
4		09690-M0063	Plate, Mark, Anti-Restamp	1	80001-
5		14X-98-11170	Plate, Operating, Lock	4	80001-
6	C2	09602-00001	Plate, Name (Limited Supply)	1	80001-
7		04418-13060	Screw	4	80001-
8		17A-98-11180	Plate, Horn	1	80001-
9		20Y-00-41530	Plate, Symbol, Ecot3	1	80001-
10		09696-50078	Plate, EU Ope Ear Noise	1	80001-
11		09696-40108	Plate, EU Around Noise	1	80001-
12		14X-98-35181	Plate, Reflector, Rear Reflecter	2	80001-
13		14X-98-51150	Decal, Machine Model,LHS	1	80001-
14		14X-98-51250	Decal, Machine Model,RHS	1	80001-
15		14X-98-11250	Plate, Work Equipment	1	80001-
16		14X-98-51211	Oil Chart	1	80001-
17		09653-A0481	Plate, Warning, High Temperature, Operating Oil Tank	1	80001-
18		09653-A0481	Plate, Warning, High Temperature, Radiator	1	80001-
19		09654-B0641	Plate	1	80001-
20		09657-A0881	Plate	2	80001-
21		09651-A0641	Plate	1	80001-
22		17M-98-41320	Plate, Safety Confirm Of Rear	1	80001-
23		09806-B1683	Plate	2	80001-
24		09667-A0481	Plate, Caution, Rotating Object, While Engine Is Running. Don't Open Cover	2	80001-
25		09963-A1640	Tag, Danger, Do Not Operate	1	80001-
26		09808-A0881	Plate	1	80001-
27		09664-60000	Decal, Danger, Battery	2	80001-
28		09659-A057B	Plate, Warning, Accumulator	1	80001-
29		17A-98-21720	Plate, Air Cleaner Replace	1	80001-
30		6217-71-6680	Plate, Fuel Filter Replace	1	80001-
31		14X-98-35170	Plate, Pre Filter Caution	1	80001-
32		09669-0000E	Plate, Caution, Diesel Fuel	1	80001-
33		17A-98-23510	Plate, Engine Stop	1	80001-
34		09842-A0481	Plate, Caution, No Jump Start	1	80001-
35		09642-11100	Plate, Specify Coolant	1	80001-

FIG. U0100-014001 Marks And Plates, English, With Power Tilt Pitch Dozer

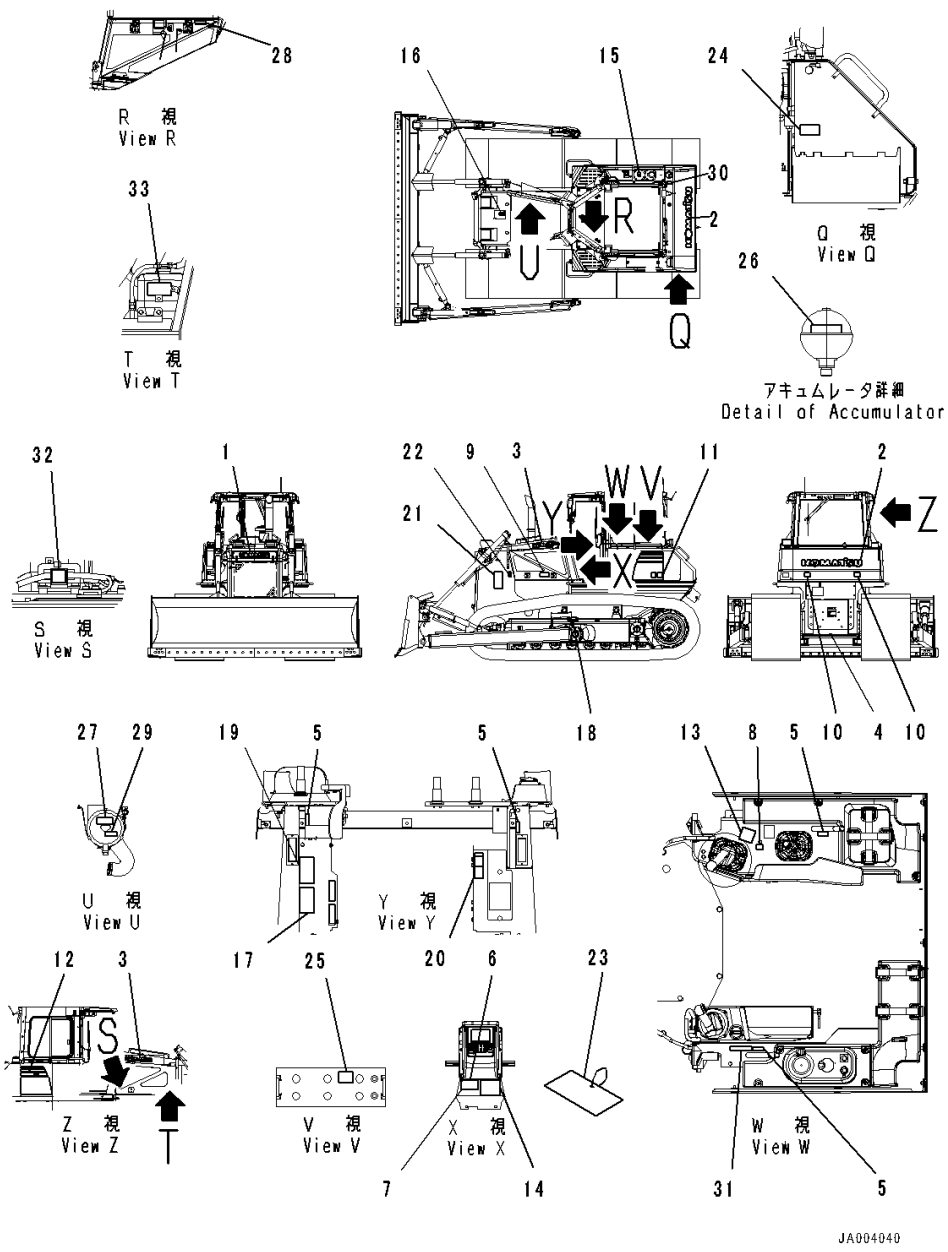

Index	Code	Part Number	Description	Qty	Serial Number
1		09690-F0560	Plate, Mark,Front	1	80001-
2		09690-P1120	Plate, Mark,Rear	1	80001-
3		09690-F0500	Decal, Komatsu Logo,Side	2	80001-
4		09690-M0063	Plate, Mark, Anti-Restamp	1	80001-
5		14X-98-11170	Plate, Operating, Lock	4	80001-
6	C2	09602-10001	Plate, Name (Limited Supply)	1	80001-
7		04418-13060	Screw	4	80001-
8		17A-98-11180	Plate, Horn	1	80001-
9		20Y-00-41530	Plate, Symbol, Ecot3	1	80001-
10		14X-98-35181	Plate, Reflector, Rear Reflecter	2	80001-
11		14X-98-51150	Decal, Machine Model,LHS	1	80001-
12		14X-98-51250	Decal, Machine Model,RHS	1	80001-
13		14X-98-11270	Plate, Work Equipment	1	80001-
14		14X-98-51211	Oil Chart	1	80001-
15		09653-A0481	Plate, Warning, High Temperature, Operating Oil Tank	1	80001-
16		09653-A0481	Plate, Warning, High Temperature, Radiator	1	80001-
17		09654-B0641	Plate	1	80001-
18		09657-A0881	Plate	2	80001-
19		09651-A0641	Plate	1	80001-
20		09802-13000	Plate, Safety Confirm Of Rear	1	80001-
21		09806-B1683	Plate	2	80001-
22		09667-A0481	Plate, Caution, Rotating Object, While Engine Is Running. Don't Open Cover	2	80001-
23		09963-A1640	Tag, Danger, Do Not Operate	1	80001-
24		09808-A0881	Plate	1	80001-
25		09664-70001	Decal, Danger, Battery	2	80001-
26		09659-A057B	Plate, Warning, Accumulator	1	80001-
27		21W-98-41720	Plate, Air Cleaner, Air Cleaner Replace..	1	80001-
28		6217-71-6470	Plate, Fuel Filter Replace	1	80001-
29		14X-98-35120	Plate, Pre Claner Caution	1	80001-
30		09669-0000E	Plate, Caution, Diesel Fuel	1	80001-
31		09649-03012	Plate	1	80001-
32		09842-A0481	Plate, Caution, No Jump Start	1	80001-
33		09642-13000	Plate, Specify Coolant	1	80001-

FIG. U0100-018001 Marks And Plates, English, EU Regulation Guard Level 2, With Power Angle Power Tilt Dozer

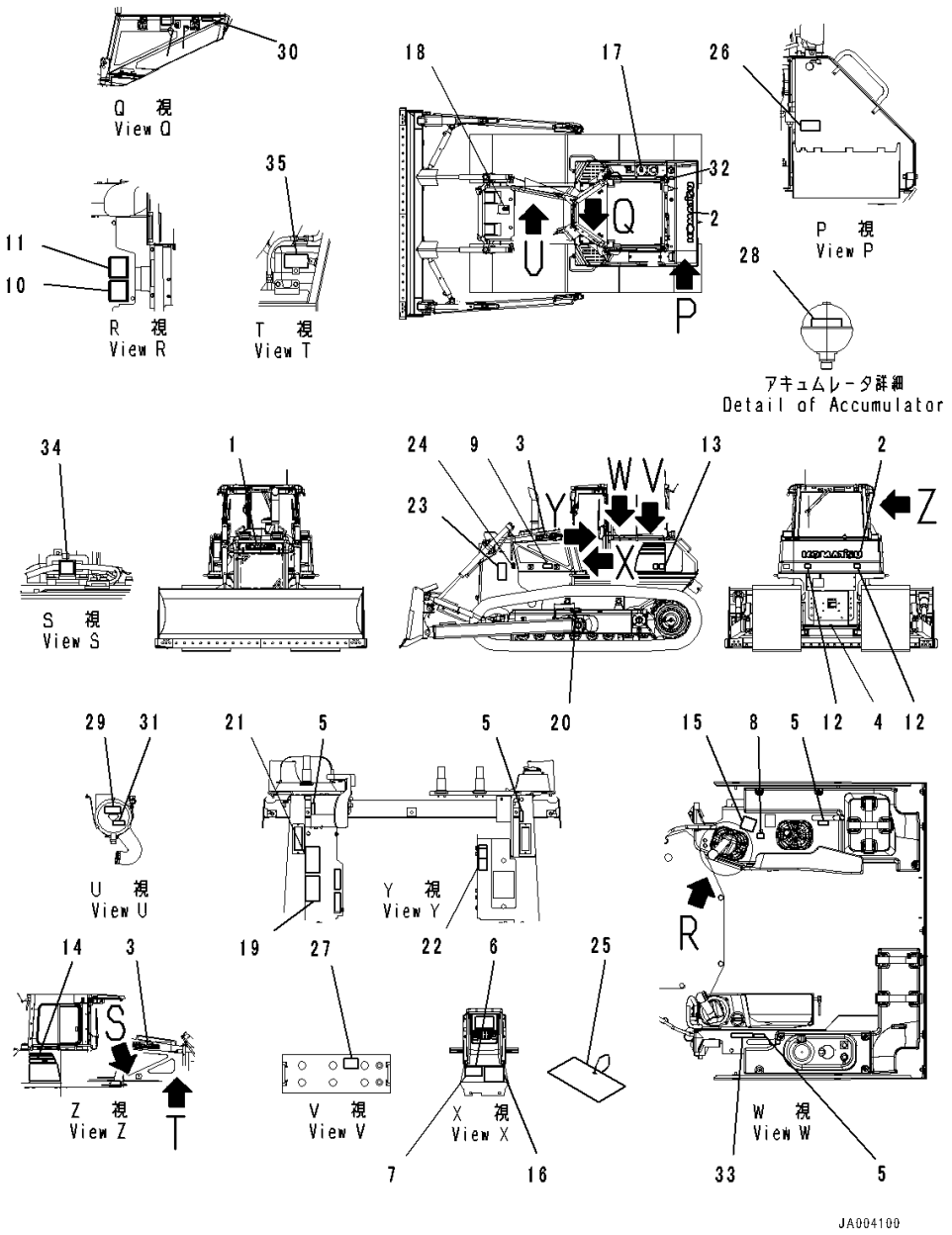

Index	Code	Part Number	Description	Qty	Serial Number
1		09690-F0560	Plate, Mark,Front	1	80001-
2		09690-P1120	Plate, Mark,Rear	1	80001-
3		09690-F0500	Decal, Komatsu Logo,Side	2	80001-
4		09690-M0063	Plate, Mark, Anti-Restamp	1	80001-
5		14X-98-11170	Plate, Operating, Lock	4	80001-
6	C2	09602-00001	Plate, Name (Limited Supply)	1	80001-
7		04418-13060	Screw	4	80001-
8		17A-98-11180	Plate, Horn	1	80001-
9		20Y-00-41530	Plate, Symbol, Ecot3	1	80001-
10		09696-50078	Plate, EU Ope Ear Noise	1	80001-
11		09696-40108	Plate, EU Around Noise	1	80001-
12		14X-98-35181	Plate, Reflector, Rear Reflecter	2	80001-
13		14X-98-51150	Decal, Machine Model,LHS	1	80001-
14		14X-98-51250	Decal, Machine Model,RHS	1	80001-
15		14X-98-11270	Plate, Work Equipment	1	80001-
16		14X-98-51211	Oil Chart	1	80001-
17		09653-A0481	Plate, Warning, High Temperature, Operating Oil Tank	1	80001-
18		09653-A0481	Plate, Warning, High Temperature, Radiator	1	80001-
19		09654-B0641	Plate	1	80001-
20		09657-A0881	Plate	2	80001-
21		09651-A0641	Plate	1	80001-
22		09802-13000	Plate, Safety Confirm Of Rear	1	80001-
23		09806-B1683	Plate	2	80001-
24		09667-A0481	Plate, Caution, Rotating Object, While Engine Is Running. Don't Open Cover	2	80001-
25		09963-A1640	Tag, Danger, Do Not Operate	1	80001-
26		09808-A0881	Plate	1	80001-
27		09664-60000	Decal, Danger, Battery	2	80001-
28		09659-A057B	Plate, Warning, Accumulator	1	80001-
29		21W-98-41720	Plate, Air Cleaner, Air Cleaner Replace..	1	80001-
30		6217-71-6470	Plate, Fuel Filter Replace	1	80001-
31		14X-98-35120	Plate, Pre Filter Caution	1	80001-
32		09669-0000E	Plate, Caution, Diesel Fuel	1	80001-
33		09649-03012	Plate	1	80001-
34		09842-A0481	Plate, Caution, No Jump Start	1	80001-
35		09642-13000	Plate, Specify Coolant	1	80001-

FIG. U0100-019001 Marks And Plates, Spanish, EU Regulation Guard Level 2, With Power Angle Power Tilt Dozer

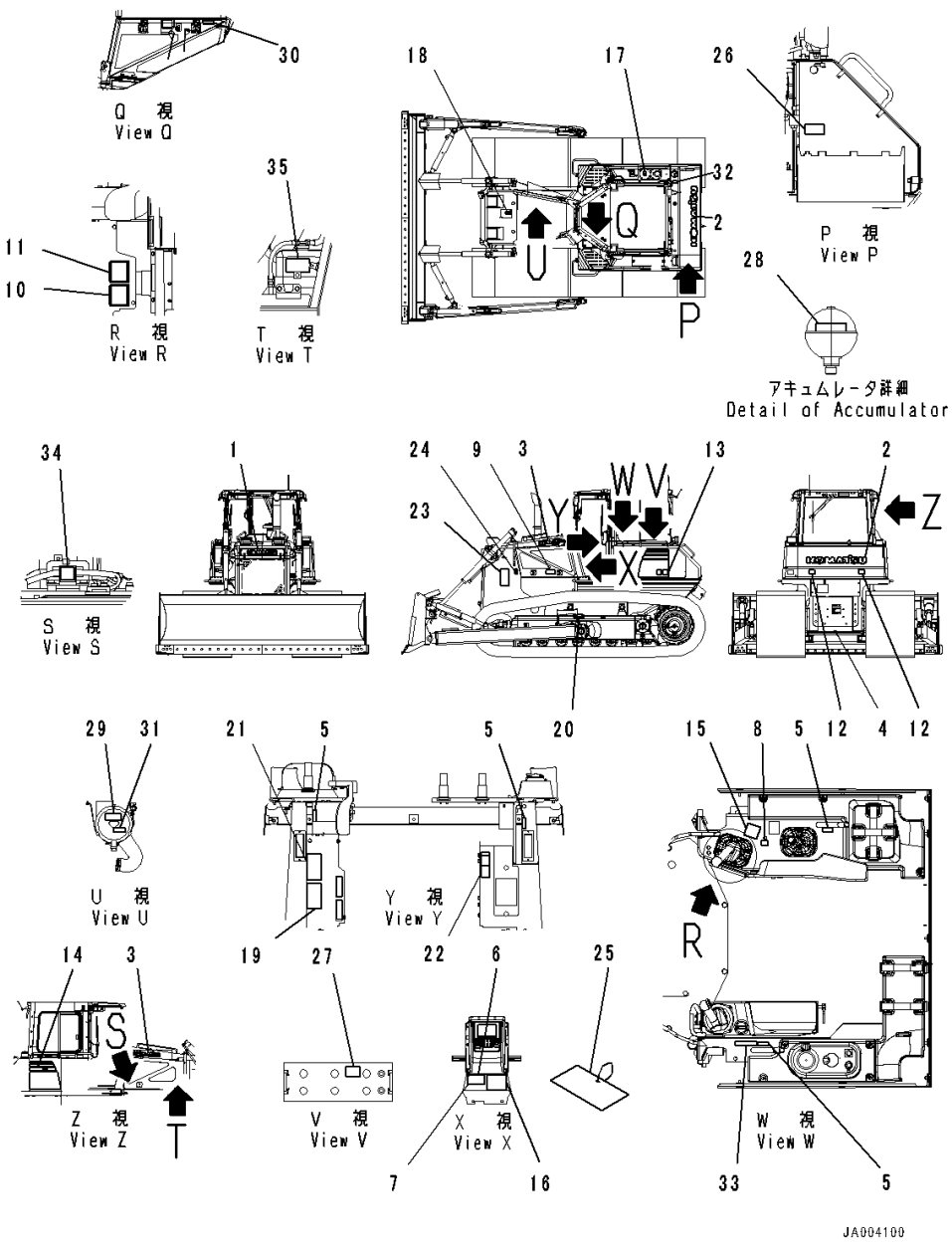

Index	Code	Part Number	Description	Qty	Serial Number
1		09690-F0560	Plate, Mark,Front	1	80001-
2		09690-P1120	Plate, Mark,Rear	1	80001-
3		09690-F0500	Decal, Komatsu Logo,Side	2	80001-
4		09690-M0063	Plate, Mark, Anti-Restamp	1	80001-
5		14X-98-11170	Plate, Operating, Lock	4	80001-
6	C2	09602-00001	Plate, Name (Limited Supply)	1	80001-
7		04418-13060	Screw	4	80001-
8		17A-98-11180	Plate, Horn	1	80001-
9		20Y-00-41530	Plate, Symbol, Ecot3	1	80001-
10		09696-50078	Plate, EU Ope Ear Noise	1	80001-
11		09696-40108	Plate, EU Around Noise	1	80001-
12		14X-98-35181	Plate, Reflector, Rear Reflecter	2	80001-
13		14X-98-51150	Decal, Machine Model,LHS	1	80001-
14		14X-98-51250	Decal, Machine Model,RHS	1	80001-
15		14X-98-11270	Plate, Work Equipment	1	80001-
16		14X-98-51211	Oil Chart	1	80001-
17		09653-A0481	Plate, Warning, High Temperature, Operating Oil Tank	1	80001-
18		09653-A0481	Plate, Warning, High Temperature, Radiator	1	80001-
19		09654-B0641	Plate	1	80001-
20		09657-A0881	Plate	2	80001-
21		09651-A0641	Plate	1	80001-
22		09802-11000	Plate, Safety Confirm Of Rear	1	80001-
23		09806-B1683	Plate	2	80001-
24		09667-A0481	Plate, Caution, Rotating Object, While Engine Is Running. Don't Open Cover	2	80001-
25		09963-A1640	Tag, Danger, Do Not Operate	1	80001-
26		09808-A0881	Plate	1	80001-
27		09664-60000	Decal, Danger, Battery	2	80001-
28		09659-A057B	Plate, Warning, Accumulator	1	80001-
29		21W-98-41940	Plate, Air Cleaner Replace	1	80001-
30		6217-71-6510	Plate, Fuel Filter Replace	1	80001-
31		14X-98-35130	Plate, Pre Filter Caution	1	80001-
32		09669-0000E	Plate, Caution, Diesel Fuel	1	80001-
33		09649-01012	Plate, Engine Stop	1	80001-
34		09842-A0481	Plate, Caution, No Jump Start	1	80001-
35		09642-11000	Plate, Specify Coolant	1	80001-

FIG. U0100-020001 Marks And Plates, French, EU Regulation Guard Level 2, With Power Angle Power Tilt Dozer

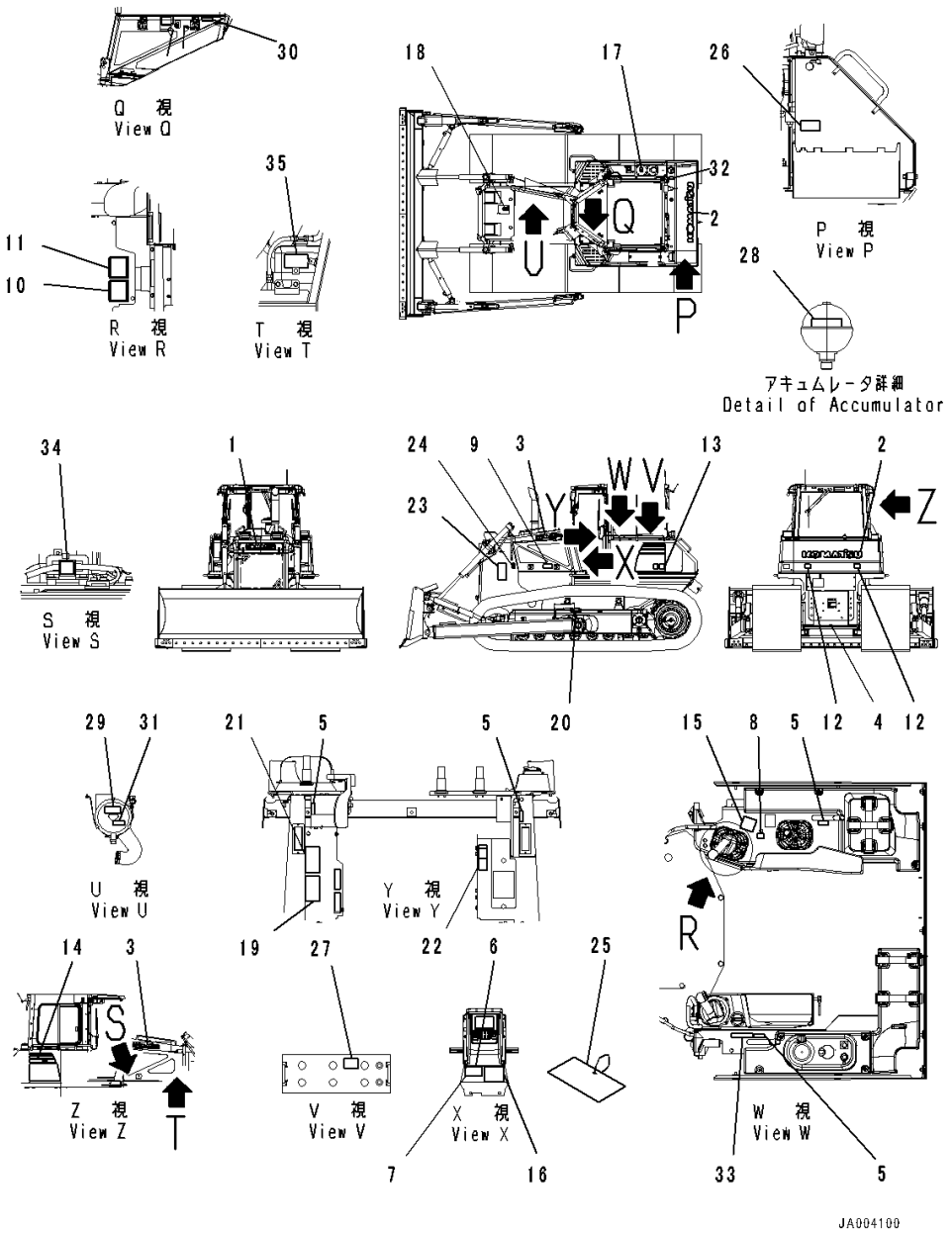

Index	Code	Part Number	Description	Qty	Serial Number
1		09690-F0560	Plate, Mark,Front	1	80001-
2		09690-P1120	Plate, Mark,Rear	1	80001-
3		09690-F0500	Decal, Komatsu Logo,Side	2	80001-
4		09690-M0063	Plate, Mark, Anti-Restamp	1	80001-
5		14X-98-11170	Plate, Operating, Lock	4	80001-
6	C2	09602-00001	Plate, Name (Limited Supply)	1	80001-
7		04418-13060	Screw	4	80001-
8		17A-98-11180	Plate, Horn	1	80001-
9		20Y-00-41530	Plate, Symbol, Ecot3	1	80001-
10		09696-50078	Plate, EU Ope Ear Noise	1	80001-
11		09696-40108	Plate, EU Around Noise	1	80001-
12		14X-98-35181	Plate, Reflector, Rear Reflecter	2	80001-
13		14X-98-51150	Decal, Machine Model,LHS	1	80001-
14		14X-98-51250	Decal, Machine Model,RHS	1	80001-
15		14X-98-11270	Plate, Work Equipment	1	80001-
16		14X-98-51211	Oil Chart	1	80001-
17		09653-A0481	Plate, Warning, High Temperature, Operating Oil Tank	1	80001-
18		09653-A0481	Plate, Warning, High Temperature, Radiator	1	80001-
19		09654-B0641	Plate	1	80001-
20		09657-A0881	Plate	2	80001-
21		09651-A0641	Plate	1	80001-
22		09802-15000	Plate	1	80001-
23		09806-B1683	Plate	2	80001-
24		09667-A0481	Plate, Caution, Rotating Object, While Engine Is Running. Don't Open Cover	2	80001-
25		09963-A1640	Tag, Danger, Do Not Operate	1	80001-
26		09808-A0881	Plate	1	80001-
27		09664-60000	Decal, Danger, Battery	2	80001-
28		09659-A057B	Plate, Warning, Accumulator	1	80001-
29		14X-98-35320	Plate, Air Cleaner Replace	1	80001-
30		6217-71-6490	Plate, Fuel Filter Replace	1	80001-
31		14X-98-35150	Plate, Pre Filter Caution	1	80001-
32		09669-0000E	Plate, Caution, Diesel Fuel	1	80001-
33		09649-05012	Plate	1	80001-
34		09842-A0481	Plate, Caution, No Jump Start	1	80001-
35		09642-15000	Plate, Specify Coolant	1	80001-

FIG. U0100-021001 Marks And Plates, Germany, EU Regulation Guard Level 2, With Power Angle Power Tilt Dozer

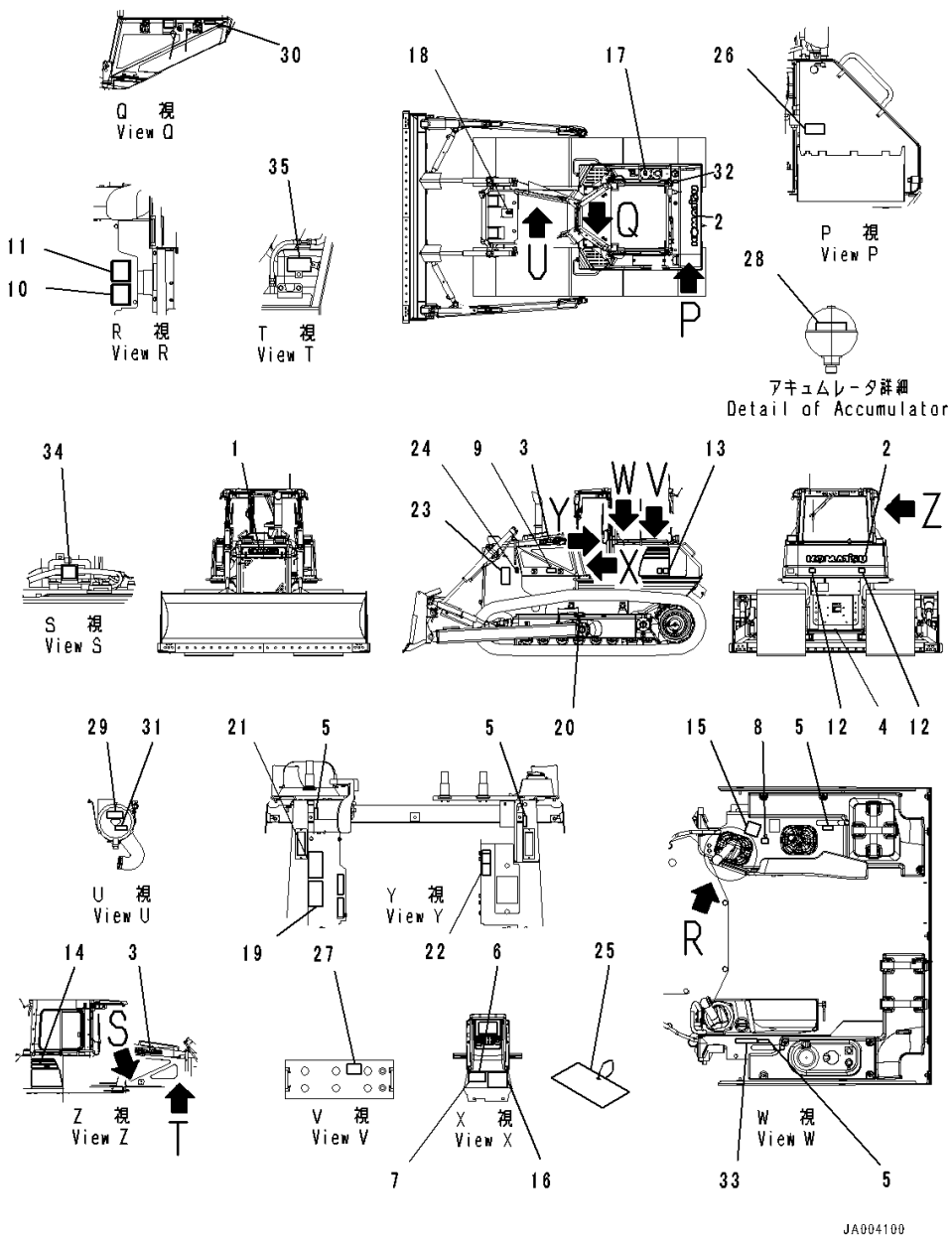

Index	Code	Part Number	Description	Qty	Serial Number
1		09690-F0560	Plate, Mark,Front	1	80001-
2		09690-P1120	Plate, Mark,Rear	1	80001-
3		09690-F0500	Decal, Komatsu Logo,Side	2	80001-
4		09690-M0063	Plate, Mark, Anti-Restanp	1	80001-
5		14X-98-11170	Plate, Operating, Lock	4	80001-
6	C2	09602-00001	Plate, Name (Limited Supply)	1	80001-
7		04418-13060	Screw	4	80001-
8		17A-98-11180	Plate, Horn	1	80001-
9		20Y-00-41530	Plate, Symbol, Ecot3	1	80001-
10		09696-50078	Plate, EU Ope Ear Noise	1	80001-
11		09696-40108	Plate, EU Around Noise	1	80001-
12		14X-98-35181	Plate, Reflector, Rear Reflecter	2	80001-
13		14X-98-51150	Decal, Machine Model,LHS	1	80001-
14		14X-98-51250	Decal, Machine Model,RHS	1	80001-
15		14X-98-11270	Plate, Work Equipment	1	80001-
16		14X-98-51211	Oil Chart	1	80001-
17		09653-A0481	Plate, Warning, High Temperature, Operaring Oil Tank	1	80001-
18		09653-A0481	Plate, Warning, High Temperature, Radiator	1	80001-
19		09654-B0641	Plate	1	80001-
20		09657-A0881	Plate	2	80001-
21		09651-A0641	Plate	1	80001-
22		09802-12000	Plate	1	80001-
23		09806-B1683	Plate	2	80001-
24		09667-A0481	Plate, Caution, Rotating Object, While Engine Is Running. Don't Open Cover	2	80001-
25		09963-A1640	Tag, Danger, Do Not Operate	1	80001-
26		09808-A0881	Plate	1	80001-
27		09664-60000	Decal, Danger, Battery	2	80001-
28		09659-A057B	Plate, Warning, Accumulator	1	80001-
29		14X-98-35310	Plate, Air Cleaner Replace	1	80001-
30		6217-71-6480	Plate, Fuel Filter Replace	1	80001-
31		14X-98-35140	Plate, Pre Filter Caution	1	80001-
32		09669-0000E	Plate, Caution, Diesel Fuel	1	80001-
33		09649-02012	Plate	1	80001-
34		09842-A0481	Plate, Caution, No Jump Start	1	80001-
35		09642-12000	Plate, Coolant	1	80001-

FIG. U0100-022001 Marks And Plates, Italian, EU Regulation Guard Level 2, With Power Angle Power Tilt Dozer

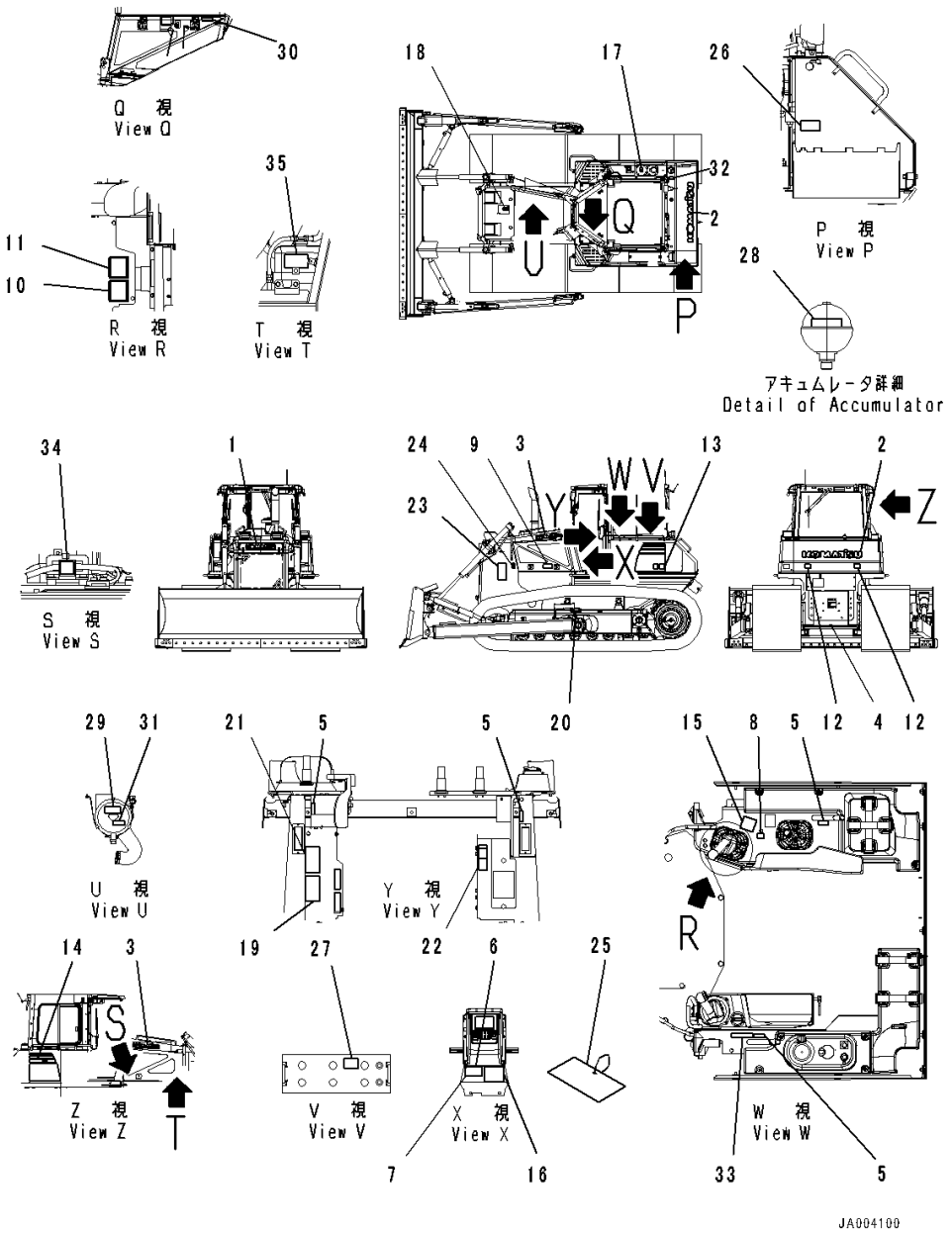

Index	Code	Part Number	Description	Qty	Serial Number
1		09690-F0560	Plate, Mark,Front	1	80001-
2		09690-P1120	Plate, Mark,Rear	1	80001-
3		09690-F0500	Decal, Komatsu Logo,Side	2	80001-
4		09690-M0063	Plate, Mark, Anti-Restamp	1	80001-
5		14X-98-11170	Plate, Operating, Lock	4	80001-
6	C2	09602-00001	Plate, Name (Limited Supply)	1	80001-
7		04418-13060	Screw	4	80001-
8		17A-98-11180	Plate, Horn	1	80001-
9		20Y-00-41530	Plate, Symbol, Ecot3	1	80001-
10		09696-50078	Plate, EU Ope Ear Noise	1	80001-
11		09696-40108	Plate, EU Around Noise	1	80001-
12		14X-98-35181	Plate, Reflector, Rear Reflecter	2	80001-
13		14X-98-51150	Decal, Machine Model,LHS	1	80001-
14		14X-98-51250	Decal, Machine Model,RHS	1	80001-
15		14X-98-11270	Plate, Work Equipment	1	80001-
16		14X-98-51211	Oil Chart	1	80001-
17		09653-A0481	Plate, Warning, High Temperature, Operating Oil Tank	1	80001-
18		09653-A0481	Plate, Warning, High Temperature, Radiator	1	80001-
19		09654-B0641	Plate	1	80001-
20		09657-A0881	Plate	2	80001-
21		09651-A0641	Plate	1	80001-
22		09802-16000	Plate	1	80001-
23		09806-B1683	Plate	2	80001-
24		09667-A0481	Plate, Caution, Rotating Object, While Engine Is Running. Don't Open Cover	2	80001-
25		09963-A1640	Tag, Danger, Do Not Operate	1	80001-
26		09808-A0881	Plate	1	80001-
27		09664-60000	Decal, Danger, Battery	2	80001-
28		09659-A057B	Plate, Warning, Accumulator	1	80001-
29		14X-98-35420	Plate, Air Cleaner Replace	1	80001-
30		6217-71-6550	Plate	1	80001-
31		14X-98-35250	Plate, Pre Filter Replace	1	80001-
32		09669-0000E	Plate, Caution, Diesel Fuel	1	80001-
33		09649-06012	Plate, Engine Stop	1	80001-
34		09842-A0481	Plate, Caution, No Jump Start	1	80001-
35		09642-16000	Plate, Specify Coolant	1	80001-

FIG. U0100-023001 Marks And Plates, Portuguese, EU Regulation Guard Level 2, With Power Angle Power Tilt Dozer

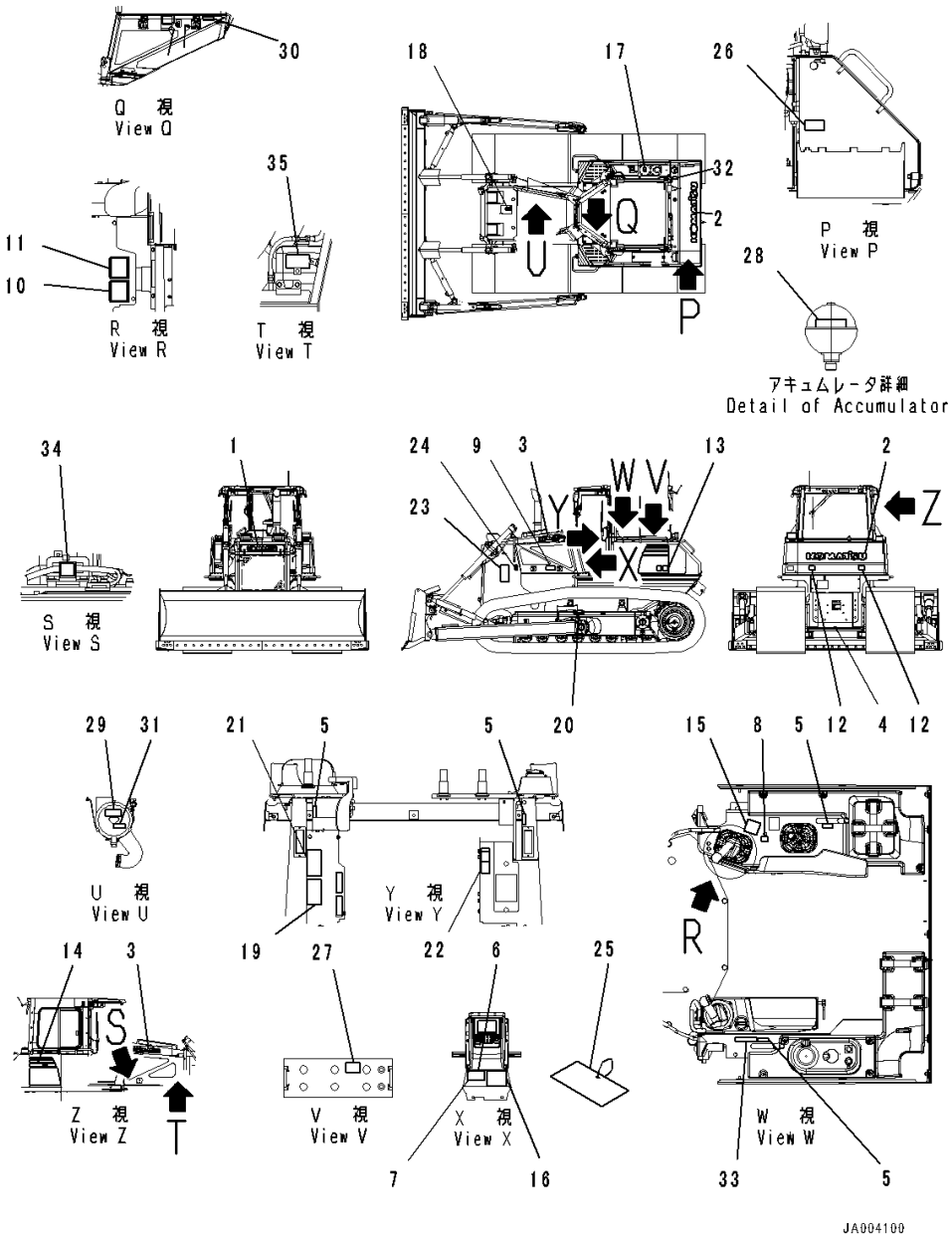

Index	Code	Part Number	Description	Qty	Serial Number
1		09690-F0560	Plate, Mark,Front	1	80001-
2		09690-P1120	Plate, Mark,Rear	1	80001-
3		09690-F0500	Decal, Komatsu Logo,Side	2	80001-
4		09690-M0063	Plate, Mark, Anti-Restamp	1	80001-
5		14X-98-11170	Plate, Operating, Lock	4	80001-
6	C2	09602-00001	Plate, Name (Limited Supply)	1	80001-
7		04418-13060	Screw	4	80001-
8		17A-98-11180	Plate, Horn	1	80001-
9		20Y-00-41530	Plate, Symbol, Ecot3	1	80001-
10		09696-50078	Plate, EU Ope Ear Noise	1	80001-
11		09696-40108	Plate, EU Around Noise	1	80001-
12		14X-98-35181	Plate, Reflector, Rear Reflecter	2	80001-
13		14X-98-51150	Decal, Machine Model,LHS	1	80001-
14		14X-98-51250	Decal, Machine Model,RHS	1	80001-
15		14X-98-11270	Plate, Work Equipment	1	80001-
16		14X-98-51211	Oil Chart	1	80001-
17		09653-A0481	Plate, Warning, High Temperature, Operating Oil Tank	1	80001-
18		09653-A0481	Plate, Warning, High Temperature, Radiator	1	80001-
19		09654-B0641	Plate	1	80001-
20		09657-A0881	Plate	2	80001-
21		09651-A0641	Plate	1	80001-
22		09802-17000	Plate, Safety Confirm Of Rear	1	80001-
23		09806-B1683	Plate	2	80001-
24		09667-A0481	Plate, Caution, Rotating Object, While Engine Is Running. Don't Open Cover	2	80001-
25		09963-A1640	Tag, Danger, Do Not Operate	1	80001-
26		09808-A0881	Plate	1	80001-
27		09664-60000	Decal, Danger, Battery	2	80001-
28		09659-A057B	Plate, Warning, Accumulator	1	80001-
29		14X-98-35330	Plate, Air Cleaner Replace	1	80001-
30		6217-71-6610	Plate, Fuel Filter Replace	1	80001-
31		14X-98-35160	Plate, Pre Filter Caution	1	80001-
32		09669-0000E	Plate, Caution, Diesel Fuel	1	80001-
33		09649-07012	Plate, Service Instruction	1	80001-
34		09842-A0481	Plate, Caution, No Jump Start	1	80001-
35		09642-17000	Plate, Specify Coolant	1	80001-

FIG. U0100-024001 Marks And Plates, Turkish, EU Regulation Guard Level 2, With Power Angle Power Tilt Dozer

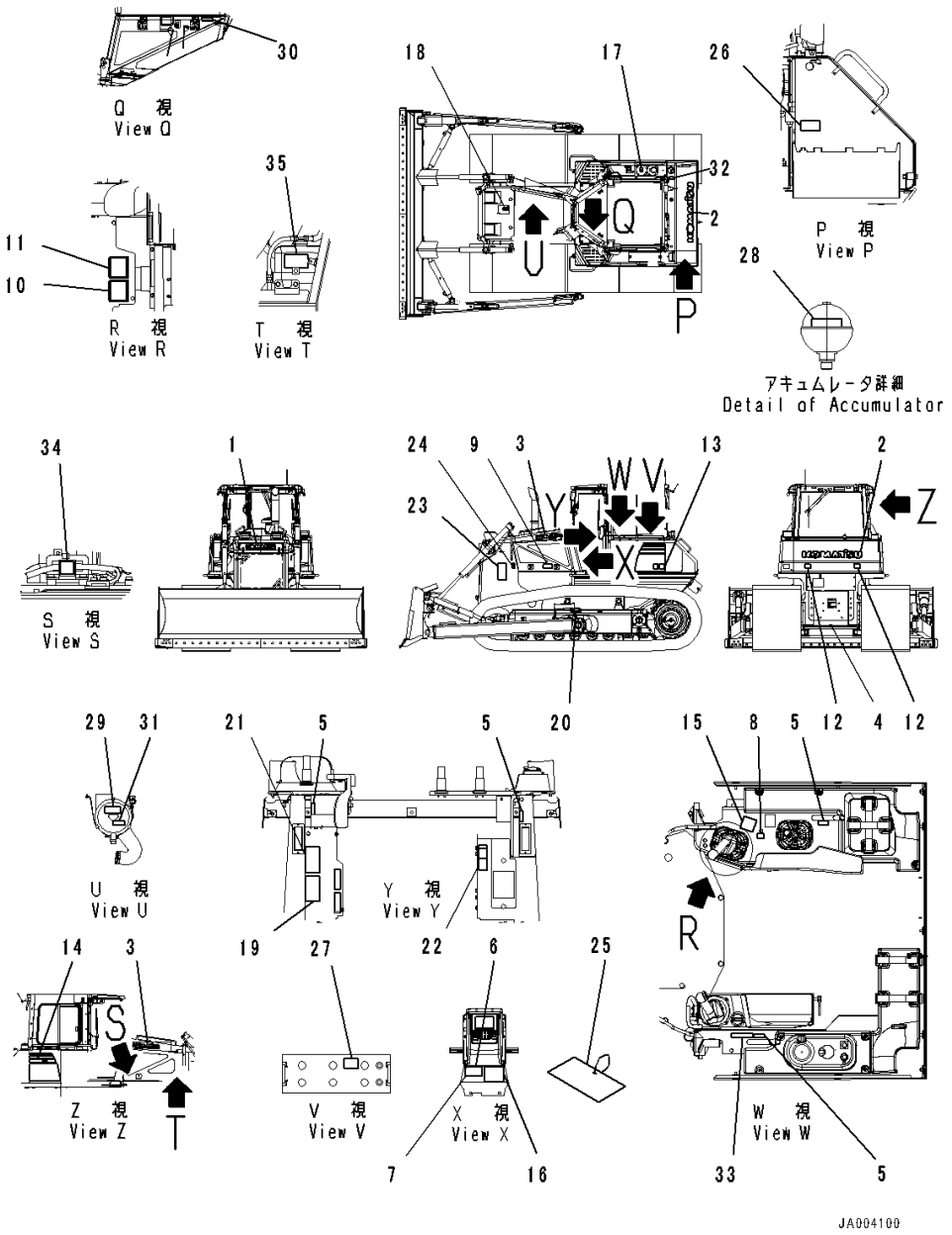

Index	Code	Part Number	Description	Qty	Serial Number
1		09690-F0560	Plate, Mark,Front	1	80001-
2		09690-P1120	Plate, Mark,Rear	1	80001-
3		09690-F0500	Decal, Komatsu Logo,Side	2	80001-
4		09690-M0063	Plate, Mark, Anti-Restamp	1	80001-
5		14X-98-11170	Plate, Operating, Lock	4	80001-
6	C2	09602-00001	Plate, Name (Limited Supply)	1	80001-
7		04418-13060	Screw	4	80001-
8		17A-98-11180	Plate, Horn	1	80001-
9		20Y-00-41530	Plate, Symbol, Ecot3	1	80001-
10		09696-50078	Plate, EU Ope Ear Noise	1	80001-
11		09696-40108	Plate, EU Around Noise	1	80001-
12		14X-98-35181	Plate, Reflector, Rear Reflecter	2	80001-
13		14X-98-51150	Decal, Machine Model,LHS	1	80001-
14		14X-98-51250	Decal, Machine Model,RHS	1	80001-
15		14X-98-11270	Plate, Work Equipment	1	80001-
16		14X-98-51211	Oil Chart	1	80001-
17		09653-A0481	Plate, Warning, High Temperature, Operating Oil Tank	1	80001-
18		09653-A0481	Plate, Warning, High Temperature, Radiator	1	80001-
19		09654-B0641	Plate	1	80001-
20		09657-A0881	Plate	2	80001-
21		09651-A0641	Plate	1	80001-
22		17M-98-41320	Plate, Safety Confirm Of Rear	1	80001-
23		09806-B1683	Plate	2	80001-
24		09667-A0481	Plate, Caution, Rotating Object, While Engine Is Running. Don't Open Cover	2	80001-
25		09963-A1640	Tag, Danger, Do Not Operate	1	80001-
26		09808-A0881	Plate	1	80001-
27		09664-60000	Decal, Danger, Battery	2	80001-
28		09659-A057B	Plate, Warning, Accumulator	1	80001-
29		17A-98-21720	Plate, Air Claner Replace	1	80001-
30		6217-71-6680	Plate, Fuel Filter Replace	1	80001-
31		14X-98-35170	Plate, Pre Filter Caution	1	80001-
32		09669-0000E	Plate, Caution, Diesel Fuel	1	80001-
33		17A-98-23510	Plate, Engine Stop	1	80001-
34		09842-A0481	Plate, Caution, No Jump Start	1	80001-
35		09642-11100	Plate, Specify Coolant	1	80001-

FIG. U0100-025001 Marks And Plates, English, With Power Tilt Pitch Dozer

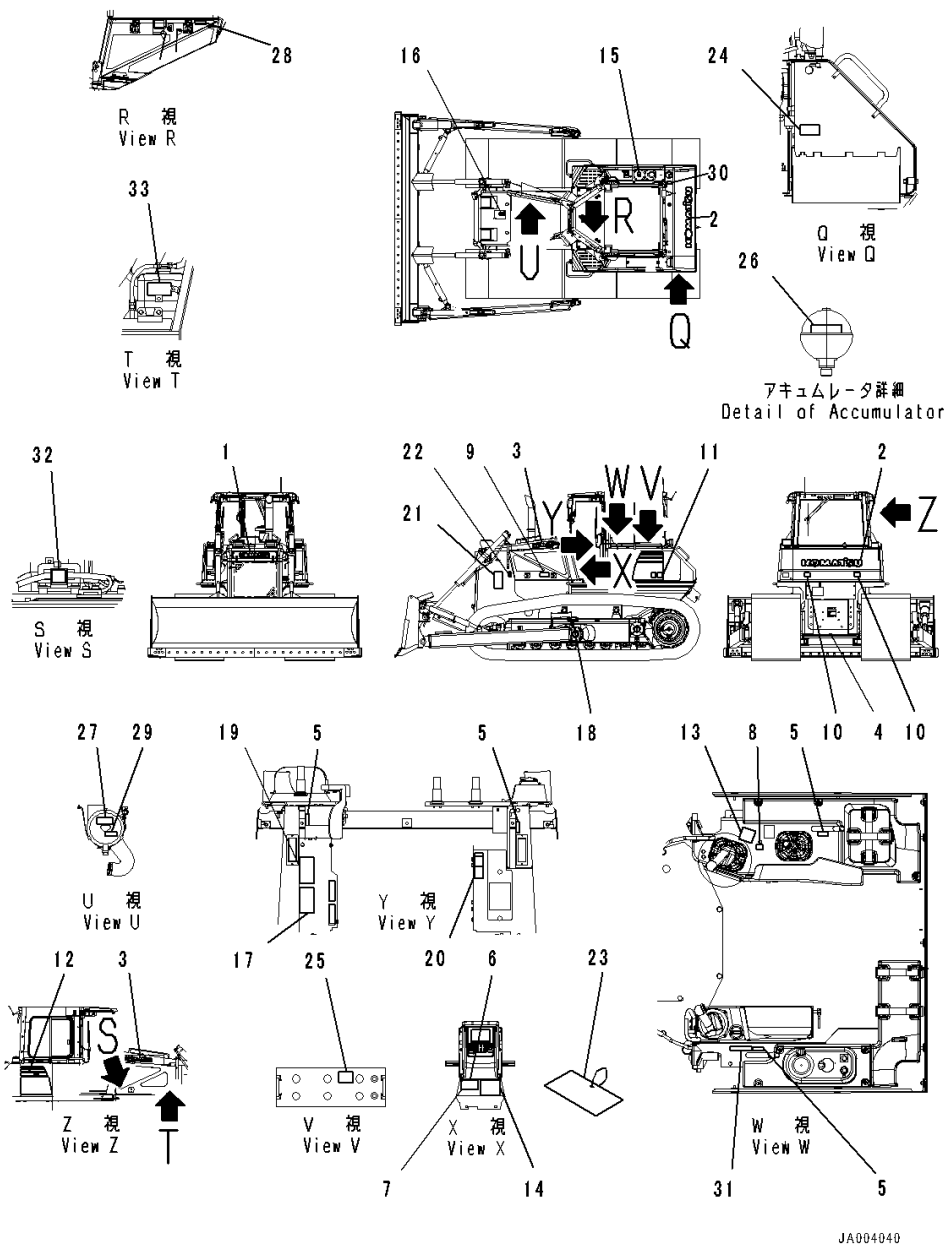

Index	Code	Part Number	Description	Qty	Serial Number
1		09690-F0560	Plate, Mark,Front	1	80001-
2		09690-P1120	Plate, Mark,Rear	1	80001-
3		09690-F0500	Decal, Komatsu Logo,Side	2	80001-
4		09690-M0063	Plate, Mark, Anti-Restamp	1	80001-
5		14X-98-11170	Plate, Operating, Lock	4	80001-
6	C2	09602-10001	Plate, Name (Limited Supply)	1	80001-
7		04418-13060	Screw	4	80001-
8		17A-98-11180	Plate, Horn	1	80001-
9		20Y-00-41530	Plate, Symbol, Ecot3	1	80001-
10		14X-98-35181	Plate, Reflector, Rear Reflecter	2	80001-
11		14X-98-51150	Decal, Machine Model,LHS	1	80001-
12		14X-98-51250	Decal, Machine Model,RHS	1	80001-
13		124-98-51140	Plate, Work Equipment	1	80001-
14		14X-98-51221	Oil Chart	1	80001-
15		09653-A0481	Plate, Warning, High Temperature, Operating Oil Tank	1	80001-
16		09653-A0481	Plate, Warning, High Temperature, Radiator	1	80001-
17		09654-B0641	Plate	1	80001-
18		09657-A0881	Plate	2	80001-
19		09651-A0641	Plate	1	80001-
20		09802-13000	Plate, Safety Confirm Of Rear	1	80001-
21		09806-B1683	Plate	2	80001-
22		09667-A0481	Plate, Caution, Rotating Object, While Engine Is Running. Don't Open Cover	2	80001-
23		09963-A1640	Tag, Danger, Do Not Operate	1	80001-
24		09808-A0881	Plate	1	80001-
25		09664-70001	Decal, Danger, Battery	2	80001-
26		09659-A057B	Plate, Warning, Accumulator	1	80001-
27		21W-98-41720	Plate, Air Cleaner, Air Cleaner Replace..	1	80001-
28		6217-71-6470	Plate, Fuel Filter Replace	1	80001-
29		14X-98-35120	Plate, Pre Filter Caution	1	80001-
30		09669-0000E	Plate, Caution, Diesel Fuel	1	80001-
31		09649-03012	Plate	1	80001-
32		09842-A0481	Plate, Caution, No Jump Start	1	80001-
33		09642-13000	Plate, Specify Coolant	1	80001-

FIG. U0100-030001 Marks And Plates, English, EU Regulation Guard Level 2, With Power Angle Power Tilt Dozer

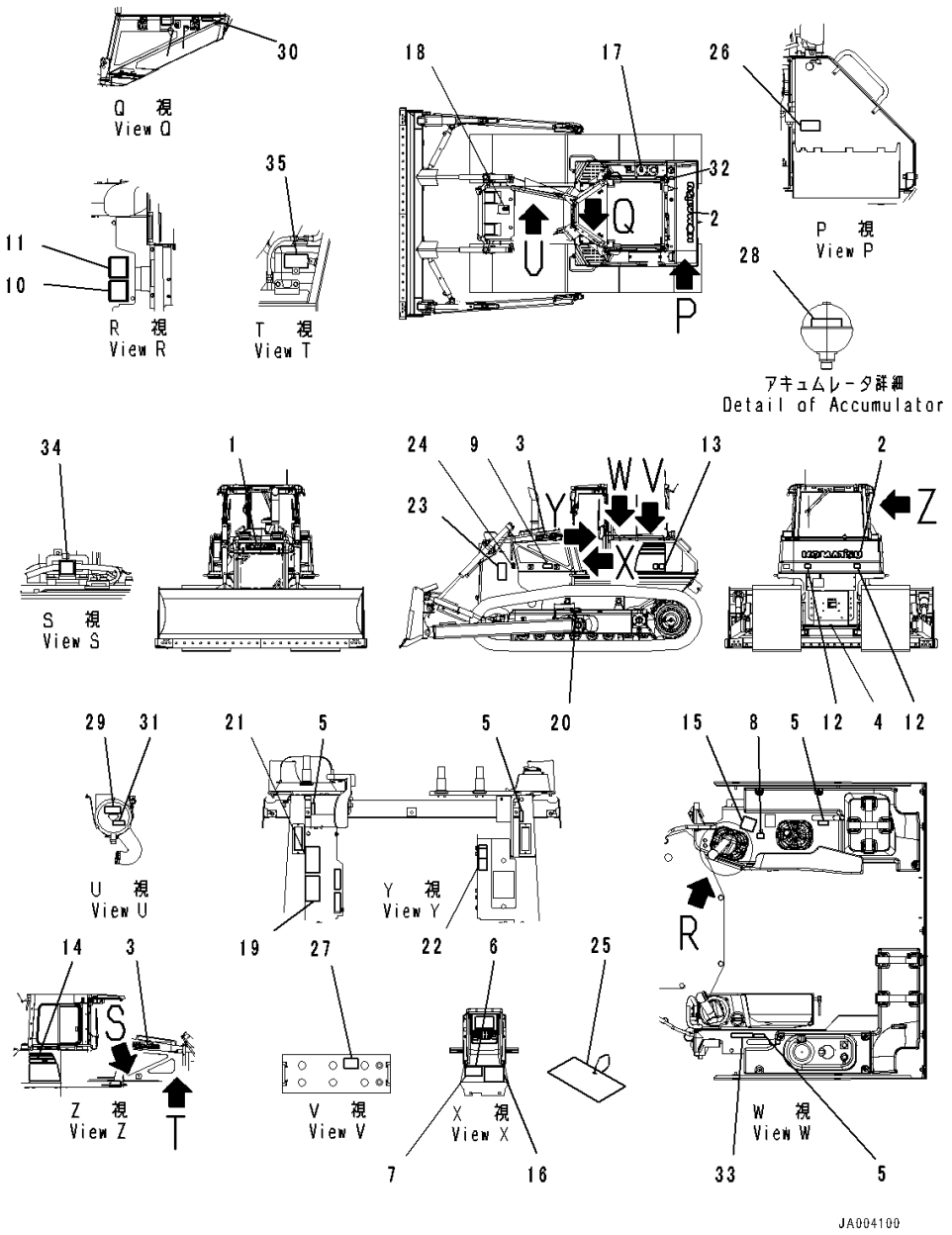

Index	Code	Part Number	Description	Qty	Serial Number
1		09690-F0560	Plate, Mark,Front	1	80001-
2		09690-P1120	Plate, Mark,Rear	1	80001-
3		09690-F0500	Decal, Komatsu Logo,Side	2	80001-
4		09690-M0063	Plate, Mark, Anti-Restamp	1	80001-
5		14X-98-11170	Plate, Operating, Lock	4	80001-
6	C2	09602-00001	Plate, Name (Limited Supply)	1	80001-
7		04418-13060	Screw	4	80001-
8		17A-98-11180	Plate, Horn	1	80001-
9		20Y-00-41530	Plate, Symbol, Ecot3	1	80001-
10		09696-50078	Plate, EU Ope Ear Noise	1	80001-
11		09696-40108	Plate, EU Around Noise	1	80001-
12		14X-98-35181	Plate, Reflector, Rear Reflecter	2	80001-
13		14X-98-51150	Decal, Machine Model,LHS	1	80001-
14		14X-98-51250	Decal, Machine Model,RHS	1	80001-
15		124-98-51140	Plate, Work Equipment	1	80001-
16		14X-98-51221	Oil Chart	1	80001-
17		09653-A0481	Plate, Warning, High Temperature, Operating Oil Tank	1	80001-
18		09653-A0481	Plate, Warning, High Temperature, Radiator	1	80001-
19		09654-B0641	Plate	1	80001-
20		09657-A0881	Plate	2	80001-
21		09651-A0641	Plate	1	80001-
22		09802-13000	Plate, Safety Confirm Of Rear	1	80001-
23		09806-B1683	Plate	2	80001-
24		09667-A0481	Plate, Caution, Rotating Object, While Engine Is Running. Don't Open Cover	2	80001-
25		09963-A1640	Tag, Danger, Do Not Operate	1	80001-
26		09808-A0881	Plate	1	80001-
27		09664-60000	Decal, Danger, Battery	2	80001-
28		09659-A057B	Plate, Warning, Accumulator	1	80001-
29		21W-98-41720	Plate, Air Cleaner, Air Cleaner Replace..	1	80001-
30		6217-71-6470	Plate, Fuel Filter Replace	1	80001-
31		14X-98-35120	Plate, Pre Filter Caution	1	80001-
32		09669-0000E	Plate, Caution, Diesel Fuel	1	80001-
33		09649-03012	Plate	1	80001-
34		09842-A0481	Plate, Caution, No Jump Start	1	80001-
35		09642-13000	Plate, Specify Coolant	1	80001-

FIG. U0100-031001 Marks And Plates, Spanish, EU Regulation Guard Level 2, With Power Angle Power Tilt Dozer

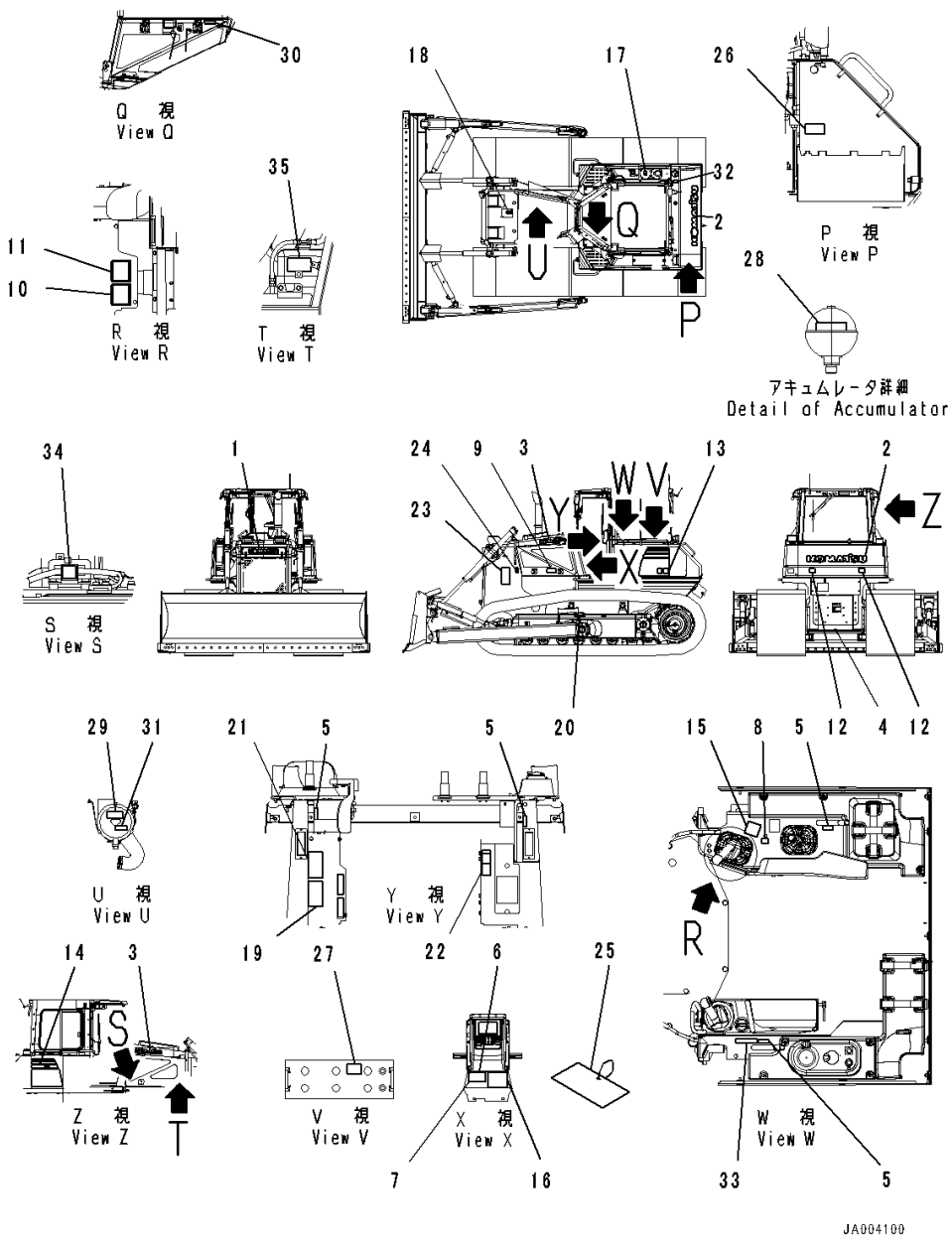

Index	Code	Part Number	Description	Qty	Serial Number
1		09690-F0560	Plate, Mark,Front	1	80001-
2		09690-P1120	Plate, Mark,Rear	1	80001-
3		09690-F0500	Decal, Komatsu Logo,Side	2	80001-
4		09690-M0063	Plate, Mark, Anti-Restamp	1	80001-
5		14X-98-11170	Plate, Operating, Lock	4	80001-
6	C2	09602-00001	Plate, Name (Limited Supply)	1	80001-
7		04418-13060	Screw	4	80001-
8		17A-98-11180	Plate, Horn	1	80001-
9		20Y-00-41530	Plate, Symbol, Ecot3	1	80001-
10		09696-50078	Plate, EU Ope Ear Noise	1	80001-
11		09696-40108	Plate, EU Around Noise	1	80001-
12		14X-98-35181	Plate, Reflector, Rear Reflecter	2	80001-
13		14X-98-51150	Decal, Machine Model,LHS	1	80001-
14		14X-98-51250	Decal, Machine Model,RHS	1	80001-
15		124-98-51140	Plate, Work Equipment	1	80001-
16		14X-98-51221	Oil Chart	1	80001-
17		09653-A0481	Plate, Warning, High Temperature, Operating Oil Tank	1	80001-
18		09653-A0481	Plate, Warning, High Temperature, Radiator	1	80001-
19		09654-B0641	Plate	1	80001-
20		09657-A0881	Plate	2	80001-
21		09651-A0641	Plate	1	80001-
22		09802-11000	Plate, Safety Confirm Of Rear	1	80001-
23		09806-B1683	Plate	2	80001-
24		09667-A0481	Plate, Caution, Rotating Object, While Engine Is Running. Don't Open Cover	2	80001-
25		09963-A1640	Tag, Danger, Do Not Operate	1	80001-
26		09808-A0881	Plate	1	80001-
27		09664-60000	Decal, Danger, Battery	2	80001-
28		09659-A057B	Plate, Warning, Accumulator	1	80001-
29		21W-98-41940	Plate, Air Cleaner Replace	1	80001-
30		6217-71-6510	Plate, Fuel Filter Replace	1	80001-
31		14X-98-35130	Plate, Pre Filter Caution	1	80001-
32		09669-0000E	Plate, Caution, Diesel Fuel	1	80001-
33		09649-01012	Plate, Engine Stop	1	80001-
34		09842-A0481	Plate, Caution, No Jump Start	1	80001-
35		09642-11000	Plate, Spacify Coolant	1	80001-

FIG. U0100-032001 Marks And Plates, French, EU Regulation Guard Level 2, With Power Angle Power Tilt Dozer

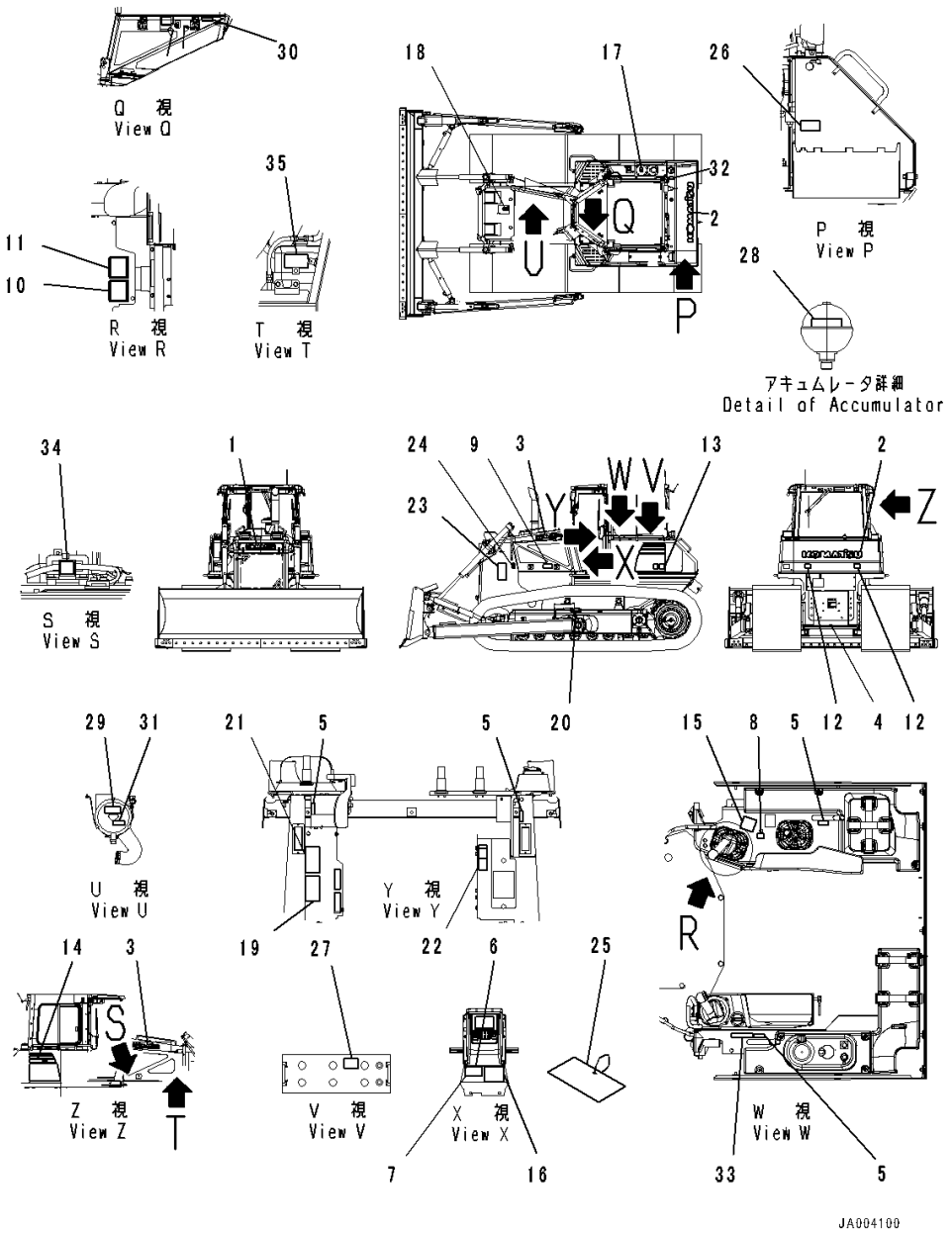

Index	Code	Part Number	Description	Qty	Serial Number
1		09690-F0560	Plate, Mark,Front	1	80001-
2		09690-P1120	Plate, Mark,Rear	1	80001-
3		09690-F0500	Decal, Komatsu Logo	2	80001-
4		09690-M0063	Plate, Mark	1	80001-
5		14X-98-11170	Plate, Operating	4	80001-
6	C2	09602-00001	Plate, Name (Limited Supply)	1	80001-
7		04418-13060	Screw	4	80001-
8		17A-98-11180	Plate	1	80001-
9		20Y-00-41530	Plate, Symbol, Ecot3	1	80001-
10		09696-50078	Plate, EU Ope Ear Noise	1	80001-
11		09696-40108	Plate, EU Around Noise	1	80001-
12		14X-98-35181	Plate, Reflector	2	80001-
13		14X-98-51150	Decal, Machine Model	1	80001-
14		14X-98-51250	Decal, Machine Model	1	80001-
15		124-98-51140	Plate	1	80001-
16		14X-98-51221	Oil Chart	1	80001-
17		09653-A0481	Plate, Warning, High Temperature	1	80001-
18		09653-A0481	Plate, Warning, High Temperature	1	80001-
19		09654-B0641	Plate	1	80001-
20		09657-A0881	Plate	2	80001-
21		09651-A0641	Plate	1	80001-
22		09802-15000	Plate	1	80001-
23		09806-B1683	Plate	2	80001-
24		09667-A0481	Plate, Caution, Rotating Object, While Engine Is Running. Don't Open Cover	2	80001-
25		09963-A1640	Tag, Danger, Do Not Operate	1	80001-
26		09808-A0881	Plate	1	80001-
27		09664-60000	Decal, Danger, Battery	2	80001-
28		09659-A057B	Plate, Warning, Accumulator	1	80001-
29		14X-98-35320	Plate, Air Cleaner Replace	1	80001-
30		6217-71-6490	Plate, Fuel Filter Replace	1	80001-
31		14X-98-35150	Plate, Pre Filter Caution	1	80001-
32		09669-0000E	Plate, Caution, Diesel Fuel	1	80001-
33		09649-05012	Plate	1	80001-
34		09842-A0481	Plate, Caution, No Jump Start	1	80001-
35		09642-15000	Plate, Specify Coolant	1	80001-

FIG. U0100-033001 Marks And Plates, Germany, EU Regulation Guard Level 2, With Power Angle Power Tilt Dozer

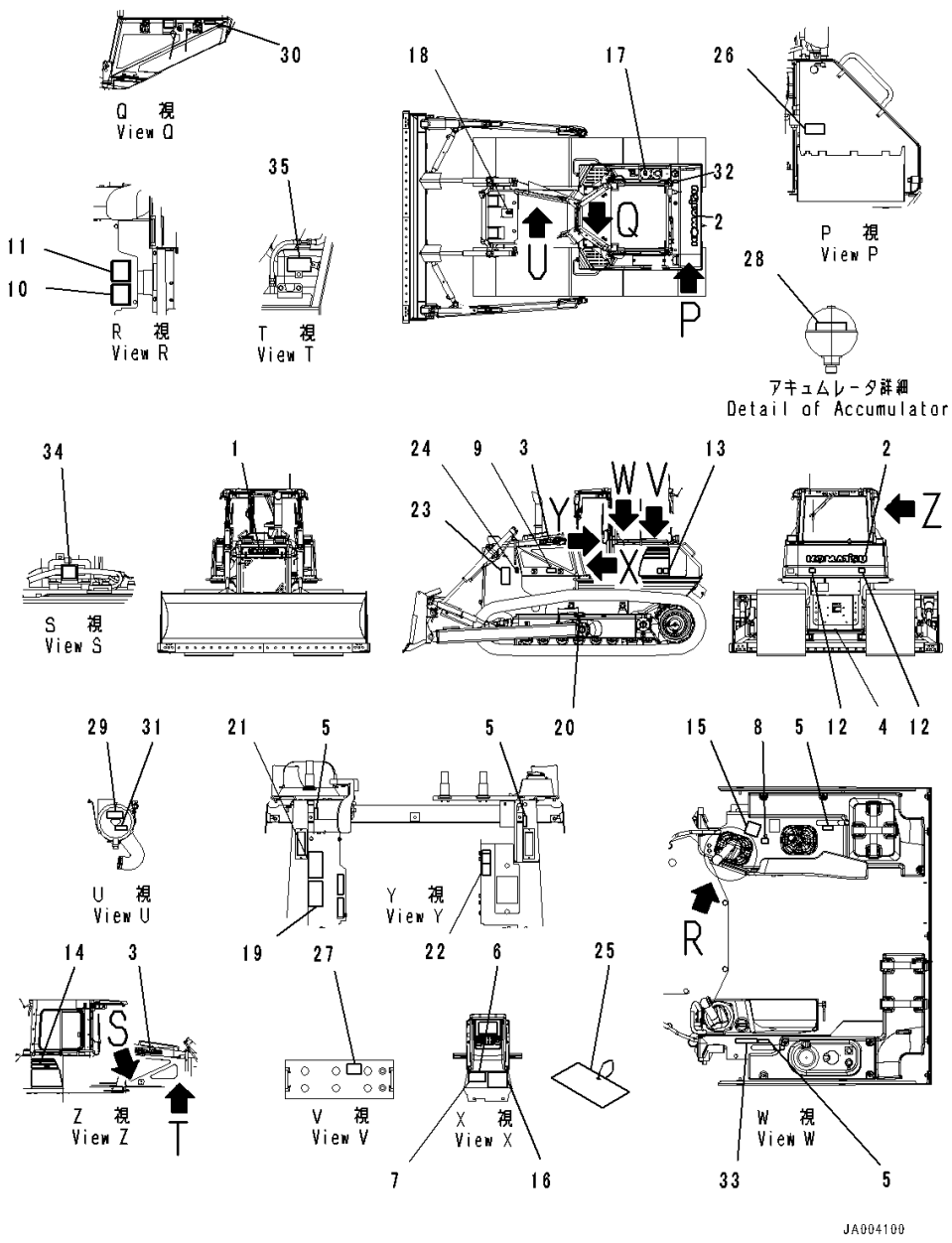

Index	Code	Part Number	Description	Qty	Serial Number
1		09690-F0560	Plate, Mark,Front	1	80001-
2		09690-P1120	Plate, Mark,Rear	1	80001-
3		09690-F0500	Decal, Komatsu Logo,Side	2	80001-
4		09690-M0063	Plate, Mark, Anti-Restamp	1	80001-
5		14X-98-11170	Plate, Operating, Lock	4	80001-
6	C2	09602-00001	Plate, Name (Limited Supply)	1	80001-
7		04418-13060	Screw	4	80001-
8		17A-98-11180	Plate, Horn	1	80001-
9		20Y-00-41530	Plate, Symbol, Ecot3	1	80001-
10		09696-50078	Plate, EU Ope Ear Noise	1	80001-
11		09696-40108	Plate, EU Around Noise	1	80001-
12		14X-98-35181	Plate, Reflector, Rear Reflecter	2	80001-
13		14X-98-51150	Decal, Machine Model,LHS	1	80001-
14		14X-98-51250	Decal, Machine Model,RHS	1	80001-
15		124-98-51140	Plate, Work Equipment	1	80001-
16		14X-98-51221	Oil Chart	1	80001-
17		09653-A0481	Plate, Warning, High Temperature, Operating Oil Tank	1	80001-
18		09653-A0481	Plate, Warning, High Temperature, Radiator	1	80001-
19		09654-B0641	Plate	1	80001-
20		09657-A0881	Plate	2	80001-
21		09651-A0641	Plate	1	80001-
22		09802-12000	Plate	1	80001-
23		09806-B1683	Plate	2	80001-
24		09667-A0481	Plate, Caution, Rotating Object, While Engine Is Running. Don't Open Cover	2	80001-
25		09963-A1640	Tag, Danger, Do Not Operate	1	80001-
26		09808-A0881	Plate	1	80001-
27		09664-60000	Decal, Danger, Battery	2	80001-
28		09659-A057B	Plate, Warning, Accumulator	1	80001-
29		14X-98-35310	Plate, Air Cleaner Replace	1	80001-
30		6217-71-6480	Plate, Fuel Filter Replace	1	80001-
31		14X-98-35140	Plate, Pre Filter Caution	1	80001-
32		09669-0000E	Plate, Caution, Diesel Fuel	1	80001-
33		09649-02012	Plate	1	80001-
34		09842-A0481	Plate, Caution, No Jump Start	1	80001-
35		09642-12000	Plate, Coolant	1	80001-

FIG. U0100-034001 Marks And Plates, Italian, EU Regulation Guard Level 2, With Power Angle Power Tilt Dozer

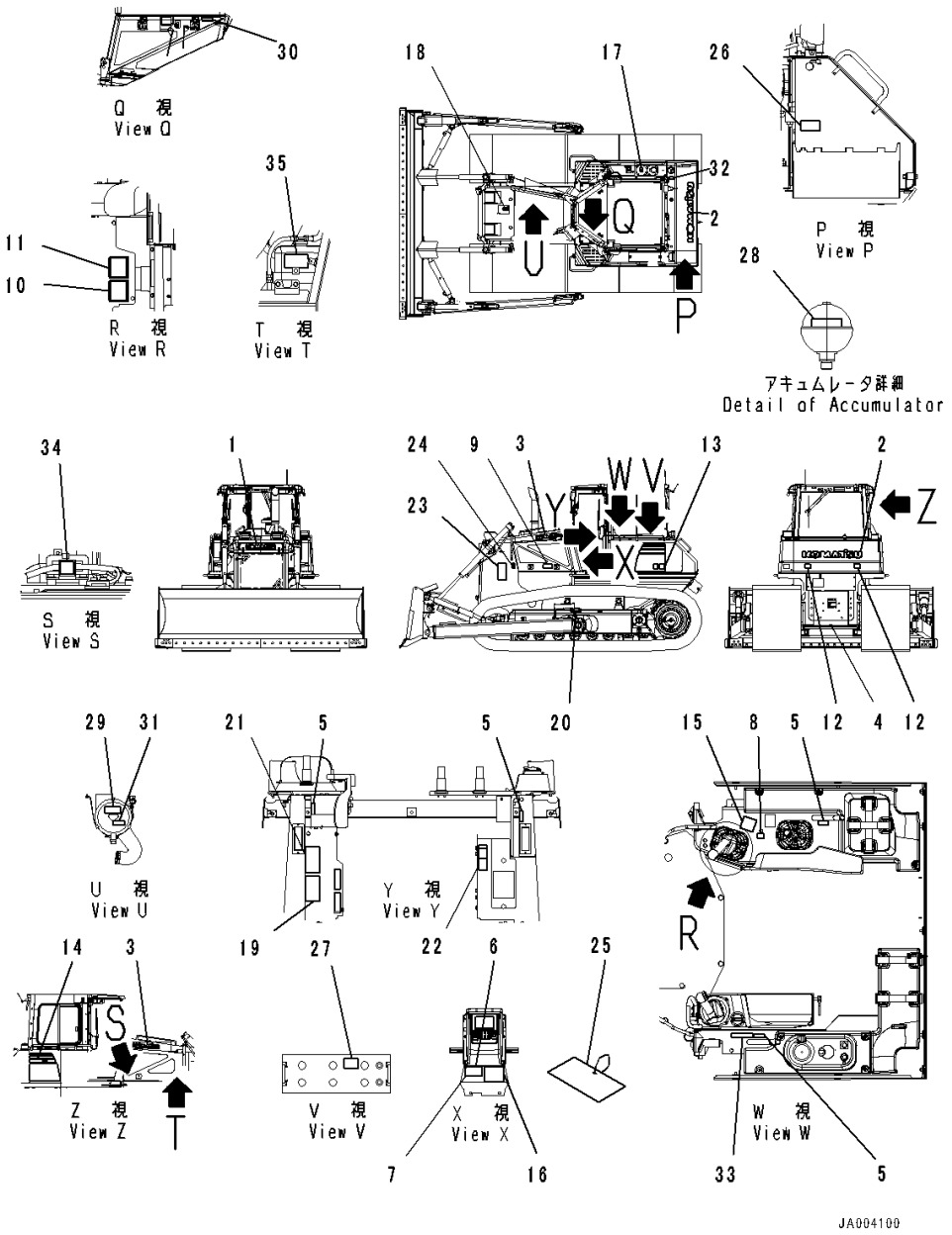

Index	Code	Part Number	Description	Qty	Serial Number
1		09690-F0560	Plate, Mark,Front	1	80001-
2		09690-P1120	Plate, Mark,Rear	1	80001-
3		09690-F0500	Decal, Komatsu Logo,Side	2	80001-
4		09690-M0063	Plate, Mark, Anti-Restamp	1	80001-
5		14X-98-11170	Plate, Operating, Lock	4	80001-
6	C2	09602-00001	Plate, Name (Limited Supply)	1	80001-
7		04418-13060	Screw	4	80001-
8		17A-98-11180	Plate, Horn	1	80001-
9		20Y-00-41530	Plate, Symbol, Ecot3	1	80001-
10		09696-50078	Plate, EU Ope Ear Noise	1	80001-
11		09696-40108	Plate, EU Around Noise	1	80001-
12		14X-98-35181	Plate, Reflector, Rear Reflecter	2	80001-
13		14X-98-51150	Decal, Machine Model,LHS	1	80001-
14		14X-98-51250	Decal, Machine Model,RHS	1	80001-
15		124-98-51140	Plate, Work Equipment	1	80001-
16		14X-98-51221	Oil Chart	1	80001-
17		09653-A0481	Plate, Warning, High Temperature, Operating Oil Tank	1	80001-
18		09653-A0481	Plate, Warning, High Temperature, Radiator	1	80001-
19		09654-B0641	Plate	1	80001-
20		09657-A0881	Plate	2	80001-
21		09651-A0641	Plate	1	80001-
22		09802-16000	Plate	1	80001-
23		09806-B1683	Plate	2	80001-
24		09667-A0481	Plate, Caution, Rotating Object, While Engine Is Running. Don't Open Cover	2	80001-
25		09963-A1640	Tag, Danger, Do Not Operate	1	80001-
26		09808-A0881	Plate	1	80001-
27		09664-60000	Decal, Danger, Battery	2	80001-
28		09659-A057B	Plate, Warning, Accumulator	1	80001-
29		14X-98-35420	Plate, Air Cleaner Replace	1	80001-
30		6217-71-6550	Plate	1	80001-
31		14X-98-35250	Plate, Pre Filter Replace	1	80001-
32		09669-0000E	Plate, Caution, Diesel Fuel	1	80001-
33		09649-06012	Plate, Engine Stop	1	80001-
34		09842-A0481	Plate, Caution, No Jump Start	1	80001-
35		09642-16000	Plate, Specify Coolant	1	80001-

FIG. U0100-035001 Marks And Plates, Portuguese, EU Regulation Guard Level 2, With Power Angle Power Tilt Dozer

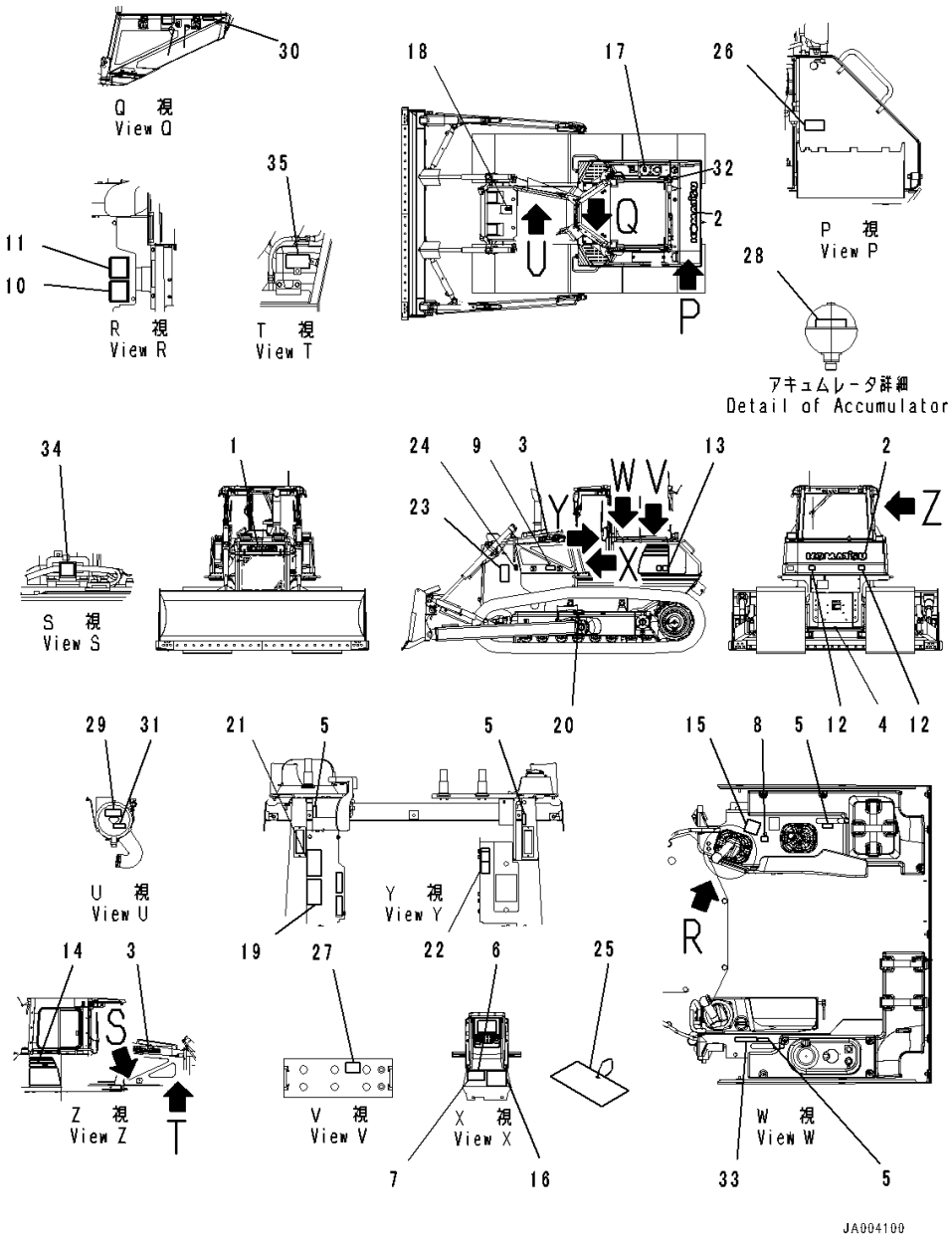

Index	Code	Part Number	Description	Qty	Serial Number
1		09690-F0560	Plate, Mark,Front	1	80001-
2		09690-P1120	Plate, Mark,Rear	1	80001-
3		09690-F0500	Decal, Komatsu Logo,Side	2	80001-
4		09690-M0063	Plate, Mark, Anti-Restamp	1	80001-
5		14X-98-11170	Plate, Operating, Lock	4	80001-
6	C2	09602-00001	Plate, Name (Limited Supply)	1	80001-
7		04418-13060	Screw	4	80001-
8		17A-98-11180	Plate, Horn	1	80001-
9		20Y-00-41530	Plate, Symbol, Ecot3	1	80001-
10		09696-50078	Plate, EU Ope Ear Noise	1	80001-
11		09696-40108	Plate, EU Around Noise	1	80001-
12		14X-98-35181	Plate, Reflector, Rear Reflecter	2	80001-
13		14X-98-51150	Decal, Machine Model,LHS	1	80001-
14		14X-98-51250	Decal, Machine Model,RHS	1	80001-
15		124-98-51140	Plate, Work Equipment	1	80001-
16		14X-98-51221	Oil Chart	1	80001-
17		09653-A0481	Plate, Warning, High Temperature, Operating Oil Tank	1	80001-
18		09653-A0481	Plate, Warning, High Temperature, Radiator	1	80001-
19		09654-B0641	Plate	1	80001-
20		09657-A0881	Plate	2	80001-
21		09651-A0641	Plate	1	80001-
22		09802-17000	Plate, Safety Confirm Of Rear	1	80001-
23		09806-B1683	Plate	2	80001-
24		09667-A0481	Plate, Caution, Rotating Object, While Engine Is Running. Don't Open Cover	2	80001-
25		09963-A1640	Tag, Danger, Do Not Operate	1	80001-
26		09808-A0881	Plate	1	80001-
27		09664-60000	Decal, Danger, Battery	2	80001-
28		09659-A057B	Plate, Warning, Accumulator	1	80001-
29		14X-98-35330	Plate, Air Cleaner Replace	1	80001-
30		6217-71-6610	Plate, Fuel Filter Replace	1	80001-
31		14X-98-35160	Plate, Pre Cleaner Caution	1	80001-
32		09669-0000E	Plate, Caution, Diesel Fuel	1	80001-
33		09649-07012	Plate, Service Instruction	1	80001-
34		09842-A0481	Plate, Caution, No Jump Start	1	80001-
35		09642-17000	Plate, Specify Coolant	1	80001-

FIG. U0100-036001 Marks And Plates, Turkish, EU Regulation Guard Level 2, With Power Angle Power Tilt Dozer

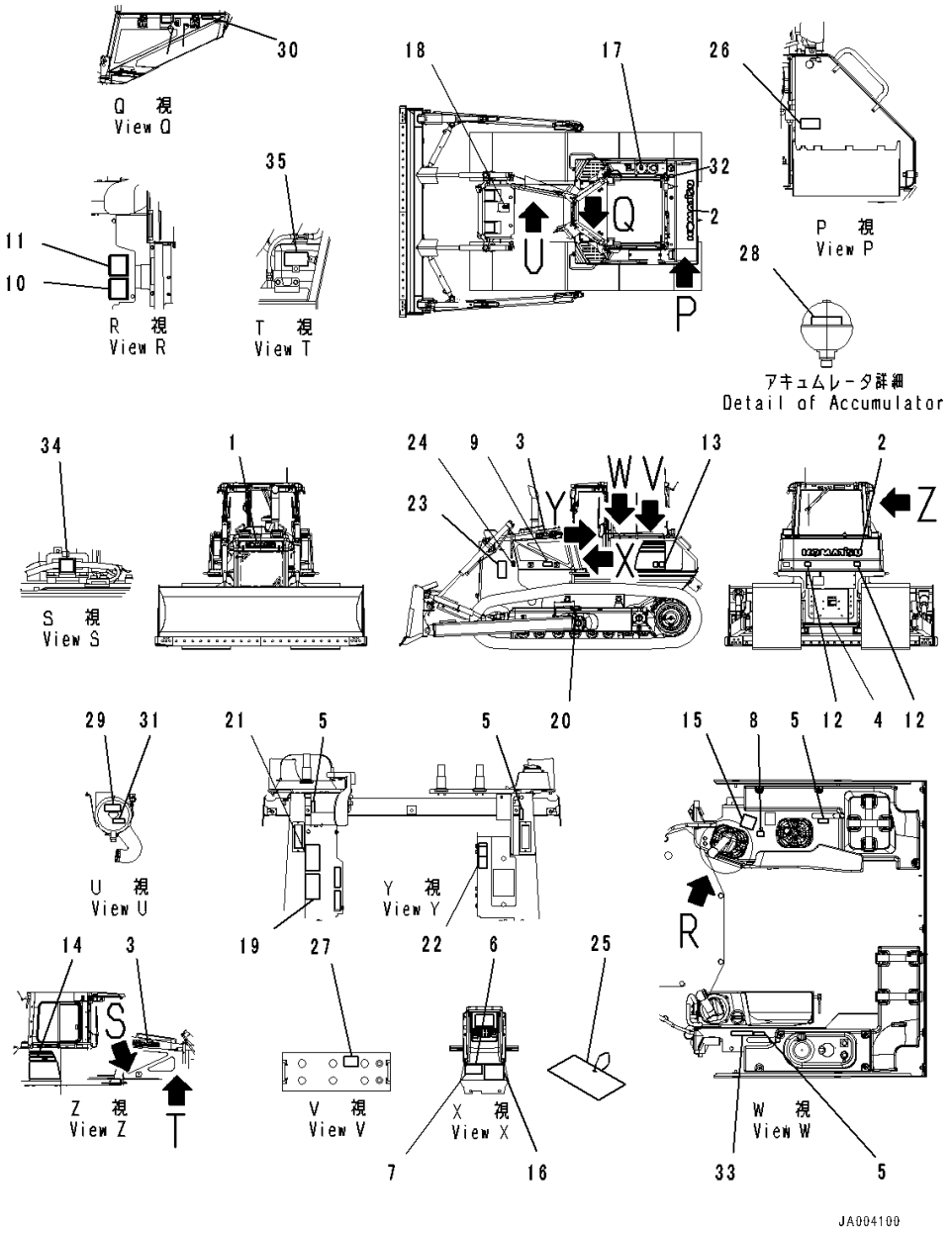

Index	Code	Part Number	Description	Qty	Serial Number
1		09690-F0560	Plate, Mark,Front	1	80001-
2		09690-P1120	Plate, Mark,Rear	1	80001-
3		09690-F0500	Decal, Komatsu Logo,Side	2	80001-
4		09690-M0063	Plate, Mark, Anti-Restamp	1	80001-
5		14X-98-11170	Plate, Operating, Lock	4	80001-
6	C2	09602-00001	Plate, Name (Limited Supply)	1	80001-
7		04418-13060	Screw	4	80001-
8		17A-98-11180	Plate, Horn	1	80001-
9		20Y-00-41530	Plate, Symbol, Ecot3	1	80001-
10		09696-50078	Plate, EU Ope Ear Noise	1	80001-
11		09696-40108	Plate, EU Around Noise	1	80001-
12		14X-98-35181	Plate, Reflector, Rear Reflecter	2	80001-
13		14X-98-51150	Decal, Machine Model,LHS	1	80001-
14		14X-98-51250	Decal, Machine Model,RHS	1	80001-
15		124-98-51140	Plate, Work Equipment	1	80001-
16		14X-98-51221	Oil Chart	1	80001-
17		09653-A0481	Plate, Warning, High Temperature, Operating Oil Tank	1	80001-
18		09653-A0481	Plate, Warning, High Temperature, Radiator	1	80001-
19		09654-B0641	Plate	1	80001-
20		09657-A0881	Plate	2	80001-
21		09651-A0641	Plate	1	80001-
22		17M-98-41320	Plate, Safety Confirm Of Rear	1	80001-
23		09806-B1683	Plate	2	80001-
24		09667-A0481	Plate, Caution, Rotating Object, While Engine Is Running. Don't Open Cover	2	80001-
25		09963-A1640	Tag, Danger, Do Not Operate	1	80001-
26		09808-A0881	Plate	1	80001-
27		09664-60000	Decal, Danger, Battery	2	80001-
28		09659-A057B	Plate, Warning, Accumulator	1	80001-
29		17A-98-21720	Plate, Air Cleaner Replace	1	80001-
30		6217-71-6680	Plate, Fuel Filter Replace	1	80001-
31		14X-98-35170	Plate, Pre Filter Caution	1	80001-
32		09669-0000E	Plate, Caution, Diesel Fuel	1	80001-
33		17A-98-23510	Plate, Engine Stop	1	80001-
34		09842-A0481	Plate, Caution, No Jump Start	1	80001-
35		09642-11100	Plate, Specify Coolant	1	80001-

FIG. U0100-037001 Marks And Plates, Italian

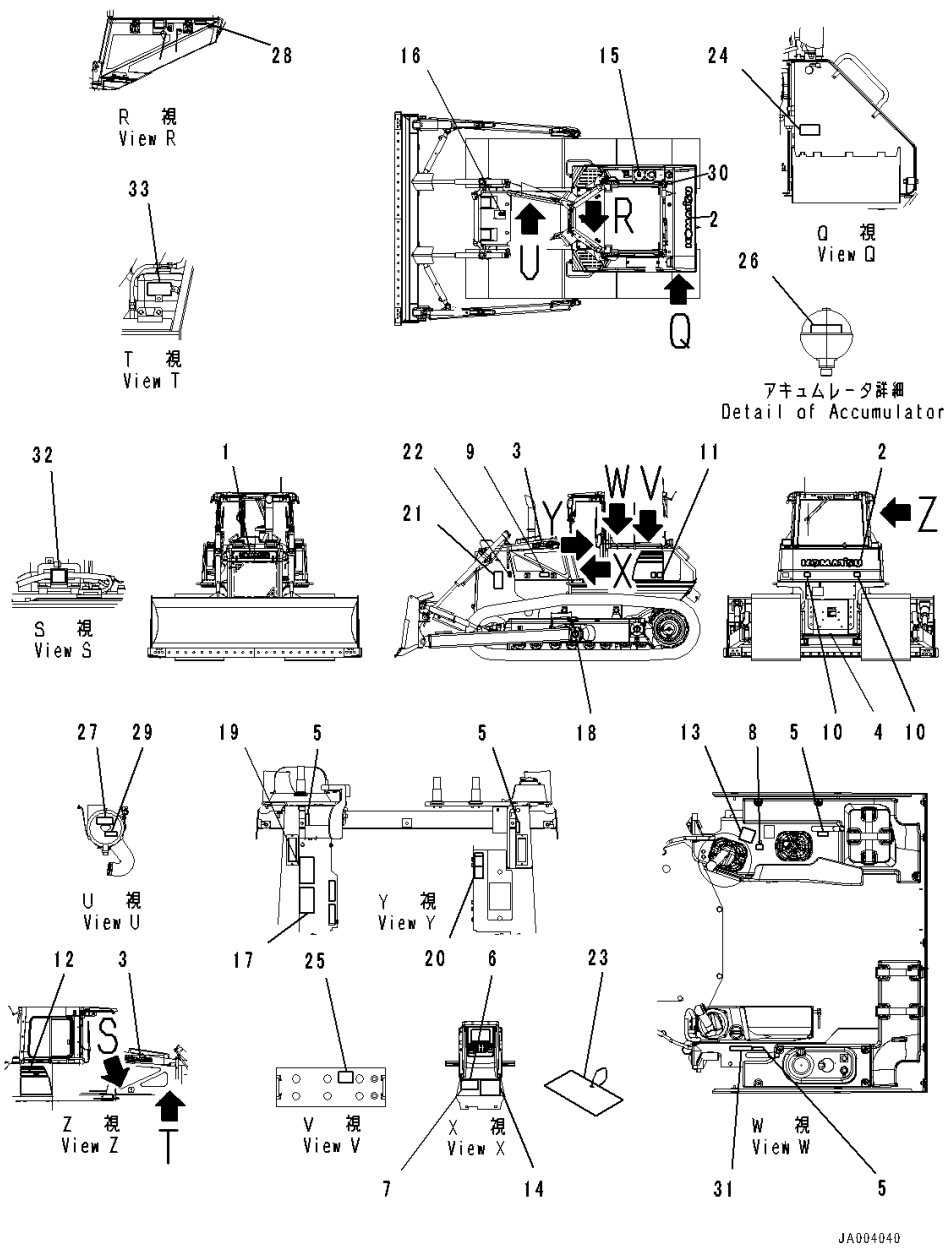

Index	Code	Part Number	Description	Qty	Serial Number
1		09690-F0560	Plate, Mark,Front	1	80001-
2		09690-P1120	Plate, Mark,Rear	1	80001-
3		09690-F0500	Decal, Komatsu Logo,Side	2	80001-
4		09690-M0063	Plate, Mark, Anti-Restamp	1	80001-
5		14X-98-11170	Plate, Operating, Lock	4	80001-
6	C2	09602-10001	Plate, Name (Limited Supply)	1	80001-
7		04418-13060	Screw	4	80001-
8		17A-98-11180	Plate, Horn	1	80001-
9		20Y-00-41530	Plate, Symbol, Ecot3	1	80001-
10		14X-98-35181	Plate, Reflector, Rear Reflecter	2	80001-
11		14X-98-51150	Decal, Machine Model,LHS	1	80001-
12		14X-98-51250	Decal, Machine Model,RHS	1	80001-
13		14X-98-11250	Plate, Work Equipment	1	80001-
14		14X-98-51211	Oil Chart	1	80001-
15		09653-A0481	Plate, Warning, High Temperature, Operating Oil Tank	1	80001-
16		09653-A0481	Plate, Warning, High Temperature, Radiator	1	80001-
17		09654-B0641	Plate	1	80001-
18		09657-A0881	Plate	2	80001-
19		09651-A0641	Plate	1	80001-
20		09802-16000	Plate	1	80001-
21		09806-B1683	Plate	2	80001-
22		09667-A0481	Plate, Caution, Rotating Object, While Engine Is Running. Don't Open Cover	2	80001-
23		09963-A1640	Tag, Danger, Do Not Operate	1	80001-
24		09808-A0881	Plate	1	80001-
25		09664-70001	Decal, Danger, Battery	2	80001-
26		09659-A057B	Plate, Warning, Accumulator	1	80001-
27		14X-98-35420	Plate, Air Cleaner Replace	1	80001-
28		6217-71-6550	Plate	1	80001-
29		14X-98-35250	Plate, Pre Filter Replace	1	80001-
30		09669-0000E	Plate, Caution, Diesel Fuel	1	80001-
31		09649-06012	Plate, Engine Stop	1	80001-
32		09842-A0481	Plate, Caution, No Jump Start	1	80001-
33		09642-16000	Plate, Specify Coolant	1	80001-

FIG. U0100-038001 Marks And Plates, Italian, With Power Tilt Pitch Dozer

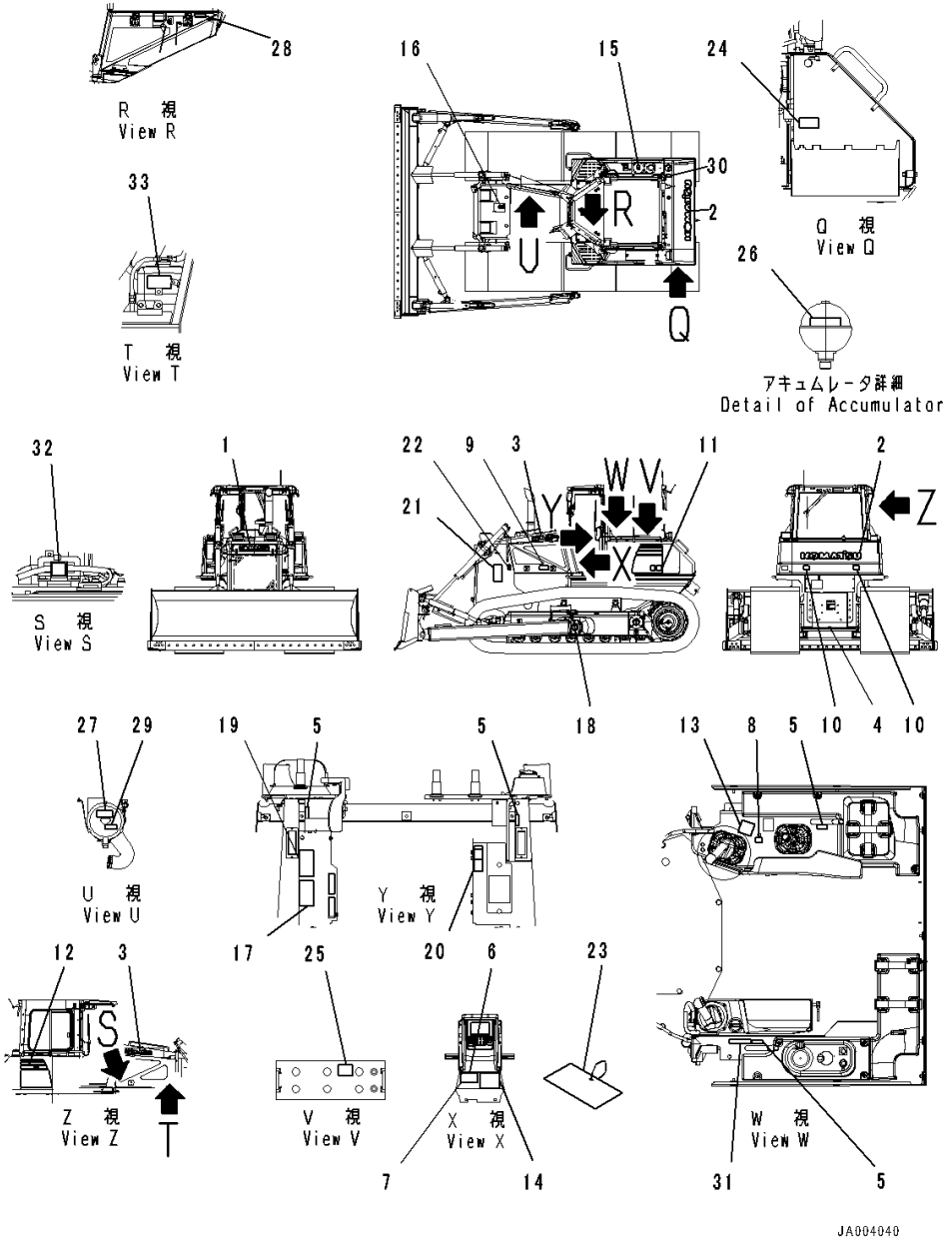

Index	Code	Part Number	Description	Qty	Serial Number
1		09690-F0560	Plate, Mark,Front	1	80001-
2		09690-P1120	Plate, Mark,Rear	1	80001-
3		09690-F0500	Decal, Komatsu Logo,Side	2	80001-
4		09690-M0063	Plate, Mark, Anti-Restamp	1	80001-
5		14X-98-11170	Plate, Operating, Lock	4	80001-
6	C2	09602-10001	Plate, Name (Limited Supply)	1	80001-
7		04418-13060	Screw	4	80001-
8		17A-98-11180	Plate, Horn	1	80001-
9		20Y-00-41530	Plate, Symbol, Ecot3	1	80001-
10		14X-98-35181	Plate, Reflector, Rear Reflecter	2	80001-
11		14X-98-51150	Decal, Machine Model,LHS	1	80001-
12		14X-98-51250	Decal, Machine Model,RHS	1	80001-
13		14X-98-11270	Plate, Work Equipment	1	80001-
14		14X-98-51211	Oil Chart	1	80001-
15		09653-A0481	Plate, Warning, High Temperature, Operating Oil Tank	1	80001-
16		09653-A0481	Plate, Warning, High Temperature, Radiator	1	80001-
17		09654-B0641	Plate	1	80001-
18		09657-A0881	Plate	2	80001-
19		09651-A0641	Plate	1	80001-
20		09802-16000	Plate	1	80001-
21		09806-B1683	Plate	2	80001-
22		09667-A0481	Plate, Caution, Rotating Object, While Engine Is Running. Don't Open Cover	2	80001-
23		09963-A1640	Tag, Danger, Do Not Operate	1	80001-
24		09808-A0881	Plate	1	80001-
25		09664-70001	Decal, Danger, Battery	2	80001-
26		09659-A057B	Plate, Warning, Accumulator	1	80001-
27		14X-98-35420	Plate, Air Cleaner Replace	1	80001-
28		6217-71-6550	Plate	1	80001-
29		14X-98-35250	Plate, Pre Filter Replace	1	80001-
30		09669-0000E	Plate, Caution, Diesel Fuel	1	80001-
31		09649-06012	Plate, Engine Stop	1	80001-
32		09842-A0481	Plate, Caution, No Jump Start	1	80001-
33		09642-16000	Plate, Specify Coolant	1	80001-

FIG. U0100-039001 Marks And Plates, Italian, With Power Angle Power Tilt Dozer

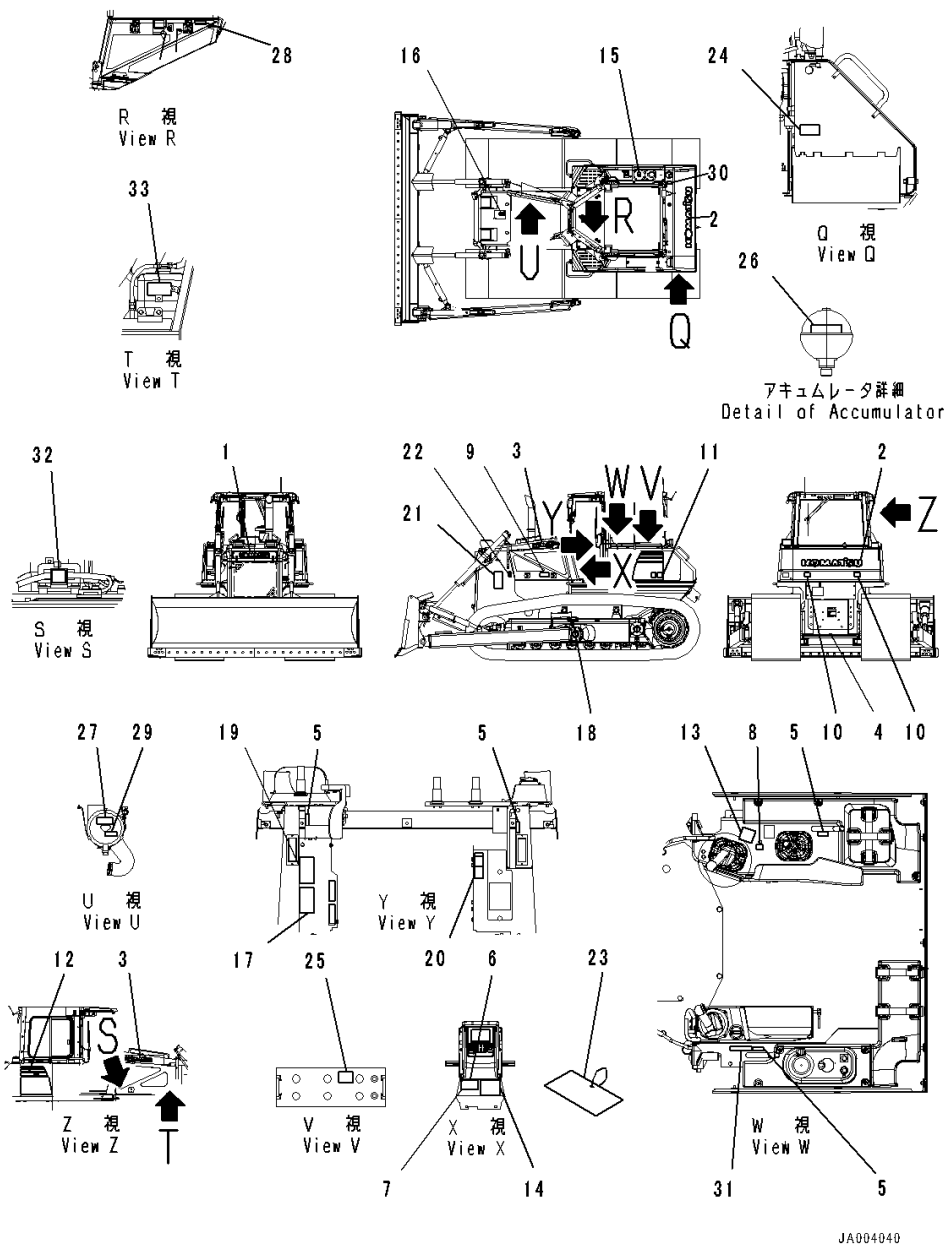

Index	Code	Part Number	Description	Qty	Serial Number
1		09690-F0560	Plate, Mark,Front	1	80001-
2		09690-P1120	Plate, Mark,Rear	1	80001-
3		09690-F0500	Decal, Komatsu Logo,Side	2	80001-
4		09690-M0063	Plate, Mark, Anti-Restamp	1	80001-
5		14X-98-11170	Plate, Operating, Lock	4	80001-
6	C2	09602-10001	Plate, Name (Limited Supply)	1	80001-
7		04418-13060	Screw	4	80001-
8		17A-98-11180	Plate, Horn	1	80001-
9		20Y-00-41530	Plate, Symbol, Ecot3	1	80001-
10		14X-98-35181	Plate, Reflector, Raer Reflecter	2	80001-
11		14X-98-51150	Decal, Machine Model,LHS	1	80001-
12		14X-98-51250	Decal, Machine Model,RHS	1	80001-
13		124-98-51140	Plate, Work Equipment	1	80001-
14		14X-98-51221	Oil Chart	1	80001-
15		09653-A0481	Plate, Warning, High Temperature, Operating Oil Tank	1	80001-
16		09653-A0481	Plate, Warning, High Temperature, Radiator	1	80001-
17		09654-B0641	Plate	1	80001-
18		09657-A0881	Plate	2	80001-
19		09651-A0641	Plate	1	80001-
20		09802-16000	Plate	1	80001-
21		09806-B1683	Plate	2	80001-
22		09667-A0481	Plate, Caution, Rotating Object, While Engine Is Running. Don't Open Cover	2	80001-
23		09963-A1640	Tag, Danger, Do Not Operate	1	80001-
24		09808-A0881	Plate	1	80001-
25		09664-70001	Decal, Danger, Battery	2	80001-
26		09659-A057B	Plate, Warning, Accumulator	1	80001-
27		14X-98-35420	Plate, Air Cleaner Replace	1	80001-
28		6217-71-6550	Plate	1	80001-
29		14X-98-35250	Plate, Pre Filter Replace	1	80001-
30		09669-0000E	Plate, Caution, Diesel Fuel	1	80001-
31		09649-06012	Plate, Engine Stop	1	80001-
32		09842-A0481	Plate, Caution, No Jump Start	1	80001-
33		09642-16000	Plate, Specify Coolant	1	80001-

FIG. U0100-040001 Marks And Plates, Portuguese

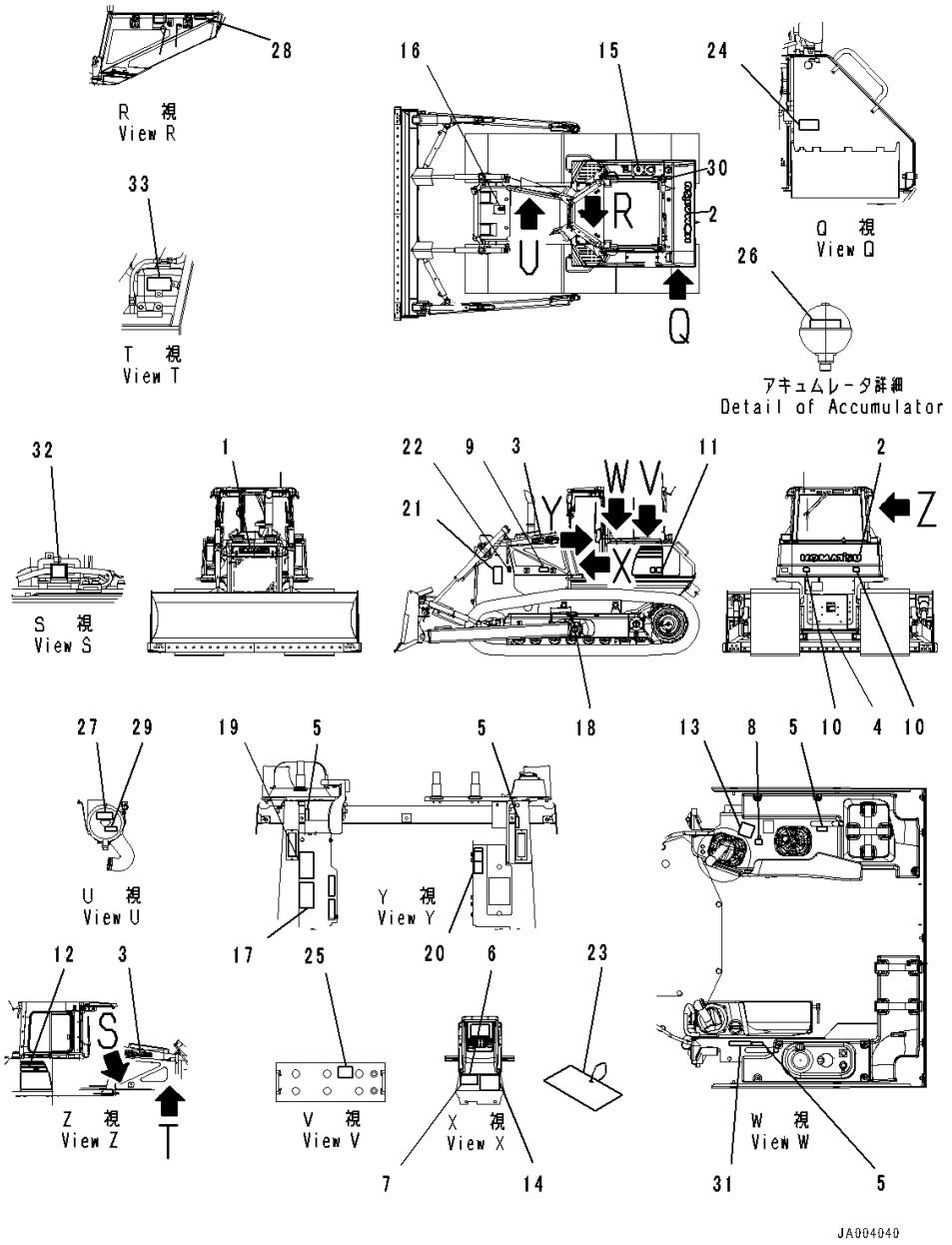

Index	Code	Part Number	Description	Qty	Serial Number
1		09690-F0560	Plate, Mark,Front	1	80001-
2		09690-P1120	Plate, Mark,Rear	1	80001-
3		09690-F0500	Decal, Komatsu Logo,Side	2	80001-
4		09690-M0063	Plate, Mark, Anti-Restamp	1	80001-
5		14X-98-11170	Plate, Operating, Lock	4	80001-
6	C2	09602-10001	Plate, Name (Limited Supply)	1	80001-
7		04418-13060	Screw	4	80001-
8		17A-98-11180	Plate, Horn	1	80001-
9		20Y-00-41530	Plate, Symbol, Ecot3	1	80001-
10		14X-98-35181	Plate, Reflector, Rear Reflecter	2	80001-
11		14X-98-51150	Decal, Machine Model,LHS	1	80001-
12		14X-98-51250	Decal, Machine Model,RHS	1	80001-
13		14X-98-11250	Plate, Work Equipment	1	80001-
14		14X-98-51211	Oil Chart	1	80001-
15		09653-A0481	Plate, Warning, High Temperature, Operating Oil Tank	1	80001-
16		09653-A0481	Plate, Warning, High Temperature, Radiator	1	80001-
17		09654-B0641	Plate	1	80001-
18		09657-A0881	Plate	2	80001-
19		09651-A0641	Plate	1	80001-
20		09802-17000	Plate, Safety Confirm Of Rear	1	80001-
21		09806-B1683	Plate	2	80001-
22		09667-A0481	Plate, Caution, Rotating Object, WhileEngine Is Running. Don't Open Cover..	2	80001-
23		09963-A1640	Tag, Danger, Do Not Operate	1	80001-
24		09808-A0881	Plate	1	80001-
25		09664-70001	Decal, Danger, Battery	2	80001-
26		09659-A057B	Plate, Warning, Accumulator	1	80001-
27		14X-98-35330	Plate, Air Cleaner Replace	1	80001-
28		6217-71-6610	Plate, Fuel Filter Replace	1	80001-
29		14X-98-35160	Plate, Pre Filter Caution	1	80001-
30		09669-0000E	Plate, Caution, Diesel Fuel	1	80001-
31		09649-07012	Plate, Service Instruction	1	80001-
32		09842-A0481	Plate, Caution, No Jump Start	1	80001-
33		09642-17000	Plate, Specify Coolant	1	80001-

FIG. U0100-041001 Marks And Plates, Portuguese, With Power Tilt Pitch Dozer

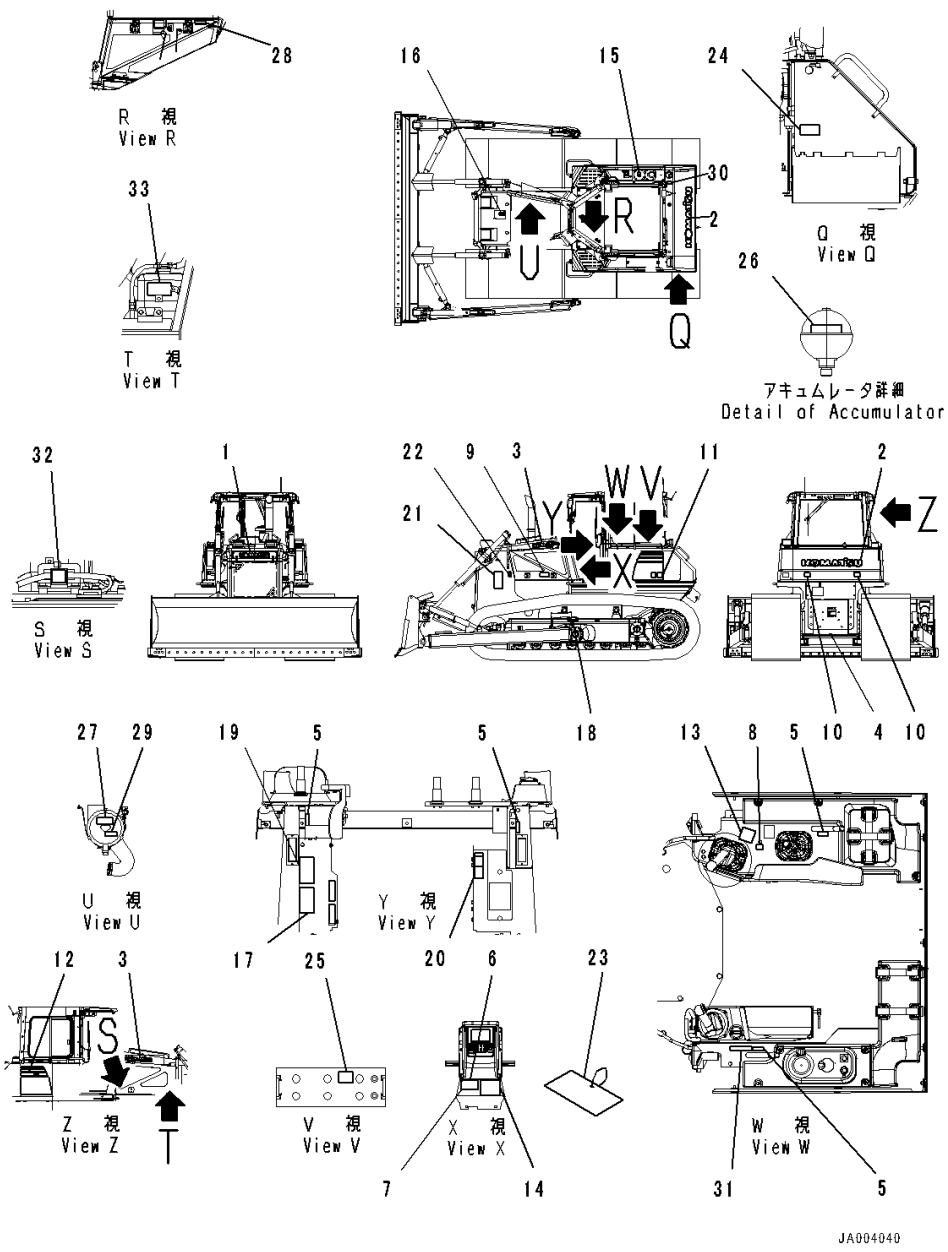

Index	Code	Part Number	Description	Qty	Serial Number
1		09690-F0560	Plate, Mark,Front	1	80001-
2		09690-P1120	Plate, Mark,Rear	1	80001-
3		09690-F0500	Decal, Komatsu Logo,Side	2	80001-
4		09690-M0063	Plate, Mark, Anti-Restamp	1	80001-
5		14X-98-11170	Plate, Operating, Lock	4	80001-
6	C2	09602-10001	Plate, Name (Limited Supply)	1	80001-
7		04418-13060	Screw	4	80001-
8		17A-98-11180	Plate, Horn	1	80001-
9		20Y-00-41530	Plate, Symbol, Ecot3	1	80001-
10		14X-98-35181	Plate, Reflector, Rear Reflecter	2	80001-
11		14X-98-51150	Decal, Machine Model,LHS	1	80001-
12		14X-98-51250	Decal, Machine Model,RHS	1	80001-
13		14X-98-11270	Plate, Work Equipment	1	80001-
14		14X-98-51211	Oil Chart	1	80001-
15		09653-A0481	Plate, Warning, High Temperature, Operating Oil Tank	1	80001-
16		09653-A0481	Plate, Warning, High Temperature, Radiator	1	80001-
17		09654-B0641	Plate	1	80001-
18		09657-A0881	Plate	2	80001-
19		09651-A0641	Plate	1	80001-
20		09802-17000	Plate, Safety Confirm Of Rear	1	80001-
21		09806-B1683	Plate	2	80001-
22		09667-A0481	Plate, Caution, Rotating Object, While Engine Is Running. Don't Open Cover	2	80001-
23		09963-A1640	Tag, Danger, Do Not Operate	1	80001-
24		09808-A0881	Plate	1	80001-
25		09664-70001	Decal, Danger, Battery	2	80001-
26		09659-A057B	Plate, Warning, Accumulator	1	80001-
27		14X-98-35330	Plate, Air Cleaner Replace	1	80001-
28		6217-71-6610	Plate, Fuel Filter Replace	1	80001-
29		14X-98-35160	Plate, Pre Filter Replace	1	80001-
30		09669-0000E	Plate, Caution, Diesel Fuel	1	80001-
31		09649-07012	Plate, Service Instruction	1	80001-
32		09842-A0481	Plate, Caution, No Jump Start	1	80001-
33		09642-17000	Plate, Specify Coolant	1	80001-

FIG. U0100-042001 Marks And Plates, Portuguese, With Power Angle Power Tilt Dozer

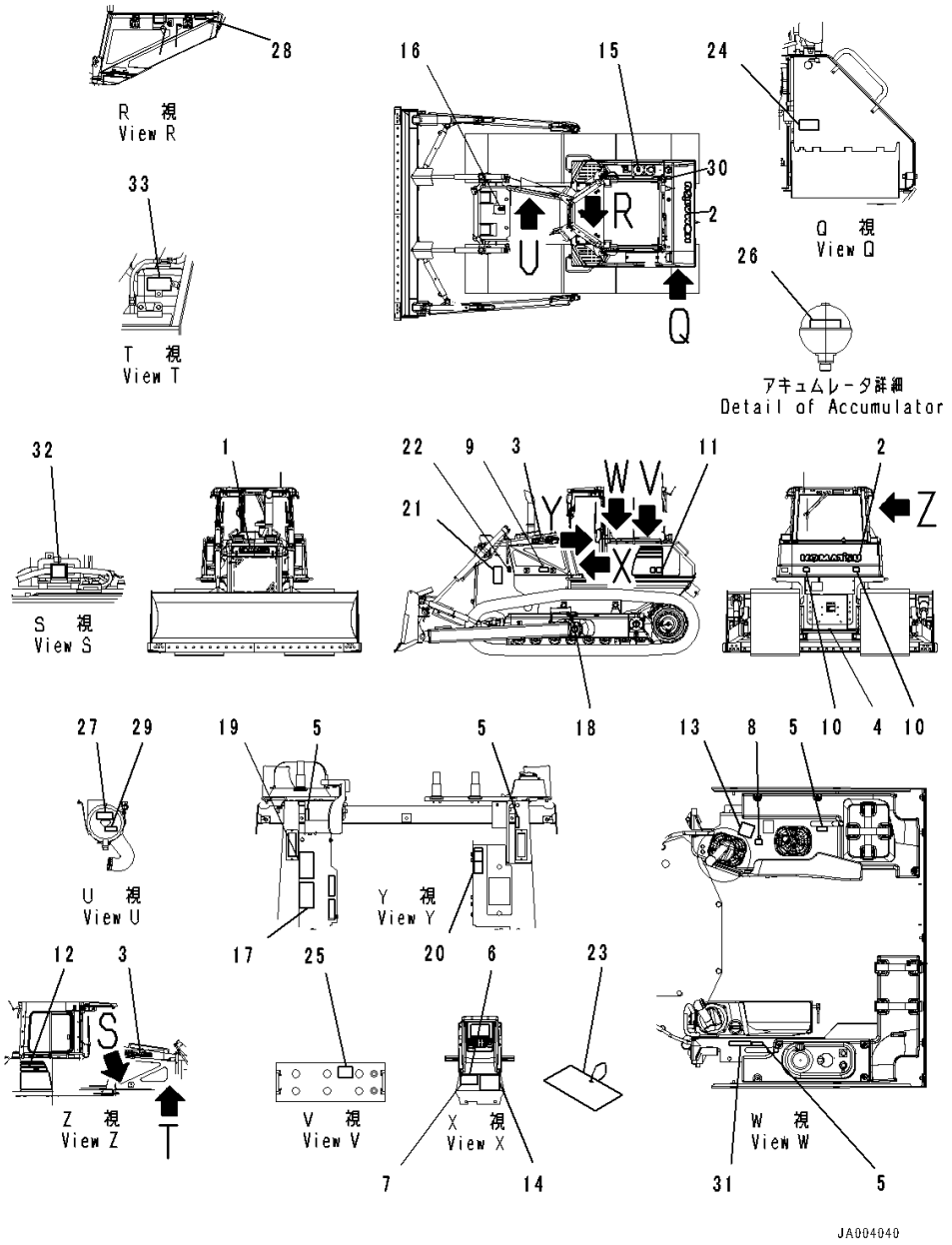

Index	Code	Part Number	Description	Qty	Serial Number
1		09690-F0560	Plate, Mark,Front	1	80001-
2		09690-P1120	Plate, Mark,Rear	1	80001-
3		09690-F0500	Decal, Komatsu Logo,Side	2	80001-
4		09690-M0063	Plate, Mark, Anti-Restamp	1	80001-
5		14X-98-11170	Plate, Operating, Lock	4	80001-
6	C2	09602-10001	Plate, Name (Limited Supply)	1	80001-
7		04418-13060	Screw	4	80001-
8		17A-98-11180	Plate, Horn	1	80001-
9		20Y-00-41530	Plate, Symbol, Ecot3	1	80001-
10		14X-98-35181	Plate, Reflector, Rear Reflecter	2	80001-
11		14X-98-51150	Decal, Machine Model,LHS	1	80001-
12		14X-98-51250	Decal, Machine Model,RHS	1	80001-
13		124-98-51140	Plate, Work Equipment	1	80001-
14		14X-98-51221	Oil Chart	1	80001-
15		09653-A0481	Plate, Warning, High Temperature, Operating Oil Tank	1	80001-
16		09653-A0481	Plate, Warning, High Temperature, Radiator	1	80001-
17		09654-B0641	Plate	1	80001-
18		09657-A0881	Plate	2	80001-
19		09651-A0641	Plate	1	80001-
20		09802-17000	Plate, Safety Confirm Of Rear	1	80001-
21		09806-B1683	Plate	2	80001-
22		09667-A0481	Plate, Caution, Rotating Object, While Engine Is Running. Don't Open Cover	2	80001-
23		09963-A1640	Tag, Danger, Do Not Operate	1	80001-
24		09808-A0881	Plate	1	80001-
25		09664-70001	Decal, Danger, Battery	2	80001-
26		09659-A057B	Plate, Warning, Accumulator	1	80001-
27		14X-98-35330	Plate, Air Cleaner Replace	1	80001-
28		6217-71-6610	Plate, Fuel Filter Replace	1	80001-
29		14X-98-35160	Plate, Pre Filter Caution	1	80001-
30		09669-0000E	Plate, Caution, Diesel Fuel	1	80001-
31		09649-07012	Plate, Service Instruction	1	80001-
32		09842-A0481	Plate, Caution, No Jump Start	1	80001-
33		09642-17000	Plate, Specify Coolant	1	80001-

FIG. U0100-045001 Marks And Plates, With Power Tilt Pitch Dozer, For EU Safety Regulation

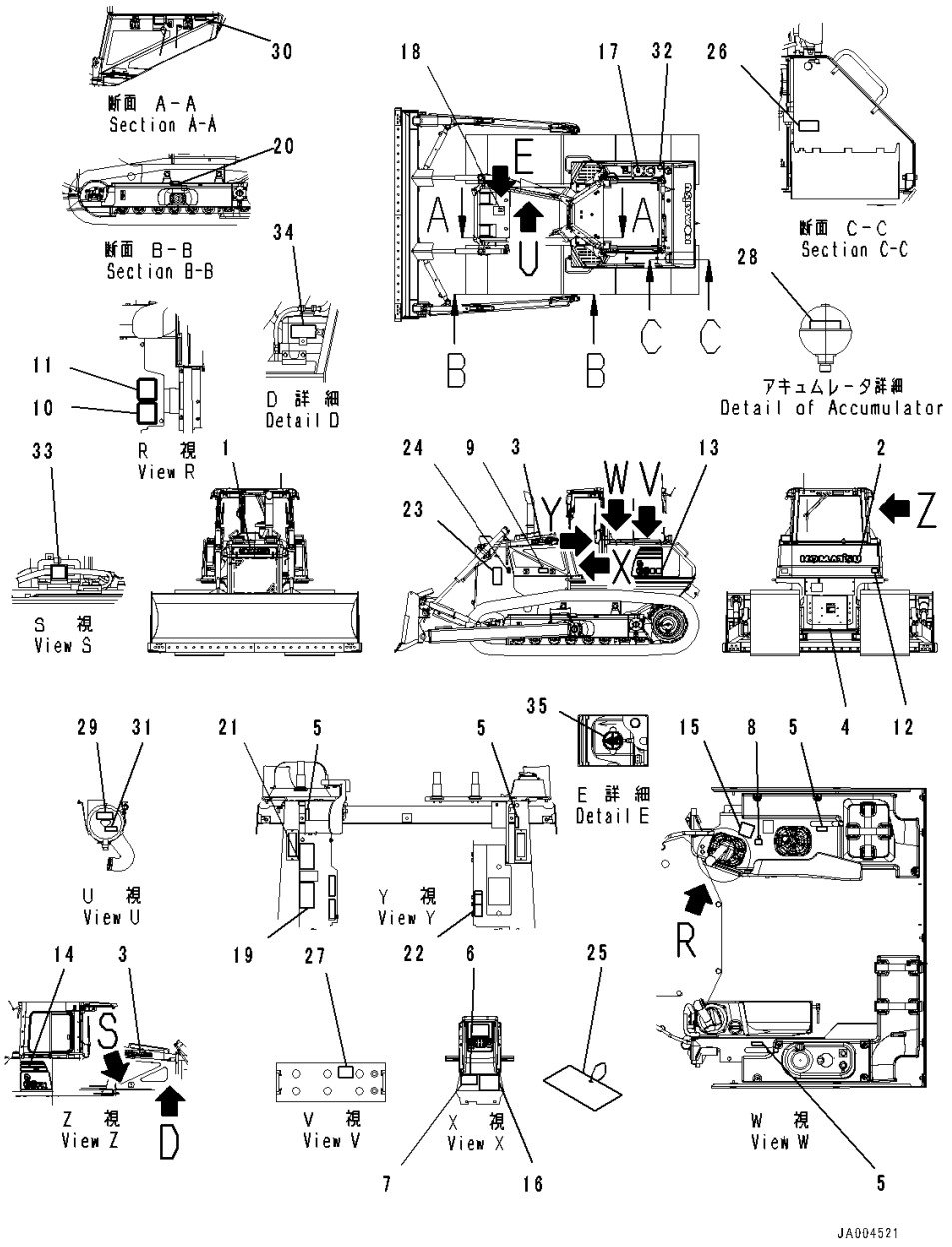

Index	Code	Part Number	Description	Qty	Serial Number
1		09690-F0560	Plate, Mark,Front	1	80062-
2		09690-P1120	Plate, Mark,Rear	1	80062-
3		09690-F0500	Decal, Komatsu Logo,Side	2	80062-
4		09690-M0063	Plate, Mark, Anti-Restamp	1	80062-
5		14X-98-11170	Plate, Operating, Lock	4	80062-
6	C2	09602-00001	Plate, Name (Limited Supply), Alumnum Plate	1	80062-
7		04418-13060	Screw	4	80062-
8		17A-98-11180	Plate, Horn	1	80062-
9		20Y-00-41530	Plate, Symbol, Ecot3	1	80062-
10		09696-50078	Plate, EU Ope Ear Noise, EU Ope Ear Noise	1	80062-
11		09696-40108	Plate, EU Around Noise, EU Around Noise	1	80062-
12		14X-98-35181	Plate, Reflector, Rear Reflecter	2	80062-
13		14X-98-51150	Decal, Machine Model	1	80062-
14		14X-98-51250	Decal, Machine Model	1	80062-
15		14X-98-11270	Plate, Work Equipment	1	80062-
16		14X-98-51211	Oil Chart	1	80062-
17		09653-A0481	Plate, Warning, High Temperature, Operating Oil Tank	1	80062-
18		09653-A0481	Plate, Warning, High Temperature, Radiator	1	80062-
19		09654-B0641	Plate, After Operating	1	80062-
20		09657-A0881	Plate, Adjustment Of Track Tension	2	80062-
21		09651-A0641	Plate, Before Operating	1	80062-
22		09802-B0640	Decal, Warning, Before Operation and Traveling	1	80062-
23		09806-B1683	Plate, Caution Danger Keep Away	2	80062-
24		09667-A0481	Plate, Caution, Rotating Object, While Engine Is Running Don't Open Cover	2	80062-
25		09963-A1640	Tag, Danger, Do Not Operate, Check And Equipment	1	80062-
26		09808-A0881	Plate, Caution Battery Cables	1	80062-
27		09664-60000	Decal, Danger, Battery	2	80062-
28		09659-A057B	Plate, Warning, Accumulator	1	80062-
29		09637-A0640	Decal, Service Instruction, Air Cleaner	1	80062-
30		6217-71-6860	Plate	1	80062-
31		6217-71-6860	Plate	1	80062-

FIG. U0100-045001 Marks And Plates, With Power Tilt Pitch Dozer, For EU Safety Regulation

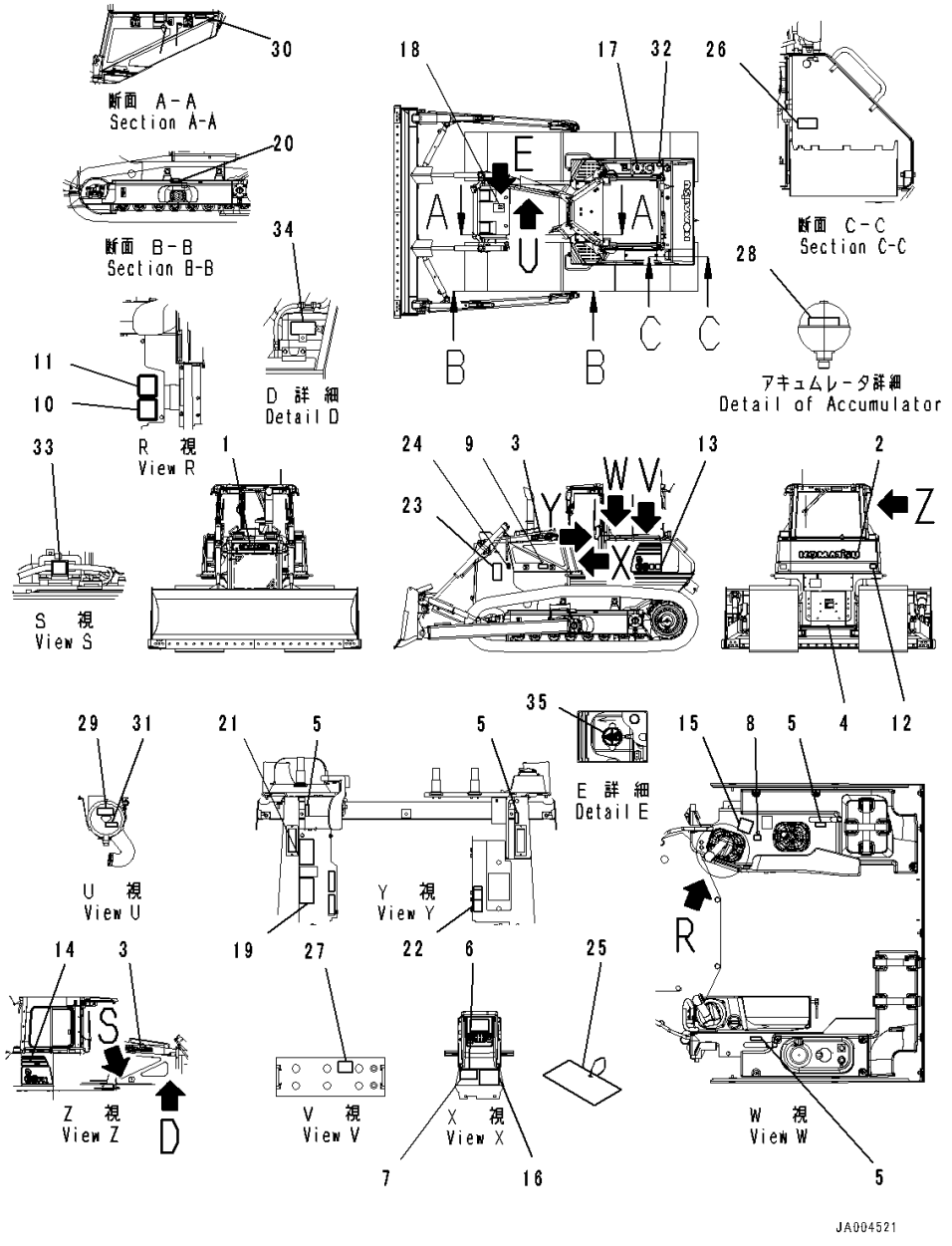

Index	Code	Part Number	Description	Qty	Serial Number
32		09669-0000E	Plate, Caution, Diesel Fuel, Fuel Direction	1	80062-
33		09842-A0481	Plate, Caution, No Jump Start	1	80062-
34		09642-A0480	Plate, Caution, Coolant	1	80062-
35		23B-53-71190	Decal, Symbol, Radiator Cap	1	80062-

FIG. U0100-046001 Marks And Plates, For EU Safety Regulation, Power Angle Power Tilt Dozer, Inside Frame

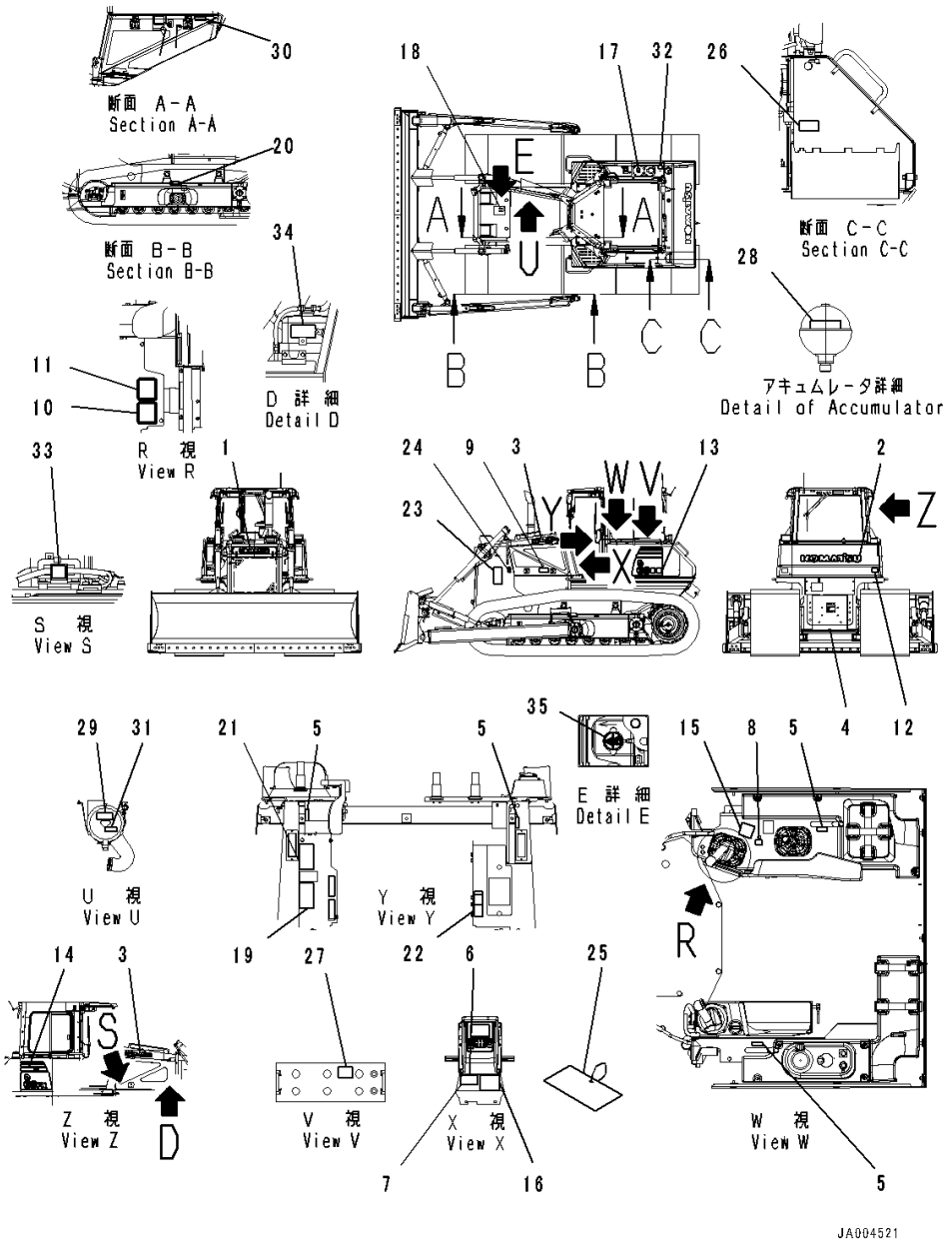

Index	Code	Part Number	Description	Qty	Serial Number
1		09690-F0560	Plate, Mark,Front	1	80062-
2		09690-P1120	Plate, Mark,Rear	1	80062-
3		09690-F0500	Decal, Komatsu Logo,Side	2	80062-
4		09690-M0063	Plate, Mark, Anti-Restamp	1	80062-
5		14X-98-11170	Plate, Operating, Lock	4	80062-
6	C2	09602-00001	Plate, Name (Limited Supply), Alumnum Plate	1	80062-
7		04418-13060	Screw	4	80062-
8		17A-98-11180	Plate, Horn	1	80062-
9		20Y-00-41530	Plate, Symbol, Ecot3	1	80062-
10		09696-50078	Plate, EU Ope Ear Noise, EU Ope Ear Noise	1	80062-
11		09696-40108	Plate, EU Around Noise, EU Around Noise	1	80062-
12		14X-98-35181	Plate, Reflector, Rear Reflecter	2	80062-
13		14X-98-51150	Decal, Machine Model	1	80062-
14		14X-98-51250	Decal, Machine Model	1	80062-
15		124-98-51140	Plate, Work Equipment	1	80062-
16		14X-98-51221	Oil Chart, For PAT	1	80062-
17		09653-A0481	Plate, Warning, High Temperature, Operating Oil Tank	1	80062-
18		09653-A0481	Plate, Warning, High Temperature, Radiator	1	80062-
19		09654-B0641	Plate, After Operating	1	80062-
20		09657-A0881	Plate, Adjustment Of Track Tension	2	80062-
21		09651-A0641	Plate, Before Operating	1	80062-
22		09802-B0640	Decal, Warning, Before Operation and Traveling	1	80062-
23		09806-B1683	Plate, Caution Danger Keep Away	2	80062-
24		09667-A0481	Plate, Caution, Rotating Object, While Engine Is Running Don't Open Cover	2	80062-
25		09963-A1640	Tag, Danger, Do Not Operate, Check And Equipment	1	80062-
26		09808-A0881	Plate, Caution Battery Cables	1	80062-
27		09664-60000	Decal, Danger, Battery	2	80062-
28		09659-A057B	Plate, Warning, Accumulator	1	80062-
29		09637-A0640	Decal, Service Instruction, Air Cleaner	1	80062-
30		6217-71-6860	Plate	1	80062-
31		6217-71-6860	Plate	1	80062-

FIG. U0100-046001 Marks And Plates, For EU Safety Regulation, Power Angle Power Tilt Dozer, Inside Frame

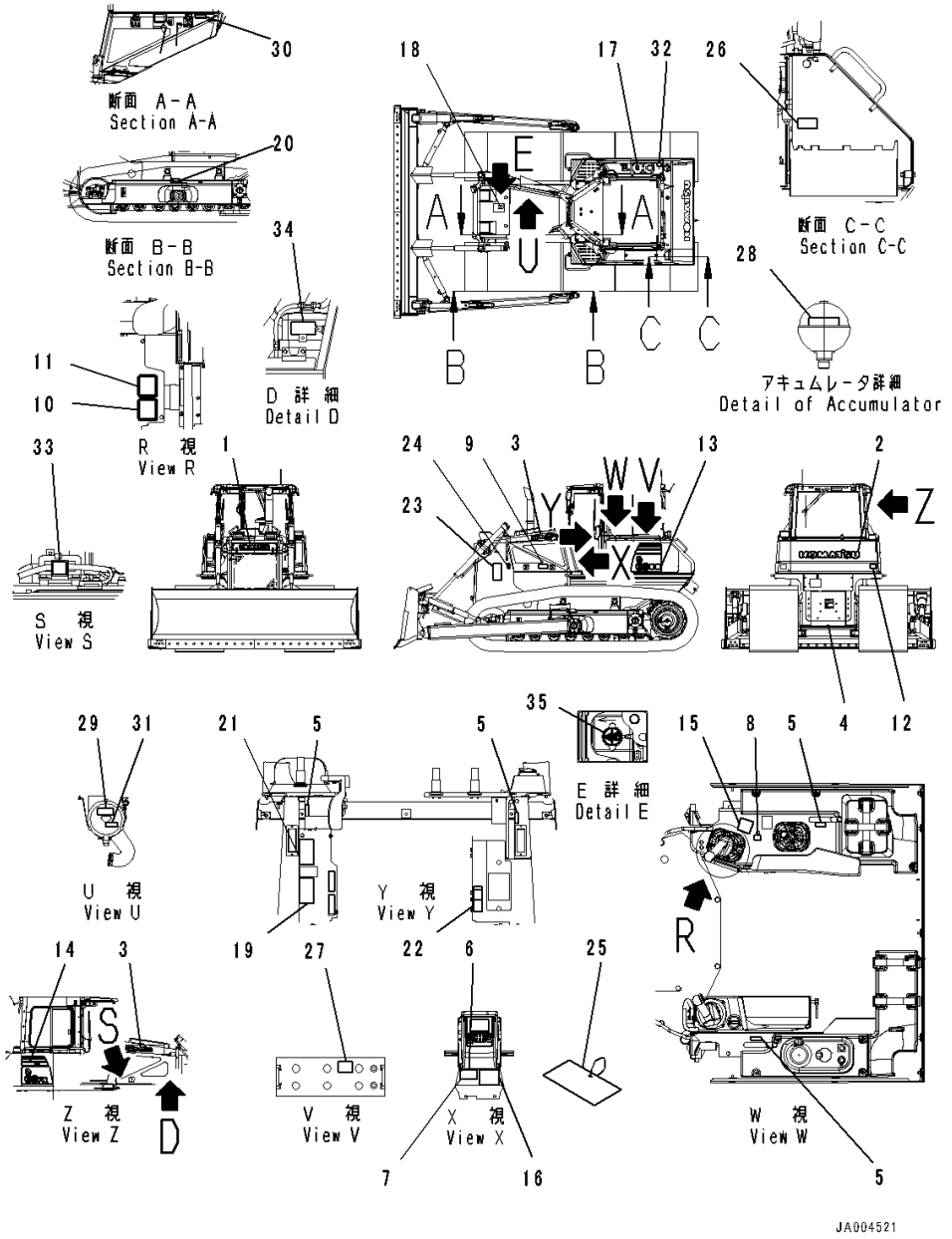

Index	Code	Part Number	Description	Qty	Serial Number
32		09669-0000E	Plate, Caution, Diesel Fuel, Fuel Direction	1	80062-
33		09842-A0481	Plate, Caution, No Jump Start	1	80062-
34		09642-A0480	Plate, Caution, Coolant	1	80062-
35		23B-53-71190	Decal, Symbol, Radiator Cap	1	80062-

FIG. U0100-044001 Marks And Plates, For EU Safety Regulation

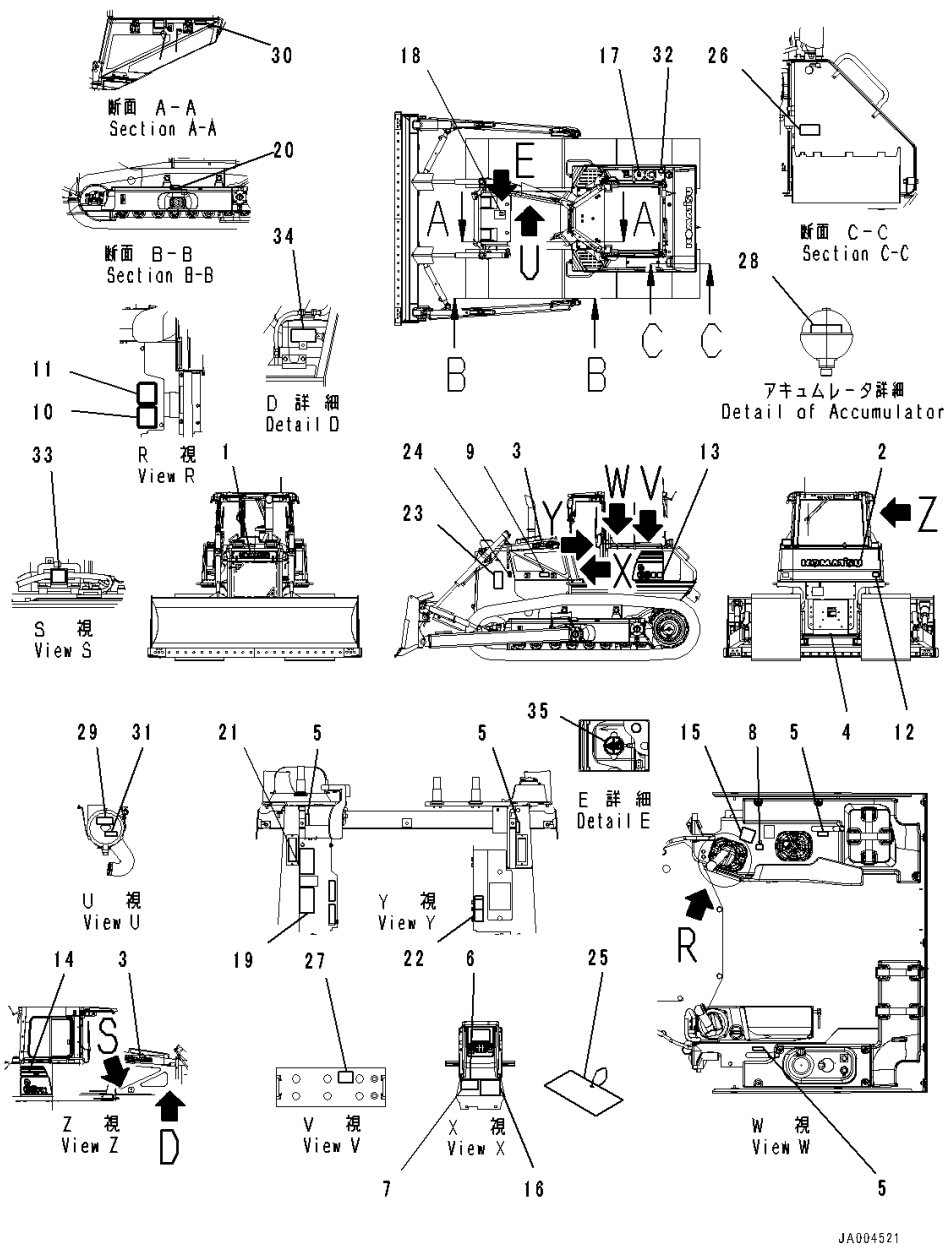

Index	Code	Part Number	Description	Qty	Serial Number
1		09690-F0560	Plate, Mark	1	80062-
2		09690-P1120	Plate, Mark	1	80062-
3		09690-F0500	Decal, Komatsu Logo	2	80062-
4		09690-M0063	Plate, Mark	1	80062-
5		14X-98-11170	Plate, Operating	4	80062-
6	C2	09602-00001	Plate, Name (Limited Supply)	1	80062-
7		04418-13060	Screw	4	80062-
8		17A-98-11180	Plate	1	80062-
9		20Y-00-41530	Plate, Symbol, Ecot3	1	80062-
10		09696-50078	Plate, EU Ope Ear Noise	1	80062-
11		09696-40108	Plate, EU Around Noise	1	80062-
12		14X-98-35181	Plate, Reflector	2	80062-
13		14X-98-51150	Decal, Machine Model	1	80062-
14		14X-98-51250	Decal, Machine Model	1	80062-
15		14X-98-11250	Plate	1	80062-
16		14X-98-51211	Oil Chart	1	80062-
17		09653-A0481	Plate, Warning, High Temperature	1	80062-
18		09653-A0481	Plate, Warning, High Temperature	1	80062-
19		09654-B0641	Plate	1	80062-
20		09657-A0881	Plate	2	80062-
21		09651-A0641	Plate	1	80062-
22		09802-B0640	Decal, Warning, Before Operation and Traveling	1	80062-
23		09806-B1683	Plate	2	80062-
24		09667-A0481	Plate, Caution, Rotating Object	2	80062-
25		09963-A1640	Tag, Danger, Do Not Operate	1	80062-
26		09808-A0881	Plate	1	80062-
27		09664-60000	Decal, Danger, Battery	2	80062-
28		09659-A057B	Plate, Warning, Accumulator	1	80062-
29		09637-A0640	Decal, Service Instruction, Air Cleaner	1	80062-
30		6217-71-6860	Plate	1	80062-
31		6217-71-6860	Plate	1	80062-
32		09669-0000E	Plate, Caution, Diesel Fuel	1	80062-
33		09842-A0481	Plate, Caution, No Jump Start	1	80062-
34		09642-A0480	Plate, Caution, Coolant	1	80062-
35		23B-53-71190	Decal, Symbol, Radiator Cap	1	80062-

FIG. U0400-001001 Balancing Mark

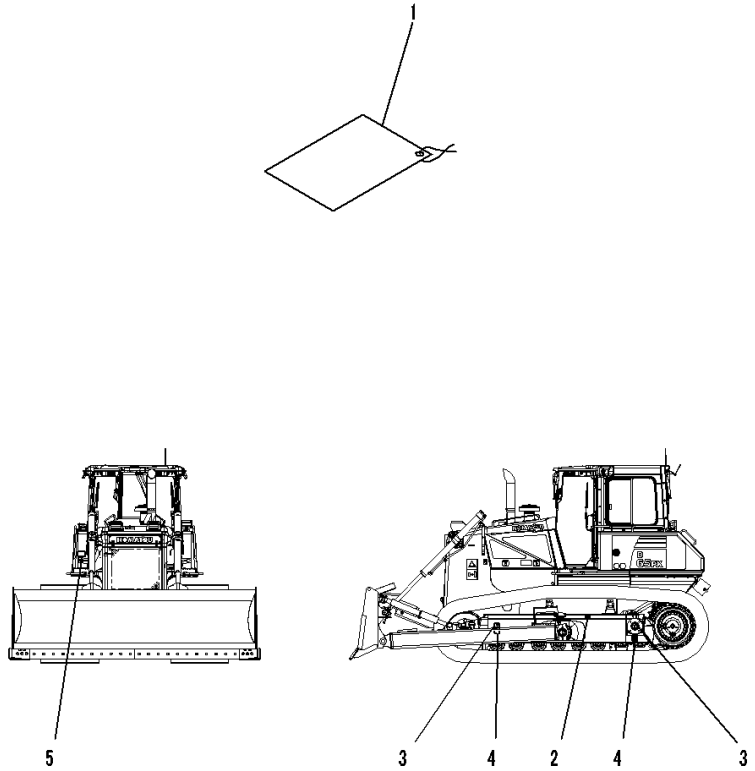

Index	Code	Part Number	Description	Qty	Serial Number
1		130-98-79210	Plate, Location Of Balance	1	80001-
2		09960-00611	Decal, Balancing Position Mark	2	80001-
3		09960-00801	Decal, Lift Point Mark, Hanging Point	4	80001-
4		09960-00802	Decal, Tie Down Point Mark, Tie Position	4	80001-
5		17A-98-41510	Plate, Mark, Hanging Posture And Tie Posture	1	80001-

FIG. U0520-001001 ROPS/FOPS Plate, English

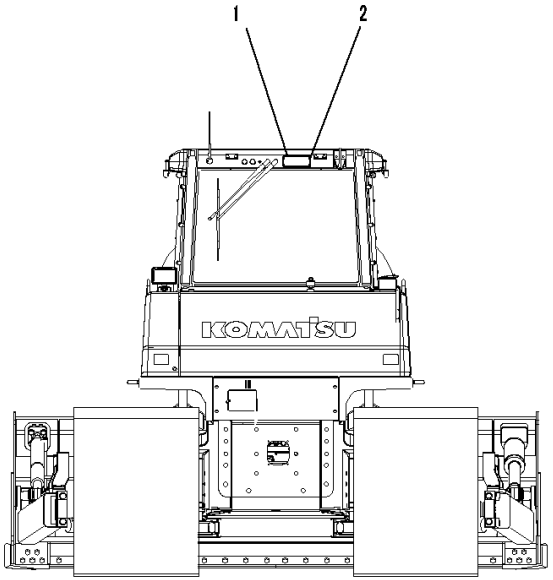

JA002754

Index	Code	Part Number	Description	Qty	Serial Number
1	C2	09620-A2000	Plate, Name (Limited Supply)	1	80001-
2		04418-13060	Screw	4	80001-

FIG. U0520-002001 ROPS/FOPS Plate, Spanish

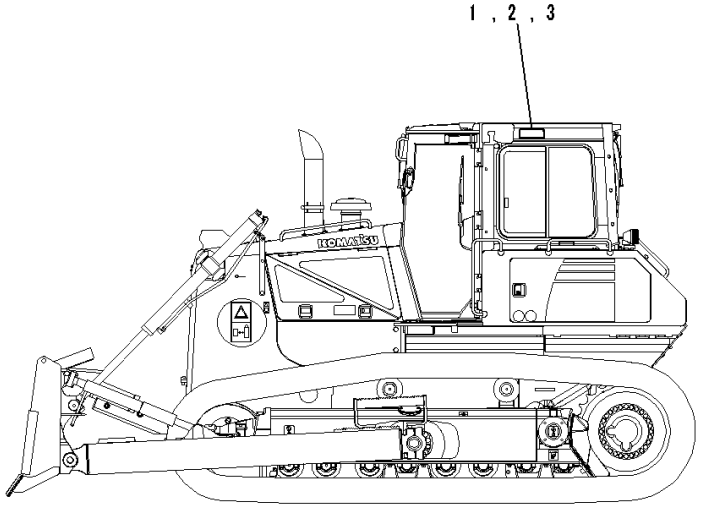

JA004092

Index	Code	Part Number	Description	Qty	Serial Number
1	C2	09620-A2000	Plate, Name (Limited Supply)	1	80005-
2		09620-A2070	Plate, Warning	1	80005-
3		04418-13060	Screw	4	80005-

FIG. U0520-003001 ROPS/FOPS Plate, French

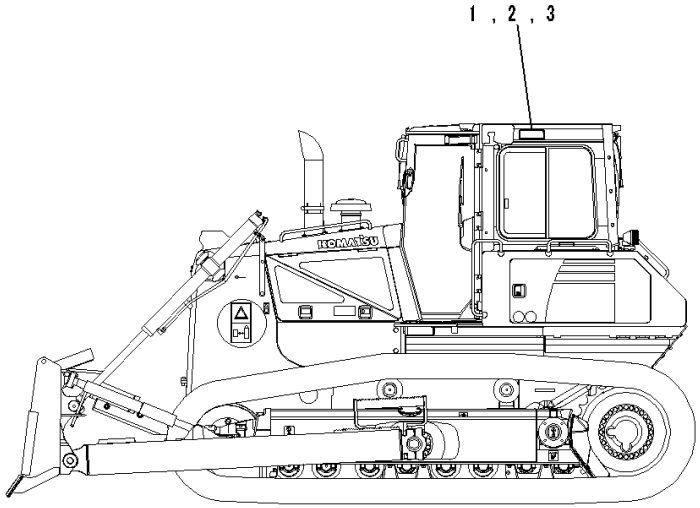

JA004092

Index	Code	Part Number	Description	Qty	Serial Number
1	C2	09620-A2000	Plate, Name (Limited Supply)	1	80005-
2		09620-A2100	Plate, Warning	1	80005-
3		04418-13060	Screw	4	80005-

FIG. U0520-004001 ROPS/FOPS Plate, Germany

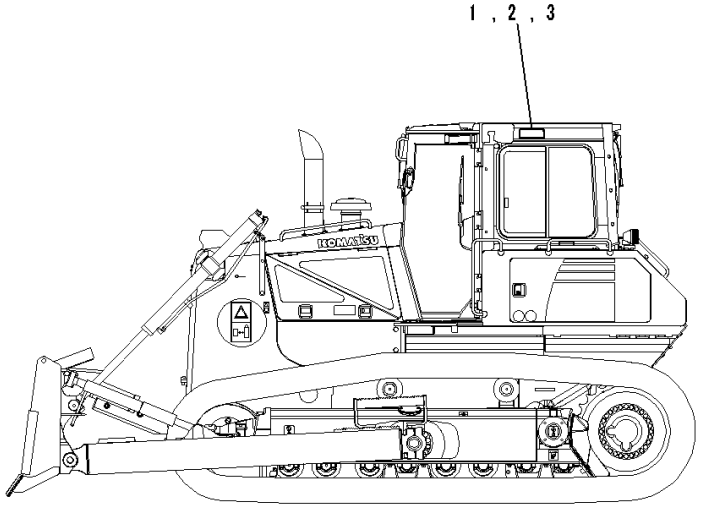

JA004092

Index	Code	Part Number	Description	Qty	Serial Number
1	C2	09620-A2000	Plate, Name (Limited Supply)	1	80005-
2		09620-A2080	Plate, Warning	1	80005-
3		04418-13060	Screw	4	80005-

FIG. U0520-005001 ROPS/FOPS Plate, Turkish

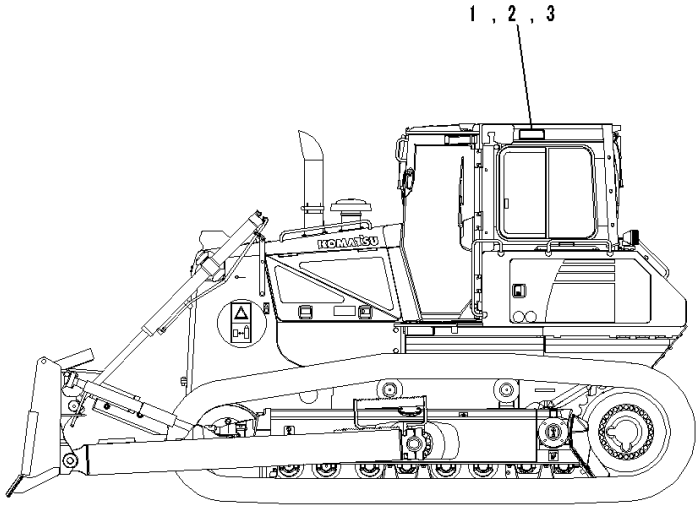

JA004092

Index	Code	Part Number	Description	Qty	Serial Number
1	C2	09620-A2000	Plate, Name (Limited Supply)	1	80005-
2		17A-98-41320	Plate, Warning	1	80005-
3		04418-13060	Screw	4	80005-

FIG. U0520-006001 ROPS/FOPS Plate, Italian

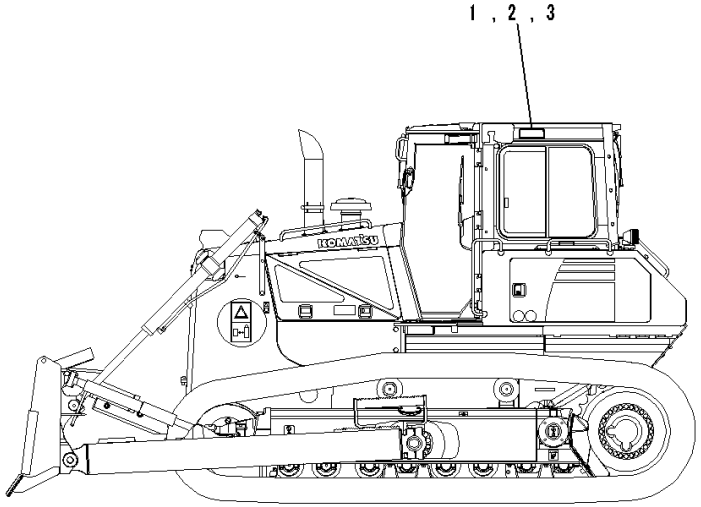

JA004092

Index	Code	Part Number	Description	Qty	Serial Number
1	C2	09620-A2000	Plate, Name (Limited Supply)	1	80005-
2		09620-A2110	Plate, Warning	1	80005-
3		04418-13060	Screw	4	80005-

FIG. U0520-007001 ROPS/FOPS Plate, Portuguese

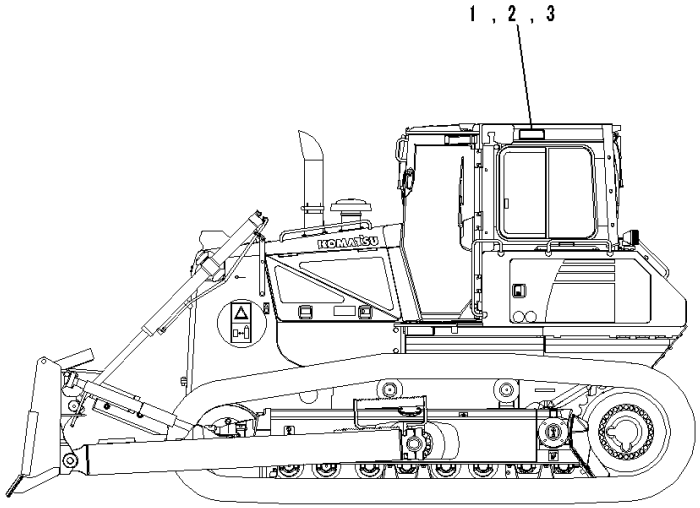

JA004092

Index	Code	Part Number	Description	Qty	Serial Number
1	C2	09620-A2000	Plate, Name (Limited Supply)	1	80005-
2		09620-A2120	Plate, Warning	1	80005-
3		04418-13060	Screw	4	80005-

FIG. U0520-008001 ROPS/FOPS Plate, For EU Safety Regulation

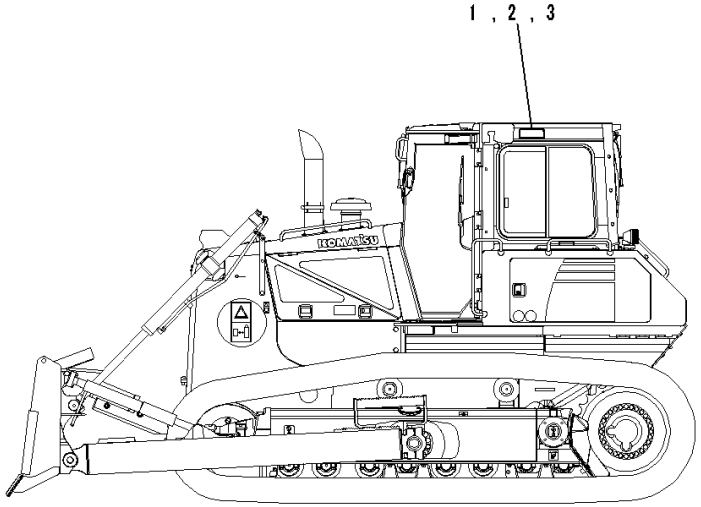

JA004092

Index	Code	Part Number	Description	Qty	Serial Number
1	C2	09620-A2000	Plate, Name (Limited Supply)	1	80062-
2	C2	09620-A3000	Plate, Warning	1	80062-
3		04418-13060	Screw	4	80062-

AUXILIARY PARTS AND TOOL

FIG. V0100-001001 Spare Parts

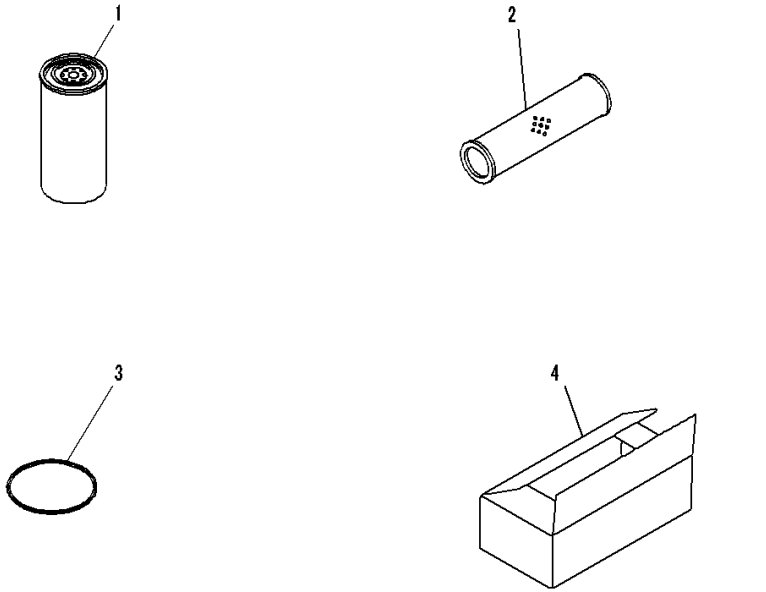

Index	Code	Part Number	Description	Qty	Serial Number
1		714-07-28713	Cartridge	1	80009-
2		14X-60-31150	Element	1	80001-
3		07000-15195	O-ring	1	80001-
4		09059-00800	Box	1	80001-

FIG. V0200-001001 Cap And Overall

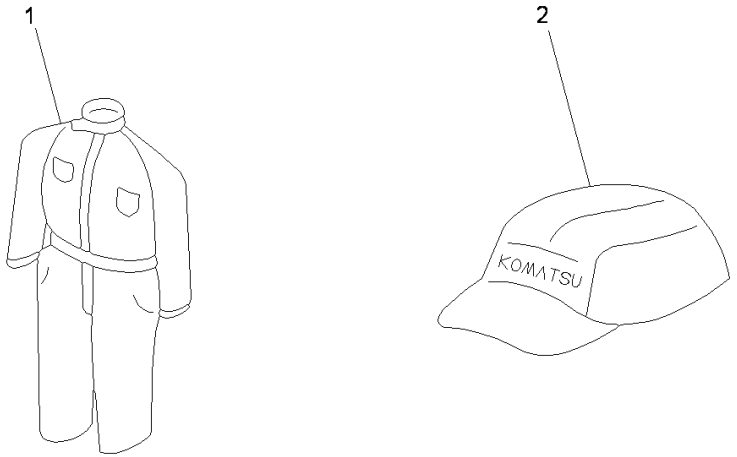

Index	Code	Part Number	Description	Qty	Serial Number
1		09980-10550	Overall	1	80001-
2		09982-10057	Cap	1	80001-

FIG. V0300-001001 Tool

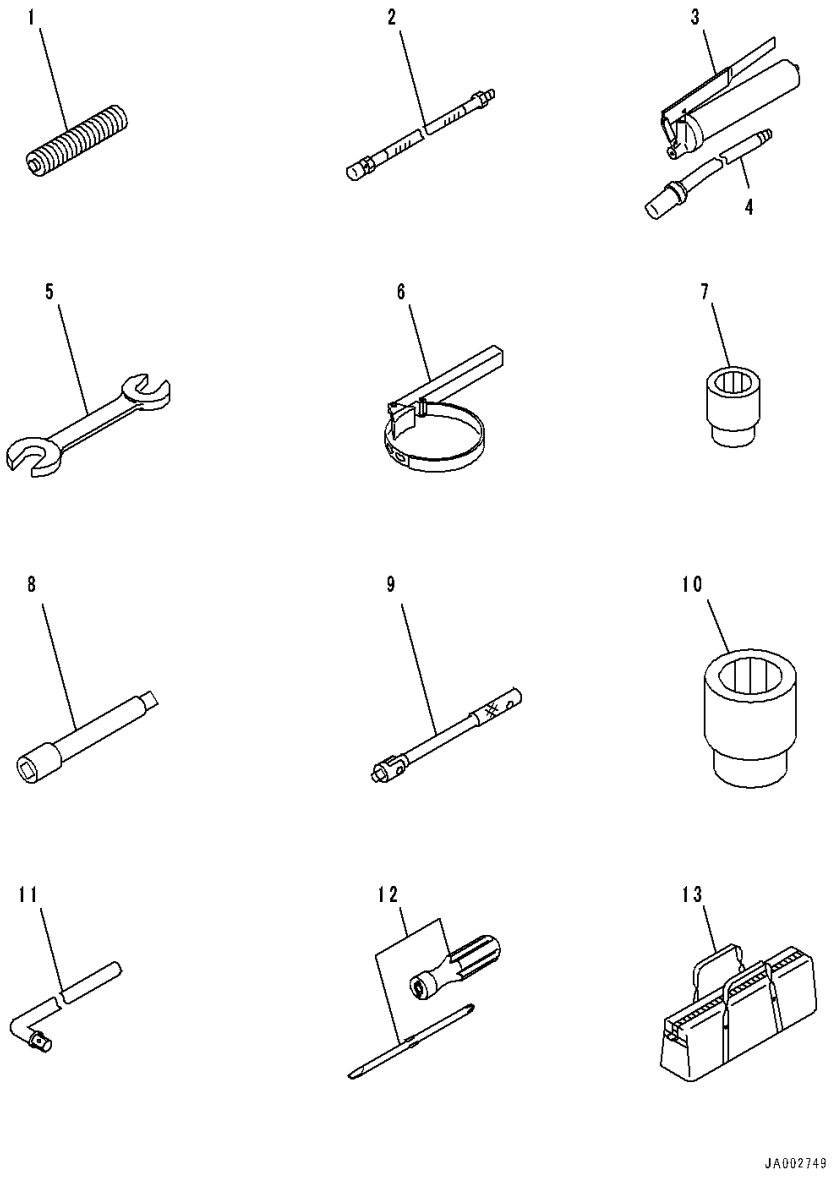

Index	Code	Part Number	Description	Qty	Serial Number
1		07950-90403	Cartridge	1	80001-
2		07951-31400	Nozzle	1	80001-
		07952-70004	Pump Assembly	1	80001-
3		07950-10450	• Pump	1	80001-
4		07951-41017	• Nozzle	1	80001-
5		09002-01317	Wrench, W=13X17mm	1	80001-
		09002-03032	Wrench, W=30X32mm	1	80001-
6		09019-28035	Wrench	1	80001-
7		09021-01725	Socket, W=17mm	1	80001-
		09021-01928	Socket, W=19mm	1	80001-
		09021-02436	Socket, W=24mm	1	80001-
8		09022-00150	Extension	1	80001-
9		09023-00300	Handle	1	80001-
10		09021-03246	Socket, W=32mm	1	80001-
		09021-03653	Socket, W=36mm	1	80001-
11		09024-00300	Handle	1	80001-
12		09033-00190	Driver	1	80001-
13		09056-04613	Bag	1	80001-

OTHER EQUIPMENT

FIG. W1113-001001 Fuel Self Charge Pump

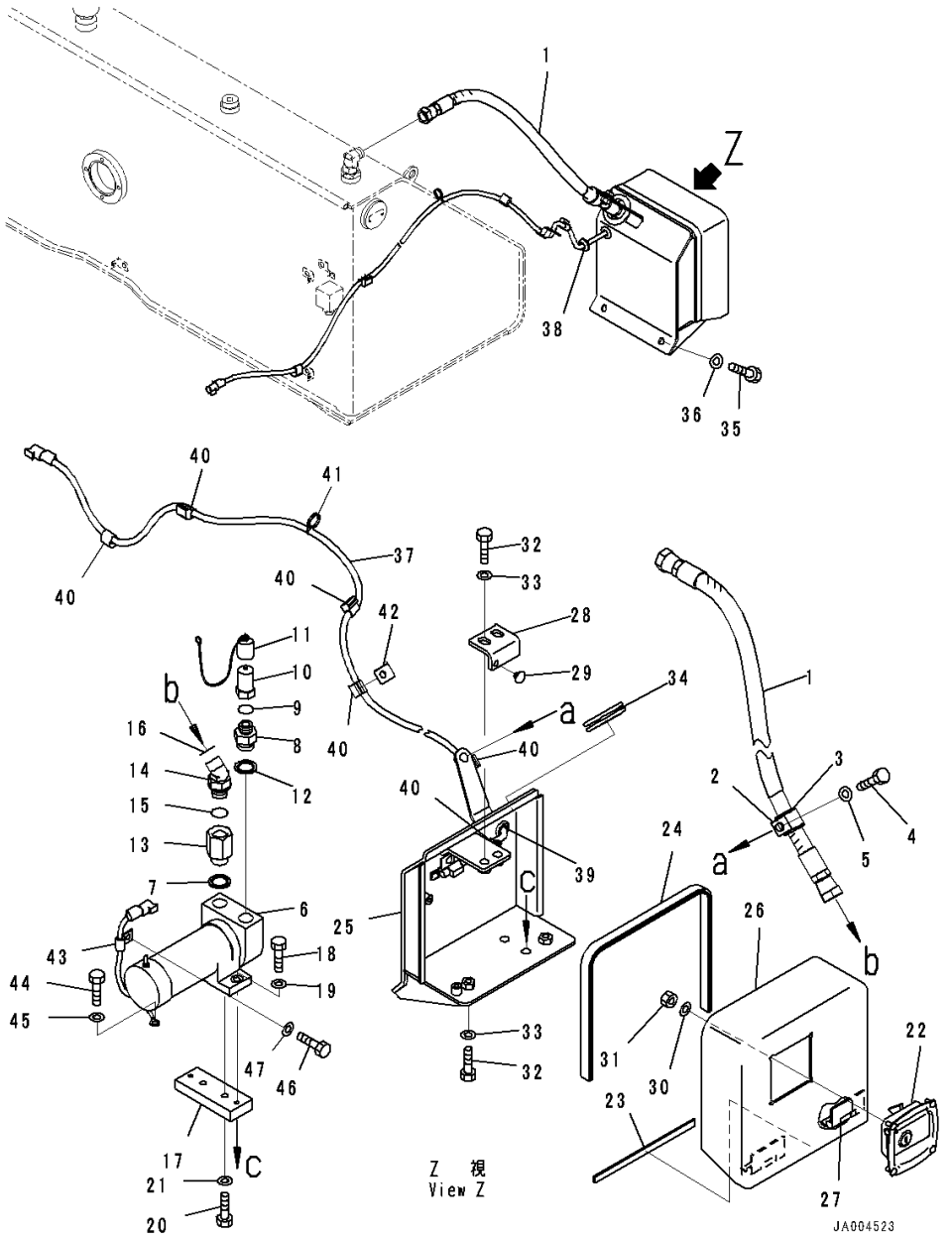

Index	Code	Part Number	Description	Qty	Serial Number
1		14X-04-51620	Hose	1	80001-
2		04434-53212	Clip	1	80001-
3		07095-20523	Cushion	1	80001-
4		01010-81225	Bolt	1	80001-
5		01643-31232	Washer	1	80001-
6		14X-04-31510	Pump	1	80001-
7		205-04-K1370	Washer, Seal	1	80001-
8		14X-04-31530	Union	1	80001-
9		208-38-11590	O-ring	1	80001-
10		134-62-63720	Coupling	1	80001-
11		14X-04-31570	Cap	1	80001-
12		205-04-K1370	Washer, Seal	1	80001-
13		14X-04-51441	Union	1	80001-
14		02783-10522	Elbow	1	80001-
15		07002-12434	O-ring	1	80001-
16		02896-11015	O-ring	1	80001-
17		14X-54-53930	Plate	1	80001-
18		01010-80830	Bolt	2	80001-
19		01643-30823	Washer	2	80001-
20		01010-81225	Bolt	2	80001-
21		01643-31232	Washer	2	80001-
		14X-54-53871	Cover Assembly	1	80001-
22		14X-54-54310	• Lock	1	80001-
23		14X-54-53950	• Sheet	1	80001-
24		14X-54-53940	• Seal	1	80001-
25		14X-54-53891	• Bracket	1	80001-
26	C1		• Cover	1	80001-
27		11Y-54-14220	•• Hinge	2	80001-
28		14X-54-53840	• Plate	1	80001-
29		14X-54-12960	• Stopper	1	80001-
30		01643-30623	• Washer	4	80001-
31		01580-10605	• Nut	4	80001-
32		01010-81230	• Bolt	4	80001-
33		01643-31232	• Washer	4	80001-
34		08037-05016	Grommet	1	80001-
35		01010-81225	Bolt	2	80001-
36		01643-31232	Washer	2	80001-
37		14X-06-52981	Wire Harness	1	80001-
38		08037-01610	Grommet	1	80001-

FIG. W1113-001001 Fuel Self Charge Pump

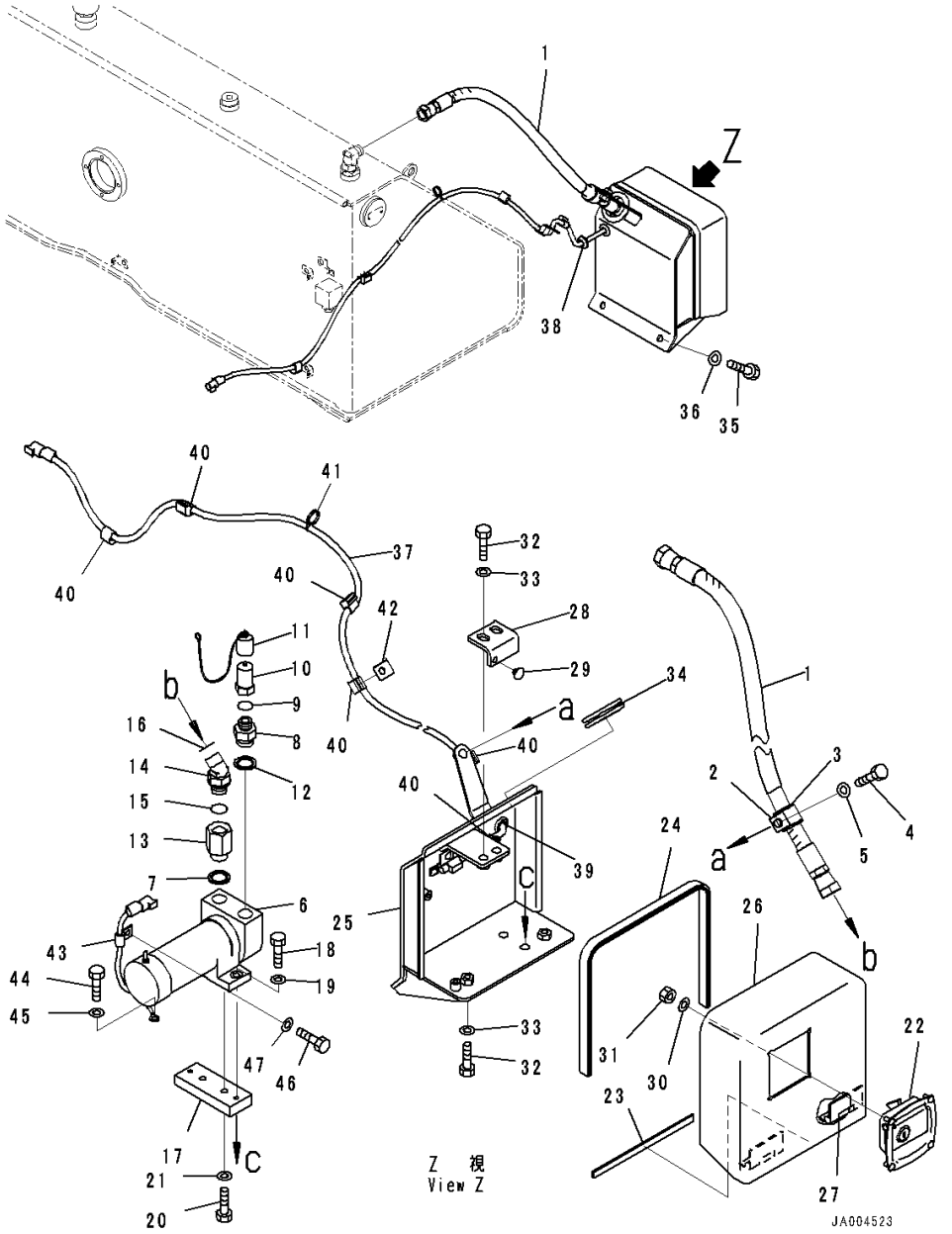

Index	Code	Part Number	Description	Qty	Serial Number
39		112-860-1360	Grommet	1	80001-
40		08211-00720	Clip	6	80001-
41		08034-40521	Band	1	80001-
42		08057-12010	Clip	1	80001-
43		04434-50808	Clip	1	80001-
44		01010-80812	Bolt	1	80001-
45		01643-30823	Washer	1	80001-
46		01010-80816	Bolt	1	80001-
47		01643-30823	Washer	1	80001-

FIG. W9970-001001 Parts For Machine Transportation

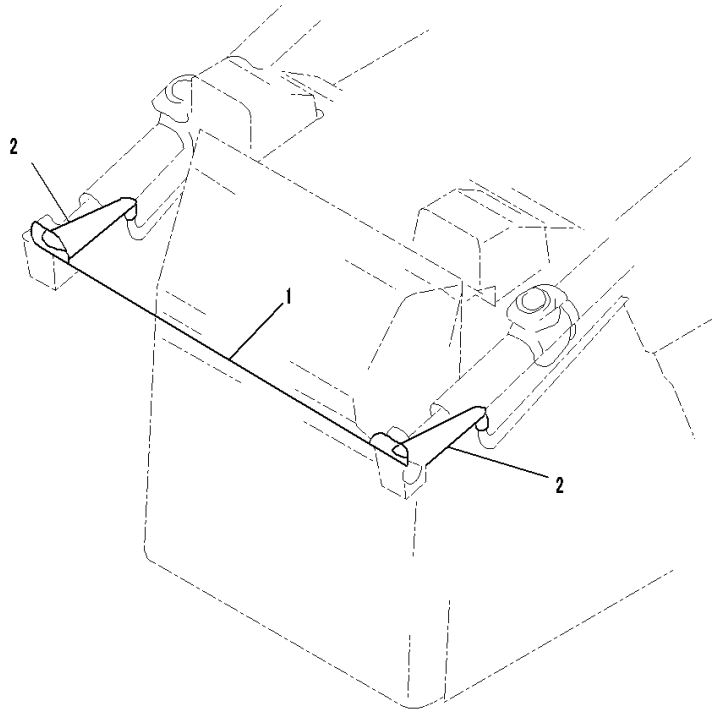

Index	Code	Part Number	Description	Qty	Serial Number
1		13F-98-11210	Wire	1	80001-
2		13F-98-11220	Wire	2	80001-

FIELD REPAIR SERVICE PARTS

FIG. KIT Service Kit Parts (1/3)

Index	Code	Part Number	Description	Qty	Serial Number
K01		14X-13-05040	Service Kit, Torque Converter		80001-
		02896-61018	• O-ring	1	-
		07000-72070	• O-ring	1	-
		07000-72090	• O-ring	1	-
		07000-72100	• O-ring	2	-
		07000-72110	• O-ring	1	-
		07000-72130	• O-ring	1	-
		07000-73030	• O-ring	2	-
		07000-73032	• O-ring	2	-
		07000-73045	• O-ring	2	-
		07000-75065	• O-ring	1	-
		07000-75210	• O-ring	1	-
		07002-61023	• O-ring	2	-
		07002-62434	• O-ring	2	-
		07005-01212	• Gasket	6	-
		07012-50095	• Seal, Oil	1	-
		425-13-32710	• Seal Ring	1	-
		426-13-42710	• Seal Ring	1	-
		567-15-12830	• Ring	2	-
		582-15-19240	• Seal Ring	2	-
K03		14X-15-05190	Service Kit, Transmission		80001-
		07000-71007	• O-ring	5	-
		07000-72015	• O-ring	20	-
		07000-73022	• O-ring	2	-
		07000-A2060	• O-ring	1	-
		07002-61023	• O-ring	6	-
		07002-61223	• O-ring	7	-
		07002-61423	• O-ring	5	-
		07002-61823	• O-ring	1	-
K04		14X-15-05210	Service Kit, Transmission Main Relief Valve		80001-
		07000-73030	• O-ring	5	-
		07002-61023	• O-ring	2	-
		07002-63034	• O-ring	4	-
K05		14X-22-05010	Service Kit, Steering		80001-
		02896-61012	• O-ring	1	-
		02896-61018	• O-ring	2	-
		07000-72018	• O-ring	21	-
		07000-72065	• O-ring	1	-
		07000-72095	• O-ring	1	-
		07000-73022	• O-ring	17	-
		07000-73032	• O-ring	1	-
		07000-75180	• O-ring	2	-
		07000-75365	• O-ring	4	-
		07002-12434	• O-ring	1	-
		07002-23634	• O-ring	1	-
		07002-61623	• O-ring	24	-
		07002-62034	• O-ring	1	-
		07002-62434	• O-ring	2	-
		14Y-22-23310	• Seal Ring	2	-
		14Y-22-37470	• O-ring	1	-
		232-15-19270	• Ring	2	-
K06		14X-22-05020	Service Kit, Steering Brake		80001-
		07002-32434	• O-ring	2	-
		07002-33034	• O-ring	2	-
		07002-61623	• O-ring	1	-
		07002-61823	• O-ring	1	-
		113-15-29110	• Seal, Oil	2	-
K07		14X-32-05010	7		80001-
		154-32-71220	• Nut	30	-
		207-32-71620	• Bolt	30	-
K08		134-32-05010	Shoe Bolt and Nut Kit		80001-
		134-32-61221	• Nut	30	-
		154-32-21323	• Bolt	30	-
K09		707-99-27110	Service Kit, Lift Cylinder		80001-
		02896-11015	• O-ring	3	-
		07000-12080	• O-ring	1	-
		07000-12085	• O-ring	1	-
		707-35-52770	• Ring, Back-up	1	-
		707-39-85120	• Ring, Wear	2	-
		707-44-85150	• Ring, Piston	1	-
		707-51-60030	• Packing, Rod	1	-
		707-51-60650	• Ring, Buffer	1	-
		707-56-60740	• Seal, Dust	1	-
K10		707-99-27530	Service Kit, Lift Cylinder		80001-
		02896-11015	• O-ring	3	-
		07000-12085	• O-ring	1	-
		07000-12090	• O-ring	1	-

FIG. KIT Service Kit Parts (2/3)

Index	Code	Part Number	Description	Qty	Serial Number
		07145-00055	• Seal, Dust	2	-
		07146-02086	• Ring, Back-up	1	-
		07156-00912	• Ring, Wear	2	-
		707-44-90150	• Ring, Piston	1	-
		707-51-60030	• Packing, Rod	1	-
		707-51-60650	• Ring, Buffer	1	-
		707-56-60740	• Seal, Dust	1	-
K11		707-99-43320	Service Kit, Tilt And Pitch Cylider		80001-
		02896-11009	• O-ring	2	-
		07000-12120	• O-ring	1	-
		07000-12125	• O-ring	1	-
		07145-00050	• Seal, Dust	2	-
		707-35-91510	• Ring, Back-up	1	-
		707-39-12520	• Ring, Wear	1	-
		707-44-12250	• Ring, Piston	1	-
		707-51-70030	• Packing, Rod	1	-
		707-51-70650	• Ring, Buffer	1	-
		707-56-70740	• Seal, Dust	1	-
K12		707-99-43730	Service Kit, Tilt Cylider		80001-
		02896-11009	• O-ring	2	-
		07000-12125	• O-ring	1	-
		07000-12130	• O-ring	1	-
		07000-13050	• O-ring	4	-
		07146-02126	• Ring, Back-up	1	-
		07156-01315	• Ring, Wear	1	-
		707-44-13150	• Ring, Piston	1	-
		707-51-70030	• Packing, Rod	1	-
		707-51-70650	• Ring, Buffer	1	-
		707-56-70740	• Seal, Dust	1	-
K13		707-99-36680	Service Kit, Angle Cylinder		80001-
		02896-11012	• O-ring	4	-
		07000-12105	• O-ring	1	-
		07000-12110	• O-ring	1	-
		07000-13050	• O-ring	4	-
		07146-02106	• Ring, Back-up	1	-
		07156-01112	• Ring, Wear	2	-
		707-44-11150	• Ring, Piston	1	-
		707-51-65030	• Packing, Rod	1	-
		707-51-65650	• Ring, Buffer	1	-
		707-56-65740	• Seal, Dust	1	-
K14		707-99-43310	Service Kit, Ripper Cylinder		80001-
		02896-11015	• O-ring	3	-
		07000-12120	• O-ring	1	-
		07000-12125	• O-ring	1	-
		07145-00075	• Seal, Dust	4	-
		707-35-91510	• Ring, Back-up	1	-
		707-39-12520	• Ring, Wear	1	-
		707-44-12250	• Ring, Piston	1	-
		707-51-70030	• Packing, Rod	1	-
		707-51-70650	• Ring, Buffer	1	-
		707-56-70740	• Seal, Dust	1	-
K15		14X-15-05180	Service Kit, Transmission		80001-
		02896-61018	• O-ring	1	-
		07000-72015	• O-ring	13	-
		07000-72018	• O-ring	5	-
		07000-72021	• O-ring	5	-
		07000-73022	• O-ring	2	-
		07000-73025	• O-ring	2	-
		07000-73032	• O-ring	1	-
		07000-73035	• O-ring	5	-
		07000-73045	• O-ring	1	-
		07002-12434	• O-ring	1	-
		07002-61023	• O-ring	1	-
		07002-62434	• O-ring	3	-
		103-15-12820	• Seal Ring	2	-
		113-15-12870	• Ring	1	-
		124-15-41910	• Seal Ring	3	-
		124-15-41920	• Seal Ring	2	-
		14X-15-19210	• Seal Ring	1	-
		14X-15-29220	• Seal Ring	1	-
		14X-15-29230	• Seal Ring	1	-
		569-15-12860	• Seal Ring	2	-
		714-12-39230	• Seal Ring	2	-
		714-21-19810	• Seal Ring	2	-
K16		14X-15-05180	Service Kit, Transmission		80001-
		02896-61018	• O-ring	1	-
		07000-72015	• O-ring	13	-
		07000-72018	• O-ring	5	-

FIG. KIT Service Kit Parts (3/3)

Index	Code	Part Number	Description	Qty	Serial Number
		07000-72021	• O-ring	5	-
		07000-73022	• O-ring	2	-
		07000-73025	• O-ring	2	-
		07000-73032	• O-ring	1	-
		07000-73035	• O-ring	5	-
		07000-73045	• O-ring	1	-
		07002-12434	• O-ring	1	-
		07002-61023	• O-ring	1	-
		07002-62434	• O-ring	3	-
		103-15-12820	• Seal Ring	2	-
		113-15-12870	• Ring	1	-
		124-15-41910	• Seal Ring	3	-
		124-15-41920	• Seal Ring	2	-
		14X-15-19210	• Seal Ring	1	-
		14X-15-29220	• Seal Ring	1	-
		14X-15-29230	• Seal Ring	1	-
		569-15-12860	• Seal Ring	2	-
		714-12-39230	• Seal Ring	2	-
		714-21-19810	• Seal Ring	2	-

NUMERICAL INDEX

Part Number	Page	Index
01010-61460	247	11
01010-61645	223	8
01010-61650	249	1
01010-61660	257	32
01010-61670	223	9
01010-61690	254	15
01010-71225	144	4
	148	3
01010-71230	547	9
	556	11
01010-71285	149	3
01010-80612	156	5
	219	19
	417	39
	438	39
	560	8
	560	17
	561	10
	561	21
	646	20
	651	20
	654	20
01010-80616	374	10
	374	14
	380	15
	385	12
	385	17
	392	13
	393	11
	393	15
	393	19
	394	26
	394	33
	394	40
	394	45
	394	50
	416	30
	418	7
	420	8
	420	11
	422	12
	422	18
	428	2
	430	2
	438	30
	444	12
	444	18
	453	14
	453	17
	467	15
	468	8
	468	11
	470	5
	475	2
	540	4
	646	23
	651	23
	654	23
01010-80620	226	21
	422	20
	444	20
01010-80625	371	24
	373	26
	486	5
01010-80630	486	1
01010-80645	157	15
01010-80670	496	38
	529	38
01010-80812	803	44
01010-80816	155	26
	208	10
	403	19
	456	19
	467	20
	468	5
	469	9
	540	11
	803	46
01010-80820	155	28
	156	15
	156	38
	157	3
	188	12
	193	20
	195	12
	200	20
	202	12
	344	3
	348	3
	349	3
	350	2
	351	3
	352	3
	420	2
	420	5
	468	2
	484	19
	486	3
	497	1
	503	1
	509	1
	512	1
	513	1
	521	1
	530	1
	534	1
	550	4
	559	4
01010-80825	155	18
	174	33
	179	25
	371	25
	372	14
	399	40
	540	2
01010-80830	191	2
	198	2
	406	11
	407	26
	408	10
	409	25
	459	11
	459	26
	460	10
	460	25
	494	10
	499	11
	508	12
	517	11
	527	12
	533	10
	667	12
	802	18
01010-80845	155	15
	252	23
01010-80850	428	17
	475	18
01010-80855	252	24
	505	6
	510	6
	514	6
	525	6
	531	6
	535	6
01010-80865	478	1
01010-80880	156	18
	484	7
01010-81016	156	27
	540	7
	552	5
01010-81020	150	2
	154	1
	155	12
	156	24
	156	32
	157	7
	162	6
	163	16
	163	19
	167	2
	167	11
	171	5
	171	9
	174	24
	179	16
	188	8
	188	16
	188	22
	188	25
	188	29
	188	34
	188	39
	189	44
	190	6
	190	12
	190	18
	190	21
	190	26
	191	5
	191	10
	191	14
	192	5
	192	8
	192	12
	192	18
	192	22
	192	25
	192	28
	192	36
	193	3
	193	7
	193	12
	193	16
	194	7
	195	8
	195	16
	195	22
	195	25
	195	29
	195	34
	195	39
	196	44
	197	6
	197	12
	197	15
	197	20
	198	5
	198	10
	198	14
	199	5
	199	8
	199	12
	199	18
	199	22
	199	25
	199	28
	199	36
	200	3
	200	7
	200	12
	200	16
	201	7
	202	8
	202	16
	202	22

Part Number	Page	Index
	202	25
	202	29
	202	34
	202	39
	203	44
	204	6
	204	12
	204	18
	204	21
	204	26
	205	5
	205	8
	205	12
	205	18
	205	22
	205	25
	205	28
	205	36
	215	2
	215	5
	254	6
	256	9
	257	6
	257	13
	257	22
	257	35
	259	20
	259	23
	259	26
	278	2
	278	5
	278	8
	282	9
	285	47
	287	48
	306	7
	311	4
	361	24
	366	24
	389	2
	389	5
	389	8
	393	5
	397	4
	410	11
	410	14
	411	8
	412	37
	412	41
	413	8
	414	25
	414	29
	416	16
	416	19
	416	25
	416	28
	416	34
	417	37
	417	44
	418	2
	418	5
	419	24
	419	28
	419	34
	420	15
	420	19
	423	14
	437	16
	437	19
	438	25
	438	28
	438	34
	438	37
	438	44
	439	14
	447	28
	453	2
	453	5
	453	8
	453	11
	461	11
	461	14
	462	8
	462	37
	463	41
	464	8
	464	25
	464	29
	466	15
	466	18
	466	22
	466	26
	466	29
	467	2
	467	9
	467	12
	467	27
	467	30
	468	15
	471	13
	475	9
	478	8
	478	11
	482	2
	482	34
	484	15
	485	10
	488	2
	488	5
	488	12
	497	16
	497	23
	503	21
	503	26
	505	27
	505	31
	505	35
	505	39
	508	18
	508	21
	509	18
	509	23
	510	24
	510	28
	510	32
	510	37
	512	18
	512	25
	513	16
	513	21
	514	24
	514	28
	514	32
	514	36
	521	21
	521	28
	525	24
	525	28
	525	32
	525	36
	527	18
	527	21
	530	18
	530	25
	531	24
	531	28
	531	32
	531	37
	534	16
	534	23
	535	24
	535	28
	535	32
	535	36
	540	21
	540	25
	540	28
	540	32
	540	35
	542	3
	542	7
	547	12
	555	4
	556	14
	557	15
	557	19
	557	24
	557	28
	558	44
	558	48
	558	53
	558	57
	579	10
	582	2
	620	14
	646	11
	646	32
	647	50
	651	11
	651	28
	652	46
	654	11
	654	32
	655	50
	667	18
	710	38
	712	38
01010-81025	156	29
	160	22
	160	25
	160	29
	163	7
	169	14
	182	16
	183	16
	184	14
	185	14
	186	14
	187	14
	190	9
	192	32
	197	9
	199	32
	204	9
	205	32
	229	14
	236	15
	245	12
	245	29
	251	18
	254	2
	255	2
	257	9
	259	17
	284	7
	284	13
	286	7
	286	13
	300	18
	311	6
	311	9
	395	19
	396	23
	396	27
	396	30

Part Number	Page	Index
	396	37
	396	40
	407	32
	407	35
	409	30
	416	12
	417	41
	422	22
	437	12
	438	41
	444	22
	459	32
	459	35
	460	30
	466	11
	484	9
	540	15
01010-81030	161	3
	167	6
	177	1
	190	15
	204	15
	220	7
	222	8
	242	3
	257	2
	397	6
	405	23
	458	23
	481	5
	484	2
	505	4
	510	4
	514	4
	525	4
	531	4
	535	4
	580	2
	580	8
01010-81035	177	13
	229	12
	243	4
	243	10
	243	24
	257	17
	296	16
	406	5
	408	4
	459	5
	460	4
	555	6
01010-81040	170	12
01010-81045	160	16
	163	5
	239	1
	257	20
	703	59
01010-81050	156	2
	167	38
	245	14
	309	27
	421	11
01010-81055	175	54
	180	46
	239	3
01010-81060	259	14
	396	34
01010-81065	241	1
	307	18
01010-81070	257	29
01010-81085	238	21
	256	16
01010-81220	156	9
	157	5
	177	18

Part Number	Page	Index
	177	21
	177	27
	206	3
	206	8
	207	3
	207	8
	209	21
	209	33
	210	21
	213	21
	214	21
	257	25
	310	9
	336	35
	338	31
	340	31
	357	4
	441	4
	447	30
	450	2
	483	40
	578	28
	600	32
	619	41
	619	49
	619	52
	638	38
	642	39
	643	47
	643	50
	645	36
	720	12
01010-81225	146	7
	146	18
	146	21
	167	17
	172	3
	177	24
	177	35
	177	38
	178	43
	182	18
	183	18
	184	26
	185	26
	186	26
	187	26
	190	2
	194	4
	197	2
	201	4
	204	2
	209	24
	211	2
	211	11
	212	2
	212	11
	213	24
	213	33
	224	3
	224	6
	254	17
	277	8
	277	11
	277	20
	278	11
	309	8
	310	13
	310	26
	310	29
	315	29
	316	35
	316	37
	316	40
	322	2

Part Number	Page	Index
	322	9
	323	4
	323	11
	325	4
	325	11
	325	18
	328	9
	328	13
	332	12
	332	15
	333	12
	333	15
	334	12
	335	12
	370	21
	373	23
	410	5
	414	33
	446	22
	461	5
	464	33
	482	5
	482	8
	482	13
	482	16
	482	21
	482	24
	482	27
	482	30
	483	43
	488	9
	541	47
	548	23
	550	13
	550	19
	554	4
	554	7
	554	12
	554	15
	558	59
	559	13
	559	19
	560	5
	560	14
	561	7
	561	18
	562	4
	562	7
	574	10
	578	24
	579	5
	600	28
	619	45
	620	5
	620	8
	638	34
	643	43
	645	32
	650	4
	650	7
	650	9
	650	13
	650	19
	684	34
	685	34
	686	34
	687	34
	696	14
	699	12
	699	16
	699	24
	699	31
	718	4
	718	16
	718	33

Part Number	Page	Index
	719	4
	719	16
	719	33
	720	8
	721	6
	802	4
	802	20
	802	35
01010-81230	161	16
	163	31
	169	3
	169	6
	169	9
	174	28
	179	20
	209	2
	209	5
	209	11
	209	14
	210	2
	210	5
	210	11
	210	14
	213	2
	213	5
	213	11
	213	14
	214	2
	214	5
	214	11
	214	14
	223	24
	228	16
	310	3
	310	7
	310	15
	310	23
	315	2
	315	13
	315	20
	322	6
	322	13
	323	8
	323	15
	324	11
	325	8
	325	15
	326	11
	326	28
	328	32
	328	37
	329	42
	329	45
	330	11
	332	18
	333	18
	333	24
	334	15
	334	21
	335	15
	337	39
	338	35
	340	35
	392	8
	537	24
	538	3
	539	3
	549	2
	552	8
	553	2
	560	20
	561	24
	584	2
	647	44
	647	47

Part Number	Page	Index
	652	40
	652	43
	655	44
	655	47
	689	11
	691	11
	699	9
	701	12
	702	14
	702	17
	718	26
	719	26
	720	28
	802	32
01010-81235	158	17
	160	19
	167	15
	170	15
	208	7
	247	6
	247	14
	248	5
	248	13
	248	15
	249	6
	252	2
	252	8
	254	30
	258	38
	263	14
	265	9
	266	23
	268	14
	270	9
	271	23
	315	23
	324	6
	324	9
	326	6
	326	9
	326	23
	326	26
	328	2
	329	48
	332	9
	333	9
	334	9
	335	9
	583	6
	650	1
	650	15
	657	6
	658	6
	659	3
	659	6
	660	3
	660	6
	661	6
	661	9
	662	6
	662	9
	667	20
	702	37
	723	9
	723	14
01010-81240	219	12
	219	22
	243	21
	245	20
	306	3
	309	21
	574	2
	581	3
	656	11
	694	27

Part Number	Page	Index
	695	27
	718	35
	719	35
01010-81245	157	11
	177	29
	252	12
	252	16
	264	20
	269	20
	307	4
	411	5
	413	5
	462	5
	464	5
	483	37
	616	23
	636	20
	721	12
	721	17
01010-81250	158	10
01010-81255	223	5
	337	50
	339	46
	341	46
	718	28
	719	28
	721	30
	721	37
01010-81260	315	26
	315	32
	325	25
	575	30
	597	34
	614	39
	634	39
	641	37
	644	37
	720	16
	720	24
01010-81265	167	19
	218	5
	252	33
	328	6
	328	16
	697	9
	697	25
	698	9
	698	16
	720	20
01010-81270	244	37
	277	5
	277	15
	309	12
	310	20
	315	6
	315	10
	330	5
01010-81275	248	19
01010-81280	228	7
	315	17
01010-81285	598	20
01010-81290	153	11
01010-81295	226	30
	328	34
	328	39
	333	28
	334	25
	336	5
	650	11
01010-81435	170	6
	723	18
01010-81440	537	10
	537	21
01010-81465	170	9
01010-81625	155	10

Part Number	Page	Index
	156	13
	357	9
	441	9
	450	7
01010-81630	674	10
	675	10
	718	7
	719	7
01010-81635	583	5
	659	8
	660	8
	661	11
	662	11
	700	21
	721	22
01010-81640	336	29
	338	25
	340	25
	545	7
	546	7
	549	6
01010-81645	263	4
	266	19
	268	4
	271	19
	666	17
01010-81650	153	17
	260	2
	295	1
	551	1
01010-81660	255	5
01010-81670	544	5
01010-81680	583	3
01010-81840	689	3
	691	3
01010-81845	684	20
	684	27
	685	20
	685	27
	686	20
	686	27
	687	20
	687	27
	688	2
	690	2
01010-81850	684	23
	684	30
	685	23
	685	30
	686	23
	686	30
	687	23
	687	30
01010-81865	670	1
	673	1
	684	24
	684	31
	685	24
	685	31
	686	24
	686	31
	687	24
	687	31
01010-82040	324	19
01010-82055	265	3
	270	3
	273	3
	299	2
	324	3
	326	3
	326	20
	328	25
	328	29
	336	12
	336	16
	338	8
	338	12
	340	8
	340	12
	552	2
01010-82060	701	20
	703	50
01010-82065	694	24
	695	24
	696	18
01010-82070	273	1
	667	31
01010-82075	338	3
	340	3
	697	13
	697	29
	698	13
	698	20
	701	24
	703	54
01010-82085	674	13
	675	13
01010-82460	537	8
	537	19
	663	2
	667	30
01010-82465	727	9
	730	11
	733	11
01010-82480	723	30
01010-83375	726	16
	728	17
	732	16
	735	18
01010-83380	727	11
	730	13
	733	13
01010-83390	723	28
	728	16
01010-D0620	449	3
	476	14
01010-D0635	359	39
	364	39
01010-D0816	388	6
	489	9
	490	6
01010-D0820	422	6
	444	6
	550	9
	559	9
01010-D0825	392	3
	396	45
	398	4
	398	12
	399	34
	399	37
	399	45
	399	48
	426	3
	426	8
	426	11
	426	15
	426	18
	427	26
	427	32
	427	35
	427	38
	427	45
	451	10
	451	14
	467	23
	472	8
	473	5
	473	8
	473	12
	473	20
	473	23
	473	26
	473	29
	473	33
	473	36
	473	39
	474	42
	474	45
	476	6
	476	9
	476	12
	476	17
	476	20
	493	4
	493	10
	498	4
	507	4
	507	10
	516	4
	516	10
	523	4
	538	7
	538	11
	539	7
	539	11
01010-D0835	446	9
01010-D1020	346	17
	354	17
	413	20
	446	15
	464	20
	550	22
	559	22
01010-D1025	446	12
	446	19
	469	7
01010-D1040	368	2
01010-D1055	425	4
	471	21
01010-D1070	425	2
	471	19
01010-D1220	539	14
01010-D1225	469	21
	472	13
01010-D1230	369	3
	369	6
	538	15
01010-D1625	450	9
01011-61035	566	9
01011-61600	265	15
	270	15
01011-61615	223	10
01011-81005	307	16
01011-81010	256	14
01011-81020	156	22
01011-81040	484	4
01011-81080	156	35
	255	9
01011-81205	153	7
	221	40
01011-81225	573	8
	596	8
	613	8
	633	8
01011-81230	576	20
01011-81250	307	6
01011-81600	704	7
	706	7
01011-81640	279	10
	280	10
01011-82025	697	5
	698	5
01011-82055	337	43
	339	39

Part Number	Page	Index
	341	39
01011-82060	276	1
01011-82465	694	6
01011-82480	153	19
	279	1
	280	1
01012-81250	708	3
	713	3
01016-50830	406	7
	408	6
	459	7
	460	6
01016-51030	412	44
	414	32
	463	44
	464	32
01016-51090	484	11
01016-51245	666	22
01023-10308	402	15
	456	15
01023-10406	550	7
01023-10416	416	23
	437	23
	559	7
01023-10420	466	24
01023-10508	398	21
01023-10510	545	4
	546	4
01023-10520	380	9
01023-10608	646	18
	651	18
	654	18
01023-10620	420	13
	468	13
01023-20416	384	1
01023-20425	384	8
01023-20510	382	2
	433	2
	442	2
	448	2
01023-60410	403	44
	457	44
01023-60516	400	11
	454	11
01023-60630	194	2
	201	2
01023-70412	358	16
	363	16
	370	20
	372	22
	387	40
01023-70414	403	46
	457	46
01050-31230	120	9
01050-61670	245	24
01052-51260	726	8
	728	8
	732	8
	735	8
01052-81265	727	6
	729	6
	730	8
	731	8
	733	8
	734	8
01084-01650	219	6
01099-03417	697	21
01220-70406	472	10
01224-70316	377	26
	379	26
01224-70408	400	19
	402	9
	402	13
	454	19
	456	9
	456	13
01224-70410	402	10
	456	10
01232-10616	399	26
	426	21
	473	16
01245-00616	360	16
	362	5
	365	16
	367	5
01245-00620	358	9
	359	29
	359	45
	359	49
	360	5
	360	9
	361	31
	361	34
	362	9
	363	9
	364	29
	364	45
	364	49
	365	5
	365	9
	366	31
	366	34
	367	9
	380	4
	382	5
	385	8
	386	4
	386	8
	386	14
	386	22
	387	37
	387	43
	432	3
	433	5
	442	5
	448	5
	476	1
	489	2
	490	2
	493	7
	498	7
	507	7
	516	7
	523	7
01245-00625	430	8
	430	14
	430	20
	431	23
01245-00630	489	5
01245-00816	361	38
	366	38
	451	8
	649	6
	649	13
01245-00820	360	21
	365	21
	387	28
	404	21
	458	21
01245-00825	359	42
	364	42
	387	46
	388	3
	452	3
01245-01020	417	46
	438	46
01245-01030	493	24
	498	20
	507	24
	516	24
	523	20
01245-01225	445	10
01252-30625	504	15
	524	15
01252-60510	238	3
	238	8
01252-60512	401	2
	455	2
01252-60616	164	23
	564	17
	586	17
	602	17
	622	17
01252-60630	564	18
	586	18
	590	10
	602	18
	606	9
	607	10
	622	18
	626	9
	627	10
01252-60635	303	23
	304	3
01252-60645	572	4
	595	4
	612	4
	632	4
01252-60650	304	2
	571	16
	594	16
	611	16
	631	16
01252-60820	568	21
	591	21
	608	21
	628	21
01252-60825	301	40
01252-60835	164	35
01252-60845	164	16
01252-61035	251	14
01252-61040	305	14
01252-61255	166	3
01252-61480	296	20
01252-70414	412	31
	413	16
	462	31
	464	16
01252-70520	223	22
	358	3
	363	3
	403	41
	457	41
01252-70525	358	5
	363	5
01252-70530	384	5
01252-70545	619	55
	643	53
01252-70650	238	15
01252-70816	404	18
	458	18
01252-70825	184	18
	185	18
	186	18
	187	18
	402	1
	456	1
01252-70860	232	47
01252-71250	220	30
01252-80410	400	12
	454	12
01252-80412	404	2
	458	2
01252-80414	404	3
	458	3

Part Number	Page	Index
01252-80510	400	13
	400	17
	454	13
	454	17
	494	3
	499	3
	508	7
	517	3
	527	7
	533	3
01252-80514	377	27
	379	27
	388	9
	403	35
	456	35
01252-80516	404	17
	458	17
01252-80520	470	18
01252-A1085	576	17
	598	17
	616	19
	636	17
01253-61200	251	11
01253-61210	250	11
01370-10310	398	18
	426	6
	427	29
01370-30412	387	26
01370-40412	387	39
01370-40414	385	20
01434-00820	182	21
	183	21
	184	29
	185	29
	186	29
	187	29
01435-00620	395	15
01435-00625	486	7
01435-00812	85	4
01435-00816	60	9
	84	12
01435-00820	58	3
	62	12
	63	12
01435-00825	111	3
01435-00885	415	2
	436	2
	443	2
	465	2
01435-01020	58	5
	120	8
01435-01025	54	10
	62	18
	63	18
01435-01040	54	16
	60	19
01435-01045	109	8
01435-01055	109	7
01435-01065	54	6
01435-01085	60	22
01435-01095	60	23
01435-01235	84	13
01435-01240	125	2
01435-01245	60	16
01435-01255	60	17
01435-40820	469	15
	469	18
01436-01005	60	24
01508-40603	406	18
	459	18
01508-40805	408	17
	460	17
01508-41408	412	28
	462	28
01546-10812	493	21
	498	17
	507	21
	516	21
	523	17
01580-00605	358	19
	363	19
	493	23
	498	19
	507	23
	516	23
	523	19
01580-10605	155	21
	371	23
	373	25
	406	22
	459	22
	548	10
	548	21
	557	10
	557	39
	646	14
	651	14
	654	14
	802	31
01580-10806	345	9
	346	9
	347	9
	353	9
	354	9
	355	9
	380	19
	381	24
	406	8
	408	7
	408	19
	459	8
	460	7
	460	19
01580-11008	182	6
	183	6
	184	6
	185	6
	186	6
	187	6
	412	43
	414	31
	463	43
	464	31
	484	12
01580-11210	120	6
	374	4
	374	6
	411	22
	413	14
	462	22
	464	14
	656	3
	656	6
01580-11411	170	4
01580-11815	689	7
	691	7
01580-12016	697	6
	698	6
01580-12419	736	4
	737	4
01580-13326	736	7
01580-20403	403	25
	456	25
01580-31210	149	6
01582-11210	123	4
	124	3
	345	7
	345	11
	346	7
	346	11
	347	7
	347	11
	353	6
	353	11
	354	6
	354	11
	355	7
	355	12
01582-11411	281	4
	281	6
	412	26
	462	26
01582-11613	219	7
	666	12
01582-12419	726	13
	728	13
	732	13
	735	13
01583-11408	505	13
	510	13
	514	13
	525	13
	531	13
	535	13
01583-12012	167	9
01584-00605	76	7
	130	10
01584-00806	385	22
01584-01008	54	17
	60	21
	62	14
	63	14
01584-01210	60	11
	125	4
01584-30806	60	8
01590-30809	282	3
01590-31215	708	7
	713	7
01592-11215	726	9
	728	9
	732	9
	735	9
01592-31215	727	7
	729	7
	730	9
	731	9
	733	9
	734	9
01593-31411	281	2
	412	23
	462	23
01594-01008	60	5
	647	40
	651	36
	655	40
01595-01008	54	13
01596-00807	717	35
01597-01009	163	23
	277	23
	705	39
	707	39
	709	36
	711	36
	724	25
01598-01214	697	10
	697	26
	698	10
	698	17
01601-20410	400	14
	454	14
01601-20411	404	4
	458	4
01601-20512	400	15
	454	15
01601-50513	400	18

Part Number	Page	Index
	454	18
01640-20408	403	24
	404	5
	456	24
	458	5
01640-20508	358	4
	358	6
	363	4
	363	6
01640-20610	155	22
	359	32
	364	32
	370	11
	370	15
	372	11
	372	17
	399	29
	406	16
	408	15
	459	16
	460	15
01640-20716	130	19
01640-20816	130	17
	345	6
	346	6
	347	6
	353	7
	354	7
	355	6
	380	20
	381	25
01640-21016	494	6
	499	7
	508	9
	517	7
	527	9
	533	6
	647	41
	651	37
	655	41
01640-31223	149	5
01641-20608	486	2
	564	19
	586	19
	590	11
	602	19
	606	10
	607	11
	622	19
	626	10
	627	11
01641-20812	548	27
	558	63
01641-21423	411	20
	462	20
01641-50508	377	28
	379	28
	388	10
	470	17
01643-10623	548	11
	548	22
	557	11
	558	40
01643-11232	144	5
	148	4
	149	4
01643-30623	130	14
	156	6
	157	16
	219	20
	226	22
	374	11
	374	15
	385	13
	385	18
	392	14
	393	12
	393	16
	393	20
	394	27
	394	34
	394	41
	394	46
	394	51
	416	31
	417	40
	418	8
	420	9
	420	12
	422	13
	422	19
	422	21
	428	3
	430	3
	438	31
	438	40
	444	13
	444	19
	444	21
	453	15
	453	18
	467	16
	468	9
	468	12
	470	6
	475	3
	486	6
	493	22
	498	18
	507	22
	516	22
	523	18
	540	5
	560	9
	560	18
	561	11
	561	22
	646	15
	646	21
	646	24
	651	15
	651	21
	651	24
	654	15
	654	21
	654	24
	802	30
01643-30823	49	9
	155	16
	155	19
	155	27
	155	29
	156	16
	156	19
	156	39
	157	4
	174	34
	179	26
	184	17
	185	17
	186	17
	187	17
	188	13
	191	3
	193	21
	195	13
	198	3
	200	21
	202	13
	208	11
	344	4
	348	4
	349	4
	350	3
	351	4
	352	4
	370	5
	371	26
	372	5
	372	15
	399	41
	402	2
	403	20
	404	19
	406	12
	407	27
	408	11
	409	26
	420	3
	420	6
	428	18
	456	2
	456	20
	458	19
	459	12
	459	27
	460	11
	460	26
	467	21
	468	3
	468	6
	469	10
	475	19
	478	2
	484	8
	484	20
	486	4
	494	11
	497	2
	499	12
	503	2
	505	7
	508	13
	509	2
	510	7
	512	2
	513	2
	514	7
	517	12
	521	2
	525	7
	527	13
	530	2
	531	7
	533	11
	534	2
	535	7
	540	3
	540	12
	550	5
	559	5
	667	13
	717	36
	802	19
	803	45
	803	47
01643-31032	54	12
	58	6
	62	15
	63	15
	150	3
	154	2
	155	5
	155	13
	156	3

Part Number	Page	Index
	156	21
	156	25
	156	28
	156	30
	156	33
	156	36
	157	8
	160	23
	160	26
	160	30
	161	4
	162	7
	163	6
	163	8
	163	17
	163	20
	163	22
	167	3
	167	7
	167	12
	168	39
	169	15
	170	13
	170	14
	171	6
	171	10
	174	25
	175	55
	177	2
	177	14
	179	17
	180	47
	182	7
	182	17
	183	7
	183	17
	184	7
	184	15
	185	7
	185	15
	186	7
	186	15
	187	7
	187	15
	188	9
	188	17
	188	23
	188	26
	188	30
	188	35
	189	40
	189	45
	190	7
	190	10
	190	13
	190	16
	190	19
	190	22
	190	27
	191	6
	191	11
	191	15
	192	6
	192	9
	192	13
	192	19
	192	23
	192	26
	192	29
	192	33
	192	37
	193	4
	193	8
	193	13
	193	17
	194	8
	195	9
	195	17
	195	23
	195	26
	195	30
	195	35
	196	40
	196	45
	197	7
	197	10
	197	13
	197	16
	197	21
	198	6
	198	11
	198	15
	199	6
	199	9
	199	13
	199	19
	199	23
	199	26
	199	29
	199	33
	199	37
	200	4
	200	8
	200	13
	200	17
	201	8
	202	9
	202	17
	202	23
	202	26
	202	30
	202	35
	203	40
	203	45
	204	7
	204	10
	204	13
	204	16
	204	19
	204	22
	204	27
	205	6
	205	9
	205	13
	205	19
	205	23
	205	26
	205	29
	205	33
	205	37
	215	3
	215	6
	220	8
	222	9
	229	13
	229	15
	236	16
	238	22
	239	2
	239	4
	241	2
	242	4
	243	5
	243	11
	243	25
	245	13
	245	15
	245	17
	245	30
	254	3
	254	7
	255	3
	255	10
	256	10
	256	15
	256	17
	257	3
	257	7
	257	10
	257	14
	257	18
	257	21
	257	23
	257	30
	258	36
	259	15
	259	18
	259	21
	259	24
	259	27
	277	24
	278	3
	278	6
	278	9
	282	10
	284	8
	284	14
	285	48
	286	8
	286	14
	287	49
	300	19
	306	8
	307	17
	307	19
	309	28
	311	5
	311	7
	311	10
	361	25
	366	25
	389	3
	389	6
	389	9
	393	6
	395	20
	396	24
	396	28
	396	31
	396	35
	396	38
	396	41
	397	5
	397	7
	405	24
	406	6
	407	33
	407	36
	408	5
	409	31
	410	12
	410	15
	411	9
	412	38
	412	42
	413	9
	414	26
	414	30
	416	13
	416	17
	416	20
	416	26
	416	29
	417	35
	417	38

Part Number	Page	Index
	417	42
	417	45
	418	3
	418	6
	419	25
	419	29
	419	35
	420	16
	420	20
	421	12
	422	23
	423	15
	437	13
	437	17
	437	20
	438	26
	438	29
	438	35
	438	38
	438	42
	438	45
	439	15
	444	23
	447	29
	453	3
	453	6
	453	9
	453	12
	458	24
	459	6
	459	33
	459	36
	460	5
	460	31
	461	12
	461	15
	462	9
	462	38
	463	42
	464	9
	464	26
	464	30
	466	12
	466	16
	466	19
	466	23
	466	27
	466	30
	467	3
	467	10
	467	13
	467	28
	467	31
	468	16
	471	14
	475	10
	478	9
	478	12
	481	6
	482	3
	482	35
	484	3
	484	5
	484	10
	484	16
	485	11
	488	3
	488	6
	488	13
	497	17
	497	24
	503	22
	503	27
	505	5
	505	28
	505	32
	505	36
	506	40
	508	19
	508	22
	509	19
	509	24
	510	5
	510	25
	510	29
	510	33
	510	38
	512	19
	512	26
	513	17
	513	22
	514	5
	514	25
	514	29
	514	33
	514	37
	521	22
	521	29
	525	5
	525	25
	525	29
	525	33
	525	37
	527	19
	527	22
	530	19
	530	26
	531	5
	531	25
	531	29
	531	33
	531	38
	534	17
	534	24
	535	5
	535	25
	535	29
	535	33
	535	37
	540	8
	540	16
	540	22
	540	26
	540	29
	540	33
	540	36
	542	4
	542	8
	547	13
	552	6
	555	5
	555	7
	556	15
	557	16
	557	20
	557	25
	557	29
	558	45
	558	49
	558	54
	558	58
	566	10
	579	11
	580	3
	580	9
	582	3
	588	10
	604	10
	620	15
	624	10
	646	12
	646	33
	647	51
	647	53
	651	12
	651	29
	652	47
	652	49
	654	12
	654	33
	655	51
	655	53
	667	19
	703	60
	705	40
	707	40
	709	37
	710	39
	711	37
	712	39
	724	26
01643-31232	120	5
	120	10
	123	3
	124	1
	146	8
	146	19
	146	22
	153	9
	153	12
	156	10
	157	6
	157	12
	158	11
	158	18
	160	20
	161	17
	163	32
	167	16
	167	18
	169	4
	169	7
	169	10
	170	16
	172	4
	174	29
	177	19
	177	22
	177	25
	177	28
	177	30
	177	36
	177	39
	178	44
	179	21
	182	19
	183	19
	184	27
	185	27
	186	27
	187	27
	190	3
	194	5
	197	3
	201	5
	204	3
	206	4
	206	9
	207	4
	207	9
	208	8
	209	3
	209	6
	209	12
	209	15

Part Number	Page	Index
	209	22
	209	25
	209	34
	210	3
	210	6
	210	12
	210	15
	210	22
	211	3
	211	12
	212	3
	212	12
	213	3
	213	6
	213	12
	213	15
	213	22
	213	25
	213	34
	214	3
	214	6
	214	12
	214	15
	214	22
	219	13
	219	23
	220	31
	221	41
	223	6
	223	25
	224	4
	224	7
	226	31
	228	8
	228	17
	243	22
	244	38
	245	21
	247	7
	247	15
	248	6
	248	14
	248	16
	248	20
	249	7
	252	3
	252	9
	252	34
	254	18
	254	31
	257	26
	258	39
	258	40
	263	15
	264	21
	265	10
	266	24
	268	15
	269	21
	270	10
	271	24
	277	6
	277	9
	277	12
	277	16
	277	21
	278	12
	306	4
	307	5
	307	7
	309	9
	309	13
	309	22
	310	4
	310	8
	310	10
	310	14
	310	16
	310	21
	310	24
	310	27
	310	30
	315	3
	315	7
	315	11
	315	14
	315	18
	315	21
	315	24
	315	27
	315	30
	315	33
	316	36
	316	38
	316	41
	322	3
	322	7
	322	10
	322	14
	323	5
	323	9
	323	12
	323	16
	324	7
	324	10
	324	12
	325	5
	325	9
	325	12
	325	16
	325	19
	325	26
	326	7
	326	10
	326	12
	326	24
	326	27
	326	29
	328	3
	328	7
	328	10
	328	14
	328	17
	328	33
	328	35
	328	38
	329	40
	329	43
	329	46
	329	49
	330	6
	330	12
	332	10
	332	13
	332	16
	332	19
	333	10
	333	13
	333	16
	333	19
	333	25
	333	29
	334	10
	334	13
	334	16
	334	22
	334	26
	335	10
	335	13
	335	16
	336	6
	336	36
	337	40
	337	51
	338	32
	338	36
	339	47
	340	32
	340	36
	341	47
	345	12
	346	12
	347	12
	353	12
	354	12
	355	13
	357	5
	370	22
	373	24
	392	9
	410	6
	411	6
	413	6
	414	34
	441	5
	446	23
	447	31
	450	3
	461	6
	462	6
	464	6
	464	34
	482	6
	482	9
	482	14
	482	17
	482	22
	482	25
	482	28
	482	31
	483	38
	483	41
	483	44
	488	10
	537	25
	538	4
	539	4
	541	48
	545	5
	546	5
	548	24
	549	3
	550	14
	550	20
	552	9
	553	3
	553	5
	554	5
	554	8
	554	13
	554	16
	558	60
	559	14
	559	20
	560	6
	560	15
	560	21
	561	8
	561	19
	561	25
	562	5
	562	8
	573	9
	574	3
	574	6

Part Number	Page	Index
	574	11
	575	31
	576	21
	578	25
	578	29
	579	6
	583	7
	584	3
	596	9
	597	35
	598	21
	600	29
	600	33
	613	9
	615	40
	616	24
	619	42
	619	46
	619	50
	619	53
	620	6
	620	9
	633	9
	635	40
	636	21
	638	35
	639	39
	641	38
	643	40
	643	44
	643	48
	643	51
	644	38
	645	33
	645	37
	647	45
	647	48
	650	2
	650	5
	650	8
	650	12
	650	14
	650	16
	652	41
	652	44
	655	45
	655	48
	656	4
	656	12
	657	7
	658	7
	659	4
	659	7
	660	4
	660	7
	661	7
	661	10
	662	7
	662	10
	666	23
	667	21
	684	35
	685	35
	686	35
	687	35
	689	12
	691	12
	694	28
	695	28
	696	15
	699	10
	699	13
	699	17
	699	25
	699	32
	701	13
	702	15
	702	18
	702	38
	708	4
	708	6
	713	4
	713	6
	718	5
	718	17
	718	27
	718	29
	718	34
	718	36
	719	5
	719	17
	719	27
	719	29
	719	34
	719	36
	720	9
	720	13
	720	17
	720	21
	720	25
	720	29
	721	7
	721	13
	721	18
	721	31
	721	38
	723	10
	723	15
	802	5
	802	21
	802	33
	802	36
01643-31445	170	5
	170	7
	170	10
	247	12
	537	11
	537	22
	723	19
01643-31645	153	18
	155	9
	156	12
	175	62
	180	54
	223	11
	245	25
	249	2
	254	16
	255	6
	257	33
	260	3
	263	5
	266	20
	268	5
	271	20
	279	11
	280	11
	285	50
	287	51
	295	2
	336	30
	338	26
	340	26
	450	6
	544	6
	545	8
	546	8
	549	7
	551	2
	583	2
	583	4
	659	9
	660	9
	661	12
	662	12
	666	13
	666	18
	700	22
	718	8
	719	8
	721	23
01643-31845	225	6
	670	2
	673	2
	684	21
	684	25
	684	28
	684	32
	685	21
	685	25
	685	28
	685	32
	686	21
	686	25
	686	28
	686	32
	687	21
	687	25
	687	28
	687	32
	688	3
	689	4
	689	8
	690	3
	691	4
	691	8
01643-32060	167	23
	265	4
	270	4
	273	2
	273	4
	276	2
	276	4
	299	3
	324	4
	324	20
	326	4
	326	21
	328	24
	328	28
	336	4
	336	13
	336	17
	337	44
	338	4
	338	9
	338	13
	339	40
	340	4
	340	9
	340	13
	341	40
	552	3
	667	32
	674	14
	675	14
	694	25
	695	25
	696	19
	697	7
	697	14
	697	30
	698	7
	698	14
	698	21

Part Number	Page	Index
	701	21
	701	25
	703	51
	703	55
01643-32460	153	20
	279	2
	280	2
	537	9
	537	20
	663	3
	667	29
	694	7
	701	19
	703	49
	723	31
	726	12
	727	10
	728	12
	729	10
	730	12
	731	12
	732	12
	733	12
	734	12
	735	12
	736	5
	737	5
01643-33380	723	29
	726	17
	727	12
	728	18
	729	12
	730	14
	731	14
	732	17
	733	14
	734	14
	735	19
	736	8
01643-50823	232	48
	252	25
	345	10
	346	10
	347	10
	353	10
	354	10
	355	10
01643-51032	251	15
	251	19
	296	17
	305	15
	307	12
	309	5
	576	18
	598	18
	616	20
	636	18
01643-51232	218	6
	250	12
	251	12
	252	13
	252	17
	345	8
	346	8
	347	8
	353	8
	354	8
	355	8
	356	2
01643-51645	704	8
	706	8
01643-70623	358	10
	358	12
	358	21
	359	30

Part Number	Page	Index
	359	35
	359	40
	359	46
	359	50
	360	4
	360	8
	360	15
	361	32
	361	35
	362	4
	362	8
	363	10
	363	12
	363	21
	364	30
	364	35
	364	40
	364	46
	364	50
	365	4
	365	8
	365	15
	366	32
	366	35
	367	4
	367	8
	380	3
	380	16
	382	6
	384	3
	385	7
	386	3
	386	7
	386	13
	386	21
	387	36
	387	42
	399	28
	426	22
	427	30
	430	10
	430	16
	430	19
	431	25
	432	4
	433	6
	442	6
	448	6
	449	4
	473	18
	476	2
	476	15
	489	3
	489	6
	490	3
	493	6
	498	6
	507	6
	516	6
	523	6
01643-70823	359	26
	359	43
	360	20
	361	39
	364	26
	364	43
	365	20
	366	39
	387	29
	388	4
	388	7
	392	4
	396	46
	398	5
	398	13

Part Number	Page	Index
	399	35
	399	38
	399	46
	399	49
	405	22
	422	7
	426	4
	426	9
	426	12
	426	16
	426	19
	427	27
	427	33
	427	36
	427	39
	444	7
	446	10
	451	7
	451	11
	451	15
	452	4
	458	22
	467	24
	473	6
	473	9
	473	13
	473	21
	473	24
	473	27
	473	30
	473	34
	473	37
	474	40
	474	43
	474	46
	476	7
	476	10
	476	13
	476	18
	476	21
	489	10
	490	7
	493	5
	493	11
	498	5
	507	5
	507	11
	516	5
	516	11
	523	5
	538	8
	538	12
	539	8
	539	12
	550	10
	559	10
	649	7
	649	14
01643-71032	346	18
	354	18
	368	3
	413	21
	417	47
	425	3
	425	5
	438	47
	446	13
	446	16
	446	20
	464	21
	469	8
	471	20
	471	22
	493	25
	498	21

Part Number	Page	Index
	507	25
	516	25
	523	21
	550	23
	559	23
01643-71232	369	2
	369	5
	445	11
	469	22
	472	14
	538	16
	539	15
01643-71645	357	10
	374	3
	441	10
	450	8
01803-02228	267	4
	272	4
	274	4
	275	4
02090-11270	700	15
	700	17
	701	8
	702	11
	702	25
	702	33
02290-11219	700	16
	700	18
	701	9
	702	12
	702	26
	702	34
02720-10104	313	11
02720-40104	220	2
02754-00405	254	8
02756-00510	317	1
02756-20511	723	32
02761-00206	506	44
	511	42
	515	41
	526	41
	532	42
	536	41
02762-00203	309	17
02762-002A4	618	36
	642	34
02762-00303	578	21
	600	25
	618	38
	638	31
	642	36
	645	29
02762-00405	175	48
	180	40
02762-004A5	161	15
02763-004A3	254	28
02764-00204	578	20
	600	24
	638	30
	645	28
02764-00205	578	19
	600	23
	638	29
	645	27
02764-002A4	618	37
	642	35
02781-0021D	497	3
	503	3
	509	3
	512	3
	513	3
	521	3
	530	3
	534	3
	617	50

Part Number	Page	Index
02781-00315	174	12
	179	8
02781-00422	229	19
	254	22
02781-00516	314	12
	597	25
	614	30
	634	30
02781-00522	167	29
02781-00628	242	5
	252	28
	253	36
	314	21
02782-10210	287	41
	307	21
	308	40
	505	23
	576	28
	576	35
	577	40
	578	12
	578	15
	598	28
	598	35
	599	40
	600	16
	600	19
	616	30
	617	37
	617	42
	618	20
	618	23
	636	28
	637	35
	637	40
	638	22
	638	25
	642	18
	642	21
	645	20
	645	23
02782-10311	284	32
	286	32
	328	20
02782-10420	167	32
	177	3
02782-10422	174	9
	174	35
	175	41
	179	5
	179	27
	179	33
	254	25
02782-10425	254	9
02782-10516	314	15
02782-10520	314	18
02782-10522	161	12
	174	19
	284	29
	286	29
02782-10628	163	9
	229	16
	254	19
02782-10630	248	25
02782-10632	580	5
02783-10315	575	20
	597	20
	614	20
	614	25
	634	20
	641	20
	641	25
	644	20
02783-10422	284	35
	286	35

Part Number	Page	Index
	634	25
	644	25
02783-10522	330	7
	802	14
02783-10628	575	15
	597	15
	614	15
	634	15
	641	15
	644	15
02789-00315	718	18
	719	18
02789-00522	330	14
	725	1
02896-11008	287	43
	307	23
	307	26
	308	42
	308	45
	497	5
	503	5
	505	16
	505	19
	505	22
	505	25
	509	5
	510	16
	510	19
	510	22
	512	5
	513	5
	514	16
	514	19
	514	22
	521	5
	525	16
	525	19
	525	22
	530	5
	531	16
	531	19
	531	22
	534	5
	535	16
	535	19
	535	22
	575	6
	575	11
	576	27
	576	30
	576	32
	576	37
	577	42
	578	14
	578	17
	597	6
	597	11
	598	27
	598	30
	598	32
	598	37
	599	42
	600	18
	600	21
	614	6
	614	11
	616	29
	616	32
	617	34
	617	39
	617	44
	617	49
	618	22
	618	25
	634	6

Part Number	Page	Index
	634	11
	636	27
	636	30
	636	32
	637	37
	637	42
	638	24
	638	27
	641	6
	641	11
	642	20
	642	23
	644	6
	644	11
	645	22
	645	25
02896-11009	98	3
	174	14
	179	10
	284	34
	286	34
	321	5
	324	2
	324	17
	326	2
	326	17
	326	19
	328	19
	328	21
	328	26
	328	30
	575	22
	576	33
	597	22
	598	33
	614	22
	614	27
	617	35
	634	22
	636	33
	641	22
	641	27
	644	22
	714	2
	715	2
	716	2
	718	2
	718	14
	719	2
	719	14
	721	8
	721	14
	721	19
	807	
	807	
02896-11012	105	3
	161	8
	161	10
	167	34
	174	11
	175	37
	175	43
	177	4
	179	7
	179	29
	179	35
	284	37
	286	37
	327	10
	328	18
	634	27
	644	27
	717	2
	717	33
	807	

Part Number	Page	Index
02896-11015	161	7
	161	13
	167	25
	167	31
	167	36
	174	21
	284	31
	286	31
	307	36
	309	25
	314	2
	314	4
	314	6
	314	8
	314	10
	314	13
	314	16
	314	19
	317	3
	319	3
	330	8
	330	13
	597	28
	614	33
	634	33
	704	2
	704	37
	706	2
	706	37
	709	2
	709	34
	711	2
	711	34
	723	33
	724	2
	724	23
	725	2
	802	16
	806	
	806	
	807	
02896-11018	285	40
	287	40
	312	5
	314	22
	575	17
	597	17
	614	17
	634	17
	641	17
	644	17
02896-21018	580	7
02896-61012	229	21
	254	11
	254	24
	254	27
	806	
02896-61018	163	12
	163	14
	229	18
	242	6
	248	27
	252	22
	252	30
	253	38
	254	21
	307	29
	307	33
	307	39
	575	14
	597	14
	614	14
	634	14
	641	14
	644	14

Part Number	Page	Index
	806	
	806	
	807	
	807	
04010-00516	370	16
	372	18
	406	13
	407	28
	408	12
	409	27
	459	13
	459	28
	460	12
	460	27
04010-00722	167	8
04020-00616	166	2
	304	4
	537	6
	537	17
04020-01024	250	10
	251	10
04020-01228	230	8
	230	18
	231	7
	231	16
	231	31
	233	33
	243	20
	249	3
	260	4
	296	19
04020-01434	223	7
04025-00316	226	8
04050-10060	723	22
04050-11610	225	9
04050-11612	282	7
	358	13
	359	23
	359	34
	359	37
	363	13
	364	23
	364	34
	364	37
	370	12
	370	14
	372	12
	372	16
	406	15
	406	20
	408	14
	459	15
	459	20
	460	14
04050-12012	359	28
	364	28
04050-12015	282	4
	408	22
	460	22
	548	28
	558	64
04050-13020	553	4
04050-13022	281	3
	411	19
	412	24
	462	19
	462	24
	708	5
	713	5
	726	10
	728	10
	732	10
	735	10
04050-13025	727	8
	729	8

Part Number	Page	Index
	730	10
	731	10
	733	10
	734	10
04050-14025	545	6
	546	6
04050-18080	708	8
	713	8
04064-01010	404	6
	458	6
04064-01610	412	32
	413	17
	462	32
	464	17
04064-01812	225	10
04064-03515	246	4
04064-04518	233	27
04064-05020	222	16
04064-05520	222	15
04064-06020	158	5
04064-07025	244	42
04064-07525	221	36
04064-09030	233	25
04065-01030	228	4
	234	36
	699	6
04065-01104	158	4
	715	5
	715	8
	717	5
	717	8
04065-01154	674	11
	675	11
04065-01254	233	26
04065-01610	226	29
04065-02012	306	2
04065-03212	166	17
04065-04018	250	15
04065-04518	166	10
04065-04818	297	35
04065-05220	235	24
04065-05820	220	11
04065-06220	302	10
04065-06825	290	7
04065-07225	246	3
	296	27
04065-07525	233	21
04065-08025	709	5
	711	5
04065-09030	234	39
	336	22
	338	18
	340	18
04070-00105	220	13
	232	46
	233	12
04071-00140	228	21
04071-00145	231	14
	243	32
04071-00160	243	6
04082-00212	699	15
	699	23
	699	30
	723	8
	723	13
04082-00312	337	38
	338	34
	340	34
04082-00514	723	17
04120-21748	484	13
04205-10618	406	19
	459	19
04205-10622	282	6
	358	11
	363	11
04205-10822	408	21
	460	21
04205-10828	548	26
	558	62
04205-11442	411	18
	462	18
04211-20634	406	21
	459	21
04211-20844	408	18
	460	18
04221-20634	406	17
	459	17
04221-20844	408	16
	460	16
04245-41487	281	7
04248-30613	407	23
	459	23
04248-30838	408	20
	460	20
04250-80847	282	2
04250-81474	225	11
	281	1
	412	25
	462	25
04260-00635	228	14
	228	22
	233	6
	233	18
	235	6
	235	22
	244	34
04260-01905	264	18
	269	18
04418-13060	223	3
	236	8
	700	26
	701	29
	703	62
	723	24
	733	16
	734	16
	735	17
	740	7
	742	7
	743	7
	744	7
	745	7
	746	7
	747	7
	748	7
	749	7
	750	7
	751	7
	752	7
	753	7
	754	7
	755	7
	756	7
	757	7
	758	7
	759	7
	760	7
	761	7
	762	7
	763	7
	764	7
	765	7
	766	7
	767	7
	768	7
	769	7
	770	7
	771	7
	772	7
	773	7
	774	7
	775	7
	776	7
	777	7
	778	7
	779	7
	780	7
	781	7
	782	7
	783	7
	785	7
	787	7
	789	2
	790	3
	791	3
	792	3
	793	3
	794	3
	795	3
	796	3
04434-50610	167	1
	215	4
	256	4
	285	46
	287	47
	306	6
	446	18
	446	24
04434-50612	579	4
	619	51
	620	4
	643	49
04434-50808	803	43
04434-50810	245	11
	282	8
	346	16
	354	16
	412	40
	414	28
	463	40
	464	28
04434-50812	620	7
04434-51008	49	7
	402	17
	456	17
04434-51010	130	32
	190	14
	190	20
	204	14
	204	20
	256	13
	257	5
	257	12
	257	19
	257	28
	257	34
	346	15
	354	15
	410	13
	420	17
	423	13
	428	8
	428	21
	439	13
	446	27
	461	13
	467	11
	475	8
04434-51012	206	7
	207	7
	209	20
	209	32
	210	20
	211	10
	212	10

Part Number	Page	Index
	213	20
	213	32
	214	20
	257	24
	258	37
	445	9
04434-51208	85	5
04434-51210	259	25
	510	35
	531	35
04434-51212	578	22
	600	26
	619	44
	638	32
	643	42
	645	30
04434-51310	175	52
	180	44
	418	1
	467	1
04434-51312	336	33
	338	29
	340	29
04434-51410	188	15
	190	23
	192	24
	195	15
	197	17
	199	24
	202	15
	204	23
	205	24
	257	4
	257	11
	257	16
	396	44
	410	10
	420	18
	461	10
	505	26
	508	16
	510	23
	514	23
	525	23
	527	16
	531	23
	535	23
04434-51412	146	20
04434-51610	192	10
	199	10
	205	10
04434-51710	190	8
	197	8
	204	8
	361	23
	366	23
	416	33
	419	27
	419	31
	438	33
	505	29
	510	26
	514	26
	525	26
	531	26
	535	26
04434-51712	177	17
	578	26
	600	30
	618	39
	638	36
	642	37
	645	34
04434-51810	505	33
	505	37
	510	30
	510	34
	514	30
	514	34
	525	30
	525	34
	531	30
	531	34
	535	30
	535	34
04434-51910	256	12
	416	32
	419	30
	421	10
	438	32
	467	8
04434-51912	310	12
	482	4
	482	12
	482	18
04434-52110	190	24
	192	3
	192	20
	197	18
	199	3
	199	20
	204	24
	205	3
	205	20
	259	11
04434-52112	482	19
	540	19
	540	23
04434-52310	188	14
	189	43
	191	4
	191	9
	195	14
	196	43
	198	4
	198	9
	202	14
	203	43
	416	15
	416	27
	417	36
	417	43
	418	4
	420	14
	423	12
	437	15
	438	27
	438	36
	438	43
	439	12
	466	14
	466	28
	468	14
	471	12
04434-52312	177	20
	177	33
	177	37
	178	42
	310	6
04434-52511	190	4
	192	1
	192	34
	197	4
	199	1
	199	34
	204	4
	205	1
	205	34
	259	10
	259	19
	278	7
	419	32
	541	41
04434-52512	541	45
04434-52711	278	1
	416	14
	416	22
	437	14
	437	22
	466	13
	466	21
04434-52712	177	34
	482	26
	483	42
	503	20
	521	20
04434-53211	188	27
	191	12
	192	30
	195	27
	198	12
	199	30
	202	27
	205	30
	311	3
	446	25
04434-53212	310	2
	802	2
04434-53411	192	17
	199	17
	205	17
	254	4
	482	32
04434-53412	178	40
	482	10
04435-51008	403	18
	456	18
04435-51210	259	22
04435-51410	497	15
	497	22
	503	19
	503	25
	509	17
	509	22
	512	17
	512	24
	513	15
	513	20
	521	19
	521	27
	530	17
	530	24
	534	15
	534	22
04435-52112	177	26
04530-11018	288	6
	289	10
06030-06215	220	34
06030-06309	228	3
	228	10
06030-06921	220	12
06040-06024	264	23
	269	23
06043-06214	244	40
06124-02020	225	5
	406	3
	408	2
	411	10
	413	10
	459	3
	460	2
	462	10
	464	10
06124-03020	411	11
	413	11

Part Number	Page	Index
	462	11
	464	11
06300-06212	158	6
06300-06921	233	11
06302-32213	219	3
06330-06822	232	45
06330-06918	233	24
06340-06207	228	19
06340-06208	158	15
06340-06210	222	11
06340-06211	222	12
06340-06311	247	4
07000-02012	576	6
	598	6
	616	6
	636	6
07000-02014	576	7
	598	7
	616	7
	636	7
07000-02018	576	9
	598	9
	616	9
	636	9
07000-02110	264	19
	269	19
07000-02115	266	22
	271	22
07000-02145	336	15
	338	11
	340	11
07000-03038	251	16
07000-05105	273	5
	276	5
07000-05165	263	10
	268	10
07000-11005	568	26
	591	26
	608	26
	628	26
07000-11006	301	42
07000-11007	565	14
	566	5
	568	24
	587	14
	588	5
	591	24
	603	14
	604	5
	606	25
	608	24
	623	14
	624	5
	628	24
07000-11008	164	26
	563	6
	568	33
	569	38
	571	6
	571	30
	585	6
	590	23
	591	33
	592	38
	594	6
	594	30
	601	6
	606	22
	607	23
	609	33
	609	38
	611	6
	611	30
	621	6
	626	22
	627	23
	629	33
	629	38
	631	6
	631	30
07000-11009	164	34
	566	7
	571	13
	588	7
	594	13
	604	7
	611	13
	619	54
	624	7
	631	13
	643	52
07000-12010	301	36
07000-12014	570	5
	593	5
	610	5
	630	5
07000-12016	568	14
	570	3
	573	12
	576	8
	591	14
	593	3
	596	12
	598	8
	608	14
	610	3
	613	12
	616	8
	628	14
	630	3
	633	12
	636	8
07000-12018	497	19
	497	21
	506	51
	509	29
	511	49
	512	21
	512	23
	513	27
	515	49
	521	24
	521	26
	526	48
	530	21
	530	23
	532	49
	534	19
	534	21
	536	49
07000-12020	563	5
	568	31
	585	5
	590	21
	591	31
	601	5
	606	20
	607	21
	608	31
	621	5
	626	20
	627	21
	628	31
07000-12021	298	4
07000-12030	301	41
07000-12065	300	17
07000-12070	500	18
	518	18
07000-12075	307	8
07000-12080	704	19
	706	19
	806	
07000-12085	174	23
	179	15
	704	16
	706	16
	709	17
	711	17
	806	
	806	
07000-12090	709	16
	711	16
	806	
07000-12105	674	5
	675	5
	717	15
	807	
07000-12110	306	5
	717	14
	807	
07000-12120	563	3
	568	32
	585	3
	590	22
	591	32
	601	3
	606	21
	607	22
	608	32
	621	3
	626	21
	627	22
	628	32
	714	13
	716	13
	724	15
	807	
	807	
07000-12125	714	10
	715	17
	716	10
	724	12
	807	
	807	
	807	
07000-12130	715	16
	807	
07000-12145	296	18
07000-13024	313	20
	571	27
	594	27
	611	27
	631	27
07000-13025	370	2
	372	2
	574	8
07000-13032	307	13
	313	4
07000-13035	296	15
	307	15
07000-13040	304	1
07000-13042	568	20
	591	20
	608	20
	628	20
07000-13045	309	23
07000-13050	715	6
	715	9
	717	6
	717	9
	807	
	807	
07000-15160	284	6
	284	12
	286	6

Part Number	Page	Index
	286	12
	295	3
	299	1
07000-15195	798	3
07000-22018	298	2
07000-71007	238	14
	806	
07000-72015	238	13
	239	6
	806	
	807	
	807	
07000-72018	220	24
	223	13
	223	15
	227	33
	229	4
	235	29
	806	
	807	
	807	
07000-72021	226	27
	235	28
	807	
	808	
07000-72055	249	10
07000-72060	252	11
07000-72065	224	2
	806	
07000-72070	247	9
	806	
07000-72075	249	4
	249	8
07000-72080	252	6
07000-72090	248	4
	806	
07000-72095	223	23
	806	
07000-72100	248	10
	806	
07000-72105	252	1
07000-72110	248	9
	806	
07000-72130	245	32
	806	
07000-73022	220	26
	223	4
	229	11
	236	10
	236	19
	238	20
	806	
	806	
	807	
	808	
07000-73025	236	11
	239	7
	249	12
	807	
	808	
07000-73030	241	3
	245	8
	252	21
	806	
	806	
07000-73032	227	34
	242	2
	245	9
	249	11
	806	
	806	
	807	
	808	
07000-73035	239	5
	255	7

Part Number	Page	Index
	807	
	808	
07000-73038	252	7
07000-73045	236	17
	248	18
	806	
	807	
	808	
07000-73048	252	15
07000-75065	245	26
	806	
07000-75180	220	33
	806	
07000-75210	247	16
	806	
07000-75365	220	25
	221	42
	806	
07000-75375	249	5
07000-75460	249	9
07000-A2060	238	19
	806	
07000-A3024	238	18
07000-B1010	303	7
07000-B3025	309	6
07000-E2012	164	15
07000-E2020	164	13
07000-E2025	164	14
07000-E2110	166	1
07000-F2016	165	37
07001-01005	568	27
	591	27
	608	27
	628	27
07001-01007	566	6
	568	25
	588	6
	591	25
	604	6
	608	25
	624	6
	628	25
07001-01009	566	8
	588	8
	604	8
	624	8
07001-02014	570	6
	593	6
	610	6
	630	6
07001-02016	165	38
	568	15
	570	4
	573	13
	591	15
	593	4
	596	13
	608	15
	610	4
	613	13
	628	15
	630	4
	633	13
07001-02018	298	3
07001-02021	298	5
07002-02434	336	19
	338	15
	340	15
	573	11
	596	11
	613	11
	633	11
07002-03634	263	2
	266	18
	268	2

Part Number	Page	Index
	271	18
07002-10823	177	11
	564	4
	571	15
	573	3
	576	12
	586	4
	590	4
	594	15
	596	3
	598	12
	602	4
	606	4
	607	4
	611	15
	613	3
	616	12
	622	4
	626	4
	627	4
	631	15
	633	3
	636	12
07002-11023	164	29
	167	28
	259	29
	573	5
	575	8
	596	5
	597	8
	613	5
	614	8
	633	5
	634	8
	641	8
	644	8
07002-11223	568	23
	568	29
	590	27
	591	23
	591	29
	607	27
	608	23
	608	29
	626	26
	627	27
	628	23
	628	29
07002-11423	164	33
	284	33
	285	42
	285	44
	286	33
	287	42
	287	45
	305	8
	307	22
	307	25
	308	41
	308	44
	313	18
	328	22
	497	4
	503	4
	505	15
	505	18
	505	21
	505	24
	509	4
	510	15
	510	18
	510	21
	512	4
	513	4
	514	15

Part Number	Page	Index
	514	18
	514	21
	521	4
	525	15
	525	18
	525	21
	530	4
	531	15
	531	18
	531	21
	534	4
	535	15
	535	18
	535	21
	566	3
	571	18
	573	7
	575	5
	575	10
	576	26
	576	29
	576	36
	577	39
	577	41
	578	7
	578	11
	578	13
	578	16
	588	3
	594	18
	596	7
	597	5
	597	10
	598	26
	598	29
	598	36
	599	39
	599	41
	600	7
	600	11
	600	15
	600	17
	600	20
	604	3
	611	18
	613	7
	614	5
	614	10
	616	13
	616	28
	616	31
	617	38
	617	41
	617	43
	617	48
	617	51
	618	7
	618	11
	618	15
	618	19
	618	21
	618	24
	624	3
	631	18
	633	7
	634	5
	634	10
	636	26
	636	29
	637	36
	637	39
	637	41
	638	9
	638	13
	638	17
	638	21
	638	23
	638	26
	641	5
	641	10
	642	7
	642	11
	642	15
	642	17
	642	19
	642	22
	644	5
	644	10
	645	9
	645	13
	645	17
	645	19
	645	21
	645	24
07002-11623	177	7
	296	6
	300	29
	571	29
	576	13
	594	29
	598	13
	611	29
	616	14
	631	29
	636	13
07002-11823	167	33
	177	5
	177	9
07002-12034	161	6
	161	11
	174	10
	174	13
	174	36
	175	39
	175	42
	179	6
	179	9
	179	28
	179	31
	179	34
	284	36
	286	36
	298	8
	299	5
	300	31
	313	15
	314	11
	314	14
	314	17
	314	20
	565	13
	567	10
	570	10
	575	21
	575	24
	576	16
	576	24
	576	34
	587	13
	589	10
	590	29
	593	10
	597	21
	597	24
	597	27
	598	16
	598	24
	598	34
	603	13
	605	10
	606	24
	607	29
	610	10
	614	21
	614	24
	614	26
	614	29
	614	32
	616	18
	616	26
	617	36
	623	13
	625	10
	626	28
	627	29
	630	10
	634	21
	634	24
	634	26
	634	29
	634	32
	636	16
	636	24
	637	34
	641	21
	641	24
	641	26
	641	29
	641	31
	644	21
	644	24
	644	26
	644	29
	644	31
07002-12434	161	14
	163	11
	165	39
	167	26
	167	30
	174	20
	236	6
	284	30
	285	39
	286	30
	287	39
	296	11
	307	35
	314	23
	330	9
	564	12
	565	3
	567	4
	567	6
	568	9
	568	13
	570	2
	571	22
	575	16
	575	19
	586	12
	587	3
	589	4
	589	8
	590	18
	591	9
	591	13
	593	2
	594	22
	597	16
	597	19
	602	12
	603	3
	605	4
	605	8
	606	17

Part Number	Page	Index
	607	18
	608	9
	608	13
	610	2
	611	22
	614	16
	614	19
	622	12
	623	3
	625	4
	625	8
	626	17
	627	18
	628	9
	628	13
	630	2
	631	22
	634	16
	634	19
	641	16
	641	19
	644	16
	644	19
	802	15
	806	
	807	
	808	
07002-13034	174	16
	179	12
	298	6
07002-13334	284	27
	286	27
	575	2
	597	2
	614	2
	634	2
	641	2
	644	2
07002-14234	174	30
	179	22
	313	3
07002-21023	164	3
	303	21
07002-21623	303	6
	303	12
07002-21823	164	8
07002-22434	76	13
07002-23334	580	6
07002-23634	224	9
	806	
07002-32434	158	9
	226	18
	806	
07002-33034	226	23
	806	
07002-61023	229	6
	236	14
	238	6
	238	11
	240	3
	245	6
	248	22
	288	8
	289	9
	806	
	806	
	806	
	807	
	808	
07002-61223	238	28
	806	
07002-61423	238	26
	806	
07002-61623	220	29
	226	3

Part Number	Page	Index
	229	2
	806	
	806	
07002-61823	226	5
	238	24
	806	
	806	
07002-62034	229	20
	254	10
	254	23
	254	26
	307	32
	307	38
	806	
07002-62434	229	17
	236	4
	242	7
	248	24
	248	26
	252	29
	253	37
	254	20
	288	5
	307	28
	575	13
	597	13
	614	13
	634	13
	641	13
	644	13
	806	
	806	
	807	
	808	
07002-63034	240	5
	240	15
	240	23
	806	
07005-01012	146	15
07005-01212	245	18
	806	
07012-50085	158	7
07012-50095	245	31
	806	
07013-10080	263	9
	268	9
07018-10653	219	9
07018-10854	235	26
07018-11805	232	43
	235	25
07020-00000	336	27
	338	23
	340	23
	407	34
	411	3
	413	3
	459	34
	462	3
	464	3
	696	20
	697	22
	699	4
	699	20
	700	24
	701	26
	703	56
	723	20
07020-00675	332	21
	333	21
	334	18
	335	18
	337	52
	339	48
	341	48
	544	4

Part Number	Page	Index
	699	26
	699	33
	702	39
	722	40
07020-00900	225	3
	411	14
	462	14
	667	10
	699	5
	699	27
07030-00252	278	13
07030-10252	158	13
07040-10807	177	10
	243	9
	576	14
	598	14
	616	15
	636	14
07040-11007	164	2
	164	28
	167	27
	236	13
	245	5
	248	21
	303	20
	575	7
	597	7
	614	7
	634	7
	641	7
	644	7
07040-11409	285	41
	285	43
	287	44
	616	16
	642	16
	645	18
07040-11612	177	6
07040-11812	177	8
	226	4
	238	23
07040-12012	229	9
	298	7
	299	4
	300	30
	641	30
	644	30
07040-12412	236	3
	248	23
07040-12414	336	18
	338	14
	340	14
07040-13016	174	15
	179	11
07041-13612	265	17
	270	17
07042-20108	54	2
	60	14
07043-70108	222	5
	228	13
	696	21
	722	41
07043-70211	243	19
	247	8
07043-70312	237	4
	243	18
07044-12412	158	8
	236	5
	288	4
07044-13620	263	1
	268	1
07049-01012	239	8
	245	4
	295	4
	336	9

Part Number	Page	Index
07049-01215	220	32
	223	26
	245	3
	284	9
	286	9
	324	21
	326	30
	332	7
	333	7
	333	30
	334	7
	334	27
	335	7
	684	36
	685	36
	686	36
	687	36
	701	22
	703	52
07049-01620	223	16
	266	30
	271	30
	273	6
	276	6
	357	6
	441	6
07049-01822	684	37
	685	37
	686	37
	687	37
07049-02025	266	29
	271	29
	336	8
	338	5
	340	5
07049-02228	701	27
	703	57
07049-02430	236	2
	332	4
	333	4
	334	4
	335	4
07049-03038	245	2
07049-03342	332	5
	333	5
	334	5
	335	5
07051-00005	284	21
	286	21
07052-31217	666	14
	668	9
	669	9
	671	9
	672	9
07055-30062	284	11
	286	11
07056-18422	179	3
07056-18425	174	7
07058-00010	174	31
	179	23
07059-11830	676	11
	677	12
	678	12
	679	12
	680	12
	681	12
	682	11
	683	12
07059-20721	676	12
	677	13
	678	13
	679	13
	680	13
	681	13
	682	12
	683	13
07094-10620	252	31
	277	13
07094-30417	328	4
	720	14
07094-30620	309	11
	315	4
	315	8
	315	15
07095-00314	575	29
	597	33
	614	38
	634	38
	641	36
	644	36
07095-00317	325	24
	446	26
	718	31
	719	31
07095-00318	721	29
	721	36
07095-00420	328	5
07095-00525	310	18
07095-00526	277	4
	330	4
07095-00628	252	32
	277	14
	309	10
	315	5
	315	9
	315	16
07095-00630	162	5
07095-01245	720	30
07095-1042B	720	15
07095-20211	192	11
	199	11
	205	11
	505	30
	510	27
	514	27
	525	27
	531	27
	535	27
	578	27
	600	31
	619	40
	638	37
	642	38
	645	35
07095-20213	505	34
	505	38
	510	31
	510	36
	514	31
	514	35
	525	31
	525	35
	531	31
	531	36
	535	31
	535	35
	540	20
	540	24
07095-20314	190	25
	192	4
	192	21
	197	19
	199	4
	199	21
	204	25
	205	4
	205	21
	259	12
	482	20
07095-20318	190	5
	192	2
	192	35
	197	5
	199	2
	199	35
	204	5
	205	2
	205	35
	419	33
	541	42
	541	46
07095-20419	177	32
07095-20522	310	1
	311	2
07095-20523	178	41
	188	28
	191	13
	192	31
	195	28
	198	13
	199	31
	202	28
	205	31
	802	3
07095-20625	254	5
	482	11
	482	33
07137-05008	715	7
	717	7
07143-10505	714	4
	716	4
07143-10707	724	4
	724	6
07145-00050	714	5
	716	5
	807	
07145-00055	704	11
	706	11
	709	8
	711	8
	807	
07145-00065	702	23
	702	31
07145-00075	724	5
	724	7
	807	
07146-02086	709	18
	711	18
	807	
07146-02106	717	16
	807	
07146-02126	715	18
	807	
07156-00912	709	25
	711	25
	807	
07156-01112	717	26
	807	
07156-01315	715	22
	807	
07177-09040	667	2
	667	6
	667	15
07179-12074	704	13
	706	13
	709	10
	711	10
07179-12079	717	13
07179-12084	714	7
	715	11
	716	7
	724	9
07206-30710	146	13
07206-30812	245	10
07260-23211	277	25

Part Number	Page	Index
07260-24111	309	18
07260-24713	252	18
07270-01025	175	46
	179	38
07270-01520	163	3
07270-21050	175	50
	180	42
07270-21530	153	21
07280-01920	163	4
07281-00167	175	51
	180	43
07281-00359	59	2
	162	3
07281-00489	84	16
07283-31529	717	34
07283-32236	705	38
	707	38
	709	35
	711	35
	724	24
07283-32738	163	21
07283-33442	277	22
07283-37663	54	11
07285-00110	171	13
07285-00115	175	47
	180	39
07285-00125	146	11
	177	16
07285-00155	396	43
07285-00180	153	22
07285-00220	79	2
07286-00875	177	15
07286-01918	79	1
07289-00035	162	2
07289-00045	277	26
07289-00055	252	19
	309	19
07289-00070	162	9
	162	11
	162	17
07289-00095	307	2
07299-00080	54	4
	163	25
	163	28
07299-00095	163	26
07299-00120	146	4
	163	29
07299-00145	146	5
07371-30640	309	3
07371-31049	307	10
07372-21030	494	5
	499	6
	508	8
	517	6
	527	8
	533	5
07372-21035	307	11
	309	4
07376-70315	324	16
	326	16
07700-40240	175	44
	179	36
07730-40004	163	2
07750-01623	226	25
07750-01628	226	26
07950-10450	800	3
07950-90403	800	1
07951-31400	800	2
07951-41017	800	4
07952-70004	800	
08000-00000	182	
	183	
	184	
	185	
	186	
	187	
08000-00001	182	
	183	
	184	
	185	
	186	
	187	
08000-32215	182	1
	184	1
	187	1
	187	2
08000-3222Z	183	1
	185	1
	186	1
	186	2
08006-40255	182	5
	183	5
	184	5
	185	5
	186	5
	187	5
08007-23549	182	3
	183	3
	184	3
	185	3
08017-31511	479	11
08017-31529	176	4
08017-31903	175	49
	180	41
	479	8
08017-31906	176	6
08017-31935	176	2
08017-32206	479	5
08017-81910	162	13
08017-A1520	421	2
08017-C1502	395	6
08017-C1503	395	7
08017-C2202	395	10
08017-C2203	395	11
08017-C2204	395	12
08017-C2518	395	2
08017-C2519	395	4
08023-10006	384	4
08024-11920	324	
	326	
	721	34
08024-21920	324	
	326	
	721	27
08028-64020	182	10
	183	10
	184	10
	185	10
	186	10
	187	10
08028-ED030	182	13
	183	13
08028-ED040	184	21
	185	21
	186	21
	187	21
	192	27
	199	27
	205	27
08028-FD040	154	3
08028-GD045	182	8
	183	8
	184	8
	185	8
	186	8
	187	8
08034-20414	720	2
	721	2
08034-20519	361	27
	366	27
	402	7
	416	21
	418	20
	421	8
	423	16
	428	11
	437	21
	439	16
	445	3
	445	13
	456	7
	466	20
	467	18
	471	15
	475	13
08034-20876	394	23
	394	30
	720	31
08034-40521	418	19
	421	7
	484	17
	579	8
	620	12
	803	41
08036-93014	485	9
08037-01008	421	5
08037-01610	346	14
	354	14
	399	50
	445	12
	802	38
08037-02512	361	36
	366	36
	412	39
	414	27
	445	2
	462	39
	464	27
08037-05016	472	11
	802	34
08037-11025	428	7
	475	7
08037-11425	445	4
08037-12536	421	3
08038-00035	184	23
	185	23
	186	23
	187	23
	191	7
	198	7
08038-00519	155	7
	156	7
	190	28
	197	22
	204	28
08038-02027	155	3
	155	6
	192	14
	199	14
	205	14
08041-00500	416	5
	437	5
	466	2
08041-01000	416	6
	437	6
08041-01500	416	7
	437	7
	466	3
08041-02000	416	8
	437	8
	466	4
08041-03000	416	9
	437	9
	466	5
08044-00600	416	2

Part Number	Page	Index
	437	2
08044-01500	416	3
	437	3
	466	6
08053-00910	419	23
	467	26
08057-00810	193	5
	193	14
	200	5
	200	14
	579	9
	620	13
08057-12008	193	18
	200	18
08057-12010	803	42
08057-14010	193	10
	200	10
	540	27
	541	43
	542	2
08059-00413	418	9
	428	19
	475	20
08064-10000	416	4
	437	4
08068-00001	184	16
	185	16
	186	16
	187	16
08088-30000	191	1
	198	1
08103-02460	207	
08191-00770	130	34
	488	15
08192-12100	130	33
08192-22100	488	14
08192-22830	576	10
	598	10
	616	10
	636	10
08192-28812	401	7
	455	7
08193-20010	130	11
	156	26
	403	21
	420	4
	456	21
	467	29
	508	20
	527	20
08193-21012	540	34
	542	6
	647	49
	652	45
	655	49
08193-30010	193	2
	200	2
08193-31012	403	22
	456	22
08210-00604	506	46
	508	15
	511	44
	526	43
	527	15
	532	44
08210-00605	506	43
	511	41
	515	40
	515	43
	526	40
	532	41
	536	40
	536	43
08210-00607	515	46
	536	46

Part Number	Page	Index
08211-00720	174	26
	175	57
	179	18
	180	49
	188	18
	193	15
	193	19
	193	22
	195	18
	200	15
	200	19
	200	22
	202	18
	540	17
	542	5
	579	3
	620	3
	803	40
08211-01020	188	19
	188	31
	188	36
	189	41
	193	6
	193	9
	193	11
	195	19
	195	31
	195	36
	196	41
	200	6
	200	9
	200	11
	202	19
	202	31
	202	36
	203	41
	540	18
	540	39
	579	2
	620	2
08211-01320	188	20
	188	32
	190	11
	195	20
	195	32
	197	11
	202	20
	202	32
	204	11
	540	30
08211-01520	541	40
	541	44
08211-01920	188	37
	189	42
	195	37
	196	42
	202	37
	203	42
08672-01000	146	9
09002-01317	800	5
09002-03032	800	
09019-28035	800	6
09021-01725	800	7
09021-01928	800	
09021-02436	800	
09021-03246	800	10
09021-03653	800	
09022-00150	800	8
09023-00300	800	9
09024-00300	800	11
09033-00190	800	12
09056-04613	800	13
09059-00800	798	4
09205-18325	691	6
09205-18330	689	6

Part Number	Page	Index
09241-50160	699	14
09244-02508	723	27
09245-04830	727	4
	729	4
	730	4
	731	4
	732	2
	733	4
	734	4
	735	3
09245-24830	726	5
	728	5
09245-50060	726	4
	727	3
	728	4
	729	3
	730	3
	731	3
	732	1
	733	3
	734	3
	735	2
09247-45180	726	6
	728	6
	732	3
	735	4
09249-00016	726	7
	727	5
	728	7
	729	5
	730	7
	731	7
	732	7
	733	7
	734	7
	735	7
09311-41237	411	21
	413	13
	462	21
	464	13
	656	5
09409-00001	356	5
09409-00002	356	6
09409-00003	356	7
09409-20000	356	4
09415-00506	472	12
	656	7
09415-00706	357	7
	441	7
09415-01008	357	8
	441	8
09415-01610	399	42
09415-02512	418	11
	451	12
	467	5
09415-03614	410	7
	418	10
	461	7
	467	4
	467	34
09453-00002	656	2
09455-13016	555	2
09460-00000	656	10
09467-00002	657	2
	658	2
09467-00006	657	3
	658	3
09479-02400	395	16
	431	28
	485	3
	485	5
	485	7
	488	18
09484-00560	485	8
09485-01005	481	1

Part Number	Page	Index
09495-40010	489	1
	490	1
09601-50000	700	25
	701	28
	703	61
	723	23
09602-00001	754	6
	755	6
	756	6
	757	6
	758	6
	759	6
	760	6
	762	6
	763	6
	764	6
	765	6
	766	6
	767	6
	768	6
	770	6
	771	6
	772	6
	773	6
	774	6
	775	6
	776	6
	783	6
	785	6
	787	6
09602-10001	740	6
	742	6
	743	6
	744	6
	745	6
	746	6
	747	6
	748	6
	749	6
	750	6
	751	6
	752	6
	753	6
	761	6
	769	6
	777	6
	778	6
	779	6
	780	6
	781	6
	782	6
09604-05080	223	2
09608-05080	236	7
09620-A2000	789	1
	790	1
	791	1
	792	1
	793	1
	794	1
	795	1
	796	1
09620-A2070	790	2
09620-A2080	792	2
09620-A2100	791	2
09620-A2110	794	2
09620-A2120	795	2
09620-A3000	796	2
09637-A0640	783	29
	785	29
	787	29
09642-11000	744	33
	747	33
	751	33
	755	35
	763	35
	771	35
09642-11100	760	35
	768	35
	776	35
09642-12000	757	35
	765	35
	773	35
09642-13000	741	33
	742	33
	743	33
	746	33
	749	33
	750	33
	753	33
	754	35
	761	33
	762	35
	769	33
	770	35
09642-15000	745	33
	748	33
	752	33
	756	35
	764	35
	772	35
09642-16000	758	35
	766	35
	774	35
	777	33
	778	33
	779	33
09642-17000	759	35
	767	35
	775	35
	780	33
	781	33
	782	33
09642-A0480	784	34
	786	34
	787	34
09649-01012	744	31
	747	31
	751	31
	755	33
	763	33
	771	33
09649-02012	757	33
	765	33
	773	33
09649-03012	740	31
	742	31
	743	31
	746	31
	749	31
	750	31
	753	31
	754	33
	761	31
	762	33
	769	31
	770	33
09649-05012	745	31
	748	31
	752	31
	756	33
	764	33
	772	33
09649-06012	758	33
	766	33
	774	33
	777	31
	778	31
	779	31
09649-07012	759	33
	767	33
	775	33
	780	31
	781	31
	782	31
09651-01001	744	19
	747	19
	751	19
09651-03001	740	19
	742	19
	743	19
	746	19
	749	19
	750	19
09651-05001	745	19
	748	19
	752	19
09651-A0641	753	19
	754	21
	755	21
	756	21
	757	21
	758	21
	759	21
	760	21
	761	19
	762	21
	763	21
	764	21
	765	21
	766	21
	767	21
	768	21
	769	19
	770	21
	771	21
	772	21
	773	21
	774	21
	775	21
	776	21
	777	19
	778	19
	779	19
	780	19
	781	19
	782	19
	783	21
	785	21
	787	21
09652-31221	740	30
	742	30
	743	30
	746	30
	749	30
	750	30
09652-51221	745	30
	748	30
	752	30
09653-01001	744	15
	747	15
	751	15
09653-03001	740	15
	742	15
	743	15
	746	15
	749	15
	750	15
09653-05001	745	15
	748	15
	752	15
09653-A0481	753	15
	753	16
	754	17
	754	18
	755	17

Part Number	Page	Index
	755	18
	756	17
	756	18
	757	17
	757	18
	758	17
	758	18
	759	17
	759	18
	760	17
	760	18
	761	15
	761	16
	762	17
	762	18
	763	17
	763	18
	764	17
	764	18
	765	17
	765	18
	766	17
	766	18
	767	17
	767	18
	768	17
	768	18
	769	15
	769	16
	770	17
	770	18
	771	17
	771	18
	772	17
	772	18
	773	17
	773	18
	774	17
	774	18
	775	17
	775	18
	776	17
	776	18
	777	15
	777	16
	778	15
	778	16
	779	15
	779	16
	780	15
	780	16
	781	15
	781	16
	782	15
	782	16
	783	17
	783	18
	785	17
	785	18
	787	17
	787	18
09654-31001	744	17
	747	17
	751	17
09654-33001	740	17
	742	17
	743	17
	746	17
	749	17
	750	17
09654-35001	745	17
	748	17
	752	17
09654-B0641	753	17
	754	19

Part Number	Page	Index
	755	19
	756	19
	757	19
	758	19
	759	19
	760	19
	761	17
	762	19
	763	19
	764	19
	765	19
	766	19
	767	19
	768	19
	769	17
	770	19
	771	19
	772	19
	773	19
	774	19
	775	19
	776	19
	777	17
	778	17
	779	17
	780	17
	781	17
	782	17
	783	19
	785	19
	787	19
09657-01004	744	18
	747	18
	751	18
09657-03003	740	18
	742	18
	743	18
	746	18
	749	18
	750	18
09657-05003	745	18
	748	18
	752	18
09657-A0881	753	18
	754	20
	755	20
	756	20
	757	20
	758	20
	759	20
	760	20
	761	18
	762	20
	763	20
	764	20
	765	20
	766	20
	767	20
	768	20
	769	18
	770	20
	771	20
	772	20
	773	20
	774	20
	775	20
	776	20
	777	18
	778	18
	779	18
	780	18
	781	18
	782	18
	783	20
	785	20

Part Number	Page	Index
	787	20
09659-51000	744	26
	747	26
	751	26
09659-53000	740	26
	742	26
	743	26
	746	26
	749	26
	750	26
09659-55000	745	26
	748	26
	752	26
09659-A057B	753	26
	754	28
	755	28
	756	28
	757	28
	758	28
	759	28
	760	28
	761	26
	762	28
	763	28
	764	28
	765	28
	766	28
	767	28
	768	28
	769	26
	770	28
	771	28
	772	28
	773	28
	774	28
	775	28
	776	28
	777	26
	778	26
	779	26
	780	26
	781	26
	782	26
	783	28
	785	28
	787	28
09664-20011	745	25
	748	25
	752	25
09664-30011	740	25
	742	25
	749	25
09664-40011	743	25
	746	25
	750	25
09664-40111	744	25
	747	25
	751	25
09664-60000	754	27
	755	27
	756	27
	757	27
	758	27
	759	27
	760	27
	762	27
	763	27
	764	27
	765	27
	766	27
	767	27
	768	27
	770	27
	771	27
	772	27

Part Number	Page	Index
	773	27
	774	27
	775	27
	776	27
	783	27
	785	27
	787	27
09664-70001	753	25
	761	25
	769	25
	777	25
	778	25
	779	25
	780	25
	781	25
	782	25
09667-01001	744	22
	747	22
	751	22
09667-03001	740	22
	742	22
	743	22
	746	22
	749	22
	750	22
09667-05001	745	22
	748	22
	752	22
09667-A0481	753	22
	754	24
	755	24
	756	24
	757	24
	758	24
	759	24
	760	24
	761	22
	762	24
	763	24
	764	24
	765	24
	766	24
	767	24
	768	24
	769	22
	770	24
	771	24
	772	24
	773	24
	774	24
	775	24
	776	24
	777	22
	778	22
	779	22
	780	22
	781	22
	782	22
	783	24
	785	24
	787	24
09668-01001	744	16
	747	16
	751	16
09668-03001	740	16
	742	16
	743	16
	746	16
	749	16
	750	16
09668-05001	745	16
	748	16
	752	16
09669-0000E	744	30
	747	30

Part Number	Page	Index
	751	30
	753	30
	754	32
	755	32
	756	32
	757	32
	758	32
	759	32
	760	32
	761	30
	762	32
	763	32
	764	32
	765	32
	766	32
	767	32
	768	32
	769	30
	770	32
	771	32
	772	32
	773	32
	774	32
	775	32
	776	32
	777	30
	778	30
	779	30
	780	30
	781	30
	782	30
	784	32
	786	32
	787	32
09690-F0500	740	3
	742	3
	743	3
	744	3
	745	3
	746	3
	747	3
	748	3
	749	3
	750	3
	751	3
	752	3
	753	3
	754	3
	755	3
	756	3
	757	3
	758	3
	759	3
	760	3
	761	3
	762	3
	763	3
	764	3
	765	3
	766	3
	767	3
	768	3
	769	3
	770	3
	771	3
	772	3
	773	3
	774	3
	775	3
	776	3
	777	3
	778	3
	779	3
	780	3
	781	3

Part Number	Page	Index
	782	3
	783	3
	785	3
	787	3
09690-F0560	740	1
	742	1
	743	1
	744	1
	745	1
	746	1
	747	1
	748	1
	749	1
	750	1
	751	1
	752	1
	753	1
	754	1
	755	1
	756	1
	757	1
	758	1
	759	1
	760	1
	761	1
	762	1
	763	1
	764	1
	765	1
	766	1
	767	1
	768	1
	769	1
	770	1
	771	1
	772	1
	773	1
	774	1
	775	1
	776	1
	777	1
	778	1
	779	1
	780	1
	781	1
	782	1
	783	1
	785	1
	787	1
09690-M0063	740	4
	742	4
	743	4
	744	4
	745	4
	746	4
	747	4
	748	4
	749	4
	750	4
	751	4
	752	4
	753	4
	754	4
	755	4
	756	4
	757	4
	758	4
	759	4
	760	4
	761	4
	762	4
	763	4
	764	4
	765	4
	766	4

Part Number	Page	Index
	767	4
	768	4
	769	4
	770	4
	771	4
	772	4
	773	4
	774	4
	775	4
	776	4
	777	4
	778	4
	779	4
	780	4
	781	4
	782	4
	783	4
	785	4
	787	4
09690-P1120	740	2
	742	2
	743	2
	744	2
	745	2
	746	2
	747	2
	748	2
	749	2
	750	2
	751	2
	752	2
	753	2
	754	2
	755	2
	756	2
	757	2
	758	2
	759	2
	760	2
	761	2
	762	2
	763	2
	764	2
	765	2
	766	2
	767	2
	768	2
	769	2
	770	2
	771	2
	772	2
	773	2
	774	2
	775	2
	776	2
	777	2
	778	2
	779	2
	780	2
	781	2
	782	2
	783	2
	785	2
	787	2
09696-40108	754	11
	755	11
	756	11
	757	11
	758	11
	759	11
	760	11
	762	11
	763	11
	764	11
	765	11
	766	11
	767	11
	768	11
	770	11
	771	11
	772	11
	773	11
	774	11
	775	11
	776	11
	783	11
	785	11
	787	11
09696-50078	754	10
	755	10
	756	10
	757	10
	758	10
	759	10
	760	10
	762	10
	763	10
	764	10
	765	10
	766	10
	767	10
	768	10
	770	10
	771	10
	772	10
	773	10
	774	10
	775	10
	776	10
	783	10
	785	10
	787	10
09697-00001	184	25
	185	25
	186	25
	187	25
09802-11000	744	20
	747	20
	751	20
	755	22
	763	22
	771	22
09802-12000	757	22
	765	22
	773	22
09802-13000	740	20
	742	20
	743	20
	746	20
	749	20
	750	20
	753	20
	754	22
	761	20
	762	22
	769	20
	770	22
09802-15000	745	20
	748	20
	752	20
	756	22
	764	22
	772	22
09802-16000	758	22
	766	22
	774	22
	777	20
	778	20
	779	20
09802-17000	759	22
	767	22
	775	22
	780	20
	781	20
	782	20
09802-B0640	783	22
	785	22
	787	22
09806-B1683	753	21
	754	23
	755	23
	756	23
	757	23
	758	23
	759	23
	760	23
	761	21
	762	23
	763	23
	764	23
	765	23
	766	23
	767	23
	768	23
	769	21
	770	23
	771	23
	772	23
	773	23
	774	23
	775	23
	776	23
	777	21
	778	21
	779	21
	780	21
	781	21
	782	21
	783	23
	785	23
	787	23
09808-01000	744	24
	747	24
	751	24
09808-03000	740	24
	742	24
	743	24
	746	24
	749	24
	750	24
09808-05000	745	24
	748	24
	752	24
09808-A0881	753	24
	754	26
	755	26
	756	26
	757	26
	758	26
	759	26
	760	26
	761	24
	762	26
	763	26
	764	26
	765	26
	766	26
	767	26
	768	26
	769	24
	770	26
	771	26
	772	26
	773	26
	774	26

Part Number	Page	Index
	775	26
	776	26
	777	24
	778	24
	779	24
	780	24
	781	24
	782	24
	783	26
	785	26
	787	26
09812-11000	744	21
	747	21
	751	21
09812-13000	740	21
	742	21
	743	21
	746	21
	749	21
	750	21
09812-15000	745	21
	748	21
	752	21
09823-00001	733	15
	734	15
	735	16
09842-A0481	741	32
	742	32
	743	32
	744	32
	745	32
	746	32
	747	32
	748	32
	749	32
	750	32
	751	32
	752	32
	753	32
	754	34
	755	34
	756	34
	757	34
	758	34
	759	34
	760	34
	761	32
	762	34
	763	34
	764	34
	765	34
	766	34
	767	34
	768	34
	769	32
	770	34
	771	34
	772	34
	773	34
	774	34
	775	34
	776	34
	777	32
	778	32
	779	32
	780	32
	781	32
	782	32
	784	33
	786	33
	787	33
09920-00150	71	13
	73	13
	76	17
09960-00611	788	2
09960-00801	788	3
09960-00802	788	4
09963-01001	744	23
	747	23
	751	23
09963-03001	740	23
	742	23
	743	23
	746	23
	749	23
	750	23
09963-05001	745	23
	748	23
	752	23
09963-A1640	753	23
	754	25
	755	25
	756	25
	757	25
	758	25
	759	25
	760	25
	761	23
	762	25
	763	25
	764	25
	765	25
	766	25
	767	25
	768	25
	769	23
	770	25
	771	25
	772	25
	773	25
	774	25
	775	25
	776	25
	777	23
	778	23
	779	23
	780	23
	781	23
	782	23
	783	25
	785	25
	787	25
09980-10550	799	1
09982-10057	799	2
103-15-12820	230	1
	231	24
	807	
	808	
103-15-12880	230	7
	231	5
103-15-12890	231	32
103-43-21380	225	7
103-43-21390	225	8
103-49-14280	576	1
	598	1
	616	1
	636	1
104-15-25480	240	19
104-15-25490	240	17
104-890-5610	356	8
10E-60-16330	316	39
112-06-12150	392	15
112-860-1360	803	39
113-15-12870	231	29
	807	
	808	
113-15-29110	226	20
	806	
113-43-23230	182	22
	183	22
	184	30
	185	30
	186	30
	187	30
11Y-06-22150	406	4
	408	3
	459	4
	460	3
11Y-09-11140	162	14
11Y-43-11181	494	7
	499	8
	505	11
	508	6
	510	11
	514	11
	517	8
	525	11
	527	6
	531	11
	533	7
	535	11
11Y-43-12710	499	4
	517	4
11Y-54-13630	560	19
	561	23
11Y-54-14220	802	27
11Y-60-11530	576	5
	598	5
	616	5
	636	5
11Y-62-12210	284	38
	286	38
11Y-62-12230	575	9
	597	9
	614	9
	634	9
	641	9
	644	9
11Y-62-36160	575	12
	597	12
	614	12
	634	12
	641	12
	644	12
120-06-24110	418	13
120-54-42450	583	1
120-X11-1510	479	1
1240101H1	61	2
1241155H1	80	1
124-15-41910	230	12
	231	2
	231	27
	807	
	808	
124-15-41920	230	3
	231	25
	807	
	808	
124-62-61531	259	28
124-98-51140	749	13
	750	13
	751	13
	752	13
	769	13
	770	15
	771	15
	772	15
	773	15
	774	15
	775	15
	776	15
	779	13
	782	13
	785	15
124-A62-1920	556	3

Part Number	Page	Index
	557	14
	557	23
	558	43
	558	52
	561	4
	561	15
125-15-15290	240	18
1294859H1	80	5
12954-65-H92	142	
12H-15-14140	240	21
12R-60-11230	284	16
	286	16
12Y-06-11650	388	8
12Y-57-11211	356	1
12Y-57-11220	356	3
12Y-978-1390	379	29
12Y-978-1410	376	
12Y-978-1420	376	1
12Y-978-1450	376	2
	378	2
12Y-978-1460	376	3
	378	3
12Y-978-1470	376	4
	378	4
12Y-978-1480	376	5
	378	5
12Y-978-1490	376	6
	378	6
12Y-978-1510	378	
12Y-978-1520	378	1
12Y-978-1550	376	7
	378	7
12Y-978-1560	376	9
	378	9
12Y-978-1570	376	10
	378	10
12Y-978-1580	376	11
	378	11
12Y-978-1590	376	12
	378	12
12Y-978-1610	376	13
	378	13
12Y-978-1620	376	14
	378	14
12Y-978-1630	376	15
	378	15
12Y-978-1640	376	8
	378	8
12Y-978-1650	376	16
	378	16
12Y-978-2192	418	16
12Y-978-2220	452	2
12Y-978-2280	382	4
	433	4
	442	4
	448	4
12Y-978-2431	360	14
12Y-978-2441	365	14
12Y-978-2490	360	17
	365	17
12Y-978-2660	362	2
	362	7
	367	2
	367	7
	387	35
	430	9
	430	15
	430	18
	431	24
12Y-978-2890	449	2
12Y-978-3210	358	8
	363	8
12Y-978-3261	359	25
12Y-978-3271	364	25
12Y-978-3281	358	14

Part Number	Page	Index
	363	14
	370	19
	372	21
12Y-978-3290	358	15
	363	15
	370	18
	372	20
12Y-978-3310	358	22
	359	33
	359	36
	363	22
	364	33
	364	36
12Y-978-3360	359	27
	364	27
12Y-978-3370	360	1
	365	1
12Y-978-3480	359	41
	364	41
12Y-978-4670	451	5
130-09-12370	332	20
	333	20
	334	17
	335	17
130-09-12911	336	24
	338	20
	340	20
130-30-12170	689	9
	691	9
130-30-12180	689	10
	691	10
130-30-13170	666	11
1304869H1	83	9
130-63-12761	704	30
	706	30
	709	31
	711	31
	717	31
130-69-11190	727	2
	729	2
	730	2
	731	2
	733	2
	734	2
130-70-13241	694	8
1307682H1	61	1
130-98-79210	788	1
131-69-11120	726	2
	728	2
131-69-11130	726	3
	728	3
134-01-61840	76	15
134-03-61410	162	15
	171	14
134-03-73750	478	3
134-06-72200	466	7
134-22-66140	229	3
134-22-79320	228	5
134-32-05010	806	K08
134-32-61221	682	15
	806	
134-43-72490	411	12
	462	12
134-54-66190	493	26
	498	22
	507	26
	516	26
	523	22
134-54-69130	472	4
134-54-69140	472	5
134-54-69190	472	6
134-57-61150	344	2
	349	2
	352	2
134-57-61170	348	2

Part Number	Page	Index
	350	4
	351	2
134-62-63720	802	10
134-62-72600	161	9
134-69-13140	735	1
134-72-62442	701	14
	703	44
134-72-62474	701	23
	703	53
134-72-71151	701	17
	703	47
134-72-72450	701	15
	703	45
134-72-72460	701	16
	703	46
134-X11-1630	646	28
	654	28
135-03-12110	170	8
135-12-31230	158	14
135-30-14620	667	17
13F-98-11210	804	1
13F-98-11220	804	2
13F-Z27-5610	697	8
	697	24
	698	8
	698	15
13G-72-61410	702	9
13G-72-61420	701	5
13G-72-63250	702	10
141-30-00616	674	
	675	
141-78-11253	723	26
141-78-11311	723	12
141-78-11321	723	7
142-43-13180	412	33
	413	18
	462	33
	464	18
144-10-12180	247	10
144-14-54610	568	35
	571	2
	591	35
	594	2
	609	35
	611	2
	629	35
	631	2
144-15-21191	232	39
144-32-21191	676	8
	682	8
144-43-81620	646	37
	651	33
	654	37
144-60-15431	704	10
	706	10
	709	7
	711	7
144-60-15450	704	9
	706	9
	709	6
	711	6
144-69-11120	726	1
	728	1
144-69-11130	732	4
144-69-11161	726	11
	728	11
	732	11
	735	11
144-69-11170	732	
144-69-11210	730	5
	731	5
	732	5
	733	5
	734	5
	735	5

Part Number	Page	Index
144-69-11230	730	6
	731	6
	732	6
	733	6
	734	6
	735	6
144-70-15171	332	2
	333	2
	334	2
	335	2
144-70-15251	544	3
144-78-11162	723	4
144-78-11174	723	3
144-78-11245	723	25
144-78-11511	723	2
144-78-11570	723	21
144-817-0670	697	
	697	
	698	
	698	
144-817-1260	700	19
144-817-2280	697	17
144-817-2420	697	3
	697	18
	698	3
144-817-2570	697	4
	698	4
144-874-7470	245	16
144-874-8470	723	5
144-874-8480	723	11
144-874-8491	723	16
144-920-1780	700	20
144-920-2122	697	23
144-Z79-2840	488	17
145-13-21730	222	13
145-14-11320	230	16
	231	23
	232	36
145-14-11571	232	38
145-14-12780	231	20
145-14-12790	230	6
	230	17
	231	6
145-Z23-4120	736	3
	737	3
145-Z23-4130	729	9
	731	11
	734	11
145-Z23-4140	736	6
14X-01-35150	153	2
	153	14
	279	4
	280	4
14X-01-35161	76	14
14X-01-35171	153	5
14X-01-35180	153	6
14X-01-35650	163	30
14X-01-51111	153	3
14X-01-51121	153	4
14X-01-51131	153	15
14X-01-51141	153	16
	154	4
14X-01-51150	153	8
14X-01-51511	547	8
	556	10
14X-01-51521	144	2
14X-01-51530	547	11
	556	13
14X-01-51540	148	1
14X-01-51551	146	6
14X-01-51561	146	3
14X-01-51570	144	3
	148	2
14X-01-51620	163	24
14X-01-51630	146	2
14X-01-51640	146	17
14X-01-51650	149	1
14X-01-51660	149	2
14X-03-35570	478	4
14X-03-35760	171	8
14X-03-51111	160	10
14X-03-51121	160	12
14X-03-51131	160	1
14X-03-51141	163	1
14X-03-51161	161	2
14X-03-51171	161	1
14X-03-51180	170	11
14X-03-51190	162	1
14X-03-51211	162	8
14X-03-51220	162	16
14X-03-51231	162	10
14X-03-51251	163	27
14X-03-51260	162	12
14X-03-51270	171	12
14X-03-51311	167	14
14X-03-51320	167	35
14X-03-51341	172	1
14X-03-51351	172	2
14X-03-51361	171	3
14X-03-51371	171	7
14X-03-51411	160	21
14X-03-51421	160	24
14X-03-51431	160	27
14X-03-51441	169	1
14X-03-51451	169	5
14X-03-51461	169	8
14X-03-51491	169	11
14X-03-51510	160	2
14X-03-51520	160	3
14X-03-51530	160	4
14X-03-51540	160	5
14X-03-51551	169	12
14X-03-51561	169	13
14X-03-51570	160	28
14X-03-51580	169	2
14X-03-51590	160	8
14X-03-51610	170	2
14X-03-51621	160	13
14X-03-51640	160	15
14X-03-51650	160	6
14X-03-51660	160	7
14X-03-51670	488	1
14X-03-51680	488	4
14X-03-51730	150	1
14X-03-51740	160	17
14X-03-51750	160	18
14X-03-51770	160	14
14X-03-51780	171	4
14X-04-21620	175	40
	179	32
14X-04-21660	174	32
	179	24
14X-04-31510	802	6
14X-04-31530	802	8
14X-04-31570	802	11
14X-04-51111	179	1
14X-04-51112	174	1
14X-04-51131	174	27
	179	19
14X-04-51170	175	61
	180	53
	285	49
	287	50
14X-04-51211	177	23
14X-04-51221	177	12
14X-04-51231	176	
14X-04-51240	176	1
14X-04-51251	176	3
14X-04-51281	176	5
14X-04-51311	105	1
14X-04-51321	98	2
14X-04-51330	175	59
	180	51
14X-04-51340	105	4
14X-04-51350	562	6
14X-04-51420	174	17
	179	13
14X-04-51431	174	18
14X-04-51441	802	13
14X-04-51620	802	1
14X-06-12260	182	14
	183	14
14X-06-12270	184	24
	185	24
	186	24
	187	24
14X-06-12280	182	9
	182	11
	183	9
	183	11
	184	9
	184	11
	185	9
	185	11
	186	9
	186	11
	187	9
	187	11
14X-06-31311	402	
	456	
14X-06-31501	403	42
	457	42
14X-06-33380	206	5
	207	5
14X-06-35221	155	2
14X-06-35471	155	14
14X-06-35491	155	20
14X-06-51111	256	5
14X-06-51122	416	
	437	
14X-06-51124	416	1
	437	1
14X-06-51132	423	10
	439	10
14X-06-51140	410	9
	461	9
14X-06-51151	402	16
	456	16
14X-06-51161	428	4
	475	4
14X-06-51171	428	6
	475	6
14X-06-51181	360	22
	365	22
14X-06-51190	428	10
	475	12
14X-06-51212	188	1
	202	1
14X-06-51221	155	1
14X-06-51230	175	56
	180	48
14X-06-51241	193	1
	200	1
14X-06-51261	188	5
	195	5
	202	5
14X-06-51271	579	1
14X-06-51281	191	8
	198	8
14X-06-51291	188	6
	195	6
	202	6
14X-06-51311	257	1
14X-06-51321	257	8
14X-06-51341	257	31

Part Number	Page	Index
14X-06-51351	416	10
	437	10
	466	9
14X-06-51361	420	1
	468	1
14X-06-51370	384	2
14X-06-51431	416	11
	437	11
	466	10
14X-06-51441	468	4
14X-06-51451	208	3
14X-06-51461	208	6
14X-06-51481	542	1
14X-06-51490	174	22
	179	14
14X-06-51520	421	6
	428	14
	475	15
14X-06-51530	428	5
	475	5
14X-06-51551	206	2
	207	2
14X-06-51561	188	7
	195	7
14X-06-51571	188	21
	195	21
	202	21
14X-06-51581	188	24
	195	24
	202	24
14X-06-51591	188	33
	195	33
	202	33
14X-06-51610	188	2
	195	2
	202	2
14X-06-51621	188	38
	195	38
	202	38
14X-06-51641	155	8
14X-06-51651	157	1
14X-06-51661	156	20
14X-06-51671	156	1
14X-06-51681	194	3
	201	3
14X-06-51691	439	1
14X-06-51710	380	10
14X-06-51730	155	4
14X-06-51750	420	21
	468	17
14X-06-51771	190	17
	197	14
	204	17
14X-06-51783	540	13
14X-06-51791	190	1
	197	1
	204	1
14X-06-51811	620	1
14X-06-51821	619	47
	643	45
14X-06-51831	428	15
	475	16
14X-06-51840	428	16
	475	17
14X-06-51881	209	23
	211	1
	212	1
	213	23
14X-06-51981	209	19
	210	19
	213	19
	214	19
14X-06-51991	209	29
	211	7
	212	7

Part Number	Page	Index
	213	29
14X-06-52111	182	2
	183	2
	184	2
	185	2
	186	3
	187	3
14X-06-52121	182	4
	183	4
	184	4
	185	4
	186	4
	187	4
14X-06-52130	156	11
14X-06-52151	206	6
	207	6
14X-06-52160	418	18
	423	19
	439	19
	467	7
	471	16
14X-06-52171	418	17
	467	6
14X-06-52191	423	1
	471	1
14X-06-52270	155	17
14X-06-52290	420	22
	468	18
14X-06-52311	466	1
14X-06-52340	471	8
14X-06-52390	446	21
14X-06-52461	418	14
	467	17
14X-06-52470	182	20
	184	28
	187	28
14X-06-52480	183	20
	185	28
	186	28
14X-06-52491	431	27
14X-06-52631	380	11
14X-06-52661	380	13
14X-06-52730	646	
	651	
	654	
14X-06-52740	380	12
14X-06-52750	418	21
14X-06-52760	418	22
14X-06-52780	508	17
	527	17
14X-06-52811	184	13
	185	13
14X-06-52830	184	22
	185	22
	186	22
	187	22
14X-06-52840	184	19
	185	19
	186	19
	187	19
14X-06-52881	488	11
14X-06-52890	182	15
	183	15
14X-06-52950	202	7
14X-06-52960	186	13
	187	13
14X-06-52981	802	37
14X-06-53160	445	5
14X-06-53170	445	6
14X-06-53221	446	14
14X-06-53390	446	11
14X-06-53550	212	9
	213	31
	214	23
14X-06-53560	206	1

Part Number	Page	Index
14X-06-54110	195	1
14X-10-11712	248	1
14X-10-11721	248	3
14X-12-11210	158	2
14X-12-11411	158	3
14X-12-51100	158	1
14X-12-51110	158	16
14X-13-05040	806	K01
14X-13-12550	245	7
14X-13-14220	247	1
14X-13-14241	247	5
14X-13-51000	243	
	245	
	246	
	247	
	248	
14X-13-51120	243	8
14X-13-51212	244	39
14X-13-51240	243	3
14X-13-51351	244	36
14X-13-51360	245	22
14X-13-51610	243	
14X-13-52210	243	12
14X-13-52220	243	31
14X-13-52260	243	30
14X-13-52620	243	1
14X-13-53111	245	1
14X-13-53260	245	19
14X-13-53350	245	28
14X-13-54320	247	3
14X-13-54330	246	1
14X-13-54341	247	13
14X-13-54411	243	17
14X-13-57111	243	23
14X-13-57210	243	26
14X-15-05180	807	K15
	807	K16
14X-15-05190	806	K03
14X-15-05210	806	K04
14X-15-12910	231	30
14X-15-12960	235	14
14X-15-15850	240	4
	240	22
14X-15-16210	240	20
14X-15-19210	232	42
	807	
	808	
14X-15-22421	235	10
14X-15-22710	230	11
	230	20
	231	9
	231	19
	231	34
14X-15-22740	231	26
14X-15-22750	230	15
	231	3
14X-15-22770	231	28
14X-15-22780	230	10
	230	19
	231	8
	231	18
	231	33
14X-15-29220	231	15
	807	
	808	
14X-15-29230	232	37
	807	
	808	
14X-15-29410	235	3
14X-15-29440	235	11
14X-15-29510	233	10
14X-15-29520	233	23
	235	8
	235	16
14X-15-29530	233	9

Part Number	Page	Index
14X-15-29540	233	32
14X-15-29610	233	20
14X-15-51000	230	
	231	
	233	
	235	
	236	
	237	
	238	
	239	
	240	
	241	
	242	
14X-15-51111	236	1
14X-15-51130	230	2
14X-15-51140	230	13
14X-15-51150	231	1
14X-15-51160	231	10
14X-15-51170	231	22
14X-15-51181	232	35
	234	40
14X-15-52111	237	1
14X-15-52120	237	5
14X-15-52140	233	34
14X-15-52151	233	7
14X-15-52160	234	37
14X-15-52170	232	44
14X-15-52211	233	28
14X-15-52220	233	29
14X-15-52240	233	30
14X-15-52250	233	31
14X-15-52311	233	13
14X-15-52320	233	1
14X-15-52330	235	17
14X-15-52340	235	9
14X-15-52350	235	1
14X-15-52370	232	41
14X-15-52420	233	2
14X-15-52430	235	18
14X-15-52510	233	17
	235	21
14X-15-52520	233	5
14X-15-52550	235	5
14X-15-52560	235	4
14X-15-52610	233	22
14X-15-52620	233	8
14X-15-52630	231	17
14X-15-52640	235	15
14X-15-52650	235	7
14X-15-52660	230	9
14X-15-52710	230	5
14X-15-55500	238	
14X-15-55511	238	1
14X-15-55520	235	27
14X-15-55600	238	2
14X-15-56121	242	1
14X-15-56130	236	9
14X-15-56140	236	12
14X-15-59310	234	35
14X-15-59320	235	23
14X-15-59330	234	38
14X-15-59410	233	3
14X-21-13130	221	37
14X-21-13240	221	38
14X-21-51101	332	1
14X-21-51341	332	8
	333	8
	334	8
	335	8
14X-21-51350	332	14
	333	14
14X-21-51361	332	17
	333	17
	334	14
	335	14

Part Number	Page	Index
	584	1
14X-21-51371	332	11
	333	11
	334	11
	335	11
14X-21-51380	279	5
	280	5
14X-21-51450	332	3
	333	3
	334	3
	335	3
14X-21-51700	335	1
14X-21-52200	333	1
14X-21-52400	334	1
14X-21-53170	280	8
14X-22-05010	806	K05
14X-22-05020	806	K06
14X-22-16170	223	12
14X-22-50000	219	
	220	
	222	
	223	
	224	
	225	
	226	
	228	
	229	
	230	
	231	
	233	
	235	
	236	
	237	
	238	
	239	
	240	
	241	
	242	
	243	
	245	
	246	
	247	
	248	
	249	
	250	
	251	
	252	
	254	
	255	
	256	
	257	
	259	
	260	
14X-22-51000	219	
	220	
	222	
	223	
	224	
	225	
	226	
	228	
	229	
14X-22-51111	260	1
14X-27-00101	266	
	271	
14X-27-05010	263	
	268	
14X-27-11170	263	3
	268	3
14X-27-11220	263	8
	268	8
14X-27-11231	263	7
	268	7
14X-27-11243	263	16
	268	16

Part Number	Page	Index
14X-27-11312	264	22
	269	22
14X-27-11420	264	24
	269	24
14X-27-11431	266	21
	271	21
14X-27-11502	265	
	270	
14X-27-11512	265	1
	270	1
14X-27-11522	265	5
	270	5
14X-27-11531	265	6
	270	6
14X-27-11542	265	7
	270	7
14X-27-11552	265	2
	270	2
14X-27-11560	265	8
	270	8
14X-27-11612	265	11
	270	11
14X-27-11622	265	12
	270	12
14X-27-11633	265	14
	270	14
14X-27-11640	265	13
	270	13
14X-27-11721	266	25
	271	25
14X-27-11751	266	26
	271	26
14X-27-15112	267	2
	272	2
14X-27-15211	274	2
	275	2
14X-27-31110	267	5
	274	5
14X-27-31120	272	5
	275	5
14X-27-31210	263	6
	268	6
14X-27-31710	267	1
	272	1
	274	1
	275	1
14X-27-52211	333	26
	334	23
14X-27-52221	333	27
	334	24
14X-27-52230	276	3
14X-30-00127	671	
14X-30-00136	672	
14X-30-00143	675	
14X-30-00431	666	
14X-30-01041	674	
14X-30-01050	668	
14X-30-01060	669	
14X-30-11D52	684	3
	684	4
	684	12
	684	13
	685	3
	685	4
	685	12
	685	13
	686	3
	686	4
	686	12
	686	13
	687	3
	687	4
	687	12
	687	13
14X-30-12115	666	1

Part Number	Page	Index
14X-30-12164	666	3
14X-30-12181	666	2
14X-30-12232	666	6
	666	8
14X-30-12252	666	16
14X-30-13164	667	14
14X-30-13340	668	2
	669	2
	671	2
	672	2
14X-30-14152	668	3
	669	3
	671	3
	672	3
14X-30-14161	668	8
	669	8
	671	8
	672	8
14X-30-14170	668	10
	669	10
	671	10
	672	10
14X-30-14311	671	1
14X-30-14321	672	1
14X-30-14331	668	4
	669	4
	671	4
	672	4
14X-30-14410	668	1
14X-30-14420	669	1
14X-30-15131	674	4
	675	4
14X-30-15140	674	2
	675	2
14X-30-15212	675	1
14X-30-15222	674	3
	675	3
14X-30-15240	674	6
	675	6
14X-30-15251	674	9
	675	9
14X-30-15310	674	1
14X-30-26230	691	5
14X-30-27230	689	5
14X-30-33170	667	11
14X-30-51151	684	1
	687	1
14X-30-51161	684	10
	687	10
14X-30-51191	336	7
14X-30-51211	685	1
	686	1
14X-30-51221	685	10
	686	10
14X-30-51331	684	6
	684	15
	685	6
	685	15
	686	6
	686	15
	687	6
	687	15
14X-30-51341	684	7
	684	16
	685	7
	685	16
	686	7
	686	16
	687	7
	687	16
14X-30-51380	667	27
14X-30-51390	684	22
	685	22
	686	22
	687	22

Part Number	Page	Index
14X-30-51410	684	29
	685	29
	686	29
	687	29
14X-30-51420	666	15
14X-30-51440	684	19
	684	26
	685	19
	685	26
14X-30-51470	666	19
14X-30-51490	667	22
14X-30-51511	666	5
14X-30-51521	666	7
14X-30-51531	667	1
14X-30-51551	667	4
14X-30-51561	667	3
14X-30-51580	667	5
14X-30-51591	691	1
14X-30-51611	691	2
14X-30-51640	690	1
14X-30-51650	684	5
	684	14
	685	5
	685	14
	686	5
	686	14
	687	5
	687	14
14X-30-51660	336	3
14X-30-51680	689	1
14X-30-51690	689	2
14X-30-51C71	684	2
	684	11
	685	2
	685	11
	686	2
	686	11
	687	2
	687	11
14X-32-00250	676	
14X-32-00310	683	
14X-32-02730	682	
14X-32-03100	678	
14X-32-03110	677	
14X-32-03120	679	
14X-32-03130	680	
14X-32-03140	681	
14X-32-05010	806	K07
14X-32-08010	676	
	682	
14X-32-08020	676	
	682	
14X-32-08210	677	
	678	
	679	
	680	
	681	
	683	
14X-32-08220	677	
	678	
	679	
	680	
	681	
	683	
14X-32-11140	676	9
	682	9
14X-32-11350	676	13
	682	17
14X-32-12200	676	7
	682	7
14X-32-13150	676	10
	682	10
14X-32-15110	678	14
	678	17
14X-32-15310	677	18

Part Number	Page	Index
	678	18
	679	18
	680	18
	681	18
	683	14
14X-32-15340	679	14
	679	17
14X-32-15350	680	14
	680	17
14X-32-15360	677	14
	677	17
14X-32-15380	681	14
	681	17
14X-32-15610	677	1
	678	1
	679	1
	680	1
	681	1
	683	1
14X-32-15630	677	2
	678	2
	679	2
	680	2
	681	2
	683	2
14X-32-15640	677	9
	678	9
	679	9
	680	9
	681	9
	683	9
14X-32-15650	677	10
	678	10
	679	10
	680	10
	681	10
	683	10
14X-32-15680	677	8
	678	8
	679	8
	680	8
	681	8
	683	8
14X-32-15700	677	7
	678	7
	679	7
	680	7
	681	7
	683	7
14X-32-15730	677	11
	678	11
	679	11
	680	11
	681	11
	683	11
14X-32-51120	682	13
	682	16
14X-32-52120	676	1
	682	1
14X-32-52130	676	2
	682	2
14X-43-12110	411	1
	462	1
14X-43-12410	412	27
	462	27
14X-43-13760	410	8
	413	1
	461	8
	464	1
14X-43-32210	411	13
	462	13
14X-43-32220	411	16
	462	16
14X-43-32230	411	17
	462	17

Part Number	Page	Index
14X-43-34310	494	4
	533	4
14X-43-34331	402	5
	456	5
14X-43-48110	426	14
	473	11
	493	2
	498	2
	507	2
	516	2
	523	2
14X-43-51111	255	1
14X-43-51120	282	1
14X-43-51211	400	1
	454	1
14X-43-51221	403	23
	456	23
14X-43-51252	404	1
	458	1
14X-43-51311	499	9
	517	9
14X-43-51330	499	10
	517	10
14X-43-51340	499	2
	517	2
14X-43-51350	494	8
	508	10
	527	10
	533	8
14X-43-51370	494	9
	508	11
	527	11
	533	9
14X-43-51402	404	
	458	
14X-43-51412	406	1
	459	1
14X-43-51421	406	9
	459	9
14X-43-51431	406	10
	459	10
14X-43-51451	407	25
	459	25
14X-43-51461	282	11
	407	31
	459	31
14X-43-51470	406	2
	459	2
14X-43-51501	400	
	454	
14X-43-51511	411	2
	462	2
14X-43-51521	413	2
	464	2
14X-43-51541	410	3
	461	3
14X-43-51551	411	4
	462	4
14X-43-51561	413	4
	464	4
14X-43-51571	411	7
	413	7
	462	7
	464	7
14X-43-51581	413	12
	464	12
14X-43-51590	411	15
	462	15
14X-43-51611	410	1
14X-43-51612	461	1
14X-43-51631	412	34
	462	34
14X-43-51651	412	35
	414	23
	462	35
	464	23
14X-43-51661	404	7
	458	7
14X-43-51681	404	8
	458	8
14X-43-51691	400	16
	454	16
14X-43-51711	408	1
	460	1
14X-43-51721	408	8
	460	8
14X-43-51731	408	9
	460	9
14X-43-51741	407	24
	459	24
14X-43-51751	409	24
	460	24
14X-43-51791	409	23
	460	23
14X-43-51810	413	19
	464	19
14X-43-51821	413	22
	464	22
14X-43-51840	406	14
	408	13
	459	14
	460	13
14X-43-51850	410	2
	461	2
14X-43-51860	410	4
	461	4
14X-43-51870	412	36
	414	24
	462	36
	464	24
14X-43-51901	508	5
	527	5
14X-43-51911	508	1
	527	1
14X-43-51921	508	4
	527	4
14X-43-51960	403	36
	456	36
14X-43-51980	403	45
	457	45
14X-43-52110	402	8
	456	8
14X-49-12310	248	7
14X-49-12320	248	11
14X-49-12330	248	8
14X-49-12340	248	12
14X-49-12411	248	2
14X-49-51110	252	10
14X-49-51120	252	14
14X-49-51130	252	20
14X-49-51141	254	1
14X-49-51151	255	4
14X-49-51161	252	35
14X-49-51171	252	26
14X-49-51211	259	1
	278	14
14X-49-51221	259	9
14X-49-51231	259	8
14X-49-51241	259	7
14X-49-51251	259	6
14X-49-51261	277	17
14X-49-51271	278	10
14X-49-51311	255	8
14X-49-51320	278	4
14X-49-51330	252	27
14X-49-51512	248	17
14X-49-51520	256	2
14X-49-51601	252	4
14X-49-51611	252	5
14X-49-51880	163	10
14X-49-52111	248	28
	277	1
14X-49-52121	277	2
14X-49-52141	163	13
14X-49-52151	163	15
14X-49-52161	163	18
14X-49-52170	277	7
14X-49-52180	277	10
14X-49-52211	277	18
14X-49-52231	580	1
14X-50-00111	336	
14X-50-35140	562	3
14X-50-51111	336	20
14X-50-51121	337	48
	339	44
	341	44
14X-50-51131	337	49
	339	45
	341	45
14X-50-51141	340	37
14X-50-51151	341	38
14X-50-51181	337	45
	339	41
	341	41
14X-50-51241	337	41
	338	37
14X-50-51251	337	42
	339	38
14X-50-51290	336	32
	338	28
	340	28
14X-50-51530	336	37
	338	33
	340	33
14X-54-12750	656	8
14X-54-12770	656	9
14X-54-12960	560	4
	560	13
	561	6
	561	17
	647	43
	652	39
	655	43
	802	29
14X-54-16490	493	3
	498	3
	507	3
	516	3
	523	3
14X-54-26640	257	27
14X-54-32310	550	15
	559	15
14X-54-32820	547	10
	556	12
14X-54-36631	404	20
	458	20
14X-54-38310	403	37
	457	37
14X-54-38320	403	38
	457	38
14X-54-38330	403	39
	457	39
14X-54-38350	403	40
	457	40
14X-54-51111	545	1
14X-54-51121	546	1
14X-54-51130	545	2
	546	2
14X-54-51210	550	
	559	
14X-54-51221	550	1
	559	1
14X-54-51230	550	8
	559	8
14X-54-51241	550	21

Part Number	Page	Index
	559	21
14X-54-51251	550	17
	559	17
14X-54-51261	550	18
	559	18
14X-54-51271	708	1
14X-54-51291	713	1
14X-54-52100	547	1
14X-54-52121	549	1
14X-54-52151	553	1
14X-54-52161	547	2
	556	4
14X-54-52171	547	3
	556	5
14X-54-52191	555	1
14X-54-52211	548	1
14X-54-52221	548	12
14X-54-52251	548	3
	548	14
	557	3
	557	32
14X-54-52331	554	6
14X-54-52341	554	14
14X-54-52351	554	2
	554	10
14X-54-52371	554	1
14X-54-52381	554	9
14X-54-52390	548	25
	558	61
14X-54-52411	560	1
14X-54-52421	560	10
14X-54-52430	560	2
	560	11
	561	2
	561	13
14X-54-52440	548	4
	548	15
	557	4
	557	33
14X-54-52450	548	5
	548	16
	557	5
	557	34
14X-54-52460	548	6
	548	17
	557	6
	557	35
14X-54-52470	547	5
	548	7
	548	18
	556	7
	557	7
	557	36
14X-54-52511	552	1
14X-54-52540	554	3
	554	11
14X-54-52550	547	6
	556	8
14X-54-52561	547	7
	556	9
14X-54-52570	547	4
	556	6
14X-54-52610	552	4
14X-54-52931	548	2
	548	13
	557	2
	557	31
14X-54-53112	562	1
14X-54-53122	562	2
14X-54-53191	582	1
14X-54-53212	646	1
	651	1
14X-54-53222	646	10
	651	10
	654	10

Part Number	Page	Index
14X-54-53261	650	6
14X-54-53281	646	31
	651	27
	654	31
14X-54-53301	648	1
	653	1
14X-54-53321	277	19
14X-54-53341	646	2
	651	2
	654	2
14X-54-53360	648	2
	653	2
14X-54-53380	647	52
	652	48
	655	52
14X-54-53390	648	5
	653	5
14X-54-53400	649	1
14X-54-53420	649	5
14X-54-53440	649	12
14X-54-53451	581	1
14X-54-53470	649	2
	649	9
14X-54-53480	649	3
	649	10
14X-54-53490	649	4
	649	11
14X-54-53500	649	8
14X-54-53511	657	1
14X-54-53521	658	1
14X-54-53530	657	4
	658	4
14X-54-53540	581	2
14X-54-53560	646	3
	651	3
	654	3
14X-54-53570	646	4
	651	4
	654	4
14X-54-53580	646	5
	651	5
	654	5
14X-54-53611	656	1
14X-54-53670	550	11
	559	11
14X-54-53680	550	12
	559	12
14X-54-53710	646	6
	651	6
	654	6
14X-54-53720	646	7
	651	7
	654	7
14X-54-53730	646	8
	651	8
	654	8
14X-54-53740	646	9
	651	9
	654	9
14X-54-53760	646	38
	651	34
	654	38
14X-54-53770	648	4
	653	4
14X-54-53830	560	3
	560	12
	561	5
	561	16
14X-54-53840	647	42
	651	38
	655	42
	802	28
14X-54-53850	647	46
	652	42
	655	46

Part Number	Page	Index
14X-54-53860	646	25
	651	25
	654	25
14X-54-53871	802	
14X-54-53891	802	25
14X-54-53930	802	17
14X-54-53940	802	24
14X-54-53950	802	23
14X-54-53960	654	1
14X-54-54111	659	1
14X-54-54121	659	2
	660	2
	661	5
	662	5
14X-54-54131	659	5
	660	5
	661	8
	662	8
14X-54-54211	660	1
14X-54-54310	548	8
	548	19
	557	8
	557	37
	646	13
	651	13
	654	13
	802	22
14X-54-54320	548	9
	548	20
	557	9
	557	38
14X-54-55130	333	22
	334	19
14X-54-55140	333	23
	334	20
14X-54-56111	537	1
14X-54-56121	537	2
14X-54-56131	537	12
14X-54-56141	537	13
14X-54-56151	399	24
14X-54-56160	423	17
	439	17
14X-54-56191	537	7
	537	18
14X-54-56213	537	23
14X-54-56230	538	9
14X-54-56240	427	42
14X-54-56260	427	43
14X-54-56270	427	44
14X-54-56291	426	1
14X-54-56321	538	1
	539	1
14X-54-56341	538	5
	539	5
14X-54-56352	426	7
14X-54-56361	427	24
14X-54-56372	426	10
	473	7
14X-54-56381	426	13
14X-54-56391	498	1
14X-54-56411	427	34
	473	25
14X-54-56421	430	1
14X-54-56431	399	39
14X-54-56442	426	17
14X-54-56451	427	31
	473	22
14X-54-56460	538	6
	539	6
14X-54-56471	427	37
	473	28
14X-54-56481	426	20
14X-54-56491	426	2
	427	25
14X-54-56511	538	13

Part Number	Page	Index
14X-54-56531	493	12
	498	8
	507	12
	516	12
	523	8
14X-54-56541	498	9
	507	13
14X-54-56542	493	13
	516	13
	523	9
14X-54-56561	539	13
14X-54-56571	539	9
14X-54-56591	493	15
	498	11
	507	15
	516	15
	523	11
14X-54-56620	538	2
	539	2
14X-54-56631	493	1
	507	1
14X-54-56640	539	10
14X-54-56661	493	8
	507	8
	516	8
14X-54-56670	493	9
	507	9
	516	9
14X-54-56711	425	1
14X-54-56721	422	15
	444	15
14X-54-56731	422	16
	444	16
14X-54-56741	422	17
	444	17
14X-54-56751	422	11
	444	11
14X-54-56760	427	46
14X-54-56770	423	9
	439	9
14X-54-56780	537	4
	537	15
14X-54-56812	422	1
	444	1
14X-54-56821	422	8
	444	8
14X-54-56891	449	1
14X-54-56910	493	14
	498	10
	507	14
	516	14
	523	10
14X-54-56921	422	9
	444	9
14X-54-56941	422	2
	444	2
14X-54-56951	422	3
	444	3
14X-54-56961	422	4
	444	4
14X-54-56970	422	5
	444	5
14X-54-56981	427	47
	474	47
14X-54-58111	469	1
14X-54-58121	469	4
14X-54-58130	469	16
14X-54-58140	470	2
14X-54-58150	469	13
14X-54-58161	470	4
14X-54-58170	469	2
	469	5
14X-54-58190	470	8
14X-54-58210	470	10
14X-54-58221	471	18
14X-54-58231	470	16
14X-54-58241	470	11
14X-54-58250	470	14
14X-54-58260	470	15
14X-54-58280	451	6
14X-54-58290	453	10
14X-54-58340	470	12
14X-54-58360	516	1
14X-54-58410	472	1
14X-54-58511	473	10
14X-54-58520	473	14
14X-54-58530	473	15
14X-54-58541	473	1
14X-54-58551	473	2
14X-54-58561	473	3
14X-54-58571	476	3
14X-54-58581	476	8
14X-54-58590	473	19
14X-54-58611	473	32
14X-54-58621	476	11
14X-54-58631	473	35
14X-54-58641	473	38
14X-54-58650	474	41
14X-54-58660	474	44
14X-54-58671	523	1
14X-54-58710	476	16
14X-54-58720	473	4
14X-54-58730	476	19
14X-54-58740	476	4
14X-54-58750	476	5
14X-54-58760	467	32
14X-54-58770	467	33
14X-54-58781	451	9
14X-54-58790	451	13
14X-54-58860	469	11
14X-54-58870	469	20
14X-54-58880	467	22
14X-54-58890	467	19
14X-54-58910	472	2
14X-54-58921	472	3
14X-54-58930	469	3
14X-54-58940	469	6
14X-54-58950	453	13
14X-54-58960	453	16
14X-57-51110	345	
	346	
	347	
	355	
14X-57-51120	345	3
	346	3
	347	3
	355	3
14X-57-51130	345	4
	346	4
	347	4
	355	4
14X-57-51140	345	2
	346	2
	347	2
	353	2
	354	2
	355	2
14X-57-51150	355	14
14X-57-51200	353	
	354	
14X-57-51211	345	1
	355	1
14X-57-51220	353	3
	354	3
14X-57-51230	353	4
	354	4
14X-57-51311	347	1
14X-57-51411	346	1
14X-57-51511	353	1
14X-57-51710	344	1
	352	1
14X-57-51810	349	1
14X-57-51910	350	1
	351	1
14X-57-52110	348	1
14X-57-52210	354	1
14X-60-12120	574	7
14X-60-31150	284	2
	286	2
	798	2
14X-60-51112	284	1
	286	1
14X-60-51131	284	5
	286	5
14X-60-51141	284	10
	286	10
14X-60-51151	284	
	286	
14X-60-51161	284	15
	286	15
14X-60-51171	284	24
	286	24
14X-60-51211	574	1
14X-60-51230	284	25
	286	25
14X-62-11460	324	18
14X-62-32540	167	37
	309	26
14X-62-35531	161	5
14X-62-51111	312	3
14X-62-51121	312	4
14X-62-51131	314	1
14X-62-51141	314	5
14X-62-51151	314	3
14X-62-51161	314	7
14X-62-51171	315	22
14X-62-51191	315	28
14X-62-51221	316	34
14X-62-51230	315	25
	315	31
14X-62-51241	310	25
14X-62-51271	315	19
14X-62-51281	327	3
14X-62-51311	310	17
14X-62-51321	311	1
14X-62-51331	310	5
14X-62-51341	310	11
14X-62-51351	310	22
14X-62-51360	311	8
14X-62-51371	317	2
	319	2
14X-62-51481	327	5
14X-62-51491	328	8
14X-62-51510	322	12
	323	14
14X-62-51520	328	12
14X-62-51530	328	11
14X-62-51541	328	15
14X-62-51551	327	1
14X-62-51561	721	1
14X-62-51571	327	2
14X-62-51581	327	4
14X-62-51591	721	9
14X-62-51611	721	24
14X-62-51621	321	1
14X-62-51631	321	2
14X-62-51651	328	23
14X-62-51661	328	27
14X-62-51670	328	31
14X-62-51680	328	36
14X-62-51722	321	3
14X-62-51732	327	6
14X-62-51742	327	7
14X-62-51752	321	4
14X-62-51762	327	8

Part Number	Page	Index
14X-62-51772	327	9
14X-62-51780	328	1
14X-62-51790	329	47
14X-62-51811	721	32
14X-62-51832	721	20
14X-62-51842	721	10
14X-62-51852	721	15
14X-62-51860	721	4
14X-62-51871	720	7
14X-62-51880	720	11
14X-62-51891	720	10
14X-62-51912	720	22
14X-62-51922	720	18
14X-62-51932	720	26
14X-62-51941	323	2
	325	2
14X-62-51961	323	1
	325	1
14X-62-51971	324	1
	326	1
14X-62-51980	324	5
	326	5
14X-62-52161	718	19
	719	19
14X-62-52171	718	22
	719	22
14X-62-52182	718	25
	719	25
14X-62-52241	324	13
	326	13
14X-62-52250	324	
	324	
	326	
	326	
14X-62-52291	718	1
	719	1
14X-62-52321	721	39
14X-62-52330	718	32
	719	32
14X-62-52351	307	1
14X-62-52361	307	3
14X-62-52371	307	9
14X-62-52380	307	14
14X-62-52391	575	26
	597	30
	614	35
	634	35
	641	33
	644	33
14X-62-52410	309	1
14X-62-52421	309	2
14X-62-52431	307	27
14X-62-52441	309	14
14X-62-52451	309	15
14X-62-52471	259	16
14X-62-52480	309	24
14X-62-52491	254	29
14X-62-52511	309	16
14X-62-52521	578	18
	600	22
	638	28
	645	26
14X-62-52541	575	27
	597	31
	614	36
	634	36
	641	34
	644	34
14X-62-52552	309	7
14X-62-52571	307	37
14X-62-52611	315	12
14X-62-52621	315	1
14X-62-52631	322	5
	323	7
	325	7

Part Number	Page	Index
14X-62-52651	721	26
14X-62-52680	721	3
14X-62-52690	720	4
14X-62-52710	720	3
14X-62-52741	720	1
14X-62-52761	307	31
14X-62-52781	721	11
	721	16
14X-62-52790	721	5
14X-62-52810	325	14
14X-62-52821	720	27
14X-62-52881	322	1
	323	3
	325	3
14X-62-52890	322	8
	323	10
	325	10
14X-62-52911	322	11
	323	13
	325	13
14X-62-52921	307	34
14X-62-52931	575	23
	597	23
	614	23
	614	28
	634	23
	634	28
	641	23
	641	28
	644	23
	644	28
14X-62-52940	575	25
	597	29
	614	34
	634	34
	641	32
	644	32
14X-62-52951	284	26
	286	26
14X-62-52960	576	19
	598	19
	636	19
14X-62-52971	616	22
	636	22
14X-62-52981	576	22
14X-62-52991	597	26
	614	31
	634	31
14X-62-53101	497	
	513	
	534	
14X-62-53151	497	
	503	
	513	
	521	
	534	
14X-62-53201	503	
	521	
14X-62-53351	497	25
	503	28
	513	23
	521	30
	534	25
14X-62-53361	497	26
	503	29
	513	24
	521	31
	534	26
14X-62-53411	503	6
	521	6
14X-62-53510	318	1
14X-62-53531	578	1
	600	1
	618	1
	638	1

Part Number	Page	Index
	642	1
	645	1
14X-62-53541	578	8
	600	8
	600	12
	617	45
	618	8
	618	12
	618	16
	638	10
	638	18
	642	8
	642	12
	645	10
14X-62-53551	576	
	598	
	636	
14X-62-53561	576	2
	598	2
	636	2
14X-62-53591	324	14
	326	14
14X-62-53611	718	9
	719	9
14X-62-53621	718	11
	719	11
14X-62-53640	329	41
14X-62-53650	329	44
14X-62-53661	312	1
14X-62-53671	312	2
14X-62-53691	503	7
	521	7
14X-62-53751	509	25
	512	27
	530	27
14X-62-53820	515	42
	536	42
14X-62-53830	515	45
	536	45
14X-62-53840	324	15
	326	15
14X-62-53861	721	21
14X-62-53950	497	6
	509	6
	509	12
	512	6
	512	12
	513	6
	530	6
	530	12
	534	6
14X-62-54110	618	26
	642	24
14X-62-54121	618	28
	642	26
14X-62-54131	509	
	512	
	530	
14X-62-54141	509	
	512	
	530	
14X-62-54150	618	31
	642	29
14X-62-54160	618	33
	642	31
14X-62-54171	509	
	512	
	530	
14X-62-54511	497	14
	503	18
	509	16
	512	16
	513	14
	521	18
	530	16

Part Number	Page	Index
	534	14
14X-62-54521	616	
14X-62-54531	616	2
14X-62-54540	616	21
14X-62-54551	326	18
14X-62-54560	326	22
14X-62-54580	325	17
14X-62-54590	324	8
	326	8
14X-62-54681	619	48
	643	46
14X-62-54690	309	20
14X-62-54710	308	43
14X-62-54731	310	28
14X-62-54741	322	4
	323	6
	325	6
14X-62-54750	618	35
	642	33
14X-62-54760	497	10
	503	8
	509	13
	512	13
	513	10
	521	8
	530	13
	534	10
14X-62-54781	325	20
14X-62-54791	325	21
14X-62-54810	497	
	513	
	534	
14X-62-54820	497	7
	503	13
	513	7
	521	13
	534	7
14X-62-54831	503	
	521	
14X-62-54840	720	6
14X-62-54850	720	5
14X-62-54860	509	26
	512	28
	530	28
14X-62-54870	575	4
	597	4
	614	4
	634	4
	641	4
	644	4
14X-62-54880	324	22
14X-62-54890	326	25
14X-62-54910	720	23
14X-62-54920	720	19
14X-62-54930	638	
	645	
14X-62-54940	638	4
	645	4
14X-62-54950	638	14
	645	14
14X-62-54960	578	4
	600	4
	618	4
	642	4
14X-62-54980	718	21
	718	24
	719	21
	719	24
14X-62-55110	324	
	324	
	326	
	326	
14X-62-55280	319	1
14X-62-55290	320	1
14X-69-11110	726	14
	732	14
	735	14
14X-69-11120	726	15
	732	15
	735	15
14X-69-11210	728	14
14X-69-11220	728	15
14X-69-51101	727	1
	729	1
14X-69-51121	736	1
	737	1
14X-69-51131	736	2
	737	2
14X-69-51200	730	1
	731	1
14X-69-51201	733	1
	734	1
14X-71-00030	544	
14X-71-11E20	697	16
14X-71-12230	694	11
	694	22
	695	11
	695	22
14X-71-12240	700	23
14X-71-13111	697	15
14X-71-51122	700	2
14X-71-51132	700	3
14X-71-51151	700	4
14X-71-53110	544	1
14X-71-53340	694	26
	695	26
14X-72-51120	701	2
	702	7
14X-72-51131	701	3
	702	8
14X-72-51161	699	21
	699	29
14X-72-51172	699	22
14X-72-51192	701	10
	702	13
14X-72-51241	696	6
14X-72-51251	696	2
14X-72-51261	696	3
14X-72-51271	696	4
14X-72-51281	696	5
14X-72-51290	699	18
14X-72-51311	699	1
14X-72-51331	699	8
14X-72-51341	699	11
14X-72-51352	699	3
14X-72-51360	699	19
14X-72-51372	699	2
14X-72-51382	701	11
	702	16
14X-72-51390	696	16
14X-72-51421	696	17
14X-72-51502	701	1
14X-72-51530	703	58
14X-72-51610	701	4
14X-72-51731	696	12
14X-72-51741	696	13
14X-72-51901	696	1
14X-72-54101	702	1
14X-72-54131	702	2
14X-72-54141	702	3
14X-72-54151	702	4
14X-72-54161	702	5
14X-72-54170	703	40
14X-72-54201	702	27
14X-72-54241	702	28
14X-72-54251	702	32
14X-72-54301	702	19
14X-72-54340	702	20
14X-72-54351	702	24
14X-72-54410	702	36
14X-72-54420	702	35
14X-72-54430	702	22
	702	30
14X-72-54D20	702	6
	702	21
	702	29
14X-78-11180	506	52
	511	50
	515	50
	526	49
	532	50
	536	50
14X-78-11310	723	6
14X-78-11490	505	2
	510	2
	514	2
	525	2
	531	2
	535	2
14X-78-51112	505	1
	510	1
	514	1
	525	1
	531	1
	535	1
14X-78-51131	505	3
	510	3
	514	3
	525	3
	531	3
	535	3
14X-78-51141	505	8
	510	8
	514	8
	525	8
	531	8
	535	8
14X-78-51171	330	10
	723	34
14X-78-51181	330	1
14X-78-51191	330	2
14X-78-51281	511	40
	514	39
	532	40
	535	39
14X-78-51291	505	12
	510	12
	514	12
	525	12
	531	12
	535	12
14X-78-51410	506	41
	510	39
	514	38
	525	38
	531	39
	535	38
14X-78-51421	506	48
	511	46
	526	45
	532	46
14X-78-51431	506	45
	511	43
	526	42
	532	43
14X-78-51450	506	42
	525	39
14X-78-52111	723	1
14X-911-1690	360	3
	360	7
	365	3
	365	7
14X-911-1761	360	2
	360	6
	365	2

Part Number	Page	Index
	365	6
14X-911-6180	491	1
14X-911-7670	393	7
	481	2
14X-911-8520	646	29
	654	29
14X-911-8533	484	
14X-911-8534	484	18
14X-952-1390	694	10
	694	21
	695	10
	695	21
14X-952-5151	700	5
14X-952-5161	700	6
14X-952-5170	700	7
14X-952-5180	700	9
14X-952-5190	700	11
14X-952-5210	700	12
14X-952-5311	700	1
14X-952-5370	700	8
14X-952-5381	700	10
14X-952-5411	694	1
14X-952-5421	694	12
	695	12
14X-952-5431	695	1
14X-952-5550	700	13
14X-952-5560	700	14
14X-958-1510	663	1
14X-978-1660	451	2
	451	4
14X-98-11170	740	5
	742	5
	743	5
	744	5
	745	5
	746	5
	747	5
	748	5
	749	5
	750	5
	751	5
	752	5
	753	5
	754	5
	755	5
	756	5
	757	5
	758	5
	759	5
	760	5
	761	5
	762	5
	763	5
	764	5
	765	5
	766	5
	767	5
	768	5
	769	5
	770	5
	771	5
	772	5
	773	5
	774	5
	775	5
	776	5
	777	5
	778	5
	779	5
	780	5
	781	5
	782	5
	783	5
	785	5
	787	5

Part Number	Page	Index
14X-98-11250	742	13
	743	13
	744	13
	745	13
	753	13
	754	15
	755	15
	756	15
	757	15
	758	15
	759	15
	760	15
	777	13
	780	13
	787	15
14X-98-11270	740	13
	746	13
	747	13
	748	13
	761	13
	762	15
	763	15
	764	15
	765	15
	766	15
	767	15
	768	15
	778	13
	781	13
	783	15
14X-98-35120	740	29
	742	29
	743	29
	746	29
	749	29
	750	29
	753	29
	754	31
	761	29
	762	31
	769	29
	770	31
14X-98-35130	744	29
	747	29
	751	29
	755	31
	763	31
	771	31
14X-98-35140	757	31
	765	31
	773	31
14X-98-35150	745	29
	748	29
	752	29
	756	31
	764	31
	772	31
14X-98-35160	759	31
	767	31
	775	31
	780	29
	781	29
	782	29
14X-98-35170	760	31
	768	31
	776	31
14X-98-35181	740	10
	742	10
	743	10
	744	10
	745	10
	746	10
	747	10
	748	10
	749	10

Part Number	Page	Index
	750	10
	751	10
	752	10
	753	10
	754	12
	755	12
	756	12
	757	12
	758	12
	759	12
	760	12
	761	10
	762	12
	763	12
	764	12
	765	12
	766	12
	767	12
	768	12
	769	10
	770	12
	771	12
	772	12
	773	12
	774	12
	775	12
	776	12
	777	10
	778	10
	779	10
	780	10
	781	10
	782	10
	783	12
	785	12
	787	12
14X-98-35250	758	31
	766	31
	774	31
	777	29
	778	29
	779	29
14X-98-35310	757	29
	765	29
	773	29
14X-98-35320	745	27
	748	27
	752	27
	756	29
	764	29
	772	29
14X-98-35330	759	29
	767	29
	775	29
	780	27
	781	27
	782	27
14X-98-35420	758	29
	766	29
	774	29
	777	27
	778	27
	779	27
14X-98-51120	429	1
14X-98-51150	740	11
	742	11
	743	11
	744	11
	745	11
	746	11
	747	11
	748	11
	749	11
	750	11
	751	11

Part Number	Page	Index
	752	11
	753	11
	754	13
	755	13
	756	13
	757	13
	758	13
	759	13
	760	13
	761	11
	762	13
	763	13
	764	13
	765	13
	766	13
	767	13
	768	13
	769	11
	770	13
	771	13
	772	13
	773	13
	774	13
	775	13
	776	13
	777	11
	778	11
	779	11
	780	11
	781	11
	782	11
	783	13
	785	13
	787	13
14X-98-51161	427	41
	429	2
14X-98-51170	473	31
14X-98-51211	740	14
	742	14
	743	14
	744	14
	745	14
	746	14
	747	14
	748	14
	753	14
	754	16
	755	16
	756	16
	757	16
	758	16
	759	16
	760	16
	761	14
	762	16
	763	16
	764	16
	765	16
	766	16
	767	16
	768	16
	777	14
	778	14
	780	14
	781	14
	783	16
	787	16
14X-98-51221	749	14
	750	14
	751	14
	752	14
	769	14
	770	16
	771	16
	772	16

Part Number	Page	Index
	773	16
	774	16
	775	16
	776	16
	779	14
	782	14
	785	16
14X-98-51250	740	12
	742	12
	743	12
	744	12
	745	12
	746	12
	747	12
	748	12
	749	12
	750	12
	751	12
	752	12
	753	12
	754	14
	755	14
	756	14
	757	14
	758	14
	759	14
	760	14
	761	12
	762	14
	763	14
	764	14
	765	14
	766	14
	767	14
	768	14
	769	12
	770	14
	771	14
	772	14
	773	14
	774	14
	775	14
	776	14
	777	12
	778	12
	779	12
	780	12
	781	12
	782	12
	783	14
	785	14
	787	14
14X-98-51260	440	1
14X-98-51270	440	2
14X-A62-5111	556	1
14X-A62-5211	557	1
14X-A62-5231	557	30
14X-A62-5311	561	1
14X-A62-5331	561	12
14X-A62-5410	661	1
14X-A62-5420	661	2
14X-A62-5430	661	3
14X-A62-5440	661	4
	662	2
14X-A62-5511	662	1
14X-A62-5521	561	3
14X-A62-5551	561	14
14X-A62-5560	556	2
14X-A62-5581	662	3
14X-A62-5590	662	4
14X-A62-5611	557	12
	557	21
	558	41
	558	50
14X-A62-5630	557	13

Part Number	Page	Index
	557	22
	558	42
	558	51
14X-A62-5651	557	17
14X-A62-5661	557	18
14X-A62-5671	557	26
14X-A62-5681	557	27
14X-A62-5691	558	55
14X-A62-5711	558	47
14X-A62-5720	558	56
14X-A62-5730	558	46
14X-Y11-1110	393	1
14X-Y11-1121	393	14
14X-Y11-1131	393	17
14X-Y11-1141	394	24
14X-Y11-1151	393	8
14X-Y11-1160	394	28
14X-Y11-1171	394	31
14X-Y11-1181	394	35
14X-Y11-1191	394	42
14X-Y11-1211	394	47
14X-Y11-1222	397	1
14X-Y11-1231	481	3
14X-Y11-1241	393	3
14X-Y11-1250	393	9
14X-Y11-1260	394	43
	394	48
14X-Y11-1280	394	36
14X-Y11-1291	399	36
14X-Y11-1351	479	4
14X-Y11-1361	479	7
14X-Y11-1371	479	10
14X-Y11-1410	484	6
14X-Y11-1421	485	2
14X-Y11-1431	485	4
14X-Y11-1441	398	1
14X-Y11-1451	399	30
14X-Y11-1461	399	43
14X-Y11-1471	397	2
14X-Y11-1490	397	3
14X-Y11-1511	398	6
14X-Y11-1521	398	7
14X-Y11-1531	398	8
14X-Y11-1540	398	9
14X-Y11-1550	398	15
14X-Y11-1561	398	14
14X-Y11-1570	399	47
14X-Y11-1580	481	4
14X-Y11-1590	398	10
14X-Y11-1611	398	16
14X-Y11-1620	399	31
14X-Y11-1661	482	7
	488	8
14X-Y11-1671	482	15
14X-Y11-1681	482	29
14X-Y11-1691	482	23
14X-Y11-1731	540	14
14X-Y11-1760	478	7
14X-Y11-1790	396	36
14X-Y11-1822	646	26
	654	26
14X-Y11-1871	395	1
14X-Y11-1881	395	3
14X-Y11-1891	395	5
14X-Y11-1911	395	9
14X-Y11-1920	478	10
14X-Y11-1930	393	10
14X-Y11-1940	394	32
14X-Y11-1971	552	7
14X-Y11-1981	482	1
14X-Y11-1990	399	51
14X-Y11-2110	540	1
14X-Y11-2121	540	6
14X-Y11-2140	540	37
14X-Y11-2150	482	36

Part Number	Page	Index
14X-Y11-2160	540	9
14X-Y11-2170	540	10
14X-Y11-2181	392	5
14X-Y11-2211	392	6
14X-Y11-2241	651	26
14X-Y11-2250	399	32
14X-Y11-2260	393	18
14X-Y11-2270	646	27
	654	27
14X-Y79-1111	357	1
14X-Y79-1112	441	1
14X-Y79-1241	430	12
	430	21
	492	1
14X-Y79-1291	385	21
14X-Y79-1311	375	1
14X-Y79-1321	375	2
14X-Y79-1331	375	3
14X-Y79-1340	375	4
14X-Y79-1361	360	10
14X-Y79-1371	365	10
14X-Y79-1380	360	11
	365	11
14X-Y79-1390	360	12
	365	12
14X-Y79-1400	376	
14X-Y79-1410	360	13
	365	13
14X-Y79-1430	376	
14X-Y79-1440	376	17
14X-Y79-1450	378	
14X-Y79-1460	378	17
14X-Y79-1500	378	
14X-Y79-1511	209	1
	210	1
	213	1
	214	1
14X-Y79-1521	209	4
	209	13
	210	4
	210	13
	213	4
	213	13
	214	4
	214	13
14X-Y79-1531	209	10
	210	10
	213	10
	214	10
14X-Y79-1541	389	1
	453	1
14X-Y79-1551	389	4
	453	4
14X-Y79-1561	389	7
	453	7
14X-Y79-1570	380	22
14X-Y79-1580	381	23
14X-Y79-1590	382	3
	432	1
	433	3
	442	3
	448	3
14X-Y79-1611	421	1
14X-Y79-2101	386	9
14X-Y79-2131	387	27
14X-Y79-2141	385	11
14X-Y79-2151	388	5
14X-Y79-2161	385	14
14X-Y79-2171	388	2
14X-Y79-2181	430	4
14X-Y79-2190	387	44
14X-Y79-2201	386	17
14X-Y79-2211	387	30
14X-Y79-2221	387	32
14X-Y79-2230	394	37

Part Number	Page	Index
14X-Y79-2241	394	38
14X-Y79-2250	380	1
14X-Y79-2261	386	1
14X-Y79-2271	386	5
14X-Y79-2280	418	15
14X-Y79-2290	374	9
	374	13
14X-Y79-2310	394	52
14X-Y79-2320	430	11
14X-Y79-2330	430	17
14X-Y79-2350	385	9
14X-Y79-2361	430	6
14X-Y79-2380	387	34
14X-Y79-2611	385	2
14X-Y79-2621	385	1
14X-Y79-2631	385	5
14X-Y79-2641	387	41
14X-Y79-2650	385	10
14X-Y79-3111	358	1
14X-Y79-3121	363	1
14X-Y79-3130	358	7
	363	7
14X-Y79-3220	358	17
14X-Y79-3230	363	17
14X-Y79-3241	362	6
14X-Y79-3251	367	6
14X-Y79-3261	362	10
	367	10
14X-Y79-3270	362	1
	367	1
14X-Y79-3280	360	19
14X-Y79-3290	365	19
14X-Y79-3310	359	44
	364	44
14X-Y79-3321	359	47
14X-Y79-3331	364	47
14X-Y79-3341	418	12
14X-Y79-3350	362	11
	367	11
14X-Y79-3360	358	18
	363	18
14X-Y79-3411	369	1
14X-Y79-3421	369	4
14X-Y79-3431	374	8
14X-Y79-3441	374	12
14X-Y79-3451	361	37
14X-Y79-3461	366	37
14X-Y79-3472	361	30
14X-Y79-3482	366	30
14X-Y79-3491	374	1
14X-Y79-3511	370	1
14X-Y79-3521	372	1
14X-Y79-3531	370	7
	372	7
14X-Y79-3551	370	8
	372	8
14X-Y79-3581	370	13
14X-Y79-3591	372	13
14X-Y79-3611	370	17
14X-Y79-3621	372	19
14X-Y79-3631	361	40
	366	40
14X-Y79-3651	359	24
14X-Y79-3661	364	24
14X-Y79-3671	368	1
14X-Y79-3681	370	6
	372	6
14X-Y79-3711	489	4
14X-Y79-3721	489	8
	490	5
14X-Y79-3731	489	7
	490	4
14X-Y79-3760	370	9
	372	9
14X-Y79-3770	361	33

Part Number	Page	Index
14X-Y79-3780	366	33
14X-Y79-4111	450	1
14X-Y79-4310	471	10
14X-Y79-4320	471	11
14X-Y79-4340	450	11
14X-Y79-4351	450	10
14X-Y79-4611	451	1
14X-Y79-4621	451	3
14X-Z11-9221	484	1
14X-Z11-9670	485	1
14Y-21-13160	279	6
	280	6
14Y-21-13171	279	8
14Y-21-13190	279	9
	280	9
14Y-21-13210	279	7
	280	7
14Y-21-23150	221	39
14Y-22-14160	261	2
	262	2
14Y-22-21161	219	11
14Y-22-21170	219	8
14Y-22-21180	219	
14Y-22-21190	219	
14Y-22-22110	222	1
14Y-22-22150	222	2
14Y-22-22161	220	5
14Y-22-22170	228	11
14Y-22-22181	228	20
14Y-22-22221	222	10
14Y-22-22231	228	12
14Y-22-22290	220	1
14Y-22-22311	228	1
14Y-22-22321	228	9
14Y-22-22330	228	18
14Y-22-22340	220	4
14Y-22-22360	222	7
14Y-22-22370	220	3
14Y-22-22380	222	3
14Y-22-23110	220	14
14Y-22-23121	220	6
14Y-22-23130	220	21
14Y-22-23140	220	15
14Y-22-23150	220	16
14Y-22-23160	220	17
14Y-22-23170	220	22
14Y-22-23180	220	23
14Y-22-23310	220	20
	806	
14Y-22-24111	220	9
14Y-22-24130	220	18
14Y-22-24190	220	10
14Y-22-25830	219	21
14Y-22-25840	219	
14Y-22-25850	219	
14Y-22-25880	219	15
14Y-22-26180	223	14
14Y-22-37420	223	21
14Y-22-37440	223	19
14Y-22-37470	223	20
	806	
14Y-22-51121	219	1
14Y-22-51130	219	10
14Y-22-52100	226	
14Y-22-54120	261	1
14Y-22-54130	262	1
14Y-22-54260	228	2
14Y-22-55110	223	1
14Y-22-55120	220	27
14Y-22-55142	225	1
14Y-22-55510	223	17
14Y-22-55522	223	18
14Y-22-55800	219	
14Y-22-56240	229	10
14Y-22-58110	254	12

Part Number	Page	Index
14Y-22-58140	254	13
14Y-27-00310	263	
	263	
	265	
	265	
	267	
14Y-27-00320	268	
	268	
	270	
	270	
	272	
14Y-27-00410	263	
	263	
	265	
	265	
	274	
14Y-27-00420	268	
	268	
	270	
	270	
	275	
14Y-27-11412	267	7
	272	7
	274	7
	275	7
14Y-27-31150	267	6
	274	6
14Y-27-31160	272	6
	275	6
14Y-30-00210	336	
	338	
	340	
14Y-30-11277	684	33
	685	33
	686	33
	687	33
14Y-30-17111	336	1
	338	1
	340	1
14Y-30-18111	336	14
	338	10
	340	10
14Y-30-18121	336	11
	338	7
	340	7
14Y-30-18130	684	8
	684	17
	685	8
	685	17
	686	8
	686	17
	687	8
	687	17
14Y-30-18140	684	9
	684	18
	685	9
	685	18
	686	9
	686	18
	687	9
	687	18
14Y-30-18150	336	10
	338	6
	340	6
14Y-30-18160	336	2
	338	2
	340	2
14Y-30-26140	688	1
14Y-30-27130	686	19
	686	26
	687	19
	687	26
14Y-49-21110	224	1
14Y-49-21120	224	5
14Y-50-00012	338	
	340	
14Y-50-11110	338	16
	340	16
14Y-50-11240	336	26
	338	22
	340	22
14Y-50-11250	336	21
	338	17
	340	17
14Y-50-11323	336	25
	338	21
	340	21
14Y-50-11390	336	28
	338	24
	340	24
14Y-50-11460	336	23
	338	19
	340	19
14Y-62-11420	718	3
	719	3
14Y-62-11440	718	15
	719	15
14Y-62-31431	718	13
	719	13
14Y-71-00081	694	
14Y-71-11330	701	6
14Y-71-11340	701	7
14Y-71-12160	718	6
	719	6
14Y-71-12170	694	2
	694	19
	695	8
	695	19
14Y-71-13110	697	1
	698	1
14Y-71-13120	697	2
	697	19
	698	2
14Y-71-13181	694	3
	694	20
	695	9
	695	20
14Y-71-13320	544	2
14Y-71-22150	694	5
14Y-71-22280	694	9
14Z-12-31310	158	19
	218	7
14Z-22-15220	226	28
14Z-40-11220	226	19
14Z-40-11320	226	6
14Z-40-11330	226	7
14Z-40-11340	226	9
14Z-40-11350	226	14
14Z-40-11360	226	17
14Z-40-11371	226	13
14Z-40-11380	226	12
14Z-40-12101	226	
14Z-40-12210	226	24
14Z-43-12411	225	4
	281	8
14Z-43-12421	225	2
14Z-71-33212	694	23
	695	23
150-30-13430	667	26
150-30-13442	667	23
150-30-13460	667	25
150-30-13480	667	24
150-74-11140	729	11
	731	13
	734	13
154-03-00050	167	
154-03-13180	167	20
154-03-72261	167	4
154-03-72270	167	10
154-15-12550	222	6
154-21-71420	332	6
	333	6
	334	6
	335	6
154-22-22280	222	4
154-22-62220	219	18
154-22-65820	219	14
154-22-65860	219	17
154-22-65890	219	16
154-27-12320	267	3
	272	3
	274	3
	275	3
154-30-73170	667	8
154-32-21323	682	14
	806	
154-32-71220	677	16
	678	16
	679	16
	680	16
	681	16
	806	
154-43-73531	402	3
	456	3
154-43-73560	402	4
	456	4
154-43-73651	402	14
	456	14
154-43-73670	404	9
	458	9
154-43-73680	404	10
	458	10
154-54-22830	472	7
154-61-16570	62	9
	63	9
154-911-7842	487	
154-911-8140	478	6
155-30-13230	666	20
155-61-15350	192	15
	199	15
	205	15
	256	6
175-03-42140	650	17
175-06-81610	428	13
	475	14
175-15-11230	231	21
175-15-56470	240	24
175-54-27350	167	21
175-54-28770	167	22
175-54-34170	581	4
	650	10
	650	20
176-06-42170	358	20
	363	20
	371	27
	373	27
17A-03-14111	171	1
17A-03-14120	171	2
17A-04-11191	175	60
	180	52
17A-04-41190	174	
	179	
17A-04-41331	175	38
	179	30
17A-04-41411	174	2
	179	2
17A-06-17931	209	7
	209	16
	209	26
	210	7
	210	16
	211	4
	212	4
	213	7
	213	16

Part Number	Page	Index
	213	26
	214	7
	214	16
	646	34
	651	30
	654	34
17A-06-17970	209	8
	209	17
	209	27
	210	8
	210	17
	211	5
	212	5
	213	8
	213	17
	213	27
	214	8
	214	17
	646	35
	651	31
	654	35
17A-06-17980	209	9
	209	18
	209	28
	210	9
	210	18
	211	6
	212	6
	213	9
	213	18
	213	28
	214	9
	214	18
	646	36
	651	32
	654	36
17A-06-41981	412	30
	413	15
	462	30
	464	15
17A-06-42210	380	5
17A-06-42220	380	6
17A-06-42230	209	31
	210	23
	211	9
17A-06-42240	207	1
17A-06-42250	423	2
	439	2
	471	2
17A-06-42260	423	3
	439	3
	471	3
17A-06-43210	467	14
17A-13-24490	246	2
17A-15-22191	221	35
17A-43-24160	281	9
	412	29
	462	29
17A-43-24170	281	5
17A-43-42240	505	9
	510	9
	514	9
	525	9
	531	9
	535	9
17A-43-42340	399	23
17A-43-42430	508	3
	527	3
17A-43-46380	493	18
	498	14
	507	18
	516	18
	523	14
17A-54-46440	537	5
	537	16

Part Number	Page	Index
17A-54-46761	470	9
17A-54-46771	469	19
17A-54-46820	470	13
17A-54-46961	398	20
17A-54-48560	469	14
	469	17
17A-54-48580	470	3
17A-57-21170	352	5
	355	11
17A-57-23270	345	5
	346	5
	347	5
	353	5
	354	5
	355	5
17A-57-23520	351	5
17A-57-41131	538	10
17A-57-41150	346	13
	354	13
17A-57-41170	538	14
17A-911-1671	479	2
17A-911-4421	396	22
	396	26
	483	39
17A-911-4810	480	
17A-979-1420	381	26
17A-979-1611	386	15
	387	23
17A-979-1620	362	3
	367	3
	385	6
	386	2
	386	6
	386	12
	386	20
17A-979-1760	385	15
17A-979-1930	386	10
	386	18
17A-979-2141	399	33
17A-979-2251	398	2
17A-979-2330	392	7
17A-979-2360	399	44
17A-979-2390	398	11
17A-979-2422	398	22
17A-979-2430	398	3
17A-979-2850	380	17
17A-979-2870	380	21
17A-979-3131	392	1
17A-979-3140	380	2
17A-979-3180	392	10
17A-979-3320	359	31
17A-979-3330	364	31
17A-979-3561	370	10
17A-979-3571	372	10
17A-979-3811	359	48
	364	48
17A-979-3890	386	11
	386	19
17A-98-11180	740	8
	742	8
	743	8
	744	8
	745	8
	746	8
	747	8
	748	8
	749	8
	750	8
	751	8
	752	8
	753	8
	754	8
	755	8
	756	8
	757	8

Part Number	Page	Index
	758	8
	759	8
	760	8
	761	8
	762	8
	763	8
	764	8
	765	8
	766	8
	767	8
	768	8
	769	8
	770	8
	771	8
	772	8
	773	8
	774	8
	775	8
	776	8
	777	8
	778	8
	779	8
	780	8
	781	8
	782	8
	783	8
	785	8
	787	8
17A-98-21720	760	29
	768	29
	776	29
17A-98-23510	760	33
	768	33
	776	33
17A-98-41320	793	2
17A-98-41510	788	5
17A-Z11-1610	376	18
	378	18
17A-Z11-1620	376	19
	378	19
17A-Z11-1660	377	20
	379	20
17A-Z11-1810	370	3
	372	3
17A-Z11-2240	432	2
17A-Z11-2581	360	18
	365	18
17A-Z11-2660	361	28
	366	28
17A-Z11-2813	470	7
17A-Z11-2940	387	38
17A-Z11-3592	374	5
	374	7
17A-Z11-4610	361	29
	366	29
	421	4
17A-Z11-7161	385	19
	387	25
	398	17
	426	5
	427	28
17M-22-45471	219	2
17M-911-3530	646	30
	654	30
17M-98-41320	760	22
	768	22
	776	22
195-03-41380	478	5
195-27-11140	265	16
	270	16
195-30-14151	667	28
195-30-17960	666	21
195-40-31540	226	10
195-43-43370	493	20
	498	16

Part Number	Page	Index
	507	20
	516	20
	523	16
195-43-64411	494	1
	499	1
	517	1
	533	1
195-54-42550	175	58
	180	50
195-54-42981	650	3
195-54-46180	549	4
195-54-68760	647	39
	651	35
	655	39
195-54-78790	399	27
	427	23
	473	17
195-60-51550	284	19
	286	19
195-979-4841	488	16
195-Z11-1371	377	
	379	
195-Z11-1381	377	24
	379	24
195-Z11-2180	388	1
	452	1
195-Z11-3630	377	21
	379	21
195-Z11-3640	377	22
	379	22
195-Z11-3670	377	25
	379	25
195-Z11-3860	377	23
	379	23
195-Z11-4510	364	38
	372	4
195-Z11-4520	359	38
	370	4
195-Z11-7250	395	18
	396	29
198-49-11460	284	4
	286	4
198-54-19150	646	17
	651	17
	654	17
198-54-42260	374	2
	537	3
	537	14
198-911-7750	393	4
198-911-9240	380	14
	468	19
198-Z11-3710	358	2
	363	2
198-Z11-6370	385	4
19M-06-18220	208	9
19M-09-11510	403	29
	456	29
	508	2
	527	2
19M-09-34110	404	11
	458	11
19M-43-33110	403	
	456	
19M-43-33140	403	
	456	
19M-43-33150	403	33
	456	33
19M-43-33160	403	34
	456	34
19M-43-33170	403	30
	456	30
19M-43-33460	403	31
	456	31
19M-43-33470	403	32
	456	32

Part Number	Page	Index
19M-43-33630	402	11
	402	
	402	
	402	
	402	
	456	11
19M-43-33660	402	12
	456	12
19M-43-33720	400	3
	454	3
19M-43-33730	400	4
	454	4
19M-43-33740	400	5
	454	5
19M-43-33750	400	6
	454	6
19M-43-33760	400	7
	454	7
19M-43-33770	400	8
	454	8
19M-43-33780	400	9
	454	9
19M-43-34120	404	12
	458	12
19M-43-34141	404	13
	458	13
19M-43-34150	404	14
	458	14
19M-43-34182	404	15
	458	15
19M-43-34190	404	16
	458	16
19M-43-34330	400	10
	454	10
19M-43-38220	494	2
	533	2
19N-911-1250	697	20
201-54-13210	446	17
201-60-11390	578	2
	578	5
	578	9
	600	2
	600	5
	600	9
	600	13
	617	46
	618	2
	618	5
	618	9
	618	13
	618	17
	638	2
	638	5
	638	11
	638	15
	638	19
	642	2
	642	5
	642	9
	642	13
	645	2
	645	5
	645	11
	645	15
202-62-21430	337	46
	339	42
	341	42
203-30-42260	667	9
203-43-56450	424	1
	471	17
203-60-62190	576	11
	598	11
	616	11
	636	11
203-62-13520	307	24

Part Number	Page	Index
203-62-21740	337	47
	339	43
	341	43
203-62-42920	336	34
	338	30
	340	30
203-62-44510	598	22
203-62-57730	497	20
	503	24
	509	21
	512	22
	513	19
	521	25
	530	22
	534	20
203-62-57910	259	5
203-62-57920	259	4
203-62-57930	259	3
203-62-57940	259	2
205-03-71330	175	53
	180	45
205-03-71331	153	10
205-04-62130	175	45
	179	37
205-04-K1370	802	7
	802	12
205-30-00220	666	
	668	
	669	
	671	
	672	
205-54-51970	646	22
	651	22
	654	22
205-54-53550	560	7
	560	16
	561	9
	561	20
	646	19
	651	19
	654	19
205-54-71680	170	1
205-60-51390	576	3
	598	3
	616	3
	636	3
205-60-71220	469	12
	550	2
	559	2
	648	3
	653	3
	657	5
	658	5
205-977-7310	209	30
	211	8
	212	8
	213	30
	447	32
206-03-43331	171	11
206-62-87990	497	8
	503	9
	503	14
	509	8
	509	14
	512	8
	512	14
	513	8
	521	9
	521	14
	530	8
	530	14
	534	8
	618	34
	642	32
207-01-35140	153	1

Part Number	Page	Index
	153	13
	279	3
	280	3
207-01-68170	60	12
207-06-71723	382	1
	442	1
207-06-71734	433	1
	448	1
207-30-54160	667	7
	667	16
207-32-71620	677	15
	678	15
	679	15
	680	15
	681	15
	806	
207-62-32890	157	13
207-62-62460	576	38
	598	38
	617	40
	637	38
207-62-64740	284	28
	286	28
	575	3
	597	3
	614	3
	634	3
	641	3
	644	3
208-06-11220	336	31
	338	27
	340	27
208-06-19170	416	18
	437	18
	466	17
208-38-11590	802	9
208-53-11M80	385	16
208-53-12220	394	29
208-53-12680	397	8
208-979-7540	392	2
208-979-7650	395	14
209-03-12270	263	17
	268	17
209-09-51210	701	18
	703	48
20B-27-11210	296	7
	303	19
	307	30
20K-62-33690	576	31
	598	31
	616	33
	636	31
20N-60-11143	284	22
	286	22
20N-60-11181	284	23
	286	23
20R-54-11460	472	9
	545	3
	546	3
20S-70-82230	699	28
20T-43-71190	402	6
	456	6
	499	5
	505	10
	510	10
	514	10
	517	5
	525	10
	531	10
	535	10
20T-54-74510	184	20
	185	20
	186	20
	187	20
20T-62-81790	575	18
	597	18
	614	18
	634	18
	641	18
	644	18
20U-03-21540	160	11
20U-54-46520	361	26
	366	26
	423	18
	428	12
	439	18
20U-62-41890	576	25
	598	25
	616	27
	636	25
20Y-00-41530	740	9
	742	9
	743	9
	744	9
	745	9
	746	9
	747	9
	748	9
	749	9
	750	9
	751	9
	752	9
	753	9
	754	9
	755	9
	756	9
	757	9
	758	9
	759	9
	760	9
	761	9
	762	9
	763	9
	764	9
	765	9
	766	9
	767	9
	768	9
	769	9
	770	9
	771	9
	772	9
	773	9
	774	9
	775	9
	776	9
	777	9
	778	9
	779	9
	780	9
	781	9
	782	9
	783	9
	785	9
	787	9
20Y-03-11220	396	33
20Y-03-41580	160	9
20Y-04-21580	174	4
20Y-06-23472	431	26
20Y-06-23940	508	14
	527	14
20Y-06-41670	446	7
20Y-06-41812	215	1
20Y-06-41990	383	
20Y-06-42180	384	6
20Y-06-42190	380	7
	423	4
	439	4
	471	4
20Y-30-16330	674	12
	675	12
20Y-43-41491	430	7
20Y-43-41750	423	7
	439	7
	471	6
20Y-43-41790	423	8
	439	8
	471	7
20Y-43-41970	430	5
20Y-53-11380	357	2
	441	2
	450	5
20Y-53-11390	357	3
	441	3
	450	4
20Y-53-12221	384	7
20Y-53-12310	393	13
	393	21
	394	25
	394	39
	394	44
	394	49
20Y-53-13361	393	2
	393	22
20Y-54-18690	385	3
	386	16
	387	24
	387	31
	387	33
20Y-54-29232	646	16
	651	16
	654	16
20Y-60-21320	284	17
	286	17
20Y-62-19560	578	3
	578	6
	578	10
	600	3
	600	6
	600	10
	600	14
	617	47
	618	3
	618	6
	618	10
	618	14
	618	18
	638	3
	638	6
	638	12
	638	16
	638	20
	642	3
	642	6
	642	10
	642	14
	645	3
	645	6
	645	12
	645	16
20Y-62-21940	576	23
	598	23
	616	25
	636	23
20Y-62-22790	497	27
	503	30
	506	49
	509	27
	511	47
	512	29
	513	25
	515	47
	521	32
	526	46
	530	29

Part Number	Page	Index
	532	47
	534	27
	536	47
20Y-62-22820	497	11
	503	10
	503	15
	509	9
	512	9
	513	11
	521	10
	521	15
	530	9
	534	11
	618	27
	618	29
	642	25
	642	27
20Y-62-22830	497	12
	503	11
	503	16
	509	10
	512	10
	513	12
	521	11
	521	16
	530	10
	534	12
	618	30
	618	32
	642	28
	642	30
20Y-62-22850	497	9
	497	13
	503	12
	503	17
	509	11
	509	15
	512	11
	512	15
	513	9
	513	13
	521	12
	521	17
	530	11
	530	15
	534	9
	534	13
20Y-62-22860	497	28
	503	31
	506	47
	509	28
	511	45
	512	30
	513	26
	515	44
	522	33
	526	44
	530	30
	532	45
	534	28
	536	44
20Y-810-1211	390	
	434	
20Y-810-1240	446	8
20Y-979-3120	479	3
20Y-979-3130	395	13
	479	6
20Y-979-3140	479	9
20Y-979-3150	395	8
	479	12
20Y-979-6131	477	
20Y-979-6161	423	5
	439	5
20Y-979-6261	399	25
20Y-979-6281	396	42
20Y-979-6630	398	19
20Y-979-6771	392	11
21J-06-11570	182	12
	183	12
	184	12
	185	12
	186	12
	187	12
21J-06-13661	155	
	466	8
21K-01-72150	574	5
21K-43-11350	282	5
21K-62-72250	509	7
	512	7
	530	7
21T-72-23260	578	23
	600	27
	619	43
	638	33
	643	41
	645	31
21U-62-34760	324	
	326	
	718	10
	718	23
	719	10
	719	23
	721	33
21U-62-34770	324	
	326	
	718	12
	718	20
	719	12
	719	20
	721	25
21W-60-41170	284	3
	286	3
21W-60-41310	579	7
	620	11
21W-62-42640	575	1
	597	1
	614	1
	634	1
	641	1
	644	1
21W-62-42660	505	20
	510	20
	514	20
	525	20
	531	20
	535	20
21W-62-43121	314	9
21W-62-43990	505	17
	510	17
	514	17
	525	17
	531	17
	535	17
21W-62-44510	505	14
	510	14
	514	14
	525	14
	531	14
	535	14
21W-62-44740	638	7
	645	7
21W-62-99926	638	8
	645	8
21W-98-41720	740	27
	742	27
	743	27
	746	27
	749	27
	750	27
	753	27
	754	29
	761	27
	762	29
	769	27
	770	29
21W-98-41940	744	27
	747	27
	751	27
	755	29
	763	29
	771	29
21Y-70-14710	703	42
21Y-70-14850	703	43
22B-06-11690	208	1
	208	4
22B-46-24180	550	6
	559	6
22B-54-12291	550	3
	559	3
22B-54-28990	428	20
	475	21
22B-60-11160	284	18
	286	18
22D-62-12440	259	13
22L-54-22990	540	38
22M-43-21470	407	29
	409	28
	459	29
	460	28
22M-60-22130	157	9
	257	15
22M-62-13660	192	16
	199	16
	205	16
	256	7
22M-977-1140	396	32
	396	39
22P-62-13510	325	23
	718	30
	719	30
	721	28
	721	35
22P-62-13520	310	19
22P-62-13540	325	22
	575	28
	597	32
	614	37
	634	37
	641	35
	644	35
22P-62-13550	277	3
	330	3
22U-04-21200	174	
22U-04-21220	174	5
22U-04-21241	174	
22U-54-25340	422	10
	444	10
22U-54-25581	427	40
22U-60-21330	576	15
	598	15
	616	17
	636	15
22U-60-21520	174	8
	179	4
22W-43-17330	240	13
232-15-11240	232	40
232-15-19270	220	19
	806	
23A-15-15490	229	7
23B-04-31580	254	14
23B-06-61810	421	9
23B-15-11370	236	18
23B-53-71190	784	35
	786	35
	787	35

Part Number	Page	Index
23E-15-13350	228	6
	228	15
23F-54-15570	555	3
23S-15-45860	423	6
	439	6
	471	5
23S-62-25850	540	31
23T-62-12160	162	4
23W-13-12680	244	35
281-01-13180	256	8
287-15-15360	231	12
287-15-15710	506	50
	511	48
	515	48
	526	47
	532	48
	536	48
361-54-21150	387	45
415-46-11370	650	18
416-54-21710	550	16
	559	16
	640	1
416-925-3941	380	18
417-43-28270	407	30
	409	29
	459	30
	460	29
417-923-3980	445	8
418-07-21210	395	
418-54-35450	493	17
	493	19
	498	13
	498	15
	507	17
	507	19
	516	17
	516	19
	523	13
	523	15
418-54-42380	445	7
41E-15-16251	240	11
421-06-22830	188	3
	195	3
	202	3
421-06-22880	188	4
	195	4
	202	4
421-06-22910	188	10
	195	10
	202	10
421-06-22920	188	11
	195	11
	202	11
421-06-23330	208	2
	208	5
421-06-26210	380	8
421-07-31270	392	12
421-09-21210	467	25
421-09-31110	167	24
421-20-12690	218	3
421-20-33621	218	1
421-20-34511	218	
421-20-34650	218	4
421-46-12740	703	41
421-60-35170	284	20
	286	20
423-06-42420	419	26
423-15-12441	235	2
423-15-12810	233	19
423-20-32631	218	2
423-43-38170	493	16
	498	12
	507	16
	516	16
	523	12

Part Number	Page	Index
423-54-42790	430	13
	430	22
	492	2
423-825-1720	708	2
	713	2
423-944-4720	470	19
425-13-32140	243	33
425-13-32710	806	
425-15-19440	233	16
	235	12
	235	20
425-15-32520	235	13
426-13-42710	243	2
	806	
426-15-15480	240	9
426-15-15490	240	7
426-15-15810	240	14
426-15-16261	240	12
426-15-46001	240	
426-56-21990	488	7
427-15-15910	666	4
	668	7
	669	7
	671	7
	672	7
515-35-13930	620	10
561-43-43390	156	17
	256	11
562-15-16110	240	8
565-62-11270	226	16
566-01-12350	574	4
566-02-42200	144	1
566-35-42430	574	9
566-95-91410	170	3
567-07-15210	485	6
567-15-12830	243	28
	806	
568-13-13351	243	7
568-15-11380	230	4
568-15-11610	158	12
569-06-61960	420	10
	468	10
569-15-12860	230	14
	231	4
	807	
	808	
569-15-41310	231	11
569-15-51721	238	16
569-15-51732	238	17
56B-15-15910	156	34
56B-15-16660	240	10
56D-15-29841	245	23
56E-15-17261	233	14
56E-15-19360	233	15
	235	19
575-41-17420	564	10
	586	10
	590	9
	602	10
	606	8
	607	9
	622	10
	626	8
	627	9
582-15-12811	243	29
582-15-19240	243	27
	806	
582-35-11170	395	17
	396	21
	396	25
600-021-2060	140	1
600-051-1100	155	23
	157	14
600-051-2050	484	14
600-051-2060	155	11

Part Number	Page	Index
600-051-2100	156	23
	156	31
600-051-2140	155	24
	156	37
	192	7
	199	7
	205	7
600-051-2180	155	25
	156	14
	157	2
600-051-2300	194	6
	201	6
600-051-3100	157	10
600-051-3160	156	8
600-184-1350	145	6
600-184-1510	145	5
600-184-1570	145	4
600-185-5100	145	
600-185-5110	145	2
600-311-3630	102	3
600-311-3640	102	4
600-311-3660	102	
600-311-3670	102	6
600-311-3690	102	9
600-311-3722	102	
600-319-3602	102	
600-319-3610	102	
	136	6
	137	6
	151	4
	152	4
600-411-1191	101	5
600-468-1600	131	1
600-645-7850	167	5
600-815-2170	156	4
600-861-6110	121	
600-861-9120	122	
600-863-5711	126	
600-863-8112	128	
6127-11-5180	60	15
6127-11-5960	84	14
6130-12-1961	71	12
6131-81-8820	146	16
6135-85-8190	123	2
	124	8
6136-21-5770	77	1
6136-21-5870	77	2
6136-21-7120	84	5
6136-21-7190	84	6
6144-11-5630	130	9
6144-81-6580	177	31
6150-23-5620	224	8
6151-11-5280	60	13
6151-53-8190	60	7
6151-53-8280	58	4
6152-11-4970	49	12
	54	8
6155-11-4840	146	1
6155-71-5810	130	12
6155-71-5820	130	13
6155-81-7100	145	
6155-81-7110	145	1
6156-81-7930	146	10
6156-81-8990	146	14
6162-43-5350	75	1
6201-81-6560	62	13
	63	13
6206-71-1770	146	12
6207-51-7690	56	4
	59	9
6207-81-6980	120	4
6211-11-5490	60	3
6215-81-9510	78	17
	97	3
	101	3

Part Number	Page	Index
6215-81-9530	73	11
6215-81-9710	78	18
	97	4
	101	4
6215-81-9730	73	12
6216-14-6820	117	1
6216-24-5730	49	6
6216-54-7320	130	31
6216-74-6180	130	30
6216-74-6190	124	2
6216-74-6220	105	2
6216-94-3450	78	16
6217-21-7150	84	15
6217-71-5770	103	2
6217-71-6470	740	28
	742	28
	743	28
	746	28
	749	28
	750	28
	753	28
	754	30
	761	28
	762	30
	769	28
	770	30
6217-71-6480	757	30
	765	30
	773	30
6217-71-6490	745	28
	748	28
	752	28
	756	30
	764	30
	772	30
6217-71-6510	744	28
	747	28
	751	28
	755	30
	763	30
	771	30
6217-71-6550	758	30
	766	30
	774	30
	777	28
	778	28
	779	28
6217-71-6610	759	30
	767	30
	775	30
	780	28
	781	28
	782	28
6217-71-6680	760	30
	768	30
	776	30
6217-71-6860	783	30
	783	31
	785	30
	785	31
	787	30
	787	31
6221-81-6810	125	1
6222-11-5940	60	4
6261-81-1900	133	18
6261-81-2901	133	
6261-81-2911	133	3
6261-81-6901	133	20
6271-81-9200	133	
6271-81-9220	133	2
	133	4
6560-81-4530	92	6
6685-81-7503	147	
6685-81-7513	147	3
6685-81-7540	147	2
6685-81-7550	147	1
6731-22-5410	85	3
6731-51-8150	59	8
6731-61-2151	90	2
6731-61-4250	101	13
6731-71-6270	49	10
6731-74-5910	97	9
	118	3
6732-11-1910	46	11
	70	1
	78	23
	80	3
6732-11-1920	46	12
	70	2
	73	10
	78	24
	80	4
6732-11-1930	90	6
6732-11-4150	101	2
6732-21-1311	73	3
6732-21-1810	78	3
6732-21-1960	46	
	78	
	92	5
	97	
	101	
6732-21-3120	130	16
6732-21-3190	84	2
6732-21-3220	84	3
6732-21-3990	71	11
6732-21-4150	73	8
6732-21-4161	73	9
6732-21-4171	73	5
6732-21-4180	104	12
	130	2
	133	10
6732-21-4220	73	7
6732-21-4290	73	4
6732-21-5160	76	16
	114	2
6732-21-5170	76	12
6732-21-6120	78	12
6732-21-6610	90	5
6732-21-6630	50	3
6732-22-3110	101	12
6732-31-4140	75	2
6732-41-1260	68	4
6732-41-4520	46	18
6732-41-5430	64	5
	64	8
6732-51-5130	66	1
	70	4
6732-51-8180	59	
6732-51-8370	59	1
6732-61-3110	133	8
6732-61-3140	66	2
	84	7
	97	14
	108	1
6732-61-3170	92	8
6732-61-3260	110	2
6732-61-3410	109	5
6732-61-3420	109	4
6732-61-3430	109	3
6732-61-3440	109	6
6732-61-3450	109	2
6732-61-4120	94	3
	96	8
6732-61-6140	47	1
	49	11
	130	18
6732-62-3410	109	
6732-62-3470	109	1
6732-71-3210	49	8
	130	27
	133	6
6732-71-3220	59	3
	115	2
	130	7
	133	7
6732-71-5620	97	10
6732-71-6510	97	11
	104	2
	104	7
	118	2
6732-81-2810	72	1
6732-81-6840	124	4
6732-81-6880	124	5
6732-81-8810	56	1
6732-81-8820	56	2
6732-81-8830	56	5
6732-81-8850	59	5
6732-81-8860	56	8
	59	6
6733-61-3150	64	13
6733-71-5680	77	3
6734-71-5270	93	4
6734-71-5520	133	11
6735-21-1910	78	
	130	
6735-21-1920	78	19
	130	28
6735-21-1930	78	20
	130	29
6735-21-4160	98	1
6735-21-5530	46	2
	84	1
6735-51-1120	88	2
6735-51-8230	59	7
6735-61-2120	133	9
6735-61-3810	120	2
6735-71-3220	120	3
6735-71-5190	49	3
	76	6
6736-11-4460	78	15
6736-21-3210	130	8
6736-21-3360	84	4
6736-21-5310	71	9
	80	7
	99	4
6736-21-5320	76	11
6736-39-1140	142	
6736-39-1150	142	5
6736-39-1160	142	6
6736-51-8710	56	7
	59	4
6736-81-6170	93	5
6736-81-8730	52	1
6738-11-4370	56	6
	61	3
6738-11-4380	61	5
6738-11-4390	61	4
6741-21-1130	78	7
6741-21-1140	78	6
6741-21-2210	78	10
6741-21-3320	70	3
6741-21-3330	70	5
6741-21-3530	71	7
6741-21-3541	71	6
6741-21-3810	71	4
6741-21-3820	71	3
6741-21-4110	73	6
6741-31-4180	74	1
6741-39-1110	142	2
6741-39-1120	142	3
6741-39-1130	142	4
6741-39-1220	142	1
6741-61-1520	111	2
6741-61-1621	112	1
	136	5

Part Number	Page	Index
	151	3
6741-61-2120	93	2
6741-61-6110	90	15
6741-61-6130	115	3
6741-61-7110	80	6
6741-81-6510	120	7
6741-81-6520	120	1
6742-01-0310	76	4
6742-01-0530	71	10
6742-01-0540	71	2
6742-01-0550	71	
6742-01-0950	71	5
6742-01-1080	90	13
6742-01-1360	78	1
6742-01-1370	78	2
6742-01-1380	78	25
	80	2
6742-01-1420	78	4
6742-01-1470	78	13
6742-01-1480	78	21
6742-01-1520	78	11
6742-01-1890	82	2
6742-01-2441	90	14
6742-01-2491	90	3
6742-01-2500	90	4
6742-01-2630	76	3
6742-01-2690	76	8
6742-01-2920	46	1
6742-01-3620	57	1
6742-01-3770	130	5
6742-01-3780	94	2
6742-01-4080	78	22
6742-01-4220	90	9
6742-01-4340	83	10
6742-01-4540	89	1
	136	3
	137	3
	151	1
	152	1
6742-01-5053	73	2
6742-01-5117	90	10
6742-01-5159	78	
6742-01-5160	78	5
6742-01-5199	81	
	142	
6742-01-5202	90	7
6742-01-5233	142	
6742-01-5240	142	
6742-01-5287	142	
6742-01-5288	142	
6742-01-5289	82	1
6742-01-5309	83	3
6742-01-5472	109	9
6742-01-5507	93	3
6742-21-8500	81	
6743-11-1610	46	19
6743-11-3230	95	5
6743-21-4190	73	1
6743-22-5110	85	1
6743-31-3101	83	
6743-31-3121	83	7
6743-31-3210	83	11
6743-51-4430	90	11
6743-51-5550	76	2
6743-61-1411	113	1
	137	5
	152	3
6743-61-1501	111	1
6743-61-1531	111	
6743-61-2112	90	1
6743-61-2150	90	8
6743-61-2210	90	12
6743-61-4120	110	1
6743-81-6310	125	3
6744-11-1070	46	6
6744-41-1010	68	3
6744-41-3020	64	3
6744-41-4031	46	16
6744-41-4050	46	17
6744-41-4080	46	15
6744-41-4110	46	5
6744-41-4120	46	7
6744-41-5010	64	1
6744-41-5030	64	2
6744-71-1020	92	3
6744-71-1040	92	4
6744-71-1250	92	7
6744-81-4010	133	19
6745-11-1121	46	
6745-11-1131	46	10
6745-11-1190	46	
6745-11-1811	46	20
6745-11-3102	95	1
6745-11-3110	95	2
6745-11-3150	95	3
6745-11-4110	50	1
6745-11-4120	50	2
6745-11-4140	51	2
6745-11-4150	51	3
6745-11-4161	51	4
6745-11-4180	52	2
6745-11-4190	51	1
6745-11-5110	55	1
6745-11-5131	60	10
6745-11-5162	65	1
6745-11-5170	55	3
6745-11-5180	60	18
6745-11-5190	60	2
6745-11-5210	55	5
6745-11-5250	54	7
6745-11-5380	60	1
6745-11-5811	55	2
6745-11-5820	60	6
6745-11-6170	62	17
	63	17
6745-11-6210	60	20
6745-11-6220	54	5
6745-11-6230	54	9
6745-11-7111	64	12
6745-11-7810	64	14
6745-11-8160	47	2
	136	2
	137	2
6745-11-8170	47	5
6745-11-8250	49	5
6745-11-8310	47	
6745-11-8320	47	4
6745-11-8810	47	3
	136	1
	137	1
6745-21-1190	78	
6745-21-1290	78	
6745-21-1330	65	2
6745-21-1611	78	14
6745-21-3111	71	1
6745-21-3210	71	8
6745-21-5130	76	10
6745-21-5220	85	2
6745-21-5310	76	9
6745-21-7110	49	
6745-21-7120	49	1
6745-21-7130	49	2
6745-21-7150	84	10
6745-21-7160	84	9
6745-21-7171	84	11
6745-21-7180	49	4
6745-21-7240	84	8
6745-31-1120	81	
6745-31-2020	83	
6745-31-2140	83	2
6745-31-2150	83	1
6745-31-4200	74	
6745-31-4210	74	2
6745-39-1100	142	
6745-39-1200	142	
6745-39-1300	142	
6745-39-1400	142	
6745-41-1110	68	1
6745-41-1130	68	2
6745-41-2100	69	
6745-41-2110	69	1
6745-41-2120	69	2
6745-41-2130	69	3
6745-41-2140	69	4
6745-41-2151	78	8
6745-41-3100	64	11
6745-41-4151	46	14
6745-41-4161	46	13
6745-41-4220	142	22
6745-41-5100	64	
6745-41-5110	64	10
6745-41-5200	64	7
6745-41-5400	64	4
6745-41-5430	64	6
	64	9
6745-51-1110	88	1
6745-51-2110	76	1
6745-51-2120	76	5
6745-51-8110	59	10
6745-51-8150	59	11
6745-51-8510	58	2
6745-51-8520	58	1
6745-61-1110	116	1
6745-61-3220	66	3
6745-61-4230	124	9
6745-61-6110	115	1
6745-61-6120	48	1
6745-61-6210	114	1
6745-61-8110	118	1
6745-61-8120	118	6
6745-61-8130	118	7
6745-61-8140	118	8
6745-61-8151	118	9
6745-71-1130	92	1
	97	2
	101	6
	104	4
	104	8
	118	4
	132	1
6745-71-1170	92	
6745-71-1180	92	14
6745-71-1210	94	1
6745-71-1220	92	9
6745-71-1230	92	10
6745-71-1240	92	15
6745-71-1250	92	16
6745-71-1260	92	19
6745-71-1820	104	
6745-71-1830	104	10
6745-71-1840	104	11
6745-71-1860	104	13
6745-71-3210	93	1
6745-71-4110	96	1
6745-71-4120	96	2
6745-71-4140	96	3
6745-71-4150	96	4
6745-71-4310	96	5
6745-71-4320	96	6
6745-71-4330	96	7
6745-71-5110	99	1
6745-71-5120	99	2
6745-71-5160	99	6
	132	5
6745-71-5210	99	3

Part Number	Page	Index
6745-71-5220	99	5
6745-71-5230	132	4
6745-71-5311	104	1
6745-71-5391	104	5
6745-71-5410	104	6
6745-71-5430	104	9
6745-71-5440	97	5
6745-71-5450	97	13
6745-71-5460	97	6
6745-71-5470	97	7
6745-71-5540	96	
6745-71-5550	96	11
6745-71-5610	97	1
6745-71-5690	132	2
6745-71-5860	104	3
6745-71-6110	101	
6745-71-6130	92	2
	101	7
	118	5
	132	3
6745-71-6150	101	10
6745-71-6170	101	8
6745-71-6230	101	14
6745-71-6240	101	1
6745-71-7203	102	
6745-71-7211	102	1
6745-71-9710	103	3
6745-81-4111	53	1
6745-81-4120	52	3
	53	2
6745-81-6120	123	1
6745-81-7250	54	15
6745-81-7280	54	14
6745-81-7290	54	1
6745-81-8080	56	
6745-81-8140	124	7
6745-81-8150	124	6
6745-81-8410	62	3
	63	3
6745-81-8420	62	2
	63	2
6745-81-8471	62	1
6745-81-8481	62	4
	63	4
6745-81-8490	62	5
	63	5
6745-81-8510	62	6
	63	6
6745-81-8520	62	7
	63	7
6745-81-8531	62	8
	63	8
6745-81-8540	62	10
	63	10
6745-81-8550	62	11
	63	11
6745-81-8562	62	16
	63	16
6745-81-8570	63	1
6745-81-9230	130	4
6745-81-9240	130	1
6745-81-9380	96	13
6745-81-9390	130	3
6745-81-9430	130	15
6745-81-9440	133	5
6745-81-9511	133	17
6745-81-9560	130	36
	133	12
6745-81-9580	97	8
	130	35
6745-81-9710	130	6
6745-81-9720	130	20
6745-81-9730	130	21
6745-81-9740	130	22
6745-81-9750	130	23
6745-81-9770	130	25
6745-81-9790	130	26
6745-81-9810	130	24
6754-11-1160	46	8
6754-11-3120	95	4
6754-11-5150	55	4
6754-71-1991	96	9
6754-71-5430	97	12
6754-71-5540	96	12
6754-71-6140	101	11
6754-71-6330	101	9
6754-71-9710	103	1
6754-79-6140	100	1
	136	4
	137	4
	151	2
	152	2
6754-81-2701	133	21
6754-81-9110	133	14
6754-81-9130	133	15
6754-81-9170	133	13
6754-81-9180	133	16
6754-81-9410	133	1
6930-21-4120	549	5
6933-11-4410	54	3
700-11-31940	238	12
700-11-31980	238	29
700-22-11410	567	2
	567	7
	570	8
	589	2
	589	6
	593	8
	605	2
	605	6
	610	8
	625	2
	625	6
	630	8
700-25-11120	588	9
700-80-51390	231	13
700-80-61260	164	18
	568	6
	591	6
	608	6
	628	6
700-80-61430	568	7
	591	7
	608	7
	628	7
700-80-64220	567	3
	567	8
	570	9
	589	3
	589	7
	593	9
	605	3
	605	7
	610	9
	625	3
	625	7
	630	9
700-85-11111	604	9
	624	9
702-16-01230	504	
	524	
702-16-02290	401	1
	455	1
702-16-06270	495	
	528	
702-16-06280	500	
	501	
	518	
	519	
702-16-51140	504	3
	524	3
702-16-51240	495	19
	500	20
	518	20
	528	19
702-16-51270	504	8
	524	8
702-16-52420	229	8
702-16-53120	504	2
	524	2
702-16-53170	504	7
	524	7
702-16-53240	497	18
	503	23
	509	20
	512	20
	513	18
	521	23
	530	20
	534	18
702-16-54540	504	1
	524	1
702-16-54550	504	4
	524	4
702-16-54560	504	6
	524	6
702-16-54571	504	5
	524	5
702-16-54580	504	9
	524	9
702-16-54590	504	10
	524	10
702-16-54610	504	11
	524	11
702-16-54620	504	12
	524	12
702-16-54630	504	13
	524	13
702-16-54641	504	14
	524	14
702-16-54650	504	17
	524	17
702-16-54660	504	16
	524	16
702-16-54670	504	
	524	
702-16-55270	572	5
	595	5
	612	5
	632	5
702-16-58820	500	17
	518	17
702-16-59330	401	3
	455	3
702-16-59670	500	23
	518	23
702-16-61270	401	6
	455	6
702-16-62730	401	4
	455	4
702-16-62740	401	5
	455	5
702-16-71150	495	15
	528	15
702-16-71280	495	16
	528	16
702-16-72810	496	36
	529	36
702-21-07610	572	3
	595	3
	612	3
	632	3
702-21-11700	313	
702-21-35130	313	8
702-21-53120	300	32

Part Number	Page	Index
702-21-54180	164	25
702-21-55420	300	34
702-21-55440	300	35
702-21-55450	571	12
	594	12
	611	12
	631	12
702-21-55520	300	33
702-21-55620	238	25
	305	7
	313	17
	566	2
	571	17
	573	6
	588	2
	594	17
	596	6
	604	2
	611	17
	613	6
	624	2
	631	17
	633	6
702-21-56220	164	21
702-21-56241	164	17
702-21-57700	303	22
702-21-81130	313	1
702-21-81330	313	10
702-21-81540	313	2
702-21-81550	313	7
702-21-81560	313	9
702-21-81570	313	12
702-21-81580	313	13
702-21-81610	313	5
702-21-81620	313	16
702-21-81630	313	19
702-75-03102	298	1
702-75-11520	568	37
	571	5
	591	37
	594	5
	609	37
	611	5
	629	37
	631	5
705-11-33240	250	
705-11-33540	251	
705-17-02011	250	1
705-17-02122	251	3
705-17-02221	250	3
705-17-02330	250	16
705-17-02353	250	
	250	
	251	
	251	
705-17-02360	250	9
	251	9
705-17-02420	251	13
705-17-02430	250	7
	251	7
705-17-02460	250	8
	251	8
705-17-02510	251	1
705-17-02612	250	6
	251	6
705-17-02830	250	14
705-17-02870	250	13
705-17-02881	251	17
705-17-33012	250	2
	251	2
705-17-33430	250	4
705-17-33450	251	4
705-17-33512	250	5
	251	5
705-29-03310	306	1
705-51-20830	250	
	251	
706-73-72420	296	8
706-7G-11291	296	25
707-00-0H990	715	
707-00-0J361	717	
707-00-0J370	724	
707-02-00930	704	
707-02-00940	706	
707-02-00970	709	
707-02-00980	711	
707-04-00270	714	
	716	
707-11-11F61	717	1
707-11-12A70	714	1
	716	1
707-11-12A80	724	1
707-11-13860	715	1
707-12-85010	704	1
707-12-85020	706	1
707-12-90280	709	1
707-12-90290	711	1
707-29-10A40	709	9
	711	9
707-29-11A00	717	10
707-29-12660	714	6
	716	6
	724	8
707-29-13280	715	10
707-29-85320	704	12
	706	12
707-35-52770	704	20
	706	20
	806	
707-35-91510	714	12
	716	12
	724	14
	807	
	807	
707-36-12840	714	16
	716	16
	724	18
707-36-13240	715	20
707-37-11111	717	20
707-37-85010	704	22
	706	22
707-37-90150	709	19
	711	19
707-39-12520	714	18
	716	18
	724	20
	807	
	807	
707-39-85120	704	28
	706	28
	806	
707-40-11321	717	30
707-40-85020	704	29
	706	29
	709	29
	711	29
707-44-11150	717	25
	807	
707-44-12250	714	17
	716	17
	724	19
	807	
	807	
707-44-13150	715	21
	807	
707-44-85150	704	27
	706	27
	806	
707-44-90150	709	24
	711	24
	807	
707-46-05040	715	4
	717	4
707-46-06020	699	7
707-46-50020	709	4
	711	4
707-51-60030	704	15
	706	15
	709	12
	711	12
	806	
	807	
707-51-60650	704	17
	706	17
	709	13
	711	13
	806	
	807	
707-51-65030	717	12
	807	
707-51-65650	717	17
	807	
707-51-70030	714	9
	715	13
	716	9
	724	11
	807	
	807	
	807	
707-51-70650	714	11
	715	14
	716	11
	724	13
	807	
	807	
	807	
707-52-90230	704	35
	706	35
	709	32
	711	32
707-52-90351	704	18
	706	18
	709	14
	711	14
707-52-90401	717	18
707-52-90451	714	14
	716	14
	724	16
707-52-90461	715	15
707-56-60740	704	14
	706	14
	709	11
	711	11
	806	
	807	
707-56-65740	717	11
	807	
707-56-70740	714	8
	715	12
	716	8
	724	10
	807	
	807	
	807	
707-58-65901	717	3
707-58-70A10	715	3
707-58-70A20	724	3
707-60-60030	704	3
	706	3
707-60-70110	714	3
	716	3
707-66-60140	704	4
	706	4
707-67-33040	704	34
	706	34

Part Number	Page	Index
	709	26
	711	26
707-67-48020	717	27
707-67-52030	714	19
	715	23
	716	19
	724	21
707-69-11011	717	28
707-69-85010	704	33
	706	33
	709	28
	711	28
707-69-85020	704	32
	706	32
	709	27
	711	27
707-75-60110	704	21
	706	21
	709	15
	711	15
707-75-65110	717	19
707-75-70110	714	15
	715	19
	716	15
	724	17
707-80-16020	717	21
707-81-45251	717	29
707-86-01070	717	32
707-86-55780	724	22
707-86-55790	704	36
707-86-55800	706	36
707-86-55850	709	33
707-86-55860	711	33
707-88-11290	704	5
	706	5
707-88-11300	704	6
	706	6
707-88-38850	704	31
	706	31
	709	30
	711	30
707-91-90040	704	
	706	
707-91-90050	709	
	711	
707-91-91111	717	
707-99-27110	806	K09
707-99-27530	806	K10
707-99-36680	807	K13
707-99-43310	807	K14
707-99-43320	807	K11
707-99-43730	807	K12
708-1L-00680	288	
	289	
	290	
	291	
	292	
	293	
	294	
708-1L-01680	288	
	289	
	290	
	291	
	292	
708-1S-00290	300	
	302	
	303	
	304	
	305	
708-1S-03390	303	
708-1S-04330	300	
708-1S-04360	303	1
708-1S-11890	166	9
708-1S-12330	302	6
708-1S-12340	302	7

Part Number	Page	Index
708-1S-12350	302	9
708-1S-17110	301	39
708-1S-18180	164	31
708-1S-19920	300	16
708-21-12541	164	22
	296	4
	305	13
	568	30
	591	30
	608	30
	628	30
708-21-12970	302	8
708-25-52861	290	5
708-2H-03620	293	
708-2L-22160	290	6
708-2L-23131	297	32
708-2L-23351	297	36
708-2L-23360	166	14
	296	31
708-2L-25490	164	24
708-2L-29460	164	30
708-2L-33350	297	37
708-7L-00070	296	
	298	
708-7L-04180	296	
708-7L-05010	296	24
708-7L-11130	296	1
708-7L-11514	296	2
708-7L-12111	296	21
708-7L-12140	296	23
708-7L-12220	296	
708-7L-12230	296	
708-7L-12240	296	
708-7L-12250	296	
708-7L-12260	296	
708-7L-12270	296	
708-7L-13111	296	28
708-7L-13140	297	34
708-7L-13160	297	33
708-7L-13220	296	29
708-7L-13410	297	39
708-7L-16211	296	12
708-7L-16220	296	13
708-7L-16311	296	14
708-7L-16510	296	9
708-7R-11210	164	5
708-7R-11220	238	27
708-7R-18230	164	32
708-7S-00352	164	
	166	
708-7S-01151	164	
708-7S-01241	164	
708-7S-05110	166	7
708-7S-11740	164	1
708-7S-12140	166	5
708-7S-12220	166	6
708-7S-12330	166	4
708-7S-13120	166	11
708-7S-13250	166	12
708-7S-13350	166	20
708-7S-13360	166	19
708-7S-13420	166	21
708-7S-13530	166	15
708-7S-13550	166	18
708-7S-13560	166	16
708-7S-18120	164	10
708-7S-18310	164	11
708-7S-18320	164	12
708-7T-02271	164	36
708-7T-12330	166	8
708-8E-16150	229	5
	238	5
	238	10
	240	2
	288	7

Part Number	Page	Index
	289	8
708-8E-16160	573	4
	596	4
	613	4
	633	4
708-8F-12151	296	22
708-8F-12230	296	26
708-8F-16170	296	10
708-8F-33310	297	38
708-8K-16280	296	5
709-25-11390	572	2
	595	2
	612	2
	632	2
709-26-11450	564	15
	586	15
	590	7
	602	15
	607	7
	622	15
	627	7
709-32-12861	164	7
711-47-11770	244	41
711-49-14230	247	2
711-53-11370	218	8
	245	27
712-85-12560	233	4
714-07-28703	580	4
714-07-28713	580	
	798	1
714-07-45500	238	7
714-12-12930	222	14
714-12-39230	237	2
	807	
	808	
714-21-19810	237	3
	807	
	808	
714-23-15690	238	4
	238	9
720-2M-11550	313	14
720-68-19610	166	13
	296	30
721-58-60780	709	3
	711	3
722-10-91130	164	6
722-12-12063	576	4
	598	4
	616	4
	636	4
723-11-15110	220	28
	226	2
	229	1
723-11-18430	164	27
723-11-27280	571	14
	594	14
	611	14
	631	14
723-20-63100	570	7
	593	7
	610	7
	630	7
723-20-66500	567	1
	589	1
	605	1
	625	1
723-20-66600	589	5
	605	5
	625	5
723-20-70600	570	1
	593	1
	610	1
	630	1
723-20-80100	567	9
	589	9

Part Number	Page	Index
	590	28
	605	9
	607	28
	625	9
	626	27
	627	28
723-21-08200	626	
723-21-08300	590	
	607	
	627	
723-21-08400	606	
723-23-10700	563	
	564	
	565	
	566	
	567	
	568	
	570	
	571	
	572	
	573	
723-24-11500	585	
	586	
	587	
	588	
	589	
	590	
	591	
	593	
	594	
	595	
	596	
723-25-10900	601	
	602	
	603	
	604	
	605	
	606	
	607	
	608	
	610	
	611	
	612	
	613	
723-25-11100	621	
	622	
	623	
	624	
	625	
	626	
	627	
	628	
	630	
	631	
	632	
	633	
723-26-14150	590	26
	607	26
	626	25
	627	26
723-26-14220	565	10
	587	10
	603	10
	623	10
723-26-14230	565	9
	587	9
	590	15
	603	9
	606	14
	607	15
	623	9
	626	14
	627	15
723-26-14240	565	11
	587	11
	603	11
	623	11
723-26-14470	568	11
	591	11
	608	11
	628	11
723-26-14560	564	13
	586	13
	602	13
723-26-14570	564	14
	586	14
	602	14
723-26-14580	564	16
	586	16
	590	6
	602	16
	606	6
	607	6
	622	16
	627	6
723-26-14590	568	4
	591	4
	608	4
	628	4
723-26-14660	622	13
723-26-14670	622	14
723-26-14680	626	6
723-26-15110	564	9
	586	9
	590	8
	602	9
	606	7
	607	8
	622	9
	626	7
	627	8
723-26-15121	564	5
	586	5
	590	5
	602	5
	606	5
	607	5
	622	5
	626	5
	627	5
723-26-15130	564	3
	586	3
	590	3
	602	3
	606	3
	607	3
	622	3
	626	3
	627	3
723-26-15190	566	4
	588	4
	604	4
	624	4
723-26-15210	590	24
	607	24
	626	23
	627	24
723-26-15220	568	28
	590	25
	591	28
	607	25
	608	28
	626	24
	627	25
	628	28
723-26-15230	565	1
	568	8
	571	21
	587	1
	590	17
	591	8
	594	21
	603	1
	606	16
	607	17
	608	8
	611	21
	623	1
	626	16
	627	17
	628	8
	631	21
723-26-15310	565	12
	587	12
	603	12
	606	23
	623	12
723-26-15370	565	2
	587	2
	590	16
	603	2
	606	15
	607	16
	623	2
	626	15
	627	16
723-26-15830	563	4
	585	4
	590	20
	601	4
	606	19
	607	20
	621	4
	626	19
	627	20
723-26-15840	563	7
	568	34
	585	7
	590	19
	591	34
	601	7
	606	18
	607	19
	609	34
	621	7
	626	18
	627	19
	629	34
723-26-15850	568	5
	591	5
	608	5
	628	5
723-26-15860	568	3
	591	3
	608	3
	628	3
723-26-16760	564	8
	586	8
	602	8
	622	8
723-26-16770	564	6
	586	6
	602	6
	622	6
723-26-16780	564	7
	586	7
	602	7
	622	7
723-26-16790	564	11
	586	11
	602	11
	622	11
723-26-21160	568	1
	591	1
	608	1

Part Number	Page	Index
	628	1
723-26-21250	563	1
	585	1
	601	1
	621	1
723-26-21360	563	2
	585	2
	601	2
	606	1
	621	2
723-26-21420	590	1
	607	1
	626	1
	627	1
723-26-21750	566	1
	604	1
	624	1
723-26-22270	590	2
	607	2
	626	2
	627	2
723-26-22830	564	1
	586	1
	602	1
	622	1
723-26-22840	564	2
	586	2
	602	2
	606	2
	622	2
723-26-22850	568	2
	591	2
	608	2
	628	2
723-26-22860	568	10
	591	10
	608	10
	628	10
723-26-41160	565	4
	587	4
	590	12
	603	4
	606	11
	607	12
	623	4
	626	11
	627	12
723-26-41210	565	5
	587	5
	603	5
	623	5
723-26-51240	565	6
	587	6
	603	6
	606	12
	623	6
723-26-51250	565	8
	587	8
	590	14
	603	8
	606	13
	607	14
	623	8
	626	13
	627	14
723-26-51510	565	7
	587	7
	603	7
	623	7
723-26-51610	590	13
	607	13
	626	12
	627	13
723-36-14120	571	9
	594	9
	611	9
	631	9
723-36-15210	568	18
	591	18
	608	18
	628	18
723-36-15230	568	16
	591	16
	608	16
	628	16
723-36-15250	568	19
	591	19
	608	19
	628	19
723-36-15340	568	17
	591	17
	608	17
	628	17
723-36-41930	313	6
723-40-85100	572	
	595	
	612	
	632	
723-40-85110	572	1
	595	1
	612	1
	632	1
723-46-15240	567	5
723-50-02800	568	
723-51-06500	571	
	572	
	594	
	595	
	611	
	612	
	631	
	632	
723-56-12210	573	1
	596	1
	613	1
	633	1
723-56-22170	571	7
	594	7
	611	7
	631	7
723-56-31211	571	8
	594	8
	611	8
	631	8
723-56-31510	571	10
	594	10
	611	10
	631	10
723-56-31630	300	28
	303	11
723-56-31640	571	28
	594	28
	611	28
	631	28
723-56-31720	571	3
	594	3
	611	3
	631	3
723-56-31730	568	36
	571	4
	591	36
	594	4
	609	36
	611	4
	629	36
	631	4
723-56-31980	301	38
723-56-32820	571	11
	594	11
	611	11
	631	11
723-56-33940	573	2
	596	2
	613	2
	633	2
723-56-41590	571	24
	594	24
	611	24
	631	24
723-56-41710	571	20
	594	20
	611	20
	631	20
723-56-41730	571	25
	594	25
	611	25
	631	25
723-56-41970	571	26
	594	26
	611	26
	631	26
723-56-42150	571	19
	594	19
	611	19
	631	19
723-56-42330	571	23
	594	23
	611	23
	631	23
723-60-21102	573	10
	596	10
	613	10
	633	10
723-60-21900	568	12
	591	12
	608	12
	628	12
723-60-27200	305	1
7825-30-1441	403	43
	457	43
7826-23-3011	428	1
	475	1
7830-74-4000	415	1
	436	1
	443	1
	465	1
7831-69-5000	422	14
	444	14
7831-69-5021	470	1
7835-33-1001	446	
7835-33-1100	446	1
7835-33-1201	446	2
7835-33-1300	446	
7835-33-1310	446	3
7835-33-1320	446	4
7835-33-1330	446	5
7835-33-1340	446	6
7835-33-8100	445	1
7861-74-5100	420	7
	468	7
	468	20
7861-93-1811	307	20
7861-93-1850	256	1
7861-93-3320	256	3
	285	45
	287	46
7861-93-5390	194	1
	201	1
799-203-8500	167	13
8233-06-3350	416	24
	423	11
	437	24
	439	11
	466	25
	471	9

Part Number	Page	Index
8288-43-1120	226	32
8A13-10-2100	428	9
	475	11
KD0-0020-05062	129	39
KD0-0055-05082	127	48
	128	37
KD0-0055-05122	122	28
KD0-0080-06142	122	22
KD0-0083-08802	122	13
KD0-0270-06402	127	43
KD0-0270-06602	129	43
KD0-0274-06202	126	17
	128	15
KD0-0275-06802	121	12
KD0-0276-08402	128	32
KD0-0280-16022	121	17
KD0-0290-20022	122	34
KD0-0291-08010	122	27
KD0-09001-4380	128	30
KD0-09001-4580	126	30
KD0-09006-0660	127	49
	129	47
KD0-09006-0670	127	50
	129	48
KD0-09011-3140	128	27
KD0-09057-0110	128	33
KD0-09057-0190	128	38
KD0-09057-0220	121	29
KD0-09170-2501	121	21
KD0-09201-0760	122	9
KD0-09201-0770	122	4
KD0-09201-0850	128	12
KD0-09201-0980	121	4
KD0-09201-1140	121	7
KD0-09271-3620	126	22
	128	21
KD0-09275-1430	127	52
	129	50
KD0-23100-0251	126	20
KD0-23100-0430	128	18
KD0-23120-0180	128	8
KD0-23200-0331	126	23
KD0-23200-0671	128	20
KD0-23303-0020	128	5
KD0-23310-1730	126	6
KD0-23310-1740	128	9
KD0-23320-0220	126	9
KD0-23500-0970	126	7
KD0-23600-0410	128	13
KD0-23600-0460	126	12
KD0-23611-0690	126	13
KD0-23611-1101	128	14
KD0-23700-0130	126	32
KD0-23710-0221	128	29
KD0-23740-0250	126	26
KD0-23740-0351	128	23
KD0-23750-0250	126	27
KD0-23750-0490	128	24
KD0-23901-0170	127	40
KD0-23904-0070	126	1
KD0-23921-0230	126	15
KD0-23927-0071	126	2
KD0-23951-0301	126	8
KD0-23951-0331	126	11
KD0-25000-8332	127	47
KD0-25000-8521	129	42
KD0-33902-0080	122	18
KD0-33902-0090	122	17
KD0-33902-0100	122	24
KD0-35100-0300	121	1
KD0-35100-0310	122	1
KD0-35120-0250	122	11
KD0-35120-0290	121	18
KD0-35200-0320	122	12
KD0-35200-0460	121	5

Part Number	Page	Index
KD0-35300-0200	122	5
KD0-35300-0350	121	6
KD0-35411-0640	121	13
KD0-35411-0650	122	31
KD0-35421-0190	122	32
KD0-35421-0240	121	14
KD0-35700-0950	121	
KD0-35700-0970	122	
KD0-35710-1150	121	19
KD0-35710-1190	122	14
KD0-35730-0162	122	15
KD0-35730-0700	121	20
KD0-35761-0190	122	29
KD0-35761-0250	121	31
KD0-35784-0210	121	27
KD0-35784-0290	121	28
KD0-35923-0130	121	23
KD0-35926-0070	121	8
KD0-35926-0080	122	6
KD0-35926-0090	121	10
KD0-35943-0100	122	23
KD0-35943-0140	121	25
KD0-35943-0150	121	22
KD0-35943-0160	121	24
KD0-35943-0170	121	26
KD0-35943-0210	122	16
KD0-35951-0060	121	9
KD0-35951-0080	122	7
KD0-47100-4651	128	19
KD0-47100-4800	126	21
KD0-47761-2671	127	45
	129	45
KD0-47761-2681	127	46
	128	25
KD0-47761-2691	126	24
	128	26
KD0-47927-1390	129	44
KD1-0020-06452	122	19
KD1-0240-06305	126	33
	129	41
KD1-0240-08405	126	37
KD1-0330-06012	122	20
	127	42
KD1-0330-08022	127	39
	128	3
KD1-0330-16012	121	15
KD1-0331-08020	122	26
KD1-0335-06002	122	21
	127	41
KD1-0335-08002	122	25
	126	38
	128	2
KD1-0335-16002	121	16
KD1-0335-20002	122	33
KD1-0345-05001	129	40
KD1-0345-08001	128	4
KD1-0400-20100	126	19
KD1-0400-30100	128	17
KD1-0454-60067	126	10
KD1-0454-62007	126	31
KD1-0454-62047	126	16
KD1-0505-00601	126	28
KD1-09211-0081	128	28
KD1-09211-0980	126	14
KD1-09211-0981	129	46
KD1-09211-1120	128	22
KD1-09257-0050	127	51
	129	49
KD1-09279-0090	128	1
KD1-23111-0160	126	5
KD1-23181-0020	126	4
	128	7
KD1-23320-0290	128	11
KD1-23500-0970	128	10
KD1-23913-0040	126	25

Part Number	Page	Index
KD1-23914-0020	126	3
	128	6
KD1-23921-0130	126	34
	128	36
KD1-23921-0140	126	35
	128	35
KD1-23941-0040	126	36
	128	34
KD1-23951-0020	126	18
KD1-23951-0051	128	16
KD1-33923-0790	121	2
KD1-33923-0890	122	2
KD1-33926-0660	122	8
KD1-33926-0730	121	11
KD1-33926-0790	122	10
KD1-35921-0010	122	35
KD1-35923-0030	122	3
KD1-35923-0160	121	3
KD1-47921-0790	126	29
	128	31
KD1-47927-1250	127	44
KD7-35719-0181	122	30
KD7-35719-0211	121	30
ND017231-0700	391	28
	434	28
ND047372-0660	480	6
	487	6
ND047410-1570	480	4
	487	4
ND047410-1580	480	
	487	
ND047761-2760	477	3
ND047762-0540	477	4
ND047762-3000	477	5
ND047764-0021	477	7
ND047765-0020	477	8
ND047782-3720	477	11
ND063600-4580	391	35
	434	35
ND063800-0300	391	27
	434	27
ND077500-5650	391	36
	434	36
ND077500-5890	391	29
	434	29
ND077800-0750	391	33
	434	33
ND116140-0050	390	14
	434	14
ND116340-7350	391	38
	435	38
ND116576-3810	390	3
	434	3
ND116576-3820	390	4
	434	4
ND116576-3852	391	25
	434	25
ND116576-3862	391	26
	434	26
ND116650-6850	390	16
	434	16
ND116660-7570	390	15
	434	15
ND116662-7670	391	23
	434	23
ND116662-7681	391	24
	434	24
ND116662-8320	391	44
	435	44
ND116780-2481	390	17
	434	17
ND116780-2491	390	18
	434	18
ND116780-2501	390	19
	434	19

Part Number	Page	Index
ND116780-2510	390	20
	434	20
ND116780-3130	390	22
	434	22
ND116780-3920	391	31
	434	31
ND116781-3000	390	21
	434	21
ND146340-0560	391	34
	434	34
ND146657-8841	390	10
	434	10
ND146657-8850	390	12
	434	12
ND146657-8860	391	37
	434	37
ND146657-9811	390	11
	434	11
ND146667-0440	391	32
	434	32
ND146691-4470	480	12
	487	12
ND147310-0110	480	2
ND147310-1750	487	2
ND147350-1640	480	3
	487	3
ND245450-5831	390	1
	434	1
ND245450-5840	390	2
	434	2
ND246470-4311	391	42
	435	42
ND246790-2060	391	30
	434	30
ND247300-4152	487	
ND247300-5320	480	
ND445013-0521	477	10
ND445013-0811	477	9
ND445021-0060	477	12
ND445021-0070	477	13
ND445021-3941	390	13
	434	13
ND446010-3132	390	
	434	
ND446600-0991	390	5
	434	5
ND447220-4781	480	1
	487	1
ND447500-2750	390	8
	434	8
ND7922-571450	477	2
ND7930-591100	477	1
ND7935-163610	477	6
ND91310-05081	487	11
ND913100-5081	480	11
ND93950-05003	391	43
	435	43
ND949001-1730	391	41
	435	41
ND949008-0330	391	40
	435	40
ND949008-0460	391	39
	435	39
ND949013-7480	480	9
	487	9
ND949013-7500	480	
	487	
ND949013-7510	480	
	487	
ND949046-3100	390	9
	434	9
ND949047-2950	480	5
	487	5
ND949048-0430	480	10
	487	10
ND949070-0640	480	8
	487	8
ND949070-1360	480	7
	487	7
ND949142-0020	390	6
	434	6
ND949142-0030	390	7
	434	7
ND949142-0040	395	
REU419B-418-C	383	15
RFU419B-418-A	383	1
RFU419B-418-B	383	6
RFU419B-418-C	383	7
RFU419B-418-D	383	3
RFU419B-418-E	383	4
RFU419B-418-F	383	16

D65WX-16 Bulldozer
Form No. FEN01122-00

©2010 KOMATSU
All Rights Reserved
Printed in Japan 01-10