RUTHZIL TRATOR COMERCIAL DE PEÇAS LTDA 11 97083-6812 ROLANDO CITRANGULO

LEPBD68CE0
DEZEMBRO 2010

Parts Book

BULLDOZER

D68ESS-12E0

SERIAL NUMBERS J20001 and up

KOMATSU

LEPBD68CE0

PARTS BOOK

D68ESS-12E0
Serial No. J20001 and up

SA6D114E-2
Serial No. 26825008 and up

FOREWORD

When ordering a spare part, specify the part number, part name, and quantity required, and also specify your machine model code, machine serial number, engine serial number and the service meter reading.

This Parts Book describes not only standard items but also optional equipment and attachments. To order a part, please contact your nearest Komatsu distributor.

This Parts Book contains the information and special codes as follows:

ILLUSTRATION AND PARTS LIST

When you open this Parts Book, you will find an illustration following its figure number (FIG.) Each individual part in the illustration is given an index number. Following the illustration, the component parts of the unit are listed in the order of the index numbers shown in the illustration. The part number, part name, quantity and applicable serial number are given for each part as a parts list.

FIGURE NUMBER (FIG.)

The figure number (FIG.) is the number which shows the figure of the page. It is not the spare part number. The numbers are not always continuous.

PARTS LIST

Spare parts information are listed in the parts list page as follows:

Index:

This is the same as the index number in the illustration. The parts are listed in index number order.

Code:

Codes are used in this column and represent as follows:

A1 This part and the part specified in the line immediately above are interchangeable.

A2 The part specified in the line above can be used instead of this part.

A3 This part can be used instead of the part specified in the line immediately above.

A4 The part specified in the description column can be used instead of this part if it is used as a set.

B1 This shows discontinued part. The part specified in the above line is supplied instead.

B2 This shows a discontinued part. The part specified in the description column is supplied instead as a set.

C1 This part cannot be supplied as an individual part. It is supplied as an assembly.

C2 This part is supplied for authorized Komatsu distributors only. It cannot be supplied as an individual part. It is supplied as an assembly.

C3 This indicates a part supplied as semi-finished. It requires additional work before installation.

Part Number:

The number given in the part number column is the part number for the part shown. It is the identification code used when ordering that part. It is important that there be no mistake in this code number when ordering.

Description:

This gives the name of part that has the part number listed. The mark "•" is put in front of the component part name of an assembly part and the item is entered following the assembly. If a part marked with "•" is a sub assembly, its components are marked with "••".

Example: Tank Assembly
- •Tank
- •Cap
- ••Packing

Furthermore, the following marks and abbreviations are used in this column.

Kit	This indicates kit parts. For kit parts, refer to the section FIELD REPAIR SERVICE PARTS in this Parts Book.
D	Diameter
L	Length
LHS	Left-hand side
RHS	Right-hand side
T	Thickness
W	Width

Quantity (Qty):

This specifies the number of pieces used for one machine. However, if a part is included in the assembly and/or component, the quantity per such assembly and/or component is specified.
Code AR (as required) shall be used in the Quantity column if the part cannot be specified numbers requires per machine and/or component. In such case, any number of quantities may be ordered depend on the field service requirement.

Serial Numbers:

Applicable engine serial number is indicated for the engine volume. In the chassis volume, this indicates the machine serial number in which the part is used.

If the serial number is enclosed in parenthesis, it shows that it is the applicable serial number for exclusive use of the equipment of figure number (FIG.)

AVANT-PROPOS

Lorsque vous passez une commande d'une pièce de rechange, vous êtes prié de spécifier le numéro de la pièce, la désignation de la pièce et la quantité requise et d'indiquer également le code du modèle de la machine, le numéro de série de la machine, le numéro de série du moteur et la lecture du compteur de service du véhicule.

Sur le présent catalogue des pièces figurent non seulement les équipements standard, mais également les équipements et accessoires en option. Si vous désirez un équipement ou une pièce quelconque, vous êtes prié de prendre contact avec le concessionnaire Komatsu le plus proche.

Ce catalogue des pièces comprend les informations et codes spéciaux de la manière suivante:

FIGURES ET LISTES DES PIÈCES

Lorsque vous ouvrez le présent catalogue, vous pouvez rechercher les figures en fonction du numéro de figure (FIG.). Chaque pièce individuelle dans la figure est fournie d'un numéro de référence. D'après la figure, les éléments de l'unité sont énumérés dans l'ordre des numéros de référence montrés sur la figure. Le numéro de la pièce, la désignation de la pièce, la quantité et le numéro de série utilisés sont indiqués pour chaque pièce comme liste des pièces.

NUMÉRO DE FIGURE (FIG.)

Le numéro de figure (FIG.) est un numéro qui permet d'identifier une figure sur une page. Il ne représente pas le numéro de la pièce de rechange. Les numéros ne sont pas toujours séquentiels.

LISTE DES PIÈCES DE RECHANGE

Les informations des pièces de rechange sont données dans la page de la liste des pièces comme ci-après:

Numéro de référence (Index):

Les numéros de référence correspondent aux numéros de référence notés sur la figure et sont énumérés dans l'ordre des numéros de référence.

Codification (Code):

Les codes sont utilisés dans cette colonne et représentent comme ci-après:

A1 Cette pièce et la pièce qui figure sur la ligne juste au-dessus sont interchangeables.

A2 La pièce indiquée sur la ligne au-dessus peut être utilisée au lieu de cette pièce.

A3 Cette pièce peut être utilisée au lieu de la pièce indiquée sur la ligne juste au-dessus.

A4 La pièce indiquée dans la colonne de description peut être utilisée au lieu de cette pièce si elle est utilisée comme ensemble.

B1 Ceci montre la pièce dont la production est interrompue. La pièce indiquée dans la ligne au-dessus est fournie à sa place.

B2 Ceci montre la pièce dont la production est interrompue. La pièce indiquée dans la colonne de description est fournie à sa place comme ensemble.

C1 Cette pièce ne peut pas être fournie comme pièce individuelle. Elle est fournie en tant qu'ensemble.

C2 Cette pièce est fournie pour les distributeurs autorisés de Komatsu seulement. Elle ne peut pas être fournie comme pièce individuelle. Elle est fournie en tant qu'ensemble.

C3 Ceci indique une pièce fournie à l'état semi-fini. Ceci exige un travail additionnel avant l'installation.

Numéros de pièce (Part Number):

Les numéros indiqués dans cette colonne correspondent aux numéros des pièces représentées et constituent les codes à spécifier pour toute commande de pièce. Il est important de ne pas faire d'erreur avec ce code au moment de la commande.

Description (Description):

Ceci indique le nom de la pièce qui montre le numéro de la pièce énumérée. La marque "•" est placée devant le nom de la pièce du composant d'une pièce d'ensemble et l'item est introduit suivant l'ensemble. Si une pièce marquée avec "•" est un sous-ensemble, ses composants sont marqués avec "• •".
Exemple: Tank Assembly (Ensemble de réservoir)
• Tank
• Cap
• • Packing

En outre, les marques et abréviations suivantes sont utilisées dans cette colonne.

Kit Ceci indique les pièces de kit. Pour les pièces de kit, se référer à la Section FIELD REPAIR SERVICE PARTS de ce Catalogue des Pièces.
D Diamètre
L Longueur
LHS Côté gauche
RHS Côté droit
T Épaisseur
W Largeur

Quantité (Qty):

Ceci spécifie le nombre de pièces nécessaires pour l'équipement en question. S'il s'agit de pièces comprises dans un ensemble et/ou composant, et la quantité indiquée est le nombre de pièces nécessaires pour l'ensemble et/ou le composant en question.
Le code AR (comme requis) sera utilisé dans la colonne de Quantité si la pièce ne peut pas se présenter en nombres indiqués comme requis par machine et/ou composant. Dans ce cas, tout nombre de quantités peut être commandé selon la condition de service de champ.

Numéros de série (Serial Numbers):

Le numéro de série du moteur applicable est indiqué pour le volume du moteur. Dans le volume de la carrosserie, ceci indique le numéro de série de l'équipement sur lequel la pièce est utilisée.

Si le numéro de série est placé entre parenthèses, cela signifie qu'il s'agit d'un numéro de série destiné exclusivement à l'utilisation de l'équipement mentionné dans le numéro de figure (FIG.).

PREFAZIONE

Quando fate un ordinazione di una parte di ricambio, siete pregati di precisare il numero della parte, la designazione della parte e la quantità necessaria ed indicare anche il codice del modello della macchina, il numero di serie della macchina, il numero di serie del motore e la lettura dell'indicatore di servizio del veicolo.

Sul presente catalogo delle parti appaiono non solo le attrezzature standard, ma anche le attrezzature ed accessori in opzione. Se desiderate un'attrezzatura o una parte qualunque, siete pregati di prendere contatto con il concessionario Komatsu più vicino.

Questo catalogo delle parti comprende le informazioni ed i codici speciali nel modo seguente:

ILLUSTRAZIONI ED ELENCO DELLE PARTI

Quando aprite il presente catalogo, troverete una figura secondo il suo numero di figura (FIG.). Ogni parte individuale nella figura è fornita di un numero di riferimento. Secondo la figura, gli elementi dell'unità sono enumerati nell'ordine dei numeri di riferimento mostrati sulla figura. Il numero della parte, la designazione della parte, la quantità ed il numero di serie utilizzati sono indicati per ogni parte come elenco delle parti.

NUMERO DI FIGURA (FIG.)

Il numero di figura (FIG.) è il numero che indica la figura della pagina. Non rappresenta il numero della parte di ricambio. I numeri non sono sempre continui.

ELENCO DELLE PARTI DI RICAMBIO

Le informazioni dei pezzi di ricambio sono elencate nella pagina dell'elenco dei pezzi come segue:

Numero di riferimento (Index):

I numeri di riferimento corrispondono ai numeri di riferimento notati sulla figura e sono enumerati nell'ordine dei numeri di riferimento.

Codice (Code):

I codici sono usati in questa colonna e rappresentano come segue:

A1 Questa parte ed la parte specificata nella linea immediatamente sopra sono intercambiabili.

A2 La parte specificata nella linea sopra può essere usata anziché questa parte.

A3 Questa parte può essere usata anziché la parte specificata nella linea immediatamente sopra.

A4 La parte specificata nella colonna di descrizione può essere usata anziché questa parte se è usata come insieme.

B1 Ciò mostra la parte non più in produzione. La parte specificata nella suddetta linea è invece fornita.

B2 Ciò mostra una parte non più in produzione. La parte specificata nella colonna di descrizione è fornita invece come insieme.

C1 Questa parte non può essere fornita come pezzo individuale. È fornita come insieme.

C2 Questa parte è destinata solo ai distributori autorizzati Komatsu. Non può essere fornita come parte individuale. È fornita come insieme.

C3 Ciò indica una parte fornita come semifinito. Richiede un lavoro supplementare prima dell'installazione.

Numeri di parte (Part Number):

I numeri indicati in questa colonna corrispondono ai numeri delle parti rappresentate e costituiscono i codici da precisare per qualsiasi ordinazione di parte. È importante non fare un errore con questo codice al momento dell'ordinazione.

Descrizione (Description):

Ciò dà il nome della parte che presenta il numero di parte elencato. Il contrassegno "•" è messo davanti al nome della parte componente di una parte di gruppo e l'articolo è inserito dopo il gruppo. Se un pezzo segnato con "•" è un sotto-gruppo, i suoi componenti sono segnati con "• •".

Esempio: Tank Assembly
- • Tank
- • Cap
- • • Packing

Inoltre, i seguenti contrassegni ed abbreviazioni sono usati in questa colonna.

Kit Ciò indica le parti di kit. Per le parti di kit, riferirsi alla sezione PARTI DI RICAMBIO PER SERVIZIO DI RIPARAZIONE IN SEDE in questo Catalogo delle Parti.
D Diametro
L Lunghezza
LHS Lato a sinistra
RHS Lato a destra
T Spessore
W Larghezza

Quantità (Qty):

Questo precisa il numero di parti necessarie per l'attrezzatura in questione. Se si tratta di parti comprese in un insieme e/o componente, e la quantità indicata è il numero di parti necessarie per l'insieme e/o il componente in questione.
Il codice AR (come richiesto) sarà utilizzato nella colonna di Quantità se la parte non può presentarsi in numeri indicati come richiesto per macchina e/o componente. In questo caso, qualsiasi numero di quantità può essere ordinato secondo la condizione di servizio di campo.

Numeri di serie (Serial Numbers):

Il numero di serie del motore applicabile è indicato per il volume del motore. Nel volume della carrozzeria, questo indica il numero di serie dell'attrezzatura sulla quale la parte è utilizzata.

Se il numero seriale è racchiuso tra parentesi, indica che è il numero di serie applicabile per uso esclusivo dell'attrezzatura del numero di figura (FIG.)

Bei der Bestellung von Teilen bitte die Teilenummer, die Teilebezeichnung und die Menge des jeweiligen Teils sowie die Modellnummer, die Seriennummer der Maschine, die Seriennummer des Motors und den Stand des Betriebsstundenzählers angeben.

In dieser Ersatzteilliste ist nicht nur das Standardzubehör aufgeführt, sondern auch als Sonderausstattung erhältliche Teile und Einrichtungen. Bestellungen nimmt Ihr zuständiger Komatsu-Händler entgegen.

Die folgenden Informationen und Kodes sind in der Ersatzteilliste enthalten:

Bilder und Ersatzteilliste

Beim Aufschlagen des Ersatzteilkatalogs finden Sie nach der Bildnummer (BILD) geordnete Bilder. Jedes Einzelteil einer Baugruppe ist mit einer Kennzahl versehen. Ausgehend von den Bildern sind die Bauteile der Baugruppe aufgeführt, und zwar geordnet nach den in den Bildern angegebenen Kennzahlen. Jedes Einzelteil wird mit Teilenummer, Teilebezeichnung und entsprechender Seriennummer angegeben.

Bildnummer (BILD)

Mit der Bildnummer (BILD) können Bilder auf einer Seite identifiziert werden. Es handelt sich dabei nicht um die Nummer des Lieferteils. Auch sind die Bilder nicht fortlaufend nummeriert.

Ersatzteilliste

Angaben zu den Ersatzteilen sind auf der Auflistungsseite wie folgt dargestellt::

Kennzahl (Index):

Hierbei handelt es sich um die Kennzahlen aus den Bildern. Die Bauteile sind nach diesen Kennzahlen geordnet aufgeführt.

Kode (Code):

In dieser Spalte werden Kodes mit den folgenden Bedeutungen benutzt:

A1 Dieses Teil ist mit dem in der vorangegangenen Zeile aufgeführten Teil austauschbar.

A2 Das in der vorangegangen Zeile aufgeführte Teil kann anstelle dieses Teils verwendet werden.

A3 Dieses Teil kann anstelle des in der vorangegangenen Zeile aufgeführten Teils verwendet werden.

A4 Anstelle dieses Teils kann das in der Spalte „Beschreibung“ aufgeführte Teil verwendet werden, wenn das Teil zusammen mit anderen Teilen als ein Bauteilsatz verwendet wird.

B1 Dieses Teil kann nicht mehr geliefert werden. Stattdessen wird das in der vorangegangenen Zeile aufgeführte Teil geliefert.

B2 Dieses Teil kann nicht mehr geliefert werden. Stattdessen wird das in der Spalte „Beschreibung“ aufgeführte Teil als ein Bauteilsatz geliefert.

C1 Dieses Teil kann nicht als Einzelteil, sondern nur als Baugruppe geliefert werden.

C2 Dieses Teil wird nur an autorisierte Komatsu-Händler geliefert. Es kann nicht als Einzelteil, sondern nur als Baugruppe geliefert werden.

C3 Hiermit werden Teile gekennzeichnet, die in vorbearbeitetem Zustand geliefert werden und für den Einbau nachbearbeitet werden müssen.

Teilenummer (Part Number):

Die in der Spalte „Teilenummer“ aufgeführte Nummer entspricht der Teilenummer für das betreffende Teil. Diese Nummer dient zur Identifizierung des Teils bei einer Bestellung. Deshalb sollte bei der Bestellung stets auf die genaue Angabe der Teilenummer geachtet werden.

Beschreibung (Description):

Hierunter wird die Bezeichnung des Teils mit der aufgeführten Teilenummer angegeben. Jedes Baugruppen-Bauteil ist mit dem vorangestellten Symbol „·“ gekennzeichnet und wird hinter der entsprechenden Baugruppe aufgeführt. Handelt es sich bei dem mit „·“ gekennzeichneten Bauteil um eine Baugruppe, sind die Bauteile dieser Baugruppe mit „· ·“ gekennzeichnet.
Beispiel: Tank Assembly
· Tank
· Cap
· · Packing

Zusätzlich werden die folgenden Zeichen und Abkürzungen in dieser Spalte verwendet:

Kit Hiermit werden Teile gekennzeichnet, die nur als Satz erhältlich sind. Siehe dazu den Abschnitt „FIELD REPAIR SERVICE PARTS“ dieses Ersatzteilkatalogs.
D Durchmesser
L Länge
LHS linke Seite
RHS Rechte Seite
T Dicke
W Breite

Menge (Qty):

Hierunter wird die Anzahl der Bauteile für eine Maschine angegeben. Im Falle einer Baugruppe oder eines Aggregats wird allerdings die Anzahl der Teile pro Baugruppe angegeben.
Der Kode AR (nach Bedarf) wird in dieser Spalte dann benutzt, wenn keine genaue Angabe darüber möglich ist, wie groß der Mengenbedarf pro Maschine und/oder Baugruppe ist. In diesem Fall kann eine beliebige Menge je nach Bedarf bestellt werden.

Serial Numbers (Seriennummern):

Im Ersatzteilkatalog für den Motor versteht man hierunter die Seriennummer des Motors, in den das betreffende Teil eingebaut ist. Im Ersatzteilkatalog für die Maschine versteht man hierunter die Seriennummer der Maschine, in die das entsprechende Teil eingebaut ist.
Wenn die Seriennummer in Klammern angegeben ist, ist diese Seriennummer ausschließlich für das in der Bildnummer (BILD) angegebene Zubehör bestimmt.

Ao solicitar uma peça, informe o número, nome e quantidade da peça necessária, bem como o código de modelo da máquina e seu número de série, o número do motor e a leitura do medidor de serviço.

Este catálogo de peças não somente especifica os acessórios padrões mas também as peças opcionais e aditamentos. Para pedir uma peça, entre em contato com o revendedor Komatsu mais próximo.

Este catálogo de peças contém as seguintes informações e códigos especiais:

LISTA DE PEÇAS E ILUSTRAÇÕES

Ao abrir este catálogo de peças, encontrar-se-á uma ilustração seguida do número da figura (FIG.). A cada peça individual na ilustração corresponde um número de índice. Seguindo a ilustração, as peças componentes da unidade são listadas na ordem dos números de índice nela indicados. O número, nome, quantidade e número de série aplicável da peça são aprsentados como uma lista de peças.

NÚMERO DA FIGURA (FIG.)

O número da figura (FIG.) é o número que mostra a ilustração da página. Não é um número para fornecimento de peças sobressalentes. Os números nem sempre são contínuos.ebene Zubehör bestimmt.

LISTA DE PEÇAS

As informações das peças sobressalentes são relacionadas na página com a lista de peças de acordo com o seguinte:

Índice (Index):

Este é o mesmo que o número de índice na ilustração. As peças são relacionadas na ordem dos números de índice.

Código (Code):

Códigos são utilizados nesta coluna e significam o seguinte:

A1 Esta peça e a peça especificada na linha imediatamente acima são intercambiáveis.

A2 A peça especificada na linha acima pode ser utilizada no lugar desta peça.

A3 Esta peça pode ser utilizada no lugar da peça especificada na linha imediatamente acima.

A4 A peça especificada na coluna “Descrição” pode ser utilizada no lugar desta peça se usada como um conjunto.

B1 Indica peça descontinuada. A peça especificada na linha acima é fornecida em seu lugar.

B2 Indica peça descontinuada. A peça especificada na coluna “Descrição” é fornecida em seu lugar como um conjunto.

C1 Esta peça não pode ser fornecida como peça individual. Ela é fornecida como um conjunto.

C2 Esta peça é fornecida somente para revendedores Komatsu autorizados. Não pode ser fornecida como peça individual. Ela é fornecida como um conjunto.

C3 Indica peça fornecida em condição semiacabada. Requer trabalho adicional antes da instalação.

Número da peça (Part Number):

O número indicado na coluna de números de peça corresponde ao número da peça exibida. É o código de identificação usado para o pedido da peça. É importante não enganar-se de número de código ao pedir a peça.

Descrição (Description):

Indica o nome da peça que tem o seu número de peça relacionado. O símbolo "•" é colocado na frente do nome peça do componente de uma peça de conjunto, e o item é lançado seguindo o conjunto. Se uma peça indicada com "•" é um subconjunto, os seus componentes são indicados por "• •".
Exemplo: Tank Assembly
• Tank
• Cap
• • Packing

Além disso, os seguintes símbolos e abreviações são usados nesta coluna.

Kit Indica peças de um jogo. Para peças de jogo, referir-se à seção "FIELD REPAIR SERVICE PARTS" neste catálogo de peças.

D Diâmetro
L Comprimento
LHS Lado esquerdo
RHS Lado direito
T Espessura
W Largura

Quantidade (Qty):

Indica o número de peças utilizadas em uma máquina. Contudo, se uma peça é incluída no conjunto e/ou componente, a quantidade por conjunto e/ou componente é especificada.
O código AR (como requerido) usar-se-á na coluna "Quantitade" caso o número de peças por máquina e/ou componente não possa ser especificado. Em tal caso, qualquer número de peças pode ser pedido dependendo dos requisitos de serviço em campo.

Números de série (Serial Numbers):

O número de série do motor aplicável é indicado para o volume do motor. No volume da carroceria, indica o número de série da máquina na qual a peça é utilizada.

Se o número de série está entre parêntesis, mostra que é o número de série aplicável para uso exclusivo do equipamento do número da figura (FIG.)

订购零件时，请注明需要零件的货号、品名、数量以及使用机器的车辆编号、发动机型号和系列号、工作时数。

此零件明细表上不仅记载了标准装备零件，还记载了选购零件、附件零件。如果您需要订货，请与最近的小松代理店联系。

为了清楚明了，零件手册中有如下规定：

图表

打开此零件清单后，可以看到附带图号（FIG.）的零件明细表图示。在图示上标有各种零件的索引号码。除图之外，还按索引号码的顺序列表表示货号、品名、数量、适用机型。

图号（FIG.）

图号表示该页图的号码。它不是补充零件用的货号。此号码不一定是连续号码。

零件表

从左栏开始按以下顺序显示零件的明细。

索引 (Index):

与图的索引号码一致，按索引号码顺序编制为表格形式。

代号 (Code):

此栏使用的代号如下所示：

A1　此行零件可与紧挨着的上一行零件互换使用。

A2　上一行的零件可取代此行零件来使用。

A3　此行零件可代替紧挨着的上一行零件使用。

A4　品名栏内的零件配套后，可取代此行零件来使用。

B1　该行零件已停止供应，用上一行的零件代替使用。

B2　该行零件已停止供应，品名栏内的零件配套后代替此行零件供应。

C1　此行零件拟成套供应，不以单一零件供应。

C2　此行零件主要面向特定的代理。不以单一零件供应，只拟成套供应。

C3　此行零件以半成品的形式供应，使用前必需再加工。

货号 (Part Number):

此栏所示的编号是图示零件的货号。它是在订货时需要标明的特定代号，是非常重要的。

品名 (Description):

表示相当于货号的零件名称。构成组装品的零件，在品名的前面有 “·”标记，记载在组装品之后。另外，如果标记 “·”的零件是组装品，则该构成零件的品名前标有 “· ·”标记。

例： TANK ASSEMBLY
· TANK
· CAP
· · PACKING

另外，说明栏可能显示以下代号。

Kit 表示修理包。关于修理包构件详情，请参考此零件清单中 “现场修理服务零件”部分的内容。
D 直径
L 全长
LHS 左侧
RHS 右侧
T 厚度
W 全宽

数量 (Qty):

表示一台机器中需要使用的该零件数量。但是，如果是组装零件的构成零件时，表示其组装件的件数。如果不能指定每个机器以及（或者）组装零件中必须的零件数量时，可以在零件数量栏中使用代码 AR。此时，数量由现场的服务要件决定，然后进行定购。

适用机型 (Serial Numbers):

发动机篇中表示该使用零件的发动机型号，在机体篇中表示该使用零件的车辆号码。

如果适用机型位于括号中，表明该适用机型专门用于图号 (FIG.) 中所指的设备。

ПРЕДИСЛОВИЕ

При заказе запчасти укажите номер части, наименование части и нужное количество; кроме того, укажите код модели вашей машины, серийный номер машины, серийный номер двигателя и показания счетчика мото-часов.

В Каталоге приведены не только стандартные изделия, но и дополнительное оборудование и принадлежности. Для заказа запчасти пожалуйста обратитесь к ближайшему дилеру "Комацу".

Содержащаяся в Каталоге информация и специальные коды разъясняются ниже:

РИСУНОК И ПЕРЕЧЕНЬ ЧАСТЕЙ

Раскрыв Каталог, вы увидите рисунок после номера рисунка (ПОЗ). Каждой отдельной части на рисунке присвоен позиционный номер. За рисунком следует перечень составных частей устройства в порядке номеров позиций рисунка. Перечень частей указывает для каждой части ее номер, наименование, количество и применимый серийный номер.

НОМЕР РИСУНКА (ПОЗ)

Номер рисунка (ПОЗ) – это номер, который указывает рисунок на странице. Он не является номером запчасти. Последовательность номеров не обязательно непрерывна.

ПЕРЕЧЕНЬ ЧАСТЕЙ

Данные запасных частей приведены на странице перечня частей следующим образом:

Индекс (Index):

То же, что номер позиции на рисунке. Части перечислены в порядке их позиционных номеров.

Код: (Code):

В этой колонке находятся коды, обозначающие следующее:

A1 Данная часть и часть, указанная в предыдущей строке, взаимозаменяемы.

A2 Вместо данной части можно использовать часть, указанную в предыдущей строке.

A3 Данную часть можно использовать вместо части, указанной в предыдущей строке.

A4 В комплекте, вместо данной части можно использовать указанную в колонке описания.

B1 Поставки этой части прекращены. Взамен поставляется часть, указанная в предыдущей строке.

B2 Поставки этой части прекращены. Взамен комплектом поставляется часть, указанная в колонке описания.

C1 Данная часть отдельно не поставляется. Она поставляется с узлом.

C2 Данная часть поставляется лишь уполномоченным дилерам "Комацу". Отдельно не поставляется. Поставляется с узлом.

C3 Обозначает часть, поставляемую без доводки. Требует предустановочной подготовки.

Номер части (Part Number):

Приведенный в колонке номеров частей номер является номером изображенной части. Это код-идентификатор для заказа данной части. Важно, чтобы при заказе этот кодовый номер был указан без ошибок.

Описание (Description):

Здесь приводится наименование части, обозначенной номером в перечне. Значок "·" ставится перед наименованием детали компонента, причем деталь записана после узла. Если помеченная "·" часть является подсборкой узла, то ее составные части обозначаются значком "··".

Пример: Tank Assembly
·Tank
·Cap
··Packing

Далее, в этой колонке используются следующие обозначения и сокращения.

Kit	Указывает на элементы комплекта. Элементы комплекта смотри в разделе ЗАПАСНЫЕ ЧАСТИ ДЛЯ РЕМОНТА В УСЛОВИЯХ ЭКСПЛУАТАЦИИ данного Каталога.
D	Диаметр
L	Длина
LHS	Левая сторона
RHS	Правая сторона
T	Толщина
W	Ширина

Количество (Qty):

Указывает общее число изделий в одной машине. Если же изделие является частью узла и/или устройства, то указывается количество в таком узле и/или устройстве.
При невозможности указать количество частей на машину и/или устройство, в колонке Количество проставляется код AR (по потребности). В таком случае можно заказывать любые количества в зависимости от потребностей обслуживания на месте.

Серийные номера (Serial Numbers):

В книге по двигателю приводится соответствующий серийный номер двигателя. В книге по шасси указывает на серийный номер машины, где используется данная часть.

Серийный номер, заключенный в круглые скобки означает, что он применяется только для оборудования с номером рисунка (ПОЗ.)

. رقم القطعة (Part Number)

الرقم الوارد في عمود رقم القطعة هو رقم القطعة الخاص بالقطعة المبينة. وهو الرمز المستخدم لطلب تلك القطعة. ومن الضروري عدم ارتكاب اي خطأ في تحديد هذا الرقم عند طلب القطع.

. الوصف (Description)

يعطي اسم القطعة المدرج رقهما في القائمة. توضع العلامة "٠" امام اسم المكون لمجموعة ما ويدرج البند بعد المجموعة. اذا كانت القطعة المشار اليها بالعلامة "٠" هي نفسها عبارة عن مجموعة مكونات, فان كلا من مكوناتها يشار اليها بالعلامة "٠٠".

مثال

Tank Assembly
٠Tank
٠Cap
٠٠Packing

بالاضافة الى ذلك, العلامات والمختصرات التالية تستخدم في هذا العمود.

Kit	هذا يشير الى قطع الطقم. حول قطع الطقم, راجع قسم "قطع غيار خدمة الإصلاح الميداني" في كتاب القطع هذا.
D	قطر
L	طول
LHS	جانب اليد اليسارى
RHS	جانب اليد اليمنى
T	السمك
W	العرض

. الكمية (Qty)

هذا هو عدد القطع المستخدمة لآلية واحدة. اما بالنسبة لمجموعات المكونات ومجموعات القطع فانه يتم تحديد عدد القطع لكل مجموعة.
الرمز AR (حسب الطلب) سوف يستخدم في عمود الكمية اذا لم يتم تحديد عدد القطع المطلوبة لكل مانكة و/او للمجموعة. في مثل هذه الحالة, فان اي عدد من الكميات ربما يتم طلبه بشكل يعتمد على متطلبات مجال الخدمة.

. الرقم التسلسلي (Serial Numbers)

في كتاب قطع المحرك يشير هذا الرقم الى الرقم التسلسلي للمحرك الذي تستخدم فيه القطعة. قي كتاب قطع الآلية, يشير هذا الرقم الى الرقم التسلسلي للآلية التي تستخدم فيها القطع.

في حالة وضع الرقم التسلسلي بين الأقواس، فهذا يعني أن هذا هو الرقم التسلسلي الساري للاستخدام الحصري للقطعة الموضحة بالشكل.

عند طلب القطع, يرجى تحديد رقم القطعة واسم القطعة والكمية المطلوبة من القطعة, مع تحديد رقم الموديل والرقم التسلسلي وقراءة عداد الخدمة.

قائمة القطع هذه لا تقتصر على الكميات القياسية فقط بل تشمل ايضاً القطع والملحقات الاختيارية. لطلب القطع, يرجى الاتصال باقرب موزع لمنتجات كوماتسو.

كتاب القطع هذا يحتوي على المعلومات ورموز التخصيص وكما مبين ادناه:

الشكل والقائمة

عندما تفتح كتاب القطع هذا, سوف تجد رسومًا توضيحية تتضمن رقم الشكل (الشكل). كل قطعة مفردة في الرسم يعطى لها رقم فهرس. في الرسم التالي, قطع المجموعة للوحدة تم ادراجها حسب ترتيب ارقام الفهرس المبينة في الرسم.. رقم القطعة, اسم القطعة, الكمية والرقم التسلسلي المطابق يعطى لكل قطعة حسب تسلسل القطع في القائمة.

رقم الشكل (الشكل)

رقم الشكل (الشكل) هو الرقم الذي يميز شكل ما داخل الصفحة. إنه ليس رقم القطعة. وليست الأرقام متتابعة دائمًا.

قائمة القطع

معلومات قطع الغيار مثبتة في صفحة قائمة القطع وكلاتي:

. الفهرست (Index)

هذا الرقم هو نفس رقم الفهرس الوارد في الشكل التوضيحي. تدرج القطع في القائمة مرتبة تبعاً لارقام الفهرس.

. الرمز (Code)

الرموز تستخدم في هذا العمود وتوصف كلاتي:

A1 هذه القطعة والقطعة المذكورة في السطر السابق مباشرة يمكن لكل منهما ان تحل محل الاخرى.

A2 القطعة المذكورة في السطر السابق يمكن استعمالها بدلاً من هذه القطعة.

A3 هذه القطعة يمكن استعمالها بدلاً من القطعة المذكورة في السطر السابق مباشرة.

A4 القطعة المذكورة في عمود الوصف يمكن استعمالها بدلاً من هذه القطعة اذا استخدمت كطقم.

B1 هذه القطعة توقف توريدها. يتم توريد القطعة المذكورة في السطر السابق بدلاً منها.

B2 هذه القطعة توقف توريدها. يتم توريد القطعة المذكورة في عمود "الوصف" بدلاً منها كطقم.

C1 هذه القطعة لا يمكن توريدها كقطعة منفردة. يتم توريدها كمجموعة.

C2 هذه القطعة يتم تجهيزها من قبل موزعين كوماتسو المرخصين فقط. لا يمكن تجهيزها كقطعة مفردة. يتم تجهيزها كمجموعة.

C3 هذا يشير الى قطعة موردة شبه مكتملة التصنيع. تتطلب استكمال تصنيعها قبل الاستعمال.

CONTENTS

FOREWORD 2

	FIG No.	PAGE
ENGINE CYLINDER HEAD AND ITS RELATED PARTS		
Head Cover	(VC 9160)	
	AVC00-001001	30
Cylinder Head	(X16-0A90150)	
	A1009-001001	31
Breather	(BR90K985)	
Cylinder Block	ABR00-001001	32
Hose	ABR00-001002	33
Air Intake Heater	(AH 9048)	
	AAH00-001001	34
Aftercooler	(TB97K994)	
	ATB20-001001	35
Aftercooler Piping	(WA 9752)	
	AWA00-001001	36
Exhaust Manifold Mounting	(TB97K995)	
	ATB10-001001	37
Exhaust Manifold	(TB97059)	
	ATB30-001001	38
Turbocharger Mounting	(PP98330)	
	APP20-001001	39
Turbocharger	(X16-0A90600)	
	A1539-001001	40
Turbocharger Oil Piping	(TP97K996)	
	ATP00-001001	41
Exhaust Connection	(XS 9258)	
Clamp	AXS00-001001	42
Water Temperature Sensor	(X16-0A02480)	
	A2010-001001	43
Front Hanger	(X16-0A02270)	
	A1030-001001	44
Rear Hanger	(X16-0A02280)	
	A1050-001001	45
Dust Seal	(SR 9007)	
Front	ASR00-001001	46
Solenoid Valve	(X16-0A02210)	
	A4510-001001	47
ENGINE CYLINDER BLOCK AND ITS RELATED PARTS		
Lubrication Oil Pump	(LP 9725)	
	ALP00-001001	50
Flywheel Mounting	(FW 9704)	
	AFW10-001001	51
Oil Pan and Suction Tube	(OP 9482)	
	AOP10-001001	52
Camshaft	(X16-0A90140)	
	A2419-001001	53
Spare Parts	(X16-0A02290)	
	B9999-501001	54
Rocker Arm	(RL 9732)	
	ARL00-001001	55
Front Gear Train Cover	(DF 9710)	
	ADF10-001001	56
Front Cover	(X16-0A90610)	
	A2049-001001	57

Flywheel Housing ..... (FH 9664)
Mounting Parts AFH00-001001 58
Flywheel Housing ..... (X16-0A02220)
Related Parts A2210-001001 59
Flywheel Housing ..... (X16-0A90480)
A2219-001001 60
Flywheel ..... (FW90K989)
AFW00-001001 61
Engine Oil Pan Drain ..... (X16-0A02230)
A2110-001001 62
Cylinder Block ..... (BB 9110)
Related Parts ABB00-001001 63
Cylinder Block ..... (X16-0A90190)
A2019-001001 64
Cylinder Block Plug ..... (BB 9093)
Lubrication Plug ABB30-001001 65
Cylinder Block Plug ..... (BB 9101)
Coolant Plug ABB40-001001 66
Cabin Heater Plug ..... (HC90J019)
AHC00-001001 67
Crankshaft ..... (X16-0A90120)
A2319-001001 68
Piston and Connecting Rod ..... (X16-0A90130)
A2359-001001 69
Engine Oil Filler ..... (OB90K991)
AOB10-001001 70
Oil Level Gauge ..... (LG90K990)
ALG00-001001 71
Water Pump Drive ..... (SR 9015)
ASR10-001001 72
ENGINE LUBRICATING SYSTEM
Engine Oil Filter ..... (LF 9102)
ALF00-001001 74
Engine Oil Cooler ..... (LC90K970)
ALC00-001001 75
ENGINE FUEL SYSTEM
Fuel Injection Pump Mounting ..... (FP97J004)
AFP20-001001 78
Fuel Injection Pump ..... (FP90J005)
AFP10-001001 79
Fuel Control ..... (FE 9005)
AFE00-001001 80
Engine Shut-off Solenoid Switch ..... (FV90K969)
AFV00-001001 81
Fuel Injection Nozzle ..... (X16-0A90620)
A4219-001001 82
Fuel Injection Piping ..... (FT90K988)
AFT00-001001 83
Fuel Injection Piping ..... (PP97K992)
APP50-001001 84
Fuel Filter ..... (FF90K986)
AFF10-001001 85
Fuel Transfer Pump ..... (FS 9759)
AFS00-001001 86
ENGINE COOLING SYSTEM
Cooling Fan Belt Tensioner ..... (WP 9916)
AWP20-001001 88

Water Pump .....(WP 9918)
Mounting Parts AWP00-001001 89
Water Pump .....(X16-0A90210)
A5019-001001 90
Water Pump Drive Belt .....(WP 9932)
AWP10-001001 91
Water Outlet Connector .....(WO 9076)
AWO00-001001 92
Water Inlet Connector .....(WI 9155)
AWI10-001001 93
Thermostat .....(EC 9702)
AEC00-001001 94
Coolant Heater Plug .....(CH 9087)
ACH00-001001 95
Coolant Ventilator .....(RP 9036)
ARP00-001001 96
Plug .....(TK 9022)
Torque Converter Cooling ATK00-001001 97
ENGINE ELECTRICAL SYSTEM
Damper .....(DA 9728)
ADA00-001001 100
Alternator Mounting .....(EH 9502)
AEH20-001001 101
Alternator, 35Amp. Alternator .....(EE 9180)
AEE00-001001 102
Starting Motor Mounting .....(SM97K993)
ASM00-001001 103
Starting Motor, 7.5KW .....(ST90K929)
AST00-001001 104
ENGINE ACCESSORIES AND OTHERS
Fuel Inlet Piping .....(FP97K984)
AFP30-001001 108
ENGINE MARKS AND PLATES
Caution Plates .....(X16-090367A)
A9810-001001 110
FIELD REPAIR SERVICE PARTS
Repair Service Parts .....(X16-0A90180)
Crankshaft A8110-001001 112
Piston, Cylinder Head A8110-001002 113
ENGINE RELATED PARTS
Engine Hanger .....(X22-0616570)
A1030-502001 116
Heater Switch .....(X22-0709130)
A1370-502001 117
Air Cleaner .....(X22-1686760)
A1410-502001 118
Heat Shield .....(X22-0201350)
Bracket A1570-501001 119
Cover A1570-501002 121
Muffler Tube .....(X22-0201140)
A1610-501001 122
Bracket .....(X22-1789340)
A2250-502001 123
Water Separator .....(X22-1585761)
Tube A4130-502001 124
Water Separator A4130-502002 125
Bracket A4130-502003 126

Cooling Fan ..... (X22-0610251)
A5030-501001 127
Fan Drive and Tension Pulley ..... (X22-0201360)
Fan Mounting A5060-501001 128
Tension Pulley A5060-501002 129
Engine Mounting ..... (X22-1585790)
B0100-002001 130
Engine Wiring Harness ..... (X22-0201480)
LHS (1/2) B0500-001001 131
LHS (2/2) B0500-001002 132
RHS (1/2) B0500-001003 133
RHS (2/2) B0500-001004 134
Damper ..... (X22-0916890)
B0600-002001 135
COOLING SYSTEM
Radiator ..... (X22-0201450)
Radiator C0100-001001 138
Radiator Mounting C0100-001002 139
Reserve Tank C0100-001003 140
FUEL SYSTEM
Fuel Tank ..... (X22-0201170)
D0100-001001 142
Fuel Tank, With Rear Cover ..... (X22-0201370)
D0100-002001 143
Fuel Supply Piping ..... (X22-0201380)
D0200-001001 144
Additional Fuel Strainer ..... (X22-0610891)
D0210-001001 145
ELECTRICAL SYSTEM
Battery ..... (X22-0708050)
E0110-001001 148
Electric Wiring Harness ..... (X22-0201200)
Main Frame Piping E0200-001001 149
Fuel Tank E0200-001002 150
Sensor (1/2) E0200-001003 151
Sensor (2/2) E0200-001004 152
Washer Tank E0200-001005 153
Battery Electric Wiring Harness ..... (X22-0708370)
E0210-001001 154
Front Working Lamp ..... (X22-0700910)
E0300-001001 155
POWER TRANSMITTING SYSTEM
Universal Joint ..... (X22-0916870)
F2200-002001 158
Power Train ..... (X22-0201420)
Bare F2300-001001 159
Torque Converter Case F2300-001002 160
Scavenging Pump F2300-001003 161
Power takeoff Gear F2300-001004 162
Filtration F2300-001005 163
1st Housing F2300-001006 164
2nd, 3rd, Forward and Reverse Housing F2300-001007 165
Transmission Carrier (1/2) F2300-001008 167
Transmission Carrier (2/2) F2300-001009 168
Transmission Case F2300-001010 169
Input and Output Shaft F2300-001011 170
Transmission Control Valve (1/2) F2300-001012 171

Transmission Control Valve (2/2) F2300-001013 172
Transmission Main Relief Valve F2300-001014 173
Cover (1/5) F2300-001015 174
Cover (2/5) F2300-001016 176
Pump F2300-001017 177
Lubricating Oil Piping F2300-001018 178
Lever F2300-001019 179
Torque Converter Piping F2300-001020 180
Mounting (1/2) F2300-001021 181
Bevel Gear and Shaft F2300-001022 182
Steering Clutch and Steering Brake (1/2) F2300-001023 183
Steering Clutch and Steering Brake (2/2) F2300-001024 184
Steering Case F2300-001025 185
Cover (3/5) F2300-001026 186
Cover (4/5) F2300-001027 187
Steering Control Lever F2300-001028 188
Brake Valve (1/3) F2300-001029 189
Brake Valve (2/3) F2300-001030 190
Brake Valve (3/3) F2300-001031 191
Reducing Valve F2300-001032 192
Elbow F2300-001033 193
Cover (5/5) F2300-001034 194
Mounting (2/2) F2300-001035 195
Inner Parts (1/2) F2300-001036 196
Inner Parts (2/2) F2300-001037 197
Piping (1/2) F2300-001038 198
Piping (2/2) F2300-001039 199
Steering Pilot Piping F2300-001040 200
Mounting Bracket F2300-001041 202
Steering Clutch and Brake ..... (X22-1585600)
F2350-002001 203
Final Drive ..... (X22-1583990)
Final Gear Case LHS F2380-002001 204
Gear and Cover LHS F2380-002002 205
Final Gear Case RHS F2380-002003 207
Gear and Cover RHS F2380-002004 208
Mounting F2380-002005 210
Power Train Oil Cooler Piping ..... (X22-1585621)
F2730-002001 211
Steering Oil Piping ..... (X22-1584111)
Brake F2740-002001 213
Additional Parts F2740-002002 215
Steering Control Related Parts ..... (X22-1686830)
Fuel Piping F2820-002001 216
Clutch and Brake F2820-002002 217
HYDRAULIC SYSTEM
Hydraulic Oil Tank ..... (X22-0610832)
H0100-001001 220
Control Valve ..... (X22-0700980)
Valve Mounting H0120-001001 221
Inner Parts (1/4) H0120-001002 222
Inner Parts (2/4) H0120-001003 223
Inner Parts (3/4) H0120-001004 224
Inner Parts (4/4) H0120-001005 225
Hydraulic Oil Pump ..... (X22-0610351)
Inner Parts H0210-001001 226
Pump Mounting H0210-001002 227

Hydraulic Oil Pump Piping ..... (X22-1686840)
Suction Piping H0310-002001 228
Delivery Piping H0310-002002 229
Cooling Piping H0310-002003 230
Dozer Blade Lift Piping ..... (X22-0611811)
Piping H2210-001001 231
Mounting Bracket H2210-001002 232
Dozer Blade Tilt Piping ..... (X22-0700920)
H2220-002001 233
FRAME AND ITS RELATED PARTS
Main Frame ..... (X22-0618490)
J2100-001001 236
Equalizer Bar and Pivot Shaft ..... (X22-0700990)
Shaft J2700-001001 237
Pin J2700-001002 238
OPERATOR'S COMPARTMENT AND CONTROL SYSTEM
Operator's Seat ..... (X22-0221501)
K0110-001001 240
Anti slip Sheet ..... (X22-0701290)
K0310-001001 241
Sweep Guard, With Side Screen ..... (X22-0701710)
K0410-002001 242
Sweep Guard, Without Side Screen ..... (X22-0702680)
K0410-003001 244
Floor Frame ..... (X22-0201230)
Frame K2110-001001 246
Lever K2110-001002 247
Blade Control Lever K2110-001003 248
Control Box K2110-001004 249
Fuel Control Lever K2110-001005 250
Steering Control (1/2) K2110-001006 251
Steering Control (2/2) K2110-001007 252
Blade Lock Lever K2110-001008 253
Transmission Lock Lever K2110-001009 254
Mounting Parts K2110-001010 255
Electric Parts K2110-001011 256
Wiring Harness K2110-001012 257
Inner Parts (1/2) K2110-001013 258
Inner Parts (2/2) K2110-001014 259
Pilot Valve Related Parts K2110-001015 260
Plugs K2110-001016 261
Knob K2110-001017 262
Suspension ..... (X22-0705530)
K2120-001001 263
Dashboard ..... (X22-0701820)
Cover and Switch K2210-001001 264
Wiring Harness Mounting K2210-001002 265
Footrest K2210-001003 266
Blade Control ..... (X22-0700940)
K2241-002001 267
Floor ..... (X22-0611371)
Brake Pedal K2400-001001 268
Decelerator Pedal K2400-001002 269
Mounting Parts K2400-001003 270
Armrest ..... (X22-0701860)
K2500-001001 271

Towing Winch Control, Without Free Spool ..... (X22-0704470)
Lever K2520-002001 272
Controller and Relay K2520-002002 274
Towing Winch Control, With Free Spool ..... (X22-0705500)
Lever (1/2) K2520-002001 272
Controller and Relay K2520-003002 275
Lever (2/2) K2520-003003 276
Handrail ..... (X22-0702100)
K2810-002001 277
GUARDS AND COVERS
Radiator Guard ..... (X22-0201250)
M2110-001001 280
Radiator Mask ..... (X22-0701510)
M2120-001001 281
Front Guard ..... (X22-0201270)
Hood M2140-001001 282
Side Cover (1/2) M2140-001002 283
Side Cover (2/2) M2140-001003 284
Hood Mounting M2140-001004 285
Stopper M2140-001005 286
Air Intake Guard M2140-001006 287
Air Intake M2140-001007 288
Rear Guard ..... (X22-0708040)
Fender,LHS M2210-001001 289
Fender,RHS M2210-001002 290
Anti Slip M2210-001003 291
Fender Cover ..... (X22-0700740)
Battery Cover M2211-001001 292
Tool Box M2211-001002 293
Rear Cover ..... (X22-0611141)
M2240-002001 294
ROPS Mounting Bracket ..... (X22-0702050)
M2710-001001 295
Cover ..... (X22-0613831)
M2811-002001 296
UNDERCARRIAGE
Front Idler ..... (X22-0700770)
R0110-001001 298
Idler Cushion ..... (X22-0700710)
R0120-001001 299
Track Roller ..... (X22-0220741)
Flange (1/2) R0200-001001 300
Flange (2/2) R0200-001002 301
Mounting Parts R0200-001003 302
Carrier Roller ..... (X22-0220751)
R0300-001001 303
Track Shoe Assembly, Single Grouser Shoe, 610mm Width, Sealed and Lubricated Links ..... (X21-1038880)
R0500-001001 304
Track Link Assembly, Supply Only ..... (X21-1039030)
R0501-001001 305
Track Frame ..... (X22-0700880)
R2100-002001 306
Sprocket ..... (X22-0700750)
R2140-001001 307
Track Roller Guard ..... (X22-0700760)
R2200-001001 308
WORK EQUIPMENT

Dozer Frame .....(X22-0700960)
T2110-002001 310
Dozer Arm and Brace .....(X22-0229900)
T2115-001001 311
Blade .....(X22-0700970)
T2120-001001 312
Blade Lift Cylinder .....(X22-0610321)
Inner Parts, Lift Cylinder T2140-001001 313
Dozer Blade Tilt Cylinder Piping .....(X22-0700820)
T2160-002001 314
Lift Arm and Linkage .....(X22-0700930)
Bracket T2310-002001 315
Grease Piping T2310-002002 316
Towing Winch, With Wire Rope .....(X22-0705370)
Mounting T2510-001001 317
Case T2510-001002 318
Transfer T2510-001003 320
Gear Shaft (1/3) T2510-001004 322
Gear Shaft (2/3) T2510-001005 324
Gear Shaft (3/3) T2510-001006 325
Clutch T2510-001007 327
Brake T2510-001008 328
Inner Parts, Hydraulic Pump T2510-001009 329
Hydraulic Pump Piping T2510-001010 330
Control Valve (1/2) T2510-001011 332
Control Valve (2/2) T2510-001012 334
Control Valve Mounting T2510-001013 335
Cover T2510-001014 336
Wire Rope T2510-001015 337
Towing Winch, Without Free Spool .....(X22-0705410)
Mounting T2510-001001 317
Case T2510-002002 338
Transfer T2510-001003 320
Gear Shaft (1/3) T2510-001004 322
Gear Shaft (2/3) T2510-001005 324
Gear Shaft (3/3) T2510-002006 339
Clutch T2510-001007 327
Brake T2510-001008 328
Inner Parts, Hydraulic Pump T2510-001009 329
Hydraulic Pump Piping T2510-001010 330
Control Valve (1/2) T2510-001011 332
Control Valve (2/2) T2510-001012 334
Control Valve Mounting T2510-001013 335
Cover T2510-001014 336
Wire Rope T2510-001015 337
Towing Winch, With Hook .....(X22-0709680)
Mounting T2510-001001 317
Case T2510-001002 318
Transfer T2510-001003 320
Gear Shaft (1/3) T2510-001004 322
Gear Shaft (2/3) T2510-001005 324
Gear Shaft (3/3) T2510-001006 325
Clutch T2510-001007 327
Brake T2510-001008 328
Inner Parts, Hydraulic Pump T2510-001009 329
Hydraulic Pump Piping T2510-001010 330
Control Valve (1/2) T2510-001011 332

Control Valve (2/2) T2510-001012 334
Control Valve Mounting T2510-001013 335
Cover T2510-001014 336
Wire Rope T2510-003015 340
Towing Winch ..... (X22-0709720)
Mounting T2510-004001 341
Case T2510-004002 342
Transfer T2510-004003 344
Gear Shaft (1/3) T2510-004004 346
Gear Shaft (2/3) T2510-004005 347
Gear Shaft (3/3) T2510-004006 348
Clutch T2510-004007 350
Brake T2510-004008 351
Inner Parts, Hydraulic Pump T2510-004009 352
Hydraulic Pump Piping T2510-004010 353
Control Valve (1/2) T2510-004011 355
Control Valve (2/2) T2510-004012 357
Control Valve Mounting T2510-004013 358
Cover T2510-004014 359
Towing Winch, With Guard and Hook ..... (X22-0709890)
Mounting T2510-001001 317
Case T2510-005002 360
Transfer T2510-001003 320
Gear Shaft (1/3) T2510-001004 322
Gear Shaft (2/3) T2510-001005 324
Gear Shaft (3/3) T2510-001006 325
Clutch T2510-001007 327
Brake T2510-001008 328
Inner Parts, Hydraulic Pump T2510-001009 329
Hydraulic Pump Piping T2510-001010 330
Control Valve (1/2) T2510-001011 332
Control Valve (2/2) T2510-001012 334
Control Valve Mounting T2510-001013 335
Cover T2510-001014 336
Wire Rope T2510-003015 340
Towing Winch, With Guard ..... (X22-0709900)
Mounting T2510-001001 317
Case T2510-005002 360
Transfer T2510-001003 320
Gear Shaft (1/3) T2510-001004 322
Gear Shaft (2/3) T2510-001005 324
Gear Shaft (3/3) T2510-001006 325
Clutch T2510-001007 327
Brake T2510-001008 328
Inner Parts, Hydraulic Pump T2510-001009 329
Hydraulic Pump Piping T2510-001010 330
Control Valve (1/2) T2510-001011 332
Control Valve (2/2) T2510-001012 334
Control Valve Mounting T2510-001013 335
Cover T2510-001014 336
Power Take Off (PTO) Shaft ..... (X22-0201300)
T2610-001001 362

MARKS AND PLATES

Marks and Plates ..... (X22-0201320)
U0100-001001 364
Balancing Mark ..... (X22-0514220)
U0400-001001 365

AUXILIARY PARTS AND TOOL
Spare Parts .....(X22-1687770)
V0100-002001 368
Cap and Overall .....(X22-0016710)
V0200-001001 369
Tool .....(X22-0615630)
V0300-001001 370
FIELD REPAIR SERVICE PARTS
Service Kit Parts .....(Y99-0000002)
KIT 372

ENGINE CYLINDER HEAD AND ITS RELATED PARTS

FIG. AVC00-001001 Head Cover

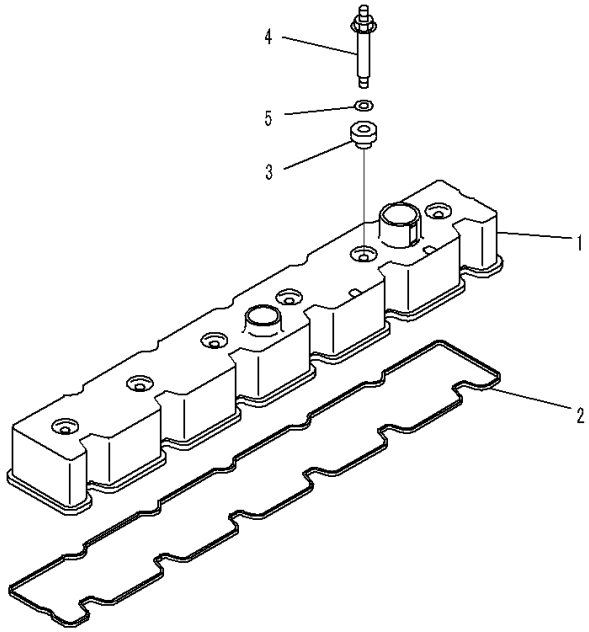

00078977

Index	Code	Part Number	Description	Qty	Serial Number
1		6741-11-8112	Cover	1	26825008-
2		6741-11-8121	O-ring	1	26825008-
3		6732-11-8210	Isolator	6	26825008-
4		1296853H1	Bolt	6	26825008-
5		6741-11-8180	Washer	6	26825008-

FIG. A1009-001001 Cylinder Head

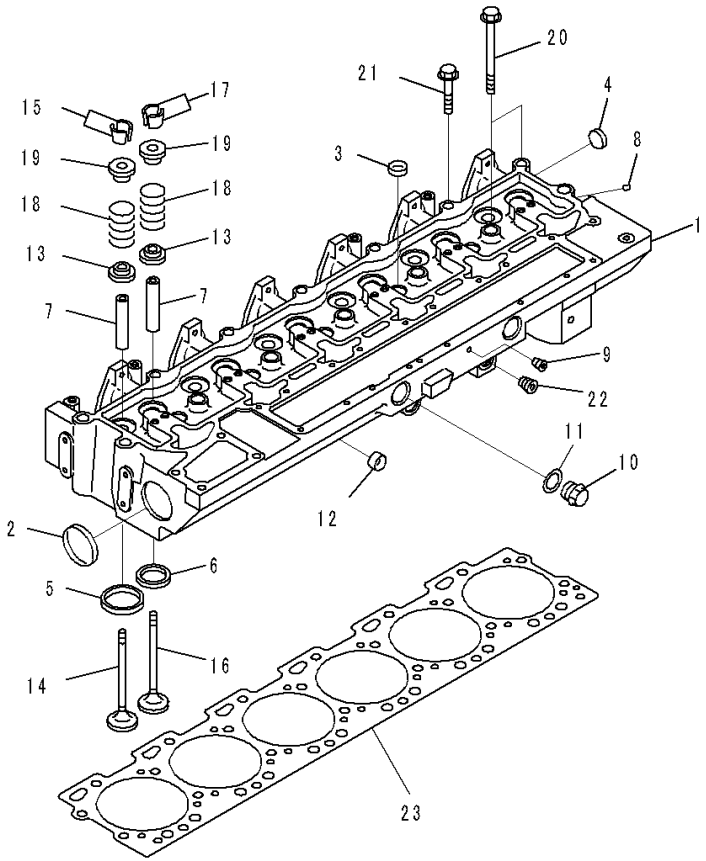

PJ6D338

Index	Code	Part Number	Description	Qty	Serial Number
		6741-11-1190	Cylinder Head Assembly	1	26825008-
	C1		• Cylinder Head Assembly	1	26825008-
1	C1		• • Head, Cylinder	1	26825008-
2		6742-01-1390	• • Plug	2	26825008-
3		6732-21-1820	• • Plug	5	26825008-
4		1296803H1	• • Plug	1	26825008-
5		6742-01-2950	• • Insert	6	26825008-
6		1307586H1	• • Insert	6	26825008-
7		6742-01-3240	• • Guide	12	26825008-
8		6742-01-2960	• Plug	1	26825008-
9		6732-61-2240	• Plug	1	26825008-
10		6736-21-5320	• Plug	2	26825008-
11		6732-21-5170	• Gasket	2	26825008-
12		6742-01-3250	• Plug	1	26825008-
13		6742-01-5224	Seal	12	26825008-
		1296823H1	Valve Assembly, Intake	6	26825008-
14	C1		• Valve, Intake	1	26825008-
15		6742-01-2990	• Collet	2	26825008-
		6742-01-3000	Valve Assembly, Exhaust	6	26825008-
16	C1		• Valve, Exhaust	1	26825008-
17		6742-01-2990	• Collet	2	26825008-
18		6741-41-4410	Spring	12	26825008-
19		6742-01-3030	Retainer	12	26825008-
20		6743-11-1610	Bolt	14	26825008-
21		6742-01-3270	Bolt	12	26825008-
22		6732-11-1910	• Plug	1	26825008-
23		6742-01-5582	Gasket	1	26825008-

FIG. ABR00-001001 Breather, Cylinder Block

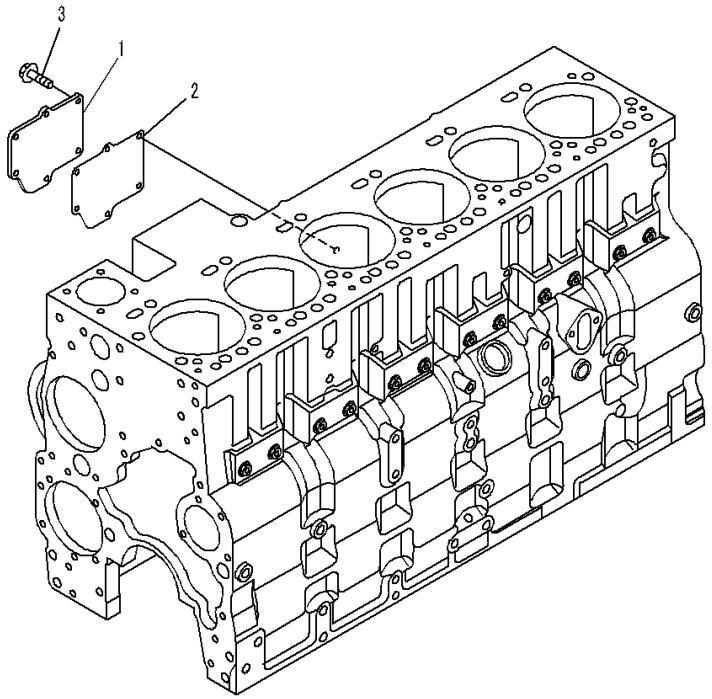

Index	Code	Part Number	Description	Qty	Serial Number
1		6741-21-7610	Plate, Cover	1	26825008-
2		6743-22-5150	Gasket	1	26825008-
3		6738-22-4110	Bolt	6	26825008-

FIG. ABR00-001002 Breather, Hose

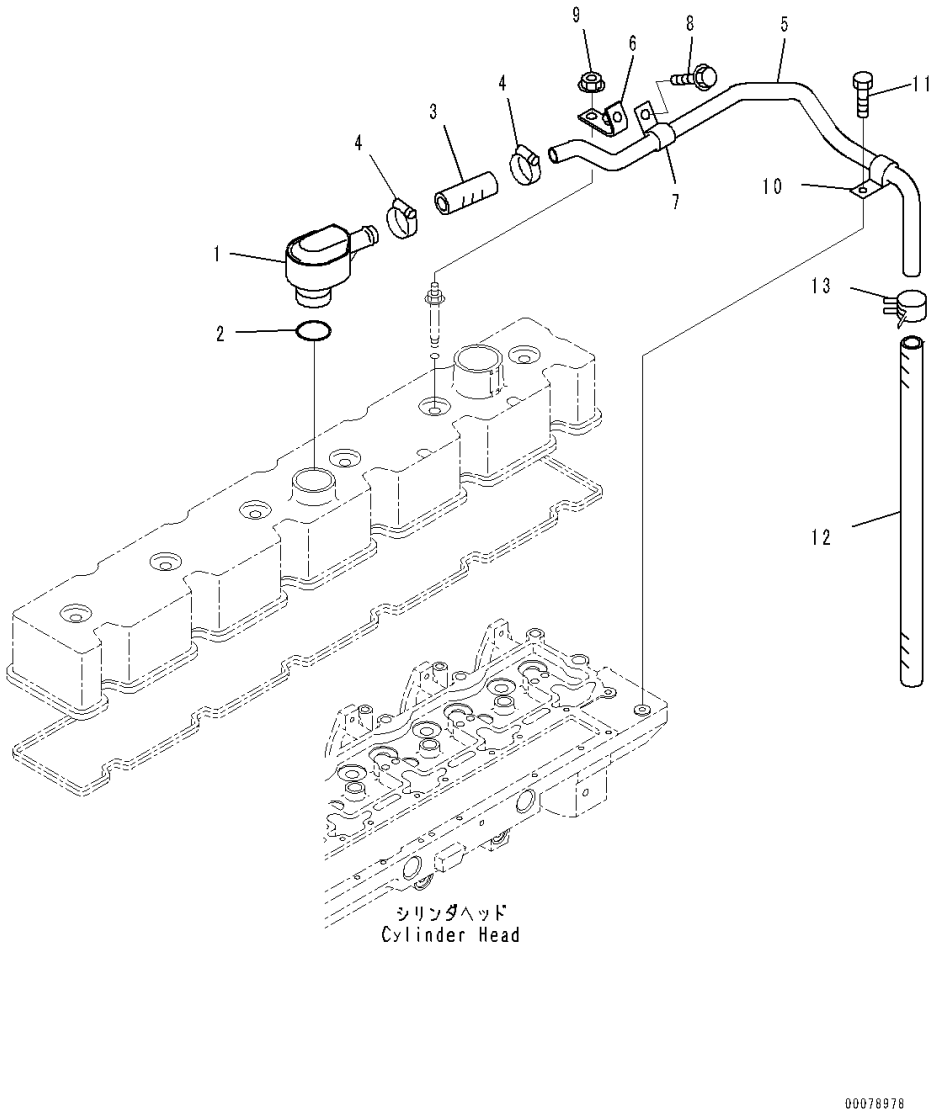

Index	Code	Part Number	Description	Qty	Serial Number
1		6150-21-6750	Breather	1	26825008-
2		6114-21-5190	O-ring	1	26825008-
3		6742-21-7110	Hose	1	26825008-
4		07281-00289	Clamp, Hose	2	26825008-
5		6742-21-7140	Tube	1	26825008-
6		6742-21-7150	Brace	1	26825008-
7		04434-51608	Clip	1	26825008-
8		6736-21-5310	Bolt	1	26825008-
9		6732-71-3210	Nut	1	26825008-
10		04434-51612	Clip	1	26825008-
11		6732-51-5130	Bolt	1	26825008-
12		6742-21-7130	Hose	1	26825008-
13		07285-00200	Clip, Hose	1	26825008-

FIG. AAH00-001001 Air Intake Heater

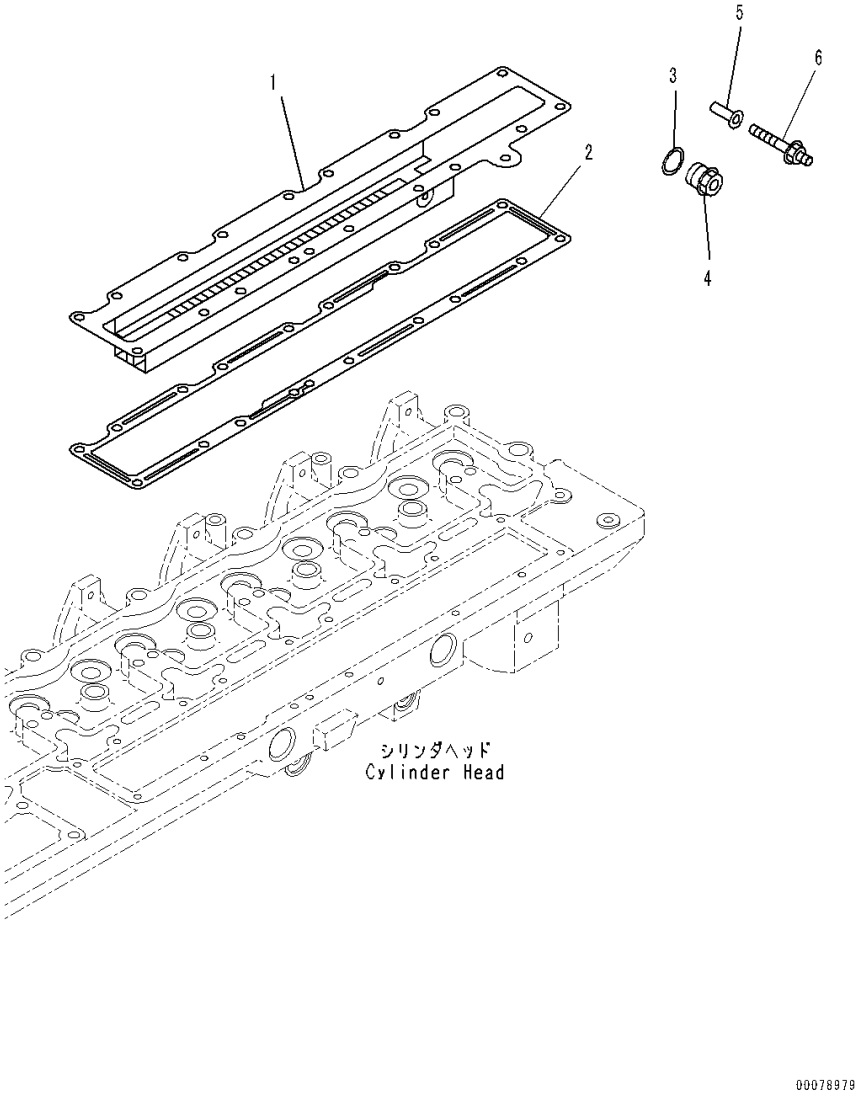

Index	Code	Part Number	Description	Qty	Serial Number
1		6742-01-5197	Heater	1	26825008-
2		6741-11-4510	Gasket	1	26825008-
3		6732-21-5170	Gasket	1	26825008-
4		1294601H1	Plug, Threaded	1	26825008-
5		1304815H1	Washer	1	26825008-
6		1304816H1	Bolt	1	26825008-

FIG. ATB20-001001 Aftercooler

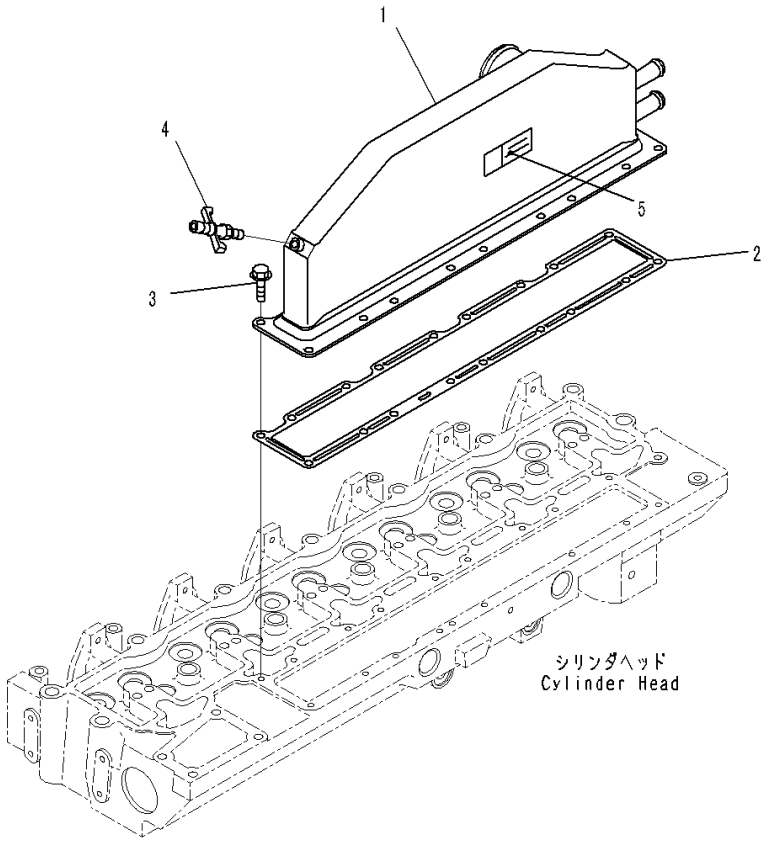

Index	Code	Part Number	Description	Qty	Serial Number
1		6742-01-5005	Aftercooler Assembly	1	26825008-
2		6741-11-4510	Gasket	1	26825008-
3		6732-21-5160	Bolt	12	26825008-
4		6736-61-6110	Valve, Drain	1	26825008-
5		6736-61-6120	Decal	1	26825008-

FIG. AWA00-001001 Aftercooler Piping

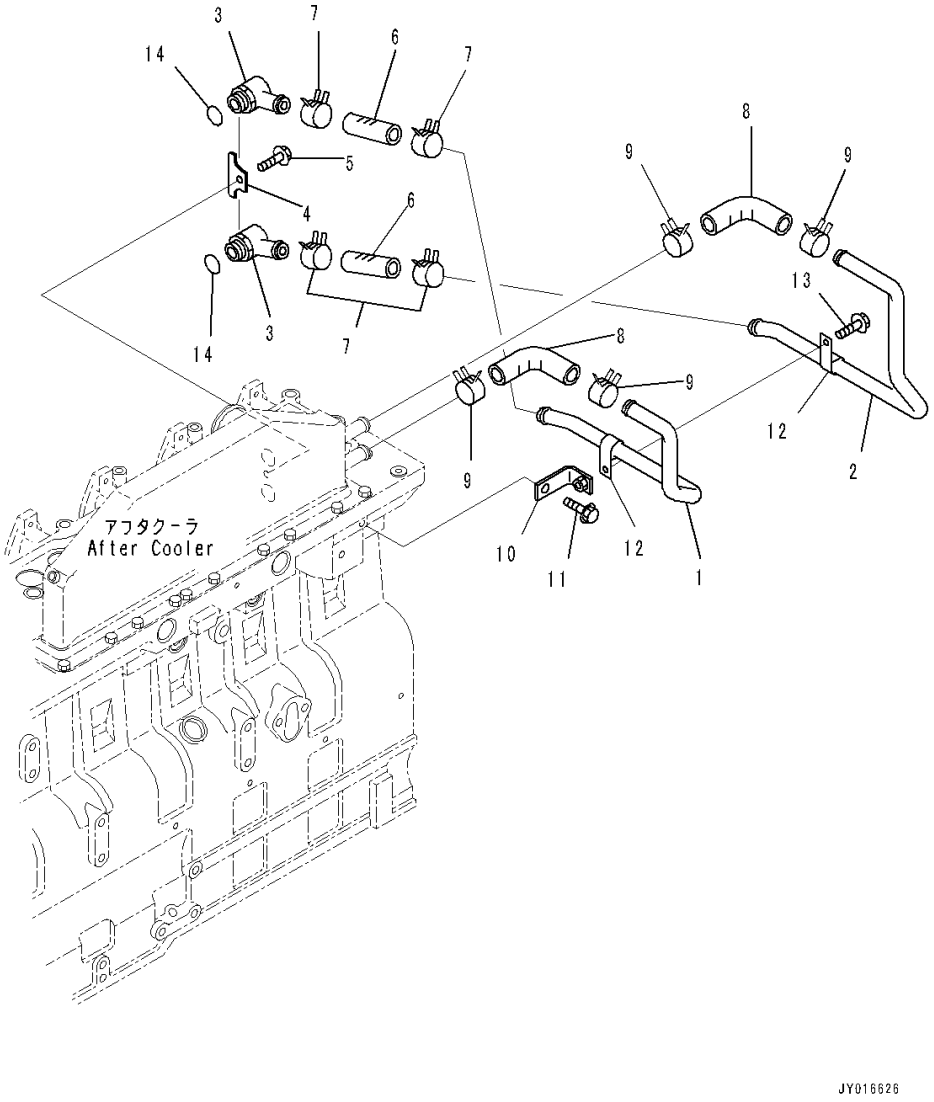

Index	Code	Part Number	Description	Qty	Serial Number
1		6742-61-5420	Tube, Water Inlet	1	26825008-
2		6742-61-5410	Tube, Water Outlet	1	26825008-
3		1294861H1	Connection	2	26825008-
4		1294859H1	Plate	1	26825008-
5		6736-21-5310	Bolt	1	26825008-
6		6736-61-5140	Hose	2	26825008-
7		6742-01-5380	Clamp, Hose	4	26825008-
8		6742-61-5440	Hose	2	26825008-
9		6742-01-5380	Clamp, Hose	4	26825008-
10		6742-61-5450	Brace	1	26825008-
11		6732-61-3140	Bolt	1	26825008-
12		1313235H1	Clamp, Hose	2	26825008-
13		6732-61-3140	Bolt	1	26825008-
14		1241155H1	O-ring	2	26825008-

FIG. ATB10-001001 Exhaust Manifold Mounting

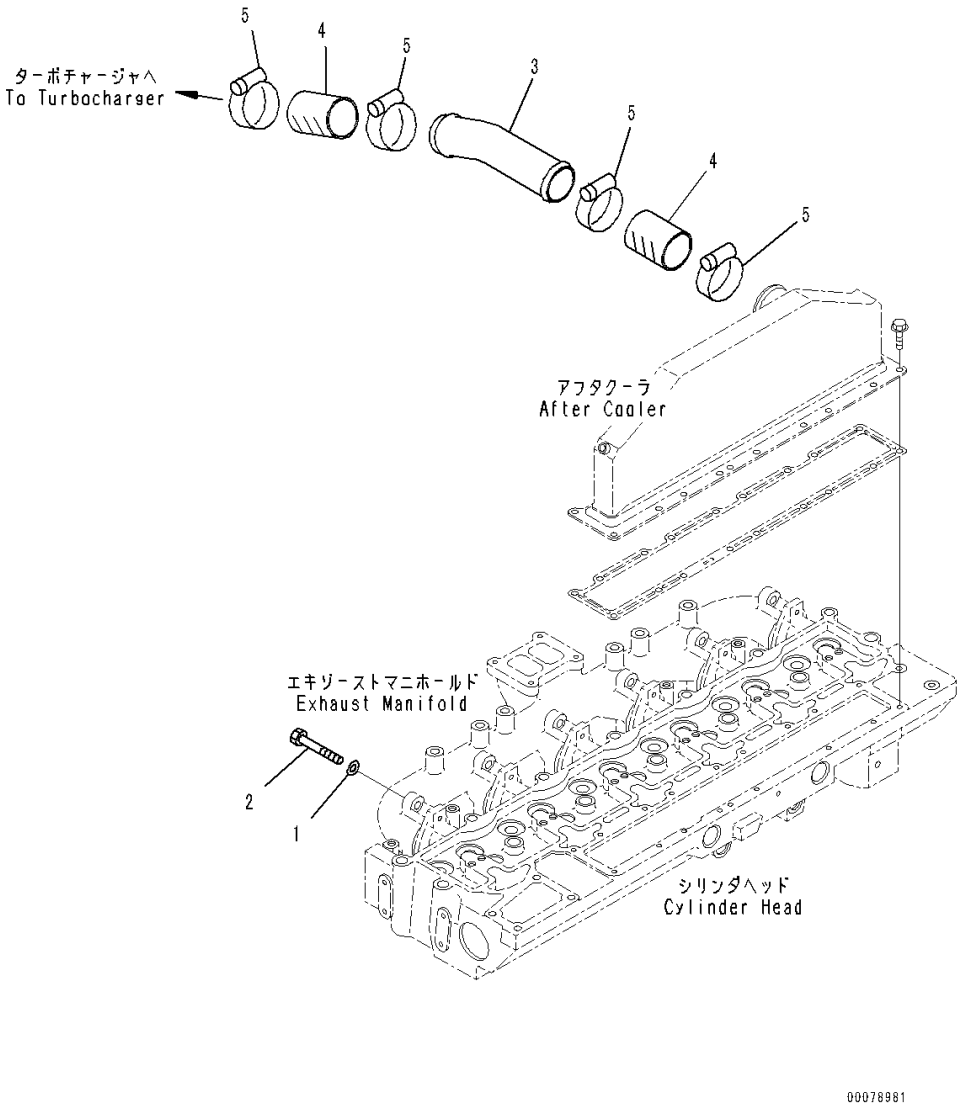

Index	Code	Part Number	Description	Qty	Serial Number
1		01643-31032	Washer	12	26825008-
2		6742-01-3340	Screw	12	26825008-
3		6742-01-5003	Tube, Air	1	26825008-
4		6736-61-6141	Hose	2	26825008-
5		07299-00070	Clamp	4	26825008-

FIG. ATB30-001001 Exhaust Manifold

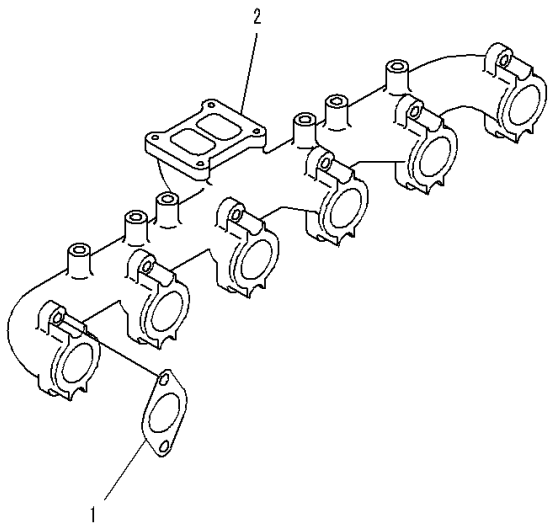

PJ6D133

Index	Code	Part Number	Description	Qty	Serial Number
1		6742-01-4010	Gasket	6	26825008-
2		6743-11-5220	Manifold, Exhaust	1	26825008-

FIG. APP20-001001 Turbocharger Mounting

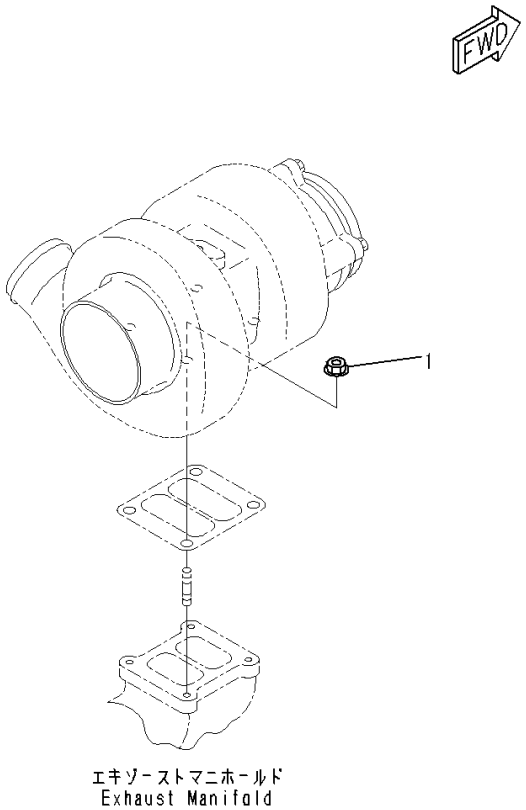

Index	Code	Part Number	Description	Qty	Serial Number
1		6732-81-8820	Nut	4	26825008-

FIG. A1539-001001 Turbocharger

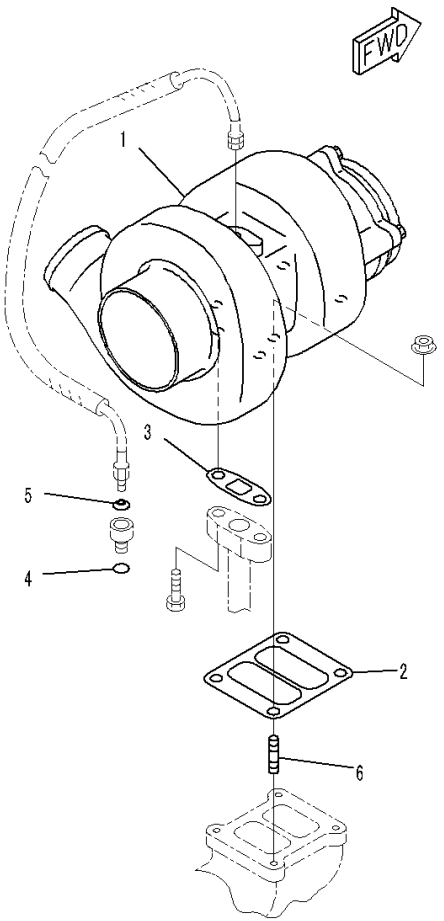

エキゾーストマニホールド
Exhaust Manifold

JY016627

Index	Code	Part Number	Description	Qty	Serial Number
		6742-81-1120	Turbocharger Kit	1	26825008-
1	C1		• Turbocharger	1	26825008-
2		6741-81-8830	• Gasket	1	26825008-
3		6207-51-7690	• Gasket	1	26825008-
4		6736-51-8710	• O-ring	1	26825008-
5		6736-51-8730	• Washer	1	26825008-
6		6732-81-8810	Stud	4	26825008-

FIG. ATP00-001001 Turbocharger Oil Piping

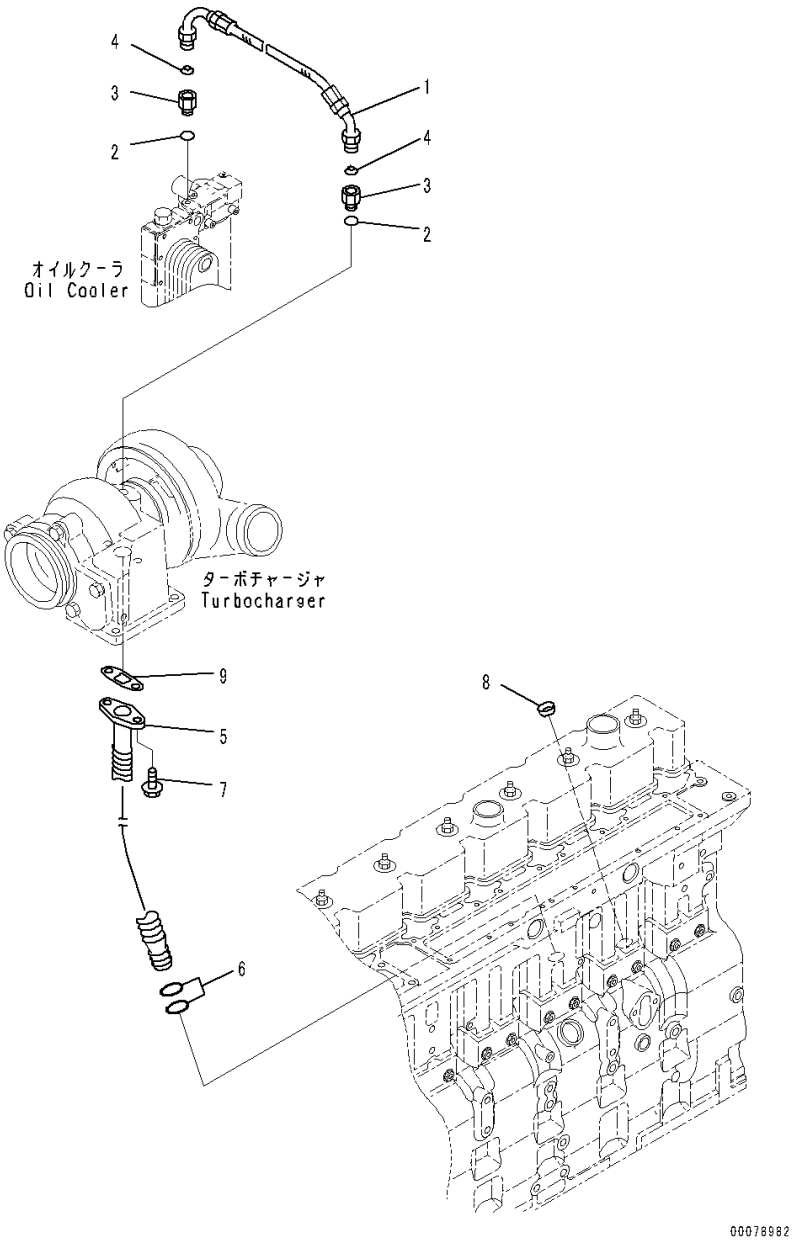

Index	Code	Part Number	Description	Qty	Serial Number
1		6735-51-8130	Hose	1	26825008-
		6736-51-8140	Connector Assembly	2	26825008-
2		6736-51-8710	• O-ring	1	26825008-
3	C1		• Connector	1	26825008-
4		6736-51-8730	Washer, Seal	2	26825008-
		130-48-35H91	Connection, Oil Drain	1	26825008-
5		6742-01-3450	• Connection	1	26825008-
6		6732-51-5330	• O-ring	2	26825008-
7		6732-71-3220	Bolt	2	26825008-
8		6735-21-5530	Plug	1	26825008-
9		6207-51-7690	Gasket	1	26825008-

FIG. AXS00-001001 Exhaust Connection, Clamp

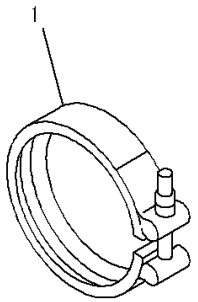

PMD1036

Index	Code	Part Number	Description	Qty	Serial Number
1		6742-01-3620	Clamp	1	26825008-

FIG. A2010-001001 Water Temperature Sensor

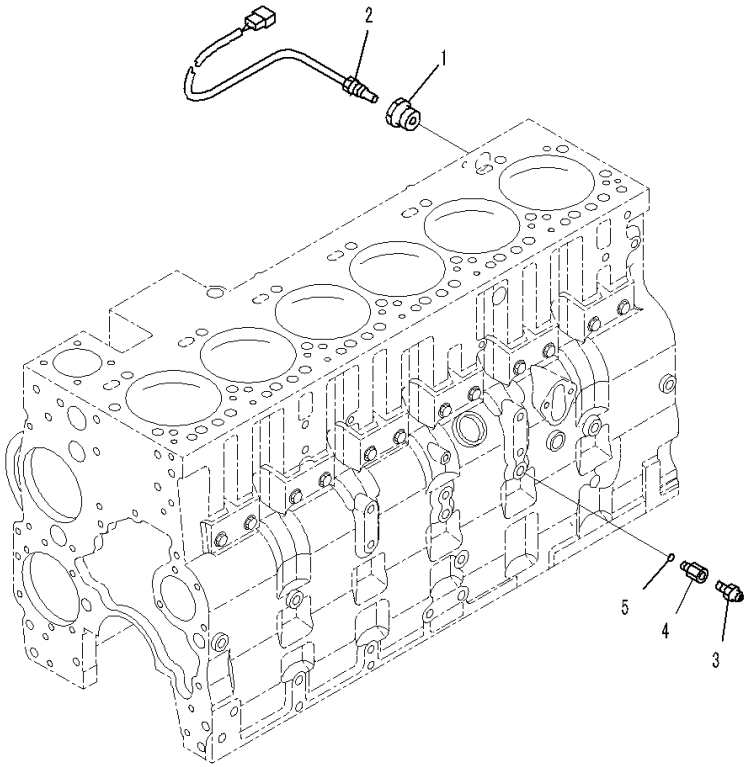

Index	Code	Part Number	Description	Qty	Serial Number
1		6732-11-6140	Adapter	1	26825008-
2		14X-06-12370	Sensor, Thermo	1	26825008-
3		08073-20505	Switch, Pressure	1	26825008-
4		6732-81-3170	Nipple	1	26825008-
5		6735-21-1970	O-ring	1	26825008-

FIG. A1030-001001 Front Hanger

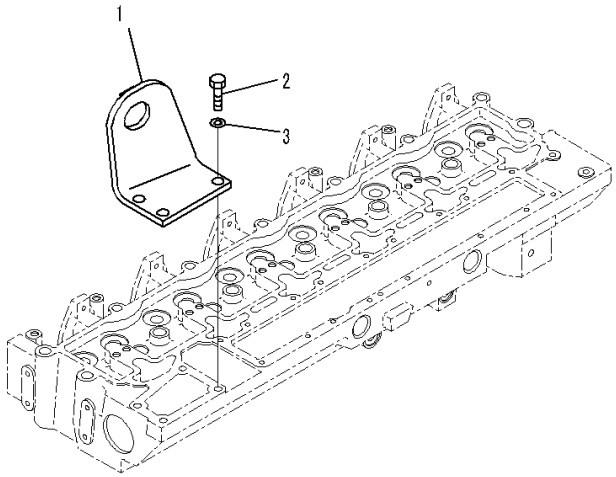

00078975

Index	Code	Part Number	Description	Qty	Serial Number
1		134-01-61512	Bracket,Front	1	26825008-
2		01010-81030	Bolt	3	26825008-
3		01643-31032	Washer	3	26825008-

FIG. A1050-001001 Rear Hanger

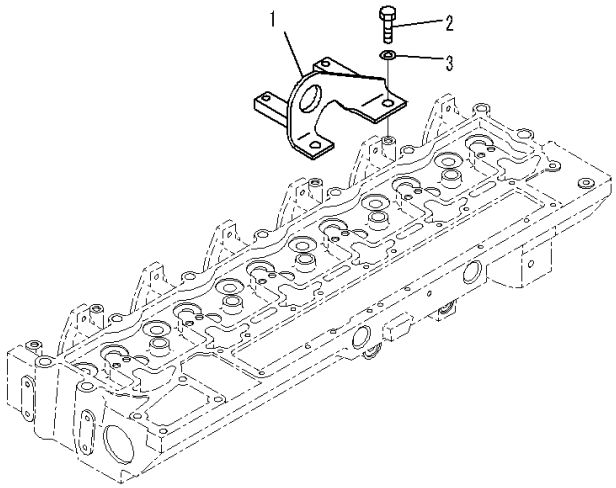

00078976

Index	Code	Part Number	Description	Qty	Serial Number
1		134-01-61151	Bracket,Rear	1	26825008-
2		01010-81025	Bolt	2	26825008-
3		01643-31032	Washer	2	26825008-

FIG. ASR00-001001 Dust Seal, Front

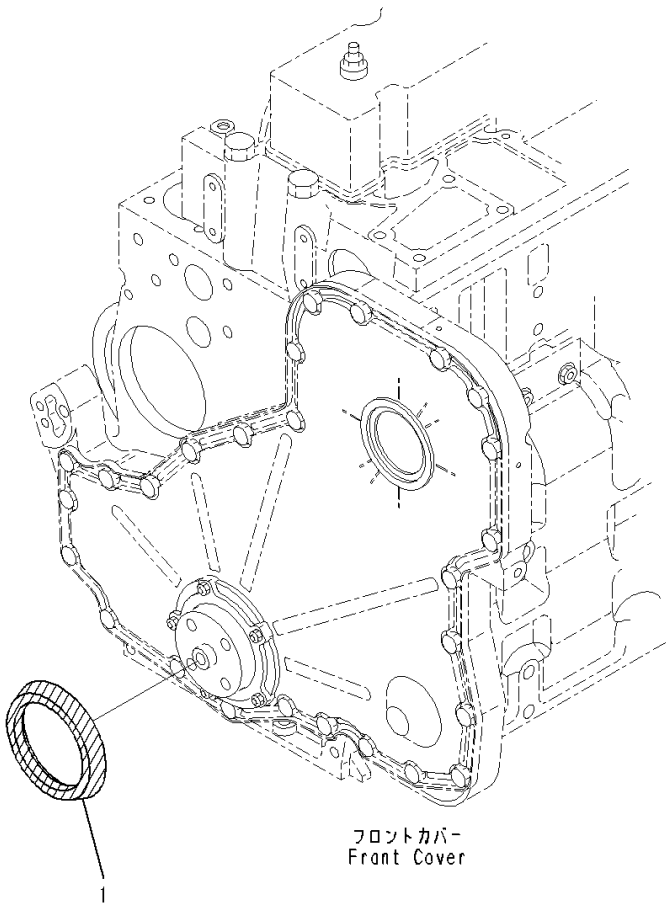

PJ6D147

Index	Code	Part Number	Description	Qty	Serial Number
1		6742-01-3320	Seal, Dust	1	26825008-

FIG. A4510-001001 Solenoid Valve

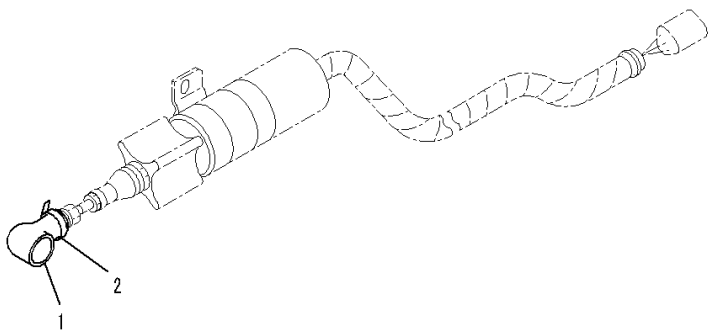

00079002

Index	Code	Part Number	Description	Qty	Serial Number
1		6743-81-9170	Cover	1	26825008-
2		08034-00414	Band	1	26825008-

ENGINE CYLINDER BLOCK AND ITS RELATED PARTS

FIG. ALP00-001001 Lubrication Oil Pump

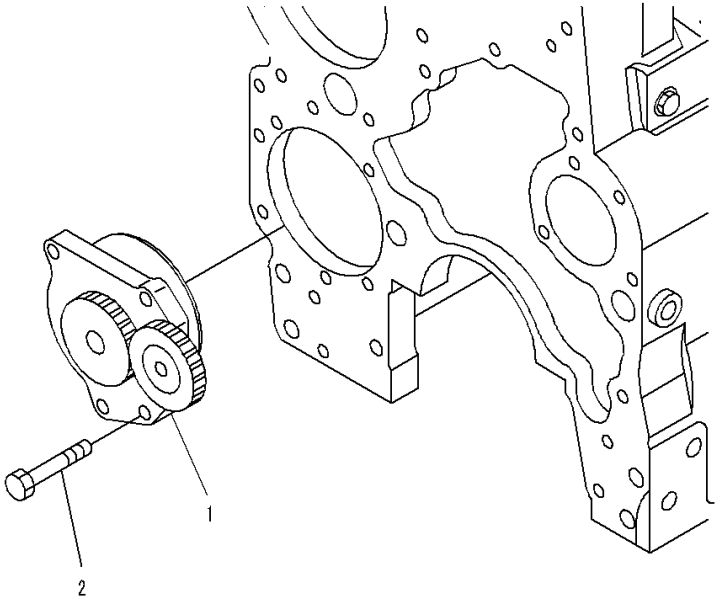

PJ6D163

Index	Code	Part Number	Description	Qty	Serial Number
1		6741-51-1110	Oil Pump Assembly	1	26825008-
2		6735-51-1120	Bolt	4	26825008-

FIG. AFW10-001001 Flywheel Mounting

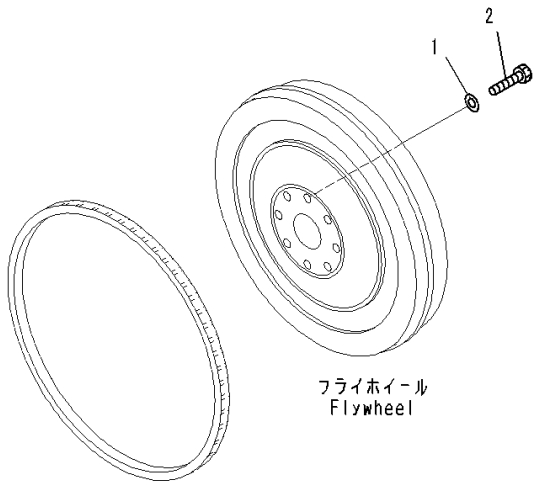

PJ6D158

Index	Code	Part Number	Description	Qty	Serial Number
1		6732-31-4120	Washer	8	26825008-
2		6732-31-4130	Bolt	8	26825008-

FIG. AOP10-001001 Oil Pan and Suction Tube

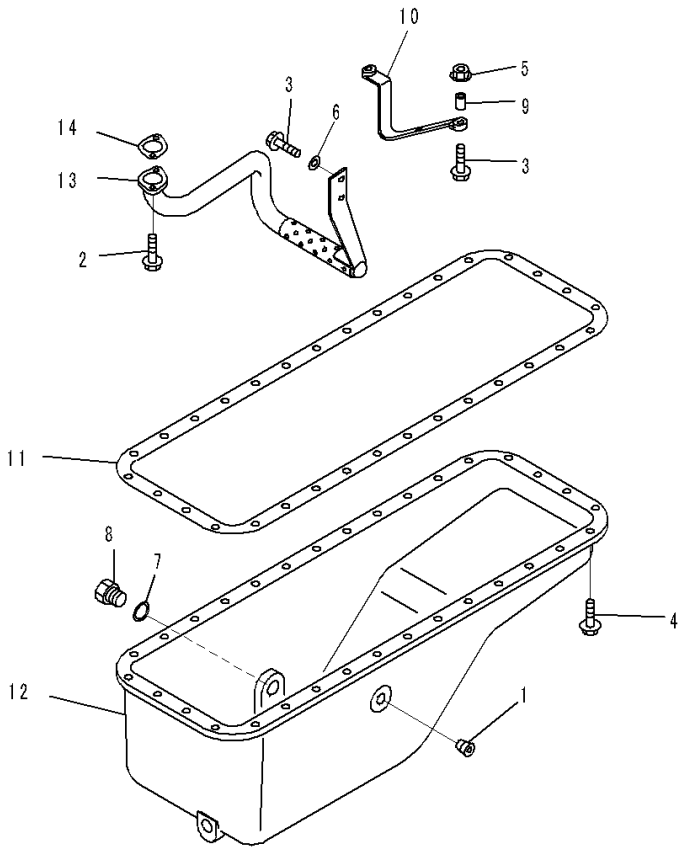

Index	Code	Part Number	Description	Qty	Serial Number
1		6732-21-5540	Plug, Pipe	1	26825008-
2		6742-01-2630	Bolt	2	26825008-
3		6735-71-5190	Bolt	4	26825008-
4		6732-21-6630	Screw	32	26825008-
5		01584-00605	Nut	2	26825008-
6		6742-01-2690	Washer	2	26825008-
7		6732-21-5190	Seal, Washer	1	26825008-
8		6732-21-5210	Plug	1	26825008-
9		6742-01-0310	Spacer	2	26825008-
10		6745-51-2120	Brace	1	26825008-
11		6745-21-5130	Gasket	1	26825008-
12		6742-01-5306	Oil Pan	1	26825008-
13		6745-51-2110	Connection	1	26825008-
14		6743-51-5550	Gasket	1	26825008-

FIG. A2419-001001 Camshaft

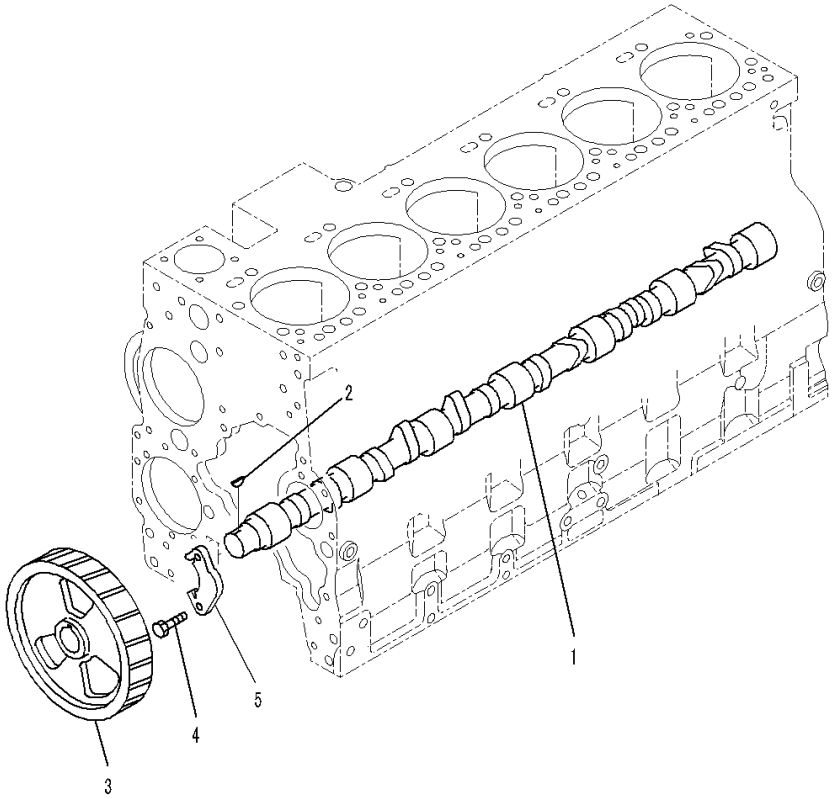

Index	Code	Part Number	Description	Qty	Serial Number
1		6742-01-4320	Camshaft	1	26825008-
2		6742-01-2880	Gear	1	26825008-
3		6732-41-1280	Key	1	26825008-
4		6732-41-1220	Support, Thrust	1	26825008-
5		6732-41-1260	Bolt	2	26825008-

FIG. B9999-501001 Spare Parts

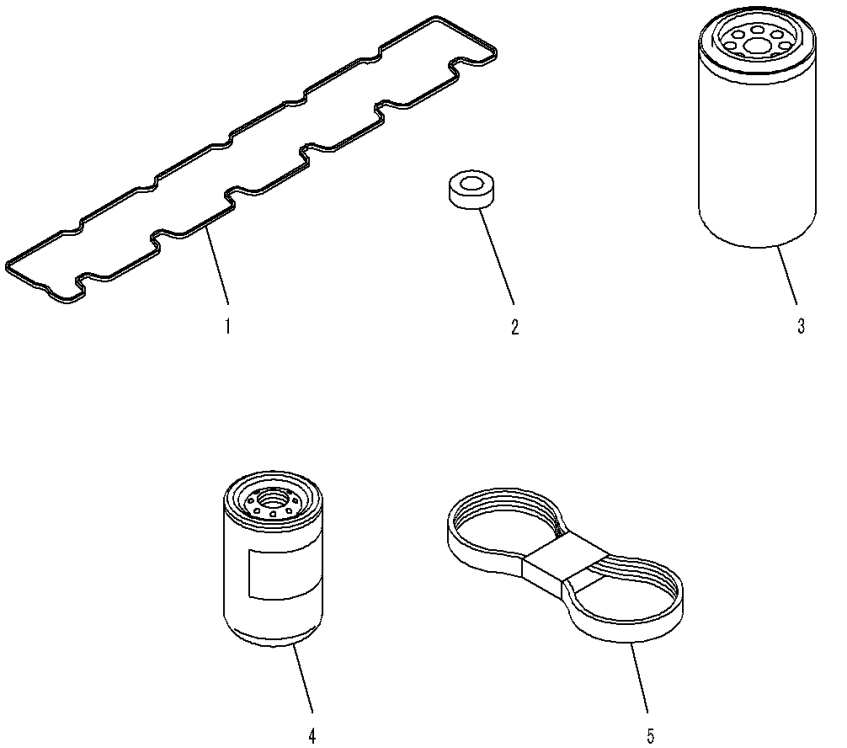

Index	Code	Part Number	Description	Qty	Serial Number
1		6741-11-8121	O-ring, Head Cover	1	26825008-
2		6732-11-8210	Isolator, Head Cover	6	26825008-
3		6742-01-4540	Cartridge, Oil	1	26825008-
4		6732-71-6112	Cartridge, Fuel	1	26825008-
5		6743-62-3710	Belt, Fan	1	26825008-

FIG. ARL00-001001 Rocker Arm

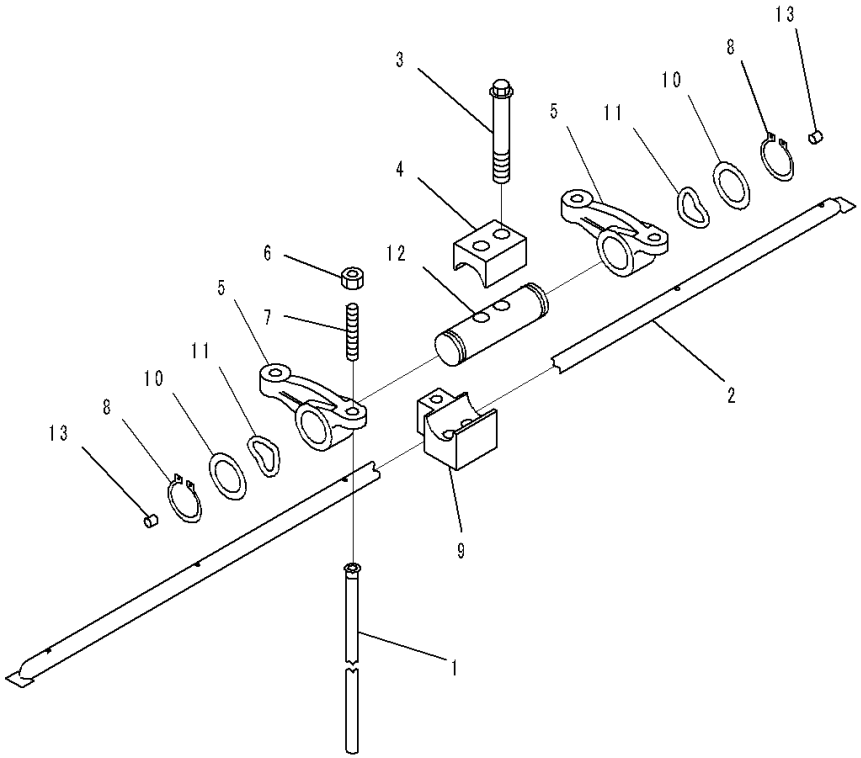

Index	Code	Part Number	Description	Qty	Serial Number
1		6742-01-1250	Rod, Push	12	26825008-
2		6742-01-1320	Manifold, Oil	1	26825008-
		6741-41-5100	Rocker Arm Assembly	6	26825008-
3		6742-01-1230	• Screw	2	26825008-
4		6742-01-1240	• Clamp	1	26825008-
5		6742-01-1270	• Lever	2	26825008-
6		6735-41-5550	• • Nut	1	26825008-
7		6735-41-5560	• • Screw	1	26825008-
8		6742-01-1330	• Ring	2	26825008-
9		6742-01-1260	• Support	1	26825008-
10		6742-01-1290	• Washer	2	26825008-
11		6742-01-1310	• Washer	2	26825008-
		6742-01-1300	• Shaft	1	26825008-
12		6742-01-5478	• • Shaft	1	26825008-
13		6732-41-5150	• • Rivet	1	26825008-

FIG. ADF10-001001 Front Gear Train Cover

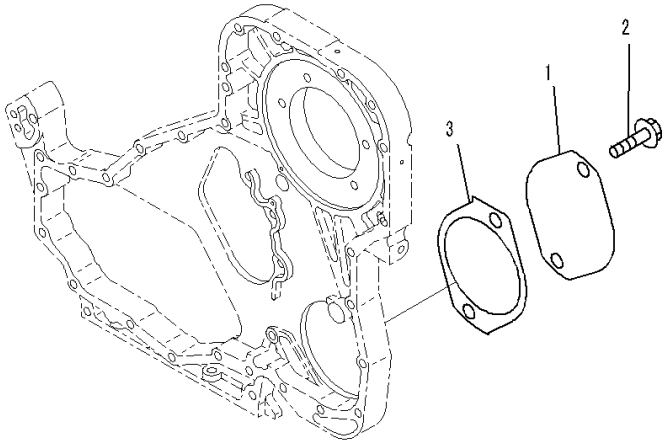

フロントカバー
Front Cover

PJ6D162

Index	Code	Part Number	Description	Qty	Serial Number
1		6741-21-3320	Plate, Cover	1	26825008-
2		6732-51-5130	Bolt	2	26825008-
3		6741-21-3330	Gasket	1	26825008-

FIG. A2049-001001 Front Cover

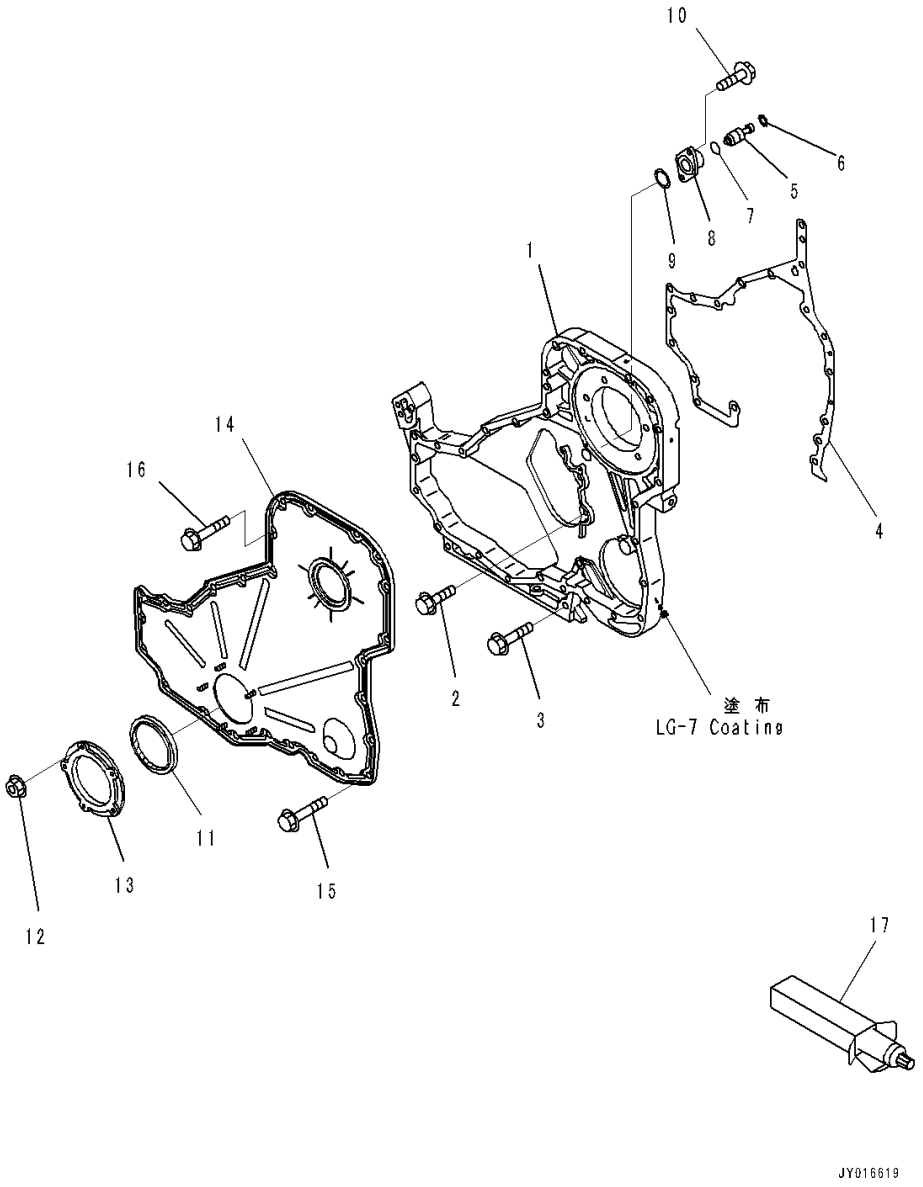

Index	Code	Part Number	Description	Qty	Serial Number
1		6742-21-3110	Housing, Gear	1	26825008-
2		6742-01-0540	Bolt	3	26825008-
3		6741-21-3820	Bolt	3	26825008-
4		6741-21-3810	Gasket	1	26825008-
5		6732-21-3140	Pin	1	26825008-
6		6732-21-3150	Ring	1	26825008-
7		6732-21-3870	Seal	1	26825008-
8		6732-21-3180	Housing	1	26825008-
9		6732-21-3880	Seal	1	26825008-
10		6732-21-3160	Bolt	2	26825008-
		6742-01-0550	Seal Kit	1	26825008-
11	C1		• Seal	1	26825008-
12		6741-21-3541	• Nut	5	26825008-
13		6741-21-3530	Carrier	1	26825008-
14		6741-21-3310	Cover, Gear	1	26825008-
15		6736-21-5310	Bolt	15	26825008-
16		6742-01-0530	Bolt	11	26825008-
17		09920-00150	Liquid gasket, LG-7, 150G	AR	26825008-

FIG. AFH00-001001 Flywheel Housing, Mounting Parts

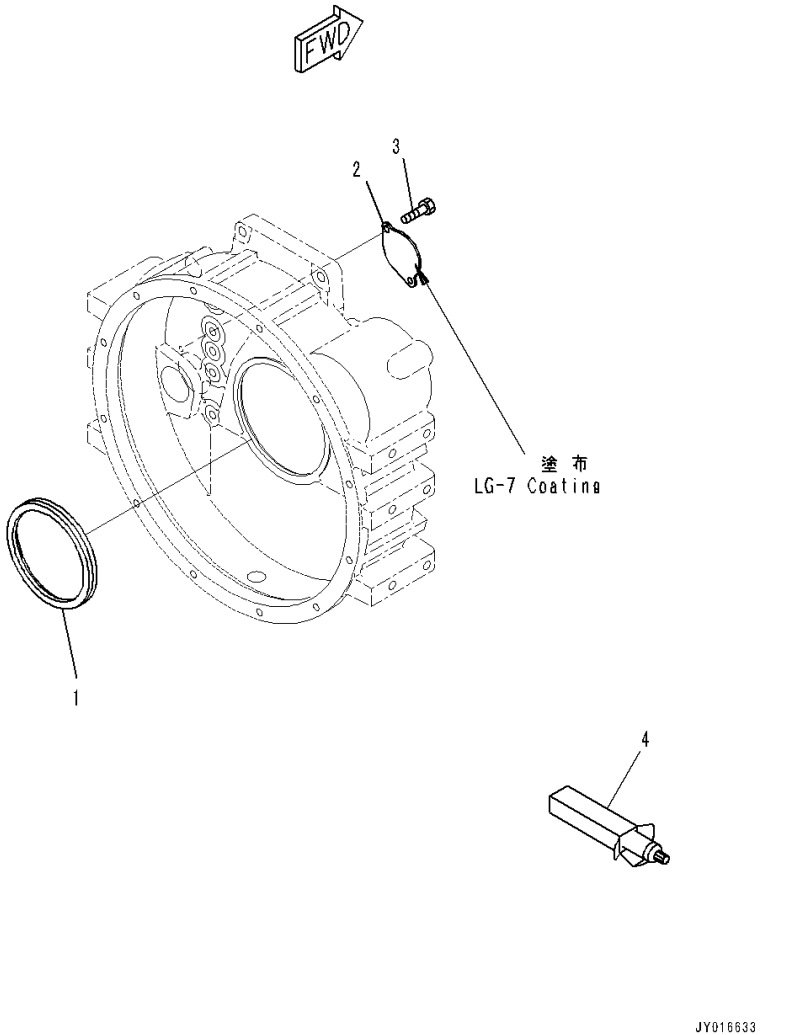

Index	Code	Part Number	Description	Qty	Serial Number
1		6732-21-1311	Seal	1	26825008-
2		6732-21-4130	Plate	1	26825008-
3		6735-21-4120	Bolt	2	26825008-
4		09920-00150	Liquid gasket, LG-7, 150G	AR	26825008-

FIG. A2210-001001 Flywheel Housing, Related Parts

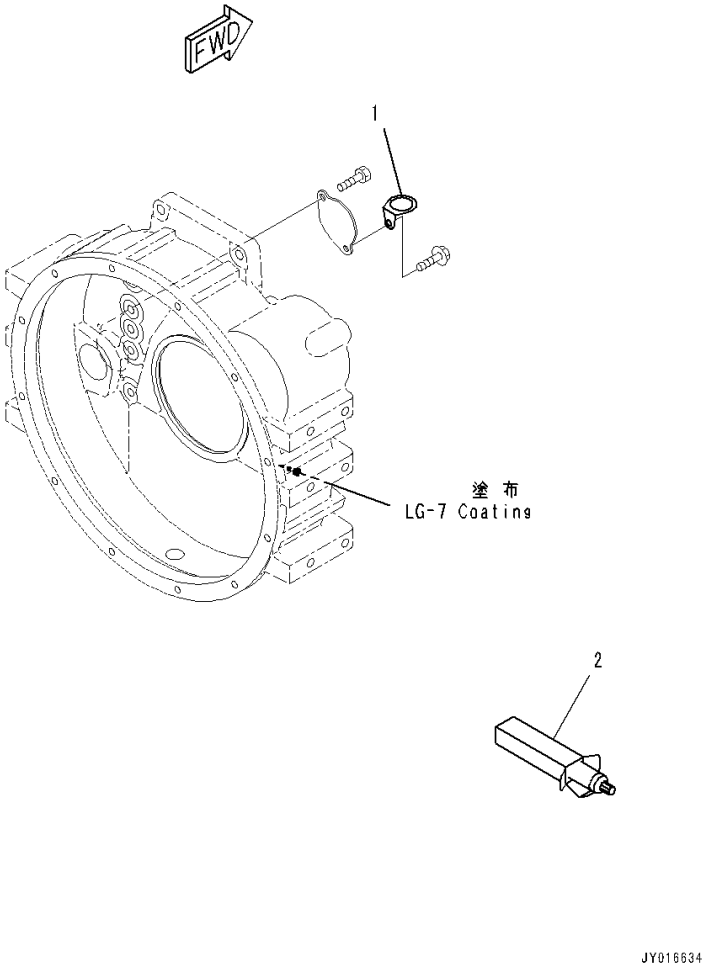

Index	Code	Part Number	Description	Qty	Serial Number
1		6735-21-4250	Clip	1	26825008-
2		09920-00150	Liquid gasket, LG-7, 150G	AR	26825008-

FIG. A2219-001001 Flywheel Housing

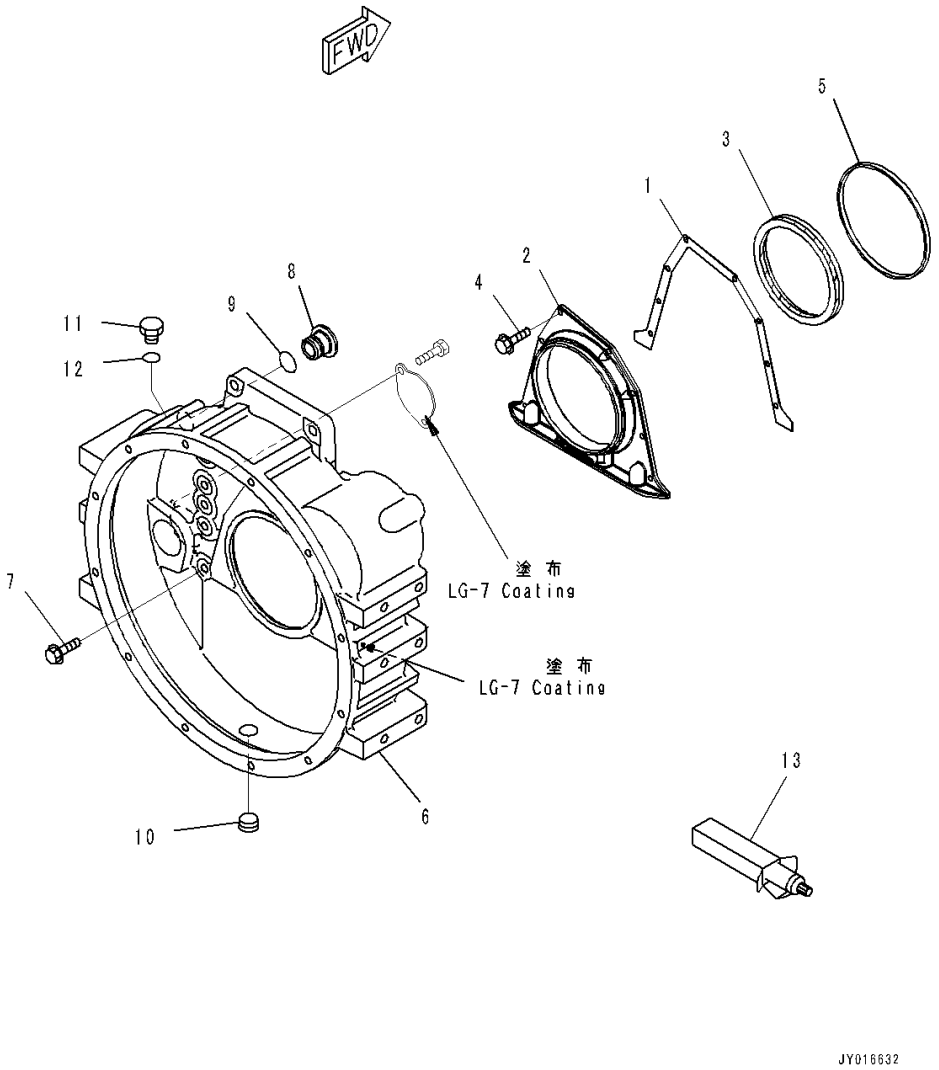

Index	Code	Part Number	Description	Qty	Serial Number
1		6743-21-4190	Gasket	1	26825008-
2		6742-01-5053	Cover	1	26825008-
3		6736-21-4221	Seal	1	26825008-
4		6732-21-4290	Bolt	8	26825008-
5		6732-21-4171	Seal Ring	1	26825008-
6		6745-31-4130	Housing, Flywheel	1	26825008-
7		6732-21-4220	Bolt	12	26825008-
8		6732-21-4150	Plug	1	26825008-
9		6732-21-4161	O-ring	1	26825008-
10		6732-11-1920	Plug	1	26825008-
11		6215-81-9530	Plug	1	26825008-
12		6215-81-9730	O-ring	1	26825008-
13		09920-00150	Liquid gasket, LG-7, 150G	AR	26825008-

FIG. AFW00-001001 Flywheel

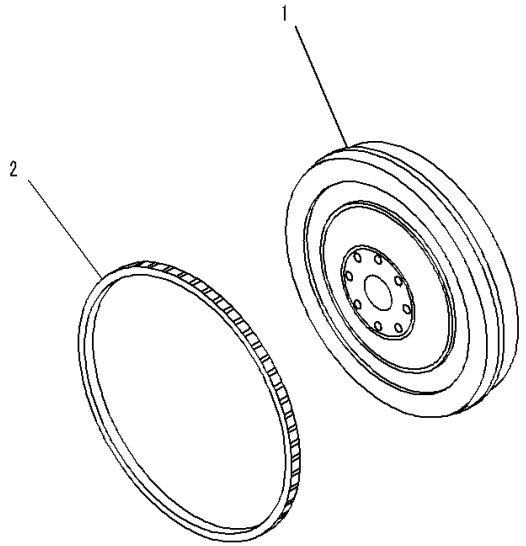

PJ6D157

Index	Code	Part Number	Description	Qty	Serial Number
		6742-31-4100	Flywheel	1	26825008-
1	C1		• Flywheel	1	26825008-
2		6742-01-5206	• Gear, Ring	1	26825008-

FIG. A2110-001001 Engine Oil Pan Drain

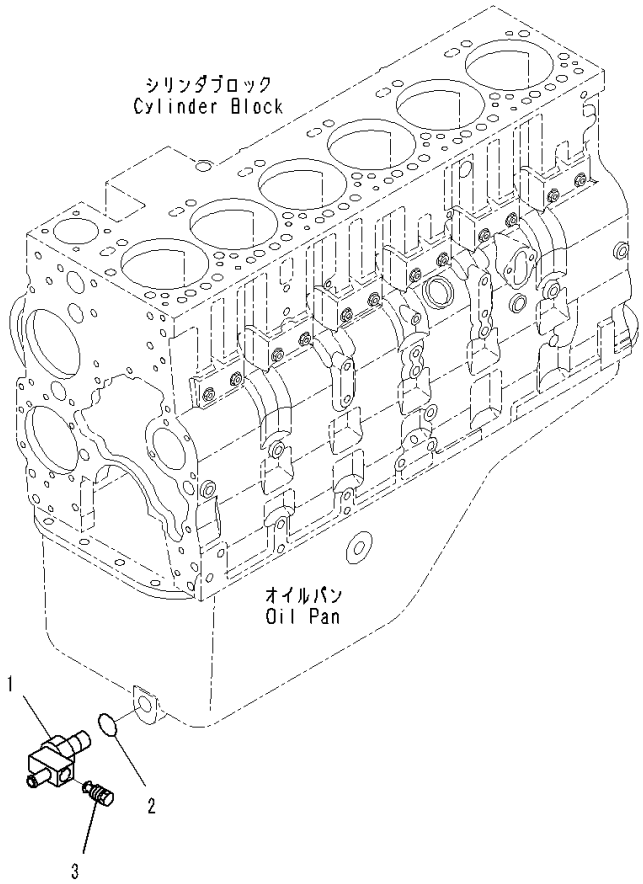

JY016591

Index	Code	Part Number	Description	Qty	Serial Number
1		134-01-61830	Elbow	1	26825008-
2		07002-22434	O-ring	1	26825008-
3		134-01-61840	Plug	1	26825008-

FIG. ABB00-001001 Cylinder Block, Related Parts

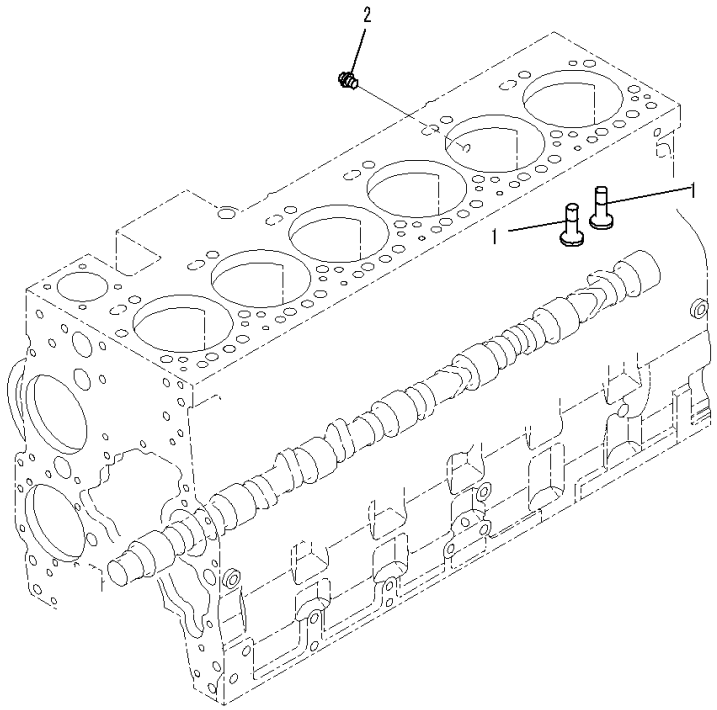

JY016660

Index	Code	Part Number	Description	Qty	Serial Number
1		6732-41-2112	Tappet, Valve	12	26825008-
2		6745-21-1120	Plug, Threaded	1	26825008-

FIG. A2019-001001 Cylinder Block

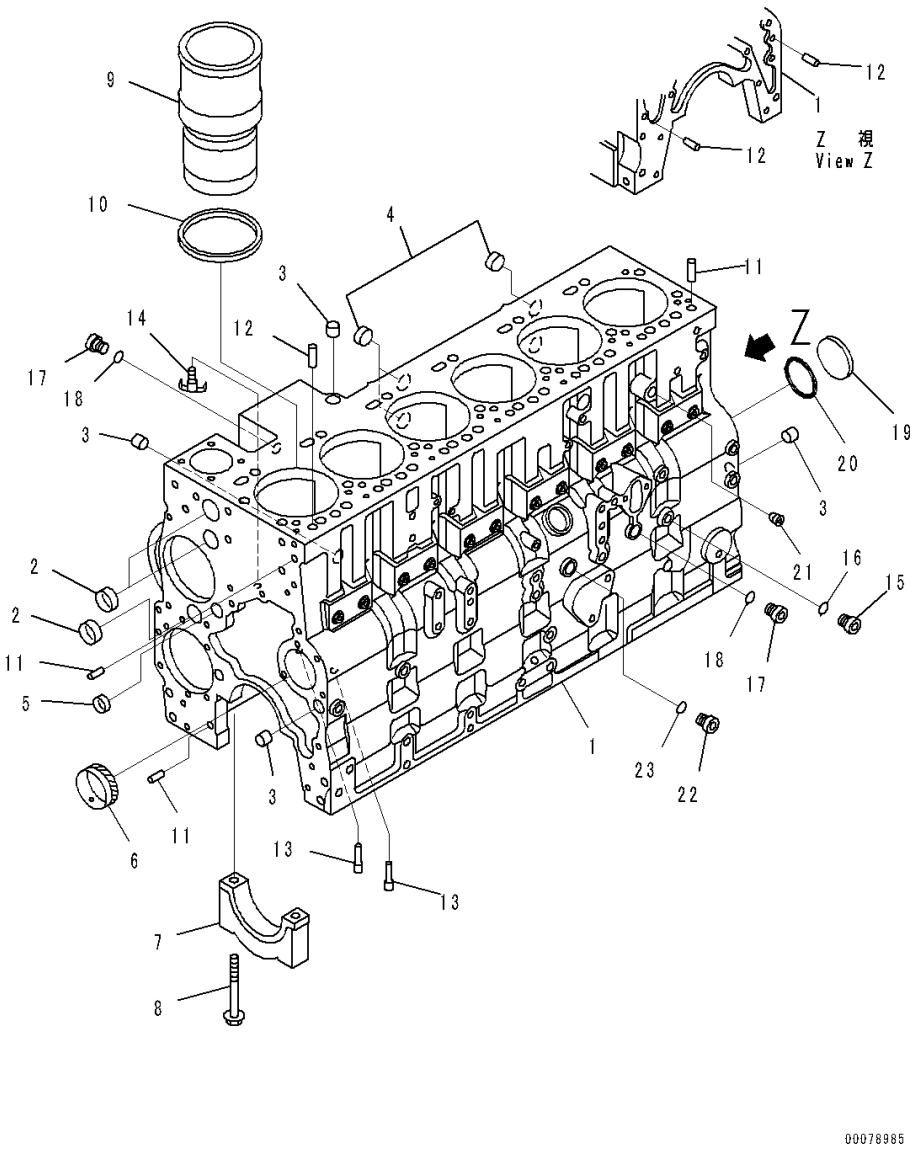

Index	Code	Part Number	Description	Qty	Serial Number
		6741-21-1190	Cylinder Kit	1	26825008-
		6741-21-1105	• Cylinder Block	1	26825008-
1	C1		• • Cylinder Block	1	26825008-
2		6742-01-1360	• • Plug	3	26825008-
3		6742-01-1370	• • Plug	4	26825008-
4		6742-01-1420	• • Plug	3	26825008-
5		6732-21-1810	• • Plug	3	26825008-
6		6742-01-5160	• • Bushing	7	26825008-
7	C3	6741-21-1130	• • Cap	7	26825008-
8		6741-21-1140	• • Bolt	14	26825008-
		6742-01-5159	Liner Kit	6	26825008-
9	C1		• Liner	1	26825008-
10		6742-01-1520	• Seal	1	26825008-
		6741-21-1290	Cylinder Kit	1	26825008-
11		6732-21-6120	• Pin, Dowel	2	26825008-
12		6742-01-1470	• Pin	4	26825008-
13		6742-01-3890	• Nozzle	12	26825008-
14		6216-94-3450	• Cock	1	26825008-
		6732-21-1960	• Plug Assembly	6	26825008-
15		6215-81-9510	• • Plug	1	26825008-
16		6215-81-9710	• • O-ring	1	26825008-
		6735-21-1910	• Plug Assembly	2	26825008-
17		6735-21-1920	• • Plug	1	26825008-
18		6735-21-1930	• • O-ring	1	26825008-
19		6742-01-1480	• Plug	1	26825008-
20		6742-01-4080	• O-ring	1	26825008-
21		6732-21-1980	• Plug	1	26825008-
		6735-21-1910	• Plug Assembly	1	26825008-
22		6735-21-1920	• • Plug	1	26825008-
23		6735-21-1930	• • O-ring	1	26825008-

FIG. ABB30-001001 Cylinder Block Plug, Lubrication Plug

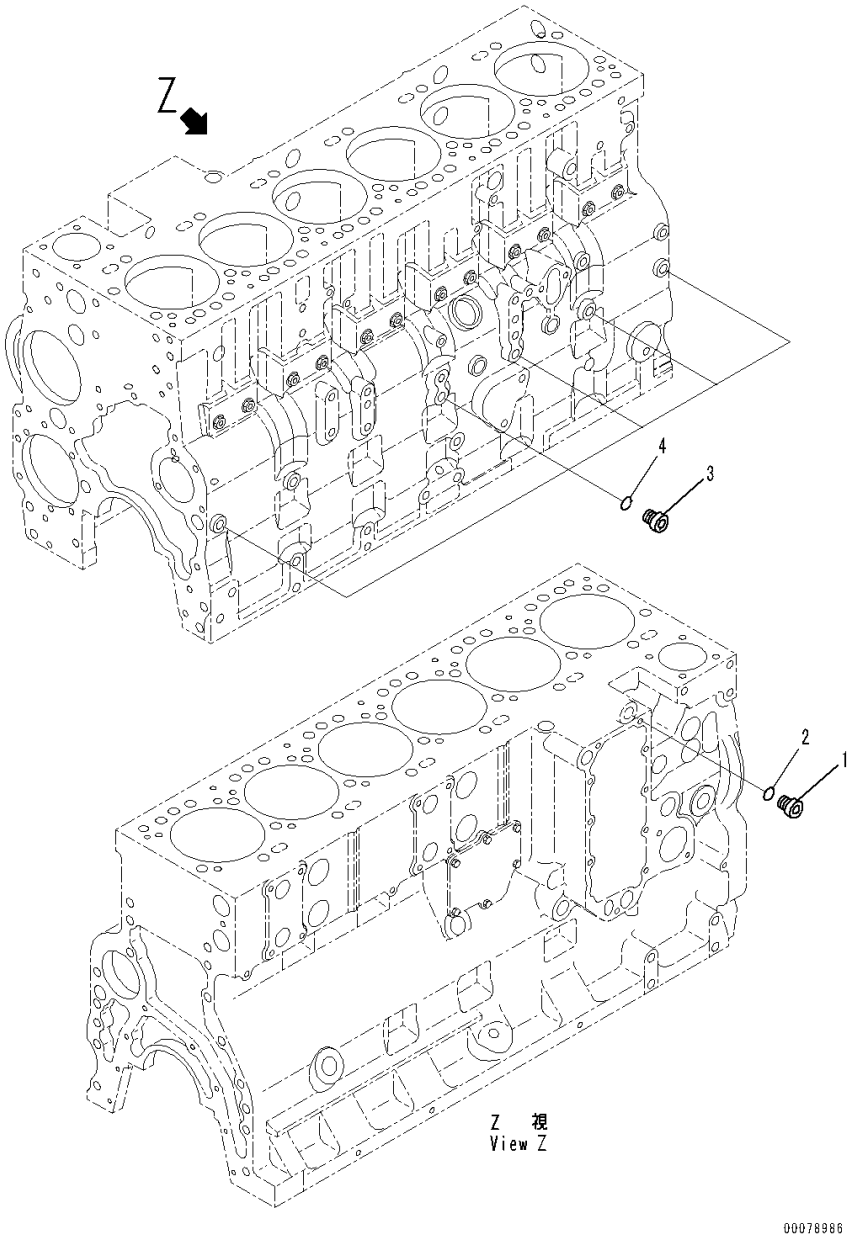

Index	Code	Part Number	Description	Qty	Serial Number
		6735-21-1910	Plug Assembly	1	26825008-
1		6735-21-1920	• Plug	1	26825008-
2		6735-21-1930	• O-ring	1	26825008-
		6732-21-1960	Plug Assembly	5	26825008-
3		6215-81-9510	• Plug	1	26825008-
4		6735-21-1970	• O-ring	1	26825008-

FIG. ABB40-001001 Cylinder Block Plug, Coolant Plug

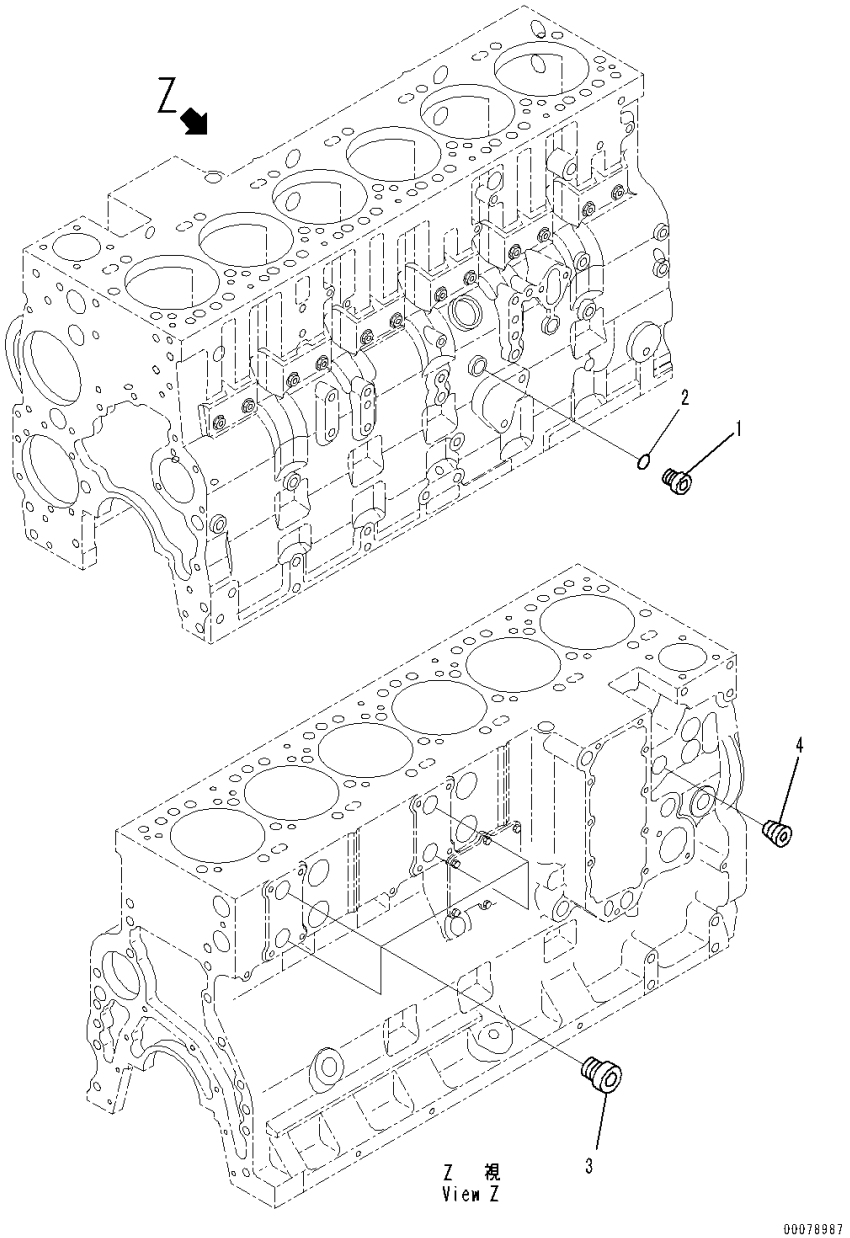

Index	Code	Part Number	Description	Qty	Serial Number
		6735-21-1910	Plug Assembly	1	26825008-
1		6735-21-1920	• Plug	1	26825008-
2		6735-21-1930	• O-ring	1	26825008-
3		6732-11-1920	Plug	4	26825008-
4		6732-21-1980	Plug	1	26825008-

FIG. AHC00-001001 Cabin Heater Plug

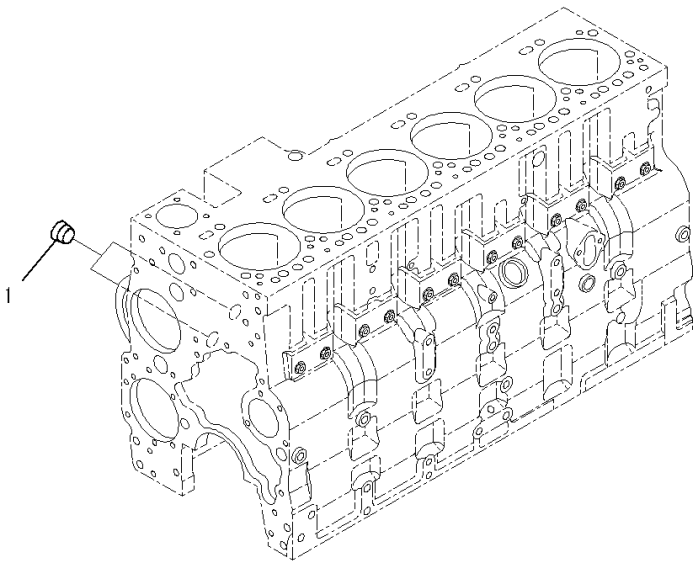

00078990

Index	Code	Part Number	Description	Qty	Serial Number
1		6732-11-1920	Plug	2	26825008-

FIG. A2319-001001 Crankshaft

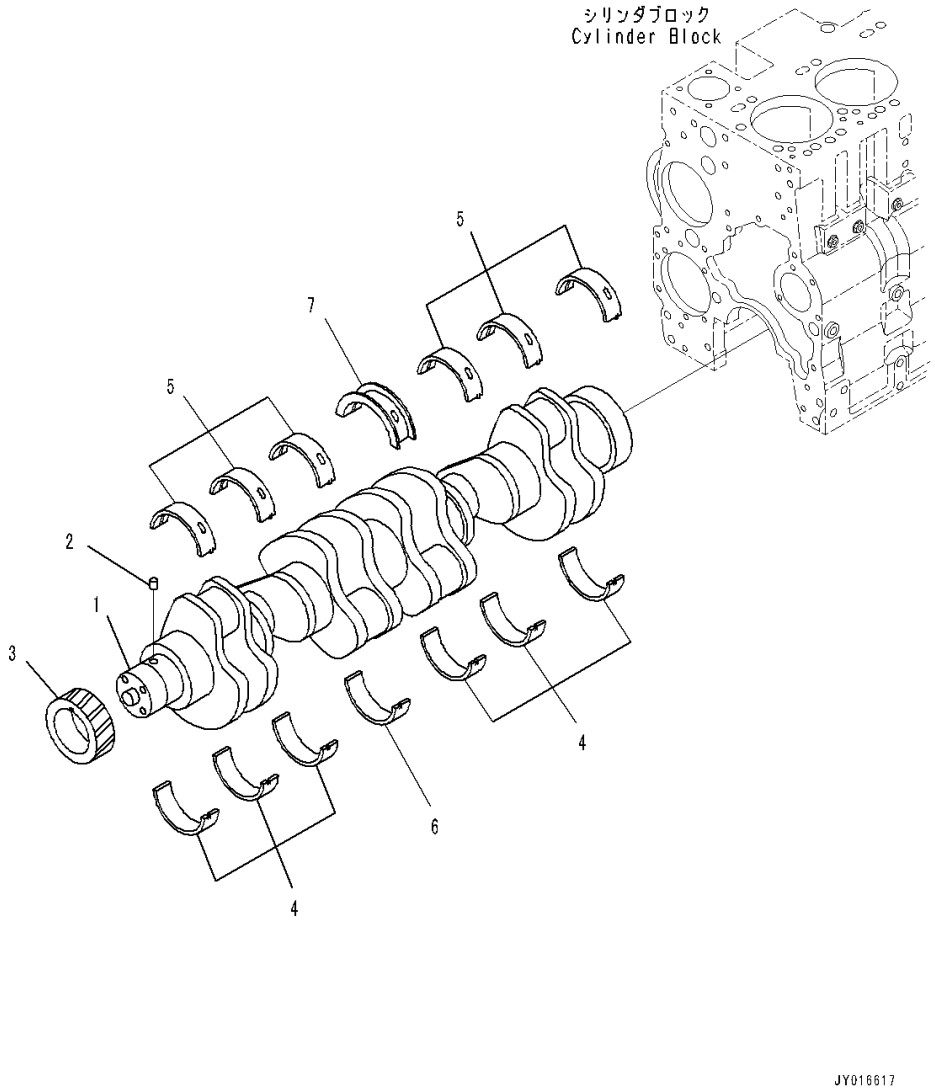

Index	Code	Part Number	Description	Qty	Serial Number
		6742-01-1570	Crankshaft Assembly	1	26825008-
1	C1		• Crankshaft	1	26825008-
2		6732-21-6150	• Pin, Dowel	1	26825008-
3		6742-01-1590	• Gear	1	26825008-
		6742-21-8200	Main Metal Assembly	6	26825008-
4	C1		• Metal,Lower	1	26825008-
5	C1		• Metal,Upper	1	26825008-
		6742-21-8500	Thrust Metal Assembly	1	26825008-
6	C1		• Metal,Lower	1	26825008-
7	C1		• Metal, Thrust	1	26825008-

FIG. A2359-001001 Piston and Connecting Rod

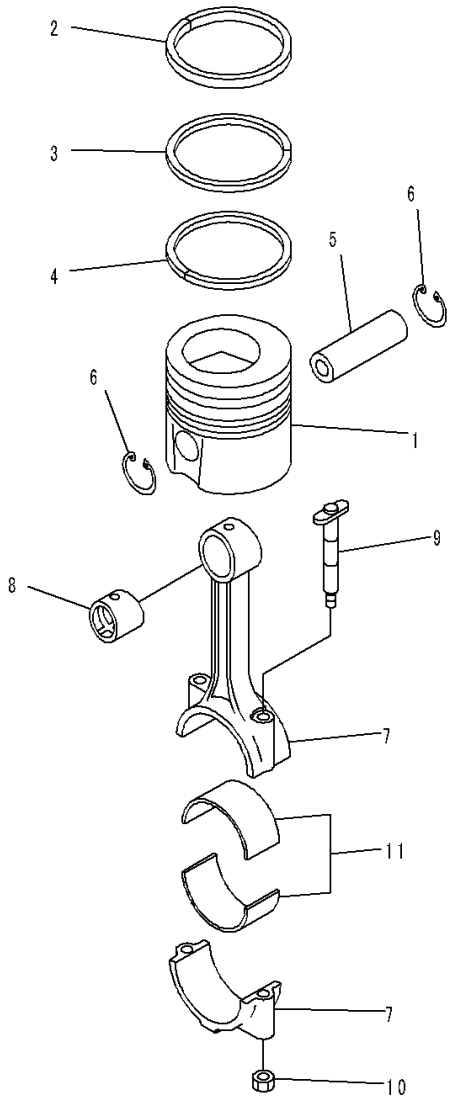

PJ6D360

Index	Code	Part Number	Description	Qty	Serial Number
		6743-31-2100	Piston Kit	6	26825008-
1		6743-31-2110	• Piston	1	26825008-
		1241748H92	• Piston Ring Assembly	1	26825008-
2	C1		• • Ring,Top	1	26825008-
3	C1		• • Ring, Second	1	26825008-
4	C1		• Ring, Oil	1	26825008-
5		6742-01-5474	Pin	6	26825008-
6		6742-01-5309	Ring, Snap	12	26825008-
		1240906H91	Connecting Rod Assembly	6	26825008-
7	C1		• Rod	1	26825008-
8		6742-01-2740	• Bushing	1	26825008-
9		1304869H1	• Bolt	2	26825008-
10		6742-01-4340	• Nut	2	26825008-
11		6742-01-2750	Bearing	72	26825008-

FIG. AOB10-001001 Engine Oil Filler

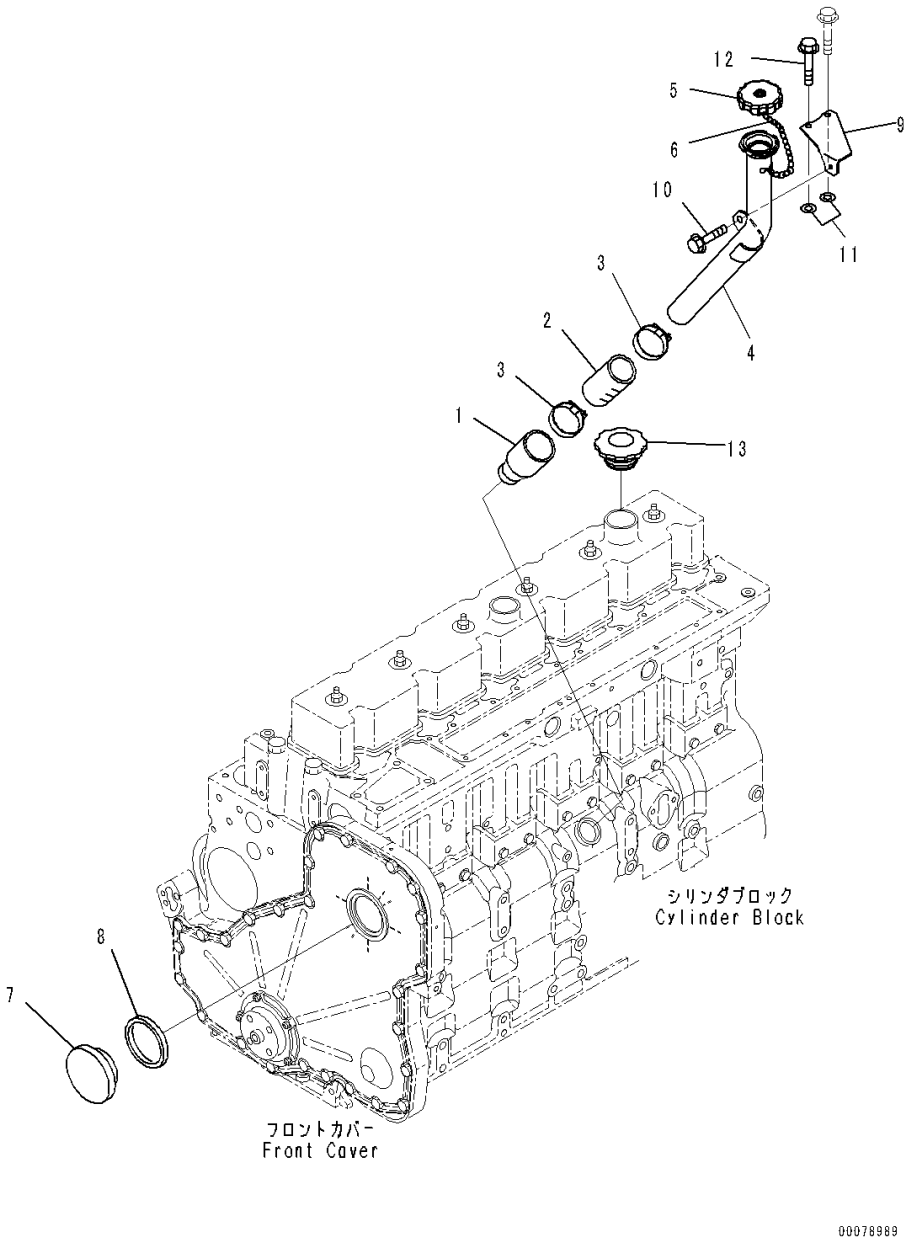

Index	Code	Part Number	Description	Qty	Serial Number
1		6742-21-5110	Tube, Oil Filler	1	26825008-
2		6127-11-5960	Hose	1	26825008-
3		07281-00489	Clamp, Hose	2	26825008-
4		6742-21-7161	Tube, Oil Filler	1	26825008-
5		6136-21-7120	Cap Assembly	1	26825008-
6		6136-21-7190	Chain	1	26825008-
7		6732-21-3190	Cover	1	26825008-
8		6732-21-3220	Seal Ring	1	26825008-
9		6742-21-7170	Brace	1	26825008-
10		6732-21-5160	Bolt	1	26825008-
11		01643-30823	Washer	2	26825008-
12		6732-21-6630	Screw	2	26825008-
13		6130-12-8610	Cap	1	26825008-

FIG. ALG00-001001 Oil Level Gauge

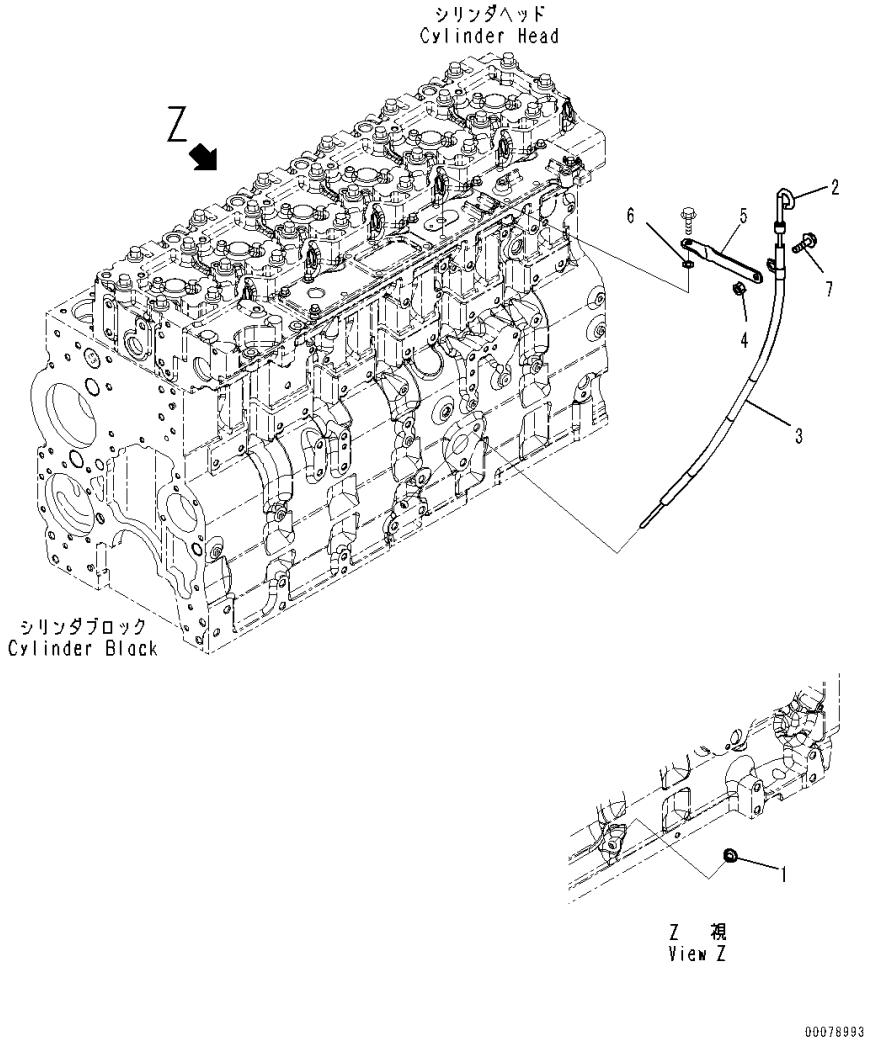

Index	Code	Part Number	Description	Qty	Serial Number
1		6732-21-5530	Plug	1	26825008-
2		6742-21-5210	Gauge	1	26825008-
3		6743-21-5540	Tube, Oil Level	1	26825008-
4		6732-41-6210	Nut	1	26825008-
5		1294830H1	Plate	1	26825008-
6		01643-30823	Washer	1	26825008-
7		6736-21-5310	Bolt	1	26825008-

FIG. ASR10-001001 Water Pump Drive

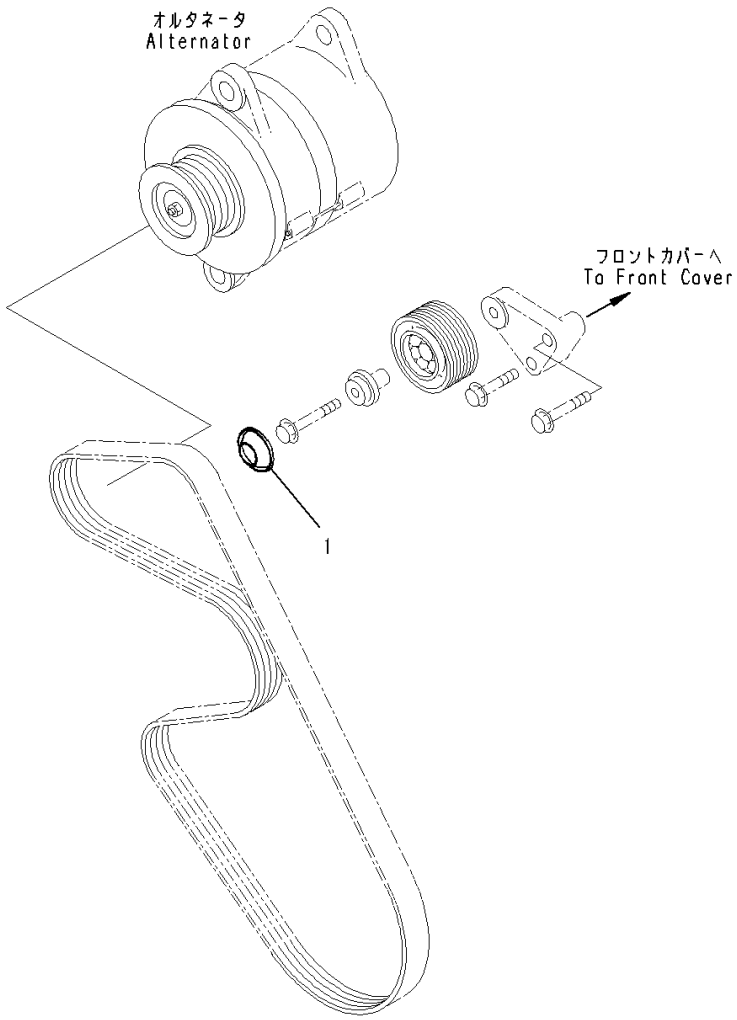

Index	Code	Part Number	Description	Qty	Serial Number
1		6742-01-4560	Cover	1	26825008-

ENGINE LUBRICATING SYSTEM

FIG. ALF00-001001 Engine Oil Filter

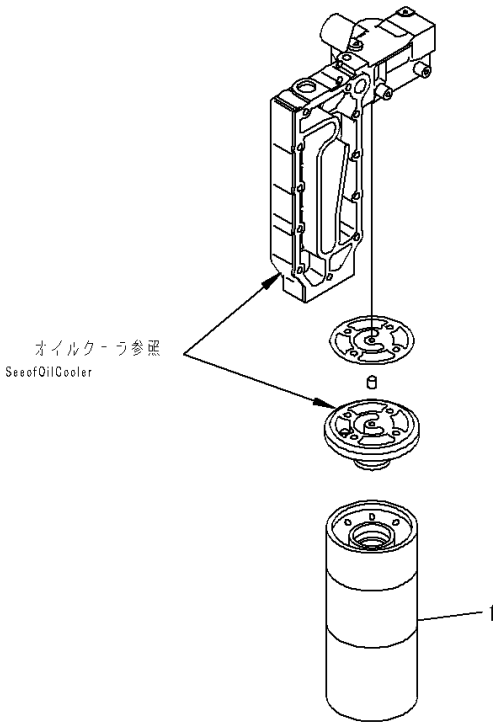

PJ6D164

Index	Code	Part Number	Description	Qty	Serial Number
1		6742-01-4540	Cartridge, Oil Filter	1	26825008-

FIG. ALC00-001001 Engine Oil Cooler

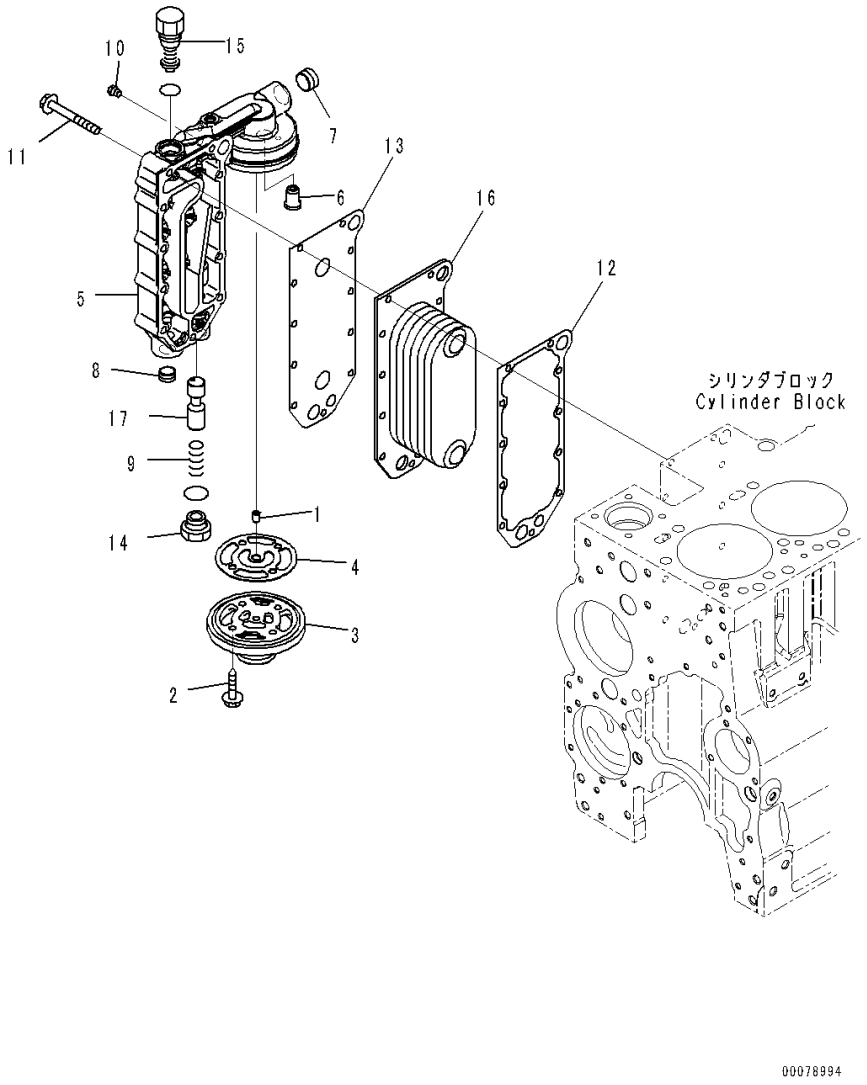

Index	Code	Part Number	Description	Qty	Serial Number
		6743-51-5300	Head	1	26825008-
1		6742-01-2480	• Ring	1	26825008-
2		6732-21-6610	• Bolt	4	26825008-
3		6743-51-5310	• Head	1	26825008-
4		6742-01-2491	• Gasket	1	26825008-
5		6743-51-5210	• Cover	1	26825008-
6		6731-61-2151	• Valve	1	26825008-
7		6732-11-1920	Plug	1	26825008-
8		6742-01-2410	Plug, Pipe	1	26825008-
9		6743-61-2150	Spring	1	26825008-
10		6732-11-1930	Plug	2	26825008-
11		6742-01-2441	Bolt	11	26825008-
12		6742-01-1080	Gasket	1	26825008-
13		6743-51-4430	Gasket	1	26825008-
14		6742-01-4220	Plug	1	26825008-
15		6742-01-5117	Valve	1	26825008-
16		6743-61-2210	Core	1	26825008-
17		6742-01-5202	Plunger	1	26825008-

ENGINE FUEL SYSTEM

FIG. AFP20-001001 Fuel Injection Pump Mounting

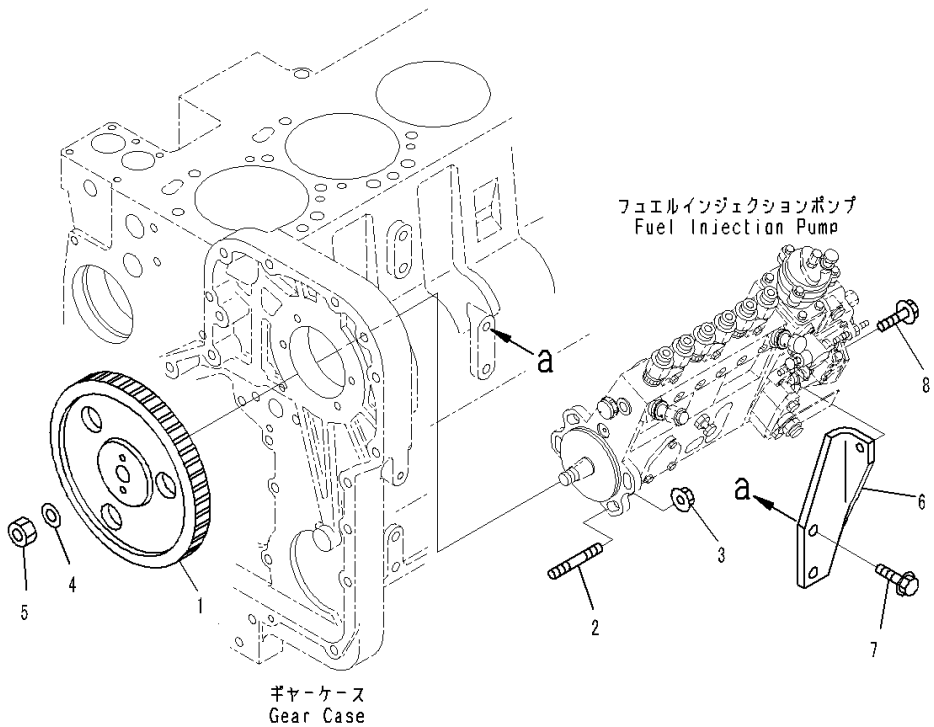

Index	Code	Part Number	Description	Qty	Serial Number
1		6742-01-5298	Gear	1	26825008-
2		6738-71-3120	Stud	4	26825008-
3		6736-81-6170	Nut	4	26825008-
4		6130-32-1361	Washer	1	26825008-
5		01582-01411	Nut	1	26825008-
6		6742-71-1810	Bracket	1	26825008-
7		6735-71-3220	Bolt	2	26825008-
8		6734-71-5610	Bolt	1	26825008-

FIG. AFP10-001001 Fuel Injection Pump

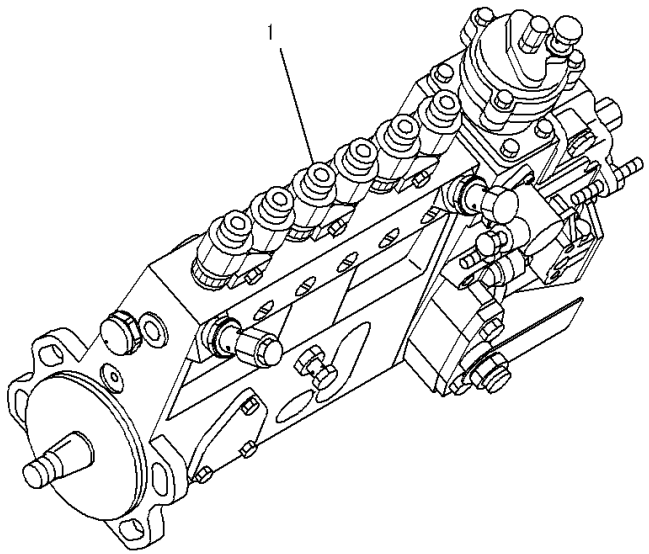

00000454

Index	Code	Part Number	Description	Qty	Serial Number
1		6742-71-1120	Injection Pump Assembly	1	26825008-

FIG. AFE00-001001 Fuel Control

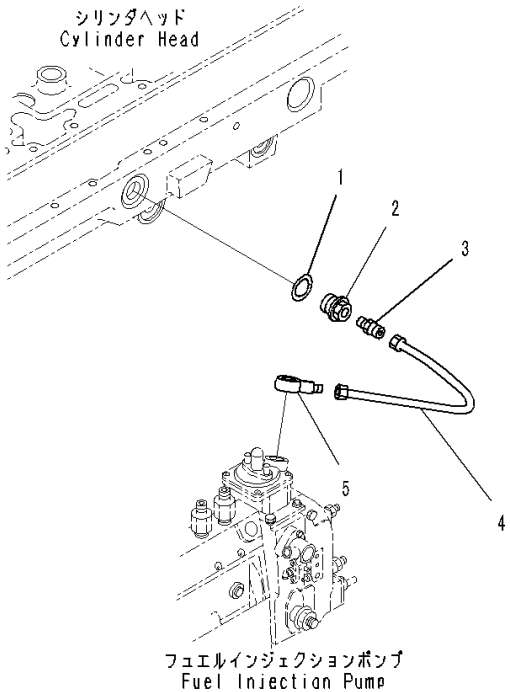

00078995

Index	Code	Part Number	Description	Qty	Serial Number
1		6732-21-5170	Gasket	1	26825008-
2		1294601H1	Plug, Threaded	1	26825008-
3		6736-11-4530	Connector	1	26825008-
4		6742-11-4360	Tube	1	26825008-
5		6738-81-8220	Joint	1	26825008-

FIG. AFV00-001001 Engine Shut-off Solenoid Switch

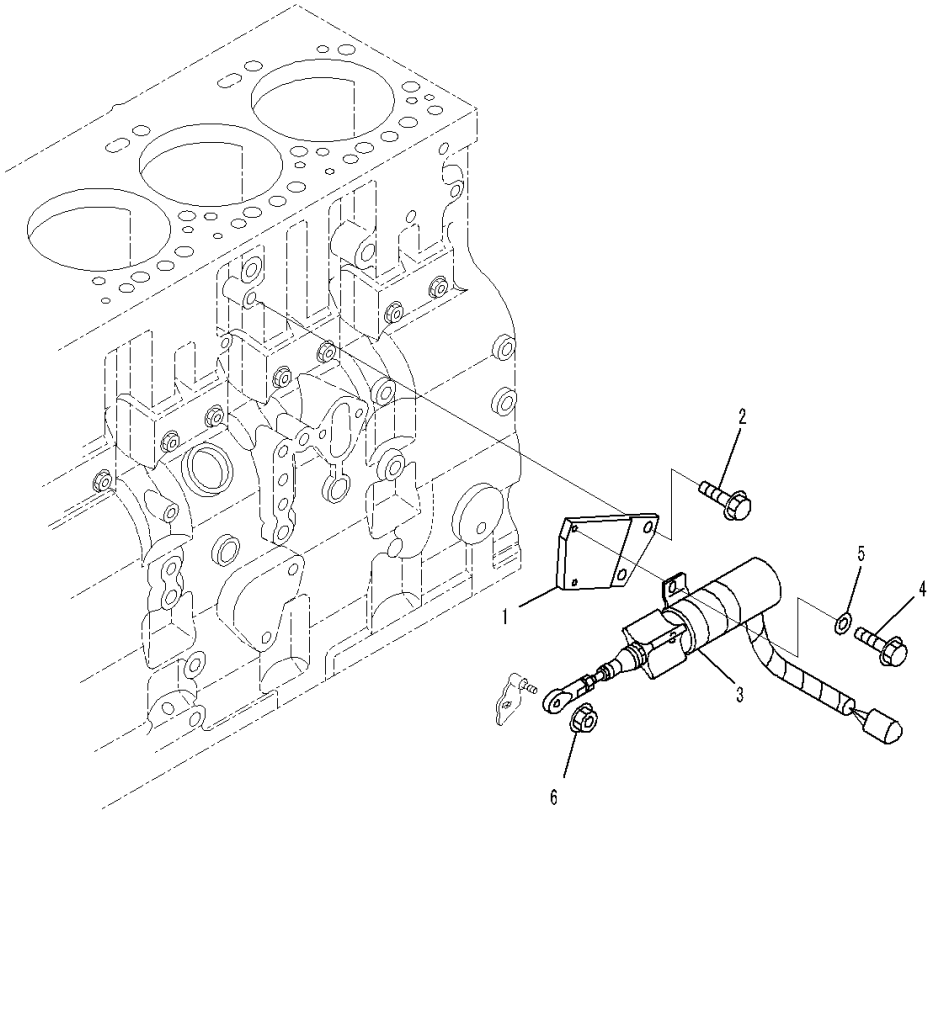

Index	Code	Part Number	Description	Qty	Serial Number
1		6742-81-9570	Bracket	1	26825008-
2		01435-00820	Bolt	2	26825008-
3		600-815-9660	Solenoid	1	26825008-
4		01435-00610	Bolt	2	26825008-
5		01640-20610	Washer	2	26825008-
6		6733-71-5540	Nut, Lock	1	26825008-

FIG. A4219-001001 Fuel Injection Nozzle

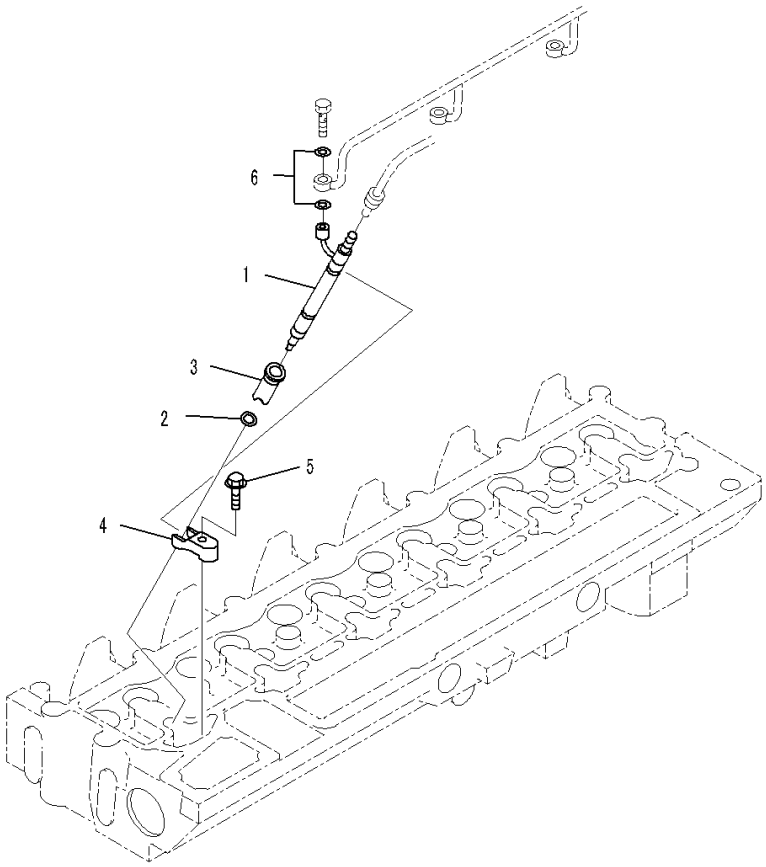

00089000

Index	Code	Part Number	Description	Qty	Serial Number
		6742-11-3130	Nozzle Kit	6	26825008-
	C1		• Injector Kit	1	26825008-
1	C1		• • Injector	1	26825008-
2		6735-11-3410	• • • Gasket	1	26825008-
3		6742-01-0740	• • Seal	1	26825008-
4		6742-01-3100	• • Clamp	1	26825008-
5		6736-81-8730	• • Bolt	1	26825008-
6		6732-71-6260	• Seal, Washer	2	26825008-

FIG. AFT00-001001 Fuel Injection Piping

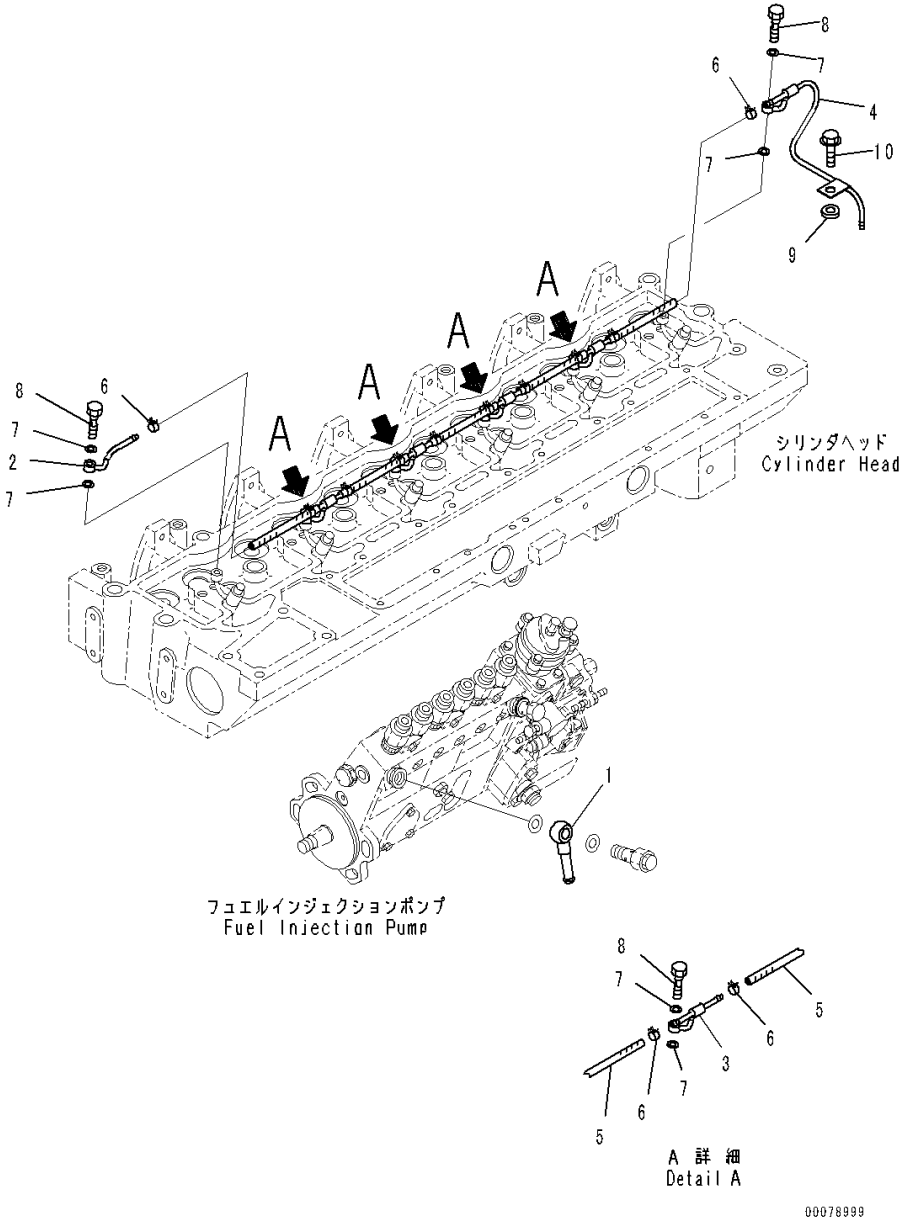

Index	Code	Part Number	Description	Qty	Serial Number
1		6141-71-1710	Joint	1	26825008-
2		6741-71-5310	Tube	1	26825008-
3		6741-71-5320	Tube	4	26825008-
4		6741-71-5330	Tube	1	26825008-
5		406-40-70	Hose	5	26825008-
6		07285-00100	Clip	10	26825008-
7		6732-71-6260	Seal, Washer	12	26825008-
8		6732-71-6240	Screw	6	26825008-
9		6742-71-5360	Spacer	1	26825008-
10		6732-21-6630	Screw	1	26825008-

FIG. APP50-001001 Fuel Injection Piping

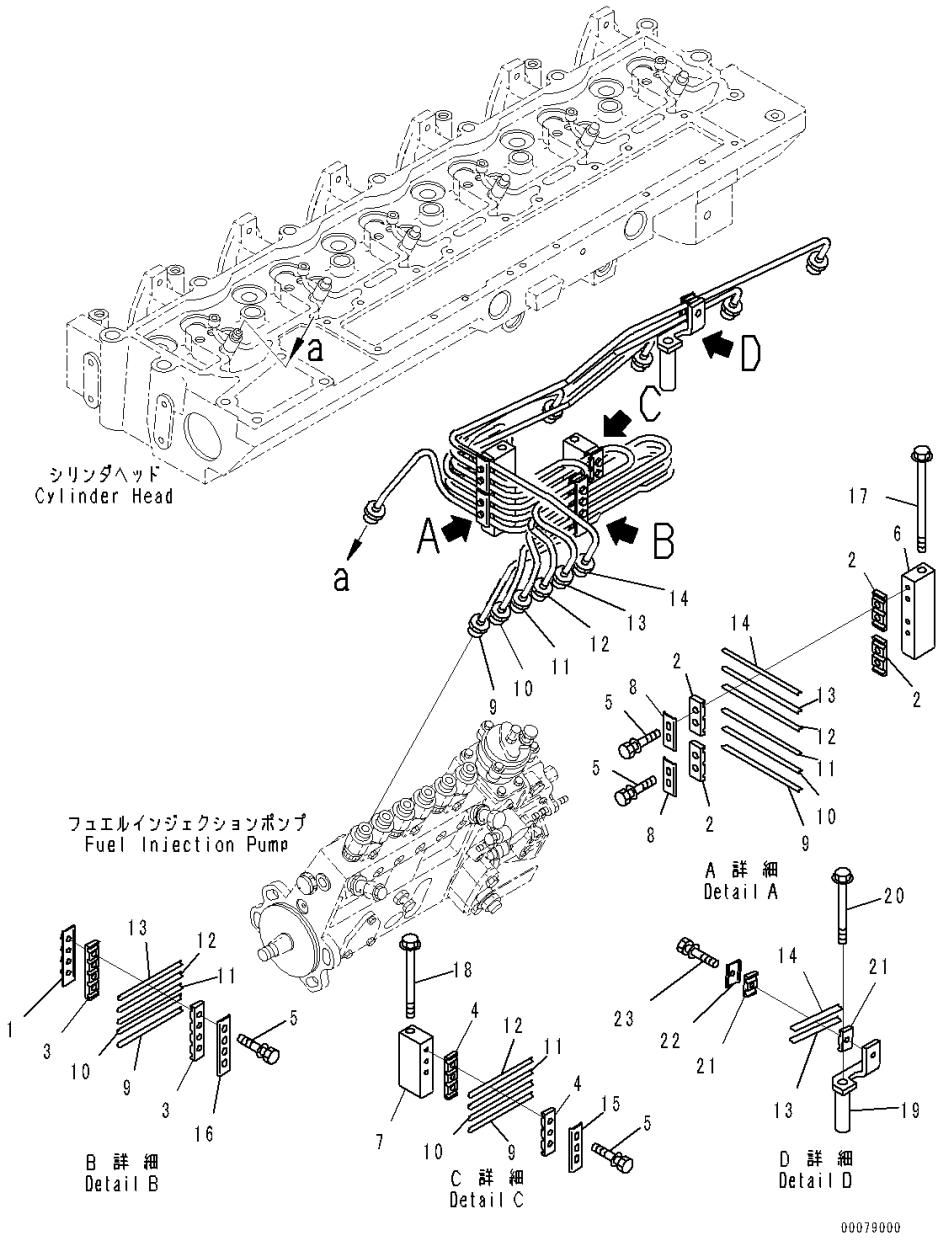

Index	Code	Part Number	Description	Qty	Serial Number
		6742-71-5300	Tube Assembly	1	26825008-
1		6742-01-5018	• Brace	1	26825008-
2		6734-71-5720	• Isolator	4	26825008-
3		6742-01-5019	• Isolator	2	26825008-
4		6731-71-5670	• Isolator	2	26825008-
5		6734-71-5520	• Bolt	11	26825008-
6		6742-71-5370	• Brace	1	26825008-
7		6742-71-5380	• Brace	1	26825008-
8		6743-72-5110	• Brace	2	26825008-
9		6742-71-5210	• Tube	1	26825008-
10		6742-71-5220	• Tube	1	26825008-
11		6742-71-5230	• Tube	1	26825008-
12		6742-71-5240	• Tube	1	26825008-
13		6742-71-5250	• Tube	1	26825008-
14		6742-71-5260	• Tube	1	26825008-
15		6742-71-5280	• Brace	1	26825008-
16		6742-71-5290	• Brace	1	26825008-
17		6222-11-4910	Bolt	1	26825008-
18		01435-00895	Bolt	1	26825008-
19		6742-71-5390	Brace	1	26825008-
20		01435-00885	Bolt	1	26825008-
21		6735-71-5860	Isolator	2	26825008-
22		6735-71-5820	Brace	1	26825008-
23		6734-71-5520	Bolt	1	26825008-

FIG. AFF10-001001 Fuel Filter

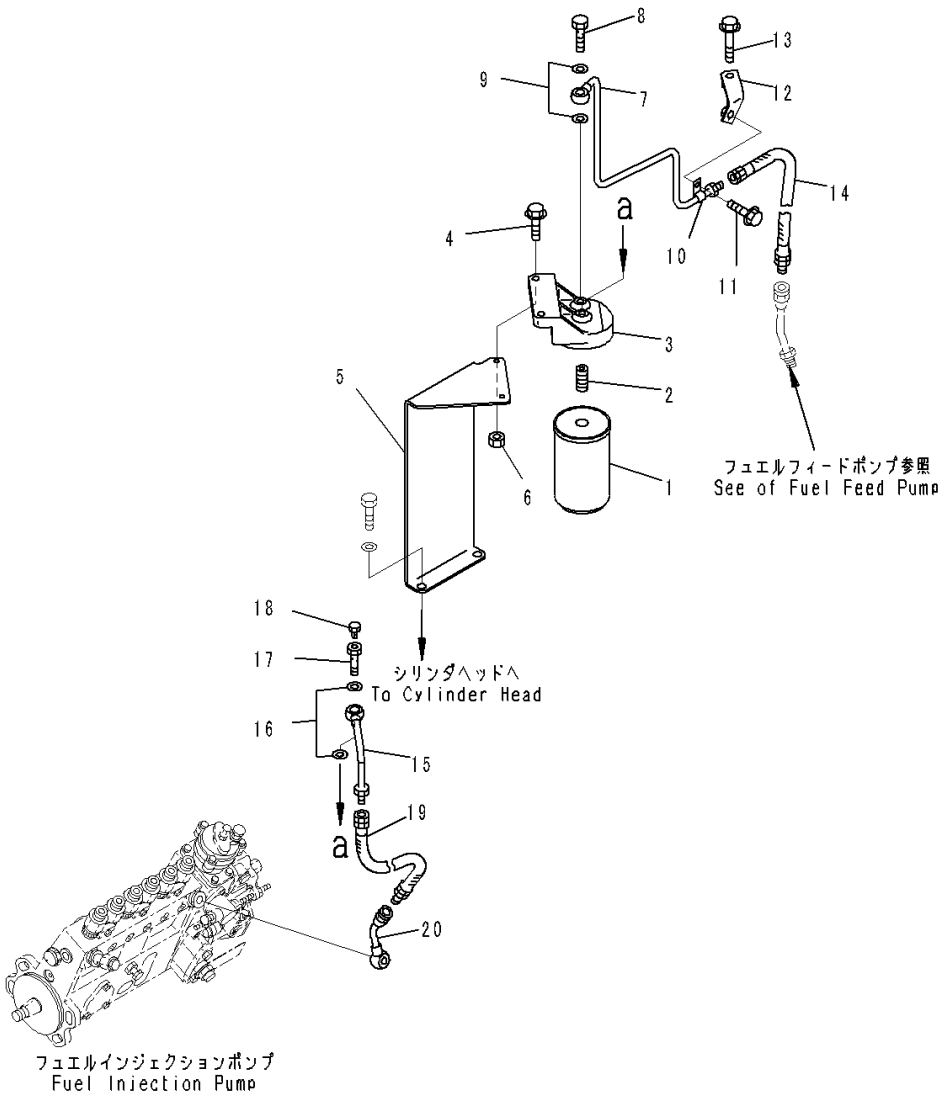

Index	Code	Part Number	Description	Qty	Serial Number
1		6732-71-6112	Cartridge	1	26825008-
		6732-71-6330	Head Assembly	1	26825008-
2		6732-71-6340	• Adapter	1	26825008-
3		6732-71-6220	• Head	1	26825008-
4		6732-21-6630	Screw	2	26825008-
5		6742-71-6290	Bracket	1	26825008-
6		6732-71-3210	Nut	2	26825008-
7		6742-71-6270	Tube	1	26825008-
8		6732-71-6510	Bolt	1	26825008-
9		07005-01212	Seal, Washer	2	26825008-
10		6210-51-8310	Clip	1	26825008-
11		6736-21-5310	Bolt	1	26825008-
12		6742-71-6280	Brace	1	26825008-
13		6735-61-2120	Bolt	1	26825008-
14		124-01-55180	Hose	1	26825008-
15		6742-01-5294	Tube	1	26825008-
16		07005-01212	Seal, Washer	2	26825008-
17		6735-71-6530	Bolt	1	26825008-
18		6735-71-6750	Bolt	1	26825008-
19		124-01-55180	Hose	1	26825008-
20		6742-01-5297	Tube	1	26825008-

FIG. AFS00-001001 Fuel Transfer Pump

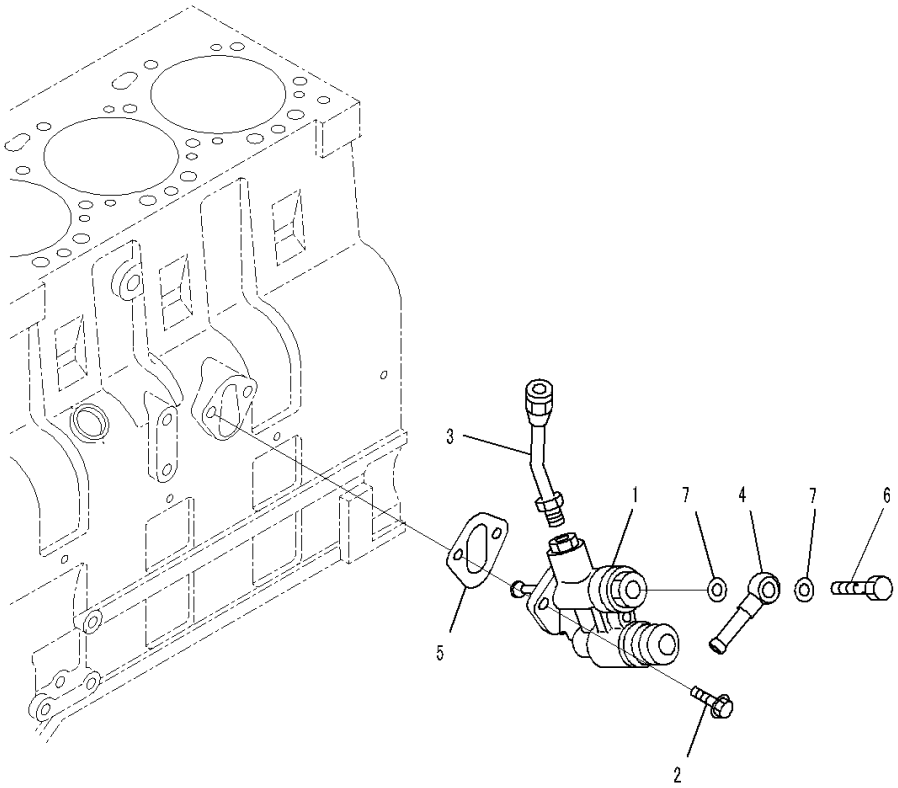

Index	Code	Part Number	Description	Qty	Serial Number
1		6743-71-7132	Pump Assembly	1	26825008-
2		6732-71-3220	Bolt	2	26825008-
3		124-01-55260	Tube	1	26825008-
4		6141-71-1710	Joint	1	26825008-
5		6735-61-6411	Gasket	1	26825008-
6		6732-71-5620	Connector	1	26825008-
7		6735-71-3821	Seal	2	26825008-

ENGINE COOLING SYSTEM

FIG. AWP20-001001 Cooling Fan Belt Tensioner

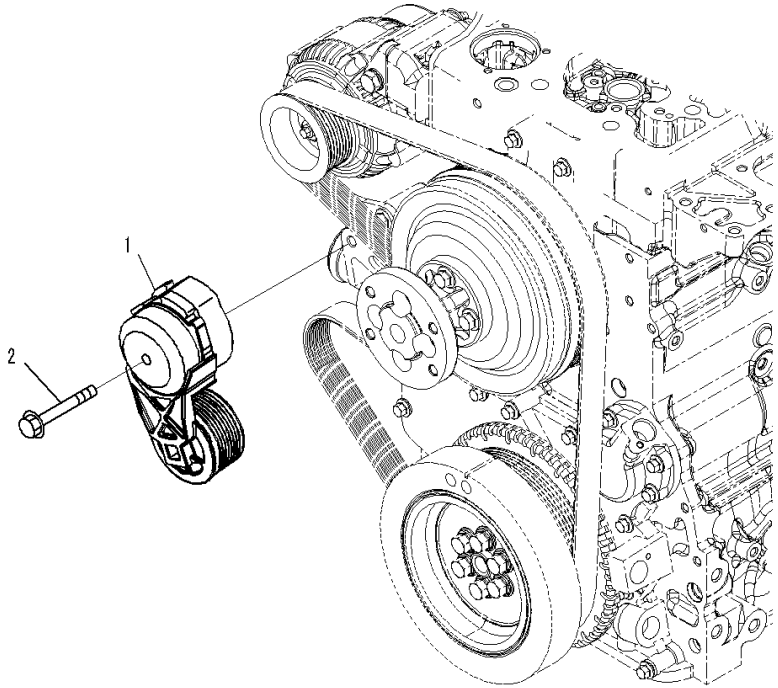

Index	Code	Part Number	Description	Qty	Serial Number
1		6754-61-4111	Tensioner, Belt	1	26825008-
2		6736-81-6190	Bolt	1	26825008-

FIG. AWP00-001001 Water Pump, Mounting Parts

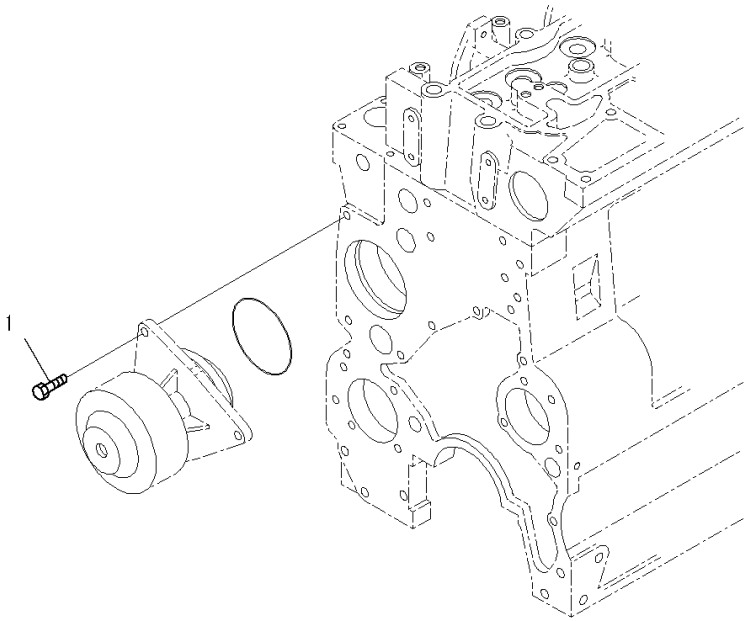

Index	Code	Part Number	Description	Qty	Serial Number
1		01435-00825	Bolt	3	26825008-

FIG. A5019-001001 Water Pump

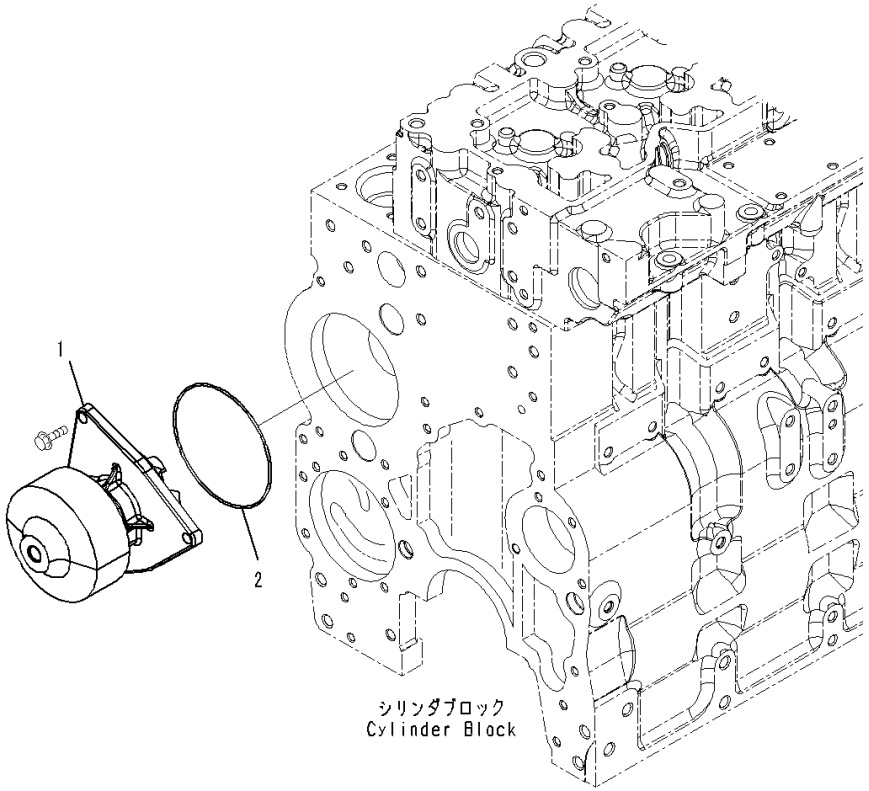

Index	Code	Part Number	Description	Qty	Serial Number
		6743-61-1531	Water Pump Assembly	1	26825008-
1	C1		• Pump	1	26825008-
2		6741-61-1520	• Seal	1	26825008-

FIG. AWP10-001001 Water Pump Drive Belt

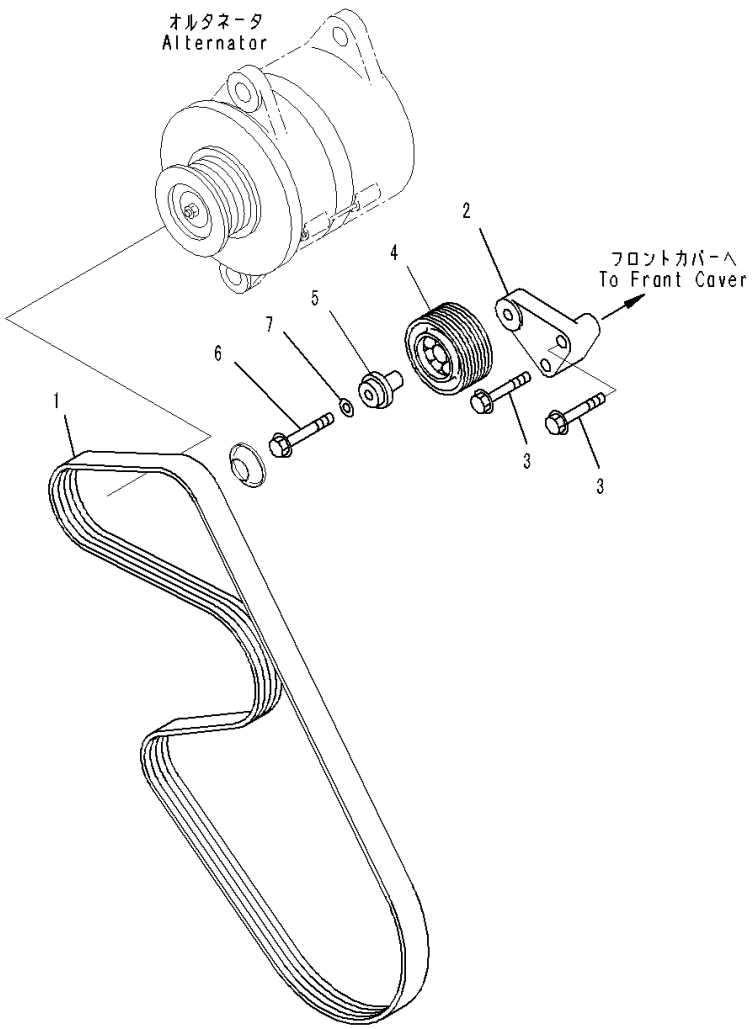

Index	Code	Part Number	Description	Qty	Serial Number
1		6743-62-3710	Belt, Fan	1	26825008-
2		6743-61-4411	Support	1	26825008-
3		6743-61-3610	Bolt	2	26825008-
4		6743-61-3441	Pulley	1	26825008-
5		6742-01-5123	Shaft	1	26825008-
6		6745-61-4120	Bolt	1	26825008-
7		01643-31032	Washer	1	26825008-

FIG. AWO00-001001 Water Outlet Connector

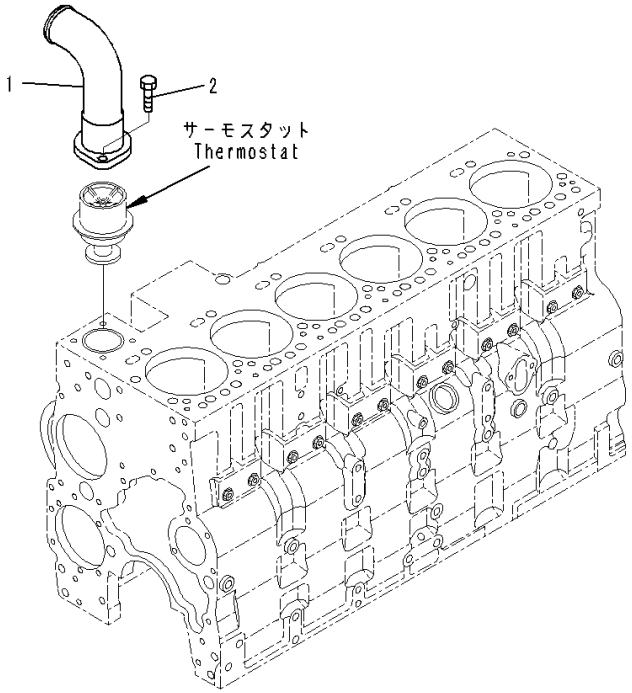

00078983

Index	Code	Part Number	Description	Qty	Serial Number
1		6742-61-6120	Connection	1	26825008-
2		6732-21-5160	Bolt	2	26825008-

FIG. AWI10-001001 Water Inlet Connector

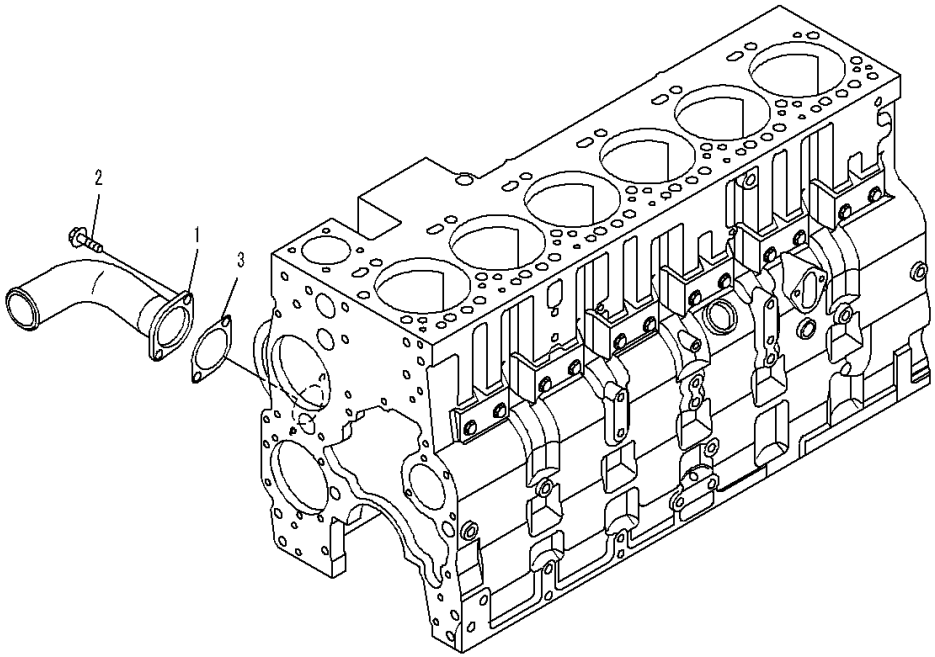

Index	Code	Part Number	Description	Qty	Serial Number
1		6743-61-6110	Connection	1	26825008-
2		6732-71-3220	Bolt	2	26825008-
3		6741-61-6130	Gasket	1	26825008-

FIG. AEC00-001001 Thermostat

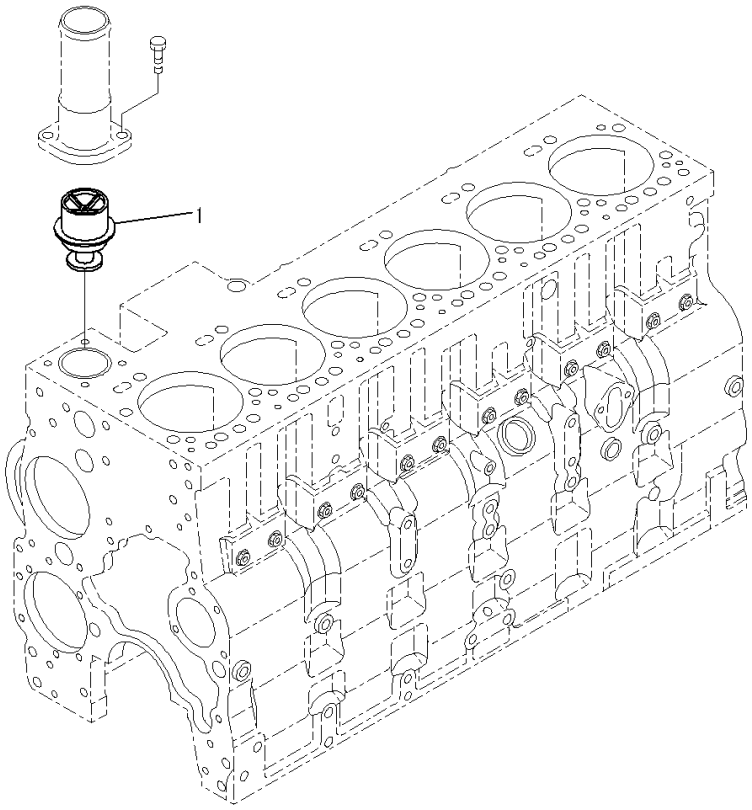

Index	Code	Part Number	Description	Qty	Serial Number
1		6741-61-1610	Thermostat	1	26825008-

FIG. ACH00-001001 Coolant Heater Plug

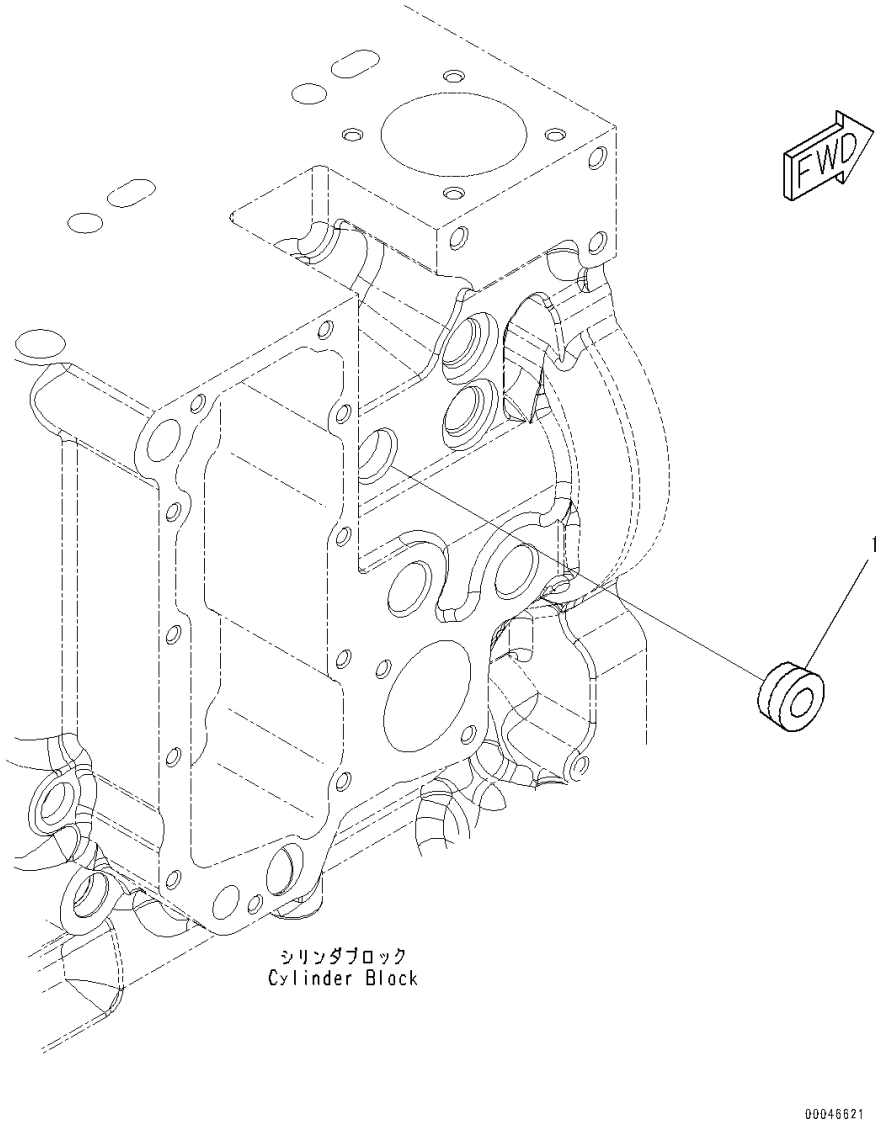

Index	Code	Part Number	Description	Qty	Serial Number
1		6732-11-1920	Plug	1	26825008-

FIG. ARP00-001001 Coolant Ventilator

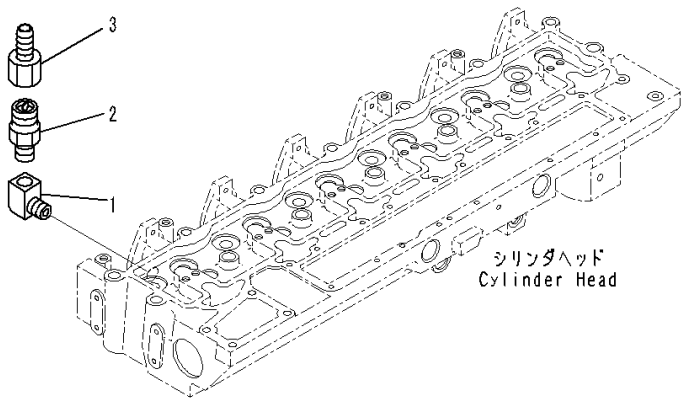

Index	Code	Part Number	Description	Qty	Serial Number
1		6743-11-6410	Elbow	1	26825008-
2		6742-01-3530	Valve, Check	1	26825008-
3		6735-61-5110	Coupling	1	26825008-

FIG. ATK00-001001 Plug, Torque Converter Cooling

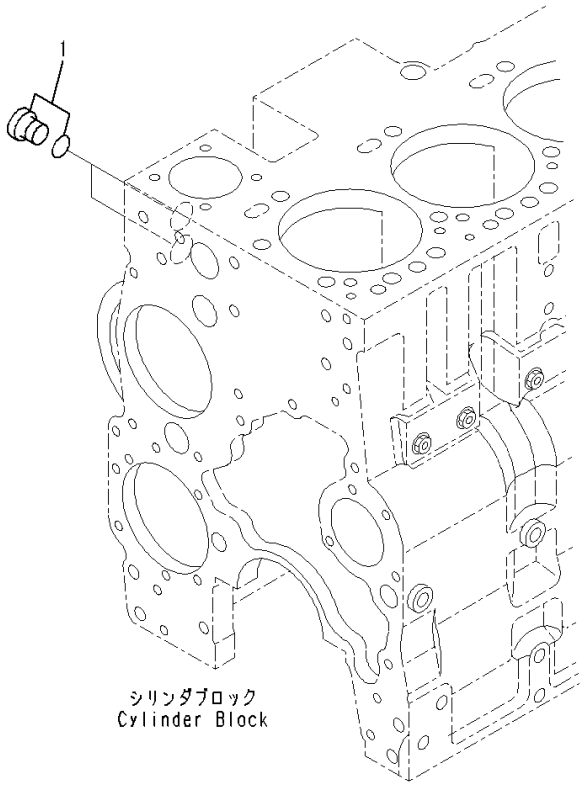

Index	Code	Part Number	Description	Qty	Serial Number
1		6216-14-6820	Plug Assembly	2	26825008-

ENGINE ELECTRICAL SYSTEM

FIG. ADA00-001001 Damper

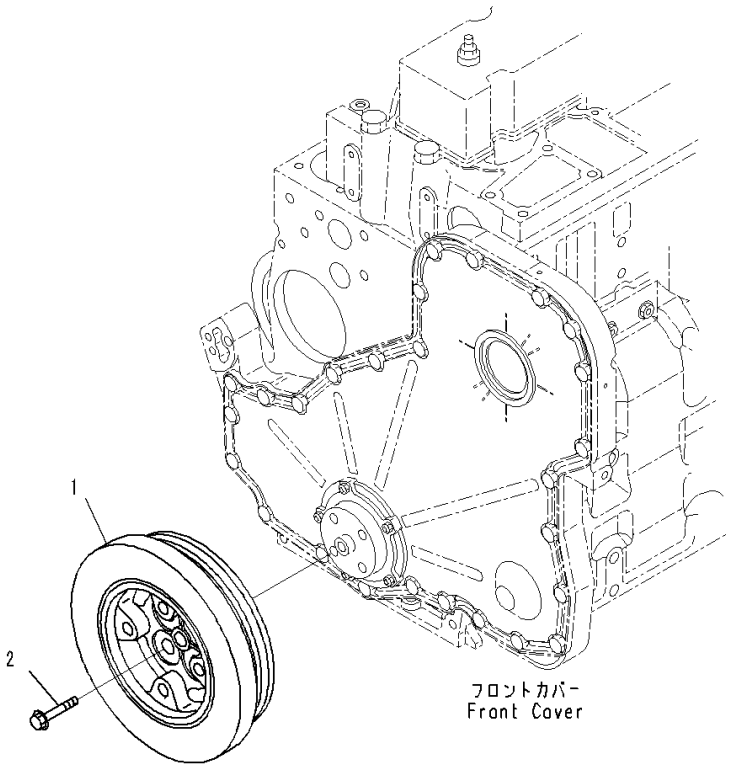

Index	Code	Part Number	Description	Qty	Serial Number
1		6742-01-5289	Damper	1	26825008-
2		6742-01-1890	Bolt	4	26825008-

FIG. AEH20-001001 Alternator Mounting

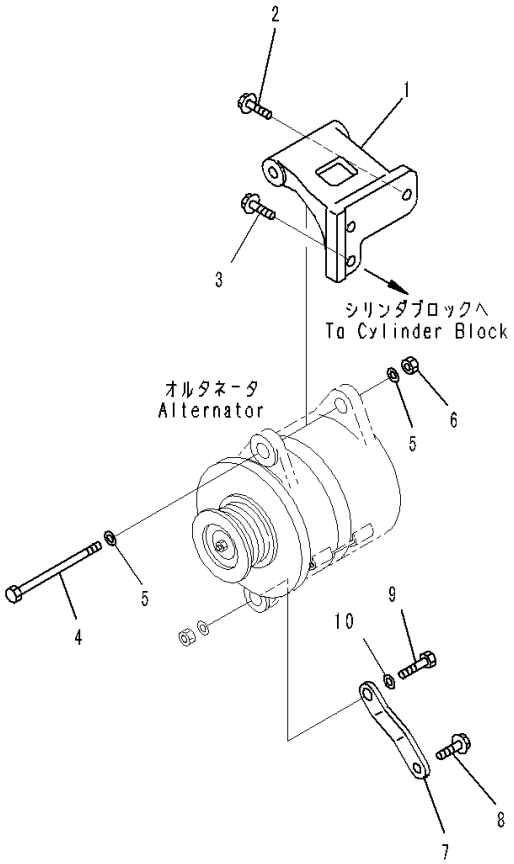

PJ6E818

Index	Code	Part Number	Description	Qty	Serial Number
1		6741-81-6520	Bracket	1	26825008-
2		6735-61-3810	Bolt	2	26825008-
3		6735-71-3220	Bolt	1	26825008-
4		6207-81-6980	Bolt	1	26825008-
5		01643-31232	Washer	2	26825008-
6		01580-11210	Nut	1	26825008-
7		6741-81-6510	Brace	1	26825008-
8		01435-01020	Bolt	1	26825008-
9		01050-31230	Bolt	1	26825008-
10		01643-31232	Washer	1	26825008-

FIG. AEE00-001001 Alternator, 35Amp. Alternator

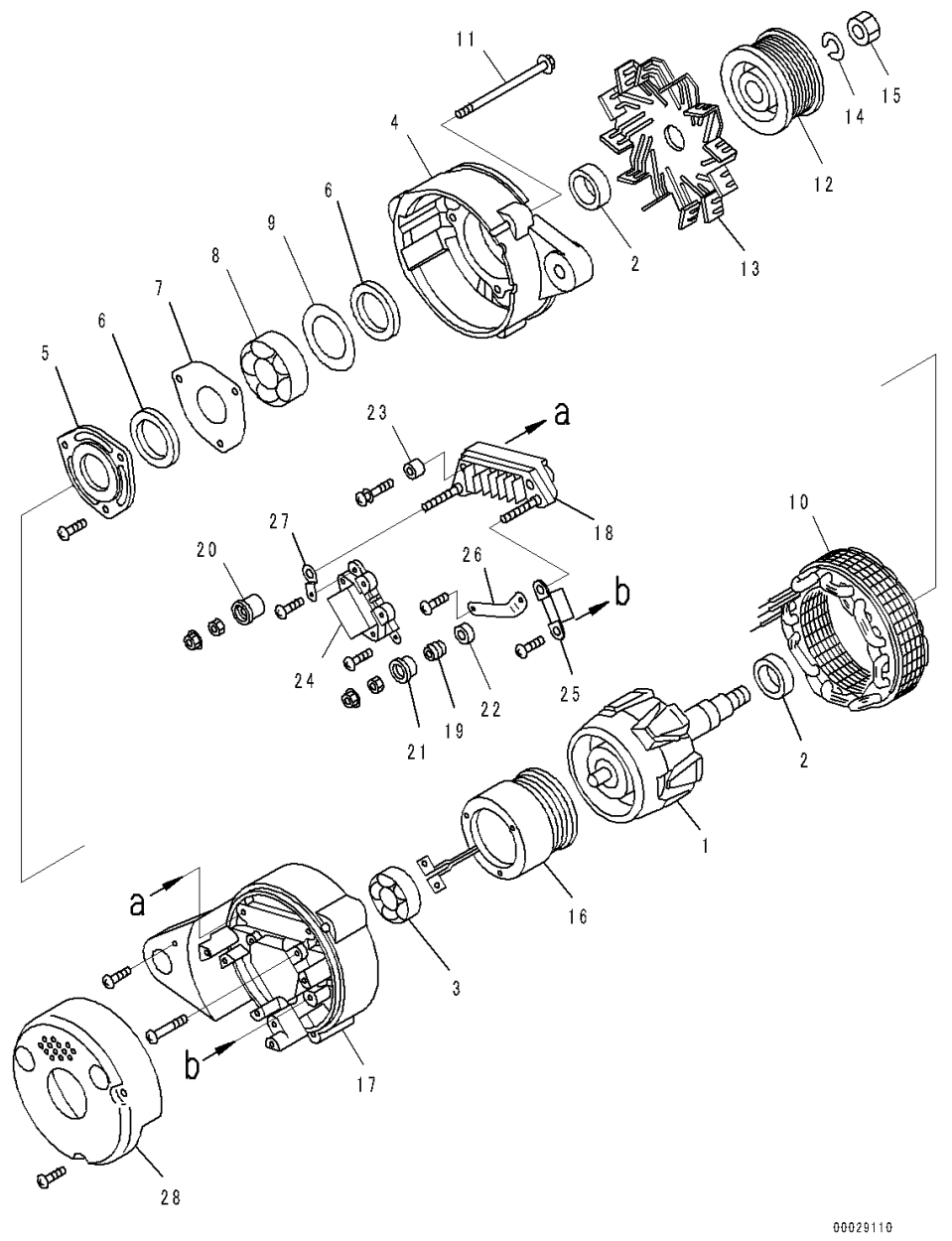

Index	Code	Part Number	Description	Qty	Serial Number
		600-861-3111	Alternator, 35Amp.	1	26825008-
1		KD0-35100-0280	• Rotor Assembly	1	26825008-
2		KD1-33923-0790	• Collar	2	26825008-
3		KD0-09201-0870	• Bearing, Ball	1	26825008-
4		KD0-35300-0160	• Bracket Assembly	1	26825008-
5		KD0-35926-0070	• Retainer	1	26825008-
6		KD0-35951-0060	• Packing	2	26825008-
7		KD0-35926-0090	• Retainer	1	26825008-
8		KD0-09201-0881	• Bearing, Ball	1	26825008-
9		KD1-33926-0730	• Retainer	1	26825008-
10		KD0-35200-0400	• Stator Assembly	1	26825008-
11		KD0-0275-06802	• Bolt	3	26825008-
12		KD0-35411-0640	• Pulley	1	26825008-
13		KD0-35421-0140	• Fan	1	26825008-
14		KD1-0335-16002	• Washer, Spring	1	26825008-
15		KD0-0280-16022	• Nut	1	26825008-
16		KD0-35120-0450	• Coil, Field	1	26825008-
		KD0-35700-0702	• Bracket Assembly	1	26825008-
17		KD0-35710-0810	• • Bracket	1	26825008-
18		KD0-35730-0510	• • Rectifier Assembly	1	26825008-
19		KD0-35923-0130	• • Collar	1	26825008-
20		KD0-35943-0140	• • Bushing, Insulate	1	26825008-
21		KD0-35943-0150	• • Bushing, Insulate	1	26825008-
22		KD0-35943-0160	• • Bushing, Insulate	1	26825008-
23		KD0-35943-0170	• • Bushing, Insulate	1	26825008-
24		KD0-35719-0280	• • Regulator Assembly	1	26825008-
25		KD0-09170-2501	• • Condenser	1	26825008-
26		KD0-35784-0280	• • Bar	1	26825008-
27		KD0-35784-0270	• • Terminal	1	26825008-
28		KD0-35761-0200	• Cover	1	26825008-

FIG. ASM00-001001 Starting Motor Mounting

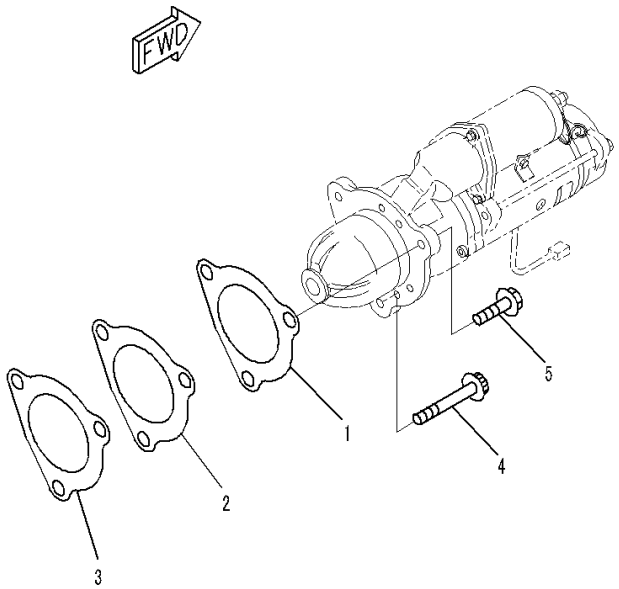

00079006

Index	Code	Part Number	Description	Qty	Serial Number
1		6221-81-6810	Gasket	1	26825008-
2		6742-81-6820	Spacer	1	26825008-
3		6221-81-6810	Gasket	1	26825008-
4		6732-82-6530	Bolt	2	26825008-
5		01435-01250	Bolt	1	26825008-

FIG. AST00-001001 Starting Motor, 7.5KW

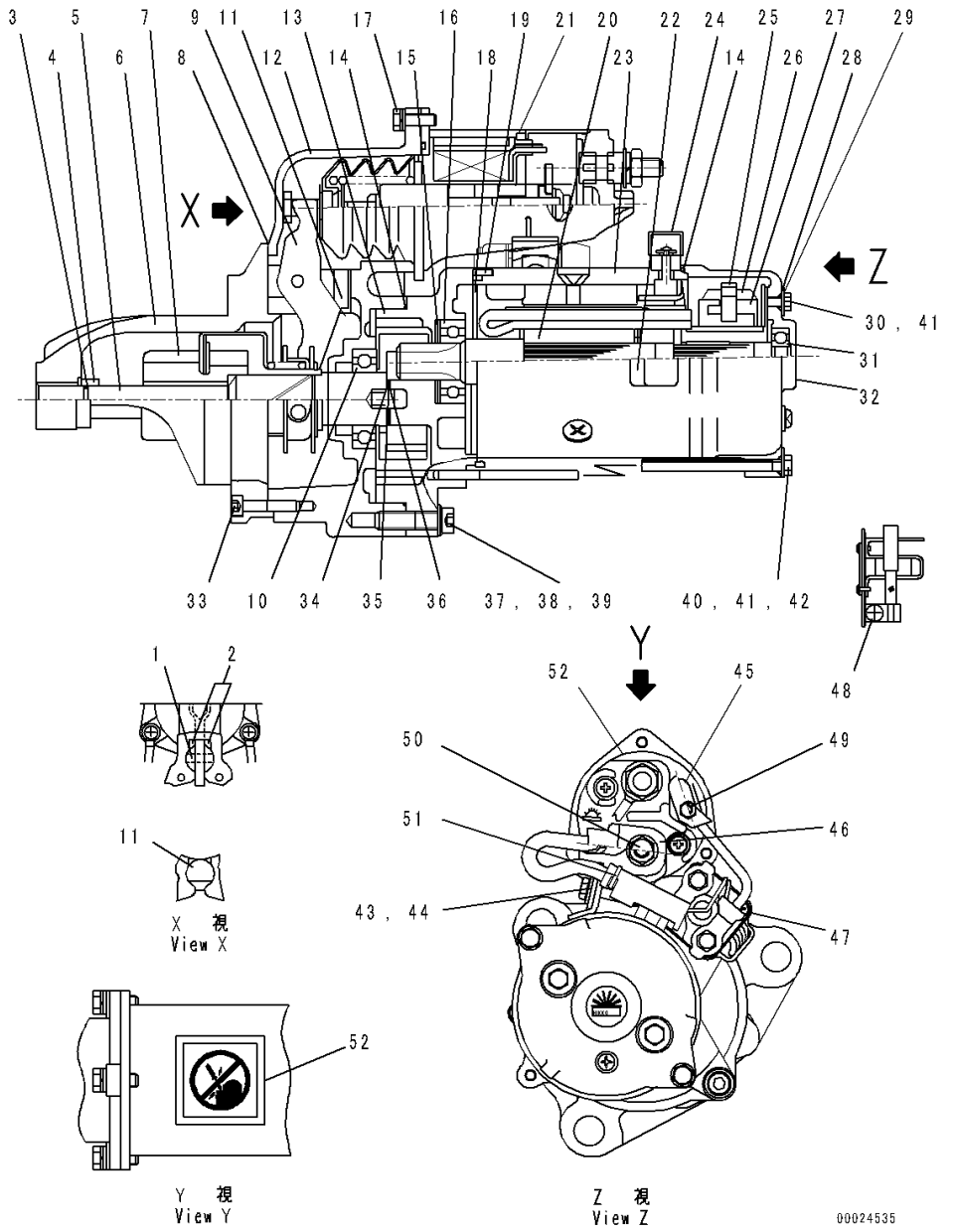

Index	Code	Part Number	Description	Qty	Serial Number
		600-863-5910	Starting Motor Assembly	1	26825008-
1		KD0-23904-0070	• Pin	1	26825008-
2		KD0-23927-0071	• Holder	2	26825008-
3		KD1-23914-0020	• Ring	1	26825008-
4		KD1-23181-0020	• Stopper	1	26825008-
5		KD1-23111-0160	• Shaft	1	26825008-
6		KD0-23310-1730	• Bracket	1	26825008-
7		KD0-23500-0970	• Clutch Assembly	1	26825008-
8		KD0-23951-0301	• Packing	1	26825008-
9		KD0-23320-0220	• Lever Assembly	1	26825008-
10		KD1-0454-60067	• Bearing, Ball	1	26825008-
11		KD0-23951-0331	• Packing	1	26825008-
12		KD0-23600-0460	• Bracket Assembly	1	26825008-
13		KD0-23611-0690	• Bracket	1	26825008-
14		KD1-09211-0980	• O-ring	2	26825008-
15		KD0-23921-0230	• Washer	1	26825008-
16		KD1-0454-62047	• Bearing, Ball	1	26825008-
17		KD0-0274-06202	• Bolt	3	26825008-
18		KD1-23951-0020	• Packing	1	26825008-
19		KD1-0400-20100	• Pin	1	26825008-
20		KD0-23100-0251	• Armature Assembly	1	26825008-
21		KD0-47100-4800	• Switch Assembly, Magnetic	1	26825008-
22		KD0-09271-3620	• Name Plate	1	26825008-
23		KD0-23200-0331	• Yoke Assembly	1	26825008-
24		KD0-47761-2691	• Cover	1	26825008-
25		KD1-23913-0040	• Spring	4	26825008-
26		KD0-23740-0250	• Brush Assembly	4	26825008-
27		KD0-23750-0250	• Holder Assembly, Brush	1	26825008-
28		KD1-0505-00601	• O-ring	2	26825008-
29		KD1-47921-0790	• Washer	2	26825008-
30		KD0-09001-4580	• Bolt	2	26825008-
31		KD1-0454-62007	• Bearing, Ball	1	26825008-
32		KD0-23700-0130	• Bracket Assembly	1	26825008-
33		KD1-0240-06305	• Bolt	6	26825008-
34		KD1-23921-0130	• Washer	1	26825008-
35		KD1-23921-0140	• Washer	1	26825008-
36		KD1-23941-0040	• Washer, Insulate	1	26825008-
37		KD1-0240-08405	• Bolt	3	26825008-
38		KD1-0335-08002	• Washer, Spring	3	26825008-
39		KD1-0330-08022	• Washer	3	26825008-

FIG. AST00-001001 Starting Motor, 7.5KW

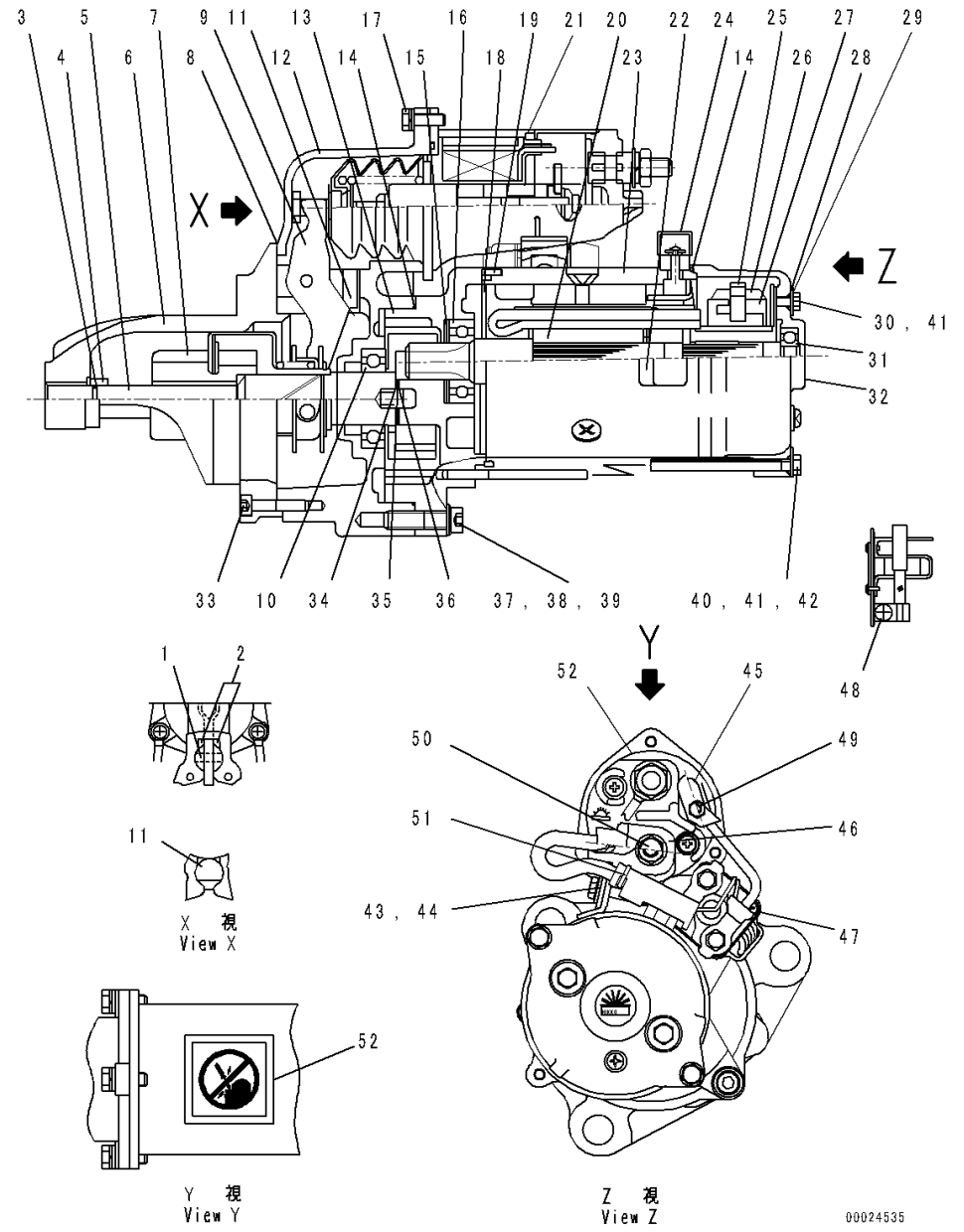

Index	Code	Part Number	Description	Qty	Serial Number
40		KD0-23901-0170	• Bolt	2	26825008-
41		KD1-0335-06002	• Washer, Spring	4	26825008-
42		KD1-0330-06012	• Washer, Prain	2	26825008-
43		KD0-0270-06402	• Bolt	1	26825008-
44		KD1-47927-1250	• Holder	1	26825008-
45		KD0-47761-2671	• Cover	1	26825008-
46		KD0-47761-2681	• Cover	1	26825008-
47		KD0-25000-8332	• Switch Assembly	1	26825008-
48		KD0-0055-05082	• Screw	4	26825008-
49		KD0-09006-0660	• Nut	1	26825008-
50		KD0-09006-0670	• Nut	1	26825008-
51		KD1-09257-0050	• Band	1	26825008-
52		KD0-09275-1430	• Plate, Caution	1	26825008-

ENGINE ACCESSORIES AND OTHERS

FIG. AFP30-001001 Fuel Inlet Piping

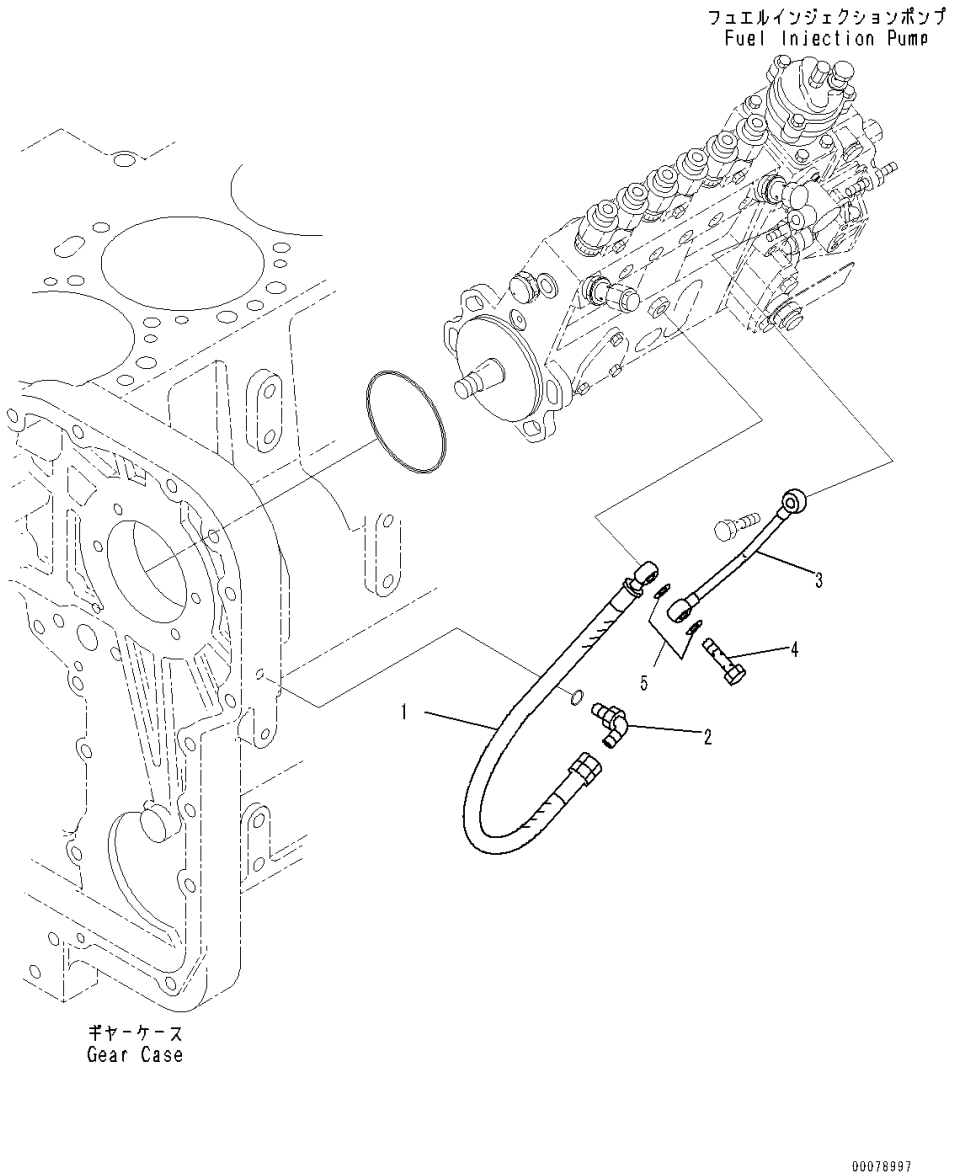

Index	Code	Part Number	Description	Qty	Serial Number
1		6743-71-1720	Hose	1	26825008-
2		6732-21-3590	Elbow	1	26825008-
3		6742-71-5410	Tube	1	26825008-
4		6735-71-5420	Screw	1	26825008-
5		07005-01012	Gasket	2	26825008-

ENGINE MARKS AND PLATES

FIG. A9810-001001 Caution Plates

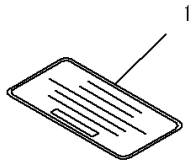

PMD1188

Index	Code	Part Number	Description	Qty	Serial Number
1		600-021-2210	Plate, Name	1	26825008-

FIELD REPAIR SERVICE PARTS

FIG. A8110-001001 Repair Service Parts, Crankshaft

Index	Code	Part Number	Description	Qty	Serial Number
		1295465H92	Seal Assembly	1	26825008-
1		6741-39-1220	• Tool	1	26825008-
2		6741-39-1110	• Seal	1	26825008-
3		6741-39-1120	• Sleeve	1	26825008-
4		6741-39-1130	• Shield	1	26825008-
		6736-39-1140	Sleeve	1	26825008-
5		6736-39-1150	• Sleeve	1	26825008-
6		6736-39-1160	• Sleeve	1	26825008-
		6742-29-8200	Main Metal Assembly, OverSize 0.25mm	6	26825008-
7	C1		• Metal,Lower	1	26825008-
8	C1		• Metal,Upper	1	26825008-
		6742-01-5475	Thrust Metal Assembly, OverSize 0.25mm	6	26825008-
9	C1		• Metal,Lower	1	26825008-
10	C1		• Metal, Thrust	1	26825008-
		6742-28-8200	Main Metal Assembly, OverSize 0.50mm	6	26825008-
11	C1		• Metal,Lower	1	26825008-
12	C1		• Metal,Upper	1	26825008-
		6742-28-8500	Thrust Metal Assembly, OverSize 0.50mm	6	26825008-
13	C1		• Metal,Lower	1	26825008-
14	C1		• Metal, Thrust	1	26825008-
		6742-27-8200	Main Metal Assembly, OverSize 0.75mm	6	26825008-
15	C1		• Metal,Lower	1	26825008-
16	C1		• Metal,Upper	1	26825008-
		6742-01-5441	Thrust Metal Assembly, OverSize 0.75mm	6	26825008-
17	C1		• Metal,Lower	1	26825008-
18	C1		• Metal, Thrust	1	26825008-
		6742-26-8200	Main Metal Assembly, OverSize 1.00mm	6	26825008-
19	C1		• Metal,Lower	1	26825008-
20	C1		• Metal,Upper	1	26825008-
		6742-26-8500	Thrust Metal Assembly, OverSize 1.0mm	6	26825008-
21	C1		• Metal,Lower	1	26825008-
22	C1		• Metal, Thrust	1	26825008-
		6742-01-5272	Thrust Metal Assembly, OverSize Standard/0.25mm	1	26825008-
23	C1		• Metal,Lower	1	26825008-
24	C1		• Metal, Thrust	1	26825008-
		6742-01-5442	Thrust Metal Assembly, OverSize Standard/0.50mm	1	26825008-
25	C1		• Metal,Lower	1	26825008-
26	C1		• Metal, Thrust	1	26825008-
		6742-01-5275	Thrust Metal Assembly, OverSize 0.50mm/0.50mm	1	26825008-
27	C1		• Metal,Lower	1	26825008-
28	C1		• Metal, Thrust	1	26825008-

FIG. A8110-001002 Repair Service Parts, Piston, Cylinder Head

Index	Code	Part Number	Description	Qty	Serial Number
1		6742-01-2810	Bearing	12	26825008-
2		6742-01-2820	Bearing	12	26825008-
3		6742-01-2830	Bearing	12	26825008-
4		6742-01-2840	Bearing	12	26825008-
5		6741-19-1180	Insert, 0.25mm, Intake	6	26825008-
6		6741-18-1180	Insert, 0.50mm, Intake	6	26825008-
7		6741-19-1170	Insert, 0.25mm, Exhaust	6	26825008-
8		6741-18-1170	Insert, 0.50mm, Exhaust	6	26825008-

ENGINE RELATED PARTS

FIG. A1030-502001 Engine Hanger

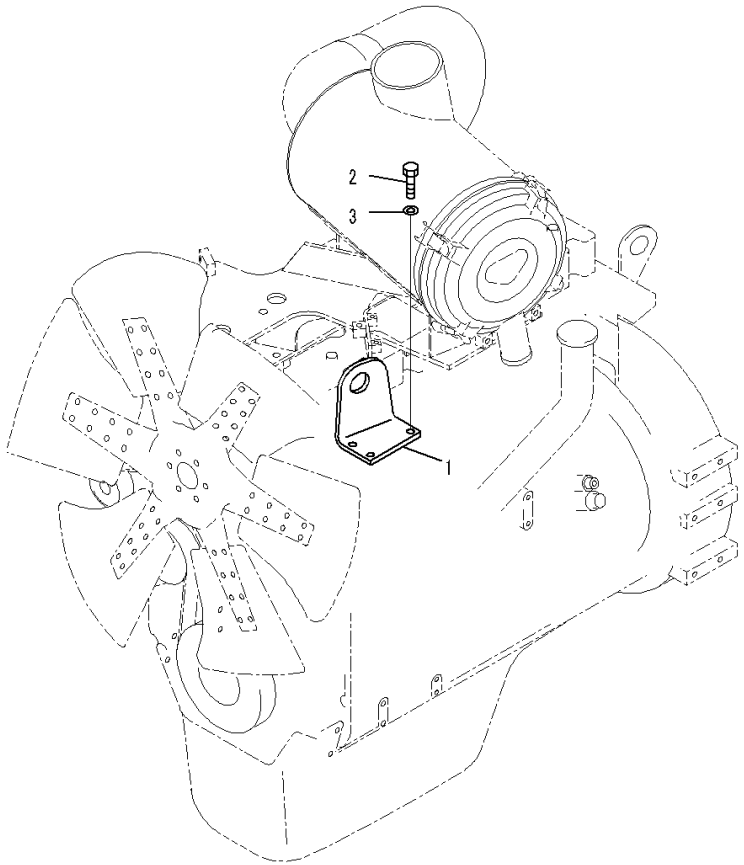

PWK8998

Index	Code	Part Number	Description	Qty	Serial Number
1		134-01-61512	Bracket	1	J20001-
2		01010-81030	Bolt	3	J20001-
3		01643-31032	Washer	3	J20001-

FIG. A1370-502001 Heater Switch

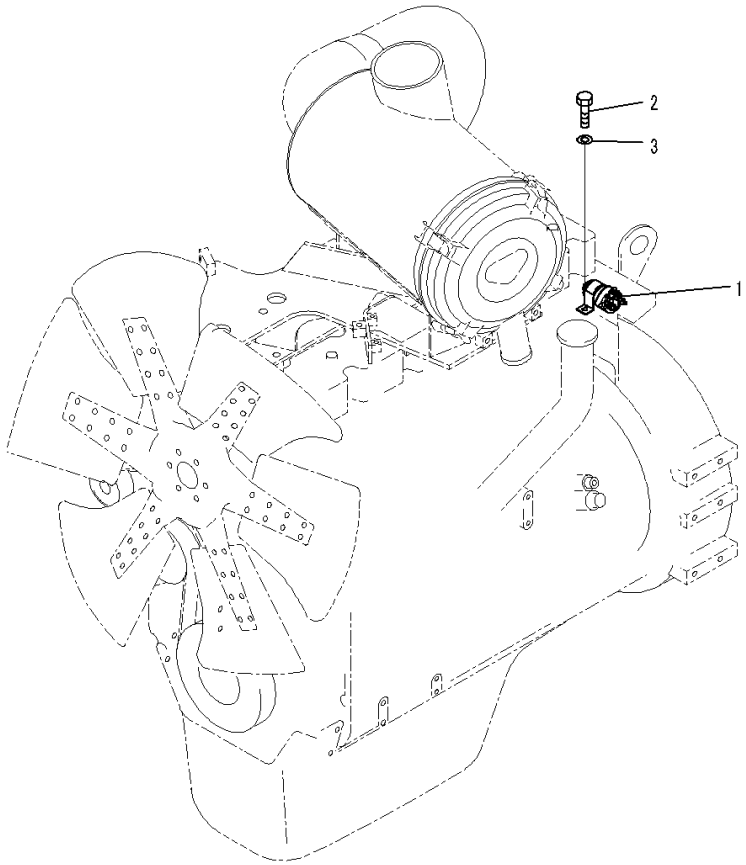

Index	Code	Part Number	Description	Qty	Serial Number
1		600-815-2170	Switch, Heater	1	J20001-
2		01010-80620	Bolt	2	J20001-
3		01643-30623	Washer	2	J20001-

FIG. A1410-502001 Air Cleaner

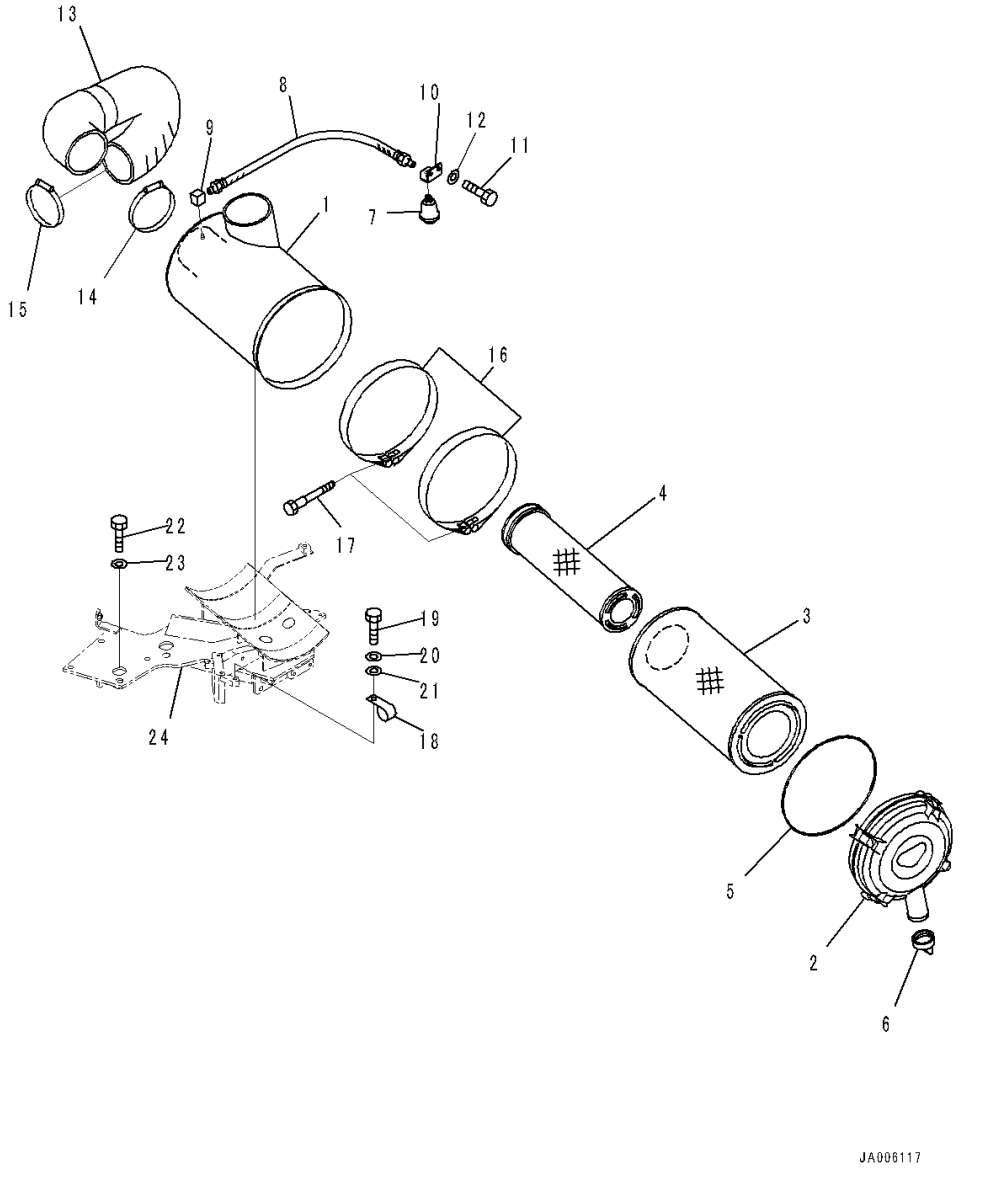

Index	Code	Part Number	Description	Qty	Serial Number
		6222-83-7401	Air Cleaner	1	J20001-
1		6222-83-7411	• Body Assembly	1	J20001-
2		600-184-1420	• Cover	1	J20001-
		600-185-4100	• Element Assembly	1	J20001-
3		600-185-4110	• • Element	1	J20001-
4		600-185-4120	• • Element	1	J20001-
5		600-184-1470	• • O-ring	1	J20001-
6		600-184-1350	• Valve, Vaquator	1	J20001-
7		08672-01000	Indicator, Dust	1	J20001-
8		08671-80030	Hose	1	J20001-
9		124-01-61130	Elbow	1	J20001-
10		134-54-75490	Bracket	1	J20001-
11		01010-80820	Bolt	2	J20001-
12		01643-30823	Washer	2	J20001-
13		134-01-71130	Hose	1	J20001-
14		07299-00130	Clamp, Hose	1	J20001-
15		07299-00120	Clamp	1	J20001-
16		6150-11-5840	Band	2	J20001-
17		6643-11-4641	Bolt	2	J20001-
18		6210-51-8320	Clip	1	J20001-
19		01010-81025	Bolt	1	J20001-
20		01643-31032	Washer	1	J20001-
21		01643-31032	Washer	1	J20001-
22		01010-80830	Bolt	2	J20001-
23		01643-30823	Washer	2	J20001-
24		(134-01-65181)	Bracket(Refer to Page 122)		-

FIG. A1570-501001 Heat Shield, Bracket

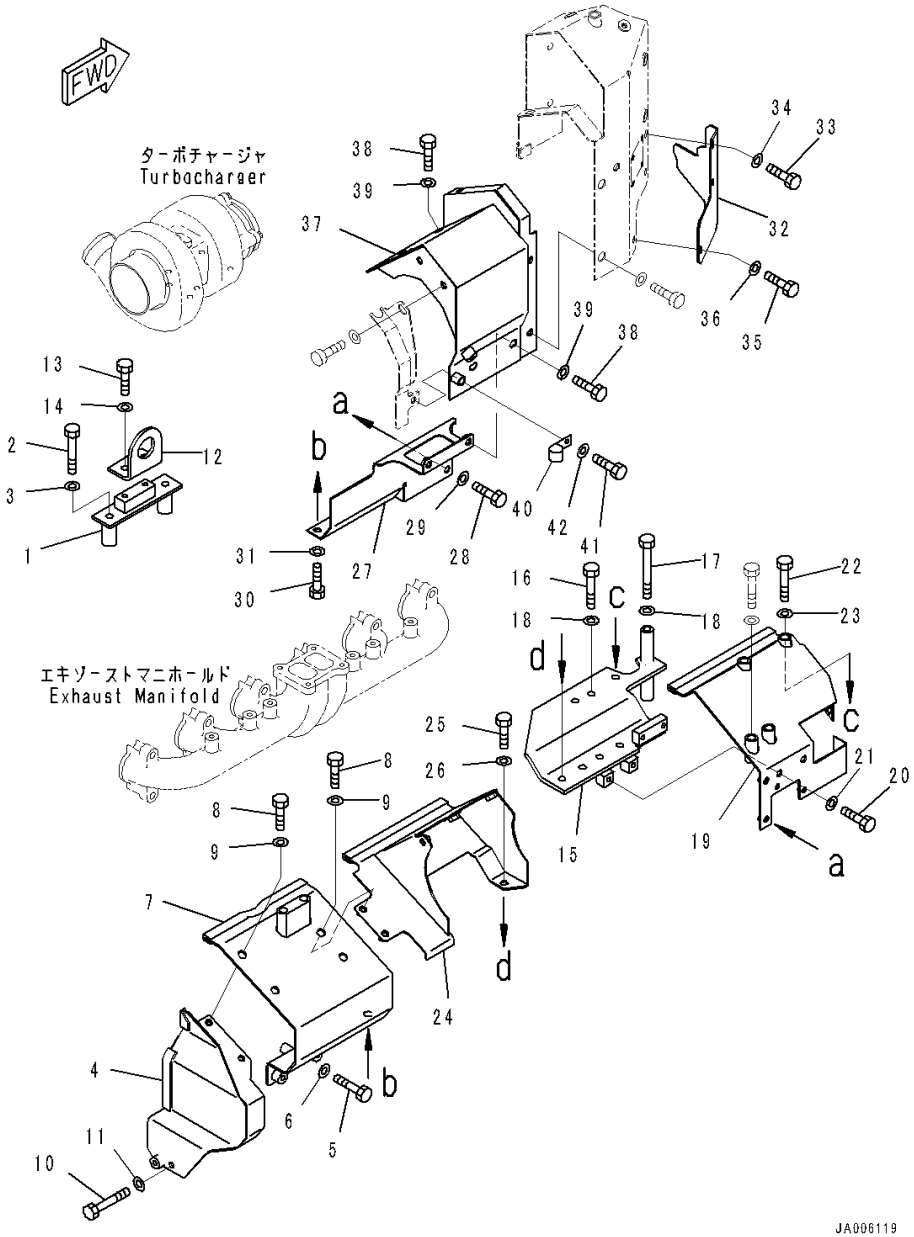

Index	Code	Part Number	Description	Qty	Serial Number
1		134-01-65160	Bracket	1	J20001-
2		01010-E1075	Bolt	2	J20001-
3		01643-31032	Washer	2	J20001-
4		134-01-65110	Cover	1	J20001-
		134-01-65410	• Sheet, Bonded	2	J20001-
		134-01-65420	• Sheet, Bonded	1	J20001-
5		01010-D0860	Bolt	1	J20001-
6		01643-70823	Washer	1	J20001-
7		134-01-65121	Cover	1	J20001-
		134-01-65490	• Sheet, Bonded	1	J20001-
8		01010-D1020	Bolt	4	J20001-
9		01643-71032	Washer	4	J20001-
10		01010-D0865	Bolt	1	J20001-
11		01643-70823	Washer	1	J20001-
12		134-01-65480	Plate	1	J20001-
13		01010-D1095	Bolt	2	J20001-
14		01643-71032	Washer	2	J20001-
15		134-01-65260	Bracket	1	J20001-
16		01010-E1025	Bolt	1	J20001-
17		01010-E1095	Bolt	1	J20001-
18		01643-31032	Washer	2	J20001-
19		134-01-65141	Cover	1	J20001-
		134-01-65390	• Sheet, Bonded	1	J20001-
20		01010-D1020	Bolt	1	J20001-
21		01643-71032	Washer	1	J20001-
22		01010-E1095	Bolt	1	J20001-
23		01643-31032	Washer	1	J20001-
24		134-01-65131	Cover	1	J20001-
		134-01-65380	• Sheet, Bonded	1	J20001-
25		01010-E1030	Bolt	1	J20001-
26		01643-31032	Washer	1	J20001-
27		134-01-65191	Bracket	1	J20001-
28		01010-D1020	Bolt	2	J20001-
29		01643-71032	Washer	2	J20001-
30		01010-D1025	Bolt	1	J20001-
31		01643-71032	Washer	1	J20001-
32		134-01-65311	Cover	1	J20001-
33		01010-D1020	Bolt	2	J20001-
34		01643-71032	Washer	2	J20001-
35		01010-D1025	Bolt	1	J20001-

FIG. A1570-501001 Heat Shield, Bracket

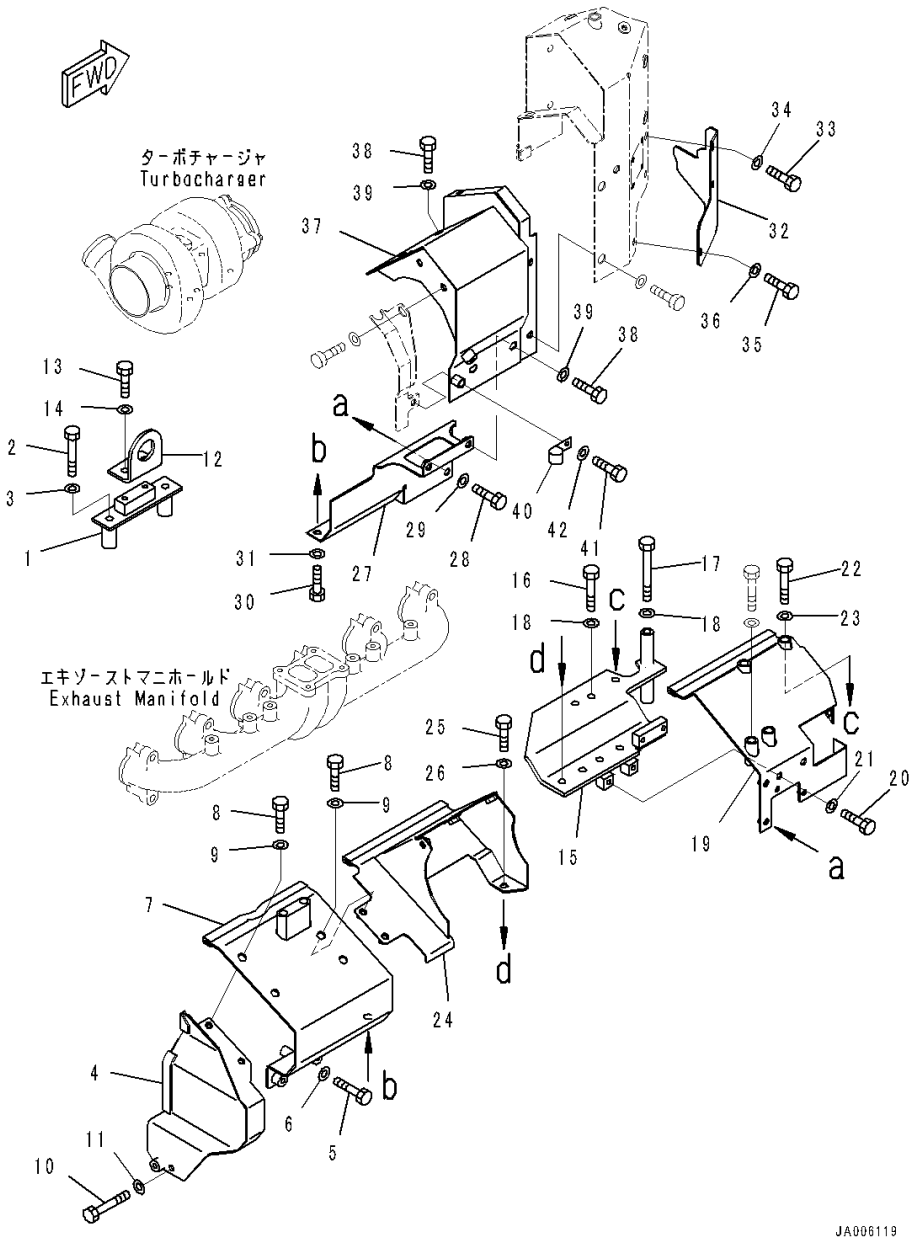

Index	Code	Part Number	Description	Qty	Serial Number
36		01643-71032	Washer	1	J20001-
37		134-01-65221	Cover	1	J20001-
38		01010-D1020	Bolt	4	J20001-
39		01643-71032	Washer	4	J20001-
40		04434-51210	Clip	1	J20001-
41		01010-D1035	Bolt	1	J20001-
42		01643-71032	Washer	1	J20001-

FIG. A1570-501002 Heat Shield, Cover

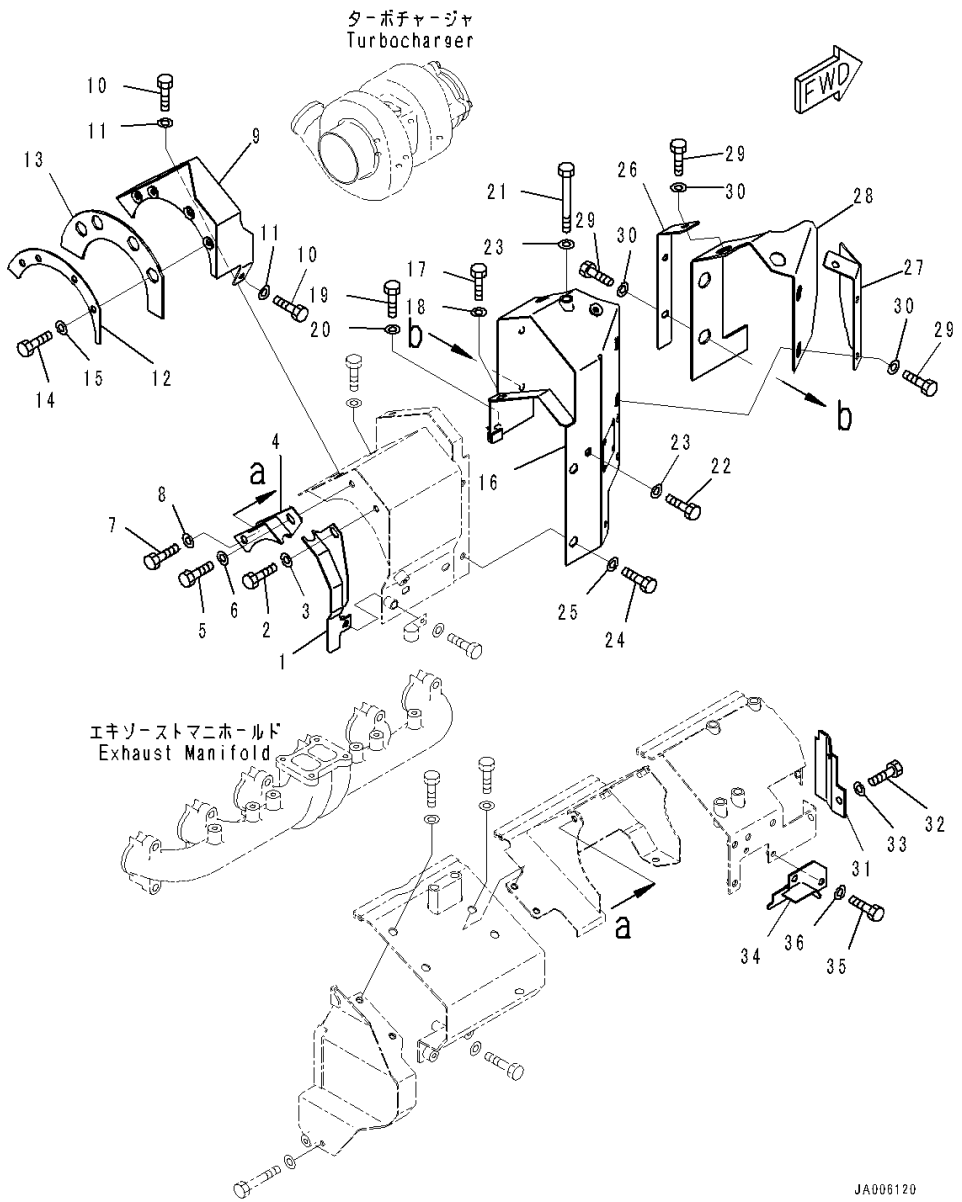

Index	Code	Part Number	Description	Qty	Serial Number
1		134-01-65231	Cover	1	J20001-
2		01010-D1020	Bolt	1	J20001-
3		01643-71032	Washer	1	J20001-
4		134-01-65241	Cover	1	J20001-
5		01010-D1020	Bolt	1	J20001-
6		01643-71032	Washer	1	J20001-
7		01010-D1016	Bolt	1	J20001-
8		01643-71032	Washer	1	J20001-
9		134-01-65291	Cover	1	J20001-
10		01010-D1020	Bolt	2	J20001-
11		01643-71032	Washer	2	J20001-
12		134-01-65321	Plate	1	J20001-
13		134-01-65361	Sheet	1	J20001-
14		01010-D0820	Bolt	4	J20001-
15		01643-70823	Washer	4	J20001-
16		134-01-65470	Cover	1	J20001-
		134-01-64410	• Sheet, Bonded	1	J20001-
17		01010-D1020	Bolt	3	J20001-
18		01643-71032	Washer	3	J20001-
19		01010-D1025	Bolt	1	J20001-
20		01643-71032	Washer	1	J20001-
21		01011-E1025	Bolt	1	J20001-
22		01010-E1020	Bolt	1	J20001-
23		01643-31032	Washer	2	J20001-
24		01010-D1020	Bolt	2	J20001-
25		423-09-41110	Washer	2	J20001-
26		134-01-65341	Plate	1	J20001-
27		134-01-65351	Plate	1	J20001-
28		134-01-65371	Sheet	1	J20001-
29		01010-D0820	Bolt	6	J20001-
30		01643-70823	Washer	6	J20001-
31		134-01-65461	Cover	1	J20001-
32		01010-D0820	Bolt	2	J20001-
33		01643-70823	Washer	2	J20001-
34		134-01-65430	Cover	1	J20001-
35		01010-D0816	Bolt	2	J20001-
36		01643-70823	Washer	2	J20001-

FIG. A1610-501001 Muffler Tube

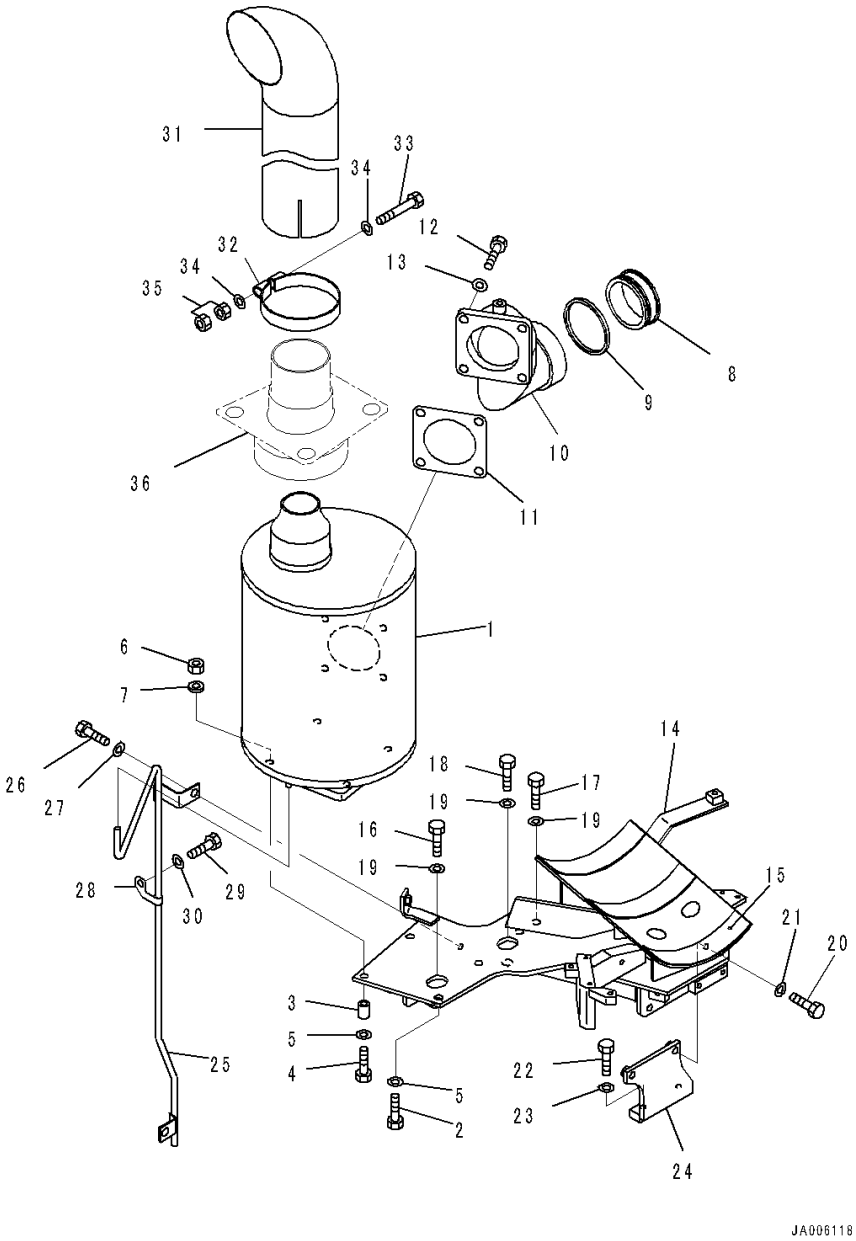

Index	Code	Part Number	Description	Qty	Serial Number
1		134-01-72280	Muffler	1	J20001-
2		6150-81-9370	Bolt	3	J20001-
3		144-10-17250	Seat	1	J20001-
4		01437-01070	Bolt	1	J20001-
5		01643-31032	Washer	4	J20001-
6		01580-11008	Nut	4	J20001-
7		6110-23-6490	Spacer	4	J20001-
8		207-01-68170	Tube	1	J20001-
9		6151-11-5280	Seal Ring	1	J20001-
10		134-01-71221	Pipe	1	J20001-
11		6150-11-5751	Gasket	1	J20001-
12		01010-E1235	Bolt	4	J20001-
13		01643-31232	Washer	4	J20001-
14		134-01-65181	Bracket	1	J20001-
15		134-01-61290	• Sheet, Bonded	3	J20001-
16		01011-E1075	Bolt	1	J20001-
17		01010-E1085	Bolt	2	J20001-
18		01011-E1000	Bolt	1	J20001-
19		01643-31032	Washer	4	J20001-
20		01010-81030	Bolt	2	J20001-
21		01643-31032	Washer	2	J20001-
22		01010-80840	Bolt	2	J20001-
23		01643-30823	Washer	2	J20001-
24		134-01-71164	Bracket	1	J20001-
25		134-01-65330	Tube	1	J20001-
26		01010-81020	Bolt	2	J20001-
27		01643-31032	Washer	2	J20001-
28		112-946-4180	Clip	1	J20001-
29		01010-81016	Bolt	1	J20001-
30		01643-31032	Washer	1	J20001-
31		134-01-71640	Pipe	1	J20001-
32		421-02-31120	Clamp	1	J20001-
33		01010-81285	Bolt	1	J20001-
34		01640-21223	Washer, Flat	2	J20001-
35		01580-11210	Nut	2	J20001-
36		(134-54-65490)	Pipe(Refer to Page 282)		-

FIG. A2250-502001 Bracket

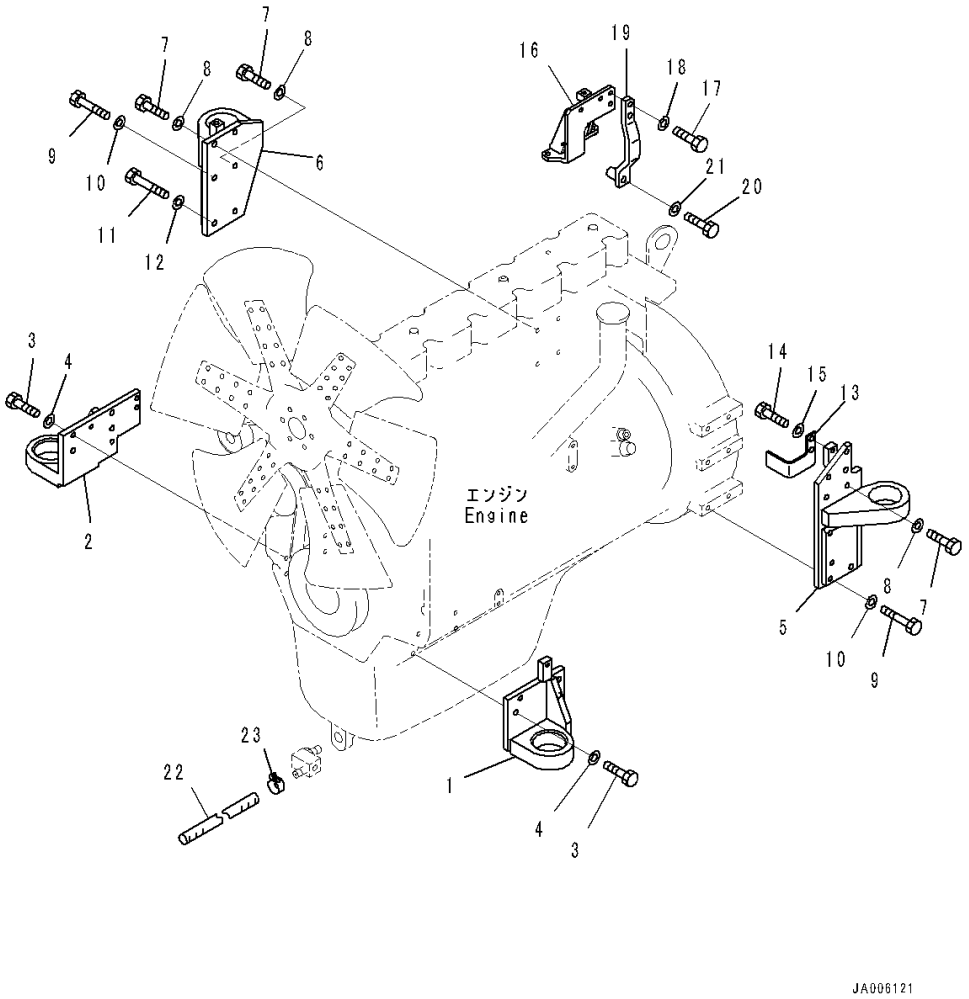

Index	Code	Part Number	Description	Qty	Serial Number
1		134-01-71210	Bracket,Front,LHS	1	J20001-
2		134-01-63411	Bracket,Front,RHS	1	J20001-
3		01010-81235	Bolt	8	J20001-
4		01643-31232	Washer	8	J20001-
5		134-01-61432	Bracket,Rear,LHS	1	J20001-
6		134-01-61443	Bracket,Rear,RHS	1	J20001-
7		01010-81235	Bolt	5	J20001-
8		01643-31232	Washer	5	J20001-
9		01010-81250	Bolt	5	J20001-
10		01643-31232	Washer	5	J20001-
11		01010-81260	Bolt	2	J20001-
12		01643-31232	Washer	2	J20001-
13		134-01-61690	Bracket	1	J20001-
14		01010-81020	Bolt	2	J20001-
15		01643-31032	Washer	2	J20001-
16		134-01-63471	Bracket	1	J20001-
17		01010-80835	Bolt	3	J20001-
18		01643-30823	Washer	3	J20001-
19		134-01-63490	Bracket	1	J20001-
20		01050-61260	Bolt	1	J20001-
21		01643-31232	Washer	1	J20001-
22		07270-21550	Tube	1	J20001-
23		07285-00180	Clip	1	J20001-

FIG. A4130-502001 Water Separator, Tube

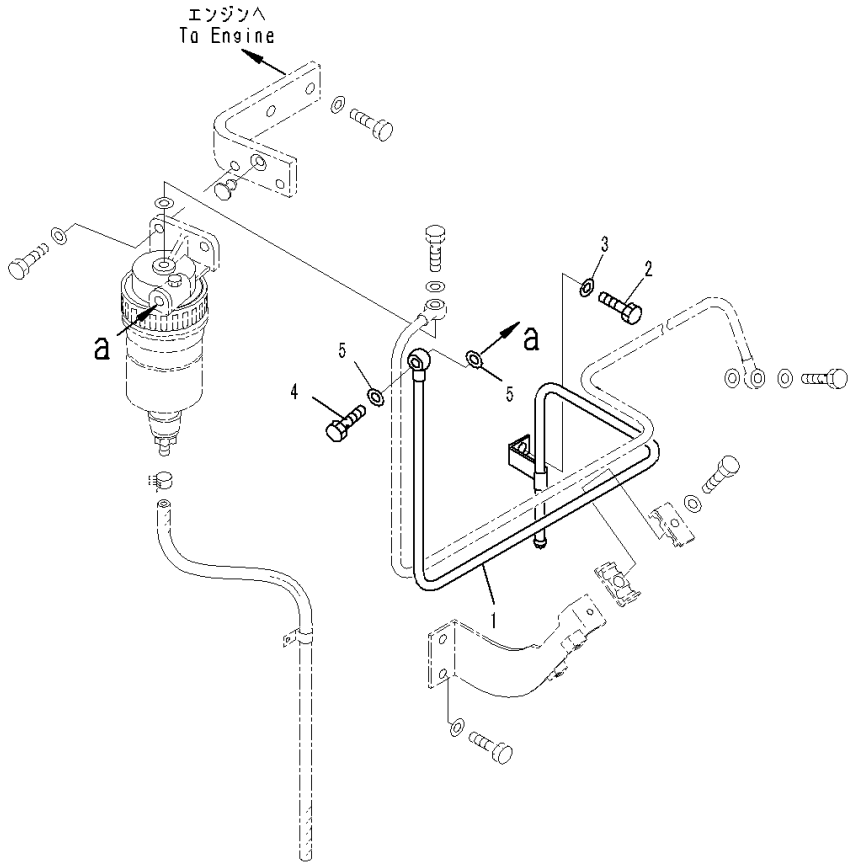

Index	Code	Part Number	Description	Qty	Serial Number
1		134-01-61722	Tube	1	J20001-
2		01010-81016	Bolt	1	J20001-
3		01643-31032	Washer	1	J20001-
4		07206-31014	Bolt, Joint	1	J20001-
5		07005-01412	Gasket	2	J20001-

FIG. A4130-502002 Water Separator, Water Separator

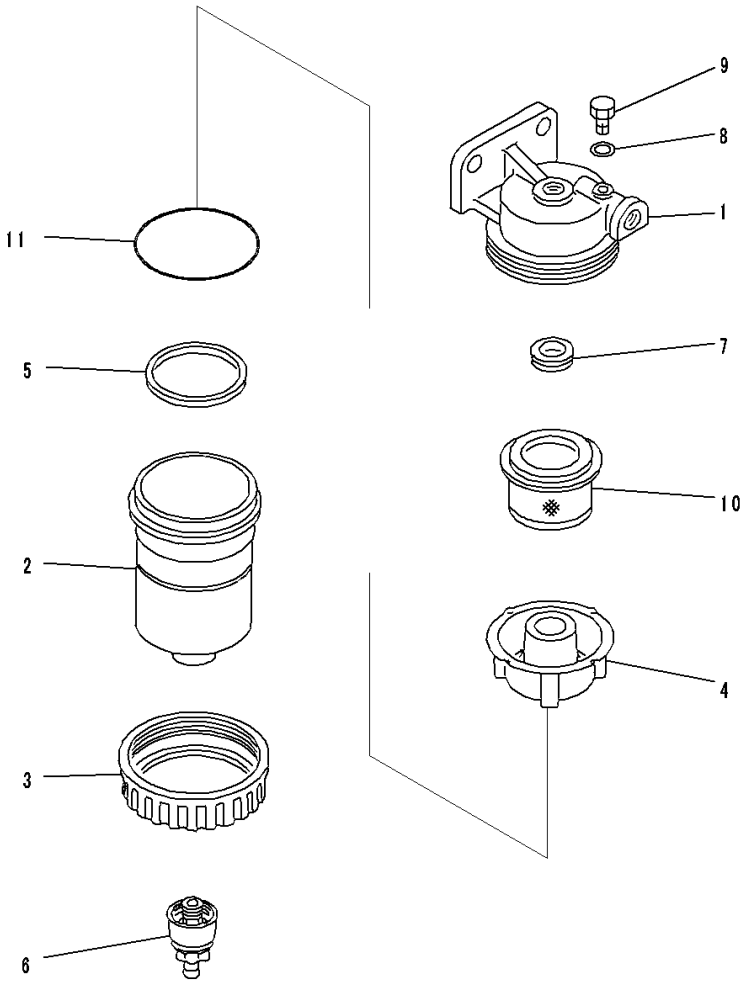

Index	Code	Part Number	Description	Qty	Serial Number
		600-311-9733	Water Separator	1	J20001-
1		600-311-9912	• Cover	1	J20001-
2		600-311-9921	• Case	1	J20001-
3		600-311-9931	• Nut	1	J20001-
4		600-311-9941	• Baffle	1	J20001-
5		600-311-9950	• Ring	1	J20001-
6		600-311-9590	• Plug	1	J20001-
7		600-311-9961	• Gasket	1	J20001-
8		07005-00812	• Gasket	1	J20001-
9		6110-73-6231	• Plug	1	J20001-
10		600-311-9971	• Screen	1	J20001-
11		600-311-9490	• O-ring	1	J20001-

FIG. A4130-502003 Water Separator, Bracket

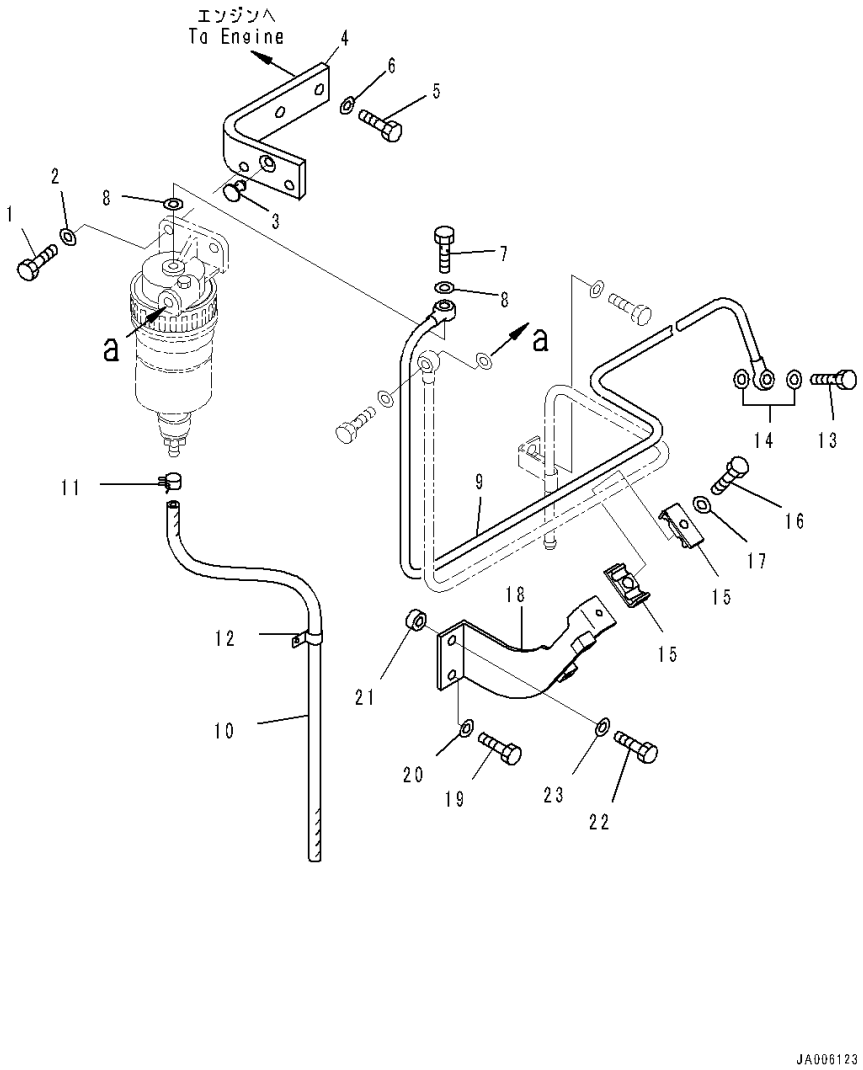

Index	Code	Part Number	Description	Qty	Serial Number
1		01010-80825	Bolt	2	J20001-
2		01643-30823	Washer	2	J20001-
3		14X-54-12960	Stopper	1	J20001-
4		134-01-63431	Bracket	1	J20001-
5		01010-81030	Bolt	2	J20001-
6		01643-31032	Washer	2	J20001-
7		07206-31014	Bolt, Joint	1	J20001-
8		07005-01412	Gasket	2	J20001-
9		134-01-63590	Tube	1	J20001-
10		07286-00855	Hose	1	J20001-
11		07285-00125	Clip	1	J20001-
12		04434-51510	Clip	1	J20001-
13		07206-31014	Bolt, Joint	1	J20001-
14		07005-01412	Gasket	2	J20001-
15		134-01-63550	Clamp	2	J20001-
16		01010-80840	Bolt	1	J20001-
17		01643-30823	Washer	1	J20001-
18		134-977-2422	Bracket	1	J20001-
19		01010-81025	Bolt	1	J20001-
20		01643-31032	Washer	1	J20001-
21		103-21-21260	Boss	1	J20001-
22		01010-80830	Bolt	1	J20001-
23		01643-30823	Washer	1	J20001-

FIG. A5030-501001 Cooling Fan

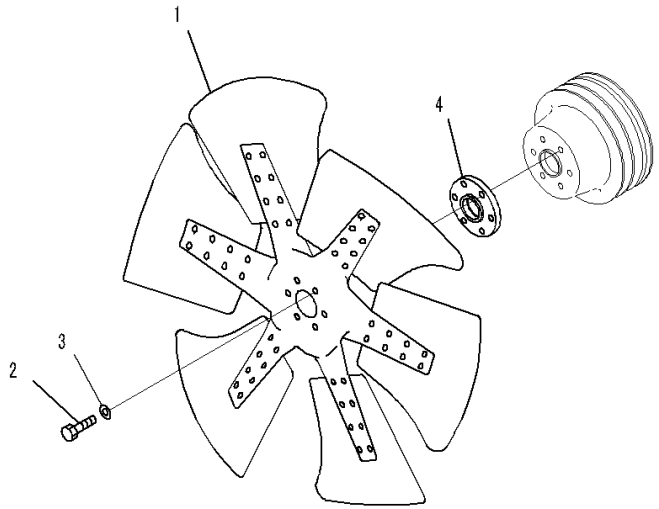

JA006124

Index	Code	Part Number	Description	Qty	Serial Number
1		600-633-7800	Fan	1	J20001-
2		01010-81055	Bolt	6	J20001-
3		01643-31032	Washer	6	J20001-
4		134-01-62330	Spacer	1	J20001-

FIG. A5060-501001 Fan Drive and Tension Pulley, Fan Mounting

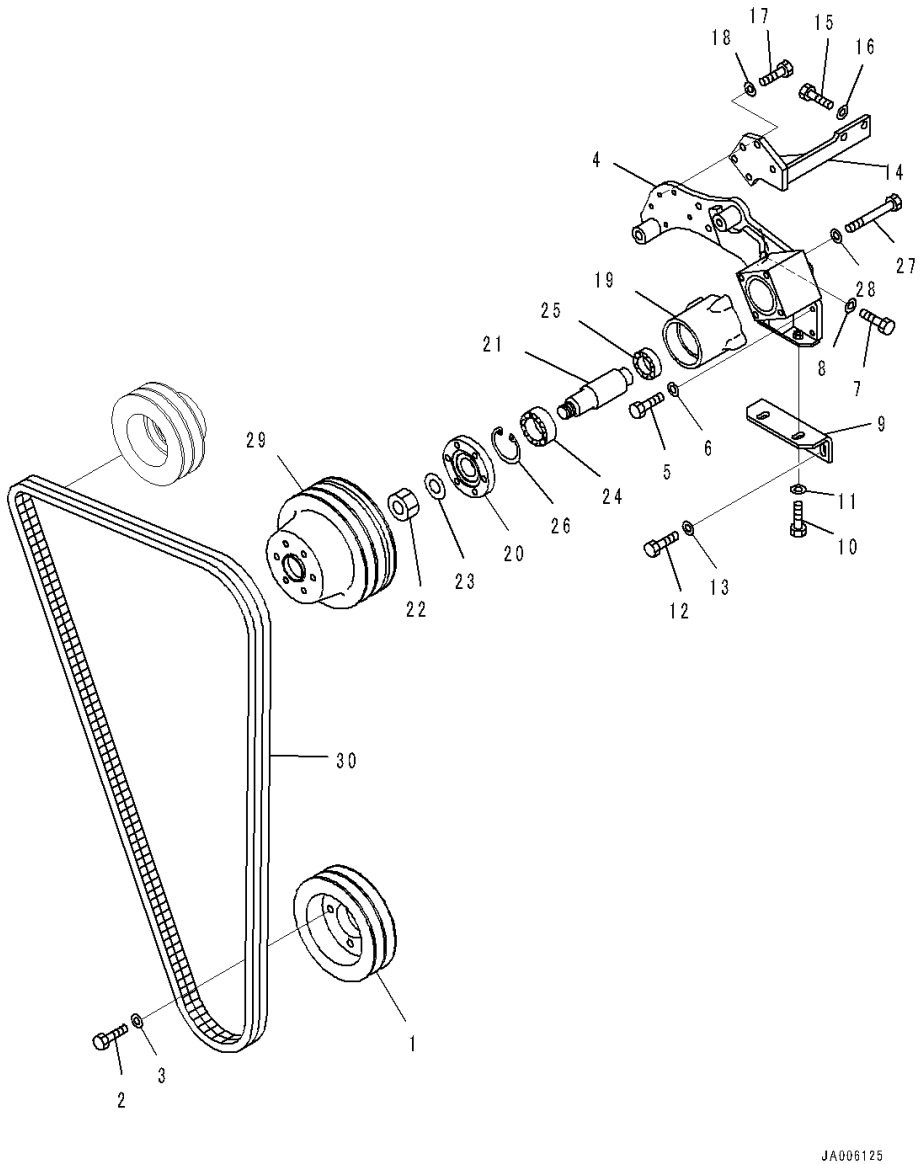

Index	Code	Part Number	Description	Qty	Serial Number
1		134-01-62160	Pulley, Crank	1	J20001-
2		01010-81250	Bolt	4	J20001-
3		01643-31232	Washer	4	J20001-
4		134-01-62451	Bracket	1	J20001-
5		134-01-62341	Bolt	4	J20001-
6		01643-30823	Washer	4	J20001-
7		07372-21240	Bolt	1	J20001-
8		01643-51232	Washer	1	J20001-
9		134-01-63610	Bracket	1	J20001-
10		134-01-62341	Bolt	2	J20001-
11		01643-30823	Washer	2	J20001-
12		01010-81025	Bolt	2	J20001-
13		01643-31032	Washer	2	J20001-
14		134-01-65280	Bracket	1	J20001-
15		01010-81030	Bolt	2	J20001-
16		01643-31032	Washer	2	J20001-
17		01010-80825	Bolt	5	J20001-
18		01643-30823	Washer	5	J20001-
		6151-61-3201	Case Assembly	1	J20001-
19		6151-61-3152	• Case	1	J20001-
20		6151-61-3120	• Hub	1	J20001-
21		6151-61-3170	• Shaft	1	J20001-
22		01583-02414	• Nut	1	J20001-
23		01643-32460	• Washer	1	J20001-
24		06037-06307	• Bearing, Ball	1	J20001-
25		06037-06206	• Bearing, Ball	1	J20001-
26		04065-08025	• Ring, Snap	1	J20001-
27		01011-81005	Bolt	4	J20001-
28		01643-31032	Washer	4	J20001-
29		134-01-62350	Pulley	1	J20001-
30		134-01-62630	V-belt	1	J20001-

FIG. A5060-501002 Fan Drive and Tension Pulley, Tension Pulley

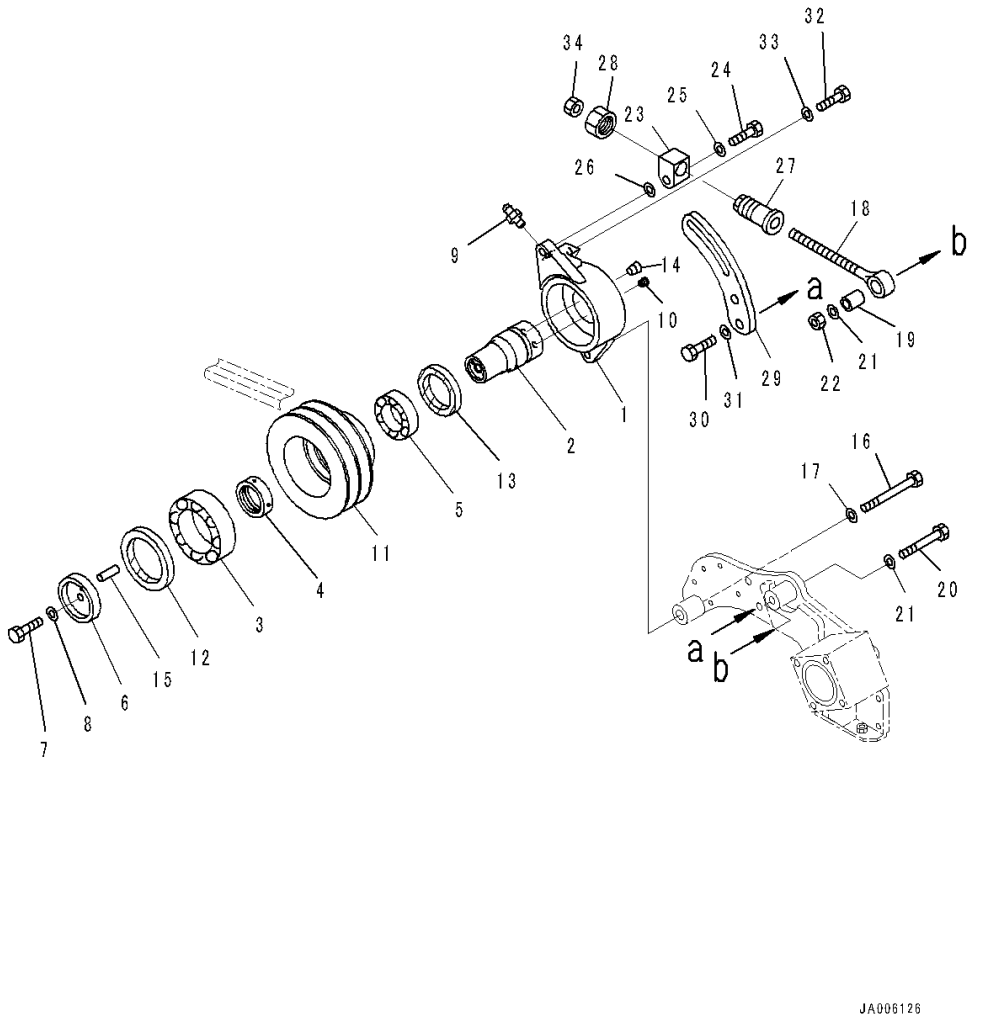

Index	Code	Part Number	Description	Qty	Serial Number
		134-01-62202	Tension Pulley Assembly	1	J20001-
1		134-01-62610	• Case	1	J20001-
2		134-01-62520	• Shaft	1	J20001-
3		06340-06309	• Bearing	1	J20001-
4		134-01-62540	• Spacer	1	J20001-
5		06340-06010	• Bearing	1	J20001-
6		134-01-62550	• Holder	1	J20001-
7		01010-81045	• Bolt	1	J20001-
8		01643-31032	• Washer	1	J20001-
9		07020-00000	• Fitting, Grease	1	J20001-
10		07029-00000	• Valve, Relief	1	J20001-
11		134-01-62530	• Pulley	1	J20001-
12		07012-50075	• Seal, Dust	1	J20001-
13		07012-50058	• Seal, Oil	1	J20001-
14		07043-00108	• Plug, Taper	1	J20001-
15		04020-00514	• Pin, Dowel	1	J20001-
16		01010-81270	Bolt	1	J20001-
17		01643-31232	Washer	1	J20001-
18		134-01-62290	Rod	1	J20001-
19		134-01-62430	Pin	1	J20001-
20		01011-81200	Bolt	1	J20001-
21		01643-31232	Washer	2	J20001-
22		01580-11210	Nut	1	J20001-
23		134-01-62241	Plate	1	J20001-
24		01010-81260	Bolt	1	J20001-
25		01643-31232	Washer	1	J20001-
26		01643-31232	Washer	1	J20001-
27		134-01-62251	Bar	1	J20001-
28		22X-61-12230	Nut	1	J20001-
29		134-01-62391	Plate	1	J20001-
30		01010-81230	Bolt	2	J20001-
31		01643-31232	Washer	2	J20001-
32		01010-81230	Bolt	1	J20001-
33		01643-31232	Washer	1	J20001-
34		01580-11613	Nut	1	J20001-

FIG. B0100-002001 Engine Mounting

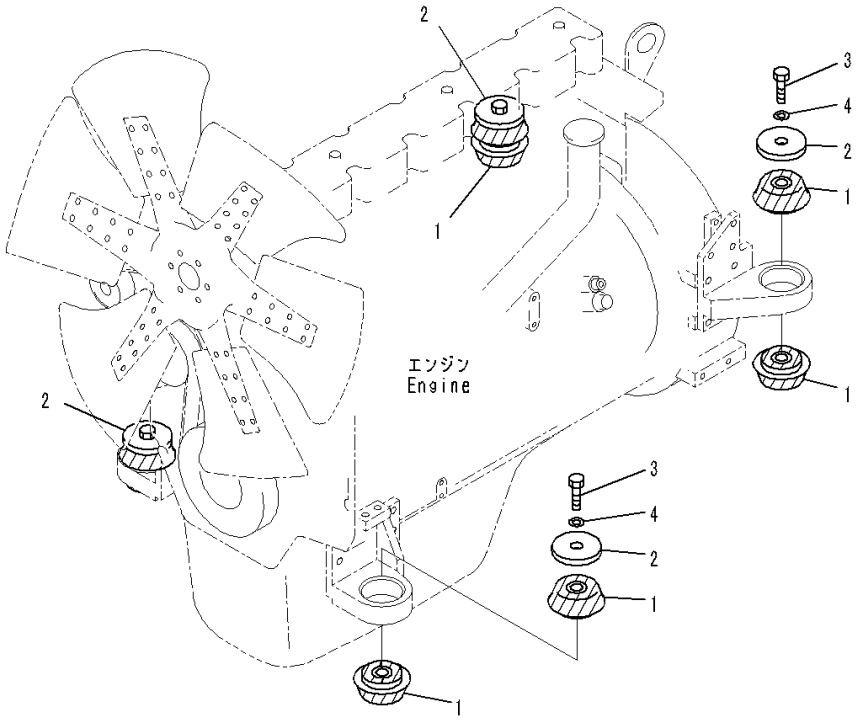

Index	Code	Part Number	Description	Qty	Serial Number
1		134-01-61452	Cushion	8	J20001-
2		134-01-61461	Washer	4	J20001-
3		01011-82035	Bolt	4	J20001-
4		01643-32060	Washer	4	J20001-

FIG. B0500-001001 Engine Wiring Harness, LHS (1/2)

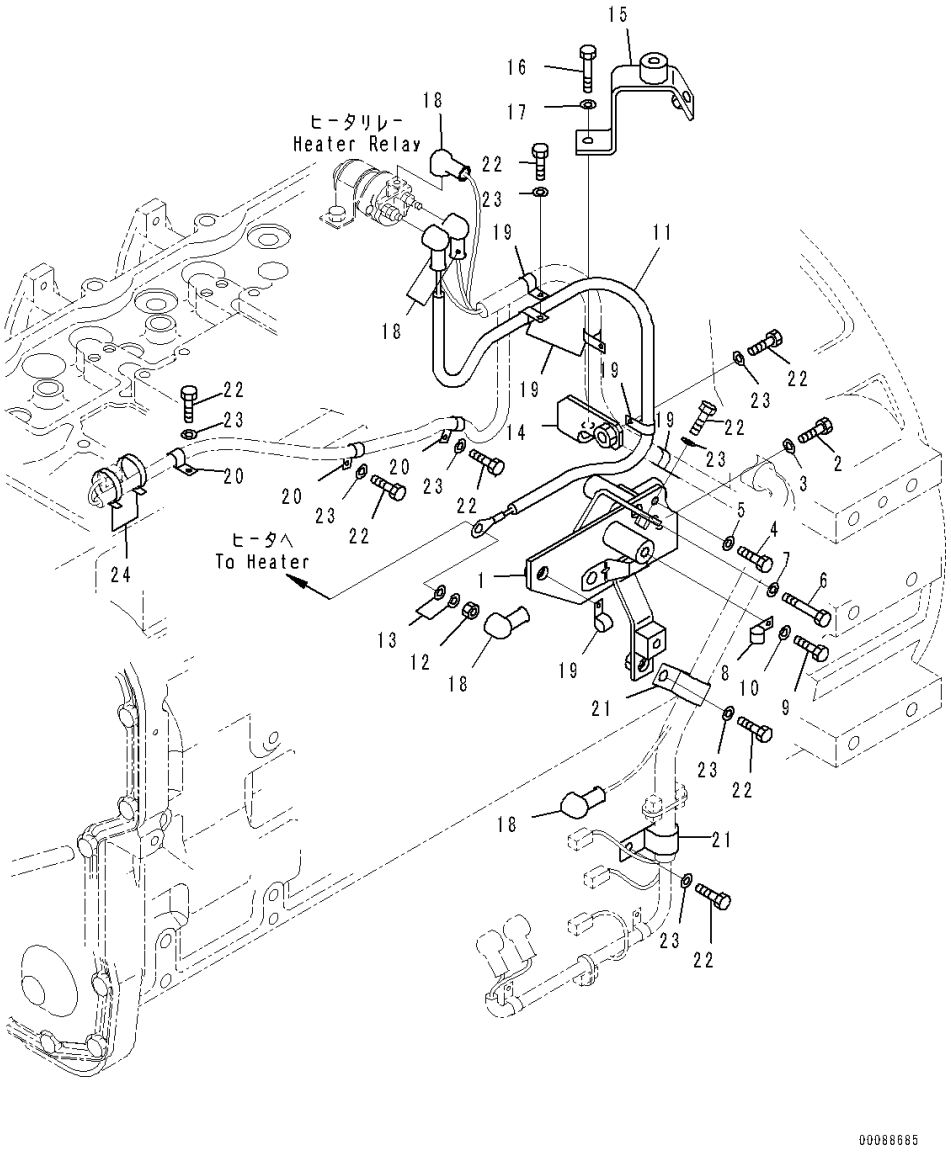

Index	Code	Part Number	Description	Qty	Serial Number
1		134-977-2542	Bracket	1	J20001-
2		01010-81025	Bolt	1	J20001-
3		01643-31032	Washer	1	J20001-
4		01010-80616	Bolt	1	J20001-
5		01643-30623	Washer	1	J20001-
6		01010-81075	Bolt	1	J20001-
7		01643-31032	Washer	1	J20001-
8		04434-51310	Clip	1	J20001-
9		01010-81020	Bolt	1	J20001-
10		01643-31032	Washer	1	J20001-
11		134-06-65140	Wire	1	J20001-
12		01580-10605	Nut	1	J20001-
13		01640-20610	Washer	2	J20001-
14		134-06-65132	Bracket	1	J20001-
15		134-06-65221	Bracket	1	J20001-
16		01010-80840	Bolt	1	J20001-
17		01643-30823	Washer	1	J20001-
18		08038-00519	Cap	5	J20001-
19		04434-51410	Clip	5	J20001-
20		04434-51010	Clip	3	J20001-
21		04434-51710	Clip	2	J20001-
22		01010-81020	Bolt	8	J20001-
23		01643-31032	Washer	8	J20001-
24		08034-20414	Band	2	J20001-

FIG. B0500-001002 Engine Wiring Harness, LHS (2/2)

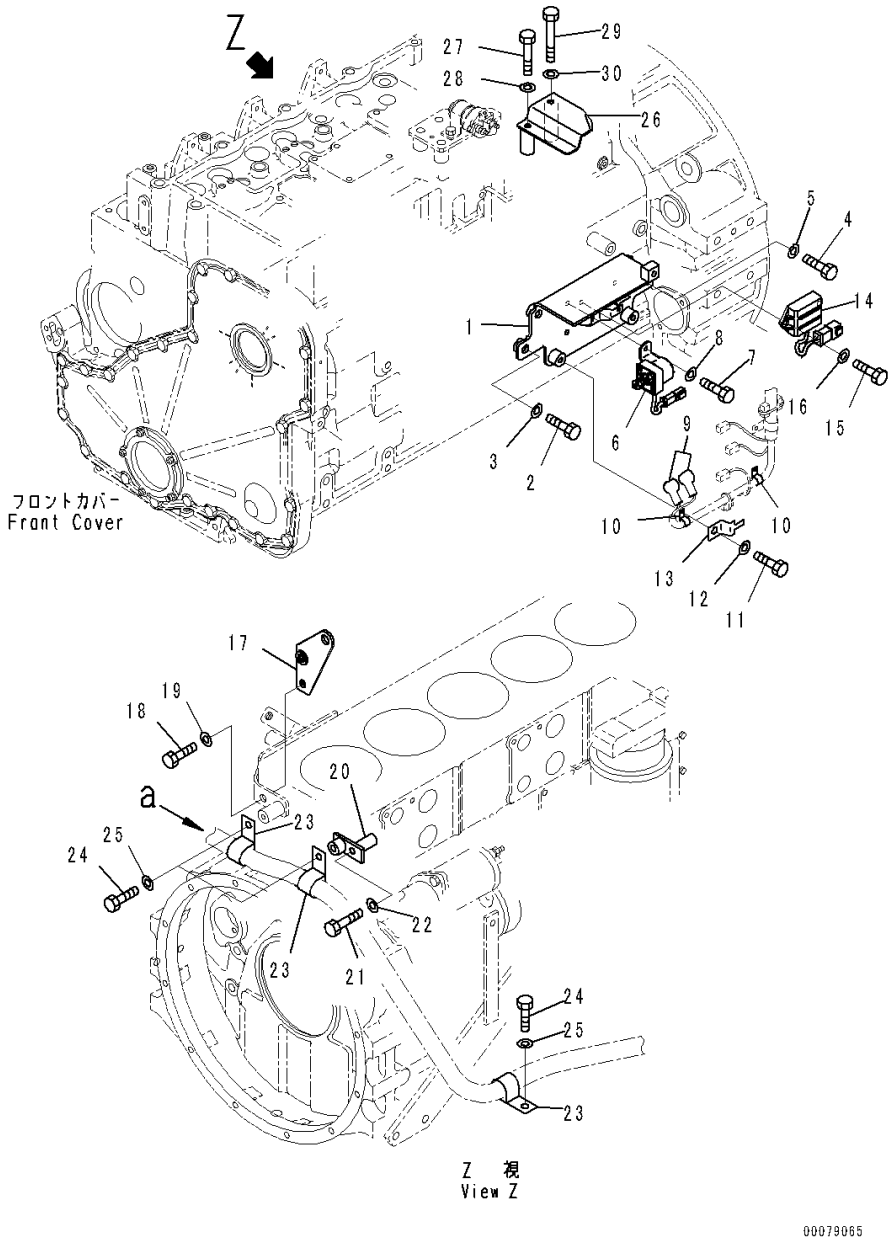

Index	Code	Part Number	Description	Qty	Serial Number
1		134-06-65160	Bracket	1	J20001-
2		01010-81235	Bolt	2	J20001-
3		01643-31232	Washer	2	J20001-
4		01010-80835	Bolt	1	J20001-
5		01643-30823	Washer	1	J20001-
6		600-815-7870	Relay	1	J20001-
7		01010-80616	Bolt	2	J20001-
8		01643-30623	Washer	2	J20001-
9		08038-00519	Cap	2	J20001-
10		04434-51010	Clip	2	J20001-
11		01010-81020	Bolt	2	J20001-
12		01643-31032	Washer	2	J20001-
13		08193-20010	Clip	1	J20001-
14		600-815-9270	Timer	1	J20001-
15		01010-80616	Bolt	2	J20001-
16		01643-30623	Washer	2	J20001-
17		134-06-72710	Bracket	1	J20001-
18		01010-81230	Bolt	1	J20001-
19		01643-31232	Washer	1	J20001-
20		134-06-65110	Bracket	1	J20001-
21		01010-80865	Bolt	1	J20001-
22		01643-30823	Washer	1	J20001-
23		04434-52710	Clip	3	J20001-
24		01010-81020	Bolt	3	J20001-
25		01643-31032	Washer	3	J20001-
26		134-06-72731	Cover	1	J20001-
27		01010-80865	Bolt	1	J20001-
28		01643-30823	Washer	1	J20001-
29		01010-80885	Bolt	1	J20001-
30		01643-30823	Washer	1	J20001-

FIG. B0500-001003 Engine Wiring Harness, RHS (1/2)

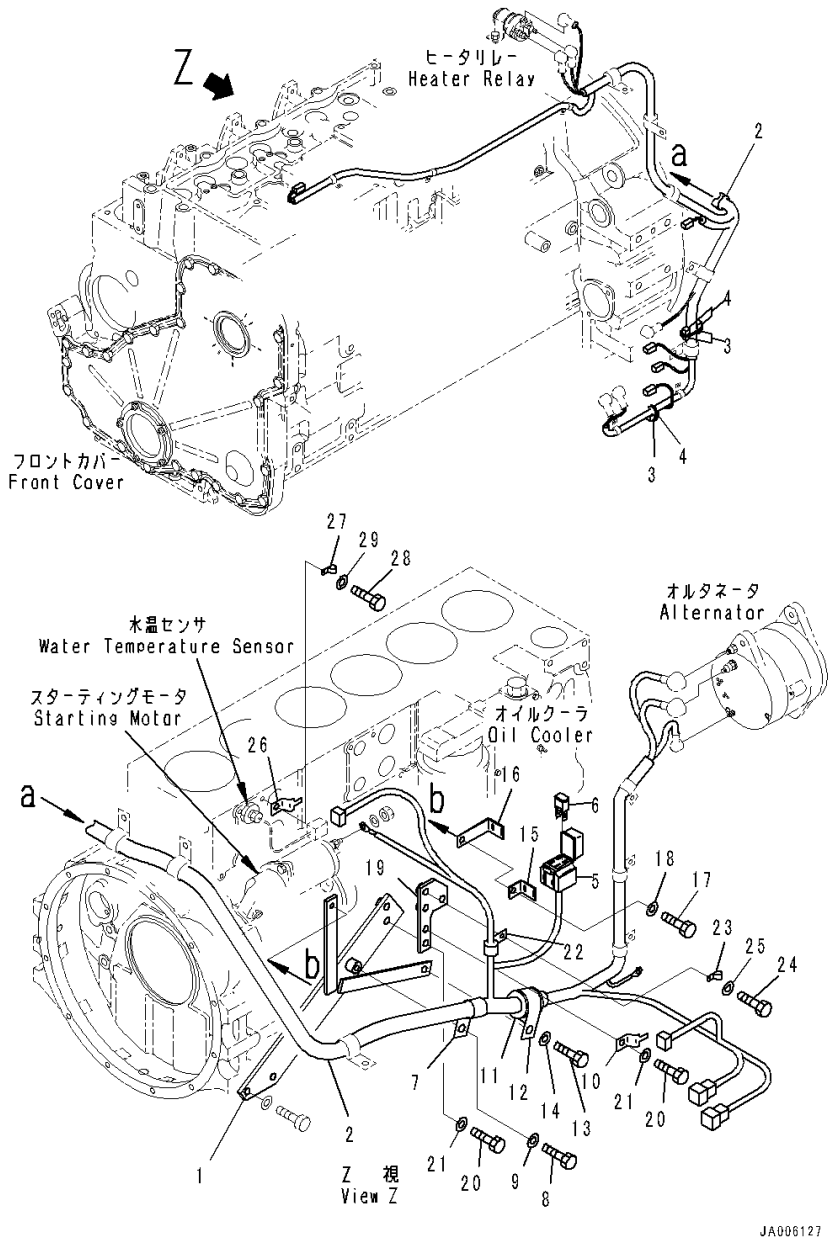

Index	Code	Part Number	Description	Qty	Serial Number
1		134-06-65170	Bracket	1	J20001-
2		134-06-63280	Wiring Harness	1	J20001-
3		21X-06-31530	• Diode	3	J20001-
4		21X-06-31540	• Connector	3	J20001-
5		421-06-22880	• Holder	1	J20001-
6		421-06-22830	• Fuse, 120Amp.	1	J20001-
7		04434-52710	Clip	1	J20001-
8		01010-81020	Bolt	1	J20001-
9		01643-31032	Washer	1	J20001-
10		08193-20010	Clip	1	J20001-
11		07095-20627	Cushion	1	J20001-
12		04434-53411	Clip	1	J20001-
13		01010-81020	Bolt	1	J20001-
14		01643-31032	Washer	1	J20001-
15		421-06-22910	Bracket	1	J20001-
16		421-06-22920	Bracket	1	J20001-
17		01010-80820	Bolt	1	J20001-
18		01643-30823	Washer	1	J20001-
19		134-06-65151	Plate	1	J20001-
20		01010-81025	Bolt	2	J20001-
21		01643-31032	Washer	2	J20001-
22		04434-51410	Clip	1	J20001-
23		04434-50610	Clip	1	J20001-
24		01010-81020	Bolt	1	J20001-
25		01643-31032	Washer	1	J20001-
26		08193-20010	Clip	1	J20001-
27		04435-50510	Clip	1	J20001-
28		01010-81020	Bolt	1	J20001-
29		01643-31032	Washer	1	J20001-

FIG. B0500-001004 Engine Wiring Harness, RHS (2/2)

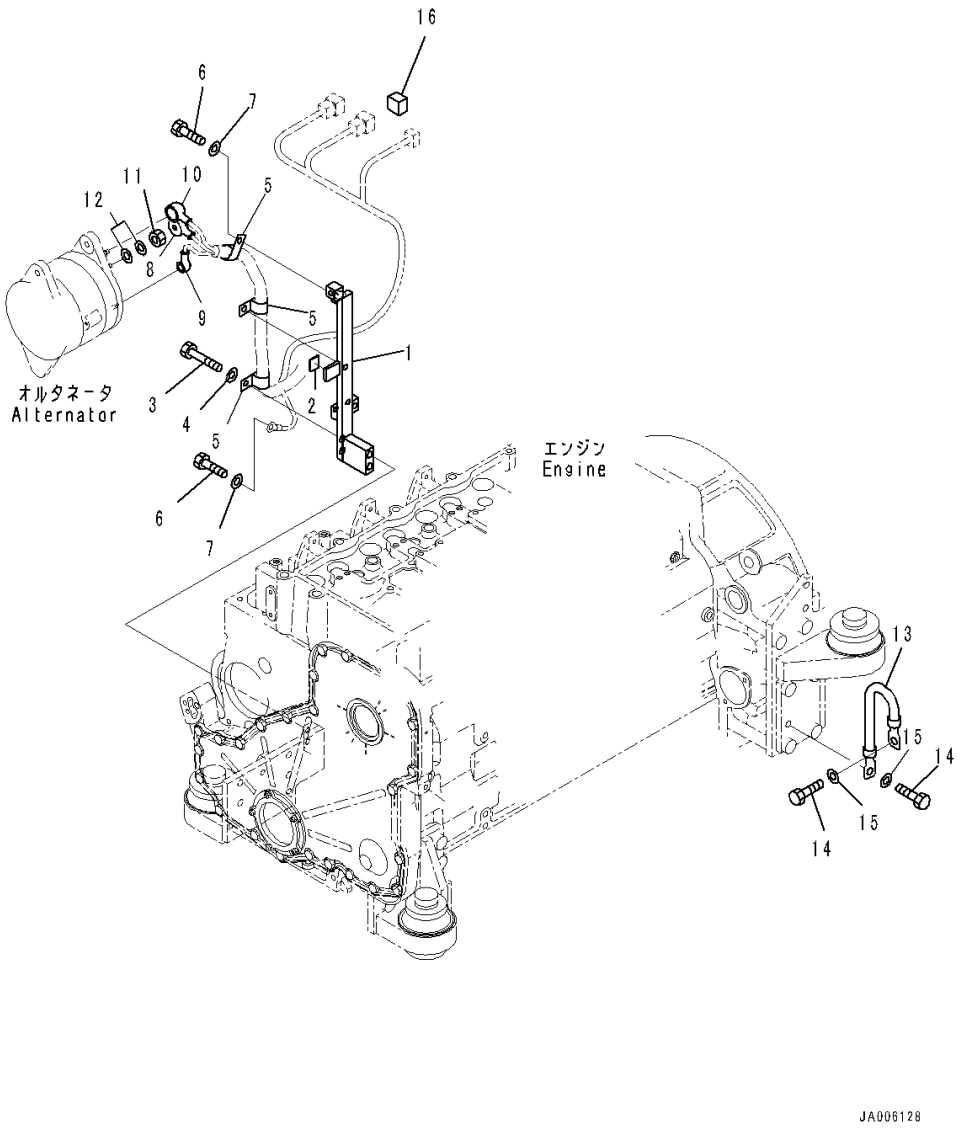

Index	Code	Part Number	Description	Qty	Serial Number
1		134-06-65121	Bracket	1	J20001-
2		134-977-2470	• Sheet, Bonded	1	J20001-
3		01010-81085	Bolt	2	J20001-
4		01643-31032	Washer	2	J20001-
5		04434-51910	Clip	3	J20001-
6		01010-81016	Bolt	4	J20001-
7		01643-31032	Washer	4	J20001-
8		134-06-63140	Cap	1	J20001-
9		08038-00519	Cap	1	J20001-
10		08038-00525	Cap	1	J20001-
11		01580-10806	Nut	1	J20001-
12		01640-20816	Washer	2	J20001-
13		08028-46040	Cable, Ground	1	J20001-
14		01010-81220	Bolt	2	J20001-
15		01643-31232	Washer	2	J20001-
16		134-06-65280	Connector	1	J20001-

FIG. B0600-002001 Damper

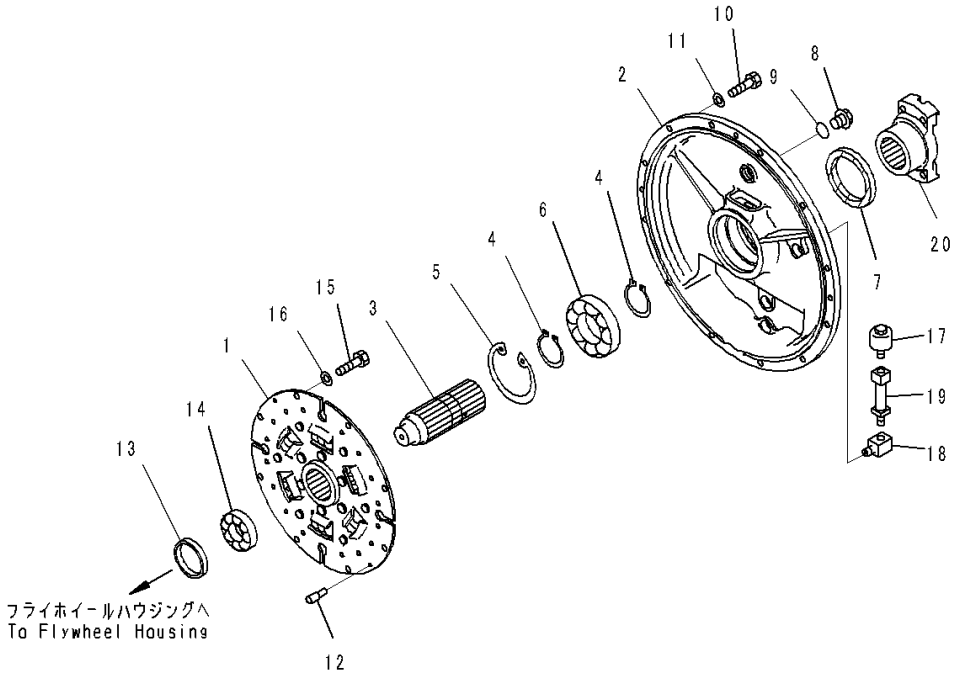

Index	Code	Part Number	Description	Qty	Serial Number
1		134-12-61131	Damper Disc Assembly	1	J20001-
2		134-12-61112	Cover	1	J20001-
3		134-12-61121	Shaft	1	J20001-
4		04064-06020	Ring, Snap	2	J20001-
5		04065-01104	Ring, Snap	1	J20001-
6		06000-06212	Bearing	1	J20001-
7		07012-50085	Seal, Oil	1	J20001-
8		07044-12412	Plug	3	J20001-
9		07002-32434	O-ring	3	J20001-
10		01010-81040	Bolt	12	J20001-
11		01643-31032	Washer	12	J20001-
12		203-01-51120	Pin	2	J20001-
13		23S-12-11330	Washer	1	J20001-
14		06000-06207	Bearing	1	J20001-
15		07372-21030	Bolt	8	J20001-
16		01643-51032	Washer	8	J20001-
17		07030-10252	Breather	1	J20001-
18		568-15-11610	Elbow	1	J20001-
19		135-12-31230	Tube	1	J20001-
20		14Z-12-31310	Coupling	1	J20001-

COOLING SYSTEM

FIG. C0100-001001 Radiator, Radiator

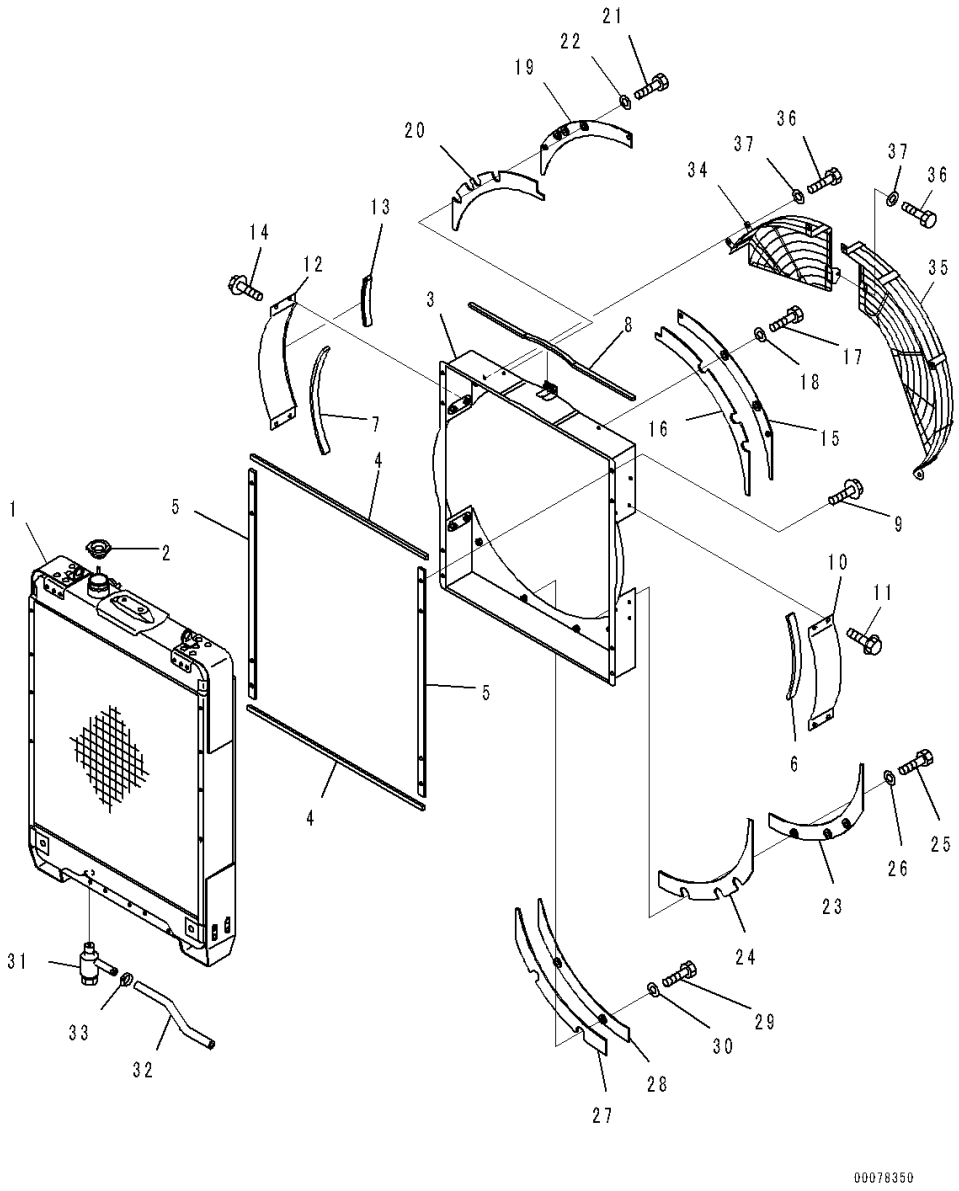

Index	Code	Part Number	Description	Qty	Serial Number
1		134-03-61511	Radiator Core Assembly	1	J20001-
2		14X-03-11140	Cap	1	J20001-
3		134-03-62210	Shroud	1	J20001-
4		134-03-61250	• Sheet, Bonded	2	J20001-
5		134-03-61261	• Sheet, Bonded	2	J20001-
6		134-03-61360	• Sheet, Bonded	1	J20001-
7		134-03-61370	• Sheet, Bonded	1	J20001-
8		134-03-62220	• Sheet, Bonded	1	J20001-
9		01435-21014	Bolt	8	J20001-
10		134-03-61271	Cover, LHS	1	J20001-
11		01435-21014	Bolt	4	J20001-
12		134-03-61281	Cover, RHS	1	J20001-
13		134-03-61470	• Rubber,Bonded	1	J20001-
14		01435-21014	Bolt	4	J20001-
15		134-03-61430	Cover	1	J20001-
16		134-03-61530	• Rubber,Bonded	1	J20001-
17		01010-81030	Bolt	2	J20001-
18		01643-31032	Washer	2	J20001-
19		134-03-61440	Cover	1	J20001-
20		134-03-61540	• Rubber,Bonded	1	J20001-
21		01010-81030	Bolt	2	J20001-
22		01643-31032	Washer	2	J20001-
23		134-03-61450	Cover	1	J20001-
24		134-03-61550	• Rubber,Bonded	1	J20001-
25		01010-81030	Bolt	2	J20001-
26		01643-31032	Washer	2	J20001-
27		134-03-61460	Cover	1	J20001-
28		134-03-61560	• Rubber,Bonded	1	J20001-
29		01010-81030	Bolt	2	J20001-
30		01643-31032	Washer	2	J20001-
31		07730-50004	Valve	1	J20001-
32		07270-01525	Tube	1	J20001-
33		07280-01920	Clamp, Hose	1	J20001-
34		134-03-61570	Guard, RHS	1	J20001-
35		134-03-65160	Guard, LHS	1	J20001-
36		01010-81030	Bolt	7	J20001-
37		01643-31032	Washer	7	J20001-

FIG. C0100-001002 Radiator, Radiator Mounting

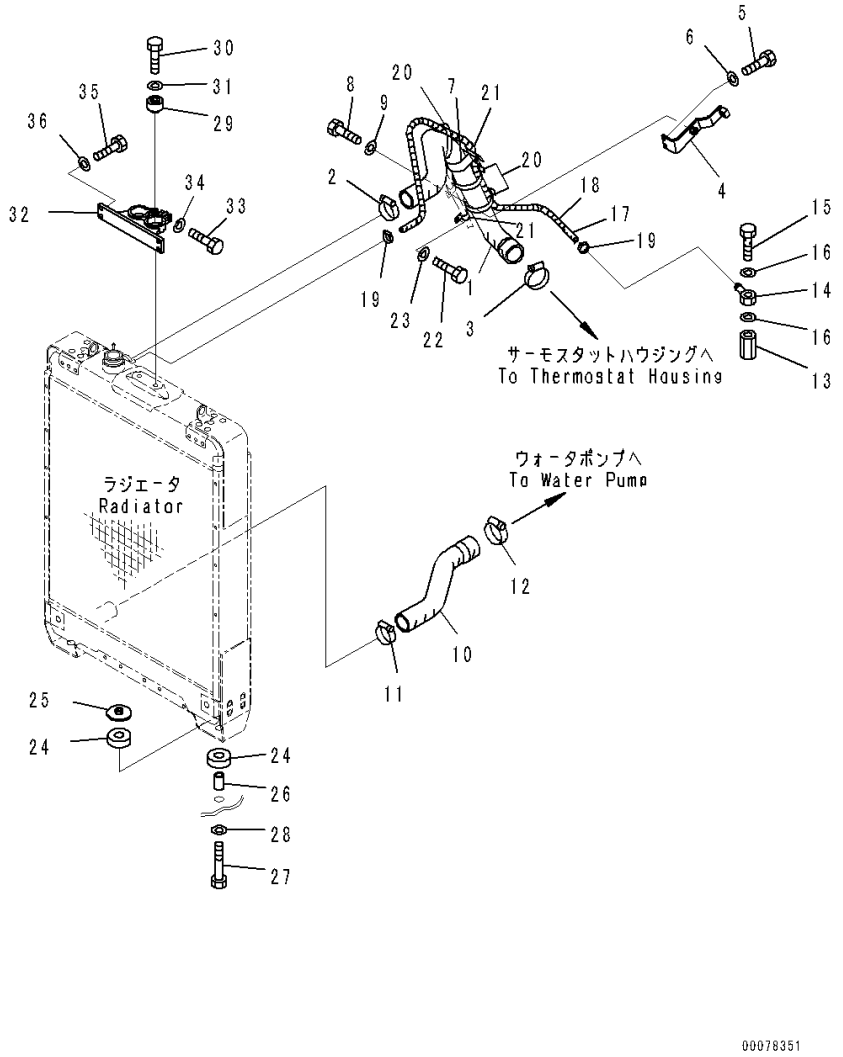

Index	Code	Part Number	Description	Qty	Serial Number
1		134-03-62110	Hose,Upper	1	J20001-
2		07289-00070	Clamp	1	J20001-
3		07289-00070	Clamp	1	J20001-
4		134-03-61310	Bracket	1	J20001-
5		01010-81025	Bolt	2	J20001-
6		01643-31032	Washer	2	J20001-
7		568-03-12240	Clip	1	J20001-
8		01010-81225	Bolt	1	J20001-
9		01643-31232	Washer	1	J20001-
10		134-03-62120	Hose,Lower	1	J20001-
11		07289-00070	Clamp	1	J20001-
12		07289-00070	Clamp	1	J20001-
13		134-03-62170	Nipple	1	J20001-
14		6204-73-5750	Joint	1	J20001-
15		07206-31014	Bolt, Joint	1	J20001-
16		07005-01412	Gasket	2	J20001-
17		134-03-62150	Hose	1	J20001-
18		08017-31910	• Conduit	1	J20001-
19		07285-00150	Clip, Hose	2	J20001-
20		134-03-61410	Band	3	J20001-
21		04434-52312	Clip	2	J20001-
22		01010-81225	Bolt	1	J20001-
23		01643-31232	Washer	1	J20001-
24		205-54-71680	Cushion	4	J20001-
25		134-03-61130	Plate	2	J20001-
26		6110-25-6290	Spacer	2	J20001-
27		01010-81280	Bolt	2	J20001-
28		01643-31232	Washer	2	J20001-
29		135-03-12110	Damper	2	J20001-
30		01010-81455	Bolt	2	J20001-
31		01643-31445	Washer	2	J20001-
32		134-03-61123	Bracket	1	J20001-
33		01010-81035	Bolt	2	J20001-
34		01643-31032	Washer	2	J20001-
35		01010-81035	Bolt	4	J20001-
36		01643-31032	Washer	4	J20001-

FIG. C0100-001003 Radiator, Reserve Tank

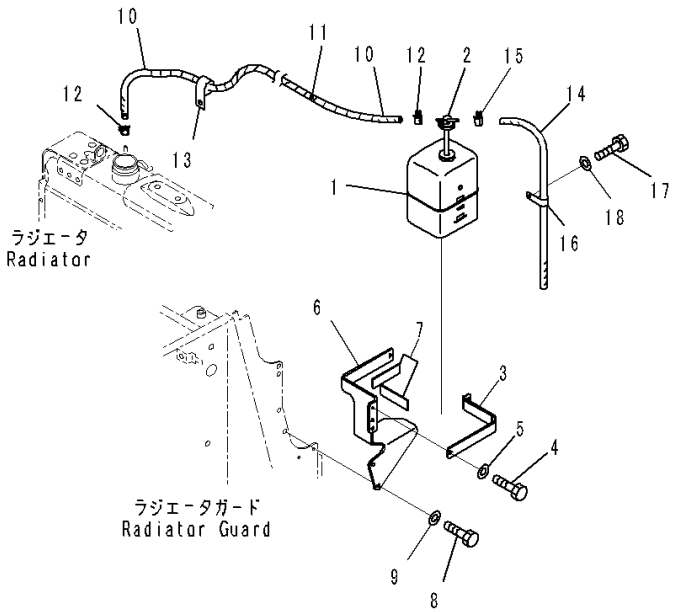

Index	Code	Part Number	Description	Qty	Serial Number
1		203-03-61640	Tank	1	J20001-
2		205-03-71532	• Cap	1	J20001-
		205-03-71540	• • Packing	1	J20001-
3		134-03-71711	Bracket	1	J20001-
4		01010-80820	Bolt	2	J20001-
5		01643-30823	Washer	2	J20001-
6		134-03-71721	Bracket	1	J20001-
7		205-03-71440	• Sheet	2	J20001-
8		01010-81025	Bolt	2	J20001-
9		01643-31032	Washer	2	J20001-
10		134-03-62130	Hose	1	J20001-
11		08017-31308	• Conduit	1	J20001-
12		07285-00110	Clip, Hose	2	J20001-
13		04434-51810	Clip	1	J20001-
14		208-03-58310	Hose	1	J20001-
15		07285-00110	Clip, Hose	1	J20001-
16		04434-51610	Clip	1	J20001-
17		01010-81016	Bolt	1	J20001-
18		01643-31032	Washer	1	J20001-

FUEL SYSTEM

FIG. D0100-001001 Fuel Tank

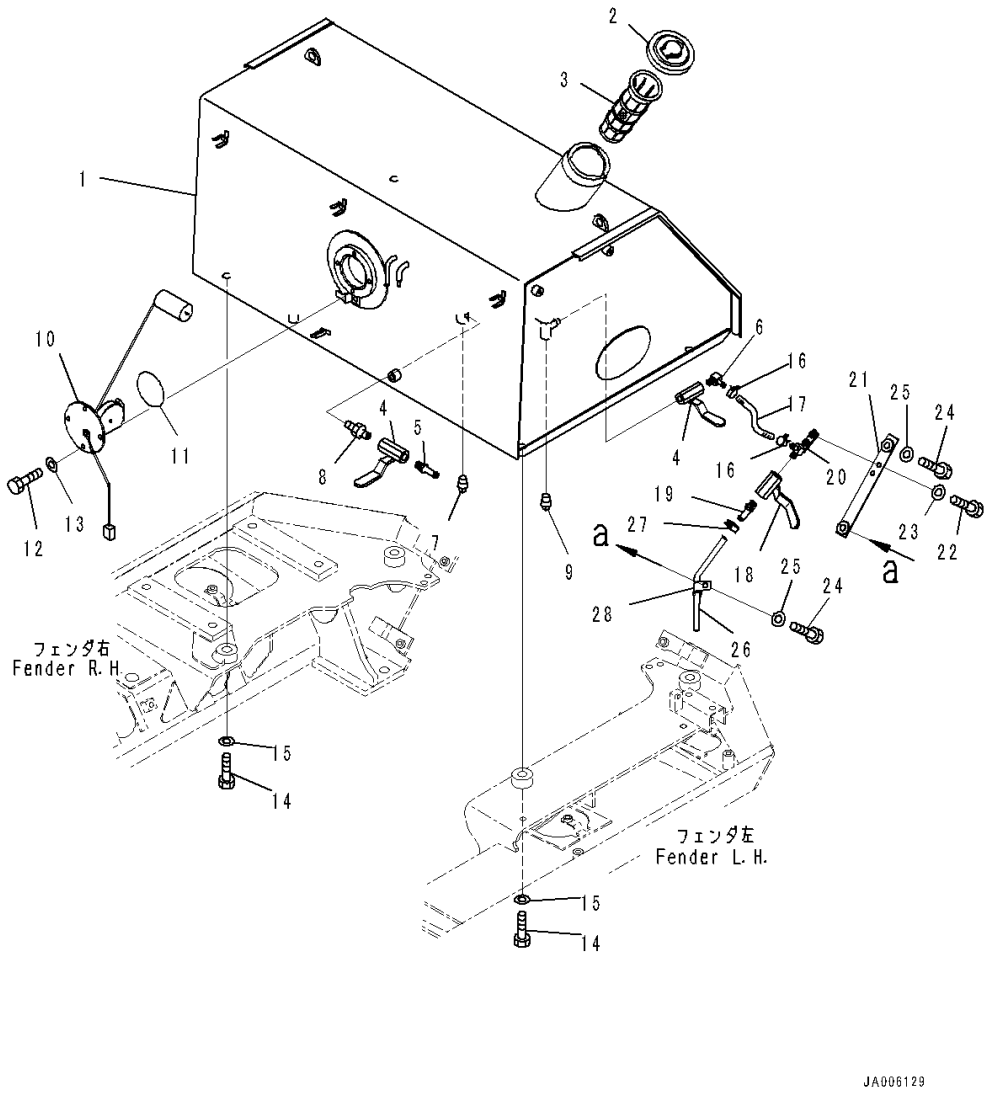

Index	Code	Part Number	Description	Qty	Serial Number
1		134-04-67110	Tank	1	J20001-
2		134-04-61180	Cap	1	J20001-
3		11Y-04-11330	Strainer	1	J20001-
4		07700-40240	Valve	2	J20001-
5		120-04-41130	Nipple	1	J20001-
6		14X-04-11260	Elbow	1	J20001-
7		07042-70211	Plug, Taper	1	J20001-
8		07325-10200	Nipple	1	J20001-
9		07042-70617	Plug, Taper	1	J20001-
10		7861-92-4940	Sensor	1	J20001-
11		07000-02085	O-ring	1	J20001-
12		01010-81020	Bolt	4	J20001-
13		01643-31032	Washer	4	J20001-
14		01010-81660	Bolt	4	J20001-
15		01643-31645	Washer	4	J20001-
16		11Y-09-11140	Clip	2	J20001-
17		07288-01003	Hose	1	J20001-
18		07700-40240	Valve	1	J20001-
19		120-04-41130	Nipple	1	J20001-
20		134-04-66160	Elbow	1	J20001-
21		134-04-66172	Plate	1	J20001-
22		01010-80816	Bolt	2	J20001-
23		01643-30823	Washer	2	J20001-
24		01010-81235	Bolt	2	J20001-
25		01643-31232	Washer	2	J20001-
26		07270-01035	Tube	1	J20001-
27		07285-00115	Clip	1	J20001-
28		04434-51312	Clip	1	J20001-

FIG. D0100-002001 Fuel Tank, With Rear Cover

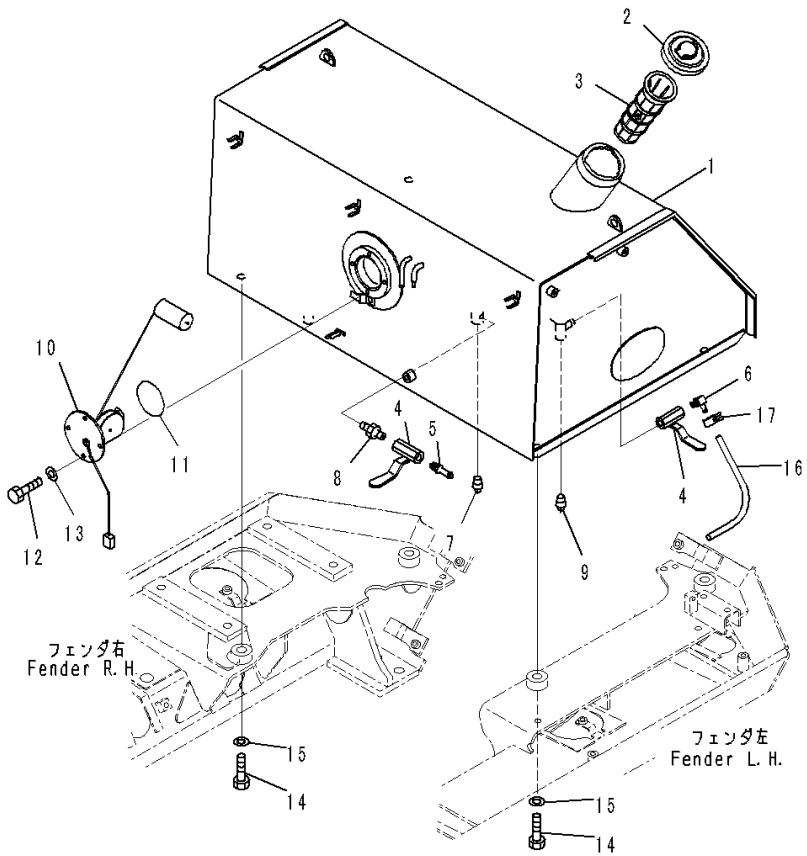

Index	Code	Part Number	Description	Qty	Serial Number
1		134-04-67110	Tank	1	J20001-
2		134-04-61180	Cap	1	J20001-
3		11Y-04-11330	Strainer	1	J20001-
4		07700-40240	Valve	2	J20001-
5		120-04-41130	Nipple	1	J20001-
6		14X-04-11260	Elbow	1	J20001-
7		07042-70211	Plug, Taper	1	J20001-
8		07325-10200	Nipple	1	J20001-
9		07042-70617	Plug, Taper	1	J20001-
10		7861-92-4940	Sensor	1	J20001-
11		07000-02085	O-ring	1	J20001-
12		01010-81020	Bolt	4	J20001-
13		01643-31032	Washer	4	J20001-
14		01010-81660	Bolt	4	J20001-
15		01643-31645	Washer	4	J20001-
16		07270-01035	Tube	1	J20001-
17		07285-00115	Clip	1	J20001-

FIG. D0200-001001 Fuel Supply Piping

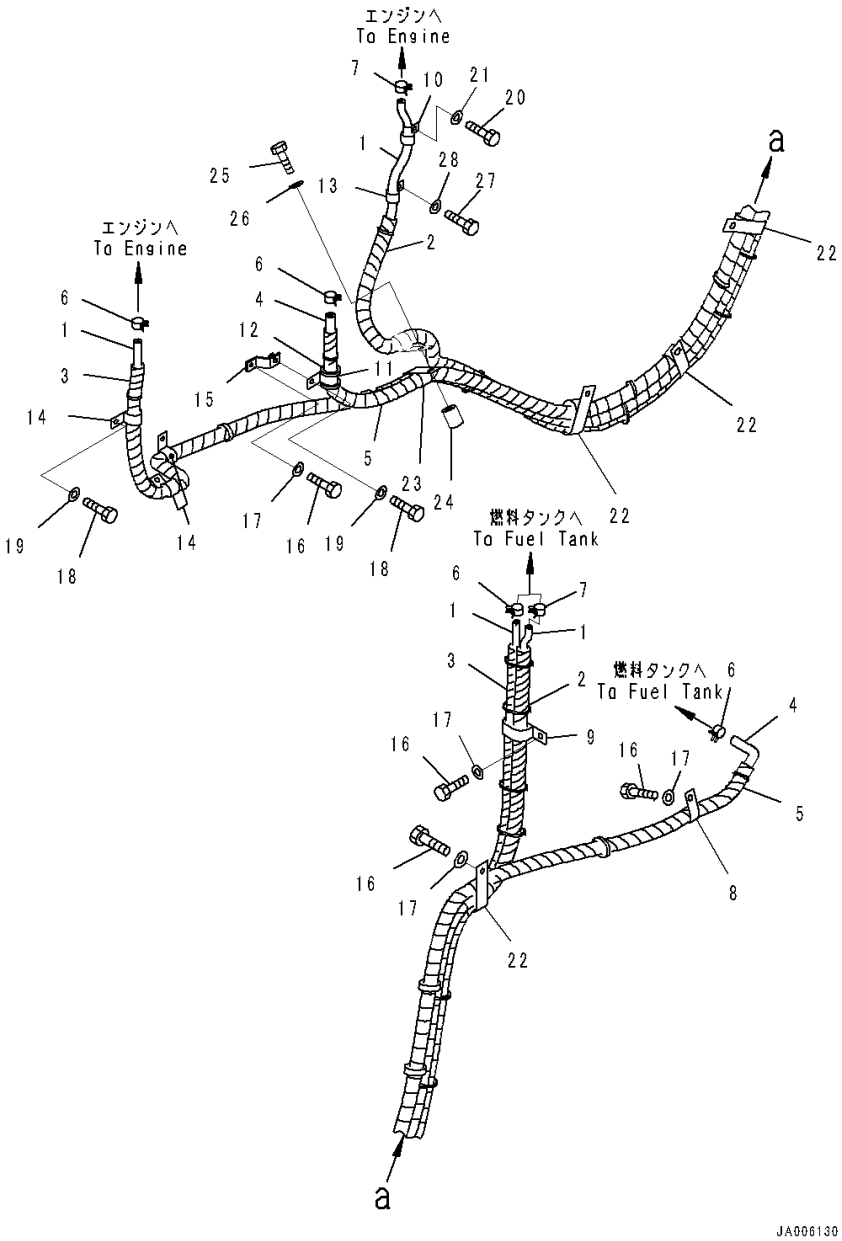

Index	Code	Part Number	Description	Qty	Serial Number
1		134-04-67120	Hose Assembly	1	J20001-
2		08017-81031	• Conduit	1	J20001-
3		08017-81935	• Conduit	2	J20001-
4		134-04-67130	Hose Assembly	1	J20001-
5		08017-81929	• Conduit	2	J20001-
6		07285-00150	Clip, Hose	4	J20001-
7		07285-00085	Clip, Hose	2	J20001-
8		04434-52312	Clip	1	J20001-
9		04434-53212	Clip	1	J20001-
10		04434-51410	Clip	1	J20001-
11		04434-53211	Clip	1	J20001-
12		07095-20523	Cushion	1	J20001-
13		04434-51410	Clip	1	J20001-
14		04434-52310	Clip	3	J20001-
15		134-04-61240	Bracket	1	J20001-
16		01010-81220	Bolt	7	J20001-
17		01643-31232	Washer	7	J20001-
18		01010-81020	Bolt	4	J20001-
19		01643-31032	Washer	4	J20001-
20		01010-81060	Bolt	1	J20001-
21		01643-31032	Washer	1	J20001-
22		21J-62-17620	Clip	4	J20001-
23		21J-62-17620	Clip	1	J20001-
24		21T-72-23290	Spacer	1	J20001-
25		01010-81250	Bolt	1	J20001-
26		01643-31232	Washer	1	J20001-
27		01010-81025	Bolt	2	J20001-
28		01643-31032	Washer	2	J20001-

FIG. D0210-001001 Additional Fuel Strainer

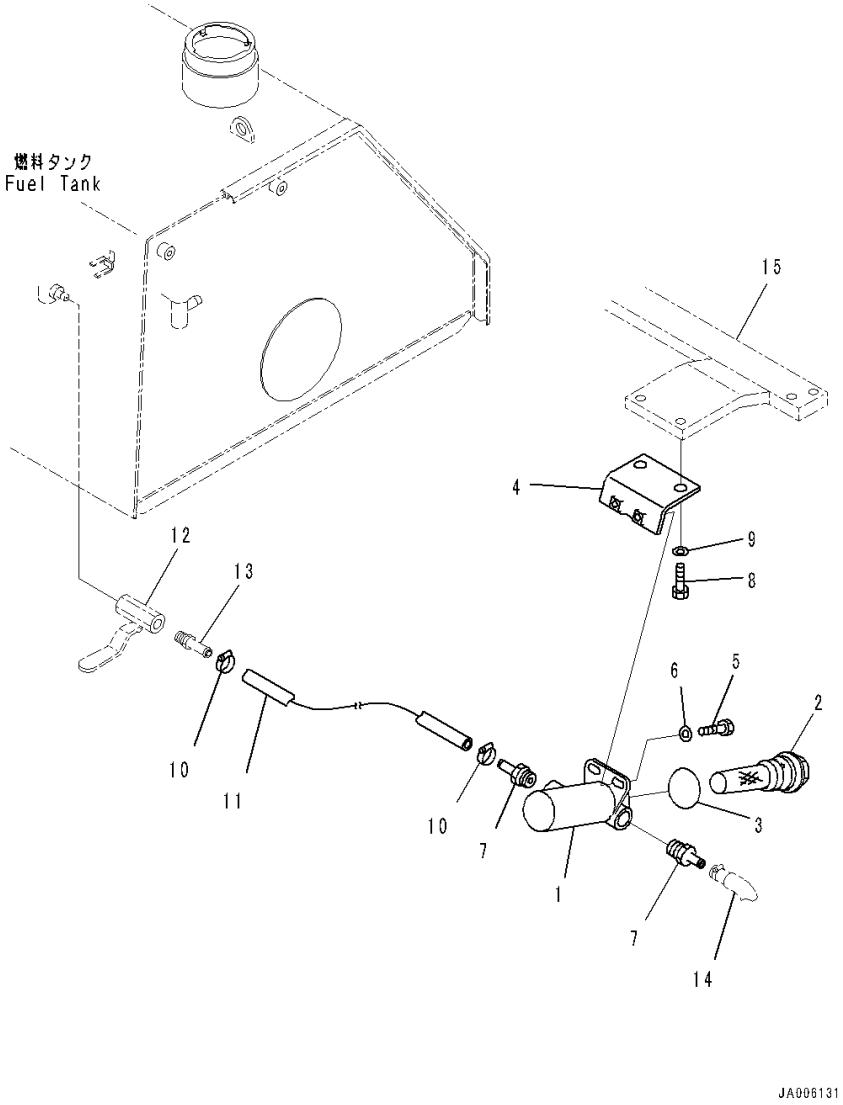

Index	Code	Part Number	Description	Qty	Serial Number
		134-04-61250	Strainer Assembly	1	J20001-
1		07058-00001	• Case	1	J20001-
2		154-04-12531	• Strainer	1	J20001-
		150-04-11170	• • Screen	1	J20001-
		154-04-12521	• • Cap	1	J20001-
3		07002-14234	• O-ring	1	J20001-
4		155-04-11211	• Bracket	1	J20001-
5		01010-80825	• Bolt	2	J20001-
6		01643-30823	• Washer	2	J20001-
7		6212-61-6950	• Nipple	2	J20001-
8		01010-81225	Bolt	2	J20001-
9		01643-31232	Washer	2	J20001-
10		11Y-09-11140	Clip	2	J20001-
11		134-04-61190	Hose	1	J20001-
12		(07700-40240)	Valve(Refer to Page 142)		-
		(07700-40240)	Valve(Refer to Page 143)		-
13		(120-04-41130)	Nipple(Refer to Page 142)		-
		(120-04-41130)	Nipple(Refer to Page 143)		-
14		(134-04-67130)	Hose Assembly(Refer to Page 144)		-
15		(134-54-63152)	Plate(Refer to Page 290)		-

FUEL LINE WITH RACOR

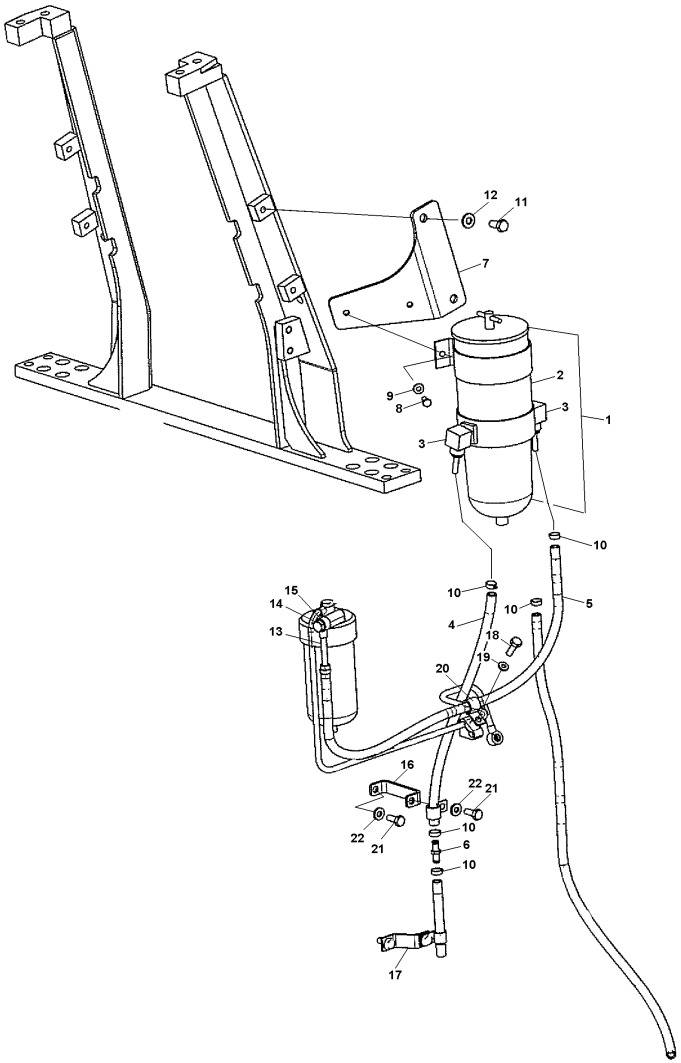

INDEX	CD	PART NO.	DESCRIPTION	QTY	SERIAL NO.
1		134-01-J1111	FUEL FILTER.....	1	J20001-UP
2		900FH10	.ELEMENT.....	1	J20001-UP
3		913O10H6	.ELBOW.....	2	J20001-UP
4		FC4980670	.HOSE.....	1	J20001-UP
5		FC4980695	.HOSE.....	1	J20001-UP
6		HU300M1010	.UNION.....	1	J20001-UP
7		134-01-J1120	.BRACKET.....	1	J20001-UP
8		01010-80820	BOLT.....	2	J20001-UP
9		01643-30823	WASHER.....	2	J20001-UP
10		07281-00197	CLAMP.....	5	J20001-UP
11		01010-81225	BOLT.....	2	J20001-UP
12		01643-31232	WASHER.....	2	J20001-UP
13		238-04-12110	TUBE.....	1	J20001-UP
14		07206-31014	JOINT.....	1	J20001-UP
15		07005-01412	GASKET.....	2	J20001-UP
16		134-01-J1160	BRACKET.....	2	J20001-UP
17		134-01-J1170	BRACKET.....	1	J20001-UP
18		01010-81020	BOLT.....	3	J20001-UP
19		01643-31032	WASHER.....	3	J20001-UP
20		04434-51712	CLIP.....	3	J20001-UP
21		01010-81025	BOLT.....	3	J20001-UP
22		01643-31032	WASHER.....	3	J20001-UP

ELECTRICAL SYSTEM

FIG. E0110-001001 Battery

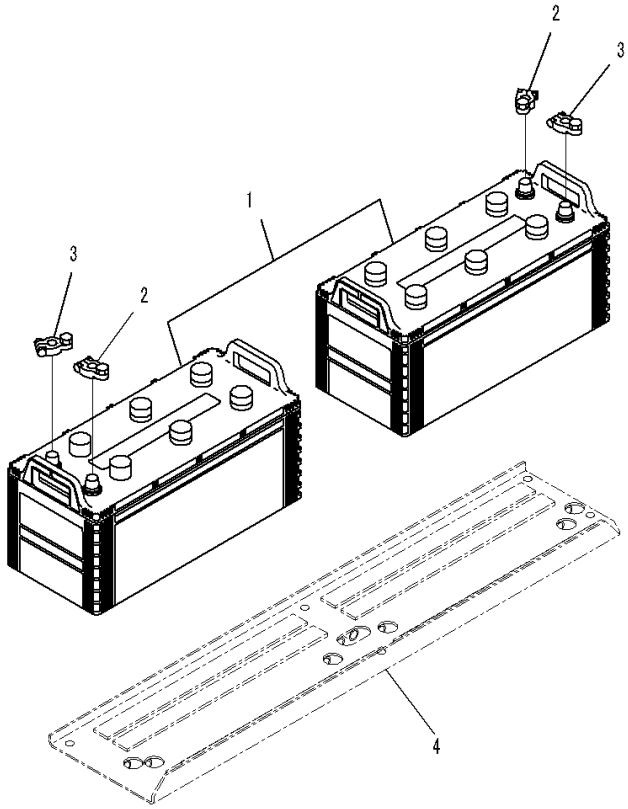

JA006132

Index	Code	Part Number	Description	Qty	Serial Number
1		08000-02215	Battery, Wet, 145G51	2	J20001-
2		08000-00000	Terminal, (+)	2	J20001-
3		08000-00001	Terminal, (-)	2	J20001-
4		(134-54-66312)	Plate(Refer to Page 291)		-

FIG. E0200-001001 Electric Wiring Harness, Main Frame Piping

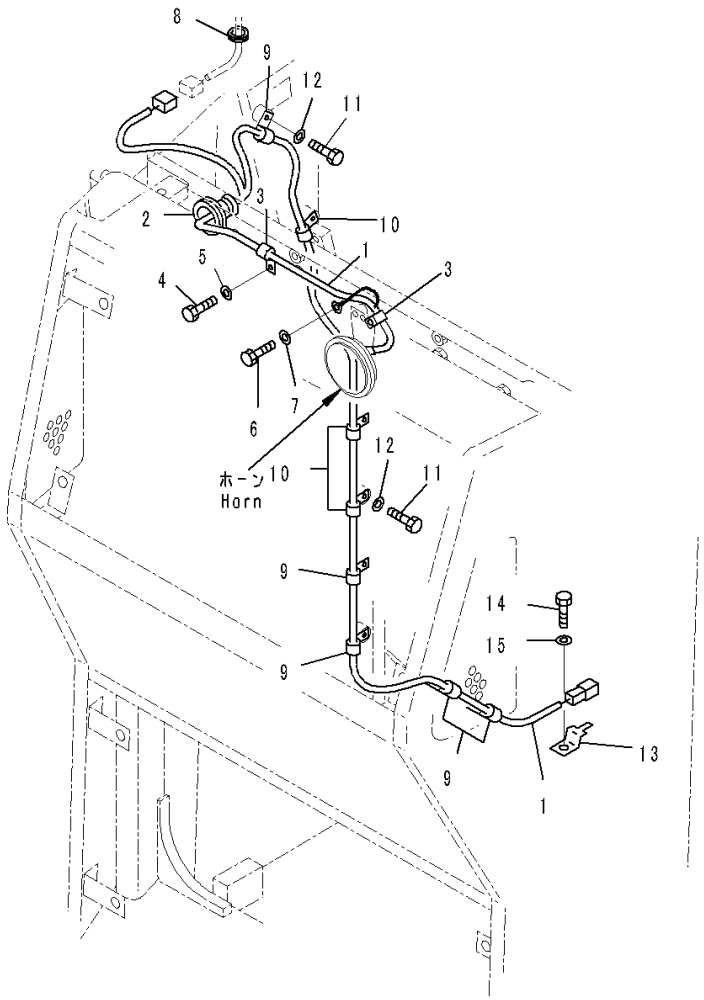

Index	Code	Part Number	Description	Qty	Serial Number
1		134-06-61521	Wiring Harness	1	J20001-
2		08037-12036	• Grommet	1	J20001-
3		04434-51010	Clip	2	J20001-
4		01010-81020	Bolt	1	J20001-
5		01643-31032	Washer	1	J20001-
6		01010-81016	Bolt	1	J20001-
7		01643-31032	Washer	1	J20001-
8		207-54-16860	Grommet	1	J20001-
9		04434-51010	Clip	5	J20001-
10		04434-51410	Clip	3	J20001-
11		01010-81020	Bolt	7	J20001-
12		01643-31032	Washer	7	J20001-
13		08053-01510	Clip	1	J20001-
14		01010-81020	Bolt	1	J20001-
15		01643-31032	Washer	1	J20001-

FIG. E0200-001002 Electric Wiring Harness, Fuel Tank

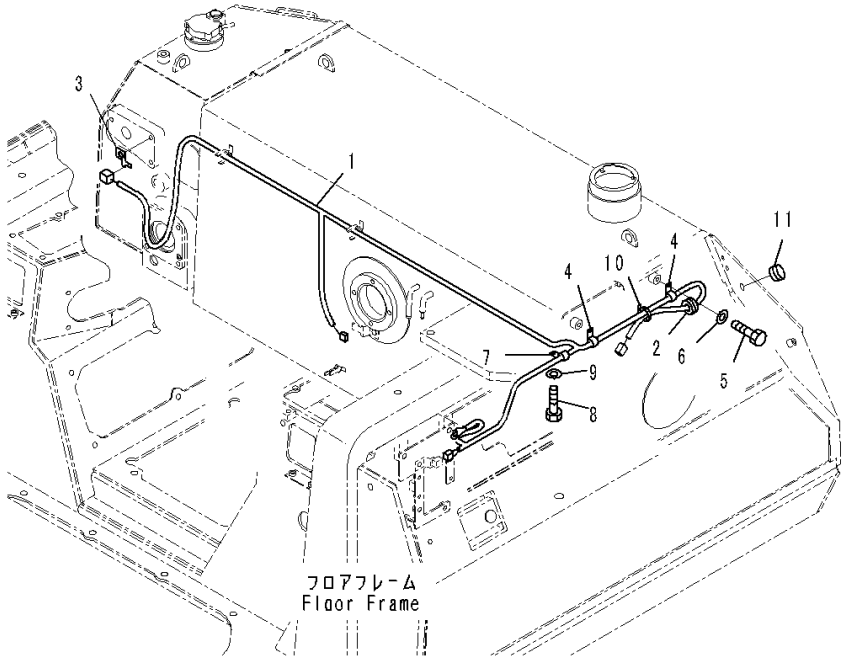

Index	Code	Part Number	Description	Qty	Serial Number
1		134-06-61511	Wiring Harness	1	J20001-
2		287-43-13270	• Cushion	1	J20001-
3		08053-01510	Clip	1	J20001-
4		04434-51010	Clip	2	J20001-
5		01010-81020	Bolt	2	J20001-
6		01643-31032	Washer	2	J20001-
7		04434-51410	Clip	1	J20001-
8		01010-81020	Bolt	1	J20001-
9		01643-31032	Washer	1	J20001-
10		08034-20519	Band	1	J20001-
11		09415-02110	Cap	1	J20001-

FIG. E0200-001003 Electric Wiring Harness, Sensor (1/2)

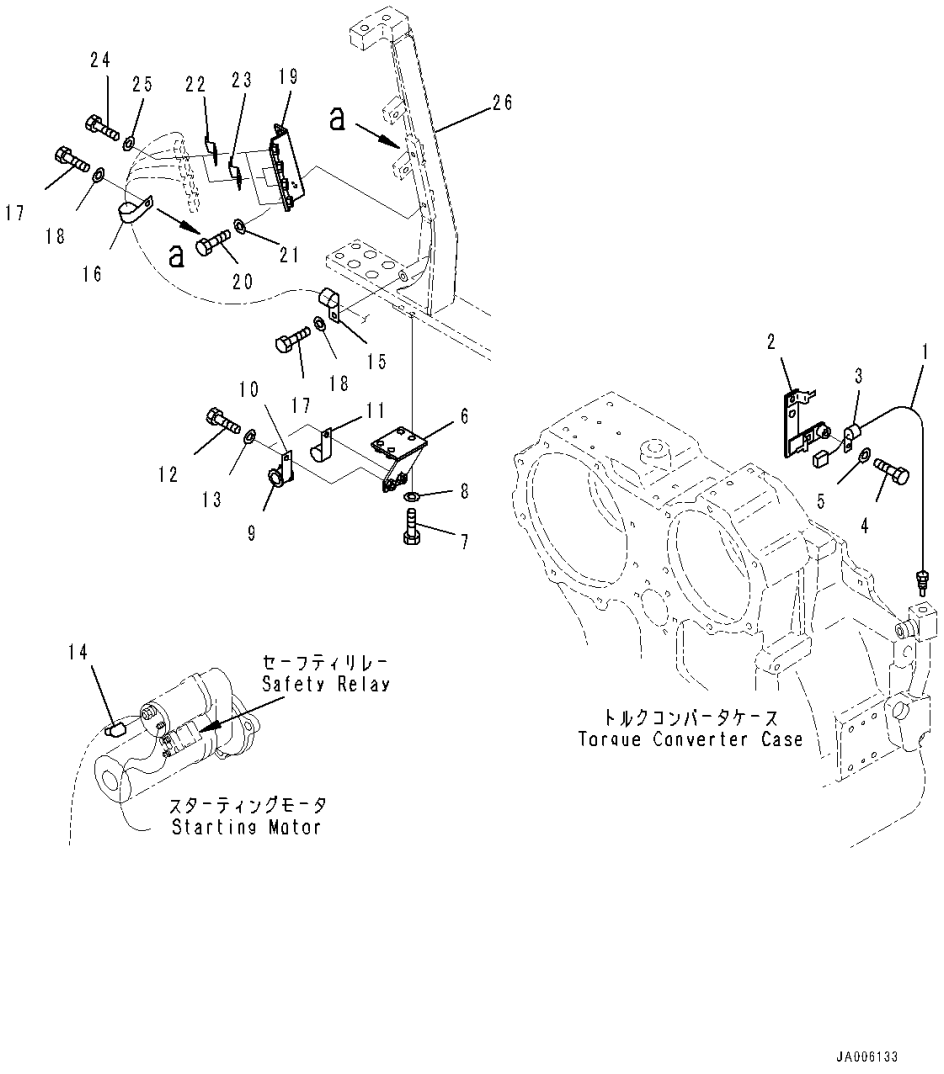

Index	Code	Part Number	Description	Qty	Serial Number
1		14X-06-12370	Sensor	1	J20001-
2		134-06-61390	Bracket	1	J20001-
3		04434-50610	Clip	1	J20001-
4		01010-81020	Bolt	1	J20001-
5		01643-31032	Washer	1	J20001-
6		134-54-62141	Bracket	1	J20001-
7		01010-81025	Bolt	2	J20001-
8		01643-31032	Washer	2	J20001-
9		07095-20523	Cushion	1	J20001-
10		04434-53210	Clip	1	J20001-
11		04434-52310	Clip	1	J20001-
12		01010-81020	Bolt	2	J20001-
13		01643-31032	Washer	2	J20001-
14		08038-00035	Cap, Terminal	1	J20001-
15		04434-52712	Clip	1	J20001-
16		04434-51912	Clip	1	J20001-
17		01010-81020	Bolt	2	J20001-
18		01643-31032	Washer	2	J20001-
19		134-54-64390	Plate	1	J20001-
20		01010-81025	Bolt	2	J20001-
21		01643-31032	Washer	2	J20001-
22		08053-01510	Clip	2	J20001-
23		08053-00910	Clip	2	J20001-
24		01010-81020	Bolt	4	J20001-
25		01643-31032	Washer	4	J20001-
26		(134-54-62132)	Bracket(Refer to Page 285)		-

FIG. E0200-001004 Electric Wiring Harness, Sensor (2/2)

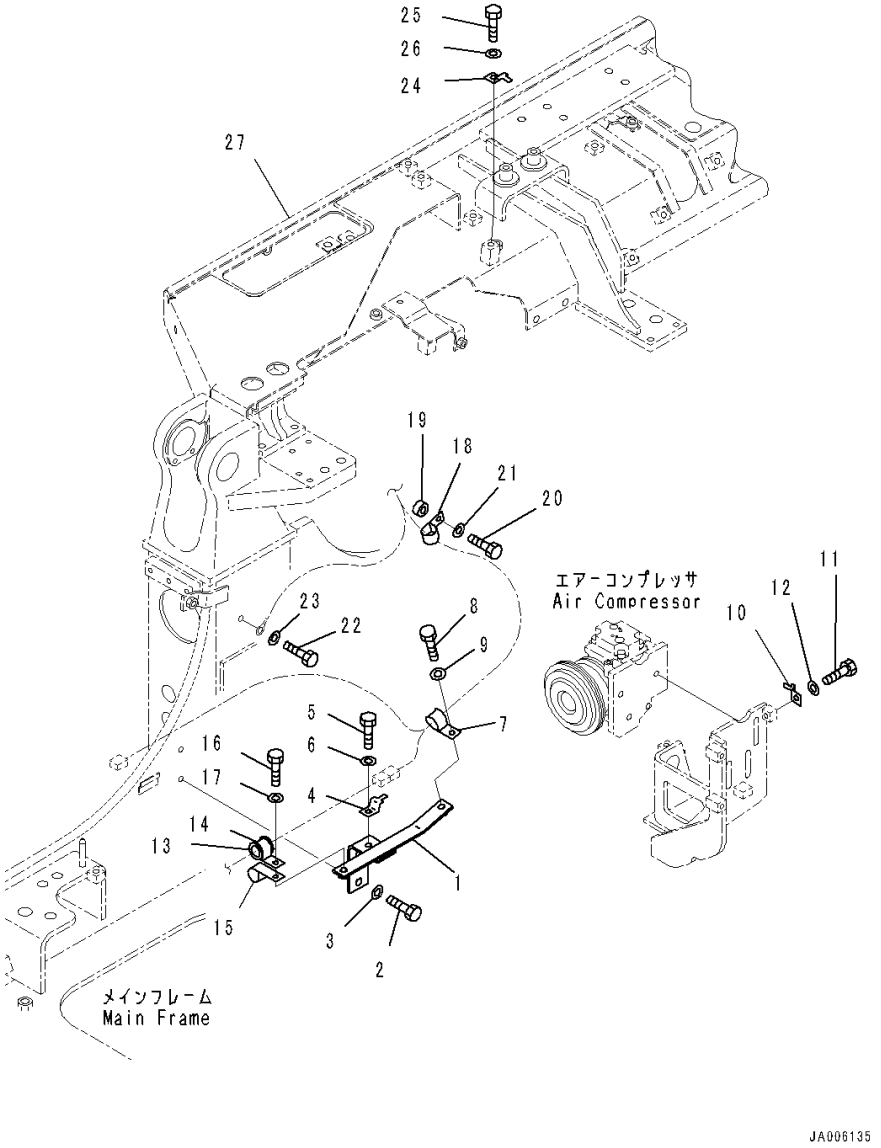

Index	Code	Part Number	Description	Qty	Serial Number
1		134-06-65180	Bracket	1	J20001-
2		01010-81225	Bolt	2	J20001-
3		01643-31232	Washer	2	J20001-
4		08053-00910	Clip	1	J20001-
5		01010-81020	Bolt	1	J20001-
6		01643-31032	Washer	1	J20001-
7		04434-51910	Clip	2	J20001-
8		01010-81020	Bolt	2	J20001-
9		01643-31032	Washer	2	J20001-
10		08193-20010	Clip	1	J20001-
11		01010-81020	Bolt	1	J20001-
12		01643-31032	Washer	1	J20001-
13		07095-20318	Cushion	1	J20001-
14		04434-52510	Clip	1	J20001-
15		04434-51010	Clip	1	J20001-
16		01010-81020	Bolt	1	J20001-
17		01643-31032	Washer	1	J20001-
18		04434-51912	Clip	1	J20001-
19		203-62-21720	Spacer	1	J20001-
20		01010-81235	Bolt	1	J20001-
21		01643-31232	Washer	1	J20001-
22		01010-81220	Bolt	1	J20001-
23		01643-31232	Washer	1	J20001-
24		08053-01512	Clip	1	J20001-
25		01010-81220	Bolt	1	J20001-
26		01643-31232	Washer	1	J20001-
27		(134-54-63940)	Fender(Refer to Page 290)		-

FIG. E0200-001005 Electric Wiring Harness, Washer Tank

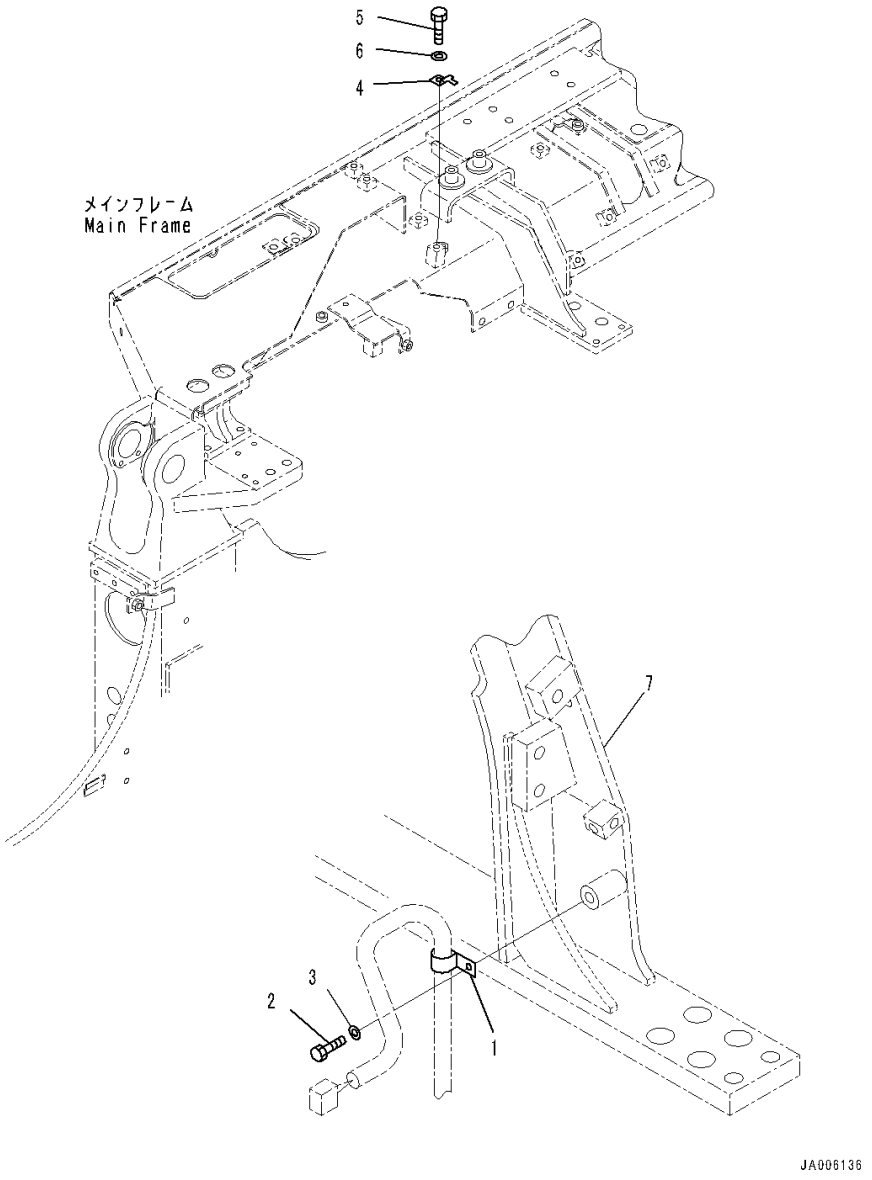

Index	Code	Part Number	Description	Qty	Serial Number
1		04434-51410	Clip	1	J20001-
2		01010-81020	Bolt	1	J20001-
3		01643-31032	Washer	1	J20001-
4		08053-01512	Clip	1	J20001-
5		01010-81220	Bolt	1	J20001-
6		01643-31232	Washer	1	J20001-
7		(134-54-62132)	Bracket(Refer to Page 285)		-

FIG. E0210-001001 Battery Electric Wiring Harness

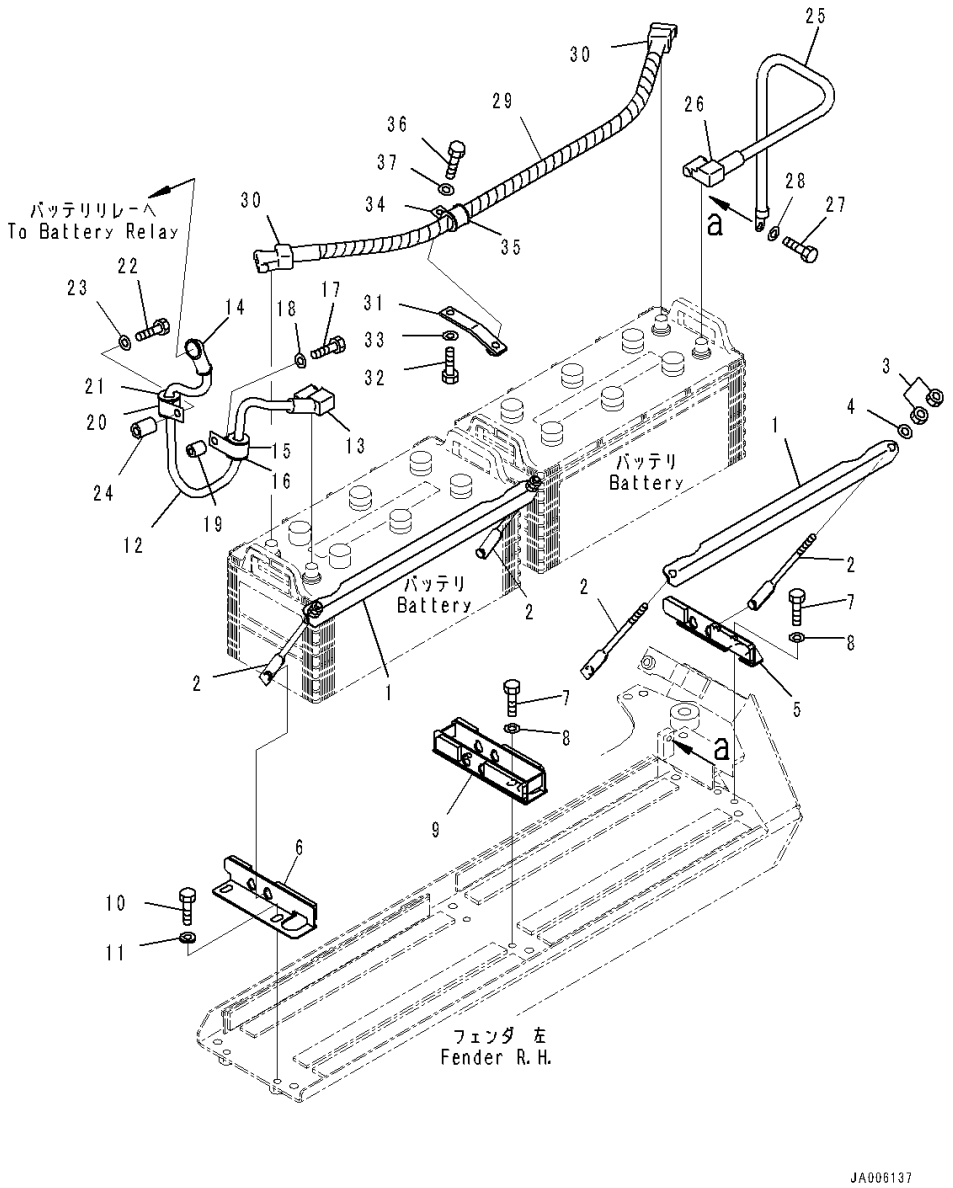

Index	Code	Part Number	Description	Qty	Serial Number
1		134-06-61850	Holder	2	J20001-
2		08006-40255	Rod	4	J20001-
3		01580-11008	Nut	8	J20001-
4		01643-31032	Washer	4	J20001-
5		134-06-61810	Bracket	1	J20001-
6		134-06-61821	Bracket	1	J20001-
7		01010-81025	Bolt	4	J20001-
8		01643-31032	Washer	4	J20001-
9		134-06-61831	Bracket	1	J20001-
10		01010-81025	Bolt	2	J20001-
11		203-54-56970	Washer	2	J20001-
12		134-06-61860	Cable	1	J20001-
13		21J-06-11570	Cover	1	J20001-
14		08038-00035	Cap, Terminal	1	J20001-
15		04434-53211	Clip	1	J20001-
16		07095-20523	Cushion	1	J20001-
17		01010-81040	Bolt	1	J20001-
18		01643-31032	Washer	1	J20001-
19		21W-01-41320	Spacer	1	J20001-
20		04434-53211	Clip	1	J20001-
21		07095-20523	Cushion	1	J20001-
22		01010-81055	Bolt	1	J20001-
23		01643-31032	Washer	1	J20001-
24		20Y-03-11220	Collar	1	J20001-
25		134-06-61430	Cable	1	J20001-
26		14X-06-12260	Cover	1	J20001-
27		01010-81020	Bolt	1	J20001-
28		01643-31032	Washer	1	J20001-
29		08028-CD100	Cable, Ground	1	J20001-
30		08038-42511	Cap	2	J20001-
31		134-06-61840	Bracket	1	J20001-
32		01010-81020	Bolt	1	J20001-
33		01643-31032	Washer	1	J20001-
34		04434-53211	Clip	1	J20001-
35		07095-20522	Cushion	1	J20001-
36		01010-81025	Bolt	1	J20001-
37		01643-31032	Washer	1	J20001-

FIG. E0300-001001 Front Working Lamp

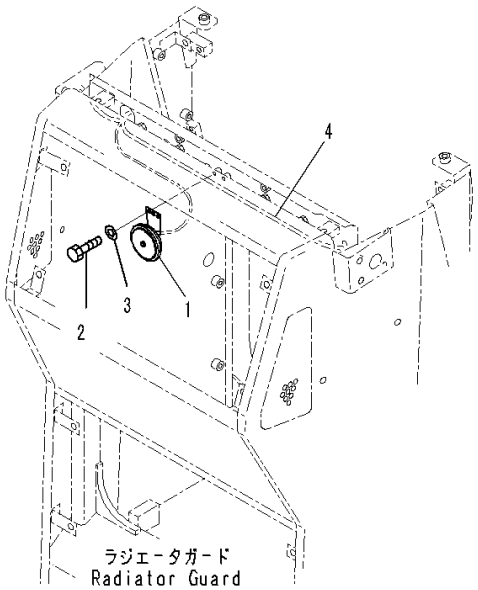

JA006138

Index	Code	Part Number	Description	Qty	Serial Number
1		08160-62430	Horn	1	J20001-
2		01010-80816	Bolt	2	J20001-
3		01643-30823	Washer	2	J20001-
4		(134-06-61521)	Wiring Harness(Refer to Page 149)		-

POWER TRANSMITTING SYSTEM

FIG. F2200-002001 Universal Joint

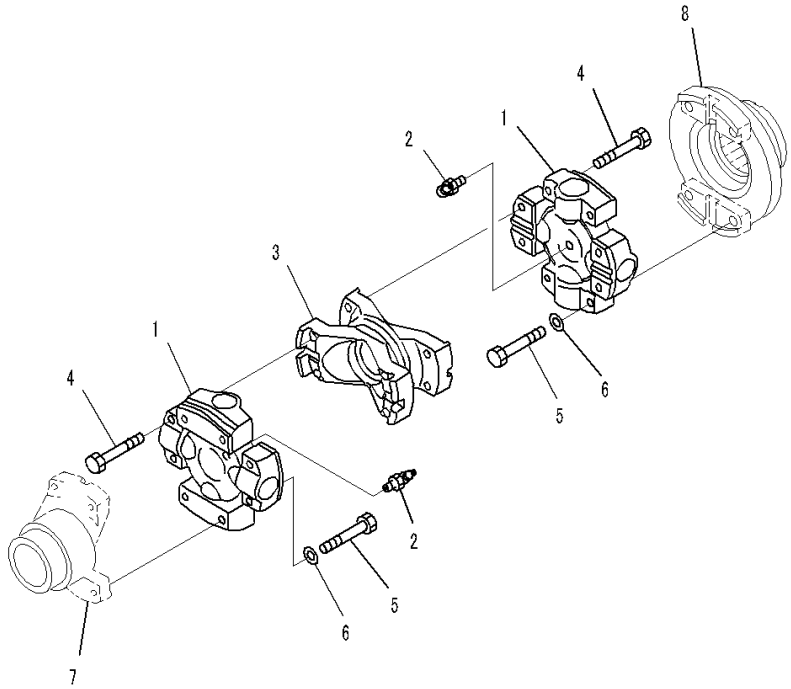

JA006139

Index	Code	Part Number	Description	Qty	Serial Number
		134-12-71310	Universal Joint	1	J20001-
1		421-20-33621	• Spider Assembly	2	J20001-
2		423-20-32631	• • Fitting	1	J20001-
3		134-12-71320	• Yoke	1	J20001-
4		421-20-12690	• Bolt	8	J20001-
5		01010-81265	Bolt	8	J20001-
6		01643-51232	Washer	8	J20001-
7		(14Z-12-31310)	Coupling(Refer to Page 135)		-
8		(14X-13-31360)	Coupling(Refer to Page 160)		-

FIG. F2300-001001 Power Train, Bare

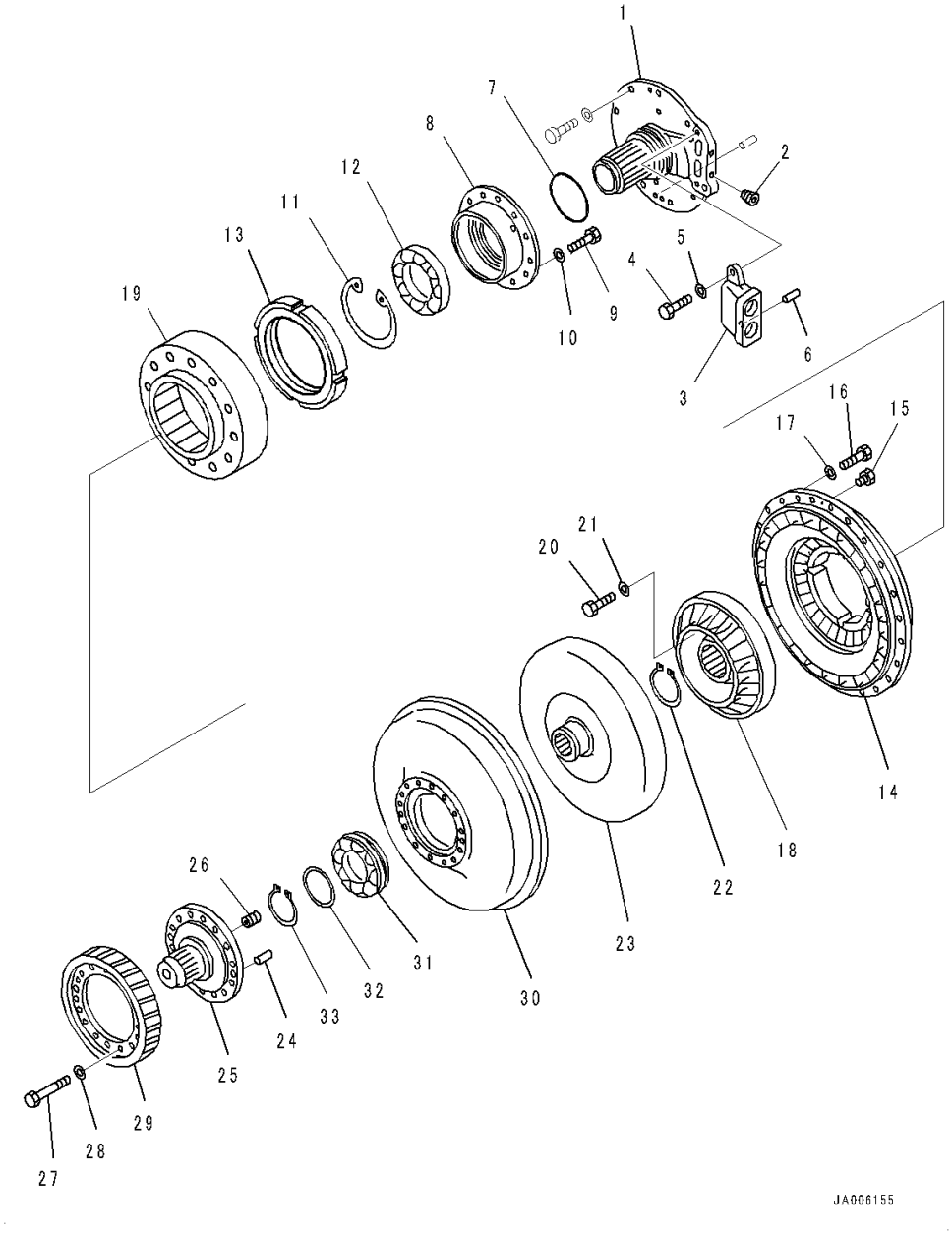

Index	Code	Part Number	Description	Qty	Serial Number
		134-22-60060	Power Train Assembly	1	J20001-
		134-13-61060	• Torque Converter Assembly	1	J20001-
1		14X-13-32520	• • Shaft	1	J20001-
2		07043-70211	• • Plug	2	J20001-
3		14X-13-22530	• • Flange	1	J20001-
4		01010-81030	• • Bolt	2	J20001-
5		01643-31032	• • Washer	2	J20001-
6		04020-00820	• • Pin, Dowel	2	J20001-
7		07018-31054	• • Seal Ring, (Kit : K01)	1	J20001-
8		14X-13-11141	• • Retainer	1	J20001-
9		01010-81035	• • Bolt	12	J20001-
10		01643-31032	• • Washer	12	J20001-
11		04071-00140	• • Ring, Snap	1	J20001-
12		14X-13-31160	• • Bearing	1	J20001-
13		14X-13-32530	• • Nut	1	J20001-
14		14X-13-11120	• • Pump	1	J20001-
15		07040-10807	• • Plug	2	J20001-
16		01010-81035	• • Bolt	24	J20001-
17		01643-31032	• • Washer	24	J20001-
18		14X-13-32110	• • Stator	1	J20001-
19		14X-13-32120	• • Race	1	J20001-
20		01010-81035	• • Bolt	12	J20001-
21		01643-31032	• • Washer	12	J20001-
22		04064-07525	• • Ring, Snap	1	J20001-
23		14X-13-11521	• • Turbine	1	J20001-
24		04020-01434	• • Pin, Dowel	2	J20001-
25		14X-13-11351	• • Shaft	1	J20001-
26		198-15-26511	• • Orifice	1	J20001-
27		01010-81060	• • Bolt	14	J20001-
28		01643-31032	• • Washer	14	J20001-
29		14X-13-11221	• • Gear	1	J20001-
30		14X-13-11211	• • Case	1	J20001-
31		06043-06214	• • Bearing	1	J20001-
32		711-47-11770	• • Plate	1	J20001-
33		04064-07025	• • Ring	1	J20001-

FIG. F2300-001002 Power Train, Torque Converter Case

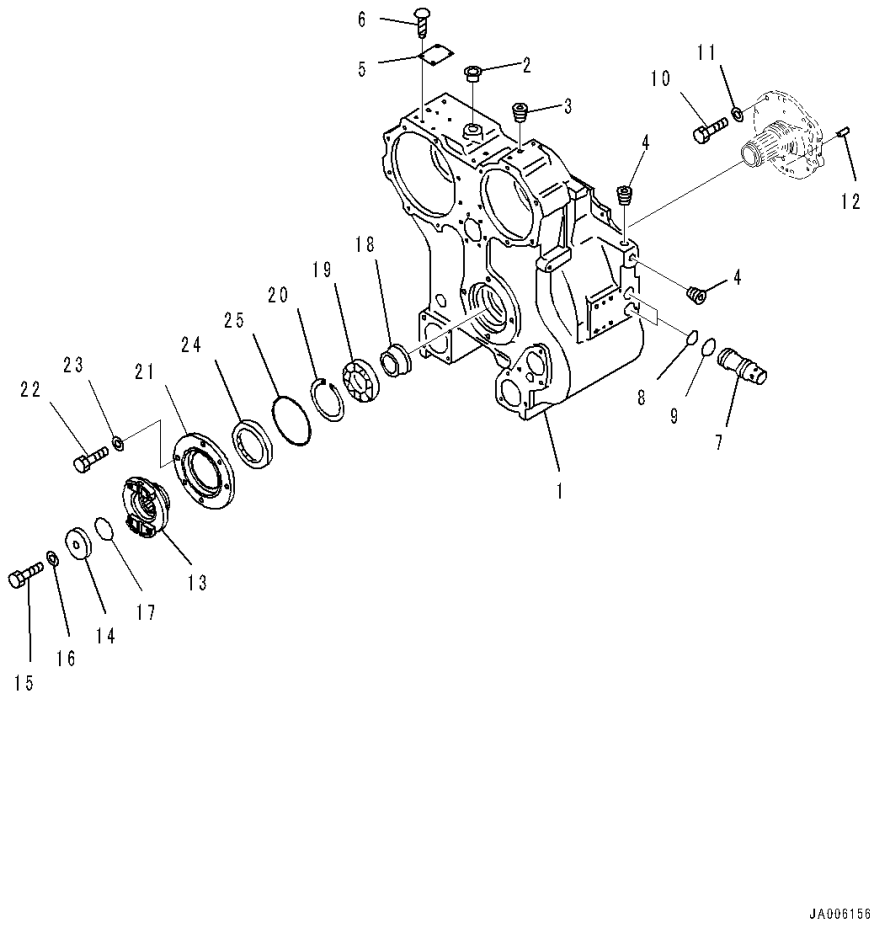

Index	Code	Part Number	Description	Qty	Serial Number
		134-22-60060	Power Train Assembly	1	J20001-
		134-13-61060	• Torque Converter Assembly	1	J20001-
1		14X-13-13113	• • Case	1	J20001-
2		07048-02216	• • Plug, Plastic	1	J20001-
3		07043-70108	• • Plug	8	J20001-
4		07043-A0617	• • Plug, Taper	2	J20001-
5	C2	09607-05080	• • Plate, Name (Limited Supply)	1	J20001-
6		04418-13060	• • Screw	4	J20001-
7		14X-13-12550	• • Sleeve	2	J20001-
8		07000-73030	• • O-ring, (Kit : K01)	2	J20001-
9		07000-73032	• • O-ring, (Kit : K01)	2	J20001-
10		01010-81030	• • Bolt	8	J20001-
11		01643-31032	• • Washer	8	J20001-
12		04020-01228	• • Pin, Dowel	1	J20001-
13		14X-13-31360	• • Coupling	1	J20001-
14		22W-15-16270	• • Holder	1	J20001-
15		01050-51670	• • Bolt	1	J20001-
16		01643-31645	• • Washer	1	J20001-
17		07000-75055	• • O-ring, (Kit : K01)	1	J20001-
18		14X-13-11370	• • Spacer	1	J20001-
19		14X-13-39320	• • Bearing	1	J20001-
20		04071-00125	• • Ring, Snap, for Hole Side	1	J20001-
21		14X-13-33350	• • Retainer	1	J20001-
22		01010-81235	• • Bolt	4	J20001-
23		01643-31232	• • Washer	4	J20001-
24		07012-50110	• • Seal, Oil	1	J20001-
25		07000-75170	• • O-ring, (Kit : K01)	1	J20001-

FIG. F2300-001003 Power Train, Scavenging Pump

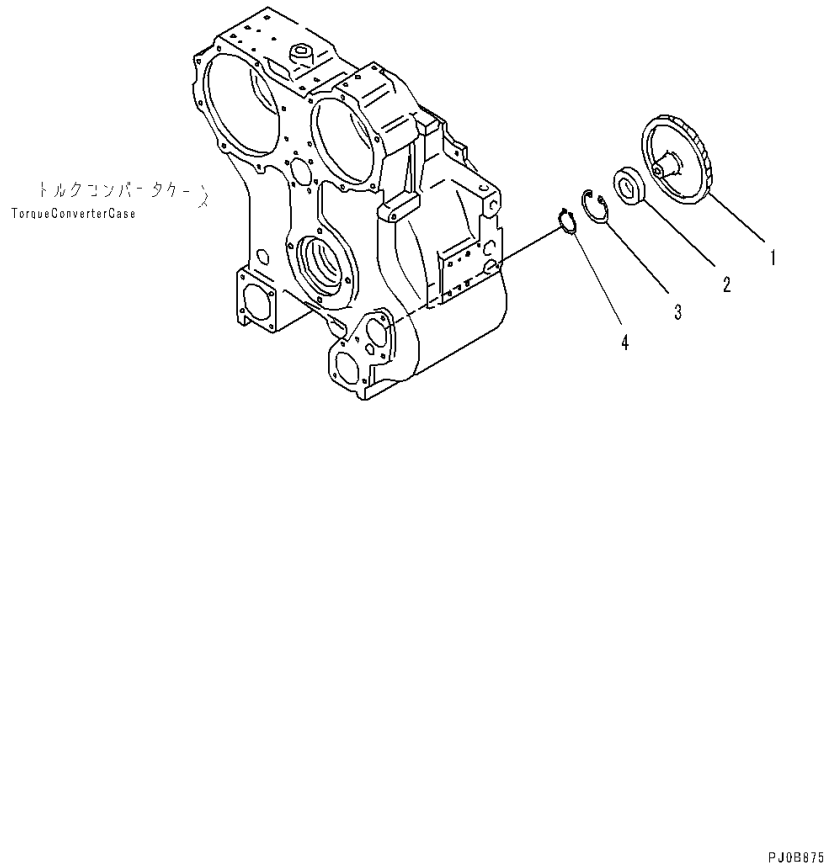

Index	Code	Part Number	Description	Qty	Serial Number
		134-22-60060	Power Train Assembly	1	J20001-
		134-13-61060	• Torque Converter Assembly	1	J20001-
1		14X-13-14111	• • Gear	1	J20001-
2		17A-13-24490	• • Bearing	1	J20001-
3		04065-07225	• • Ring, Snap	1	J20001-
4		04064-03515	• • Ring	1	J20001-

FIG. F2300-001004 Power Train, Power takeoff Gear

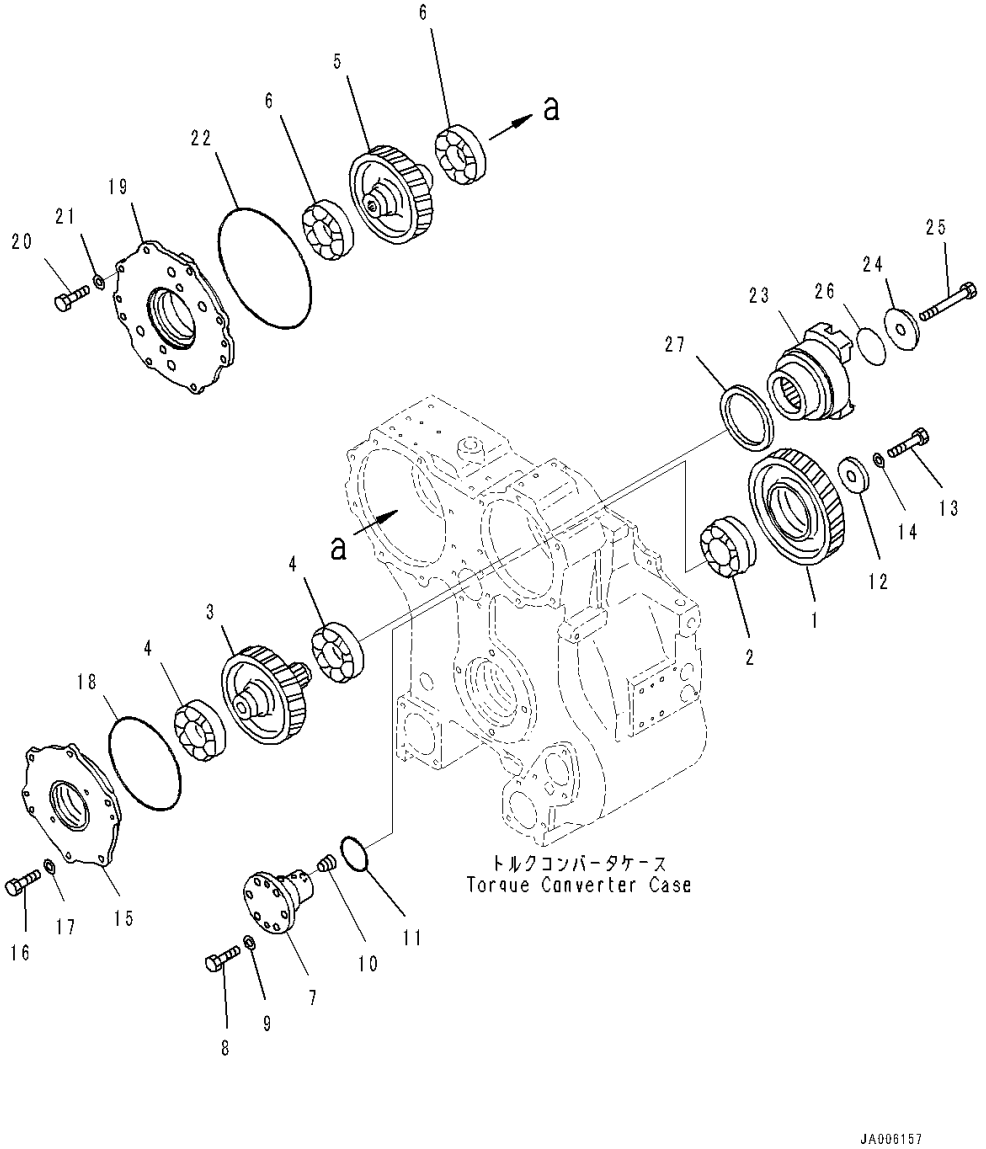

Index	Code	Part Number	Description	Qty	Serial Number
		134-22-60060	Power Train Assembly	1	J20001-
		134-13-61060	• Torque Converter Assembly	1	J20001-
1		14X-13-14220	• • Gear	1	J20001-
2		711-49-14230	• • Bearing	1	J20001-
3		14X-13-14321	• • Gear	1	J20001-
4		06000-06311	• • Bearing	2	J20001-
5		14X-13-14421	• • Gear	1	J20001-
6		06000-06311	• • Bearing	2	J20001-
7		14X-13-14241	• • Shaft	1	J20001-
8		01010-81235	• • Bolt	6	J20001-
9		01643-31232	• • Washer	6	J20001-
10		07043-70211	• • Plug	1	J20001-
11		07000-72070	• • O-ring, (Kit : K01)	1	J20001-
12		144-10-12180	• • Holder	1	J20001-
13		01010-61460	• • Bolt	1	J20001-
14		01643-31445	• • Washer	1	J20001-
15		14X-13-14340	• • Cover	1	J20001-
16		01010-81235	• • Bolt	6	J20001-
17		01643-31232	• • Washer	6	J20001-
18		07000-75210	• • O-ring, (Kit : K01)	1	J20001-
19		17M-13-44350	• • Cover	1	J20001-
20		01010-81235	• • Bolt	6	J20001-
21		01643-31232	• • Washer	6	J20001-
22		07000-75260	• • O-ring, (Kit : K01)	1	J20001-
23		14X-13-11660	• • Coupling	1	J20001-
24		363-15-22940	• • Plate	1	J20001-
25		01050-51480	• • Bolt	1	J20001-
26		07000-75042	• • O-ring	1	J20001-
27		07012-10070	• • Seal, Oil	1	J20001-

FIG. F2300-001005 Power Train, Filtration

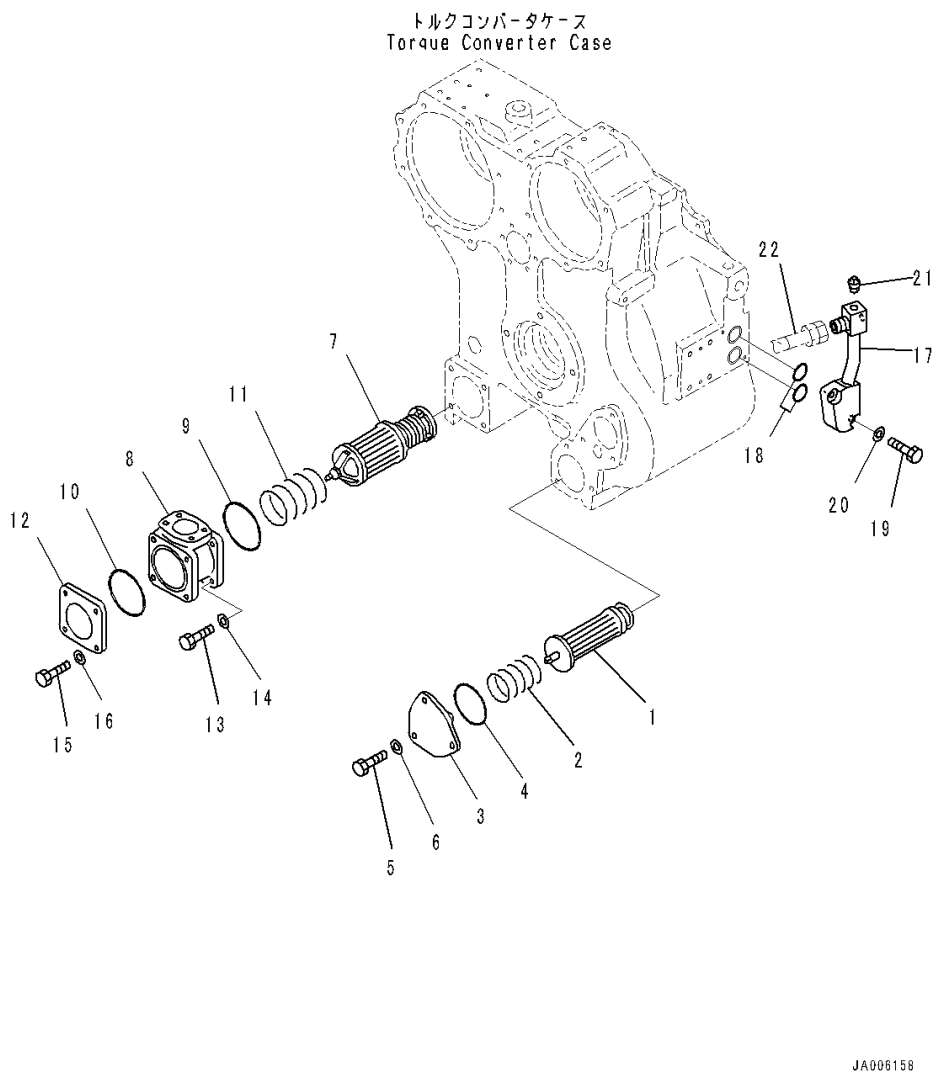

Index	Code	Part Number	Description	Qty	Serial Number
		134-22-60060	Power Train Assembly	1	J20001-
		134-13-61060	• Torque Converter Assembly	1	J20001-
1		14X-10-11712	• • Strainer	1	J20001-
2		14X-49-12411	• • Spring	1	J20001-
3		14X-10-11721	• • Cover	1	J20001-
4		07000-72090	• • O-ring, (Kit : K01)	1	J20001-
5		01010-81235	• • Bolt	3	J20001-
6		01643-31232	• • Washer	3	J20001-
7		14X-49-12310	• • Magnet Assembly	1	J20001-
8		14X-49-12330	• • Head	1	J20001-
9		07000-72110	• • O-ring, (Kit : K01)	1	J20001-
10		07000-72100	• • O-ring, (Kit : K01)	1	J20001-
11		14X-49-12320	• • Spring	1	J20001-
12		14X-49-12340	• • Cover	1	J20001-
13		01010-81235	• • Bolt	4	J20001-
14		01643-31232	• • Washer	4	J20001-
15		01010-81235	• • Bolt	4	J20001-
16		01643-31232	• • Washer	4	J20001-
17		14X-49-11512	• • Tube	1	J20001-
18		07000-73045	• • O-ring, (Kit : K01)	2	J20001-
19		01010-81245	• • Bolt	2	J20001-
20		01643-31232	• • Washer	2	J20001-
21		07042-80108	• • Plug	1	J20001-
22		(07102-20628)	Hose, Taper Seal Type(Refer to Page 211)		-

FIG. F2300-001006 Power Train, 1st Housing

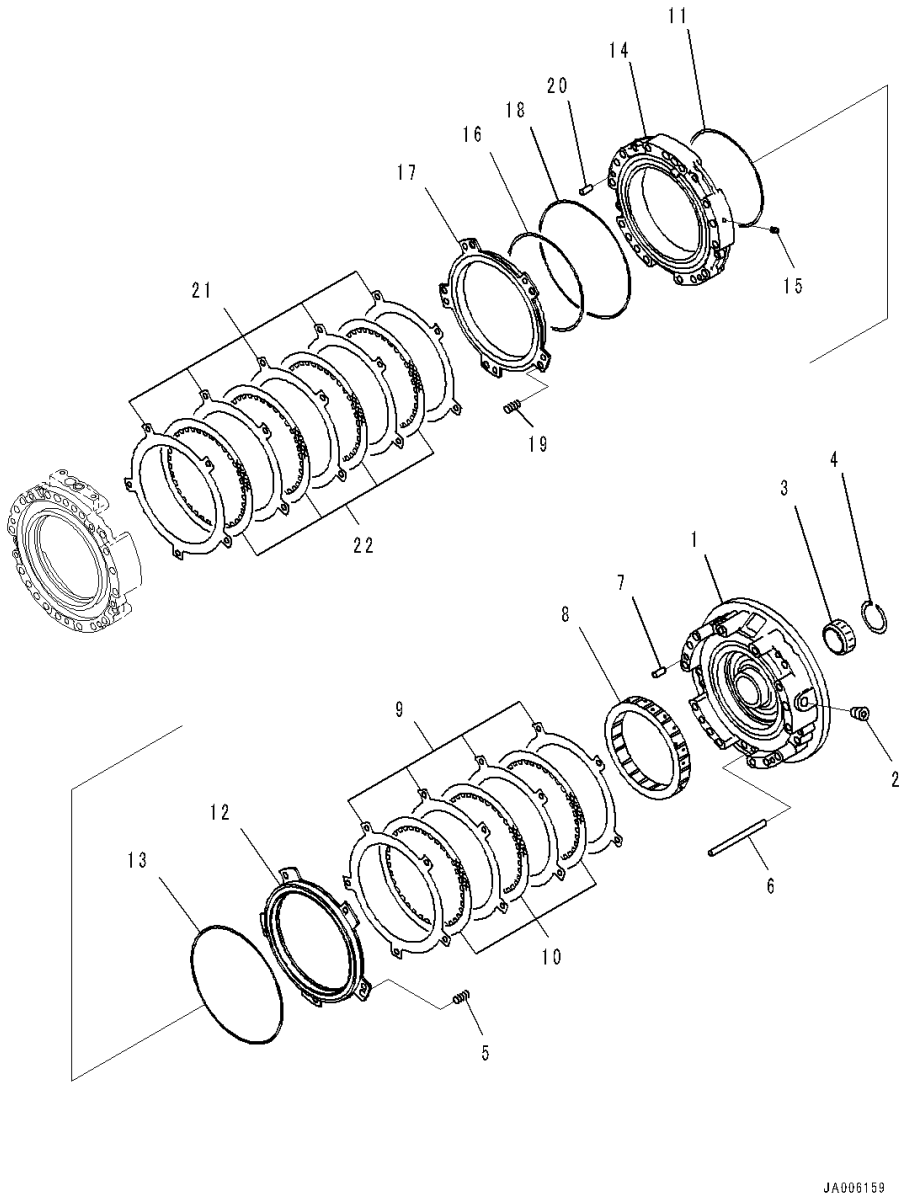

Index	Code	Part Number	Description	Qty	Serial Number
		134-22-60060	Power Train Assembly	1	J20001-
		134-15-61051	• Transmission Assembly	1	J20001-
1		14X-15-21132	• • Housing	1	J20001-
2		07043-70415	• • Plug	1	J20001-
3		14X-15-29321	• • Bearing	1	J20001-
4		714-12-19520	• • Ring	1	J20001-
5		145-14-12790	• • Spring, L=59mm	5	J20001-
6		103-15-12880	• • Pin	5	J20001-
7		04020-01228	• • Pin, Dowel	2	J20001-
8		14X-15-22680	• • Gear, Ring	1	J20001-
9		14X-15-22780	• • Plate	4	J20001-
10		14X-15-22710	• • Disc	3	J20001-
11		103-15-12820	• • Seal Ring, (Kit : K02)	1	J20001-
12		14X-15-22760	• • Piston	1	J20001-
13		113-15-12870	• • Ring, (Kit : K02)	1	J20001-
14		14X-15-21140	• • Housing	1	J20001-
15		145-14-11320	• • Plug	1	J20001-
16		124-15-41910	• • Seal Ring, (Kit : K02)	1	J20001-
17		14X-15-22730	• • Piston	1	J20001-
18		113-15-12870	• • Ring, (Kit : K02)	1	J20001-
19		145-14-12790	• • Spring, L=59mm	5	J20001-
20		04020-01228	• • Pin, Dowel	2	J20001-
21		14X-15-22780	• • Plate	5	J20001-
22		14X-15-22710	• • Disc	4	J20001-

FIG. F2300-001007 Power Train, 2nd, 3rd, Forward and Reverse Housing

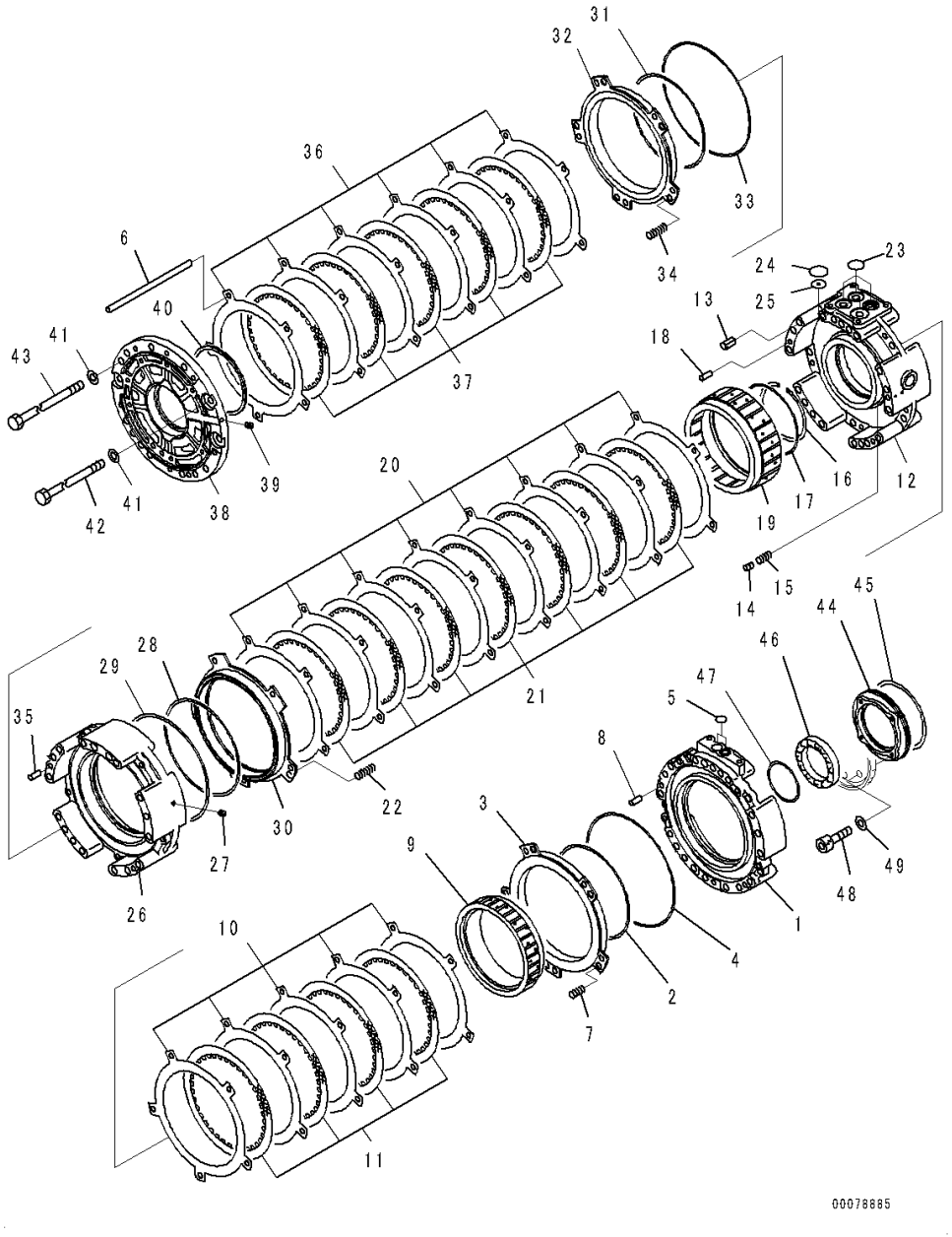

Index	Code	Part Number	Description	Qty	Serial Number
		134-22-60060	Power Train Assembly	1	J20001-
		134-15-61051	• Transmission Assembly	1	J20001-
1		14X-15-21150	• • Housing	1	J20001-
2		124-15-41910	• • Seal Ring, (Kit : K02)	1	J20001-
3		14X-15-22750	• • Piston	1	J20001-
4		569-15-12860	• • Seal Ring, (Kit : K02)	1	J20001-
5		07000-72020	• • O-ring, (Kit : K02)	2	J20001-
6		238-15-11290	• • Pin	5	J20001-
7		145-14-12790	• • Spring, L=59mm	5	J20001-
8		04020-01228	• • Pin, Dowel	2	J20001-
9		14X-15-22640	• • Gear, Ring	1	J20001-
10		14X-15-22780	• • Plate	5	J20001-
11		14X-15-22710	• • Disc	4	J20001-
12		14X-15-21160	• • Housing	1	J20001-
13		569-15-41310	• • Sleeve	14	J20001-
14		287-15-15360	• • Piston	1	J20001-
15		700-80-51390	• • Spring	1	J20001-
16		04071-00145	• • Ring, Snap, for Hole Side	1	J20001-
17		14X-15-29220	• • Seal Ring, (Kit : K02)	1	J20001-
18		04020-01228	• • Pin, Dowel	2	J20001-
19		14X-15-22661	• • Gear, Ring	1	J20001-
20		14X-15-22780	• • Plate	8	J20001-
21		14X-15-22710	• • Disc	7	J20001-
22		14X-15-12910	• • Spring	5	J20001-
23		07000-73030	• • O-ring, (Kit : K02)	3	J20001-
24		07000-73035	• • O-ring, (Kit : K02)	1	J20001-
25		17A-15-21310	• • Orifice	1	J20001-
26		14X-15-21170	• • Housing	1	J20001-
27		145-14-11320	• • Plug	1	J20001-
28		103-15-12820	• • Seal Ring, (Kit : K02)	1	J20001-
29		124-15-41920	• • Seal Ring, (Kit : K02)	1	J20001-
30		14X-15-22740	• • Piston	1	J20001-
31		124-15-41910	• • Seal Ring, (Kit : K02)	1	J20001-
32		14X-15-22770	• • Piston	1	J20001-
33		113-15-12870	• • Ring, (Kit : K02)	1	J20001-
34		14X-15-12910	• • Spring	5	J20001-
35		04020-01228	• • Pin, Dowel	2	J20001-
36		14X-15-22780	• • Plate	6	J20001-
37		14X-15-22710	• • Disc	5	J20001-
38		14X-15-21180	• • Housing	1	J20001-

FIG. F2300-001007 Power Train, 2nd, 3rd, Forward and Reverse Housing

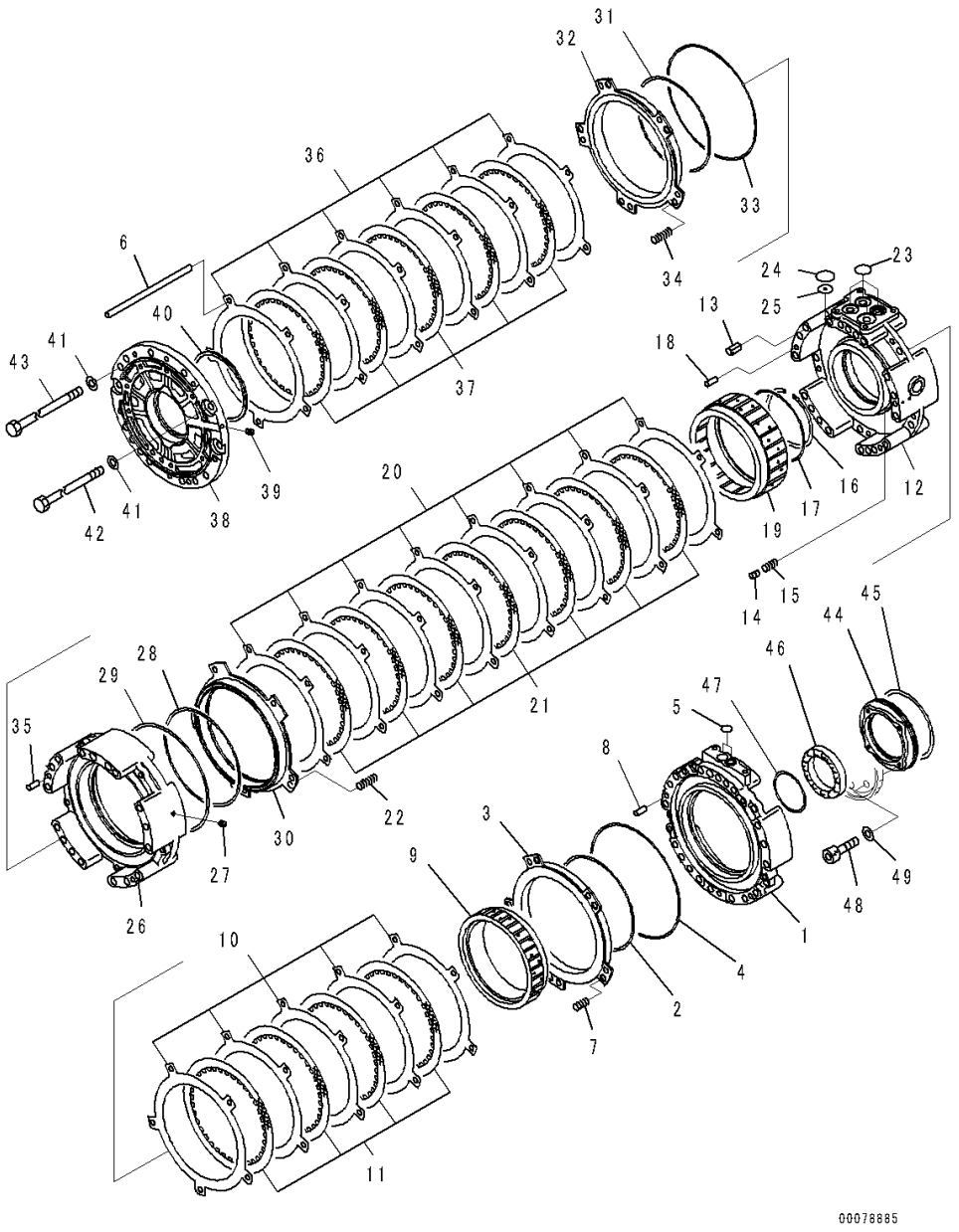

Index	Code	Part Number	Description	Qty	Serial Number
39		175-15-11230	• • Plug	1	J20001-
40		14X-15-29230	• • Seal Ring, (Kit : K02)	1	J20001-
41		145-14-11571	• • Washer	14	J20001-
42		144-15-21191	• • Bolt	3	J20001-
43		155-15-11191	• • Bolt	11	J20001-
44		14X-15-22371	• • Cover	1	J20001-
45		14X-15-29230	• • Seal Ring, (Kit : K02)	1	J20001-
46		06000-06917	• • Bearing	1	J20001-
47		04064-08530	• • Ring, Snap	1	J20001-
48		01252-70860	• • Bolt, Hexagon Socket Head	4	J20001-
49		01643-50823	• • Washer	4	J20001-

FIG. F2300-001008 Power Train, Transmission Carrier (1/2)

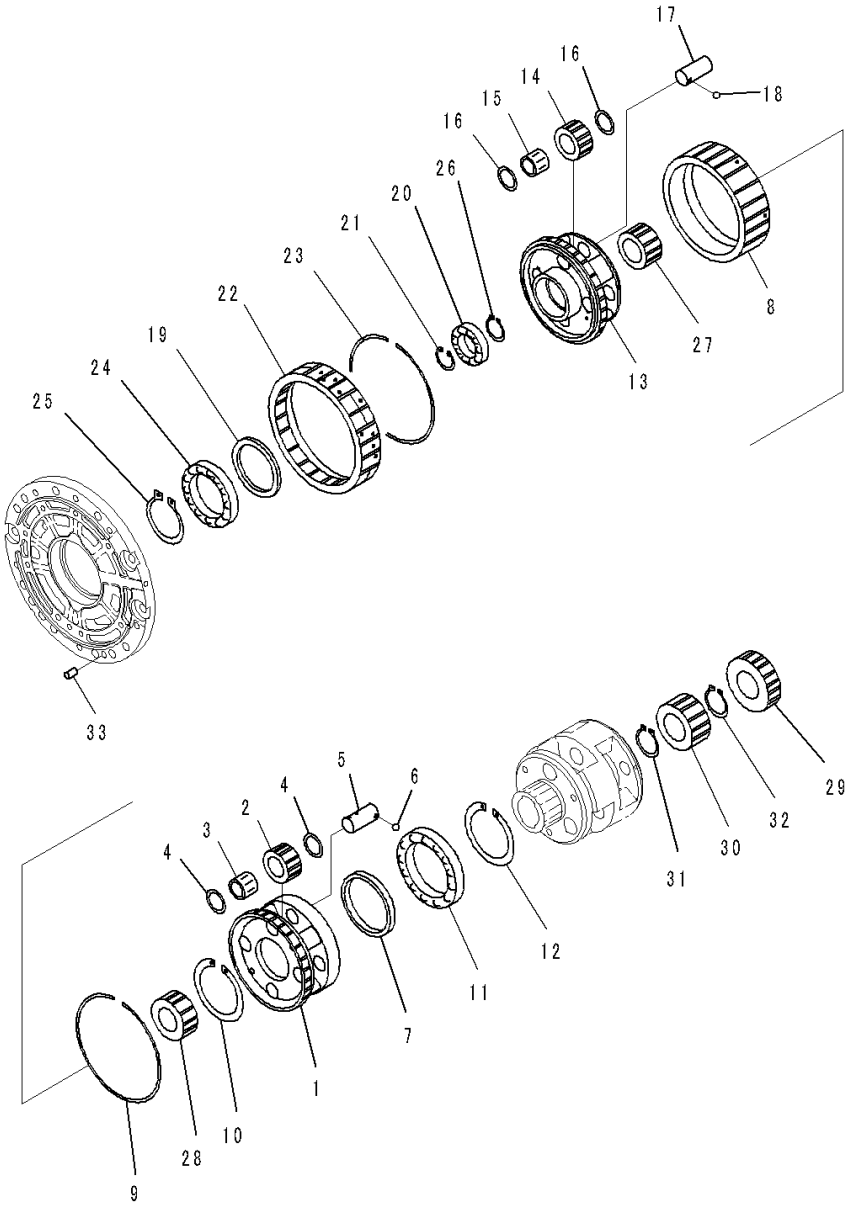

Index	Code	Part Number	Description	Qty	Serial Number
		134-22-60060	Power Train Assembly	1	J20001-
		134-15-61051	• Transmission Assembly	1	J20001-
1		14X-15-22340	• • Carrier	1	J20001-
2		14X-15-22421	• • Gear	4	J20001-
3		14X-15-29440	• • Bearing	4	J20001-
4		09233-12920	• • Washer	8	J20001-
5		14X-15-22540	• • Shaft	4	J20001-
6		04260-00635	• • Ball, Steel	4	J20001-
7		14X-15-22150	• • Spacer	1	J20001-
8		14X-15-22620	• • Gear, Ring	1	J20001-
9		14X-15-29530	• • Ring, Snap	1	J20001-
10		14X-15-29510	• • Ring, Snap	1	J20001-
11		06000-06921	• • Bearing	1	J20001-
12		04070-00105	• • Ring, Snap	1	J20001-
13		14X-15-22310	• • Carrier	1	J20001-
14		14X-15-22411	• • Gear	4	J20001-
15		14X-15-29440	• • Bearing	4	J20001-
16		09233-12920	• • Washer	8	J20001-
17		14X-15-22540	• • Shaft	4	J20001-
18		04260-00635	• • Ball, Steel	4	J20001-
19		14X-15-22190	• • Spacer	1	J20001-
20		14X-15-29610	• • Bearing	1	J20001-
21		04065-07525	• • Ring, Snap, for Hole Side	1	J20001-
22		14X-15-22610	• • Gear, Ring	1	J20001-
23		14X-15-29520	• • Ring, Snap	1	J20001-
24		06030-06918	• • Bearing	1	J20001-
25		04064-09030	• • Ring, Snap	1	J20001-
26		04064-04518	• • Ring, Snap	5	J20001-
27		14X-15-22211	• • Gear	1	J20001-
28		14X-15-22221	• • Gear	1	J20001-
29		14X-15-22250	• • Gear	1	J20001-
30		14X-15-22241	• • Gear	1	J20001-
31		04064-04819	• • Ring, Snap, for Shaft Side	1	J20001-
32		14X-15-29540	• • Ring	2	J20001-
33		04020-01228	• • Pin, Dowel	2	J20001-

FIG. F2300-001009 Power Train, Transmission Carrier (2/2)

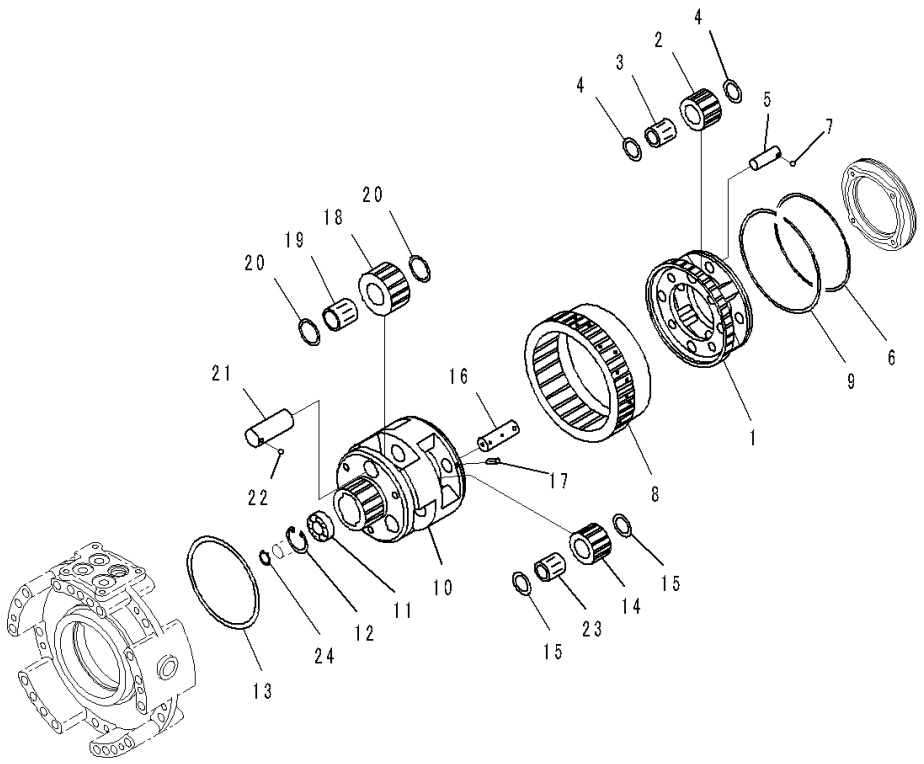

Index	Code	Part Number	Description	Qty	Serial Number
		134-22-60060	Power Train Assembly	1	J20001-
		134-15-61051	• Transmission Assembly	1	J20001-
1		14X-15-22351	• • Carrier	1	J20001-
2		423-15-12441	• • Gear	4	J20001-
3		14X-15-29410	• • Bearing	4	J20001-
4		09233-12020	• • Washer, Thrust	8	J20001-
5		14X-15-22510	• • Shaft	4	J20001-
6		14X-15-29210	• • Seal Ring, (Kit : K02)	1	J20001-
7		04260-00635	• • Ball, Steel	4	J20001-
8		14X-15-22670	• • Gear, Ring	1	J20001-
9		14X-15-29520	• • Ring, Snap	1	J20001-
10		14X-15-22330	• • Carrier	1	J20001-
11		06030-06205	• • Bearing, Ball	1	J20001-
12		04065-05220	• • Ring, Snap	1	J20001-
13		14X-15-29220	• • Seal Ring, (Kit : K02)	1	J20001-
14		14X-15-22441	• • Gear	3	J20001-
15		09233-12620	• • Washer, Thrust	6	J20001-
16		14X-15-22520	• • Shaft	3	J20001-
17		14X-15-12960	• • Pin	3	J20001-
18		14X-15-22431	• • Gear	3	J20001-
19		428-15-19312	• • Bearing	3	J20001-
20		09233-13220	• • Washer, Thrust	6	J20001-
21		14X-15-22530	• • Shaft	3	J20001-
22		04260-00635	• • Ball, Steel	3	J20001-
23		14X-15-29420	• • Bearing	3	J20001-
24		04064-02512	• • Ring, Snap	1	J20001-

FIG. F2300-001010 Power Train, Transmission Case

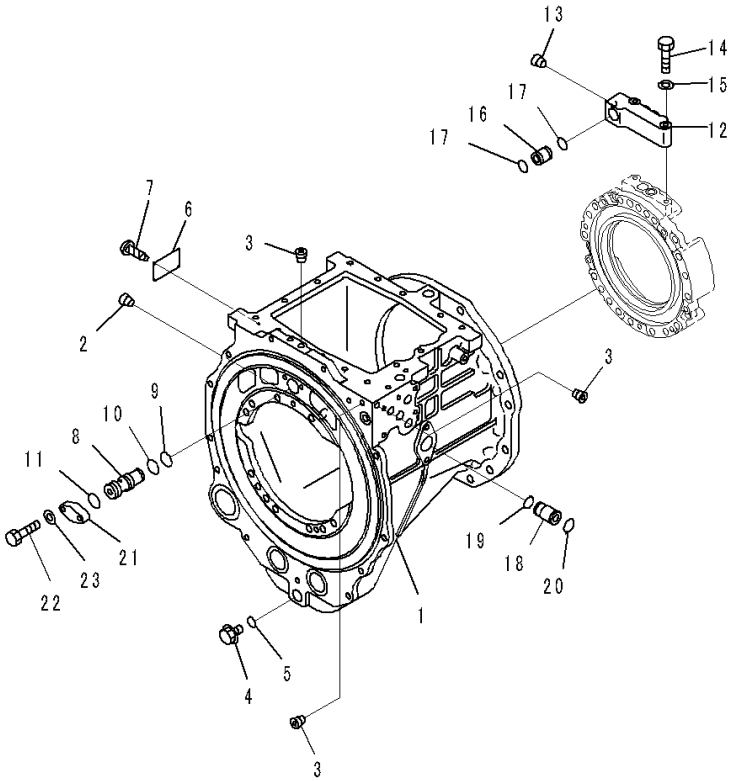

Index	Code	Part Number	Description	Qty	Serial Number
		134-22-60060	Power Train Assembly	1	J20001-
		134-15-61051	• Transmission Assembly	1	J20001-
1		134-15-71110	• • Case	1	J20001-
2		07043-70617	• • Plug	1	J20001-
3		07043-70211	• • Plug	3	J20001-
4		07044-12412	• • Plug	1	J20001-
5		07002-62434	• • O-ring, (Kit : K02)	1	J20001-
6	C2	09608-05080	• • Plate, Name (Limited Supply)	1	J20001-
7		04418-13060	• • Screw	4	J20001-
8		14X-15-15161	• • Sleeve	1	J20001-
9		07000-73022	• • O-ring, (Kit : K02)	1	J20001-
10		07000-73025	• • O-ring, (Kit : K02)	1	J20001-
11		07000-73028	• • O-ring, (Kit : K02)	1	J20001-
12		14X-15-25140	• • Block	1	J20001-
13		07043-70312	• • Plug	1	J20001-
14		01010-81065	• • Bolt	2	J20001-
15		01643-31032	• • Washer	2	J20001-
16		134-15-65180	• • Sleeve	1	J20001-
17		07000-73022	• • O-ring, (Kit : K02)	2	J20001-
18		14X-15-14150	• • Sleeve	1	J20001-
19		07000-73022	• • O-ring, (Kit : K02)	1	J20001-
20		07000-73025	• • O-ring, (Kit : K02)	1	J20001-
21		07336-60416	• • Flange	1	J20001-
22		01010-81040	• • Bolt	2	J20001-
23		01643-31032	• • Washer	2	J20001-

FIG. F2300-001011 Power Train, Input and Output Shaft

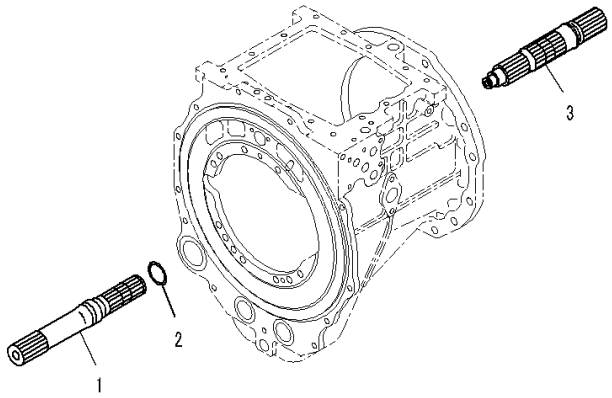

PW08967

Index	Code	Part Number	Description	Qty	Serial Number
		134-22-60060	Power Train Assembly	1	J20001-
		134-15-61051	• Transmission Assembly	1	J20001-
1		14X-15-22111	• • Shaft	1	J20001-
2		07018-10552	• • Ring	1	J20001-
3		14X-15-22121	• • Shaft	1	J20001-

FIG. F2300-001012 Power Train, Transmission Control Valve (1/2)

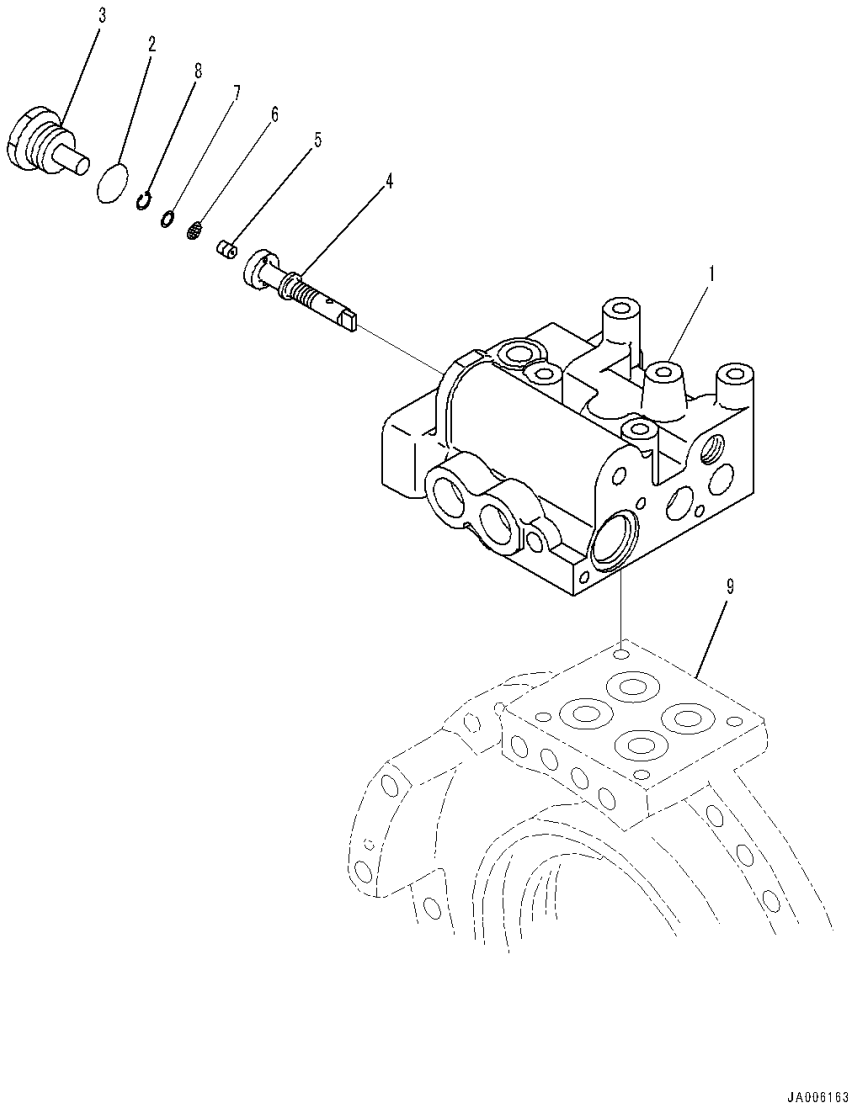

Index	Code	Part Number	Description	Qty	Serial Number
		134-22-60060	Power Train Assembly	1	J20001-
		134-15-61051	• Transmission Assembly	1	J20001-
		17A-15-15010	• • Valve Assembly, Control	1	J20001-
1		14X-15-15230	• • • Valve Body	1	J20001-
2		07002-03034	• • • O-ring, (Kit : K03)	1	J20001-
3		134-15-35361	• • • Plug	1	J20001-
4		17A-15-15511	• • • Spool	1	J20001-
5		14X-15-16461	• • • • Plug	1	J20001-
6		714-07-17540	• • • • Screen	1	J20001-
7		714-07-17550	• • • • Plate	1	J20001-
8		04065-01210	• • • • Ring, Snap, for Hole Side	1	J20001-
9		(14X-15-21160)	Housing(Refer to Page 165)		-

FIG. F2300-001013 Power Train, Transmission Control Valve (2/2)

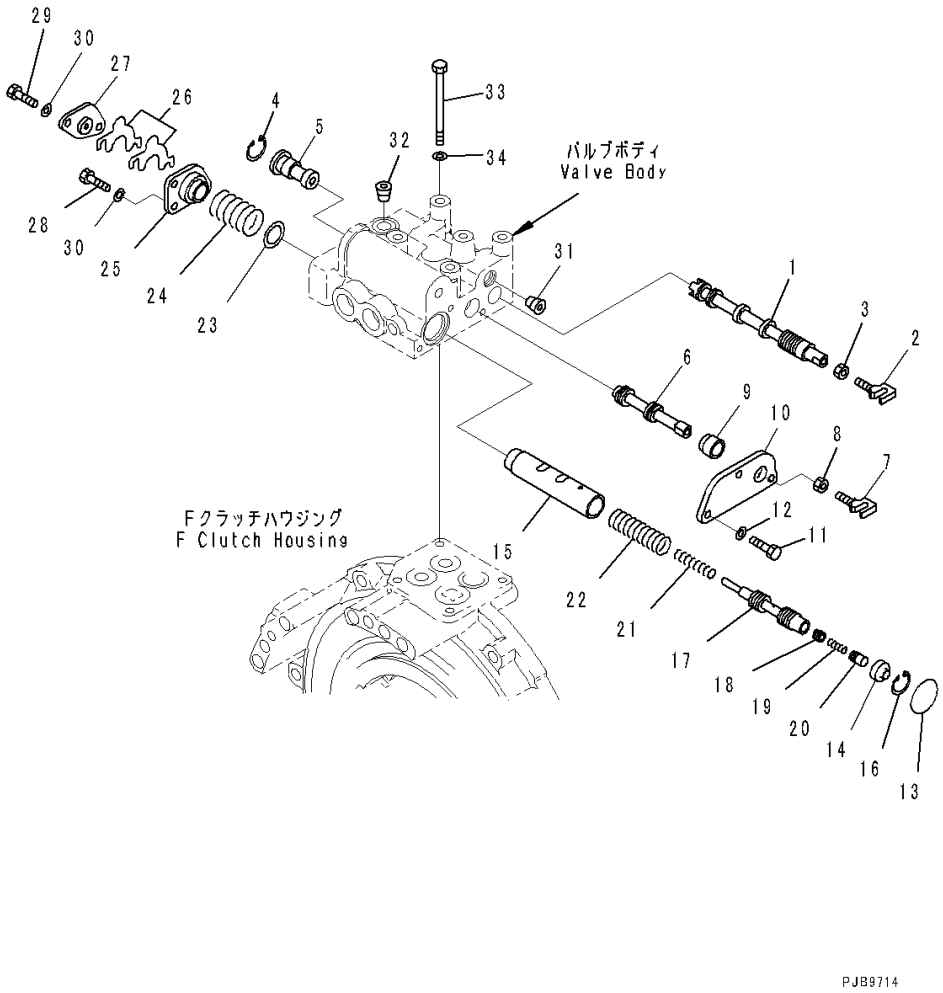

Index	Code	Part Number	Description	Qty	Serial Number
		134-22-60060	Power Train Assembly	1	J20001-
		134-15-61051	• Transmission Assembly	1	J20001-
		17A-15-15010	• • Valve Assembly, Control	1	J20001-
1		134-15-15131	• • • Spool	1	J20001-
2		09363-00850	• • • York	1	J20001-
3		01580-10806	• • • Nut	1	J20001-
4		04065-03012	• • • Ring, Snap	1	J20001-
5		125-15-15141	• • • Stopper	1	J20001-
6		17A-15-25120	• • • Spool	1	J20001-
7		09363-00850	• • • York	1	J20001-
8		01580-10806	• • • Nut	1	J20001-
9		14X-15-15260	• • • Collar	1	J20001-
10		125-15-15390	• • • Cover	1	J20001-
11		01010-80820	• • • Bolt	3	J20001-
12		01643-30823	• • • Washer	3	J20001-
13		07000-73038	• • • O-ring, (Kit : K03)	1	J20001-
14		125-15-15230	• • • Stopper	1	J20001-
15		14X-15-15210	• • • Valve	1	J20001-
16		120-09-15110	• • • Ring, Snap	1	J20001-
17		125-15-15220	• • • Valve	1	J20001-
18		103-15-15460	• • • Valve	1	J20001-
19		125-15-15290	• • • Spring	1	J20001-
20		144-40-21830	• • • Valve	1	J20001-
21		14X-15-16260	• • • Spring	1	J20001-
22		14X-15-16220	• • • Spring	1	J20001-
23		125-15-15260	• • • Washer	1	J20001-
24		125-15-15330	• • • Spring	1	J20001-
25		134-15-15270	• • • Spacer	1	J20001-
26		125-15-15170	• • • Shim, (Kit : K03)	7	J20001-
27		134-15-15280	• • • Cover	1	J20001-
28		01010-80820	• • • Bolt	1	J20001-
29		01010-80830	• • • Bolt	2	J20001-
30		01643-30823	• • • Washer	3	J20001-
31		07043-70415	• • • Plug	1	J20001-
32		07043-70312	• • • Plug	1	J20001-
33		01011-81010	• • Bolt	4	J20001-
34		01643-31032	• • Washer	4	J20001-

FIG. F2300-001014 Power Train, Transmission Main Relief Valve

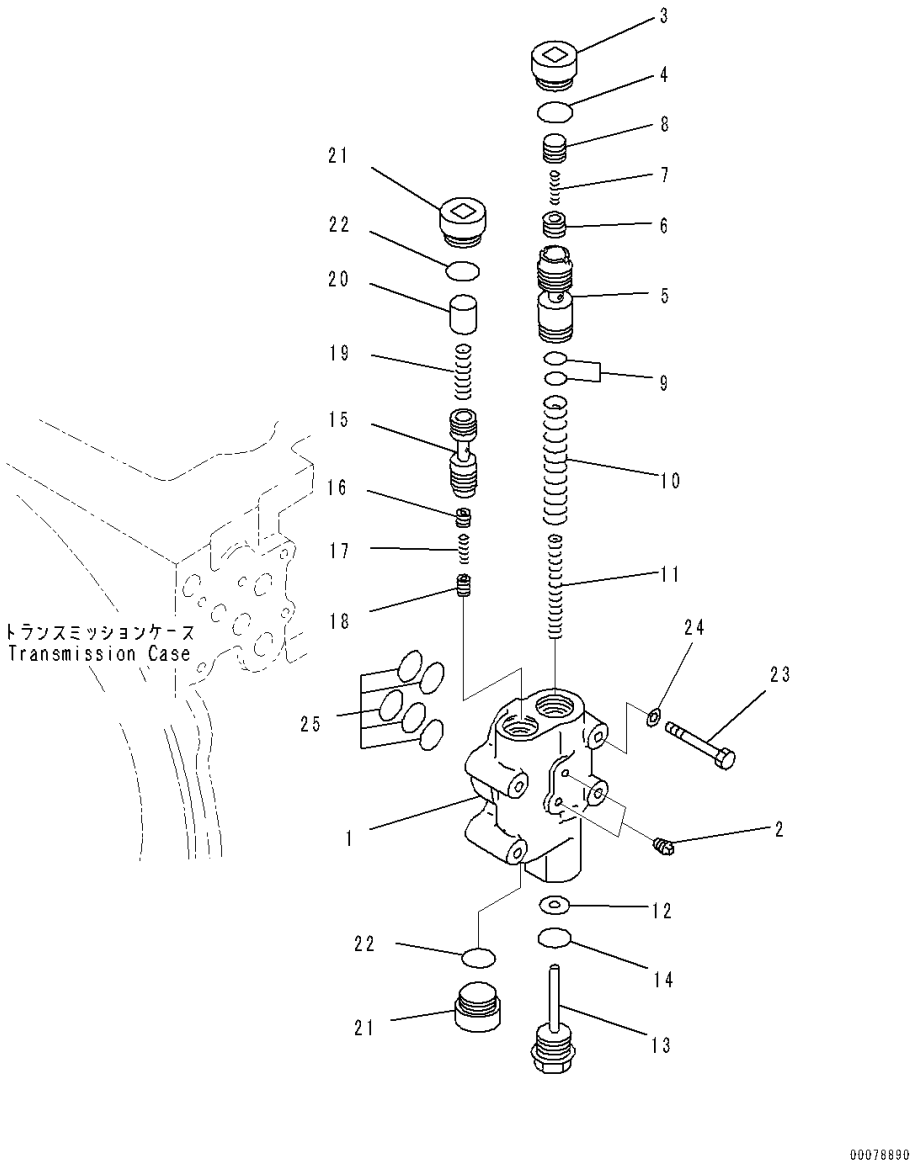

Index	Code	Part Number	Description	Qty	Serial Number
		134-22-60060	Power Train Assembly	1	J20001-
		134-15-61051	• Transmission Assembly	1	J20001-
		14X-15-16003	• • Valve Assembly, Relief	1	J20001-
1		17A-15-25131	• • • Valve Body	1	J20001-
2		07042-20108	• • • Plug	3	J20001-
3		14X-15-15850	• • • Plug	1	J20001-
4		07002-03034	• • • O-ring, (Kit : K04)	1	J20001-
5		41E-15-15230	• • • Valve	1	J20001-
6		426-15-15490	• • • Valve	1	J20001-
7		198-15-15770	• • • Spring, L=30mm	1	J20001-
8		426-15-15480	• • • Valve	1	J20001-
9		198-15-15570	• • • Shim, T=0.5mm, (Kit : K04)	6	J20001-
10		41E-15-16251	• • • Spring, L=128mm	1	J20001-
11		426-15-16261	• • • Spring, L=108.0mm	1	J20001-
12		22W-43-17330	• • • Washer	1	J20001-
13		426-15-15810	• • • Plug	1	J20001-
14		07002-03034	• • • O-ring, (Kit : K04)	1	J20001-
15		12H-15-14130	• • • Spool	1	J20001-
16		104-15-25490	• • • Valve	1	J20001-
17		125-15-15290	• • • Spring	1	J20001-
18		104-15-25480	• • • Valve	1	J20001-
19		14X-15-16210	• • • Spring	1	J20001-
20		12H-15-14140	• • • Guide	1	J20001-
21		14X-15-15850	• • • Plug	2	J20001-
22		07002-03034	• • • O-ring, (Kit : K04)	2	J20001-
23		01010-81065	• • Bolt	4	J20001-
24		01643-31032	• • Washer	4	J20001-
25		07000-73030	• • O-ring, (Kit : K04)	5	J20001-

FIG. F2300-001015 Power Train, Cover (1/5)

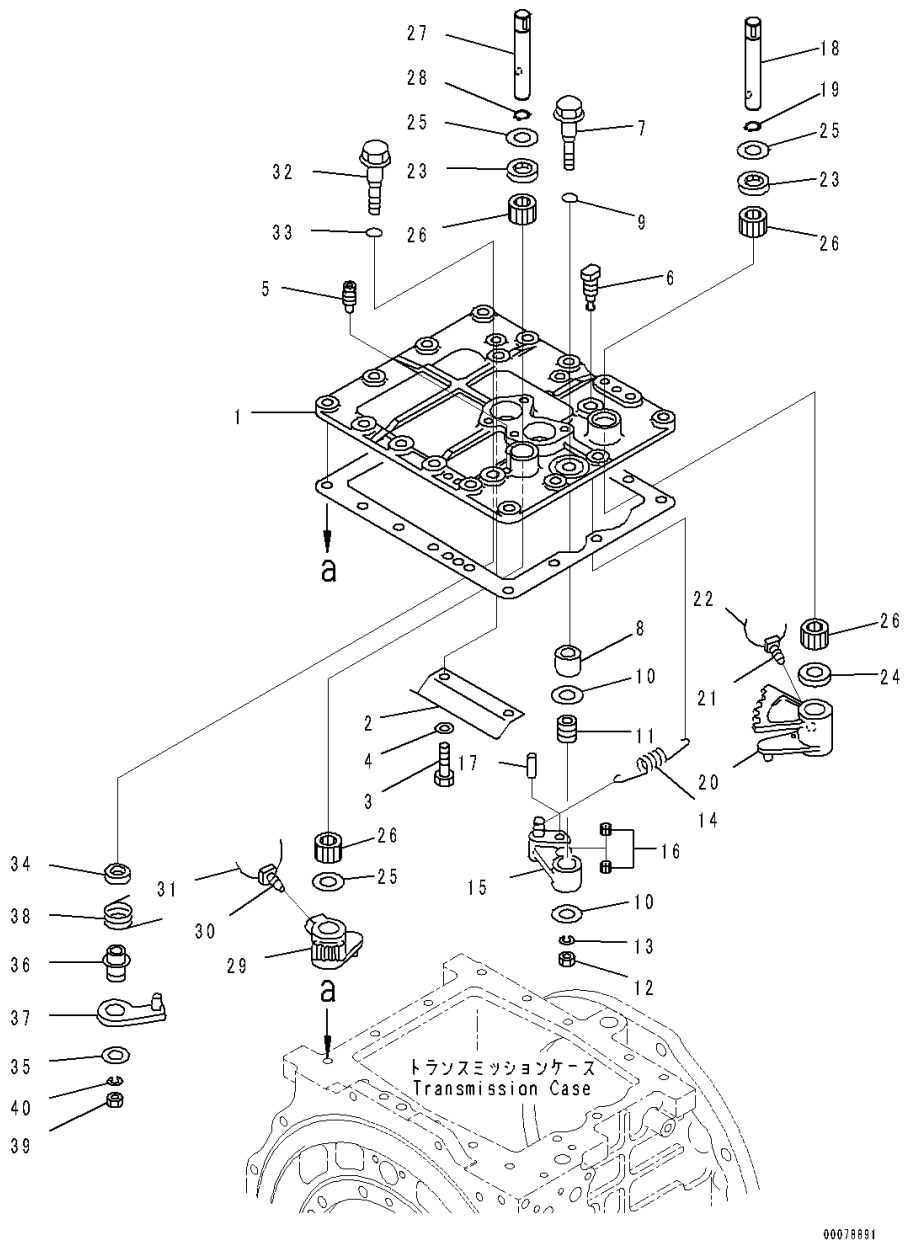

Index	Code	Part Number	Description	Qty	Serial Number
		134-22-60060	Power Train Assembly	1	J20001-
		134-15-61051	• Transmission Assembly	1	J20001-
		134-15-67001	• • Cover Assembly	1	J20001-
1		14X-15-15812	• • • Cover	1	J20001-
2		14X-15-15770	• • • Plate	1	J20001-
3		01010-81025	• • • Bolt	2	J20001-
4		01643-31032	• • • Washer	2	J20001-
5		14X-15-15750	• • • Screw	1	J20001-
6		14X-15-15760	• • • Screw	1	J20001-
7		134-15-21450	• • • Bolt	1	J20001-
8		14X-15-15830	• • • Collar	1	J20001-
9		07000-B2015	• • • O-ring, (Kit : K02)	1	J20001-
10		175-15-45660	• • • Washer	2	J20001-
11		144-15-25670	• • • Bushing	1	J20001-
12		01580-11008	• • • Nut	1	J20001-
13		01602-21030	• • • Washer, Spring	1	J20001-
14		134-15-66180	• • • Spring	1	J20001-
15		125-15-11440	• • • Lever	1	J20001-
16		144-15-29121	• • • Bearing	2	J20001-
17		144-15-25691	• • • Roller	1	J20001-
18		134-15-67130	• • • Shaft	1	J20001-
19		04064-02012	• • • Ring, Snap	1	J20001-
20		14X-15-15640	• • • Lever	1	J20001-
21		01306-11025	• • • Screw	1	J20001-
22		04059-01010	• • • Wire, Lock	1	J20001-
23		144-15-29110	• • • Seal, Oil, (Kit : K02)	2	J20001-
24		708-27-12581	• • • Washer	1	J20001-
25		144-15-25570	• • • Washer	3	J20001-
26		06120-02016	• • • Bearing, Needle	4	J20001-
27		134-15-67140	• • • Shaft	1	J20001-
28		04064-02012	• • • Ring, Snap	1	J20001-
29		134-15-65720	• • • Lever	1	J20001-
30		01306-11025	• • • Screw	1	J20001-
31		04059-01010	• • • Wire, Lock	1	J20001-
32		134-15-21450	• • • Bolt	1	J20001-
33		07000-B2015	• • • O-ring, (Kit : K02)	1	J20001-
34		14X-15-15840	• • • Collar	1	J20001-
35		175-15-45660	• • • Washer	1	J20001-
36		14X-15-15671	• • • Bushing	1	J20001-
37		14X-15-15791	• • • Lever	1	J20001-

FIG. F2300-001015 Power Train, Cover (1/5)

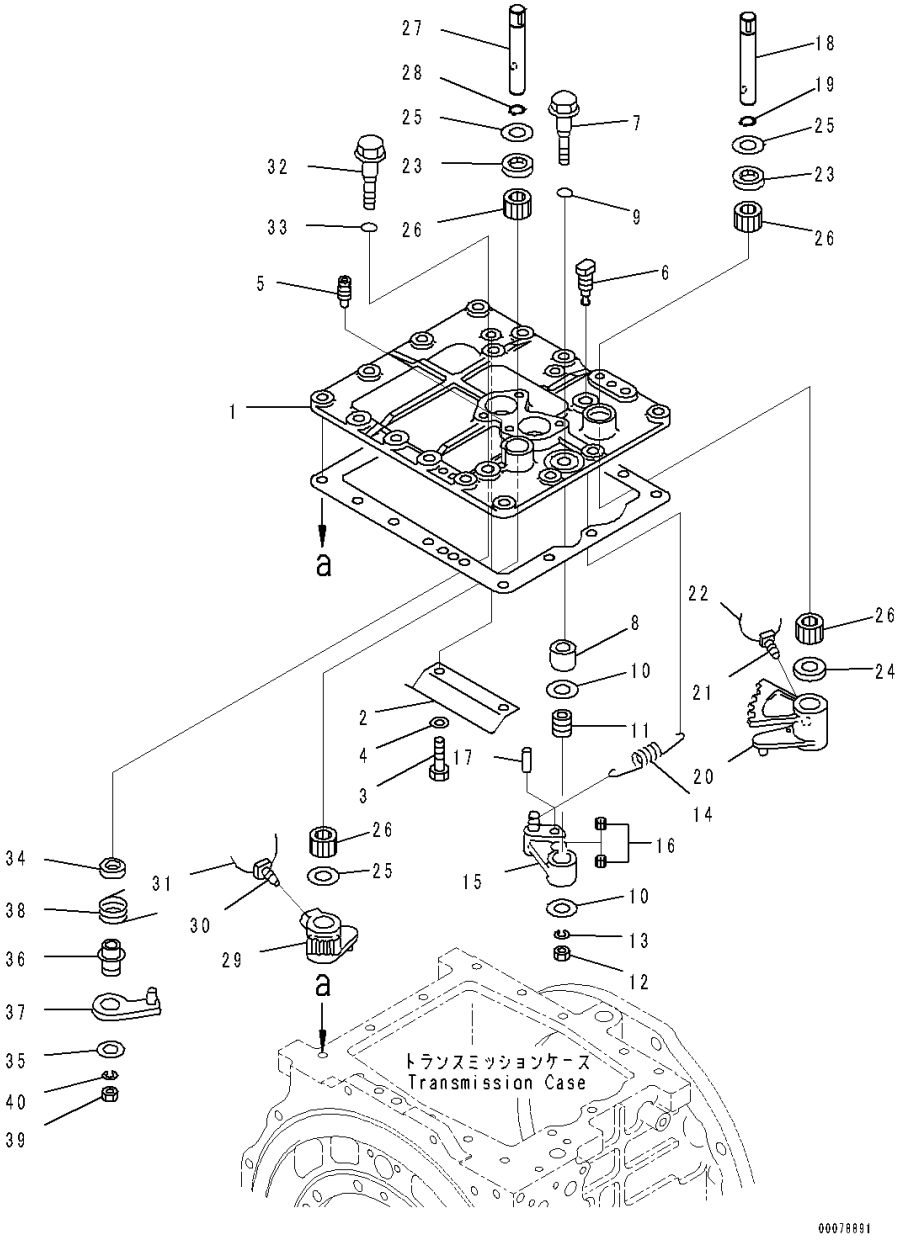

Index	Code	Part Number	Description	Qty	Serial Number
38		14X-15-16192	• • • Spring	1	J20001-
39		01580-11008	• • • Nut	1	J20001-
40		01602-21030	• • • Washer, Spring	1	J20001-

FIG. F2300-001016 Power Train, Cover (2/5)

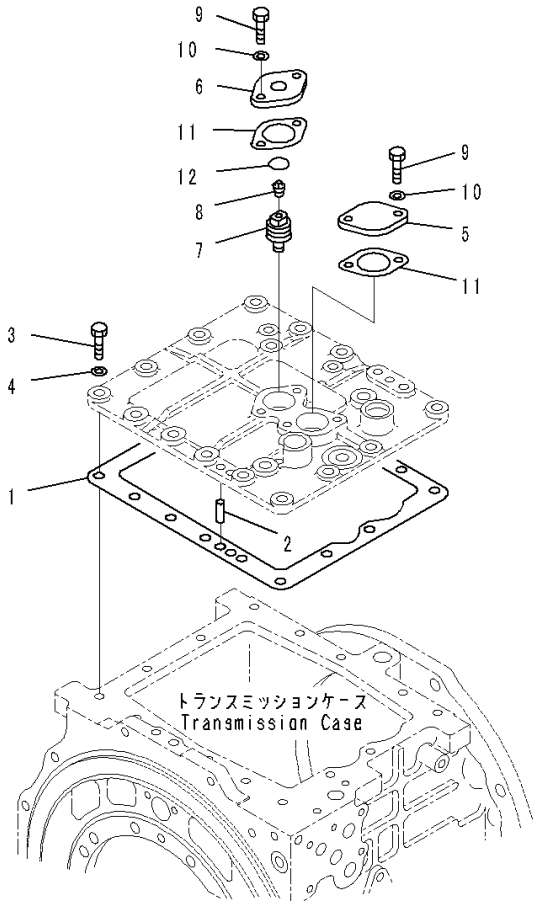

Index	Code	Part Number	Description	Qty	Serial Number
		134-22-60060	Power Train Assembly	1	J20001-
		134-15-61051	• Transmission Assembly	1	J20001-
1		14X-15-15910	• • Gasket, (Kit : K02)	1	J20001-
2		04020-01228	• • Pin, Dowel	2	J20001-
3		01010-81235	• • Bolt	6	J20001-
4		01643-31232	• • Washer	6	J20001-
5		125-15-21640	• • Plate	1	J20001-
6		14X-15-15821	• • Cover	1	J20001-
7		14X-15-16450	• • Plug	1	J20001-
8		07042-80108	• • Plug	1	J20001-
9		01010-81035	• • Bolt	4	J20001-
10		01643-31032	• • Washer	4	J20001-
11		113-15-11641	• • Gasket, (Kit : K02)	2	J20001-
12		07000-72020	• • O-ring, (Kit : K02)	1	J20001-

FIG. F2300-001017 Power Train, Pump

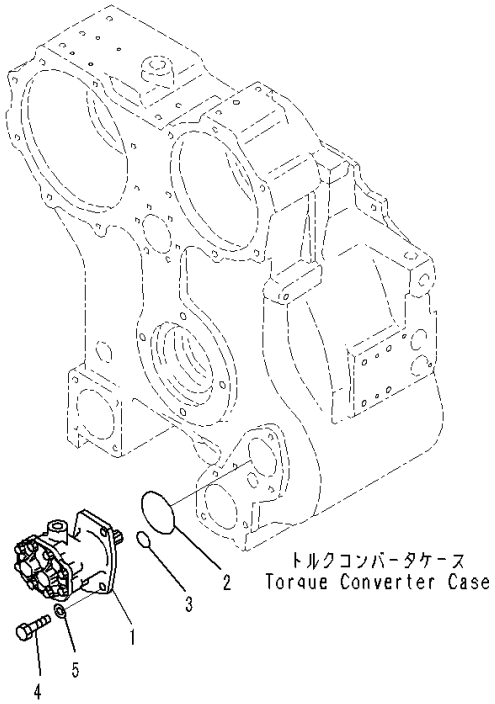

JA006164

Index	Code	Part Number	Description	Qty	Serial Number
		134-22-60060	Power Train Assembly	1	J20001-
1		14X-49-11600	• Pump Assembly	1	J20001-
2		07000-72080	• O-ring	1	J20001-
3		07000-73038	• O-ring	1	J20001-
4		01010-81235	• Bolt	3	J20001-
5		01643-31232	• Washer	3	J20001-

FIG. F2300-001018 Power Train, Lubricating Oil Piping

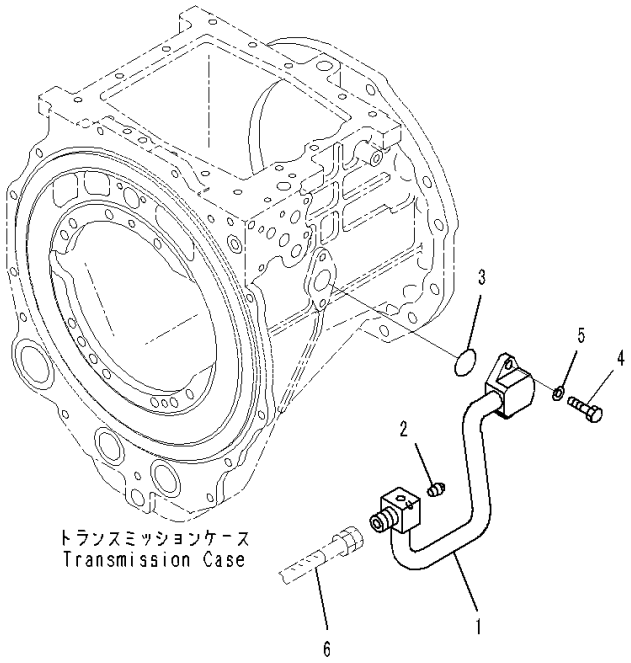

JA006165

Index	Code	Part Number	Description	Qty	Serial Number
		134-22-60060	Power Train Assembly	1	J20001-
1		134-49-67120	• Tube	1	J20001-
2		07042-70108	• Plug	1	J20001-
3		07000-73042	• O-ring, (Kit : K02)	1	J20001-
4		01010-81235	• Bolt	2	J20001-
5		01643-31232	• Washer	2	J20001-
6		(07102-20621)	Hose, Taper Seal Type(Refer to Page 211)		-

FIG. F2300-001019 Power Train, Lever

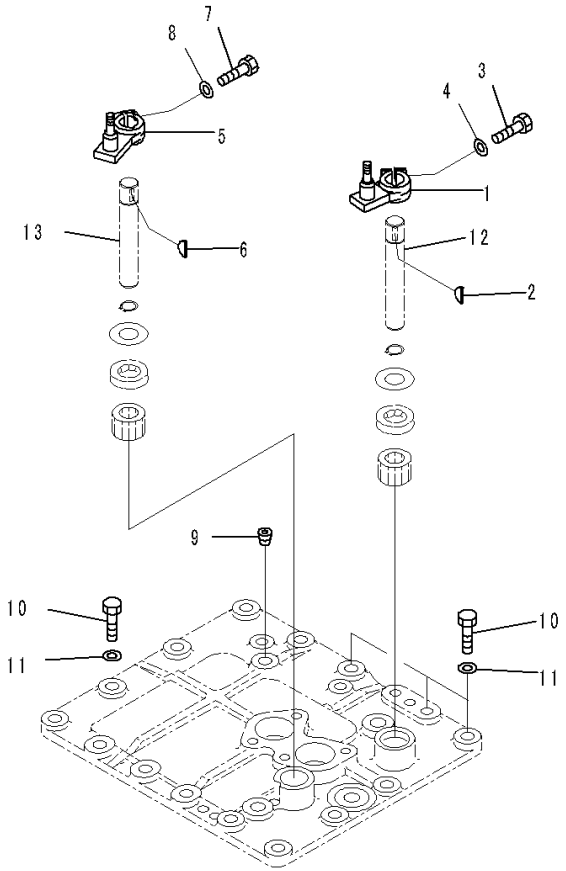

Index	Code	Part Number	Description	Qty	Serial Number
		134-22-60060	Power Train Assembly	1	J20001-
1		134-15-67160	• Lever	1	J20001-
2		04010-00516	• Key	1	J20001-
3		01010-80830	• Bolt	1	J20001-
4		01643-50823	• Washer	1	J20001-
5		134-15-67150	• Lever	1	J20001-
6		04010-00516	• Key	1	J20001-
7		01010-80830	• Bolt	1	J20001-
8		01643-50823	• Washer	1	J20001-
9		07043-70211	• Plug	1	J20001-
10		01010-81235	• Bolt	4	J20001-
11		01643-31232	• Washer	4	J20001-
12		(134-15-67130)	Shaft(Refer to Page 174)		-
13		(134-15-67140)	Shaft(Refer to Page 174)		-

FIG. F2300-001020 Power Train, Torque Converter Piping

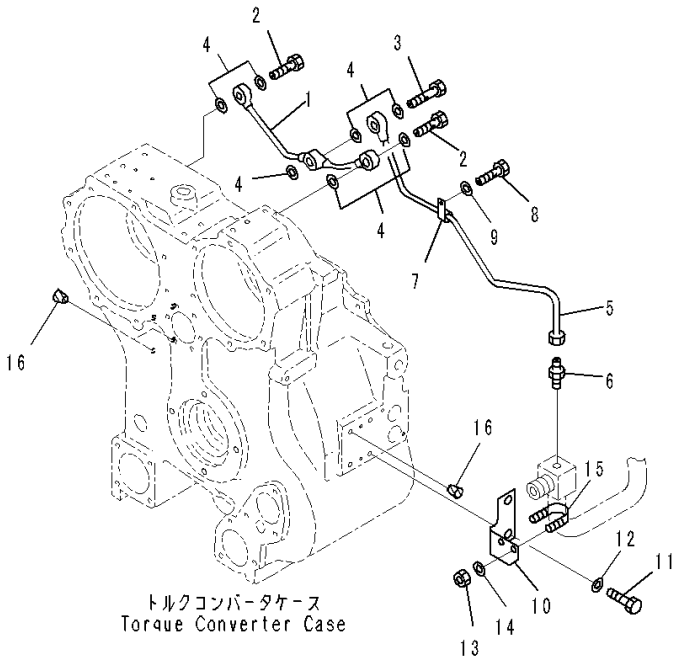

00078880

Index	Code	Part Number	Description	Qty	Serial Number
		134-22-60060	Power Train Assembly	1	J20001-
1		14X-10-11320	• Tube	1	J20001-
2		07206-30812	• Bolt, Joint	2	J20001-
3		14X-10-11330	• Joint	1	J20001-
4		07005-01212	• Seal, Washer, (Kit : K01)	7	J20001-
5		134-13-63260	• Tube	1	J20001-
6		07213-50813	• Connector	1	J20001-
7		04434-50810	• Clip	1	J20001-
8		01010-81020	• Bolt	1	J20001-
9		01643-31032	• Washer	1	J20001-
10		134-49-61560	• Bracket	1	J20001-
11		01010-61630	• Bolt	2	J20001-
12		01643-31645	• Washer	2	J20001-
13		07283-32738	• Clip, Pipe	1	J20001-
14		01597-01009	• Nut	2	J20001-
15		01643-31032	• Washer	2	J20001-
16		07049-01620	• Plug	3	J20001-

FIG. F2300-001021 Power Train, Mounting (1/2)

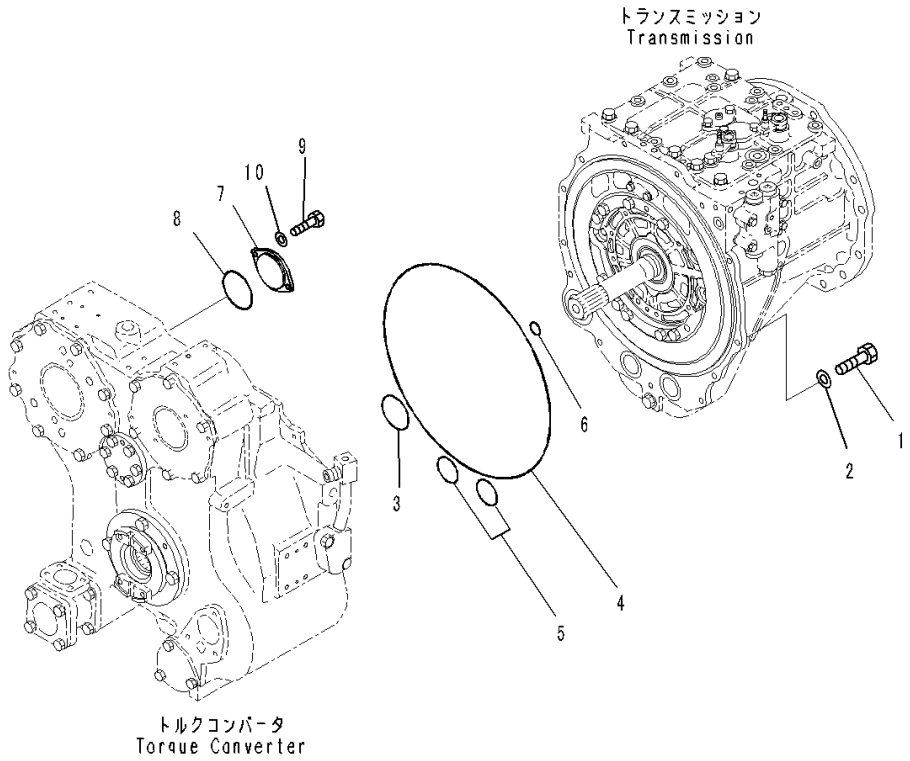

Index	Code	Part Number	Description	Qty	Serial Number
		134-22-60060	Power Train Assembly	1	J20001-
1		01010-81235	• Bolt	13	J20001-
2		01643-31232	• Washer	13	J20001-
3		07000-72075	• O-ring	1	J20001-
4		07000-75500	• O-ring	1	J20001-
5		07000-72055	• O-ring	2	J20001-
6		07000-73030	• O-ring	1	J20001-
7		134-13-64450	• Cover	1	J20001-
8		07000-72085	• O-ring	1	J20001-
9		01010-81025	• Bolt	2	J20001-
10		01643-31032	• Washer	2	J20001-

FIG. F2300-001022 Power Train, Bevel Gear and Shaft

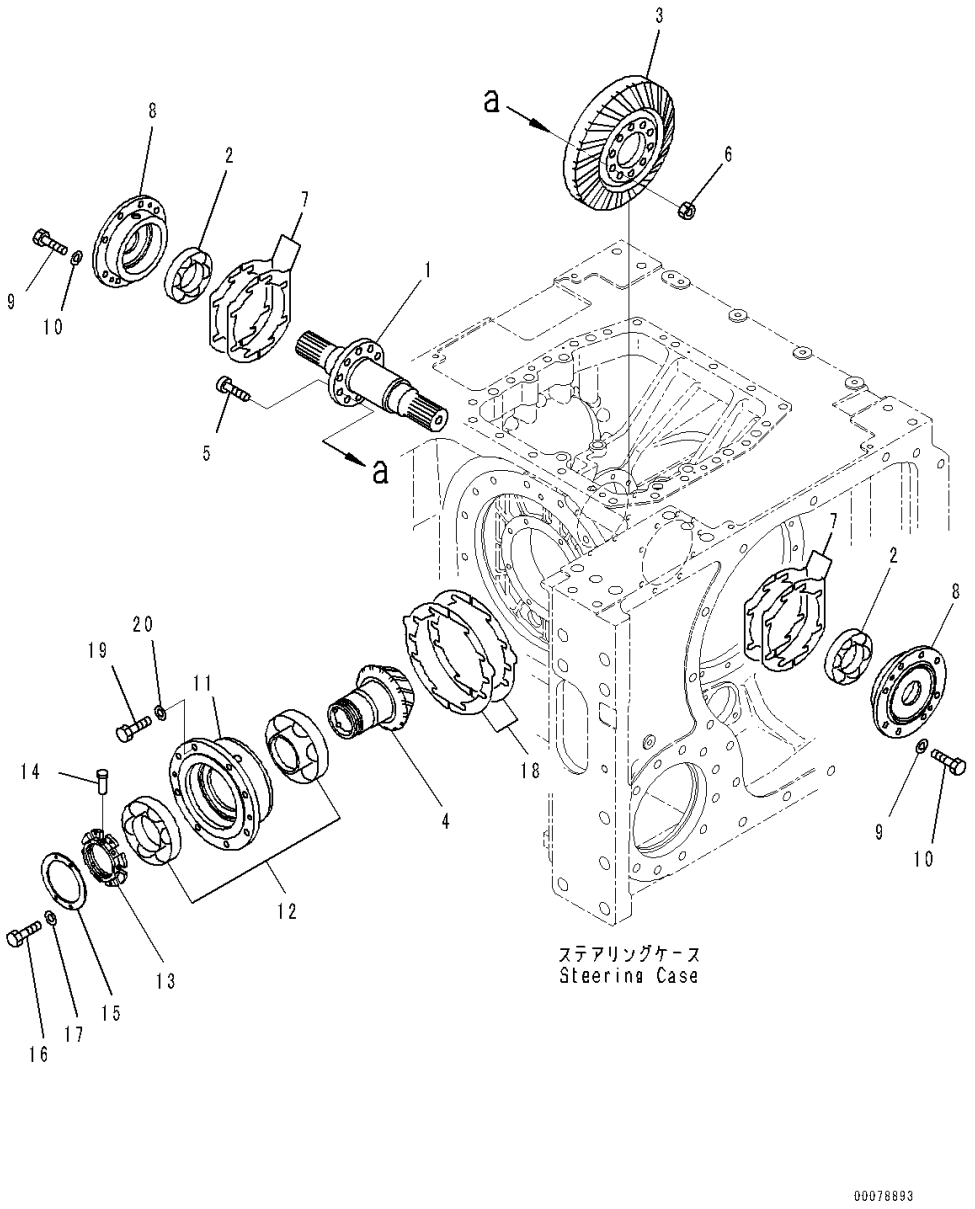

Index	Code	Part Number	Description	Qty	Serial Number
		134-22-60060	Power Train Assembly	1	J20001-
		134-22-61051	• Steering Assembly	1	J20001-
1		14X-22-21121	• • Shaft	1	J20001-
2		06302-32213	• • Bearing	2	J20001-
		14X-22-25801	• • Pinion and Gear Assembly	1	J20001-
3	C1		• • • Gear, Bevel	1	J20001-
4	C1		• • • Pinion	1	J20001-
5		01084-01650	• • Bolt	10	J20001-
6		01582-11613	• • Nut	10	J20001-
7		14Y-22-21170	• • Shim, T=0.3mm	8	J20001-
		14Y-22-21180	• • Shim, T=0.2mm	8	J20001-
		14Y-22-21190	• • Shim, T=0.5mm	4	J20001-
8		14Y-22-21131	• • Cage	2	J20001-
9		01010-81240	• • Bolt	16	J20001-
10		01643-31232	• • Washer	16	J20001-
11		154-22-65820	• • Cage	1	J20001-
12		14Y-22-25880	• • Bearing	1	J20001-
13		154-22-65890	• • Nut	1	J20001-
14		154-22-65860	• • Pin	1	J20001-
15		154-22-62220	• • Plate	1	J20001-
16		01010-80612	• • Bolt	4	J20001-
17		01643-30623	• • Washer	4	J20001-
18		14Y-22-25830	• • Shim, T=0.2mm	6	J20001-
		14Y-22-25840	• • Shim, T=0.3mm	4	J20001-
		14Y-22-25850	• • Shim, T=0.4mm	2	J20001-
19		01010-81240	• • Bolt	8	J20001-
20		01643-31232	• • Washer	8	J20001-

FIG. F2300-001023 Power Train, Steering Clutch and Steering Brake (1/2)

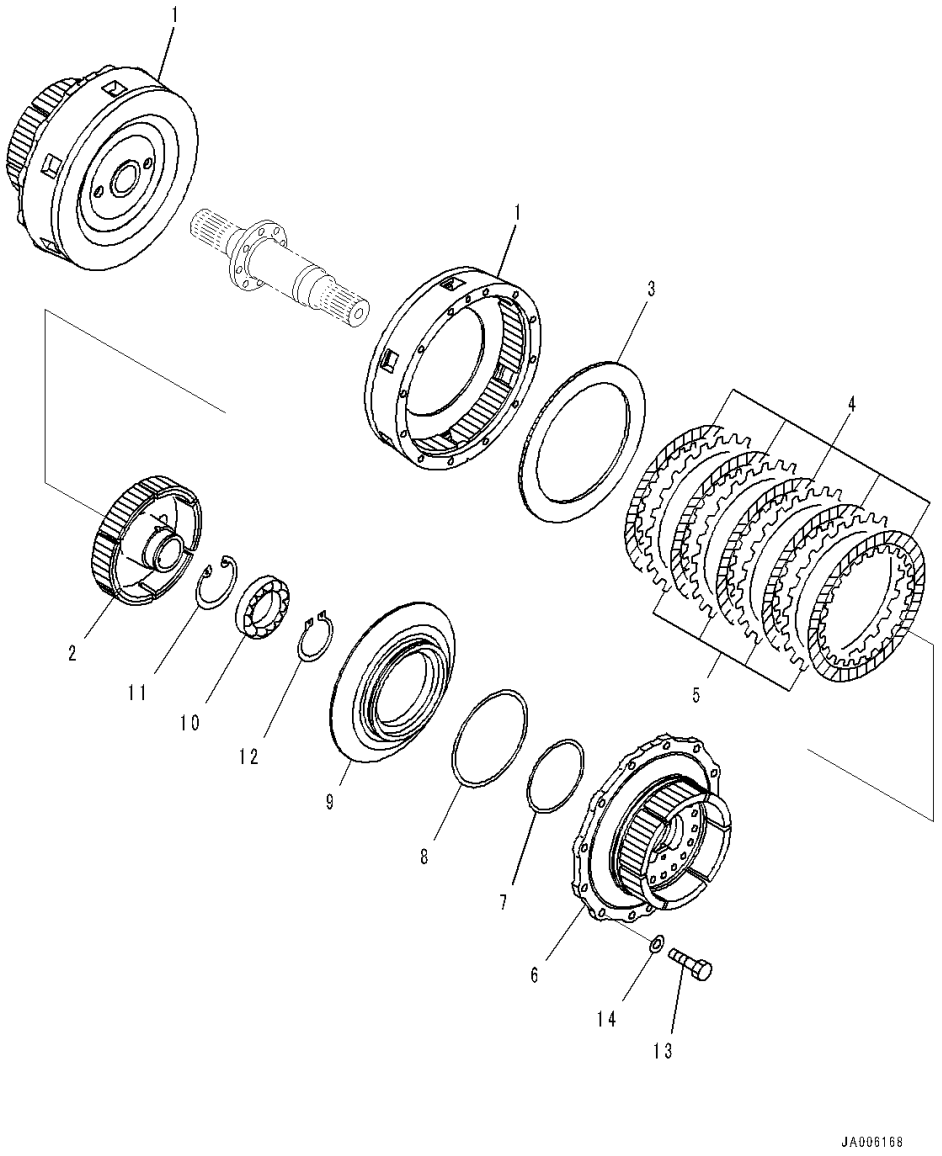

Index	Code	Part Number	Description	Qty	Serial Number
		134-22-60060	Power Train Assembly	1	J20001-
		134-22-61051	• Steering Assembly	1	J20001-
		134-22-61300	• • Clutch and Brake Assembly	2	J20001-
1		14X-22-22110	• • • Drum	1	J20001-
2		14X-22-22120	• • • Drum	1	J20001-
3		14X-22-22210	• • • Plate	1	J20001-
4		14X-22-22150	• • • Disc	5	J20001-
5		14X-22-22160	• • • Plate	4	J20001-
6		14X-22-23120	• • • Hub	1	J20001-
7		415-15-12360	• • • Seal Ring	1	J20001-
8		425-15-19260	• • • Seal Ring	1	J20001-
9		14X-22-22130	• • • Piston	1	J20001-
10		06030-06014	• • • Bearing	1	J20001-
11		04065-01104	• • • Ring, Snap	1	J20001-
12		04064-07025	• • • Ring	1	J20001-
13		01010-81235	• • • Bolt	12	J20001-
14		01643-31232	• • • Washer	12	J20001-

FIG. F2300-001024 Power Train, Steering Clutch and Steering Brake (2/2)

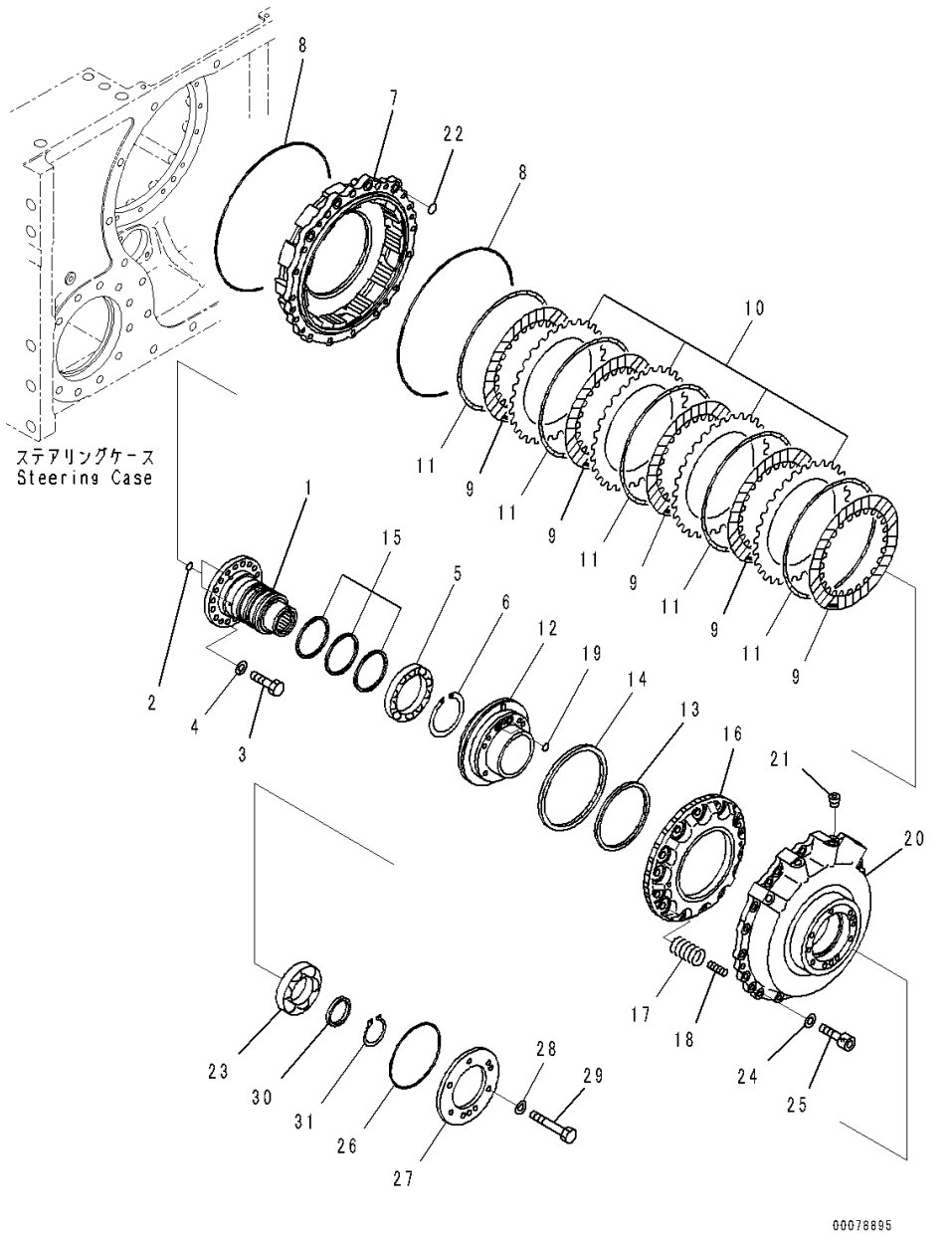

Index	Code	Part Number	Description	Qty	Serial Number
		134-22-60060	Power Train Assembly	1	J20001-
		134-22-61051	• Steering Assembly	1	J20001-
		134-22-61300	• • Clutch and Brake Assembly	2	J20001-
1		14X-22-24110	• • • Hub	1	J20001-
2		07000-72018	• • • O-ring	1	J20001-
3		01010-81235	• • • Bolt	18	J20001-
4		01643-31232	• • • Washer	18	J20001-
5		06030-06921	• • • Bearing	1	J20001-
6		04070-00105	• • • Ring, Snap	1	J20001-
7		14Y-22-23110	• • • Drum	1	J20001-
8		07000-75365	• • • O-ring	2	J20001-
9		14Y-22-23140	• • • Disc	5	J20001-
10		14Y-22-23150	• • • Plate	4	J20001-
11		14Y-22-23160	• • • Spring	5	J20001-
12		14X-22-24130	• • • Cage	1	J20001-
13		232-15-19270	• • • Seal Ring	1	J20001-
14		14Y-22-23310	• • • Seal Ring	1	J20001-
15		14X-22-23270	• • • Seal Ring	3	J20001-
16		14Y-22-23130	• • • Piston	1	J20001-
17		14Y-22-23170	• • • Spring	14	J20001-
18		14Y-22-23180	• • • Spring	14	J20001-
19		07000-72018	• • • O-ring	2	J20001-
20		134-22-75120	• • • Cover	1	J20001-
21		07043-70312	• • • Plug	4	J20001-
22		07000-73022	• • • O-ring	4	J20001-
23		06030-06215	• • • Bearing	1	J20001-
24		01643-31232	• • • Washer	4	J20001-
25		01252-71250	• • • Bolt	4	J20001-
26		07000-75195	• • • O-ring	1	J20001-
27		134-22-74210	• • • Flange	1	J20001-
28		01643-31232	• • • Washer	6	J20001-
29		01011-81205	• • • Bolt	6	J20001-
30		17A-15-22191	• • • Spacer	1	J20001-
31		04064-07525	• • • Ring, Snap	1	J20001-

FIG. F2300-001025 Power Train, Steering Case

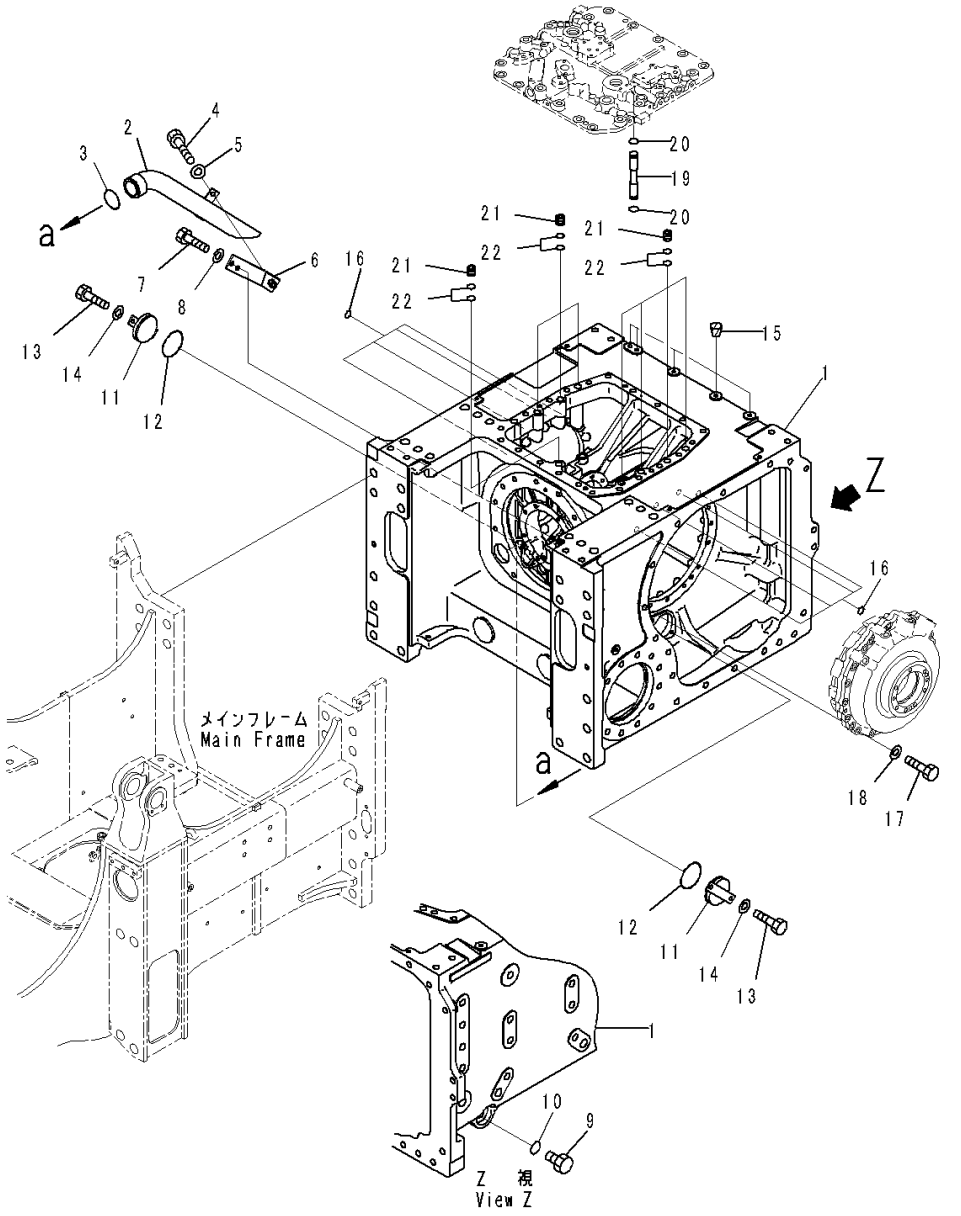

Index	Code	Part Number	Description	Qty	Serial Number
		134-22-60060	Power Train Assembly	1	J20001-
		134-22-61051	• Steering Assembly	1	J20001-
1		134-22-67111	• • Case	1	J20001-
2		134-49-71111	• • Tube	1	J20001-
3		07000-72065	• • O-ring	1	J20001-
4		01010-81225	• • Bolt	1	J20001-
5		01643-31232	• • Washer	1	J20001-
6		134-49-67260	• • Bracket	1	J20001-
7		01010-81225	• • Bolt	2	J20001-
8		01643-31232	• • Washer	2	J20001-
9		6150-23-5620	• • Plug	1	J20001-
10		07002-63634	• • O-ring	1	J20001-
11		134-22-65130	• • Plug	2	J20001-
12		07000-72090	• • O-ring	2	J20001-
13		01010-81225	• • Bolt	4	J20001-
14		01643-31232	• • Washer	4	J20001-
15		07049-01215	• • Plug	5	J20001-
16		07000-72022	• • O-ring	8	J20001-
17		01010-81255	• • Bolt	32	J20001-
18		01643-31232	• • Washer	32	J20001-
19		14Y-22-26180	• • Tube	2	J20001-
20		07000-72018	• • O-ring	4	J20001-
21		14X-22-16170	• • Sleeve	9	J20001-
22		07000-72018	• • O-ring	18	J20001-

FIG. F2300-001026 Power Train, Cover (3/5)

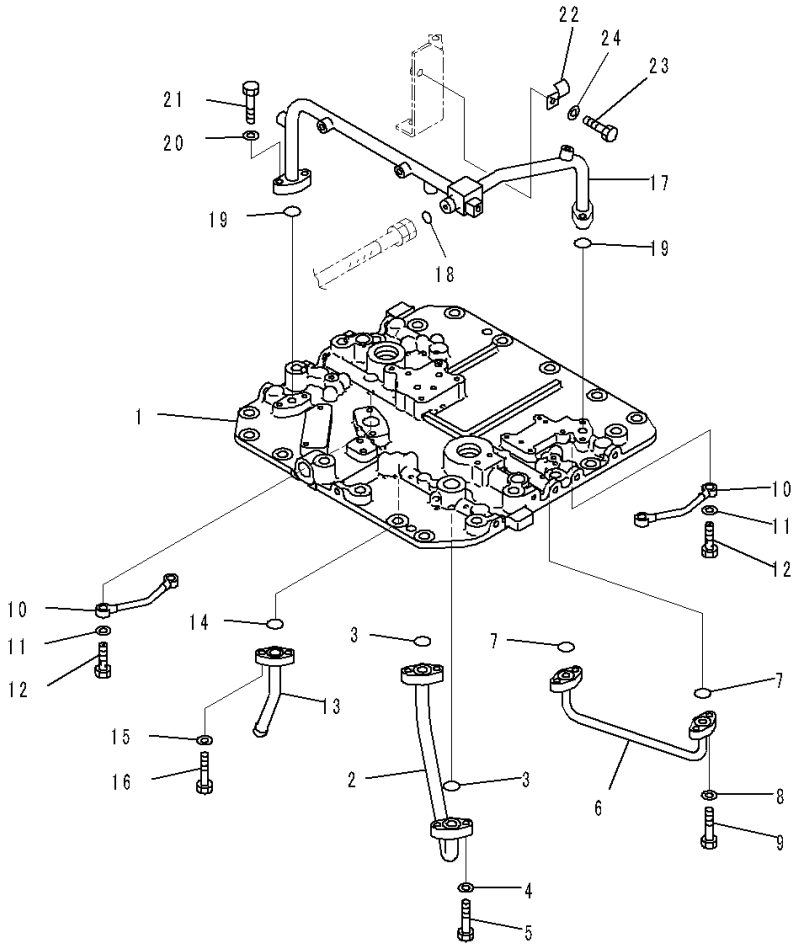

Index	Code	Part Number	Description	Qty	Serial Number
		134-22-60060	Power Train Assembly	1	J20001-
		134-22-61051	• Steering Assembly	1	J20001-
		134-22-67102	• • Cover Assembly	1	J20001-
1		134-22-67121	• • • Cover	1	J20001-
2		14X-22-26260	• • • Tube	1	J20001-
3		07000-73025	• • • O-ring	2	J20001-
4		01643-51032	• • • Washer	4	J20001-
5		01010-81040	• • • Bolt	4	J20001-
6		134-22-66261	• • • Tube	1	J20001-
7		07000-73022	• • • O-ring	2	J20001-
8		01643-51032	• • • Washer	4	J20001-
9		01010-81035	• • • Bolt	4	J20001-
10		14X-22-26290	• • • Tube	2	J20001-
11		07005-01412	• • • Gasket	8	J20001-
12		07206-31014	• • • Bolt, Joint	4	J20001-
13		134-22-67161	• • • Tube	1	J20001-
14		07000-73022	• • • O-ring	1	J20001-
15		01643-51032	• • • Washer	2	J20001-
16		01010-81035	• • • Bolt	2	J20001-
17		134-22-67151	• • • Tube	1	J20001-
18		02896-61018	• • • O-ring	1	J20001-
19		07000-73025	• • • O-ring	2	J20001-
20		01643-51032	• • • Washer	4	J20001-
21		01010-81040	• • • Bolt	4	J20001-
22		10E-60-16330	• • • Clip	1	J20001-
23		01010-81025	• • • Bolt	1	J20001-
24		01643-31032	• • • Washer	1	J20001-

FIG. F2300-001027 Power Train, Cover (4/5)

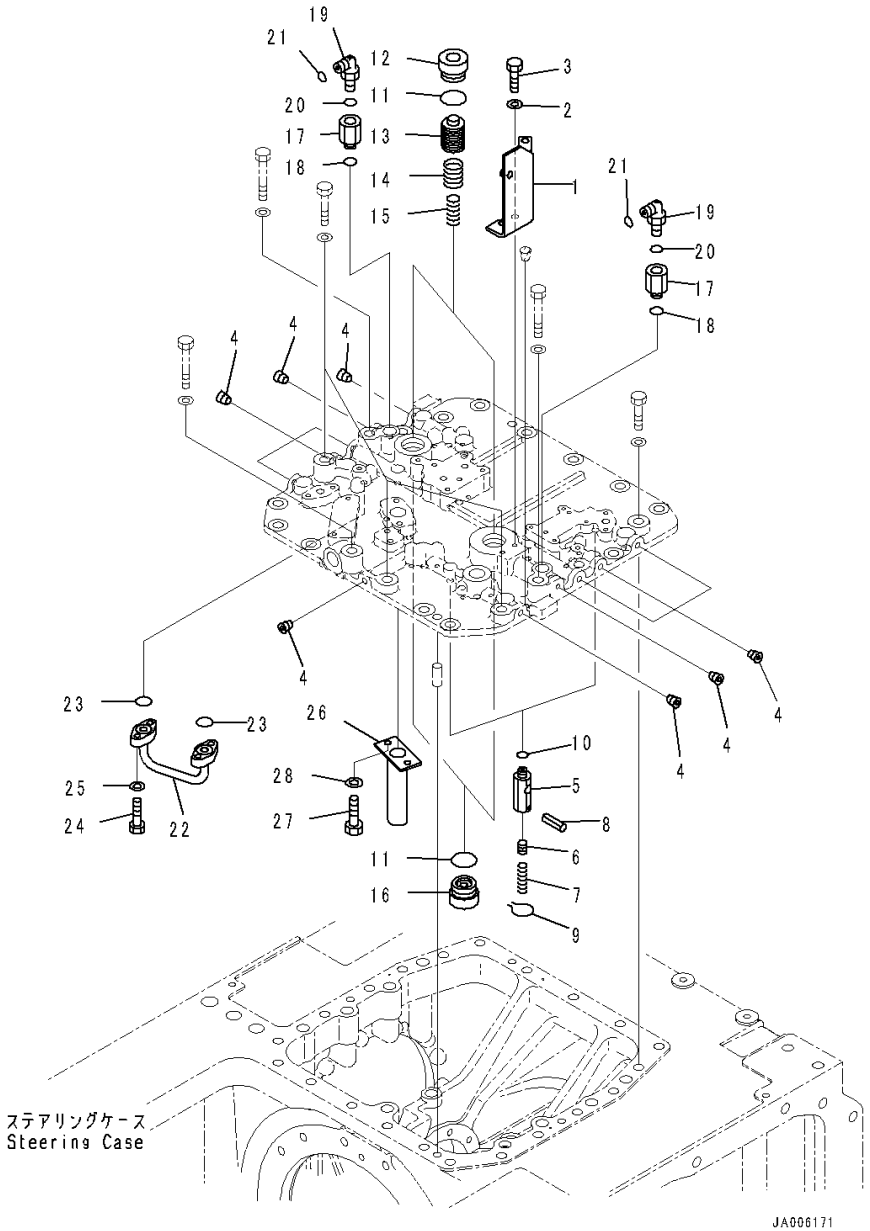

Index	Code	Part Number	Description	Qty	Serial Number
		134-22-60060	Power Train Assembly	1	J20001-
		134-22-61051	• Steering Assembly	1	J20001-
		134-22-67102	• • Cover Assembly	1	J20001-
1		134-22-67141	• • • Bracket	1	J20001-
2		01643-51032	• • • Washer	2	J20001-
3		01010-81025	• • • Bolt	2	J20001-
4		07043-70211	• • • Plug	11	J20001-
5		14X-22-16160	• • • Body	2	J20001-
6		287-15-15360	• • • Piston	2	J20001-
7		234-15-15120	• • • Spring	2	J20001-
8		04025-00320	• • • Pin, Spring	2	J20001-
9		04059-01010	• • • Wire, Lock	2	J20001-
10		07002-61423	• • • O-ring	2	J20001-
11		07002-64234	• • • O-ring	2	J20001-
12		07040-14220	• • • Plug	2	J20001-
13		14X-22-26330	• • • Valve	2	J20001-
14		14X-22-26310	• • • Spring	2	J20001-
15		14X-22-26320	• • • Spring	2	J20001-
16		14X-22-26350	• • • Plug	2	J20001-
17		134-49-67311	• • • Joint	2	J20001-
18		07002-62034	• • • O-ring	2	J20001-
19		02782-50315	• • • Elbow	2	J20001-
20		07002-62034	• • • O-ring	2	J20001-
21		02896-61009	• • • O-ring	2	J20001-
22		134-22-67130	• • • Tube	1	J20001-
23		07000-73022	• • • O-ring	2	J20001-
24		01010-81035	• • • Bolt	4	J20001-
25		01643-51032	• • • Washer	4	J20001-
26		134-49-61430	• • • Filler	1	J20001-
27		01010-81025	• • • Bolt	2	J20001-
28		01643-31032	• • • Washer	2	J20001-

FIG. F2300-001028 Power Train, Steering Control Lever

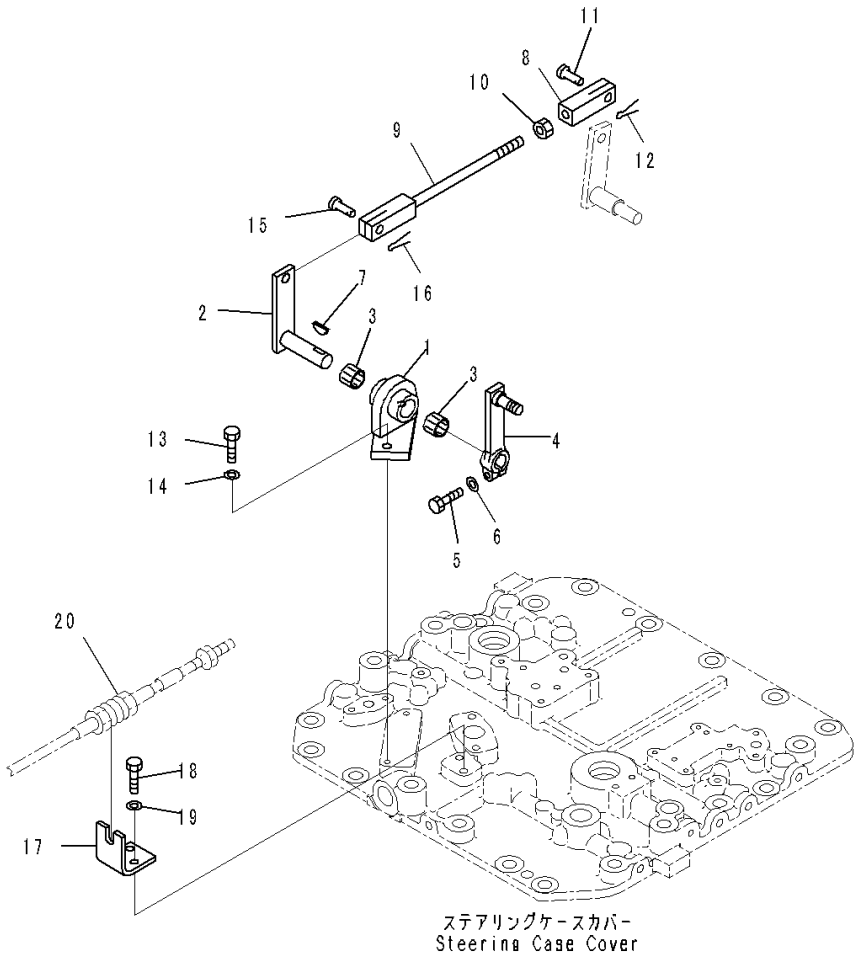

Index	Code	Part Number	Description	Qty	Serial Number
		134-22-60060	Power Train Assembly	1	J20001-
		134-22-61051	• Steering Assembly	1	J20001-
		134-22-67102	• • Cover Assembly	1	J20001-
		134-22-67200	• • • Lever Assembly, Control	1	J20001-
1		134-43-65120	• • • • Bracket	1	J20001-
2		134-43-65110	• • • • Lever	1	J20001-
3		06124-02020	• • • • Bearing	2	J20001-
4		134-43-65130	• • • • Lever	1	J20001-
5		01010-80830	• • • • Bolt	1	J20001-
6		01643-50823	• • • • Washer	1	J20001-
7		04010-00519	• • • • Key, Woodruff	1	J20001-
8		04211-21266	• • • • Yoke	1	J20001-
9		04244-51226	• • • • Rod, with York	1	J20001-
10		01582-11210	• • • • Nut	1	J20001-
11		04205-11235	• • • • Pin	1	J20001-
12		04050-13022	• • • • Pin, Cotter	1	J20001-
13		01010-81030	• • • Bolt	2	J20001-
14		01643-31032	• • • Washer	2	J20001-
15		04205-11235	• • • Pin	1	J20001-
16		04050-13022	• • • Pin, Cotter	1	J20001-
17		134-43-62180	• • • Plate	1	J20001-
18		01010-81025	• • • Bolt	2	J20001-
19		01643-31032	• • • Washer	2	J20001-
20		(124-43-52171)	Cable(Refer to Page 217)		-

FIG. F2300-001029 Power Train, Brake Valve (1/3)

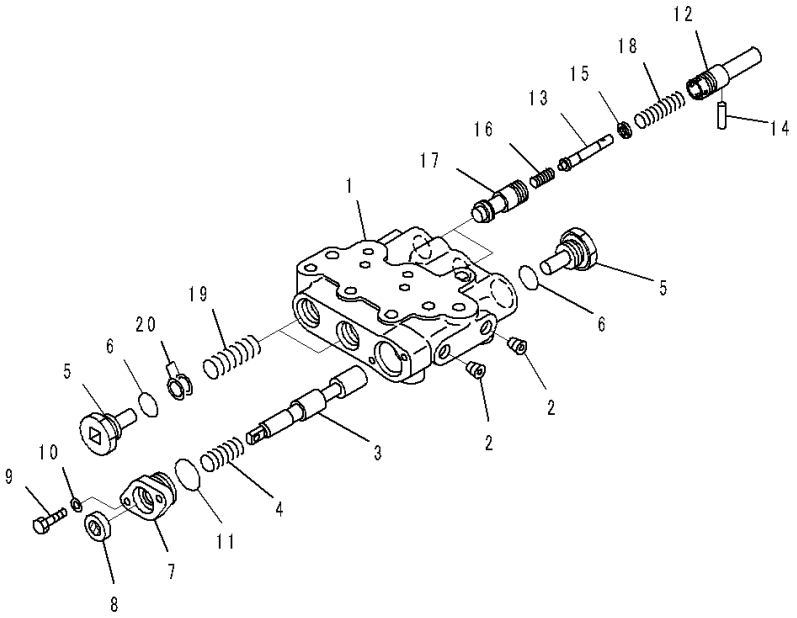

Index	Code	Part Number	Description	Qty	Serial Number
		134-22-60060	Power Train Assembly	1	J20001-
		134-22-61051	• Steering Assembly	1	J20001-
		134-22-67102	• • Cover Assembly	1	J20001-
1		134-40-61110	• • • Body	1	J20001-
2		07043-70211	• • • Plug	2	J20001-
3		14Z-40-11610	• • • Spool	1	J20001-
4		565-62-11270	• • • Spring	1	J20001-
5		14Z-40-11360	• • • Plug	3	J20001-
6		07002-32434	• • • O-ring	3	J20001-
7		14Z-40-11220	• • • Cover	1	J20001-
8		113-15-29110	• • • Seal, Oil	1	J20001-
9		01010-80620	• • • Bolt	2	J20001-
10		01643-30623	• • • Washer	2	J20001-
11		07002-33034	• • • O-ring	2	J20001-
12		134-40-61141	• • • Guide	2	J20001-
13		14Z-40-11330	• • • Shaft	2	J20001-
14		04025-00316	• • • Pin, Spring	2	J20001-
15		14Z-40-11340	• • • Guide	2	J20001-
16		195-40-31540	• • • Piston	2	J20001-
17		14Z-40-11310	• • • Valve	2	J20001-
18		14Z-40-11380	• • • Spring	2	J20001-
19		14Z-40-11371	• • • Spring	2	J20001-
20		14Z-40-11350	• • • Shim, T=0.05mm	8	J20001-

FIG. F2300-001030 Power Train, Brake Valve (2/3)

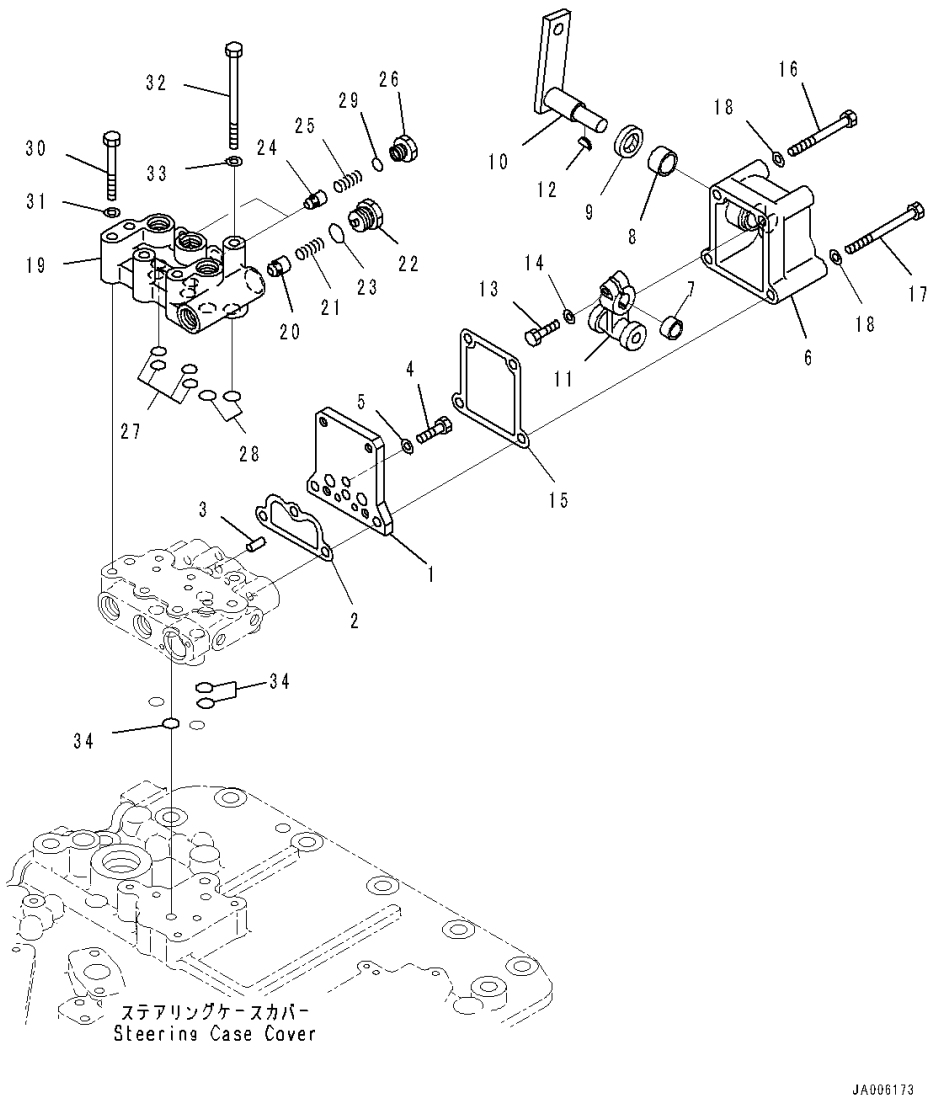

Index	Code	Part Number	Description	Qty	Serial Number
		134-22-60060	Power Train Assembly	1	J20001-
		134-22-61051	• Steering Assembly	1	J20001-
		134-22-67102	• • Cover Assembly	1	J20001-
1		134-40-61151	• • • Plate	1	J20001-
2		134-40-61170	• • • Gasket	1	J20001-
3		04020-00820	• • • Pin, Dowel	2	J20001-
4		01010-81030	• • • Bolt	1	J20001-
5		01643-31032	• • • Washer	1	J20001-
6		134-40-61130	• • • Cover	1	J20001-
7		06120-01612	• • • Bearing, Needle	1	J20001-
8		06120-02216	• • • Bearing, Needle	1	J20001-
9		195-40-11650	• • • Seal, Oil	1	J20001-
10		134-40-61180	• • • Lever	1	J20001-
11		14X-40-11840	• • • Lever Assembly	1	J20001-
12		04010-00519	• • • Key, Woodruff	1	J20001-
13		01010-80830	• • • Bolt	1	J20001-
14		01643-50823	• • • Washer	1	J20001-
15		134-40-61160	• • • Gasket	1	J20001-
16		01010-81085	• • • Bolt	2	J20001-
17		01011-81005	• • • Bolt	2	J20001-
18		01643-31032	• • • Washer	4	J20001-
19		134-40-61121	• • • Body	1	J20001-
20		07750-01623	• • • Valve	1	J20001-
21		07750-01628	• • • Spring	1	J20001-
22		120-49-34331	• • • Plug	1	J20001-
23		07002-32434	• • • O-ring	1	J20001-
24		205-60-51390	• • • Poppet	2	J20001-
25		722-12-12063	• • • Spring	2	J20001-
26		103-49-14280	• • • Plug	2	J20001-
27		07000-72012	• • • O-ring	4	J20001-
28		07000-72015	• • • O-ring	2	J20001-
29		07002-72015	• • • O-ring	2	J20001-
30		01010-81070	• • • Bolt	2	J20001-
31		01643-31032	• • • Washer	2	J20001-
32		01011-81025	• • • Bolt	4	J20001-
33		01643-31032	• • • Washer	4	J20001-
34		07000-72015	• • • O-ring	3	J20001-

FIG. F2300-001031 Power Train, Brake Valve (3/3)

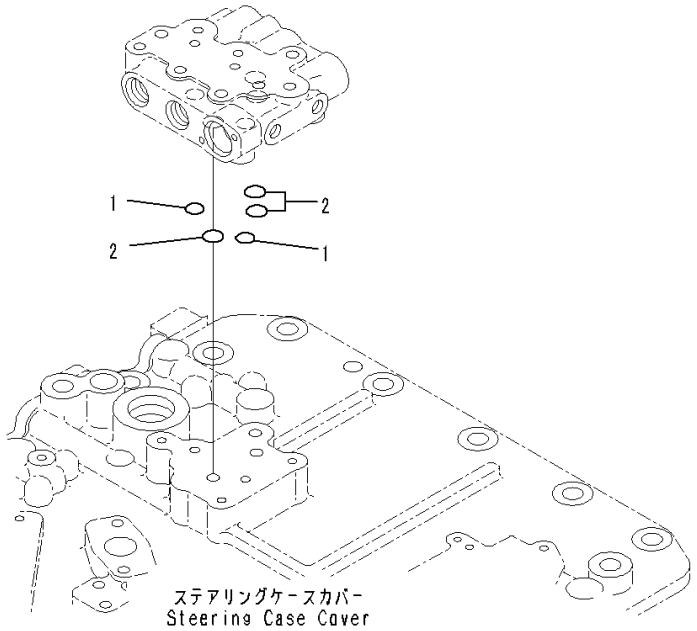

Index	Code	Part Number	Description	Qty	Serial Number
		134-22-60060	Power Train Assembly	1	J20001-
		134-22-61051	• Steering Assembly	1	J20001-
		134-22-67102	• • Cover Assembly	1	J20001-
1		07000-72012	• • • O-ring	2	J20001-
2		07000-72014	• • • O-ring	3	J20001-

FIG. F2300-001032 Power Train, Reducing Valve

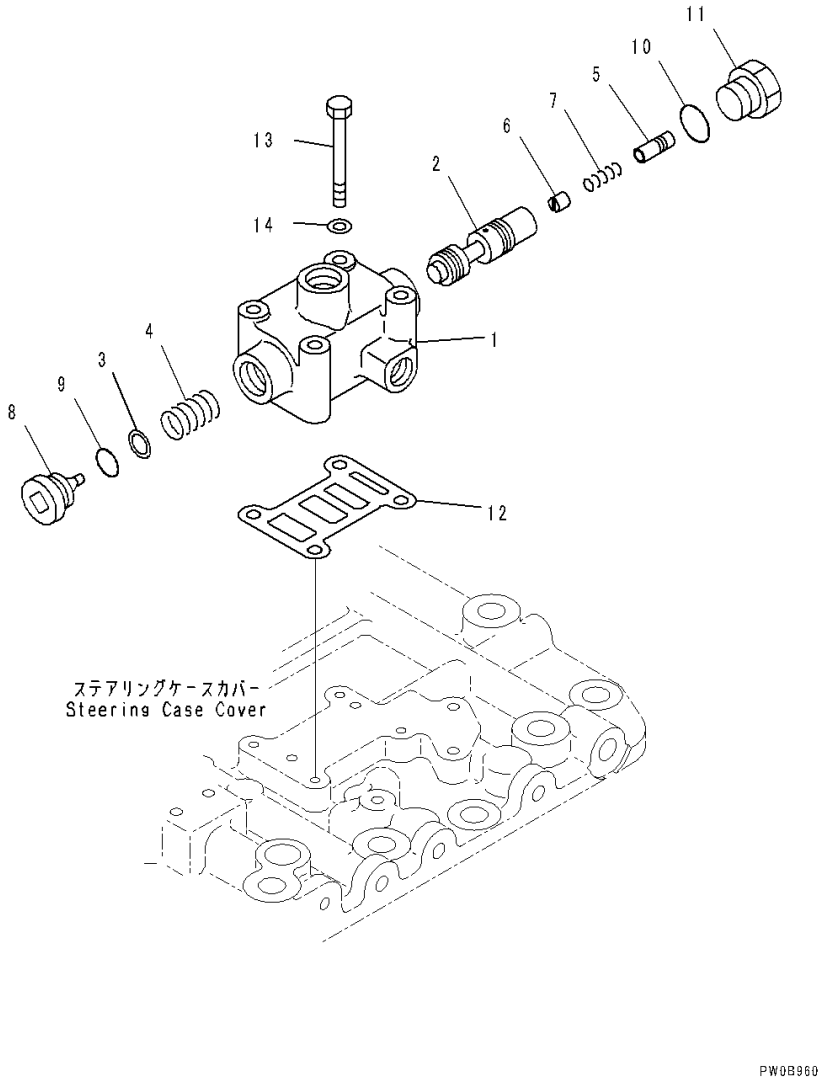

Index	Code	Part Number	Description	Qty	Serial Number
		134-22-60060	Power Train Assembly	1	J20001-
		134-22-61051	• Steering Assembly	1	J20001-
		134-22-67102	• • Cover Assembly	1	J20001-
		14X-49-21101	• • • Valve Assembly	1	J20001-
1		14X-49-23110	• • • • Valve Body	1	J20001-
2		14X-49-13120	• • • • Spool	1	J20001-
3		14X-40-11390	• • • • Spring	1	J20001-
4		14Z-40-11350	• • • • Shim, T=0.05mm	10	J20001-
5		22W-75-18880	• • • • Valve	1	J20001-
6		22W-75-18890	• • • • Valve	1	J20001-
7		125-15-15290	• • • • Spring	1	J20001-
8		14X-40-11251	• • • • Plug	1	J20001-
9		07002-62434	• • • • O-ring	1	J20001-
10		07040-12412	• • • • Plug	1	J20001-
11		07002-62434	• • • • O-ring	1	J20001-
12		14X-49-13130	• • • Gasket	1	J20001-
13		01010-80870	• • • Bolt	4	J20001-
14		01643-30823	• • • Washer	4	J20001-

FIG. F2300-001033 Power Train, Elbow

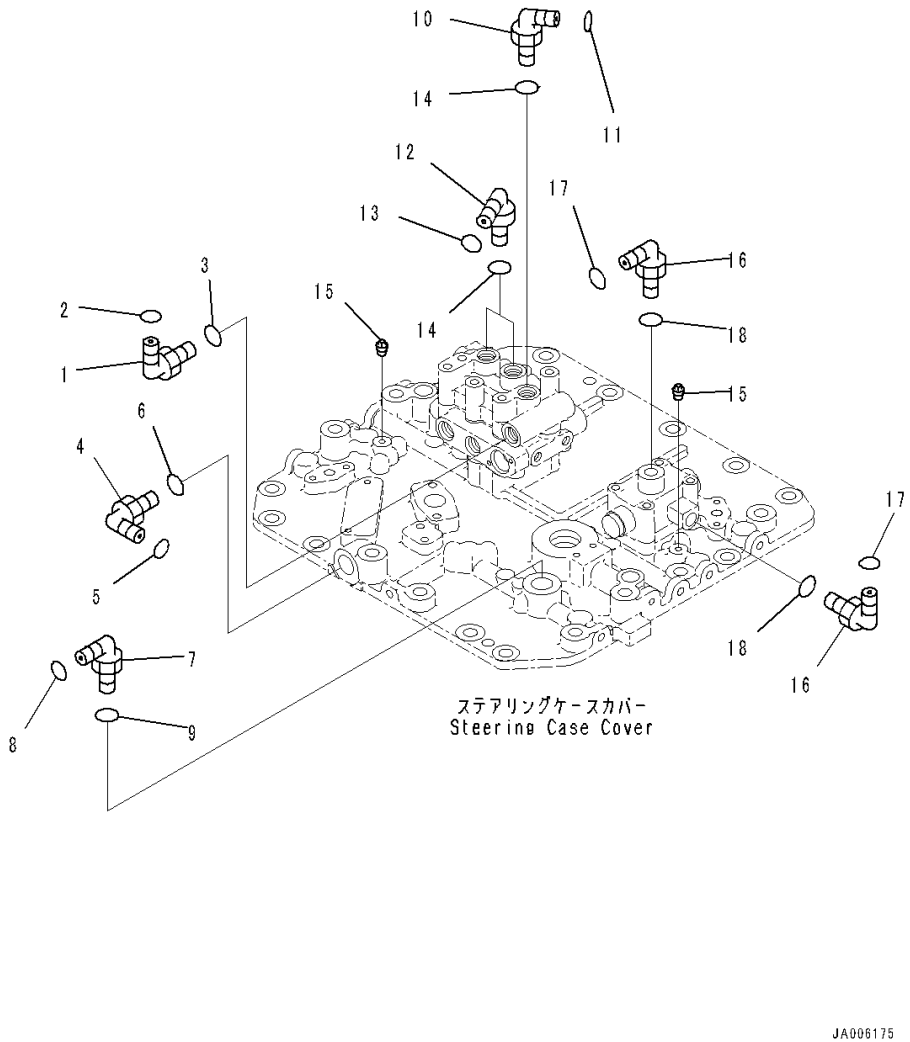

Index	Code	Part Number	Description	Qty	Serial Number
		134-22-60060	Power Train Assembly	1	J20001-
		134-22-61051	• Steering Assembly	1	J20001-
		134-22-67102	• • Cover Assembly	1	J20001-
1		02782-10423	• • • Elbow	1	J20001-
2		02896-61012	• • • O-ring	1	J20001-
3		07002-62034	• • • O-ring	1	J20001-
4		02782-10628	• • • Elbow	1	J20001-
5		02896-61018	• • • O-ring	1	J20001-
6		07002-62434	• • • O-ring	1	J20001-
7		02782-10628	• • • Elbow	1	J20001-
8		02896-61018	• • • O-ring	1	J20001-
9		07002-62434	• • • O-ring	1	J20001-
10		02782-10315	• • • Elbow	1	J20001-
11		02896-61009	• • • O-ring	1	J20001-
12		02782-10316	• • • Elbow	2	J20001-
13		02896-61009	• • • O-ring	2	J20001-
14		07002-62034	• • • O-ring	3	J20001-
15		07042-80108	• • • Plug	2	J20001-
16		02782-10315	• • • Elbow	2	J20001-
17		02896-61009	• • • O-ring	2	J20001-
18		07002-62034	• • • O-ring	2	J20001-

FIG. F2300-001034 Power Train, Cover (5/5)

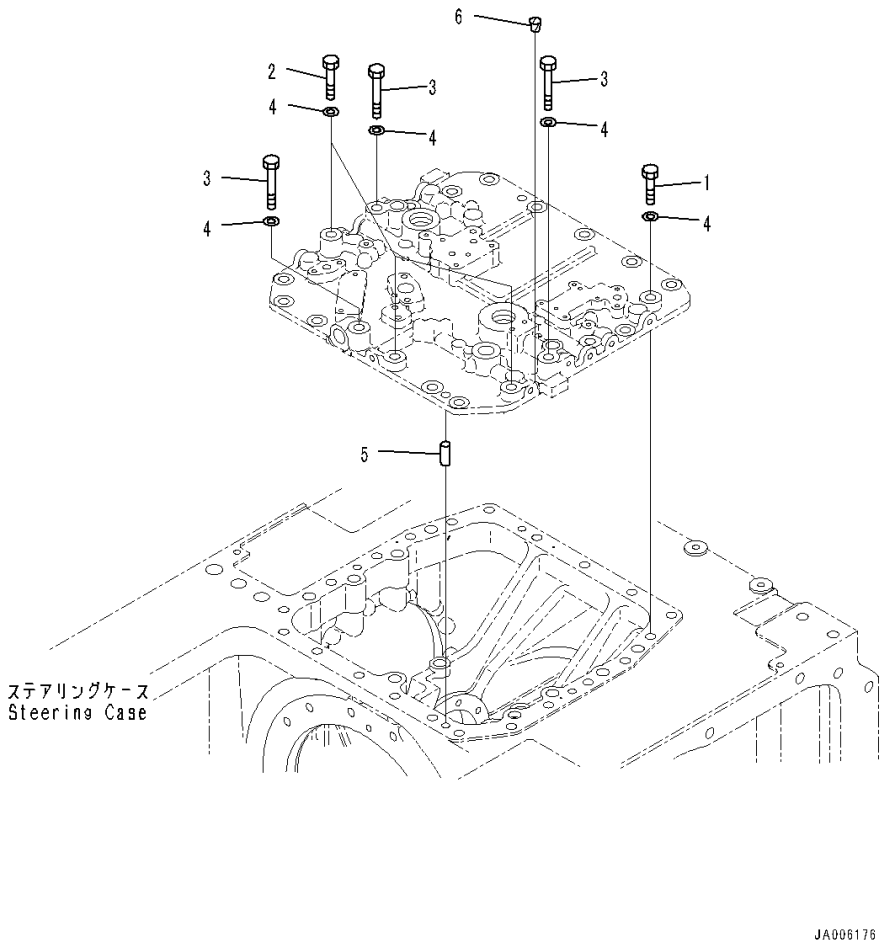

Index	Code	Part Number	Description	Qty	Serial Number
		134-22-60060	Power Train Assembly	1	J20001-
		134-22-61051	• Steering Assembly	1	J20001-
1		21K-27-22510	• • Bolt	13	J20001-
2		01010-81675	• • Bolt	3	J20001-
3		01010-81695	• • Bolt	3	J20001-
4		01643-31645	• • Washer	19	J20001-
5		04020-01638	• • Pin, Dowel	4	J20001-
6		07049-01620	• • Plug	2	J20001-

FIG. F2300-001035 Power Train, Mounting (2/2)

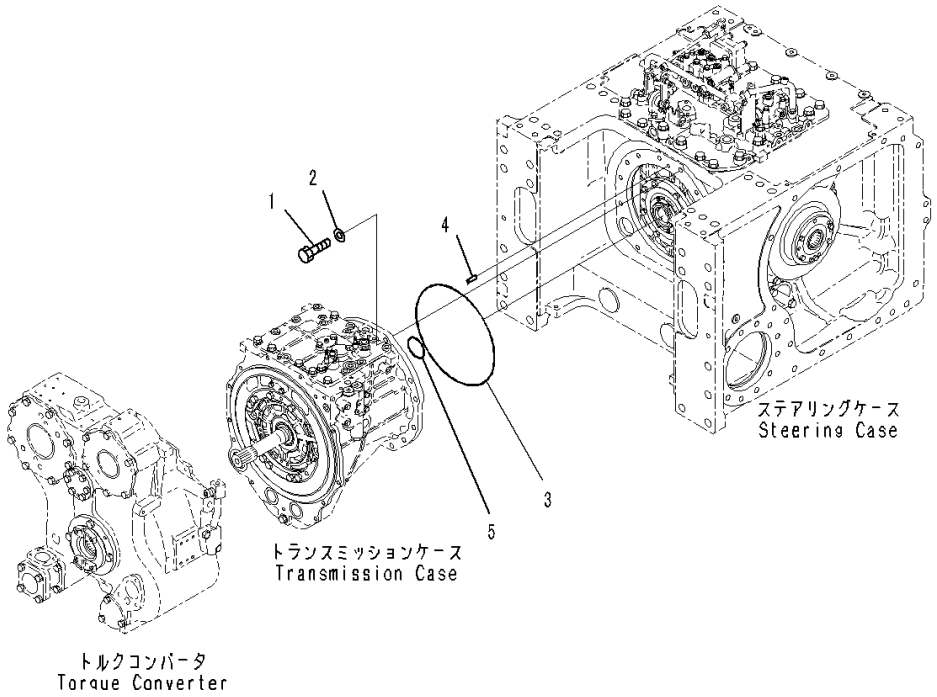

Index	Code	Part Number	Description	Qty	Serial Number
		134-22-60060	Power Train Assembly	1	J20001-
1		01010-81650	• Bolt	13	J20001-
2		01643-31645	• Washer	13	J20001-
3		07000-75375	• O-ring	1	J20001-
4		04020-01228	• Pin, Dowel	1	J20001-
5		07000-72075	• O-ring	1	J20001-

FIG. F2300-001036 Power Train, Inner Parts (1/2)

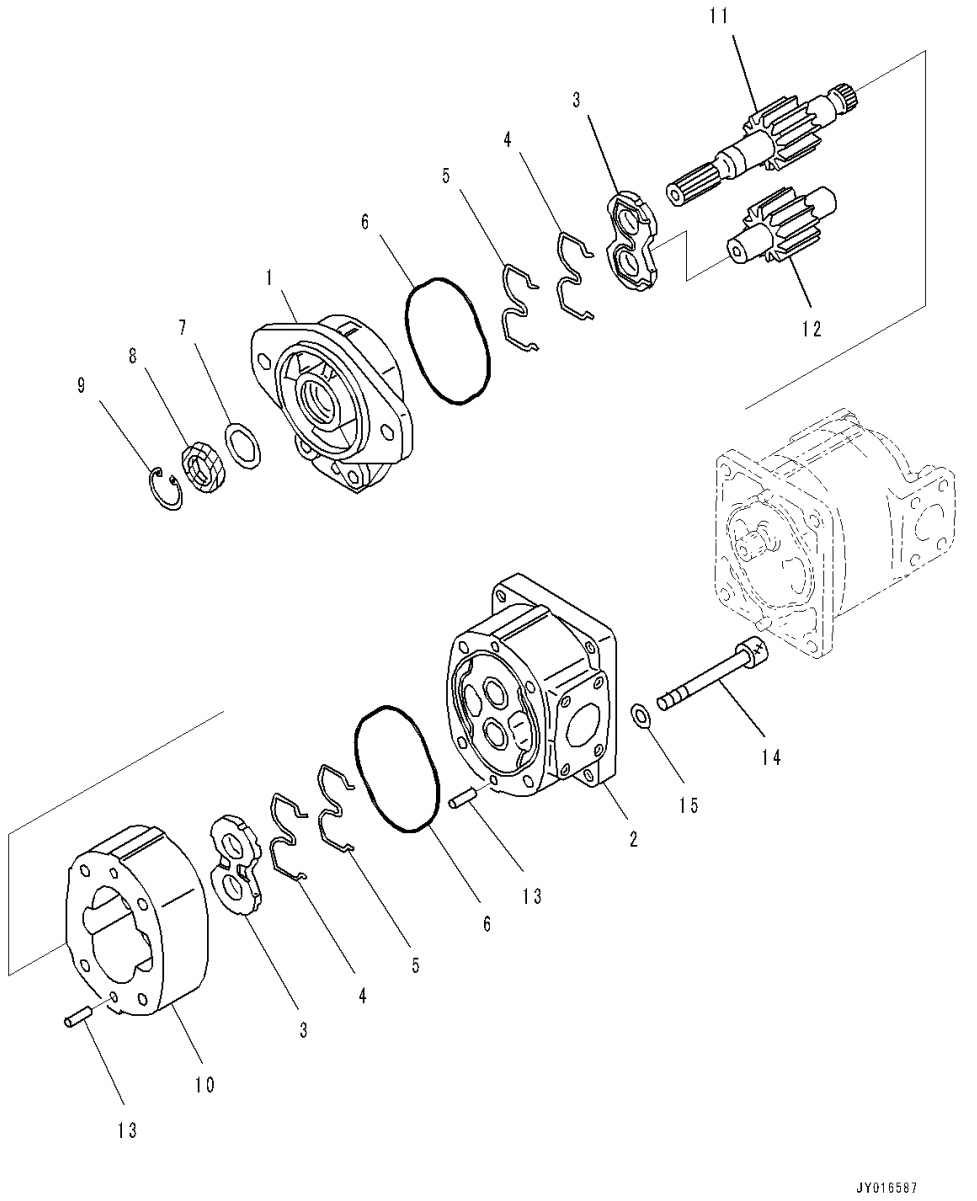

Index	Code	Part Number	Description	Qty	Serial Number
		134-22-60060	Power Train Assembly	1	J20001-
		705-51-20830	• Pump Assembly	1	J20001-
		705-11-33240	• • Pump Assembly	1	J20001-
1	C2	705-17-02011	• • • Bracket Assembly	1	J20001-
	C2	705-17-02353	• • • • Bushing	2	J20001-
2	C2	705-17-02221	• • • Carrier Assembly	1	J20001-
	C2	705-17-02353	• • • • Bushing	2	J20001-
3		705-17-02612	• • • Plate	2	J20001-
4		705-17-02430	• • • Ring, Back-up	2	J20001-
5		705-17-02460	• • • Seal Ring	2	J20001-
6		705-17-02360	• • • O-ring	2	J20001-
7		705-17-02870	• • • Plate	1	J20001-
8		705-17-02830	• • • Seal, Oil	1	J20001-
9		04065-04018	• • • Ring, Snap	1	J20001-
10	C2	705-17-33012	• • • Gear Case	1	J20001-
11	C2	705-17-33430	• • • Gear, Drive	1	J20001-
12	C2	705-17-33512	• • • Gear, Driven	1	J20001-
13		04020-01024	• • • Pin, Dowel	4	J20001-
14		01253-61210	• • • Bolt, Hexagon Socket Head	4	J20001-
15		01643-51232	• • • Washer	4	J20001-

FIG. F2300-001037 Power Train, Inner Parts (2/2)

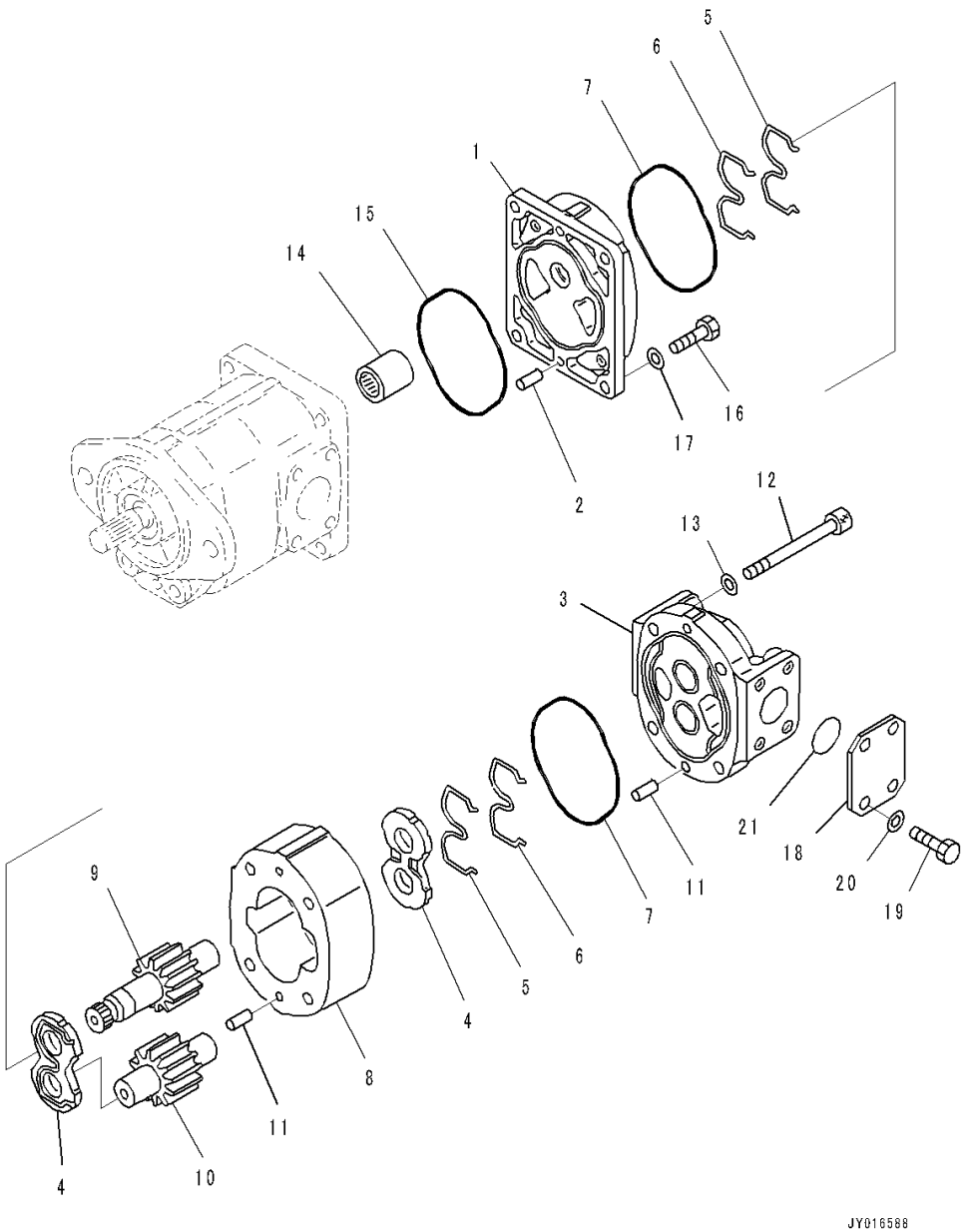

Index	Code	Part Number	Description	Qty	Serial Number
		134-22-60060	Power Train Assembly	1	J20001-
		705-51-20830	• Pump Assembly	1	J20001-
		705-11-33540	• • Pump Assembly	1	J20001-
1	C2	705-17-02510	• • • Bracket Assembly	1	J20001-
	C2	705-17-02353	• • • • Bushing	2	J20001-
2		04020-01024	• • • Pin, Dowel	2	J20001-
3	C2	705-17-02122	• • • Cover Assembly	1	J20001-
	C2	705-17-02353	• • • • Bushing	2	J20001-
4		705-17-02612	• • • Plate	2	J20001-
5		705-17-02430	• • • Ring, Back-up	2	J20001-
6		705-17-02460	• • • Seal Ring	2	J20001-
7		705-17-02360	• • • O-ring	2	J20001-
8	C2	705-17-33012	• • • Gear Case	1	J20001-
9	C2	705-17-33450	• • • Gear, Drive	1	J20001-
10	C2	705-17-33512	• • • Gear, Driven	1	J20001-
11		04020-01024	• • • Pin, Dowel	4	J20001-
12		01253-61200	• • • Bolt	4	J20001-
13		01643-51232	• • • Washer	4	J20001-
14		705-17-02330	• • Coupling Assembly	1	J20001-
15		705-17-02360	• • O-ring	1	J20001-
16		01252-61035	• • Bolt	4	J20001-
17		01643-51032	• • Washer	4	J20001-
18		705-17-02881	• • Plate	1	J20001-
19		01010-81025	• • Bolt	4	J20001-
20		01643-51032	• • Washer	4	J20001-
21		07000-E3038	• • O-ring	1	J20001-

FIG. F2300-001038 Power Train, Piping (1/2)

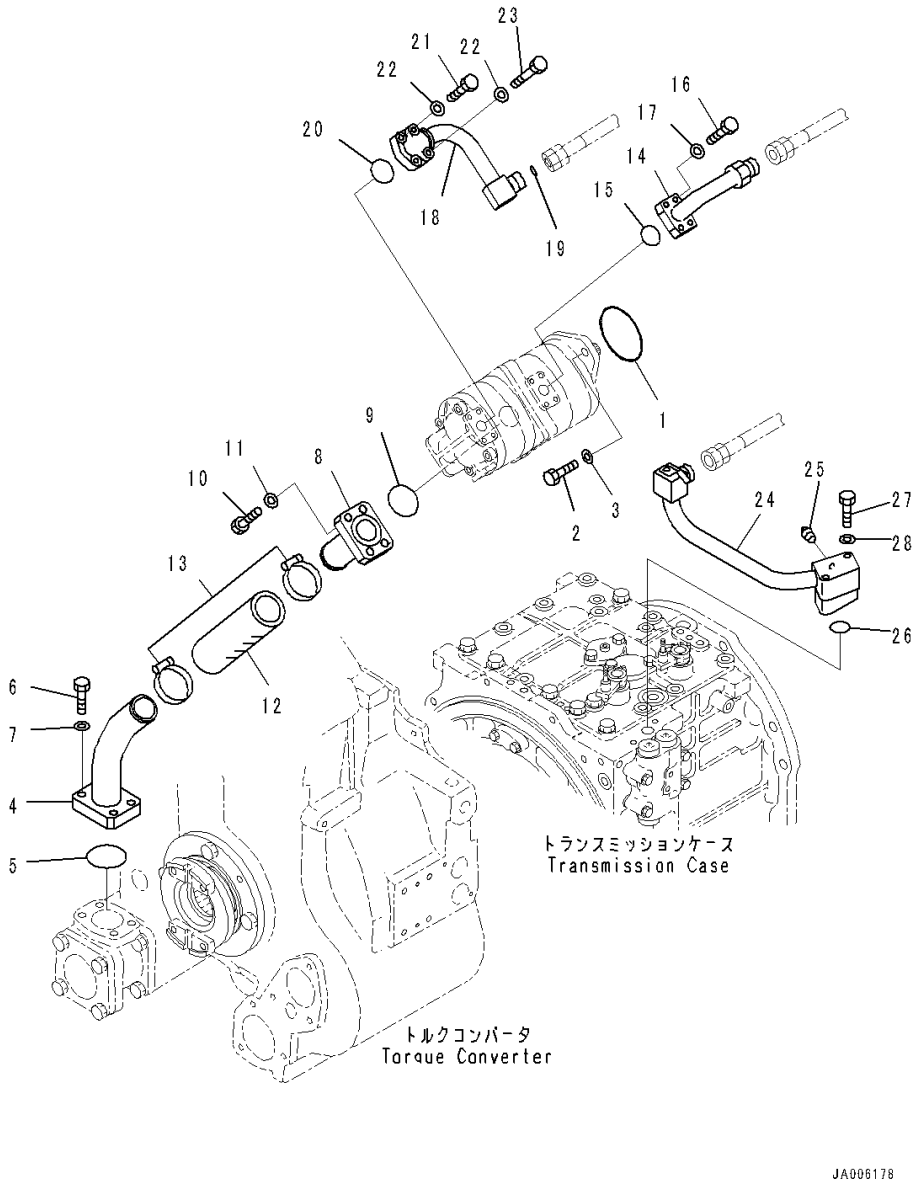

Index	Code	Part Number	Description	Qty	Serial Number
		134-22-60060	Power Train Assembly	1	J20001-
1		07000-72105	• O-ring	1	J20001-
2		01010-81235	• Bolt	2	J20001-
3		01643-31232	• Washer	2	J20001-
4		14X-49-11211	• Tube	1	J20001-
5		07000-72060	• O-ring	1	J20001-
6		01010-81245	• Bolt	4	J20001-
7		01643-51232	• Washer	4	J20001-
8		14X-49-11221	• Tube	1	J20001-
9		07000-73048	• O-ring	1	J20001-
10		01010-81245	• Bolt	4	J20001-
11		01643-51232	• Washer	4	J20001-
12		07260-24713	• Hose	1	J20001-
13		07289-00055	• Clamp	2	J20001-
14		134-49-61141	• Tube	1	J20001-
15		07000-73025	• O-ring	1	J20001-
16		01010-80835	• Bolt	4	J20001-
17		01643-50823	• Washer	4	J20001-
18		14X-49-31321	• Tube	1	J20001-
19		02896-61018	• O-ring	1	J20001-
20		07000-73030	• O-ring	1	J20001-
21		01010-80845	• Bolt	2	J20001-
22		01643-50823	• Washer	4	J20001-
23		01010-80855	• Bolt	2	J20001-
24		134-49-67210	• Tube	1	J20001-
25		07042-80108	• Plug	1	J20001-
26		07000-73028	• O-ring	1	J20001-
27		01010-81090	• Bolt	2	J20001-
28		01643-31032	• Washer	2	J20001-

FIG. F2300-001039 Power Train, Piping (2/2)

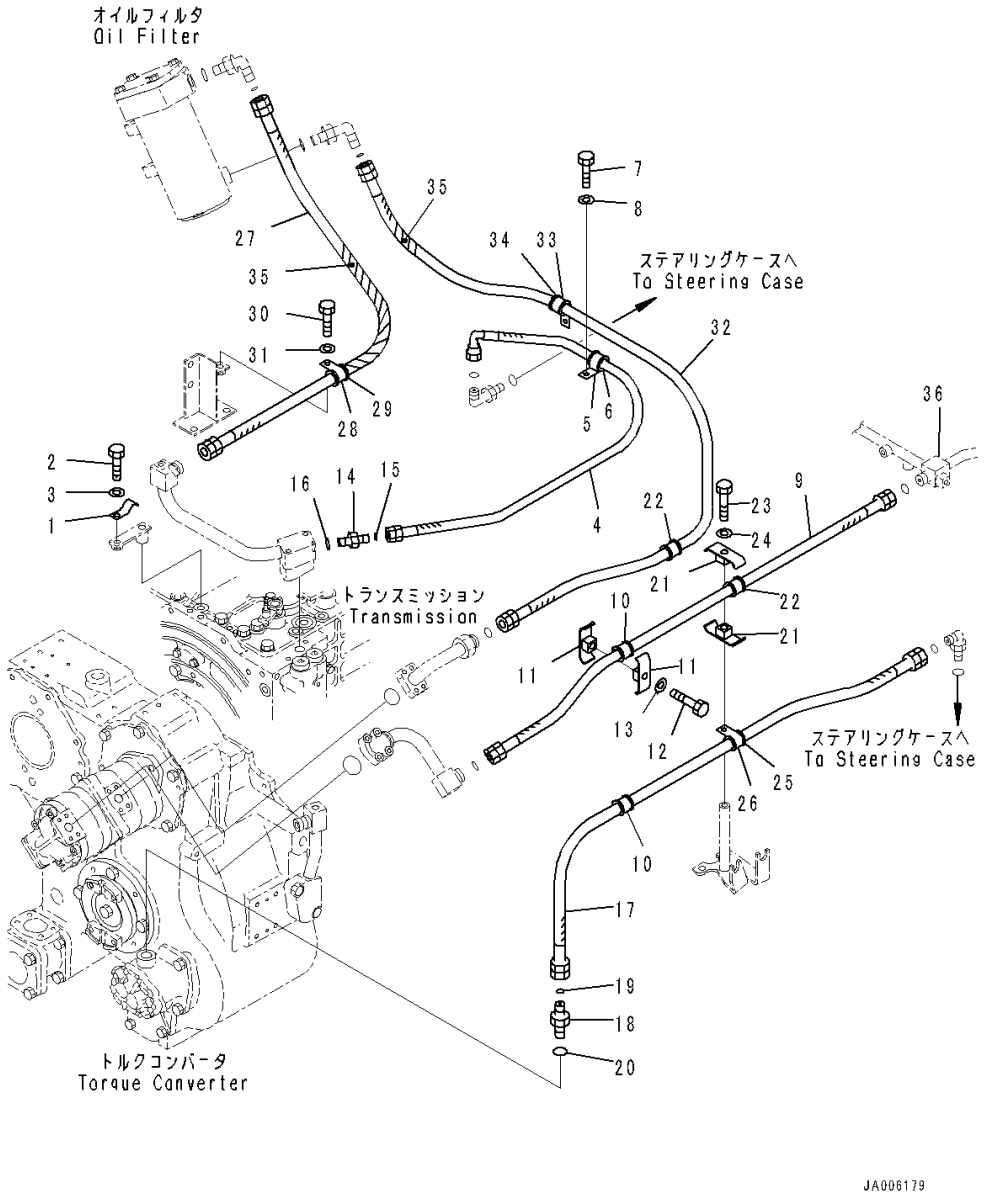

Index	Code	Part Number	Description	Qty	Serial Number
		134-22-60060	Power Train Assembly	1	J20001-
1		112-62-32150	• Clamp	1	J20001-
2		01010-81025	• Bolt	1	J20001-
3		01643-31032	• Washer	1	J20001-
4		02763-004A9	• Hose, Face Seal Type	1	J20001-
5		04434-52712	• Clip	1	J20001-
6		07095-20420	• Cushion	1	J20001-
7		01010-81020	• Bolt	1	J20001-
8		01643-31032	• Washer	1	J20001-
9		134-49-71640	• Hose	1	J20001-
10		07095-00627	• Cushion	2	J20001-
11		07094-30620	• Clamp	2	J20001-
12		01010-81270	• Bolt	1	J20001-
13		01643-31232	• Washer	1	J20001-
14		02781-00422	• Union	1	J20001-
15		02896-61012	• O-ring	1	J20001-
16		07002-62034	• O-ring	1	J20001-
17		02762-00612	• Hose	1	J20001-
18		02781-00628	• Union	1	J20001-
19		02896-61018	• O-ring	1	J20001-
20		07002-62434	• O-ring	1	J20001-
21		07094-30620	• Clamp	2	J20001-
22		07095-00627	• Cushion	2	J20001-
23		01010-81270	• Bolt	1	J20001-
24		01643-31232	• Washer	1	J20001-
25		07095-20627	• Cushion	1	J20001-
26		04434-53412	• Clip	1	J20001-
27		07108-20610	• Hose	1	J20001-
28		04434-53412	• Clip	1	J20001-
29		07095-20627	• Cushion	1	J20001-
30		01010-81220	• Bolt	1	J20001-
31		01643-31232	• Washer	1	J20001-
32		07108-20615	• Hose, Taper Seal Type	1	J20001-
33		04434-53412	• Clip	1	J20001-
34		07095-20627	• Cushion	1	J20001-
35		08210-02904	• Tube, Spiral	2	J20001-
36		(134-22-67151)	Tube(Refer to Page 186)		-

FIG. F2300-001040 Power Train, Steering Pilot Piping

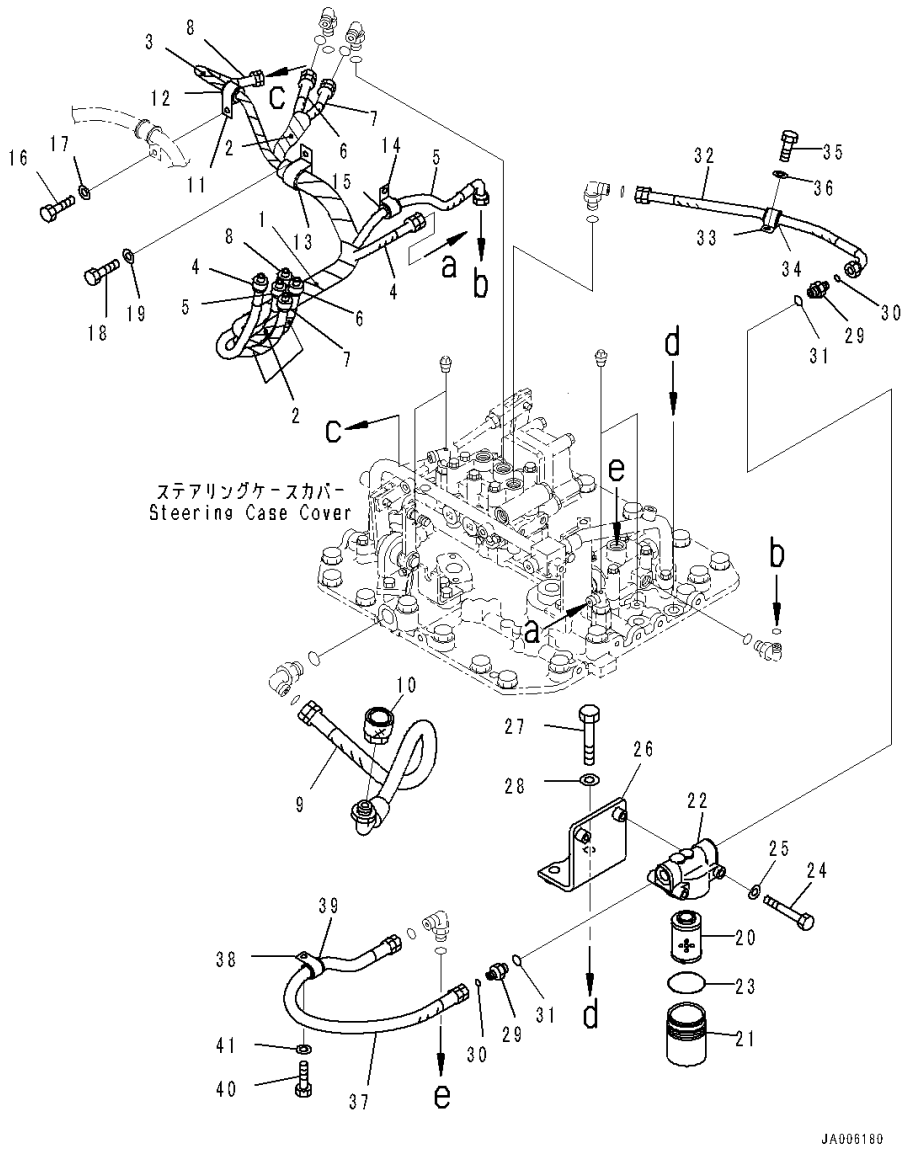

Index	Code	Part Number	Description	Qty	Serial Number
		134-22-60060	Power Train Assembly	1	J20001-
		134-49-67181	• Hose Assembly	1	J20001-
1		08210-01807	• • Spiral Tube	1	J20001-
2		08210-01202	• • Spiral Tube	4	J20001-
3		08210-01205	• • Spiral Tube	1	J20001-
4		134-49-67290	• • Hose	1	J20001-
5		134-49-67141	• • Hose	1	J20001-
6		134-49-67151	• • Hose	1	J20001-
7		134-49-67161	• • Hose	1	J20001-
8		134-49-67280	• • Hose	1	J20001-
9		134-49-67191	• Hose	1	J20001-
10		134-49-61870	• Coupling	1	J20001-
11		04434-52112	• Clip	1	J20001-
12		07095-20314	• Cushion	1	J20001-
13		155-61-15350	• Clip	1	J20001-
14		04434-52112	• Clip	1	J20001-
15		07095-20314	• Cushion	1	J20001-
16		01010-81020	• Bolt	2	J20001-
17		01643-31032	• Washer	2	J20001-
18		01010-81020	• Bolt	1	J20001-
19		01643-31032	• Washer	1	J20001-
		134-49-61770	• Filter Assembly	1	J20001-
20		134-49-61780	• • Element	1	J20001-
21		134-49-61790	• • Case	1	J20001-
22		134-49-61860	• • Head	1	J20001-
23		07000-02060	• • O-ring	1	J20001-
24		01010-81095	• Bolt	2	J20001-
25		01643-31032	• Washer	2	J20001-
26		134-49-67110	• Bracket	1	J20001-
27		01010-81695	• Bolt	2	J20001-
28		01643-31645	• Washer	2	J20001-
29		56B-88-12220	• Union	2	J20001-
30		02896-61009	• O-ring	2	J20001-
31		07000-B2018	• O-ring	2	J20001-
32		02761-003A4	• Hose	1	J20001-
33		04434-52112	• Clip	1	J20001-
34		07095-20314	• Cushion	1	J20001-
35		01010-81020	• Bolt	1	J20001-
36		01643-31032	• Washer	1	J20001-
37		02760-003A5	• Hose, Face Seal Type	1	J20001-

FIG. F2300-001040 Power Train, Steering Pilot Piping

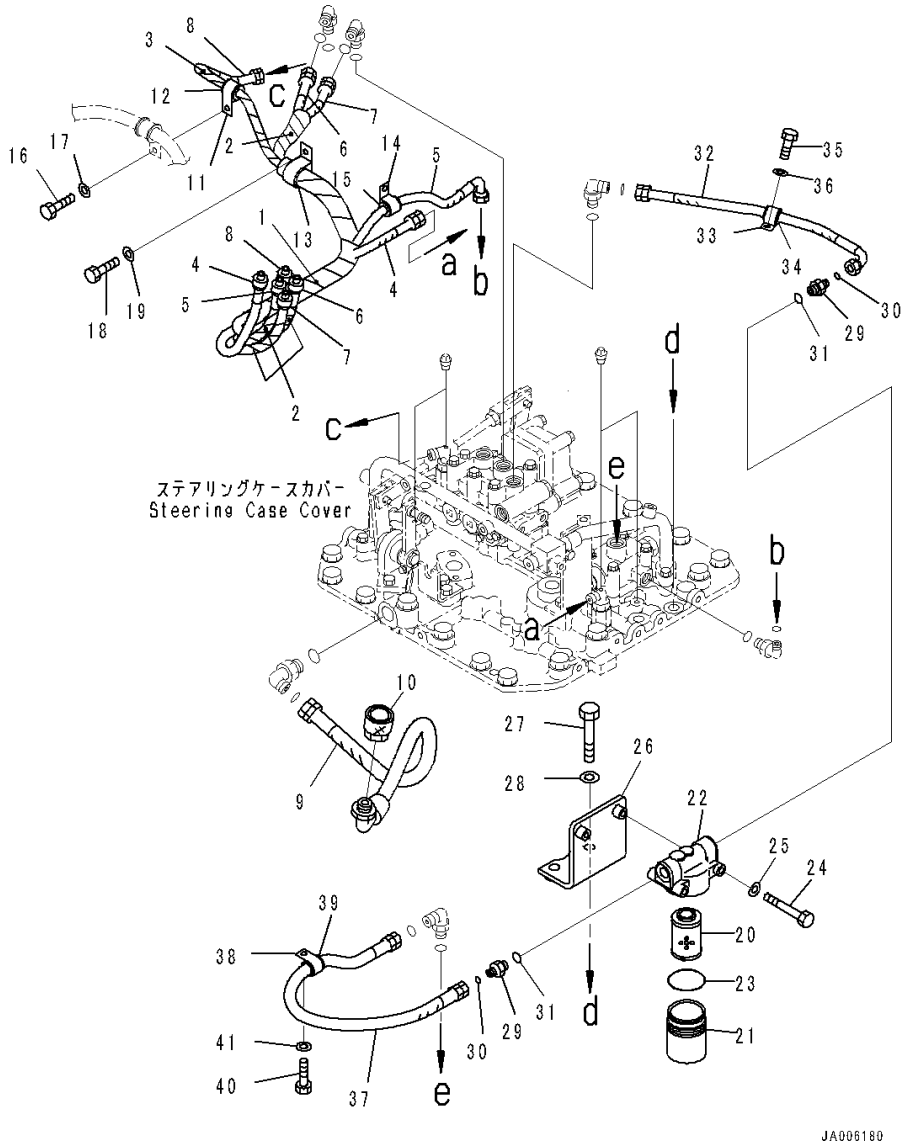

Index	Code	Part Number	Description	Qty	Serial Number
38		04434-52112	• Clip	1	J20001-
39		07095-20314	• Cushion	1	J20001-
40		01010-81020	• Bolt	1	J20001-
41		01643-31032	• Washer	1	J20001-

FIG. F2300-001041 Power Train, Mounting Bracket

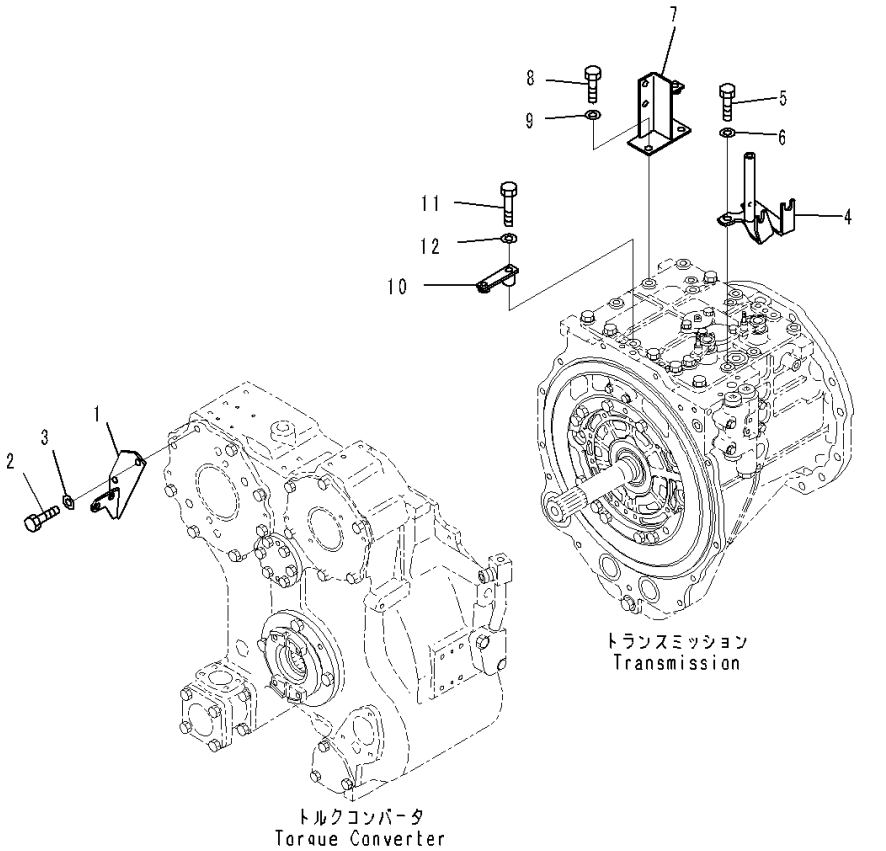

Index	Code	Part Number	Description	Qty	Serial Number
		134-22-60060	Power Train Assembly	1	J20001-
1		134-62-61821	• Bracket	1	J20001-
2		01010-81240	• Bolt	2	J20001-
3		01643-31232	• Washer	2	J20001-
4		134-43-67111	• Bracket	1	J20001-
5		01010-81240	• Bolt	2	J20001-
6		01643-31232	• Washer	2	J20001-
7		134-62-67550	• Bracket	1	J20001-
8		01010-81240	• Bolt	2	J20001-
9		01643-31232	• Washer	2	J20001-
10		14X-49-21430	• Plate	1	J20001-
11		01010-81270	• Bolt	1	J20001-
12		01643-31232	• Washer	1	J20001-

FIG. F2350-002001 Steering Clutch and Brake

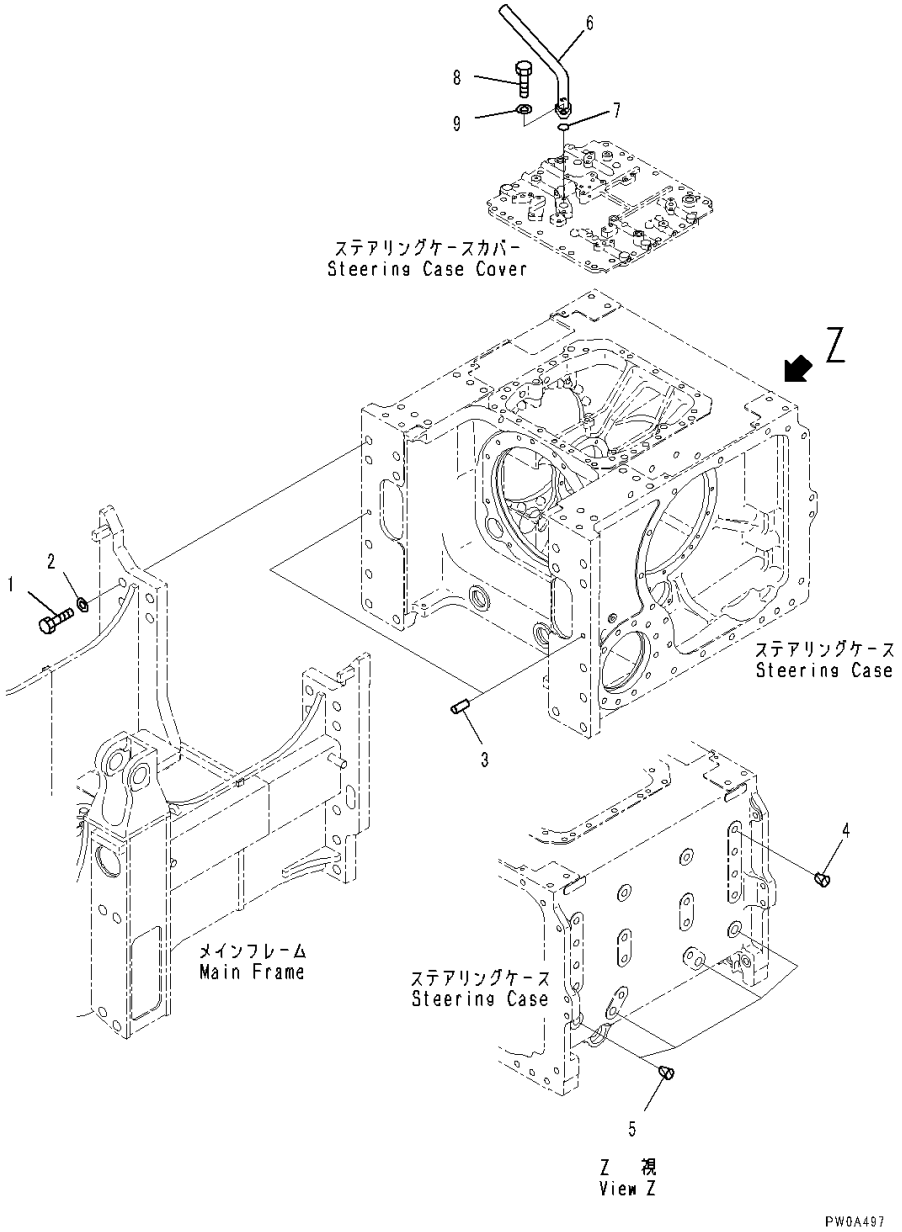

Index	Code	Part Number	Description	Qty	Serial Number
1		01011-83000	Bolt	16	J20001-
2		01643-33080	Washer	16	J20001-
3		04020-01638	Pin, Dowel	2	J20001-
4		07049-02430	Plug	16	J20001-
5		07049-03038	Plug	4	J20001-
6		134-49-67240	Filler	1	J20001-
7		07000-73035	O-ring	1	J20001-
8		01010-81040	Bolt	2	J20001-
9		01643-31032	Washer	2	J20001-

FIG. F2380-002001 Final Drive, Final Gear Case LHS

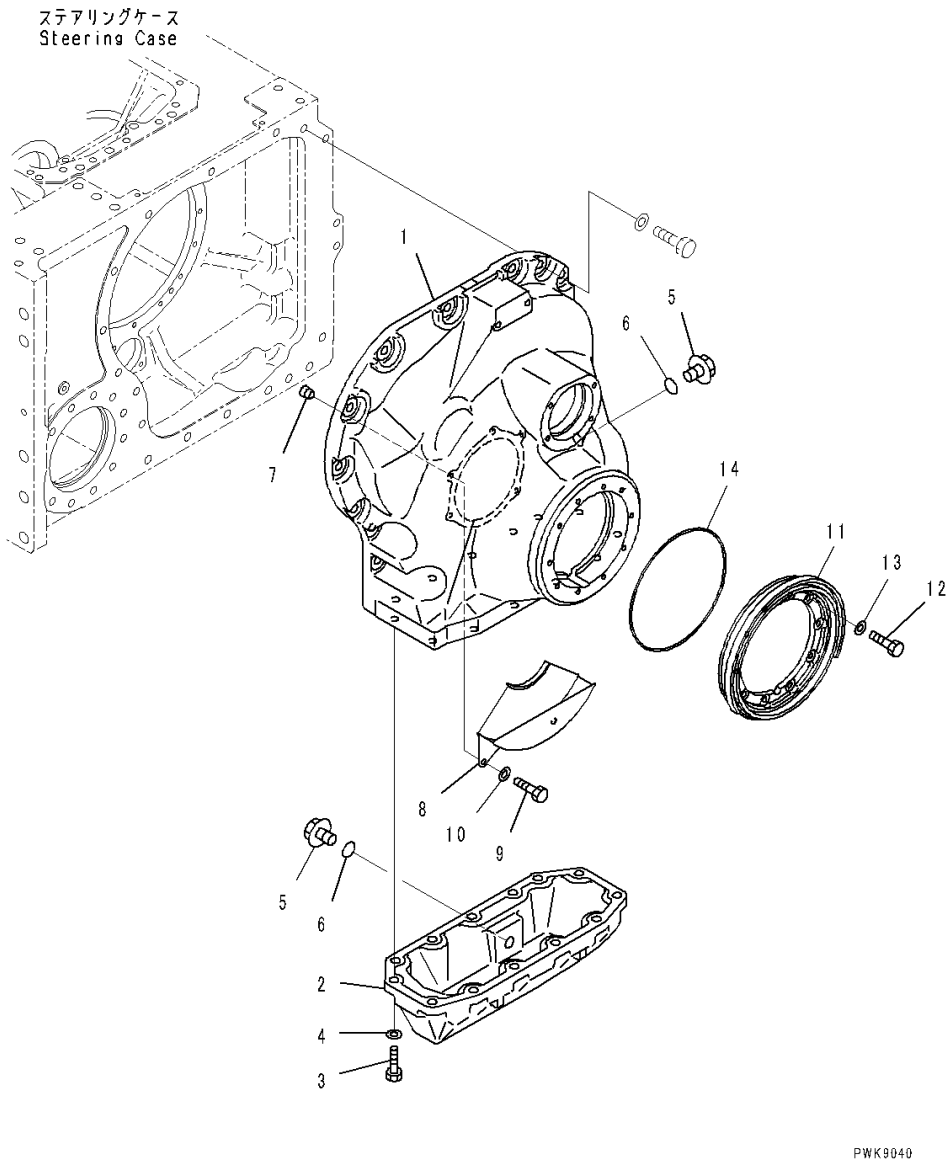

Index	Code	Part Number	Description	Qty	Serial Number
		134-27-00230	Final Drive Assembly	1	J20001-
1		134-27-61113	• Case	1	J20001-
2		134-27-61133	• Cover	1	J20001-
3		01010-82060	• Bolt	13	J20001-
4		01643-32060	• Washer	13	J20001-
5		07044-13620	• Plug	2	J20001-
6		07002-13634	• O-ring	2	J20001-
7		07043-70312	• Plug	2	J20001-
8		134-27-61481	• Cover	1	J20001-
9		01010-81225	• Bolt	2	J20001-
10		01643-31232	• Washer	2	J20001-
11		134-27-61170	• Cover	1	J20001-
12		01010-81235	• Bolt	10	J20001-
13		01643-31232	• Washer	10	J20001-
14		07000-15320	• O-ring	1	J20001-

FIG. F2380-002002 Final Drive, Gear and Cover LHS

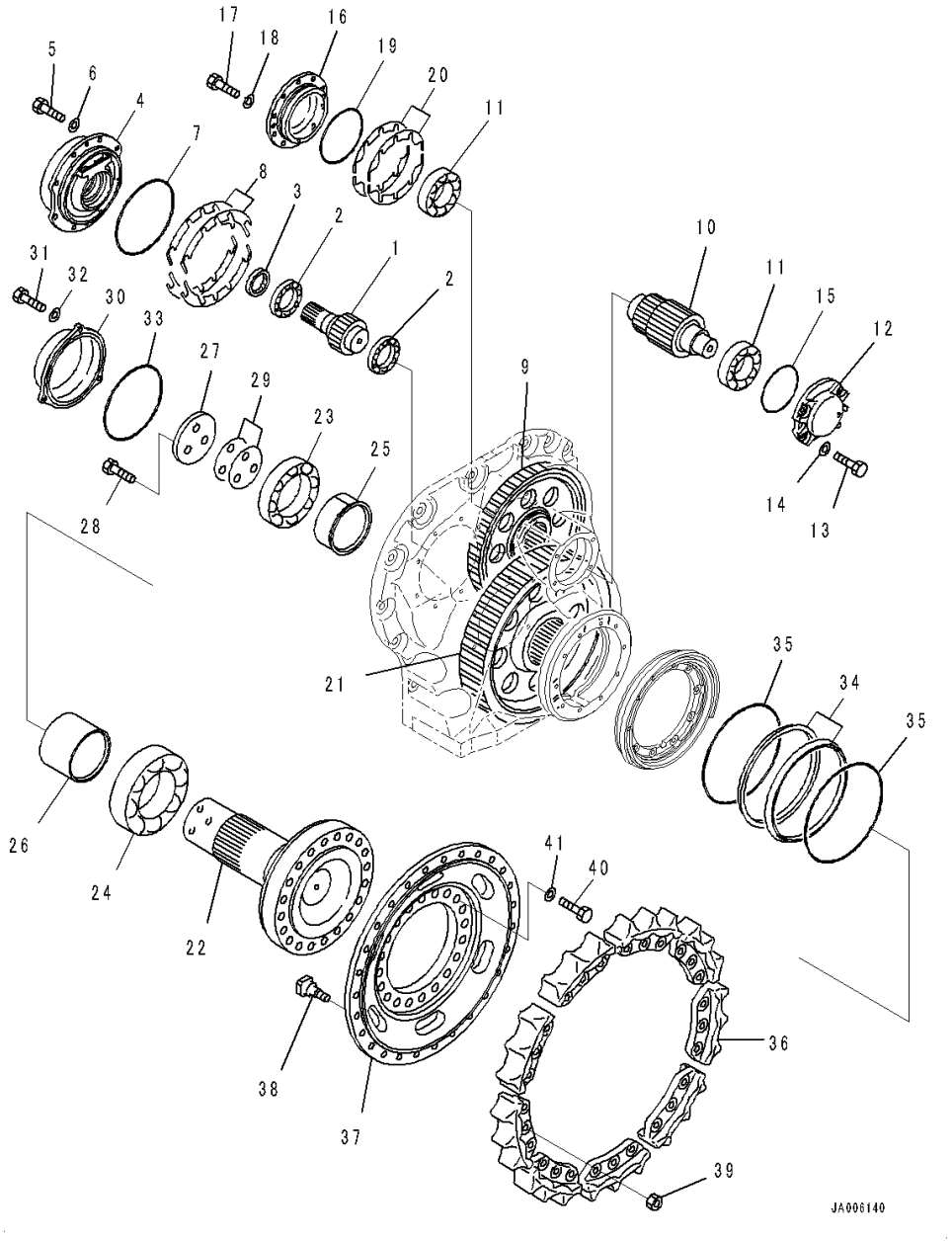

Index	Code	Part Number	Description	Qty	Serial Number
		134-27-00230	Final Drive Assembly	1	J20001-
1		134-27-71151	• Pinion	1	J20001-
2		06300-32015	• Bearing	2	J20001-
3		07013-50062	• Seal, Oil	1	J20001-
4		134-27-61192	• Cage	1	J20001-
5		01010-81235	• Bolt	8	J20001-
6		01643-31232	• Washer	8	J20001-
7		07000-15230	• O-ring	1	J20001-
8		134-27-05010	• Shim Kit	1	J20001-
	C1		• • Shim	6	J20001-
	C1		• • Shim	4	J20001-
	C1		• • Shim	2	J20001-
9		134-27-61232	• Gear	1	J20001-
10		134-27-61240	• Pinion	1	J20001-
11		134-27-61270	• Bearing	2	J20001-
12		134-27-61180	• Cover	1	J20001-
13		01010-81235	• Bolt	4	J20001-
14		01643-31232	• Washer	4	J20001-
15		07000-15140	• O-ring	1	J20001-
16		134-27-61340	• Cage	1	J20001-
17		01010-81235	• Bolt	10	J20001-
18		01643-31232	• Washer	10	J20001-
19		07000-15165	• O-ring	1	J20001-
20		134-27-05020	• Shim Kit	1	J20001-
	C1		• • Shim	6	J20001-
	C1		• • Shim	4	J20001-
	C1		• • Shim	2	J20001-
21		134-27-61610	• Gear	1	J20001-
22		134-27-61261	• Shaft	1	J20001-
23		134-27-61280	• Bearing	1	J20001-
24		134-27-61290	• Bearing	1	J20001-
25		134-27-61640	• Spacer	1	J20001-
26		134-27-61320	• Spacer	1	J20001-
27		134-27-61330	• Plate	1	J20001-
28		01010-82475	• Bolt	3	J20001-
29		134-27-05030	• Shim Kit	1	J20001-
	C1		• • Shim	6	J20001-
	C1		• • Shim	4	J20001-
	C1		• • Shim	2	J20001-
30		134-27-61210	• Cover	1	J20001-

FIG. F2380-002002 Final Drive, Gear and Cover LHS

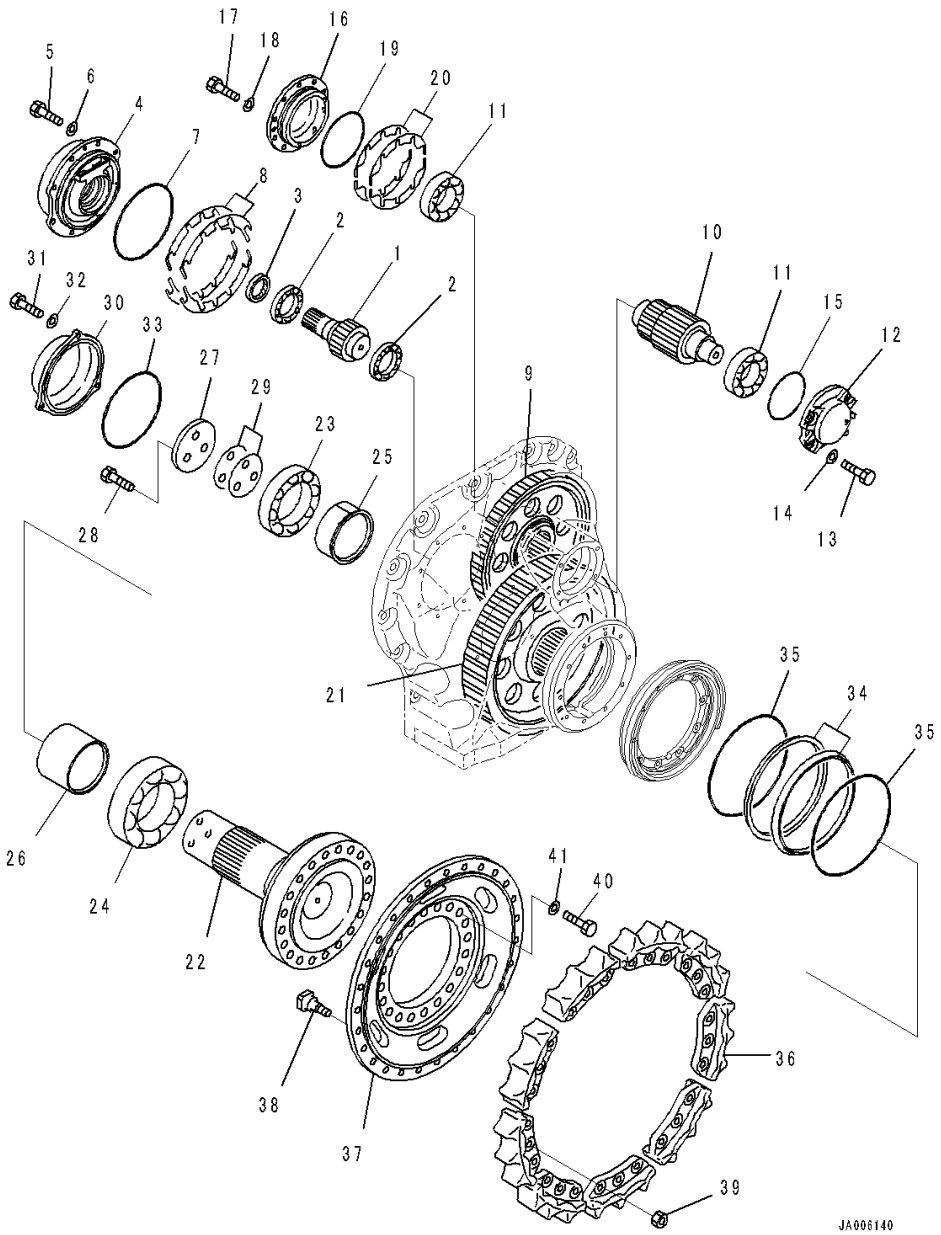

Index	Code	Part Number	Description	Qty	Serial Number
31		01010-81235	• Bolt	3	J20001-
32		01643-31232	• Washer	3	J20001-
33		07000-15230	• O-ring	1	J20001-
		150-27-00029	• Floating Seal Assembly	1	J20001-
34		150-27-00263	• • Seal Ring Assembly	1	J20001-
	C1		• • • Seal	2	J20001-
35		144-873-0310	• • O-ring Assembly	1	J20001-
	C1		• • • O-ring	2	J20001-
36		134-27-61631	• Teeth	5	J20001-
37		134-27-61620	• Hub	1	J20001-
38		154-27-12320	• Bolt	25	J20001-
39		01803-02228	• Nut	25	J20001-
40		01010-82475	• Bolt	20	J20001-
41		01643-32460	• Washer	20	J20001-

FIG. F2380-002003 Final Drive, Final Gear Case RHS

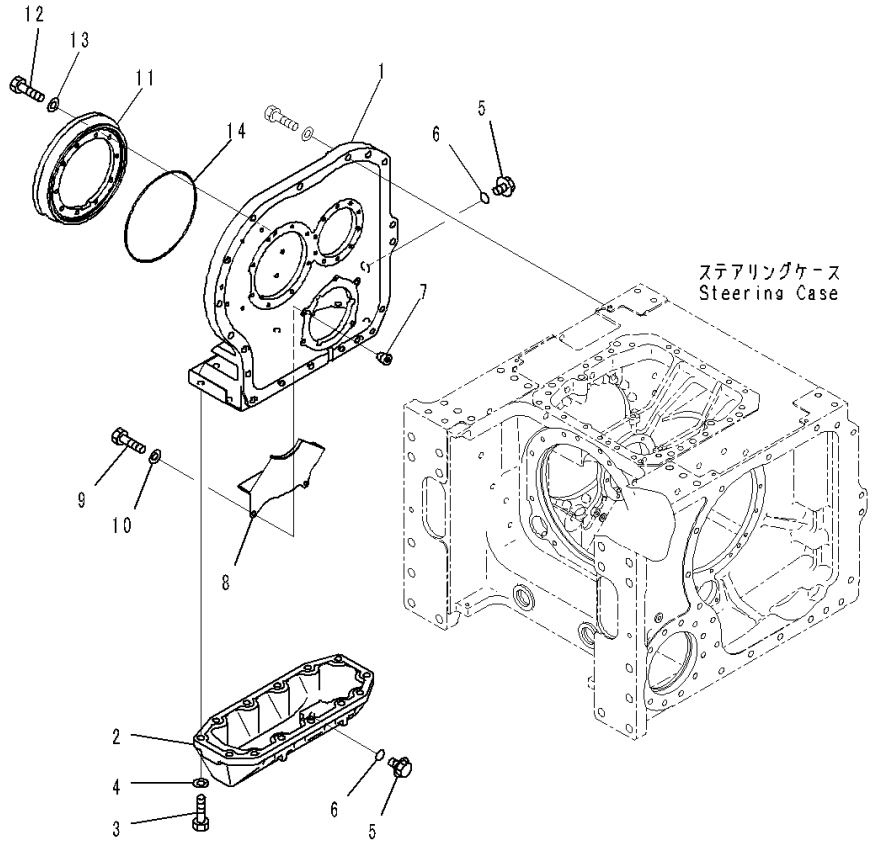

Index	Code	Part Number	Description	Qty	Serial Number
		134-27-00240	Final Drive Assembly	1	J20001-
1		134-27-61123	• Case	1	J20001-
2		134-27-61143	• Cover	1	J20001-
3		01010-82060	• Bolt	13	J20001-
4		01643-32060	• Washer	13	J20001-
5		07044-13620	• Plug	2	J20001-
6		07002-13634	• O-ring	2	J20001-
7		07043-70312	• Plug	2	J20001-
8		134-27-61491	• Cover	1	J20001-
9		01010-81225	• Bolt	2	J20001-
10		01643-31232	• Washer	2	J20001-
11		134-27-61170	• Cover	1	J20001-
12		01010-81235	• Bolt	10	J20001-
13		01643-31232	• Washer	10	J20001-
14		07000-15320	• O-ring	1	J20001-

FIG. F2380-002004 Final Drive, Gear and Cover RHS

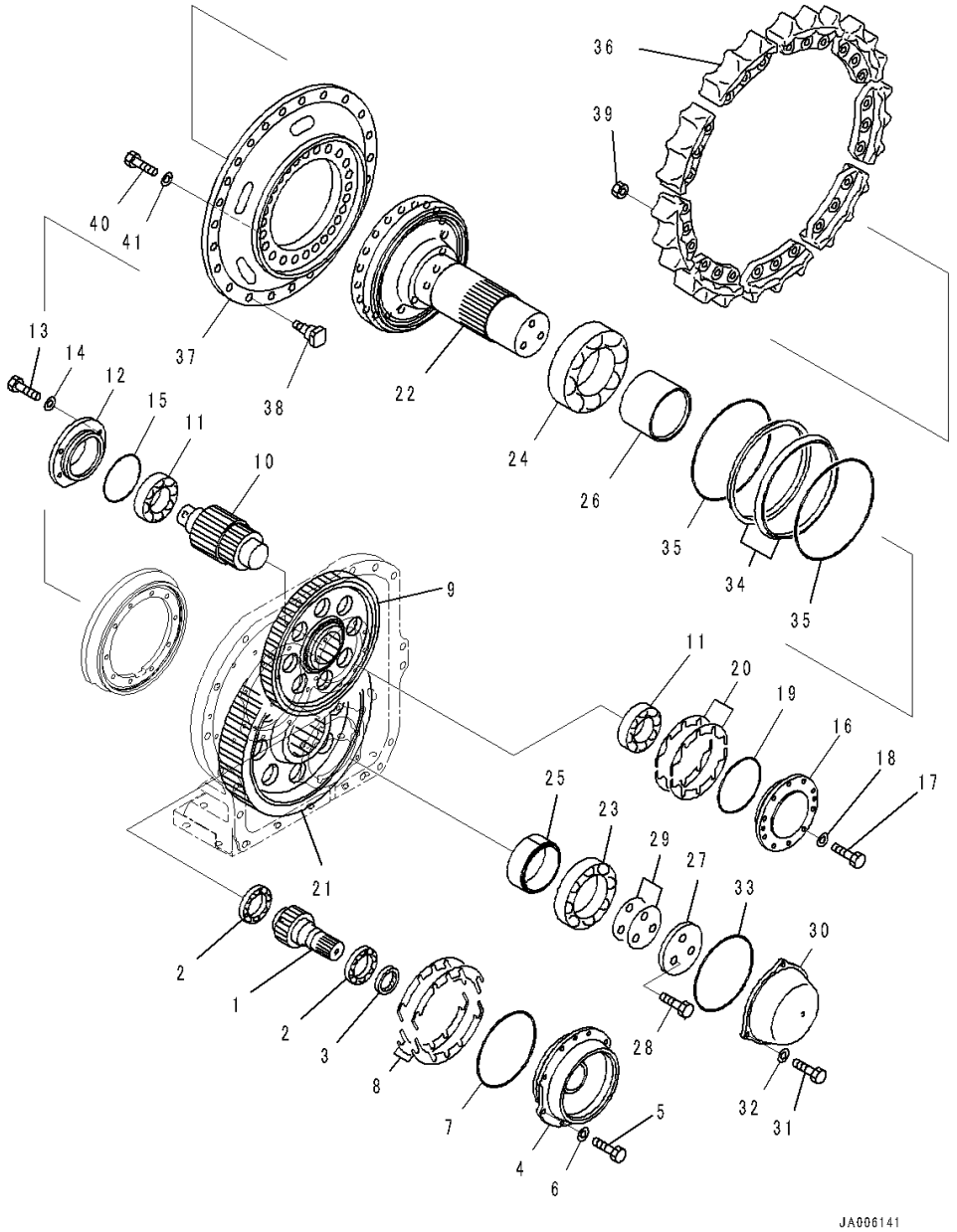

Index	Code	Part Number	Description	Qty	Serial Number
		134-27-00240	Final Drive Assembly	1	J20001-
1		134-27-71151	• Pinion	1	J20001-
2		06300-32015	• Bearing	2	J20001-
3		07013-50062	• Seal, Oil	1	J20001-
4		134-27-61192	• Cage	1	J20001-
5		01010-81235	• Bolt	8	J20001-
6		01643-31232	• Washer	8	J20001-
7		07000-15230	• O-ring	1	J20001-
8		134-27-05010	• Shim Kit	1	J20001-
	C1		• • Shim	6	J20001-
	C1		• • Shim	4	J20001-
	C1		• • Shim	2	J20001-
9		134-27-61232	• Gear	1	J20001-
10		134-27-61240	• Pinion	1	J20001-
11		134-27-61270	• Bearing	2	J20001-
12		134-27-61180	• Cover	1	J20001-
13		01010-81235	• Bolt	4	J20001-
14		01643-31232	• Washer	4	J20001-
15		07000-15140	• O-ring	1	J20001-
16		134-27-61340	• Cage	1	J20001-
17		01010-81235	• Bolt	10	J20001-
18		01643-31232	• Washer	10	J20001-
19		07000-15165	• O-ring	1	J20001-
20		134-27-05020	• Shim Kit	1	J20001-
	C1		• • Shim	6	J20001-
	C1		• • Shim	4	J20001-
	C1		• • Shim	2	J20001-
21		134-27-61610	• Gear	1	J20001-
22		134-27-61261	• Shaft	1	J20001-
23		134-27-61280	• Bearing	1	J20001-
24		134-27-61290	• Bearing	1	J20001-
25		134-27-61640	• Spacer	1	J20001-
26		134-27-61320	• Spacer	1	J20001-
27		134-27-61330	• Plate	1	J20001-
28		01010-82475	• Bolt	3	J20001-
29		134-27-05030	• Shim Kit	1	J20001-
	C1		• • Shim	6	J20001-
	C1		• • Shim	4	J20001-
	C1		• • Shim	2	J20001-
30		134-27-61210	• Cover	1	J20001-

FIG. F2380-002004 Final Drive, Gear and Cover RHS

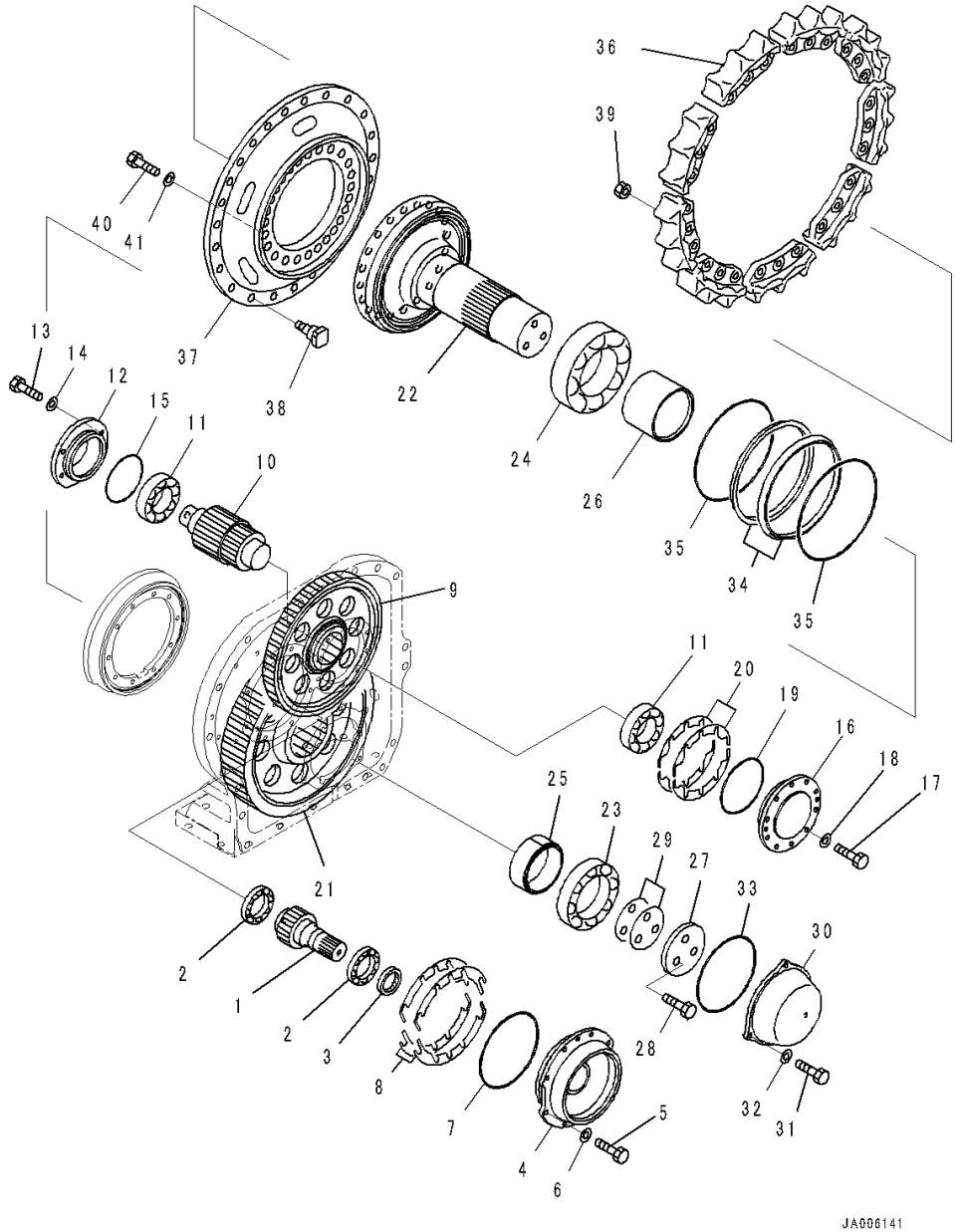

Index	Code	Part Number	Description	Qty	Serial Number
31		01010-81235	• Bolt	3	J20001-
32		01643-31232	• Washer	3	J20001-
33		07000-15230	• O-ring	1	J20001-
		150-27-00029	• Floating Seal Assembly	1	J20001-
34		150-27-00263	• • Seal Ring Assembly	1	J20001-
	C1		• • • Seal	2	J20001-
35		144-873-0310	• • O-ring Assembly	1	J20001-
	C1		• • • O-ring	2	J20001-
36		134-27-61631	• Teeth	5	J20001-
37		134-27-61620	• Hub	1	J20001-
38		154-27-12320	• Bolt	25	J20001-
39		01803-02228	• Nut	25	J20001-
40		01010-82475	• Bolt	20	J20001-
41		01643-32460	• Washer	20	J20001-

FIG. F2380-002005 Final Drive, Mounting

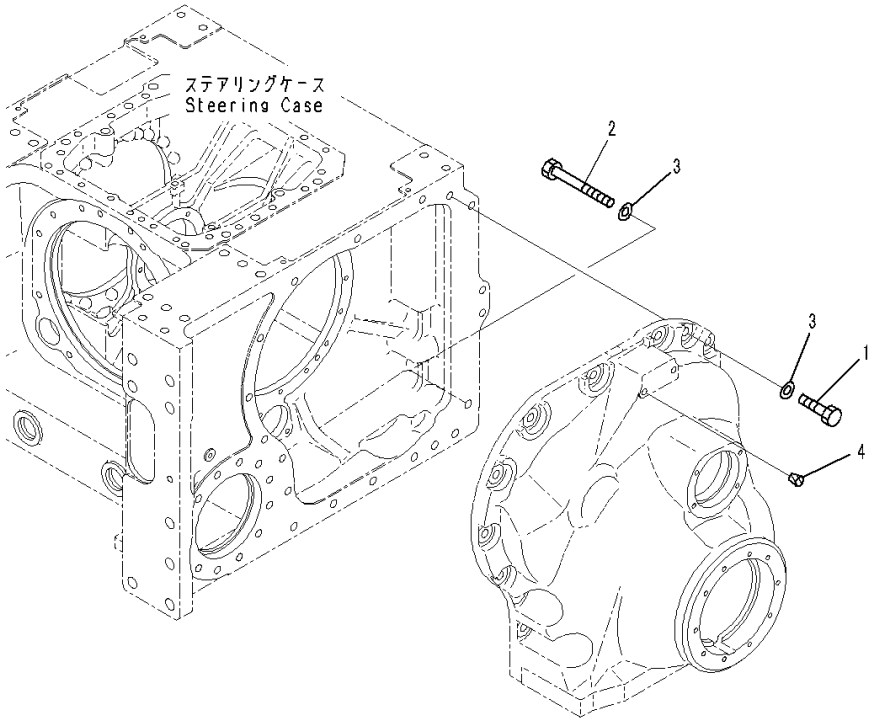

Index	Code	Part Number	Description	Qty	Serial Number
1		01010-82060	Bolt	36	J20001-
2		01011-82000	Bolt	2	J20001-
3		01643-32060	Washer	38	J20001-
4		07049-01620	Plug	4	J20001-

FIG. F2730-002001 Power Train Oil Cooler Piping

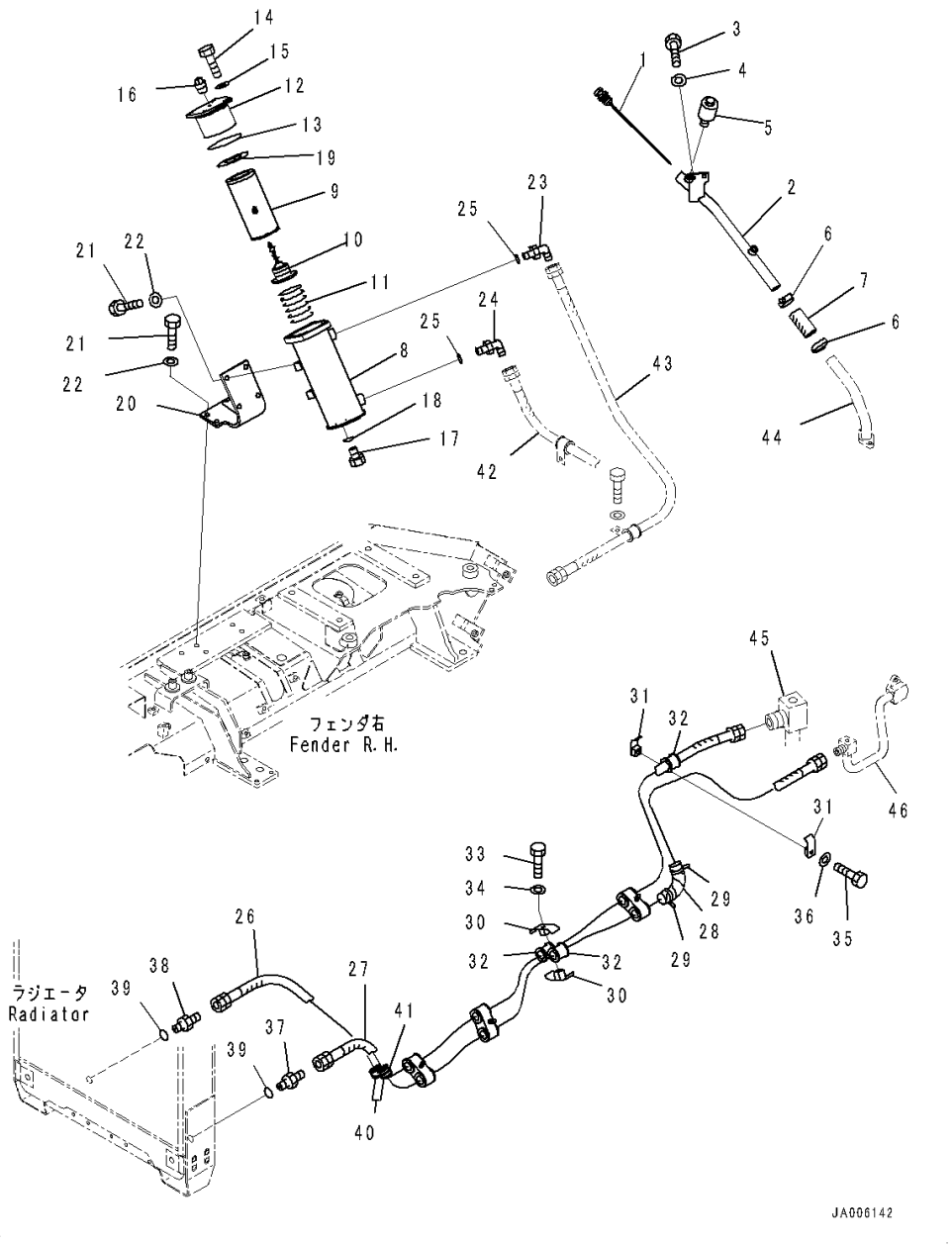

Index	Code	Part Number	Description	Qty	Serial Number
1		134-49-67250	Gauge	1	J20001-
2		134-49-67231	Filler	1	J20001-
3		01010-81225	Bolt	2	J20001-
4		01643-31232	Washer	2	J20001-
5		07030-00252	Breather	1	J20001-
6		07289-00045	Clamp, Hose	2	J20001-
7		07260-23211	Hose	1	J20001-
8		134-49-61321	Case	1	J20001-
9		07063-01054	Element, Oil Filter	1	J20001-
10		144-60-31162	Valve Assembly	1	J20001-
11		198-49-11460	Spring	1	J20001-
12		14X-49-12126	Cover	1	J20001-
13		07000-72110	O-ring	1	J20001-
14		01010-81035	Bolt	4	J20001-
15		01643-31032	Washer	4	J20001-
16		07042-30108	Plug	1	J20001-
17		07040-12412	Plug	1	J20001-
18		07002-22434	O-ring	1	J20001-
19		134-49-61920	Plate	1	J20001-
20		134-49-61341	Bracket	1	J20001-
21		01010-81230	Bolt	8	J20001-
22		01643-31232	Washer	8	J20001-
23		07235-10628	Elbow	1	J20001-
24		07235-10630	Elbow	1	J20001-
25		07002-62434	O-ring	2	J20001-
26		07102-20628	Hose, Taper Seal Type	1	J20001-
27		07102-20621	Hose, Taper Seal Type	1	J20001-
28		08210-01802	Tube, Spiral	1	J20001-
29		08034-00519	Band	2	J20001-
30		07094-20620	Clamp	8	J20001-
31		07094-10620	Clamp	2	J20001-
32		07095-00628	Cushion	9	J20001-
33		01010-81270	Bolt	4	J20001-
34		01643-31232	Washer	4	J20001-
35		01010-81275	Bolt	1	J20001-
36		01643-31232	Washer	1	J20001-
37		07230-20628	Union	1	J20001-
38		134-49-61311	Union	1	J20001-
39		07002-22434	O-ring	2	J20001-
40		07095-20627	Cushion	2	J20001-

FIG. F2730-002001 Power Train Oil Cooler Piping

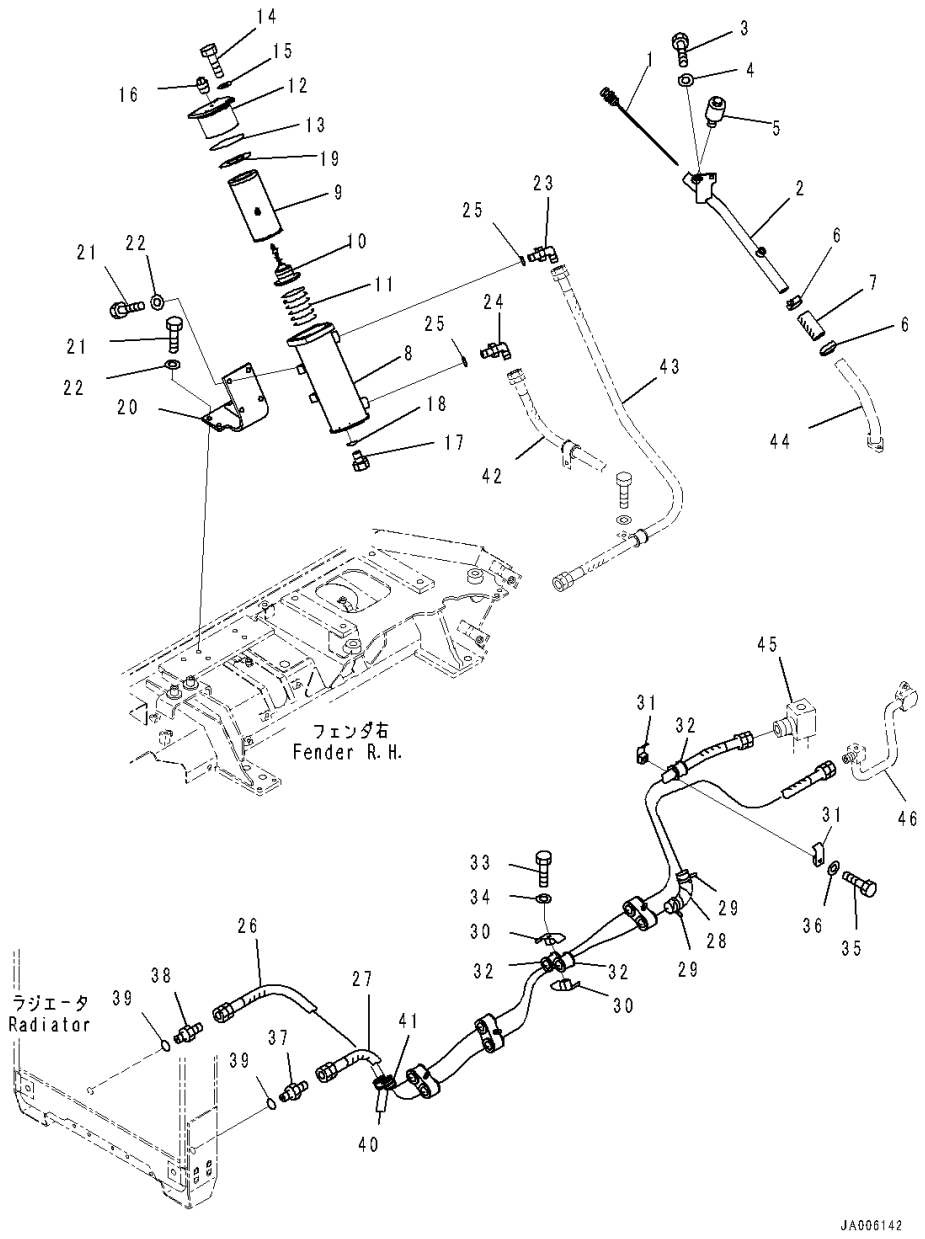

Index	Code	Part Number	Description	Qty	Serial Number
41		08034-20536	Band	1	J20001-
42		(07108-20615)	Hose, Taper Seal Type(Refer to Page 199)		-
43		(07108-20610)	Hose(Refer to Page 199)		-
44		(134-49-67240)	Filler(Refer to Page 203)		-
45		(14X-49-11512)	Tube(Refer to Page 163)		-
46		(134-49-67120)	Tube(Refer to Page 178)		-

FIG. F2740-002001 Steering Oil Piping, Brake

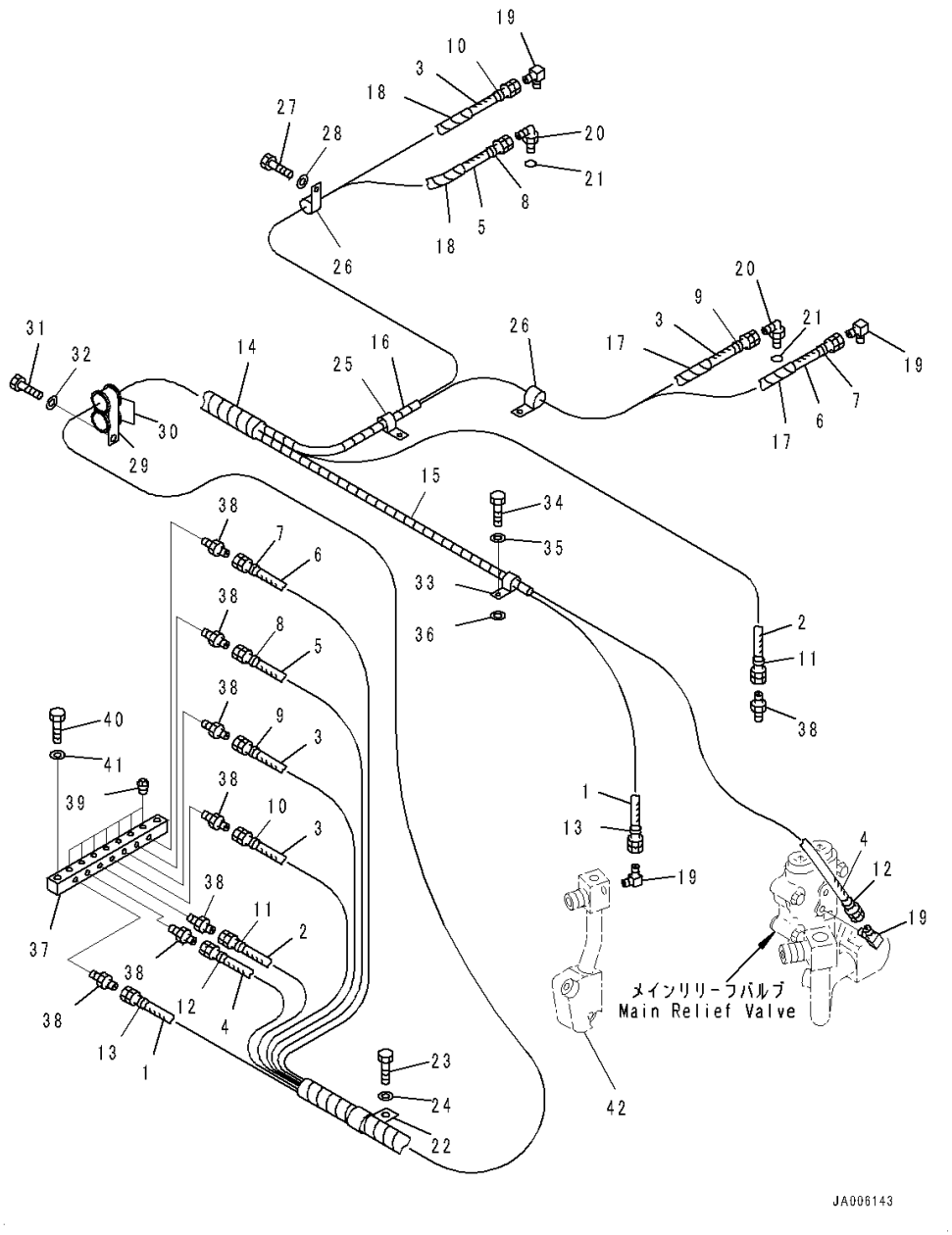

Index	Code	Part Number	Description	Qty	Serial Number
		134-49-61423	Hose Assembly	1	J20001-
1		134-49-61650	• Hose	1	J20001-
2		134-49-61690	• Hose	1	J20001-
3		14X-49-11970	• Hose, L=1700mm	2	J20001-
4		17A-49-17721	• Hose, L=1600mm	1	J20001-
5		17M-22-28320	• Hose, L=1700mm	1	J20001-
6		17M-22-28290	• Hose	1	J20001-
7		203-62-57910	• Mark, 1	2	J20001-
8		203-62-57920	• Mark, 2	2	J20001-
9		203-62-57930	• Mark, 3	2	J20001-
10		203-62-57940	• Mark, 4	2	J20001-
11		203-62-57950	• Decal, Mark, 5	2	J20001-
12		203-62-57960	• Decal, Mark, 6	2	J20001-
13		203-62-57970	• Decal, Mark, 7	2	J20001-
14		08210-01811	• Tube, Spiral	1	J20001-
15		08210-01804	• Tube, Spiral	1	J20001-
16		08210-01803	• Tube, Spiral	1	J20001-
17		08210-00603	• Tube, Spiral	2	J20001-
18		08210-00602	• Tube, Spiral	2	J20001-
19		202-62-21430	Elbow	4	J20001-
20		124-62-61531	Elbow	2	J20001-
21		07002-61023	O-ring	2	J20001-
22		04434-52712	Clip	1	J20001-
23		01010-81020	Bolt	1	J20001-
24		01643-31032	Washer	1	J20001-
25		04434-52312	Clip	1	J20001-
26		04434-51912	Clip	3	J20001-
27		01010-81220	Bolt	2	J20001-
28		01643-31232	Washer	2	J20001-
29		569-06-61980	Clip	1	J20001-
30		07095-20522	Cushion	2	J20001-
31		01010-81020	Bolt	1	J20001-
32		01643-31032	Washer	1	J20001-
33		04434-51912	Clip	3	J20001-
34		01010-81240	Bolt	1	J20001-
35		01643-31232	Washer	1	J20001-
36		01643-31232	Washer	1	J20001-
37		134-49-61410	Block	1	J20001-
38		203-62-21740	Nipple	8	J20001-
39		07042-20108	Plug	7	J20001-

FIG. F2740-002001 Steering Oil Piping, Brake

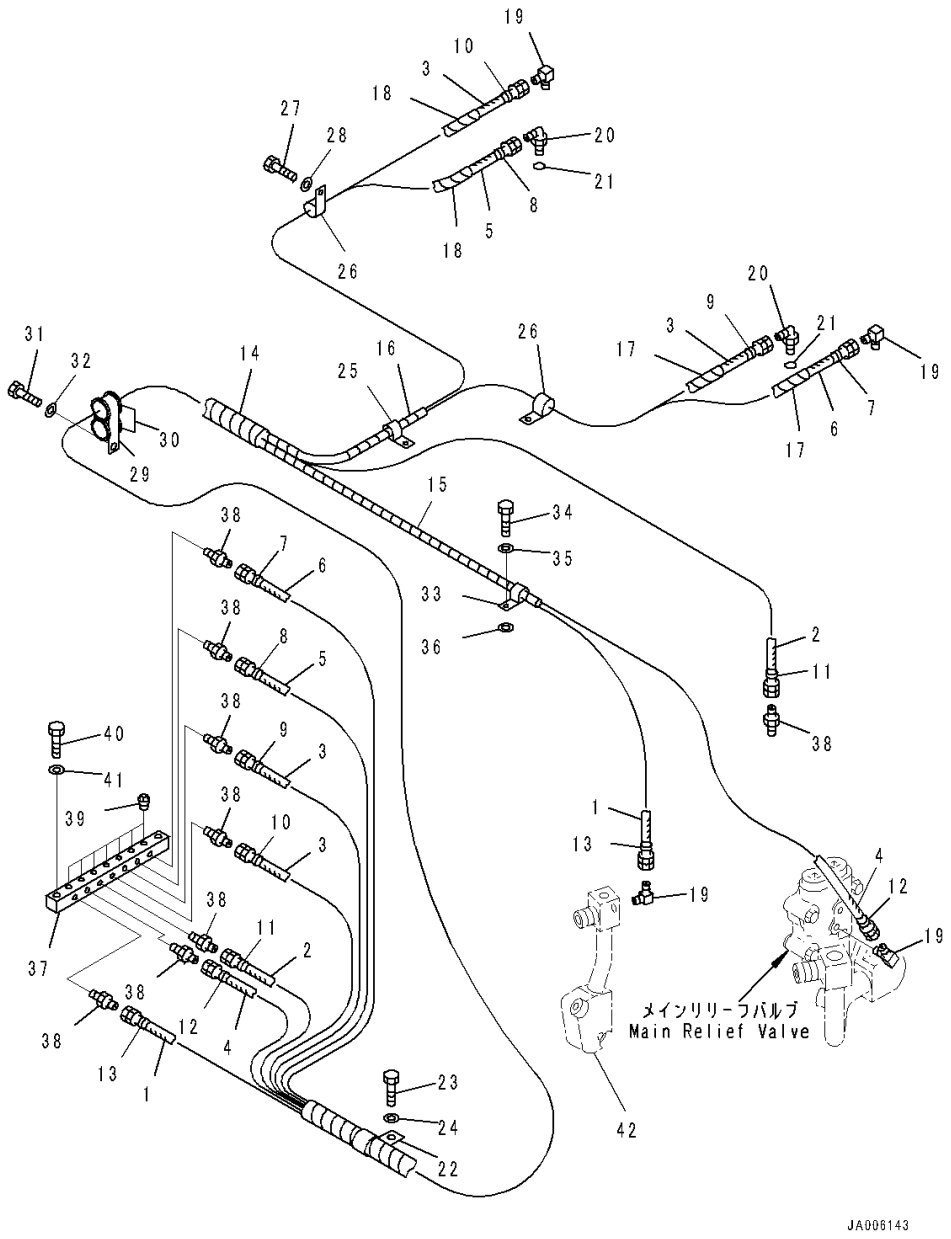

Index	Code	Part Number	Description	Qty	Serial Number
40		01010-81225	Bolt	2	J20001-
41		01643-31232	Washer	2	J20001-
42		(14X-49-11512)	Tube(Refer to Page 163)		-

FIG. F2740-002002 Steering Oil Piping, Additional Parts

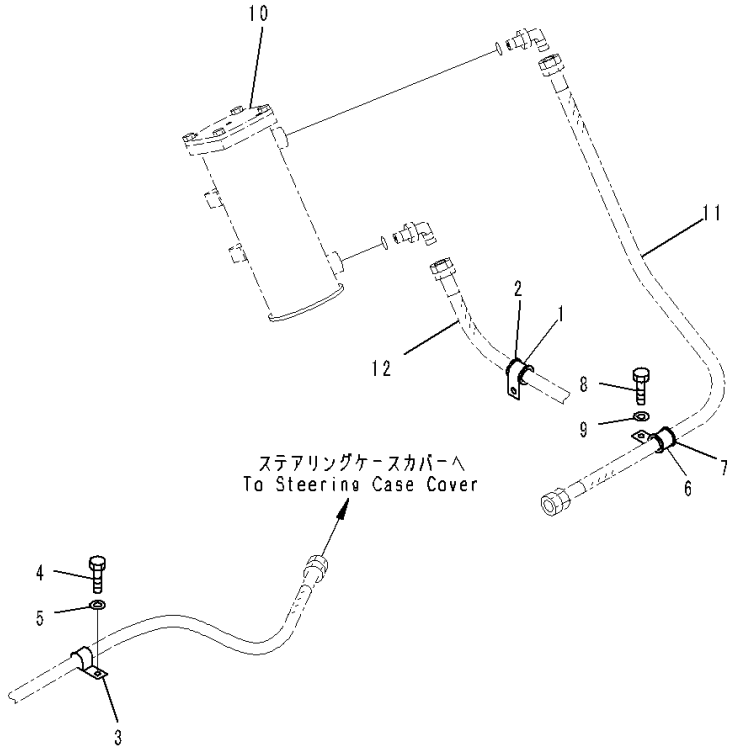

Index	Code	Part Number	Description	Qty	Serial Number
1		04434-53412	Clip	1	J20001-
2		07095-20627	Cushion	1	J20001-
3		23S-62-25850	Clip	1	J20001-
4		01010-81220	Bolt	1	J20001-
5		01643-31232	Washer	1	J20001-
6		04434-53412	Clip	1	J20001-
7		07095-20627	Cushion	1	J20001-
8		01010-81220	Bolt	1	J20001-
9		01643-31232	Washer	1	J20001-
10		(134-49-61321)	Case(Refer to Page 211)		-
11		(07108-20610)	Hose(Refer to Page 199)		-
12		(07108-20615)	Hose, Taper Seal Type(Refer to Page 199)		-

FIG. F2820-002001 Steering Control Related Parts, Fuel Piping

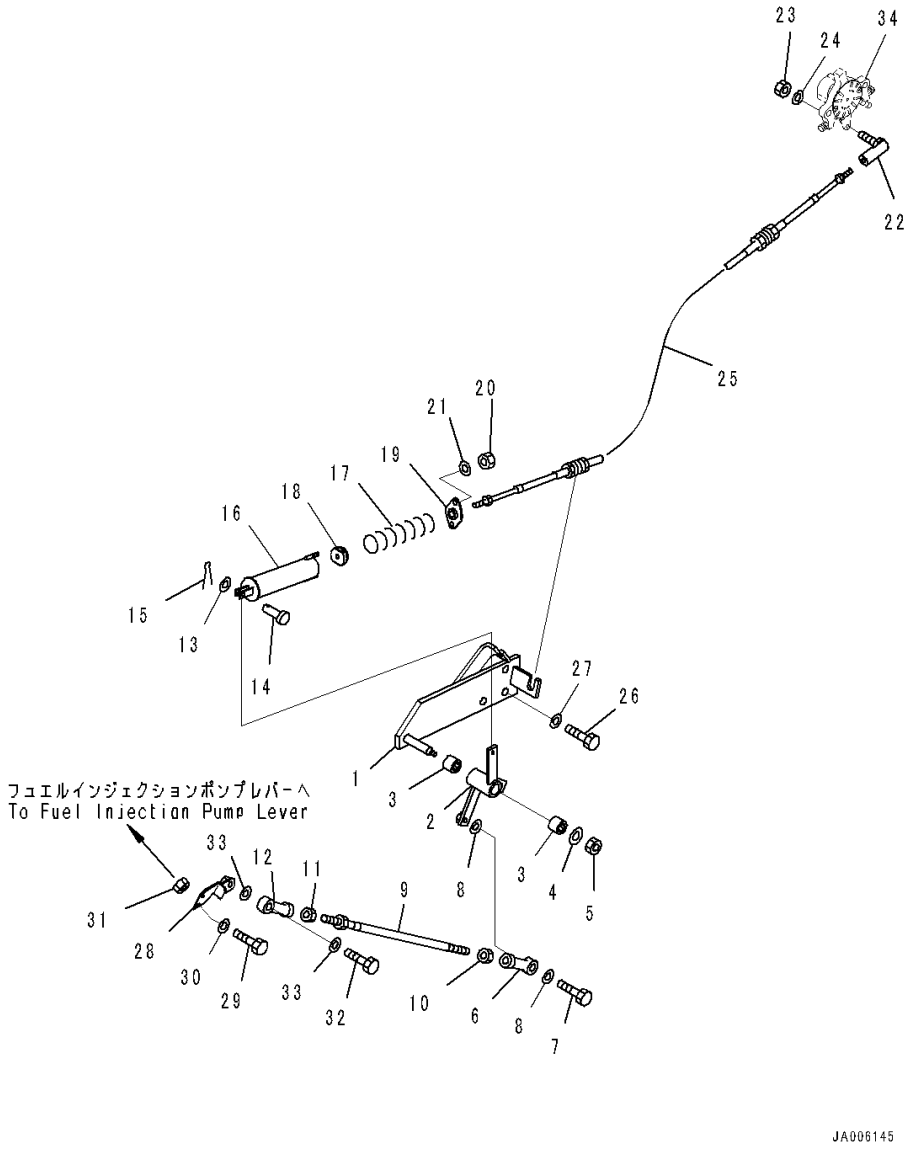

Index	Code	Part Number	Description	Qty	Serial Number
1		134-43-68112	Bracket	1	J20001-
2		134-43-68121	Lever	1	J20001-
3		06123-01414	Bearing	2	J20001-
4		113-43-23230	Washer	1	J20001-
5		01598-00809	Nut	1	J20001-
6		04250-90847	Rod End	1	J20001-
7		01010-80830	Bolt	1	J20001-
8		04254-10823	Spacer	2	J20001-
9		134-43-68150	Rod	1	J20001-
10		01508-40805	Nut	1	J20001-
11		01580-10806	Nut	1	J20001-
12		04250-80847	Rod End	1	J20001-
13		01641-20608	Washer	1	J20001-
14		04205-10622	Pin	1	J20001-
15		04050-11612	Pin, Cotter	1	J20001-
16		12G-43-51440	Coupling	1	J20001-
17		135-43-15821	Spring	1	J20001-
18		134-43-68240	Nut	1	J20001-
19		134-43-68270	Plate	1	J20001-
20		01598-00608	Nut	2	J20001-
21		01640-20610	Washer	2	J20001-
22		10S-43-16251	Yoke	1	J20001-
23		04205-10522	Pin	1	J20001-
24		01643-30623	Washer	1	J20001-
25		134-43-68220	Cable	1	J20001-
26		01010-81230	Bolt	3	J20001-
27		01643-31232	Washer	3	J20001-
28		134-43-67170	Lever	1	J20001-
29		01010-80616	Bolt	2	J20001-
30		01643-30623	Washer	2	J20001-
31		01580-10605	Nut	2	J20001-
32		01010-80830	Bolt	1	J20001-
33		04254-10823	Spacer	2	J20001-
34		(134-43-66210)	Lever Assembly(Refer to Page 247)		-

FIG. F2820-002002 Steering Control Related Parts, Clutch and Brake

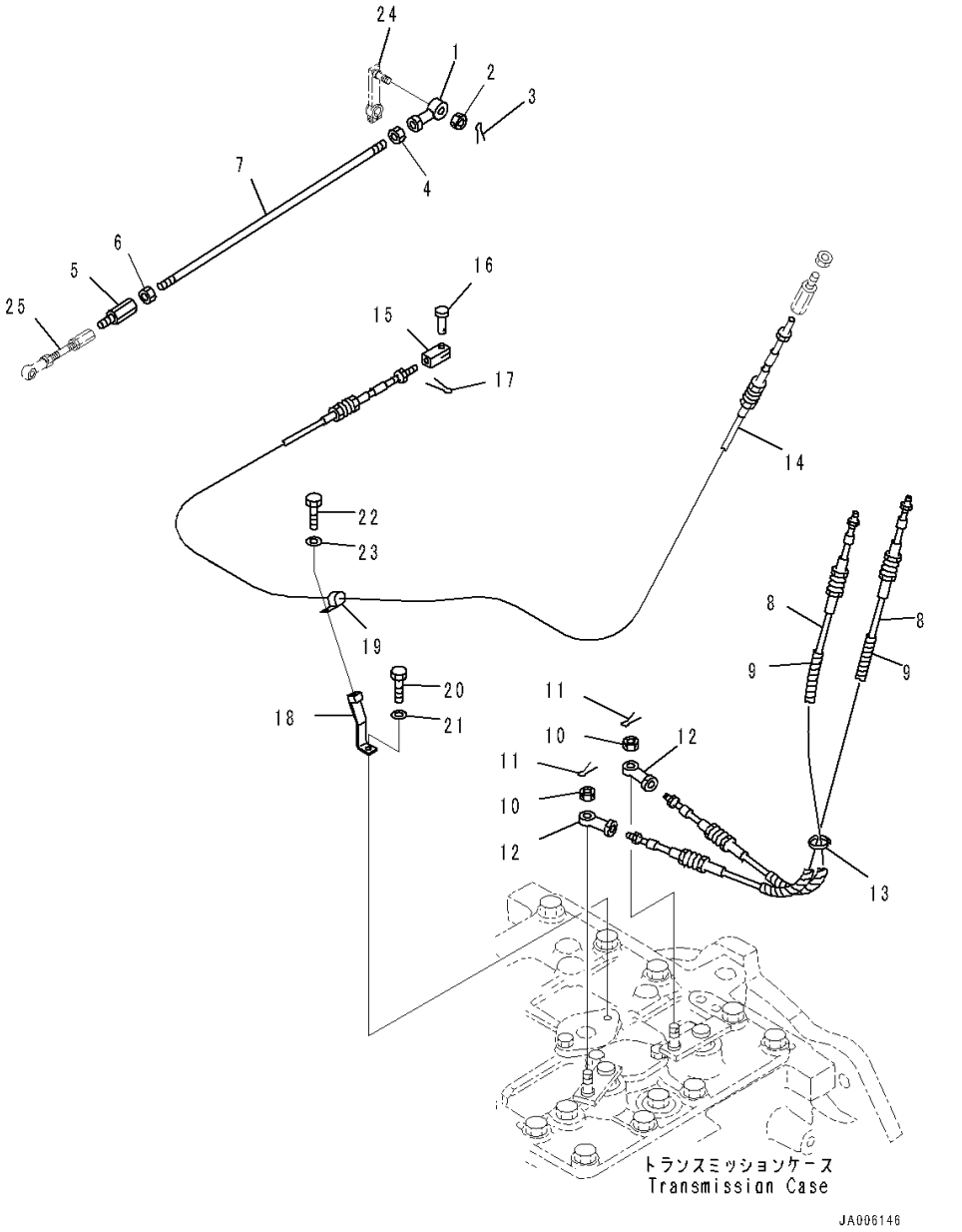

Index	Code	Part Number	Description	Qty	Serial Number
1		04250-81474	End	1	J20001-
2		01593-31411	Nut	1	J20001-
3		04050-13022	Pin, Cotter	1	J20001-
4		01582-11411	Nut	1	J20001-
5		17A-43-24170	Joint	1	J20001-
6		01582-11411	Nut	1	J20001-
7		04245-41471	Rod	1	J20001-
8		134-43-66260	Cable	2	J20001-
9		08210-01204	Tube, Spiral	2	J20001-
10		01590-30809	Nut	2	J20001-
11		04050-12015	Pin, Cotter	2	J20001-
12		04250-80847	Rod End	2	J20001-
13		08034-20519	Band	1	J20001-
14		124-43-52171	Cable	1	J20001-
15		154-43-14580	Yoke	1	J20001-
16		04205-10618	Pin	1	J20001-
17		04050-11612	Pin, Cotter	1	J20001-
18		134-43-66342	Bracket	1	J20001-
19		08036-00814	Clip	1	J20001-
20		01010-81040	Bolt	1	J20001-
21		01643-31032	Washer	1	J20001-
22		01010-81020	Bolt	1	J20001-
23		01643-31032	Washer	1	J20001-
24		(134-43-65130)	Lever(Refer to Page 188)		-
25		(17A-43-24160)	Joint(Refer to Page 268)		-

HYDRAULIC SYSTEM

FIG. H0100-001001 Hydraulic Oil Tank

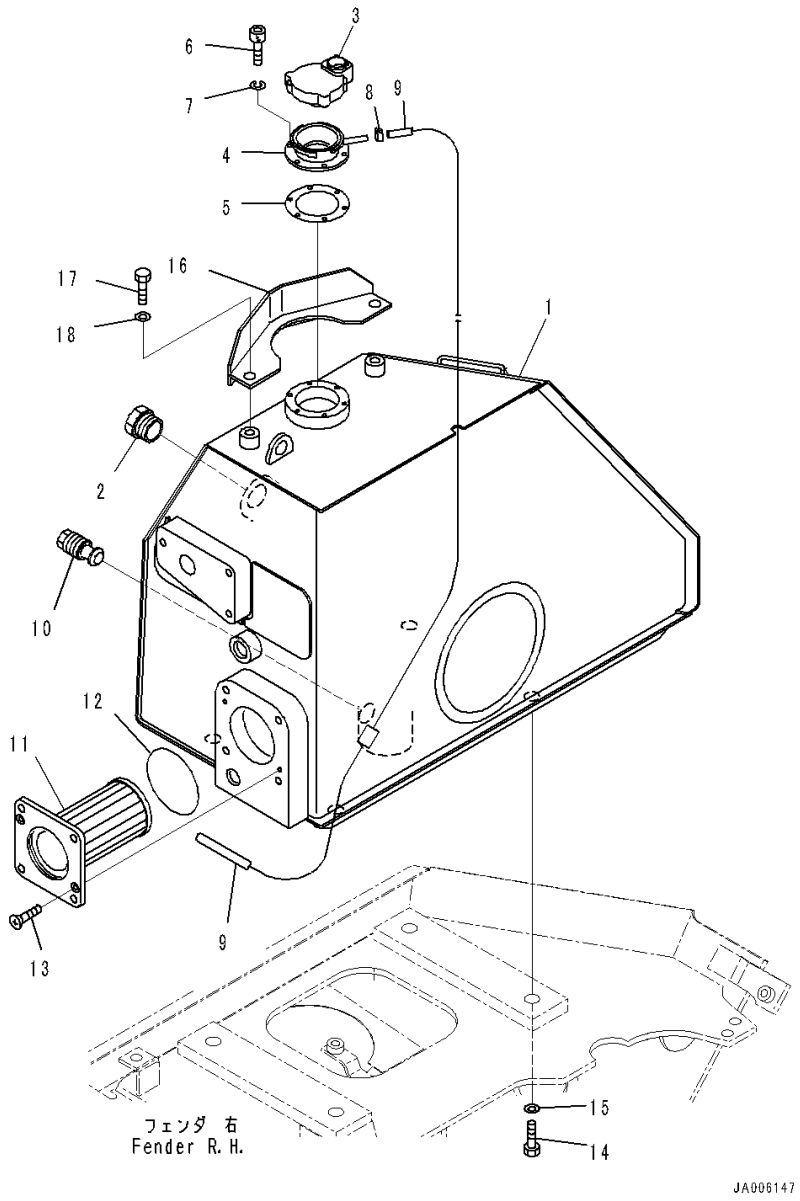

Index	Code	Part Number	Description	Qty	Serial Number
1		134-60-61410	Tank	1	J20001-
2		20N-60-11143	Gauge	1	J20001-
		20N-60-11181	• Gasket	1	J20001-
3		14X-60-11130	Cap Assembly	1	J20001-
4		201-60-12172	Filler	1	J20001-
5		20Y-60-21340	Gasket	1	J20001-
6		01252-70514	Bolt, Hexagon Socket Head	6	J20001-
7		01601-20513	Washer	6	J20001-
8		07285-00095	Clip, Hose	1	J20001-
9		07270-00872	Tube	1	J20001-
10		124-60-51150	Plug	1	J20001-
11		14X-60-11120	Strainer	1	J20001-
12		07000-12090	O-ring	1	J20001-
13		01224-40616	Screw	2	J20001-
14		01010-81645	Bolt	4	J20001-
15		01643-31645	Washer	4	J20001-
16		134-60-61330	Cover	1	J20001-
17		01010-81225	Bolt	3	J20001-
18		01643-31232	Washer	3	J20001-

FIG. H0120-001001 Control Valve, Valve Mounting

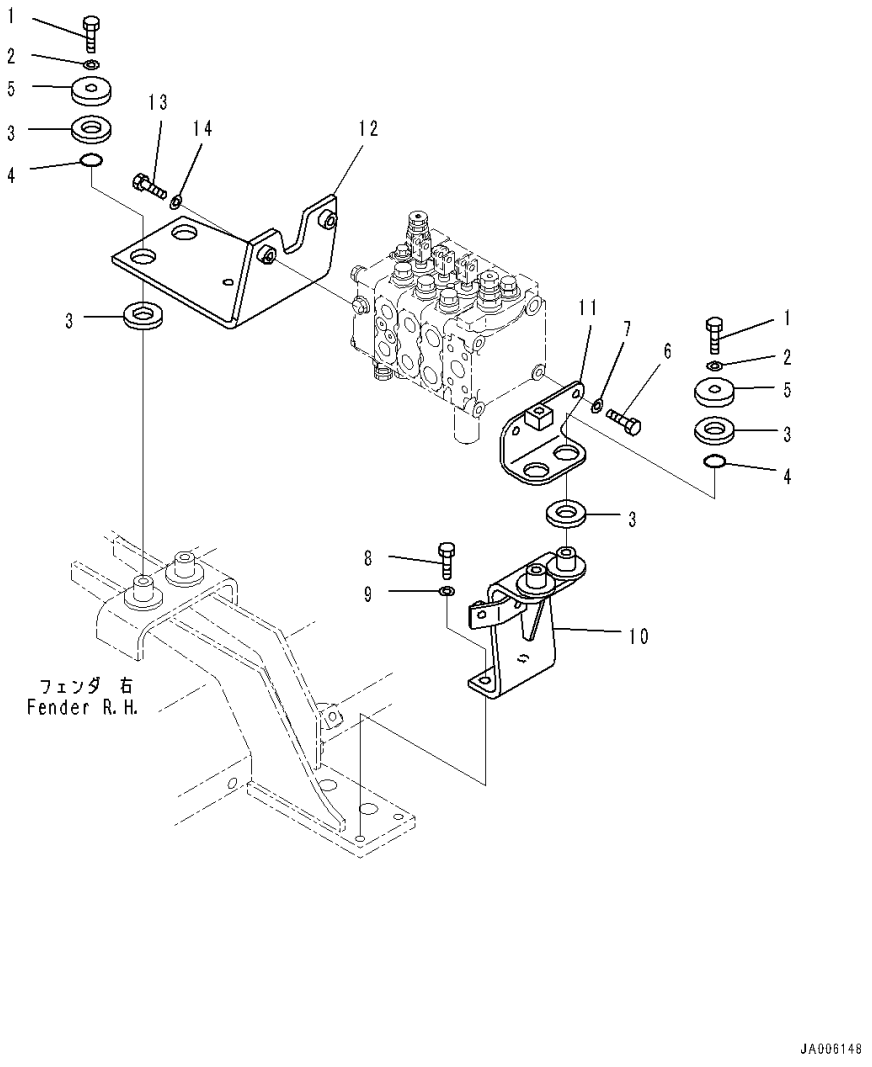

Index	Code	Part Number	Description	Qty	Serial Number
1		01010-81225	Bolt	4	J20001-
2		01643-31232	Washer	4	J20001-
3		14X-60-12120	Cushion	8	J20001-
4		07000-13025	O-ring	4	J20001-
5		566-35-42430	Plate	4	J20001-
6		01010-81025	Bolt	2	J20001-
7		01643-31032	Washer	2	J20001-
8		01010-81225	Bolt	2	J20001-
9		01643-31232	Washer	2	J20001-
10		134-60-61231	Bracket	1	J20001-
11		124-60-51131	Bracket	1	J20001-
12		134-60-61223	Bracket	1	J20001-
13		01010-80835	Bolt	2	J20001-
14		01643-30823	Washer	2	J20001-

FIG. H0120-001002 Control Valve, Inner Parts (1/4)

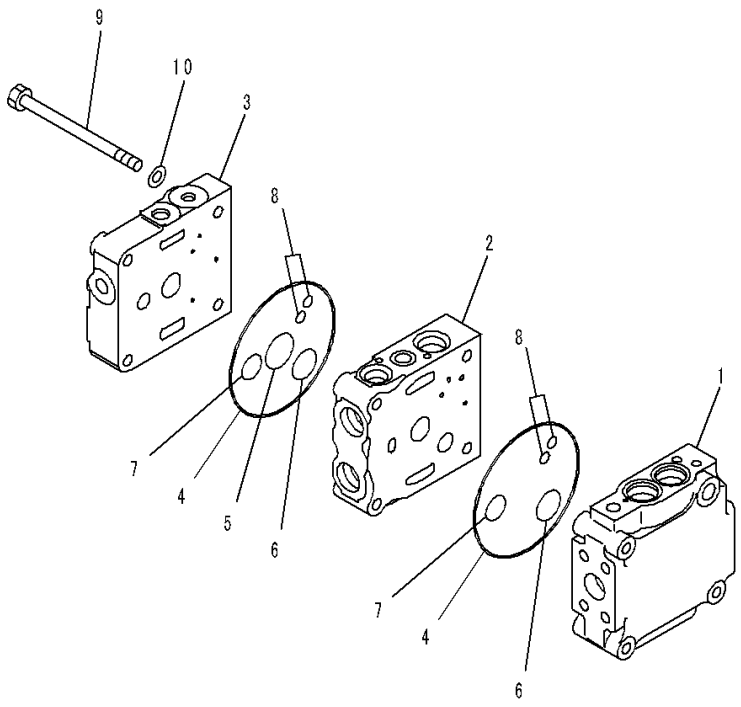

Index	Code	Part Number	Description	Qty	Serial Number
		723-21-10101	Valve Assembly	1	J20001-
1	C1		• Block	1	J20001-
2	C1		• Valve Body	1	J20001-
3		723-26-21720	• Cover	1	J20001-
4		07000-12120	• O-ring	2	J20001-
5		723-26-15830	• O-ring	1	J20001-
6		723-26-15840	• O-ring	2	J20001-
7		07000-12020	• O-ring	2	J20001-
8		07000-11008	• O-ring	4	J20001-
9		01010-81095	• Bolt	4	J20001-
10		01643-31032	• Washer	4	J20001-

FIG. H0120-001003 Control Valve, Inner Parts (2/4)

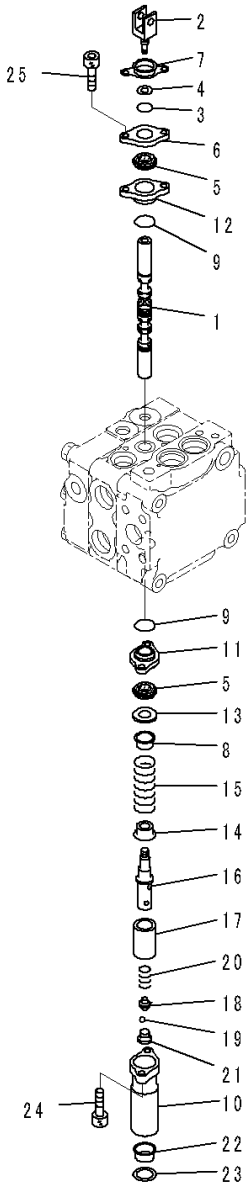

JY016563

Index	Code	Part Number	Description	Qty	Serial Number
		723-21-10101	Valve Assembly	1	J20001-
1	C1		• Spool	1	J20001-
2		723-26-16180	• Plug	1	J20001-
3		07000-11003	• O-ring	1	J20001-
4		07001-01003	• Ring, Back-up	1	J20001-
5		709-25-11290	• Seal	2	J20001-
6		723-26-15820	• Plate	1	J20001-
7		124-43-64160	• Plate	1	J20001-
8		700-22-11291	• Retainer	1	J20001-
9		700-80-61260	• O-ring	2	J20001-
10		723-26-15410	• Case	1	J20001-
11		723-26-15770	• Plate	1	J20001-
12		723-26-15780	• Plate	1	J20001-
13		723-26-15790	• Plate	1	J20001-
14		700-22-11520	• Retainer	1	J20001-
15		700-22-11510	• Spring	1	J20001-
16		700-22-12250	• Plug	1	J20001-
17		700-22-12440	• Detent	1	J20001-
18		700-22-12480	• Guide	1	J20001-
19		700-84-11730	• Ball	3	J20001-
20		723-26-14170	• Spring	1	J20001-
21		700-21-11210	• Plug	1	J20001-
22		700-22-12270	• Plug	1	J20001-
23		700-22-11610	• Ring, Snap	1	J20001-
24		01252-60625	• Bolt	2	J20001-
25		01252-60620	• Bolt, Hexagon Socket Head	2	J20001-

FIG. H0120-001004 Control Valve, Inner Parts (3/4)

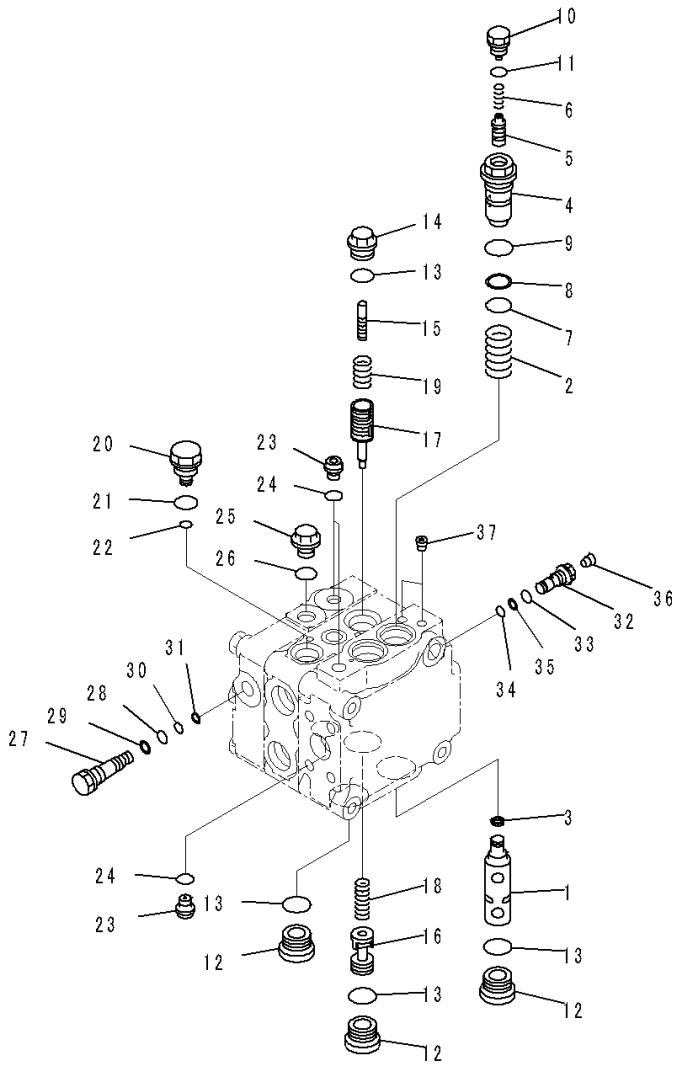

Index	Code	Part Number	Description	Qty	Serial Number
		723-21-10101	Valve Assembly	1	J20001-
1	C1		• Spool	1	J20001-
2		723-26-14180	• Spring	1	J20001-
3		709-70-71610	• Seal	1	J20001-
4	C1		• Sleeve	1	J20001-
5	C1		• Piston	1	J20001-
6		723-26-14190	• Spring	1	J20001-
7		07000-12018	• O-ring	1	J20001-
8		07001-02018	• Ring, Back-up	1	J20001-
9		07002-12434	• O-ring	1	J20001-
10		723-40-56130	• Plug	1	J20001-
11		07002-11423	• O-ring	1	J20001-
12		723-26-15230	• Plug	3	J20001-
13		07002-12434	• O-ring	4	J20001-
14		723-26-15370	• Plug	1	J20001-
15	C1		• Piston	1	J20001-
16	C1		• Valve	1	J20001-
17	C1		• Valve	1	J20001-
18		723-26-14220	• Spring	1	J20001-
19		723-26-14240	• Spring	1	J20001-
20		723-26-15310	• Plug	1	J20001-
21		07002-12034	• O-ring	1	J20001-
22		07000-11007	• O-ring	1	J20001-
23		708-8E-16160	• Plug	3	J20001-
24		07002-11023	• O-ring	3	J20001-
25		706-73-71450	• Plug	1	J20001-
26		07002-11423	• O-ring	1	J20001-
27		723-26-15190	• Plug	1	J20001-
28		07000-11009	• O-ring	1	J20001-
29		07001-01009	• Ring, Back-up	1	J20001-
30		07000-11007	• O-ring	1	J20001-
31		07001-01007	• Ring, Back-up	1	J20001-
32	C1		• Plug	1	J20001-
33		07002-11223	• O-ring	1	J20001-
34		07000-11007	• O-ring	1	J20001-
35		07001-01007	• Ring, Back-up	1	J20001-
36	C1		• Screw	1	J20001-
37	C1		• Plug	2	J20001-

FIG. H0120-001005 Control Valve, Inner Parts (4/4)

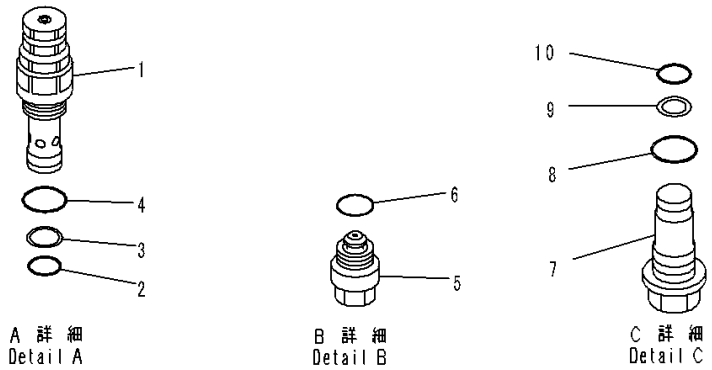

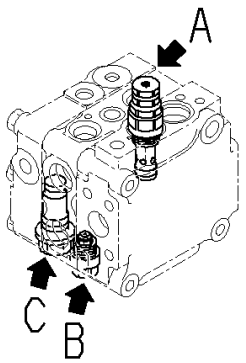

00051259

Index	Code	Part Number	Description	Qty	Serial Number
		723-21-10101	Valve Assembly	1	J20001-
1		723-20-62500	• Valve, Relief	1	J20001-
2		700-22-11410	• • O-ring	1	J20001-
3		700-80-64220	• • Ring	1	J20001-
4		07002-12434	• • O-ring	1	J20001-
5		723-20-80100	• Valve Assembly, Suction	1	J20001-
6		07002-12034	• • O-ring	1	J20001-
7		723-46-15240	• Plug	1	J20001-
8		07002-12434	• O-ring	1	J20001-
9		700-80-64220	• Ring	1	J20001-
10		700-22-11410	• O-ring	1	J20001-

FIG. H0210-001001 Hydraulic Oil Pump, Inner Parts

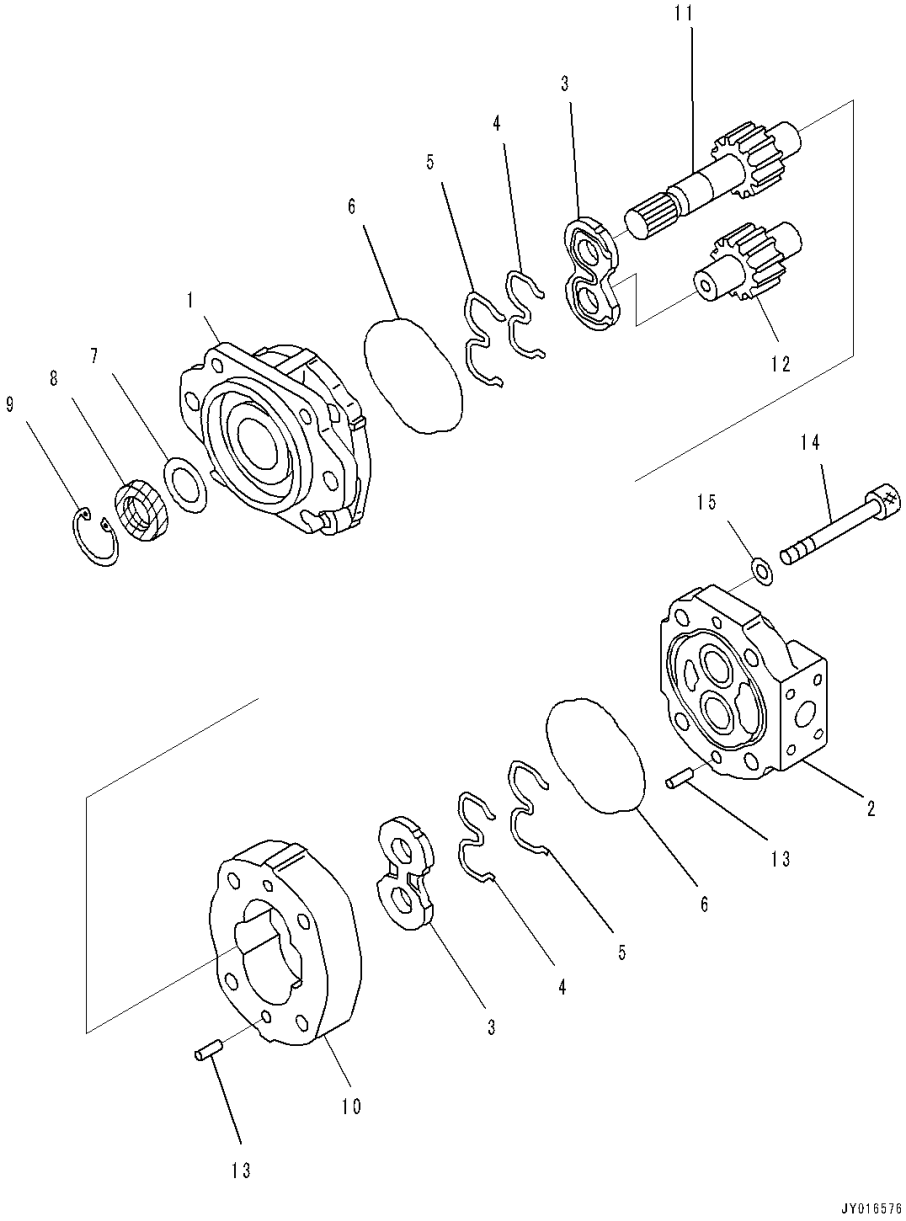

Index	Code	Part Number	Description	Qty	Serial Number
		705-11-36010	Pump Assembly	1	J20001-
1	C2	705-17-03012	• Bracket Assembly	1	J20001-
	C2	705-17-03352	• • Bushing	2	J20001-
2	C2	705-17-03121	• Cover Assembly	1	J20001-
	C2	705-17-03352	• • Bushing	2	J20001-
3		705-17-03610	• Plate	2	J20001-
4		705-17-03440	• Ring, Back-up	2	J20001-
5		705-17-03470	• Seal Ring	2	J20001-
6		705-17-03380	• O-ring	2	J20001-
7		705-17-03870	• Plate	1	J20001-
8		705-17-03810	• Seal, Oil	1	J20001-
9		04065-05220	• Ring, Snap	1	J20001-
10		705-17-36010	• Gear Case	1	J20001-
11	C2	705-17-36411	• Gear, Drive	1	J20001-
12	C2	705-17-36511	• Gear, Driven	1	J20001-
13		04020-01228	• Pin, Dowel	4	J20001-
14		01253-61615	• Bolt, Hexagon Socket Head	4	J20001-
15		01643-51645	• Washer	4	J20001-

FIG. H0210-001002 Hydraulic Oil Pump, Pump Mounting

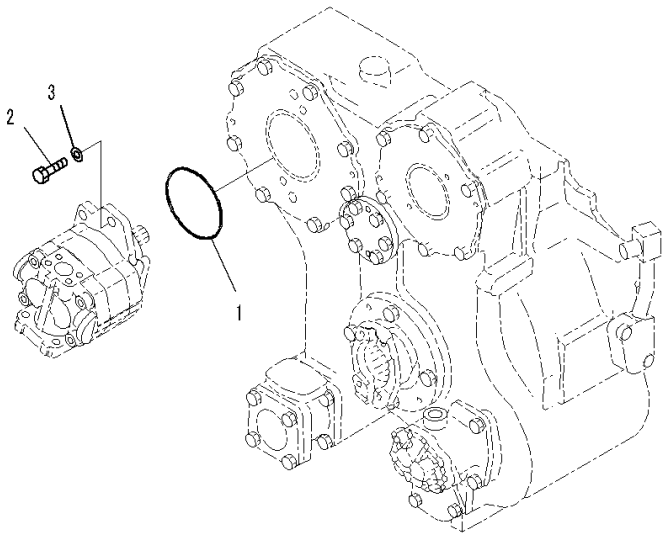

Index	Code	Part Number	Description	Qty	Serial Number
1		07000-12130	O-ring	1	J20001-
2		01010-81645	Bolt	2	J20001-
3		01643-31645	Washer	2	J20001-

FIG. H0310-002001 Hydraulic Oil Pump Piping, Suction Piping

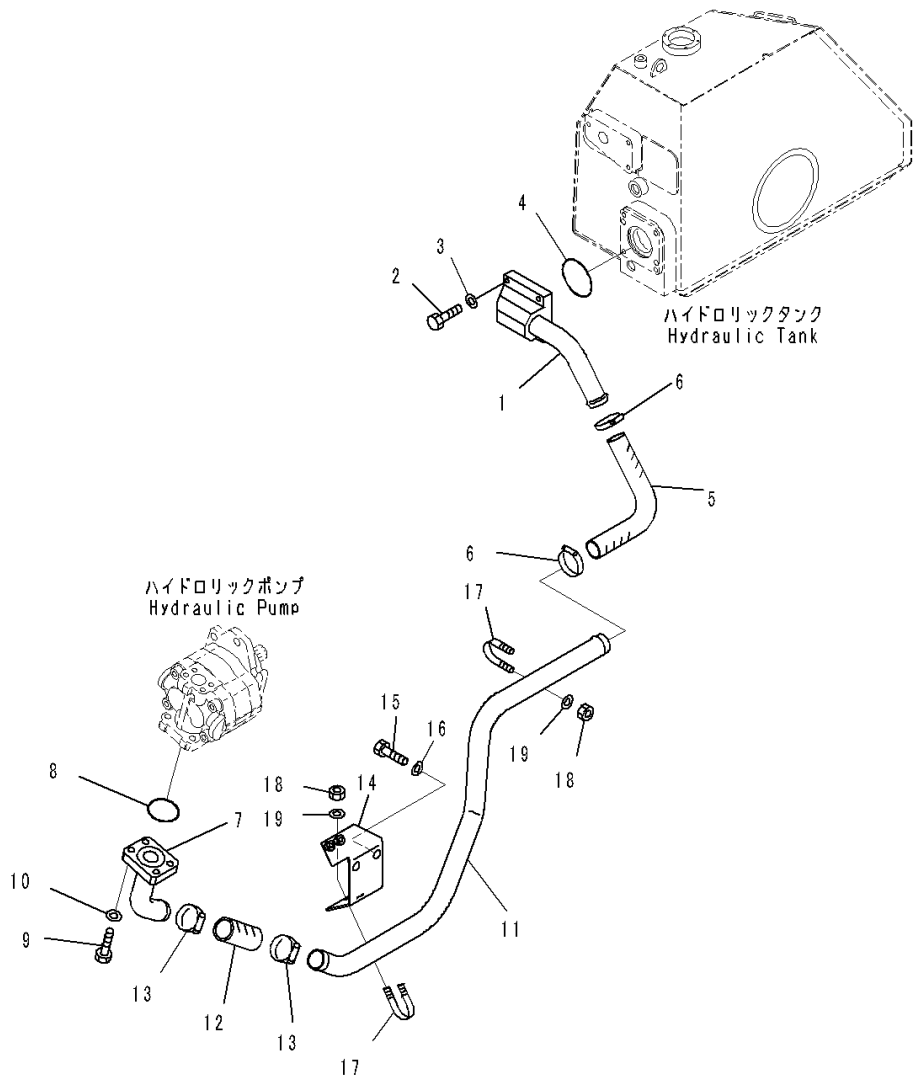

Index	Code	Part Number	Description	Qty	Serial Number
1		134-62-67540	Tube	1	J20001-
2		01010-81050	Bolt	4	J20001-
3		01643-31032	Washer	4	J20001-
4		07000-12090	O-ring	1	J20001-
5		134-62-61122	Hose	1	J20001-
6		07289-00055	Clamp	2	J20001-
7		134-62-61680	Tube	1	J20001-
8		07000-12060	O-ring	1	J20001-
9		01010-81245	Bolt	4	J20001-
10		01643-31232	Washer	4	J20001-
11		134-62-67560	Tube	1	J20001-
12		07260-04111	Hose	1	J20001-
13		07289-00055	Clamp	2	J20001-
14		134-62-61152	Bracket	1	J20001-
15		01010-81630	Bolt	2	J20001-
16		01643-31645	Washer	2	J20001-
17		07283-34346	Clip	2	J20001-
18		01597-01009	Nut	4	J20001-
19		01643-31032	Washer	4	J20001-

FIG. H0310-002002 Hydraulic Oil Pump Piping, Delivery Piping

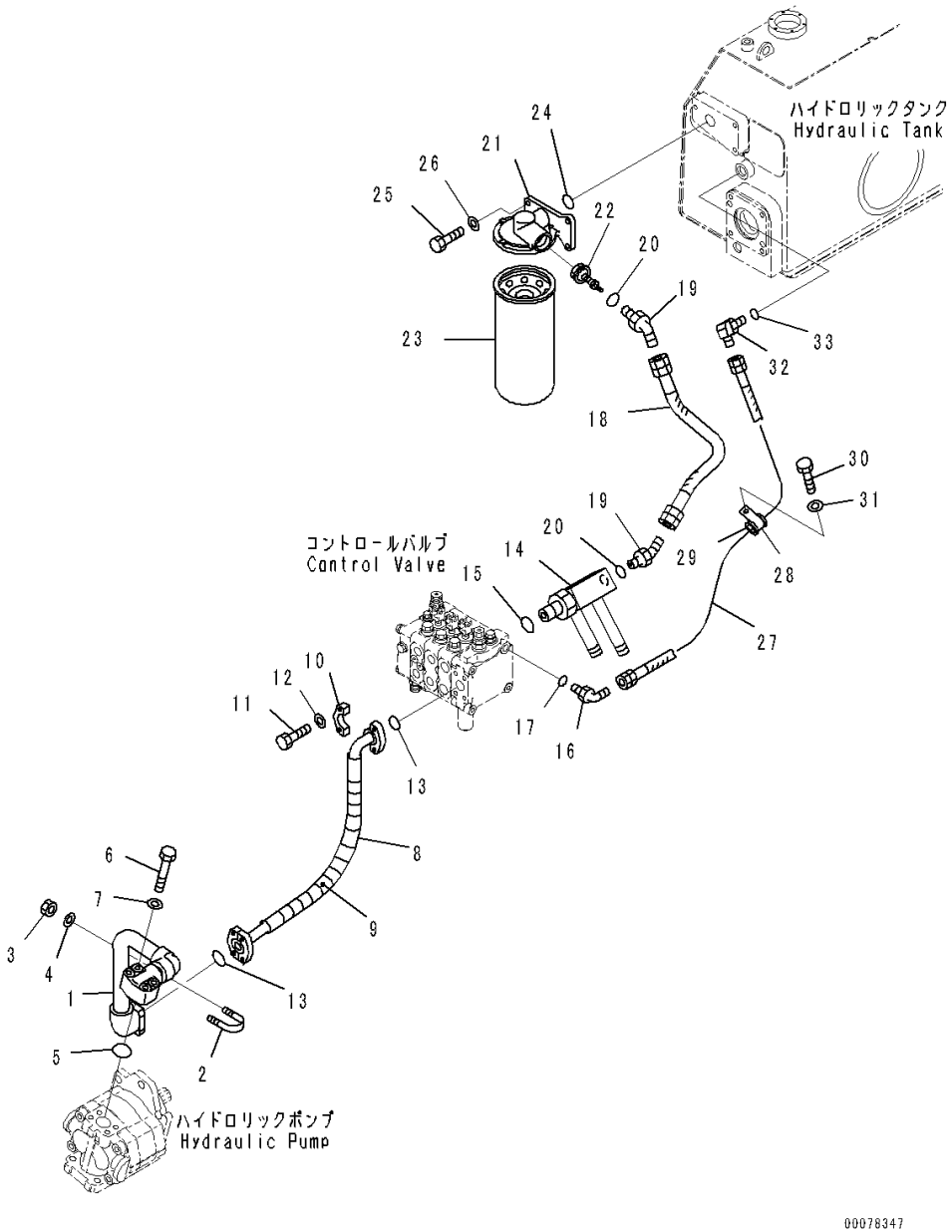

Index	Code	Part Number	Description	Qty	Serial Number
1		134-62-61612	Tube	1	J20001-
2		07283-33442	Clip	1	J20001-
3		01597-01009	Nut	2	J20001-
4		01643-31032	Washer	2	J20001-
5		07000-13035	O-ring	1	J20001-
6		01010-81060	Bolt	4	J20001-
7		01643-31032	Washer	4	J20001-
8		134-62-61162	Hose	1	J20001-
9		08210-02930	Tube, Spiral	1	J20001-
10		07371-31049	Flange, Split	4	J20001-
11		07372-21035	Bolt	8	J20001-
12		01643-51032	Washer	8	J20001-
13		07000-13032	O-ring	2	J20001-
14		134-62-61173	Elbow	1	J20001-
15		07002-13334	O-ring	1	J20001-
16		07235-10210	Elbow	1	J20001-
17		07002-11423	O-ring	1	J20001-
18		07102-210A4	Hose, Taper Seal Type, L=450mm	1	J20001-
19		07236-11034	Elbow	2	J20001-
20		07002-13334	O-ring	2	J20001-
		134-60-61310	Filter Assembly	1	J20001-
21		103-60-23250	• Base	1	J20001-
22		103-60-23260	• Valve	1	J20001-
23		21N-60-12210	• Cartridge	1	J20001-
24		07000-13032	O-ring	1	J20001-
25		01010-81030	Bolt	3	J20001-
26		01643-31032	Washer	3	J20001-
27		07102-20206	Hose, Taper Seal Type, L=600mm	1	J20001-
28		04434-51912	Clip	1	J20001-
29		07095-20213	Cushion	1	J20001-
30		01010-81220	Bolt	1	J20001-
31		01643-31232	Washer	1	J20001-
32		205-62-66181	Elbow	1	J20001-
33		07002-12434	O-ring	1	J20001-

FIG. H0310-002003 Hydraulic Oil Pump Piping, Cooling Piping

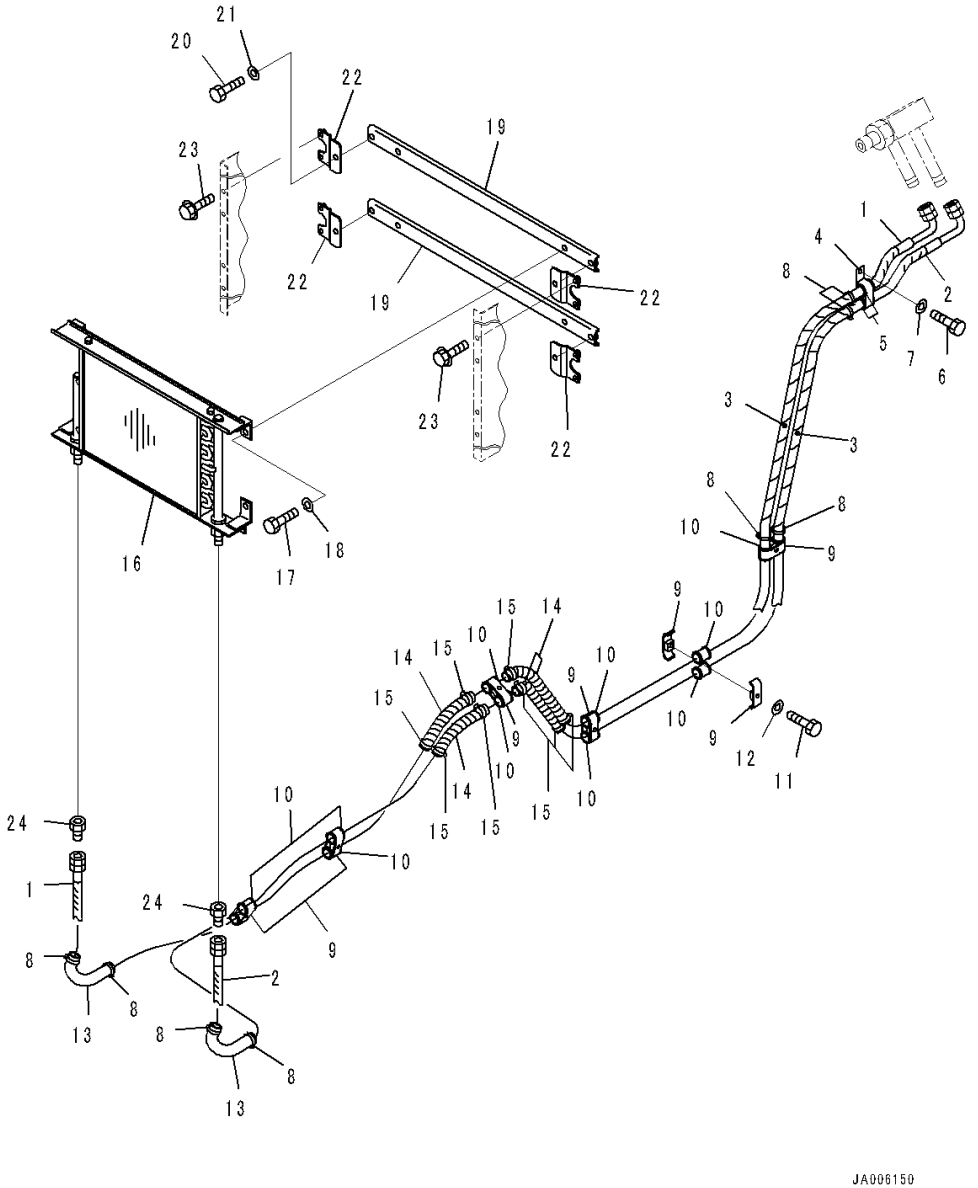

Index	Code	Part Number	Description	Qty	Serial Number
1		07621-00537	Hose, Taper Seal Type	1	J20001-
2		07621-00542	Hose, Taper Seal Type	1	J20001-
3		08210-01806	Tube, Spiral	2	J20001-
4		569-06-61980	Clip	1	J20001-
5		07095-20522	Cushion	2	J20001-
6		01010-81220	Bolt	1	J20001-
7		01643-31232	Washer	1	J20001-
8		08034-00536	Band	8	J20001-
9		07094-30518	Clamp	12	J20001-
10		07094-30518	Clamp	12	J20001-
11		01010-81265	Bolt	12	J20001-
12		01643-31232	Washer	12	J20001-
13		20U-62-11760	Tube	2	J20001-
14		08210-01802	Tube, Spiral	4	J20001-
15		08034-20519	Band	8	J20001-
16		113-49-41111	Cooler	1	J20001-
17		01010-81020	Bolt	4	J20001-
18		01643-31032	Washer	4	J20001-
19		134-54-61261	Plate	2	J20001-
20		01010-81020	Bolt	4	J20001-
21		01643-31032	Washer	4	J20001-
22		134-54-61480	Bracket	4	J20001-
23		01435-00812	Bolt	8	J20001-
24		20T-62-51390	Nipple	2	J20001-

FIG. H2210-001001 Dozer Blade Lift Piping, Piping

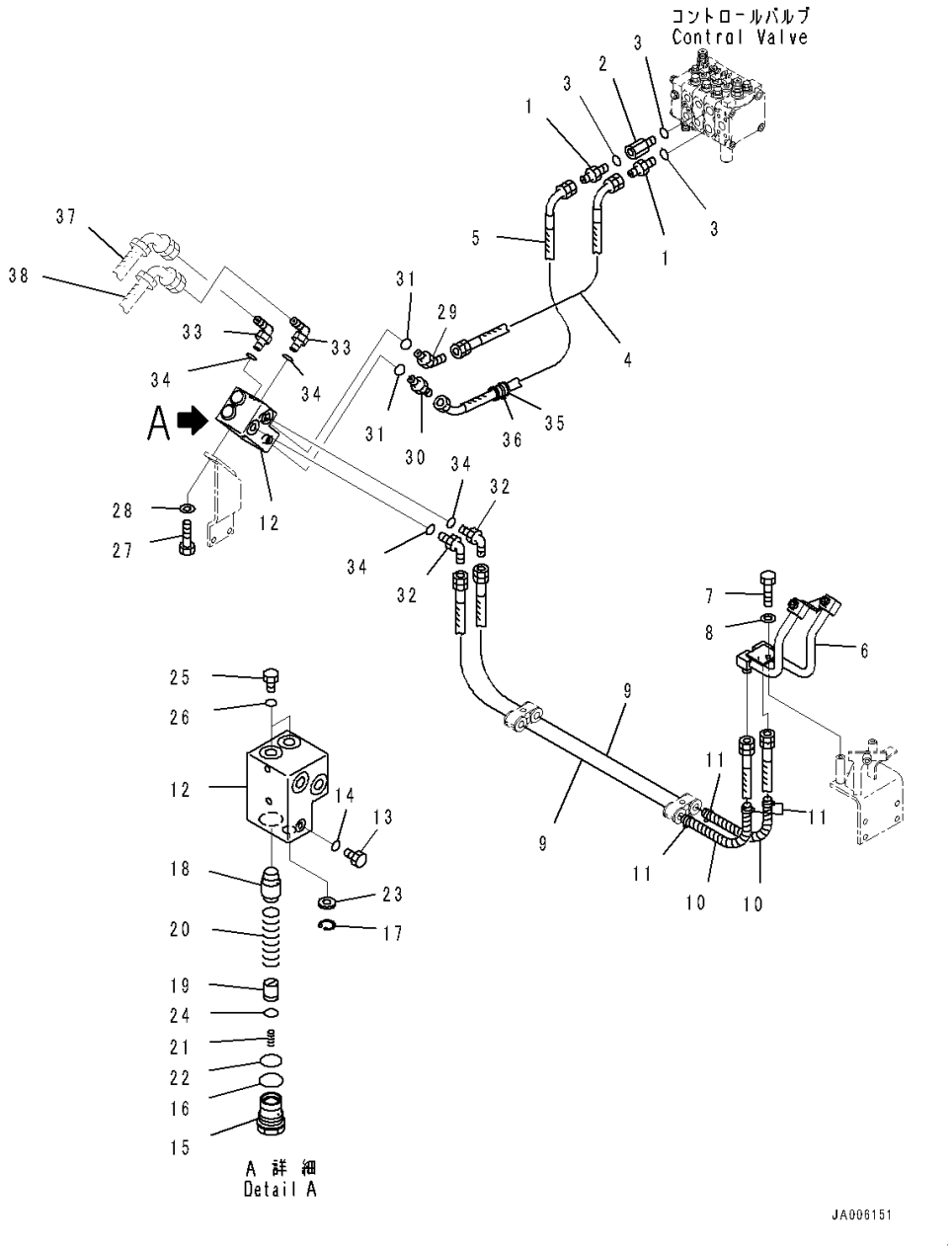

Index	Code	Part Number	Description	Qty	Serial Number
1		07230-20628	Union	2	J20001-
2		201-62-71820	Joint	1	J20001-
3		07002-12434	O-ring	3	J20001-
4		134-62-61311	Hose	1	J20001-
5		134-62-61431	Hose	1	J20001-
6		134-62-61322	Tube	1	J20001-
7		01010-81025	Bolt	2	J20001-
8		01643-31032	Washer	2	J20001-
9		134-62-61460	Hose	2	J20001-
10		08210-01803	Tube, Spiral	2	J20001-
11		08034-00519	Band	4	J20001-
		134-62-64101	Valve Assembly	1	J20001-
12	C1		• Valve Body	1	J20001-
13		07040-11007	• Plug	1	J20001-
14		07002-11023	• O-ring	1	J20001-
15		14X-62-16142	• Plug	1	J20001-
16		07002-14234	• O-ring	1	J20001-
17		04065-02012	• Ring, Snap	1	J20001-
18	C1		• Valve	1	J20001-
19		14X-62-16131	• Piston	1	J20001-
20		14X-62-16160	• Spring	1	J20001-
21		723-36-41930	• Spring	1	J20001-
22		07000-13032	• O-ring	1	J20001-
23		134-62-64120	• Collar	1	J20001-
24		702-21-35130	• Seal	1	J20001-
25		07040-12012	• Plug	2	J20001-
26		07002-12034	• O-ring	2	J20001-
27		01010-81230	Bolt	2	J20001-
28		01643-31232	Washer	2	J20001-
29		07236-10628	Elbow	1	J20001-
30		07230-20628	Union	1	J20001-
31		07002-12434	O-ring	2	J20001-
32		07235-10422	Elbow	2	J20001-
33		07235-10423	Elbow	2	J20001-
34		07002-12034	O-ring	4	J20001-
35		07095-00630	Cushion	1	J20001-
36		08034-20823	Band	1	J20001-
37		(134-62-63111)	Hose(Refer to Page 314)		-
38		(134-62-63121)	Hose(Refer to Page 314)		-

FIG. H2210-001002 Dozer Blade Lift Piping, Mounting Bracket

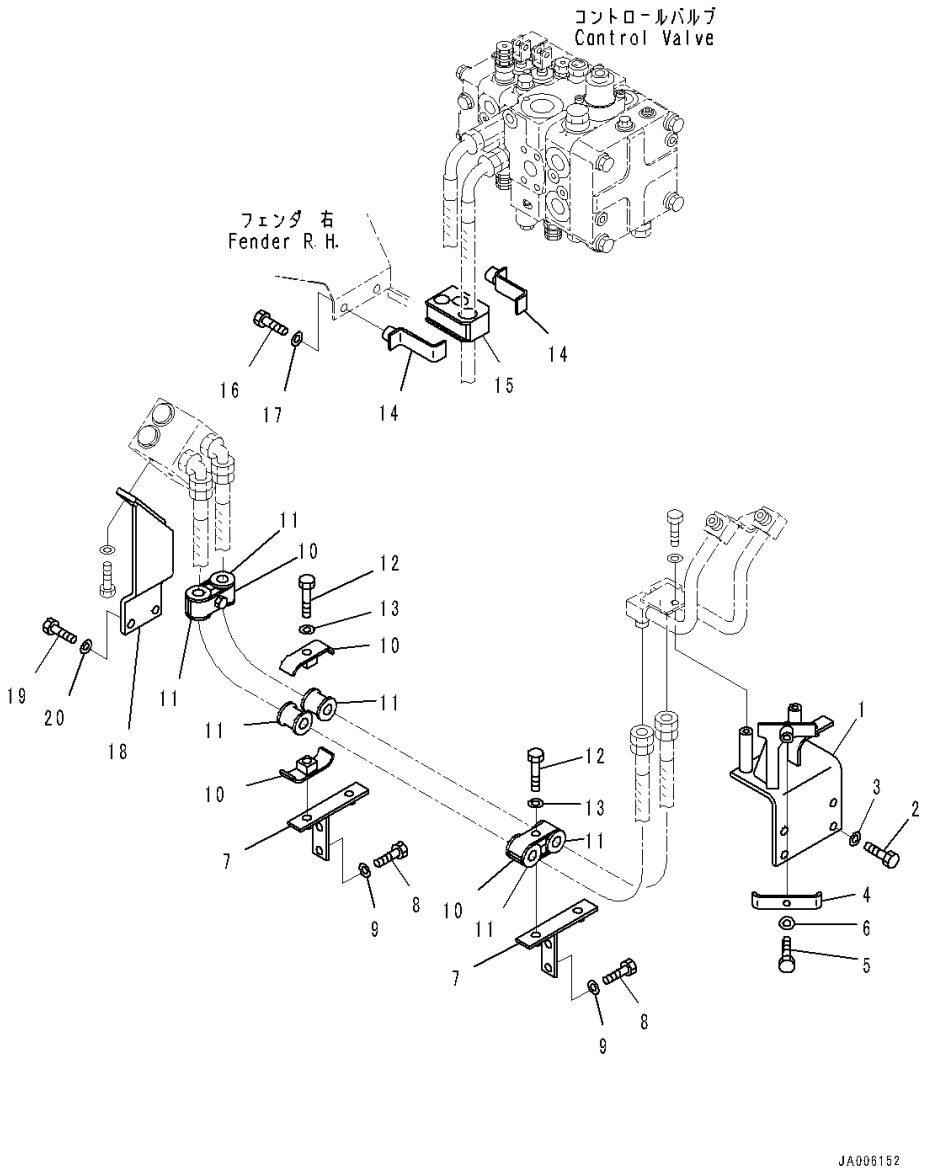

Index	Code	Part Number	Description	Qty	Serial Number
1		134-62-61352	Bracket	1	J20001-
2		01010-81240	Bolt	4	J20001-
3		01643-31232	Washer	4	J20001-
4		203-936-6260	Clamp	1	J20001-
5		01010-81045	Bolt	1	J20001-
6		01643-31032	Washer	1	J20001-
7		134-62-61371	Bracket	2	J20001-
8		01010-81225	Bolt	4	J20001-
9		01643-31232	Washer	4	J20001-
10		07094-30417	Clamp	6	J20001-
11		07095-00420	Cushion	6	J20001-
12		01010-81265	Bolt	3	J20001-
13		01643-31232	Washer	3	J20001-
14		134-62-61541	Plate	2	J20001-
15		134-62-61550	Cushion	1	J20001-
16		01010-81225	Bolt	2	J20001-
17		01643-31232	Washer	2	J20001-
18		134-62-61812	Bracket	1	J20001-
19		01010-81240	Bolt	2	J20001-
20		01643-31232	Washer	2	J20001-

FIG. H2220-002001 Dozer Blade Tilt Piping

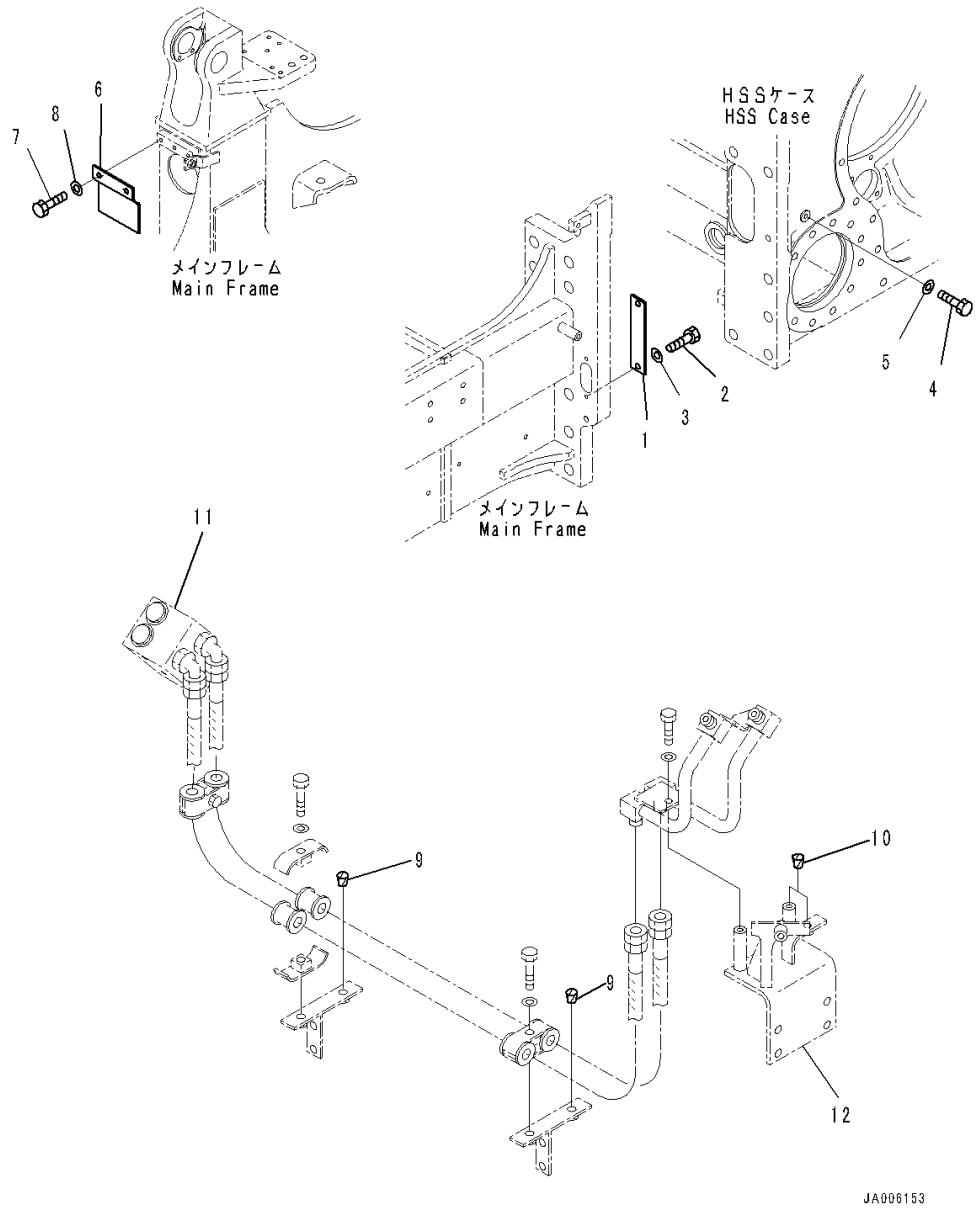

Index	Code	Part Number	Description	Qty	Serial Number
1		134-62-61560	Cover	2	J20001-
2		01010-81225	Bolt	4	J20001-
3		01643-31232	Washer	4	J20001-
4		01010-81220	Bolt	2	J20001-
5		01643-31232	Washer	2	J20001-
6		134-62-63180	Plate	2	J20001-
7		01010-81225	Bolt	4	J20001-
8		01643-31232	Washer	4	J20001-
9		07049-01215	Plug	2	J20001-
10		07049-01012	Plug	2	J20001-
11		(134-62-64112)	Valve Body(Refer to Page 231)		-
12		(134-62-61352)	Bracket(Refer to Page 232)		-

FRAME AND ITS RELATED PARTS

FIG. J2100-001001 Main Frame

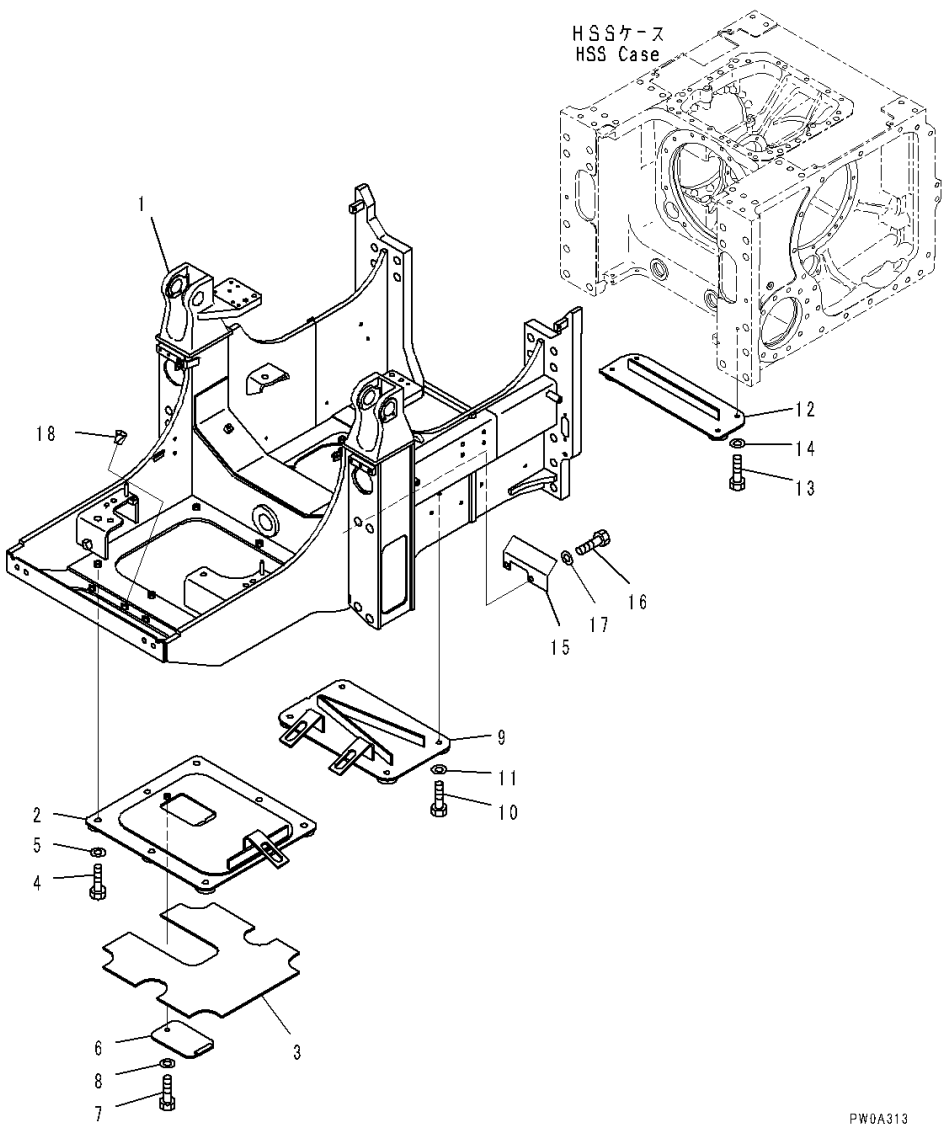

Index	Code	Part Number	Description	Qty	Serial Number
1		134-21-61101	Frame Assembly	1	J20001-
2		134-21-61372	Cover	1	J20001-
3		134-21-61390	• Plate	1	J20001-
4		01010-81645	Bolt	7	J20001-
5		01643-31645	Washer	7	J20001-
6		124-21-51332	Cover	1	J20001-
7		01010-81230	Bolt	1	J20001-
8		01643-31232	Washer	1	J20001-
9		134-21-61380	Cover	1	J20001-
10		01010-81635	Bolt	4	J20001-
11		01643-31645	Washer	4	J20001-
12		134-21-61242	Cover	1	J20001-
13		01010-81230	Bolt	4	J20001-
14		01643-31232	Washer	4	J20001-
15		134-21-61420	Cover	1	J20001-
16		01010-81220	Bolt	2	J20001-
17		01643-31232	Washer	2	J20001-
18		07049-01620	Plug	4	J20001-

FIG. J2700-001001 Equalizer Bar and Pivot Shaft, Shaft

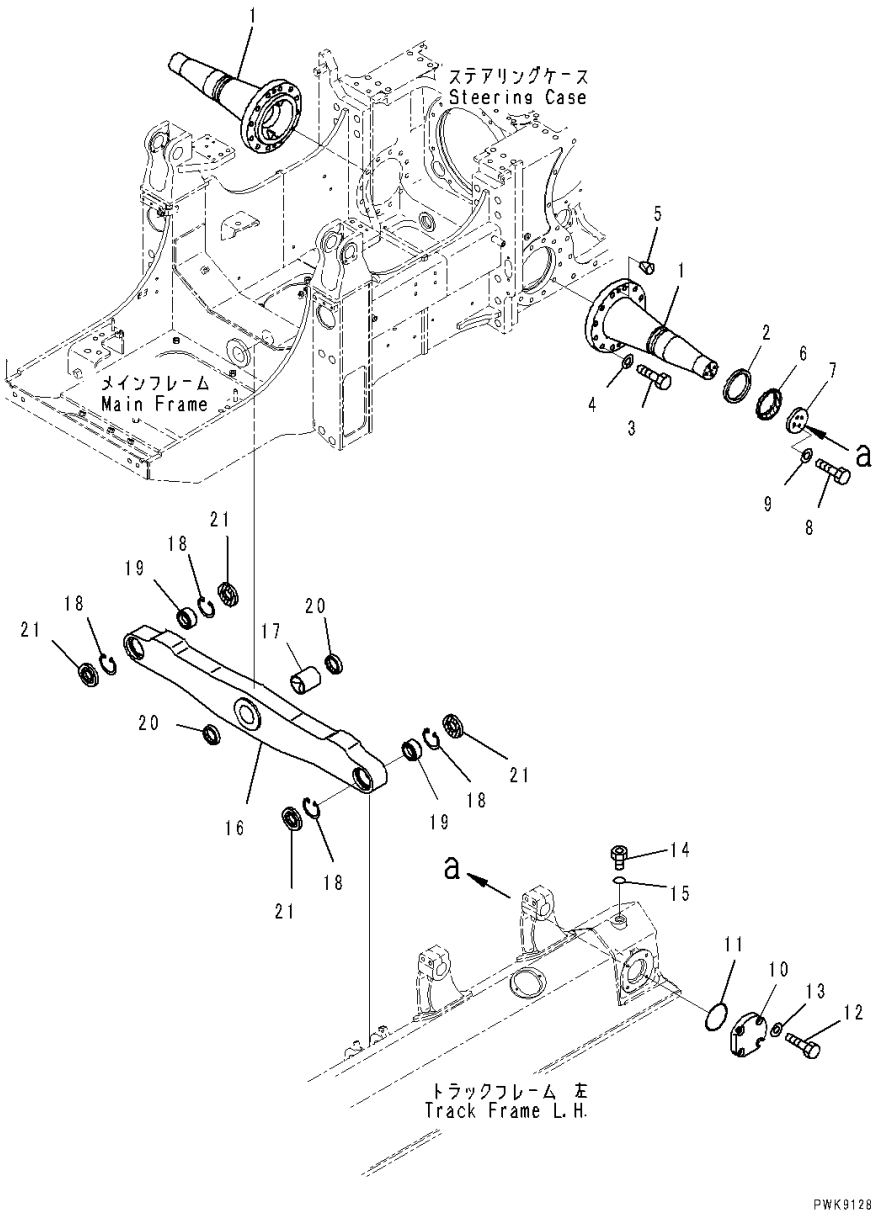

Index	Code	Part Number	Description	Qty	Serial Number
1		134-50-63120	Shaft	2	J20001-
2		134-50-61171	Ring	2	J20001-
3		01010-82080	Bolt	24	J20001-
4		01643-32060	Washer	24	J20001-
5		07049-02025	Plug	4	J20001-
6		134-50-61160	Seal	2	J20001-
7		134-50-61131	Spacer	2	J20001-
8		01010-81640	Bolt	8	J20001-
9		01643-31645	Washer	8	J20001-
10		134-50-61121	Cover	2	J20001-
11		07000-12125	O-ring	2	J20001-
12		01010-81640	Bolt	8	J20001-
13		01643-31645	Washer	8	J20001-
14		07040-12414	Plug	2	J20001-
15		07002-12434	O-ring	2	J20001-
16		134-50-63111	Bar	1	J20001-
17		13F-50-31131	Bushing	1	J20001-
18		04065-08530	Ring, Snap	4	J20001-
19		134-50-62150	Bushing	2	J20001-
20		130-09-12911	Seal, DUST	2	J20001-
21		134-50-62160	Seal	4	J20001-

FIG. J2700-001002 Equalizer Bar and Pivot Shaft, Pin

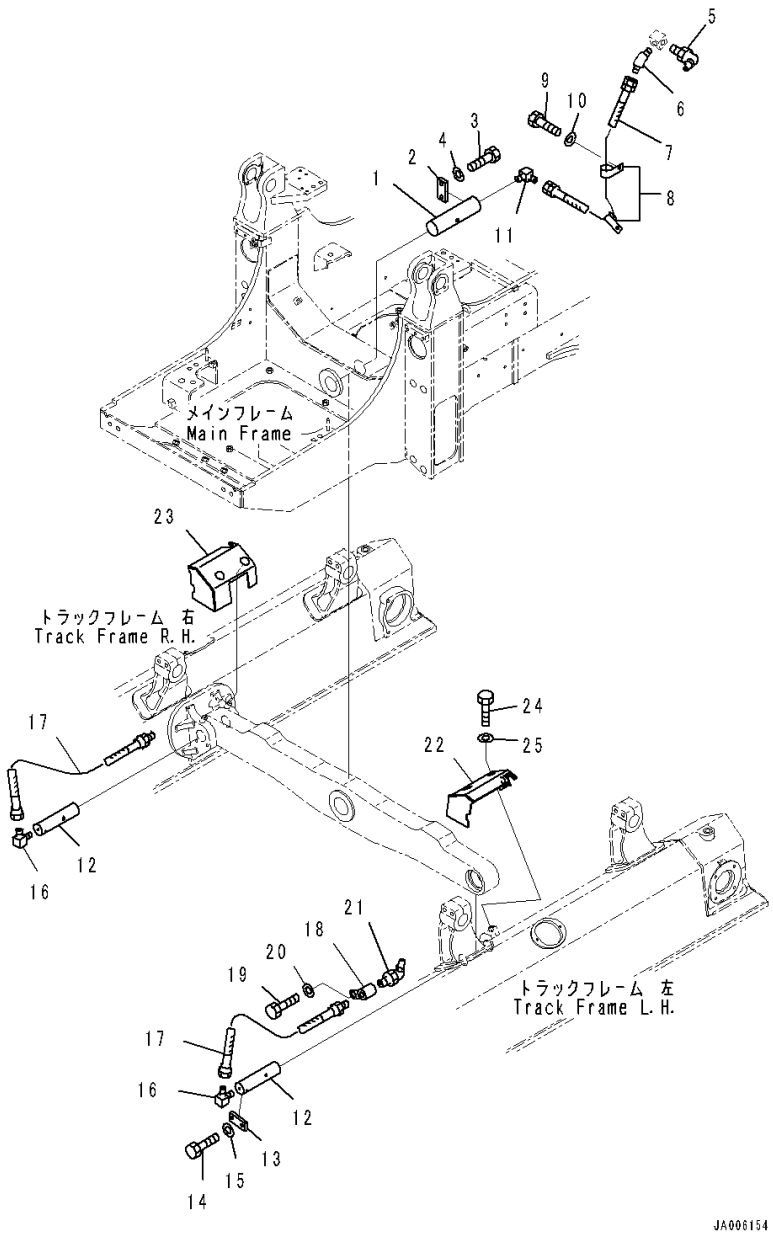

Index	Code	Part Number	Description	Qty	Serial Number
1		134-50-62121	Pin	1	J20001-
2		14Y-50-11390	Lock	1	J20001-
3		01010-81640	Bolt	2	J20001-
4		01643-31645	Washer	2	J20001-
5		07020-00675	Fitting, Grease	1	J20001-
6		41E-35-11391	Nipple	1	J20001-
7		134-50-62190	Hose	1	J20001-
8		04434-51312	Clip	2	J20001-
9		01010-81220	Bolt	2	J20001-
10		01643-31232	Washer	2	J20001-
11		203-62-42920	Elbow	1	J20001-
12		134-50-62131	Pin	2	J20001-
13		14Y-50-11390	Lock	2	J20001-
14		01010-81640	Bolt	4	J20001-
15		01643-31645	Washer	4	J20001-
16		202-62-21430	Elbow	2	J20001-
17		418-S95-2680	Hose	2	J20001-
18		12G-72-51120	Seat	2	J20001-
19		01010-81225	Bolt	2	J20001-
20		01643-31232	Washer	2	J20001-
21		07020-00675	Fitting, Grease	2	J20001-
22		134-50-63131	Cover, LHS	1	J20001-
23		134-50-63141	Cover, RHS	1	J20001-
24		01010-81020	Bolt	4	J20001-
25		01643-31032	Washer	4	J20001-

OPERATOR'S COMPARTMENT AND CONTROL SYSTEM

FIG. K0110-001001 Operator's Seat

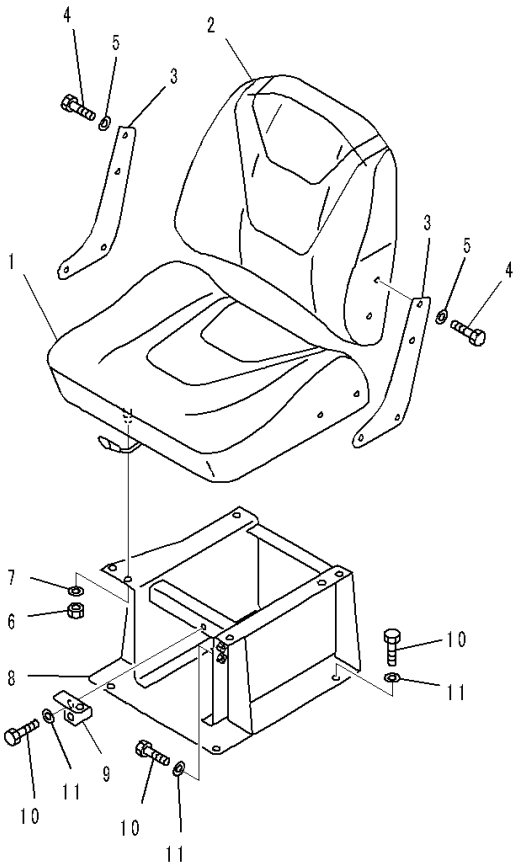

JA006247

Index	Code	Part Number	Description	Qty	Serial Number
		114-57-41251	Seat Assembly	1	J20001-
1		114-57-41260	• Cushion	1	J20001-
2		114-57-41271	• Cushion	1	J20001-
3		114-57-41280	• Plate	2	J20001-
4		01010-80825	• Bolt	8	J20001-
5		01643-30823	• Washer	8	J20001-
6		01580-11210	Nut	4	J20001-
7		01643-31232	Washer	4	J20001-
8		14X-57-11113	Bracket	1	J20001-
9		14X-57-11380	Plate	1	J20001-
10		01010-81230	Bolt	6	J20001-
11		01643-31232	Washer	6	J20001-

OPERATOR'S SEAT

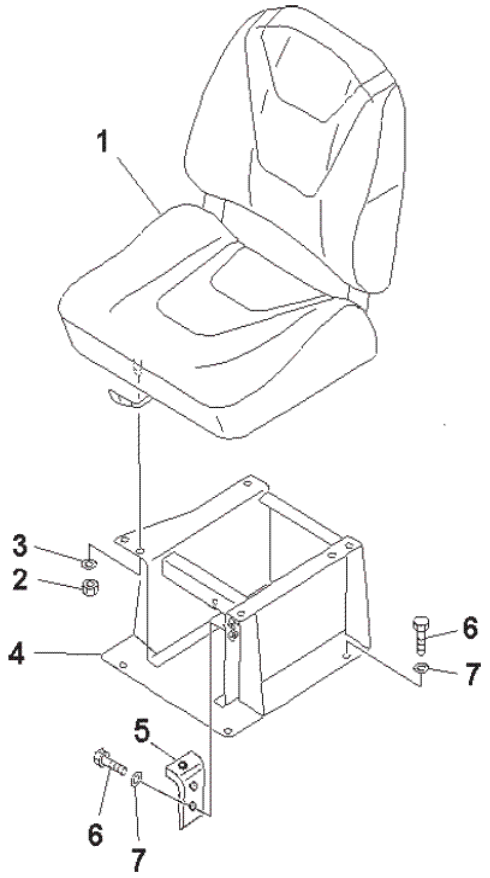

INDEX	CD	PART NO.	DESCRIPTION	QTY	SERIAL NO.
1		144-57-J1201	OPERATOR' SEAT ASS'Y.....	1	J20001-UP
2		14X-57-J1111	.BRACKET.....	1	J20001-UP
3		14X-57-J1381	.PLATE.....	1	J20001-UP
4		01010-81230	BOLT.....	6	J20001-UP
5		01643-31232	WASHER.....	6	J20001-UP
6		01580-01210	NUT.....	8	J20001-UP
7		01602-21236	WASHER.....	8	J20001-UP

FIG. K0310-001001 Anti slip Sheet

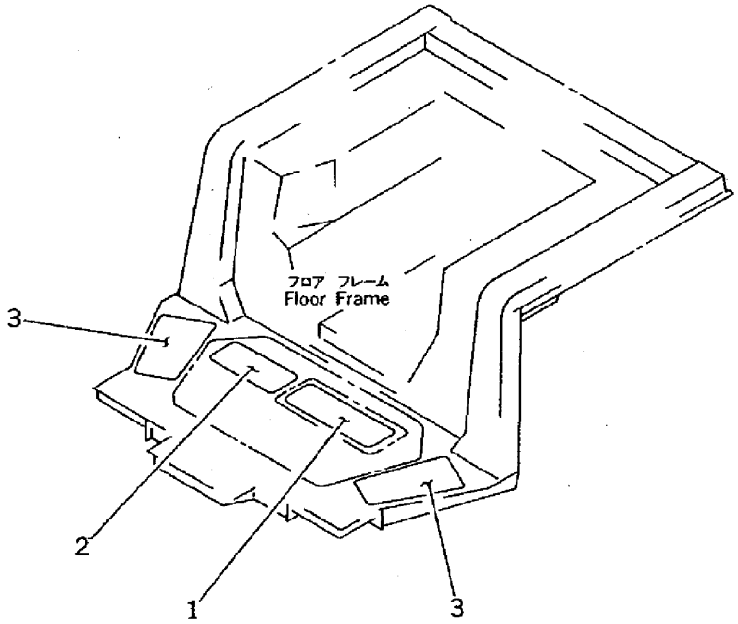

JA006219

Index	Code	Part Number	Description	Qty	Serial Number
1		14X-54-16240	Sheet	1	J20001-
2		134-54-61380	Sheet	1	J20001-
3		14X-54-16260	Sheet	2	J20001-

FIG. K0410-002001 Sweep Guard, With Side Screen

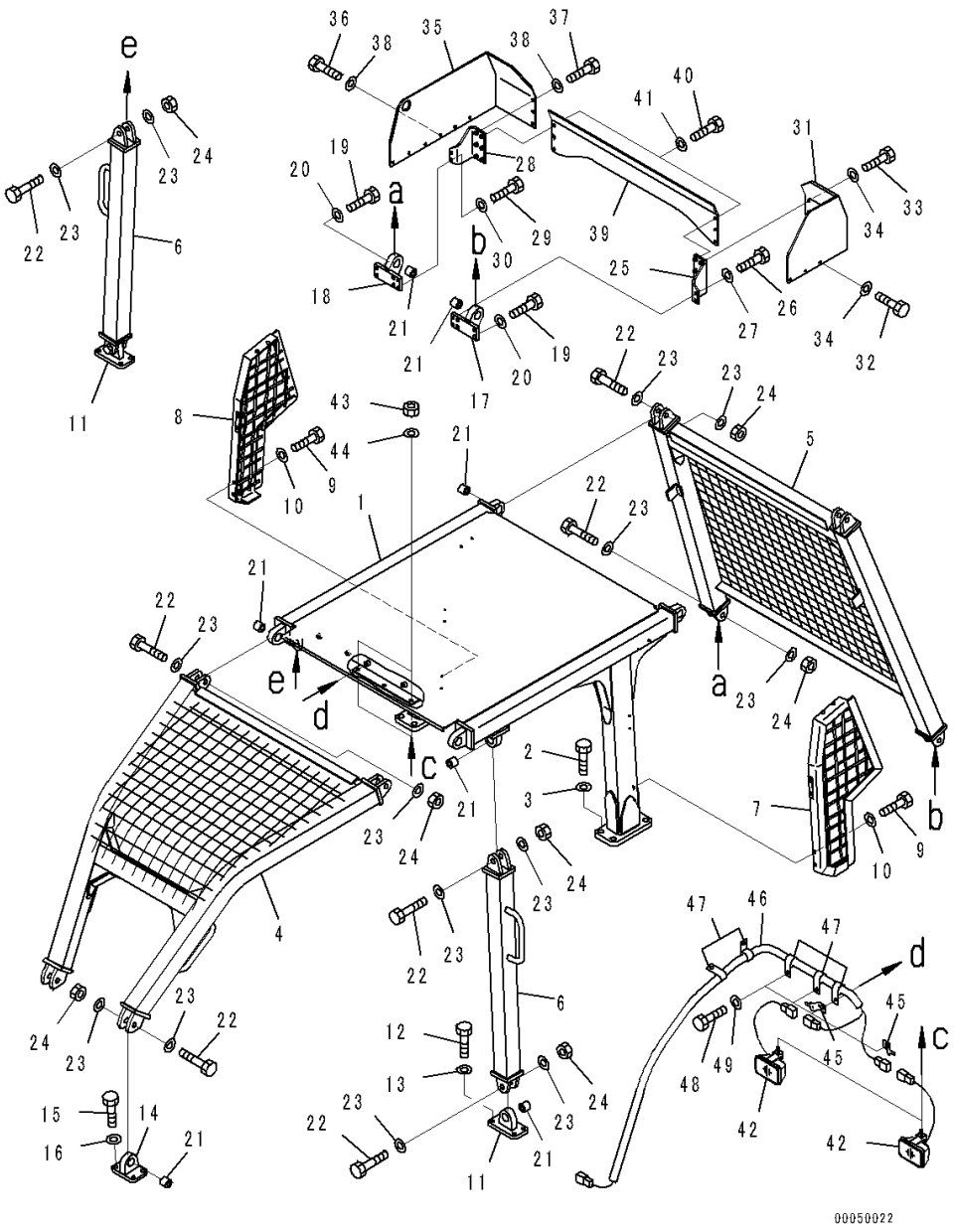

Index	Code	Part Number	Description	Qty	Serial Number
1		134-X06-2111	Guard	1	J20001-
2		01010-82460	Bolt	8	J20001-
3		01643-32460	Washer	8	J20001-
4		134-X06-2121	Sweeper	1	J20001-
5		134-X06-2131	Guard	1	J20001-
6		134-X06-2211	Pole	2	J20001-
7		134-X06-2350	Net,LHS	1	J20001-
8		134-X06-2360	Net,RHS	1	J20001-
9		01010-81230	Bolt	12	J20001-
10		01643-31232	Washer	12	J20001-
11		134-X06-2240	Bracket	2	J20001-
12		01010-81645	Bolt	8	J20001-
13		01643-31645	Washer	8	J20001-
14		134-X06-2270	Bracket	2	J20001-
15		01010-81645	Bolt	8	J20001-
16		01643-31645	Washer	8	J20001-
17		134-X06-J150	Bracket,LHS	1	J20001-
18		134-X06-J160	Bracket,RHS	1	J20001-
19		01010-81645	Bolt	8	J20001-
20		01643-31645	Washer	8	J20001-
21		134-X06-2230	Cushion	12	J20001-
22		01011-82420	Bolt	12	J20001-
23		01643-32460	Washer	24	J20001-
24		01596-02419	Nut, Flanged	12	J20001-
25		134-X06-J110	Plate,LHS	1	J20001-
26		01010-81230	Bolt	2	J20001-
27		01643-31232	Washer	2	J20001-
28		134-X06-J120	Plate,RHS	1	J20001-
29		01010-81230	Bolt	2	J20001-
30		01643-31232	Washer	2	J20001-
31		134-X06-J140	Cover	1	J20001-
32		01010-81230	Bolt	3	J20001-
33		01010-81240	Bolt	3	J20001-
34		01643-31232	Washer	6	J20001-
35		134-X06-J130	Cover	1	J20001-
36		01010-81230	Bolt	6	J20001-
37		01010-81240	Bolt	3	J20001-
38		01643-31232	Washer	9	J20001-
39		134-X06-J170	Cover	1	J20001-
40		01010-81240	Bolt	6	J20001-

FIG. K0410-002001 Sweep Guard, With Side Screen

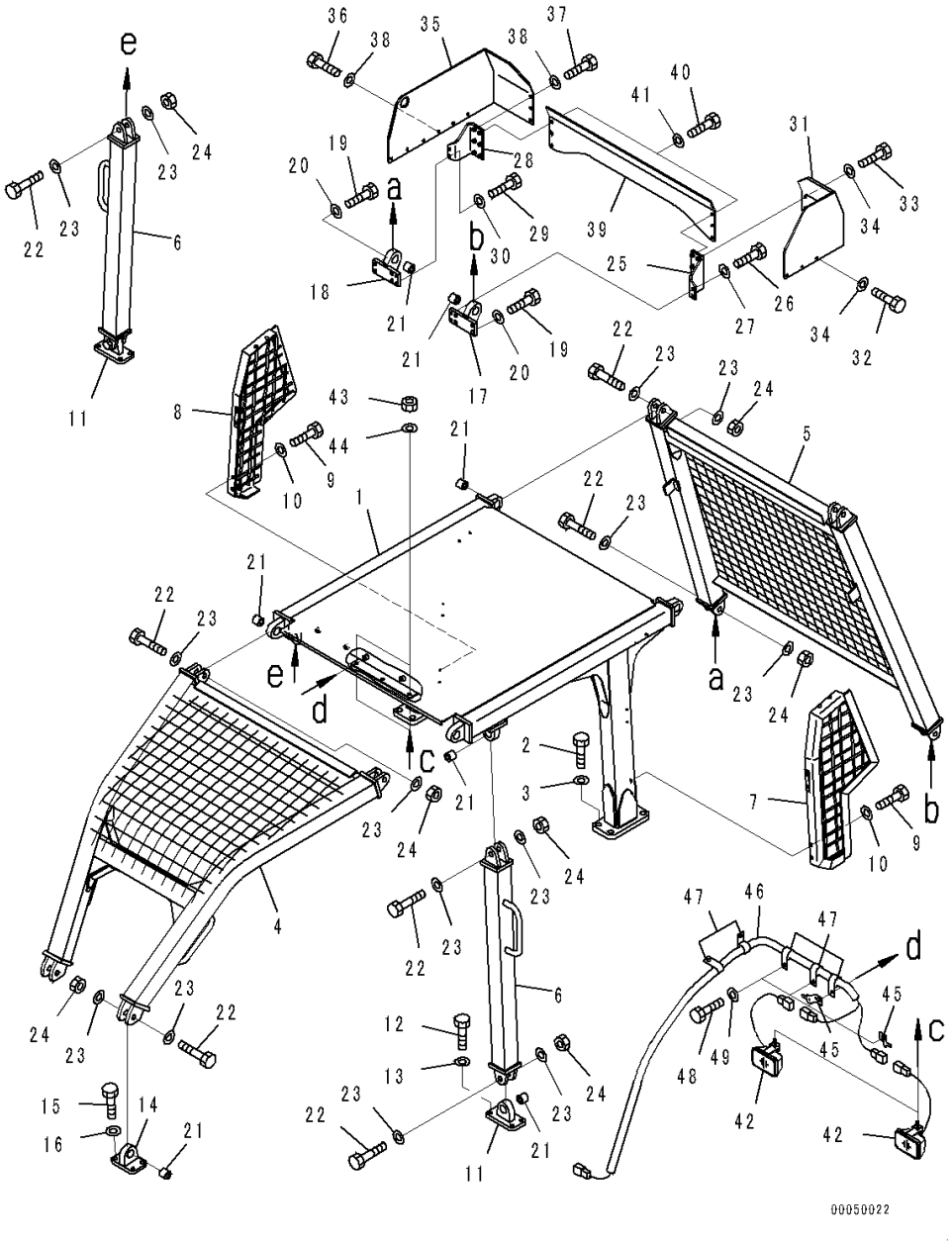

Index	Code	Part Number	Description	Qty	Serial Number
41		01643-31232	Washer	6	J20001-
42		134-06-61410	Working Lamp Assembly	2	J20001-
43		01582-11411	• Nut	1	J20001-
44		01643-31445	• Washer	1	J20001-
45		08053-01512	Clip	2	J20001-
46		134-X06-2290	Wiring Harness	1	J20001-
47		04434-51512	Clip	5	J20001-
48		01010-81220	Bolt	6	J20001-
49		01643-31232	Washer	6	J20001-

FIG. K0410-003001 Sweep Guard, Without Side Screen

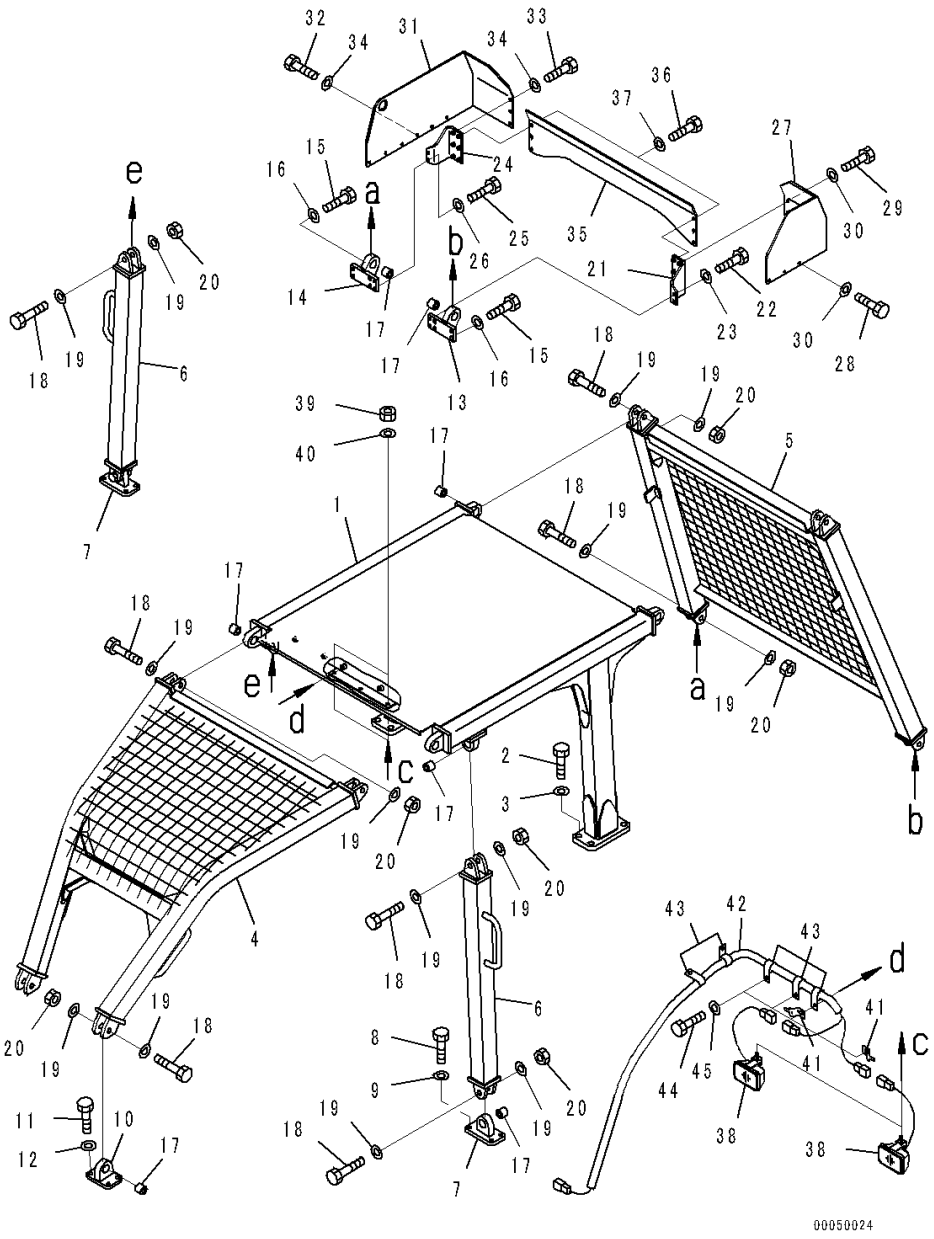

Index	Code	Part Number	Description	Qty	Serial Number
1		134-X06-2111	Guard	1	J20001-
2		01010-82460	Bolt	8	J20001-
3		01643-32460	Washer	8	J20001-
4		134-X06-2121	Sweeper	1	J20001-
5		134-X06-2131	Guard	1	J20001-
6		134-X06-2211	Pole	2	J20001-
7		134-X06-2240	Bracket	2	J20001-
8		01010-81645	Bolt	8	J20001-
9		01643-31645	Washer	8	J20001-
10		134-X06-2270	Bracket	2	J20001-
11		01010-81645	Bolt	8	J20001-
12		01643-31645	Washer	8	J20001-
13		134-X06-2250	Bracket,LHS	1	J20001-
14		134-X06-2260	Bracket,RHS	1	J20001-
15		01010-81645	Bolt	8	J20001-
16		01643-31645	Washer	8	J20001-
17		134-X06-2230	Cushion	12	J20001-
18		01011-82420	Bolt	12	J20001-
19		01643-32460	Washer	24	J20001-
20		01596-02419	Nut, Flanged	12	J20001-
21		134-X06-2170	Plate,LHS	1	J20001-
22		01010-81230	Bolt	2	J20001-
23		01643-31232	Washer	2	J20001-
24		134-X06-2180	Plate,RHS	1	J20001-
25		01010-81230	Bolt	2	J20001-
26		01643-31232	Washer	2	J20001-
27		134-X06-2151	Cover	1	J20001-
28		01010-81230	Bolt	3	J20001-
29		01010-81240	Bolt	3	J20001-
30		01643-31232	Washer	6	J20001-
31		134-X06-2161	Cover	1	J20001-
32		01010-81230	Bolt	6	J20001-
33		01010-81240	Bolt	3	J20001-
34		01643-31232	Washer	9	J20001-
35		134-X06-2191	Cover	1	J20001-
36		01010-81240	Bolt	6	J20001-
37		01643-31232	Washer	6	J20001-
38		134-06-61410	Working Lamp Assembly	2	J20001-
39		01582-11411	• Nut	1	J20001-
40		01643-31445	• Washer	1	J20001-

FIG. K0410-003001 Sweep Guard, Without Side Screen

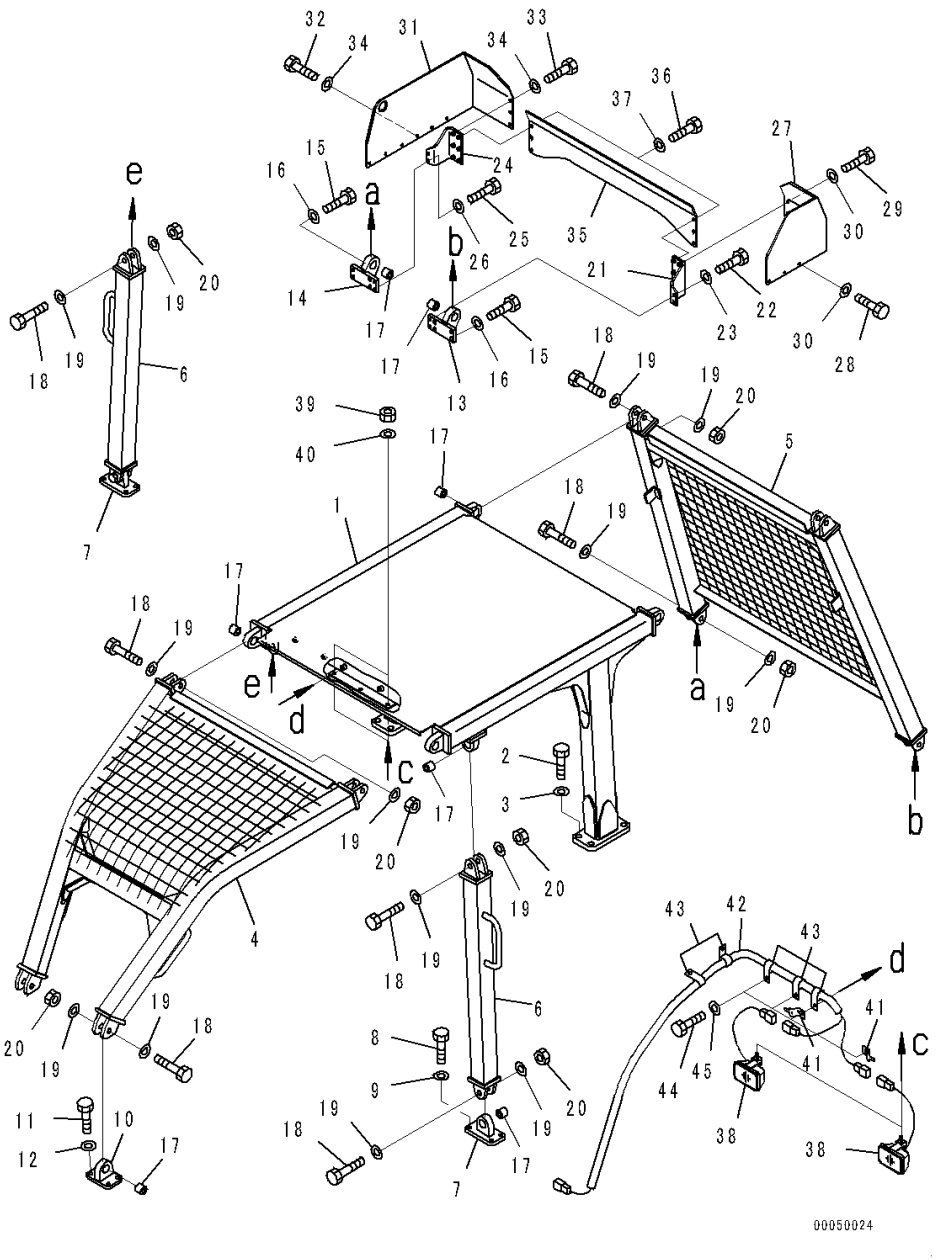

Index	Code	Part Number	Description	Qty	Serial Number
41		08053-01512	Clip	2	J20001-
42		134-X06-2290	Wiring Harness	1	J20001-
43		04434-51512	Clip	5	J20001-
44		01010-81220	Bolt	6	J20001-
45		01643-31232	Washer	6	J20001-

FIG. K2110-001001 Floor Frame, Frame

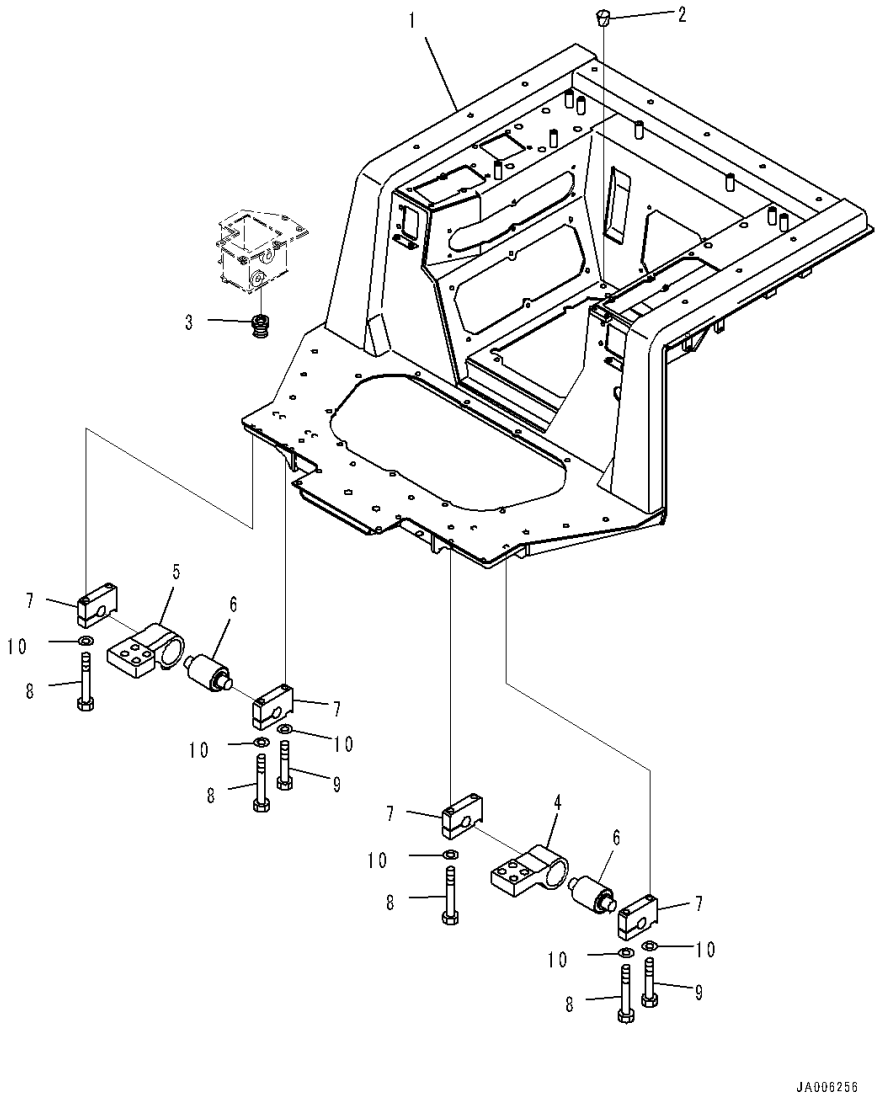

Index	Code	Part Number	Description	Qty	Serial Number
1		134-54-65210	Frame	1	J20001-
2		07049-01215	Plug	8	J20001-
3		08037-11025	Grommet	1	J20001-
4		124-54-53450	Bracket	1	J20001-
5		134-54-63472	Bracket	1	J20001-
6		17A-54-16821	Cushion	2	J20001-
7		134-54-63481	Plate	4	J20001-
8		01011-81615	Bolt	4	J20001-
9		01011-81605	Bolt	4	J20001-
10		01643-31645	Washer	8	J20001-

FIG. K2110-001002 Floor Frame, Lever

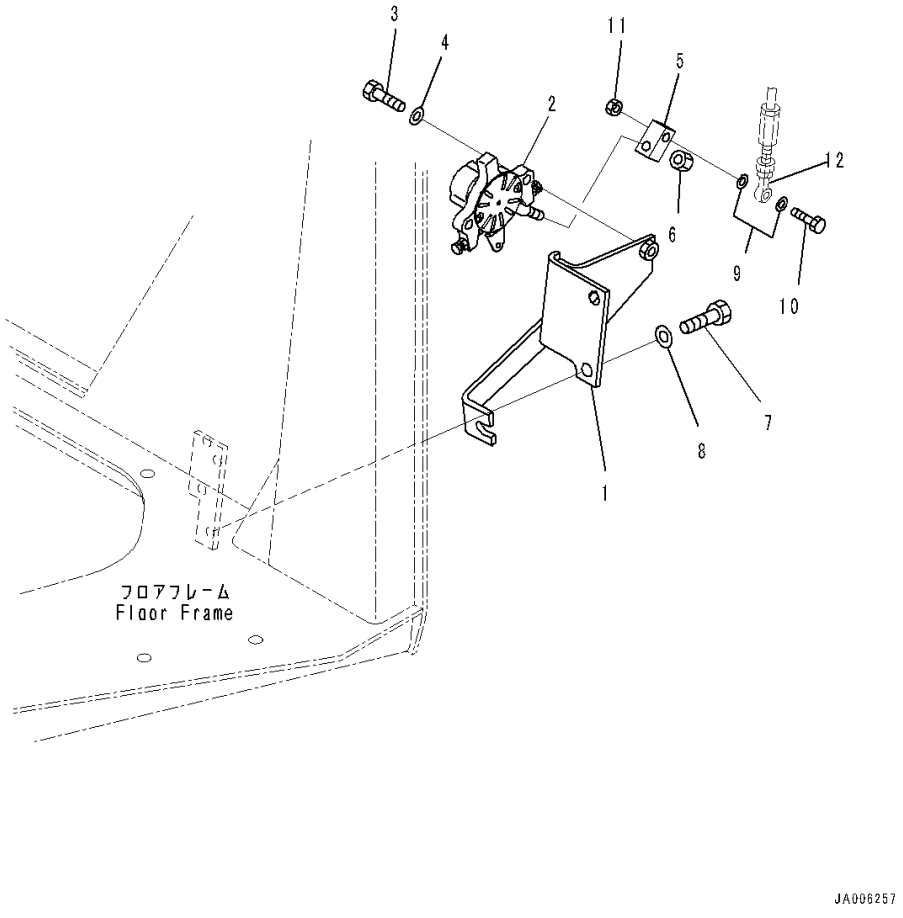

Index	Code	Part Number	Description	Qty	Serial Number
1		134-43-68250	Bracket	1	J20001-
2		134-43-66210	Lever Assembly	1	J20001-
3		01252-41030	Bolt, Hexagon Socket Head	2	J20001-
4		01643-31032	Washer	2	J20001-
5		124-43-54590	Joint	1	J20001-
6		01582-11008	Nut	1	J20001-
7		01010-81220	Bolt	2	J20001-
8		01643-31232	Washer	2	J20001-
9		04254-11032	Spacer	2	J20001-
10		01010-81050	Bolt	1	J20001-
11		01580-11008	Nut	2	J20001-
12		(04250-81056)	End(Refer to Page 252)		-

FIG. K2110-001003 Floor Frame, Blade Control Lever

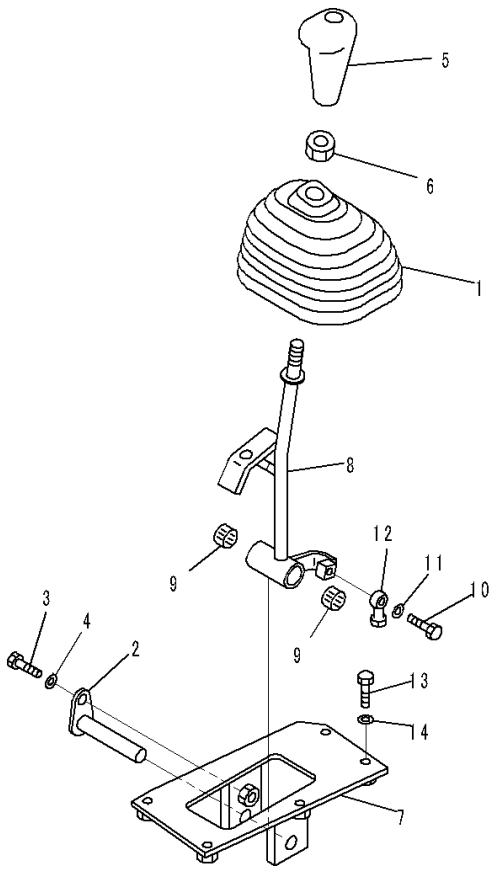

JA006258

Index	Code	Part Number	Description	Qty	Serial Number
1		14X-43-11320	Boot	1	J20001-
2		134-43-66350	Shaft	1	J20001-
3		01010-81230	Bolt	1	J20001-
4		01643-51232	Washer	1	J20001-
5		14X-43-14171	Knob	1	J20001-
6		20T-43-71190	Nut	1	J20001-
7		134-43-61510	Bracket	1	J20001-
8		134-43-61491	Lever	1	J20001-
9		06123-01614	Bearing	2	J20001-
10		01010-80830	Bolt	1	J20001-
11		01643-30823	Washer	1	J20001-
12		04250-80847	Rod End	1	J20001-
13		01010-80830	Bolt	5	J20001-
14		01643-30823	Washer	5	J20001-

FIG. K2110-001004 Floor Frame, Control Box

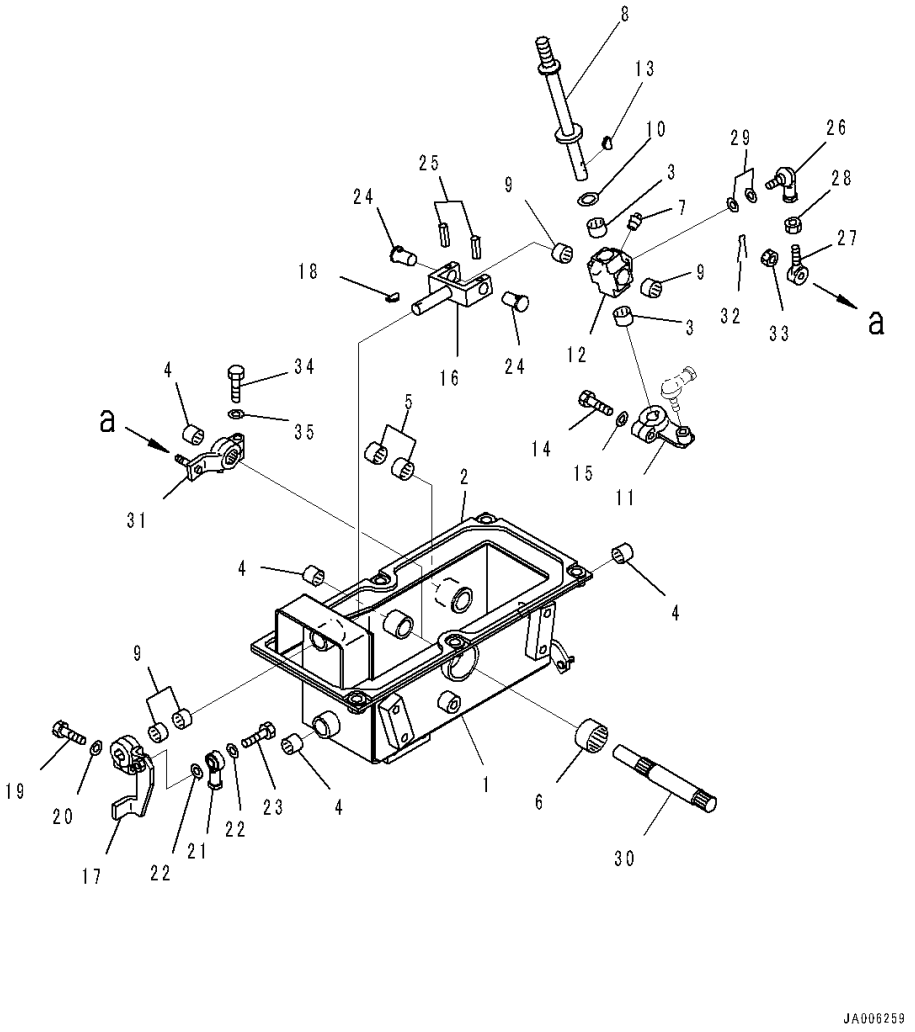

Index	Code	Part Number	Description	Qty	Serial Number
1		134-43-61331	Bracket	1	J20001-
2		14Z-43-13180	• Sheet, Bonded	1	J20001-
3		06123-01414	Bearing	2	J20001-
4		06124-01416	Bearing, Needle	4	J20001-
5		06123-01614	Bearing	2	J20001-
6		06124-03520	Bearing, Needle	1	J20001-
7		07042-70108	Plug	1	J20001-
8		124-43-51620	Lever	1	J20001-
9		06123-01414	Bearing	4	J20001-
10		124-43-51610	Shim	1	J20001-
11		134-43-61420	Lever	1	J20001-
12		17A-43-25151	Lever	1	J20001-
13		04010-00516	Key	1	J20001-
14		01010-80830	Bolt	1	J20001-
15		01643-30823	Washer	1	J20001-
16		17A-43-25131	Yoke	1	J20001-
17		134-43-67160	Lever	1	J20001-
18		04010-00516	Key	1	J20001-
19		01010-80830	Bolt	1	J20001-
20		01643-30823	Washer	1	J20001-
21		04250-80847	Rod End	1	J20001-
22		04254-10823	Spacer	2	J20001-
23		01010-80830	Bolt	1	J20001-
24		17A-43-25140	Pin	2	J20001-
25		04025-00520	Pin, Spring	2	J20001-
26		04256-40817	Joint, Ball	1	J20001-
27		04252-20853	End	1	J20001-
28		01580-10806	Nut	1	J20001-
29		01643-30823	Washer	2	J20001-
30		124-43-51631	Shaft	1	J20001-
31		17A-43-25171	Lever	1	J20001-
32		04050-12015	Pin, Cotter	1	J20001-
33		01590-30809	Nut	1	J20001-
34		01010-80830	Bolt	1	J20001-
35		01643-30823	Washer	1	J20001-

FIG. K2110-001005 Floor Frame, Fuel Control Lever

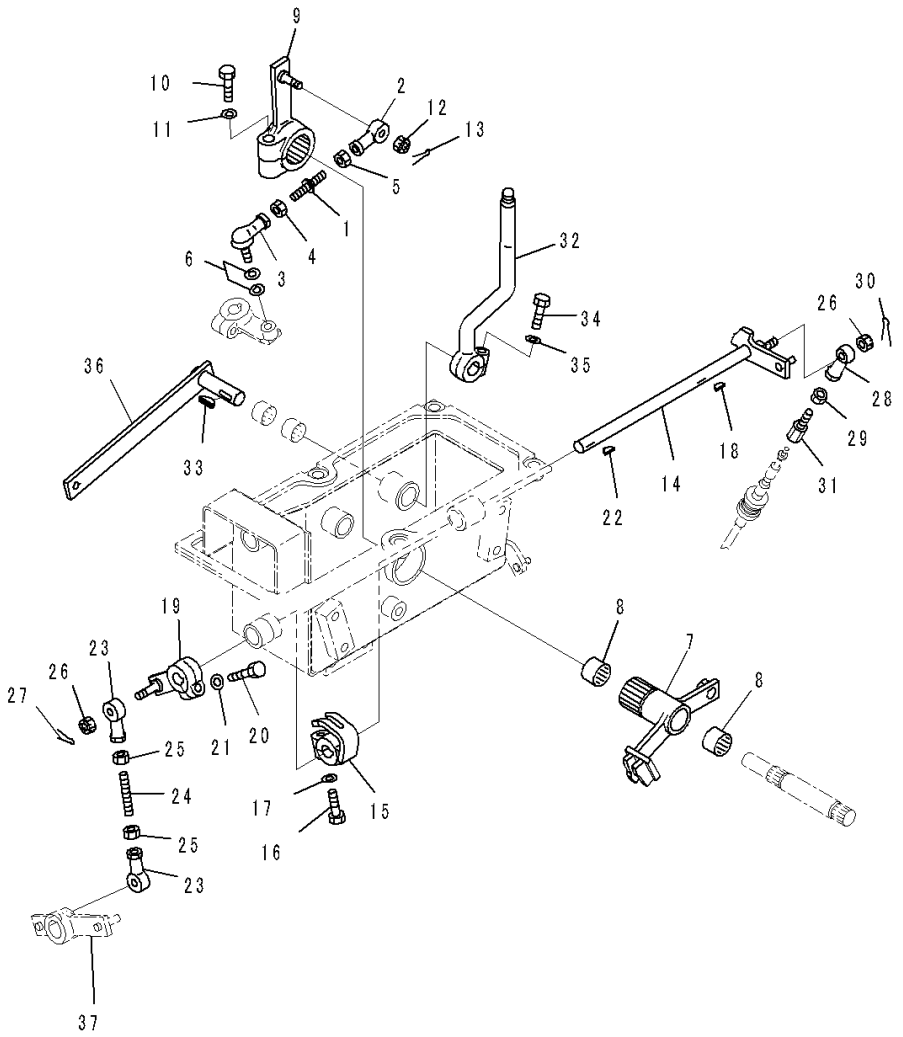

Index	Code	Part Number	Description	Qty	Serial Number
1		205-43-72920	Bolt	1	J20001-
2		04250-90847	Rod End	1	J20001-
3		04256-40817	Joint, Ball	1	J20001-
4		01580-10806	Nut	1	J20001-
5		01508-20805	Nut, Left-handed	1	J20001-
6		01643-30823	Washer	2	J20001-
7		134-43-61282	Lever	1	J20001-
8		06123-02018	Bearing, Needle	2	J20001-
9		134-43-61230	Lever	1	J20001-
10		01010-81245	Bolt	1	J20001-
11		01643-31232	Washer	1	J20001-
12		01590-30809	Nut	1	J20001-
13		04050-12015	Pin, Cotter	1	J20001-
14		134-43-61220	Lever	1	J20001-
15		14X-43-15740	Lever	1	J20001-
16		01010-80830	Bolt	1	J20001-
17		01643-30823	Washer	1	J20001-
18		04010-00516	Key	1	J20001-
19		17A-43-25271	Lever	1	J20001-
20		01010-80830	Bolt	1	J20001-
21		01643-30823	Washer	1	J20001-
22		04010-00516	Key	1	J20001-
23		04250-80847	Rod End	2	J20001-
24		04245-40805	Rod	1	J20001-
25		01580-10806	Nut	2	J20001-
26		01590-30809	Nut	2	J20001-
27		04050-12015	Pin, Cotter	1	J20001-
28		04250-90847	Rod End	1	J20001-
29		01508-40805	Nut	1	J20001-
30		04050-12015	Pin, Cotter	1	J20001-
31		124-43-52160	Joint	1	J20001-
32		134-43-66171	Lever	1	J20001-
33		04010-00519	Key, Woodruff	1	J20001-
34		01010-80830	Bolt	1	J20001-
35		01643-30823	Washer	1	J20001-
36		134-43-66241	Lever	1	J20001-
37		(17A-43-25531)	Lever(Refer to Page 255)		-

FIG. K2110-001006 Floor Frame, Steering Control (1/2)

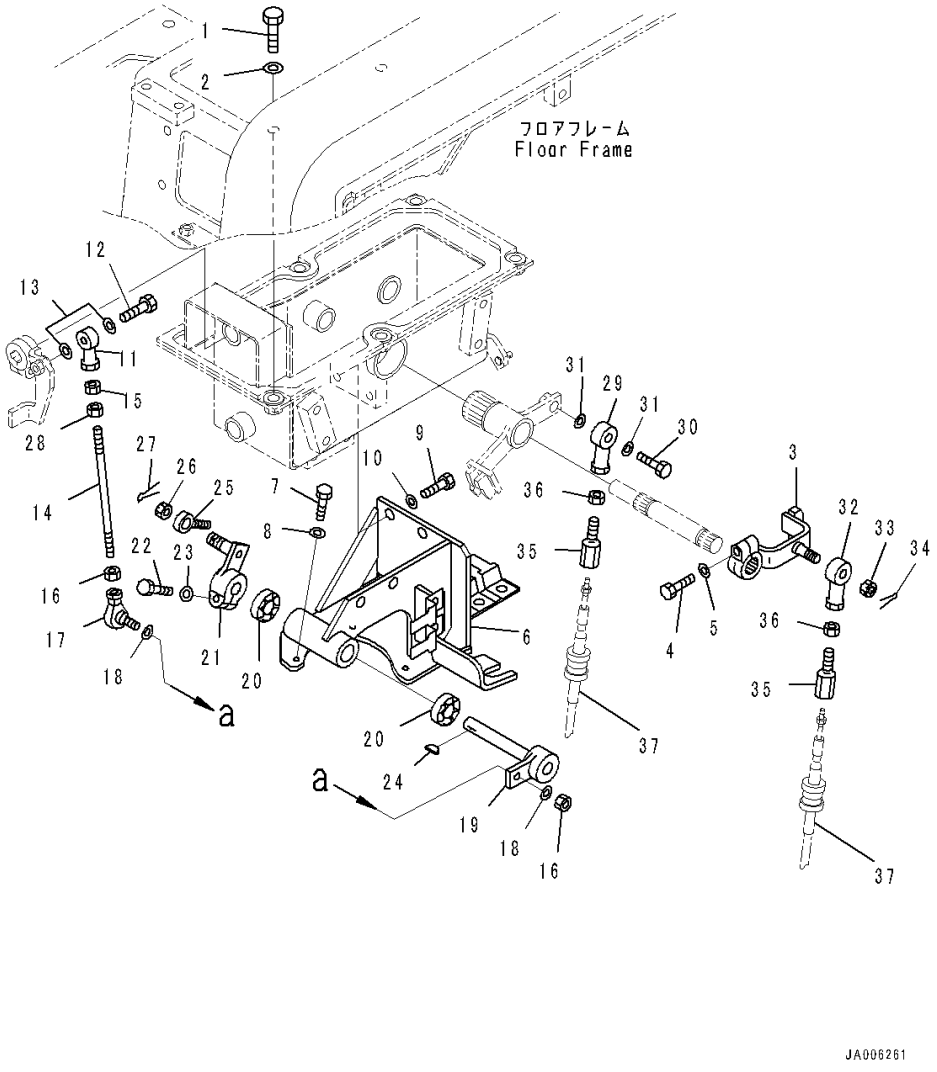

Index	Code	Part Number	Description	Qty	Serial Number
1		01010-81030	Bolt	6	J20001-
2		01643-31032	Washer	6	J20001-
3		134-43-61272	Lever	1	J20001-
4		01010-80830	Bolt	1	J20001-
5		01643-30823	Washer	1	J20001-
6		134-43-67120	Bracket	1	J20001-
7		01010-80830	Bolt	3	J20001-
8		01643-30823	Washer	3	J20001-
9		01010-81030	Bolt	4	J20001-
10		01643-31032	Washer	4	J20001-
11		04250-80847	Rod End	1	J20001-
12		01010-80835	Bolt	1	J20001-
13		04254-10823	Spacer	2	J20001-
14		04248-30817	Rod	1	J20001-
15		01508-40805	Nut	1	J20001-
16		01580-10806	Nut	2	J20001-
17		04256-40817	Joint, Ball	1	J20001-
18		01643-30823	Washer	2	J20001-
19		134-43-67130	Lever	1	J20001-
20		06123-01416	Bearing, Needle	2	J20001-
21		134-43-67140	Lever	1	J20001-
22		01010-80830	Bolt	1	J20001-
23		01643-30823	Washer	1	J20001-
24		04010-00516	Key	1	J20001-
25		04252-20853	End	1	J20001-
26		01590-30809	Nut	1	J20001-
27		04050-12015	Pin, Cotter	1	J20001-
28		01580-10806	Nut	1	J20001-
29		04250-91056	Rod End, Left-handed Thread	1	J20001-
30		01010-81035	Bolt	1	J20001-
31		01643-31032	Washer	2	J20001-
32		04250-91056	Rod End, Left-handed Thread	1	J20001-
33		01593-11008	Nut, Slotted	1	J20001-
34		04050-12018	Pin, Cotter	1	J20001-
35		14Z-43-11170	Joint	2	J20001-
36		01508-41006	Nut, Left-handed	2	J20001-
37		(134-43-66260)	Cable(Refer to Page 217)		-

FIG. K2110-001007 Floor Frame, Steering Control (2/2)

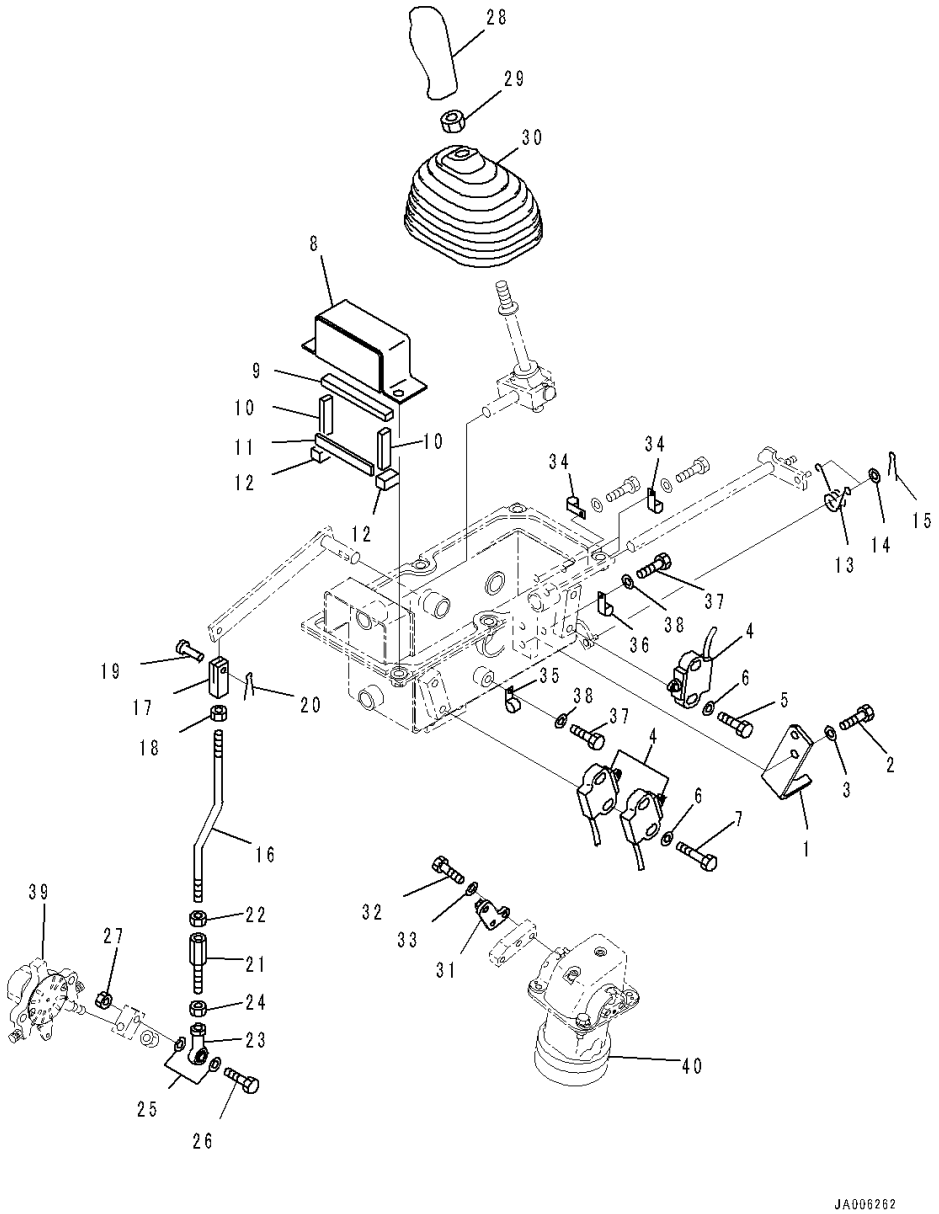

Index	Code	Part Number	Description	Qty	Serial Number
1		134-43-61310	Plate	1	J20001-
2		01010-81025	Bolt	2	J20001-
3		01643-31032	Washer	2	J20001-
4		14X-06-12120	Switch, Limit Switch	3	J20001-
5		01010-81030	Bolt	4	J20001-
6		01643-31032	Washer	6	J20001-
7		01010-81050	Bolt	2	J20001-
8		134-43-61340	Plate	1	J20001-
9		134-43-61430	• Sheet,Bonded	1	J20001-
10		134-43-61440	• Sheet,Bonded	2	J20001-
11		134-43-61450	• Sheet,Bonded	1	J20001-
12		14X-43-12860	• Sheet,Bonded	2	J20001-
13		09463-00006	Spring	1	J20001-
14		01643-30623	Washer	2	J20001-
15		04050-11612	Pin, Cotter	2	J20001-
16		134-43-61212	Rod	1	J20001-
17		198-43-18170	Yoke	1	J20001-
18		01582-11008	Nut	1	J20001-
19		04205-10822	Pin	1	J20001-
20		04050-12015	Pin, Cotter	1	J20001-
21		198-43-41940	Rod	1	J20001-
22		01508-41006	Nut, Left-handed	1	J20001-
23		04250-81056	End	1	J20001-
24		01582-11008	Nut	1	J20001-
25		04254-11032	Spacer	2	J20001-
26		01010-81050	Bolt	1	J20001-
27		01580-11008	Nut	1	J20001-
28		17A-43-25681	Knob	1	J20001-
29		20T-43-71190	Nut	1	J20001-
30		14X-43-11320	Boot	1	J20001-
31		134-43-67150	Lever	1	J20001-
32		01010-80830	Bolt	2	J20001-
33		01643-30823	Washer	2	J20001-
34		04434-50810	Clip	4	J20001-
35		04434-51610	Clip	1	J20001-
36		04434-51210	• Clip	1	J20001-
37		01010-81020	Bolt	2	J20001-
38		01643-31032	Washer	2	J20001-
39		(134-43-66210)	Lever Assembly(Refer to Page 247)		-
40		(702-16-05060)	Valve, Pilot(Refer to Page 258)		-

FIG. K2110-001008 Floor Frame, Blade Lock Lever

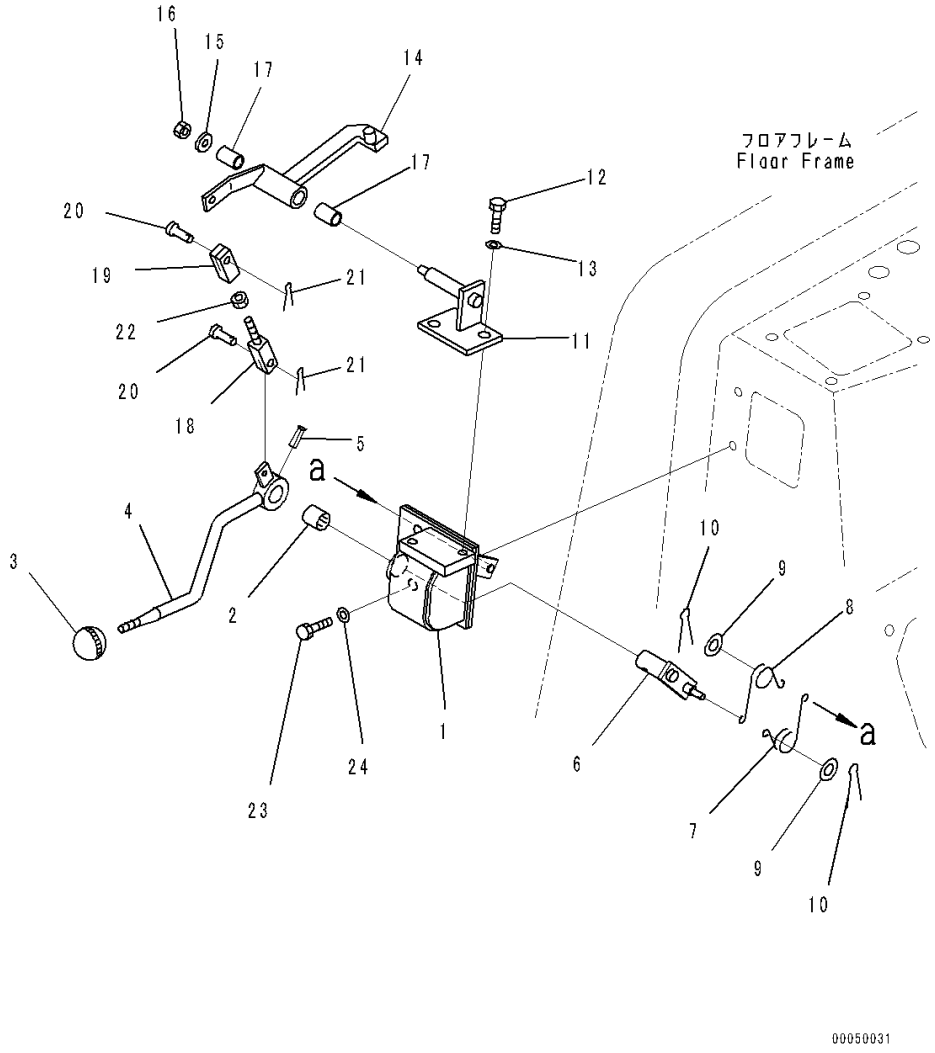

Index	Code	Part Number	Description	Qty	Serial Number
1		14X-43-14560	Bracket	1	J20001-
2		06124-02020	Bearing	1	J20001-
3		09304-10835	Knob	1	J20001-
4		14X-43-14452	Lever	1	J20001-
5		14X-43-14520	Pin	1	J20001-
6		14X-43-14423	Lever	1	J20001-
7		09463-00002	Spring	1	J20001-
8		09463-00006	Spring	1	J20001-
9		01641-20608	Washer	2	J20001-
10		04050-11612	Pin, Cotter	2	J20001-
11		14X-43-14540	Bracket	1	J20001-
12		01010-81020	Bolt	2	J20001-
13		01643-31032	Washer	2	J20001-
14		134-43-61531	Lever	1	J20001-
15		113-43-23230	Washer	1	J20001-
16		01598-00809	Nut	1	J20001-
17		09350-01420	Bushing	2	J20001-
18		04244-40805	Rod, with York	1	J20001-
19		04210-20832	Yoke	1	J20001-
20		04205-10822	Pin	2	J20001-
21		04050-12015	Pin, Cotter	2	J20001-
22		01580-10806	Nut	1	J20001-
23		01010-81025	Bolt	2	J20001-
24		01643-31032	Washer	2	J20001-

FIG. K2110-001009 Floor Frame, Transmission Lock Lever

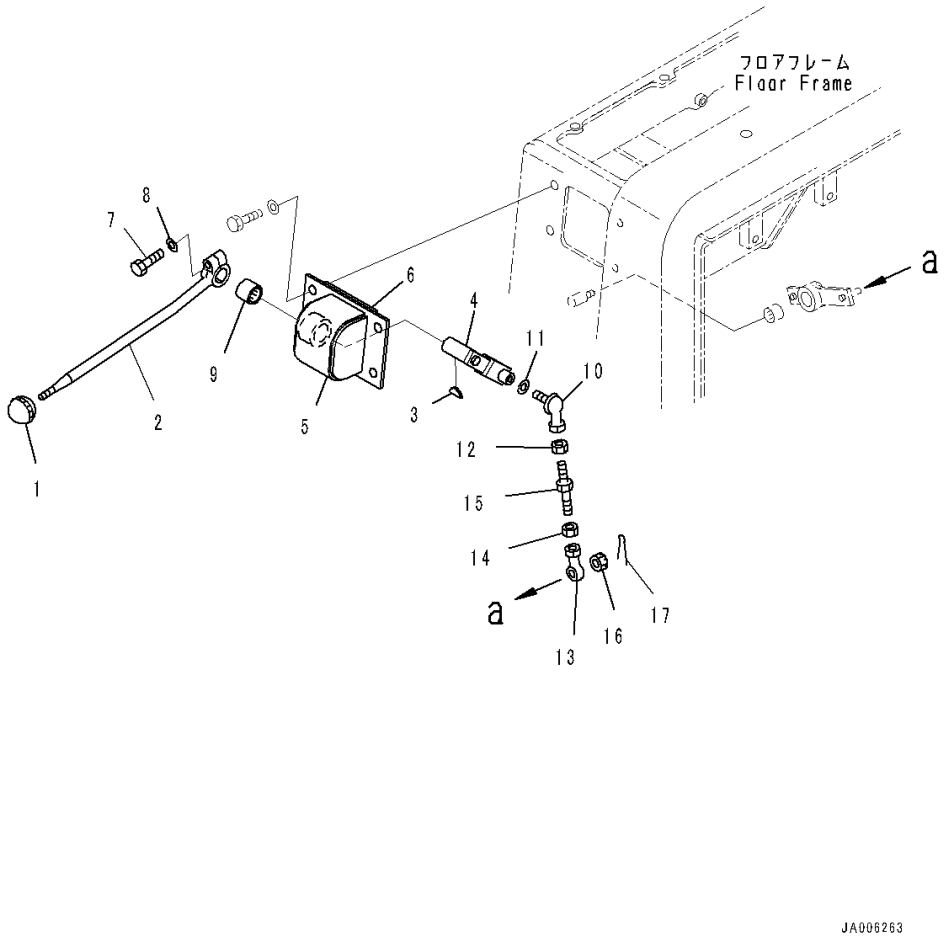

Index	Code	Part Number	Description	Qty	Serial Number
1		09304-10835	Knob	1	J20001-
2		17A-43-25430	Lever	1	J20001-
3		04010-00516	Key	1	J20001-
4		124-43-51272	Lever	1	J20001-
5		14Z-43-11751	Bracket	1	J20001-
6		14Z-43-11940	• Sheet, Bonded	1	J20001-
7		01010-80830	Bolt	1	J20001-
8		01643-30823	Washer	1	J20001-
9		06124-02020	Bearing	1	J20001-
10		04256-40817	Joint, Ball	1	J20001-
11		01643-30823	Washer	2	J20001-
12		01580-10806	Nut	1	J20001-
13		04250-90847	Rod End	1	J20001-
14		01508-40805	Nut	1	J20001-
15		581-43-11870	Rod	1	J20001-
16		01590-30809	Nut	1	J20001-
17		04050-12015	Pin, Cotter	1	J20001-

FIG. K2110-001010 Floor Frame, Mounting Parts

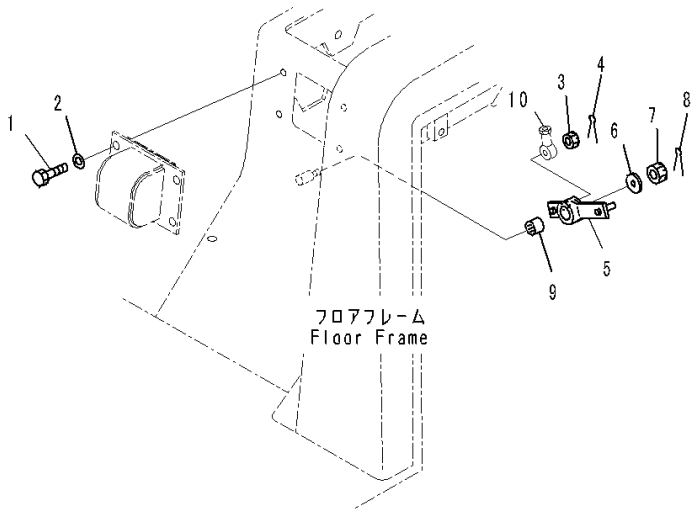

Index	Code	Part Number	Description	Qty	Serial Number
1		01010-81025	Bolt	4	J20001-
2		01643-31032	Washer	4	J20001-
3		01590-30809	Nut	3	J20001-
4		04050-12015	Pin, Cotter	3	J20001-
5		17A-43-25531	Lever	1	J20001-
6		113-43-23230	Washer	1	J20001-
7		01590-30809	Nut	1	J20001-
8		04050-12015	Pin, Cotter	1	J20001-
9		06124-01416	Bearing, Needle	1	J20001-
10		(04250-80847)	Rod End(Refer to Page 250)		-

FIG. K2110-001011 Floor Frame, Electric Parts

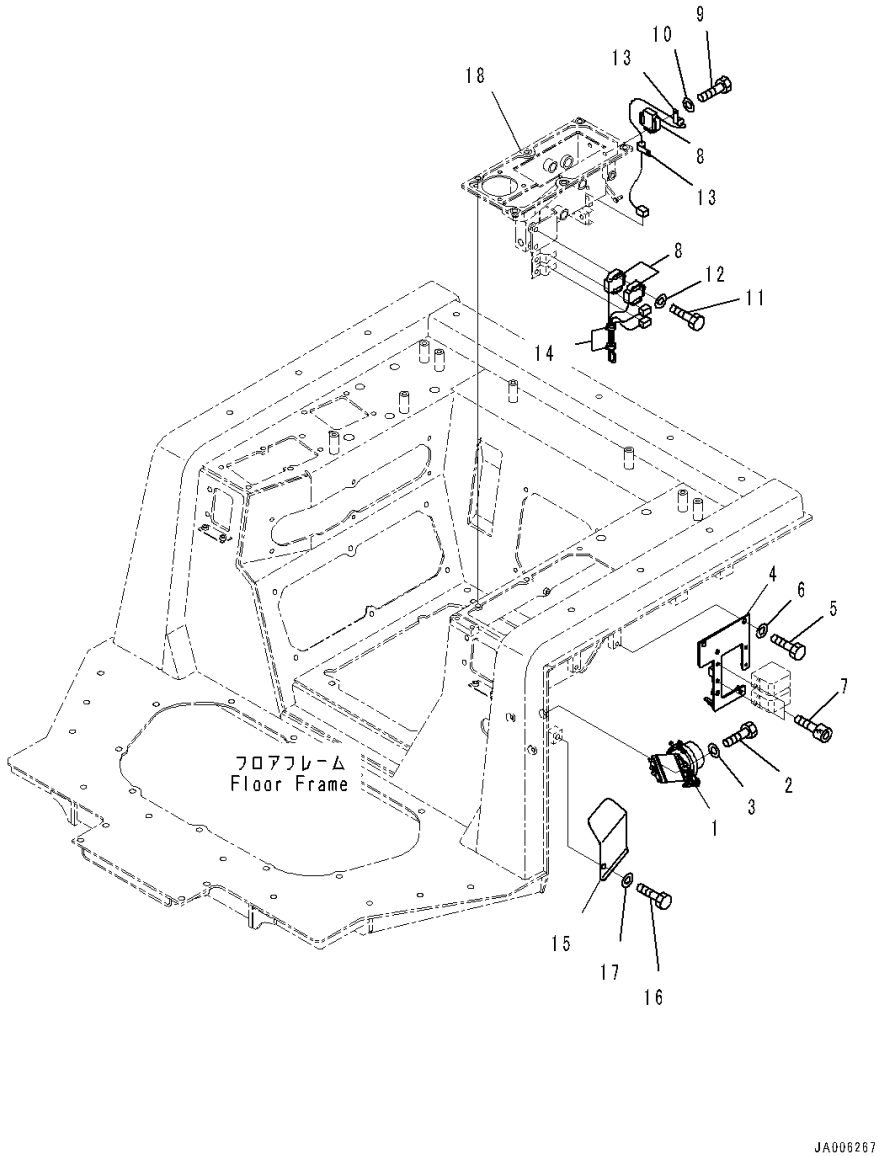

Index	Code	Part Number	Description	Qty	Serial Number
1		22W-06-13220	Switch	1	J20001-
2		01010-80825	Bolt	2	J20001-
3		01643-30823	Washer	2	J20001-
4		134-06-62120	Bracket	1	J20001-
5		01010-81020	Bolt	2	J20001-
6		01643-31032	Washer	2	J20001-
7		01252-40820	Bolt, Hexagon Socket Head	4	J20001-
8		14X-06-12120	Switch	3	J20001-
9		01010-81035	Bolt	2	J20001-
10		01643-31032	Washer	2	J20001-
11		01010-81050	Bolt	2	J20001-
12		01643-31032	Washer	2	J20001-
13		04434-50810	Clip	2	J20001-
14		08034-20414	Band	2	J20001-
15		134-06-61320	Cover	1	J20001-
16		01010-81220	Bolt	1	J20001-
17		01643-31232	Washer	1	J20001-
18		(134-43-61331)	Bracket(Refer to Page 249)		-

FIG. K2110-001012 Floor Frame, Wiring Harness

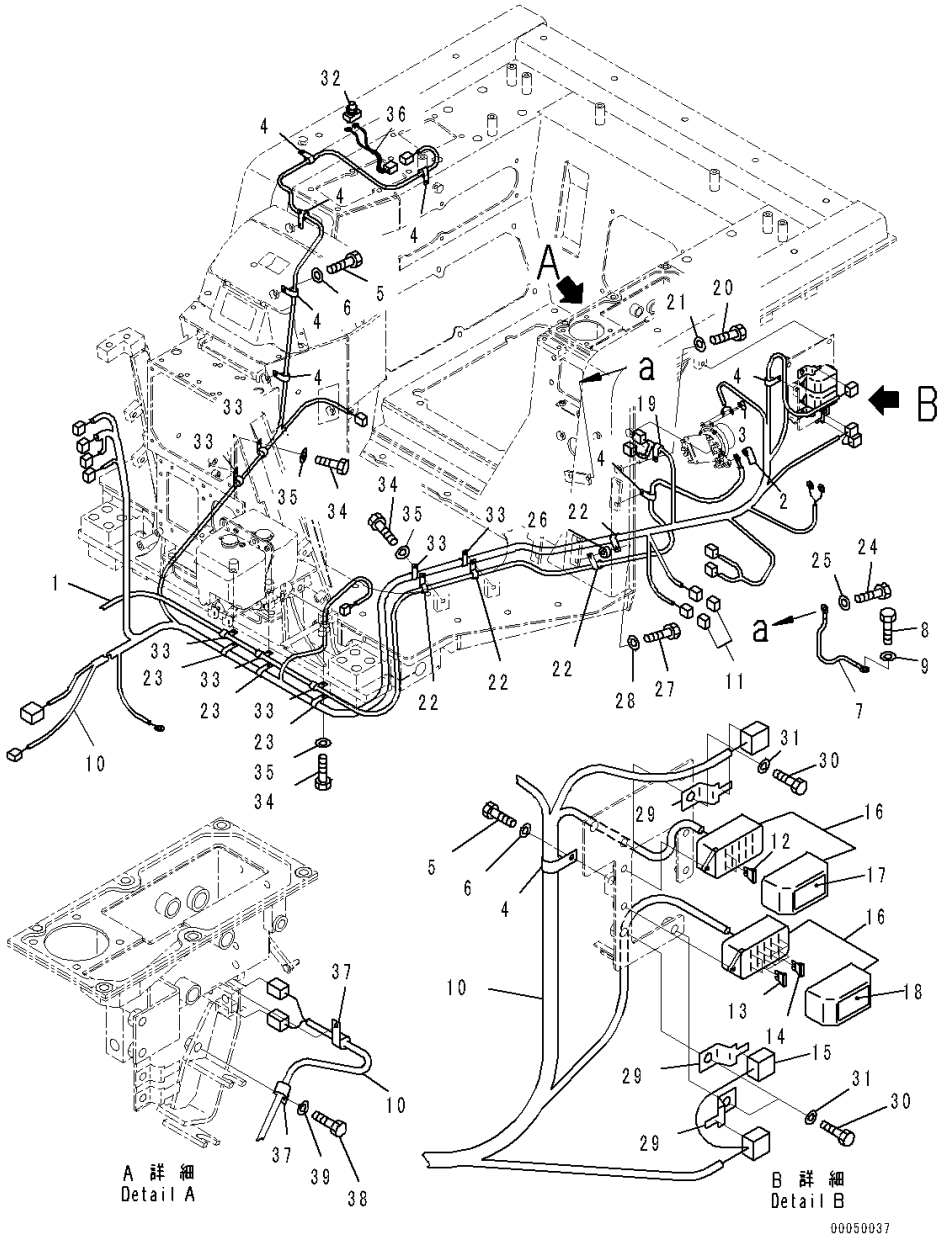

Index	Code	Part Number	Description	Qty	Serial Number
1		134-06-62110	Cable	1	J20001-
2		08038-00035	Cap, Terminal	1	J20001-
3		08038-00519	Cap	2	J20001-
4		04434-52310	Clip	7	J20001-
5		01010-81020	Bolt	6	J20001-
6		01643-31032	Washer	6	J20001-
7		14X-06-14390	Wire	1	J20001-
8		01010-81020	Bolt	1	J20001-
9		01643-31032	Washer	1	J20001-
10		134-06-63150	Wiring Harness	1	J20001-
11		08020-00000	• Connector	2	J20001-
12		08041-03000	• Fuse, 30Amp.	2	J20001-
13		08041-02000	• Fuse, 20Amp.	4	J20001-
14		08041-01000	• Fuse, 10Amp.	8	J20001-
15		20T-06-81230	• Fusible Link	1	J20001-
16		20T-06-71560	• Box, Fuse	1	J20001-
17		124-06-54240	• Plate, Fuse Box	1	J20001-
18		134-06-61440	• Plate, Fuse Box	1	J20001-
19		04434-51410	Clip	1	J20001-
20		01010-81020	Bolt	1	J20001-
21		01643-31032	Washer	1	J20001-
22		04434-52310	Clip	4	J20001-
23		04434-52310	Clip	3	J20001-
24		01010-81020	Bolt	1	J20001-
25		01643-31032	Washer	2	J20001-
26		581-95-19870	Boss	1	J20001-
27		01010-81025	Bolt	1	J20001-
28		01643-31032	Washer	1	J20001-
29		08053-01510	Clip	3	J20001-
30		01010-81020	Bolt	3	J20001-
31		01643-31032	Washer	3	J20001-
32		08064-10000	Switch, Horn	1	J20001-
33		04434-51010	Clip	7	J20001-
34		01010-81020	Bolt	7	J20001-
35		01643-31032	Washer	7	J20001-
36		7861-92-9120	Wiring Harness	1	J20001-
37		04434-51010	Clip	2	J20001-
38		01010-81020	Bolt	1	J20001-
39		01643-31032	Washer	1	J20001-

FIG. K2110-001013 Floor Frame, Inner Parts (1/2)

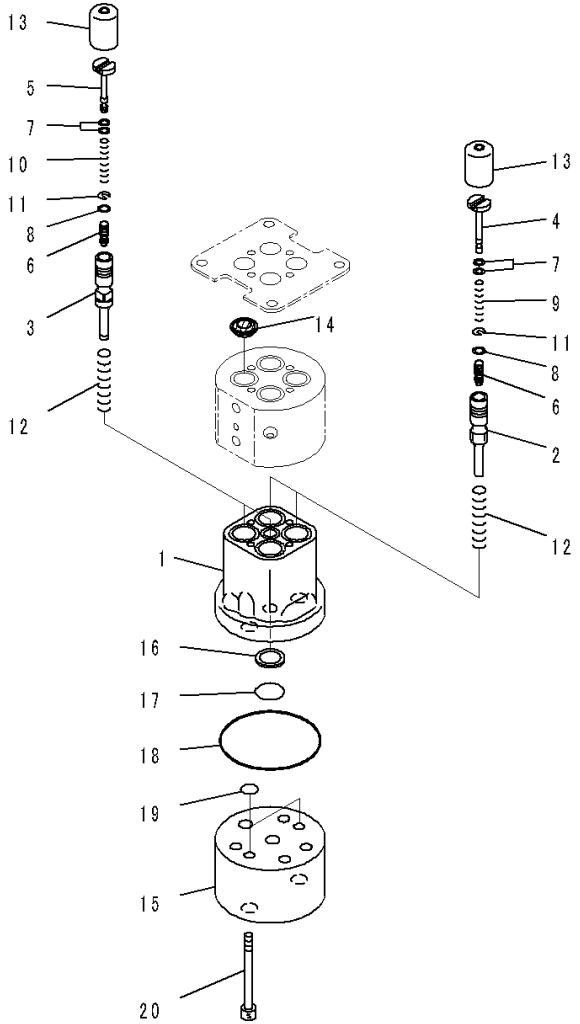

00078390

Index	Code	Part Number	Description	Qty	Serial Number
		702-16-05060	Valve, Pilot	1	J20001-
1	C1		• Valve Body	1	J20001-
2	C1		• Valve	2	J20001-
3	C1		• Valve	2	J20001-
4	C1		• Shaft	2	J20001-
5	C1		• Shaft	2	J20001-
6	C1		• Piston	4	J20001-
7	C1		• Shim, T=0.30mm	8	J20001-
8	C1		• Spacer	4	J20001-
9	C1		• Spring	2	J20001-
10	C1		• Spring	2	J20001-
11	C1		• Retainer	4	J20001-
12	C1		• Spring	4	J20001-
13	C1		• Piston	4	J20001-
14	C1		• Seal	4	J20001-
15	C1		• Cover	1	J20001-
16	C1		• Filter	1	J20001-
17	C1		• O-ring	1	J20001-
18	C1		• O-ring	1	J20001-
19	C1		• O-ring	2	J20001-
20	C1		• Bolt, Hexagon Socket Head	2	J20001-

FIG. K2110-001014 Floor Frame, Inner Parts (2/2)

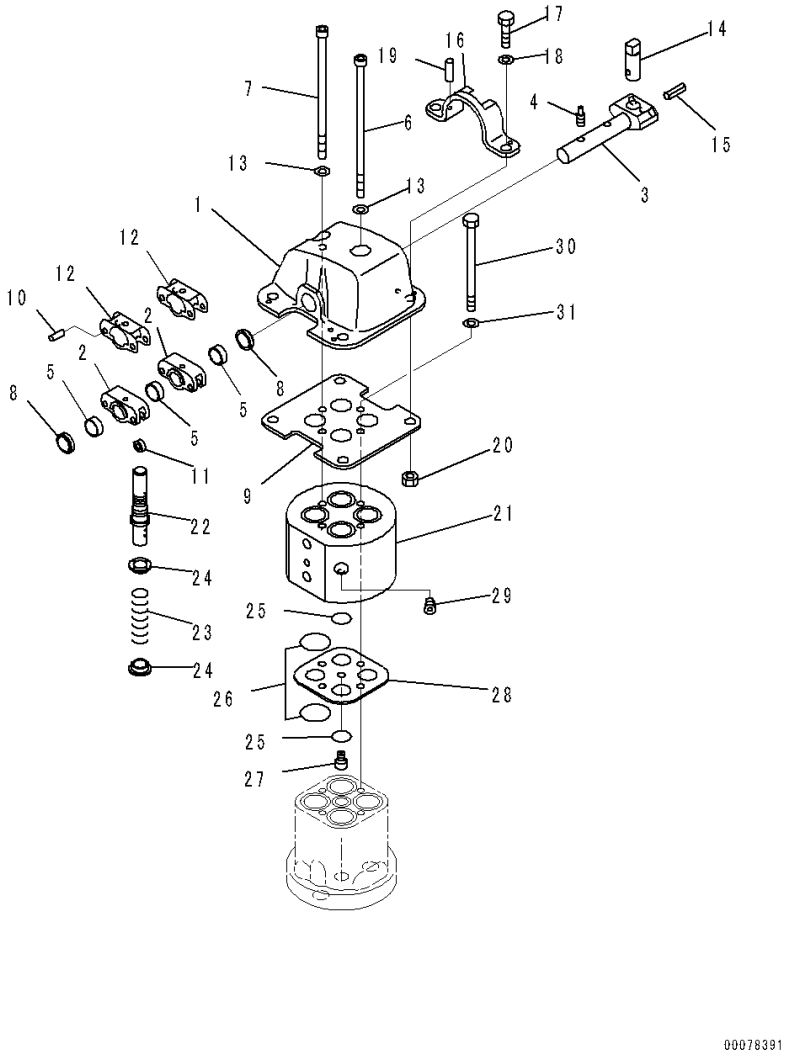

Index	Code	Part Number	Description	Qty	Serial Number
		702-16-05060	Valve, Pilot	1	J20001-
1	C1		• Case	1	J20001-
2	C1		• Link	2	J20001-
3	C1		• Shaft	1	J20001-
4	C1		• Screw	2	J20001-
5	C1		• Bushing	3	J20001-
6	C1		• Bolt	1	J20001-
7	C1		• Bolt	1	J20001-
8	C1		• Scraper	2	J20001-
9	C1		• Plate	1	J20001-
10	C1		• Pin	4	J20001-
11	C1		• Bearing	4	J20001-
12	C1		• Plate	2	J20001-
13	C1		• Washer	2	J20001-
14	C1		• Pin	1	J20001-
15	C1		• Pin, Spring	1	J20001-
16	C1		• Plate	1	J20001-
17	C1		• Bolt	2	J20001-
18	C1		• Washer	2	J20001-
19	C1		• Pin, Dowel	2	J20001-
20	C1		• Nut	2	J20001-
21	C1		• Valve Body	1	J20001-
22	C1		• Piston	4	J20001-
23	C1		• Spring	4	J20001-
24	C1		• Retainer	8	J20001-
25	C1		• O-ring	2	J20001-
26	C1		• O-ring	8	J20001-
27	C1		• Orifice	1	J20001-
28	C1		• Plate	1	J20001-
29	C1		• Plug	2	J20001-
30	C1		• Bolt	2	J20001-
31	C1		• Washer	2	J20001-

FIG. K2110-001015 Floor Frame, Pilot Valve Related Parts

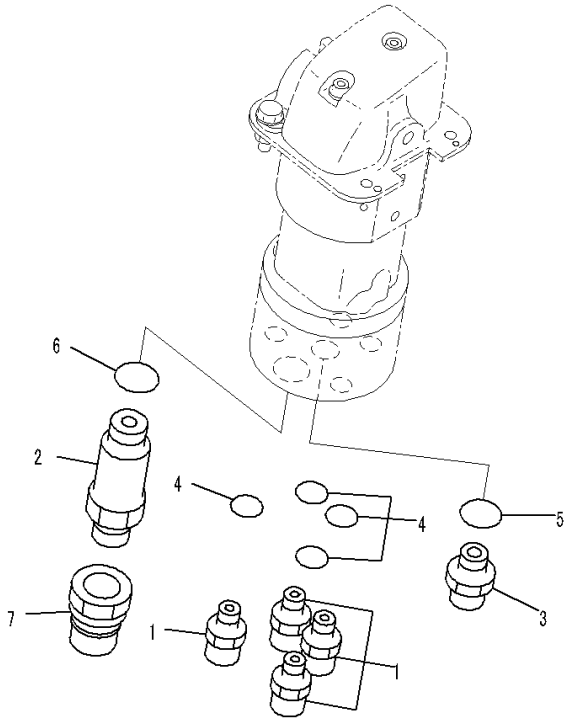

JA006268

Index	Code	Part Number	Description	Qty	Serial Number
1		114-40-48481	Joint	4	J20001-
2		134-49-61750	Union	1	J20001-
3		134-49-61760	Joint	1	J20001-
4		07002-21423	O-ring	4	J20001-
5		07002-21823	O-ring	1	J20001-
6		07002-22434	O-ring	1	J20001-
7		134-49-61731	Coupling	1	J20001-

FIG. K2110-001016 Floor Frame, Plugs

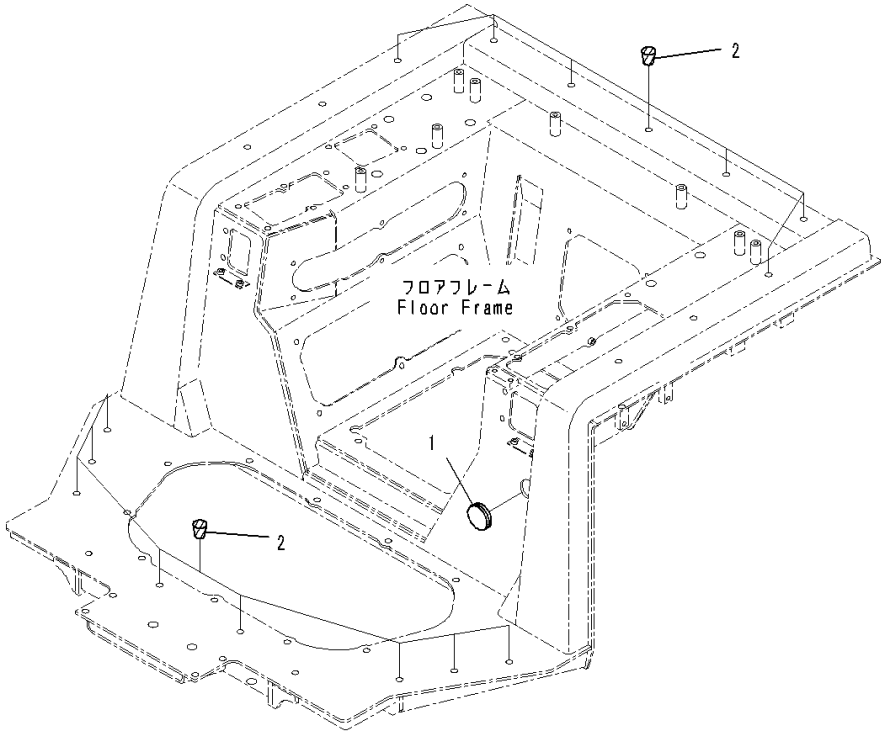

Index	Code	Part Number	Description	Qty	Serial Number
1		09415-03614	Cap	1	J20001-
2		07049-01215	Plug	15	J20001-

FIG. K2110-001017 Floor Frame, Knob

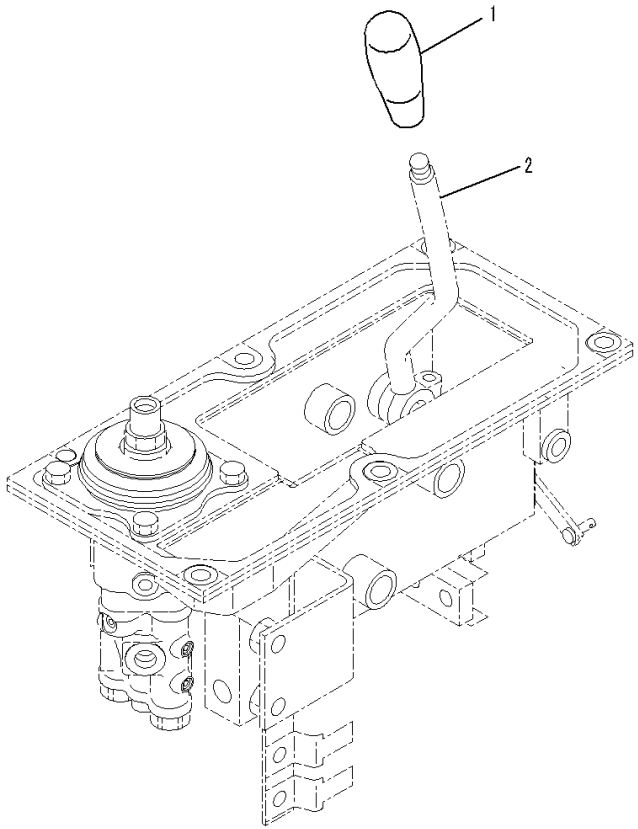

JA006269

Index	Code	Part Number	Description	Qty	Serial Number
1		14Z-43-11310	Knob	1	J20001-
2		(134-43-66171)	Lever(Refer to Page 250)		-

FIG. K2120-001001 Suspension

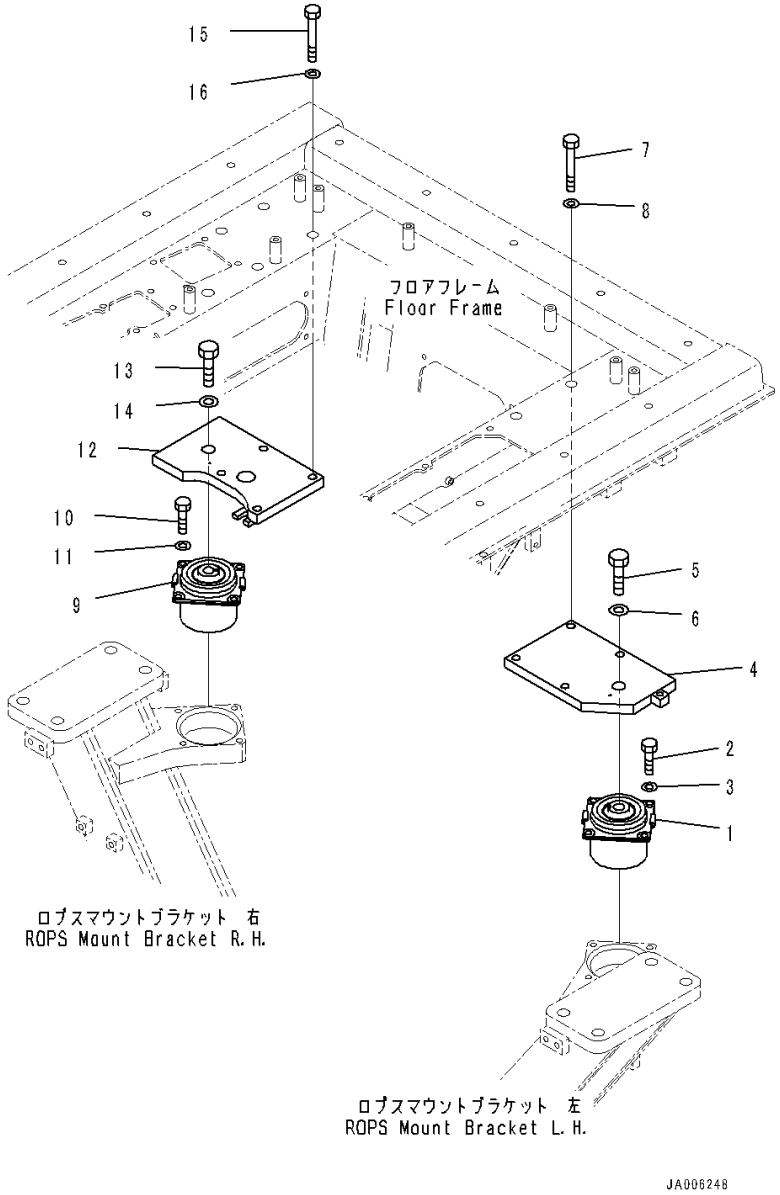

Index	Code	Part Number	Description	Qty	Serial Number
1		198-54-58111	Cushion	1	J20001-
2		01010-81225	Bolt	4	J20001-
3		01643-31232	Washer	4	J20001-
4		134-54-63441	Plate,LHS	1	J20001-
5		01010-82460	Bolt	1	J20001-
6		01643-32460	Washer	1	J20001-
7		01010-81675	Bolt	4	J20001-
8		01643-31645	Washer	4	J20001-
9		198-54-58111	Cushion	1	J20001-
10		01010-81225	Bolt	4	J20001-
11		01643-31232	Washer	4	J20001-
12		134-960-2450	Plate,RHS	1	J20001-
13		01010-82460	Bolt	1	J20001-
14		01643-32460	Washer	1	J20001-
15		01010-81675	Bolt	4	J20001-
16		01643-31645	Washer	4	J20001-

FIG. K2210-001001 Dashboard, Cover and Switch

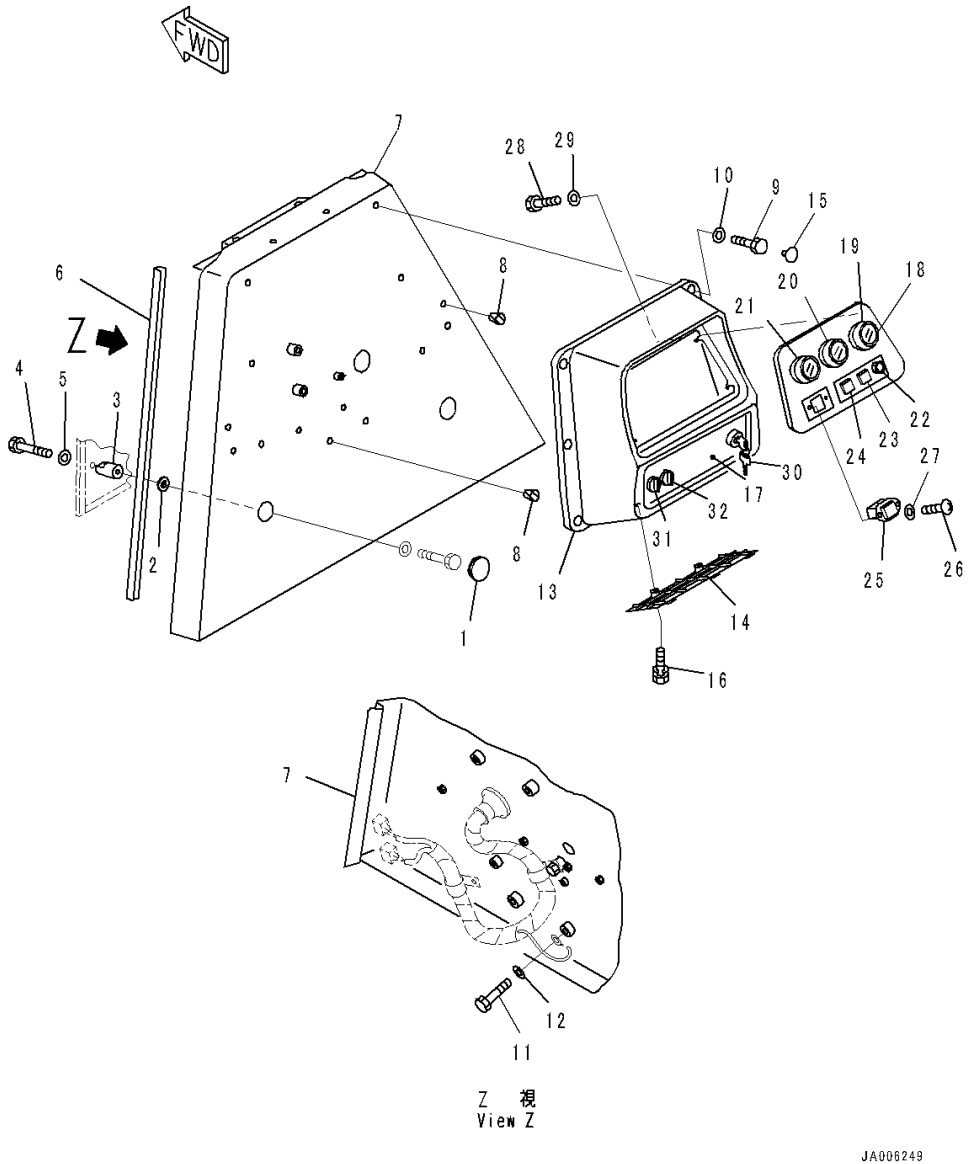

Index	Code	Part Number	Description	Qty	Serial Number
1		14X-54-12590	Cap	2	J20001-
2		134-54-68220	Collar	2	J20001-
3		134-54-68190	Spacer	2	J20001-
4		01010-81225	Bolt	6	J20001-
5		01643-31232	Washer	6	J20001-
6		14X-54-12940	Seal	2	J20001-
7		134-54-68312	Cover	1	J20001-
8		07049-01215	Plug	8	J20001-
9		01010-80820	Bolt	9	J20001-
10		01643-30823	Washer	9	J20001-
11		01010-80610	Bolt	1	J20001-
12		01643-30623	Washer	1	J20001-
13		134-54-69122	Instrument Panel	1	J20001-
14		14X-54-19121	Cover	1	J20001-
15		14X-54-19130	Cap	6	J20001-
16		14X-54-19170	Bolt	2	J20001-
17		14X-54-28840	Panel	1	J20001-
18		14X-06-12410	Panel	1	J20001-
19		14X-06-12361	Gauge, Oil Temperature	1	J20001-
20		14X-06-12351	Gauge, Water Temperature	1	J20001-
21		08652-20000	Gauge, Fuel Level	1	J20001-
22		144-06-81220	Signal, Heater	1	J20001-
23		103-06-32250	Lamp, Indicator	1	J20001-
24		103-06-32240	Lamp, Indicator	1	J20001-
25		21S-06-11140	Service Meter	1	J20001-
26		01220-40312	Screw	2	J20001-
27		01641-20305	Washer	2	J20001-
28		01010-80820	Bolt	4	J20001-
29		01643-30823	Washer	4	J20001-
30		08086-10000	Switch, Starting	1	J20001-
31		14X-06-12160	Switch, Head Lamp	2	J20001-
32		14X-06-12160	Switch, Rear Lamp	2	J20001-

FIG. K2210-001002 Dashboard, Wiring Harness Mounting

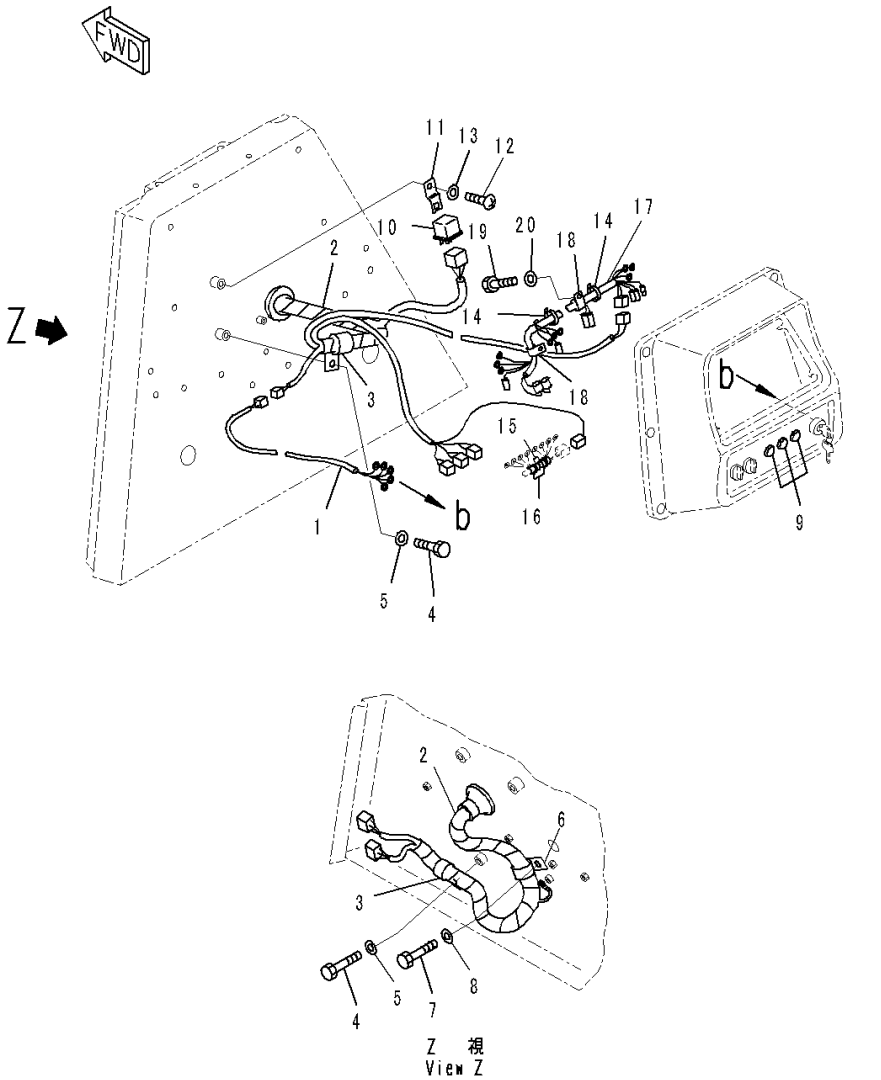

Index	Code	Part Number	Description	Qty	Serial Number
1		124-06-54251	Wiring Harness	1	J20001-
2		134-06-63134	Wiring Harness	1	J20001-
3		04434-52710	Clip	3	J20001-
4		01010-81016	Bolt	3	J20001-
5		01643-31032	Washer	3	J20001-
6		04434-52710	Clip	1	J20001-
7		01010-81016	Bolt	1	J20001-
8		01643-31032	Washer	1	J20001-
9		134-06-61612	Lamp Assembly, Working	1	J20001-
		11Y-06-11560	• Bulb	3	J20001-
		134-06-61650	• Lens	1	J20001-
		134-06-61660	• Lens	1	J20001-
		134-06-61670	• Lens	1	J20001-
10		569-06-61960	Relay	1	J20001-
11		287-06-16420	Bracket	1	J20001-
12		01220-40512	Screw, Philips Head	1	J20001-
13		01641-20508	Washer, Flat	1	J20001-
14		08034-00519	Band	2	J20001-
15		08023-04007	Tube	2	J20001-
16		08034-00414	Band	2	J20001-
17		134-06-61530	Wiring Harness	1	J20001-
18		08036-01414	Clip	2	J20001-
19		01010-80816	Bolt	2	J20001-
20		01643-30823	Washer	2	J20001-

FIG. K2210-001003 Dashboard, Footrest

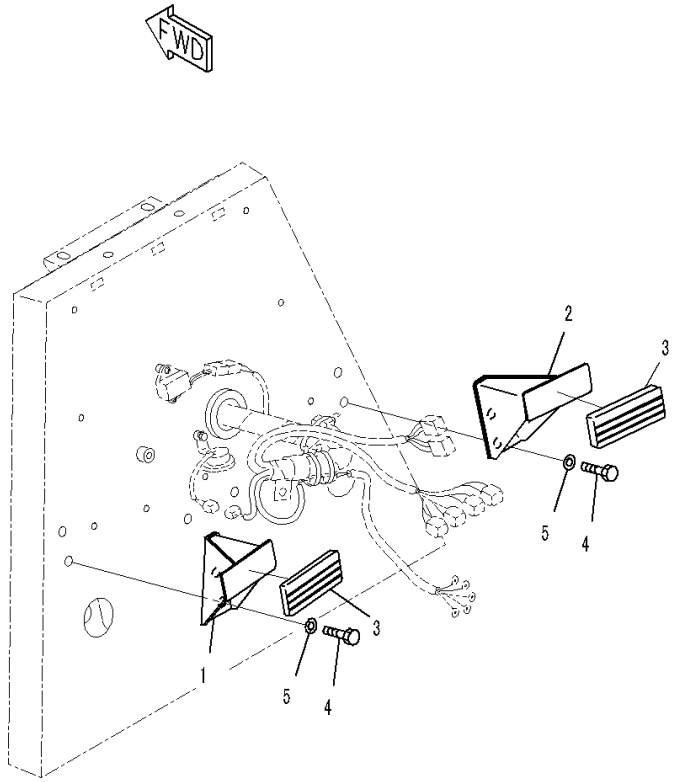

Index	Code	Part Number	Description	Qty	Serial Number
1		14X-911-5711	Bracket	1	J20001-
2		14X-911-5721	Bracket	1	J20001-
3		203-43-56450	Pedal Cap	2	J20001-
4		01010-D1225	Bolt	4	J20001-
5		01643-71232	Washer	4	J20001-

FIG. K2241-002001 Blade Control

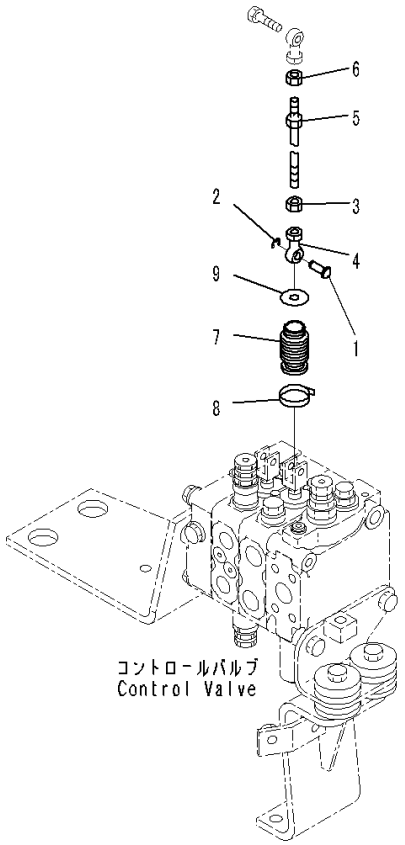

JA006252

Index	Code	Part Number	Description	Qty	Serial Number
1		124-43-64120	Pin	1	J20001-
2		124-43-64131	Ring	1	J20001-
3		01508-40805	Nut	1	J20001-
4		04250-90847	Rod End	1	J20001-
5		04248-30823	Rod	1	J20001-
6		01580-10806	Nut	1	J20001-
7		124-43-64112	Boot	1	J20001-
8		08034-00414	Band	1	J20001-
9		205-06-64680	Washer	1	J20001-

FIG. K2400-001001 Floor, Brake Pedal

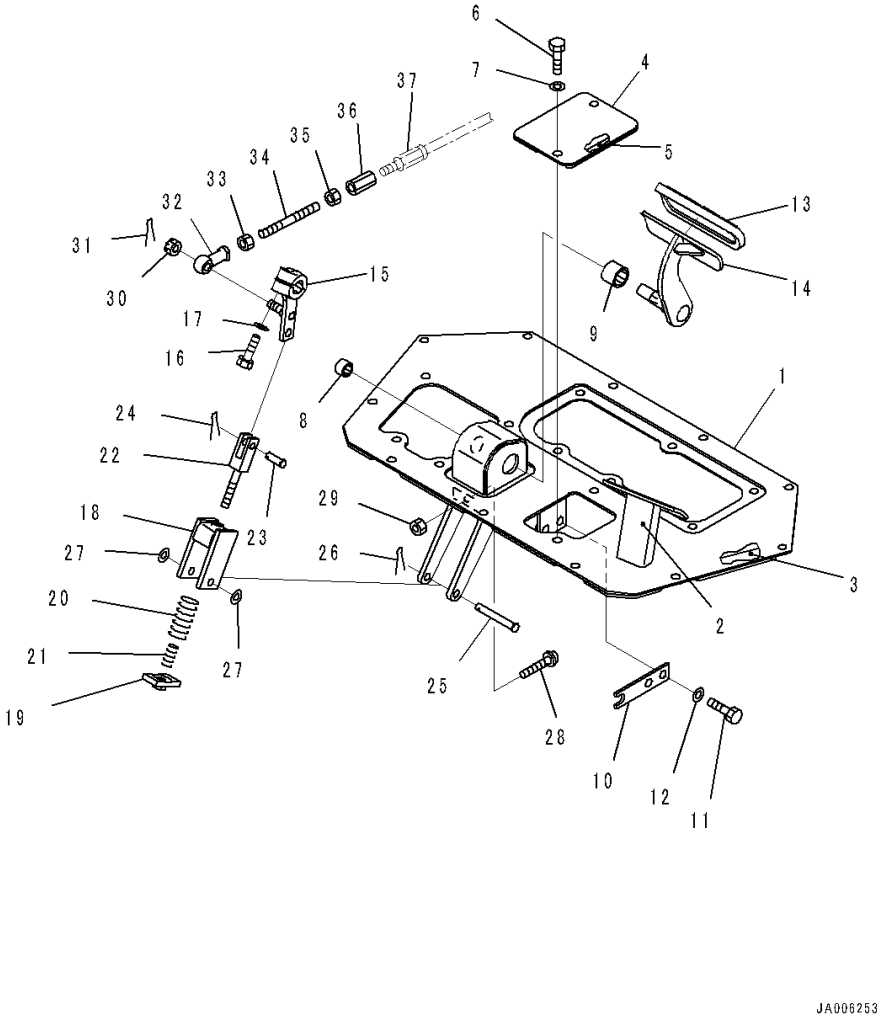

Index	Code	Part Number	Description	Qty	Serial Number
1		134-43-62311	Floor	1	J20001-
2		14X-43-12340	• Footrest,Welded	1	J20001-
3		14X-43-12360	• Sheet, Bonded	1	J20001-
4		14X-43-12350	Cover	1	J20001-
5		14X-43-12390	• Sheet, Bonded	1	J20001-
6		01010-81230	Bolt	2	J20001-
7		01643-31232	Washer	2	J20001-
8		06124-02020	Bearing	1	J20001-
9		06124-03020	Bearing	1	J20001-
10		134-43-68260	Plate	1	J20001-
11		01010-81225	Bolt	2	J20001-
12		01643-31232	Washer	2	J20001-
13		14X-43-12110	Pedal Cap	1	J20001-
14		134-43-62320	Pedal	1	J20001-
15		134-43-62360	Lever	1	J20001-
16		01010-81245	Bolt	1	J20001-
17		01643-51232	Washer	1	J20001-
18		14X-43-12251	Holder	1	J20001-
19		14X-43-12260	Plate	1	J20001-
20		700-84-11660	Spring	1	J20001-
21		205-43-51470	Spring	1	J20001-
22		14X-43-12270	Rod	1	J20001-
23		04205-11238	Pin	1	J20001-
24		04050-13022	Pin, Cotter	1	J20001-
25		14X-43-11270	Pin	1	J20001-
26		04050-13022	Pin, Cotter	1	J20001-
27		01641-21223	Washer	2	J20001-
28		09311-41237	Bumper, Pedal	1	J20001-
29		01580-11210	Nut	1	J20001-
30		01593-31411	Nut	1	J20001-
31		04050-13022	Pin, Cotter	1	J20001-
32		04250-81474	End	1	J20001-
33		01582-11411	Nut	1	J20001-
34		14X-43-12410	Rod	1	J20001-
35		01508-41408	Nut	1	J20001-
36		17A-43-24160	Joint	1	J20001-
37		(17A-43-24170)	Joint(Refer to Page 217)		-

FIG. K2400-001002 Floor, Decelerator Pedal

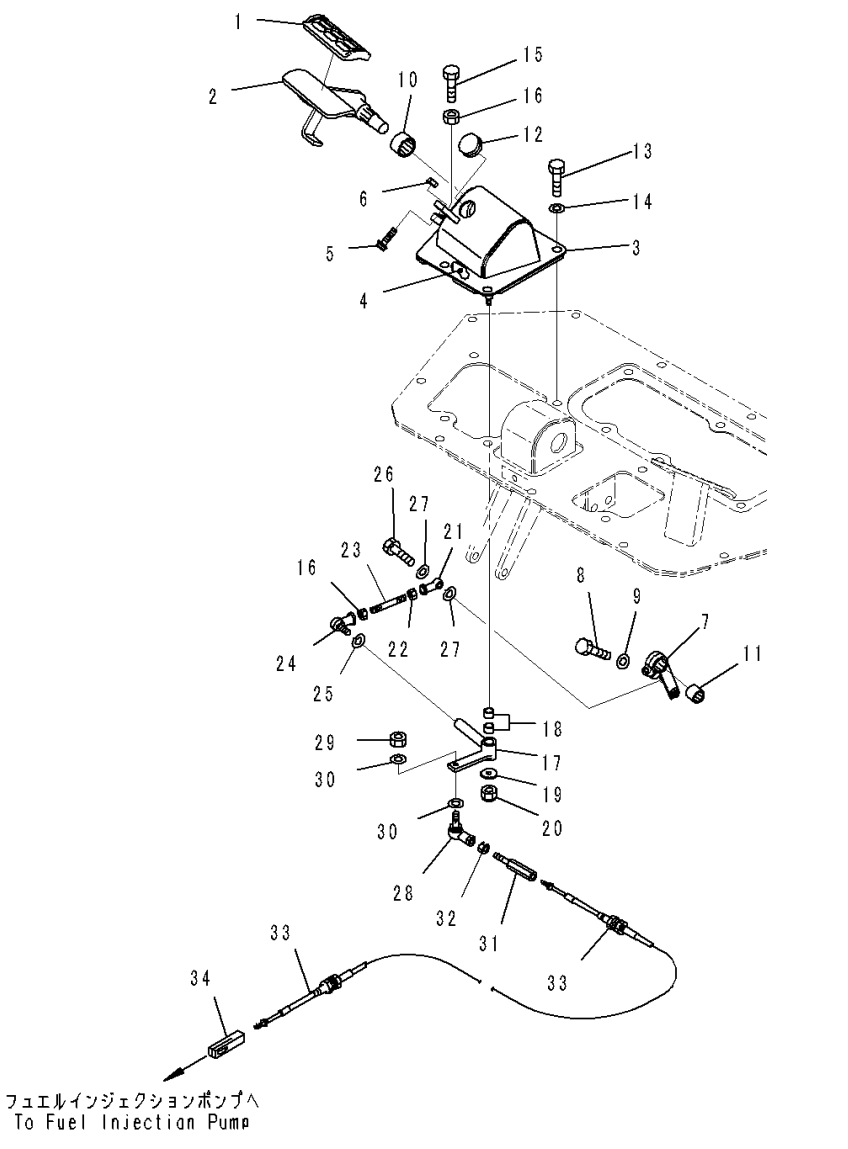

Index	Code	Part Number	Description	Qty	Serial Number
1		14X-43-13760	Cap	1	J20001-
2		134-43-62431	Pedal	1	J20001-
3		134-43-62421	Bracket	1	J20001-
4		14X-43-12380	• Sheet, Bonded	1	J20001-
5		09311-41237	Bumper, Pedal	1	J20001-
6		01580-11210	Nut	1	J20001-
7		124-43-55160	Lever	1	J20001-
8		01010-80830	Bolt	1	J20001-
9		01643-30823	Washer	1	J20001-
10		06124-03020	Bearing	1	J20001-
11		06124-02020	Bearing	1	J20001-
12		09415-02512	Cap	1	J20001-
13		01010-51230	Bolt	4	J20001-
14		01643-31232	Washer	4	J20001-
15		01016-50830	Bolt	1	J20001-
16		01580-10806	Nut	2	J20001-
17		14X-43-13722	Lever	1	J20001-
18		09350-01415	Bushing	2	J20001-
19		113-43-23230	Washer	1	J20001-
20		01598-00809	Nut	1	J20001-
21		04250-80847	Rod End	1	J20001-
22		01580-10806	Nut	1	J20001-
23		04245-40805	Rod	1	J20001-
24		04256-40817	Joint, Ball	1	J20001-
25		01643-30823	Washer	1	J20001-
26		01010-80830	Bolt	1	J20001-
27		04254-10823	Spacer	2	J20001-
28		04256-50615	Joint, Ball	1	J20001-
29		01580-10605	Nut	1	J20001-
30		01641-20608	Washer	2	J20001-
31		14Z-43-12890	Rod	1	J20001-
32		01508-40603	Nut, Left-handed	1	J20001-
33		104-43-44970	Cable	1	J20001-
34		14X-43-13790	Joint	1	J20001-

FIG. K2400-001003 Floor, Mounting Parts

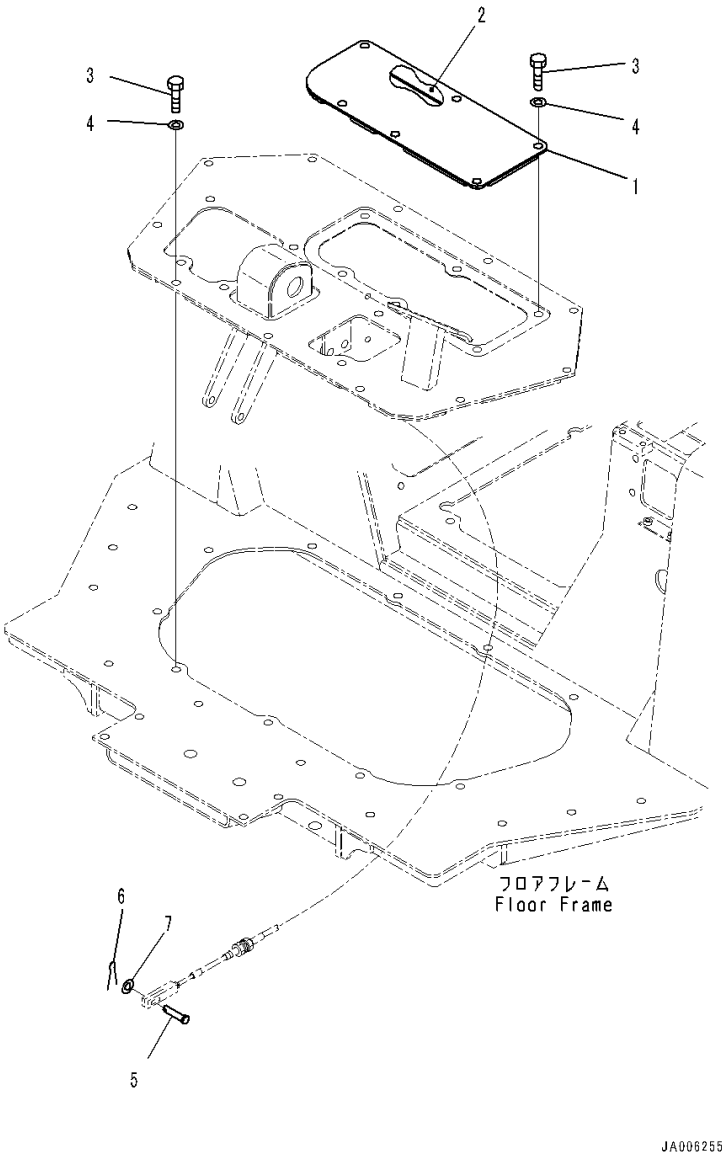

Index	Code	Part Number	Description	Qty	Serial Number
1		134-43-62380	Cover	1	J20001-
2		134-43-62390	• Sheet, Bonded	1	J20001-
3		01010-81230	Bolt	17	J20001-
4		01643-31232	Washer	17	J20001-
5		04205-10625	Pin	1	J20001-
6		04050-11612	Pin, Cotter	1	J20001-
7		01641-20608	Washer	1	J20001-

FIG. K2500-001001 Armrest

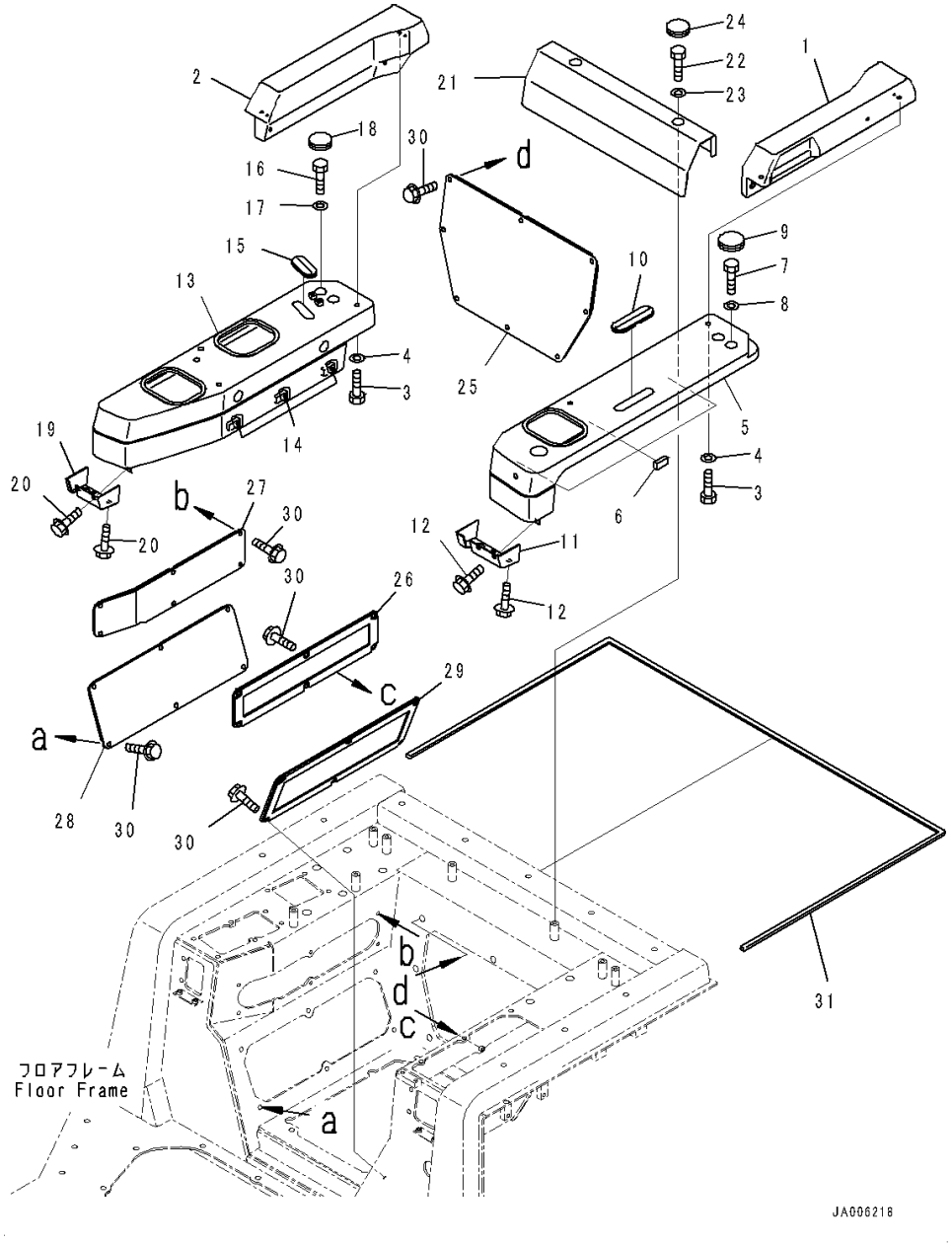

Index	Code	Part Number	Description	Qty	Serial Number
1		14X-54-16532	Armrest,LHS	1	J20001-
2		14X-54-16542	Armrest,RHS	1	J20001-
3		01010-80812	Bolt	8	J20001-
4		01643-30823	Washer	8	J20001-
5		134-54-68330	Cover,LHS	1	J20001-
6		17A-54-16881	• Sheet, Bonded	3	J20001-
7		01010-81020	Bolt	2	J20001-
8		01643-31032	Washer	2	J20001-
9		09415-02512	Cap	2	J20001-
10		134-54-68161	Grommet	1	J20001-
11		14X-54-16442	Cover,LHS	1	J20001-
12		01439-00814	Bolt, Flanged	4	J20001-
13		134-54-68411	Cover,RHS	1	J20001-
14		17A-54-16881	• Sheet, Bonded	3	J20001-
15		114-43-48231	Grommet	1	J20001-
16		01010-81020	Bolt	2	J20001-
17		01643-31032	Washer	2	J20001-
18		09415-02512	Cap	2	J20001-
19		14X-54-16452	Cover	1	J20001-
20		01439-00814	Bolt, Flanged	4	J20001-
21		14X-54-16481	Cover	1	J20001-
22		01010-81020	Bolt	2	J20001-
23		01643-31032	Washer	2	J20001-
24		09415-02512	Cap	2	J20001-
25		14X-54-16710	Cover	1	J20001-
26		134-54-65131	Cover	1	J20001-
27		14X-54-16731	Cover	1	J20001-
28		14X-54-16741	Cover	1	J20001-
29		124-54-54540	Cover	1	J20001-
30		01439-00820	Bolt, Flanged	26	J20001-
31		14X-54-16230	Seal	1	J20001-

FIG. K2520-002001 Towing Winch Control, Lever

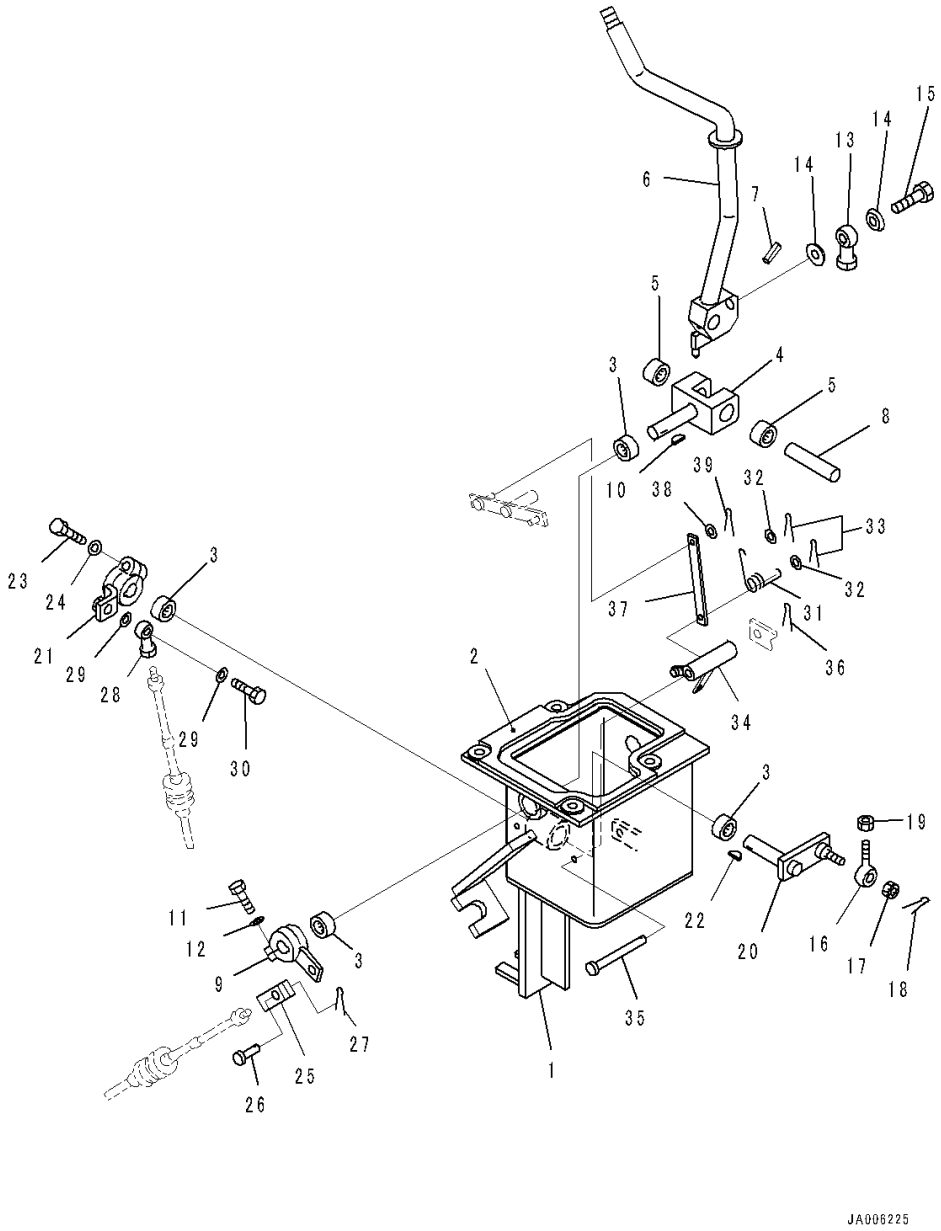

Index	Code	Part Number	Description	Qty	Serial Number
		Note: This list covers following specifications.			
		Without Free Spool			
		With Free Spool			
1		134-960-6311	Bracket	1	J20001-
2		14W-960-7122	• Sheet, Bonded	1	J20001-
3		06123-01414	Bearing	4	J20001-
4		14Y-43-11121	Yoke	1	J20001-
5		06124-01416	Bearing, Needle	2	J20001-
6		134-960-1550	Lever	1	J20001-
7		04025-00332	Pin, Spring	1	J20001-
8		363-43-27161	Pin	1	J20001-
9		14W-960-7141	Lever	1	J20001-
10		04010-00516	Key	1	J20001-
11		01010-80830	Bolt	1	J20001-
12		01643-30823	Washer	1	J20001-
13		04250-81056	End	1	J20001-
14		04254-11032	Spacer	2	J20001-
15		01010-81035	Bolt	1	J20001-
16		04252-21061	Rod End	1	J20001-
17		01593-31008	Nut, Slotted	1	J20001-
18		04050-12018	Pin, Cotter	1	J20001-
19		01582-11008	Nut	1	J20001-
20		14W-960-7151	Lever	1	J20001-
21		134-960-6391	Lever	1	J20001-
22		04010-00516	Key	1	J20001-
23		01010-80830	Bolt	1	J20001-
24		01643-30823	Washer	1	J20001-
25		04210-20832	Yoke	1	J20001-
26		04205-10825	Pin	1	J20001-
27		04050-12015	Pin, Cotter	1	J20001-
28		04250-80847	Rod End	1	J20001-
29		04254-10823	Spacer	2	J20001-
30		01010-80835	Bolt	1	J20001-
31		09463-00002	Spring	1	J20001-
32		01641-20608	Washer	2	J20001-
33		04052-10633	Pin, Snap	2	J20001-
34		14W-960-7173	Lever	1	J20001-
35		195-61-45280	Pin	1	J20001-
36		04050-12015	Pin, Cotter	1	J20001-
37		14W-960-7181	Plate	1	J20001-

FIG. K2520-002001 Towing Winch Control, Lever

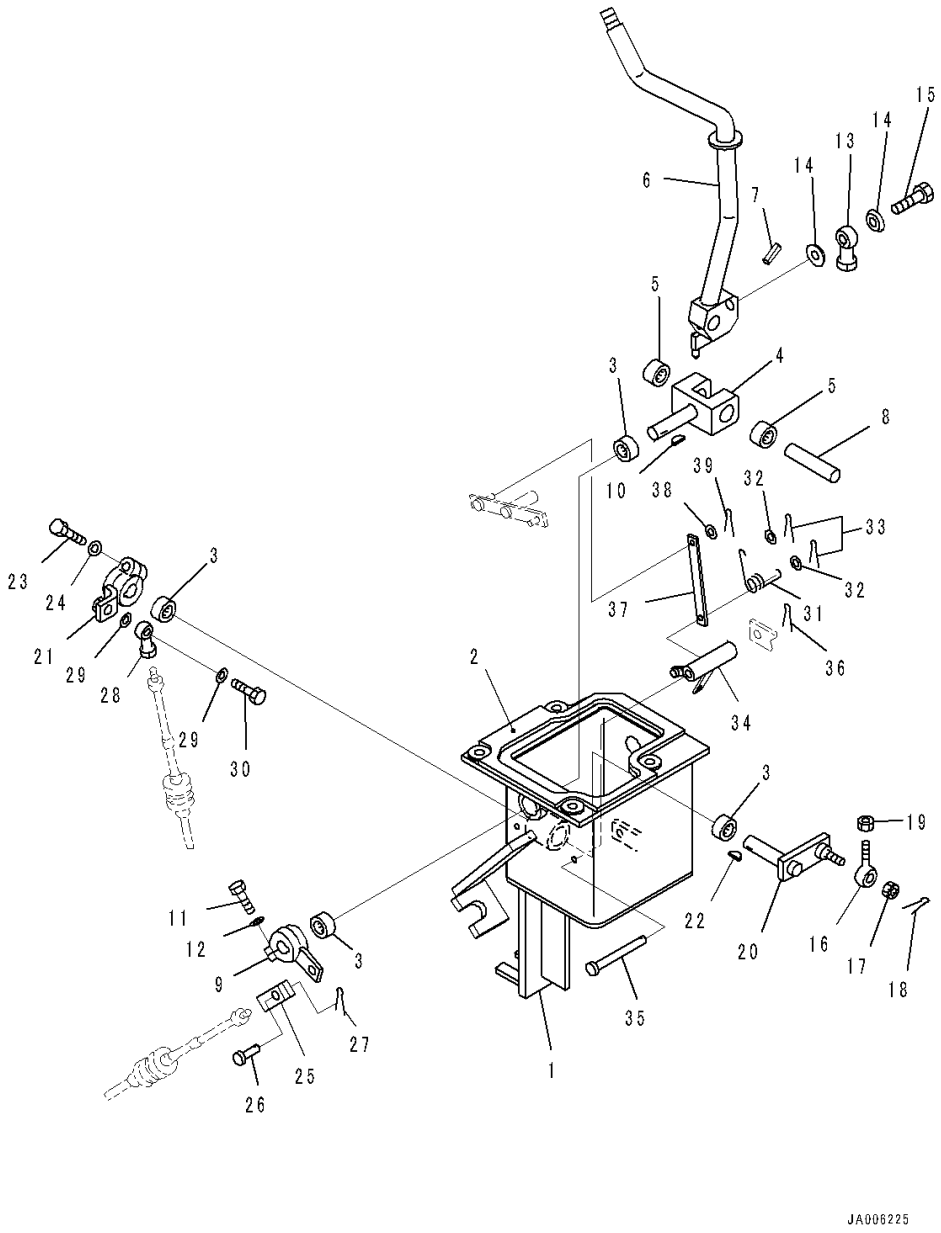

Index	Code	Part Number	Description	Qty	Serial Number
38		01641-20608	Washer	1	J20001-
39		04050-11612	Pin, Cotter	1	J20001-

FIG. K2520-002002 Towing Winch Control, Without Free Spool, Controller and Relay

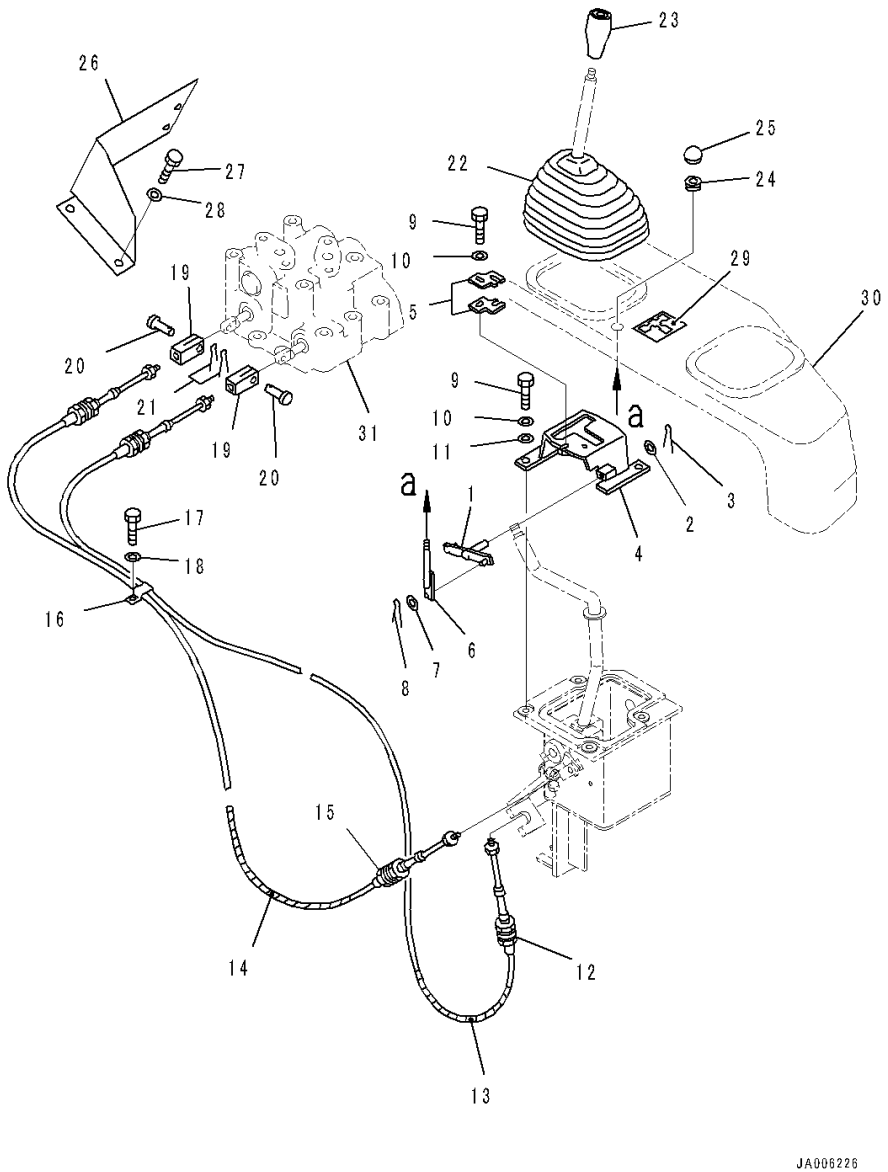

Index	Code	Part Number	Description	Qty	Serial Number
1		14W-960-7192	Plate	1	J20001-
2		01641-20812	Washer	1	J20001-
3		04050-12015	Pin, Cotter	1	J20001-
4		14W-960-7231	Bracket	1	J20001-
5		14W-960-7240	Plate	2	J20001-
6		14W-960-7211	Rod	1	J20001-
7		01641-20608	Washer	1	J20001-
8		04050-11612	Pin, Cotter	1	J20001-
9		01010-80830	Bolt	6	J20001-
10		01643-30823	Washer	6	J20001-
11		01643-31032	Washer	4	J20001-
12		15A-916-1210	Cable	1	J20001-
13		08210-01221	Tube, Spiral	1	J20001-
14		19M-43-15350	Cable	1	J20001-
15		08210-01215	Tube, Spiral	1	J20001-
16		195-01-14450	Clip	1	J20001-
17		01010-81225	Bolt	1	J20001-
18		01643-31232	Washer	1	J20001-
19		04210-20832	Yoke	2	J20001-
20		04205-10825	Pin	2	J20001-
21		04050-12015	Pin, Cotter	2	J20001-
22		14X-43-11320	Boot	1	J20001-
23		14Z-43-11310	Knob	1	J20001-
24		08037-01008	Grommet	1	J20001-
25		09304-10835	Knob	1	J20001-
26		134-960-6360	Cover	1	J20001-
27		01010-81225	Bolt	2	J20001-
28		01643-31232	Washer	2	J20001-
29		14W-960-7310	Plate	1	J20001-
30		(134-54-68411)	Cover(Refer to Page 271)		-
31		(14X-960-5210)	Valve Body(Refer to Page 332)		-
		(14X-960-5210)	Valve Body(Refer to Page 355)		-

FIG. K2520-003002 Towing Winch Control, With Free Spool, Controller and Relay

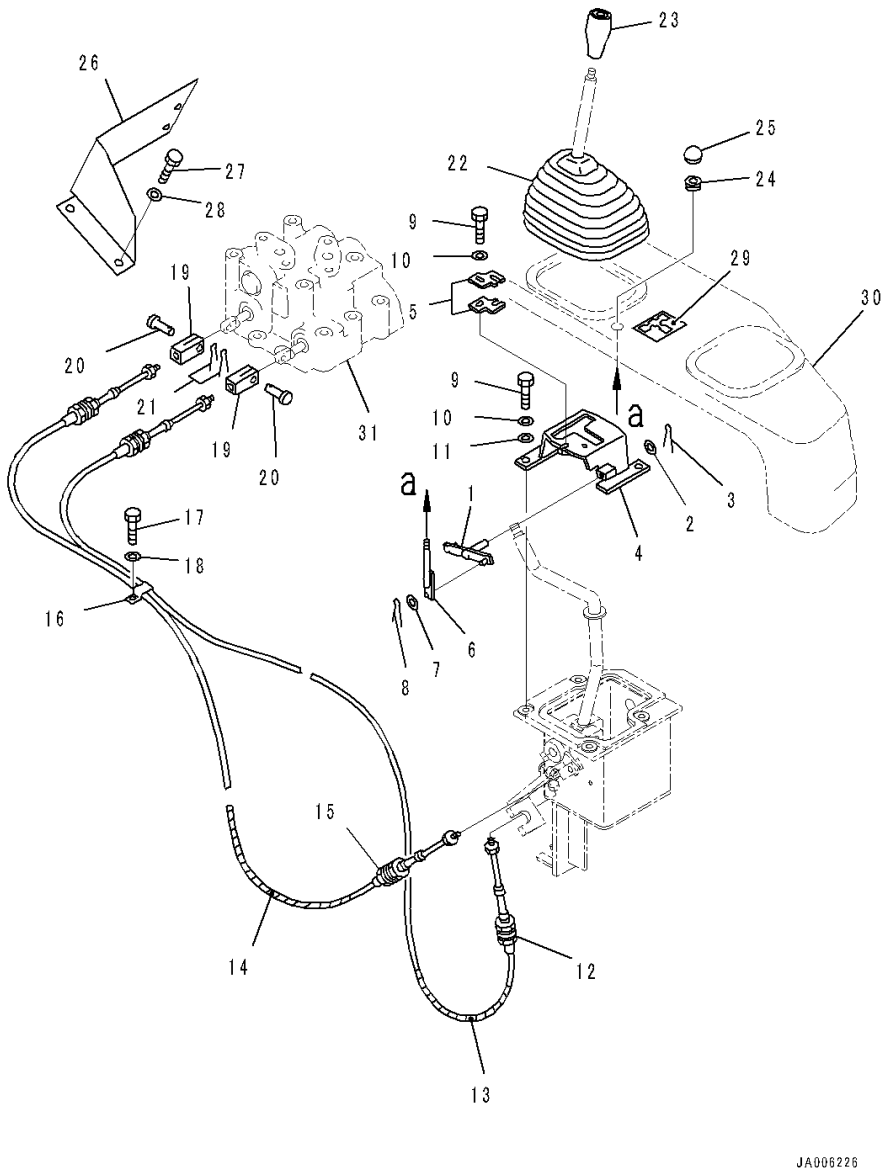

Index	Code	Part Number	Description	Qty	Serial Number
1		14W-960-7192	Plate	1	J20001-
2		01641-20812	Washer	1	J20001-
3		04050-12015	Pin, Cotter	1	J20001-
4		14W-960-7231	Bracket	1	J20001-
5		14W-960-7240	Plate	2	J20001-
6		14W-960-7211	Rod	1	J20001-
7		01641-20608	Washer	1	J20001-
8		04050-11612	Pin, Cotter	1	J20001-
9		01010-80830	Bolt	6	J20001-
10		01643-30823	Washer	6	J20001-
11		01643-31032	Washer	4	J20001-
12		15A-916-1210	Cable	1	J20001-
13		08210-01221	Tube, Spiral	1	J20001-
14		19M-43-15350	Cable	1	J20001-
15		08210-01215	Tube, Spiral	1	J20001-
16		195-01-14450	Clip	2	J20001-
17		01010-81225	Bolt	1	J20001-
18		01643-31232	Washer	1	J20001-
19		04210-20832	Yoke	2	J20001-
20		04205-10825	Pin	2	J20001-
21		04050-12015	Pin, Cotter	2	J20001-
22		14X-43-11320	Boot	1	J20001-
23		14Z-43-11310	Knob	1	J20001-
24		08037-01008	Grommet	1	J20001-
25		09304-10835	Knob	1	J20001-
26		134-960-6360	Cover	1	J20001-
27		01010-81225	Bolt	2	J20001-
28		01643-31232	Washer	2	J20001-
29		14W-960-7310	Plate	1	J20001-
30		(134-54-68411)	Cover(Refer to Page 271)		-
31		(14X-960-5210)	Valve Body(Refer to Page 332)		-
		(14X-960-5210)	Valve Body(Refer to Page 355)		-

FIG. K2520-003003 Towing Winch Control, With Free Spool, Lever (2/2)

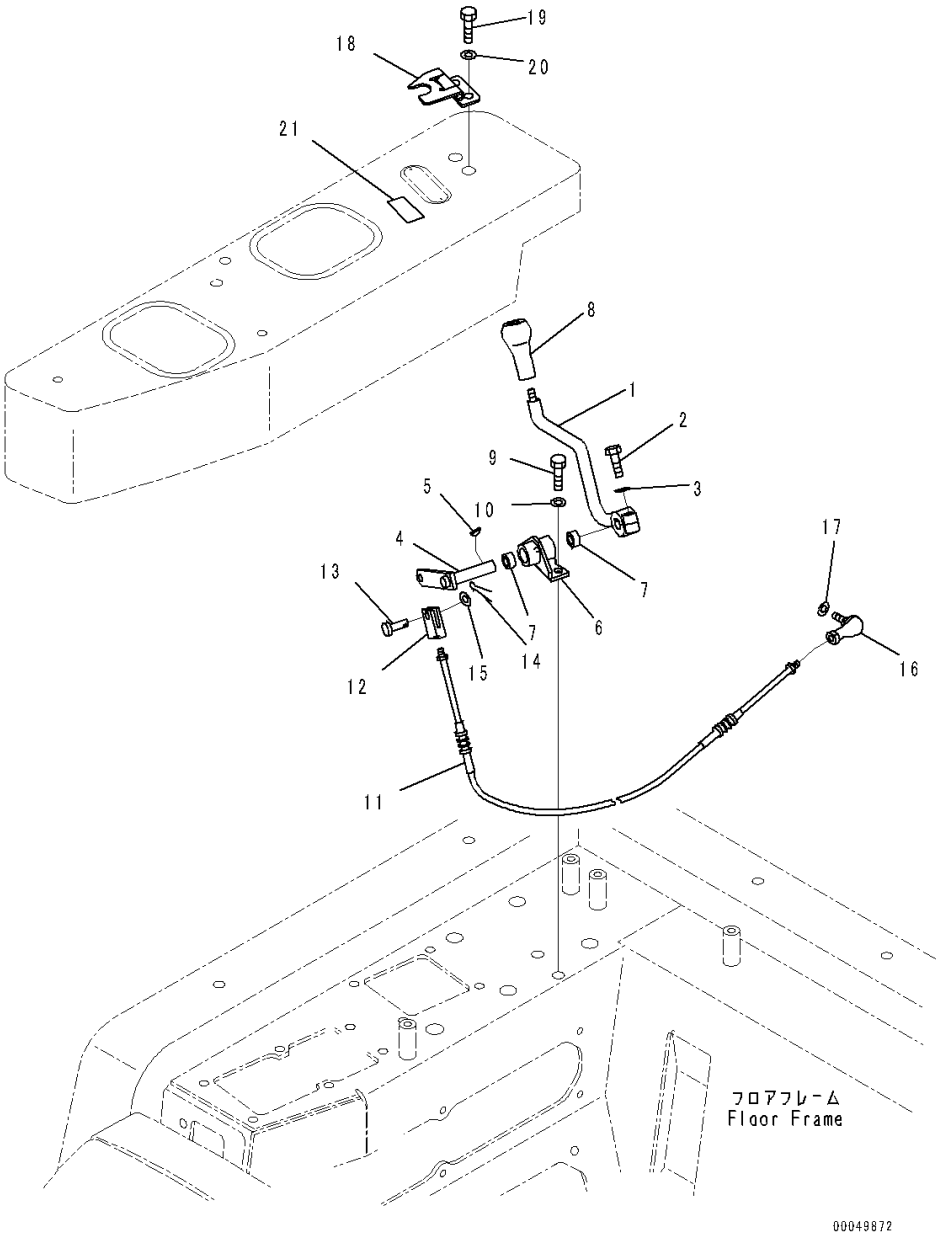

Index	Code	Part Number	Description	Qty	Serial Number
1		134-960-2410	Lever	1	J20001-
2		01010-80830	Bolt	1	J20001-
3		01643-30823	Washer	1	J20001-
4		134-960-2420	Lever	1	J20001-
5		04010-00516	Key	1	J20001-
6		134-960-2431	Bracket	1	J20001-
7		06123-01414	Bearing	2	J20001-
8		14Z-43-11310	Knob	1	J20001-
9		01010-80820	Bolt	2	J20001-
10		01643-30823	Washer	2	J20001-
11		134-960-2440	Cable	1	J20001-
12		04210-20832	Yoke	1	J20001-
13		04205-10825	Pin	1	J20001-
14		04050-12015	Pin, Cotter	1	J20001-
15		01640-20816	Washer	1	J20001-
16		04256-40817	Joint, Ball	1	J20001-
17		01643-30823	Washer	1	J20001-
18		134-960-2480	Lock	1	J20001-
19		01010-80816	Bolt	2	J20001-
20		01643-30823	Washer	2	J20001-
21		134-960-1910	Plate	1	J20001-

FIG. K2810-002001 Handrail

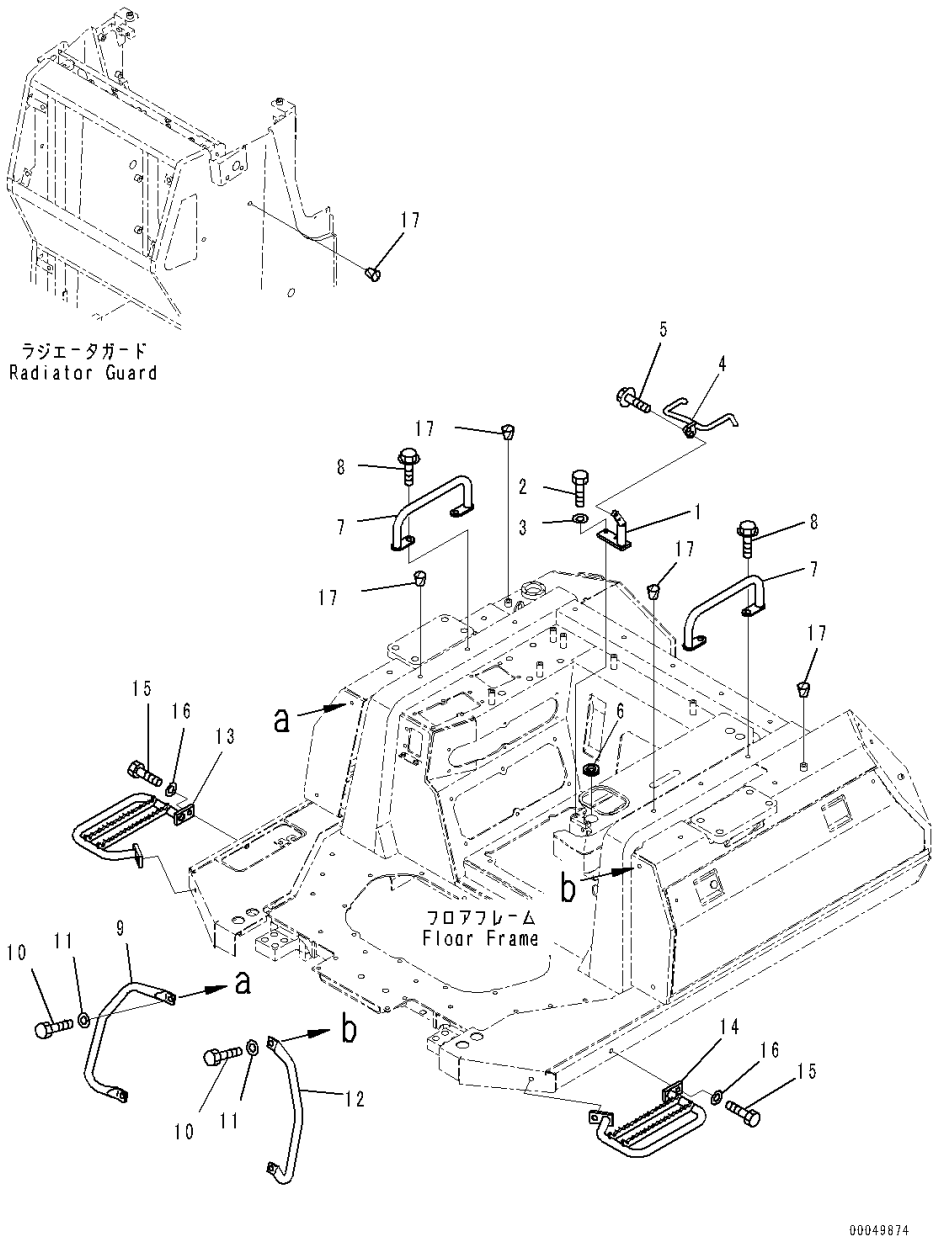

Index	Code	Part Number	Description	Qty	Serial Number
1		14X-54-16641	Bracket	1	J20001-
2		01010-81025	Bolt	2	J20001-
3		01643-31032	Washer	2	J20001-
4		134-54-66211	Handle	1	J20001-
5		01439-01025	Bolt, Flanged	2	J20001-
6		14X-54-16660	Grommet	1	J20001-
7		14X-54-16670	Handle	2	J20001-
8		01439-01225	Bolt, Flanged	4	J20001-
9		14X-54-13911	Handle,LHS	1	J20001-
10		01010-81225	Bolt	4	J20001-
11		01643-31232	Washer	4	J20001-
12		14X-54-13921	Handle,RHS	1	J20001-
13		14X-54-13215	Handle,LHS	1	J20001-
14		14X-54-13232	Handle,RHS	1	J20001-
15		01010-81230	Bolt	4	J20001-
16		01643-31232	Washer	4	J20001-
17		07049-01215	Plug	8	J20001-

GUARDS AND COVERS

FIG. M2110-001001 Radiator Guard

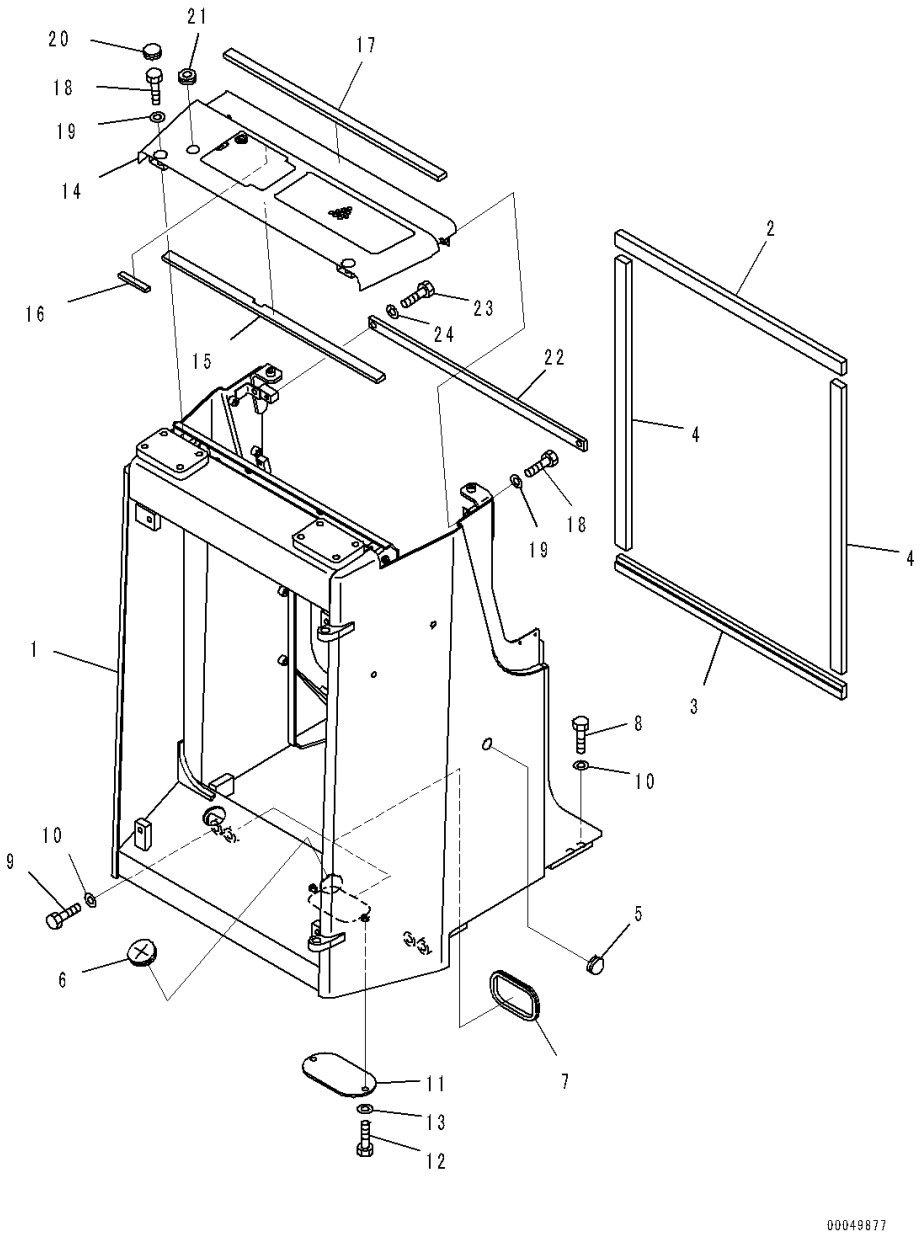

Index	Code	Part Number	Description	Qty	Serial Number
1		134-54-68810	Guard Assembly	1	J20001-
2		134-54-61160	Sheet	1	J20001-
3		134-54-61370	Sheet	1	J20001-
4		134-54-61170	Sheet	2	J20001-
5		09415-02520	Cap	2	J20001-
6		175-06-39660	Grommet	2	J20001-
7		20N-62-21250	Grommet	2	J20001-
8		20Y-30-16230	Bolt	4	J20001-
9		21K-27-22510	Bolt	4	J20001-
10		01643-31645	Washer	8	J20001-
11		134-54-61140	Plate	1	J20001-
12		01010-81225	Bolt	2	J20001-
13		01643-31232	Washer	2	J20001-
14		134-54-61832	Cover	1	J20001-
15		134-54-61191	• Sheet	1	J20001-
16		134-54-61350	• Seal	2	J20001-
17		134-54-61180	Sheet	1	J20001-
18		01010-81225	Bolt	4	J20001-
19		01643-31232	Washer	4	J20001-
20		09415-02512	Cap	2	J20001-
21		08037-02512	Grommet	1	J20001-
22		134-54-61120	Plate	1	J20001-
23		01010-81235	Bolt	2	J20001-
24		01643-31232	Washer	2	J20001-

FIG. M2120-001001 Radiator Mask

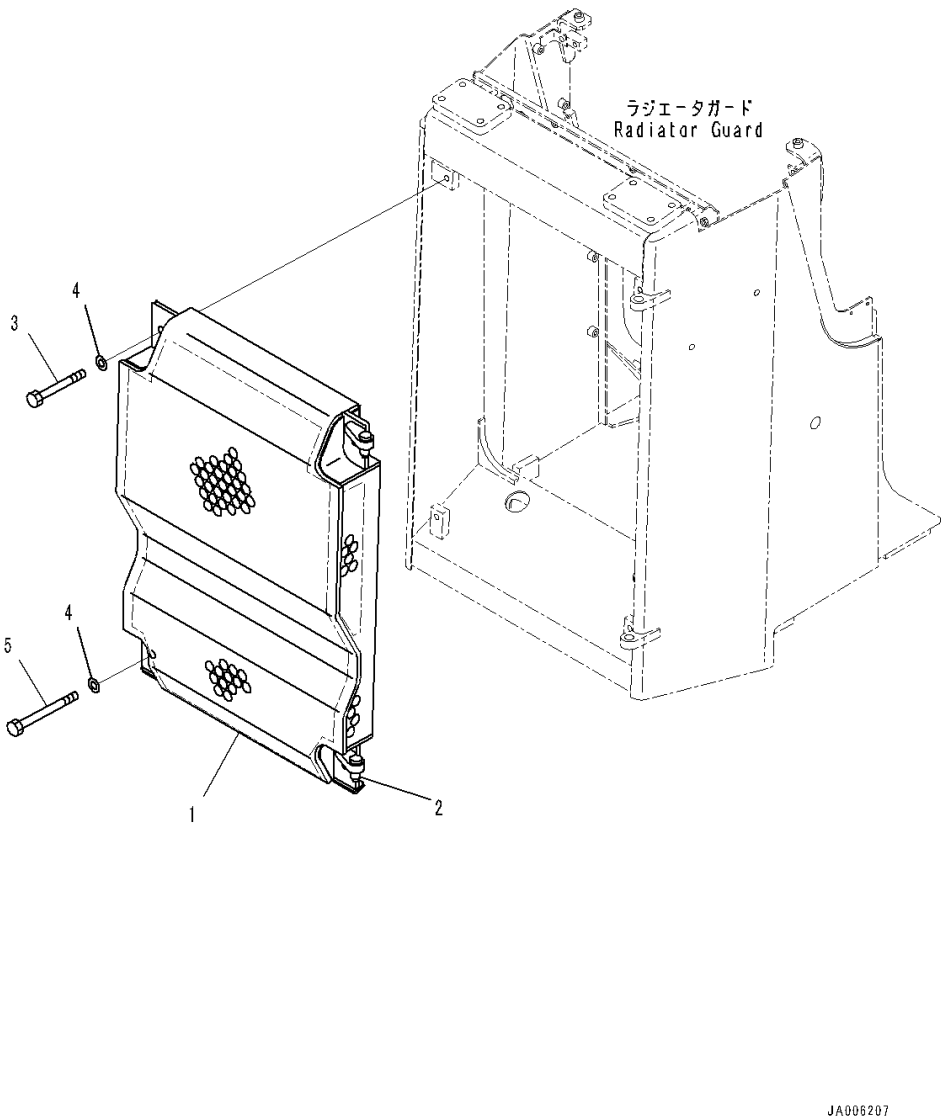

Index	Code	Part Number	Description	Qty	Serial Number
1		134-54-61841	Mask	1	J20001-
2		144-54-11940	• Pin	2	J20001-
3		01011-81660	Bolt	2	J20001-
4		01643-31645	Washer	4	J20001-
5		01011-81690	Bolt	2	J20001-

FIG. M2140-001001 Front Guard, Hood

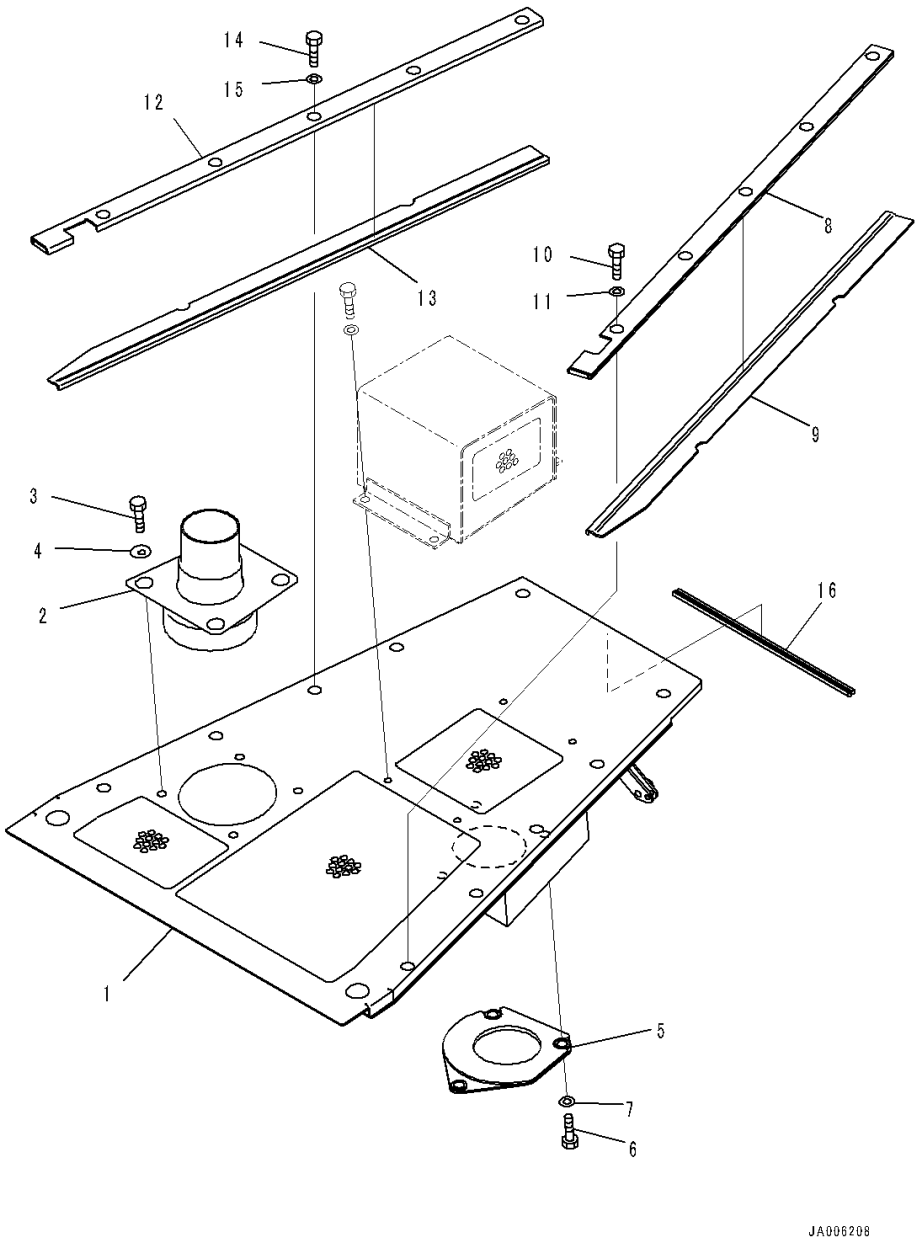

Index	Code	Part Number	Description	Qty	Serial Number
1		134-54-68820	Hood	1	J20001-
2		134-54-65490	Pipe	1	J20001-
3		195-54-43210	Bolt	4	J20001-
4		124-54-52480	Washer	4	J20001-
5		134-54-61931	Cover	1	J20001-
6		01010-80820	Bolt	3	J20001-
7		113-43-23230	Washer	3	J20001-
8		134-54-65540	Cover, LHS	1	J20001-
9		134-54-65550	Sheet, LHS	1	J20001-
10		01010-80816	Bolt	5	J20001-
11		01643-30823	Washer	5	J20001-
12		134-54-65360	Cover, RHS	1	J20001-
13		134-54-65370	Sheet, RHS	1	J20001-
14		01010-80816	Bolt	5	J20001-
15		01643-30823	Washer	5	J20001-
16		134-54-65560	Seal	1	J20001-

FIG. M2140-001002 Front Guard, Side Cover (1/2)

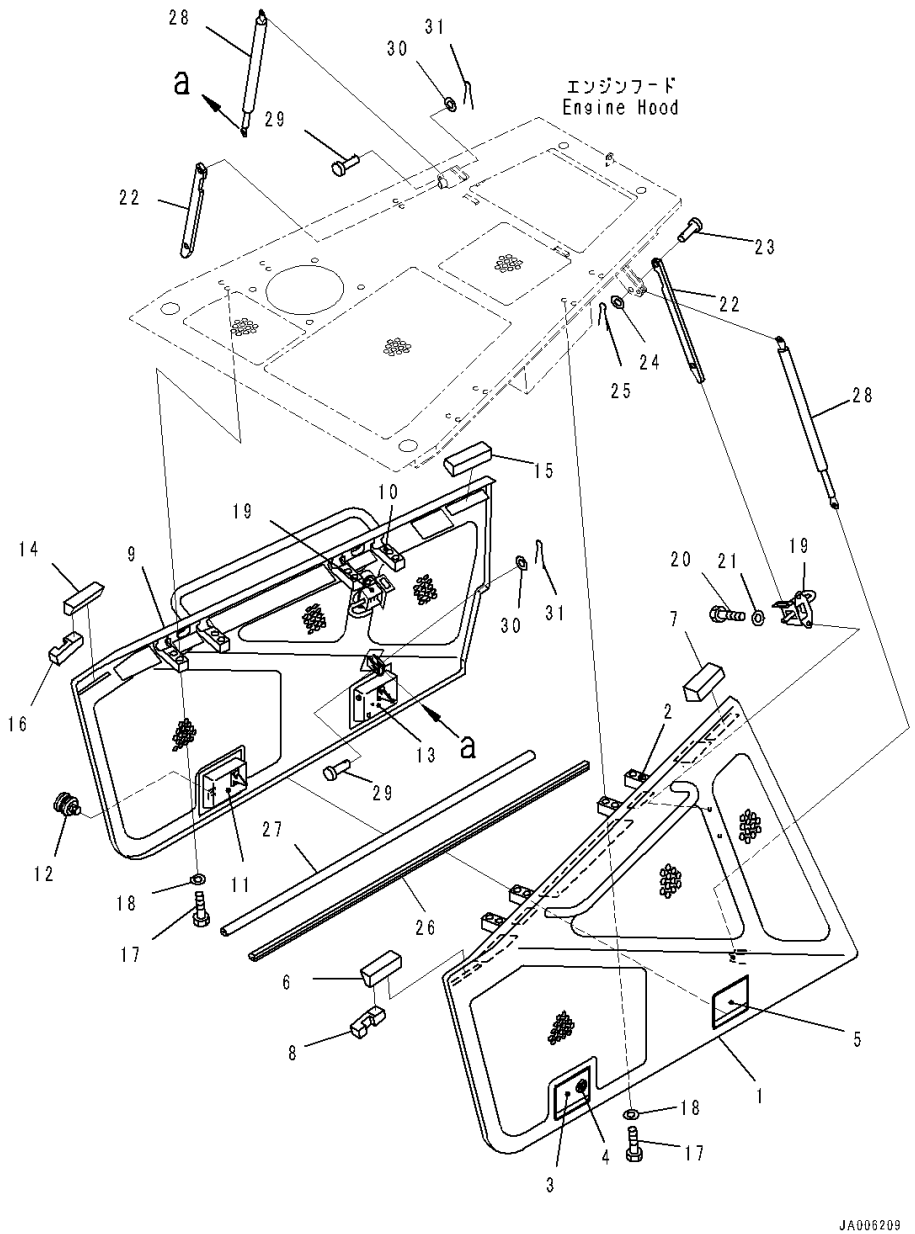

Index	Code	Part Number	Description	Qty	Serial Number
1		134-54-62612	Cover, LHS	1	J20001-
2		134-54-62180	• Hinge	2	J20001-
3		17A-54-14230	• Lock,Welded	1	J20001-
4		421-54-11381	• • Lock	1	J20001-
5		17A-54-14240	• Lock,Welded	1	J20001-
6		134-54-62771	• Seal, Bonded	1	J20001-
7		134-54-62780	• Seal, Bonded	1	J20001-
8		134-54-63380	• Seal, Bonded	1	J20001-
9		134-54-62622	Cover, RHS	1	J20001-
10		134-54-62180	• Hinge	2	J20001-
11		17A-54-14230	• Lock,Welded	1	J20001-
12		421-54-11381	• • Lock	1	J20001-
13		17A-54-14240	• Lock,Welded	1	J20001-
14		134-54-62771	• Seal, Bonded	1	J20001-
15		134-54-62780	• Seal, Bonded	1	J20001-
16		134-54-63390	• Seal, Bonded	1	J20001-
17		01010-81045	Bolt	16	J20001-
18		01643-31032	Washer	16	J20001-
19		134-54-62431	Bracket	2	J20001-
20		01010-81020	Bolt	4	J20001-
21		01643-31032	Washer	4	J20001-
22		124-54-62770	Stay	2	J20001-
23		135-43-33770	Pin	2	J20001-
24		205-54-53470	Washer	2	J20001-
25		04050-13022	Pin, Cotter	2	J20001-
26		134-54-62210	Seal, LHS	1	J20001-
27		134-54-62220	Seal, RHS	1	J20001-
28		14X-54-12780	Damper	2	J20001-
29		04205-10828	Pin	4	J20001-
30		01641-20812	Washer	4	J20001-
31		04050-12015	Pin, Cotter	4	J20001-

FIG. M2140-001003 Front Guard, Side Cover (2/2)

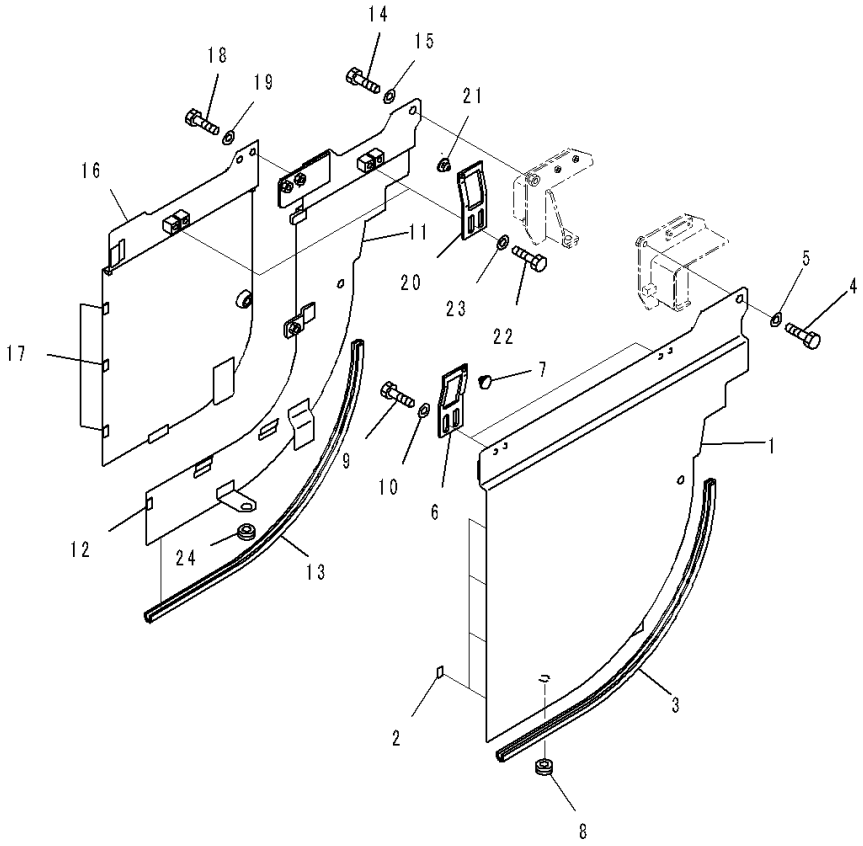

Index	Code	Part Number	Description	Qty	Serial Number
1		134-54-J1330	Cover, LHS	1	J20001-
2		124-54-52550	• Sheet	4	J20001-
3		134-54-62670	Seal	1	J20001-
4		01010-81225	Bolt	2	J20001-
5		130-43-64260	Collar	2	J20001-
6		14X-54-13980	Plate	2	J20001-
7		14X-54-12960	Stopper	2	J20001-
8		08037-01610	Grommet	1	J20001-
9		01010-81225	Bolt	4	J20001-
10		01643-31232	Washer	4	J20001-
11		134-54-J1310	Cover, RHS	1	J20001-
12		124-54-52550	• Sheet	1	J20001-
13		134-54-62670	Seal	1	J20001-
14		01010-81225	Bolt	2	J20001-
15		130-43-64260	Collar	2	J20001-
16		134-54-J1320	Cover, RHS	1	J20001-
17		124-54-52550	• Sheet	3	J20001-
18		01010-81225	Bolt	3	J20001-
19		01643-31232	Washer	3	J20001-
20		14X-54-13980	Plate	2	J20001-
21		14X-54-12960	Stopper	2	J20001-
22		01010-81225	Bolt	4	J20001-
23		01643-31232	Washer	4	J20001-
24		08037-01610	Grommet	1	J20001-

FIG. M2140-001004 Front Guard, Hood Mounting

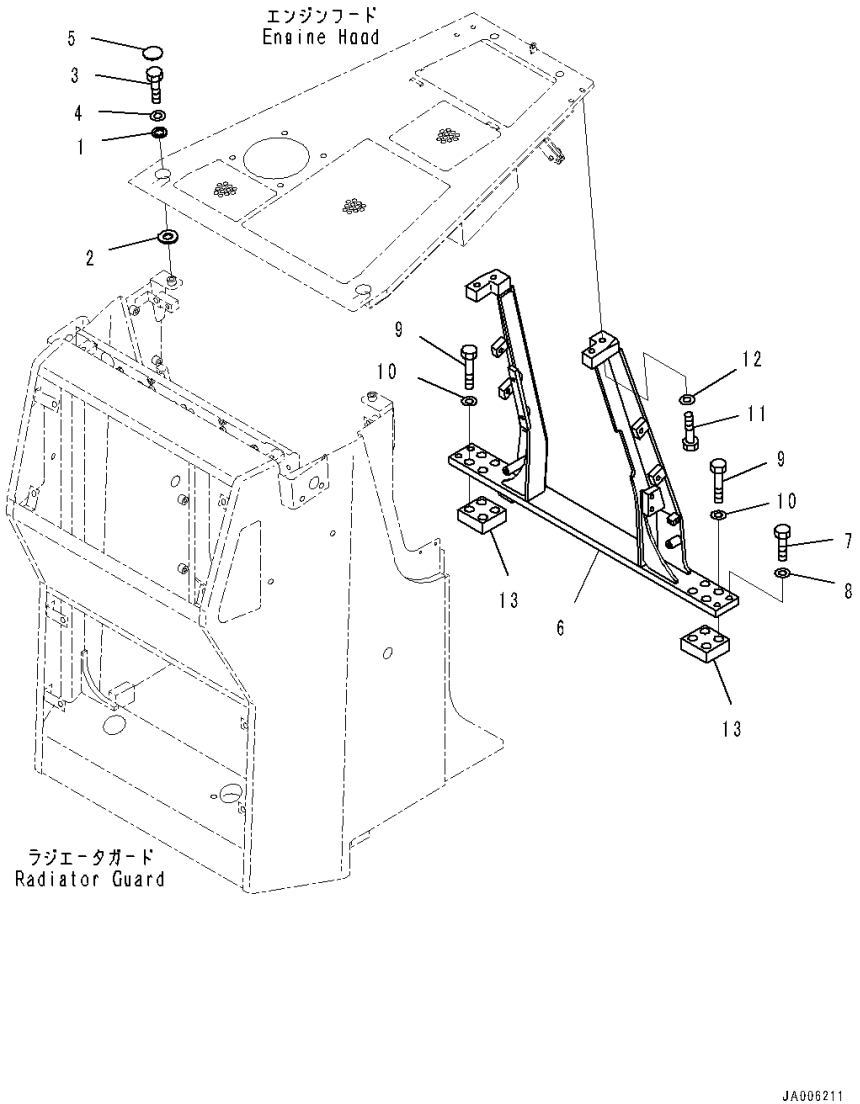

Index	Code	Part Number	Description	Qty	Serial Number
1		124-54-52190	Spacer	2	J20001-
2		124-54-52180	Spacer	2	J20001-
3		01010-81235	Bolt	2	J20001-
4		01643-31232	Washer	2	J20001-
5		14X-54-18150	Cap	2	J20001-
6		134-54-62132	Bracket	1	J20001-
7		01010-81245	Bolt	4	J20001-
8		01643-31232	Washer	4	J20001-
9		01011-82040	Bolt	8	J20001-
10		01643-32060	Washer	8	J20001-
11		01010-81255	Bolt	4	J20001-
12		01643-31232	Washer	4	J20001-
13		134-54-62171	Plate	2	J20001-

FIG. M2140-001005 Front Guard, Stopper

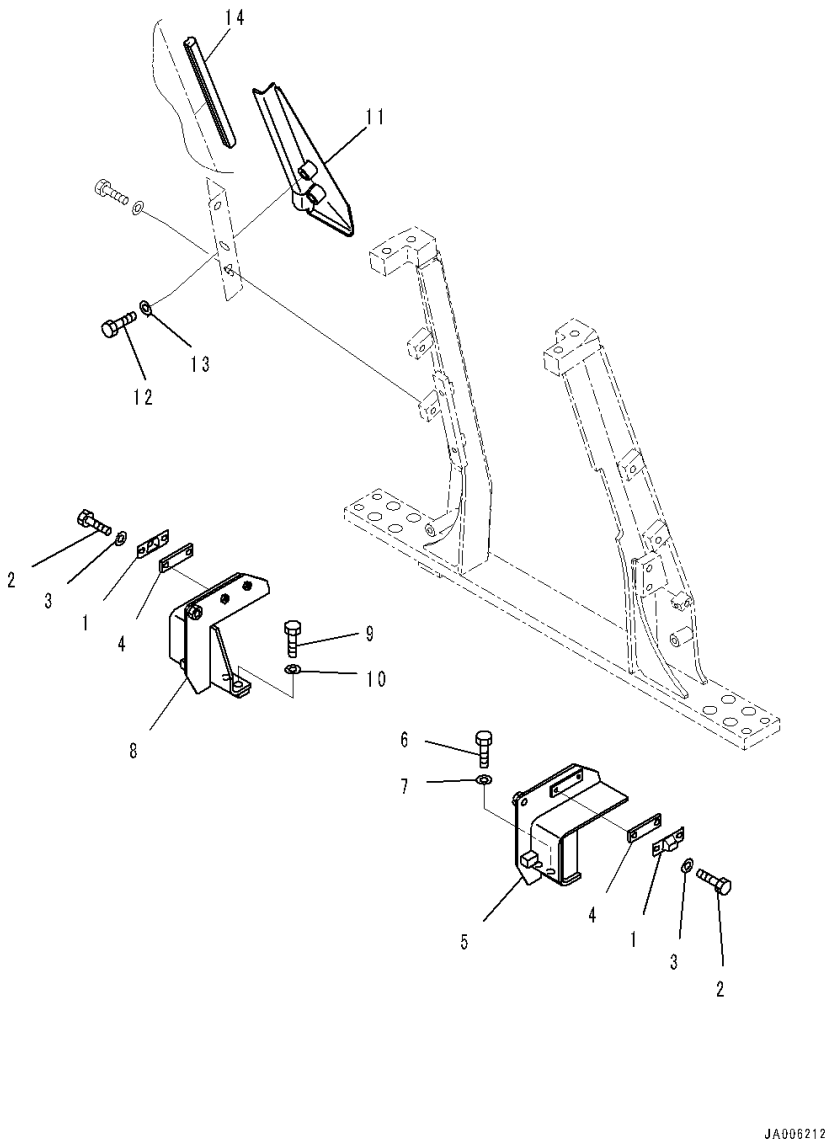

Index	Code	Part Number	Description	Qty	Serial Number
1		205-54-53550	Dovetail	4	J20001-
2		01010-80625	Bolt	8	J20001-
3		01643-30623	Washer	8	J20001-
4		11Y-54-11270	Plate	4	J20001-
5		134-54-62831	Bracket, LHS	1	J20001-
6		01010-81235	Bolt	2	J20001-
7		01643-31232	Washer	2	J20001-
8		134-54-62642	Bracket, RHS	1	J20001-
9		01010-81235	Bolt	2	J20001-
10		01643-31232	Washer	2	J20001-
11		134-54-62631	Cover	2	J20001-
12		01010-81225	Bolt	2	J20001-
13		01643-31232	Washer	2	J20001-
14		09412-00003	Seal, Door	1	J20001-

FIG. M2140-001006 Front Guard, Air Intake Guard

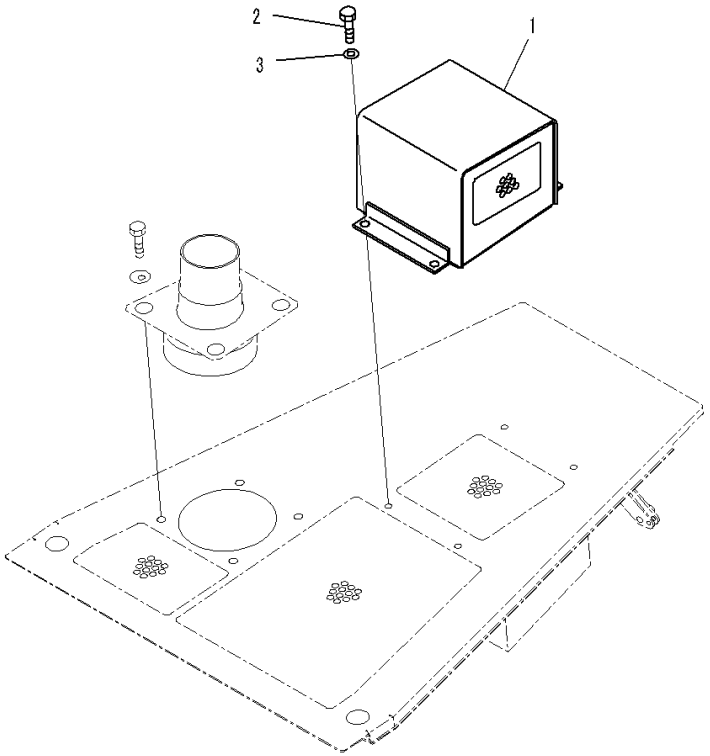

Index	Code	Part Number	Description	Qty	Serial Number
1		134-54-61970	Cover	1	J20001-
2		01010-81220	Bolt	4	J20001-
3		01643-31232	Washer	4	J20001-

FIG. M2140-001007 Front Guard, Air Intake

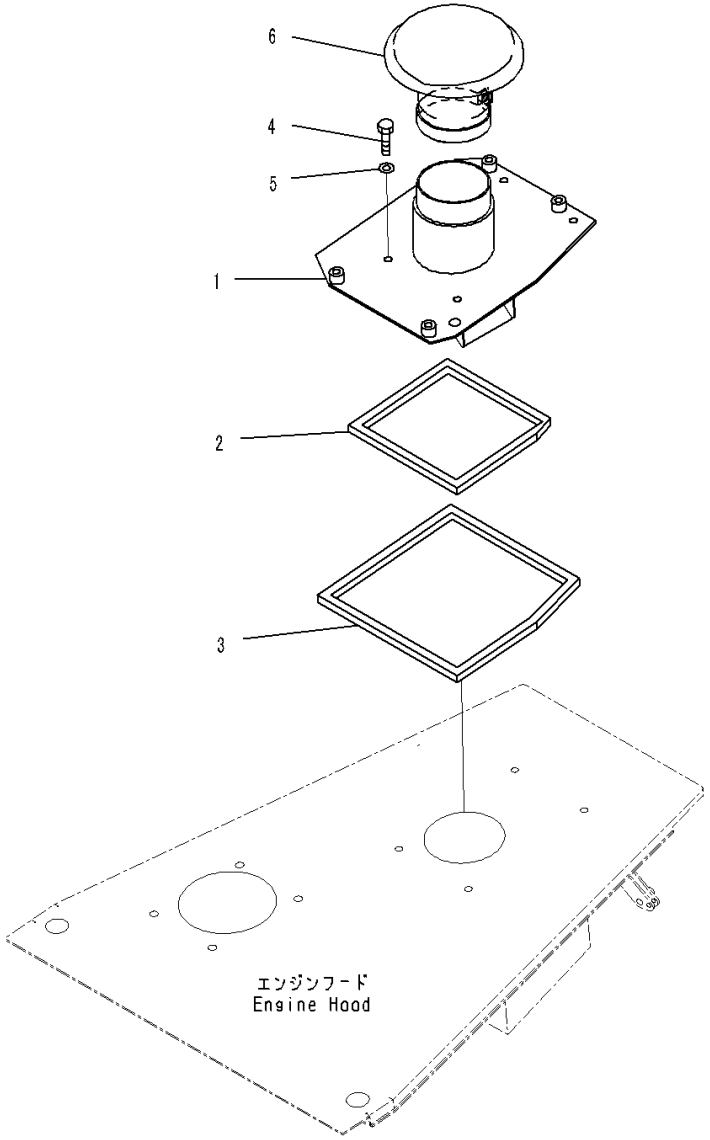

Index	Code	Part Number	Description	Qty	Serial Number
1		134-54-66770	Bracket	1	J20001-
2		134-54-61780	Seal	1	J20001-
3		134-54-61790	Seal	1	J20001-
4		01010-81225	Bolt	4	J20001-
5		01643-31232	Washer	4	J20001-
6		600-181-3860	Cap	1	J20001-

FIG. M2210-001001 Rear Guard, Fender,LHS

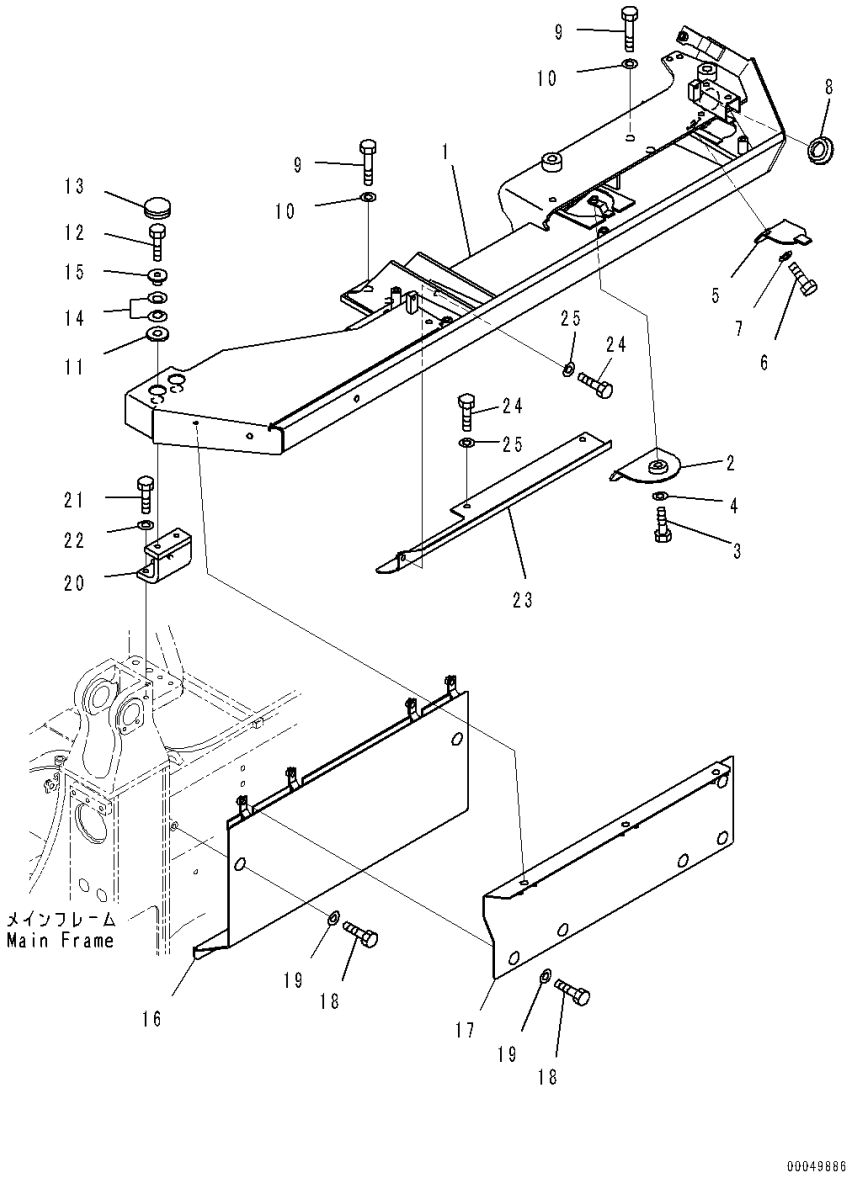

Index	Code	Part Number	Description	Qty	Serial Number
1		134-54-63930	Fender, LHS	1	J20001-
2		134-54-63131	Cover	1	J20001-
3		01010-81225	Bolt	1	J20001-
4		01643-31232	Washer	1	J20001-
5		134-54-63271	Cover	1	J20001-
6		01010-81225	Bolt	1	J20001-
7		01643-31232	Washer	1	J20001-
8		09415-05022	Cap	1	J20001-
9		01010-82050	Bolt	4	J20001-
10		01643-32060	Washer	4	J20001-
11		134-54-63880	Plate	1	J20001-
12		01010-81245	Bolt	2	J20001-
13		09415-03614	Cap	2	J20001-
14		175-54-27350	Spring	4	J20001-
15		134-54-62541	Spacer	2	J20001-
16		134-54-63221	Cover	1	J20001-
17		134-54-63950	Cover	1	J20001-
18		01010-81225	Bolt	13	J20001-
19		01643-31232	Washer	13	J20001-
20		134-54-62532	Bracket	1	J20001-
21		01010-81235	Bolt	2	J20001-
22		01643-31232	Washer	2	J20001-
23		134-21-66120	Cover	1	J20001-
24		01010-81225	Bolt	3	J20001-
25		01643-31232	Washer	3	J20001-

FIG. M2210-001002 Rear Guard, Fender,RHS

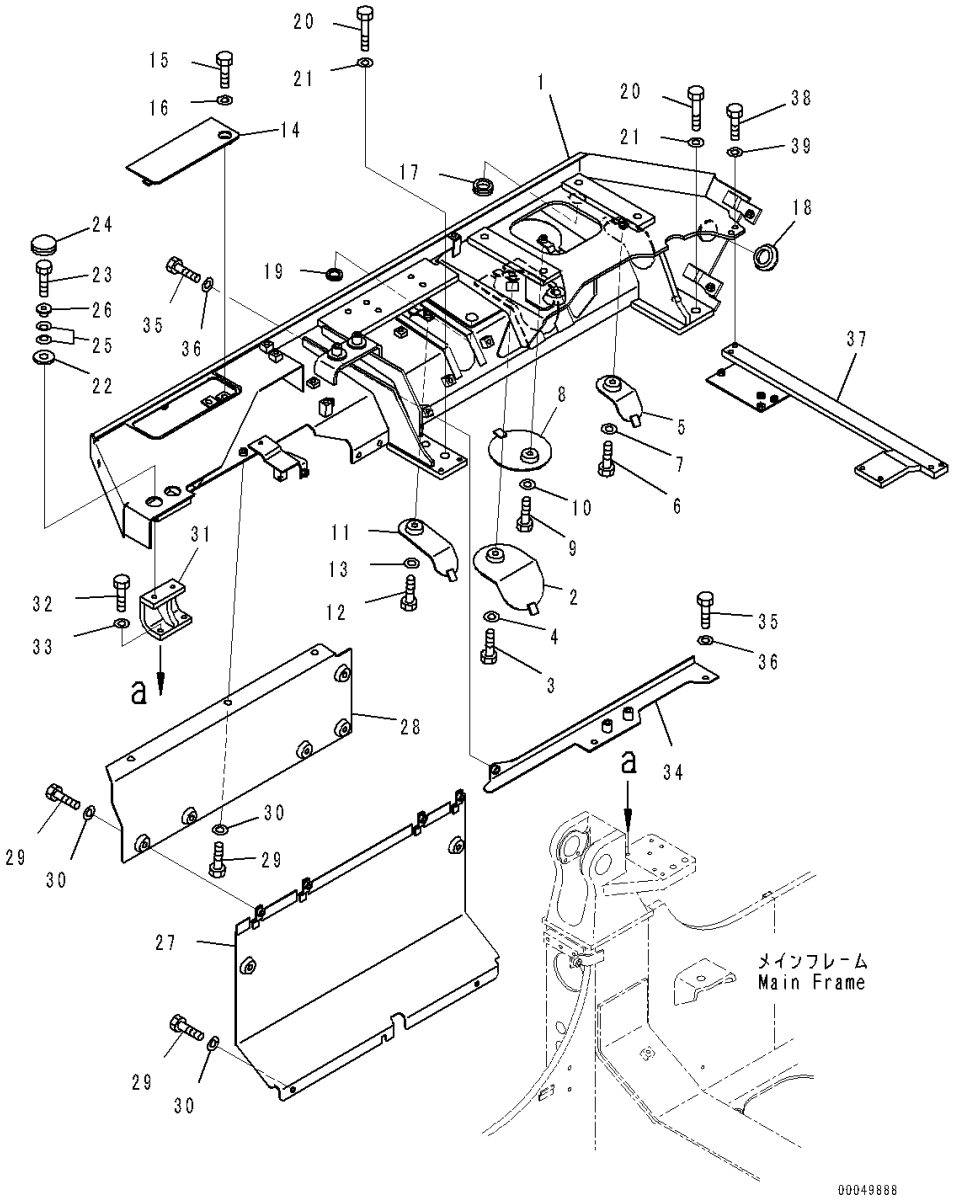

Index	Code	Part Number	Description	Qty	Serial Number
1		134-54-J1730	Fender, RHS	1	J20001-
2		134-54-63131	Cover	1	J20001-
3		01010-81225	Bolt	1	J20001-
4		01643-31232	Washer	1	J20001-
5		134-54-63141	Cover	1	J20001-
6		01010-81225	Bolt	1	J20001-
7		01643-31232	Washer	1	J20001-
8		134-54-63181	Cover	1	J20001-
9		01010-81225	Bolt	1	J20001-
10		01643-31232	Washer	1	J20001-
11		134-54-63281	Cover	1	J20001-
12		01010-81225	Bolt	1	J20001-
13		01643-31232	Washer	1	J20001-
14		14X-54-13132	Cover	1	J20001-
15		01010-81225	Bolt	1	J20001-
16		01643-31232	Washer	1	J20001-
17		09415-03614	Cap	2	J20001-
18		09415-05022	Cap	1	J20001-
19		09415-02512	Cap	1	J20001-
20		01010-82050	Bolt	4	J20001-
21		01643-32060	Washer	4	J20001-
22		134-54-63880	Plate	1	J20001-
23		01010-81245	Bolt	2	J20001-
24		09415-03614	Cap	2	J20001-
25		175-54-27350	Spring	4	J20001-
26		134-54-62541	Spacer	2	J20001-
27		134-54-63231	Cover	1	J20001-
28		134-54-63960	Cover	1	J20001-
29		01010-81225	Bolt	13	J20001-
30		01643-31232	Washer	13	J20001-
31		134-54-62532	Bracket	1	J20001-
32		01010-81235	Bolt	2	J20001-
33		01643-31232	Washer	2	J20001-
34		134-21-66110	Cover	1	J20001-
35		01010-81225	Bolt	3	J20001-
36		01643-31232	Washer	3	J20001-
37		134-54-63152	Plate	1	J20001-
38		01010-81230	Bolt	4	J20001-
39		01643-31232	Washer	4	J20001-

FIG. M2210-001003 Rear Guard, Anti Slip

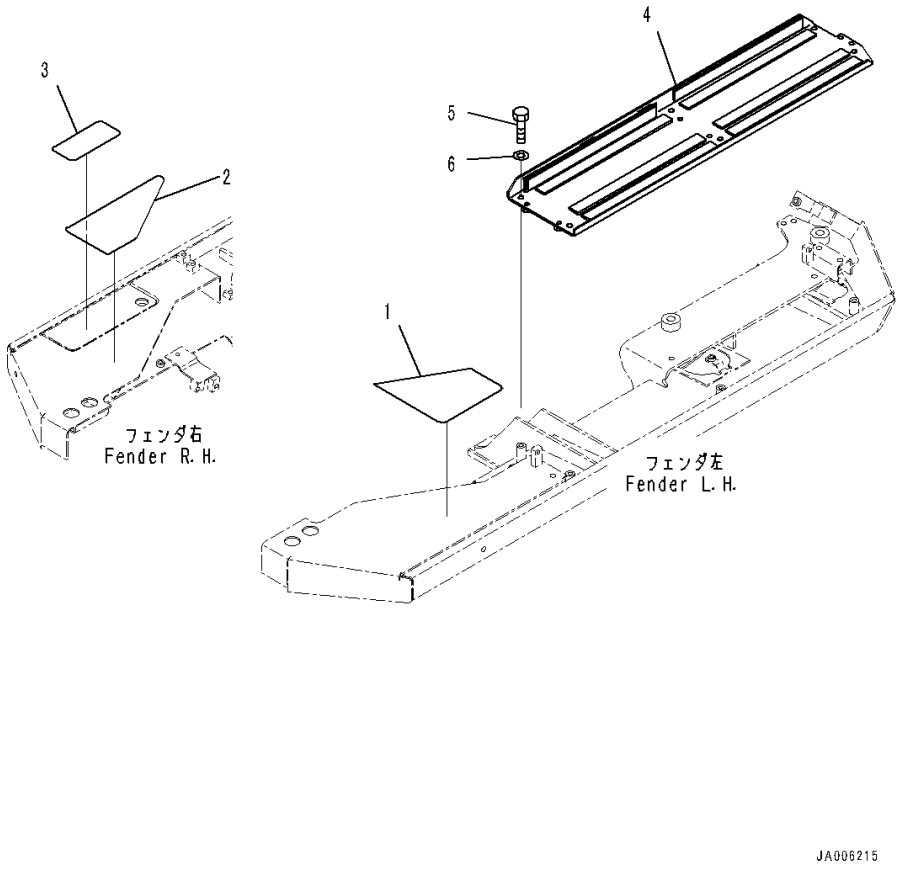

Index	Code	Part Number	Description	Qty	Serial Number
1		134-911-1110	Sheet, LHS	1	J20001-
2		134-911-1120	Sheet, RHS	1	J20001-
3		14X-54-13830	Sheet, RHS	1	J20001-
4		134-54-66312	Plate	1	J20001-
5		01010-81230	Bolt	6	J20001-
6		01643-31232	Washer	6	J20001-

FIG. M2211-001001 Fender Cover, Battery Cover

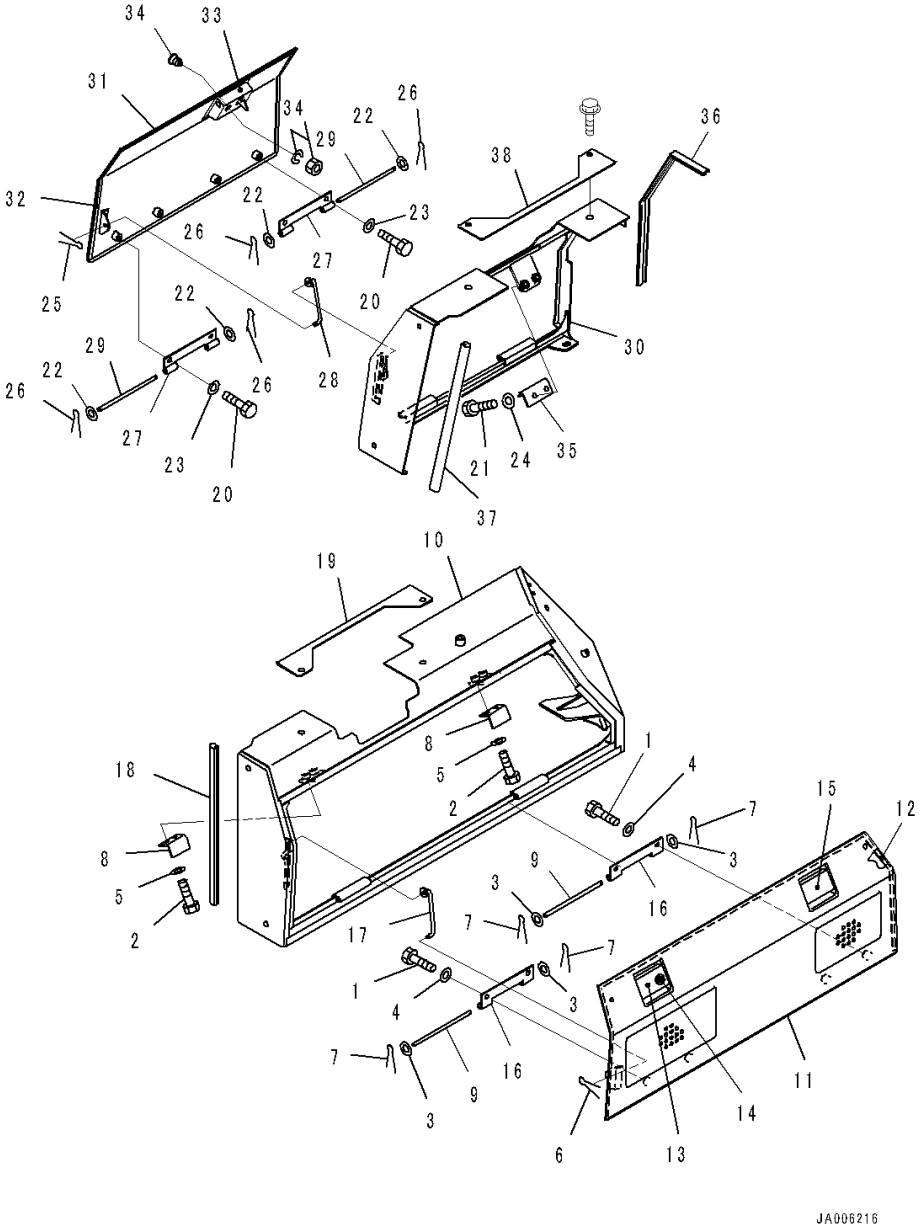

Index	Code	Part Number	Description	Qty	Serial Number
		134-54-65100	Cover Assembly, LHS	1	J20001-
1		01010-81020	• Bolt	4	J20001-
2		01010-81225	• Bolt	4	J20001-
3		01641-21016	• Washer	4	J20001-
4		01643-31032	• Washer	4	J20001-
5		01643-31232	• Washer	4	J20001-
6		04050-12015	• Pin, Cotter	1	J20001-
7		04050-13020	• Pin, Cotter	4	J20001-
8		14X-54-35380	• Plate	2	J20001-
9		124-54-54170	• Pin	2	J20001-
10		134-54-64730	• Cover, LHS	1	J20001-
11		134-54-64740	• Cover, LHS	1	J20001-
12		134-54-64K41	• • Seal	1	J20001-
13		17A-54-14230	• • Lock,Welded	1	J20001-
14		421-54-11381	• • • Lock	1	J20001-
15		17A-54-14240	• • Lock,Welded	1	J20001-
16		134-54-64130	• Hinge	2	J20001-
17		134-54-64160	• Hook	1	J20001-
18		134-54-67380	Seal	1	J20001-
19		134-54-64141	Plate	1	J20001-
		134-54-64900	Cover Assembly, RHS	1	J20001-
20		01010-81020	• Bolt	4	J20001-
21		01010-81225	• Bolt	2	J20001-
22		01641-21016	• Washer	4	J20001-
23		01643-31032	• Washer	4	J20001-
24		01643-31232	• Washer	2	J20001-
25		04050-12015	• Pin, Cotter	1	J20001-
26		04050-13020	• Pin, Cotter	4	J20001-
27		134-54-64130	• Hinge	2	J20001-
28		134-54-64160	• Hook	1	J20001-
29		124-54-54170	• Pin	2	J20001-
30		134-54-64830	• Cover,RHS	1	J20001-
31		134-54-64840	• Cover, RHS	1	J20001-
32		134-54-64M40	• • Seal	1	J20001-
33		17A-54-14230	• • Lock,Welded	1	J20001-
34		421-54-11381	• • • Lock	1	J20001-
35		134-54-64171	• Plate	1	J20001-
36		134-54-64183	• Seal	1	J20001-
37		134-54-67390	Seal	1	J20001-
38		134-54-64141	Plate	1	J20001-

FIG. M2211-001002 Fender Cover, Tool Box

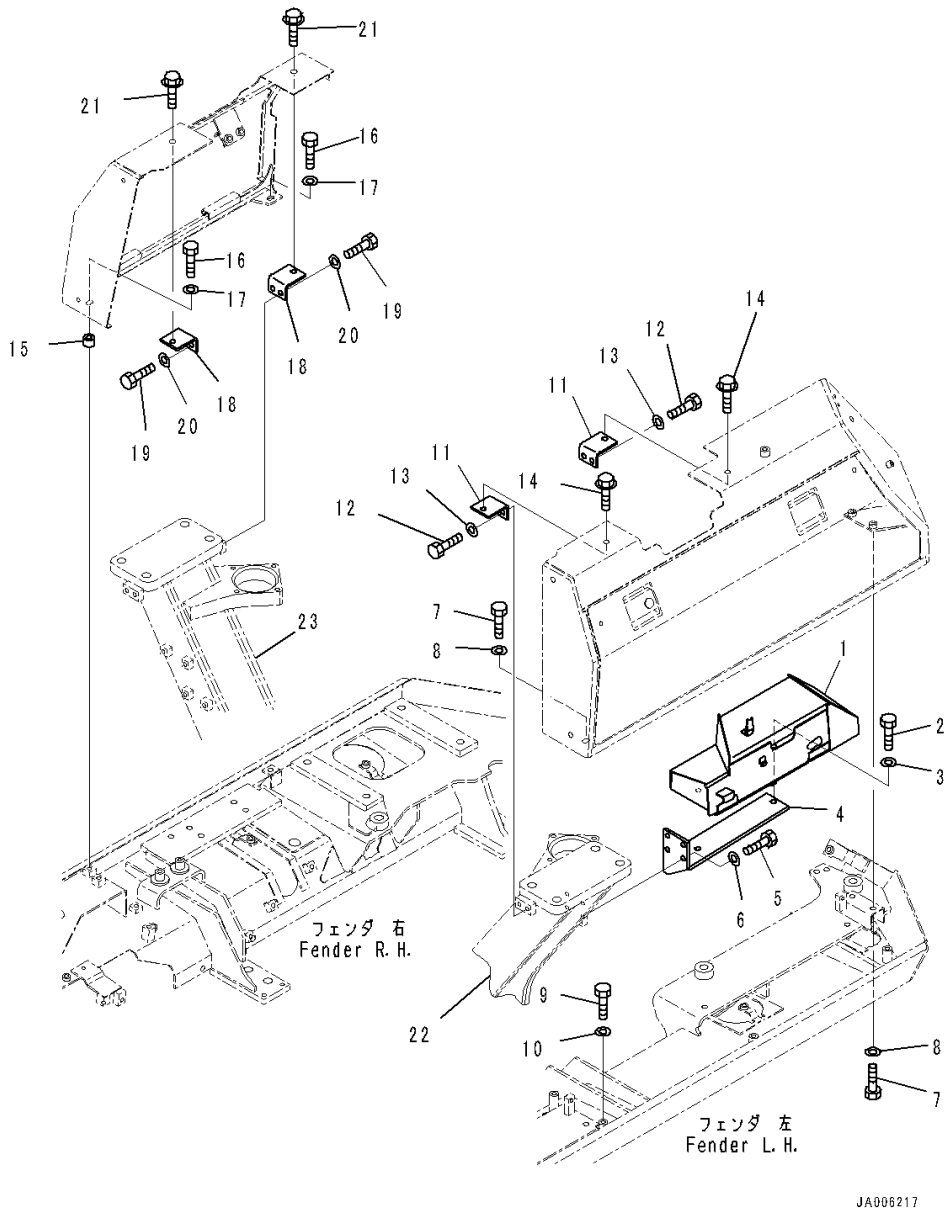

Index	Code	Part Number	Description	Qty	Serial Number
1		134-54-64420	Box, Tool	1	J20001-
2		01010-81225	Bolt	2	J20001-
3		01643-31232	Washer	2	J20001-
4		134-54-64450	Bracket	1	J20001-
5		01010-81230	Bolt	4	J20001-
6		01643-31232	Washer	4	J20001-
7		01010-81225	Bolt	2	J20001-
8		01643-31232	Washer	2	J20001-
9		01010-81225	Bolt	1	J20001-
10		20Y-54-12670	Washer	1	J20001-
11		134-54-64151	Bracket	2	J20001-
12		01010-81225	Bolt	4	J20001-
13		01643-31232	Washer	4	J20001-
14		01439-01225	Bolt, Flanged	2	J20001-
15		424-64-11110	Spacer	2	J20001-
16		01010-81245	Bolt	2	J20001-
17		01643-31232	Washer	2	J20001-
18		134-54-64151	Bracket	2	J20001-
19		01010-81225	Bolt	4	J20001-
20		01643-31232	Washer	4	J20001-
21		01439-01225	Bolt, Flanged	2	J20001-
22		(134-X78-1610)	Bracket(Refer to Page 295)		-
23		(134-X78-1620)	Bracket(Refer to Page 295)		-

FIG. M2240-002001 Rear Cover

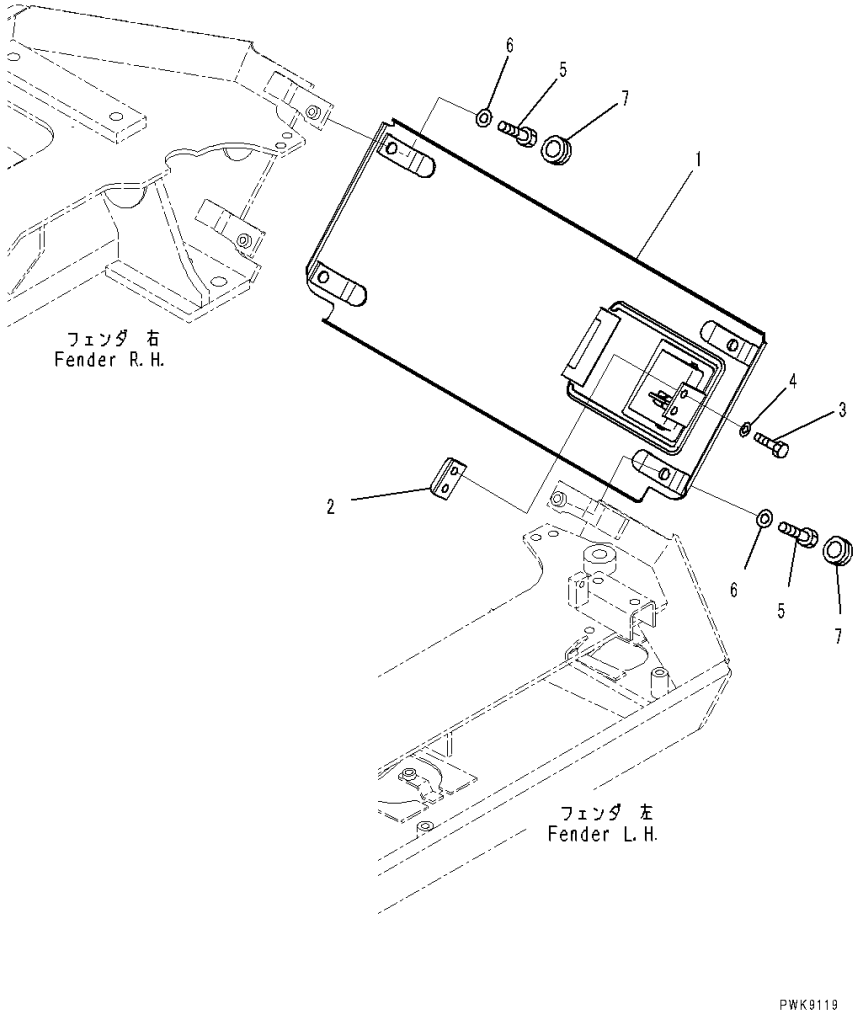

Index	Code	Part Number	Description	Qty	Serial Number
1		134-54-63213	Cover	1	J20001-
2		09461-00014	Bracket	1	J20001-
3		01010-81020	Bolt	2	J20001-
4		01643-31032	Washer	2	J20001-
5		01010-81235	Bolt	4	J20001-
6		01643-31232	Washer	4	J20001-
7		09415-02512	Cap	4	J20001-

REAR COVER

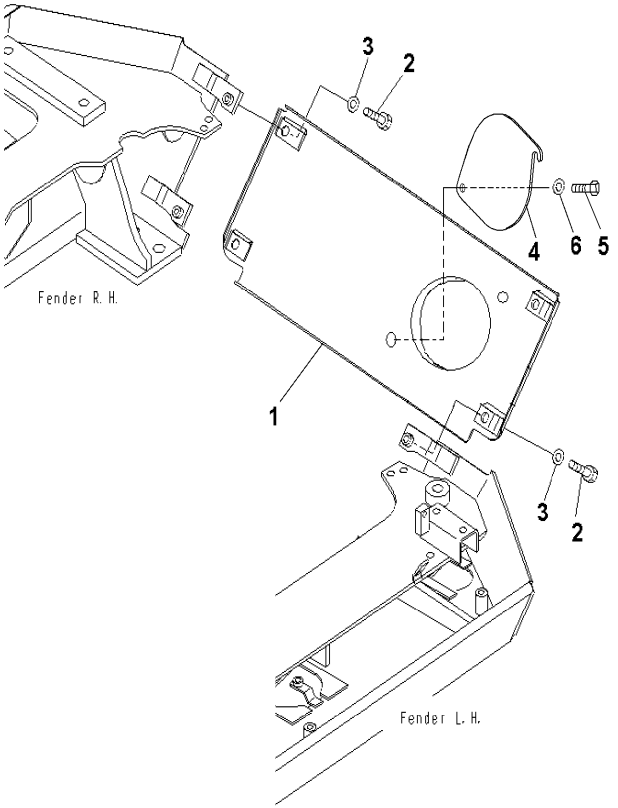

INDEX	CD	PART NO.	DESCRIPTION	QTY	SERIAL NO.
1		134-54-J1260	COVER	1	J20001-UP
2		134-54-J1270	PLATE	1	J20001-UP
3		01010-81025	BOLT	2	J20001-UP
4		01643-31032	WASHER	2	J20001-UP
5		01010-81235	BOLT	4	J20001-UP
6		01643-31232	WASHER	4	J20001-UP

REAR COVER(TOWING WINCH SPEC)

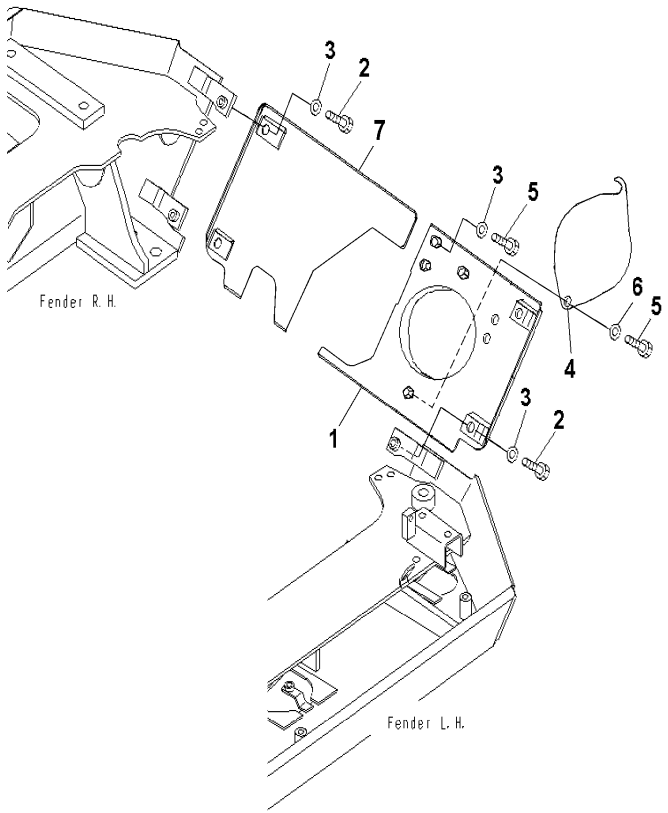

INDEX	CD	PART NO.	DESCRIPTION	QTY	SERIAL NO.
1		134-54-J9990	COVER	1	J20001-UP
2		01010-81240	BOLT	4	J20001-UP
3		01643-31232	WASHER	6	J20001-UP
4		134-54-J9986	COVER	1	J20001-UP
5		134-54-J9972	BOLT WING	2	J20001-UP
6		01643-31032	WASHER	2	J20001-UP
7		134-54-J9989	COVER	1	J20001-UP

FIG. M2710-001001 ROPS Mounting Bracket

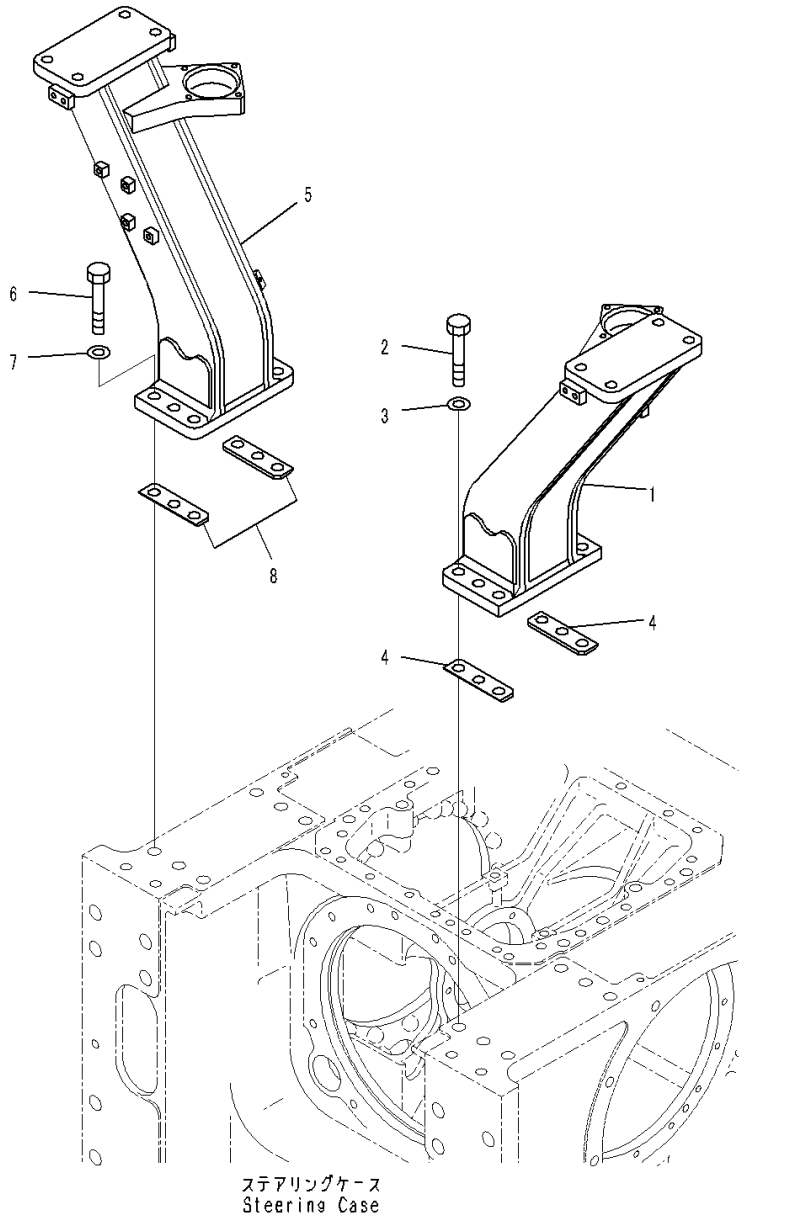

Index	Code	Part Number	Description	Qty	Serial Number
1		134-X78-1610	Bracket,LHS	1	J20001-
2		01010-82480	Bolt	6	J20001-
3		19M-09-13120	Washer	6	J20001-
4		134-X78-1250	Plate	2	J20001-
5		134-X78-1620	Bracket,RHS	1	J20001-
6		01010-82480	Bolt	6	J20001-
7		19M-09-13120	Washer	6	J20001-
8		134-X78-1250	Plate	2	J20001-

FIG. M2811-002001 Cover

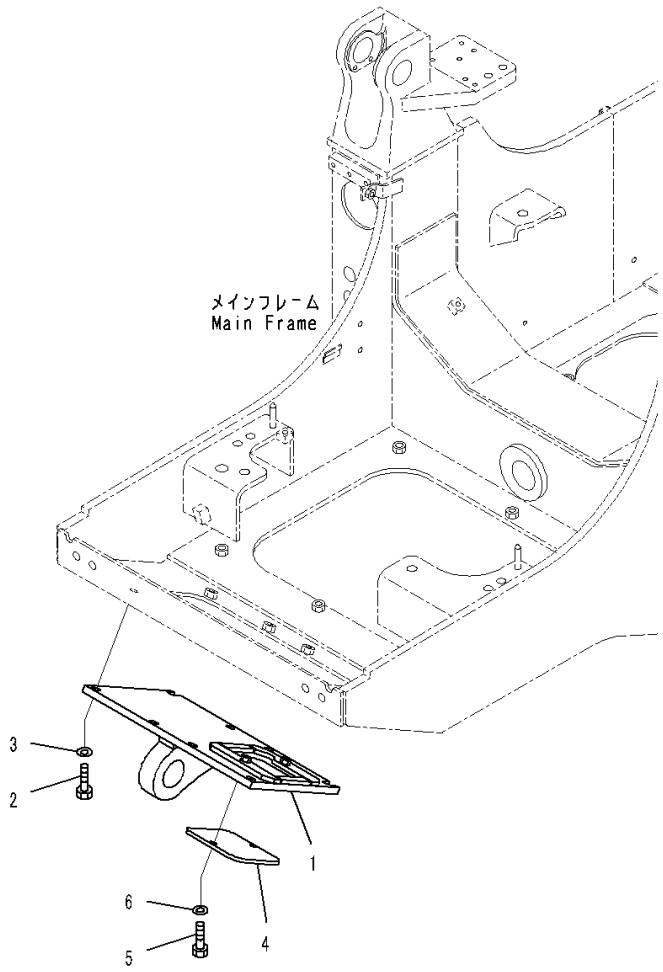

PWK8965

Index	Code	Part Number	Description	Qty	Serial Number
1		134-X44-1111	Cover, Hook	1	J20001-
2		01010-81645	Bolt	8	J20001-
3		01643-31645	Washer	8	J20001-
4		134-21-61261	Cover	1	J20001-
5		01010-81230	Bolt	2	J20001-
6		01643-31232	Washer	2	J20001-

UNDERCARRIAGE

FIG. R0110-001001 Front Idler

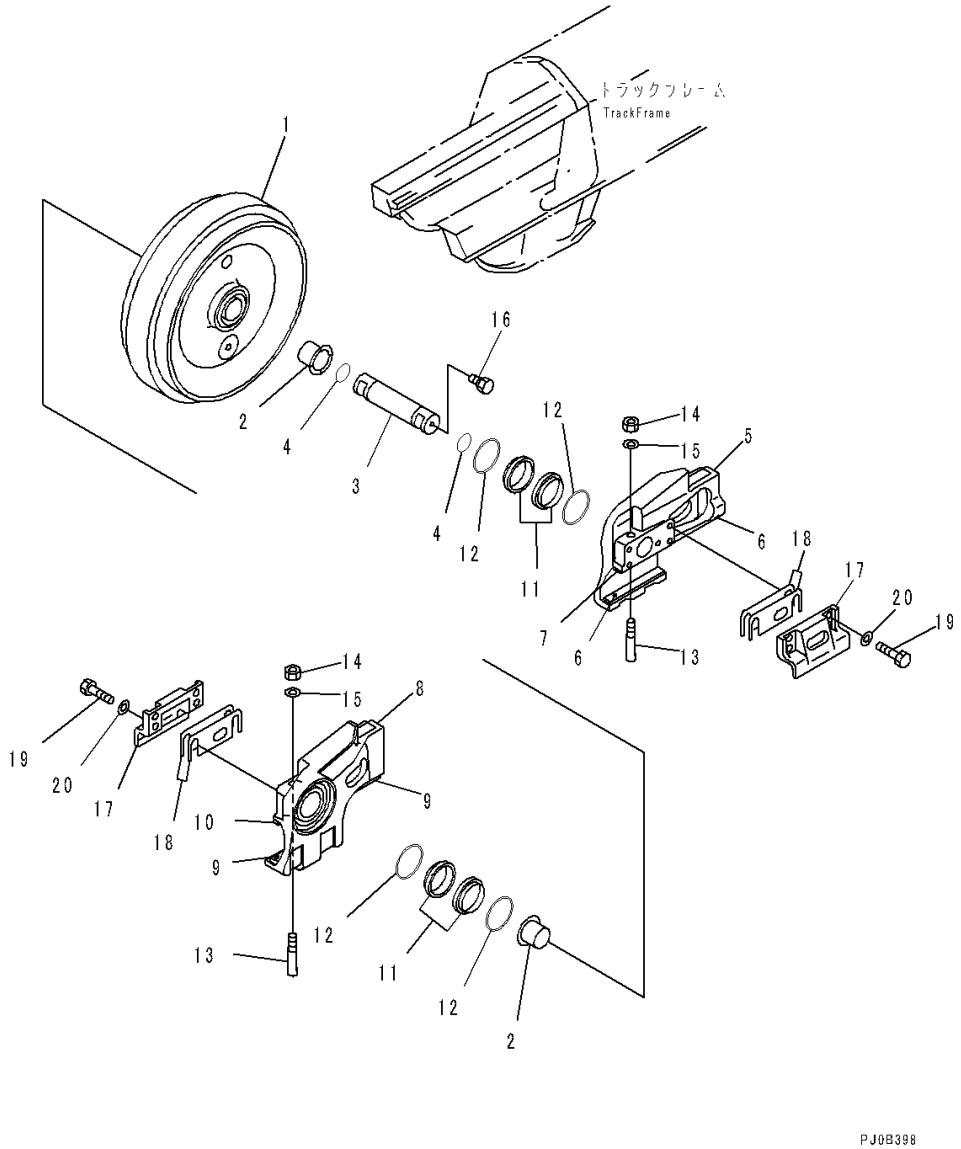

Index	Code	Part Number	Description	Qty	Serial Number
		134-30-00402	Idler Assembly	2	J20001-
1		14X-30-12115	• Idler	1	J20001-
2		14X-30-12181	• Bushing	2	J20001-
3		14X-30-12164	• Shaft	1	J20001-
4		427-15-15910	• O-ring	2	J20001-
5		134-30-66231	• Support, LHS	1	J20001-
6		14X-30-12232	• • Plate, Welded	2	J20001-
7		14X-30-12263	• • Plate, Welded	1	J20001-
8		134-30-66241	• Support, RHS	1	J20001-
9		14X-30-12232	• • Plate, Welded	2	J20001-
10		14X-30-12263	• • Plate, Welded	1	J20001-
		205-30-00220	• Floating Seal Assembly	2	J20001-
11	C1		• • Seal	2	J20001-
12	C1		• • O-ring	2	J20001-
13		130-30-13170	• Bolt	2	J20001-
14		01582-11613	• Nut	2	J20001-
15		01643-31645	• Washer	2	J20001-
16		07052-31217	• Plug	1	J20001-
17		134-30-66250	Cover	4	J20001-
18		14X-30-12252	Shim, T=1.0mm	28	J20001-
19		01010-81645	Bolt	16	J20001-
20		01643-31645	Washer	16	J20001-

FIG. R0120-001001 Idler Cushion

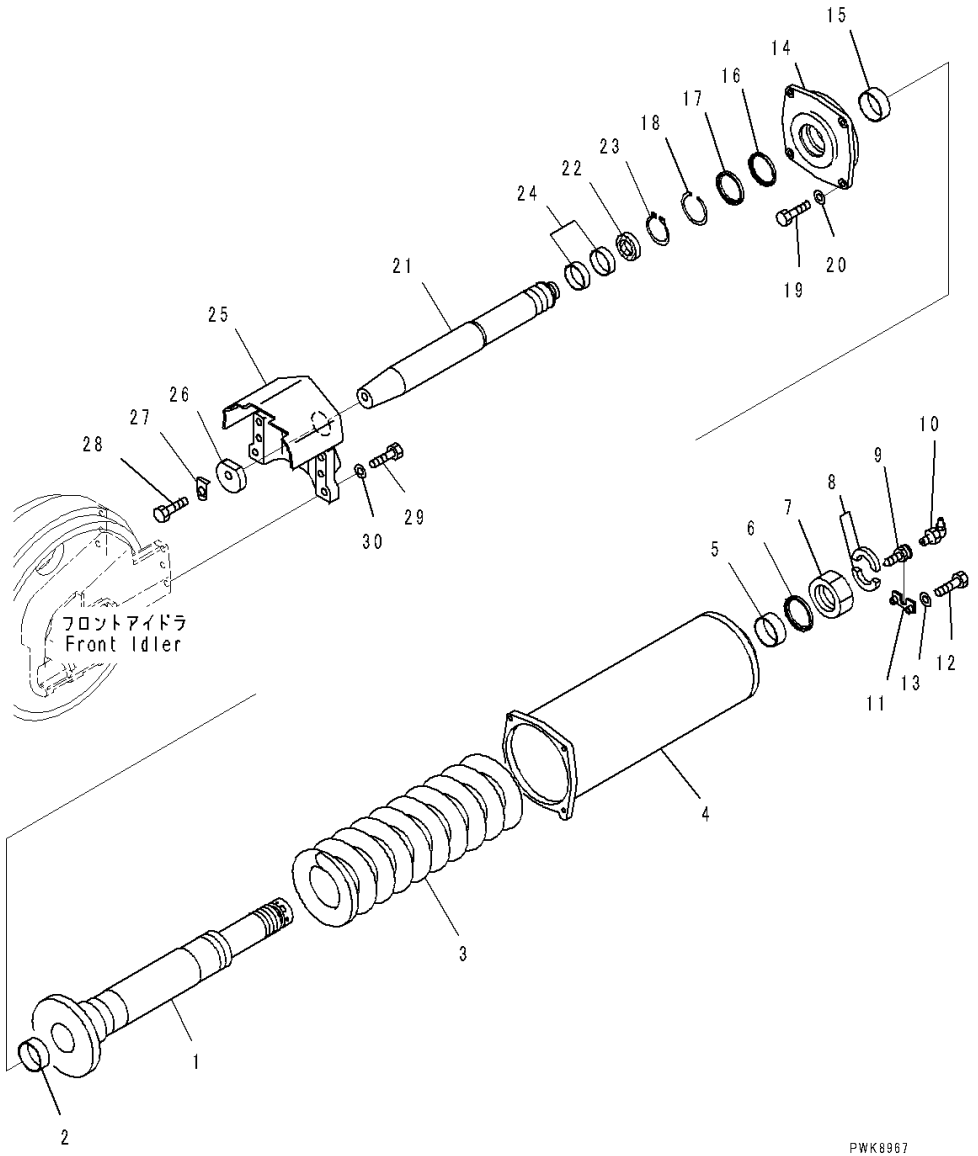

Index	Code	Part Number	Description	Qty	Serial Number
1		134-30-63154	Cylinder	2	J20001-
2		07177-07530	Bushing	2	J20001-
3		134-30-63162	Spring	2	J20001-
4		134-30-63210	Cab	2	J20001-
5		07177-08030	Bushing	2	J20001-
6		195-50-22860	Seal	2	J20001-
7		14X-30-13310	Nut	2	J20001-
8		14X-30-13241	Spacer	4	J20001-
9		203-30-42260	Valve	2	J20001-
10		07020-00900	Fitting, Grease	2	J20001-
11		14X-30-13174	Plate	2	J20001-
12		01010-80830	Bolt	4	J20001-
13		01643-30823	Washer	4	J20001-
14		134-30-63220	Holder	2	J20001-
15		07177-07530	Bushing	2	J20001-
16		17M-50-24360	Seal	2	J20001-
17		134-30-63181	Spacer	2	J20001-
18		04077-00090	Ring	2	J20001-
19		01010-81235	Bolt	8	J20001-
20		01643-31232	Washer	8	J20001-
21		134-30-63142	Piston	2	J20001-
22		09370-00070	U-packing	2	J20001-
23		04064-04518	Ring, Snap	2	J20001-
24		07155-00720	Ring, Wear	4	J20001-
25		134-30-66512	Yoke	2	J20001-
26		154-30-11332	Washer	2	J20001-
27		154-30-11540	Lock	2	J20001-
28		01010-82055	Bolt	2	J20001-
29		01010-81655	Bolt	12	J20001-
30		01643-31645	Washer	12	J20001-

FIG. R0200-001001 Track Roller, Flange (1/2)

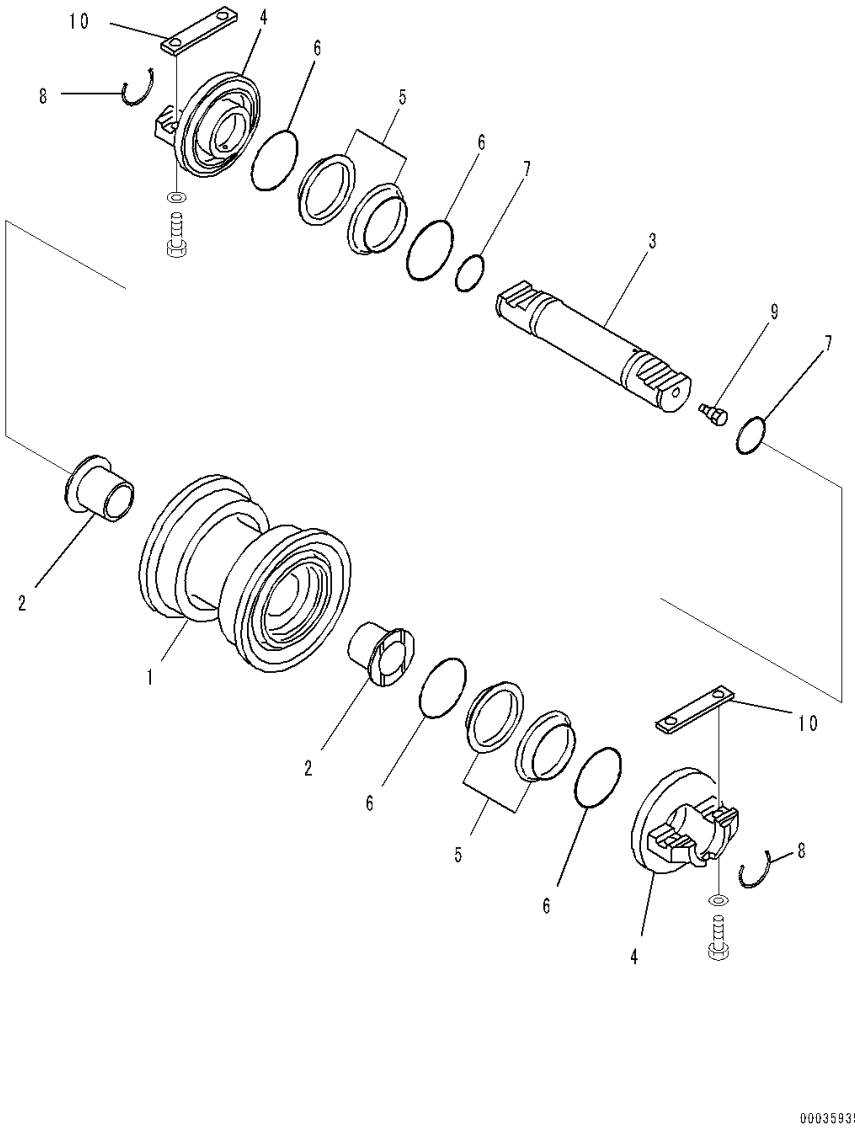

Index	Code	Part Number	Description	Qty	Serial Number
		14X-30-00127	Track Roller Assembly	10	J20001-
1		14X-30-14311	• Roller, Track, Single Flanged	1	J20001-
2		14X-30-13340	• Bushing	2	J20001-
3		14X-30-14152	• Shaft	1	J20001-
4		14X-30-14331	• Collar	2	J20001-
		205-30-00220	• Floating Seal Assembly	2	J20001-
5	C1		• • Seal	2	J20001-
6	C1		• • O-ring	2	J20001-
7		427-15-15910	• O-ring	2	J20001-
8		14X-30-14161	• Lock	2	J20001-
9		07052-31217	• Plug	1	J20001-
10		14X-30-14170	Key	20	J20001-

FIG. R0200-001002 Track Roller, Flange (2/2)

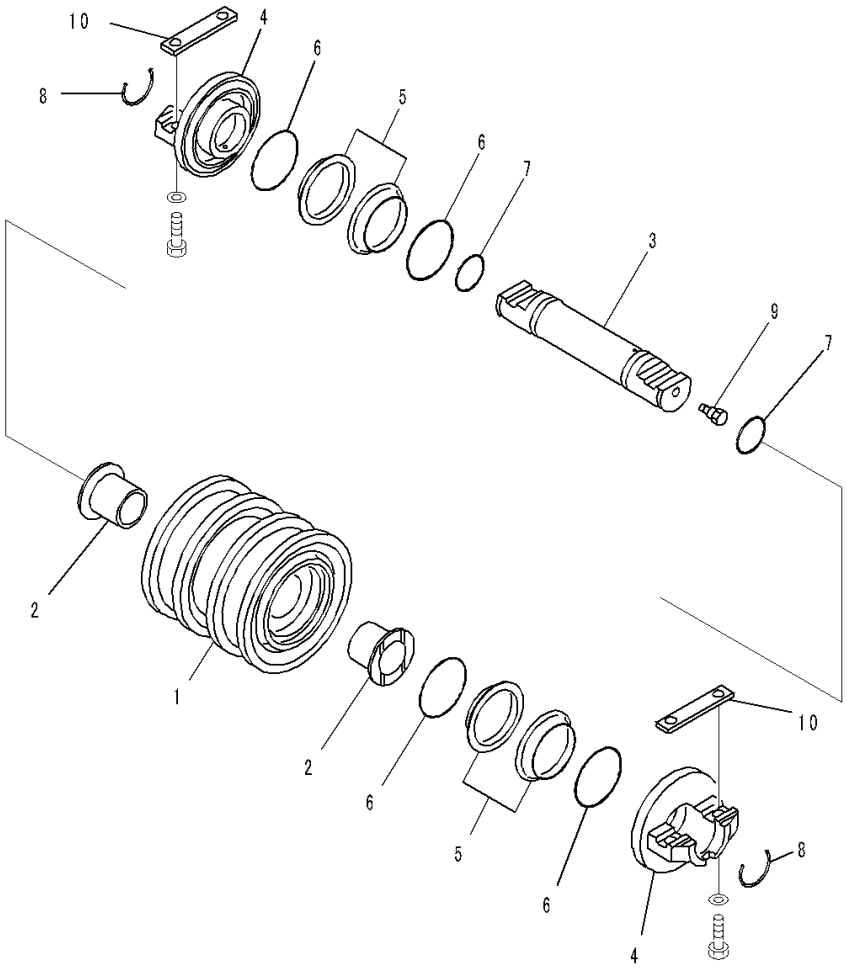

Index	Code	Part Number	Description	Qty	Serial Number
		14X-30-00136	Track Roller Assembly	4	J20001-
1		14X-30-14321	• Roller, Track, Double Flanged	1	J20001-
2		14X-30-13340	• Bushing	2	J20001-
3		14X-30-14152	• Shaft	1	J20001-
4		14X-30-14331	• Collar	2	J20001-
		205-30-00220	• Floating Seal Assembly	2	J20001-
5	C1		• • Seal	2	J20001-
6	C1		• • O-ring	2	J20001-
7		427-15-15910	• O-ring	2	J20001-
8		14X-30-14161	• Lock	2	J20001-
9		07052-31217	• Plug	1	J20001-
10		14X-30-14170	Key	8	J20001-

FIG. R0200-001003 Track Roller, Mounting Parts

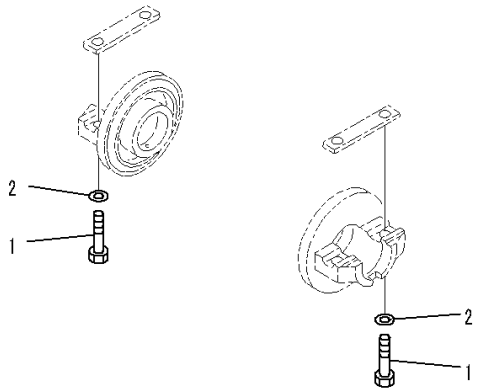

00035937

Index	Code	Part Number	Description	Qty	Serial Number
1		01010-81865	Bolt	56	J20001-
2		01643-31845	Washer	56	J20001-

FIG. R0300-001001 Carrier Roller

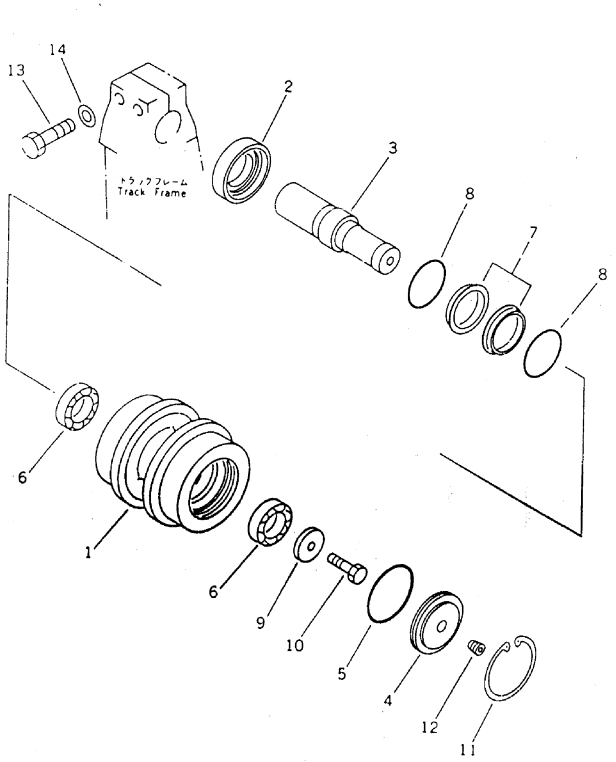

JA006220

Index	Code	Part Number	Description	Qty	Serial Number
		14X-30-00143	Carrier Assembly	4	J20001-
1		14X-30-15212	• Roller	1	J20001-
2		14X-30-15140	• Ring	1	J20001-
3		14X-30-15222	• Shaft	1	J20001-
4		14X-30-15131	• Cover	1	J20001-
5		07000-12105	• O-ring	1	J20001-
6		14X-30-15240	• Bearing	2	J20001-
		141-30-00616	• Floating Seal Assembly	1	J20001-
7	C1		• • Seal	2	J20001-
8	C1		• • O-ring	2	J20001-
9		14X-30-15251	• Holder	1	J20001-
10		01010-81630	• Bolt	1	J20001-
11		04065-01154	• Ring	1	J20001-
12		20Y-30-16330	• Plug	1	J20001-
13		01010-82085	Bolt	8	J20001-
14		01643-32060	Washer	8	J20001-

FIG. R0500-001001 Track Shoe Assembly, Single Grouser Shoe, 610mm Width, Sealed and Lubricated Links

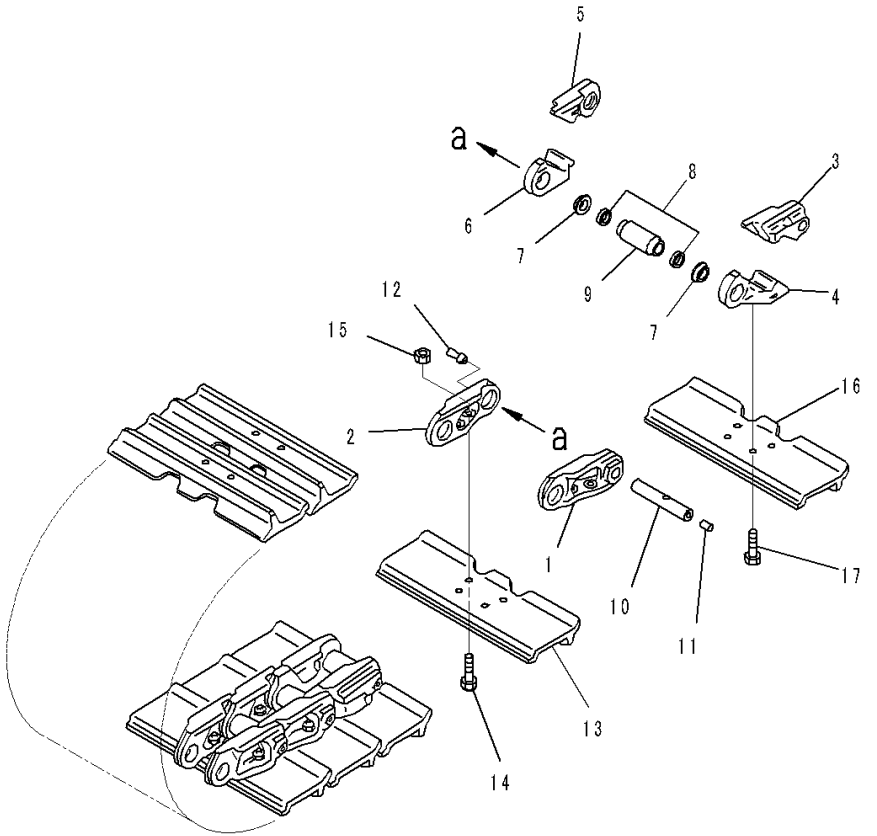

Index	Code	Part Number	Description	Qty	Serial Number
		134-32-01152	Track Shoe Assembly	1	J20001-
1		14X-32-11120	• Link,LHS	80	J20001-
2		14X-32-11130	• Link,RHS	80	J20001-
3		14X-32-11320	• Link, Master, LHS, Pin Side	2	J20001-
4		14X-32-11330	• Link, Master, LHS, Bushing Side	2	J20001-
5		14X-32-11420	• Link, Master, RHS, Pin Side	2	J20001-
6		14X-32-11430	• Link, Master, RHS, Bushing Side	2	J20001-
7		14X-32-12200	• Seal Assembly	164	J20001-
8		144-32-21191	• Spacer	164	J20001-
9		14X-32-11140	• Bushing	82	J20001-
10		144-32-21151	• Pin	82	J20001-
11		07059-11830	• Plug, Large	82	J20001-
12		07059-20721	• Plug, Small	82	J20001-
13		14X-32-11370	• Shoe	80	J20001-
14		14X-32-11210	• Bolt, (Kit : K05)	320	J20001-
15		14X-32-11220	• Nut, (Kit : K05)	320	J20001-
16		14X-32-11370	• Shoe	2	J20001-
17		14X-32-11350	• Bolt, Master Track Shoe	8	J20001-

FIG. R0501-001001 Track Link Assembly, Supply Only

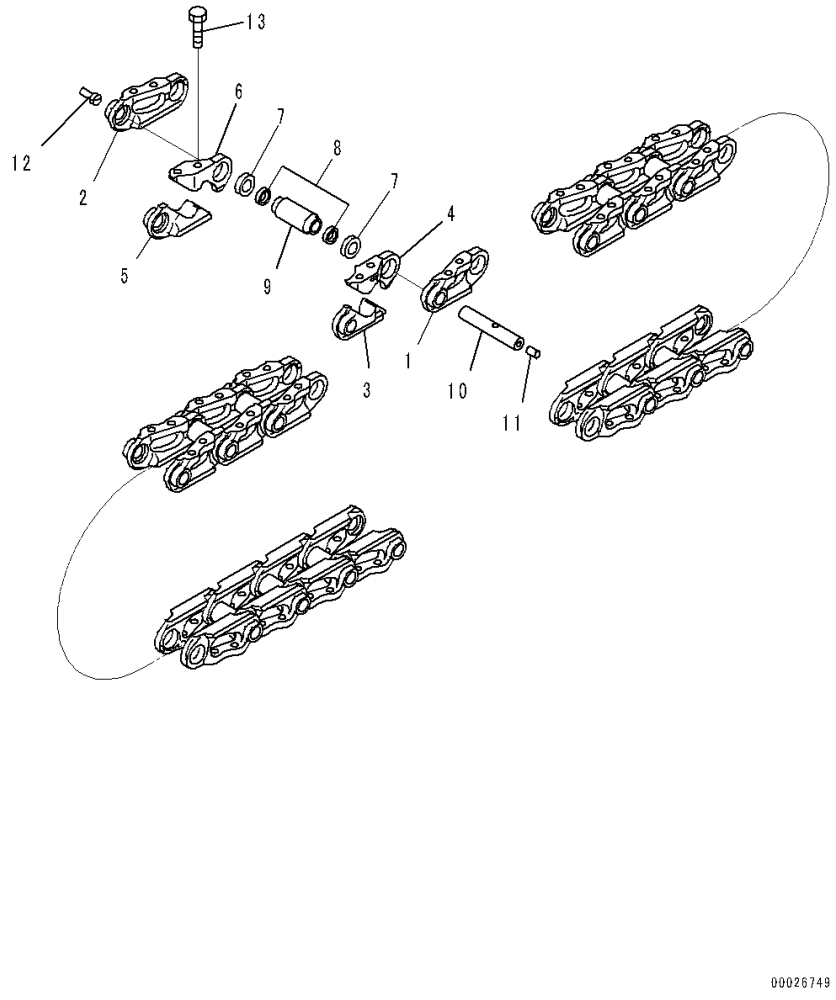

Index	Code	Part Number	Description	Qty	Serial Number
		134-32-00142	Track Link Assembly	1	J20001-
1		14X-32-11120	• Link,LHS	80	J20001-
2		14X-32-11130	• Link,RHS	80	J20001-
3		14X-32-11320	• Link, Master, LHS, Pin Side	2	J20001-
4		14X-32-11330	• Link, Master, LHS, Bushing Side	2	J20001-
5		14X-32-11420	• Link, Master, RHS, Pin Side	2	J20001-
6		14X-32-11430	• Link, Master, RHS, Bushing Side	2	J20001-
7		14X-32-12200	• Seal Assembly	164	J20001-
8		144-32-21191	• Spacer	164	J20001-
9		14X-32-11140	• Bushing	82	J20001-
10		144-32-21151	• Pin	82	J20001-
11		07059-11830	• Plug, Large	82	J20001-
12		07059-20721	• Plug, Small	82	J20001-
13		14X-32-11350	• Bolt, Master Track Shoe	8	J20001-

FIG. R2100-002001 Track Frame

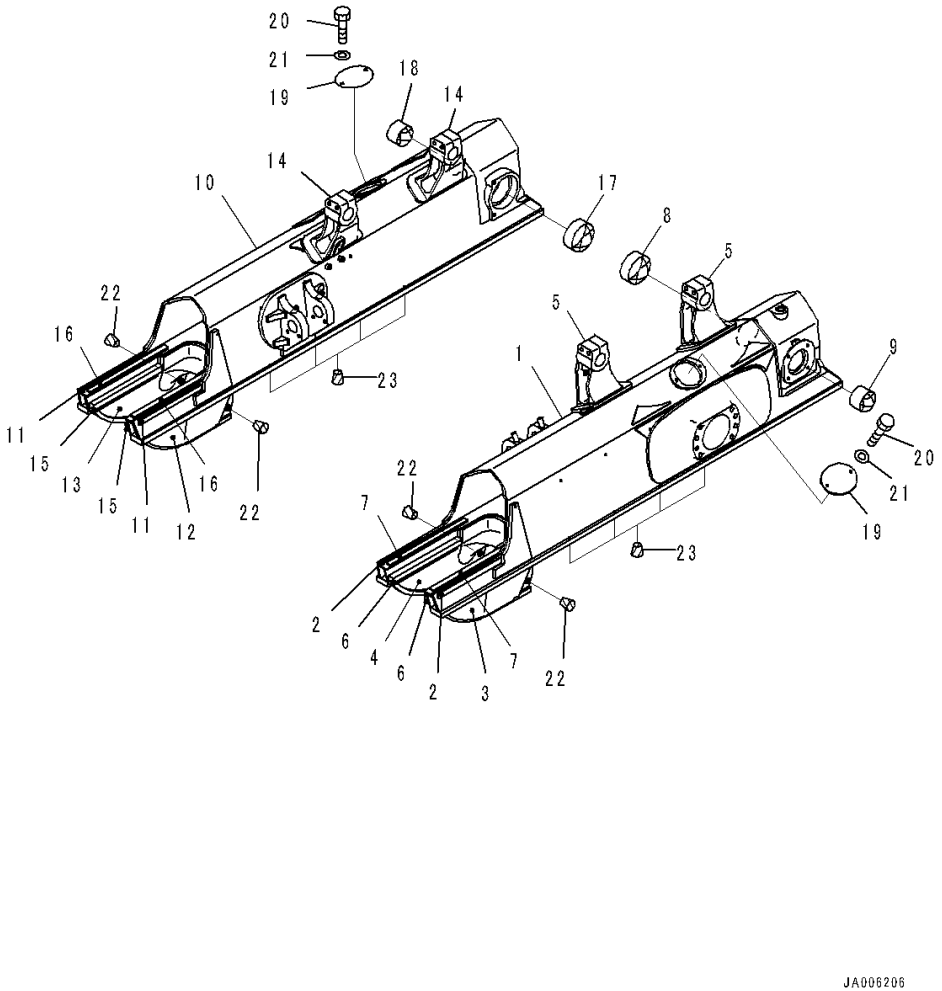

Index	Code	Part Number	Description	Qty	Serial Number
1		134-30-66413	Frame, LHS	1	J20001-
2		134-30-66C50	• Plate,Welded	2	J20001-
3		134-30-66130	• Guard	1	J20001-
4		134-30-66140	• Guard	1	J20001-
5		134-30-66170	• Bracket,Welded	2	J20001-
6		14X-30-11D52	• Plate,Welded	2	J20001-
7		14X-30-11D93	• Plate,Welded	2	J20001-
8		134-50-61140	Bushing	1	J20001-
9		134-50-61150	Bushing	1	J20001-
10		134-30-66423	Frame, RHS	1	J20001-
11		134-30-66C50	• Plate,Welded	2	J20001-
12		134-30-66130	• Guard	1	J20001-
13		134-30-66140	• Guard	1	J20001-
14		134-30-66170	• Bracket,Welded	2	J20001-
15		14X-30-11D52	• Plate,Welded	2	J20001-
16		14X-30-11D93	• Plate,Welded	2	J20001-
17		134-50-61140	Bushing	1	J20001-
18		134-50-61150	Bushing	1	J20001-
19		14Y-30-11277	Cover	2	J20001-
20		01010-81225	Bolt	4	J20001-
21		01643-31232	Washer	4	J20001-
22		07049-01215	Plug	20	J20001-
23		07049-01822	Plug	20	J20001-

FIG. R2140-001001 Sprocket

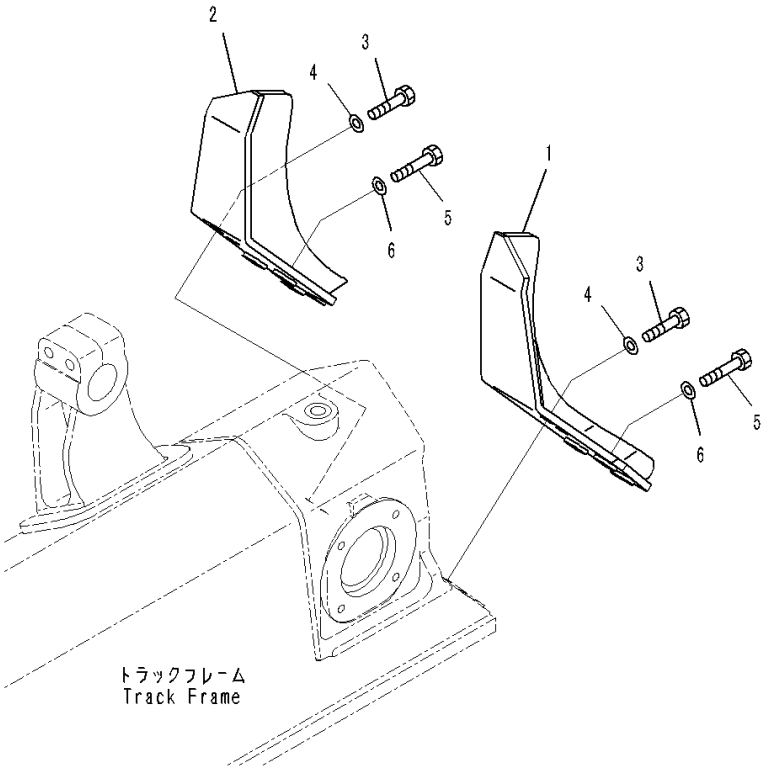

Index	Code	Part Number	Description	Qty	Serial Number
1		134-30-66610	Bracket	2	J20001-
2		134-30-66620	Bracket	2	J20001-
3		01010-81840	Bolt	8	J20001-
4		01643-31845	Washer	8	J20001-
5		01010-81865	Bolt	8	J20001-
6		01643-31845	Washer	8	J20001-

FIG. R2200-001001 Track Roller Guard

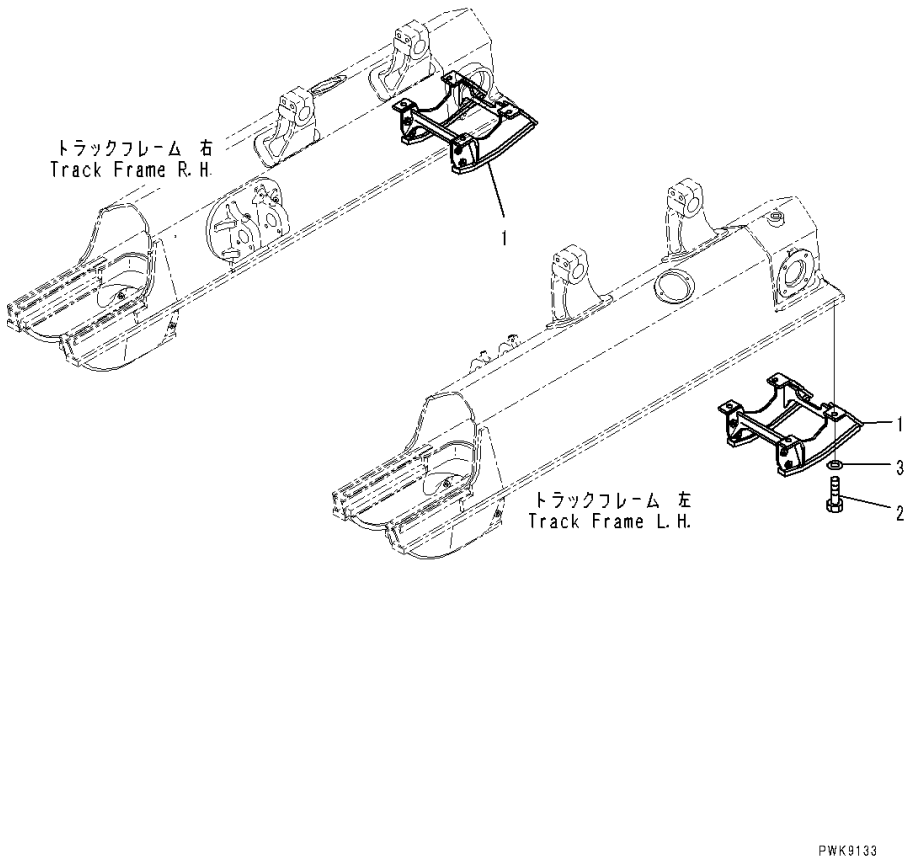

Index	Code	Part Number	Description	Qty	Serial Number
1		134-30-66630	Guard	2	J20001-
2		01010-81845	Bolt	8	J20001-
3		01643-31845	Washer	8	J20001-

WORK EQUIPMENT

FIG. T2110-002001 Dozer Frame

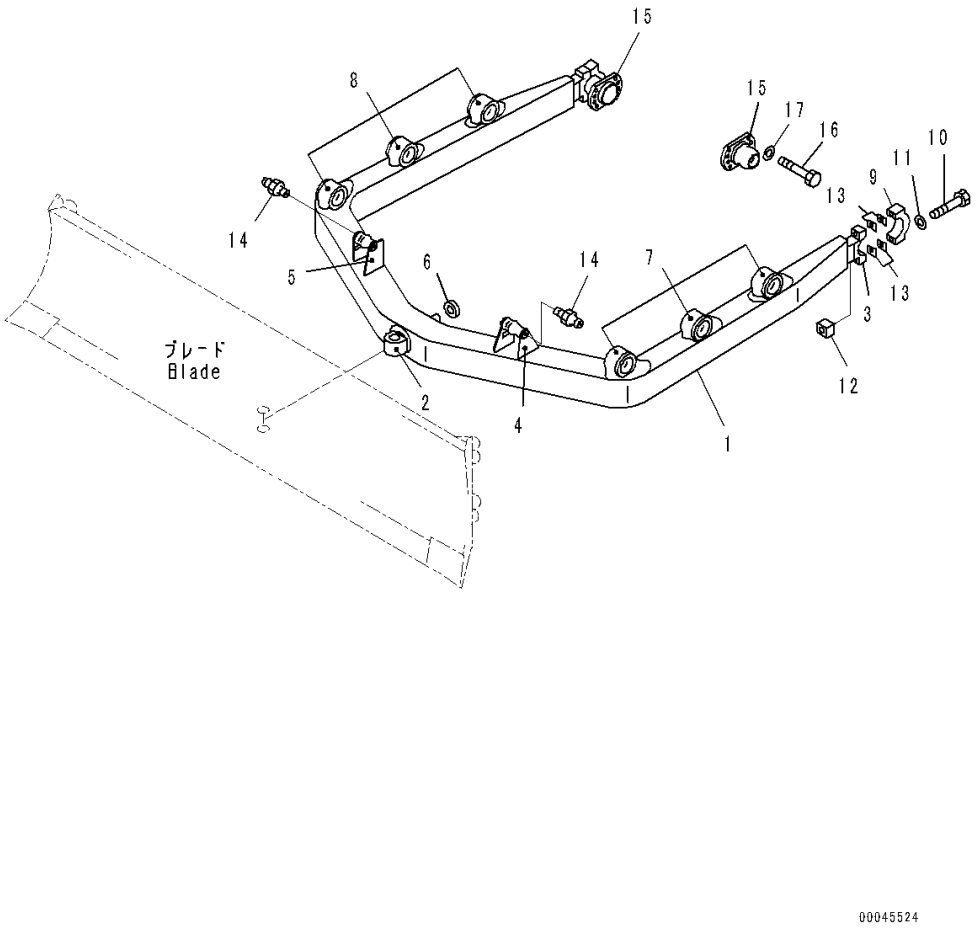

Index	Code	Part Number	Description	Qty	Serial Number
		134-70-00010	Frame Assembly, Angle	1	J20001-
1	C1		• Frame, Angle	1	J20001-
2		14U-70-12120	• • Pin	1	J20001-
3		14X-70-12130	• • Pivot,Welded	2	J20001-
4		134-70-61230	• • Bracket, LHS,Welded	1	J20001-
5		134-70-61220	• • Bracket, RHS,Welded	1	J20001-
6		140-70-13130	• • Collar,Welded	1	J20001-
7		144-70-13210	• • Bracket,Welded	3	J20001-
8		144-70-13220	• • Bracket,Welded	3	J20001-
9		14Y-71-22150	• Cap	2	J20001-
10		01011-82465	• Bolt	4	J20001-
11		01643-32460	• Washer	4	J20001-
12		130-70-13241	• Nut	4	J20001-
13		14Y-71-22280	• Shim, T=1.0mm	40	J20001-
14		07020-00000	Fitting, Grease	2	J20001-
15		14Z-71-33212	Trunnion	2	J20001-
16		01010-82065	Bolt	16	J20001-
17		01643-32060	Washer	16	J20001-

FIG. T2115-001001 Dozer Arm and Brace

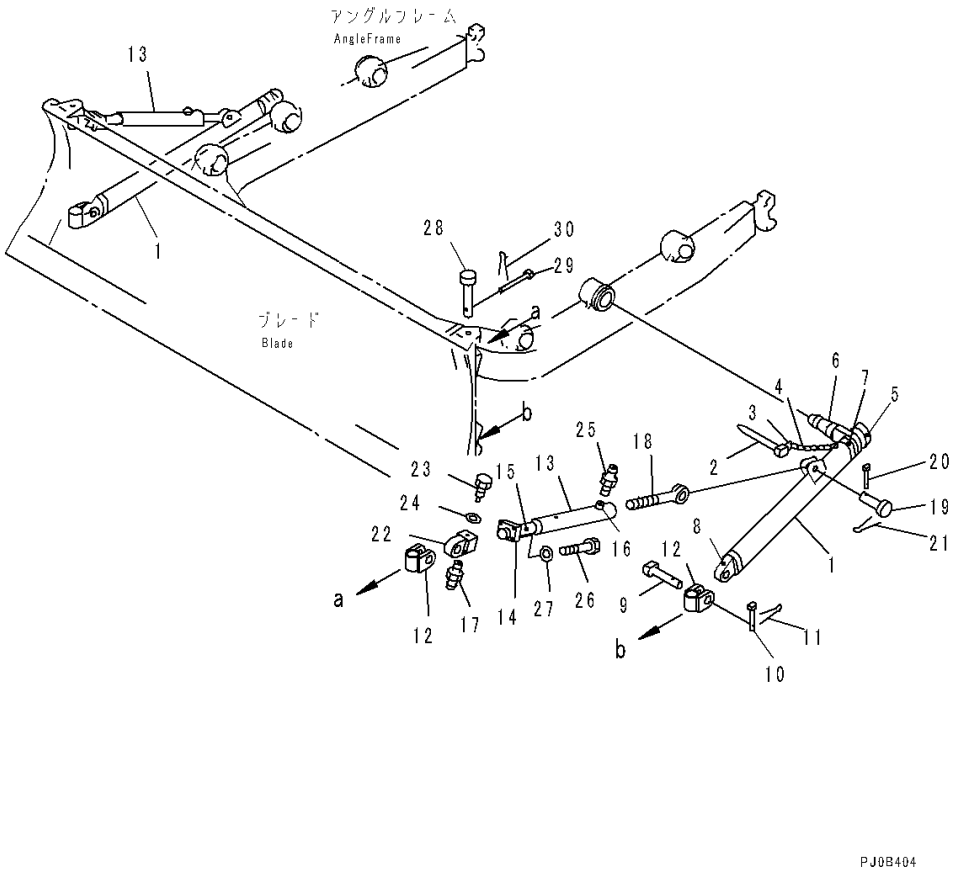

Index	Code	Part Number	Description	Qty	Serial Number
1		144-854-1221	Arm	2	J20001-
2		170-70-12150	• Pin	1	J20001-
3		170-70-12160	• Lock,Welded	2	J20001-
4		09245-04830	• Chain	1	J20001-
5		150-70-12120	• Bushing,Welded	1	J20001-
6		144-70-12181	• Pin	1	J20001-
7		140-915-2140	• Stopper,Welded	1	J20001-
8		144-854-1231	• Boss,Welded	1	J20001-
9		144-854-1280	Pin	4	J20001-
10		144-854-1290	Pin	4	J20001-
11		04050-14025	Pin, Cotter	4	J20001-
12		14W-70-13110	Joint	4	J20001-
13		144-854-1242	Brace	2	J20001-
14		170-70-12190	• Plate	1	J20001-
15		144-854-1271	• Shaft,Welded	1	J20001-
16		01099-03417	• Protector,Welded	1	J20001-
17		07020-00000	Fitting, Grease	2	J20001-
18		144-817-2312	Joint	2	J20001-
19		150-70-13411	Pin	2	J20001-
20		170-70-12240	Pin	2	J20001-
21		04050-14025	Pin, Cotter	2	J20001-
22		170-70-12221	Bearing	2	J20001-
23		150-70-12242	Screw, Set	2	J20001-
24		01602-21236	Washer, Spring	2	J20001-
25		07020-00000	Fitting, Grease	2	J20001-
26		01010-82050	Bolt	8	J20001-
27		01643-32060	Washer	8	J20001-
28		144-854-6150	Pin	4	J20001-
29		170-70-12240	Pin	4	J20001-
30		04050-14025	Pin, Cotter	4	J20001-

FIG. T2120-001001 Blade

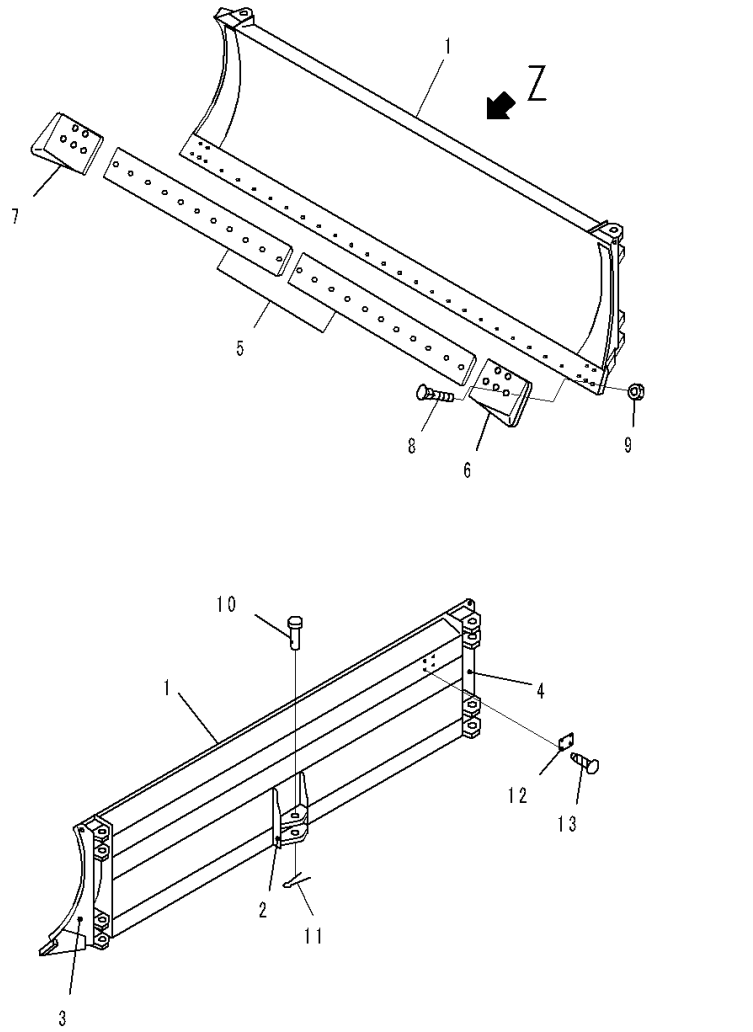

Index	Code	Part Number	Description	Qty	Serial Number
1		14W-70-11112	Blade	1	J20001-
2		14W-70-11121	• Bracket,Welded	1	J20001-
3		14W-70-11132	• Bracket, LHS,Welded	1	J20001-
4		14W-70-11142	• Bracket, RHS,Welded	1	J20001-
5		144-70-11131	Edge	2	J20001-
6		14X-71-11330	End Bit	1	J20001-
7		14X-71-11340	End Bit	1	J20001-
8		02090-11270	Bolt	32	J20001-
9		02290-11219	Nut	32	J20001-
10		144-70-11160	Pin	1	J20001-
11		04050-18080	Pin, Cotter	1	J20001-
12	C2	09601-50000	Plate, Name (Limited Supply), EU Regulation	1	J20001-
13		04418-13060	Screw	4	J20001-

FIG. T2140-001001 Blade Lift Cylinder, Inner Parts, Lift Cylinder

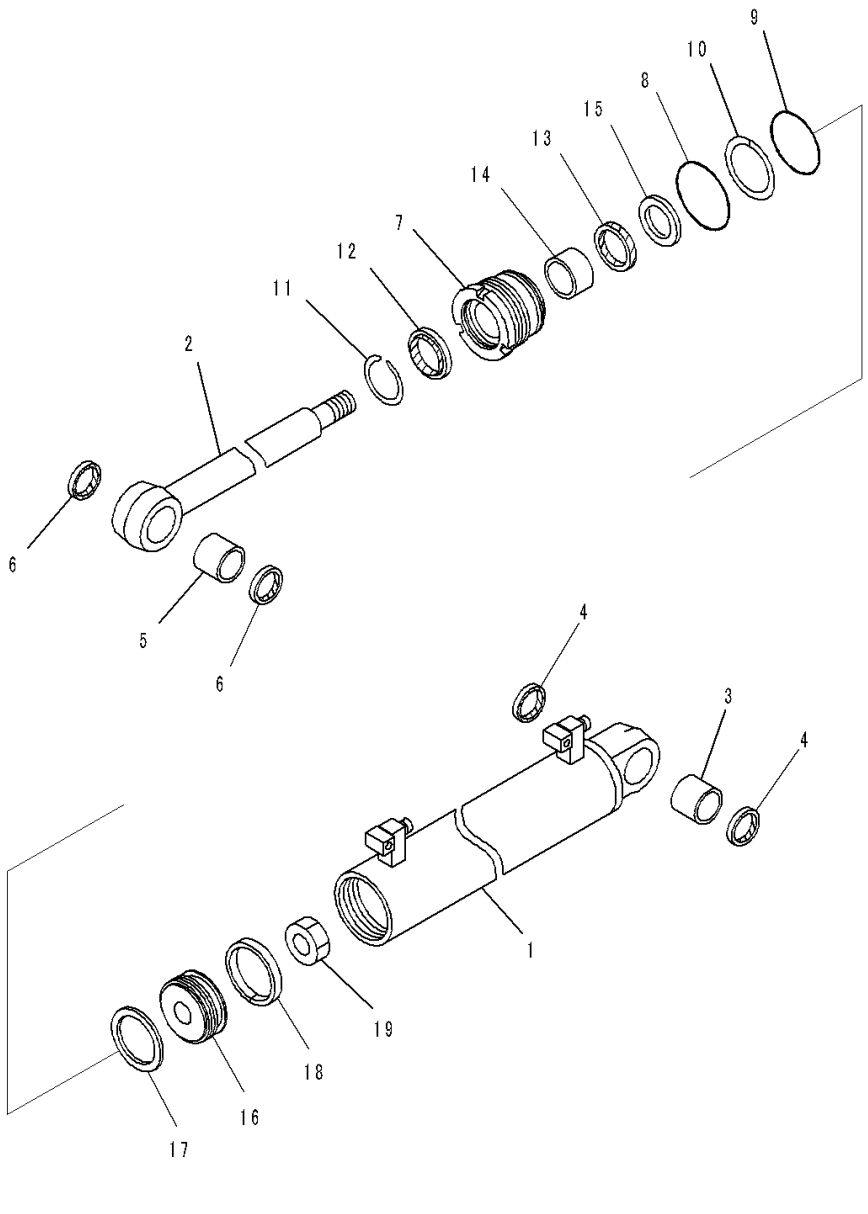

Index	Code	Part Number	Description	Qty	Serial Number
		134-63-01013	Cylinder Assembly	2	J20001-
1		134-63-12042	• Cylinder	1	J20001-
2		134-63-12020	• Rod, Piston	1	J20001-
3		07143-10606	• Bushing	1	J20001-
4		07145-00060	• Seal, Dust, (Kit : K06)	2	J20001-
5		07143-10606	• Bushing	1	J20001-
6		07145-00060	• Seal, Dust, (Kit : K06)	2	J20001-
7		707-29-11620	• Head, Cylinder	1	J20001-
8		07000-12110	• O-ring, (Kit : K06)	1	J20001-
9		07000-12105	• O-ring, (Kit : K06)	1	J20001-
10		07146-02106	• Ring, Back-up, (Kit : K06)	1	J20001-
11		07179-12069	• Ring, Snap	1	J20001-
12		707-56-55540	• Seal, Dust, (Kit : K06)	1	J20001-
13		707-51-55030	• Packing, Rod, (Kit : K06)	1	J20001-
14		707-52-90301	• Bushing	1	J20001-
15		707-51-55640	• Ring, (Kit : K06)	1	J20001-
16		707-36-11040	• Piston	1	J20001-
17		707-44-11180	• Ring, Piston, (Kit : K06)	1	J20001-
18		07156-01112	• Ring, Wear, (Kit : K06)	1	J20001-
19		707-67-39010	• Nut	1	J20001-

FIG. T2160-002001 Dozer Blade Tilt Cylinder Piping

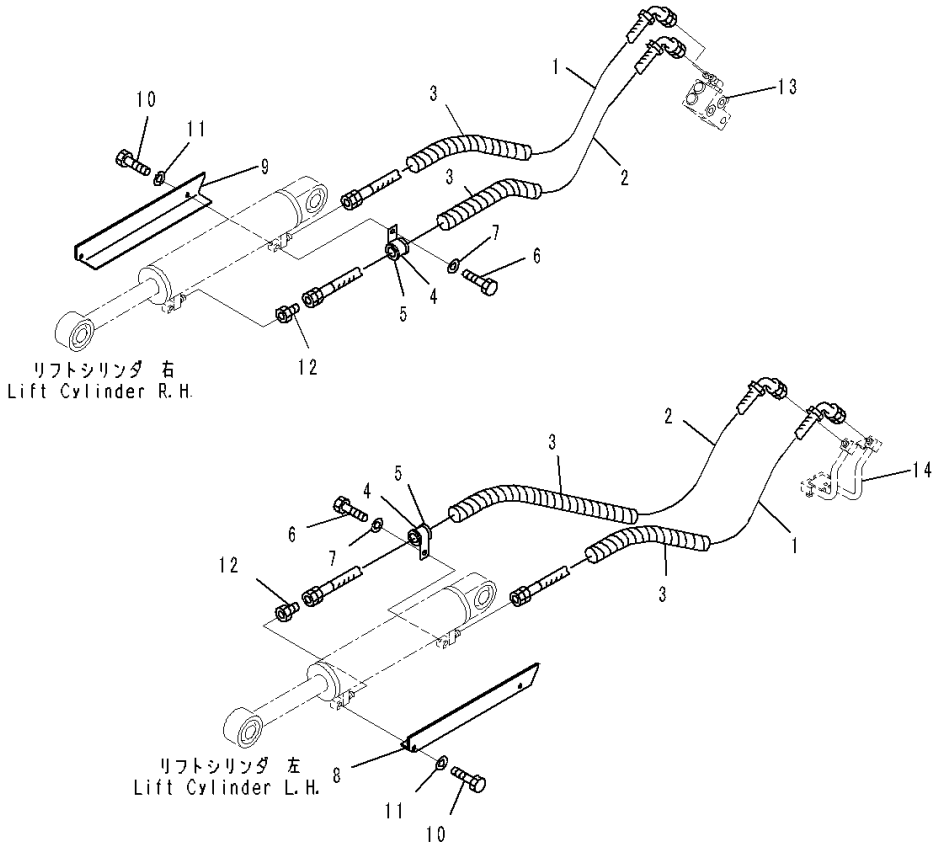

Index	Code	Part Number	Description	Qty	Serial Number
1		134-62-63111	Hose	2	J20001-
2		134-62-63121	Hose	2	J20001-
3		08210-01806	Tube, Spiral	4	J20001-
4		04434-52712	Clip	2	J20001-
5		07095-20420	Cushion	2	J20001-
6		01010-81220	Bolt	2	J20001-
7		01643-31232	Washer	2	J20001-
8		134-62-63132	Cover, LHS	1	J20001-
9		134-62-63141	Cover, RHS	1	J20001-
10		01010-81220	Bolt	4	J20001-
11		01643-31232	Washer	4	J20001-
12		134-62-64130	Nipple	2	J20001-
13		(134-62-64112)	Valve Body(Refer to Page 231)		-
14		(134-62-61322)	Tube(Refer to Page 231)		-

FIG. T2310-002001 Lift Arm and Linkage, Bracket

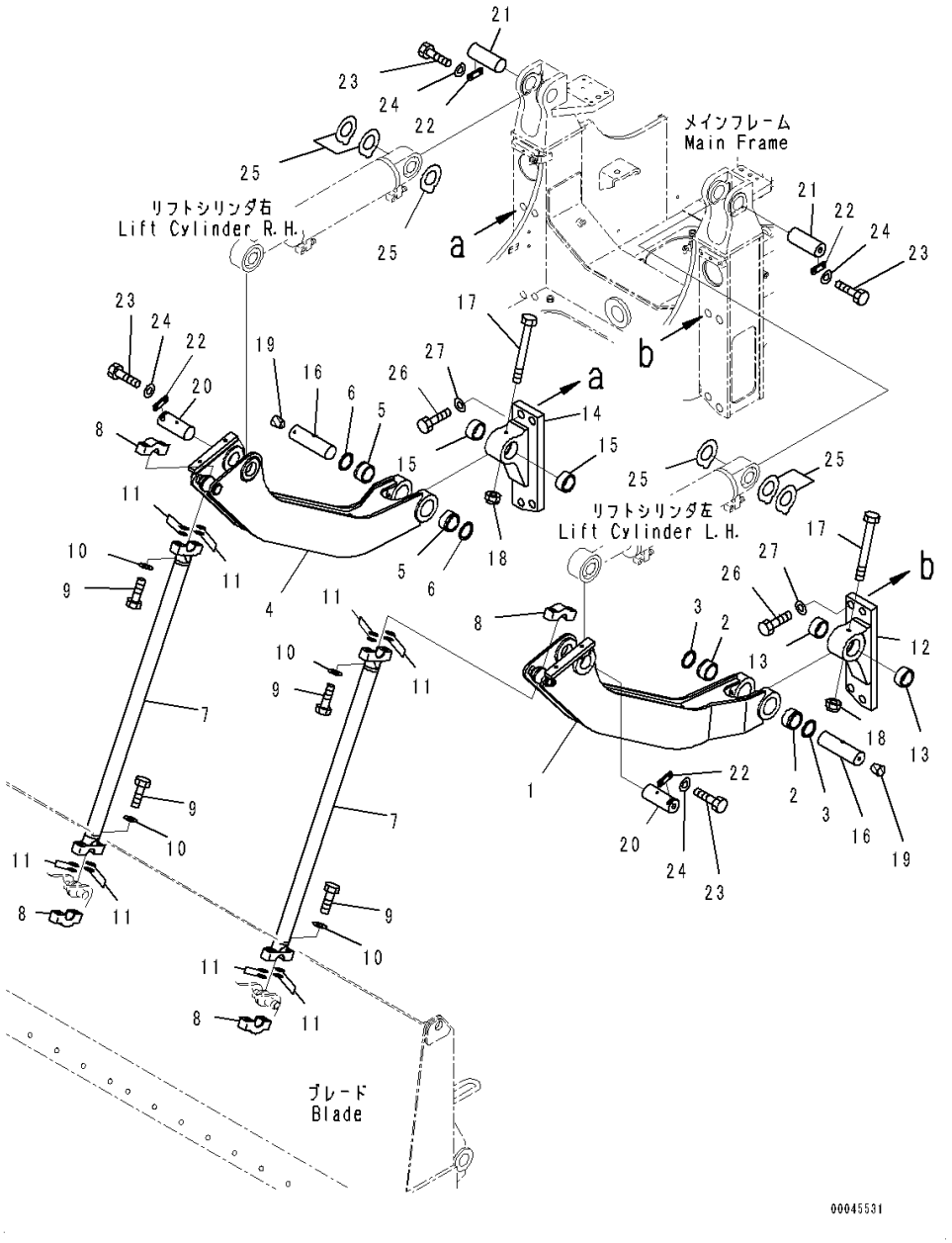

Index	Code	Part Number	Description	Qty	Serial Number
1		134-70-J1530	Bracket	1	J20001-
2		134-71-63182	Bushing	2	J20001-
3		07145-00060	Seal, Dust	4	J20001-
4		134-70-J1540	Bracket	1	J20001-
5		134-71-63182	Bushing	2	J20001-
6		07145-00060	Seal, Dust	4	J20001-
7		134-70-61332	Rod	2	J20001-
8		707-66-70020	Cap	4	J20001-
9		01011-81600	Bolt	16	J20001-
10		01643-51645	Washer	16	J20001-
11		707-88-11290	Shim, T=1.0mm	24	J20001-
		707-88-11300	Shim, T=0.5mm	32	J20001-
12		134-71-63152	Bracket	1	J20001-
13		134-71-63320	Bushing	2	J20001-
14		134-71-63162	Bracket	1	J20001-
15		134-71-63320	Bushing	2	J20001-
16		134-71-63172	Pin	2	J20001-
17		01011-51235	Bolt	2	J20001-
18		01596-01211	Nut	2	J20001-
19		07049-01215	Plug	4	J20001-
20		13G-71-61260	Pin	2	J20001-
21		134-72-61521	Pin	2	J20001-
22		04082-00212	Lock	4	J20001-
23		01010-81230	Bolt	8	J20001-
24		01643-51232	Washer	8	J20001-
25		134-71-63230	Shim, T=2.0mm	6	J20001-
26		01011-83000	Bolt	8	J20001-
27		01643-33080	Washer	8	J20001-

LIFT ARM LUBRICATION (ANGLE DOZER)

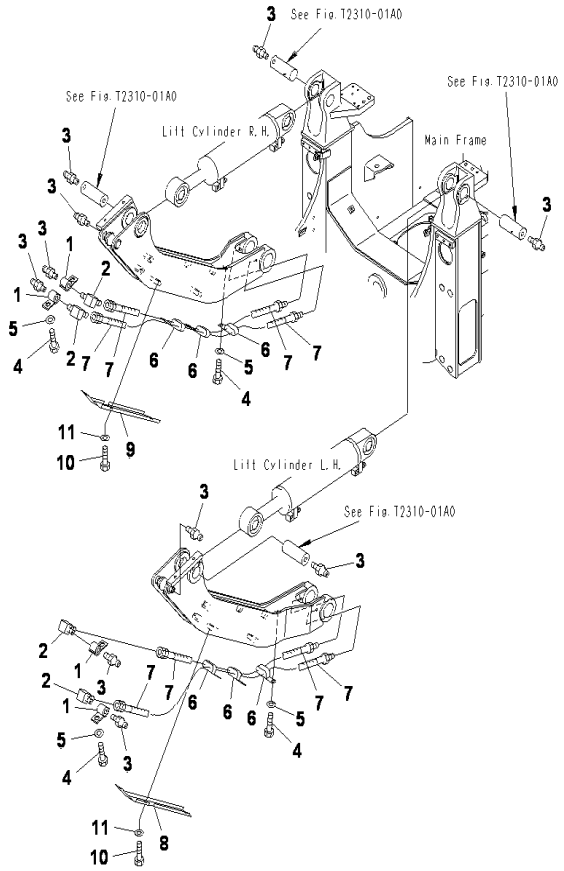

INDEX	CD	PART NO.	DESCRIPTION	QTY	SERIAL NO.
1		134-72-61380	JOINT	4	J20001-UP
2		202-62-21430	ELBOW	4	J20001-UP
3		07020-00000	FITTING	10	J20001-UP
4		01010-81020	BOLT	8	J20001-UP
5		01643-31032	WASHER	8	J20001-UP
6		04435-50810	CLIP	4	J20001-UP
7		206-70-41150	HOSE, 950MM	4	J20001-UP
8		134-70-J1510	COVER L.H.	1	J20001-UP
9		134-70-J1520	COVER R.H.	1	J20001-UP
10		01010-81225	BOLT	6	J20001-UP
11		01643-31232	WASHER	6	J20001-UP

FIG. T2510-001001 Towing Winch, Mounting

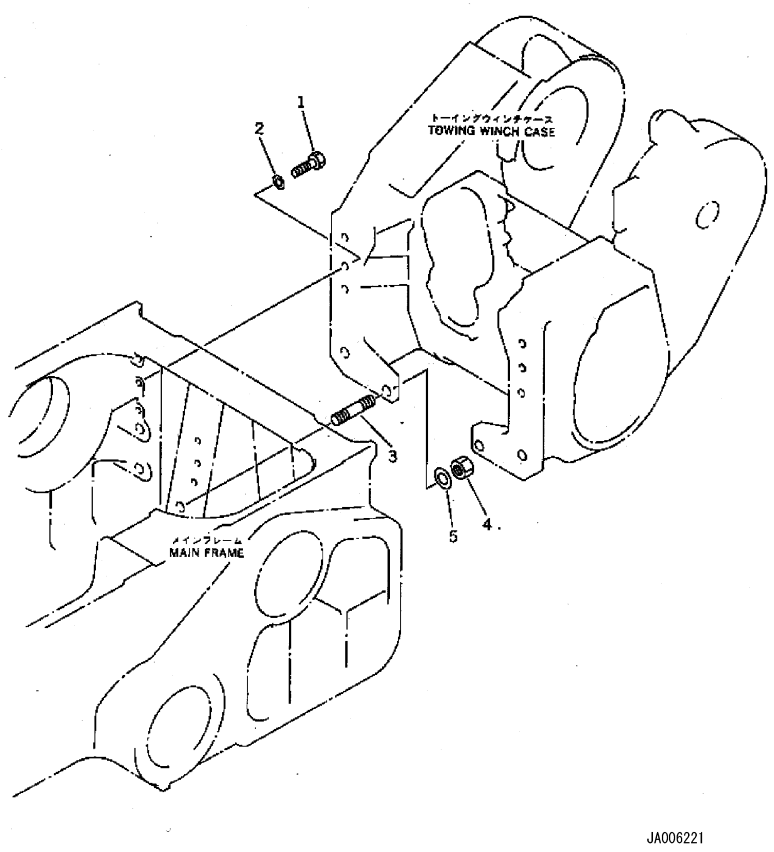

Index	Code	Part Number	Description	Qty	Serial Number
		Note: This list covers following specifications.			
		With Wire Rope			
		Without Free Spool			
		With Hook			
		With Guard and Hook			
		With Guard			
1		01010-82465	Bolt	6	J20001-
2		01643-32460	Washer	6	J20001-
3		01124-53070	Stud	4	J20001-
4		01580-13024	Nut	4	J20001-
5		01643-33080	Washer	4	J20001-

FIG. T2510-001002 Towing Winch, Case

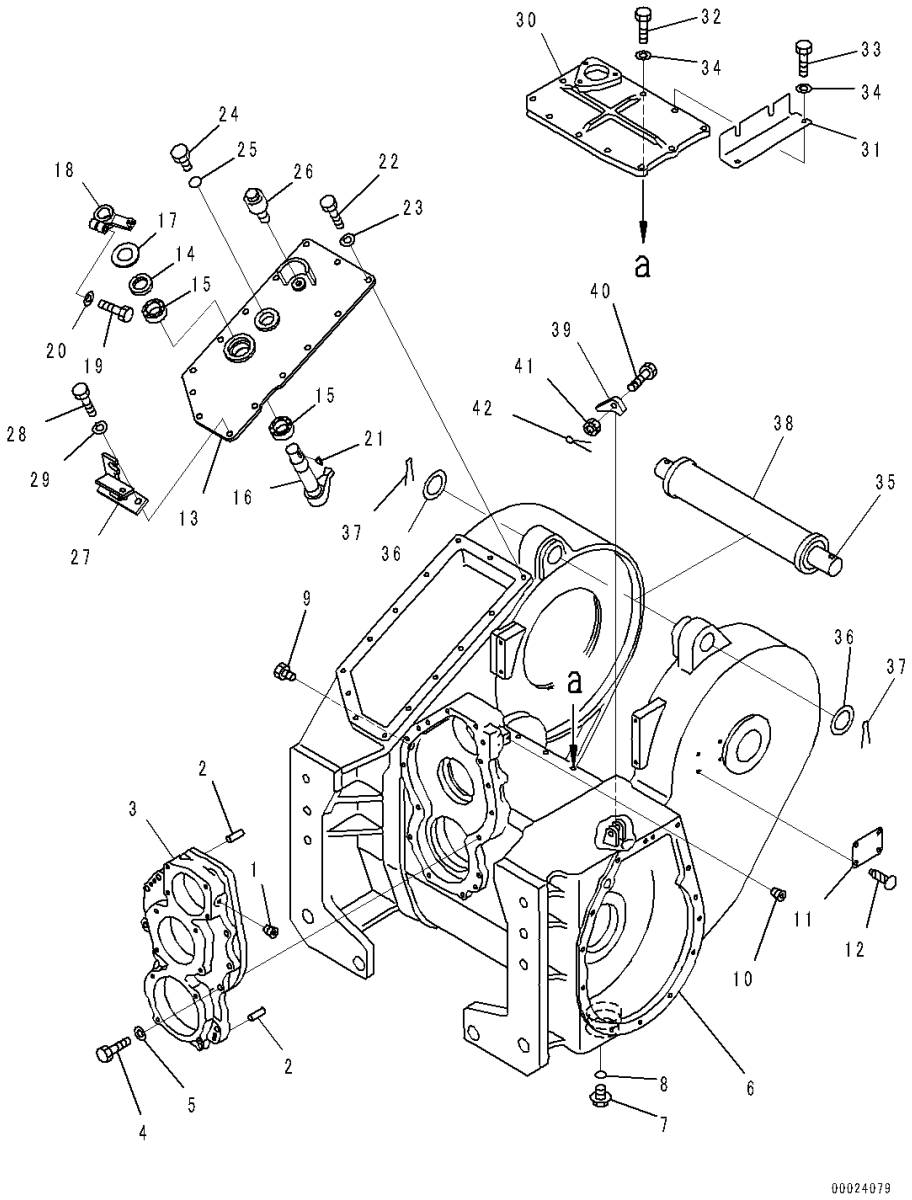

Index	Code	Part Number	Description	Qty	Serial Number
		Note: This list covers following specifications.			
		With Wire Rope			
		With Hook			
1		07043-00108	Plug, Taper	1	J20001-
2		04020-01228	Pin, Dowel	2	J20001-
3		14X-960-3850	Cover	1	J20001-
4		01010-81245	Bolt	11	J20001-
5		01643-31232	Washer	11	J20001-
6		134-960-1610	Case Assembly	1	J20001-
7		07044-13620	Plug	1	J20001-
8		07002-03634	O-ring	1	J20001-
9		144-916-1820	Plug	1	J20001-
10		07043-00108	Plug, Taper	1	J20001-
11	C2	09601-50000	Plate, Name (Limited Supply), EU Regulation	1	J20001-
12		04418-13060	Screw	4	J20001-
13		134-960-1630	Cover	1	J20001-
14		07012-00035	Seal, Oil	1	J20001-
15		06120-03520	Bearing, Needle	2	J20001-
16		134-960-1641	Shaft	1	J20001-
17		01640-23550	Washer, Flat	1	J20001-
18		134-960-2461	Lever	1	J20001-
19		01010-81245	Bolt	1	J20001-
20		01643-31232	Washer	1	J20001-
21		04010-00722	Key	1	J20001-
22		01010-81230	Bolt	12	J20001-
23		01643-31232	Washer	12	J20001-
24		07040-13618	Plug	1	J20001-
25		07002-03634	O-ring	1	J20001-
26		07030-00252	Breather	1	J20001-
27		134-960-2470	Bracket	1	J20001-
28		01010-81235	Bolt	2	J20001-
29		01643-31232	Washer	2	J20001-
30		14X-960-3871	Cover	1	J20001-
31		14W-960-7220	Bracket	1	J20001-
32		01010-81235	Bolt	8	J20001-
33		01010-81260	Bolt	2	J20001-
34		01643-31232	Washer	10	J20001-
35		14X-960-3731	Bar	1	J20001-
36		176-43-54481	Washer	2	J20001-

FIG. T2510-001002 Towing Winch, Case

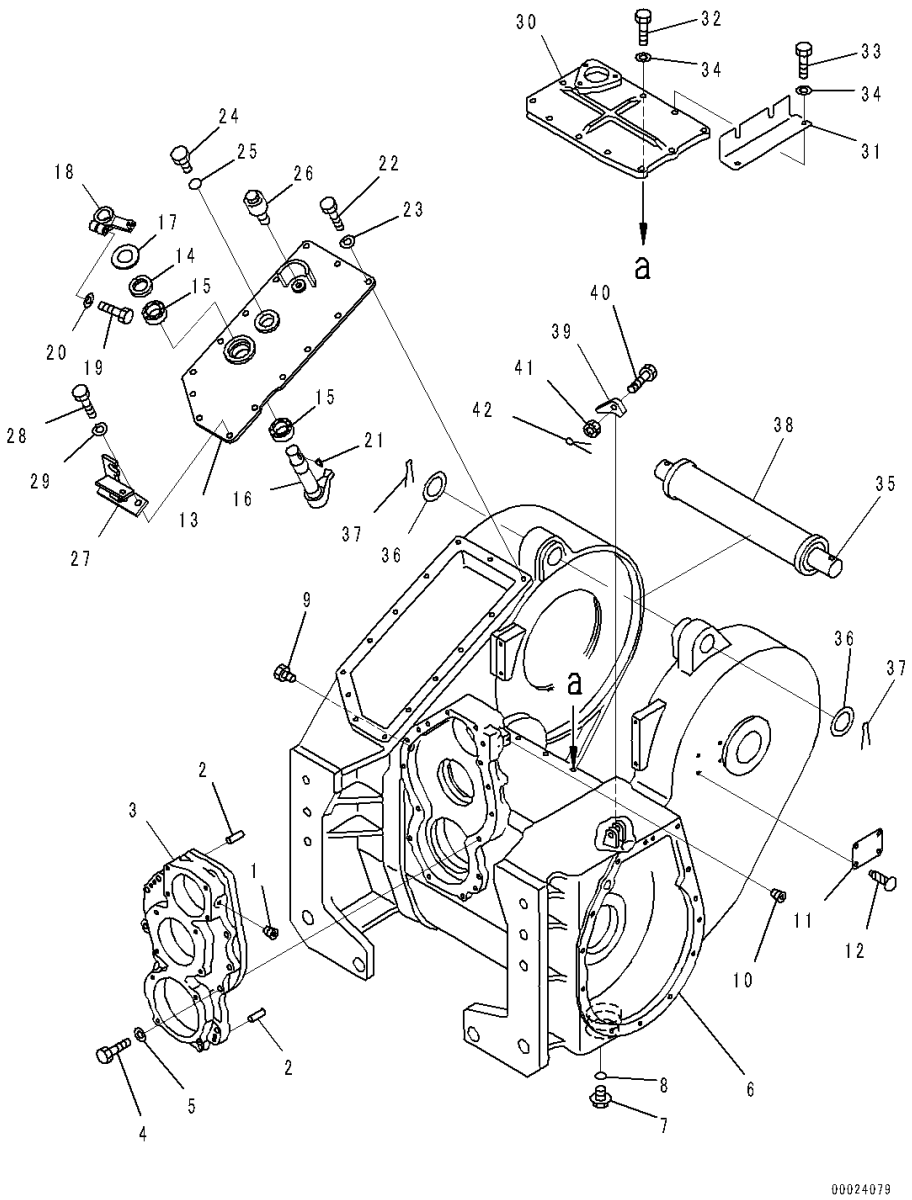

Index	Code	Part Number	Description	Qty	Serial Number
37		04050-00060	Pin, Cotter	2	J20001-
38		14X-960-3992	Collar	1	J20001-
39		09249-00016	Latch	1	J20001-
40		01052-51260	Bolt	1	J20001-
41		01592-11215	Nut, Slotted	1	J20001-
42		04050-13025	Pin, Cotter	1	J20001-

FIG. T2510-001003 Towing Winch, Transfer

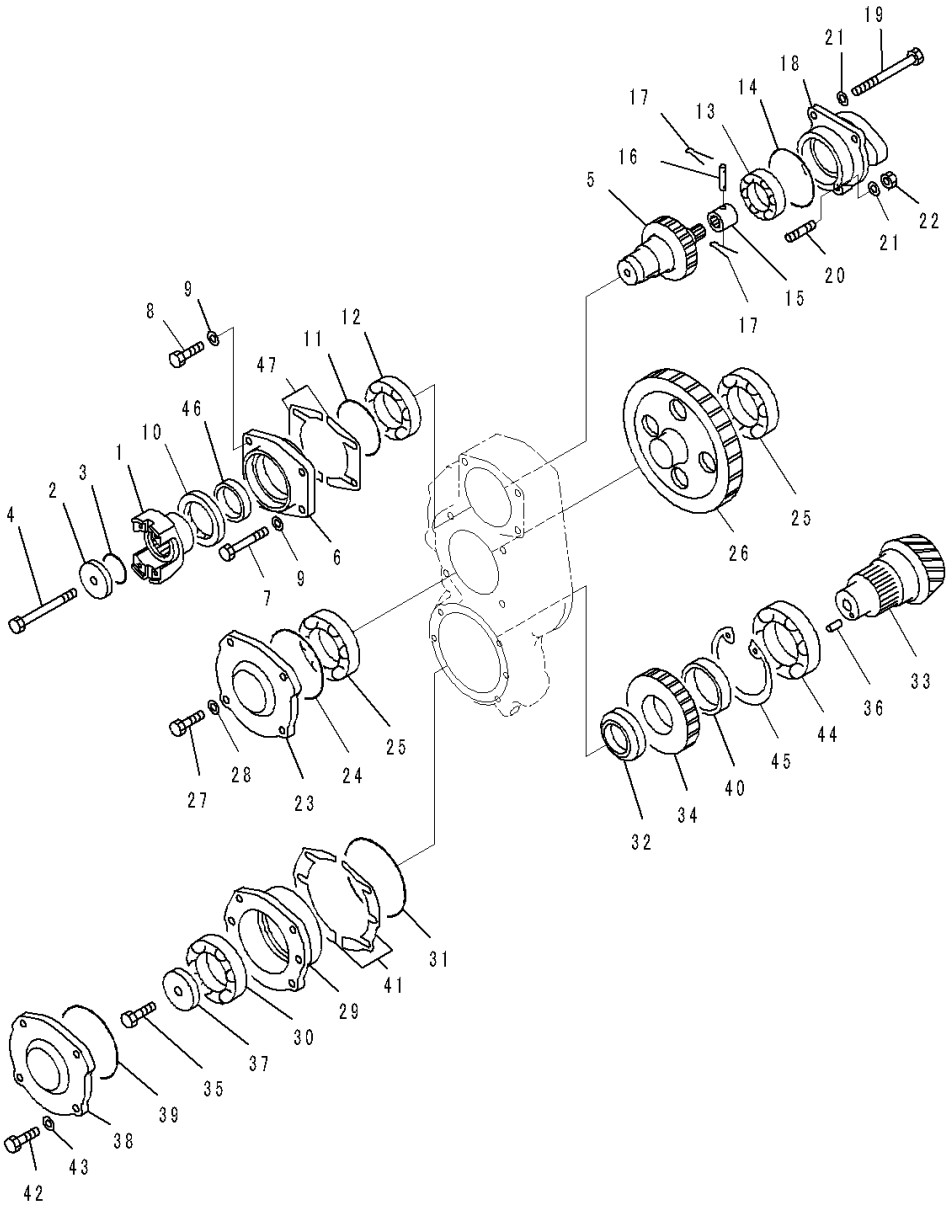

Index	Code	Part Number	Description	Qty	Serial Number
		Note: This list covers following specifications.			
		With Wire Rope			
		Without Free Spool			
		With Hook			
		With Guard and Hook			
		With Guard			
1		14X-960-4110	Coupling	1	J20001-
2		15B-960-4320	Plate	1	J20001-
3		155-15-19620	O-ring	1	J20001-
4		01011-81400	Bolt	1	J20001-
5		14X-960-4140	Gear	1	J20001-
6		14X-960-4180	Cage	1	J20001-
7		01010-81295	Bolt	1	J20001-
8		01010-81235	Bolt	3	J20001-
9		01643-31232	Washer	4	J20001-
10		07012-10075	Seal, Oil	1	J20001-
11		07000-02105	O-ring	1	J20001-
12		06002-30212	Bearing	1	J20001-
13		06002-30209	Bearing	1	J20001-
14		07000-72105	O-ring	1	J20001-
15		14X-960-4220	Coupling	1	J20001-
16		144-916-4220	Pin	1	J20001-
17		04050-11208	Pin, Cotter	2	J20001-
18		14X-960-4210	Cage	1	J20001-
19		01011-81200	Bolt	2	J20001-
20		01124-51235	Stud	1	J20001-
21		01643-31232	Washer	3	J20001-
22		01580-11210	Nut	1	J20001-
23		14X-960-1130	Cover	1	J20001-
24		07000-02130	O-ring	1	J20001-
25		06040-06311	Bearing	2	J20001-
26		14X-960-4150	Gear	1	J20001-
27		01010-81235	Bolt	4	J20001-
28		01643-31232	Washer	4	J20001-
29		14X-960-1190	Cage	1	J20001-
30		06040-06311	Bearing	1	J20001-
31		07000-02145	O-ring	1	J20001-
32		14X-960-4370	Spacer	1	J20001-
33		14X-960-4361	Pinion	1	J20001-
34		14X-960-4350	Gear	1	J20001-

FIG. T2510-001003 Towing Winch, Transfer

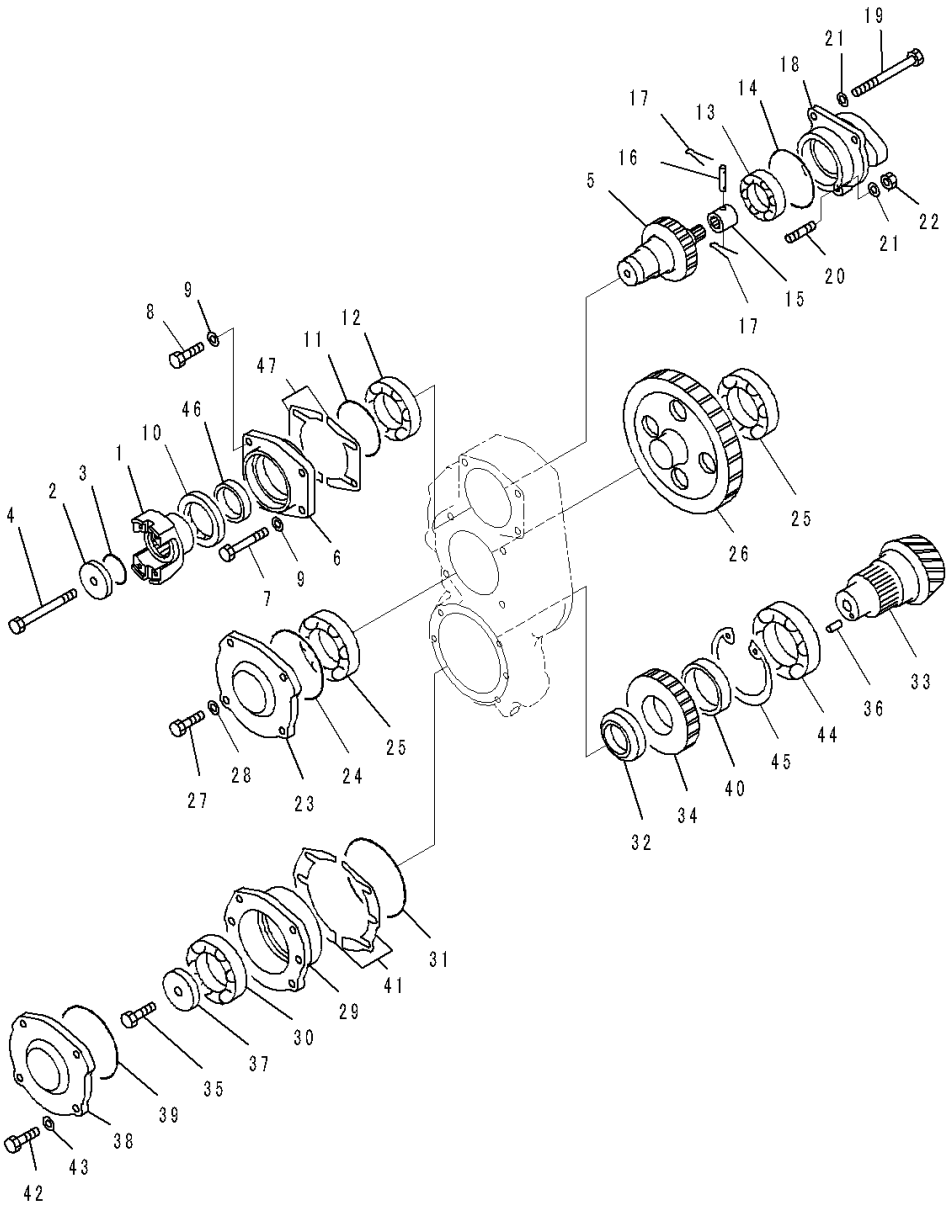

Index	Code	Part Number	Description	Qty	Serial Number
35		01010-81450	Bolt	1	J20001-
36		04020-00820	Pin, Dowel	1	J20001-
37		15B-960-4310	Plate	1	J20001-
38		14X-960-1130	Cover	1	J20001-
39		07000-02130	O-ring	1	J20001-
40		14X-960-4380	Spacer	1	J20001-
41		14X-960-0510	Shim Kit	1	J20001-
	C1		• Shim, T=0.2mm	4	J20001-
	C1		• Shim, T=0.3mm	6	J20001-
	C1		• Shim, T=1.0mm	4	J20001-
42		01010-81245	Bolt	4	J20001-
43		01643-31232	Washer	4	J20001-
44		06041-00216	Bearing	1	J20001-
45		04077-00140	Ring	1	J20001-
46		14X-960-4260	Spacer	1	J20001-
47		14X-960-0520	Shim Kit	1	J20001-
	C1		• Shim, T=0.2mm	4	J20001-
	C1		• Shim, T=0.3mm	6	J20001-
	C1		• Shim, T=1.0mm	4	J20001-

FIG. T2510-001004 Towing Winch, Gear Shaft (1/3)

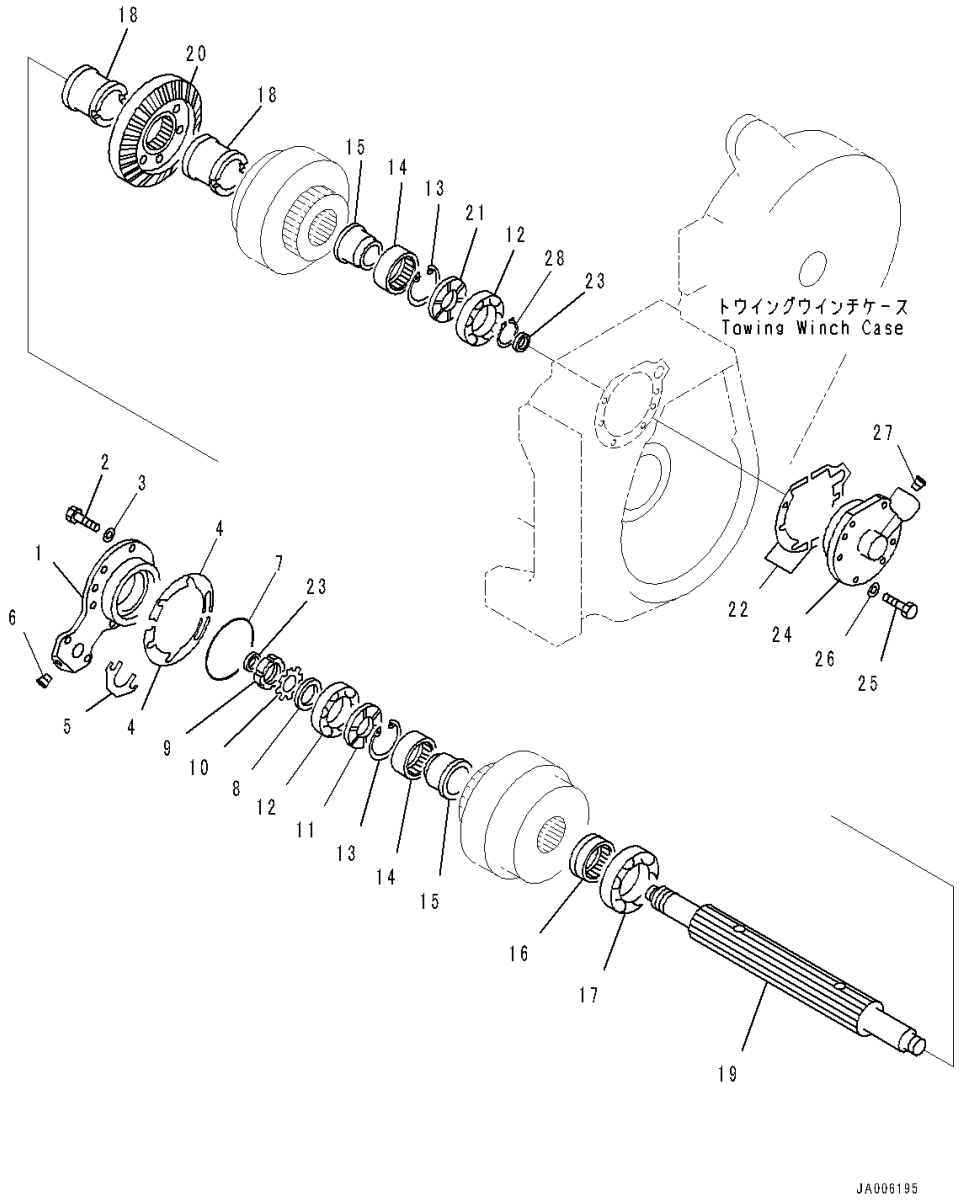

Index	Code	Part Number	Description	Qty	Serial Number
		Note: This list covers following specifications.			
		With Wire Rope			
		Without Free Spool			
		With Hook			
		With Guard and Hook			
		With Guard			
1		14X-960-2780	Cover	1	J20001-
2		01010-81235	Bolt	8	J20001-
3		01643-31232	Washer	8	J20001-
4		14X-960-0531	Shim Kit	1	J20001-
	C1		• Shim, T=0.2mm	4	J20001-
	C1		• Shim, T=0.3mm	6	J20001-
	C1		• Shim, T=1.0mm	4	J20001-
5		14X-960-0540	Shim Kit	1	J20001-
	C1		• Shim, T=0.2mm	2	J20001-
	C1		• Shim, T=0.3mm	3	J20001-
	C1		• Shim, T=1.0mm	2	J20001-
6		07043-00312	Plug, Taper	1	J20001-
7		07000-05130	O-ring	1	J20001-
8		144-916-1270	Washer	1	J20001-
9		01530-04812	Nut, Lock	1	J20001-
10		01658-04823	Washer, Lock	1	J20001-
11		144-916-2730	Spacer	1	J20001-
12		06002-30310	Bearing	2	J20001-
13		04065-08225	Ring, Snap	2	J20001-
14		144-916-7950	Bearing	2	J20001-
15		14X-960-2710	Spacer	2	J20001-
16		15B-960-1221	Spacer	1	J20001-
17		06040-06018	Bearing	1	J20001-
18		14X-960-1210	Spacer	2	J20001-
19		14X-960-1230	Shaft	1	J20001-
20		14X-960-1181	Gear	1	J20001-
21		144-916-2730	Spacer	1	J20001-
22		14X-960-0550	Shim Kit	1	J20001-
	C1		• Shim, T=0.2mm	2	J20001-
	C1		• Shim, T=0.3mm	3	J20001-
	C1		• Shim, T=1.0mm	2	J20001-
	C1		• Shim, T=0.2mm	2	J20001-
	C1		• Shim, T=0.3mm	3	J20001-
	C1		• Shim, T=1.0mm	2	J20001-

FIG. T2510-001004 Towing Winch, Gear Shaft (1/3)

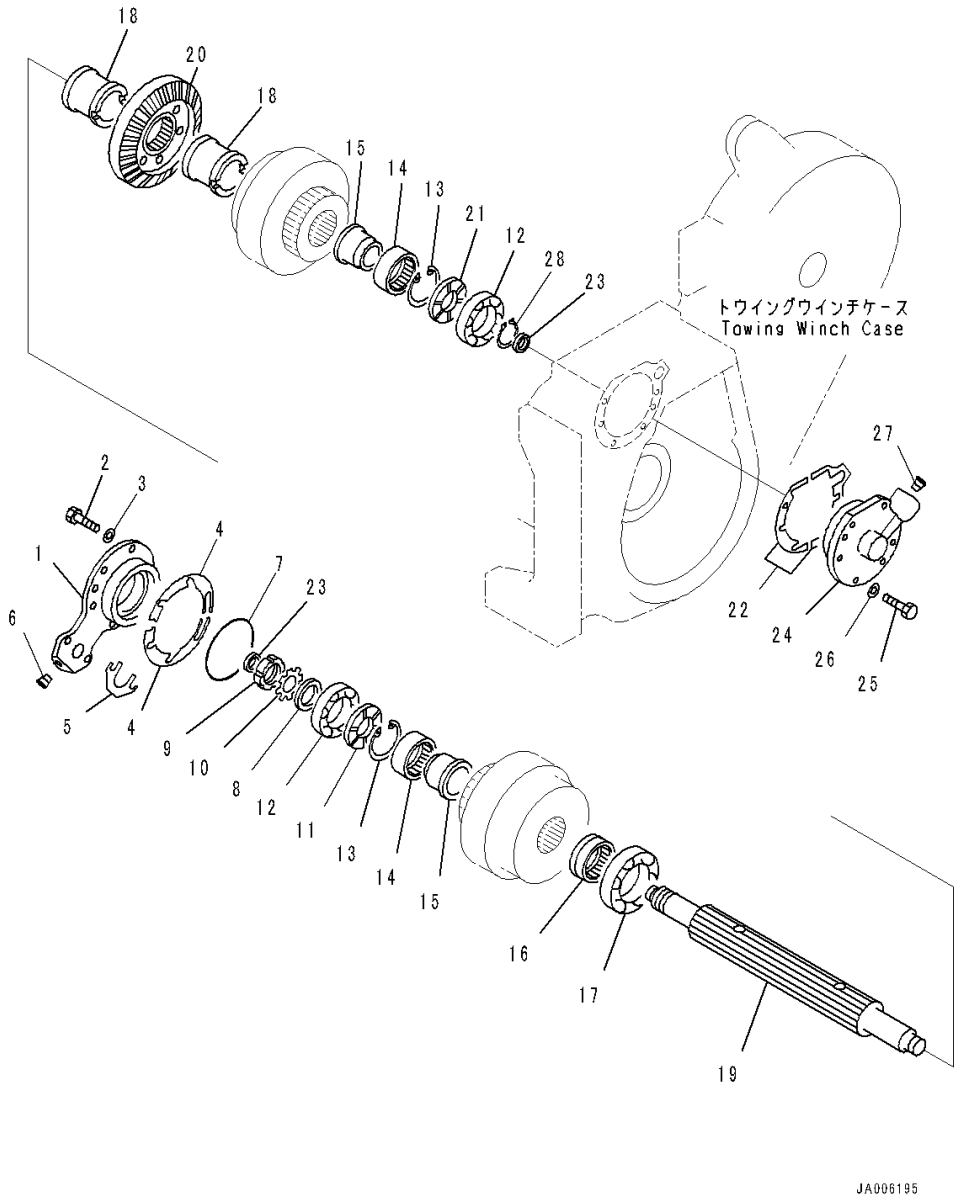

Index	Code	Part Number	Description	Qty	Serial Number
23		144-916-2770	Seal	2	J20001-
24		14X-960-1281	Cover	1	J20001-
25		01010-81235	Bolt	6	J20001-
26		01643-31232	Washer	6	J20001-
27		07043-00312	Plug, Taper	1	J20001-
28		04064-05020	Ring, Snap	1	J20001-

FIG. T2510-001005 Towing Winch, Gear Shaft (2/3)

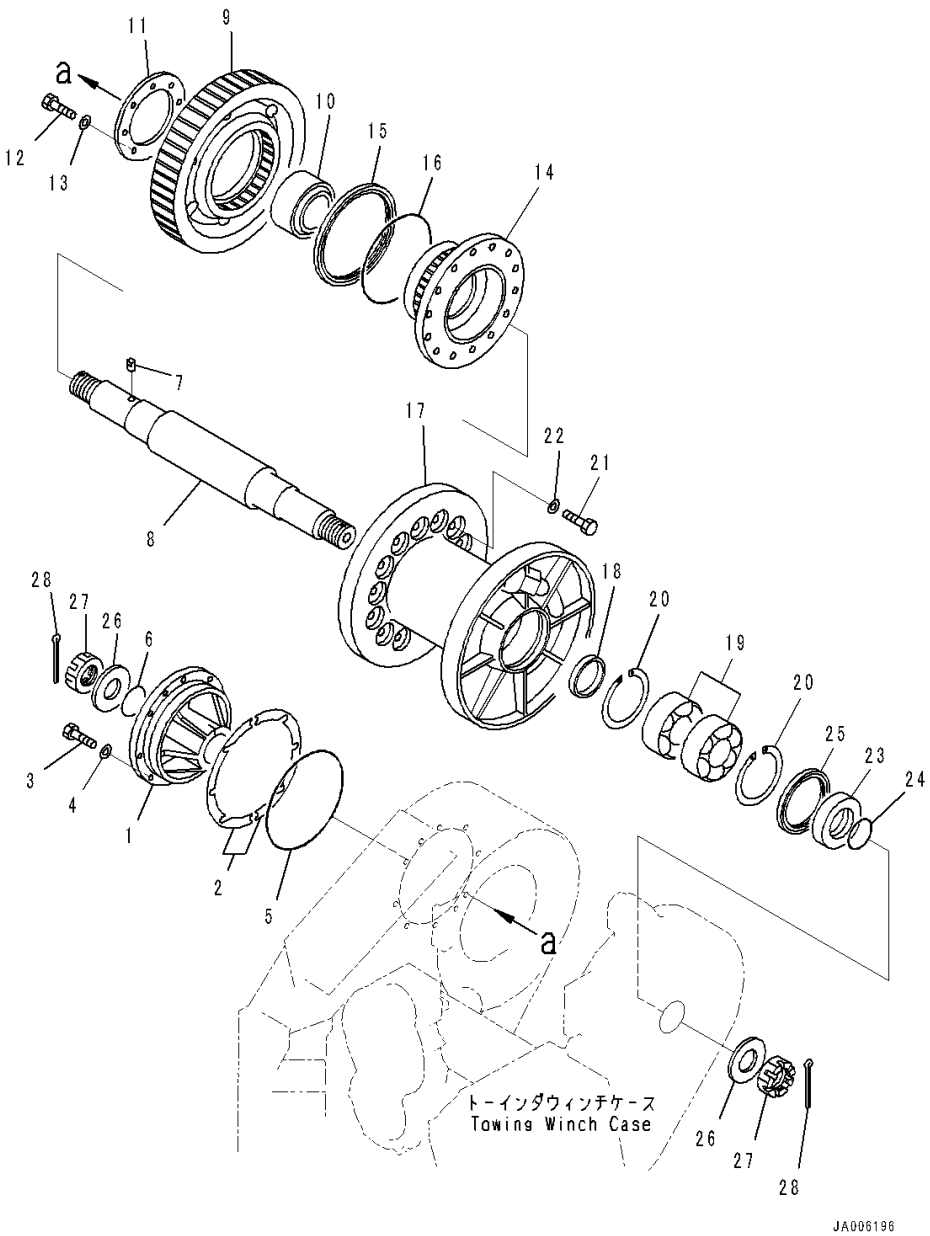

Index	Code	Part Number	Description	Qty	Serial Number
		Note: This list covers following specifications.			
		With Wire Rope			
		Without Free Spool			
		With Hook			
		With Guard and Hook			
		With Guard			
1		134-960-1650	Cover	1	J20001-
2		14X-960-0561	Shim Kit	1	J20001-
	C1		• Shim, T=0.2mm	4	J20001-
	C1		• Shim, T=0.3mm	6	J20001-
	C1		• Shim, T=1.0mm	4	J20001-
3		01010-81235	Bolt	8	J20001-
4		01643-31232	Washer	8	J20001-
5		07000-15230	O-ring	1	J20001-
6		07000-02085	O-ring	1	J20001-
7		150-951-2410	Pin	1	J20001-
8		14X-960-1690	Shaft	1	J20001-
9		14X-960-1640	Gear	1	J20001-
10		150-951-1130	Bearing	1	J20001-
11		134-960-1690	Plate	1	J20001-
12		01010-81435	Bolt	8	J20001-
13		01643-31445	Washer	8	J20001-
14		14X-960-1610	Drum	1	J20001-
15		15B-960-7980	Seal	1	J20001-
16		07000-05240	O-ring	1	J20001-
17		134-960-1860	Drum	1	J20001-
18		134-960-1850	Spacer	1	J20001-
19		06342-02218	Bearing	2	J20001-
20		04071-00160	Ring, Snap, for Hole Side	2	J20001-
21		01010-82050	Bolt	14	J20001-
22		01643-32060	Washer	14	J20001-
23		134-960-1840	Spacer	1	J20001-
24		07000-03088	O-ring	1	J20001-
25		07012-10140	Seal, Oil	1	J20001-
26		150-801-1250	Washer	2	J20001-
27		150-951-2450	Nut	2	J20001-
28		150-951-2460	Pin, Cotter	2	J20001-

FIG. T2510-001006 Towing Winch, Gear Shaft (3/3)

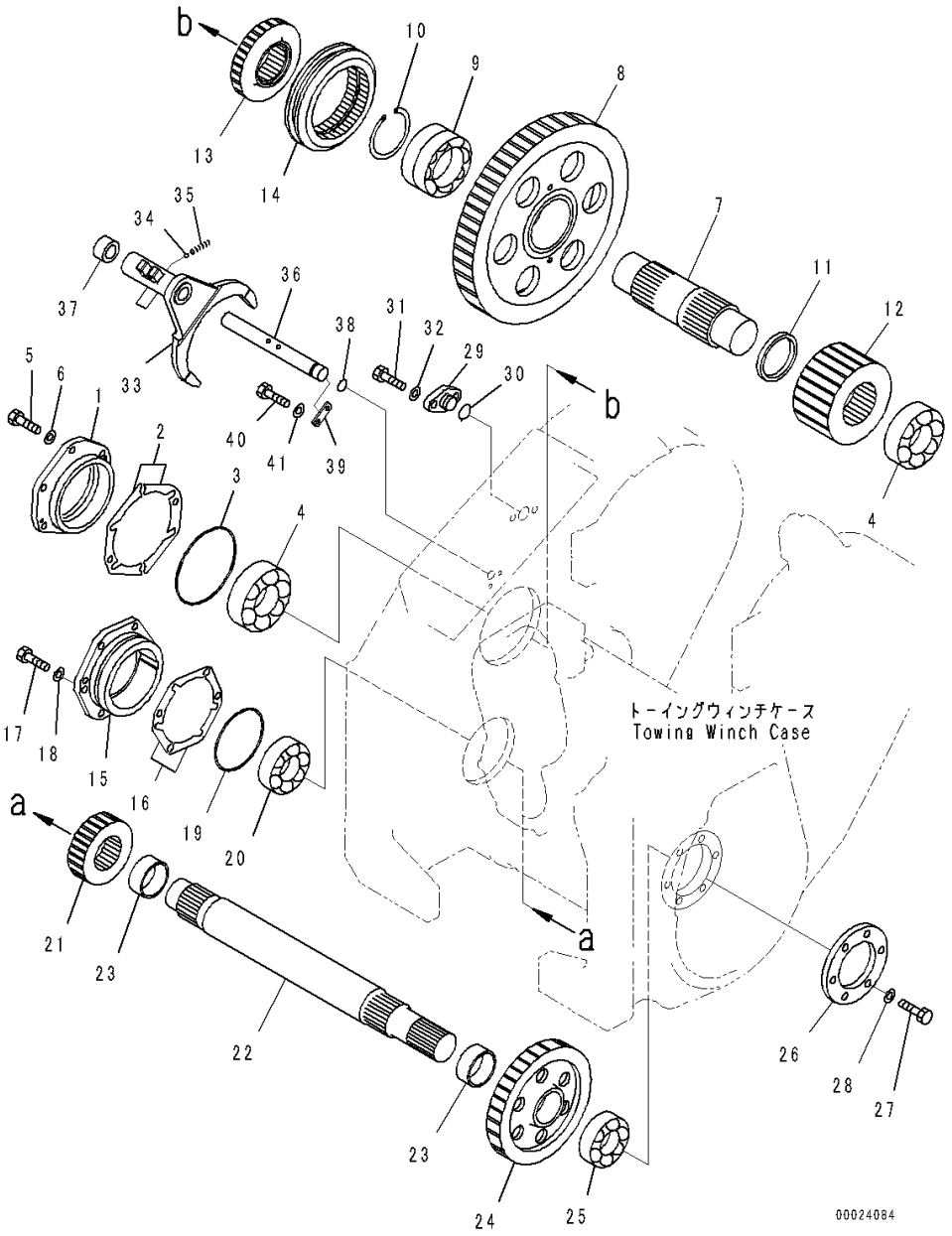

Index	Code	Part Number	Description	Qty	Serial Number
		Note: This list covers following specifications.			
		With Wire Rope			
		With Hook			
		With Guard and Hook			
		With Guard			
1		14X-960-1410	Cover	1	J20001-
2		14X-960-0570	Shim Kit	1	J20001-
	C1		• Shim, T=0.2mm	4	J20001-
	C1		• Shim, T=0.3mm	6	J20001-
	C1		• Shim, T=1.0mm	4	J20001-
3		07000-05170	O-ring	1	J20001-
4		06002-32314	Bearing	2	J20001-
5		01010-81235	Bolt	6	J20001-
6		01643-31232	Washer	6	J20001-
7		134-960-1720	Shaft	1	J20001-
8		134-960-1730	Gear	1	J20001-
9		134-960-1740	Bearing	1	J20001-
10		04077-00110	Ring, Snap, for Hole Side	1	J20001-
11		134-960-1780	Spacer	1	J20001-
12		134-960-1770	Gear	1	J20001-
13		134-960-1790	Gear	1	J20001-
14		144-947-4120	Gear	1	J20001-
15		14X-960-1480	Cover	1	J20001-
16		14X-960-0580	Shim Kit	1	J20001-
	C1		• Shim, T=0.2mm	4	J20001-
	C1		• Shim, T=0.3mm	6	J20001-
	C1		• Shim, T=1.0mm	4	J20001-
17		01010-81235	Bolt	6	J20001-
18		01643-31232	Washer	6	J20001-
19		07000-05140	O-ring	1	J20001-
20		06002-32213	Bearing	1	J20001-
21		14X-960-1391	Gear	1	J20001-
22		14X-960-1370	Shaft	1	J20001-
23		14X-960-1360	Spacer	2	J20001-
24		14X-960-1351	Gear	1	J20001-
25		06002-32213	Bearing	1	J20001-
26		14X-960-1320	Cover	1	J20001-
27		01010-81235	Bolt	6	J20001-
28		01643-31232	Washer	6	J20001-
29		134-960-1940	Plug	1	J20001-

FIG. T2510-001006 Towing Winch, Gear Shaft (3/3)

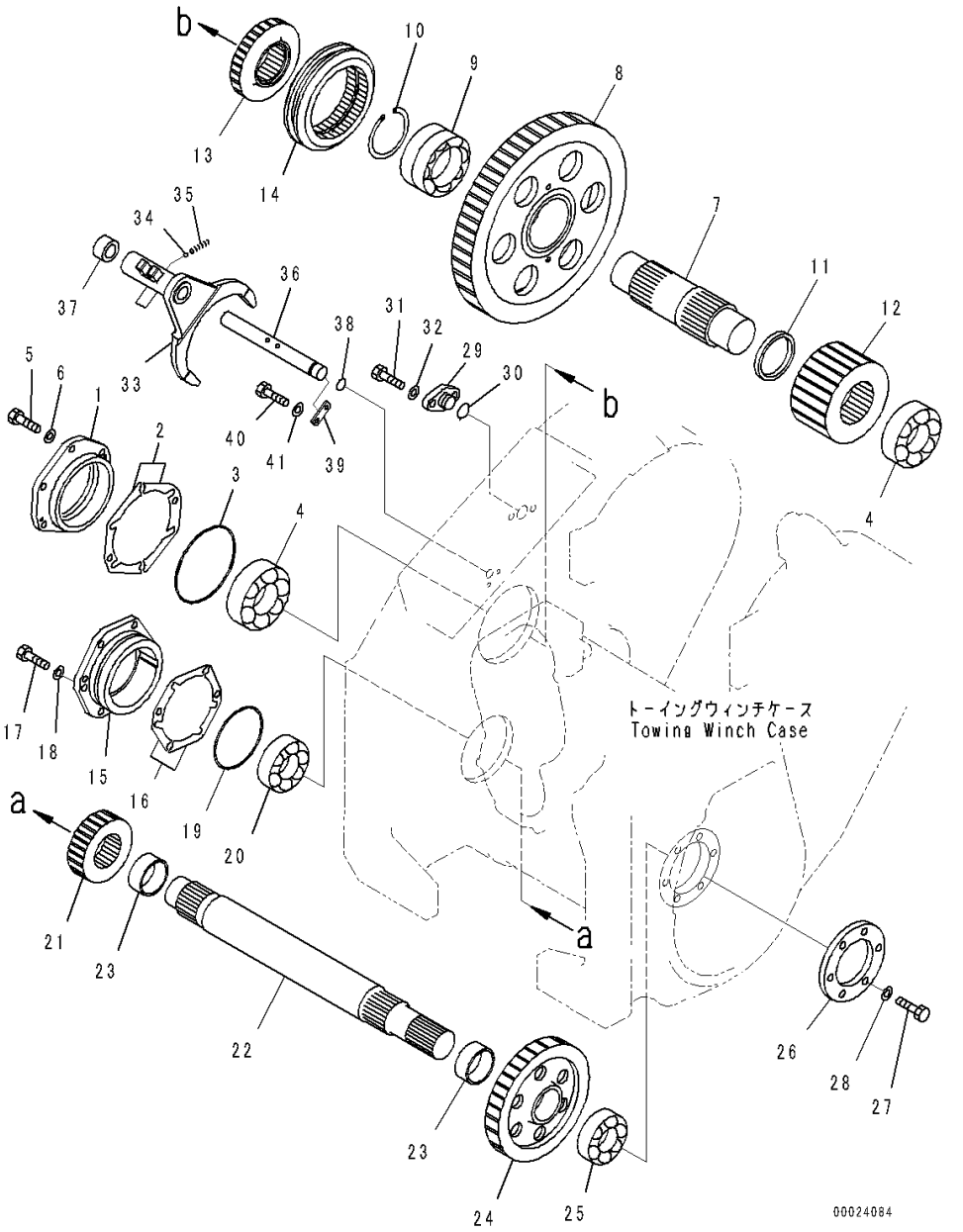

Index	Code	Part Number	Description	Qty	Serial Number
30		07000-12030	O-ring	1	J20001-
31		01010-81235	Bolt	2	J20001-
32		01643-31232	Washer	2	J20001-
33		134-960-1811	Fork	1	J20001-
34		04260-00952	Ball	1	J20001-
35		130-961-5730	Spring	1	J20001-
36		134-960-1820	Shaft	1	J20001-
37		134-960-1830	Spacer	1	J20001-
38		07000-13022	O-ring	1	J20001-
39		130-901-3140	Plate	1	J20001-
40		01010-80820	Bolt	2	J20001-
41		01643-30823	Washer	2	J20001-

FIG. T2510-001007 Towing Winch, Clutch

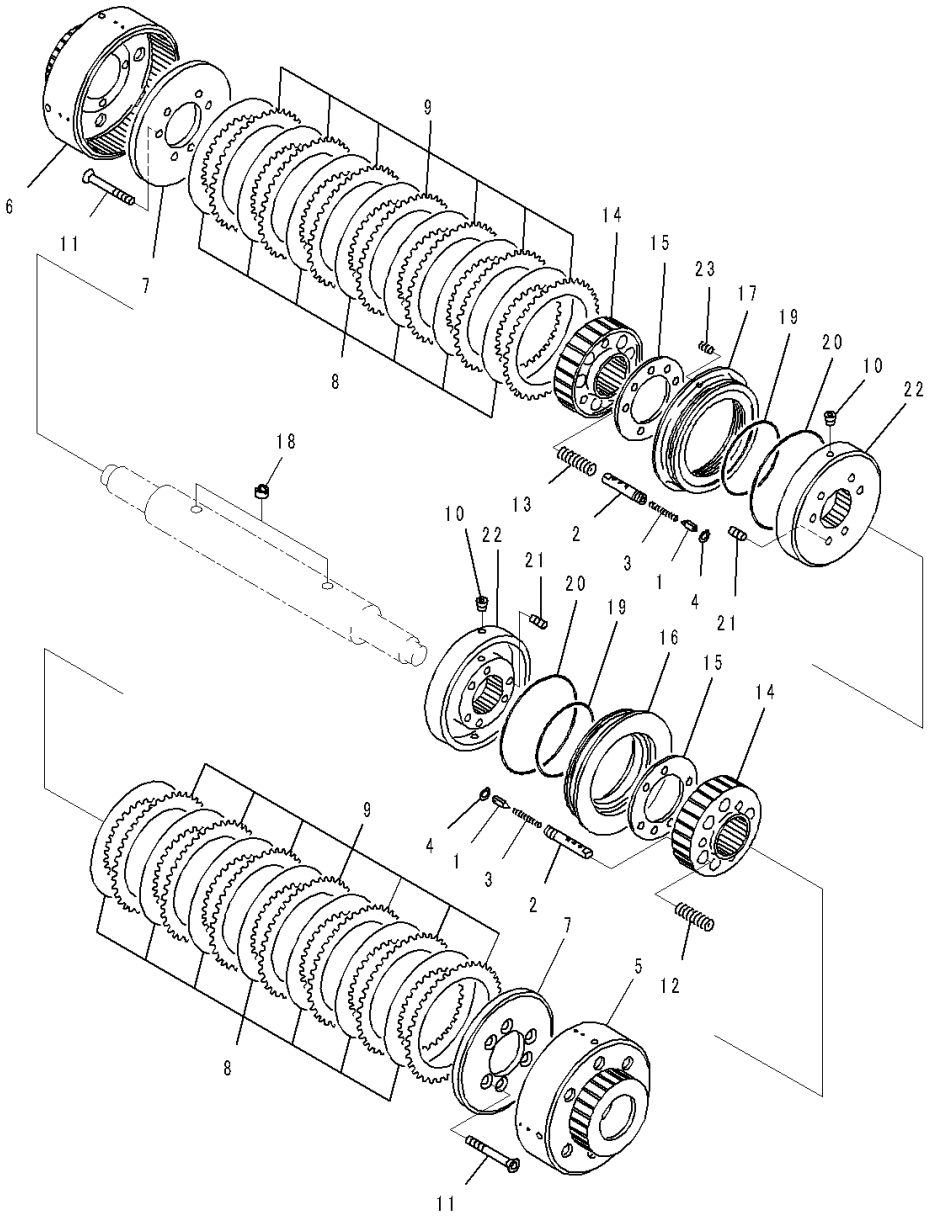

Index	Code	Part Number	Description	Qty	Serial Number
		Note: This list covers following specifications.			
		With Wire Rope			
		Without Free Spool			
		With Hook			
		With Guard and Hook			
		With Guard			
1		175-916-2620	Spool	2	J20001-
2		175-916-2610	Housing	2	J20001-
3		175-916-2630	Ring, Snap	2	J20001-
4		175-916-2640	Ring, Snap	2	J20001-
5		14X-960-2661	Gear	1	J20001-
6		14X-960-2670	Gear	1	J20001-
7		14X-960-2650	Plate	2	J20001-
8		176-76-13230	Plate	14	J20001-
9		100-22-15210	Plate	14	J20001-
10		07043-70108	Plug	4	J20001-
11		14X-960-2510	Bolt	12	J20001-
12		144-916-2590	Spring	6	J20001-
13		14X-960-2580	Spring	6	J20001-
14		144-916-2850	Drum	2	J20001-
15		144-916-2550	Plate	2	J20001-
16		144-916-2560	Piston	1	J20001-
17		14X-960-2570	Piston	1	J20001-
18		144-916-2520	Seal	4	J20001-
19		07000-05135	O-ring	2	J20001-
20		07000-05190	O-ring	2	J20001-
21		144-916-2570	Screw, Set	12	J20001-
22		144-916-2540	Housing	2	J20001-
23		14X-960-2590	Spring	4	J20001-

FIG. T2510-001008 Towing Winch, Brake

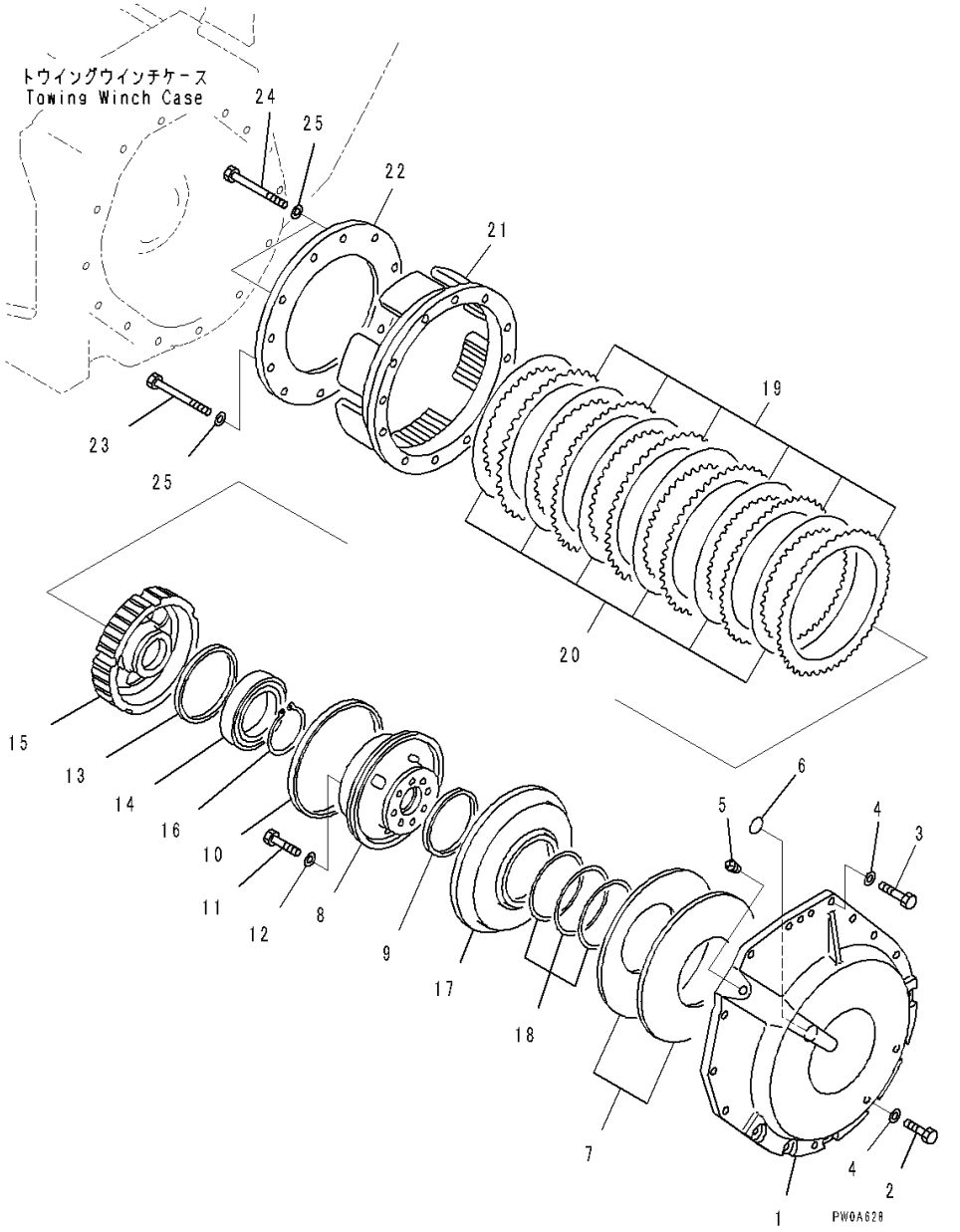

Index	Code	Part Number	Description	Qty	Serial Number
		Note: This list covers following specifications.			
		With Wire Rope			
		Without Free Spool			
		With Hook			
		With Guard and Hook			
		With Guard			
1		14X-960-3141	Cover	1	J20001-
2		01010-81235	Bolt	12	J20001-
3		01010-81260	Bolt	3	J20001-
4		01643-31232	Washer	15	J20001-
5		07042-30312	Plug, Taper	1	J20001-
6		07000-73025	O-ring	1	J20001-
7		14X-960-3190	Spring	2	J20001-
8		14X-960-3130	Housing	1	J20001-
9		14X-10-19210	Seal Ring	1	J20001-
10		103-15-29210	Seal Ring	1	J20001-
11		01010-81260	Bolt	7	J20001-
12		01643-31232	Washer	7	J20001-
13		04071-00140	Ring, Snap	1	J20001-
14		06030-06018	Bearing	1	J20001-
15		14X-960-3120	Drum	1	J20001-
16		04064-09030	Ring, Snap	1	J20001-
17		14X-960-3151	Piston	1	J20001-
18		14X-960-0590	Spacer Kit	1	J20001-
	C1		• Spacer, T=0.4mm	1	J20001-
	C1		• Spacer, T=0.8mm	1	J20001-
	C1		• Spacer, T=1.2mm	1	J20001-
19		14X-960-3180	Plate	6	J20001-
20		14X-960-3171	Disk	6	J20001-
21		14X-960-3110	Drum	1	J20001-
22		14X-960-3161	Plate	1	J20001-
23		01011-81230	Bolt	10	J20001-
24		01011-81225	Bolt	2	J20001-
25		01643-31232	Washer	12	J20001-

FIG. T2510-001009 Towing Winch, Inner Parts, Hydraulic Pump

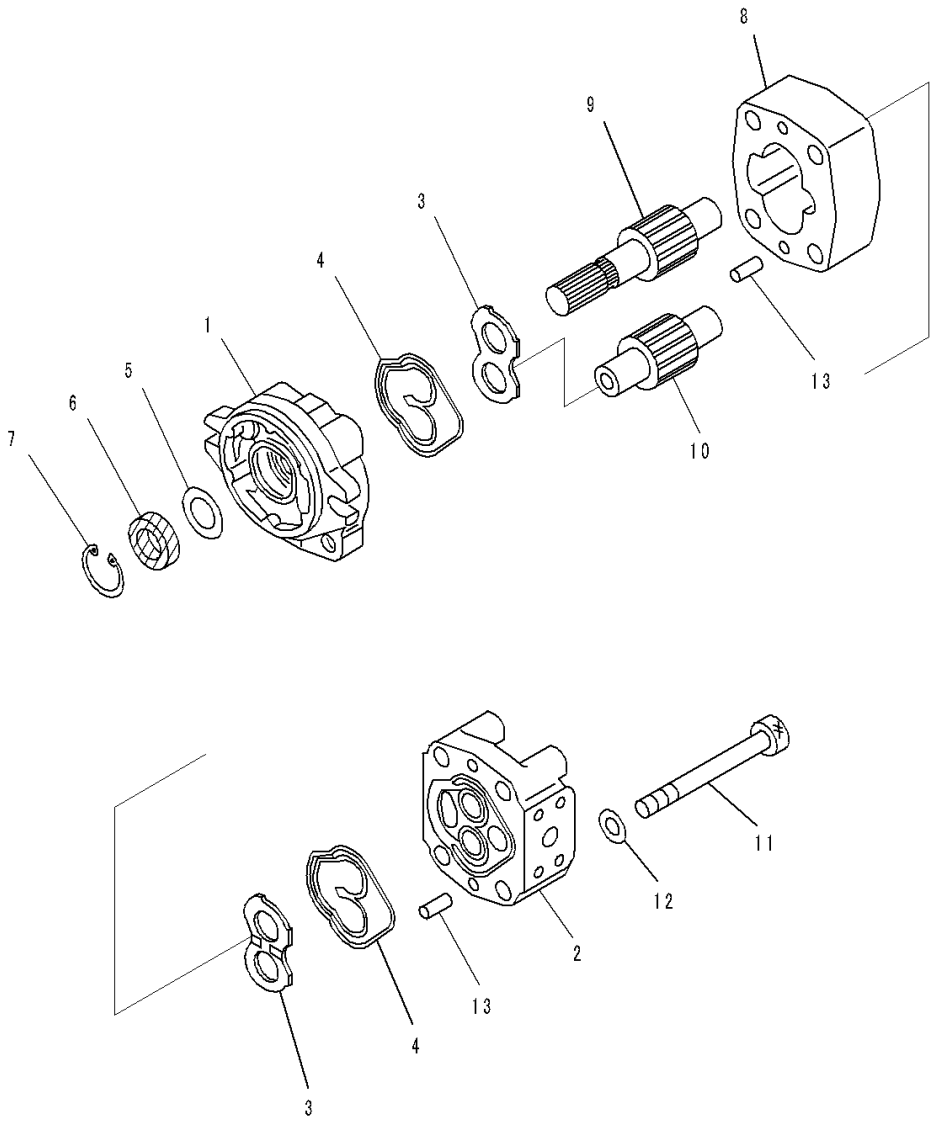

Index	Code	Part Number	Description	Qty	Serial Number
		Note: This list covers following specifications.			
		With Wire Rope			
		Without Free Spool			
		With Hook			
		With Guard and Hook			
		With Guard			
		705-41-01200	Pump Assembly	1	J20001-
1	C2	705-41-80230	• Bracket Assembly	1	J20001-
		705-41-80610	• • Bushing	1	J20001-
		705-41-80620	• • Bushing	1	J20001-
2	C2	705-40-80131	• Cover Assembly	1	J20001-
		705-41-80610	• • Bushing	1	J20001-
		705-41-80620	• • Bushing	1	J20001-
3		705-40-83720	• Plate	2	J20001-
4		705-40-80760	• Seal	2	J20001-
5		705-40-80870	• Plate	1	J20001-
6		705-40-80810	• Seal, Oil	1	J20001-
7		04065-03515	• Ring, Snap	1	J20001-
8	C2	705-40-33011	• Gear Case	1	J20001-
9	C2	705-40-33411	• Gear, Drive	1	J20001-
10	C2	705-40-33511	• Gear, Driven	1	J20001-
11		01253-71210	• Bolt	4	J20001-
12		01643-51232	• Washer	4	J20001-
13		04020-00820	• Pin, Dowel	4	J20001-

FIG. T2510-001010 Towing Winch, Hydraulic Pump Piping

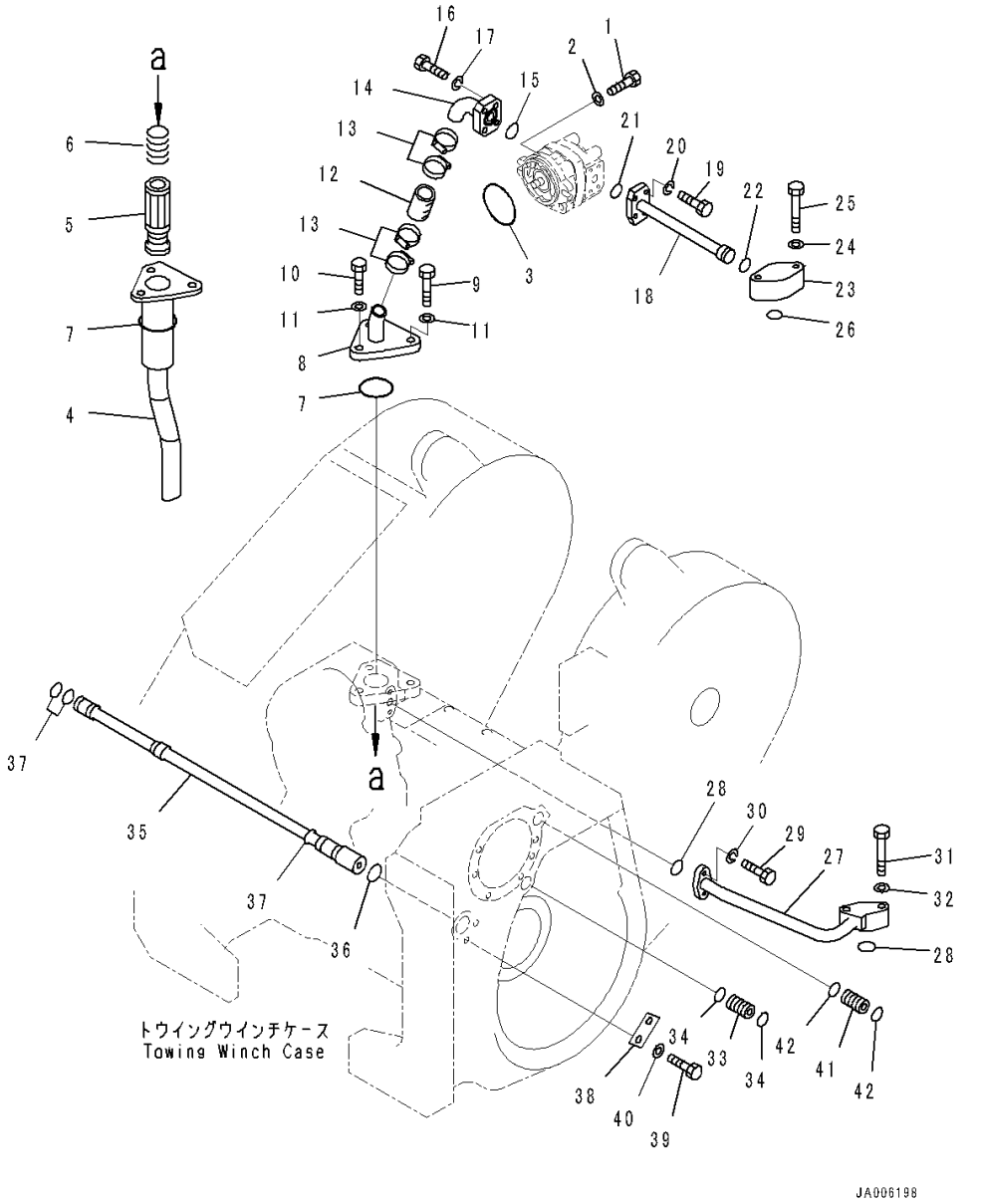

Index	Code	Part Number	Description	Qty	Serial Number
		Note: This list covers following specifications.			
		With Wire Rope			
		Without Free Spool			
		With Hook			
		With Guard and Hook			
		With Guard			
1		01010-81030	Bolt	2	J20001-
2		01643-31032	Washer	2	J20001-
3		07000-72085	O-ring	1	J20001-
4		14X-960-6123	Tube	1	J20001-
5		14X-960-6462	Strainer	1	J20001-
6		176-62-15240	Spring	1	J20001-
7		07000-72085	O-ring	2	J20001-
8		14X-960-6132	Tube	1	J20001-
9		01010-81280	Bolt	2	J20001-
10		01010-81245	Bolt	1	J20001-
11		01643-31232	Washer	3	J20001-
12		07260-02609	Hose	1	J20001-
13		07281-00489	Clamp, Hose	4	J20001-
14		14X-960-6142	Tube	1	J20001-
15		07000-73032	O-ring	1	J20001-
16		01010-81040	Bolt	4	J20001-
17		01602-21030	Washer, Spring	4	J20001-
18		14X-960-6190	Tube	1	J20001-
19		01010-80835	Bolt	4	J20001-
20		01602-20825	Washer, Spring	4	J20001-
21		07000-73025	O-ring	1	J20001-
22		07000-73022	O-ring	1	J20001-
23		14X-960-6170	Block	1	J20001-
24		01643-31032	Washer	2	J20001-
25		01011-81080	Bolt	2	J20001-
26		07000-73025	O-ring	1	J20001-
27		14X-960-6150	Tube	1	J20001-
28		07000-73025	O-ring	2	J20001-
29		01010-81030	Bolt	2	J20001-
30		01602-21030	Washer, Spring	2	J20001-
31		01011-81080	Bolt	2	J20001-
32		01643-31032	Washer	2	J20001-
33		15B-960-6260	Sleeve	1	J20001-
34		07000-72021	O-ring	2	J20001-

FIG. T2510-001010 Towing Winch, Hydraulic Pump Piping

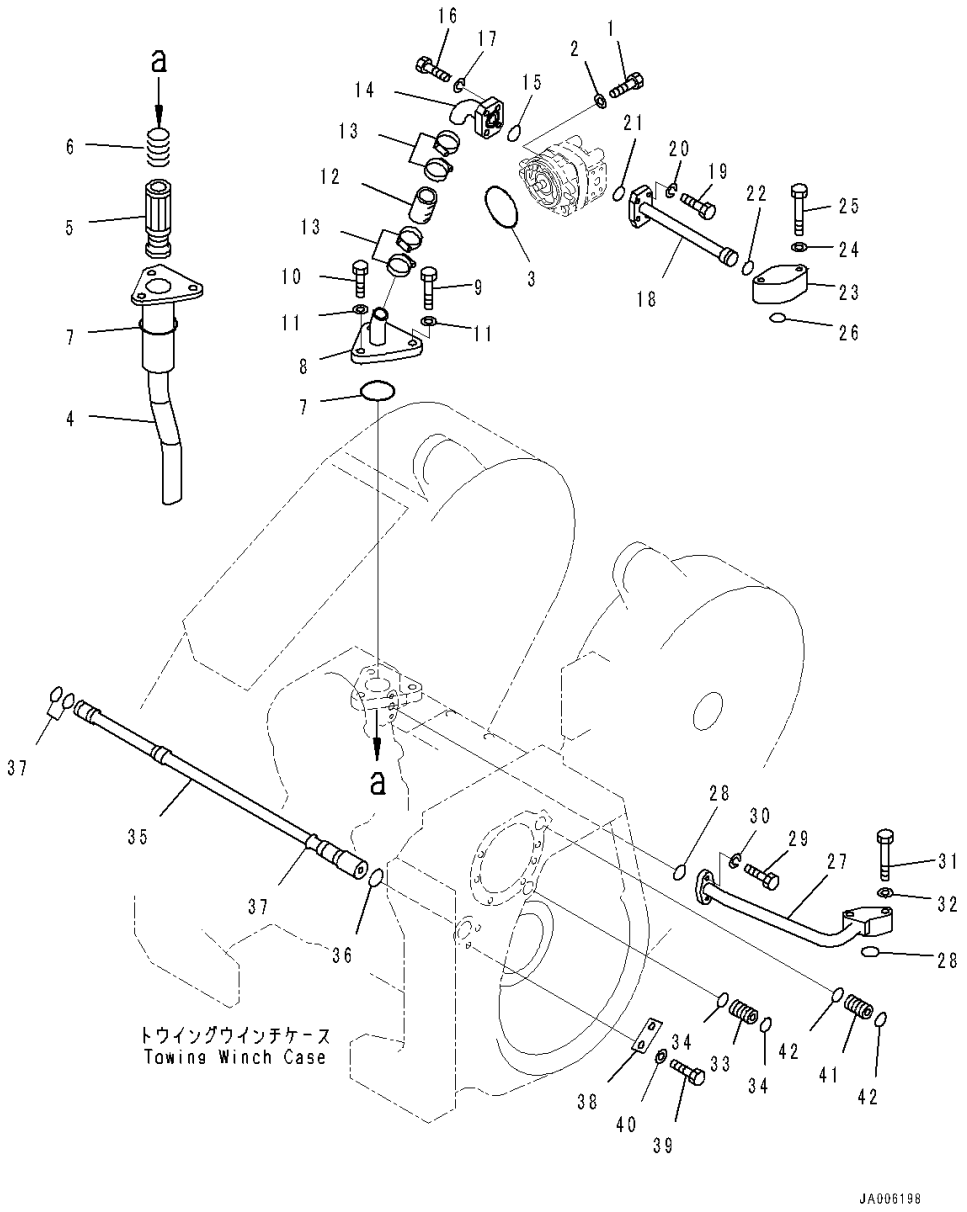

Index	Code	Part Number	Description	Qty	Serial Number
35		14X-960-6391	Tube	1	J20001-
36		07000-73028	O-ring	1	J20001-
37		07000-73025	O-ring	3	J20001-
38		04082-00206	Lock	1	J20001-
39		01010-81225	Bolt	2	J20001-
40		01643-31232	Washer	2	J20001-
41		14X-960-6260	Sleeve	1	J20001-
42		07000-72021	O-ring	2	J20001-

FIG. T2510-001011 Towing Winch, Control Valve (1/2)

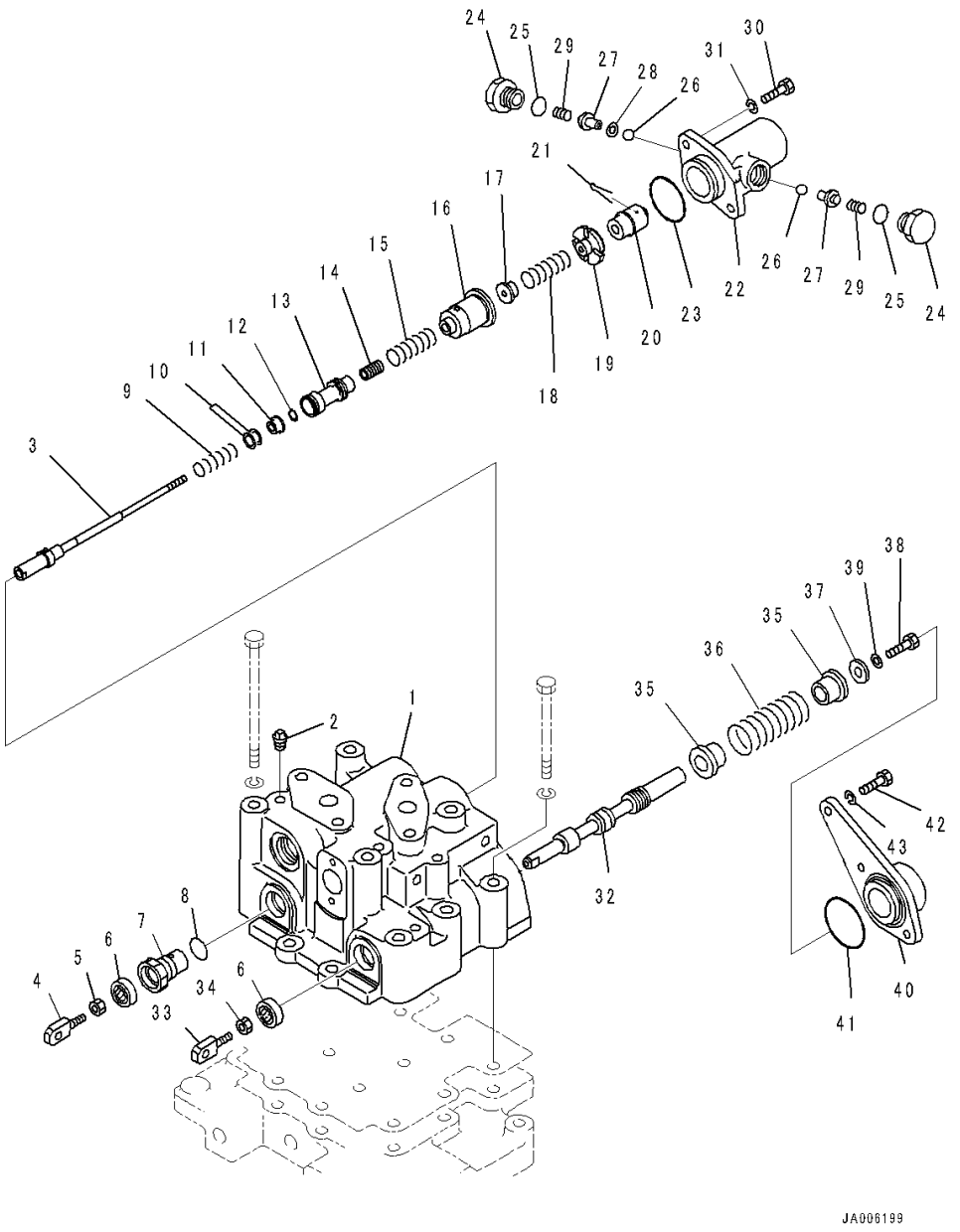

Index	Code	Part Number	Description	Qty	Serial Number
		Note: This list covers following specifications.			
		With Wire Rope			
		Without Free Spool			
		With Hook			
		With Guard and Hook			
		With Guard			
		14X-960-0012	Valve Assembly	1	J20001-
1		14X-960-5210	• Valve Body	1	J20001-
2		07042-20108	• Plug	8	J20001-
3		14X-960-5122	• Spool	1	J20001-
4		15B-960-5330	• Yoke	1	J20001-
5		01580-10806	• Nut	1	J20001-
6		113-15-29110	• Seal, Oil	2	J20001-
7		14X-960-5220	• Cover	1	J20001-
8		07002-02434	• O-ring	1	J20001-
9		14X-960-5230	• Spring	1	J20001-
10		14X-960-5310	• Shim	2	J20001-
11		14X-960-5240	• Guide	1	J20001-
12		150-43-14960	• Ring, Snap	1	J20001-
13		14X-960-5250	• Valve	1	J20001-
14		14X-960-5260	• Sleeve	1	J20001-
15		709-32-11780	• Spring	1	J20001-
16		14X-960-5270	• Cage	1	J20001-
17		14X-960-5280	• Collar	1	J20001-
18		709-32-11780	• Spring	1	J20001-
19		14X-960-5290	• Stopper	1	J20001-
20		14X-960-5141	• Detent	1	J20001-
21		04050-01618	• Pin, Cotter	1	J20001-
22		15B-960-5230	• Cover	1	J20001-
23		07000-73035	• O-ring	1	J20001-
24		175-916-4180	• Plug	2	J20001-
25		07000-72015	• O-ring	2	J20001-
26		04260-00635	• Ball, Steel	2	J20001-
27		14X-960-5160	• Guide	2	J20001-
28		702-21-31360	• Spacer	4	J20001-
29		709-62-31180	• Spring	2	J20001-
30		01010-80820	• Bolt	2	J20001-
31		01602-20825	• Washer, Spring	2	J20001-
32		14X-960-5132	• Spool	1	J20001-
33		15B-960-5330	• Yoke	1	J20001-

FIG. T2510-001011 Towing Winch, Control Valve (1/2)

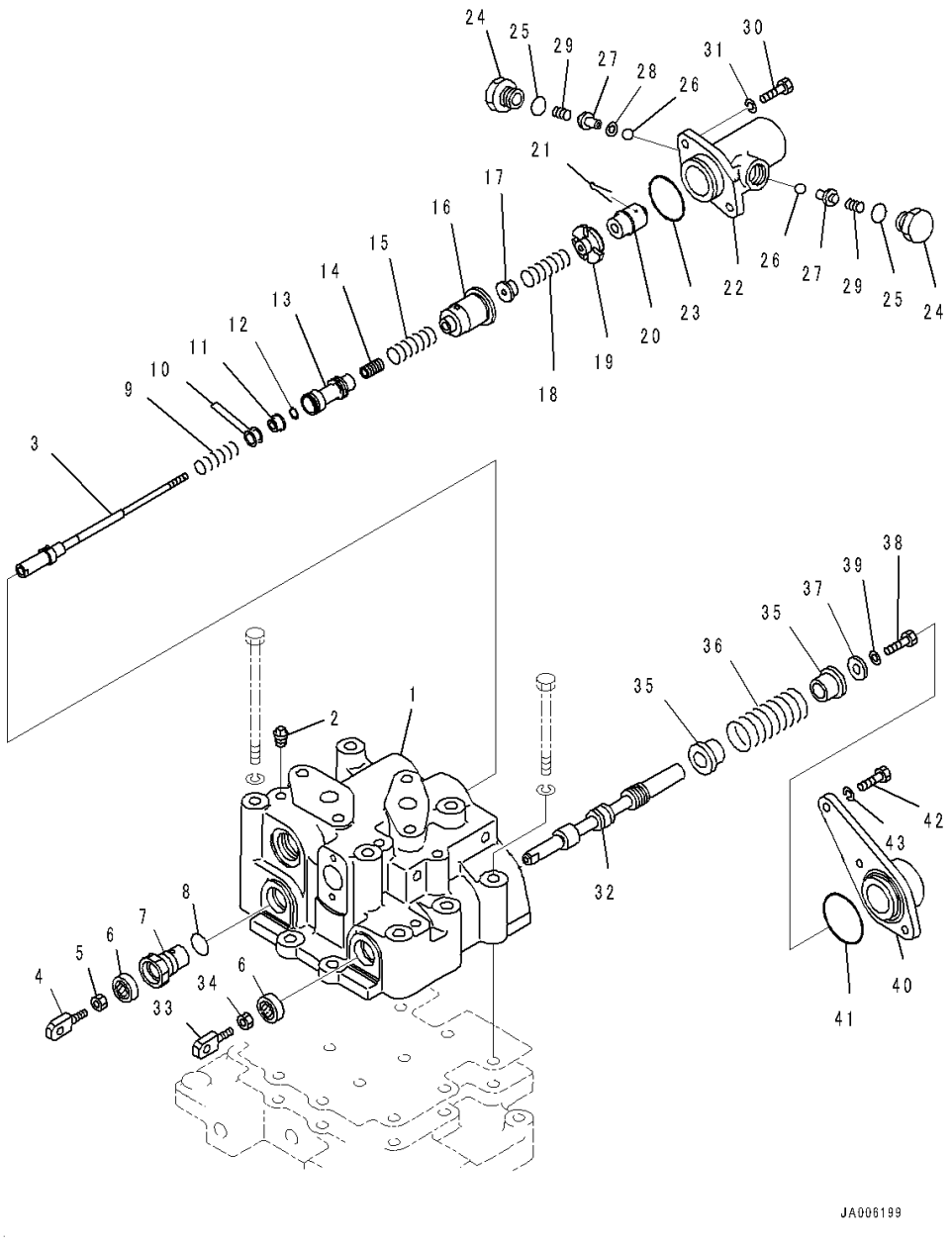

Index	Code	Part Number	Description	Qty	Serial Number
34		01580-10806	• Nut	1	J20001-
35		175-916-4210	• Collar	2	J20001-
36		14X-960-5110	• Spring	1	J20001-
37		175-916-4230	• Washer	1	J20001-
38		01010-80816	• Bolt	1	J20001-
39		01643-50823	• Washer	1	J20001-
40		15B-960-5240	• Cover	1	J20001-
41		07000-73048	• O-ring	1	J20001-
42		01010-80820	• Bolt	3	J20001-
43		01602-20825	• Washer, Spring	3	J20001-

FIG. T2510-001012 Towing Winch, Control Valve (2/2)

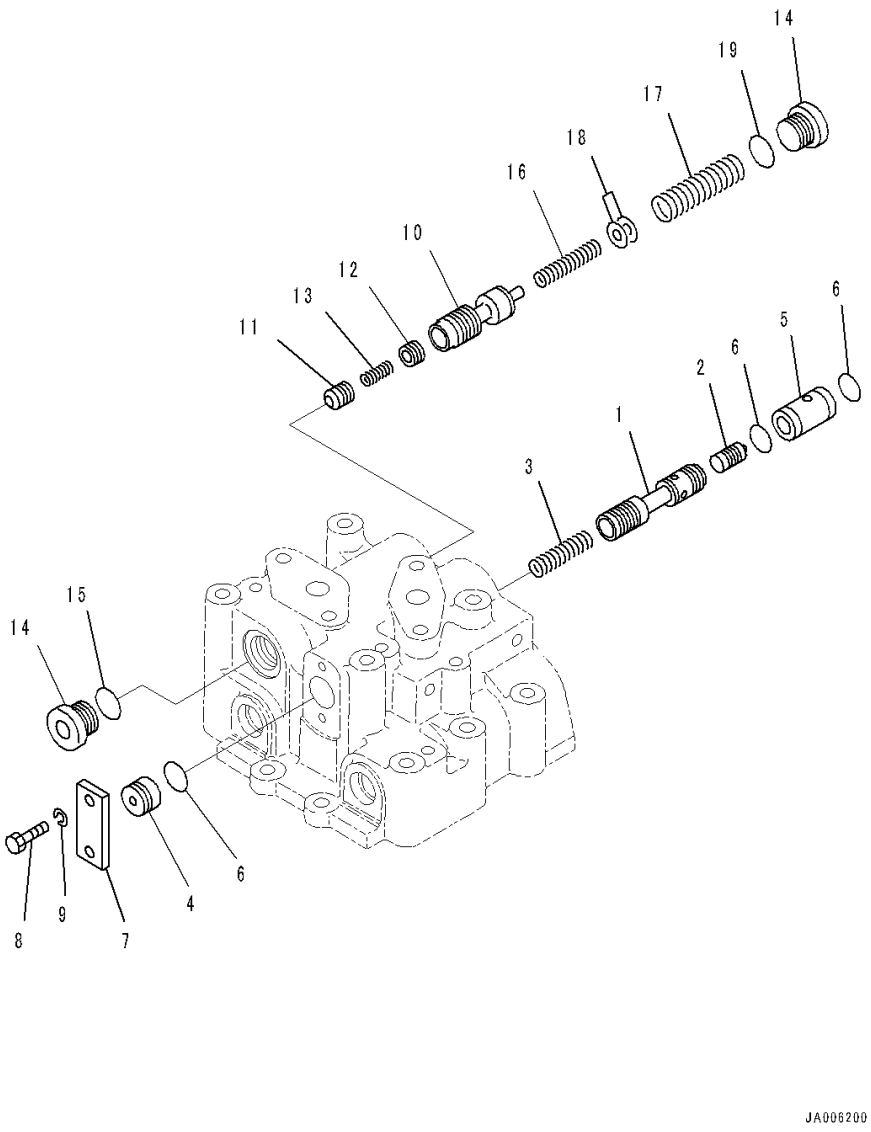

Index	Code	Part Number	Description	Qty	Serial Number
		Note: This list covers following specifications.			
		With Wire Rope			
		Without Free Spool			
		With Hook			
		With Guard and Hook			
		With Guard			
		14X-960-0012	Valve Assembly	1	J20001-
1		15B-960-5350	• Spool	1	J20001-
2		15B-960-5340	• Piston	1	J20001-
3		175-916-4360	• Spring	1	J20001-
4		175-916-4370	• Stopper	1	J20001-
5		175-916-4330	• Stopper	1	J20001-
6		07000-72018	• O-ring	3	J20001-
7		15B-960-5260	• Cover	1	J20001-
8		01010-80820	• Bolt	2	J20001-
9		01602-20825	• Washer, Spring	2	J20001-
10		104-15-25210	• Spool	1	J20001-
11		104-15-25480	• Valve	1	J20001-
12		104-15-25490	• Valve	1	J20001-
13		125-15-15290	• Spring	1	J20001-
14		102-10-46360	• Plug	2	J20001-
15		07002-02434	• O-ring	1	J20001-
16		104-15-25280	• Spring	1	J20001-
17		104-15-25290	• Spring, L=62.0mm	1	J20001-
18		112-10-46210	• Shim, T=0.5mm	6	J20001-
19		07002-02434	• O-ring	1	J20001-

FIG. T2510-001013 Towing Winch, Control Valve Mounting

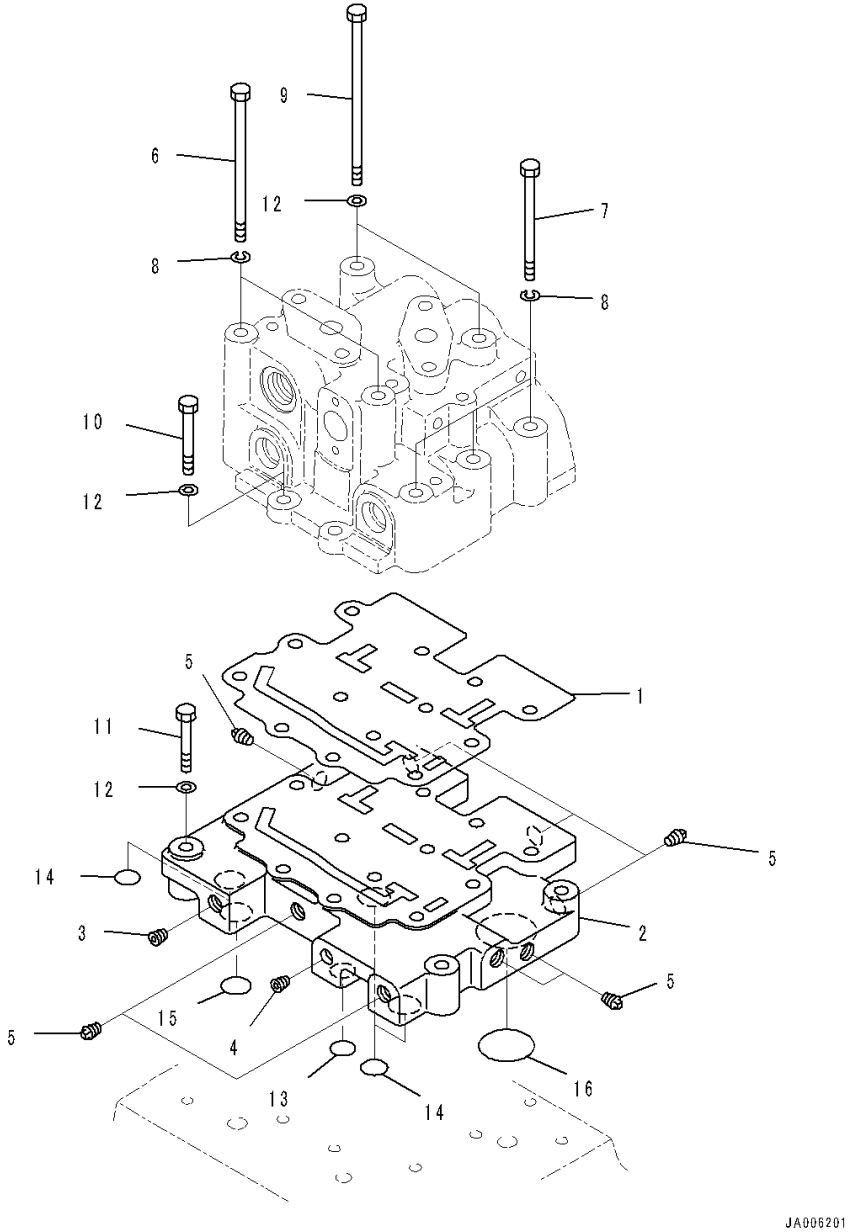

Index	Code	Part Number	Description	Qty	Serial Number
		Note: This list covers following specifications.			
		With Wire Rope			
		Without Free Spool			
		With Hook			
		With Guard and Hook			
		With Guard			
1		15B-960-5251	Gasket	1	J20001-
2		15B-960-5221	Seat, Valve	1	J20001-
3		07043-00312	Plug, Taper	1	J20001-
4		07043-00211	Plug, Taper	1	J20001-
5		07042-20312	Plug, Taper	8	J20001-
6		01011-81030	Bolt	2	J20001-
7		01010-81080	Bolt	3	J20001-
8		01602-21030	Washer, Spring	5	J20001-
9		01011-81065	Bolt	2	J20001-
10		01010-81065	Bolt	2	J20001-
11		01010-81055	Bolt	3	J20001-
12		01643-31032	Washer	7	J20001-
13		07000-72016	O-ring	1	J20001-
14		07000-72018	O-ring	3	J20001-
15		07000-72020	O-ring	1	J20001-
16		07000-73038	O-ring	1	J20001-

FIG. T2510-001014 Towing Winch, Cover

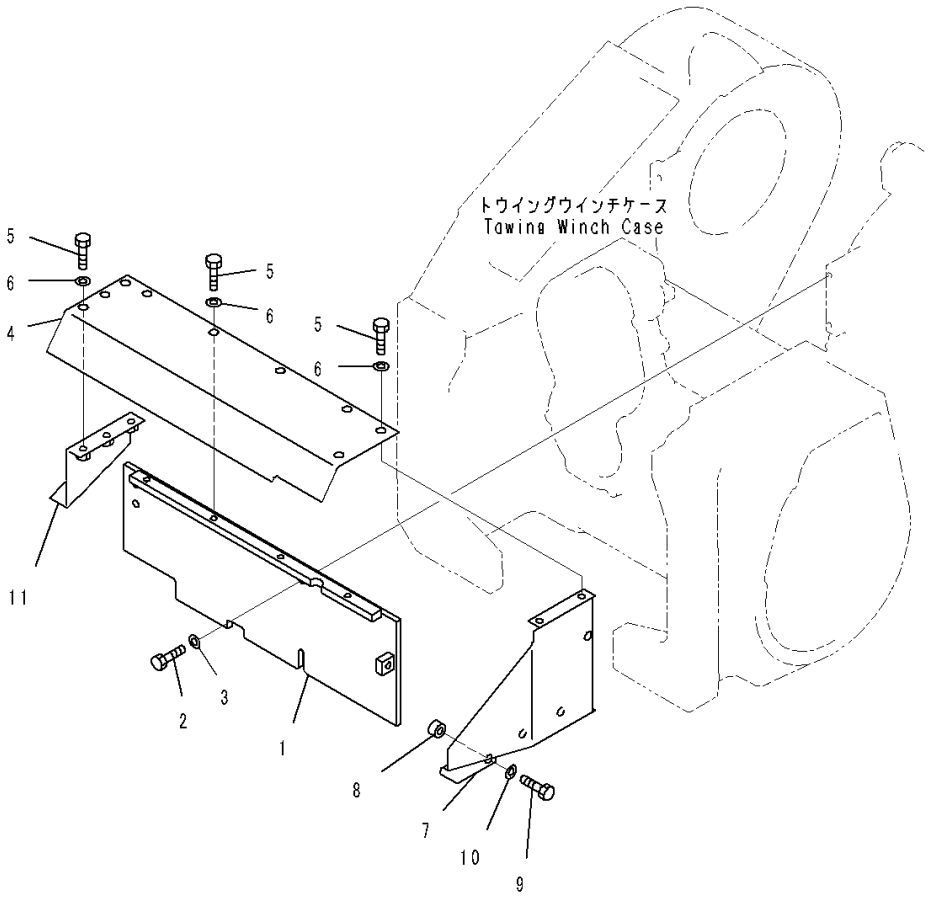

Index	Code	Part Number	Description	Qty	Serial Number
		Note: This list covers following specifications.			
		With Wire Rope			
		Without Free Spool			
		With Hook			
		With Guard and Hook			
		With Guard			
1		14X-960-3794	Cover	1	J20001-
2		01010-81230	Bolt	4	J20001-
3		01643-31232	Washer	4	J20001-
4		134-960-6330	Cover	1	J20001-
5		01010-81225	Bolt	9	J20001-
6		01643-31232	Washer	9	J20001-
7		134-960-6340	Cover	1	J20001-
8		15B-960-6320	Seat	3	J20001-
9		01010-81225	Bolt	1	J20001-
10		01643-31232	Washer	1	J20001-
11		134-960-6350	Cover	1	J20001-

FIG. T2510-001015 Towing Winch, Wire Rope

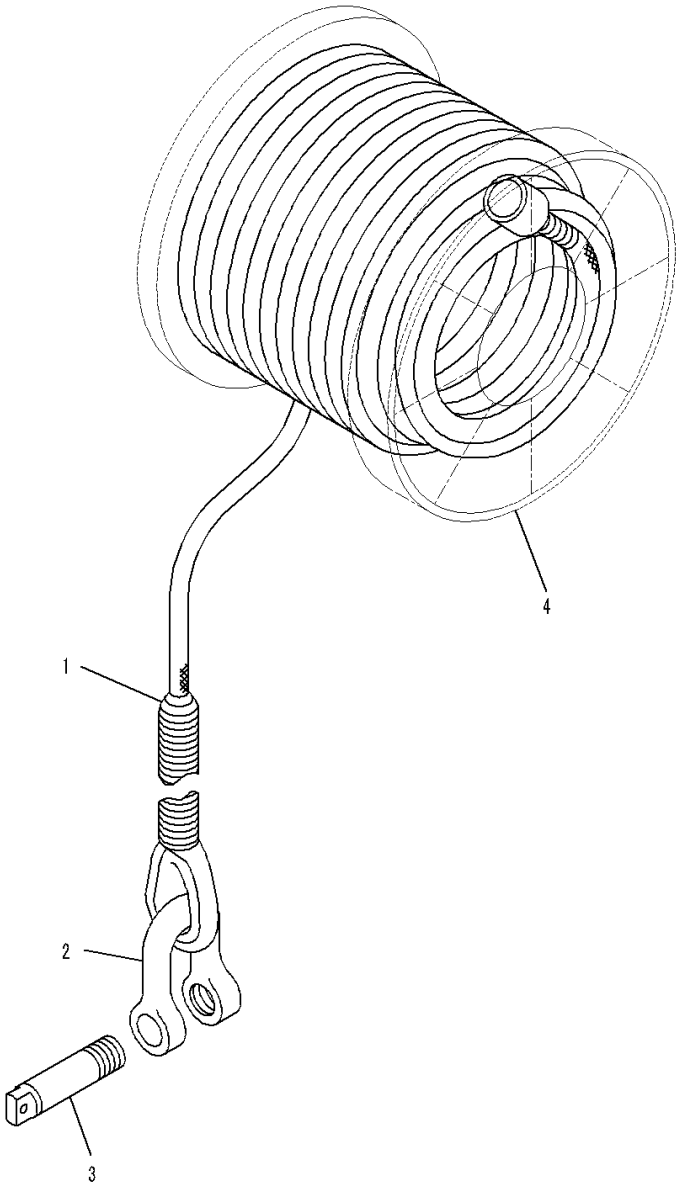

Index	Code	Part Number	Description	Qty	Serial Number
		Note: This list covers following specifications.			
		With Wire Rope			
		Without Free Spool			
1		14X-960-1960	Wire	1	J20001-
2		144-947-1410	Hook	1	J20001-
3		144-947-1420	Pin	1	J20001-
4		(134-960-1860)	Drum(Refer to Page 324)		-

FIG. T2510-002002 Towing Winch, Without Free Spool, Case

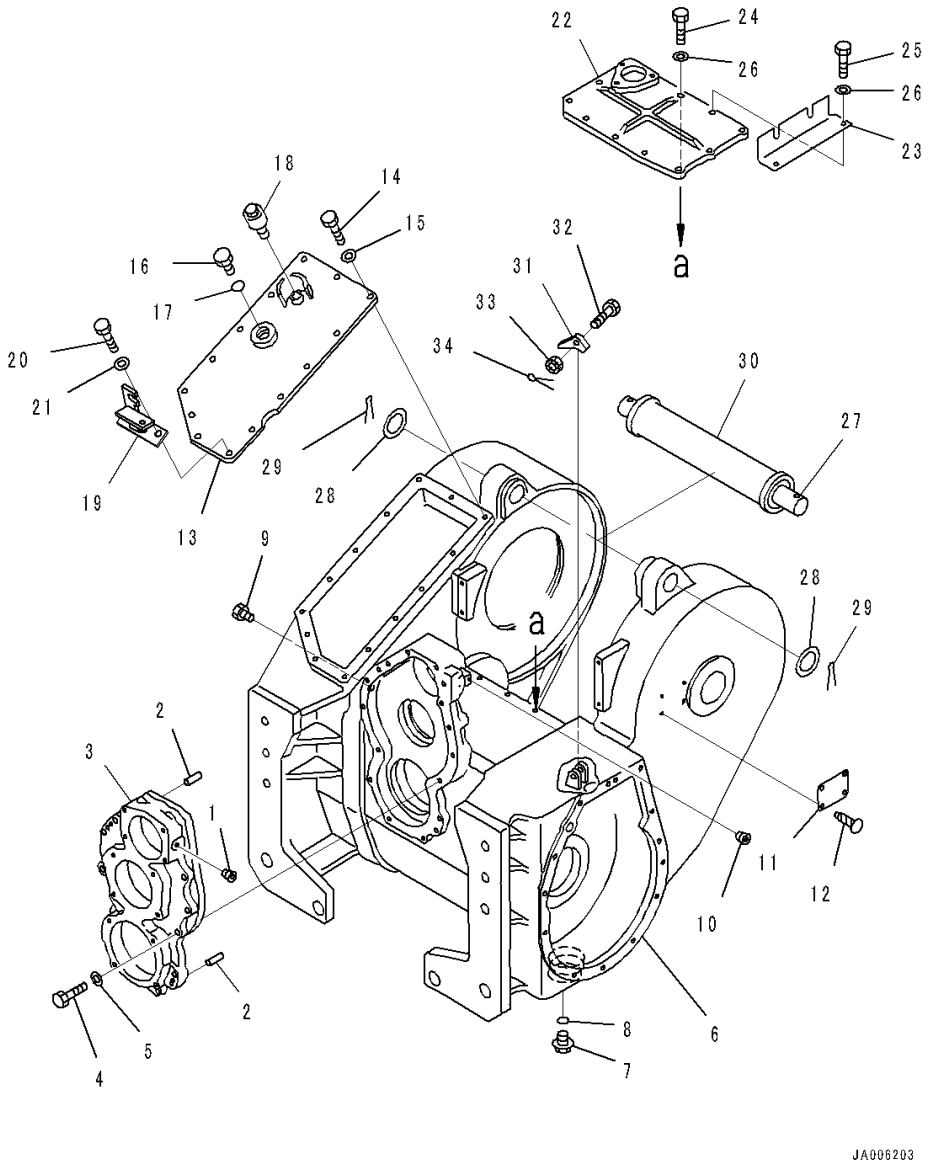

Index	Code	Part Number	Description	Qty	Serial Number
1		07043-00108	Plug, Taper	1	J20001-
2		04020-01228	Pin, Dowel	2	J20001-
3		14X-960-3850	Cover	1	J20001-
4		01010-81245	Bolt	11	J20001-
5		01643-31232	Washer	11	J20001-
6		134-960-1610	Case Assembly	1	J20001-
7		07044-13620	Plug	1	J20001-
8		07002-03634	O-ring	1	J20001-
9		144-916-1820	Plug	1	J20001-
10		07043-00108	Plug, Taper	1	J20001-
11	C2	09601-50000	Plate, Name (Limited Supply), EU Regulation	1	J20001-
12		04418-13060	Screw	4	J20001-
13		14X-960-3751	Cover	1	J20001-
14		01010-81230	Bolt	12	J20001-
15		01643-31232	Washer	12	J20001-
16		07040-13618	Plug	1	J20001-
17		07002-03634	O-ring	1	J20001-
18		07030-00252	Breather	1	J20001-
19		134-960-2470	Bracket	1	J20001-
20		01010-81235	Bolt	2	J20001-
21		01643-31232	Washer	2	J20001-
22		14X-960-3871	Cover	1	J20001-
23		14W-960-7220	Bracket	1	J20001-
24		01010-81235	Bolt	8	J20001-
25		01010-81260	Bolt	2	J20001-
26		01643-31232	Washer	10	J20001-
27		14X-960-3731	Bar	1	J20001-
28		176-43-54481	Washer	2	J20001-
29		04050-00060	Pin, Cotter	2	J20001-
30		14X-960-3992	Collar	1	J20001-
31		09249-00016	Latch	1	J20001-
32		01052-51260	Bolt	1	J20001-
33		01592-11215	Nut, Slotted	1	J20001-
34		04050-13025	Pin, Cotter	1	J20001-

FIG. T2510-002006 Towing Winch, Without Free Spool, Gear Shaft (3/3)

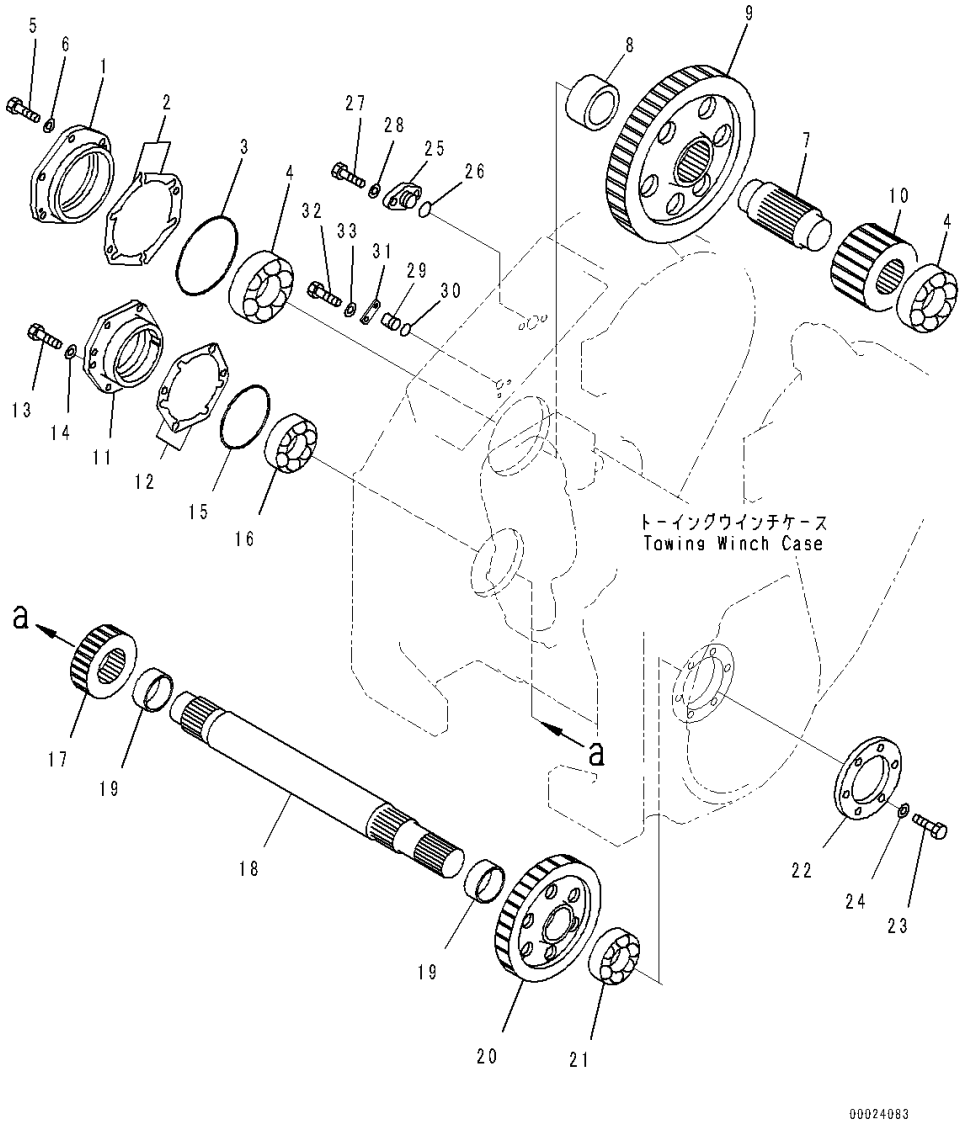

Index	Code	Part Number	Description	Qty	Serial Number
1		14X-960-1410	Cover	1	J20001-
2		14X-960-0570	Shim Kit	1	J20001-
	C1		• Shim, T=0.2mm	4	J20001-
	C1		• Shim, T=0.3mm	6	J20001-
	C1		• Shim, T=1.0mm	4	J20001-
3		07000-05170	O-ring	1	J20001-
4		06002-32314	Bearing	2	J20001-
5		01010-81235	Bolt	6	J20001-
6		01643-31232	Washer	6	J20001-
7		134-960-1870	Shaft	1	J20001-
8		134-960-1880	Spacer	1	J20001-
9		14X-960-1491	Gear	1	J20001-
10		14X-960-1630	Gear	1	J20001-
11		14X-960-1480	Cover	1	J20001-
12		14X-960-0580	Shim Kit	1	J20001-
	C1		• Shim, T=0.2mm	4	J20001-
	C1		• Shim, T=0.3mm	6	J20001-
	C1		• Shim, T=1.0mm	4	J20001-
13		01010-81235	Bolt	6	J20001-
14		01643-31232	Washer	6	J20001-
15		07000-05140	O-ring	1	J20001-
16		06002-32213	Bearing	1	J20001-
17		14X-960-1391	Gear	1	J20001-
18		14X-960-1370	Shaft	1	J20001-
19		14X-960-1360	Spacer	2	J20001-
20		14X-960-1351	Gear	1	J20001-
21		06002-32213	Bearing	1	J20001-
22		14X-960-1320	Cover	1	J20001-
23		01010-81235	Bolt	6	J20001-
24		01643-31232	Washer	6	J20001-
25		134-960-1940	Plug	1	J20001-
26		07000-12030	O-ring	1	J20001-
27		01010-81235	Bolt	2	J20001-
28		01643-31232	Washer	2	J20001-
29		134-960-1890	Plug	1	J20001-
30		07000-13022	O-ring	1	J20001-
31		130-901-3140	Plate	1	J20001-
32		01010-80820	Bolt	2	J20001-
33		01643-30823	Washer	2	J20001-

FIG. T2510-003015 Towing Winch, Wire Rope

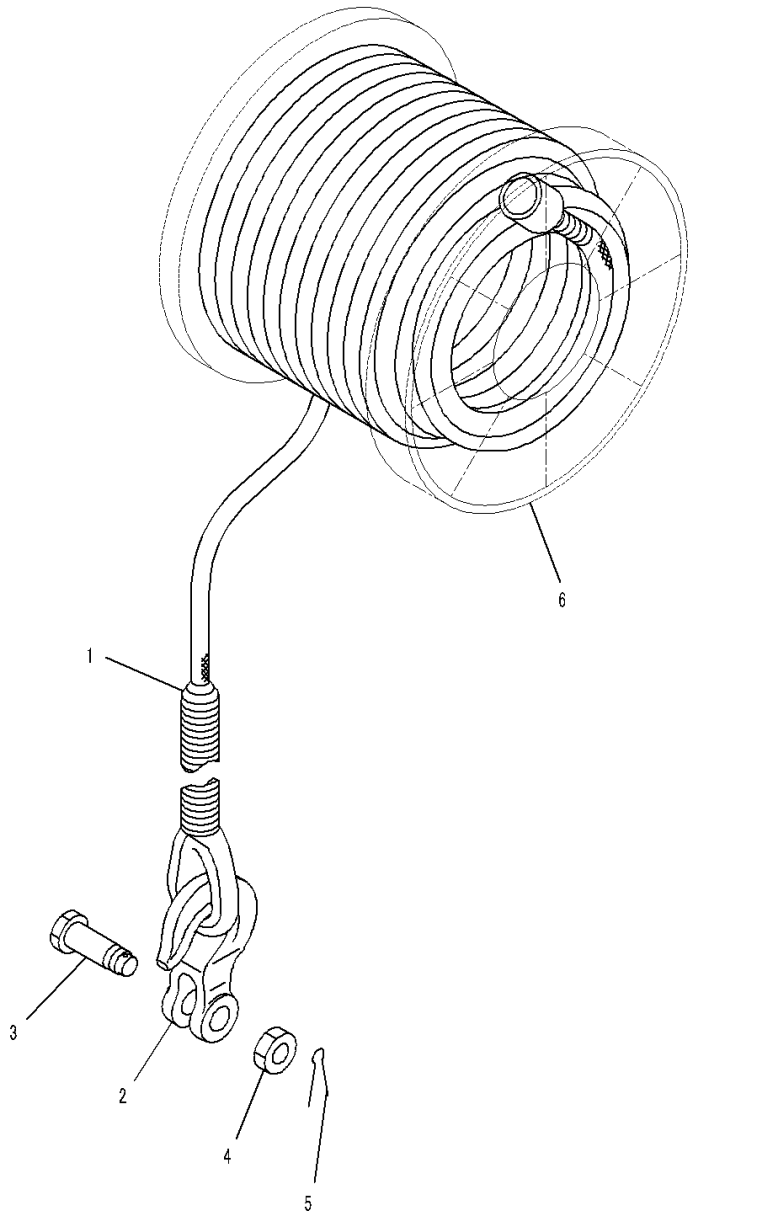

Index	Code	Part Number	Description	Qty	Serial Number
		Note: This list covers following specifications.			
		With Hook			
		With Guard and Hook			
1		14X-960-1960	Wire	1	J20001-
2		130-961-2960	Hook	1	J20001-
3		130-961-2970	Pin	1	J20001-
4		130-961-2980	Nut	1	J20001-
5		04050-06050	Pin, Cotter	1	J20001-
6		(134-960-1860)	Drum(Refer to Page 324)		-

FIG. T2510-004001 Towing Winch, Mounting

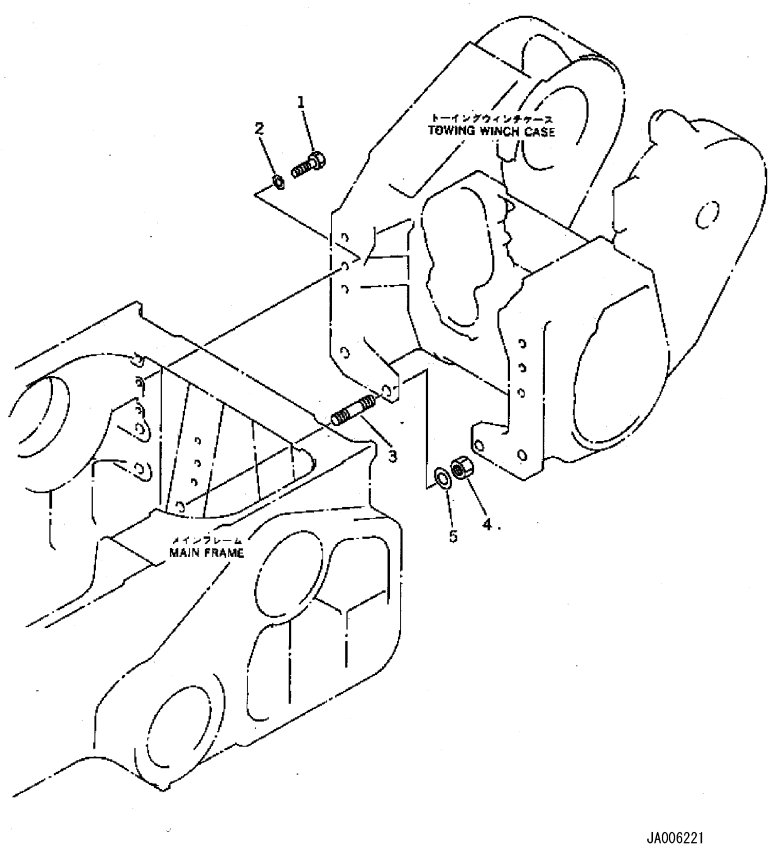

Index	Code	Part Number	Description	Qty	Serial Number
1		01010-82465	Bolt	6	J20001-
2		01643-32460	Washer	6	J20001-
3		01124-53070	Stud	4	J20001-
4		01580-13024	Nut	4	J20001-
5		01643-33080	Washer	4	J20001-

FIG. T2510-004002 Towing Winch, Case

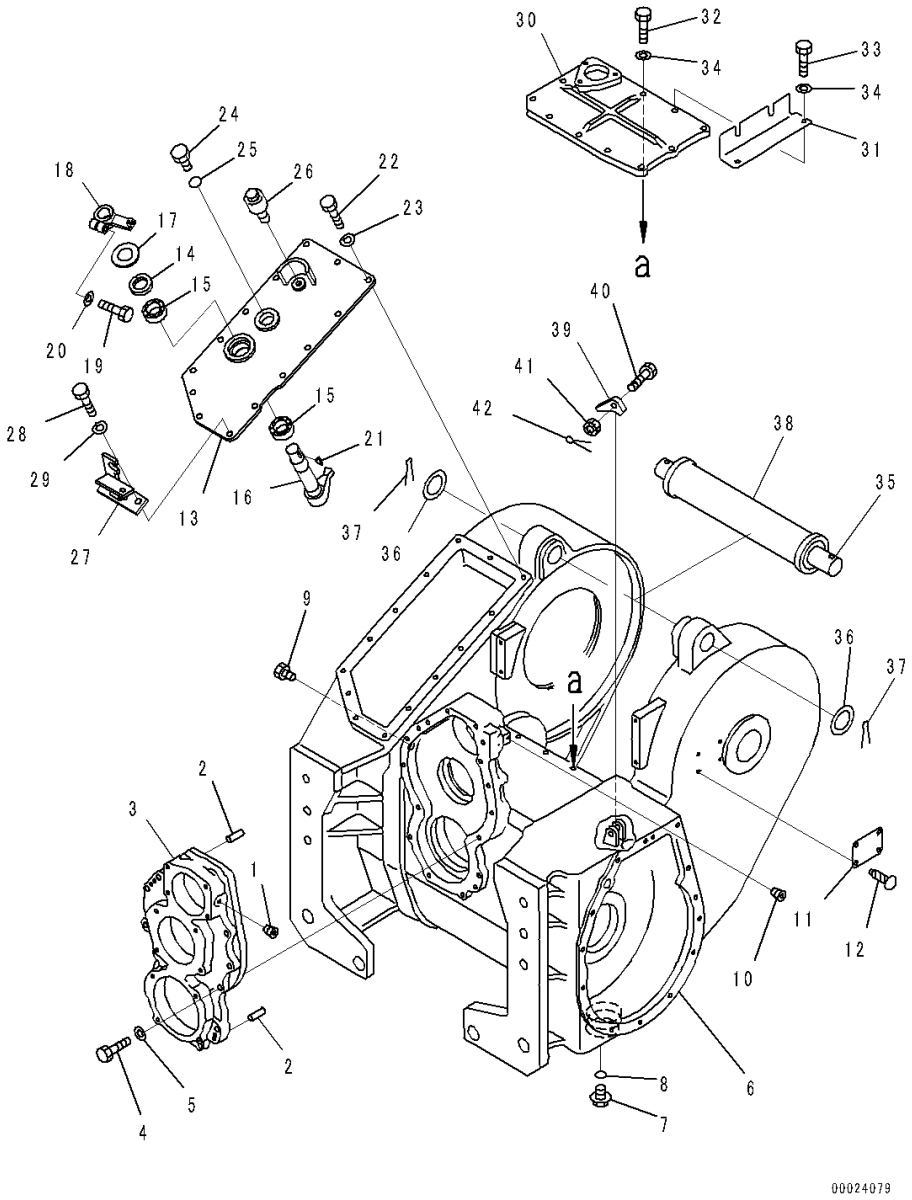

Index	Code	Part Number	Description	Qty	Serial Number
1		07043-00108	Plug, Taper	1	J20001-
2		04020-01228	Pin, Dowel	2	J20001-
3		14X-960-3850	Cover	1	J20001-
4		01010-81245	Bolt	11	J20001-
5		01643-31232	Washer	11	J20001-
6		134-960-1610	Case Assembly	1	J20001-
7		07044-13620	Plug	1	J20001-
8		07002-03634	O-ring	1	J20001-
9		144-916-1820	Plug	1	J20001-
10		07043-00108	Plug, Taper	1	J20001-
11	C2	09601-50000	Plate, Name (Limited Supply), EU Regulation	1	J20001-
12		04418-13060	Screw	4	J20001-
13		134-960-1630	Cover	1	J20001-
14		07012-00035	Seal, Oil	1	J20001-
15		06120-03520	Bearing, Needle	2	J20001-
16		134-960-1641	Shaft	1	J20001-
17		01640-23550	Washer, Flat	1	J20001-
18		134-960-2461	Lever	1	J20001-
19		01010-81245	Bolt	1	J20001-
20		01643-31232	Washer	1	J20001-
21		04010-00722	Key	1	J20001-
22		01010-81230	Bolt	12	J20001-
23		01643-31232	Washer	12	J20001-
24		07040-13618	Plug	1	J20001-
25		07002-03634	O-ring	1	J20001-
26		07030-00252	Breather	1	J20001-
27		134-960-2470	Bracket	1	J20001-
28		01010-81235	Bolt	2	J20001-
29		01643-31232	Washer	2	J20001-
30		14X-960-3871	Cover	1	J20001-
31		14W-960-7220	Bracket	1	J20001-
32		01010-81235	Bolt	8	J20001-
33		01010-81260	Bolt	2	J20001-
34		01643-31232	Washer	10	J20001-
35		14X-960-3731	Bar	1	J20001-
36		176-43-54481	Washer	2	J20001-
37		04050-00060	Pin, Cotter	2	J20001-
38		14X-960-3992	Collar	1	J20001-
39		09249-00016	Latch	1	J20001-

FIG. T2510-004002 Towing Winch, Case

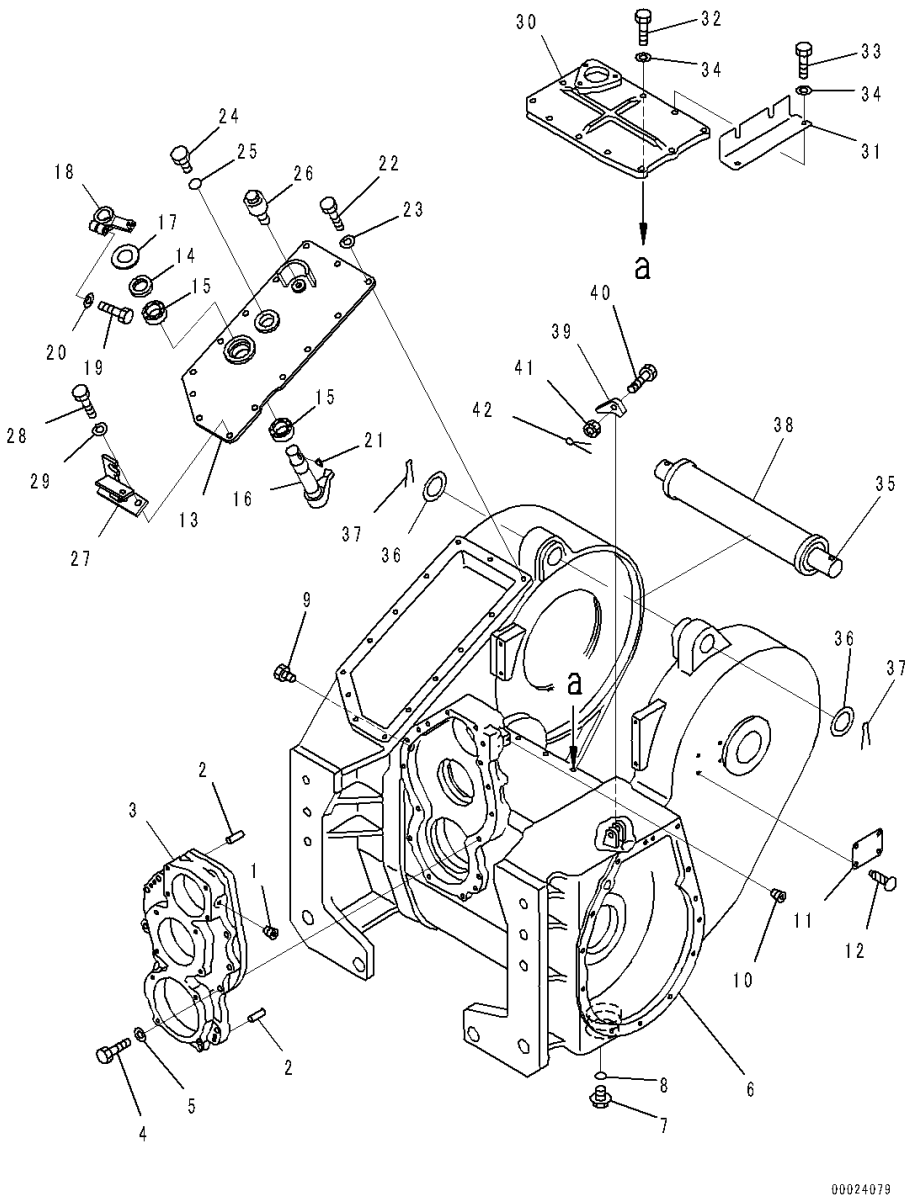

Index	Code	Part Number	Description	Qty	Serial Number
40		01052-51260	Bolt	1	J20001-
41		01592-11215	Nut, Slotted	1	J20001-
42		04050-13025	Pin, Cotter	1	J20001-

FIG. T2510-004003 Towing Winch, Transfer

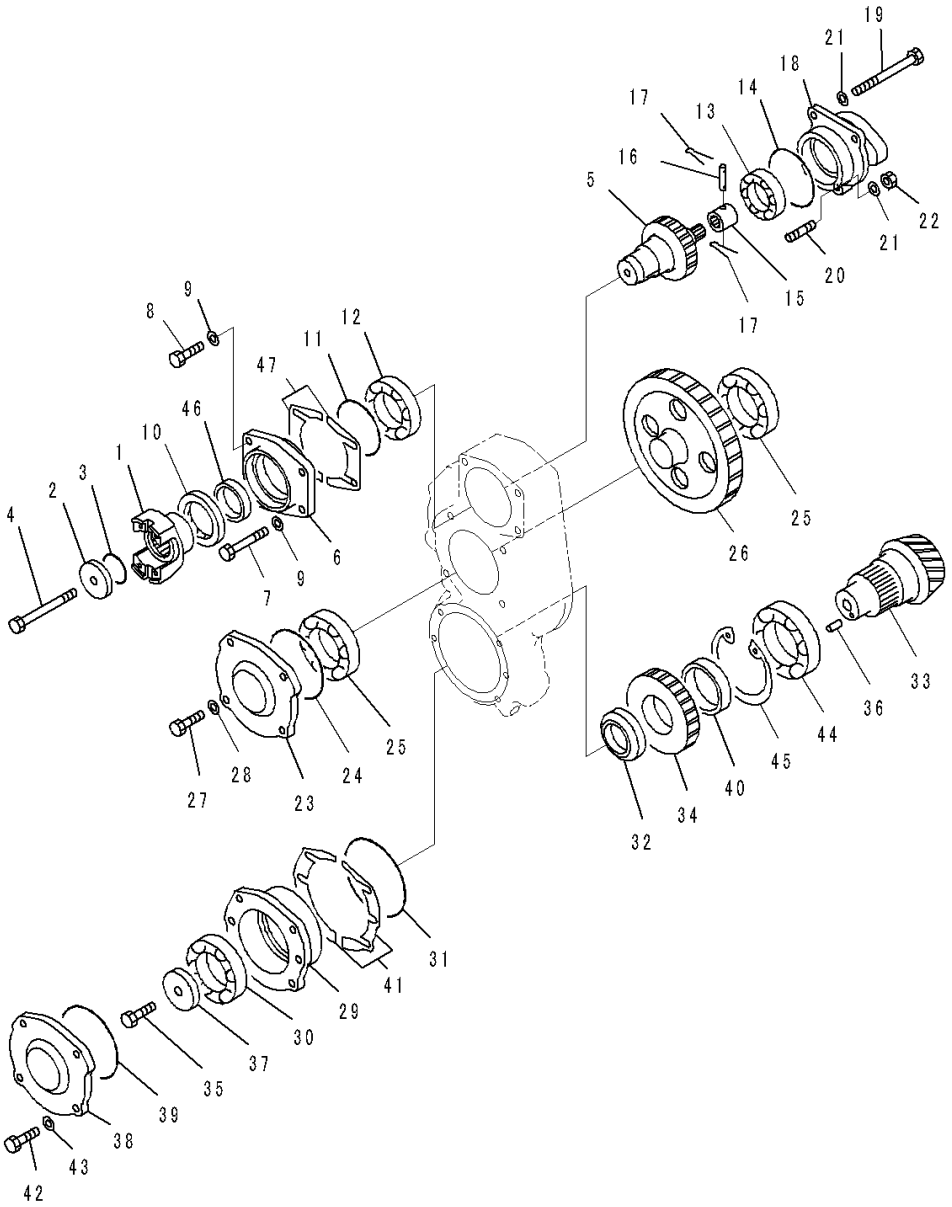

Index	Code	Part Number	Description	Qty	Serial Number
1		14X-960-4110	Coupling	1	J20001-
2		15B-960-4320	Plate	1	J20001-
3		155-15-19620	O-ring	1	J20001-
4		01011-81400	Bolt	1	J20001-
5		14X-960-4140	Gear	1	J20001-
6		14X-960-4180	Cage	1	J20001-
7		01010-81295	Bolt	1	J20001-
8		01010-81235	Bolt	3	J20001-
9		01643-31232	Washer	4	J20001-
10		07012-10075	Seal, Oil	1	J20001-
11		07000-02105	O-ring	1	J20001-
12		06002-30212	Bearing	1	J20001-
13		06002-30209	Bearing	1	J20001-
14		07000-72105	O-ring	1	J20001-
15		14X-960-4220	Coupling	1	J20001-
16		144-916-4220	Pin	1	J20001-
17		04050-11208	Pin, Cotter	2	J20001-
18		14X-960-4210	Cage	1	J20001-
19		01011-81200	Bolt	2	J20001-
20		01124-51235	Stud	1	J20001-
21		01643-31232	Washer	3	J20001-
22		01580-11210	Nut	1	J20001-
23		14X-960-1130	Cover	1	J20001-
24		07000-02130	O-ring	1	J20001-
25		06040-06311	Bearing	2	J20001-
26		14X-960-4150	Gear	1	J20001-
27		01010-81235	Bolt	4	J20001-
28		01643-31232	Washer	4	J20001-
29		14X-960-1190	Cage	1	J20001-
30		06040-06311	Bearing	1	J20001-
31		07000-02145	O-ring	1	J20001-
32		14X-960-4370	Spacer	1	J20001-
33		14X-960-4361	Pinion	1	J20001-
34		14X-960-4350	Gear	1	J20001-
35		01010-81450	Bolt	1	J20001-
36		04020-00820	Pin, Dowel	1	J20001-
37		15B-960-4310	Plate	1	J20001-
38		14X-960-1130	Cover	1	J20001-
39		07000-02130	O-ring	1	J20001-
40		14X-960-4380	Spacer	1	J20001-

FIG. T2510-004003 Towing Winch, Transfer

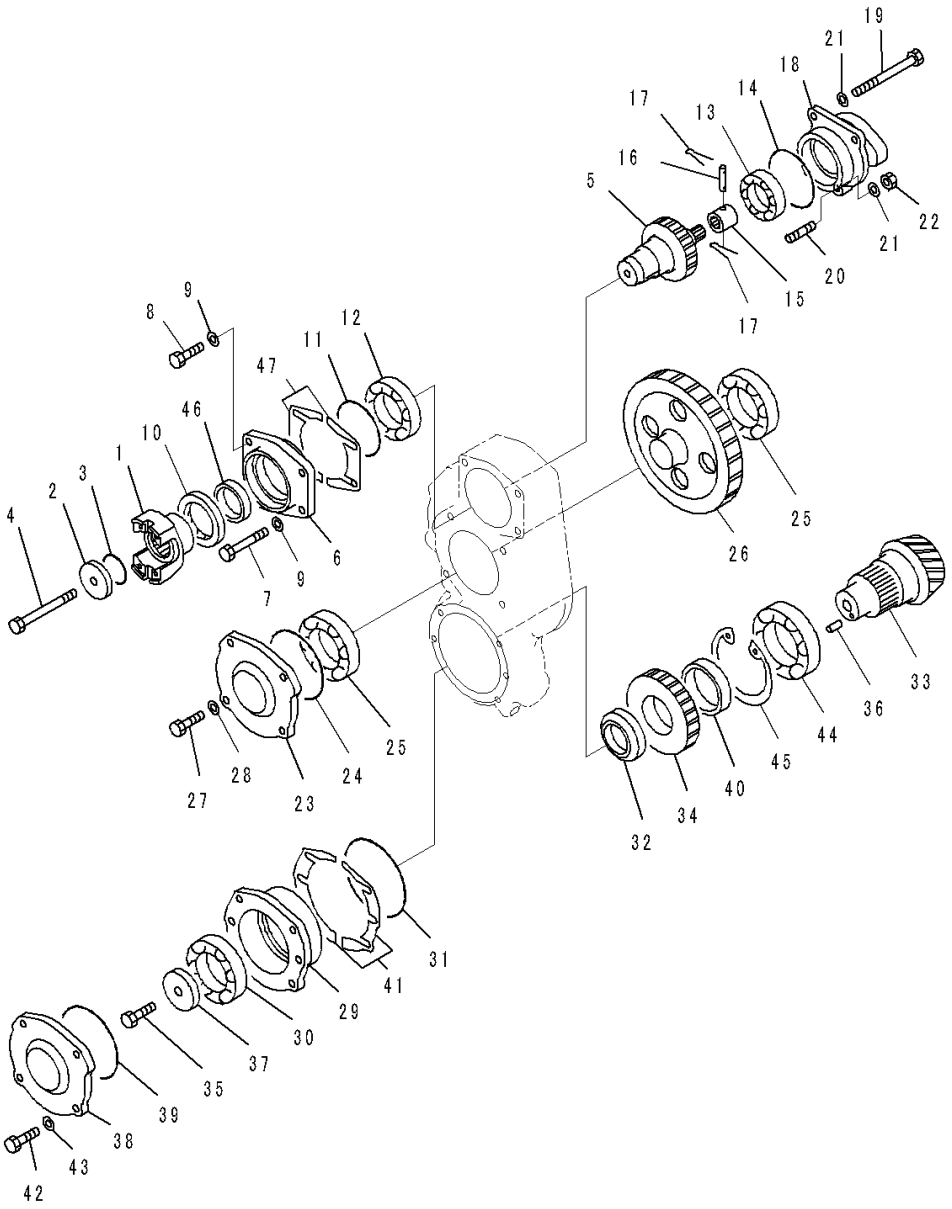

Index	Code	Part Number	Description	Qty	Serial Number
41		14X-960-0510	Shim Kit	1	J20001-
	C1		• Shim, T=0.2mm	4	J20001-
	C1		• Shim, T=0.3mm	6	J20001-
	C1		• Shim, T=1.0mm	4	J20001-
42		01010-81245	Bolt	4	J20001-
43		01643-31232	Washer	4	J20001-
44		06041-00216	Bearing	1	J20001-
45		04077-00140	Ring	1	J20001-
46		14X-960-4260	Spacer	1	J20001-
47		14X-960-0520	Shim Kit	1	J20001-
	C1		• Shim, T=0.2mm	4	J20001-
	C1		• Shim, T=0.3mm	6	J20001-
	C1		• Shim, T=1.0mm	4	J20001-

FIG. T2510-004004 Towing Winch, Gear Shaft (1/3)

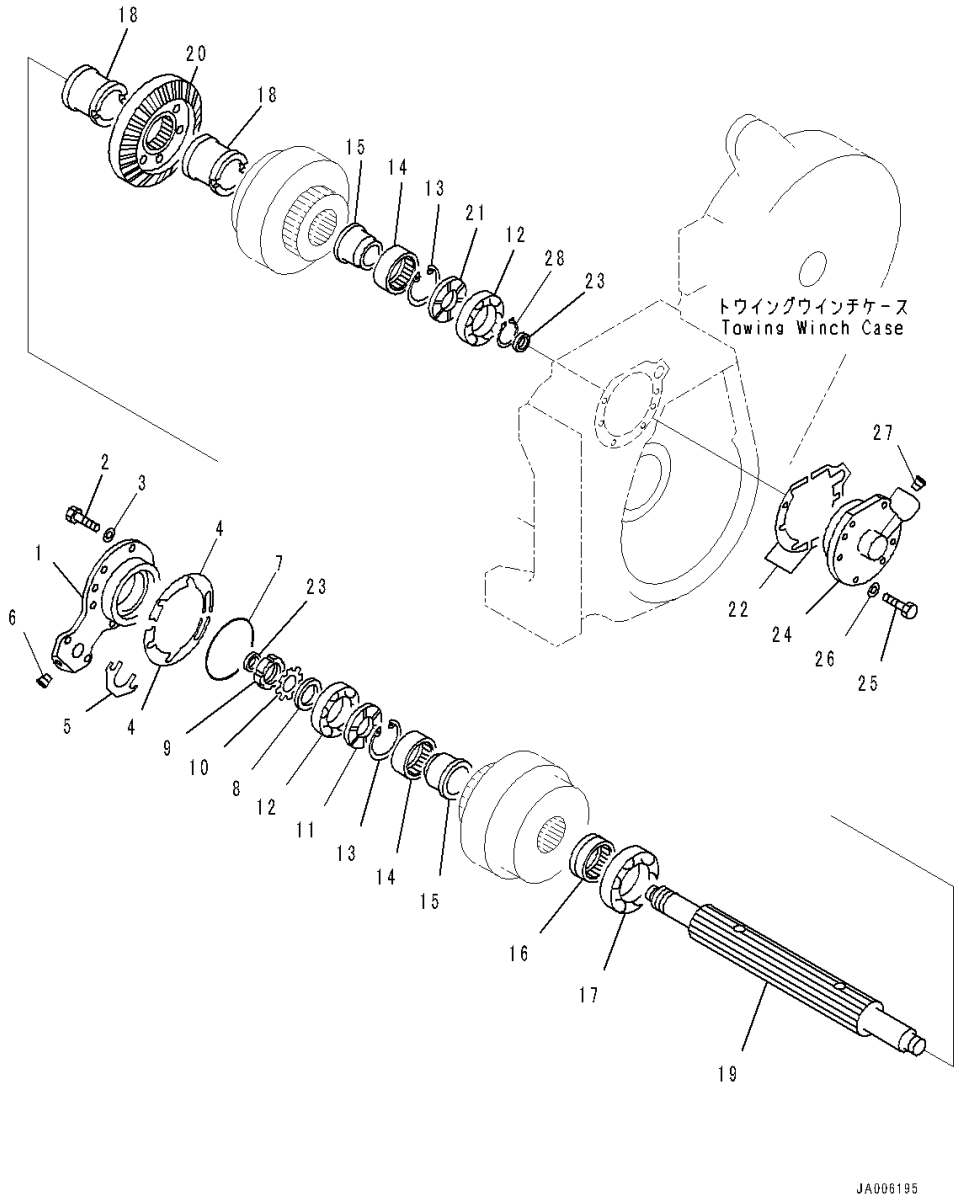

Index	Code	Part Number	Description	Qty	Serial Number
1		14X-960-2780	Cover	1	J20001-
2		01010-81235	Bolt	8	J20001-
3		01643-31232	Washer	8	J20001-
4		14X-960-0531	Shim Kit	1	J20001-
	C1		• Shim, T=0.2mm	4	J20001-
	C1		• Shim, T=0.3mm	6	J20001-
	C1		• Shim, T=1.0mm	4	J20001-
5		14X-960-0540	Shim Kit	1	J20001-
	C1		• Shim, T=0.2mm	2	J20001-
	C1		• Shim, T=0.3mm	3	J20001-
	C1		• Shim, T=1.0mm	2	J20001-
6		07043-00312	Plug, Taper	1	J20001-
7		07000-05130	O-ring	1	J20001-
8		144-916-1270	Washer	1	J20001-
9		01530-04812	Nut, Lock	1	J20001-
10		01658-04823	Washer, Lock	1	J20001-
11		144-916-2730	Spacer	1	J20001-
12		06002-30310	Bearing	2	J20001-
13		04065-08225	Ring, Snap	2	J20001-
14		144-916-7950	Bearing	2	J20001-
15		14X-960-2710	Spacer	2	J20001-
16		15B-960-1221	Spacer	1	J20001-
17		06040-06018	Bearing	1	J20001-
18		14X-960-1210	Spacer	2	J20001-
19		14X-960-1230	Shaft	1	J20001-
20		14X-960-1181	Gear	1	J20001-
21		144-916-2730	Spacer	1	J20001-
22		14X-960-0550	Shim Kit	1	J20001-
	C1		• Shim, T=0.2mm	2	J20001-
	C1		• Shim, T=0.3mm	3	J20001-
	C1		• Shim, T=1.0mm	2	J20001-
	C1		• Shim, T=0.2mm	2	J20001-
	C1		• Shim, T=0.3mm	3	J20001-
	C1		• Shim, T=1.0mm	2	J20001-
23		144-916-2770	Seal	2	J20001-
24		14X-960-1281	Cover	1	J20001-
25		01010-81235	Bolt	6	J20001-
26		01643-31232	Washer	6	J20001-
27		07043-00312	Plug, Taper	1	J20001-
28		04064-05020	Ring, Snap	1	J20001-

FIG. T2510-004005 Towing Winch, Gear Shaft (2/3)

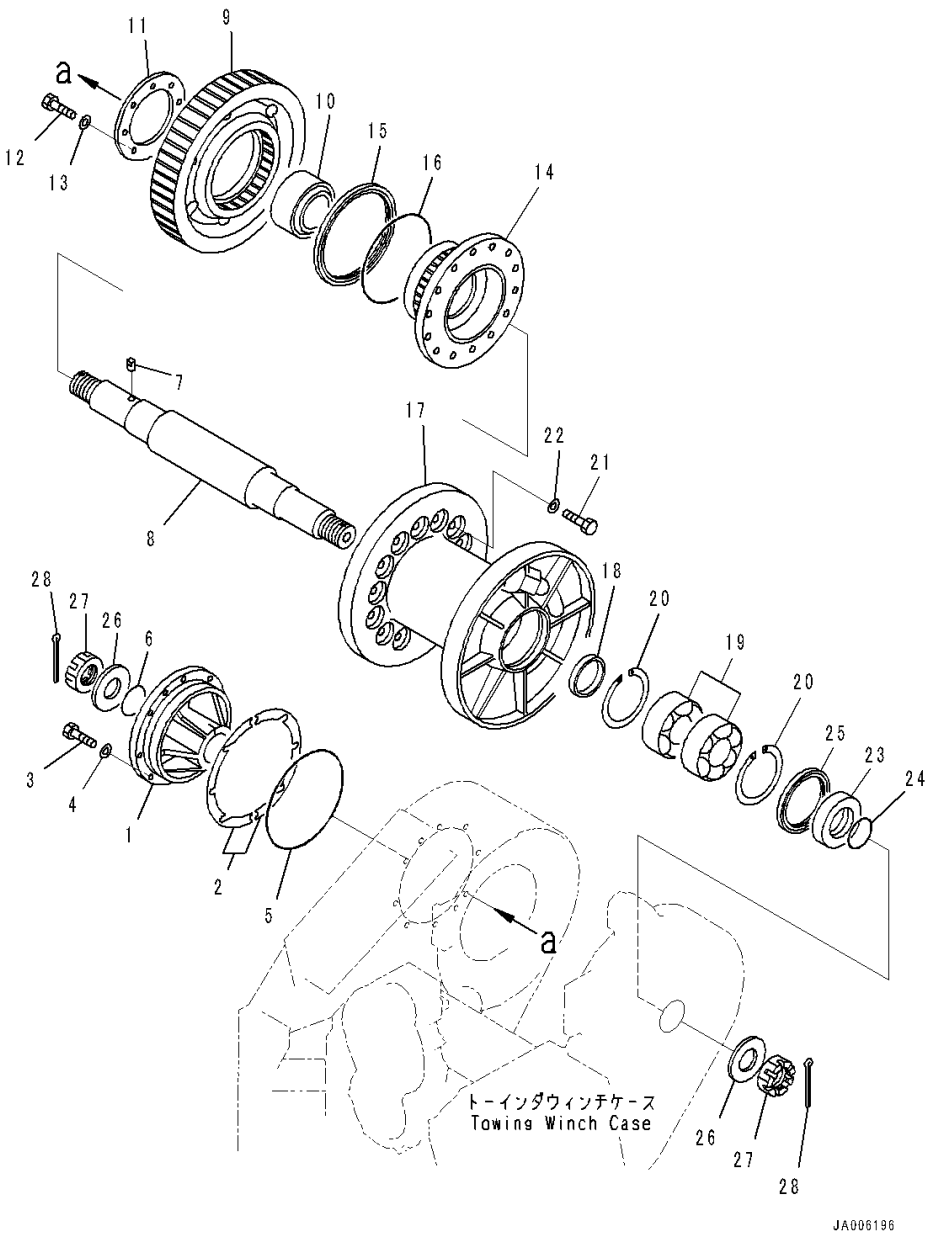

Index	Code	Part Number	Description	Qty	Serial Number
1		134-960-1650	Cover	1	J20001-
2		14X-960-0561	Shim Kit	1	J20001-
	C1		• Shim, T=0.2mm	4	J20001-
	C1		• Shim, T=0.3mm	6	J20001-
	C1		• Shim, T=1.0mm	4	J20001-
3		01010-81235	Bolt	8	J20001-
4		01643-31232	Washer	8	J20001-
5		07000-15230	O-ring	1	J20001-
6		07000-02085	O-ring	1	J20001-
7		150-951-2410	Pin	1	J20001-
8		14X-960-1690	Shaft	1	J20001-
9		14X-960-1640	Gear	1	J20001-
10		150-951-1130	Bearing	1	J20001-
11		134-960-1690	Plate	1	J20001-
12		01010-81435	Bolt	8	J20001-
13		01643-31445	Washer	8	J20001-
14		14X-960-1610	Drum	1	J20001-
15		15B-960-7980	Seal	1	J20001-
16		07000-05240	O-ring	1	J20001-
17		134-960-1860	Drum	1	J20001-
18		134-960-1850	Spacer	1	J20001-
19		06342-02218	Bearing	2	J20001-
20		04071-00160	Ring, Snap, for Hole Side	2	J20001-
21		01010-82050	Bolt	14	J20001-
22		01643-32060	Washer	14	J20001-
23		134-960-1840	Spacer	1	J20001-
24		07000-03088	O-ring	1	J20001-
25		07012-10140	Seal, Oil	1	J20001-
26		150-801-1250	Washer	2	J20001-
27		150-951-2450	Nut	2	J20001-
28		150-951-2460	Pin, Cotter	2	J20001-

FIG. T2510-004006 Towing Winch, Gear Shaft (3/3)

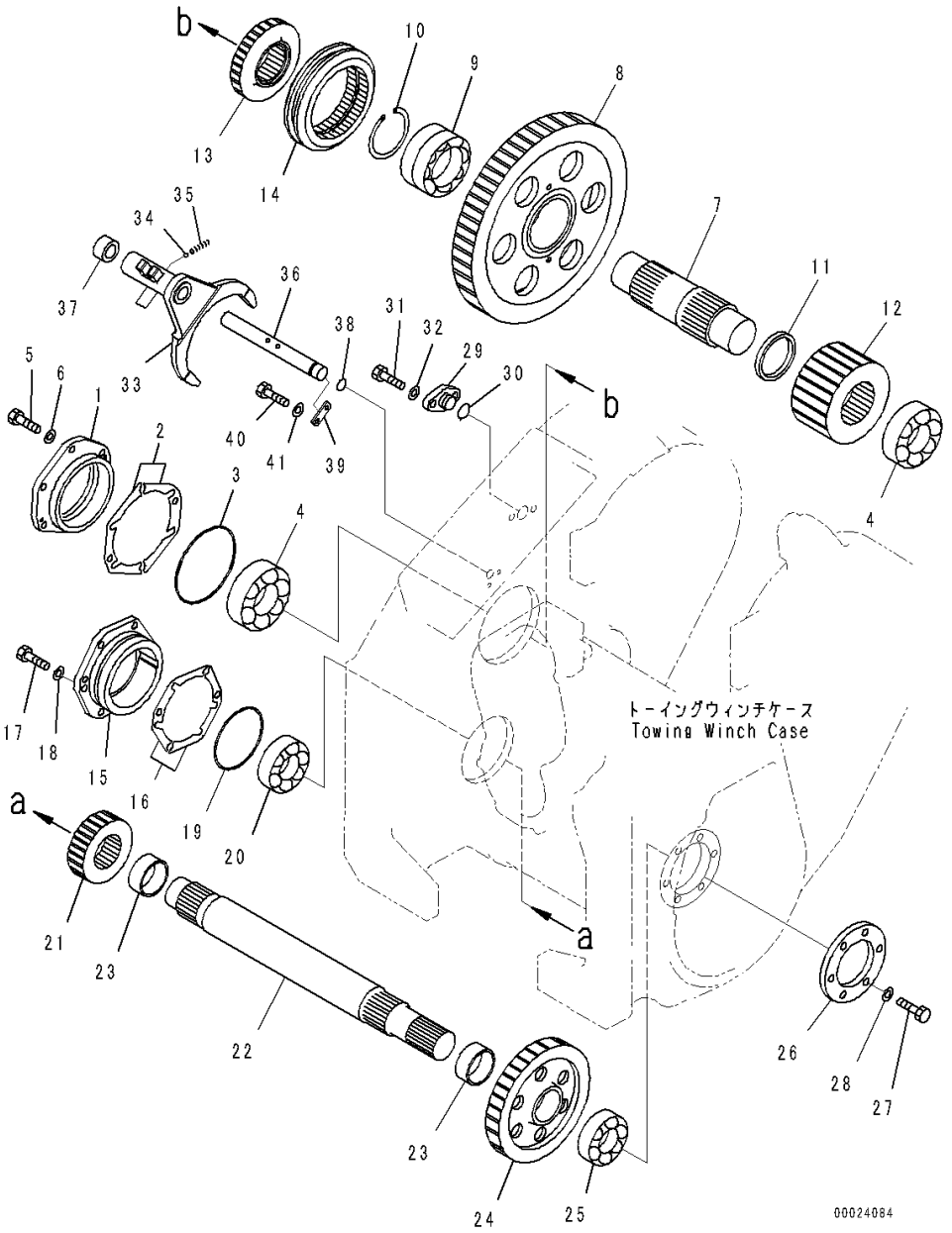

Index	Code	Part Number	Description	Qty	Serial Number
1		14X-960-1410	Cover	1	J20001-
2		14X-960-0570	Shim Kit	1	J20001-
	C1		• Shim, T=0.2mm	4	J20001-
	C1		• Shim, T=0.3mm	6	J20001-
	C1		• Shim, T=1.0mm	4	J20001-
3		07000-05170	O-ring	1	J20001-
4		06002-32314	Bearing	2	J20001-
5		01010-81235	Bolt	6	J20001-
6		01643-31232	Washer	6	J20001-
7		134-960-1720	Shaft	1	J20001-
8		134-960-1730	Gear	1	J20001-
9		134-960-1740	Bearing	1	J20001-
10		04077-00110	Ring, Snap, for Hole Side	1	J20001-
11		134-960-1780	Spacer	1	J20001-
12		134-960-1770	Gear	1	J20001-
13		134-960-1790	Gear	1	J20001-
14		144-947-4120	Gear	1	J20001-
15		14X-960-1480	Cover	1	J20001-
16		14X-960-0580	Shim Kit	1	J20001-
	C1		• Shim, T=0.2mm	4	J20001-
	C1		• Shim, T=0.3mm	6	J20001-
	C1		• Shim, T=1.0mm	4	J20001-
17		01010-81235	Bolt	6	J20001-
18		01643-31232	Washer	6	J20001-
19		07000-05140	O-ring	1	J20001-
20		06002-32213	Bearing	1	J20001-
21		14X-960-1391	Gear	1	J20001-
22		14X-960-1370	Shaft	1	J20001-
23		14X-960-1360	Spacer	2	J20001-
24		14X-960-1351	Gear	1	J20001-
25		06002-32213	Bearing	1	J20001-
26		14X-960-1320	Cover	1	J20001-
27		01010-81235	Bolt	6	J20001-
28		01643-31232	Washer	6	J20001-
29		134-960-1940	Plug	1	J20001-
30		07000-12030	O-ring	1	J20001-
31		01010-81235	Bolt	2	J20001-
32		01643-31232	Washer	2	J20001-
33		134-960-1811	Fork	1	J20001-
34		04260-00952	Ball	1	J20001-

FIG. T2510-004006 Towing Winch, Gear Shaft (3/3)

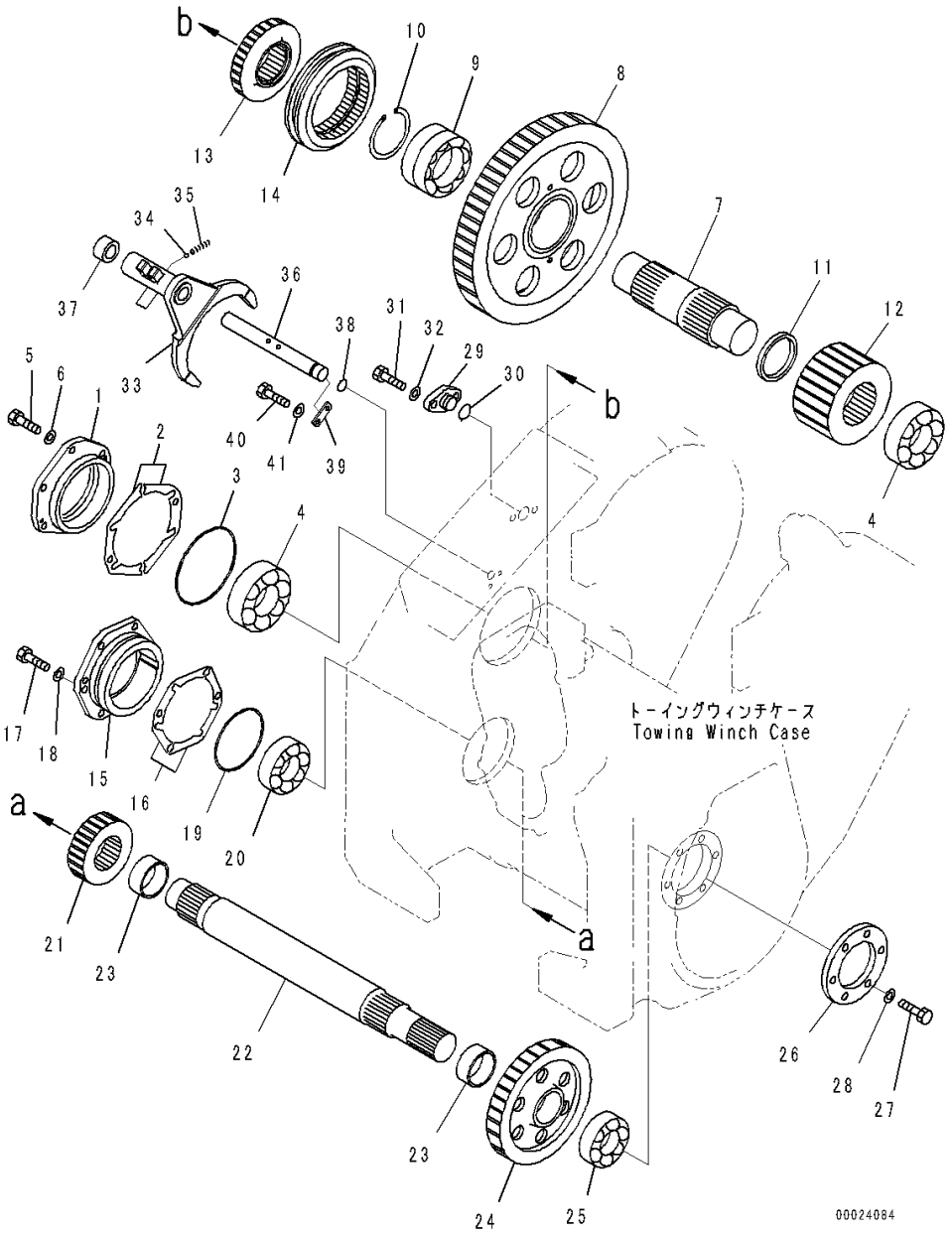

Index	Code	Part Number	Description	Qty	Serial Number
35		130-961-5730	Spring	1	J20001-
36		134-960-1820	Shaft	1	J20001-
37		134-960-1830	Spacer	1	J20001-
38		07000-13022	O-ring	1	J20001-
39		130-901-3140	Plate	1	J20001-
40		01010-80820	Bolt	2	J20001-
41		01643-30823	Washer	2	J20001-

FIG. T2510-004007 Towing Winch, Clutch

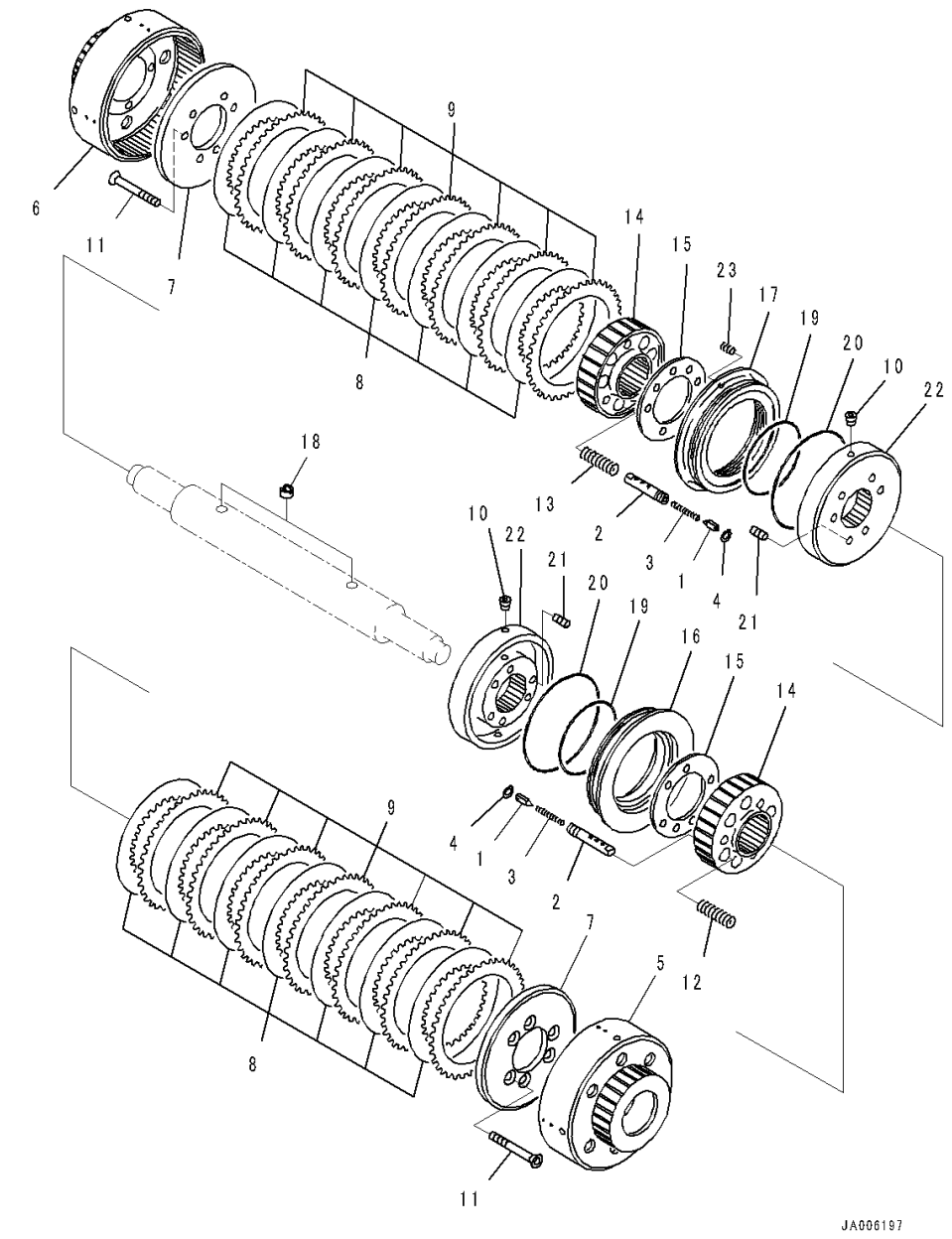

Index	Code	Part Number	Description	Qty	Serial Number
1		175-916-2620	Spool	2	J20001-
2		175-916-2610	Housing	2	J20001-
3		175-916-2630	Ring, Snap	2	J20001-
4		175-916-2640	Ring, Snap	2	J20001-
5		14X-960-2661	Gear	1	J20001-
6		14X-960-2670	Gear	1	J20001-
7		14X-960-2650	Plate	2	J20001-
8		176-76-13230	Plate	14	J20001-
9		100-22-15210	Plate	14	J20001-
10		07043-70108	Plug	4	J20001-
11		14X-960-2510	Bolt	12	J20001-
12		144-916-2590	Spring	6	J20001-
13		14X-960-2580	Spring	6	J20001-
14		144-916-2850	Drum	2	J20001-
15		144-916-2550	Plate	2	J20001-
16		144-916-2560	Piston	1	J20001-
17		14X-960-2570	Piston	1	J20001-
18		144-916-2520	Seal	4	J20001-
19		07000-05135	O-ring	2	J20001-
20		07000-05190	O-ring	2	J20001-
21		144-916-2570	Screw, Set	12	J20001-
22		144-916-2540	Housing	2	J20001-
23		14X-960-2590	Spring	4	J20001-

FIG. T2510-004008 Towing Winch, Brake

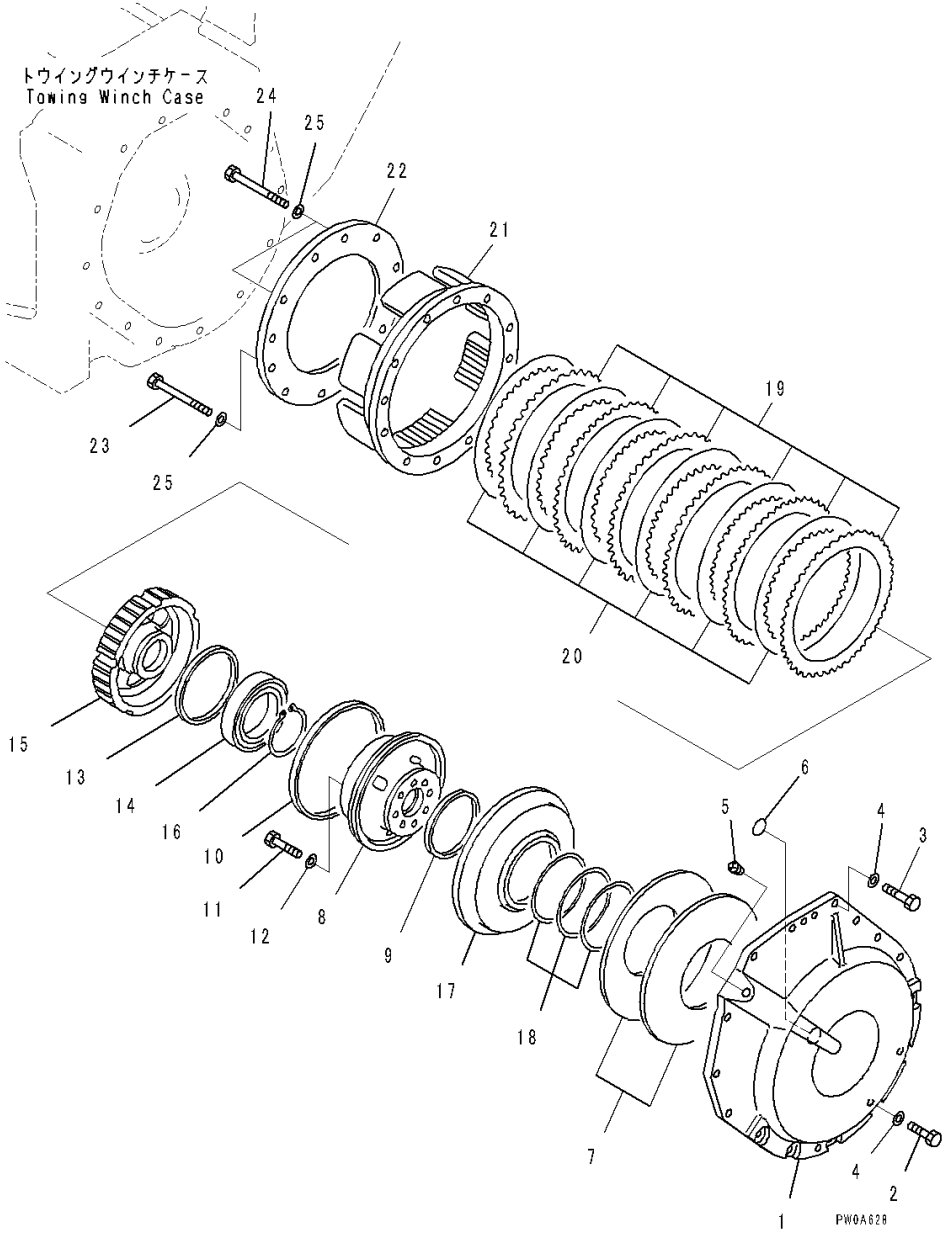

Index	Code	Part Number	Description	Qty	Serial Number
1		14X-960-3141	Cover	1	J20001-
2		01010-81235	Bolt	12	J20001-
3		01010-81260	Bolt	3	J20001-
4		01643-31232	Washer	15	J20001-
5		07042-30312	Plug, Taper	1	J20001-
6		07000-73025	O-ring	1	J20001-
7		14X-960-3190	Spring	2	J20001-
8		14X-960-3130	Housing	1	J20001-
9		14X-10-19210	Seal Ring	1	J20001-
10		103-15-29210	Seal Ring	1	J20001-
11		01010-81260	Bolt	7	J20001-
12		01643-31232	Washer	7	J20001-
13		04071-00140	Ring, Snap	1	J20001-
14		06030-06018	Bearing	1	J20001-
15		14X-960-3120	Drum	1	J20001-
16		04064-09030	Ring, Snap	1	J20001-
17		14X-960-3151	Piston	1	J20001-
18		14X-960-0590	Spacer Kit	1	J20001-
	C1		• Spacer, T=0.4mm	1	J20001-
	C1		• Spacer, T=0.8mm	1	J20001-
	C1		• Spacer, T=1.2mm	1	J20001-
19		14X-960-3180	Plate	6	J20001-
20		14X-960-3171	Disk	6	J20001-
21		14X-960-3110	Drum	1	J20001-
22		14X-960-3161	Plate	1	J20001-
23		01011-81230	Bolt	10	J20001-
24		01011-81225	Bolt	2	J20001-
25		01643-31232	Washer	12	J20001-

FIG. T2510-004009 Towing Winch, Inner Parts, Hydraulic Pump

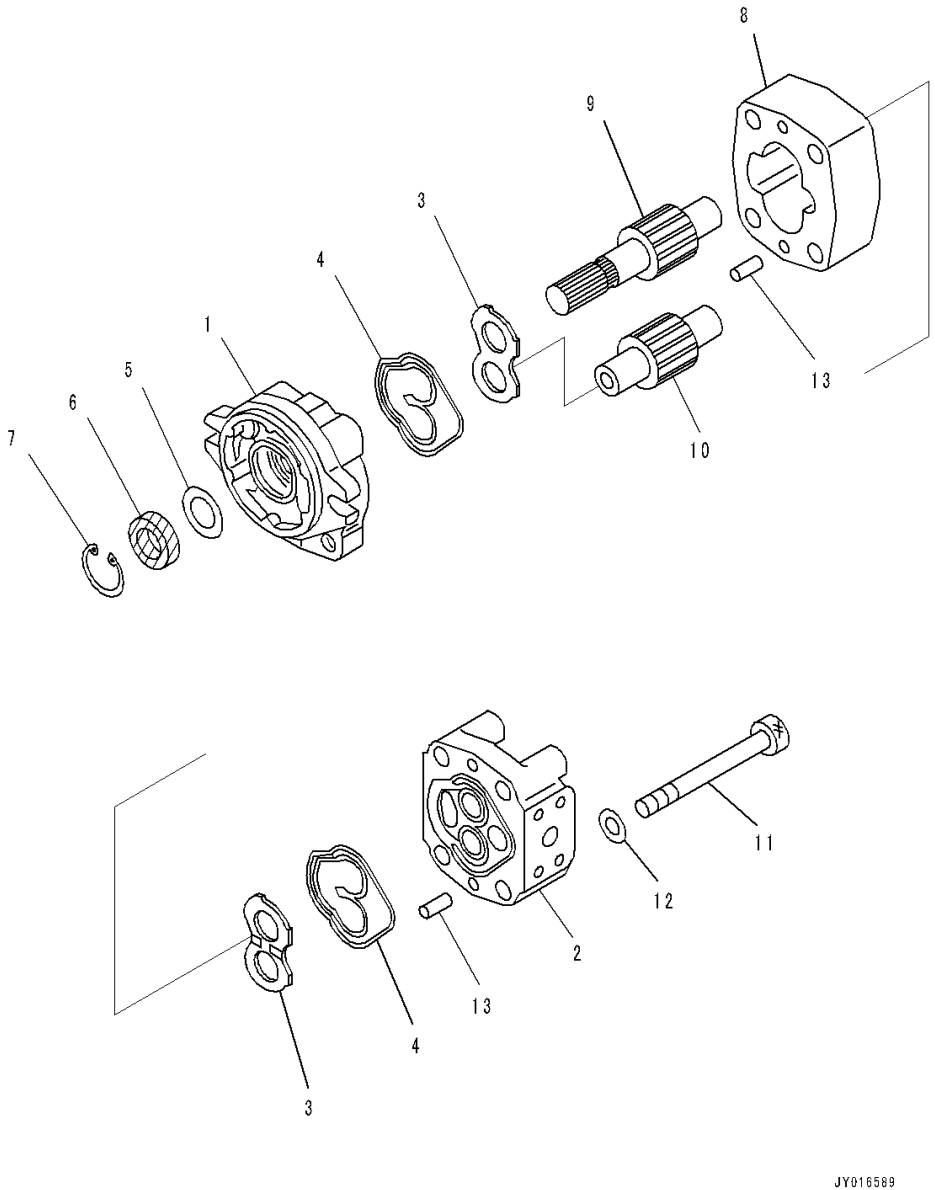

Index	Code	Part Number	Description	Qty	Serial Number
		705-41-01200	Pump Assembly	1	J20001-
1	C2	705-41-80230	• Bracket Assembly	1	J20001-
		705-41-80610	• • Bushing	1	J20001-
		705-41-80620	• • Bushing	1	J20001-
2	C2	705-40-80131	• Cover Assembly	1	J20001-
		705-41-80610	• • Bushing	1	J20001-
		705-41-80620	• • Bushing	1	J20001-
3		705-40-83720	• Plate	2	J20001-
4		705-40-80760	• Seal	2	J20001-
5		705-40-80870	• Plate	1	J20001-
6		705-40-80810	• Seal, Oil	1	J20001-
7		04065-03515	• Ring, Snap	1	J20001-
8	C2	705-40-33011	• Gear Case	1	J20001-
9	C2	705-40-33411	• Gear, Drive	1	J20001-
10	C2	705-40-33511	• Gear, Driven	1	J20001-
11		01253-71210	• Bolt	4	J20001-
12		01643-51232	• Washer	4	J20001-
13		04020-00820	• Pin, Dowel	4	J20001-

FIG. T2510-004010 Towing Winch, Hydraulic Pump Piping

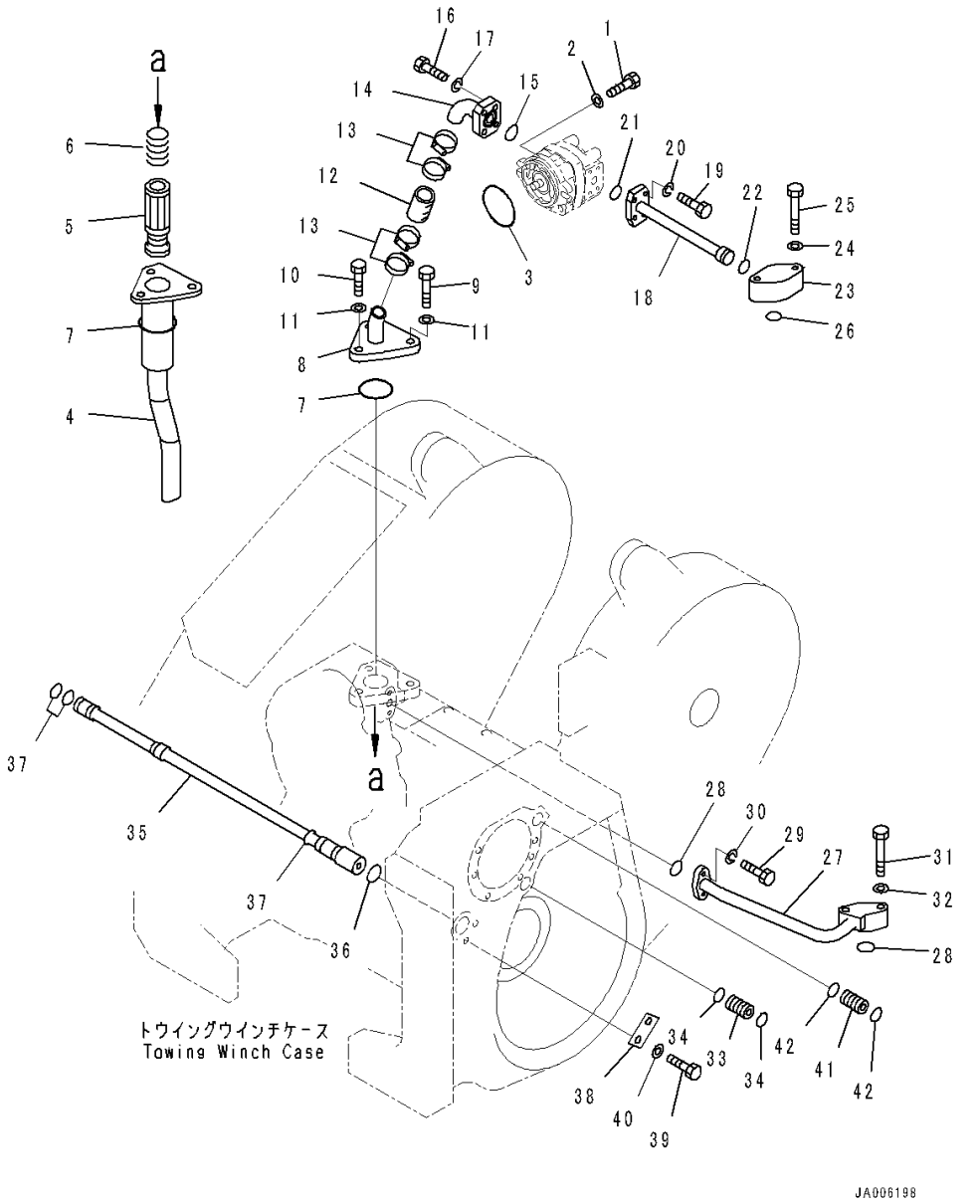

Index	Code	Part Number	Description	Qty	Serial Number
1		01010-81030	Bolt	2	J20001-
2		01643-31032	Washer	2	J20001-
3		07000-72085	O-ring	1	J20001-
4		14X-960-6123	Tube	1	J20001-
5		14X-960-6462	Strainer	1	J20001-
6		176-62-15240	Spring	1	J20001-
7		07000-72085	O-ring	2	J20001-
8		14X-960-6132	Tube	1	J20001-
9		01010-81280	Bolt	2	J20001-
10		01010-81245	Bolt	1	J20001-
11		01643-31232	Washer	3	J20001-
12		07260-02609	Hose	1	J20001-
13		07281-00489	Clamp, Hose	4	J20001-
14		14X-960-6142	Tube	1	J20001-
15		07000-73032	O-ring	1	J20001-
16		01010-81040	Bolt	4	J20001-
17		01602-21030	Washer, Spring	4	J20001-
18		14X-960-6190	Tube	1	J20001-
19		01010-80835	Bolt	4	J20001-
20		01602-20825	Washer, Spring	4	J20001-
21		07000-73025	O-ring	1	J20001-
22		07000-73022	O-ring	1	J20001-
23		14X-960-6170	Block	1	J20001-
24		01643-31032	Washer	2	J20001-
25		01011-81080	Bolt	2	J20001-
26		07000-73025	O-ring	1	J20001-
27		14X-960-6150	Tube	1	J20001-
28		07000-73025	O-ring	2	J20001-
29		01010-81030	Bolt	2	J20001-
30		01602-21030	Washer, Spring	2	J20001-
31		01011-81080	Bolt	2	J20001-
32		01643-31032	Washer	2	J20001-
33		15B-960-6260	Sleeve	1	J20001-
34		07000-72021	O-ring	2	J20001-
35		14X-960-6391	Tube	1	J20001-
36		07000-73028	O-ring	1	J20001-
37		07000-73025	O-ring	3	J20001-
38		04082-00206	Lock	1	J20001-
39		01010-81225	Bolt	2	J20001-
40		01643-31232	Washer	2	J20001-

FIG. T2510-004010 Towing Winch, Hydraulic Pump Piping

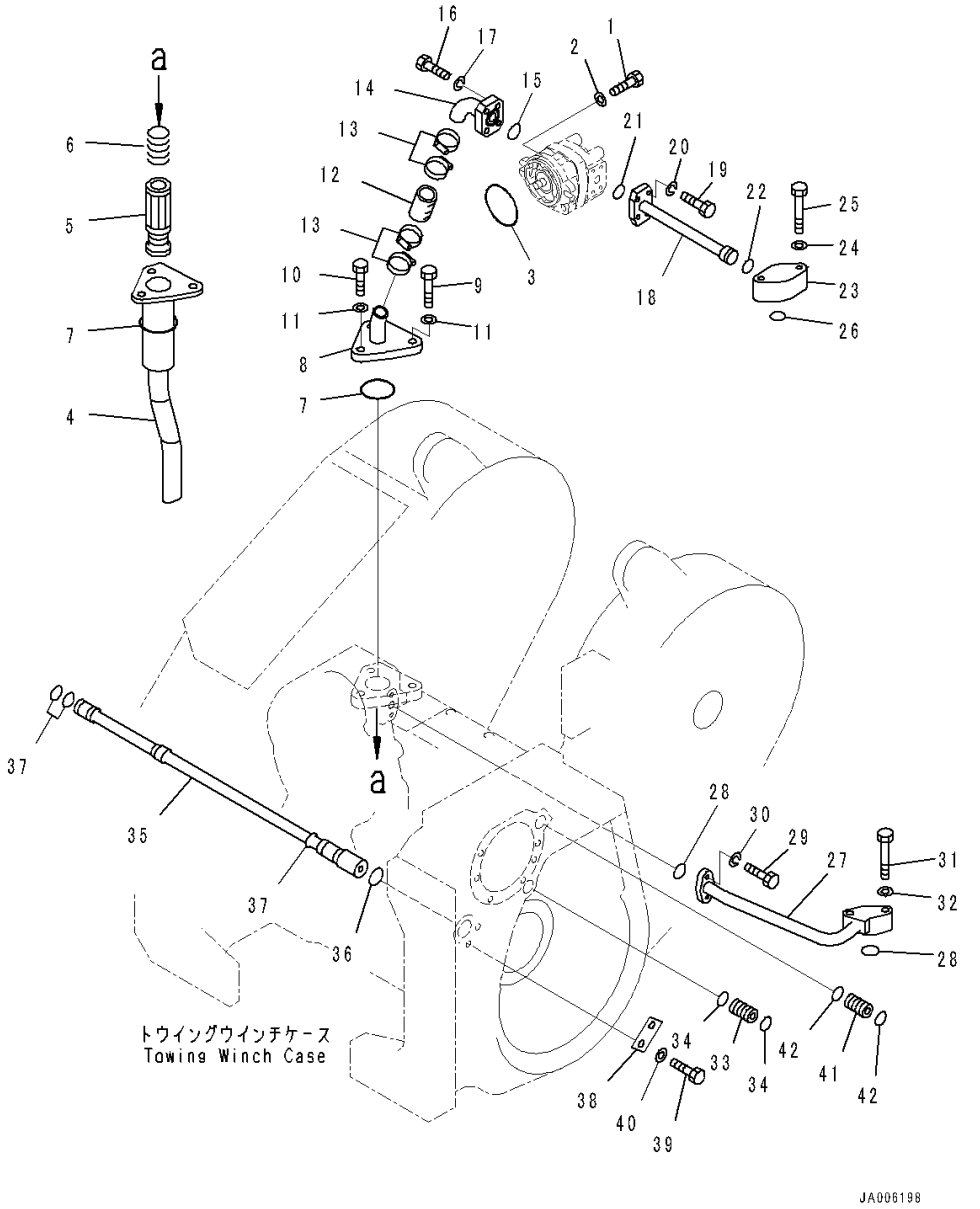

Index	Code	Part Number	Description	Qty	Serial Number
41		14X-960-6260	Sleeve	1	J20001-
42		07000-72021	O-ring	2	J20001-

FIG. T2510-004011 Towing Winch, Control Valve (1/2)

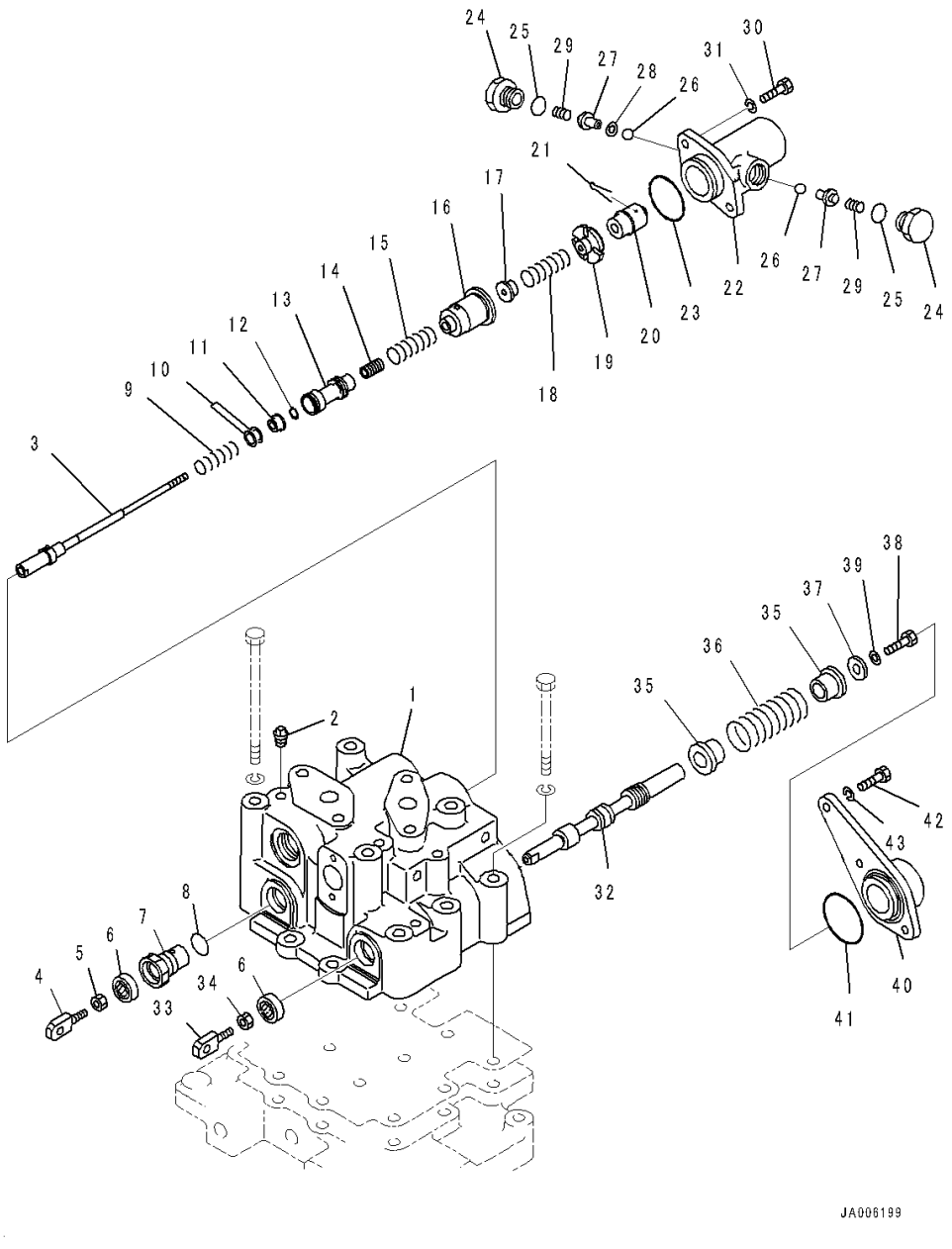

Index	Code	Part Number	Description	Qty	Serial Number
		14X-960-0012	Valve Assembly	1	J20001-
1		14X-960-5210	• Valve Body	1	J20001-
2		07042-20108	• Plug	8	J20001-
3		14X-960-5122	• Spool	1	J20001-
4		15B-960-5330	• Yoke	1	J20001-
5		01580-10806	• Nut	1	J20001-
6		113-15-29110	• Seal, Oil	2	J20001-
7		14X-960-5220	• Cover	1	J20001-
8		07002-02434	• O-ring	1	J20001-
9		14X-960-5230	• Spring	1	J20001-
10		14X-960-5310	• Shim	2	J20001-
11		14X-960-5240	• Guide	1	J20001-
12		150-43-14960	• Ring, Snap	1	J20001-
13		14X-960-5250	• Valve	1	J20001-
14		14X-960-5260	• Sleeve	1	J20001-
15		709-32-11780	• Spring	1	J20001-
16		14X-960-5270	• Cage	1	J20001-
17		14X-960-5280	• Collar	1	J20001-
18		709-32-11780	• Spring	1	J20001-
19		14X-960-5290	• Stopper	1	J20001-
20		14X-960-5141	• Detent	1	J20001-
21		04050-01618	• Pin, Cotter	1	J20001-
22		15B-960-5230	• Cover	1	J20001-
23		07000-73035	• O-ring	1	J20001-
24		175-916-4180	• Plug	2	J20001-
25		07000-72015	• O-ring	2	J20001-
26		04260-00635	• Ball, Steel	2	J20001-
27		14X-960-5160	• Guide	2	J20001-
28		702-21-31360	• Spacer	4	J20001-
29		709-62-31180	• Spring	2	J20001-
30		01010-80820	• Bolt	2	J20001-
31		01602-20825	• Washer, Spring	2	J20001-
32		14X-960-5132	• Spool	1	J20001-
33		15B-960-5330	• Yoke	1	J20001-
34		01580-10806	• Nut	1	J20001-
35		175-916-4210	• Collar	2	J20001-
36		14X-960-5110	• Spring	1	J20001-
37		175-916-4230	• Washer	1	J20001-
38		01010-80816	• Bolt	1	J20001-
39		01643-50823	• Washer	1	J20001-

FIG. T2510-004011 Towing Winch, Control Valve (1/2)

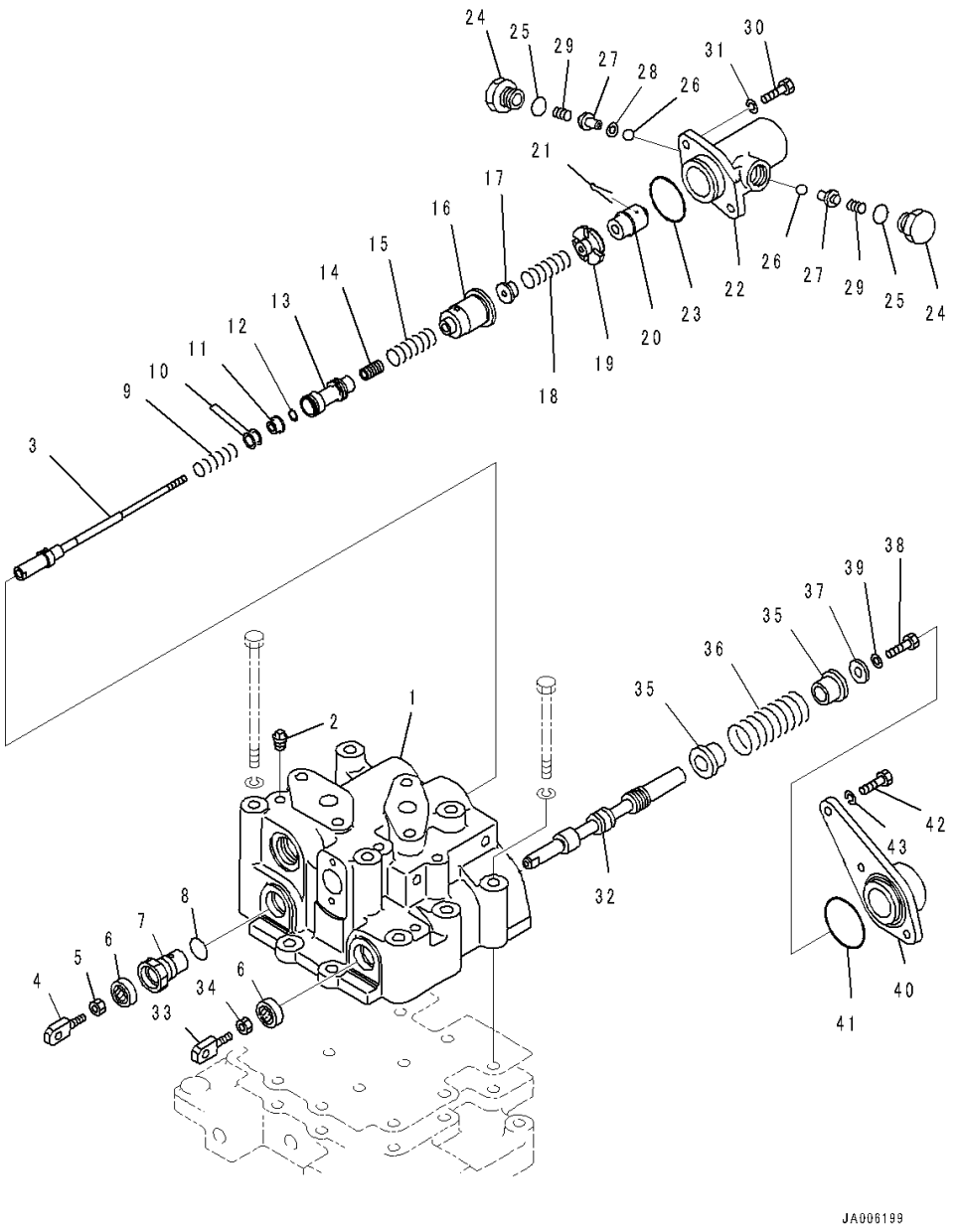

Index	Code	Part Number	Description	Qty	Serial Number
40		15B-960-5240	• Cover	1	J20001-
41		07000-73048	• O-ring	1	J20001-
42		01010-80820	• Bolt	3	J20001-
43		01602-20825	• Washer, Spring	3	J20001-

FIG. T2510-004012 Towing Winch, Control Valve (2/2)

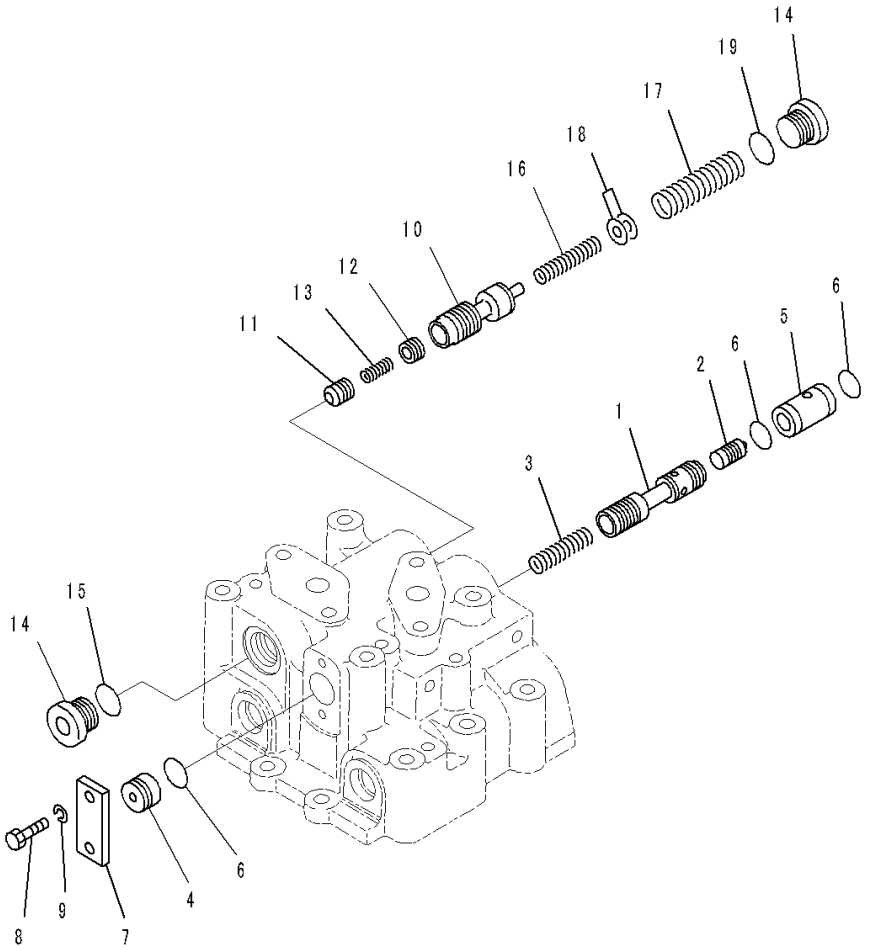

Index	Code	Part Number	Description	Qty	Serial Number
		14X-960-0012	Valve Assembly	1	J20001-
1		15B-960-5350	• Spool	1	J20001-
2		15B-960-5340	• Piston	1	J20001-
3		175-916-4360	• Spring	1	J20001-
4		175-916-4370	• Stopper	1	J20001-
5		175-916-4330	• Stopper	1	J20001-
6		07000-72018	• O-ring	3	J20001-
7		15B-960-5260	• Cover	1	J20001-
8		01010-80820	• Bolt	2	J20001-
9		01602-20825	• Washer, Spring	2	J20001-
10		104-15-25210	• Spool	1	J20001-
11		104-15-25480	• Valve	1	J20001-
12		104-15-25490	• Valve	1	J20001-
13		125-15-15290	• Spring	1	J20001-
14		102-10-46360	• Plug	2	J20001-
15		07002-02434	• O-ring	1	J20001-
16		104-15-25280	• Spring	1	J20001-
17		104-15-25290	• Spring, L=62.0mm	1	J20001-
18		112-10-46210	• Shim, T=0.5mm	6	J20001-
19		07002-02434	• O-ring	1	J20001-

FIG. T2510-004013 Towing Winch, Control Valve Mounting

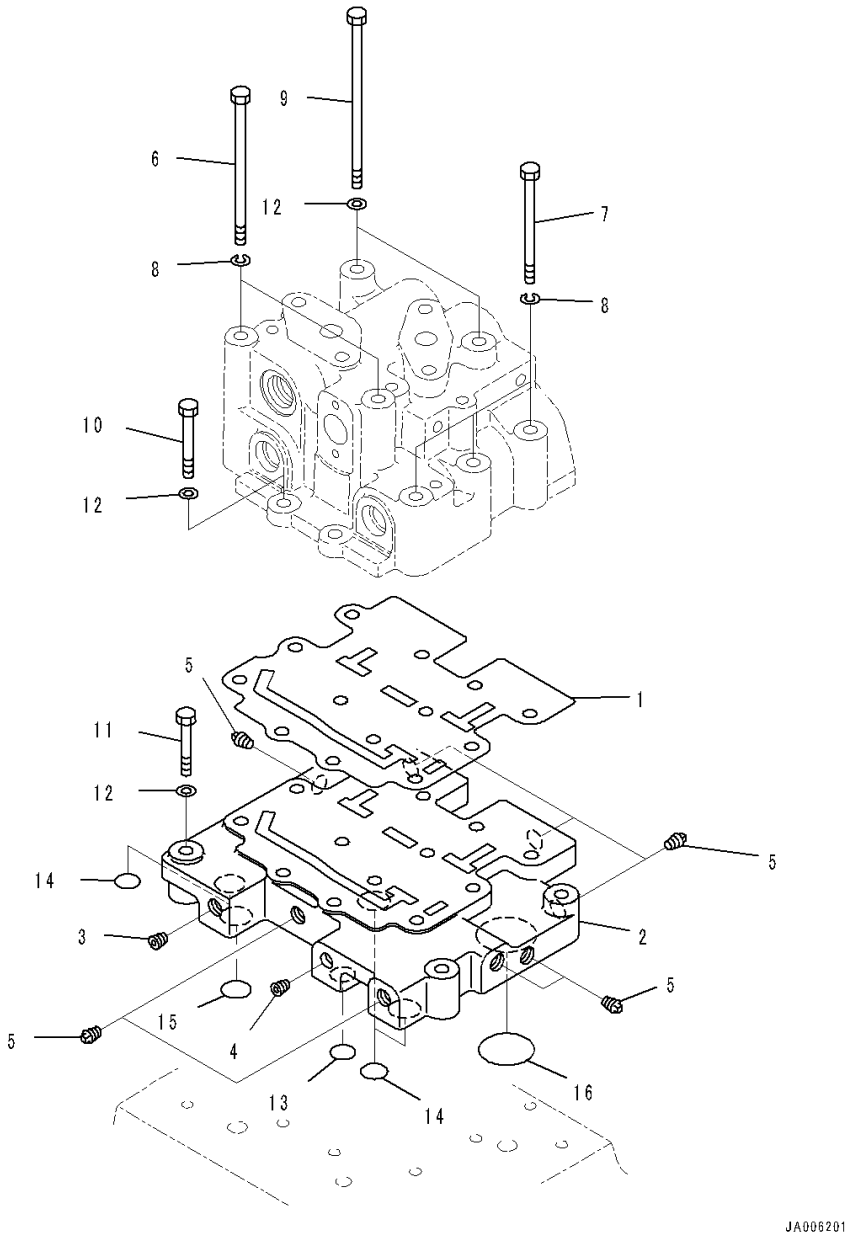

Index	Code	Part Number	Description	Qty	Serial Number
1		15B-960-5251	Gasket	1	J20001-
2		15B-960-5221	Seat, Valve	1	J20001-
3		07043-00312	Plug, Taper	1	J20001-
4		07043-00211	Plug, Taper	1	J20001-
5		07042-20312	Plug, Taper	8	J20001-
6		01011-81030	Bolt	2	J20001-
7		01010-81080	Bolt	3	J20001-
8		01602-21030	Washer, Spring	5	J20001-
9		01011-81065	Bolt	2	J20001-
10		01010-81065	Bolt	2	J20001-
11		01010-81055	Bolt	3	J20001-
12		01643-31032	Washer	7	J20001-
13		07000-72016	O-ring	1	J20001-
14		07000-72018	O-ring	3	J20001-
15		07000-72020	O-ring	1	J20001-
16		07000-73038	O-ring	1	J20001-

FIG. T2510-004014 Towing Winch, Cover

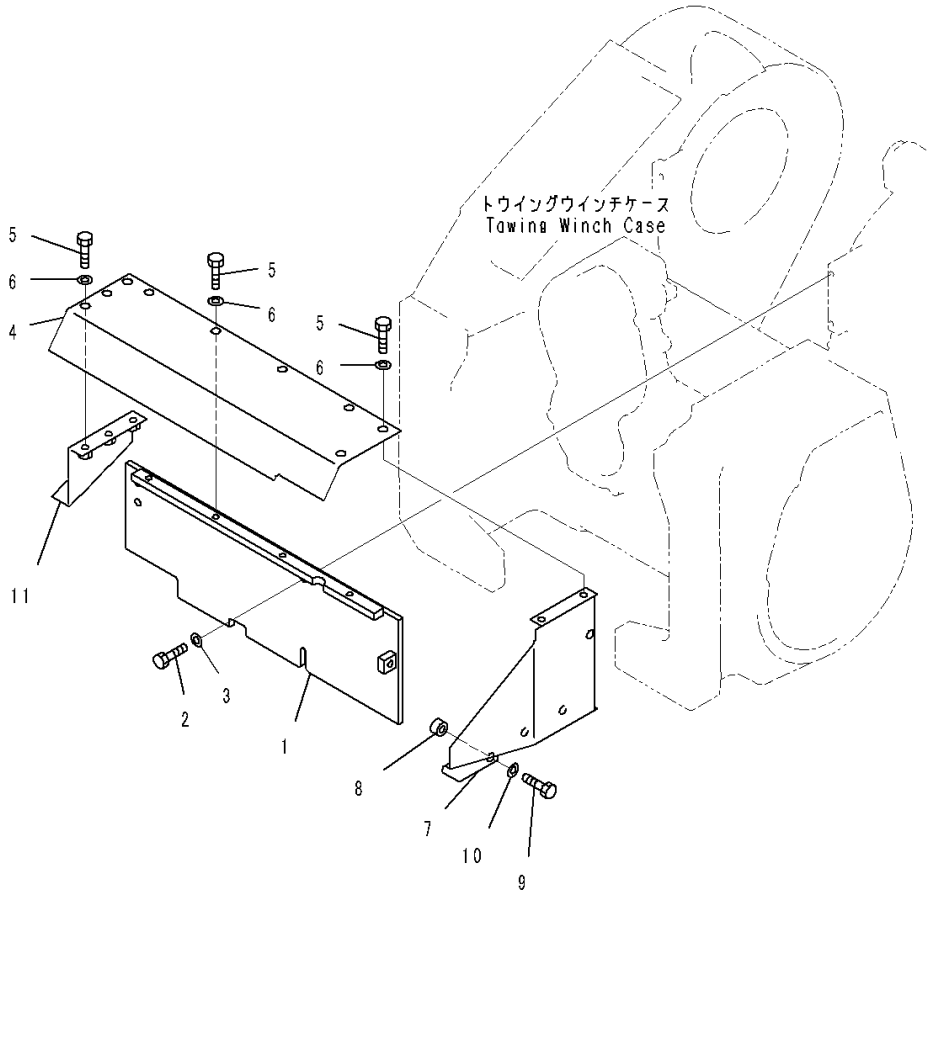

Index	Code	Part Number	Description	Qty	Serial Number
1		14X-960-3794	Cover	1	J20001-
2		01010-81230	Bolt	4	J20001-
3		01643-31232	Washer	4	J20001-
4		134-960-6330	Cover	1	J20001-
5		01010-81225	Bolt	9	J20001-
6		01643-31232	Washer	9	J20001-
7		134-960-6340	Cover	1	J20001-
8		15B-960-6320	Seat	3	J20001-
9		01010-81225	Bolt	1	J20001-
10		01643-31232	Washer	1	J20001-
11		134-960-6350	Cover	1	J20001-

FIG. T2510-005002 Towing Winch, Case

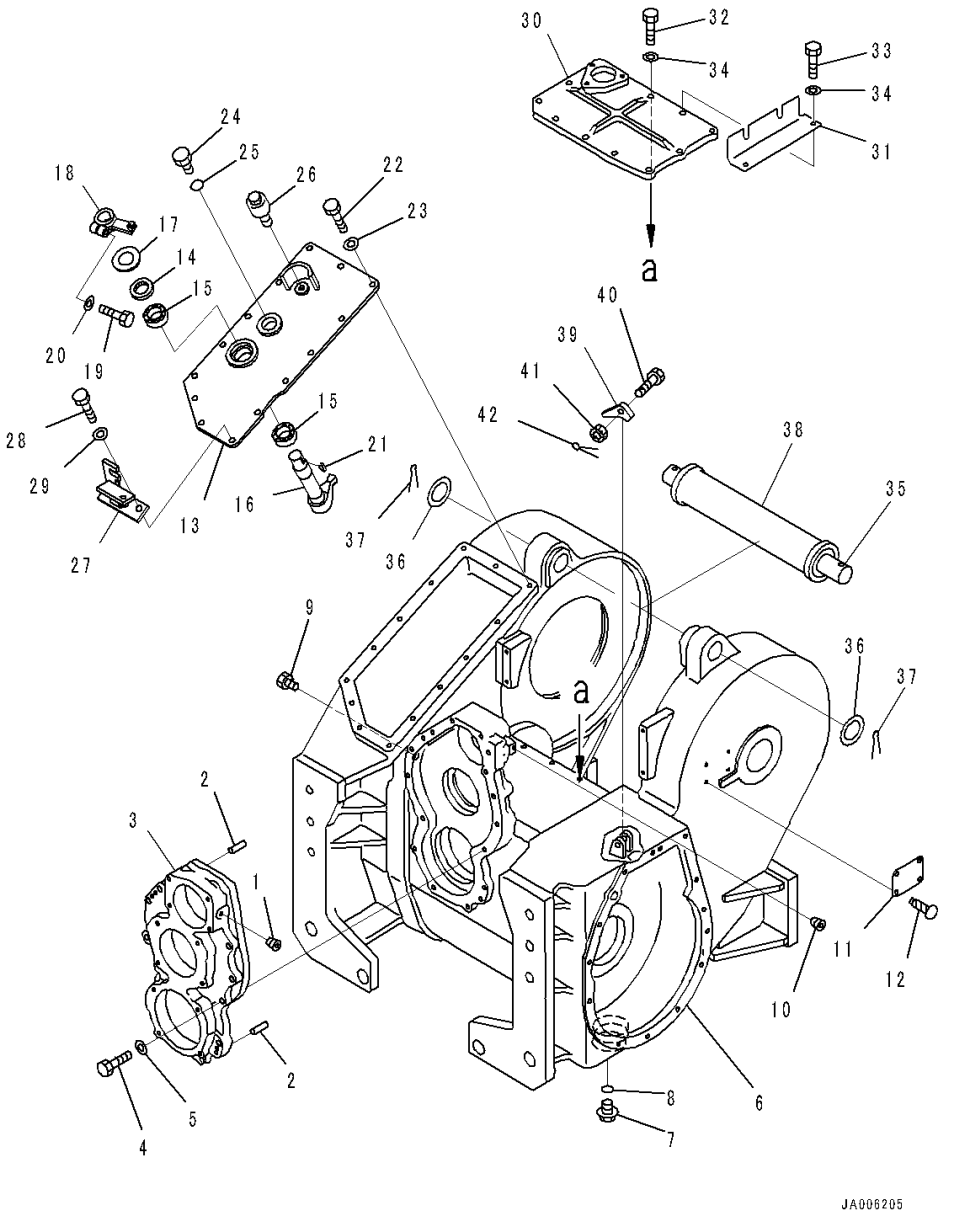

Index	Code	Part Number	Description	Qty	Serial Number
		Note: This list covers following specifications.			
		With Guard and Hook			
		With Guard			
1		07043-00108	Plug, Taper	1	J20001-
2		04020-01228	Pin, Dowel	2	J20001-
3		14X-960-3850	Cover	1	J20001-
4		01010-81245	Bolt	11	J20001-
5		01643-31232	Washer	11	J20001-
6		134-960-2511	Case Assembly	1	J20001-
7		07044-13620	Plug	1	J20001-
8		07002-03634	O-ring	1	J20001-
9		144-916-1820	Plug	1	J20001-
10		07043-00108	Plug, Taper	1	J20001-
11	C2	09601-50000	Plate, Name (Limited Supply), EU Regulation	1	J20001-
12		04418-13060	Screw	4	J20001-
13		134-960-1630	Cover	1	J20001-
14		07012-00035	Seal, Oil	1	J20001-
15		06120-03520	Bearing, Needle	2	J20001-
16		134-960-1641	Shaft	1	J20001-
17		01640-23550	Washer, Flat	1	J20001-
18		134-960-2461	Lever	1	J20001-
19		01010-81245	Bolt	1	J20001-
20		01643-31232	Washer	1	J20001-
21		04010-00722	Key	1	J20001-
22		01010-81230	Bolt	12	J20001-
23		01643-31232	Washer	12	J20001-
24		07040-13618	Plug	1	J20001-
25		07002-03634	O-ring	1	J20001-
26		07030-00252	Breather	1	J20001-
27		134-960-2470	Bracket	1	J20001-
28		01010-81235	Bolt	2	J20001-
29		01643-31232	Washer	2	J20001-
30		14X-960-3871	Cover	1	J20001-
31		14W-960-7220	Bracket	1	J20001-
32		01010-81235	Bolt	8	J20001-
33		01010-81260	Bolt	2	J20001-
34		01643-31232	Washer	10	J20001-
35		14X-960-3731	Bar	1	J20001-
36		176-43-54481	Washer	2	J20001-

FIG. T2510-005002 Towing Winch, Case

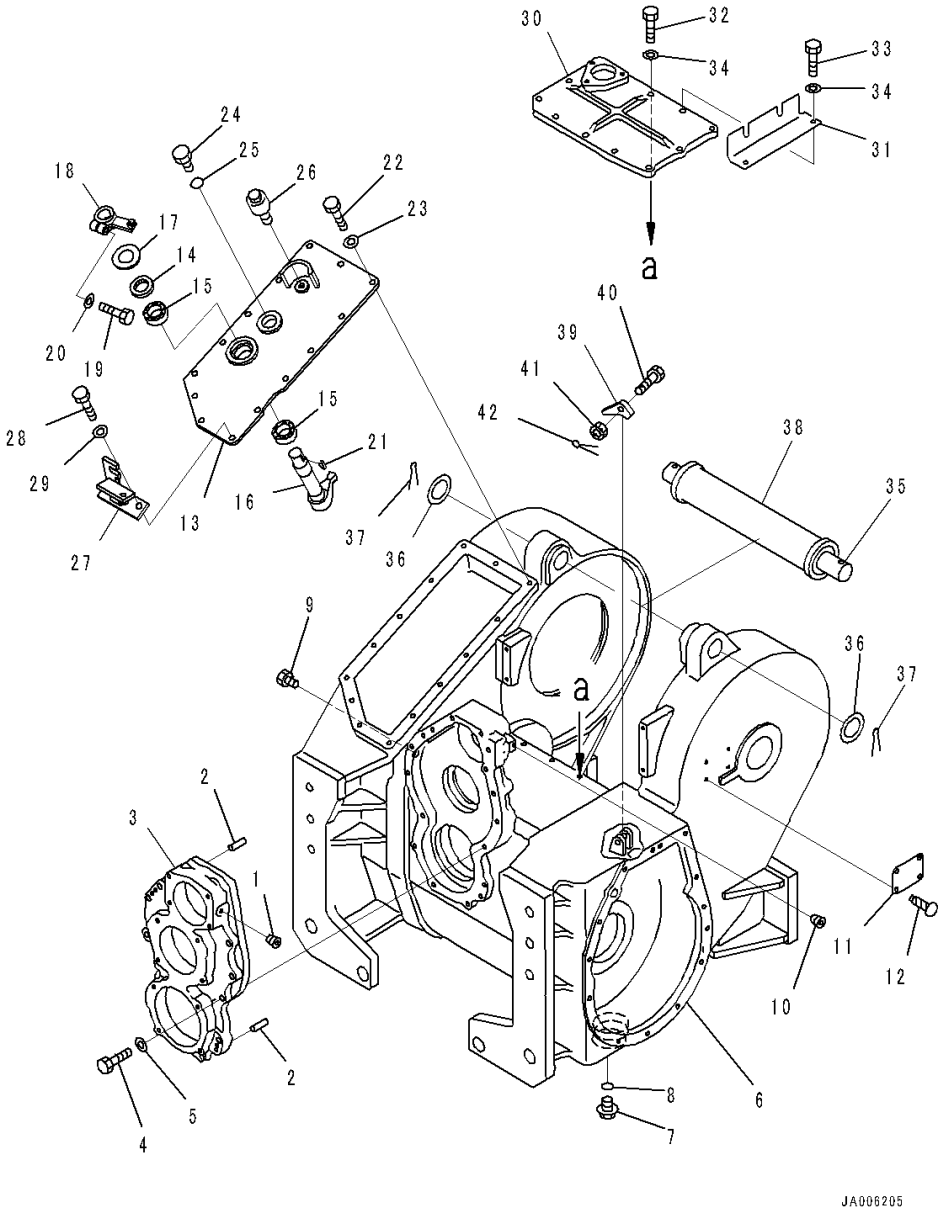

Index	Code	Part Number	Description	Qty	Serial Number
37		04050-00060	Pin, Cotter	2	J20001-
38		14X-960-3992	Collar	1	J20001-
39		09249-00016	Latch	1	J20001-
40		01052-51260	Bolt	1	J20001-
41		01592-11215	Nut, Slotted	1	J20001-
42		04050-13025	Pin, Cotter	1	J20001-

FIG. T2610-001001 Power Take Off (PTO) Shaft

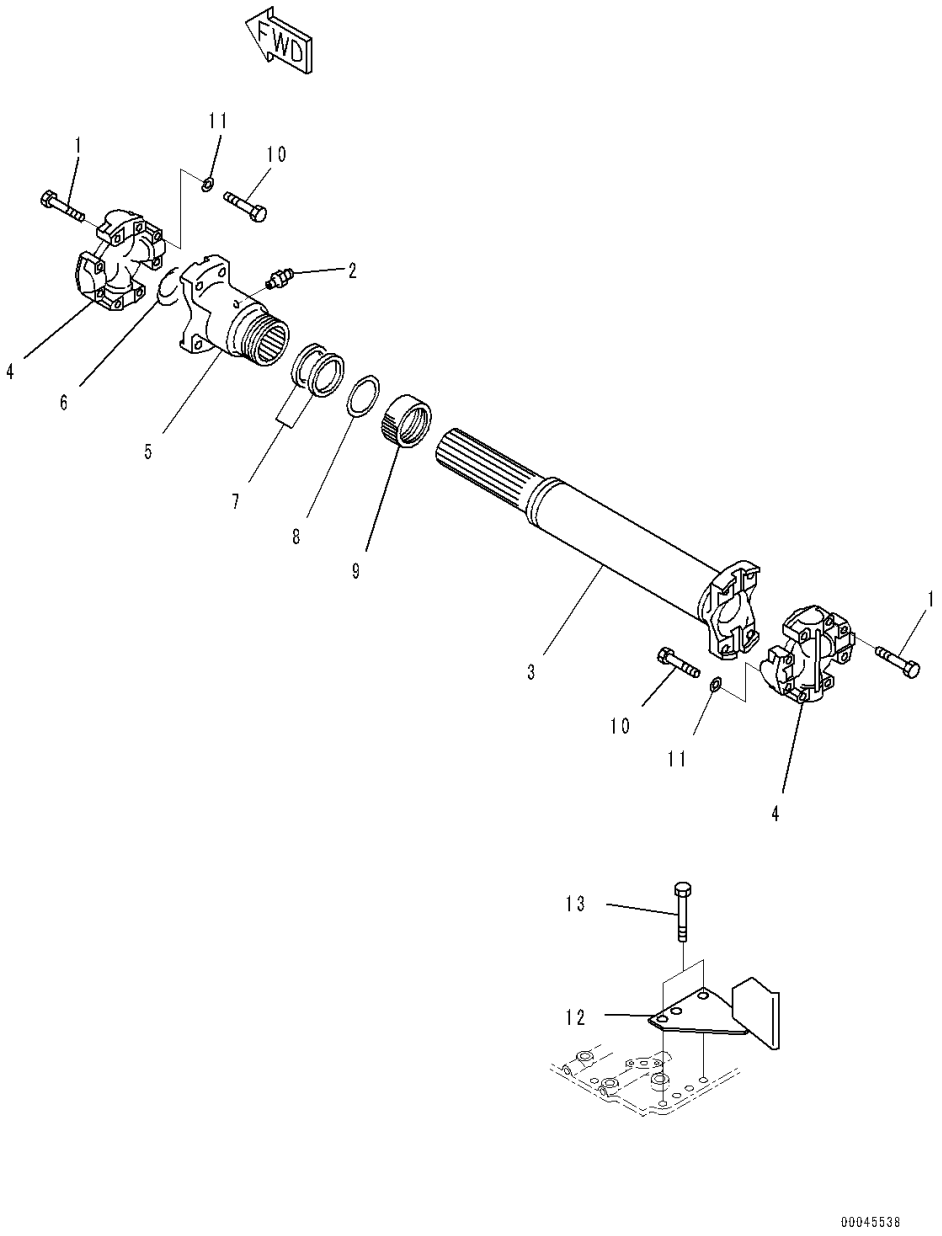

Index	Code	Part Number	Description	Qty	Serial Number
		134-67-61100	Shaft Assembly, PTO	1	J20001-
1		01010-81050	• Bolt	8	J20001-
2		07020-00000	• Fitting, Grease	1	J20001-
3		134-67-61110	• Shaft	1	J20001-
4		154-66-12100	• Wire	2	J20001-
5		154-67-11180	• Coupling	1	J20001-
6		07046-15020	• • Plug	1	J20001-
7		154-67-11321	• Gasket	2	J20001-
8		154-67-11331	• Retainer	1	J20001-
9		170-65-11211	• Nut	1	J20001-
10		07372-21045	Bolt	8	J20001-
11		01643-51032	Washer	8	J20001-
12		134-960-6660	Cover	1	J20001-
13		01010-81670	Bolt	2	J20001-

MARKS AND PLATES

FIG. U0100-001001 Marks and Plates

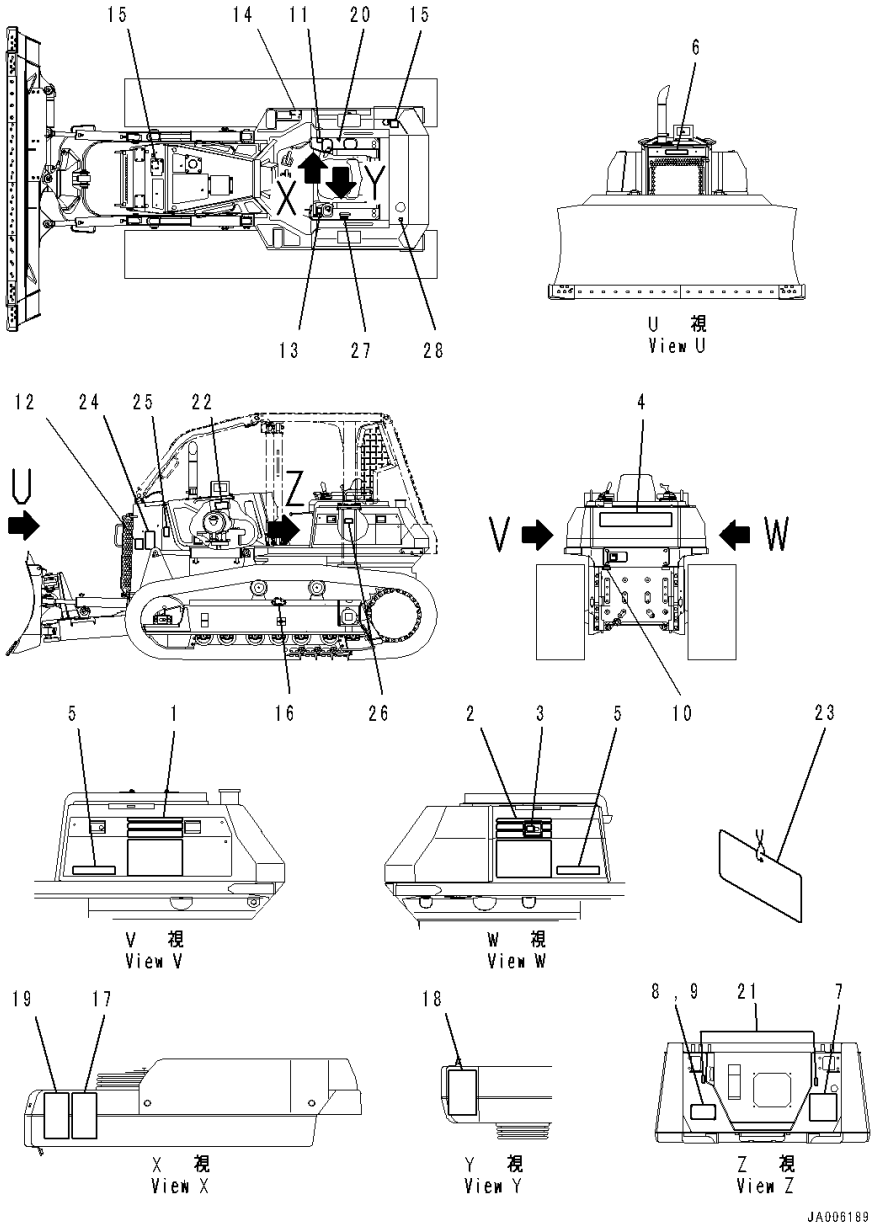

Index	Code	Part Number	Description	Qty	Serial Number
1		134-98-61611	Mark, Model,LHS	1	J20001-
2		134-98-61621	Mark, Model,RHS	1	J20001-
3		134-98-61631	Mark, Model,RHS	1	J20001-
4		09690-P0900	Mark, Komatsu Logo	1	J20001-
5		09690-P0280	Decal, Komatsu Logo	2	J20001-
6		09690-P0450	Mark, Komatsu Logo	1	J20001-
7		134-98-61470	Lubrication Chart	1	J20001-
8	C2	09602-10001	Plate, Name (Limited Supply)	1	J20001-
9		04418-13060	Screw	4	J20001-
10		09690-M0063	Mark, Komatsu Logo	1	J20001-
11		14X-98-11260	Plate, Operating	1	J20001-
12		134-98-62190	Plate, Brace Adjustment	2	J20001-
13		14X-98-11240	Plate, Steering	1	J20001-
14		14X-98-11570	Plate, Pressure Pick Up	1	J20001-
15		09653-A0481	Plate, Warning, High Temperature	2	J20001-
16		09657-A0881	Plate	2	J20001-
17		09651-A0641	Plate, Warning, Read Manual Before Operating	1	J20001-
18		09802-13000	Plate, Warning, Back-up	1	J20001-
19		09654-B0641	Plate, Warning, Before Leaving Seat	1	J20001-
20		17A-98-11180	Plate, Horn	1	J20001-
21		14X-98-11170	Plate, Operating	2	J20001-
22		09637-30163	Plate, Service Instruction, Air Cleaner	1	J20001-
23		09963-03001	Tag, Danger, Do Not Operate	1	J20001-
24		09806-B1201	Plate, Caution, Do not Approach	2	J20001-
25		09667-A0641	Plate, Caution, Rotating Object	2	J20001-
26		09808-A0881	Plate, Warning, Battery Cables	1	J20001-
27		362-54-17320	Plate, Fuel Lever	1	J20001-
28		09669-0000E	Plate, Symbol, Fuel Filler	1	J20001-

FIG. U0400-001001 Balancing Mark

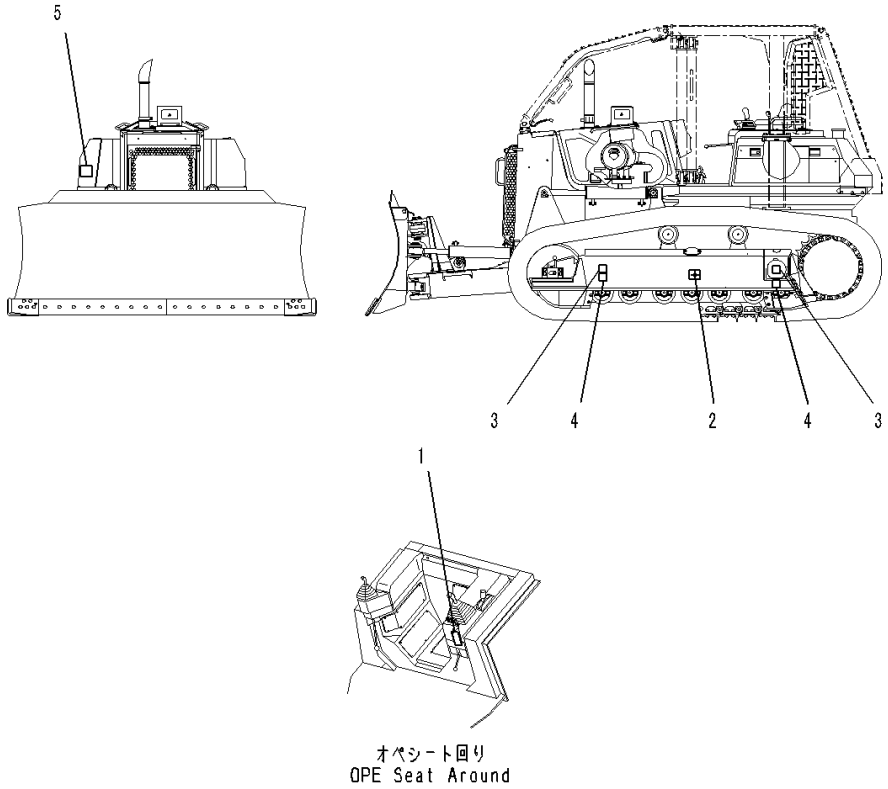

Index	Code	Part Number	Description	Qty	Serial Number
1		130-98-79210	Plate	1	J20001-
2		09960-00611	Mark, Balancing Position	2	J20001-
3		09960-00801	Decal, Lift Point Mark	4	J20001-
4		09960-00802	Decal, Tie Down Point Mark	4	J20001-
5		17A-98-41510	Plate, Lift Point and Tie Down Point Marks	1	J20001-

AUXILIARY PARTS AND TOOL

FIG. V0100-002001 Spare Parts

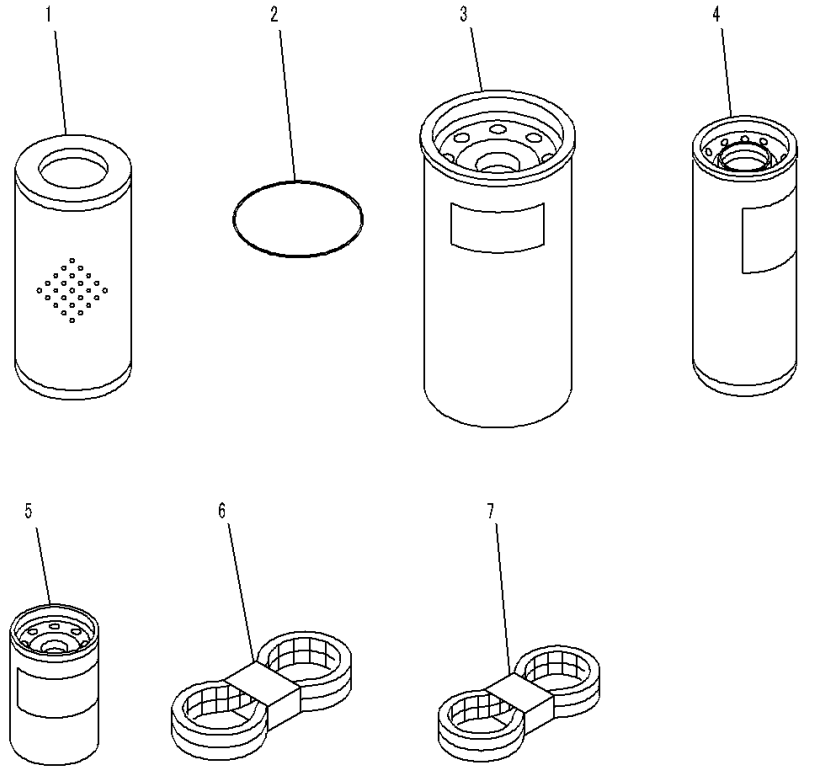

Index	Code	Part Number	Description	Qty	Serial Number
1		07063-01054	Element, Oil Filter	1	J20001-
2		07000-72110	O-ring	1	J20001-
3		21N-60-12210	Cartridge	1	J20001-
4		6742-01-4540	Cartridge	1	J20001-
5		6732-71-6112	Cartridge	1	J20001-
6		6743-62-3710	Belt	1	J20001-
7		134-01-62630	V-belt	1	J20001-

SPARE PARTS (ADDITIONAL FILTER)

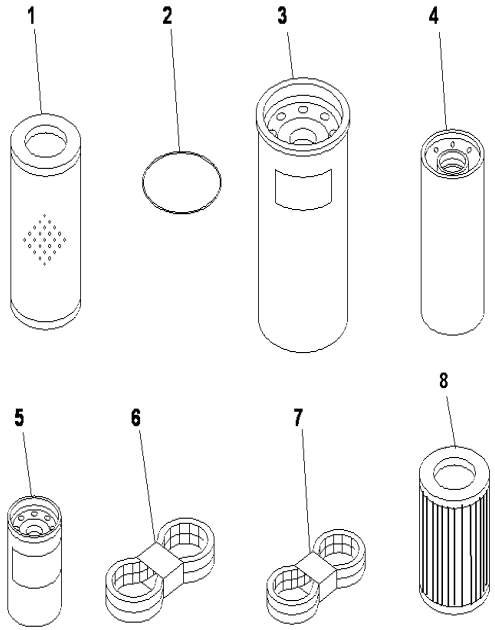

INDEX	CD	PART NO.	DESCRIPTION	QTY	SERIAL NO.
1		07063-01054	ELEMENT.....	1	J20001-UP
2		07000-72110	O-RING.....	1	J20001-UP
3		21N-60-12210	FILTER CATRIDGE.....	1	J20001-UP
4		6742-01-4540	CARTRIDGE.....	1	J20001-UP
5		6732-71-6112	CARTRIDGE.....	1	J20001-UP
6		6743-62-3710	V-BELT.....	1	J20001-UP
7		134-01-62630	V BELT.....	1	J20001-UP
8		20Y-04-J1250	ELEMENT.....	1	J20001-UP

FIG. V0200-001001 Cap and Overall

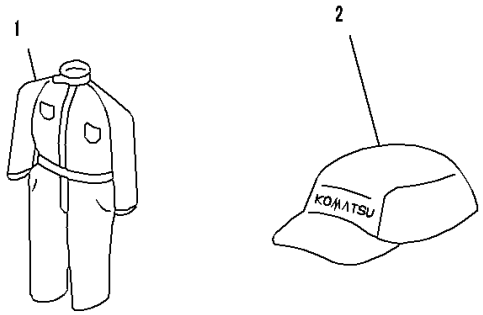

PVK5728

Index	Code	Part Number	Description	Qty	Serial Number
1		09980-10550	Overall	1	J20001-
2		09982-10057	Cap	1	J20001-

FIG. V0300-001001 Tool

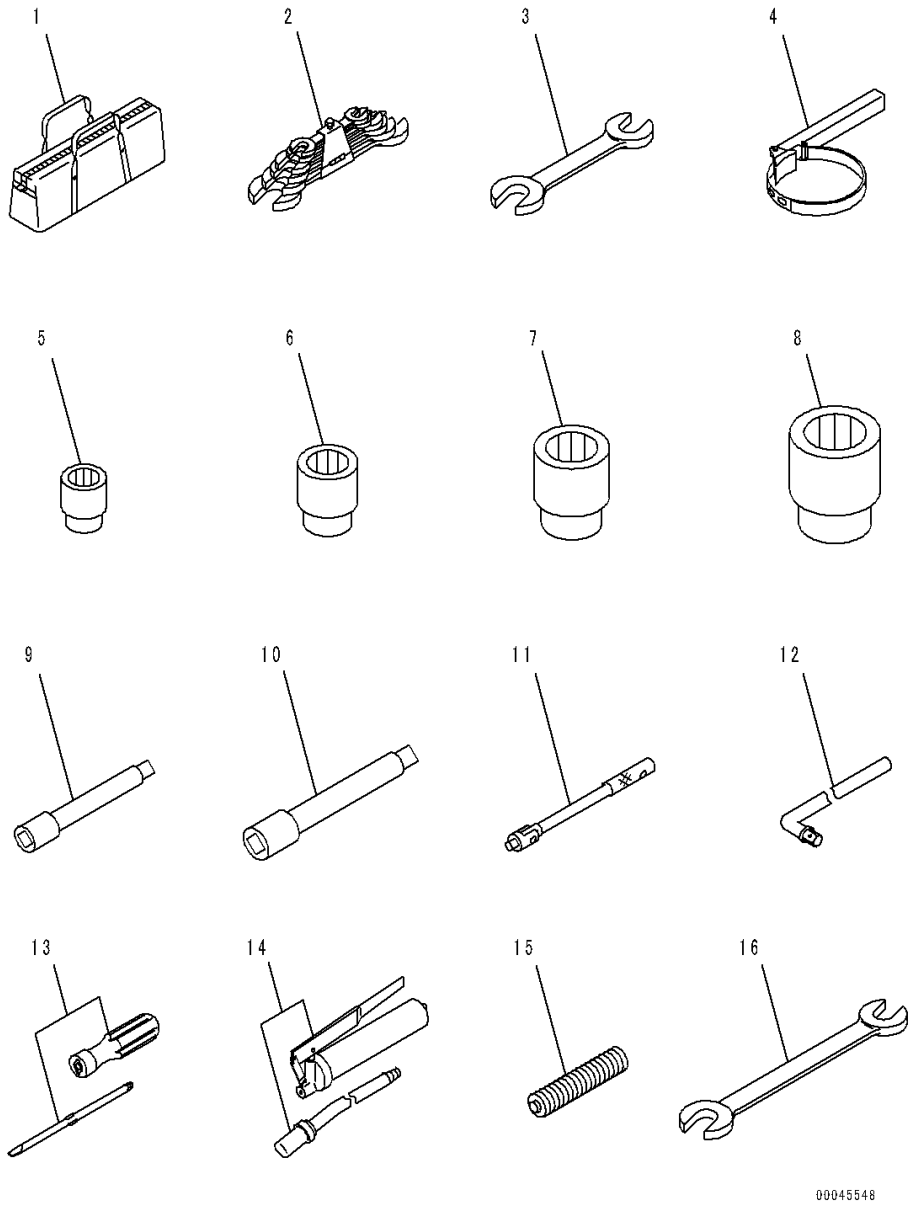

Index	Code	Part Number	Description	Qty	Serial Number
1		09056-05513	Tool Bag	1	J20001-
2		09000-30006	Wrench Set	1	J20001-
3		09082-00911	Wrench	1	J20001-
4		09019-28035	Wrench	1	J20001-
5		09021-01725	Socket, W=17mm	1	J20001-
6		09021-01928	Socket, W=19mm	1	J20001-
7		09021-02436	Socket, W=24mm	1	J20001-
8		09021-03246	Socket, W=32mm	1	J20001-
9		09022-00150	Extension	1	J20001-
10		09022-00250	Extension	1	J20001-
11		09023-00300	Handle	1	J20001-
12		09024-00300	Handle	1	J20001-
13		09033-00190	Driver	1	J20001-
14		07952-70004	Pump Assembly	1	J20001-
15		07950-90403	Cartridge	1	J20001-
16		09002-03641	Wrench, W=36X41mm	1	J20001-

FIELD REPAIR SERVICE PARTS

FIG. KIT Service Kit Parts (1/1)

Index	Code	Part Number	Description	Qty	Serial Number
K01		14X-13-05050	Service Kit, Torque Converter		J20001-
		07000-72070	• O-ring	1	-
		07000-72090	• O-ring	1	-
		07000-72100	• O-ring	1	-
		07000-72110	• O-ring	1	-
		07000-73030	• O-ring	2	-
		07000-73032	• O-ring	2	-
		07000-73045	• O-ring	2	-
		07000-75055	• O-ring	1	-
		07000-75170	• O-ring	1	-
		07000-75210	• O-ring	1	-
		07000-75260	• O-ring	1	-
		07005-01212	• Seal, Washer	7	-
		07018-31054	• Seal Ring	1	-
K02		14X-15-05083	Service Kit, Transmission		J20001-
		07000-72020	• O-ring	1	-
		07000-73022	• O-ring	1	-
		07000-73025	• O-ring	1	-
		07000-73028	• O-ring	1	-
		07000-73030	• O-ring	3	-
		07000-73035	• O-ring	1	-
		07000-73042	• O-ring	1	-
		07000-B2015	• O-ring	1	-
		07002-62434	• O-ring	1	-
		103-15-12820	• Seal Ring	1	-
		113-15-11641	• Gasket	2	-
		113-15-12870	• Ring	1	-
		124-15-41910	• Seal Ring	1	-
		124-15-41920	• Seal Ring	1	-
		144-15-29110	• Seal, Oil	2	-
		14X-15-15910	• Gasket	1	-
		14X-15-29210	• Seal Ring	1	-
		14X-15-29220	• Seal Ring	1	-
		14X-15-29230	• Seal Ring	1	-
		569-15-12860	• Seal Ring	1	-
K03		134-15-05170	Service Kit, Transmission Control Valve		J20001-
		07000-73038	• O-ring	1	-
		07002-03034	• O-ring	1	-
		125-15-15170	• Shim	7	-

Index	Code	Part Number	Description	Qty	Serial Number
K04		134-15-05180	Service Kit, Transmission Main Relief Valve		J20001-
		07000-73030	• O-ring	5	-
		07002-03034	• O-ring	4	-
		198-15-15570	• Shim	6	-
K05		14X-32-05000	Shoe Bolt and Nut Kit		J20001-
		14X-32-11210	• Bolt	30	-
		14X-32-11220	• Nut	30	-
K06		707-99-34600	Service Kit, Hydrauric Cylinder		J20001-
		07000-12105	• O-ring	1	-
		07000-12110	• O-ring	1	-
		07145-00060	• Seal, Dust	4	-
		07146-02106	• Ring, Back-up	1	-
		07156-01112	• Ring, Wear	1	-
		707-44-11180	• Ring, Piston	1	-
		707-51-55030	• Packing, Rod	1	-
		707-51-55640	• Ring	1	-
		707-56-55540	• Seal, Dust	1	-

NUMERICAL INDEX

PartNumber	Page	Index
01010-51230	269	13
01010-61460	162	13
01010-61630	180	11
01010-80610	264	11
01010-80612	182	16
01010-80616	131	4
	132	7
	132	15
	216	29
01010-80620	117	2
	189	9
01010-80625	286	2
01010-80812	271	3
01010-80816	142	22
	155	2
	265	19
	276	19
	282	10
	282	14
	333	38
	355	38
01010-80820	118	11
	133	17
	140	4
	172	11
	172	28
	264	9
	264	28
	276	9
	282	6
	326	40
	332	30
	333	42
	334	8
	339	32
	349	40
	355	30
	356	42
	357	8
01010-80825	126	1
	128	17
	145	5
	240	4
	256	2
01010-80830	118	22
	126	22
	172	29
	179	3
	179	7
	188	5
	190	13
	216	7
	216	32
	248	10
	248	13
	249	14
	249	19
	249	23
	249	34
	250	16
	250	20
	250	34
	251	4
	251	7
	251	22
	252	32
	254	7
	269	8
	269	26
	272	11
	272	23
	274	9
	275	9
	276	2
	299	12

PartNumber	Page	Index
01010-80835	123	17
	132	4
	198	16
	221	13
	251	12
	272	30
	330	19
	353	19
01010-80840	122	22
	126	16
	131	16
01010-80845	198	21
01010-80855	198	23
01010-80865	132	21
	132	27
01010-80870	192	13
01010-80885	132	29
01010-81016	122	29
	124	2
	134	6
	140	17
	149	6
	265	4
	265	7
01010-81020	122	26
	123	14
	131	9
	131	22
	132	11
	132	24
	133	8
	133	13
	133	24
	133	28
	142	12
	143	12
	144	18
	149	4
	149	11
	149	14
	150	5
	150	8
	151	4
	151	12
	151	17
	151	24
	152	5
	152	8
	152	11
	152	16
	153	2
	154	27
	154	32
	180	8
	199	7
	200	16
	200	18
	200	35
	201	40
	213	23
	213	31
	217	22
	230	17
	230	20
	238	24
	252	37
	253	12
	256	5
	257	5
	257	8
	257	20
	257	24
	257	30
	257	34
	257	38

PartNumber	Page	Index
	271	7
	271	16
	271	22
	283	20
	292	1
	292	20
	294	3
	316	4
01010-81025	45	2
	118	19
	126	19
	128	12
	131	2
	133	20
	139	5
	140	8
	144	27
	151	7
	151	20
	154	7
	154	10
	154	36
	174	3
	181	9
	186	23
	187	3
	187	27
	188	18
	197	19
	199	2
	221	6
	231	7
	252	2
	253	23
	255	1
	257	27
	277	2
01010-81030	44	2
	116	2
	122	20
	126	5
	128	15
	138	17
	138	21
	138	25
	138	29
	138	36
	159	4
	160	10
	188	13
	190	4
	229	25
	251	1
	251	9
	252	5
	330	1
	330	29
	353	1
	353	29
01010-81035	139	33
	139	35
	159	9
	159	16
	159	20
	176	9
	186	9
	186	16
	187	24
	211	14
	251	30
	256	9
	272	15
01010-81040	135	10
	154	17
	169	22

PartNumber	Page	Index
	186	5
	186	21
	203	8
	217	20
	330	16
	353	16
01010-81045	129	7
	232	5
	283	17
01010-81050	228	2
	247	10
	252	7
	252	26
	256	11
	362	1
01010-81055	127	2
	154	22
	335	11
	358	11
01010-81060	144	20
	159	27
	229	6
01010-81065	169	14
	173	23
	335	10
	358	10
01010-81070	190	30
01010-81075	131	6
01010-81080	335	7
	358	7
01010-81085	134	3
	190	16
01010-81090	198	27
01010-81095	200	24
	222	9
01010-81220	134	14
	144	16
	152	22
	152	25
	153	5
	199	30
	213	27
	215	4
	215	8
	229	30
	230	6
	233	4
	236	16
	238	9
	243	48
	245	44
	247	7
	256	16
	287	2
	314	6
	314	10
01010-81225	139	8
	139	22
	145	8
	152	2
	185	4
	185	7
	185	13
	204	9
	207	9
	211	3
	214	40
	220	17
	221	1
	221	8
	232	8
	232	16
	233	2
	233	7
	238	19
	263	2
	263	10
	264	4
	268	11
	274	17
	274	27
	275	17
	275	27
	277	10
	280	12
	280	18
	284	4
	284	9
	284	14
	284	18
	284	22
	286	12
	288	4
	289	3
	289	6
	289	18
	289	24
	290	3
	290	6
	290	9
	290	12
	290	15
	290	29
	290	35
	292	2
	292	21
	293	2
	293	7
	293	9
	293	12
	293	19
	306	20
	316	9
	331	39
	336	5
	336	9
	353	39
	359	5
	359	9
01010-81230	129	30
	129	32
	132	18
	211	21
	216	26
	231	27
	236	7
	236	13
	240	10
	242	9
	242	26
	242	29
	242	32
	242	36
	244	22
	244	25
	244	28
	244	32
	248	3
	268	6
	270	3
	277	15
	290	38
	291	5
	293	5
	296	5
	315	23
	318	22
	336	2
	338	14
	342	22
	359	2
	360	22
01010-81235	123	3
	123	7
	132	2
	142	24
	152	20
	160	22
	162	8
	162	16
	162	20
	163	5
	163	13
	163	15
	176	3
	177	4
	178	4
	179	10
	181	1
	183	13
	184	3
	198	2
	204	12
	205	5
	205	13
	205	17
	206	31
	207	12
	208	5
	208	13
	208	17
	209	31
	280	23
	285	3
	286	6
	286	9
	289	21
	290	32
	294	5
	299	19
	318	28
	318	32
	320	8
	320	27
	322	2
	323	25
	324	3
	325	5
	325	17
	325	27
	326	31
	328	2
	338	20
	338	24
	339	5
	339	13
	339	23
	339	27
	342	28
	342	32
	344	8
	344	27
	346	2
	346	25
	347	3
	348	5
	348	17
	348	27
	348	31
	351	2
	360	28
	360	32
01010-81240	182	9
	182	19
	202	2

PartNumber	Page	Index
	202	5
	202	8
	213	34
	232	2
	232	19
	242	33
	242	37
	242	40
	244	29
	244	33
	244	36
01010-81245	163	19
	198	6
	198	10
	228	9
	250	10
	268	16
	285	7
	289	12
	290	23
	293	16
	318	4
	318	19
	321	42
	330	10
	338	4
	342	4
	342	19
	345	42
	353	10
	360	4
	360	19
01010-81250	123	9
	128	2
	144	25
01010-81255	185	17
	285	11
01010-81260	123	11
	129	24
	318	33
	328	3
	328	11
	338	25
	342	33
	351	3
	351	11
	360	33
01010-81265	158	5
	230	11
	232	12
01010-81270	129	16
	199	12
	199	23
	202	11
	211	33
01010-81275	211	35
01010-81280	139	27
	330	9
	353	9
01010-81285	122	33
01010-81295	320	7
	344	7
01010-81435	324	12
	347	12
01010-81450	321	35
	344	35
01010-81455	139	30
01010-81630	228	15
	303	10
01010-81635	236	10
01010-81640	237	8
	237	12
	238	3
	238	14
01010-81645	220	14

PartNumber	Page	Index
	227	2
	236	4
	242	12
	242	15
	242	19
	244	8
	244	11
	244	15
	296	2
	298	19
01010-81650	195	1
01010-81655	299	29
01010-81660	142	14
	143	14
01010-81670	362	13
01010-81675	194	2
	263	7
	263	15
01010-81695	194	3
	200	27
01010-81840	307	3
01010-81845	308	2
01010-81865	302	1
	307	5
01010-82050	289	9
	290	20
	311	26
	324	21
	347	21
01010-82055	299	28
01010-82060	204	3
	207	3
	210	1
01010-82065	310	16
01010-82080	237	3
01010-82085	303	13
01010-82460	242	2
	244	2
	263	5
	263	13
01010-82465	317	1
	341	1
01010-82475	205	28
	206	40
	208	28
	209	40
01010-82480	295	2
	295	6
01010-D0816	121	35
01010-D0820	121	14
	121	29
	121	32
01010-D0860	119	5
01010-D0865	119	10
01010-D1016	121	7
01010-D1020	119	8
	119	20
	119	28
	119	33
	120	38
	121	2
	121	5
	121	10
	121	17
	121	24
01010-D1025	119	30
	119	35
	121	19
01010-D1035	120	41
01010-D1095	119	13
01010-D1225	266	4
01010-E1020	121	22
01010-E1025	119	16
01010-E1030	119	25
01010-E1075	119	2

PartNumber	Page	Index
01010-E1085	122	17
01010-E1095	119	17
	119	22
01010-E1235	122	12
01011-51235	315	17
01011-81005	128	27
	190	17
01011-81010	172	33
01011-81025	190	32
01011-81030	335	6
	358	6
01011-81065	335	9
	358	9
01011-81080	330	25
	330	31
	353	25
	353	31
01011-81200	129	20
	320	19
	344	19
01011-81205	184	29
01011-81225	328	24
	351	24
01011-81230	328	23
	351	23
01011-81400	320	4
	344	4
01011-81600	315	9
01011-81605	246	9
01011-81615	246	8
01011-81660	281	3
01011-81690	281	5
01011-82000	210	2
01011-82035	130	3
01011-82040	285	9
01011-82420	242	22
	244	18
01011-82465	310	10
01011-83000	203	1
	315	26
01011-E1000	122	18
01011-E1025	121	21
01011-E1075	122	16
01016-50830	269	15
01050-31230	101	9
01050-51480	162	25
01050-51670	160	15
01050-61260	123	20
01052-51260	319	40
	338	32
	343	40
	361	40
01084-01650	182	5
01099-03417	311	16
01124-51235	320	20
	344	20
01124-53070	317	3
	341	3
01220-40312	264	26
01220-40512	265	12
01224-40616	220	13
01252-40820	256	7
01252-41030	247	3
01252-60620	223	25
01252-60625	223	24
01252-61035	197	16
01252-70514	220	6
01252-70860	166	48
01252-71250	184	25
01253-61200	197	12
01253-61210	196	14
01253-61615	226	14
01253-71210	329	11
	352	11
01306-11025	174	21

PartNumber	Page	Index
	174	30
01435-00610	81	4
01435-00812	230	23
01435-00820	81	2
01435-00825	89	1
01435-00885	84	20
01435-00895	84	18
01435-01020	101	8
01435-01250	103	5
01435-21014	138	9
	138	11
	138	14
01437-01070	122	4
01439-00814	271	12
	271	20
01439-00820	271	30
01439-01025	277	5
01439-01225	277	8
	293	14
	293	21
01508-20805	250	5
01508-40603	269	32
01508-40805	216	10
	250	29
	251	15
	254	14
	267	3
01508-41006	251	36
	252	22
01508-41408	268	35
01530-04812	322	9
	346	9
01580-10605	131	12
	216	31
	269	29
01580-10806	134	11
	172	3
	172	8
	216	11
	249	28
	250	4
	250	25
	251	16
	251	28
	253	22
	254	12
	267	6
	269	16
	269	22
	332	5
	333	34
	355	5
	355	34
01580-11008	122	6
	154	3
	174	12
	175	39
	247	11
	252	27
01580-11210	101	6
	122	35
	129	22
	240	6
	268	29
	269	6
	320	22
	344	22
01580-11613	129	34
01580-13024	317	4
	341	4
01582-01411	78	5
01582-11008	247	6
	252	18
	252	24
	272	19
01582-11210	188	10
01582-11411	217	4
	217	6
	243	43
	244	39
	268	33
01582-11613	182	6
	298	14
01583-02414	128	22
01584-00605	52	5
01590-30809	217	10
	249	33
	250	12
	250	26
	251	26
	254	16
	255	3
	255	7
01592-11215	319	41
	338	33
	343	41
	361	41
01593-11008	251	33
01593-31008	272	17
01593-31411	217	2
	268	30
01596-01211	315	18
01596-02419	242	24
	244	20
01597-01009	180	14
	228	18
	229	3
01598-00608	216	20
01598-00809	216	5
	253	16
	269	20
01601-20513	220	7
01602-20825	330	20
	332	31
	333	43
	334	9
	353	20
	355	31
	356	43
	357	9
01602-21030	174	13
	175	40
	330	17
	330	30
	335	8
	353	17
	353	30
	358	8
01602-21236	311	24
01640-20610	81	5
	131	13
	216	21
01640-20816	134	12
	276	15
01640-21223	122	34
01640-23550	318	17
	342	17
	360	17
01641-20305	264	27
01641-20508	265	13
01641-20608	216	13
	253	9
	269	30
	270	7
	272	32
	273	38
	274	7
	275	7
01641-20812	274	2
	275	2
	283	30
01641-21016	292	3
	292	22
01641-21223	268	27
01643-30623	117	3
	131	5
	132	8
	132	16
	182	17
	189	10
	216	24
	216	30
	252	14
	264	12
	286	3
01643-30823	70	11
	71	6
	118	12
	118	23
	122	23
	123	18
	126	2
	126	17
	126	23
	128	6
	128	11
	128	18
	131	17
	132	5
	132	22
	132	28
	132	30
	133	18
	140	5
	142	23
	145	6
	155	3
	172	12
	172	30
	192	14
	221	14
	240	5
	248	11
	248	14
	249	15
	249	20
	249	29
	249	35
	250	6
	250	17
	250	21
	250	35
	251	5
	251	8
	251	18
	251	23
	252	33
	254	8
	254	11
	256	3
	264	10
	264	29
	265	20
	269	9
	269	25
	271	4
	272	12
	272	24
	274	10
	275	10
	276	3
	276	10
	276	17
	276	20
	282	11

PartNumber	Page	Index
	282	15
	299	13
	326	41
	339	33
	349	41
01643-31032	37	1
	44	3
	45	3
	91	7
	116	3
	118	20
	118	21
	119	3
	119	18
	119	23
	119	26
	121	23
	122	5
	122	19
	122	21
	122	27
	122	30
	123	15
	124	3
	126	6
	126	20
	127	3
	128	13
	128	16
	128	28
	129	8
	131	3
	131	7
	131	10
	131	23
	132	12
	132	25
	133	9
	133	14
	133	21
	133	25
	133	29
	134	4
	134	7
	135	11
	138	18
	138	22
	138	26
	138	30
	138	37
	139	6
	139	34
	139	36
	140	9
	140	18
	142	13
	143	13
	144	19
	144	21
	144	28
	149	5
	149	7
	149	12
	149	15
	150	6
	150	9
	151	5
	151	8
	151	13
	151	18
	151	21
	151	25
	152	6
	152	9
	152	12
	152	17
	153	3
	154	4
	154	8
	154	18
	154	23
	154	28
	154	33
	154	37
	159	5
	159	10
	159	17
	159	21
	159	28
	160	11
	169	15
	169	23
	172	34
	173	24
	174	4
	176	10
	180	9
	180	15
	181	10
	186	24
	187	28
	188	14
	188	19
	190	5
	190	18
	190	31
	190	33
	198	28
	199	3
	199	8
	200	17
	200	19
	200	25
	200	36
	201	41
	203	9
	211	15
	213	24
	213	32
	217	21
	217	23
	221	7
	222	10
	228	3
	228	19
	229	4
	229	7
	229	26
	230	18
	230	21
	231	8
	232	6
	238	25
	247	4
	251	2
	251	10
	251	31
	252	3
	252	6
	252	38
	253	13
	253	24
	255	2
	256	6
	256	10
	256	12
	257	6
	257	9
	257	21
	257	25
	257	28
	257	31
	257	35
	257	39
	265	5
	265	8
	271	8
	271	17
	271	23
	274	11
	275	11
	277	3
	283	18
	283	21
	292	4
	292	23
	294	4
	316	5
	330	2
	330	24
	330	32
	335	12
	353	2
	353	24
	353	32
	358	12
01643-31232	101	5
	101	10
	122	13
	123	4
	123	8
	123	10
	123	12
	123	21
	128	3
	129	17
	129	21
	129	25
	129	26
	129	31
	129	33
	132	3
	132	19
	134	15
	139	9
	139	23
	139	28
	142	25
	144	17
	144	26
	145	9
	152	3
	152	21
	152	23
	152	26
	153	6
	160	23
	162	9
	162	17
	162	21
	163	6
	163	14
	163	16
	163	20
	176	4
	177	5
	178	5
	179	11
	181	2
	182	10
	182	20
	183	14
	184	4
	184	24
	184	28

PartNumber	Page	Index
	185	5
	185	8
	185	14
	185	18
	198	3
	199	13
	199	24
	199	31
	202	3
	202	6
	202	9
	202	12
	204	10
	204	13
	205	6
	205	14
	205	18
	206	32
	207	10
	207	13
	208	6
	208	14
	208	18
	209	32
	211	4
	211	22
	211	34
	211	36
	213	28
	213	35
	213	36
	214	41
	215	5
	215	9
	216	27
	220	18
	221	2
	221	9
	228	10
	229	31
	230	7
	230	12
	231	28
	232	3
	232	9
	232	13
	232	17
	232	20
	233	3
	233	5
	233	8
	236	8
	236	14
	236	17
	238	10
	238	20
	240	7
	240	11
	242	10
	242	27
	242	30
	242	34
	242	38
	243	41
	243	49
	244	23
	244	26
	244	30
	244	34
	244	37
	245	45
	247	8
	250	11
	256	17
	263	3
	263	11
	264	5
	268	7
	268	12
	269	14
	270	4
	274	18
	274	28
	275	18
	275	28
	277	11
	277	16
	280	13
	280	19
	280	24
	284	10
	284	19
	284	23
	285	4
	285	8
	285	12
	286	7
	286	10
	286	13
	287	3
	288	5
	289	4
	289	7
	289	19
	289	22
	289	25
	290	4
	290	7
	290	10
	290	13
	290	16
	290	30
	290	33
	290	36
	290	39
	291	6
	292	5
	292	24
	293	3
	293	6
	293	8
	293	13
	293	17
	293	20
	294	6
	296	6
	299	20
	306	21
	314	7
	314	11
	316	10
	318	5
	318	20
	318	23
	318	29
	318	34
	320	9
	320	21
	320	28
	321	43
	322	3
	323	26
	324	4
	325	6
	325	18
	325	28
	326	32
	328	4
	328	12
	328	25
	330	11
	331	40
	336	3
	336	6
	336	10
	338	5
	338	15
	338	21
	338	26
	339	6
	339	14
	339	24
	339	28
	342	5
	342	20
	342	23
	342	29
	342	34
	344	9
	344	21
	344	28
	345	43
	346	3
	346	26
	347	4
	348	6
	348	18
	348	28
	348	32
	351	4
	351	12
	351	25
	353	11
	353	40
	359	3
	359	6
	359	10
	360	5
	360	20
	360	23
	360	29
	360	34
01643-31445	139	31
	162	14
	243	44
	244	40
	324	13
	347	13
01643-31645	142	15
	143	15
	160	16
	180	12
	194	4
	195	2
	200	28
	220	15
	227	3
	228	16
	236	5
	236	11
	237	9
	237	13
	238	4
	238	15
	242	13
	242	16
	242	20
	244	9
	244	12
	244	16
	246	10
	263	8
	263	16
	280	10
	281	4

PartNumber	Page	Index
	296	3
	298	15
	298	20
	299	30
01643-31845	302	2
	307	4
	307	6
	308	3
01643-32060	130	4
	204	4
	207	4
	210	3
	237	4
	285	10
	289	10
	290	21
	303	14
	310	17
	311	27
	324	22
	347	22
01643-32460	128	23
	206	41
	209	41
	242	3
	242	23
	244	3
	244	19
	263	6
	263	14
	310	11
	317	2
	341	2
01643-33080	203	2
	315	27
	317	5
	341	5
01643-50823	166	49
	179	4
	179	8
	188	6
	190	14
	198	17
	198	22
	333	39
	355	39
01643-51032	135	16
	186	4
	186	8
	186	15
	186	20
	187	2
	187	25
	197	17
	197	20
	229	12
	362	11
01643-51232	128	8
	158	6
	196	15
	197	13
	198	7
	198	11
	248	4
	268	17
	315	24
	329	12
	352	12
01643-51645	226	15
	315	10
01643-70823	119	6
	119	11
	121	15
	121	30
	121	33
	121	36
01643-71032	119	9
	119	14
	119	21
	119	29
	119	31
	119	34
	120	36
	120	39
	120	42
	121	3
	121	6
	121	8
	121	11
	121	18
	121	20
01643-71232	266	5
01658-04823	322	10
	346	10
01803-02228	206	39
	209	39
02090-11270	312	8
02290-11219	312	9
02760-003A5	200	37
02761-003A4	200	32
02762-00612	199	17
02763-004A9	199	4
02781-00422	199	14
02781-00628	199	18
02782-10315	193	10
	193	16
02782-10316	193	12
02782-10423	193	1
02782-10628	193	4
	193	7
02782-50315	187	19
02896-61009	187	21
	193	11
	193	13
	193	17
	200	30
02896-61012	193	2
	199	15
02896-61018	186	18
	193	5
	193	8
	198	19
	199	19
04010-00516	179	2
	179	6
	249	13
	249	18
	250	18
	250	22
	251	24
	254	3
	272	10
	272	22
	276	5
04010-00519	188	7
	190	12
	250	33
04010-00722	318	21
	342	21
	360	21
04020-00514	129	15
04020-00820	159	6
	190	3
	321	36
	329	13
	344	36
	352	13
04020-01024	196	13
	197	2
	197	11
04020-01228	160	12
	164	7
	164	20
	165	8
	165	18
	165	35
	167	33
	176	2
	195	4
	226	13
	318	2
	338	2
	342	2
	360	2
04020-01434	159	24
04020-01638	194	5
	203	3
04025-00316	189	14
04025-00320	187	8
04025-00332	272	7
04025-00520	249	25
04050-00060	319	37
	338	29
	342	37
	361	37
04050-01618	332	21
	355	21
04050-06050	340	5
04050-11208	320	17
	344	17
04050-11612	216	15
	217	17
	252	15
	253	10
	270	6
	273	39
	274	8
	275	8
04050-12015	217	11
	249	32
	250	13
	250	27
	250	30
	251	27
	252	20
	253	21
	254	17
	255	4
	255	8
	272	27
	272	36
	274	3
	274	21
	275	3
	275	21
	276	14
	283	31
	292	6
	292	25
04050-12018	251	34
	272	18
04050-13020	292	7
	292	26
04050-13022	188	12
	188	16
	217	3
	268	24
	268	26
	268	31
	283	25
04050-13025	319	42
	338	34
	343	42
	361	42
04050-14025	311	11

PartNumber	Page	Index
	311	21
	311	30
04050-18080	312	11
04052-10633	272	33
04059-01010	174	22
	174	31
	187	9
04064-02012	174	19
	174	28
04064-02512	168	24
04064-03515	161	4
04064-04518	167	26
	299	23
04064-04819	167	31
04064-05020	323	28
	346	28
04064-06020	135	4
04064-07025	159	33
	183	12
04064-07525	159	22
	184	31
04064-08530	166	47
04064-09030	167	25
	328	16
	351	16
04065-01104	135	5
	183	11
04065-01154	303	11
04065-01210	171	8
04065-02012	231	17
04065-03012	172	4
04065-03515	329	7
	352	7
04065-04018	196	9
04065-05220	168	12
	226	9
04065-07225	161	3
04065-07525	167	21
04065-08025	128	26
04065-08225	322	13
	346	13
04065-08530	237	18
04070-00105	167	12
	184	6
04071-00125	160	20
04071-00140	159	11
	328	13
	351	13
04071-00145	165	16
04071-00160	324	20
	347	20
04077-00090	299	18
04077-00110	325	10
	348	10
04077-00140	321	45
	345	45
04082-00206	331	38
	353	38
04082-00212	315	22
04205-10522	216	23
04205-10618	217	16
04205-10622	216	14
04205-10625	270	5
04205-10822	252	19
	253	20
04205-10825	272	26
	274	20
	275	20
	276	13
04205-10828	283	29
04205-11235	188	11
	188	15
04205-11238	268	23
04210-20832	253	19
	272	25

PartNumber	Page	Index
	274	19
	275	19
	276	12
04211-21266	188	8
04244-40805	253	18
04244-51226	188	9
04245-40805	250	24
	269	23
04245-41471	217	7
04248-30817	251	14
04248-30823	267	5
04250-80847	216	12
	217	12
	248	12
	249	21
	250	23
	251	11
	255	10
	269	21
	272	28
04250-81056	247	12
	252	23
	272	13
04250-81474	217	1
	268	32
04250-90847	216	6
	250	2
	250	28
	254	13
	267	4
04250-91056	251	29
	251	32
04252-20853	249	27
	251	25
04252-21061	272	16
04254-10823	216	8
	216	33
	249	22
	251	13
	269	27
	272	29
04254-11032	247	9
	252	25
	272	14
04256-40817	249	26
	250	3
	251	17
	254	10
	269	24
	276	16
04256-50615	269	28
04260-00635	167	6
	167	18
	168	7
	168	22
	332	26
	355	26
04260-00952	326	34
	348	34
04418-13060	160	6
	169	7
	312	13
	318	12
	338	12
	342	12
	360	12
	364	9
04434-50610	133	23
	151	3
04434-50810	180	7
	252	34
	256	13
04434-51010	131	20
	132	10
	149	3

PartNumber	Page	Index
	149	9
	150	4
	152	15
	257	33
	257	37
04434-51210	120	40
	252	36
04434-51310	131	8
04434-51312	142	28
	238	8
04434-51410	131	19
	133	22
	144	10
	144	13
	149	10
	150	7
	153	1
	257	19
04434-51510	126	12
04434-51512	243	47
	245	43
04434-51608	33	7
04434-51610	140	16
	252	35
04434-51612	33	10
04434-51710	131	21
04434-51810	140	13
04434-51910	134	5
	152	7
04434-51912	151	16
	152	18
	213	26
	213	33
	229	28
04434-52112	200	11
	200	14
	200	33
	201	38
04434-52310	144	14
	151	11
	257	4
	257	22
	257	23
04434-52312	139	21
	144	8
	213	25
04434-52510	152	14
04434-52710	132	23
	133	7
	265	3
	265	6
04434-52712	151	15
	199	5
	213	22
	314	4
04434-53210	151	10
04434-53211	144	11
	154	15
	154	20
	154	34
04434-53212	144	9
04434-53411	133	12
04434-53412	199	26
	199	28
	199	33
	215	1
	215	6
04435-50510	133	27
04435-50810	316	6
06000-06207	135	14
06000-06212	135	6
06000-06311	162	4
	162	6
06000-06917	166	46
06000-06921	167	11

PartNumber	Page	Index
06002-30209	320	13
	344	13
06002-30212	320	12
	344	12
06002-30310	322	12
	346	12
06002-32213	325	20
	325	25
	339	16
	339	21
	348	20
	348	25
06002-32314	325	4
	339	4
	348	4
06030-06014	183	10
06030-06018	328	14
	351	14
06030-06205	168	11
06030-06215	184	23
06030-06918	167	24
06030-06921	184	5
06037-06206	128	25
06037-06307	128	24
06040-06018	322	17
	346	17
06040-06311	320	25
	320	30
	344	25
	344	30
06041-00216	321	44
	345	44
06043-06214	159	31
06120-01612	190	7
06120-02016	174	26
06120-02216	190	8
06120-03520	318	15
	342	15
	360	15
06123-01414	216	3
	249	3
	249	9
	272	3
	276	7
06123-01416	251	20
06123-01614	248	9
	249	5
06123-02018	250	8
06124-01416	249	4
	255	9
	272	5
06124-02020	188	3
	253	2
	254	9
	268	8
	269	11
06124-03020	268	9
	269	10
06124-03520	249	6
06300-32015	205	2
	208	2
06302-32213	182	2
06340-06010	129	5
06340-06309	129	3
06342-02218	324	19
	347	19
07000-02060	200	23
07000-02085	142	11
	143	11
	324	6
	347	6
07000-02105	320	11
	344	11
07000-02130	320	24
	321	39
	344	24
	344	39
07000-02145	320	31
	344	31
07000-03088	324	24
	347	24
07000-05130	322	7
	346	7
07000-05135	327	19
	350	19
07000-05140	325	19
	339	15
	348	19
07000-05170	325	3
	339	3
	348	3
07000-05190	327	20
	350	20
07000-05240	324	16
	347	16
07000-11003	223	3
07000-11007	224	22
	224	30
	224	34
07000-11008	222	8
07000-11009	224	28
07000-12018	224	7
07000-12020	222	7
07000-12030	326	30
	339	26
	348	30
07000-12060	228	8
07000-12090	220	12
	228	4
07000-12105	303	5
	313	9
	372	
07000-12110	313	8
	372	
07000-12120	222	4
07000-12125	237	11
07000-12130	227	1
07000-13022	326	38
	339	30
	349	38
07000-13025	221	4
07000-13032	229	13
	229	24
	231	22
07000-13035	229	5
07000-15140	205	15
	208	15
07000-15165	205	19
	208	19
07000-15230	205	7
	206	33
	208	7
	209	33
	324	5
	347	5
07000-15320	204	14
	207	14
07000-72012	190	27
	191	1
07000-72014	191	2
07000-72015	190	28
	190	34
	332	25
	355	25
07000-72016	335	13
	358	13
07000-72018	184	2
	184	19
	185	20
	185	22
	334	6
	335	14
	357	6
	358	14
07000-72020	165	5
	176	12
	335	15
	358	15
	372	
07000-72021	330	34
	331	42
	353	34
	354	42
07000-72022	185	16
07000-72055	181	5
07000-72060	198	5
07000-72065	185	3
07000-72070	162	11
	372	
07000-72075	181	3
	195	5
07000-72080	177	2
07000-72085	181	8
	330	3
	330	7
	353	3
	353	7
07000-72090	163	4
	185	12
	372	
07000-72100	163	10
	372	
07000-72105	198	1
	320	14
	344	14
07000-72110	163	9
	211	13
	368	2
	372	
07000-73022	169	9
	169	17
	169	19
	184	22
	186	7
	186	14
	187	23
	330	22
	353	22
	372	
07000-73025	169	10
	169	20
	186	3
	186	19
	198	15
	328	6
	330	21
	330	26
	330	28
	331	37
	351	6
	353	21
	353	26
	353	28
	353	37
	372	
07000-73028	169	11
	198	26
	331	36
	353	36
	372	
07000-73030	160	8
	165	23
	173	25
	181	6
	198	20

PartNumber	Page	Index
	372	
07000-73032	160	9
	330	15
	353	15
	372	
07000-73035	165	24
	203	7
	332	23
	355	23
	372	
07000-73038	172	13
	177	3
	335	16
	358	16
	372	
07000-73042	178	3
	372	
07000-73045	163	18
	372	
07000-73048	198	9
	333	41
	356	41
07000-75042	162	26
07000-75055	160	17
	372	
07000-75170	160	25
	372	
07000-75195	184	26
07000-75210	162	18
	372	
07000-75260	162	22
	372	
07000-75365	184	8
07000-75375	195	3
07000-75500	181	4
07000-B2015	174	9
	174	33
	372	
07000-B2018	200	31
07000-E3038	197	21
07001-01003	223	4
07001-01007	224	31
	224	35
07001-01009	224	29
07001-02018	224	8
07002-02434	332	8
	334	15
	334	19
	355	8
	357	15
	357	19
07002-03034	171	2
	173	4
	173	14
	173	22
	372	
07002-03634	318	8
	318	25
	338	8
	338	17
	342	8
	342	25
	360	8
	360	25
07002-11023	224	24
	231	14
07002-11223	224	33
07002-11423	224	11
	224	26
	229	17
07002-12034	224	21
	225	6
	231	26
	231	34
07002-12434	224	9
	224	13
	225	4
	225	8
	229	33
	231	3
	231	31
	237	15
07002-13334	229	15
	229	20
07002-13634	204	6
	207	6
07002-14234	145	3
	231	16
07002-21423	260	4
07002-21823	260	5
07002-22434	62	2
	211	18
	211	39
	260	6
07002-32434	135	9
	189	6
	190	23
07002-33034	189	11
07002-61023	213	21
07002-61423	187	10
07002-62034	187	18
	187	20
	193	3
	193	14
	193	18
	199	16
07002-62434	169	5
	192	9
	192	11
	193	6
	193	9
	199	20
	211	25
	372	
07002-63634	185	10
07002-64234	187	11
07002-72015	190	29
07005-00812	125	8
07005-01012	108	5
07005-01212	85	9
	85	16
	180	4
	372	
07005-01412	124	5
	126	8
	126	14
	139	16
	186	11
07012-00035	318	14
	342	14
	360	14
07012-10070	162	27
07012-10075	320	10
	344	10
07012-10140	324	25
	347	25
07012-50058	129	13
07012-50075	129	12
07012-50085	135	7
07012-50110	160	24
07013-50062	205	3
	208	3
07018-10552	170	2
07018-31054	159	7
	372	
07020-00000	129	9
	310	14
	311	17
	311	25
	316	3
	362	2
07020-00675	238	5
	238	21
07020-00900	299	10
07029-00000	129	10
07030-00252	211	5
	318	26
	338	18
	342	26
	360	26
07030-10252	135	17
07040-10807	159	15
07040-11007	231	13
07040-12012	231	25
07040-12412	192	10
	211	17
07040-12414	237	14
07040-13618	318	24
	338	16
	342	24
	360	24
07040-14220	187	12
07042-20108	173	2
	213	39
	332	2
	355	2
07042-20312	335	5
	358	5
07042-30108	211	16
07042-30312	328	5
	351	5
07042-70108	178	2
	249	7
07042-70211	142	7
	143	7
07042-70617	142	9
	143	9
07042-80108	163	21
	176	8
	193	15
	198	25
07043-00108	129	14
	318	1
	318	10
	338	1
	338	10
	342	1
	342	10
	360	1
	360	10
07043-00211	335	4
	358	4
07043-00312	322	6
	323	27
	335	3
	346	6
	346	27
	358	3
07043-70108	160	3
	327	10
	350	10
07043-70211	159	2
	162	10
	169	3
	179	9
	187	4
	189	2
07043-70312	169	13
	172	32
	184	21
	204	7
	207	7
07043-70415	164	2
	172	31
07043-70617	169	2

PartNumber	Page	Index
07043-A0617	160	4
07044-12412	135	8
	169	4
07044-13620	204	5
	207	5
	318	7
	338	7
	342	7
	360	7
07046-15020	362	6
07048-02216	160	2
07049-01012	233	10
07049-01215	185	15
	233	9
	246	2
	261	2
	264	8
	277	17
	306	22
	315	19
07049-01620	180	16
	194	6
	210	4
	236	18
07049-01822	306	23
07049-02025	237	5
07049-02430	203	4
07049-03038	203	5
07052-31217	298	16
	300	9
	301	9
07058-00001	145	1
07059-11830	304	11
	305	11
07059-20721	304	12
	305	12
07063-01054	211	9
	368	1
07094-10620	211	31
07094-20620	211	30
07094-30417	232	10
07094-30518	230	9
	230	10
07094-30620	199	11
	199	21
07095-00420	232	11
07095-00627	199	10
	199	22
07095-00628	211	32
07095-00630	231	35
07095-20213	229	29
07095-20314	200	12
	200	15
	200	34
	201	39
07095-20318	152	13
07095-20420	199	6
	314	5
07095-20522	154	35
	213	30
	230	5
07095-20523	144	12
	151	9
	154	16
	154	21
07095-20627	133	11
	199	25
	199	29
	199	34
	211	40
	215	2
	215	7
07102-20206	229	27
07102-20621	178	6
	211	27
07102-20628	163	22
	211	26
07102-210A4	229	18
07108-20610	199	27
	212	43
	215	11
07108-20615	199	32
	212	42
	215	12
07143-10606	313	3
	313	5
07145-00060	313	4
	313	6
	315	3
	315	6
	372	
07146-02106	313	10
	372	
07155-00720	299	24
07156-01112	313	18
	372	
07177-07530	299	2
	299	15
07177-08030	299	5
07179-12069	313	11
07206-30812	180	2
07206-31014	124	4
	126	7
	126	13
	139	15
	186	12
07213-50813	180	6
07230-20628	211	37
	231	1
	231	30
07235-10210	229	16
07235-10422	231	32
07235-10423	231	33
07235-10628	211	23
07235-10630	211	24
07236-10628	231	29
07236-11034	229	19
07260-02609	330	12
	353	12
07260-04111	228	12
07260-23211	211	7
07260-24713	198	12
07270-00872	220	9
07270-01035	142	26
	143	16
07270-01525	138	32
07270-21550	123	22
07280-01920	138	33
07281-00289	33	4
07281-00489	70	3
	330	13
	353	13
07283-32738	180	13
07283-33442	229	2
07283-34346	228	17
07285-00085	144	7
07285-00095	220	8
07285-00100	83	6
07285-00110	140	12
	140	15
07285-00115	142	27
	143	17
07285-00125	126	11
07285-00150	139	19
	144	6
07285-00180	123	23
07285-00200	33	13
07286-00855	126	10
07288-01003	142	17
07289-00045	211	6
07289-00055	198	13
	228	6
	228	13
07289-00070	139	2
	139	3
	139	11
	139	12
07299-00070	37	5
07299-00120	118	15
07299-00130	118	14
07325-10200	142	8
	143	8
07336-60416	169	21
07371-31049	229	10
07372-21030	135	15
07372-21035	229	11
07372-21045	362	10
07372-21240	128	7
07621-00537	230	1
07621-00542	230	2
07700-40240	142	4
	142	18
	143	4
	145	
	145	12
07730-50004	138	31
07750-01623	190	20
07750-01628	190	21
07950-90403	370	15
07952-70004	370	14
08000-00000	148	2
08000-00001	148	3
08000-02215	148	1
08006-40255	154	2
08017-31308	140	11
08017-31910	139	18
08017-81031	144	2
08017-81929	144	5
08017-81935	144	3
08020-00000	257	11
08023-04007	265	15
08028-46040	134	13
08028-CD100	154	29
08034-00414	47	2
	265	16
	267	8
08034-00519	211	29
	231	11
	265	14
08034-00536	230	8
08034-20414	131	24
	256	14
08034-20519	150	10
	217	13
	230	15
08034-20536	212	41
08034-20823	231	36
08036-00814	217	19
08036-01414	265	18
08037-01008	274	24
	275	24
08037-01610	284	8
	284	24
08037-02512	280	21
08037-11025	246	3
08037-12036	149	2
08038-00035	151	14
	154	14
	257	2
08038-00519	131	18
	132	9
	134	9
	257	3
08038-00525	134	10
08038-42511	154	30

PartNumber	Page	Index
08041-01000	257	14
08041-02000	257	13
08041-03000	257	12
08053-00910	151	23
	152	4
08053-01510	149	13
	150	3
	151	22
	257	29
08053-01512	152	24
	153	4
	243	45
	245	41
08064-10000	257	32
08073-20505	43	3
08086-10000	264	30
08160-62430	155	1
08193-20010	132	13
	133	10
	133	26
	152	10
08210-00602	213	18
08210-00603	213	17
08210-01202	200	2
08210-01204	217	9
08210-01205	200	3
08210-01215	274	15
	275	15
08210-01221	274	13
	275	13
08210-01802	211	28
	230	14
08210-01803	213	16
	231	10
08210-01804	213	15
08210-01806	230	3
	314	3
08210-01807	200	1
08210-01811	213	14
08210-02904	199	35
08210-02930	229	9
08652-20000	264	21
08671-80030	118	8
08672-01000	118	7
09000-30006	370	2
09002-03641	370	16
09019-28035	370	4
09021-01725	370	5
09021-01928	370	6
09021-02436	370	7
09021-03246	370	8
09022-00150	370	9
09022-00250	370	10
09023-00300	370	11
09024-00300	370	12
09033-00190	370	13
09056-05513	370	1
09082-00911	370	3
09233-12020	168	4
09233-12620	168	15
09233-12920	167	4
	167	16
09233-13220	168	20
09245-04830	311	4
09249-00016	319	39
	338	31
	342	39
	361	39
09304-10835	253	3
	254	1
	274	25
	275	25
09311-41237	268	28
	269	5
09350-01415	269	18
09350-01420	253	17
09363-00850	172	2
	172	7
09370-00070	299	22
09412-00003	286	14
09415-02110	150	11
09415-02512	269	12
	271	9
	271	18
	271	24
	280	20
	290	19
	294	7
09415-02520	280	5
09415-03614	261	1
	289	13
	290	17
	290	24
09415-05022	289	8
	290	18
09461-00014	294	2
09463-00002	253	7
	272	31
09463-00006	252	13
	253	8
09601-50000	312	12
	318	11
	338	11
	342	11
	360	11
09602-10001	364	8
09607-05080	160	5
09608-05080	169	6
09637-30163	364	22
09651-A0641	364	17
09653-A0481	364	15
09654-B0641	364	19
09657-A0881	364	16
09667-A0641	364	25
09669-0000E	364	28
09690-M0063	364	10
09690-P0280	364	5
09690-P0450	364	6
09690-P0900	364	4
09802-13000	364	18
09806-B1201	364	24
09808-A0881	364	26
09920-00150	57	17
	58	4
	59	2
	60	13
09960-00611	365	2
09960-00801	365	3
09960-00802	365	4
09963-03001	364	23
09980-10550	369	1
09982-10057	369	2
100-22-15210	327	9
	350	9
102-10-46360	334	14
	357	14
103-06-32240	264	24
103-06-32250	264	23
103-15-12820	164	11
	165	28
	372	
103-15-12880	164	6
103-15-15460	172	18
103-15-29210	328	10
	351	10
103-21-21260	126	21
103-49-14280	190	26
103-60-23250	229	21
103-60-23260	229	22
104-15-25210	334	10
	357	10
104-15-25280	334	16
	357	16
104-15-25290	334	17
	357	17
104-15-25480	173	18
	334	11
	357	11
104-15-25490	173	16
	334	12
	357	12
104-43-44970	269	33
10E-60-16330	186	22
10S-43-16251	216	22
112-10-46210	334	18
	357	18
112-62-32150	199	1
112-946-4180	122	28
113-15-11641	176	11
	372	
113-15-12870	164	13
	164	18
	165	33
	372	
113-15-29110	189	8
	332	6
	355	6
113-43-23230	216	4
	253	15
	255	6
	269	19
	282	7
113-49-41111	230	16
114-40-48481	260	1
114-43-48231	271	15
114-57-41251	240	
114-57-41260	240	1
114-57-41271	240	2
114-57-41280	240	3
11Y-04-11330	142	3
	143	3
11Y-06-11560	265	
11Y-09-11140	142	16
	145	10
11Y-54-11270	286	4
120-04-41130	142	5
	142	19
	143	5
	145	
	145	13
120-09-15110	172	16
120-49-34331	190	22
124-01-55180	85	14
	85	19
124-01-55260	86	3
124-01-61130	118	9
124-06-54240	257	17
124-06-54251	265	1
1240906H91	69	
1241155H1	36	14
124-15-41910	164	16
	165	2
	165	31
	372	
124-15-41920	165	29
	372	
1241748H92	69	
124-21-51332	236	6
124-43-51272	254	4
124-43-51610	249	10
124-43-51620	249	8
124-43-51631	249	30
124-43-52160	250	31
124-43-52171	188	20
	217	14

PartNumber	Page	Index
124-43-54590	247	5
124-43-55160	269	7
124-43-64112	267	7
124-43-64120	267	1
124-43-64131	267	2
124-43-64160	223	7
124-54-52180	285	2
124-54-52190	285	1
124-54-52480	282	4
124-54-52550	284	2
	284	12
	284	17
124-54-53450	246	4
124-54-54170	292	9
	292	29
124-54-54540	271	29
124-54-62770	283	22
124-60-51131	221	11
124-60-51150	220	10
124-62-61531	213	20
125-15-11440	174	15
125-15-15141	172	5
125-15-15170	172	26
	372	
125-15-15220	172	17
125-15-15230	172	14
125-15-15260	172	23
125-15-15290	172	19
	173	17
	192	7
	334	13
	357	13
125-15-15330	172	24
125-15-15390	172	10
125-15-21640	176	5
1294601H1	34	4
	80	2
1294830H1	71	5
1294859H1	36	4
1294861H1	36	3
1295465H92	112	
1296803H1	31	4
1296823H1	31	
1296853H1	30	4
12G-43-51440	216	16
12G-72-51120	238	18
12H-15-14130	173	15
12H-15-14140	173	20
130-09-12911	237	20
130-30-13170	298	13
130-43-64260	284	5
	284	15
1304815H1	34	5
1304816H1	34	6
130-48-35H91	41	
1304869H1	69	9
130-70-13241	310	12
1307586H1	31	6
130-901-3140	326	39
	339	31
	349	39
130-961-2960	340	2
130-961-2970	340	3
130-961-2980	340	4
130-961-5730	326	35
	349	35
130-98-79210	365	1
1313235H1	36	12
134-01-61151	45	1
134-01-61290	122	15
134-01-61432	123	5
134-01-61443	123	6
134-01-61452	130	1
134-01-61461	130	2
134-01-61512	44	1
	116	1
134-01-61690	123	13
134-01-61722	124	1
134-01-61830	62	1
134-01-61840	62	3
134-01-62160	128	1
134-01-62202	129	
134-01-62241	129	23
134-01-62251	129	27
134-01-62290	129	18
134-01-62330	127	4
134-01-62341	128	5
	128	10
134-01-62350	128	29
134-01-62391	129	29
134-01-62430	129	19
134-01-62451	128	4
134-01-62520	129	2
134-01-62530	129	11
134-01-62540	129	4
134-01-62550	129	6
134-01-62610	129	1
134-01-62630	128	30
	368	7
134-01-63411	123	2
134-01-63431	126	4
134-01-63471	123	16
134-01-63490	123	19
134-01-63550	126	15
134-01-63590	126	9
134-01-63610	128	9
134-01-64410	121	
134-01-65110	119	4
134-01-65121	119	7
134-01-65131	119	24
134-01-65141	119	19
134-01-65160	119	1
134-01-65181	118	24
	122	14
134-01-65191	119	27
134-01-65221	120	37
134-01-65231	121	1
134-01-65241	121	4
134-01-65260	119	15
134-01-65280	128	14
134-01-65291	121	9
134-01-65311	119	32
134-01-65321	121	12
134-01-65330	122	25
134-01-65341	121	26
134-01-65351	121	27
134-01-65361	121	13
134-01-65371	121	28
134-01-65380	119	
134-01-65390	119	
134-01-65410	119	
134-01-65420	119	
134-01-65430	121	34
134-01-65461	121	31
134-01-65470	121	16
134-01-65480	119	12
134-01-65490	119	
134-01-71130	118	13
134-01-71164	122	24
134-01-71210	123	1
134-01-71221	122	10
134-01-71640	122	31
134-01-72280	122	1
134-03-61123	139	32
134-03-61130	139	25
134-03-61250	138	4
134-03-61261	138	5
134-03-61271	138	10
134-03-61281	138	12
134-03-61310	139	4
134-03-61360	138	6
134-03-61370	138	7
134-03-61410	139	20
134-03-61430	138	15
134-03-61440	138	19
134-03-61450	138	23
134-03-61460	138	27
134-03-61470	138	13
134-03-61511	138	1
134-03-61530	138	16
134-03-61540	138	20
134-03-61550	138	24
134-03-61560	138	28
134-03-61570	138	34
134-03-62110	139	1
134-03-62120	139	10
134-03-62130	140	10
134-03-62150	139	17
134-03-62170	139	13
134-03-62210	138	3
134-03-62220	138	8
134-03-65160	138	35
134-03-71711	140	3
134-03-71721	140	6
134-04-61180	142	2
	143	2
134-04-61190	145	11
134-04-61240	144	15
134-04-61250	145	
134-04-66160	142	20
134-04-66172	142	21
134-04-67110	142	1
	143	1
134-04-67120	144	1
134-04-67130	144	4
	145	14
134-06-61320	256	15
134-06-61390	151	2
134-06-61410	243	42
	244	38
134-06-61430	154	25
134-06-61440	257	18
134-06-61511	150	1
134-06-61521	149	1
	155	4
134-06-61530	265	17
134-06-61612	265	9
134-06-61650	265	
134-06-61660	265	
134-06-61670	265	
134-06-61810	154	5
134-06-61821	154	6
134-06-61831	154	9
134-06-61840	154	31
134-06-61850	154	1
134-06-61860	154	12
134-06-62110	257	1
134-06-62120	256	4
134-06-63134	265	2
134-06-63140	134	8
134-06-63150	257	10
134-06-63280	133	2
134-06-65110	132	20
134-06-65121	134	1
134-06-65132	131	14
134-06-65140	131	11
134-06-65151	133	19
134-06-65160	132	1
134-06-65170	133	1
134-06-65180	152	1
134-06-65221	131	15
134-06-65280	134	16
134-06-72710	132	17
134-06-72731	132	26
134-12-61112	135	2

PartNumber	Page	Index
134-12-61121	135	3
134-12-61131	135	1
134-12-71310	158	
134-12-71320	158	3
134-13-61060	159	
	160	
	161	
	162	
	163	
134-13-63260	180	5
134-13-64450	181	7
134-15-05170	372	K03
134-15-05180	372	K04
134-15-15131	172	1
134-15-15270	172	25
134-15-15280	172	27
134-15-21450	174	7
	174	32
134-15-35361	171	3
134-15-61051	164	
	165	
	167	
	168	
	169	
	170	
	171	
	172	
	173	
	174	
	176	
134-15-65180	169	16
134-15-65720	174	29
134-15-66180	174	14
134-15-67001	174	
134-15-67130	174	18
	179	12
134-15-67140	174	27
	179	13
134-15-67150	179	5
134-15-67160	179	1
134-15-71110	169	1
134-21-61101	236	1
134-21-61242	236	12
134-21-61261	296	4
134-21-61372	236	2
134-21-61380	236	9
134-21-61390	236	3
134-21-61420	236	15
134-21-66110	290	34
134-21-66120	289	23
134-22-60060	159	
	160	
	161	
	162	
	163	
	164	
	165	
	167	
	168	
	169	
	170	
	171	
	172	
	173	
	174	
	176	
	177	
	178	
	179	
	180	
	181	
	182	
	183	
	184	
	185	
	186	
	187	
	188	
	189	
	190	
	191	
	192	
	193	
	194	
	195	
	196	
	197	
	198	
	199	
	200	
	202	
134-22-61051	182	
	183	
	184	
	185	
	186	
	187	
	188	
	189	
	190	
	191	
	192	
	193	
	194	
134-22-61300	183	
	184	
134-22-65130	185	11
134-22-66261	186	6
134-22-67102	186	
	187	
	188	
	189	
	190	
	191	
	192	
	193	
134-22-67111	185	1
134-22-67121	186	1
134-22-67130	187	22
134-22-67141	187	1
134-22-67151	186	17
	199	36
134-22-67161	186	13
134-22-67200	188	
134-22-74210	184	27
134-22-75120	184	20
134-27-00230	204	
	205	
134-27-00240	207	
	208	
134-27-05010	205	8
	208	8
134-27-05020	205	20
	208	20
134-27-05030	205	29
	208	29
134-27-61113	204	1
134-27-61123	207	1
134-27-61133	204	2
134-27-61143	207	2
134-27-61170	204	11
	207	11
134-27-61180	205	12
	208	12
134-27-61192	205	4
	208	4
134-27-61210	205	30
	208	30
134-27-61232	205	9
	208	9
134-27-61240	205	10
	208	10
134-27-61261	205	22
	208	22
134-27-61270	205	11
	208	11
134-27-61280	205	23
	208	23
134-27-61290	205	24
	208	24
134-27-61320	205	26
	208	26
134-27-61330	205	27
	208	27
134-27-61340	205	16
	208	16
134-27-61481	204	8
134-27-61491	207	8
134-27-61610	205	21
	208	21
134-27-61620	206	37
	209	37
134-27-61631	206	36
	209	36
134-27-61640	205	25
	208	25
134-27-71151	205	1
	208	1
134-30-00402	298	
134-30-63142	299	21
134-30-63154	299	1
134-30-63162	299	3
134-30-63181	299	17
134-30-63210	299	4
134-30-63220	299	14
134-30-66130	306	3
	306	12
134-30-66140	306	4
	306	13
134-30-66170	306	5
	306	14
134-30-66231	298	5
134-30-66241	298	8
134-30-66250	298	17
134-30-66413	306	1
134-30-66423	306	10
134-30-66512	299	25
134-30-66610	307	1
134-30-66620	307	2
134-30-66630	308	1
134-30-66C50	306	2
	306	11
134-32-00142	305	
134-32-01152	304	
134-40-61110	189	1
134-40-61121	190	19
134-40-61130	190	6
134-40-61141	189	12
134-40-61151	190	1
134-40-61160	190	15
134-40-61170	190	2
134-40-61180	190	10
134-43-61212	252	16
134-43-61220	250	14
134-43-61230	250	9
134-43-61272	251	3
134-43-61282	250	7
134-43-61310	252	1
134-43-61331	249	1
	256	18
134-43-61340	252	8
134-43-61420	249	11
134-43-61430	252	9
134-43-61440	252	10
134-43-61450	252	11

PartNumber	Page	Index
134-43-61491	248	8
134-43-61510	248	7
134-43-61531	253	14
134-43-62180	188	17
134-43-62311	268	1
134-43-62320	268	14
134-43-62360	268	15
134-43-62380	270	1
134-43-62390	270	2
134-43-62421	269	3
134-43-62431	269	2
134-43-65110	188	2
134-43-65120	188	1
134-43-65130	188	4
	217	24
134-43-66171	250	32
	262	2
134-43-66210	216	34
	247	2
	252	39
134-43-66241	250	36
134-43-66260	217	8
	251	37
134-43-66342	217	18
134-43-66350	248	2
134-43-67111	202	4
134-43-67120	251	6
134-43-67130	251	19
134-43-67140	251	21
134-43-67150	252	31
134-43-67160	249	17
134-43-67170	216	28
134-43-68112	216	1
134-43-68121	216	2
134-43-68150	216	9
134-43-68220	216	25
134-43-68240	216	18
134-43-68250	247	1
134-43-68260	268	10
134-43-68270	216	19
134-49-61141	198	14
134-49-61311	211	38
134-49-61321	211	8
	215	10
134-49-61341	211	20
134-49-61410	213	37
134-49-61423	213	
134-49-61430	187	26
134-49-61560	180	10
134-49-61650	213	1
134-49-61690	213	2
134-49-61731	260	7
134-49-61750	260	2
134-49-61760	260	3
134-49-61770	200	
134-49-61780	200	20
134-49-61790	200	21
134-49-61860	200	22
134-49-61870	200	10
134-49-61920	211	19
134-49-67110	200	26
134-49-67120	178	1
	212	46
134-49-67141	200	5
134-49-67151	200	6
134-49-67161	200	7
134-49-67181	200	
134-49-67191	200	9
134-49-67210	198	24
134-49-67231	211	2
134-49-67240	203	6
	212	44
134-49-67250	211	1
134-49-67260	185	6
134-49-67280	200	8

PartNumber	Page	Index
134-49-67290	200	4
134-49-67311	187	17
134-49-71111	185	2
134-49-71640	199	9
134-50-61121	237	10
134-50-61131	237	7
134-50-61140	306	8
	306	17
134-50-61150	306	9
	306	18
134-50-61160	237	6
134-50-61171	237	2
134-50-62121	238	1
134-50-62131	238	12
134-50-62150	237	19
134-50-62160	237	21
134-50-62190	238	7
134-50-63111	237	16
134-50-63120	237	1
134-50-63131	238	22
134-50-63141	238	23
134-54-61120	280	22
134-54-61140	280	11
134-54-61160	280	2
134-54-61170	280	4
134-54-61180	280	17
134-54-61191	280	15
134-54-61261	230	19
134-54-61350	280	16
134-54-61370	280	3
134-54-61380	241	2
134-54-61480	230	22
134-54-61780	288	2
134-54-61790	288	3
134-54-61832	280	14
134-54-61841	281	1
134-54-61931	282	5
134-54-61970	287	1
134-54-62132	151	26
	153	7
	285	6
134-54-62141	151	6
134-54-62171	285	13
134-54-62180	283	2
	283	10
134-54-62210	283	26
134-54-62220	283	27
134-54-62431	283	19
134-54-62532	289	20
	290	31
134-54-62541	289	15
	290	26
134-54-62612	283	1
134-54-62622	283	9
134-54-62631	286	11
134-54-62642	286	8
134-54-62653	284	11
134-54-62670	284	3
	284	13
134-54-62771	283	6
	283	14
134-54-62780	283	7
	283	15
134-54-62812	284	1
134-54-62821	284	16
134-54-62831	286	5
134-54-63131	289	2
	290	2
134-54-63141	290	5
134-54-63152	145	15
	290	37
134-54-63181	290	8
134-54-63213	294	1
134-54-63221	289	16
134-54-63231	290	27

PartNumber	Page	Index
134-54-63271	289	5
134-54-63281	290	11
134-54-63380	283	8
134-54-63390	283	16
134-54-63441	263	4
134-54-63472	246	5
134-54-63481	246	7
134-54-63880	289	11
	290	22
134-54-63930	289	1
134-54-63940	152	27
	290	1
134-54-63950	289	17
134-54-63960	290	28
134-54-64130	292	16
	292	27
134-54-64141	292	19
	292	38
134-54-64151	293	11
	293	18
134-54-64160	292	17
	292	28
134-54-64171	292	35
134-54-64183	292	36
134-54-64390	151	19
134-54-64420	293	1
134-54-64450	293	4
134-54-64730	292	10
134-54-64740	292	11
134-54-64830	292	30
134-54-64840	292	31
134-54-64900	292	
134-54-64K41	292	12
134-54-64M40	292	32
134-54-65100	292	
134-54-65131	271	26
134-54-65210	246	1
134-54-65360	282	12
134-54-65370	282	13
134-54-65490	122	36
	282	2
134-54-65540	282	8
134-54-65550	282	9
134-54-65560	282	16
134-54-66211	277	4
134-54-66312	148	4
	291	4
134-54-66770	288	1
134-54-67380	292	18
134-54-67390	292	37
134-54-68161	271	10
134-54-68190	264	3
134-54-68220	264	2
134-54-68312	264	7
134-54-68330	271	5
134-54-68411	271	13
	274	30
	275	30
134-54-68810	280	1
134-54-68820	282	1
134-54-69122	264	13
134-54-75490	118	10
134-60-61223	221	12
134-60-61231	221	10
134-60-61310	229	
134-60-61330	220	16
134-60-61410	220	1
134-62-61122	228	5
134-62-61152	228	14
134-62-61162	229	8
134-62-61173	229	14
134-62-61311	231	4
134-62-61322	231	6
	314	14
134-62-61352	232	1

PartNumber	Page	Index
	233	12
134-62-61371	232	7
134-62-61431	231	5
134-62-61460	231	9
134-62-61541	232	14
134-62-61550	232	15
134-62-61560	233	1
134-62-61612	229	1
134-62-61680	228	7
134-62-61812	232	18
134-62-61821	202	1
134-62-63111	231	37
	314	1
134-62-63121	231	38
	314	2
134-62-63132	314	8
134-62-63141	314	9
134-62-63180	233	6
134-62-64101	231	
134-62-64112	233	11
	314	13
134-62-64120	231	23
134-62-64130	314	12
134-62-67540	228	1
134-62-67550	202	7
134-62-67560	228	11
134-63-01013	313	
134-63-12020	313	2
134-63-12042	313	1
134-67-61100	362	
134-67-61110	362	3
134-70-00010	310	
134-70-61220	310	5
134-70-61230	310	4
134-70-61310	315	1
134-70-61320	315	4
134-70-61332	315	7
134-71-63152	315	12
134-71-63162	315	14
134-71-63172	315	16
134-71-63182	315	2
	315	5
134-71-63230	315	25
134-71-63320	315	13
	315	15
134-72-61380	316	1
134-72-61521	315	21
134-911-1110	291	1
134-911-1120	291	2
134-960-1550	272	6
134-960-1610	318	6
	338	6
	342	6
134-960-1630	318	13
	342	13
	360	13
134-960-1641	318	16
	342	16
	360	16
134-960-1650	324	1
	347	1
134-960-1690	324	11
	347	11
134-960-1720	325	7
	348	7
134-960-1730	325	8
	348	8
134-960-1740	325	9
	348	9
134-960-1770	325	12
	348	12
134-960-1780	325	11
	348	11
134-960-1790	325	13
	348	13

PartNumber	Page	Index
134-960-1811	326	33
	348	33
134-960-1820	326	36
	349	36
134-960-1830	326	37
	349	37
134-960-1840	324	23
	347	23
134-960-1850	324	18
	347	18
134-960-1860	324	17
	337	4
	340	6
	347	17
134-960-1870	339	7
134-960-1880	339	8
134-960-1890	339	29
134-960-1910	276	21
134-960-1940	325	29
	339	25
	348	29
134-960-2410	276	1
134-960-2420	276	4
134-960-2431	276	6
134-960-2440	276	11
134-960-2450	263	12
134-960-2461	318	18
	342	18
	360	18
134-960-2470	318	27
	338	19
	342	27
	360	27
134-960-2480	276	18
134-960-2511	360	6
134-960-6311	272	1
134-960-6330	336	4
	359	4
134-960-6340	336	7
	359	7
134-960-6350	336	11
	359	11
134-960-6360	274	26
	275	26
134-960-6391	272	21
134-960-6660	362	12
134-977-2422	126	18
134-977-2470	134	2
134-977-2542	131	1
134-98-61470	364	7
134-98-61611	364	1
134-98-61621	364	2
134-98-61631	364	3
134-98-62190	364	12
134-X06-2111	242	1
	244	1
134-X06-2121	242	4
	244	4
134-X06-2131	242	5
	244	5
134-X06-2151	242	31
	244	27
134-X06-2161	242	35
	244	31
134-X06-2170	242	25
	244	21
134-X06-2180	242	28
	244	24
134-X06-2191	242	39
	244	35
134-X06-2211	242	6
	244	6
134-X06-2230	242	21
	244	17
134-X06-2240	242	11

PartNumber	Page	Index
	244	7
134-X06-2250	242	17
	244	13
134-X06-2260	242	18
	244	14
134-X06-2270	242	14
	244	10
134-X06-2290	243	46
	245	42
134-X06-2350	242	7
134-X06-2360	242	8
134-X44-1111	296	1
134-X78-1250	295	4
	295	8
134-X78-1610	293	22
	295	1
134-X78-1620	293	23
	295	5
135-03-12110	139	29
135-12-31230	135	19
135-43-15821	216	17
135-43-33770	283	23
13F-50-31131	237	17
13G-71-61260	315	20
13G-71-63140	316	8
140-70-13130	310	6
140-915-2140	311	7
141-30-00616	303	
144-06-81220	264	22
144-10-12180	162	12
144-10-17250	122	3
144-15-21191	166	42
144-15-25570	174	25
144-15-25670	174	11
144-15-25691	174	17
144-15-29110	174	23
	372	
144-15-29121	174	16
144-32-21151	304	10
	305	10
144-32-21191	304	8
	305	8
144-40-21830	172	20
144-54-11940	281	2
144-60-31162	211	10
144-70-11131	312	5
144-70-11160	312	10
144-70-12181	311	6
144-70-13210	310	7
144-70-13220	310	8
144-817-2312	311	18
144-854-1221	311	1
144-854-1231	311	8
144-854-1242	311	13
144-854-1271	311	15
144-854-1280	311	9
144-854-1290	311	10
144-854-6150	311	28
144-873-0310	206	35
	209	35
144-916-1270	322	8
	346	8
144-916-1820	318	9
	338	9
	342	9
	360	9
144-916-2520	327	18
	350	18
144-916-2540	327	22
	350	22
144-916-2550	327	15
	350	15
144-916-2560	327	16
	350	16
144-916-2570	327	21

PartNumber	Page	Index
	350	21
144-916-2590	327	12
	350	12
144-916-2730	322	11
	322	21
	346	11
	346	21
144-916-2770	323	23
	346	23
144-916-2850	327	14
	350	14
144-916-4220	320	16
	344	16
144-916-7950	322	14
	346	14
144-947-1410	337	2
144-947-1420	337	3
144-947-4120	325	14
	348	14
145-14-11320	164	15
	165	27
145-14-11571	166	41
145-14-12790	164	5
	164	19
	165	7
14U-70-12120	310	2
14W-70-11112	312	1
14W-70-11121	312	2
14W-70-11132	312	3
14W-70-11142	312	4
14W-70-13110	311	12
14W-960-7122	272	2
14W-960-7141	272	9
14W-960-7151	272	20
14W-960-7173	272	34
14W-960-7181	272	37
14W-960-7192	274	1
	275	1
14W-960-7211	274	6
	275	6
14W-960-7220	318	31
	338	23
	342	31
	360	31
14W-960-7231	274	4
	275	4
14W-960-7240	274	5
	275	5
14W-960-7310	274	29
	275	29
14X-03-11140	138	2
14X-04-11260	142	6
	143	6
14X-06-12120	252	4
	256	8
14X-06-12160	264	31
	264	32
14X-06-12260	154	26
14X-06-12351	264	20
14X-06-12361	264	19
14X-06-12370	43	2
	151	1
14X-06-12410	264	18
14X-06-14390	257	7
14X-10-11320	180	1
14X-10-11330	180	3
14X-10-11712	163	1
14X-10-11721	163	3
14X-10-19210	328	9
	351	9
14X-13-05050	372	K01
14X-13-11120	159	14
14X-13-11141	159	8
14X-13-11211	159	30
14X-13-11221	159	29

PartNumber	Page	Index
14X-13-11351	159	25
14X-13-11370	160	18
14X-13-11521	159	23
14X-13-11660	162	23
14X-13-12550	160	7
14X-13-13113	160	1
14X-13-14111	161	1
14X-13-14220	162	1
14X-13-14241	162	7
14X-13-14321	162	3
14X-13-14340	162	15
14X-13-14421	162	5
14X-13-22530	159	3
14X-13-31160	159	12
14X-13-31360	158	8
	160	13
14X-13-32110	159	18
14X-13-32120	159	19
14X-13-32520	159	1
14X-13-32530	159	13
14X-13-33350	160	21
14X-13-39320	160	19
14X-15-05083	372	K02
14X-15-12910	165	22
	165	34
14X-15-12960	168	17
14X-15-14150	169	18
14X-15-15161	169	8
14X-15-15210	172	15
14X-15-15230	171	1
14X-15-15260	172	9
14X-15-15640	174	20
14X-15-15671	174	36
14X-15-15750	174	5
14X-15-15760	174	6
14X-15-15770	174	2
14X-15-15791	174	37
14X-15-15812	174	1
14X-15-15821	176	6
14X-15-15830	174	8
14X-15-15840	174	34
14X-15-15850	173	3
	173	21
14X-15-15910	176	1
	372	
14X-15-16003	173	
14X-15-16192	175	38
14X-15-16210	173	19
14X-15-16220	172	22
14X-15-16260	172	21
14X-15-16450	176	7
14X-15-16461	171	5
14X-15-21132	164	1
14X-15-21140	164	14
14X-15-21150	165	1
14X-15-21160	165	12
	171	9
14X-15-21170	165	26
14X-15-21180	165	38
14X-15-22111	170	1
14X-15-22121	170	3
14X-15-22150	167	7
14X-15-22190	167	19
14X-15-22211	167	27
14X-15-22221	167	28
14X-15-22241	167	30
14X-15-22250	167	29
14X-15-22310	167	13
14X-15-22330	168	10
14X-15-22340	167	1
14X-15-22351	168	1
14X-15-22371	166	44
14X-15-22411	167	14
14X-15-22421	167	2
14X-15-22431	168	18

PartNumber	Page	Index
14X-15-22441	168	14
14X-15-22510	168	5
14X-15-22520	168	16
14X-15-22530	168	21
14X-15-22540	167	5
	167	17
14X-15-22610	167	22
14X-15-22620	167	8
14X-15-22640	165	9
14X-15-22661	165	19
14X-15-22670	168	8
14X-15-22680	164	8
14X-15-22710	164	10
	164	22
	165	11
	165	21
	165	37
14X-15-22730	164	17
14X-15-22740	165	30
14X-15-22750	165	3
14X-15-22760	164	12
14X-15-22770	165	32
14X-15-22780	164	9
	164	21
	165	10
	165	20
	165	36
14X-15-25140	169	12
14X-15-29210	168	6
	372	
14X-15-29220	165	17
	168	13
	372	
14X-15-29230	166	40
	166	45
	372	
14X-15-29321	164	3
14X-15-29410	168	3
14X-15-29420	168	23
14X-15-29440	167	3
	167	15
14X-15-29510	167	10
14X-15-29520	167	23
	168	9
14X-15-29530	167	9
14X-15-29540	167	32
14X-15-29610	167	20
14X-22-16160	187	5
14X-22-16170	185	21
14X-22-21121	182	1
14X-22-22110	183	1
14X-22-22120	183	2
14X-22-22130	183	9
14X-22-22150	183	4
14X-22-22160	183	5
14X-22-22210	183	3
14X-22-23120	183	6
14X-22-23270	184	15
14X-22-24110	184	1
14X-22-24130	184	12
14X-22-25801	182	
14X-22-26260	186	2
14X-22-26290	186	10
14X-22-26310	187	14
14X-22-26320	187	15
14X-22-26330	187	13
14X-22-26350	187	16
14X-30-00127	300	
14X-30-00136	301	
14X-30-00143	303	
14X-30-11D52	306	6
	306	15
14X-30-11D93	306	7
	306	16
14X-30-12115	298	1

PartNumber	Page	Index
14X-30-12164	298	3
14X-30-12181	298	2
14X-30-12232	298	6
	298	9
14X-30-12252	298	18
14X-30-12263	298	7
	298	10
14X-30-13174	299	11
14X-30-13241	299	8
14X-30-13310	299	7
14X-30-13340	300	2
	301	2
14X-30-14152	300	3
	301	3
14X-30-14161	300	8
	301	8
14X-30-14170	300	10
	301	10
14X-30-14311	300	1
14X-30-14321	301	1
14X-30-14331	300	4
	301	4
14X-30-15131	303	4
14X-30-15140	303	2
14X-30-15212	303	1
14X-30-15222	303	3
14X-30-15240	303	6
14X-30-15251	303	9
14X-32-05000	372	K05
14X-32-11120	304	1
	305	1
14X-32-11130	304	2
	305	2
14X-32-11140	304	9
	305	9
14X-32-11210	304	14
	372	
14X-32-11220	304	15
	372	
14X-32-11320	304	3
	305	3
14X-32-11330	304	4
	305	4
14X-32-11350	304	17
	305	13
14X-32-11370	304	13
	304	16
14X-32-11420	304	5
	305	5
14X-32-11430	304	6
	305	6
14X-32-12200	304	7
	305	7
14X-40-11251	192	8
14X-40-11390	192	3
14X-40-11840	190	11
14X-43-11270	268	25
14X-43-11320	248	1
	252	30
	274	22
	275	22
14X-43-12110	268	13
14X-43-12251	268	18
14X-43-12260	268	19
14X-43-12270	268	22
14X-43-12340	268	2
14X-43-12350	268	4
14X-43-12360	268	3
14X-43-12380	269	4
14X-43-12390	268	5
14X-43-12410	268	34
14X-43-12860	252	12
14X-43-13722	269	17
14X-43-13760	269	1
14X-43-13790	269	34

PartNumber	Page	Index
14X-43-14171	248	5
14X-43-14423	253	6
14X-43-14452	253	4
14X-43-14520	253	5
14X-43-14540	253	11
14X-43-14560	253	1
14X-43-15740	250	15
14X-49-11211	198	4
14X-49-11221	198	8
14X-49-11512	163	17
	212	45
	214	42
14X-49-11600	177	1
14X-49-11970	213	3
14X-49-12126	211	12
14X-49-12310	163	7
14X-49-12320	163	11
14X-49-12330	163	8
14X-49-12340	163	12
14X-49-12411	163	2
14X-49-13120	192	2
14X-49-13130	192	12
14X-49-21101	192	
14X-49-21430	202	10
14X-49-23110	192	1
14X-49-31321	198	18
14X-54-12590	264	1
14X-54-12780	283	28
14X-54-12940	264	6
14X-54-12960	126	3
	284	7
	284	21
14X-54-13132	290	14
14X-54-13215	277	13
14X-54-13232	277	14
14X-54-13830	291	3
14X-54-13911	277	9
14X-54-13921	277	12
14X-54-13980	284	6
	284	20
14X-54-16230	271	31
14X-54-16240	241	1
14X-54-16260	241	3
14X-54-16442	271	11
14X-54-16452	271	19
14X-54-16481	271	21
14X-54-16532	271	1
14X-54-16542	271	2
14X-54-16641	277	1
14X-54-16660	277	6
14X-54-16670	277	7
14X-54-16710	271	25
14X-54-16731	271	27
14X-54-16741	271	28
14X-54-18150	285	5
14X-54-19121	264	14
14X-54-19130	264	15
14X-54-19170	264	16
14X-54-28840	264	17
14X-54-35380	292	8
14X-57-11113	240	8
14X-57-11380	240	9
14X-60-11120	220	11
14X-60-11130	220	3
14X-60-12120	221	3
14X-62-16131	231	19
14X-62-16142	231	15
14X-62-16160	231	20
14X-70-12130	310	3
14X-71-11330	312	6
14X-71-11340	312	7
14X-911-5711	266	1
14X-911-5721	266	2
14X-960-0012	332	
	334	

PartNumber	Page	Index
	355	
	357	
14X-960-0510	321	41
	345	41
14X-960-0520	321	47
	345	47
14X-960-0531	322	4
	346	4
14X-960-0540	322	5
	346	5
14X-960-0550	322	22
	346	22
14X-960-0561	324	2
	347	2
14X-960-0570	325	2
	339	2
	348	2
14X-960-0580	325	16
	339	12
	348	16
14X-960-0590	328	18
	351	18
14X-960-1130	320	23
	321	38
	344	23
	344	38
14X-960-1181	322	20
	346	20
14X-960-1190	320	29
	344	29
14X-960-1210	322	18
	346	18
14X-960-1230	322	19
	346	19
14X-960-1281	323	24
	346	24
14X-960-1320	325	26
	339	22
	348	26
14X-960-1351	325	24
	339	20
	348	24
14X-960-1360	325	23
	339	19
	348	23
14X-960-1370	325	22
	339	18
	348	22
14X-960-1391	325	21
	339	17
	348	21
14X-960-1410	325	1
	339	1
	348	1
14X-960-1480	325	15
	339	11
	348	15
14X-960-1491	339	9
14X-960-1610	324	14
	347	14
14X-960-1630	339	10
14X-960-1640	324	9
	347	9
14X-960-1690	324	8
	347	8
14X-960-1960	337	1
	340	1
14X-960-2510	327	11
	350	11
14X-960-2570	327	17
	350	17
14X-960-2580	327	13
	350	13
14X-960-2590	327	23
	350	23

PartNumber	Page	Index
14X-960-2650	327	7
	350	7
14X-960-2661	327	5
	350	5
14X-960-2670	327	6
	350	6
14X-960-2710	322	15
	346	15
14X-960-2780	322	1
	346	1
14X-960-3110	328	21
	351	21
14X-960-3120	328	15
	351	15
14X-960-3130	328	8
	351	8
14X-960-3141	328	1
	351	1
14X-960-3151	328	17
	351	17
14X-960-3161	328	22
	351	22
14X-960-3171	328	20
	351	20
14X-960-3180	328	19
	351	19
14X-960-3190	328	7
	351	7
14X-960-3731	318	35
	338	27
	342	35
	360	35
14X-960-3751	338	13
14X-960-3794	336	1
	359	1
14X-960-3850	318	3
	338	3
	342	3
	360	3
14X-960-3871	318	30
	338	22
	342	30
	360	30
14X-960-3992	319	38
	338	30
	342	38
	361	38
14X-960-4110	320	1
	344	1
14X-960-4140	320	5
	344	5
14X-960-4150	320	26
	344	26
14X-960-4180	320	6
	344	6
14X-960-4210	320	18
	344	18
14X-960-4220	320	15
	344	15
14X-960-4260	321	46
	345	46
14X-960-4350	320	34
	344	34
14X-960-4361	320	33
	344	33
14X-960-4370	320	32
	344	32
14X-960-4380	321	40
	344	40
14X-960-5110	333	36
	355	36
14X-960-5122	332	3
	355	3
14X-960-5132	332	32
	355	32
14X-960-5141	332	20
	355	20
14X-960-5160	332	27
	355	27
14X-960-5210	274	
	274	31
	275	
	275	31
	332	1
	355	1
14X-960-5220	332	7
	355	7
14X-960-5230	332	9
	355	9
14X-960-5240	332	11
	355	11
14X-960-5250	332	13
	355	13
14X-960-5260	332	14
	355	14
14X-960-5270	332	16
	355	16
14X-960-5280	332	17
	355	17
14X-960-5290	332	19
	355	19
14X-960-5310	332	10
	355	10
14X-960-6123	330	4
	353	4
14X-960-6132	330	8
	353	8
14X-960-6142	330	14
	353	14
14X-960-6150	330	27
	353	27
14X-960-6170	330	23
	353	23
14X-960-6190	330	18
	353	18
14X-960-6260	331	41
	354	41
14X-960-6391	331	35
	353	35
14X-960-6462	330	5
	353	5
14X-98-11170	364	21
14X-98-11240	364	13
14X-98-11260	364	11
14X-98-11570	364	14
14Y-22-21131	182	8
14Y-22-21170	182	7
14Y-22-21180	182	
14Y-22-21190	182	
14Y-22-23110	184	7
14Y-22-23130	184	16
14Y-22-23140	184	9
14Y-22-23150	184	10
14Y-22-23160	184	11
14Y-22-23170	184	17
14Y-22-23180	184	18
14Y-22-23310	184	14
14Y-22-25830	182	18
14Y-22-25840	182	
14Y-22-25850	182	
14Y-22-25880	182	12
14Y-22-26180	185	19
14Y-30-11277	306	19
14Y-43-11121	272	4
14Y-50-11390	238	2
	238	13
14Y-71-22150	310	9
14Y-71-22280	310	13
14Z-12-31310	135	20
	158	7
14Z-40-11220	189	7
14Z-40-11310	189	17
14Z-40-11330	189	13
14Z-40-11340	189	15
14Z-40-11350	189	20
	192	4
14Z-40-11360	189	5
14Z-40-11371	189	19
14Z-40-11380	189	18
14Z-40-11610	189	3
14Z-43-11170	251	35
14Z-43-11310	262	1
	274	23
	275	23
	276	8
14Z-43-11751	254	5
14Z-43-11940	254	6
14Z-43-12890	269	31
14Z-43-13180	249	2
14Z-71-33212	310	15
150-04-11170	145	
150-27-00029	206	
	209	
150-27-00263	206	34
	209	34
150-43-14960	332	12
	355	12
150-70-12120	311	5
150-70-12242	311	23
150-70-13411	311	19
150-801-1250	324	26
	347	26
150-951-1130	324	10
	347	10
150-951-2410	324	7
	347	7
150-951-2450	324	27
	347	27
150-951-2460	324	28
	347	28
154-04-12521	145	
154-04-12531	145	2
154-22-62220	182	15
154-22-65820	182	11
154-22-65860	182	14
154-22-65890	182	13
154-27-12320	206	38
	209	38
154-30-11332	299	26
154-30-11540	299	27
154-43-14580	217	15
154-66-12100	362	4
154-67-11180	362	5
154-67-11321	362	7
154-67-11331	362	8
155-04-11211	145	4
155-15-11191	166	43
155-15-19620	320	3
	344	3
155-61-15350	200	13
15A-916-1210	274	12
	275	12
15B-960-1221	322	16
	346	16
15B-960-4310	321	37
	344	37
15B-960-4320	320	2
	344	2
15B-960-5221	335	2
	358	2
15B-960-5230	332	22
	355	22
15B-960-5240	333	40
	356	40
15B-960-5251	335	1

PartNumber	Page	Index
	358	1
15B-960-5260	334	7
	357	7
15B-960-5330	332	4
	332	33
	355	4
	355	33
15B-960-5340	334	2
	357	2
15B-960-5350	334	1
	357	1
15B-960-6260	330	33
	353	33
15B-960-6320	336	8
	359	8
15B-960-7980	324	15
	347	15
170-65-11211	362	9
170-70-12150	311	2
170-70-12160	311	3
170-70-12190	311	14
170-70-12221	311	22
170-70-12240	311	20
	311	29
175-06-39660	280	6
175-15-11230	166	39
175-15-45660	174	10
	174	35
175-54-27350	289	14
	290	25
175-916-2610	327	2
	350	2
175-916-2620	327	1
	350	1
175-916-2630	327	3
	350	3
175-916-2640	327	4
	350	4
175-916-4180	332	24
	355	24
175-916-4210	333	35
	355	35
175-916-4230	333	37
	355	37
175-916-4330	334	5
	357	5
175-916-4360	334	3
	357	3
175-916-4370	334	4
	357	4
176-43-54481	318	36
	338	28
	342	36
	360	36
176-62-15240	330	6
	353	6
176-76-13230	327	8
	350	8
17A-13-24490	161	2
17A-15-15010	171	
	172	
17A-15-15511	171	4
17A-15-21310	165	25
17A-15-22191	184	30
17A-15-25120	172	6
17A-15-25131	173	1
17A-43-24160	217	25
	268	36
17A-43-24170	217	5
	268	37
17A-43-25131	249	16
17A-43-25140	249	24
17A-43-25151	249	12
17A-43-25171	249	31
17A-43-25271	250	19
17A-43-25430	254	2
17A-43-25531	250	37
	255	5
17A-43-25681	252	28
17A-49-17721	213	4
17A-54-14230	283	3
	283	11
	292	13
	292	33
17A-54-14240	283	5
	283	13
	292	15
17A-54-16821	246	6
17A-54-16881	271	6
	271	14
17A-98-11180	364	20
17A-98-41510	365	5
17M-13-44350	162	19
17M-22-28290	213	6
17M-22-28320	213	5
17M-50-24360	299	16
195-01-14450	274	16
	275	16
195-40-11650	190	9
195-40-31540	189	16
195-50-22860	299	6
195-54-43210	282	3
195-61-45280	272	35
198-15-15570	173	9
	372	
198-15-15770	173	7
198-15-26511	159	26
198-43-18170	252	17
198-43-41940	252	21
198-49-11460	211	11
198-54-58111	263	1
	263	9
19M-09-13120	295	3
	295	7
19M-43-15350	274	14
	275	14
201-60-12172	220	4
201-62-71820	231	2
202-62-21430	213	19
	238	16
	316	2
203-01-51120	135	12
203-03-61640	140	1
203-30-42260	299	9
203-43-56450	266	3
203-54-56970	154	11
203-62-21720	152	19
203-62-21740	213	38
203-62-42920	238	11
203-62-57910	213	7
203-62-57920	213	8
203-62-57930	213	9
203-62-57940	213	10
203-62-57950	213	11
203-62-57960	213	12
203-62-57970	213	13
203-936-6260	232	4
205-03-71440	140	7
205-03-71532	140	2
205-03-71540	140	
205-06-64680	267	9
205-30-00220	298	
	300	
	301	
205-43-51470	268	21
205-43-72920	250	1
205-54-53470	283	24
205-54-53550	286	1
205-54-71680	139	24
205-60-51390	190	24
205-62-66181	229	32
206-70-41150	316	7
207-01-68170	122	8
207-54-16860	149	8
208-03-58310	140	14
20N-60-11143	220	2
20N-60-11181	220	
20N-62-21250	280	7
20T-06-71560	257	16
20T-06-81230	257	15
20T-43-71190	248	6
	252	29
20T-62-51390	230	24
20U-62-11760	230	13
20Y-03-11220	154	24
20Y-30-16230	280	8
20Y-30-16330	303	12
20Y-54-12670	293	10
20Y-60-21340	220	5
21J-06-11570	154	13
21J-62-17620	144	22
	144	23
21K-27-22510	194	1
	280	9
21N-60-12210	229	23
	368	3
21S-06-11140	264	25
21T-72-23290	144	24
21W-01-41320	154	19
21X-06-31530	133	3
21X-06-31540	133	4
22W-06-13220	256	1
22W-15-16270	160	14
22W-43-17330	173	12
22W-75-18880	192	5
22W-75-18890	192	6
22X-61-12230	129	28
232-15-19270	184	13
234-15-15120	187	7
238-15-11290	165	6
23S-12-11330	135	13
23S-62-25850	215	3
287-06-16420	265	11
287-15-15360	165	14
	187	6
287-43-13270	150	2
362-54-17320	364	27
363-15-22940	162	24
363-43-27161	272	8
406-40-70	83	5
415-15-12360	183	7
418-S95-2680	238	17
41E-15-15230	173	5
41E-15-16251	173	10
41E-35-11391	238	6
421-02-31120	122	32
421-06-22830	133	6
421-06-22880	133	5
421-06-22910	133	15
421-06-22920	133	16
421-20-12690	158	4
421-20-33621	158	1
421-54-11381	283	4
	283	12
	292	14
	292	34
423-09-41110	121	25
423-15-12441	168	2
423-20-32631	158	2
424-64-11110	293	15
425-15-19260	183	8
426-15-15480	173	8
426-15-15490	173	6
426-15-15810	173	13
426-15-16261	173	11

PartNumber	Page	Index
427-15-15910	298	4
	300	7
	301	7
428-15-19312	168	19
565-62-11270	189	4
566-35-42430	221	5
568-03-12240	139	7
568-15-11610	135	18
569-06-61960	265	10
569-06-61980	213	29
	230	4
569-15-12860	165	4
	372	
569-15-41310	165	13
56B-88-12220	200	29
581-43-11870	254	15
581-95-19870	257	26
600-021-2210	110	1
600-181-3860	288	6
600-184-1350	118	6
600-184-1420	118	2
600-184-1470	118	5
600-185-4100	118	
600-185-4110	118	3
600-185-4120	118	4
600-311-9490	125	11
600-311-9590	125	6
600-311-9733	125	
600-311-9912	125	1
600-311-9921	125	2
600-311-9931	125	3
600-311-9941	125	4
600-311-9950	125	5
600-311-9961	125	7
600-311-9971	125	10
600-633-7800	127	1
600-815-2170	117	1
600-815-7870	132	6
600-815-9270	132	14
600-815-9660	81	3
600-861-3111	102	
600-863-5910	104	
6110-23-6490	122	7
6110-25-6290	139	26
6110-73-6231	125	9
6114-21-5190	33	2
6127-11-5960	70	2
6130-12-8610	70	13
6130-32-1361	78	4
6136-21-7120	70	5
6136-21-7190	70	6
6141-71-1710	83	1
	86	4
6150-11-5751	122	11
6150-11-5840	118	16
6150-21-6750	33	1
6150-23-5620	185	9
6150-81-9370	122	2
6151-11-5280	122	9
6151-61-3120	128	20
6151-61-3152	128	19
6151-61-3170	128	21
6151-61-3201	128	
6204-73-5750	139	14
6207-51-7690	40	3
	41	9
6207-81-6980	101	4
6210-51-8310	85	10
6210-51-8320	118	18
6212-61-6950	145	7
6215-81-9510	64	15
	65	3
6215-81-9530	60	11
6215-81-9710	64	16
6215-81-9730	60	12
6216-14-6820	97	1
6216-94-3450	64	14
6221-81-6810	103	1
	103	3
6222-11-4910	84	17
6222-83-7401	118	
6222-83-7411	118	1
6643-11-4641	118	17
6731-61-2151	75	6
6731-71-5670	84	4
6732-11-1910	31	22
6732-11-1920	60	10
	66	3
	67	1
	75	7
	95	1
6732-11-1930	75	10
6732-11-6140	43	1
6732-11-8210	30	3
	54	2
6732-21-1311	58	1
6732-21-1810	64	5
6732-21-1820	31	3
6732-21-1960	64	
	65	
6732-21-1980	64	21
	66	4
6732-21-3140	57	5
6732-21-3150	57	6
6732-21-3160	57	10
6732-21-3180	57	8
6732-21-3190	70	7
6732-21-3220	70	8
6732-21-3590	108	2
6732-21-3870	57	7
6732-21-3880	57	9
6732-21-4130	58	2
6732-21-4150	60	8
6732-21-4161	60	9
6732-21-4171	60	5
6732-21-4220	60	7
6732-21-4290	60	4
6732-21-5160	35	3
	70	10
	92	2
6732-21-5170	31	11
	34	3
	80	1
6732-21-5190	52	7
6732-21-5210	52	8
6732-21-5530	71	1
6732-21-5540	52	1
6732-21-6120	64	11
6732-21-6150	68	2
6732-21-6610	75	2
6732-21-6630	52	4
	70	12
	83	10
	85	4
6732-31-4120	51	1
6732-31-4130	51	2
6732-41-1220	53	4
6732-41-1260	53	5
6732-41-1280	53	3
6732-41-2112	63	1
6732-41-5150	55	13
6732-41-6210	71	4
6732-51-5130	33	11
	56	2
6732-51-5330	41	6
6732-61-2240	31	9
6732-61-3140	36	11
	36	13
6732-71-3210	33	9
	85	6
6732-71-3220	41	7
	86	2
	93	2
6732-71-5620	86	6
6732-71-6112	54	4
	85	1
	368	5
6732-71-6220	85	3
6732-71-6240	83	8
6732-71-6260	82	6
	83	7
6732-71-6330	85	
6732-71-6340	85	2
6732-71-6510	85	8
6732-81-3170	43	4
6732-81-8810	40	6
6732-81-8820	39	1
6732-82-6530	103	4
6733-71-5540	81	6
6734-71-5520	84	5
	84	23
6734-71-5610	78	8
6734-71-5720	84	2
6735-11-3410	82	2
6735-21-1910	64	
	65	
	66	
6735-21-1920	64	17
	64	22
	65	1
	66	1
6735-21-1930	64	18
	64	23
	65	2
	66	2
6735-21-1970	43	5
	65	4
6735-21-4120	58	3
6735-21-4250	59	1
6735-21-5530	41	8
6735-41-5550	55	6
6735-41-5560	55	7
6735-51-1120	50	2
6735-51-8130	41	1
6735-61-2120	85	13
6735-61-3810	101	2
6735-61-5110	96	3
6735-61-6411	86	5
6735-71-3220	78	7
	101	3
6735-71-3821	86	7
6735-71-5190	52	3
6735-71-5420	108	4
6735-71-5820	84	22
6735-71-5860	84	21
6735-71-6530	85	17
6735-71-6750	85	18
6736-11-4530	80	3
6736-21-4221	60	3
6736-21-5310	33	8
	36	5
	57	15
	71	7
	85	11
6736-21-5320	31	10
6736-39-1140	112	
6736-39-1150	112	5
6736-39-1160	112	6
6736-51-8140	41	
6736-51-8710	40	4
	41	2
6736-51-8730	40	5
	41	4
6736-61-5140	36	6
6736-61-6110	35	4

PartNumber	Page	Index
6736-61-6120	35	5
6736-61-6141	37	4
6736-81-6170	78	3
6736-81-6190	88	2
6736-81-8730	82	5
6738-22-4110	32	3
6738-71-3120	78	2
6738-81-8220	80	5
6741-11-1190	31	
6741-11-4510	34	2
	35	2
6741-11-8112	30	1
6741-11-8121	30	2
	54	1
6741-11-8180	30	5
6741-18-1170	113	8
6741-18-1180	113	6
6741-19-1170	113	7
6741-19-1180	113	5
6741-21-1105	64	
6741-21-1130	64	7
6741-21-1140	64	8
6741-21-1190	64	
6741-21-1290	64	
6741-21-3310	57	14
6741-21-3320	56	1
6741-21-3330	56	3
6741-21-3530	57	13
6741-21-3541	57	12
6741-21-3810	57	4
6741-21-3820	57	3
6741-21-7610	32	1
6741-39-1110	112	2
6741-39-1120	112	3
6741-39-1130	112	4
6741-39-1220	112	1
6741-41-4410	31	18
6741-41-5100	55	
6741-51-1110	50	1
6741-61-1520	90	2
6741-61-1610	94	1
6741-61-6130	93	3
6741-71-5310	83	2
6741-71-5320	83	3
6741-71-5330	83	4
6741-81-6510	101	7
6741-81-6520	101	1
6741-81-8830	40	2
6742-01-0310	52	9
6742-01-0530	57	16
6742-01-0540	57	2
6742-01-0550	57	
6742-01-0740	82	3
6742-01-1080	75	12
6742-01-1230	55	3
6742-01-1240	55	4
6742-01-1250	55	1
6742-01-1260	55	9
6742-01-1270	55	5
6742-01-1290	55	10
6742-01-1300	55	
6742-01-1310	55	11
6742-01-1320	55	2
6742-01-1330	55	8
6742-01-1360	64	2
6742-01-1370	64	3
6742-01-1390	31	2
6742-01-1420	64	4
6742-01-1470	64	12
6742-01-1480	64	19
6742-01-1520	64	10
6742-01-1570	68	
6742-01-1590	68	3
6742-01-1890	100	2
6742-01-2410	75	8
6742-01-2441	75	11
6742-01-2480	75	1
6742-01-2491	75	4
6742-01-2630	52	2
6742-01-2690	52	6
6742-01-2740	69	8
6742-01-2750	69	11
6742-01-2810	113	1
6742-01-2820	113	2
6742-01-2830	113	3
6742-01-2840	113	4
6742-01-2880	53	2
6742-01-2950	31	5
6742-01-2960	31	8
6742-01-2990	31	15
	31	17
6742-01-3000	31	
6742-01-3030	31	19
6742-01-3100	82	4
6742-01-3240	31	7
6742-01-3250	31	12
6742-01-3270	31	21
6742-01-3320	46	1
6742-01-3340	37	2
6742-01-3450	41	5
6742-01-3530	96	2
6742-01-3620	42	1
6742-01-3890	64	13
6742-01-4010	38	1
6742-01-4080	64	20
6742-01-4220	75	14
6742-01-4320	53	1
6742-01-4340	69	10
6742-01-4540	54	3
	74	1
	368	4
6742-01-4560	72	1
6742-01-5003	37	3
6742-01-5005	35	1
6742-01-5018	84	1
6742-01-5019	84	3
6742-01-5053	60	2
6742-01-5117	75	15
6742-01-5123	91	5
6742-01-5159	64	
6742-01-5160	64	6
6742-01-5197	34	1
6742-01-5202	75	17
6742-01-5206	61	2
6742-01-5224	31	13
6742-01-5272	112	
6742-01-5275	112	
6742-01-5289	100	1
6742-01-5294	85	15
6742-01-5297	85	20
6742-01-5298	78	1
6742-01-5306	52	12
6742-01-5309	69	6
6742-01-5380	36	7
	36	9
6742-01-5441	112	
6742-01-5442	112	
6742-01-5474	69	5
6742-01-5475	112	
6742-01-5478	55	12
6742-01-5582	31	23
6742-11-3130	82	
6742-11-4360	80	4
6742-21-3110	57	1
6742-21-5110	70	1
6742-21-5210	71	2
6742-21-7110	33	3
6742-21-7130	33	12
6742-21-7140	33	5
6742-21-7150	33	6
6742-21-7161	70	4
6742-21-7170	70	9
6742-21-8200	68	
6742-21-8500	68	
6742-26-8200	112	
6742-26-8500	112	
6742-27-8200	112	
6742-28-8200	112	
6742-28-8500	112	
6742-29-8200	112	
6742-31-4100	61	
6742-61-5410	36	2
6742-61-5420	36	1
6742-61-5440	36	8
6742-61-5450	36	10
6742-61-6120	92	1
6742-71-1120	79	1
6742-71-1810	78	6
6742-71-5210	84	9
6742-71-5220	84	10
6742-71-5230	84	11
6742-71-5240	84	12
6742-71-5250	84	13
6742-71-5260	84	14
6742-71-5280	84	15
6742-71-5290	84	16
6742-71-5300	84	
6742-71-5360	83	9
6742-71-5370	84	6
6742-71-5380	84	7
6742-71-5390	84	19
6742-71-5410	108	3
6742-71-6270	85	7
6742-71-6280	85	12
6742-71-6290	85	5
6742-81-1120	40	
6742-81-6820	103	2
6742-81-9570	81	1
6743-11-1610	31	20
6743-11-5220	38	2
6743-11-6410	96	1
6743-21-4190	60	1
6743-21-5540	71	3
6743-22-5150	32	2
6743-31-2100	69	
6743-31-2110	69	1
6743-51-4430	75	13
6743-51-5210	75	5
6743-51-5300	75	
6743-51-5310	75	3
6743-51-5550	52	14
6743-61-1531	90	
6743-61-2150	75	9
6743-61-2210	75	16
6743-61-3441	91	4
6743-61-3610	91	3
6743-61-4411	91	2
6743-61-6110	93	1
6743-62-3710	54	5
	91	1
	368	6
6743-71-1720	108	1
6743-71-7132	86	1
6743-72-5110	84	8
6743-81-9170	47	1
6745-21-1120	63	2
6745-21-5130	52	11
6745-31-4130	60	6
6745-51-2110	52	13
6745-51-2120	52	10
6745-61-4120	91	6
6754-61-4111	88	1
700-21-11210	223	21
700-22-11291	223	8
700-22-11410	225	2

PartNumber	Page	Index
	225	10
700-22-11510	223	15
700-22-11520	223	14
700-22-11610	223	23
700-22-12250	223	16
700-22-12270	223	22
700-22-12440	223	17
700-22-12480	223	18
700-80-51390	165	15
700-80-61260	223	9
700-80-64220	225	3
	225	9
700-84-11660	268	20
700-84-11730	223	19
702-16-05060	252	40
	258	
	259	
702-21-31360	332	28
	355	28
702-21-35130	231	24
705-11-33240	196	
705-11-33540	197	
705-11-36010	226	
705-17-02011	196	1
705-17-02122	197	3
705-17-02221	196	2
705-17-02330	197	14
705-17-02353	196	
	197	
705-17-02360	196	6
	197	7
	197	15
705-17-02430	196	4
	197	5
705-17-02460	196	5
	197	6
705-17-02510	197	1
705-17-02612	196	3
	197	4
705-17-02830	196	8
705-17-02870	196	7
705-17-02881	197	18
705-17-03012	226	1
705-17-03121	226	2
705-17-03352	226	
705-17-03380	226	6
705-17-03440	226	4
705-17-03470	226	5
705-17-03610	226	3
705-17-03810	226	8
705-17-03870	226	7
705-17-33012	196	10
	197	8
705-17-33430	196	11
705-17-33450	197	9
705-17-33512	196	12
	197	10
705-17-36010	226	10
705-17-36411	226	11
705-17-36511	226	12
705-40-33011	329	8
	352	8
705-40-33411	329	9
	352	9
705-40-33511	329	10
	352	10
705-40-80131	329	2
	352	2
705-40-80760	329	4
	352	4
705-40-80810	329	6
	352	6
705-40-80870	329	5
	352	5
705-40-83720	329	3
	352	3
705-41-01200	329	
	352	
705-41-80230	329	1
	352	1
705-41-80610	329	
	352	
705-41-80620	329	
	352	
705-51-20830	196	
	197	
706-73-71450	224	25
707-29-11620	313	7
707-36-11040	313	16
707-44-11180	313	17
	372	
707-51-55030	313	13
	372	
707-51-55640	313	15
	372	
707-52-90301	313	14
707-56-55540	313	12
	372	
707-66-70020	315	8
707-67-39010	313	19
707-88-11290	315	11
707-88-11300	315	
707-99-34600	372	K06
708-27-12581	174	24
708-8E-16160	224	23
709-25-11290	223	5
709-32-11780	332	15
	332	18
	355	15
	355	18
709-62-31180	332	29
	355	29
709-70-71610	224	3
711-47-11770	159	32
711-49-14230	162	2
714-07-17540	171	6
714-07-17550	171	7
714-12-19520	164	4
722-12-12063	190	25
723-20-62500	225	1
723-20-80100	225	5
723-21-10101	222	
	223	
	224	
	225	
723-26-14170	223	20
723-26-14180	224	2
723-26-14190	224	6
723-26-14220	224	18
723-26-14240	224	19
723-26-15190	224	27
723-26-15230	224	12
723-26-15310	224	20
723-26-15370	224	14
723-26-15410	223	10
723-26-15770	223	11
723-26-15780	223	12
723-26-15790	223	13
723-26-15820	223	6
723-26-15830	222	5
723-26-15840	222	6
723-26-16180	223	2
723-26-21720	222	3
723-36-41930	231	21
723-40-56130	224	10
723-46-15240	225	7
7861-92-4940	142	10
	143	10
7861-92-9120	257	36
KD0-0055-05082	105	48
KD0-0270-06402	105	43
KD0-0274-06202	104	17
KD0-0275-06802	102	11
KD0-0280-16022	102	15
KD0-09001-4580	104	30
KD0-09006-0660	105	49
KD0-09006-0670	105	50
KD0-09170-2501	102	25
KD0-09201-0870	102	3
KD0-09201-0881	102	8
KD0-09271-3620	104	22
KD0-09275-1430	105	52
KD0-23100-0251	104	20
KD0-23200-0331	104	23
KD0-23310-1730	104	6
KD0-23320-0220	104	9
KD0-23500-0970	104	7
KD0-23600-0460	104	12
KD0-23611-0690	104	13
KD0-23700-0130	104	32
KD0-23740-0250	104	26
KD0-23750-0250	104	27
KD0-23901-0170	105	40
KD0-23904-0070	104	1
KD0-23921-0230	104	15
KD0-23927-0071	104	2
KD0-23951-0301	104	8
KD0-23951-0331	104	11
KD0-25000-8332	105	47
KD0-35100-0280	102	1
KD0-35120-0450	102	16
KD0-35200-0400	102	10
KD0-35300-0160	102	4
KD0-35411-0640	102	12
KD0-35421-0140	102	13
KD0-35700-0702	102	
KD0-35710-0810	102	17
KD0-35719-0280	102	24
KD0-35730-0510	102	18
KD0-35761-0200	102	28
KD0-35784-0270	102	27
KD0-35784-0280	102	26
KD0-35923-0130	102	19
KD0-35926-0070	102	5
KD0-35926-0090	102	7
KD0-35943-0140	102	20
KD0-35943-0150	102	21
KD0-35943-0160	102	22
KD0-35943-0170	102	23
KD0-35951-0060	102	6
KD0-47100-4800	104	21
KD0-47761-2671	105	45
KD0-47761-2681	105	46
KD0-47761-2691	104	24
KD1-0240-06305	104	33
KD1-0240-08405	104	37
KD1-0330-06012	105	42
KD1-0330-08022	104	39
KD1-0335-06002	105	41
KD1-0335-08002	104	38
KD1-0335-16002	102	14
KD1-0400-20100	104	19
KD1-0454-60067	104	10
KD1-0454-62007	104	31
KD1-0454-62047	104	16
KD1-0505-00601	104	28
KD1-09211-0980	104	14
KD1-09257-0050	105	51
KD1-23111-0160	104	5
KD1-23181-0020	104	4
KD1-23913-0040	104	25
KD1-23914-0020	104	3
KD1-23921-0130	104	34
KD1-23921-0140	104	35
KD1-23941-0040	104	36

PartNumber	Page	Index
KD1-23951-0020	104	18
KD1-33923-0790	102	2
KD1-33926-0730	102	9
KD1-47921-0790	104	29
KD1-47927-1250	105	44

PartNumber	Page	Index

PartNumber	Page	Index

D68ESS-12E0 Bulldozer
Form No. LEPBD68CE0

©2010 KOMATSU
All Rights Reserved
Printed in Indonesia 12-10

KOMATSU

©2010 KOMATSU
All Right Reserved
Printed in Indonesia 12-10