RUTHZIL TRATOR COMERCIAL DE PEÇAS LTDA 11 97083-6812 ROLANDO CITRANGULO

PARTS BOOK

FORM UE070095
AGOSTO 1968

CATERPILLAR
D6C TRACTOR

POWER SHIFT

SERIAL NUMBERS
10K1 — UP

FORM UE070095

D6C TRACTOR

POWER SHIFT

SERIAL NUMBERS

10K1—UP

REVISION PUBLISHED AUGUST 1968

INDEX

Diesel Engine
(Page 7)

Name	Page	Name	Page
Accessory Drive	26	Gauges	36
Air Cleaner	13	Generator	40
Battery and Wiring	45	Glow Plug and Wiring	15
Breather and Fumes Disposal	37	Governor	27
Camshaft	25	Guard—Radiator	7
Connecting Rod	24	Indicator—Air Filter	13
Control—Decelerator	28	Manifold	14
Control—Governor	28	Muffler	15
Crankshaft	22	Oil Cooler—Torque Converter	40
Crankshaft Bearings	23	Piston	24
Cylinder Block and Covers	18	Pump—Fuel Priming	32
Cylinder Head	16	Pump—Fuel Transfer	31
Drive—Hydraulic Pump	25	Pump—Oil	38
Drive and Support—Fan	10	Pump—Water	11
Fan and Guard—Blower	10	Rack Stop	27
Filter—Fuel	32	Radiator	8
Filter and Lines—Oil	39	Service Meter	37
Filter—Primary Fuel	26	Starting Motor	44
Flywheel	24	Specifications	126
Fuel Lines	31	Tools	124
Fuel Pump Housing	27	Transfers	125
Fuel Valves and Lines	35	Valve Mechanism	16
Gasket Kits	23	Water Lines	12

Transmission and Chassis

(Page 51)

Name	Page
Bar and Suspension—Equalizer	75
Brakes	76
Case and Covers—Bevel Gear	74
Clutch—Steering	73
Control—Steering Clutch Hydraulic	70
Drawbar—Fixed	91
Fenders	88
Final Drive	78
Frame—Track Roller	82
Fuel Tank	90
Gauges—Transmission	58
Guard—Track Roller Frame	83
Hood and Dash	86
Idler—Front	80
Linkage—Transmission Control	57
Lubrication System—Steering Clutch	66
Lubrication System—Transmission	66
Power Train	51
Roller—Track	84
Roller—Track Carrier	85
Seat Cushions and Frame	90
Tool Box	91
Torque Divider	52
Track	85
Transmission	59

Attachments

(Page 92)

Canopy	118
Drawbar—Swinging	123
Extension—Air Cleaner	106
Fan and Guard—Reversible Blade	110
Fan—Suction	110
Frame—Track Roller	120
Generator	97
Grid—Radiator Core Protector	109
Guard—Brush	117
Guard—Crankcase	115
Guard—Final Drive Wear	122
Guard—Precleaner	107
Guard—Track Roller	119
Hinge—Radiator Guard	108
Hook—Front Pull	114
Lighting System	92
Panel Protection—Instrument	113
Plate—Radiator Grill	109
Prescreener	107
Protection Cover	111
Seat	113
Starting—Direct Electric	96
Tools	124
Track	121
Track Sprocket—Snow	122
Turbocharger	101

INDEX ALPHABÉTIQUE

Moteur diesel

(Page 7)

Désignation	Page
Arbre à cames	25
Batterie et installation électrique	45
Bielles	24
Bloc-cylindres	18
Bougie de départ et câblage	15
Butée de crémaillère	27

Désignation	Page
Canalisations de carburant	31
Caractéristiques	126
Collecteurs	14
Compteur d'entretien	37
Coussinets de vilebrequin	23
Culasse	16
Décélérateur (commande)	28
Démarreur	44
Dynamo	40
Entraînements secondaires	26
Filtre à air	13
Filtre à carburant diesel	32
Filtre à huile de graissage et canalisations	39
Indicateur de colmatage (filtre à air)	13
Injecteurs et tuyauterie	35
Instructions sur décalcomanies	125
Instruments de contrôle	36
Jeux de joints	23
Outillage	124
Pistons	24
Pompe à eau	11
Pompe à huile de graissage	38
Pompe d'alimentation de carburant	31
Pompe d'amorçage	32
Pompe d'injection	27
Pompe hydraulique (entraînement)	25
Pot d'échappement	15
Préfiltre à carburant	26
Protège-radiateur	7
Radiateur	8
Réfrigérant d'huile de graissage (convertisseur)	40
Régulateur	27
Régulateur (timonerie extérieure)	28
Reniflard et aspirateur de vapeurs d'huile	37
Soupapes et train de commande	16
Tuyauterie d'eau	12
Ventilateur soufflant et grille de protection	10
Ventilateur (support et entraînement)	10
Vilebrequin	22
Volant	24

Bâti et organes de transmission

(Page 51)

Barre d'attelage (non oscillante)	91
Bâti arrière	74
Boîte de vitesses	59
Boîte de vitesses (graissage)	66
Boîte de vitesses (timonerie)	57
Capot et tablier	86
Chaînes de roulement	85
Châssis porteurs	82
Châssis porteurs (tôlerie de protection)	83
Coffre à outils	91
Coupleur différentiel	52
Embrayages de direction	73
Embrayages de direction (servo-hydraulique)	70
Freins	76
Galets inférieurs	84
Galets supérieurs	85
Garde-boue	88
Manomètres du circuit de transmission	58
Réducteurs de barbotin	78
Réservoir à carburant	90
Roues avant	80
Servo des embrayages de direction (canalisations)	66
Siège (coussins et support)	90
Train de transmission	51
Traverse de suspension	75

Accessoires
(Page 92)

Désignation	Page
Barbotin (pour travail dans la neige)	122
Barre d'attelage oscillante	123
Chaînes de roulement	121
Charnières (protège-radiateur)	108
Châssis porteurs	120
Couvercle de protection	111
Crochet avant	114
Démarrage électrique direct	96
Dynamo	97
Éclairage électrique	92
Grille de protection de tableau de bord	113
Grille de protection du faisceau de radiateur	109
Grille de radiateur renforcée	109
Outillage	124
Préfiltre (protecteur)	107
Protège-carter-moteur	115
Protège-galets	119
Protège-réducteur de barbotin	122
Rallonge du filtre à air	106
Siège	113
Tamis de préfiltre	107
Toit en toile	118
Tôle pare-broussailles	117
Turbo-compresseur	101
Ventilateur à pales réversibles	110
Ventilateur aspirant	110

INDICE

Motor Diesel
(Página 7)

Nombre	Página
Arbol de levas	25
Batería y alambrado	45
Bielas	24
Bloque del motor y tapas	18
Bomba de cebado del combustible	32
Bomba de transferencia del combustible	31
Bomba del aceite	38
Bomba del agua	11
Bujías incandescentes y alambrado	15
Caja de las bombas del combustible	27
Cajas con empaquetaduras	23
Calcomanías	125
Cigüeñal	22
Cojinetes de bancada	23
Control—Decelerador	28
Control del regulador	28
Culata	16
Enfriador del aceite—Convertidor de par	40
Especificaciones	126
Filtro de aire	13
Filtro del combustible	32
Filtro primario del combustible	26
Filtro y tuberías del aceite	39
Generador	40
Herramientas	124
Indicador del filtro de aire	13
Instrumentos	36
Inyectores y tuberías	35
Mando de accesorios	26
Mando de la bomba hidráulica	25
Mando y soporte del ventilador	10
Mecanismo de las válvulas	16

Nombre	Página
Medidor de servicio	37
Motor de arranque	44
Múltiple	14
Pistones	24
Protección del radiador	7
Radiador	8
Regulador	27
Respiradero	37
Silenciador	15
Tope de la cremallera	27
Tuberías del agua	12
Tuberías del combustible	31
Ventilador insuflador y protección	10
Volante	24

Transmisión y Chasís

(Página 51)

Barra compensadora y suspensión	75
Barra de tiro fija	91
Bastidor de los rodillos	82
Caja de herramientas	91
Caja y tapas de la corona	74
Capota y tablero	86
Carril	85
Cojinetes del asiento y bastidor	90
Control hidráulico de embragues de dirección	70
Divisor de par	52
Embragues de dirección	73
Frenos	76
Instrumentos—Transmisión	58
Mandos finales	78
Protección—Bastidor de los rodillos	83
Rodillos inferiores	84
Rodillos superiores	85
Ruedas guías	80
Sistema de lubricación—Embragues de dirección	66
Sistema de lubricación de la transmisión	66
Tanque del combustible	90
Tapabarros	88
Transmisión	59
Tren de potencia	51
Varilla de control de la transmisión	57

Accesorios

(Página 92)

Antefiltro especial	107
Arranque eléctrico directo	96
Asiento	113
Barra de tiro giratoria	123
Bastidor de los rodillos	120
Carrill	121
Charnelas—Protección del radiador	108
Extensión del filtro de aire	106
Gancho delantero	114
Generador	97
Herramientas	124
Plancha—Rejilla del radiador	109
Protección—Desgaste de mandos finales	122
Protección contra maleza	117
Protección de los rodillos	119
Protección del antefiltro	107
Protección del cárter	115
Protección del tablero—Instrumentos	113
Reja protectora del radiador	109
Rueda dentada motriz para nieve	122
Sistema de luces	92
Tapa protectora	111
Toldo	118
Turboalimentador	101
Ventilador de paletas reversibles	110
Ventilador de succión	110

ÍNDICE

Motor diesel
(Página 7)

Designação	Página
Arrefecedor do conversor de torque	40
Árvore de comando das válvulas	25
Árvore de manivelas (virabrequim)	22
Batente da cremalheira do combustível	27
Bateria e fios	45
Biela	24
Bloco do motor e tampas	18
Bomba d'água	11
Bomba de óleo	38
Bomba de purgação do combustível	32
Bomba de transferência do combustível	31
Cabeçote	16
Caixa das bombas injetoras	27
Coletor	14
Comando da bomba hidráulica	25
Comando de acessórios	26
Comando do ventilador e suporte	10
Contrôle do regulador de velocidade (acelerador)	28
Decalcomanias	125
Decelerador	28
Especificações	126
Ferramentas	124
Filtro de óleo e tubulações	39
Filtro primário do combustível	26
Filtro principal do combustível	32
Gerador	40
Indicador de limpeza do purificador de ar	13
Instrumentos	36
Jogos de juntas	23
Mancais principais do motor	23
Marcador de horas de serviço	37
Mecanismo das válvulas	16
Motor de arranque	44
Pistão	24
Protetor do radiador	7
Purificador de ar	13
Radiador	8
Regulador de velocidade	27
Respiro e ventilação do cárter	37
Silenciador	15
Tubos d'água	12
Tubulações do combustível	31
Válvulas injetoras e tubos	35
Velas de aquecimento e fios	15
Ventilador de sôpro e protetor	10
Volante do motor	24

Sistema de transmissão e chassi
(Página 51)

Designação	Página
Armação dos rolêtes de esteira	82
Armação e almofadas do assento	90
Barra de suspensão e suportes	75
Barra de tração fixa	91
Caixa da coroa e tampas	74
Caixa de ferramentas	91
Caixa de mudanças	59
Comando final	78
Contrôle hidráulico das embreagens de direção	70
Capô e painel	86
Divisor de torque	52
Embreagem de direção	73
Esteira	85
Freios	76
Indicadores do sistema de transmissão	58

Designação	Página
Ligações de contrôle das marchas	57
Paralamas	88
Protetor dos rolêtes inferiores	83
Roda-guia	80
Rolête inferior	84
Rolête superior	85
Sistema de lubrificação das embreagens de direção	66
Sistema de lubrificação do sistema de marchas	66
Sistema de transmissão	51
Tanque de combustível	90

Acessórios
(Página 92)

Armação dos rolêtes de esteira	120
Barra de tração oscilável	123
Cadeira	113
Dobradiças para a grade do radiador	108
Esteira	121
Extensão da tomada de ar	106
Ferramentas	124
Gancho dianteiro	114
Gerador	97
Grade de proteção do radiador contra erosão	109
Grade reforçada do radiador	109
Guarda-mato	117
Partida elétrica direta	96
Pré-purificador de ar	107
Protetor da caixa do comando final	122
Protetor do cárter	115
Protetor do pré-purificador	107
Protetor dos rolêtes inferiores	119
Roda motriz para neve ou lama	122
Sistema de iluminação	92
Tampa de bocal com trava	111
Tampa do painel de instrumentos	113
Tôldo	118
Turbocompressor	101
Ventilador de pás reversíveis	110
Ventilador de sucção	110

INHALTSVERZEICHNIS

Dieselmotor
(Seite 7)

Bezeichnung	Seite
Abziehbilder	125
Auspuffdämpfer	15
Batterie und Verkabelung	45
Blasventilator und Schutz	10
Dichtungssätze	23
Einspritzpumpengehäuse	27
Einspritzventile und Leitungen	35
Entlüfter und Entdunster	37
Gasgestänge	28
Gasreduziergestänge	28
Glühkerze und Verdrahtung	15
Hydraulikpumpenantrieb	25
Kolben	24
Kraftstoffentlüftungspumpe	32
Kraftstoffilter	32
Kraftstoffförderpumpe	31
Kraftstoffleitungen	31
Krümmer	14
Kühlernetz	8
Kühlerschutz	7
Kurbellager	23
Kurbelwelle	22

Bezeichnung	Seite
Lichtmaschine	40
Luftfilteranzeige	13
Luftreiniger	13
Messstäbe	36
Motorblock und Deckel	18
Nockenwelle	25
Pleuel	24
Primärkraftstoffilter	26
Regelstangenanschlag	27
Regler	27
Schmierfilter und Leitungen	39
Schmierpumpe	38
Schwungscheibe	24
Startermotor	44
Steuerantrieb	26
Technische Daten	126
Ventilatorantrieb und Aufhängung	10
Ventilsteuerung	16
Wandlerölkühler	40
Wartungsmesser	37
Wasserleitungen	12
Wasserpumpe	11
Werkzeuge	124
Zylinderkopf	16

Getriebe und Laufwerk

(Seite 51)

Bremsen	76
Differentialwandler	52
Getriebe	59
Getriebearmaturen	58
Getriebeschaltgestänge	57
Getriebeschmiersystem	66
Hydraulikgestänge der Lenkkupplung	70
Kraftstofftank	90
Kraftübertragung	51
Laufkette	85
Laufrolle	84
Laufwerksrahmen	82
Laufwerksrahmenschutz	83
Leitrad	80
Lenkkupplung	73
Motorhaube und Armaturenbrett	86
Quertraverse und Auflager	75
Schmiersystem der Lenkkupplungen	66
Schutzbleche	88
Seitenantrieb	78
Sitzpolster und Rahmen	90
Stützrolle	85
Tellerradgehäuse und Deckel	74
Werkzeugkasten	91
Zugbalken, starr	91

Zubehör

(Seite 92)

Anlasser, direktelektrisch	96
Beleuchtungsanlage	92
Fahrersitz	113
Frontzughaken	114
Instrumentenbrettabdecke	113
Kühlerschutz mit Scharnieren	108
Kurbelgehäuseschutz	115
Laufkette	121
Laufrollenschutz	119
Laufwerksrahmen	120
Lichtmaschine	97
Luftreinigerverlängerung	106
Motorseitenverkleidung	117
Saugventilator	110
Schneekettenantriebsrad	122
Schutzgitter für Kühlernetz	109
Schutzkappe	111
Schwere Kühlerverkleidung	109
Seitenantriebsverschleisschutz	122
Turbolader	101
Ventilator, umkehrbar	110
Vorabscheider	107
Vorreinigerschutz	107
Werkzeuge	124
Wetterdach	118
Zugbalken, unstarr	123

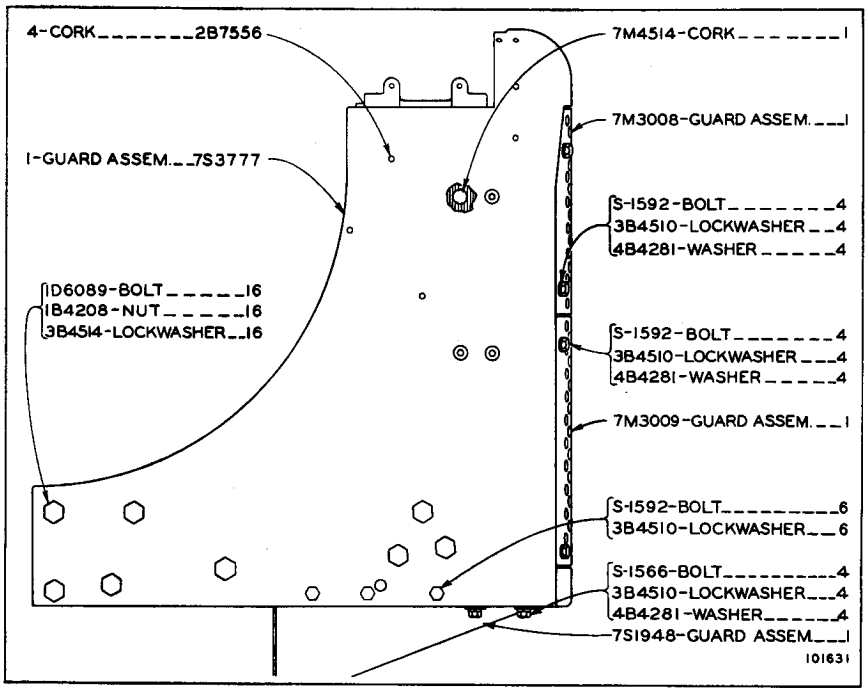

RADIATOR GUARD

REFER ALSO TO PAGE 108 FOR SPECIAL PARTS

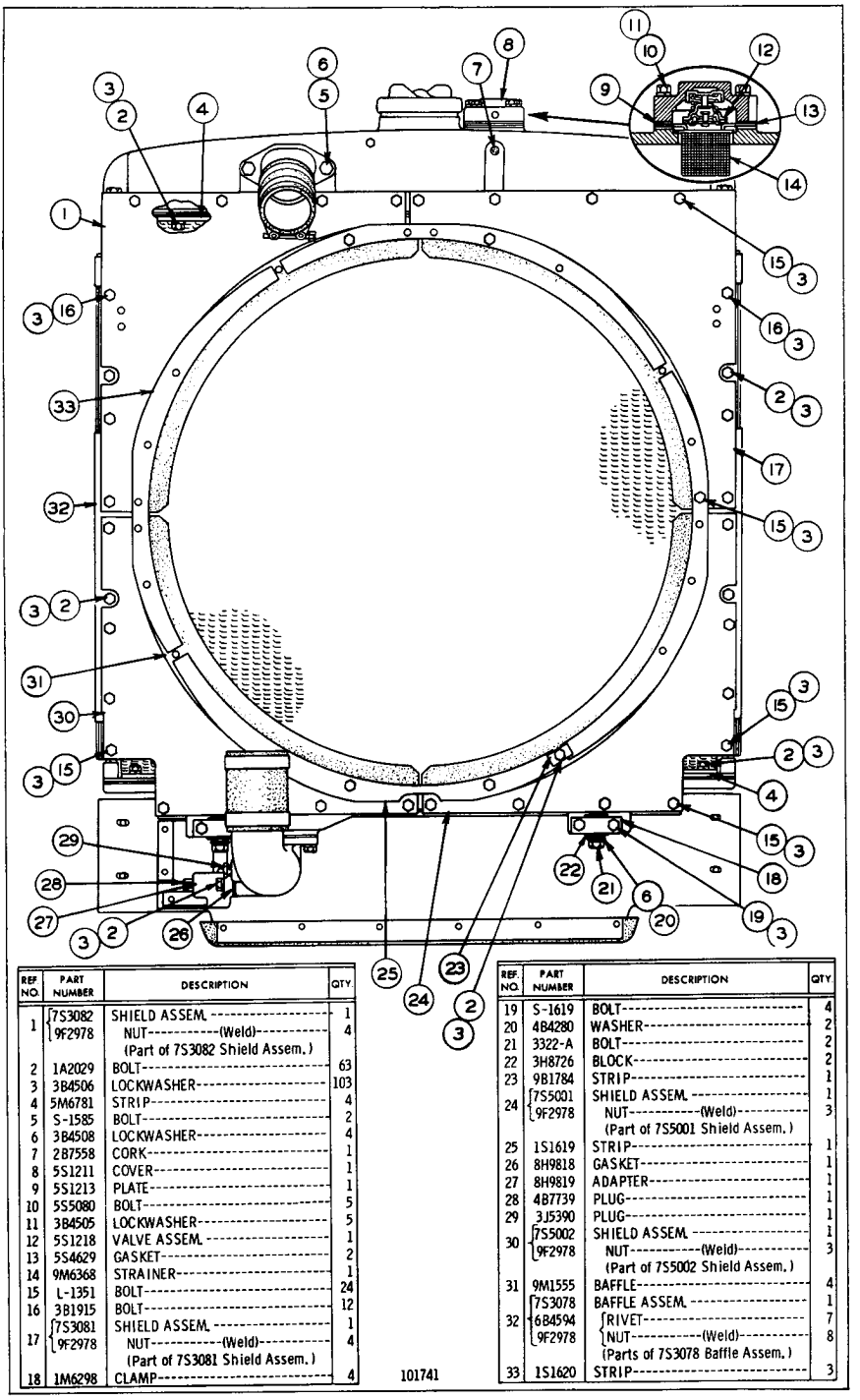

REF. NO.	PART NUMBER	DESCRIPTION	QTY.
1	7S3082	SHIELD ASSEM.	1
	9F2978	NUT----------(Weld)----------	4
		(Part of 7S3082 Shield Assem.)	
2	1A2029	BOLT----------	63
3	3B4506	LOCKWASHER----------	103
4	5M6781	STRIP----------	4
5	S-1585	BOLT----------	2
6	3B4508	LOCKWASHER----------	4
7	2B7558	CORK----------	1
8	5S1211	COVER----------	1
9	5S1213	PLATE----------	1
10	5S5080	BOLT----------	5
11	3B4505	LOCKWASHER----------	5
12	5S1218	VALVE ASSEM. ----------	1
13	5S4629	GASKET----------	2
14	9M6368	STRAINER----------	1
15	L-1351	BOLT----------	24
16	3B1915	BOLT----------	12
17	7S3081	SHIELD ASSEM. ----------	1
	9F2978	NUT----------(Weld)----------	4
		(Part of 7S3081 Shield Assem.)	
18	1M6298	CLAMP----------	4

REF. NO.	PART NUMBER	DESCRIPTION	QTY.
19	S-1619	BOLT----------	4
20	4B4280	WASHER----------	2
21	3322-A	BOLT----------	2
22	3H8726	BLOCK----------	2
23	9B1784	STRIP----------	1
24	7S5001	SHIELD ASSEM. ----------	1
	9F2978	NUT----------(Weld)----------	3
		(Part of 7S5001 Shield Assem.)	
25	1S1619	STRIP----------	1
26	8H9818	GASKET----------	1
27	8H9819	ADAPTER----------	1
28	4B7739	PLUG----------	1
29	3J5390	PLUG----------	1
30	7S5002	SHIELD ASSEM. ----------	1
	9F2978	NUT----------(Weld)----------	3
		(Part of 7S5002 Shield Assem.)	
31	9M1555	BAFFLE----------	4
32	7S3078	BAFFLE ASSEM. ----------	1
	6B4594	RIVET----------	7
	9F2978	NUT----------(Weld)----------	8
		(Parts of 7S3078 Baffle Assem.)	
33	1S1620	STRIP----------	3

101741

RADIATOR--AS VIEWED FROM REAR OF ENGINE
NOTE: 6F6041 RUST INHIBITOR IS AVAILABLE

ALWAYS GIVE SERIAL NUMBER WHEN ORDERING PARTS

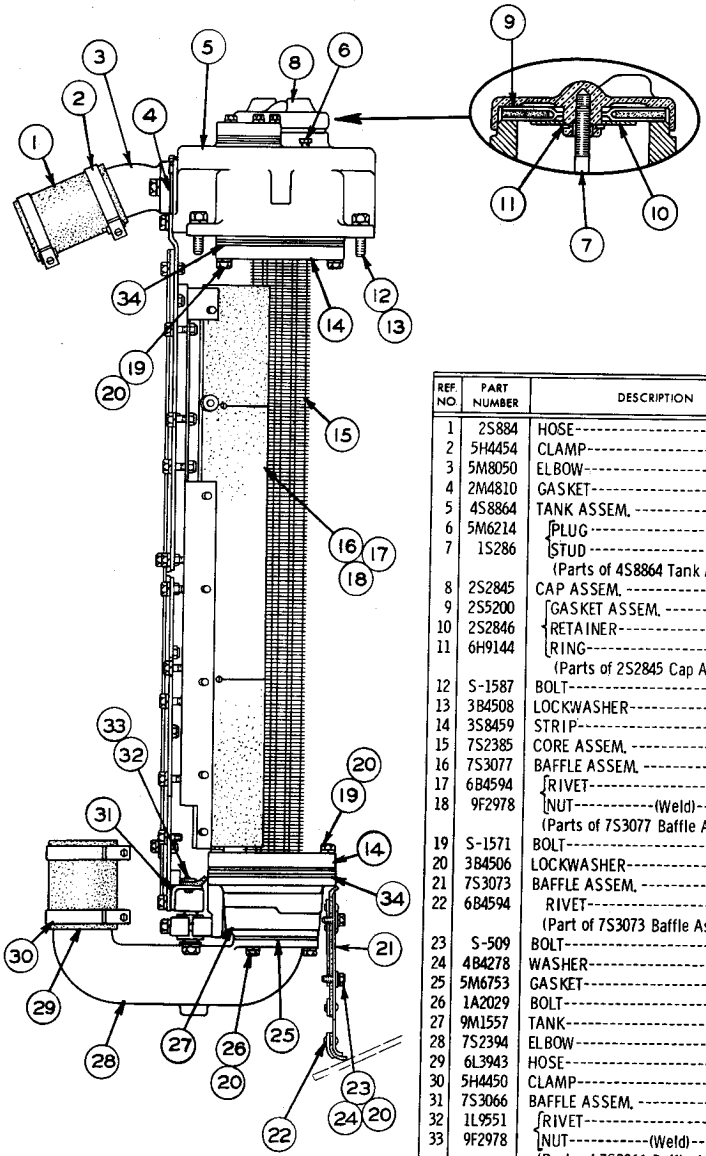

REF. NO.	PART NUMBER	DESCRIPTION	QTY
1	2S884	HOSE	1
2	5H4454	CLAMP	2
3	5M8050	ELBOW	1
4	2M4810	GASKET	1
5	4S8864	TANK ASSEM.	1
6	5M6214	PLUG	1
7	1S286	STUD	1
		(Parts of 4S8864 Tank Assem.)	
8	2S2845	CAP ASSEM.	1
9	2S5200	GASKET ASSEM.	1
10	2S2846	RETAINER	1
11	6H9144	RING	1
		(Parts of 2S2845 Cap Assem.)	
12	S-1587	BOLT	4
13	3B4508	LOCKWASHER	4
14	3S8459	STRIP	4
15	7S2385	CORE ASSEM.	1
16	7S3077	BAFFLE ASSEM.	1
17	6B4594	RIVET	7
18	9F2978	NUT----------(Weld)----------	8
		(Parts of 7S3077 Baffle Assem.)	
19	S-1571	BOLT	8
20	3B4506	LOCKWASHER	15
21	7S3073	BAFFLE ASSEM.	1
22	6B4594	RIVET	20
		(Part of 7S3073 Baffle Assem.)	
23	S-509	BOLT	4
24	4B4278	WASHER	4
25	5M6753	GASKET	1
26	1A2029	BOLT	3
27	9M1557	TANK	1
28	7S2394	ELBOW	1
29	6L3943	HOSE	1
30	5H4450	CLAMP	2
31	7S3066	BAFFLE ASSEM.	1
32	1L9551	RIVET	6
33	9F2978	NUT----------(Weld)----------	6
		(Parts of 7S3066 Baffle Assem.)	
34	9M2250	GASKET	2

RADIATOR--As Viewed from Right Hand Side of Engine
Refer also to Pages 109 and 111 for special parts

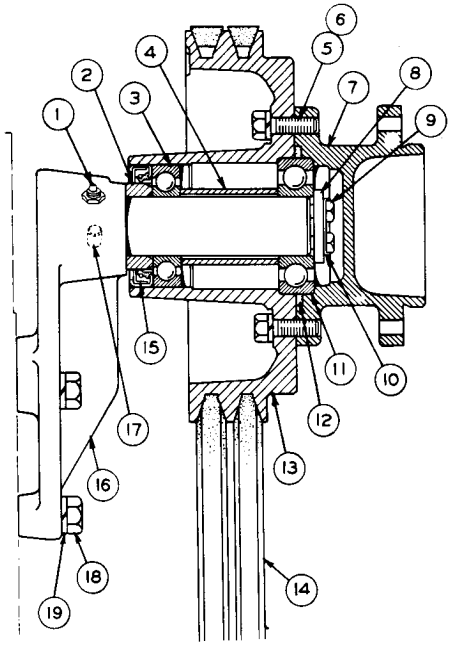

REF NO.	PART NUMBER	DESCRIPTION	QTY
1	3B8489	FITTING	1
2	5S9062	SPACER	1
3	8H9789	BEARING	1
4	5S9049	SPACER	1
5	S-1588	BOLT	6
6	3B4506	LOCKWASHER	6
7	5S9905	ADAPTER	1
8	5S7264	WASHER	1
9	1H5403	BOLT	2
10	2F6156	LOCK	1
11	3L1425	BEARING	1
12	9F4446	SEAL	1
13	5S9515	PULLEY	1
14	7S9810	VEE BELT SET-(2 Belts)	1
15	5S2106	SEAL	1
16	8S863	BRACKET ASSEM.	1
17	5B5812	DOWEL (Part of 8S863 Bracket Assem.)	1
18	1A1460	BOLT	4
19	3B4508	LOCKWASHER	4

101630

FAN DRIVE AND SUPPORT

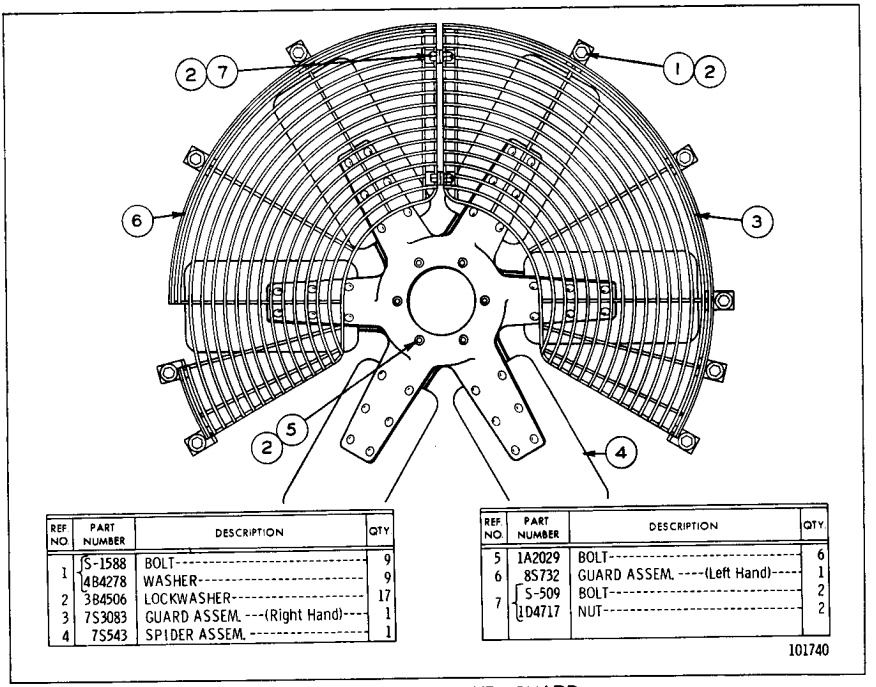

REF NO.	PART NUMBER	DESCRIPTION	QTY
1	S-1588	BOLT	9
	4B4278	WASHER	9
2	3B4506	LOCKWASHER	17
3	7S3083	GUARD ASSEM.-(Right Hand)	1
4	7S543	SPIDER ASSEM.	1

REF NO.	PART NUMBER	DESCRIPTION	QTY
5	1A2029	BOLT	6
6	8S732	GUARD ASSEM.-(Left Hand)	1
7	S-509	BOLT	2
	1D4717	NUT	2

101740

BLOWER FAN AND GUARD

REFER ALSO TO PAGE 110 FOR SPECIAL PARTS

ALWAYS GIVE SERIAL NUMBER WHEN ORDERING PARTS

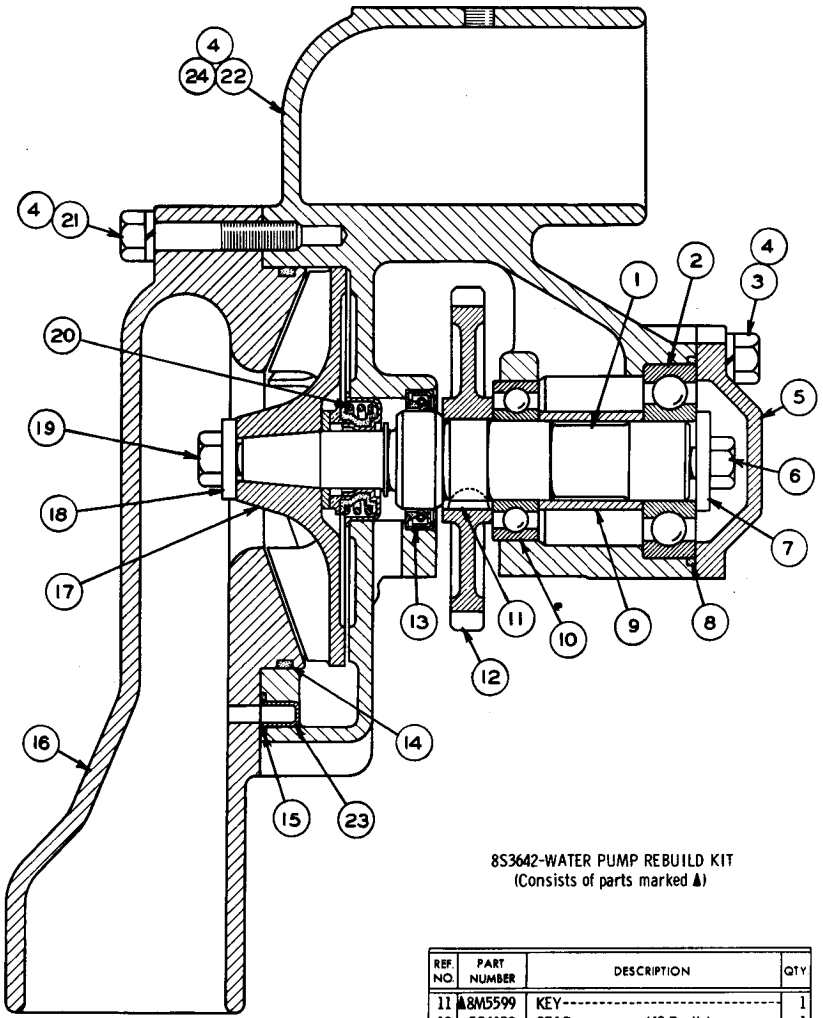

8S3642-WATER PUMP REBUILD KIT
(Consists of parts marked ▲)

REF. NO.	PART NUMBER	DESCRIPTION	QTY.
1	▲5S6116	SHAFT	1
2	▲2F5721	BEARING	1
3	S-1594	BOLT	2
4	▲3B4506	LOCKWASHER	10
5	5S6048	COVER	1
6	S-1591	BOLT	1
7	▲2S6160	WASHER	1
8	8S768	SEAL	1
9	▲5S6052	SPACER	1
10	▲6B1124	BEARING	1
11	▲8M5599	KEY	1
12	5S6132	GEAR----------(40 Teeth)---------	1
13	9H8839	SEAL	1
14	5F3999	SEAL	1
15	4J2506	SEAL	1
16	5S6664	COVER	1
17	▲5S6097	IMPELLER ASSEM.	1
18	▲9M6527	WASHER	1
19	▲4L9337	BOLT	1
20	4S6413	SEAL ASSEM.	1
21	S-1590	BOLT	2
22	5S6667	HOUSING ASSEM.	1
	5S6047	GASKET	1
23	4M1336	FERRULE (Part of 5S6667 Housing Assem.)	1
24	L-1352	BOLT---------(3.25" Long)---------	3
	1A5183	BOLT---------(4.75" Long)---------	1

101455

5S6684 WATER PUMP GROUP
SEE PAGE 23 FOR GASKET KIT

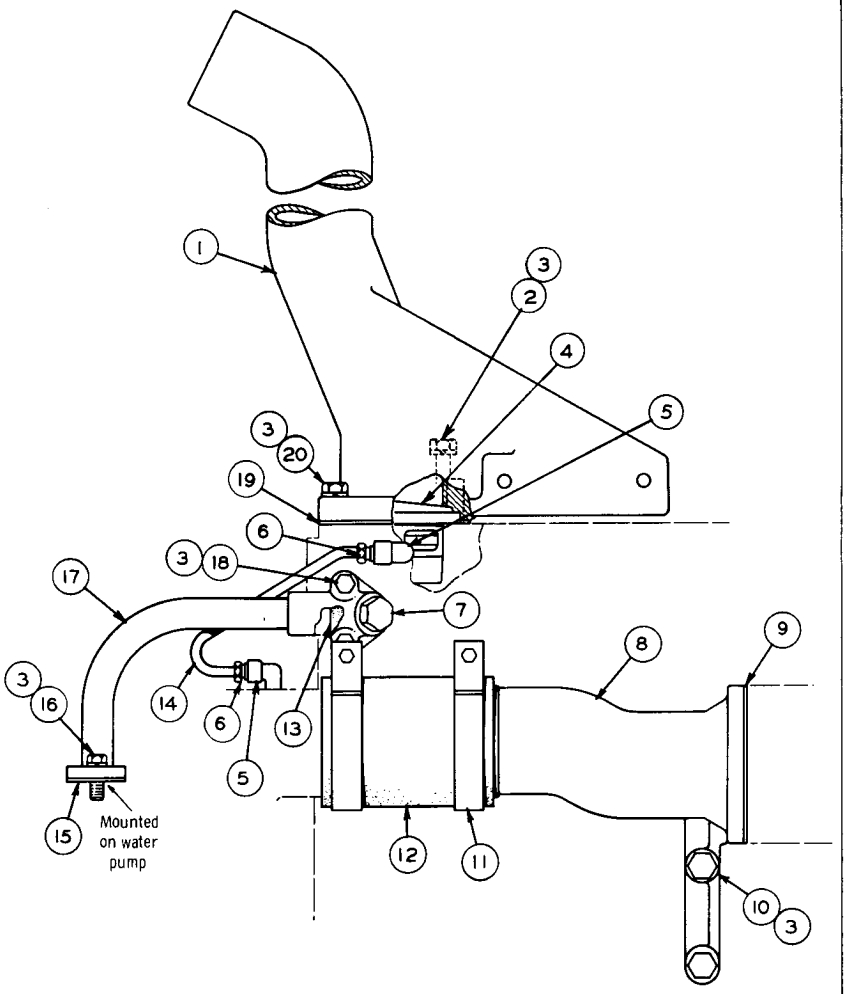

REF NO	PART NUMBER	DESCRIPTION	QTY
1	7S3150	ELBOW ASSEM.	1
	4M1336	FERRULE (Part of 7S3150 Elbow Assem.)	1
2	L-2070	BOLT---------(2.25" Long)--------	1
3	3B4506	LOCKWASHER----------	10
4	2S4044	REGULATOR----------	1
5	3B8998	FITTING----------	2
6	1F1344	NUT---------- (1 in each 3B8998 Fitting)	2
7	3J5389	PLUG----------	1
8	5S6108	BONNET----------	1
9	5S6051	GASKET----------	1

REF NO	PART NUMBER	DESCRIPTION	QTY
10	L-1143	BOLT----------	2
11	5H4454	CLAMP----------	2
12	4S6825	HOSE----------	1
13	5S9588	GASKET----------	1
14	5S6154	TUBE----------	1
15	T-225	GASKET----------	1
16	S-1594	BOLT----------	2
17	5S6141	TUBE ASSEM.	1
18	S-1571	BOLT----------	2
19	5S9059	GASKET----------	1
20	S-1588	BOLT---------(1.25" Long)--------	3

101639

WATER LINES

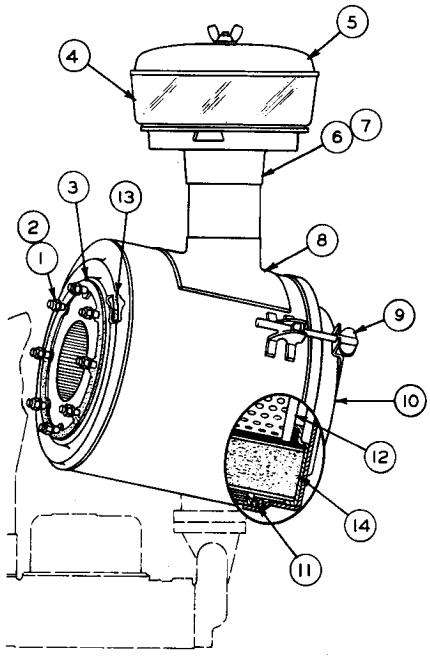

REF. NO.	PART NUMBER	DESCRIPTION	QTY.
1	1D4717	NUT	8
2	3B4506	LOCKWASHER	8
3	4M4299	GASKET	1
	4M3310	PRECLEANER ASSEM.	1
		Consisting of:	
4	1M7250	BODY	1
5	9M4939	COVER ASSEM.	1
6	7M8228	SLEEVE ASSEM.	1
7	1S5163	BOLT (Part of 7M8228 Sleeve Assem.)	1
8	7S5474	AIR CLEANER ASSEM.	1
	7S5730	BODY ASSEM.	1
9	9M3695	ROD ASSEM. (Part of 7S5730 Body Assem.)	2
10	7S5731	CUP ASSEM.	1
11	9M8513	GASKET (Part of 7S5731 Cup Assem.)	1
12	2S1286	ELEMENT------(Secondary)------	1
13	4M4299	GASKET (Part of 2S1286 Element)	1
14	4M9334	ELEMENT------(Primary)-------- (Parts of 7S5474 Air Cleaner Assem.)	1

101447

AIR CLEANER

REFER ALSO TO PAGES 106 AND 107 FOR SPECIAL PARTS

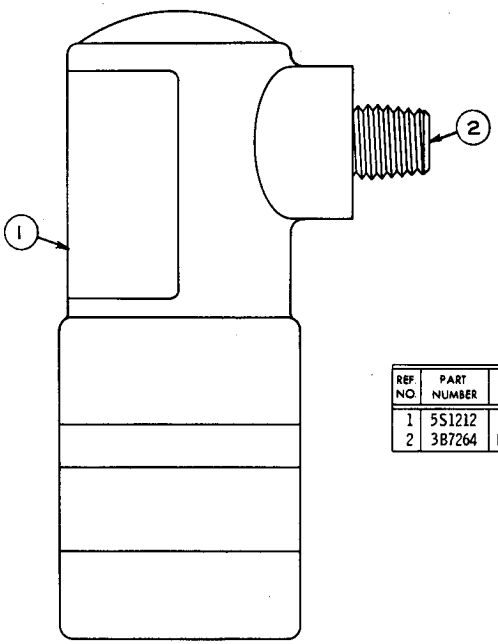

REF. NO.	PART NUMBER	DESCRIPTION	QTY.
1	5S1212	INDICATOR	1
2	3B7264	NIPPLE	1

101672

AIR FILTER SERVICE INDICATOR

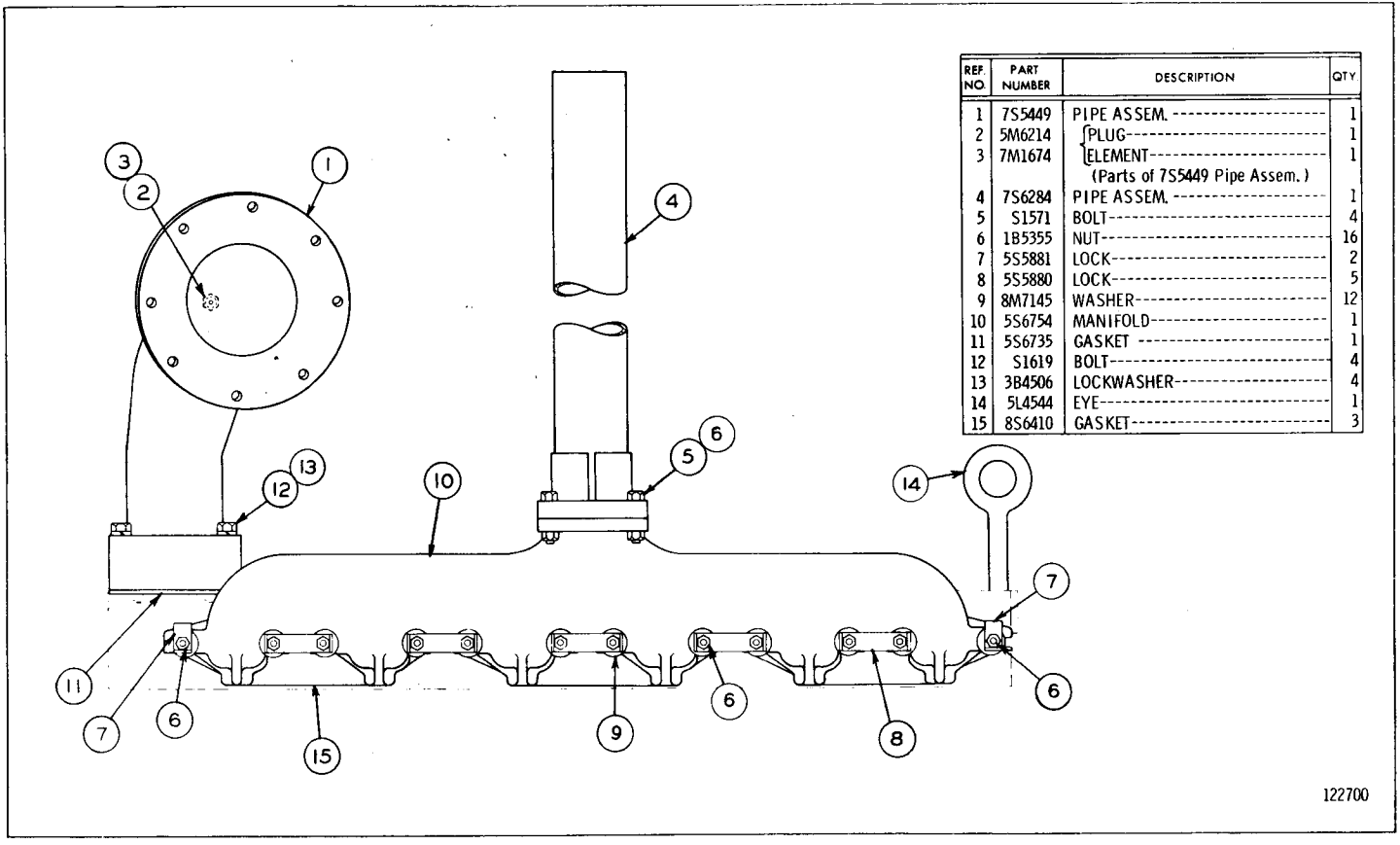

REF. NO.	PART NUMBER	DESCRIPTION	QTY
1	7S5449	PIPE ASSEM.	1
2	5M6214	PLUG	1
3	7M1674	ELEMENT	1
		(Parts of 7S5449 Pipe Assem.)	
4	7S6284	PIPE ASSEM.	1
5	S1571	BOLT	4
6	1B5355	NUT	16
7	5S5881	LOCK	2
8	5S5880	LOCK	5
9	8M7145	WASHER	12
10	5S6754	MANIFOLD	1
11	5S6735	GASKET	1
12	S1619	BOLT	4
13	3B4506	LOCKWASHER	4
14	5L4544	EYE	1
15	8S6410	GASKET	3

MANIFOLD

NOTE: 8S1935 RAIN CAP ASSEMBLY IS AVAILABLE

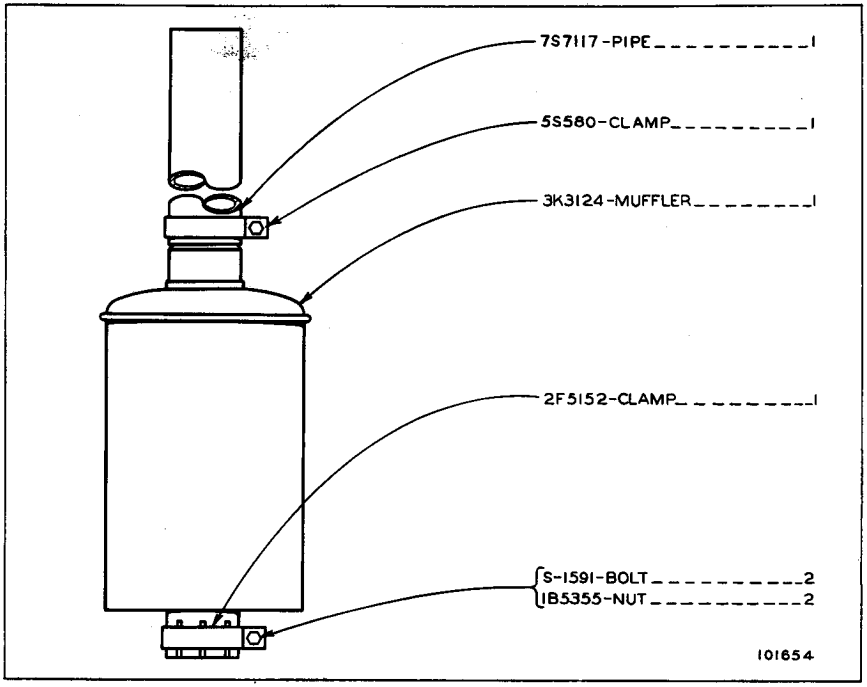

MUFFLER

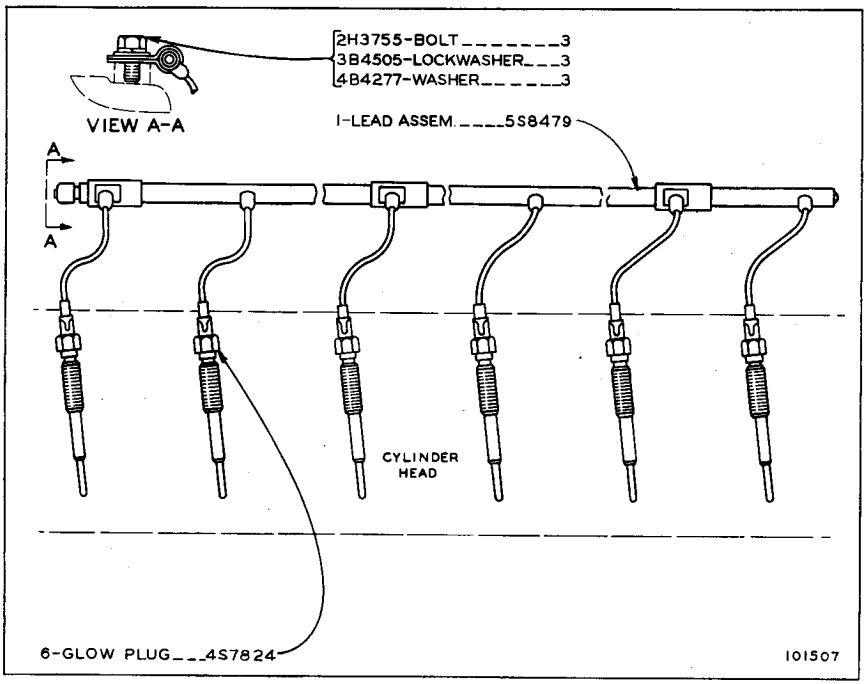

GLOW PLUG AND WIRING

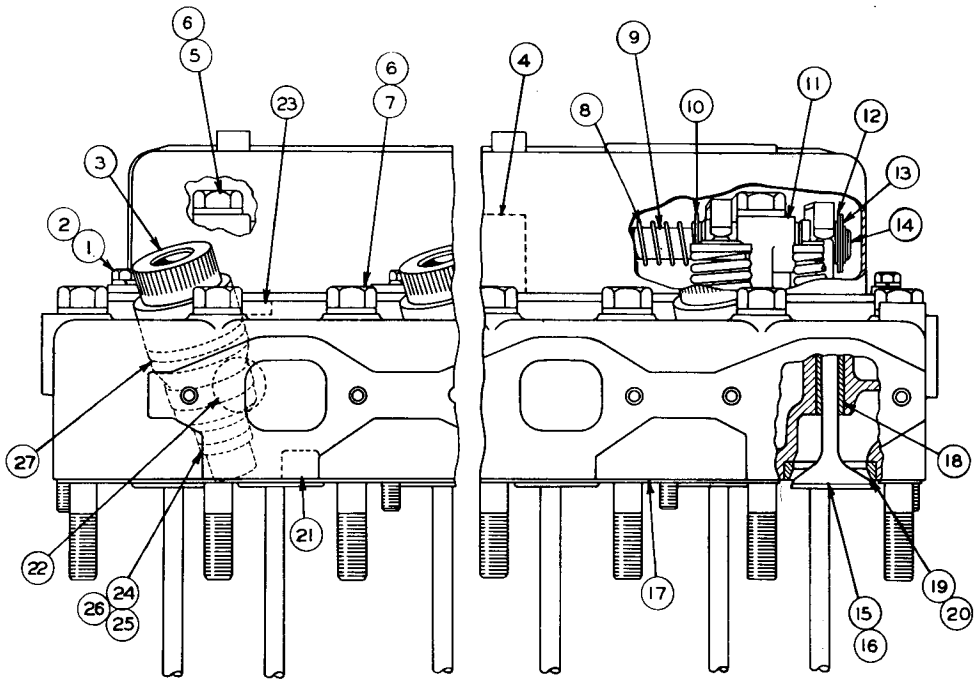

REF NO	PART NUMBER	DESCRIPTION	QTY
1	S 1617	BOLT	15
2	3B4505	LOCKWASHER	15
3	5S6795	CHAMBER ASSEM.	6
4	5S5878	BRACKET	4
5	1B7709	BOLT	6
6	2S736	WASHER	26
7	1D4595	BOLT	20
8	4B4910	SPRING	5
9	5S6033	SHAFT ASSEM.	1
	5S5879	BRACKET	1
	T 200	PLUG	2
	5M4606	DOWEL	1
		(Parts of 5S6033 Shaft Assem.)	
10	9H1110	WASHER	12
11	8S1499	BRACKET ASSEM.	1
	3F6795	DOWEL	1
		(Part of 8S1499 Bracket Assem.)	
12	9H1112	SPRING	2
13	9M9886	WASHER	2
14	9H1113	RING	2
15	5S6449	VALVE---(Exhaust)---	6
16	5S6452	VALVE---(Intake)---	6
17	7S7069	HEAD ASSEM.	1
18	5S4598	BUSHING	12
19	5S7221	INSERT---(Exhaust)---	6
20	5S7218	INSERT---(Intake)---	6
21	1S3062	DIRECTOR	18
22	3S8313	PLUG	8
23	3B623	PLUG	6
		(Parts of 7S7069 Head Assem.)	
24	5M2667	GASKET---(.194" Thick)---	6
25	2S8959	GASKET---(.223" Thick)---	6
26	2S8960	GASKET---(.248" Thick)---	6
27	7S3206	SEAL	6

122702

CYLINDER HEAD AND VALVE MECHANISM--SIDE VIEW

SEE PAGE 23 FOR GASKET KITS

CYLINDER HEAD AND VALVE MECHANISM--END VIEW

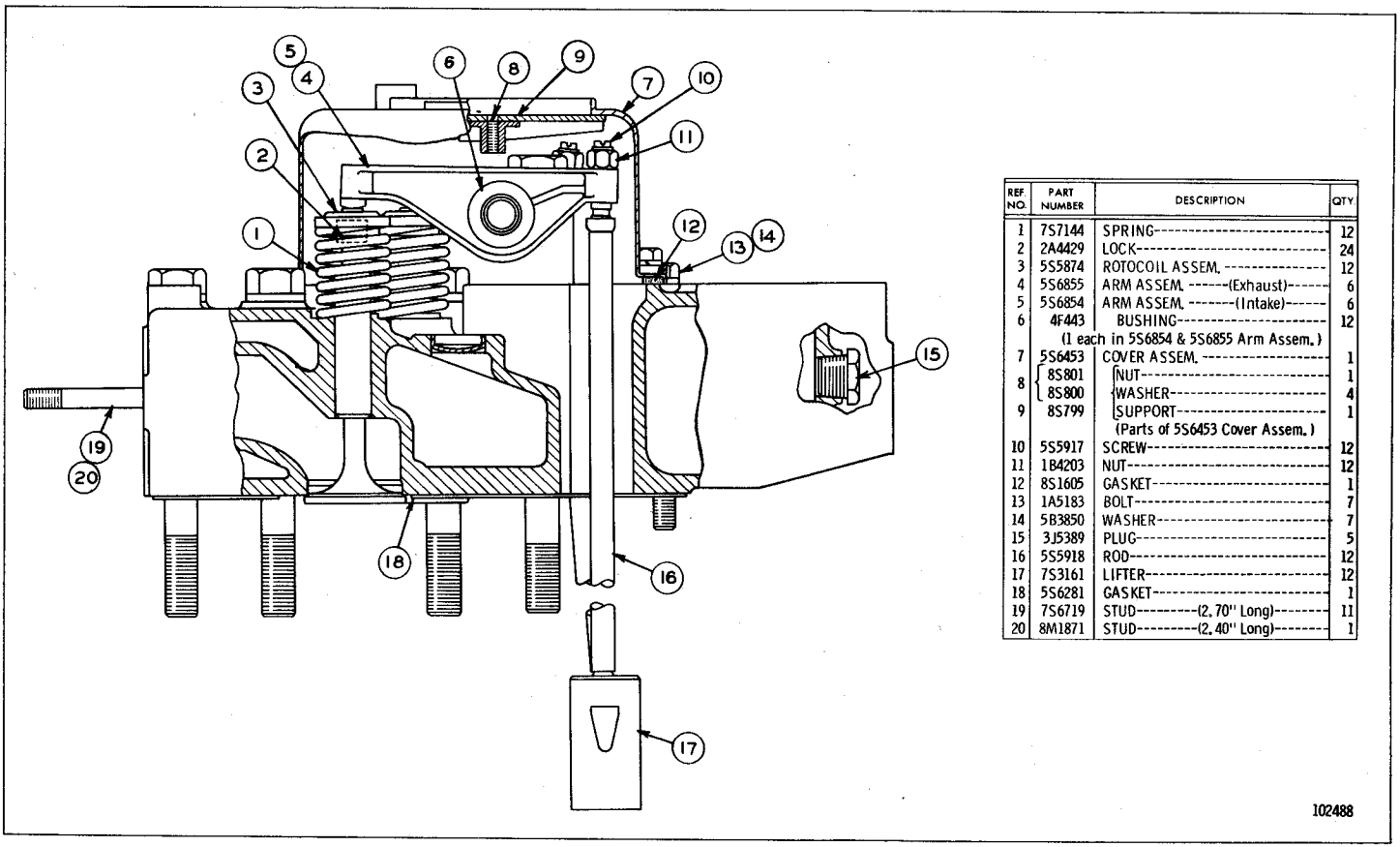

REF. NO.	PART NUMBER	DESCRIPTION	QTY
1	7S7144	SPRING	12
2	2A4429	LOCK	24
3	5S5874	ROTOCOIL ASSEM.	12
4	5S6855	ARM ASSEM. -----(Exhaust)-----	6
5	5S6854	ARM ASSEM. -------(Intake)------	6
6	4F443	BUSHING	12
		(1 each in 5S6854 & 5S6855 Arm Assem.)	
7	5S6453	COVER ASSEM.	1
8	8S801	NUT	1
	8S800	WASHER	4
9	8S799	SUPPORT	1
		(Parts of 5S6453 Cover Assem.)	
10	5S5917	SCREW	12
11	1B4203	NUT	12
12	8S1605	GASKET	1
13	1A5183	BOLT	7
14	5B3850	WASHER	7
15	3J5389	PLUG	5
16	5S5918	ROD	12
17	7S3161	LIFTER	12
18	5S6281	GASKET	1
19	7S6719	STUD---------(2.70" Long)-------	11
20	8M1871	STUD---------(2.40" Long)-------	1

ONLY "CATERPILLAR" PARTS GIVE "CATERPILLAR" PERFORMANCE

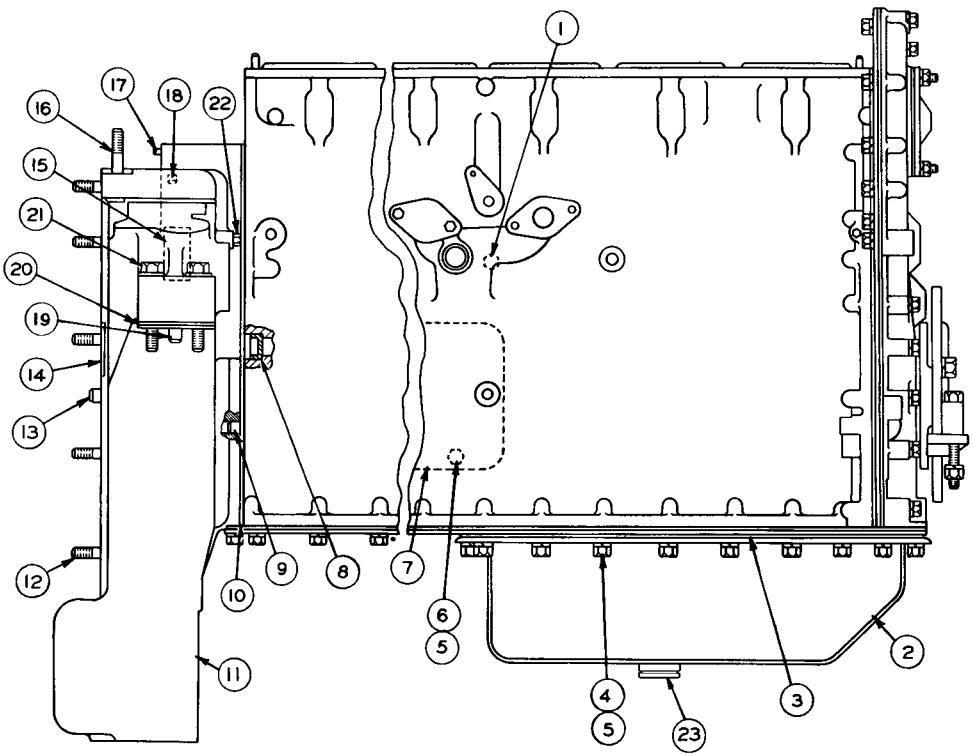

REF NO	PART NUMBER	DESCRIPTION	QTY.
1	8M9307	PLUG	1
	6F7062	GASKET	1
2	8S8206	PAN ASSEM.	1
3	8S1965	GASKET	1
4	S 1588	BOLT-------(1.25" Long)--------	20
	1A2029	BOLT--------(1.125" Long)--------	8
5	3B4506	LOCKWASHER	36
6	L 1351	BOLT	8
7	8S876	COVER	1
	8S877	GASKET	1
8	4B3938	PLUG	1
9	2A3798	DOWEL	2
10	9H5921	GASKET	1
11	7S2392	HOUSING ASSEM.	1
12	3D490	STUD---------(2" Long)---------	10
	5M1932	STUD-------(2.20" Long)-------	2
13	2A3798	DOWEL	2
14	1S1550	PLATE	1
	4B4158	SCREW	2
15	9M8395	BEARING	1
16	3D472	STUD	2
17	3F957	STUD	2
18	9F2247	PLUG	3
		(Parts of 7S2392 Housing Assem.)	
19	2B8162	DOWEL	2
20	5M7135	SHIM--------(.032" Thick)--------	4
	5M7136	SHIM--------(.065" Thick)--------	2
	5M7159	SHIM--------(.014" Thick)--------	2
21	1D4586	BOLT	4
	9H1024	WASHER	4
22	5M6213	PLUG	1
23	4B2363	PLUG	1
	6F4868	GASKET	1

122703

CYLINDER BLOCK AND COVERS--SIDE VIEW--PART 1 OF 3

SEE PAGE 23 FOR GASKET KITS

CYLINDER BLOCK AND COVERS—Side View—Part 2 of 3

Cylinder Block Assembly parts are shown on Page 21

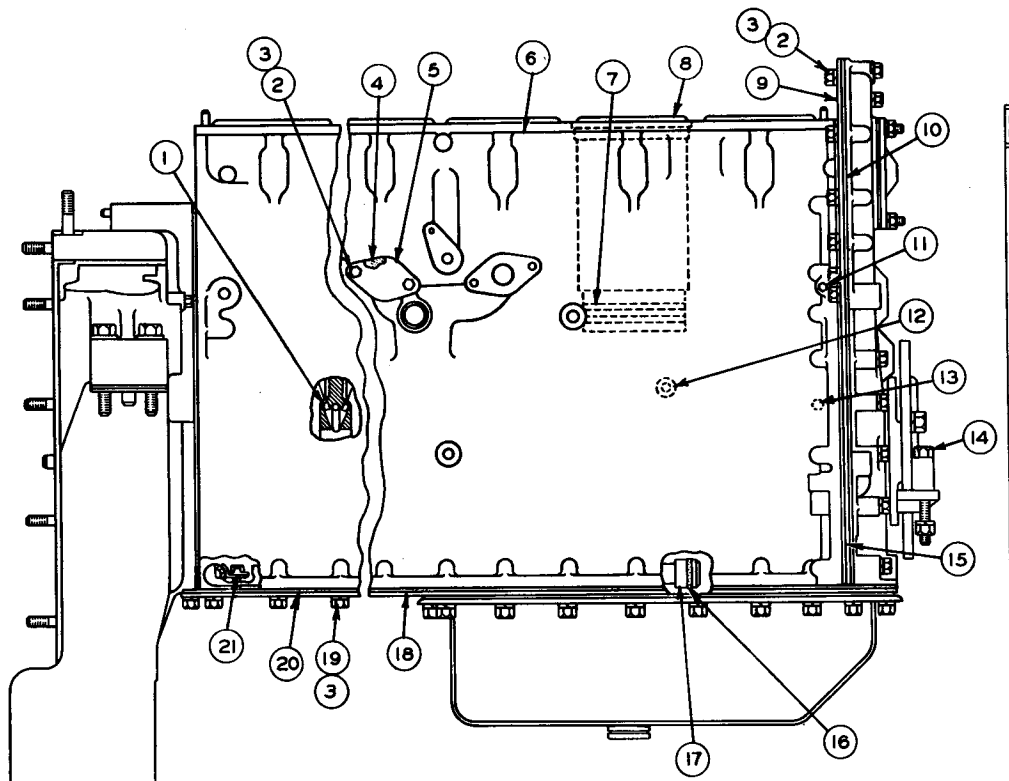

REF. NO.	PART NUMBER	DESCRIPTION	QTY.
1	7M4593	PLUG	6
2	S 1594	BOLT	10
3	3B4506	LOCKWASHER	26
4	4M6480	GASKET	1
5	1M130	COVER	1
6	Not Serv	BLOCK ASSEM. (See Separate Illustration)	1
7	5S6670	SEAL	12
8	5S6346	LINER	6
9	5S7136	PLATE ASSEM.	1
	5S7190	STUD (Part of 5S7136 Plate Assem.)	1
10	5S7134	GASKET	1
11	5M6214	PLUG	1
12	5B8030	SPACER	1
13	5M6213	PLUG	5
14	3B2968	BOLT	2
	2J3506	NUT	2
	2S115	WASHER	2
15	5S7135	GASKET	1
16	9H6067	SEAL	1
17	8S501	TUBE ASSEM.	1
18	8S1961	PLATE ASSEM.	1
19	L 1351	BOLT	16
20	4M2969	GASKET	1
21	4F4879	BOLT	1
	L 364	LOCK	1

ONLY "CATERPILLAR" PARTS GIVE "CATERPILLAR" PERFORMANCE

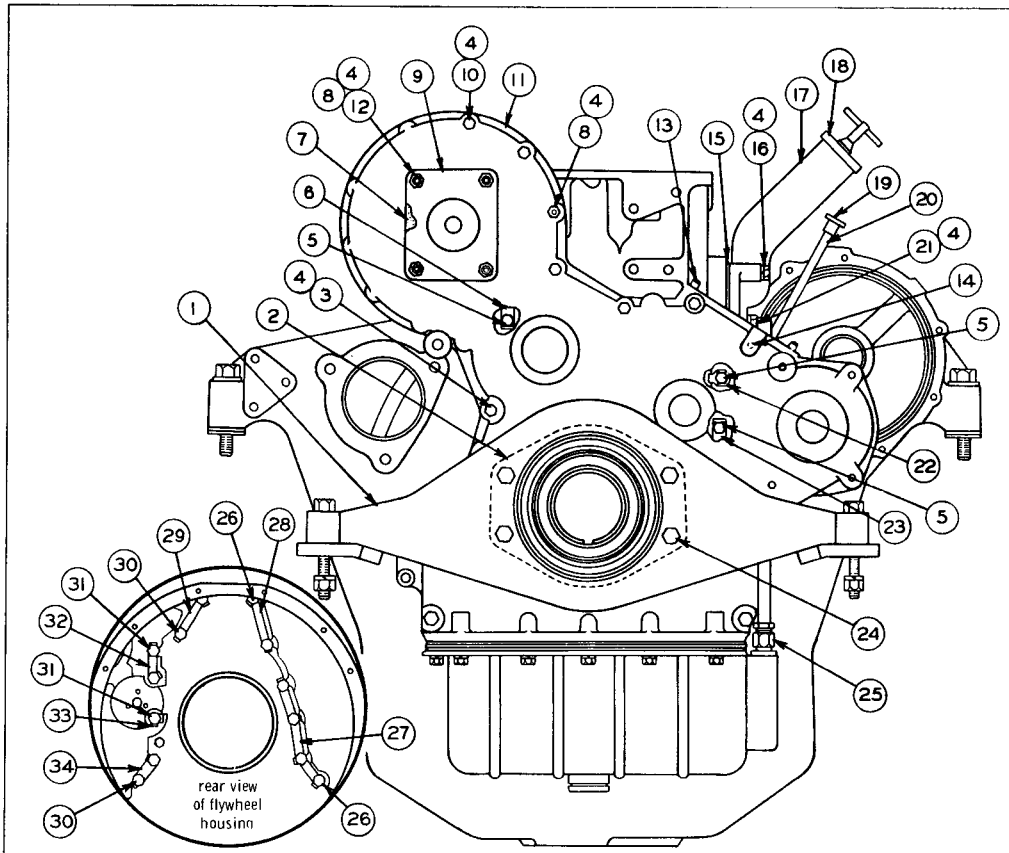

REF. NO.	PART NUMBER	DESCRIPTION	QTY.
1	7S633	SUPPORT ASSEM.	1
2	7S1234	BUSHING ASSEM.	1
3	L 1143	BOLT	9
4	3B4506	LOCKWASHER	20
5	S 1594	BOLT	8
6	7H9831	LOCK	1
7	9H4891	GASKET	1
8	1B4203	NUT	6
9	7M232	COVER	1
10	1C2251	BOLT	2
11	5S6385	COVER ASSEM.	1
12	6H192	STUD	4
13	2A3630	PIN	2
14	3B2460	STUD	1
		(Parts of 5S6385 Cover Assem.)	
15	5S8055	GASKET	1
16	7H7954	BOLT	2
17	7S3658	PIPE ASSEM.	1
	7S1801	ANCHOR	1
18	7S1803	CAP ASSEM.	1
		(Parts of 7S3658 Pipe Assem.)	
19	8S3995	GAUGE ASSEM.	1
20	5S8059	TUBE ASSEM.	1
21	S 1591	BOLT	1
22	L 364	LOCK	2
23	4M4419	LOCK	2
24	6H1717	BOLT	4
	9B453	LOCKWASHER	4
25	8S1326	FITTING	1
26	2B947	BOLT	6
27	5M9131	LOCK	1
28	5M9134	LOCK	1
29	5M9135	LOCK	1
30	1A1460	BOLT	4
31	S 1585	BOLT	3
32	9M300	LOCK	1
33	7M7205	LOCK	1
34	5M9136	LOCK	1

CYLINDER BLOCK AND COVERS--END VIEW--PART 3 OF 3

REFER ALSO TO PAGE 111 FOR SPECIAL PARTS

CYLINDER BLOCK ASSEMBLY

Part of Cylinder Block and Covers shown on Page 19

Note: For Field Replacement order 8S3710 Service Block Assembly

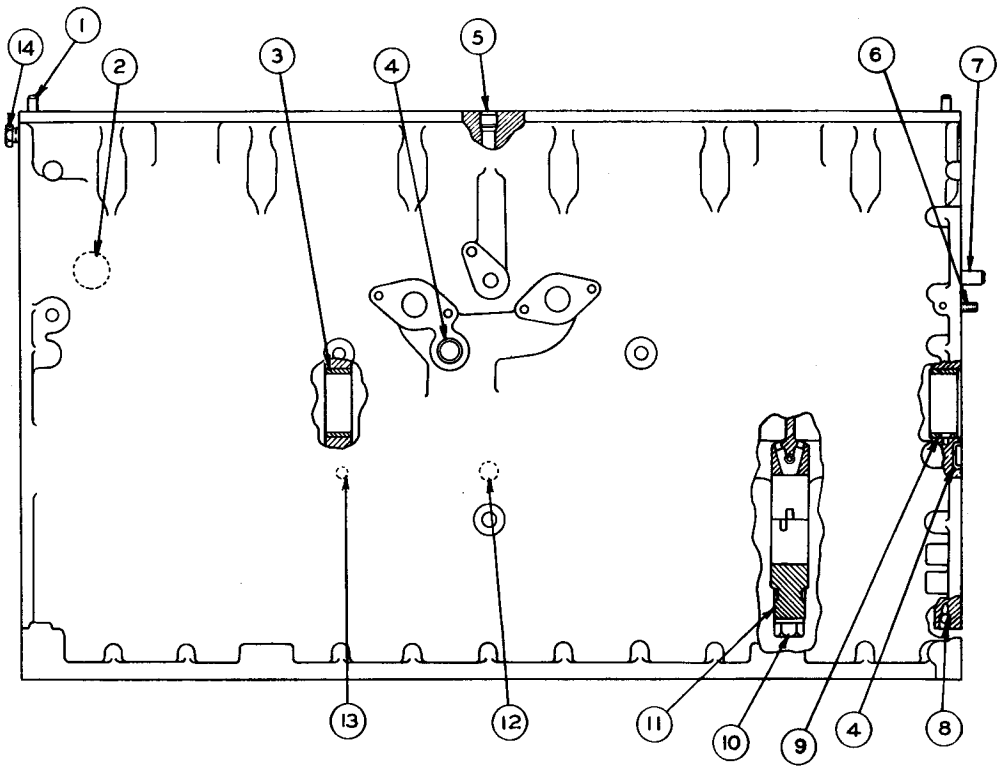

REF. NO.	PART NUMBER	DESCRIPTION	QTY.
1	8B1312	DOWEL	2
2	3S8313	PLUG	2
3	7M4046	BEARING	4
4	4B5387	PLUG	2
5	5B7652	DOWEL	2
6	5S8462	STUD	1
7	8B6349	DOWEL	2
8	4B9782	BALL	1
9	9M5477	BEARING	1
10	7S3224	BOLT	14
	2S5658	WASHER	14
11	8S4676	BEARING CAP GROUP	7
	8S4674	SHIM---------(Long)	2
	8S4673	SHIM---------(Short)	6
		(Parts of 8S4676 Bearing Cap Group)	
12	8S835	DOWEL	1
13	1H974	DOWEL	1
14	5M6213	PLUG	1
FM030102-04		FORM	1
		(Bearing Cap Installation)	

102826

ONLY "CATERPILLAR" PARTS GIVE "CATERPILLAR" PERFORMANCE

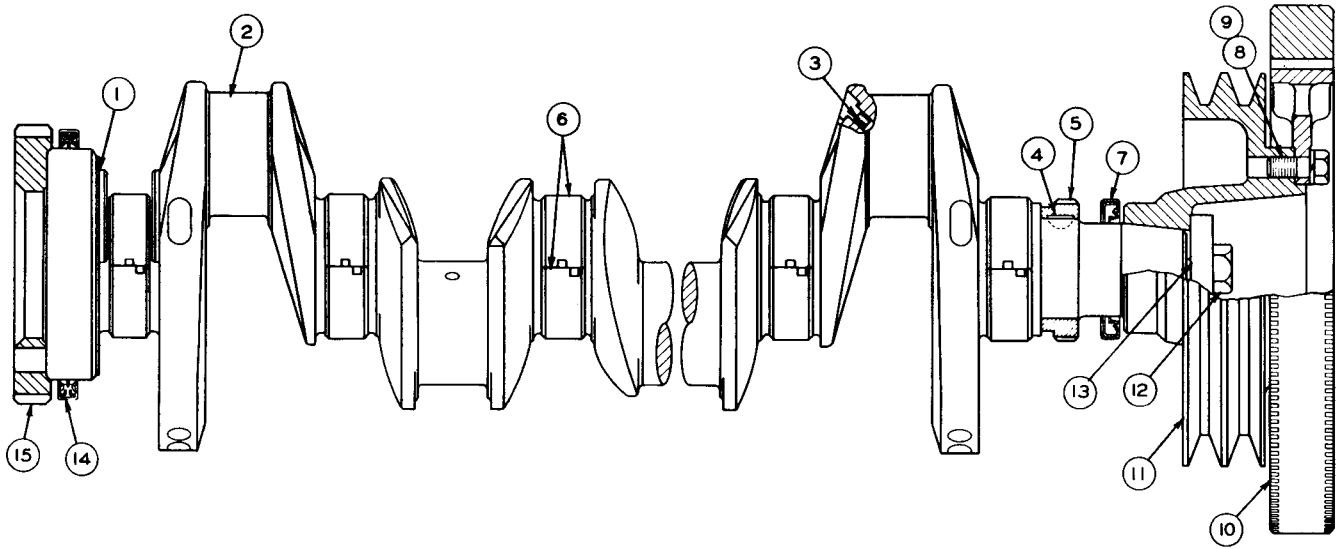

REF. NO.	PART NUMBER	DESCRIPTION	QTY
1	3S7774	PLATE	2
2	5S5871	CRANKSHAFT ASSEM.	1
3	9F2247	PLUG	6
4	5H2671	KEY	1
5	4M9933	GEAR (40 Teeth)	1
		(Parts of 5S5871 Crankshaft Assem.)	

REF. NO.	PART NUMBER	DESCRIPTION	QTY
6	3S9730	BEARING	7
7	5S9021	SEAL	1
8	S-1595	BOLT	6
9	3B4508	LOCKWASHER	6
10	8S1503	DAMPER ASSEM.	1

REF. NO.	PART NUMBER	DESCRIPTION	QTY
11	5S8168	PULLEY	1
12	6B5310	BOLT	1
13	5S9948	WASHER	1
14	8S754	SEAL	1
15	9M1687	GEAR (58 Teeth)	1

101629

CRANKSHAFT

8S3982 FOR USE WITH STANDARD CRANKSHAFT

Consists of:
Complete set of Bearing Assemblies as shown with Standard Crankshaft

8S3983 FOR USE WITH .010 UNDERSIZE CRANKSHAFT

Consists of:
7 4S8881 Bearing
2 3S7774 Plate

8S3984 FOR USE WITH .020 UNDERSIZE CRANKSHAFT

Consists of:
7 4S8883 Bearing
2 3S7774 Plate

8S3985 FOR USE WITH .030 UNDERSIZE CRANKSHAFT

Consists of:
7 4S8885 Bearing
2 3S7774 Plate

CRANKSHAFT BEARING REPLACEMENT GROUPS

8S7062 Diesel Engine Basic

8S7066 Diesel Engine Supplementary

8S7059 Valve Grinding

8S7058 Cylinder Liner and Piston Replacement
Note: Piston and Liner Replacement require the use of 8S7059 & 8S7058 Gasket Kits

8S7057 Water Pump

9S1070 Transmission

9S1058 Torque Converter

GASKET KITS

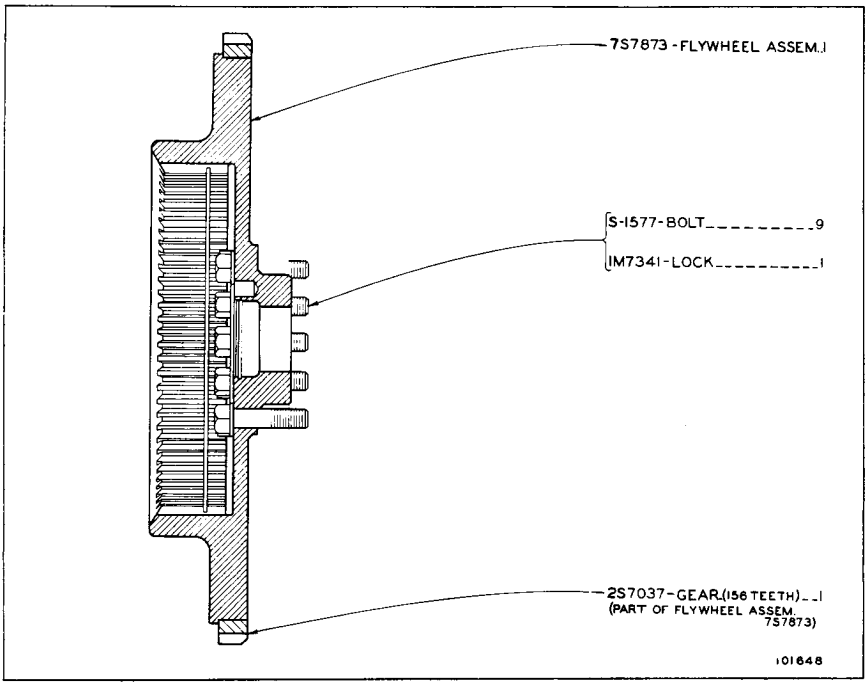

FLYWHEEL

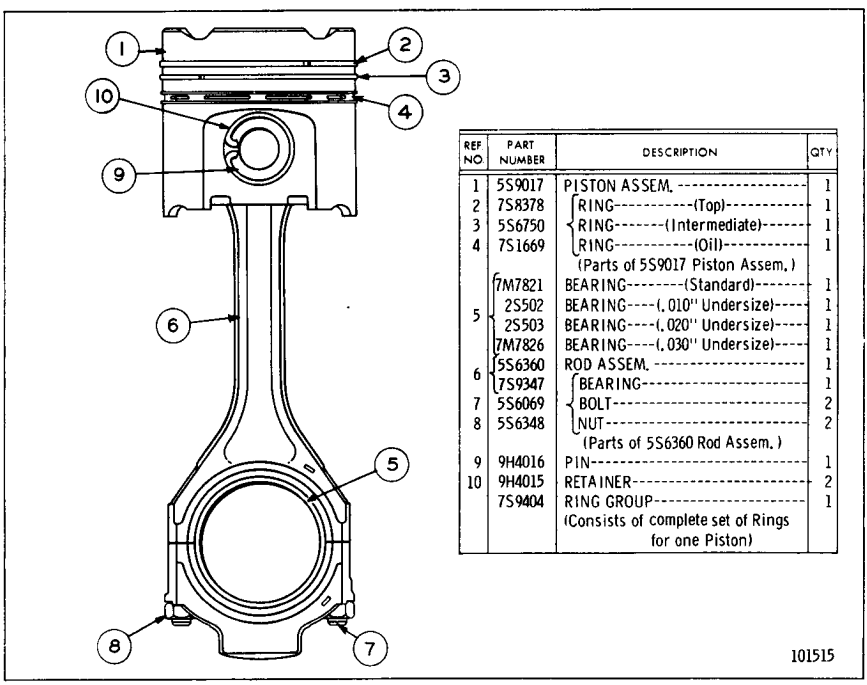

REF NO	PART NUMBER	DESCRIPTION	QTY
1	5S9017	PISTON ASSEM.	1
2	7S8378	RING---(Top)	1
3	5S6750	RING---(Intermediate)	1
4	7S1669	RING---(Oil)	1
		(Parts of 5S9017 Piston Assem.)	
5	7M7821	BEARING---(Standard)	1
	2S502	BEARING---(.010" Undersize)	1
	2S503	BEARING---(.020" Undersize)	1
	7M7826	BEARING---(.030" Undersize)	1
6	5S6360	ROD ASSEM.	1
	7S9347	BEARING	1
7	5S6069	BOLT	2
8	5S6348	NUT	2
		(Parts of 5S6360 Rod Assem.)	
9	9H4016	PIN	1
10	9H4015	RETAINER	2
	7S9404	RING GROUP (Consists of complete set of Rings for one Piston)	1

CONNECTING ROD AND PISTON--6 REQUIRED

NOTE: 8S4635 PISTON AND LINER GROUP, CONSISTING OF 1--PISTON, 1--LINER AND 2--SEAL, IS AVAILABLE

ALWAYS GIVE SERIAL NUMBER WHEN ORDERING PARTS

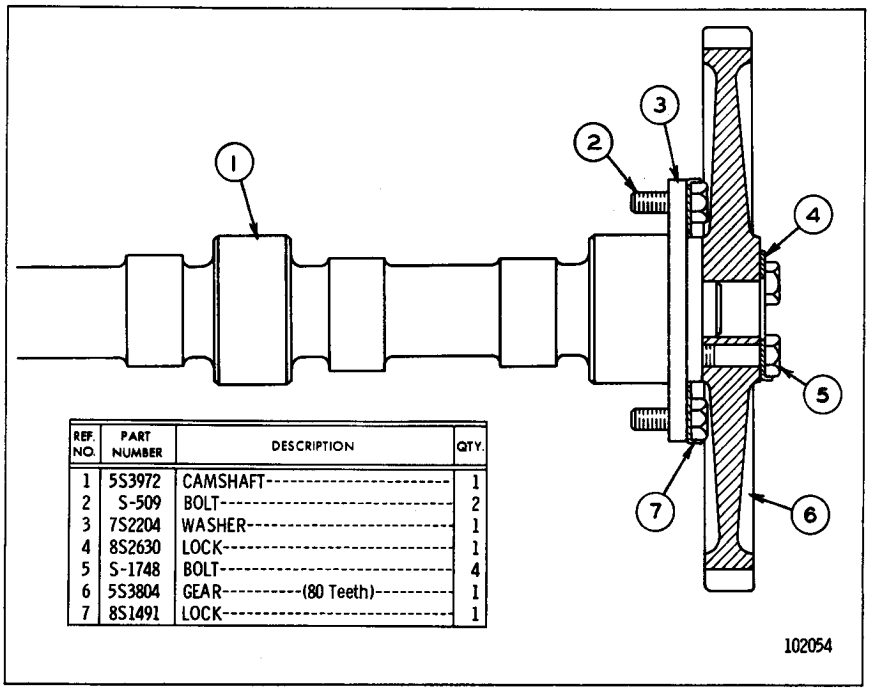

REF. NO.	PART NUMBER	DESCRIPTION	QTY.
1	5S3972	CAMSHAFT	1
2	S-509	BOLT	2
3	7S2204	WASHER	1
4	8S2630	LOCK	1
5	S-1748	BOLT	4
6	5S3804	GEAR----------(80 Teeth)---------	1
7	8S1491	LOCK	1

CAMSHAFT

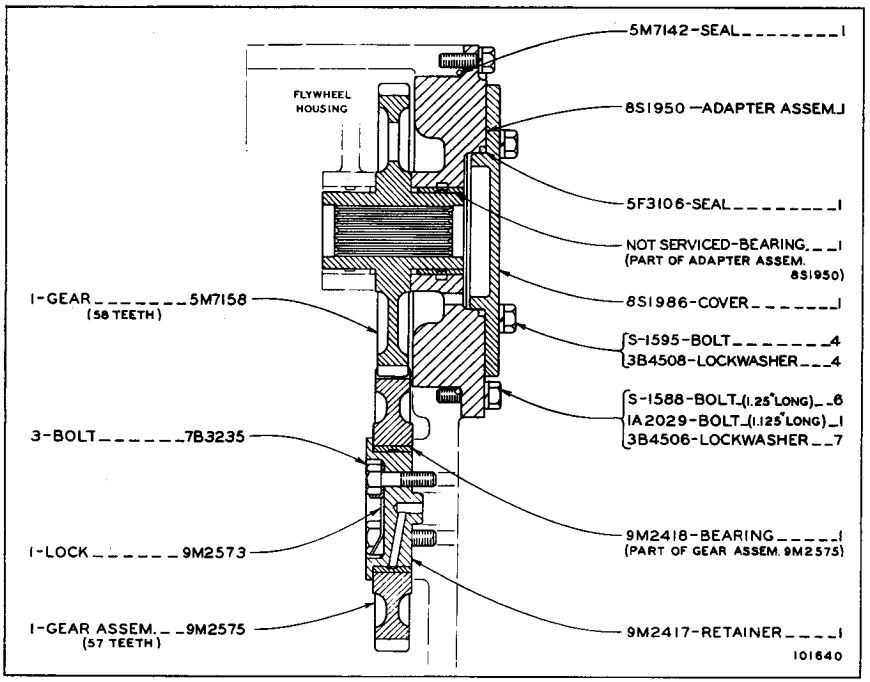

HYDRAULIC PUMP DRIVE

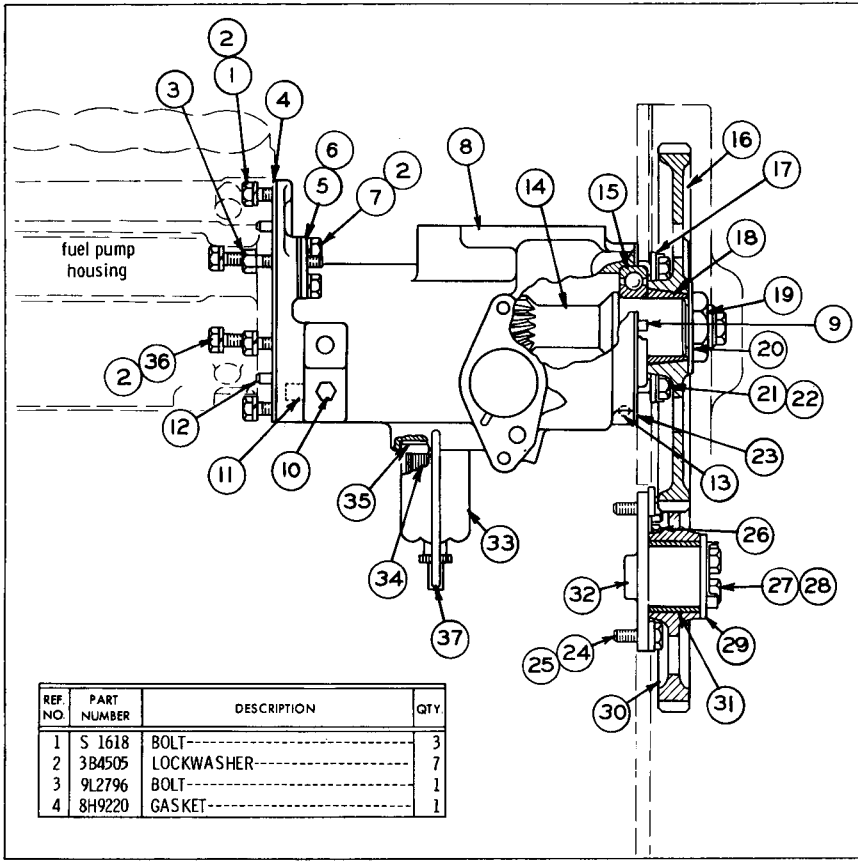

REF. NO.	PART NUMBER	DESCRIPTION	QTY.
1	S 1618	BOLT	3
2	3B4505	LOCKWASHER	7
3	9L2796	BOLT	1
4	8H9220	GASKET	1

REF. NO.	PART NUMBER	DESCRIPTION	QTY.
5	8H9787	COVER	1
6	8H9788	GASKET	1
7	1A9136	BOLT	2
8	7S5045	HOUSING ASSEM.	1
9	2A3348	DOWEL	1
10	5M6214	PLUG	2
11	9F2247	DOWEL	1
12	2H1190	DOWEL	2
13	2D6642	BALL	1
		(Parts of 7S5045 Housing Assem.)	
14	7S5047	SHAFT	1
15	8H9789	BEARING	1
16	5S7614	GEAR---(80 Teeth)	1
17	8H9718	RETAINER	1
18	5S3828	SLEEVE	1
19	791 A	NUT	1
20	7S9847	WASHER	1
21	S 1594	BOLT	4
22	7M9763	LOCK	2
23	8H9364	GASKET	1
24	L 1351	BOLT	2
25	5S7611	LOCK	1
26	5B9079	NUT	1
27	2H3755	BOLT	2
28	2F6156	LOCK	1
29	5S7612	PLATE	1
30	5S7660	GEAR ASSEM. ---(57 Teeth)	1
31	5S7630	BEARING	1
		(Part of 5S7660 Gear Assem.)	
32	5S7608	SHAFT	1
33	9H2769	BOWL	1
34	5S7645	ELEMENT ASSEM. ---(Disposable)	1
35	9H2770	GASKET	1
36	1B9575	BOLT	2
37	4D322	BAIL ASSEM.	1

104131

ACCESSORY DRIVE AND PRIMARY FUEL FILTER

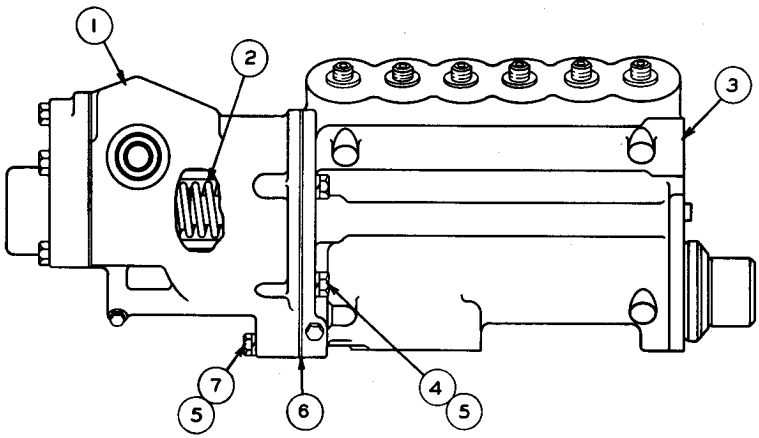

REF NO.	PART NUMBER	DESCRIPTION	QTY
1	7S9333	GOVERNOR GROUP (See Separate Illustration)	1
2	8M9140	SPRING	1
3	5S9076	FUEL PUMP HOUSING GROUP (See Separate Illustration)	1

REF NO.	PART NUMBER	DESCRIPTION	QTY
4	S-1618	BOLT	3
5	3B4505	LOCKWASHER	5
6	7L552	GASKET	1
7	1B9575	BOLT	2

101638

FUEL PUMP HOUSING AND GOVERNOR
7S9333 Governor and 5S9076 Pump Housing parts are shown on Pages 30 and 34

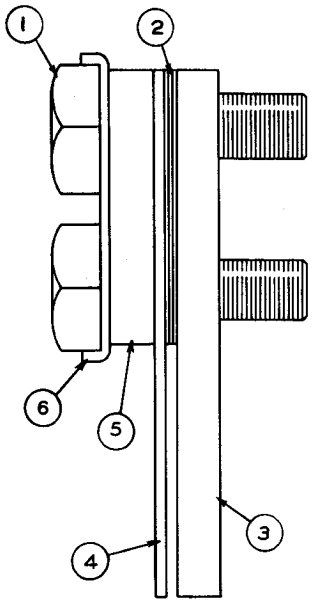

REF NO.	PART NUMBER	DESCRIPTION	QTY.
1	2A762	BOLT	2
2	8M9065	SHIM-------(.002" Thick)--------	2
	8M9066	SHIM-------(.010" Thick)--------	1
3	8M9068	BAR	1
4	8S762	SPRING-------(.030" Thick)-------	1
5	8M9062	RETAINER	1
6	9M6292	LOCK	1

103799

GOVERNOR TORQUE SPRING

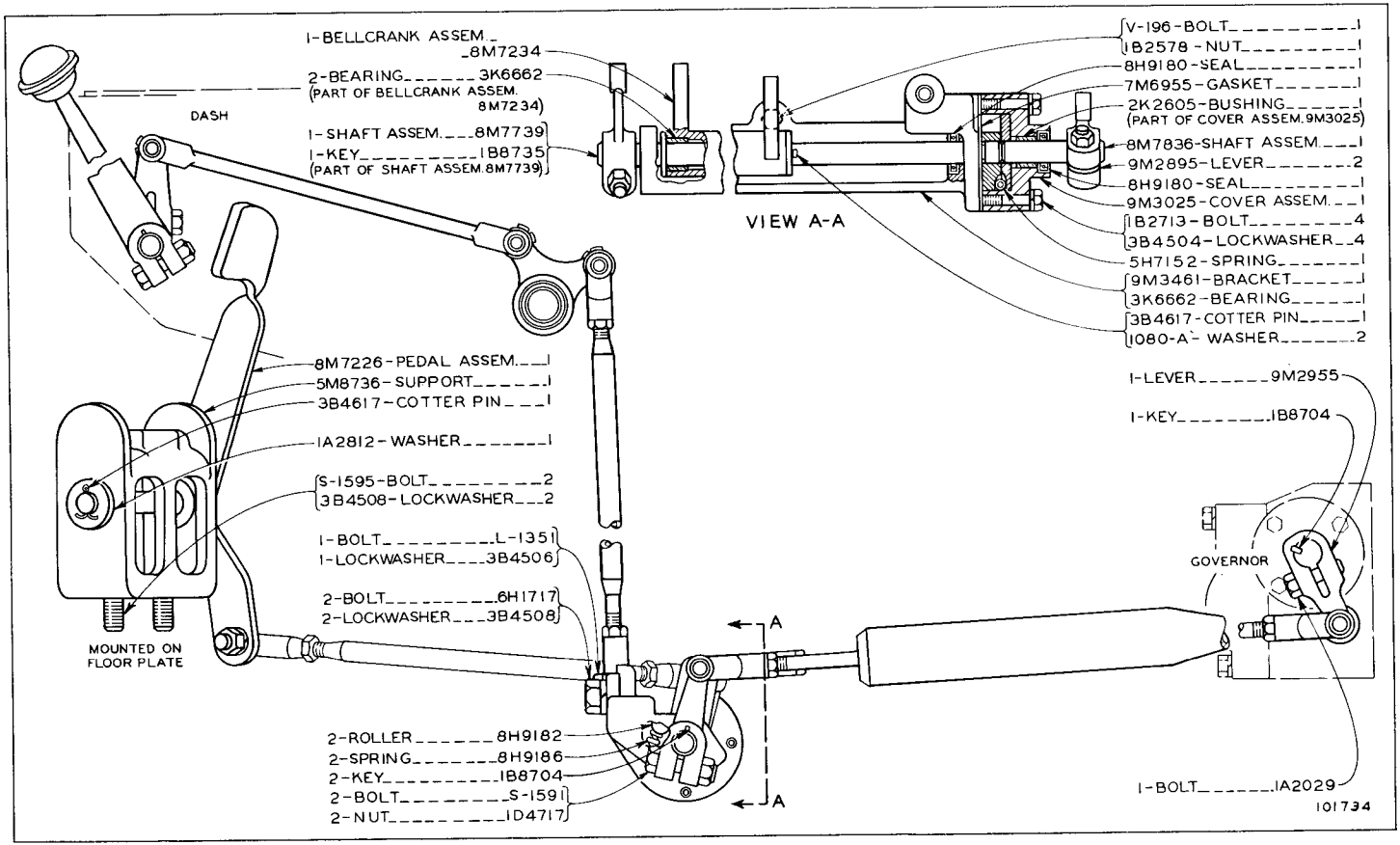

GOVERNOR AND DECELERATOR CONTROL--PART 1

ALWAYS GIVE SERIAL NUMBER WHEN ORDERING PARTS

GOVERNOR AND DECELERATOR CONTROL--PART 2

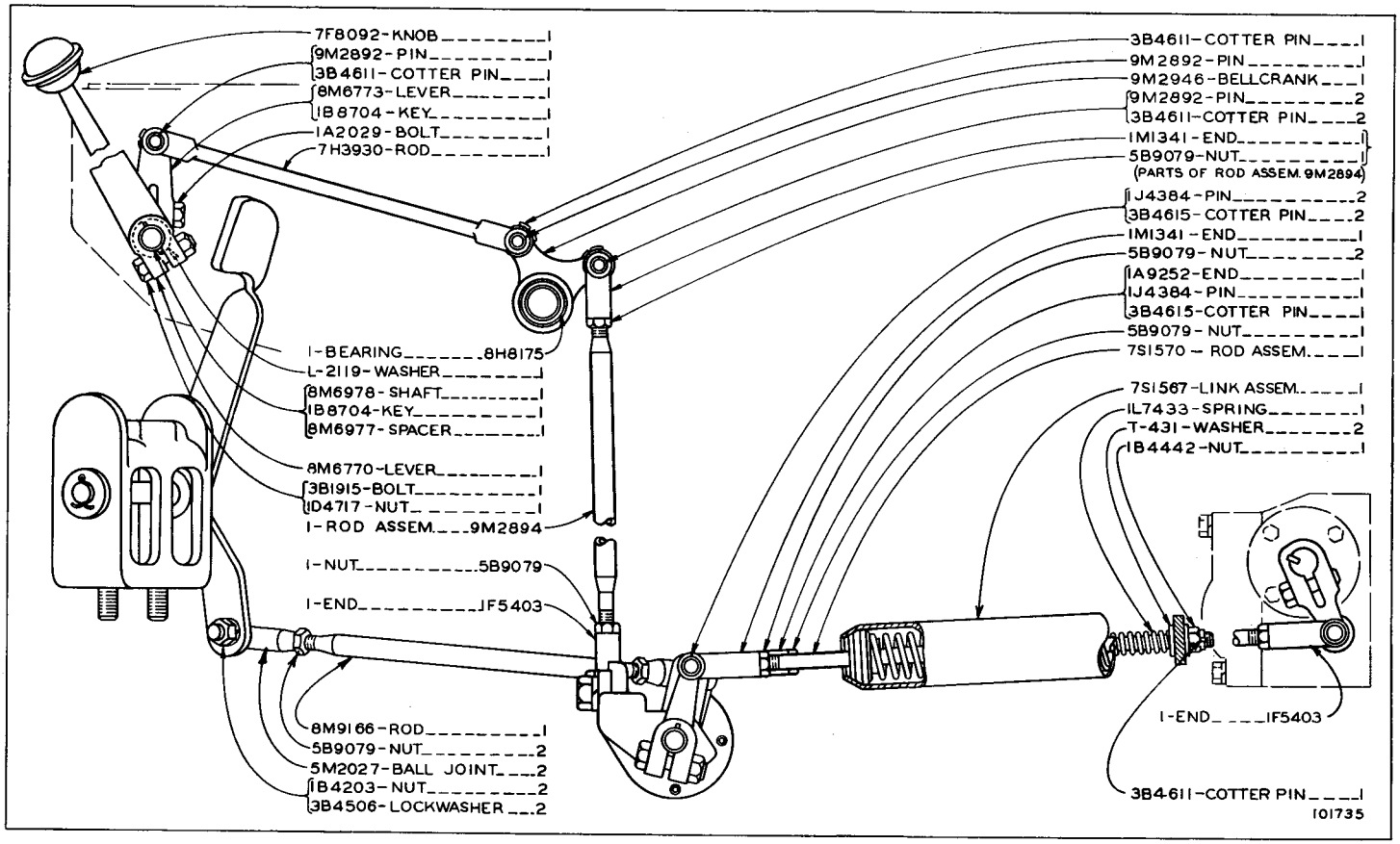

ONLY "CATERPILLAR" PARTS GIVE "CATERPILLAR" PERFORMANCE

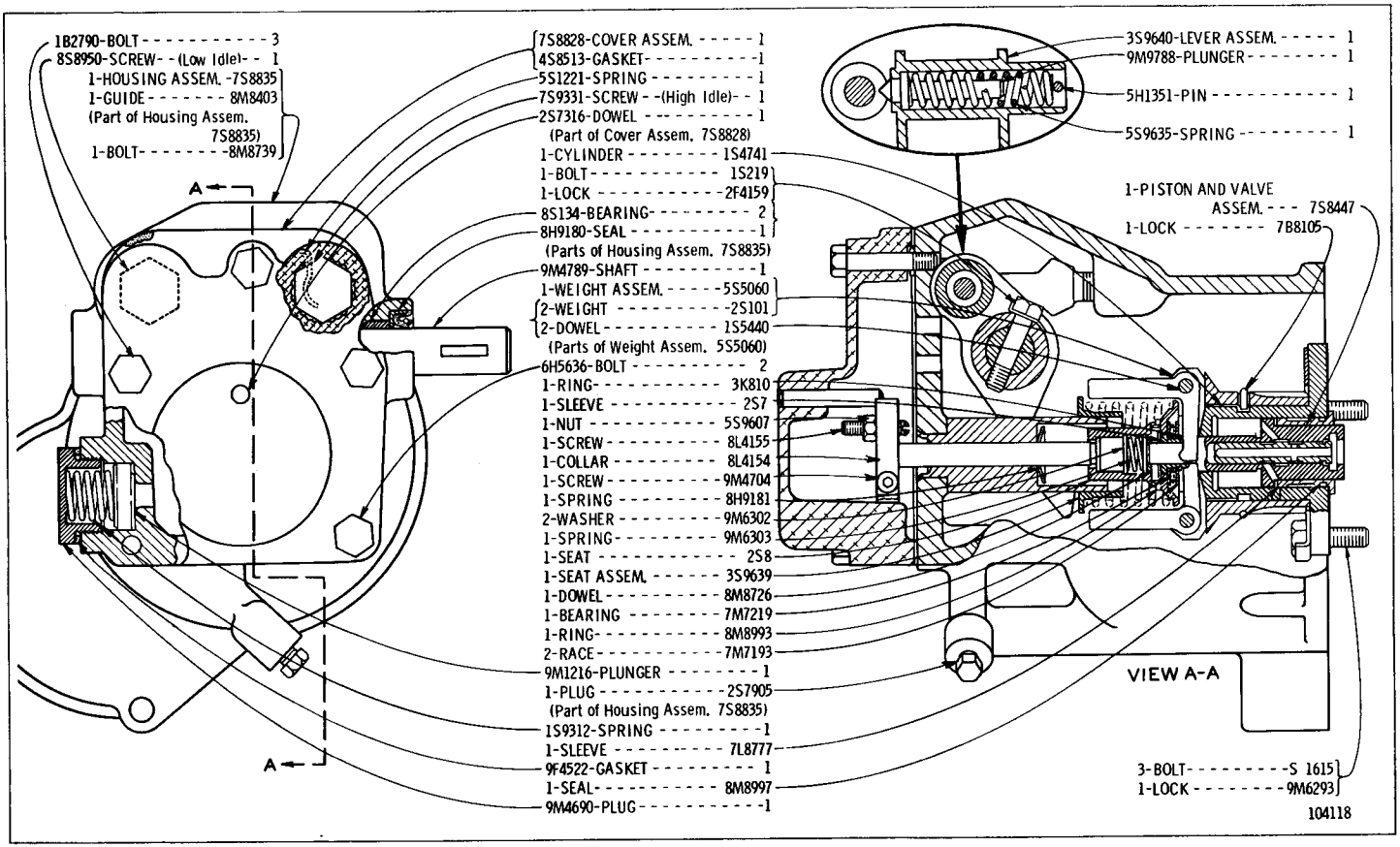

7S9333 GOVERNOR GROUP

PART OF FUEL PUMP HOUSING AND GOVERNOR SHOWN ON PAGE 27

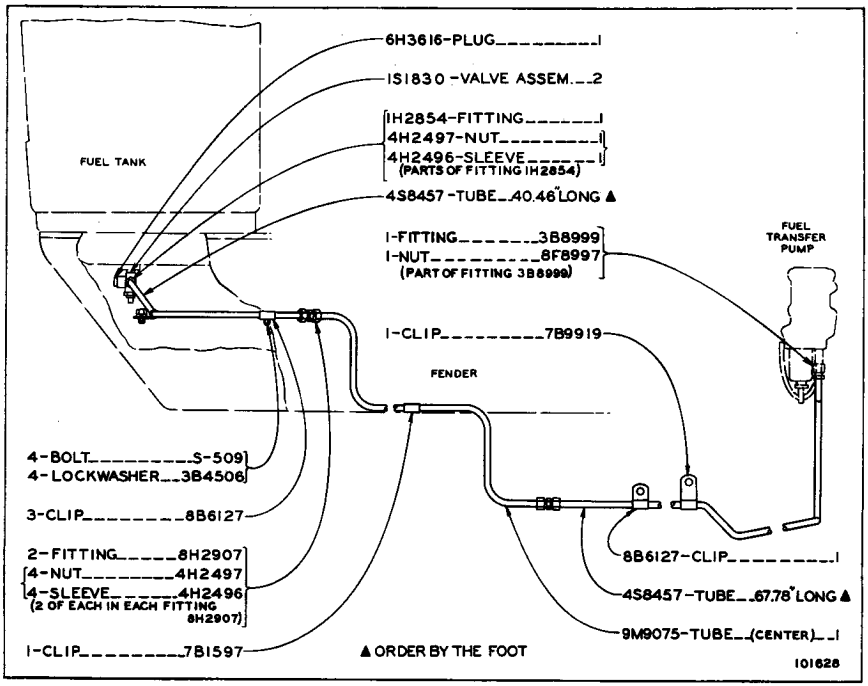

FUEL LINES

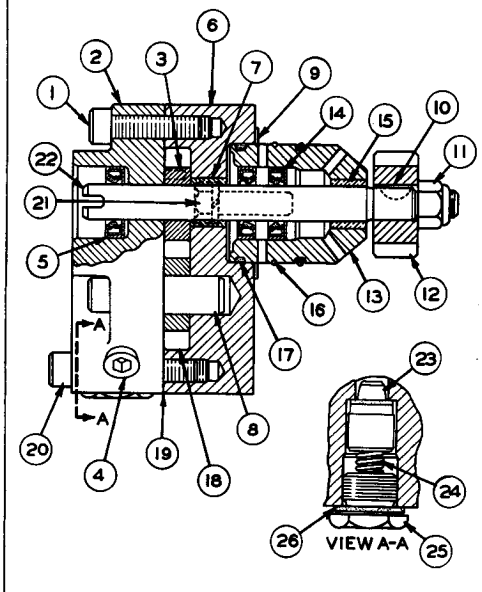

REF. NO.	PART NUMBER	DESCRIPTION	QTY.
1	9F6641	SCREW	4
2	8S5581	COVER ASSEM.	1
3	7S4433	FERRULE	2
4	7H3171	PLUG	1
5	8S5575	SEAL	1
		(Parts of 8S5581 Cover Assem.)	
6	7S4434	BODY ASSEM.	1
7	2S7467	BEARING	1
8	7S4436	SHAFT	1
		(Parts of 7S4434 Body Assem.)	
9	7S2374	GASKET	1
10	3H1489	KEY	1
11	2F8616	NUT	1
12	8H9806	GEAR-(11 Teeth-Drive)	1
13	8S4375	CAGE ASSEM.	1
14	4S7756	SEAL	2
15	2S7467	BEARING	1
		(Parts of 8S4375 Cage Assem.)	
16	7S4439	RING	1
17	6J2419	SEAL	2
18	8S4368	GEAR-(10 Teeth-Idler)	1
19		PERMATEX FORM-A-GASKET NO. 3	
20	7S6701	SCREW	2
21	4B3388▲	BOLT	2
	3B4505▲	LOCKWASHER	2
22	8S4373	SHAFT ASSEM.-(10 Teeth-Drive)	1
23	8M874	PLUNGER ASSEM.	1
24	8M3210	SPRING	1
25	7S4440	BOLT	1
26	2A1913	GASKET	1

▲ Not part of 7S4430 Fuel Transfer Pump Group

103417

7S4430 FUEL TRANSFER PUMP GROUP

REF. NO.	PART NUMBER	DESCRIPTION	QTY.
1	2A1927	NEEDLE ASSEM.	1
2	7F3901	SEAT	1
3	5S9580	BASE	1
4	1H9722	PLUG	1
5	4S8447	STUD	1
6	5M6214	PLUG	4
7	5S9060	GASKET	1
8	5S6333	ADAPTER	1
9	1B9575	BOLT	3
	8F7242	WASHER	3
10	6L7440	ELEMENT-------(Disposable)-------	1
11	5S9020	GASKET	1
12	1D4538	BOLT---------(2.25" Long)--------	3
	4B3388	BOLT---------(1.25" Long)--------	2
13	8F7242	WASHER	5
14	8H9402	ADAPTER	1
15	9H4557	SEAL	2

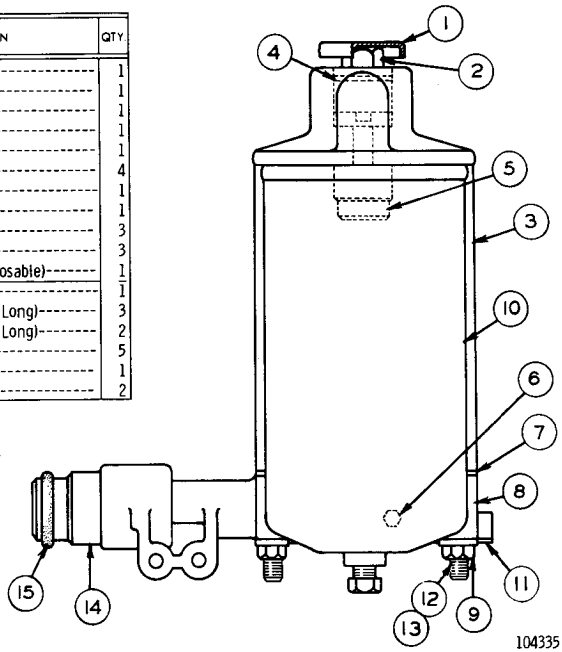

FUEL FILTER

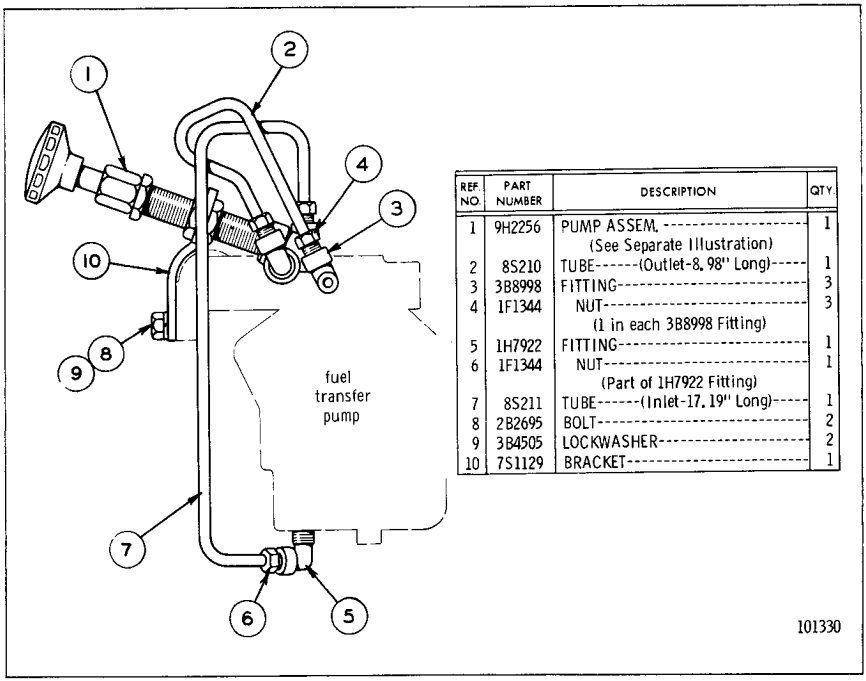

REF. NO.	PART NUMBER	DESCRIPTION	QTY.
1	9H2256	PUMP ASSEM. (See Separate Illustration)	1
2	8S210	TUBE------(Outlet-8.98" Long)-----	1
3	3B8998	FITTING	3
4	1F1344	NUT (1 in each 3B8998 Fitting)	3
5	1H7922	FITTING	1
6	1F1344	NUT (Part of 1H7922 Fitting)	1
7	8S211	TUBE------(Inlet-17.19" Long)-----	1
8	2B2695	BOLT	2
9	3B4505	LOCKWASHER	2
10	7S1129	BRACKET	1

FUEL PRIMING PUMP

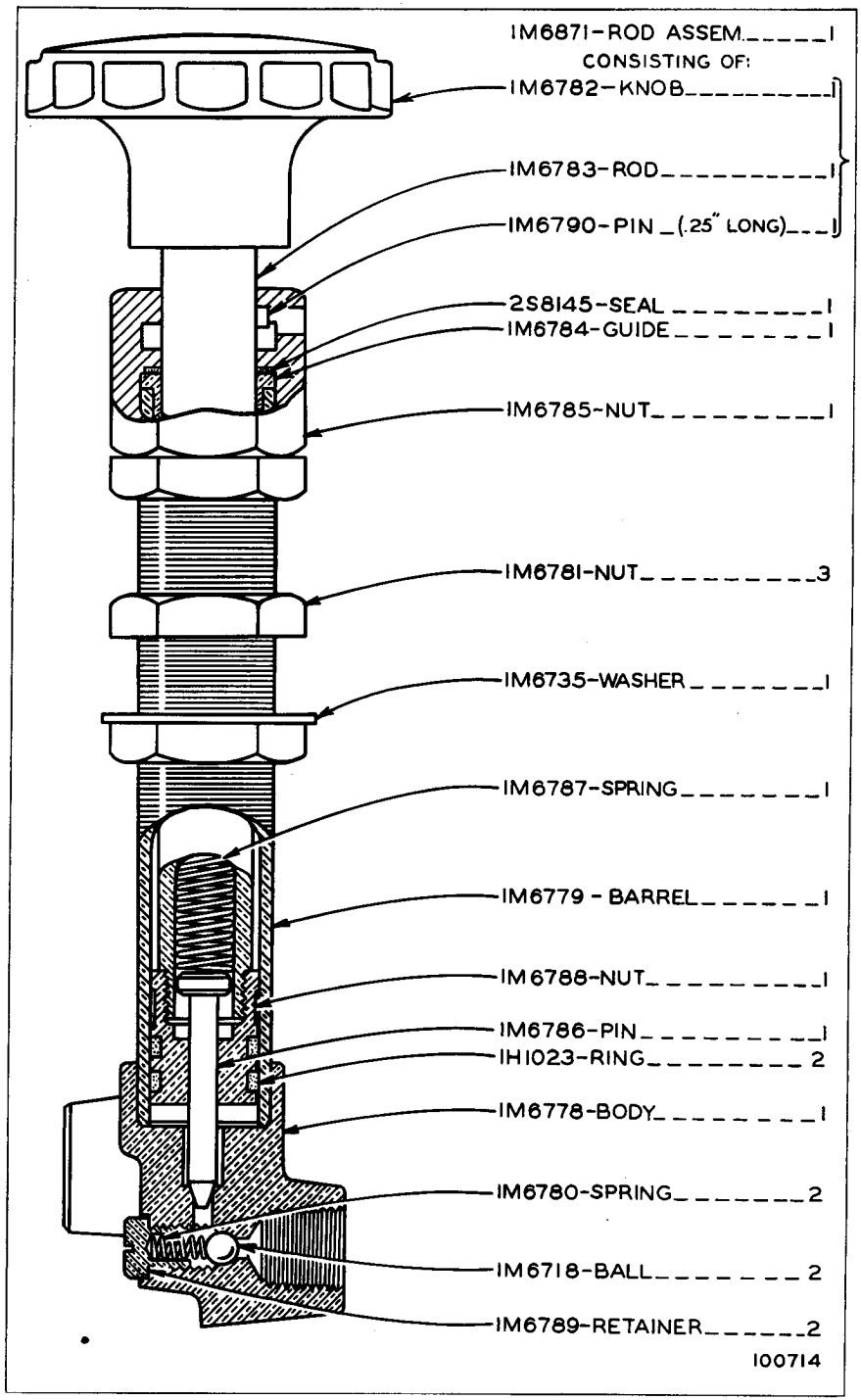

9H2256 PUMP ASSEMBLY
PART OF FUEL PRIMING PUMP

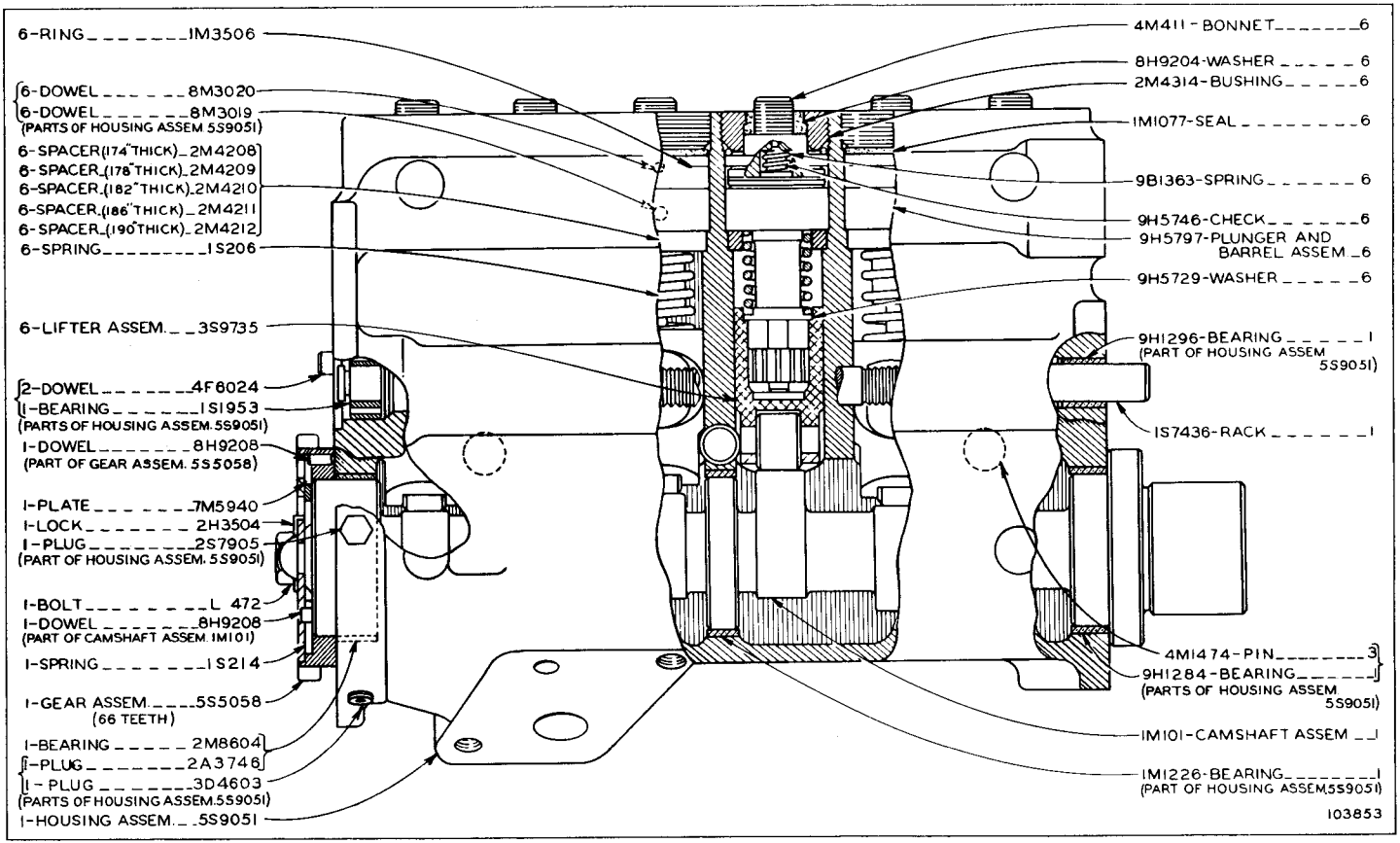

5S9076 FUEL PUMP HOUSING GROUP

PART OF FUEL PUMP HOUSING AND GOVERNOR SHOWN ON PAGE 27

FUEL INJECTION VALVES AND LINES

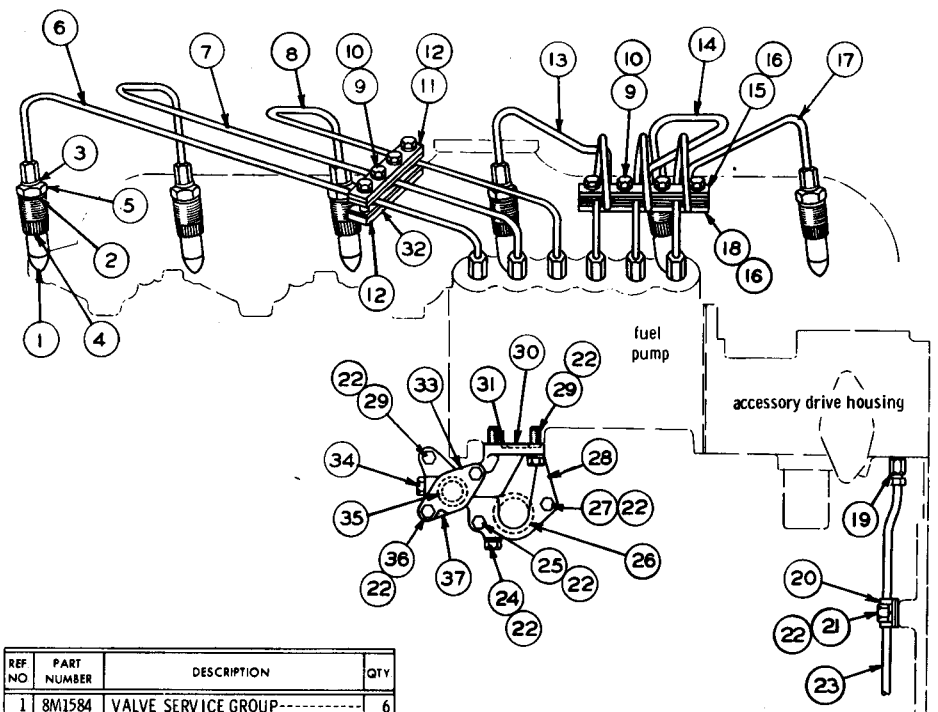

REF NO	PART NUMBER	DESCRIPTION	QTY
1	8M1584	VALVE SERVICE GROUP	6
2	5B3718	SEAL	6
3	6F1069	SEAL	6
		(1 each in 8M1584 Valve Service Group)	

REF. NO.	PART NUMBER	DESCRIPTION	QTY.
4	8S2389	BODY	6
5	5H7225	NUT	6
6	5S7176	LINE ASSEM. -------(No. 6)	1
7	5S7175	LINE ASSEM. -------(No. 5)	1
8	5S7174	LINE ASSEM. -------(No. 4)	1
9	1B2790	BOLT	8
10	3B4505	LOCKWASHER	8
11	8S3999	CLAMP	1
12	8S4000	DAMPER	2
13	5S7173	LINE ASSEM. -------(No. 3)	1
14	5S7172	LINE ASSEM. -------(No. 2)	1
15	8S4004	CLAMP	1
16	8S4005	DAMPER	2
17	5S7171	LINE ASSEM. -------(No. 1)	1
18	8S4003	CLAMP	1
19	3B8996	FITTING	1
	8F8997	NUT	1
		(Part of 3B8996 Fitting)	
20	2837A	CLIP	1
21	S509	BOLT	1
22	3B4506	LOCKWASHER	8
23	5S7223	TUBE----(Transfer Pump Drain)---	1
24	T55	BOLT	1
25	S1571	BOLT	1
26	4F7391	SEAL	1
27	3B1915	BOLT	1
28	7S6722	BRACKET	1
29	1A2029	BOLT	2
30	8F3469	SEAL----------(Small)----------	1
31	2H3932	SEAL----------(Large)----------	1
32	8S3998	CLAMP	1
33	4F6110	COVER	1
34	5M6214	PLUG	1
35	3H107	SEAL	1
36	S1594	BOLT	2
37	1M825	GASKET	1

104144

ONLY "CATERPILLAR" PARTS GIVE "CATERPILLAR" PERFORMANCE

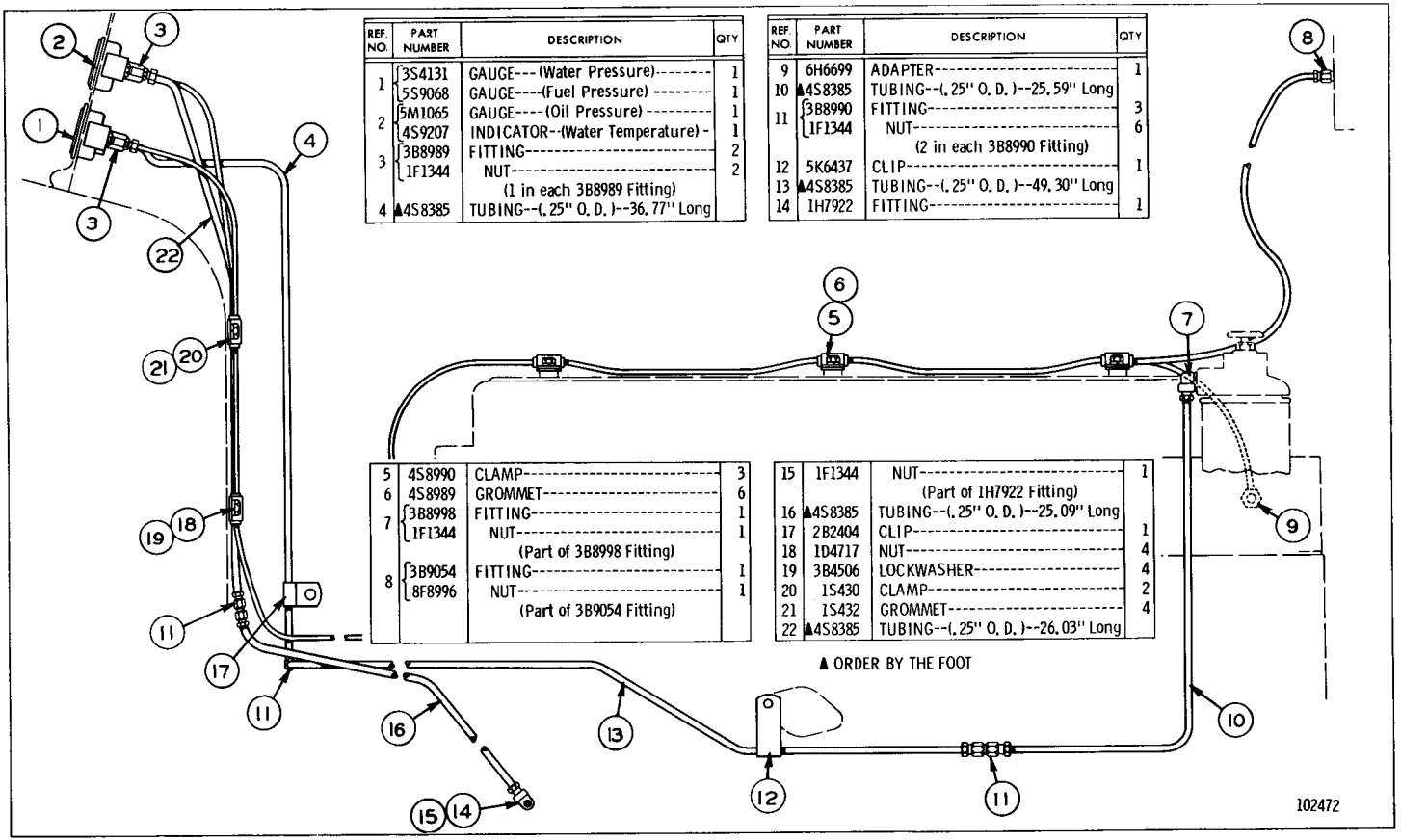

REF. NO.	PART NUMBER	DESCRIPTION	QTY
1	3S4131	GAUGE---(Water Pressure)--------	1
	5S9068	GAUGE----(Fuel Pressure) --------	1
2	5M1065	GAUGE----(Oil Pressure) ---------	1
	4S9207	INDICATOR--(Water Temperature) -	1
3	3B8989	FITTING----------	2
	1F1344	NUT----------	2
		(1 in each 3B8989 Fitting)	
4	▲4S8385	TUBING--(.25" O. D.)--36. 77" Long	

REF. NO.	PART NUMBER	DESCRIPTION	QTY
9	6H6699	ADAPTER----------	1
10	▲4S8385	TUBING--(.25" O. D.)--25. 59" Long	
11	3B8990	FITTING----------	3
	1F1344	NUT----------	6
		(2 in each 3B8990 Fitting)	
12	5K6437	CLIP----------	1
13	▲4S8385	TUBING--(.25" O. D.)--49. 30" Long	
14	1H7922	FITTING----------	1

5	4S8990	CLAMP----------	3
6	4S8989	GROMMET----------	6
7	3B8998	FITTING----------	1
	1F1344	NUT----------	1
		(Part of 3B8998 Fitting)	
8	3B9054	FITTING----------	1
	8F8996	NUT----------	1
		(Part of 3B9054 Fitting)	

15	1F1344	NUT----------	1
		(Part of 1H7922 Fitting)	
16	▲4S8385	TUBING--(.25" O. D.)--25. 09" Long	
17	2B2404	CLIP----------	1
18	1D4717	NUT----------	4
19	3B4506	LOCKWASHER----------	4
20	1S430	CLAMP----------	2
21	1S432	GROMMET----------	4
22	▲4S8385	TUBING--(.25" O. D.)--26. 03" Long	

▲ ORDER BY THE FOOT

GAUGES--AS VIEWED FROM RIGHT HAND SIDE OF ENGINE

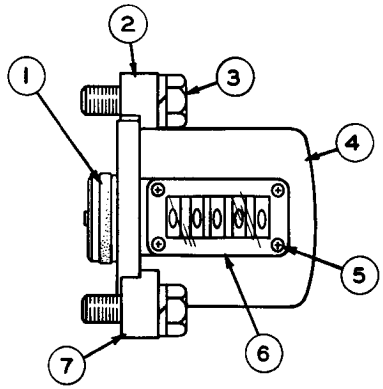

REF. NO.	PART NUMBER	DESCRIPTION	QTY.
1	4M8303	SEAL	1
2	8S1393	CLAMP	1
3	S-1618	BOLT	2
	3B4505	LOCKWASHER	2

REF. NO.	PART NUMBER	DESCRIPTION	QTY.
4	8S1392	SERVICE METER ASSEM.	1
5	8S1389	SCREW	4
6	8S1390	WINDOW	1
	8S1391	GASKET	1
		(Parts of 8S1392 Service Meter Assem.)	
7	8S1394	CLAMP	1

102237

SERVICE METER

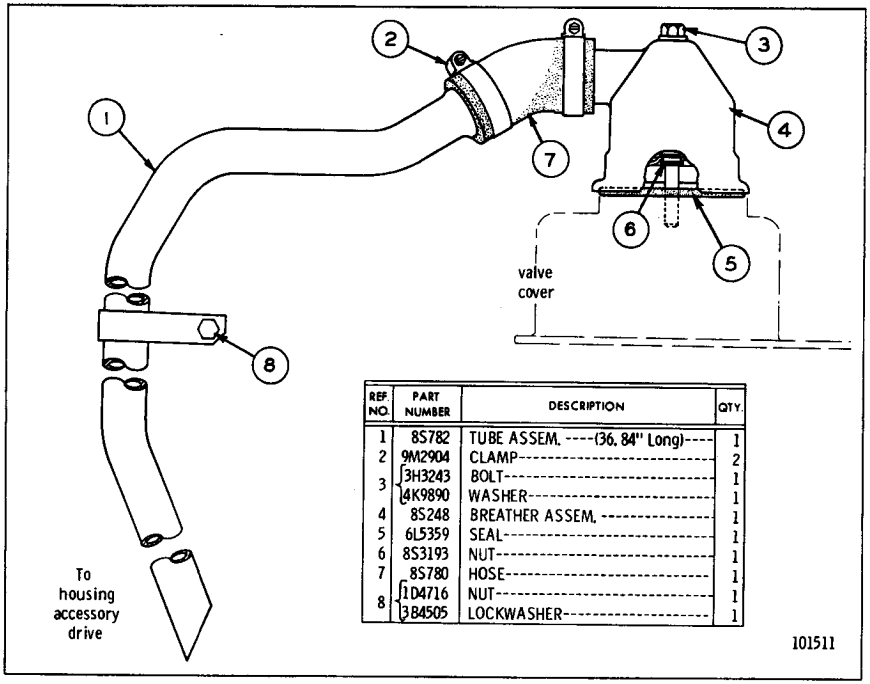

REF. NO.	PART NUMBER	DESCRIPTION	QTY.
1	8S782	TUBE ASSEM. ----(36, 84" Long)----	1
2	9M2904	CLAMP	2
3	3H3243	BOLT	1
	4K9890	WASHER	1
4	8S248	BREATHER ASSEM.	1
5	6L5359	SEAL	1
6	8S3193	NUT	1
7	8S780	HOSE	1
8	1D4716	NUT	1
	3B4505	LOCKWASHER	1

101511

BREATHER AND FUMES DISPOSAL

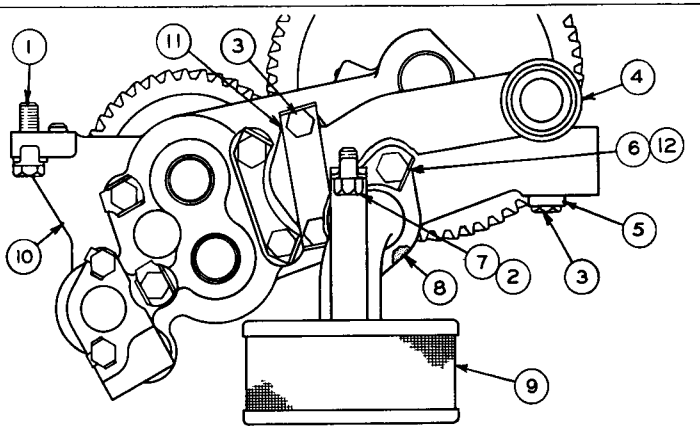

REF. NO.	PART NUMBER	DESCRIPTION	QTY.
1	1A2029	BOLT	2
	7H1861	LOCK	2
2	L364	LOCK	1
3	S1590	BOLT	4
4	8S1926	ELBOW	1
	7H1796	GASKET	1
5	T329	LOCK	1
6	S1594	BOLT	2

REF. NO.	PART NUMBER	DESCRIPTION	QTY.
7	4F4879	BOLT	1
8	8M904	GASKET	1
9	8S5015	BELL ASSEM.	1
10	7S1849	PUMP ASSEM. (See Separate Illustration)	1
11	6H4208	LOCK	1
12	8S8874	LOCK	1

103862

OIL PUMP

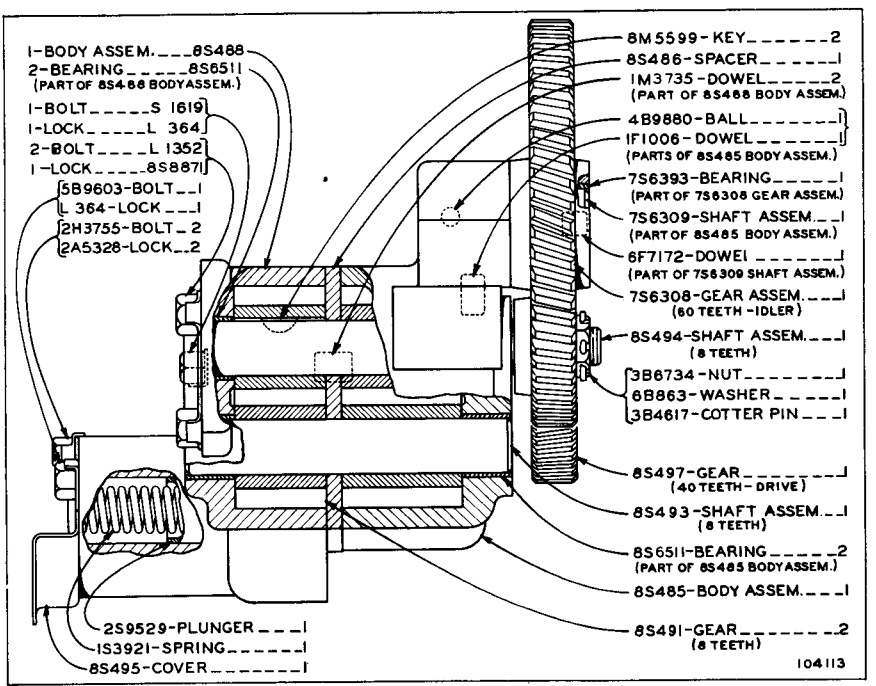

7S1849 OIL PUMP ASSEMBLY
PART OF OIL PUMP

ALWAYS GIVE SERIAL NUMBER WHEN ORDERING PARTS

REF. NO.	PART NUMBER	DESCRIPTION	QTY.
1	S 1588	BOLT---------(1.25" Long)--------	4
2	3B4506	LOCKWASHER----------	13
3	3B1915	BOLT---------(1.37" Long)--------	5
4	1D4717	NUT----------	4
5	4B4278	WASHER----------	5
6	S 1571	BOLT---------(1.75" Long)--------	1
7	7S6639	FILTER ASSEM. ---------- (See Separate Illustration)	1
8	7S6654	TUBE ASSEM. -(6.98" Long Overall)- (Oil Filter Outlet)	1
9	7F7590	GASKET----------	1
10	8S7657	TUBE ASSEM. -(21.74" Long Overall) (Oil Filter Inlet)	1
11	S 1590	BOLT---------(2" Long)----------	1
12	1A2029	BOLT---------(1.12" Long)--------	2
13	2M5407	GASKET----------	1
14	9H6067	SEAL----------	2

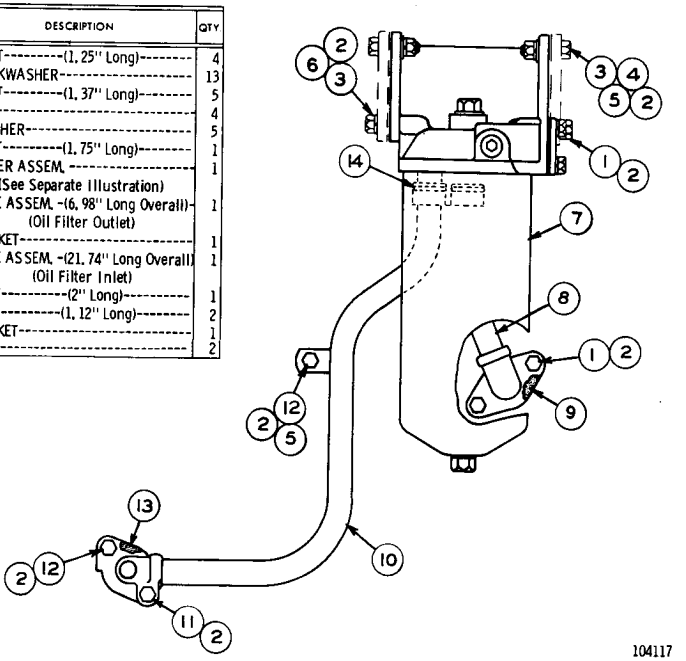

OIL FILTER AND LINES

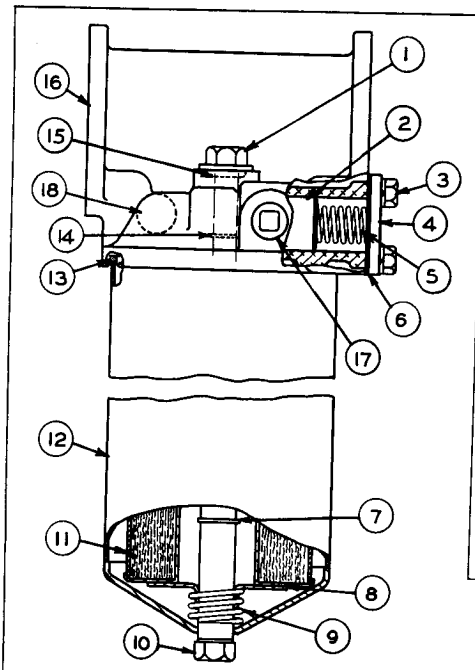

REF. NO.	PART NUMBER	DESCRIPTION	QTY.
1	7S6636	SCREW----------	1
	1K505	WASHER----------	1
2	9M853	PLUNGER----------	1
3	S-1618	BOLT----------	2
	3B4505	LOCKWASHER----------	2
4	6B830	COVER----------	1
5	6F8007	SPRING----------	1
6	7S6744	GASKET----------	1
7	2J6356	RING----------	1
8	7S6745	RETAINER----------	1
9	7S6746	SPRING----------	1
10	2H8829	PLUG----------	1
	6F7062	WASHER----------	1
11	5S484	ELEMENT ASSEM. --(Disposable)--	1
12	5S7128	CASE ASSEM. ----------	1
13	2M8691	GASKET----------	1
14	5H9899	RING----------	1
15	1S7104	SEAL----------	1
16	7S6637	BASE ASSEM. ----------	1
17	3L1850	PLUG----------	1
18	1B5174	PLUG---------- (Parts of 7S6637 Base Assem.)	2

7S6639 OIL FILTER ASSEMBLY
PART OF OIL FILTER AND LINES

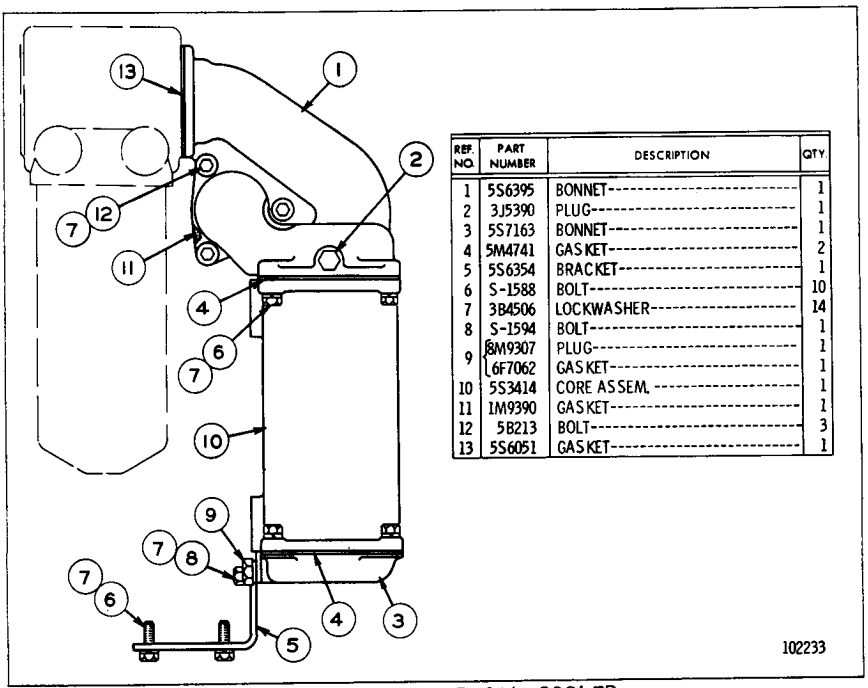

REF. NO.	PART NUMBER	DESCRIPTION	QTY.
1	5S6395	BONNET	1
2	3J5390	PLUG	1
3	5S7163	BONNET	1
4	5M4741	GASKET	2
5	5S6354	BRACKET	1
6	S-1588	BOLT	10
7	3B4506	LOCKWASHER	14
8	S-1594	BOLT	1
9	8M9307	PLUG	1
	6F7062	GASKET	1
10	5S3414	CORE ASSEM.	1
11	1M9390	GASKET	1
12	5B213	BOLT	3
13	5S6051	GASKET	1

TORQUE CONVERTER OIL COOLER

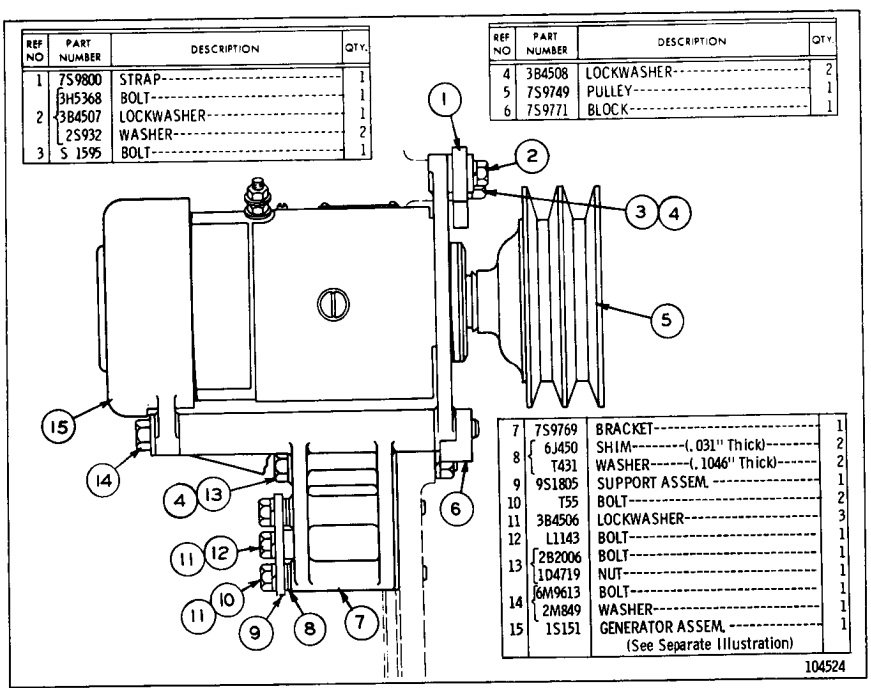

REF NO	PART NUMBER	DESCRIPTION	QTY.
1	7S9800	STRAP	1
2	3H5368	BOLT	1
	3B4507	LOCKWASHER	1
	2S932	WASHER	2
3	S 1595	BOLT	1

REF NO	PART NUMBER	DESCRIPTION	QTY.
4	3B4508	LOCKWASHER	2
5	7S9749	PULLEY	1
6	7S9771	BLOCK	1

7	7S9769	BRACKET	1
8	6J450	SHIM--------(.031" Thick)--------	2
	T431	WASHER------(.1046" Thick)------	2
9	9S1805	SUPPORT ASSEM.	1
10	T55	BOLT	2
11	3B4506	LOCKWASHER	3
12	L1143	BOLT	1
13	2B2006	BOLT	1
	1D4719	NUT	1
14	6M9613	BOLT	1
	2M849	WASHER	1
15	1S151	GENERATOR ASSEM. (See Separate Illustration)	1

GENERATOR--24 VOLT, 15 AMPERE

REFER ALSO TO PAGE 97 FOR SPECIAL PARTS

ALWAYS GIVE SERIAL NUMBER WHEN ORDERING PARTS

1S151 GENERATOR ASSEMBLY
PART OF GENERATOR

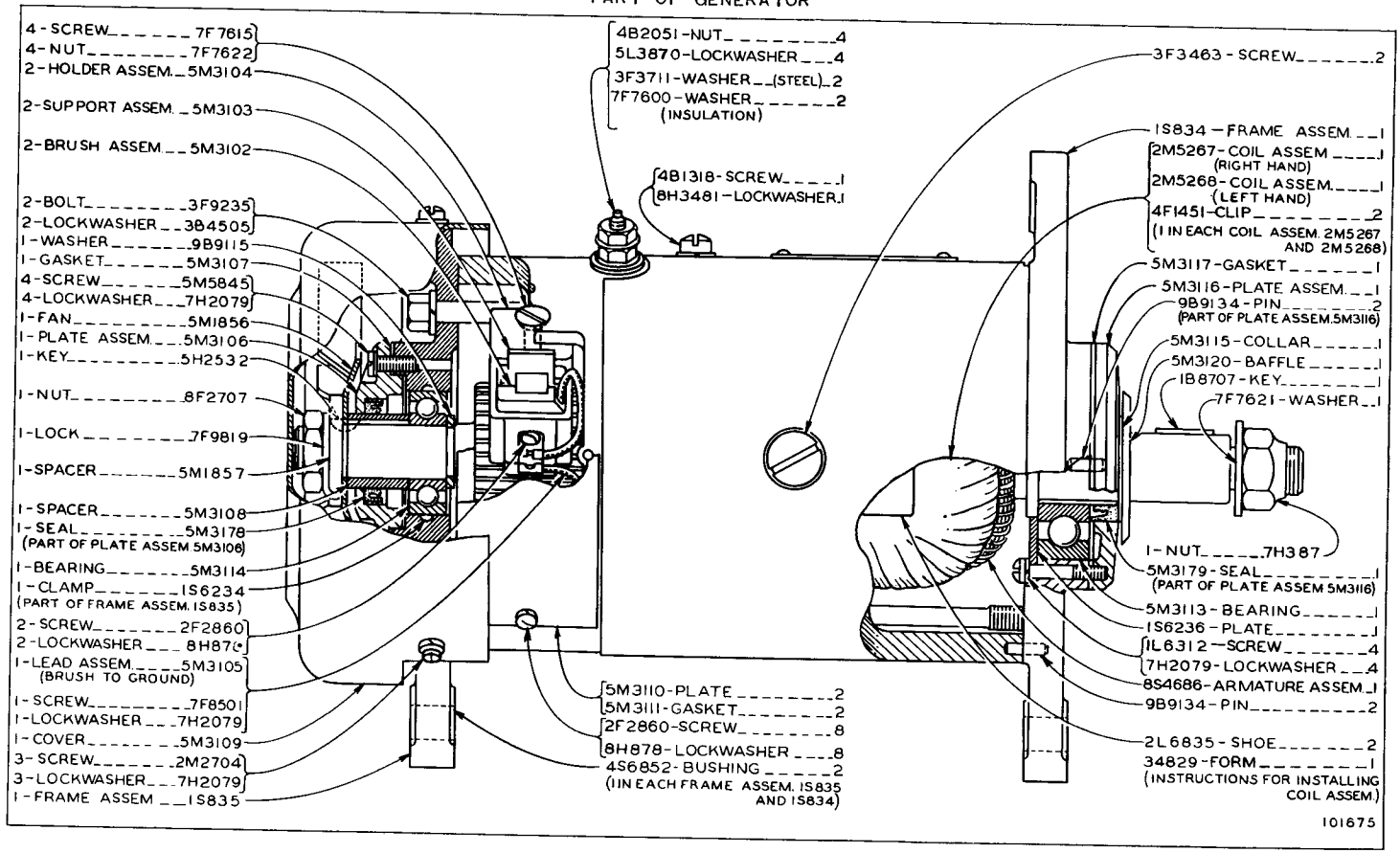

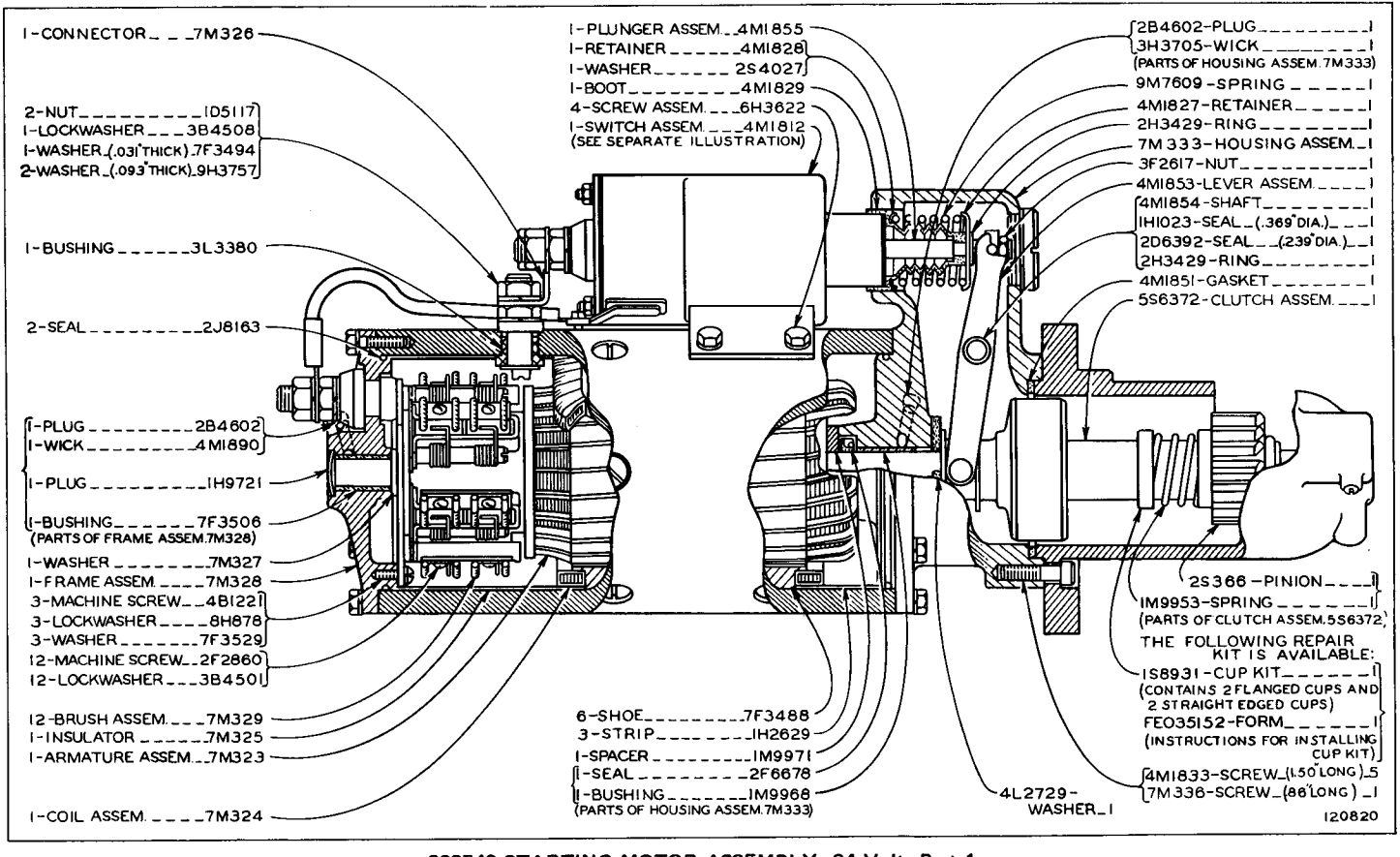

8S9540 STARTING MOTOR ASSEMBLY—24 Volt—Part 1
Part of 8S9541 Starting Motor Group shown on Page 44
4M1812 Switch parts are shown on Page 44

8S9540 STARTING MOTOR ASSEMBLY—24 Volt—Part 2

Part of 8S9541 Starting Motor Group shown on Page 44

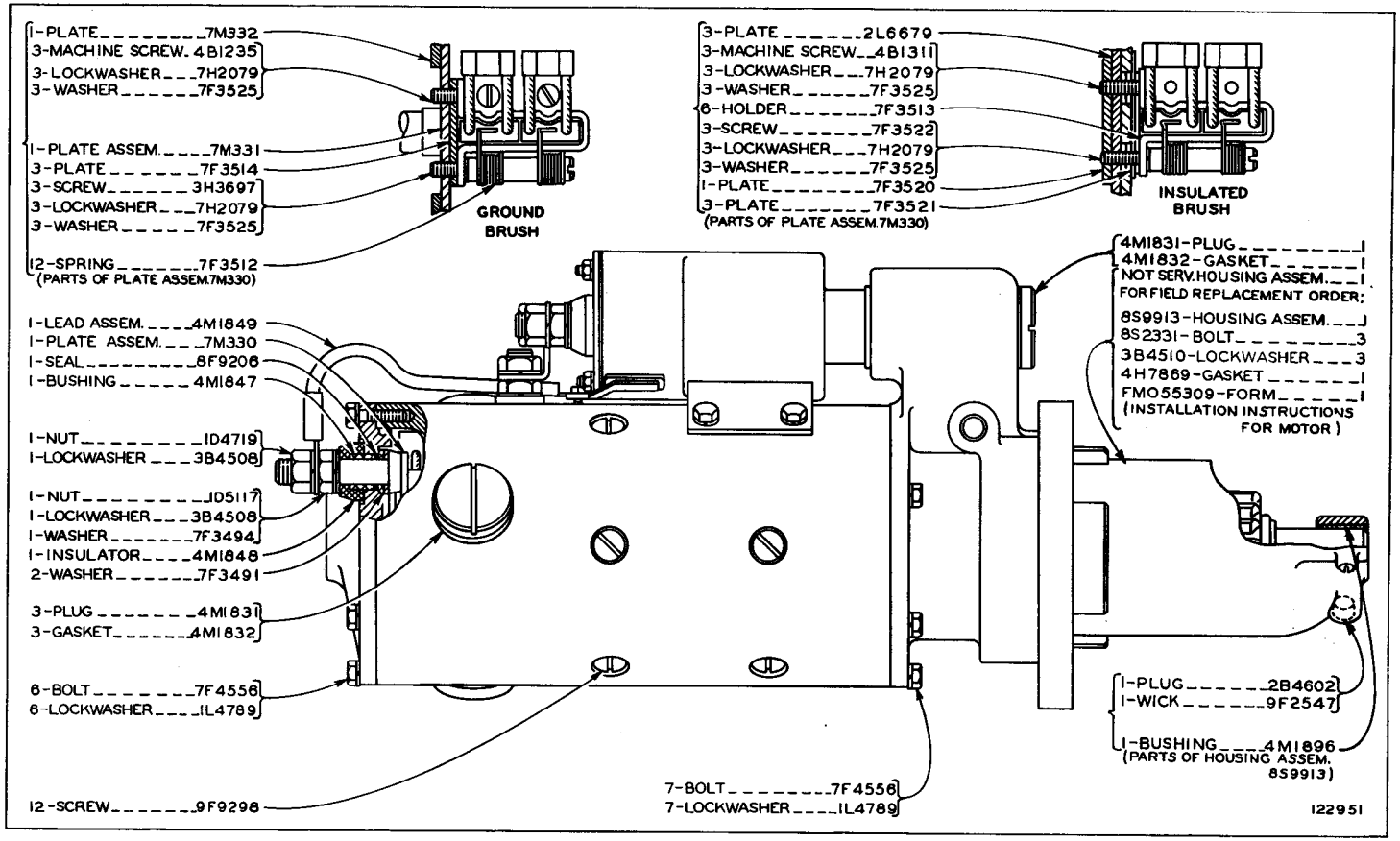

ONLY "CATERPILLAR" PARTS GIVE "CATERPILLAR" PERFORMANCE

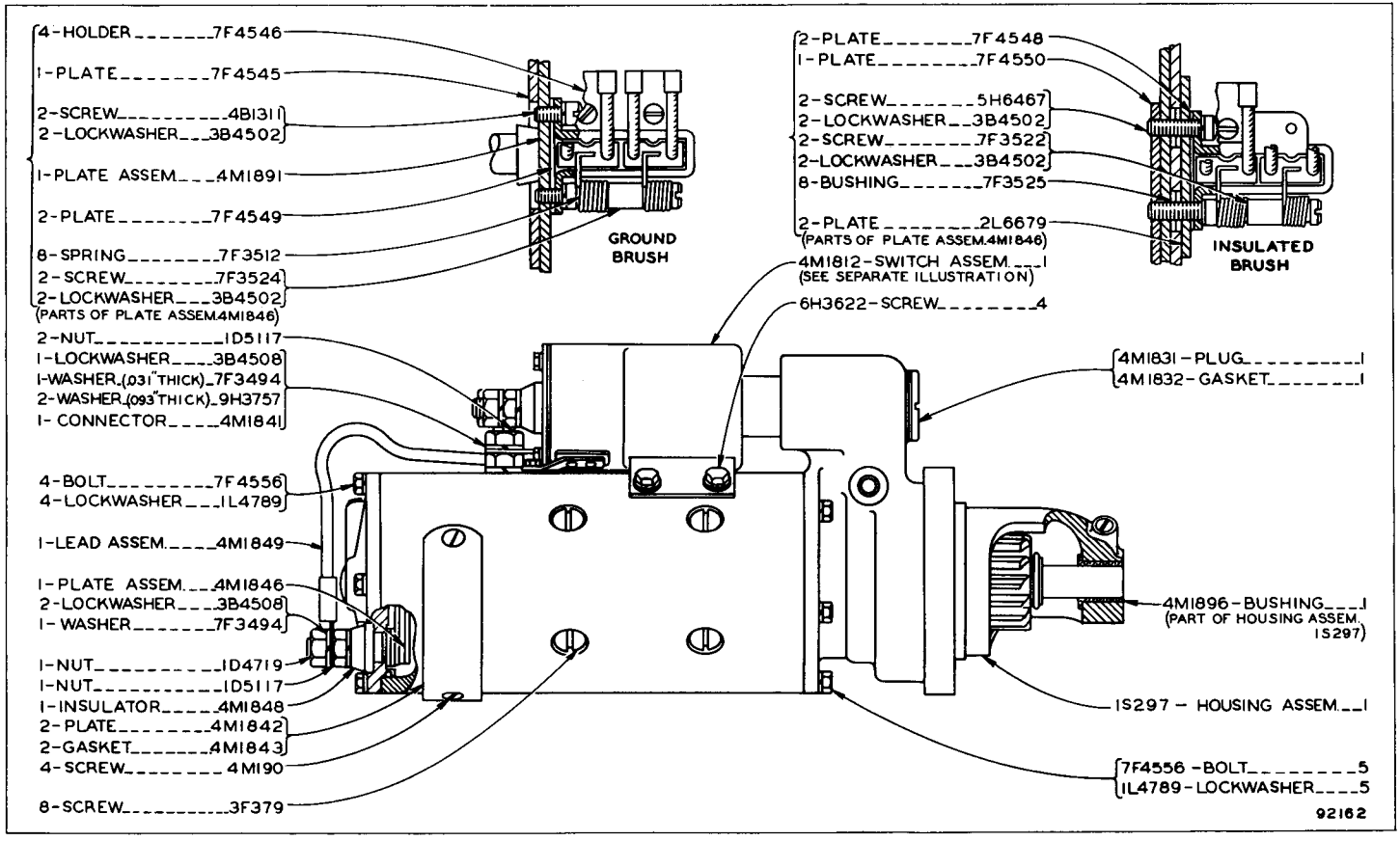

9M1662 ELECTRIC STARTING MOTOR ASSEMBLY—Part 1
Part of 7S3622 Starting Motor Group shown on Page 44A
4M1812 Switch parts are shown on Page 44

9M1662 ELECTRIC STARTING MOTOR ASSEMBLY—Part 2

Part of 7S3622 Starting Motor Group shown on Page 44A

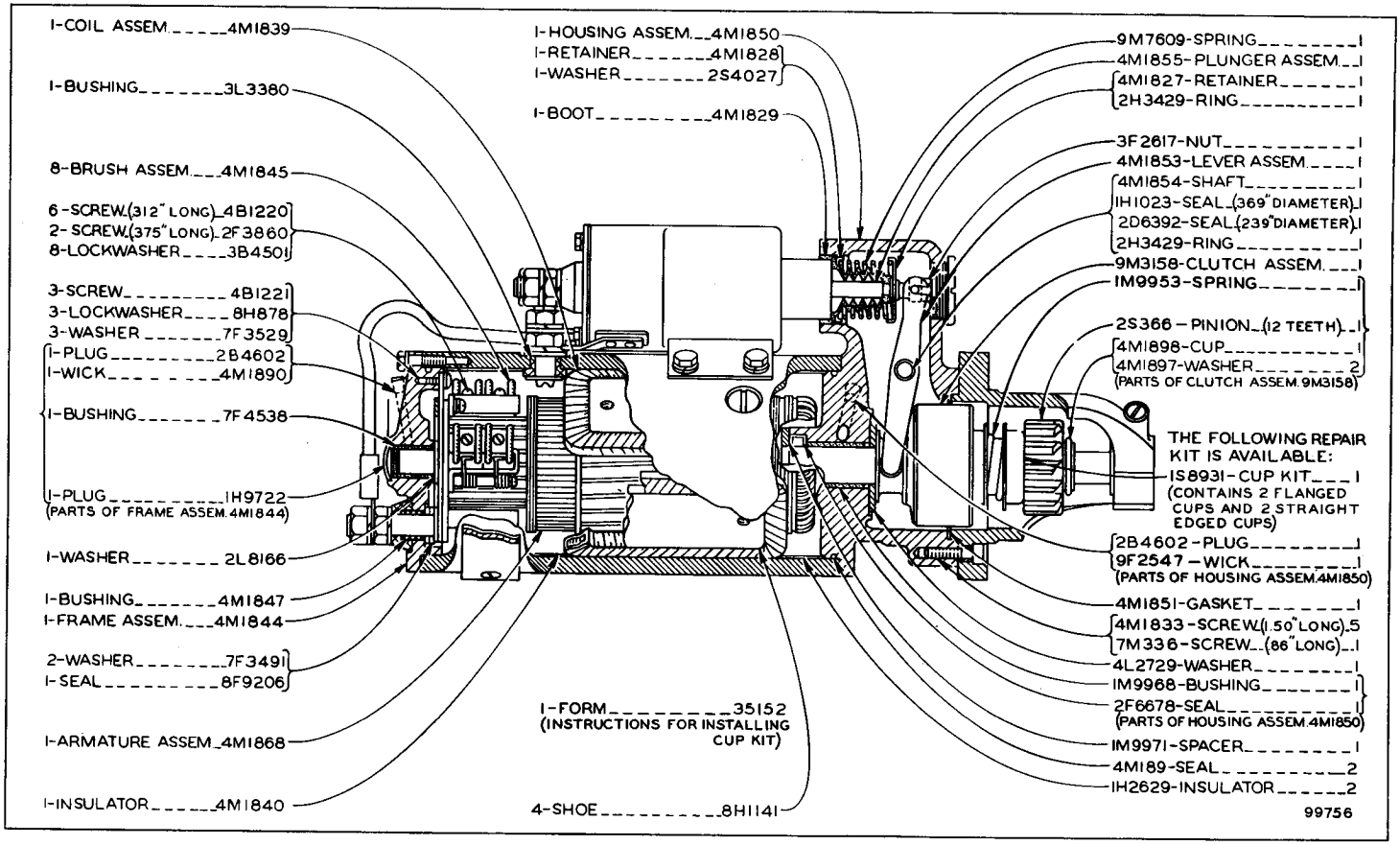

ONLY "CATERPILLAR" PARTS GIVE "CATERPILLAR" PERFORMANCE

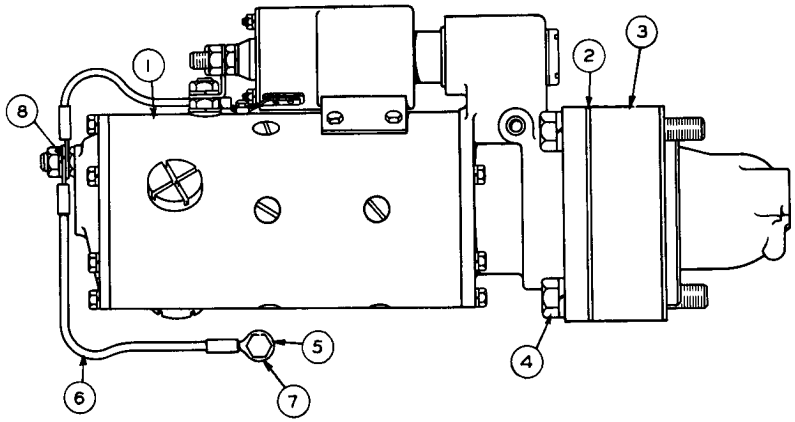

REF. NO.	PART NUMBER	DESCRIPTION	QTY.
1	8S9540	MOTOR ASSEM. (See Separate Illustration)	1
2	4S9737	GASKET	2
3	8S9525	ADAPTER	1
4	1D4585	BOLT	3
	3B4510	LOCKWASHER	3

REF. NO.	PART NUMBER	DESCRIPTION	QTY.
5	4F4879	BOLT	1
	3B4506	LOCKWASHER	1
6	9F4337	WIRE ASSEM.	1
7	2L8052	TERMINAL	1
8	2L8054	TERMINAL (Parts of 9F4337 Wire Assem.)	1

122950

8S9541 STARTING MOTOR GROUP—24 Volt
Serial No. 10K1 to 10K397, 10K399, 10K408 and 10K415 inclusive
8S9540 Motor parts are shown on Pages 42 and 43

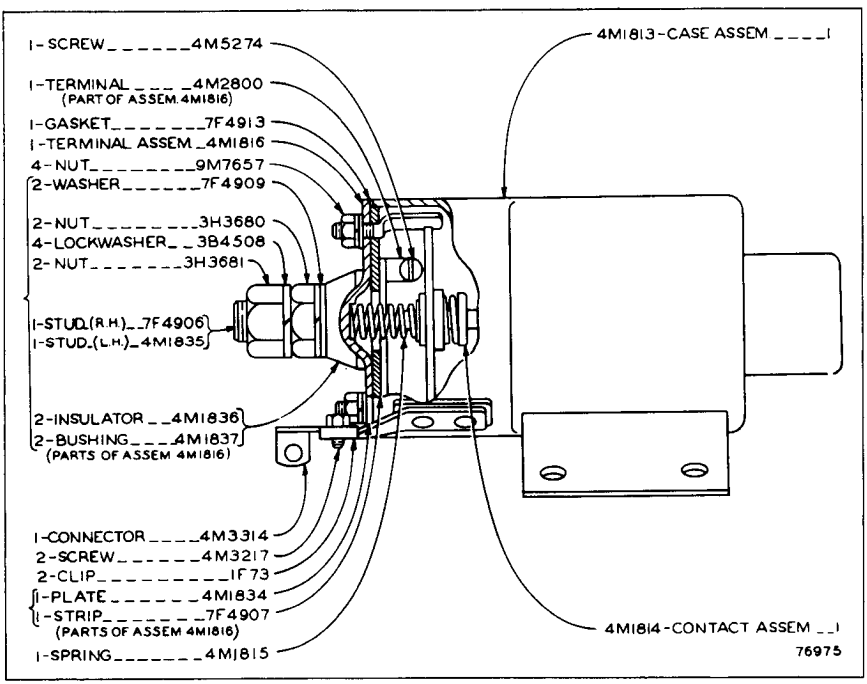

4M1812 SOLENOID SWITCH ASSEMBLY
Part of 8S9540, 9M1662 and 8S3961 Starting Motors
shown on Pages 42, 43A and 99

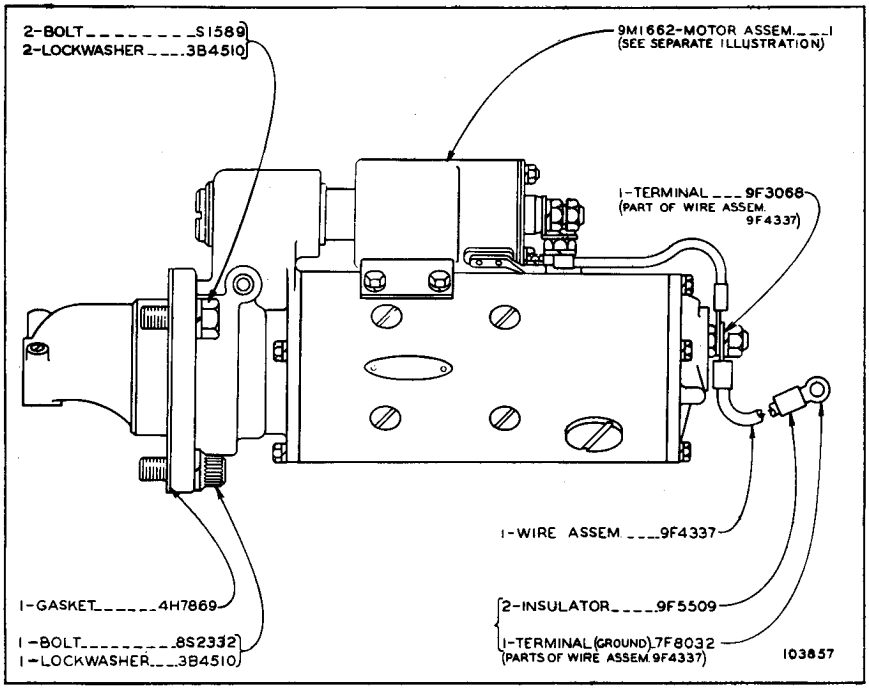

7S3622 STARTING MOTOR GROUP—24 Volt
Serial No. 10K398, 10K400 to 10K407, 10K409 to 10K414 and 10K416-Up
9M1662 Motor parts are shown on Pages 43A and 43B
Refer also to Page 96 for special parts

BATTERY AND WIRING--24 VOLT--TOP VIEW--PART 1 OF 3

7S2773, 7S2772 HARNESS & 7H7290 SWITCH PARTS ARE SHOWN ON PAGES 49 AND 50. SEE PAGE 48 FOR WIRING DIAGRAM

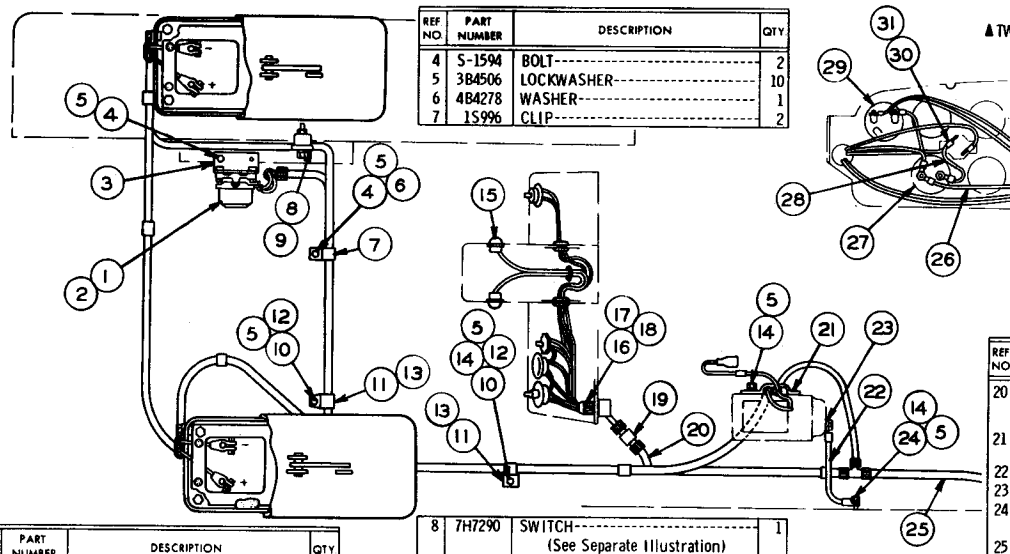

REF NO.	PART NUMBER	DESCRIPTION	QTY.
4	S-1594	BOLT	2
5	3B4506	LOCKWASHER	10
6	4B4278	WASHER	1
7	1S996	CLIP	2

REF NO.	PART NUMBER	DESCRIPTION	QTY.
1	2M6497	REGULATOR ASSEM.	1
		The following Repair Kit is available:	
	8M3146	KIT--------(Shockmount)	1
		(Consists of such parts as Bracket, Assemblies, Lead Assem. and Hardware)	
2	7B2742	BOLT	4
	3B4504	LOCKWASHER	4
	4B4276	WASHER	4
3	7S2055	BRACKET ASSEM.	1
	1F748	NUT----------(Weld)	1
	9F2978	NUT----------(Weld)	1
	9F6445	NUT----------(Weld)	5
		(Parts of 7S2055 Bracket Assem.)	

REF NO.	PART NUMBER	DESCRIPTION	QTY.
8	7H7290	SWITCH	1
		(See Separate Illustration)	
9	8H8648	PLATE	1
10	L-1351	BOLT	1
11	1S3411	BRACKET ASSEM.	3
12	9F2978	NUT----------(Weld)	3
		(1 in each 1S3411 Bracket Assem.)	
13	9M9015	CLAMP	3
14	S-509	BOLT	7
15	3S8642	LAMP ASSEM.	2
	2D1959	BULB	2
		(1 in each 3S8642 Lamp Assem.)	
16	1S945	BOOT	1
17	1S2320	NUT	1
18	▲9M9664	ELBOW	2
19	5S1680	BOX	2

REF NO.	PART NUMBER	DESCRIPTION	QTY.
20	7S2772	HARNESS	1
		(See Separate Illustration)	
21	1S2334	CLAMP	2
	1S2335	BRACKET ASSEM.	1
22	3S8624	CABLE ASSEM.	1
23	1S7251	TERMINAL	1
24	1S7252	TERMINAL	1
		(Parts of 3S8624 Cable Assem.)	
25	7S2773	HARNESS	1
		(See Separate Illustration)	
26	4S8067	WIRE ASSEM.	1
	1F7240	TERMINAL	2
		(Part of 4S8067 Wire Assem.)	
27	1F7307	AMMETER	1
28	4S6313	WIRE ASSEM.	1
	1F7240	TERMINAL	2
		(Part of 4S6313 Wire Assem.)	
29	4D1259	SWITCH	1
30	3H4105	CIRCUIT BREAKER	1
31	5M6668	SCREW	2
32	2S2342	SWITCH ASSEM.	1
33	1M4543	GROMMET	2
34	9M5870	GROMMET	1

103067

ONLY "CATERPILLAR" PARTS GIVE "CATERPILLAR" PERFORMANCE

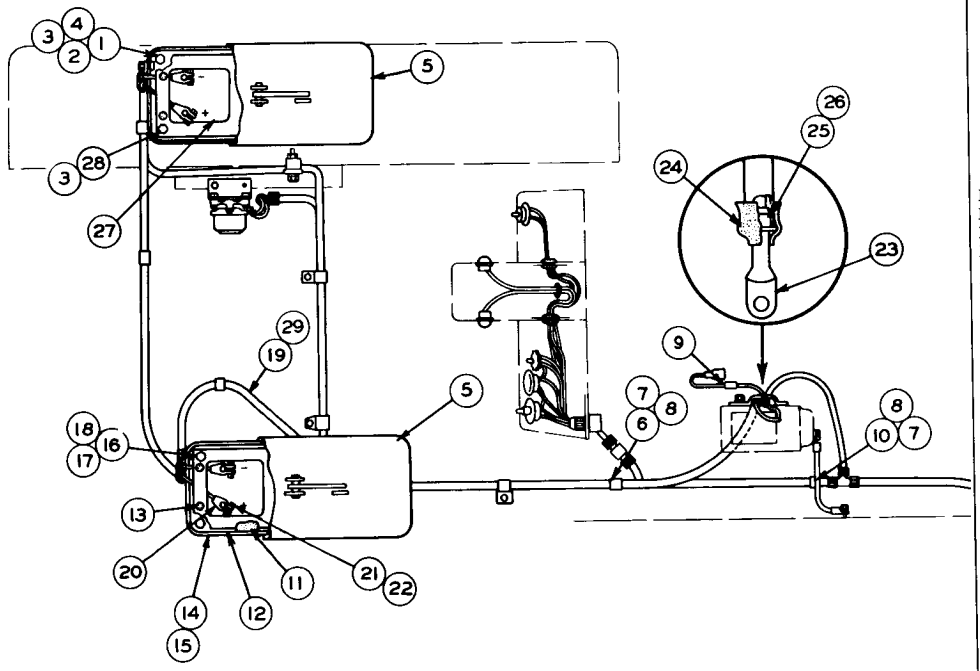

REF NO.	PART NUMBER	DESCRIPTION	QTY
1	S-1585	BOLT	4
2	1D4719	NUT	4
3	3B4508	LOCKWASHER	4
4	4B4280	WASHER	2
5	9M737	COVER ASSEM.	2
	1S6385	LUG (4 in each 9M737 Cover Assem.)	8
6	1S3403	CLIP	1
7	S-509	BOLT	3
8	3B4506	LOCKWASHER	3
9	8M2772	CLIP	1
10	9M9738	CLIP	2
11	1S7850	MAT	2
12	1S8230	HOLDDOWN ASSEM.	2
13	9M5617	GROMMET (6 in each 1S8230 Holddown Assem.)	12
14	1S7849	BOX ASSEM.	2
15	9F2978	NUT-----(Weld) (2 in each 1S7849 Box Assem.)	4
16	2S1686	BOLT	4
17	9H8524	NUT	8
18	4B4278	WASHER	8
19	1S969	CABLE ASSEM.	1
	4S8732	CONDUIT-----9 Feet	
	1S968	CABLE ASSEM.	1
	3D2098	TERMINAL ASSEM. (Part of 1S968 Cable Assem.) Consisting of:	1
20	2D8403	TERMINAL	1
21	2D8788	BOLT	1
22	2D8787	NUT	1
23	1S7251	TERMINAL	1
24	1S2244	BOOT	2
25	1S4915	LINER	2
26	3S2093	TIE (Parts of 1S969 Cable Assem.)	2
27	4S9261	BATTERY	2
28	S-1595	BOLT	4
29	3H2900	GROMMET	1

101634

BATTERY AND WIRING--24 VOLT--TOP VIEW--PART 2 OF 3

SEE PAGE 48 FOR WIRING DIAGRAM

BATTERY AND WIRING--24 VOLT--TOP VIEW--PART 3 OF 3

SEE PAGE 48 FOR WIRING DIAGRAM

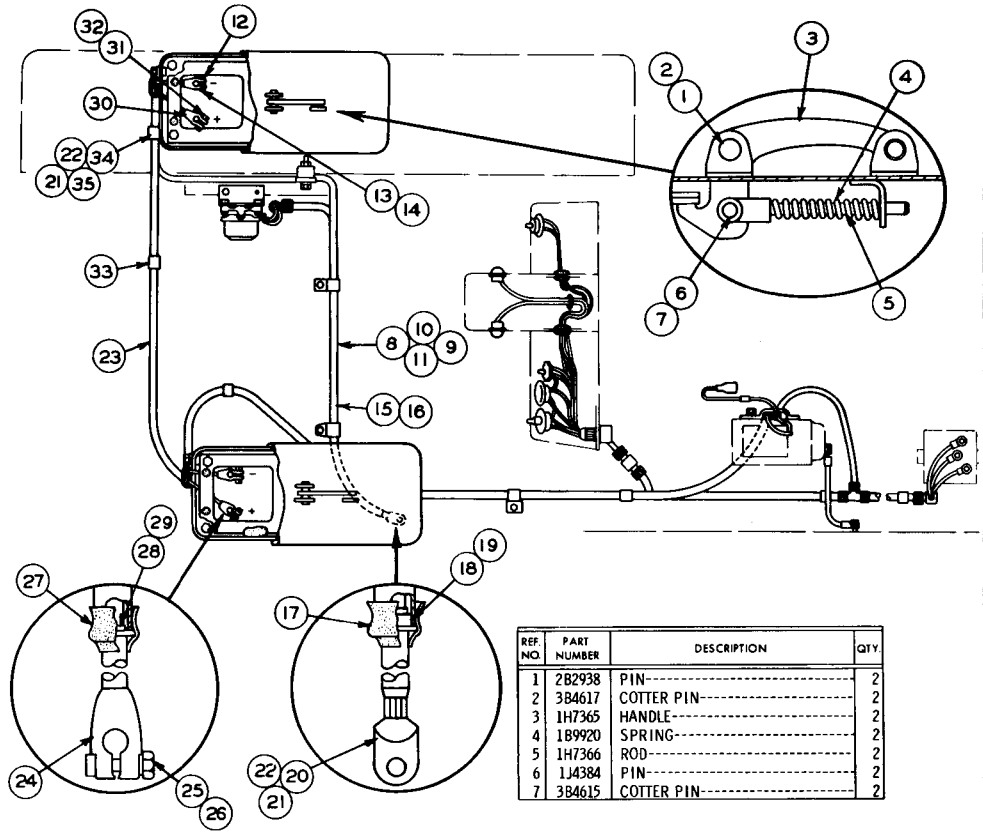

REF. NO.	PART NUMBER	DESCRIPTION	QTY.
	8S1078	CABLE ASSEM.	1
8	4S8732	CONDUIT---(.50" I. D.)---3 Feet	
	1S7252	TERMINAL	1
9	1S2244	BOOT	2
10	1S4915	LINER	2
11	3S2093	TIE	2
12	3S6050	TERMINAL ASSEM.	1
		(Parts of 8S1078 Cable Assem.)	
13	2D8788	BOLT	1
14	2D8787	NUT	1
		(Parts of 3S6050 Terminal Assem.)	
15	7S9285	CABLE ASSEM.	1
16	4S8732	CONDUIT---(.50" I. D.)---4 Feet	
17	1S2244	BOOT	2
18	3S2093	TIE	2
19	1S4915	LINER	2
20	1S7252	TERMINAL	2
		(Parts of 7S9285 Cable Assem.)	
21	S-509	BOLT	3
22	3B4506	LOCKWASHER	3
	1S967	CABLE ASSEM.	1
23	4S8732	CONDUIT---(.50" I. D.)---5 Feet	
	1S3428	CABLE ASSEM.	1
	3D2098	TERMINAL ASSEM.	1
		(Part of 1S3428 Cable Assem.) Consisting of:	
24	2D8403	TERMINAL	1
25	2D8788	BOLT	1
26	2D8787	NUT	1
27	1S2244	BOOT	2
28	1S4915	LINER	2
29	3S2093	TIE	2
30	5M9205	TERMINAL ASSEM.	1
		(Parts of 1S967 Cable Assem.)	
31	2D8788	BOLT	1
32	2D8787	NUT	1
		(Parts of 5M9205 Terminal Assem.)	
33	1H5166	CLIP	1
34	9M9015	CLAMP	2
35	1S3413	BRACKET	1

REF. NO.	PART NUMBER	DESCRIPTION	QTY.
1	2B2938	PIN	2
2	3B4617	COTTER PIN	2
3	1H7365	HANDLE	2
4	1B9920	SPRING	2
5	1H7366	ROD	2
6	1J4384	PIN	2
7	3B4615	COTTER PIN	2

101635

ONLY "CATERPILLAR" PARTS GIVE "CATERPILLAR" PERFORMANCE

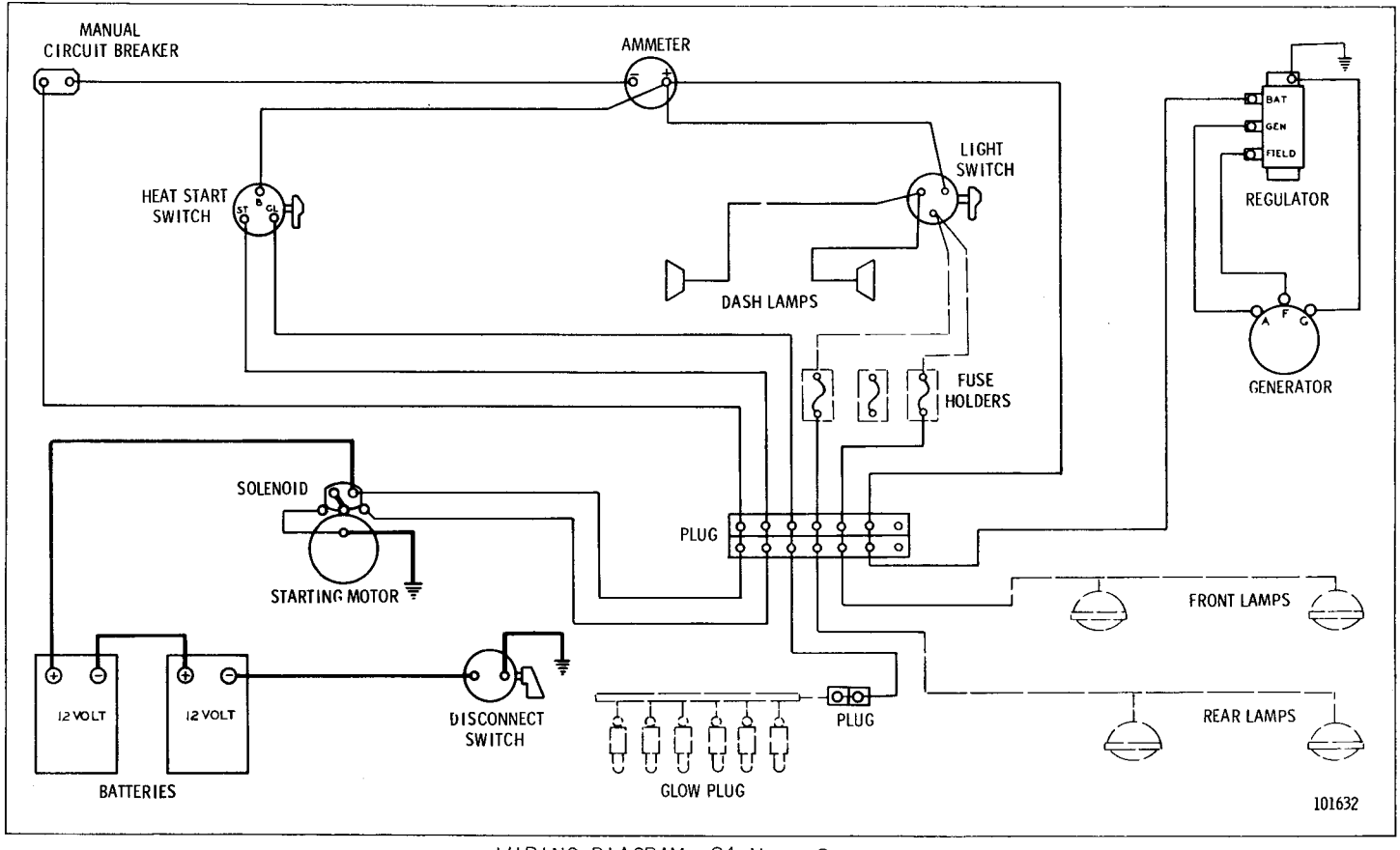

WIRING DIAGRAM--24 VOLT SYSTEM

7S2773 HARNESS ASSEMBLY

PART OF BATTERY AND WIRING SHOWN ON PAGE 45

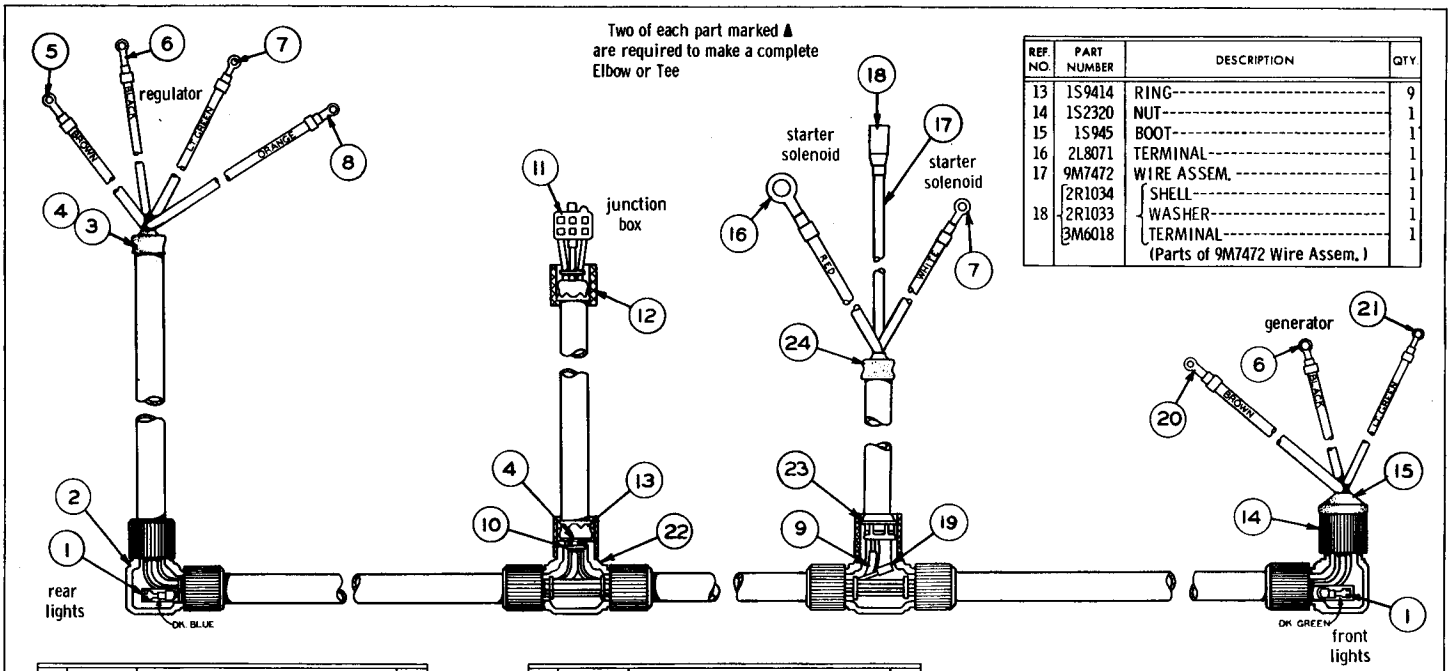

REF. NO.	PART NUMBER	DESCRIPTION	QTY.
13	1S9414	RING	9
14	1S2320	NUT	1
15	1S945	BOOT	1
16	2L8071	TERMINAL	1
17	9M7472	WIRE ASSEM.	1
18	2R1034	SHELL	1
	2R1033	WASHER	1
	3M6018	TERMINAL	1
		(Parts of 9M7472 Wire Assem.)	

REF. NO.	PART NUMBER	DESCRIPTION	QTY.
1	1H6249	TERMINAL	2
2	▲9M9664	ELBOW	4
3	1S2244	BOOT	1
4	1S4915	LINER	10
5	1S7838	TERMINAL	1
6	2L8067	TERMINAL	2

REF. NO.	PART NUMBER	DESCRIPTION	QTY.
7	2L8076	TERMINAL	2
8	2L8066	TERMINAL	1
9	8B653	INSULATOR	1
10	3S2093	TIE	8
11	2S5061	PLUG ASSEM.	1
12	9M9662	NUT	10

19	3F4505	CONNECTOR	1
20	2L8058	TERMINAL	1
21	2L8077	TERMINAL	1
22	▲9M9661	TEE	4
23	1S8228	RING	1
24	1S2294	BOOT	1
	1S6870	LINER	2

101636

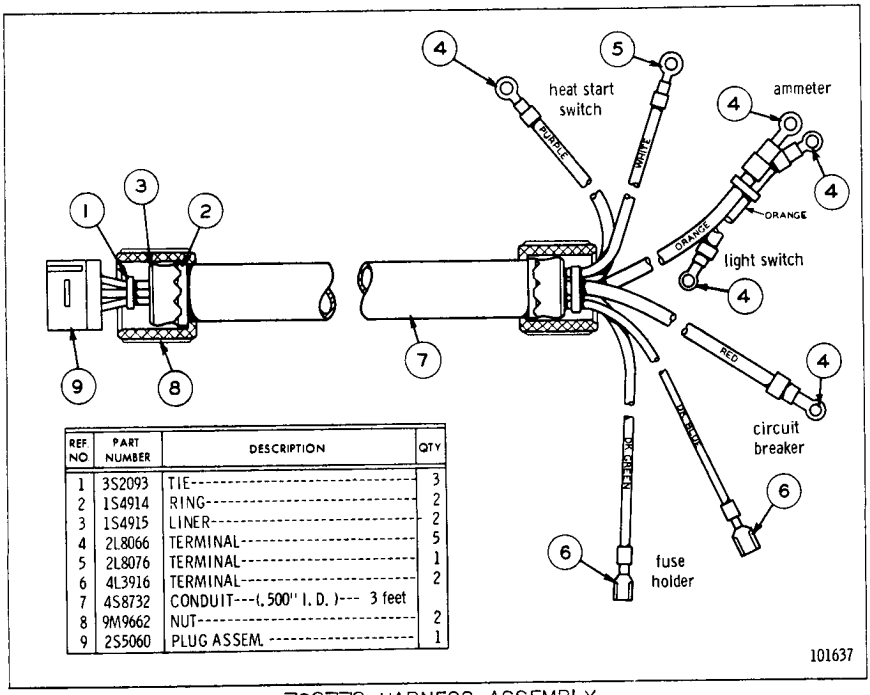

REF NO	PART NUMBER	DESCRIPTION	QTY
1	3S2093	TIE	3
2	1S4914	RING	2
3	1S4915	LINER	2
4	2L8066	TERMINAL	5
5	2L8076	TERMINAL	1
6	4L3916	TERMINAL	2
7	4S8732	CONDUIT---(.500" I. D.)--- 3 feet	
8	9M9662	NUT	2
9	2S5060	PLUG ASSEM.	1

7S2772 HARNESS ASSEMBLY

PART OF BATTERY AND WIRING SHOWN ON PAGE 45

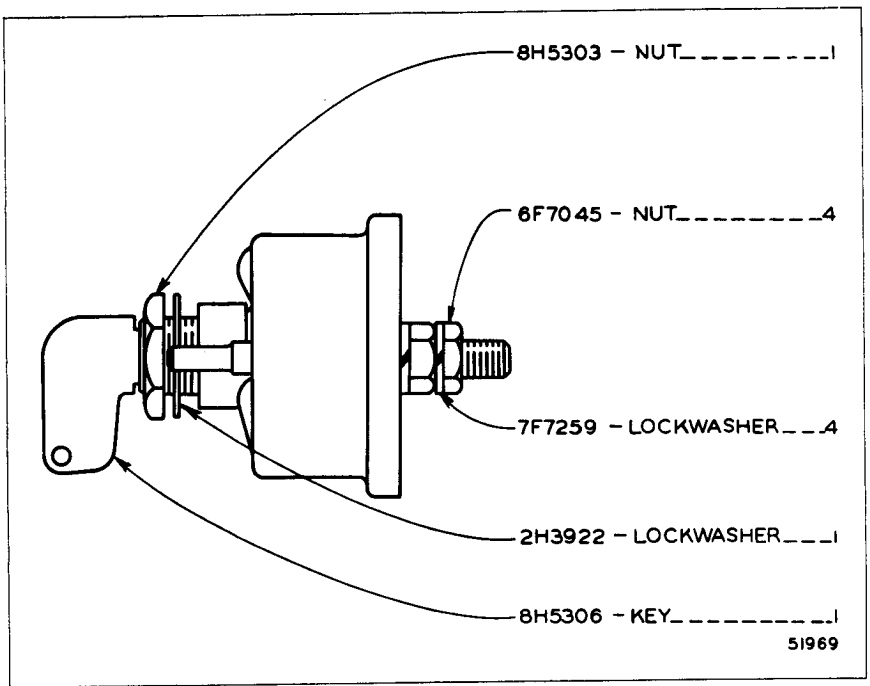

7H7290 DISCONNECT SWITCH ASSEMBLY

PART OF BATTERY AND WIRING SHOWN ON PAGE 45

POWER TRAIN

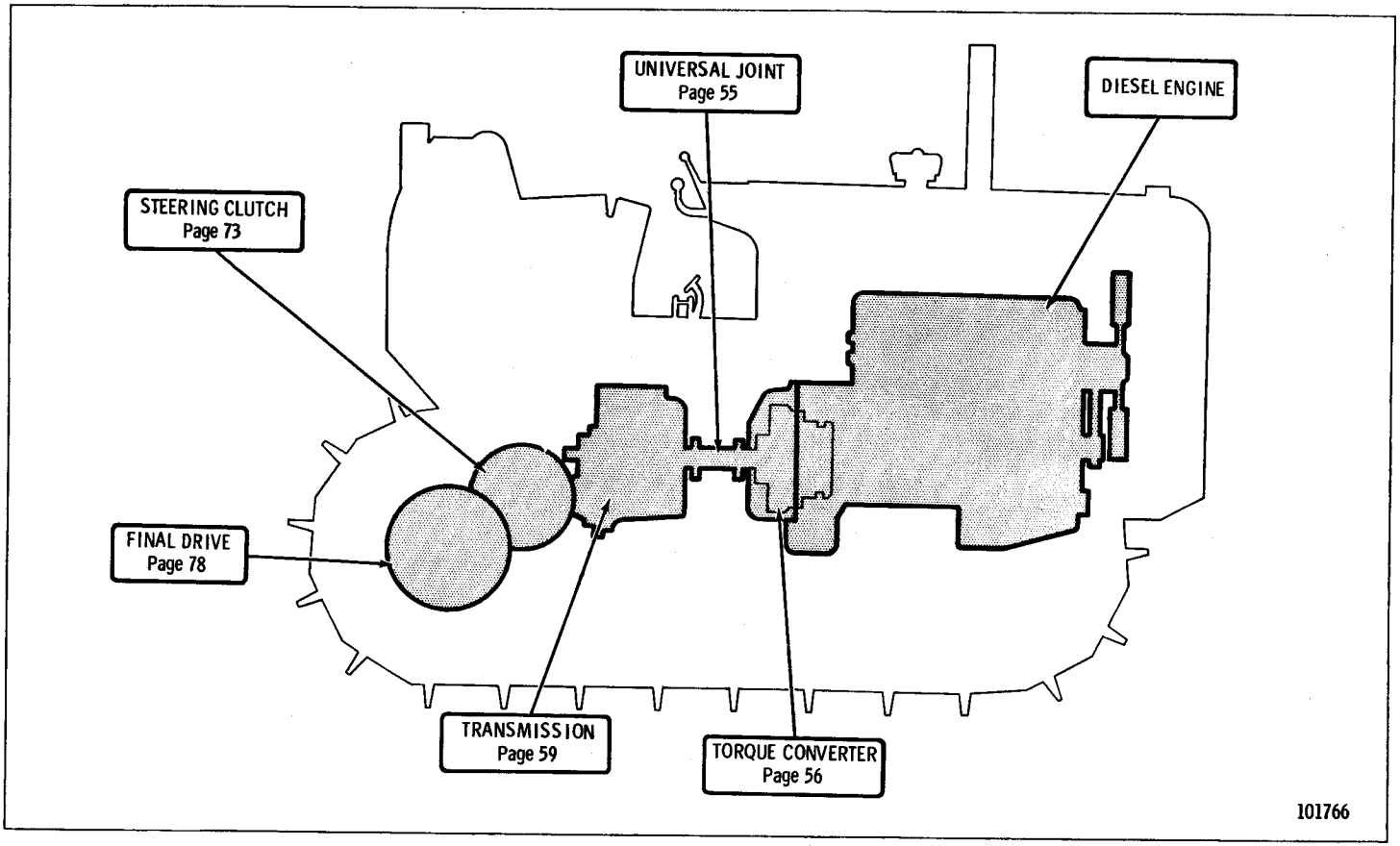

ONLY "CATERPILLAR" PARTS GIVE "CATERPILLAR" PERFORMANCE

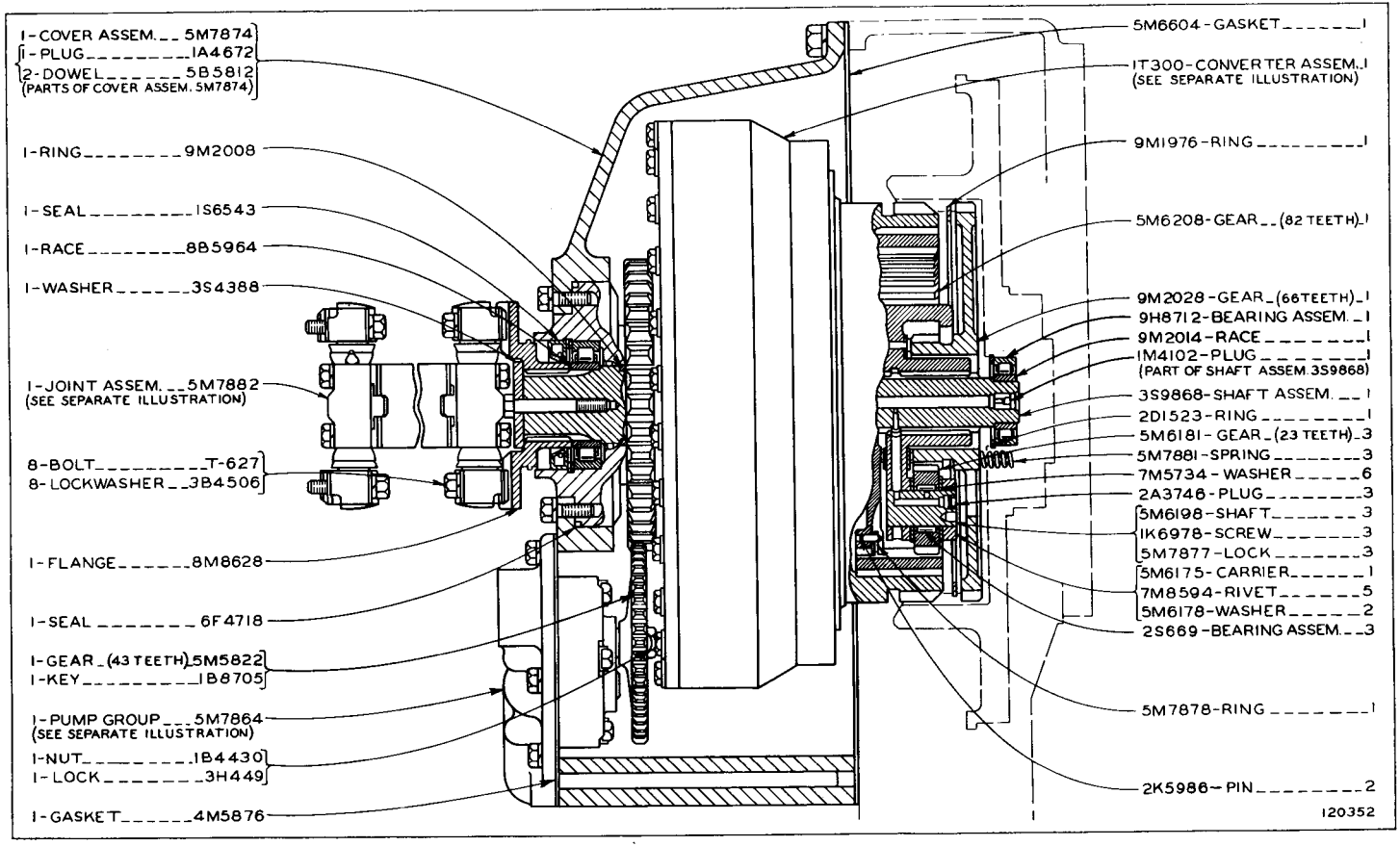

TORQUE DIVIDER--SIDE VIEW

5M7864 PUMP, 5M7882 UNIVERSAL JOINT & 1T300 CONVERTER PARTS ARE SHOWN ON PAGES 54, 55 & 56

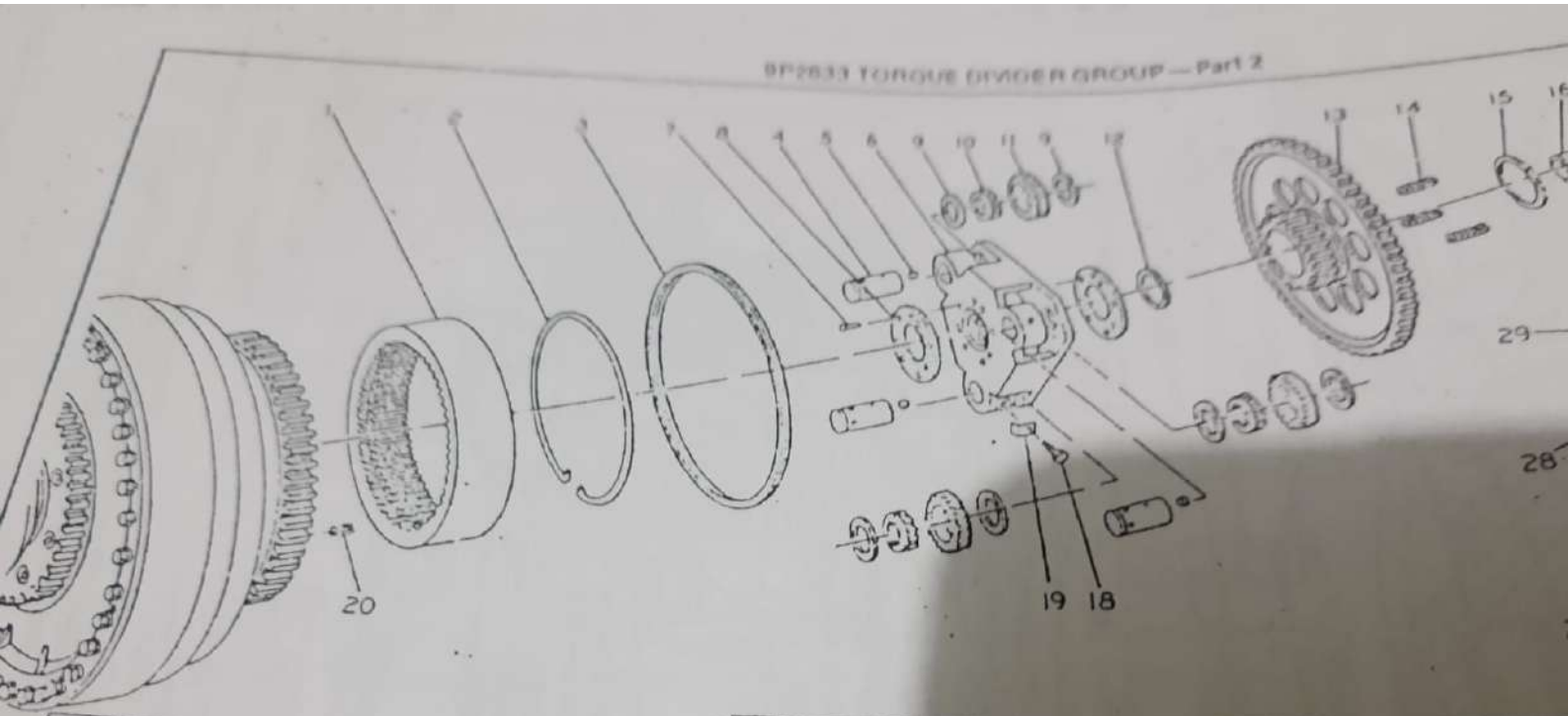

REF NO	PART NUMBER	DESCRIPTION	QTY
1	5M6208	GEAR--------(82 Teeth)----------	1
2	5M7878	RING----------	1
3	9M1976	RING----------	1
4	5M6198	SHAFT----------	1
5	2A3746	PLUG----------	3
6	9S5267	CARRIER ASSEM.----------	3
	5P6943	RIVET----------	1
	8P1958	WASHER----------	5
C	9	7G892	WASHER----------	6
	10	2S669	BEARING ASSEM.----------	3
C	11	7G2474	GEAR--------(23 Teeth)----------	3
	12	5M6480	RING----------	1
	13	9M2028	GEAR--------(66 Teeth)----------	1
	14	1K7041	SPRING----------	3
	15	2D1523	RING----------	1
	16	9M2014	RACE----------	1
	17	9H8712	BEARING ASSEM.----------	1
	18	1K6978	SCREW----------	3
	19	5M7877	LOCK----------	3
	20	2K5986	PIN----------	2
	21	3H18		
	22	5M5		
	23	5M5		
	24	3B		
	25	1A2		
	26	18		
	27	9B		
	28	5M		
	29	2		

TORQUE DIVIDER--END VIEW

2S625 AND 2S1386 VALVE PARTS ARE SHOWN ON PAGES 54 AND 55

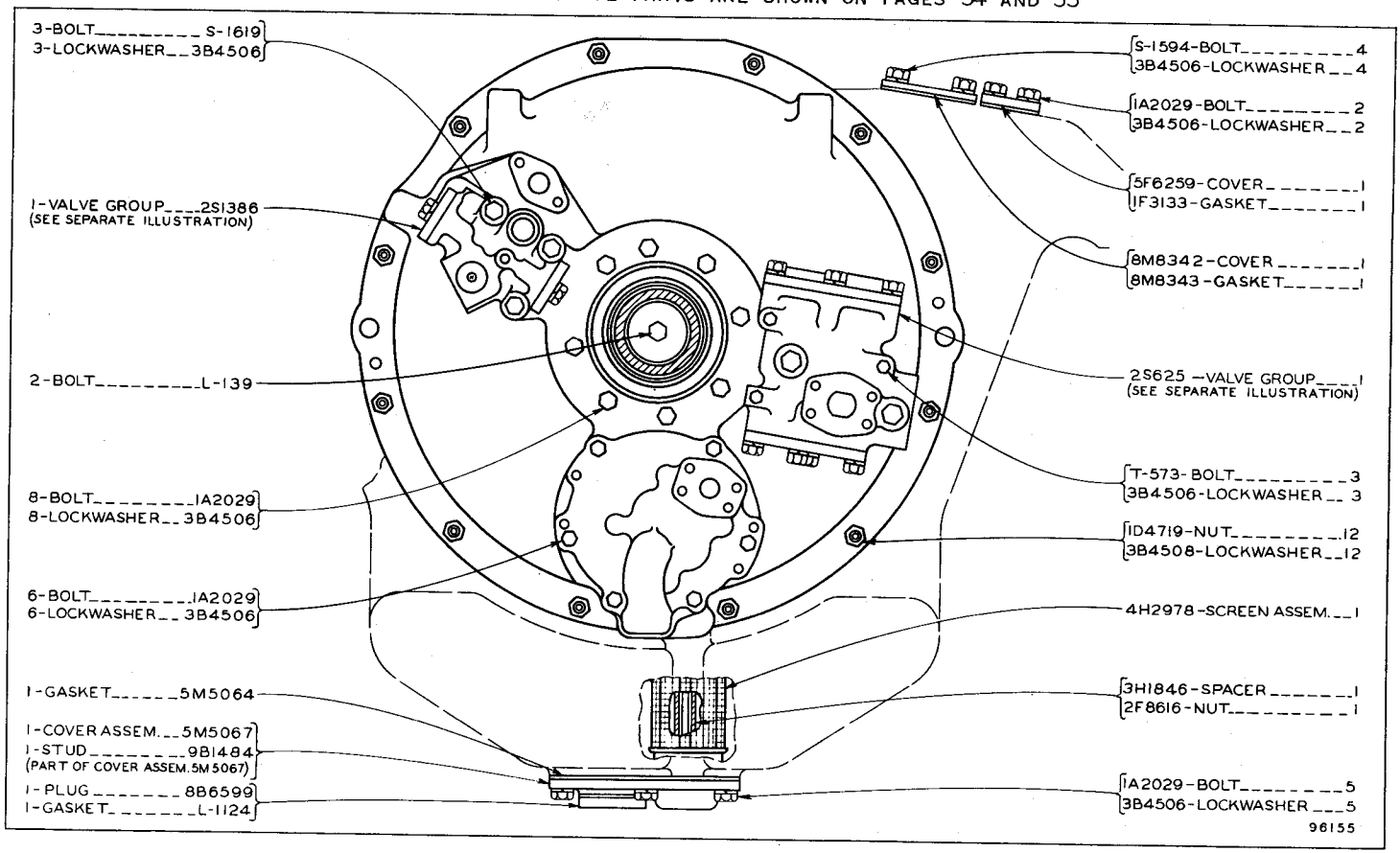

ONLY "CATERPILLAR" PARTS GIVE "CATERPILLAR" PERFORMANCE

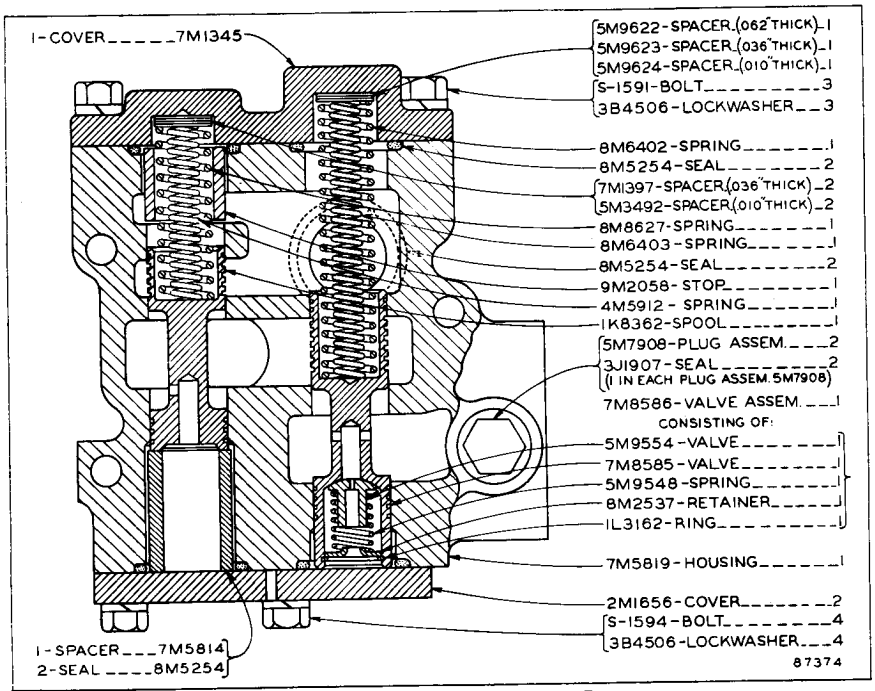

2S625 RELIEF VALVE GROUP
PART OF TORQUE DIVIDER SHOWN ON PAGE 53

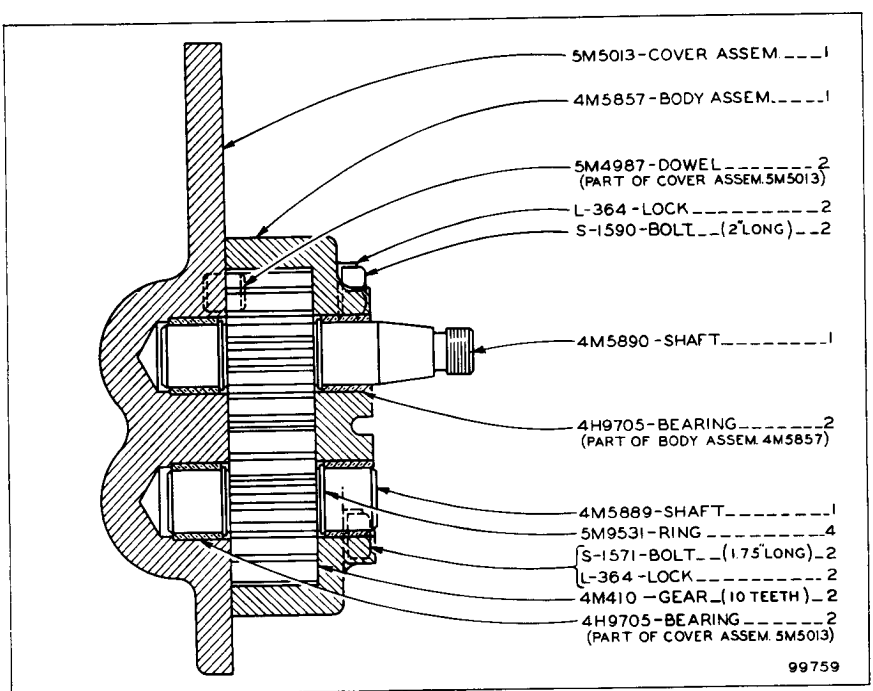

5M7864 SCAVENGE PUMP GROUP
PART OF TORQUE DIVIDER SHOWN ON PAGE 52

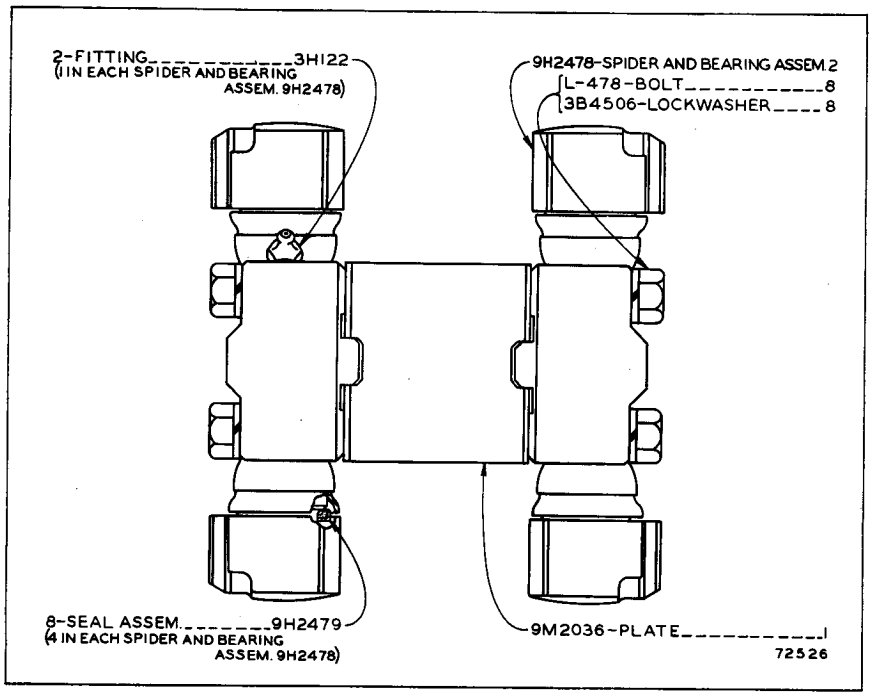

5M7882 UNIVERSAL JOINT ASSEMBLY
PART OF TORQUE DIVIDER SHOWN ON PAGE 52

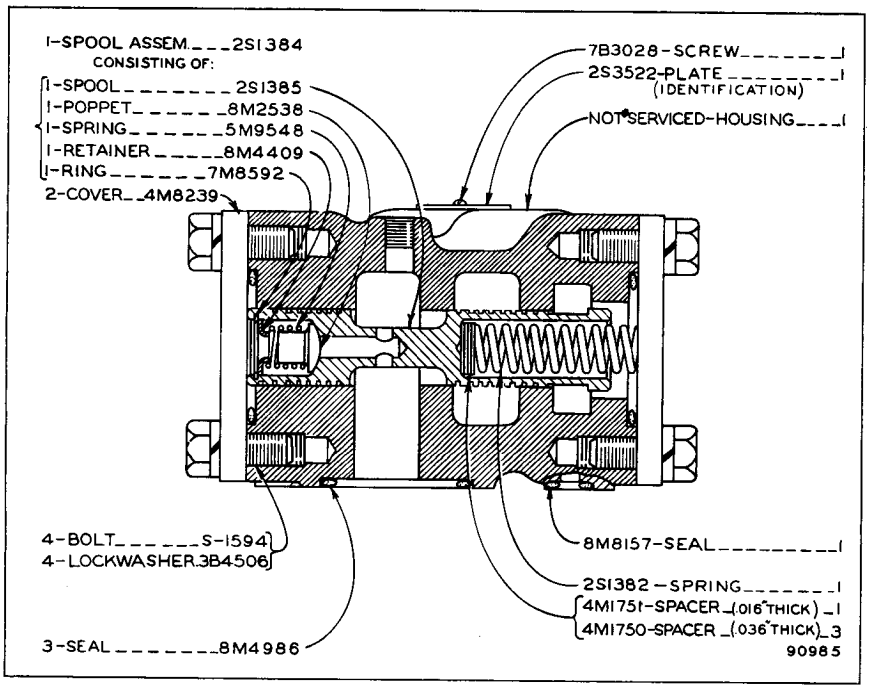

2S1386 RELIEF VALVE GROUP
PART OF TORQUE DIVIDER SHOWN ON PAGE 53

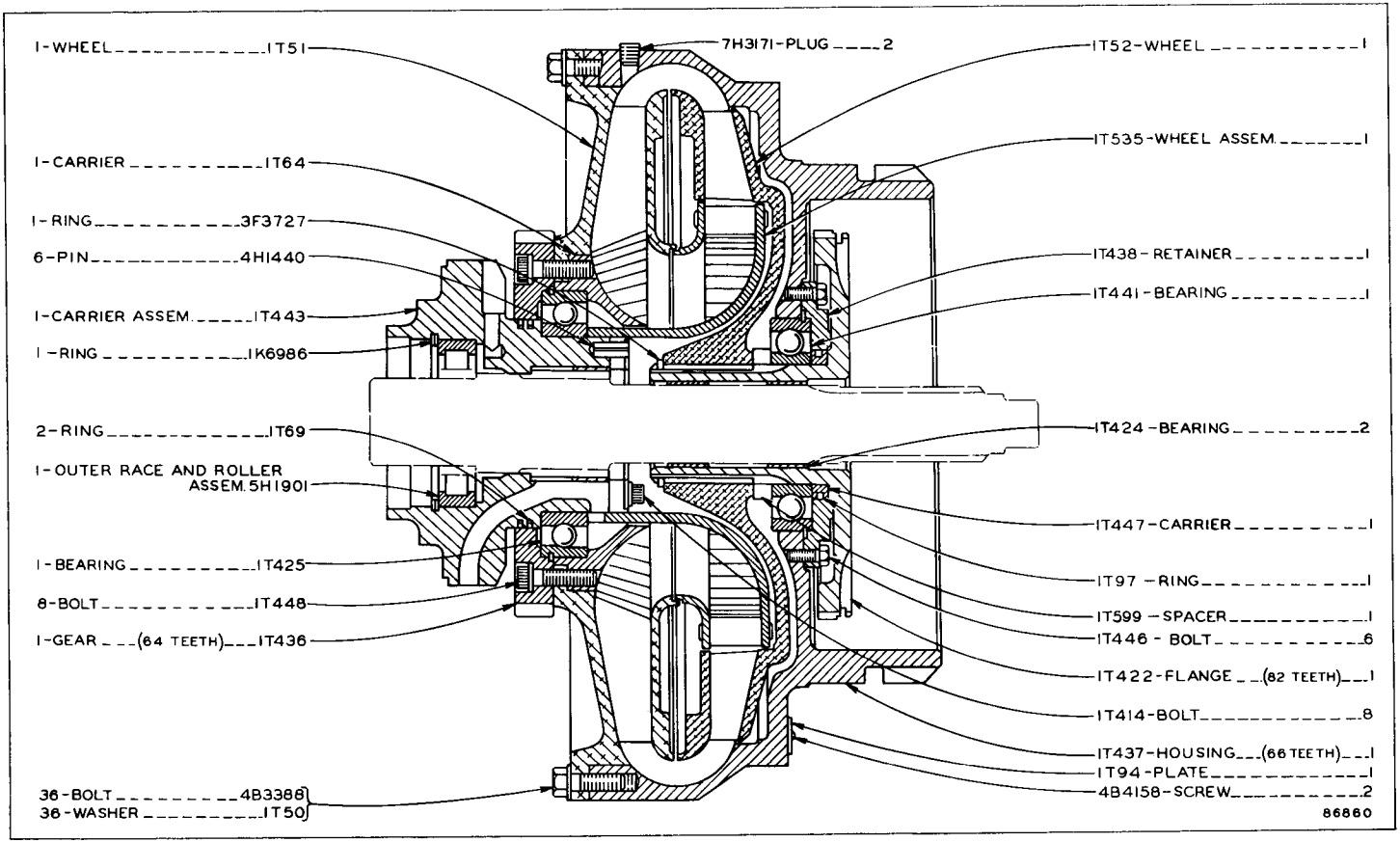

1T300 HYDRAULIC TORQUE CONVERTER ASSEMBLY
EFFECTIVE WITH TORQUE CONVERTER SERIAL NO. 22T1-UP
PART OF TORQUE DIVIDER SHOWN ON PAGE 52

TRANSMISSION CONTROL LINKAGE

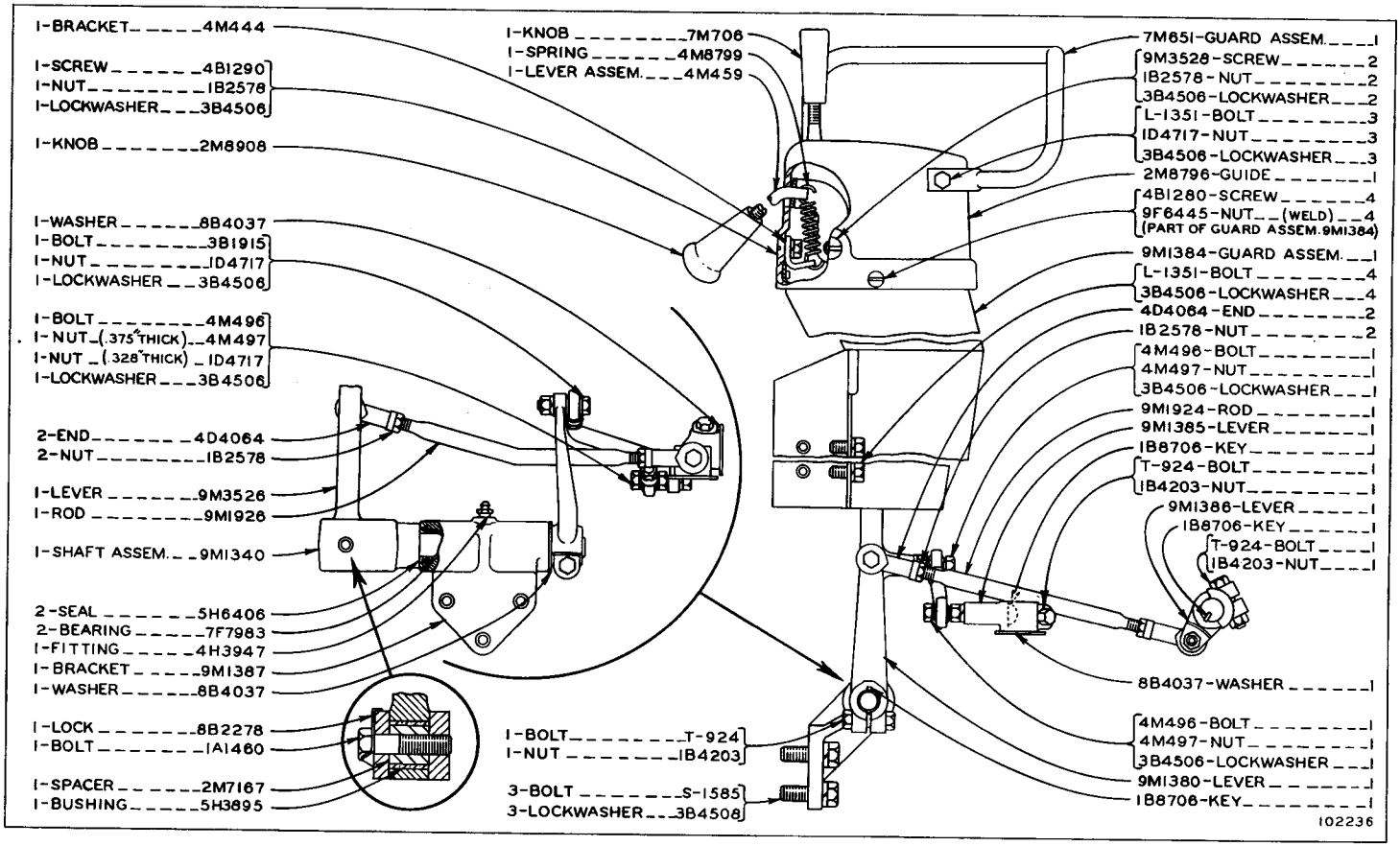

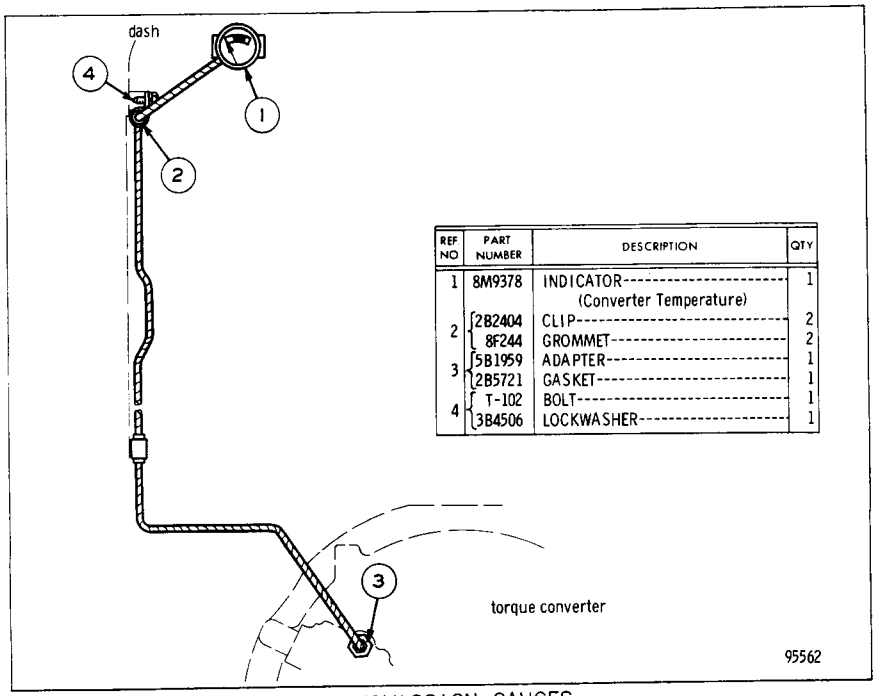

REF NO	PART NUMBER	DESCRIPTION	QTY
1	8M9378	INDICATOR (Converter Temperature)	1
2	2B2404	CLIP	2
	8F244	GROMMET	2
3	5B1959	ADAPTER	1
	2B5721	GASKET	1
4	T-102	BOLT	1
	3B4506	LOCKWASHER	1

TRANSMISSION GAUGES

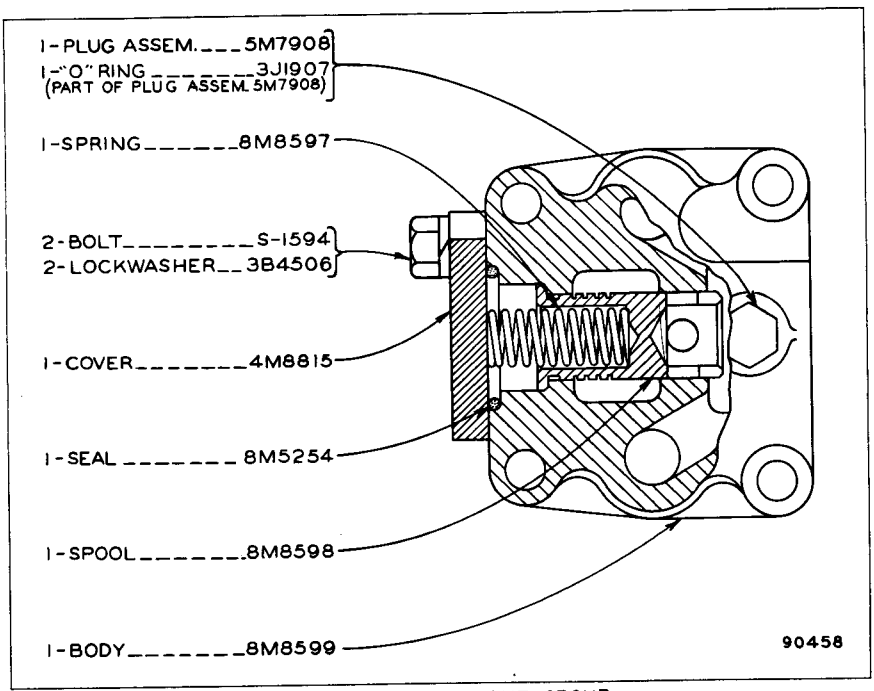

8M8551 RELIEF VALVE GROUP
PART OF 8S590 RANGE TRANSMISSION ARRANGEMENT

ALWAYS GIVE SERIAL NUMBER WHEN ORDERING PARTS

8S590 RANGE TRANSMISSION ARRANGEMENT

PLANETARY TRANSMISSION, TRANSFER GEARS AND TRANSMISSION HYDRAULIC CONTROL PARTS ARE SHOWN ON PAGES 60 THROUGH 63

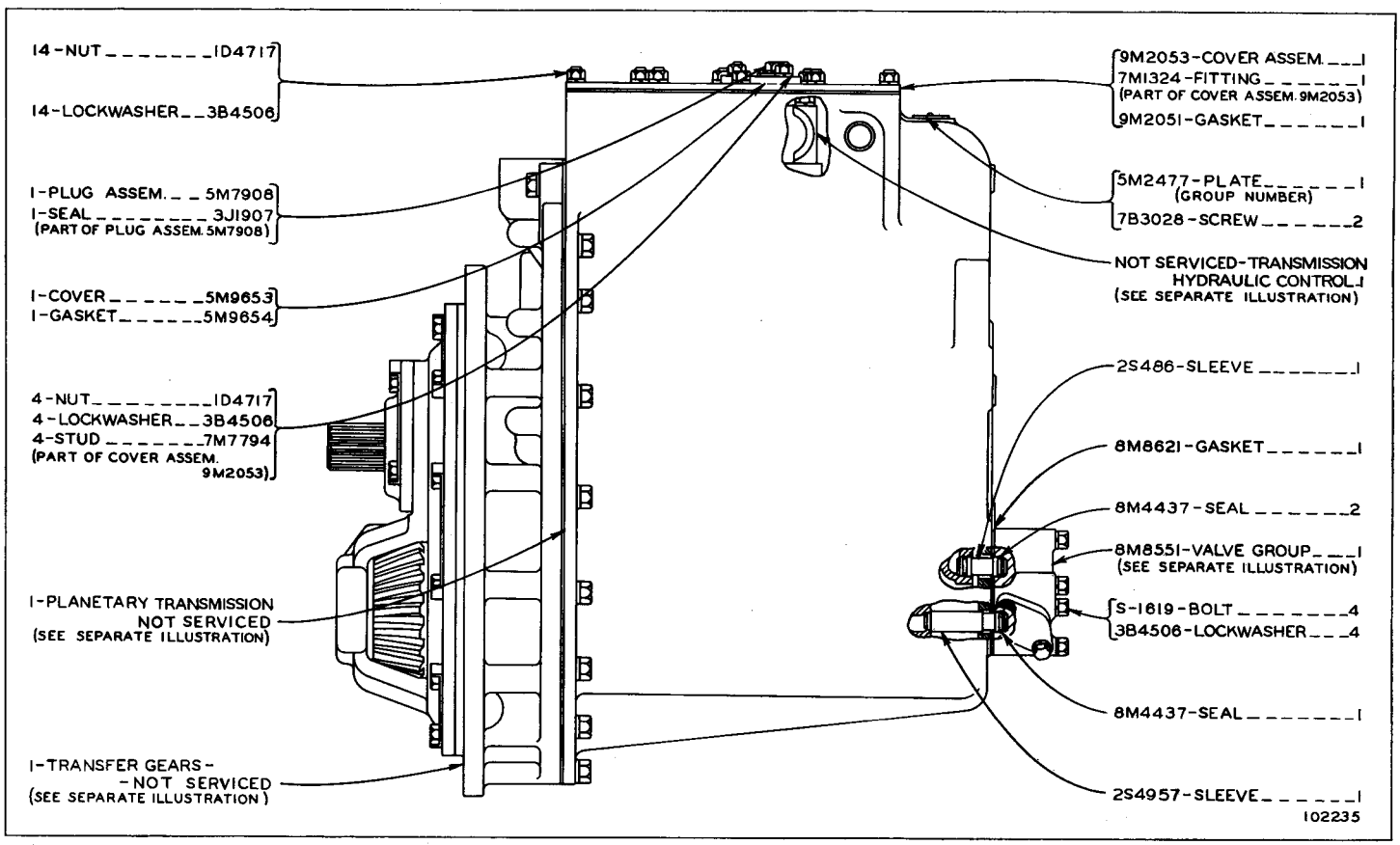

ONLY "CATERPILLAR" PARTS GIVE "CATERPILLAR" PERFORMANCE

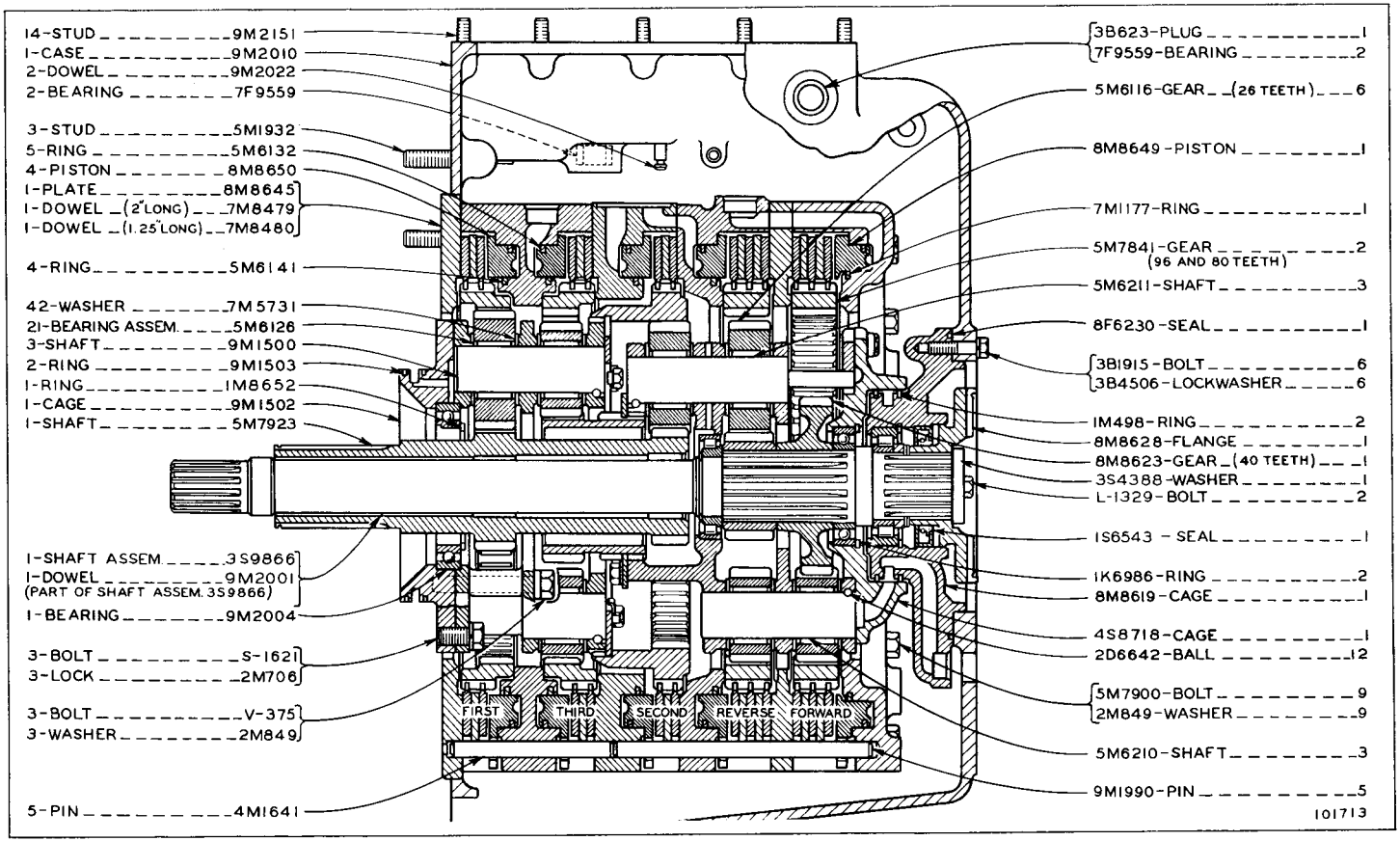

PLANETARY TRANSMISSION--PART 1

PART OF 8S590 RANGE TRANSMISSION SHOWN ON PAGE 59

PLANETARY TRANSMISSION--PART 2
PART OF 8S590 RANGE TRANSMISSION SHOWN ON PAGE 59

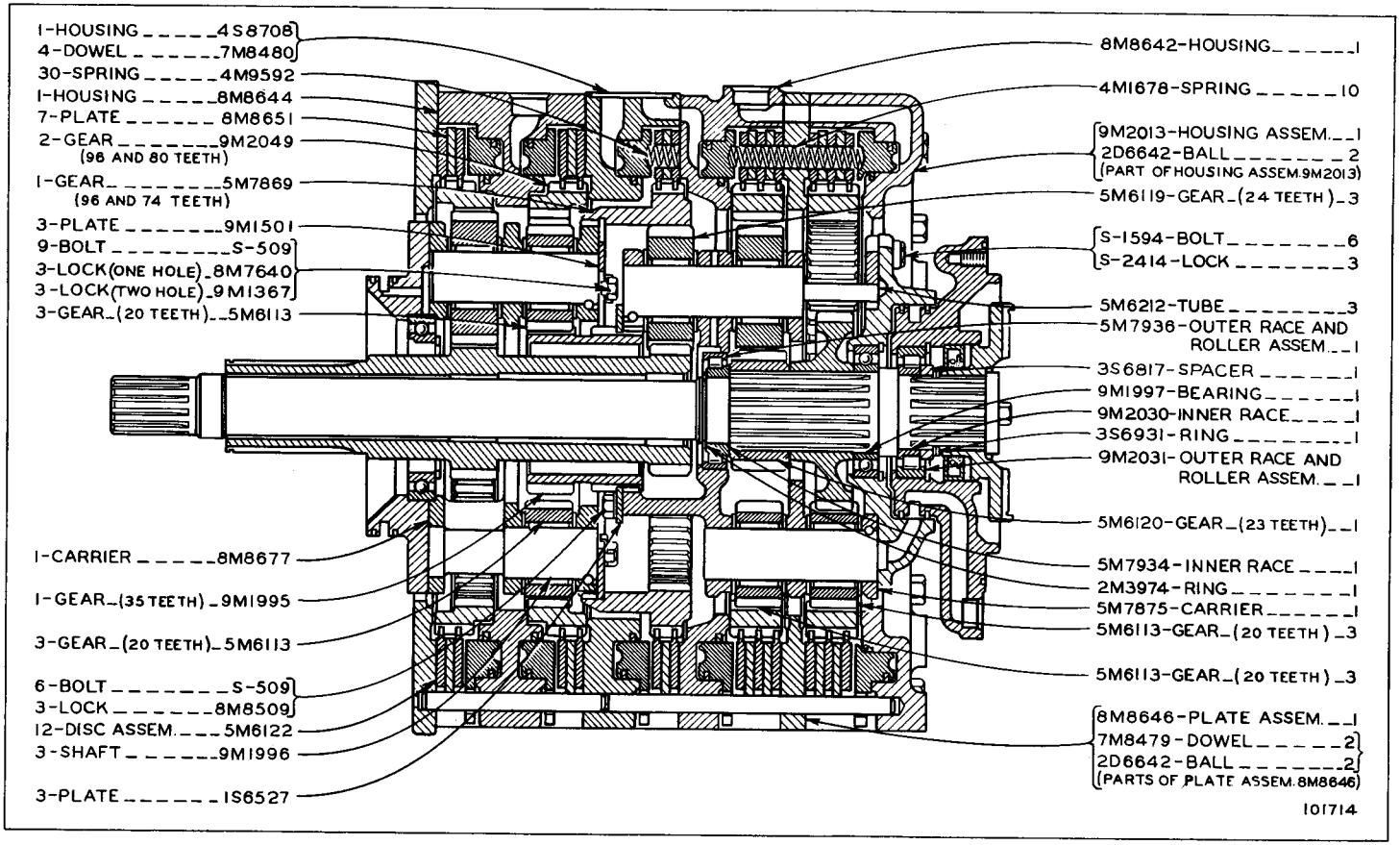

ONLY "CATERPILLAR" PARTS GIVE "CATERPILLAR" PERFORMANCE

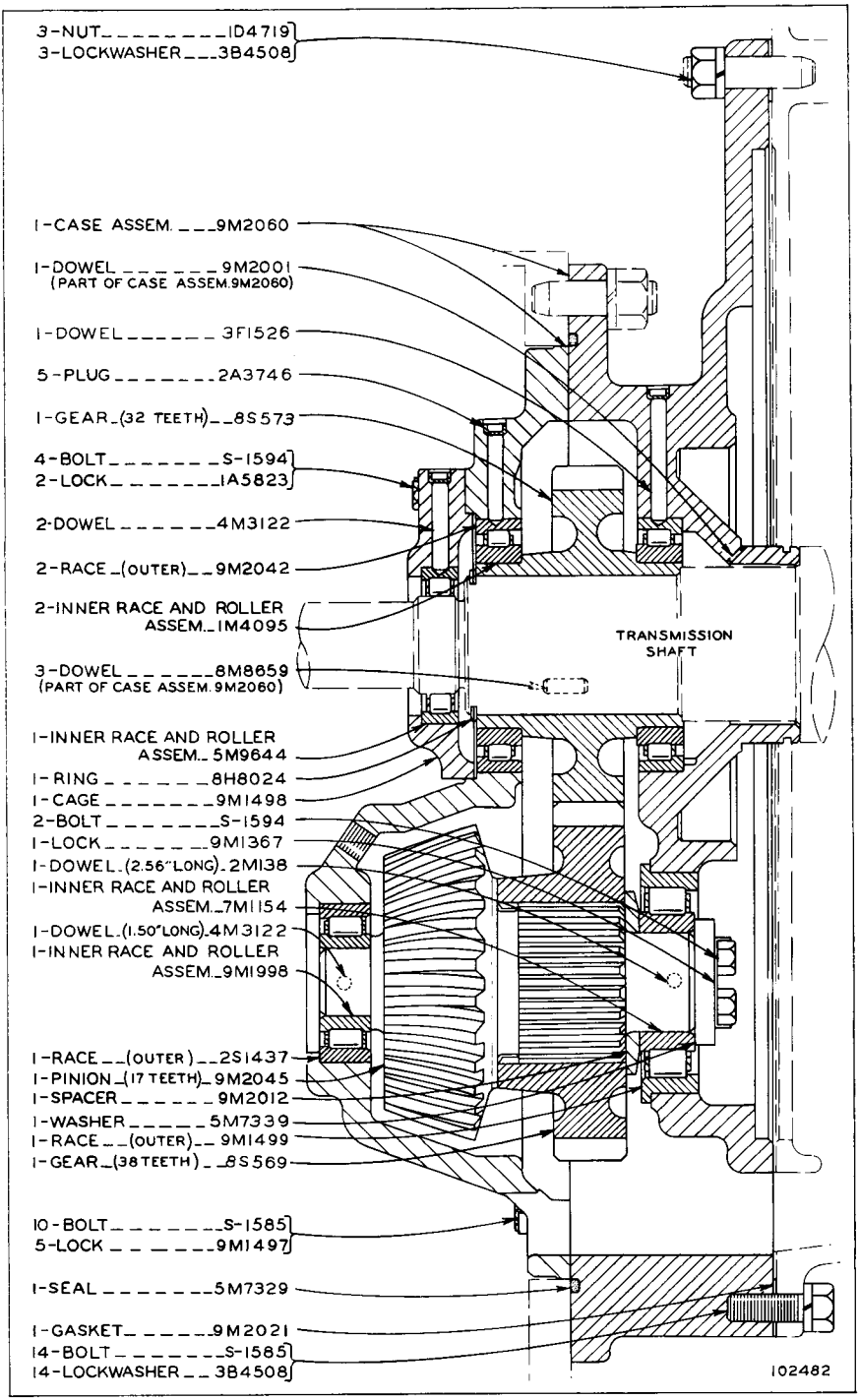

TRANSFER GEARS

PART OF 8S590 RANGE TRANSMISSION ARRANGEMENT SHOWN ON PAGE 59

TRANSMISSION HYDRAULIC CONTROL

PART OF 8S590 RANGE TRANSMISSION SHOWN ON PAGE 59

8M6347, 8M6348 VALVE AND 8M6349 PRESSURE CONTROL PARTS ARE SHOWN ON PAGES 64 AND 65

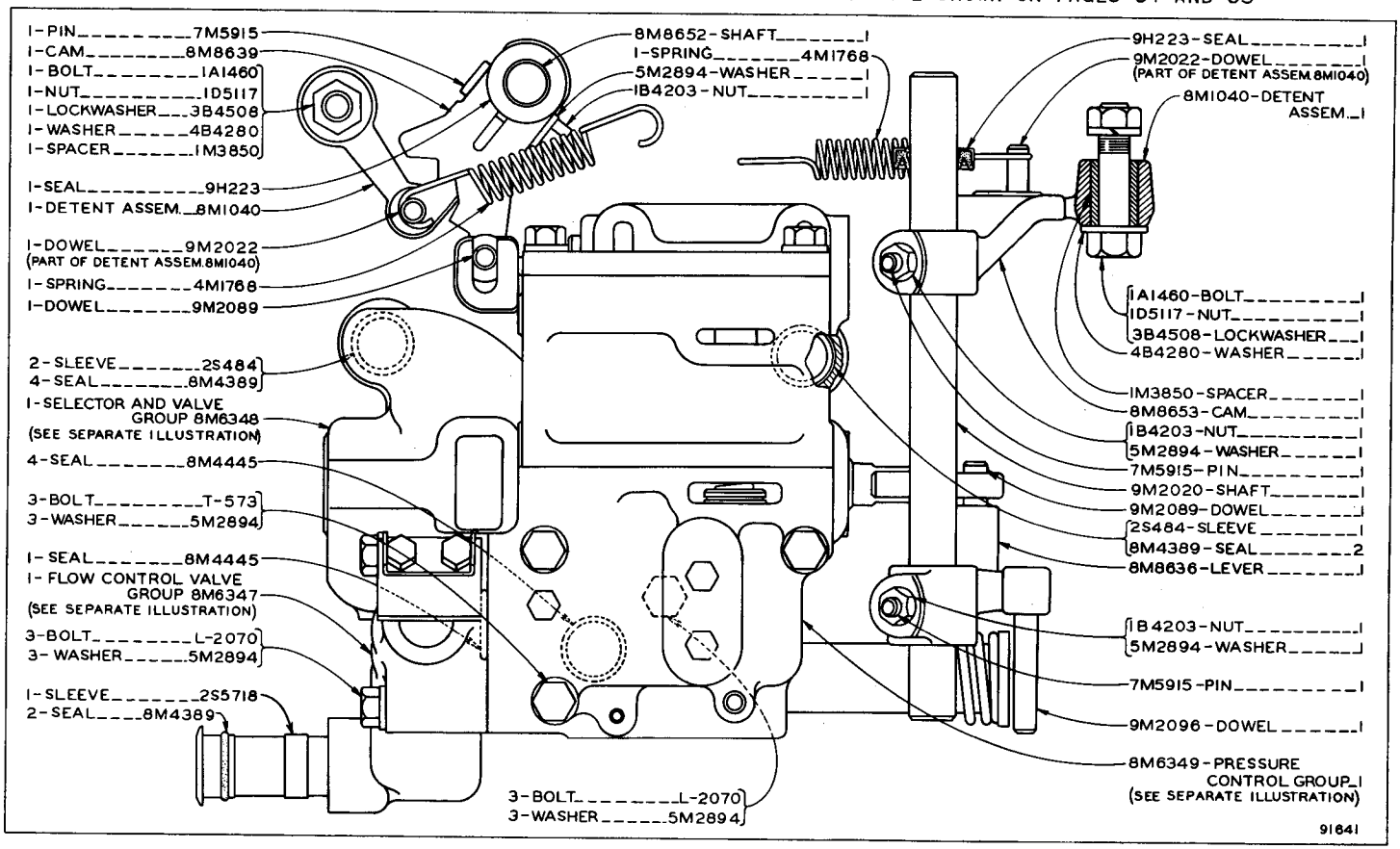

ONLY "CATERPILLAR" PARTS GIVE "CATERPILLAR" PERFORMANCE

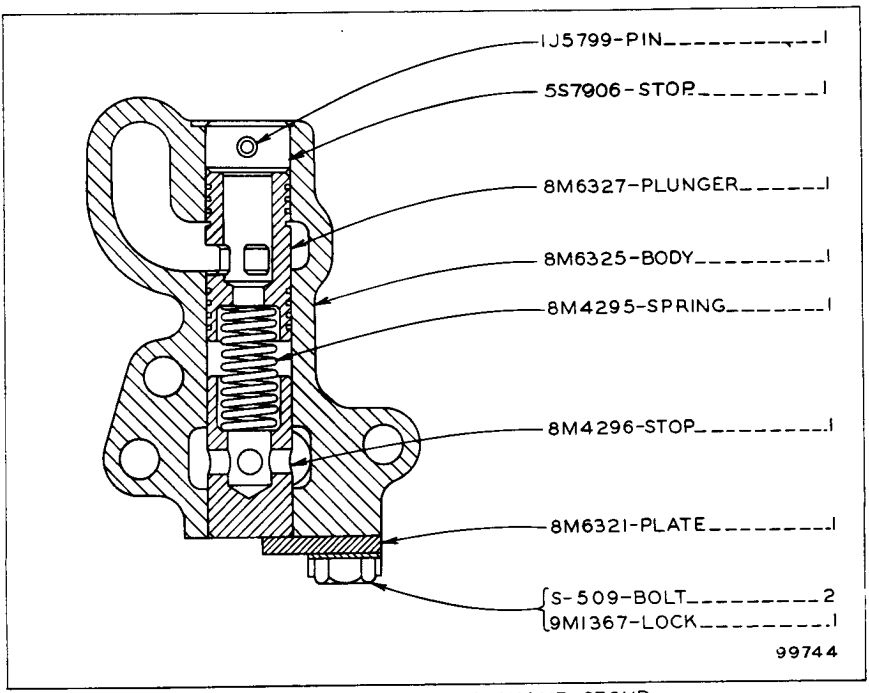

8M6347 FLOW CONTROL VALVE GROUP
PART OF TRANSMISSION HYDRAULIC CONTROL SHOWN ON PAGE 63

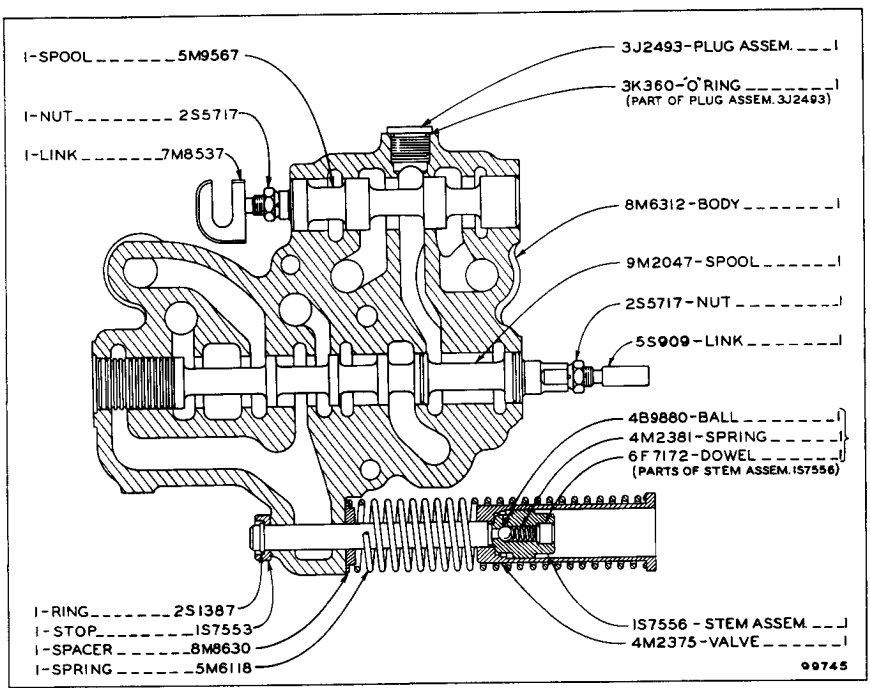

8M6348 SELECTOR AND SAFETY VALVE GROUP
PART OF TRANSMISSION HYDRAULIC CONTROL SHOWN ON PAGE 63

8M6349 PRESSURE CONTROL GROUP

PART OF TRANSMISSION HYDRAULIC CONTROL SHOWN ON PAGE 63

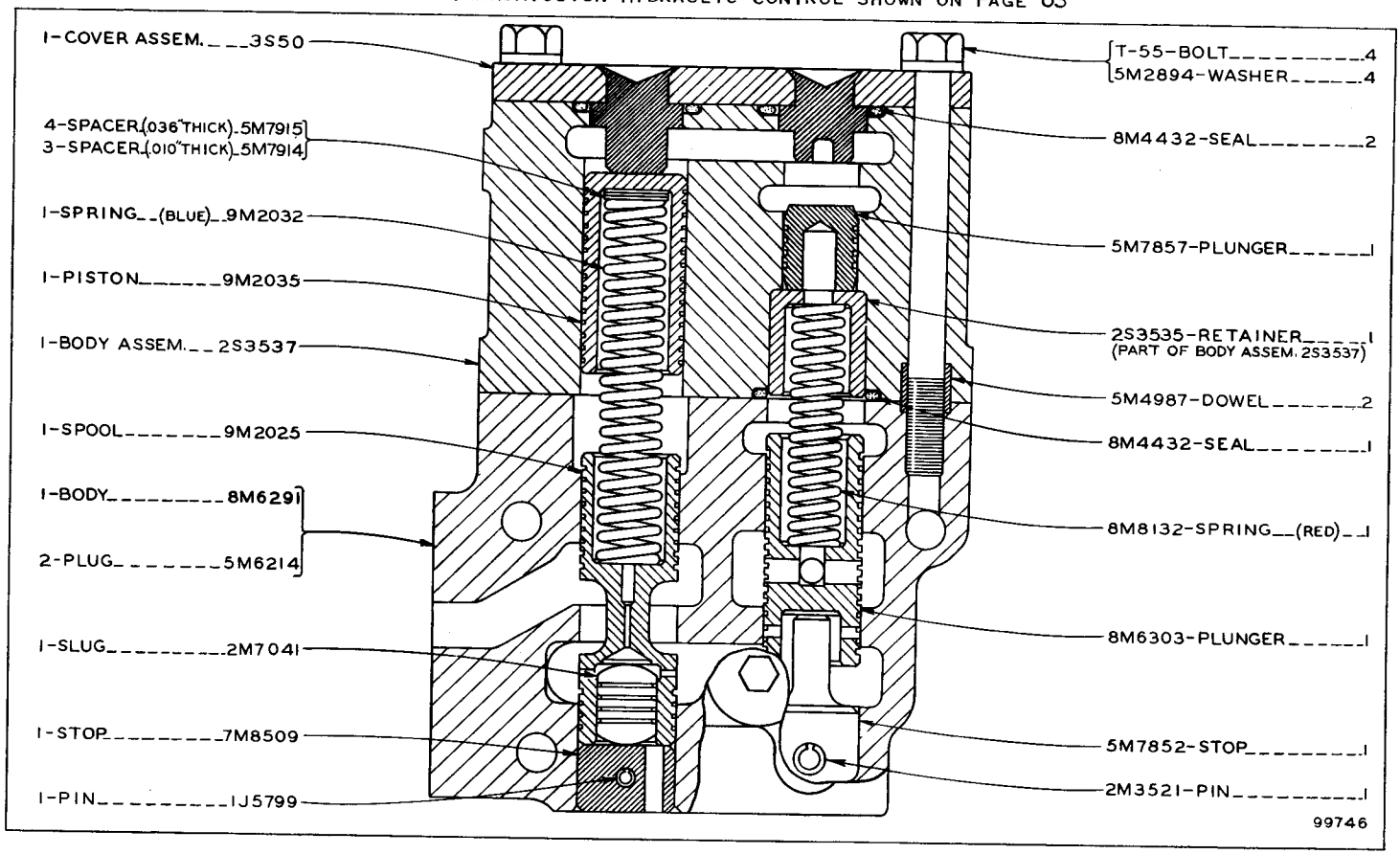

ONLY "CATERPILLAR" PARTS GIVE "CATERPILLAR" PERFORMANCE

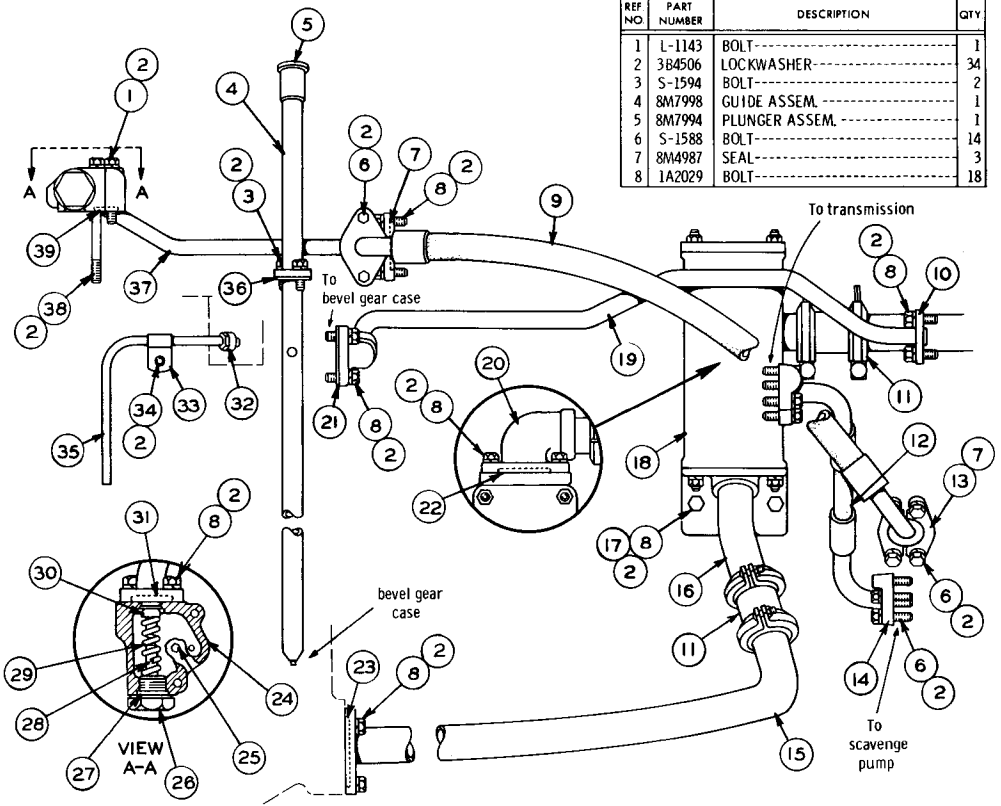

REF. NO.	PART NUMBER	DESCRIPTION	QTY
1	L-1143	BOLT	1
2	3B4506	LOCKWASHER	34
3	S-1594	BOLT	2
4	8M7998	GUIDE ASSEM.	1
5	8M7994	PLUNGER ASSEM.	1
6	S-1588	BOLT	14
7	8M4987	SEAL	3
8	1A2029	BOLT	18

REF. NO.	PART NUMBER	DESCRIPTION	QTY
9	5S763	HOSE ASSEM. -(29.38" long overall)	1
10	9M9037	FLANGE	1
	1S4	SEAL	1
11	4S8417	JOINT ASSEM.	2
12	5S786	HOSE ASSEM. -(10.30" long overall)	1
13	1H3305	FLANGE	2
14	2K190	FLANGE	4
	8M4988	SEAL	2
15	7S9289	TUBE ASSEM.	1
16	8S4381	TUBE ASSEM.	1
17	4B4278	WASHER	3
18	9M8669	SCREEN GROUP (See Separate Illustration)	1
19	9M2968	TUBE ASSEM.	1
20	7S9138	TUBE ASSEM.	1
21	1F3133	GASKET	1
22	8M4436	SEAL	1
23	8M4390	SEAL	1
24	2S8373	VALVE GROUP	1
25	5M6214	PLUG	1
26	9M135	PLUG	1
27	8M4988	SEAL	1
28	7B472	PIN	1
29	L-1142	SPRING	1
30	3S8236	VALVE (Parts of 2S8373 Valve Group)	1
31	8M4445	SEAL	1
32	3B9004	FITTING	2
	8F8997	NUT (1 in each 3B9004 Fitting)	2
33	8B6127	CLIP	2
34	T-102	BOLT	2
35	9M3019	TUBE (Right Hand)	1
	9M3020	TUBE (Left Hand)	1
36	7M1588	GASKET	1
37	3S2053	TUBE ASSEM.	1
38	5B9603	BOLT	1
39	8M4448	SEAL	1

TRANSMISSION AND STEERING CLUTCH LUBRICATION SYSTEM--SIDE VIEW

9M8669 MAGNETIC SCREEN PARTS ARE SHOWN ON PAGE 68

TRANSMISSION AND STEERING CLUTCH LUBRICATION SYSTEM--SIDE VIEW
3S1741 FILTER AND 9M222 PUMP PARTS ARE SHOWN ON PAGES 68 AND 69

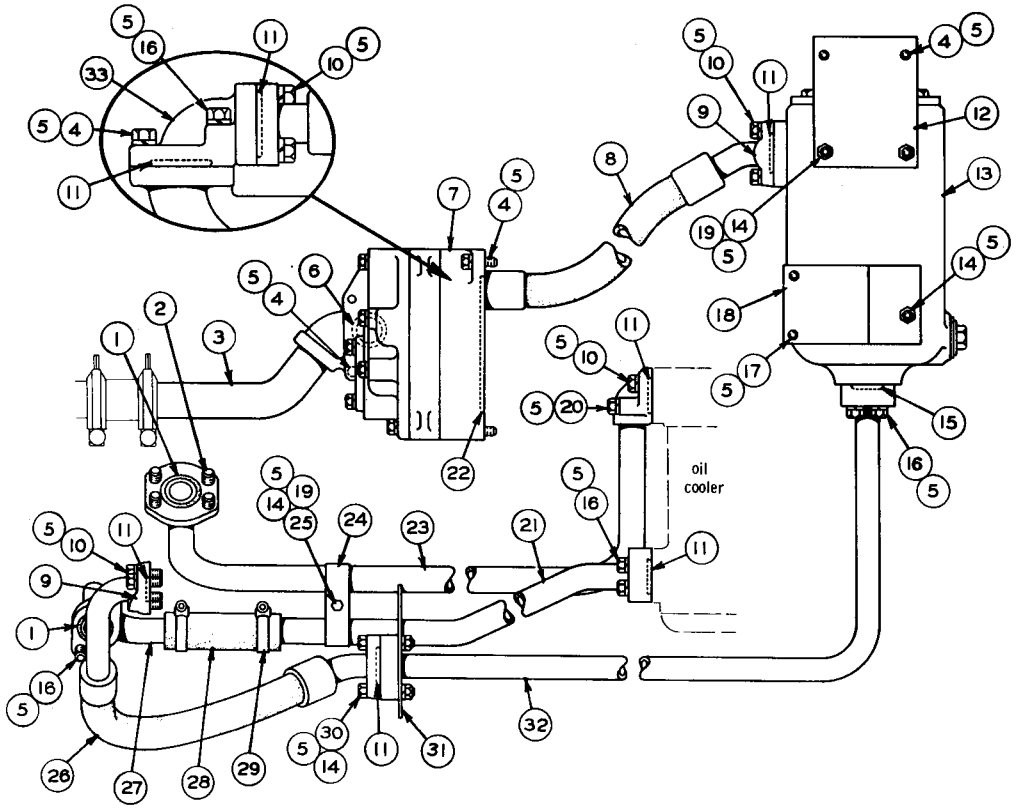

REF. NO.	PART NUMBER	DESCRIPTION	QTY.
1	8M4986	SEAL	2
2	4F8965	BOLT	4
	3B4507	LOCKWASHER	4
3	7S9177	TUBE ASSEM.	1
4	1A2029	BOLT	7
5	3B4506	LOCKWASHER	41
6	8M4436	SEAL	1
7	9M222	PUMP GROUP (See Separate Illustration)	1
8	7S1645	HOSE ASSEM. -(32.50" long overall)	1
9	1H3305	FLANGE	4
10	S-1588	BOLT	12
11	8M4987	SEAL	7
12	7S1636	PLATE	1
13	3S1741	FILTER GROUP (See Separate Illustration)	1
14	1D4717	NUT	7
15	8M5249	SEAL	1
16	S-1571	BOLT	11
17	S-1619	BOLT	2
18	8S2957	BRACKET ASSEM.	1
19	4B4278	WASHER	4
20	S-1590	BOLT	2
21	7S1650	TUBE ASSEM.	1
22	8F8882	SEAL	1
23	7S1654	TUBE ASSEM.	1
24	1H5948	CLAMP	2
25	S-1594	BOLT	1
26	5S803	HOSE ASSEM. -(18.66" long overall)	1
27	7S1857	TUBE ASSEM.	1
28	8M2126	HOSE	1
29	9M7958	CLAMP	2
30	L-2070	BOLT	2
31	9M3832	PLATE	1
32	7S1646	TUBE ASSEM.	1
33	9M5962	ELBOW	1

101650

ONLY "CATERPILLAR" PARTS GIVE "CATERPILLAR" PERFORMANCE

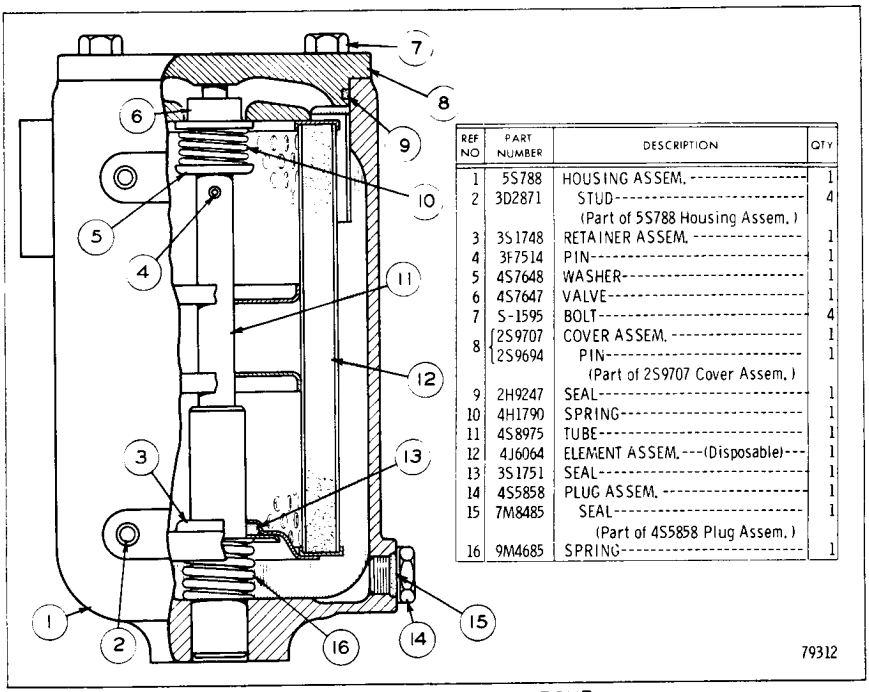

REF NO	PART NUMBER	DESCRIPTION	QTY
1	5S788	HOUSING ASSEM.	1
2	3D2871	STUD (Part of 5S788 Housing Assem.)	4
3	3S1748	RETAINER ASSEM.	1
4	3F7514	PIN	1
5	4S7648	WASHER	1
6	4S7647	VALVE	1
7	S-1595	BOLT	4
8	2S9707	COVER ASSEM.	1
	2S9694	PIN (Part of 2S9707 Cover Assem.)	1
9	2H9247	SEAL	1
10	4H1790	SPRING	1
11	4S8975	TUBE	1
12	4J6064	ELEMENT ASSEM. (Disposable)	1
13	3S1751	SEAL	1
14	4S5858	PLUG ASSEM.	1
15	7M8485	SEAL (Part of 4S5858 Plug Assem.)	1
16	9M4685	SPRING	1

3S1741 OIL FILTER GROUP

PART OF TRANSMISSION AND STEERING CLUTCH LUBRICATION SYSTEM

SHOWN ON PAGE 67

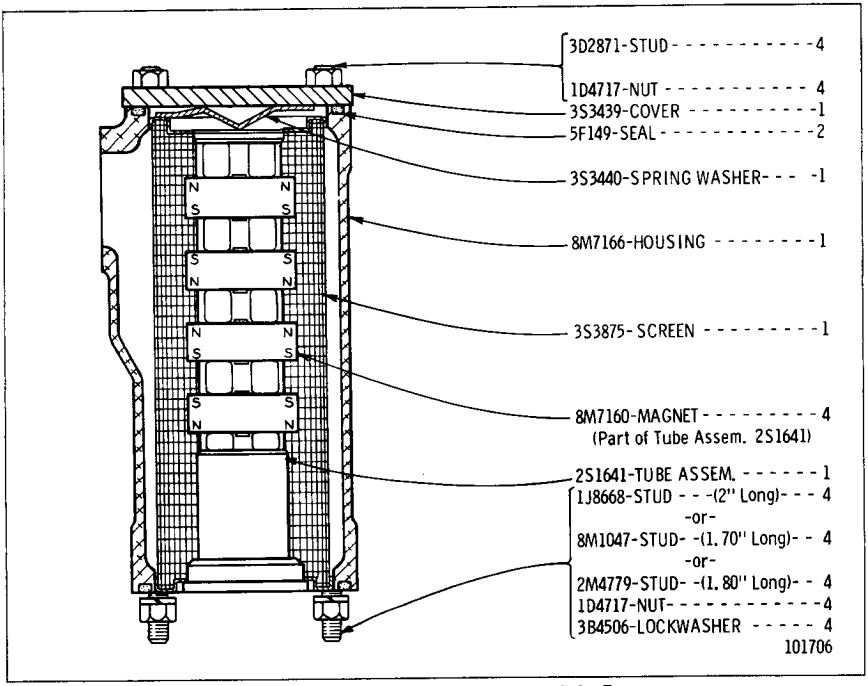

9M8669 MAGNETIC SCREEN GROUP

PART OF TRANSMISSION AND STEERING CLUTCH LUBRICATION SYSTEM

SHOWN ON PAGE 66

ALWAYS GIVE SERIAL NUMBER WHEN ORDERING PARTS

9M222 OIL PUMP GROUP

PART OF TRANSMISSION AND STEERING CLUTCH LUBRICATION SYSTEM SHOWN ON PAGE 67

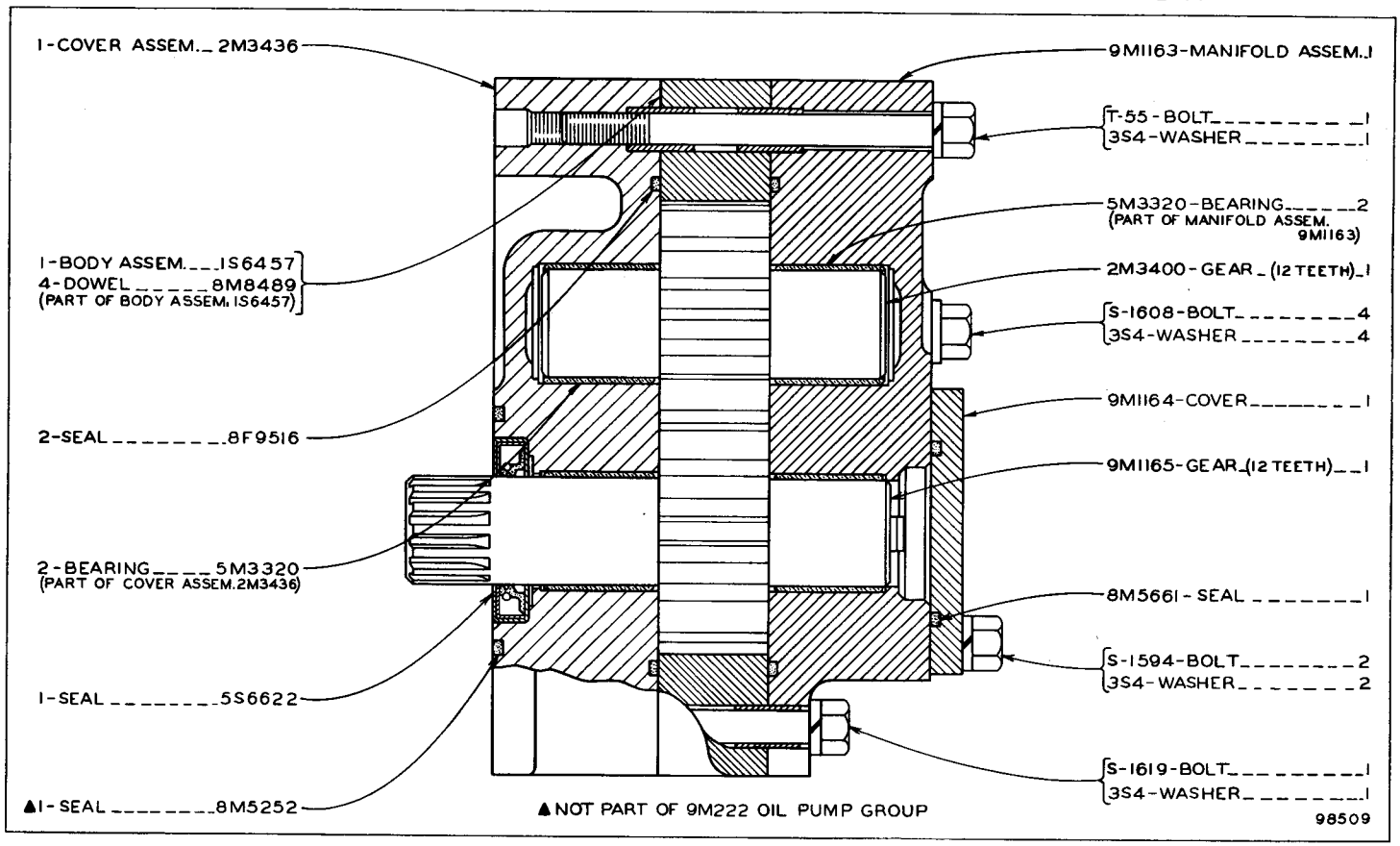

ONLY "CATERPILLAR" PARTS GIVE "CATERPILLAR" PERFORMANCE

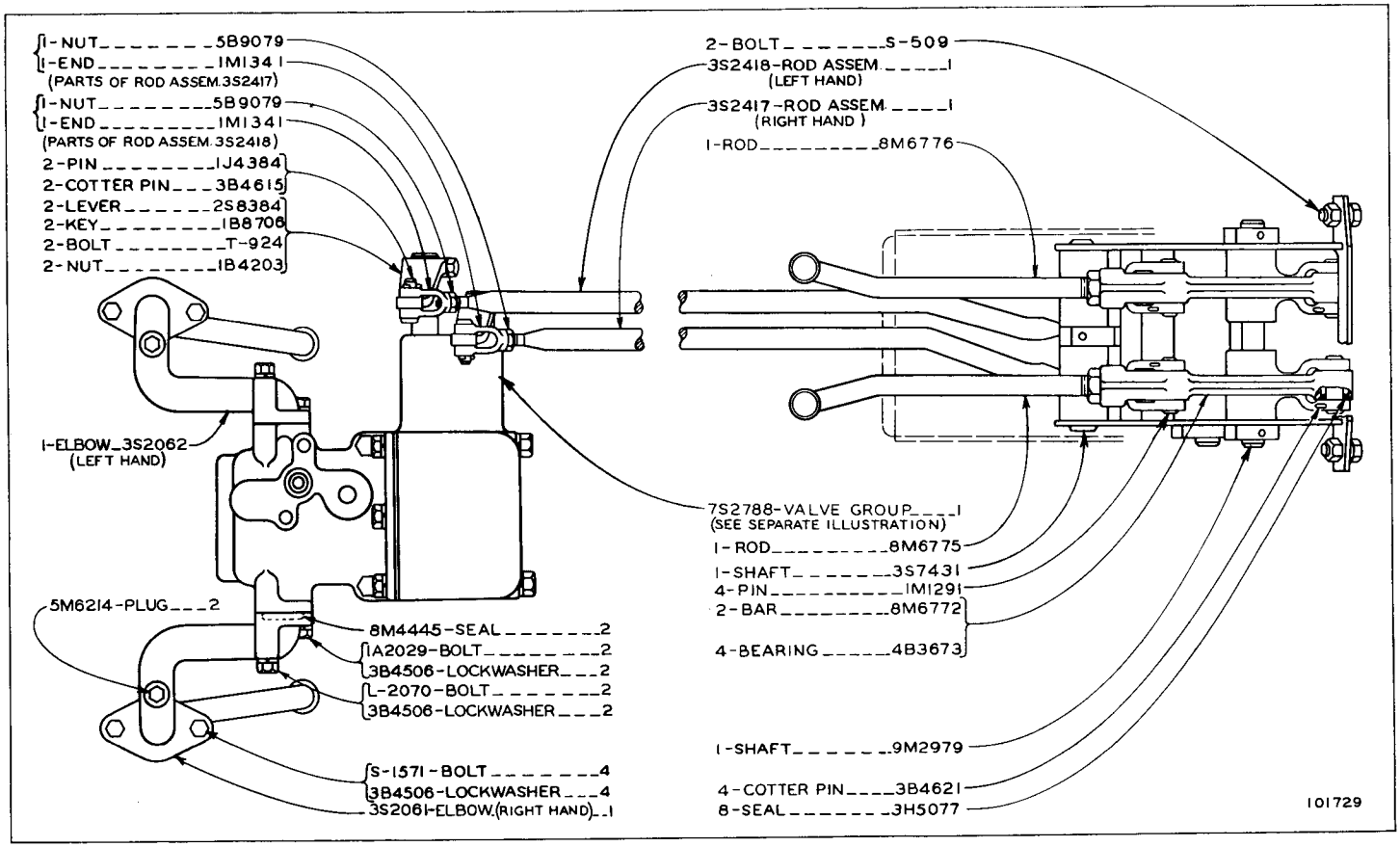

STEERING CLUTCH HYDRAULIC CONTROL--TOP VIEW
7S2788 VALVE PARTS ARE SHOWN ON PAGE 72

STEERING CLUTCH HYDRAULIC CONTROL
AS VIEWED FROM RIGHT HAND SIDE OF MACHINE

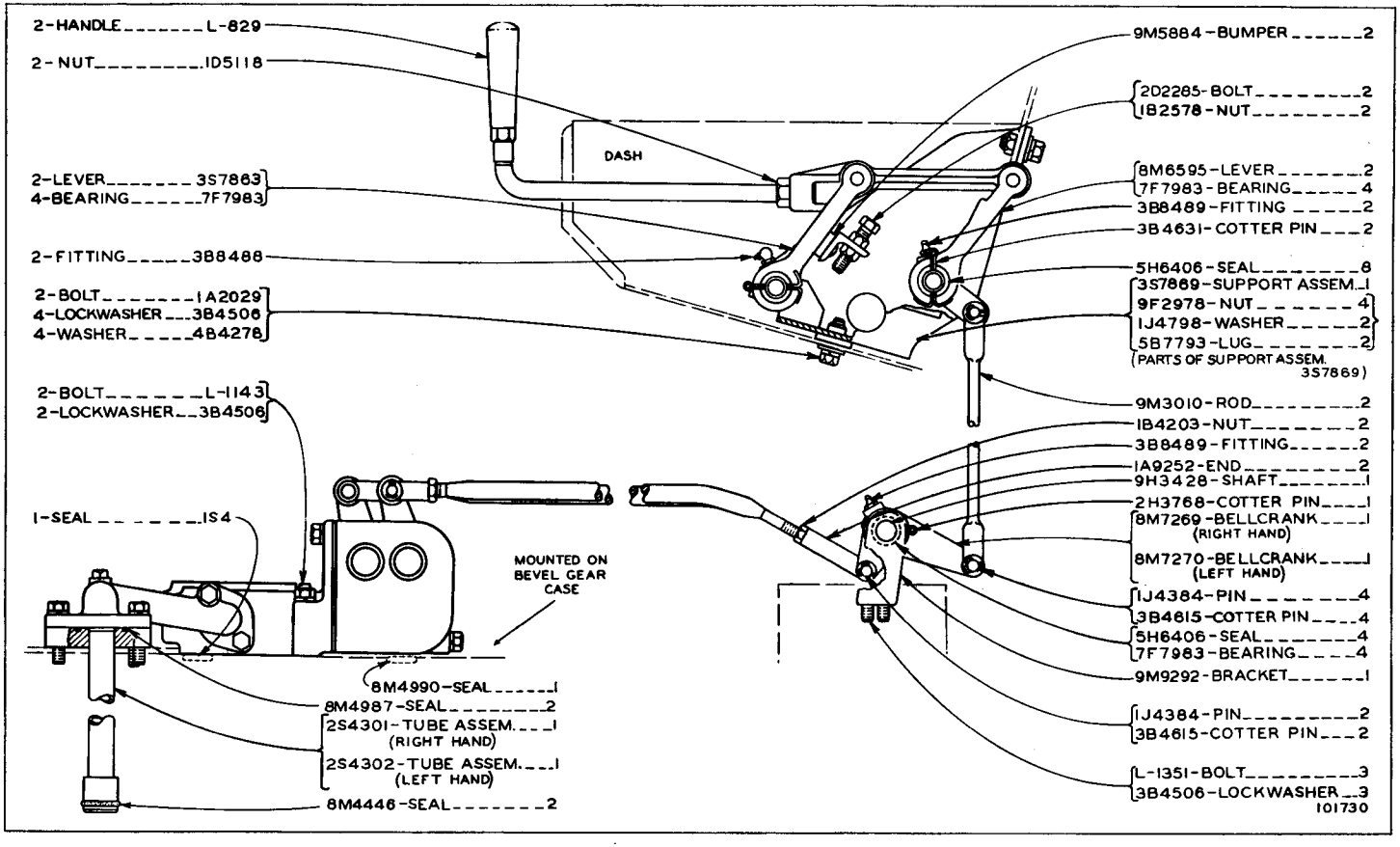

ONLY "CATERPILLAR" PARTS GIVE "CATERPILLAR" PERFORMANCE

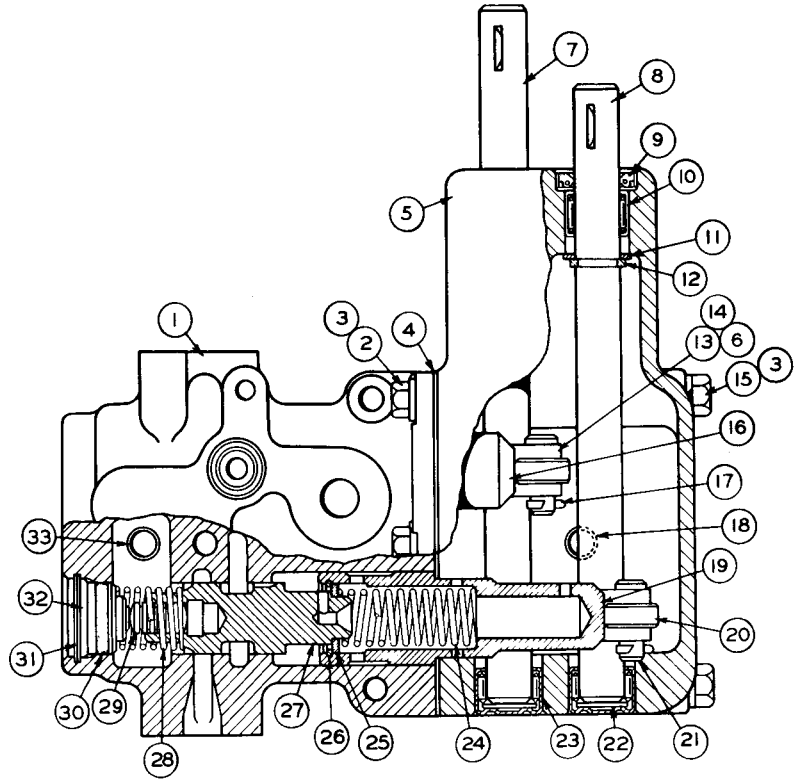

REF. NO.	PART NUMBER	DESCRIPTION	QTY
1	5S5779	HOUSING	1
2	S-1594	BOLT	3
3	3B4506	LOCKWASHER	5
4	2S8414	GASKET	1
5	2S8307	HOUSING	1
6	1B8706	KEY	2
7	2S8380	SHAFT	1
8	2S8395	SHAFT	1
9	9H223	SEAL	2
10	7F7983	BEARING	2
11	3B9363	WASHER	2
12	3S7005	RING	2
13	2S8396	LEVER	2
14	S-1588	BOLT	2
15	1A5183	BOLT	2
16	5S5778	PLUNGER-------(Left Hand)	1
17	3B4615	COTTER PIN	2
18	2S8413	STAND PIPE	1
19	5S5777	PLUNGER-------(Right Hand)	1
20	2S8411	ROLLER	2
21	1J4384	PIN	2
22	5S6876	SPACER	2
23	3J7584	BEARING	2
24	2S8410	SPRING	2
25	2S8415	WASHER	2
26	3K6837	RING	2
27	2S8397	VALVE	2
28	2S8398	SPRING	2
29	5M2504	SLUG	2
30	8M4445	SEAL	2
31	8H1037	RING	2
32	4S6323	PLUG	2
33	2S8412	STAND PIPE	1

120269

7S2788 STEERING CLUTCH HYDRAULIC VALVE GROUP

PART OF STEERING CLUTCH HYDRAULIC CONTROL SHOWN ON PAGE 70

ALWAYS GIVE SERIAL NUMBER WHEN ORDERING PARTS

STEERING CLUTCH

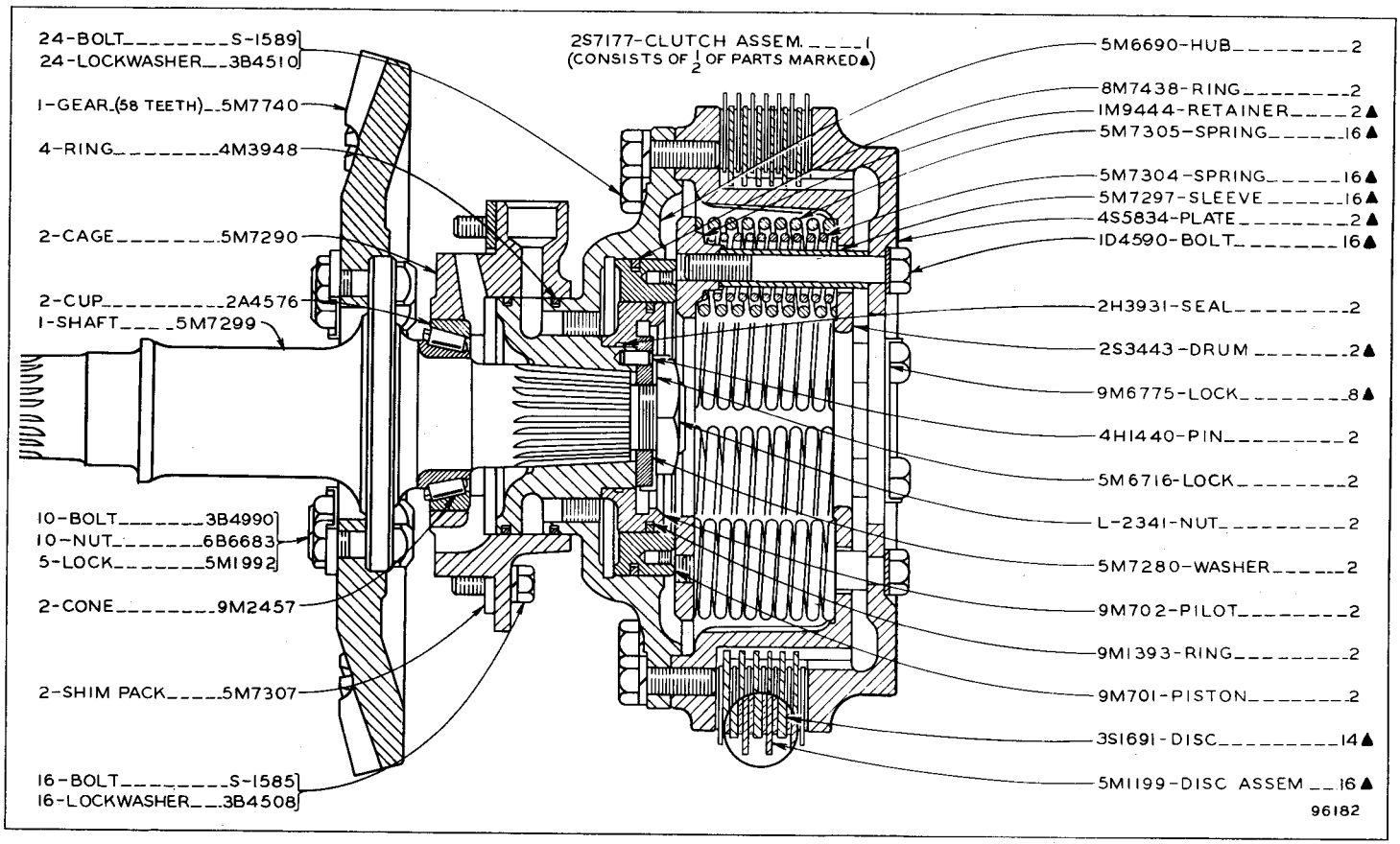

ONLY "CATERPILLAR" PARTS GIVE "CATERPILLAR" PERFORMANCE

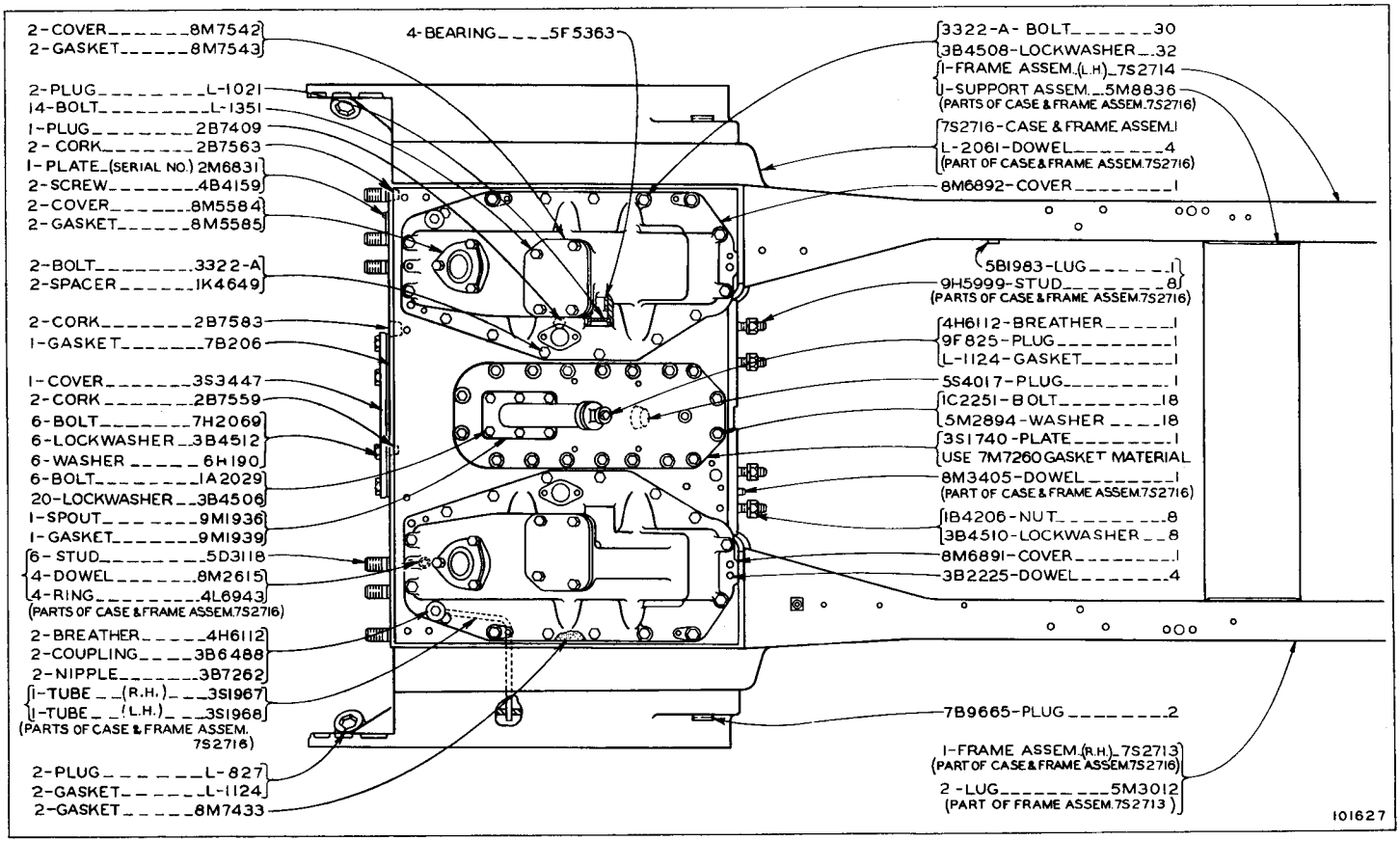

BEVEL GEAR CASE AND COVERS

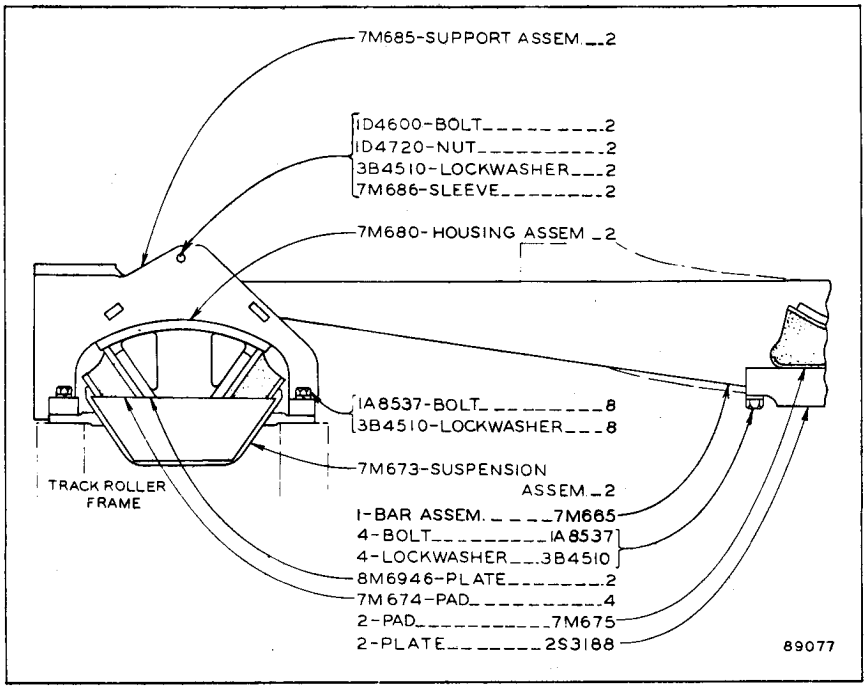

EQUALIZER BAR AND SUSPENSION

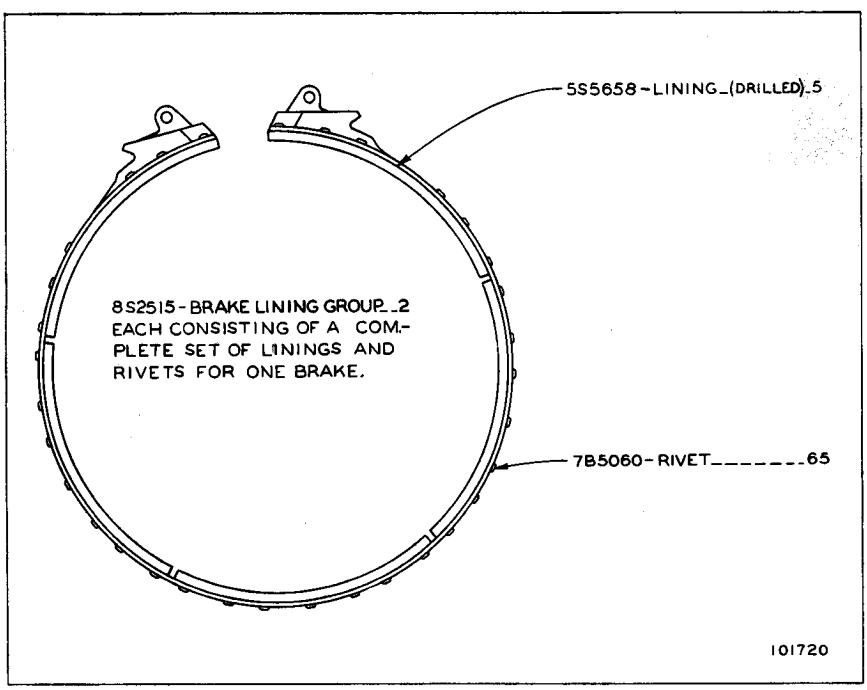

9M8068 BRAKE BAND ASSEMBLY--2 REQUIRED
PART OF BRAKES SHOWN ON PAGE 76

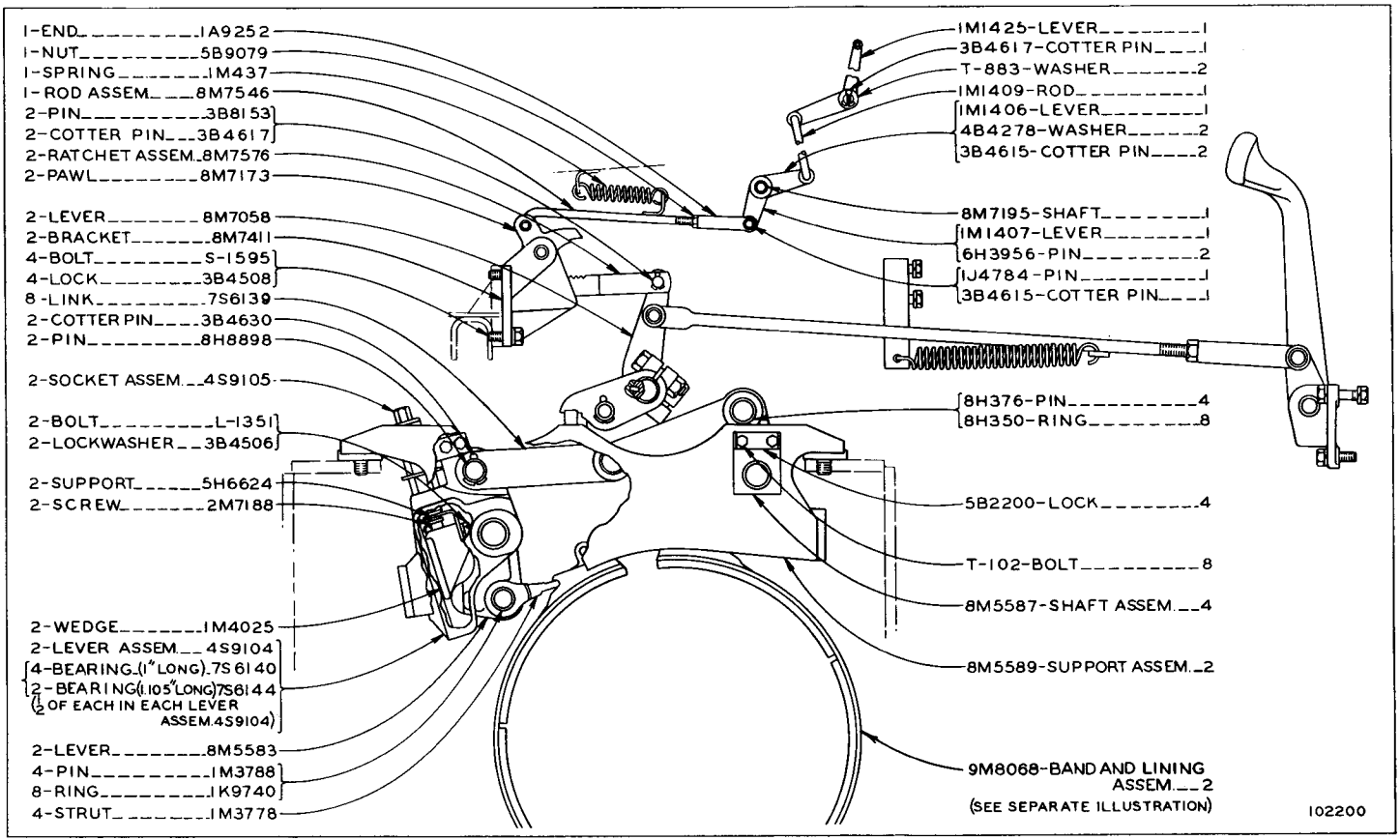

BRAKES--AS VIEWED FROM RIGHT HAND SIDE OF MACHINE
9M8068 BRAKE BAND PARTS ARE SHOWN ON PAGE 75

BRAKES--Top View

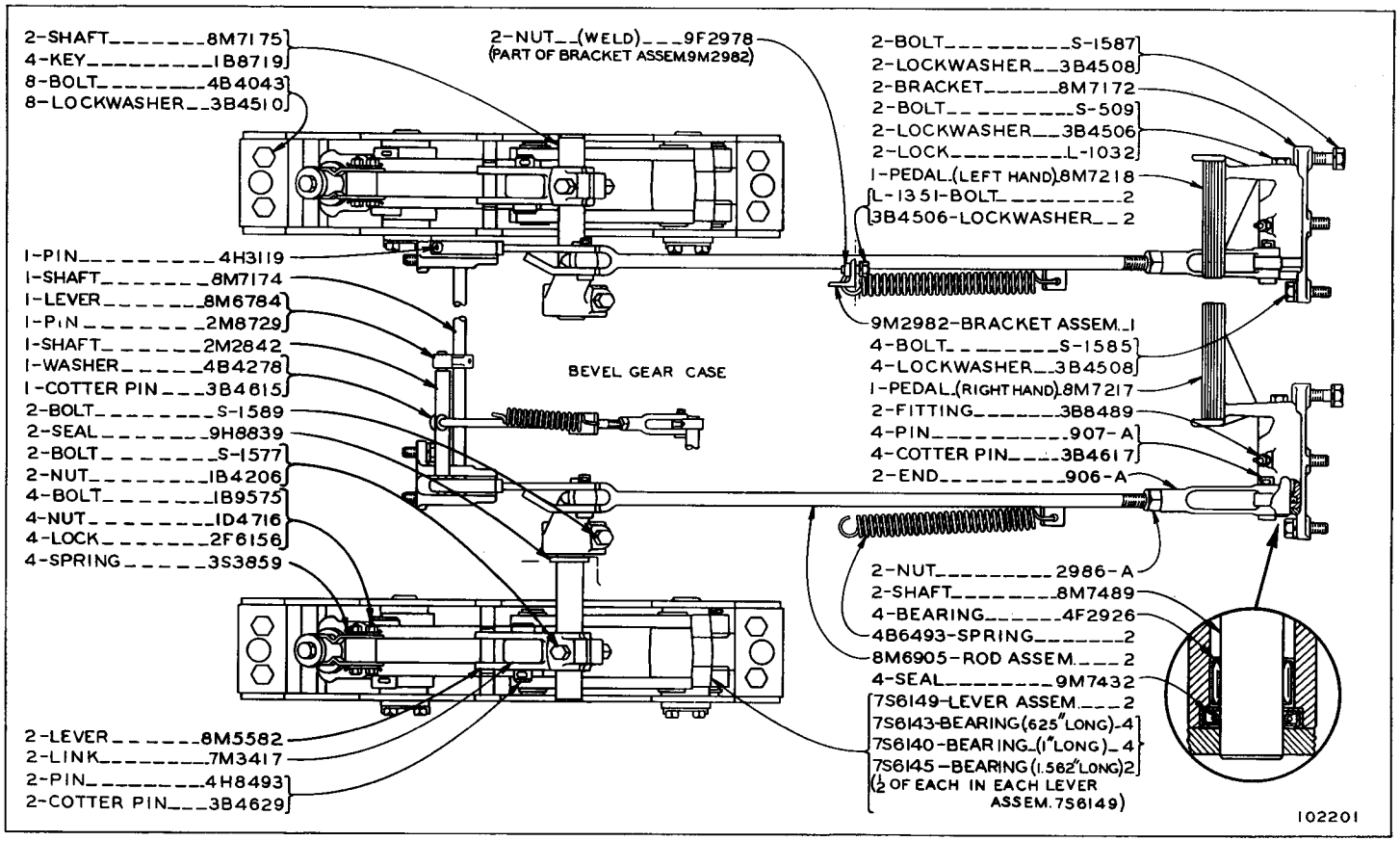

ONLY "CATERPILLAR" PARTS GIVE "CATERPILLAR" PERFORMANCE

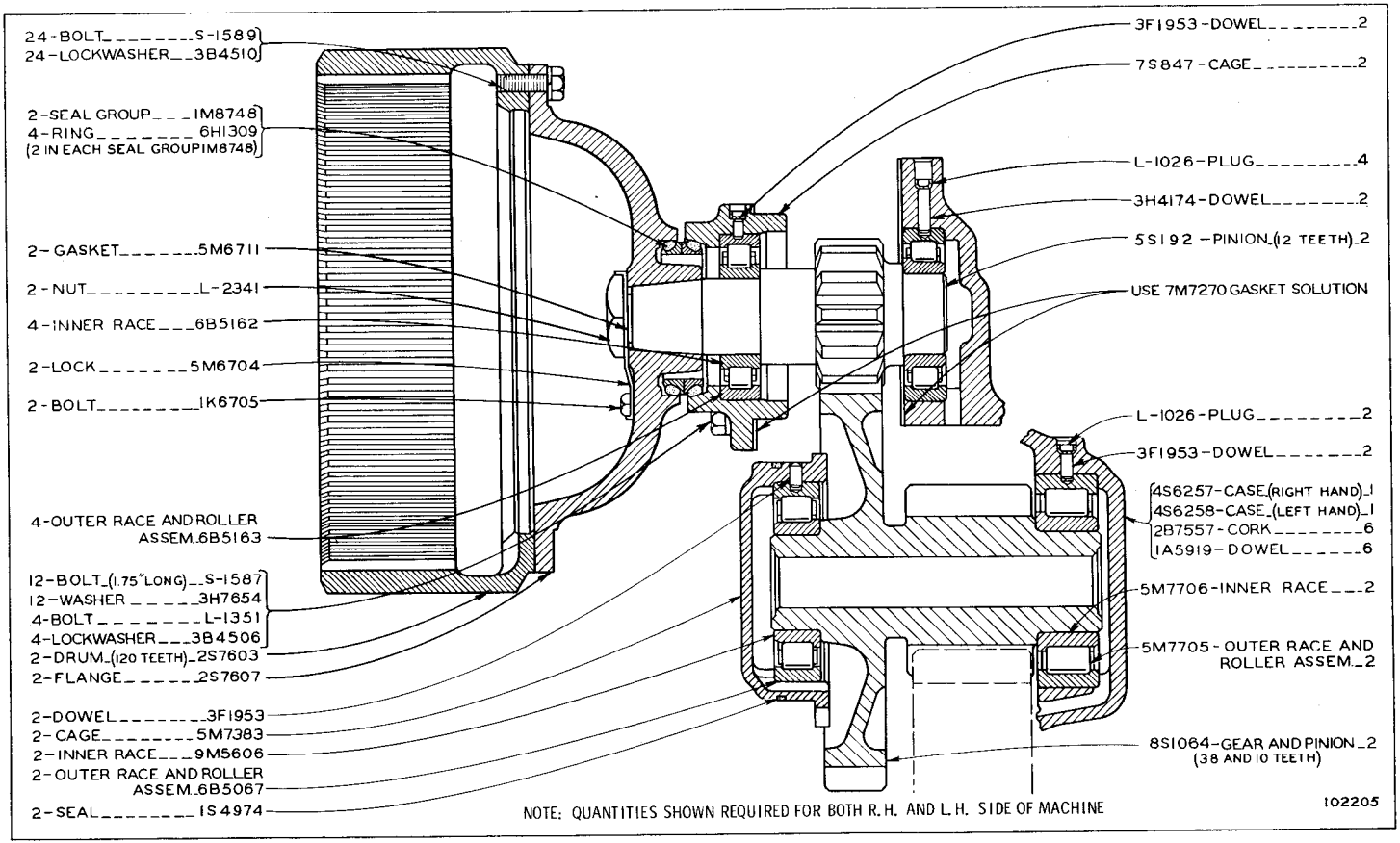

FINAL DRIVE--UPPER HALF

REFER ALSO TO PAGE 122 FOR SPECIAL PARTS

FINAL DRIVE--LOWER HALF

REFER ALSO TO PAGE 122 FOR SPECIAL PARTS

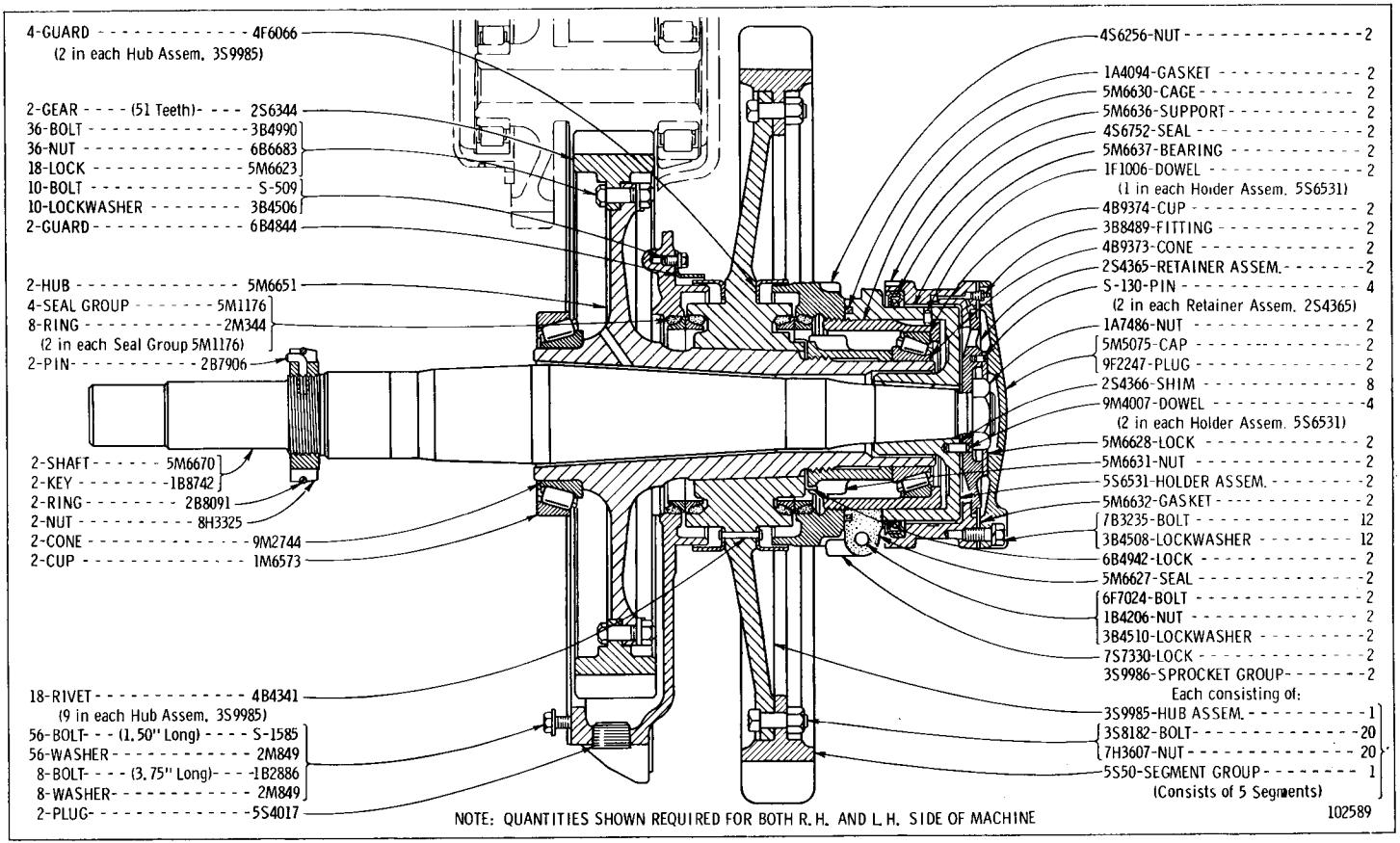

ONLY "CATERPILLAR" PARTS GIVE "CATERPILLAR" PERFORMANCE

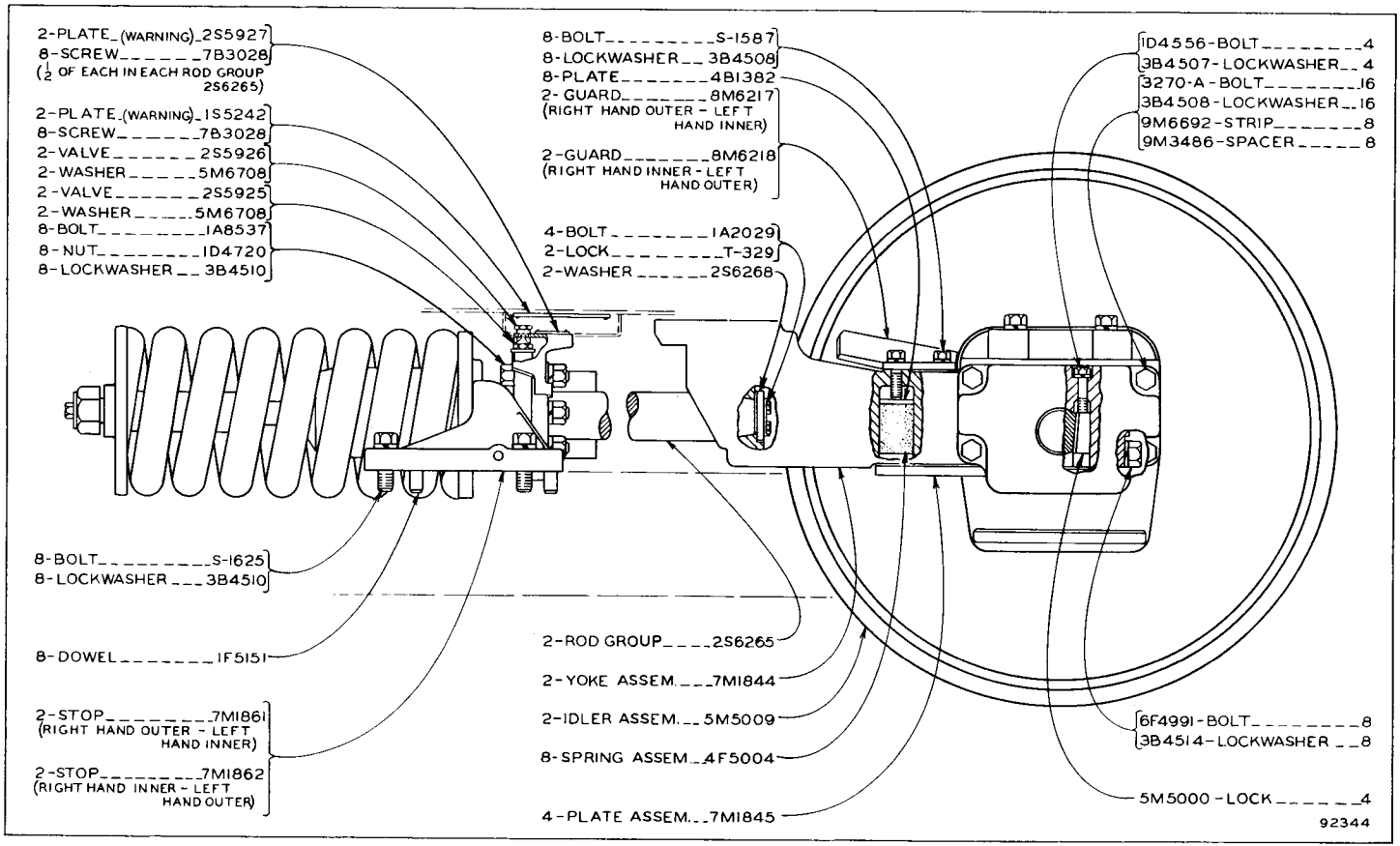

FRONT IDLER--PART 1

FRONT IDLER--PART 2

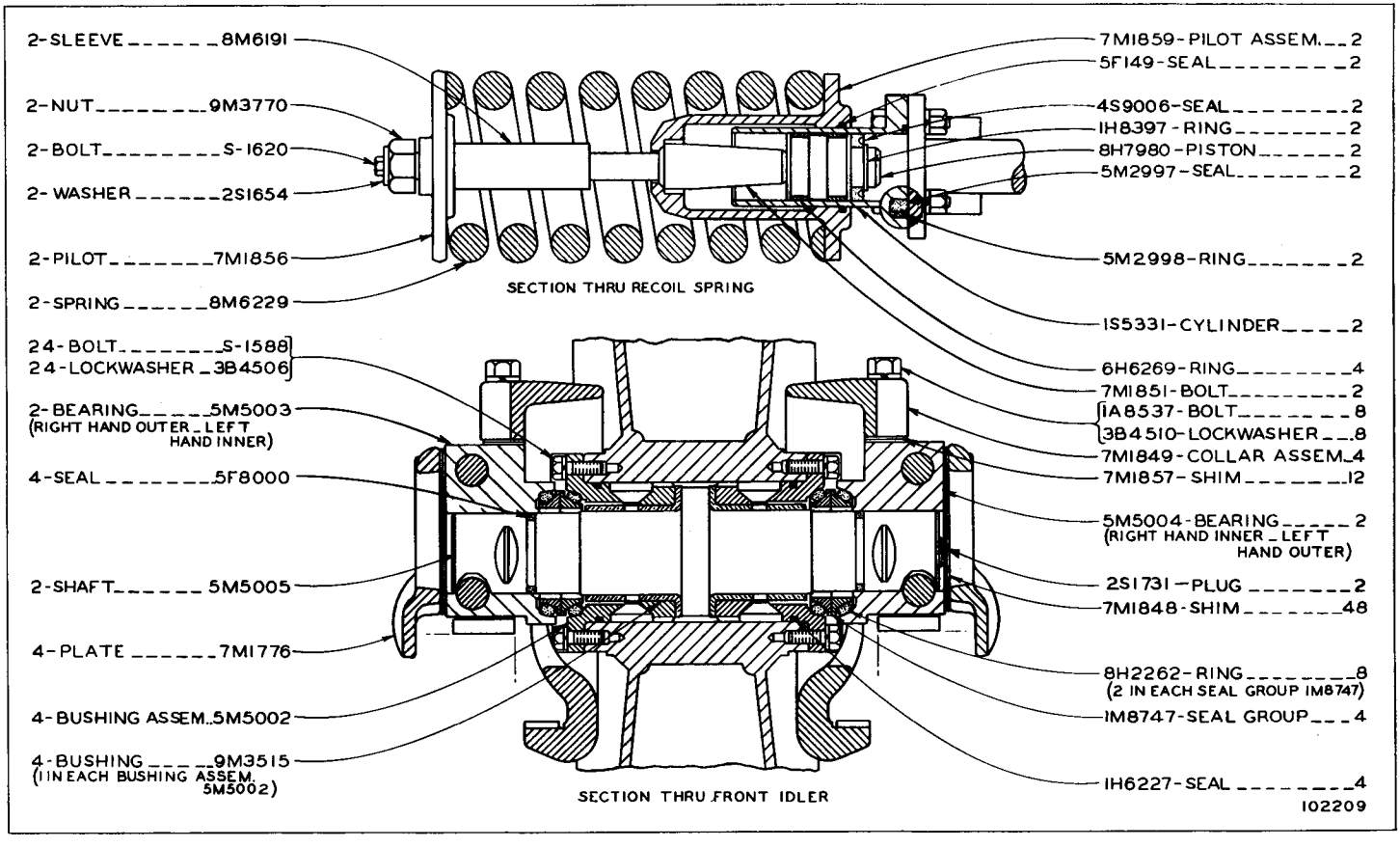

ONLY "CATERPILLAR" PARTS GIVE "CATERPILLAR" PERFORMANCE

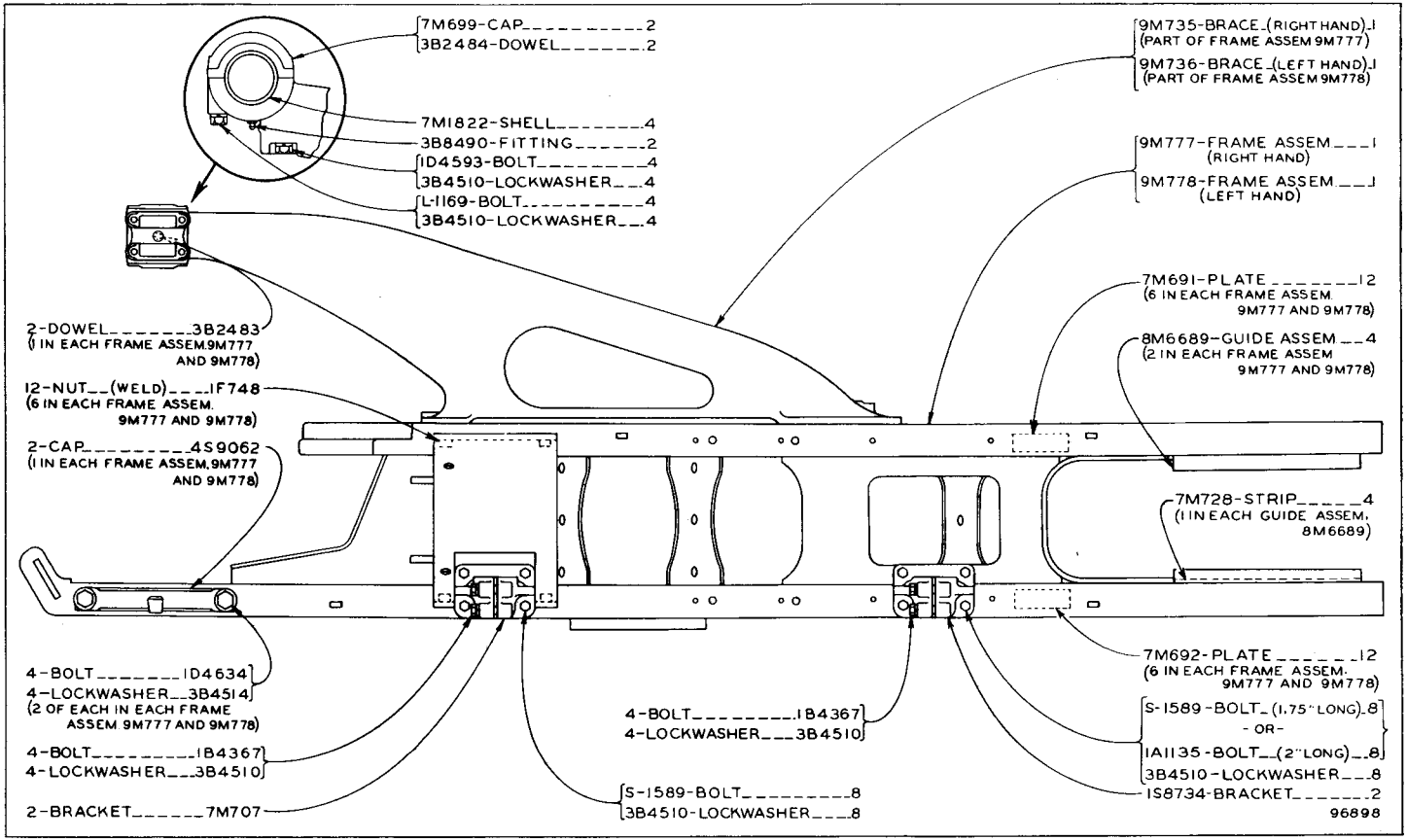

TRACK ROLLER FRAME

NOTE: QUANTITIES SHOWN ARE THOSE REQUIRED FOR BOTH R.H. AND L.H. SIDES

REFER ALSO TO PAGE 120 FOR SPECIAL PARTS

TRACK ROLLER FRAME GUARD

NOTE: QUANTITIES SHOWN ARE THOSE REQUIRED FOR BOTH R.H. AND L.H. SIDES

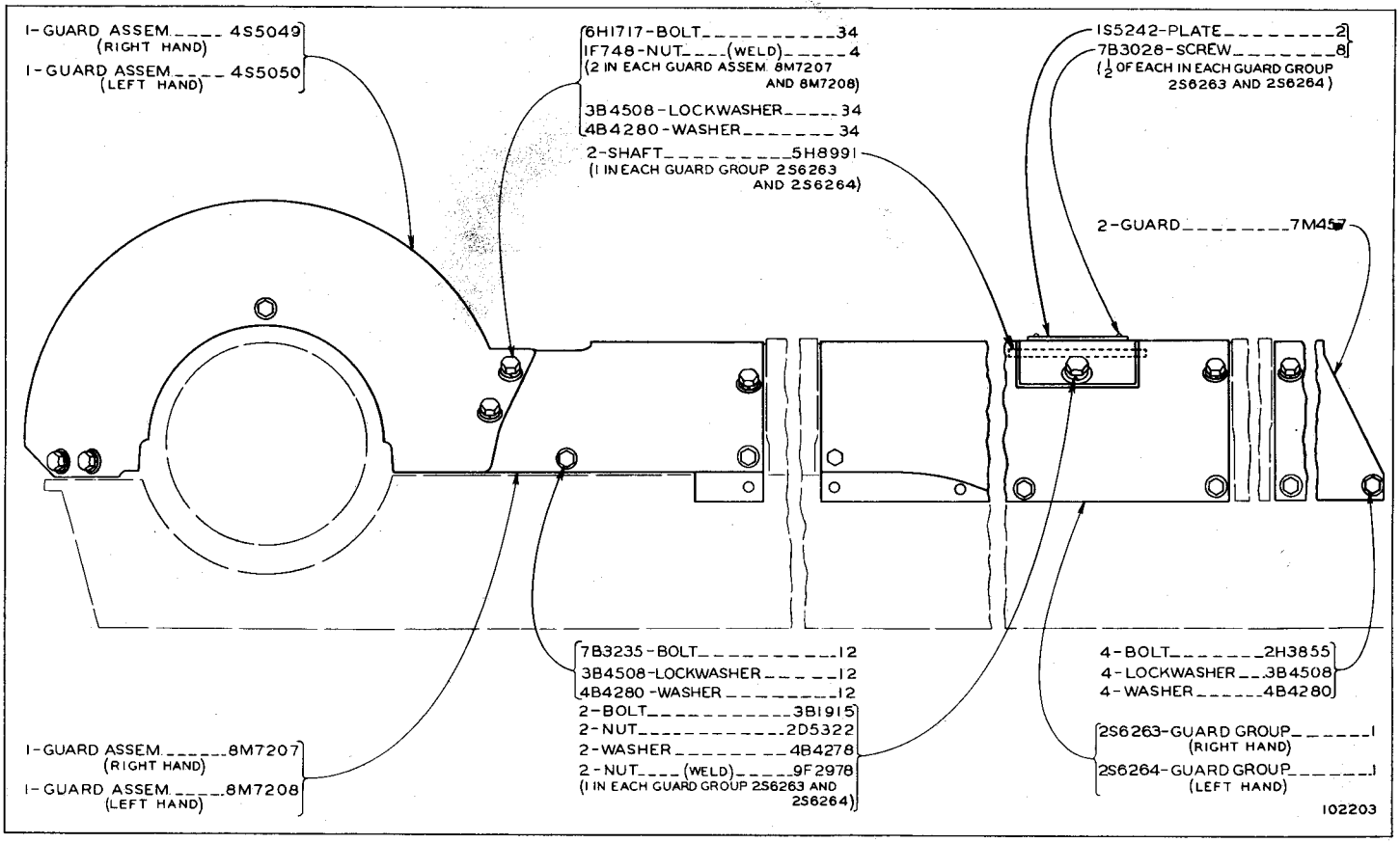

ONLY "CATERPILLAR" PARTS GIVE "CATERPILLAR" PERFORMANCE

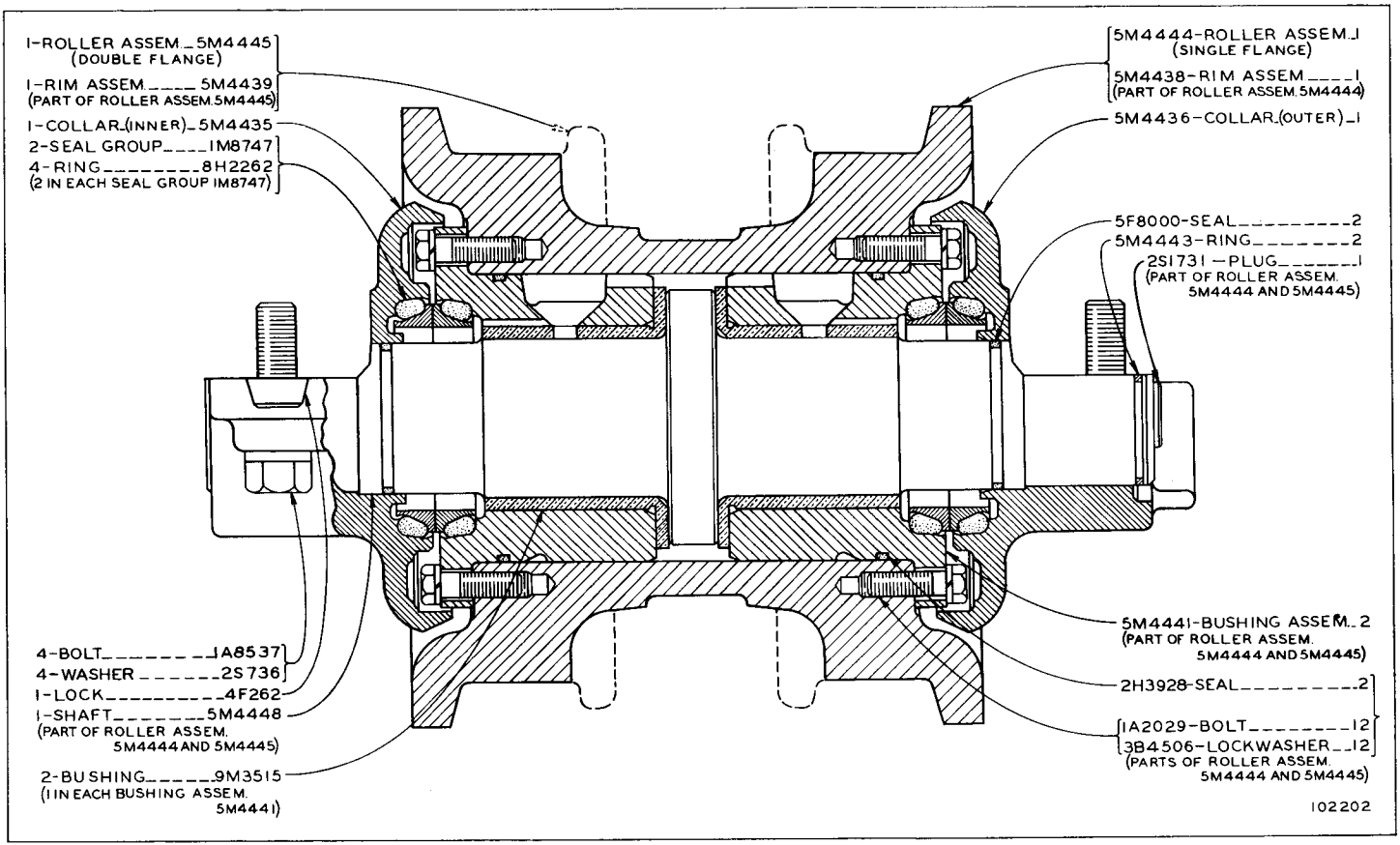

5M4447 TRACK ROLLER GROUP--SINGLE FLANGE--6 GROUPS REQUIRED
5M4446 TRACK ROLLER GROUP--DOUBLE FLANGE--6 GROUPS REQUIRED

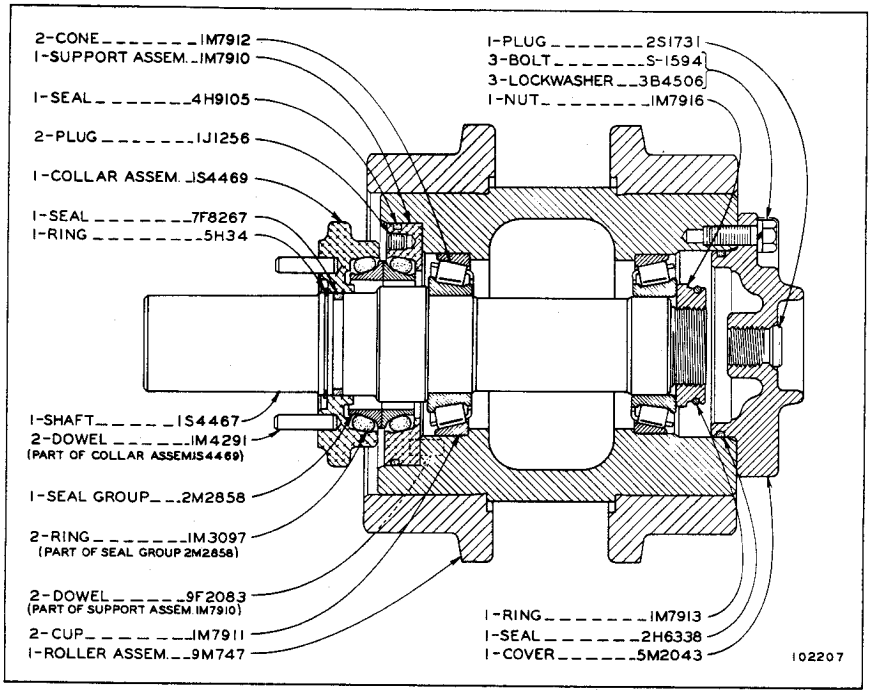

5M7318 TRACK CARRIER ROLLER GROUP--4 GROUPS REQUIRED

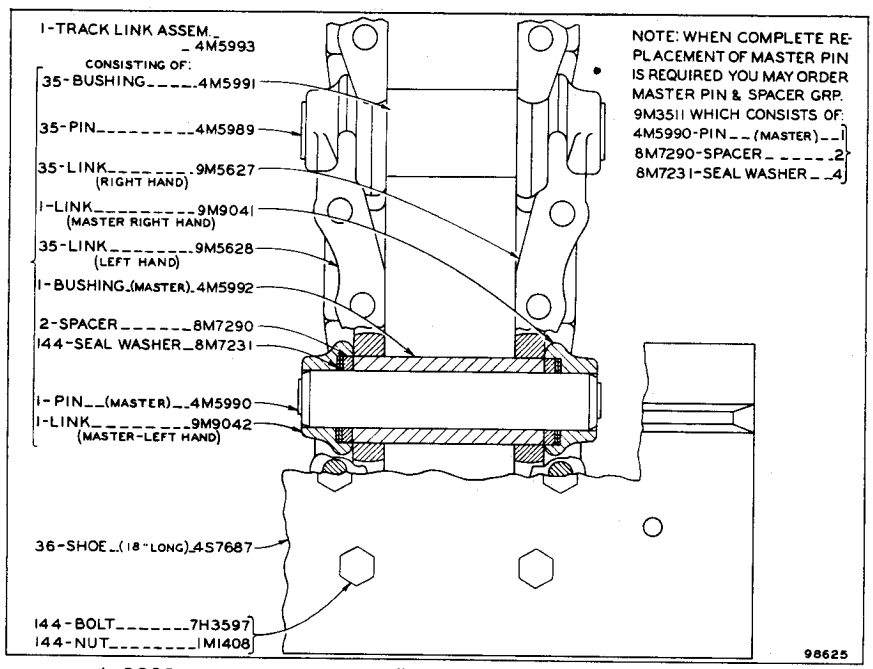

4S8008 TRACK GROUP--18" GROUSER SHOE--2 REQUIRED

NOTE: 9M3510 TRACK PIN & BUSHING GROUP, CONSISTING OF A COMPLETE SET OF PINS & BUSHINGS FOR ONE TRACK, IS AVAILABLE

REFER ALSO TO PAGE 121 FOR SPECIAL PARTS

ONLY "CATERPILLAR" PARTS GIVE "CATERPILLAR" PERFORMANCE

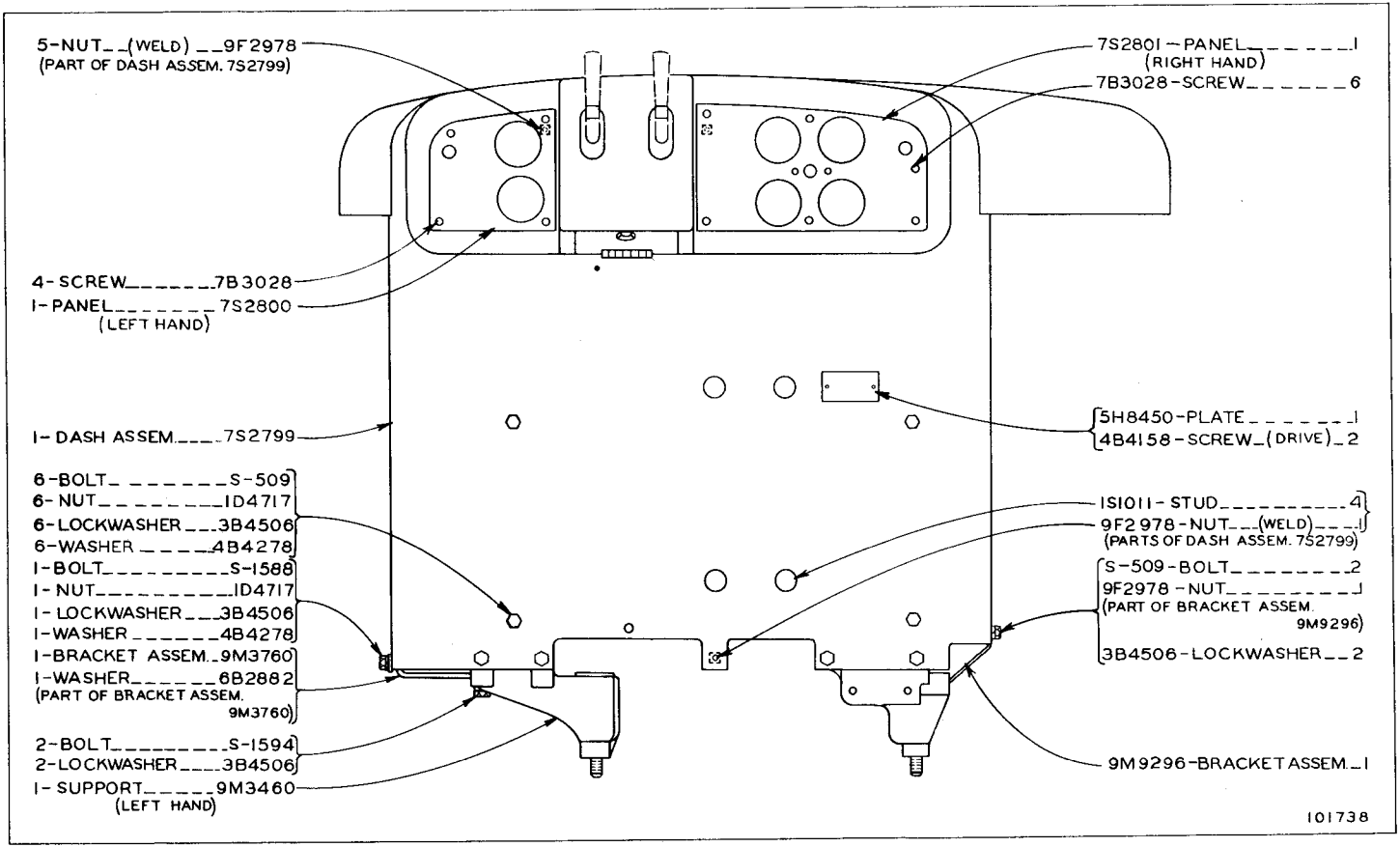

HOOD AND DASH--PART 1

REFER ALSO TO PAGE 113 FOR SPECIAL PARTS

HOOD AND DASH--PART 2

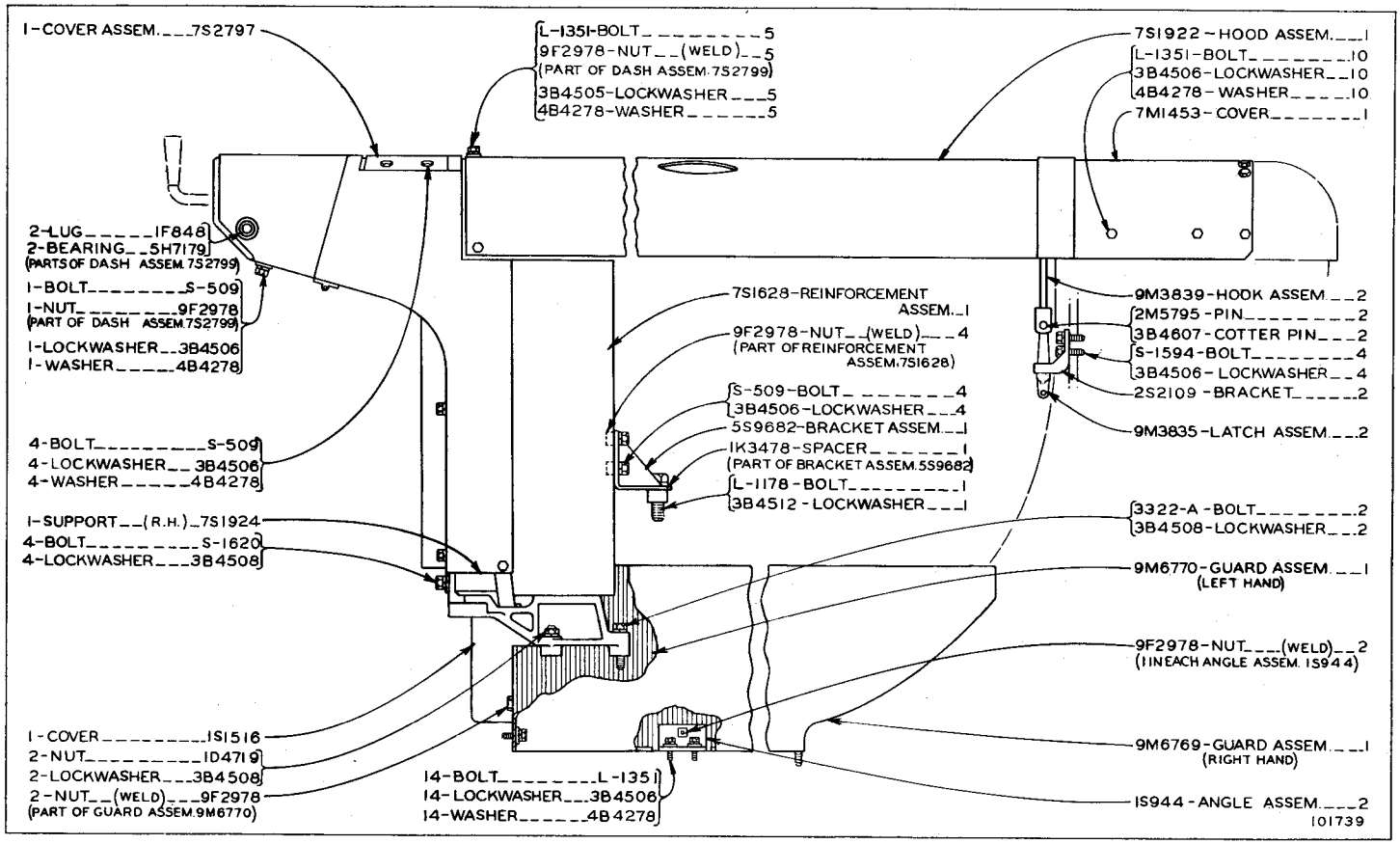

ONLY "CATERPILLAR" PARTS GIVE "CATERPILLAR" PERFORMANCE

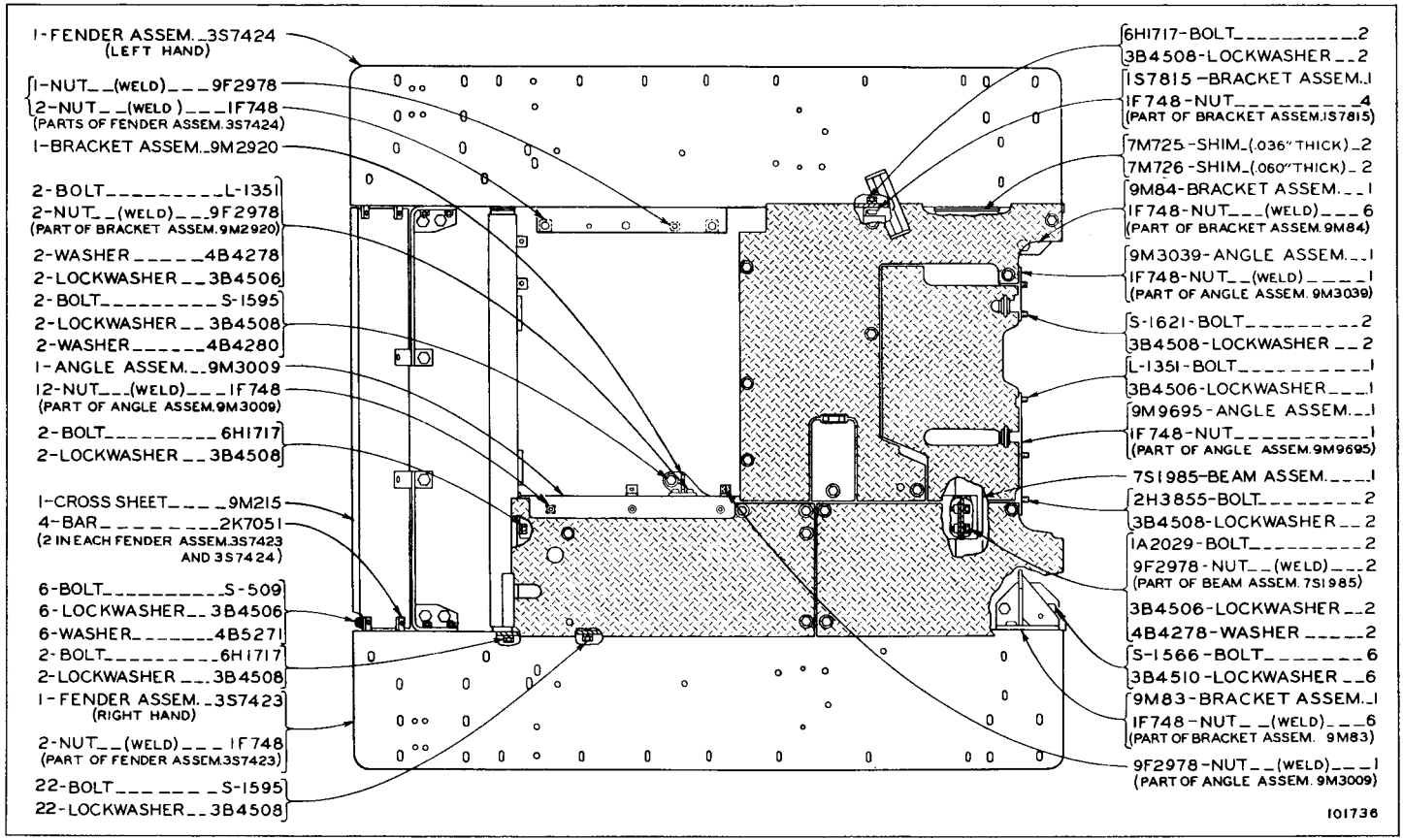

FENDERS--PART 1

FENDERS--PART 2

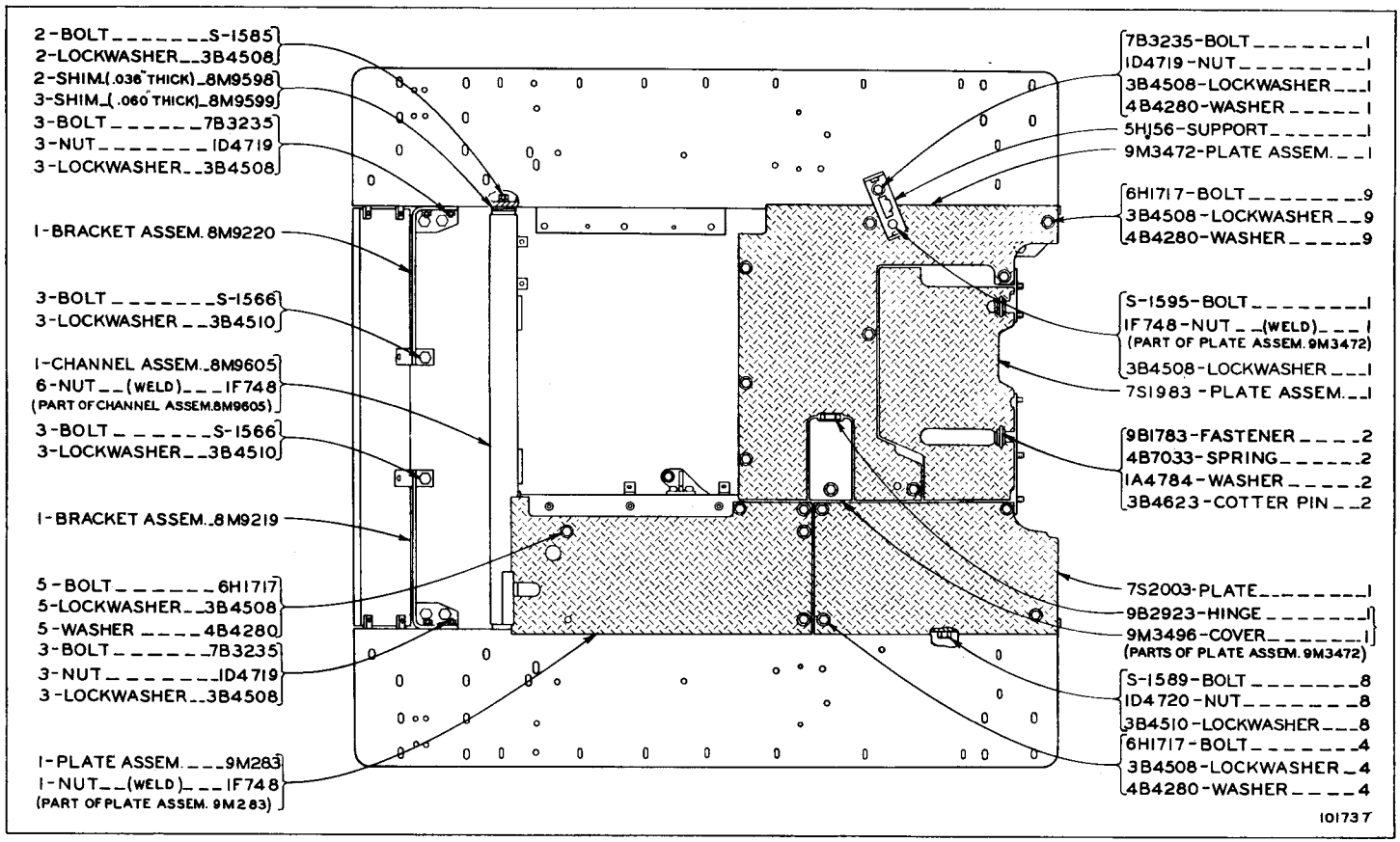

ONLY "CATERPILLAR" PARTS GIVE "CATERPILLAR" PERFORMANCE

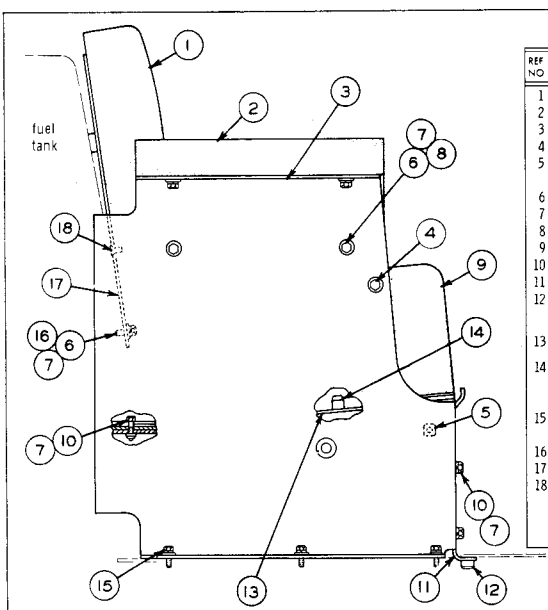

REF NO	PART NUMBER	DESCRIPTION	QTY
1	1S7171	CUSHION ASSEM.	1
2	8H9167	CUSHION ASSEM.	2
3	7S5648	SEAT ASSEM.	1
4	2B3191	PIN	1
5	9F2978	NUT (Weld)	20
		(Parts of 7S5648 Seat Assem.)	
6	6F7030	BOLT	10
7	3B4506	LOCKWASHER	22
8	4B4278	WASHER	8
9	8H433	CUSHION ASSEM.	1
10	L-1351	BOLT	12
11	7S5652	SUPPORT ASSEM.	1
12	1F748	NUT (Weld)	3
		(Part of 7S5652 Support Assem.)	
13	7S5659	PLATE ASSEM. (Right Hand)	1
	7S5660	PLATE ASSEM. (Left Hand)	1
14	3B2568	DOWEL	2
		(1 in each 7S5659 & 7S5660 Plate Assem.)	
15	S-1595	BOLT	6
	3B4508	LOCKWASHER	6
	4B4280	WASHER	6
16	4B5271	WASHER	2
17	5H169	STRIP	2
18	7B6636	SCREW	4
	FM055196	FORM	1
		(Installation instructions for Seat Assem. on 12 Volt System)	

SEAT CUSHIONS AND FRAME

NOTE: 6D4709 SEAT BELT ASSEMBLY IS AVAILABLE

REFER ALSO TO PAGE 113 FOR SPECIAL PARTS

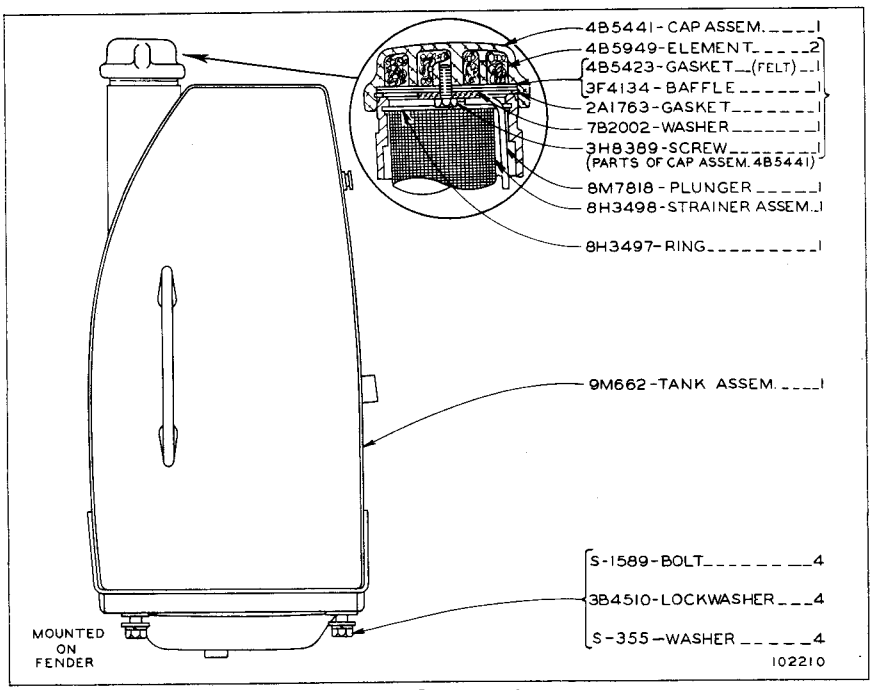

FUEL TANK--78 U.S. GALLONS

REFER ALSO TO PAGE 112 FOR SPECIAL PARTS

ALWAYS GIVE SERIAL NUMBER WHEN ORDERING PARTS

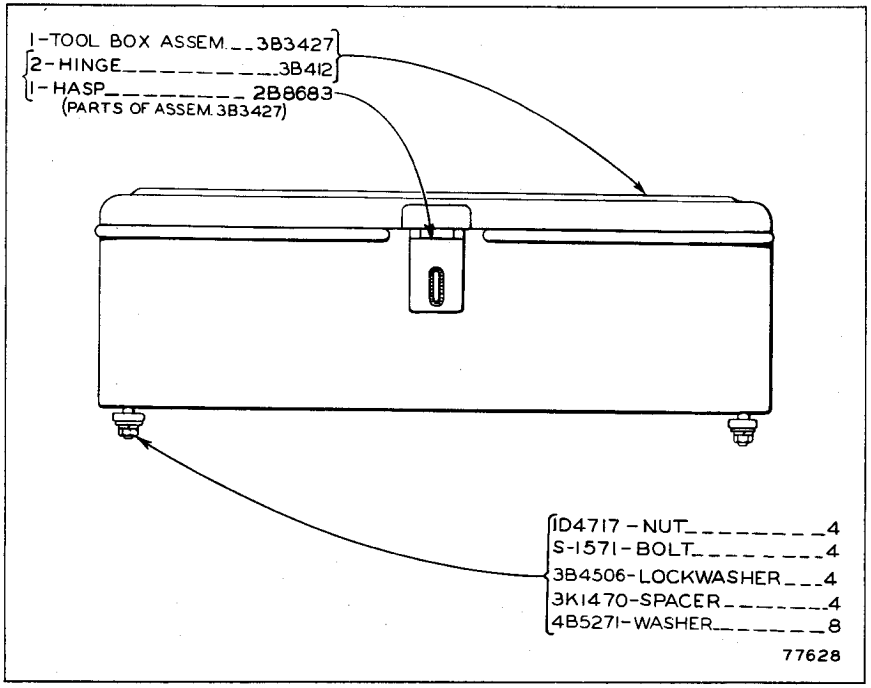

3B3460 TOOL BOX GROUP

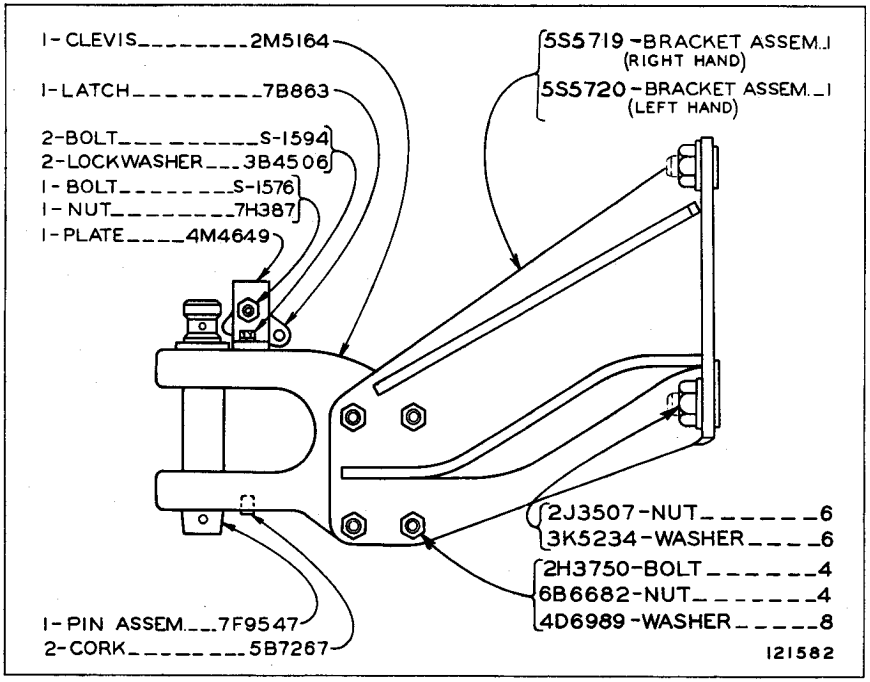

FIXED DRAWBAR

REFER ALSO TO PAGE 123 FOR SPECIAL PARTS

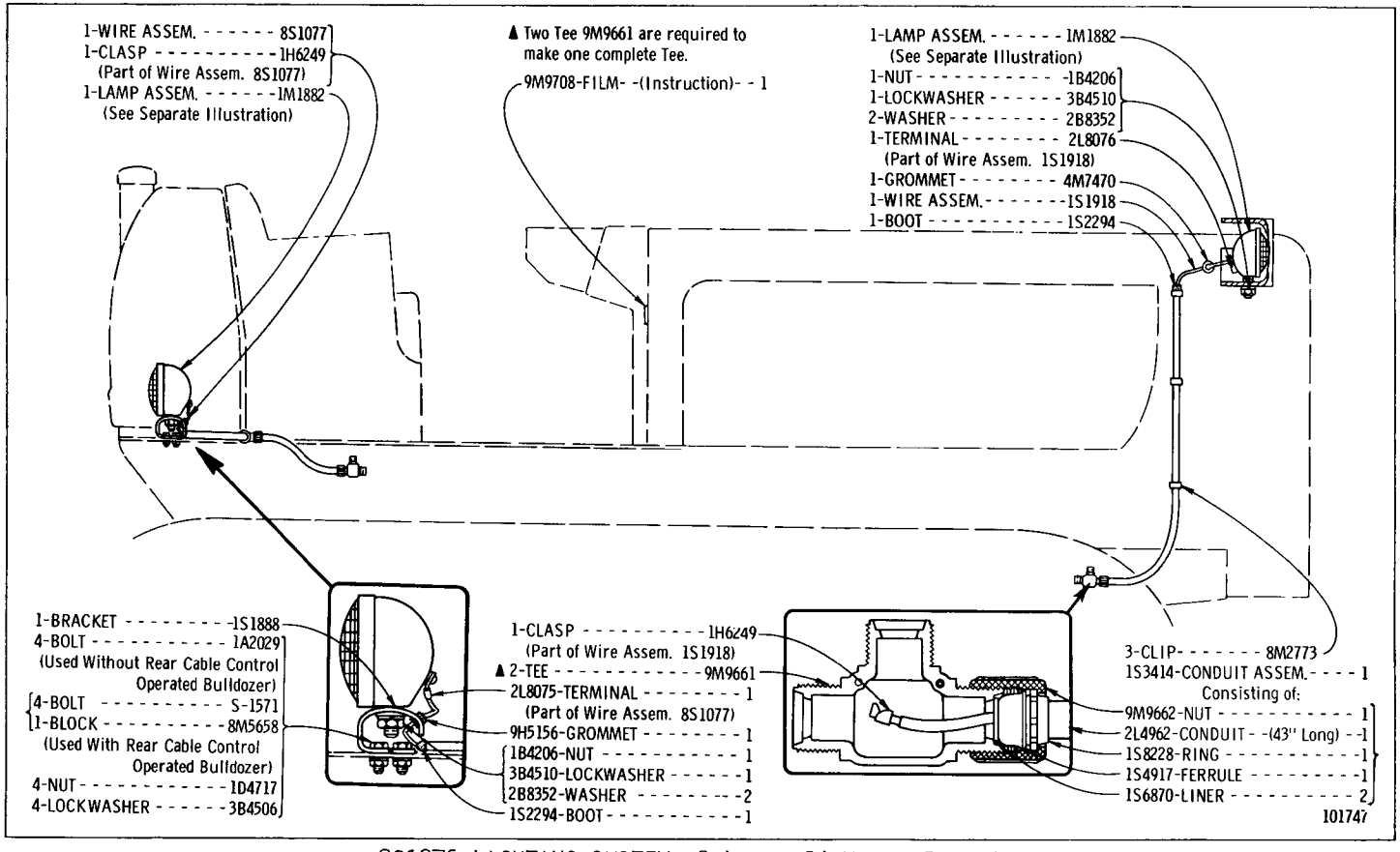

8S1076 LIGHTING SYSTEM--2 LAMP--24 VOLT--PART 1

1M1882 LAMP PARTS ARE SHOWN ON PAGE 96

8S1076 LIGHTING SYSTEM--2 LAMP--24 VOLT--PART 2

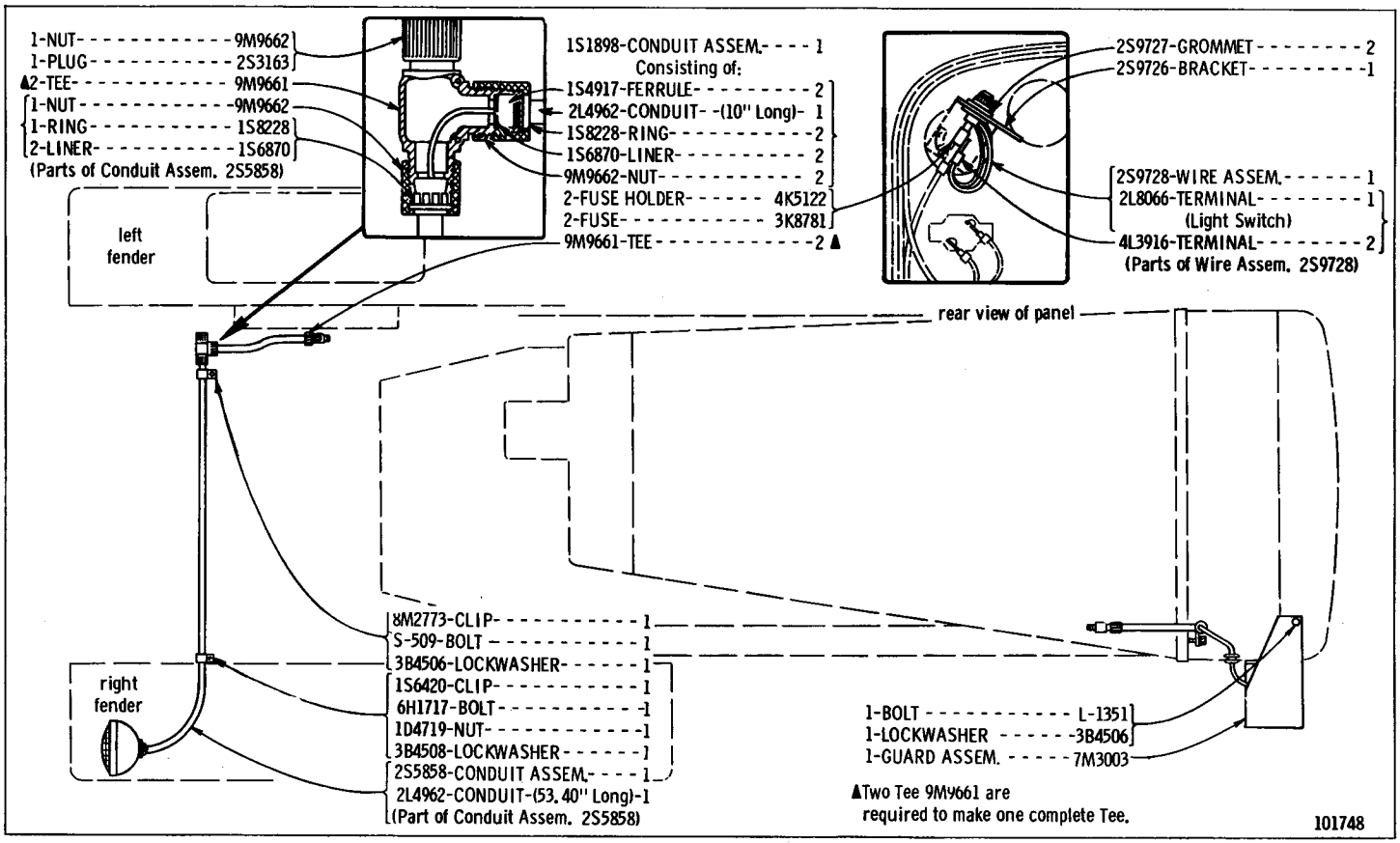

ONLY "CATERPILLAR" PARTS GIVE "CATERPILLAR" PERFORMANCE

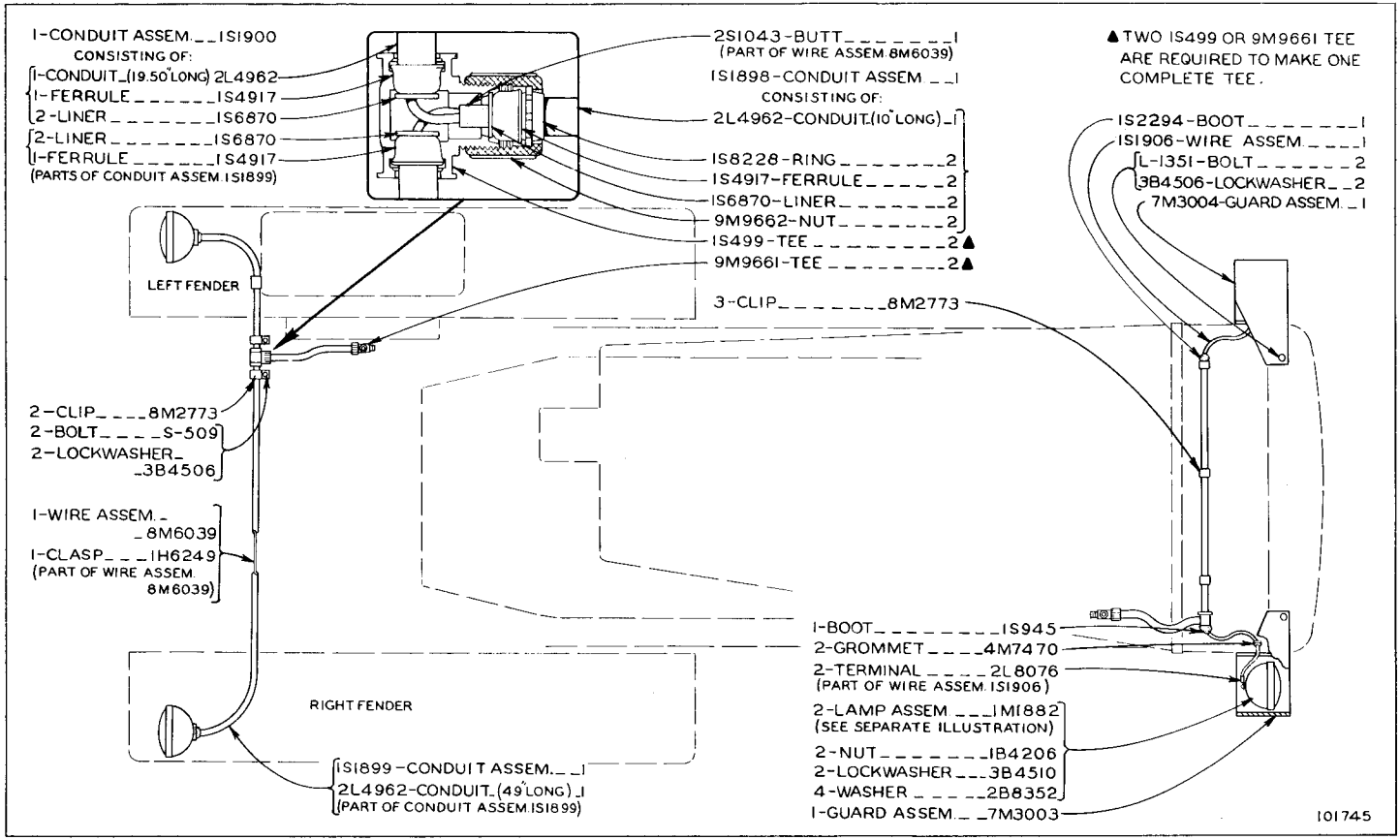

7S7955 LIGHTING SYSTEM--4 LAMP--24 VOLT--PART 1

1M1882 LAMP PARTS ARE SHOWN ON PAGE 96

7S7955 LIGHTING SYSTEM--4 LAMP--24 VOLT--PART 2

1M1882 LAMP PARTS ARE SHOWN ON PAGE 96

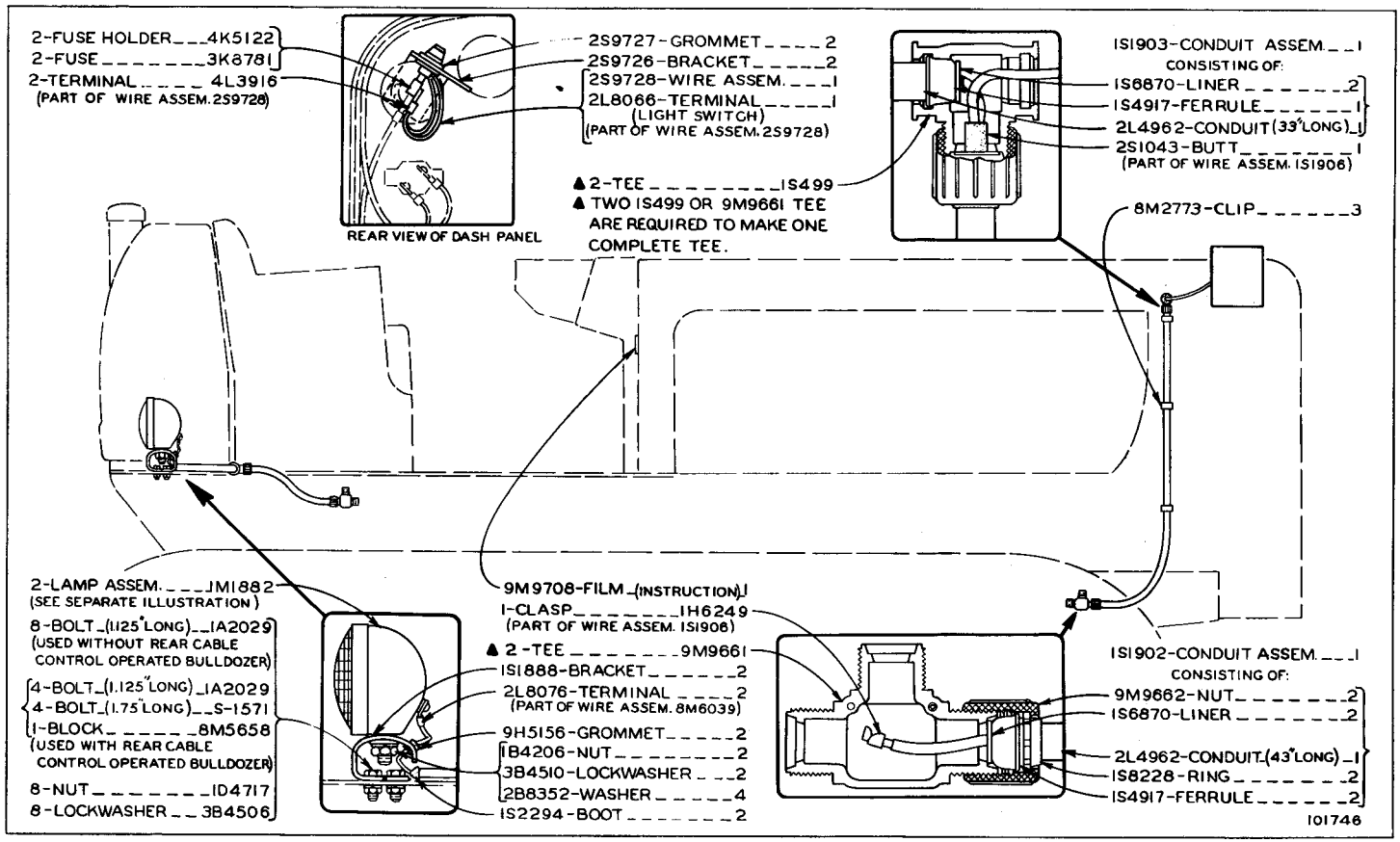

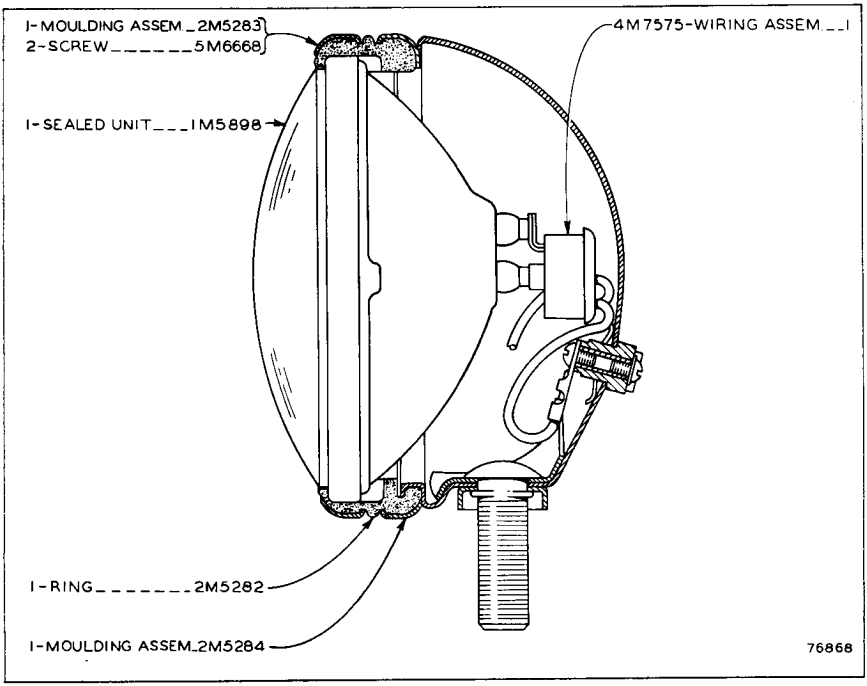

1M1882 FLOOD LAMP ASSEMBLY
PART OF 8S1076 & 7S7955 LIGHTING SYSTEMS SHOWN
ON PAGES 92, 94 & 95

CONSISTS OF: PAGE

1 8S3886 MOTOR GROUP--STARTING 97

1 8S138 GENERATOR GROUP 97

8S3883 DIRECT ELECTRIC STARTING ARRANGEMENT--24 VOLT
FOR USE IN TEMPERATURES OF 0° FAHRENHEIT OR BELOW

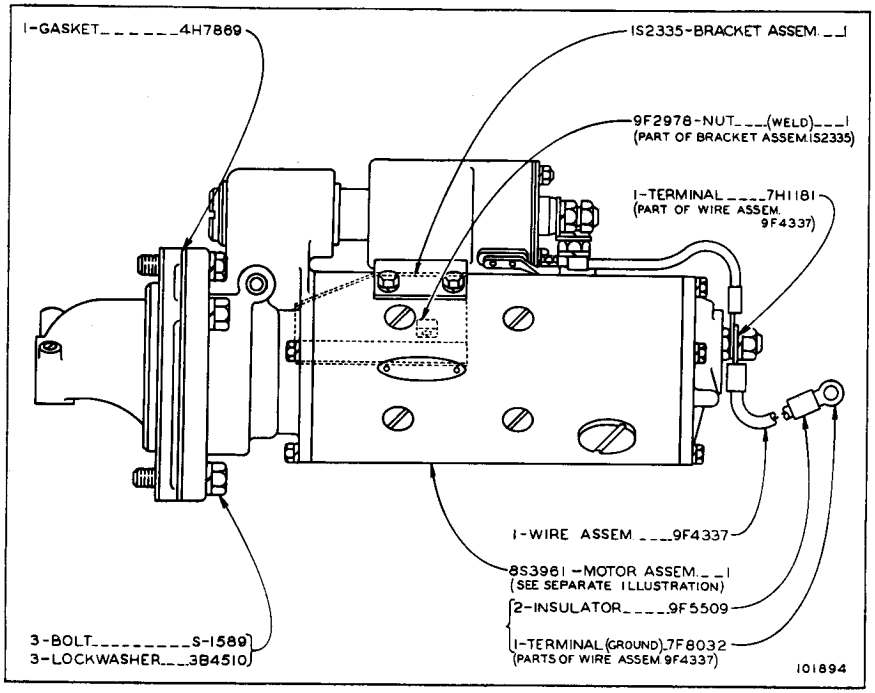

8S3886 STARTING MOTOR GROUP--24 VOLT
PART OF 8S3883 DIRECT ELECTRIC STARTING ARRANGEMENT
8S3961 MOTOR PARTS ARE SHOWN ON PAGES 98 & 99

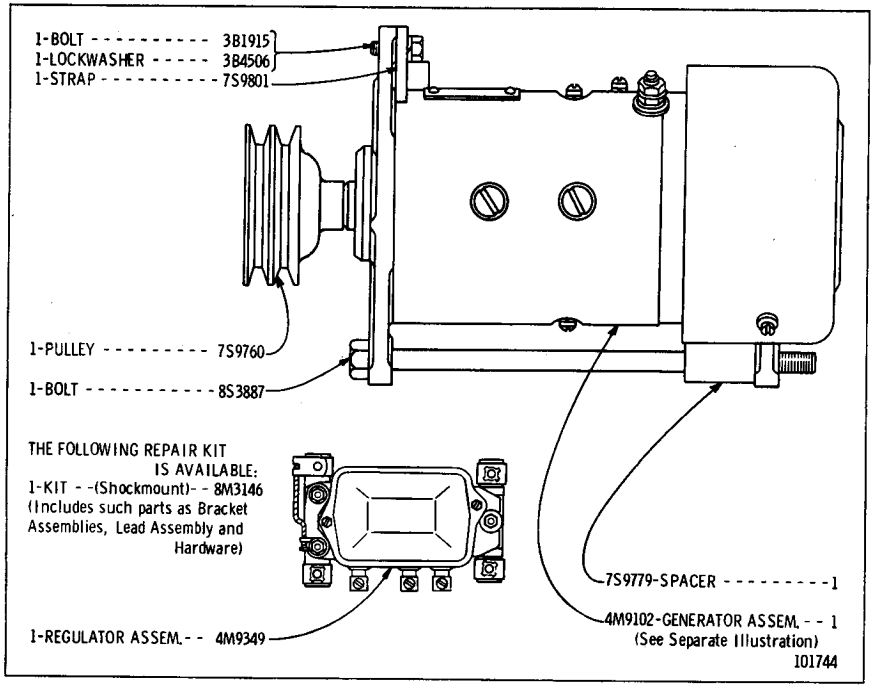

8S138 GENERATOR GROUP--24 VOLT, 20 AMPERE
ALSO PART OF 8S3883 DIRECT ELECTRIC STARTING ARRANGEMENT
4M9102 GENERATOR PARTS ARE SHOWN ON PAGE 100

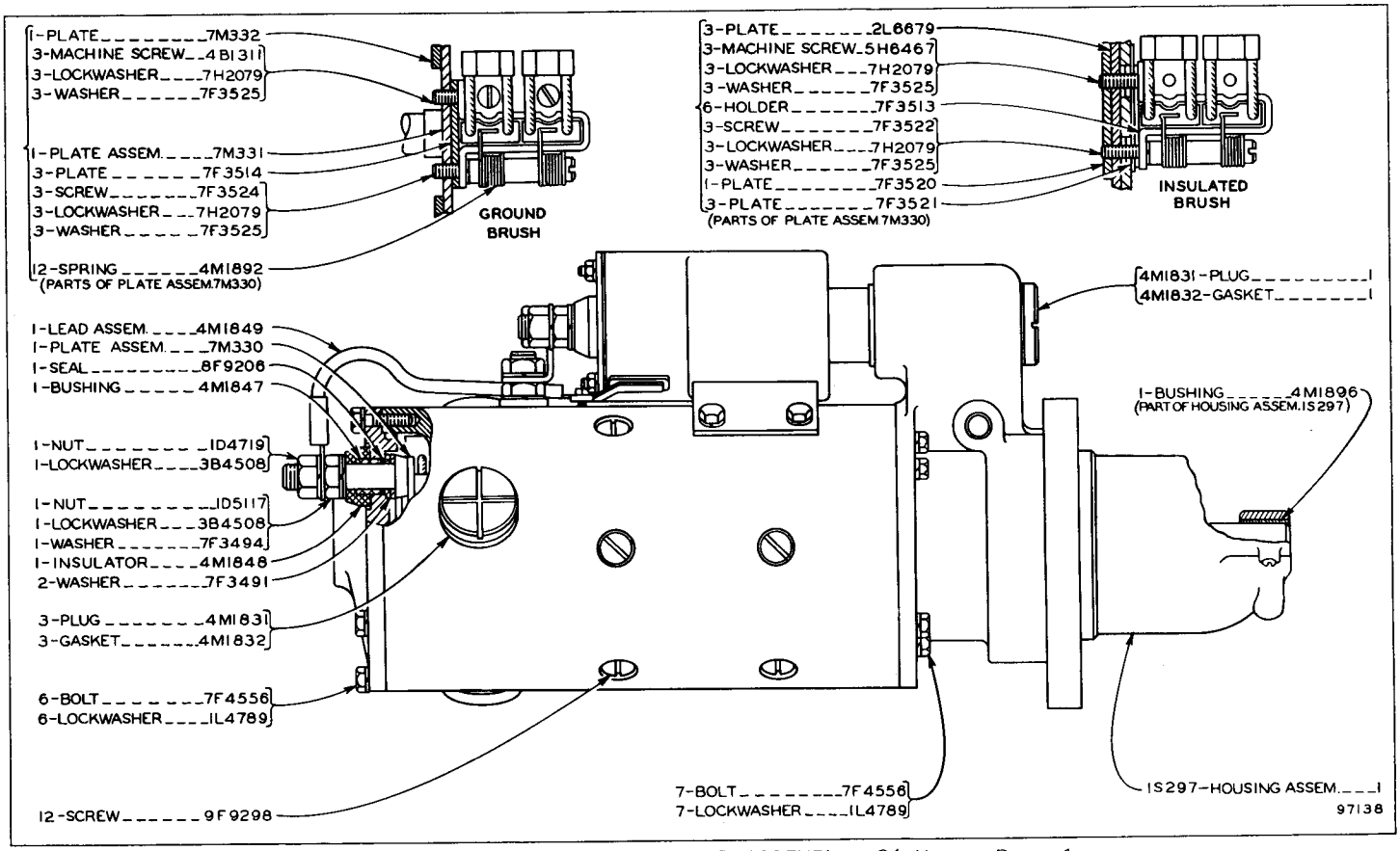

8S3961 ELECTRIC STARTING MOTOR ASSEMBLY--24 VOLT--PART 1
PART OF 8S3886 STARTING MOTOR SHOWN ON PAGE 97

8S3961 ELECTRIC STARTING MOTOR ASSEMBLY--24 VOLT--PART 2

PART OF 8S3886 STARTING MOTOR SHOWN ON PAGE 97
4M1812 SWITCH PARTS ARE SHOWN ON PAGE 44

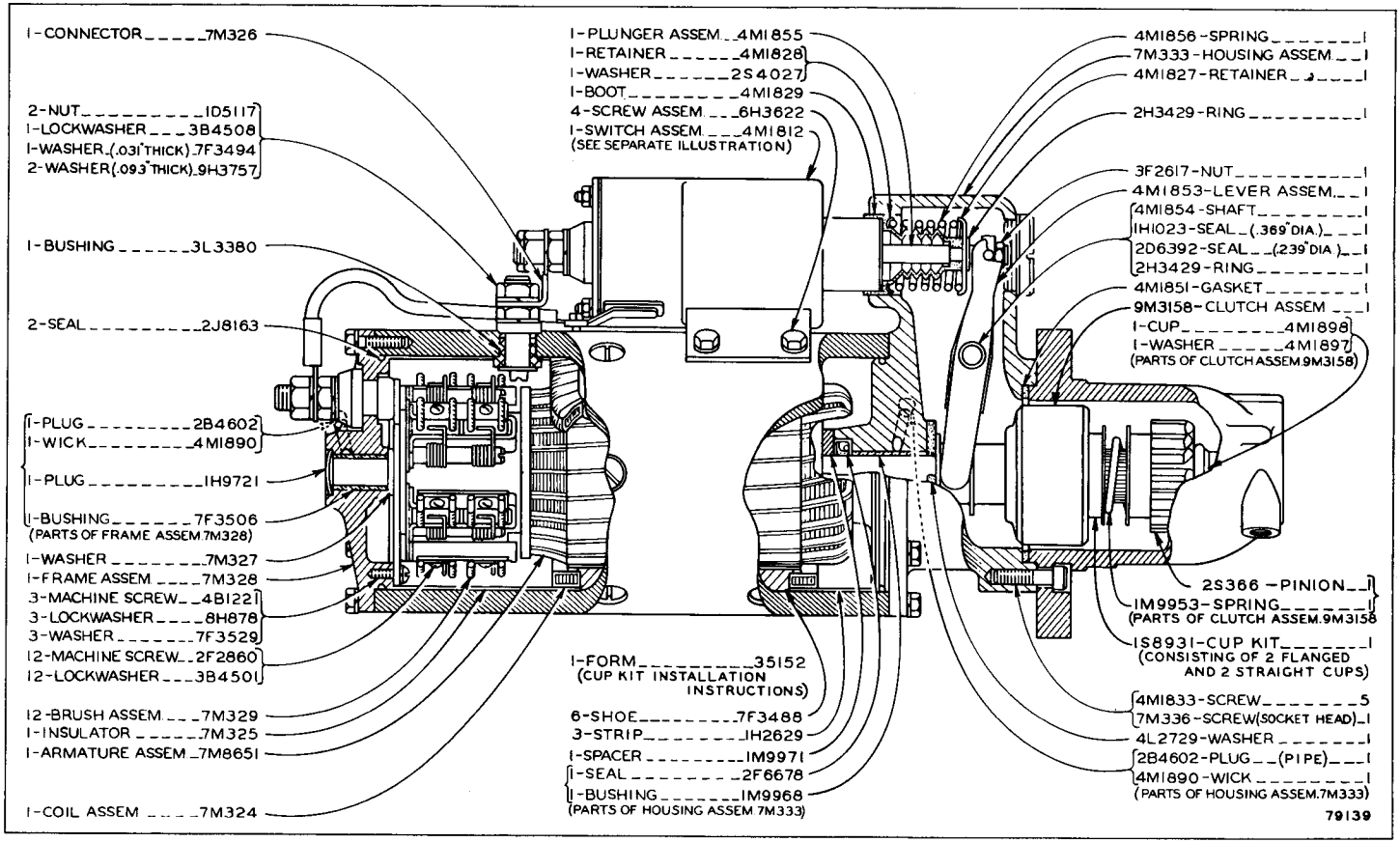

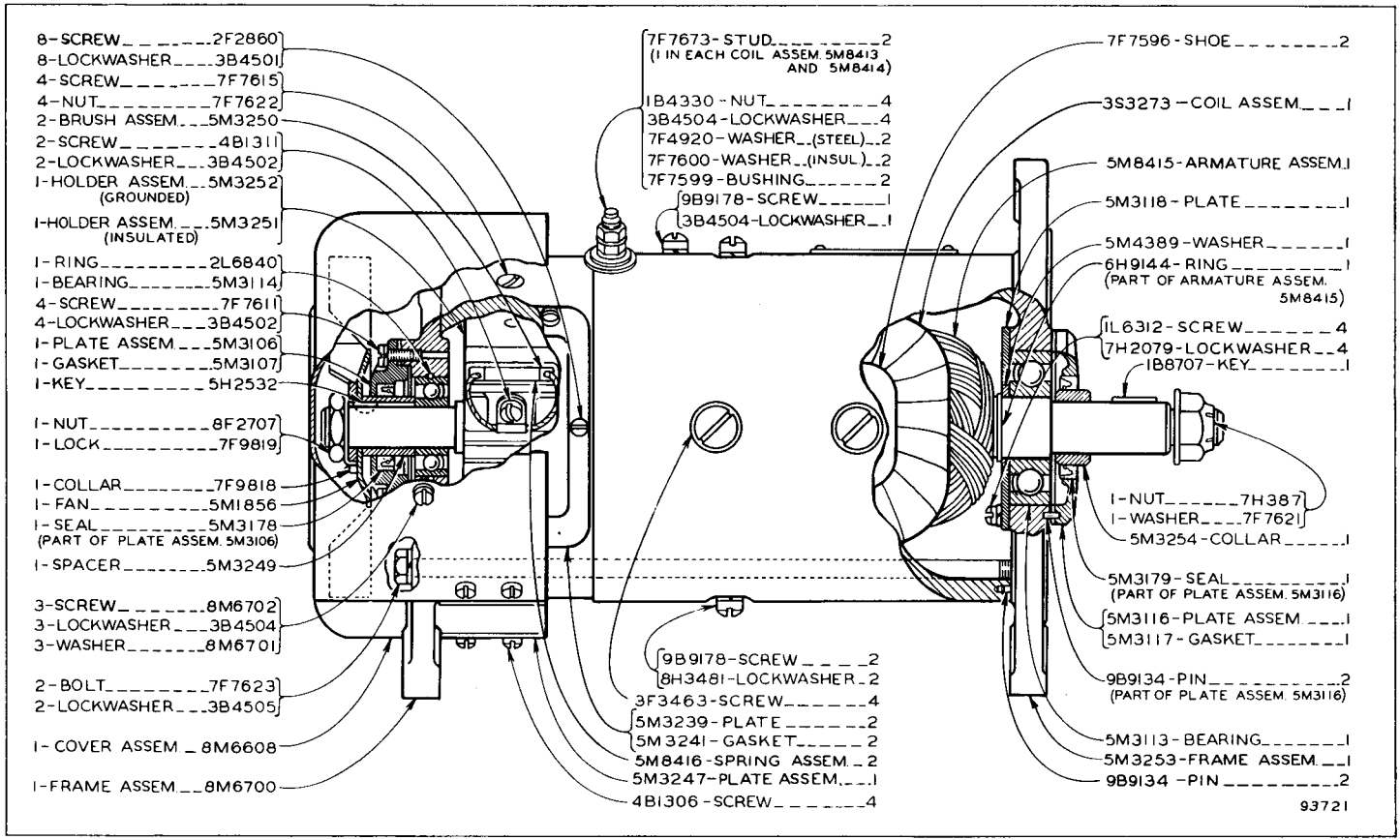

4M9102 GENERATOR ASSEMBLY--24 VOLT, 20 AMPERE
PART OF 8S138 GENERATOR SHOWN ON PAGE 97

		CONSISTS OF:	PAGE
1	.....	TURBOCHARGER OIL LINES	103
1	7S1702	TURBOCHARGER ASSEMBLY	102
1	8S3581	MANIFOLD GROUP	104
1	8S3597	AIR CLEANER GROUP	103
1	8S1767	HOOD ASSEMBLY	
1	6F8815	CLAMP - PIPE TO MUFFLER	
2	S1588	BOLT - TO CLAMP	
2	1B5355	NUT - TO BOLT	
1	7S8443	MUFFLER - TO ELBOW	
1	7S8798	PIPE - TO MUFFLER	
1	7H4266	CLAMP - MUFFLER TO ELBOW	
1	6H4356	PLATE - TO COVER ASSEMBLY	
4	4B4158	DRIVE SCREW - PLATE TO COVER ASSEMBLY	

8S1478 TURBOCHARGER ARRANGEMENT
Normalizing for High Altitude Operation

		CONSISTS OF:	PAGE
1	.....	TURBOCHARGER OIL LINES	103
1	7S1702	TURBOCHARGER ASSEMBLY	102
1	8S483	MOUNTING GROUP	105
1	8S3581	MANIFOLD GROUP	104
1	8S3597	AIR CLEANER GROUP	103
1	8S1767	HOOD ASSEMBLY	
1	6F8815	CLAMP - PIPE TO MUFFLER	
2	S1588	BOLT - TO CLAMP	
2	1B5355	NUT - TO BOLT	
1	7S8443	MUFFLER - TO ELBOW	
1	7S8798	PIPE - TO MUFFLER	
1	7H4266	CLAMP - MUFFLER TO ELBOW	
1	6H4356	PLATE - TO COVER ASSEMBLY	
4	4B4158	DRIVE SCREW - PLATE TO COVER ASSEMBLY	

8S1938 TURBOCHARGER ARRANGEMENT
FOR USE WITH HYDRAULIC BULLDOZER
Normalizing for High Altitude Operation

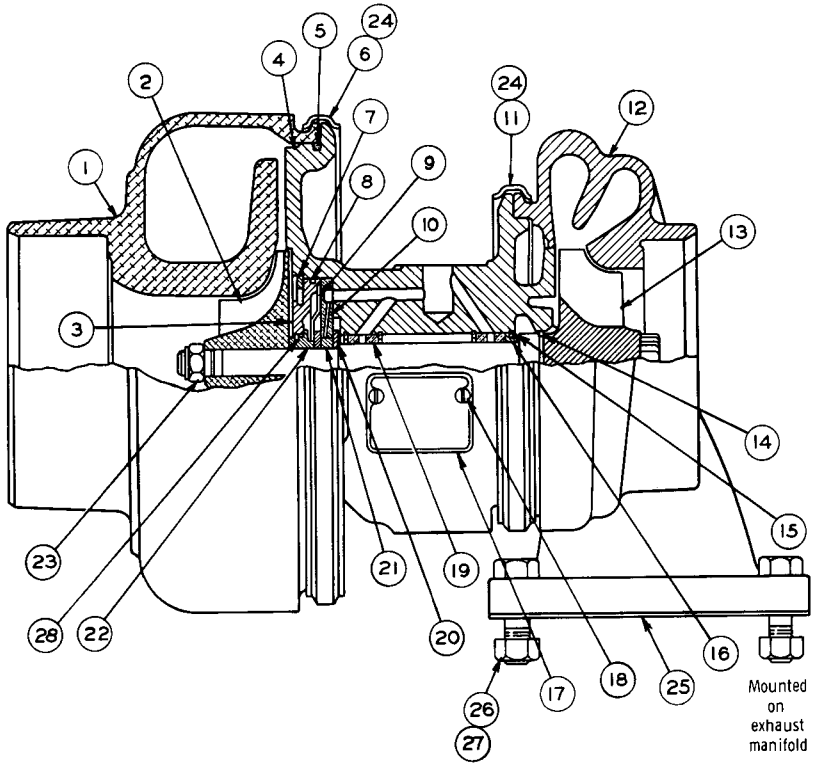

● NOT PART OF 7S1702 TURBOCHARGER ASSEM.

REF. NO.	PART NUMBER	DESCRIPTION	QTY.
1	▲7S7698	COVER------(Compressor)--------	1
2	7S7697	WHEEL----------	1
3	5S4556	INSERT----------	1
4	5S4543	HOUSING ASSEM. ----------	1
	5S5199	PIN---------- (Part of 5S4543 Housing Assem.)	2
5	5S4554	"O" RING----------	1
6	▲5S4558	V CLAMP----------	1
7	5S4546	RING----------	1
8	5S4548	"O" RING----------	1
9	5S4549	DEFLECTOR----------	1
10	5S4552	BEARING----------	1
11	▲5S4517	V CLAMP----------	1
12	▲8S1430	HOUSING---------(Turbine)-------	1
13	8S4989	WHEEL ASSEM. ----------	1
14	4S9248	RING----------	1
15	4M6983	RING----------	4
16	5S4551	SLEEVE----------	1
17	▲5S4545	PLATE------(Name-Warning)------	1
	2S1507	PLATE------(Name-Cartridge)------	1
18	8H3710	SCREW----------	3
19	5S4557	BEARING----------	2
20	5S4550	RING----------	2
21	5S4547	SLEEVE----------	1
22	5S4553	SLEEVE----------	1
23	5S4555	LOCKNUT----------	1
24	▲7M9918	NUT----------	2
25	●1S4295	GASKET----------	1
26	●S-1571	BOLT----------	4
27	●1B5355	NUT----------	4
28	4M8013	RING----------	1
	8S4579	CARTRIDGE ASSEM. ---------- (Consists of all parts except those marked ▲ and ●)	1

102275

7S1702 TURBOCHARGER ASSEMBLY

PART OF 8S1478 AND 8S1938 ARRANGEMENTS LISTED ON PAGE 101

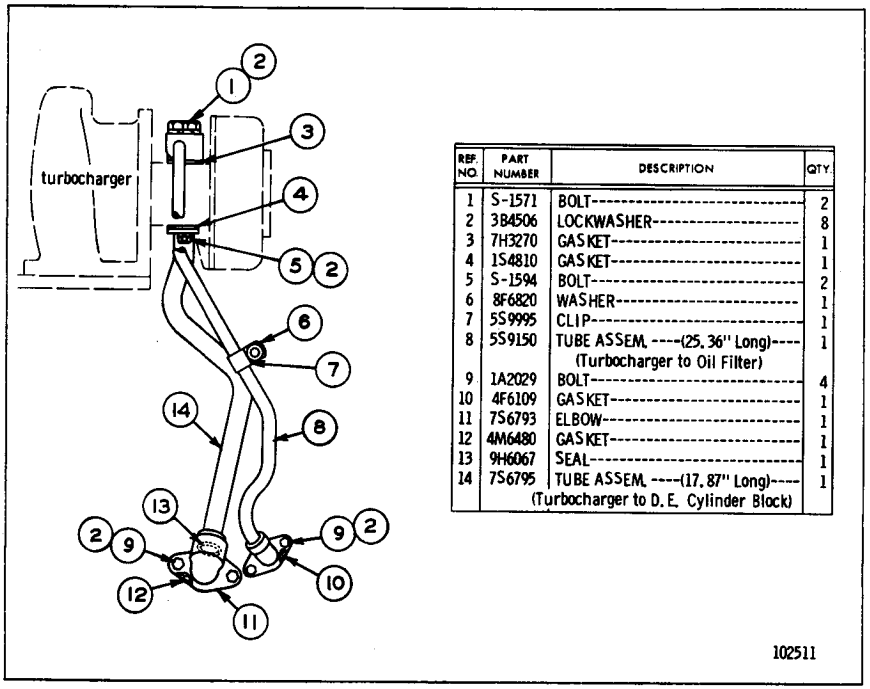

REF. NO.	PART NUMBER	DESCRIPTION	QTY.
1	S-1571	BOLT	2
2	3B4506	LOCKWASHER	8
3	7H3270	GASKET	1
4	1S4810	GASKET	1
5	S-1594	BOLT	2
6	8F6820	WASHER	1
7	5S9995	CLIP	1
8	5S9150	TUBE ASSEM. ----(25, 36" Long)---- (Turbocharger to Oil Filter)	1
9	1A2029	BOLT	4
10	4F6109	GASKET	1
11	7S6793	ELBOW	1
12	4M6480	GASKET	1
13	9H6067	SEAL	1
14	7S6795	TUBE ASSEM. ----(17, 87" Long)---- (Turbocharger to D. E. Cylinder Block)	1

TURBOCHARGER OIL LINES
PART OF 8S1478 AND 8S1938 ARRANGEMENTS LISTED ON PAGE 101

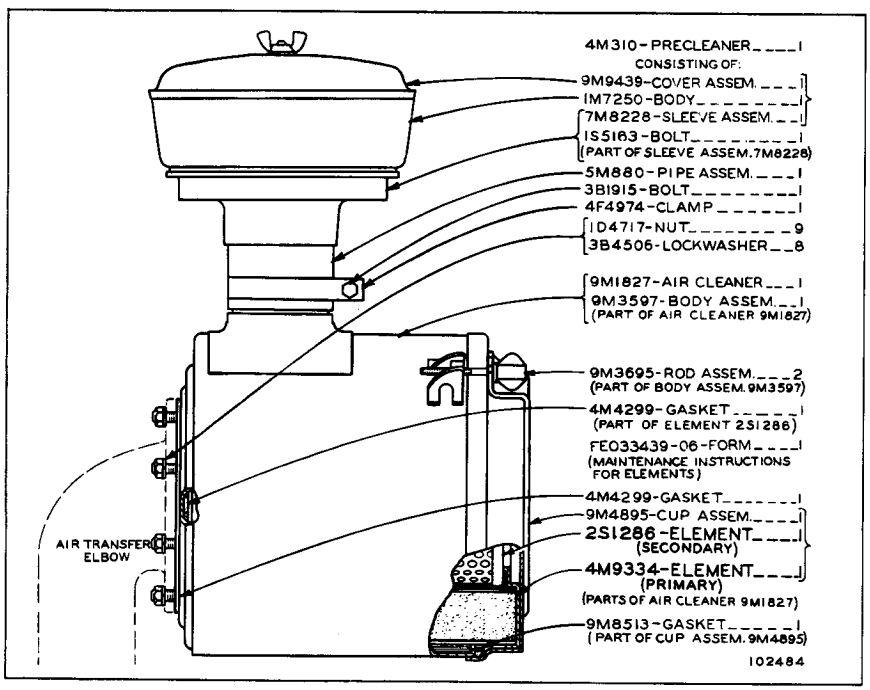

8S3597 AIR CLEANER GROUP
PART OF 8S1478 AND 8S1938 ARRANGEMENTS LISTED ON PAGE 101

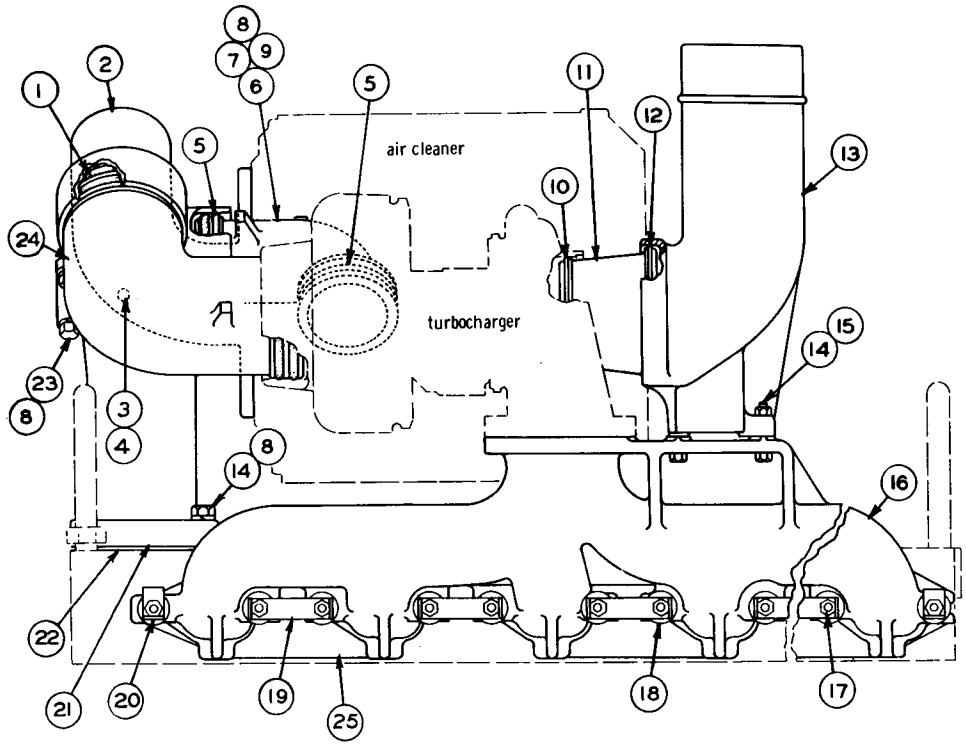

REF. NO.	PART NUMBER	DESCRIPTION	QTY
1	5H7704	SEAL	4
2	3S8430	PIPE ASSEM.	1
3	5M6214	PLUG	1
4	7M1674	ELEMENT	1
		(Parts of 3S8430 Pipe Assem.)	
5	4L8337	SEAL	4
6	5S1293	ELBOW	1
7	L 1351	BOLT	1
8	3B4506	LOCKWASHER	8
9	3F1417	WASHER	1
10	5L8855	RING	1
11	2S5551	COUPLING	1
12	2S5301	RING	1
13	3S5017	ELBOW-------(Exhaust)	1
14	S 1571	BOLT	8
15	1B5355	NUT	4
16	5S7077	MANIFOLD	1
17	1B5355	NUT	12
18	8M7145	WASHER	12
19	5S5880	LOCK	5
20	5S5881	LOCK	2
21	3S8432	ELBOW	1
22	5S6735	GASKET	1
23	1A2029	BOLT	3
24	4S8924	ELBOW	1
25	8S6410	GASKET	3

122699

8S3581 MANIFOLD GROUP

PART OF 8S1478 AND 8S1938 ARRANGEMENTS LISTED ON PAGE 101

8S483 MOUNTING GROUP
PART OF 8S1938 ARRANGEMENT LISTED ON PAGE 101

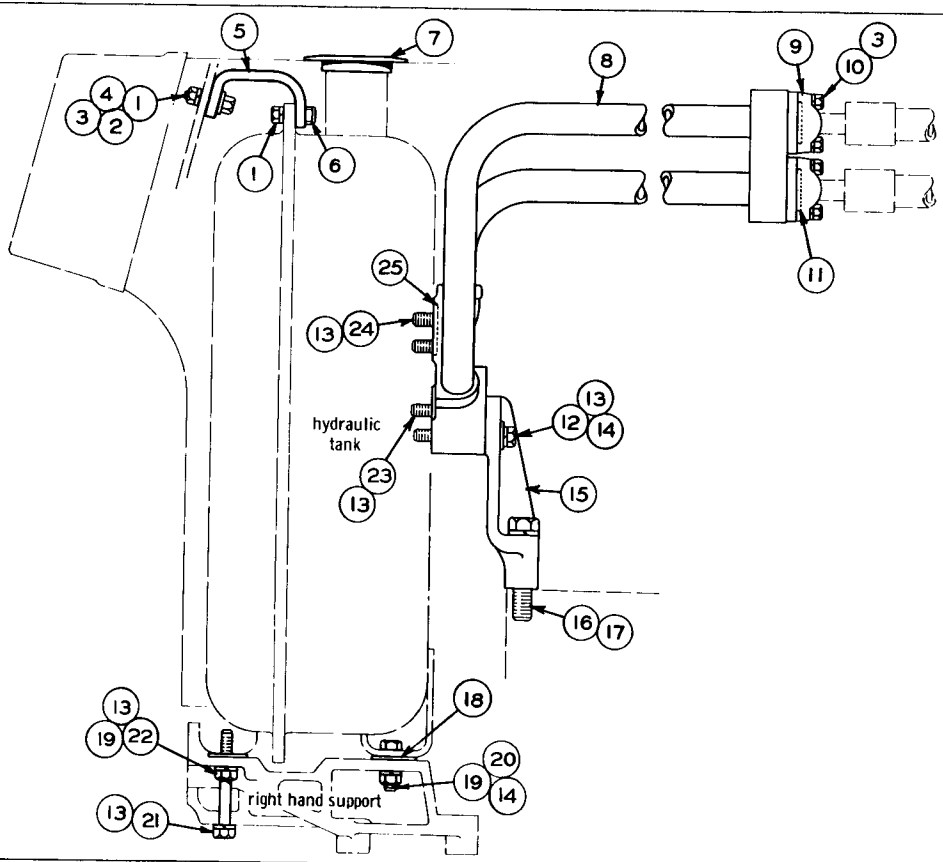

REF. NO.	PART NUMBER	DESCRIPTION	QTY
1	1A2029	BOLT	4
2	1D4717	NUT	2
3	3B4506	LOCKWASHER	18
4	4B4278	WASHER	2
5	7S9598	BRACKET ASSEM.	2
6	9F2978	NUT-(Weld) (1 in each 7S9598 Bracket Assem.)	2
7	3J4586	GROMMET	1
8	8S1229	TUBE ASSEM.	1
9	2K190	FLANGE	8
10	S-1588	BOLT	16
11	5F1678	SEAL	4
12	1B2886	BOLT	1
13	3B4508	LOCKWASHER	8
14	7F502	WASHER	1
15	8S4418	BRACKET	1
16	1D4610	BOLT	1
17	3B4512	LOCKWASHER	1
18	3J3372	SHIM	8
19	7B3235	BOLT	2
20	1D4719	NUT	1
21	S-1573	BOLT	1
22	S-1585	BOLT	1
23	L-1329	BOLT	1
24	S-1595	BOLT	2
25	1H9696	SEAL	2

ONLY "CATERPILLAR" PARTS GIVE "CATERPILLAR" PERFORMANCE

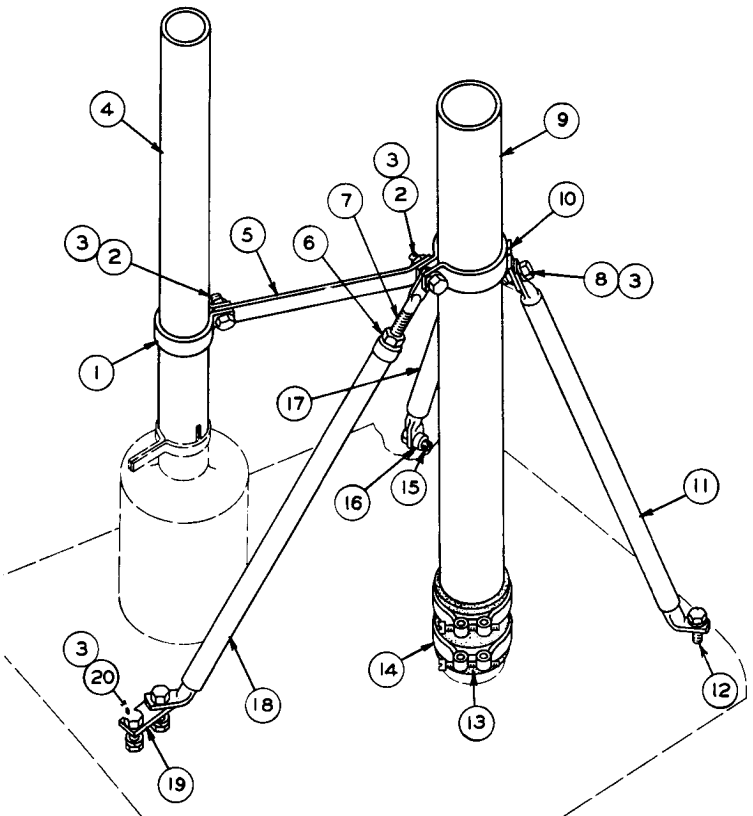

REF. NO.	PART NUMBER	DESCRIPTION	QTY
1	5S580	CLAMP	1
2	S-1591	BOLT	2
3	1D4717	NUT	6
	3B4506	LOCKWASHER	6
4	8S985	PIPE	1
5	8S982	BRACE	1
6	1B4205	NUT	1
7	7F3943	END	1
8	L-1351	BOLT	2
9	1F1342	EXTENSION	1
10	8S983	CLAMP ASSEM.	1
11	8S1007	BRACE ASSEM.	1

REF. NO.	PART NUMBER	DESCRIPTION	QTY
12	S-1594	BOLT	1
13	6L3930	HOSE	1
14	5M4564	CLAMP	2
15	S-1571	BOLT	1
16	4F6526	SPACER	1
17	8S984	BRACE ASSEM.	1
18	8S981	BRACE ASSEM.	1
19	5M1486	PLATE	1
20	1A2029	BOLT	2
	8H3526	WASHER	2
	FM055206	FORM (Instructions for installing Air Filter Extension)	1

101756

8S980 AIR CLEANER EXTENSION GROUP

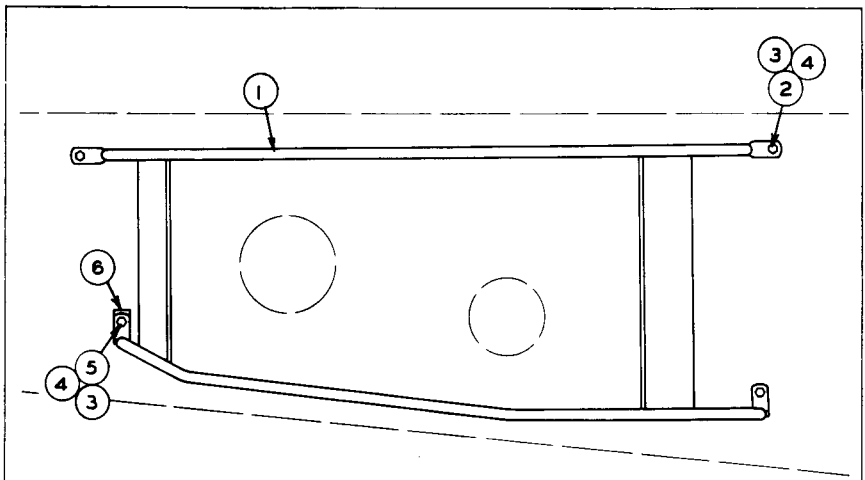

REF NO.	PART NUMBER	DESCRIPTION	QTY
1	8S3035	GUARD ASSEM.	1
2	S-1594	BOLT	3
3	1D4717	NUT	4
4	3B4506	LOCKWASHER	4
5	S-1591	BOLT	1
6	4D9831	BLOCK	1

8S3034 PRECLEANER GUARD GROUP

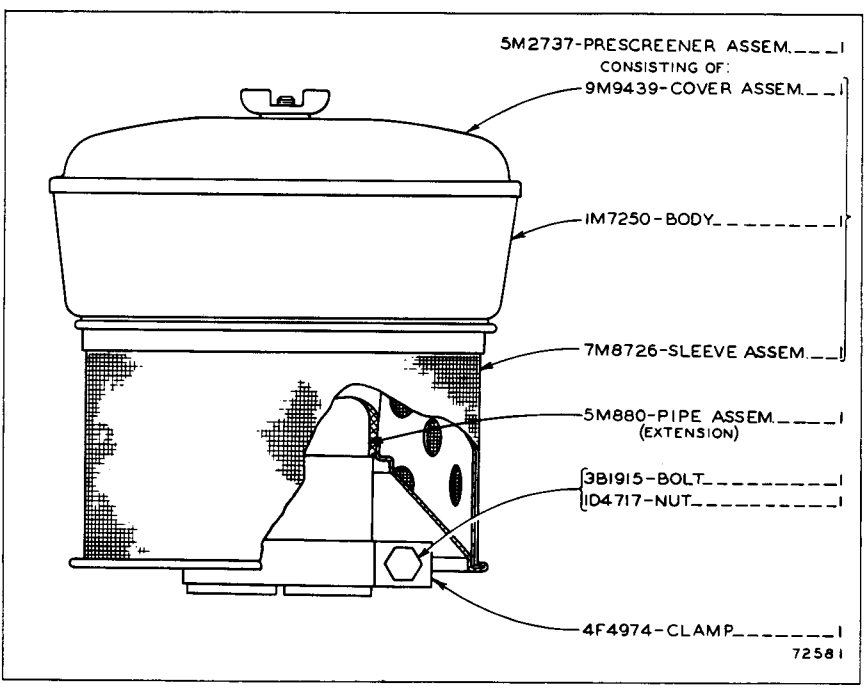

5M2734 PRESCREENER GROUP

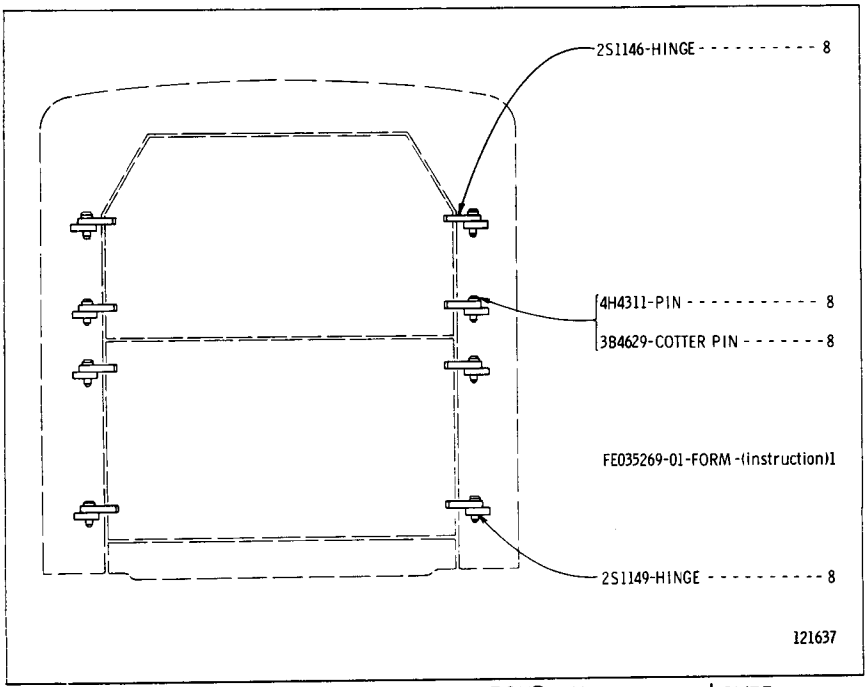

8S1715 RADIATOR GUARD HINGE GROUP--UPPER AND LOWER

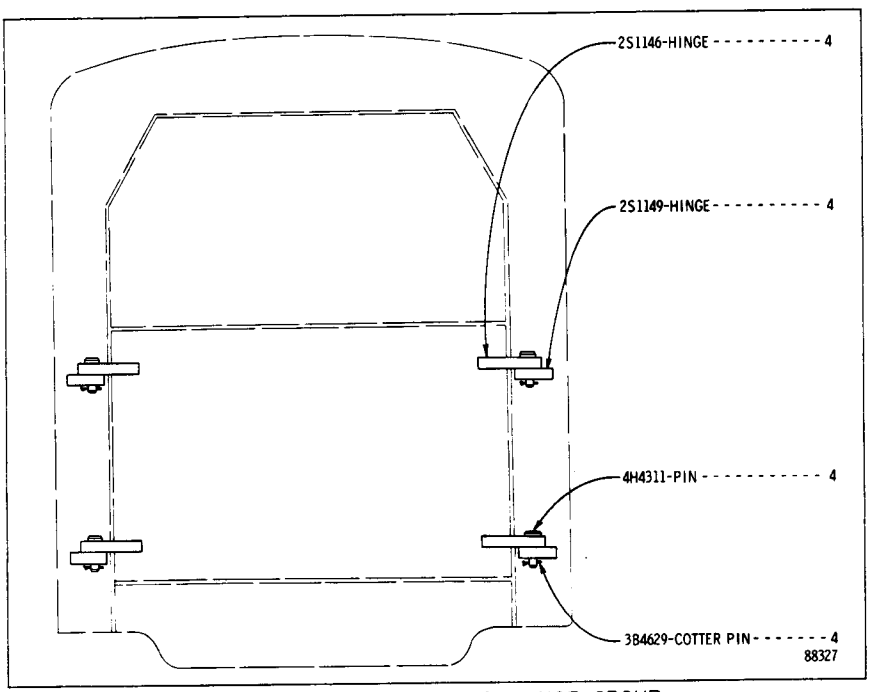

2S1163 RADIATOR GUARD HINGE GROUP

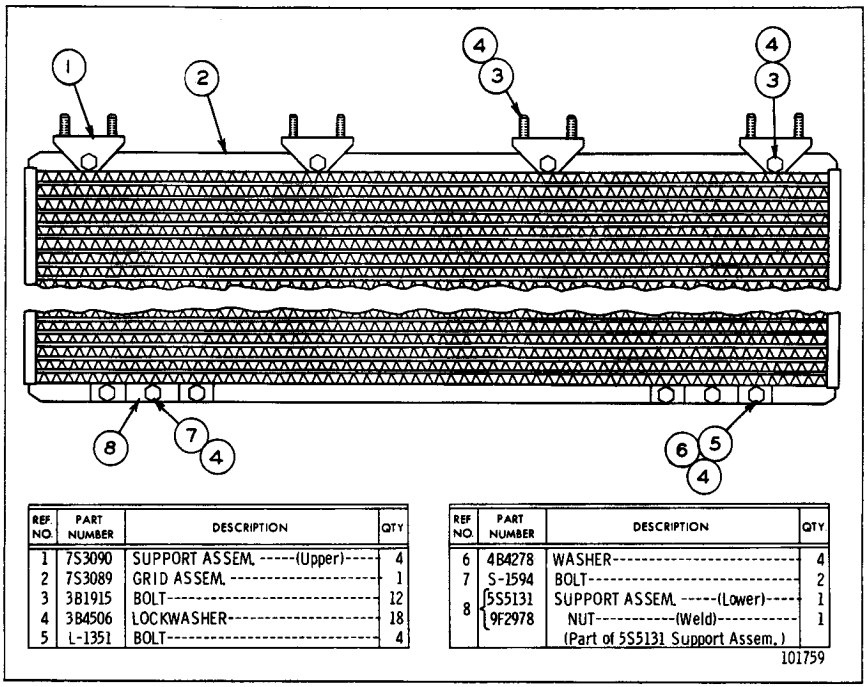

REF NO.	PART NUMBER	DESCRIPTION	QTY
1	7S3090	SUPPORT ASSEM. -----(Upper)----	4
2	7S3089	GRID ASSEM. ----------	1
3	3B1915	BOLT----------	12
4	3B4506	LOCKWASHER----------	18
5	L-1351	BOLT----------	4

REF NO.	PART NUMBER	DESCRIPTION	QTY
6	4B4278	WASHER----------	4
7	S-1594	BOLT----------	2
8	5S5131	SUPPORT ASSEM. -----(Lower)----	1
	9F2978	NUT----------(Weld)----------	1
		(Part of 5S5131 Support Assem.)	

101759

7S3088 RADIATOR CORE PROTECTOR GRID GROUP

NOTE: THIS GROUP PREVENTS SANDBLASTING OF RADIATOR CORE

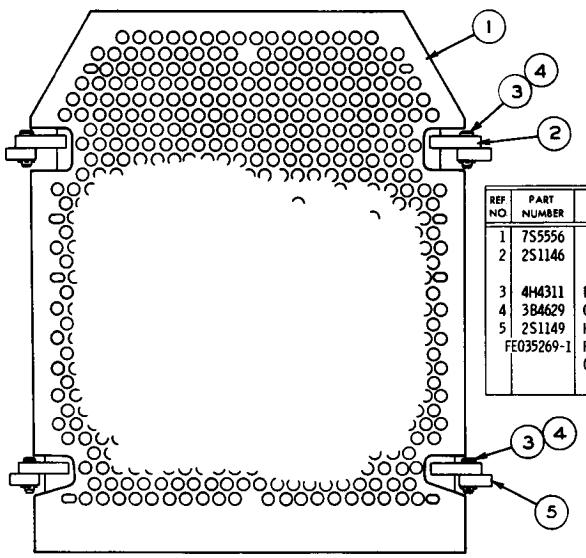

REF NO	PART NUMBER	DESCRIPTION	QTY
1	7S5556	PLATE ASSEM. ----------	1
2	2S1146	HINGE----------	4
		(Part of 7S5556 Plate Assem.)	
3	4H4311	PIN----------	4
4	3B4629	COTTER PIN----------	4
5	2S1149	HINGE----------	4
	FE035269-1	FORM----------	1
		(Instructions for installing Radiator Guard Hinge Groups)	

121747

7S5561 RADIATOR GRILL PLATE GROUP--HEAVY DUTY

PROVIDES EXTRA RADIATOR CORE PROTECTION IN LOGGING AND LAND CLEARING OPERATIONS

ONLY "CATERPILLAR" PARTS GIVE "CATERPILLAR" PERFORMANCE

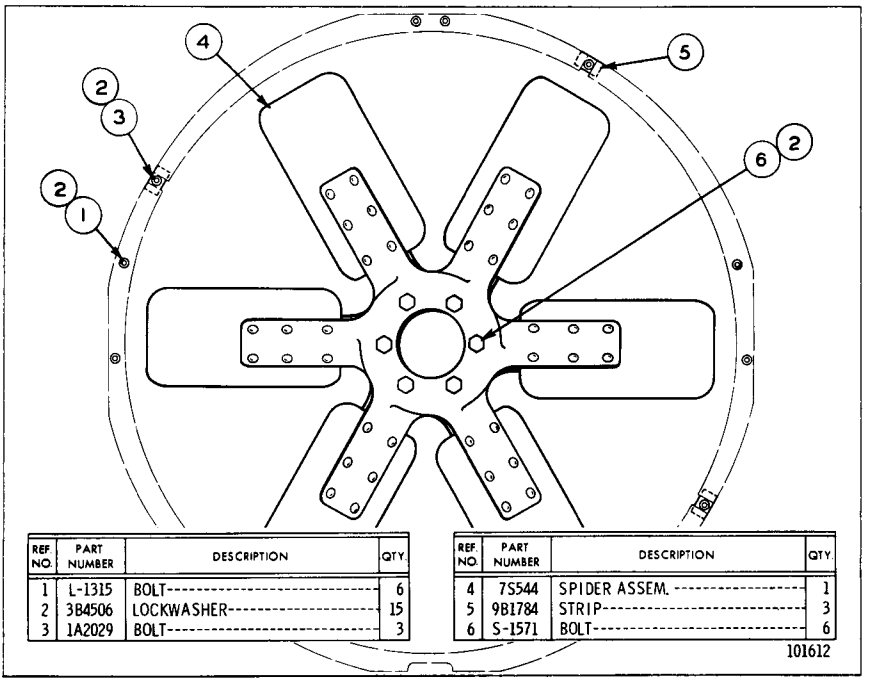

REF. NO.	PART NUMBER	DESCRIPTION	QTY.
1	L-1315	BOLT	6
2	3B4506	LOCKWASHER	15
3	1A2029	BOLT	3
4	7S544	SPIDER ASSEM.	1
5	9B1784	STRIP	3
6	S-1571	BOLT	6

7S1167 SUCTION FAN GROUP

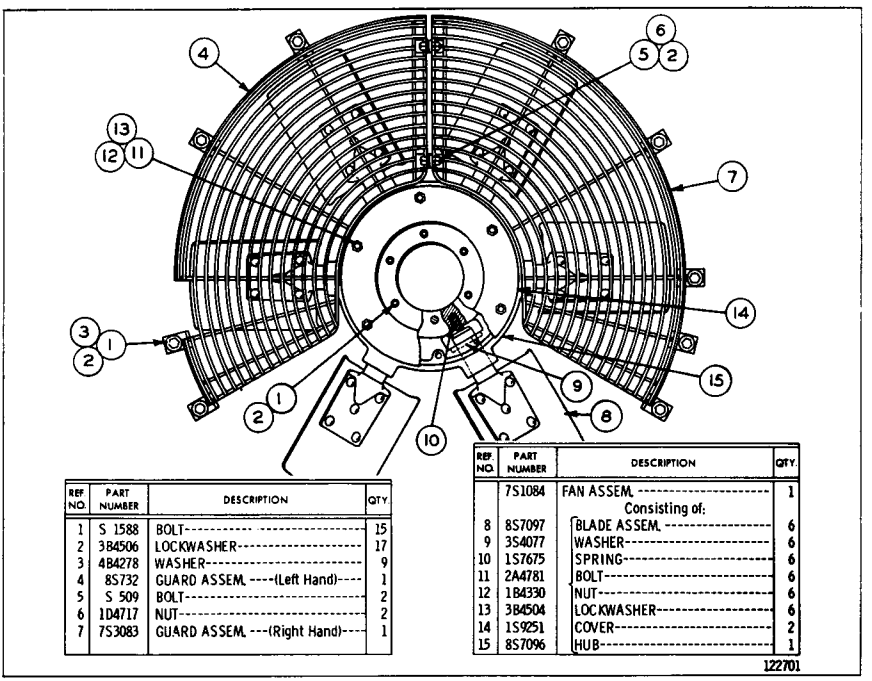

REF NO.	PART NUMBER	DESCRIPTION	QTY.
1	S 1588	BOLT	15
2	3B4506	LOCKWASHER	17
3	4B4278	WASHER	9
4	8S732	GUARD ASSEM. ----(Left Hand)----	1
5	S 509	BOLT	2
6	1D4717	NUT	2
7	7S3083	GUARD ASSEM. ---(Right Hand)----	1

REF NO.	PART NUMBER	DESCRIPTION	QTY.
	7S1084	FAN ASSEM.	1
		Consisting of:	
8	8S7097	BLADE ASSEM.	6
9	3S4077	WASHER	6
10	1S7675	SPRING	6
11	2A4781	BOLT	6
12	1B4330	NUT	6
13	3B4504	LOCKWASHER	6
14	1S9251	COVER	2
15	8S7096	HUB	1

8S789 FAN AND GUARD GROUP--REVERSIBLE BLADE

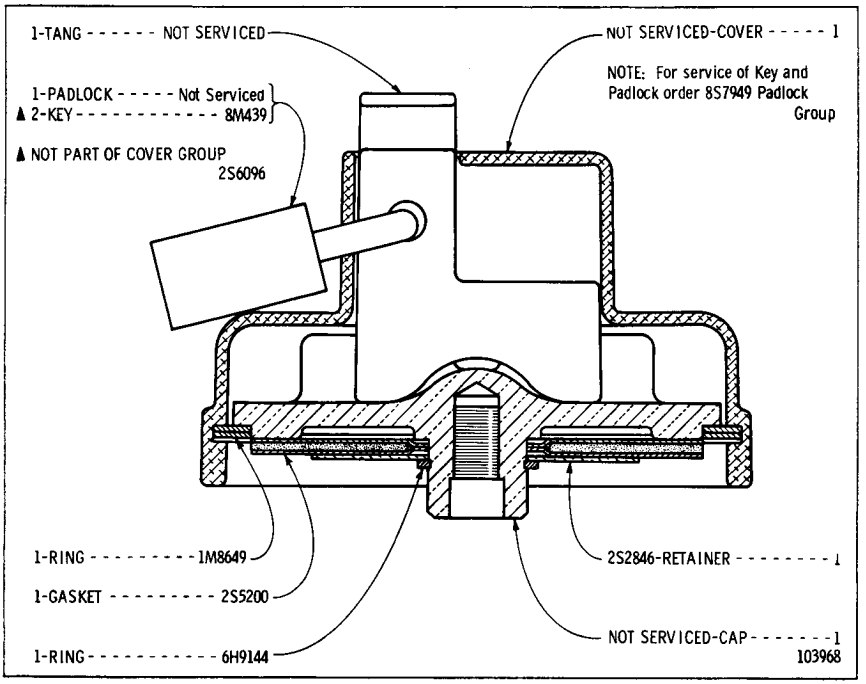

2S6096 PROTECTION COVER GROUP--RADIATOR CAP

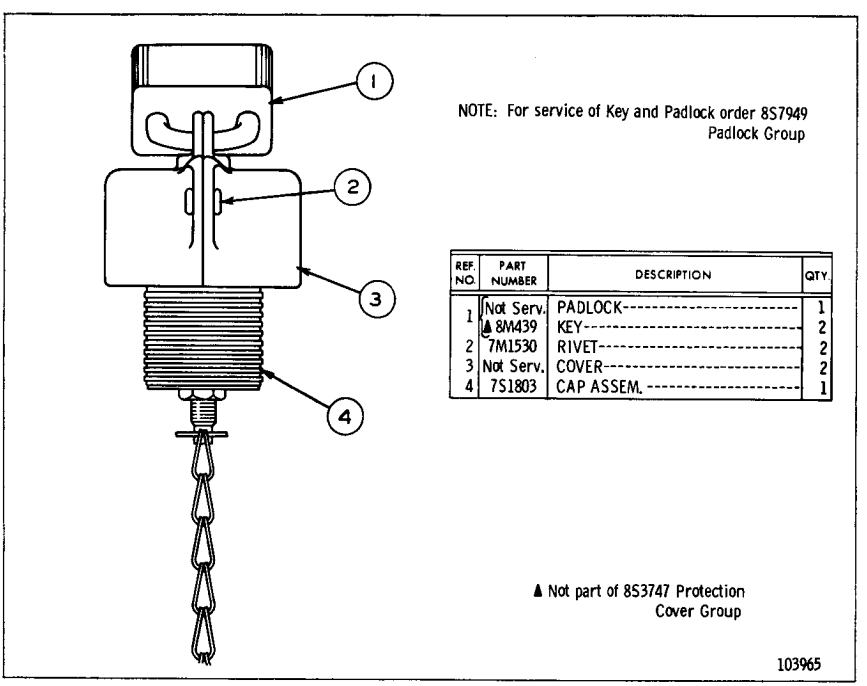

REF. NO.	PART NUMBER	DESCRIPTION	QTY.
1	Not Serv.	PADLOCK	1
	▲ 8M439	KEY	2
2	7M1530	RIVET	2
3	Not Serv.	COVER	2
4	7S1803	CAP ASSEM.	1

8S3747 PROTECTION COVER GROUP--OIL FILLER CAP

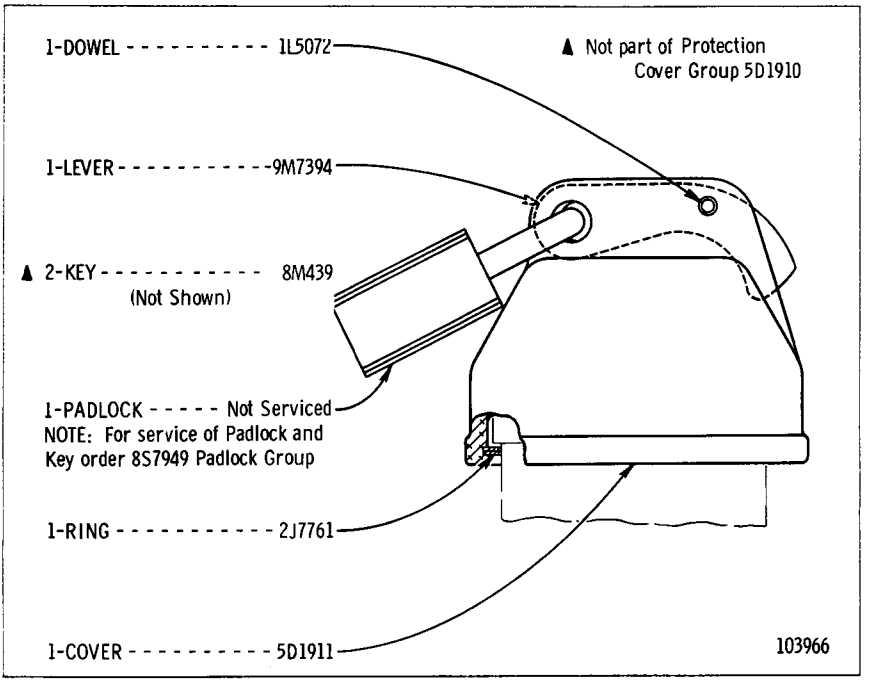

5D1910 PROTECTION COVER GROUP--HYDRAULIC TANK

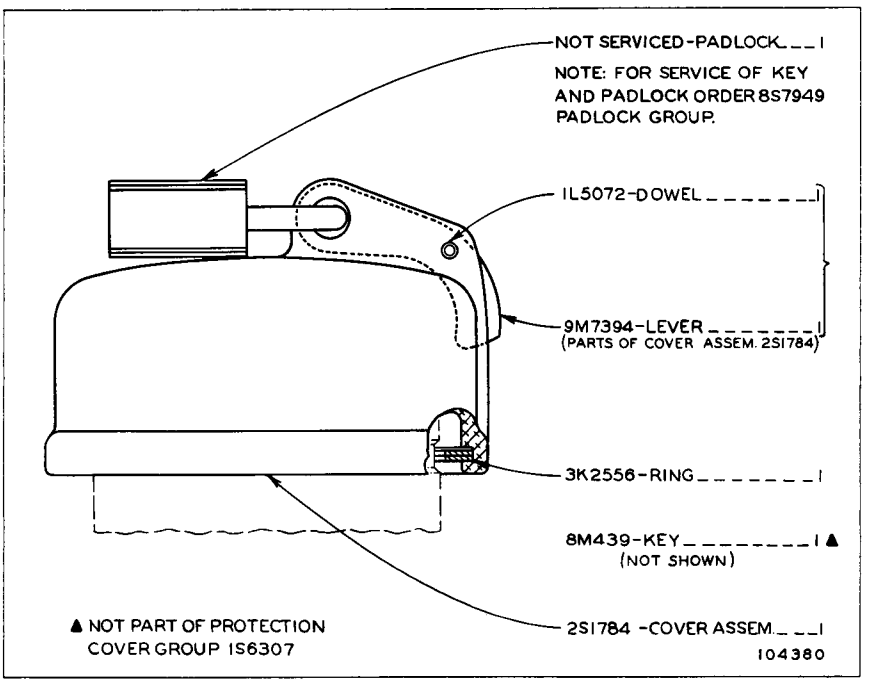

1S6307 PROTECTION COVER GROUP--FUEL TANK

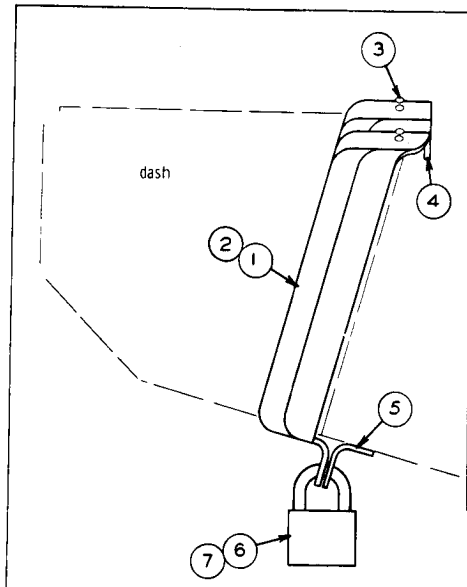

REF NO	PART NUMBER	DESCRIPTION	QTY
1	8S1225	COVER ASSEM. ---(Right Hand)----	1
2	8S1226	COVER ASSEM. ----(Left Hand)-----	1
3	7M1530	RIVET----------	6
		(4 in 8S1225 & 2 in 8S1226 Cover Assem.)	
4	7M3218	TANG----------	3
		(2 in 8S1225 & 1 in 8S1226 Cover Assem.)	
5	7M3222	ANGLE----------	2
6	8M438	PADLOCK----------	2
7	▲ 8M439	KEY----------	2
	2H5330	BOLT----------	1
	1D4717	NUT----------	1
		(Not Shown-Mounted on Left Hand Battery Box-for Direct Drive Tractors Only)	
	FM055201	FORM----------	1
		(Field installation instructions)	

▲ Not part of 8S482 Instrument Panel Protection Group

101757

8S482 INSTRUMENT PANEL PROTECTION GROUP

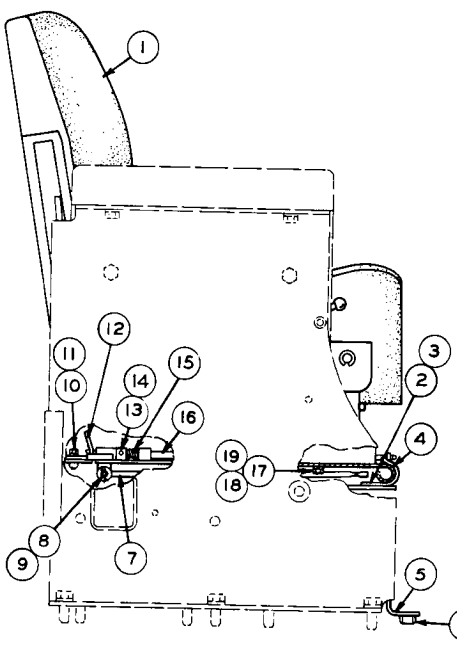

REF NO	PART NUMBER	DESCRIPTION	QTY
1	5S45	SEAT ASSEM. ----------	1
		(See Separate Illustration)	
2	7S5655	SUPPORT ASSEM. --(Right Hand)--	1
3	7S5656	SUPPORT ASSEM. ---(Left Hand)---	1
4	7S4876	HINGE ASSEM. ----------	1
5	7S5657	SUPPORT ASSEM. ----------	1
6	1F748	NUT----------(Weld)----------	3
		(Part of 7S5657 Support Assem.)	
7	2S1715	ROD----------	1
8	3B4607	COTTER PIN----------	2
9	4B4276	WASHER----------	2
10	2A762	BOLT----------	2
11	3B4504	LOCKWASHER----------	2
12	3S1682	LATCH----------	1
13	7M5182	BLOCK----------	1
14	9F7882	PIN----------	1
15	8B3090	SPRING----------	1
16	3S1684	ROD----------	1
17	S-509	BOLT----------	4
18	3B4506	LOCKWASHER----------	4
19	4B4278	WASHER----------	4

101623

7S8037 ADJUSTABLE SEAT GROUP

5S45 SEAT PARTS ARE SHOWN ON PAGE 114

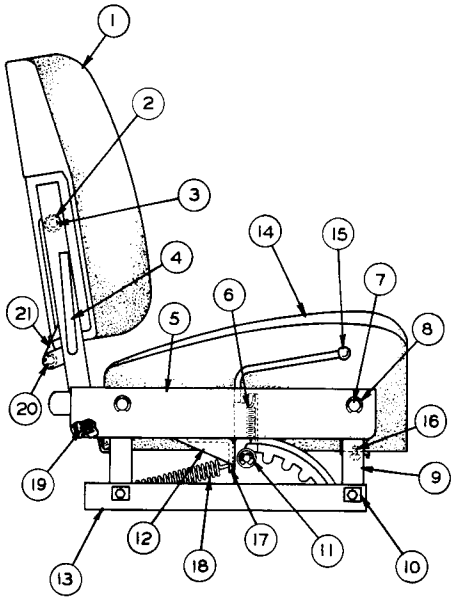

REF NO	PART NUMBER	DESCRIPTION	QTY
1	7S5387	CUSHION ASSEM.	1
2	7F3494	WASHER	2
3	7S5386	ROLLER	4
	7S5381	BRACKET ASSEM. ---(Right Hand)--	1
	7S5382	BRACKET ASSEM. ----(Left Hand)---	1
4	7S5385	LINK ASSEM.	1
5	7S5391	FRAME ASSEM.	1
	7S5750	FRAME ASSEM.	1
6	7S5758	SPRING	1
7	7S5755	PIN	4
8	2R364	RING	8
9	7S5753	LEVER ASSEM.	2
10	7S5759	NUT	4
11	7F4909	WASHER	2
	7S5757	RING	2
12	7S5754	LEVER ASSEM.	1
13	7S5751	ANGLE ASSEM. ---(Right Hand)---	1
	7S5752	ANGLE ASSEM. ---(Left Hand)---- (Parts of 7S5391 Frame Assem.)	1
14	7S5390	CUSHION ASSEM.	1
15	7S5380	KNOB	1
16	2K7115	SCREW	12
	4F2293	LOCKWASHER	12
17	7S5389	BRACKET	1
18	7S5388	SPRING	1
19	7S5383	SPRING	2
20	7S5757	RING	4
21	7S5384	LINK	2

101698

5S45 SEAT ASSEMBLY

PART OF 7S8037 ADJUSTABLE SEAT SHOWN ON PAGE 113

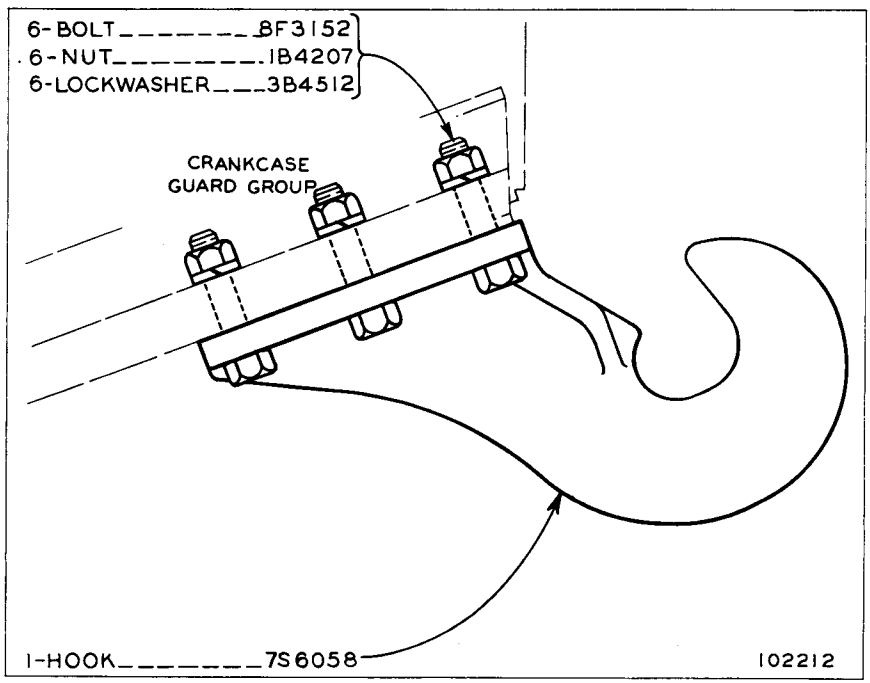

7B4464 FRONT PULL HOOK

7S1974 CRANKCASE GUARD GROUP--HEAVY DUTY

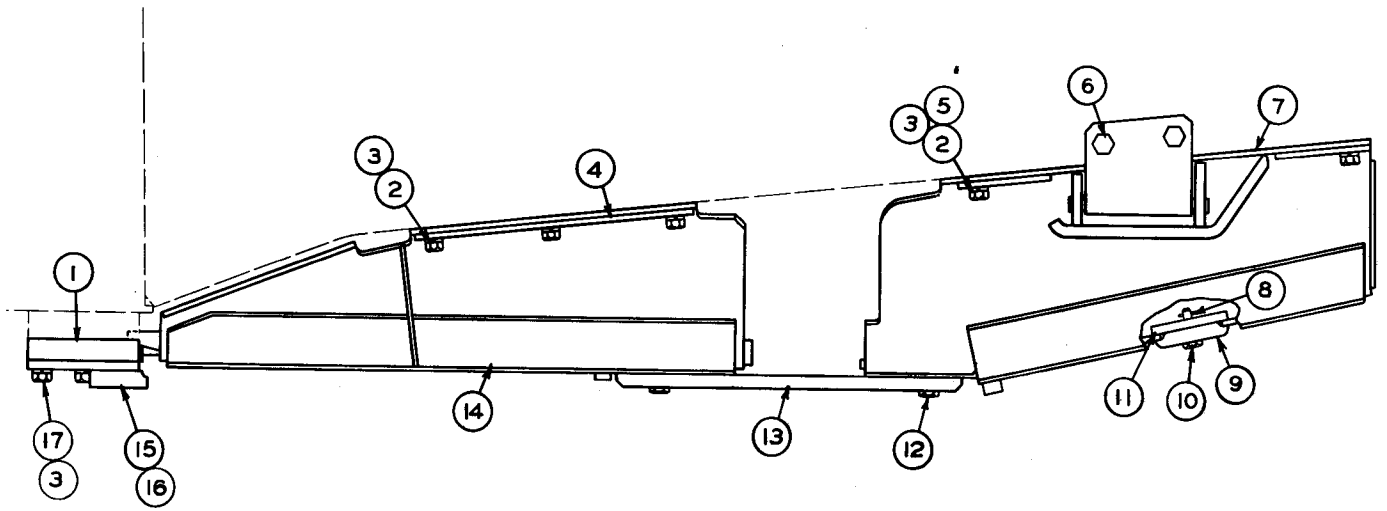

REF. NO.	PART NUMBER	DESCRIPTION	QTY.
1	5S1654	SPACER	2
2	L-1178	BOLT	12
3	3B4512	LOCKWASHER	18
4	2S9668	STRIP	2
5	2S9661	STRIP--(Left Hand)	1
6	S-1606	BOLT	2
7	7S1973	GUARD ASSEM.	1
8	4H5128	PIN--(Spring)	1
9	2S9731	COVER	1

REF. NO.	PART NUMBER	DESCRIPTION	QTY.
10	2S9732	BOLT	1
11	2S9434	STRIP	1
12	S-1585	BOLT	4
	8M4791	WASHER	4
13	2S9662	GUARD ASSEM.	1
14	5S1657	GUARD ASSEM.	1
15	5S1655	BRACKET ASSEM.--(Right Hand)	1
16	5S1656	BRACKET ASSEM.--(Left Hand)	1
17	1D4610	BOLT	6

101760

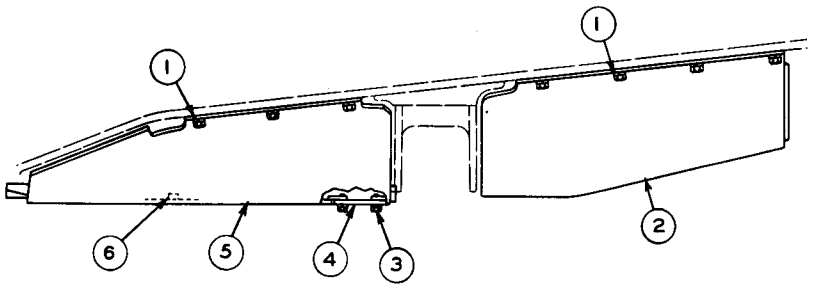

REF. NO.	PART NUMBER	DESCRIPTION	QTY.
1	S-1626	BOLT	14
	3B4512	LOCKWASHER	14
2	7S1972	GUARD ASSEM.	1
3	6H1717	BOLT	4
	3B4508	LOCKWASHER	4

REF. NO.	PART NUMBER	DESCRIPTION	QTY.
4	7M644	PLATE	1
5	9M3434	GUARD ASSEM.	1
6	1F748	NUT----------(Weld)---------- (Part of 9M3434 Guard Assem.)	2

101762

7S1976 CRANKCASE GUARD GROUP
FOR USE WITH FIXED DRAWBAR

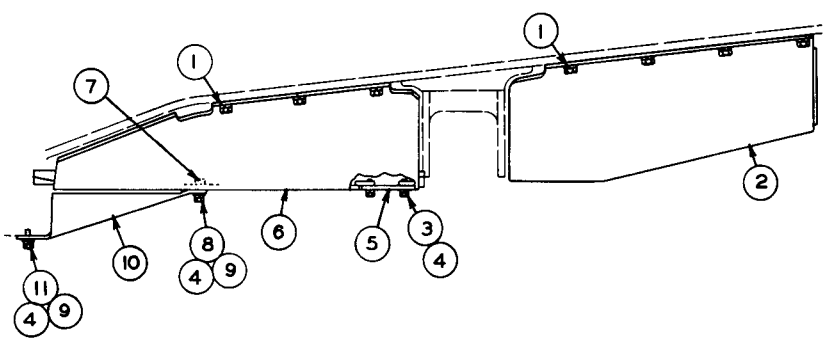

REF. NO.	PART NUMBER	DESCRIPTION	QTY.
1	S-1626	BOLT	14
	3B4512	LOCKWASHER	14
2	7S1972	GUARD ASSEM.	1
3	6H1717	BOLT	4
4	3B4508	LOCKWASHER	8
5	7M644	PLATE	1

REF. NO.	PART NUMBER	DESCRIPTION	QTY.
6	8S4544	GUARD ASSEM.	1
7	1F748	NUT----------(Weld)---------- (Part of 8S4544 Guard Assem.)	2
8	S-1585	BOLT	2
9	4B4280	WASHER	4
10	9M3435	GUARD ASSEM.	1
11	7B3235	BOLT	2

101761

7S1975 CRANKCASE GUARD GROUP
FOR USE WITH SWINGING DRAWBAR

8S1754 BRUSH GUARD GROUP

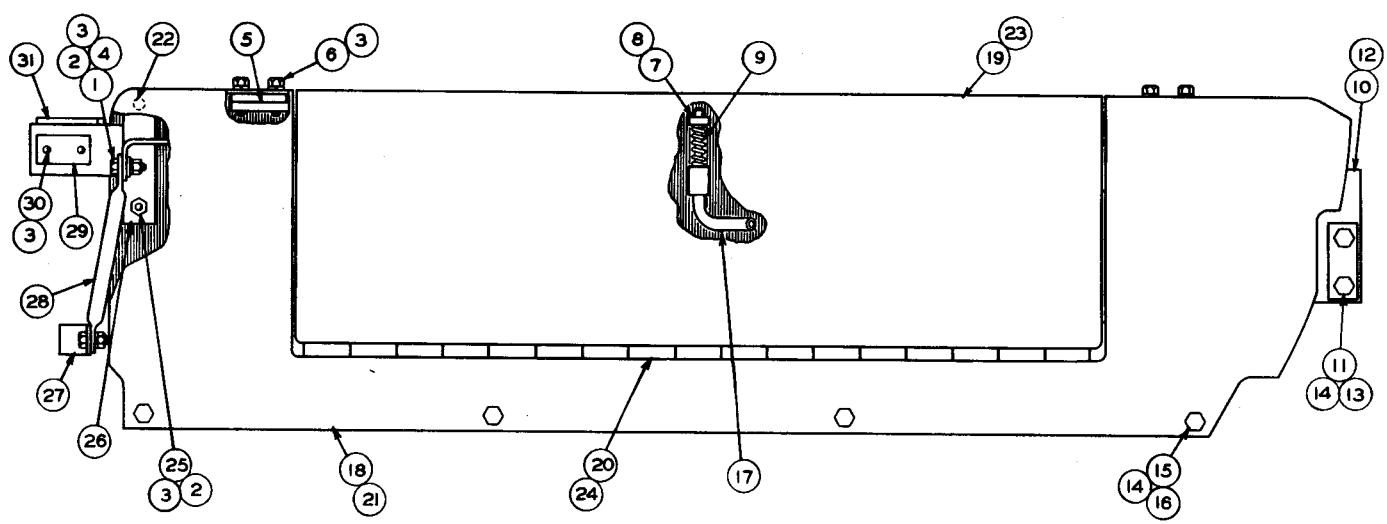

REF. NO.	PART NUMBER	DESCRIPTION	QTY.
1	S-1594	BOLT	2
2	1D4717	NUT	4
3	3B4506	LOCKWASHER	14
4	4B4278	WASHER	1
5	8S1752	PLATE	2
6	S-1588	BOLT	8
7	7M1779	PLATE	2
8	6H3956	PIN	2
9	1A4213	SPRING	2
10	9M7455	PLATE ASSEM. ----(Right Hand)----	1
11	1F748	NUT ----------(Weld)---------- (Part of 9M7455 Plate Assem.)	2
	7B3235	BOLT	2

REF. NO.	PART NUMBER	DESCRIPTION	QTY.
12	9M7456	PLATE ASSEM. -----(Left Hand)----	1
13	1F748	NUT----------(Weld)---------- (Part of 9M7456 Plate Assem.)	2
	7B3235	BOLT	2
14	3B4508	LOCKWASHER	12
15	6H1717	BOLT	8
16	1D4719	NUT	8
17	7F4404	HANDLE	2
18	8S1759	GUARD ASSEM. ----(Right Hand)---	1
19	8S1755	DOOR ASSEM.	1
20	8S1777	HINGE (Parts of 8S1759 Guard Assem.)	1

REF. NO.	PART NUMBER	DESCRIPTION	QTY.
21	8S1760	GUARD ASSEM. ----(Left Hand)----	1
22	5B8030	SPACER	2
23	8S1755	DOOR ASSEM.	1
24	8S1777	HINGE (Parts of 8S1760 Guard Assem.)	1
25	1A2029	BOLT	2
26	2B2296	CLIP	1
27	1S1845	ANGLE	1
28	1S1846	BRACE	1
29	8B1006	PLATE	1
30	L-1351	BOLT	2
31	9M7457	BRACKET ASSEM.	1

101758

ONLY "CATERPILLAR" PARTS GIVE "CATERPILLAR" PERFORMANCE

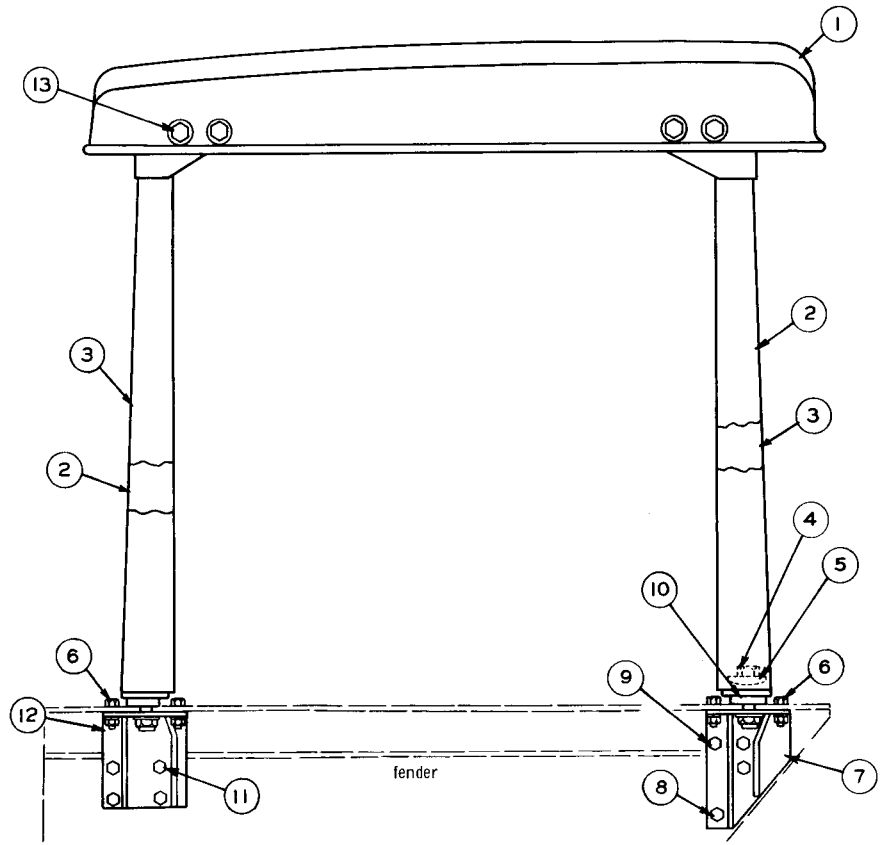

REF. NO.	PART NUMBER	DESCRIPTION	QTY
1	5S1512	CANOPY	1
2	7S6115	SUPPORT ASSEM.	2
3	7S6116	SUPPORT ASSEM.	2
4	6B5310	BOLT	4
	3D8659	NUT	4
	4D6989	WASHER	4
5	4S9120	SEAT	4
6	7B3235	BOLT	16
	1D4719	NUT	16
	3B4508	LOCKWASHER	16
7	7S4928	BRACKET ASSEM. -(left hand-rear)	1
	7S4927	BRACKET ASSEM. (right hand-rear)	1
8	S-1585	BOLT	2
9	S-1587	BOLT	6
10	4S9121	PAD	4
11	1A1135	BOLT	8
12	7S4924	BRACKET ASSEM. -(left hand-front)	1
	7S4923	BRACKET ASSEM. (right hand-front)	1
13	3B1915	BOLT	8
	9H8524	NUT	8
	4B5271	WASHER--------( )	8
	1S7760	WASHER--------( )	8

7S1566 CANOPY GROUP

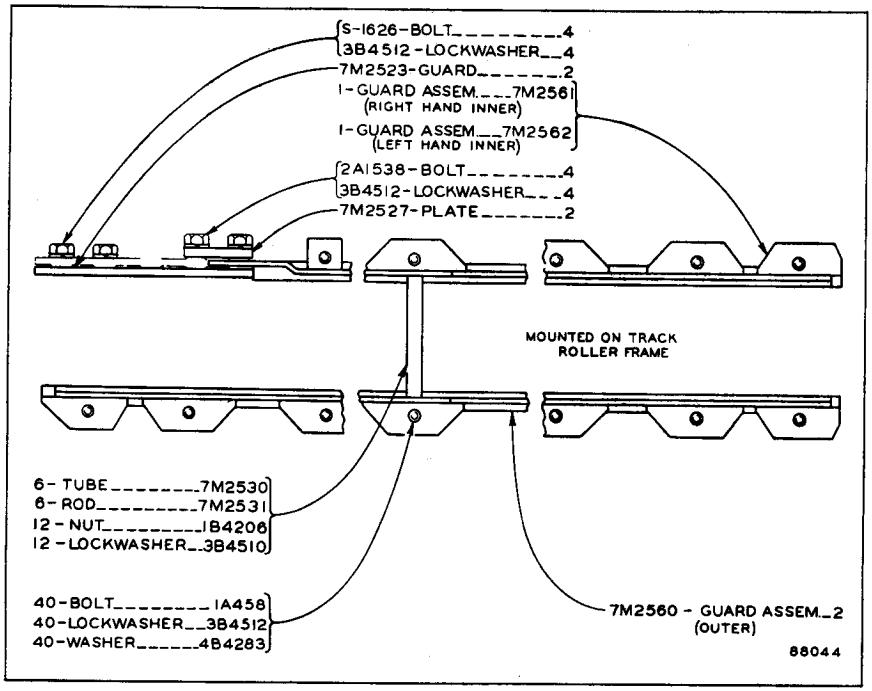

7M2570 TRACK ROLLER GUARD GROUP

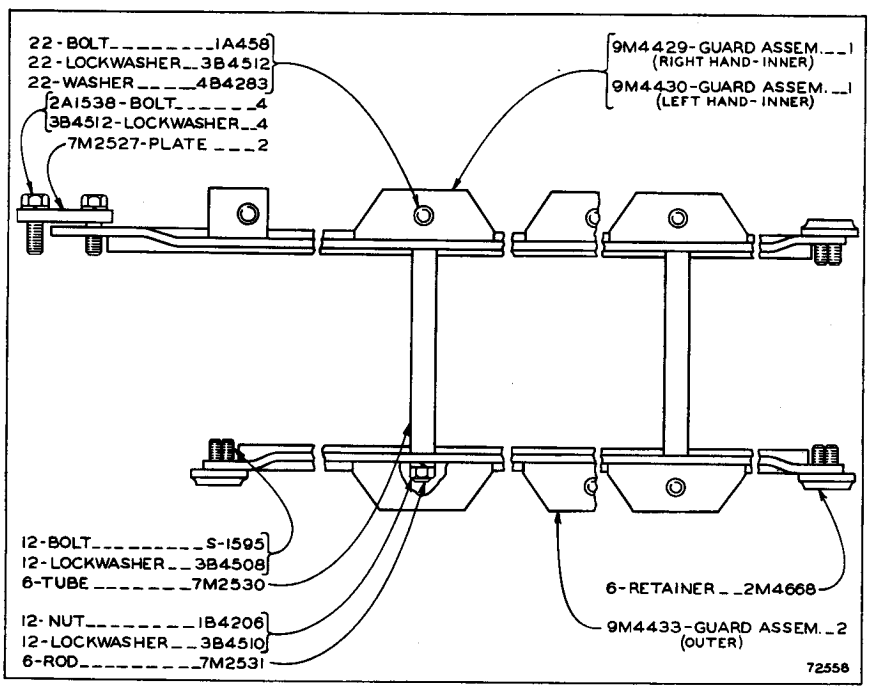

9M4432 TRACK ROLLER GUARD GROUP
FOR USE WITH 9M4434 TRACK ROLLER FRAME GROUP

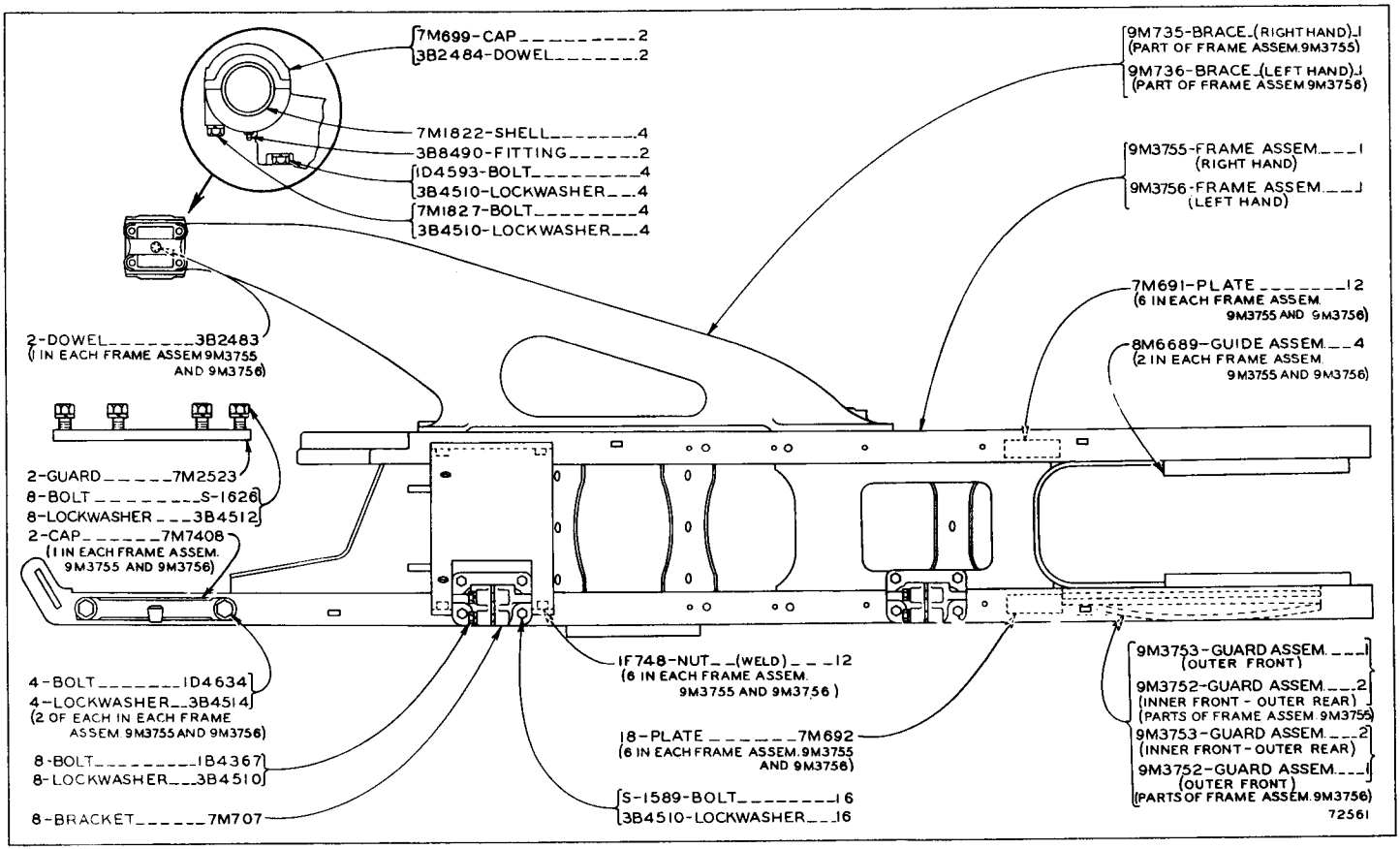

9M4434 TRACK ROLLER FRAME GROUP--FACTORY INSTALLATION
PROVIDES WELDED GUIDING GUARDS

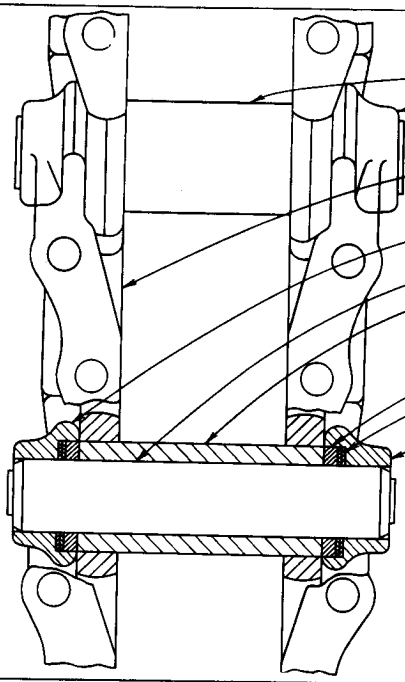

NAME	SHOE (36 REQUIRED FOR ONE TRACK)	COMPLETE TRACK GROUP (HARDWARE INCLUDED) 2 REQUIRED PER TRACTOR
18" GROUSER SHOE	5S822	2S5125
20" GROUSER SHOE	4S7685	4S8009
22" GROUSER SHOE	4S7684	4S8011
24" GROUSER SHOE	4S7683	4S8010

7H3597 TRACK SHOE BOLT--144 REQUIRED FOR ONE TRACK
1M1408 NUT--USED WITH 7H3597

NOTE: 9M3510 TRACK PIN AND BUSHING GROUP, CONSISTING OF A COMPLETE SET OF PINS AND BUSHINGS FOR ONE TRACK, IS AVAILABLE

TRACK GROUPS--2 GROUPS REQUIRED

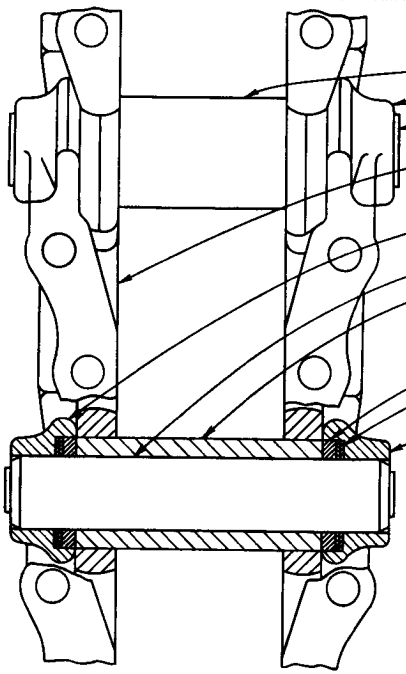

7S9568-LINK ASSEM. - - - - - - 1
Consisting of:
4M5991-BUSHING - - - - - - - - 35
7S9109-LINK - -(Right Hand)- -35
4M5989-PIN - - - - - - - - - - 35
7S9110-LINK - - (Left Hand)- - 35
7S9112-LINK - - - - - - - - - - - 1
(Master-Left Hand)
4M5990-PIN - - - - (Master)- - - 1
4M5992-BUSHING - -(Master)- - 1
8M7290-SPACER - - - - - - - - - 2
8M7231-SEAL WASHER - - - - 144
7S9111-LINK - - - - - - - - - - - 1
(Master-Right Hand)

NOTE: When complete replacement of Master Pin is required, you may order Master Pin and Spacer Group 9M3511 which consists of:
4M5990-PIN - - - -(Master)- - - -1
8M7290-SPACER - - - - - - - - - 2
8M7231-SEAL WASHER - - - - - 4
103163

NAME	SHOE (36. REQUIRED FOR ONE TRACK)	COMPLETE TRACK GROUP (HARDWARE INCLUDED) 2 REQUIRED PER TRACTOR
18" GROUSER SHOE	7S9566	7S9542
20" GROUSER SHOE	7S9557	7S9535
22" GROUSER SHOE	7S9558	7S9533
24" GROUSER SHOE	7S9559	7S9534

1S1859 TRACK SHOE BOLT--144 REQUIRED FOR ONE TRACK
1S1860 NUT--USED WITH 1S1859

NOTE: 9M3510 TRACK PIN AND BUSHING GROUP, CONSISTING OF A COMPLETE SET OF PINS AND BUSHINGS FOR ONE TRACK, IS AVAILABLE

TRACK GROUPS--2 Required

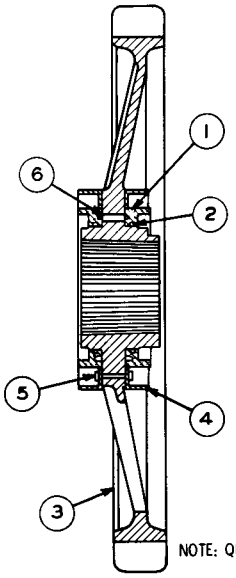

REF NO	PART NUMBER	DESCRIPTION	QTY
1	5M6626	RETAINER	4
2	4F9652	SEAL	4
3	9M5885	SPROCKET ASSEM.	2
4	4F6066	GUARD (2 in each 9M5885 Sprocket Assem.)	4
5	4B4341	RIVET (9 in each 9M5885 Sprocket Assem.)	18
6	1A4089	PIN (3 in each 9M5885 Sprocket Assem.)	6

NOTE: QUANTITIES SHOWN ARE REQUIRED FOR RIGHT HAND AND LEFT HAND FINAL DRIVE

98718

9M5886 TRACK SNOW SPROCKET GROUP

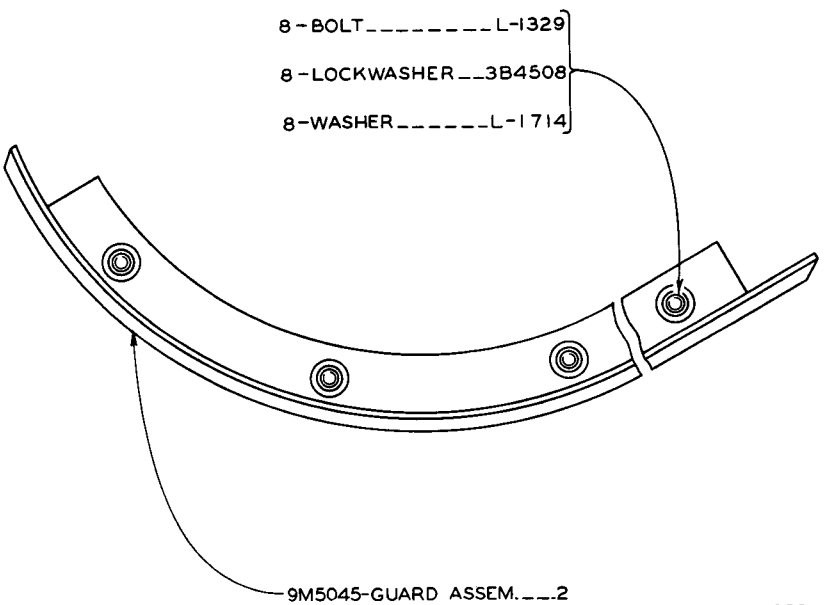

9M5046 FINAL DRIVE WEAR GUARD GROUP

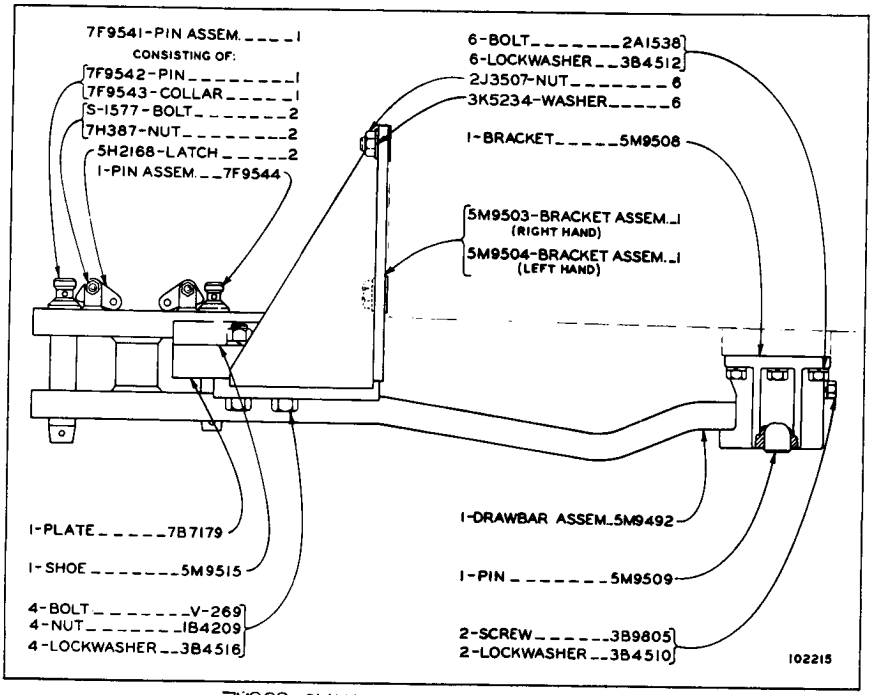

7M828 SWINGING DRAWBAR GROUP

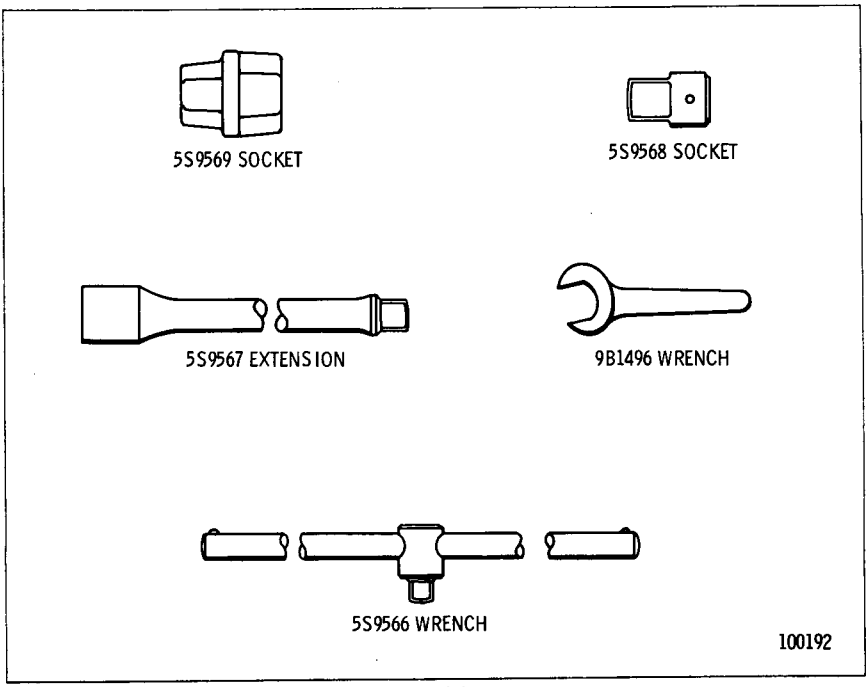

TOOLS

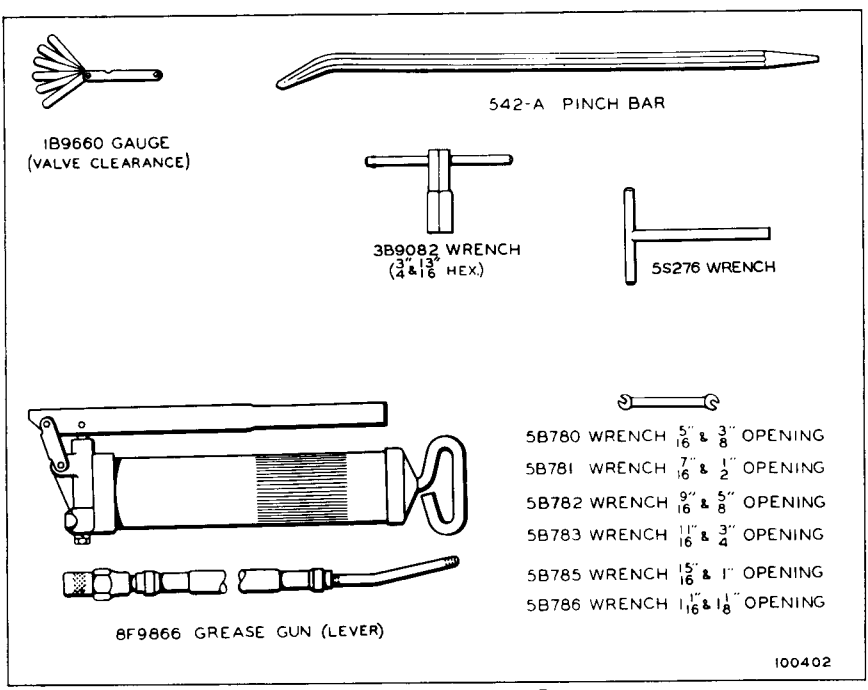

8M9853 TOOL GROUP
AN ATTACHMENT

ALWAYS GIVE SERIAL NUMBER WHEN ORDERING PARTS

QUANTITY USED	PART NUMBER	DESCRIPTION
3	2M6831	PLATE--SERIAL NUMBER
1	7S9346	PLATE--ORIGIN
1	8S3696	PLATE--DIRECT ELECTRIC STARTING
1	8S3907	PLATE--LUBRICATION INSTRUCTION
16	4B4158	DRIVE SCREW
1	5H9856	TRANSFER--MANUFACTURER'S ADDRESS
1	8S6562	TRANSFER--FUEL FILTER INSTRUCTION
1	4S8849	FILM--FILTER INSTRUCTIONS
1	9M9147	TRANSFER GROUP
		CONSISTING OF:
1	.....	TRANSFER--SAFETY ON DASH
1	.....	TRANSFER--FILTER INSTRUCTIONS ON OIL FILTER COVER
1	.....	TRANSFER--FUEL OIL CAPACITY LEFT OF FUEL TANK FILLER NECK
1	.....	TRANSFER--AIR CLEANER INSTRUCTIONS ON DIESEL AIR CLEANER
2	.....	TRANSFER--GENERATOR INSTRUCTIONS ON REGULATOR AND GENERATOR BODY
2	8S5497	TRANSFER--CATERPILLAR ON EACH SIDE OF HOOD
1	8S8959	TRANSFER--CATERPILLAR ON BACK OF FUEL TANK
2	8S3923	FILM--CORPORATE SYMBOL ON EACH SIDE OF FUEL TANK
2	8S5490	FILM--D6C ON EACH SIDE OF FUEL TANK

NAME PLATES AND TRANSFERS

MEMORANDA

MEMORANDA

SPECIFICATIONS

(SUBJECT TO CHANGE WITHOUT NOTICE)

WEIGHT, SHIPPING (APPROXIMATE)	23,700 LBS.

DIMENSIONS

LENGTH	13'
HEIGHT	6' 11 1/2"
WIDTH	7' 9"
GAUGE (CENTER TO CENTER TRACKS)	74"
GROUND CLEARANCE	14 5/8"
DRAWBAR HEIGHT (LOW POSITION)	16 1/4"

CAPACITIES

COOLING SYSTEM	10 1/4 U.S. GAL.
CRANKCASE, LUBRICATING OIL	7 1/4 U.S. GAL.
TRANSMISSION, STEERING CLUTCH AND BRAKE, LUBRICATING OIL	21 U.S. GAL.
FINAL DRIVE, LUBRICATING OIL, EACH SIDE	5 U.S. GAL.
FUEL TANK	78 U.S. GAL.

ATTACHMENTS

ADDITIONAL EQUIPMENT SUCH AS CRANKCASE & BRUSH GUARDS, CABLE & HYDRAULIC CONTROLS, LIGHTING SYSTEM, ETC., ARE AVAILABLE AT EXTRA COST. CONSULT YOUR "CATERPILLAR" DEALER.

MACHINE SERIAL NUMBER PLATE LOCATION

SERIAL NUMBER PLATES ARE LOCATED ON THE BACK OF THE TRANSMISSION CASE, IN OPERATOR'S COMPARTMENT ON LOWER RIGHT-HAND DASH PLATE AND ON THE LEFT-HAND SIDE OF THE CYLINDER BLOCK.

PRINTED IN U.S.A. FORM UE070095