RUTHZIL TRATOR COMERCIAL DE PEÇAS LTDA 11 97083-6812 ROLANDO CITRANGULO

CATERPILLAR

PARTS BOOK

SETEMBRO 1980

D6D LGP
TRACTOR

POWER SHIFT

POWERED BY
3306 ENGINE

SETEMBRO 1980

SERIAL NUMBERS

6X1-UP (VEHICLE)
3N52495-UP (ENGINE)
2HA1-UP (TRANSMISSION)

QUICK REFERENCE CHARTS

USE THESE CHARTS TO RECORD FREQUENTLY USED MAINTENANCE INFORMATION

MACHINE SERIAL NO.	6X345
EQUIPMENT NO.	886-176

FREQUENTLY REPLACED ITEMS

PART NO.	PART NAME

FLUIDS & LUBRICANTS

WHERE USED	TYPE	AMOUNT

OTHER MAINTENANCE ITEMS

FORM SEBP1142

CONTENTS

ALPHABETICAL INDEX OF GROUPS__ 3
CONVERSION EQUIVALENT TABLES INSIDE BACK COVER
ORDERING PARTS_____2
QUICK REFERENCE CHART INSIDE FRONT COVER
USING THE PARTS BOOK_____2

D6D LGP
TRACTOR POWER SHIFT POWERED BY 3306 ENGINE

SERIAL NUMBER
6X1—UP (VEHICLE)
3N52495—UP (ENGINE)
2HA1—UP (TRANSMISSION)

REVISION PUBLISHED SEPTEMBER 1980
CATERPILLAR TRACTOR CO.
PUBLICATIONS DIV.—SERVICE G.O.
PEORIA, ILL. U.S.A.

QUICK REFERENCE GUIDE TO MAJOR SECTIONS

BASIC ENGINE
LUBRICATION SYSTEM
COOLING SYSTEM
INTAKE & EXHAUST SYSTEM
FUEL SYSTEM & GOVERNOR
STARTING & ELECTRICAL SYSTEM
POWER TRAIN— POWER TRANSMISSION UNIT
STEERING CLUTCHES & BRAKES
CHASSIS & UNDERCARRIAGE
CAB, GAUGES & ACCESSORIES
SERVICE EQUIPMENT & SUPPLIES

ORDERING PARTS Quality Caterpillar Replacement parts are available from Caterpillar dealers throughout the world. Their parts stocks are up to date and include all parts normally required to protect your investment in Caterpillar machines. When ordering parts, always use the Parts Book covering the serial number of your machine. Your order should specify the quantity, part number, part name and show the machine serial number for which the parts are needed. If in doubt about the part number, please provide your dealer with a complete description of the needed item.

SEE SPECIFICATIONS FOR LOCATION OF SERIAL NUMBER PLATES

HOW TO USE THE PARTS BOOK Caterpillar Parts Books include illustrations of the groups or assemblies which make up the machine. These illustrations show the standard components of the machine plus many of the attachments available for the machine.

The alphabetical index located in the front part of the book should be used to determine the page number on which specific illustrations are shown. Reference to those pages will identify each of the individual serviceable parts.

Captions

The caption under each illustration identifies the part number and name of the group or assembly shown. If more than one illustration is included for any group, the caption identifies the specific machine serial numbers to which each illustration applies. In some cases it is not possible to determine the specific machine serial numbers to which different illustrations are applicable. In those cases the caption identifies the illustration as "First Type", "Second Type", etc. Reference to the actual group or assembly is necessary in those cases to determine which illustration should be used.

Captions provide additional information such as page numbers where illustrations of sub assemblies are shown, information regarding quantities used and other information intended to assist the user in determining parts needs.

Indented Part Names

Within each illustration is a parts list identifying each serviceable part in the illustration. When a part name is indented in this list, it means that serviceable item is a part of the serviceable item under which it is indented.

Abbreviations and Symbols

▲ ●	Used to call attention to additional information shown elsewhere within the illustration.	
R.H.	Right Hand	Refers to the side of the machine as viewed from the operator's compartment.
L.H.	Left Hand	
C	Indicates changes from the previous illustration of the same group or assembly.	
O.D.	Outside Diameter	
I.D.	Inside Diameter	
N/S	Not Serviced	
Assem.	Assembly	
in.	Inch	
ft	Foot	
cm	Centimetre	
dm	Decimetre	

Note:

Continuing improvement and advancement of product design may cause changes to your machine which may not be included in this publication. Each publication is reviewed and revised, as required, to update and include these changes in later editions.

Whenever a question arises regarding your Caterpillar product, or this publication, please consult your Caterpillar dealer for the latest available information.

INDEX

A

Name	Page
Adapter — Fuel Pump & Governor Support to Cylinder Block	61
Air Cleaner	41
Air Conditioner	176
Air Conditioner Lines	184
Air Filter Service Indicator	188
Air Lines	40
Alternator	72
Alternator Adjusting Bracket	72
Alternator Pulley	72
Ammeter — 19 Ampere	67
Ammeter — 60 Ampere	72
Arm — Windshield Wiper	165
Armature — Starting Motor	77
Ash Tray	175

B

Name	Page
Back-Up Warning	92
Baffles—Radiator	32
Baffles—Torque Converter Oil Cooler	38
Band—Cylinder Liners	6
Base—Oil Filter	27
Battery & Wiring	65
Bearing Cap—Main Crankshaft	7
Bearings—Connecting Rod	10
Bearings—Crankshaft	8
Blades—Windshield Wiper	165
Bracket—Alternator Adjusting	72
Bracket—Governor Control Linkage	59
Bracket—Radiator Mounting	33
Brackets—Cab Mounting	162
Brackets—Fender Support	136
Brackets—Steering Clutch Control Lever	118
Brake Band & Lining	116
Brake Linkage Service	120B
Brake Mechanism—Hydraulic	124
Breather — Engine Crankcase Oil	30
Breather — Hydraulic Brake Mechanism	124
Brushes — Alternator	73

C

Name	Page
Cab—ROPS	155
Cab Accessory	175
Cab Heater	185
Cab Liner	158
Cab Mounting	162
Cab Pressurizer—Roll-Over Protective Structure	159
Camshaft	10
Cap—Fuel Tank	63
Cap—Oil Filler	26
Cap—Radiator Fill	33
Cap—Rain	41B
Circuit Breaker—15 Ampere—Cab Pressurizer	159
Circuit Breaker—30 Ampere—Air Conditioner	181
Circuit Breaker—40 Ampere	67
Condenser—Air Conditioner	182
Control—Steering Clutch	118
Control Linkage—Transmission	102, 103
Coolant Flow Switch	91
Cooling Supplemental	38A
Core—Engine Oil Cooler	37
Core—Torque Converter Oil Cooler	38
Core—Transmission Oil Cooler	37
Cover—Cylinder Block	6
Cover—Front Housing	19
Crankcase Guard	131
Crankshaft	8
Crankshaft Bearing Replacements	9
Crankshaft Seal	9
Cylinder Block	7
Cylinder Head	12
Cylinder Head Cover	13
Cylinder Head Fastener	12

D

Name	Page
Damper	15
Dipstick—Engine Oil	25
Dipstick—Transmission Oil	110
Door—Cab	155
Drain Cock—Radiator	32
Drawbar	130
Drum—Steering Clutch Driven	114
Dryer—Air Conditioner Condenser	182
Duo-Cone Seal—Final Drive	114, 115

E

Elbow — Radiator Top Tank Hose to Cylinder Head	36
Elbow — Turbocharger to Muffler	40
Electric Horn	187
Element — Air Lines	40
Element — Primary & Secondary Air Cleaner	41
Element — Transmission & Steering Clutch Filter	112
Element — Water Separator	64
Engine Arrangement	4
Engine Arrangement — Air Conditioning	3
Engine Enclosure	135
Engine Mounting Hardware	20
Equalizer Bar	128
Exhaust Manifold	44

F

Fan & Guard	34
Fan Drive	16
Fan Drive Bracket	16
Fans — Air Conditioner Condenser	182
Fastener — Exhaust Manifold	44
Fastener — Front Housing	19
Fastener — Oil Pan	24
Fender	136
Fender Support	137
Filter—Transmission & Steering Clutch	112
Final Drive	114
Fire Extinguisher	188
Flood Lamp	91
Floorplate	137
Flywheel	23
Flywheel Housing	22
Frame & Case	126
Front Housing	18
Front Idler	150
Front Pull Hook	130
Fuel Filter	62
Fuel Injection Lines	61
Fuel Lines	60
Fuel Priming Pump	62
Fuel Tank	63
Fuel Tank Guard	133
Fumes Disposal	31
Fuse—2 Ampere—Back-Up Warning	92
Fuse—4 Ampere—Rear Wiper	166
Fuse—15 Ampere	67
Fuse Holder, Fuse & Wire Kit—Hour Meter	188A

G

Gasket—Air Cleaner to Air Pipe	41
Gasket—Air Lines to Cylinder Head	40
Gasket—Coolant Flow Switch to Transmission Oil Cooler Bonnet	91
Gasket—Core Assembly to Bonnet	37
Gasket—Exhaust Manifold to Cylinder Head	44
Gasket—Front Housing Cover to Timing Gear Housing	19
Gasket—Fuel Priming Pump to Fuel Filter Base	62
Gasket—Governor to Governor Cover	45, 47
Gasket—Oil Cooler to Water Line Outlet Pipe	37
Gasket—Oil Filler to Block	26

Name Page

Gasket—Oil Filter Base to Tube 29
Gasket—Oil Pan to Cylinder Block 24
Gasket—Oil Pump to Tube 29
Gasket—Turbocharger to
Exhaust Manifold.....42
Gasket—Valve Mechanism Cover
to Cylinder Block 14
Gasket—Water Elbow to
Cylinder Head.....36
Gasket—Water Elbow to
Water Pump 36
Gasket—Water Regulator Housing
to Cylinder Head.....36
Gasket Kits.....192
Gaskets—Turbocharger to
Supply & Drain Tubes 43B
Gauge—Engine Oil Level 25
Gauge—Fuel Pressure 189
Gauge—Oil Pressure.....189
Gauges.....189
Gear—Camshaft 18
Gear—Crankshaft 18
Gear—Fuel Pump Drive.....18
Gear—Fuel Pump Idler 18
Gear—Oil Pump Drive 27
Gear—Oil Pump Idler.....18
Gear—Torque Divider 94
Gears—Planetary Transmission 100, 101
Glass—Cab Door.....163
Glow Plug 71
Governor & Fuel Injection Pump 45
Governor & Fuel Injection
Support Bracket.....61
Governor Control 58
Governor Cover 45
Governor Spring.....45
Grab Iron—Engine Enclosure.....135
Grab Iron—Hood & Dash 140
Grab Irons—ROPS.....152
Grease Gun.....192
Guard—Fuel Tank 133
Guard—Radiator.....133
Guard—Transmission Shift Control 102

H

Name Page

Hand Tools.....191
Handles—Cab Door.....155
Handles—Steering Clutch Control 118
Handles—Support & Seat 170
Hardware—Engine Oil Pump 27
Hardware—Exhaust Manifold 44
Harness Assembly—Cab Pressurizer....167B
Harness Assembly—Connects
Dash Area Harness to Engine
Area Harness 69
Harness Assembly—Dash Area 70
Harness Assembly—Engine Area 69
Harness Assembly—Washer to
Front & Rear Wiper Switches.....164
Holddown—Battery 66
Hood and Dash 138
Hook—Coat.....175
Hook—Front Pull.....130
Hose—Engine Oil Breather to
Fumes Disposal Tube 31
Hose—Oil Cooler Elbow to Heater 185
Hose—Radiator Inlet & Outlet.....33
Hose—Steering Clutch Control
to torque Converter 109
Hose—Torque Converter to
Bevel Gear Case 109
Hose—Transmission & Steering
Clutch Filter to Gear Pump.....111
Hose—Washer to Rear of Cab 164
Hose—Water Elbow to Water Pipe 36
Hoses—Torque Converter to
Gear Pump 111
Hour Meter 197
Housing & Regulator—
Water Temperature 36

I

Indicator — Oil Temperature 189
Indicator — Water Temperature 189
Inserts — Intake & Exhaust 12

J

Name — Page

Jacket Water Heater 38

K

Key—Cab Door 155
Key—Disconnect Switch 70
Kit—Turbocharger Cartridge Repair 43
Kit—Water Pump Rebuild 35
Kits—Alternator Repair 73
Kits—Solenoid Switch Repair 85
Kits—Starting Motor Repair 78
Knob—Governor Control 58
Knob—Transmission Safety 103
Knob—Transmission Shift 103

L

Latch—Door. 154B
Latch—Hood 138
Latches—Support & Seat. 170
Lever—Parking Brake Control 122
Lifting 14
Light—Dome. 160
Lighting & Wiring—4 Lamp. 86
Liners—Cylinder Block. 6
Linkage—Cover Control 58
Linkage—Parking Brake. 122
Linkage—Steering Brake 121
Linkage—Steering Clutch Control ... 118

M

Magnetic Screen—Power Train Oil .. 112
Mirror 154B
Muffler 42

N

Name — Page

Nameplate — Torque Converter 96
Name Plates — Front Idler Warning ..150
Non Roll-over Protective Structure Conversion 154
Nozzle — Fuel 61

O

Oil Cooler — Engine 37
Oil Cooler — Torque Converter 38
Oil Cooler — Transmission 37
Oil Filler 26
Oil Filter — Engine 27
Oil Lines — Engine 29
Oil Pan 24
Oil Pump — Engine 26, 27
Orifice — Air Conditioner Condenser .182

P

Padlock & Key 63
Padlock & Key — Hydraulic Tank Cap 175
Padlock & Key — Oil Filler Protection Cover 26
Padlock & Key — Oil Level Gauge Protection Cover 25
Padlock & Key — Vandalism Guard ..190
Parking Brake 121
Pedal — Governor Control 59
Pedals — Steering Brake 123
Pipe — Water Hose to Oil Cooler 36
Piston Rings 10
Plug — Fuel Injection Drain 56
Plug — Oil Pan Drain 24
Plug — Transmission Oil Cooler Pipe Drain 37
Plugs — Final Drive Oil Fill 126
Plunger — Fuel Tank 63
Plunger — Transmission Oil 110
Power Train Oil Lines 109
Power Train Schematic 93
Precleaner — Air Cleaner 41
Prescreener 41
Protection Cover — Fuel Tank Cap ... 63

Name Page

Protection Cover — Hydraulic Tank Cap 175
Protection Cover — Oil Filler 26
Protection Cover — Oil Level Gauge . 25
Protective Screen 169
Pulley — Alternator 72
Pulley — Crankshaft 15
Pulley — Fan Drive 15
Pump — Fuel Priming 62
Pump — Gear — Power Train Oil Lines 113
Pump — Water 35

R

Radiator 32
Radiator Grill Hinged Plate 134
Radiator Guard.....133
Radiator Guard Hinge 134
Rear Gear—Accessory Drive.....21
Refrigerant Compressor 177
Regulator—19 Ampere 73
Rod & Piston.....10
Roll-Over Protective Structure 155
Roll-Over Protective Structure—Enclosed 152A
Roll-Over Protective Structure—Open.....152
Roll-Over Protective Structure—With Sound Suppression.....153
Roll-Over Protective Structure Mounting 128
Rotocoil—Cylinder Head 11

S

Safety Brace 158
Scavenge Pump 98
Screen — Torque Divider 95
Seal — Adapter to Cylinder Block ... 61
Seal — Breather to Valve Cover 30
Seal — Cab Glass 164
Seal — Control Valve to Bevel Gear Case 118

Name Page

Seal — Elbow to Muffler 40
Seal — Gear Pump to Transmission & Steering Clutch Filter 111
Seal — High Temperature — Final Drive 115
Seal — Power Train Oil Lines to Steering Clutch Control Valve 109
Seal — Power Train Oil Lines to Brake Hydraulic Housing 109
Seal — Torque Converter to Cover ... 94
Seal — Transmission & Steering Clutch Pump to Magnetic Screen ...111
Seal — Tube to Return Lines to Transmission 39
Seal — Tube to Scavenge Pump 111
Seals — Cylinder Liners 6
Seals — Tube to Air Conditioner 180
Seat 173
Seat Belt 174
Segmented Sprocket 116
Solenoid Switch — Starting Motor 85
Starting Motor — Electric — 24 Volt .. 76
Strainer — Fuel Tank 63
Strainer — Windshield Wiper 165
Steering Brake 121
Steering Clutch 120
Steering Clutch Control 118
Support — Front Engine 20
Support & Seat 170
Sweep 168
Switch — Actuator — Rear Wiper ...166
Switch — Blower 160
Switch — Coolant Flow 91
Switch — Disconnect 70
Switch — Heat — Start 67
Switch — Horn 187
Switch — Magnetic — Cab Pressurizer 159
Switch — Oil Pressure ..... 159 & 189
Switch — Rear Wiper 166
Switch — Thermostat — Air Conditioner 181
Switch — 3 Position 67
Switch — Toggle — Windshield Wiper 165

T

Name	Page
Thermostat—Water Temperature	36
Timing Gear Housing	18
Timing Gears—Front	18
Torque Control	57
Torque Converter	96
Torque Converter Oil Cooler Lines	39
Torque Divider	94
Track	146
Track Carrier Roller	142
Track Roller	141
Track Roller Frame	143
Track Roller Frame Guard	144
Track Roller Guard	145
Transfer Gear	105
Transfers	193
Transmission—Planetary	100
Transmission Arrangement—Powershift	99
Transmission Control	102
Transmission Hydraulic Control	104
Trunnion—Rear Engine	17
Tube—Gear Pump to Magnetic Screen	111
Tube—Oil Filter Base to Cylinder Block	29
Tube—Oil Filter Base to Engine Oil Pump	29
Tube—Steering Clutch Control to Bevel Gear Case	119
Tube—Transmission & Steering Clutch Filter to Torque Converter	111
Tube—Transmission Filler	124
Tube—Water Separator Base to Fuel Filter	64
Tubes—Air Conditioner to Compressor	180
Tubes—Bevel Gear Pinion Sprayer	110
Tubes—Fuel Tank to Fuel Filter	60
Tubes—Oil Cooler to Return Lines to Transmission	39
Tubes — Supply & Drain — Turbocharger Oil Lines	43B
Tubes — Track Roller Guard	145
Turbocharger	42
Turbocharger Oil Lines	43B

U

Name	Page
Universal Joint	98

V

Name	Page
Valve — Fuel Injection	61
Valve — Relief — Transmission	106
Valve — Rocker Arm & Lifters	13
Valve — Selector — Transmission Hydraulic Control	106
Valve — Steering Clutch Control	117
Valve — Torque Converter Relief	97
Valve — Transmission Hydraulic Pressure Control	107
Valve Mechanism	13
Valve Mechanism Cover	14
Valves — Intake & Exhaust — Cylinder Head	11
Vandalism Guard	190
Vee-Belts — Alternator	72
Visor — Sun	175

W

Name	Page
Water Lines	36
Water Pump	35
Water Separator	64
Windshield Washer	164
Windshield Wiper	164A
Windshield Wiper—Rear	164B & 166
Wire—Starting Motor Ground	76
Wiring Diagram	68

INDEX ALPHABÉTIQUE

Moteur de base (Page 3)

Désignation	Page
Arbre à cames	10
Bielles et pistons	10
Bloc-cylindres	6
Bloc-cylindres (couvercles)	6
Bride de levage	14
Carter avant	18
Carter avant (boulonnerie)	19
Carter avant (couvercle)	19
Carter de volant	22
Carter inférieur	24
Carter inférieur (boulonnerie)	24
Coussinets de rechange de vilebrequin	9
Culasse	11
Culasse (boulonnerie)	12
Culasse (couvercle)	13
Damper	15
Engrenage arrière	21
Engrenage de distribution avant	18
Ensemble moteur	4
Ensemble moteur (pour climatiseur)	3
Joint de vilebrequin	9
Pièces de fixation du moteur	20
Poulie	15
Soupapes (couvercle)	14
Soupapes et train de commande	13
Support	20
Tourillon	17
Ventilateur (entraînement)	16
Vilebrequin	8
Volant	23

Circuit de graissage (Page 25)

Désignation	Page
Canalisations d'huile	29
Chapeau de sécurité (bouchon de tubulure de remplissage d'huile)	26
Couvercle de protection (jauge de niveau d'huile)	25
Filtre à huile	27
Jauge de niveau d'huile	25
Pompe à huile	27
Reniflard	30
Tubulure de remplissage d'huile	26
Tuyauterie d'évacuation de vapeurs	31

Circuit de refroidissement (Page 32)

Désignation	Page
Convertisseur de couple (refroidisseur d'huile)	38
Convertisseur de couple (tuyauterie du refroidisseur d'huile)	39
Pompe à eau	35
Radiateur	32
Réchauffeur d'eau de cylindres	38
Refroidisseur d'huile de transmission	37
Refroidisseur d'huile moteur	37
Thermostat et boîtier	36
Tuyauterie d'eau	36
Ventilateur soufflant et protecteur	34

Admission et échappement (Page 40)

Désignation	Page
Canalisations d'air	40
Collecteur d'échappement	44
Collecteur d'échappement (boulonnerie)	44
Filtre à air	41
Silencieux d'échappement	42
Tamis de préfiltre à air	41
Turbocompresseur	42
Turbocompresseur (canalisations d'huile)	43B

Alimentation en carburant et régulateur (Page 45)

Désignation	Page
Canalisations de carburant	60
Chapeau de sécurité (bouchon de réservoir de carburant)	63

Désignation Page

Filtre à carburant 62
Pompe d'amorçage de carburant 62
Régulateur (couvercle) 45
Régulateur (timonerie extérieure) 58
Régulateur et pompe d'injection 45
Réservoir de carburant 63
Séparateur d'eau 64
Tuyauterie d'injection de carburant 61

Démarrage et installation électrique (Page 65)

Alternateur 71
Avertisseur de recul 92
Batterie et câblage 65
Bougies de préchauffage 71
Contacteur de circulation d'eau 91
Démarreur électrique 76
Éclairage 86
Schéma de câblage 68

Train de transmission (Page 93)

Cardans 98
Convertisseur de couple 96
Coupleur différentiel 94
Engrenages de transfert 105
Mécanisme de transmission 93
Mécanisme de transmission (canalisations d'huile) 109
Pompe de reprise 98
Réducteurs latéraux 114
Soupape régulatrice de pression 108
Transmission 99
Transmission à trains planétaires 100
Vitesses (commande) 102
Vitesses (commande hydraulique) 104

Embrayages de direction et freins (Page 116)

Désignation Page

Embrayages de direction 120
Embrayages de direction (commande) 118
Frein de direction 121
Servo hydraulique des freins 124

Bâti et train de roulement (Page 126)

Barre d'attelage (non oscillante) 130
Bâti AR et châssis 126
Capot 138
Chaînes de roulement 146
Chapeau de sécurité (réservoir de carburant) 133
Châssis porteur 143
Châssis porteur (tôlerie de protection) 144
Crochet d'attelage avant 130
Galets inférieurs 141
Galets supérieurs 142
Garde-boue 136
Garde-boue (support) 137
Grille de radiateur sur charnières 134
Grilles pour compartiment moteur 135
Groupe de pose pour bâti de sécurité 128
Protège-carter moteur 131
Protège-galets 145
Protège-radiateur 133
Protège-radiateur sur charnières . . 134
Roues AV 150
Tablier 138
Tôle de plate-forme 137
Traverse de suspension 128

Cabine, instruments de contrôle et accessoires (Page 152)

Accessoires de cabine 175
Avertisseur sonore de marche AV (électrique) 187

Désignation	Page
Barre pare-branches	168
Bâti de sécurité (clos)	153
Bâti de sécurité (ouvert)	152
Bâti de sécurité (insonorisation)	153
Chapeau de sécurité (bouchon de réservoir hydraulique)	175
Chauffage de cabine	185
Climatiseur	176
Couvercle de protection de tableau de bord	190
Essuie-glace	166
Extincteur	188
Grille AR	169
Groupe de transformation de montage de bâti de sécurité	154
Indicateur de colmatage du filtre à air	188
Instruments de contrôle du moteur	189
Siège	173
Support et siège	170

Divers (Page 191)

Désignation	Page
Caractéristiques	195
Instructions sur décalcomanies	193
Jeux de joints	192
Outillage	191

INDICE

Motor Básico (Página 3)

Nombre	Página
Amortiguador de vibraciones	15
Arbol de levas	10
Bielas y pistones	10
Bloque de motor	6
Caja del volante	22
Caja delantera	18
Cárter	24
Cigüeñal	8
Cojinetes de bancada de repuesto	9
Conjunto de motor	4
Conjunto de motor y acondicionador de aire	3
Culata	11
Engranaje delantero	18
Engranaje trasero	21
Herrajes de la caja delantera	19
Herrajes de la culata	12
Herrajes del cárter	24
Levantamiento	14
Mando del ventilador	16
Mecanismo de las válvulas	13
Muñón	17
Partes montadas en el motor	20
Polea	15
Sello del cigüeñal	9
Soporte	20
Tapa de la caja delantera	19
Tapa de la culata	13
Tapa del bloque de motor	6
Tapa del mecanismo de las válvulas	14
Volante	23

Sistema de Lubricación (Página 25)

Nombre	Página
Bomba del aceite	27
Filtro del aceite	27
Respiradero	30
Tapa del tubo de llenado del aceite	26
Tapa protectora de la varilla indicadora del nivel del aceite	25
Tapa protectora del tubo de llenado del aceite	26
Tuberías del aceite	29
Tubo de llenado del aceite	26
Varilla indicadora de nivel del aceite	25

Sistema de Enfriamiento (Página 32)

Nombre	Página
Bomba del agua	35
Caja y regulador	36
Calentador del agua de las camisas	38
Enfriador del aceite de la transmisión	37
Enfriador del aceite del convertidor de par	38
Enfriador del aceite del motor	37
Radiador	32
Tuberías del agua	36
Tuberías del enfriador del convertidor de par	39
Ventildador insuflador y protección	34

Sistema de Admisión y Escape (Página 40)

Nombre	Página
Antefiltro especial	41
Filtro de aire	41
Herrajes del múltiple de escape	44
Múltiple de escape	44
Silenciador	42
Tuberías de aire	40
Turboalimentador	42

Sistema del Combustible y Regulador (Página 45)

Nombre	Página
Bomba de cebado del combustible	62

Nombre Página

Control del regulador 58
Filtro del combustible 62
Regulador y bombas de inyección del combustible 45
Separador de agua 64
Tapa del regulador 45
Tanque del combustible 63
Tapa protectora del tanque del combustible 63
Tuberías del combustible 60
Tuberías de inyección del combustible 61

Sistema de Arranque Eléctrico (Página 65)

Alarma para retroceso 92
Alternador 71
Batería y alambrado 65
Bujías incandescentes 71
Diagrama de conexiones 68
Interruptor de flujo de refrigerante 91
Luces 86
Motor de arranque eléctrico 76

Tren de Potencia—Unidad de Transmisión de Fuerza (Página 93)

Bomba de sumidero 98
Control de la transmisión 102
Control hidráulico de la transmisión 104
Convertidor de par 96
Divisor de par 94
Engranaje de transferencia 105
Junta universal 98
Mando final 114
Presión de la válvula de control 108
Servotransmisión 99
Transmisión planetaria 100
Tren de potencia 93
Tuberías de aceite del tren de potencia 109

Embragues de Dirección y Frenos (Página 116)

Nombre Página

Control de los embragues de dirección 118
Embragues de dirección 120
Frenos de dirección 121
Mecanismo hidráulico de los frenos 124

Chasís y Tren de Rodaje (Página 126)

Barra de tiro fija 130
Barra compensadora 128
Bastidor de los rodillos inferiores 143
Bastidor y caja 126
Capota y tablero 138
Carril 146
Cubierta del motor 135
Gancho delantero 130
Montaje de la estructura protectora contra vuelcos 128
Planchas del piso 137
Protección de los rodillos inferiores 145
Protección del bastidor de los rodillos inferiores 144
Protección del cárter 131
Protección del radiador 133
Protección del tanque de combustible 133
Protección engoznada de reja del radiador 134
Protección engoznada del radiador 134
Rodillos inferiores 141
Rodillos superiores 142
Rueda guía 150
Soporte del tapabarros 137
Tapabarros 136

Instrumentos y Accesorios (Página 152)

Accesorio de la cabina 175
Acondicionador de aire 176

Nombre	Página
Asiento	173
Bocina eléctrica	187
Calentador de la cabina	185
Conversión de la estructura protectora contra vuelcos	154
Estructura protectora contra vuelcos abierta	152
Estructura protectora contra vuelcos cubierta	153
Extinguidor de incendios	188
Indicador de servicio de filtro de aire	188
Instrumentos del motor	189
Limpiaparabrisas	166
Protección contra vandalismo	190
Protección sobre el motor	168
Rejilla protectora	169
Soporte y asiento	170
Supresión de ruidos de la estructura protectora contra vuelcos	153
Tapa protectora de tanque hidráulico	175

Materiales Diversos (Página 191)

Nombre	Página
Calcomanías	193
Especificaciones	196
Herramientas	191
Juegos de empaquetaduras	192

ÍNDICE

Partes da máquina relativas ao motor (Página 3)

Designação	Página
Amortecedor da árvore de manivelas	15
Arranjo básico do motor	4
Arranjo do motor com refrigerador de ar da cabine	3
Árvore de comando das válvulas	10
Árvore de manivelas	8
Biela e pistão	10
Bloco do motor	6
Cabeçote	11
Caixa das engrenagens de distribuição	18
Caixa do volante	22
Cárter de óleo do motor	24
Comando do ventilador	16
Engrenagem de comando traseiro	21
Engrenagens de distribuição	18
Mancais principais do motor	9
Mecanismo das válvulas	13
Munhão	17
Olhal de levantamento	14
Peças para montagem da caixa das engrenagens de distribuição	19
Peças para montagem do cabeçote	12
Peças para montagem do cárter	24
Peças para montagem do motor	20
Polia da árvore de manivelas	15
Suporte	20
Tampa da caixa das engrenagens de distribuição	19
Tampa do bloco do motor	6
Tampa do cabeçote	13
Tampa superior do motor	14
Vedador da árvore de manivelas	9
Volante do motor	23

Sistema de lubrificação (Página 25)

Designação	Página
Bocal de enchimento do cárter	26
Bomba de óleo	27
Filtro de óleo	27
Respiro	30
Tampa do bocal de enchimento de óleo do motor com cadeado	26
Tampa da vareta de nível do óleo do motor com cadeado	25
Tubulações do óleo	29
Vareta de nível do óleo do motor	25
Ventilador do cárter	31

Sistema de arrefecimento (Página 32)

Designação	Página
Aquecedor d'água do motor	38
Arrefecedor de óleo da caixa de mudanças	37
Arrefecedor de óleo do conversor de torque	38
Arrefecedor de óleo do motor	37
Bomba d'água	35
Radiador	32
Termostato	36
Tubos d'água	36
Tubulações do arrefecedor de óleo do conversor de torque	39
Ventilador insuflador e protetor	34

Sistema de admissão e escape (Página 40)

Designação	Página
Coletor de escape	44
Peças para montagem do coletor de escape	44
Pré-purificador de ar	41
Purificador de ar	41
Silenciador	42
Tubos de ar	40
Tubulações de óleo do turbocompressor	43B
Turbocompressor	42

Sistema de alimentação e regulador de velocidade (Página 45)

Designação	Página
Bomba de purgação do combustível	62
Controle de aceleração	58
Filtro de combustível	62
Regulador de velocidade e bomba injetora de combustível	45
Separador d'água	64
Tampa do tanque de combustível com cadeado	63
Tampa no regulador de velocidade	45
Tanque de combustível	63
Tubos injetores de combustível	61
Tubulações de combustível	60

Sistema elétrico e de partida (Página 65)

Alarme de marcha à ré	92
Alternador	71
Bateria e instalação elétrica	65
Detector do nível d'água	91
Diagrama da instalação elétrica	68
Partida elétrica	76
Sistema de iluminação	86
Vela de aquecimento	71

Sistema de transmissão (Página 93)

Bomba auxiliar do sistema de transmissão	98
Caixa de mudanças	99
Comando final	114
Controle das marchas	102
Controle hidráulico da caixa de mudanças	104
Conversor de torque	96
Divisor de torque	94
Engrenagens da caixa de mudanças	100
Engrenagems de transferência	105
Junta universal	98
Sistema de transmissão	93
Tubulações de óleo do sistema de transmissão	109
Válvula de pressão da caixa de mudanças	108

Embreagens de direção e freios (Página 116)

Controle hidráulico das embreagens de direção	118
Embreagem de direção	120
Freios da máquina	121
Reforçador hidráulico dos freios	124

Chassi e material rodante (Página 126)

Armação dos roletes de esteira	143
Barra de suspensão	128
Barra de tração fixa	120
Capô e painel	138
Chapa do piso	137
Chassi e caixa da coroa	126
Cobertura do motor	135
Esteira	146
Gancho dianteiro	130
Grade articulada do radiador	134
Grade do radiador com dobradiças	134
Moldura do radiador	133
Montagem da estrutura contra capotagem	128
Pára-lamas	136
Protetor da armação dos roletes	144
Protetor do cárter	131
Protetor do tanque de combustível	133
Protetor dos roletes de esteira	145
Roda-guia	150
Rolete inferior	141
Rolete superior	142
Suporte do pára-lama	137

Cabine, indicadores e acessórios (Página 152)

Designação	Página
Acessórios da cabine	175
Aquecedor da cabine	185
Armação do assento	170
Arranjo para conversão da estrutura de segurança	154
Assento	173
Barras de proteção do capô	168
Buzina elétrica — marcha avante	187
Cabine de segurança	153
Estrutura de segurança — arranjo silenciador	153
Extintor de incêndio	188
Indicador de limpeza do purificador de ar	188
Indicadores	189
Limpador do pára-brisa	166
Refrigerador de ar da cabine	176
Tampa do reservatório hidráulico com cadeado	175
Tampas com cadeado	190
Tela de proteção	169
Toldo de segurança	152

Equipamento para manutenção e diversos (Página 191)

Designação	Página
Decalcomanias	193
Especificações	197
Ferramentas manuais	191
Jogos de juntas	192

INHALTSVERZEICHNIS

Motor (Seite 3)

Bezeichnung	Seite
Dämpfer	15
Hinteres Nockenwellenzahnrad	21
Huböse	14
Kurbelwelle	8
Kurbelwellen-Ersatzlager	9
Kurbelwellendichtung	9
Lüfterantrieb	16
Montagezapfen	17
Motorauflager	20
Motorblock	6
Motorblockdeckel	6
Motor-Halteteile	20
Motorteillisten	4
Motorteillisten (mit Klimaanlage	3
Nockenwelle	10
Ölwanne	24
Ölwannen-Halteteile	24
Pleuelstange und Kolben	10
Riemenscheibe	15
Schwungscheibe	23
Schwungscheibengehäuse	22
Stirnrad	18
Stirnradgehäuse	18
Stirnradgehäusedeckel	19
Stirnradgehäuse-Halteteile	19
Ventildeckel	14
Ventilsteuerung	13
Zylinderkopf	11
Zylinderkopfdeckel	13
Zylinderkopf-Halteteile	12

Schmiersystem (Seite 25)

Bezeichnung	Seite
Entdunster	31
Entlüfter	30
Öleinfüllstutzen	26
Ölleitungen	29
Ölmeßstab	25
Schmierfilter	27
Schmierpumpe	27
Schutzkappe des Öleinfüllstutzens	26
Schutzkappe des Ölmeßstabs	25

Kühlsystem (Seite 32)

Bezeichnung	Seite
Drucklüfter und Verkleidung	34
Getriebeölkühler	37
Kühlernetz	32
Kühlwasserheizung	38
Motorölkühler	37
Thermostat und Gehäuse	36
Wandlerölkühler	38
Wandlerölkühlerleitungen	39
Wasserleitungen	36
Wasserpumpe	35

Ansaug- und Abgasanlage (Seite 40)

Bezeichnung	Seite
Auspuffkrümmer	44
Auspuffkrümmer-Halteteile	44
Druckluftleitungen	40
Luftreiniger	41
Schalldämpfer	42
Turbolader	42
Turboladerölleitungen	43B
Vorabscheider	41

Kraftstoffanlage und Regler (Seite 45)

Bezeichnung	Seite
Kraftstoffeinspritzleitungen	61
Kraftstoffentlüftungspumpe	62
Kraftstofffilter	62
Kraftstoffleitungen	60
Kraftstofftank	63
Regler und Kraftstoff-einspritzpumpe	45

Bezeichnung Seite

Reglerdeckel 45
Reglersteuerung 58
Tankkappe 63
Wasserabscheider 64

Anlasser und elektr. Anlage (Seite 65)

Anlasser, elektr. 76
Batterie und Verdrahtung 65
Beleuchtungsanlage 86
Drehstromlichtmaschine 71
Glühkerze 71
Kühlwarnschalter 91
Rückfahrwarnhorn 92
Schaltplan 68

Kraftübertragung — Getriebe (Seite 93)

Differentialwandler 94
Drehmomentwandler 96
Drucksteuerventil 108
Getriebe 99
Getriebehydraulik 104
Kraftübertragung 93
Kreuzgelenk 98
Ölleitungen der Kraftübertragung 109
Planetengetriebe 100
Rückspülpumpe 98
Schaltgestänge 102
Seitenantrieb 114
Vorgelege 105

Lenkkupplungen und Bremsen (Seite 116)

Bremshydraulik 124
Lenkbremse 121
Lenkkupplung 120
Lenkkupplungsgestänge 118

Fahr- und Laufwerk (Seite 126)

Bezeichnung Seite

Bodenplatte 137
Frontzughaken 130
Kühlerschutz 133
Kühlerschutz mit Scharnieren 134
Kühlerverkleidung mit Scharnieren 134
Laufkette 146
Laufrollen 141
Laufrollenführung 145
Laufrollenschutz 144
Laufwerksrahmen 143
Leitrad 150
Motorhaube und Armaturenbrett 138
Motorverkleidung 135
Panzerwanne 131
Quertraverse 128
Rahmen und Gehäuse 126
Schutzbleche 136
Schutzblechträger 137
Stützrollen 142
Tankverkleidung 133
Überroll-Schutzdachauflager 128
Zughaken, starr 130

Fahrerhaus, Anzeigen und Zubehör (Seite 152)

Fahrerhausheizung 185
Fahrerhauszubehör 175
Fahrersitz 173
Fahrersitz und Unterbau 170
Feuerlöscher 188
Hupe, elektr. 187
Hydrauliktankkappe 175
Klimaanlage 176
Luftfilter-Wartungsanzeige 188
Motoranzeigen 189
Schalldämpfung — Schutzkabine 153

Bezeichnung	Seite
Scheibenwischer	166
Schutzabdecke	190
Schutzbügel	168
Schutzdach-Umbausatz	154
Schutzgitter	169
Überroll-Schutzdach	152
Überroll-Schutzkabine	153

Wartungsmesser und Zubehör (Seite 191)

Bezeichnung	Seite
Abziehbilder	193
Dichtungssätze	192
Technische Daten	198
Werkzeuge	191

	CONSISTS OF:		PAGE
1	7N2504	BASIC ENGINE ARRANGEMENT	4
1	6N206	REFRIGERANT COMPRESSOR ARRANGEMENT	177

7N3997 ENGINE ARRANGEMENT—Air Conditioning
3306 Engine Serial No. 3N52495 to 3N69599 inclusive. NOTE: WHEN ORDERING PARTS GIVE ENGINE ARRANGEMENT AND SERIAL NUMBER. AN ATTACHMENT

		CONSISTS OF:	PAGE
CENTRAL STRUCTURE			
1	2P6560	CYLINDER BLOCK GROUP	6
1	4N5164	CYLINDER BLOCK COVER GROUP	6
1	2P6222	CRANKSHAFT GROUP	8
1	2P6226	CRANKSHAFT SEAL GROUP	9
6	9S8912	ROD AND PISTON GROUP	10
1	2P6202	CAMSHAFT GROUP	10
UPPER STRUCTURE			
1	2P6486	CYLINDER HEAD GROUP	11
1	2P6531	CYLINDER HEAD COVER GROUP	13
1	2P6546	CYLINDER HEAD FASTENER GROUP	12
1	2P6526	VALVE MECHANISM GROUP	13
1	2P6516	VALVE MECHANISM COVER GROUP	14
1	1P3840	LIFTING GROUP	14
	- OR -		
1	6N8336	ENGINE LIFTING GROUP	14A
	- OR -		
1	7N7858	ENGINE LIFTING GROUP	14A
FRONT STRUCTURE			
1	2P9641	FRONT HOUSING GROUP	18
1	4N5162	FRONT HOUSING COVER GROUP	19
1	2P6498	FRONT HOUSING FASTENER GROUP	19
1	2P9642	FRONT GEAR GROUP--TIMING	18
1	2P6246	TRUNNION GROUP	17
1	7N2506	PULLEY GROUP	15
1	2P7838	DAMPER GROUP	15
1	2P7753	SUPPORT GROUP	20
1	2P7831	FAN DRIVE GROUP	16
REAR STRUCTURE			
1	2P6156	FLYWHEEL HOUSING GROUP	22
1	7S7874	FLYWHEEL GROUP	23
1	2P8161	REAR GEAR GROUP	21
LOWER STRUCTURE			
1	2P6152	OIL PAN GROUP	24
1	2P6200	OIL PAN FASTENER GROUP	24

7N2504 BASIC ENGINE ARRANGEMENT—Part 1
3306 Engine Serial No. 3N52495 to 3N69599 inclusive. NOTE: WHEN ORDERING PARTS GIVE ENGINE ARRANGEMENT NUMBER AND SERIAL NUMBER

		CONSISTS OF:	PAGE
LUBRICATION SYSTEM			
1	2P1784	OIL PUMP GROUP	28
1	2P6105	OIL LINES GROUP	29
1	2P6475	OIL FILTER GROUP	27
1	4N5139	OIL FILLER GROUP	26
1	1P4244	BREATHER GROUP	30
1	2P6493	OIL LEVEL GAUGE GROUP	25
COOLING SYSTEM			
1	7N5909	WATER PUMP GROUP	35A
1	7N7211	WATER LINES GROUP	36A
1	2P6215	ENGINE OIL COOLER GROUP	37
1	2P6510	TRANSMISSION OIL COOLER GROUP	37
INTAKE AND EXHAUST SYSTEM			
1	4N8970	TURBOCHARGER GROUP	42
1	6N25	TURBOCHARGER OIL LINES GROUP	43B
1	7N3884	AIR LINES GROUP	40A
1	6N164	EXHAUST MANIFOLD GROUP	44
1	4N9586	EXHAUST MANIFOLD FASTENER GROUP	44
FUEL SYSTEM AND GOVERNOR			
1	1P2299	FUEL FILTER ASSEMBLY	62
1	4N4314	FUEL PRIMING PUMP GROUP	62
1	6N299	GOVERNOR & FUEL INJECTION PUMP GROUP	45
1	7N4016	FUEL INJECTION LINES GROUP	61A
1	4N4510	GOVERNOR COVER GROUP	45
1	7N3616	DRAIN LINES GROUP	61B
ELECTRICAL SYSTEM			
1	5S8501	GLOW PLUG GROUP	71

NOTE: REFER TO INDEX FOR PAGE LOCATION OF GASKET KITS

7N2504 BASIC ENGINE ARRANGEMENT—Part 2
3306 Engine Serial No. 3N52495 to 3N69599 inclusive. NOTE: WHEN ORDERING PARTS GIVE ENGINE ARRANGEMENT NUMBER AND SERIAL NUMBER

		CONSISTS OF:	PAGE
CENTRAL STRUCTURE			
1	2P6560	CYLINDER BLOCK GROUP	6
	- OR -		
1	7N8016	CYLINDER BLOCK GROUP	6A
1	7N9778	CYLINDER BLOCK COVER GROUP	6B
	- OR -		
1	7N9779	CYLINDER BLOCK COVER GROUP	6B
1	2P6222	CRANKSHAFT GROUP	8
	- OR -		
1	6N8079	CRANKSHAFT GROUP	8A
1	2P6226	CRANKSHAFT SEAL GROUP	9
6	9S8912	CONNECTING ROD AND PISTON GROUP	10
1	2P6202	CAMSHAFT GROUP	10
UPPER STRUCTURE			
1	2P6486	CYLINDER HEAD GROUP	11A
	- OR -		
1	7N8536	CYLINDER HEAD GROUP	11A-2
1	2P6531	CYLINDER HEAD COVER GROUP	13
1	2P6546	CYLINDER HEAD FASTENER GROUP	12
	- OR -		
1	7N9536	CYLINDER HEAD FASTENER GROUP	12A
1	2P6526	VALVE MECHANISM GROUP	13
	- OR -		
1	7N8026	VALVE MECHANISM GROUP	13
1	2P6516	VALVE MECHANISM COVER GROUP	14
1	7N7858	LIFTING GROUP	14A
FRONT STRUCTURE			
1	2P9641	FRONT HOUSING GROUP	18
1	4N5162	FRONT HOUSING COVER GROUP	19
1	2P6498	FRONT HOUSING FASTENER GROUP	19
1	2P9642	FRONT TIMING GEAR GROUP	18
1	2P6246	TRUNNION GROUP	17
1	7N2887	PULLEY GROUP	16
1	2P7838	DAMPER GROUP	15
1	2P7753	SUPPORT GROUP	20
REAR STRUCTURE			
1	2P6156	FLYWHEEL HOUSING GROUP	22
1	7S7874	FLYWHEEL GROUP	23
1	2P8161	REAR GEAR GROUP	21
LOWER STRUCTURE			
1	2P6152	OIL PAN GROUP	24
1	2P6200	OIL PAN FASTENER GROUP	24

7N1535 ENGINE ARRANGEMENT—Part 1
3306 Engine Serial No. 3N69600 to 3N82448 inclusive. NOTE: WHEN ORDERING PARTS GIVE ARRANGEMENT NUMBER AND SERIAL NUMBER

		CONSISTS OF:	PAGE
LUBRICATION SYSTEM			
1	2P1784	OIL PUMP GROUP	28
1	2P6105	OIL LINES GROUP	29
1	2P6475	OIL FILTER GROUP	27
1	4N5139	OIL FILLER GROUP	26
1	1P4244	BREATHER GROUP	30
1	2P6493	OIL LEVEL GAUGE GROUP	25
COOLING SYSTEM			
1	7N5909	WATER PUMP GROUP	35A
1	7N7211	WATER LINES GROUP	36A
1	2P6215	ENGINE OIL COOLER GROUP	37
1	2P6510	TRANSMISSION OIL COOLER GROUP	37
	- OR -		
1	7N3520	TRANSMISSION OIL COOLER GROUP	37A
INTAKE AND EXHAUST SYSTEM			
1	4N8970	TURBOCHARGER GROUP	42
1	6N25	TURBOCHARGER OIL LINES GROUP	43B
1	7N3884	AIR LINES GROUP	40A
1	6N164	EXHAUST MANIFOLD GROUP	44
1	4N9586	EXHAUST MANIFOLD FASTENER GROUP	44
FUEL SYSTEM AND GOVERNOR			
1	1P2299	FUEL FILTER ASSEMBLY	62
1	4N4314	FUEL PRIMING PUMP GROUP	62
1	6N299	GOVERNOR & FUEL INJECTION PUMP GROUP	45
1	7N4016	FUEL INJECTION LINES GROUP	61A
1	4N4510	GOVERNOR COVER GROUP	45
1	7N3616	DRAIN LINES GROUP	61B
ELECTRICAL SYSTEM			
1	5S8501	GLOW PLUG GROUP	71

NOTE: REFER TO INDEX FOR PAGE LOCATION OF GASKET KITS

7N1535 ENGINE ARRANGEMENT—Part 2
3306 Engine Serial No. 3N69600 to 3N82448 inclusive. NOTE: WHEN ORDERING PARTS GIVE ARRANGEMENT NUMBER AND SERIAL NUMBER

		CONSISTS OF:	PAGE
CENTRAL STRUCTURE			
1	7N8016	CYLINDER BLOCK GROUP	6A
1	7N9779	CYLINDER BLOCK COVER GROUP	6B
1	6N8079	CRANKSHAFT GROUP	8A
1	2P6226	CRANKSHAFT SEAL GROUP	9
6	9S8912	CONNECTING ROD AND PISTON GROUP	10
1	2P6202	CAMSHAFT GROUP	10
UPPER STRUCTURE			
1	7N8536	CYLINDER HEAD GROUP	11-2
1	2P6531	CYLINDER HEAD COVER GROUP	13
1	7N9536	CYLINDER HEAD FASTENER GROUP	12A
1	7N8026	VALVE MECHANISM GROUP	13
1	2P6516	VALVE MECHANISM COVER GROUP	14
1	7N7858	LIFTING GROUP	14A
FRONT STRUCTURE			
1	2P9641	FRONT HOUSING GROUP	18
1	4N5162	FRONT HOUSING COVER GROUP	19
1	2P6498	FRONT HOUSING FASTENER GROUP	19
1	2P9642	FRONT TIMING GEAR GROUP	18
1	2P6246	TRUNNION GROUP	17
1	7N2887	PULLEY GROUP	16
1	2P7838	DAMPER GROUP	15
1	2P7753	SUPPORT GROUP	20
REAR STRUCTURE			
1	2P6156	FLYWHEEL HOUSING GROUP	22
1	7S7874	FLYWHEEL GROUP	23
1	2P8161	REAR GEAR GROUP	21
LOWER STRUCTURE			
1	2P6152	OIL PAN GROUP	24
1	2P6206	OIL PAN FASTENER GROUP	24

7N1539 ENGINE ARRANGEMENT—Part 1
3306 Engine Serial No. 3N82449—Up. NOTE: WHEN ORDERING PARTS GIVE ARRANGEMENT NUMBER AND SERIAL NUMBER

		CONSISTS OF:	PAGE
LUBRICATION SYSTEM			
1	2P1784	OIL PUMP GROUP	28
1	2P6105	OIL LINES GROUP	29
1	2P6475	OIL FILTER GROUP	27
1	4N5139	OIL FILLER GROUP	26
1	1P4244	BREATHER GROUP	30
1	2P6493	OIL LEVEL GAUGE GROUP	25
COOLING SYSTEM			
1	7N5909	WATER PUMP GROUP	35A
1	7N7211	WATER LINES GROUP	36A
1	2P6215	ENGINE OIL COOLER GROUP	37
1	2P6515	TRANSMISSION OIL COOLER GROUP	37B
INTAKE AND EXHAUST SYSTEM			
1	4N8970	TURBOCHARGER GROUP	42
1	6N25	TURBOCHARGER OIL LINES GROUP	43B
1	7N3884	AIR LINES GROUP	40A
1	6N164	EXHAUST MANIFOLD GROUP	44
1	4N9586	EXHAUST MANIFOLD FASTENER GROUP	44
FUEL SYSTEM AND GOVERNOR			
1	1P2299	FUEL FILTER ASSEMBLY	62
1	4N4314	FUEL PRIMING PUMP GROUP	62
1	6N299	GOVERNOR & FUEL INJECTION PUMP GROUP	45
1	7N4016	FUEL INJECTION LINES GROUP	61A
1	4N4510	GOVERNOR COVER GROUP	45
1	7N3616	DRAIN LINES GROUP	61B
ELECTRICAL SYSTEM			
1	5S8501	GLOW PLUG GROUP	71

NOTE: REFER TO INDEX FOR PAGE LOCATION OF GASKET KITS

7N1539 ENGINE ARRANGEMENT—Part 2
3306 Engine Serial No. 3N82449—Up. NOTE: WHEN ORDERING PARTS GIVE ARRANGEMENT NUMBER AND SERIAL NUMBER

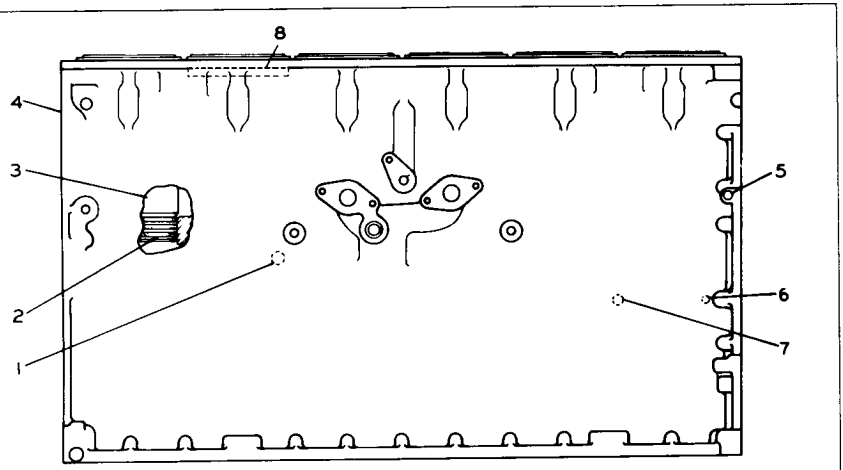

REF. NO.	PART NUMBER	DESCRIPTION	QTY
1	8M9307	PLUG	1
	6F7062	GASKET	1
2	5S6670	SEAL	18
3	2P8889	LINER	6
4	2P8776	BLOCK ASSEM. (Separate Illustration)	1
5	5M6214	PLUG	1
6	7H3171	PLUG	1
7	5M6213	PLUG	4
C 8	9L5854	BAND	6

C INDICATES CHANGE

206006

2P6560 CYLINDER BLOCK GROUP
Engine Serial No. 3N52495 to 3N79762 inclusive
2P8776 Block parts are shown on Page 7

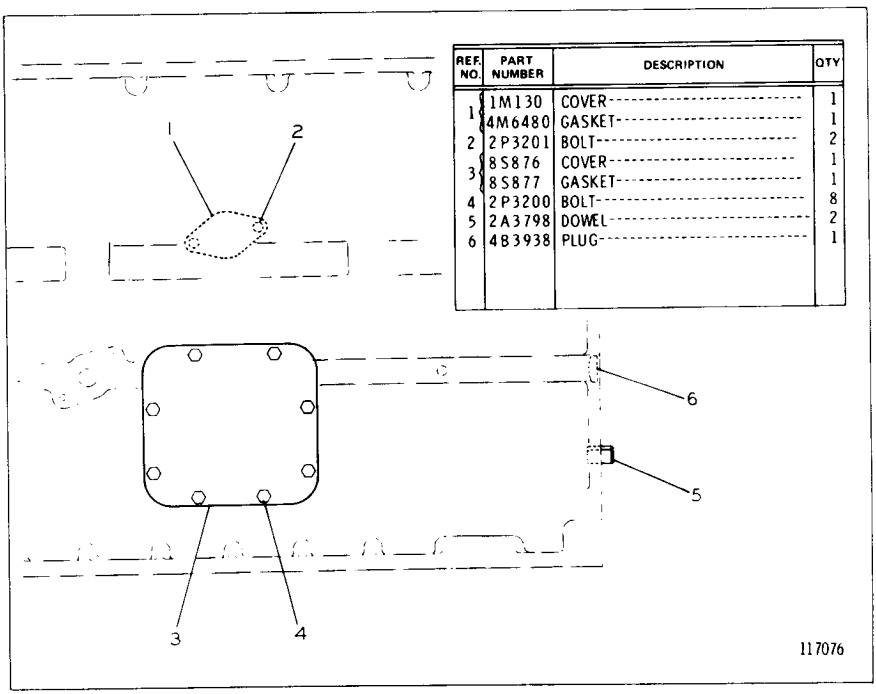

REF. NO.	PART NUMBER	DESCRIPTION	QTY
1	1M130	COVER	1
	4M6480	GASKET	1
2	2P3201	BOLT	2
3	8S876	COVER	1
	8S877	GASKET	1
4	2P3200	BOLT	8
5	2A3798	DOWEL	2
6	4B3938	PLUG	1

4N5164 CYLINDER BLOCK COVER GROUP
Engine Serial No. 3N52495 to 3N69599 inclusive

7N8016 CYLINDER BLOCK GROUP
Engine Serial No. 3N79763—Up
6N8124 Block parts are shown on Page 7B

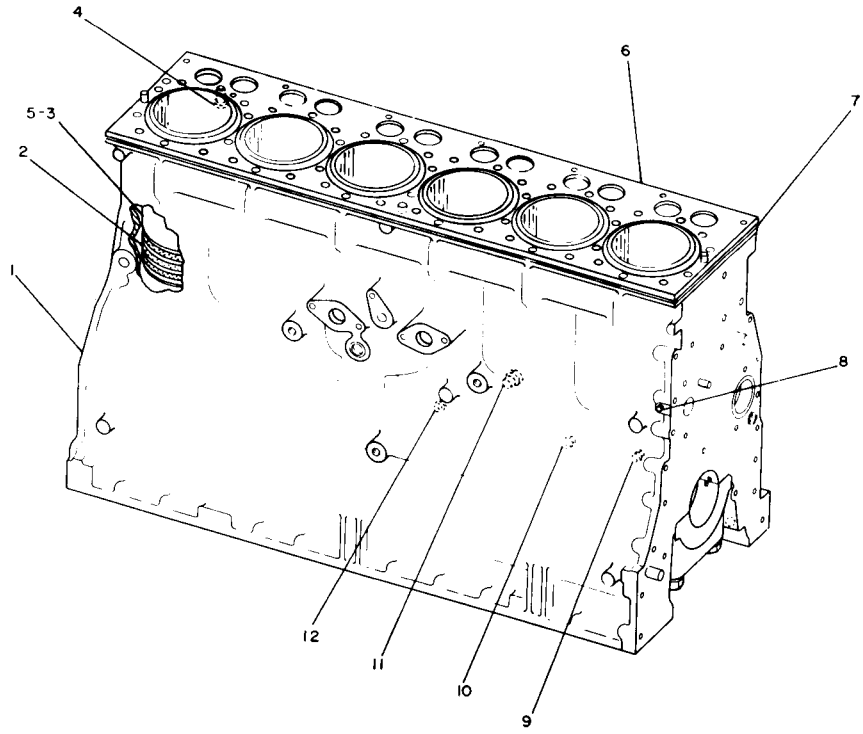

REF NO	PART NUMBER	DESCRIPTION	QTY
1	6N8124	BLOCK ASSEM. (Separate Illustration)	1
2	5S6670	SEAL	18
3	2P8889	LINER	6
4	3S5496	SEAL	1
5	9L5854	BAND	6
6	7N7998	PLATE	1
7	7N7997	GASKET	1
8	5M6214	PLUG	1
9	7H3171	PLUG	1
10	5M6213	PLUG	4
11	8M9307	PLUG	1
	6F7062	GASKET	1
12	3J5389	PLUG	2

222405

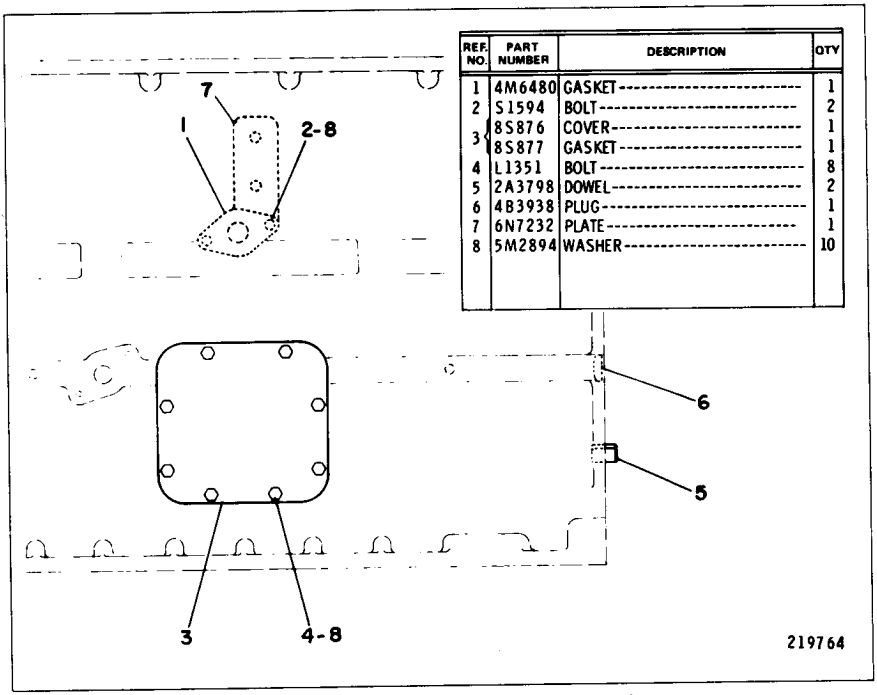

REF. NO.	PART NUMBER	DESCRIPTION	QTY
1	4M6480	GASKET	1
2	S1594	BOLT	2
3	8S876	COVER	1
	8S877	GASKET	1
4	L1351	BOLT	8
5	2A3798	DOWEL	2
6	4B3938	PLUG	1
7	6N7232	PLATE	1
8	5M2894	WASHER	10

7N9778 CYLINDER BLOCK COVER GROUP
Engine Serial No. 3N69600 to 3N79762 inclusive

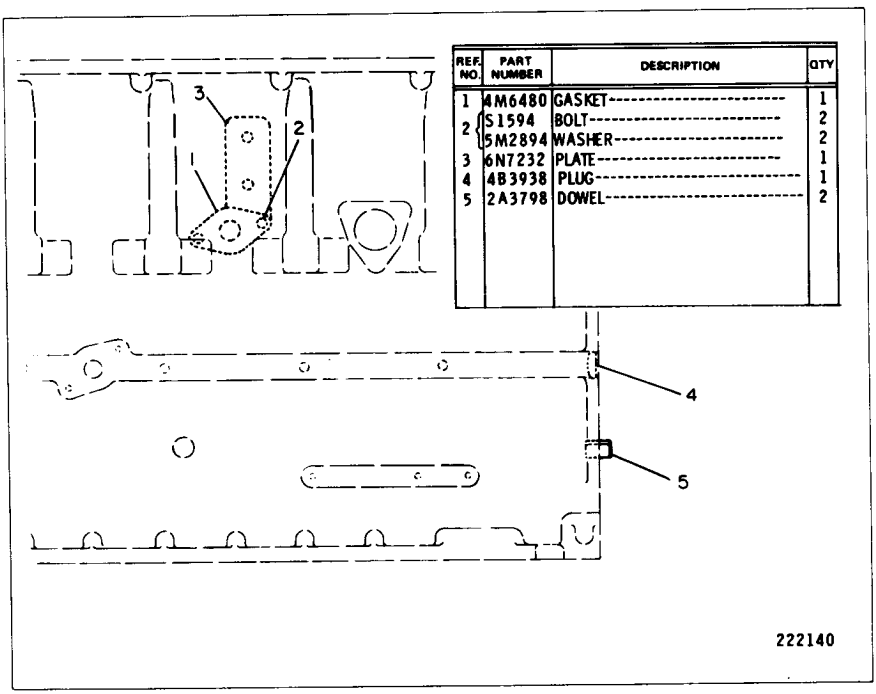

REF. NO.	PART NUMBER	DESCRIPTION	QTY
1	4M6480	GASKET	1
2	S1594	BOLT	2
	5M2894	WASHER	2
3	6N7232	PLATE	1
4	4B3938	PLUG	1
5	2A3798	DOWEL	2

7N9779 CYLINDER BLOCK COVER GROUP
Engine Serial No. 3N79763—Up

2P8776 CYLINDER BLOCK ASSEMBLY
Engine Serial No. 3N52495 to 3N79762 inclusive
Part of 2P6560 Cylinder Block Group shown on Page 6

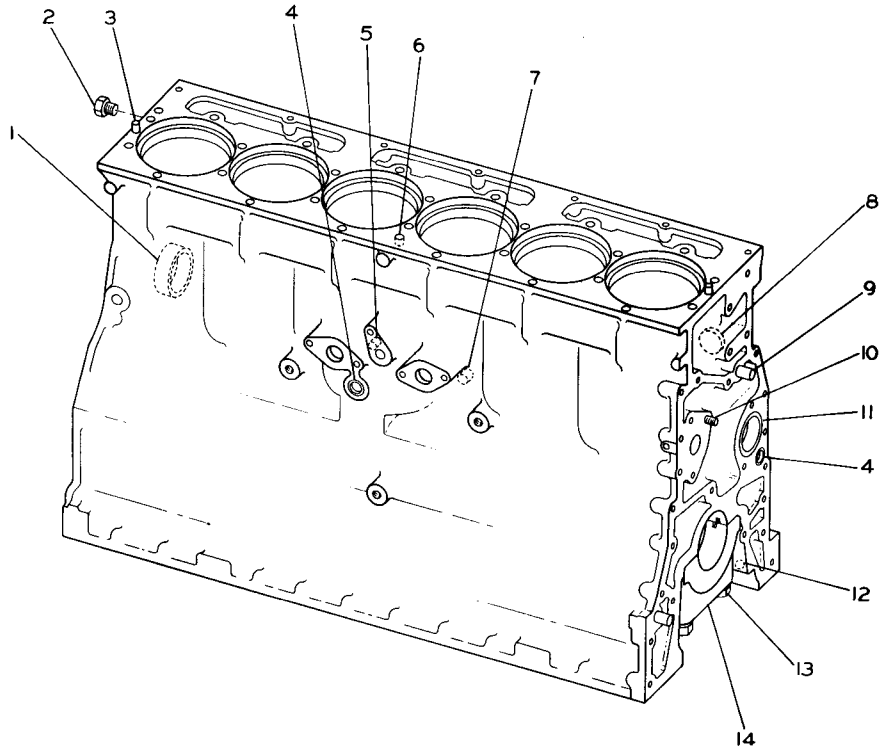

REF. NO.	PART NUMBER	DESCRIPTION	QTY
1	7M4046	BEARING	4
2	5M6213	PLUG	1
3	8B1312	DOWEL	2
4	4B5387	PLUG	2
5	1H974	DOWEL	1
6	5B7652	DOWEL	2
7	8S835	DOWEL	1
8	3S8313	PLUG	2
9	8B6349	DOWEL	2
10	5S8462	STUD	1
11	9M5477	BEARING	1
12	4B9782	BALL	1
13	7S3224	BOLT	14
	2S5658	WASHER	14
14	1P2717	BEARING CAP	7

114554

CONSISTS OF:

1	8N3659	PLATE
1	7N7999	GASKET
1	8N3658	GASKET
2	3J5389	PLUG
6	7N8018	SEAL
18	7N8025	SEAL
7	5B9603	BOLT
2	7N9342	PLATE
2	7N9343	PLATE
2	4K4937	BOLT
2	323180	BOLT
2	S1585	BOLT
3	T65	BOLT
1	9S1366	BOLT
1	.....	FORM SMH27541

8N6273 CYLINDER BLOCK HARDWARE KIT—Field Installation
Engine Serial No. 3N52495 to 3N79762 inclusive
Provides the necessary hardware to allow a counterbore 3306 Engine to be serviced with a spacer plate block

6N8124 CYLINDER BLOCK ASSEMBLY

Engine Serial No. 3N79763—Up

Part of 7N8016 Cylinder Block Group shown on Pages 6A

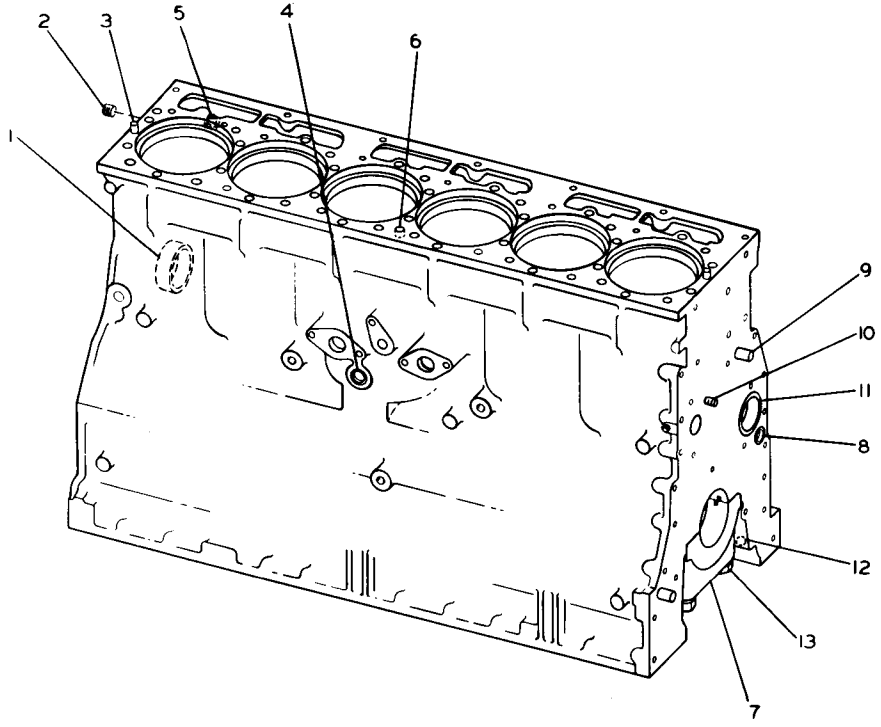

	REF. NO	PART NUMBER	DESCRIPTION	QTY
	1	7M4046	BEARING	4
	2	2B858	PLUG	1
	3	8K1207	DOWEL	2
	4	4B5387	PLUG	1
	5	1S9540	DOWEL	1
	6	5B7652	DOWEL	2
	7	6N8003	BEARING CAP	7
	8	4B3938	PLUG	1
	9	8B6349	DOWEL	2
	10	5S8462	STUD	1
C	11	8N4110	BEARING	1
	12	4B9782	BALL	1
	13	7S3224	BOLT	14
		2S5658	WASHER	14
			THE FOLLOWING REPAIR KIT IS AVAILABLE:	
		6N7727	KIT---(cylinder block) (Includes Orifice, Plugs, Dowels, Sleeve and Bolts)	1
		SMHS6809	FORM (Installing Cylinder Block Service Group)	1

C INDICATES CHANGE

226957

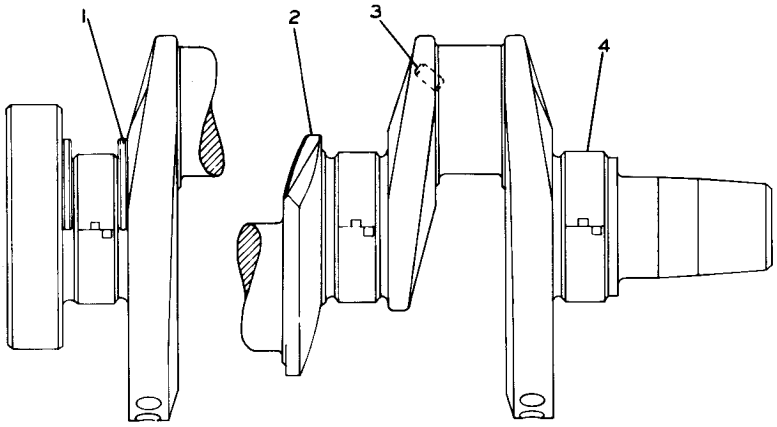

	REF. NO.	PART NUMBER	DESCRIPTION	QTY
C	1	6N8940	PLATE	2
	2	4N7697	CRANKSHAFT ASSEM.	1
	3	9F2247	PLUG	6
	4	3S9730	BEARING	7

C INDICATES CHANGE

210404

2P6222 CRANKSHAFT GROUP
Engine Serial No. 3N52495 to 3N79762 inclusive
4N7697 Crankshaft Assembly is replaced by 4N7693 shown on Page 8

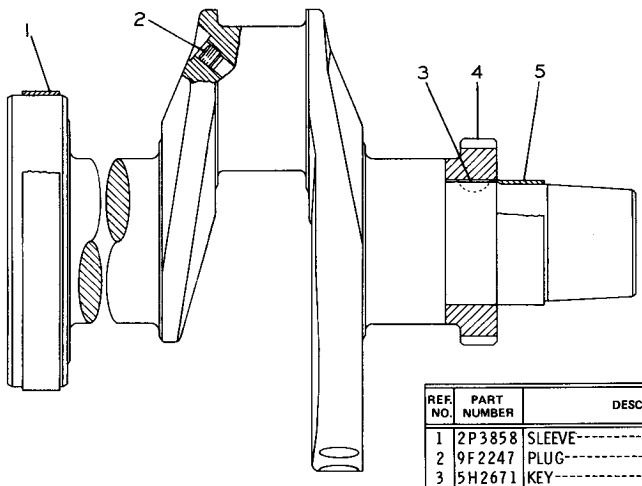

	REF. NO.	PART NUMBER	DESCRIPTION	QTY
	1	2P3858	SLEEVE	1
	2	9F2247	PLUG	6
	3	5H2671	KEY	1
C	4	7N4525	GEAR-(40 teeth)	1
	5	2P3859	SLEEVE	1
		GMG02327	FORM (Installing Crankshaft)	1

C INDICATES CHANGE

229687

4N7693 CRANKSHAFT ASSEMBLY—Field Replacement

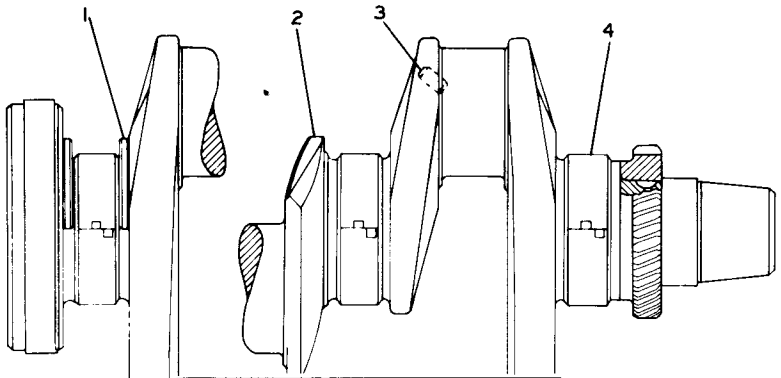

	REF. NO.	PART NUMBER	DESCRIPTION	QTY.
	1	7N9342	PLATE	2
C	2	4N7697	CRANKSHAFT ASSEM. (Includes)	1
	3	9F2247	PLUG	6
	4	3S9730	BEARING	7

C INDICATES CHANGE

172107

6N8079 CRANKSHAFT GROUP
Engine Serial No. 3N79763—Up
4N7697 Crankshaft Assembly is replaced by 4N7693 shown on Page 8

1	7N9343	THRUST PLATE
1	.....	FORM SMHS7060

CRANKSHAFT SERVICE THRUST PLATE—Field Installation
Engine Serial No. 3N52495 to 3N79762 inclusive. Provides a Thrust Plate to be used in the event a "Wide" Thrust Journal Crankshaft is installed in a Spacer Plate Cylinder Block

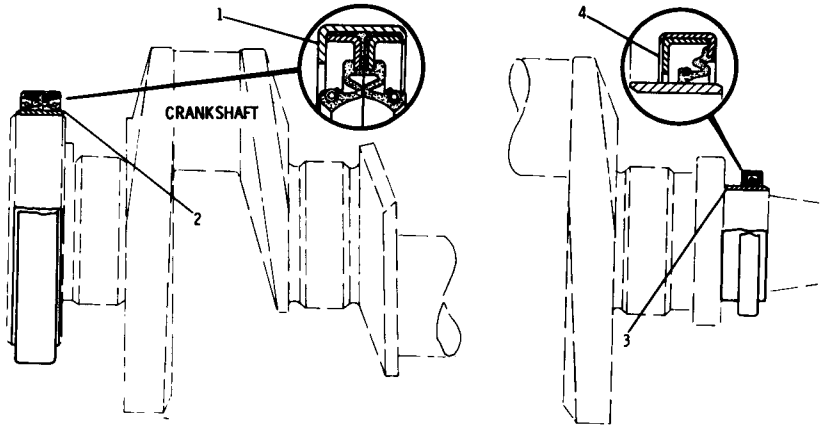

	REF. NO.	PART NUMBER	DESCRIPTION	QTY
C	1	6N8853	SEAL	1
	2	2P3858	SLEEVE	1
	3	2P3859	SLEEVE	1
	4	5S6296	SEAL	1

C INDICATES CHANGE 210718

2P6226 CRANKSHAFT SEAL GROUP

7	4S8881	BEARING (.010 UNDERSIZE)
7	4S8883	BEARING (.020 UNDERSIZE)
7	4S8885	BEARING (.030 UNDERSIZE)

BEARINGS FOR REBORED CYLINDER BLOCK

7	6N3822	BEARING--MAIN (.020 OVERSIZE & .010 UNDERSIZE)
7	6N3823	BEARING--MAIN (.020 OVERSIZE)

CRANKSHAFT BEARING REPLACEMENTS

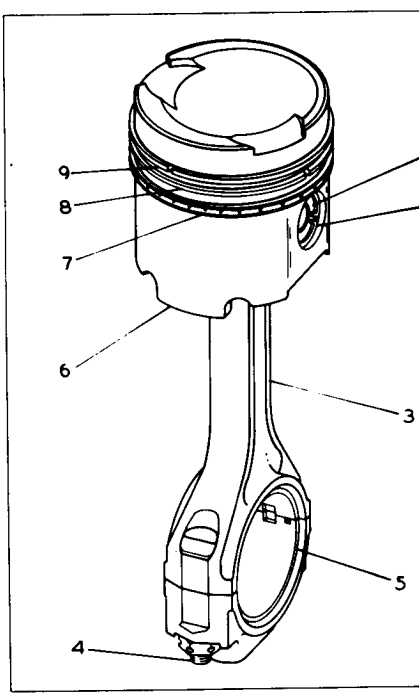

	REF. NO.	PART NUMBER	DESCRIPTION	QTY
C	1	7N9804	PIN	1
	2	9H4015	RETAINER	2
C	3	6N8061	ROD ASSEM.	1
		7S9347	BEARING	1
	4	1P9956	BOLT	2
		5S6348	NUT	2
	5	7M7821	BEARING-(Standard)	1
		2S502	BEARING-(.010" Undersize)	1
		2S503	BEARING-(.020" Undersize)	1
		7M7826	BEARING-(.030" Undersize)	1
C	6	8N3183	PISTON GROUP	1
	7	9S7788	RING-(Oil)	1
	8	5S6750	RING-(Intermediate)	1
	9	7S8378	RING-(Top)	1
		7S9404	RING GROUP (Consists of Complete Set of Rings For One Piston)	1

C INDICATES CHANGE

222701

9S8912 CONNECTING ROD AND PISTON GROUP—6 Required
Engine Serial No. 3N52495 to 3N89426 inclusive

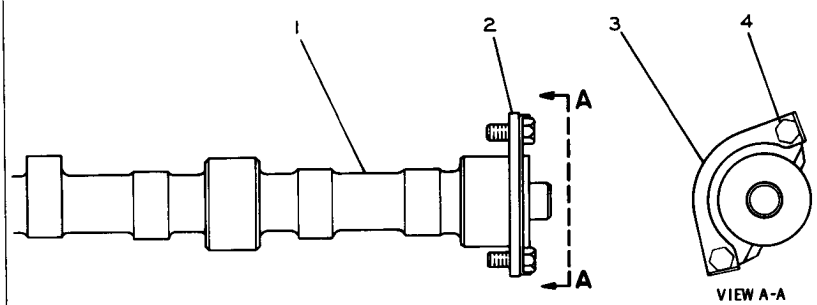

	REF. NO.	PART NUMBER	DESCRIPTION	QTY
C	1	8N3981	CAMSHAFT	1
	2	7S2204	WASHER	1
	3	8S1491	LOCK	1
	4	S509	BOLT	2

C INDICATES CHANGE

226144

2P6202 CAMSHAFT GROUP

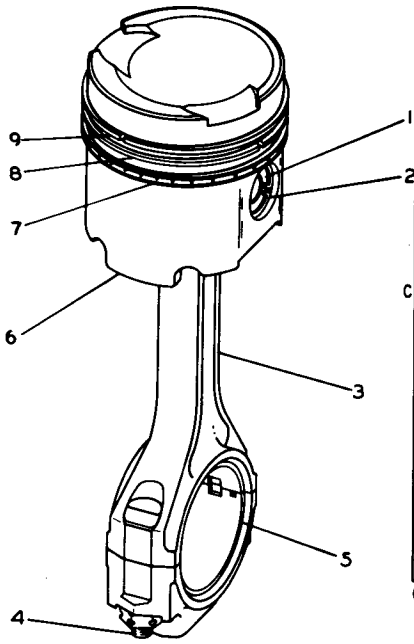

	REF. NO.	PART NUMBER	DESCRIPTION	QTY
	1	7N9804	PIN	1
	2	9H4015	RETAINER	2
C	3	8N1984	ROD ASSEM.	1
		8N1985	BEARING	1
	4	1P9956	BOLT	2
		5S6348	NUT	2
	5	7M7821	BEARING-------(Standard)-------	1
		2S502	BEARING----(.010" Undersize)----	1
		2S503	BEARING----(.020" Undersize)----	1
		7M7826	BEARING----(.030" Undersize)----	1
	6	8N3183	PISTON GROUP	1
	7	9S7788	RING---------(Oil)----------	1
	8	5S6750	RING-----(Intermediate)-------	1
	9	7S8378	RING---------(Top)----------	1
		7S9404	RING GROUP (Consists of Complete Set of Rings For One Piston)	1

C INDICATES CHANGE

226004

9S8912 CONNECTING ROD AND PISTON GROUP—6 Required
Engine Serial No. 3N89427—Up

2P6486 CYLINDER HEAD GROUP

Engine Serial No. 3N52495 to 3N55722 inclusive

4N7446 Cylinder Head parts are shown on Page 12

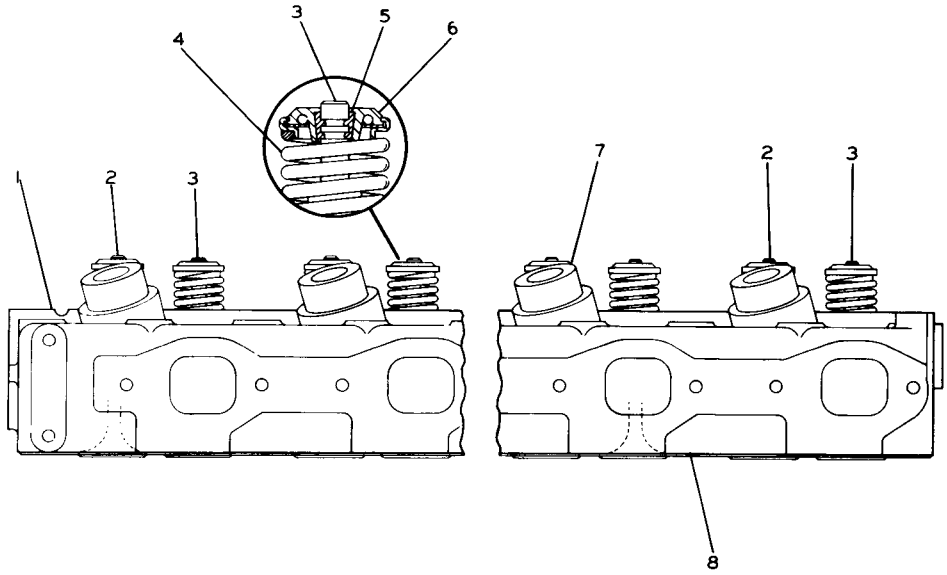

	REF. NO.	PART NUMBER	DESCRIPTION	QTY
	1	4N7446	HEAD ASSEM. (Separate Illustration)	1
C	2	5S6452	VALVE (Intake)	6
C	3	5S7232	VALVE (Exhaust)	6
	4	7S7144	SPRING	12
	5	2A4429	LOCK	24
	6	5S5874	ROTOCOIL	12
		8S3970	CHAMBER ASSEM.	6
	7	7S3206	SEAL	6
		2S8966	KIT (Gasket)	6
	8	5S6281	GASKET	1

C INDICATES CHANGE

144578

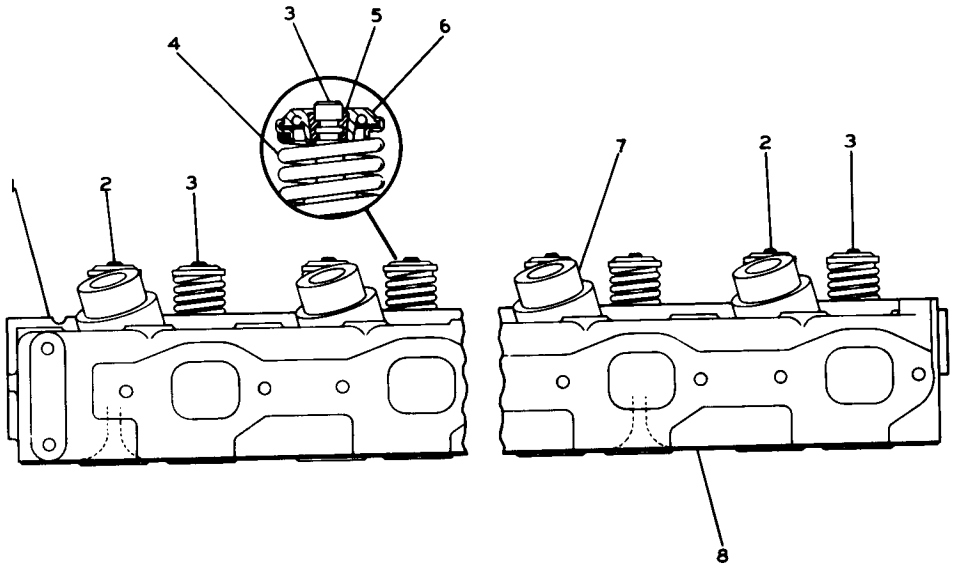

	REF. NO.	PART NUMBER	DESCRIPTION	QTY
C	1	6N8889	HEAD ASSEM. ---------- (Separate Illustration)	1
	2	5S6452	VALVE----------(intake)----------	6
	3	5S7232	VALVE---------(exhaust)---------	6
	4	7S7144	SPRING----------	12
	5	2A4429	LOCK----------	24
	6	5S5874	ROTOCOIL----------	12
		8S3970	CHAMBER ASSEM. ----------	6
		7S3206	SEAL----------	6
C	7	5M2667	GASKET---4.93 mm(.194 in.) thick	6
C		2S8959	GASKET---5.66 mm(.223 in.) thick	6
C		2S8960	GASKET---6.3 mm(.248 in.) thick	6
C	8	5S6281	GASKET----------	1

C INDICATES CHANGE 215310

2P6486 CYLINDER HEAD GROUP
Engine Serial No. 3N55723 to 3N75970 inclusive
6N8889 Head parts are shown on Page 11B

2P6486 CYLINDER HEAD GROUP
Engine Serial No. 3N75971 to 3N79762 inclusive

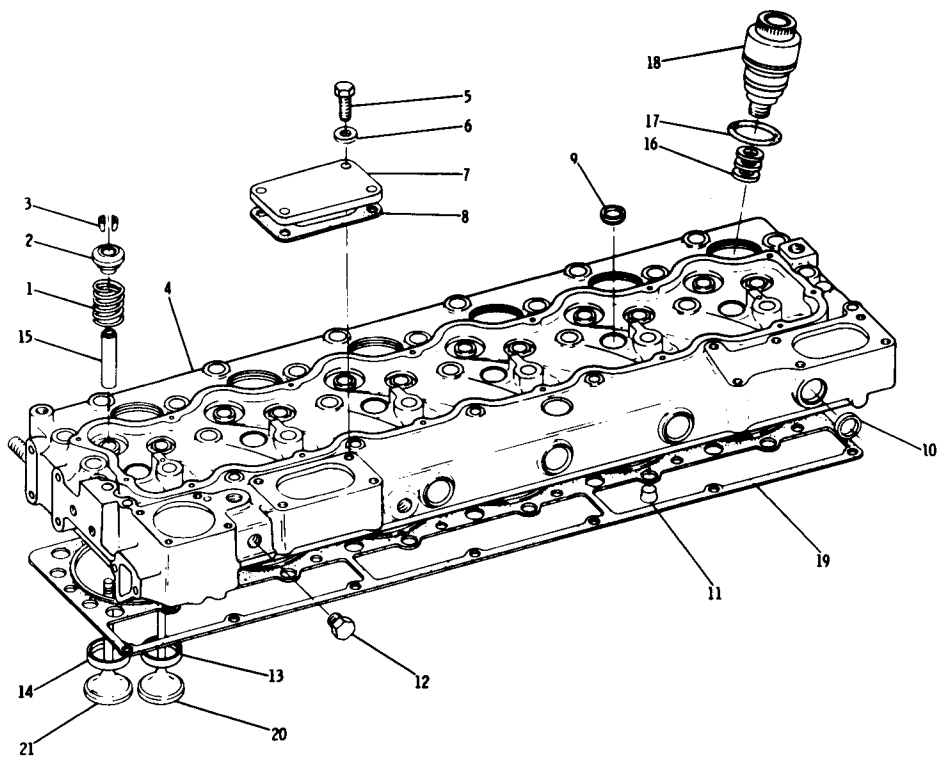

	REF. NO.	PART NUMBER	DESCRIPTION	QTY
	1	7S7144	SPRING	12
	2	5S5874	ROTOCOIL	12
	3	2A4429	LOCK	24
C	4	6N8120	HEAD ASSEM. (Includes)	1
	5	S1594	BOLT	4
	6	5M2894	WASHER	4
	7	1P6367	COVER	1
	8	5S6735	GASKET	1
	9	3B623	PLUG	6
	10	3S8313	PLUG	7
	11	1S3062	DIRECTOR	18
	12	2B858	PLUG	3
	13	7N4448	INSERT-(intake)	6
	14	5S7221	INSERT-(exhaust)	6
	15	2P1262	GUIDE	12
	16	5M2667	GASKET---4.93 mm(.194 in.) thick	6
		2S8959	GASKET---5.66 mm(.223 in.) thick	6
		2S8960	GASKET---6.3 mm(.248 in.) thick	6
	17	7S3206	SEAL	6
	18	8S3970	CHAMBER ASSEM.	6
C	19	6N7263	GASKET	1
	20	5S6452	VALVE-(intake)	6
	21	5S7232	VALVE-(exhaust)	6

C INDICATES CHANGE

216924

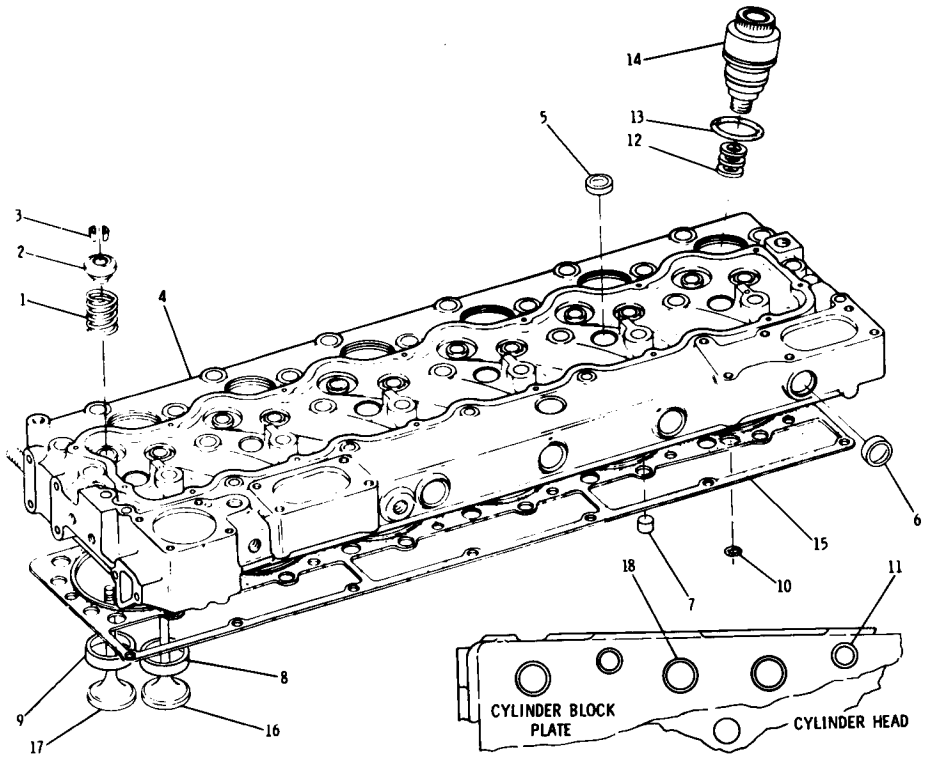

REF. NO.	PART NUMBER	DESCRIPTION	QTY.
1	7S7144	SPRING	12
2	5S5874	ROTOCOIL ASSEM.	12
3	2A4429	LOCK	24
C 4	8N1187	HEAD GROUP (Separate Illustration)	1
5	3B623	PLUG	6
6	3S8313	PLUG	7
7	1S3062	DIRECTOR	18
8	7N4448	INSERT-------(intake)----------	6
9	1P6837	INSERT-------(exhaust)---------	6
10	3S5496	SEAL	1
11	7N8018	SEAL	6
12	5M2667	GASKET--4.93mm (.194 in.) thick	6
	2S8959	GASKET--5.66mm (.223 in.) thick	6
	2S8960	GASKET---6.3 mm (.248 in.)thick	6
13	7S3206	SEAL	6
14	8S3970	CHAMBER ASSEM.	6
15	7N7999	GASKET	1
16	5S6452	VALVE---------(intake)---------	6
17	5S7232	VALVE---------(exhaust)---------	6
18	7N8025	SEAL	18

C INDICATES CHANGE

223141

7N8536 CYLINDER HEAD GROUP
Engine Serial No. 3N79763 to 3N91962 inclusive
8N1187 Cylinder Head parts are shown on Page 11D

7N8536 CYLINDER HEAD GROUP

Engine Serial No. 3N91963—Up

8N1187 Cylinder Head parts are shown on Page 11D

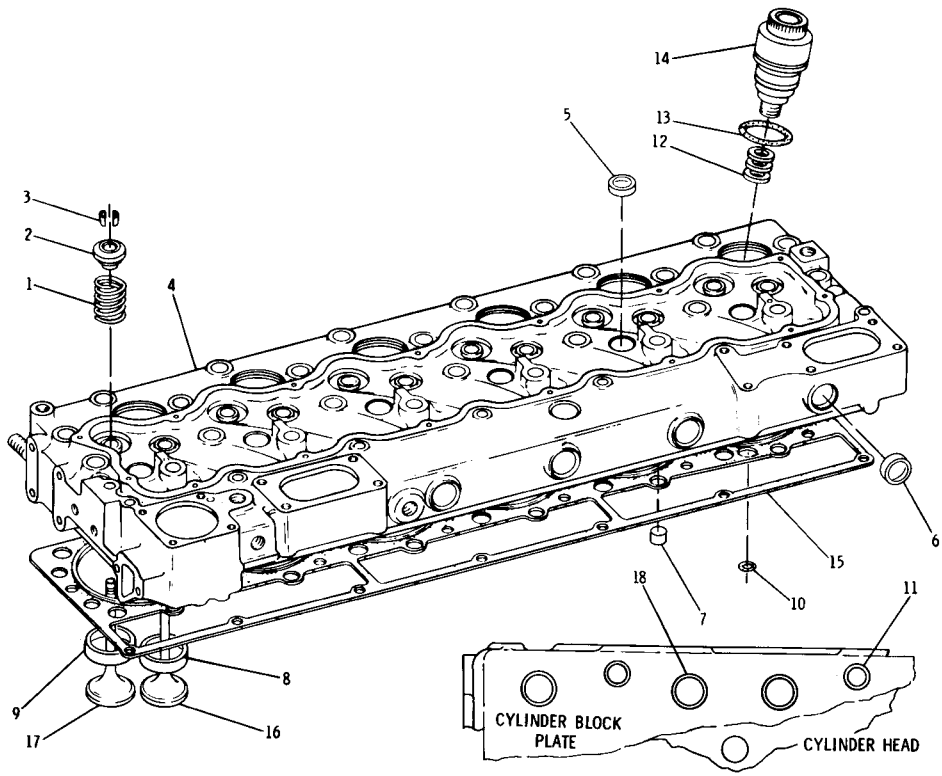

	REF. NO.	PART NUMBER	DESCRIPTION	QTY.
	1	7S7144	SPRING	12
C	2	8N7782	ROTOCOIL ASSEM.	12
	3	2A4429	LOCK	24
	4	8N1187	HEAD GROUP (Separate Illustration)	1
	5	3B623	PLUG	6
	6	3S8313	PLUG	7
	7	1S3062	DIRECTOR	18
	8	7N4448	INSERT-------(intake)---------	6
	9	1P6837	INSERT-------(exhaust)---------	6
	10	3S5496	SEAL	1
	11	7N8018	SEAL	6
	12	5M2667	GASKET--4.93mm (.194 in.) thick	6
		2S8959	GASKET--5.66mm (.223 in.) thick	6
		2S8960	GASKET---6.3 mm (.248 in.)thick	6
	13	7S3206	SEAL	6
	14	8S3970	CHAMBER ASSEM.	6
	15	7N7999	GASKET	1
	16	5S6452	VALVE---------(intake)---------	6
	17	5S7232	VALVE---------(exhaust)---------	6
	18	7N8025	SEAL	18

C INDICATES CHANGE

176804

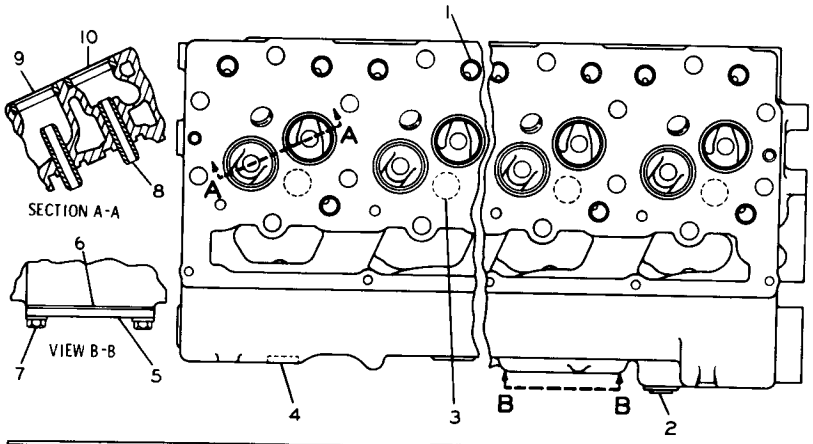

REF. NO.	PART NUMBER	DESCRIPTION	QTY
1	1S3062	DIRECTOR	18
2	2B858	PLUG	3
3	3B623	PLUG	6
4	3S8313	PLUG	7
5	1P6367	COVER	1
6	5S6735	GASKET	1
7	1S1594	BOLT	4
	5M2894	WASHER	4
8	2P1262	GUIDE	12
9	5S7218	INSERT-(intake)	6
10	5S7221	INSERT-(exhaust)	6

212515

6N8889 CYLINDER HEAD ASSEMBLY
Engine Serial No. 3N55723 to 3N75970 inclusive
Part of 2P6486 Cylinder Head Group shown on Page 11A

8N1187 CYLINDER HEAD GROUP
Engine Serial No. 3N79763—Up
Part of 7N8536 Cylinder Head Group shown on Page 11A-2

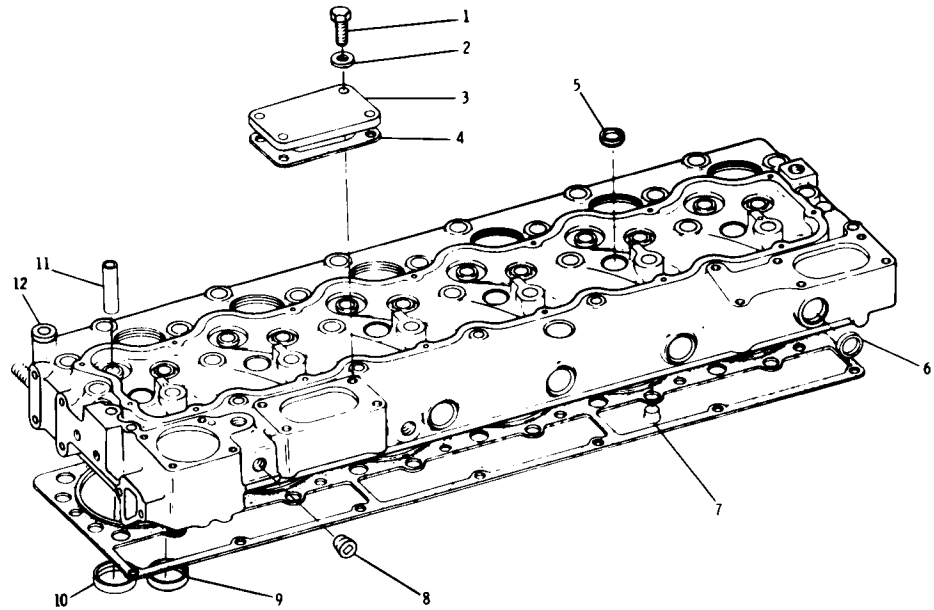

REF. NO.	PART NUMBER	DESCRIPTION	QTY.
1	S1594	BOLT	4
2	5M2894	WASHER	4
3	1P6367	COVER	1
4	5S6735	GASKET	1
5	3B623	PLUG	6
6	3S8313	PLUG	7
7	1S3062	DIRECTOR	18
8	2B858	PLUG	3
9	7N4448	INSERT--------(intake)--------	6
10	5S7221	INSERT------(exhaust)----------	6
11	2P1262	GUIDE	12
12	7N2597	SPACER	1

223144

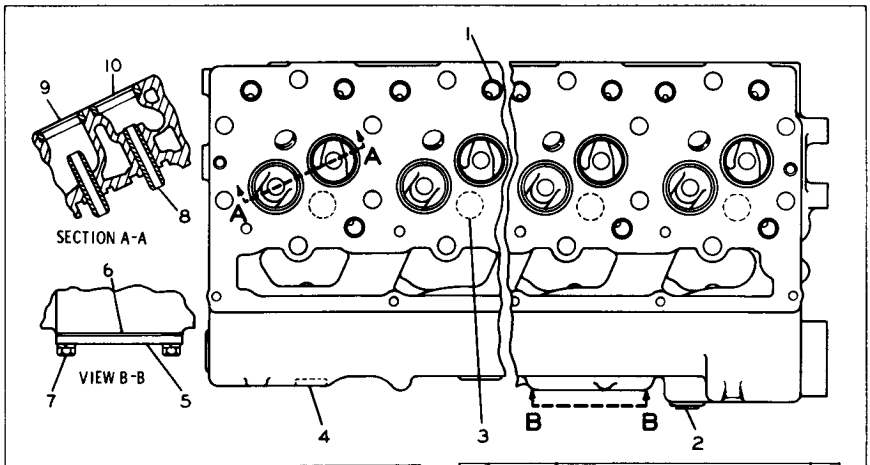

	REF. NO.	PART NUMBER	DESCRIPTION	QTY
	1	1S3062	DIRECTOR	18
C	2	2B858	PLUG	3
	3	3B623	PLUG	6
	4	3S8313	PLUG	7
	5	1P6367	COVER	1
	6	5S6735	GASKET	1
	7	1S1594	BOLT	4
		3B4506	LOCKWASHER	4
	8	2P1262	GUIDE	12
	9	5S7218	INSERT--------(intake)----------	6
	10	5S7221	INSERT-------(exhaust)----------	6

C INDICATES CHANGE 205775

4N7446 CYLINDER ASSEMBLY
Engine Serial No. 3N52495 to 3N55722 inclusive
Part of 2P6486 Cylinder Head Group shown on Page 11

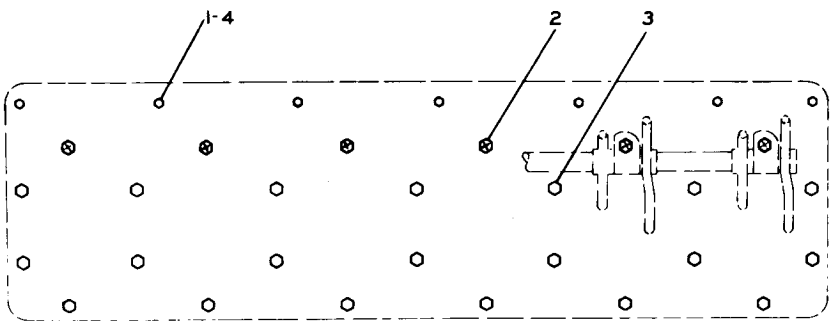

	REF. NO.	PART NUMBER	DESCRIPTION	QTY
C▲	1	1A5964	BOLT----------11.4 cm(4.50 in.)	7
	2	1B7709	BOLT--------(location X)-------	6
		2S736	WASHER----------	6
	3	1D4595	BOLT----------	20
		2S736	WASHER----------	20
C▲	4	5B2638	BOLT----------13.3 cm(5.25 in.)	1

C INDICATES CHANGE
▲USE AS REQUIRED 222689

2P6546 CYLINDER HEAD FASTENER GROUP
Engine Serial No. 3N52495 to 3N79762 inclusive

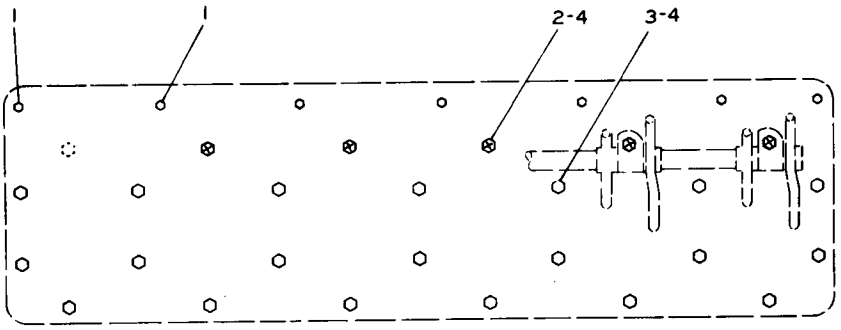

	REF. NO.	PART NUMBER	DESCRIPTION	QTY.
	1	5B9603	BOLT----12.7 cm(5 in.)long-------	7
C	2	1B7709	BOLT--------(location X)----------	5
	3	1D4595	BOLT----------	20
			(Use as Required)	
C	4	2S736	WASHER----------	25

C INDICATES CHANGE

226521

7N9536 CYLINDER HEAD FASTENER GROUP
Engine Serial No. 3N79763—Up

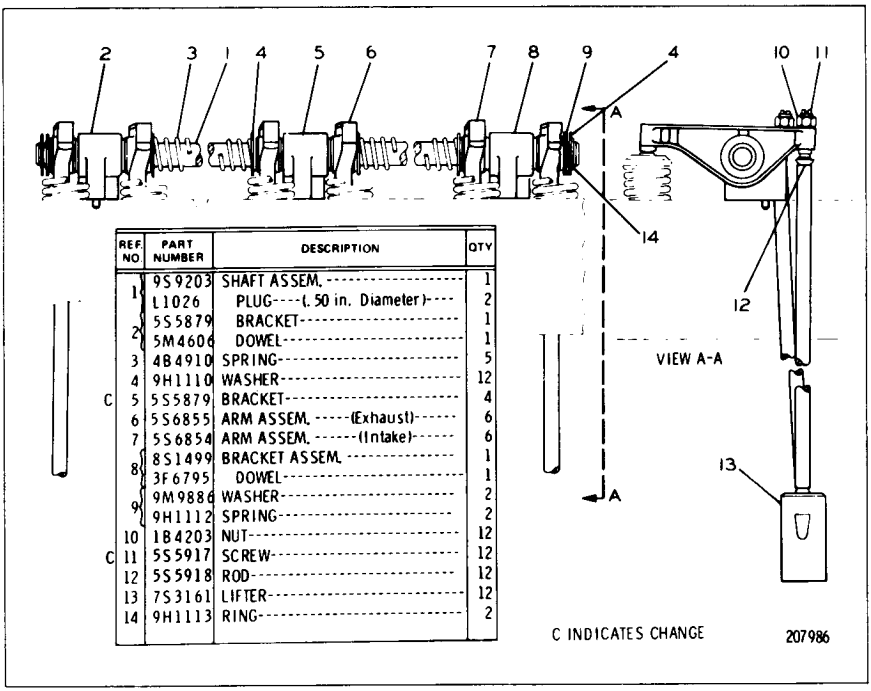

REF NO	PART NUMBER	DESCRIPTION	QTY
1	9S9203	SHAFT ASSEM.	1
	L1026	PLUG (.50 in. Diameter)	2
2	5S5879	BRACKET	1
	5M4606	DOWEL	1
3	4B4910	SPRING	5
4	9H1110	WASHER	12
C 5	5S5879	BRACKET	4
6	5S6855	ARM ASSEM. (Exhaust)	6
7	5S6854	ARM ASSEM. (Intake)	6
8	8S1499	BRACKET ASSEM.	1
	3F6795	DOWEL	1
9	9M9886	WASHER	2
	9H1112	SPRING	2
10	1B4203	NUT	12
C 11	5S5917	SCREW	12
12	5S5918	ROD	12
13	7S3161	LIFTER	12
14	9H1113	RING	2

2P6526 VALVE MECHANISM GROUP
Engine Serial No. 3N52495 to 3N78910 inclusive

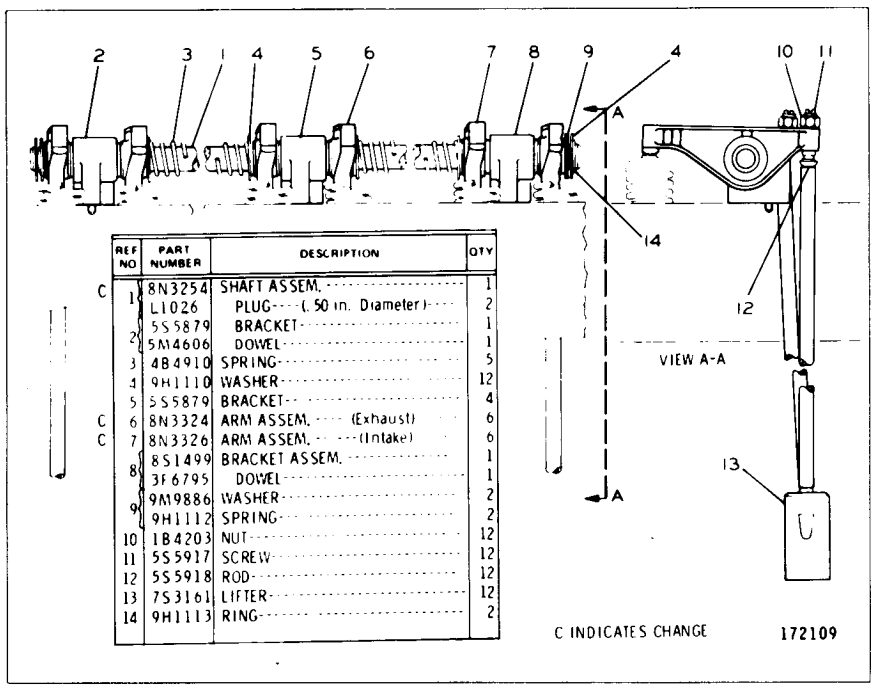

REF NO	PART NUMBER	DESCRIPTION	QTY
C 1	8N3254	SHAFT ASSEM.	1
	L1026	PLUG (.50 in. Diameter)	2
2	5S5879	BRACKET	1
	5M4606	DOWEL	1
3	4B4910	SPRING	5
4	9H1110	WASHER	12
5	5S5879	BRACKET	4
C 6	8N3324	ARM ASSEM. (Exhaust)	6
C 7	8N3326	ARM ASSEM. (Intake)	6
8	8S1499	BRACKET ASSEM.	1
	3F6795	DOWEL	1
9	9M9886	WASHER	2
	9H1112	SPRING	2
10	1B4203	NUT	12
11	5S5917	SCREW	12
12	5S5918	ROD	12
13	7S3161	LIFTER	12
14	9H1113	RING	2

2P6526 VALVE MECHANISM GROUP
Engine Serial No. 3N78911 to 3N79762 inclusive

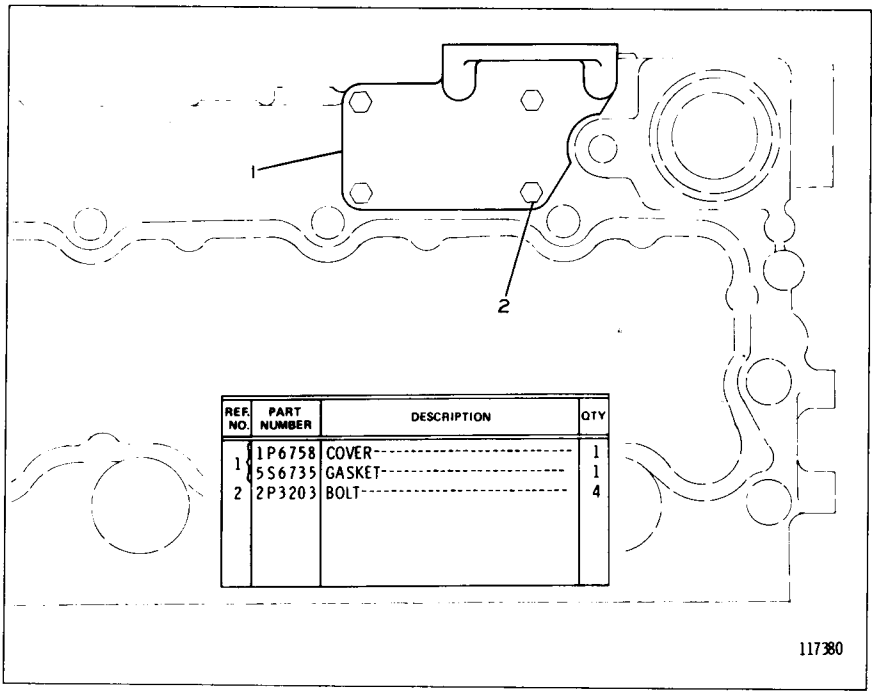

REF. NO.	PART NUMBER	DESCRIPTION	QTY
1	1P6758	COVER	1
	5S6735	GASKET	1
2	2P3203	BOLT	4

2P6531 CYLINDER HEAD COVER GROUP

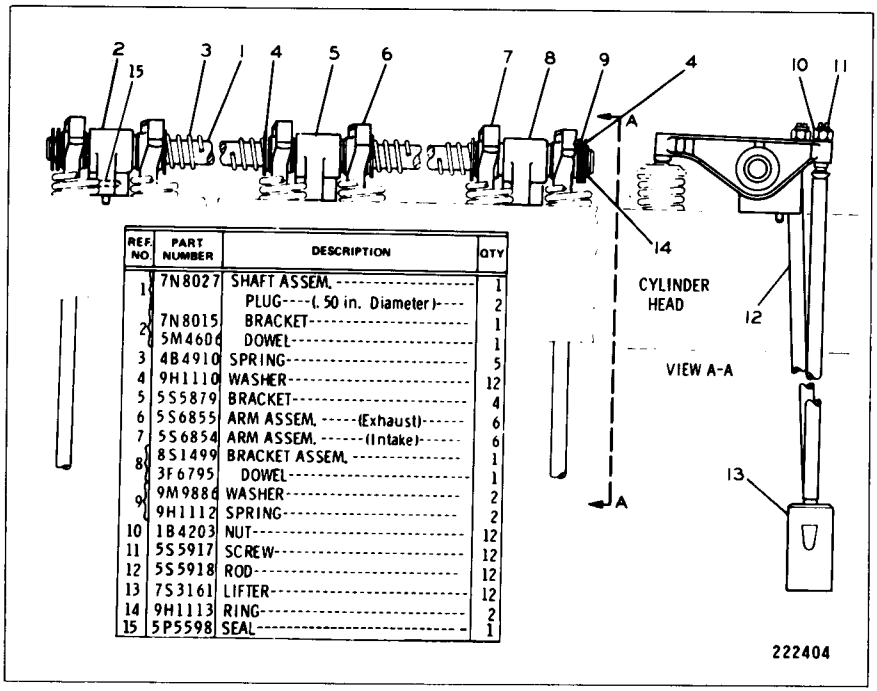

REF. NO.	PART NUMBER	DESCRIPTION	QTY
1	7N8027	SHAFT ASSEM.	1
		PLUG----(.50 in. Diameter)----	2
2	7N8015	BRACKET	1
	5M4606	DOWEL	1
3	4B4910	SPRING	5
4	9H1110	WASHER	12
5	5S5879	BRACKET	4
6	5S6855	ARM ASSEM. -----(Exhaust)-----	6
7	5S6854	ARM ASSEM. -----(Intake)-----	6
8	8S1499	BRACKET ASSEM.	1
	3F6795	DOWEL	1
9	9M9886	WASHER	2
	9H1112	SPRING	2
10	1B4203	NUT	12
11	5S5917	SCREW	12
12	5S5918	ROD	12
13	7S3161	LIFTER	12
14	9H1113	RING	2
15	5P5598	SEAL	1

7N8026 VALVE MECHANISM GROUP
Engine Serial No. 3N79763 to 3N87116 inclusive

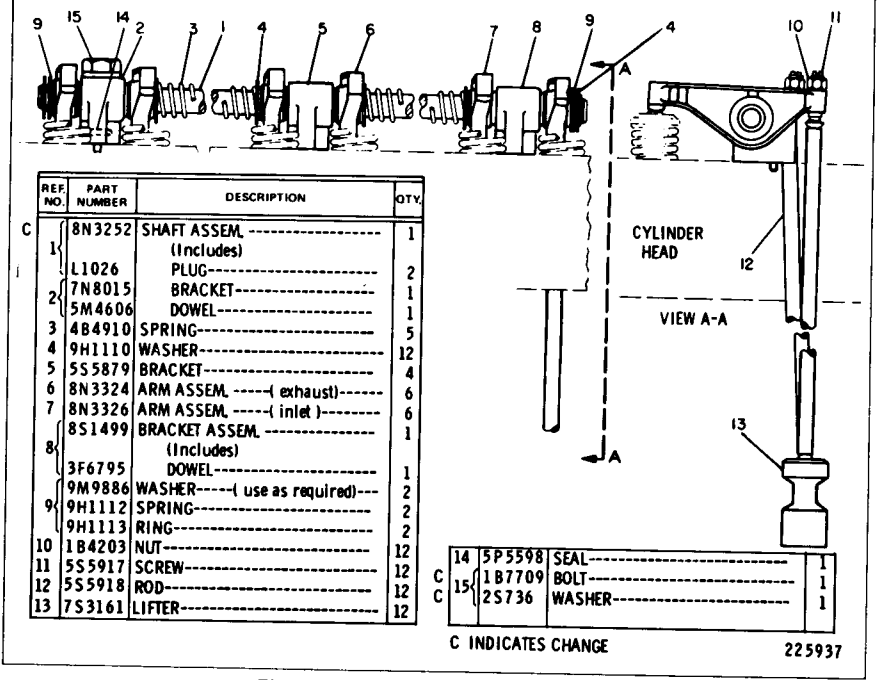

	REF. NO.	PART NUMBER	DESCRIPTION	QTY.
C	1	8N3252	SHAFT ASSEM. (Includes)	1
		L1026	PLUG	2
	2	7N8015	BRACKET	1
		5M4606	DOWEL	1
	3	4B4910	SPRING	5
	4	9H1110	WASHER	12
	5	5S5879	BRACKET	4
	6	8N3324	ARM ASSEM. -----(exhaust)------	6
	7	8N3326	ARM ASSEM. -----(inlet)--------	6
	8	8S1499	BRACKET ASSEM. (Includes)	1
		3F6795	DOWEL	1
	9	9M9886	WASHER-----(use as required)---	2
		9H1112	SPRING	2
		9H1113	RING	2
	10	1B4203	NUT	12
	11	5S5917	SCREW	12
	12	5S5918	ROD	12
	13	7S3161	LIFTER	12
	14	5P5598	SEAL	1
C	15	1B7709	BOLT	1
C		2S736	WASHER	1

C INDICATES CHANGE

225937

7N8026 VALVE MECHANISM GROUP
Engine Serial No. 3N87117—Up

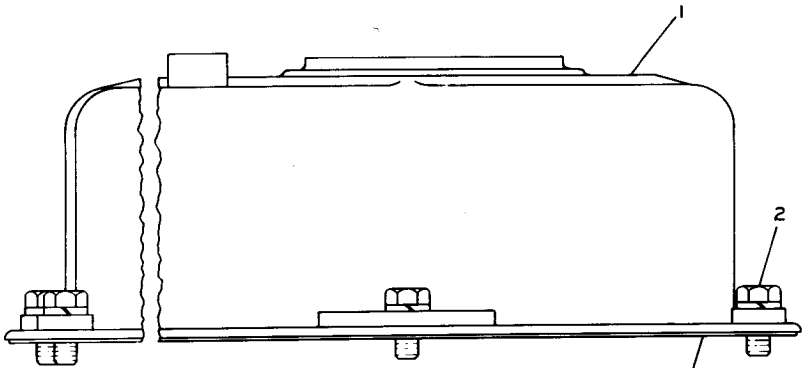

	REF. NO.	PART NUMBER	DESCRIPTION	QTY
C	1	2N3872	COVER ASSEM.	1
	2	1617	BOLT	15
		3B4505	LOCKWASHER	15
	3	8S1605	GASKET	1

C INDICATES CHANGE

118768

2P6516 VALVE MECHANISM COVER GROUP

REF. NO.	PART NUMBER	DESCRIPTION	QTY
1	5L4544	EYE	2

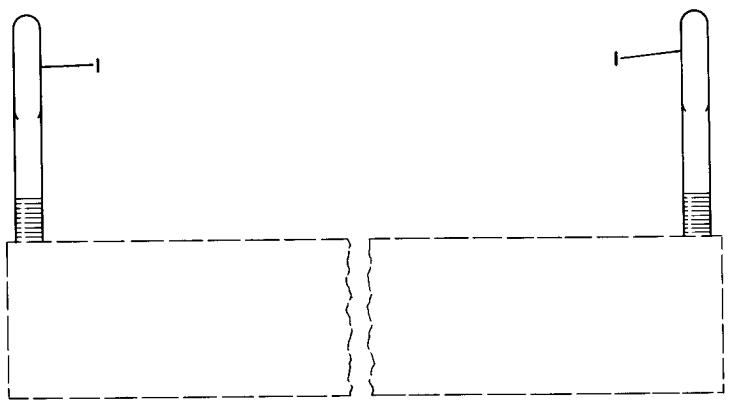

112542

1P3840 ENGINE LIFTING GROUP
Engine Serial No. 3N52495 to 3N55722 inclusive

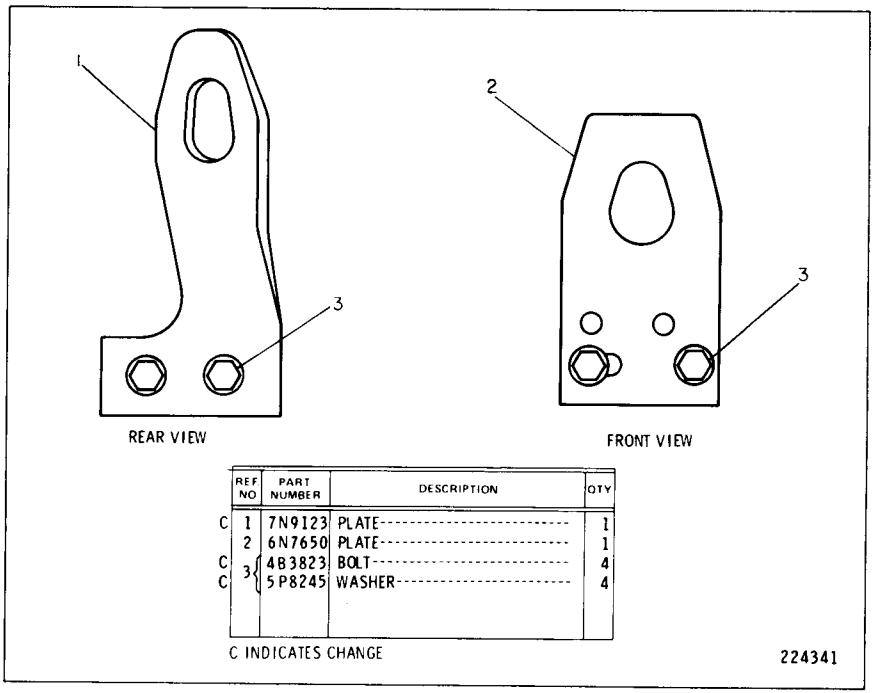

	REF NO	PART NUMBER	DESCRIPTION	QTY
C	1	7N9123	PLATE	1
	2	6N7650	PLATE	1
C	3	4B3823	BOLT	4
C		5P8245	WASHER	4

C INDICATES CHANGE

224341

6N8336 ENGINE LIFTING GROUP
Engine Serial No. 3N55723 to 3N59514 inclusive

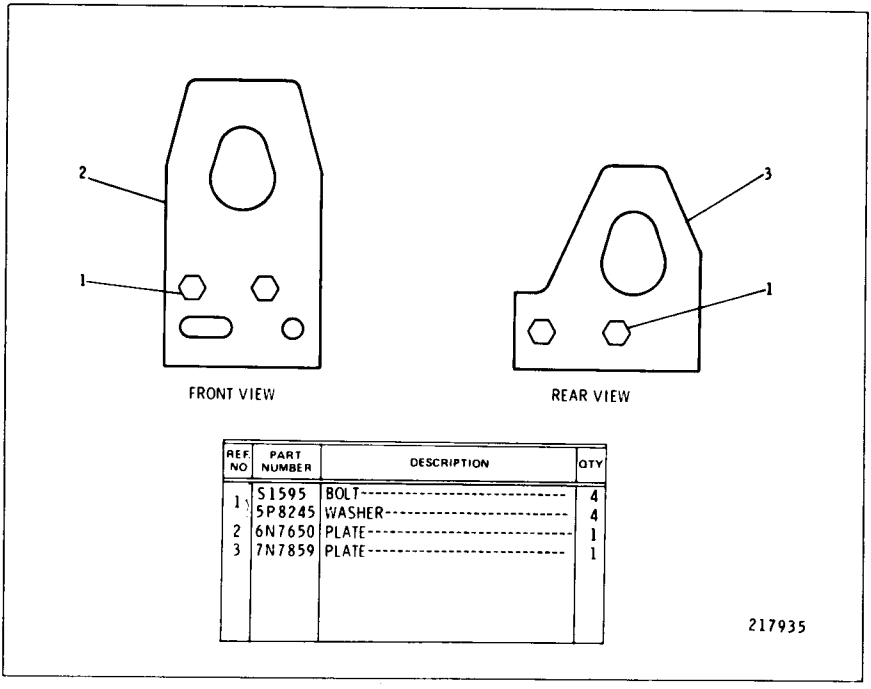

REF NO	PART NUMBER	DESCRIPTION	QTY
1	S1595	BOLT	4
	5P8245	WASHER	4
2	6N7650	PLATE	1
3	7N7859	PLATE	1

217935

7N7858 ENGINE LIFTING GROUP
Engine Serial No. 3N59515—Up

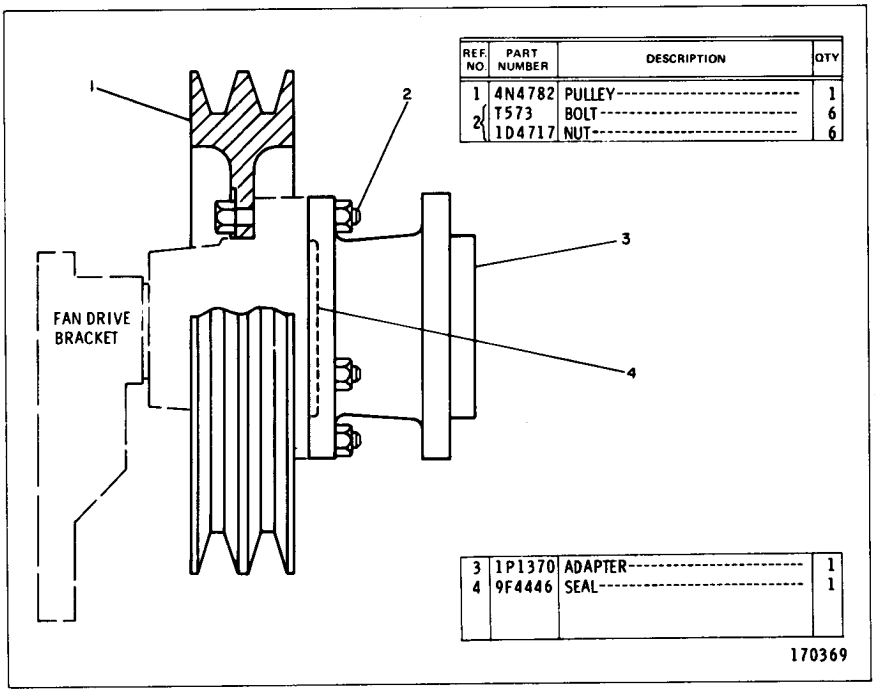

REF. NO.	PART NUMBER	DESCRIPTION	QTY
1	4N4782	PULLEY	1
2	T573	BOLT	6
	1D4717	NUT	6
3	1P1370	ADAPTER	1
4	9F4446	SEAL	1

170369

7N4102 FAN PULLEY GROUP
Serial No. 6X515 to 6X769 inclusive
Note: 7M4707 Vee Belt Set, consisting of 2 belts, is used

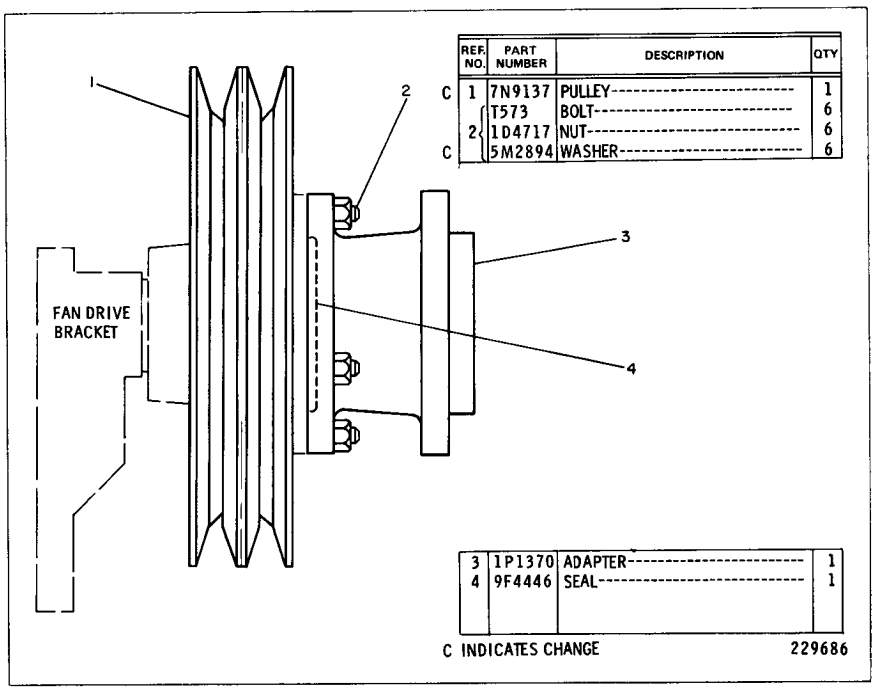

	REF. NO.	PART NUMBER	DESCRIPTION	QTY
C	1	7N9137	PULLEY	1
	2	T573	BOLT	6
		1D4717	NUT	6
C		5M2894	WASHER	6
	3	1P1370	ADAPTER	1
	4	9F4446	SEAL	1

C INDICATES CHANGE

229686

7N4102 FAN PULLEY GROUP
Serial No. 6X770—Up
Note: 7M4707 Vee Belt Set, consisting of 2 belts, is used

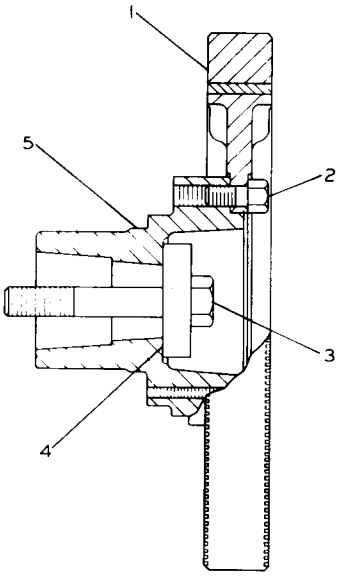

	REF. NO.	PART NUMBER	DESCRIPTION	QTY
C	1	7N9312	DAMPER ASSEM.	1
	2	S1595	BOLT	6
	3	7B5163	BOLT	1
	4	5S9948	WASHER	1
	5	2P1818	HUB	1

C INDICATES CHANGE 218548

2P7838 DAMPER GROUP

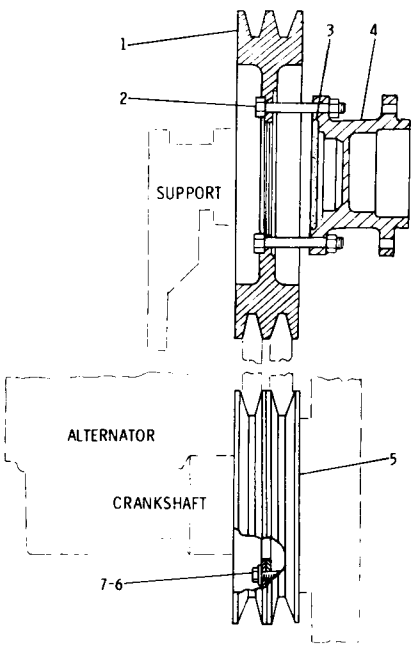

	REF. NO	PART NUMBER	DESCRIPTION	QTY
	1	4N4782	PULLEY--------(fan drive)--------	1
	2	T573	BOLT	6
		1D4717	NUT	6
	3	9F4446	SEAL	1
	4	1P1370	ADAPTER	1
C	5	7N2949	PULLEY--------(crankshaft)------	1
	6	S1594	BOLT-------2.54 cm(1.00 in.) long	6
			-OR-	
C		1A2029	BOLT-------2.86 cm(1.125 in.) long	6
C	7	5M2894	WASHER	6

C INDICATES CHANGE 212276

7N2506 PULLEY GROUP
Engine Serial No. 3N52495 to 3N69599 inclusive
Note: 7M4707 Vee Belt Set, consisting of 2 belts, is used

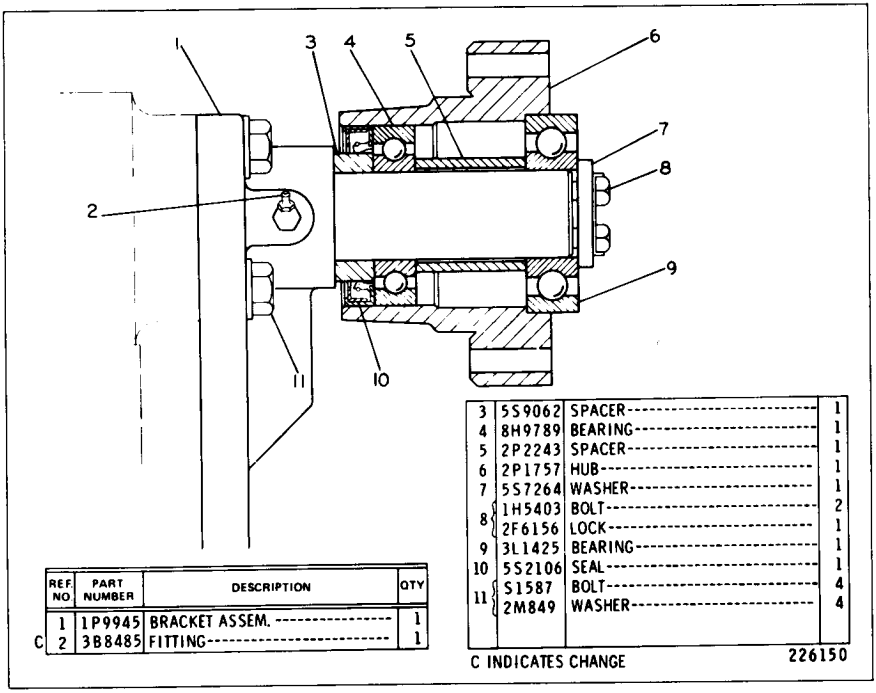

REF. NO.	PART NUMBER	DESCRIPTION	QTY
1	1P9945	BRACKET ASSEM.	1
C 2	3B8485	FITTING	1

3	5S9062	SPACER	1
4	8H9789	BEARING	1
5	2P2243	SPACER	1
6	2P1757	HUB	1
7	5S7264	WASHER	1
8	1H5403	BOLT	2
	2F6156	LOCK	1
9	3L1425	BEARING	1
10	5S2106	SEAL	1
11	S1587	BOLT	4
	2M849	WASHER	4

C INDICATES CHANGE

226150

2P7831 FAN DRIVE GROUP

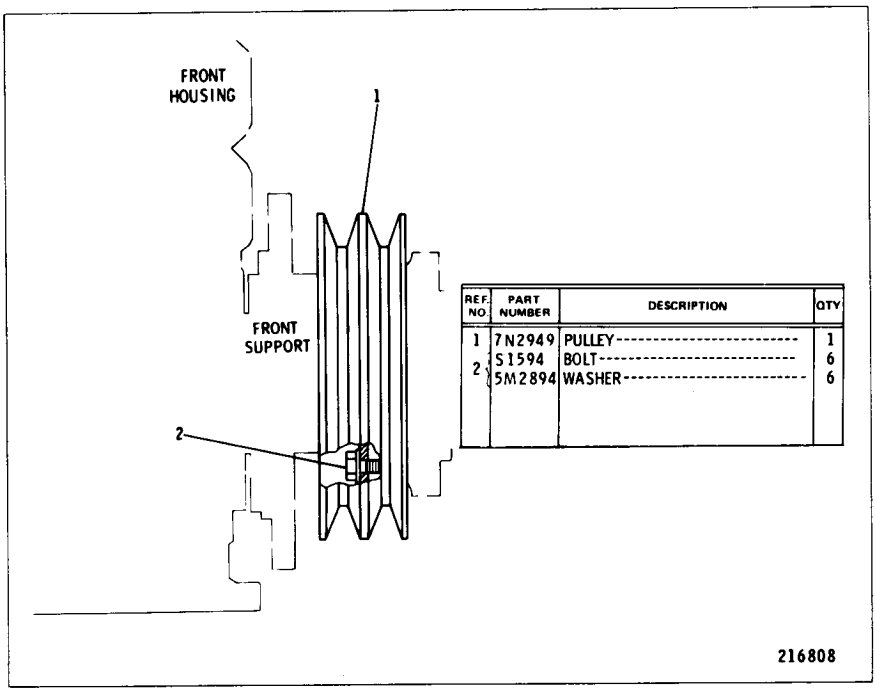

REF. NO.	PART NUMBER	DESCRIPTION	QTY
1	7N2949	PULLEY	1
2	S1594	BOLT	6
	5M2894	WASHER	6

7N2887 CRANKSHAFT PULLEY GROUP
Engine Serial No. 3N69600—Up
Note: 7M4707 Vee Belt Set, includes 2 belts, is used

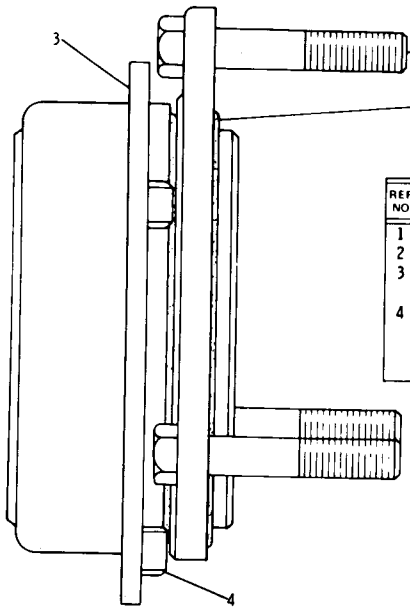

REF NO	PART NUMBER	DESCRIPTION	QTY
1	L1329	BOLT	3
2	2P1692	SEAL	1
3	8N2	TRUNNION ASSEM. (Includes)	1
4	1F748	NUT	4

226146

2P6246 TRUNNION GROUP

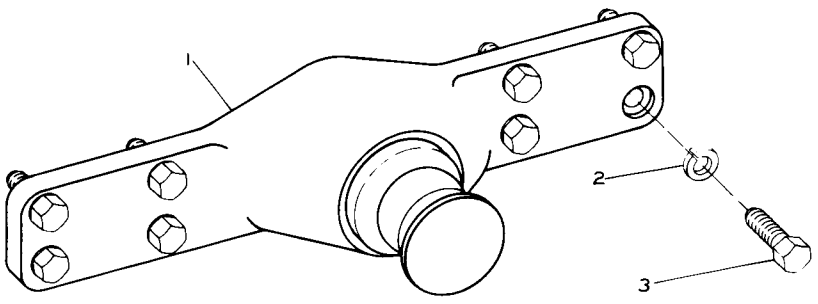

REF. NO.	PART NUMBER	DESCRIPTION	QTY
1	5A8065	TRUNNION ASSEM.	2
2	3B4516	LOCKWASHER	16
3	1D4635	BOLT	16

115558

5A8064 TRUNNION GROUP
AN ATTACHMENT

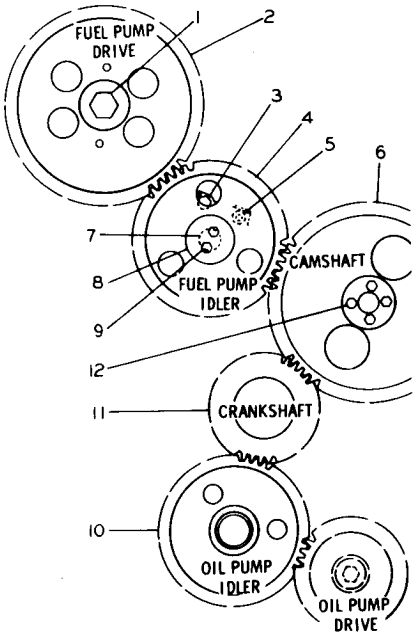

REF. NO.	PART NUMBER	DESCRIPTION	QTY
1	1S1603	BOLT	1
	4N3371	WASHER	1
2	4N3330	GEAR (80 Teeth)	1
3	L1351	BOLT	2
4	5S7660	GEAR ASSEM. (57 Teeth)	1
	5S7630	BEARING	1
5	5B9079	NUT	1
	5S7611	LOCK	1
6	5S3804	GEAR (80 Teeth)	1
7	5S7608	SHAFT	1
8	5S7612	PLATE	1
9	2H3755	BOLT	2
10	2P1172	GEAR ASSEM. (60 Teeth)	1
	2P1168	BEARING	1
11	4M9933	GEAR (40 Teeth)	1
	5H2671	KEY	1
12	S1748	BOLT	4

207194

2P9642 FRONT GEAR GROUP—Timing

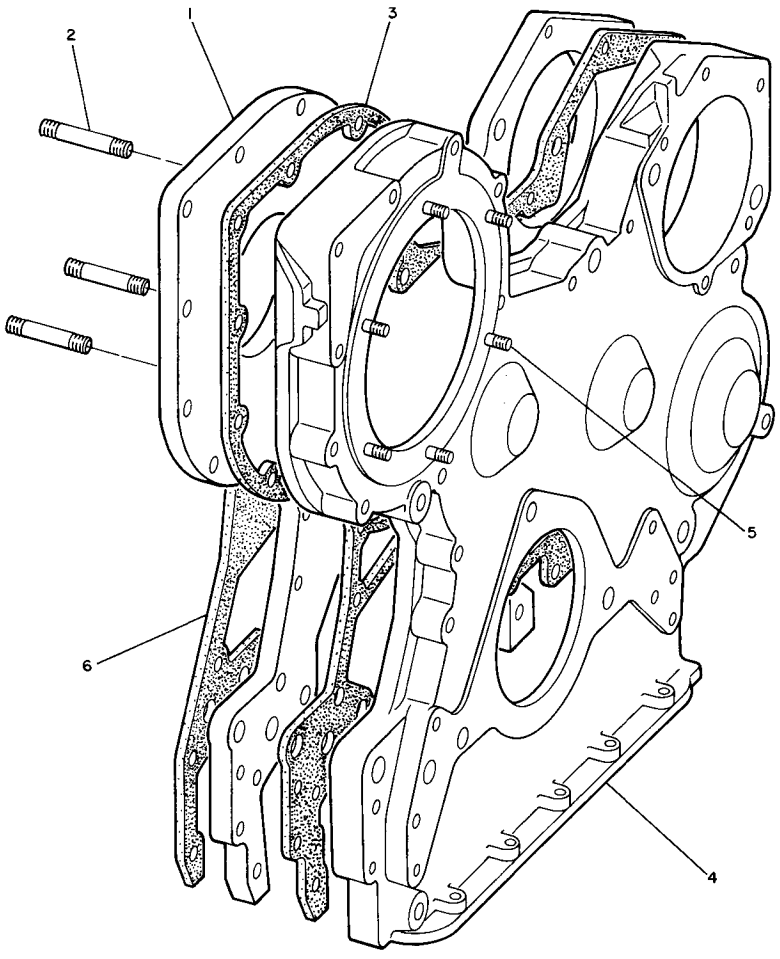

	REF. NO.	PART NUMBER	DESCRIPTION	QTY
	1	6N9060	PLATE ASSEM. (Includes)	1
	2	4M8743	STUD	3
	3	2P1274	GASKET	1
C	4	8N7711	HOUSING ASSEM. (Includes)	1
	5	2S42	STUD	6
	6	2P1273	GASKET	1

C INDICATES CHANGE

228004

2P9641 FRONT HOUSING GROUP—Timing Gear
Engine Serial No. 3N52495 to 3N92135 inclusive

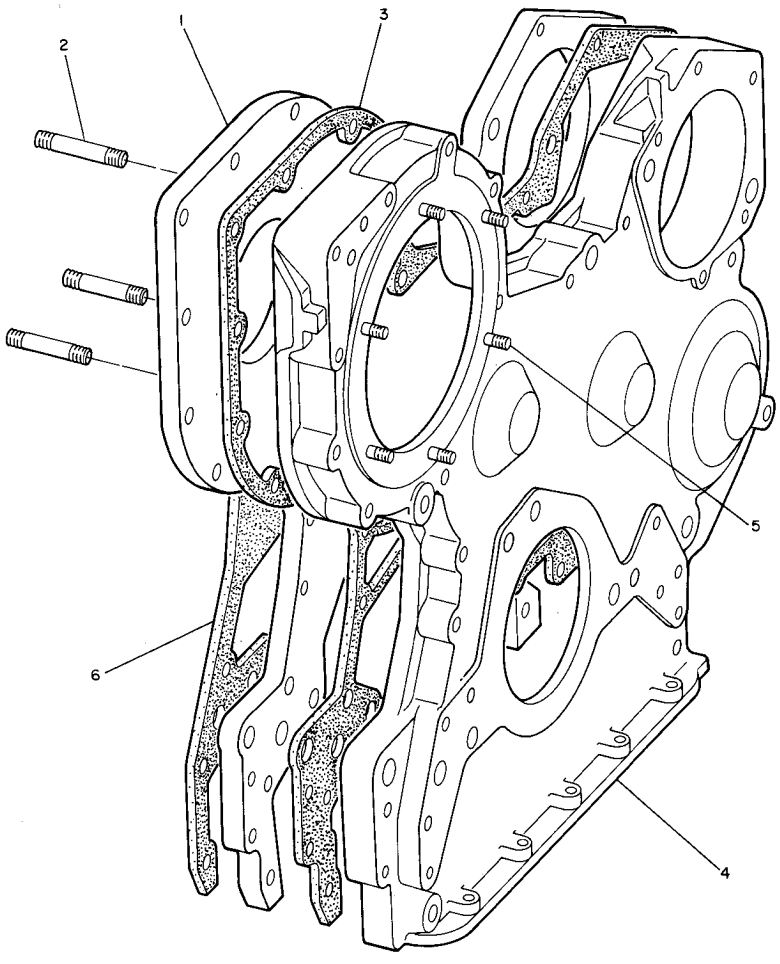

REF. NO.	PART NUMBER	DESCRIPTION	QTY
1	6N9060	PLATE ASSEM. (Includes)	1
2	4M8743	STUD	3
C 3	8N533	GASKET	1
C 4	8N109	HOUSING ASSEM. (Includes)	1
5	2S42	STUD	6
6	2P1273	GASKET	1

C INDICATES CHANGE

229218

2P9641 FRONT HOUSING GROUP—Timing Gear
Engine Serial No. 3N92136—Up

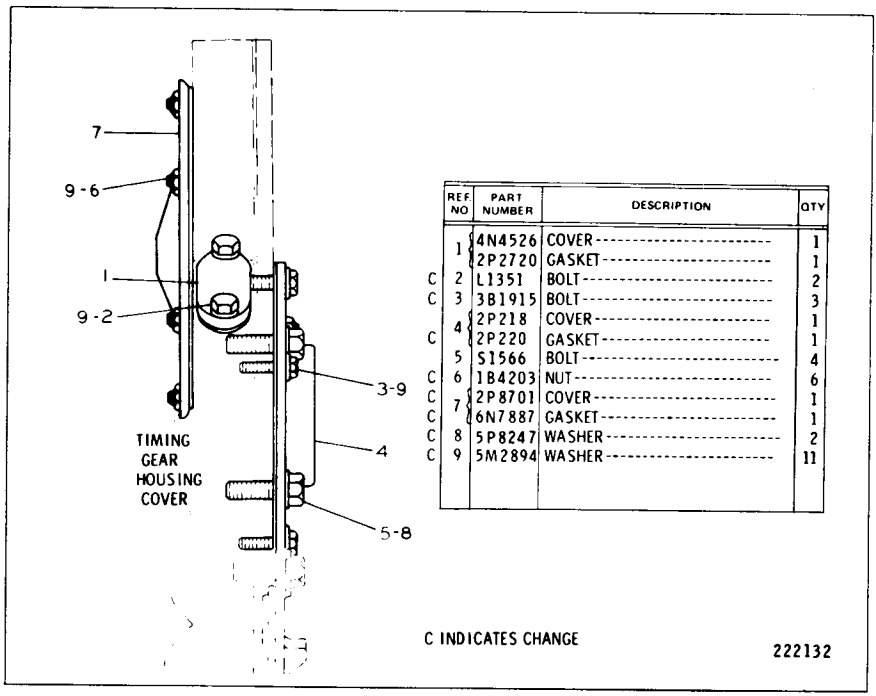

	REF NO	PART NUMBER	DESCRIPTION	QTY
	1	4N4526	COVER	1
		2P2720	GASKET	1
C	2	L1351	BOLT	2
C	3	3B1915	BOLT	3
	4	2P218	COVER	1
C		2P220	GASKET	1
	5	S1566	BOLT	4
C	6	1B4203	NUT	6
C	7	2P8701	COVER	1
C		6N7887	GASKET	1
C	8	5P8247	WASHER	2
C	9	5M2894	WASHER	11

C INDICATES CHANGE

222132

4N5162 FRONT HOUSING COVER GROUP

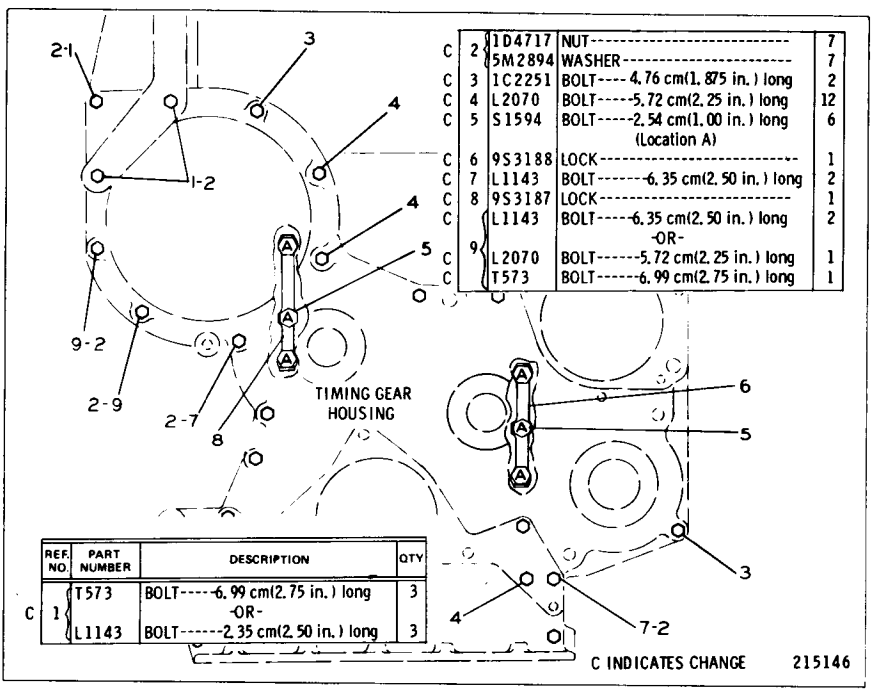

	REF NO	PART NUMBER	DESCRIPTION	QTY
C	2	1D4717	NUT	7
		5M2894	WASHER	7
C	3	1C2251	BOLT----4.76 cm(1.875 in.) long	2
C	4	L2070	BOLT-----5.72 cm(2.25 in.) long	12
C	5	S1594	BOLT-----2.54 cm(1.00 in.) long (Location A)	6
C	6	9S3188	LOCK	1
C	7	L1143	BOLT-------6.35 cm(2.50 in.) long	2
C	8	9S3187	LOCK	1
C	9	L1143	BOLT-----6.35 cm(2.50 in.) long -OR-	2
C		L2070	BOLT------5.72 cm(2.25 in.) long	1
C		T573	BOLT------6.99 cm(2.75 in.) long	1

	REF NO	PART NUMBER	DESCRIPTION	QTY
C	1	T573	BOLT-----6.99 cm(2.75 in.) long -OR-	3
		L1143	BOLT------2.35 cm(2.50 in.) long	3

C INDICATES CHANGE

215146

2P6498 FRONT HOUSING FASTENER GROUP—Timing Gear

CONSISTS OF:

2	2B8162	DOWEL--FRAME TO FLYWHEEL HOUSING
2	3B2968	BOLT--FRONT SUPPORT TO FRAME
4	1D4586	BOLT--FLYWHEEL HOUSING TO FRAME
4	9H1024	WASHER--BOLT TO FLYWHEEL HOUSING
2	2J3506	NUT--FRONT SUPPORT TO FRAME
4	5M7135	SHIM (.032)--FLYWHEEL HOUSING TO FRAME
2	5M7136	SHIM (.065)--FLYWHEEL HOUSING TO FRAME
2	5M7159	SHIM (.014)--FLYWHEEL HOUSING TO FRAME
2	2S115	WASHER--FRONT SUPPORT TO FRAME

7S3623 ENGINE MOUNTING PARTS GROUP

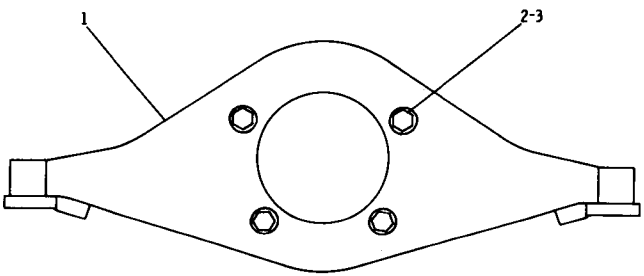

REF. NO.	PART NUMBER	DESCRIPTION	QTY
1	2P1466	SUPPORT ASSEM.	1
C 2	S1585	BOLT	4
C 3	2M849	WASHER	4

.C INDICATES CHANGE

212668

2P7753 SUPPORT GROUP
Engine Serial No. 3N52495 to 3N89284 inclusive

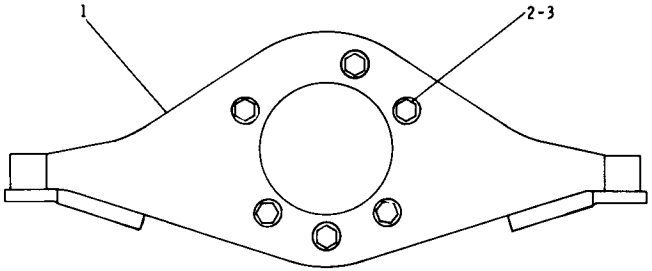

	REF. NO.	PART NUMBER	DESCRIPTION	QTY
C	1	8N5584	SUPPORT ASSEM.	1
C	2	S1585	BOLT	6
C	3	5P8245	WASHER	6

C INDICATES CHANGE

175274

2P7753 SUPPORT GROUP
Engine Serial No. 3N89285—Up

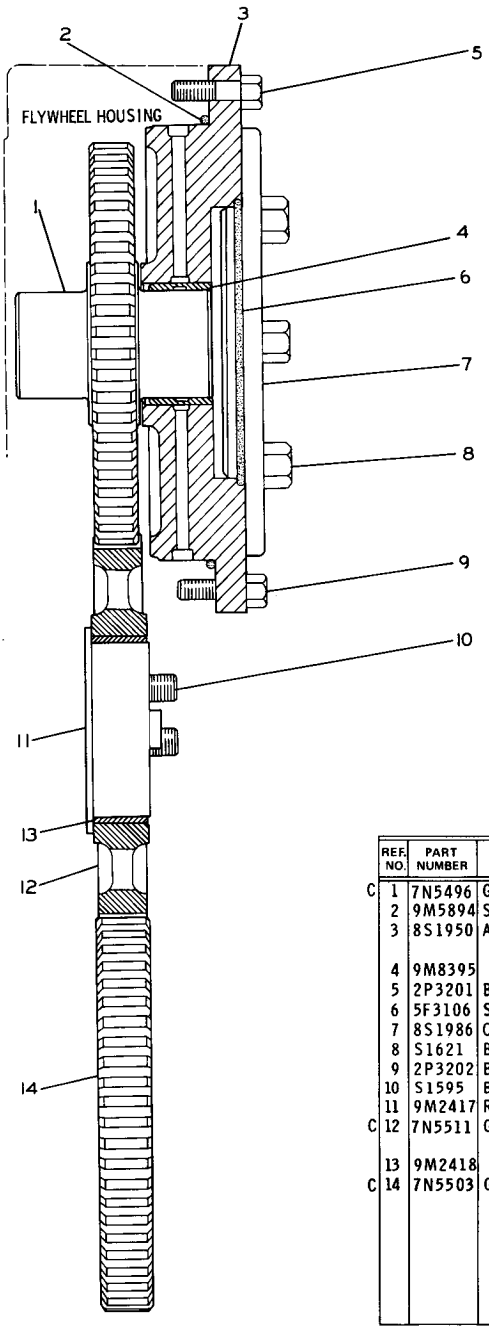

	REF. NO.	PART NUMBER	DESCRIPTION	QTY
C	1	7N5496	GEAR----------(58 teeth)----------	1
	2	9M5894	SEAL----------	1
	3	8S1950	ADAPTER ASSEM. ---------- (Includes)	1
	4	9M8395	BEARING----------	1
	5	2P3201	BOLT----------	1
	6	5F3106	SEAL----------	1
	7	8S1986	COVER----------	1
	8	S1621	BOLT----------	4
	9	2P3202	BOLT----------	6
	10	S1595	BOLT----------	3
	11	9M2417	RETAINER----------	1
C	12	7N5511	GEAR ASSEM. ------(57 teeth) ----- (Includes)	1
	13	9M2418	BEARING----------	1
C	14	7N5503	GEAR----------(58 teeth)---------	1

C INDICATES CHANGE

228654

2P8161 REAR GEAR GROUP—Accessory Drive
Engine Serial No. 3N52495 to 3N95205 inclusive

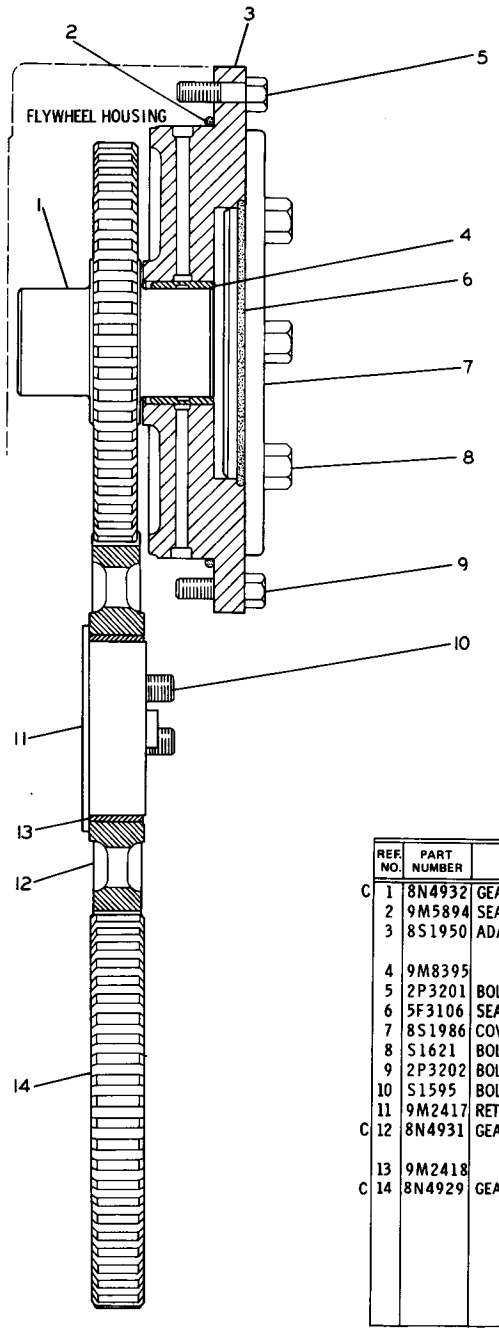

	REF. NO.	PART NUMBER	DESCRIPTION	QTY
C	1	8N4932	GEAR----------(57 teeth)----------	1
	2	9M5894	SEAL----------	1
	3	8S1950	ADAPTER ASSEM.---------- (Includes)	1
	4	9M8395	BEARING----------	1
	5	2P3201	BOLT----------	1
	6	5F3106	SEAL----------	1
	7	8S1986	COVER----------	1
	8	S1621	BOLT----------	4
	9	2P3202	BOLT----------	6
	10	S1595	BOLT----------	3
	11	9M2417	RETAINER----------	1
C	12	8N4931	GEAR ASSEM.----------(56 teeth)---- (Includes)	1
	13	9M2418	BEARING----------	1
C	14	8N4929	GEAR----------(57 teeth)----------	1

C INDICATES CHANGE.

228655

2P8161 REAR GEAR GROUP—Accessory Drive
Engine Serial No. 3N95206—Up

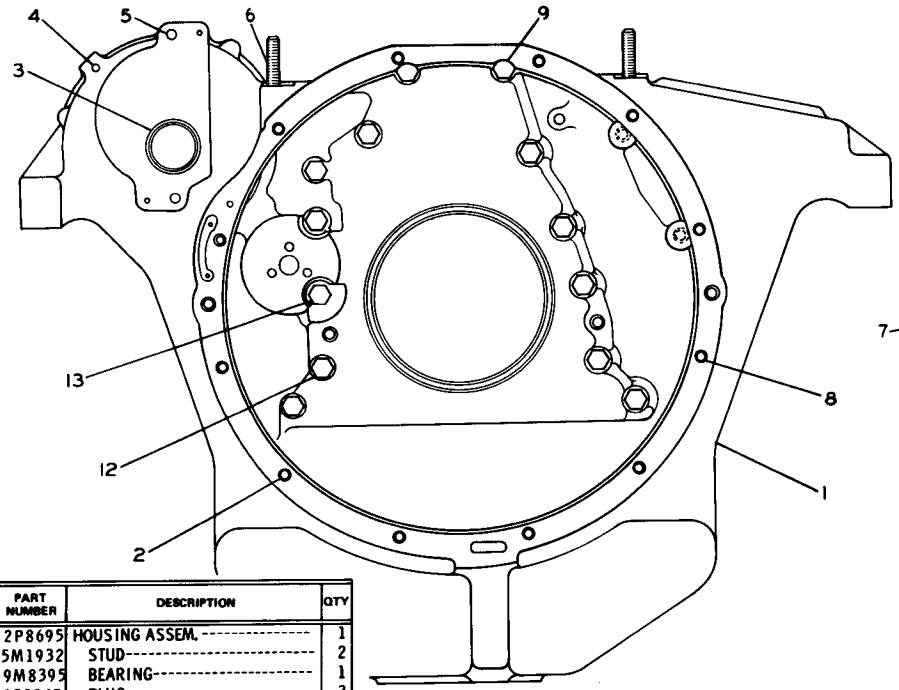

REF. NO.	PART NUMBER	DESCRIPTION	QTY
1	2P8695	HOUSING ASSEM.	1
2	5M1932	STUD	2
3	9M8395	BEARING	1
4	9F2247	PLUG	3
5	3F957	DOWEL	2
6	3D472	STUD	2
7	2A3798	DOWEL	2
8	3D490	STUD	10
9	2B947	BOLT	6
10	5M6213	PLUG	1
11	9H5921	GASKET	1
12	1A1460	BOLT	4
13	S1585	BOLT	3

117377

2P6156 FLYWHEEL HOUSING GROUP

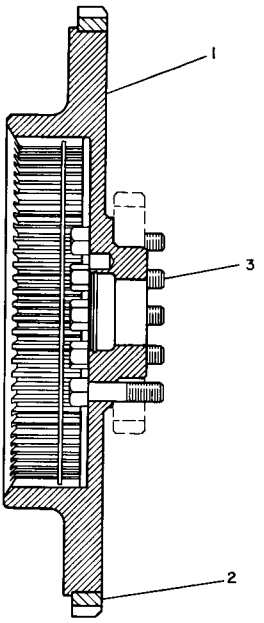

REF. NO.	PART NUMBER	DESCRIPTION	QTY.
1	7S7873	FLYWHEEL ASSEM. ---------- (Includes)	1
2	7N9146	GEAR------ (156 teeth)-----	1
3	S1577	BOLT----------	9

229684

7S7874 FLYWHEEL GROUP

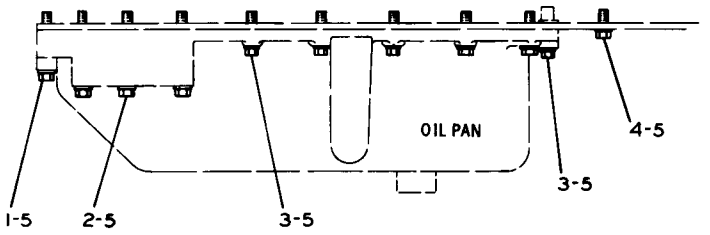

	REF. NO.	PART NUMBER	DESCRIPTION	QTY
C	1	T573	BOLT----------	5
C	2	L1352	BOLT----------	3
C	3	S1591	BOLT----------	20
C	4	S1594	BOLT----------	18
C	5	5M2894	WASHER----------	46

C INDICATES CHANGE

215084

2P6200 OIL PAN FASTENER GROUP
Engine Serial No. 3N52495 to 3N82448 inclusive

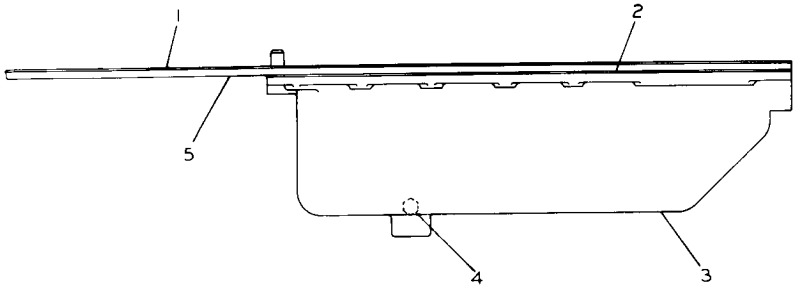

REF. NO.	PART NUMBER	DESCRIPTION	QTY
1	4M2969	GASKET	1
2	8S1965	GASKET	1
3	9S5417	PAN	1
4	4B7739	PLUG	1
5	2P1738	PLATE ASSEM.	1

117213

2P6152 OIL PAN GROUP

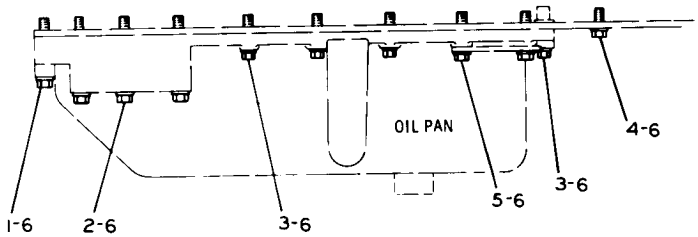

	REF. NO.	PART NUMBER	DESCRIPTION	QTY
C	1	T573	BOLT	5
C	2	L1352	BOLT	3
C	3	S1591	BOLT	18
C	4	L1351	BOLT	18
C	5	1C2251	BOLT	2
C	6	5M2894	WASHER	46

C INDICATES CHANGE

226147

2P6206 OIL PAN FASTENER GROUP
Engine Serial No. 3N82449—Up

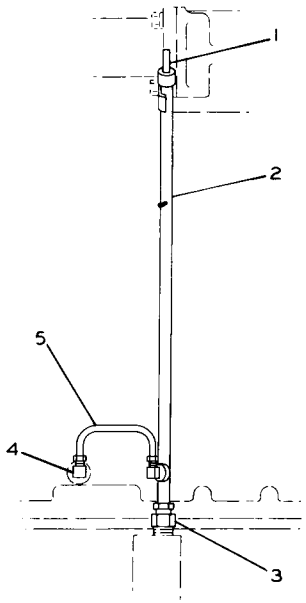

REF. NO.	PART NUMBER	DESCRIPTION	QTY
1	8S3995	GAGE ASSEM.	1
2	2P2547	TUBE ASSEM.	1
3	8S1326	FITTING	1
	8F8998	NUT	1
4	5K9243	ELBOW	2
5	2P2697	TUBE ASSEM.	1

117215

2P6493 OIL LEVEL GAUGE GROUP

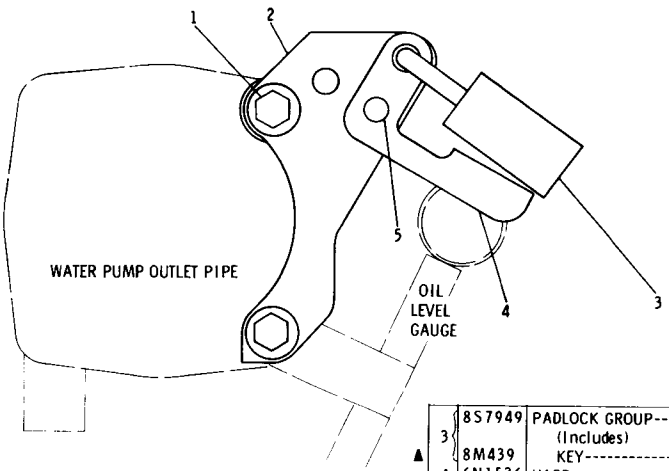

	REF. NO.	PART NUMBER	DESCRIPTION	QTY
C	1	S1591	BOLT	2
		5M2894	WASHER	2
C	2	6N7325	BRACKET	1

	REF. NO.	PART NUMBER	DESCRIPTION	QTY
	3	8S7949	PADLOCK GROUP (Includes)	1
▲		8M439	KEY	2
	4	6N1536	HASP	1
C	5	6N2011	RIVET	1
		8H3526	WASHER	1

▲ NOT PART OF 6N1568 PROTECTION GROUP C INDICATES CHANGE 211204

6N1568 PROTECTION COVER GROUP—Oil Level Gauge AN ATTACHMENT

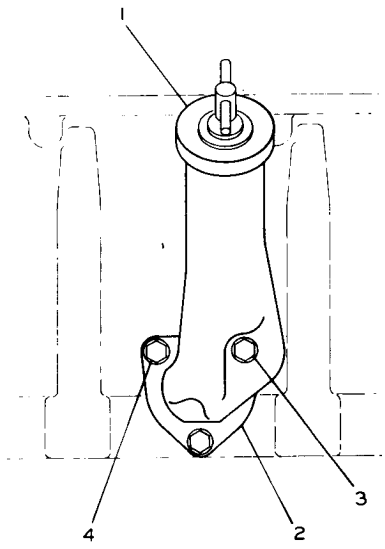

REF. NO.	PART NUMBER	DESCRIPTION	QTY
1	7S1803	CAP ASSEM.	1
2	9S1434	PIPE	1
	7S1801	ANCHOR	1
	5S8055	GASKET	1
3	2P3206	BOLT	1
4	2P3201	BOLT	2

117217

4N5139 OIL FILLER GROUP

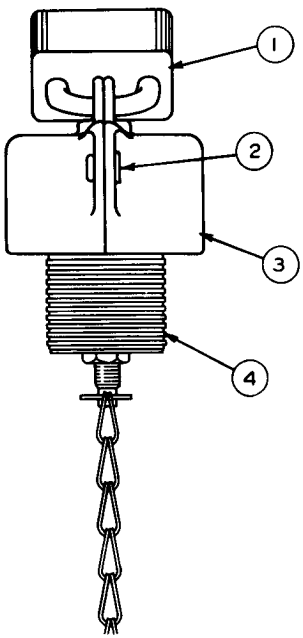

NOTE: For service of Key and Padlock order 8S7949 Padlock Group

REF. NO.	PART NUMBER	DESCRIPTION	QTY.
1	Not Serv.	PADLOCK	1
	▲ 8M439	KEY	2
2	8S4212	RIVET	2
3	Not Serv.	COVER	2
4	7S1803	CAP ASSEM.	1

▲ Not part of 8S3747 Protection Cover Group

111307

8S3747 PROTECTION COVER GROUP—Oil Filler Cap AN ATTACHMENT

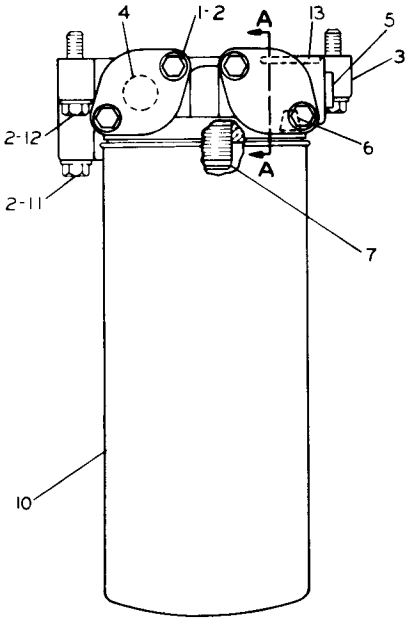

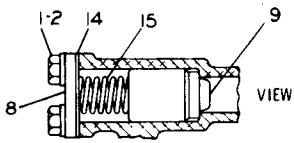

REF NO	PART NUMBER	DESCRIPTION	QTY.
1	S1618	BOLT	4
2	9M1974	WASHER	8
3	1P6448	BASE ASSEM. (Includes)	1
4	1B5174	PLUG-1, 91cm(. 75 in.) thread	3
5	3L1850	PLUG-1, 27 cm(. 5 in.) thread	1
6	7H3171	PLUG	1
7	2P2537	STUD	1
8	6B830	COVER	2
9	1P1367	PLUNGER	2
10	2P4004	FILTER ASSEM.	1
11	1D4540	BOLT-----6, 99 cm(2. 75 in.) long	1
12	1A9579	BOLT-----3, 81 cm(1. 5 in.) long	3
13	8M4432	SEAL	2
14	4N8207	GASKET	2
15	8M3182	SPRING	2

226160

2P6475 OIL FILTER GROUP

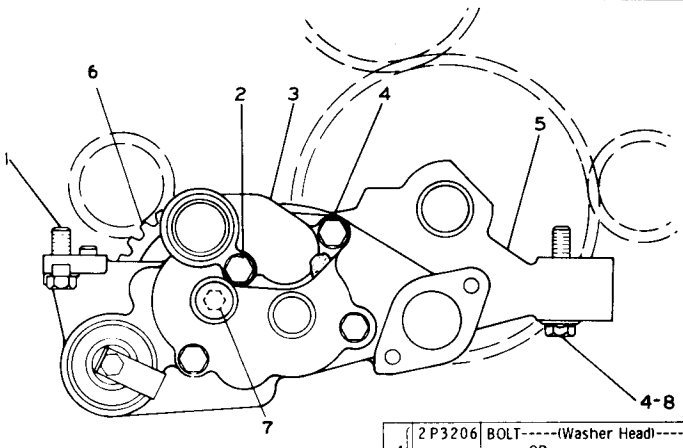

	REF NO	PART NUMBER	DESCRIPTION	QTY
	1	1A2029	BOLT	2
		8M7587	LOCK	2
	2	2P3210	BOLT---(Washer Head) - OR -	1
C		S1619	BOLT-----(Std. Hex Head)	1
	3	4N5353	ELBOW	1
		2P8746	GASKET	1
	4	2P3206	BOLT-----(Washer Head) - OR -	3
C		S1590	BOLT----(Std. Hex Head)	3
	5	2P1785	PUMP GROUP (Separate Illustration)	1
C	6	8S497	GEAR---(40 teeth)	1
C		8M5599	KEY	1
C	7	S1590	BOLT	1
C		1P7346	WASHER	1
C	8	5M2894	WASHER	2

C INDICATES CHANGE 224342

2P1784 OIL PUMP GROUP

2P1785 Pump parts are shown on Page 28

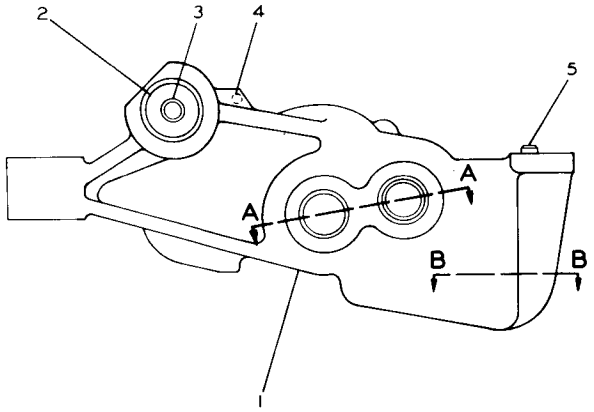

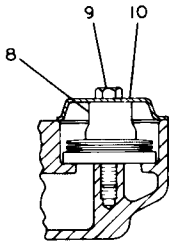

SECTION B-B

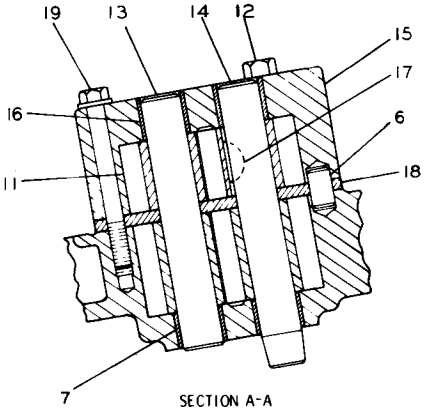

SECTION A-A

REF. NO.	PART NUMBER	DESCRIPTION	QTY
1	2P685	BODY ASSEM.	1
2	2P1170	SHAFT ASSEM.	1
3	6F7172	DOWEL	1
4	4B9880	BALL	1
5	1F1006	DOWEL	1
6	1M3735	DOWEL	2
7	8S6511	BEARING	2
C 8	4N8385	VALVE ASSEM.	1
9	1B9575	BOLT	1
10	4N3732	COVER	1
C 11	6N1036	GEAR (8 Teeth)	2
C 12	T65	BOLT	2
C 13	8S493	SHAFT ASSEM.	1
14	2P6245	SHAFT ASSEM.	1
15	4N4055	BODY ASSEM.	1
16	8S6511	BEARING	2
17	1B8709	KEY	1
18	2P1781	SPACER	1
C 19	2M3403	BOLT	1
C 19	5M2894	WASHER	1

C INDICATES CHANGE

208705

2P1785 GEAR PUMP GROUP—Engine Oil
Part of 2P1784 Oil Pump Group shown on Page 27

2P1785 GEAR PUMP GROUP—Engine Oil—Type 2
Part of 2P1784 Oil Pump Group shown on Page 27

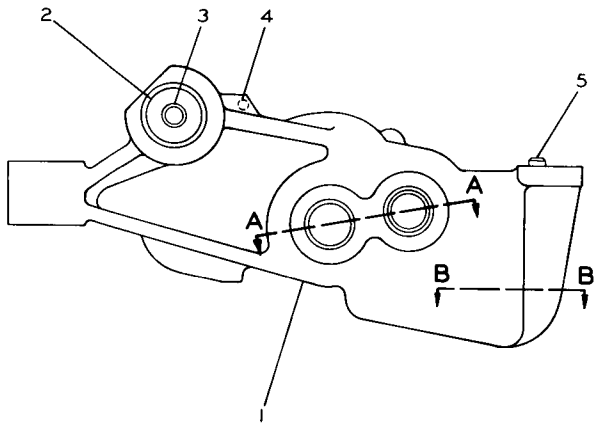

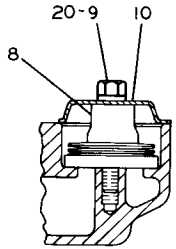

SECTION B-B

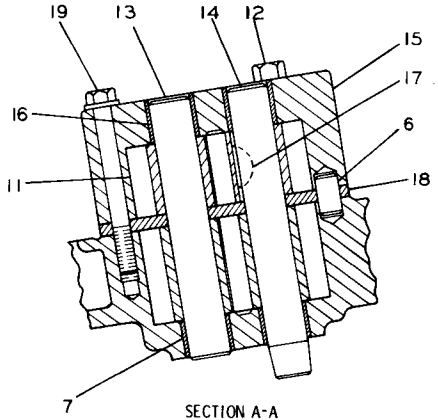

SECTION A-A

	REF. NO.	PART NUMBER	DESCRIPTION	QTY
C	1	8N8636	BODY ASSEM.	1
	2	2P1170	SHAFT ASSEM.	1
	3	6F7172	DOWEL	1
	4	4B9880	BALL	1
	5	1F1006	DOWEL	1
	6	1M3735	DOWEL	2
	7	8S6511	BEARING	2

8	4N8385	VALVE ASSEM.	1
9	2B2694	BOLT	1
10	4N3732	COVER	1
11	6N1036	GEAR (8 Teeth)	2
12	T65	BOLT	2
13	8S493	SHAFT ASSEM.	1
14	2P6245	SHAFT ASSEM.	1

15	4N4055	BODY ASSEM.	1
16	8S6511	BEARING	2
17	1B8709	KEY	1
18	2P1781	SPACER	1
19	2M3403	BOLT	1
	5M2894	WASHER	1
20	9M1974	WASHER	1

C INDICATES CHANGE

228659

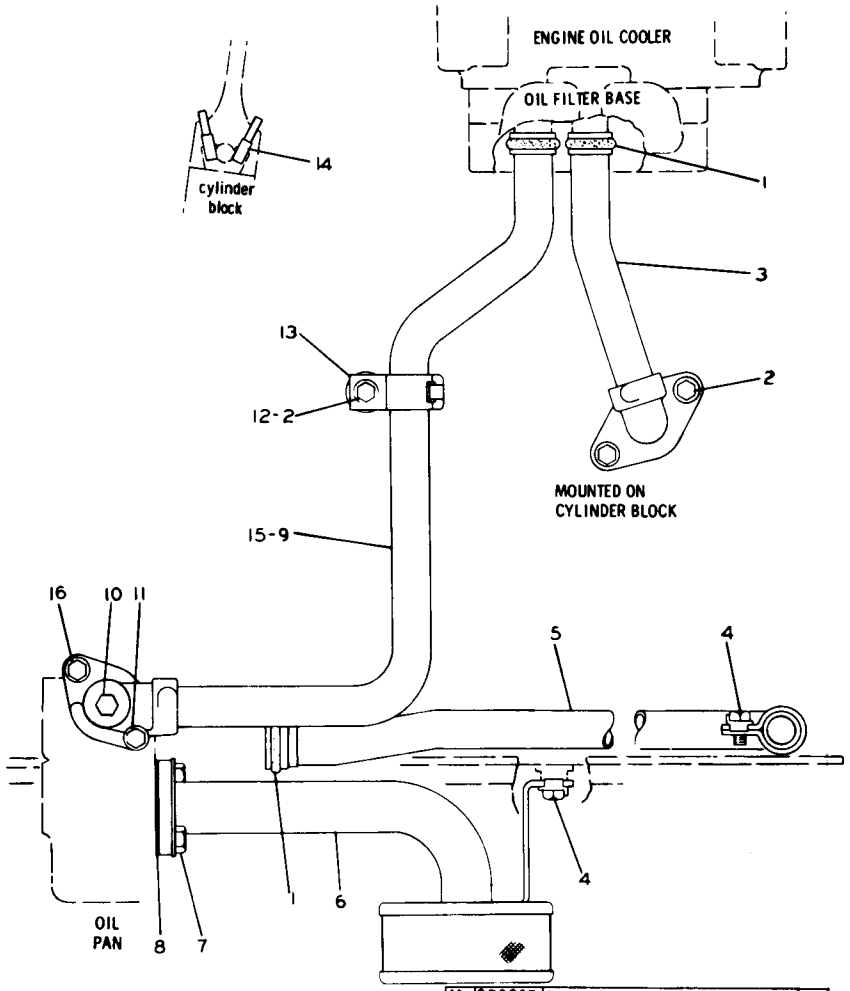

	REF. NO.	PART NUMBER	DESCRIPTION	QTY
C	1	9M4849	SEAL	3
	2	2P3201	BOLT	3
	3	2P2460	TUBE ASSEM.	1
		7F7590	GASKET	1
	4	T102	BOLT	2
		L364	LOCK	2
	5	2P1739	TUBE ASSEM.	1
	6	2P1751	BELL ASSEM.	1
	7	S1594	BOLT	2
		8S8874	LOCK	1
	8	8M904	GASKET	1
	9	2P2519	TUBE ASSEM. (Includes)	1
C	10	5M6213	PLUG	1
	11	2P3207	BOLT	1
	12	5B8030	SPACER	1
		4B4278	WASHER	1
	13	7S3919	CLIP	1
		7S3916	CLIP (tab)	1
	14	2S1541	ORIFICE	6
	15	2M5407	GASKET	1
	16	2P3202	BOLT	1

C INDICATES CHANGE 218685

2P6105 OIL LINES GROUP
Engine Serial No. 3N53224 to 3N69599 inclusive

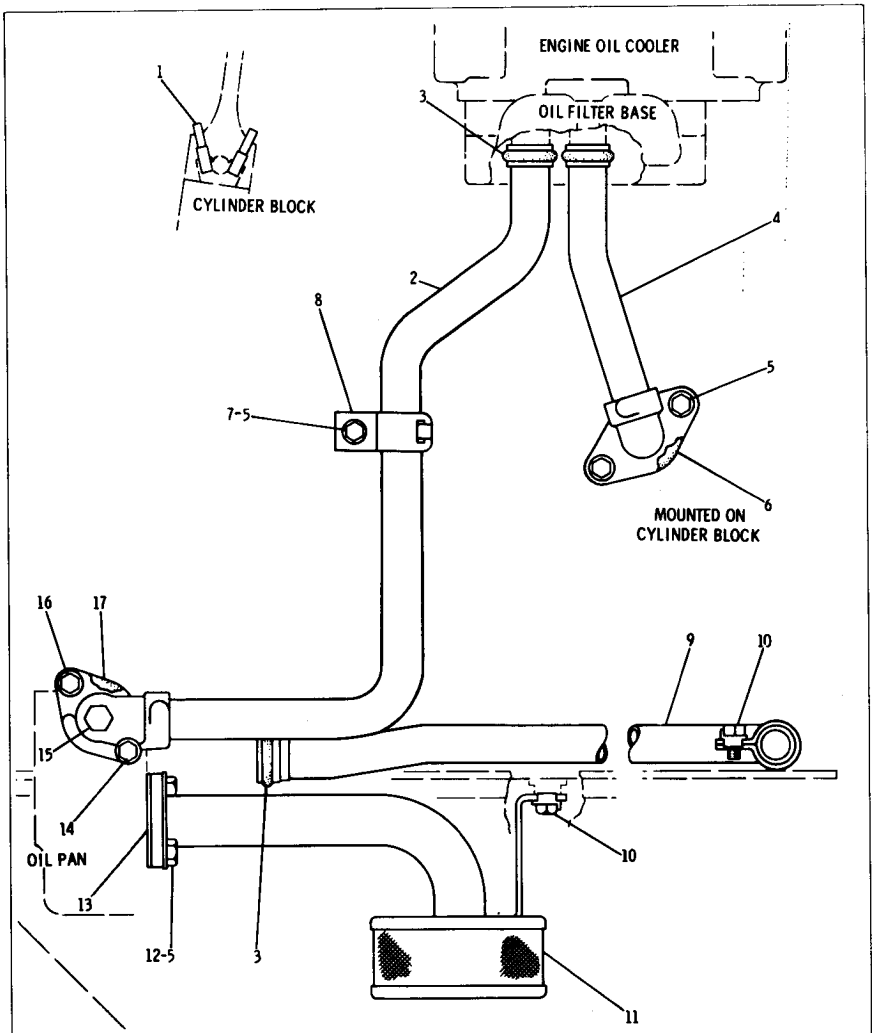

	REF. NO.	PART NUMBER	DESCRIPTION	QTY.
	1	2S1541	ORIFICE	6
C	2	2P2519	TUBE ASSEM.	1
	3	9M4849	SEAL	3
	4	2P2460	TUBE ASSEM.	1
C	5	S1594	BOLT	5
	6	7F7590	GASKET	1
C	7	9L9132	WASHER	1
C		5B8030	SPACER	1
C	8	7S3919	CLIP--------slot)	1
C		7S3916	CLIP--------(tab)	1
	9	2P1739	TUBE ASSEM.	1
	10	T102	BOLT	2
		L364	LOCK	2
	11	2P1751	BELL ASSEM.	1
	12	8S8874	LOCK	1
	13	8M904	GASKET	1
C	14	L2070	BOLT	1
C	15	5M6213	PLUG	1
C	16	1A2029	BOLT	1
	17	2M5407	GASKET	1

C INDICATES CHANGE

172344

2P6105 OIL LINES GROUP
Engine Serial No. 3N69600 to 3N93250 inclusive

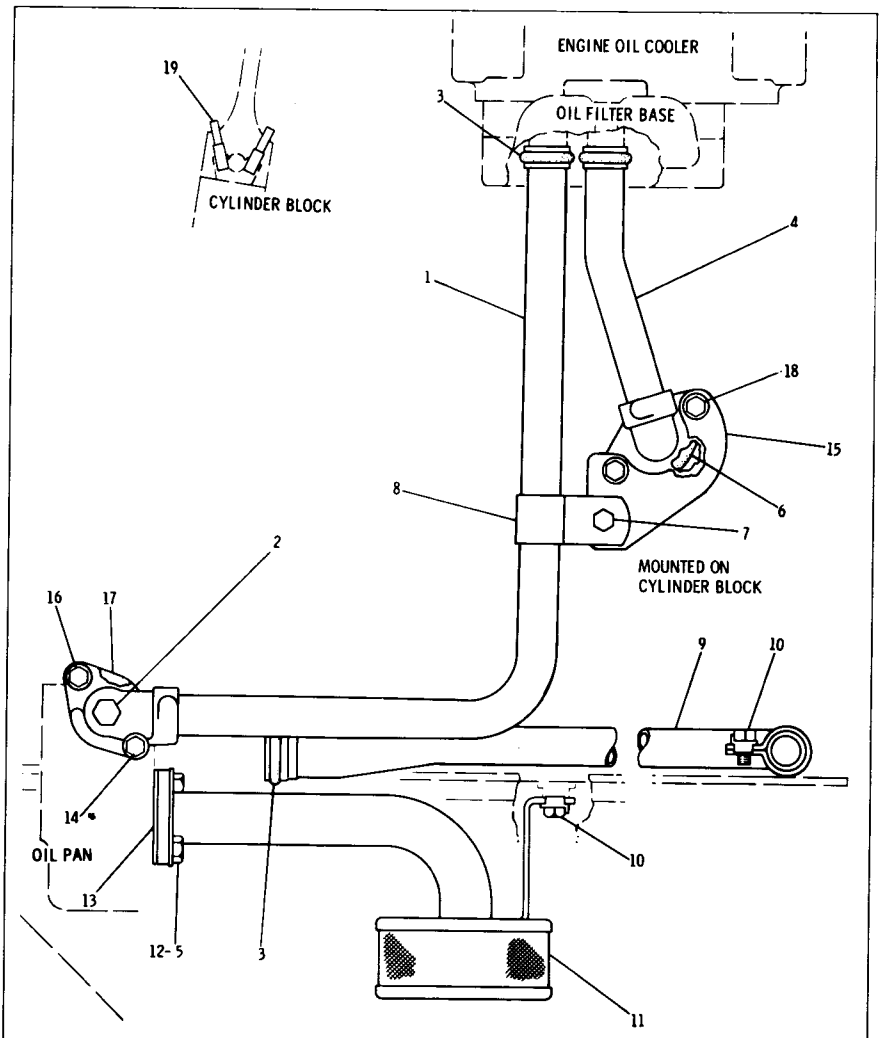

	REF. NO.	PART NUMBER	DESCRIPTION	QTY.
C	1	8N7318	TUBE ASSEM. (Includes)	1
	2	5M6213	PLUG	1
	3	9M4849	SEAL	3
C	4	8N7315	TUBE ASSEM.	1
C	5	S1594	BOLT	2
	6	7F7590	GASKET	1
C	7	L1351	BOLT	1
C		1D4717	NUT	1
C	8	9L9132	WASHER	1
C		8M2769	CLIP	1
	9	2P1739	TUBE ASSEM.	1
	10	T102	BOLT	2
		L364	LOCK	2
	11	2P1751	BELL ASSEM.	1
	12	8S8874	LOCK	1
	13	8M904	GASKET	1
	14	L2070	BOLT	1
C	15	8N5739	BRACKET	1
	16	1A2029	BOLT	1
	17	2M5407	GASKET	1
C		S1590	BOLT	2
C	18	8D5898	SPACER	4
C		5M2894	WASHER	2
	19	2S1541	ORIFICE	6

C INDICATES CHANGE

225436

2P6105 OIL LINES GROUP
Engine Serial No. 3N93251—Up

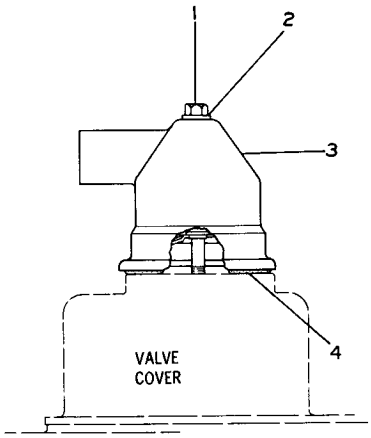

	REF. NO.	PART NUMBER	DESCRIPTION	QTY.
	1	3H3243	BOLT	1
	2	4K9890	WASHER	1
	3	8S248	BREATHER ASSEM.	1
C	4	4L9564	SEAL	1

C INDICATES CHANGE 227531

1P4244 BREATHER GROUP

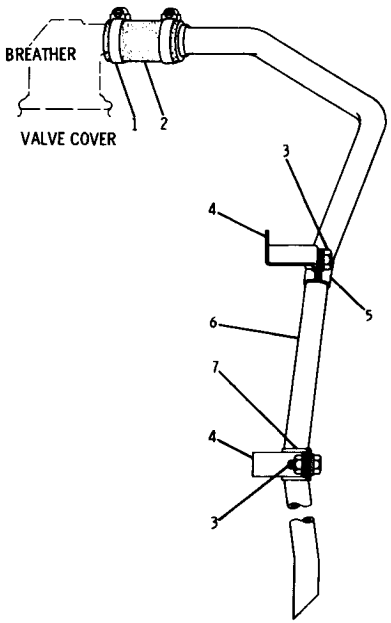

	REF. NO.	PART NUMBER	DESCRIPTION	QTY
	1	9M2904	CLAMP	2
C	2	5P1254	HOSE--10, 16 cm(4 in.)	
C		S1594	BOLT	2
C	3	1D4717	NUT	2
C		5M2894	WASHER	4
C	4	4N9796	BRACKET	2
C	5	8J4111	CLAMP	1
C	6	6N8790	TUBE	1
C	7	1S4557	CLIP	1

C INDICATES CHANGE 211287

6N1134 FUMES DISPOSAL GROUP—Crankcase Breather—Replaced by 8N233
Serial No. 6X1 to 6X735 inclusive
Part of 6N206 Refrigerant Compressor Group listed on Page 177
AN ATTACHMENT

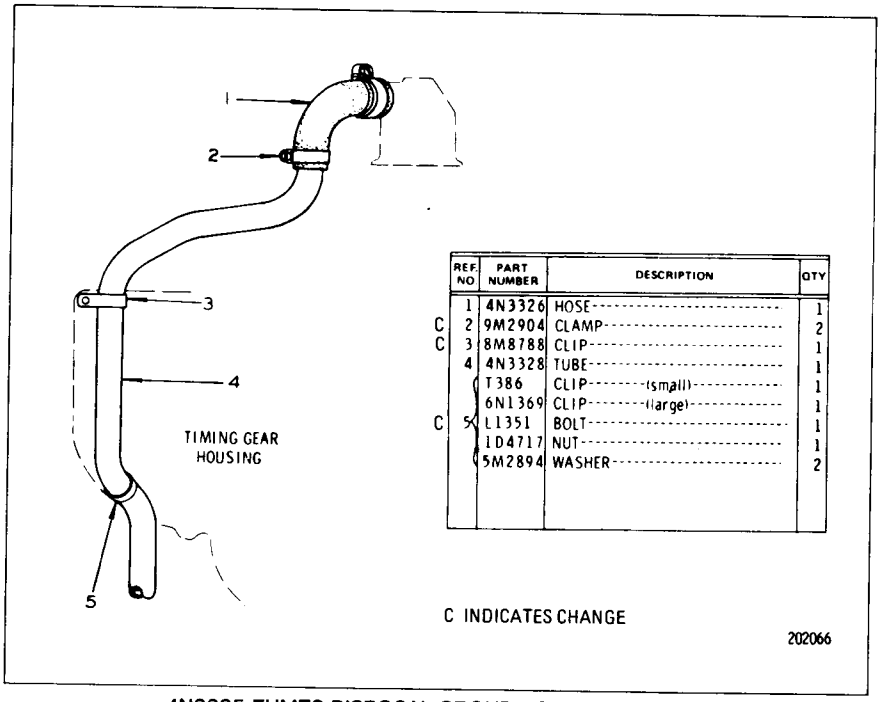

	REF NO	PART NUMBER	DESCRIPTION	QTY
	1	4N3326	HOSE	1
C	2	9M2904	CLAMP	2
C	3	8M8788	CLIP	1
	4	4N3328	TUBE	1
		T386	CLIP (small)	1
		6N1369	CLIP (large)	1
C	5	L1351	BOLT	1
		1D4717	NUT	1
		5M2894	WASHER	2

4N3325 FUMES DISPOSAL GROUP—Crankcase Breather
Serial No. 6X1 to 6X735 inclusive

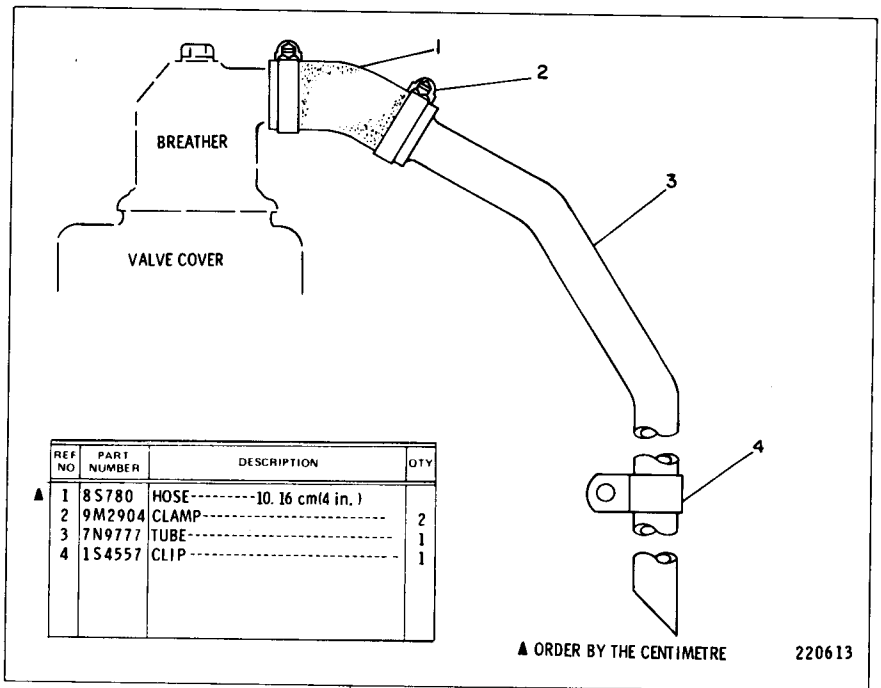

	REF NO	PART NUMBER	DESCRIPTION	QTY
▲	1	8S780	HOSE—10.16 cm(4 in.)	
	2	9M2904	CLAMP	2
	3	7N9777	TUBE	1
	4	1S4557	CLIP	1

8N233 FUMES DISPOSAL GROUP—Crankcase Breather
Serial No. 6X736—Up
Also part of 6N206 Refrigerant Compressor Arrangement listed on Page 177

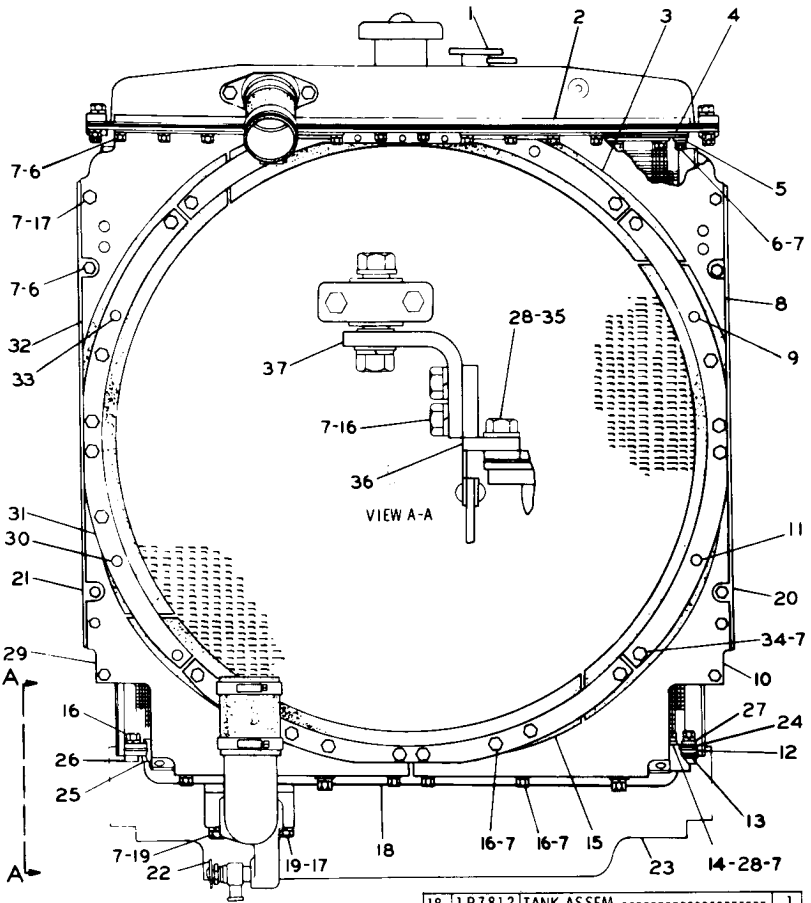

REF NO	PART NUMBER	DESCRIPTION	QTY
1	2S3080	CAP ASSEM.	1
2	1P2296	STRIP	1
3	1P7785	BAFFLE ASSEM.	1
C 4	6N4949	GASKET	1
5	1P7316	STRIP	1
6	S1588	BOLT	33
7	3B4506	LOCKWASHER	105
8	4N5725	SHIELD ASSEM.	1
	9F2978	NUT	2
9	5M9621	STUD	2
10	4N5723	SHIELD ASSEM.	1
	7M7794	STUD	1
	9F2978	NUT	4
11	5M9621	STUD	1
12	1P7132	PLATE ASSEM.	1
C 13	6N4955	GASKET	1
14	1P2678	STRIP	4
15	1P7786	BAFFLE	3
C 16	S1594	BOLT	38
17	S509	BOLT	4
18	1P7812	TANK ASSEM.	1
19	8F6974	BOLT	2
20	1P7828	BAFFLE ASSEM.	1
21	1P7829	BAFFLE ASSEM.	1
22	8F8151	COCK	1
23	1P6384	BAFFLE ASSEM.	1
C 24	6N4956	GASKET	1
25	1P7318	STRIP	2
26	1P7315	STRIP	2
27	1P7342	STRIP	2
28	S1591	BOLT	29
29	4N5724	SHIELD ASSEM.	1
	9F2978	NUT	4
30	5M9621	STUD	2
31	1P7783	STRIP	3
32	4N5722	SHIELD ASSEM.	1
	9F2978	NUT	2
33	5M9621	STUD	2
C 34	1D4717	NUT	1
C 35	9M6527	WASHER	2
C 36	4N7667	PLATE ASSEM.	1
C 37	4N7449	BRACKET	1

C INDICATES CHANGE

208714

2P8198 RADIATOR GROUP—Rear View
Serial No. 6X1 to 6X752 inclusive

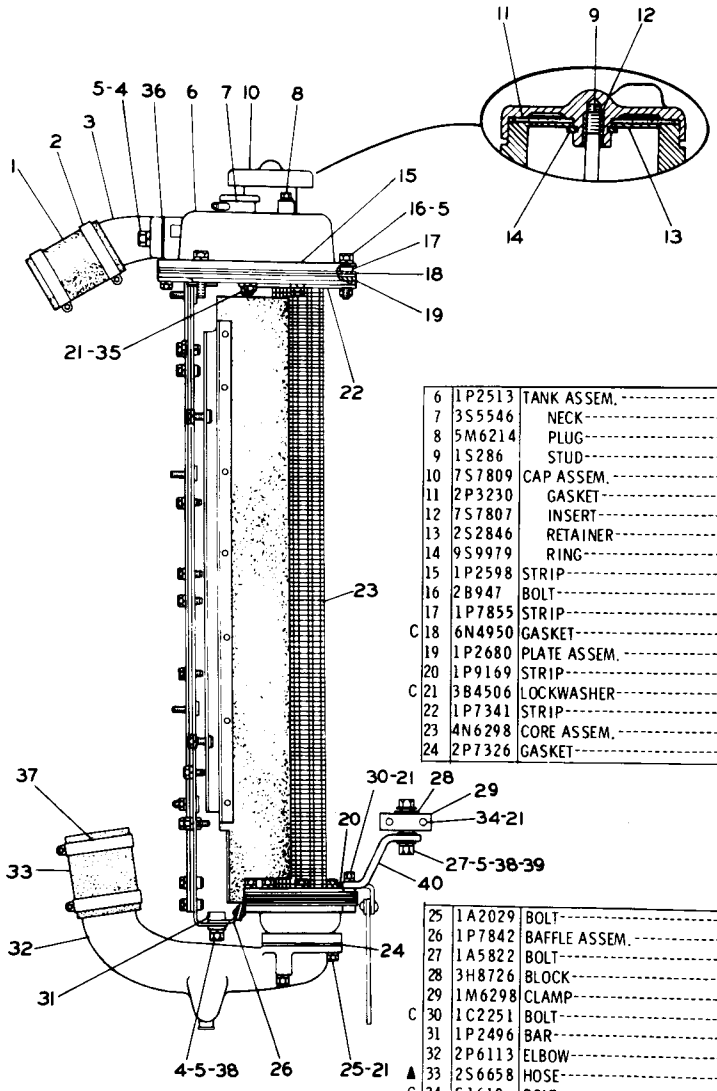

6	1P2513	TANK ASSEM.	1
7	3S5546	NECK	1
8	5M6214	PLUG	1
9	1S286	STUD	1
10	7S7809	CAP ASSEM.	1
11	2P3230	GASKET	1
12	7S7807	INSERT	1
13	2S2846	RETAINER	1
14	9S9979	RING	1
15	1P2598	STRIP	2
16	2B947	BOLT	4
17	1P7855	STRIP	1
C 18	6N4950	GASKET	1
19	1P2680	PLATE ASSEM.	1
20	1P9169	STRIP	1
C 21	3B4506	LOCKWASHER	25
22	1P7341	STRIP	2
23	4N6298	CORE ASSEM.	1
24	2P7326	GASKET	1

25	1A2029	BOLT	1
26	1P7842	BAFFLE ASSEM.	1
27	1A5822	BOLT	2
28	3H8726	BLOCK	2
29	1M6298	CLAMP	4
C 30	1C2251	BOLT	2
31	1P2496	BAR	1
32	2P6113	ELBOW	1
▲ 33	2S6658	HOSE 5 in.	
C 34	S1619	BOLT	4
35	S1591	BOLT	18
36	1P6434	GASKET	1
C 37	5P4868	CLAMP	2
C 38	4B4280	WASHER	8
C 39	1D4719	NUT	2
C 40	4N7668	BRACKET	1

REF. NO.	PART NUMBER	DESCRIPTION	QTY
▲ 1	2S6659	HOSE 4.5 in.	
C 2	5P598	CLAMP	2
3	1P2635	ELBOW	1
C 4	7B3235	BOLT	4
C 5	3B4508	LOCKWASHER	10

▲ ORDER BY THE FOOT

C INDICATES CHANGE

208715

2P8198 RADIATOR GROUP—Side View
Serial No. 6X1 to 6X1752 inclusive
Note: 2P6330 Radiator Cap Protection Cover Group and 8M439 Key are available

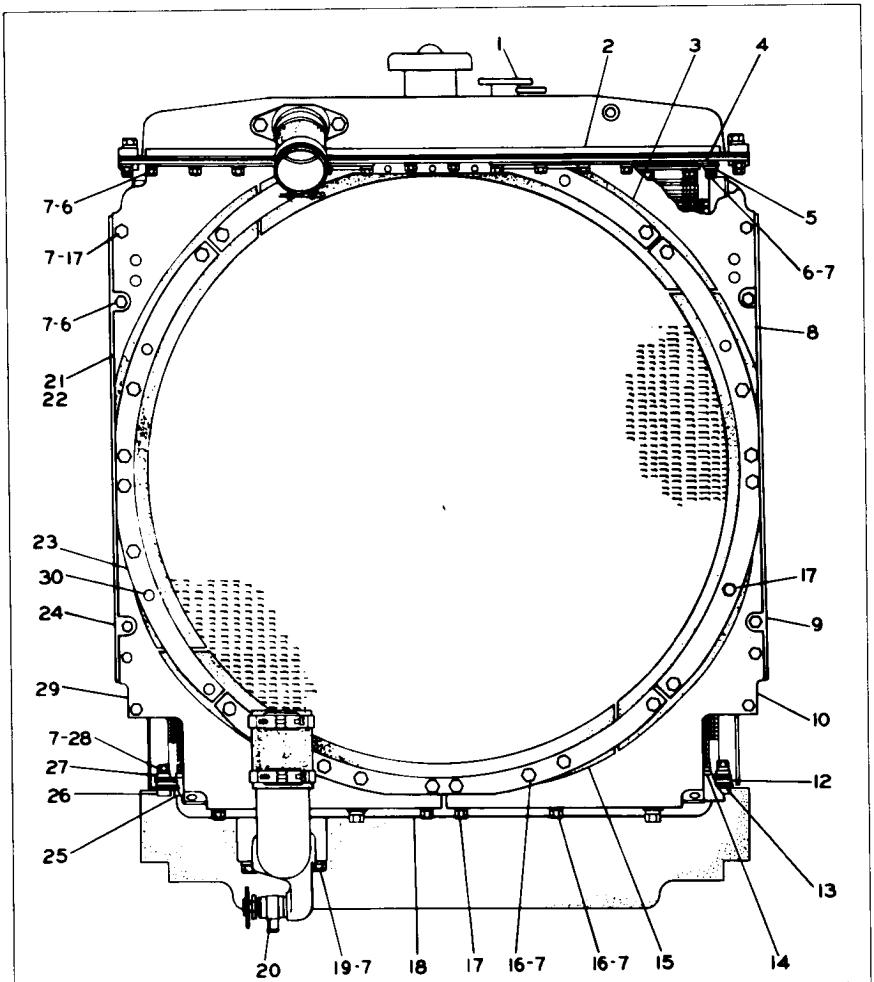

REF. NO.	PART NUMBER	DESCRIPTION	QTY
1	2S3080	CAP ASSEM.	1
2	1P2296	STRIP	1
3	1P7785	BAFFLE ASSEM.	1
4	6N4952	GASKET	1
5	1P7316	STRIP	2
6	S1588	BOLT	35
7	5M2894	WASHER	99
8	4N5725	SHIELD ASSEM.	1
	5M9621	STUD	2
	9F2978	NUT	2
9	1P7828	BAFFLE ASSEM.	1
10	4N5723	SHIELD ASSEM.	1
	9F2978	NUT	4
	7M7794	STUD	1
11	5M9621	STUD	1
12	1P7121	PLATE	1
13	6N4955	GASKET	2
14	1P7343	STRIP	4
15	1P7786	BAFFLE	3
16	S1594	BOLT	28
17	S509	BOLT	4
18	1P7812	TANK ASSEM.	1
19	8F6974	BOLT	2
20	8F8151	COCK	1
21	4N5722	SHIELD ASSEM.	1
	5M9621	STUD	2
22	9F2978	NUT	2
23	1P7783	STRIP	3
24	1P7956	BAFFLE ASSEM.	1
25	1P7318	STRIP	2
26	1P7315	STRIP	2
27	1P9169	STRIP	2
28	S1591	BOLT	30
29	4N5724	SHIELD	1
	9F2978	NUT	4
30	5M9621	STUD	2

174167

7N4541 RADIATOR GROUP—Rear View
Serial No. 6X753 to 6X836 inclusive

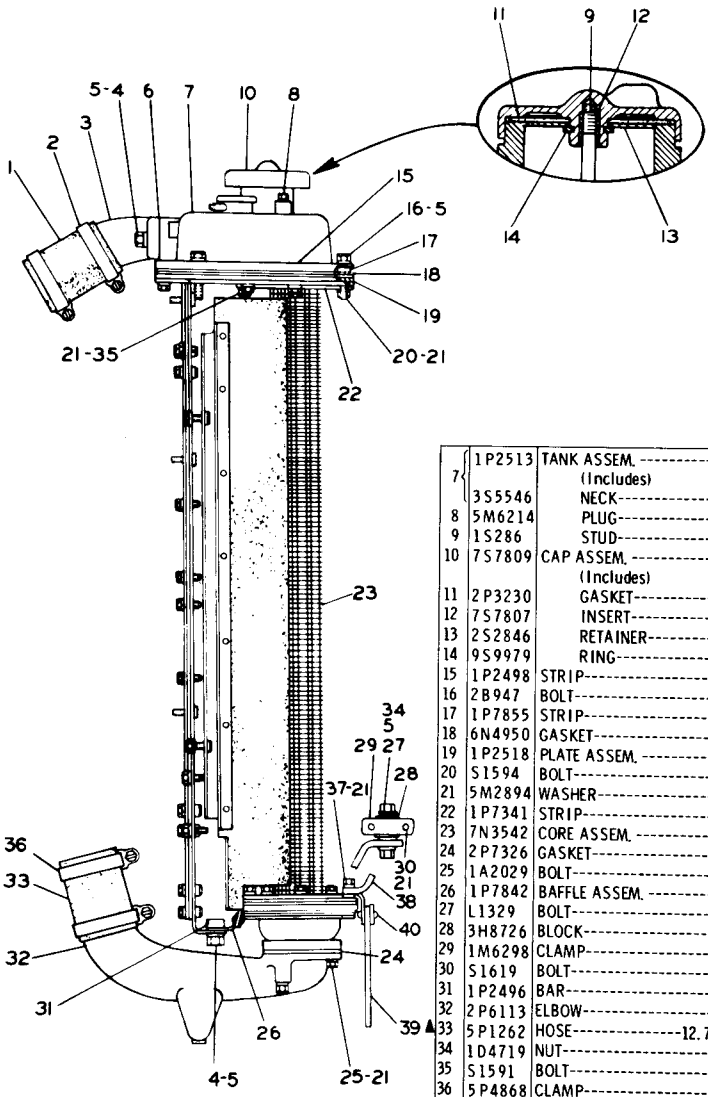

REF NO.	PART NUMBER	DESCRIPTION	QTY.
▲ 1	5P1263	HOSE---------11.43 cm(4.5 in.)	
2	5P598	CLAMP----------	2
3	1P2635	ELBOW----------	1
4	7B3235	BOLT----------	4
5	5P8245	WASHER----------	14
6	1P6434	GASKET----------	1

▲ ORDER BY THE CENTIMETER

REF NO.	PART NUMBER	DESCRIPTION	QTY.
7	1P2513	TANK ASSEM. ----------	1
		(Includes)	
	3S5546	NECK----------	1
8	5M6214	PLUG----------	1
9	1S286	STUD----------	1
10	7S7809	CAP ASSEM. ----------	1
		(Includes)	
11	2P3230	GASKET----------	1
12	7S7807	INSERT----------	1
13	2S2846	RETAINER----------	1
14	9S9979	RING----------	1
15	1P2498	STRIP----------	2
16	2B947	BOLT----------	4
17	1P7855	STRIP----------	1
18	6N4950	GASKET----------	1
19	1P2518	PLATE ASSEM. ----------	1
20	S1594	BOLT----------	4
21	5M2894	WASHER----------	32
22	1P7341	STRIP----------	2
23	7N3542	CORE ASSEM. ----------	1
24	2P7326	GASKET----------	1
25	1A2029	BOLT----------	1
26	1P7842	BAFFLE ASSEM. ----------	1
27	L1329	BOLT----------	2
28	3H8726	BLOCK----------	2
29	1M6298	CLAMP----------	4
30	S1619	BOLT----------	4
31	1P2496	BAR----------	1
32	2P6113	ELBOW----------	1
33	5P1262	HOSE----------12.7 cm(5 in.)	
34	1D4719	NUT----------	2
35	S1591	BOLT----------	19
36	5P4868	CLAMP----------	2
37	1C2251	BOLT----------	4
38	4N7668	BRACKET--------(R. H.)----------	1
	4N7669	BRACKET--------(L. H.)----------	1
39	1P6384	BAFFLE ASSEM. ----------	1
		(Includes)	
	1P6385	BAFFLE----------	1
40	1P6386	PLATE----------	1
	6B4594	RIVET----------	8
	2P9610	STRIP----------	1
	1F1605	WASHER----------	1

174168

7N4541 RADIATOR GROUP—Side View
Serial No. 6X753 to 6X836 inclusive
Note: 2P6330 Radiator Cap Protection Cover Group and 8M439 Key are available

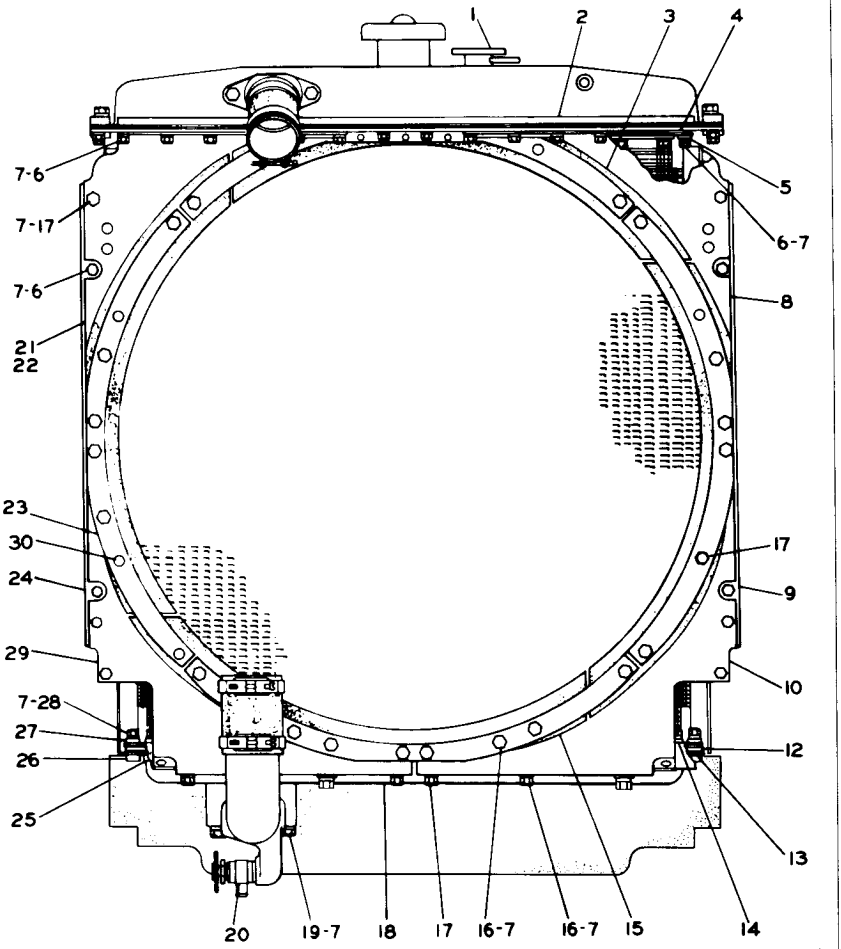

REF. NO.	PART NUMBER	DESCRIPTION	QTY
1	2S3080	CAP ASSEM.	1
2	1P2296	STRIP	1
3	1P7785	BAFFLE ASSEM.	1
4	6N4952	GASKET	1
5	1P7316	STRIP	2
6	S1588	BOLT	35
7	5M2894	WASHER	99
8	4N5725	SHIELD ASSEM.	1
	5M9621	STUD	2
	9F2978	NUT	2
9	1P7828	BAFFLE ASSEM.	1
10	4N5723	SHIELD ASSEM.	1
	9F2978	NUT	4
	7M7794	STUD	1
11	5M9621	STUD	1
12	1P7121	PLATE	1
13	6N4955	GASKET	2
14	1P7343	STRIP	4
15	1P7786	BAFFLE	3
16	S1594	BOLT	28
17	S509	BOLT	4
18	1P7812	TANK ASSEM.	1
19	8F6974	BOLT	2
20	8F8151	COCK	1
21	4N5722	SHIELD ASSEM.	1
	5M9621	STUD	2
22	9F2978	NUT	2
23	1P7783	STRIP	3
24	1P7956	BAFFLE ASSEM.	1
25	1P7318	STRIP	2
26	1P7315	STRIP	2
27	1P9169	STRIP	2
28	S1591	BOLT	30
29	4N5724	SHIELD	1
	9F2978	NUT	4
30	5M9621	STUD	2

174167

7N4541 RADIATOR GROUP—Rear View
Serial No. 6X837—Up

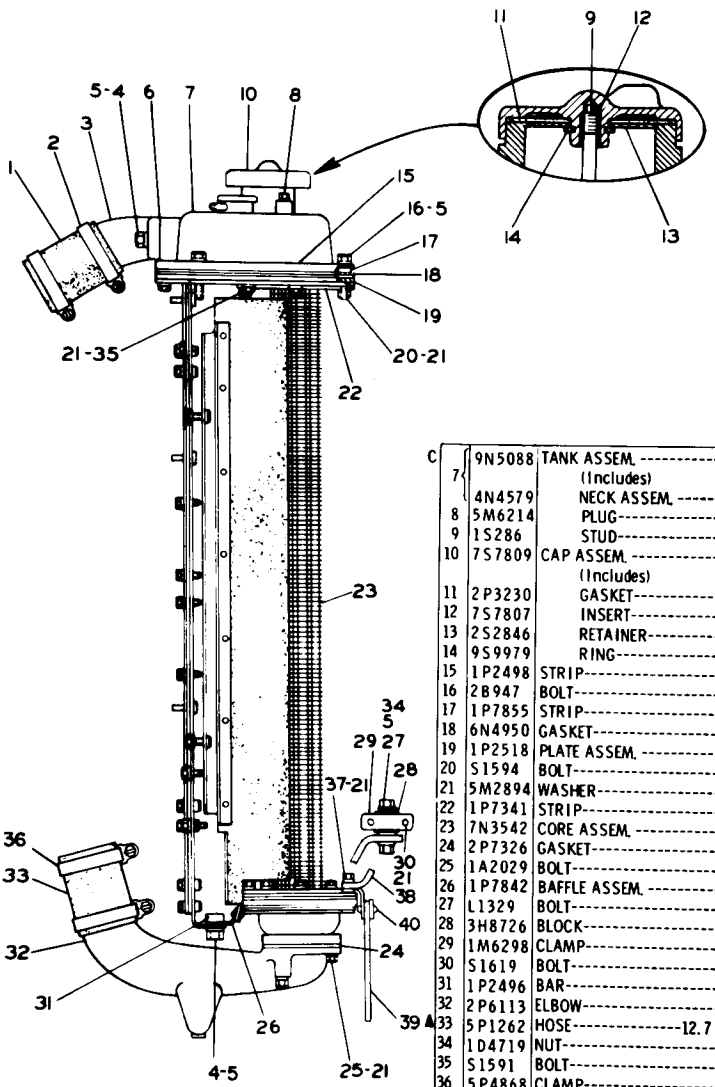

C				
	7	9N5088	TANK ASSEM. (Includes)	1
		4N4579	NECK ASSEM.	1
	8	5M6214	PLUG	1
	9	1S286	STUD	1
	10	7S7809	CAP ASSEM. (Includes)	1
	11	2P3230	GASKET	1
	12	7S7807	INSERT	1
	13	2S2846	RETAINER	1
	14	9S9979	RING	1
	15	1P2498	STRIP	2
	16	2B947	BOLT	4
	17	1P7855	STRIP	1
	18	6N4950	GASKET	1
	19	1P2518	PLATE ASSEM.	1
	20	S1594	BOLT	4
	21	5M2894	WASHER	32
	22	1P7341	STRIP	2
	23	7N3542	CORE ASSEM.	1
	24	2P7326	GASKET	1
	25	1A2029	BOLT	1
	26	1P7842	BAFFLE ASSEM.	1
	27	L1329	BOLT	2
	28	3H8726	BLOCK	2
	29	1M6298	CLAMP	4
	30	S1619	BOLT	4
	31	1P2496	BAR	1
	32	2P6113	ELBOW	1
	33	5P1262	HOSE--12.7 cm(5 in.)	
	34	1D4719	NUT	2
	35	S1591	BOLT	19
	36	5P4868	CLAMP	2
	37	1C2251	BOLT	4
	38	4N7668	BRACKET--(R. H.)	1
		4N7669	BRACKET--(L. H.)	1
	39	1P6384	BAFFLE ASSEM. (Includes)	1
		1P6385	BAFFLE	1
	40	1P6386	PLATE	1
		6B4594	RIVET	8
		2P9610	STRIP	1
		1F1605	WASHER	1

C INDICATES CHANGE

REF. NO.	PART NUMBER	DESCRIPTION	QTY.
▲ 1	5P1263	HOSE--11.43 cm(4.5 in.)	
2	5P598	CLAMP	2
3	1P2635	ELBOW	1
4	7B3235	BOLT	4
5	5P8245	WASHER	14
6	1P6434	GASKET	1

▲ ORDER BY THE CENTIMETER

226000

7N4541 RADIATOR GROUP—Side View
Serial No. 6X837—Up
Note: 2P6330 Radiator Cap Protection Cover Group and 8M439 are available

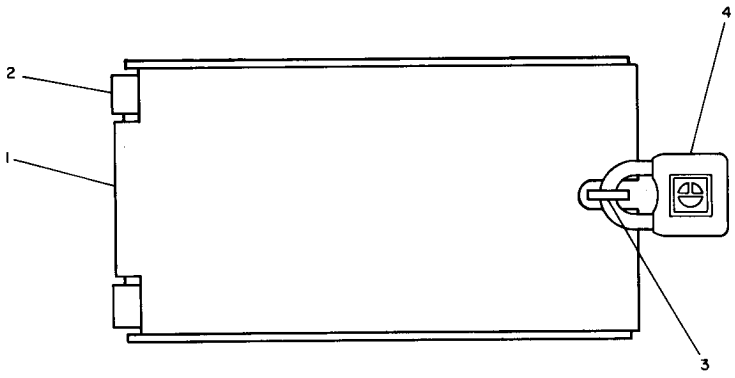

REF. NO.	PART NUMBER	DESCRIPTION	QTY.
1	2P6379	COVER ASSEM. (Includes)	1
2	2B4330	SPACER	2
3	4K8651	TAB	1

▲ NOT PART OF 9G8849 PROTECTIVE COVER GROUP

4	5P8502	PADLOCK GROUP (Includes)	1
▲	5P8500	KEY	2

226982

9G8849 PROTECTION COVER GROUP—Radiator Cap
AN ATTACHMENT

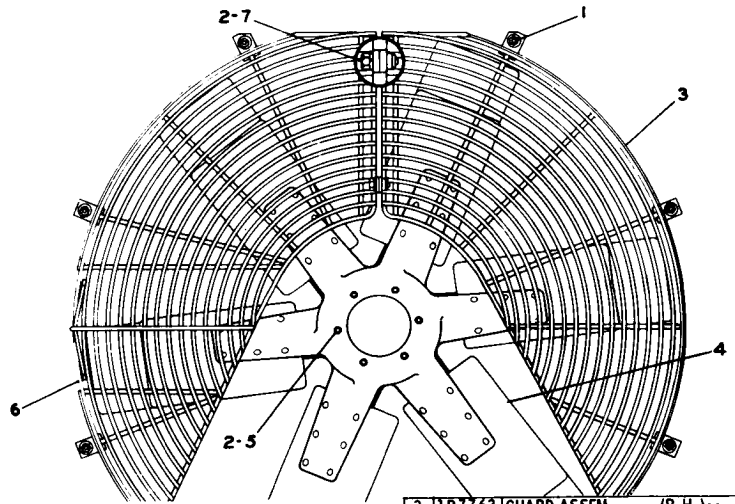

REF. NO.	PART NUMBER	DESCRIPTION	QTY
C 1	2K4973	NUT	8
C 1	4B4278	WASHER	8
2	3B4506	LOCKWASHER	7
3	1P7763	GUARD ASSEM. -----(R. H.)-----	1
4	7S546	SPIDER ASSEM.	1
5	3B1915	BOLT	6
6	1P7764	GUARD ASSEM. -------(L. H.)----	1
7	S509	BOLT	2

C INDICATES CHANGE

212670

1P7878 BLOWER FAN AND GUARD GROUP
Note: 1P8494 Reversible Fan Assembly is available

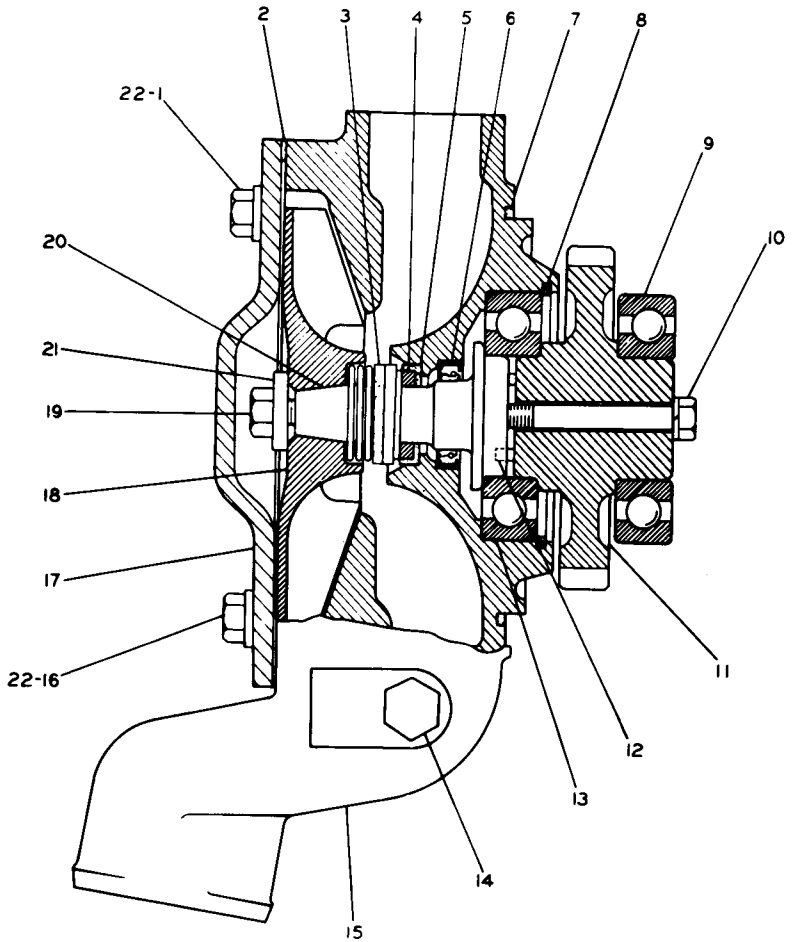

7N4836-REBUILD KIT ---------- 1C
(Includes Parts Marked ▲)

	REF. NO.	PART NUMBER	DESCRIPTION	QTY
C	1	L1351	BOLT	2
C	2	6N8190	GASKET	1
	3	4N6556	SEAL ASSEM.	1
	4	8S7762	RING	1
	5	8S8821	SEAL	1
	6	8H9520	SEAL	1
	7	5F3106	SEAL	1
▲	8	1K6985	RETAINER	1
▲	9	8H9789	BEARING	1
▲	10	S1619	BOLT	1
▲		3B4506	LOCKWASHER	1
	11	2P660	GEAR ASSEM. ------(40 teeth)---- (Includes)	1
	12	2L5893	PIN	2
▲	13	6H3957	BEARING	1
▲	14	5M6213	PLUG	1
C	15	6N8413	HOUSING	1
C	16	8S9191	BOLT	2
C	17	8N5929	COVER	1
C▲	18	6N8411	IMPELLER	1
▲	19	4L6454	BOLT	1
▲	20	1P9929	SHAFT	1
▲	21	9M6527	WASHER	1
C	22	5M2894	WASHER	4

C INDICATES CHANGE

226246

2P662 WATER PUMP GROUP
Engine Serial No. 3N52495 to 3N69599 inclusive

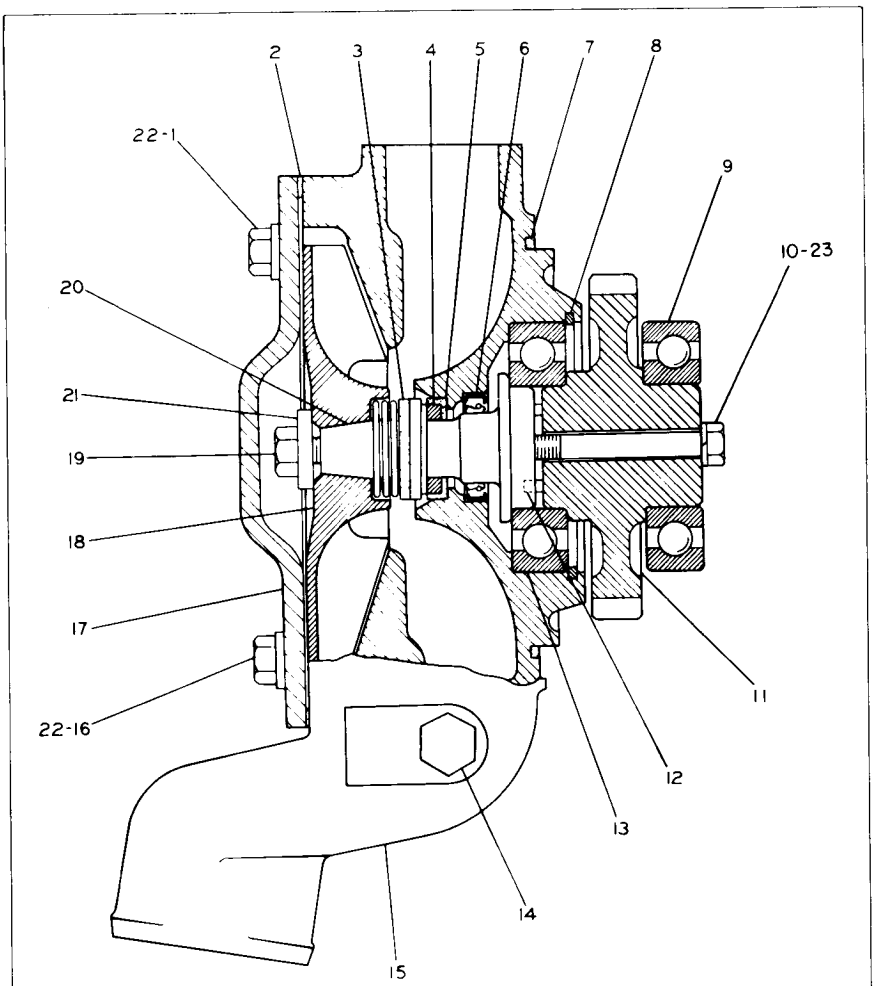

7N4836 -REBUILD KIT----------1
(Includes parts marked ▲)

	REF. NO.	PART NUMBER	DESCRIPTION	QTY
	1	L1351	BOLT----------	2
C	2	6N8190	GASKET----------	1
	3	4N6556	SEAL ASSEM.----------	1
	4	8S7762	RING----------	1
	5	8S8821	SEAL----------	1
	6	8H9520	SEAL----------	1
	7	5F3106	SEAL----------	1
▲	8	1K6985	RING----------	1
▲	9	8H9789	BEARING----------	1
▲	10	S1619	BOLT----------	1
	11	2P660	GEAR ASSEM.------(40 teeth)----- (Includes)	1
	12	2L5893	PIN----------	2
▲	13	6H3957	BEARING----------	1
▲	14	5M6213	PLUG----------	1
C	15	6N8413	HOUSING----------	1
C	16	8S9191	BOLT----------	2
	17	2P404	COVER----------	1
C ▲	18	6N8411	IMPELLER----------	1
▲	19	4L6454	BOLT----------	1
C ▲	20	1P9929	SHAFT----------	1
▲	21	9M6527	WASHER----------	1
C	22	5M2894	WASHER----------	4
▲	23	3B4506	LOCKWASHER----------	1

C INDICATES CHANGE 169766

7N5909 WATER PUMP GROUP
Engine Serial No. 3N69600 to 3N71205 inclusive

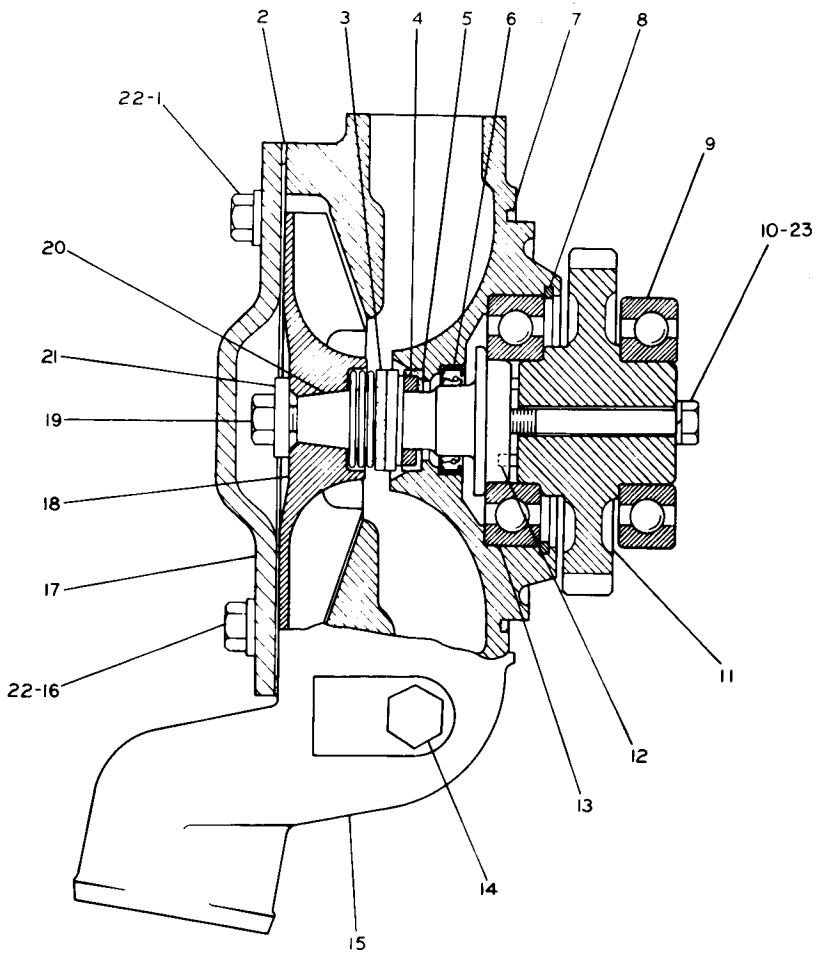

7N4836 -REBUILD KIT----------1
(Includes parts marked ▲)

	REF. NO.	PART NUMBER	DESCRIPTION	QTY
	1	L1351	BOLT	2
C	2	6N8190	GASKET	1
	3	4N6556	SEAL ASSEM.	1
	4	8S7762	RING	1
	5	8S8821	SEAL	1
	6	8H9520	SEAL	1
	7	5F3106	SEAL	1
▲	8	1K6985	RING	1
▲	9	8H9789	BEARING	1
▲	10	S1619	BOLT	1
	11	2P660	GEAR ASSEM. ------(40 teeth)----- (Includes)	1
	12	2L5893	PIN	2
▲	13	6H3957	BEARING	1
▲	14	5M6213	PLUG	1
C	15	6N8413	HOUSING	1
C	16	8S9191	BOLT	2
	17	2P404	COVER	1
C ▲	18	6N8411	IMPELLER	1
▲	19	4L6454	BOLT	1
C ▲	20	1P9929	SHAFT	1
▲	21	9M6527	WASHER	1
C	22	5M2894	WASHER	4
▲	23	3B4506	LOCKWASHER	1

C INDICATES CHANGE

169766

7N5909 WATER PUMP GROUP
Engine Serial No. 3N71206 to 3N92077 inclusive

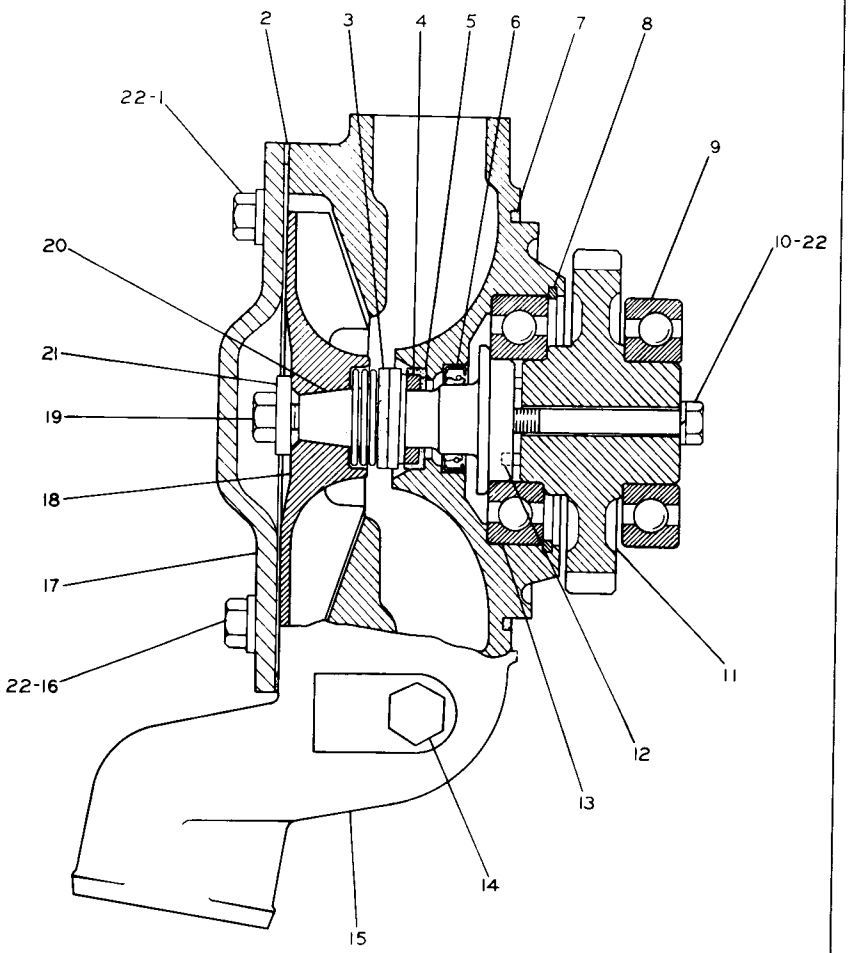

7N9955-REBUILD KIT----------1
(Includes parts marked ▲)

	REF. NO.	PART NUMBER	DESCRIPTION	QTY
	1	L1351	BOLT	2
C	2	8N5928	GASKET	1
	3	4N6556	SEAL ASSEM.	1
	4	8S7762	RING	1
	5	8S8821	SEAL	1
	6	8H9520	SEAL	1
	7	5F3106	SEAL	1
▲	8	1K6985	RING	1
▲	9	8H9789	BEARING	1
▲	10	S1619	BOLT	1
C	11	7N5193	GEAR---(40 teeth)	1
	12	2L5893	PIN	2
▲	13	6H3957	BEARING	1
	14	5M6213	PLUG	1
	15	7N196	HOUSING	1
	16	T55	BOLT	2
C	17	8N5929	COVER	1
▲	18	7N5910	IMPELLER	1
▲	19	4L6454	BOLT	1
▲	20	7N5899	SHAFT	1
▲	21	9M6527	WASHER	1
▲	22	5M2894	WASHER	5

C INDICATES CHANGE

228670

7N5909 WATER PUMP GROUP
Engine Serial No. 3N92078—Up

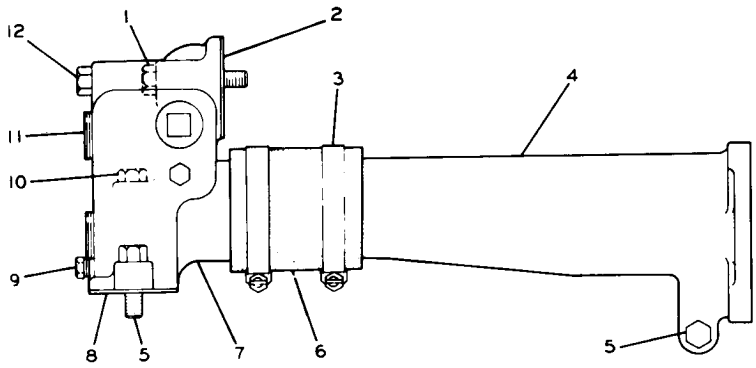

	REF. NO.	PART NUMBER	DESCRIPTION	QTY
C	1	T65	BOLT	1
	2	2P6132	GASKET	1
C	3	5P4868	CLAMP	2
	4	2P2511	PIPE	1
C	5	S1588	BOLT	2
C▲	6	5P1260	HOSE--------7.62 cm(3 in.)	
C	7	2P6117	ELBOW	1
	8	2P406	GASKET	1
	9	5M6213	PLUG	2
C	10	S1619	BOLT	1
	11	1B5174	PLUG	3
C	12	S1590	BOLT	1

C INDICATES CHANGE

▲ ORDER BY THE CENTIMETER

226547

2P6188 WATER LINES GROUP
Engine Serial No. 3N52495 to 3N69599 inclusive

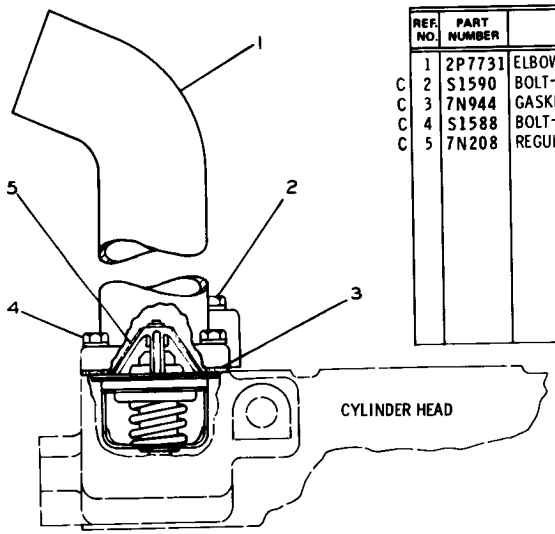

	REF. NO.	PART NUMBER	DESCRIPTION	QTY
	1	2P7731	ELBOW	1
C	2	S1590	BOLT	1
C	3	7N944	GASKET	1
C	4	S1588	BOLT	3
C	5	7N208	REGULATOR	1

C INDICATES CHANGE

212666

2P8173 HOUSING AND REGULATOR GROUP

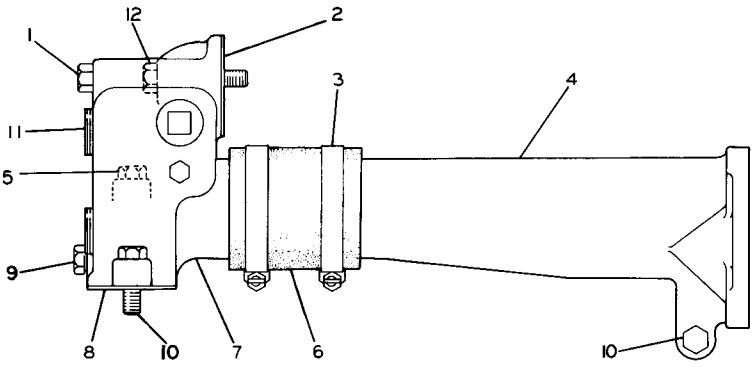

	REF. NO.	PART NUMBER	DESCRIPTION	QTY.
	1	T65	BOLT----------	1
	2	2P6132	GASKET----------	1
	3	5P4868	CLAMP----------	2
	4	2P2511	PIPE----------	1
C	5	S1619	BOLT--76.2 mm(3 in.)long--------	1
▲	6	5P1260	HOSE-------7.62 cm(3 in.)	
C	7	2P6117	ELBOW----------	1

C INDICATES CHANGE

C	8	2P406	GASKET----------	1
	9	5M6213	PLUG----------	2
C	10	S1588	BOLT--31.7 mm(1.25 in.)long-----	2
	11	1B5174	PLUG----------	3
	12	S1590	BOLT----------	1

▲ ORDER BY THE CENTIMETER

176119

7N7211 WATER LINES GROUP
Engine Serial No. 3N69600 to 3N71205 inclusive

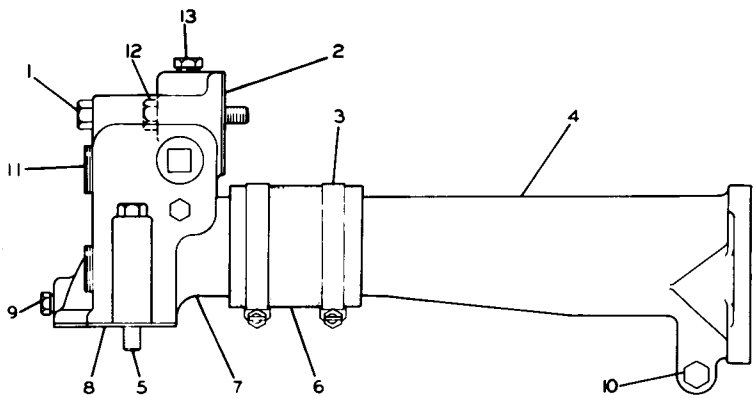

REF. NO.	PART NUMBER	DESCRIPTION	QTY
1	T65	BOLT----------	1
2	2P6132	GASKET----------	1
3	5P4868	CLAMP----------	2
4	2P2511	PIPE----------	1
5	S1619	BOLT----------	2
▲ 6	5P1260	HOSE----------7.62 cm(3 in.)	
7	7N172	ELBOW----------	1

8	7N200	GASKET----------	1
9	5M6213	PLUG----------	2
10	S1588	BOLT----------	1
11	1B5174	PLUG----------	3
12	S1590	BOLT----------	1
13	3J5390	PLUG----------	1

▲ ORDER BY THE CENTIMETRE

216810

7N7211 WATER LINES GROUP
Engine Serial No. 3N71206—Up

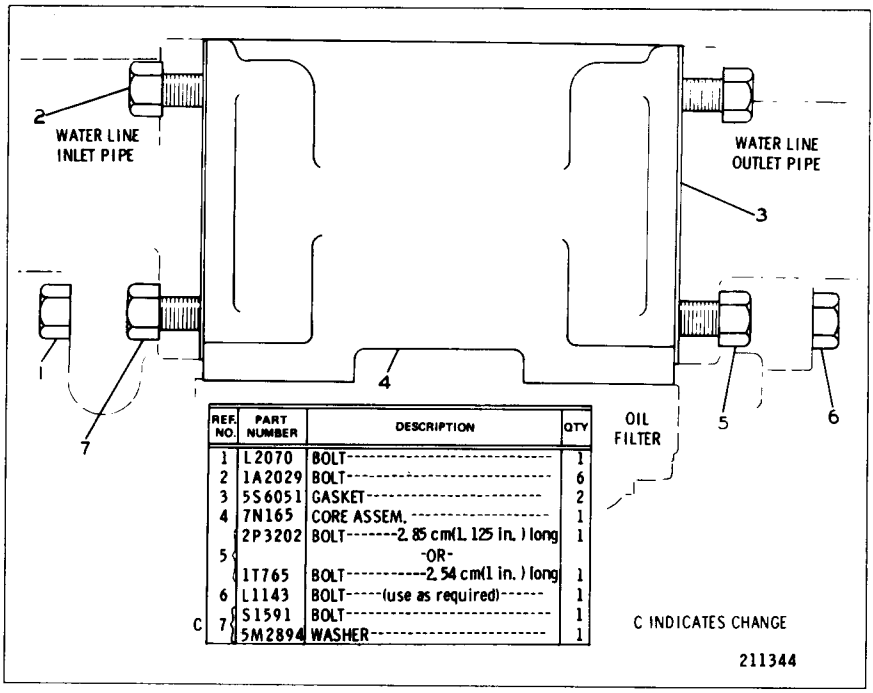

REF. NO.	PART NUMBER	DESCRIPTION	QTY
1	L2070	BOLT	1
2	1A2029	BOLT	6
3	5S6051	GASKET	2
4	7N165	CORE ASSEM.	1
5	2P3202	BOLT-2.85 cm(1.125 in.) long	1
		-OR-	
	1T765	BOLT-2.54 cm(1 in.) long	1
6	L1143	BOLT-(use as required)	1
C 7	S1591	BOLT	1
	5M2894	WASHER	1

C INDICATES CHANGE

2P6215 ENGINE OIL COOLER GROUP

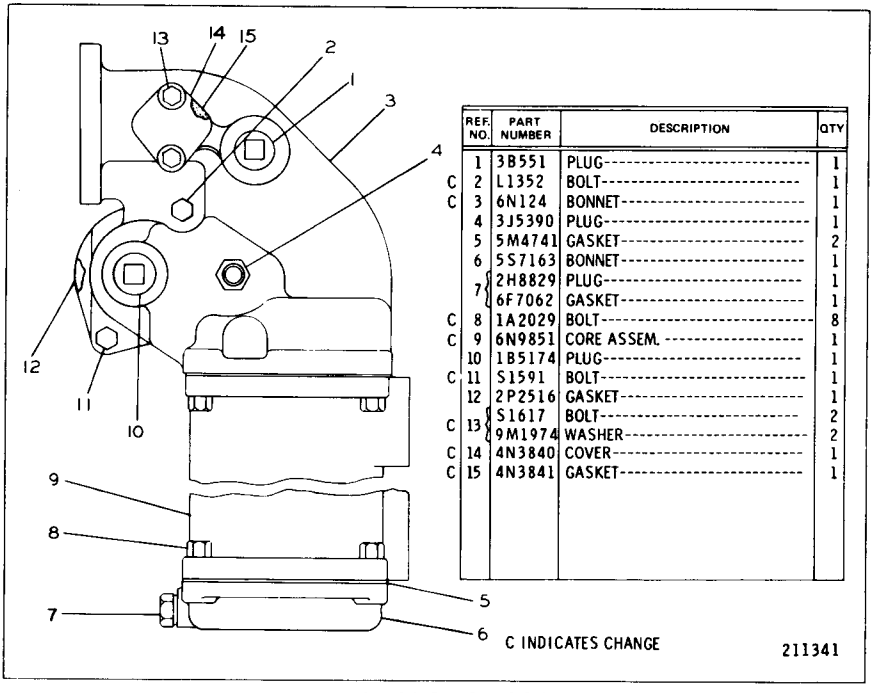

REF. NO.	PART NUMBER	DESCRIPTION	QTY
1	3B551	PLUG	1
C 2	L1352	BOLT	1
C 3	6N124	BONNET	1
4	3J5390	PLUG	1
5	5M4741	GASKET	2
6	5S7163	BONNET	1
7	2H8829	PLUG	1
	6F7062	GASKET	1
C 8	1A2029	BOLT	8
C 9	6N9851	CORE ASSEM.	1
10	1B5174	PLUG	1
C 11	S1591	BOLT	1
12	2P2516	GASKET	1
C 13	S1617	BOLT	2
	9M1974	WASHER	2
C 14	4N3840	COVER	1
C 15	4N3841	GASKET	1

2P6510 TRANSMISSION OIL COOLER GROUP
Engine Serial No. 3N52495 to 81108, 81115 to 81122, 81145 to 81151, 81157 to 81162 & 3N81168 inclusive

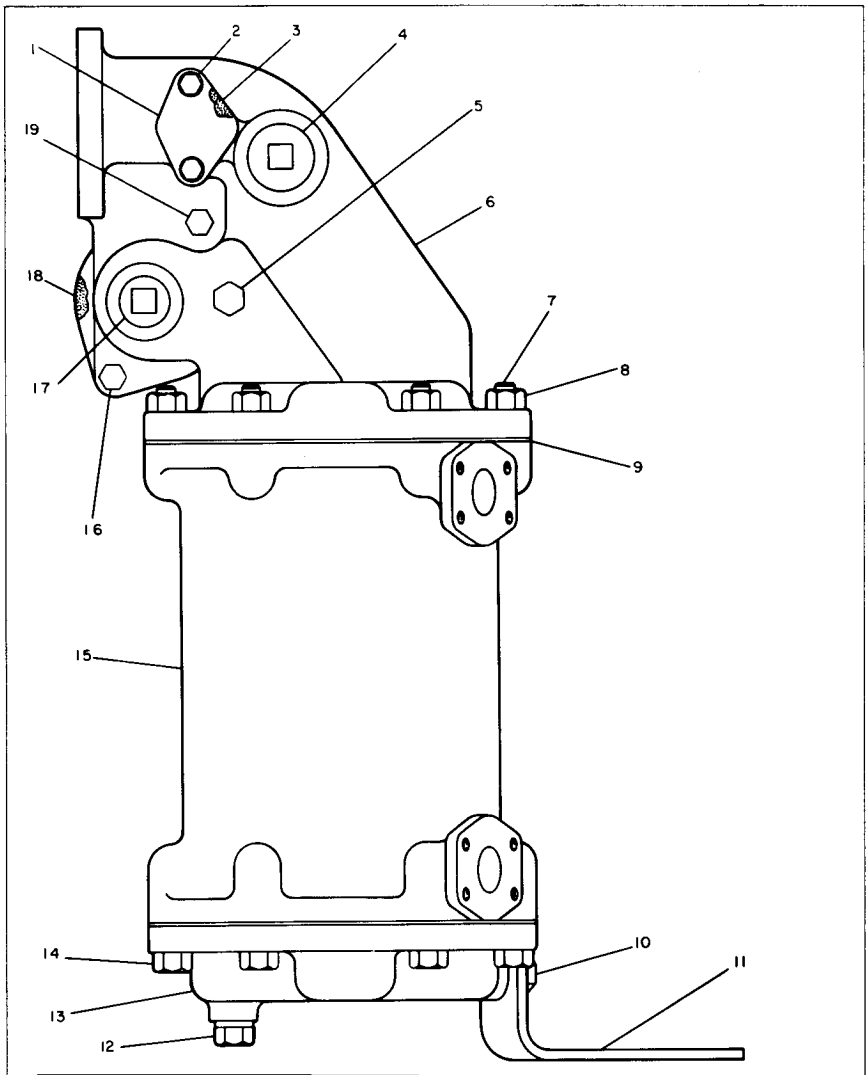

REF. NO.	PART NUMBER	DESCRIPTION	QTY.
1	4N3840	COVER	1
2	S1617	BOLT	2
	9M1974	WASHER	2
3	4N3841	GASKET	1
4	3B551	PLUG	1
5	3J5390	PLUG	1
6	7N3340	BONNET	1
7	9M5082	STUD	6
8	1D4718	NUT	6
9	2S795	GASKET	2
10	S1595	BOLT	1
	5P8245	WASHER	1
11	7N3331	BRACKET	1
12	2H8829	PLUG	1
	6F7062	GASKET	1
13	7N3512	BONNET	1
14	4F8965	BOLT	6
15	7N3521	CORE ASSEM.	1
		(Includes)	
	7N3505	SHELL	1
	7N3522	BUNDLE ASSEM.	1
16	S1591	BOLT	1
17	1B5174	PLUG	1
18	2P2516	GASKET	1
19	L1352	BOLT	1

174170

7N3520 TRANSMISSION OIL COOLER GROUP
Engine Serial No. 3N81109 to 81114, 81123 to 81144, 81152 to 81156, 81163 to 81167 and 3N81169—Up

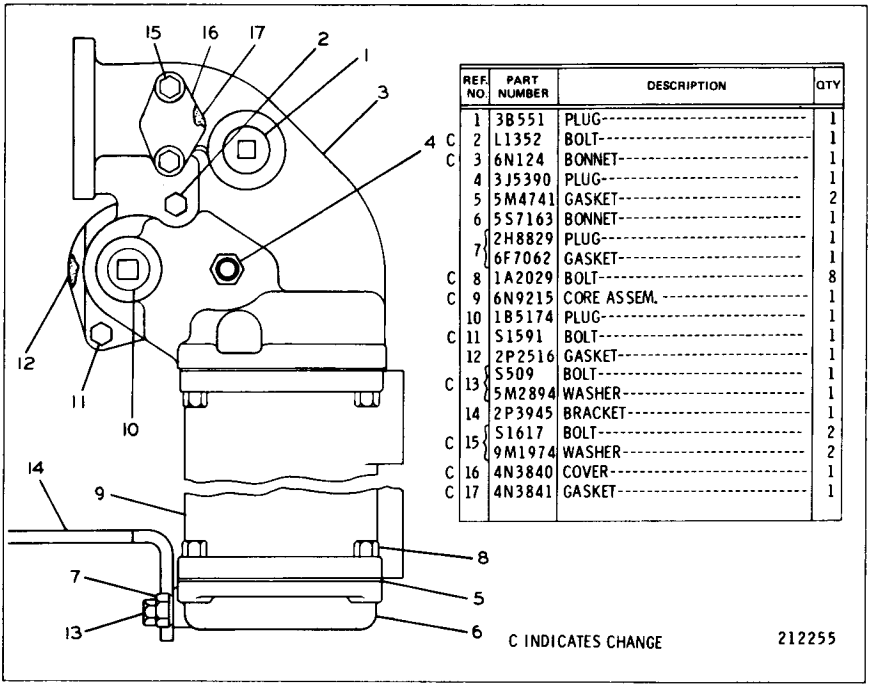

	REF. NO.	PART NUMBER	DESCRIPTION	QTY
	1	3B551	PLUG	1
C	2	L1352	BOLT	1
C	3	6N124	BONNET	1
	4	3J5390	PLUG	1
	5	5M4741	GASKET	2
	6	5S7163	BONNET	1
	7	2H8829	PLUG	1
		6F7062	GASKET	1
C	8	1A2029	BOLT	8
C	9	6N9215	CORE ASSEM.	1
	10	1B5174	PLUG	1
C	11	S1591	BOLT	1
	12	2P2516	GASKET	1
C	13	S509	BOLT	1
		5M2894	WASHER	1
	14	2P3945	BRACKET	1
C	15	S1617	BOLT	2
		9M1974	WASHER	2
C	16	4N3840	COVER	1
C	17	4N3841	GASKET	1

C INDICATES CHANGE

212255

2P6515 TRANSMISSION OIL COOLER GROUP
Engine Serial No. 3N82449—Up

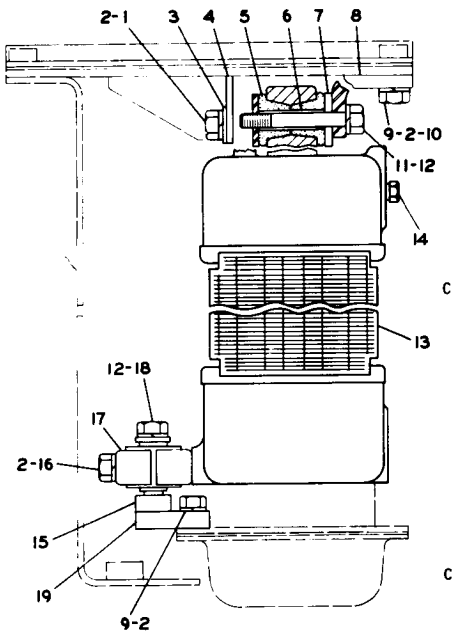

	REF. NO.	PART NUMBER	DESCRIPTION	QTY
	1	S1594	BOLT	4
	2	3B4506	LOCKWASHER	10
	3	1P7742	PLATE	2
	4	1P2626	BAFFLE	2
	5	1P5412	BUSHING	2
	6	1P5411	SLEEVE	1
	7	1J8965	WASHER	2
	8	1P2623	BRACKET	1
	9	S1591	BOLT-1.50 in. long	4
	10	4B4278	WASHER	2
	11	1D4566	BOLT	1
	12	3B4508	LOCKWASHER	2
C	13	8N4363	CORE ASSEM. (Includes)	1
	14	5M6214	PLUG	1
	15	5F7207	SPACER	1
	16	T573	BOLT	2
	17	1M6298	CLAMP	2
		1A5822	BOLT	1
	18	4B4280	WASHER	1
		3H8726	BLOCK	1
	19	1P7358	BRACKET	1

C INDICATES CHANGE

174166

1P2663 TORQUE CONVERTER OIL COOLER GROUP
Serial No. 6X1 to 6X752 inclusive

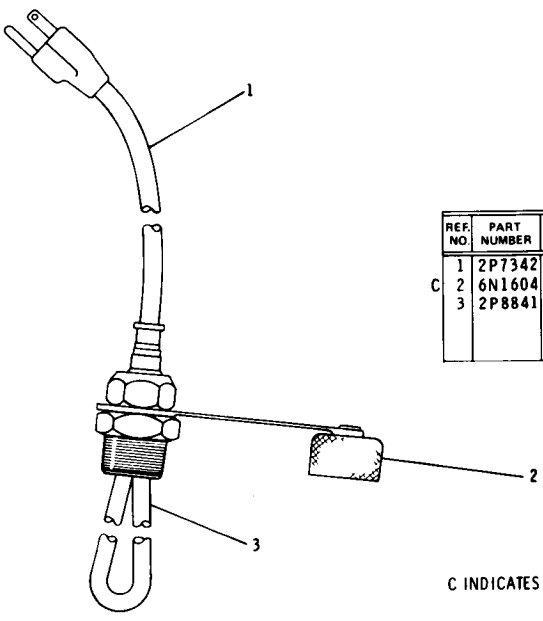

	REF. NO.	PART NUMBER	DESCRIPTION	QTY
	1	2P7342	CORD ASSEM.	1
C	2	6N1604	CAP ASSEM.	1
	3	2P8841	ELEMENT ASSEM.	1

C INDICATES CHANGE

205356

4N3586 JACKET WATER HEATER GROUP
AN ATTACHMENT

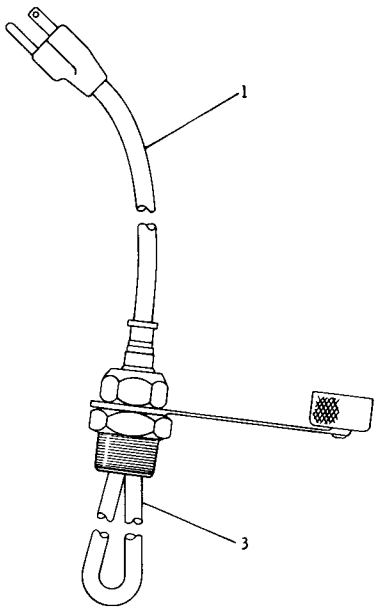

	REF. NO.	PART NUMBER	DESCRIPTION	QTY
C	1	9N5253	CORD ASSEM.	1
	2	6N1604	CAP ASSEM.	1
C	3	9G6657	ELEMENT ASSEM.	1

C INDICATES CHANGE

228660

4N3586 JACKET WATER HEATER GROUP—Type 2
AN ATTACHMENT

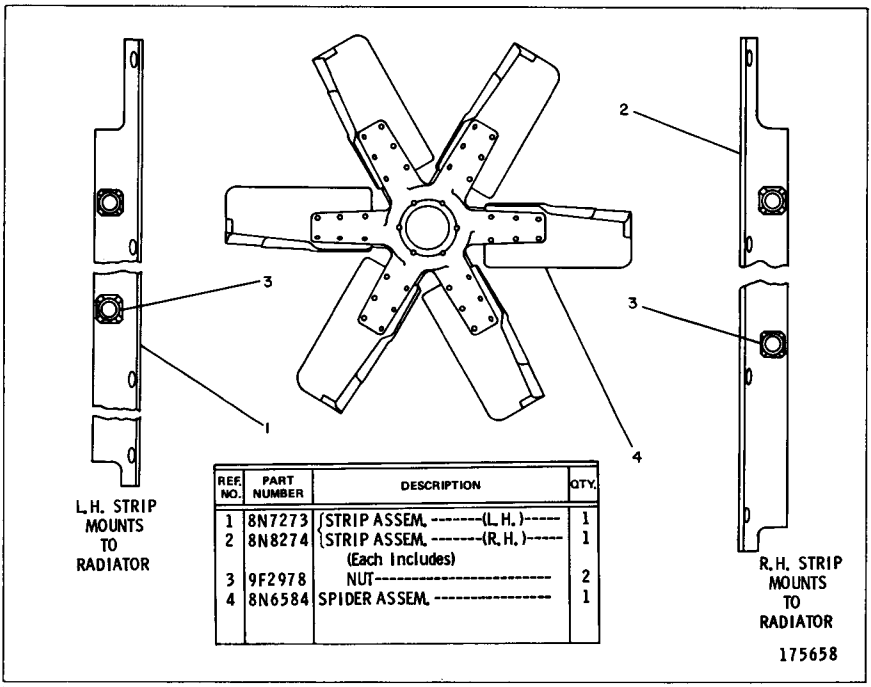

REF. NO.	PART NUMBER	DESCRIPTION	QTY.
1	8N7273	STRIP ASSEM. -------(L. H.)-----	1
2	8N8274	STRIP ASSEM. -------(R. H.)-----	1
		(Each Includes)	
3	9F2978	NUT----------	2
4	8N6584	SPIDER ASSEM. ----------	1

8N7272 SUPPLEMENTAL COOLING GROUP
Serial No. 6X515—Up. FOR USE IN AREAS WHERE THERE IS A LARGE AMOUNT OF DEBRIS. AN ATTACHMENT

3P2848 TORQUE CONVERTER OIL COOLER LINES GROUP

Serial No. 6X1 to 6X470 inclusive

REF. NO.	PART NUMBER	DESCRIPTION	QTY
1	S1571	BOLT	2
2	3B4506	LOCKWASHER	18
3	8M4986	SEAL	7
4	1P8733	TUBE ASSEM.	1
5	T768	BOLT	4
	3B4507	LOCKWASHER	4
6	1P4566	HOSE	1
C 7	5P597	CLAMP	2
8	2K3019	CLIP	2
9	S1591	BOLT	1
10	1D4717	NUT	2
11	3P4461	TUBE ASSEM.	1
12	8M4987	SEAL	6
13	2A4639	BOLT	4
14	S1588	BOLT	25
15	1P4577	FLANGE	10
16	3P2703	TUBE ASSEM.	1
17	3P2698	HOSE ASSEM.	1
18	6K2669	CLIP ASSEM.	1
C 19	4B4278	WASHER	23
20	2P8089	PLATE	1
21	1A2029	BOLT	2
22	3P2699	BRACKET ASSEM.	1
	1F748	NUT	1
23	S1621	BOLT	1
	3B4508	LOCKWASHER	1
24	8S23	CLIP	1
	8S24	CLIP (Tab)	1
25	2P8088	HOSE ASSEM.	1
C 26	3P5535	TUBE ASSEM.	1
	3P2929	VALVE GROUP	1
C 27	6P3206	VALVE ASSEM.	1
C	3P774	GASKET	1
28	1P4578	FLANGE	2
C 29	8F4197	BOLT	4
	T307	STUD	4
30	1B4204	NUT	4
	3K6113	WASHER	4
31	1P8361	ADAPTER	1
C 32	5M6214	PLUG	3
33	3P1080	HOSE ASSEM.	1
34	3P1076	ADAPTER	1
35	S1595	BOLT	4
C	1D4718	NUT	4
C 36	3B4507	LOCKWASHER	4
C	4B4279	WASHER	4

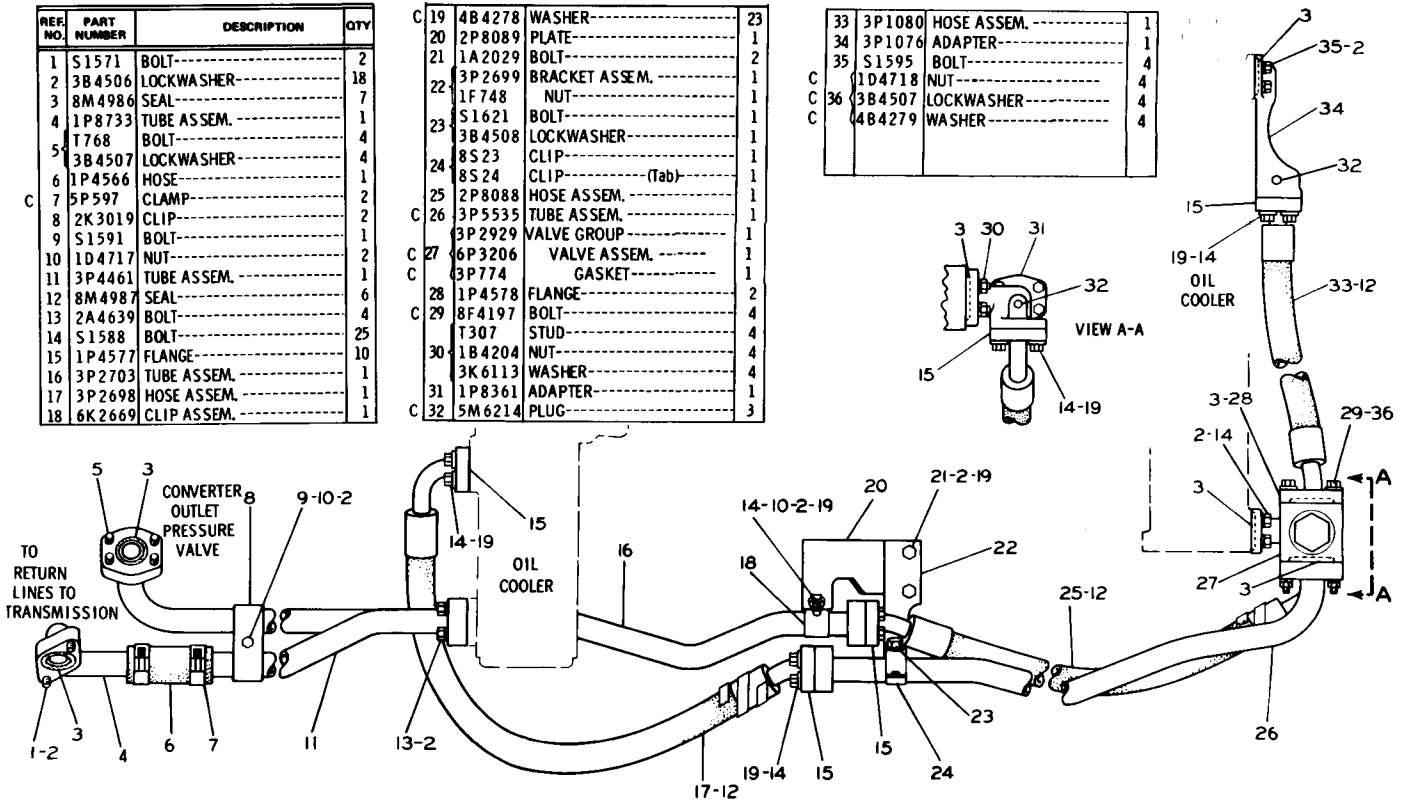

3P2848 TORQUE CONVERTER OIL COOLER LINES GROUP
Serial No. 6X471 to 6X752 inclusive

REF. NO.	PART NUMBER	DESCRIPTION	QTY
1	S1571	BOLT	2
C 2	3B4506	LOCKWASHER	14
C 3	8M4986	SEAL	6
4	1P8733	TUBE ASSEM.	1
5	T768	BOLT	4
6	1P4566	HOSE	1
7	5P597	CLAMP	2
8	2K3019	CLIP	2
9	S1591	BOLT	1
10	1D4717	NUT	2
11	3P4461	TUBE ASSEM.	1
12	8M4987	SEAL	6
13	2A4639	BOLT	4
14	S1588	BOLT	25
15	1P4577	FLANGE	10
16	3P2703	TUBE ASSEM.	1
17	3P2698	HOSE ASSEM.	1
18	6K2669	CLIP ASSEM.	1

19	4B4278	WASHER	23
20	2P8089	PLATE	1
21	1A2029	BOLT	2
22	3P2699	BRACKET ASSEM.	1
	1F748	NUT	1
23	S1621	BOLT	1
	3B4508	LOCKWASHER	1
24	8S23	CLIP	1
	8S24	CLIP (Tab)	1
25	2P8088	HOSE ASSEM.	1
26	3P5535	TUBE ASSEM.	1
	3P2929	VALVE GROUP	1
27	6P3206	VALVE ASSEM.	1
	3P774	GASKET	1
28	1P4578	FLANGE	2
29	8F4197	BOLT	4
	T307	STUD	4
30	1B4204	NUT	4
	3K6113	WASHER	4
31	1P8361	ADAPTER	1
32	5M6214	PLUG	3

33	3P1080	HOSE ASSEM.	1	
34	3P1076	ADAPTER	1	
35	S1595	BOLT	4	
36	1D4718	NUT	4	
	4B4279	WASHER	4	
C 37	5P7085	SEAL	2	

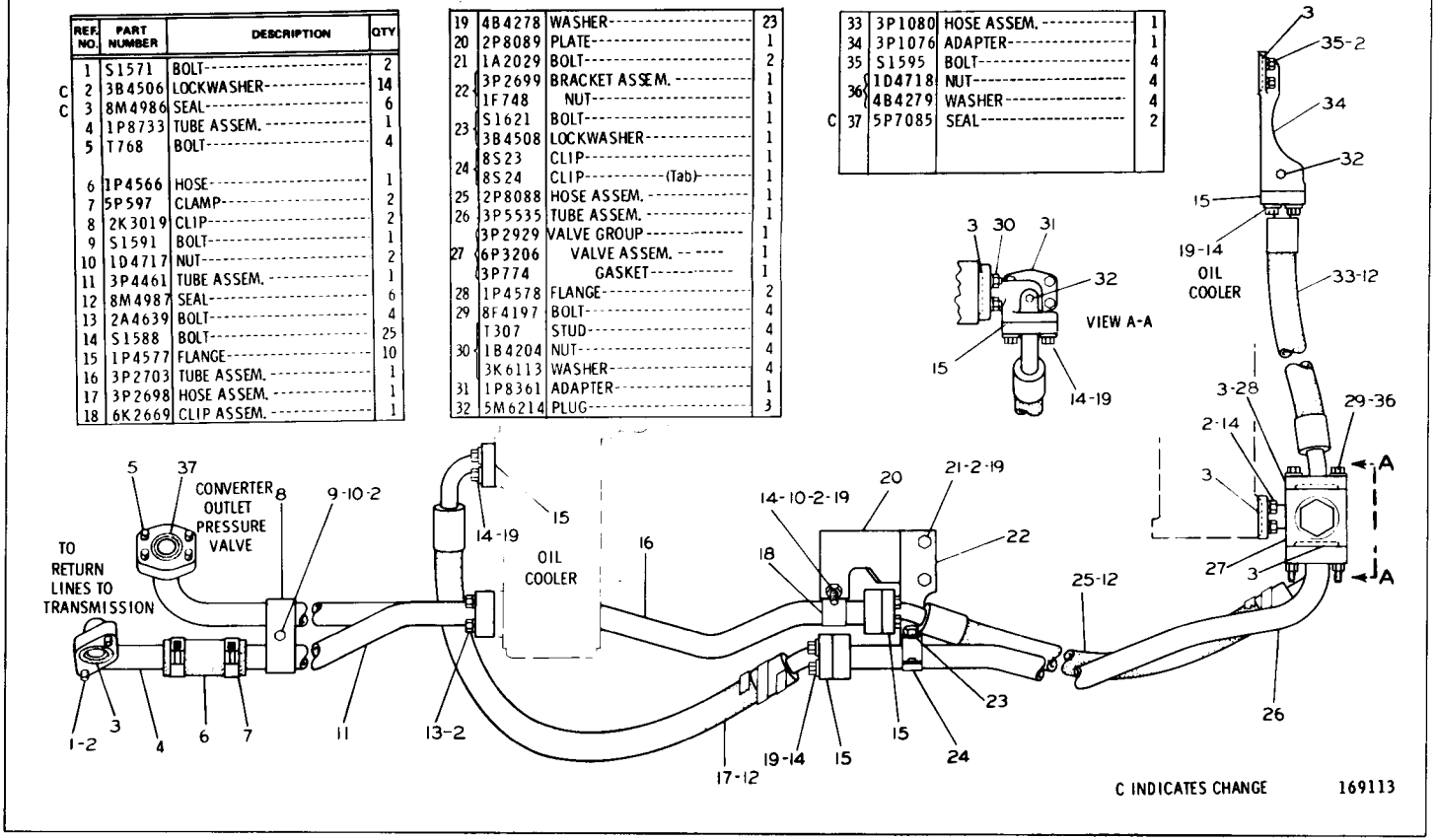

C INDICATES CHANGE 169113

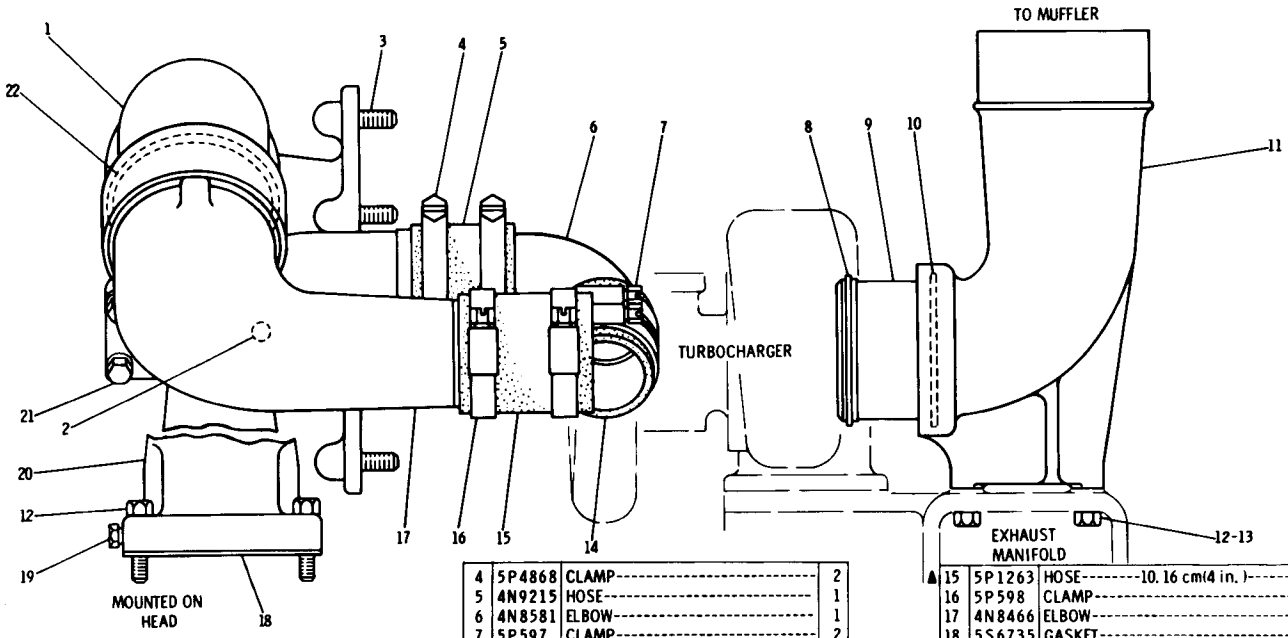

REF. NO.	PART NUMBER	DESCRIPTION	QTY
1	4N8305	PIPE ASSEM. (Includes)	1
2	7M1674	ELEMENT	1
3	9M2151	STUD	8
4	5P4868	CLAMP	2
5	4N9215	HOSE	1
6	4N8581	ELBOW	1
7	5P597	CLAMP	2
8	6N9	SEAL (ring)	1
9	4N8591	COUPLING	1
10	5L8855	SEAL (ring)	1
11	4N9213	ELBOW (exhaust)	1
12	S1571	BOLT	7
13	1B5355	NUT	3
14	4N9311	HOSE	1
▲15	5P1263	HOSE-10.16 cm(4 in.)	
16	5P598	CLAMP	2
17	4N8466	ELBOW	1
18	5S6735	GASKET	1
19	5M6213	PLUG	1
20	4N8320	ELBOW	1
21	1A2029	BOLT	3
22	5H7704	SEAL	2

▲ ORDER BY THE CENTIMETRE

155658

4N9218 AIR LINES GROUP
Engine Serial No. 3N52495 to 3N69599 inclusive

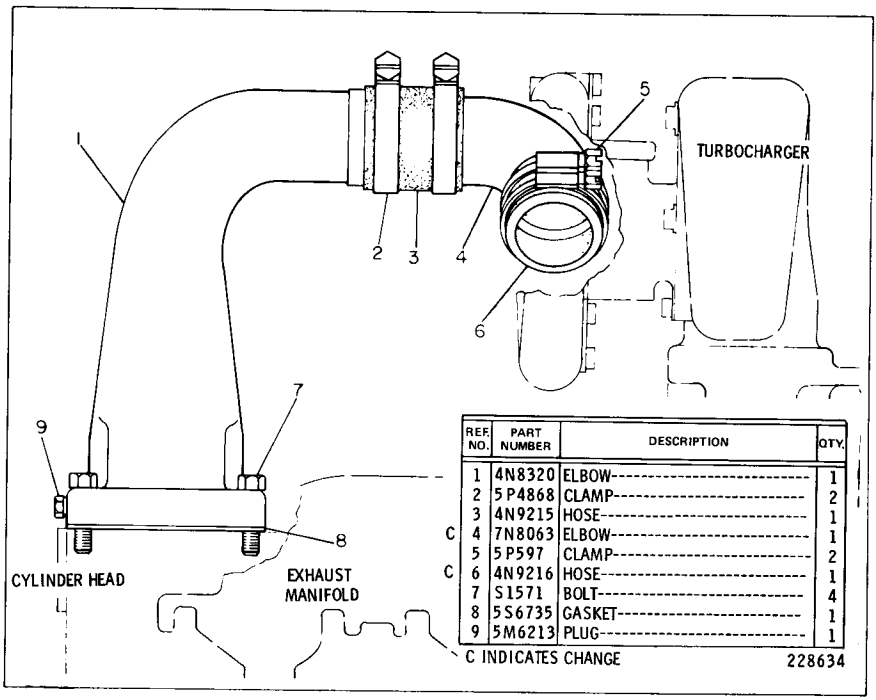

REF. NO.		PART NUMBER	DESCRIPTION	QTY.
1		4N8320	ELBOW	1
2		5P4868	CLAMP	2
3		4N9215	HOSE	1
4	C	7N8063	ELBOW	1
5		5P597	CLAMP	2
6	C	4N9216	HOSE	1
7		S1571	BOLT	4
8		5S6735	GASKET	1
9		5M6213	PLUG	1

C INDICATES CHANGE

228634

7N3884 AIR LINES GROUP
Engine Serial No. 3N69600—Up

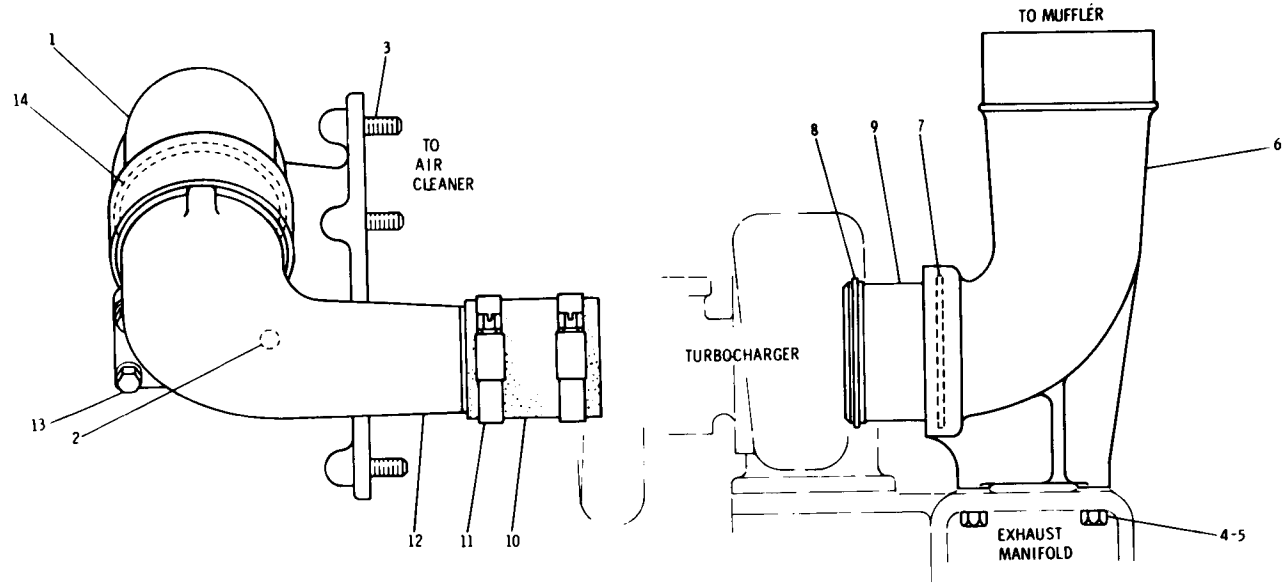

REF. NO.	PART NUMBER	DESCRIPTION	QTY
1	4N8246	PIPE	1
2	7M1674	ELEMENT	1
3	9M2151	STUD	8
4	S1571	BOLT	3
5	1B5355	NUT	3
6	4N9213	ELBOW--------(exhaust)---------	1
7	5L8855	SEAL----------(ring)----------	1
8	6N9	SEAL----------(ring)----------	1
9	4N8591	COUPLING	1
▲ 10	5P1263	HOSE----------10.16 cm (4 in.)	
11	5P598	CLAMP	2
12	4N8466	ELBOW	1
13	1A2029	BOLT	3
14	5H7704	SEAL	2

▲ ORDER BY THE CENTIMETRE

170302

7N4098 AIR LINES GROUP
Serial No. 6X515—Up

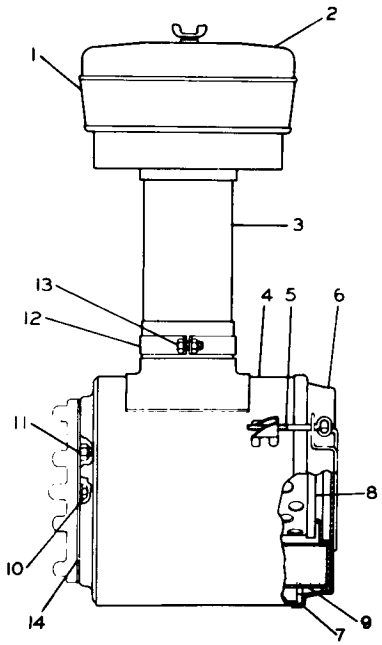

	REF. NO.	PART NUMBER	DESCRIPTION	QTY
	1	5L7942	PRECLEANER GROUP	1
			(Includes)	
		6H8021	BODY	1
	2	9M5201	COVER ASSEM.	1
C	3	4N8017	PIPE	1
	4	2P1482	AIR CLEANER GROUP	1
			(Includes)	
	5	9M3695	ROD ASSEM.	2
	6	1P7748	CUP ASSEM.	1
			(Includes)	
C	7	9M8513	GASKET	1
	8	1P7360	ELEMENT ASSEM. --(secondary)-	1
	9	1P7716	ELEMENT ASSEM. --(primary)--	1
	10	1T822	BOLT	2
		3B4506	LOCKWASHER	2
	11	2K4973	LOCKNUT	8
C	12	6F8814	CLAMP	1
C	13	S1571	BOLT	1
C		1B5355	NUT	1
	14	1P6832	GASKET	1

C INDICATES CHANGE 216620

2P1484 AIR CLEANER GROUP

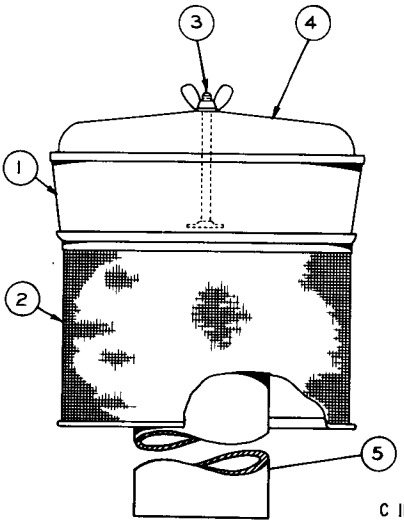

REF. NO.	PART NUMBER	DESCRIPTION	QTY
1	9S601	PRESCREENER ASSEM.	1
	6H8021	BODY	1
2	9S614	SLEEVE ASSEM.	1
3	3S2966	BOLT	1
	3S9228	WASHER	1
4	9M5201	COVER ASSEM.	1
C 5	8S2381	STACK	1

C INDICATES CHANGE 229302

7N6470 PRESCREENER ASSEMBLY
AN ATTACHMENT

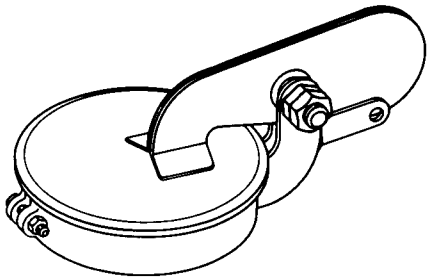

THE INDIVIDUAL PARTS OF THIS
ASSEMBLY ARE NOT SERVICED SEPARATELY

217936

7S1784 RAIN CAP ASSEMBLY
Serial No. 6X434—Up
Also available as an attachment from Serial No. 6X1 to 6X433 inclusive

C INDICATES CHANGE FROM PREVIOUS TYPE

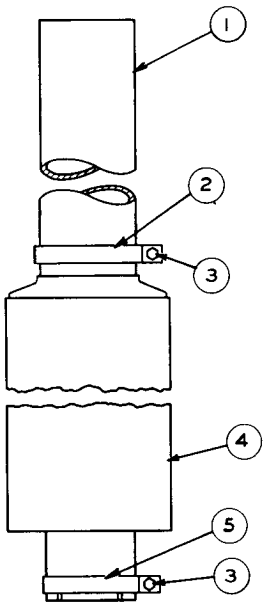

REF NO	PART NUMBER	DESCRIPTION	QTY	
1	9S1768	PIPE	1	C
2	6F8815	CLAMP	1	
3	S1591	BOLT	2	
	1B5355	NUT	2	
4	7S8443	MUFFLER	1	
5	7H4266	CLAMP	1	

126221

7S6741 MUFFLER GROUP
Also available as an Attachment Serial No. 6X1 to 6X433 inclusive

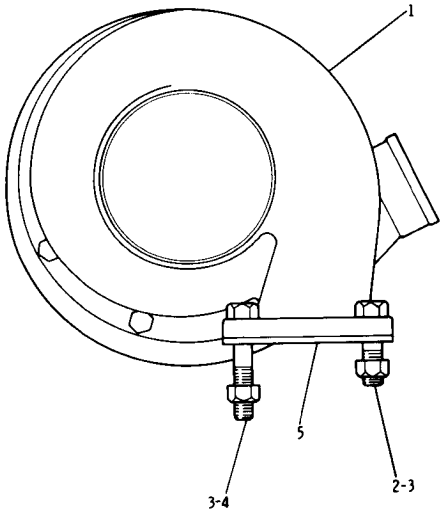

REF NO	PART NUMBER	DESCRIPTION	QTY
1	4N8969	TURBOCHARGER GROUP (Separate Illustration)	1
2	S1591	BOLT	2
3	1B5355	NUT	4
4	L2070	BOLT	2
5	1P451	GASKET	1

154847

4N8970 TURBOCHARGER GROUP
4N8969 Turbocharger parts are shown on Page 43

4N8969 TURBOCHARGER GROUP

Part of 4N8970 Turbocharger Group shown on Page 42

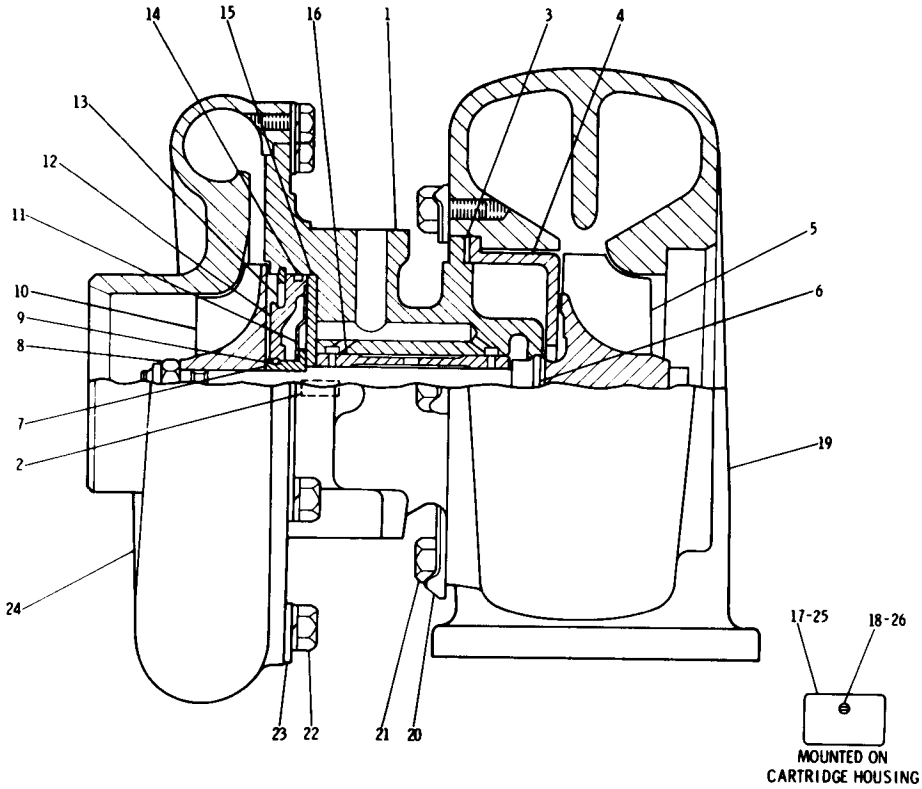

MOUNTED ON CARTRIDGE HOUSING

	REF. NO.	PART NUMBER	DESCRIPTION	QTY
	1	6N1524	CARTRIDGE ASSEM.	1
			(Includes)	
		6N1529	HOUSING ASSEM.	1
			(Includes)	
	2	6N1530	PIN	2
▲	3	6N4357	GASKET	1
	4	6N1531	SHROUD	1
	5	6N1532	SHAFT AND WHEEL ASSEM.	1
▲	6	4N9852	RING	1
▲	7	6N1535	SLEEVE	1
▲	8	1P718	NUT	1
▲	9	6N1526	RING	1
	10	6N1525	WHEEL	1
▲	11	6N1534	DEFLECTOR	1
	12	6N1527	INSERT	1
▲	13	5S4546	RING	1
C ▲	14	5P5757	SEAL	1
	15	6N1528	BEARING	1
▲	16	6N1533	BEARING	1
C	17	2S1507	NAMEPLATE	1
C	18	8H3710	SCREW	1
	19	6N1521	HOUSING (turbine)	1
	20	6N1523	LOCK	2
		6N1522	PLATE	2
	21	6N2145	BOLT	4
C	22	S1614	BOLT	8
		3B4504	LOCKWASHER	8
	23	1P715	PLATE	4
	24	6N1520	COVER (compressor)	1
C	25	4N8155	NAMEPLATE	1
C	26	8H3710	SCREW	1
C ▲		SMHS6774	FORM	1
			(Installing turbo. repair kit)	
			THE FOLLOWING REPAIR KIT IS AVAILABLE:	
C		6N7242	KIT (cartridge)	1
			(Includes parts marked ▲)	

C INDICATES CHANGE

218556

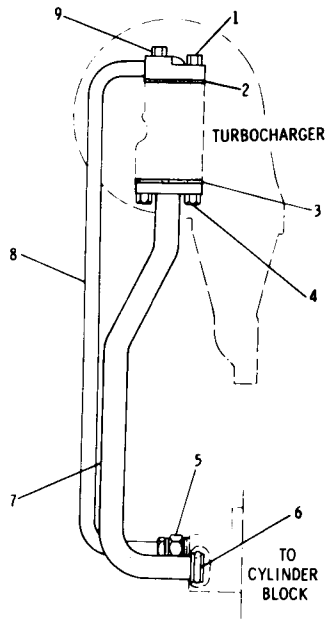

REF. NO.	PART NUMBER	DESCRIPTION	QTY
1	4B3388	BOLT	1
2	1S6595	GASKET	1
3	1P1255	GASKET	1
4	1A2029	BOLT	2
5	5K9245	CONNECTOR	1
6	9M4849	SEAL	1
7	4N9886	TUBE ASSEM. -------(drain)-------	1
8	4N9888	TUBE ASSEM. ------(supply)-------	1
9	1B2790	BOLT	1

154849

6N25 TURBOCHARGER OIL LINES GROUP
Engine Serial No. 3N52495 to 3N75192 inclusive

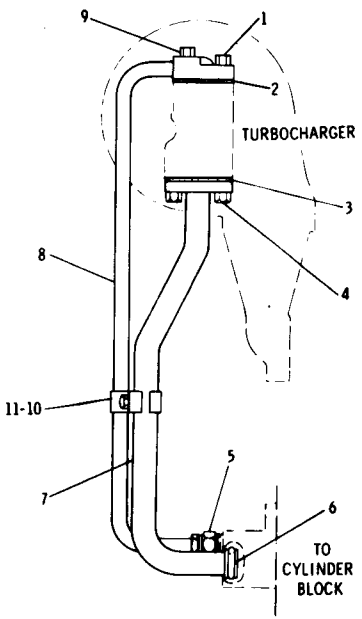

	REF. NO.	PART NUMBER	DESCRIPTION	QTY
	1	4B3388	BOLT	1
	2	1S6595	GASKET	1
	3	1P1255	GASKET	1
	4	1A2029	BOLT	2
C	5	3R5387	CONNECTOR	1
	6	9M4849	SEAL	1
	7	4N9886	TUBE ASSEM. -------(drain)-------	1
	8	4N9888	TUBE ASSEM. ------(supply)-------	1
	9	1B2790	BOLT	1
C	10	6N6033	CLIP	2
C	11	S1617	BOLT	1
C		1D4716	NUT	1
C		5M2894	WASHER	2

C INDICATES CHANGE

173696

6N25 TURBOCHARGER OIL LINES GROUP
Engine Serial No. 3N75193—Up

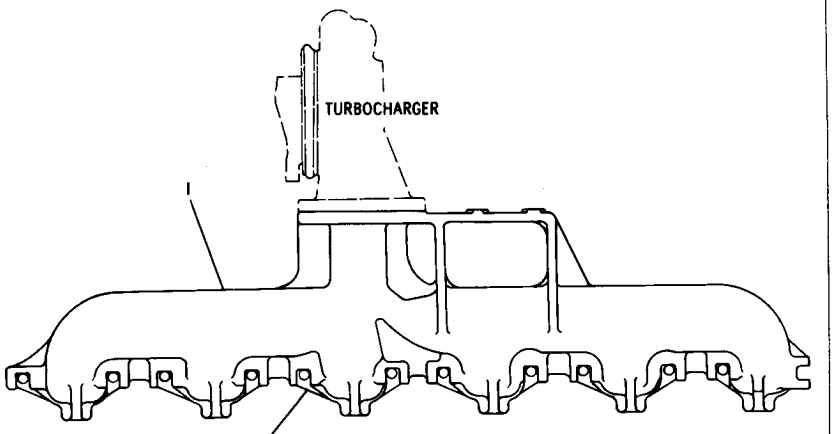

	REF. NO.	PART NUMBER	DESCRIPTION	QTY
C	1	7N3486	MANIFOLD	1
	2	8S8258	GASKET	6

C INDICATES CHANGE 213547

6N164 EXHAUST MANIFOLD GROUP

	REF. NO.	PART NUMBER	DESCRIPTION	QTY
	1	4N9587	SHIELD	1
C	2	7S6719	STUD	10
	3	2M2488	STUD	2
	4	1B4971	SPACER	1
	5	5M2894	WASHER-----. 1094 in. (2.778 mm)	2
C	6	9M6527	WASHER	1
	7	1B5355	NUT	12
C	8	8M7145	WASHER-----. 1875 in. (4.763 mm)	11
	9	1M7643	SPACER	1

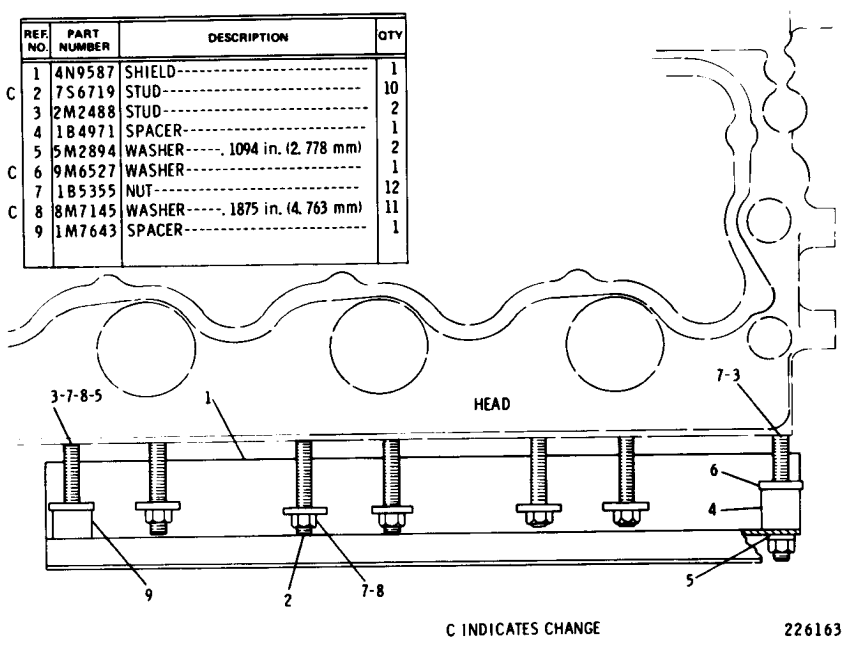

C INDICATES CHANGE 226163

4N9586 EXHAUST MANIFOLD FASTENER GROUP

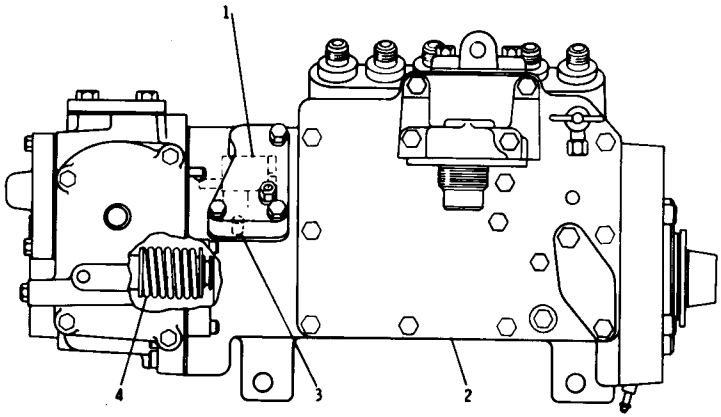

	REF. NO.	PART NUMBER	DESCRIPTION	QTY
C	1	6N3630	TORQUE CONTROL GROUP--------- (Separate Illustration)	1
	2	6N261	PUMP GROUP---------- (Separate Illustration)	1
	3	4N443	PIN----------	1
	4	4N4224	SPRING----------	1

C INDICATES CHANGE

156306

6N299 GOVERNOR AND FUEL INJECTION PUMP GROUP
Replaced by 6N5227 shown on Page 47
Engine Serial No. 3N52495 to 3N69599 inclusive
6N261 Pump and 6N3630 Torque Control parts are shown on Pages 46 and 57

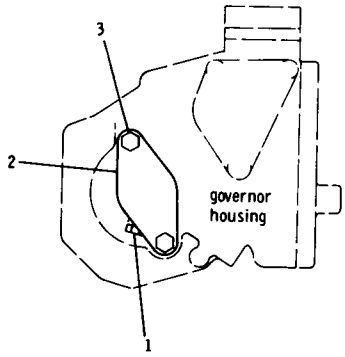

REF. NO.	PART NUMBER	DESCRIPTION	QTY
1	2S7905	PLUG----------	1
2	4N4508	COVER----------	1
	4N4509	GASKET----------	1
3	S1615	BOLT----------	2

144197

4N4510 GOVERNOR COVER GROUP
Engine Serial No. 3N52495 to 3N95459 inclusive

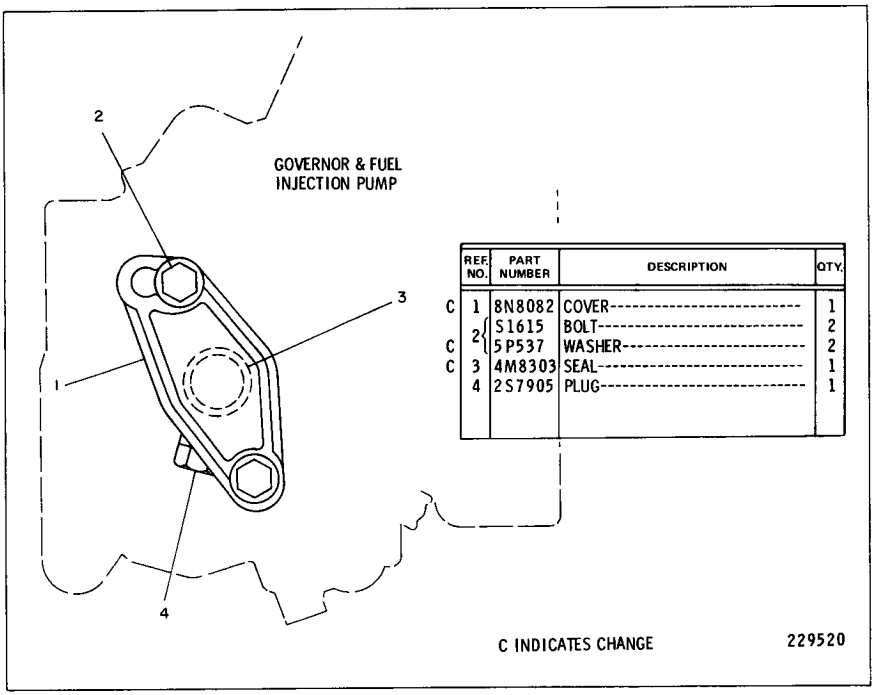

	REF. NO.	PART NUMBER	DESCRIPTION	QTY.
C	1	8N8082	COVER	1
	2	S1615	BOLT	2
C		5P537	WASHER	2
C	3	4M8303	SEAL	1
	4	2S7905	PLUG	1

4N4510 GOVERNOR COVER GROUP
Engine Serial No. 3N95460—Up

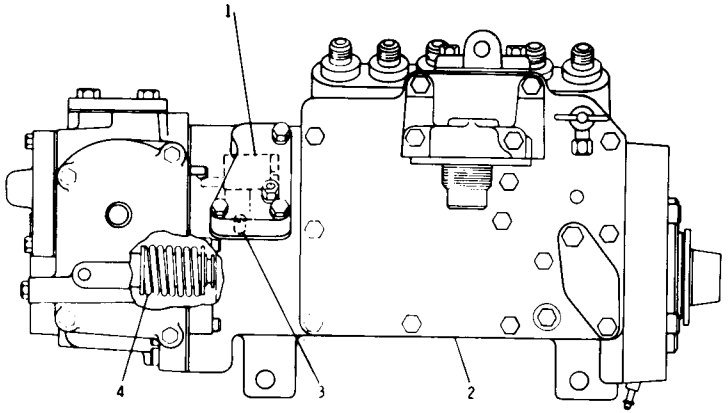

	REF NO	PART NUMBER	DESCRIPTION	QTY
C	1	6N454	TORQUE CONTROL GROUP--------- (Separate Illustration)	1
	2	6N261	PUMP GROUP---------- (Separate Illustration)	1
	3	4N443	PIN----------	1
	4	4N4224	SPRING----------	1

C INDICATES CHANGE 171103

6N299 GOVERNOR AND FUEL INJECTION PUMP GROUP
Replaced by 6N5227 listed on Page 47
Engine Serial No. 3N69600 to 3N69946 inclusive
6N261 Pump and 6N454 Control parts are shown on Page 46 and 57B

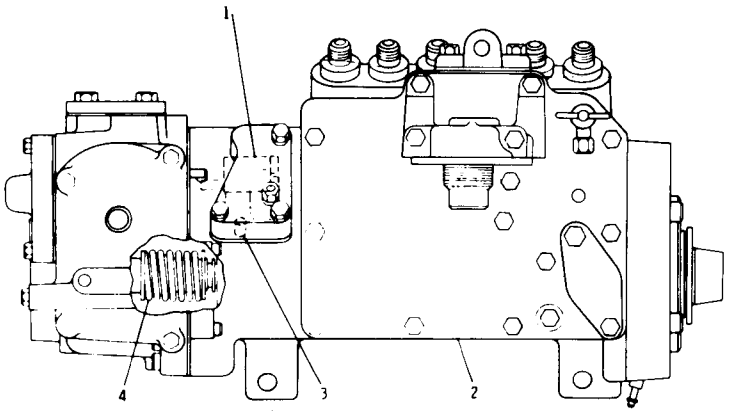

	REF NO	PART NUMBER	DESCRIPTION	QTY
C	1	6N3609	TORQUE CONTROL GROUP--------- (Separate Illustration)	1
	2	6N261	PUMP GROUP---------- (Separate Illustration)	1
	3	4N443	PIN----------	1
	4	4N4224	SPRING----------	1

C INDICATES CHANGE 222685

6N299 GOVERNOR AND FUEL INJECTION PUMP GROUP
Replaced by 6N5227 listed on Page 47
Engine Serial No. 3N69947—Up
6N261 Pump and 6N3609 Control parts are shown on Page 46 and 57B

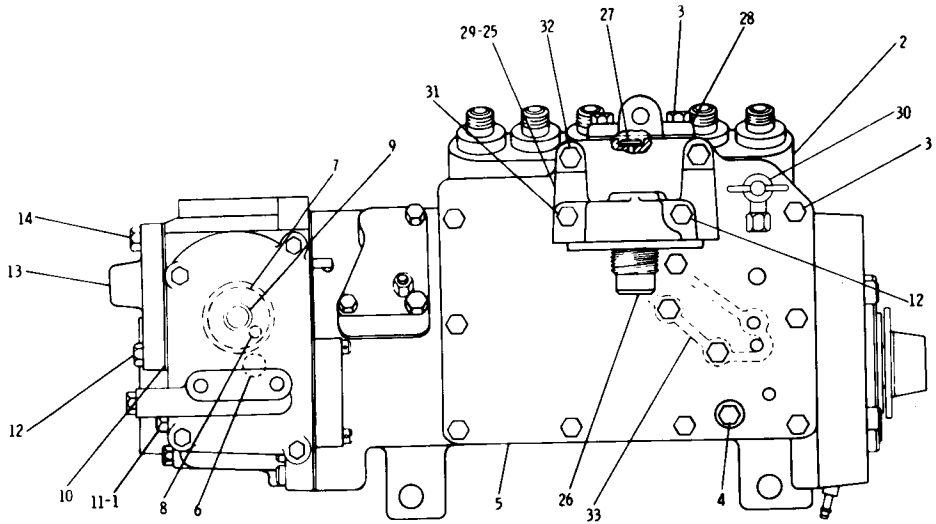

REF. NO	PART NUMBER	DESCRIPTION	QTY
1	9S4191	PLUG	1
2	4N1836	PUMP GROUP (Separate Illustration)	1
3	S1615	BOLT	13
4	9S4180	PLUG	1
	4J7533	SEAL	1
5	4N4351	COVER	1
	4N9057	GASKET	1
6	4N8179	PIN	1
7	4N4366	SPRING	1
8	4N444	SPACER	2
9	4N4320	SHAFT ASSEM.	1
10	4N159	GASKET	1
11	3J1907	SEAL	1
12	8S4710	BOLT	3
13	4N53	COVER	1
14	S1616	BOLT	1
25	4N5490	BASE ASSEM. (Includes)	1
26	9S4167	STUD	1
27	4N9336	DISC	1
28	4N7572	ELBOW	1
	4N9337	GASKET	1
29	6N2843	GASKET	1
C 30	7N450	VALVE ASSEM.	1
31	9F7022	BOLT	1
32	9F6580	BOLT--2.86 cm(1.125 in.) long	2
33	4N4431	GASKET	1
	6N2810	CHANNEL	1

C INDICATES CHANGE 212672

6N261 GOVERNOR AND FUEL INJECTION PUMP GROUP
Part of 6N299 Governor and Fuel Injection Pump Group shown on Page 45
4N1836 Governor and Fuel Injection Pump parts are shown on Pages 48 through 51

		CONSISTS OF:	PAGE
1	6N5228	GOVERNOR AND FUEL INJECTION PUMP GROUP ..	56
1	6N230	SPRING--(1) YELLOW & (2) GREEN STRIPE	
1	4N4222	SPRING--(2) PINK & (1) YELLOW STRIPE	
1	4N4223	SPRING--(2) YELLOW STRIPES	
1	4N4224	SPRING--(2) YELLOW & (1) WHITE STRIPE	
1	4N4225	SPRING--(1) PINK & (2) YELLOW STRIPE	
1	4N4227	SPRING--(2) YELLOW & (1) GREEN STRIPE	
1	4N4228	SPRING--(2) YELLOW & (1) PURPLE STRIPE	
1	2H3934	SEAL--TRANSFER PUMP TO PLATE	
1	4N49	GASKET--IDLE SCREW COVER	
1	4N159	GASKET--ADAPTER BASE TO GOVERNOR HOUSING	
1	4N9057	GASKET--SIDE COVER	
1	1P436	GASKET--PRIMING PUMP	
1	4N402	GASKET--THROTTLE CONTROL COVER	
1	4N594	GASKET--GOVERNOR HOUSING TO FUEL PUMP HOUSING	
1	4N508	GASKET--TORQUE SPRING COVER	
1	4N9337	GASKET--FUEL RETURN ELBOW	
1	6L5773	GASKET--SMOKE LIMITER	
1	6N2843	GASKET--FILTER BASE	
1	6N6597	GASKET--ADAPTER ASSEMBLY TO BASE	
2	9L9347	SHIM--.020 IN. (.5080 MM) THICK	
3	4N7777	SPACER--.010 IN. (.2540 MM) THICK	
3	9L7235	SHIM--.039 IN. (.991 MM) THICK	
1	4N9098	SPACER--.500 IN. (12.7 MM) THICK	
8	8L8601	SPACER--.002 IN. (.0508 MM) THICK	
1	1P6453	BAR	
1	9L3626	SPACER--.016 IN. (.4064 MM) THICK	
1	9L5176	TORQUE SPRING--.024 IN. (.61 MM) THICK	
1	6N3034	TORQUE SPRING--.016 IN. (.5064 MM) THICK	
1	9L3625	TORQUE SPRING--.022 IN. (.559 MM) THICK	
1	9L6483	TORQUE SPRING--.020 IN. (.5080 MM) THICK	
1	9S9662	TORQUE SPRING--.018 IN. (.4572 MM) THICK	
1	.....	FORM SMHS 6728	

6N5227 GOVERNOR AND FUEL INJECTION PUMP GROUP—Field Installation

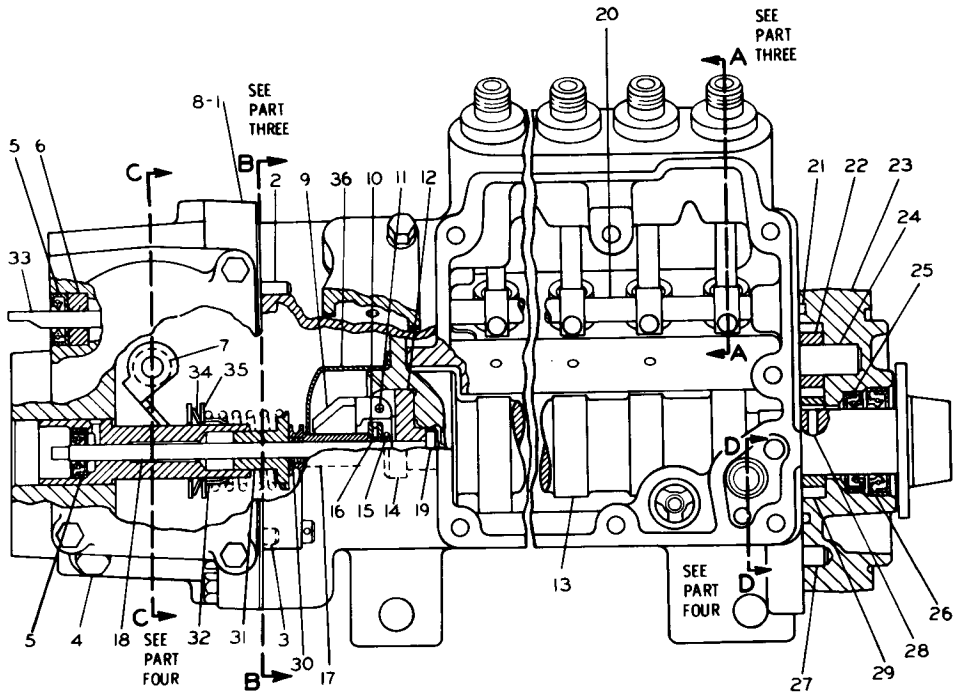

	REF. NO.	PART NUMBER	DESCRIPTION	QTY
C	1	6N5324	HOUSING ASSEM.	1
	2	4N2333	DOWEL	1
	3	8S6814	DOWEL	2
	4	4N5050	PLUG	1
	5	4N260	SEAL	2
	6	6N2578	BEARING	1
	7	4N2786	SEAL	1
	8	9S4180	PLUG	1
		4J7533	SEAL	1
	9	4N425	WEIGHT	3
	10	4N2927	RACE	2
	11	4N511	DOWEL	3
	12	4N446	CARRIER	1
	13	4N4313	CAMSHAFT	1
	14	4N2955	BOLT	3
	15	4N2953	RING	1
	16	4N2401	BEARING	1
	17	4N434	RISER	1
	18	4N9018	SHAFT	1
	19	4N9019	DOWEL	1
	20	4N572	SHAFT ASSEM.	1
	21	5M6509	SEAL	1
	22	4N406	GEAR (10 teeth)	1
C	23	9L6863	BODY ASSEM.	1
		4N5050	PLUG	1
	24	8H9804	SHAFT	1
	25	4N636	SEAL	1
	26	4N1584	SEAL	1
	27	8S6814	DOWEL	1
	28	4N3779	KEY	1
	29	4N429	GEAR (15 teeth)	1
	30	4N527	SPRING	1
	31	4N535	SEAT	1
	32	6N7451	SEAT	1
	33	4N927	SHAFT ASSEM.	1
	34	6N2956	WASHER (spring)	1
	35	6N2957	WASHER	2
	36	4N1723	SHIELD	1

C INDICATES CHANGE 213005

4N1836 GOVERNOR AND FUEL INJECTION PUMP GROUP—Part 1 of 4
Part of 6N261 Governor and Fuel Injection Pump Group shown on Page 46

4N1836 GOVERNOR AND FUEL INJECTION PUMP GROUP—Part 2 of 4

Part of 6N261 Governor and Fuel Injection Pump Group shown on Page 46

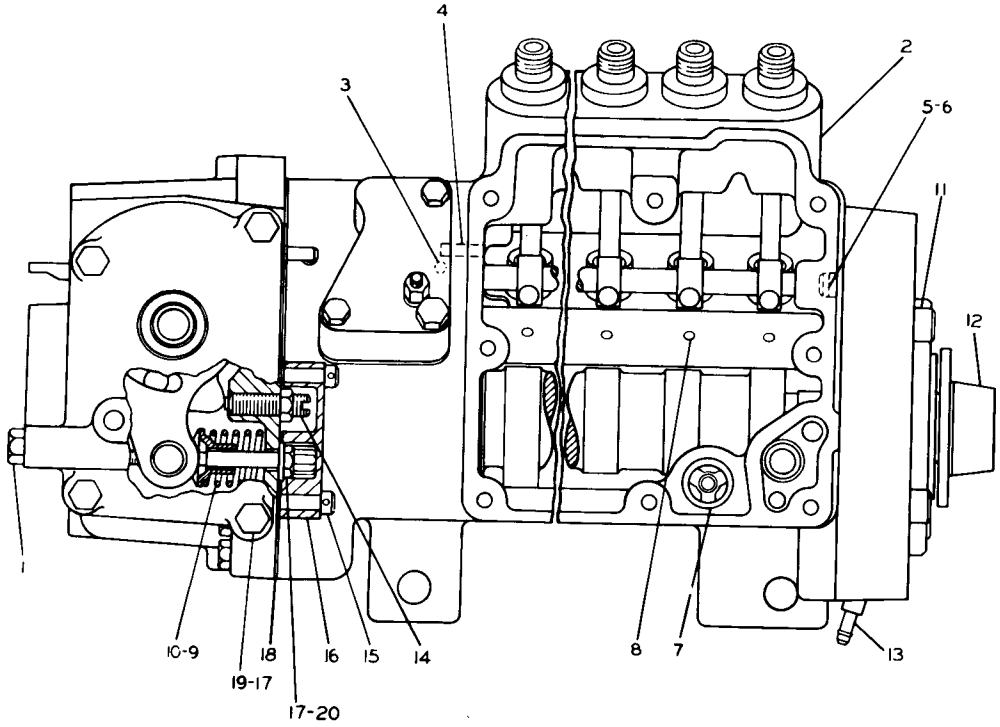

REF. NO.	PART NUMBER	DESCRIPTION	QTY
1	4N6430	PIN	1
2	6N1347	HOUSING ASSEM. (Includes)	2
3	6N343	STUD	1
4	4N2333	PIN	1
5	4N1826	DOWEL	1
6	2D6392	SEAL	1
7	1P2298	VALVE ASSEM.	1
8	6N5325	PIN	6
9	9S8632	SPRING	1
10	4N116	GUIDE	1
11	5J5314	BOLT	4
12	4N2954	SLEEVE	1
13	1P4001	FITTING	1
14	4N54	SCREW	1
	5B3180	NUT	1
15	1P2497	BOLT	2
16	4N5578	COVER	1
	4N49	GASKET	1
17	1P9925	BOLT--------6.35 cm(2.50 in.) long	2
18	4N594	GASKET	1
19	2A4781	BOLT--------6.99 cm(2.75 in.) long	1
	3B8695	BOLT--------8.89 cm(3.50 in.) long	1
20	6N7523	WASHER	1

213006

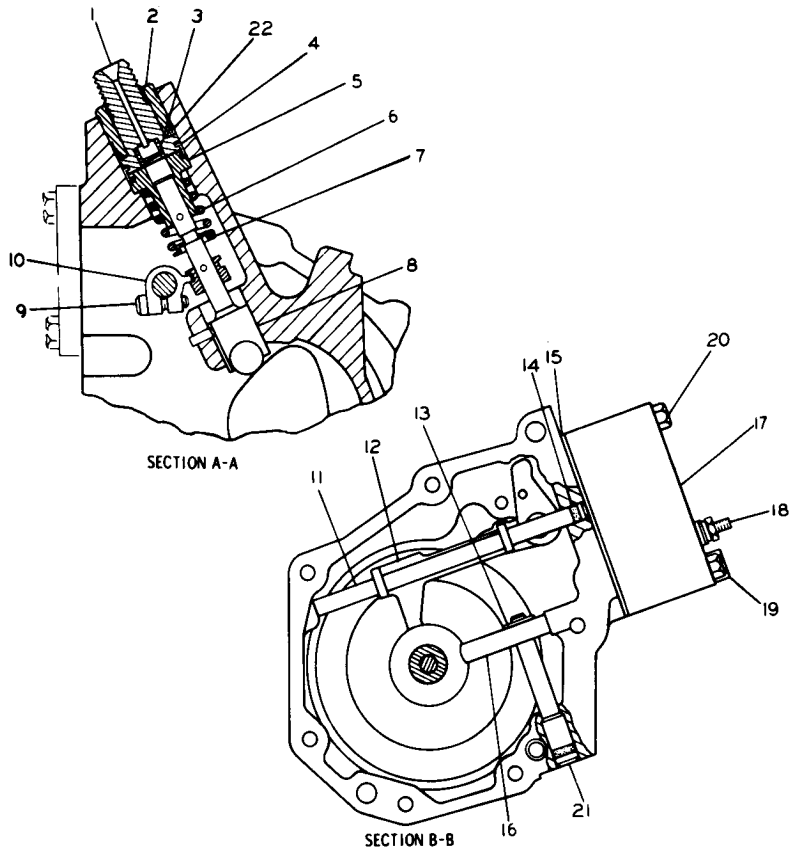

REF. NO.	PART NUMBER	DESCRIPTION	QTY
1	4N209	BONNET	6
2	4N218	BUSHING	6
3	4N2655	VALVE	6
	9L9424	SPRING	6
4	4N224	RING	6
5	4N1765	PLUNGER & BARREL ASSEM.	6
6	4N4318	SPRING	6
7	4N2728	WASHER	6
8	4N1750	LIFTER	6
	4N2685	ROLLER	6
9	2N2658	SCREW	6
10	4N1763	LEVER	6
11	4N528	SHAFT	1
12	4N2677	LEVER ASSEM.	1
13	2M7819	RING	1
14	3H442	SEAL	1
15	4N508	GASKET	1
16	4N445	LEVER	1
17	4N1591	COVER ASSEM.	1
	6N411	COVER	1
	6N412	MACHINE SCREW	1
	4B2042	NUT	1
18	3B4501	LOCKWASHER	1
	1P7326	WASHER--1.52 mm(.06 in.) thick	1
	8F1326	WASHER--.813 mm(.032 in.) thick	1
19	2P3200	BOLT	1
	1J9671	SEAL	1
20	2M5471	BOLT	2
21	4N523	DOWEL	1
	2D6392	SEAL	1
22	4N223	SEAL	6

213007

4N1836 GOVERNOR AND FUEL INJECTION PUMP GROUP—Part 3 of 4
Part of 6N261 Governor and Fuel Injection Pump Group shown on Page 46

4N1836 GOVERNOR AND FUEL INJECTION PUMP GROUP—Part 4 of 4

Part of 6N261 Governor and Fuel Injection Pump Group shown on Page 46

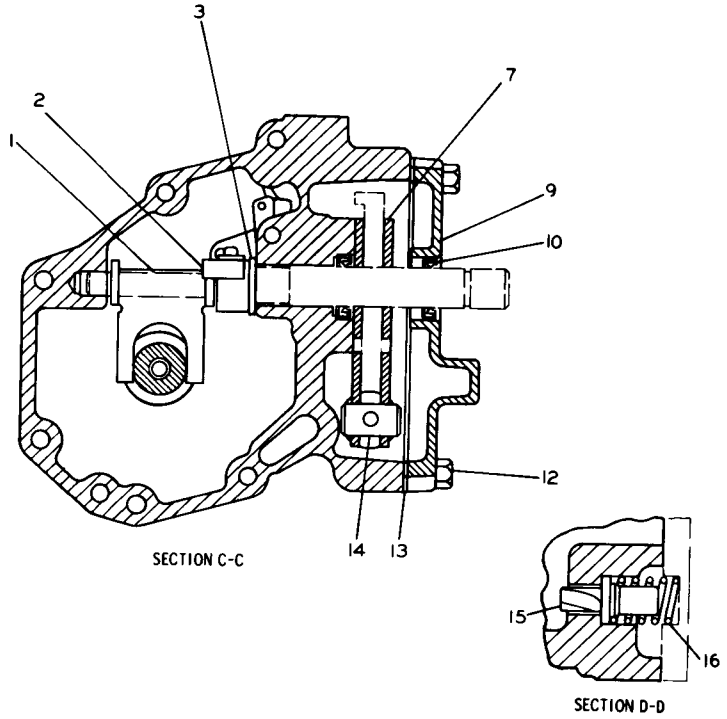

REF. NO.	PART NUMBER	DESCRIPTION	QTY
1	4N1881	LEVER	1
2	4N448	LEVER ASSEM. (Includes)	1
	9L8571	DOWEL	1
3	8F5368	WASHER	1
7	6N5482	PLATE	2
9	4N687	COVER ASSEM. (Includes)	1
10	4N2786	SEAL	1
12	S1616	BOLT	4
13	4N402	GASKET	1
14	9S8601	PIN	1
15	4N1767	VALVE	1
16	4N605	SPRING	1

213008

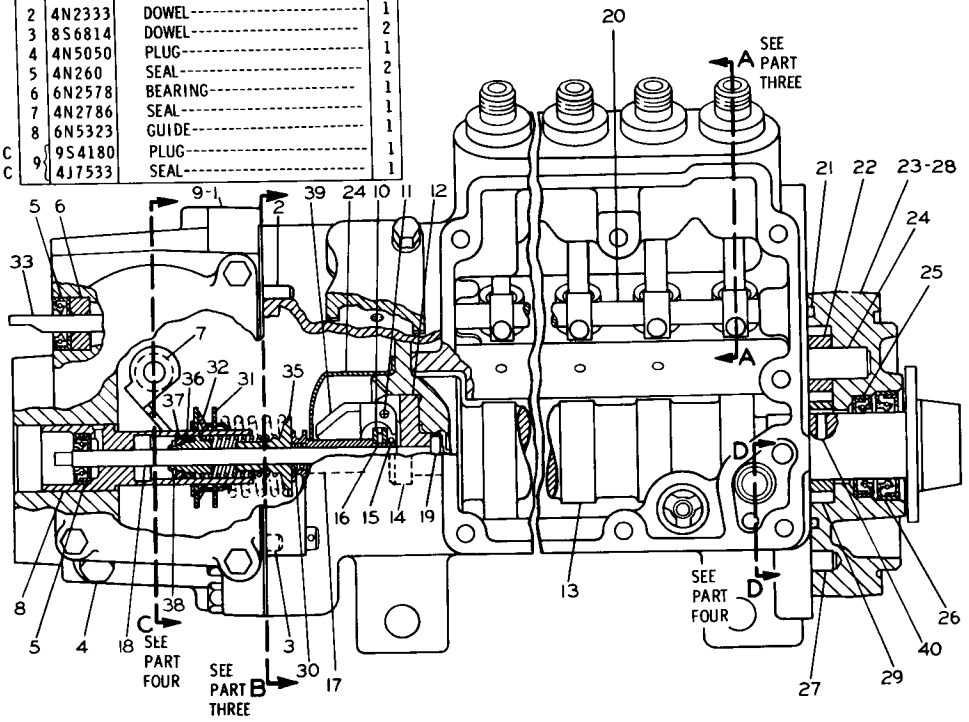

REF. NO.	PART NUMBER	DESCRIPTION	QTY
1	6N5324	HOUSING ASSEM. (Includes)	1
2	4N2333	DOWEL	1
3	8S6814	DOWEL	2
4	4N5050	PLUG	1
5	4N260	SEAL	2
6	6N2578	BEARING	1
7	4N2786	SEAL	1
8	6N5323	GUIDE	1
C 9	9S4180	PLUG	1
C	4J7533	SEAL	1
10	4N2927	RACE	2
11	4N511	DOWEL	3
12	4N446	CARRIER	1
13	4N4313	CAMSHAFT	1
14	4N2955	BOLT	3
15	4N2953	RING	1
16	4N2401	BEARING	1
17	4N434	RISER	1
18	4N9018	SHAFT	1
19	4N9019	DOWEL	1
20	4N572	SHAFT ASSEM.	1
21	5M6509	SEAL	1
22	4N406	GEAR--------(10 teeth)	1
C 23	9L6863	BODY ASSEM. (Includes)	1
24	8H9804	SHAFT	1
25	4N636	SEAL	1
26	4N1584	SEAL	1
27	8S6814	DOWEL	1
28	4N5050	PLUG	1
29	4N429	GEAR--------(15 teeth)	1
30	4N527	SPRING	1
31	6N2957	WASHER	1
32	6N2956	WASHER	1
33	4N927	SHAFT ASSEM.	1
34	4N1723	SHIELD	1
35	6N4655	DASHPOT ASSEM.	1
	6N7451	SEAT	1
36	4N6407	SPOOL	1
37	4N6406	RING	1
38	4N6404	RING	1
39	4N425	WEIGHT	3
40	4N3779	KEY	1

C INDICATES CHANGE 212933

6N5355 GOVERNOR AND FUEL INJECTION PUMP GROUP—Part 1 of 4
Part of 6N5228 Governor and Fuel Injection Pump Group shown on Page 56

6N5355 GOVERNOR AND FUEL INJECTION PUMP GROUP—Part 2 of 4

Part of 6N5228 Governor and Fuel Injection Pump Group shown on Page 56

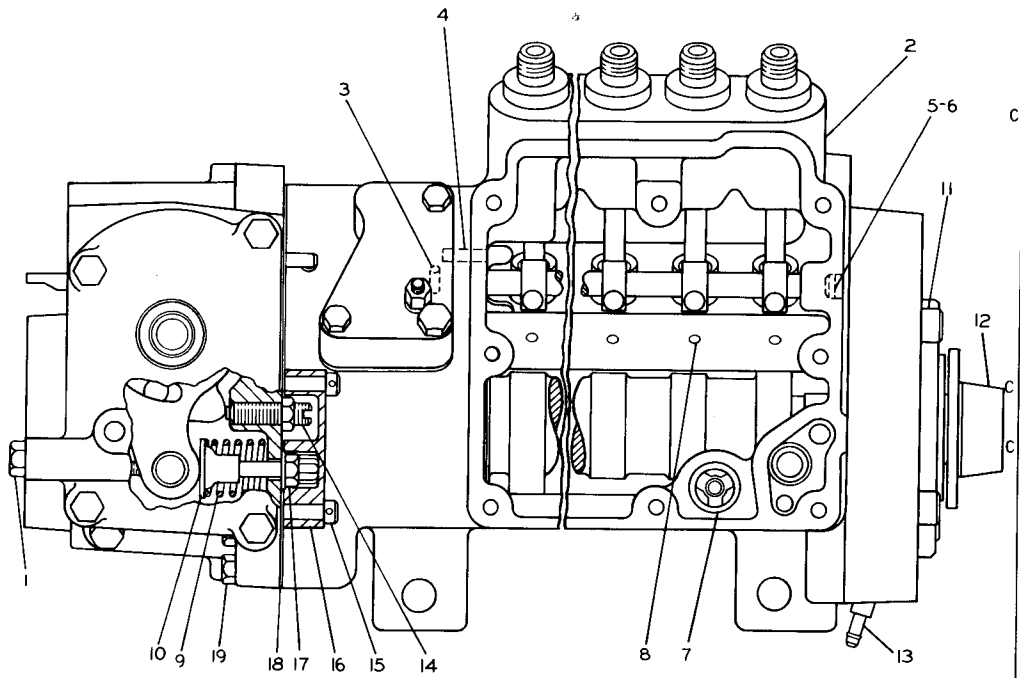

REF. NO.	PART NUMBER	DESCRIPTION	QTY
1	4N6430	PIN	1
2	6N1347	HOUSING ASSEM. (Each Includes)	2
C 3	4N5481	STUD	1
4	4N2333	PIN	1
5	4N1826	DOWEL	1
6	2D6392	SEAL	1
7	1P2298	VALVE ASSEM.	1
8	6N5325	PIN	6
9	9S8632	SPRING	1
10	4N116	GUIDE	1
11	5J5314	BOLT	4
12	4N2954	SLEEVE	1
13	1P4001	FITTING	1
14	4N54	SCREW	1
	5B3180	NUT	1
15	1P2497	BOLT	2
16	4N5578	COVER	1
	4N49	GASKET	1
17	1P9925	BOLT	1
	6N7523	WASHER	1
18	4N594	GASKET	1
	1P9925	BOLT-------6.35 cm(2.5 in.) long	1
19	2A4781	BOLT------6.99 cm(2.75 in.) long	1
	3B8695	BOLT-------8.89 cm(3.5 in.) long	1

C INDICATES CHANGE

212934

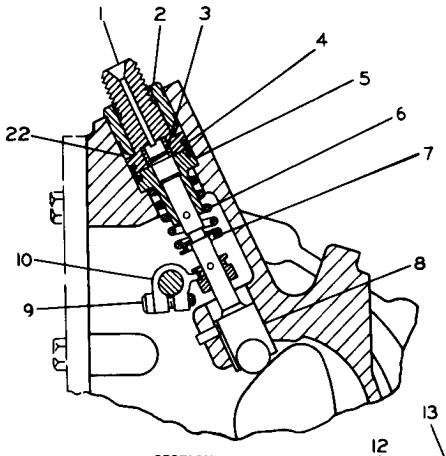

SECTION A-A

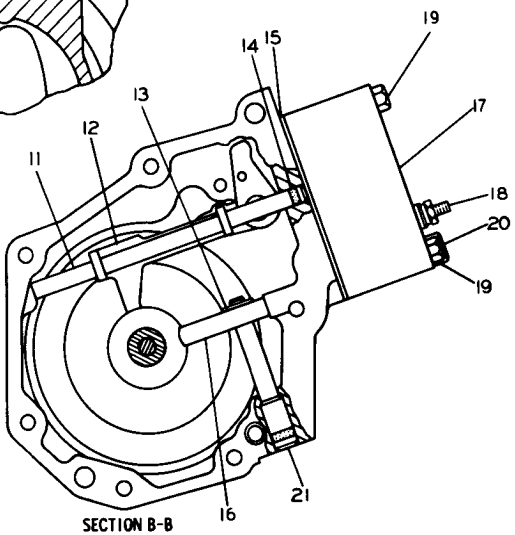

SECTION B-B

REF. NO.	PART NUMBER	DESCRIPTION	QTY
1	4N209	BONNET	6
2	4N218	BUSHING	6
3	9B1320	VALVE	6
	9L9424	SPRING	6
4	4N224	RING	6
5	4N1765	PLUNGER & BARREL ASSEM.	6
6	4N4318	SPRING	6
7	4N2728	WASHER	6
8	4N1750	LIFTER	6
	4N2685	ROLLER	6
9	2N2658	SCREW	6
10	4N1763	LEVER	6
11	4N528	SHAFT	1
12	4N2677	LEVER ASSEM.	1
13	2M7819	RING	1
14	3H442	SEAL	1
15	4N508	GASKET	1
16	4N445	LEVER	1
17	4N1591	COVER ASSEM. (Includes)	1
	6N411	COVER	1
	6N412	MACHINE SCREW	1
	4B2042	NUT	1
18	3B4501	LOCKWASHER	1
	1P7326	WASHER .06 in. (1.52 mm) thick	1
	8F1326	WASHER .032 in. (.81 mm) thick	1
C 19	2P3200	BOLT	1
C	1J9671	SEAL	1
20	2M5471	BOLT	2
21	4N523	DOWEL	1
	2D6392	SEAL	1
22	4N223	SEAL	6

C INDICATES CHANGE

211356

6N5355 GOVERNOR AND FUEL INJECTION PUMP GROUP—Part 3 of 4
Part of 6N5228 Governor and Fuel Injection Pump Group shown on Page 56

6N5355 GOVERNOR AND FUEL INJECTION PUMP GROUP—Part 4 of 4

Part of 6N5228 Governor and Fuel Injection Pump Group shown on Page 56

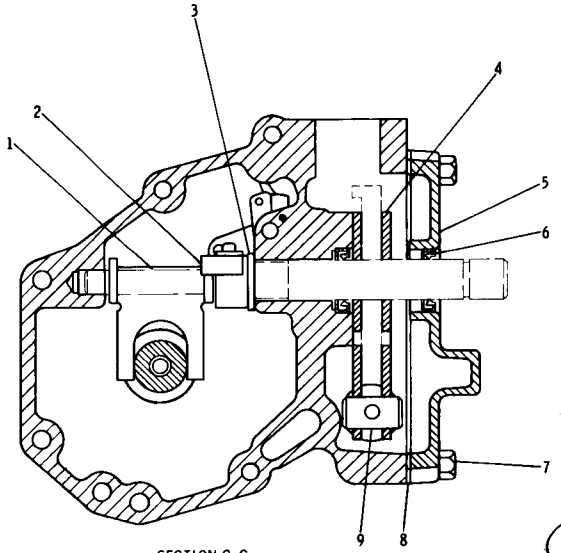

SECTION C-C

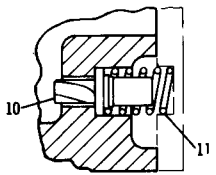

SECTION D-D

REF. NO.	PART NUMBER	DESCRIPTION	QTY.
1	4N1881	LEVER	1
2	4N448	LEVER ASSEM. (Includes)	1
	9L8571	DOWEL	1
3	8F5368	WASHER	1
4	6N5428	PLATE	2
5	4N687	COVER ASSEM. (Includes)	1
6	4N2786	SEAL	1
7	S1616	BOLT	4
8	4N402	GASKET	1
9	9S8601	PIN	1
10	4N1767	VALVE	1
11	4N605	SPRING	1

157545

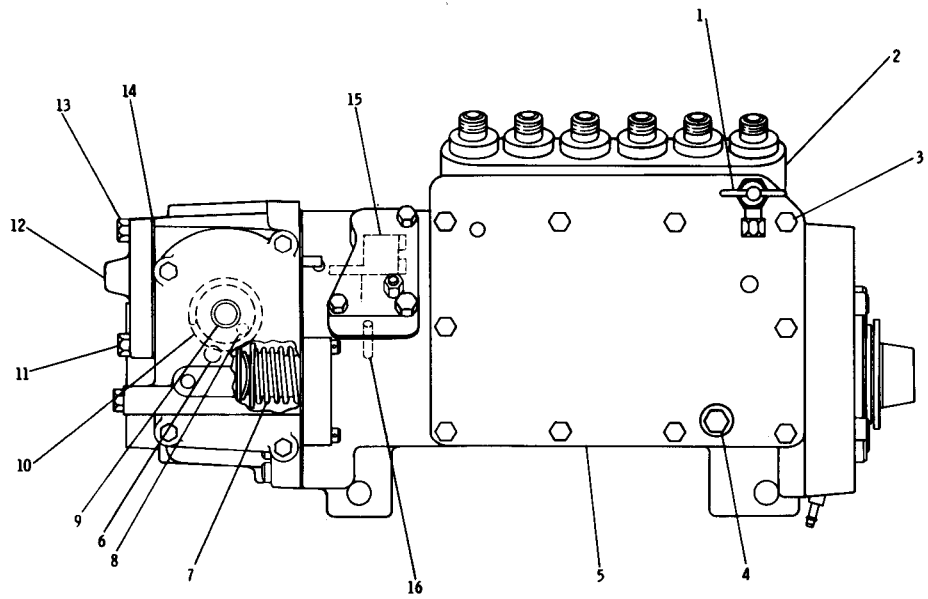

	REF. NO.	PART NUMBER	DESCRIPTION	QTY
C	1	7N450	VALVE ASSEM.	1
	2	6N5355	FUEL INJECTION PUMP GROUP (Separate Illustration)	1
	3	S1615	BOLT	10
	4	9S4180	PLUG (drain)	1
		4J7533	SEAL	1
	5	4N9339	COVER	1
		4N9057	GASKET	1
	6	4N8179	PIN	1
	7	6N5170	SPRING	1
	8	4N444	SPACER	2
	9	4N4320	SHAFT ASSEM.	1
	10	4N4366	SPRING	1
	11	8S4710	BOLT	2
	12	4N53	COVER	1
	13	S1616	BOLT	1
	14	4N159	GASKET	1
	15	6N509	CONTROL GROUP (Separate Illustration)	1
	16	4N443	PIN	1

C INDICATES CHANGE 212674

6N5228 GOVERNOR AND FUEL INJECTION PUMP GROUP

Part of 6N5227 Governor and Fuel Injection Pump Group shown on Page 47

6N5355 Pump and 6N509 Torque Control parts are shown on Pages 52 through 55 and on Page 57

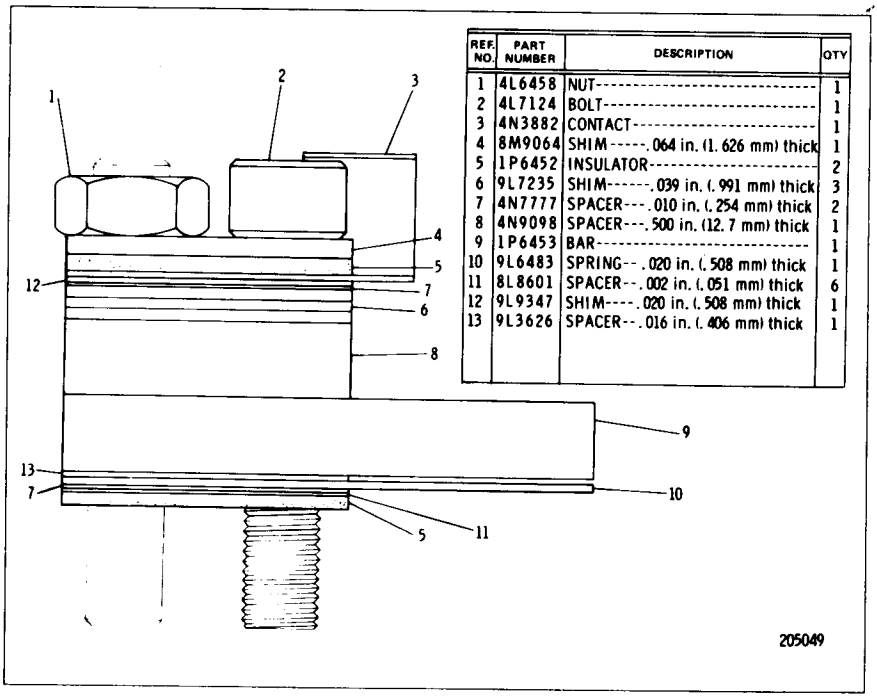

REF. NO.	PART NUMBER	DESCRIPTION	QTY
1	4L6458	NUT	1
2	4L7124	BOLT	1
3	4N3882	CONTACT	1
4	8M9064	SHIM-----.064 in. (1.626 mm) thick	1
5	1P6452	INSULATOR	2
6	9L7235	SHIM------.039 in. (.991 mm) thick	3
7	4N7777	SPACER---.010 in. (.254 mm) thick	2
8	4N9098	SPACER---.500 in. (12.7 mm) thick	1
9	1P6453	BAR	1
10	9L6483	SPRING--.020 in. (.508 mm) thick	1
11	8L8601	SPACER---.002 in. (.051 mm) thick	6
12	9L9347	SHIM-----.020 in. (.508 mm) thick	1
13	9L3626	SPACER---.016 in. (.406 mm) thick	1

6N3630 TORQUE CONTROL GROUP
Engine Serial No. 3N52495 to 3N69599 inclusive
Part of 6N299 Governor and Fuel Injection Pump Group shown on Page 45

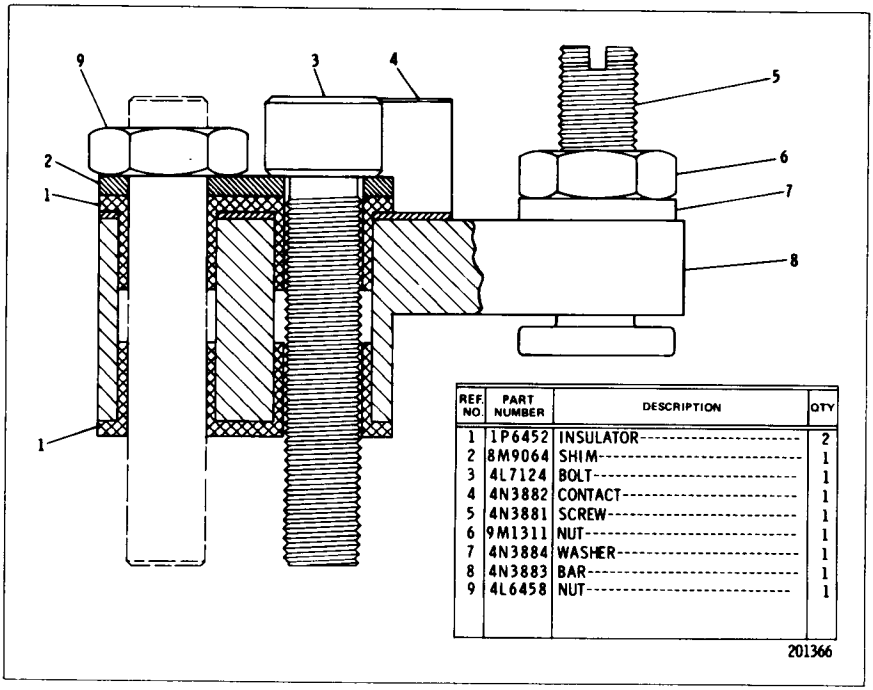

REF. NO.	PART NUMBER	DESCRIPTION	QTY
1	1P6452	INSULATOR	2
2	8M9064	SHIM	1
3	4L7124	BOLT	1
4	4N3882	CONTACT	1
5	4N3881	SCREW	1
6	9M1311	NUT	1
7	4N3884	WASHER	1
8	4N3883	BAR	1
9	4L6458	NUT	1

6N509 TORQUE CONTROL GROUP
Part of 6N5228 Governor and Fuel Injection Pump Group shown on Page 56

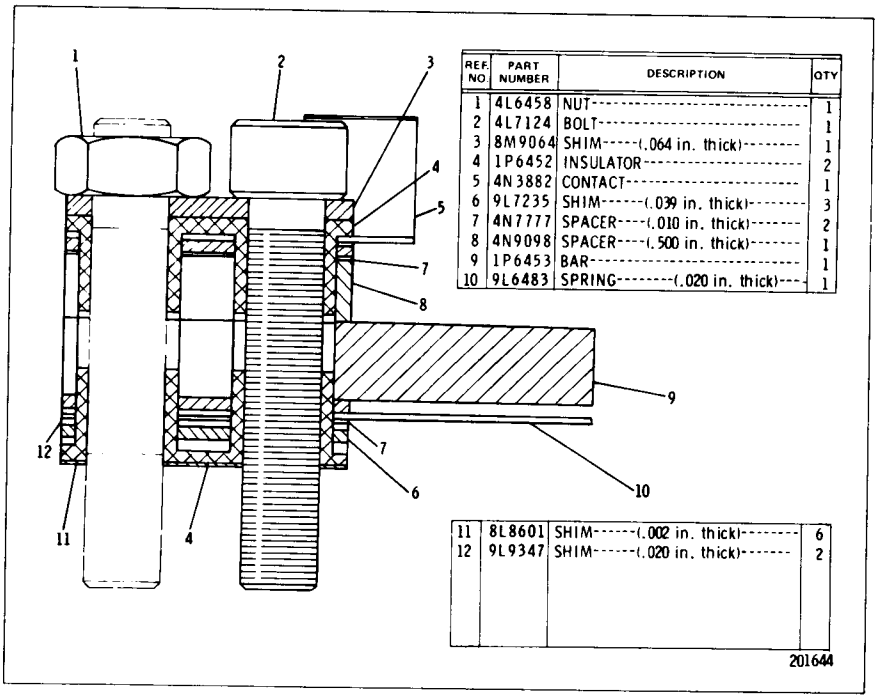

REF. NO.	PART NUMBER	DESCRIPTION	QTY
1	4L6458	NUT	1
2	4L7124	BOLT	1
3	8M9064	SHIM-----(.064 in. thick)	1
4	1P6452	INSULATOR	2
5	4N3882	CONTACT	1
6	9L7235	SHIM------(.039 in. thick)	3
7	4N7777	SPACER----(.010 in. thick)	2
8	4N9098	SPACER----(.500 in. thick)	1
9	1P6453	BAR	1
10	9L6483	SPRING--------(.020 in. thick)	1
11	8L8601	SHIM------(.002 in. thick)	6
12	9L9347	SHIM------(.020 in. thick)	2

6N454 TORQUE CONTROL GROUP
Engine Serial No. 3N69600 to 3N69946 inclusive
Part of 6N299 Governor and Fuel Injection Pump Group shown on Page 45B

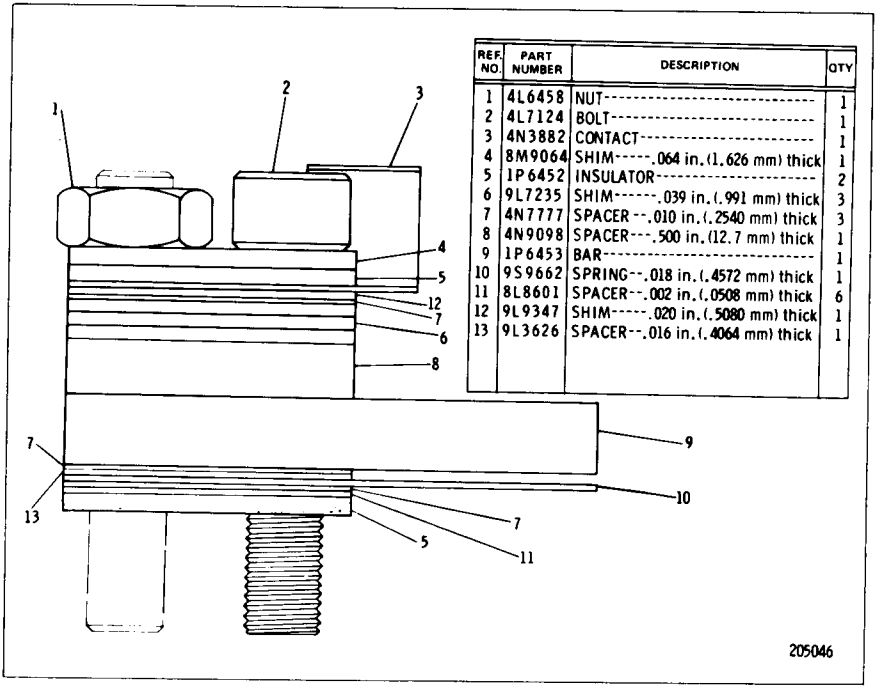

REF. NO.	PART NUMBER	DESCRIPTION	QTY
1	4L6458	NUT	1
2	4L7124	BOLT	1
3	4N3882	CONTACT	1
4	8M9064	SHIM-----.064 in.(1.626 mm) thick	1
5	1P6452	INSULATOR	2
6	9L7235	SHIM------.039 in.(.991 mm) thick	3
7	4N7777	SPACER--.010 in.(.2540 mm) thick	3
8	4N9098	SPACER---.500 in.(12.7 mm) thick	1
9	1P6453	BAR	1
10	9S9662	SPRING--.018 in.(.4572 mm) thick	1
11	8L8601	SPACER--.002 in.(.0508 mm) thick	6
12	9L9347	SHIM------.020 in.(.5080 mm) thick	1
13	9L3626	SPACER--.016 in.(.4064 mm) thick	1

6N3609 TORQUE CONTROL GROUP
Engine Serial No. 3N69947—Up
Part of 6N299 Governor and Fuel Injection Pump Group shown on Page 45B

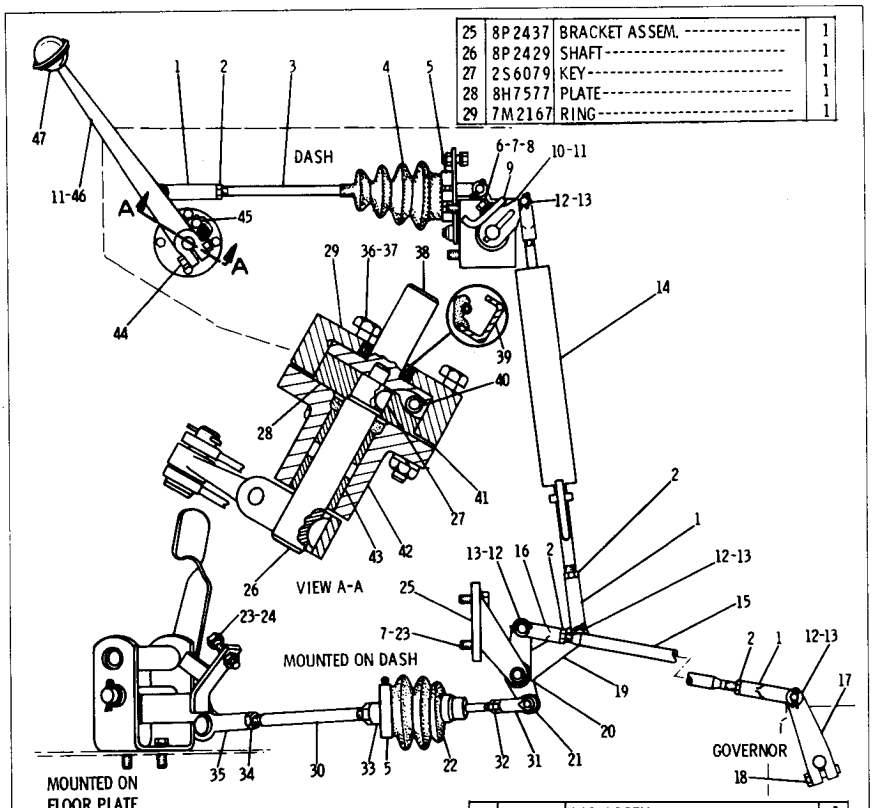

REF. NO.	PART NUMBER	DESCRIPTION	QTY
1	1A9252	END	4
2	5B9079	NUT	5
3	1P4573	ROD	1
4	8P7317	BOOT	1
5	5P597	CLAMP	2
6	S1591	BOLT	1
7	3B4506	LOCKWASHER	3
8	4B4278	WASHER	1
9	8P3167	ANGLE	1
10	4K21	LEVER	1
11	1N8704	KEY	2
12	9H6673	PIN	4
13	3B4611	COTTER PIN	4
14	8P2451	ROD ASSEM.	1
15	8P2445	ROD	1
16	1F5403	END	1
17	1V26	LEVER	1
18	4B3388	BOLT	1
19	8P2441	BELLCRANK ASSEM. (Includes)	1
	3K6662	BEARING	2
20	8P2443	SHAFT	1
	6H3956	PIN	1
21	3D8752	NUT	1
22	8P7792	BOOT	1
23	S1588	BOLT	3
24	1B2578	NUT	1
25	8P2437	BRACKET ASSEM.	1
26	8P2429	SHAFT	1
27	2S6079	KEY	1
28	8H7577	PLATE	1
29	7M2167	RING	1
30	8P2454	ROD ASSEM. (Includes)	1
	8P2455	ROD	1
31	9K8757	END	1
32	1A8285	NUT	1
33	8P2456	TUBE	1
	8H9523	SPRING	1
34	1B4430	NUT	2
35	5J557	END	1
36	8B2377	BOLT—50.80 mm(2 in.) long	3
	1B2713	BOLT—44.45 mm(1.75 in.) long	1
37	1B4330	NUT	4
	3B4504	LOCKWASHER	4
38	8P2430	SHAFT ASSEM. (Includes)	1
	2S6091	DOWEL	2
39	8H9180	SEAL	2
40	5H7152	SPRING	1
41	7M6955	GASKET	1
42	8P2426	SUPPORT ASSEM. (Includes)	1
43	9F5647	BEARING	1
44	3B1915	BOLT	1
	1D4717	NUT	1
45	8H9182	ROLLER	2
	8H9186	SPRING	2
46	8M6770	LEVER	1
47	7F8092	KNOB	1

212288

8P2457 GOVERNOR CONTROL GROUP—Part 1
Serial No. 6X1 to 6X497 inclusive

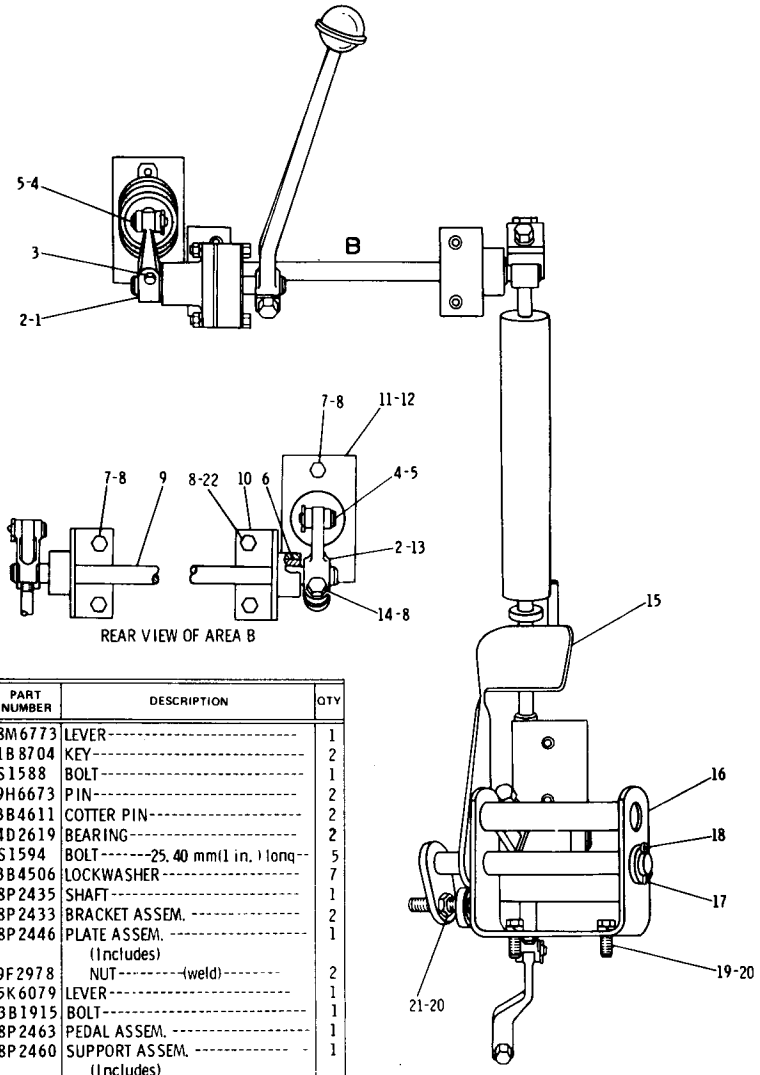

REAR VIEW OF AREA B

	REF. NO.	PART NUMBER	DESCRIPTION	QTY
	1	8M6773	LEVER	1
	2	1B8704	KEY	2
	3	S1588	BOLT	1
	4	9H6673	PIN	2
	5	3B4611	COTTER PIN	2
	6	4D2619	BEARING	2
C	7	S1594	BOLT---25.40 mm(1 in.) long	5
	8	3B4506	LOCKWASHER	7
	9	8P2435	SHAFT	1
	10	8P2433	BRACKET ASSEM.	2
	11	8P2446	PLATE ASSEM. (Includes)	1
	12	9F2978	NUT---(weld)	2
	13	5K6079	LEVER	1
	14	3B1915	BOLT	1
	15	8P2463	PEDAL ASSEM.	1
	16	8P2460	SUPPORT ASSEM. (Includes)	1
	17	1P6313	BUSHING	2
	18	3B4617	COTTER PIN	1
	19	S1595	BOLT	2
	20	3B4508	LOCKWASHER	3
	21	1B4205	NUT	1
C	22	S509	BOLT---19.05 mm(.75 in.) long	1

C INDICATES CHANGE 218333

8P2457 GOVERNOR CONTROL GROUP—Part 2
Serial No. 6X1 to 6X497 inclusive

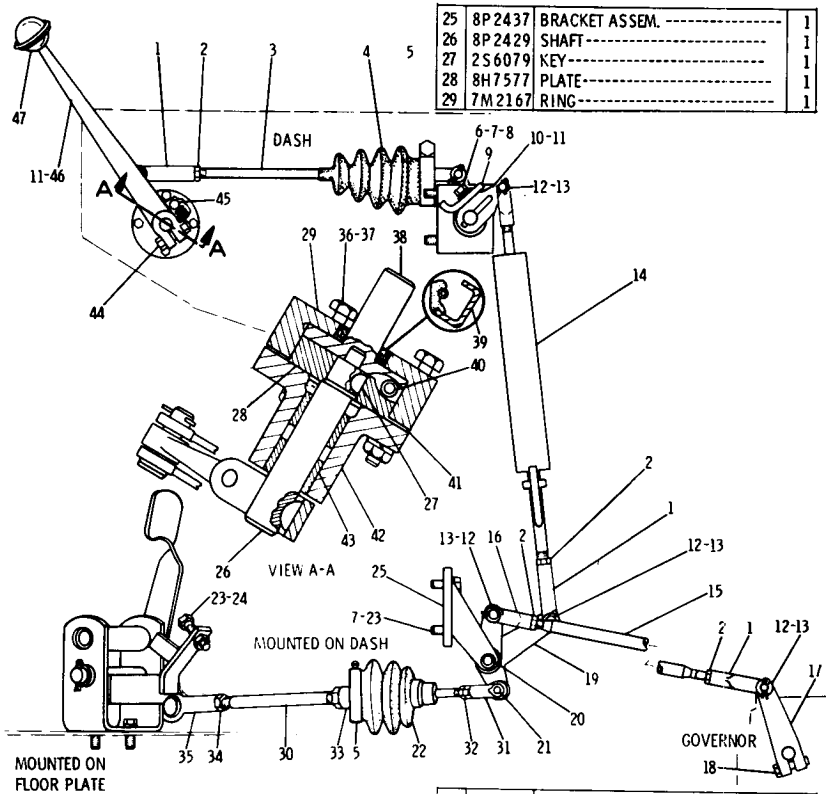

REF. NO.	PART NUMBER	DESCRIPTION	QTY
1	1A9252	END	4
2	5B9079	NUT	5
3	1P4573	ROD	1
4	8P7317	BOOT	1
5	5P597	CLAMP	2
6	S1591	BOLT	1
7	3B4506	LOCKWASHER	3
8	4B4278	WASHER	1
9	8P3167	ANGLE	1
10	4K21	LEVER	1
11	1N8704	KEY	2
12	9H6673	PIN	4
C 13	3B4615	COTTER PIN	4
14	8P2451	ROD ASSEM.	1
15	8P2445	ROD	1
16	1F5403	END	1
17	1V26	LEVER	1
18	4B3388	BOLT	1
19	8P2441	BELLCRANK ASSEM. (Includes)	1
	3K6662	BEARING	2
20	8P2443	SHAFT	1
	6H3956	PIN	1
21	3D8752	NUT	1
22	8P7792	BOOT	1
23	S1588	BOLT	3
24	1B2578	NUT	1
25	8P2437	BRACKET ASSEM.	1
26	8P2429	SHAFT	1
27	2S6079	KEY	1
28	8H7577	PLATE	1
29	7M2167	RING	1
30	8P2454	ROD ASSEM. (Includes)	1
	8P2455	ROD	1
31	9K8757	END	1
32	1A8285	NUT	1
33	8P2456	TUBE	1
	8H9523	SPRING	1
34	1B4430	NUT	2
35	5J557	END	1
36	8B2377	BOLT---50.80 mm(2 in.) long	3
	1B2713	BOLT---44.45 mm(1.75 in.) long	1
37	1B4330	NUT	4
	3B4504	LOCKWASHER	4
38	8P2430	SHAFT ASSEM. (Includes)	1
	2S6091	DOWEL	2
39	8H9180	SEAL	2
40	5H7152	SPRING	1
41	7M6955	GASKET	1
42	8P2426	SUPPORT ASSEM. (Includes)	1
43	9F5647	BEARING	1
44	3B1915	BOLT	1
	1D4717	NUT	1
45	8H9182	ROLLER	2
	8H9186	SPRING	2
46	8M6770	LEVER	1
47	7F8092	KNOB	1

C INDICATES CHANGE

220100

8P2457 GOVERNOR CONTROL GROUP—Part 1
Serial No. 6X498—Up

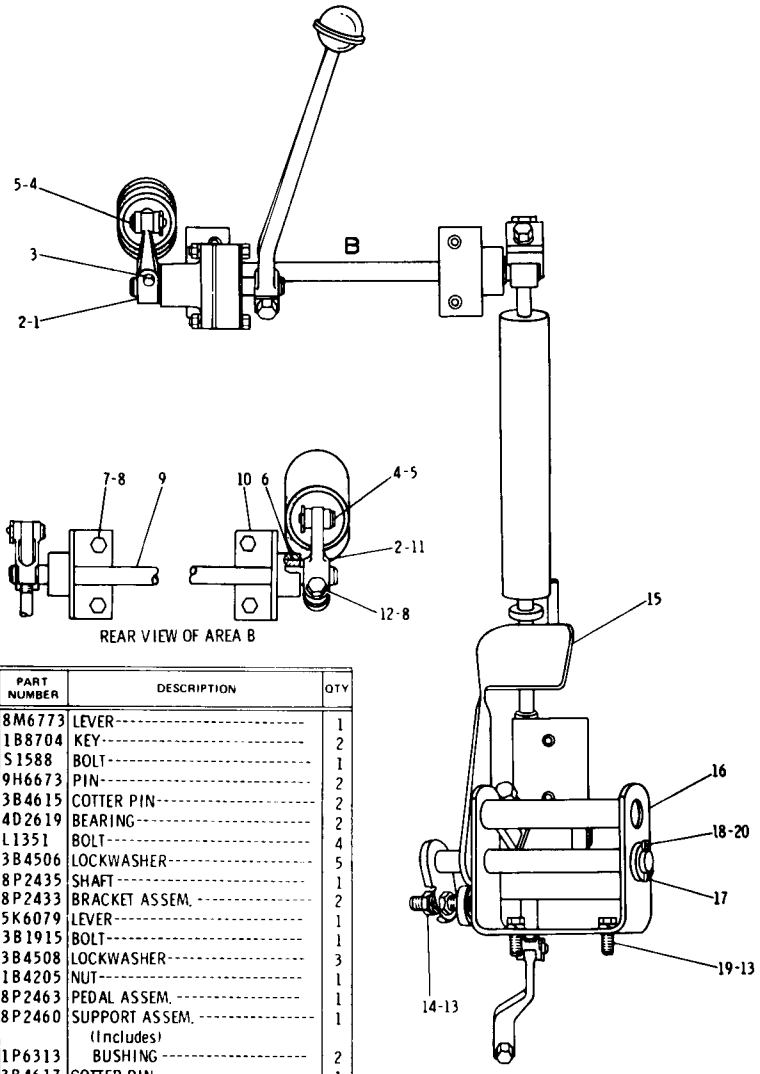

	REF. NO.	PART NUMBER	DESCRIPTION	QTY
	1	8M6773	LEVER	1
	2	1B8704	KEY	2
	3	S1588	BOLT	1
	4	9H6673	PIN	2
C	5	3B4615	COTTER PIN	2
	6	4D2619	BEARING	2
C	7	L1351	BOLT	4
C	8	3B4506	LOCKWASHER	5
	9	8P2435	SHAFT	1
	10	8P2433	BRACKET ASSEM.	2
	11	5K6079	LEVER	1
	12	3B1915	BOLT	1
	13	3B4508	LOCKWASHER	3
	14	1B4205	NUT	1
	15	8P2463	PEDAL ASSEM.	1
	16	8P2460	SUPPORT ASSEM. (Includes)	1
	17	1P6313	BUSHING	2
	18	3B4617	COTTER PIN	1
	19	S1595	BOLT	2
C	20	1A2812	WASHER	1

C INDICATES CHANGE 220101

8P2457 GOVERNOR CONTROL GROUP—Part 2
Serial No. 6X498—Up

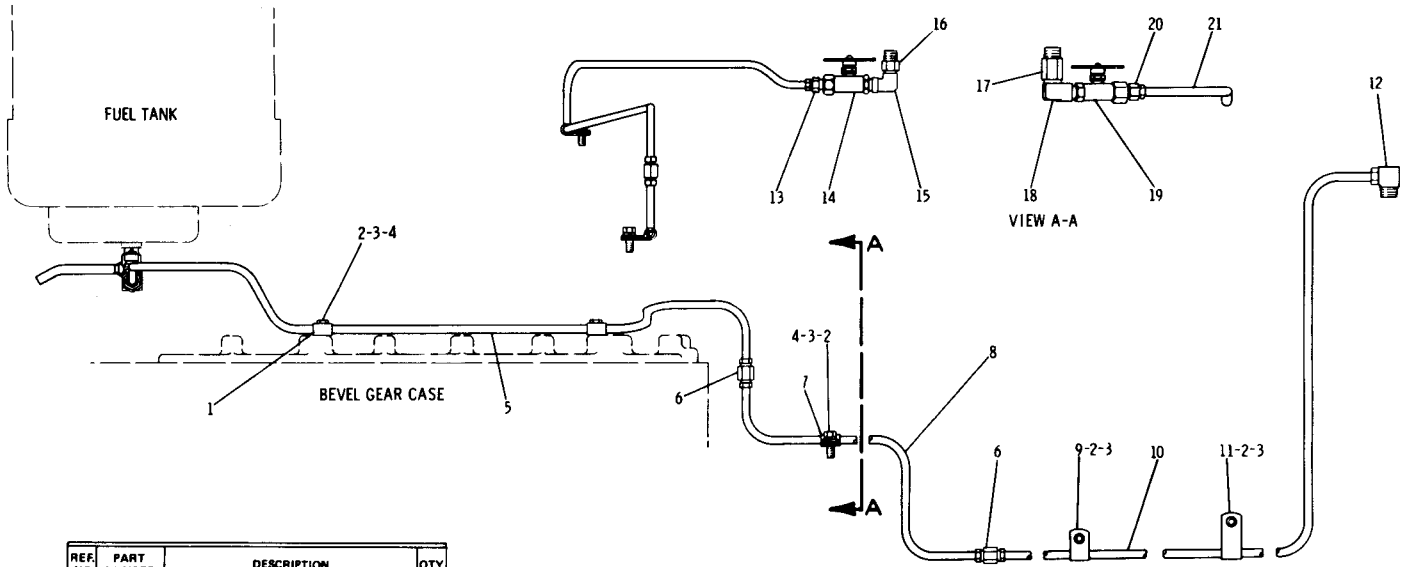

REF. NO.	PART NUMBER	DESCRIPTION	QTY
1	8B6127	CLIP	2
2	S509	BOLT	5
3	3B4506	LOCKWASHER	5
4	4B4278	WASHER	3
5	8P4322	TUBE ASSEM.	1
6	7K1456	UNION	2
7	7B1597	CLIP	1
8	8P4321	TUBE ASSEM.	1
9	8B6127	CLIP	1
10	8P4320	TUBE ASSEM.	1
11	7B9919	CLIP	1
12	5K9235	ELBOW	1
13	5K9248	CONNECTOR	1
14	5P7090	VALVE	1
15	32143	ELBOW	1
16	5K6875	ADAPTER	1
17	6L5652	ADAPTER	1
18	9L3560	ELBOW	1
19	5P6940	VALVE	1
20	5K9245	CONNECTOR	1
21	8P6939	TUBE ASSEM.	1

212292

8P2492 FUEL LINES GROUP
Serial No. 6X1 to 6X514 inclusive

8P2492 FUEL LINES GROUP
Serial No. 6X515—Up

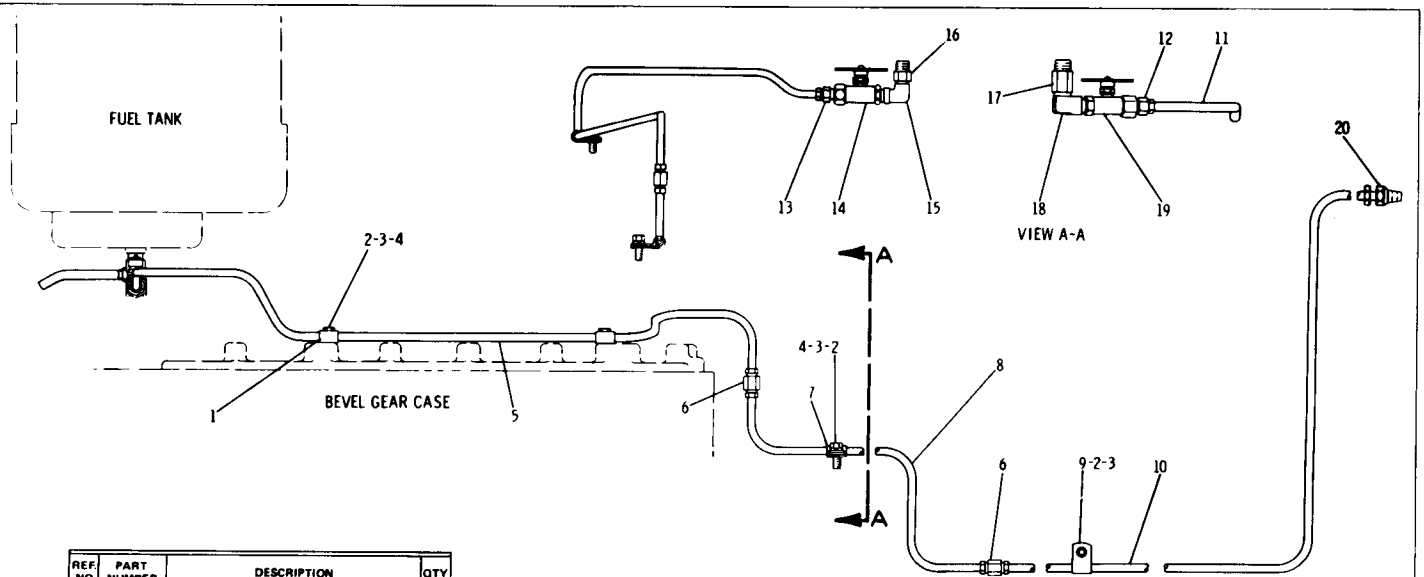

REF. NO.	PART NUMBER	DESCRIPTION	QTY
1	8B6127	CLIP	2
C 2	S509	BOLT	4
C 3	3B4506	LOCKWASHER	4
4	4B4278	WASHER	3
5	8P4322	TUBE ASSEM.	1
6	7K1456	UNION	2
7	7B1597	CLIP	1
8	8P4321	TUBE ASSEM.	1
9	8B6127	CLIP	1
C 10	8P7384	TUBE ASSEM.	1

11	8P6939	TUBE ASSEM.	1
12	5K9245	CONNECTOR	1
13	5K9248	CONNECTOR	1
14	5P7090	VALVE	1
15	32143	ELBOW	1
16	5K6875	ADAPTER	1
17	6L5652	ADAPTER	1
18	9L3560	ELBOW	1

19	5P6940	VALVE	1
20	5K9246	FITTING	1

C INDICATES CHANGE

221309

4N8054 FUEL INJECTION LINES GROUP

Engine Serial No. 3N52495 to 3N65626 inclusive

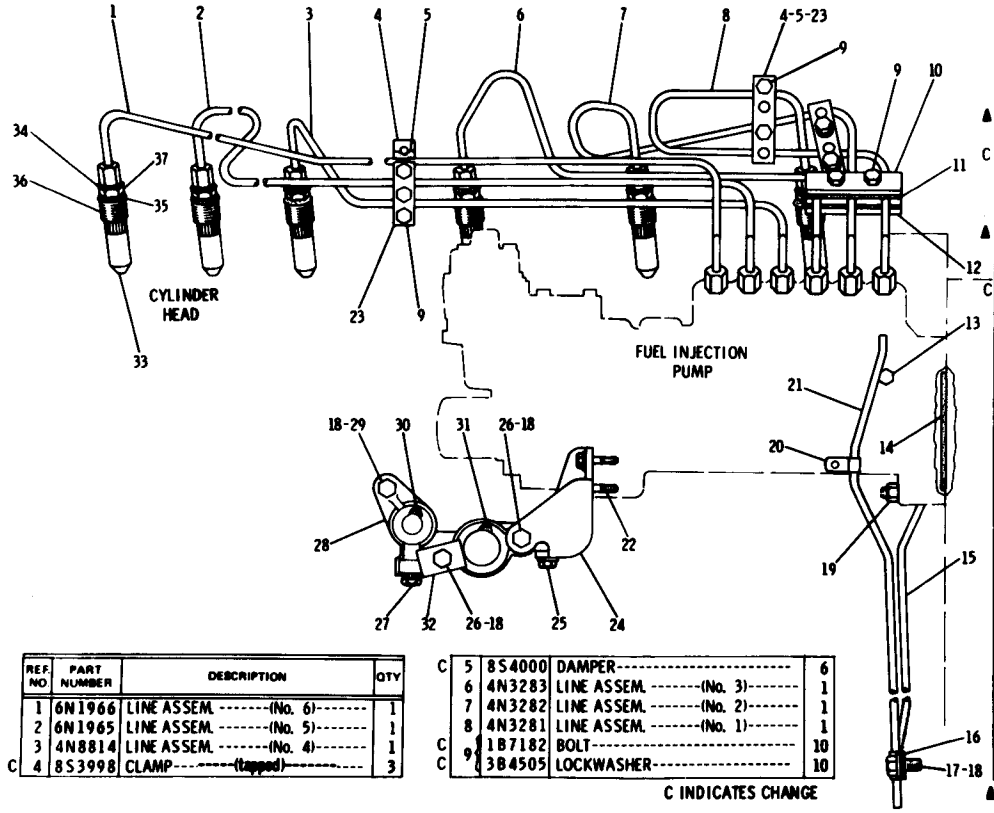

REF NO	PART NUMBER	DESCRIPTION	QTY
1	6N1966	LINE ASSEM. -------(No. 6)-------	1
2	6N1965	LINE ASSEM. -------(No. 5)-------	1
3	4N8814	LINE ASSEM. -------(No. 4)-------	1
C 4	8S3998	CLAMP----------(tapped)----------	3
C 5	8S4000	DAMPER----------	6
6	4N3283	LINE ASSEM. -------(No. 3)-------	1
7	4N3282	LINE ASSEM. -------(No. 2)-------	1
8	4N3281	LINE ASSEM. -------(No. 1)-------	1
C 9	1B7182	BOLT----------	10
C 9	3B4505	LOCKWASHER----------	10

C INDICATES CHANGE

10	6N535	CLAMP----------	1
11	6N537	DAMPER----------	2
12	6N536	CLAMP----------	1
13	5M6214	PLUG----------	1
14	2H3934	SEAL----------	1
▲ 15	5P6011	TUBE----------.406 m(16 in.)	
16	5K2298	CLIP----------	1
C 17	T102	BOLT----------	1
18	5M2894	WASHER----------	4
19	1B4203	NUT----------	3
20	1A5350	CLIP----------	1
▲ 21	5P6011	TUBE----------.559 m(22 in.)	
22	2A5546	BOLT----------	2
	5P537	WASHER----------	2
23	8S3999	CLAMP----------	3
24	6N4682	BRACKET----------	1
25	2B2695	BOLT----------	2
	9M1974	WASHER----------	2
26	S1619	BOLT----------	2
27	5M6214	PLUG----------	1
28	2P5641	ADAPTER----------	1
29	1A2029	BOLT----------	1
30	8M5253	SEAL----------	1
31	8M5248	SEAL----------	1
32	4D9786	BLOCK----------	1
33	7S9891	VALVE SERVICE GROUP---------- (Each Includes)	6
34	6F1069	SEAL ASSEM. ----------	1
35	5B3718	SEAL----------	1
36	8S2389	BODY----------	6
37	5H7225	NUT----------	6

▲ ORDER BY THE METRE

211345

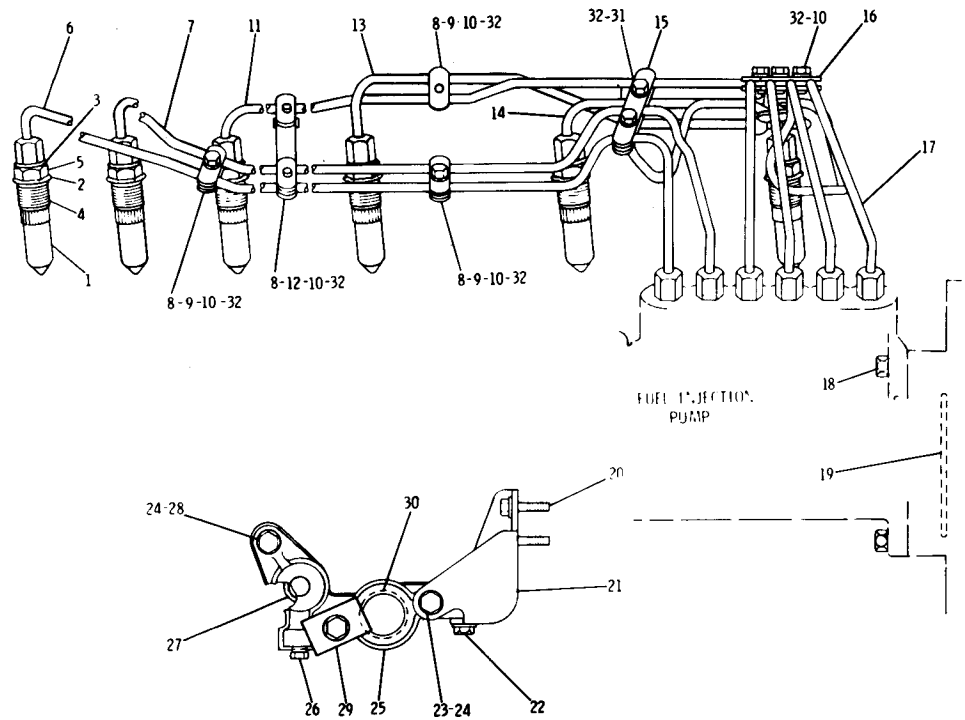

REF. NO.	PART NUMBER	DESCRIPTION	QTY
1	7S9891	FUEL VALVE	6
2	5B3718	SEAL	6
3	6F1069	SEAL ASSEM.	6
4	8S2389	BODY	6
5	5H7225	NUT	6
6	7N2876	LINE ASSEM. -------(no. 6)-------	1
7	7N2875	LINE ASSEM. -------(no. 5)-------	1
8	6N6403	CLAMP--------(tapped)----------	7
9	6N6404	CLAMP	5
10	S1615	BOLT	13
11	7N2874	LINE ASSEM. -------(no. 4)-------	1
12	7N4156	CLAMP ASSEM.	1
13	7N2873	LINE ASSEM. -------(no. 3)-------	1
14	7N2872	LINE ASSEM. -------(no. 2)-------	1
15	7N2877	CLAMP--------(tapped)----------	1
	7N2878	CLAMP	1
16	6N5124	CLAMP--------(tapped)----------	3
	6N5125	CLAMP	3
17	7N2871	LINE ASSEM. -------(no. 1)-------	1
18	1B4203	NUT	3
19	2H3934	SEAL	1
20	2A5546	BOLT	2
	5P537	WASHER	2
21	6N4682	BRACKET	1
22	2B2695	BOLT	2
	9M1974	WASHER	2
23	S1619	BOLT	2
24	5M2894	WASHER	3
25	2P5641	ADAPTER	1
26	5M6214	PLUG	1
27	8M5253	SEAL	1
28	1A2029	BOLT	1
29	4D9786	BLOCK	1
30	8M5248	SEAL	1
C 31	4F7957	BOLT	2
32	3B4504	WASHER	15

C INDICATES CHANGE

220103

7N4016 FUEL INJECTION LINES GROUP
Engine Serial No. 3N65627 to 3N84302 inclusive

7N4016 FUEL INJECTION LINES GROUP
Engine Serial No. 3N84303 to 3N91064 inclusive

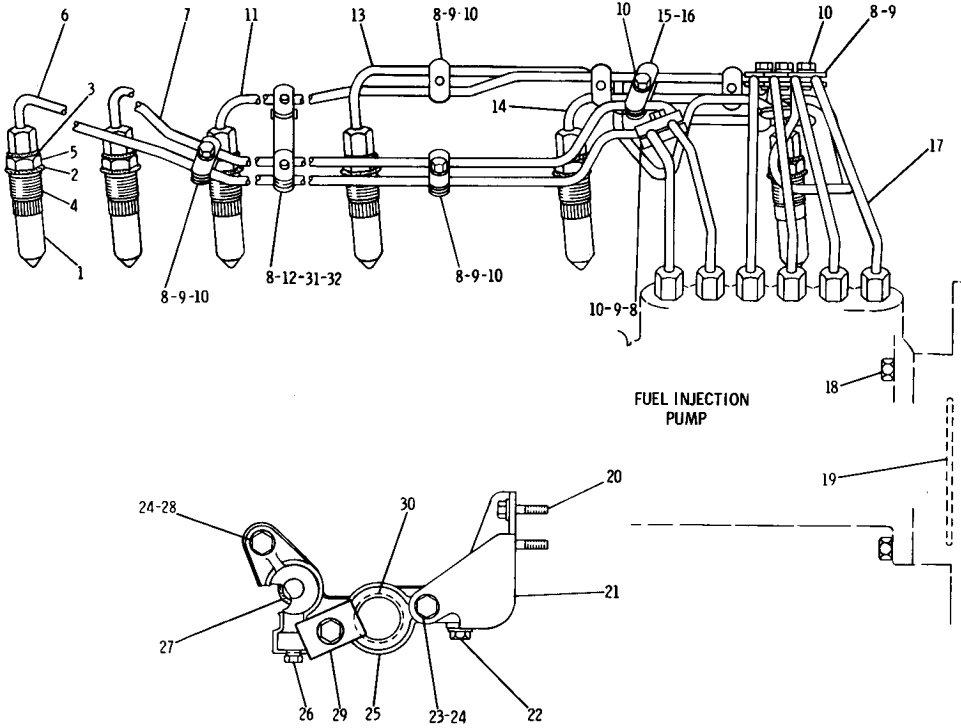

	REF. NO.	PART NUMBER	DESCRIPTION	QTY.
C	1	8N8796	FUEL VALVE	6
	2	5B3718	SEAL	6
	3	6F1069	SEAL ASSEM.	6
	4	8S2389	BODY	6
	5	5H7225	NUT	6
	6	7N2876	LINE ASSEM. -----(no. 6)---------	1
	7	7N2875	LINE ASSEM. -----(no. 5)---------	1
C	8	6N6403	CLAMP--------(tapped)----------	13
C	9	6N6404	CLAMP	11
C	10	6H9954	MACHINE SCREW	13
	11	7N2874	LINE ASSEM. -------(no. 4)-------	1
	12	7N4156	CLAMP ASSEM.	1
C	13	8N9733	LINE ASSEM. -------(no. 3)-------	1
	14	7N2872	LINE ASSEM. -------(no. 2)------	1
C	15	8N9809	CLAMP---------(tapped)----------	1
C	16	8N9810	CLAMP	1
	17	7N2871	LINE ASSEM. -------(no. 1)-------	1
	18	1B4203	NUT	3
	19	2H3934	SEAL	1
	20	2A5546	BOLT	2
		5P537	WASHER	2
	21	6N4682	BRACKET	1
	22	2B2695	BOLT	2
		9M1974	WASHER	2
	23	S1619	BOLT	2
	24	5M2894	WASHER	3
	25	2P5641	ADAPTER	1
	26	5M6214	PLUG	1
	27	8M5253	SEAL	1
	28	1A2029	BOLT	1
	29	4D9786	BLOCK	1
	30	8M5248	SEAL	1
C	31	2A762	BOLT	1
C	32	3B4504	LOCKWASHER	1

C INDICATES CHANGE

175937

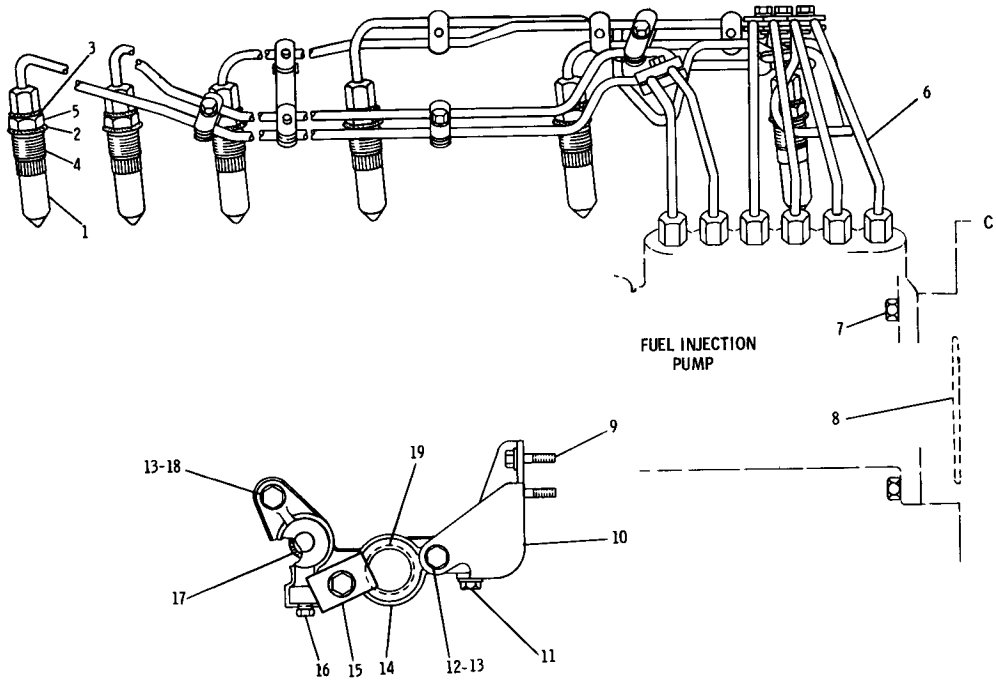

REF. NO.	PART NUMBER	DESCRIPTION	QTY.
1	8N8796	FUEL VALVE	6
2	5B3718	SEAL	6
3	6F1069	SEAL ASSEM.	6
4	8S2389	BODY	6
5	5H7225	NUT	6
6	8N9617	LINES GROUP (Separate Illustration)	1
7	1B4203	NUT	3
8	2H3934	SEAL	1
9	2A5546	BOLT	2
	5P537	WASHER	2
10	6N4682	BRACKET	1
11	2B2695	BOLT	2
	9M1974	WASHER	2
12	S1619	BOLT	2
13	5M2894	WASHER	3
14	2P5641	ADAPTER	1
15	4D9786	BLOCK	1
16	5M6214	PLUG	1
17	8M5253	SEAL	1
18	1A2029	BOLT	1
19	8M5248	SEAL	1

C INDICATES CHANGE

C INDICATES CHANGE

176836

7N4016 FUEL INJECTION LINES GROUP
Engine Serial No. 3N91065—Up
8N9617 Fuel Injection Lines parts are shown on Page 61A-3

8N9617 FUEL INJECTION LINES GROUP
Engine Serial No. 3N91065—Up
Part of 7N4016 Fuel Injection Lines Group shown on Page 61A-2

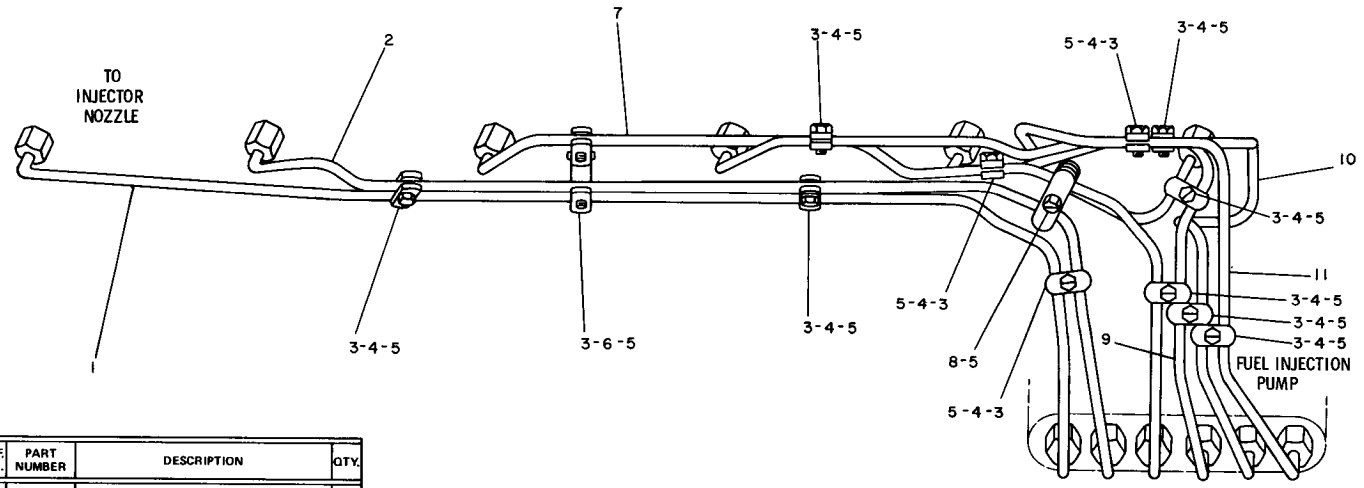

REF. NO.	PART NUMBER	DESCRIPTION	QTY.
1	7N2876	LINE ASSEM. ---(no. 6)----------	1
2	7N2875	LINE ASSEM. ---(no. 5)----------	1
3	6N6403	CLAMP-------(tapped)----------	13
4	6N6404	CLAMP----------	11
5	6H9954	MACHINE SCREW ASSEM. --------	14
6	7N4156	CLAMP ASSEM. ----------	1
7	7N2874	LINE ASSEM. -------(no. 4)--------	1
8	8N9809	CLAMP------(tapped) ----------	1
	8N9810	CLAMP----------	1
9	8N9733	LINE ASSEM. ------(no. 3)--------	1
10	7N2872	LINE ASSEM. ------(no. 2)--------	1
11	7N2871	LINE ASSEM. ------(no. 1)--------	1

176532

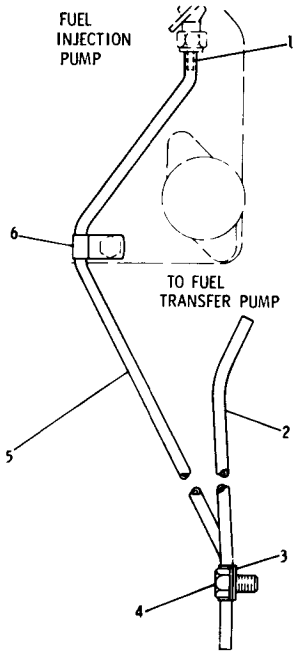

REF. NO.	PART NUMBER	DESCRIPTION	QTY
1	7K8332	INSERT	1
▲ 2	5P6011	TUBE-----.4 m(15.74 in.)	
3	5K2298	CLIP	1
4	T102	BOLT	1
	5M2894	WASHER	1
▲ 5	5P6011	TUBE----------.6 m(23.62 in.)	
6	1A5350	CLIP	1

▲ ORDER BY THE METRE

217981

7N3616 DRAIN LINES GROUP
Engine Serial No. 3N65627—Up

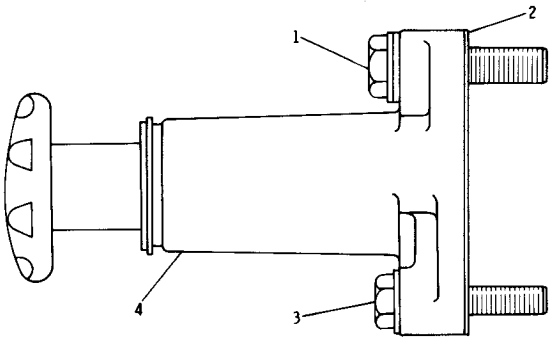

	REF. NO.	PART NUMBER	DESCRIPTION	QTY
C	1	1H5514	BOLT	1
C		9M1974	WASHER-----(use as required)-----	2
	2	1P436	GASKET	1
C	3	9F7022	BOLT	1
		5P537	WASHER	1
	4	4N2511	PUMP ASSEM.	1

C INDICATES CHANGE 210119

4N4314 FUEL PRIMING PUMP GROUP

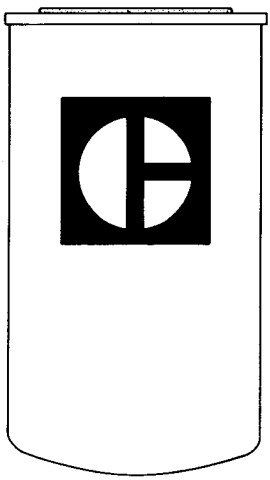

208065

1P2299 FUEL FILTER ASSEMBLY

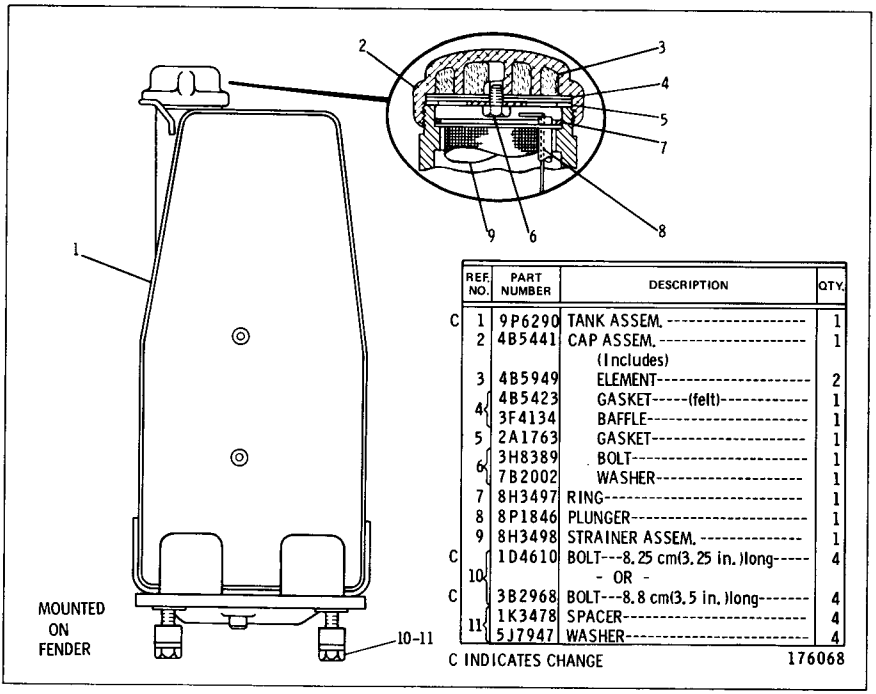

	REF. NO.	PART NUMBER	DESCRIPTION	QTY.
C	1	9P6290	TANK ASSEM.	1
	2	4B5441	CAP ASSEM. (Includes)	1
	3	4B5949	ELEMENT	2
	4	4B5423	GASKET-----(felt)	1
		3F4134	BAFFLE	1
	5	2A1763	GASKET	1
	6	3H8389	BOLT	1
		7B2002	WASHER	1
	7	8H3497	RING	1
	8	8P1846	PLUNGER	1
	9	8H3498	STRAINER ASSEM.	1
C	10	1D4610	BOLT---8.25 cm(3.25 in.)long	4
			- OR -	
C		3B2968	BOLT---8.8 cm(3.5 in.)long	4
	11	1K3478	SPACER	4
		5J7947	WASHER	4

C INDICATES CHANGE 176068

8P2421 FUEL TANK GROUP
Serial No. 6X1 to 6X870 inclusive

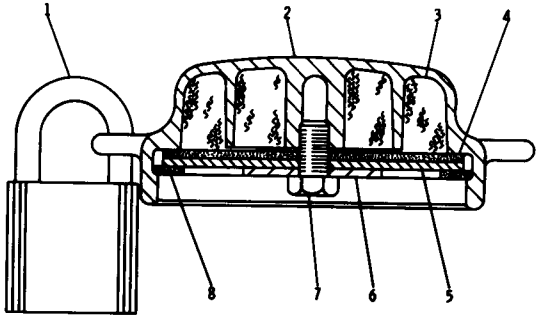

REF. NO.	PART NUMBER	DESCRIPTION	QTY
1	8S7949	PADLOCK GROUP (Includes)	1
	8M439	KEY	2
2	8P408	CAP	1
3	4B5949	ELEMENT	2
4	4B5423	GASKET	1
5	3F4134	BAFFLE	1
6	7B2002	WASHER	1
7	3H8389	SCREW	1
8	2A1763	GASKET	1

158655

8P456 PROTECTION COVER GROUP—Fuel Tank Cap
AN ATTACHMENT

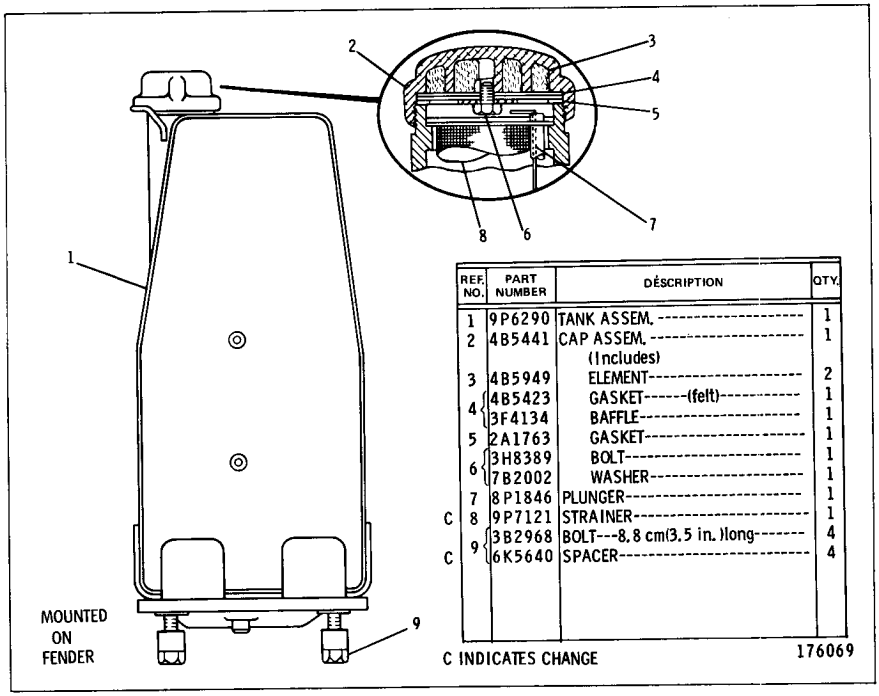

REF. NO.	PART NUMBER	DESCRIPTION	QTY.
1	9P6290	TANK ASSEM.	1
2	4B5441	CAP ASSEM.	1
		(Includes)	
3	4B5949	ELEMENT	2
4	4B5423	GASKET-----(felt)	1
	3F4134	BAFFLE	1
5	2A1763	GASKET	1
6	3H8389	BOLT	1
	7B2002	WASHER	1
7	8P1846	PLUNGER	1
C 8	9P7121	STRAINER	1
9	3B2968	BOLT---8.8 cm(3.5 in.)long	4
C	6K5640	SPACER	4

C INDICATES CHANGE 176069

8P2421 FUEL TANK GROUP
Serial No. 6X871—Up

		CONSISTS OF:	PAGE
1	8H4681	PRIMARY FUEL FILTER GROUP	63B
1	6N6	FUEL PUMP ASSEMBLY	
1	.....	FORM SMHS7468	

8N3569 FUEL PUMP GROUP—Boost—24 Volt—Field Installation
Provides positive pressure to the sleeve metering fuel system components on the suction side of the fuel transfer pump

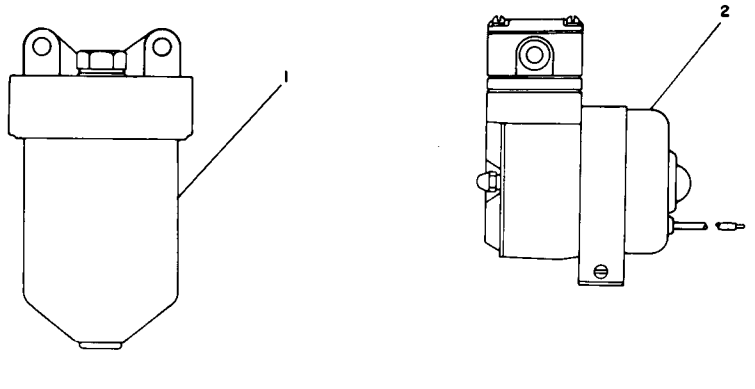

REF NO	PART NUMBER	DESCRIPTION	QTY
1	8H4681	FILTER GROUP---------- (Separate Illustration)	1
2	9N5459	PUMP ASSEM. ----------	1
	SMHS7468	FORM--(Installation Instructions)	

221653

9N5458 ELECTRICAL FUEL PUMP GROUP—Boost—12 Volt—Field Installation

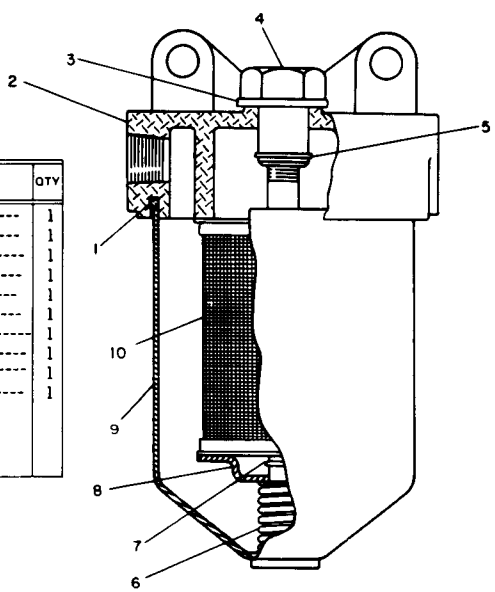

	REF. NO.	PART NUMBER	DESCRIPTION	QTY
	1	8H2778	GASKET----------	1
	2	7H9680	COVER----------	1
C	3	8N4410	WASHER----------	1
	4	8H2807	NUT----------	1
	5	1L3769	RING----------	1
	6	7S9323	SPRING----------	1
	7	2H3429	RING----------	1
	8	7H9678	RETAINER----------	1
	9	8H2810	CASE ASSEM. ----------	1
	10	9M2341	ELEMENT ASSEM. ---(washable)----	1

C INDICATES CHANGE

225778

8H4681 PRIMARY FUEL FILTER GROUP

Part of 8N3569 and 9N5458 Electrical Fuel Pump Groups shown on Pages 63A & 63B

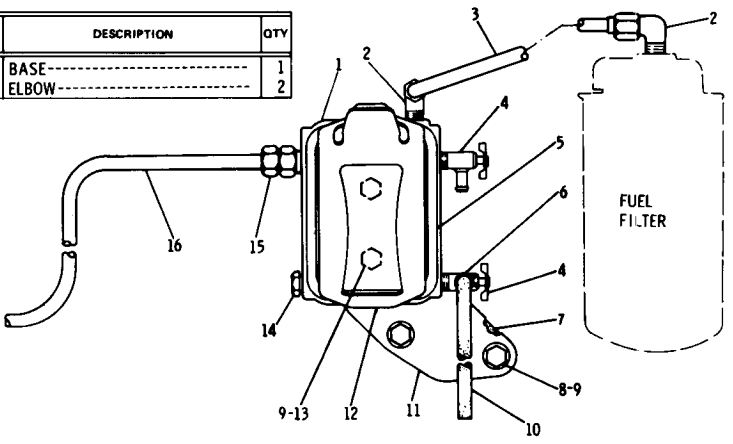

REF. NO.	PART NUMBER	DESCRIPTION	QTY
1	6N7624	BASE	1
2	321268	ELBOW	2
3	6N7521	TUBE ASSEM.	1
4	5P7833	VALVE	2
5	6N7617	ELEMENT	1
6	6L8700	CLAMP	1
7	4M6480	GASKET	1
C 8	S1594	BOLT	2
9	5M2894	WASHER	4
▲ 10	5P5991	HOSE---------. 6 m(23.6 in.)	
11	6N7232	PLATE	1
12	6N7618	CLAMP	1
13	S509	BOLT	2
14	5M6213	PLUG	1
15	5K9246	FITTING	1
16	8P7384	TUBE	1

C INDICATES CHANGE

▲ ORDER BY THE METRE

167604

7N4301 WATER SEPARATOR GROUP
Serial No. 6X1 to 6X514 inclusive
AN ATTACHMENT

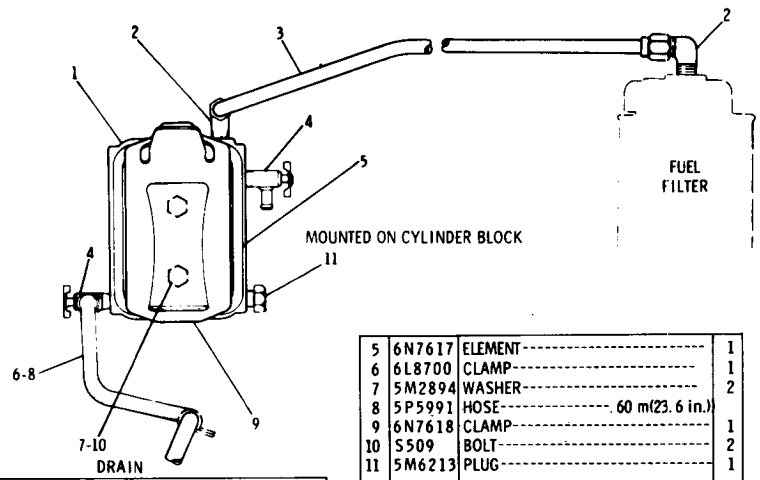

REF. NO.	PART NUMBER	DESCRIPTION	QTY
1	6N7624	BASE	1
2	321268	ELBOW	2
3	6N7521	TUBE ASSEM.	1
4	5P7833	VALVE	2
5	6N7617	ELEMENT	1
6	6L8700	CLAMP	1
7	5M2894	WASHER	2
8	5P5991	HOSE----------. 60 m(23.6 in.)	
9	6N7618	CLAMP	1
10	S509	BOLT	2
11	5M6213	PLUG	1

▲ ORDER BY THE METRE

219765

7N9781 WATER SEPARATOR GROUP
Serial No. 6X515 to 6X637 inclusive

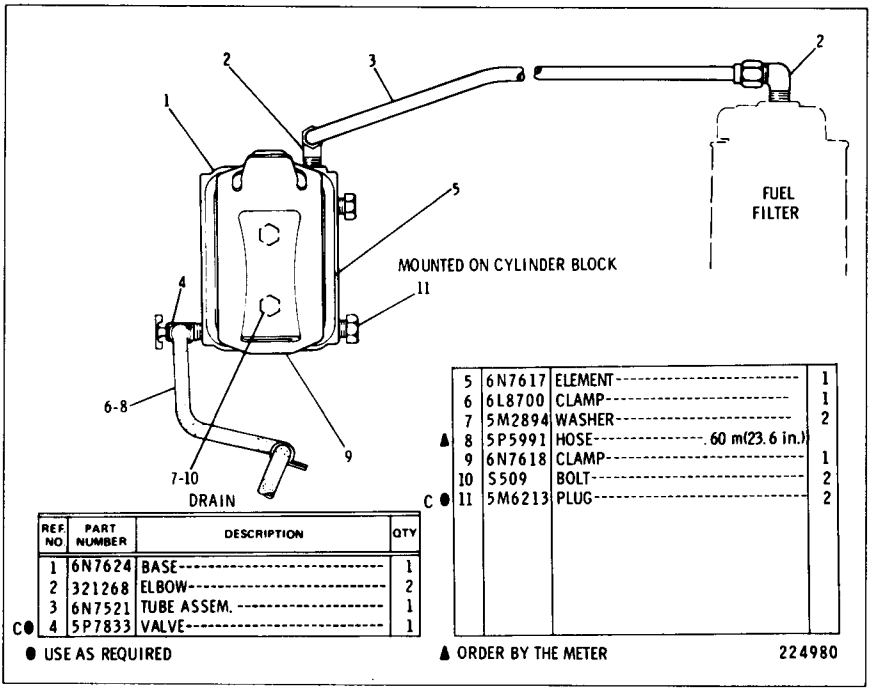

REF NO	PART NUMBER	DESCRIPTION	QTY
1	6N7624	BASE	1
2	321268	ELBOW	2
3	6N7521	TUBE ASSEM.	1
C● 4	5P7833	VALVE	1
5	6N7617	ELEMENT	1
6	6L8700	CLAMP	1
7	5M2894	WASHER	2
▲ 8	5P5991	HOSE-.60 m(23.6 in.)	
9	6N7618	CLAMP	1
10	S509	BOLT	2
C● 11	5M6213	PLUG	2

● USE AS REQUIRED

▲ ORDER BY THE METER

224980

7N9781 WATER SEPARATOR GROUP
Serial No. 6X638—Up

8P4711 BATTERY AND WIRING GROUP—24 Volt—Top View—Part 1 of 3
Serial No. 6X1 to 6X594 inclusive
7N718 Switch parts are shown on Page 70

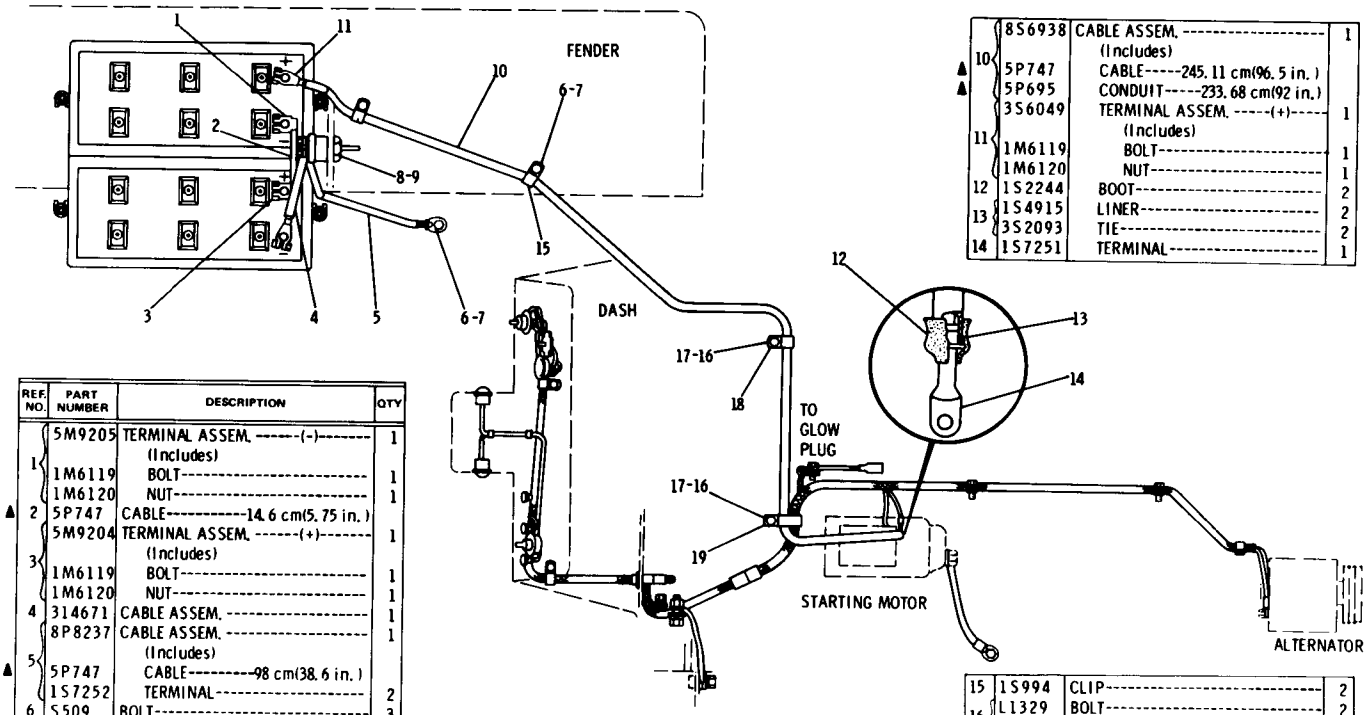

REF. NO.	PART NUMBER	DESCRIPTION	QTY
	5M9205	TERMINAL ASSEM. ------(-)------	1
1		(Includes)	
	1M6119	BOLT----------	1
	1M6120	NUT----------	1
▲ 2	5P747	CABLE----------14.6 cm(5.75 in.)	1
	5M9204	TERMINAL ASSEM. ------(+)------	1
3		(Includes)	
	1M6119	BOLT----------	1
	1M6120	NUT----------	1
4	314671	CABLE ASSEM. ----------	1
	8P8237	CABLE ASSEM. ----------	1
5		(Includes)	
▲	5P747	CABLE---------98 cm(38.6 in.)	
	1S7252	TERMINAL----------	2
6	S509	BOLT----------	3
7	3B4506	LOCKWASHER----------	3
8	7N718	SWITCH ASSEM. ----------	1
		(Separate Illustration)	
9	8H8648	PLATE----------	1

	8S6938	CABLE ASSEM. ----------	1
10		(Includes)	
▲	5P747	CABLE-----245.11 cm(96.5 in.)	
▲	5P695	CONDUIT-----233.68 cm(92 in.)	
	3S6049	TERMINAL ASSEM. -----(+)-----	1
11		(Includes)	
	1M6119	BOLT----------	1
	1M6120	NUT----------	1
12	1S2244	BOOT----------	2
13	1S4915	LINER----------	2
	3S2093	TIE----------	2
14	1S7251	TERMINAL----------	1

15	1S994	CLIP----------	2
16	1L1329	BOLT----------	2
	3S3158	PIPE----------	2
17	3B4508	LOCKWASHER----------	2
18	1S1015	CLIP----------	1
19	7S1912	CLIP----------	1

▲ ORDER BY THE CENTIMETRE

212656

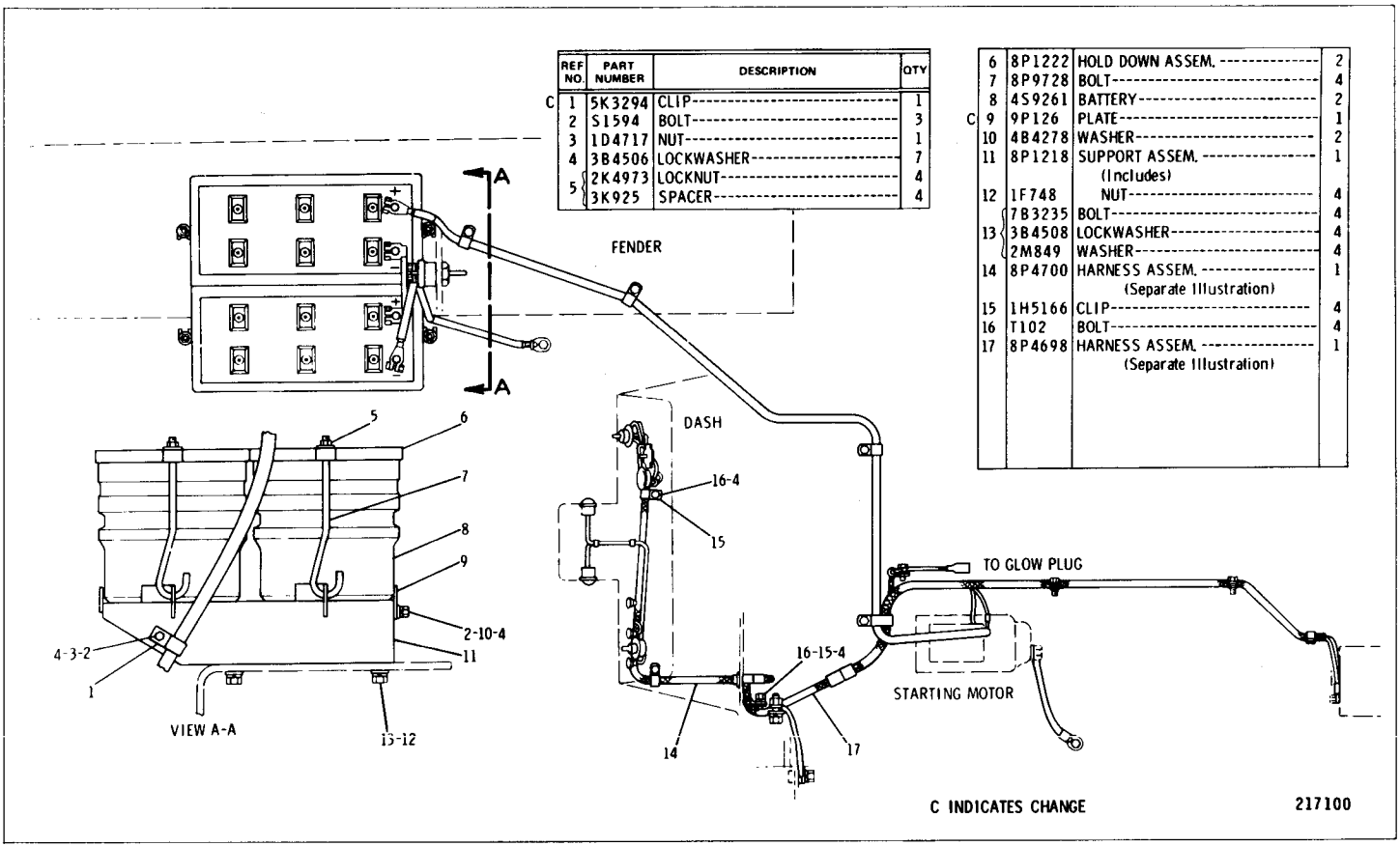

REF NO.	PART NUMBER	DESCRIPTION	QTY
C 1	5K3294	CLIP	1
2	S1594	BOLT	3
3	1D4717	NUT	1
4	3B4506	LOCKWASHER	7
5	2K4973	LOCKNUT	4
	3K925	SPACER	4
6	8P1222	HOLD DOWN ASSEM.	2
7	8P9728	BOLT	4
8	4S9261	BATTERY	2
C 9	9P126	PLATE	1
10	4B4278	WASHER	2
11	8P1218	SUPPORT ASSEM. (Includes)	1
12	1F748	NUT	4
13	7B3235	BOLT	4
	3B4508	LOCKWASHER	4
	2M849	WASHER	4
14	8P4700	HARNESS ASSEM. (Separate Illustration)	1
15	1H5166	CLIP	4
16	T102	BOLT	4
17	8P4698	HARNESS ASSEM. (Separate Illustration)	1

8P4711 BATTERY AND WIRING GROUP—24 Volt—Top View—Part 2 of 3
Serial No. 6X1 to 6X594 inclusive
8P4698 and 8P4700 Harness parts are shown on Pages 69 and 70

8P4711 BATTERY AND WIRING GROUP—24 Volt—Top View—Part 3 of 3

Serial No. 6X1 to 6X594 inclusive

8P4699 Harness parts are shown on Page 69

REF. NO	PART NUMBER	DESCRIPTION	QTY
	S1594	BOLT	1
1	1D4717	NUT	1
	4B4278	WASHER	1
2	3B4508	LOCKWASHER	3
	1H6936	WIRE ASSEM. (Includes)	1
▲ 3	5P5689	WIRE--------. 2096 m(8. 25 in.)	
	2L8060	TERMINAL---(. 375 in. screw)---	1
	2L8058	TERMINAL---(. 250 in. screw)---	1
	S1615	BOLT	1
4	3B4504	LOCKWASHER	1
	4B4276	WASHER	1
5	4D7794	CLIP	1
6	S509	BOLT	2
7	8P4699	HARNESS ASSEM. (Separate Illustration)	1
8	2M287	CLIP	2
9	S1624	BOLT	2
	3B4510	LOCKWASHER	2
10	1H5166	CLIP	1
11	3S8624	CABLE ASSEM. (Includes)	1
●	5P747	CABLE--------26 cm(10. 25 in.)	
12	1S7251	TERMINAL	1
13	1S7252	TERMINAL	1
14	4K5122	HOLDER	2
15	8M8948	FUSE	3
	8P7353	WIRE ASSEM. (Includes)	1
▲ 16	5P5624	WIRE---------. 155 m(6.102 in.)	
	4L3916	TERMINAL------(female)-------	1
17	2L8075	TERMINAL	1
18	7S6402	SWITCH ASSEM. --(three-position)-	1
19	3S8642	LAMP ASSEM. (Each Includes)	2
	2D1959	BULB	1

C INDICATES CHANGE

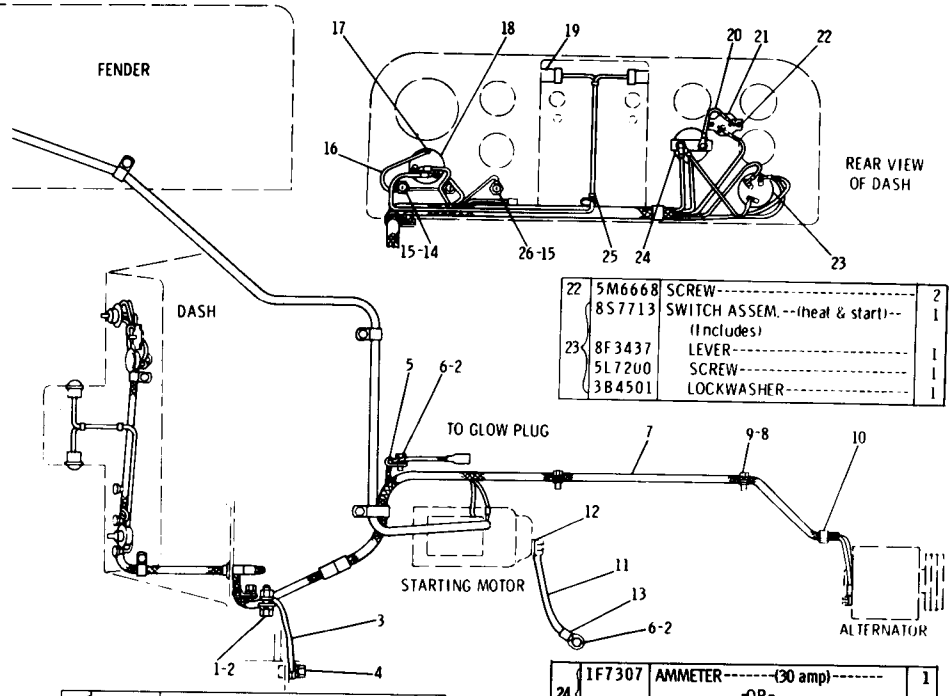

22	5M6668	SCREW	2
	8S7713	SWITCH ASSEM. --(heat & start)-- (Includes)	1
23	8F3437	LEVER	1
	5L7200	SCREW	1
	3B4501	LOCKWASHER	1

	4S6313	WIRE ASSEM. (Includes)	1
▲ 20	5P5632	WIRE---------. 1 m(3. 937 in.)	
	2L8066	TERMINAL	2
21	5M2555	BREAKER	1

● ORDER BY THE CENTIMETRE

	1F7307	AMMETER-------(30 amp)-------	1
24		-OR-	
C	8M7892	AMMETER-------(60 amp)-------	1
C 25	1S9593	STRAP	3
26	4K8029	HOLDER	1
	GMG00698	FORM (Installing 8S7713 Switch Assem.)	1

▲ ORDER BY THE METRE

217101

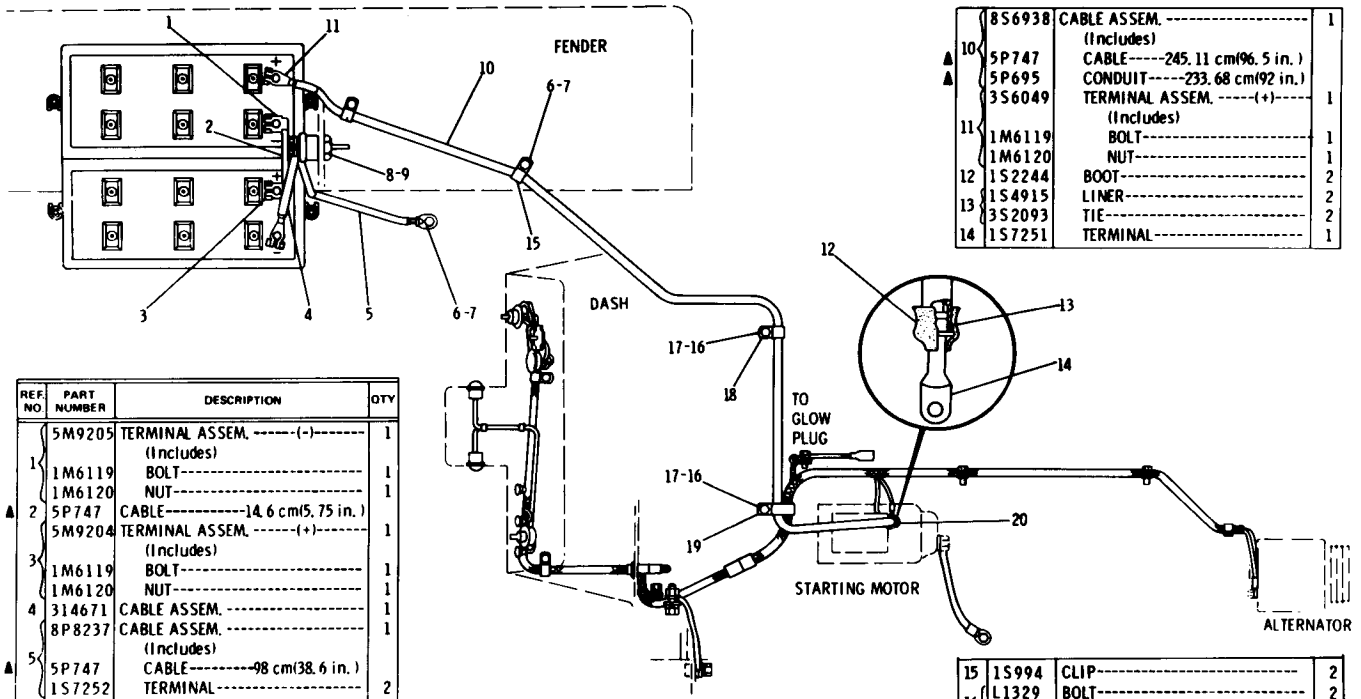

REF. NO.	PART NUMBER	DESCRIPTION	QTY
1	5M9205	TERMINAL ASSEM. ------(-)------ (Includes)	1
	1M6119	BOLT----------	1
	1M6120	NUT----------	1
▲ 2	5P747	CABLE----------14.6 cm(5.75 in.)	
3	5M9204	TERMINAL ASSEM. ------(+)------ (Includes)	1
	1M6119	BOLT----------	1
	1M6120	NUT----------	1
4	314671	CABLE ASSEM. ----------	1
5	8P8237	CABLE ASSEM. ---------- (Includes)	1
▲	5P747	CABLE---------98 cm(38.6 in.)	
	1S7252	TERMINAL----------	2
6	S509	BOLT----------	3
7	3B4506	LOCKWASHER----------	3
8	7N718	SWITCH ASSEM. ---------- (Separate Illustration)	1
9	8H8648	PLATE----------	1

10	8S6938	CABLE ASSEM. ---------- (Includes)	1
▲	5P747	CABLE-----245.11 cm(96.5 in.)	
▲	5P695	CONDUIT-----233.68 cm(92 in.)	
	3S6049	TERMINAL ASSEM. -----(+)----- (Includes)	1
11	1M6119	BOLT----------	1
	1M6120	NUT----------	1
12	1S2244	BOOT----------	2
13	1S4915	LINER----------	2
	3S2093	TIE----------	2
14	1S7251	TERMINAL----------	1

15	1S994	CLIP----------	2
16	L1329	BOLT----------	2
	3S3158	PIPE----------	2
17	3B4508	LOCKWASHER----------	2
18	1S1015	CLIP----------	1
19	7S1912	CLIP----------	1
20	8N869	COVER----------	1

▲ ORDER BY THE CENTIMETER

171119 C

8P4711 BATTERY AND WIRING GROUP—24 Volt—Top View—Part 1 of 3
Serial No. 6X595 to 6X691 inclusive
7N718 Switch parts are shown on Page 70

8P4711 BATTERY AND WIRING GROUP—24 Volt—Top View—Part 2 of 3
Serial No. 6X595 to 6X691 inclusive
8P4698 and 8P4700 Harness parts are shown on Pages 69 and 70

REF NO.	PART NUMBER	DESCRIPTION	QTY
1	5K3294	CLIP	1
2	S1594	BOLT	3
3	1D4717	NUT	1
4	3B4506	LOCKWASHER	7
5	2K4973	LOCKNUT	4
	3K925	SPACER	4
6	8P1222	HOLD DOWN ASSEM.	2
7	8P9728	BOLT	4
8	4S9261	BATTERY	2
9	9P126	PLATE	1
10	4B4278	WASHER	2
11	8P1218	SUPPORT ASSEM. (Includes)	1
12	1F748	NUT	4
	7B3235	BOLT	4
13	3B4508	LOCKWASHER	4
	2M849	WASHER	4
14	8P4700	HARNESS ASSEM. (Separate Illustration)	1
15	1H5166	CLIP	4
16	T102	BOLT	4
17	8P4698	HARNESS ASSEM. (Separate Illustration)	1

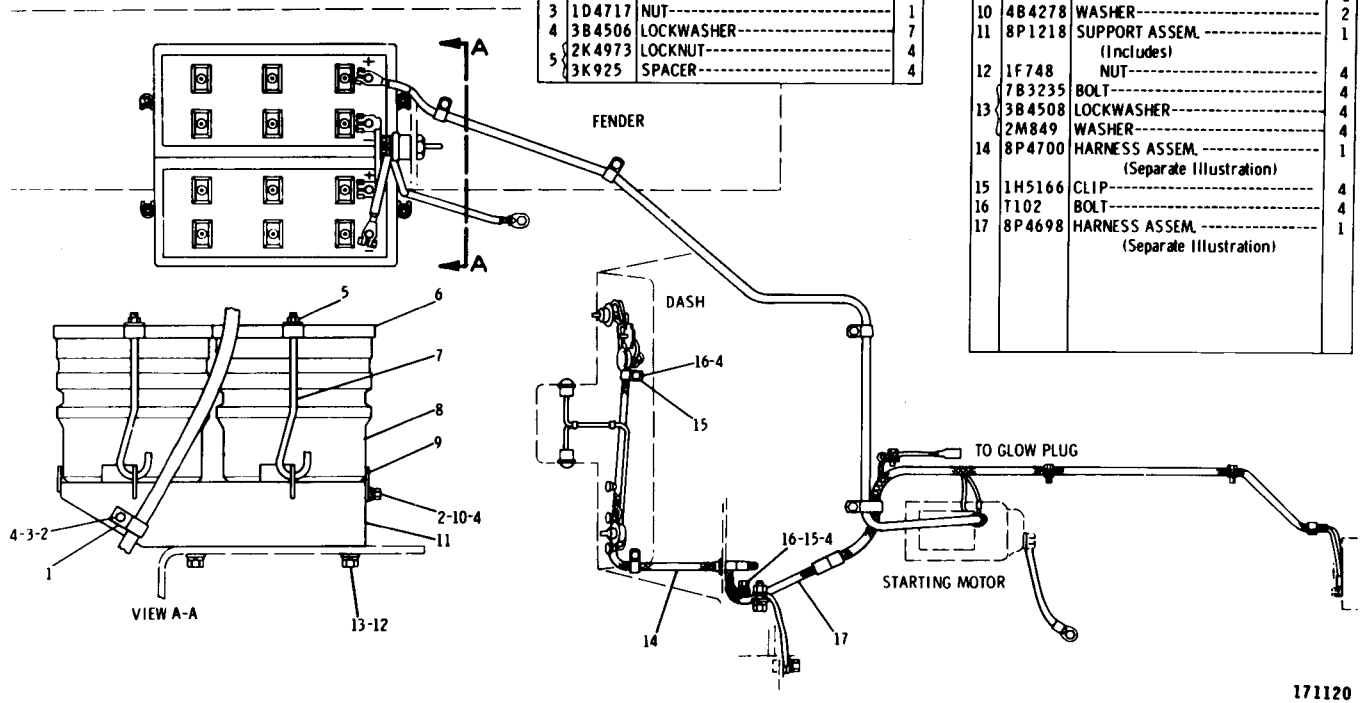

REF. NO.	PART NUMBER	DESCRIPTION	QTY.
1	8S7713	SWITCH ASSEM. --(heat & start)-- (Includes)	1
2	8F3437	LEVER	1
	5L7200	SCREW	1
	3B4501	LOCKWASHER	1
C 3	7H27	NUT	1
C	6F253	LOCKWASHER	1
C 4	9F9327	SCREW	3
C	9F8125	LOCKWASHER	3
5	4D7794	CLIP	1
6	S509	BOLT	2
7	8P4699	HARNESS ASSEM. (Separate Illustration)	1
8	2M287	CLIP	2
9	S1624	BOLT	2
	3B4510	LOCKWASHER	2
10	1H5166	CLIP	1
11	3S8624	CABLE ASSEM. (Includes)	1
●	5P747	CABLE--------26 cm(10.25 in.)	
12	1S7251	TERMINAL	1
13	1S7252	TERMINAL	1
14	4K5122	HOLDER	2
15	8M8948	FUSE	3
16	8P7353	WIRE ASSEM. (Includes)	1
	5P5624	WIRE--------.155 m(6.102 in.)	
	4L3916	TERMINAL--------(female)----	1
17	2L8075	TERMINAL	1
18	7S6402	SWITCH ASSEM. -(three-position)-	1
19	3S8642	LAMP ASSEM. (Each Includes)	2
	2D1959	BULB	1
20	4S6313	WIRE ASSEM. (Includes)	1
▲	5P5632	WIRE------.1 m(3.937 in.)	
	2L8066	TERMINAL	2

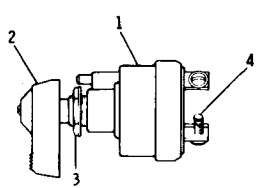

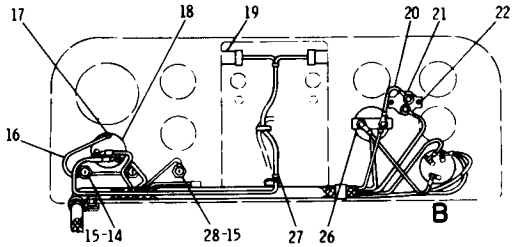

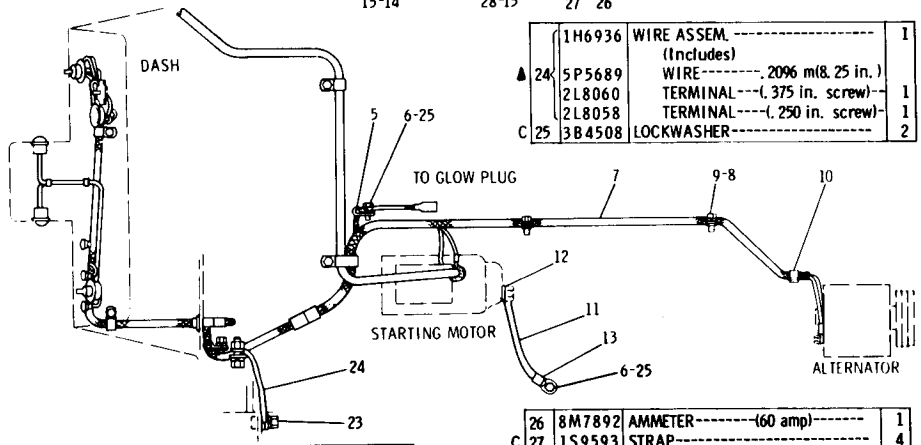

	1H6936	WIRE ASSEM. (Includes)		1
▲ 24	5P5689	WIRE--------.2096 m(8.25 in.)		
	2L8060	TERMINAL---(.375 in. screw)--		1
	2L8058	TERMINAL-----(.250 in. screw)-		1
C 25	3B4508	LOCKWASHER		2

C 21	9S173	BREAKER	1
C 22	5M6668	SCREW	2
	S1615	BOLT	1
23	3B4504	LOCKWASHER	1
	4B4276	WASHER	1

26	8M7892	AMMETER--------(60 amp)-------	1
C 27	1S9593	STRAP	4
28	4K8029	HOLDER	1
	GMG00698	FORM (Installing 8S7713 Switch Assem.)	1

● ORDER BY THE CENTIMETER C INDICATES CHANGE

▲ ORDER BY THE METER 171121

8P4711 BATTERY AND WIRING GROUP—24 Volt—Top View—Part 3 of 3
Serial No. 6X595 to 6X691 inclusive
8P4699 Harness parts are shown on Page 69

8P4711 BATTERY AND WIRING GROUP—24 Volt—Top View—Part 1 of 3
Serial No. 6X692, 711 and 6X713 inclusive
7N718 Switch parts are shown on Page 70

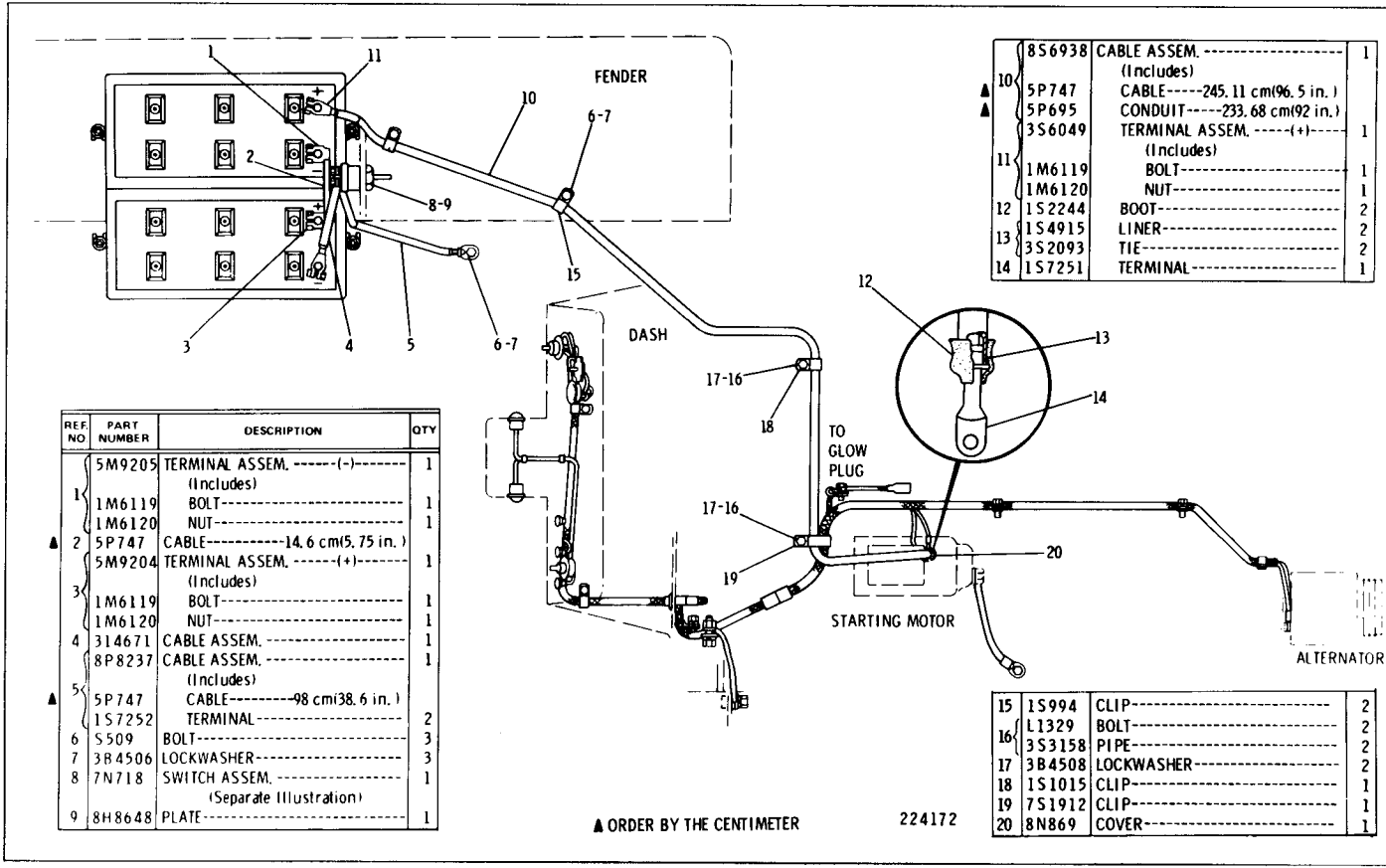

REF. NO	PART NUMBER	DESCRIPTION	QTY
1	5M9205	TERMINAL ASSEM. ------(-)------ (Includes)	1
	1M6119	BOLT	1
	1M6120	NUT	1
▲ 2	5P747	CABLE----------14.6 cm(5.75 in.)	
3	5M9204	TERMINAL ASSEM. ------(+)------ (Includes)	1
	1M6119	BOLT	1
	1M6120	NUT	1
4	314671	CABLE ASSEM.	1
5	8P8237	CABLE ASSEM. (Includes)	1
▲	5P747	CABLE---------98 cm(38.6 in.)	
	1S7252	TERMINAL	2
6	S509	BOLT	3
7	3B4506	LOCKWASHER	3
8	7N718	SWITCH ASSEM. (Separate Illustration)	1
9	8H8648	PLATE	1

10	8S6938	CABLE ASSEM. (Includes)	1
▲	5P747	CABLE-----245.11 cm(96.5 in.)	
▲	5P695	CONDUIT-----233.68 cm(92 in.)	
	3S6049	TERMINAL ASSEM. -----(+)-----	1
11		(Includes)	
	1M6119	BOLT	1
	1M6120	NUT	1
12	1S2244	BOOT	2
13	1S4915	LINER	2
	3S2093	TIE	2
14	1S7251	TERMINAL	1

15	1S994	CLIP	2
16	L1329	BOLT	2
	3S3158	PIPE	2
17	3B4508	LOCKWASHER	2
18	1S1015	CLIP	1
19	7S1912	CLIP	1
20	8N869	COVER	1

▲ ORDER BY THE CENTIMETER

224172

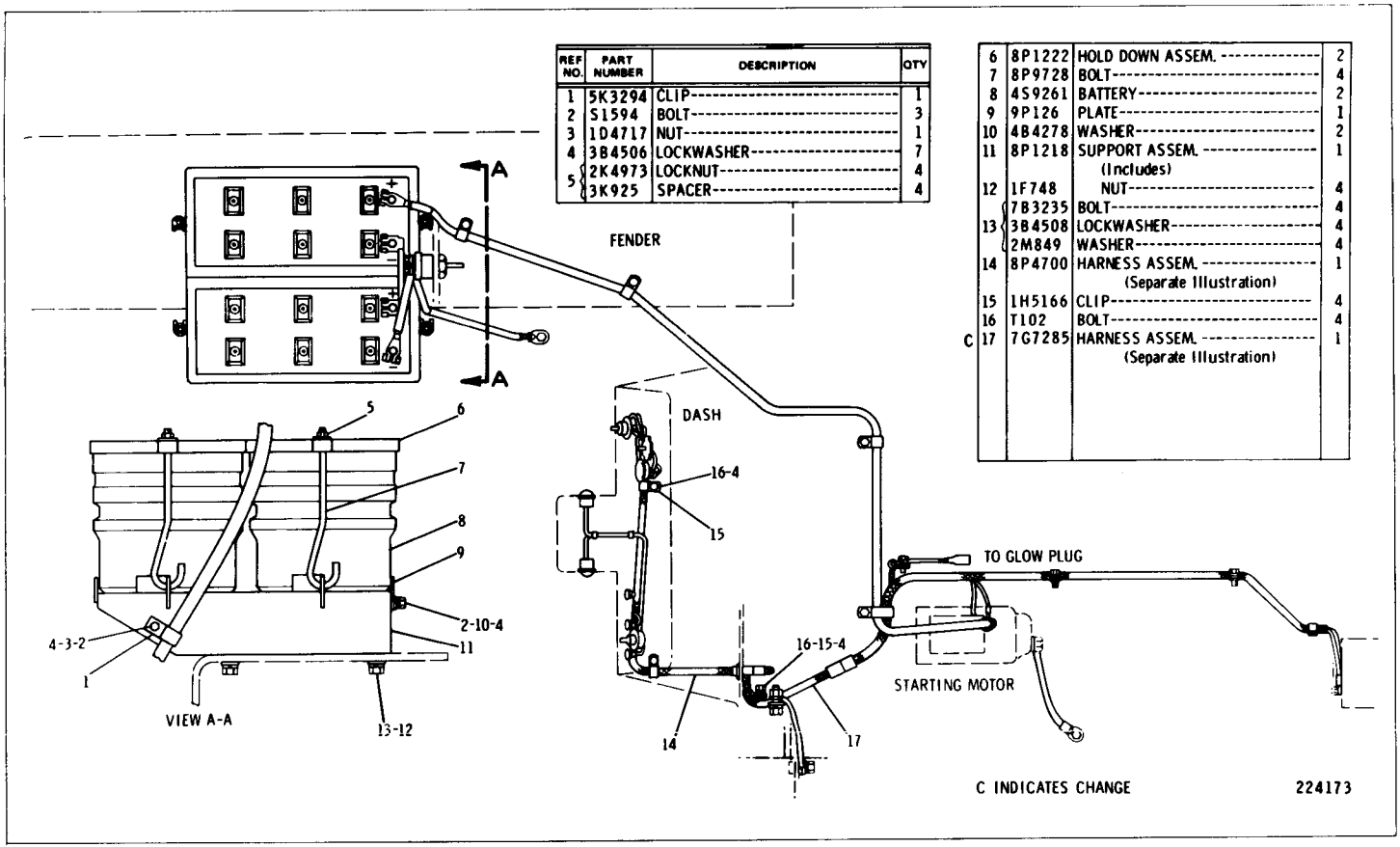

8P4711 BATTERY AND WIRING GROUP—24 Volt—Top View—Part 2 of 3
Serial No. 6X692, 711 and 6X713 inclusive
7G7285 and 8P4700 Harness parts are shown on Page 69B and 70

8P4711 BATTERY AND WIRING GROUP—24 Volt—Top View—Part 3 of 3

Serial No. 6X692, 711 and 6X713 inclusive

8P4699 Harness parts are shown on Page 69

REF. NO.	PART NUMBER	DESCRIPTION	QTY.
1	8S7713	SWITCH ASSEM. --(heat & start)-- (Includes)	1
2	8F3437	LEVER	1
	5L7200	SCREW	1
	3B4501	LOCKWASHER	1
3	7H27	NUT	1
	6F253	LOCKWASHER	1
4	9F9327	SCREW	3
	9F8125	LOCKWASHER	3
5	4D7794	CLIP	1
6	S509	BOLT	2
7	8P4699	HARNESS ASSEM. (Separate Illustration)	1
8	2M287	CLIP	2
9	S1624	BOLT	2
	3B4510	LOCKWASHER	2
10	1H5166	CLIP	1
11	3S8624	CABLE ASSEM. (Includes)	1
●	5P747	CABLE-------26 cm(10.25 in.)	
12	1S7251	TERMINAL	1
13	1S7252	TERMINAL	1
14	4K5122	HOLDER	2
15	8M8948	FUSE	3
16	8P7353	WIRE ASSEM. (Includes)	1
	5P5624	WIRE--------.155 m(6.102 in.)	
	4L3916	TERMINAL--------(female)----	1
17	2L8075	TERMINAL	1
18	7S6402	SWITCH ASSEM. -(three-position)-	1
19	3S8642	LAMP ASSEM. (Each Includes)	2
	2D1959	BULB	1
20	4S6313	WIRE ASSEM. (Includes)	1
▲	5P5632	WIRE-------.1 m(3.937 in.)	
	2L8066	TERMINAL	2

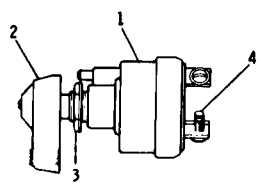

VIEW OF AREA B

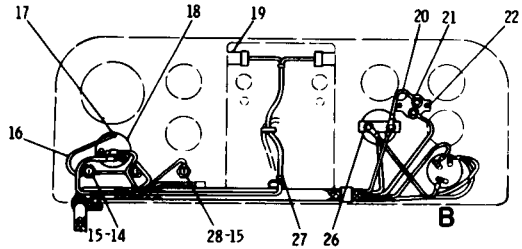

REAR VIEW OF DASH

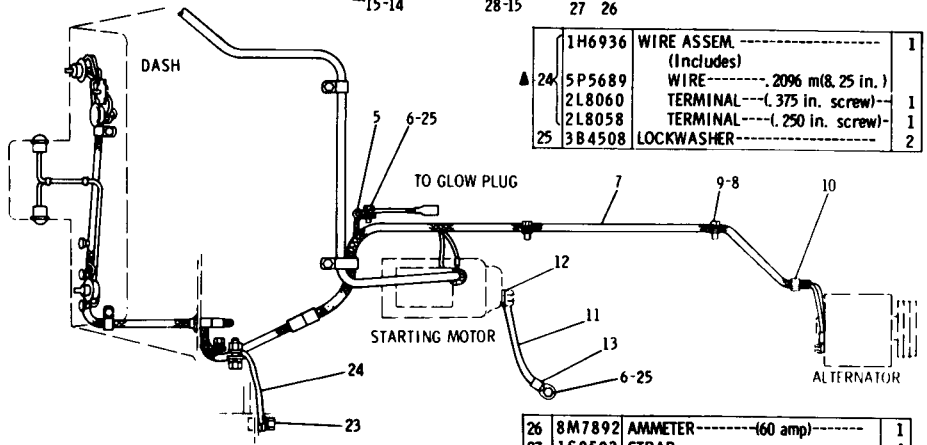

	1H6936	WIRE ASSEM. (Includes)	1
▲ 24	5P5689	WIRE--------.2096 m(8.25 in.)	
	2L8060	TERMINAL---(.375 in. screw)---	1
	2L8058	TERMINAL----(.250 in. screw)-	1
25	3B4508	LOCKWASHER	2

21	9S173	BREAKER	1
22	5M6668	SCREW	2
	S1615	BOLT	1
23	3B4504	LOCKWASHER	1
	4B4276	WASHER	1

26	8M7892	AMMETER--------(60 amp)-------	1
27	1S9593	STRAP	4
28	4K8029	HOLDER	1
	GMG00698	FORM (Installing 8S7713 Switch Assem.)	1

● ORDER BY THE CENTIMETER

▲ ORDER BY THE METER

224174

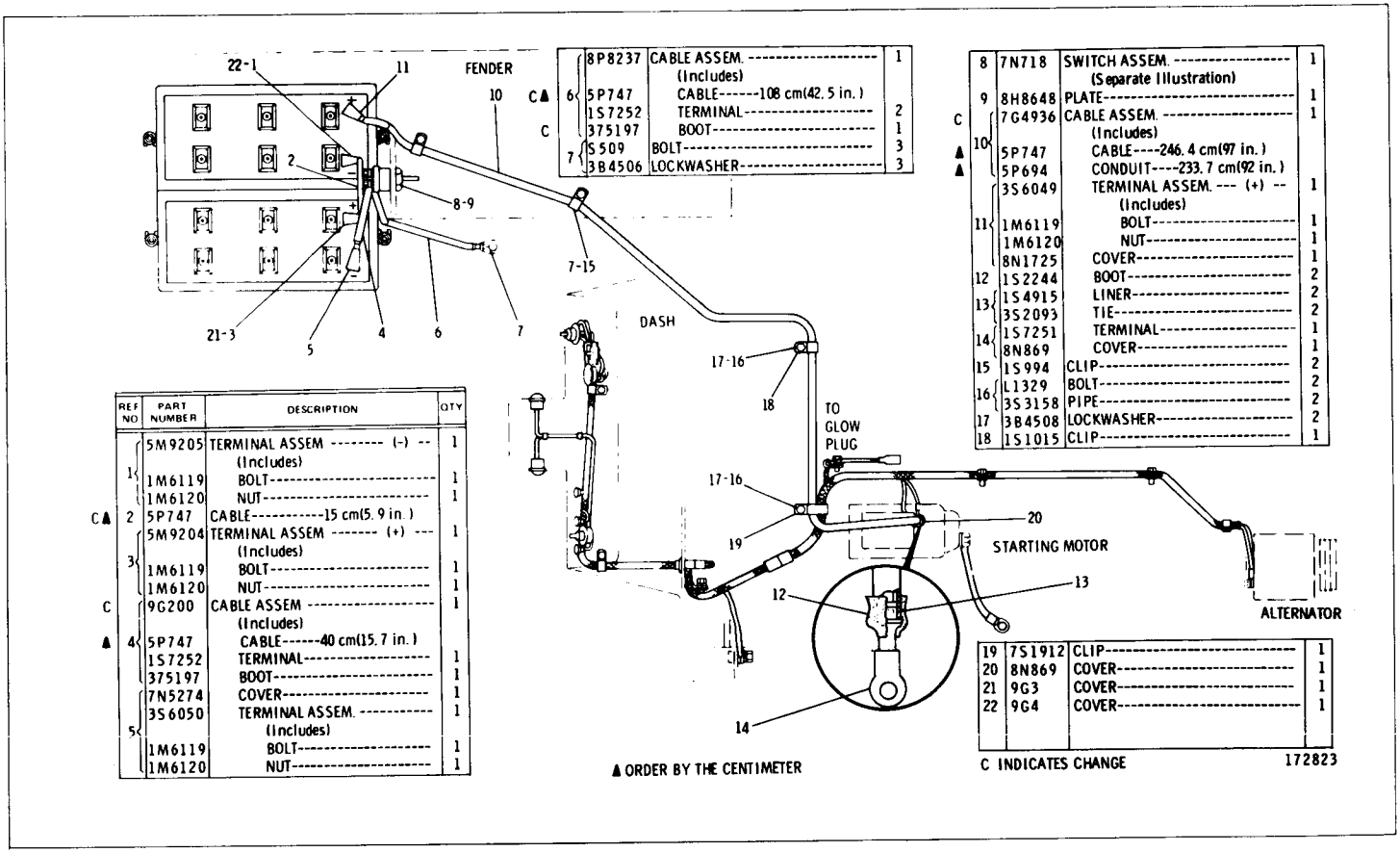

REF NO	PART NUMBER	DESCRIPTION	QTY
	5M9205	TERMINAL ASSEM -------- (-) -- (Includes)	1
1	1M6119	BOLT----------	1
	1M6120	NUT----------	1
C▲ 2	5P747	CABLE----------15 cm(5.9 in.)	
	5M9204	TERMINAL ASSEM ------- (+) --- (Includes)	1
3	1M6119	BOLT----------	1
	1M6120	NUT----------	1
C	9G200	CABLE ASSEM ---------- (Includes)	1
▲ 4	5P747	CABLE------40 cm(15.7 in.)	
	1S7252	TERMINAL----------	1
	375197	BOOT----------	1
	7N5274	COVER----------	1
	3S6050	TERMINAL ASSEM. ---------- (Includes)	1
5	1M6119	BOLT----------	1
	1M6120	NUT----------	1

	8P8237	CABLE ASSEM. ---------- (Includes)	1
C▲ 6	5P747	CABLE------108 cm(42.5 in.)	
C	1S7252	TERMINAL----------	2
	375197	BOOT----------	1
7	1S509	BOLT----------	3
	3B4506	LOCKWASHER----------	3

8	7N718	SWITCH ASSEM. ---------- (Separate Illustration)	1
9	8H8648	PLATE----------	1
C	7G4936	CABLE ASSEM. ---------- (Includes)	1
10	5P747	CABLE----246.4 cm(97 in.)	
▲ ▲	5P694	CONDUIT----233.7 cm(92 in.)	
	3S6049	TERMINAL ASSEM. --- (+) -- (Includes)	1
11	1M6119	BOLT----------	1
	1M6120	NUT----------	1
	8N1725	COVER----------	1
12	1S2244	BOOT----------	2
13	1S4915	LINER----------	2
	3S2093	TIE----------	2
14	1S7251	TERMINAL----------	1
	8N869	COVER----------	1
15	1S994	CLIP----------	2
16	1L1329	BOLT----------	2
	3S3158	PIPE----------	2
17	3B4508	LOCKWASHER----------	2
18	1S1015	CLIP----------	1

19	7S1912	CLIP----------	1
20	8N869	COVER----------	1
21	9G3	COVER----------	1
22	9G4	COVER----------	1

8P4711 BATTERY AND WIRING GROUP—24 Volt—Top View—Part 1 of 3
Serial No. 6X712 and 6X714—Up
7N718 Switch parts are shown on Page 70

8P4711 BATTERY AND WIRING GROUP—24 Volt—Top View—Part 2 of 3
Serial No. 6X712 and 6X714—Up
7G7285 and 8P4700 Harness parts are shown on Page 69B and 70

REF NO	PART NUMBER	DESCRIPTION	QTY
1	5K3294	CLIP	1
2	S1594	BOLT	3
3	1D4717	NUT	1
4	3B4506	LOCKWASHER	7
5	2K4973	LOCKNUT	4
	3K925	SPACER	4
6	8P1222	HOLD DOWN ASSEM.	2
7	8P9728	BOLT	4
8	4S9261	BATTERY	2
9	9P126	PLATE	1
10	4B4278	WASHER	2
11	8P1218	SUPPORT ASSEM. (Includes)	1
12	1F748	NUT	4
	7B3235	BOLT	4
13	3B4508	LOCKWASHER	4
	2M849	WASHER	4
14	8P4700	HARNESS ASSEM. (Separate Illustration)	1
15	1H5166	CLIP	4
16	T102	BOLT	4
17	7G7285	HARNESS ASSEM. (Separate Illustration)	1

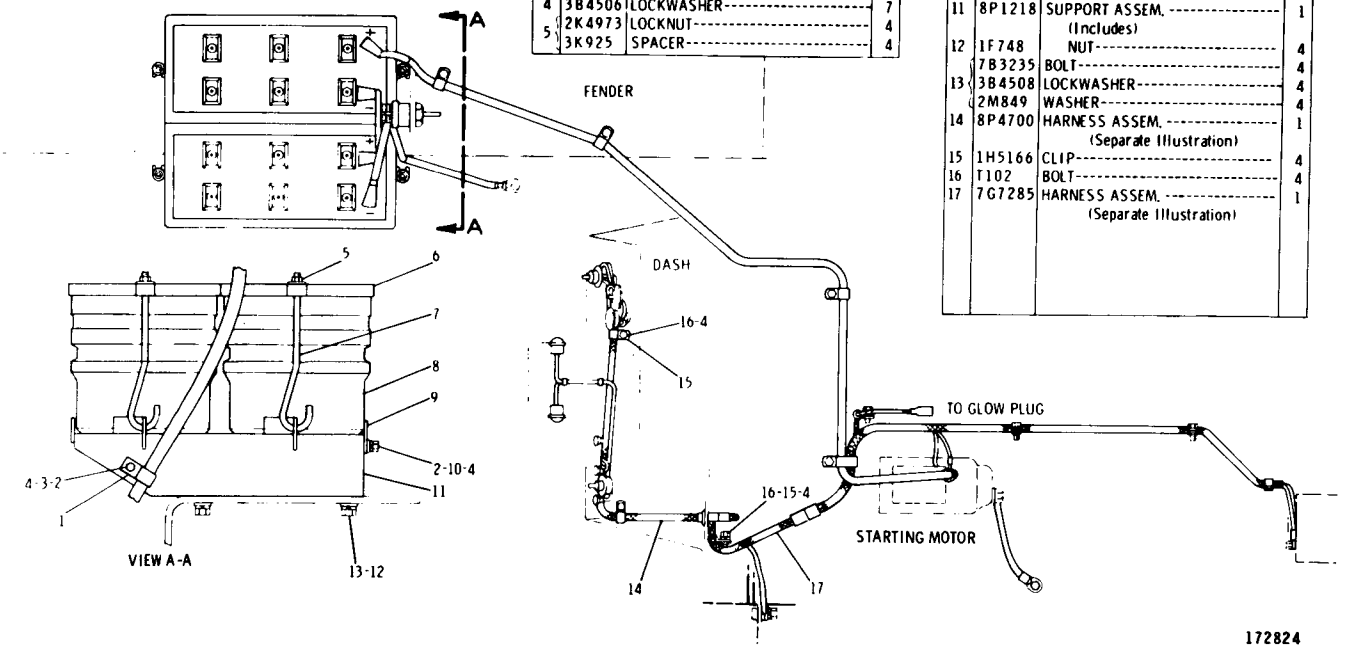

REF NO.	PART NUMBER	DESCRIPTION	QTY.
C 1	7N4160	SWITCH ASSEM. --(heat & start)-- (Includes)	1
2	8F3437	LEVER----------	1
	5L7200	SCREW----------	1
	3B4501	LOCKWASHER----------	1
3	7H27	NUT----------	1
	6F253	LOCKWASHER----------	1
4	9F9327	SCREW----------	3
	9F8125	LOCKWASHER----------	3
5	4D7794	CLIP----------	1
6	S509	BOLT----------	2
7	8P4699	HARNESS ASSEM. ---------- (Separate Illustration)	1
8	2M287	CLIP----------	2
9	S1624	BOLT----------	2
	3B4510	LOCKWASHER----------	2
10	1H5166	CLIP----------	1
11	3S8624	CABLE ASSEM. ---------- (Includes)	1
●	5P747	CABLE-------26 cm(10.25 in.)	
12	1S7251	TERMINAL----------	1
13	1S7252	TERMINAL----------	1
14	4K5122	HOLDER----------	2
15	8M8948	FUSE----------(15 amp)----------	3
16	8P7353	WIRE ASSEM. ---------- (Includes)	1
▲	5P5624	WIRE--------. 155 m(6.102 in.)	
	4L3916	TERMINAL;--------(female)----	1
17	2L8075	TERMINAL----------	1
18	7S6402	SWITCH ASSEM. -(three-position)-	1
19	3S8642	LAMP ASSEM. ---------- (Each Includes)	2
	2D1959	BULB----------	1
	4S6313	WIRE ASSEM. ---------- (Includes)	1
▲ 20	5P5632	WIRE-------. 1 m(3.937 in.)	
	2L8066	TERMINAL----------	2

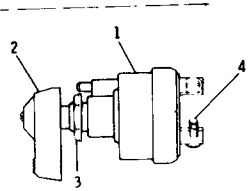

VIEW OF AREA B

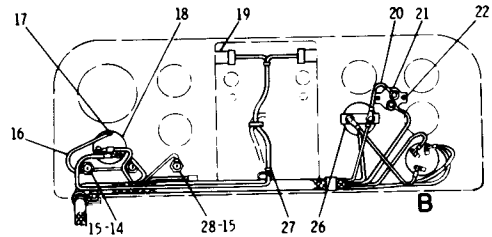

REAR VIEW OF DASH

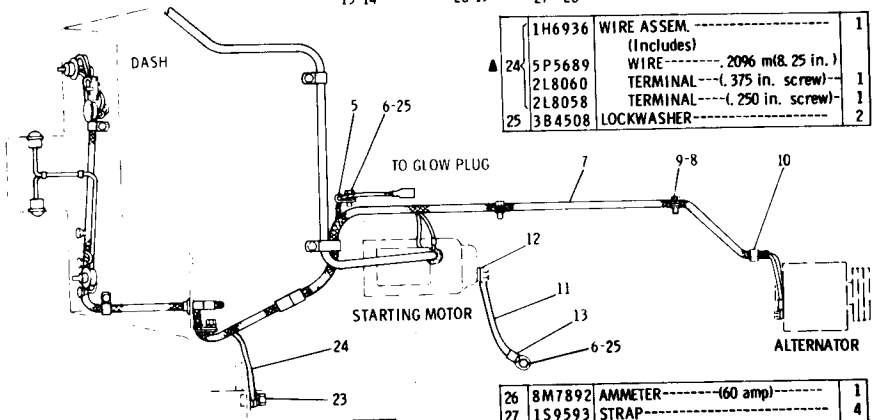

	1H6936	WIRE ASSEM. ---------- (Includes)	1
▲ 24	5P5689	WIRE--------. 2096 m(8.25 in.)	
	2L8060	TERMINAL---(.375 in. screw)--	1
25	2L8058	TERMINAL----(.250 in. screw)-	1
	3B4508	LOCKWASHER----------	2

C 21	9S173	BREAKER---------(60 amp)------	1
22	4B1223	SCREW----------	2
23	S1615	BOLT----------	1
	3B4504	LOCKWASHER----------	1
	4B4276	WASHER----------	1

26	8M7892	AMMETER--------(60 amp)-------	1
27	1S9593	STRAP----------	4
28	4K8029	HOLDER----------	1

● ORDER BY THE CENTIMETER C INDICATES CHANGE

▲ ORDER BY THE METER 172825

8P4711 BATTERY AND WIRING GROUP—24 Volt—Top View—Part 3 of 3
Serial No. 6X712 and 6X714—Up
8P4699 Harness parts are shown on Page 69

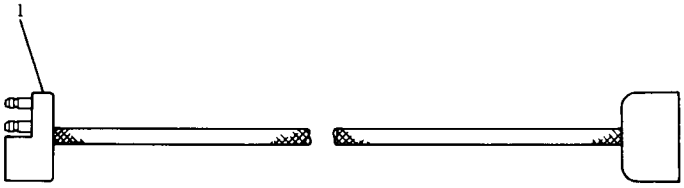

REF. NO.	PART NUMBER	DESCRIPTION	QTY
1	5P3160	CONNECTOR---------- (Includes)	1
▲	5P6642	WIRE---------1.60 m(63 in.)	
		THE FOLLOWING WIRES ARE AVAILABLE:	
▲	5P5622	WIRE---------(10 gauge)--------	
▲	5P5621	WIRE---------(12 gauge)--------	
▲	5P5624	WIRE---------(14 gauge)--------	

▲ ORDER BY THE METRE

212660

8P4698 HARNESS ASSEMBLY
Serial No. 6X1 to 6X691 inclusive
Part of 8P4711 Battery and Wiring Group shown on Page 66

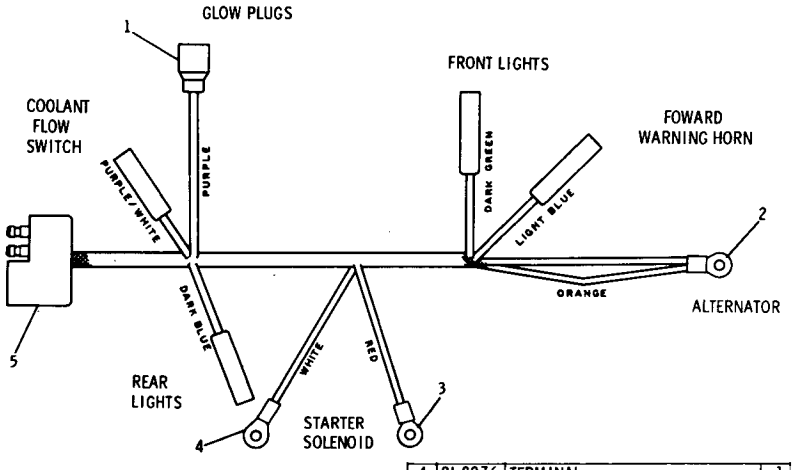

REF. NO.	PART NUMBER	DESCRIPTION	QTY
1	2R1034	SHELL----------	1
	2R1033	WASHER----------	1
	3M6018	TERMINAL----------	1
2	2L8054	TERMINAL----------	1
3	2L8071	TERMINAL----------	1
4	2L8076	TERMINAL----------	1
5	5P3160	CONNECTOR---------- (Includes)	1
	5P6642	WIRE-------1.60 m(63 in.)	
		THE FOLLOWING WIRE ARE AVAILABLE:	
	5P5622	WIRE----------(10 gauge)------	
▲	5P5621	WIRE----------(12 gauge)------	
	5P5624	WIRE----------(14 gauge)-------	

212661

8P4699 HARNESS ASSEMBLY
Part of 8P4711 Battery and Wiring Group shown on Pages 67, 67C, 67F & 68

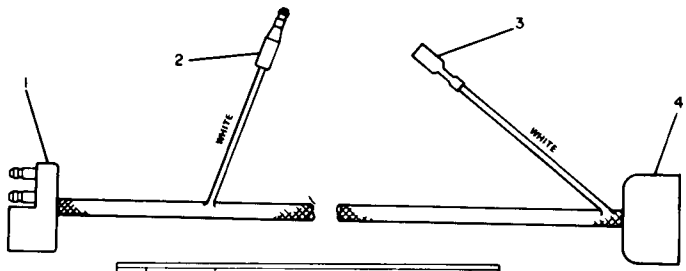

REF. NO.	PART NUMBER	DESCRIPTION	QTY.
1	5P3160	CONNECTOR ASSEM. ----------	1
2	5P6725	CONNECTOR ASSEM. ----------	1
3	6N9587	CONNECTOR----------	1
4	5P3161	CONNECTOR ASSEM. ----------	1
		THE FOLLOWING WIRES ARE AVAILABLE:	
♦	5P5622	WIRE----------(10 gauge)	
♦	5P5621	WIRE----------(12 gauge)	
♦	5P5624	WIRE----------(14 gauge)	

♦ ORDER BY THE METER

224175

7G7285 HARNESS ASSEMBLY
Serial No. 6X692—Up
Part of 8P4711 Battery and Wiring Group shown on Pages 67E and 67H

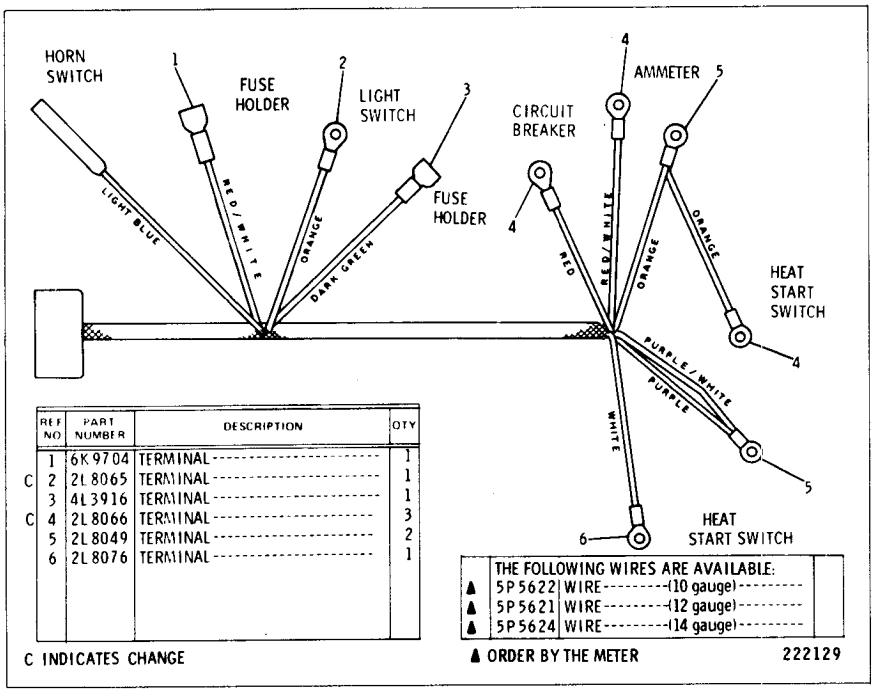

REF NO	PART NUMBER	DESCRIPTION	QTY
1	6K9704	TERMINAL	1
C 2	2L8065	TERMINAL	1
3	4L3916	TERMINAL	1
C 4	2L8066	TERMINAL	3
5	2L8049	TERMINAL	2
6	2L8076	TERMINAL	1

C INDICATES CHANGE

	THE FOLLOWING WIRES ARE AVAILABLE:	
▲	5P5622 WIRE (10 gauge)	
▲	5P5621 WIRE (12 gauge)	
▲	5P5624 WIRE (14 gauge)	

▲ ORDER BY THE METER

222129

8P4700 HARNESS ASSEMBLY
Part of 8P4711 Battery & Wiring Group shown on Pages 66, 67B, 67E & 67H

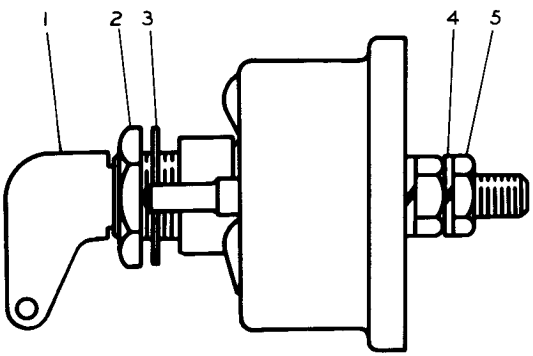

REF. NO.	PART NUMBER	DESCRIPTION	QTY
1	8H5306	KEY	1
2	8H5303	NUT	1
3	2H3922	LOCKWASHER	1
4	7F7259	LOCKWASHER	4
5	6F7045	NUT	4

211499

7N718 DISCONNECT SWITCH ASSEMBLY
Part of 8P4711 Battery & Wiring Group shown on Pages 65, 67A, 67D & 67G

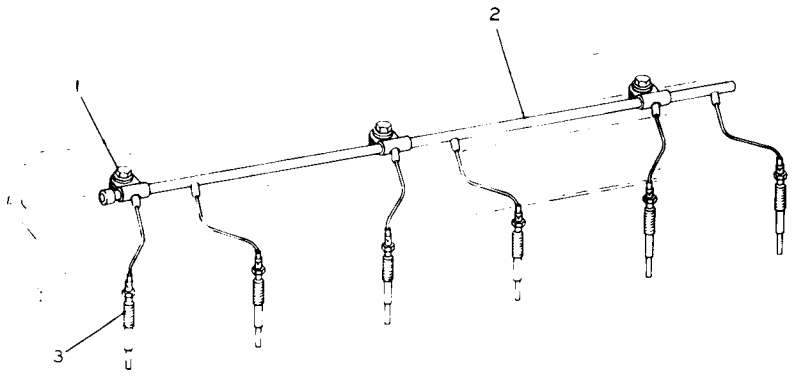

	REF. NO	PART NUMBER	DESCRIPTION	QTY
C	1	1C569	BOLT----------	3
		9M1974	WASHER----------	3

C	2	7N9636	LEAD ASSEM.----------	1
C	3	4N360	GLOW PLUG--------(24 volt)-----	6
C	SMHS6842		FORM----------	1
			(Instructions For Installing Glow Plugs)	

C INDICATES CHANGE

226159

5S8501 GLOW PLUG GROUP—24 Volt

CONSISTS OF:

			PAGE
1	9S6693	ALTERNATOR GROUP	72
1	8M7892	AMMETER	
1	9S173	CIRCUIT BREAKER	

9S6591 ALTERNATOR ARRANGEMENT—24 Volt, 50 Ampere
Serial No. 6X1 to 6X412 inclusive
Also part of 8P8284 Roll-Over Protective System Arrangement listed on Page 152A

		CONSISTS OF:	PAGE
1	9S6693	ALTERNATOR GROUP	72
1	9S173	CIRCUIT BREAKER--60 AMPERE	

9D1460 ALTERNATOR ARRANGEMENT—24 Volt, 50 Ampere
Serial No. 6X1 to 6X561 inclusive
AN ATTACHMENT

		CONSISTS OF:	PAGE
1	5S9088	ALTERNATOR GROUP	74
1	1H6936	WIRE ASSEMBLY--ALTERNATOR TO ENGINE	
		CONSISTS OF:	
	1	2L8060 TERMINAL--No. 8 WIRE--3/8 SCREW	
	1	2L8058 TERMINAL--No. 8 WIRE--3/8 SCREW	
3 DM		5P5689 WIRE	

8N1084 ALTERNATOR GROUP—24 Volt, 50 Ampere
Serial No. 6X562—Up
Also part of 8P8284 ROPS Arrangement shown on Page 152A

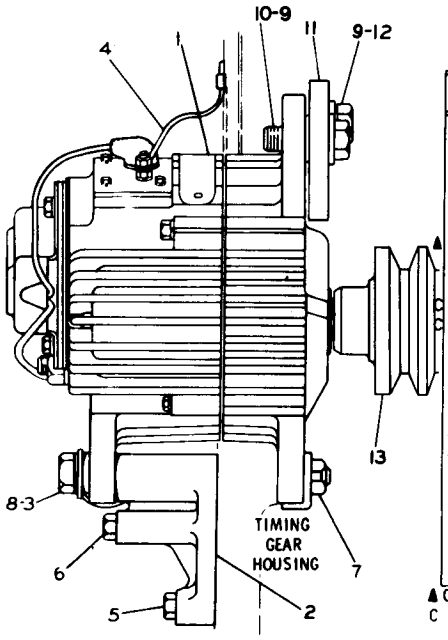

REF. NO.	PART NUMBER	DESCRIPTION	QTY
1	2P1204	ALTERNATOR ASSEM. (Separate Illustration)	1
2	7S6723	BRACKET	1
3	1D4574	BOLT--15.24 cm(6 in.)long	1
	9S4146	WIRE ASSEM. (Includes)	1
▲ 4	5P5622	WIRE--.16 m(6.5 in.)	
	2L8069	TERMINAL--(large)	1
	2L8066	TERMINAL--(small)	1
C 5	2D2285	BOLT	1
C 6	7F1866	BOLT	1
	9S1240	NUT ASSEM. (Includes)	1
7	1F748	NUT	1
8	8M4791	WASHER	1
9	S1585	BOLT	2
10	8M4791	WASHER	2
11	8S4183	STRAP	1
12	2S6735	SPACER	1
13	9S6129	PULLEY	1

▲ ORDER BY THE METRE
C INDICATES CHANGE

167177

6N5468 ALTERNATOR GROUP—24 Volt, 19 Ampere
Serial No. 6X1 to 6X561 inclusive
2P1204 Alternator parts are shown on Page 73
Note: 7M4707 Vee Belt Set, consisting of 2 belts, is available

CONSISTS OF: PAGE

1	5S9088	ALTERNATOR ASSEMBLY	74
1	9S6129	PULLEY--ALTERNATOR DRIVE	
1	1H6936	WIRE ASSEMBLY--ALTERNATOR TO ENGINE	

CONSISTS OF:

1	9F9353	TERMINAL
1	9F5320	TERMINAL
2	8B653	INSULATOR

9S6693 ALTERNATOR GROUP
Part of 9S6591 and 9D1460 Alternator Arrangement listed on Pages 71A & 71B
AN ATTACHMENT

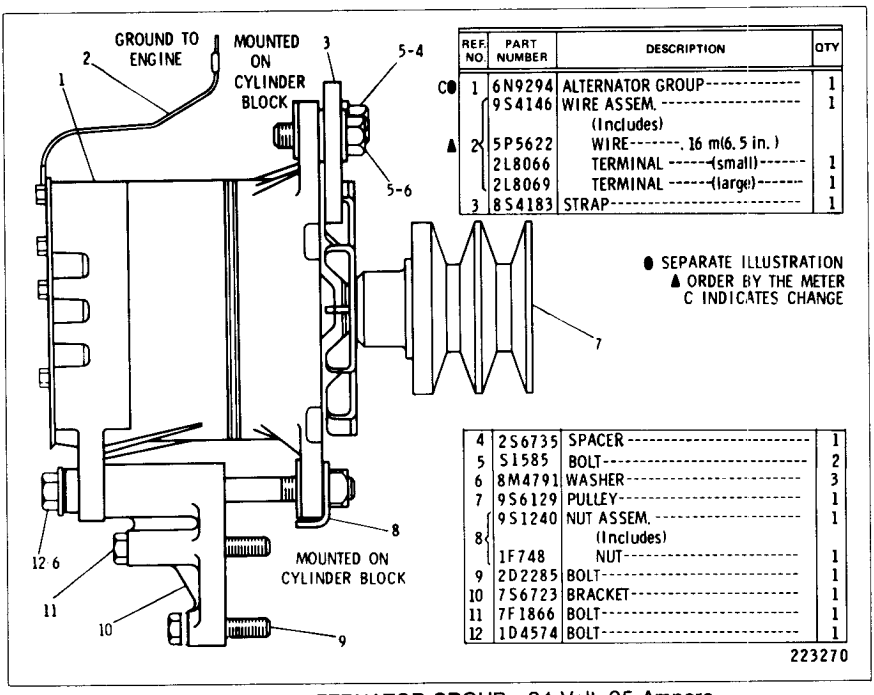

REF. NO.	PART NUMBER	DESCRIPTION	QTY
C● 1	6N9294	ALTERNATOR GROUP	1
	9S4146	WIRE ASSEM. (Includes)	1
▲ 2	5P5622	WIRE, 16 m(6.5 in.)	
	2L8066	TERMINAL (small)	1
	2L8069	TERMINAL (large)	1
3	8S4183	STRAP	1
4	2S6735	SPACER	1
5	S1585	BOLT	2
6	8M4791	WASHER	3
7	9S6129	PULLEY	1
8	9S1240	NUT ASSEM. (Includes)	1
	1F748	NUT	1
9	2D2285	BOLT	1
10	7S6723	BRACKET	1
11	7F1866	BOLT	1
12	1D4574	BOLT	1

● SEPARATE ILLUSTRATION
▲ ORDER BY THE METER
C INDICATES CHANGE

223270

6N5468 ALTERNATOR GROUP—24 Volt, 35 Ampere
Serial No. 6X562—Up
6N9294 Alternator parts are shown on Pages 73A and 73B
Note: 7M4707 Vee Belt Set, consisting of 2 belts, is available

2P1204 ALTERNATOR GROUP—24 Volt, 19 Ampere
Serial No. 6X1 to 6X561 inclusive
Part of 6N5468 Alternator Group shown on Page 71B

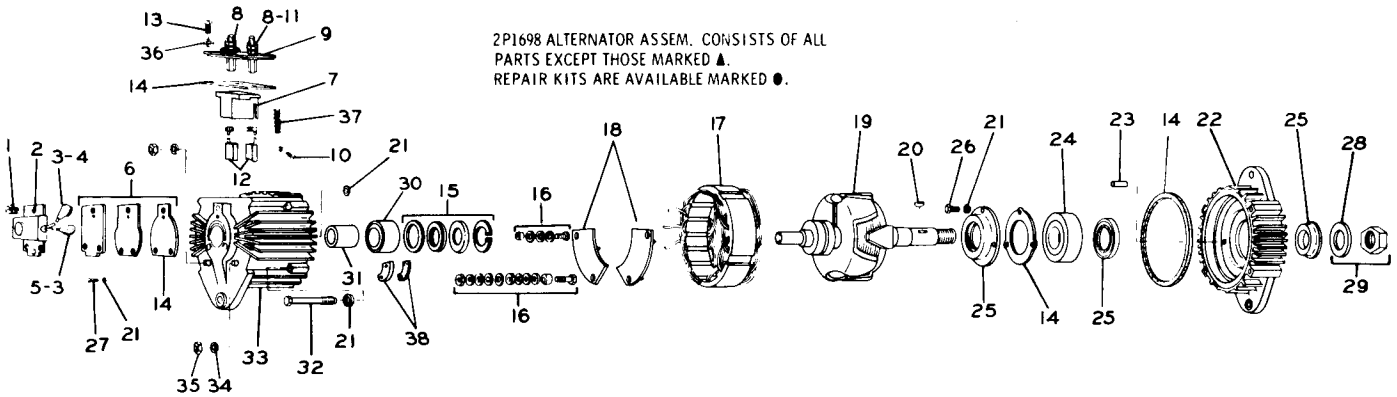

2P1698 ALTERNATOR ASSEM. CONSISTS OF ALL PARTS EXCEPT THOSE MARKED ▲.
REPAIR KITS ARE AVAILABLE MARKED ●.

REF. NO.	PART NUMBER	DESCRIPTION	QTY
1	310243	SCREW	3
C▲	6N3821	REGULATOR ASSEM.	1
2	3K6234	SCREW	1
	4B4863	WASHER	1
3	98708	BOOT	2
4	2L8076	TERMINAL	1
5	2L8077	TERMINAL	1
● 6	1P1091	KIT-(Reg. Mounting Plate & Gasket)	
7	1P1145	HOLDER ASSEM.	1
	1P1137	HOLDER	1
8	4B2049	NUT	4
	3B4502	LOCKWASHER	4
9	1P1138	FIELD TERMINAL & PLATE ASSEM.	1
10	5S4245	SCREW	2
	6B4542	LOCKWASHER	2
11	4B4274	WASHER	1

●	12	1P1130	KIT-(2 Brushes)	1
	13	324000	SCREW	4
●	14	2P1714	KIT-(4 Gaskets)	1
●	15	1P1080	KIT-(Retainer and Seals)	1
C●	16	6N6717	KIT- (Insulator) (Terminal Stud)	1
	17	2P1709	RECTIFIER & STATOR ASSEM.	1
	18	2P1719	PLATE & RECTIFIER ASSEM. (Positive)	1
		2P1720	PLATE & RECTIFIER ASSEM. (Negative)	1
C	19	6N1226	ROTOR ASSEM.	1
	20	1B8705	KEY	1
	21	3B4502	LOCKWASHER	10
C	22	6N5255	HEAD ASSEM.	1
	23	6D9953	PIN	2
C	24	1B5387	BEARING	1

GMG00844-FORM(Alternator Installation)--1

●	25	2P1713	KIT-(Retainer and Seal) (Retainer, Seal, Spacer, Washer)	1
	26	172311	SCREW	3
	27	9M5520	SCREW	1
	28	3B4511	LOCKWASHER	1
●	29	1P1131	KIT-(Shaft Parts-Nut & Lockwasher)	1
	30	2L611	BEARING	1
	31	1P1134	RACE	1
C●	32	6N5257	KIT- (frame screw-12 bolts)	1
C	33	6N5254	HEAD ASSEM.	1
	34	3B4507	LOCKWASHER-11mm(.437 in.)I.D.	2
		3B4504	LOCKWASHER-6.35mm(.25 in.)I.D.	2
	35	1D4718	NUT-11mm(.437 in.)I.D.	2
		9M1311	NUT-6.35mm(.25 in.)I.D.	2
	36	2H6139	LOCKWASHER	4
●	37	1P1088	KIT-(2 Brush Springs)	1
C	38	2P6261	INSULATOR	2

C INDICATES CHANGE

207038

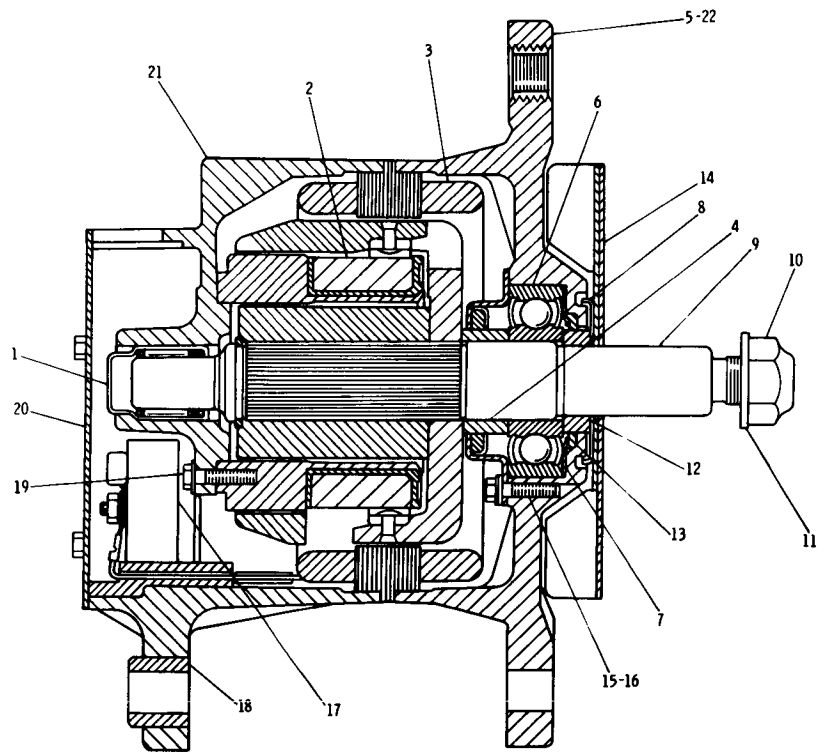

REF. NO.	PART NUMBER	DESCRIPTION	QTY.
1	5P6920	BEARING	1
2	7N7806	COIL ASSEM.	1
3	7N7804	STRATOR ASSEM.	1
4	7N7795	COLLAR	1
5	7N7810	FRAME ASSEM.	1
6	5P9514	BEARING	1
7	9L2140	PLATE	1
8	9L6782	SHIELD	1
9	7N7800	ROTOR ASSEM.	1
10	2K4821	LOCKNUT	1
11	7F7621	WASHER	1
12	9L6783	COLLAR	1
13	9L2139	WASHER	1
14	9N1210	FAN ASSEM.	1
15	7N9020	SCREW ASSEM.	3
16	9L2137	RETAINER ASSEM.	1
C 17	7N7122	RECTIFIER ASSEM.	1
18	9S2396	BUSHING	1
19	9S2007	SCREW	4
20	7N7809	PLATE	1
C 21	7N7805	HOUSING	1
22	7N9024	BOLT	4

C INDICATES CHANGE 226124

6N9294 ALTERNATOR GROUP—24 Volt, 35 Ampere—Part 1
Serial No. 6X562 to 6X890 inclusive
Part of 6N5468 Alternator Group shown on Page 72

6N9294 ALTERNATOR GROUP—24 Volt, 35 Ampere—Part 2
Serial No. 6X562 to 6X890 inclusive
Part of 6N5468 Alternator Group shown on Page 72

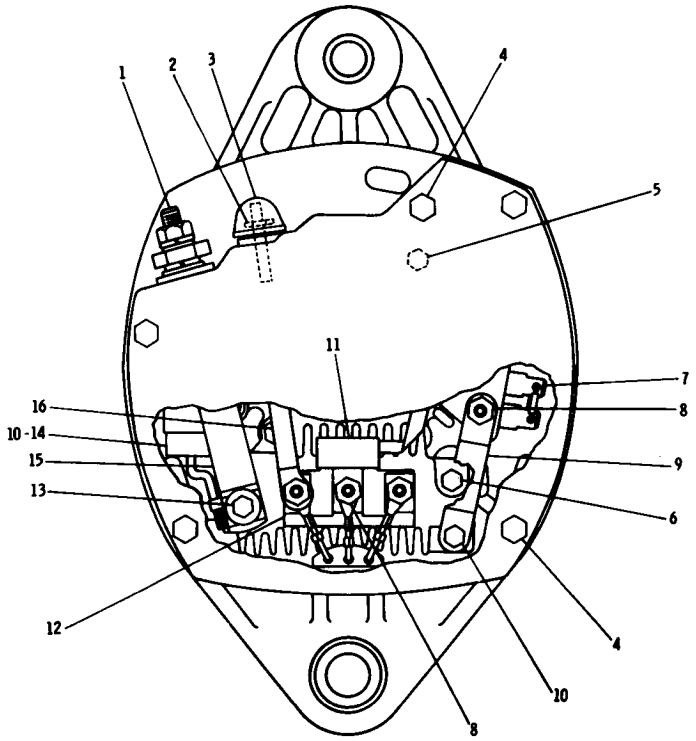

REF. NO.	PART NUMBER	DESCRIPTION	QTY
1	7N7807	TERMINAL KIT-----(output)------- (Includes Insulator, Screw, Washers, Lockwasher,Nut,&Adapter)	1
2	7N7808	TERMINAL KIT---------- (Includes Stud, Bushings, Washers & Nut Assem.)	1
3	9L6770	CAP----------	1
4	8N740	SCREW ASSEM.----------	5
5	7N9022	SCREW ASSEM.----------	2
	9N938	WASHER----------	2
6	7N9023	SCREW ASSEM.----------	2
7	7N7799	REGULATOR ASSEM.----------	1
8	6N1869	NUT ASSEM.----------	4
9	7N7811	CONNECTOR----------	1
10	7N9018	SCREW ASSEM.----------	3
11	9N1202	DIODE ASSEM.----------	1
12	7N7797	INSULATOR----------	2
13	7N9021	SCREW ASSEM.----------	2
	7N7796	BUSHING----------	1
14	7N7802	CAPACITOR ASSEM.----------	1
	3N4082	BRACKET----------	1
15	7N7798	CONNECTOR----------	1
16	7N7801	CONNECTOR----------	1

218759

		CONSISTS OF:	PAGE
1	9G8255	ALTERNATOR GROUP--DELCO-REMY	73E
	- OR -		
1	7N9720	ALTERNATOR GROUP--ROBERT BOSCH	73D

6N9294 ALTERNATOR GROUP—24 Volt, 35 Ampere
Serial No. 6X891—Up
Part of 6N5468 Alternator Group shown on Page 72

7N9720 ALTERNATOR GROUP—Robert Bosch—24 Volt, 35 Ampere
Serial No. 6X891—Up
Part of 6N9294 Alternator Group listed on Page 73C

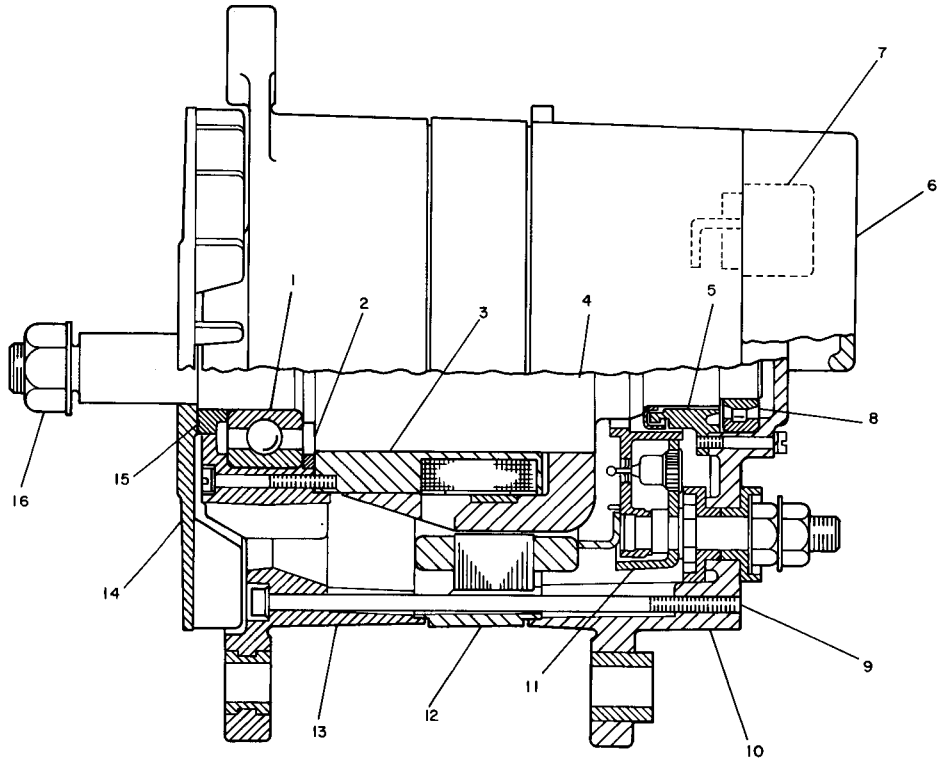

REF. NO.	PART NUMBER	DESCRIPTION	QTY.
1	9G7551	BEARING	1
2	9G7548	RING	1
3	9G7558	COIL ASSEM.	1
4	9G7560	ROTOR ASSEM.	1
5	9G7553	RING	1
6	9G7562	COVER ASSEM.	1
7	9G7567	REGULATOR ASSEM.	1
8	9G7552	BEARING	1
9	9G7557	SCREW ASSEM.	1
10	9G7568	FRAME ASSEM.	1
11	9G7563	DIODE ASSEM.	1
12	9G7561	STATOR ASSEM.	1
13	9G7566	FRAME	1
14	9G7564	FAN	1
15	9G7549	SPACER	1
16	2K4821	LOCKNUT	1
	7K7621	WASHER	1

THE FOLLOWING REPAIR KITS ARE AVAILABLE:

9G7554	KIT-------(ground terminal)------- (Includes nuts & lockwashers)	1
9G7555	KIT-----(output terminal)---------- (Includes nuts, washers & bushings)	1
9G7556	KIT-------(capacitor)---------- (Includes capacitor, screw, lockwasher & washer)	1
9G7559	KIT-----(relay terminal)---------- (Includes splice, tube, nut, terminal, lockwasher, washers, and bushing)	1
9G7565	KIT-------(regulator terminal)----- (Includes nuts, lockwashers, washers and bushing)	1

228797

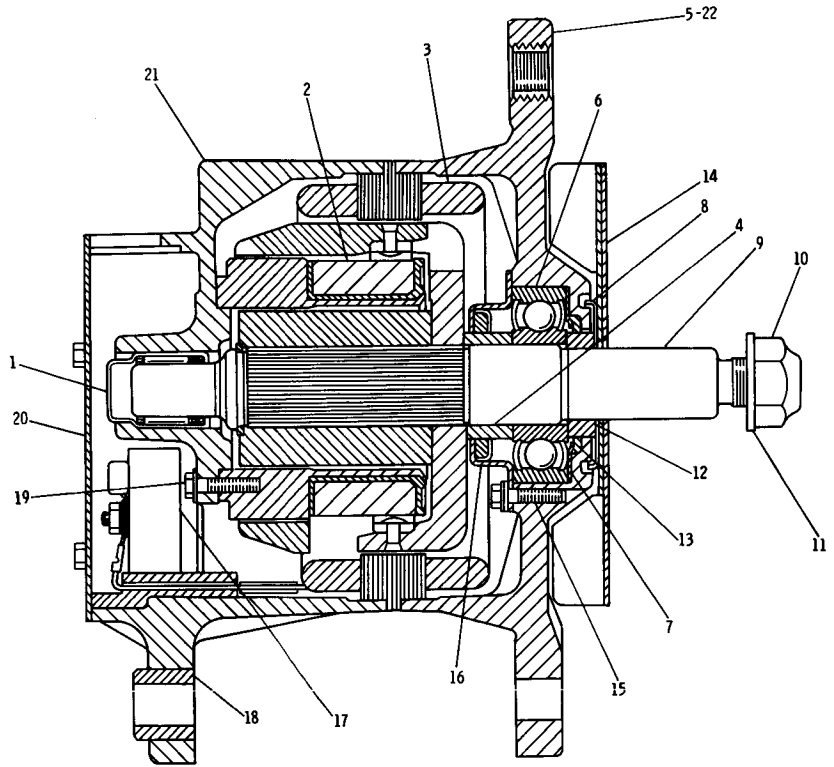

REF. NO.	PART NUMBER	DESCRIPTION	QTY
1	5P6920	BEARING	1
2	7N7806	COIL ASSEM.	1
3	7N7804	STATOR ASSEM.	1
4	7N7795	COLLAR	1
5	7N7810	FRAME ASSEM.	1
6	5P9514	BEARING	1
7	9L2140	PLATE	1
8	9L6782	SHIELD	1
9	7N7800	ROTOR ASSEM.	1
10	2K4821	LOCKNUT	1
11	7F7621	WASHER	1
12	9L6783	COLLAR	1
13	9L2139	WASHER	1
14	9N1210	FAN ASSEM.	1
15	7N9020	SCREW ASSEM.	3
16	9L2137	RETAINER ASSEM.	1
17	7N7122	RECTIFIER ASSEM.	1
18	9S2396	BUSHING	1
19	9S2007	SCREW	4
20	7N7809	PLATE	1
21	7N7805	HOUSING	1
22	7N9024	BOLT	4

228795

9G8255 ALTERNATOR GROUP—Delco-Remy—24 Volt, 35 Ampere—Part 1
Serial No. 6X891—Up
Part of 6N9294 Alternator Group listed on Page 73C

9G8255 ALTERNATOR GROUP—Delco-Remy—24 Volt, 35 Ampere—Part 2
Serial No. 6X891—Up
Part of 6N9294 Alternator Group listed on Page 73C

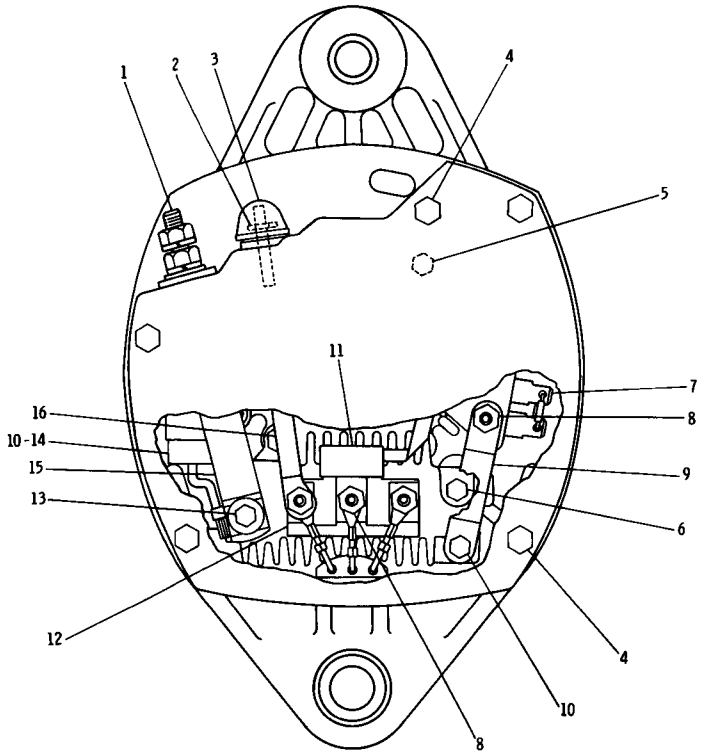

REF. NO.	PART NUMBER	DESCRIPTION	QTY
1	7N7807	TERMINAL KIT-----(output)------- (Includes Insulator, Screw, Washers, Lockwasher, Nut &Adapter)	1
2	7N7808	TERMINAL KIT---------- (Includes Stud, Bushings, Washers & Nut Assem.)	1
3	9L6770	CAP----------	1
4	8N740	SCREW ASSEM.----------	5
5	7N9022	SCREW ASSEM.----------	2
	9N938	WASHER----------	2
6	7N9023	SCREW ASSEM.----------	2
7	7N7799	REGULATOR ASSEM.----------	1
8	6N1869	NUT ASSEM.----------	4
9	7N7811	CONNECTOR----------	1
10	7N9018	SCREW ASSEM.----------	3
11	9N1202	DIODE ASSEM.----------	1
12	7N7797	INSULATOR----------	2
13	7N9021	SCREW ASSEM.----------	1
	7N7796	BUSHING----------	1
14	7N7802	CAPACITOR ASSEM.----------	1
	3N4082	BRACKET----------	1
15	7N7798	CONNECTOR----------	1
16	7N7801	CONNECTOR----------	1

228796

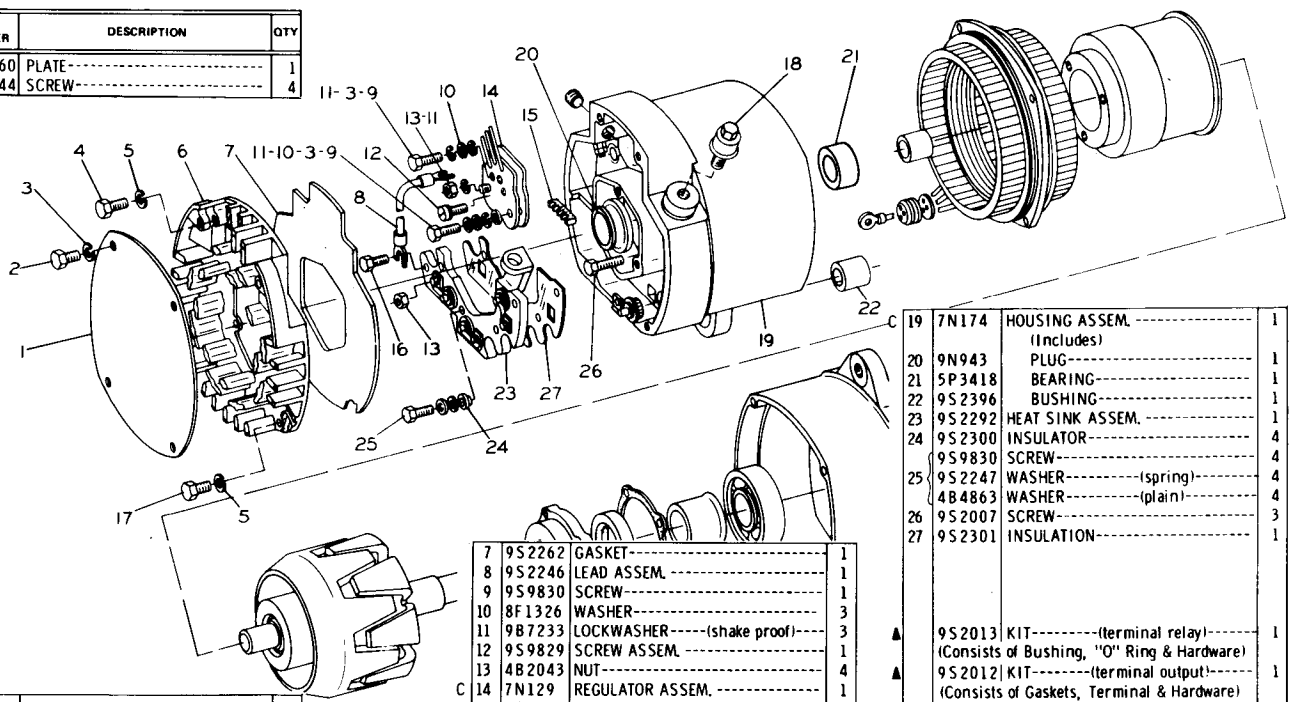

REF. NO.	PART NUMBER	DESCRIPTION	QTY
1	9S2260	PLATE	1
2	9S2544	SCREW	4
3	8H878	LOCKWASHER	6
4	9S2438	SCREW	2
5	7H2079	LOCKWASHER	7
6	9S2255	COVER	1
7	9S2262	GASKET	1
8	9S2246	LEAD ASSEM.	1
9	9S9830	SCREW	1
10	8F1326	WASHER	3
11	9B7233	LOCKWASHER-----(shake proof)----	3
12	9S9829	SCREW ASSEM.	1
13	4B2043	NUT	4
C 14	7N129	REGULATOR ASSEM.	1
15	9S2250	GROMMET	1
16	9S2542	SCREW	1
17	9S2437	SCREW	5
18	9S2389	STUD ASSEM.	1
19	7N174	HOUSING ASSEM. (Includes)	1
20	9N943	PLUG	1
21	5P3418	BEARING	1
22	9S2396	BUSHING	1
23	9S2292	HEAT SINK ASSEM.	1
24	9S2300	INSULATOR	4
25	9S9830	SCREW	4
	9S2247	WASHER----------(spring)----------	4
	4B4863	WASHER----------(plain)----------	4
26	9S2007	SCREW	3
27	9S2301	INSULATION	1
▲	9S2013	KIT----------(terminal relay)---------- (Consists of Bushing, "O" Ring & Hardware)	1
▲	9S2012	KIT----------(terminal output)---------- (Consists of Gaskets, Terminal & Hardware)	1
▲	9S2290	KIT----------(heat sink)---------- (Diode Junction Hardware)	1
▲	9S2291	KIT----------(heat sink)---------- (Positive Diode Hardware)	1

C INDICATES CHANGE

▲ NOT PART OF 5S9088 ALTERNATOR ASSEM. 162528

5S9088 ALTERNATOR ASSEMBLY—24 Volt, 50 Ampere—Part 1
Part of 8N1084 & 9S6693 Alternator Group shown on Page 71B & 72

5S9088 ALTERNATOR ASSEMBLY—24 Volt, 50 Ampere—Part 2
Part of 8N1084 & 9S6693 Alternator Group shown on Pages 71B & 72

REF. NO.	PART NUMBER	DESCRIPTION	QTY
C 1	5P3419	RACE	1
2	9S2248	FIELD COIL AND SUPPORT ASSEM.	1
3	9S2004	STATOR ASSEM.	1
4	9S2006	INSULATOR	1
5	9S2005	GROMMET	1
6	9S2014	CLIP	3
7	9S2302	ROTOR ASSEM.	1
8	9S2390	RETAINER ASSEM.	1
9	9S2391	SEAL	1
10	9S2256	GASKET	1
11	9S2261	COLLAR	1
12	2F5721	BEARING	1
13	2P5616	FRAME	1
14	3B4502	LOCKWASHER	4
15	9S2009	BOLT	4
16	9S2391	SEAL	1
17	9S2254	COLLAR	1
18	9S2252	SLINGER	1
19	9S2008	SCREW	4
20	9S2258	FAN AND BAFFLE ASSEM.	1
21	7F7621	WASHER	1
22	2K4821	LOCKNUT	1

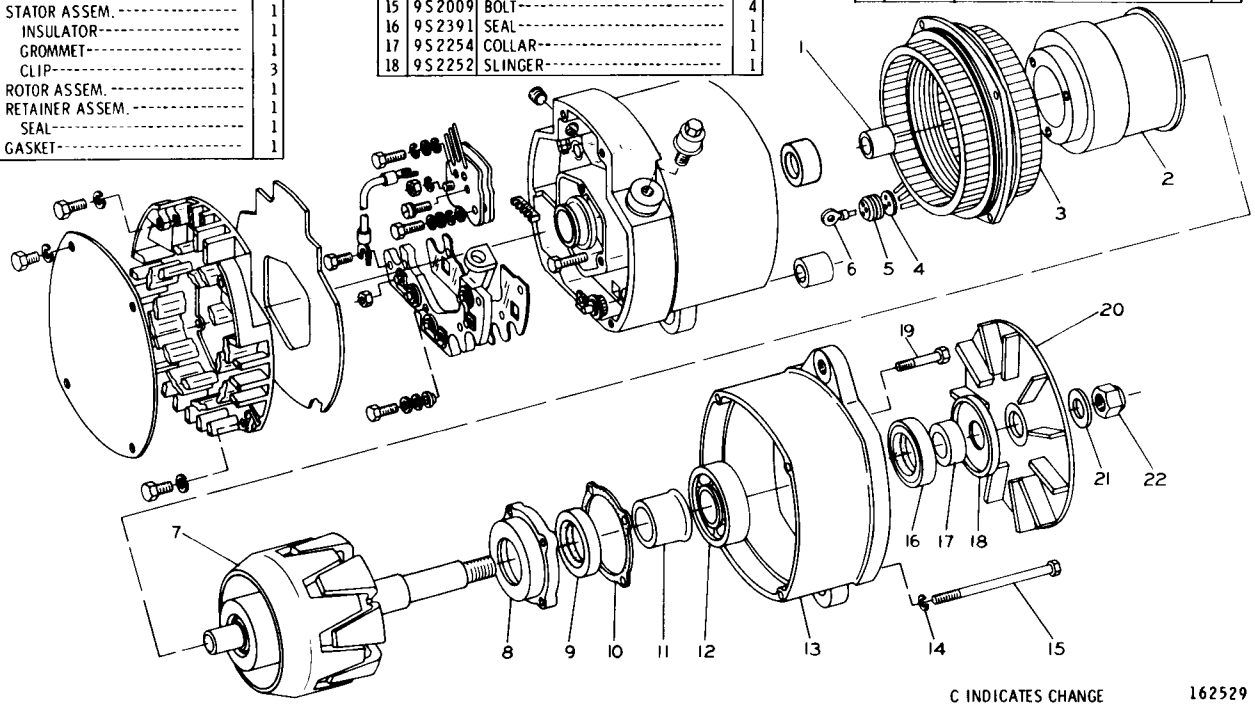

C INDICATES CHANGE

162529

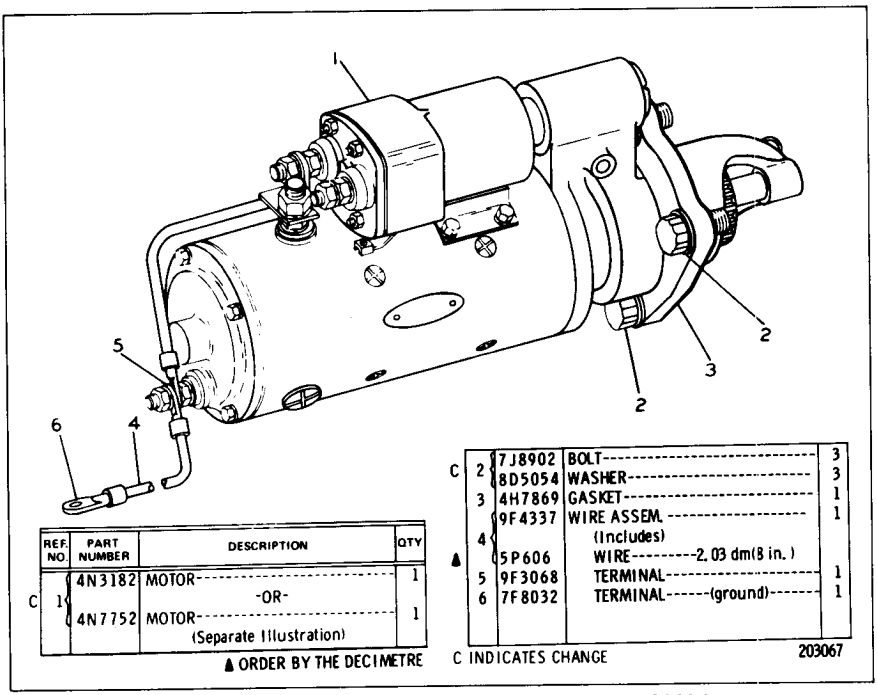

	REF. NO.	PART NUMBER	DESCRIPTION	QTY
C	1	4N3182	MOTOR	1
			-OR-	
		4N7752	MOTOR (Separate Illustration)	1
C	2	7J8902	BOLT	3
		8D5054	WASHER	3
	3	4H7869	GASKET	1
	4	9F4337	WIRE ASSEM. (Includes)	1
▲		5P606	WIRE--2.03 dm(8 in.)	
	5	9F3068	TERMINAL	1
	6	7F8032	TERMINAL--(ground)	1

▲ ORDER BY THE DECIMETRE
C INDICATES CHANGE
203067

7S3622 ELECTRIC STARTING MOTOR GROUP—24 Volt
4N3182 and 4N7752 Starting Motor parts are shown on Pages 77 through 81

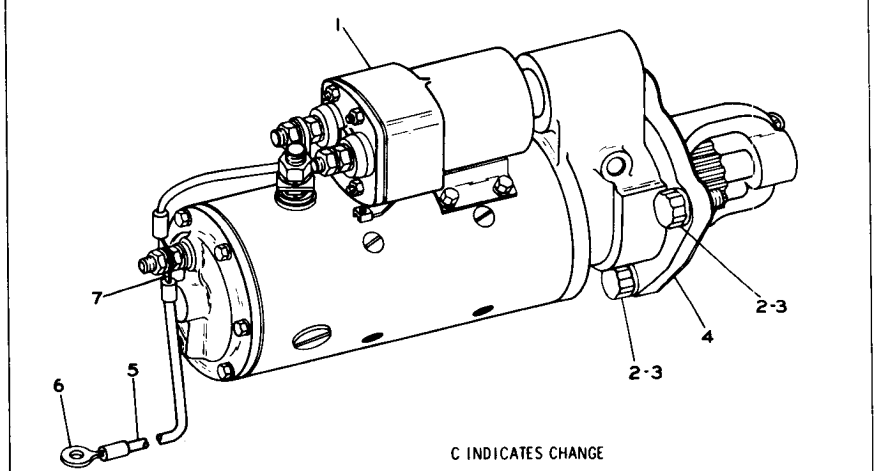

C INDICATES CHANGE

	REF. NO.	PART NUMBER	DESCRIPTION	QTY
C	1	2P3926	MOTOR ASSEM. (Separate Illustration)	1
C	2	7J8902	BOLT	3
C	3	8D5054	WASHER	3
	4	4H7869	GASKET	1
	5	9F4337	WIRE ASSEM. (Includes)	1
C ▲		5P6641	WIRE--.229 m(9 in.)	1
C	6	2L8052	TERMINAL--(ground)	1
C	7	2L8054	TERMINAL	1

▲ ORDER BY THE METRE
209124

8S3886 ELECTRIC STARTING MOTOR GROUP
FOR USE IN TEMPERATURES OF 0 DEGREES FAHRENHEIT OR BELOW
2P3926 Starting Motor parts are shown on Pages 82 through 84. AN ATTACHMENT

4N3182 ELECTRIC STARTING MOTOR GROUP—24 Volt—Delco-Remy—Part 1 of 3

Part of 7S3622 Starting Motor Group shown on Page 76

6N5123 Switch parts are shown on Page 85

REF. NO.	PART NUMBER	DESCRIPTION	QTY
1	7F4556	BOLT	4
2	1L4789	LOCKWASHER	4
3	4M1844	FRAME ASSEM.	1
4	7S9826	PLUG	1
5	3S2398	BUSHING	1
6	2B4602	PLUG	1
7	9F2547	WICK	1
8	2L8166	WASHER	1
9	4M1868	ARMATURE ASSEM.	1
10	3L3380	BUSHING	1
11	4M1839	COIL ASSEM.	1
12	9H3757	WASHER	2
13	7F3494	WASHER	1
14	4M1841	CONNECTOR	1
15	1D5117	NUT	2
C 16	6N5123	SWITCH ASSEM. (Separate Illustration)	1
17	6H3622	SCREW ASSEM.	4
18	3B4508	LOCKWASHER	1
19	3F379	SCREW	8
C 20	2N3145	INSULATOR	1
21	4M1831	PLUG	2
22	4M1832	GASKET	2
23	1H2629	STRIP	2
24	8H1141	SHOE	4

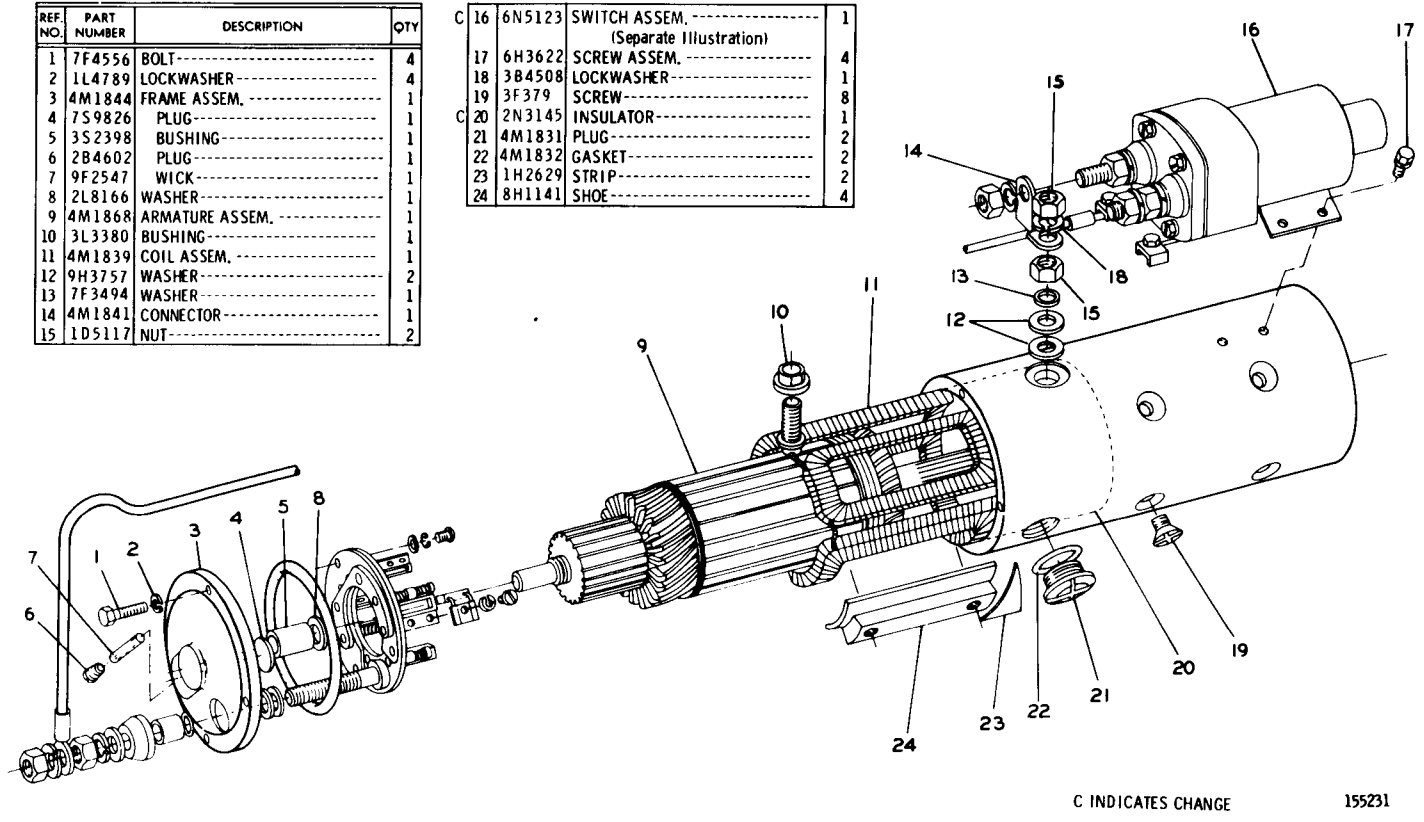

C INDICATES CHANGE

155231

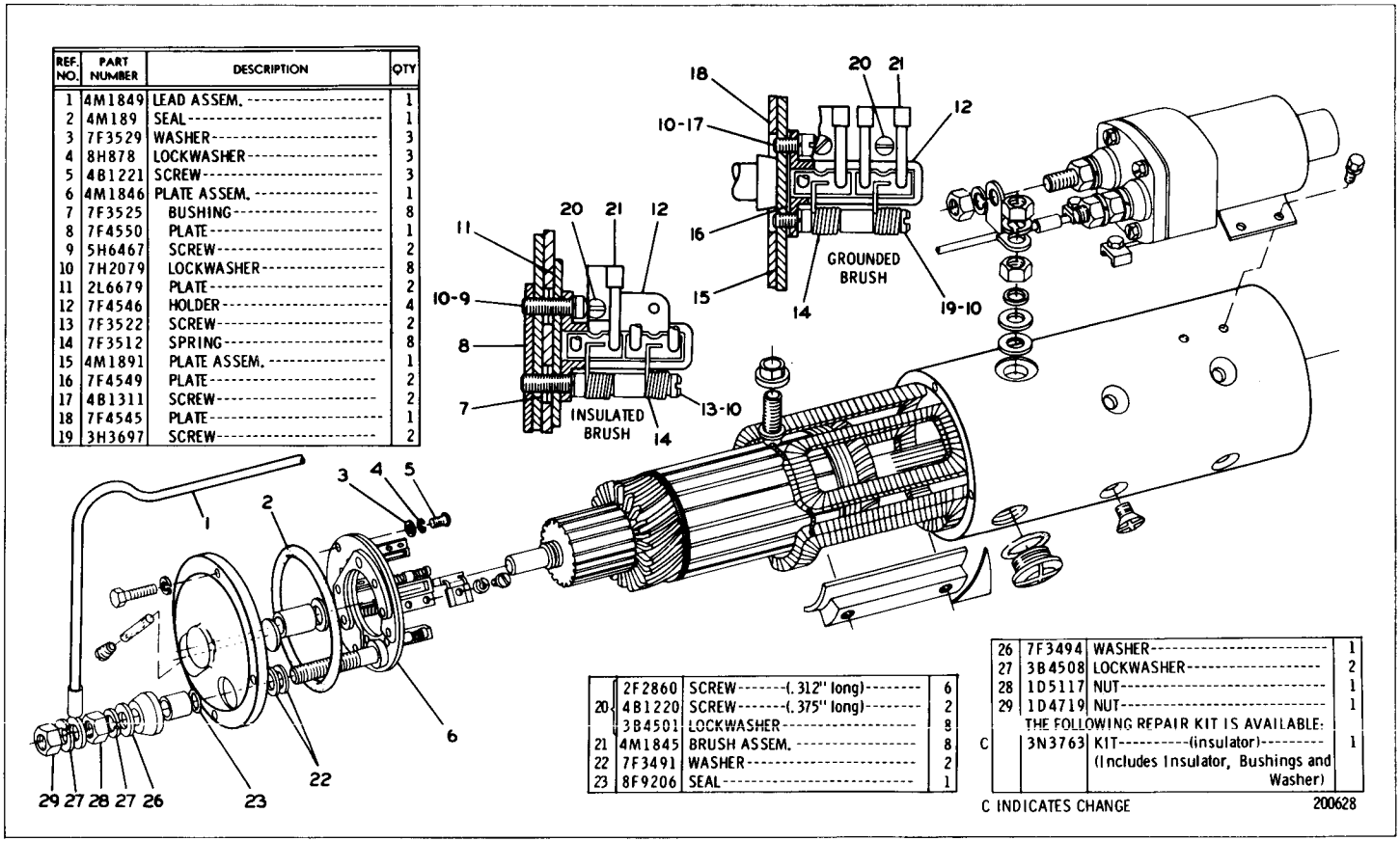

REF. NO.	PART NUMBER	DESCRIPTION	QTY
1	4M1849	LEAD ASSEM.	1
2	4M189	SEAL	1
3	7F3529	WASHER	3
4	8H878	LOCKWASHER	3
5	4B1221	SCREW	3
6	4M1846	PLATE ASSEM.	1
7	7F3525	BUSHING	8
8	7F4550	PLATE	1
9	5H6467	SCREW	2
10	7H2079	LOCKWASHER	8
11	2L6679	PLATE	2
12	7F4546	HOLDER	4
13	7F3522	SCREW	2
14	7F3512	SPRING	8
15	4M1891	PLATE ASSEM.	1
16	7F4549	PLATE	2
17	4B1311	SCREW	2
18	7F4545	PLATE	1
19	3H3697	SCREW	2

20	2F2860	SCREW-------(.312" long)--------	6
	4B1220	SCREW-------(.375" long)--------	2
	3B4501	LOCKWASHER	8
21	4M1845	BRUSH ASSEM.	8
22	7F3491	WASHER	2
23	8F9206	SEAL	1

26	7F3494	WASHER	1
27	3B4508	LOCKWASHER	2
28	1D5117	NUT	1
29	1D4719	NUT	1
		THE FOLLOWING REPAIR KIT IS AVAILABLE:	
C	3N3763	KIT----------(insulator)----------	1
		(Includes Insulator, Bushings and Washer)	

C INDICATES CHANGE

200628

4N3182 ELECTRIC STARTING MOTOR GROUP—24 Volt—Delco-Remy—Part 2 of 3
Part of 7S3622 Starting Motor Group shown on Page 76

4N3182 ELECTRIC STARTING MOTOR GROUP—24 Volt—Delco-Remy—Part 3 of 3

Part of 7S3622 Starting Motor Group shown on Page 76

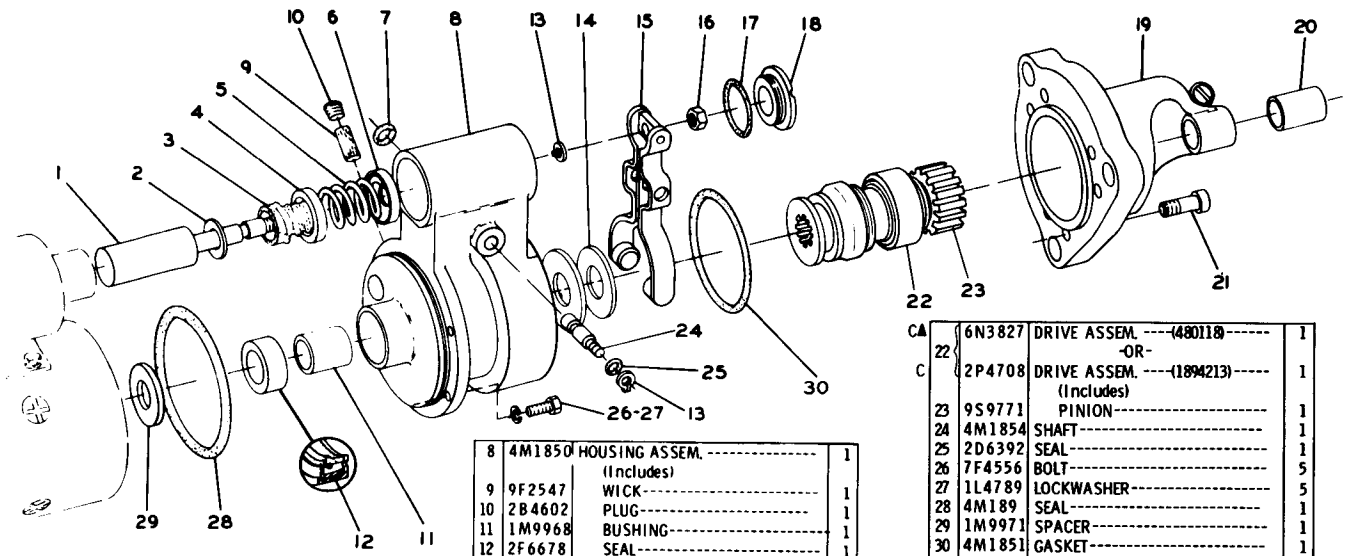

REF. NO.	PART NUMBER	DESCRIPTION	QTY
1	4M1855	PLUNGER ASSEM.	1
	FM055075	FORM----(installation instructions)	1
2	2S4027	WASHER	1
3	4M1829	BOOT	1
4	4M1828	RETAINER	1
5	9M7609	SPRING	1
6	4M1827	RETAINER	1
7	1H1023	SEAL	1
8	4M1850	HOUSING ASSEM. (Includes)	1
9	9F2547	WICK	1
10	2B4602	PLUG	1
11	1M9968	BUSHING	1
12	2F6678	SEAL	1
13	2H3429	RING	2
14	4L2729	WASHER	1
15	4M1853	LEVER ASSEM.	1
16	3F2617	NUT	1
17	4M1832	GASKET	1
18	4M1831	PLUG	1
19	1S297	HOUSING ASSEM. (Includes)	1
20	4M1896	BUSHING	1
21	4M1833	SCREW---1.50 in. (38.10 mm) long	5
	7M336	SCREW---.875 in. (22.23 mm) long	1
C▲ 22	6N3827	DRIVE ASSEM. ----(480118)-----	1
		-OR-	
C 22	2P4708	DRIVE ASSEM. ----(1894213)----- (Includes)	1
23	9S9771	PINION	1
24	4M1854	SHAFT	1
25	2D6392	SEAL	1
26	7F4556	BOLT	5
27	1L4789	LOCKWASHER	5
28	4M189	SEAL	1
29	1M9971	SPACER	1
30	4M1851	GASKET	1
		THE FOLLOWING REPAIR KITS ARE AVAILABLE FOR 2P4708 DRIVE ASSEM.:	
C	7N6098	KIT--------(spring)--------- (Includes Cup & Spring)	1
	9S9825	KIT---------(cup)---------- (Includes Cup & Washers)	1
	4S9459	KIT-------(washer)---------- (Includes Cup & Washers)	1
	FM035152	FORM. ------(cup kit installation)--	1

C INDICATES CHANGE

▲ NOT PART OF 4N3182 MOTOR GROUP

217034

REF. NO.	PART NUMBER	DESCRIPTION	QTY
1	7F4556	BOLT	4
2	1L4789	LOCKWASHER	4
3	4M1844	FRAME ASSEM.	1
4	7S9826	PLUG	1
C 5	9G4100	BUSHING	1
6	2B4602	PLUG	1
7	9F2547	WICK	1
8	2L8166	WASHER	1
9	4M1868	ARMATURE ASSEM.	1
10	3L3380	BUSHING	1
11	4M1839	COIL ASSEM.	1
12	9H3757	WASHER	2
13	7F3494	WASHER	1
14	4M1841	CONNECTOR	1
15	1D5117	NUT	2

C	16	4M1812	SWITCH ASSEM. (Separate Illustration)	1
	17	6H3622	SCREW ASSEM.	4
	18	3B4508	LOCKWASHER	1
	19	3F379	SCREW	8
	20	2N3145	INSULATOR	1
	21	4M1831	PLUG	2
	22	4M1832	GASKET	2
	23	1H2629	STRIP	2
	24	8H1141	SHOE	4
C	GM	G00012	FORM (Installing Electric Starting Motor)	1

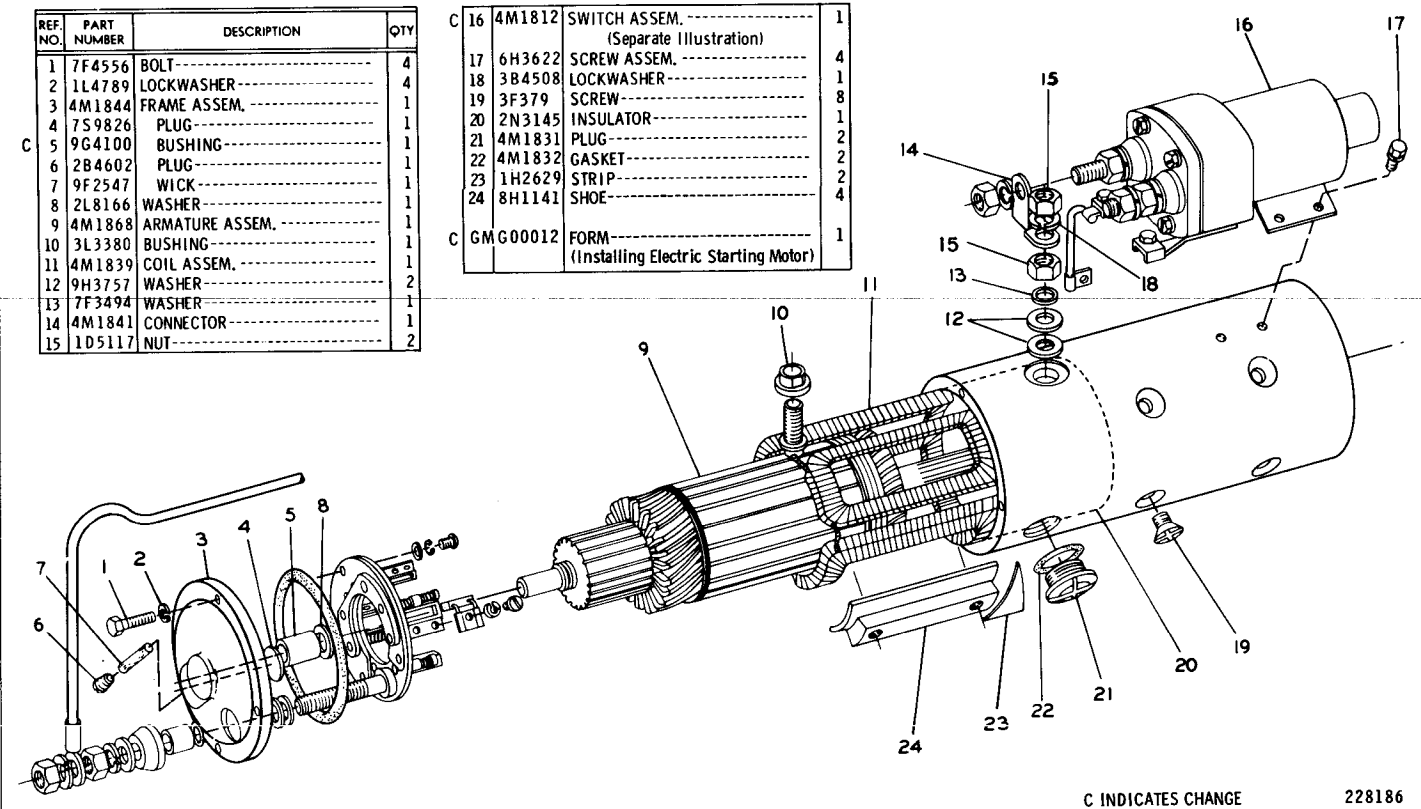

C INDICATES CHANGE

228186

4N3182 ELECTRIC STARTING MOTOR GROUP—Delco-Remy—24 Volt—Part 1 of 3—Type 2
Part of 7S3622 Starting Motor Group shown on Page 76
4M1812 Switch parts are shown on Page 84D

4N3182 ELECTRIC STARTING MOTOR GROUP—Delco-Remy—24 Volt—Part 2 of 3—Type 2

Part of 7S3622 Starting Motor Group shown on Page 76

REF. NO.	PART NUMBER	DESCRIPTION	QTY
1	4M1849	LEAD ASSEM.	1
2	4M189	SEAL	1
3	7F3529	WASHER	3
4	8H878	LOCKWASHER	3
5	4B1221	SCREW	3
6	4M1846	PLATE ASSEM.	1
7	7F3525	BUSHING	8
8	7F4550	PLATE	1
9	5H6467	SCREW	2
10	7H2079	LOCKWASHER	8
11	2L6679	PLATE	2
12	7F4546	HOLDER	4
13	7F3522	SCREW	2
14	7F3512	SPRING	8
15	4M1891	PLATE ASSEM.	1
16	7F4549	PLATE	2
17	4B1311	SCREW	2
18	7F4545	PLATE	1
19	3H3697	SCREW	2

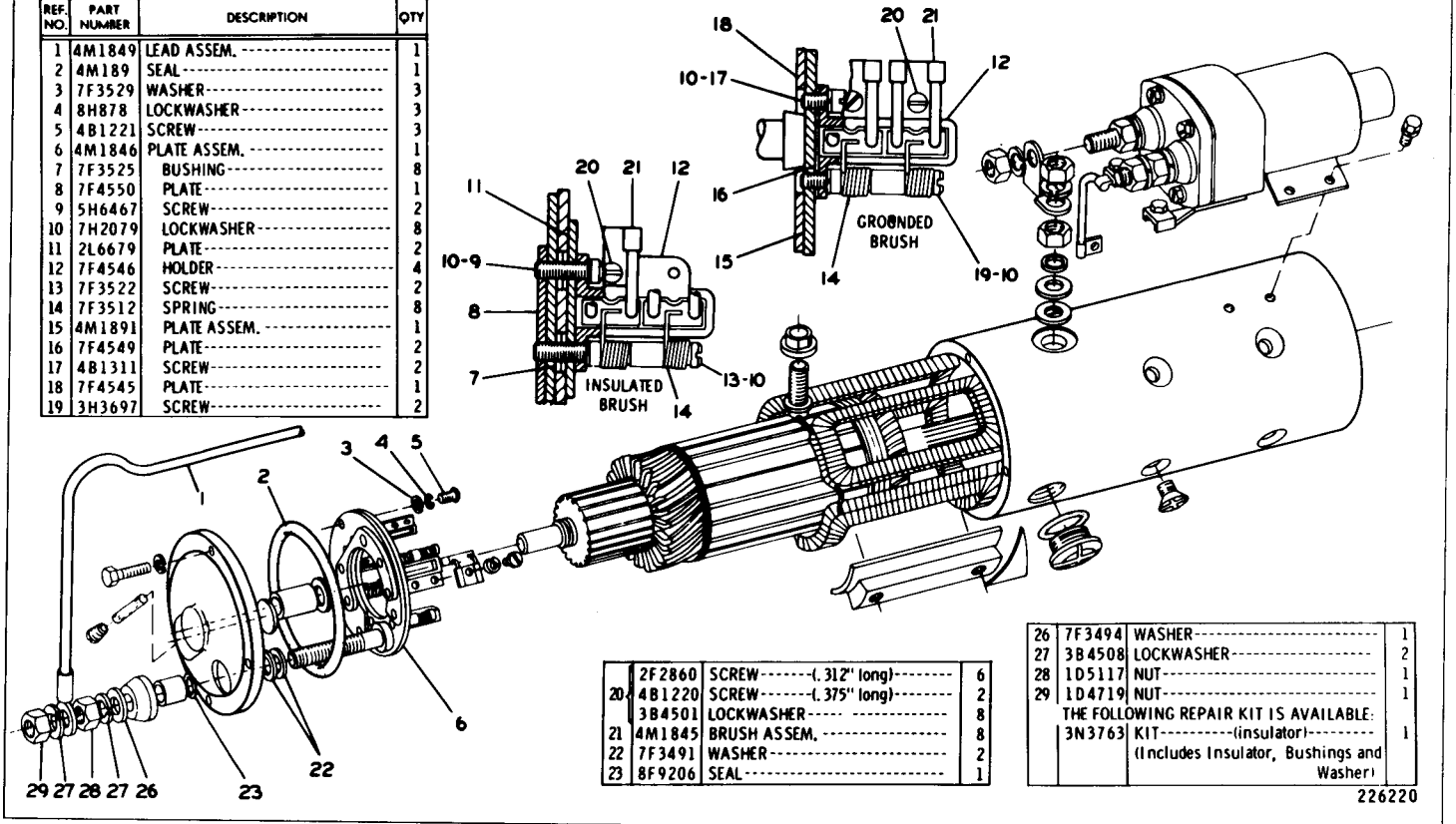

20	2F2860	SCREW-------(.312" long)--------	6
	4B1220	SCREW-------(.375" long)--------	2
	3B4501	LOCKWASHER-----	8
21	4M1845	BRUSH ASSEM.	8
22	7F3491	WASHER	2
23	8F9206	SEAL	1

26	7F3494	WASHER	1
27	3B4508	LOCKWASHER	2
28	1D5117	NUT	1
29	1D4719	NUT	1
	THE FOLLOWING REPAIR KIT IS AVAILABLE:		
	3N3763	KIT----------(insulator)--------- (Includes Insulator, Bushings and Washer)	1

226220

4N3182 ELECTRIC STARTING MOTOR GROUP—Delco-Remy—24 Volt—Part 3 of 3—Type 2
Part of 7S3622 Starting Motor Group shown on Page 76

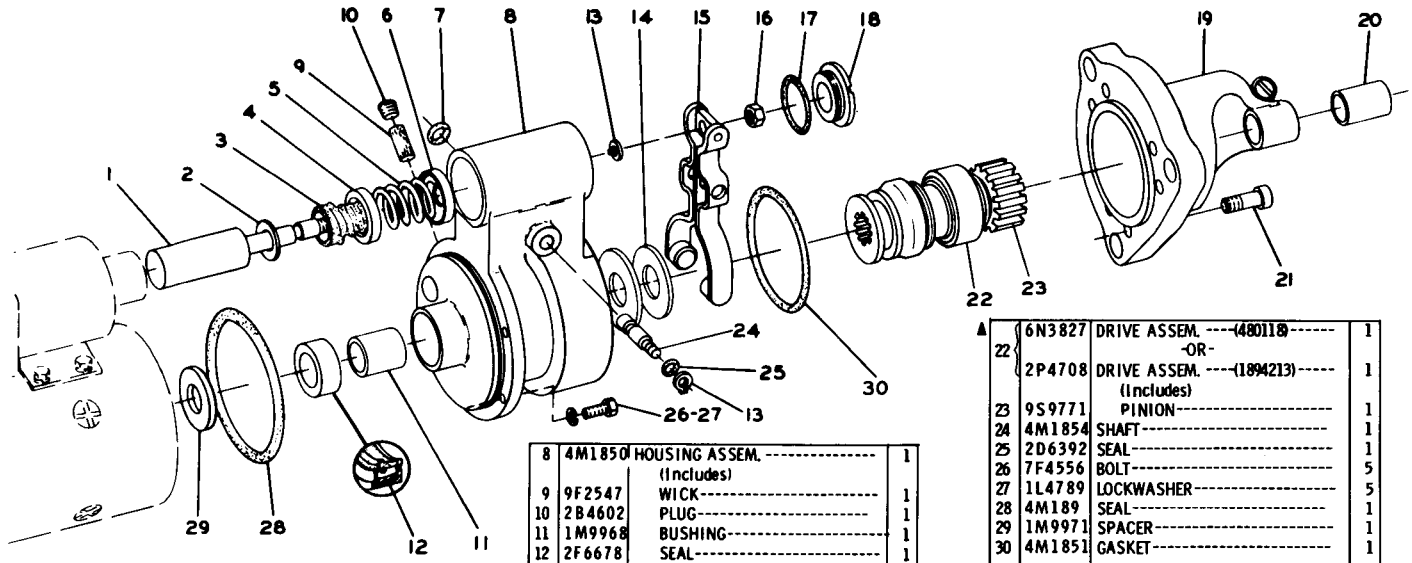

REF. NO.	PART NUMBER	DESCRIPTION	QTY
1	4M1855	PLUNGER ASSEM.	1
	FM055075	FORM----(installation instructions)	1
2	2S4027	WASHER	1
3	4M1829	BOOT	1
4	4M1828	RETAINER	1
5	9M7609	SPRING	1
6	4M1827	RETAINER	1
7	1H1023	SEAL	1
8	4M1850	HOUSING ASSEM. (Includes)	1
9	9F2547	WICK	1
10	2B4602	PLUG	1
11	1M9968	BUSHING	1
12	2F6678	SEAL	1
13	2H3429	RING	2
14	4L2729	WASHER	1
15	4M1853	LEVER ASSEM.	1
16	3F2617	NUT	1
17	4M1832	GASKET	1
18	4M1831	PLUG	1
19	1S297	HOUSING ASSEM. (Includes)	1
20	4M1896	BUSHING	1
21	4M1833	SCREW---1.50 in. (38.10 mm) long	5
	7M336	SCREW---.875 in. (22.23 mm) long	1

▲ 22	6N3827	DRIVE ASSEM. ----(480118)----	1
		-OR-	
	2P4708	DRIVE ASSEM. ----(1894213)---- (Includes)	1
23	9S9771	PINION	1
24	4M1854	SHAFT	1
25	2D6392	SEAL	1
26	7F4556	BOLT	5
27	1L4789	LOCKWASHER	5
28	4M189	SEAL	1
29	1M9971	SPACER	1
30	4M1851	GASKET	1
		THE FOLLOWING REPAIR KITS ARE AVAILABLE FOR 2P4708 DRIVE ASSEM.:	
	7N6098	KIT--------(spring)---------- (Includes Cup & Spring)	1
	9S9825	KIT---------(cup)---------- (Includes Cup & Washers)	1
	4S9459	KIT-------(washer)---------- (Includes Cup & Washers)	1
	FM035152	FORM. ------(cup kit installation)--	1

226221

▲ NOT PART OF 4N3182 MOTOR GROUP

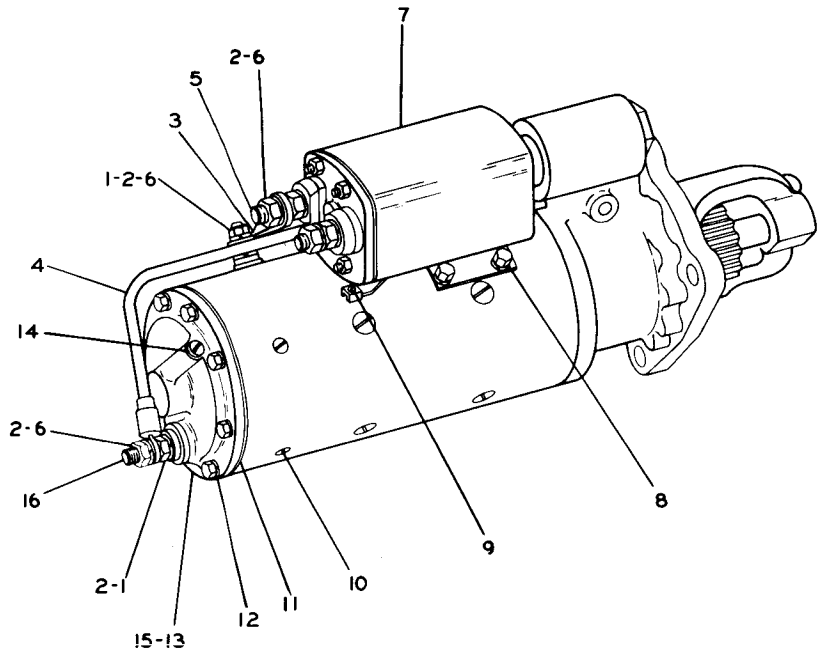

REF. NO.	PART NUMBER	DESCRIPTION	QTY
1	1D5117	NUT---------(jam)----------	2
2	3B4508	LOCKWASHER----------	6
3	4N9405	CONNECTOR----------	1
4	4N9404	LEAD ASSEM.----------	1
5	2P8819	KIT-----(Field Terminal Stud)----- (Includes Stud, Bushing & Washers)	1
6	1D4719	NUT----------	4
7	9S7976	SOLENOID ASSEM. ---------- (Separate Illustration)	1
8	6H3622	SCREW----------	4
	3B4504	LOCKWASHER----------	4
	3K6116	WASHER----------	4
9	4M3217	SCREW----------	2
10	4B1220	SCREW----------	3
11	8S1553	GASKET----------	1
12	3B4502	LOCKWASHER----------	7
13	1P7831	HEAD ASSEM. --(Commutator End)-	1
14	2B4602	PLUG----------	1
15	1P7832	KIT--------(Bearing & Wick)------	1
16	4N9403	KIT-(Commutator End Terminal Stud) (Includes Stud, Bushing & Washers)	1

200573

4N7752 ELECTRIC STARTING MOTOR GROUP—24 Volt—Prestolite—Part 1
Part of 7S3622 Starting Motor Group shown on Page 76
9S7976 Switch parts are shown on Page 85

4N7752 ELECTRIC STARTING MOTOR GROUP—24 Volt—Prestolite—Part 2

Part of 7S3622 Electric Starting Motor Group shown on Page 76

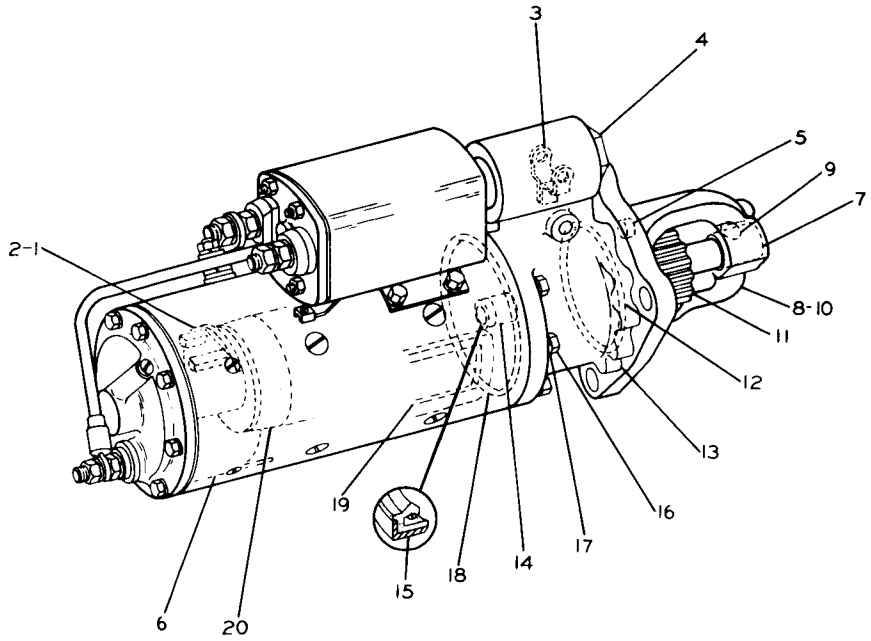

REF. NO.	PART NUMBER	DESCRIPTION	QTY
1	2P8822	PLATE ASSEM.	1
2	4N9401	KIT--(Includes 6 Brushes)	1
	2P8868	KIT--(Includes 8 Springs)	1
3	2P8825	SHIFT YOKE ASSEM.	1
4	2P8817	KIT--(Yoke Adjusting) (Includes Plugs, Pin, Gasket & Nut)	1
5	8S1535	KIT--(Includes 6 Plugs)	1
6	4N9402	KIT--(Includes 10 Insulations)	1
7	8S4684	KIT--(Bearing & Wick)	1
8	8S1543	HOUSING ASSEM.--(Pinion)	1
9	2B4602	PLUG	1
10	8S4680	KIT--(Includes 10 Seals)	1
11	4N4517	DRIVE ASSEM.	1
12	2H3931	SEAL	1
13	2P8824	HOUSING ASSEM.	1
	2B4602	PLUG	1
14	8S2226	BUSHING	1
15	8S2225	SEAL	1
16	L1340	SCREW	7
	2P8816	KIT--(Includes Housing Screws)	1
17	3B4504	LOCKWASHER	7
18	4M189	SEAL	1
19	2P8818	KIT--(Field Coil) (Includes Coils, Gaskets & Screws)	1
20	8S1546	ARMATURE ASSEM.	1
	8S8075	KIT--(Armature Thrust Washers)	1

200574

REF. NO.	PART NUMBER	DESCRIPTION	QTY
1	7F4556	BOLT	6
2	1L4789	LOCKWASHER	6
3	7M328	FRAME ASSEM.	1
4	7S9826	PLUG	1
5	7F3506	BUSHING	1
6	9F2247	PLUG	1
7	9F2547	WICK	1
8	7S9825	GASKET	1
9	7M8651	ARMATURE ASSEM.	1
10	3L3380	BUSHING	1
11	7M324	COIL ASSEM.	1
12	9H3757	WASHER	2
13	7F3494	WASHER	1
14	7M326	CONNECTOR	1
15	1D5117	NUT	2
C 16	6N5123	SWITCH ASSEM. (Separate Illustration)	1
17	6H3622	SCREW ASSEM.	4
18	3B4508	LOCKWASHER	1
19	9F9298	SCREW	12
20	7M325	INSULATOR	1
21	4M1831	PLUG	3
22	4M1832	GASKET	3
23	1H2629	STRIP	3
24	7F3488	SHOE	6
25	7M327	WASHER	1

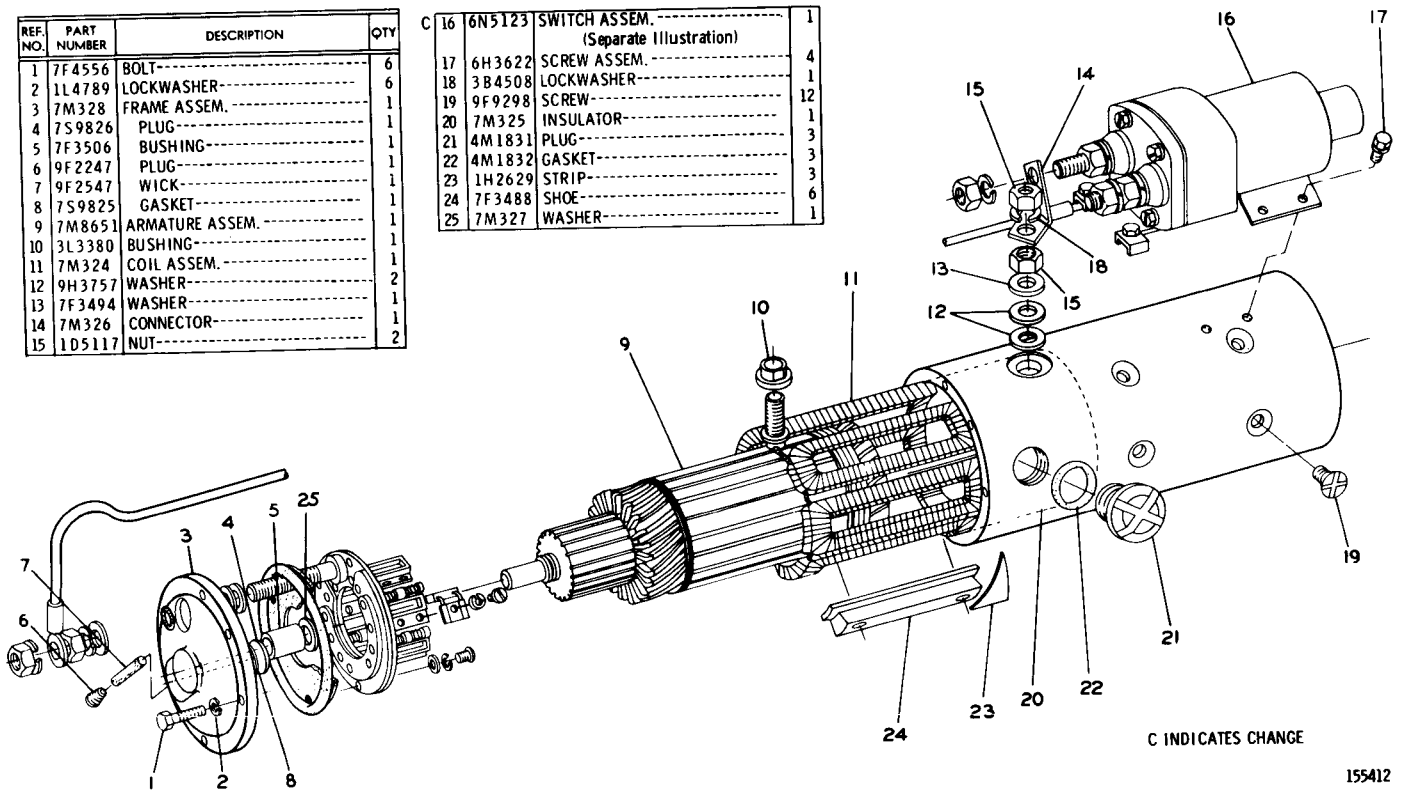

2P3926 ELECTRIC STARTING MOTOR GROUP—Part 1 of 3
FOR USE IN TEMPERATURES OF 0 DEGREES FAHRENHEIT OR BELOW
Part of 8S3886 Starting Motor Group shown on Page 76
6N5123 Switch parts are shown on Page 85

2P3926 ELECTRIC STARTING MOTOR GROUP—Part 2 of 3
FOR USE IN TEMPERATURES OF 0 DEGREES FAHRENHEIT OR BELOW
Part of 8S3886 Starting Motor Group shown on Page 76

REF. NO.	PART NUMBER	DESCRIPTION	QTY
1	4M1849	LEAD ASSEM.	1
2	2J8163	SEAL	1
3	7F3529	WASHER	3
4	8H878	LOCKWASHER	3
5	4B1221	SCREW	3
6	7M330	PLATE ASSEM.	1
7	7F3525	WASHER	12
8	7F3520	PLATE	1
9	5H6467	SCREW	3
10	7H2079	LOCKWASHER	12
11	2L6679	PLATE	3
12	7F3513	HOLDER	6
13	7F3522	SCREW	3
14	7F3512	SPRING	12
15	7M331	PLATE ASSEM.	1
16	7F3521	PLATE	3
17	7F7611	SCREW	3
18	7M332	PLATE	1
19	3H3697	SCREW	3

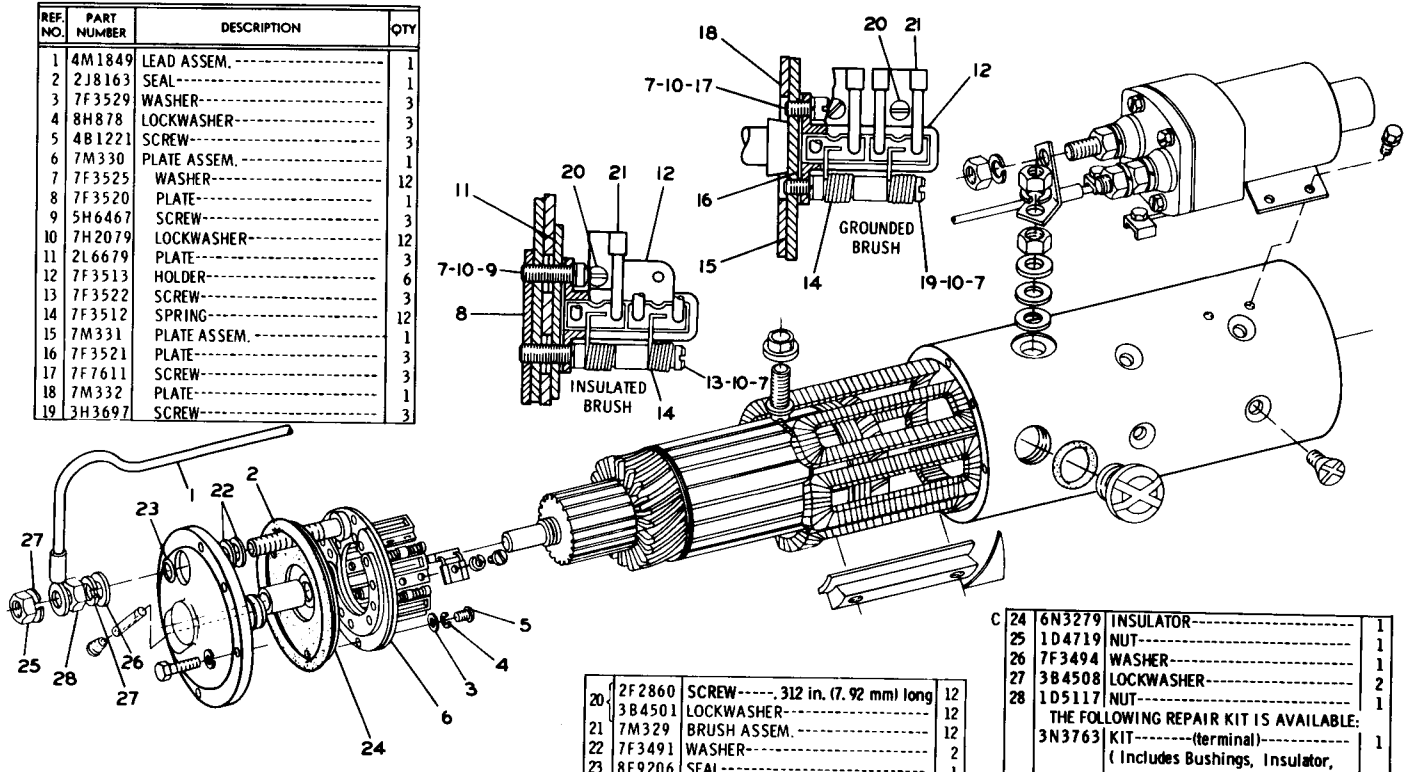

20	2F2860	SCREW-----.312 in. (7.92 mm) long	12
	3B4501	LOCKWASHER	12
21	7M329	BRUSH ASSEM.	12
22	7F3491	WASHER	2
23	8F9206	SEAL	1

C 24	6N3279	INSULATOR	1
25	1D4719	NUT	1
26	7F3494	WASHER	1
27	3B4508	LOCKWASHER	2
28	1D5117	NUT	1
	THE FOLLOWING REPAIR KIT IS AVAILABLE:		
	3N3763	KIT--------(terminal)----------	1
		(Includes Bushings, Insulator, & Washer)	

205355

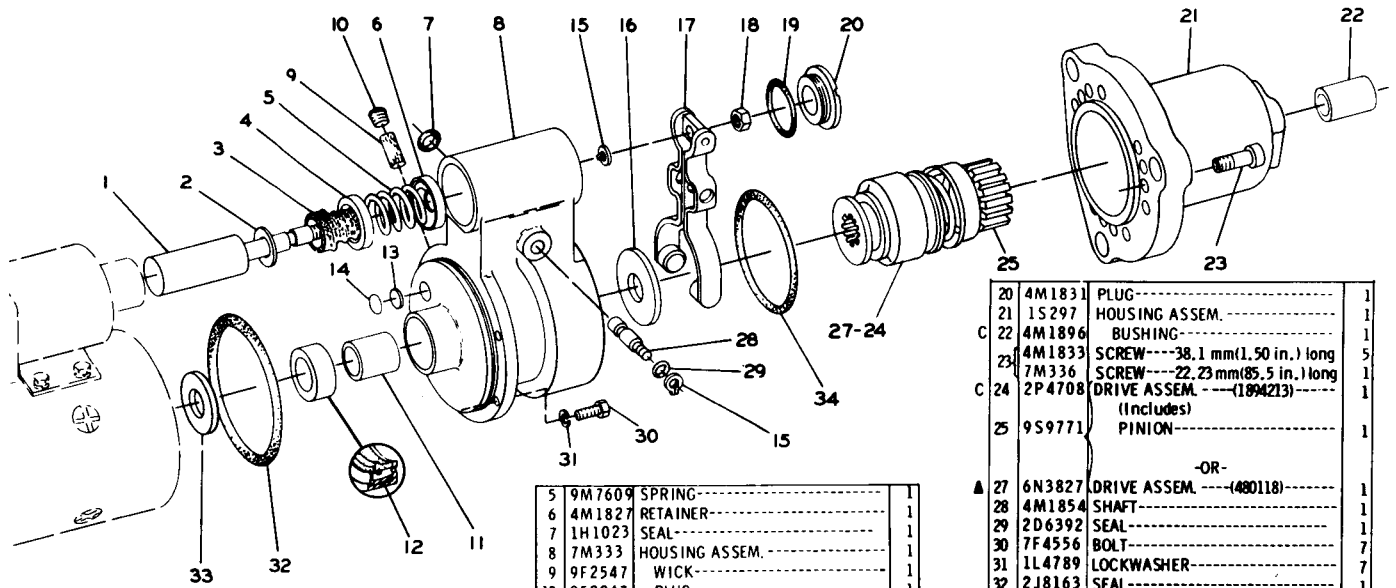

REF. NO.	PART NUMBER	DESCRIPTION	QTY
1	4M1855	PLUNGER ASSEM.	1
	FM055075	FORM--(Installation Instructions)	1
2	2S4027	WASHER	1
3	4M1829	BOOT	1
4	4M1828	RETAINER	1
5	9M7609	SPRING	1
6	4M1827	RETAINER	1
7	1H1023	SEAL	1
8	7M333	HOUSING ASSEM.	1
9	9F2547	WICK	1
10	9F2247	PLUG	1
11	1M9968	BUSHING	1
12	2F6678	SEAL	1
13	7S9826	PLUG	1
14	7S9825	GASKET	1
15	2H3429	RING	2
16	4L2729	WASHER	1
17	4M1853	LEVER ASSEM.	1
18	3F2617	NUT	1
19	4M1832	GASKET	1

▲ NOT PART OF 2P3926 STARTING MOTOR GROUP

20	4M1831	PLUG	1
21	1S297	HOUSING ASSEM.	1
C 22	4M1896	BUSHING	1
23	4M1833	SCREW---38.1 mm(1.50 in.) long	5
	7M336	SCREW---22.23 mm(85.5 in.) long	1
C 24	2P4708	DRIVE ASSEM. ---(1894213) (Includes)	1
25	9S9771	PINION	1
		-OR-	
▲ 27	6N3827	DRIVE ASSEM. ---(480118)	1
28	4M1854	SHAFT	1
29	2D6392	SEAL	1
30	7F4556	BOLT	7
31	1L4789	LOCKWASHER	7
32	2J8163	SEAL	1
33	1M9971	SPACER	1
34	4M1851	GASKET	1

THE FOLLOWING REPAIR KITS ARE AVAILABLE FOR 2P4708 DRIVE ASSEM.:

C	7N6098	KIT---(spring)
	4S9459	KIT---(washer)
	GMG00012	FORM---(Electric Starting Motor Changeover)

C INDICATES CHANGE

218550

2P3926 ELECTRIC STARTING MOTOR GROUP—Part 3 of 3
FOR USE IN TEMPERATURES OF 0 DEGREES FAHRENHEIT OR BELOW
Part of 8S3886 Starting Motor Group shown on Page 76

2P3926 ELECTRIC STARTING MOTOR GROUP—24 Volt—Part 1 of 3—Type 2
FOR USE IN TEMPERATURES OF 0 DEGREES FAHRENHEIT OR BELOW
Part of 8S3886 Starting Motor Group shown on Page 76
4M1812 Switch parts are shown on Page 84D. AN ATTACHMENT

REF. NO.	PART NUMBER	DESCRIPTION	QTY
1	7F4556	BOLT	6
2	1L4789	LOCKWASHER	6
3	7M328	FRAME ASSEM.	1
4	7S9826	PLUG	1
5	7F3506	BUSHING	1
6	9F2247	PLUG	1
7	9F2547	WICK	1
8	7S9825	GASKET	1
9	7M8651	ARMATURE ASSEM.	1
10	3L3380	BUSHING	1
11	7M324	COIL ASSEM.	1
12	9H3757	WASHER	2
13	7F3494	WASHER	1
14	7M326	CONNECTOR	1
15	1D5117	NUT	2

C	16	4M1812	SWITCH ASSEM. (Separate Illustration)	1
	17	6H3622	SCREW ASSEM.	4
	18	3B4508	LOCKWASHER	1
	19	9F9298	SCREW	12
	20	7M325	INSULATOR	1
	21	4M1831	PLUG	3
	22	4M1832	GASKET	3
	23	1H2629	STRIP	3
	24	7F3488	SHOE	6
	25	7M327	WASHER	1

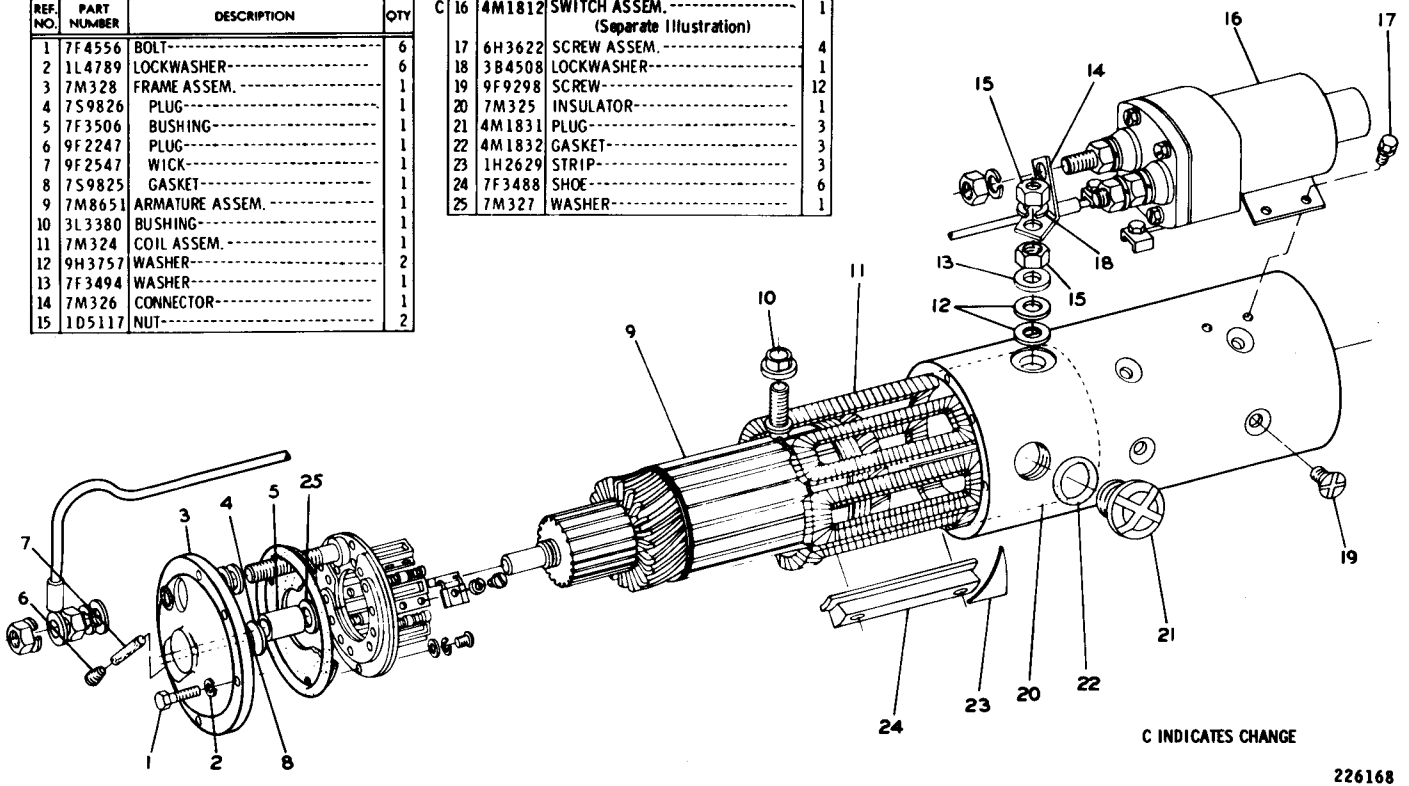

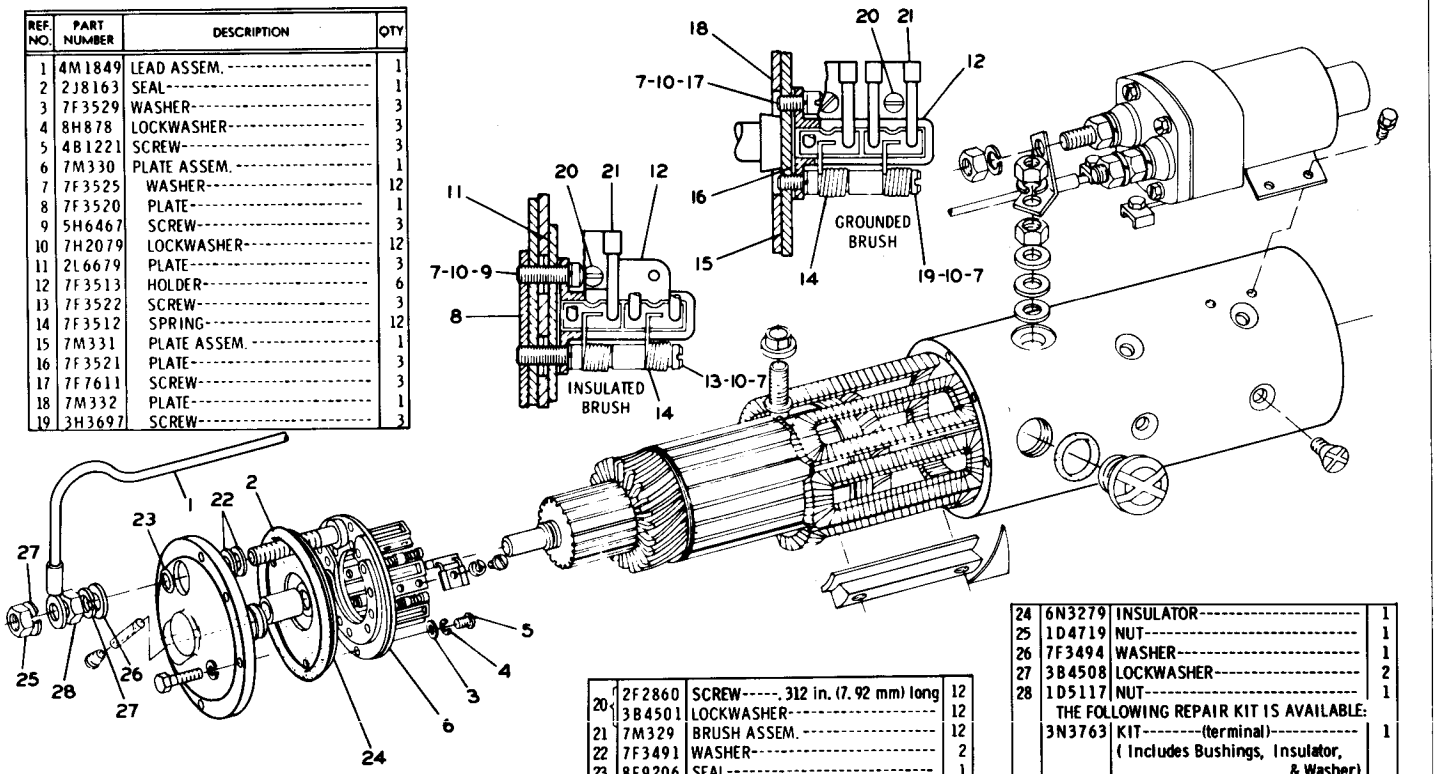

REF. NO.	PART NUMBER	DESCRIPTION	QTY
1	4M1849	LEAD ASSEM.	1
2	2J8163	SEAL	1
3	7F3529	WASHER	3
4	8H878	LOCKWASHER	3
5	4B1221	SCREW	3
6	7M330	PLATE ASSEM.	1
7	7F3525	WASHER	12
8	7F3520	PLATE	1
9	5H6467	SCREW	3
10	7H2079	LOCKWASHER	12
11	2L6679	PLATE	3
12	7F3513	HOLDER	6
13	7F3522	SCREW	3
14	7F3512	SPRING	12
15	7M331	PLATE ASSEM.	1
16	7F3521	PLATE	3
17	7F7611	SCREW	3
18	7M332	PLATE	1
19	3H3697	SCREW	3

20	2F2860	SCREW-----.312 in. (7.92 mm) long	12
	3B4501	LOCKWASHER	12
21	7M329	BRUSH ASSEM.	12
22	7F3491	WASHER	2
23	8F9206	SEAL	1

24	6N3279	INSULATOR	1
25	1D4719	NUT	1
26	7F3494	WASHER	1
27	3B4508	LOCKWASHER	2
28	1D5117	NUT	1
	THE FOLLOWING REPAIR KIT IS AVAILABLE:		
	3N3763	KIT--------(terminal)---------- (Includes Bushings, Insulator, & Washer)	1

226169

2P3926 ELECTRIC STARTING MOTOR GROUP—24 Volt—Part 2 of 3—Type 2
FOR USE IN TEMPERATURES OF 0 DEGREES FAHRENHEIT OR BELOW
Part of 8S3886 Starting Motor Group shown on Page 76. AN ATTACHMENT

2P3926 ELECTRIC STARTING MOTOR GROUP—24 Volt—Part 3 of 3—Type 2
FOR USE IN TEMPERATURES OF 0 DEGREES FAHRENHEIT OR BELOW
Part of 8S3886 Starting Motor Group shown on Page 76. AN ATTACHMENT

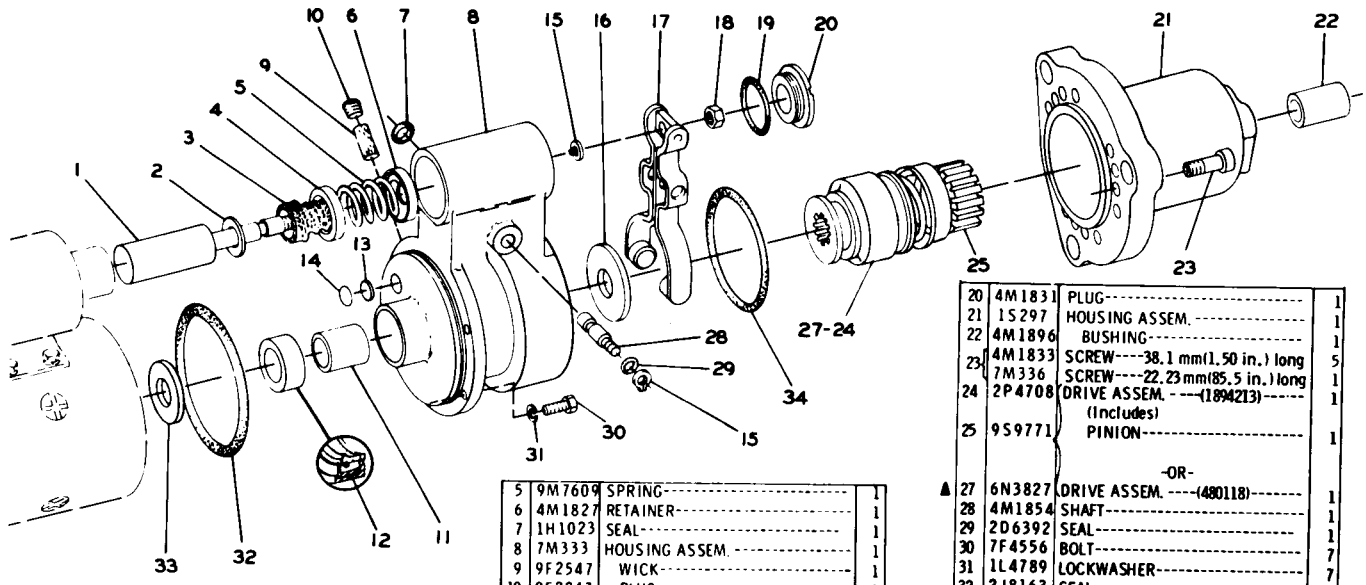

REF. NO.	PART NUMBER	DESCRIPTION	QTY
1	4M1855	PLUNGER ASSEM.	1
	FM055075	FORM--(Installation Instructions)	1
2	2S4027	WASHER	1
3	4M1829	BOOT	1
4	4M1828	RETAINER	1
5	9M7609	SPRING	1
6	4M1827	RETAINER	1
7	1H1023	SEAL	1
8	7M333	HOUSING ASSEM.	1
9	9F2547	WICK	1
10	9F2247	PLUG	1
11	1M9968	BUSHING	1
12	2F6678	SEAL	1
13	7S9826	PLUG	1
14	7S9825	GASKET	1
15	2H3429	RING	2
16	4L2729	WASHER	1
17	4M1853	LEVER ASSEM.	1
18	3F2617	NUT	1
19	4M1832	GASKET	1

▲ NOT PART OF 2P3926 STARTING MOTOR GROUP

20	4M1831	PLUG	1
21	1S297	HOUSING ASSEM.	1
22	4M1896	BUSHING	1
23	4M1833	SCREW----38.1 mm(1.50 in.) long	5
	7M336	SCREW----22.23 mm(85.5 in.) long	1
24	2P4708	DRIVE ASSEM. ----(1894213)---- (Includes)	1
25	9S9771	PINION	1
		-OR-	
▲ 27	6N3827	DRIVE ASSEM. ----(480118)----	1
28	4M1854	SHAFT	1
29	2D6392	SEAL	1
30	7F4556	BOLT	7
31	1L4789	LOCKWASHER	7
32	2J8163	SEAL	1
33	1M9971	SPACER	1
34	4M1851	GASKET	1

THE FOLLOWING REPAIR KITS ARE AVAILABLE FOR 2P4708 DRIVE ASSEM.:

7N6098	KIT	(spring)
4S9459	KIT	(washer)
GMG00012	FORM	(Electric Starting Motor Changeover)

226170

REF. NO.	PART NUMBER	DESCRIPTION	QTY
C 1	7N1269	TERMINAL ASSEM.	1
	4M1834	PLATE	1
2	7F4907	STRIP	1
3	3H3681	NUT	2
4	3B4508	LOCKWASHER	4
5	3H3680	NUT	2
6	7F3494	WASHER	2
7	4M1836	INSULATOR	2
8	4M1837	BUSHING	2
9	7F4906	STUD	1
10	4M2800	TERMINAL	1
11	7N1271	TERMINAL ASSEM.	1
12	4M5274	SCREW--(hex head)	1
		- OR -	
C	5P9132	SCREW--(truss head)	1
13	1P3879	LEAD ASSEM.	1
14	4M3217	SCREW	2
C 15	9G6770	CONTACT ASSEM.	1
16	4M1813	CASE ASSEM.	1
17	1F73	CLIP	2
18	4M1815	SPRING	1
19	9M7657	NUT	4
		- OR -	
	9S4489	SCREW ASSEM.	4
20	9S4490	GASKET	4

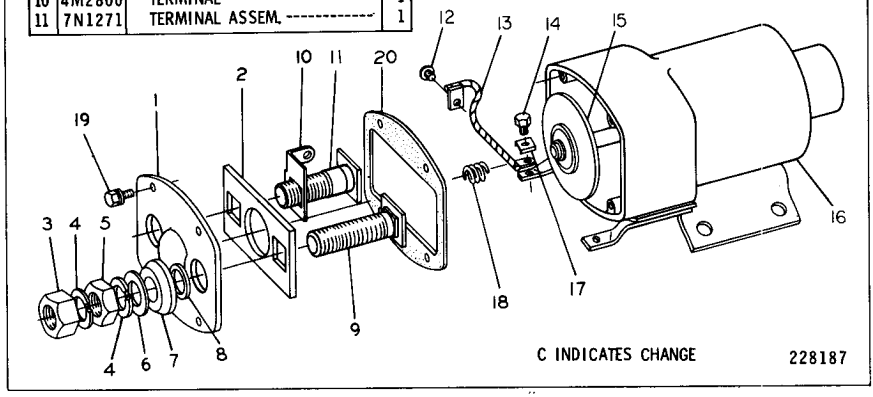

4M1812 SOLENOID SWITCH ASSEMBLY

Part of 4N3182 and 2P3926 Electric Starting Motor Groups shown on Pages 79A & 84A

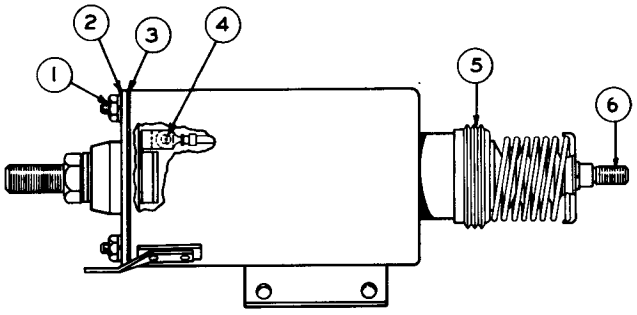

	REF. NO.	PART NUMBER	DESCRIPTION	QTY.
C	1	9M7657	NUT	4
	2	8S8023	COVER ASSEM.	1
	3	8S8024	GASKET (Part of 8S8023 Cover Assem.)	1
	4	9B7235	SCREW	1
		9M7233	LOCKWASHER	1
	5	8S1528	BOOT	1
	6	8S8021	CORE ASSEM.	1

The following Repair Kits are available:

8S1524-KIT--------(Terminal Stud-Battery)-------- 1
8S1525-KIT---------(Terminal Stud-Motor)-------- 1
9S8688-KIT----------(Core-Contact End)---------- 1
8S1527-KIT----------(Core-Yoke End)---------- 1

C INDICATES CHANGE

115899

9S7976 SOLENOID SWITCH ASSEMBLY
Part of 4N7752 Starting Motor Group shown on Page 80

	REF. NO.	PART NUMBER	DESCRIPTION	QTY
C	1	7N908	TERMINAL ASSEM. (Includes)	1
		4M1834	PLATE	1
	2	7F4907	STRIP	1
	3	3H3681	NUT	2
	4	3B4508	LOCKWASHER	4
	5	3H3680	NUT	2
	6	7F3494	WASHER	2
	7	4M1836	INSULATOR	2
	8	4M1837	BUSHING	2
C	9	7F4906	STUD	1
	10	7N909	TERMINAL ASSEM.	1
	11	9S4490	GASKET	1
	12	4M5274	SCREW---------(large)----------	1
			- OR -	
C		5P9132	SCREW---------(small)----------	1
	13	9S4489	SCREW ASSEM.	4
	14	4M3217	SCREW	2
	15	4M1814	CONTACT ASSEM.	1
	16	3P72	CASE ASSEM.	1
	17	1F73	CLIP	2
	18	4M1815	SPRING	1

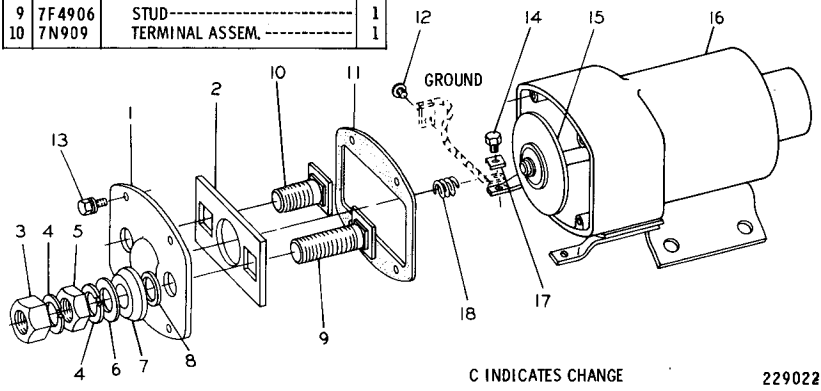

C INDICATES CHANGE

229022

6N5123 SOLENOID SWITCH ASSEMBLY
Part of 4N3182 and 2P3926 Starting Motor Groups shown on Pages 77 and 82

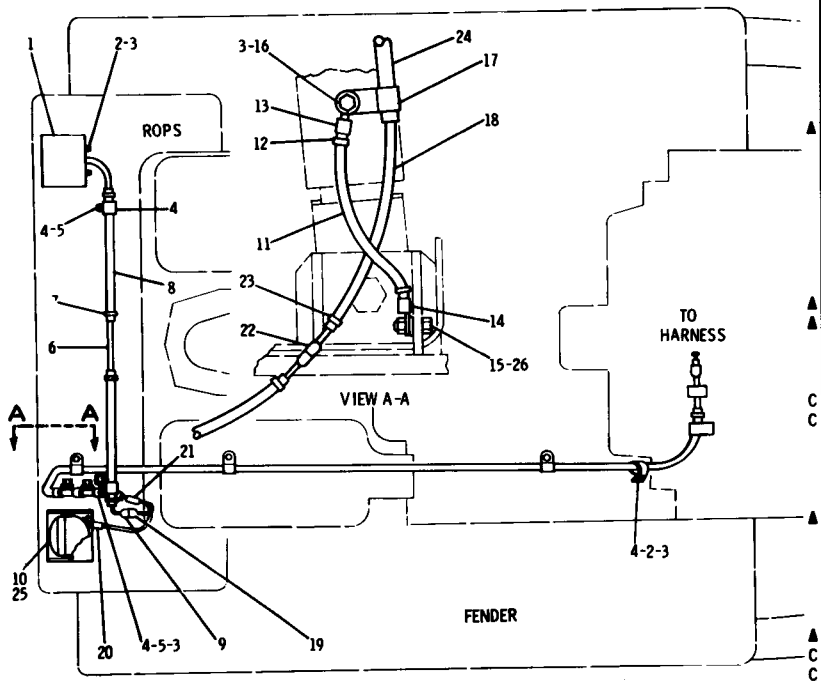

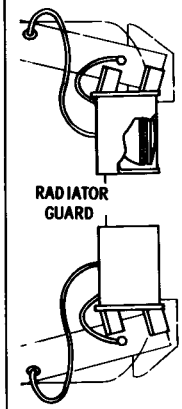

REF. NO.	PART NUMBER	DESCRIPTION	QTY
1	8P8306	BRACKET ASSEM.	2
2	S1594	BOLT	4
3	5P1075	WASHER	10
4	1S2487	CLIP	3
5	S509	BOLT	3
6	8P6432	WIRE ASSEM. (Includes)	1
▲	5P5624	WIRE--------1.55 m(61.02 in.)	
	2L8075	TERMINAL--------(lamp)--------	1
7	3S2093	STRAP	4
8	5P5628	TUBE---------.92 m(36.22 in.)	
9	5P6725	CONNECTOR ASSEM.	1
10	1M1882	LAMP ASSEM. (Separate Illustration)	2
11	9P2696	WIRE ASSEM. (Includes)	1
▲	5P5624	WIRE----------.25 m(9.84in.)	
▲	5P5628	TUBE----------.2 m(7.87 in.)	
12	3S2093	STRAP	2
13	2L8079	TERMINAL	1
14	2L8081	TERMINAL	1
C 15	S1595	BOLT	1
C	1D4719	NUT	1
16	T102	BOLT	2
17	4S5718	CLIP	2
18	8P6433	WIRE ASSEM. (Includes)	1
▲	5P5624	WIRE----------1.9 m(74.8 in.)	
19	6K1828	CONNECTOR	1
20	2L8075	TERMINAL	1
21	2S1043	SPLICE	1
22	5P6725	CONNECTOR ASSEM.	1
23	3S2093	STRAP	4
▲	24 5P5628	TUBE----------.76 m(29.92 in.	
C	25 1B4206	NUT	4
C	26 4B4280	WASHER	1
C	27 3B4510	LOCKWASHER	2

C INDICATES CHANGE ▲ ORDER BY THE METRE

165985

9P1152 LIGHTING GROUP—4 Lamp—24 Volt—Part 1—Replaced by 8P6569 shown on Page 88
FOR USE WITH SWEEP WITHOUT ROPS
1M1882 Lamp parts are shown on Page 91
AN ATTACHMENT

9P1152 LIGHTING GROUP—4 Lamp—24 Volt—Part 2—Replaced by 8P6569 shown on Page 88
FOR USE WITH SWEEP WITHOUT ROPS
1M1882 Lamp parts are shown on Page 91
AN ATTACHMENT

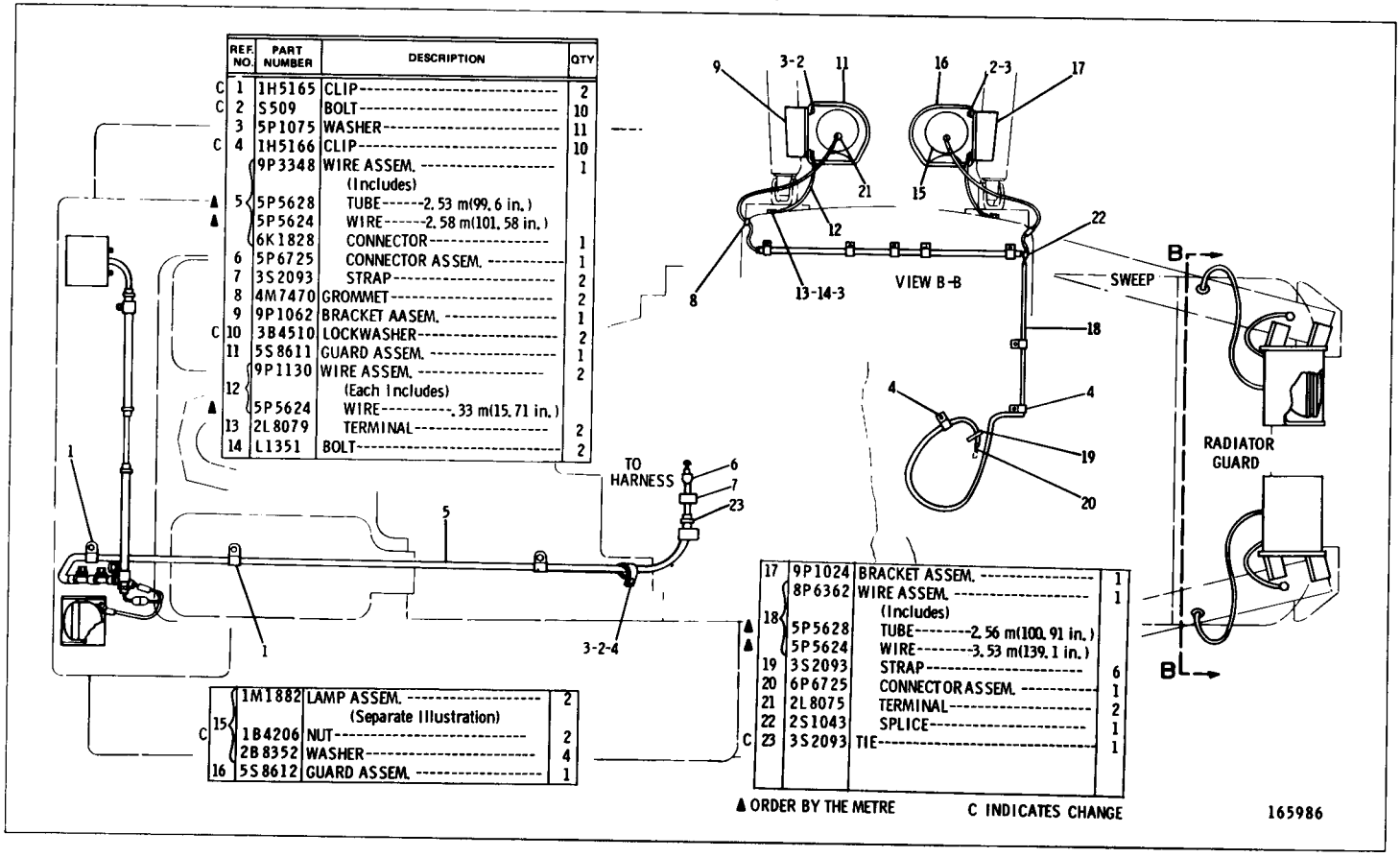

	REF. NO.	PART NUMBER	DESCRIPTION	QTY
C	1	1H5165	CLIP	2
C	2	S509	BOLT	10
	3	5P1075	WASHER	11
C	4	1H5166	CLIP	10
		9P3348	WIRE ASSEM. (Includes)	1
▲	5	5P5628	TUBE------2.53 m(99.6 in.)	
▲		5P5624	WIRE------2.58 m(101.58 in.)	
		6K1828	CONNECTOR	1
	6	5P6725	CONNECTOR ASSEM.	1
	7	3S2093	STRAP	2
	8	4M7470	GROMMET	2
	9	9P1062	BRACKET AASEM.	1
C	10	3B4510	LOCKWASHER	2
	11	5S8611	GUARD ASSEM.	1
	12	9P1130	WIRE ASSEM. (Each Includes)	2
▲		5P5624	WIRE----------.33 m(15.71 in.)	
	13	2L8079	TERMINAL	2
	14	L1351	BOLT	2

	15	1M1882	LAMP ASSEM. (Separate Illustration)	2
C		1B4206	NUT	2
		2B8352	WASHER	4
	16	5S8612	GUARD ASSEM.	1

	17	9P1024	BRACKET ASSEM.	1
		8P6362	WIRE ASSEM. (Includes)	1
	18	5P5628	TUBE--------2.56 m(100.91 in.)	
		5P5624	WIRE--------3.53 m(139.1 in.)	
	19	3S2093	STRAP	6
	20	6P6725	CONNECTOR ASSEM.	1
	21	2L8075	TERMINAL	2
	22	2S1043	SPLICE	1
C	23	3S2093	TIE	1

▲ ORDER BY THE METRE C INDICATES CHANGE 165986

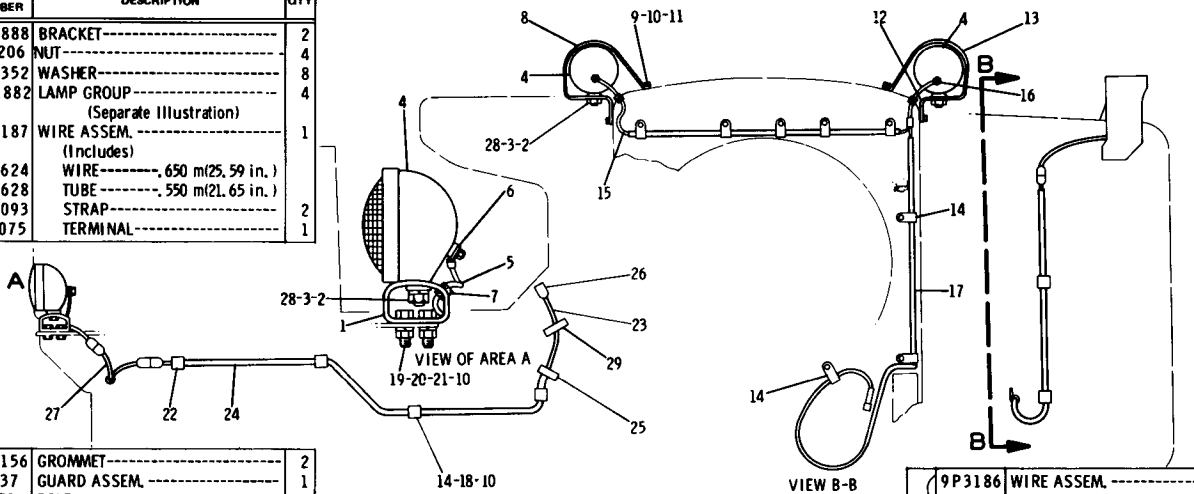

REF. NO.	PART NUMBER	DESCRIPTION	QTY
1	1S1888	BRACKET	2
C 2	4B4206	NUT	4
3	2B8352	WASHER	8
4	1M1882	LAMP GROUP (Separate Illustration)	4
	9P3187	WIRE ASSEM. (Includes)	1
▲ 5	5P5624	WIRE-----.650 m(25.59 in.)	
▲	5P5628	TUBE-----.550 m(21.65 in.)	
	3S2093	STRAP	2
6	2L8075	TERMINAL	1
7	9H5156	GROMMET	2
8	9P737	GUARD ASSEM.	1
9	L1351	BOLT	2
C 10	5P1075	WASHER	12
11	1K7091	WASHER	4
12	4M7470	GROMMET	2
13	9P738	GUARD ASSEM.	1
C 14	1H5166	CLIP	12
	8P6362	WIRE ASSEM. (Includes)	1
▲ 15	5P5624	WIRE-------3.53 m(139.08 in.)	
	2S1043	SPLICE	1
	3S2093	STRAP	6
16	2L8075	TERMINAL	2
▲ 17	5P5628	TUBE-------2.56 m(100.89 in.)	
C 18	S509	BOLT	2
19	3B1915	BOLT	8
20	1D4717	NUT	8
21	4B5271	WASHER	8
C 22	1H5165	CLIP	4
	9P3348	WIRE ASSEM. (Includes)	1
C▲ 23	5P5624	WIRE-------2.58 m(101.57 in.)	
	5P6725	CONNECTOR ASSEM.	1
C▲ 24	5P5628	TUBE-------2.53 m(99.60 in.)	
25	3S2093	STRAP	2
26	6K1828	CONNECTOR	1
	9P3186	WIRE ASSEM. (Includes)	1
C▲	5P5624	WIRE------1.72 m(66.90 in.)	
▲ 27	5P5628	TUBE--------1.50 m(59.05 in.)	
	3S2093	STRAP	2
	2S1043	SPLICE	1
	6K1828	CONNECTOR	1
	2L8075	TERMINAL	1
C 28	3B4510	LOCKWASHER	4
C 29	3S2093	STRAP	1

C INDICATES CHANGE

▲ ORDER BY THE METRE

166280

8P6570 LIGHTING GROUP—4 Lamp—24 Volt—Type 1
FOR USE WITHOUT ROPS
1M1882 Lamp parts are shown on Page 91. AN ATTACHMENT

8P6570 LIGHTING GROUP—4 lamp—24 Volt—Type 2
FOR USE WITHOUT ROPS
1M1882 Lamp parts are shown on Page 91. AN ATTACHMENT

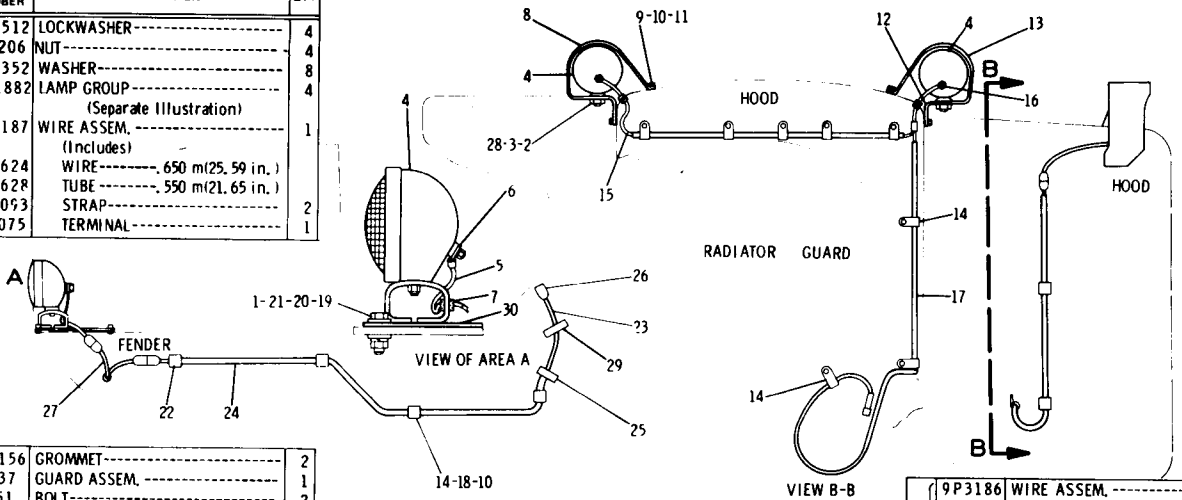

	REF. NO.	PART NUMBER	DESCRIPTION	QTY
C	1	3B4512	LOCKWASHER	4
	2	4B4206	NUT	4
	3	2B8352	WASHER	8
	4	1M1882	LAMP GROUP (Separate Illustration)	4
		9P3187	WIRE ASSEM. (Includes)	1
▲	5	5P5624	WIRE—.650 m(25.59 in.)	
▲		5P5628	TUBE—.550 m(21.65 in.)	
		3S2093	STRAP	2
	6	2L8075	TERMINAL	1
	7	9H5156	GROMMET	2
	8	9P737	GUARD ASSEM.	1
	9	L1351	BOLT	2
C	10	5P1075	WASHER	4
	11	1K7091	WASHER	4
	12	4M7470	GROMMET	2
	13	9P738	GUARD ASSEM.	1
C	14	1H5166	CLIP	10
		8P6362	WIRE ASSEM. (Includes)	1
▲	15	5P5624	WIRE—3.53 m(139.08 in.)	
		2S1043	SPLICE	1
		3S2093	STRAP	6
	16	2L8075	TERMINAL	2
▲	17	5P5628	TUBE—2.56 m(100.89 in.)	
	18	S509	BOLT	2
C	19	1A458	BOLT	4
C	20	1B4331	NUT	4
C	21	4B4283	WASHER	8
	22	1H5165	CLIP	4
		9P3348	WIRE ASSEM. (Includes)	1
▲	23	5P5624	WIRE—2.58 m(101.57 in.)	
		5P6725	CONNECTOR ASSEM.	1
▲	24	5P5628	TUBE—2.53 m(99.60 in.)	
	25	3S2093	STRAP	2
	26	6K1828	CONNECTOR	1
		9P3186	WIRE ASSEM. (Includes)	1
▲	27	5P5624	WIRE—1.72 m(66.90 in.)	
▲		5P5628	TUBE—1.50 m(59.05 in.)	
		3S2093	STRAP	2
		2S1043	SPLICE	1
		6K1828	CONNECTOR	1
		2L8075	TERMINAL	1
	28	3B4510	LOCKWASHER	4
	29	3S2093	STRAP	1
		9P6890	PLATE ASSEM. (Includes)	1
	30	1S1888	BRACKET	1

C INDICATES CHANGE

171641

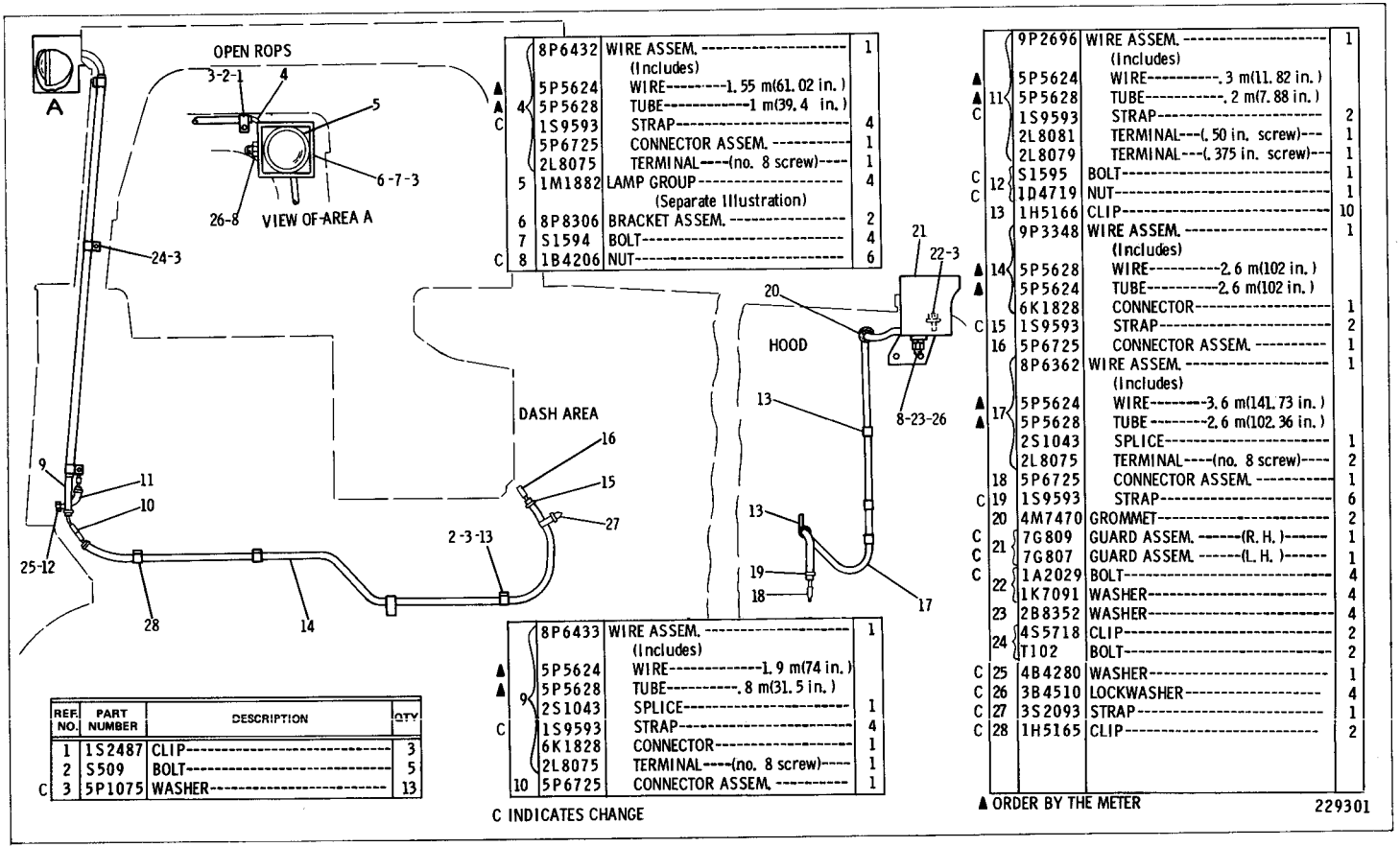

	4	8P6432	WIRE ASSEM. (Includes)	1
▲		5P5624	WIRE---1.55 m(61.02 in.)	
▲		5P5628	TUBE---1 m(39.4 in.)	
C		1S9593	STRAP	4
		5P6725	CONNECTOR ASSEM.	1
		2L8075	TERMINAL---(no. 8 screw)	1
	5	1M1882	LAMP GROUP (Separate Illustration)	4
	6	8P8306	BRACKET ASSEM.	2
	7	S1594	BOLT	4
C	8	1B4206	NUT	6

	9	8P6433	WIRE ASSEM. (Includes)	1
▲		5P5624	WIRE---1.9 m(74 in.)	
▲		5P5628	TUBE---.8 m(31.5 in.)	
		2S1043	SPLICE	1
C		1S9593	STRAP	4
		6K1828	CONNECTOR	1
		2L8075	TERMINAL---(no. 8 screw)	1
	10	5P6725	CONNECTOR ASSEM.	1

		9P2696	WIRE ASSEM. (Includes)	1
▲		5P5624	WIRE---.3 m(11.82 in.)	
▲	11	5P5628	TUBE---.2 m(7.88 in.)	
C		1S9593	STRAP	2
		2L8081	TERMINAL---(.50 in. screw)	1
		2L8079	TERMINAL---(.375 in. screw)	1
C	12	S1595	BOLT	1
C		1D4719	NUT	1
	13	1H5166	CLIP	10
		9P3348	WIRE ASSEM. (Includes)	1
▲	14	5P5628	WIRE---2.6 m(102 in.)	
▲		5P5624	TUBE---2.6 m(102 in.)	
		6K1828	CONNECTOR	1
C	15	1S9593	STRAP	2
	16	5P6725	CONNECTOR ASSEM.	1
		8P6362	WIRE ASSEM. (Includes)	1
▲	17	5P5624	WIRE---3.6 m(141.73 in.)	
▲		5P5628	TUBE---2.6 m(102.36 in.)	
		2S1043	SPLICE	1
		2L8075	TERMINAL---(no. 8 screw)	2
	18	5P6725	CONNECTOR ASSEM.	1
C	19	1S9593	STRAP	6
	20	4M7470	GROMMET	2
C	21	7G809	GUARD ASSEM. ---(R.H.)	1
C		7G807	GUARD ASSEM. ---(L.H.)	1
C	22	1A2029	BOLT	4
		1K7091	WASHER	4
	23	2B8352	WASHER	4
	24	4S5718	CLIP	2
		T102	BOLT	2
C	25	4B4280	WASHER	1
C	26	3B4510	LOCKWASHER	4
C	27	3S2093	STRAP	1
C	28	1H5165	CLIP	2

REF. NO.	PART NUMBER	DESCRIPTION	QTY
1	1S2487	CLIP	3
2	S509	BOLT	5
C 3	5P1075	WASHER	13

C INDICATES CHANGE

▲ ORDER BY THE METER

229301

8P6569 LIGHTING GROUP—24 Volt—4 Lamp
FOR USE WITH OPEN ROLL-OVER PROTECTIVE STRUCTURE AND SWEEPS
1M1882 Lamp parts are shown on Page 91. AN ATTACHMENT

9P3695 LIGHTING GROUP—4 Lamp—24 Volt—Replaced by 9P3386 shown on Page 90
FOR USE WITH SWEEPS AND ENCLOSED ROPS
1M1882 Lamp parts are shown on Page 91. AN ATTACHMENT

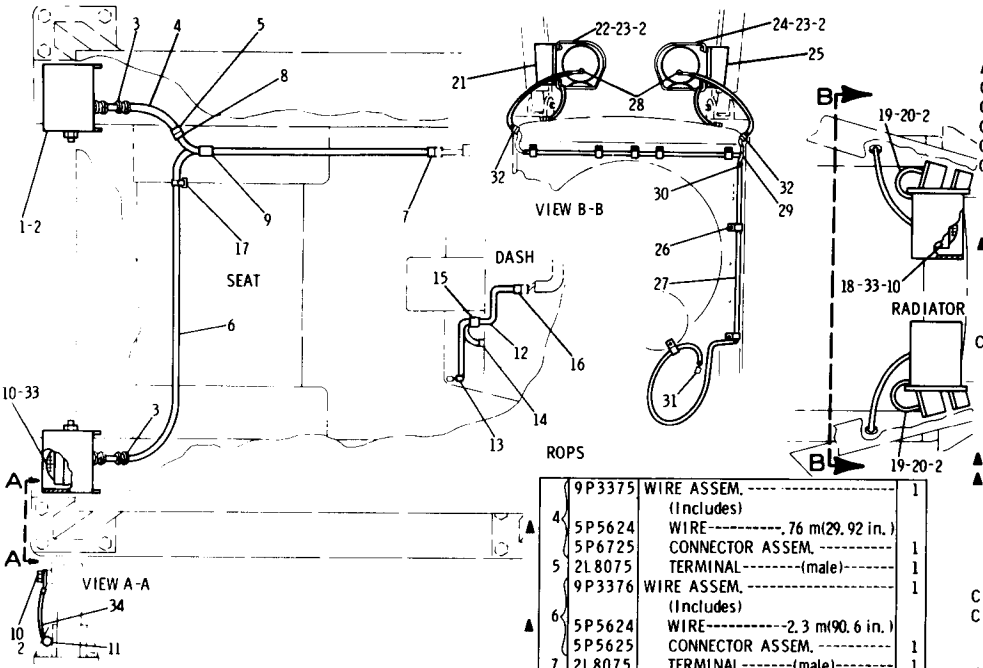

REF. NO	PART NUMBER	DESCRIPTION	QTY
1	8P8306	BRACKET ASSEM.	2
	S1594	BOLT	4
C 2	5P1075	WASHER	15
3	5P7856	GROMMET	4

	9P3375	WIRE ASSEM. (Includes)	1
4	5P5624	WIRE-----.76 m(29.92 in.)	
	5P6725	CONNECTOR ASSEM.	1
5	2L8075	TERMINAL-----(male)-----	1
	9P3376	WIRE ASSEM. (Includes)	1
6	5P5624	WIRE-----2.3 m(90.6 in.)	
	5P5625	CONNECTOR ASSEM.	1
7	2L8075	TERMINAL-----(male)-----	1
8	6N9587	CONNECTOR-----(female)-----	1
9	2S1043	SPLICE	1
10	1M1882	LAMP GROUP (Separate Illustration)	4
C	S1595	BOLT	1
C 11	1D4719	NUT	1
C	4B4280	WASHER	1

C INDICATES CHANGE

	9P3374	WIRE ASSEM. (Includes)	1
12	5P5624	WIRE-----.9 m(35.4 in.)	
C 13	4S1988	TERMINAL	1
C 14	5P4571	TERMINAL	1
C 15	2S1043	SPLICE	1
C 16	5P6725	CONNECTOR ASSEM.	1
C 17	3S2093	STRAP	1
18	2B8352	WASHER	4
	9P1130	WIRE ASSEM. (Each Includes)	2
19	5P5624	WIRE-----.33 m(15.7 in.)	
	2L8079	TERMINAL	2
20	L1351	BOLT	2
21	9P1062	BRACKET ASSEM. -----(L.H.)-----	2
22	5S8612	GUARD ASSEM. -------(L.H.)-----	1
C 23	S509	BOLT	8
24	5S8611	GUARD ASSEM. ------(R.H.)-----	1
25	9P1024	BRACKET ASSEM. -----(R.H.)-----	1
26	1H5166	CLIP	8
	8P6362	WIRE ASSEM. (Includes)	1
27	5P5624	WIRE--------3.6 m(139.075 in.)	
	5P5628	TUBE---------2.6 m(100.91 in.)	
28	2L8075	TERMINAL------(male)---------	2
29	2S1043	BUTT	1
30	3S2093	TIE	6
31	5P6725	CONNECTOR ASSEM.	1
32	4M7470	GROMMET	2
C 33	1B4206	NUT	4
C	3B4510	LOCKWASHER	4
	9P2696	WIRE ASSEM. (Includes)	1
	5P5624	WIRE--------.25 m(9.843 in.)	
34	5P5628	TUBE---------.2 m(7.784 in.)	
	3S2093	TIE	2
	2L8079	TERMINAL-------(small)-------	1
	2L8081	TERMINAL-------(large)-------	1

▲ ORDER BY THE METRE

165983

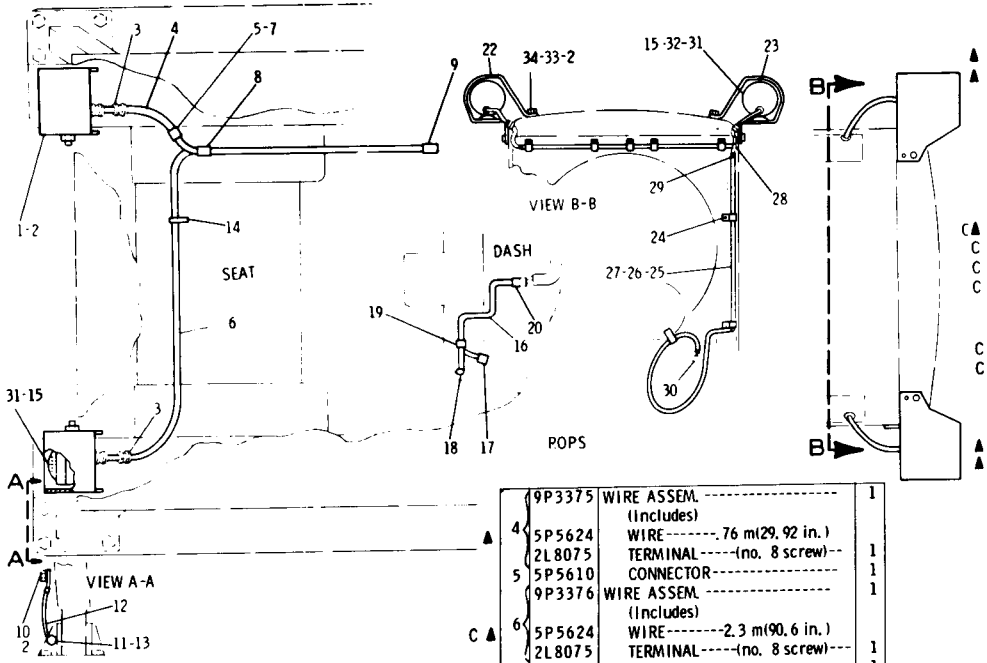

REF NO	PART NUMBER	DESCRIPTION	QTY
1	8P8306	BRACKET ASSEM.	2
	S1594	BOLT	4
2	5P1075	WASHER	7
3	5P7856	GROMMET	4

4	9P3375	WIRE ASSEM. (Includes)	1
	5P5624	WIRE-------.76 m(29.92 in.)	
	2L8075	TERMINAL-----(no. 8 screw)--	1
5	5P5610	CONNECTOR	1
6	9P3376	WIRE ASSEM. (Includes)	1
C	5P5624	WIRE--------2.3 m(90.6 in.)	
	2L8075	TERMINAL-----(no. 8 screw)---	1
C 7	6N9587	CONNECTOR	1
C 8	2S1043	SPLICE	1
9	5P5610	CONNECTOR	1
10	T102	BOLT	1
11	S1595	BOLT	1
	1D4719	NUT	1
	4B4280	WASHER	1

C INDICATES CHANGE

	9P2696	WIRE ASSEM. (Includes)	1
12	5P5624	WIRE-------.25 m(9.843 in.)	
	5P5628	TUBE--------.2 m(7.784 in.)	
	3S2093	TIE	2
	2L8081	TERMINAL------(.5 in. screw)--	1
13	2L8079	TERMINAL---(.375 in. screw)--	1
14	3S2093	STRAP	1
15	3B4510	LOCKWASHER	4
16	9P3374	WIRE ASSEM. (Includes)	1
C	5P5624	WIRE-------.78 m(30.71 in.)	
C 17	5P4571	TERMINAL	1
C 18	4S1988	TERMINAL	1
C 19	2S1043	SPLICE	1
20	5P5610	CONNECTOR	1
21	4M7470	GROMMET	2
C 22	7G807	GUARD ASSEM. --------(L.H.)----	1
C 23	7G809	GUARD ASSEM. --------(R.H.)----	1
24	1H5166	CLIP	8
25	8P6362	WIRE ASSEM. (Includes)	1
26	5P5624	WIRE-------3.6 m(139.075 in.)	
	5P5628	TUBE-------2.6 m(100.91 in.)	
27	2L8075	TERMINAL-------(male)----	2
28	2S1043	BUTT	1
29	3S2093	TIE	6
30	5P5610	CONNECTOR	1
31	1M1882	LAMP GROUP (Separate Illustration)	4
	1B4206	NUT	6
32	2B8352	WASHER	4
33	1K7091	WASHER	4
34	L1351	BOLT	2

▲ ORDER BY THE METER

171642

9P3386 LIGHTING GROUP—4 Lamp—24 Volt
FOR USE WITH ENCLOSED ROPS
1M1882 Lamp parts are shown on Page 91. AN ATTACHMENT

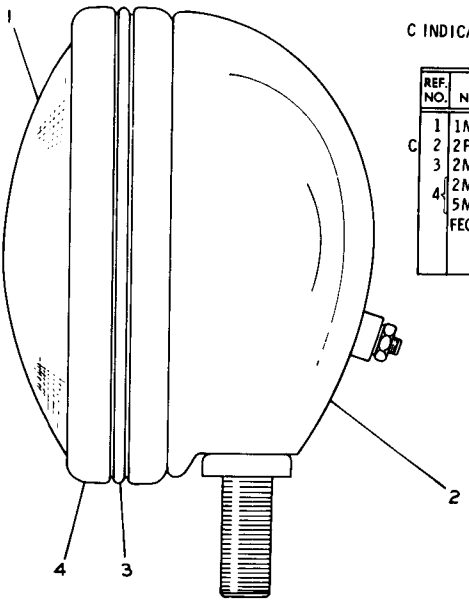

C INDICATES CHANGE

	REF. NO.	PART NUMBER	DESCRIPTION	QTY
	1	1M5898	SEALED UNIT	1
C	2	2P2541	BODY ASSEM.	1
	3	2M5282	RING	1
	4	2M5284	MOULDING ASSEM.	2
		5M6668	SCREW	2
		FE035430	FORM (Instructions For Installing Lamp Assem.)	1

1M1882 FLOOD LAMP ASSEMBLY
Part of 9P1152, 8P6570, 8P6569, 9P3695 and 9P3386 Lighting Groups
shown on Pages 86 through 90

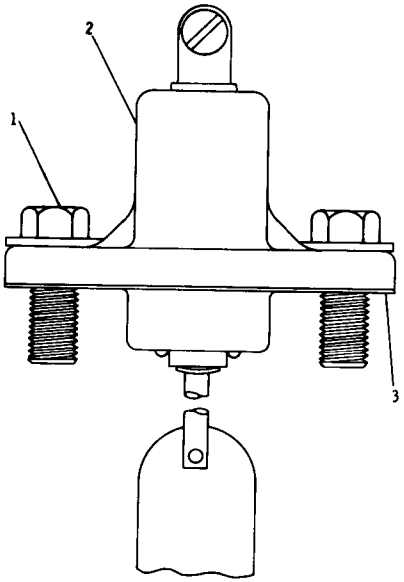

	REF. NO.	PART NUMBER	DESCRIPTION	QTY
C	1	2B2695	BOLT	2
		9M1974	WASHER	2
	2	4N9072	SWITCH ASSEM.	1
	3	4N3841	GASKET	1

C INDICATES CHANGE

4N8985 COOLANT FLOW SWITCH GROUP
AN ATTACHMENT

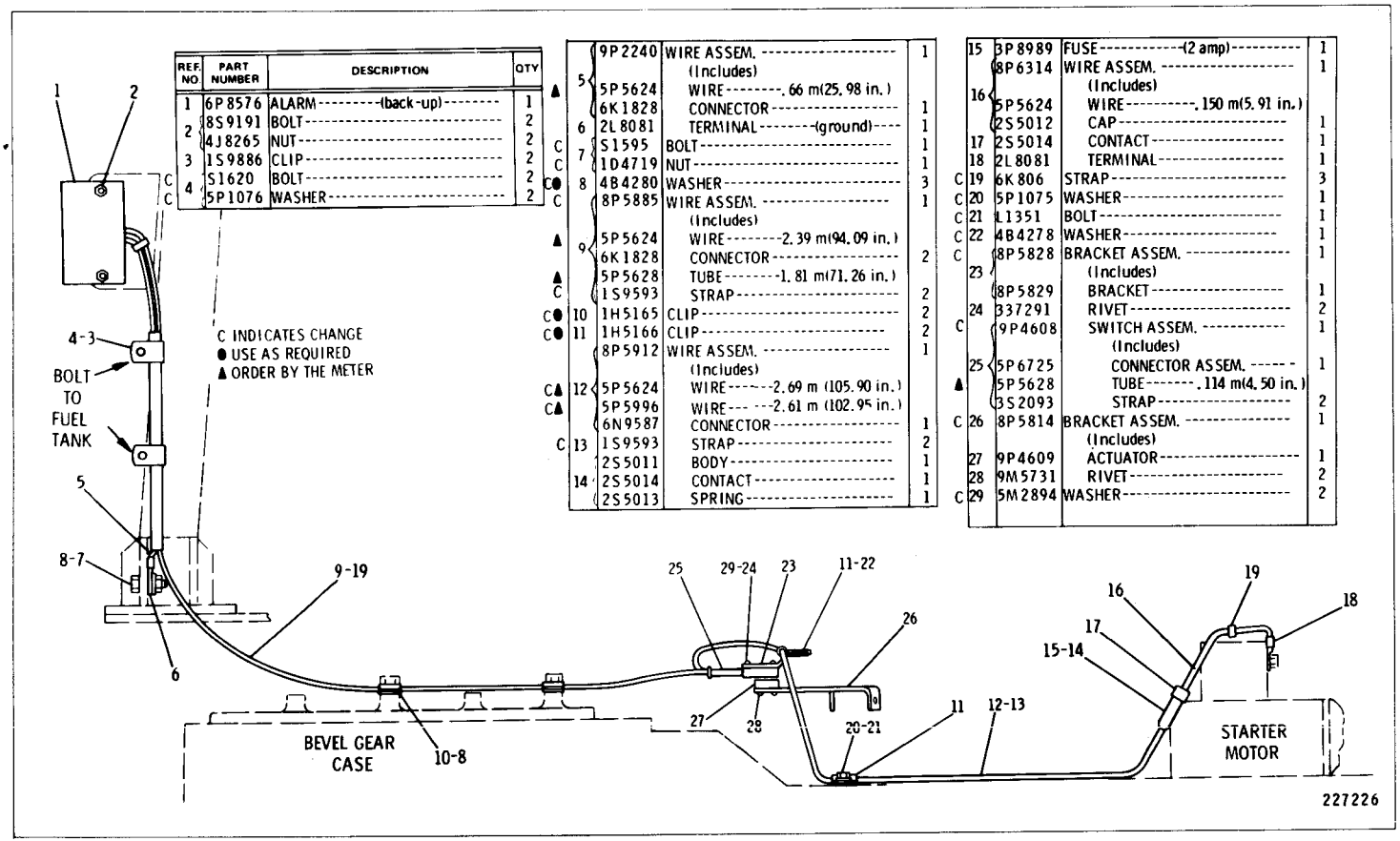

REF. NO.	PART NUMBER	DESCRIPTION	QTY	
1	6P8576	ALARM ---------(back-up)--------	1	▲
2	8S9191	BOLT ----------	2	
	4J8265	NUT ----------	2	C
3	1S9886	CLIP ----------	2	C
4	1S1620	BOLT ----------	2	C●
	5P1076	WASHER ----------	2	C

5	9P2240	WIRE ASSEM. (Includes) ----------	1	
	5P5624	WIRE --------. 66 m(25. 98 in.)		▲
	6K1828	CONNECTOR ----------	1	
6	2L8081	TERMINAL --------(ground)----	1	
7	1S1595	BOLT ----------	1	C
	1D4719	NUT ----------	1	C
8	4B4280	WASHER ----------	3	C●
9	8P5885	WIRE ASSEM. (Includes) ----------	1	C
	5P5624	WIRE --------2. 39 m(94. 09 in.)		▲
	6K1828	CONNECTOR ----------	2	
	5P5628	TUBE --------1. 81 m(71. 26 in.)		▲
	1S9593	STRAP ----------	2	C
10	1H5165	CLIP ----------	2	C●
11	1H5166	CLIP ----------	2	C●
12	8P5912	WIRE ASSEM. (Includes) ----------	1	
	5P5624	WIRE ------2. 69 m (105. 90 in.)		C▲
	5P5996	WIRE --- ---2. 61 m (102. 95 in.)		C▲
	6N9587	CONNECTOR ----------	1	
13	1S9593	STRAP ----------	2	C
	2S5011	BODY ----------	1	
14	2S5014	CONTACT ----------	1	
	2S5013	SPRING ----------	1	

15	3P8989	FUSE ----------(2 amp)----------	1	
16	8P6314	WIRE ASSEM. (Includes) ----------	1	
	5P5624	WIRE ----------. 150 m(5. 91 in.)		
	2S5012	CAP ----------	1	
17	2S5014	CONTACT ----------	1	
18	2L8081	TERMINAL ----------	1	
19	6K806	STRAP ----------	3	C
20	5P1075	WASHER ----------	1	C
21	L1351	BOLT ----------	1	C
22	4B4278	WASHER ----------	1	C
23	8P5828	BRACKET ASSEM. (Includes) ----------	1	C
	8P5829	BRACKET ----------	1	
24	337291	RIVET ----------	2	
	9P4608	SWITCH ASSEM. (Includes) ----------	1	C
25	5P6725	CONNECTOR ASSEM. ------	1	
	5P5628	TUBE --------. 114 m(4. 50 in.)		▲
	3S2093	STRAP ----------	2	
26	8P5814	BRACKET ASSEM. (Includes) ----------	1	C
27	9P4609	ACTUATOR ----------	1	
28	9M5731	RIVET ----------	2	
29	5M2894	WASHER ----------	2	C

8P7063 BACK-UP WARNING GROUP

POWER TRAIN ARRANGEMENT

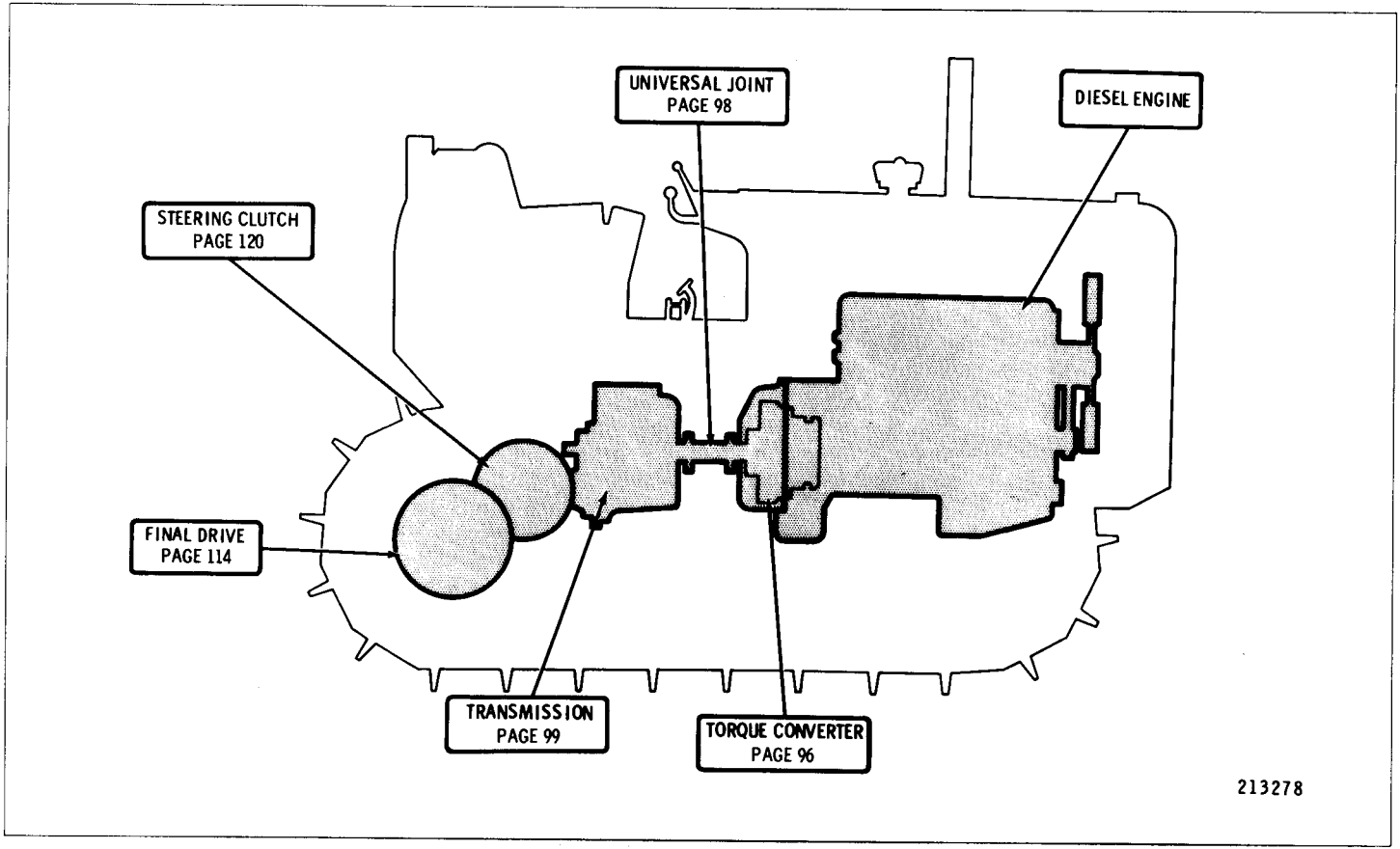

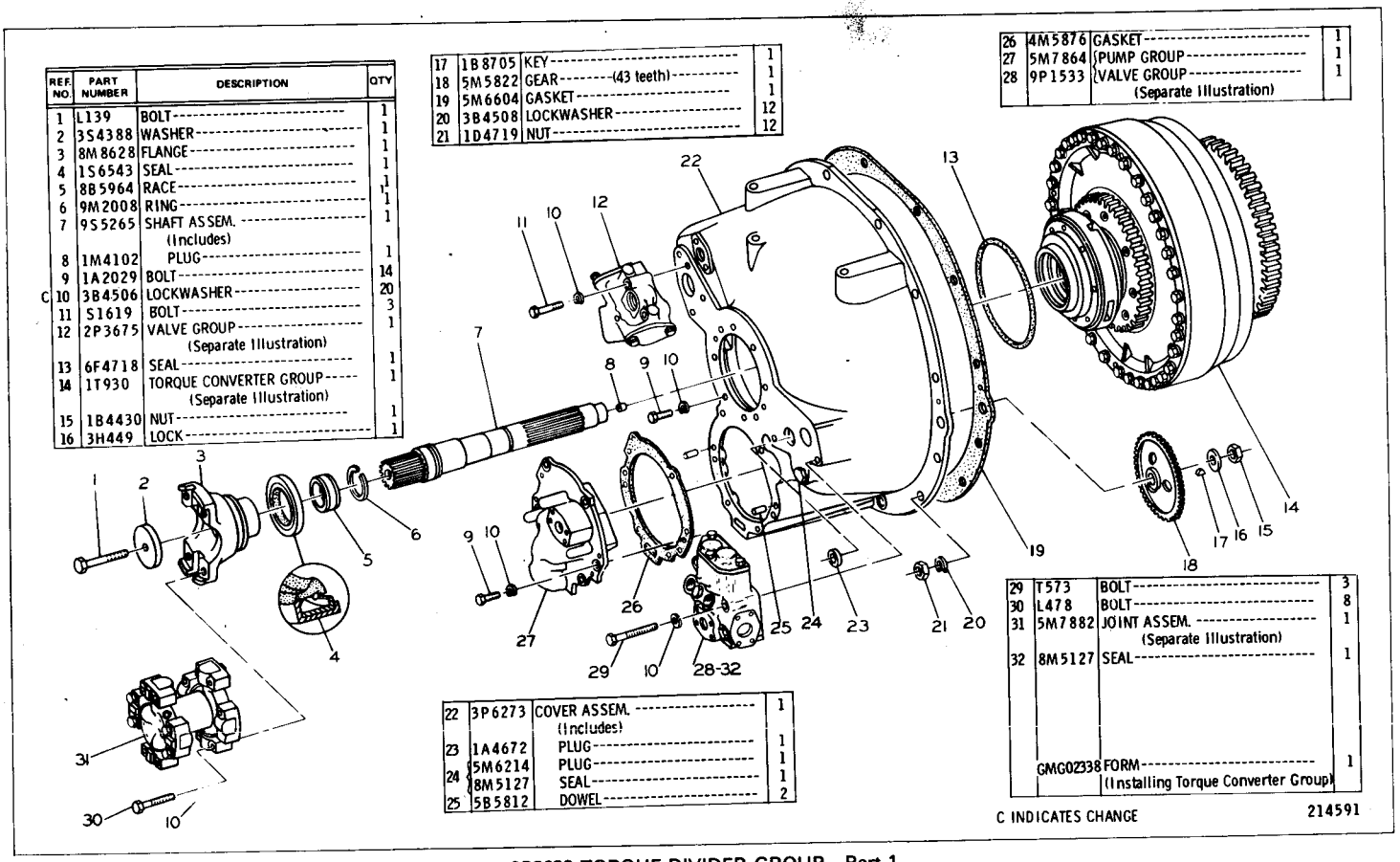

REF. NO.	PART NUMBER	DESCRIPTION	QTY
1	L139	BOLT	1
2	3S4388	WASHER	1
3	8M8628	FLANGE	1
4	1S6543	SEAL	1
5	8B5964	RACE	1
6	9M2008	RING	1
7	9S5265	SHAFT ASSEM. (Includes)	1
8	1M4102	PLUG	1
9	1A2029	BOLT	14
C 10	3B4506	LOCKWASHER	20
11	S1619	BOLT	3
12	2P3675	VALVE GROUP (Separate Illustration)	1
13	6F4718	SEAL	1
14	1T930	TORQUE CONVERTER GROUP (Separate Illustration)	1
15	1B4430	NUT	1
16	3H449	LOCK	1

17	1B8705	KEY	1
18	5M5822	GEAR (43 teeth)	1
19	5M6604	GASKET	1
20	3B4508	LOCKWASHER	12
21	1D4719	NUT	12

26	4M5876	GASKET	1
27	5M7864	PUMP GROUP	1
28	9P1533	VALVE GROUP (Separate Illustration)	1

22	3P6273	COVER ASSEM. (Includes)	1
23	1A4672	PLUG	1
24	5M6214	PLUG	1
	8M5127	SEAL	1
25	5B5812	DOWEL	2

29	T573	BOLT	3
30	L478	BOLT	8
31	5M7882	JOINT ASSEM. (Separate Illustration)	1
32	8M5127	SEAL	1
	GMG02338	FORM (Installing Torque Converter Group)	1

C INDICATES CHANGE

214591

9P2633 TORQUE DIVIDER GROUP—Part 1
1T930 Torque Converter, 2P3675, 9P1533 Valve, 5M7864 Pump and 5M7882 Joint parts
are shown on Pages 96 through 98

9P2633 TORQUE DIVIDER GROUP—Part 2

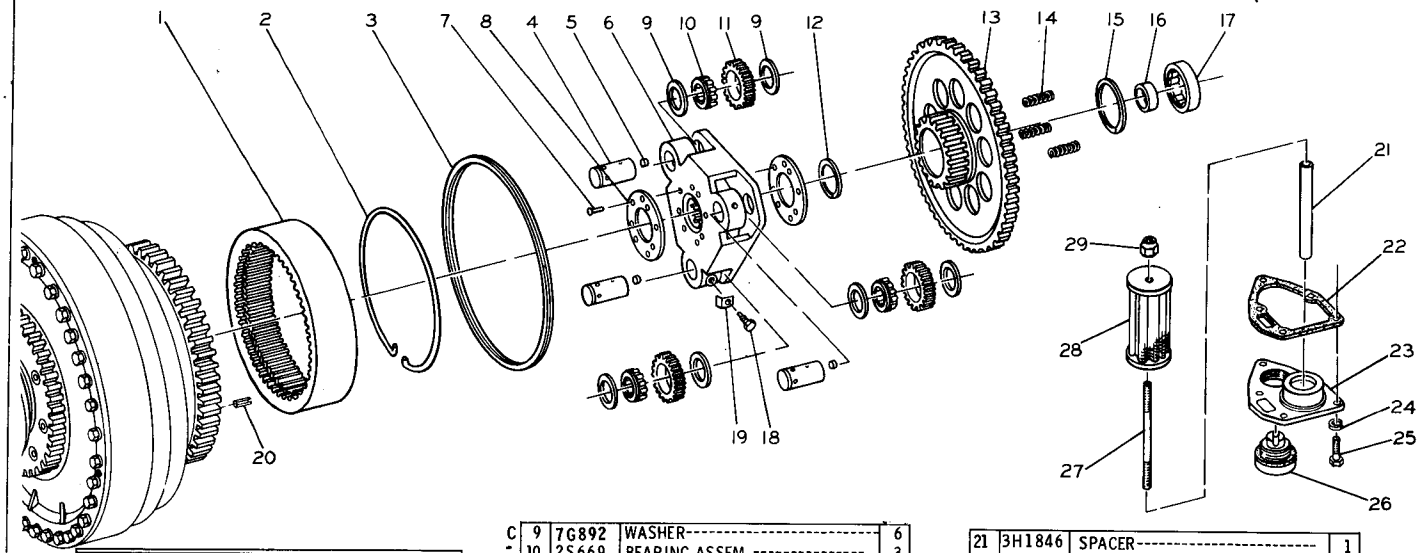

	REF. NO.	PART NUMBER	DESCRIPTION	QTY.
	1	5M6208	GEAR-------(82 Teeth)----------	1
	2	5M7878	RING----------	1
	3	9M1976	RING----------	1
C	4	5M6198	SHAFT----------	3
C	5	2A3746	PLUG----------	3
	6	9S5267	CARRIER ASSEM.----------	1
C	7	5P6943	RIVET----------	5
	8	8P1958	WASHER----------	2
C	9	7G892	WASHER----------	6
	10	2S669	BEARING ASSEM.----------	3
C	11	7G2474	GEAR--------(23 Teeth)----------	3
	12	5H6480	RING----------	1
	13	9M2028	GEAR--------(66 Teeth)----------	1
	14	1K7041	SPRING----------	3
	15	2D1523	RING----------	1
	16	9M2014	RACE----------	1
	17	9H8712	BEARING ASSEM.----------	1
	18	1K6978	SCREW----------	3
	19	5M7877	LOCK----------	3
	20	2K5986	PIN----------	2
	21	3H1846	SPACER----------	1
	22	5M5064	GASKET----------	1
	23	5M5071	COVER----------	1
	24	3B4506	LOCKWASHER----------	5
	25	1A2029	BOLT----------	5
	26	8B6599	PLUG----------	1
		L1124	GASKET----------	1
	27	9B1484	STUD----------	1
	28	4H2978	SCREEN ASSEM.----------	1
	29	2F8616	NUT----------	1
			(Mounted on flywheel housing)	

C INDICATES CHANGE

229690

REF. NO.	PART NUMBER	DESCRIPTION	QTY
1	1K6986	RING	1
2	5H1901	RACE AND ROLLER ASSEM.	1
3	1T443	CARRIER ASSEM.	1
4	1T69	RING	2
5	1T436	GEAR---(64 teeth)	1
6	1T448	BOLT	8
7	1T425	BEARING	1
8	1T51	WHEEL	1

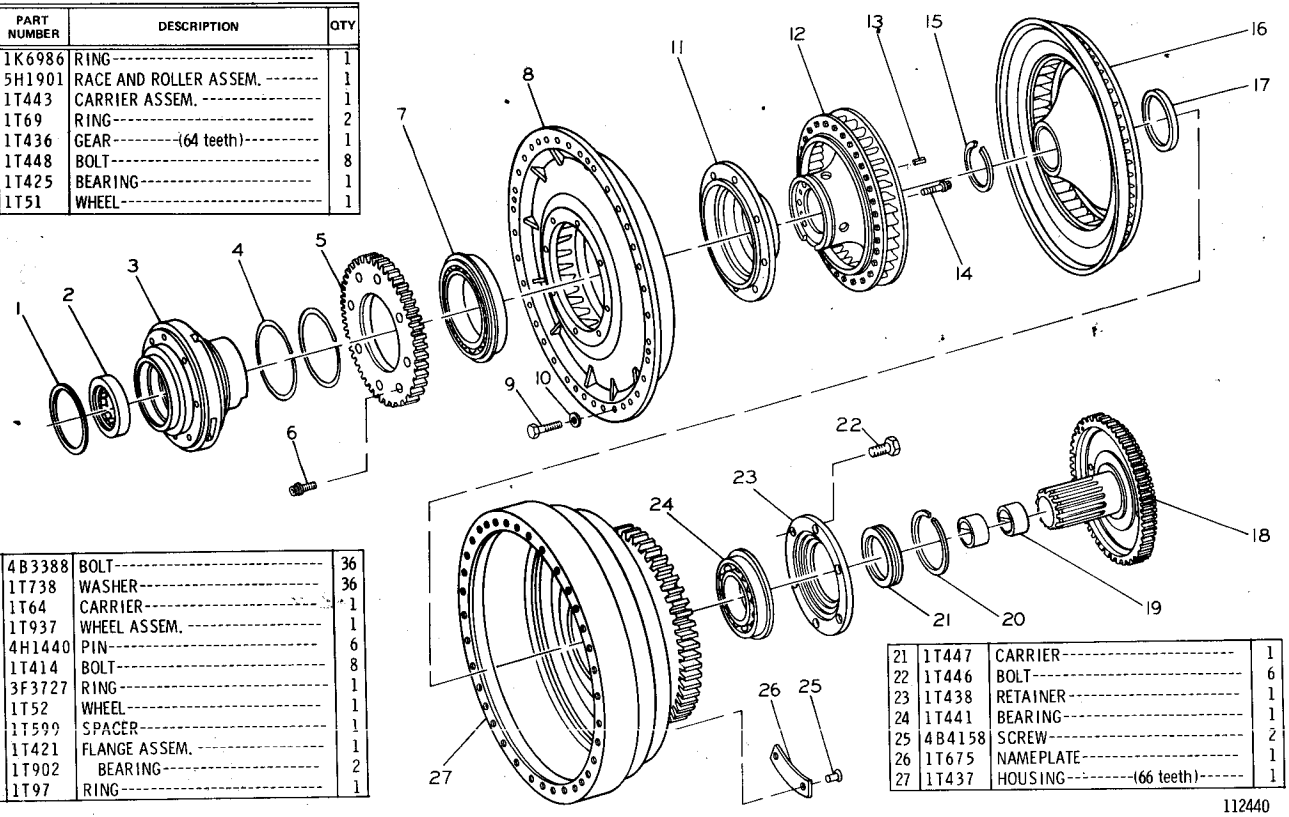

9	4B3388	BOLT	36
10	1T738	WASHER	36
11	1T64	CARRIER	1
12	1T937	WHEEL ASSEM.	1
13	4H1440	PIN	6
14	1T414	BOLT	8
15	3F3727	RING	1
16	1T52	WHEEL	1
17	1T599	SPACER	1
18	1T421	FLANGE ASSEM.	1
19	1T902	BEARING	2
20	1T97	RING	1

21	1T447	CARRIER	1
22	1T446	BOLT	6
23	1T438	RETAINER	1
24	1T441	BEARING	1
25	4B4158	SCREW	2
26	1T675	NAMEPLATE	1
27	1T437	HOUSING---(66 teeth)	1

112440

1T930 TORQUE CONVERTER GROUP
Torque Converter Serial No. 50T1—Up
Part of 9P2633 Torque Divider Group shown on Page 94

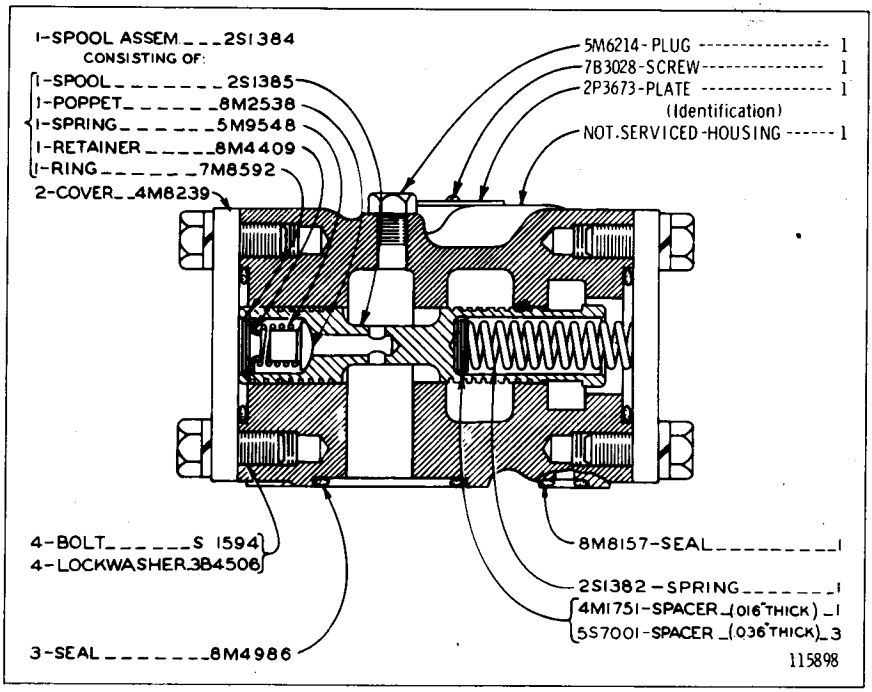

2P3675 RELIEF VALVE GROUP
Part of 9P2633 Torque Divider Group shown on Page 94

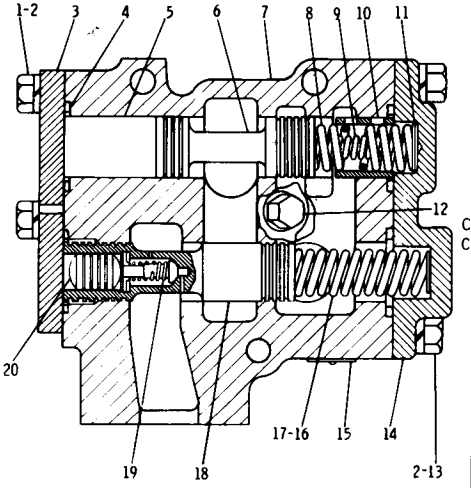

REF. NO	PART NUMBER	DESCRIPTION	QTY
1	S1594	BOLT	4
2	3B4506	LOCKWASHER	7
3	2M1656	COVER	2

4	8M5254	SEAL	6
5	7M5814	SPACER	1
6	1K8362	SPOOL	1
7	3P362	HOUSING	1
8	8M8627	SPRING-------(outer)------	1
9	4M5912	SPRING-------(inner)------	1
10	9M2058	STOP	1
11	7M1397	SPACER--.92 mm(.036 in.)	2
	5M3492	SPACER--.26 mm(.010 in.) (Use as Required)	2
C 12	9S4191	PLUG	3
C	3J1907	SEAL	3
13	S1591	BOLT	3
14	7M1345	COVER	1
15	9P1532	PLATE----(identification)----	1
	7B3028	SCREW	1
16	7M8499	SPRING	1
17	5M9622	SPACER--1.58mm(.062 in.)	1
	5M9623	SPACER--.92 mm(.036 in.)	1
	5M9624	SPACER--.26 mm(.010 in.) (Use as Required)	1
18	3P2755	SPOOL ASSEM. (Includes)	
	8M1013	RETAINER	1
	3D8317	RING	1
19	4M2381	SPRING	1
	1S2121	PLUNGER	1
20	2M7041	SLUG	1

C INDICATES CHANGE 166276

9P1533 RELIEF VALVE GROUP
Part of 9P2633 Torque Divider Group shown on Page 94

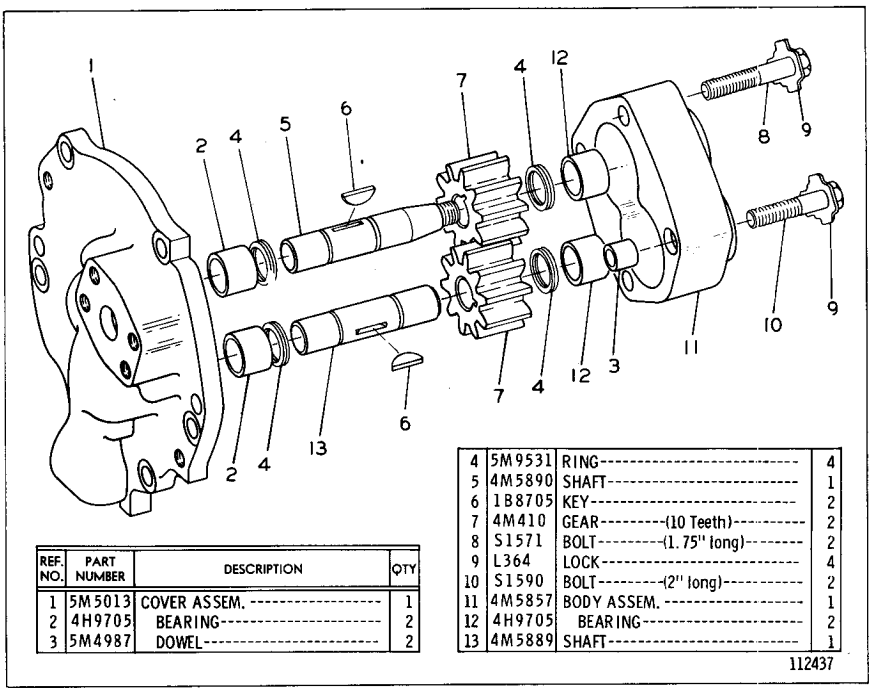

REF. NO.	PART NUMBER	DESCRIPTION	QTY
1	5M5013	COVER ASSEM.	1
2	4H9705	BEARING	2
3	5M4987	DOWEL	2
4	5M9531	RING	4
5	4M5890	SHAFT	1
6	1B8705	KEY	2
7	4M410	GEAR--(10 Teeth)	2
8	S1571	BOLT--(1.75" long)	2
9	L364	LOCK	4
10	S1590	BOLT--(2" long)	2
11	4M5857	BODY ASSEM.	1
12	4H9705	BEARING	2
13	4M5889	SHAFT	1

112437

5M7864 SCAVENGE PUMP GROUP
Part of 9P2633 Torque Divider Group shown on Page 94

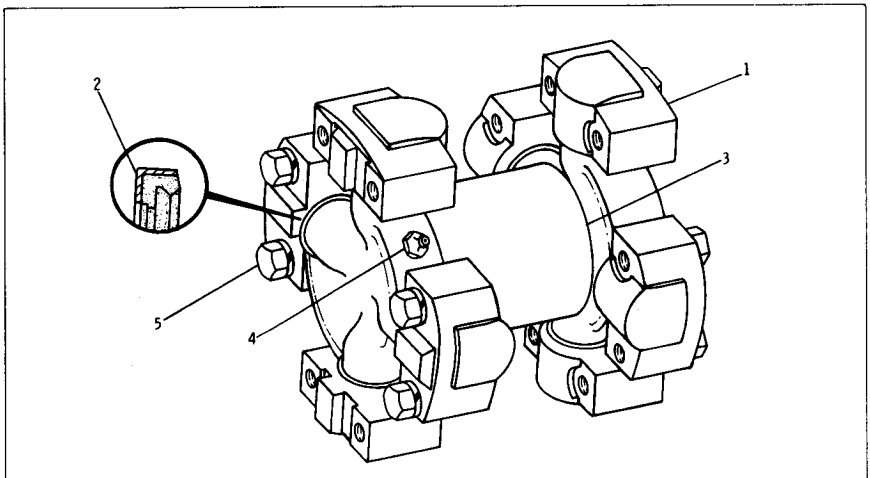

REF. NO.	PART NUMBER	DESCRIPTION	QTY
1	1S9670	SPIDER AND BEARING ASSEM. (Each Includes)	2
2	9H2479	SEAL ASSEM.	4
3	9M2036	PLATE	1
4	3H122	FITTING	2
5	L478	BOLT	8
	3B4506	LOCKWASHER	8

213276

5M7882 UNIVERSAL JOINT ASSEMBLY
Part of 9P2633 Torque Divider Group shown on Page 94

7M1310 TRANSMISSION ARRANGEMENT

Serial No. 61X1 to 6X507 inclusive

9M2040 Planetary Transmission, 8M6350 Transmission Hydraulic Control, 9M2041 Transfer Gear and 8M8551 Relief Valve parts are shown on Pages 100, 101, 104, 105 and 106

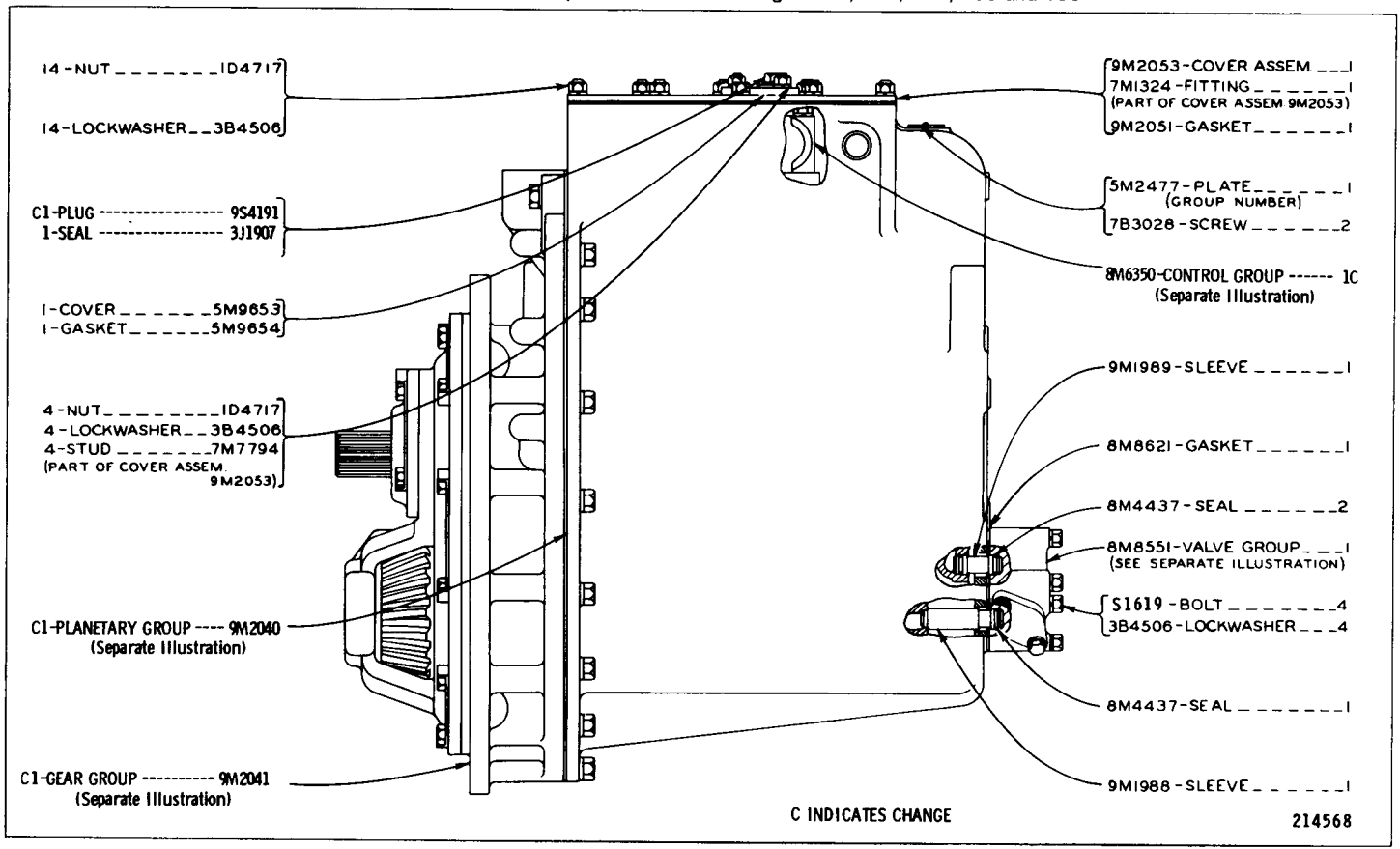

7G4245 TRANSMISSION ARRANGEMENT

IF TRANSMISSION IS SERIALIZED USE TRANSMISSION SERIAL NO. OTHERWISE USE VEHICLE SERIAL NO. Serial No. 6X508 to 6X905 inclusive, Test No. 342—Up. Transmission Serial No. 2HA1—Up.7G4244 Planetary Transmission, 7G4491 Relief Valve parts are shown on Pages 101A, 101B, 101D and 106A. 8M6350 Transmission Hydraulic Control, 9M2041 Transfer Gear parts are shown on Pages 104 and 105

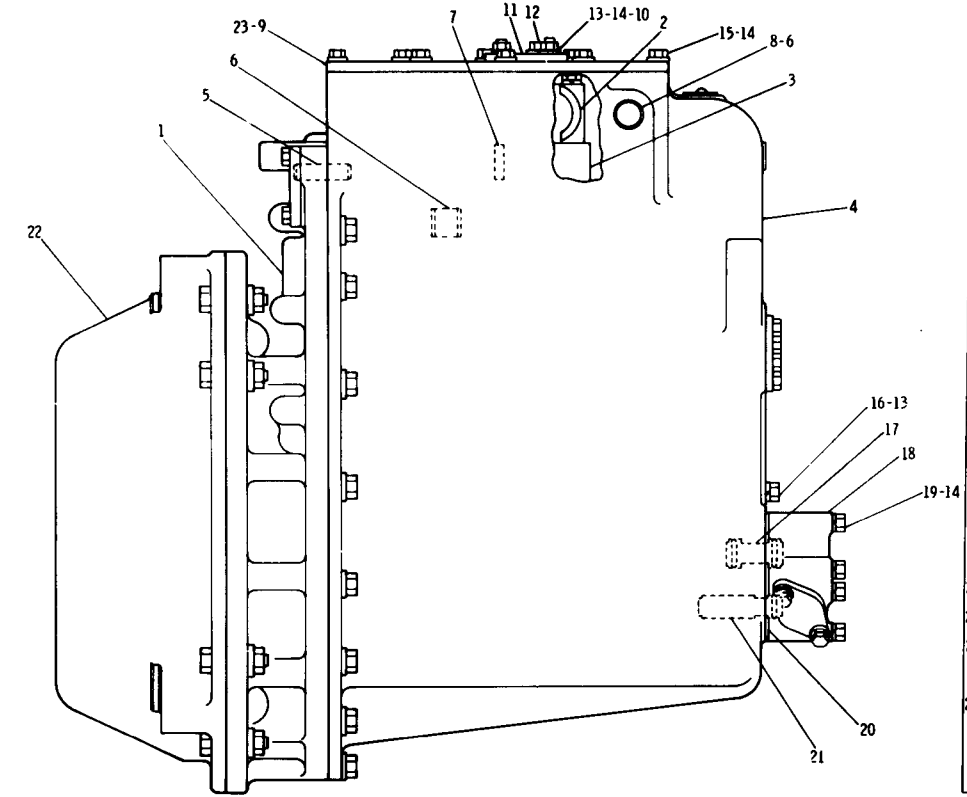

REF. NO.	PART NUMBER	DESCRIPTION	QTY
1	9M2041	GEAR GROUP	1
2	8M6350	CONTROL GROUP	1
3	7G4244	PLANETARY GROUP (Separate Illustration)	1
4	1P4459	CASE ASSEM. (Includes)	1
5	5M1932	STUD	3
6	4H8175	BEARING	4
7	1M3833	DOWEL	2
8	3B623	PLUG	1
9	9M2053	COVER ASSEM. (Includes)	1
	2S6548	FITTING	1
10	7M7794	STUD	4
11	5M9653	COVER	1
	5M9654	GASKET	1
12	9S4191	PLUG	1
	3J1907	SEAL	1
13	1D4717	NUT	4
14	3B4506	LOCKWASHER	28
15	S1594	BOLT	14
16	3B1915	BOLT	6
17	2S486	SLEEVE	1
	8M4437	SEAL	2
18	7G4491	VALVE GROUP (Separate Illustration)	1
19	S1619	BOLT	4
20	8M8621	GASKET	1
21	2S4957	SLEEVE	1
	8M4437	SEAL	1
22	2S6450	COVER GROUP (For Shipping and Storage-Includes Covers, Gaskets, and Hardware)	1
23	9M2051	GASKET	1

220102

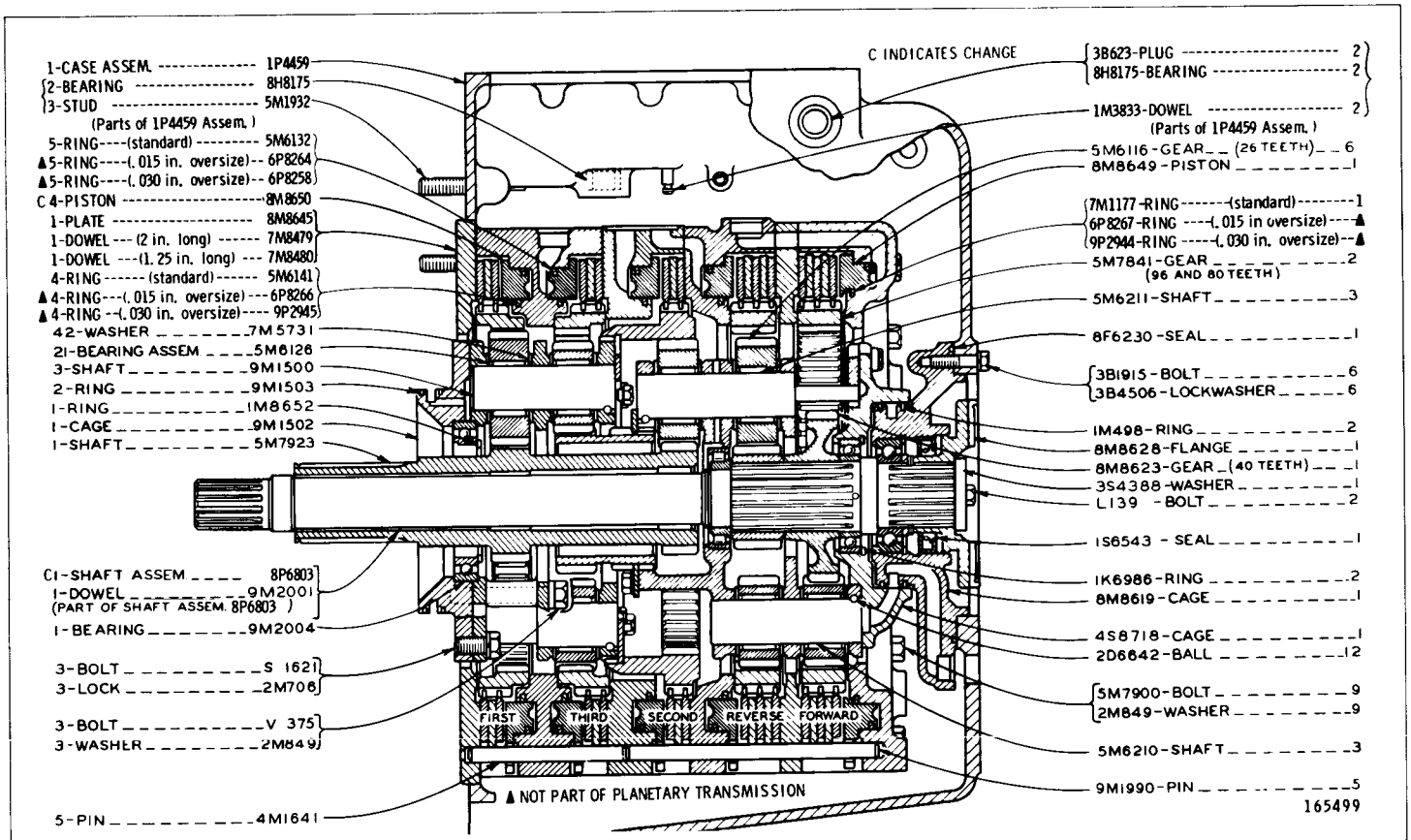

9M2040 PLANETARY TRANSMISSION ARRANGEMENT—Part 1
Serial No. 6X1 to 6X507 inclusive and Test No. 1 to 341 inclusive
Part of 7M1310 Transmission Arrangement shown on Page 99

9M2040 PLANETARY TRANSMISSION ARRANGEMENT—Part 2
Serial No. 6X1 to 6X507 inclusive and Test No. 1 to 341 inclusive
Part of 7M1310 Transmission Arrangement shown on Page 99

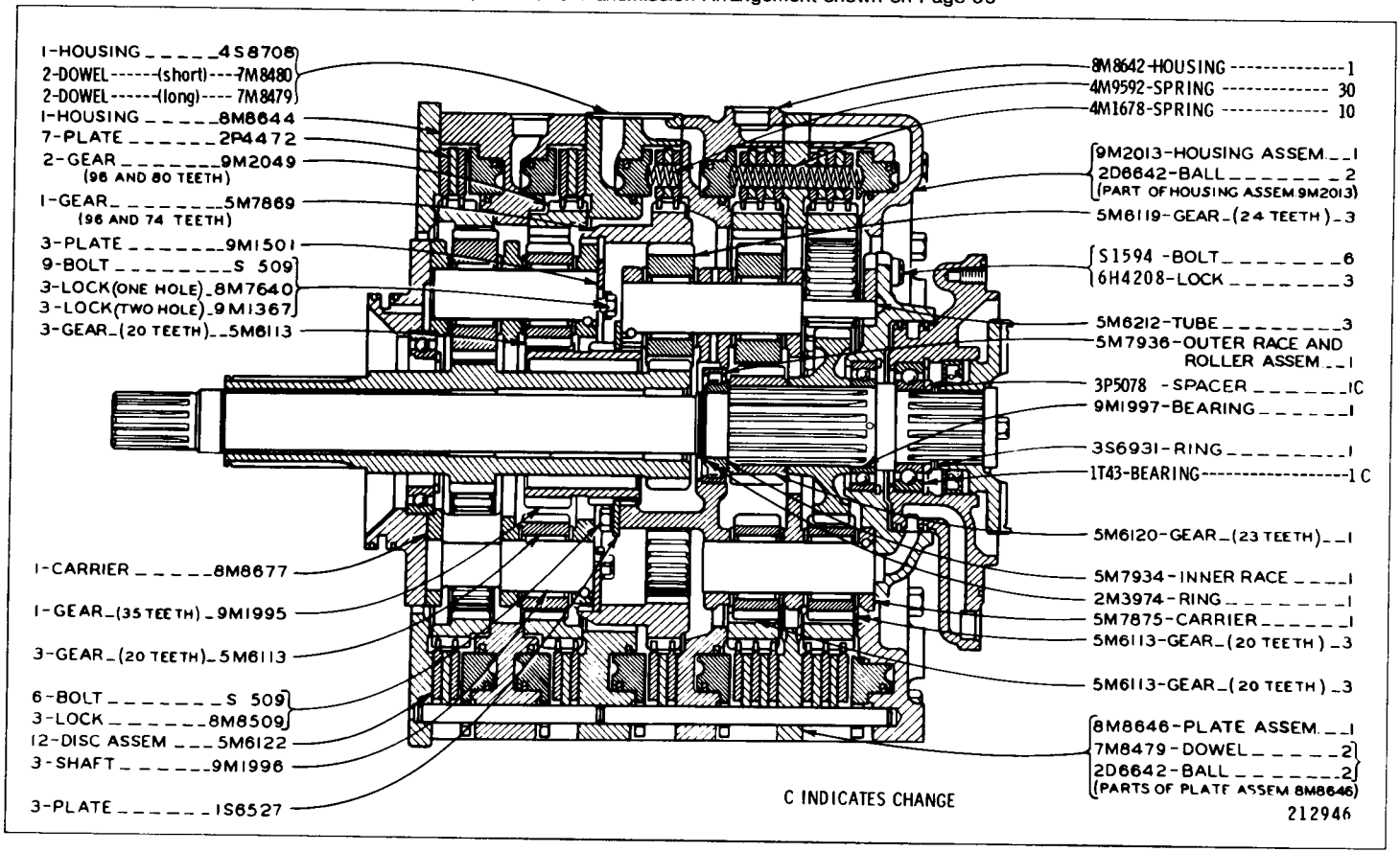

REF. NO.	PART NUMBER	DESCRIPTION	QTY
1	8M8645	PLATE	1
	7M8479	DOWEL-(Long)	1
	7M8480	DOWEL-(Short)	1
2	2M3974	RING	1
3	5M7936	OUTER RACE & ROLLER ASSEM.	1
	5M7934	INNER RACE	1
4	9M1997	BEARING	1
5	3P5078	SPACER	1
6	3S6931	RING	1
7	3S4388	WASHER	1
8	L139	BOLT	1
9	1S6543	SEAL	1
10	8M8628	FLANGE	1
11	1T43	BEARING	1
12	8M8619	CAGE	1
13	8F6230	SEAL	1
14	1K6986	RING	2
15	1M498	RING	2
16	5P8091	BOLT	3
17	2M849	WASHER	3
18	9M1502	CAGE	1
19	8M8677	CARRIER	1
20	9M1503	RING	2
21	1M8652	RING	1
22	8P6803	SHAFT ASSEM. (Includes)	1
	9M2001	DOWEL	1
23	5M7923	SHAFT	1
24	9M2004	BEARING	1

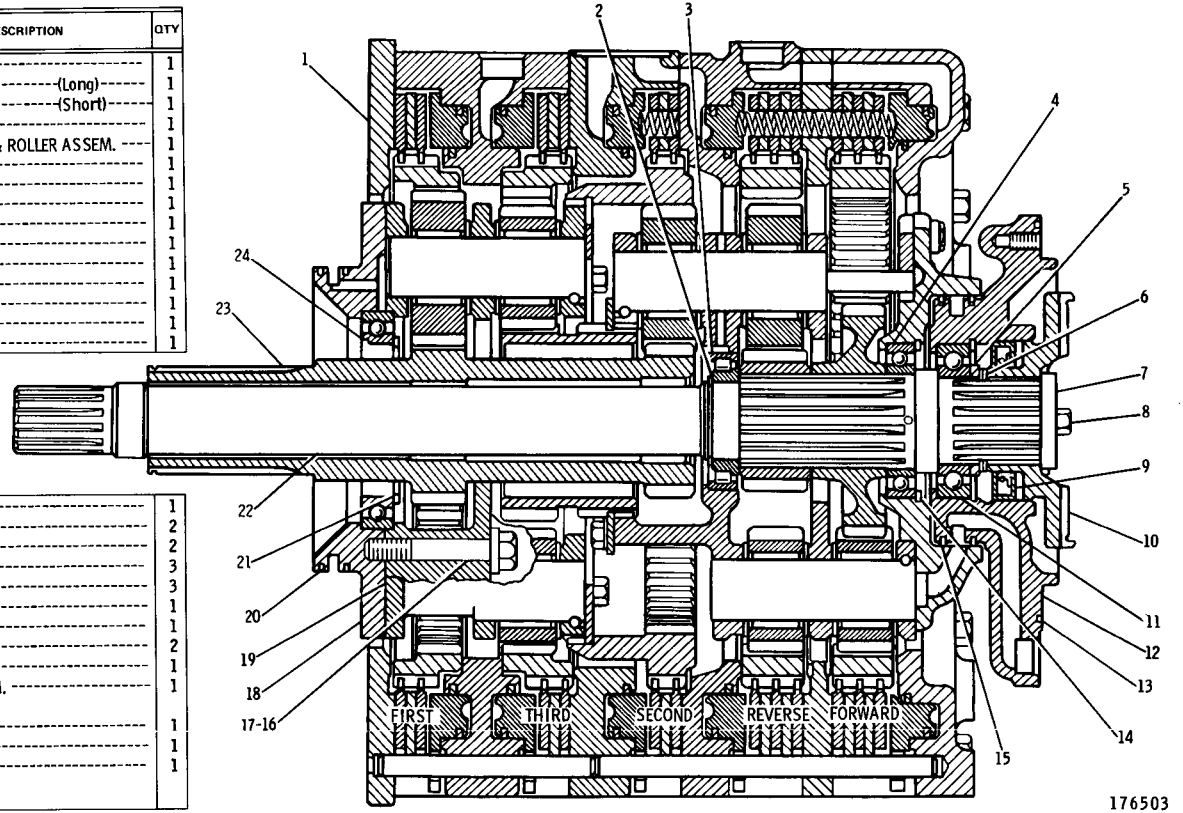

7G4244 PLANETARY TRANSMISSION GROUP—Part 1 of 3
IF TRANSMISSION IS SERIALIZED USE TRANSMISSION SERIAL NO. OTHERWISE USE VEHICLE SERIAL NO.
Serial No. 6X508 to 6X905 inclusive, Test No. 342—Up. Transmission Serial No. 2HA1—Up
Part of 7G4245 Transmission Arrangement shown on Page 99B

7G4244 PLANETARY TRANSMISSION GROUP—Part 2 of 3

IF TRANSMISSION IS SERIALIZED USE TRANSMISSION SERIAL NO. OTHERWISE USE VEHICLE SERIAL NO.
Serial No. 6X508 to 6X905 inclusive, Test No. 342—Up. Transmission Serial No. 2HA1—Up
Part of 7G4245 Transmission Arrangement shown on Page 99B

	REF. NO.	PART NUMBER	DESCRIPTION	QTY
	1	5M6126	BEARING	21
		7G894	WASHER	42
C	2	7G2513	GEAR (26 teeth)	6
	3	9M2049	GEAR (96 and 80 teeth)	2
C	4	8P8679	DISC. ASSEM.	6
	5	2P4472	PLATE	7
	6	8M8644	HOUSING	1
C	7	7G2476	GEAR (20 teeth)	6
	8	4S8708	HOUSING	1
		7M8480	DOWEL (short)	2
		7M8479	DOWEL (long)	2
	9	4M9592	SPRING	30
	10	9P5379	HOUSING	1
C	11	7G2475	GEAR (24 teeth)	3
	12	8M8646	PLATE ASSEM. (Includes)	1
		7M8479	DOWEL	2
		2D6642	BALL	2
	13	4M1678	SPRING	10
	14	9M2013	HOUSING ASSEM. (Includes)	1
		2D6642	BALL	2
	15	5M6211	SHAFT	3
	16	2D6642	BALL	3
	17	5D353	BOLT	6
		6H4208	LOCK	3
	18	5M6212	TUBE	3
	19	8M8623	GEAR (40 teeth)	1
	20	4S8718	CAGE	1
	21	5M7900	BOLT	9
	22	2M849	WASHER	9
	23	5M6120	GEAR (23 teeth)	1
	24	9M1501	PLATE	3
	25	5K9107	BOLT	15
	26	1S6527	PLATE	3
	27	8M8509	LOCK	3

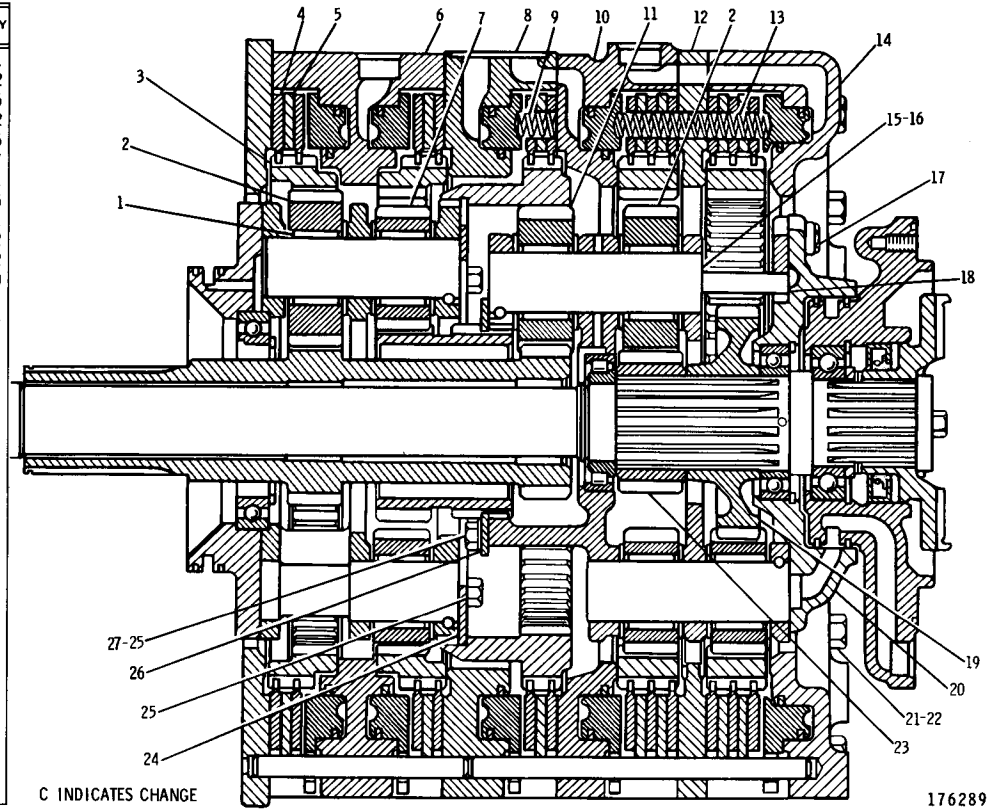

C INDICATES CHANGE

176289

7G4244 PLANETARY TRANSMISSION GROUP—Part 3 of 3

IF TRANSMISSION IS SERIALIZED USE TRANSMISSION SERIAL NO. OTHERWISE USE VEHICLE SERIAL NO.
Serial No. 6X508 to 6X905 inclusive, Test No. 342—Up. Transmission Serial No. 2HA1—Up
Part of 7G4245 Transmission Arrangement shown on Page 99B

REF. NO.	PART NUMBER	DESCRIPTION	QTY
1	9M1995	GEAR----------(35 teeth)----------	1
2	5M6210	SHAFT----------	3
3	2D6642	BALL----------	9
● 4	7M1177	RING----------(Standard)--------	1
	6P8267	RING - 0.39 mm(.015 in.) Oversize	1
●	9P2944	RING - 0.77 mm(.030 in.) Oversize	1
● 5	5M6132	RING----------(Standard)--------	4
	6P8264	RING - 0.39 mm(.015 in.) Oversize	4
●	6P8258	RING - 0.77 mm(.030 in.) Oversize	4
6	8M8649	PISTON----------	1
7	9M1990	DOWEL----------	5
8	5M7841	GEAR----(96 and 80 teeth)---------	2
9	9P5254	DISC ASSEM.----------	6
10	9P5363	PISTON----------	1
C 11	7G2476	GEAR----------(20 teeth)--------	6
12	9P5364	RING----------	1
13	5M7875	CARRIER----------	1
14	5M7869	GEAR-----(96 and 74 teeth)-------	1
15	8M8650	PISTON----------	3
16	4M1641	DOWEL----------	5
17	9M1996	SHAFT----------	3
	5M6141	RING--------(Standard)----------	4
● 18	6P8266	RING - 0.39 mm(.015 in.) Oversize	4
●	9P2945	RING - 0.77 mm(.030 in.) Oversize	4
19	6K7917	BOLT----------	3
	2M706	LOCK----------	3
20	9M1500	SHAFT----------	3
C ▲	6V1720	PLATE-----(Serial Number)-------	1
	7B3028	SCREW----------	2
		(Mounted on Case Assem.)	

● NOT PART OF 7G4244 PLANETARY TRANSMISSION GROUP
▲ NOT SHOWN

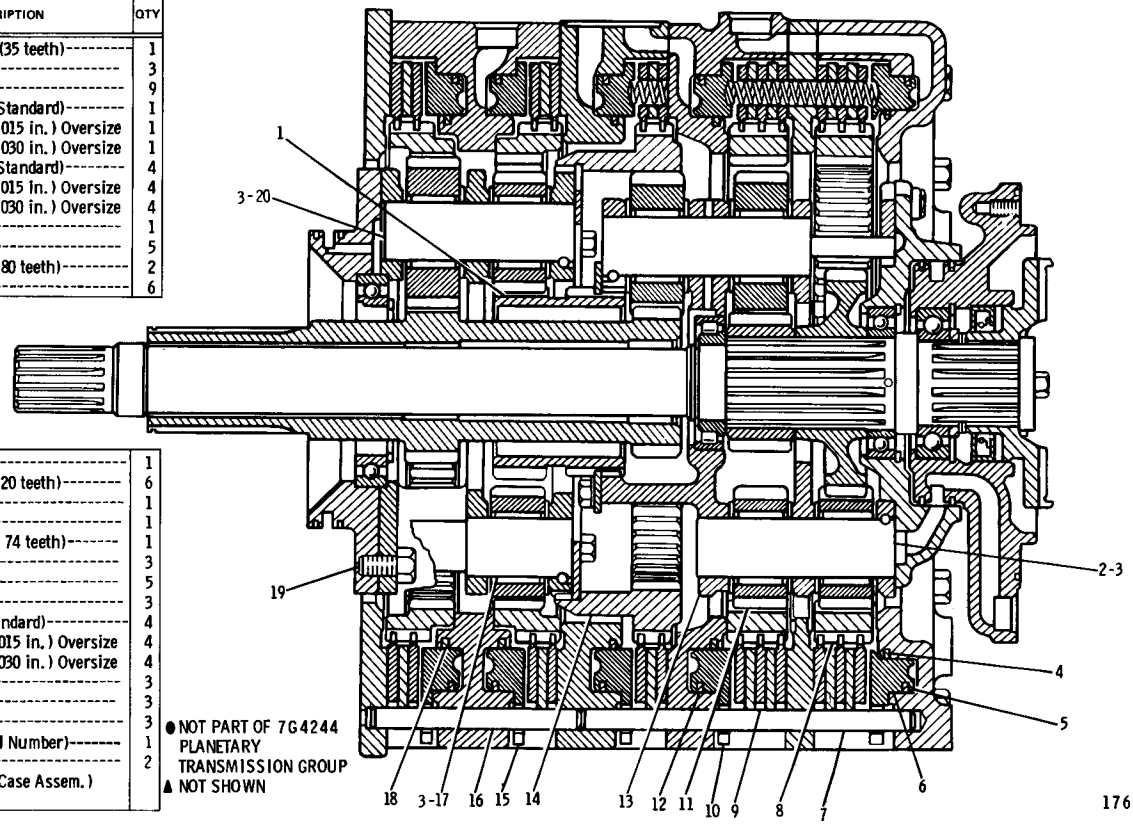

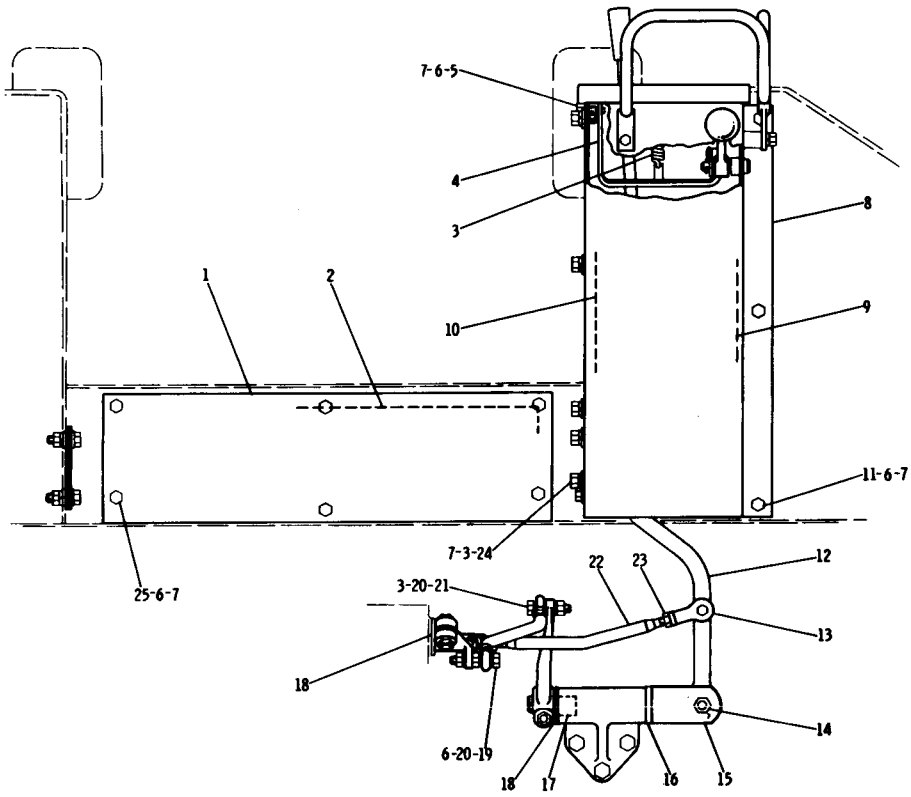

REF. NO.	PART NUMBER	DESCRIPTION	QTY
1	8P3547	COVER ASSEM. (Includes)	1
▲ 2	5P7246	SEAL----------1.5 m(59.06 in.)	
3	5M9813	SPRING----------	1
4	8P2272	LEVER ASSEM. (Includes)	1
	3R4762	PIN----------	1
5	4D9483	SCREW----------	2
6	3B4506	LOCKWASHER----------	17
7	4B4278	WASHER----------	15
8	8P2266	GUARD ASSEM. (Includes)	1
	5D2643	LUG----------	2
▲ 9	5P5926	SEAL----------1.1 m(43.31 in.)	
▲ 10	5P7246	SEAL----------.6 m(23.63 in.)	
11	L1351	BOLT----------	6
12	8P2422	LEVER ASSEM. (Includes)	1
	5H3895	BEARING----------	1
13	4D4064	ROD END----------	2
14	1A1460	BOLT----------	1
	2M7167	SPACER----------	1
	1K6872	LOCKNUT----------	1
15	8P1876	SHAFT ASSEM.	1
16	9S1385	SPACER----------	1
17	6D5974	BEARING----------	2
18	8B4037	WASHER----------	2
19	4M496	BOLT----------	1
	4M497	NUT-------9.53 mm(.375 in.) thick	1
20	1D4717	NUT-------8.34 mm(.328 in.) thick	1
21	S1591	BOLT----------	1
22	8P2425	ROD----------	1
23	5B9079	NUT----------	2
24	1A2029	BOLT----------	1
25	S1594	BOLT----------	6

▲ ORDER BY THE METRE-USE AS REQUIRED 212285

8P4063 TRANSMISSION CONTROL GROUP—Part 1
Serial No. 6X1 to 6X441 inclusive

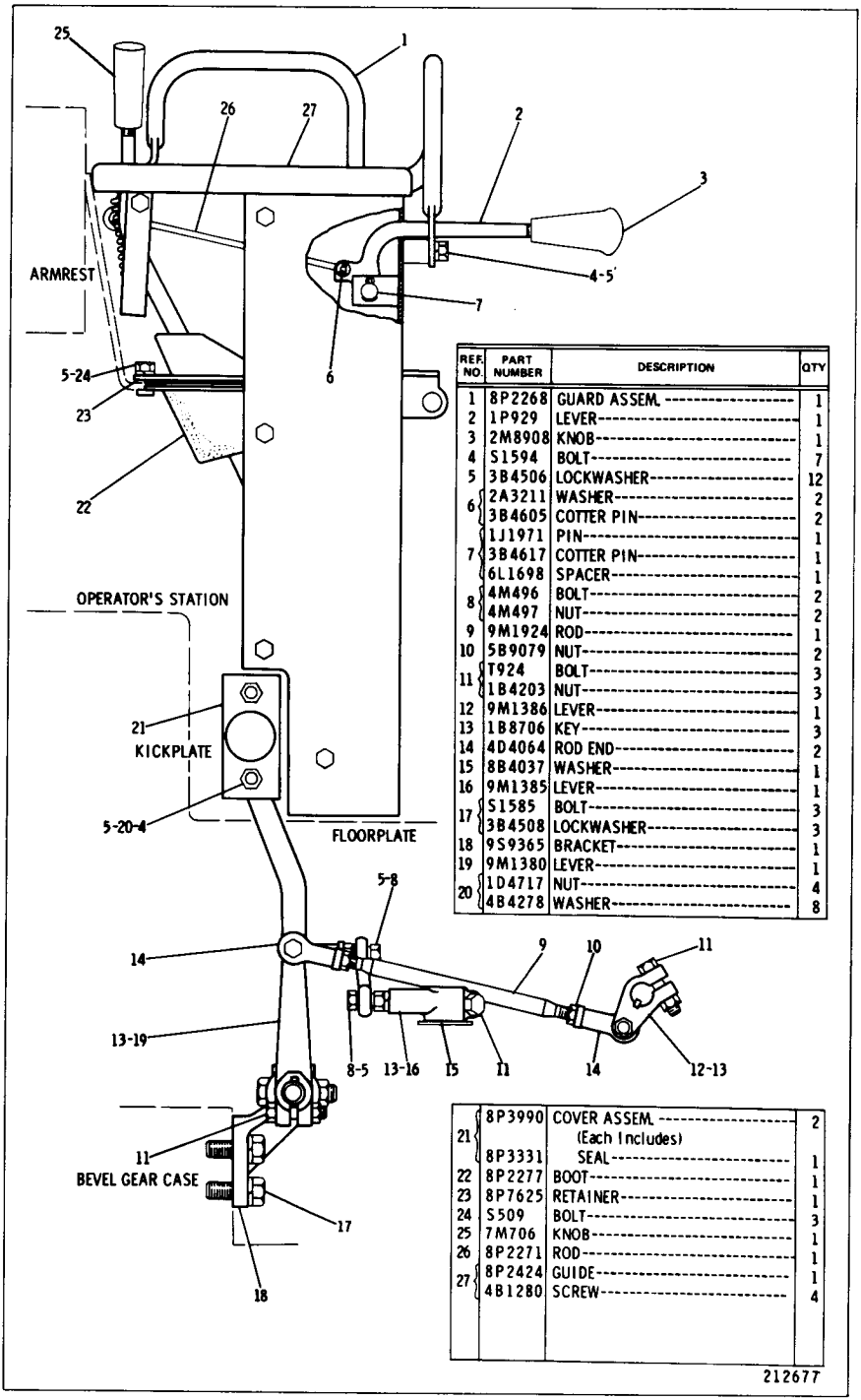

REF. NO.	PART NUMBER	DESCRIPTION	QTY
1	8P2268	GUARD ASSEM.	1
2	1P929	LEVER	1
3	2M8908	KNOB	1
4	S1594	BOLT	7
5	3B4506	LOCKWASHER	12
6	2A3211	WASHER	2
	3B4605	COTTER PIN	2
7	1J1971	PIN	1
	3B4617	COTTER PIN	1
	6L1698	SPACER	1
8	4M496	BOLT	2
	4M497	NUT	2
9	9M1924	ROD	1
10	5B9079	NUT	2
11	T924	BOLT	3
	1B4203	NUT	3
12	9M1386	LEVER	1
13	1B8706	KEY	3
14	4D4064	ROD END	2
15	8B4037	WASHER	1
16	9M1385	LEVER	1
17	S1585	BOLT	3
	3B4508	LOCKWASHER	3
18	9S9365	BRACKET	1
19	9M1380	LEVER	1
20	1D4717	NUT	4
	4B4278	WASHER	8

21	8P3990	COVER ASSEM. (Each Includes)	2
	8P3331	SEAL	1
22	8P2277	BOOT	1
23	8P7625	RETAINER	1
24	S509	BOLT	3
25	7M706	KNOB	1
26	8P2271	ROD	1
27	8P2424	GUIDE	1
	4B1280	SCREW	4

212677

8P4063 TRANSMISSION CONTROL GROUP—Part 2
Serial No. 6X1 to 6X441 inclusive

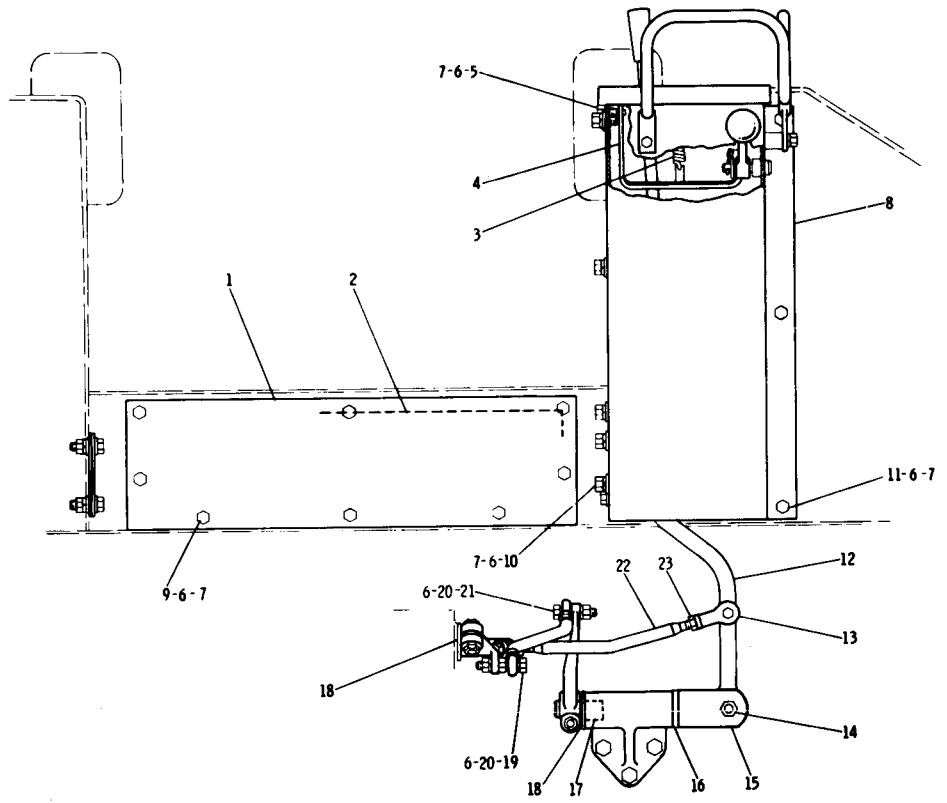

REF. NO.	PART NUMBER	DESCRIPTION	QTY
	1 8P3547	COVER ASSEM. (Includes)	1
▲	2 5P7246	SEAL----------1.5 m(59.06 in.)	
	3 5M9813	SPRING----------	1
	4 8P2272	LEVER ASSEM. (Includes)	1
	3R4762	PIN----------	1
	5 4D9483	SCREW----------	2
C	6 3B4506	LOCKWASHER----------	19
C	7 4B4278	WASHER----------	17
	8 8P2266	GUARD ASSEM. (Includes)	1
	5D2643	LUG----------	2
C	9 S1594	BOLT----------	8
	10 1A2029	BOLT----------	1
	11 L1351	BOLT----------	6
	12 8P2422	LEVER ASSEM. (Includes)	1
	5H3895	BEARING----------	1
	13 4D4064	ROD END----------	2
	14 1A1460	BOLT----------	1
	2M7167	SPACER----------	1
	1K6872	LOCKNUT----------	1
	15 8P1876	SHAFT ASSEM. ----------	1
	16 9S1385	SPACER----------	1
C	17 7P4190	BEARING----------	2
	18 8B4037	WASHER----------	2
	19 4M496	BOLT----------	1
	4M497	NUT-------9.53 mm(.375 in.) thick	1
	20 1D4717	NUT-------8.34 mm(.328 in.) thick	2
	21 S1591	BOLT----------	1
	22 8P2425	ROD----------	1
	23 5B9079	NUT----------	2

C INDICATES CHANGE 168578
▲ ORDER BY THE METRE

8P4063 TRANSMISSION CONTROL GROUP—Part 1
Serial No. 6X442 to 6X556 inclusive

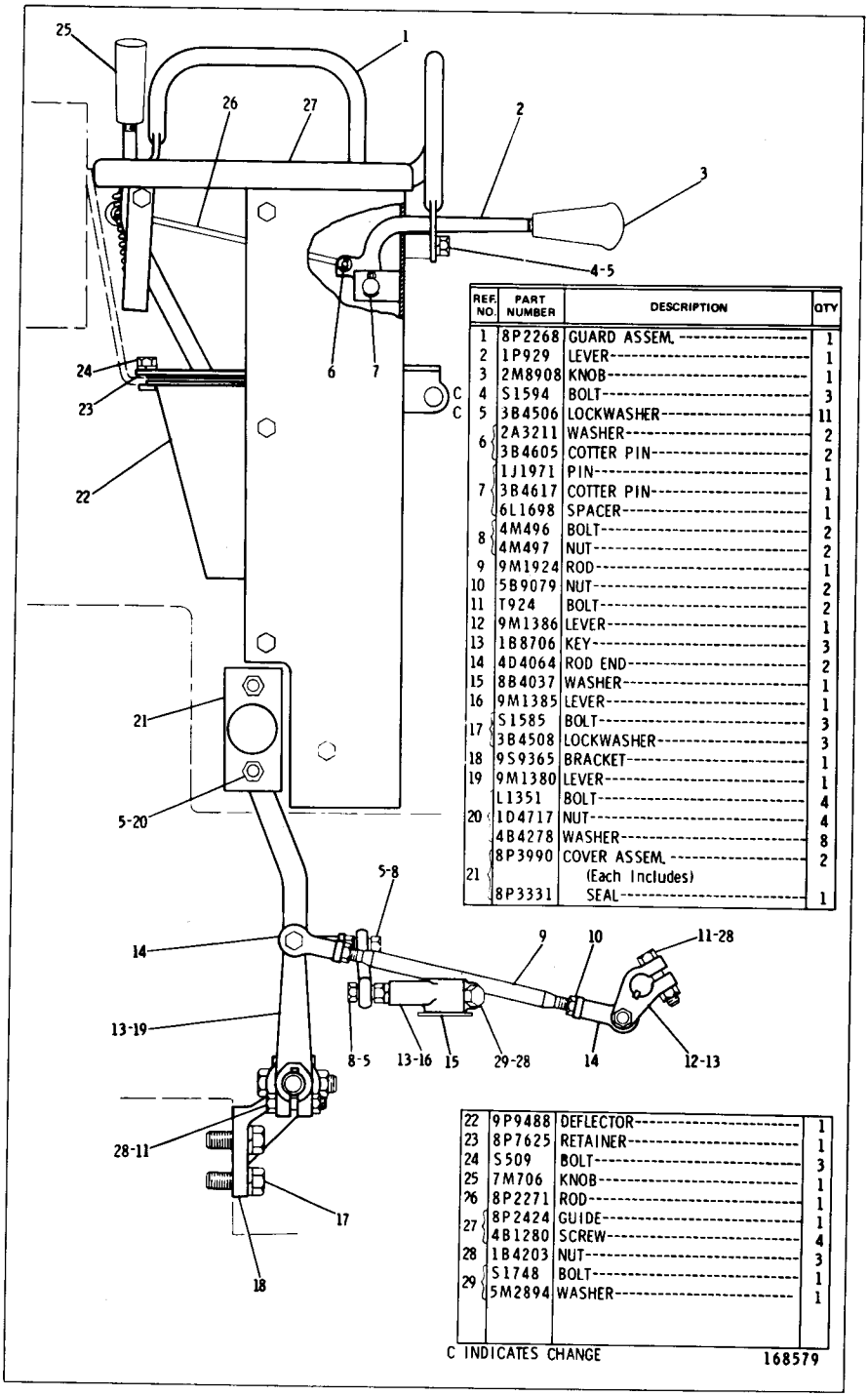

REF. NO.	PART NUMBER	DESCRIPTION	QTY
1	8P2268	GUARD ASSEM.	1
2	1P929	LEVER	1
3	2M8908	KNOB	1
4	S1594	BOLT	3
5	3B4506	LOCKWASHER	11
6	2A3211	WASHER	2
	3B4605	COTTER PIN	2
	1J1971	PIN	1
7	3B4617	COTTER PIN	1
	6L1698	SPACER	1
8	4M496	BOLT	2
	4M497	NUT	2
9	9M1924	ROD	1
10	5B9079	NUT	2
11	T924	BOLT	2
12	9M1386	LEVER	1
13	1B8706	KEY	3
14	4D4064	ROD END	2
15	8B4037	WASHER	1
16	9M1385	LEVER	1
17	S1585	BOLT	3
	3B4508	LOCKWASHER	3
18	9S9365	BRACKET	1
19	9M1380	LEVER	1
	L1351	BOLT	4
20	1D4717	NUT	4
	4B4278	WASHER	8
21	8P3990	COVER ASSEM. (Each Includes)	2
	8P3331	SEAL	1

22	9P9488	DEFLECTOR	1
23	8P7625	RETAINER	1
24	S509	BOLT	3
25	7M706	KNOB	1
26	8P2271	ROD	1
27	8P2424	GUIDE	1
	4B1280	SCREW	4
28	1B4203	NUT	3
29	S1748	BOLT	1
	5M2894	WASHER	1

C INDICATES CHANGE

168579

8P4063 TRANSMISSION CONTROL GROUP—Part 2
Serial No. 6X442 to 6X556 inclusive

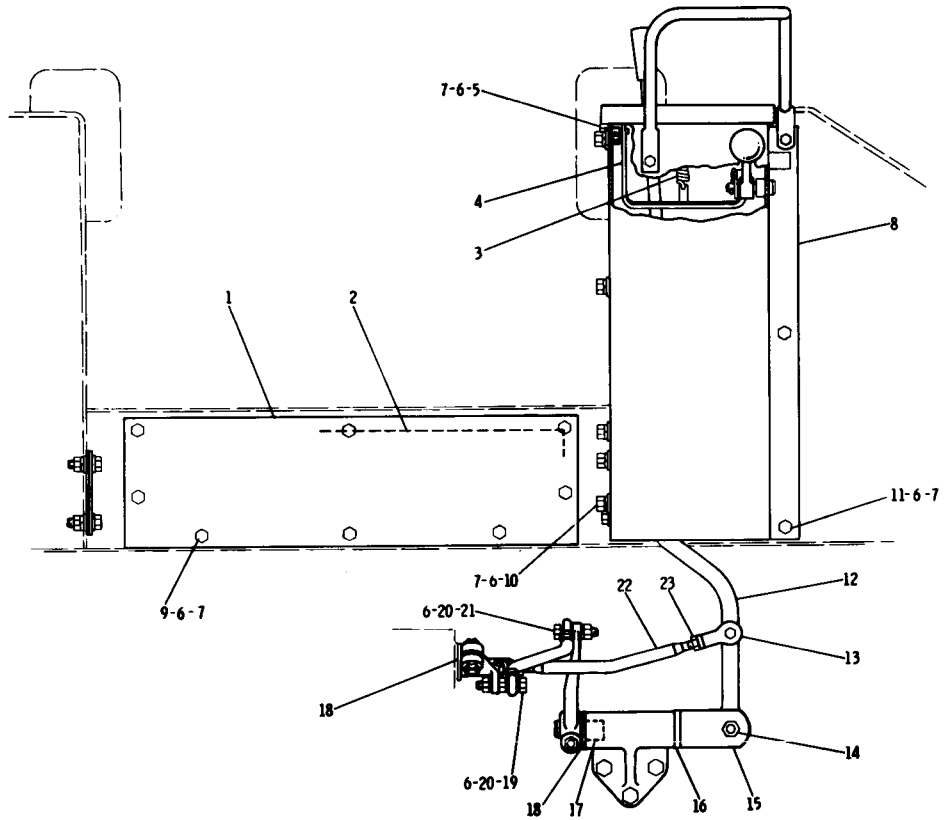

REF. NO.	PART NUMBER	DESCRIPTION	QTY
1	8P3547	COVER ASSEM. (Includes)	1
▲ 2	5P7246	SEAL----------1.5 m(59.06 in.)	
3	5M9813	SPRING----------	1
4	8P2272	LEVER ASSEM. (Includes)	1
	3R4762	PIN----------	1
5	4D9483	SCREW----------	2
6	3B4506	LOCKWASHER----------	19
C 7	4B4278	WASHER----------	16
8	8P2266	GUARD ASSEM. (Includes)	1
	5D2643	LUG----------	2
9	S1594	BOLT----------	8
10	1A2029	BOLT----------	1
C 11	L1351	BOLT----------	5
12	8P2422	LEVER ASSEM. (Includes)	1
	5H3895	BEARING----------	1
13	4D4064	ROD END----------	2
	1A1460	BOLT----------	1
14	2M7167	SPACER----------	1
	1K6872	LOCKNUT----------	1
15	8P1876	SHAFT ASSEM. ----------	1
16	9S1385	SPACER----------	1
17	7P4190	BEARING----------	2
18	8B4037	WASHER----------	2
19	4M496	BOLT----------	1
	4M497	NUT-------9.53 mm(.375 in.) thick	1
20	1D4717	NUT-------8.34 mm(.328 in.) thick	2
21	S1591	BOLT----------	1
22	8P2425	ROD----------	1
23	5B9079	NUT----------	2

C INDICATES CHANGE
▲ ORDER BY THE METER

171665

8P4063 TRANSMISSION CONTROL GROUP—Part 1
Serial No. 6X557 to 6X1020 inclusive

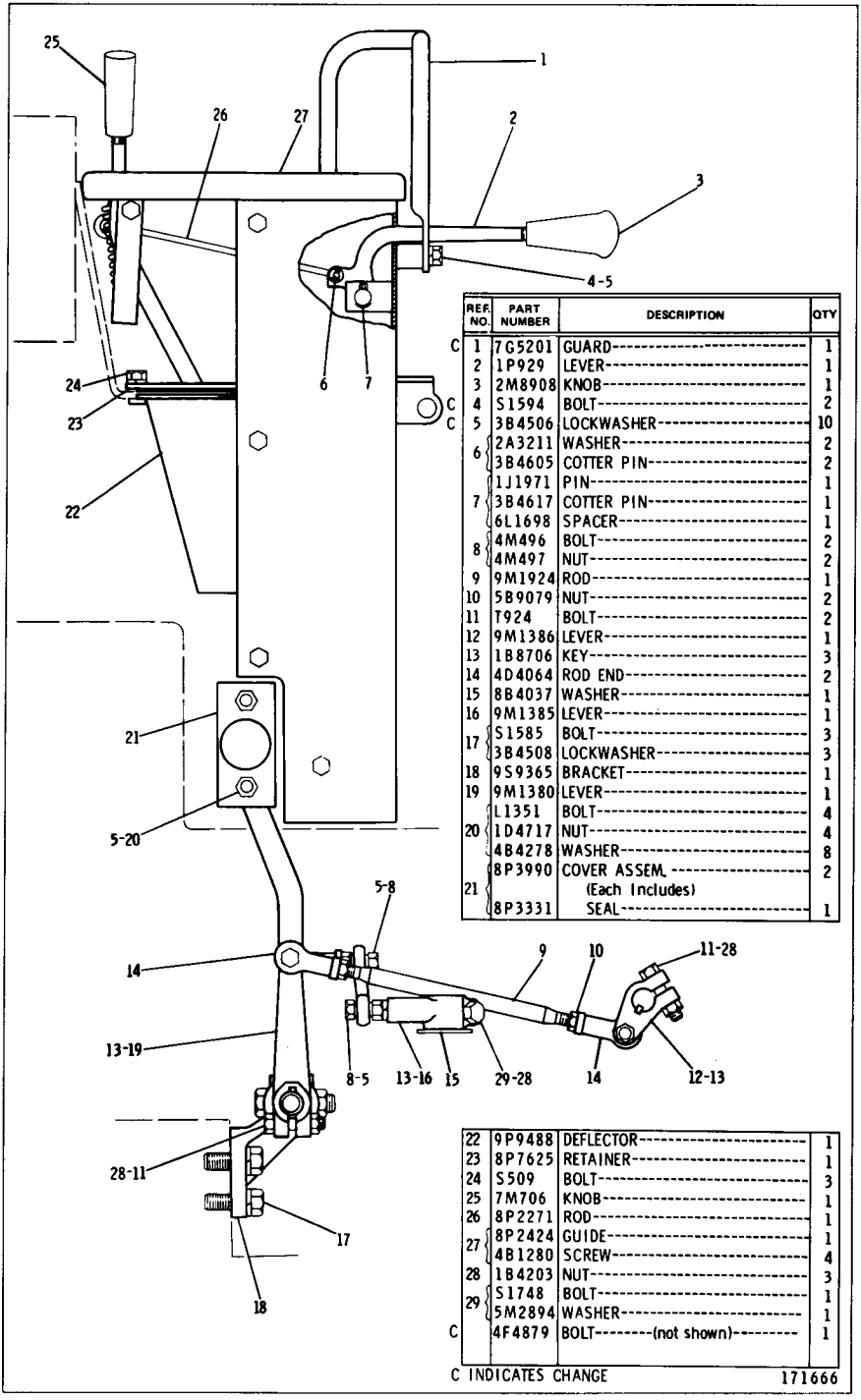

C	REF. NO.	PART NUMBER	DESCRIPTION	QTY
C	1	7G5201	GUARD	1
	2	1P929	LEVER	1
	3	2M8908	KNOB	1
C	4	S1594	BOLT	2
C	5	3B4506	LOCKWASHER	10
	6	2A3211	WASHER	2
		3B4605	COTTER PIN	2
	7	1J1971	PIN	1
		3B4617	COTTER PIN	1
		6L1698	SPACER	1
	8	4M496	BOLT	2
		4M497	NUT	2
	9	9M1924	ROD	1
	10	5B9079	NUT	2
	11	T924	BOLT	2
	12	9M1386	LEVER	1
	13	1B8706	KEY	3
	14	4D4064	ROD END	2
	15	8B4037	WASHER	1
	16	9M1385	LEVER	1
	17	S1585	BOLT	3
		3B4508	LOCKWASHER	3
	18	9S9365	BRACKET	1
	19	9M1380	LEVER	1
		L1351	BOLT	4
	20	1D4717	NUT	4
		4B4278	WASHER	8
		8P3990	COVER ASSEM.	2
	21		(Each Includes)	
		8P3331	SEAL	1
	22	9P9488	DEFLECTOR	1
	23	8P7625	RETAINER	1
	24	S509	BOLT	3
	25	7M706	KNOB	1
	26	8P2271	ROD	1
	27	8P2424	GUIDE	1
		4B1280	SCREW	4
	28	1B4203	NUT	3
	29	S1748	BOLT	1
		5M2894	WASHER	1
C		4F4879	BOLT--------(not shown)--------	1

C INDICATES CHANGE 171666

8P4063 TRANSMISSION CONTROL GROUP—Part 2
Serial No. 6X557 to 6X1020 inclusive

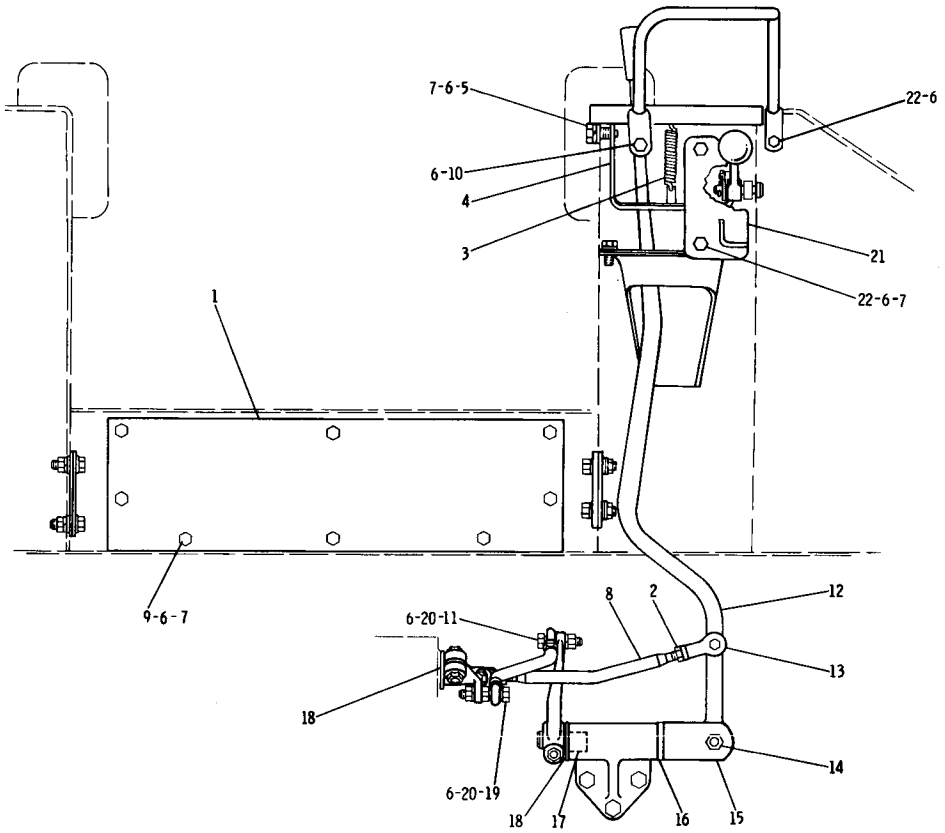

	REF. NO.	PART NUMBER	DESCRIPTION	QTY
C	1	8P3548	COVER	1
	2	5B9079	NUT	2
	3	5M9813	SPRING	1
	4	8P2272	LEVER ASSEM. (Includes)	1
		3R4762	PIN	1
	5	4D9483	SCREW	2
C	6	3B4506	LOCKWASHER	16
C	7	4B4278	WASHER	12
	8	8P2425	ROD	1
	9	S1594	BOLT	8
	10	1A2029	BOLT	1
	11	S1591	BOLT	1
	12	8P2422	LEVER ASSEM. (Includes)	1
		5H3895	BEARING	1
	13	4D4064	ROD END	2
	14	1A1460	BOLT	1
		2M7167	SPACER	1
		1K6872	LOCKNUT	1
	15	8P1876	SHAFT ASSEM.	1
	16	9S1385	SPACER	1
	17	7P4190	BEARING	2
	18	8B4037	WASHER	2
	19	4M496	BOLT	1
		4M497	NUT-----9,53 mm (.375 in.) thick	1
	20	1D4717	NUT-----8,34 mm (.328 in.) thick	2
C	21	9G6544	COVER ASSEM.	1
C	22	S509	BOLT	3

C INDICATES CHANGE 229688

8P4063 TRANSMISSION CONTROL GROUP—Part 1
Serial No. 6X1021—Up

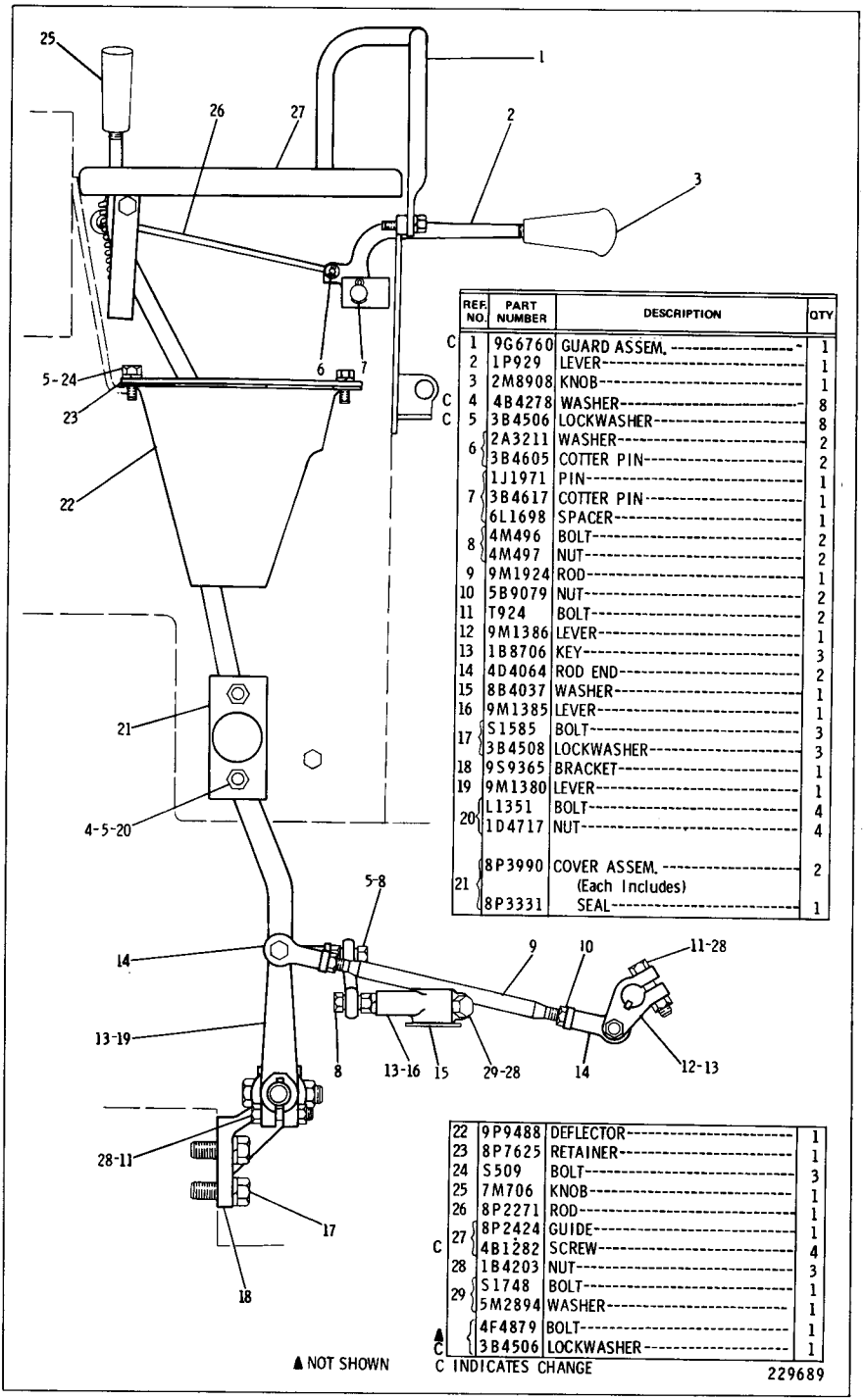

	REF. NO.	PART NUMBER	DESCRIPTION	QTY
C	1	9G6760	GUARD ASSEM.	1
	2	1P929	LEVER	1
	3	2M8908	KNOB	1
C	4	4B4278	WASHER	8
C	5	3B4506	LOCKWASHER	8
	6	2A3211	WASHER	2
		3B4605	COTTER PIN	2
	7	1J1971	PIN	1
		3B4617	COTTER PIN	1
		6L1698	SPACER	1
	8	4M496	BOLT	2
		4M497	NUT	2
	9	9M1924	ROD	1
	10	5B9079	NUT	2
	11	T924	BOLT	2
	12	9M1386	LEVER	1
	13	1B8706	KEY	3
	14	4D4064	ROD END	2
	15	8B4037	WASHER	1
	16	9M1385	LEVER	1
	17	S1585	BOLT	3
		3B4508	LOCKWASHER	3
	18	9S9365	BRACKET	1
	19	9M1380	LEVER	1
	20	L1351	BOLT	4
		1D4717	NUT	4
	21	8P3990	COVER ASSEM. (Each Includes)	2
		8P3331	SEAL	1
	22	9P9488	DEFLECTOR	1
	23	8P7625	RETAINER	1
	24	S509	BOLT	3
	25	7M706	KNOB	1
	26	8P2271	ROD	1
	27	8P2424	GUIDE	1
C		4B1282	SCREW	4
	28	1B4203	NUT	3
	29	S1748	BOLT	1
		5M2894	WASHER	1
▲ C		4F4879	BOLT	1
▲ C		3B4506	LOCKWASHER	1

▲ NOT SHOWN
C INDICATES CHANGE
229689

8P4063 TRANSMISSION CONTROL GROUP—Part 2
Serial No. 6X1021—Up

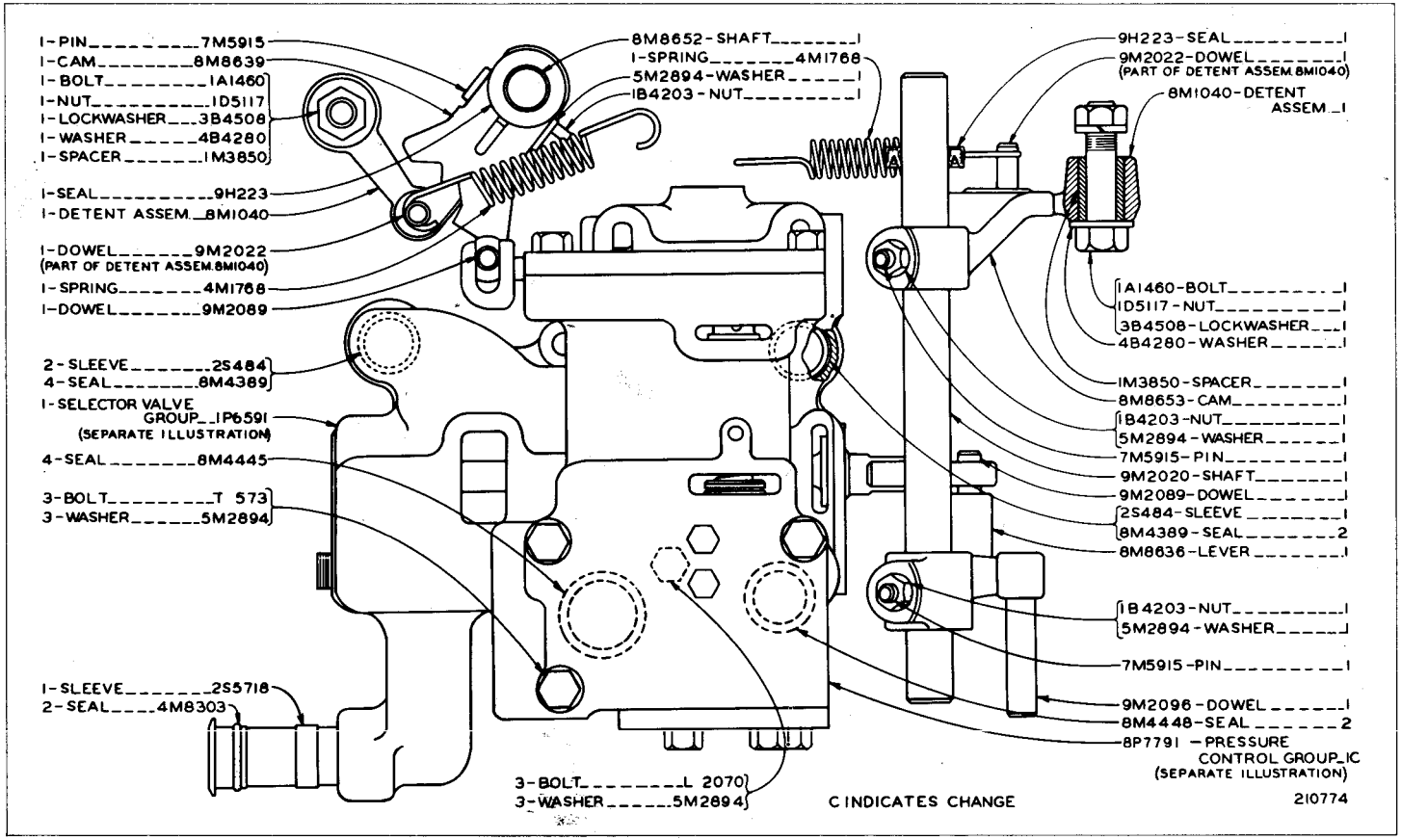

8M6350 TRANSMISSION HYDRAULIC CONTROL GROUP
IF TRANSMISSION IS SERIALIZED USE TRANSMISSION SERIAL NO. OTHERWISE USE VEHICLE SERIAL NO.
Serial No. 6X1 to 6X905 inclusive. Transmission Serial No. 2HA1—Up. Part of 7M1310 and 7G4245 Transmission Arrangements shown on Pages 99 and 99B. 1P6591 and 8P7791 Valve parts are shown on Pages 106 & 107

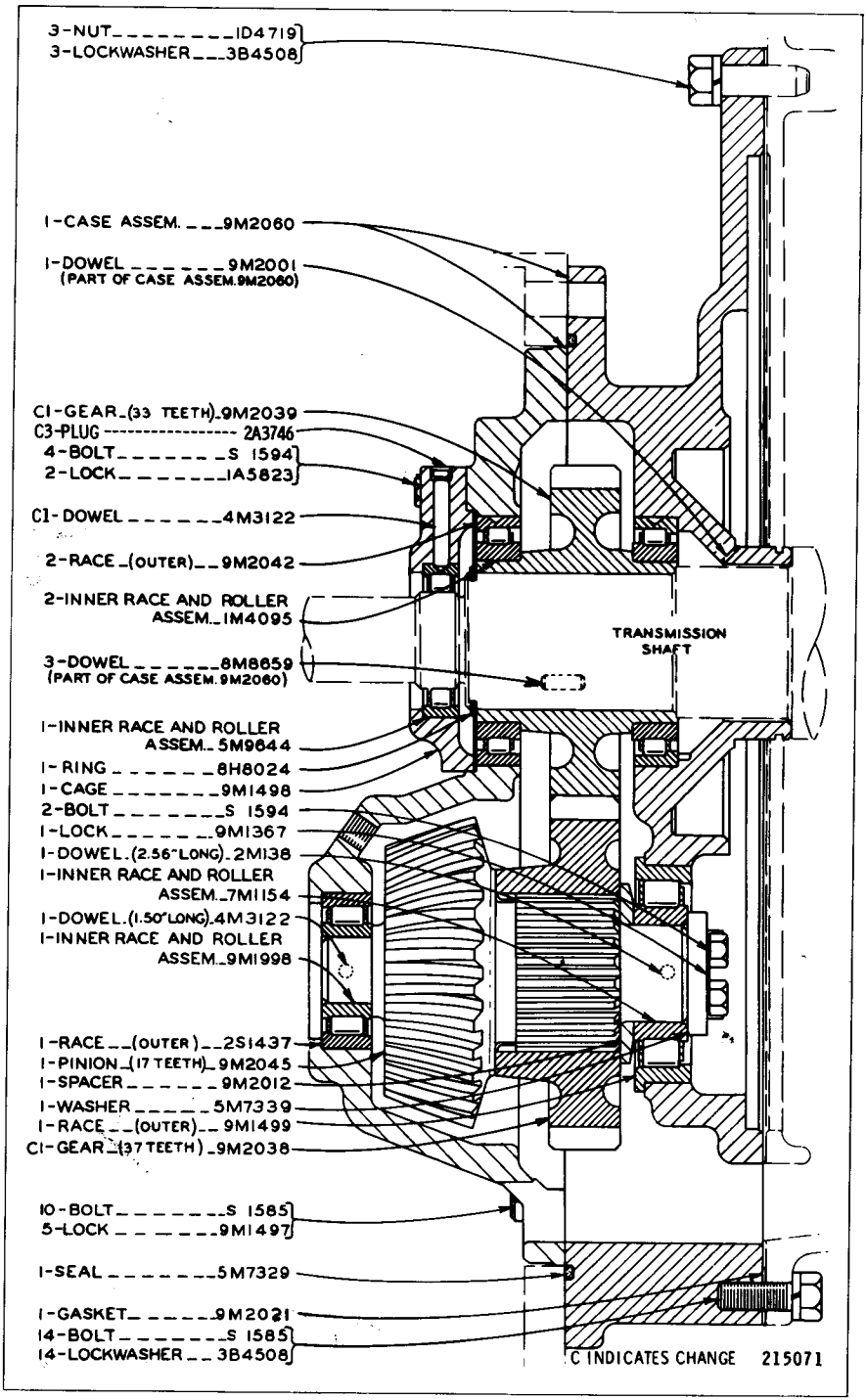

9M2041 TRANSFER GEAR GROUP

IF TRANSMISSION IS SERIALIZED USE TRANSMISSION SERIAL NO. OTHERWISE USE VEHICLE SERIAL NO. Serial No. 6X1 to 6X905 inclusive. Transmission Serial No. 2HA1—Up. Part of 7M1310 and 7G4245 Transmission Arrangements shown on Pages 99 and 99B

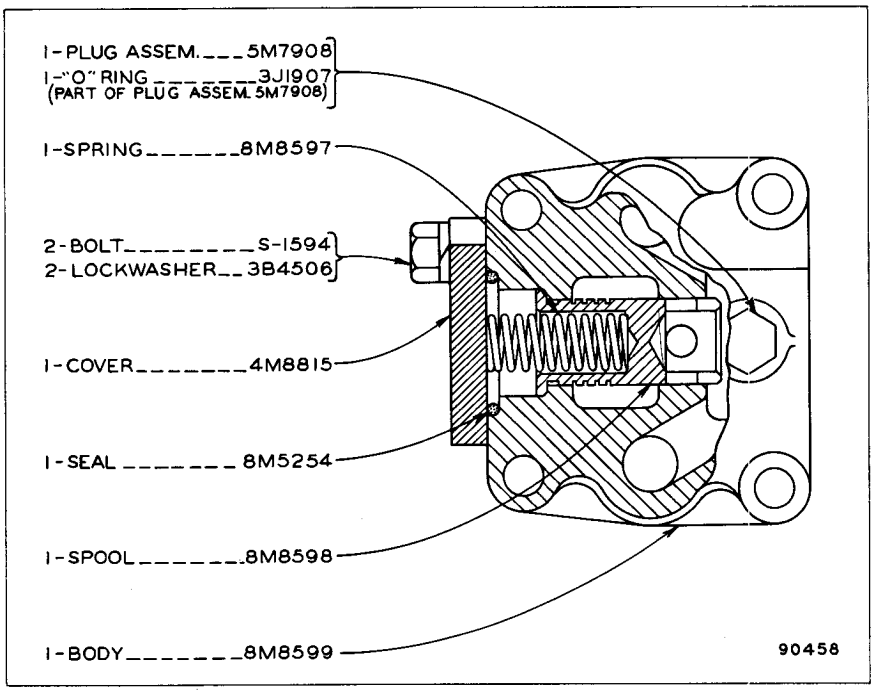

8M8551 RELIEF VALVE GROUP
Serial No. 6X1 to 6X507 inclusive and Test No. 1 to 341 inclusive
Part of 7M1310 Transmission Arrangement shown on Page 99

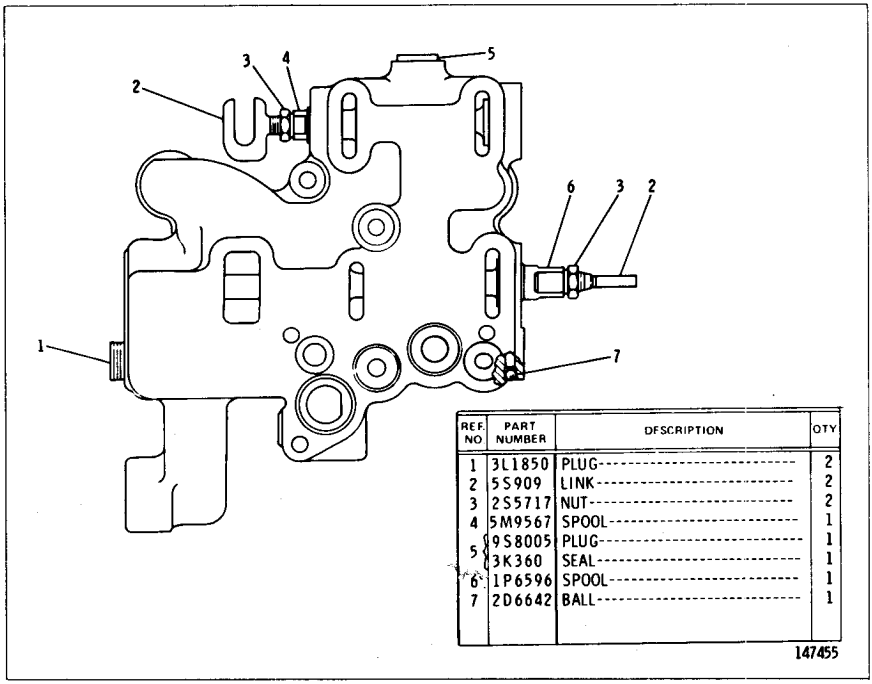

REF NO	PART NUMBER	DESCRIPTION	QTY
1	3L1850	PLUG	2
2	5S909	LINK	2
3	2S5717	NUT	2
4	5M9567	SPOOL	1
5	9S8005	PLUG	1
	3K360	SEAL	1
6	1P6596	SPOOL	1
7	2D6642	BALL	1

147455

1P6591 SELECTOR VALVE GROUP
IF TRANSMISSION IS SERIALIZED USE TRANSMISSION SERIAL NO. OTHERWISE USE VEHICLE SERIAL NO. Serial No. 6X1 to 6X905 inclusive. Transmission Serial No. 2HA1—Up. Part of 8M6350 Transmission Hydraulic Control Group shown on Page 104

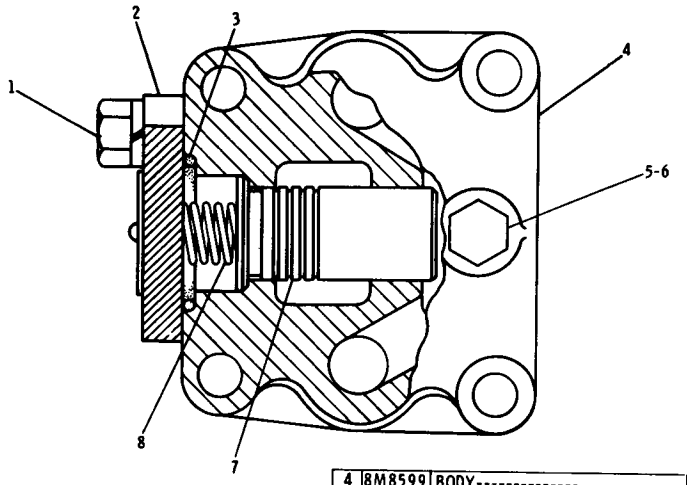

REF. NO.	PART NUMBER	DESCRIPTION	QTY
1	S1594	BOLT	2
	3B4506	LOCKWASHER	2
2	4M8815	COVER	1
3	8M5254	SEAL	1
4	8M8599	BODY	1
5	9S4191	PLUG	1
6	3J1907	SEAL	1
7	8M8598	SPOOL	1
8	2S5816	SPRING	1

218740

7G4491 RELIEF VALVE GROUP
IF TRANSMISSION IS SERIALIZED USE TRANSMISSION SERIAL NO. OTHERWISE USE VEHICLE SERIAL NO. Serial No. 6X508 to 6X905 inclusive, Test No. 342—Up Transmission Serial No. 2HA1—Up. Part of 7G4245 Transmission Arrangement shown on Page 99B

8P7791 PRESSURE CONTROL VALVE GROUP

IF TRANSMISSION IS SERIALIZED USE TRANSMISSION SERIAL NO. OTHERWISE USE VEHICLE SERIAL NO.
Serial No. 6X1 to 6X905 inclusive. Transmission Serial No. 2HA1—Up. Part of 8M6350 Transmission Hydraulic Control
Group shown on Page 104. For Field Replacement order 8P7790 shown on Page 108

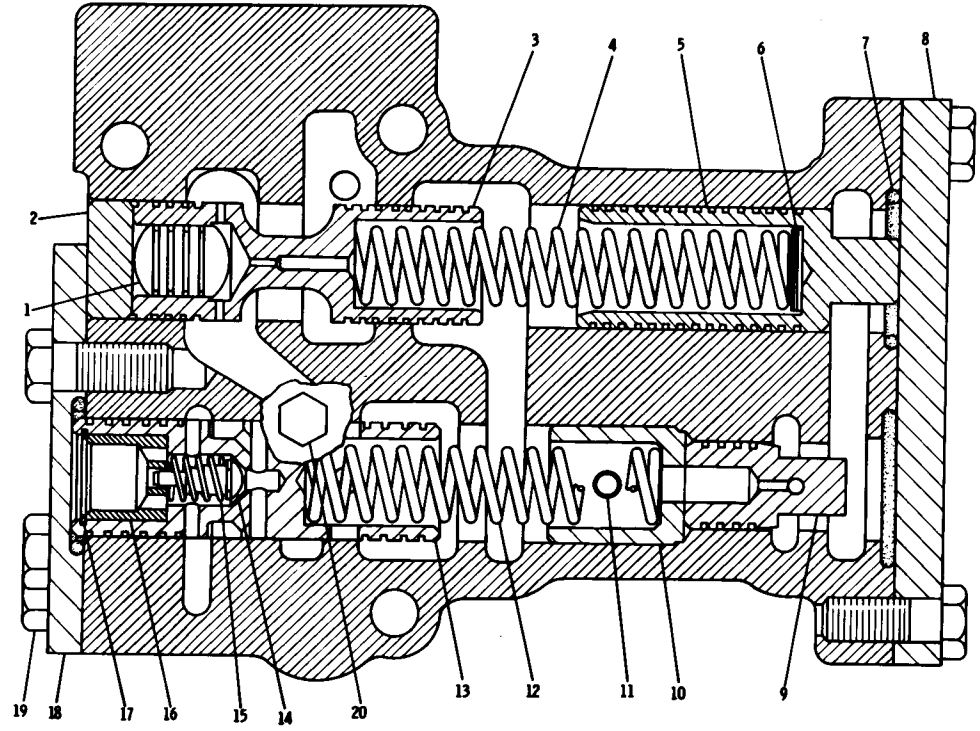

REF. NO.	PART NUMBER	DESCRIPTION	QTY
1	2M7041	SLUG	1
2	1P8612	STOP	1
3	9M2025	SPOOL	1
4	3P394	SPRING	1
5	8S9198	PISTON	1
6	5M7915	SPACER---0.77 mm(.030 in.) thick	4
	5M7914	SPACER---0.26 mm(.010 in.) thick	3
7	8M5248	SEAL	3
8	9S2753	COVER	1
9	3P391	VALVE	1
10	1P9665	RETAINER	1
11	6D3036	DOWEL	2
12	8M8132	SPRING	1
13	6P4711	SPOOL ASSEM. (Includes)	1
14	6P8848	PLUNGER	1
15	9H2367	SPRING	1
16	6P4717	SLEEVE	1
17	2M8191	RING	1
18	1P8573	COVER	1
19	S1594	BOLT	7
20	5M6214	PLUG	2
	SMHS6943	FORM (Installing Control Valves)	1

210775

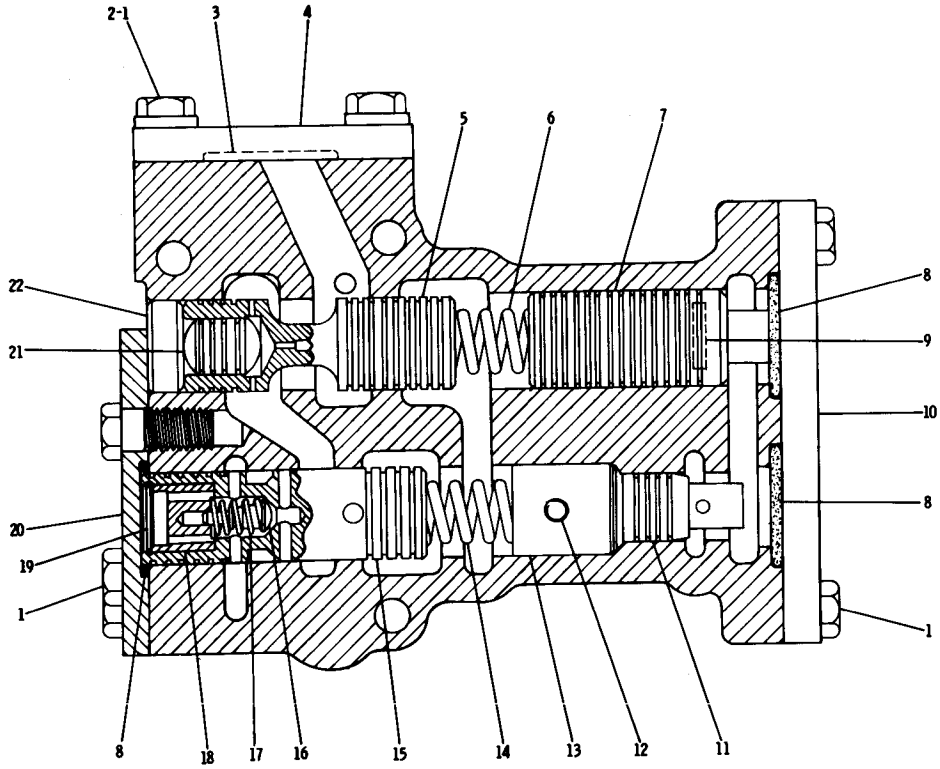

REF. NO.	PART NUMBER	DESCRIPTION	QTY
1	S1594	BOLT	9
2	5M2894	WASHER	2
3	8M4433	SEAL	1
4	1P9666	COVER	1
5	9M2025	SPOOL	1
6	3P394	SPRING	1
7	8S9198	PISTON	1
8	8M5248	SEAL	3
9	5M7914	SPACER----.254 mm(.010 in.) thick	3
	5M7915	SPACER----.914 mm(.036 in.) thick	4
10	9S2753	COVER	1
11	3P391	VALVE	1
12	6D3036	DOWEL	2
13	1P9665	RETAINER	1
14	8M8132	SPRING	1
15	6P4711	SPOOL ASSEM.	1
		(Includes)	
16	6P8848	PLUNGER	1
17	9H2367	SPRING	1
18	6P4717	SLEEVE	1
19	2M8191	RING	1
20	1P8573	COVER	1
21	2M7041	SLUG	1
22	1P8612	STOP	1
A	5M6214	PLUG	2
A	4B9880	BALL	2
	SMHS6943	FORM (Installing Control Valves)	1

A NOT SHOWN

210776

8P7790 PRESSURE CONTROL VALVE GROUP—Field Installation

8P5223 POWER TRAIN OIL LINES GROUP—Right Hand Side View—Part 1 of 3
Serial No. 6X1 to 6X752 inclusive

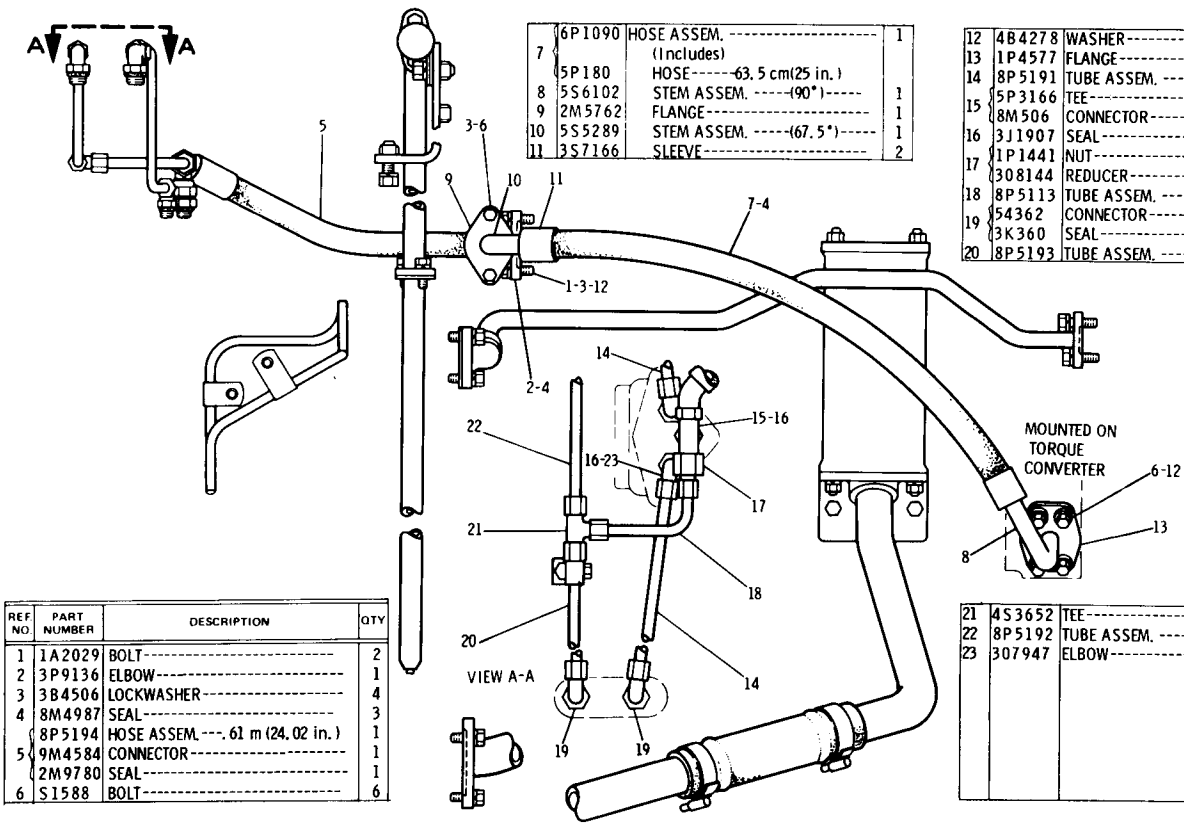

REF. NO.	PART NUMBER	DESCRIPTION	QTY
1	1A2029	BOLT	2
2	3P9136	ELBOW	1
3	3B4506	LOCKWASHER	4
4	8M4987	SEAL	3
5	8P5194	HOSE ASSEM. ---. 61 m (24.02 in.)	1
	9M4584	CONNECTOR	1
	2M9780	SEAL	1
6	S1588	BOLT	6
7	6P1090	HOSE ASSEM. (Includes)	1
	5P180	HOSE---63.5 cm(25 in.)	
8	5S6102	STEM ASSEM. -----(90°)-----	1
9	2M5762	FLANGE	1
10	5S5289	STEM ASSEM. -----(67.5°)-----	1
11	3S7166	SLEEVE	2
12	4B4278	WASHER	6
13	1P4577	FLANGE	2
14	8P5191	TUBE ASSEM.	2
15	5P3166	TEE	1
	8M506	CONNECTOR	1
16	3J1907	SEAL	3
17	1P1441	NUT	1
	308144	REDUCER	1
18	8P5113	TUBE ASSEM.	1
19	54362	CONNECTOR	4
	3K360	SEAL	4
20	8P5193	TUBE ASSEM.	1
21	4S3652	TEE	1
22	8P5192	TUBE ASSEM.	1
23	307947	ELBOW	2

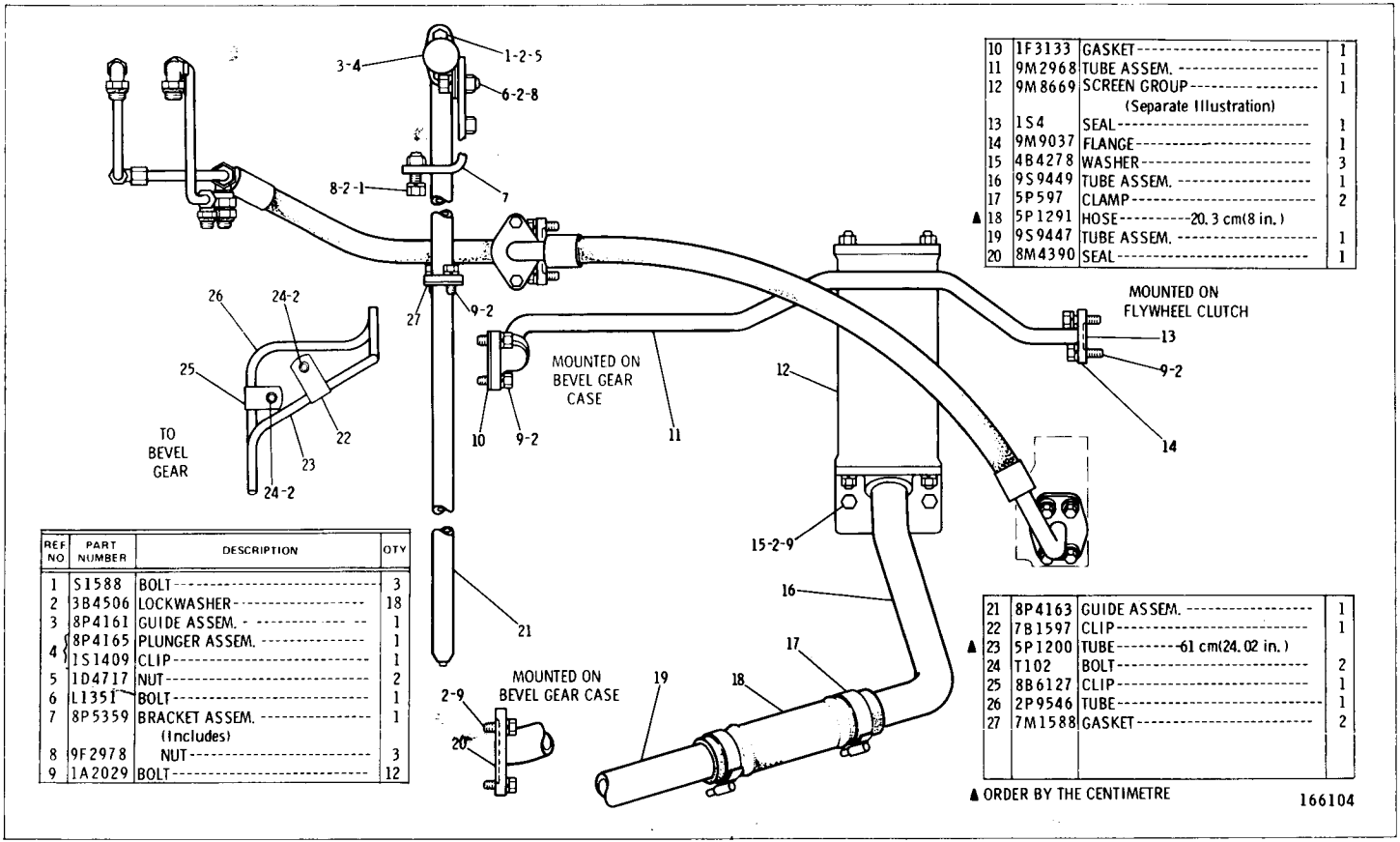

REF NO	PART NUMBER	DESCRIPTION	QTY
1	S1588	BOLT	3
2	3B4506	LOCKWASHER	18
3	8P4161	GUIDE ASSEM.	1
4	8P4165	PLUNGER ASSEM.	1
	1S1409	CLIP	1
5	1D4717	NUT	2
6	L1351	BOLT	1
7	8P5359	BRACKET ASSEM. (Includes)	1
8	9F2978	NUT	3
9	1A2029	BOLT	12
10	1F3133	GASKET	1
11	9M2968	TUBE ASSEM.	1
12	9M8669	SCREEN GROUP (Separate Illustration)	1
13	1S4	SEAL	1
14	9M9037	FLANGE	1
15	4B4278	WASHER	3
16	9S9449	TUBE ASSEM.	1
17	5P597	CLAMP	2
▲18	5P1291	HOSE---20.3 cm(8 in.)	
19	9S9447	TUBE ASSEM.	1
20	8M4390	SEAL	1
21	8P4163	GUIDE ASSEM.	1
22	7B1597	CLIP	1
▲23	5P1200	TUBE---61 cm(24.02 in.)	
24	T102	BOLT	2
25	8B6127	CLIP	1
26	2P9546	TUBE	1
27	7M1588	GASKET	2

▲ ORDER BY THE CENTIMETRE

166104

8P5223 POWER TRAIN OIL LINES GROUP—Right Hand Side View—Part 2 of 3
Serial No. 6X1 to 6X752 inclusive
9M8869 Screen parts are shown on Page 112

8P5223 POWER TRAIN OIL LINES GROUP—Right Hand Side View—Part 3 of 3
Serial No. 6X1 to 6X752 inclusive
3S1741 Filter and 3P6816 Pump parts are shown on Pages 112 and 113

REF. NO.	PART NUMBER	DESCRIPTION	QTY
1	1A2029	BOLT	9
2	3B4506	LOCKWASHER	18
3	4B4278	WASHER	24
4	9M5962	ELBOW	1
5	S1571	BOLT	1
6	S1588	BOLT	22
7	8M4987	SEAL	6
8	8M4436	SEAL	2
9	5P597	CLAMP	2
▲ 10	5P1291	HOSE--------20.3 cm(8 in.)	
11	4D9517	CLIP	1
12	3P8117	HOSE ASSEM. -----.71 m(28 in.)	
13	3P6816	PUMP GROUP (Separate Illustration)	1
14	1P1556	HOSE ASSEM. ----.85 m(33.38 in.)	1
15	1P4577	FLANGE	6
16	7S1636	PLATE	1
17	1D4717	NUT	6
18	3S1741	FILTER GROUP (Separate Illustration)	1
19	9S9407	TUBE ASSEM.	1
20	8S2957	BRACKET	1
21	L2070	BOLT	2
22	2K5232	SPACER	1
23	6F127	SPACER	1
24	8F8882	SEAL	1
25	307947	ELBOW	1
26	336042	SEAL	2
27	9S9393	TUBE ASSEM.	1
28	307942	ELBOW	1
29	9M3832	PLATE	1
30	5S803	HOSE ASSEM. -------.69 m(27 in.)	1
31	1P4576	FLANGE	4
	8M4988	SEAL	2
32	5S786	HOSE ASSEM. ----.26 m(10.3 in.)	1
33	9M2740	TUBE ASSEM.	1
34	S1619	BOLT	2

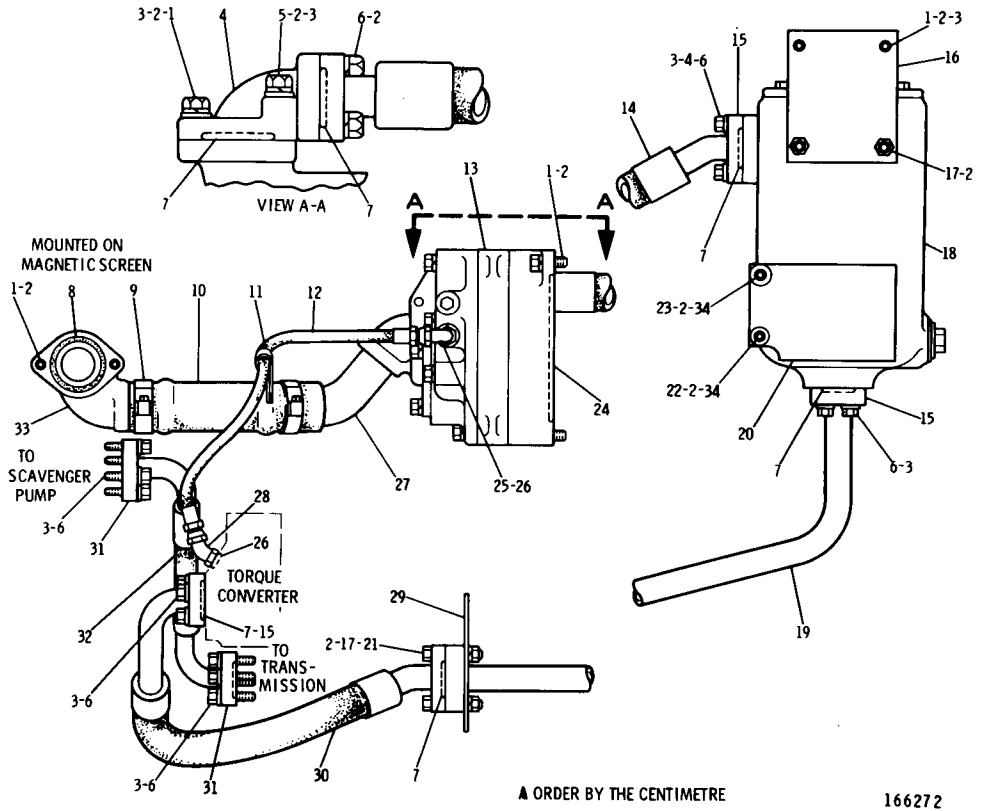

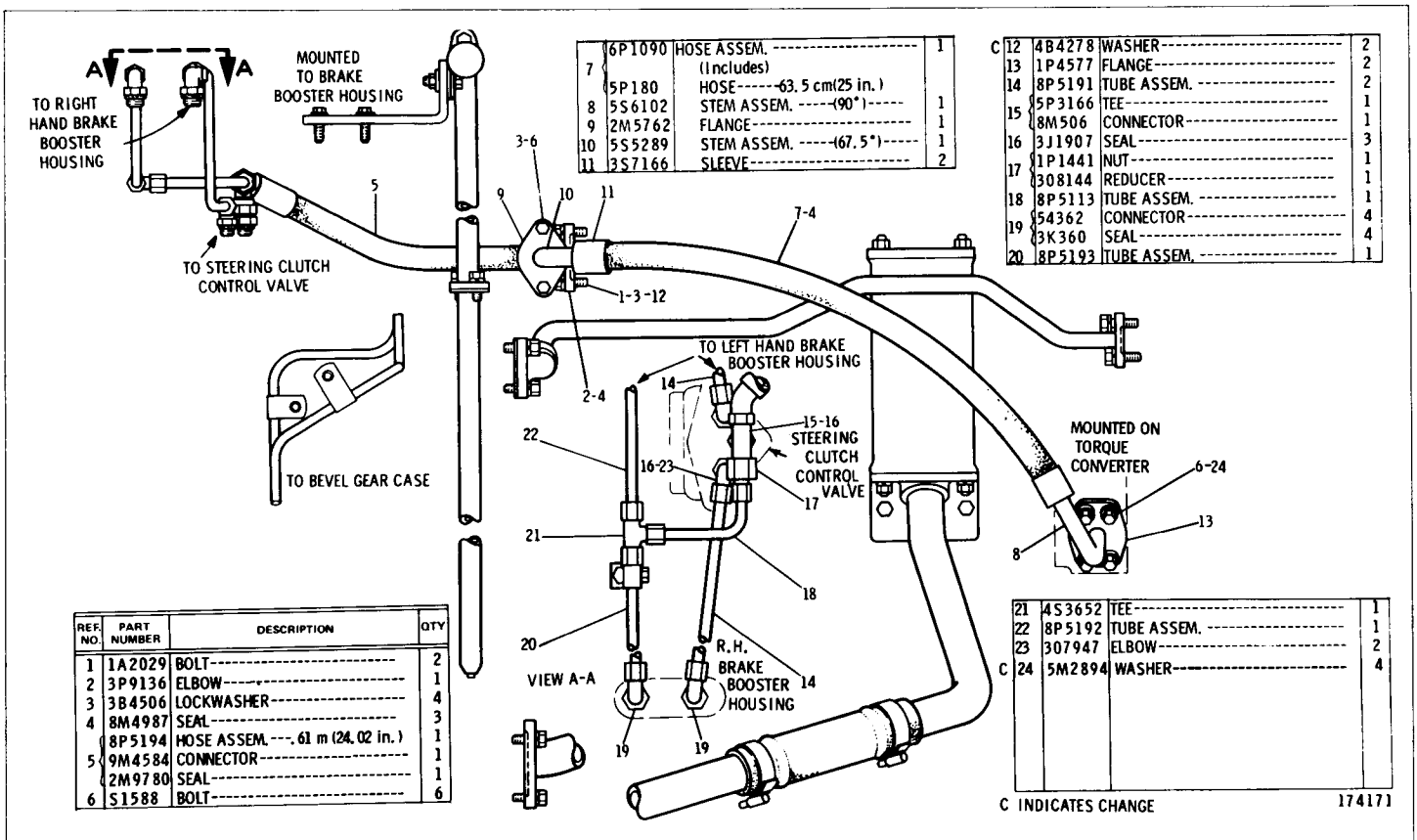

7	6P1090	HOSE ASSEM. (Includes)	1
	5P180	HOSE------63.5 cm(25 in.)	
8	5S6102	STEM ASSEM. -----(90°)-----	1
9	2M5762	FLANGE	1
10	5S5289	STEM ASSEM. -----(67.5°)-----	1
11	3S7166	SLEEVE	2

C 12	4B4278	WASHER	2
13	1P4577	FLANGE	2
14	8P5191	TUBE ASSEM.	2
15	5P3166	TEE	1
	8M506	CONNECTOR	1
16	3J1907	SEAL	3
17	1P1441	NUT	1
	308144	REDUCER	1
18	8P5113	TUBE ASSEM.	1
19	54362	CONNECTOR	4
	3K360	SEAL	4
20	8P5193	TUBE ASSEM.	1

REF. NO.	PART NUMBER	DESCRIPTION	QTY
1	1A2029	BOLT	2
2	3P9136	ELBOW	1
3	3B4506	LOCKWASHER	4
4	8M4987	SEAL	3
	8P5194	HOSE ASSEM.---.61 m (24.02 in.)	1
5	9M4584	CONNECTOR	1
	2M9780	SEAL	1
6	S1588	BOLT	6

21	4S3652	TEE	1
22	8P5192	TUBE ASSEM.	1
23	307947	ELBOW	2
C 24	5M2894	WASHER	4

C INDICATES CHANGE

174171

8P5223 POWER TRAIN OIL LINES GROUP—R.H.—Side View—Part 1 of 3
Serial No. 6X753—Up

8P5223 POWER TRAIN OIL LINES GROUP—R.H.—Side View—Part 2 of 3
Serial No. 6X753—Up
9M8669 Screen parts are shown on Page 112

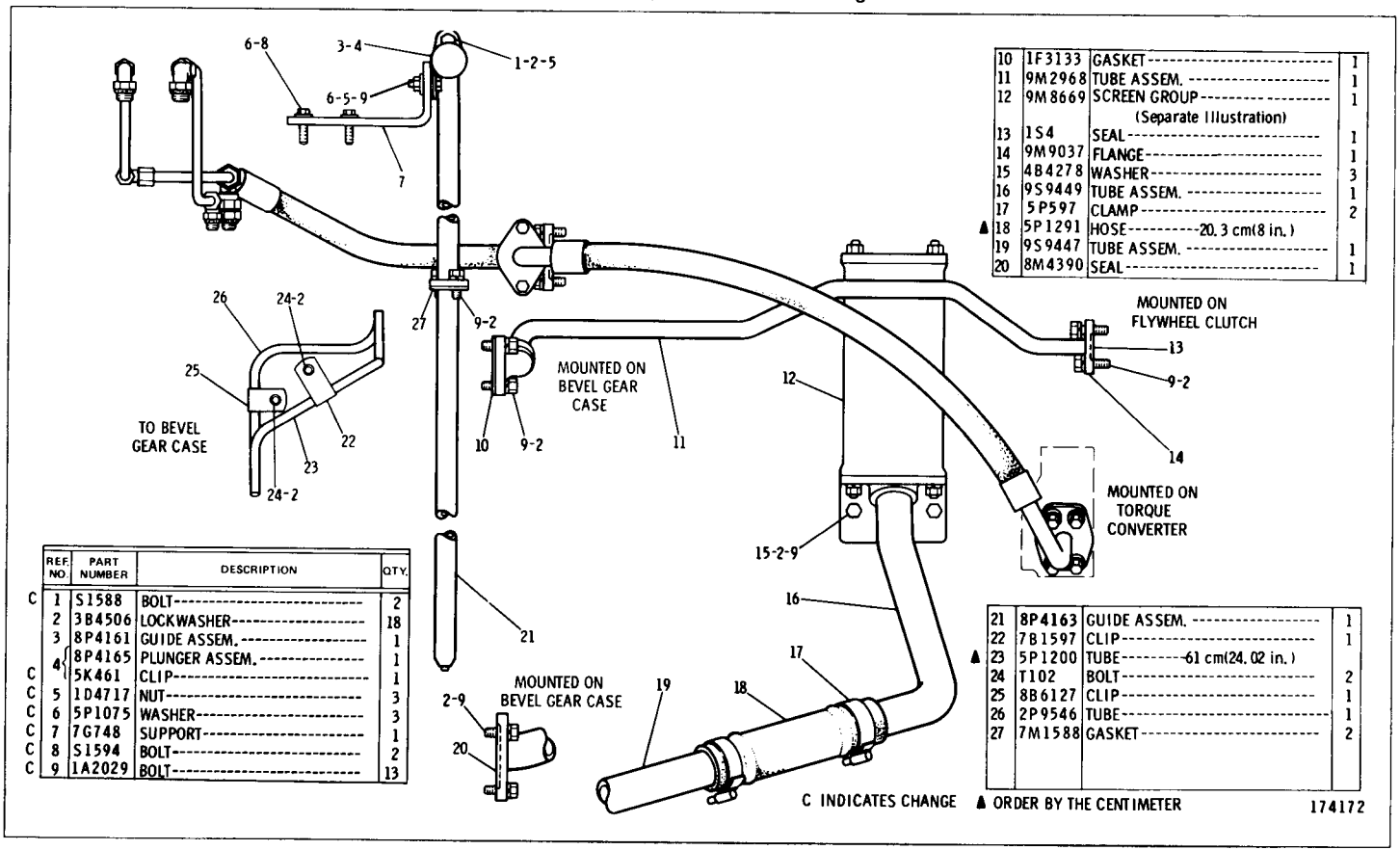

REF. NO.	PART NUMBER	DESCRIPTION	QTY.
C 1	S1588	BOLT	2
2	3B4506	LOCKWASHER	18
3	8P4161	GUIDE ASSEM.	1
4	8P4165	PLUNGER ASSEM.	1
C	5K461	CLIP	1
C 5	1D4717	NUT	3
C 6	5P1075	WASHER	3
C 7	7G748	SUPPORT	1
C 8	S1594	BOLT	2
C 9	1A2029	BOLT	13
10	1F3133	GASKET	1
11	9M2968	TUBE ASSEM.	1
12	9M8669	SCREEN GROUP (Separate Illustration)	1
13	1S4	SEAL	1
14	9M9037	FLANGE	1
15	4B4278	WASHER	3
16	9S9449	TUBE ASSEM.	1
17	5P597	CLAMP	2
▲ 18	5P1291	HOSE—20.3 cm(8 in.)	
19	9S9447	TUBE ASSEM.	1
20	8M4390	SEAL	1
21	8P4163	GUIDE ASSEM.	1
22	7B1597	CLIP	1
▲ 23	5P1200	TUBE—61 cm(24.02 in.)	
24	T102	BOLT	2
25	8B6127	CLIP	1
26	2P9546	TUBE	1
27	7M1588	GASKET	2

C INDICATES CHANGE ▲ ORDER BY THE CENTIMETER 174172

8P5223 POWER TRAIN OIL LINES GROUP—R.H.—Side View—Part 3 of 3
Serial No. 6X753—Up
3S1741 Filter and 3P6816 Pump parts are shown on Pages 112 and 113

	REF NO.	PART NUMBER	DESCRIPTION	QTY.
	1	1A2029	BOLT	9
C	2	3B4506	LOCKWASHER	20
C	3	4B4278	WASHER	4
	4	9M5962	ELBOW	1
	5	S1571	BOLT	1
C	6	S1588	BOLT	32
	7	8M4987	SEAL	6
	8	8M4436	SEAL	2
	9	5P597	CLAMP	2
▲	10	5P1291	HOSE---------20.3 cm(8 in.)	
	11	4D9517	CLIP	1
	12	3P8117	HOSE ASSEM.--------.71 m(28 in.)	1
	13	3P6816	PUMP GROUP (Separate Illustration)	1
	14	1P1566	HOSE ASSEM.---.85 m(33.38 in.)	1
C	15	1P4577	FLANGE	10
C	16	7S1636	PLATE	1
	17	1D4717	NUT	6
	18	3S1741	FILTER GROUP (Separate Illustration)	1
C	19	9P3440	TUBE ASSEM.	1
	20	8S2957	BRACKET	1
	21	L2070	BOLT	2
	22	2K5232	SPACER	1
	23	6F127	SPACER	1
	24	8P8882	SEAL	1
	25	307947	ELBOW	1
	26	336042	SEAL	2
	27	9S9393	TUBE ASSEM.	1
	28	307942	ELBOW	1
C	29	7G8032	PLATE	1
	30	5S803	HOSE ASSEM.------.69 m(27 in.)	1
	31	1P4576	FLANGE	4
		8M4988	SEAL	2
	32	5S786	HOSE ASSEM.------.26 m(10.3 in.)	1
	33	9M2740	TUBE ASSEM.	1
	34	S1619	BOLT	2
C	35	5M2894	WASHER	28
C	36	9P2760	HOSE ASSEM.--.835 m(32.87 in.)	1
C	37	9P2759	HOSE ASSEM.----.89 m(35.04 in.)	1
C	38	1P4578	FLANGE	2
C	39	T772	BOLT	4
C		5P8244	WASHER	4

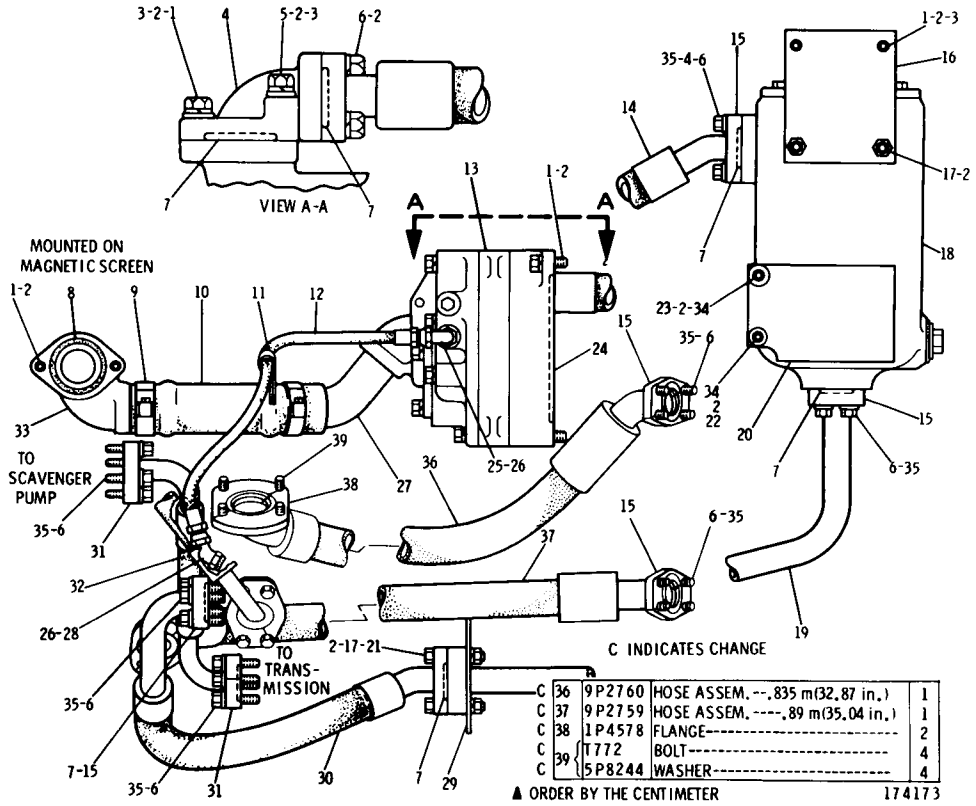

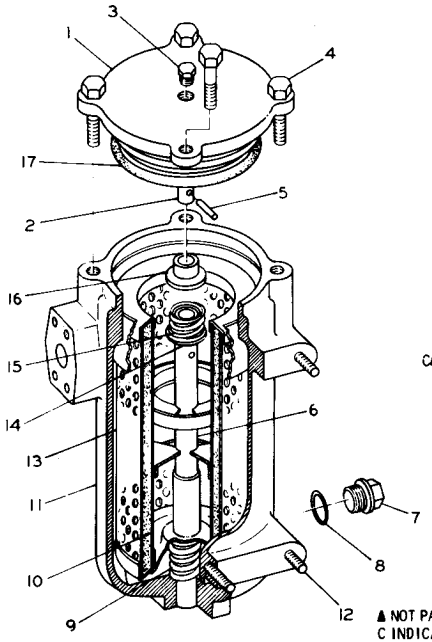

REF. NO.	PART NUMBER	DESCRIPTION	QTY
1	9S7227	COVER ASSEM.	1
2	2S9694	PIN	1
3	9S4191	PLUG	1
	3J1907	SEAL	1
4	S1595	BOLT	4
5	3F7514	PIN	1
6	4S8975	TUBE	1
7	9S4205	PLUG	1
8	7M8485	SEAL	1
9	9M4685	SPRING	1
10	3S1748	RETAINER ASSEM.	1
	3S1751	SEAL	1
11	5S788	HOUSING ASSEM.	1
12	3D2871	STUD	4
C▲ 13	4J6064	ELEMENT ASSEM. -----(disposable)- -OR-	1
	3G4621	ELEMENT ASSEM. (Fire Resistant Fluid)	1
14	4S7648	WASHER	1
15	4H1790	SPRING	1
16	4S7647	VALVE	1
17	2H9247	SEAL	1

▲ NOT PART OF 3S1741 FILTER GROUP
C INDICATES CHANGE

168199

3S1741 TRANSMISSION AND STEERING CLUTCH FILTER GROUP
Part of 8P5223 Power Train Oil Lines Group shown on Page 111

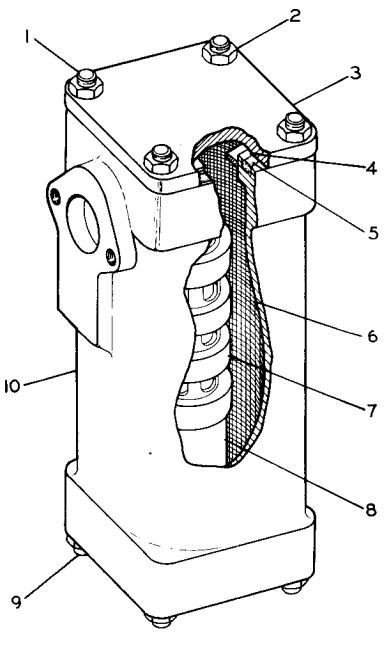

REF. NO.	PART NUMBER	DESCRIPTION	QTY
1	3D2871	STUD	4
2	1D4717	NUT	4
3	3S3439	COVER	1
4	3S3440	SPRING WASHER	1
5	5F149	SEAL	2
6	3S3875	SCREEN	1
7	2S1641	TUBE ASSEM.	1
8	8M7160	MAGNET	4
9	1J8668	STUD----------(2" long)---------- -OR-	4
	8M1047	STUD--------(1.70" long)--------- -OR-	4
	2M4779	STUD--------(1.80" long)---------	4
	1D4717	NUT	4
	3B4506	LOCKWASHER	4
10	8M7166	HOUSING	1

113539

9M8669 MAGNETIC SCREEN GROUP
Part of 8P5223 Power Train Oil Lines Group shown on Page 110

3P6816 GEAR PUMP GROUP

Part of 8P5223 Power Train Oil Lines Group shown on Page 111

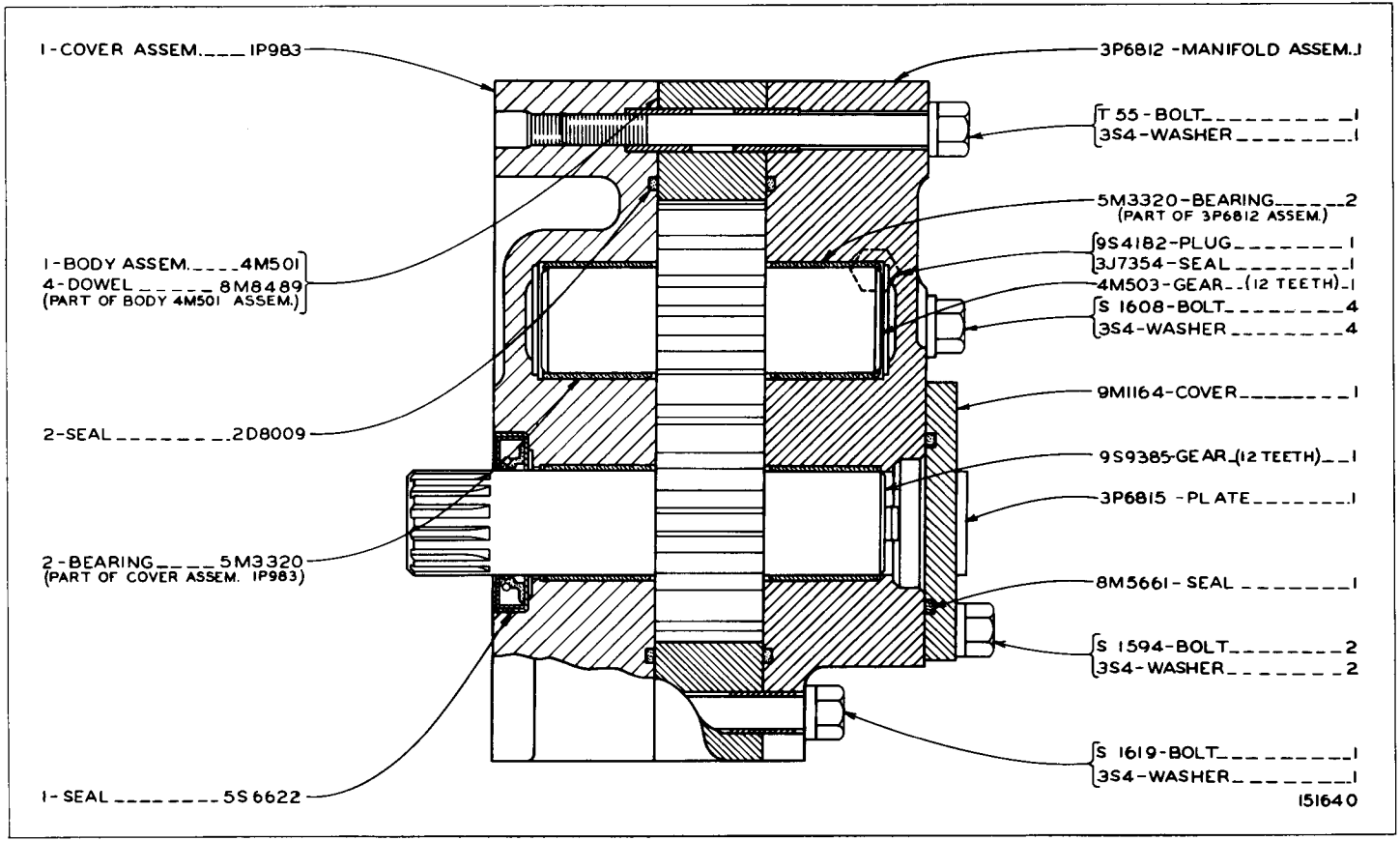

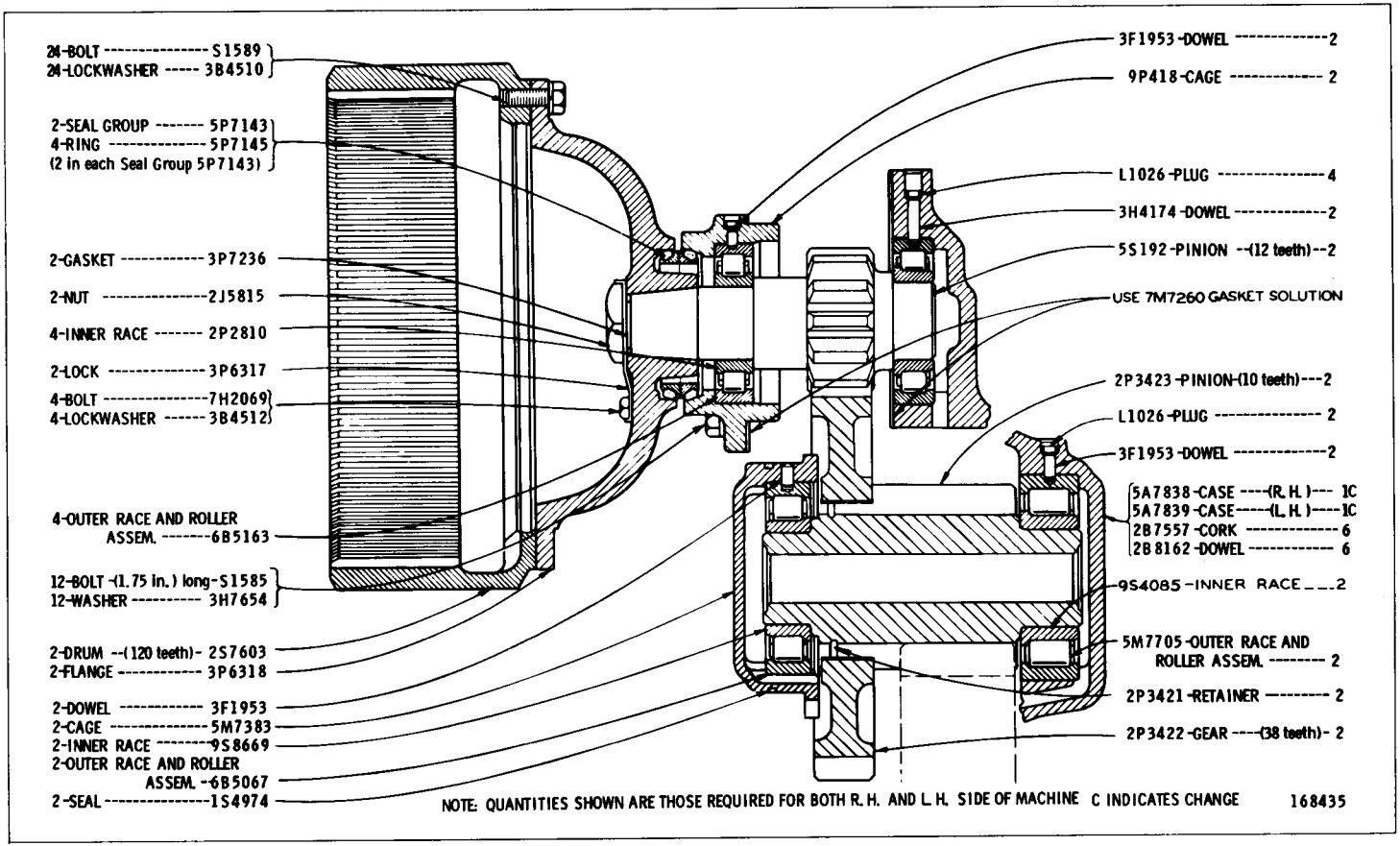

5A7837 FINAL DRIVE GROUP—Upper Half
Serial No. 6X1 to 6X423 inclusive

5A7837 FINAL DRIVE GROUP—Lower Half

Serial No. 6X1 to 6X423 inclusive

8P8914 Segmented Sprocket parts are shown on Page 116

Note: Quantities shown are those required for both R.H. and L.H. Sides

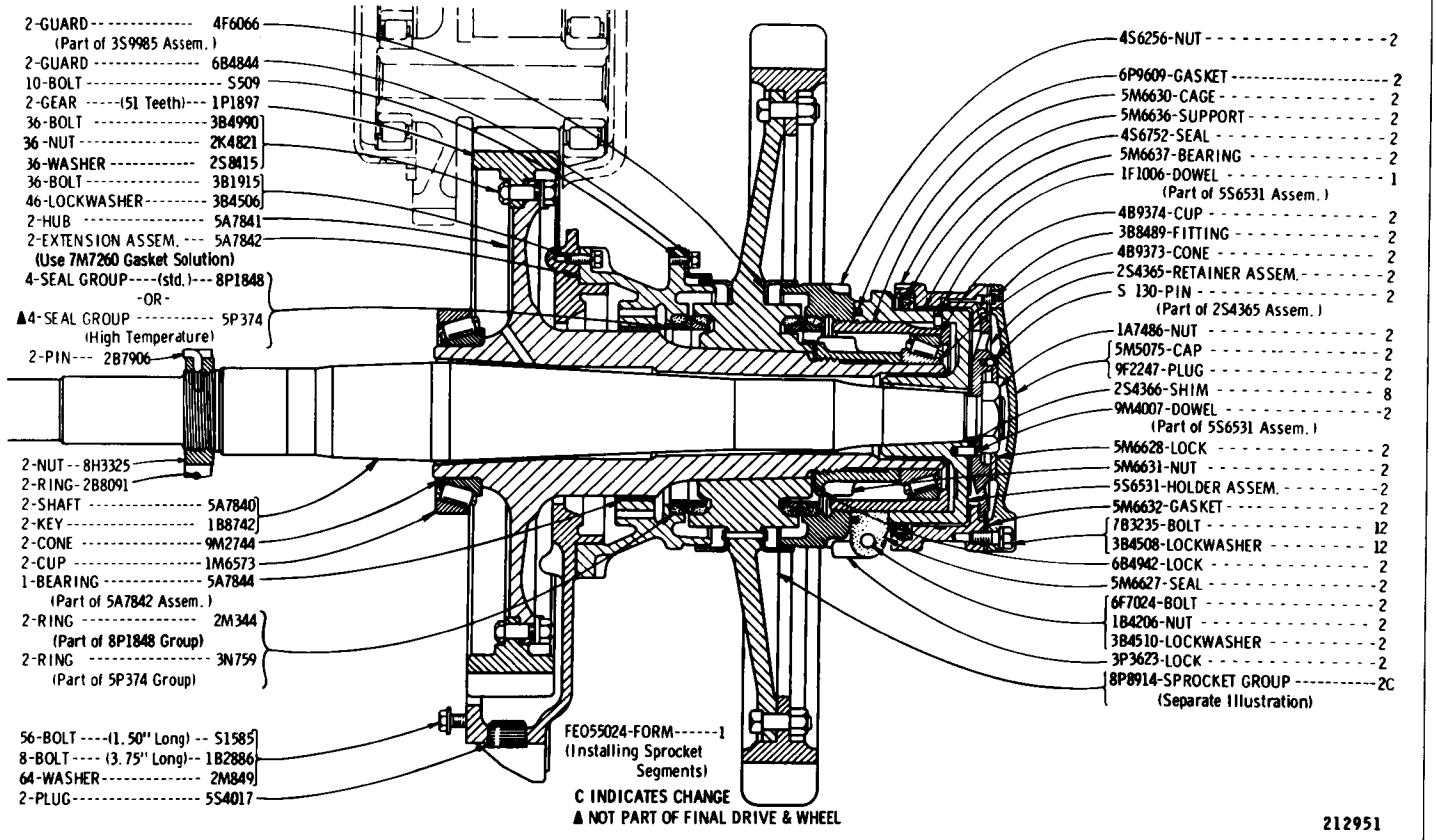

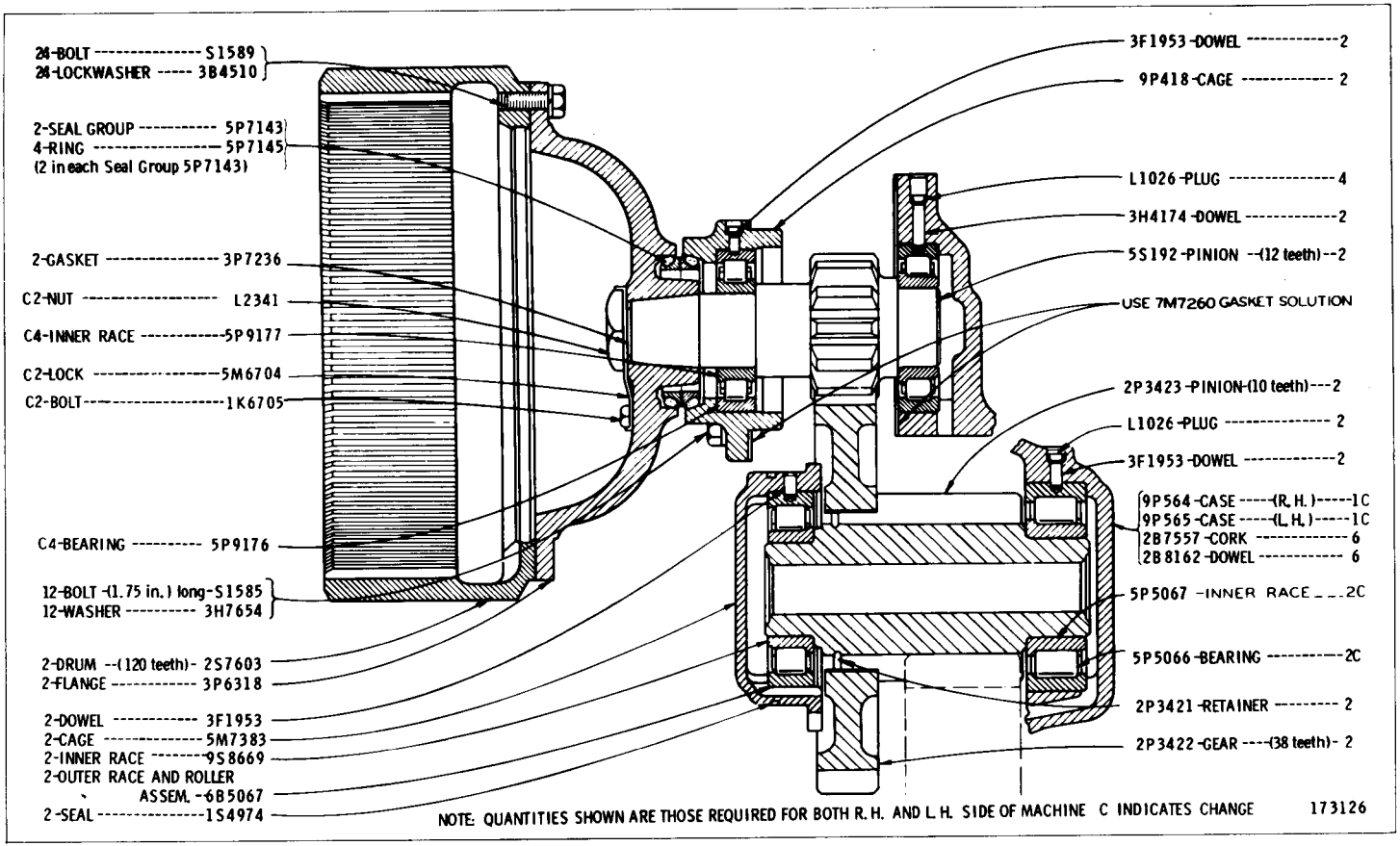

5A7837 FINAL DRIVE GROUP—Upper Half
Serial No. 6X424 to 6X818 inclusive

5A7837 FINAL DRIVE GROUP—Lower Half
Serial No. 6X424 to 6X818 inclusive
8P8914 Segmented Sprocket parts are shown on Page 116
Note: Quantities shown are those required for both R.H. and L.H. sides

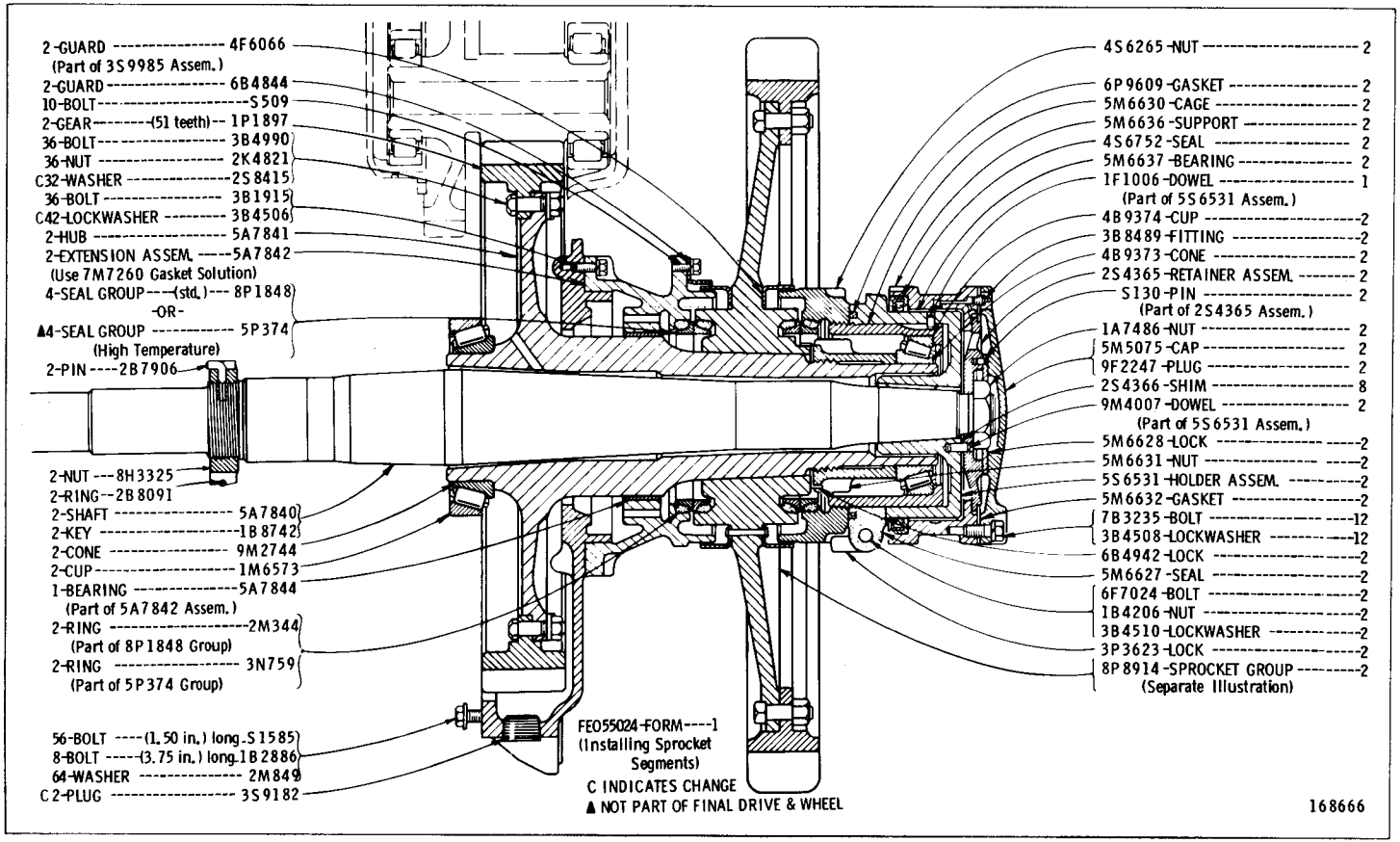

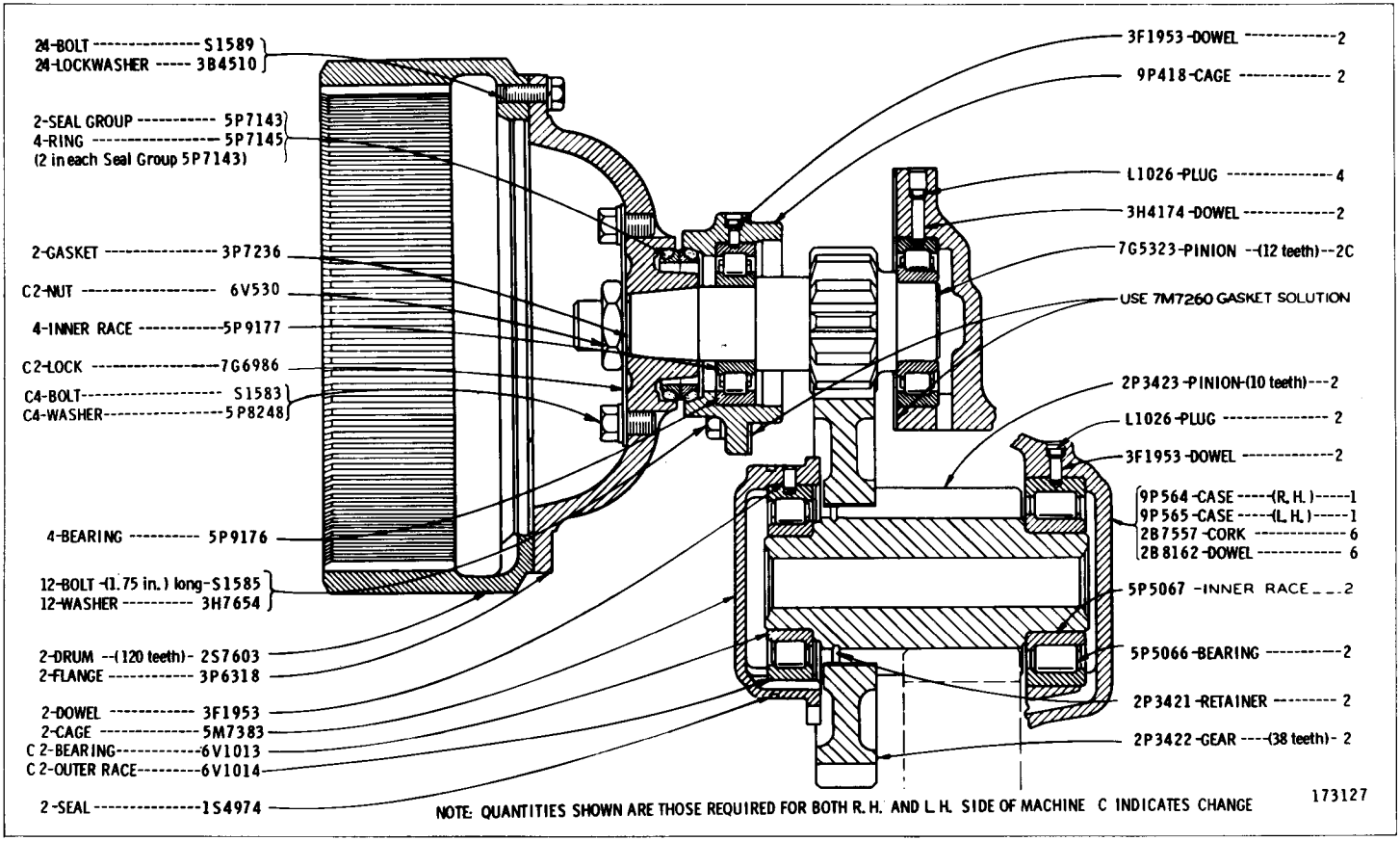

5A7837 FINAL DRIVE GROUP—Upper Half
Serial No. 6X819 to 1003, 1041 to 6X1046 inclusive

5A7837 FINAL DRIVE GROUP—Lower Half
Serial No. 6X819 to 1003, 1041 to 6X1046 inclusive
8P8914 Segmented Sprocket parts are shown on Page 116
Note: Quantities shown are those required for both R.H. and L.H. sides

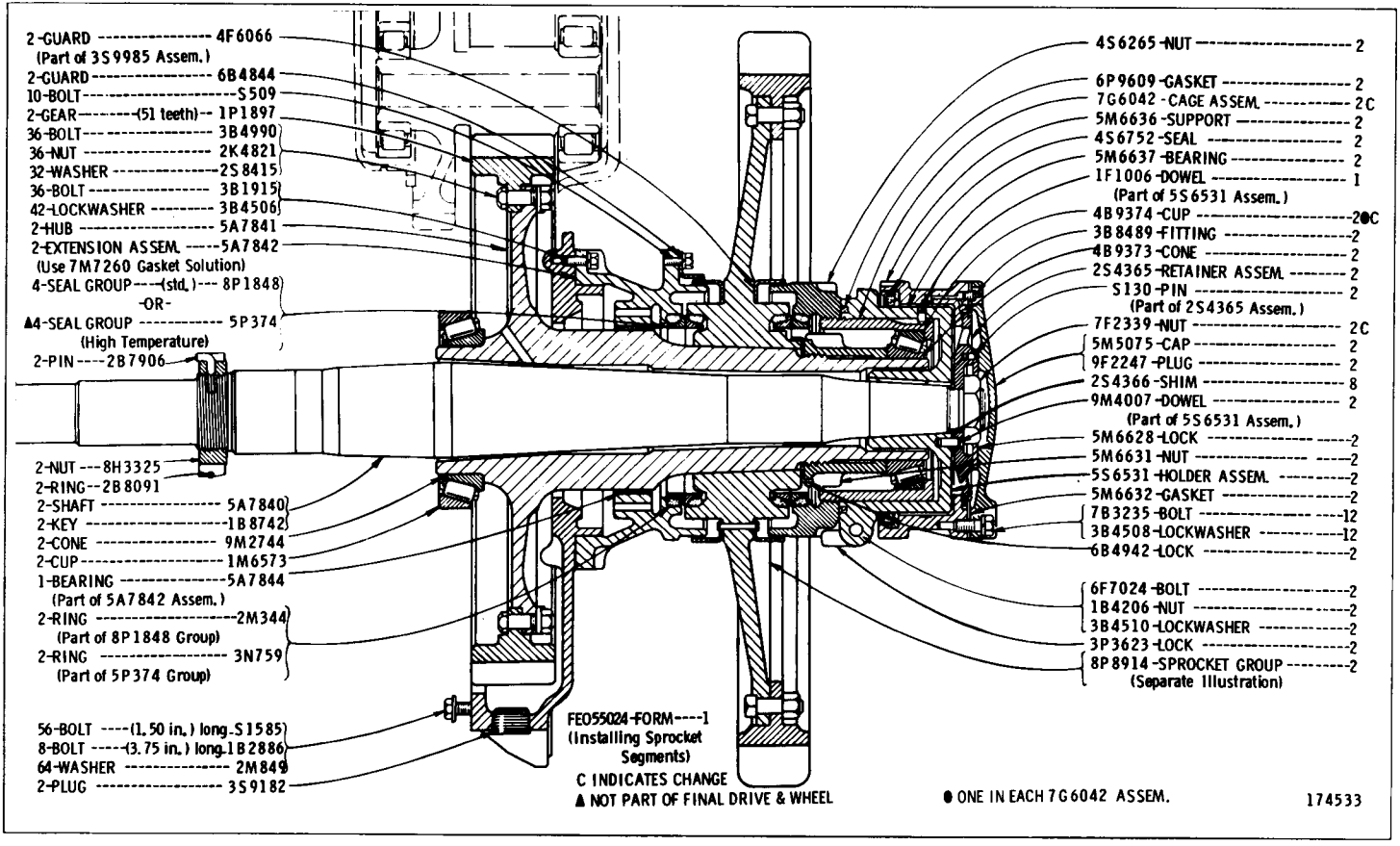

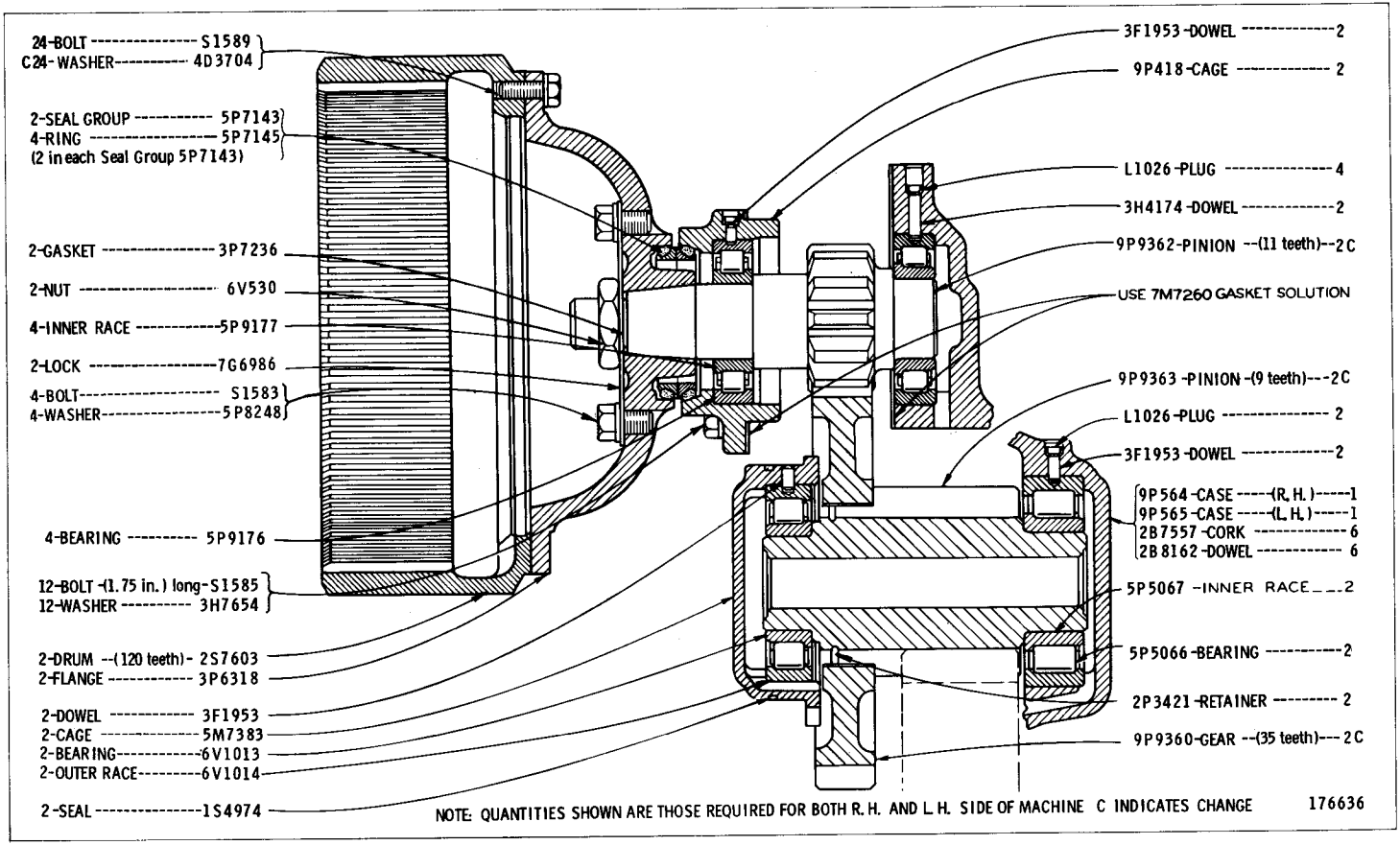

5A7837 FINAL DRIVE GROUP—Upper Half
Serial No. 6X1004 to 1040 and 6X1047—Up

5A7837 FINAL DRIVE GROUP—Lower Half
Serial No. 6X1004 to 1040 and 6X1047—Up
8P8914 Segmented Sprocket parts are shown on Page 116
Note: Quantities shown are those required for both R.H. and L.H. sides

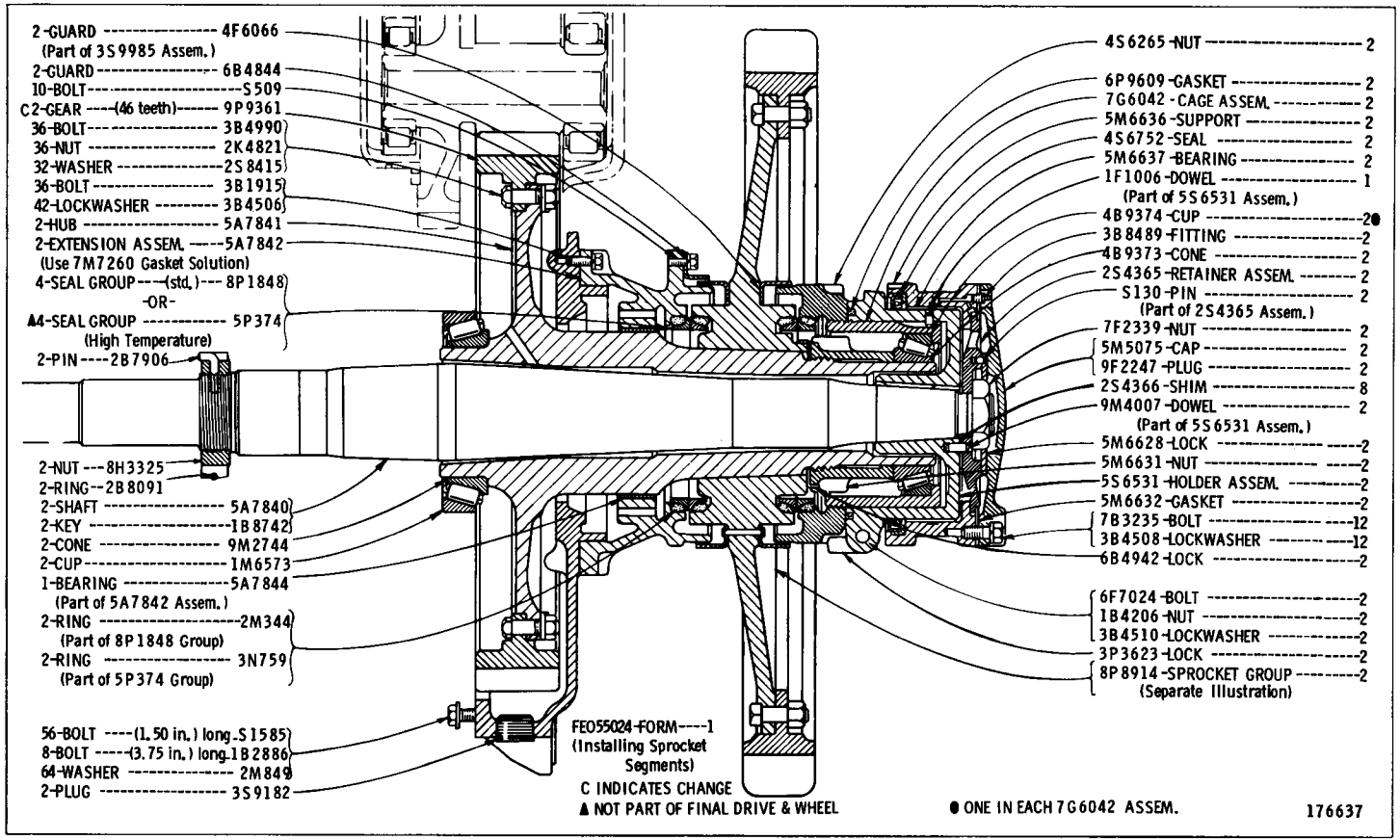

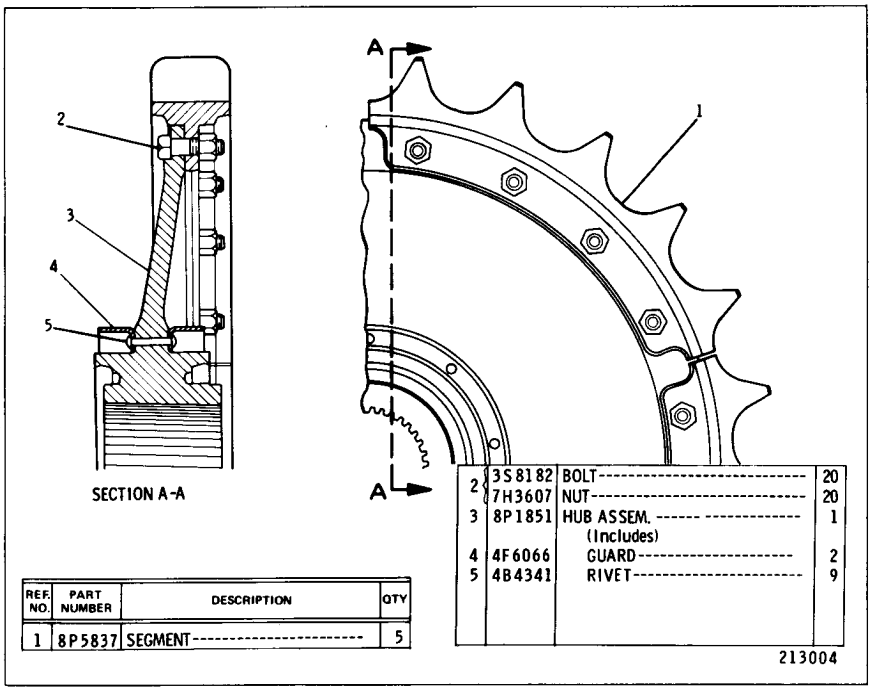

REF. NO.	PART NUMBER	DESCRIPTION	QTY
1	8P5837	SEGMENT	5

2	3S8182	BOLT	20
	7H3607	NUT	20
3	8P1851	HUB ASSEM. (Includes)	1
4	4F6066	GUARD	2
5	4B4341	RIVET	9

213004

8P8914 SEGMENTED SPROCKET GROUP
Part of 5A7837 Final Drive Group shown on Page 115

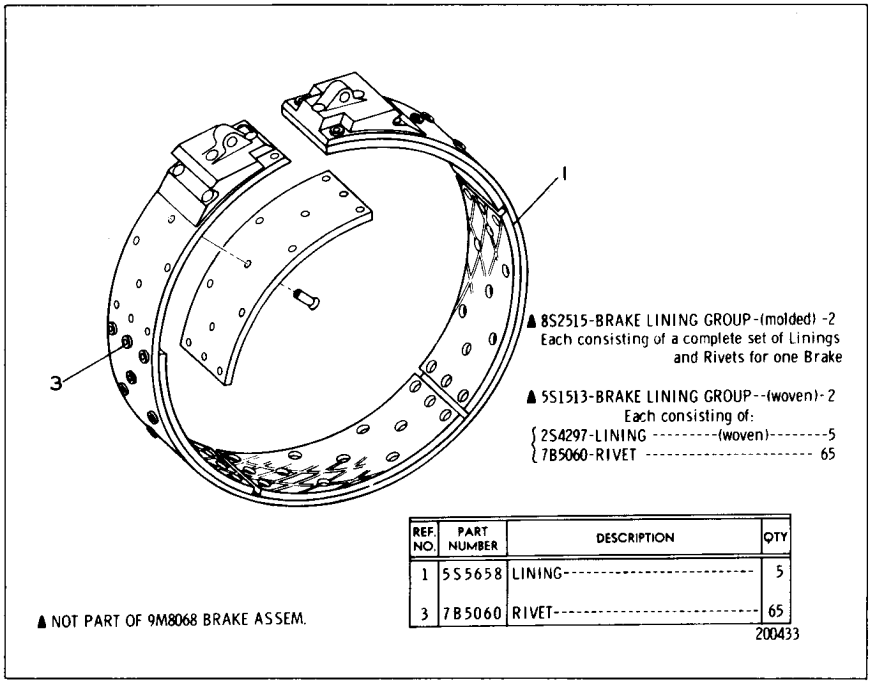

▲ 8S2515-BRAKE LINING GROUP-(molded) -2
Each consisting of a complete set of Linings and Rivets for one Brake

▲ 5S1513-BRAKE LINING GROUP--(woven)-2
Each consisting of:
2S4297-LINING ---------(woven)--------5
7B5060-RIVET ---------- 65

REF. NO.	PART NUMBER	DESCRIPTION	QTY
1	5S5658	LINING	5
3	7B5060	RIVET	65

▲ NOT PART OF 9M8068 BRAKE ASSEM.

200433

9M8068 BRAKE BAND AND LINING ASSEMBLY—24 Volt
Part of 8P4935 Steering Brake Group shown on Page 121

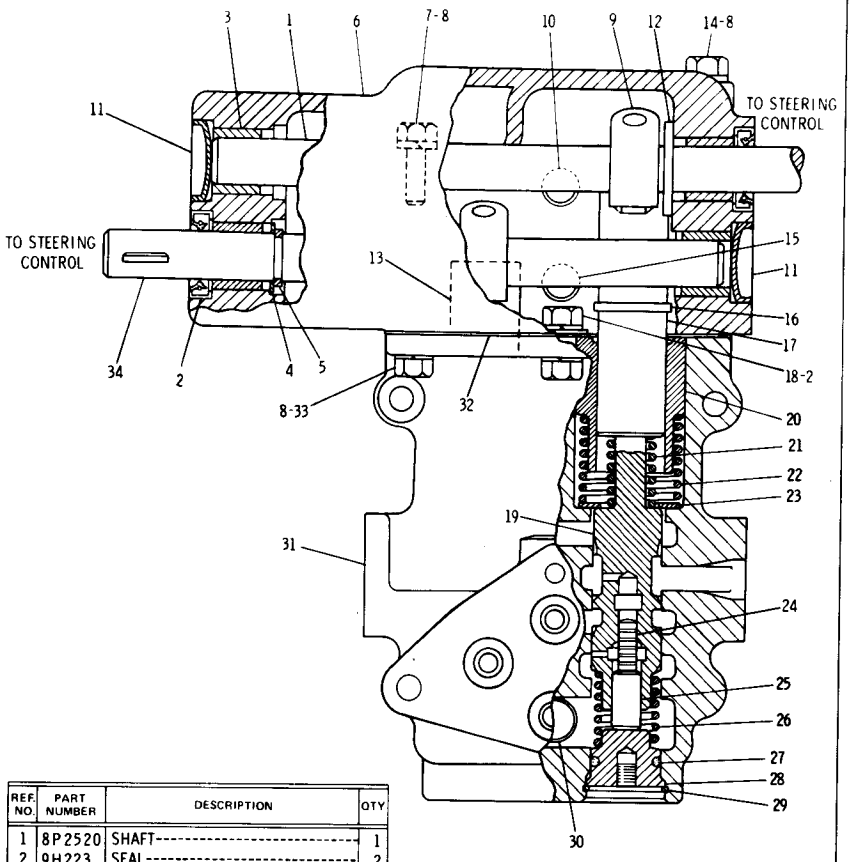

REF. NO.	PART NUMBER	DESCRIPTION	QTY.
1	8P2520	SHAFT	1
2	9H223	SEAL	2
3	8H8175	BEARING	4
4	3B9363	WASHER	1
5	3S7005	RING	1
6	8P8043	HOUSING	1
7	T65	BOLT	1
8	3B4506	LOCKWASHER	6
9	2P4045	LEVER	2
	1B8706	KEY	2
	S1588	BOLT	2
10	2S8413	STANDPIPE	1
11	3S8313	PLUG	2
12	4B4283	WASHER	1
13	8S1016	PLUNGER	1
14	1A5183	BOLT	1
15	8S5716	STANDPIPE	1
16	1H4148	RING	1
17	8S1015	PLUNGER	1
18	S509	BOLT	1
	3K925	WASHER	1
19	3P3774	VALVE ASSEM.	1
	3K9042	RING	2
	L1365	WASHER	2
20	8S1043	BUSHING	2
21	5J4698	SPRING---------(inner)	2
22	8S5753	SPRING---------(outer)	2
23	2H1730	WASHER	2
24	3P3716	SLUG	2
25	3P3717	PISTON	2
26	2S8398	SPRING	2
27	8M4445	SEAL	2
28	2S8399	PLUG	2
29	8H1037	RING	2
30	2S8412	STANDPIPE	1
31	6P968	HOUSING	1
32	2S8414	GASKET	1
33	S1594	BOLT	3
34	8P3301	SHAFT	1

212287

8P5199 CONTROL VALVE GROUP

Part of 8P4366 Steering Clutch Control Group shown on Page 119

REF. NO.	PART NUMBER	DESCRIPTION	QTY
1	L829	HANDLE	2
2	8P3409	BRACKET ASSEM. (Each Includes)	2
	9F2978	NUT	2
3	1P2878	ROLLER	4
4	8P3410	ROD	2
5	9S1354	NUT	2
6	4K5563	END	2
7	9S1315	PIN	2
	3B4617	COTTER PIN	2
8	9M5884	BUMPER	2
9	1M1341	ROD END	2
10	8P2971	ROD	2
11	5B9079	NUT	4
12	2K400	END	2
C 13	1B676	PIN	8
C 14	3B4615	COTTER PIN	12
15	3D8525	LEVER	1
16	1B8706	KEY	2
17	8M4990	SEAL	1
C 18	1S4	SEAL	2
19	S1588	BOLT	2
20	8P3205	LEVER	1
	8P3262	LEVER-(R. H.)	1
21	8P3261	LEVER-(L. H.)	1
	6K8088	BEARING	4
	9S1328	WASHER	4
22	8P9821	WASHER-(spring)	4
23	1A8827	PIN	4
24	T102	BOLT	4
	3B4506	LOCKWASHER	4

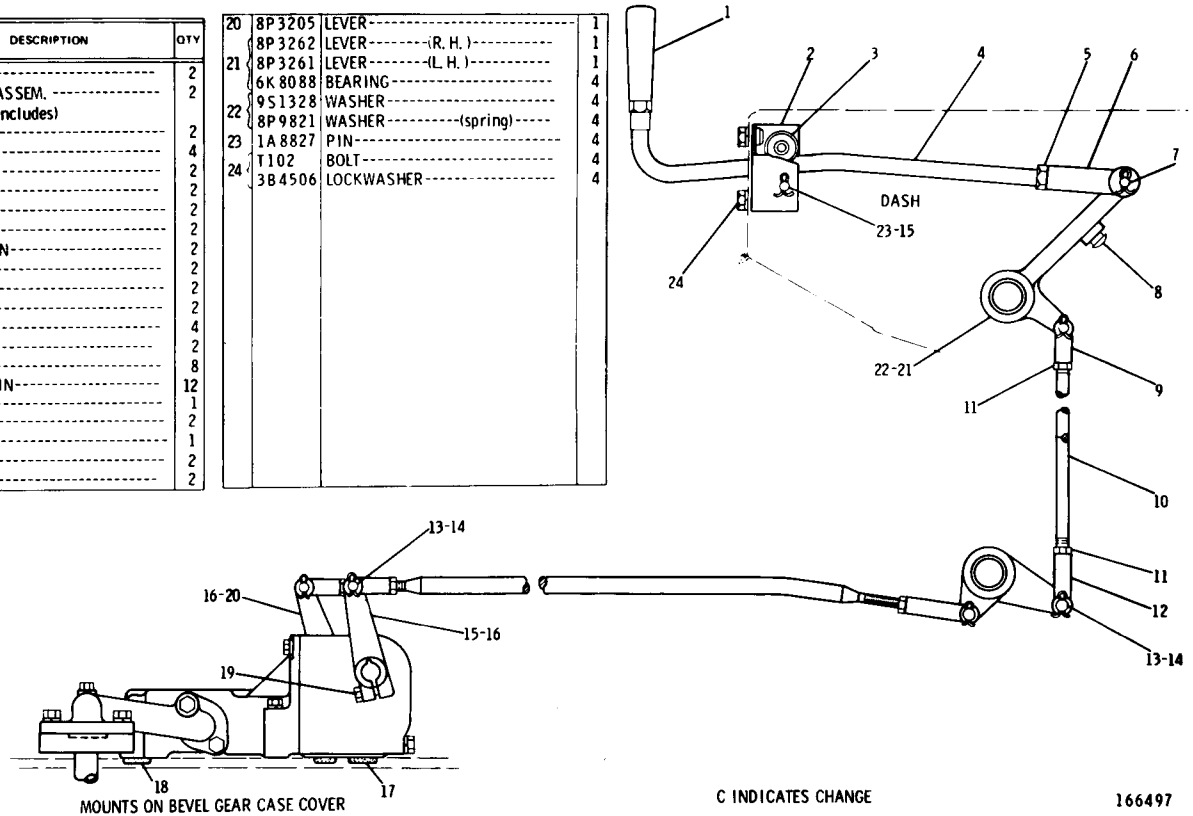

8P4366 STEERING CLUTCH CONTROL GROUP—Part 1
Serial No. 6X1 to 6X599 inclusive

8P4366 STEERING CLUTCH CONTROL GROUP—Part 2

Serial No. 6X1 to 6X599 inclusive

8P5199 Valve parts are shown on Page 117

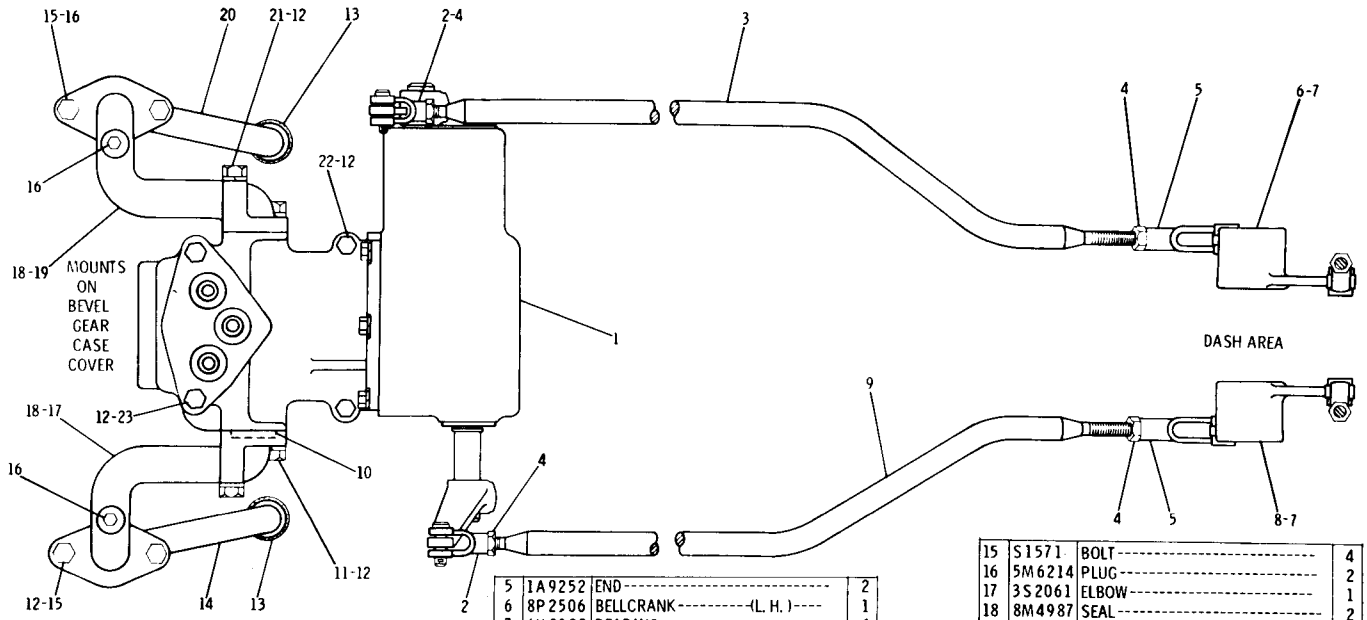

REF NO	PART NUMBER	DESCRIPTION	QTY
1	8P5199	VALVE GROUP (Separate Illustration)	1
2	1M1341	END	2
3	8P2519	ROD	1
4	5B9079	NUT	4
5	1A9252	END	2
6	8P2506	BELLCRANK (L. H.)	1
7	6K8088	BEARING	4
8	8P2505	BELLCRANK (R. H.)	1
9	8P2517	ROD	1
C 10	8M4445	SEAL	2
11	1A2029	BOLT	2
C 12	3B4506	LOCKWASHER	12
13	8M4446	SEAL	2
14	2S4301	TUBE ASSEM.	1
15	S1571	BOLT	4
16	5M6214	PLUG	2
17	3S2061	ELBOW	1
18	8M4987	SEAL	2
19	3S2062	ELBOW	1
20	2S4302	TUBE ASSEM.	1
21	L2070	BOLT	2
22	L1143	BOLT	2
C 23	L1352	BOLT	2

C INDICATES CHANGE

166498

REF NO	PART NUMBER	DESCRIPTION	QTY
1	L829	HANDLE	2
2	8P3409	BRACKET ASSEM. (Each Includes)	2
	9F2978	NUT	2
3	1P2878	ROLLER	4
4	8P3410	ROD	2
5	9S1354	NUT	2
6	4K5563	END	2
C 7	7H9397	PIN	2
C	1H1200	PIN (spring)	2
8	9M5884	BUMPER	2
9	1M1341	ROD END	2
10	8P2971	ROD	2
11	5B9079	NUT	4
12	2K400	END	2
13	1B676	PIN	8
14	3B4615	COTTER PIN	12
15	3D8525	LEVER	1
16	1B8706	KEY	2
17	8M4990	SEAL	1
18	1S4	SEAL	2
19	S1588	BOLT	2
20	8P3205	LEVER	1
	8P3262	LEVER (R. H.)	1
21	8P3261	LEVER (L. H.)	1
	6K8088	BEARING	4
	9S1328	WASHER	4
22	8P9821	WASHER (spring)	4
23	1A8827	PIN	4
24	T102	BOLT	4
	3B4506	LOCKWASHER	4

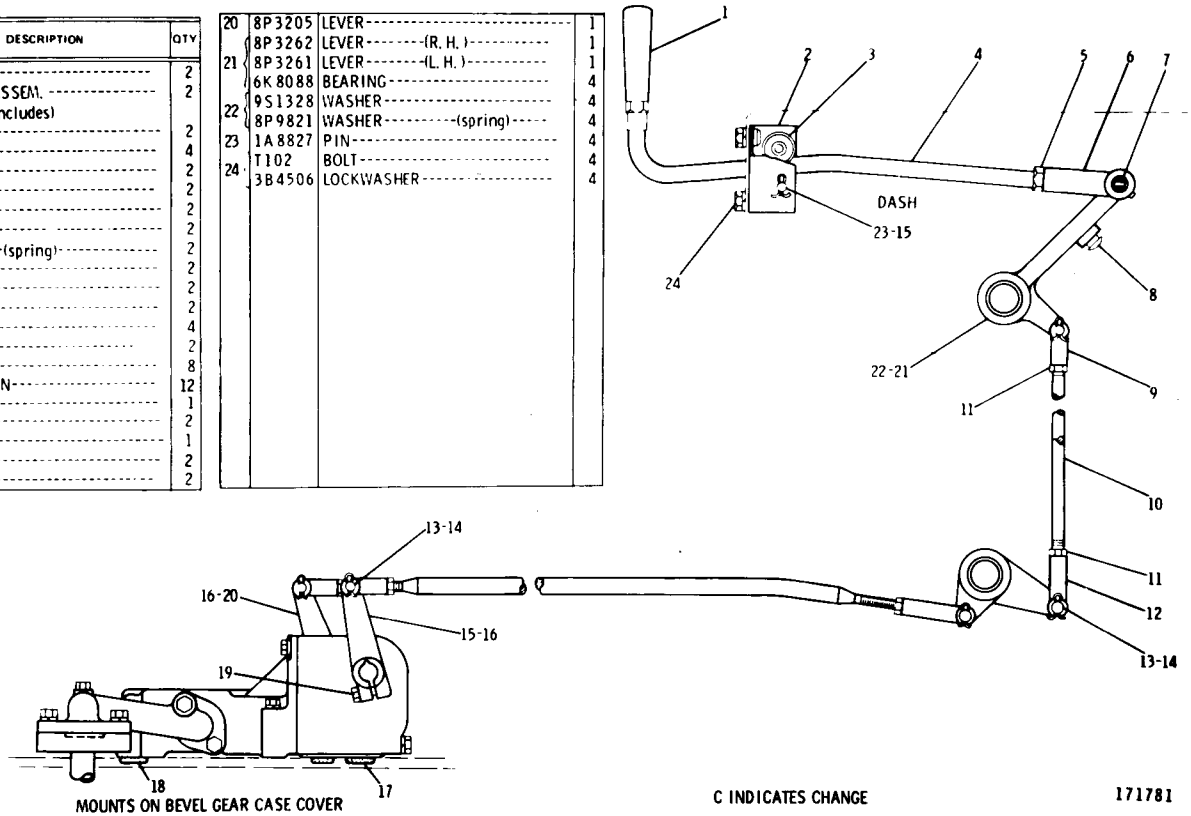

8P4366 STEERING CLUTCH CONTROL GROUP—Part 1
Serial No. 6X600—Up

8P4366 STEERING CLUTCH CONTROL GROUP—Part 2

Serial No. 6X600—Up

8P5199 Valve parts are shown on Page 117

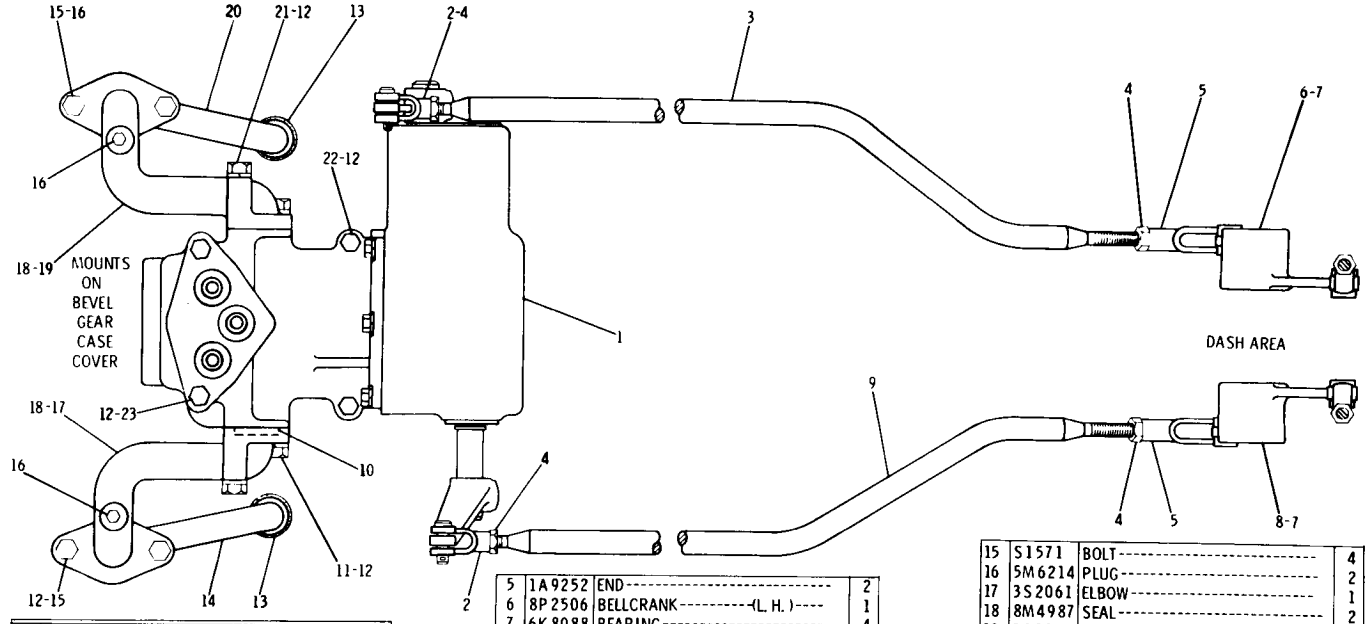

REF NO	PART NUMBER	DESCRIPTION	QTY
1	8P5199	VALVE GROUP (Separate Illustration)	1
2	1M1341	END	2
3	8P2519	ROD	1
4	5B9079	NUT	4
5	1A9252	END	2
6	8P2506	BELLCRANK (L. H.)	1
7	6K8088	BEARING	4
8	8P2505	BELLCRANK (R. H.)	1
9	8P2517	ROD	1
C 10	8M4445	SEAL	2
11	1A2029	BOLT	2
C 12	3B4506	LOCKWASHER	12
13	8M4446	SEAL	2
14	2S4301	TUBE ASSEM.	1
15	S1571	BOLT	4
16	5M6214	PLUG	2
17	3S2061	ELBOW	1
18	8M4987	SEAL	2
19	3S2062	ELBOW	1
20	2S4302	TUBE ASSEM.	1
21	L2070	BOLT	2
22	L1143	BOLT	2
C 23	L1352	BOLT	2

C INDICATES CHANGE

166498

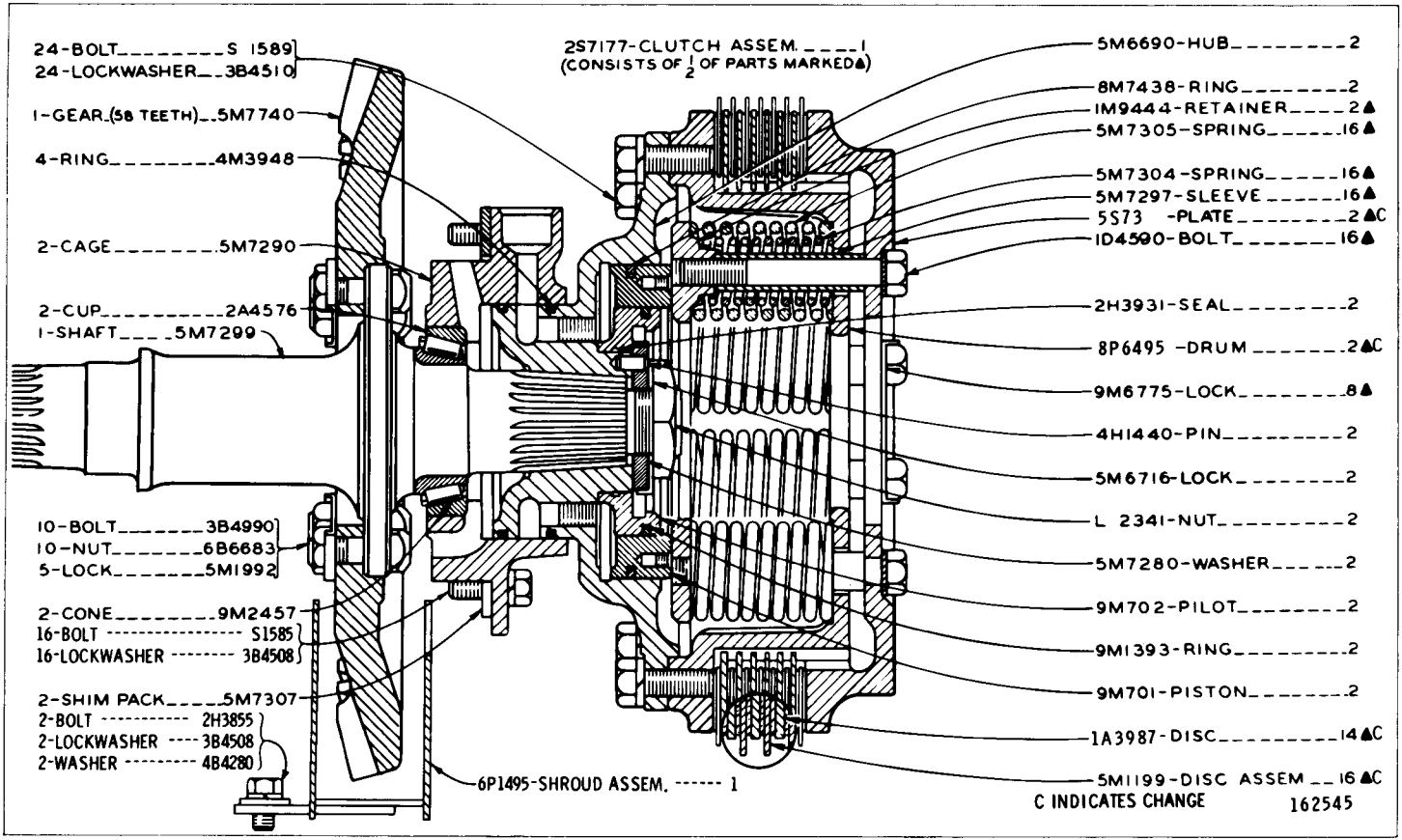

5M7745 STEERING CLUTCH GROUP
Serial No. 6X1 to 6X644 inclusive

5M7745 STEERING CLUTCH GROUP
Serial No. 6X645—Up

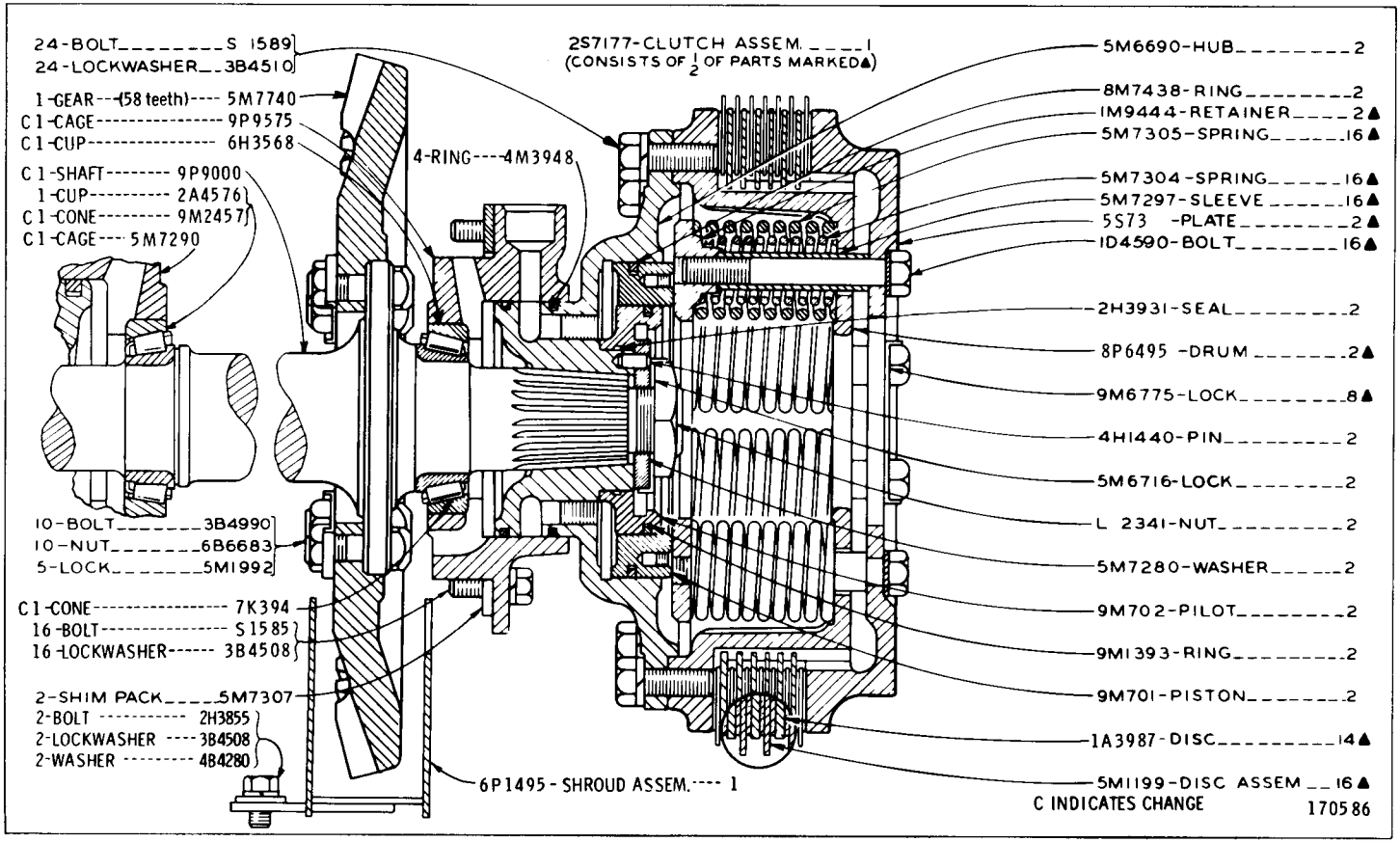

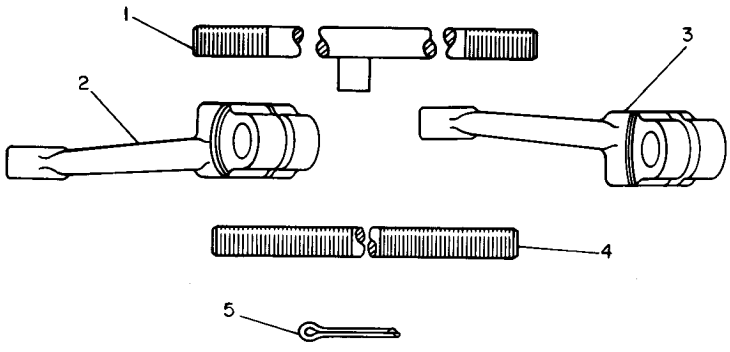

REF. NO	PART NUMBER	DESCRIPTION	QTY
1	7G2426	ROD ASSEM.	1
2	7G1974	LEVER	1
3	7G1975	LEVER	1
4	8P2511	ROD	1
5	3B4617	COTTER PIN	4

220612

7G3967 BRAKE LINKAGE SERVICE GROUP—Field Installation
Serial No. 6X1 to 6X492 inclusive
Allows parking brake to be applied one pedal at a time

8P4935 STEERING BRAKE GROUP—Part 1 of 3

Serial No. 6X1 to 6X476 inclusive

9M8068 Band and Lining parts are shown on Page 116

REF. NO.	PART NUMBER	DESCRIPTION	QTY
1	S509	BOLT	4
2	3B4506	LOCKWASHER	6
3	L1032	LOCK	4
4	9S1315	PIN	6
	3B4617	COTTER PIN	6
5	8P2502	ROD	2
6	9S1354	NUT	6
7	4M7930	ROD END	4
8	9S1314	YOKE END	2
9	7S6149	LEVER ASSEM. (Each Includes)	2
	7S6140	BEARING	2
10	7S6143	BEARING	2
11	7S6145	BEARING	1
12	8H376	PIN	4
	8H350	RING	8

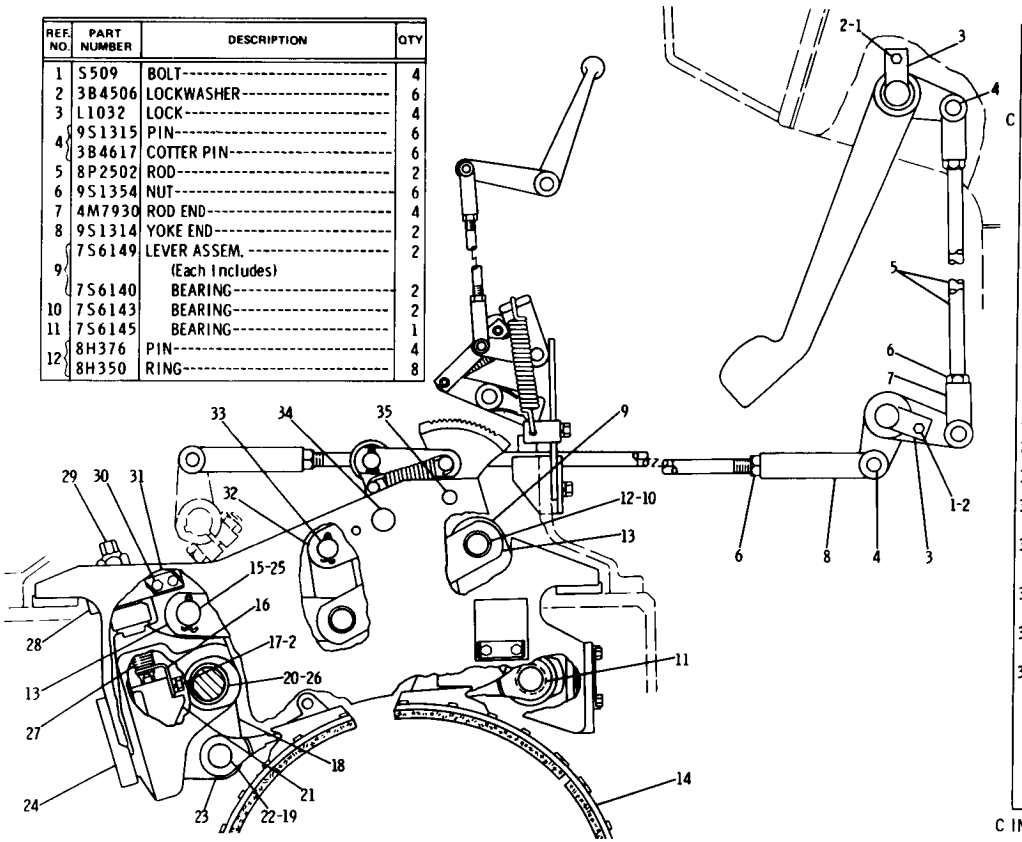

13	7S6139	LINK	8
14	9M8068	BAND AND LINING ASSEM. (Separate Illustration)	2
15	8H8898	PIN	2
	3B4632	COTTER PIN	2
16	5H6624	SUPPORT	2
17	L1351	BOLT	2
18	7S6148	LEVER ASSEM. (Each Includes)	2
19	7S6145	BEARING	1
20	7S6140	BEARING	1
21	1M4025	WEDGE	2
22	1M3788	PIN	4
	1K9740	RING	8
23	1M3778	STRUT	4
24	4S9104	LEVER ASSEM. (Each Includes)	2
25	7S6144	BEARING	1
26	7S6140	BEARING	2
27	2M7188	SCREW	2
28	9S8220	SPRING	2
29	1P4524	SOCKET	2
30	1B9575	BOLT	4
	1D4716	NUT	4
31	2F6156	LOCK	4
32	1P3310	BELLCRANK ASSEM. (Each Includes)	2
	7S2670	BEARING	1
33	9H750	PIN	2
	3B4629	COTTER PIN	2
34	7S2668	SHAFT	2
	4H6996	PIN	2
35	9H8918	PIN (large)	2
	1H1200	PIN (small)	2

C INDICATES CHANGE

214566

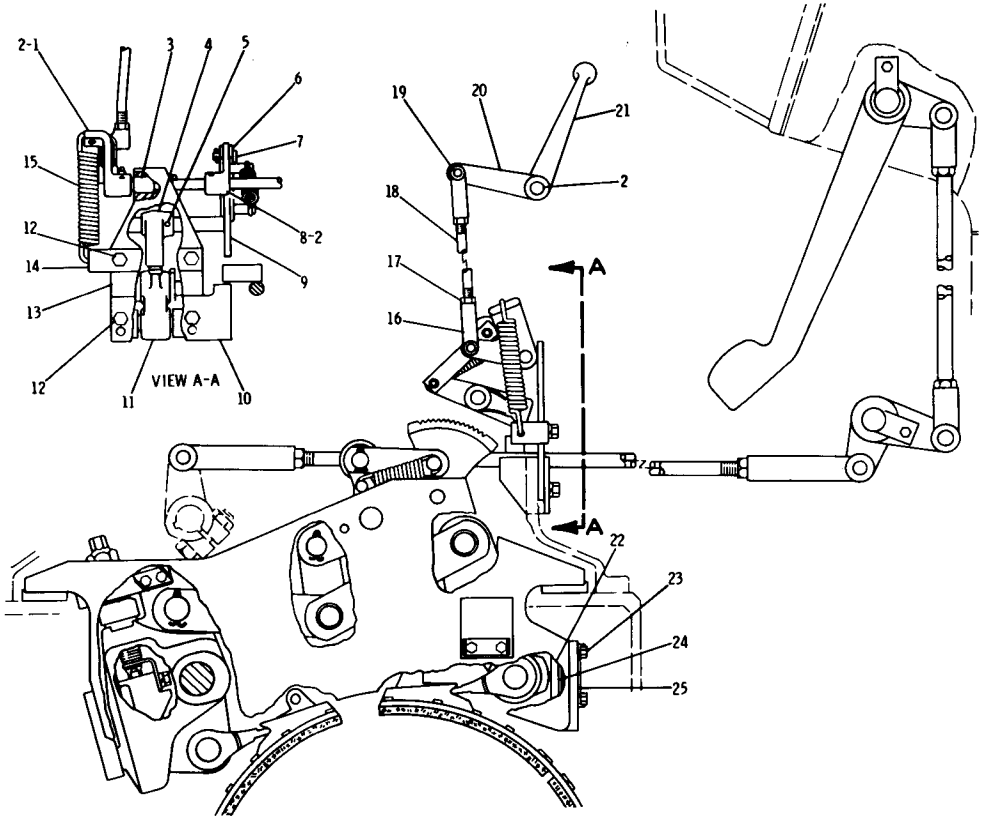

REF. NO.	PART NUMBER	DESCRIPTION	QTY
1	8P3175	LEVER	1
2	6H3956	PIN	4
3	5P1901	BEARING	2
4	3P5206	PAWL	2
5	1H1200	PIN	2
6	6P2772	PLATE	4
7	1A2457	PIN	2
	L261	WASHER	2
	3B4607	COTTER PIN	2
8	8P3173	LEVER	2
9	8P3170	LEVER ASSEM.	1
10	8P3180	BRACKET	1
11	3P6105	RATCHET	2
12	1A2029	BOLT	4
	3B4506	LOCKWASHER	4
13	8P3168	COVER ASSEM.	2
	7S2780	GASKET	2
14	8P3181	BRACKET	1
15	1D1313	SPRING	1
16	2K400	YOKE END	2
17	5B9079	NUT	2
18	8P3174	ROD	1
19	1B676	PIN	2
	3B4615	COTTER PIN	2
20	8P3177	LEVER ASSEM.	1
21	8P3176	LEVER	1
22	8H372	PLATE	2
23	3B1915	BOLT	4
24	8H8871	SHIM	4
25	6H4208	LOCK	2

212282

8P4935 STEERING BRAKE GROUP—Part 2 of 3
Serial No. 6X1 to 6X476 inclusive

8P4935 STEERING BRAKE GROUP—Part 3 of 3
Serial No. 6X1 to 6X476 inclusive

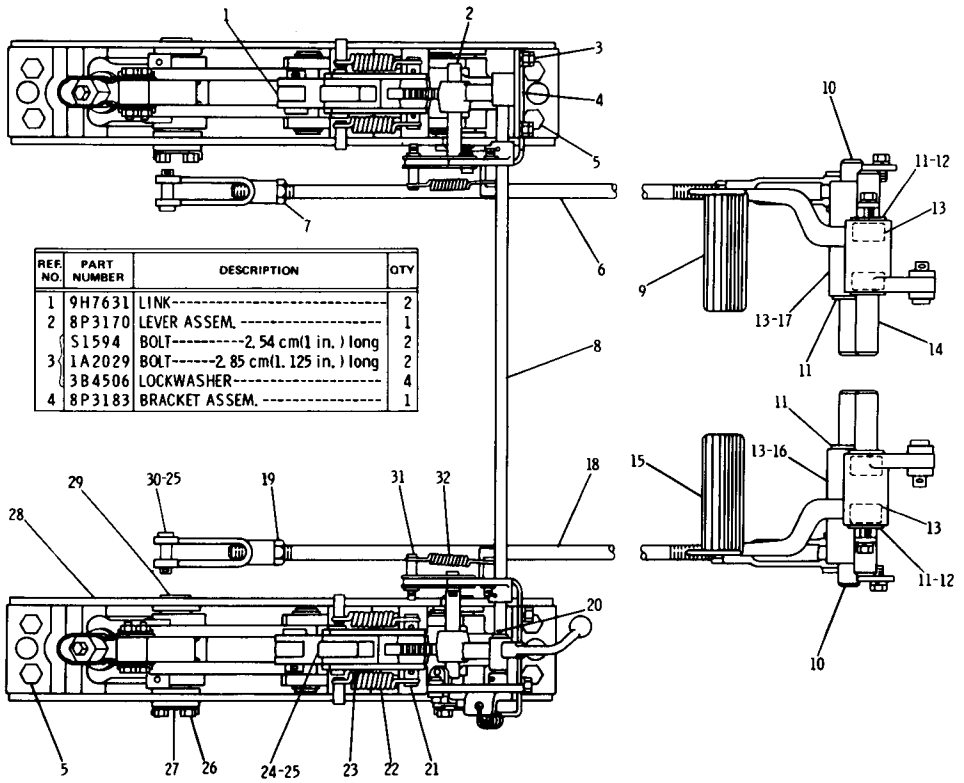

REF. NO.	PART NUMBER	DESCRIPTION	QTY
1	9H7631	LINK	2
2	8P3170	LEVER ASSEM.	1
3	S1594	BOLT—2.54 cm(1 in.) long	2
	1A2029	BOLT—2.85 cm(1.125 in.) long	2
	3B4506	LOCKWASHER	4
4	8P3183	BRACKET ASSEM.	1

5	4B4043	BOLT	8
	3B4510	LOCKWASHER	8
6	8P2512	ROD ASSEM. (Includes)	1
7	1B4206	NUT	1
8	8P3182	SHAFT	1
9	8P1870	PEDAL	1
10	8P2507	SHAFT	2
11	9S1328	WASHER	6
12	8P9821	WASHER	2
13	6K8088	BEARING	8
14	8P3475	SHAFT	2
15	8P1871	PEDAL	1
16	8P2503	BELLCRANK	1
17	8P2504	BELLCRANK	1
18	8P2510	ROD ASSEM. (Includes)	1
19	1B4206	NUT	1
20	3B4615	COTTER PIN	1
	9S201	WASHER	1
21	1M424	PIN—(large)	2
	3H6660	PIN—(small)	4
22	1H2320	SPRING	4
23	1P3592	LINK	4
24	1P1650	ROLLER	2
	2B974	PIN	2
25	3B4617	COTTER PIN	4
26	T102	BOLT	8
27	5B2200	LOCK	4
28	8P524	SUPPORT ASSEM.	2
29	8H352	SHAFT ASSEM.	4
30	9S1315	PIN	2
	6P4406	PIN	4
31	L261	WASHER	4
	3B4607	COTTER PIN	4
32	9D1058	SPRING	2

212963

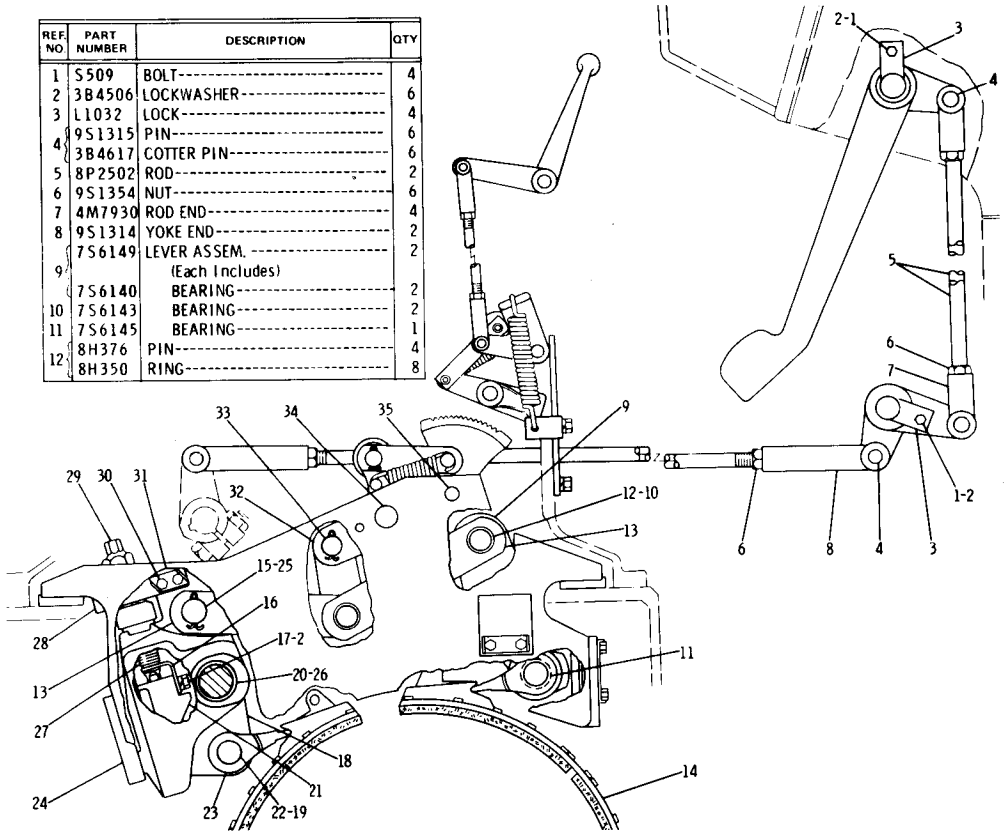

REF. NO	PART NUMBER	DESCRIPTION	QTY
1	S509	BOLT	4
2	3B4506	LOCKWASHER	6
3	L1032	LOCK	4
4	9S1315	PIN	6
	3B4617	COTTER PIN	6
5	8P2502	ROD	2
6	9S1354	NUT	6
7	4M7930	ROD END	4
8	9S1314	YOKE END	2
9	7S6149	LEVER ASSEM.	2
		(Each Includes)	
	7S6140	BEARING	2
10	7S6143	BEARING	2
11	7S6145	BEARING	1
12	8H376	PIN	4
	8H350	RING	8
13	7S6139	LINK	8
14	9M8068	BAND AND LINING ASSEM.	2
		(Separate Illustration)	
15	8H8898	PIN	2
	3B4632	COTTER PIN	2
16	5H6624	SUPPORT	2
17	L1351	BOLT	2
18	7S6148	LEVER ASSEM.	2
		(Each Includes)	
19	7S6145	BEARING	1
20	7S6140	BEARING	1
21	1M4025	WEDGE	2
22	1M3788	PIN	4
	1K9740	RING	8
23	1M3778	STRUT	4
24	4S9104	LEVER ASSEM.	2
		(Each Includes)	
25	7S6144	BEARING	1
26	7S6140	BEARING	2
27	2M7188	SCREW	2
28	9S8220	SPRING	2
29	1P4524	SOCKET	2
30	1B9575	BOLT	4
	1D4716	NUT	4
31	2F6156	LOCK	4
32	1P3310	BELLCRANK ASSEM.	2
		(Each Includes)	
	7S2670	BEARING	1
33	9H750	PIN	2
	3B4629	COTTER PIN	2
34	7S2668	SHAFT	2
	4H6996	PIN	2
35	9H8918	PIN-(large)	2
	1H1200	PIN-(small)	2

220116

8P4935 STEERING BRAKE GROUP—Part 1 of 3
Serial No. 6X477 to 6X492 inclusive
9M8068 Band and Lining parts are shown on Page 116

8P4935 STEERING BRAKE GROUP—Part 2 of 3
Serial No. 6X477 to 6X492 inclusive

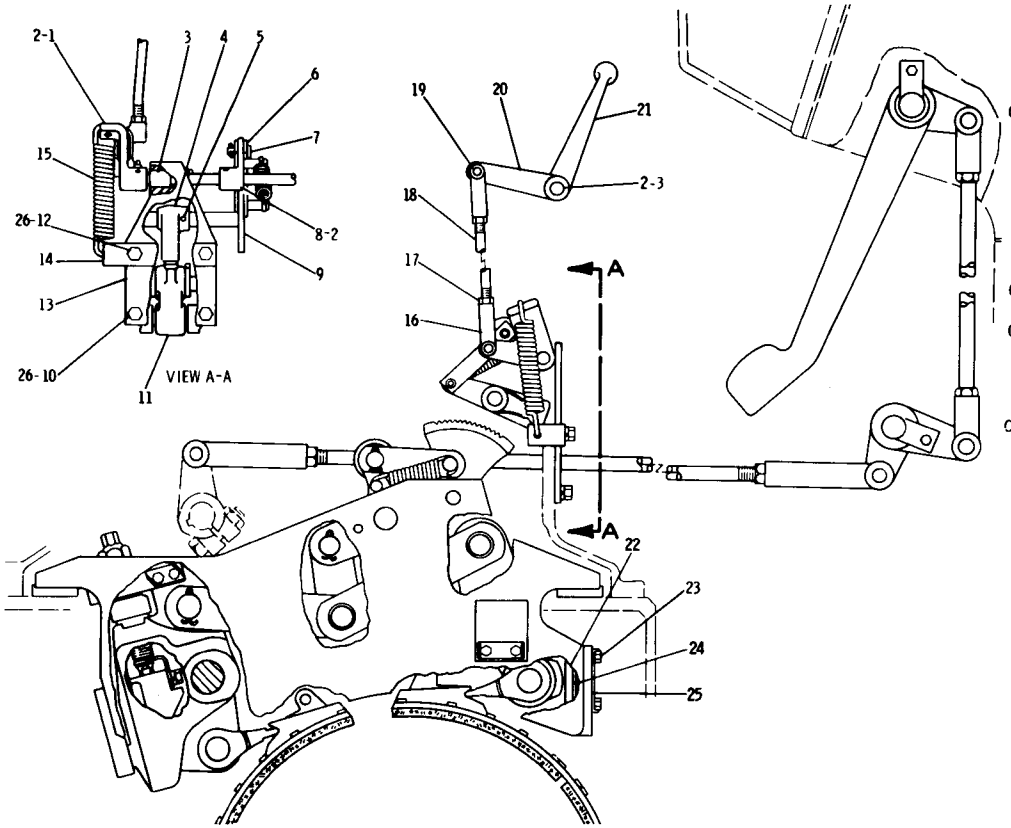

REF. NO.	PART NUMBER	DESCRIPTION	QTY
1	8P3175	LEVER	1
2	6H3956	PIN	4
C 3	5P1901	BEARING	3
4	3P5206	PAWL	2
5	1H1200	PIN	2
6	6P2772	PLATE	4
7	1A2457	PIN	2
	L261	WASHER	2
	3B4607	COTTER PIN	2
8	8P3173	LEVER	2
9	8P3170	LEVER ASSEM.	1
C 10	S1594	BOLT	2
11	3P6105	RATCHET	2
C 12	1A2029	BOLT	2
13	8P3168	COVER ASSEM.	2
	7S2780	GASKET	2
14	8P3181	BRACKET	1
C 15	8D8456	SPRING	1
16	2K400	YOKE END	2
17	5B9079	NUT	2
18	8P3174	ROD	1
19	1B676	PIN	2
	3B4615	COTTER PIN	2
20	8P3177	LEVER ASSEM.	1
21	8P3176	LEVER	1
22	8H372	PLATE	2
23	3B1915	BOLT	4
24	8H8871	SHIM	4
25	6H4208	LOCK	2
26	3B4506	LOCKWASHER	4

C INDICATES CHANGE 220104

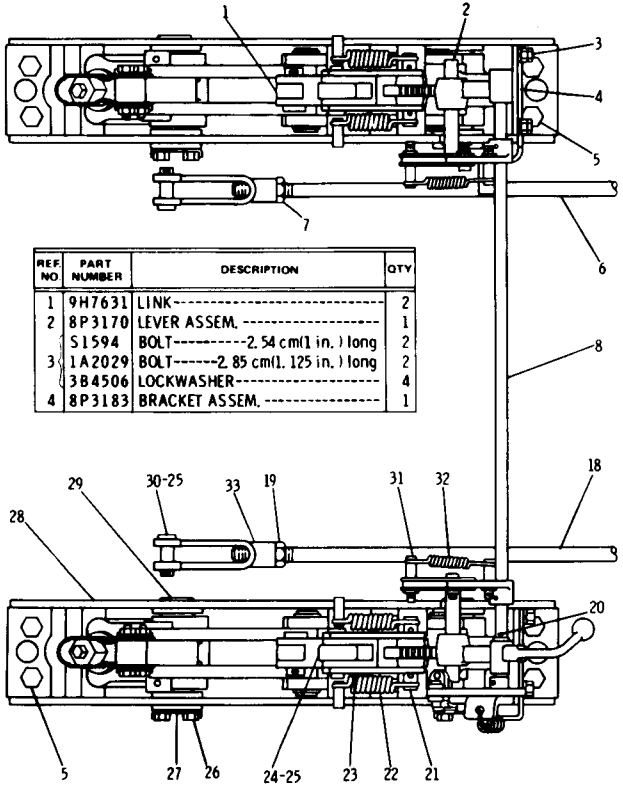

REF NO	PART NUMBER	DESCRIPTION	QTY
1	9H7631	LINK	2
2	8P3170	LEVER ASSEM.	1
3	S1594	BOLT-2.54 cm(1 in.) long	2
	1A2029	BOLT-2.85 cm(1.125 in.) long	2
	3B4506	LOCKWASHER	4
4	8P3183	BRACKET ASSEM.	1

5	4B4043	BOLT	8
	3B4510	LOCKWASHER	8
6	8P2512	ROD ASSEM. (Includes)	1
7	1B4206	NUT	1
8	8P3182	SHAFT	1
9	8P1870	PEDAL	1
10	8P2507	SHAFT	2
11	9S1328	WASHER	6
12	8P9821	WASHER	2
13	6K8088	BEARING	8
14	8P3475	SHAFT	2
15	8P1871	PEDAL	1
16	8P2503	BELLCRANK	1
17	8P2504	BELLCRANK	1
C 18	8P2511	ROD	1
C 19	9S1354	NUT	1
20	3B4615	COTTER PIN	1
	9S201	WASHER	1
21	1M424	PIN-(large)	2
	3H6660	PIN-(small)	4
22	1H2320	SPRING	4
23	1P3592	LINK	4
24	1P1650	ROLLER	2
	2B974	PIN	2
25	3B4617	COTTER PIN	4
26	T102	BOLT	8
27	5B2200	LOCK	4
28	8P524	SUPPORT ASSEM.	2
29	8H352	SHAFT ASSEM.	4
30	9S1315	PIN	2
	6P4406	PIN	4
31	L261	WASHER	4
	3B4607	COTTER PIN	4
32	9D1058	SPRING	2
C 33	9S1314	END	1

C INDICATES CHANGE

220105

8P4935 STEERING BRAKE GROUP—Part 3 of 3
Serial No. 6X477 to 6X492 inclusive

8P4935 STEERING BRAKE GROUP—Part 1 of 3
Serial No. 6X493—Up
9M8068 Band and Lining parts are shown on Page 116

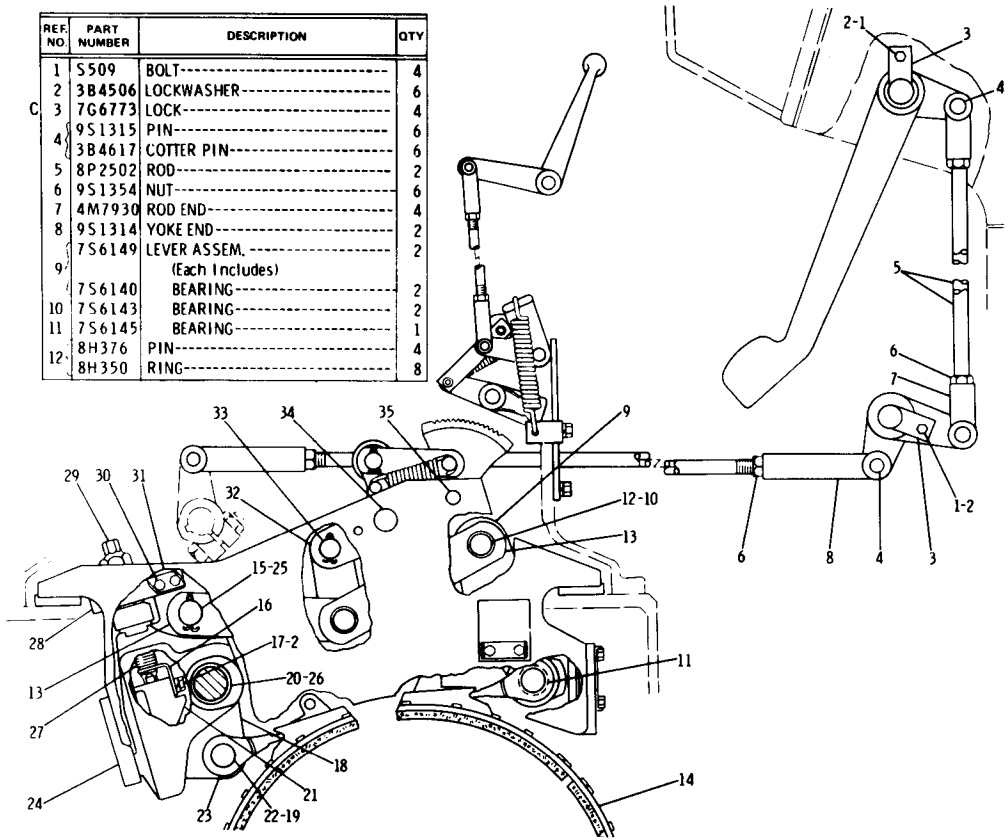

REF. NO.	PART NUMBER	DESCRIPTION	QTY
1	S509	BOLT	4
2	3B4506	LOCKWASHER	6
C 3	7G6773	LOCK	4
4	9S1315	PIN	6
	3B4617	COTTER PIN	6
5	8P2502	ROD	2
6	9S1354	NUT	6
7	4M7930	ROD END	4
8	9S1314	YOKE END	2
9	7S6149	LEVER ASSEM. (Each Includes)	2
	7S6140	BEARING	2
10	7S6143	BEARING	2
11	7S6145	BEARING	1
12	8H376	PIN	4
	8H350	RING	8

	REF. NO.	PART NUMBER	DESCRIPTION	QTY
C	13	7G2041	LINK	8
	14	9M8068	BAND AND LINING ASSEM. (Separate Illustration)	2
	15	8H8898	PIN	2
		3B4632	COTTER PIN	2
	16	5H6624	SUPPORT	2
	17	L1351	BOLT	2
	18	7S6148	LEVER ASSEM. (Each Includes)	2
	19	7S6145	BEARING	1
	20	7S6140	BEARING	1
	21	1M4025	WEDGE	2
	22	1M3788	PIN	4
		1K9740	RING	8
	23	1M3778	STRUT	4
	24	4S9104	LEVER ASSEM. (Each Includes)	2
	25	7S6144	BEARING	1
	26	7S6140	BEARING	2
	27	2M7188	SCREW	2
	28	9S8220	SPRING	2
	29	1P4524	SOCKET	2
	30	1B9575	BOLT	4
		1D4716	NUT	4
	31	2F6156	LOCK	4
	32	1P3310	BELLCRANK ASSEM. (Each Includes)	2
		7S2670	BEARING	1
	33	9H750	PIN	2
		3B4629	COTTER PIN	2
	34	7S2668	SHAFT	2
		4H6996	PIN	2
	35	9H8918	PIN (large)	2
		1H1200	PIN (small)	2

C INDICATES CHANGE

224224

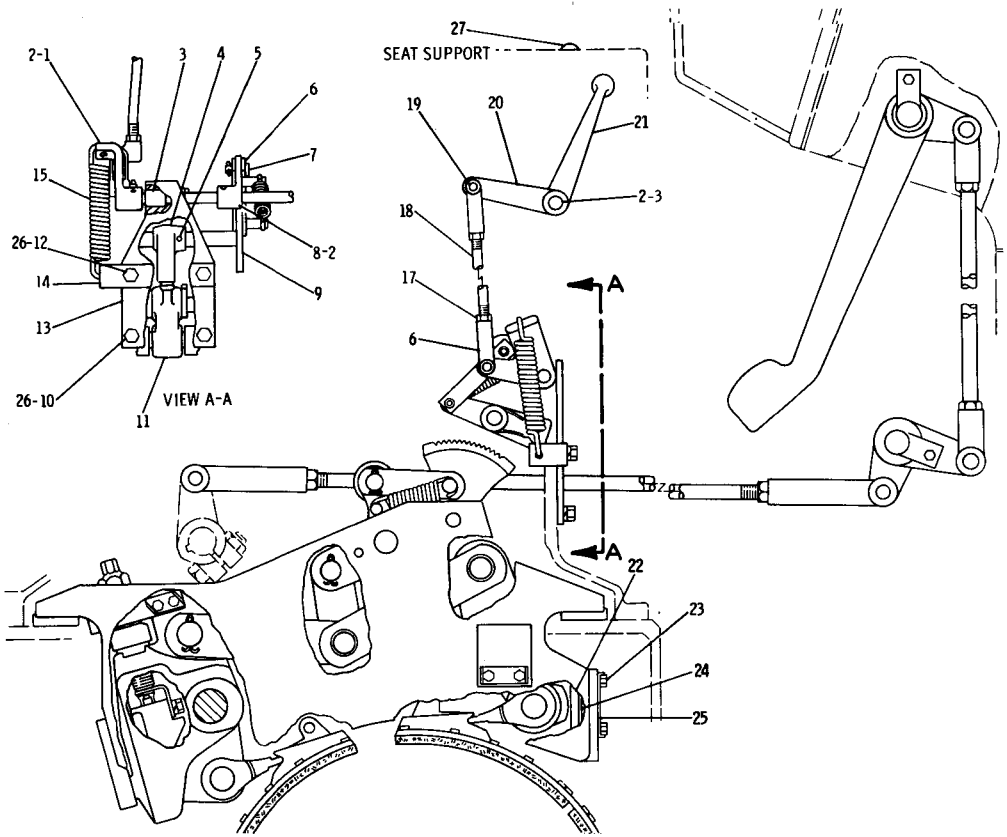

C	REF. NO.	PART NUMBER	DESCRIPTION	QTY
	1	8P3175	LEVER	1
	2	6H3956	PIN	4
	3	5P1901	BEARING	3
	4	3P5206	PAWL	2
	5	1H1200	PIN	2
	6	6P2772	PLATE	4
	7	1A2457	PIN	2
		L261	WASHER	2
		3B4607	COTTER PIN	2
	8	8P3173	LEVER	2
	9	8P3170	LEVER ASSEM.	1
	10	S1594	BOLT	2
	11	3P6105	RATCHET	2
	12	1A2029	BOLT	2
	13	8P3168	COVER ASSEM.	1
		7S2780	GASKET	1
	14	8P3181	BRACKET	1
	15	8D8456	SPRING	1
	16	2K400	YOKE END	2
	17	5B9079	NUT	2
	18	8P3174	ROD	1
	19	1B676	PIN	2
		3B4615	COTTER PIN	2
	20	8P3177	LEVER ASSEM.	1
	21	8P3176	LEVER	1
	22	8H372	PLATE	2
	23	3B1915	BOLT	4
	24	8H8871	SHIM	4
	25	6H4208	LOCK	2
	26	3B4506	LOCKWASHER	4
C	27	3D9871	BUTTON	1

C INDICATES CHANGE 230318

8P4935 STEERING BRAKE GROUP—Part 2 of 3
Serial No. 6X493—Up

8P4965 STEERING BRAKE GROUP—Part 3 of 3
Serial No. 6X493—Up

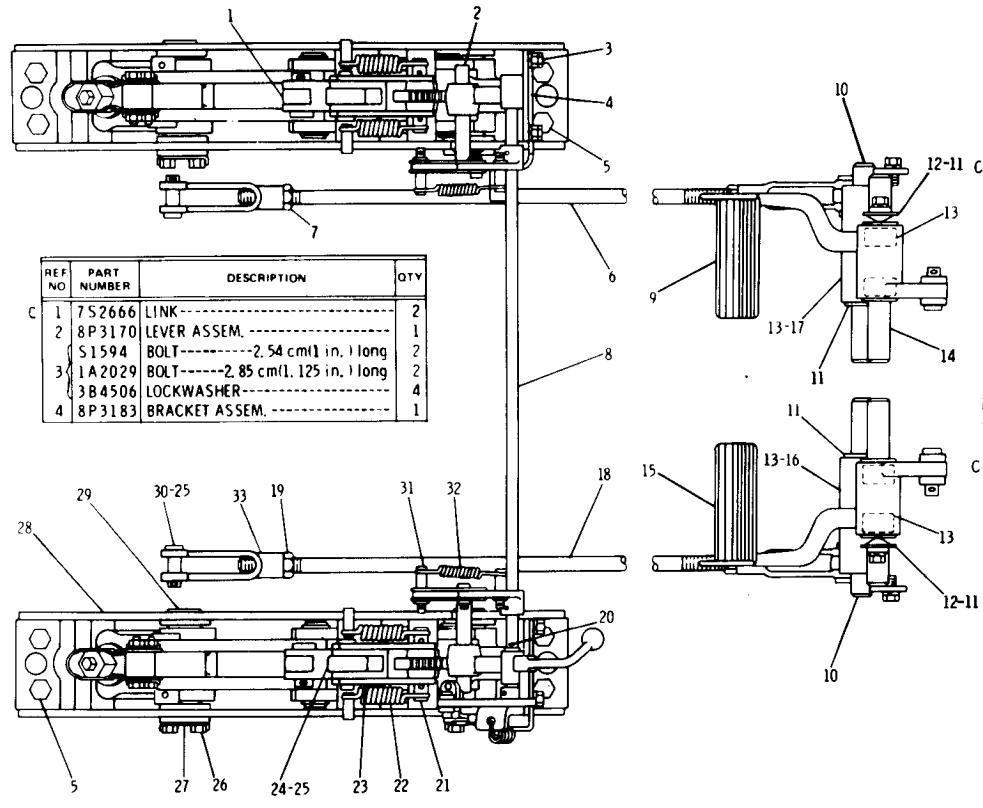

REF NO	PART NUMBER	DESCRIPTION	QTY
C 1	7S2666	LINK	2
2	8P3170	LEVER ASSEM.	1
	S1594	BOLT—2.54 cm(1 in.) long	2
3	1A2029	BOLT—2.85 cm(1.125 in.) long	2
	3B4506	LOCKWASHER	4
4	8P3183	BRACKET ASSEM.	1

5	4B4043	BOLT	8
	3B4510	LOCKWASHER	8
6	8P2512	ROD ASSEM. (Includes)	1
7	1B4206	NUT	1
8	8P3182	SHAFT	1
9	8P1870	PEDAL	1
10	8P2507	SHAFT	2
11	9S1328	WASHER	8
12	8P9821	WASHER (spring)	2
13	6K8088	BEARING	8
14	8P3475	SHAFT	2
15	8P1871	PEDAL	1
16	8P2503	BELLCRANK	1
17	8P2504	BELLCRANK	1
18	8P2511	ROD	1
19	9S1354	NUT	1
20	3B4615	COTTER PIN	1
	9S201	WASHER	1
21	1M424	PIN (large)	2
	3H6660	PIN (small)	4
22	1H2320	SPRING	4
23	7G2926	LINK	4
24	1P1650	ROLLER	2
	2B974	PIN	2
25	3B4617	COTTER PIN	4
26	T102	BOLT	8
27	5B2200	LOCK	4
28	8P524	SUPPORT ASSEM.	2
29	8H352	SHAFT ASSEM.	4
30	9S1315	PIN	2
	6P4406	PIN	4
31	L261	WASHER	4
	3B4607	COTTER PIN	4
32	9D1058	SPRING	2
33	9S1314	END	1

C INDICATES CHANGE

224225

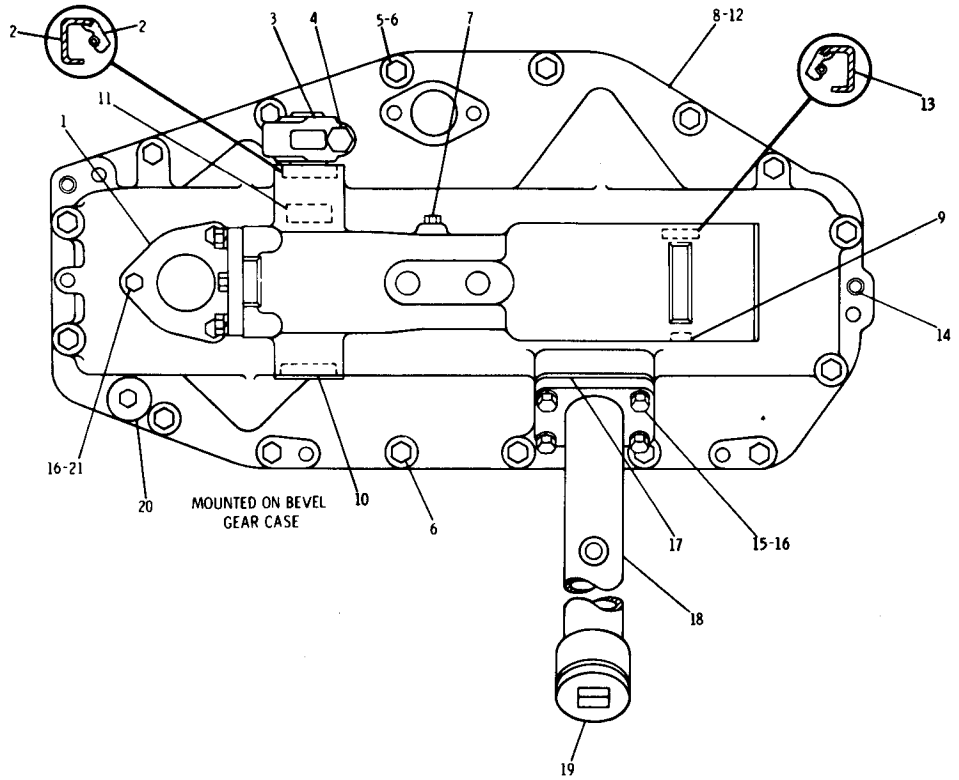

REF. NO.	PART NUMBER	DESCRIPTION	QTY
1	9H8889	COVER	2
	9H8890	GASKET	2
2	9H8839	SEAL	1
3	8P2514	LEVER	1
	1B8719	KEY	1
4	S1589	BOLT	1
5	9S1366	BOLT	16
	3B4508	LOCKWASHER	16
6	1K4649	SPACER	1
7	5M6214	PLUG	2
8	8P1191	HOUSING ASSEM. (Includes)	1
	2S8359	SLEEVE	1
9	5B1866	PLUG	1
10	L1021	PLUG	1
11	1J3710	BEARING	2
12	7M7260	LIQUID GASKET	
13	5H1190	SEAL	1
14	3B2225	DOWEL	4
15	S1591	BOLT	4
16	3B4506	LOCKWASHER	10
17	8P2680	GASKET	1
18	8P1217	SPOUT	1
19	L827	PLUG	1
	L1124	GASKET	1
	4H6112	BREATHER	2
20	3B6488	COUPLING	2
C	3B7276	NIPPLE	2
21	L1351	BOLT	6

C INDICATES CHANGE

215906

8P1216 BRAKE HYDRAULIC MECHANISM GROUP—R.H.—Part 1
Serial No. 6X1 to 6X361 inclusive

8P1216 BRAKE HYDRAULIC MECHANISM GROUP—L.H.—Part 2
Serial No. 6X1 to 6X361 inclusive

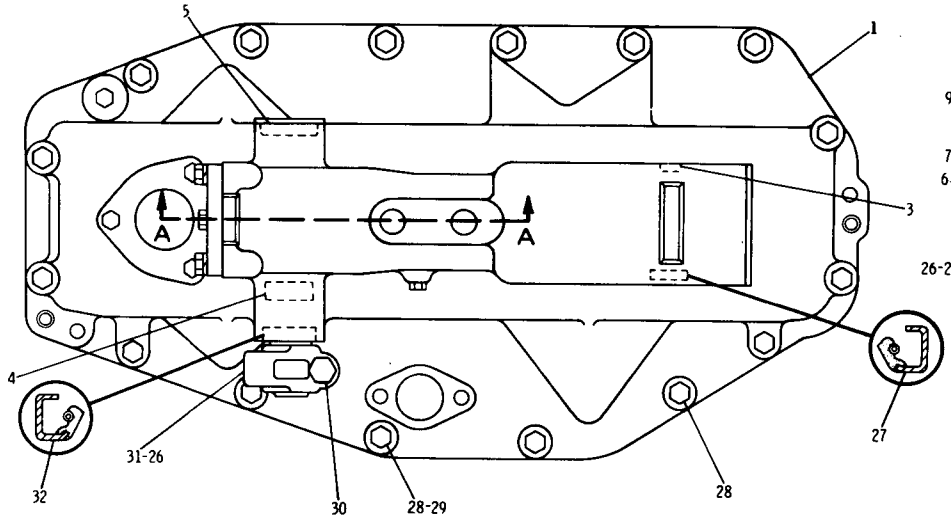

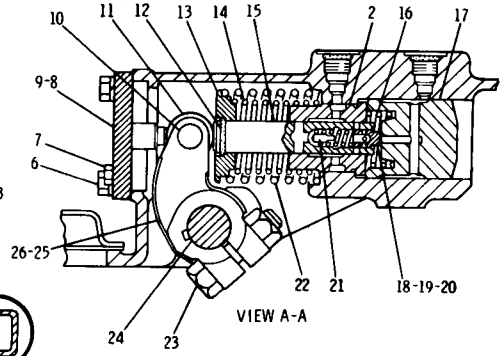

REF NO	PART NUMBER	DESCRIPTION	QTY
1	8P1190	HOUSING ASSEM. (Includes)	1
2	2S8359	SLEEVE	1
3	5B1866	PLUG	1
4	1J3710	BEARING	1
5	L1021	PLUG	1
6	1A2029	BOLT	8
	3B4506	LOCKWASHER	8
7	5M6213	PLUG	2
8	8P8255	COVER ASSEM.	2

9	7M7260	LIQUID GASKET	
10	3H1977	PIN	2
	3B4617	COTTER PIN	2
11	6B7687	ROLLER	2
12	4H8158	RING	2
13	2S8416	RETAINER	2
14	9H7553	SPRING—(inner)	2
15	5S6880	PLUNGER	2
16	7J2025	SPRING	2
17	8P1186	PISTON	2
18	2S8571	VALVE	2
19	2S8418	RING	2

20	1B9061	SPRING	2
21	1S2121	PLUNGER	2
22	9H7534	SPRING—(outer)	2
23	8S9092	BOLT	2
	1D4720	NUT	2
24	7S3842	SHAFT	2
25	9H7657	LEVER	2
26	1B8719	KEY	3
27	5H1190	SEAL	1
28	9S1366	BOLT	16
	3B4508	LOCKWASHER	16
C 29	1K4649	SPACER	1
30	S1589	BOLT	1
31	8P2515	LEVER	1
32	9H8839	SEAL	1

C INDICATES CHANGE

229691

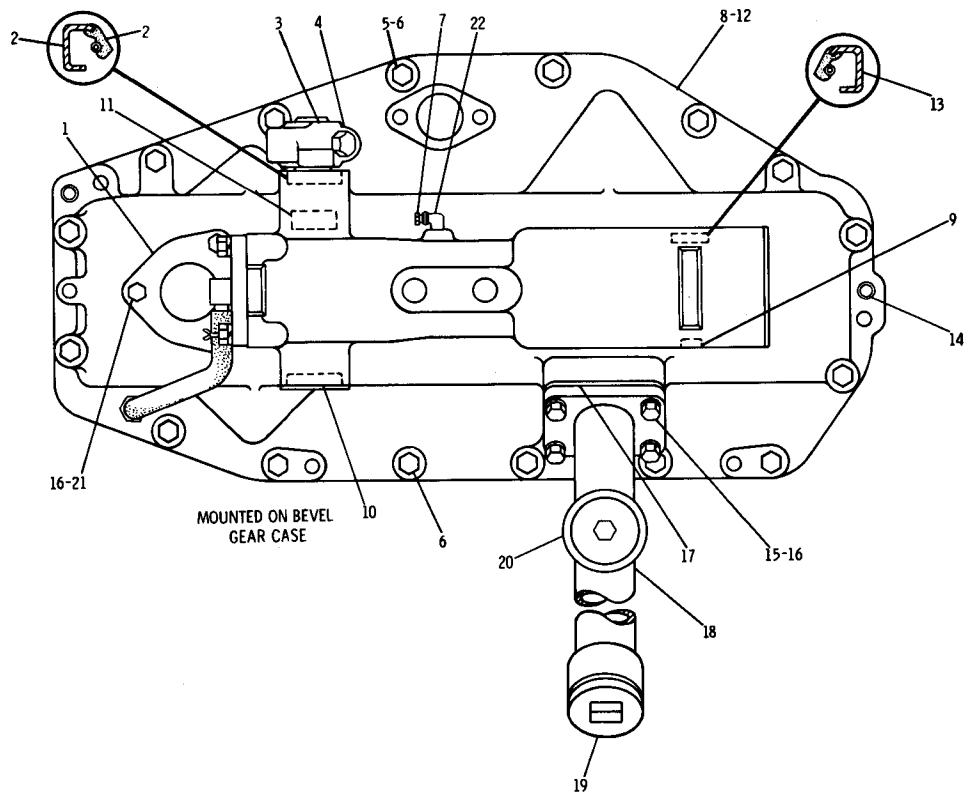

	REF. NO.	PART NUMBER	DESCRIPTION	QTY
	1	9H8889	COVER	2
		9H8890	GASKET	2
C	2	2P6286	SEAL	1
	3	8P2514	LEVER	1
		1B8719	KEY	1
	4	S1589	BOLT	1
	5	9S1366	BOLT	16
		3B4508	LOCKWASHER	16
	6	1F1609	SPACER	1
	7	5M6214	PLUG	2
	8	8P1191	HOUSING ASSEM. (Includes)	1
		2S8359	SLEEVE	1
	9	5B1866	PLUG	1
	10	L1021	PLUG	1
	11	1J3710	BEARING	2
	12	7M7260	LIQUID GASKET	
	13	5H1190	SEAL	1
C	14	5M7937	DOWEL	4
C	15	S1588	BOLT----31.75 mm(1.25 in.) long	4
			-OR-	
		S1591	BOLT----38.10 mm (1.50 in.)long	4
	16	3B4506	LOCKWASHER	10
	17	8P2680	GASKET	1
	18	8P1217	SPOUT	1
	19	L827	PLUG	1
		L1124	GASKET	1
C	20	3D9142	BREATHER	1
	21	L1351	BOLT	6
C	22	3B6552	ELBOW	2

C INDICATES CHANGE

230316

8P1216 BRAKE HYDRUALIC MECHANISM GROUP—R.H.—Part 1
Serial No. 6X362—Up

8P1216 BRAKE HYDRAULIC MECHANISM GROUP—L.H.—Part 2
Serial No. 6X362—Up

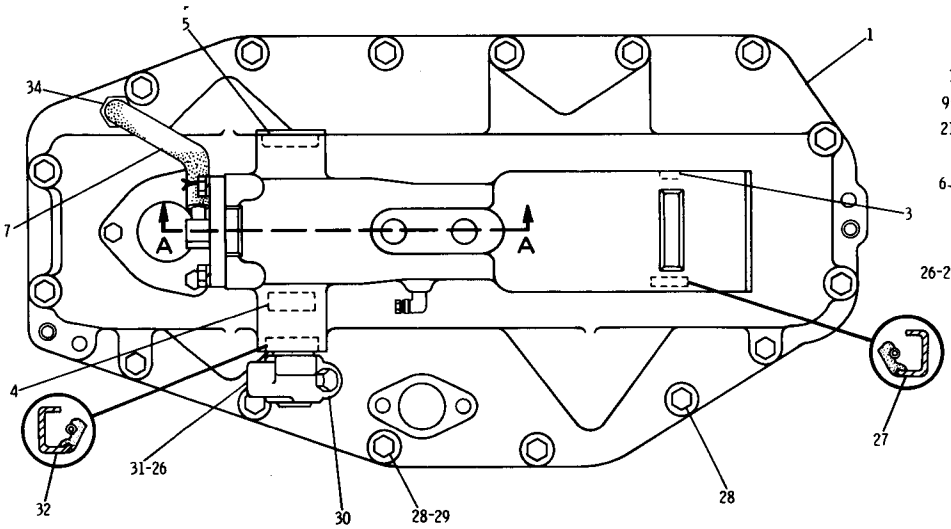

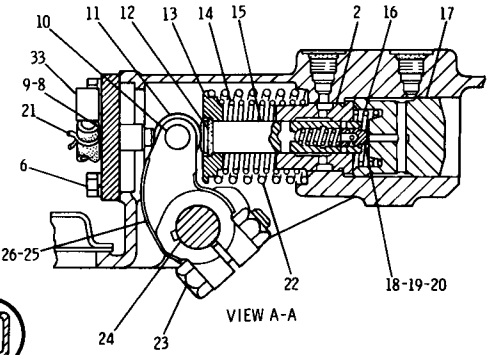

REF. NO.	PART NUMBER	DESCRIPTION	QTY
1	8P1190	HOUSING ASSEM. (Includes)	1
2	2S8359	SLEEVE	1
3	5B1866	PLUG	1
4	1J3710	BEARING	1
5	L1021	PLUG	1
6	1A2029	BOLT	8
	3B4506	LOCKWASHER	8
CA 7	5P1442	HOSE----------50.8 cm(20 in.)	
8	8P8255	COVER ASSEM.	2
9	7M7260	LIQUID GASKET	
10	3H1977	PIN	2
	3B4617	COTTER PIN	2
11	6B7687	ROLLER	2
12	4H8158	RING	2
13	2S8416	RETAINER	2
14	9H7553	SPRING---------(inner)--------	2
15	5S6880	PLUNGER	2
16	7J2025	SPRING	2
17	8P1186	PISTON	2
18	2S8571	VALVE	2
C 19	5P6717	RING	2
C 20	5M3389	SPRING----------(outer)--------	2
C 21	3S5096	CLAMP	4
22	9H7534	SPRING	2
23	8S9092	BOLT	2
	1D4720	NUT	2
24	7S3842	SHAFT	2
25	9H7657	LEVER	2
26	1B8719	KEY	3
27	5H1190	SEAL	1
28	9S1366	BOLT	16
	3B4508	LOCKWASHER	16
C 29	1F1609	SPACER	1
30	S1589	BOLT	1
31	8P2515	LEVER	1
C 32	2P6286	SEAL	1
C 33	672935	FITTING	2
C 34	5P7175	FITTING	2

C INDICATES CHANGE

▲ ORDER BY THE CENTIMETER-USE AS REQUIRED

230317

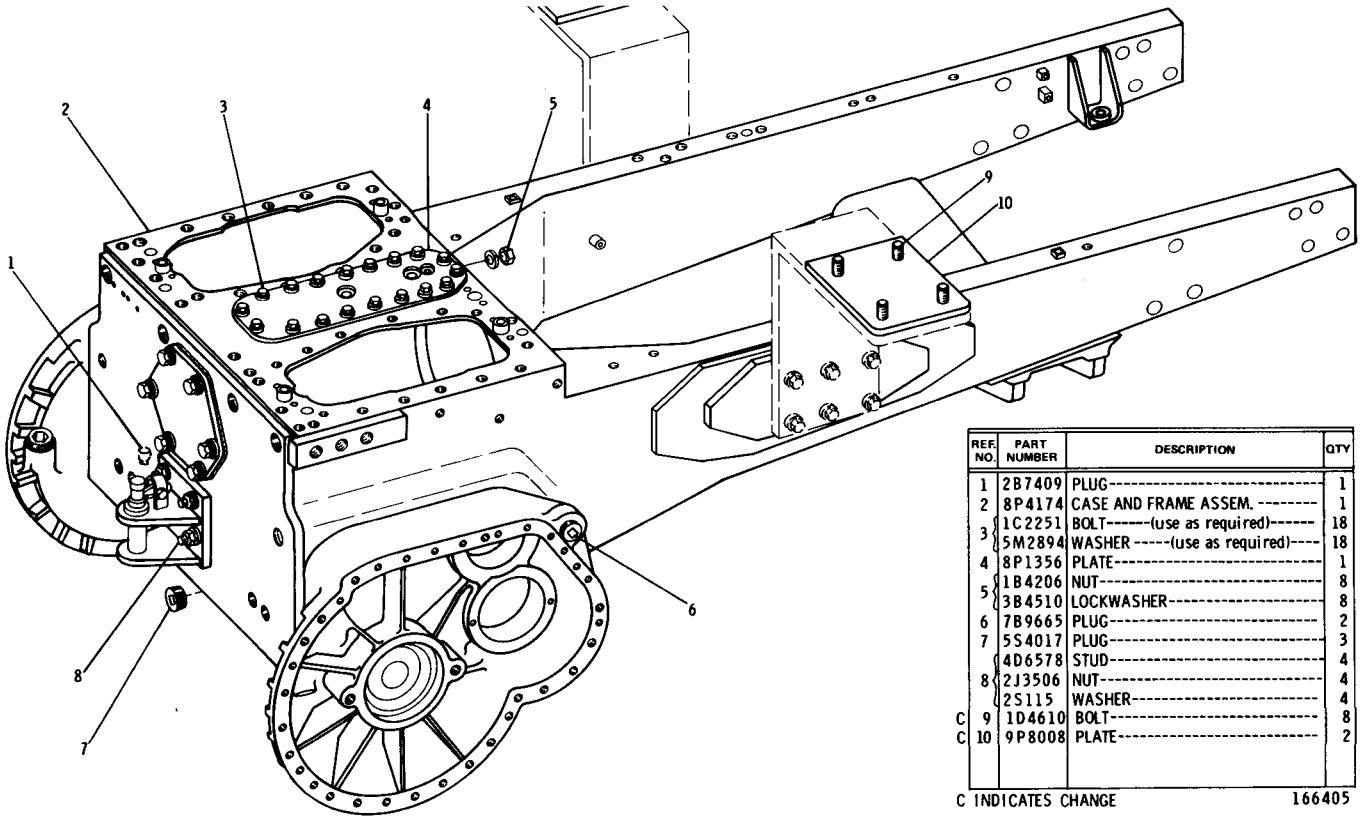

	REF. NO.	PART NUMBER	DESCRIPTION	QTY
	1	2B7409	PLUG	1
	2	8P4174	CASE AND FRAME ASSEM.	1
	3	1C2251	BOLT-(use as required)	18
		5M2894	WASHER-(use as required)	18
	4	8P1356	PLATE	1
	5	1B4206	NUT	8
		3B4510	LOCKWASHER	8
	6	7B9665	PLUG	2
	7	5S4017	PLUG	3
	8	4D6578	STUD	4
		2J3506	NUT	4
		2S115	WASHER	4
C	9	1D4610	BOLT	8
C	10	9P8008	PLATE	2

C INDICATES CHANGE 166405

8P4173 FRAME AND CASE GROUP—Part 1

8P4173 FRAME AND CASE GROUP—Part 2

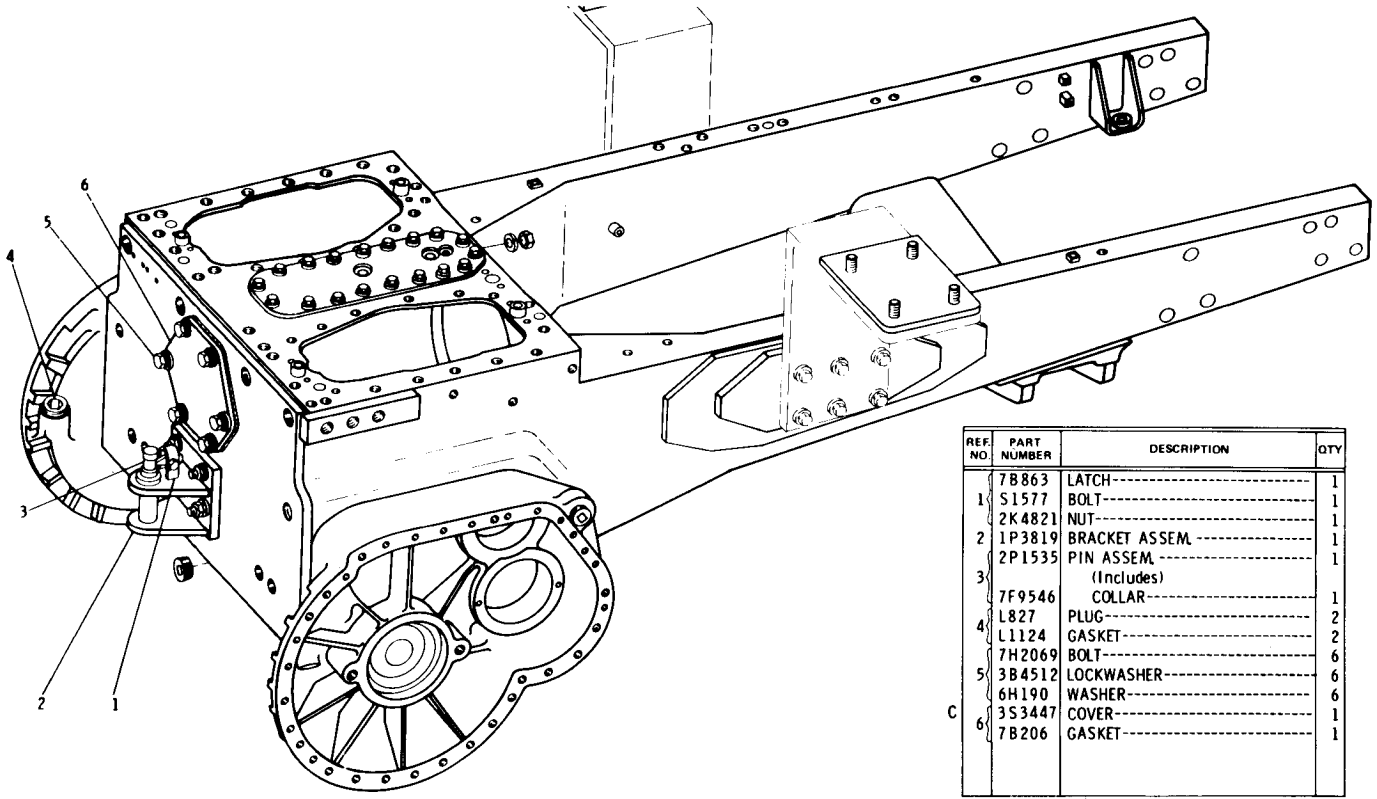

REF. NO.	PART NUMBER	DESCRIPTION	QTY
	7B863	LATCH	1
1	S1577	BOLT	1
	2K4821	NUT	1
2	1P3819	BRACKET ASSEM.	1
	2P1535	PIN ASSEM.	1
3		(Includes)	
	7F9546	COLLAR	1
4	L827	PLUG	2
	L1124	GASKET	2
	7H2069	BOLT	6
5	3B4512	LOCKWASHER	6
	6H190	WASHER	6
C 6	3S3447	COVER	1
	7B206	GASKET	1

C INDICATES CHANGE 222029

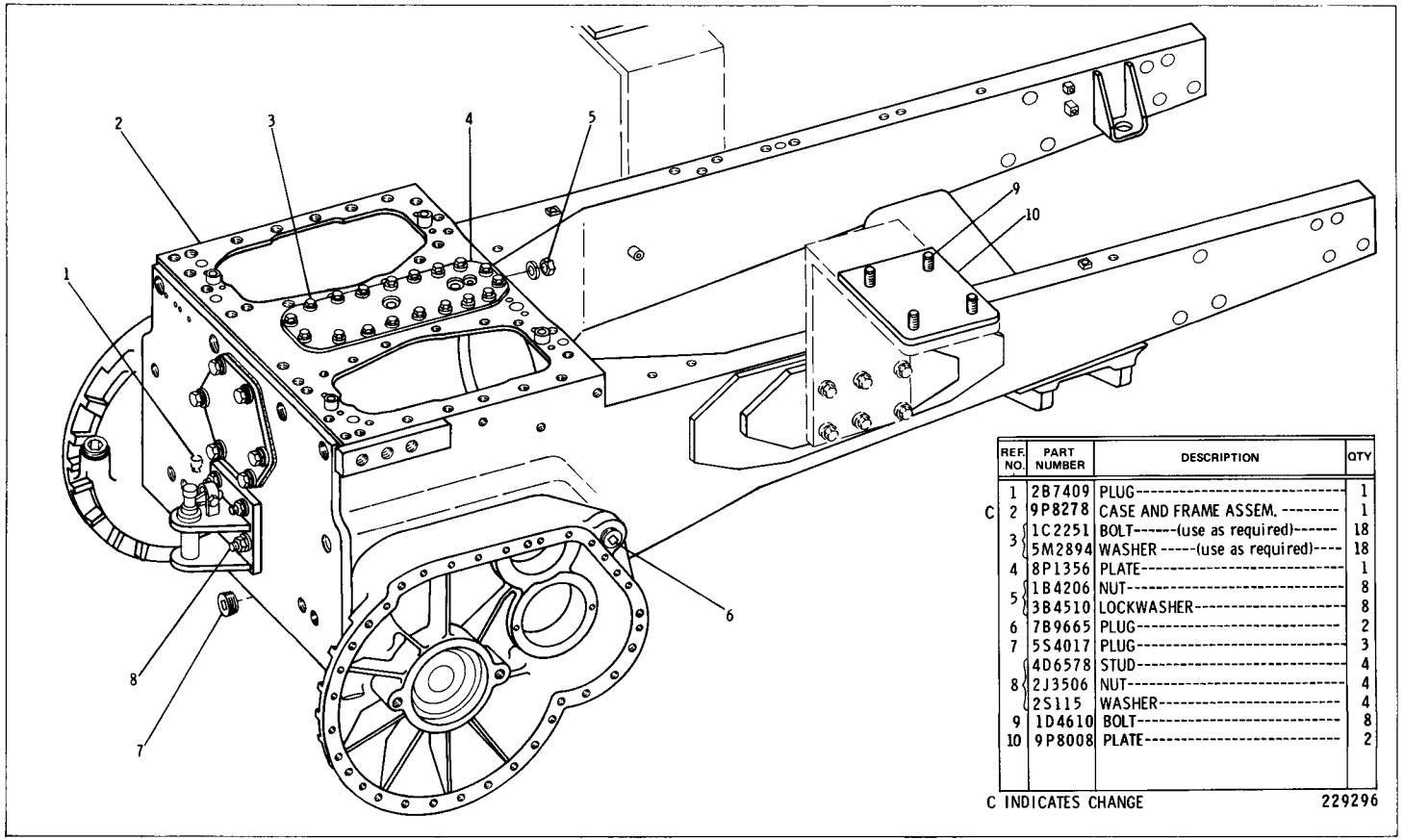

	REF. NO.	PART NUMBER	DESCRIPTION	QTY
	1	2B7409	PLUG	1
C	2	9P8278	CASE AND FRAME ASSEM.	1
	3	1C2251	BOLT-----(use as required)-----	18
		5M2894	WASHER -----(use as required)----	18
	4	8P1356	PLATE	1
	5	1B4206	NUT	8
		3B4510	LOCKWASHER	8
	6	7B9665	PLUG	2
	7	5S4017	PLUG	3
	8	4D6578	STUD	4
		2J3506	NUT	4
		2S115	WASHER	4
	9	1D4610	BOLT	8
	10	9P8008	PLATE	2

C INDICATES CHANGE 229296

8P4173 FRAME AND CASE GROUP—Part 1—Type 2

8P4173 FRAME AND CASE GROUP—Part 2—Type 2

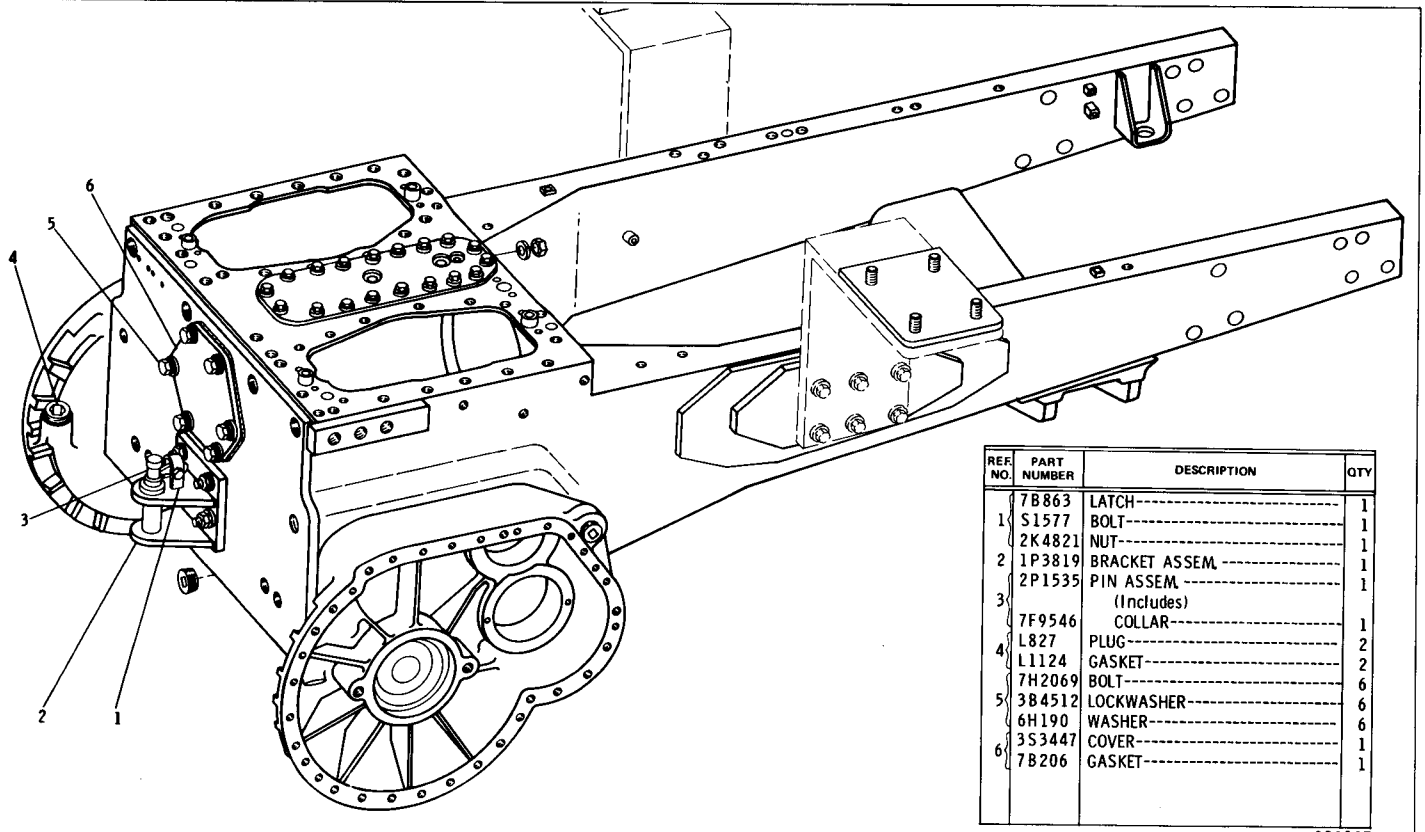

REF. NO.	PART NUMBER	DESCRIPTION	QTY
1	7B863	LATCH	1
	S1577	BOLT	1
	2K4821	NUT	1
2	1P3819	BRACKET ASSEM.	1
3	2P1535	PIN ASSEM.	1
		(Includes)	
	7F9546	COLLAR	1
4	L827	PLUG	2
	L1124	GASKET	2
5	7H2069	BOLT	6
	3B4512	LOCKWASHER	6
	6H190	WASHER	6
6	3S3447	COVER	1
	7B206	GASKET	1

229297

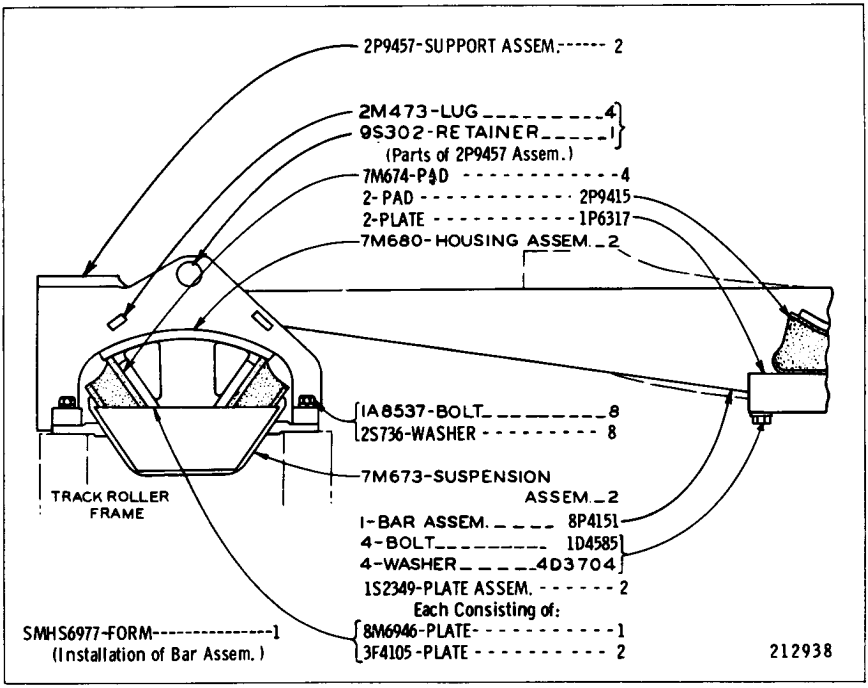

8P4150 EQUALIZER BAR GROUP

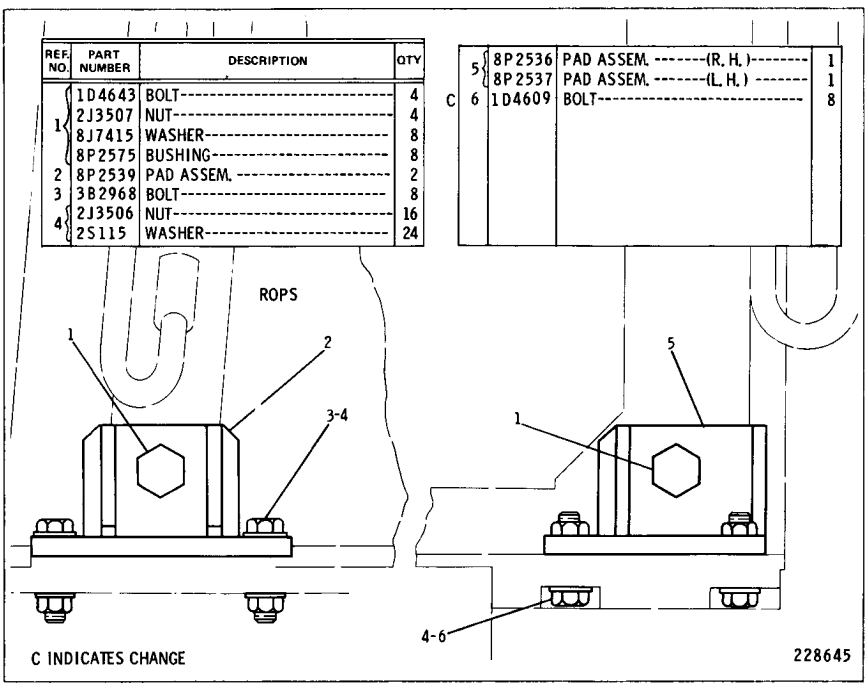

8P2130 ROLL-OVER PROTECTIVE STRUCTURE MOUNTING GROUP

8P4944 ROLL-OVER PROTECTIVE STRUCTURE MOUNTING GROUP
Serial No. 6X1 to 6X826 inclusive

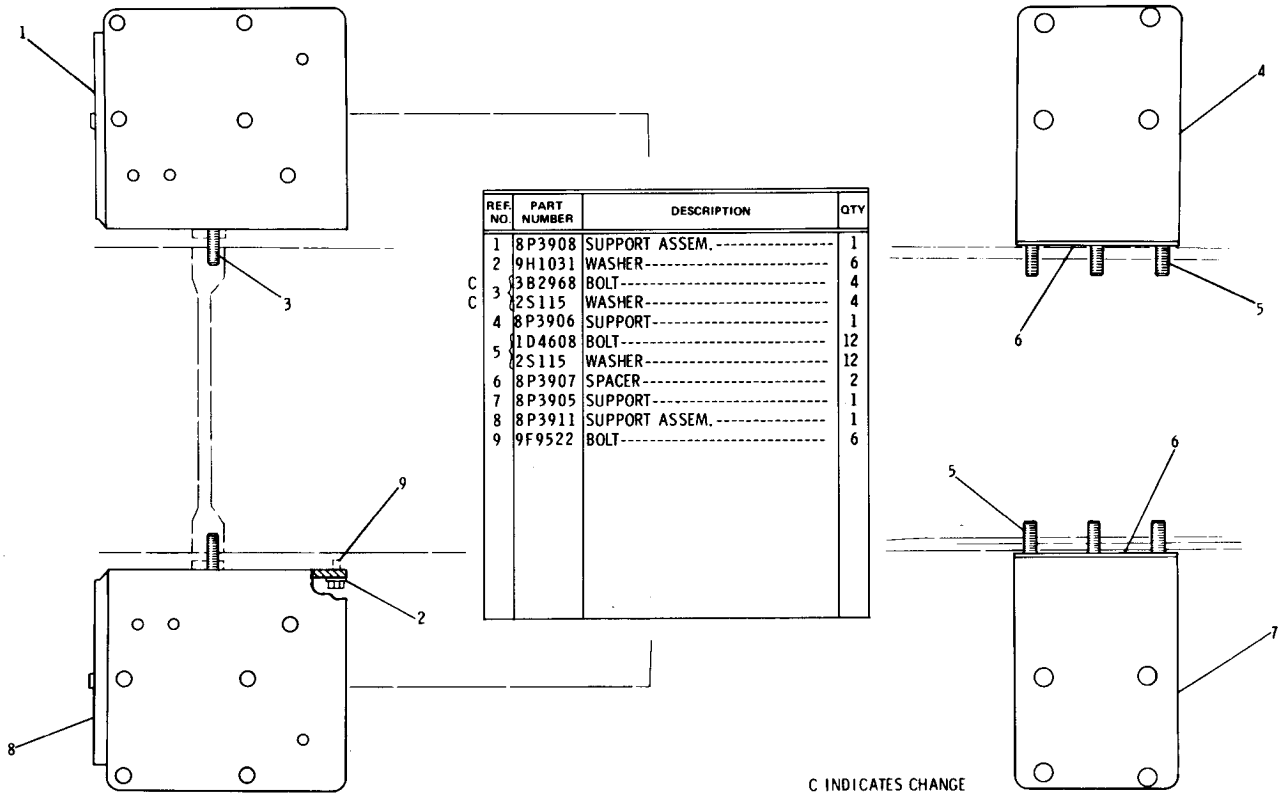

	REF. NO.	PART NUMBER	DESCRIPTION	QTY
	1	8P3908	SUPPORT ASSEM.	1
	2	9H1031	WASHER	6
C	3	3B2968	BOLT	4
C		2S115	WASHER	4
	4	8P3906	SUPPORT	1
	5	1D4608	BOLT	12
		2S115	WASHER	12
	6	8P3907	SPACER	2
	7	8P3905	SUPPORT	1
	8	8P3911	SUPPORT ASSEM.	1
	9	9F9522	BOLT	6

C INDICATES CHANGE

218335

8P4944 ROLL-OVER PROTECTIVE STRUCTURE MOUNTING GROUP
Serial No. 6X827—Up

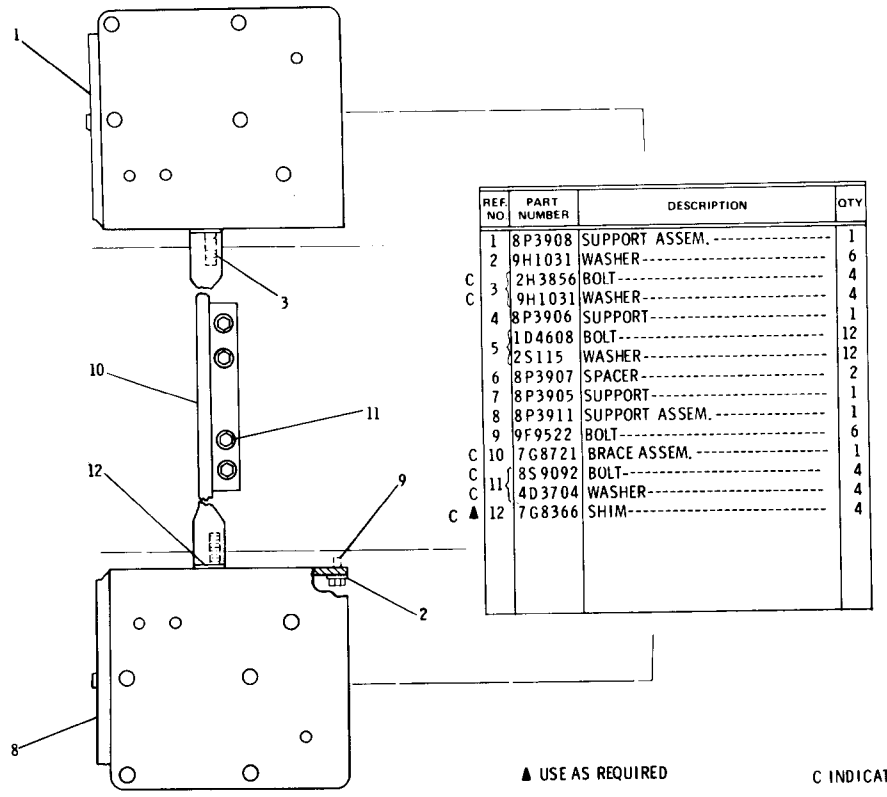

	REF. NO.	PART NUMBER	DESCRIPTION	QTY
	1	8P3908	SUPPORT ASSEM.	1
	2	9H1031	WASHER	6
C	3	2H3856	BOLT	4
C		9H1031	WASHER	4
	4	8P3906	SUPPORT	1
	5	1D4608	BOLT	12
		2S115	WASHER	12
	6	8P3907	SPACER	2
	7	8P3905	SUPPORT	1
	8	8P3911	SUPPORT ASSEM.	1
	9	9F9522	BOLT	6
C	10	7G8721	BRACE ASSEM.	1
C	11	8S9092	BOLT	4
C		4D3704	WASHER	4
C ▲	12	7G8366	SHIM	4

▲ USE AS REQUIRED

C INDICATES CHANGE

173612

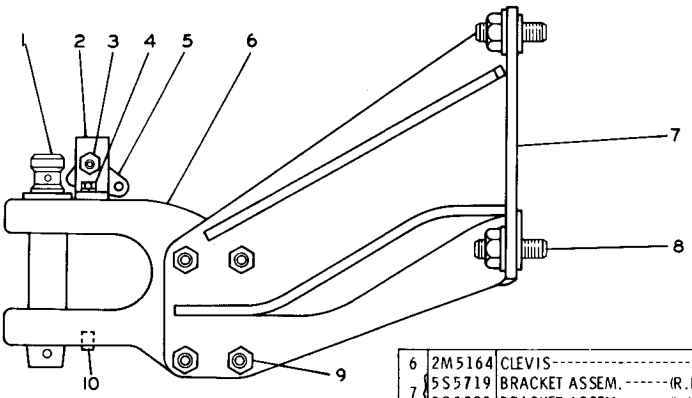

	REF. NO.	PART NUMBER	DESCRIPTION	QTY
	1	7F9547	PIN ASSEM.	1
	2	4M4649	PLATE	1
C	3	S1577	BOLT	1
		2K4821	LOCKNUT	1
	4	S1594	BOLT	2
		3B4506	LOCKWASHER	2
	5	7B863	LATCH	1
	6	2M5164	CLEVIS	1
	7	5S5719	BRACKET ASSEM. (R.H.)	1
		5S5720	BRACKET ASSEM. (L.H.)	1
C		5D3118	STUD	6
	8	2J3507	NUT	6
		3K5234	WASHER	6
		2H3750	BOLT	4
	9	6B6682	NUT	4
		4D6989	WASHER	8
	10	5B7267	CORK	2

C INDICATES CHANGE

209448

5M7811 FIXED DRAWBAR GROUP
AN ATTACHMENT

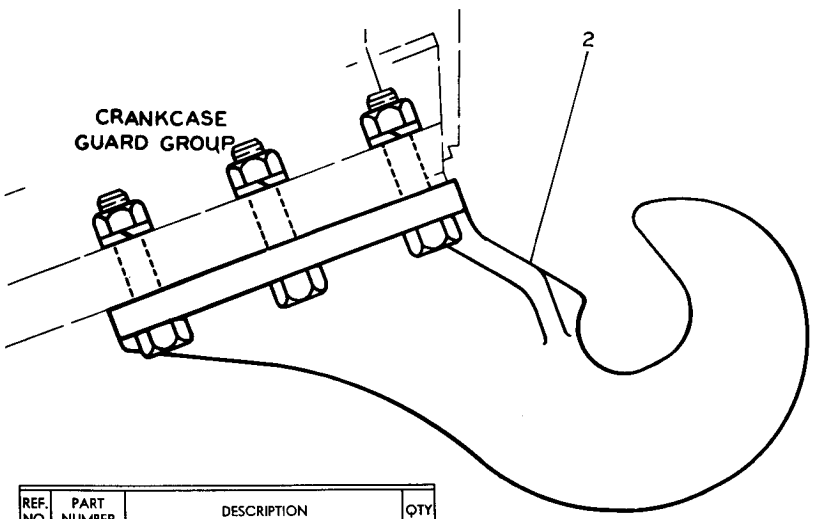

REF. NO.	PART NUMBER	DESCRIPTION	QTY
1	8F3152	BOLT	6
	1B4207	NUT	6
	3B4512	LOCKWASHER	6
2	7S6058	HOOK	1

113569

7B4464 FRONT PULL HOOK GROUP
AN ATTACHMENT

1P6998 CRANKCASE GUARD GROUP

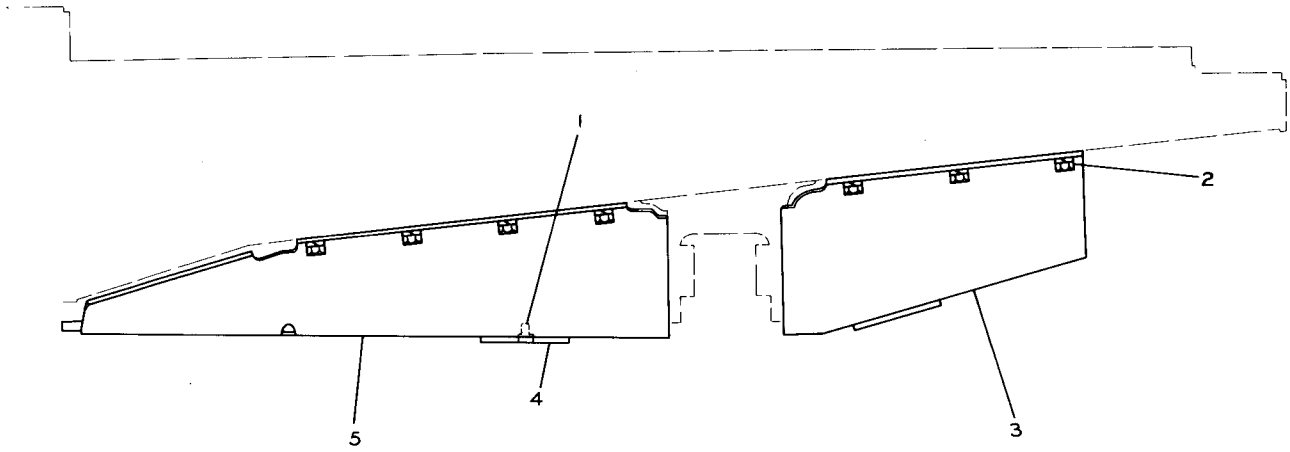

REF. NO.	PART NUMBER	DESCRIPTION	QTY
1	S1621	BOLT	4
	3B4508	WASHER	4
2	1A458	BOLT	14
	3B4512	LOCKWASHER	14
	4B4283	WASHER	14

3	1P7257	GUARD ASSEM.	1
4	5A8101	COVER	2
5	1P7211	GUARD ASSEM.	1

115623

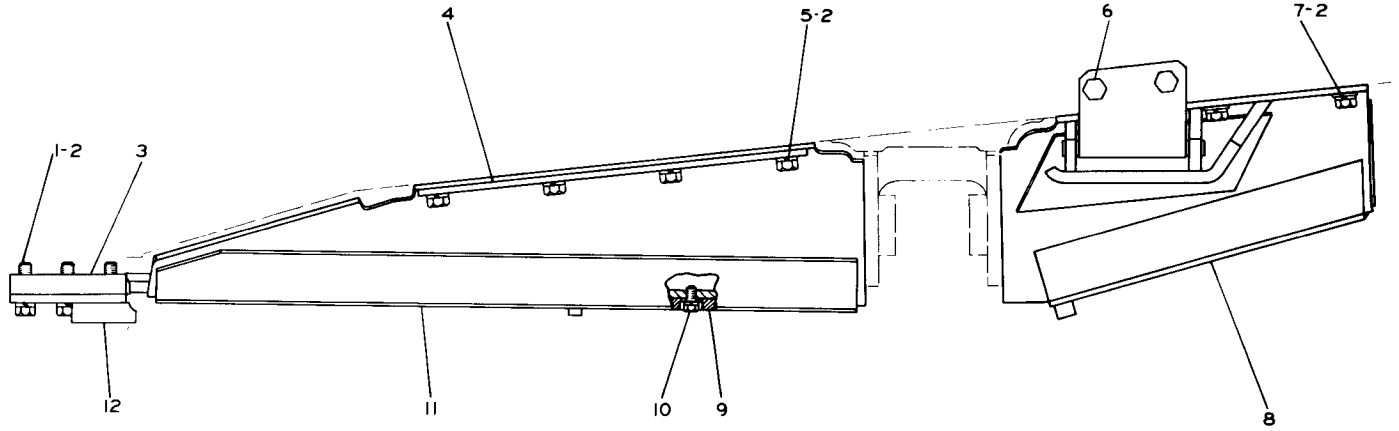

REF. NO.	PART NUMBER	DESCRIPTION	QTY
1	1D4610	BOLT	6
2	3B4512	LOCKWASHER	18
3	5S1654	SPACER	2
4	3P1031	STRIP	2
5	L1178	BOLT	8
6	6F4991	BOLT	2
7	1A458	BOLT	4
	4B4283	WASHER	4
8	3P601	GUARD ASSEM.	1
9	5S8101	COVER	2
10	S1621	BOLT	4
	3B4508	LOCKWASHER	4
11	3P978	GUARD ASSEM.	1
12	5S1655	BRACKET ASSEM. -----(R.H.)-----	1
	5S1656	BRACKET ASSEM. -----(L.H.)-----	1

115907

3P526 CRANKCASE GUARD GROUP—Extreme Service
AN ATTACHMENT

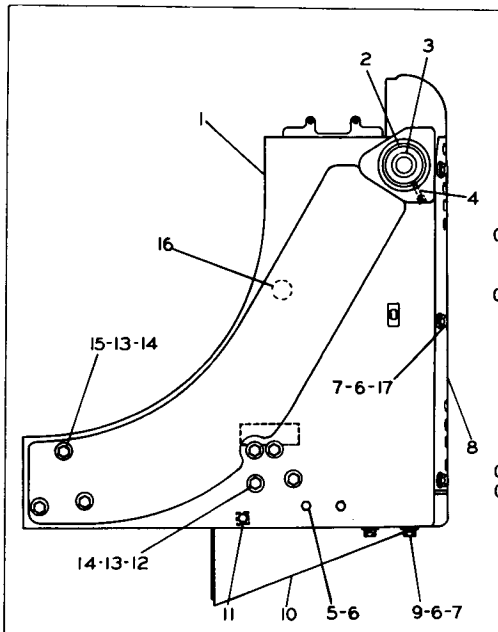

	REF. NO.	PART NUMBER	DESCRIPTION	QTY
	1	3P8112	GUARD ASSEM. (Includes)	1
	2	2J6316	BEARING	2
	3	2J6306	BEARING	2
	4	4H3947	FITTING	2
C	5	S1592	BOLT	6
	6	3B4510	LOCKWASHER	16
	7	4B4281	WASHER	10
C	8	8P8022	PLATE ASSEM.	1
	9	S1566	BOLT	4
	10	2P1589	GUARD ASSEM. (Includes)	1
	11	5A9083	BLOCK	2
	12	9S1351	BOLT	8
	13	2J3505	NUT	14
	14	9H1031	WASHER	28
	15	9S1322	BOLT	6
C	16	8P2926	GROMMET	1
C	17	S1589	BOLT	6

C INDICATES CHANGE 212948

2P1563 RADIATOR GUARD GROUP

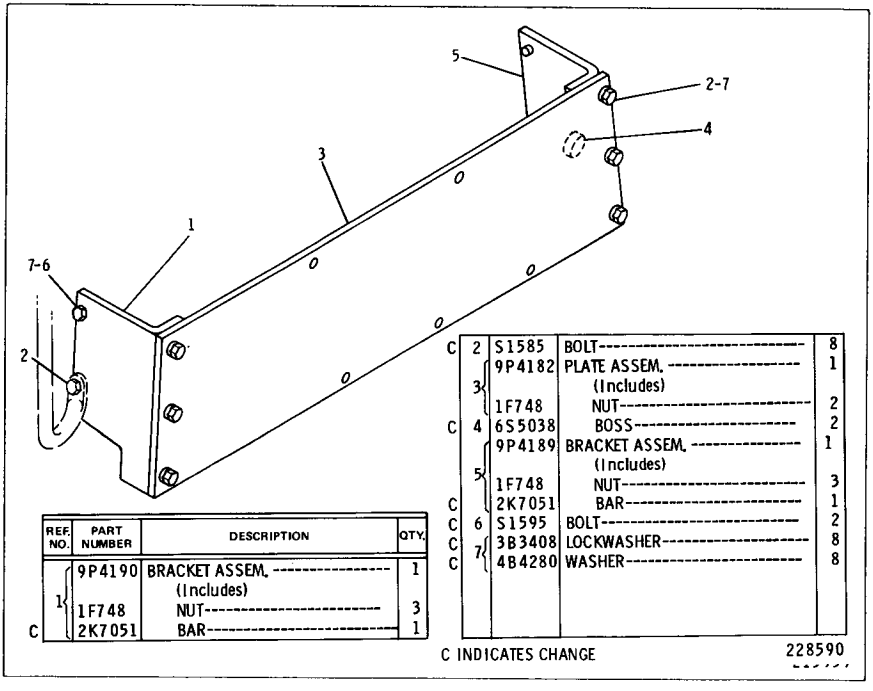

	REF. NO.	PART NUMBER	DESCRIPTION	QTY.
	1	9P4190	BRACKET ASSEM. (Includes)	1
		1F748	NUT	3
C		2K7051	BAR	1

C	2	S1585	BOLT	8
	3	9P4182	PLATE ASSEM. (Includes)	1
		1F748	NUT	2
C	4	6S5038	BOSS	2
	5	9P4189	BRACKET ASSEM. (Includes)	1
		1F748	NUT	3
C		2K7051	BAR	1
C	6	S1595	BOLT	2
C	7	3B3408	LOCKWASHER	8
C		4B4280	WASHER	8

C INDICATES CHANGE 228590

8P2141 FUEL TANK GUARD GROUP
AN ATTACHMENT

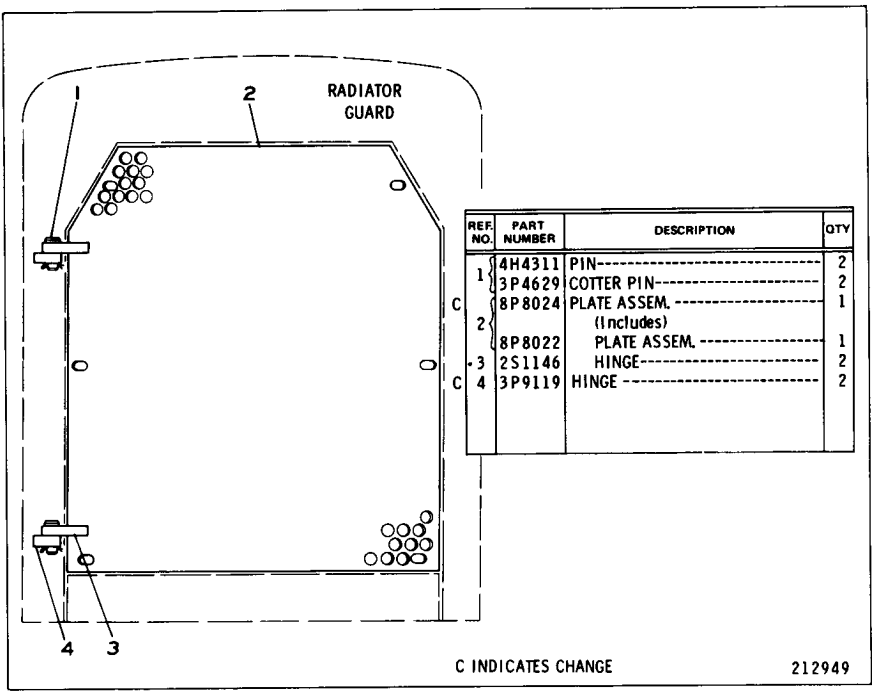

REF. NO.	PART NUMBER	DESCRIPTION	QTY
1	4H4311	PIN	2
	3P4629	COTTER PIN	2
C	8P8024	PLATE ASSEM.	1
2		(Includes)	
	8P8022	PLATE ASSEM.	1
3	2S1146	HINGE	2
C 4	3P9119	HINGE	2

C INDICATES CHANGE 212949

3P524 RADIATOR GRILL HINGED PLATE GROUP AN ATTACHMENT

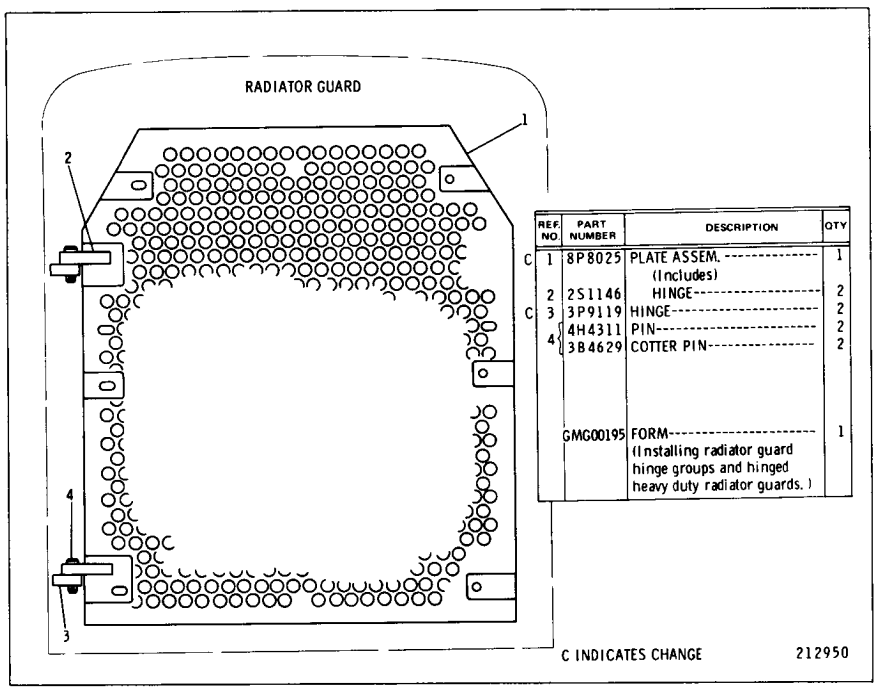

REF. NO.	PART NUMBER	DESCRIPTION	QTY
C 1	8P8025	PLATE ASSEM.	1
		(Includes)	
2	2S1146	HINGE	2
C 3	3P9119	HINGE	2
4	4H4311	PIN	2
	3B4629	COTTER PIN	2
	GMG00195	FORM (Installing radiator guard hinge groups and hinged heavy duty radiator guards.)	1

C INDICATES CHANGE 212950

3P525 RADIATOR HINGED GUARD GROUP—Heavy Duty AN ATTACHMENT

8P5649 ENGINE ENCLOSURE GROUP
AN ATTACHMENT

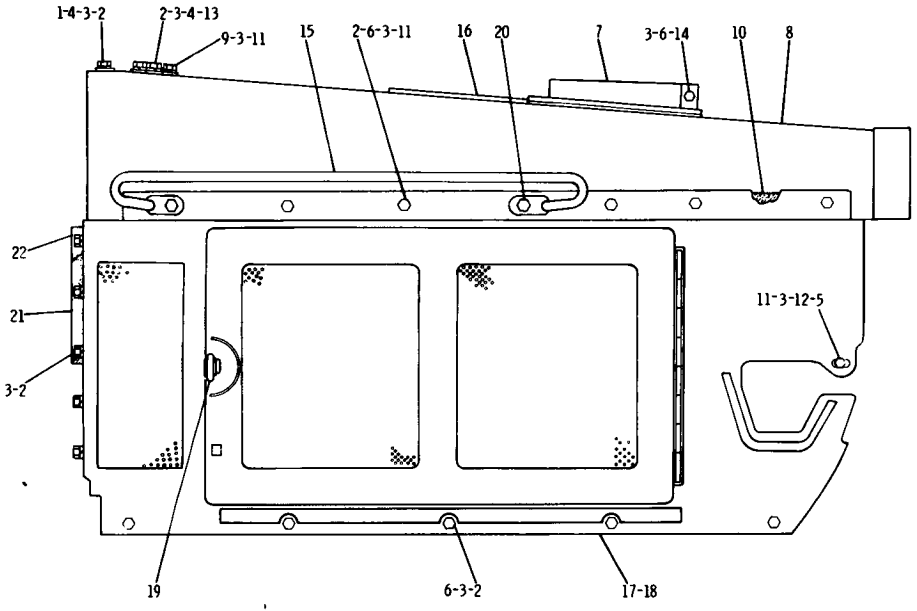

REF. NO.	PART NUMBER	DESCRIPTION	QTY
1	8P4350	COVER	1
2	L1351	BOLT	34
3	3B4506	LOCKWASHER	39
4	3F1417	WASHER	4
5	1A2029	BOLT	2
6	1D4717	NUT	21
7	8P4178	CLAMP ASSEM.	1
8	8P4346	HOOD ASSEM.	1
9	S509	BOLT	2
10	8P6120	GASKET	2
11	4B4278	WASHER	14
12	4B3785	SPACER	2
	9F2978	NUT	2
13	8P4349	COVER	1
14	S1594	BOLT	1
15	8P8300	GRAB IRON	1
16	8S2572	GROMMET	1
17	8P5046	ENCLOSURE ARM-----(R. H.)----	1
18	8P5044	ENCLOSURE ARM-----(L. H.)-----	1
19	9B1783	FASTENER	2
	4B7033	SPRING	2
	3B5301	COTTER PIN	2
	1A4784	WASHER	2
	S1587	BOLT	4
20	1D4719	NUT	4
	3B4508	LOCKWASHER	4
	4B4280	WASHER	4
▲ 21	5P5923	SEAL---------, 23 m(9.06 in.)	
22	8P4183	PLATE ASSEM. ---------(R. H.)---	1
	8P4185	PLATE ASSEM. ---------(L. H.)-----	1
		(Each Includes)	
	9F2978	NUT	5

▲ ORDER BY THE METRE

212942

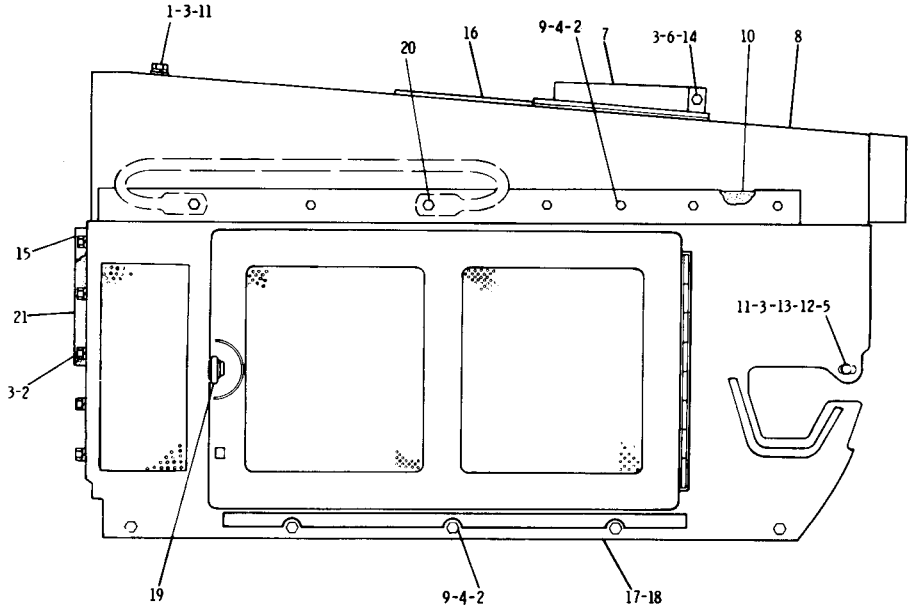

	REF. NO.	PART NUMBER	DESCRIPTION	QTY.
	1	S509	BOLT	2
C	2	L1351	BOLT	30
C	3	3B4506	LOCKWASHER	15
C	4	2K4973	LOCKNUT	20
	5	1A2029	BOLT	2
C	6	1D4717	NUT	1
	7	8P4178	CLAMP ASSEM.	1
	8	8P4346	HOOD ASSEM.	1
C	9	5M2894	WASHER	20
	10	8P6120	GASKET	2
C	11	4B4278	WASHER	4
	12	4B3785	SPACER	2
	13	9F2978	NUT	2
	14	S1594	BOLT	1
	15	8P4183	PLATE ASSEM. -----(R. H.)	1
		8P4185	PLATE ASSEM. ------(L. H.) (Each Includes)	1
		9F2978	NUT	5
	16	8S2572	GROMMET	1
	17	8P5046	ENCLOSURE ARM--------(R. H.)	1
	18	8P5044	ENCLOSURE ARM--------(L. H.)	1
	19	9B1783	FASTENER	2
		4B7033	SPRING	2
		3B5301	COTTER PIN	2
		1A4784	WASHER	2
	20	S1587	BOLT	4
		1D4719	NUT	4
		3B4508	LOCKWASHER	4
		4B4280	WASHER	4
▲	21	5P5923	SEAL---------.23 m(9.06 in.)	

C INDICATES CHANGE

▲ ORDER BY THE METER

173418

8P5649 ENGINE ENCLOSURE GROUP—Type 2
AN ATTACHMENT

8P5649 ENGINE ENCLOSURE GROUP—Type 3
AN ATTACHMENT

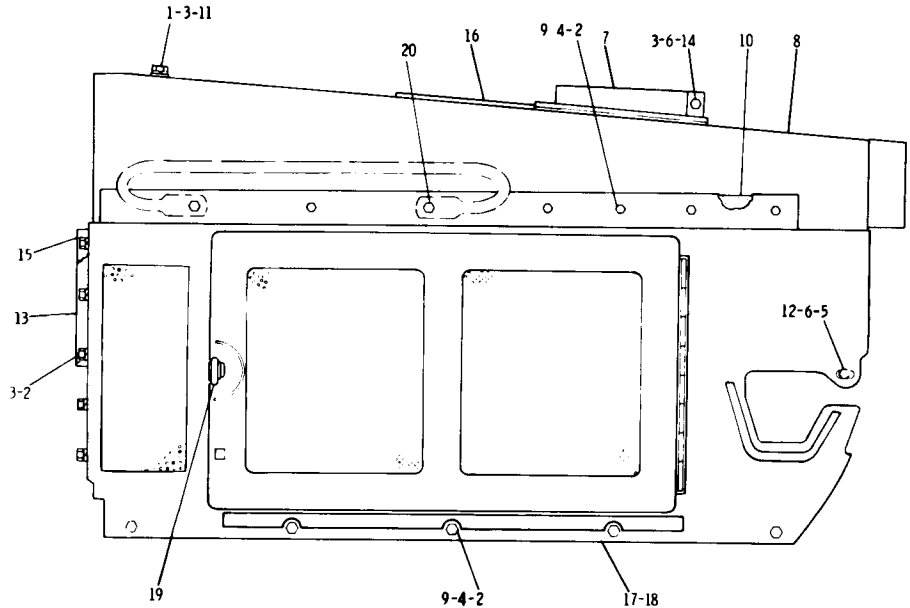

	REF NO.	PART NUMBER	DESCRIPTION	QTY.
	1	S509	BOLT	2
	2	L1351	BOLT	30
C	3	3B4506	LOCKWASHER	13
	4	2K4973	LOCKNUT	20
C	5	3B1915	BOLT	2
C	6	1D4717	NUT	3
	7	8P4178	CLAMP ASSEM.	1
	8	8P4346	HOOD ASSEM.	1
	9	5M2894	WASHER	20
	10	8P6120	GASKET	2
C	11	4B4278	WASHER	2
C	12	8M4069	WASHER	4
▲	13	5P5923	SEAL—, 23 m(9.06 in.)	
	14	S1594	BOLT	1
	15	8P4183	PLATE ASSEM. —(R. H.)	1
		8P4185	PLATE ASSEM. —(L. H.) (Each Includes)	1
		9F2978	NUT	5
	16	8S2572	GROMMET	1
	17	8P5046	ENCLOSURE ARM—(R. H.)	1
	18	8P5044	ENCLOSURE ARM—(L. H.)	1
	19	9B1783	FASTENER	2
		4B7033	SPRING	2
		3B5301	COTTER PIN	2
		1A4784	WASHER	2
	20	S1587	BOLT	4
		1D4719	NUT	4
		3B4508	LOCKWASHER	4
		4B4280	WASHER	4

C INDICATES CHANGE ▲ ORDER BY THE METER

174253

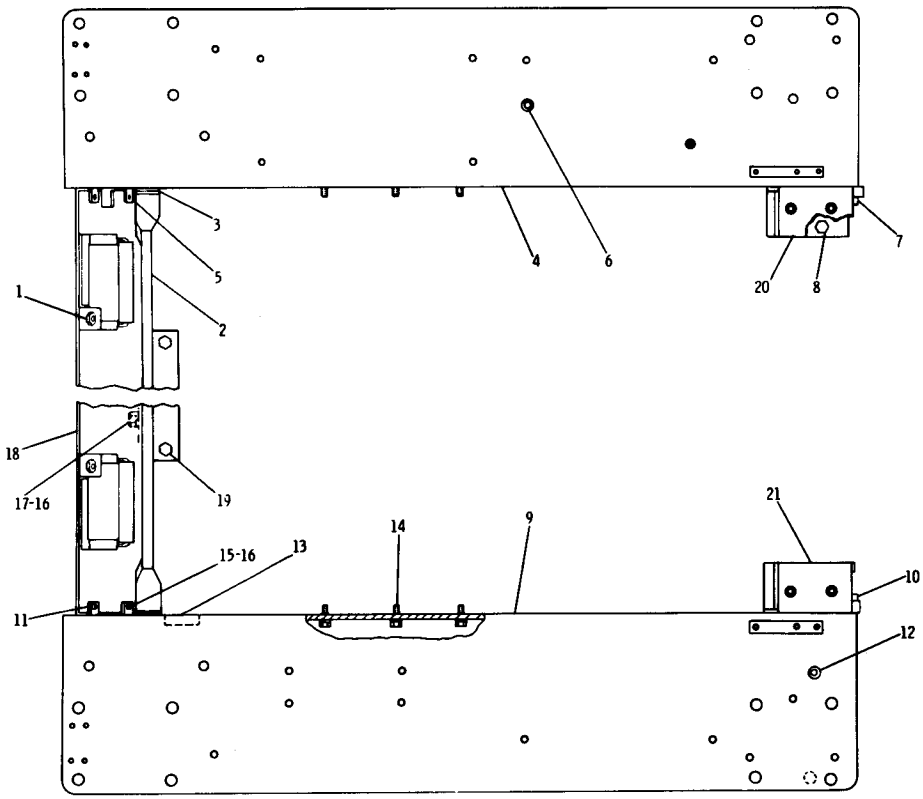

REF. NO.	PART NUMBER	DESCRIPTION	QTY
1	6D1746	BOLT	2
	4B4280	WASHER	2
	3B4610	COTTER	2
2	9P4966	BRACE ASSEM.	1
3	9P3128	SHIM	2
	9P6575	SHIM	4
4	7G50	FENDER ASSEM. (Includes)	1
	8P3912	SPACER	1
5	2K7051	BAR	2
6	8F9836	LUG	3
7	4D8797	LUG	1
8	S1566	BOLT	6
	3B4510	LOCKWASHER	6
9	7G49	FENDER ASSEM. (Includes)	1
10	4D8797	LUG	1
11	2K7051	BAR	2
12	8F9836	LUG	1
13	8P3912	SPACER	1
14	S1595	BOLT	10
	3B4508	LOCKWASHER	10
15	S509	BOLT	4
	3B4506	LOCKWASHER	4
16	4B5271	WASHER	6
17	S1594	BOLT	2
	5P1075	WASHER	2
18	9P110	PLATE ASSEM.	1
19	8S9092	BOLT	2
	4D3704	WASHER	2
20	8P3460	SUPPORT ASSEM.	1
21	8P3459	SUPPORT ASSEM.	1

167211

7G56 FENDER GROUP
Serial No. 6X1 to 6X471 inclusive

7G56 FENDER GROUP
Serial No. 6X472 to 6X826 inclusive

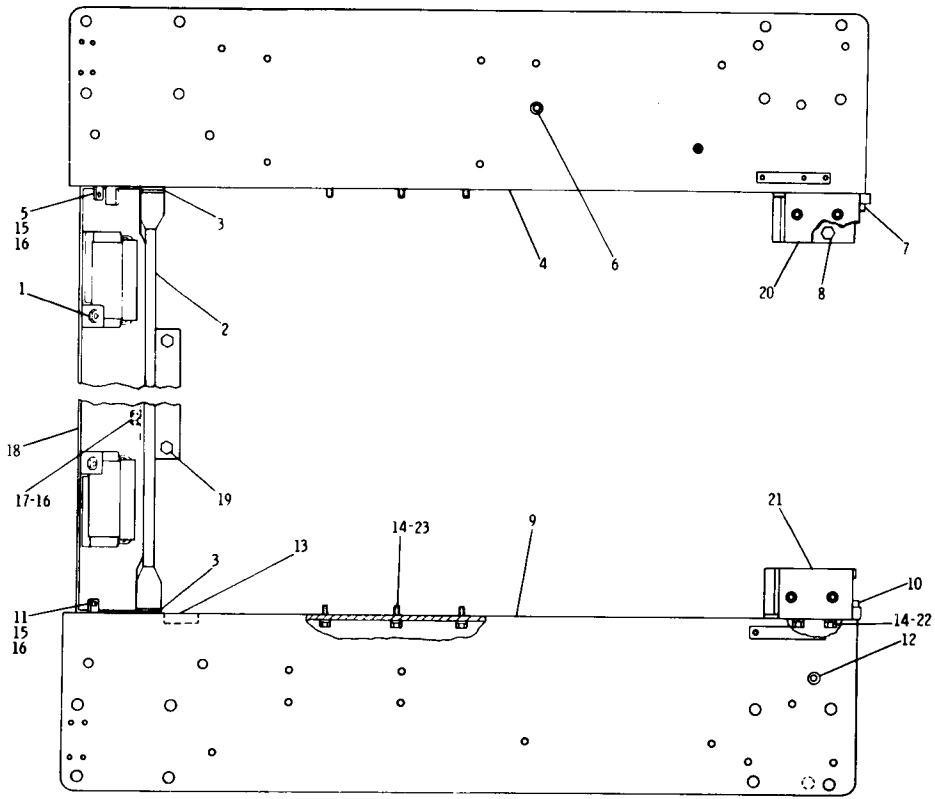

	REF. NO.	PART NUMBER	DESCRIPTION	QTY
	1	6D1746	BOLT	2
		4B4280	WASHER	2
		3B4610	COTTER	2
	2	9P4966	BRACE ASSEM.	1
C	3	9P3128	SHIM------1.6 mm(.063 in.) thick	4
C		9P6575	SHIM------.8 mm(.031 in.) thick	8
	4	7G50	FENDER ASSEM. (Includes)	1
		8P3912	SPACER	1
C	5	2K7051	BAR	1
	6	8F9836	LUG	3
	7	4D8797	LUG	1
	8	S1566	BOLT	6
		3B4510	LOCKWASHER	6
	9	7G49	FENDER ASSEM. (Includes)	1
	10	4D8797	LUG	1
C	11	2K7051	BAR	1
	12	8F9836	LUG	1
	13	8P3912	SPACER	1
	14	S1595	BOLT	10
C	15	S509	BOLT	2
C		3B4506	LOCKWASHER	2
C	16	4B5271	WASHER	4
	17	S1594	BOLT	2
		5P1075	WASHER	2
	18	9P110	PLATE ASSEM.	1
	19	8S9092	BOLT	2
		4D3704	WASHER	2
	20	8P3460	SUPPORT ASSEM.	1
	21	8P3459	SUPPORT ASSEM.	1
C	22	3B4508	LOCKWASHER	4
C	23	5P1076	WASHER	6

C INDICATES CHANGE

169108

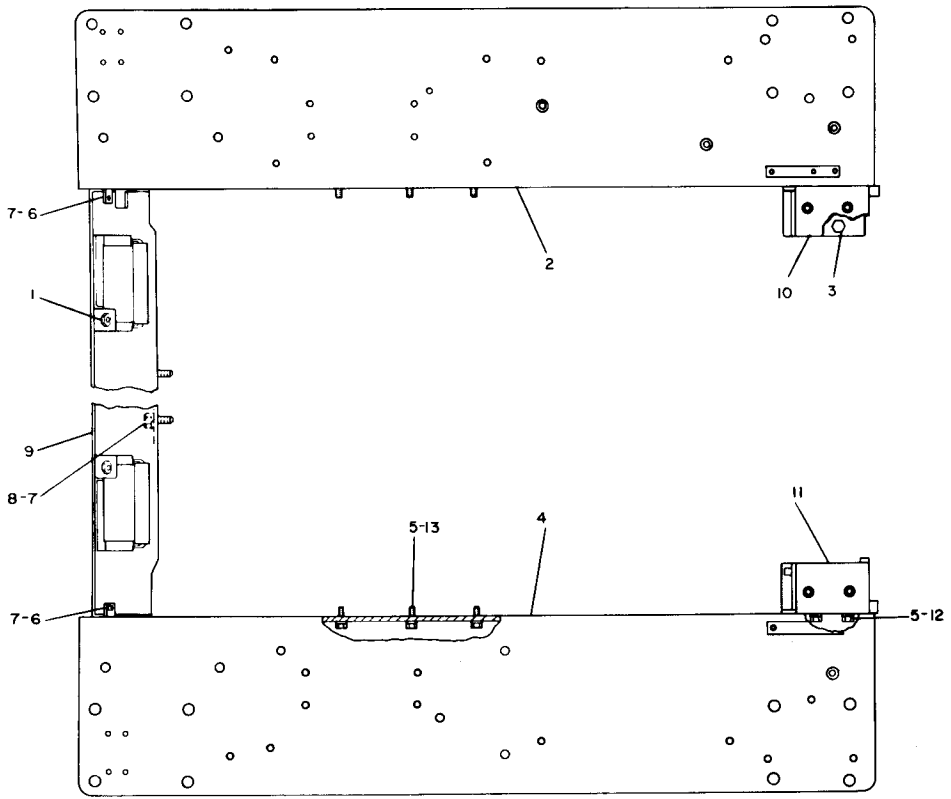

	REF NO.	PART NUMBER	DESCRIPTION	QTY.
		6D1746	BOLT	2
	1	4B4280	WASHER	2
		3B4610	COTTER	2
C	2	7G8718	FENDER ASSEM.	1
	3	S1566	BOLT	6
		3B4510	LOCKWASHER	6
C	4	7G8717	FENDER ASSEM.	1
	5	S1595	BOLT	10
	6	S509	BOLT	2
C	7	5P1075	WASHER	4
	8	S1594	BOLT	2
	9	9P110	PLATE ASSEM.	1
	10	8P3460	SUPPORT ASSEM.	1
	11	8P3459	SUPPORT ASSEM.	1
	12	3B4508	LOCKWASHER	4
	13	5P1076	WASHER	6

C INDICATES CHANGE

174176

7G56 FENDER GROUP
Serial No. 6X827—Up

CONSISTS OF:

2	8P4739	PLATE--FENDER TO CASE
4	2H3757	BOLT--PLATE TO CASE
4	4B4284	WASHER--PLATE TO CASE
4	2A1538	BOLT--TANK TO FENDER
4	S1595	BOLT--FENDER ASSEMBLY TO SUPPORT
4	3B4508	LOCKWASHER--FENDER ASSEMBLY TO SUPPORT
4	1A8063	BOLT
2	7B3235	BOLT--FENDER TO SEAT SUPPORT

8P5608 FENDER SUPPORT GROUP
FOR USE ON MACHINES EXPORTED WITHOUT ROPS MOUNTING AN ATTACHMENT

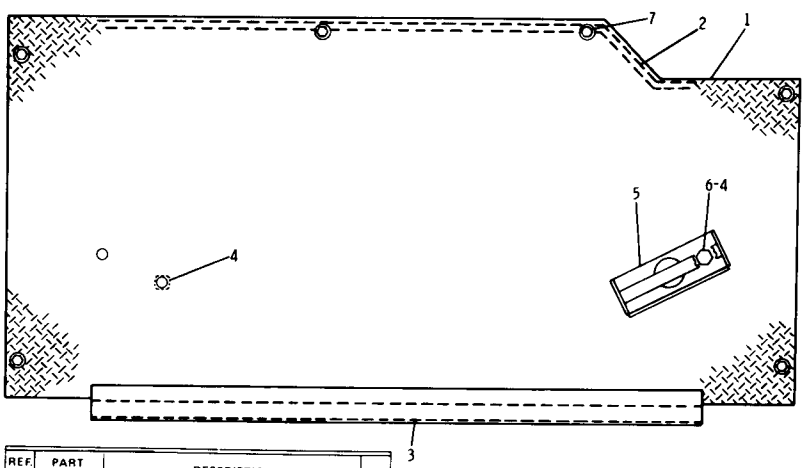

REF. NO.	PART NUMBER	DESCRIPTION	QTY
1	8P4089	FLOORPLATE ASSEM. ---------- (Includes)	1
▲ 2	5P7246	SEAL----------3.1 m(122 in.)	
▲ 3	5P7245	SEAL----------.9 m(35.44 in.)	
4	1F748	NUT----------	4
5	5H156	SUPPORT ASSEM. ----------	1

▲ ORDER BY THE METRE-USE AS REQUIRED

C	6	S1595	BOLT----------	2
		3B4508	LOCKWASHER----------	2
C		S1594	BOLT----------	6
	7	3B4506	LOCKWASHER----------	6
		4B4278	WASHER----------	6

C INDICATES CHANGE

168156

8P4554 FLOORPLATE GROUP
Serial No. 6X1 to 6X582 inclusive

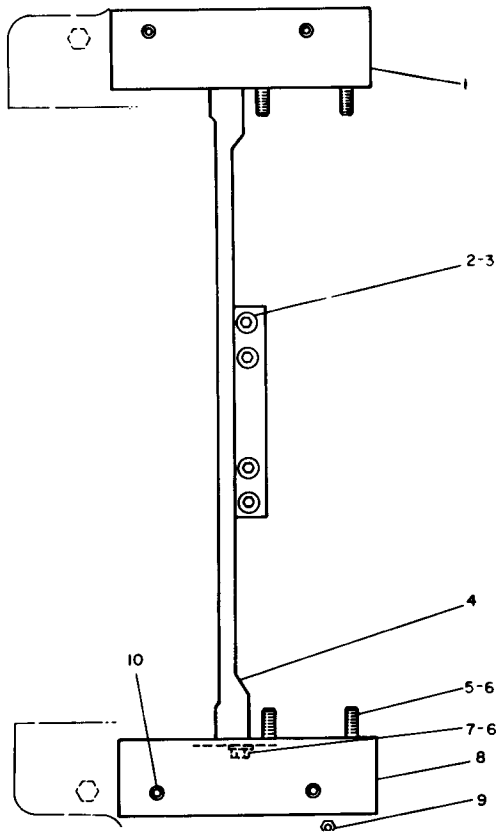

CASE AND FRAME

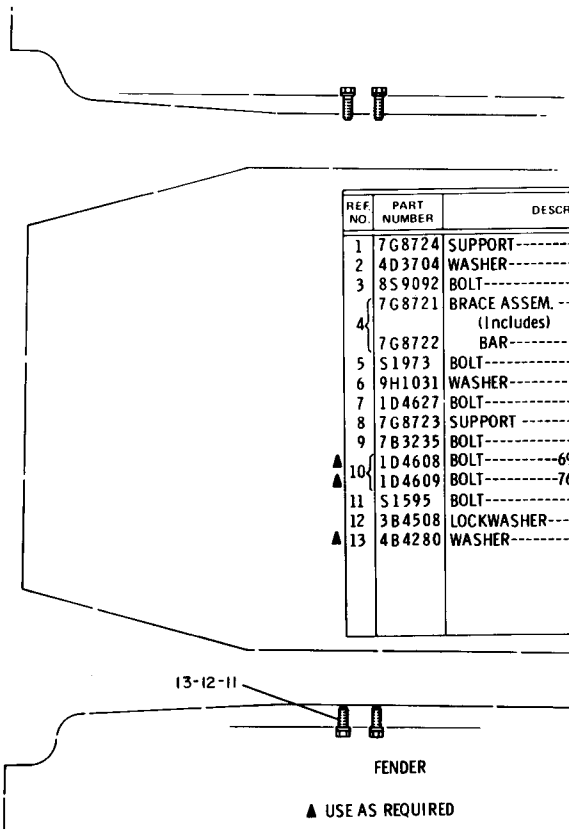

REF. NO.	PART NUMBER	DESCRIPTION	QTY.
1	7G8724	SUPPORT	1
2	4D3704	WASHER	4
3	8S9092	BOLT	4
4	7G8721	BRACE ASSEM. (Includes)	1
	7G8722	BAR	2
5	S1973	BOLT	4
6	9H1031	WASHER	6
7	1D4627	BOLT	2
8	7G8723	SUPPORT	1
9	7B3235	BOLT	2
▲ 10	1D4608	BOLT---69.85mm(2.75 in.)	4
▲ 10	1D4609	BOLT---76.20mm(3 in.)	2
11	S1595	BOLT	4
12	3B4508	LOCKWASHER	4
▲ 13	4B4280	WASHER	2

174878

▲ USE AS REQUIRED

8P5608 FENDER SUPPORT GROUP—Type 2
FOR USE ON MACHINES EXPORTED WITHOUT ROPS MOUNTING
AN ATTACHMENT

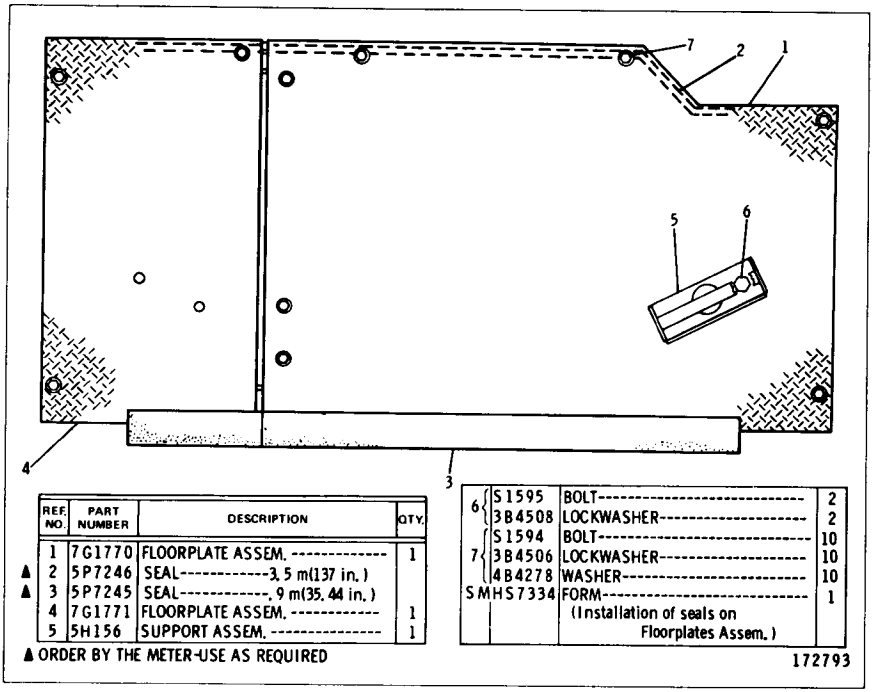

REF. NO.	PART NUMBER	DESCRIPTION	QTY.
1	7G1770	FLOORPLATE ASSEM. ----------	1
▲ 2	5P7246	SEAL----------3.5 m(137 in.)	
▲ 3	5P7245	SEAL----------.9 m(35.44 in.)	
4	7G1771	FLOORPLATE ASSEM. ----------	1
5	5H156	SUPPORT ASSEM. ----------	1

6	1S1595	BOLT----------	2
	3B4508	LOCKWASHER----------	2
7	1S1594	BOLT----------	10
	3B4506	LOCKWASHER----------	10
	4B4278	WASHER----------	10
SMHS7334		FORM----------	1
		(Installation of seals on Floorplates Assem.)	

▲ ORDER BY THE METER-USE AS REQUIRED

172793

7G1775 FLOORPLATE GROUP
Serial No. 6X583—Up

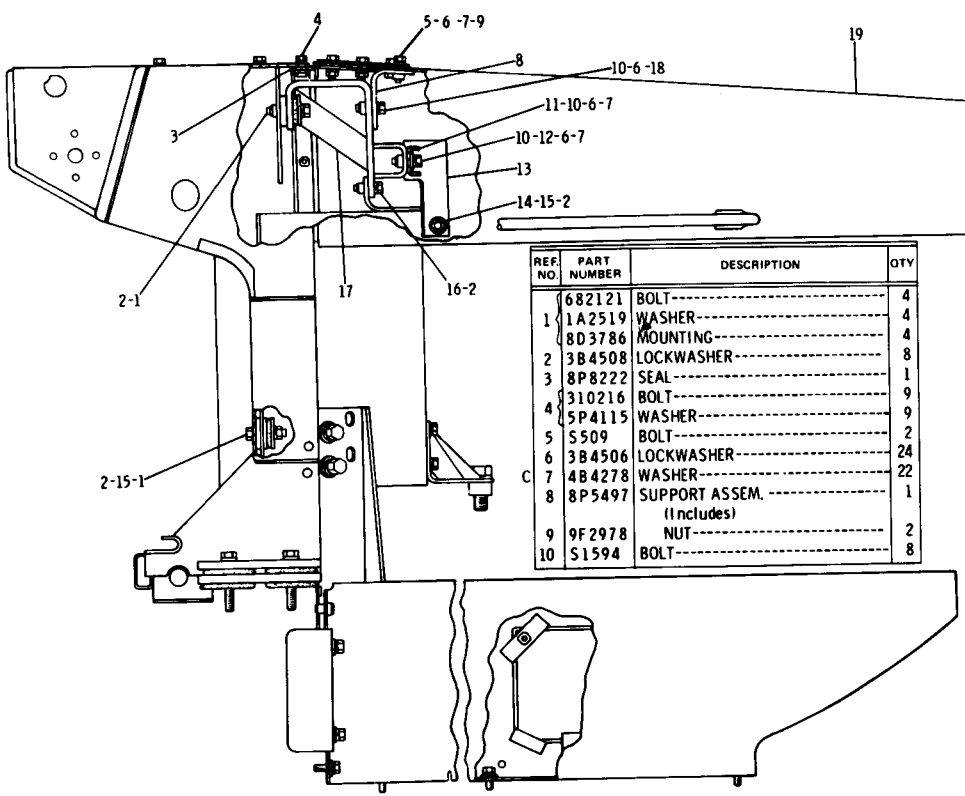

REF. NO.	PART NUMBER	DESCRIPTION	QTY
	682121	BOLT	4
1	1A2519	WASHER	4
	8D3786	MOUNTING	4
2	3B4508	LOCKWASHER	8
3	8P8222	SEAL	1
4	310216	BOLT	9
	5P4115	WASHER	9
5	S509	BOLT	2
6	3B4506	LOCKWASHER	24
C 7	4B4278	WASHER	22
8	8P5497	SUPPORT ASSEM. (Includes)	1
9	9F2978	NUT	2
10	S1594	BOLT	8
11	8P6690	CHANNEL	1
12	1D4717	NUT	4
13	8P6691	BRACKET-(R. H.)	1
	8P6692	BRACKET-(L. H.)	1
14	7B3235	BOLT	2
	4B5273	WASHER	2
15	1D4719	NUT	4
16	S1621	BOLT	2
C 17	8P5495	PLATE ASSEM. (Each Includes)	2
18	9F2978	NUT	2
19	8P3530	HOOD ASSEM.	1
20	8P3527	COVER ASSEM.	1
21	L1351	BOLT	10
22	3R6757	SPACER	2
23	S1571	BOLT	4
24	2S2109	BRACKET	2
25	9M3835	LATCH ASSEM.	2
26	2M5795	PIN	2
	3B4607	COTTER PIN	2
27	9M3839	HOOK ASSEM.	2

C INDICATES CHANGE

166282

8P4367 HOOD AND DASH GROUP—Part 1 of 3
Serial No. 6X1 to 6X329 inclusive

8P4367 HOOD AND DASH GROUP—Part 2 of 3
Serial No. 6X1 to 6X329 inclusive

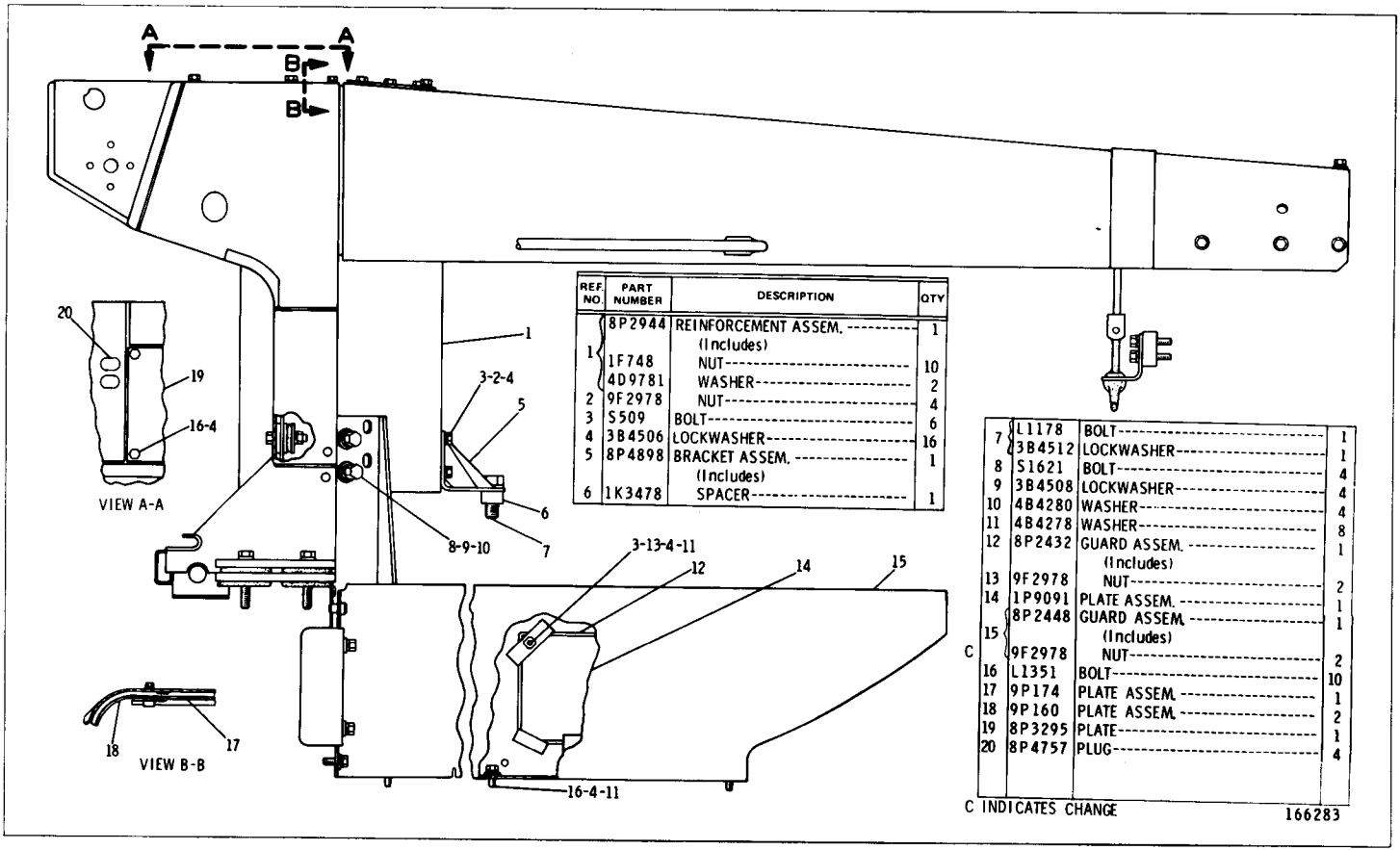

REF. NO.	PART NUMBER	DESCRIPTION	QTY
	8P2944	REINFORCEMENT ASSEM.	1
1		(Includes)	
	1F748	NUT	10
	4D9781	WASHER	2
2	9F2978	NUT	4
3	S509	BOLT	6
4	3B4506	LOCKWASHER	16
5	8P4898	BRACKET ASSEM.	1
		(Includes)	
6	1K3478	SPACER	1

7	L1178	BOLT	1
	3B4512	LOCKWASHER	1
8	S1621	BOLT	4
9	3B4508	LOCKWASHER	4
10	4B4280	WASHER	4
11	4B4278	WASHER	8
12	8P2432	GUARD ASSEM.	1
		(Includes)	
13	9F2978	NUT	2
14	1P9091	PLATE ASSEM.	1
15	8P2448	GUARD ASSEM.	1
		(Includes)	
C	9F2978	NUT	2
16	L1351	BOLT	10
17	9P174	PLATE ASSEM.	1
18	9P160	PLATE ASSEM.	2
19	8P3295	PLATE	1
20	8P4757	PLUG	4

C INDICATES CHANGE

166283

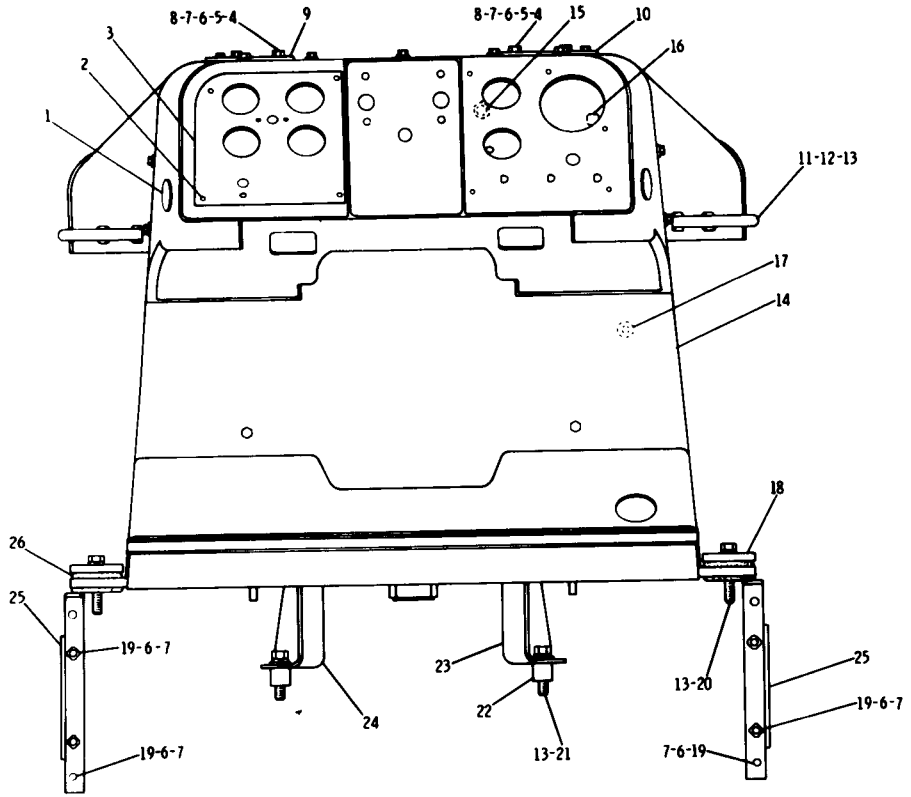

	REF. NO.	PART NUMBER	DESCRIPTION	QTY
	1	4F8711	PLUG	2
	2	7B3028	DRIVE SCREW	4
	3	8P1860	PANEL	1
	4	S509	BOLT	5
	5	1D4717	NUT	5
C	6	3B4506	LOCKWASHER	11
C	7	4B4278	WASHER	11
	8	7K3222	WASHER	5
	9	2P9673	COVER (L. H.)	1
	10	2P9674	COVER (R. H.)	1
	11	8P8299	GRAB IRON	2
	12	S1595	BOLT	2
		4J4144	WASHER	2
		1D4719	NUT	2
	13	3B4508	LOCKWASHER	8
	14	8P3332	DASH ASSEM. (Includes)	1
	15	1F748	NUT	2
	16	9F2978	NUT	12
	17	4D9376	BOSS	4
	18	8P3185	PLATE	2
C	19	L1351	BOLT	6
	20	L1329	BOLT	4
	21	2B947	BOLT	2
		4B4280	WASHER	2
	22	1F9341	SPACER	2
	23	8P8444	PLATE ASSEM.	1
	24	8P8443	PLATE ASSEM.	1
C	25	1S1516	COVER	2
	26	8P3595	BUSHING	8

C INDICATES CHANGE

174298

8P4367 HOOD AND DASH GROUP—Part 3 of 3
Serial No. 6X1 to 6X329 inclusive

8P4367 HOOD AND DASH GROUP—Part 1 of 3
Serial No. 6X330 to 6X622 inclusive

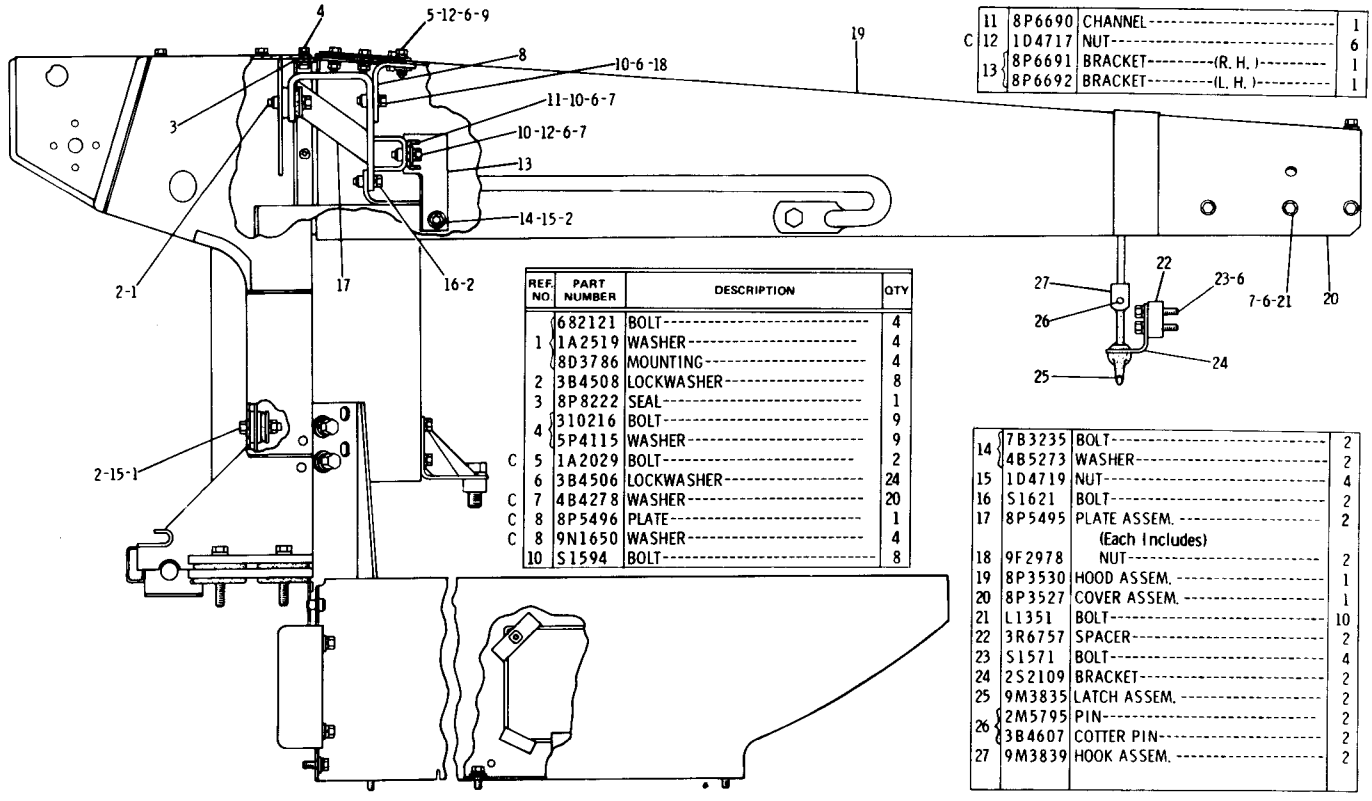

REF. NO.	PART NUMBER	DESCRIPTION	QTY
	682121	BOLT	4
1	1A2519	WASHER	4
	8D3786	MOUNTING	4
2	3B4508	LOCKWASHER	8
3	8P8222	SEAL	1
	310216	BOLT	9
4	5P4115	WASHER	9
C 5	1A2029	BOLT	2
6	3B4506	LOCKWASHER	24
C 7	4B4278	WASHER	20
C 8	8P5496	PLATE	1
C 8	9N1650	WASHER	4
10	S1594	BOLT	8
11	8P6690	CHANNEL	1
C 12	1D4717	NUT	6
13	8P6691	BRACKET—(R. H.)	1
	8P6692	BRACKET—(L. H.)	1
14	7B3235	BOLT	2
	4B5273	WASHER	2
15	1D4719	NUT	4
16	S1621	BOLT	2
17	8P5495	PLATE ASSEM.	2
		(Each Includes)	
18	9F2978	NUT	2
19	8P3530	HOOD ASSEM.	1
20	8P3527	COVER ASSEM.	1
21	L1351	BOLT	10
22	3R6757	SPACER	2
23	S1571	BOLT	4
24	2S2109	BRACKET	2
25	9M3835	LATCH ASSEM.	2
26	2M5795	PIN	2
	3B4607	COTTER PIN	2
27	9M3839	HOOK ASSEM.	2

C INDICATES CHANGE

167273

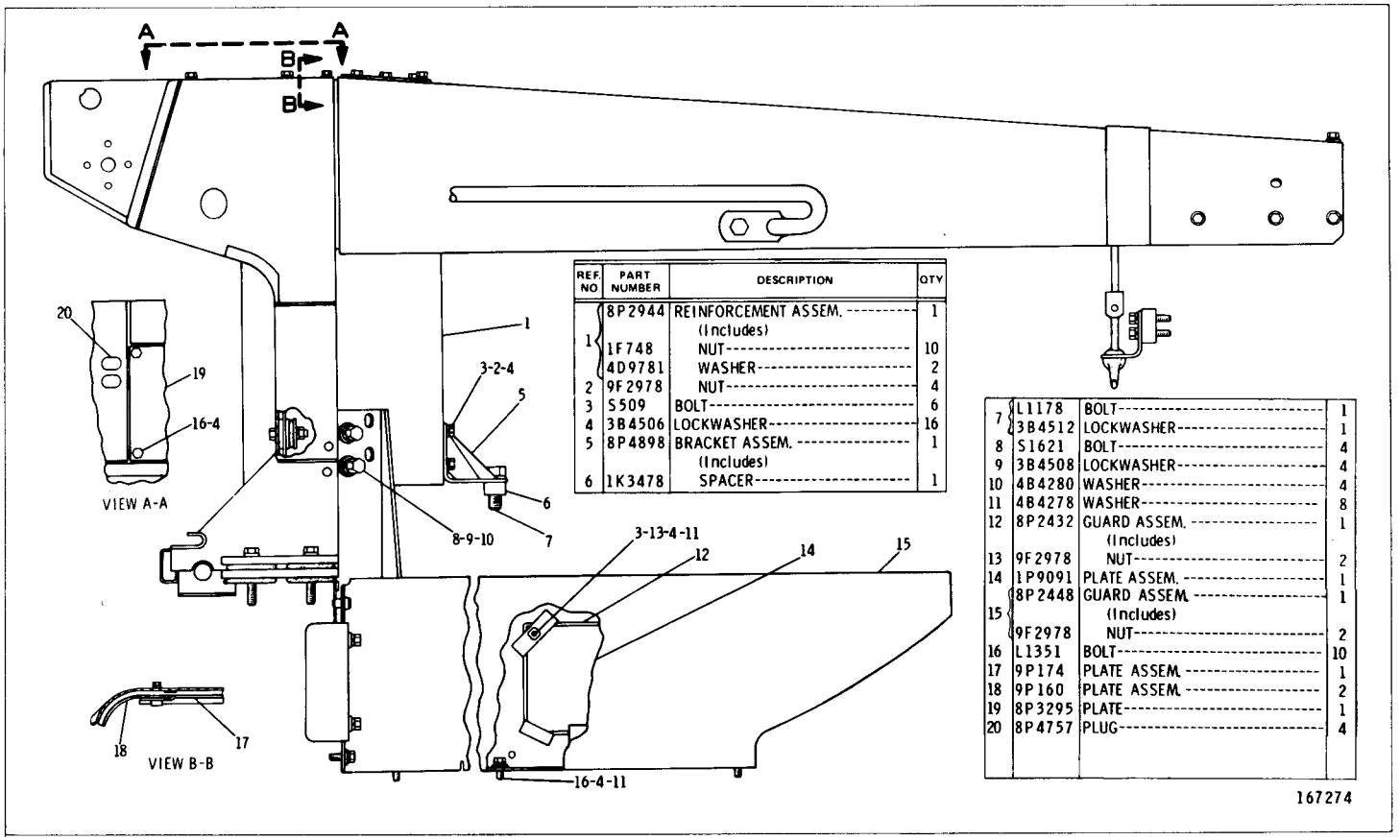

REF NO	PART NUMBER	DESCRIPTION	QTY
1	8P2944	REINFORCEMENT ASSEM. (Includes)	1
	1F748	NUT	10
	4D9781	WASHER	2
2	9F2978	NUT	4
3	S509	BOLT	6
4	3B4506	LOCKWASHER	16
5	8P4898	BRACKET ASSEM. (Includes)	1
6	1K3478	SPACER	1
7	L1178	BOLT	1
	3B4512	LOCKWASHER	1
8	S1621	BOLT	4
9	3B4508	LOCKWASHER	4
10	4B4280	WASHER	4
11	4B4278	WASHER	8
12	8P2432	GUARD ASSEM. (Includes)	1
13	9F2978	NUT	2
14	1P9091	PLATE ASSEM.	1
15	8P2448	GUARD ASSEM. (Includes)	1
	9F2978	NUT	2
16	L1351	BOLT	10
17	9P174	PLATE ASSEM.	1
18	9P160	PLATE ASSEM.	2
19	8P3295	PLATE	1
20	8P4757	PLUG	4

8P4367 HOOD AND DASH GROUP—Part 2 of 3
Serial No. 6X330 to 6X622 inclusive

8P4367 HOOD AND DASH GROUP—Part 3 of 3
Serial No. 6X330 to 6X622 inclusive

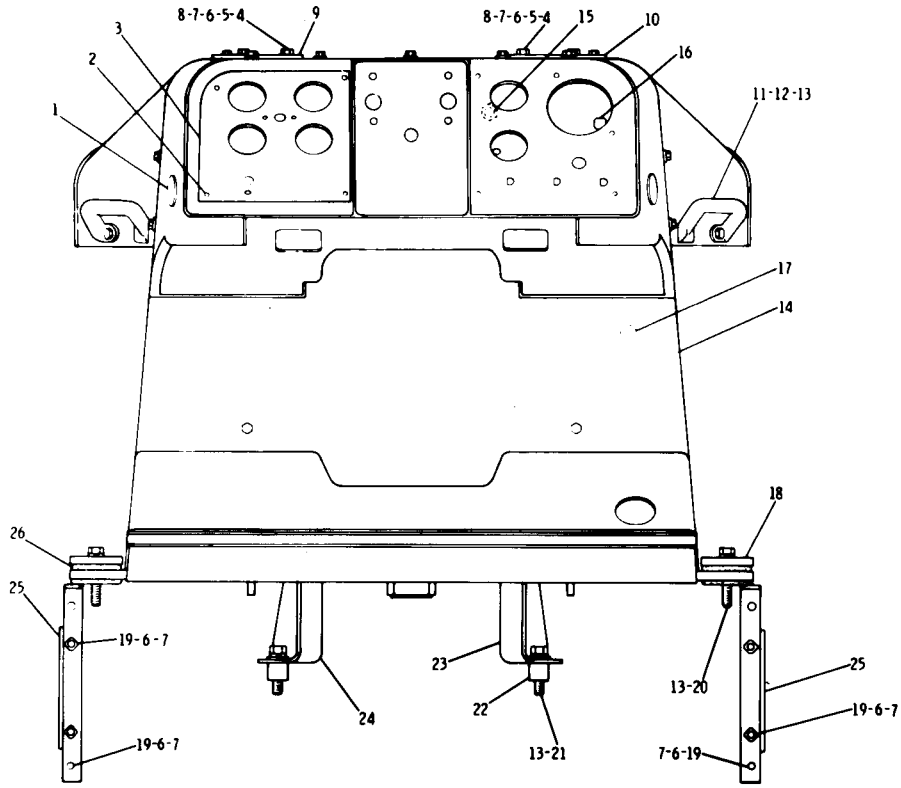

REF. NO	PART NUMBER	DESCRIPTION	QTY
1	4F8711	PLUG	2
2	7B3028	DRIVE SCREW	4
3	8P1860	PANEL	1
4	S509	BOLT	5
5	1D4717	NUT	5
6	3B4506	LOCKWASHER	11
7	4B4278	WASHER	11
8	7K3222	WASHER	5
9	2P9673	COVER (L. H.)	1
10	2P9674	COVER (R. H.)	1
C 11	8P8300	GRAB IRON	2
	S1595	BOLT	2
12	4J4144	WASHER	2
	1D4719	NUT	2
13	3B4508	LOCKWASHER	8
14	8P3332	DASH ASSEM. (Includes)	1
15	1F748	NUT	2
16	9F2978	NUT	12
17	4D9376	BOSS	4
18	8P3185	PLATE	2
19	L1351	BOLT	6
20	L1329	BOLT	4
21	2B947	BOLT	2
	4B4280	WASHER	2
22	1F9341	SPACER	2
23	8P8444	PLATE ASSEM.	1
24	8P8443	PLATE ASSEM.	1
C 25	1S1516	COVER	2
26	8P3595	BUSHING	8

C INDICATES CHANGE

225081

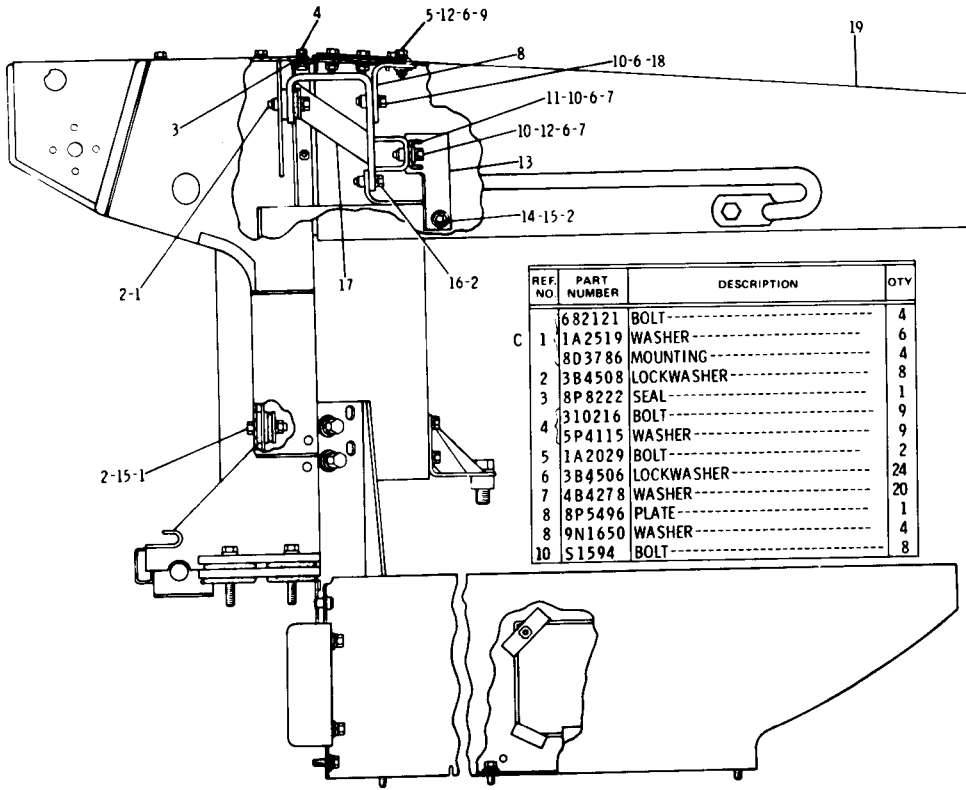

REF. NO	PART NUMBER	DESCRIPTION	QTY
	682121	BOLT	4
C 1	1A2519	WASHER	6
	8D3786	MOUNTING	4
2	3B4508	LOCKWASHER	8
3	8P8222	SEAL	1
4	310216	BOLT	9
	5P4115	WASHER	9
5	1A2029	BOLT	2
6	3B4506	LOCKWASHER	24
7	4B4278	WASHER	20
8	8P5496	PLATE	1
8	9N1650	WASHER	4
10	S1594	BOLT	8

11	8P6690	CHANNEL	1
12	1D4717	NUT	6
13	8P6691	BRACKET-(R. H.)	1
	8P6692	BRACKET-(L. H.)	1

14	7B3235	BOLT	2
	4B5273	WASHER	2
15	1D4719	NUT	4
16	S1621	BOLT	2
17	8P5495	PLATE ASSEM.	2
		(Each Includes)	
18	9F2978	NUT	2
19	8P3530	HOOD ASSEM.	1
20	8P3527	COVER ASSEM.	1
21	L1351	BOLT	10
22	3R6757	SPACER	2
23	S1571	BOLT	4
24	2S2109	BRACKET	2
25	9M3835	LATCH ASSEM.	2
26	2M5795	PIN	2
	3B4607	COTTER PIN	2
27	9M3839	HOOK ASSEM.	2

C INDICATES CHANGE

224981

8P4367 HOOD AND DASH GROUP—Part 1 of 3
Serial No. 6X623 to 6X639 inclusive

8P4367 HOOD AND DASH GROUP—Part 2 of 3
Serial No. 6X623 to 6X639 inclusive

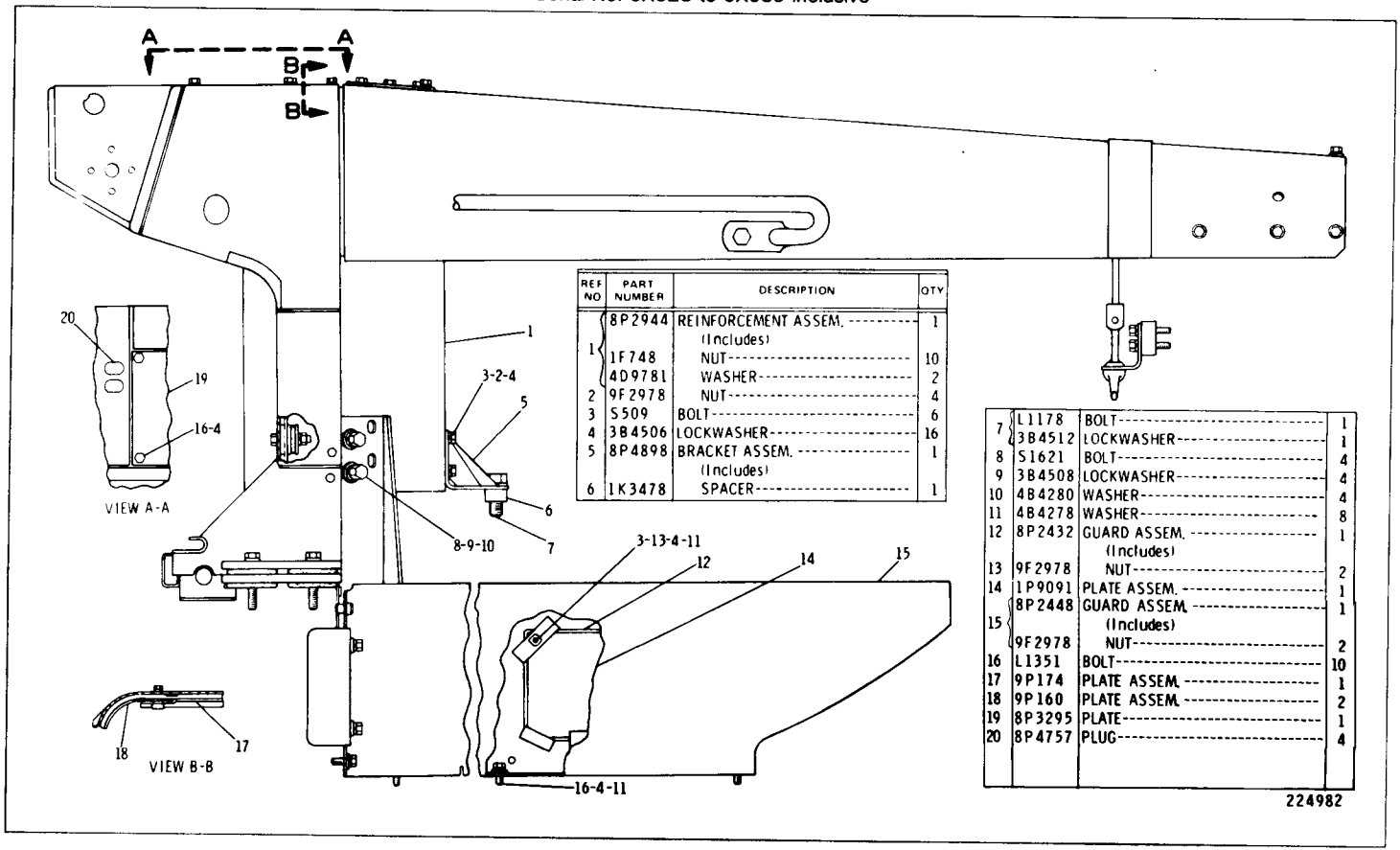

REF NO	PART NUMBER	DESCRIPTION	QTY
1	8P2944	REINFORCEMENT ASSEM. (Includes)	1
	1F748	NUT	10
	4D9781	WASHER	2
2	9F2978	NUT	4
3	S509	BOLT	6
4	3B4506	LOCKWASHER	16
5	8P4898	BRACKET ASSEM. (Includes)	1
6	1K3478	SPACER	1
7	L1178	BOLT	1
	3B4512	LOCKWASHER	1
8	S1621	BOLT	4
9	3B4508	LOCKWASHER	4
10	4B4280	WASHER	4
11	4B4278	WASHER	8
12	8P2432	GUARD ASSEM. (Includes)	1
13	9F2978	NUT	2
14	1P9091	PLATE ASSEM.	1
15	8P2448	GUARD ASSEM. (Includes)	1
	9F2978	NUT	2
16	L1351	BOLT	10
17	9P174	PLATE ASSEM.	1
18	9P160	PLATE ASSEM.	2
19	8P3295	PLATE	1
20	8P4757	PLUG	4

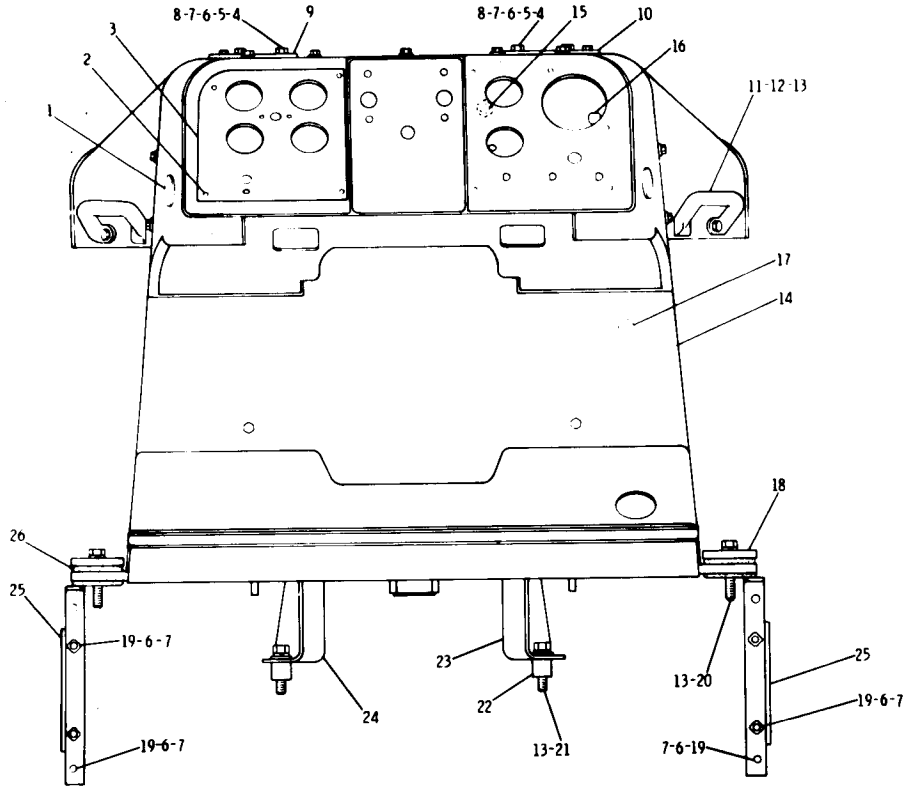

	REF NO	PART NUMBER	DESCRIPTION	QTY
	1	4F8711	PLUG	2
	2	7B3028	DRIVE SCREW	4
	3	8P1860	PANEL	1
	4	S509	BOLT	5
	5	1D4717	NUT	5
	6	3B4506	LOCKWASHER	11
	7	4B4278	WASHER	11
	8	7K3222	WASHER	5
	9	2P9673	COVER (L. H.)	1
	10	2P9674	COVER (R. H.)	1
C	11	7G2819	HANDLE	2
	12	S1595	BOLT	2
		4J4144	WASHER	2
		1D4719	NUT	2
	13	3B4508	LOCKWASHER	8
	14	8P3332	DASH ASSEM. (Includes)	1
	15	1F748	NUT	2
C	16	9F2978	NUT	26
	17	4D9376	BOSS	4
	18	8P3185	PLATE	2
	19	L1351	BOLT	6
	20	L1329	BOLT	4
	21	2B947	BOLT	2
		4B4280	WASHER	2
	22	1F9341	SPACER	2
	23	8P8444	PLATE ASSEM.	1
	24	8P8443	PLATE ASSEM.	1
C	25	1S1516	COVER	2
	26	8P3595	BUSHING	8

C INDICATES CHANGE

174299

8P4367 HOOD AND DASH GROUP—Part 3 of 3
Serial No. 6X623 to 6X639 inclusive

8P4367 HOOD AND DASH GROUP—Part 1 of 3
Serial No. 6X640—Up

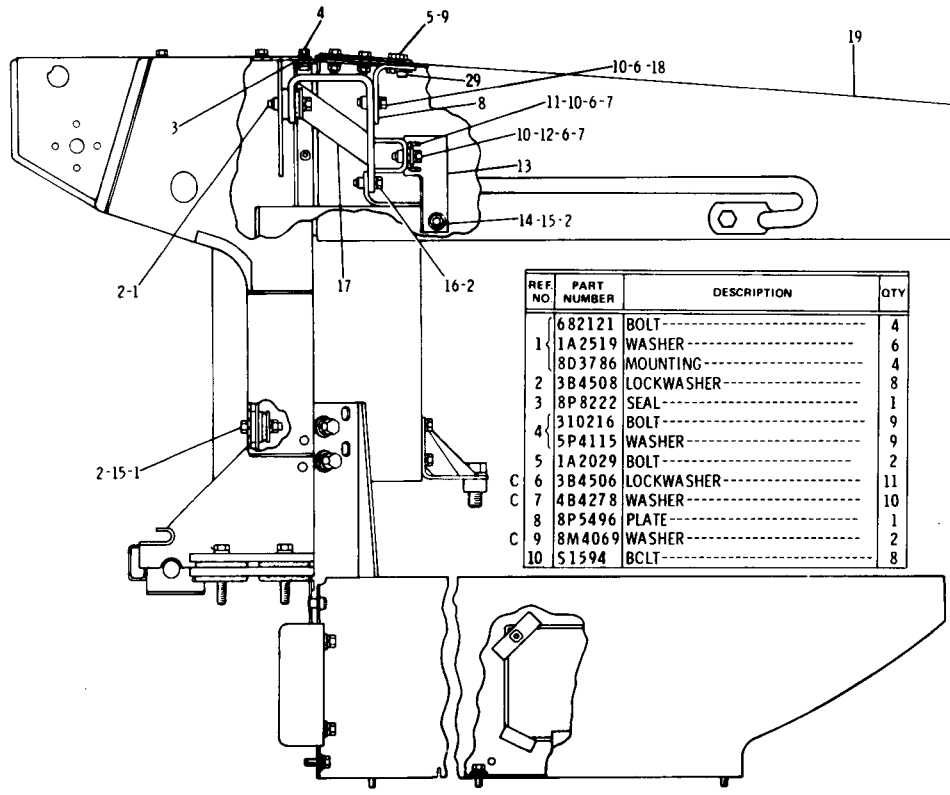

REF. NO.	PART NUMBER	DESCRIPTION	QTY
1	682121	BOLT	4
	1A2519	WASHER	6
	8D3786	MOUNTING	4
2	3B4508	LOCKWASHER	8
3	8P8222	SEAL	1
4	310216	BOLT	9
	5P4115	WASHER	9
5	1A2029	BOLT	2
C 6	3B4506	LOCKWASHER	11
C 7	4B4278	WASHER	10
8	8P5496	PLATE	1
C 9	8M4069	WASHER	2
10	S1594	BOLT	8
11	8P6690	CHANNEL	1
C 12	1D4717	NUT	4
13	8P6691	BRACKET—(R. H.)	1
	8P6692	BRACKET—(L. H.)	1
14	7B3235	BOLT	2
	4B5273	WASHER	2
15	1D4719	NUT	4
16	S1621	BOLT	2
17	8P5495	PLATE ASSEM. (Each Includes)	2
18	9F2978	NUT	2
19	8P3530	HOOD ASSEM.	1
20	8P3527	COVER ASSEM.	1
21	L1351	BOLT	10
22	3R6757	SPACER	2
23	S1571	BOLT	4
24	2S2109	BRACKET	2
25	9M3835	LATCH ASSEM.	2
26	2M5795	PIN	2
	3B4607	COTTER PIN	2
27	9M3839	HOOK ASSEM.	2
C 28	5P1075	WASHER	10
C 29	9G1237	STRIP ASSEM.	1

C INDICATES CHANGE

224984

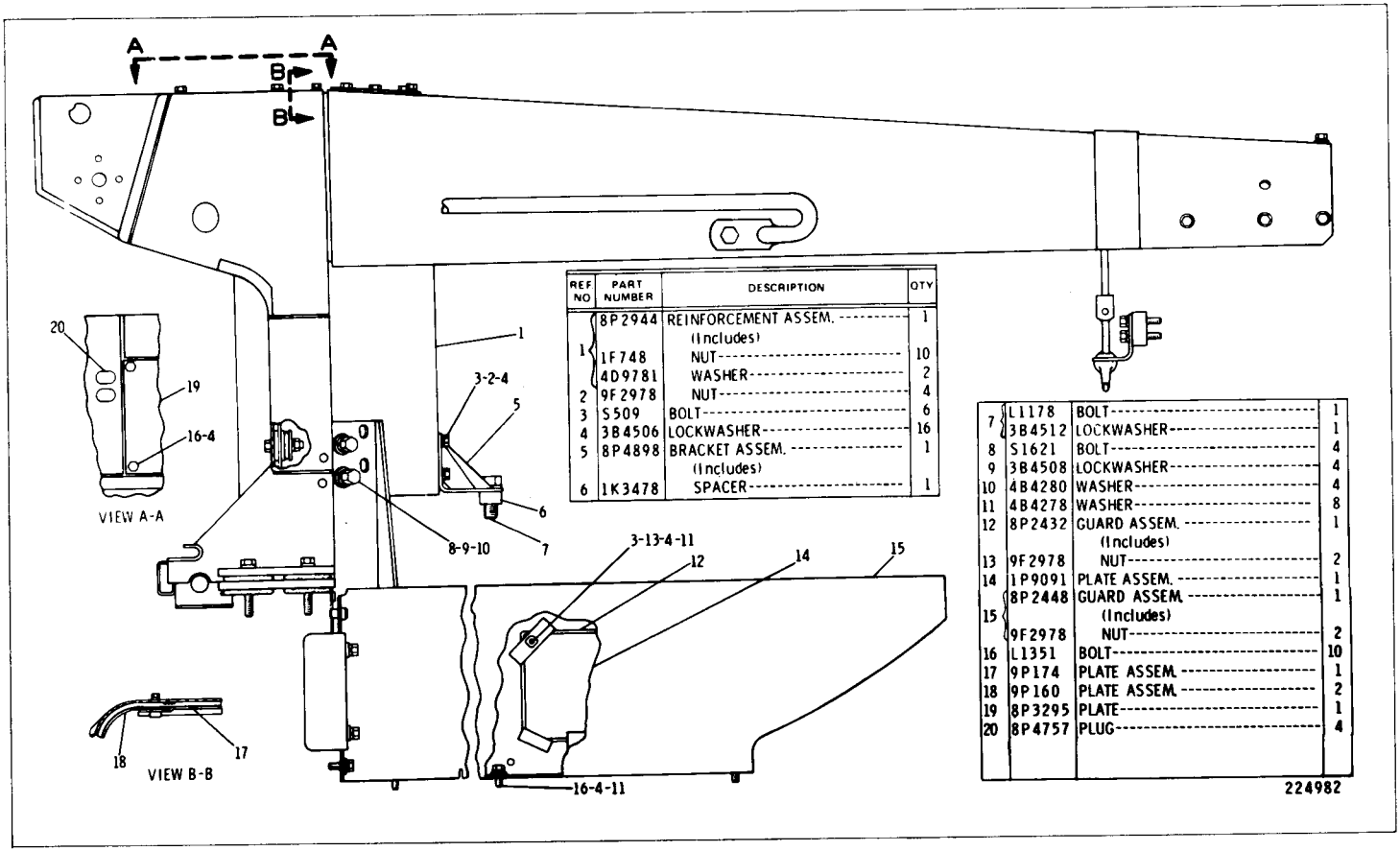

REF NO	PART NUMBER	DESCRIPTION	QTY
1	8P2944	REINFORCEMENT ASSEM. (Includes)	1
	1F748	NUT	10
	4D9781	WASHER	2
2	9F2978	NUT	4
3	S509	BOLT	6
4	3B4506	LOCKWASHER	16
5	8P4898	BRACKET ASSEM. (Includes)	1
6	1K3478	SPACER	1
7	L1178	BOLT	1
	3B4512	LOCKWASHER	1
8	S1621	BOLT	4
9	3B4508	LOCKWASHER	4
10	4B4280	WASHER	4
11	4B4278	WASHER	8
12	8P2432	GUARD ASSEM. (Includes)	1
13	9F2978	NUT	2
14	1P9091	PLATE ASSEM.	1
15	8P2448	GUARD ASSEM. (Includes)	1
	9F2978	NUT	2
16	L1351	BOLT	10
17	9P174	PLATE ASSEM.	1
18	9P160	PLATE ASSEM.	2
19	8P3295	PLATE	1
20	8P4757	PLUG	4

224982

8P4367 DASH AND HOOD GROUP—Part 2 of 3
Serial No. 6X640—Up

8P4367 DASH AND HOOD GROUP—Part 3 of 3
Serial No. 6X640—Up

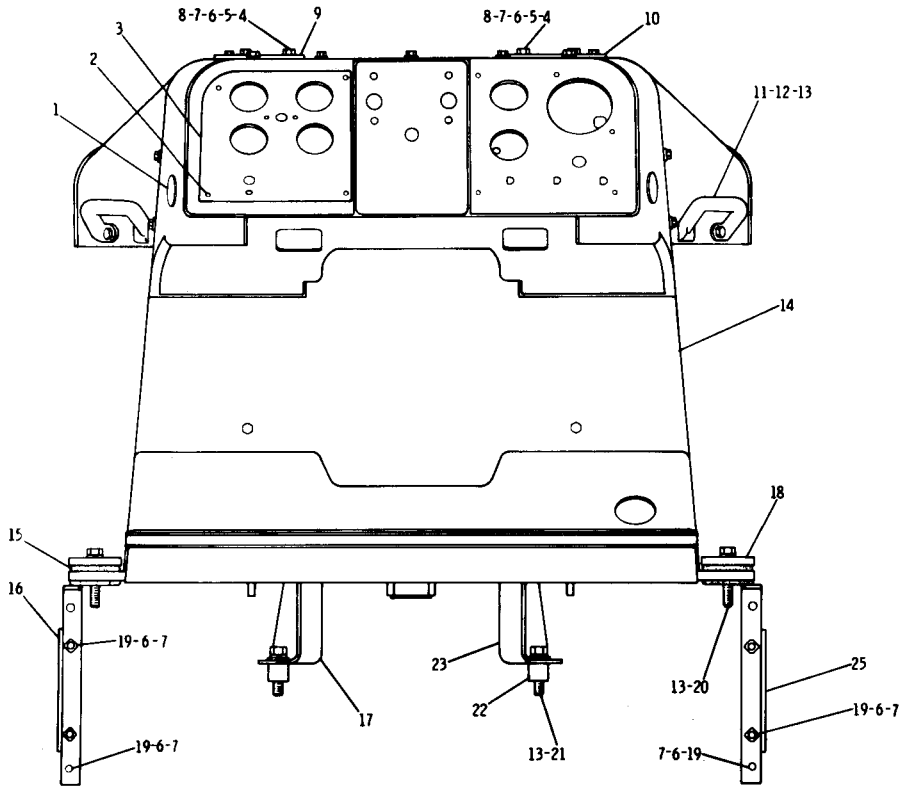

REF. NO.	PART NUMBER	DESCRIPTION	QTY
1	4F8711	PLUG	2
2	7B3028	DRIVE SCREW	4
3	8P1860	PANEL	1
4	S509	BOLT	5
5	1D4717	NUT	5
6	3B4506	LOCKWASHER	11
7	4B4278	WASHER	11
8	7K3222	WASHER	5
9	2P9673	COVER (L.H.)	1
10	2P9674	COVER (R.H.)	1
11	7G2819	HANDLE	2
12	S1595	BOLT	2
	4J4144	WASHER	2
	1D4719	NUT	2
13	3B4508	LOCKWASHER	8
C 14	7G9737	DASH ASSEM.	1
15	8P3595	BUSHING	8
C 16	1S1516	COVER	2
17	8P8443	PLATE ASSEM.	1
18	8P3185	PLATE	2
19	L1351	BOLT	6
20	L1329	BOLT	4
21	2B947	BOLT	2
	4B4280	WASHER	2
22	1F9341	SPACER	2
23	8P8444	PLATE ASSEM.	1

C INDICATES CHANGE

174300

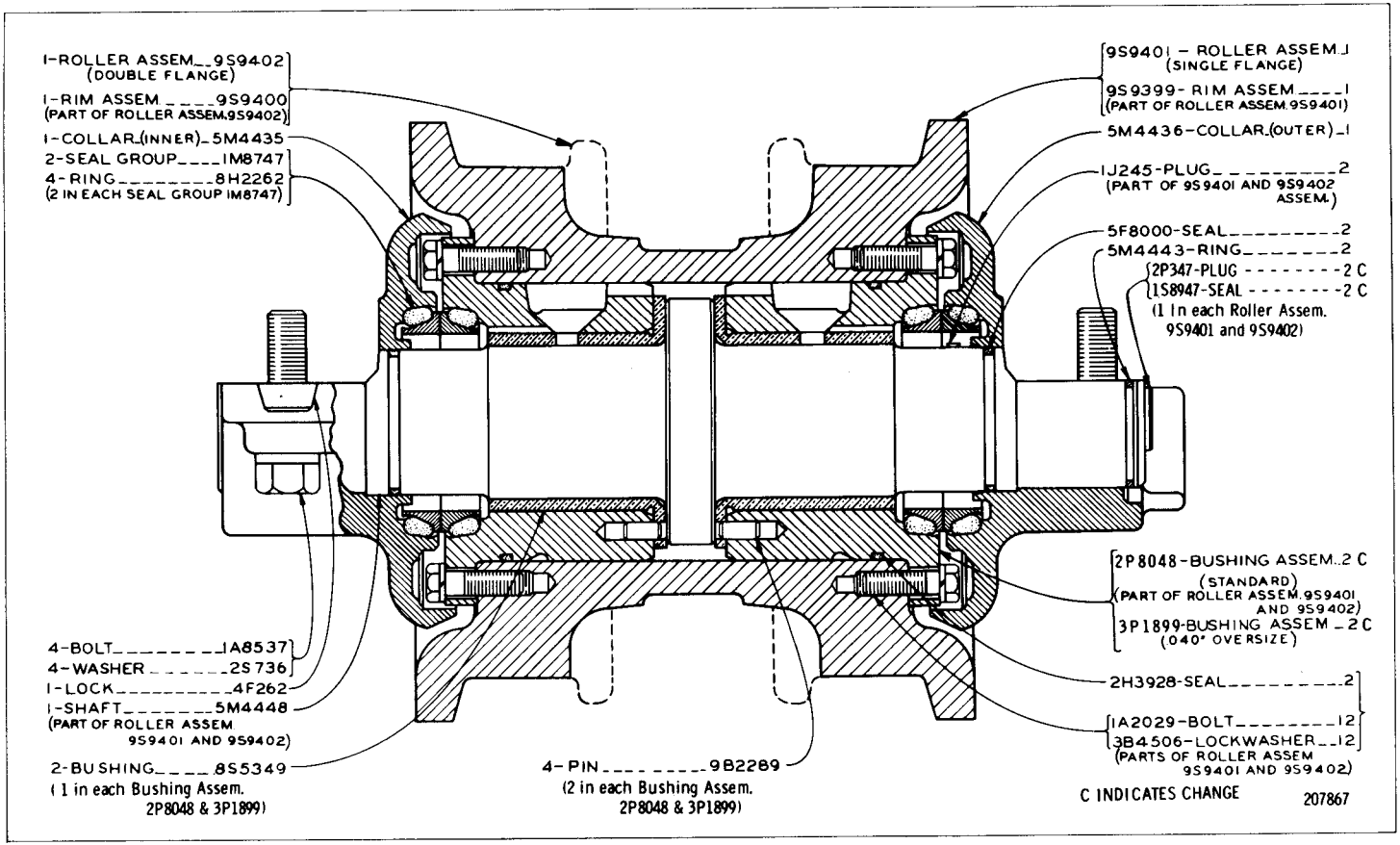

9S9403 TRACK ROLLER GROUP—Single Flange—6 Required
9S9404 TRACK ROLLER GROUP—Double Flange—8 Required
Serial No. 6X1 to 6X818 inclusive

7G421 TRACK ROLLER GROUP—Single Flange—6 Required
Serial No. 6X819—Up

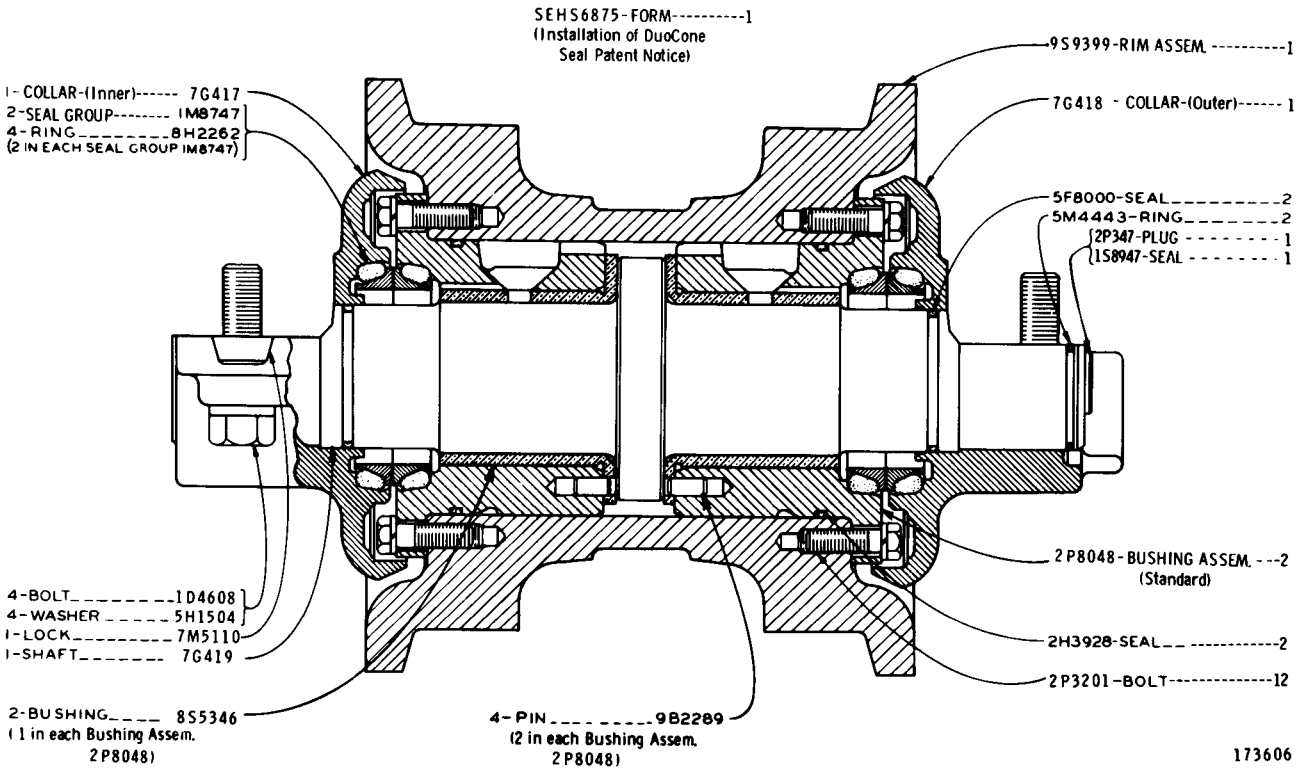

7G423 TRACK ROLLER GROUP—Double Flange—8 Required
Serial No. 6X819—Up

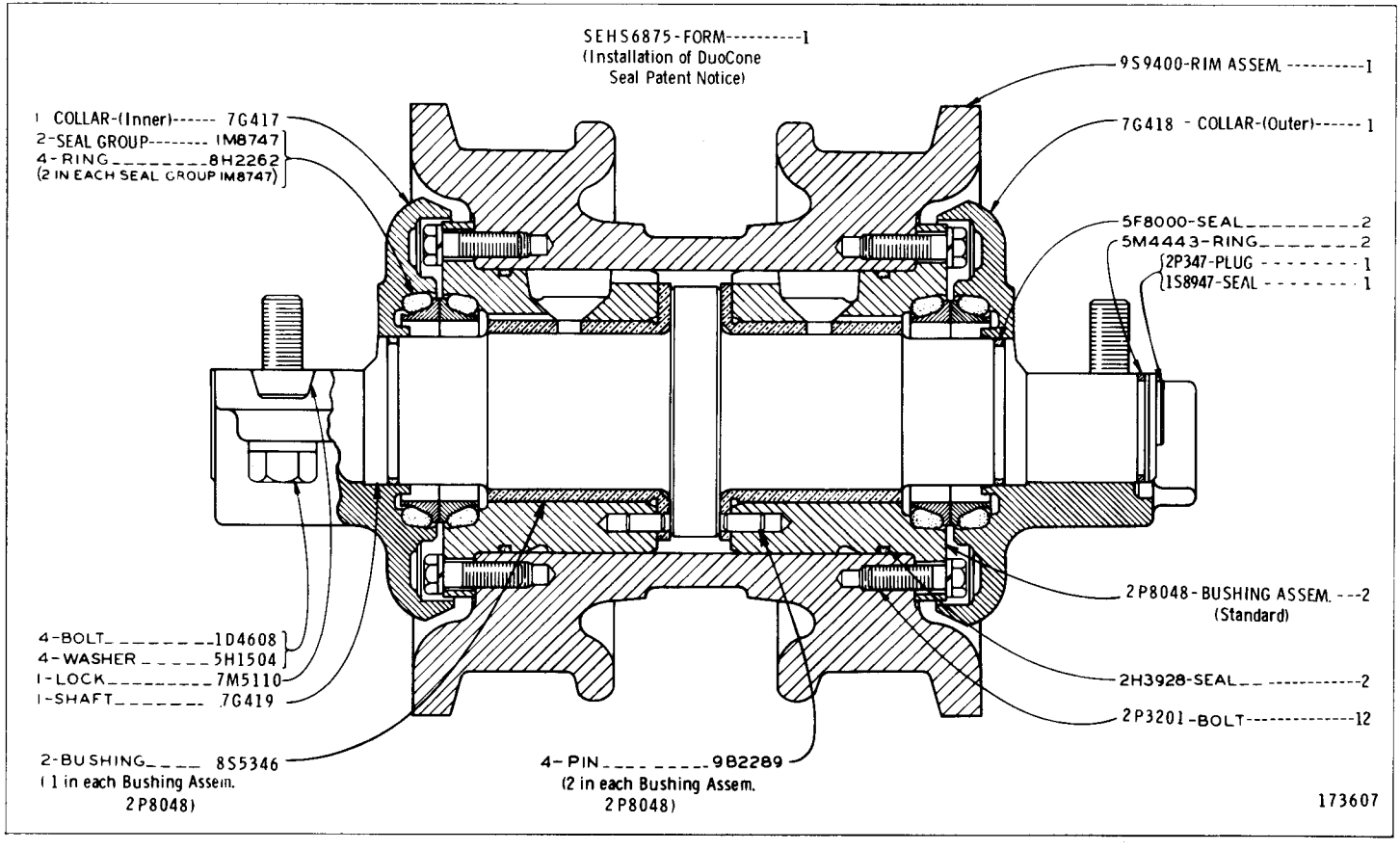

REF. NO.	PART NUMBER	DESCRIPTION	QTY
1	9S8320	ROLLER ASSEM.	1
2	9S3567	COLLAR ASSEM.	1
		(Includes)	
3	1M4291	DOWEL	2
4	9S3565	SHAFT	1
5	1H9696	SEAL	1
6	1M7914	RING	1
7	1M8747	SEAL GROUP	1
		(Includes)	
8	8H2262	SEAL	2
9	9S3582	CONE	2
10	9S3581	CUP	2
C 11	8P6188	PLATE	1
12	2H6338	SEAL	1
13	T703	BOLT	2
	T329	LOCK	1
14	2P347	PLUG	1
15	1S8947	SEAL	1
16	S1594	BOLT	3
	3B4506	LOCKWASHER	3
17	5M2043	COVER	1

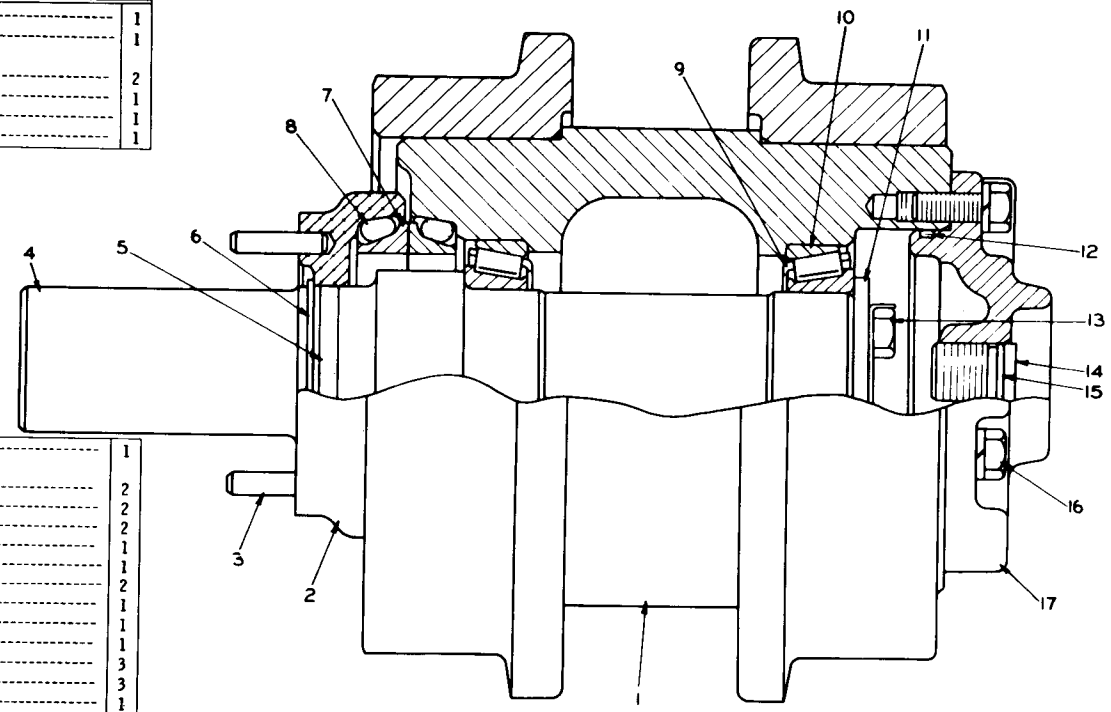

C INDICATES CHANGE 220503

9S2730 TRACK CARRIER ROLLER GROUP—4 Required

5A7786 TRACK ROLLER FRAME GROUP
Serial No. 6X1 to 6X818 inclusive

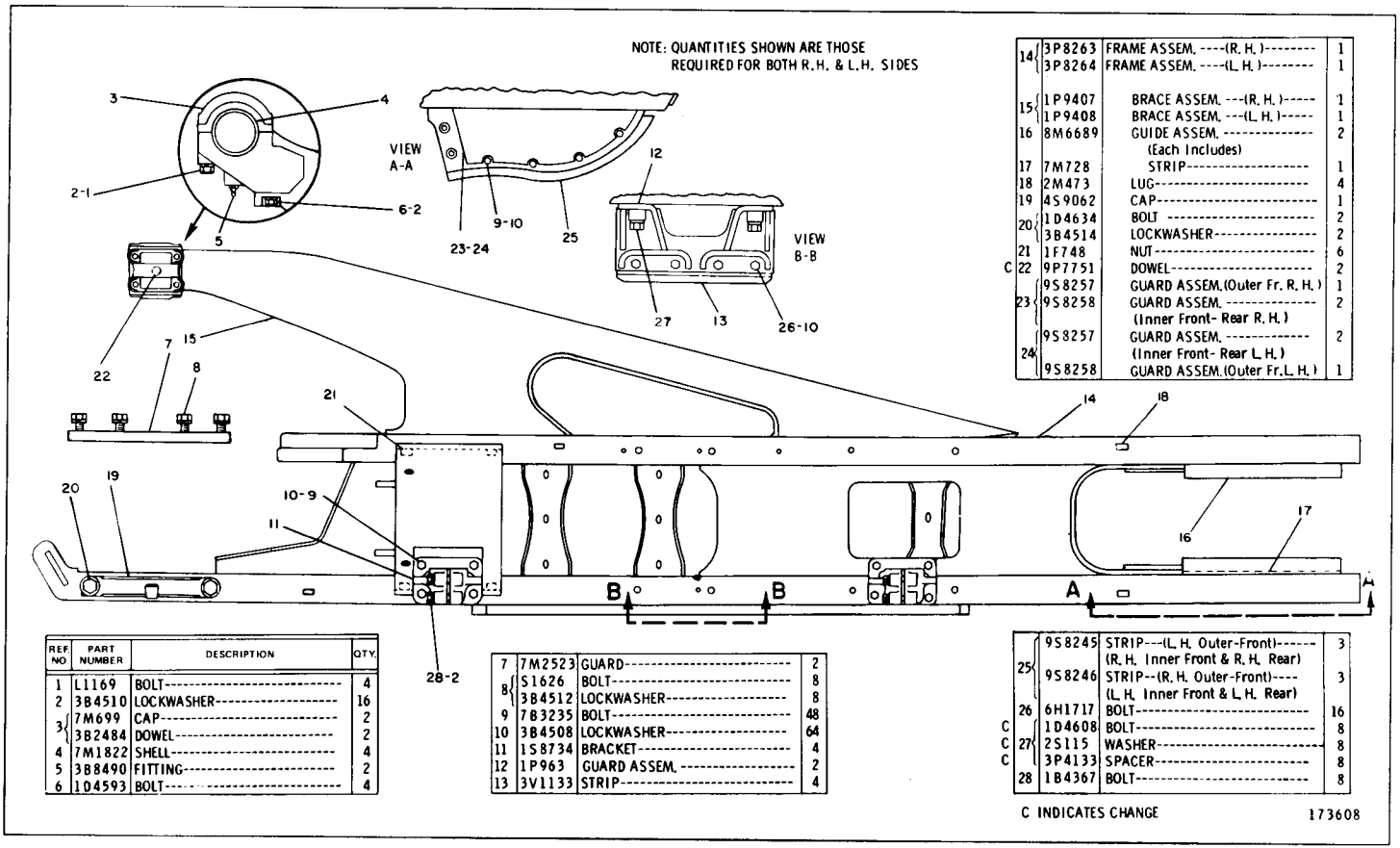

14	3P8263	FRAME ASSEM. ----(R. H.)--------	1
	3P8264	FRAME ASSEM. ----(L. H.)--------	1
15	1P9407	BRACE ASSEM. ---(R. H.)-----	1
	1P9408	BRACE ASSEM. ---(L. H.)-----	1
16	8M6689	GUIDE ASSEM. ---------- (Each Includes)	2
17	7M728	STRIP----------	1
18	2M473	LUG----------	4
19	4S9062	CAP----------	1
20	1D4634	BOLT ----------	2
	3B4514	LOCKWASHER----------	2
21	1F748	NUT----------	6
C 22	9P7751	DOWEL----------	2
23	9S8257	GUARD ASSEM.(Outer Fr. R. H.)	1
	9S8258	GUARD ASSEM. ---------- (Inner Front- Rear R. H.)	2
24	9S8257	GUARD ASSEM. ---------- (Inner Front- Rear L. H.)	2
	9S8258	GUARD ASSEM.(Outer Fr.L. H.)	1

REF. NO.	PART NUMBER	DESCRIPTION	QTY.
1	L1169	BOLT----------	4
2	3B4510	LOCKWASHER----------	16
3	7M699	CAP----------	2
	3B2484	DOWEL----------	2
4	7M1822	SHELL----------	4
5	3B8490	FITTING----------	2
6	1D4593	BOLT----------	4

7	7M2523	GUARD----------	2
8	S1626	BOLT----------	8
	3B4512	LOCKWASHER----------	8
9	7B3235	BOLT----------	48
10	3B4508	LOCKWASHER----------	64
11	1S8734	BRACKET----------	4
12	1P963	GUARD ASSEM. ----------	2
13	3V1133	STRIP----------	4

25	9S8245	STRIP---(L. H. Outer-Front)------ (R. H. Inner Front & R. H. Rear)	3
	9S8246	STRIP--(R. H. Outer-Front)---- (L. H. Inner Front & L. H. Rear)	3
26	6H1717	BOLT----------	16
C	1D4608	BOLT----------	8
C 27	2S115	WASHER----------	8
C	3P4133	SPACER----------	8
28	1B4367	BOLT----------	8

C INDICATES CHANGE

173608

7G8571 TRACK ROLLER FRAME GROUP
Serial No. 6X819—Up

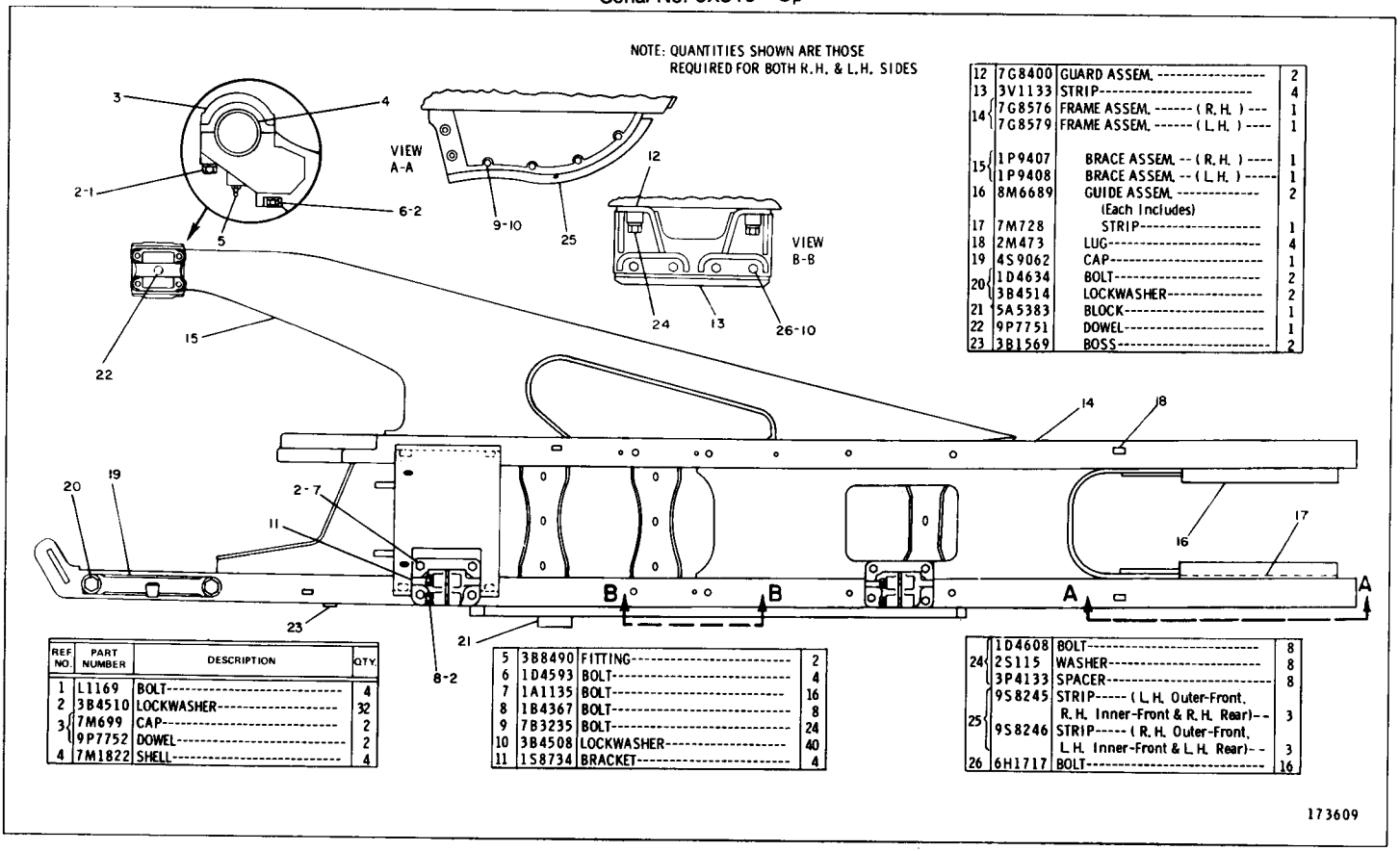

REF NO.	PART NUMBER	DESCRIPTION	QTY.
1	L1169	BOLT	4
2	3B4510	LOCKWASHER	32
3	7M699	CAP	2
	9P7752	DOWEL	2
4	7M1822	SHELL	4
5	3B8490	FITTING	2
6	1D4593	BOLT	4
7	1A1135	BOLT	16
8	1B4367	BOLT	8
9	7B3235	BOLT	24
10	3B4508	LOCKWASHER	40
11	1S8734	BRACKET	4
12	7G8400	GUARD ASSEM.	2
13	3V1133	STRIP	4
14	7G8576	FRAME ASSEM. (R.H.)	1
	7G8579	FRAME ASSEM. (L.H.)	1
15	1P9407	BRACE ASSEM. (R.H.)	1
	1P9408	BRACE ASSEM. (L.H.)	1
16	8M6689	GUIDE ASSEM. (Each Includes)	2
17	7M728	STRIP	1
18	2M473	LUG	4
19	4S9062	CAP	1
20	1D4634	BOLT	2
	3B4514	LOCKWASHER	2
21	5A5383	BLOCK	1
22	9P7751	DOWEL	1
23	3B1569	BOSS	2
24	1D4608	BOLT	8
	2S115	WASHER	8
	3P4133	SPACER	8
25	9S8245	STRIP (L.H. Outer-Front, R.H. Inner-Front & R.H. Rear)	3
	9S8246	STRIP (R.H. Outer-Front, L.H. Inner-Front & L.H. Rear)	3
26	6H1717	BOLT	16

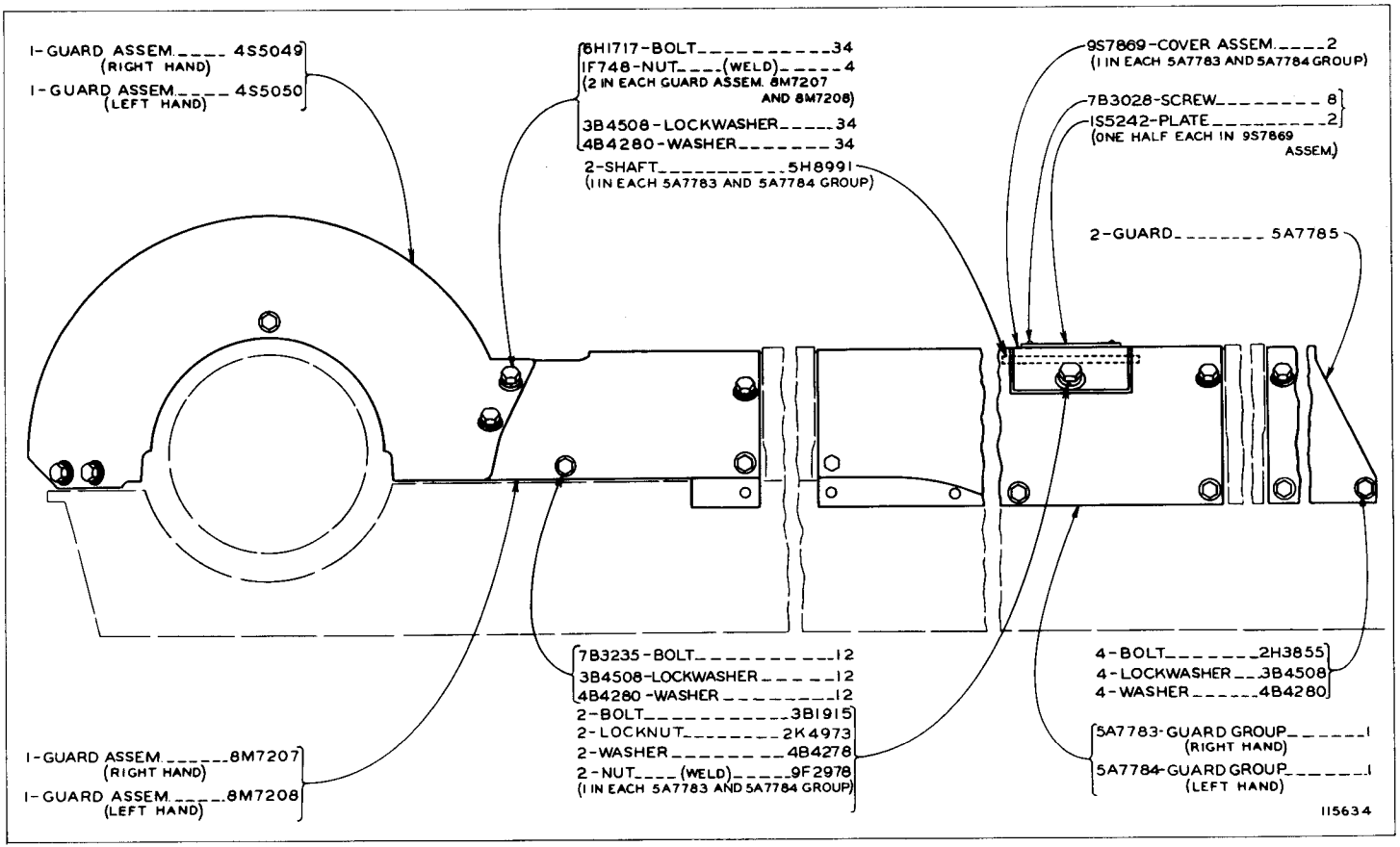

5A7778 TRACK ROLLER FRAME GUARD GROUP
Note: Quantities shown are those required for both R.H. and L.H. sides

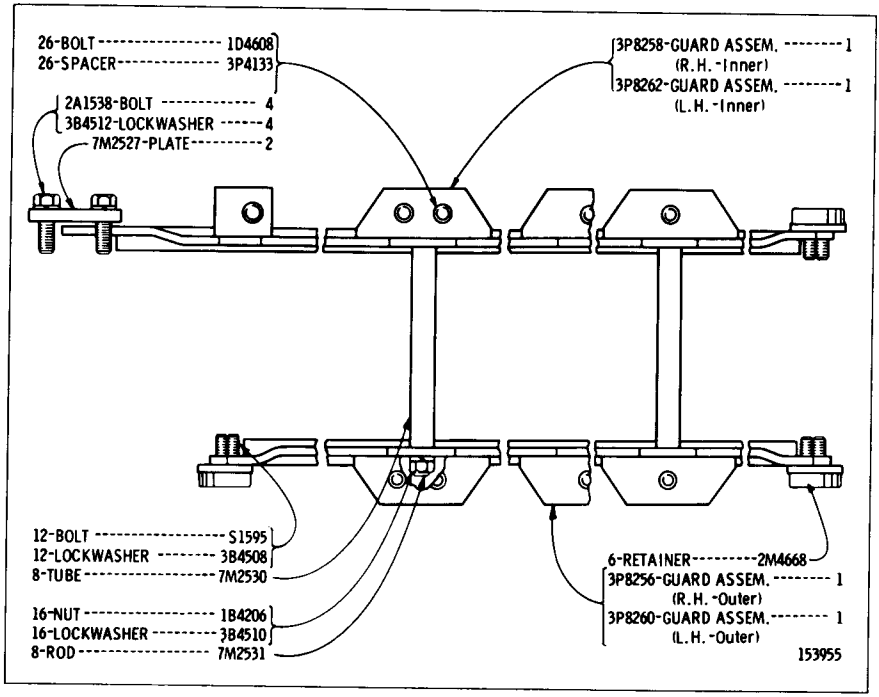

3P8252 TRACK ROLLER GUARD GROUP
Serial No. 6X1 to 6X818 inclusive
AN ATTACHMENT

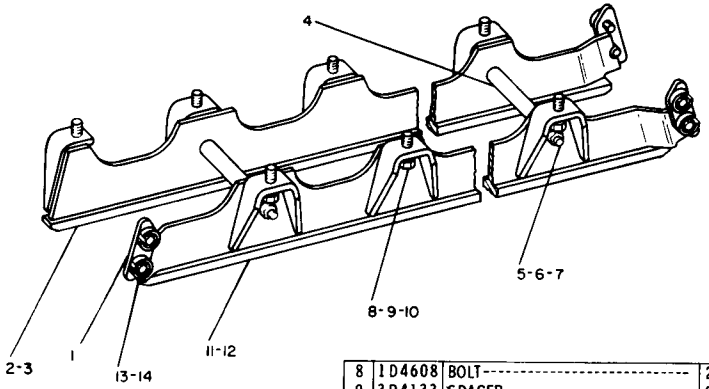

REF. NO.	PART NUMBER	DESCRIPTION	QTY.
1	2M4668	RETAINER	6
2	7G8527	GUARD ASSEM. ---(Inner R. H.)--	1
3	7G8532	GUARD ASSEM. ---(Inner L. H.)--	1
4	7M2530	TUBE	8
5	7M2531	ROD	8
6	1B4206	NUT	16
7	3B4510	LOCKWASHER	16
8	1D4608	BOLT	26
9	3P4133	SPACER	26
10	2S115	WASHER	26
11	7G8533	GUARD ASSEM. ---(outer R.H.)---	1
12	7G8528	GUARD ASSEM. ---(outer L.H.)---	1
13	S1595	BOLT	12
14	3B4508	LOCKWASHER	12

175003

7G8529 TRACK ROLLER GUARD GROUP
Serial No. 6X819—Up
AN ATTACHMENT

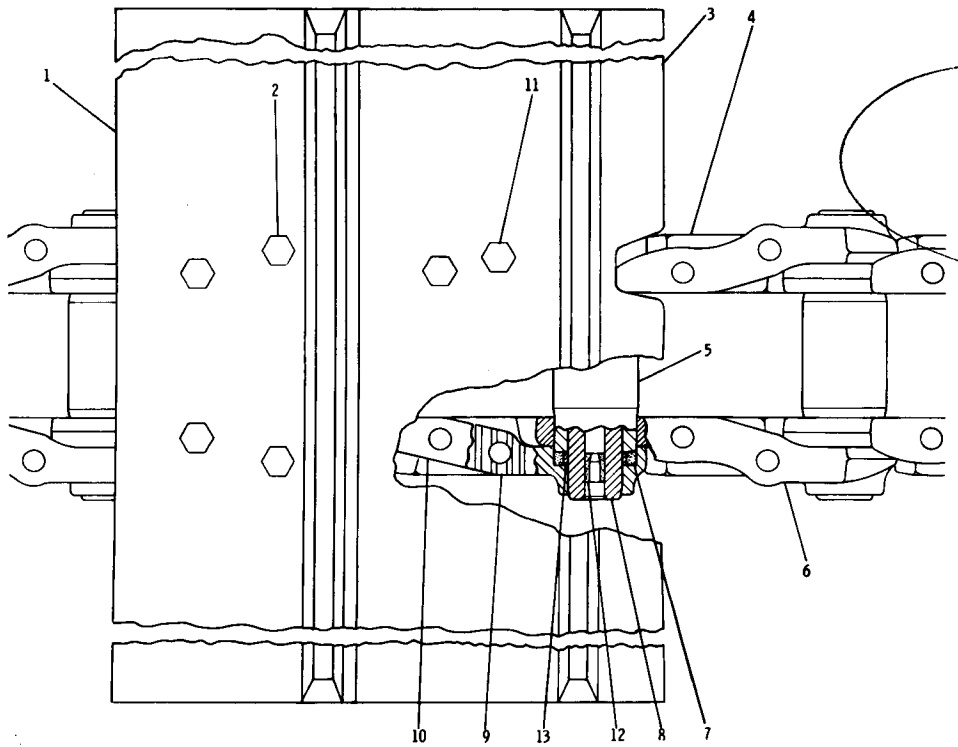

REF. NO.	PART NUMBER	DESCRIPTION	QTY
1	1P2062	SHOE	40
2	1S1859	BOLT	160
	1S1860	NUT	160
3	3P1132	SHOE-(master)	1
4	3P1110	LINK ASSEM. (Includes)	1
	3P1113	LINK-(L. H.)	40
5	3P1109	BUSHING	41
6	3P1112	LINK-(R. H.)	40
7	3P1107	SEAL ASSEM.	82
8	3P1108	PIN	41
9	3P1114	LINK-(master) (R. H. -Pin End)	1
	3P1115	LINK-(master) (L. H. -Pin End)	1
10	3P1116	LINK-(master) (R. H. -Bushing End)	1
	3P1117	LINK-(master) (L. H. -Bushing End)	1
11	9S1838	BOLT	4
12	3P1103	STOPPER	41
	3P3080	PLUG	41
13	3P1104	RING	82

3P1151 TRACK GROUP—36.50" Grouser Shoe—2 Required—Sealed and Lubricated

3P1150 TRACK GROUP—36.50" LGP Shoe—2 Required—Sealed and Lubricated
AN ATTACHMENT

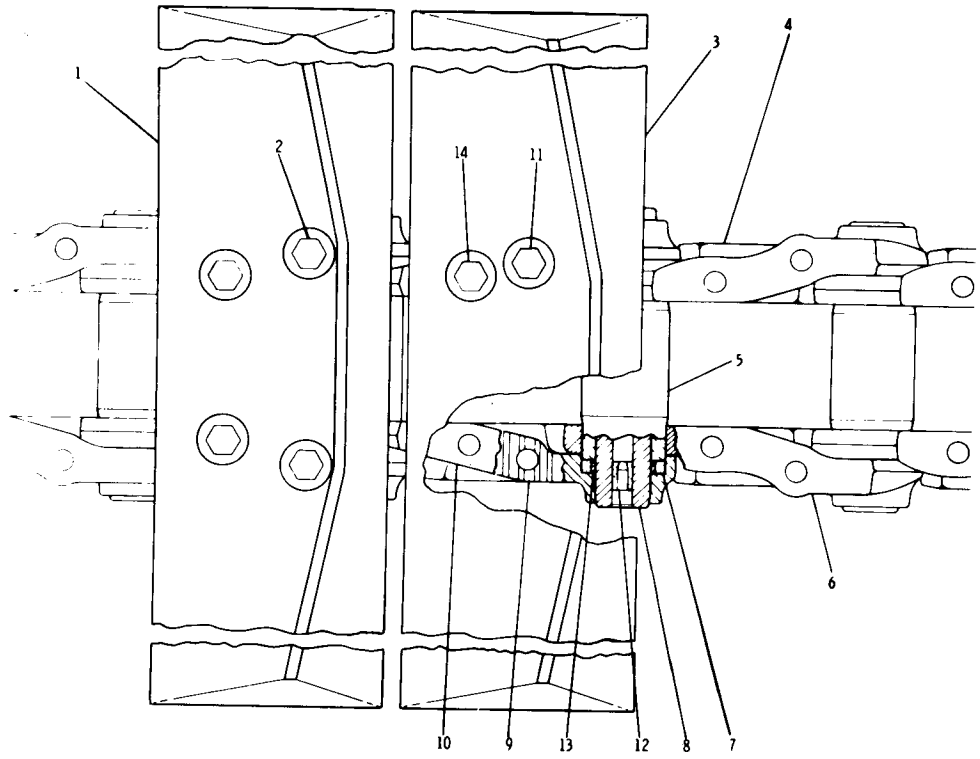

	REF. NO.	PART NUMBER	DESCRIPTION	QTY
	1	3P1134	SHOE	40
C		5A7524	BOLT—90.06 mm(3.90 in.) long	80
	2	1S1859	BOLT—54.61 mm(2.15 in.) long	80
C		1S1860	NUT	160
	3	3P1133	SHOE—(master)	1
	4	3P1119	LINK ASSEM. (Includes)	1
		3P1113	LINK—(L. H.)	40
	5	3P1109	BUSHING	41
	6	3P1112	LINK—(R. H.)	40
C	7	3P1107	SEAL ASSEM.	82
	8	3P1108	PIN	41
	9	3P1114	LINK—(master) (R. H. -PIN END)	1
		3P1115	LINK—(master) (L. H. -PIN END)	1
		3P1116	LINK—(master) (R. H. -BUSHING END)	1
	10	3P1117	LINK—(master) (L. H. -BUSHING END)	1
	11	3P1111	BOLT—138.93 mm(5.47 in.) long	2
	12	3P1103	STOPPER	41
		3P3080	PLUG	41
	13	3P1104	RING	82
	14	8S1838	BOLT—107.18 mm(4.22 in.) long	2

C INDICATES CHANGE

222017

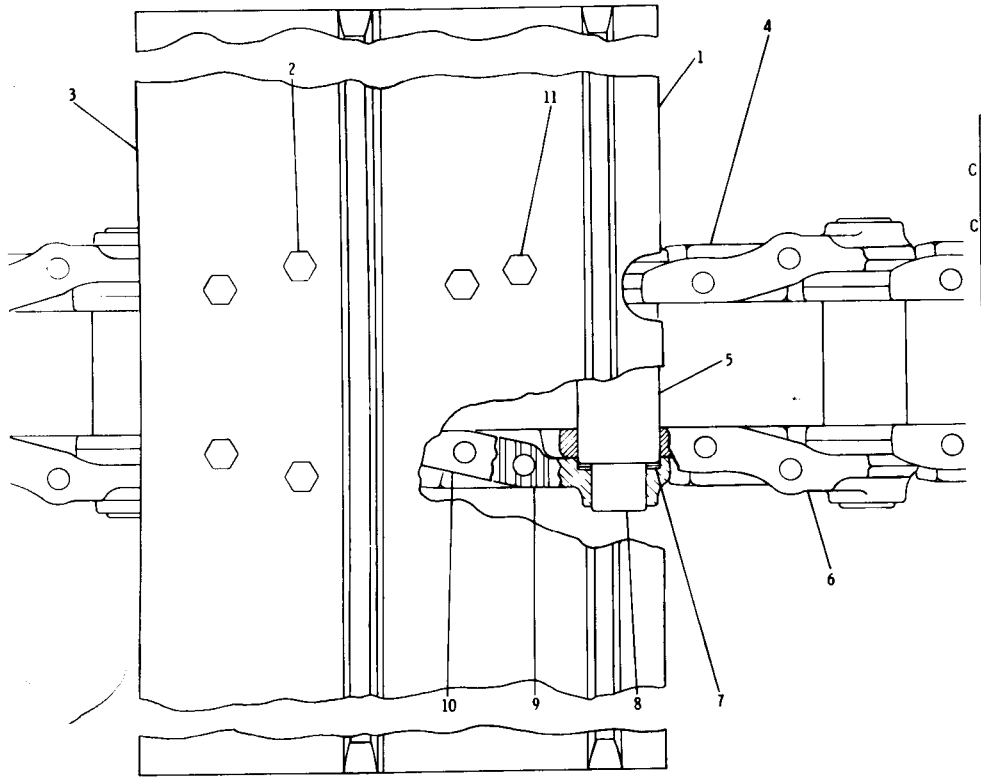

	REF. NO.	PART NUMBER	DESCRIPTION	QTY
C	1	3P1132	SHOE--------(master)----------	1
	2	1S1859	BOLT----------	160
		1S1860	NUT----------	160
C	3	1P2062	SHOE----------	40
	4	3P5927	LINK ASSEM.---------- (Includes)	1
		3P1113	LINK----------(L. H.)---------	40
	5	4M5991	BUSHING----------	41
	6	3P1112	LINK----------(R. H.)---------	40
	7	8M7231	SEAL----------	164
	8	4M5989	PIN----------	41
	9	3P1114	LINK---------(master)-------- (R. H. -Pin End)	1
		3P1115	LINK---------(master)-------- (L. H. -Pin End)	1
	10	3P1116	LINK---------(master)-------- (R. H. -Bushing End)	1
		3P1117	LINK---------(master)-------- (L. H. -Bushing End)	1
	11	9S1838	BOLT----------	4

C INDICATES CHANGE

157690

3P1101 TRACK GROUP—36.50" Grouser Shoe—2 Required—Sealed Non-Lubricated
AN ATTACHMENT

3P1102 TRACK GROUP—36.50" LGP Shoe—Sealed Non-Lubricated
AN ATTACHMENT

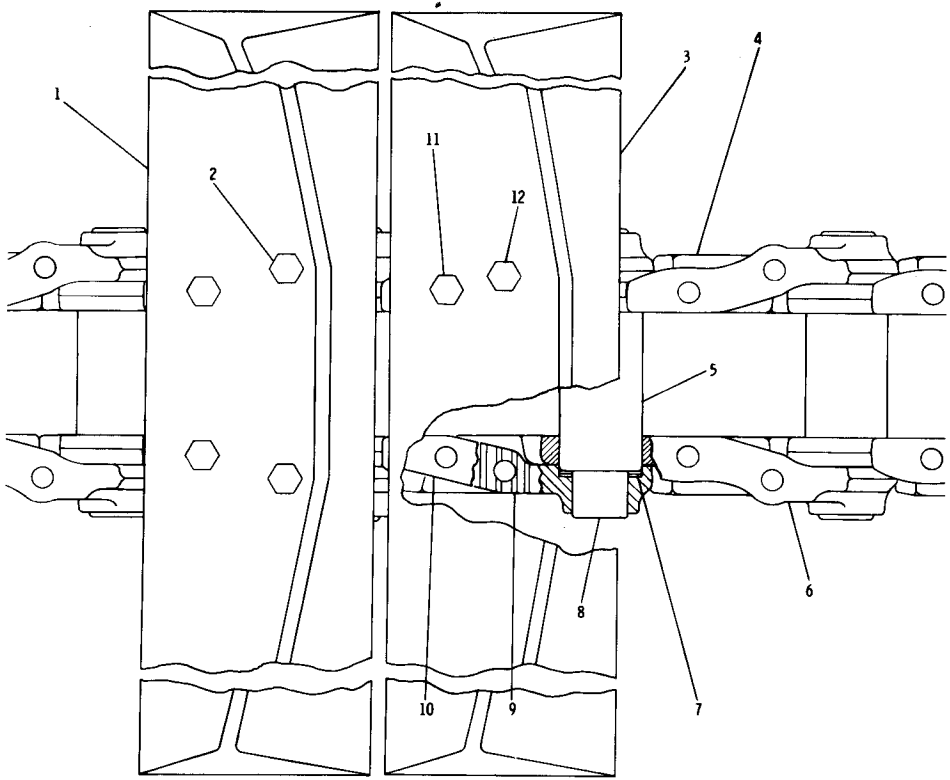

REF. NO.	PART NUMBER	DESCRIPTION	QTY
1	3P1134	SHOE	40
2	5A7524	BOLT----3.90 in. (90.06 mm) long	80
	1S1859	BOLT----2.15 in. (54.76 mm) long	80
	1S1860	NUT	160
3	3P1133	SHOE---------(master)	1
4	3P1087	LINK ASSEM. (Includes)	1
	3P1113	LINK-------(L. H.)	40
5	4M5991	BUSHING	41
6	3P1112	LINK--------(R. H.)	40
7	8M7231	SEAL	164
8	4M5989	PIN	41
9	3P1114	LINK---------(master)-------(R. H. - Pin End)	1
	3P1115	LINK--------(master)--------(L. H. - Pin End)	1
10	3P1116	LINK-------(master)--------(R. H. - Bushing End)	1
	3P1117	LINK-------(master)--------(L. H. - Bushing End)	1
11	9S1838	BOLT--4.22 in. (107.18 mm)long	2
12	3P1111	BOLT--5.47 in. (138.93 mm)long	2

150006

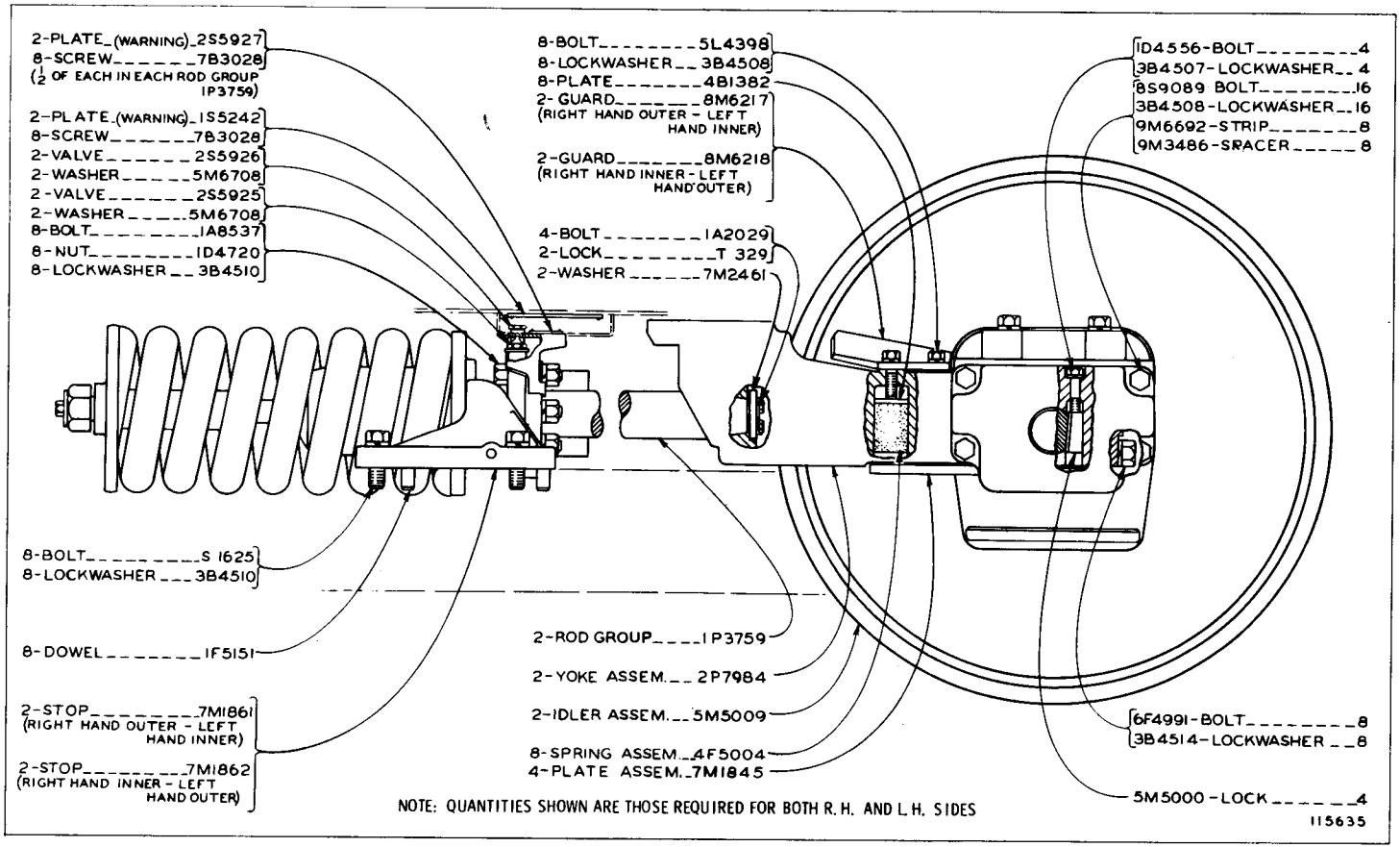

5A8085 FRONT IDLER GROUP—Part 1

5A8085 FRONT IDLER GROUP—Section Views—Part 2

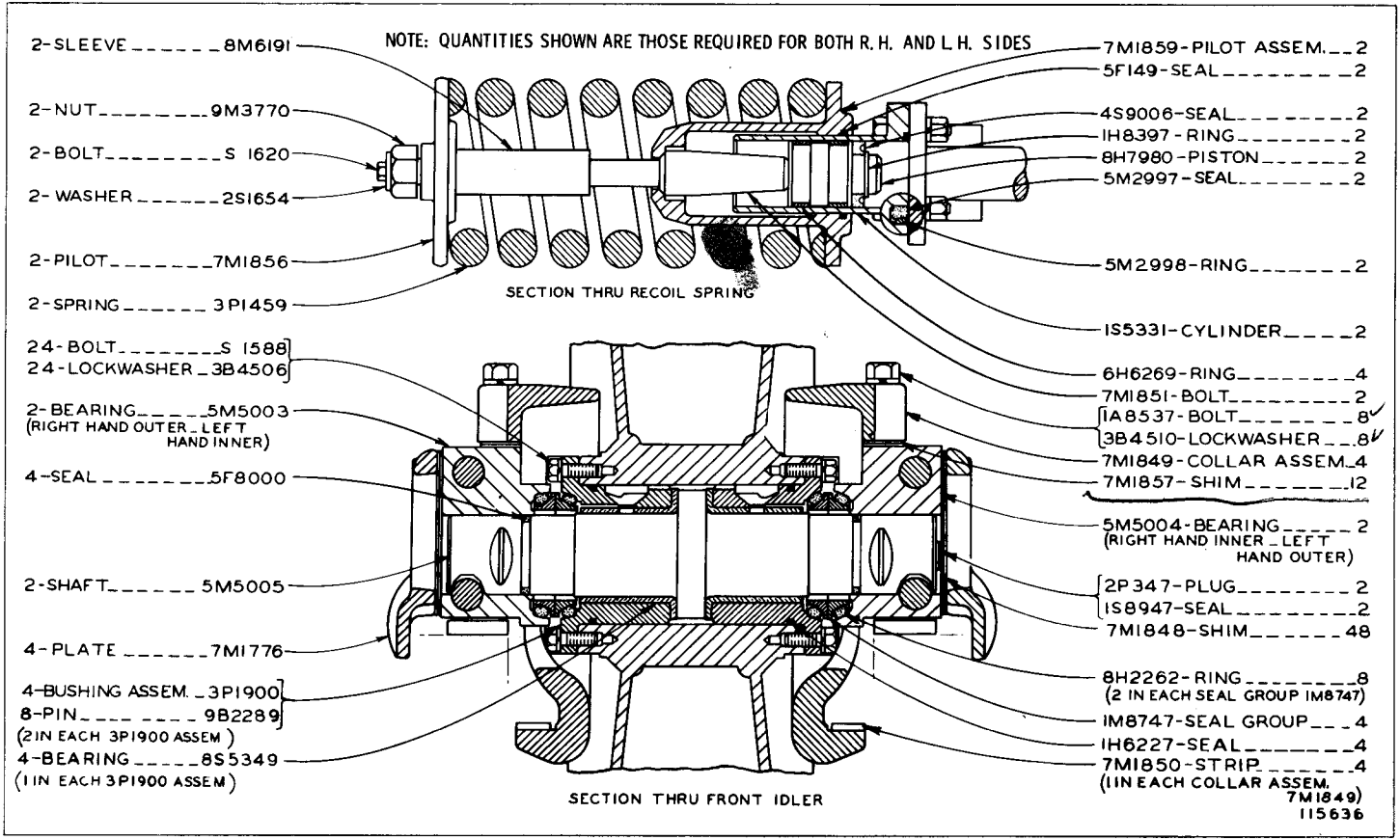

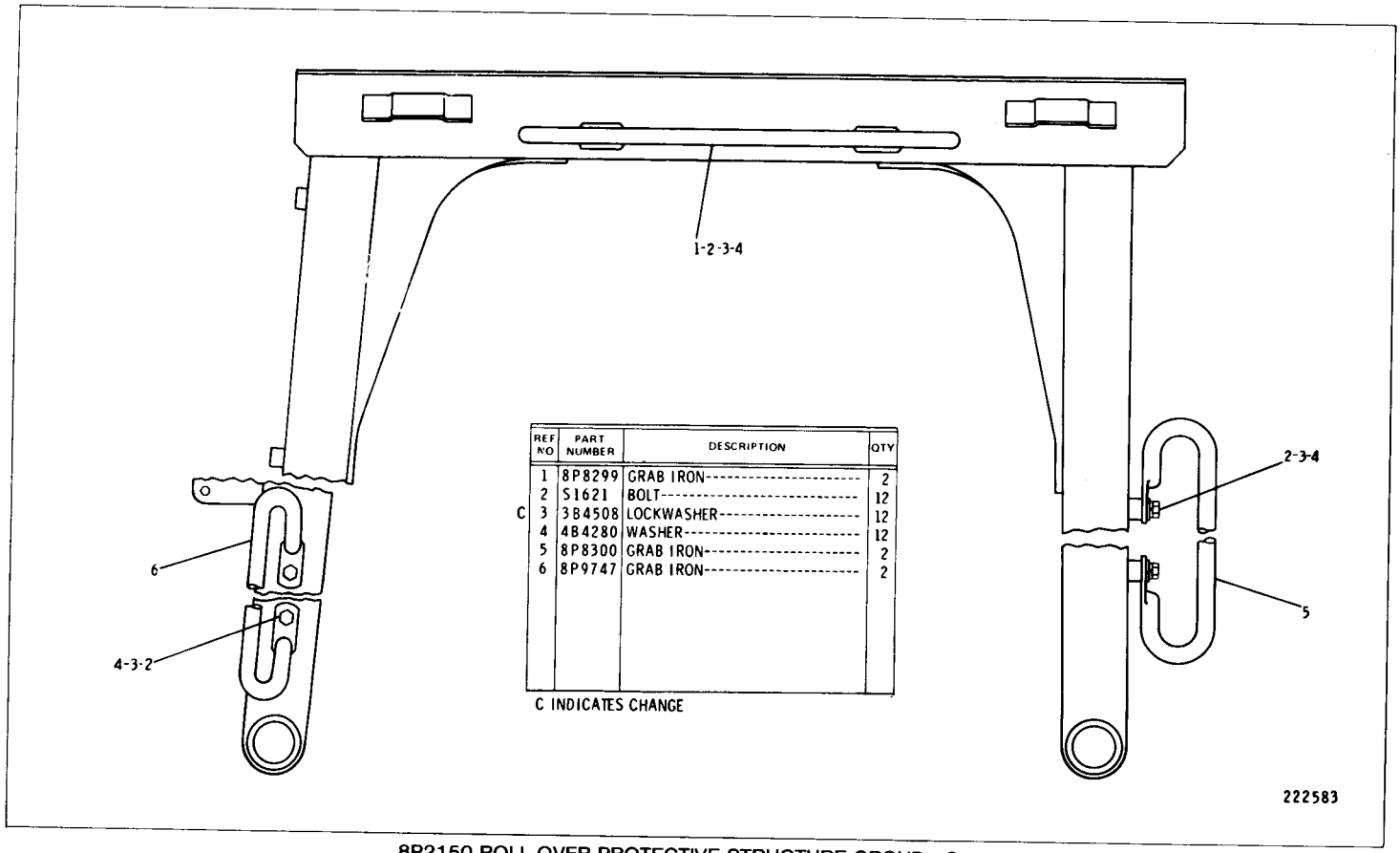

	REF NO	PART NUMBER	DESCRIPTION	QTY
	1	8P8299	GRAB IRON	2
	2	S1621	BOLT	12
C	3	3B4508	LOCKWASHER	12
	4	4B4280	WASHER	12
	5	8P8300	GRAB IRON	2
	6	8P9747	GRAB IRON	2

C INDICATES CHANGE

8P2150 ROLL-OVER PROTECTIVE STRUCTURE GROUP—Open
Serial No. 6X1 to 6X520 inclusive

8P2150 ROLL-OVER PROTECTIVE STRUCTURE GROUP—Open
Serial No. 6X521 to 6X554 inclusive

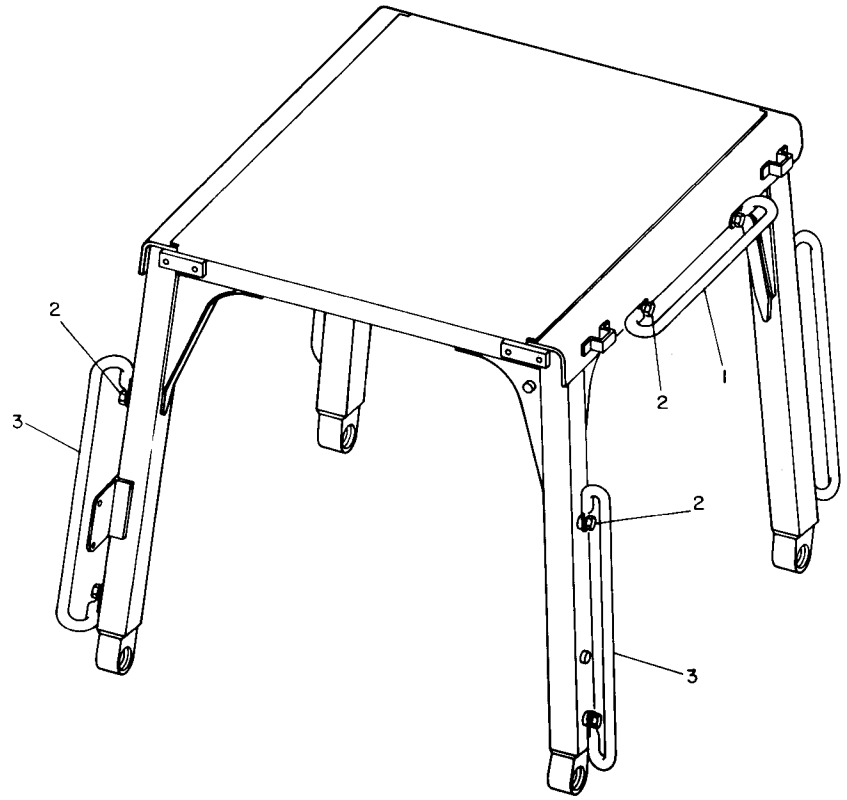

	REF. NO.	PART NUMBER	DESCRIPTION	QTY
	1	8P8299	GRABIRON	2
	2	S1621	BOLT	12
		3B4508	LOCKWASHER	12
		4B4280	WASHER	12
C	3	9P7853	GRABIRON	4

C INDICATES CHANGE

218771

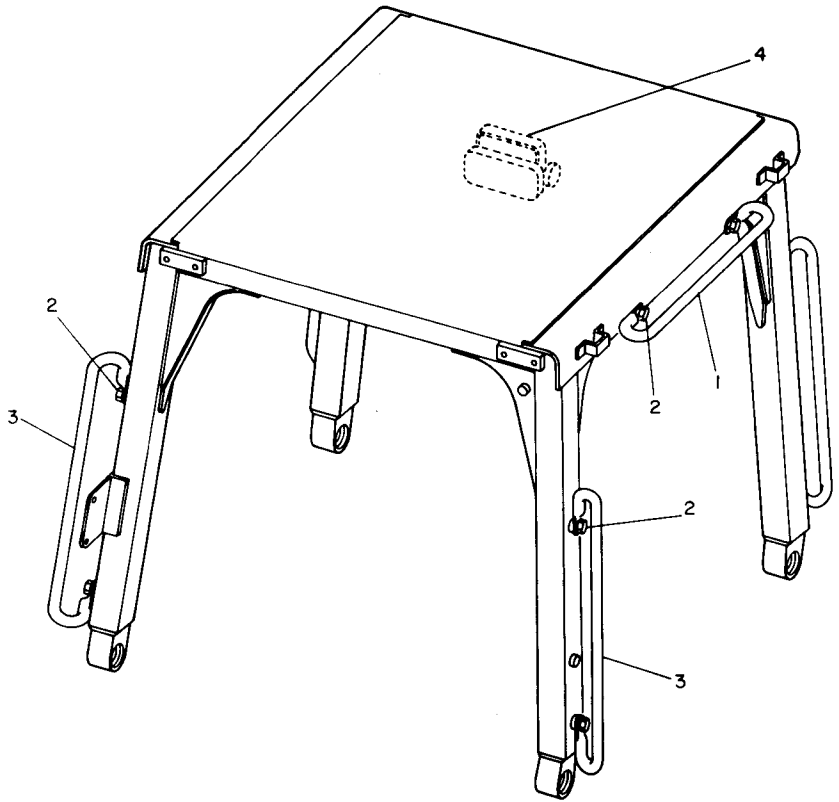

REF. NO.	PART NUMBER	DESCRIPTION	QTY
1	8P8299	GRABIRON	2
	S1621	BOLT	12
2	3B4508	LOCKWASHER	12
	4B4280	WASHER	12
3	9P7853	GRABIRON	4
C 4	9P9392	MIRROR GROUP (Separate Illustration)	1

C INDICATES CHANGE

220168

8P2150 ROLL-OVER PROTECTIVE STRUCTURE GROUP—Open
Serial No. 6X555—Up
9P9392 Mirror parts are shown on Page 154B

		CONSISTS OF:	PAGE
1	8P2124	ROLL-OVER PROTECTIVE SYSTEM	153
1	9S6591	ALTERNATOR ARRANGEMENT	71
	- OR -		
1	9D1460	ALTERNATOR ARRANGEMENT	71A
	- OR -		
1	8N1084	ALTERNATOR GROUP	71B

8P8283 COVER GROUP

CONSISTS OF:

1	3P9091	BOOT--RIPPER LINKAGE
2	8P3870	PLATE--BOOT TO DASH
2	8P3202	BOOT--TO DASH
1	8P6363	PLUG--TORQUE CONV. OPENING ON DD TO DASH
1	8P6364	PLUG--TACH CABLE OPENING TO DASH
3	4B1282	SCREW--TO BOTTOM OF WINCH CONT. CASTING
1	6P8863	PLATE--TO BOTTOM OF WINCH CONT. CASTING
1	6P8861	PLATE--TO WINCH CONT. LEVER
1	6P8862	PLATE--TO WINCH CONT. LEVER
1	2J7295	SPRING--TO WINCH CONT. LEVER
6	L1351	BOLT--PLATE--BOOT TO DASH
6	3B4506	LOCKWASHER--PLATE--BOOT TO DASH
2	9S3335	BULB--DASH
2	5P7856	GROMMET--FOR LIGHT WIRES
1	S1594	BOLT--TO STOP BRACKET
1	9P8348	BRACKET--STOP
1	9M5884	BUMPER--TO STOP BRACKET
1	9P7989	BOLT--TO PS CONSOLE
19 DM	5P782	SEAL--TO COVER
1M	5P5611	SEAL--TO COVER ASSEMBLY
6 DM	3P646	SEALER
1	8P7624	PLATE--INSIDE CONSOLE
3	S509	BOLT--TO PLATE
3	3B4506	LOCKWASHER--TO BOLT
2	4S6336	BUTTON--PLUG CONDENSER HOLES
2	S509	BOLT--PLUG DRYER HOLES
2	1D4717	NUT--PLUG DRYER HOLES

8P8284 ROLL-OVER PROTECTIVE ARRANGEMENT
Enclosed with Sound Suppression. AN ATTACHMENT

	CONSISTS OF:		PAGE
1	8P2125	ROLL-OVER PROTECTIVE SYSTEM ARRANGEMENT	154
1	8P2129	SAFETY BRACE GROUP	158
1	8P2151	CAB LINER GROUP	158
1	8P2131	CAB PRESSURIZER GROUP	159
1	8P3864	CAB MOUNTING GROUP	162
1	8P9495	WASHER GROUP	164
12	S1621	BOLT	
12	3B4508	LOCKWASHER	
12	4B4280	WASHER	
2	8P8300	IRON--GRAB	
2	8P9747	IRON--GRAB	
2	9P1131	IRON--GRAB	
2	9P4707	GUIDE ASSEMBLY	
	CONSISTS OF:		
1	1D4717	NUT	
2	8P4700	LATCH ASSEMBLY	
2	9P4704	LATCH	
2	9P4982	BRACKET ASSEMBLY	
2	7H2614	PIN	
2	3B4621	COTTER	
2	3J3938	SPRING	
2	1B2578	NUT	

8P2124 ROLL-OVER PROTECTIVE SYSTEM ARRANGEMENT—
With Sound Suppression—Type 1
Part of 8P8284 Roll-Over Protective Structure System listed on Page 152A
AN ATTACHMENT

		CONSISTS OF:	PAGE
1	8P2125	ROLL-OVER PROTECTIVE SYSTEM ARRANGEMENT.	154
1	8P2129	SAFETY BRACE GROUP	161
1	8P2151	CAB LINER GROUP	154
1	8P2131	CAB PRESSURIZER GROUP	159
1	8P3864	CAB MOUNTING GROUP	162
1	8P9495	WASHER GROUP	164
1	9P9392	MIRROR GROUP	154B
1	4V8015	LATCH GROUP	154B
12	S1621	BOLT	
12	3B4508	LOCKWASHER	
12	4B4280	WASHER	
4	9P7853	IRON--GRAB	
1	9P1034	PLATE	
2	9P1579	COVER	
8	4F7957	BOLT	
5	S1614	BOLT	
13	3B4504	LOCKWASHER	
5	T102	BOLT	
3	5P1075	WASHER	
1	9P5053	PLATE	
1	9P5052	PLATE ASSEMBLY	
2	9P2639	GASKET	
6	3B4506	LOCKWASHER	
2	S1594	BOLT	
4	S509	BOLT	
2	9P1131	IRON--GRAB	

8P2124 ROLL-OVER PROTECTIVE SYSTEM ARRANGEMENT
With Sound Suppression—Type 2
AN ATTACHMENT

			CONSISTS OF:	PAGE
	1	8P2125	ROLL-OVER PROTECTIVE SYSTEM ARRANGEMENT	154
	1	8P2129	SAFETY BRACE GROUP	161
	1	8P2151	CAB LINER GROUP	154
	1	8P2131	CAB PRESSURIZER GROUP	159
	1	8P3864	CAB MOUNTING GROUP	162
	1	8P9495	WASHER GROUP	164
	1	9P9392	MIRROR GROUP	154B
	2	4V8015	LATCH GROUP	154B
	1	9P5052	PLATE ASSEMBLY	
C	16	3B4506	LOCKWASHER	
C	1	9P2033	FRONT CAB PLATE	
C	1	9P2034	FRONT CAB PLATE	
C	10	L1351	BOLT	
C	10	4B4278	WASHER	
	12	S1621	BOLT	
	12	3B4508	LOCKWASHER	
	12	4B4280	WASHER	
	4	9P7853	GRAB IRON	
	1	9P1034	PLATE	
	2	9P1579	COVER	
	8	4F7957	BOLT	
	5	S1614	BOLT	
	13	3B4504	LOCKWASHER	
	5	4B4276	WASHER	
	3	T102	BOLT	
	3	5P1075	WASHER	
	1	9P5053	PLATE	
	2	9P2639	GASKET	
	2	S1594	BOLT	
	4	S509	BOLT	

C INDICATES CHANGE

8P2124 ROLL-OVER PROTECTIVE SYSTEM ARRANGEMENT—Type 3—With Sound Suppression
Part of 8P8284 Roll-Over Protective System Arrangement listed on Page 152A
AN ATTACHMENT

		CONSISTS OF:	PAGE
1	8P2126	ROLL-OVER PROTECTIVE STRUCTURE GROUP ...	155
1	8P2127	WINDSHIELD WIPER GROUP	164A
1	8P2136	WIPER GROUP--REAR	166

8P2125 ROLL-OVER PROTECTIVE SYSTEM ARRANGEMENT—Type 1
Part of 8P2124 Roll-Over Protective System Arrangement listed on Pages 153 & 153B
AN ATTACHMENT

CONSISTS OF:

2	8P9830	GRAB IRON ASSEMBLY
4	S1620	BOLT--1/2" x 3/4"--TO GRAB IRON
4	3B4508	LOCKWASHER--TO GRAB IRON
1	9P5380	COVER ASSEMBLY--TO FENDER
1	9P3694	COVER ASSEMBLY--TO FENDER
4	1A5822	BOLT--1/2" x 3/4"--COVER ASSEMBLY TO FENDER
4	L1714	WASHER--COVER ASSEMBLY TO FENDER
4	3B4508	LOCKWASHER--COVER ASSEMBLY TO FENDER
16	3B4512	LOCKWASHER--ROPS MOUNTING BRACKET TO FENDER
32	4B4283	WASHER--ROPS MOUNTING BRACKET TO FENDER
16	1B4331	NUT--ROPS MOUNTING BRACKET TO FENDER
8	1D4608	BOLT--3/4" x 2 3/4"--ROPS MOUNTING BRACKET TO FENDER
8	2A1538	BOLT--3/4" x 2 1/4"--ROPS MOUNTING BRACKET TO FENDER
1	9P6891	PLATE ASSEMBLY--TO FENDER

CONSISTS OF:

2	8P2813	BOSS
1	1S1888	BRACKET
1	4V1204	PLATE

9P7412 NON ROLL-OVER PROTECTIVE STRUCTURE CONVERSION ARRANGEMENT—Type 1
FOR USE ON MACHINES EXPORTED WITHOUT ROPS. AN ATTACHMENT

		CONSISTS OF:	PAGE
1	8P2126	ROLL-OVER GROUP	156
1	8P2127	WIPER GROUP	164A

8P2125 ROLL-OVER PROTECTIVE SYSTEM ARRANGEMENT—Type 2
Part of 8P2124 Roll-Over Protective System Arrangement listed on Page 153
AN ATTACHMENT

CONSISTS OF:

C	8	1B4331	NUT--ROPS MTG. BRACKET TO FENDER REAR
C	4	2B947	BOLT (1/2" x 2 1/4") ROPS MTG. BRACKET TO COVER ASSEMBLY
C	4	3B4508	LOCKWASHER--ROPS MTG. BRACKET TO COVER ASSEMBLY
C	8	3B4512	LOCKWASHER--ROPS MTG. BRACKET TO FENDER REAR
C	16	4B4283	WASHER--ROPS MTG. BRACKET TO FENDER REAR
C	8	1D4608	BOLT--ROPS MTG. BRACKET TO FENDER REAR
C	1	9G7117	COVER ASSEMBLY--TO FENDER
C	1	9G7122	COVER ASSEMBLY--TO FENDER
C	4	L1714	WASHER--ROPS MTG. BRACKET TO COVER ASSEMBLY
	2	8P9830	GRAB IRON ASSEMBLY
	1	9P6891	PLATE ASSEMBLY--TO FENDER REAR
			CONSISTS OF:
		2 8P2813	BOSS
		1 1S1888	BRACKET
		1 4V1204	PLATE
	4	S1620	BOLT--TO GRAB IRON
	4	3B4508	LOCKWASHER--TO GRAB IRON

C INDICATES CHANGE

9P7412 NON ROLL-OVER PROTECTIVE STRUCTURE CONVERSION ARRANGEMENT—
Type 2
FOR USE ON MACHNES EXPORTED WITHOUT ROPS. AN ATTACHMENT

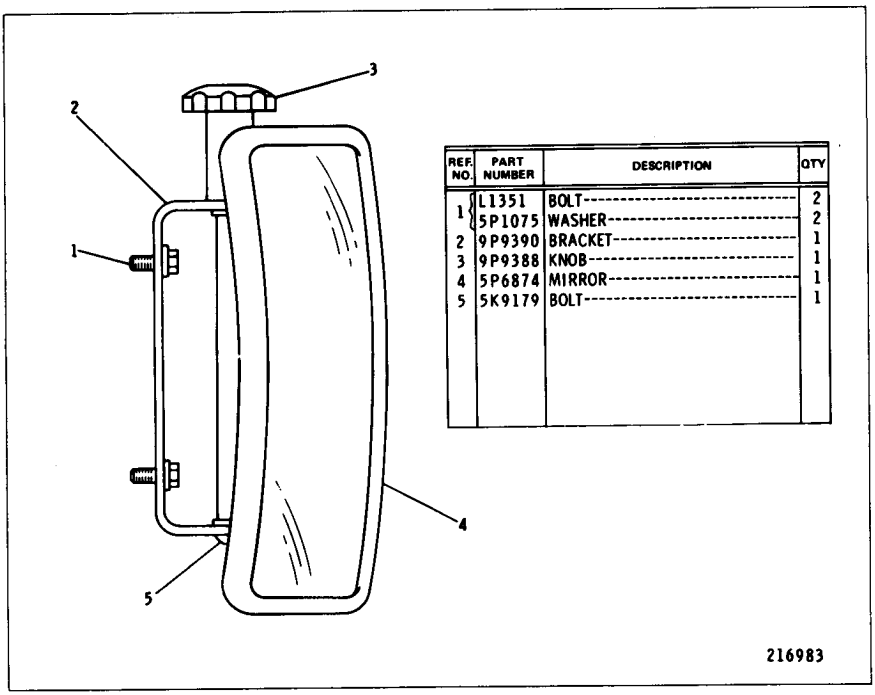

REF. NO.	PART NUMBER	DESCRIPTION	QTY
1	L1351	BOLT	2
	5P1075	WASHER	2
2	9P9390	BRACKET	1
3	9P9388	KNOB	1
4	5P6874	MIRROR	1
5	5K9179	BOLT	1

9P9392 MIRROR GROUP
Serial No. 6X555—Up
Also part of 8P2150 Roll-Over Protective Structure Group shown on Page 152-1

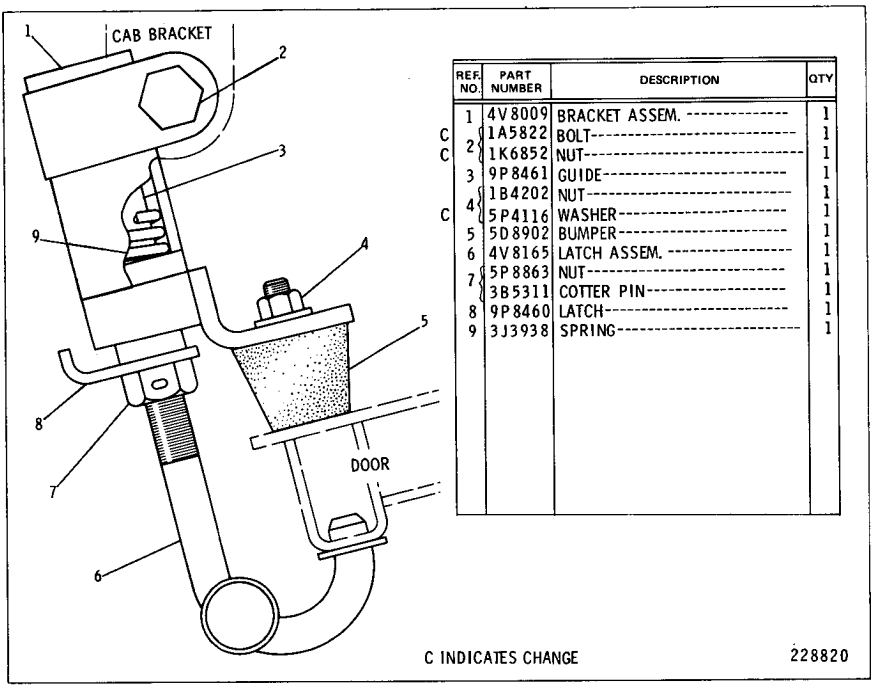

	REF. NO.	PART NUMBER	DESCRIPTION	QTY
	1	4V8009	BRACKET ASSEM.	1
C	2	1A5822	BOLT	1
C		1K6852	NUT	1
	3	9P8461	GUIDE	1
	4	1B4202	NUT	1
C		5P4116	WASHER	1
	5	5D8902	BUMPER	1
	6	4V8165	LATCH ASSEM.	1
	7	5P8863	NUT	1
		3B5311	COTTER PIN	1
	8	9P8460	LATCH	1
	9	3J3938	SPRING	1

4V8015 LATCH GROUP—Door Hold Back
Part of 8P2124 Roll-Over Protective System Arrangement listed on Page 153

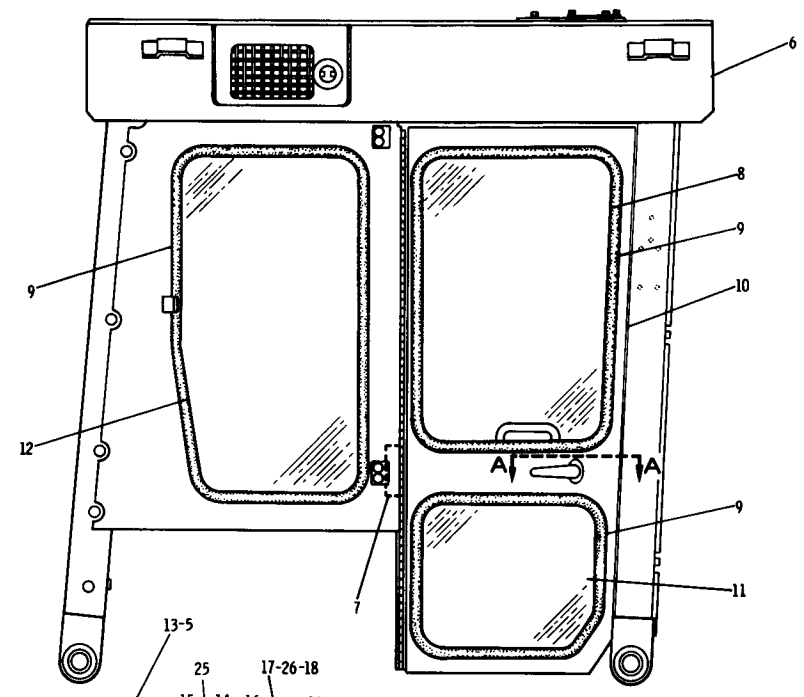

VIEW A-A

REF. NO.	PART NUMBER	DESCRIPTION	QTY
1	9P553	HANDLE ASSEM. (Each Includes)	2
	9D1447	KEY	1
2	9P897	SPACER	2
3	S1615	BOLT	6
4	9P1395	COVER ASSEM. -----(R. H.)-----	1
	9P1396	COVER ASSEM. -----(L. H.)-----	1
C 5	3H9675	PIN	4
6	8P3900	CAB ASSEM. (Includes)	1
7	8P3898	DUCT	2
	7K6536	RIVET	8
8	8P3325	GLASS	1
▲ 9	5P5768	SEAL-------(use as required)-----	
10	9P1224	DOOR ASSEM.	1
11	8P3326	GLASS	1
12	8P4069	GLASS	1
13	9P435	HANDLE	2
14	9P436	LEVER ASSEM.	2
15	4H3521	SPRING	2
16	5P6100	STRIKER	2
17	S1616	BOLT	4
18	4B4276	WASHER	10
19	9P1145	PLATE	2
	9P1200	SHIM----------1.9 mm(.074 in.)	6
20	8P3327	PLATE	2
▲ 21	5P5638	SEAL----------2.6 m(102.36 in.)	
22	7B2742	BOLT	8
	2D6235	NUT	8
23	5P6102	LATCH---------(R. H.)----------	1
	5P6101	LATCH---------(L. H.)----------	1
24	5P5582	SCREW	4
	3F1147	LOCKWASHER	4
C	9P6894	LEVER	2
C 25	9P6895	PIN	4
C	3B4606	COTTER PIN	4
26	3B4504	LOCKWASHER	10
	SMHS6848	FORM--(Installation instructions for handle assem.)	

C INDICATES CHANGE

▲ ORDER BY THE METRE

215135

8P2126 ROLL-OVER PROTECTIVE STRUCTURE GROUP—Right Hand Side View—Part 1 of 3

Part of 8P2125 Roll-Over Protective System Arrangement listed on Page 154

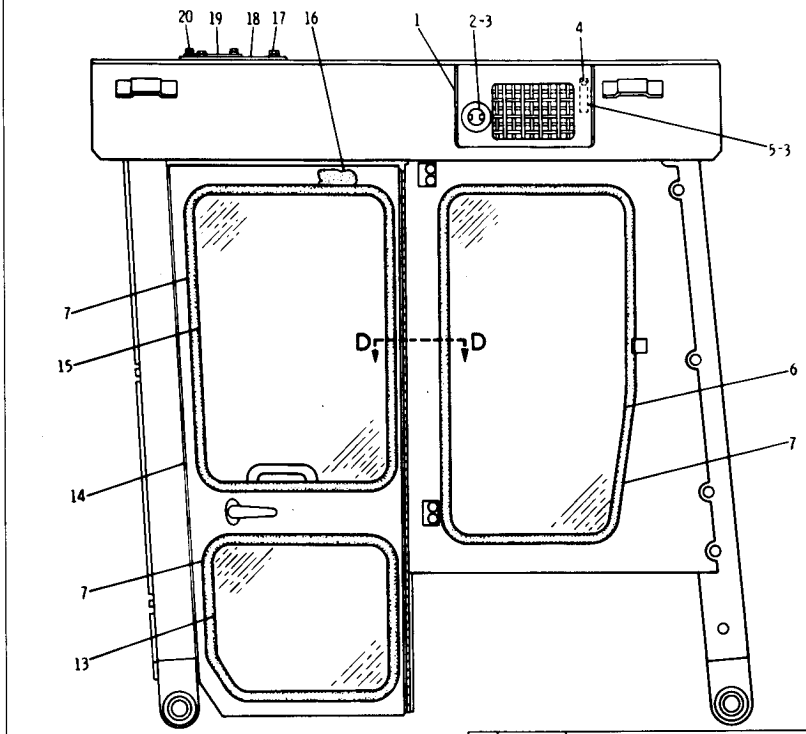

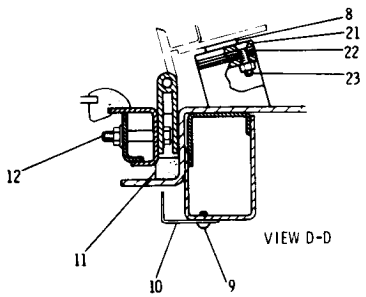

REF. NO.	PART NUMBER	DESCRIPTION	QTY
1	8P9736	DOOR ASSEM. -------(L. H.)-------	1
	8P9779	DOOR ASSEM. -------(R. H.)-------	1
	8P9588	SHIM------(use as required)------	4
2	4D6082	BOLT----------	2
	4B4280	WASHER----------	2
3	3B4610	COTTER PIN----------	4
4	L1351	BOLT----------	4
	3B4506	LOCKWASHER----------	4
	4B4278	WASHER----------	4

5	8P9591	ARM ASSEM. --------(L. H.)------	1
	8P9594	ARM ASSEM. --------(R. H.)------	1
6	8P4069	GLASS----------	1
▲ 7	5P5768	SEAL---------(use as required)---	
8	9M5884	BUMPER----------	8
9	167150	SCREW----------	3
10	9P5389	ANGLE----------	1
▲ 11	5P5640	SEAL--------2.9 m(114. 11 in.)	
12	1B2713	BOLT----------	18
	7H8909	NUT----------	16
	4B4276	WASHER----------	18
	8M2337	WASHER----------	16
13	8P3326	GLASS----------	1
14	9P1222	DOOR ASSEM. ----------	1
15	8P3325	GLASS----------	1
▲ 16	5P5638	SEAL----------1. 25 m(49. 22 in.)	
17	4F7957	BOLT----------	8
	3B4504	LOCKWASHER----------	8
18	9P1579	COVER----------	2
19	9P1811	COVER----------	1
	9P1810	GASKET----------	1
20	S509	BOLT----------	2
	3B4506	LOCKWASHER----------	2
C 21	9P7844	PLATE----------	4
C 22	9P7845	SHIM----1. 6 mm(. 063 in.) thick	8
C	9P7846	SHIM-----. 8 mm(. 031 in.) thick	8
C 23	7D6921	SCREW----------	8
C	8F8052	LOCKWASHER----------	8

C INDICATES CHANGE ▲ ORDER BY THE METER 222614

8P2126 ROLL-OVER PROTECTIVE STRUCTURE GROUP—Left Hand Side View—Part 2 of 3

Part of 8P2125 Roll-Over Protective System Arrangement listed on Page 154

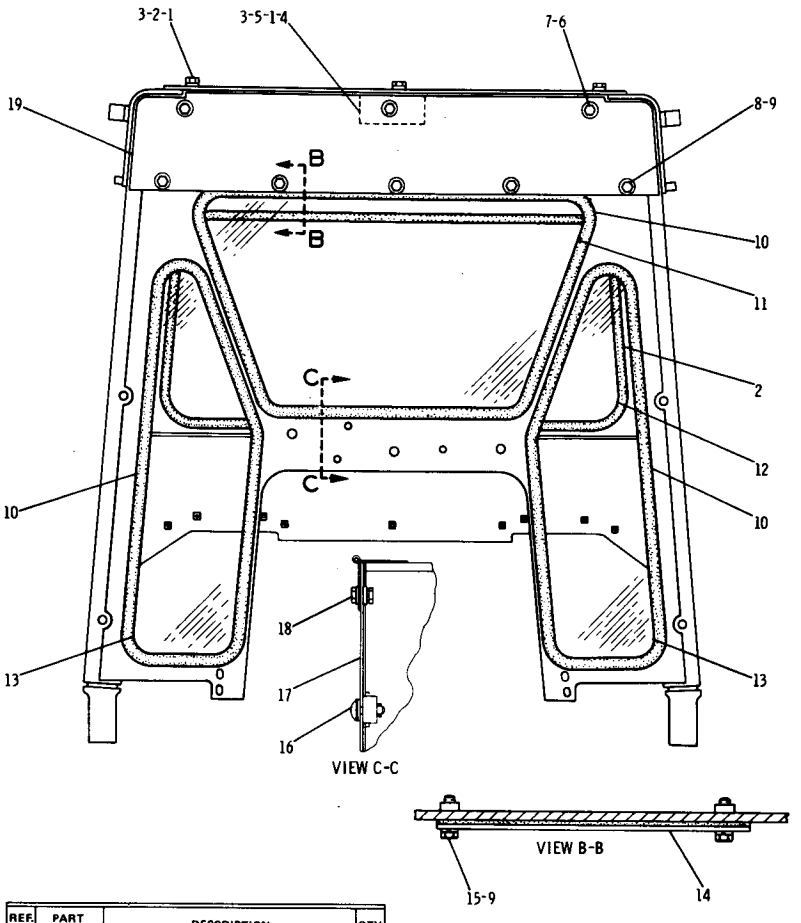

REF. NO.	PART NUMBER	DESCRIPTION	QTY
1	S1594	BOLT----------2.54 cm(1 in.) long	5
2	1D4717	NUT----------	3
3	3B4506	LOCKWASHER----------	9
4	9P5052	PLATE ASSEM. ----(rear inside)----	1
	9P5053	PLATE-------(rear outside)--------	1
	9P2639	GASKET----------	2
5	S509	BOLT----------1.9 cm(.75 in.) long	4
6	T102	BOLT----------	3
	5P1075	WASHER----------	3
7	8P3142	BRACKET ASSEM. ----------	3
8	S1614	BOLT----------	5
	4B4276	WASHER----------	5
9	3B4504	LOCKWASHER----------	19
▲10	5P5768	SEAL------(use as required)-------	
11	8P3762	GLASS----------	1
12	8P3366	GLASS----------	1
13	8P3763	GLASS----------	1

14	8P3880	PLATE----------	1
	8P3881	GASKET----------	1
15	4F7957	BOLT----------	14
16	5P7520	FASTENER GROUP----------	2
17	8P3487	DOOR----------	1
18	8L6521	BOLT----------	3
	4B2049	NUT----------	3
	3B4502	LOCKWASHER----------	3
	4B4274	WASHER----------	6
19	9P1034	PLATE----------	1

▲ ORDER BY THE METRE

212841

8P2126 ROLL-OVER PROTECTIVE STRUCTURE GROUP—Front View—Part 3 of 3
Part of 8P2125 Roll-over Protective System Arrangement listed on Page 154
AN ATTACHMENT

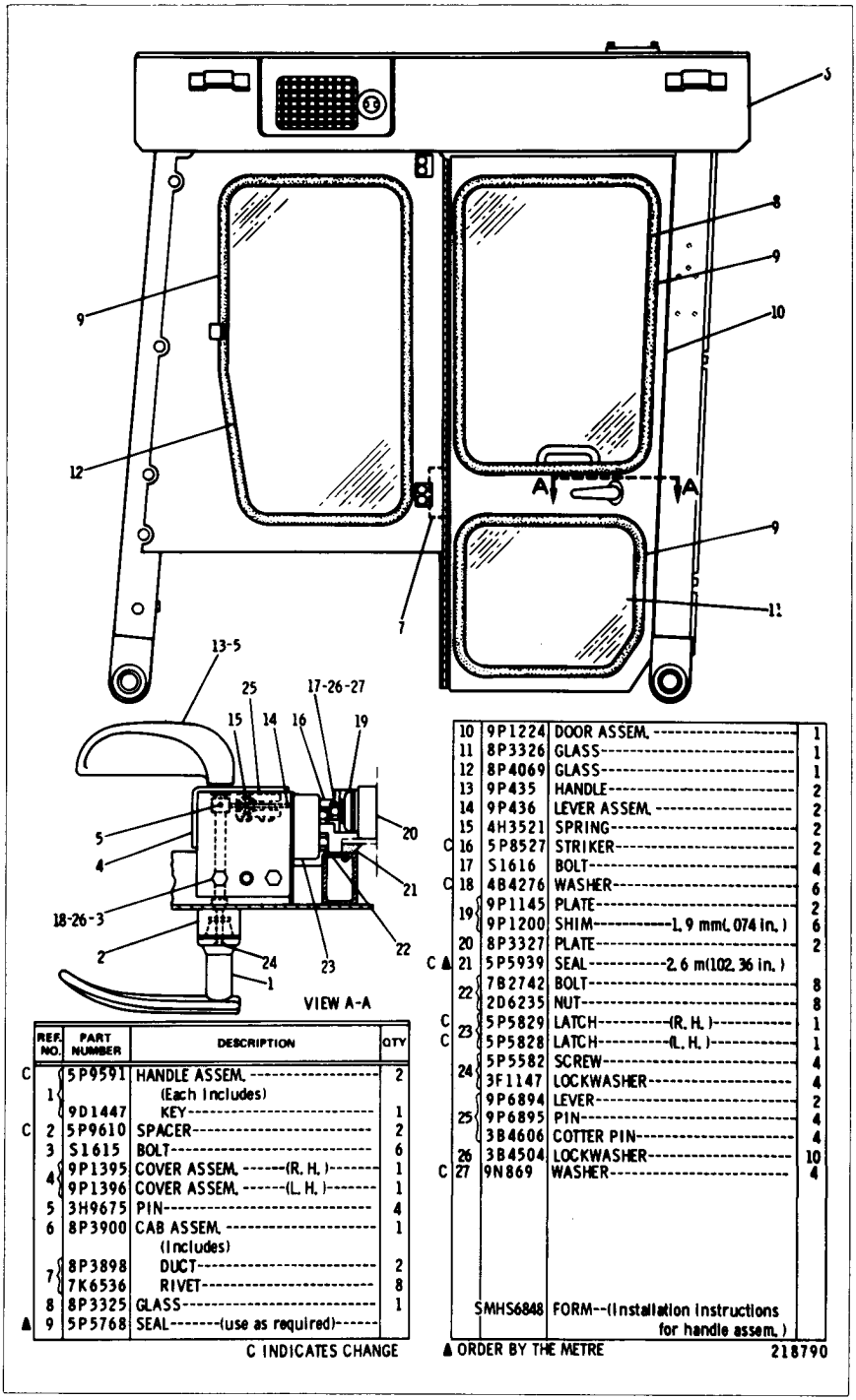

REF. NO.	PART NUMBER	DESCRIPTION	QTY
C	5P9591	HANDLE ASSEM.	2
1		(Each Includes)	
	9D1447	KEY	1
C 2	5P9610	SPACER	2
3	S1615	BOLT	6
4	9P1395	COVER ASSEM. (R. H.)	1
	9P1396	COVER ASSEM. (L. H.)	1
5	3H9675	PIN	4
6	8P3900	CAB ASSEM.	1
		(Includes)	
7	8P3898	DUCT	2
	7K6536	RIVET	8
8	8P3325	GLASS	1
▲ 9	5P5768	SEAL (use as required)	

C INDICATES CHANGE

10	9P1224	DOOR ASSEM.	1
11	8P3326	GLASS	1
12	8P4069	GLASS	1
13	9P435	HANDLE	2
14	9P436	LEVER ASSEM.	2
15	4H3521	SPRING	2
C 16	5P8527	STRIKER	2
17	S1616	BOLT	4
C 18	4B4276	WASHER	6
19	9P1145	PLATE	2
	9P1200	SHIM (1.9 mm/.074 in.)	6
20	8P3327	PLATE	2
C ▲ 21	5P5939	SEAL (2.6 m/102.36 in.)	
22	7B2742	BOLT	8
	2D6235	NUT	8
C 23	5P5829	LATCH (R. H.)	1
C	5P5828	LATCH (L. H.)	1
24	5P5582	SCREW	4
	3F1147	LOCKWASHER	4
	9P6894	LEVER	2
25	9P6895	PIN	4
	3B4606	COTTER PIN	4
26	3B4504	LOCKWASHER	10
C 27	9N869	WASHER	4
	SMHS6848	FORM--(Installation Instructions for handle assem.)	

▲ ORDER BY THE METRE

218790

8P2126 ROLL-OVER PROTECTIVE STRUCTURE GROUP—Right Hand Side View—Part 1 of 3—Type 2

Part of 8P2125 Roll-Over Protective System Arrangement listed on Pages 154 and 154A. AN ATTACHMENT

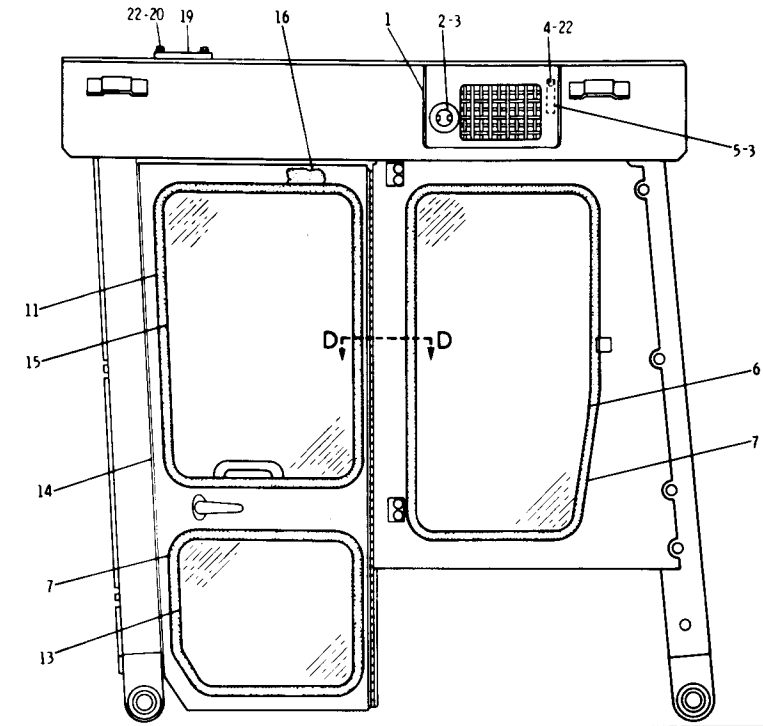

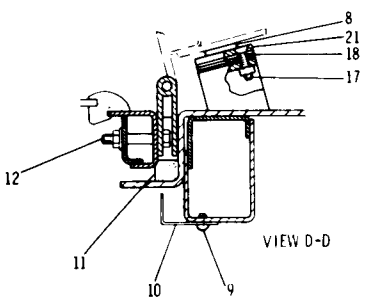

REF. NO.	PART NUMBER	DESCRIPTION	QTY
1	8P9736	DOOR ASSEM. --------(L. H.)--------	1
	8P9779	DOOR ASSEM. --------(R. H.)--------	1
	8P9588	SHIM------(use as required)------	4
2	4D6082	BOLT----------	2
	4B4280	WASHER----------	2
3	3B4610	COTTER PIN----------	4
4	L1351	BOLT----------	4
	4B4278	WASHER----------	4

	5	8P9591	ARM ASSEM. --------(L. H.)------	1
		8P9594	ARM ASSEM. --------(R. H.)------	1
	6	8P4069	GLASS----------	1
▲	7	5P5768	SEAL---------(use as required)---	
	8	9M5884	BUMPER----------	8
	9	167150	SCREW----------	3
	10	9P5389	ANGLE----------	1
▲	11	5P5640	SEAL--------2.9 m(114.11 in.)	
	12	1B2713	BOLT----------	18
		7H8909	NUT----------	16
		4B4276	WASHER----------	18
		8M2337	WASHER----------	16
	13	8P3326	GLASS----------	1
	14	9P1222	DOOR ASSEM. ----------	1
	15	8P3325	GLASS----------	1
C▲	16	5P5939	SEAL---------1.25 m (49.22 in.)	
	17	7D6921	SCREW----------	8
		8F8052	LOCKWASHER----------	8
	18	9P7845	SHIM------1.6 mm (.063 in.) thick	8
		9P7846	SHIM-------.8 mm (.031 in.) thick	8
	19	9P1811	COVER----------	1
		9P1810	GASKET----------	1
	20	S509	BOLT----------	2
	21	9P7844	PLATE----------	4
	22	3B4506	LOCKWASHER----------	6

C INDICATES CHANGE ▲ ORDER BY THE METER 722615

8P2126 ROLL-OVER PROTECTIVE STRUCTURE GROUP—Left Hand Side View—Part 2 of 3—Type 2

Part of 8P2125 Roll-Over Protective System Arrangement listed on Pages 154 and 154A AN ATTACHMENT

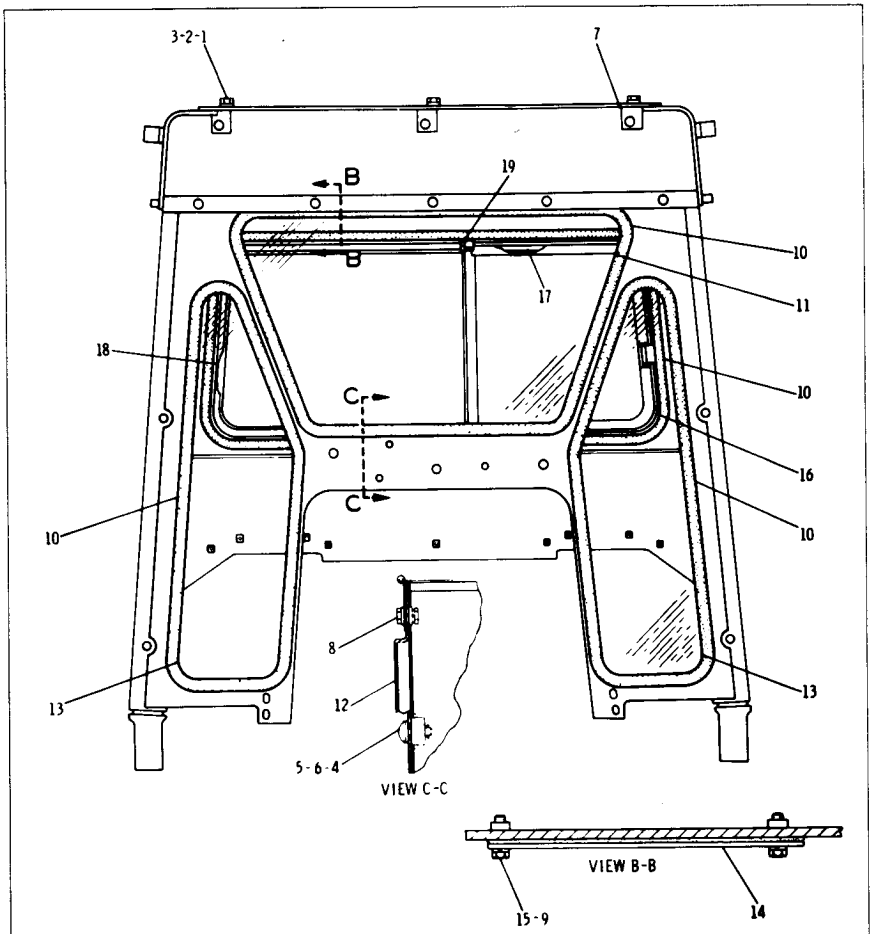

	REF. NO.	PART NUMBER	DESCRIPTION	QTY
C	1	S1594	BOLT-------2.54 cm (1 in.) long	3
	2	1D4717	NUT----------	3
C	3	3B4506	LOCKWASHER----------	3
C	4	5P7518	RETAINER----------	2
C	5	5P7519	NUT----------	2
C	6	5P9034	STUD----------	2
	7	8P3142	BRACKET ASSEM.----------	3
C	8	8L6521	BOLT----------	5
C		4B2049	NUT----------	5
C		3B4502	LOCKWASHER----------	5
C		4B4274	WASHER----------	10
C	9	3B4504	LOCKWASHER----------	14
▲	10	5P5768	SEAL----------(use as required)	
	11	8P3762	GLASS----------	1
C	12	9P7854	DOOR----------	1
	13	8P3763	GLASS----------	1

	REF. NO.	PART NUMBER	DESCRIPTION	QTY
	14	8P3880	PLATE----------	1
		8P3881	GASKET----------	1
	15	4F7957	BOLT----------	14
C	16	9P9385	WINDOW ASSEM.---------- (Includes)	1
		9P9387	GLASS----------	1
▲	17	5P8918	SEAL-------1.3 m (51.19 in.)	
▲	18	5P5680	SEAL-------2.54 m (100 in.)	
	19	9P7856	KNOB----------	1

▲ ORDER BY THE METER
C INDICATES CHANGE

222616

8P2126 ROLL-OVER PROTECTIVE STRUCTURE GROUP—Front View—Part 3 of 3—Type 2

Part of 8P2125 Roll-Over Protective System Arrangement listed on Pages 154 & 154A

AN ATTACHMENT

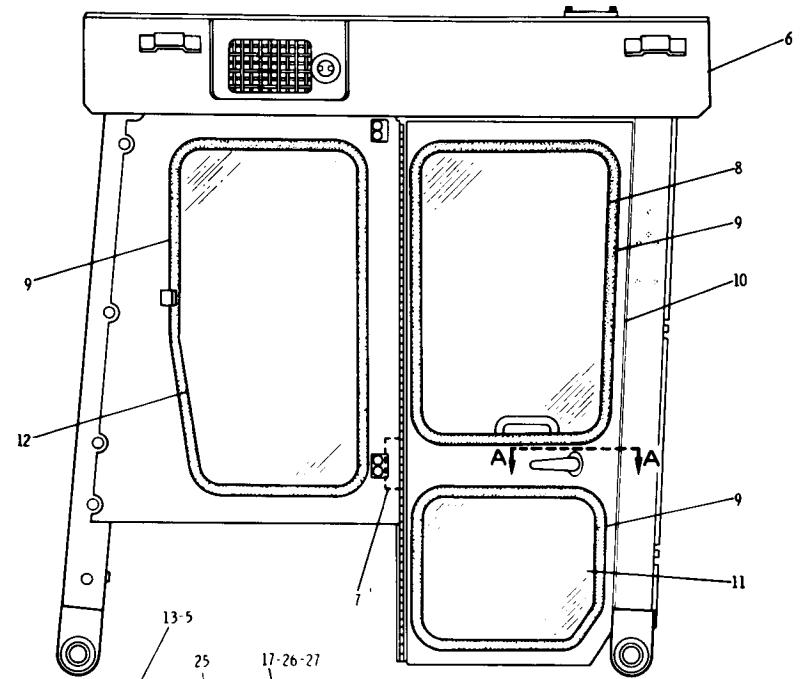

REF. NO.	PART NUMBER	DESCRIPTION	QTY
1	5P9591	HANDLE ASSEM. (Each Includes)	2
	9D1447	KEY	1
2	5P9610	SPACER	2
3	S1615	BOLT	6
4	9P1395	COVER ASSEM. -----(R. H.)-----	1
	9P1396	COVER ASSEM. -----(L. H.)-----	1
C 5	5606	PIN	4
6	8P3900	CAB ASSEM. (Includes)	1
7	8P3898	DUCT	2
	7K6536	RIVET	8
8	8P3325	GLASS	1
▲ 9	5P5768	SEAL-----(use as required)-----	
10	9P1224	DOOR ASSEM.	1
11	8P3326	GLASS	1
12	8P4069	GLASS	1
13	9P435	HANDLE	2
14	9P436	LEVER ASSEM.	2
15	4H3521	SPRING	2
C 16	6V1155	STRIKER ASSEM.	2
17	S1616	BOLT	4
18	4B4276	WASHER	6
19	9P1145	PLATE	2
	9P1200	SHIM----------1.9 mm(.074 in.)	6
20	8P3327	PLATE	2
▲ 21	5P5939	SEAL----------2.6 m(102.36 in.)	
22	7B2742	BOLT	8
	2D6235	NUT	8
C 23	6V1157	LATCH----------(R. H.)----------	1
C	6V1156	LATCH----------(L. H.)----------	1
C	6V1251	SCREW	4
24	3F1147	LOCKWASHER	4
	9P6894	LEVER	2
25	9P6895	PIN	4
	3B4606	COTTER PIN	4
26	3B4504	LOCKWASHER	10
27	9N869	WASHER	4
	SMHS6848	FORM--(Installation instructions for handle assem.)	

C INDICATES CHANGE

▲ ORDER BY THE METER

224178

8P2126 ROLL-OVER PROTECTIVE STRUCTURE GROUP—Right Hand Side View—
Part 1 of 3—Type 3
Part of 8P2125 Roll-Over Protective System Arrangement listed on Pages 154 and 154A
AN ATTACHMENT

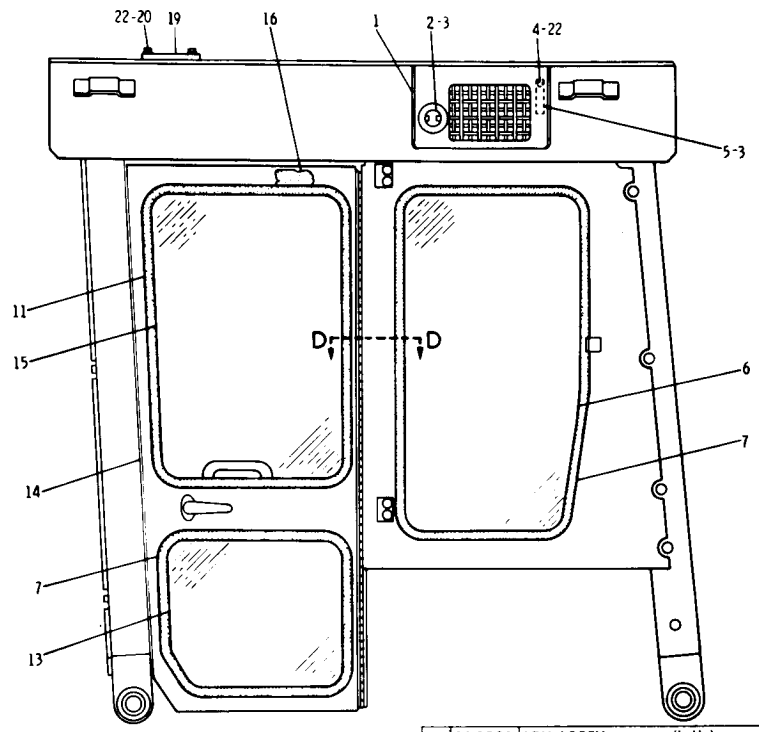

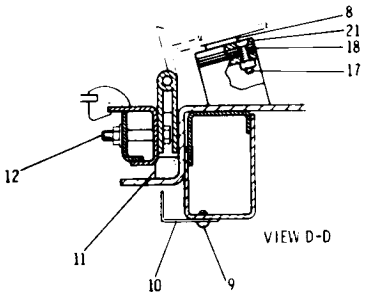

REF NO	PART NUMBER	DESCRIPTION	QTY
1	8P9736	DOOR ASSEM. --------(L. H.)--------	1
	8P9779	DOOR ASSEM. --------(R. H.)--------	1
	8P9588	SHIM------(use as required)------	4
2	4D6082	BOLT----------	2
	4B4280	WASHER----------	2
3	3B4610	COTTER PIN----------	4
4	L1351	BOLT----------	4
	4B4278	WASHER----------	4

REF NO	PART NUMBER	DESCRIPTION	QTY
5	8P9591	ARM ASSEM. --------(L. H.)------	1
	8P9594	ARM ASSEM. --------(R. H.)------	1
6	8P4069	GLASS----------	1
▲ 7	5P5768	SEAL---------(use as required)---	
8	9M5884	BUMPER----------	8
9	167150	SCREW----------	3
10	9P5389	ANGLE----------	1
▲ 11	5P5640	SEAL--------2.9 m(114.11 in.)	
12	1B2713	BOLT----------	18
	7H8909	NUT----------	16
	4B4276	WASHER----------	18
	8M2337	WASHER----------	16
13	8P3326	GLASS----------	1
14	9P1222	DOOR ASSEM. ----------	1
15	8P3325	GLASS----------	1
▲ 16	5P5939	SEAL---------1.25 m (49.22 in.)	
17	7D6921	SCREW----------	8
	8F8052	LOCKWASHER----------	8
18	9P7845	SHIM------1.6 mm (.063 in.) thick	8
	9P7846	SHIM-------.8 mm (.031 in.) thick	8
19	9P1811	COVER----------	1
	9P1810	GASKET----------	1
20	S509	BOLT----------	2
21	9P7844	PLATE----------	4
22	3B4506	LOCKWASHER----------	6

▲ ORDER BY THE METER 224179

8P2126 ROLL-OVER PROTECTIVE STRUCTURE GROUP—Left Hand Side View—
Part of 2 of 3—Type 3
Part of 8P2125 Roll-Over Protective System Arrangement listed on Pages 154 and 154A
AN ATTACHMENT

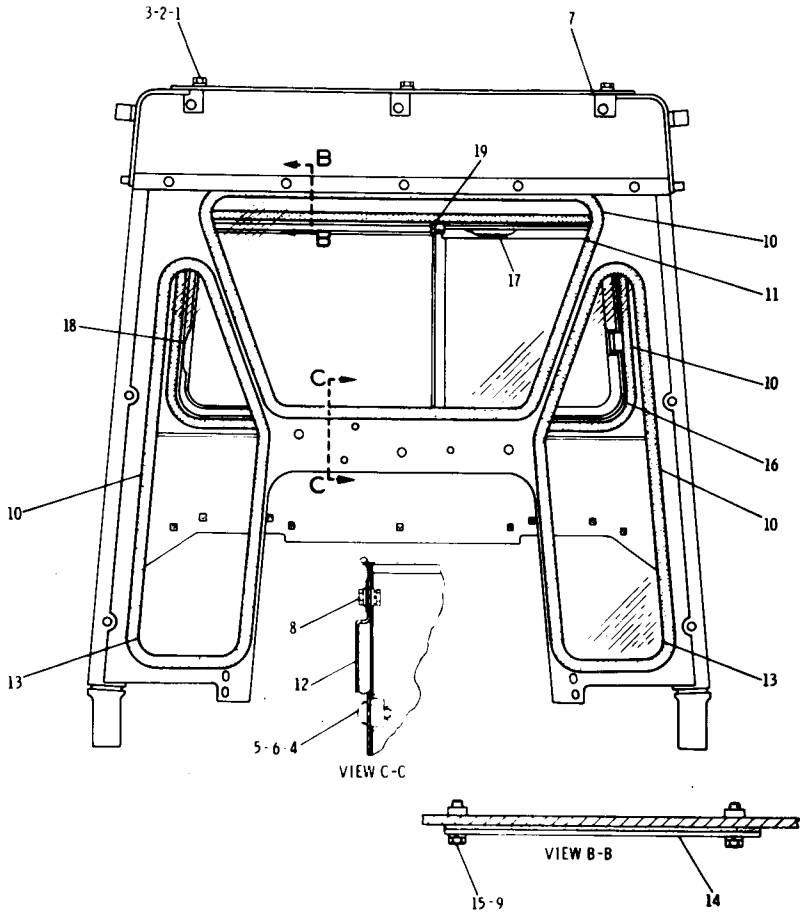

REF. NO.	PART NUMBER	DESCRIPTION	QTY
1	S1594	BOLT-------2.54 cm (1 in.) long	3
2	1D4717	NUT----------	3
3	3B4506	LOCKWASHER----------	3
4	5P7518	RETAINER----------	2
5	5P7519	NUT----------	2
6	5P9034	STUD----------	2
7	8P3142	BRACKET ASSEM.----------	3
8	8L6521	BOLT----------	5
	4B2049	NUT----------	5
	3B4502	LOCKWASHER----------	5
	4B4274	WASHER----------	10
9	3B4504	LOCKWASHER----------	14
▲ 10	5P5768	SEAL----------(use as required)	
11	8P3762	GLASS----------	1
12	9P7854	DOOR----------	1
13	8P3763	GLASS----------	1

14	8P3880	PLATE----------	1
	8P3881	GASKET----------	1
15	4F7957	BOLT----------	14
16	9P9385	WINDOW ASSEM.---------- (Includes)	1
	9P9387	GLASS----------	1
▲ 17	5P8918	SEAL-------1.3 m (51.19 in.)	
▲ 18	5P5680	SEAL-------2.54 m (100 in.)	
19	9P7856	KNOB----------	1

▲ ORDER BY THE METER

224180

8P2126 ROLL-OVER PROTECTIVE STRUCTURE GROUP—Front View—Part 3 of 3—Type 3

Part of 8P2125 Roll-Over Protective System Attachment listed on Pages 154 and 154A

AN ATTACHMENT

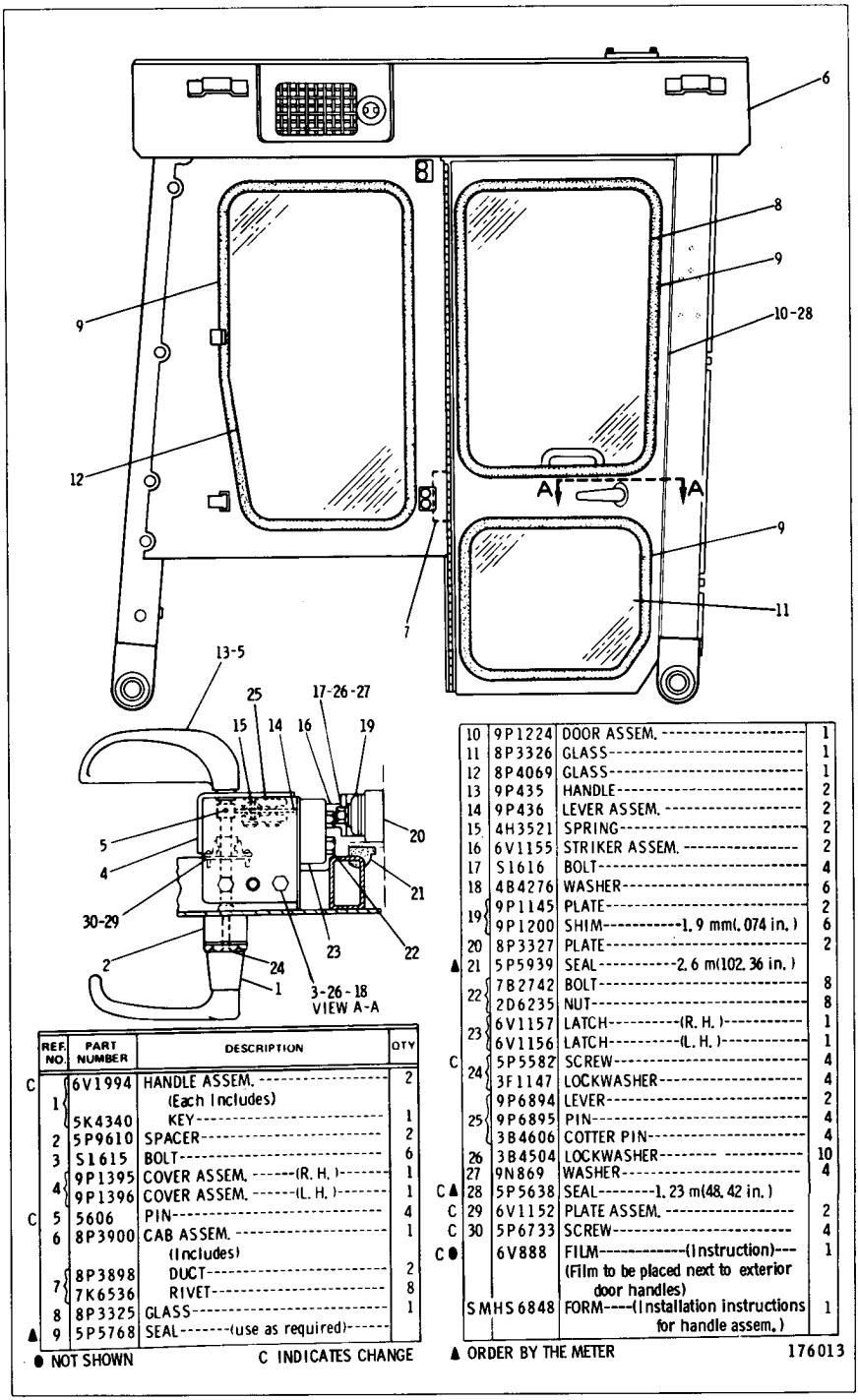

REF. NO.	PART NUMBER	DESCRIPTION	QTY
C	6V1994	HANDLE ASSEM. (Each Includes)	2
1	5K4340	KEY	1
2	5P9610	SPACER	2
3	S1615	BOLT	6
4	9P1395	COVER ASSEM. -----(R. H.)-----	1
	9P1396	COVER ASSEM. -----(L. H.)-----	1
C 5	5606	PIN	4
6	8P3900	CAB ASSEM. (Includes)	1
7	8P3898	DUCT	2
	7K6536	RIVET	8
8	8P3325	GLASS	1
▲ 9	5P5768	SEAL-------(use as required)-----	

10	9P1224	DOOR ASSEM.	1
11	8P3326	GLASS	1
12	8P4069	GLASS	1
13	9P435	HANDLE	2
14	9P436	LEVER ASSEM.	2
15	4H3521	SPRING	2
16	6V1155	STRIKER ASSEM.	2
17	S1616	BOLT	4
18	4B4276	WASHER	6
19	9P1145	PLATE	2
	9P1200	SHIM----------1.9 mm(.074 in.)	6
20	8P3327	PLATE	2
▲ 21	5P5939	SEAL----------2.6 m(102.36 in.)	
22	7B2742	BOLT	8
	2D6235	NUT	8
23	6V1157	LATCH----------(R. H.)----------	1
	6V1156	LATCH----------(L. H.)----------	1
C	5P5582	SCREW	4
24	3F1147	LOCKWASHER	4
	9P6894	LEVER	2
25	9P6895	PIN	4
	3B4606	COTTER PIN	4
26	3B4504	LOCKWASHER--------	10
27	9N869	WASHER	4
C ▲ 28	5P5638	SEAL--------1.23 m(48.42 in.)	
C 29	6V1152	PLATE ASSEM.	2
C 30	5P6733	SCREW	4
C ●	6V888	FILM----------(Instruction)--- (Film to be placed next to exterior door handles)	1
	SMHS6848	FORM----(Installation instructions for handle assem.)	1

● NOT SHOWN C INDICATES CHANGE ▲ ORDER BY THE METER 176013

8P2126 ROLL-OVER PROTECTIVE STRUCTURE GROUP—R.H. View—Part 1 of 3—Type 4

Part of 8P2125 Roll-Over Protective System Arrangement listed on Pages 154 & 154A

AN ATTACHMENT

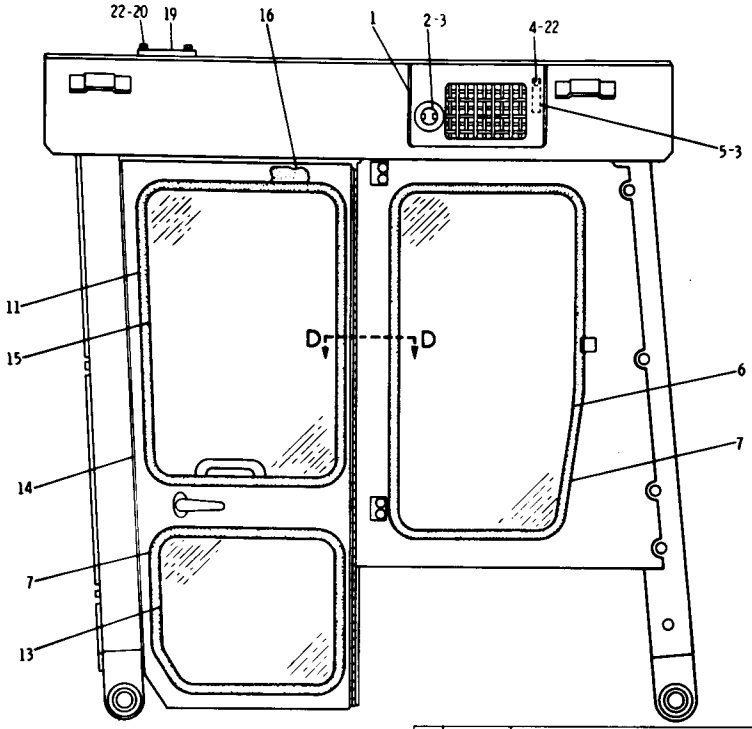

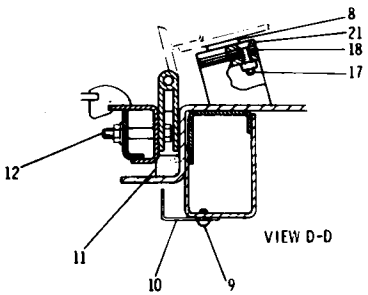

REF. NO.	PART NUMBER	DESCRIPTION	QTY
1	8P9736	DOOR ASSEM. -------(L. H.)-------	1
	8P9779	DOOR ASSEM. --------(R. H.)-------	1
	8P9588	SHIM------(use as required)------	4
2	4D6082	BOLT----------	2
	4B4280	WASHER----------	2
3	3B4610	COTTER PIN----------	4
4	L1351	BOLT----------	4
	4B4278	WASHER----------	4
5	8P9591	ARM ASSEM. --------(L. H.)------	1
	8P9594	ARM ASSEM. --------(R. H.)------	1
6	8P4069	GLASS----------	1
▲ 7	5P5768	SEAL---------(use as required)---	
8	9M5884	BUMPER----------	8
9	167150	SCREW----------	3
10	9P5389	ANGLE----------	1
▲ 11	5P5640	SEAL--------2.9 m(114.11 in.)	
12	1B2713	BOLT----------	18
	7H8909	NUT----------	16
	4B4276	WASHER----------	18
	8M2337	WASHER----------	16
13	8P3326	GLASS----------	1
14	9P1222	DOOR ASSEM. ----------	1
15	8P3325	GLASS----------	1
▲ 16	5P5939	SEAL---------1.25 m (49.22 in.)	
17	7D6921	SCREW----------	8
	8F8052	LOCKWASHER----------	8
18	9P7845	SHIM------1.6 mm (.063 in.) thick	8
	9P7846	SHIM-------.8 mm (.031 in.) thick	8
19	9P1811	COVER----------	1
	9P1810	GASKET----------	1
20	S509	BOLT----------	2
21	9P7844	PLATE----------	4
22	3B4506	LOCKWASHER----------	6

▲ ORDER BY THE METER

224179

8P2126 ROLL-OVER PROTECTIVE STRUCTURE GROUP—L.H. Side—Part 2 of 3—Type 4

Part of 8P2125 ROPS Arrangement listed on Pages 154 and 154A. AN ATTACHMENT

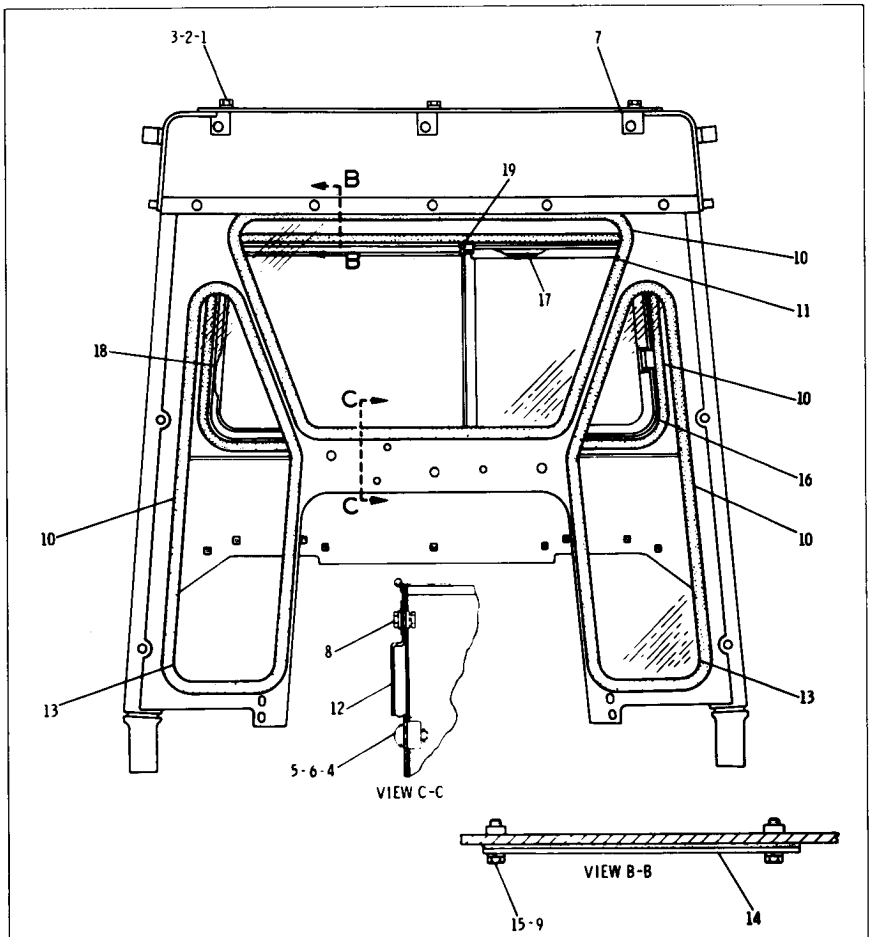

REF. NO.	PART NUMBER	DESCRIPTION	QTY
1	S1594	BOLT-------2.54 cm (1 in.) long	3
2	1D4717	NUT----------	3
3	3B4506	LOCKWASHER----------	3
4	5P7518	RETAINER----------	2
5	5P7519	NUT----------	2
6	5P9034	STUD----------	2
7	8P3142	BRACKET ASSEM.----------	3
8	8L6521	BOLT----------	5
	4B2049	NUT----------	5
	3B4502	LOCKWASHER----------	5
	4B4274	WASHER----------	10
9	3B4504	LOCKWASHER----------	14
▲ 10	5P5768	SEAL----------(use as required)	
11	8P3762	GLASS----------	1
12	9P7854	DOOR----------	1
13	8P3763	GLASS----------	1

14	8P3880	PLATE----------	1
	8P3881	GASKET----------	1
15	4F7957	BOLT----------	14
16	9P9385	WINDOW ASSEM.---------- (Includes)	1
	9P9387	GLASS----------	1
▲ 17	5P8918	SEAL-------1.3 m (51.19 in.)	
▲ 18	5P5680	SEAL-------2.54 m (100 in.)	
19	9P7856	KNOB----------	1

▲ ORDER BY THE METER

224180

8P2126 ROLL-OVER PROTECTIVE STRUCTURE GROUP—Front View—Part 3 of 3—Type 4

Part of 8P2125 ROPS Arrangement listed on Pages 154 and 154A. AN ATTACHMENT

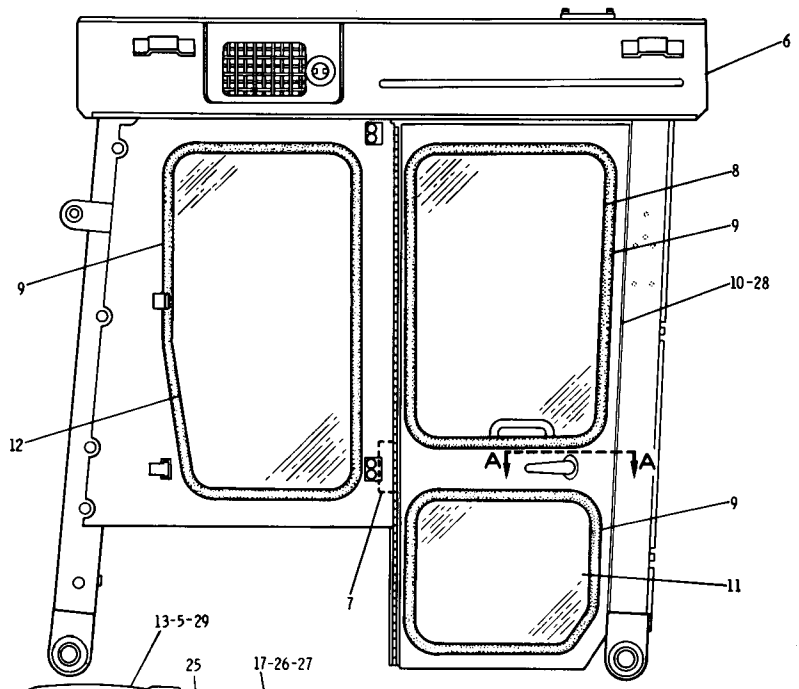

REF. NO.	PART NUMBER	DESCRIPTION	QTY
1	6V1994	HANDLE ASSEM. (Each Includes)	2
	5K4340	KEY	1
2	5P9610	SPACER	2
3	S1615	BOLT	6
4	9P1395	COVER ASSEM. -----(R. H.)	1
	9P1396	COVER ASSEM. -----(L. H.)	1
C 5	4V1281	SCREW	4
6	8P3900	CAB ASSEM. (Includes)	1
7	8P3898	DUCT	2
	7K6536	RIVET	8
8	8P3325	GLASS	1
▲ 9	5P5768	SEAL-------(use as required)-----	
10	9P1224	DOOR ASSEM.	1
11	8P3326	GLASS	1
12	8P4069	GLASS	1
C 13	6V1637	HANDLE ASSEM. --	2
14	9P436	LEVER ASSEM.	2
15	4H3521	SPRING	2
16	6V1155	STRIKER ASSEM.	2
17	S1616	BOLT	4
18	4B4276	WASHER	6
19	9P1145	PLATE	2
	9P1200	SHIM-----1.9 mm(.074 in.)	6
20	8P3327	PLATE	2
▲ 21	5P5939	SEAL--------2.6 m(102.36 in.)	
22	7B2742	BOLT	8
	2D6235	NUT	8
23	6V1157	LATCH----------(R. H.)	1
	6V1156	LATCH----------(L. H.)	1
C 24	6V1251	SCREW	4
25	9P6894	LEVER	2
	9P6895	PIN	4
	3B4606	COTTER PIN	4
26	3B4504	LOCKWASHER	10
27	9N869	WASHER	4
▲ 28	5P5638	SEAL---------- 1.23 m(48.42 in.)	
C 29	8F8052	LOCKWASHER	4
C ●	6V888	FILM--------(Instruction) (Film to be placed next to exterior door handles)	1
	SMHS6848	FORM-(Installation instructions for handle assem.)	

● NOT SHOWN C INDICATES CHANGE ▲ ORDER BY THE METER 176014

8P2126 ROLL-OVER PROTECTIVE STRUCTURE GROUP—R.H. Side—Part 1 of 3—Type 5

Part of 8P2125 ROPS Arrangement listed on Pages 154 and 154A. AN ATTACHMENT

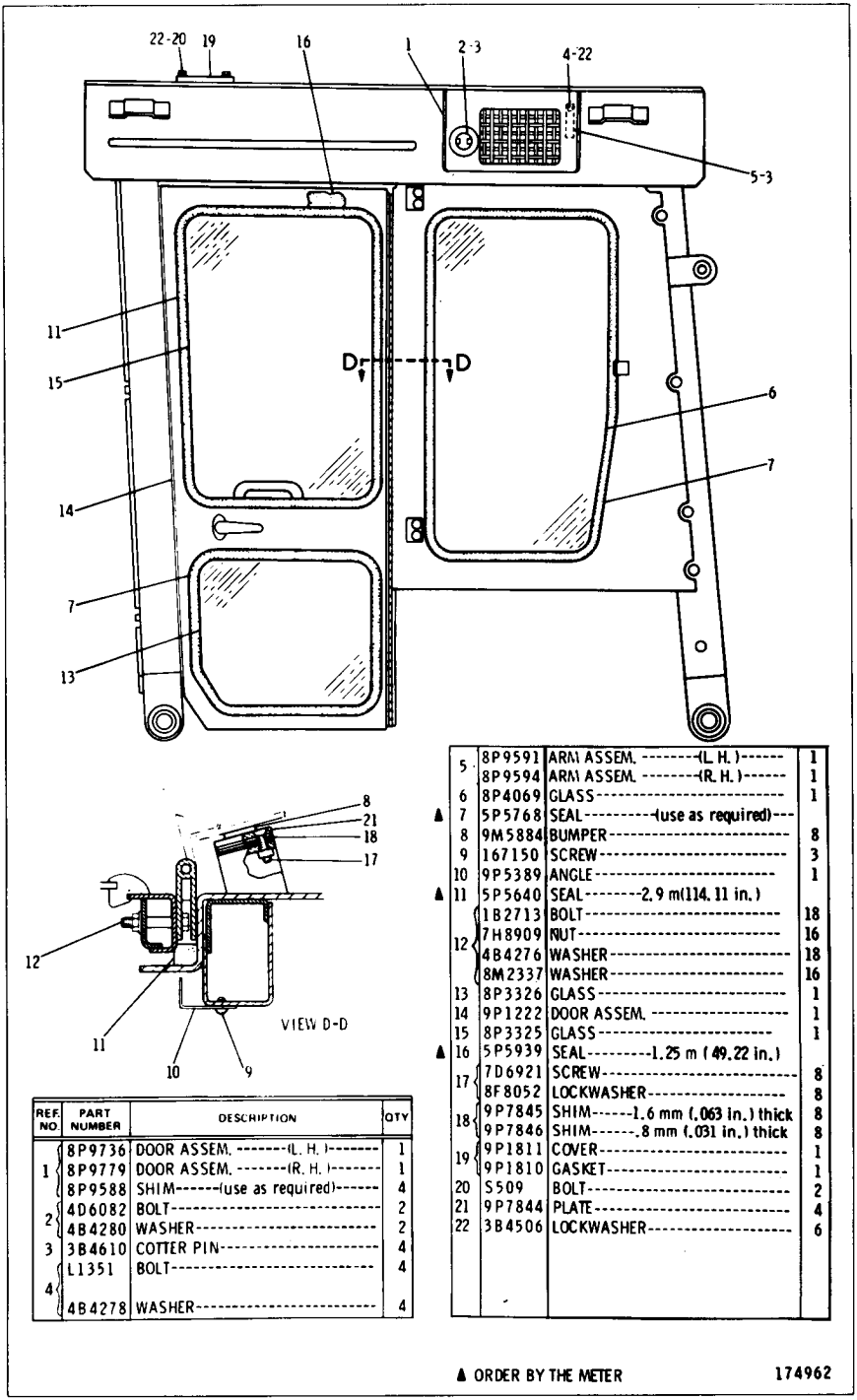

REF. NO.	PART NUMBER	DESCRIPTION	QTY
1	8P9736	DOOR ASSEM. --------(L. H.)-------	1
	8P9779	DOOR ASSEM. --------(R. H.)-------	1
	8P9588	SHIM------(use as required)------	4
2	4D6082	BOLT----------	2
	4B4280	WASHER----------	2
3	3B4610	COTTER PIN----------	4
4	L1351	BOLT----------	4
	4B4278	WASHER----------	4
5	8P9591	ARM ASSEM. --------(L. H.)------	1
	8P9594	ARM ASSEM. --------(R. H.)------	1
6	8P4069	GLASS----------	1
▲ 7	5P5768	SEAL---------(use as required)---	
8	9M5884	BUMPER----------	8
9	167150	SCREW----------	3
10	9P5389	ANGLE----------	1
▲ 11	5P5640	SEAL--------2.9 m(114.11 in.)	
12	1B2713	BOLT----------	18
	7H8909	NUT----------	16
	4B4276	WASHER----------	18
	8M2337	WASHER----------	16
13	8P3326	GLASS----------	1
14	9P1222	DOOR ASSEM. ----------	1
15	8P3325	GLASS----------	1
▲ 16	5P5939	SEAL---------1.25 m (49.22 in.)	
17	7D6921	SCREW----------	8
	8F8052	LOCKWASHER----------	8
18	9P7845	SHIM------1.6 mm (.063 in.) thick	8
	9P7846	SHIM-------.8 mm (.031 in.) thick	8
19	9P1811	COVER----------	1
	9P1810	GASKET----------	1
20	S509	BOLT----------	2
21	9P7844	PLATE----------	4
22	3B4506	LOCKWASHER----------	6

▲ ORDER BY THE METER

174962

8P2126 ROLL-OVER PROTECTIVE STRUCTURE GROUP—L.H. Side—
Part 2 of 3—Type 5
Part of 8P2125 ROPS Arrangement listed on Pages 154 and 154A. AN ATTACHMENT

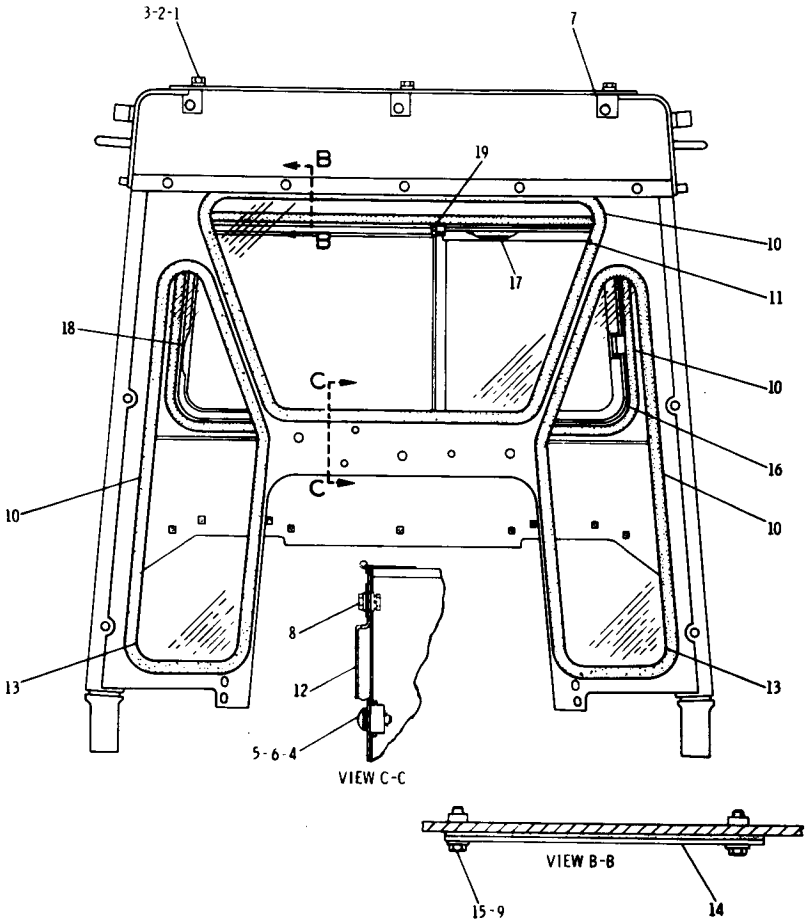

REF. NO.	PART NUMBER	DESCRIPTION	QTY
1	S1594	BOLT-------2.54 cm (1 in.) long	3
2	1D4717	NUT----------	3
3	3B4506	LOCKWASHER--------	3
4	5P7518	RETAINER----------	2
5	5P7519	NUT----------	2
6	5P9034	STUD----------	2
7	8P3142	BRACKET ASSEM.----------	3
8	8L6521	BOLT----------	5
	4B2049	NUT----------	5
	3B4502	LOCKWASHER----------	5
	4B4274	WASHER----------	10
C 9	5P4115	WASHER----------	14
▲ 10	5P5768	SEAL----------(use as required)	
11	8P3762	GLASS----------	1
12	9P7854	DOOR----------	1
13	8P3763	GLASS----------	1

14	8P3880	PLATE----------		1
	8P3881	GASKET----------		1
C 15	687624	SCREW----------		14
16	9P9385	WINDOW ASSEM.---------- (Includes)		1
	9P9387	GLASS----------		1
▲ 17	5P8918	SEAL-------1.3 m (51.19 in.)		
▲ 18	5P5680	SEAL-------2.54 m (100 in.)		
19	9P7856	KNOB----------		1

▲ ORDER BY THE METER

C INDICATES CHANGE

174963

8P2126 ROLL-OVER PROTECTIVE STRUCTURE GROUP—Front View—Part 3 of 3—Type 5

Part of 8P2125 ROPS Arrangement listed on Pages 154 and 154A. AN ATTACHMENT

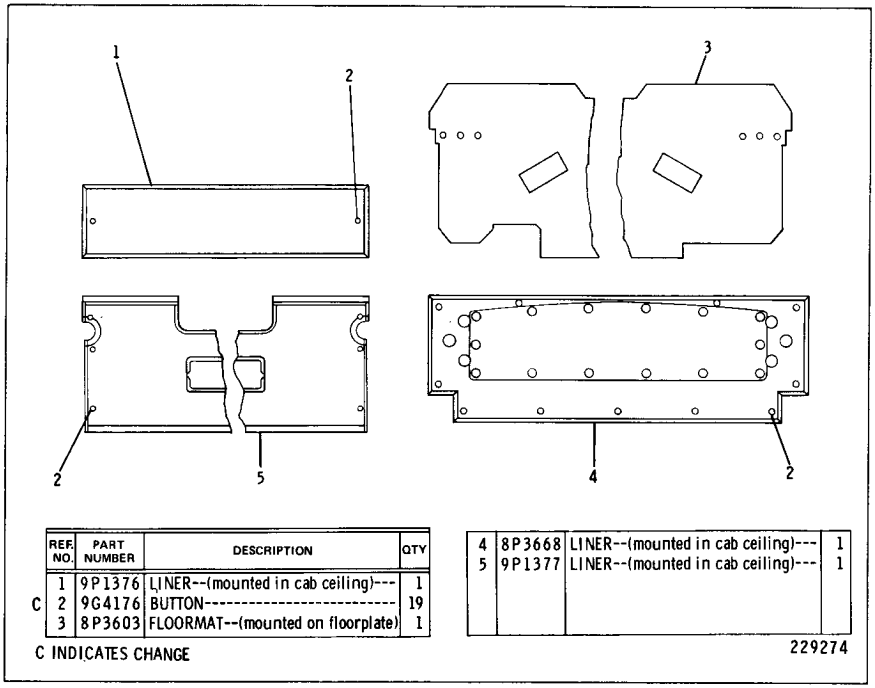

	REF. NO.	PART NUMBER	DESCRIPTION	QTY
	1	9P1376	LINER--(mounted in cab ceiling)---	1
C	2	9G4176	BUTTON----------	19
	3	8P3603	FLOORMAT--(mounted on floorplate)	1
	4	8P3668	LINER--(mounted in cab ceiling)---	1
	5	9P1377	LINER--(mounted in cab ceiling)---	1

C INDICATES CHANGE

229274

8P2151 CAB LINER GROUP—Sound Suppression
Part of 8P2124 Roll-over Protective System Arrangement listed on Page 153
AN ATTACHMENT

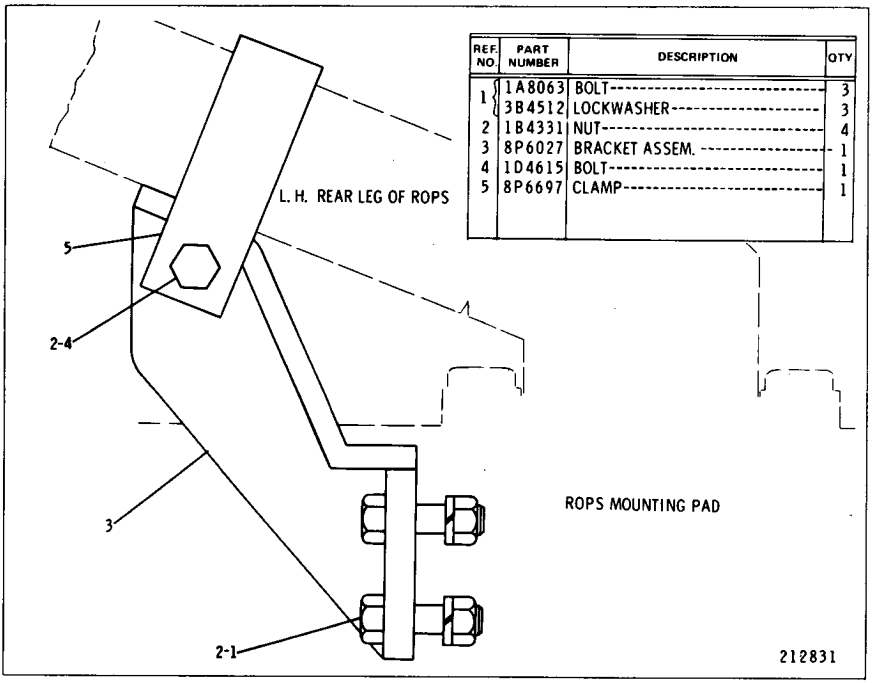

REF. NO.	PART NUMBER	DESCRIPTION	QTY
1	1A8063	BOLT----------	3
	3B4512	LOCKWASHER----------	3
2	1B4331	NUT----------	4
3	8P6027	BRACKET ASSEM. ----------	1
4	1D4615	BOLT----------	1
5	8P6697	CLAMP----------	1

212831

8P2129 SAFETY BRACE GROUP
Part of 8P2124 Roll-over Protective System Arrangement listed on Page 153
AN ATTACHMENT

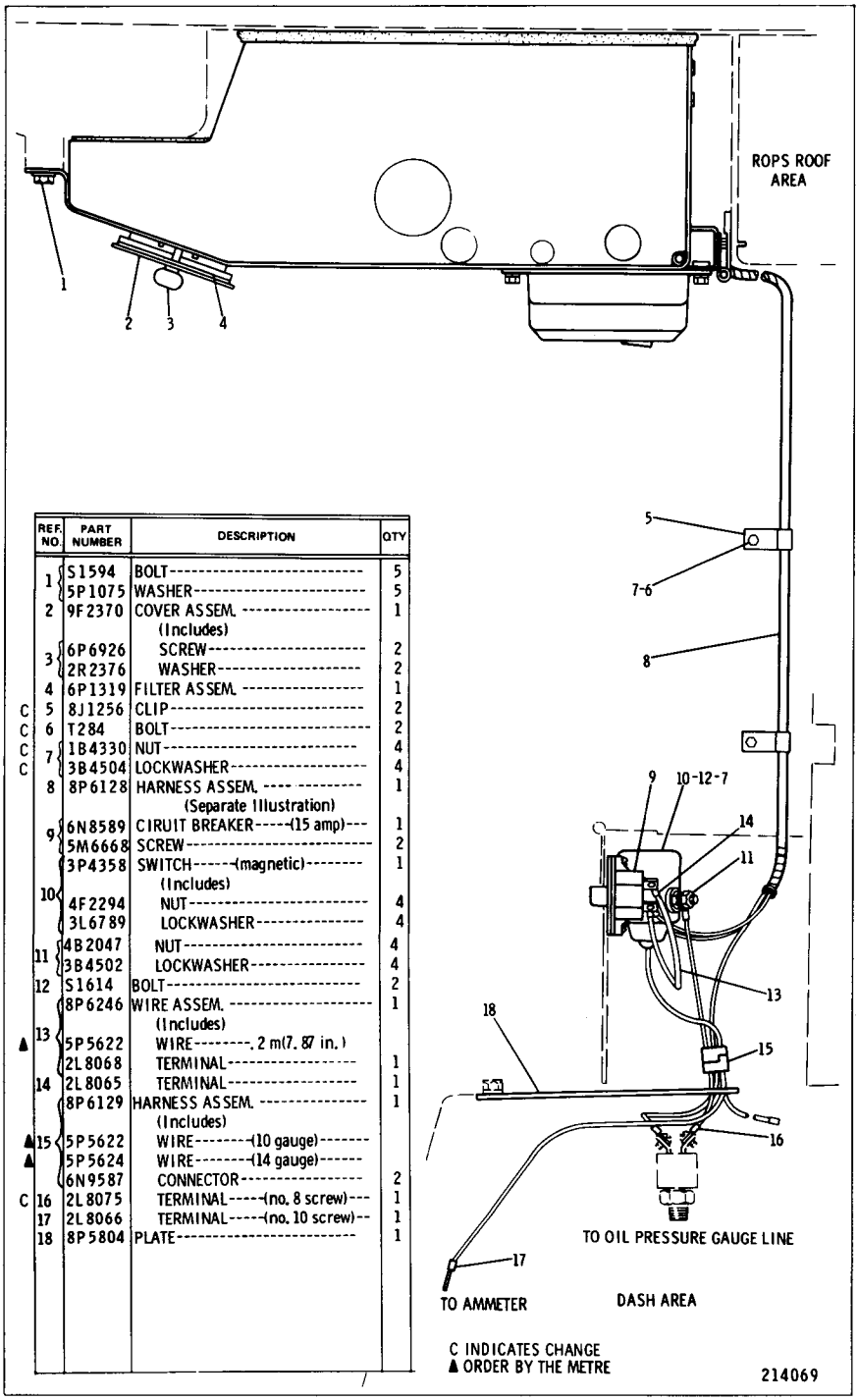

	REF. NO.	PART NUMBER	DESCRIPTION	QTY
	1	S1594	BOLT	5
		5P1075	WASHER	5
	2	9F2370	COVER ASSEM. (Includes)	1
	3	6P6926	SCREW	2
		2R2376	WASHER	2
	4	6P1319	FILTER ASSEM.	1
C	5	8J1256	CLIP	2
C	6	T284	BOLT	2
C	7	1B4330	NUT	4
C		3B4504	LOCKWASHER	4
	8	8P6128	HARNESS ASSEM. (Separate Illustration)	1
	9	6N8589	CIRUIT BREAKER-(15 amp)	1
		5M6668	SCREW	2
	10	3P4358	SWITCH-(magnetic) (Includes)	1
		4F2294	NUT	4
		3L6789	LOCKWASHER	4
	11	4B2047	NUT	4
		3B4502	LOCKWASHER	4
	12	S1614	BOLT	2
	13	8P6246	WIRE ASSEM. (Includes)	1
▲		5P5622	WIRE-, 2 m(7.87 in.)	
		2L8068	TERMINAL	1
	14	2L8065	TERMINAL	1
	15	8P6129	HARNESS ASSEM. (Includes)	1
▲		5P5622	WIRE-(10 gauge)	
▲		5P5624	WIRE-(14 gauge)	
		6N9587	CONNECTOR	2
C	16	2L8075	TERMINAL-(no. 8 screw)	1
	17	2L8066	TERMINAL-(no. 10 screw)	1
	18	8P5804	PLATE	1

8P2131 CAB PRESSURIZER GROUP—Part 1 of 3
Part of 8P2124 Roll-Over Protective System Arrangement listed on Page 153
8P6128 Harness parts are shown on Page 167

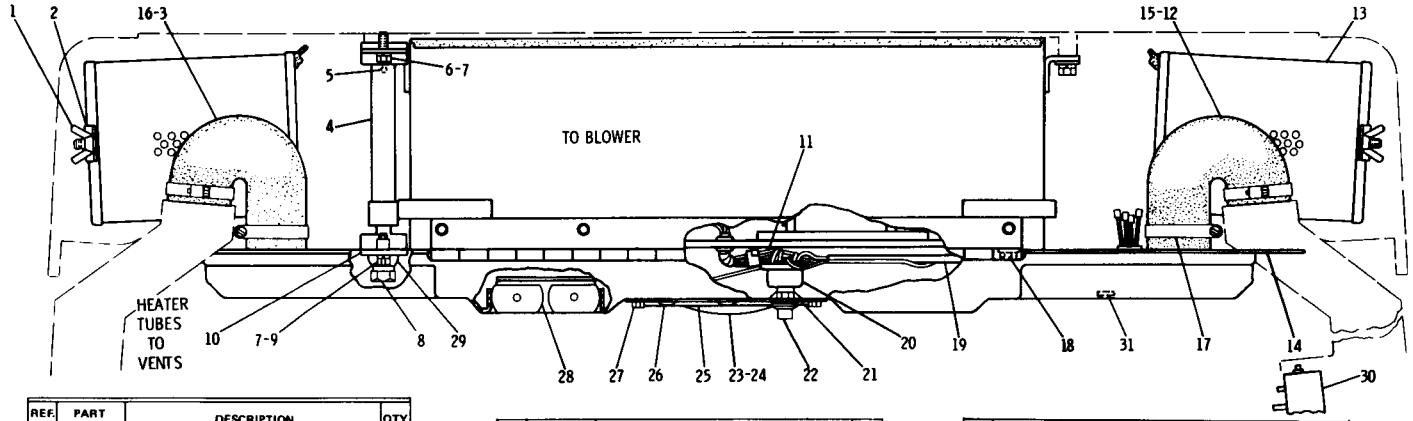

REF. NO.	PART NUMBER	DESCRIPTION	QTY
1	2P9498	NUT	4
2	8P9587	STRAP	2
● 3	5P3915	HOSE----65 cm(25.6 in.)	
4	6P4147	TUBE ASSEM.	1
5	4H1641	PIN	1
6	S509	BOLT	2
7	3B4506	LOCKWASHER	4
8	6P5812	SCREW ASSEM.	1
9	S1594	BOLT	2
10	6P4152	BRACKET	1
11	9P2046	HARNESS ASSEM. (Includes)	1
▲	5P5624	WIRE----(14 gauge)	
▲	5P5623	WIRE----(16 gauge)	
	2L8065	TERMINAL	1
	2L8075	TERMINAL	1
● 12	5P3915	HOSE----65 cm(25.6 in.)	
13	2V36	FILTER	2
14	8P3588	DUCT ASSEM. (Includes)	1
	8P3589	COVER	1
15	8P3587	ADAPTER	1
16	9P2027	ADAPTER	1
17	2J6540	CLAMP	4
C	S1614	BOLT	10
C 18	3B4504	LOCKWASHER	10
C	4B4276	WASHER	10
19	8P6368	HARNESS ASSEM. (Separate Illustration)	1
20	6P3236	SWITCH ASSEM.	1
21	2P4339	NUT	1
22	1P6509	KNOB	1
23	9M4192	LAMP ASSEM. (Includes)	1
	1S3291	DOOR ASSEM.	1
	1S3290	BULB	1
	2F2860	SCREW	2
24	1H2204	SCREW ASSEM.	3
	4B2047	NUT	3
25	8P3710	PLATE	1
26	302283	PLUG	2
27	310243	SCREW	4
28	6P5673	LOUVER	4
29	6P5564	ROD	1
C 30	6P8689	LOUVER	2
C 31	2D3406	BUTTON----25.4 mm(1 in.) dia. hole	1

▲ ORDER BY THE METRE C INDICATES CHANGE ● ORDER BY THE CENTIMETRE 213906

8P2131 CAB PRESSURIZER GROUP—Part 2 of 3
Part of 8P2124 Roll-Over Protective System Arrangement listed on Page 153
8P6368 Harness parts are shown on Page 167B

8P2131 CAB PRESSURIZER GROUP—Part 3 of 3
Part of 8P2124 Roll-Over Protective System Arrangement listed on Page 153
9P5089 Pressurizer parts are shown on Page 163B

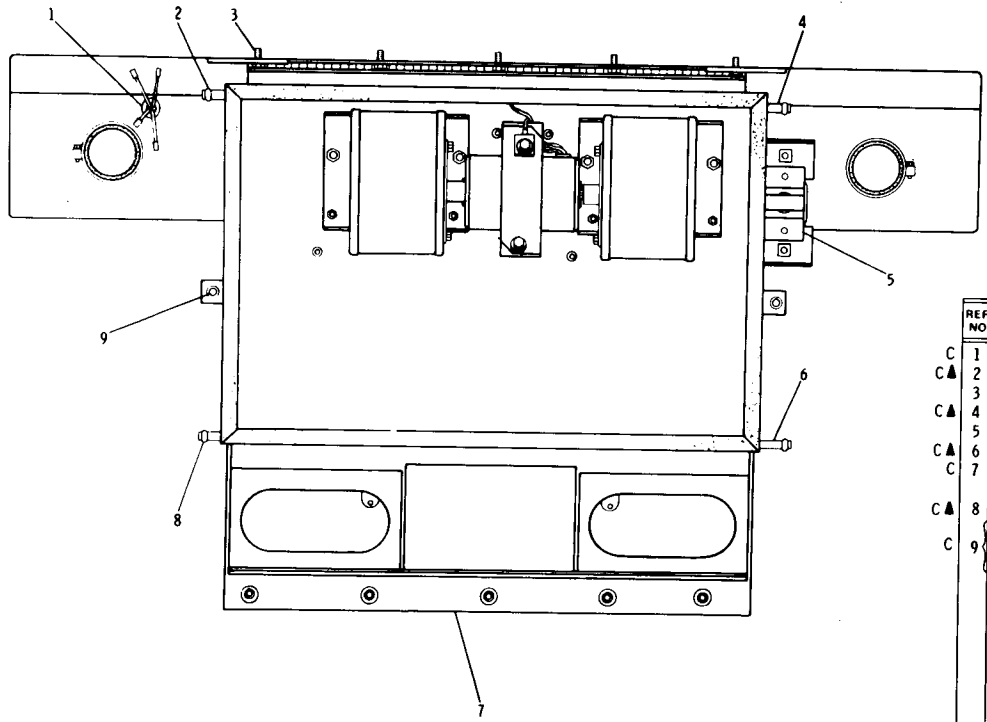

	REF. NO.	PART NUMBER	DESCRIPTION	QTY
C	1	9D3768	GROMMET	1
C▲	2	5P6129	TUBE-----.23 m(9.06 in.)	
	3	S1615	BOLT	5
C▲	4	5P6129	TUBE-----.23 m(9.06 in.)	
	5	6P4151	BRACKET	1
C▲	6	5P6129	TUBE-----.23 m(9.06 in.)	
C	7	9P5089	PRESSURIZER GROUP (Separate Illustration)	1
C▲	8	5P6129	TUBE-----.23 m(9.06 in.)	
	9	L1351	BOLT	2
C		3B4506	LOCKWASHER	2
		5P1075	WASHER	2

C INDICATES CHANGE ▲ DRAIN TUBE-ORDER BY THE METRE 169911

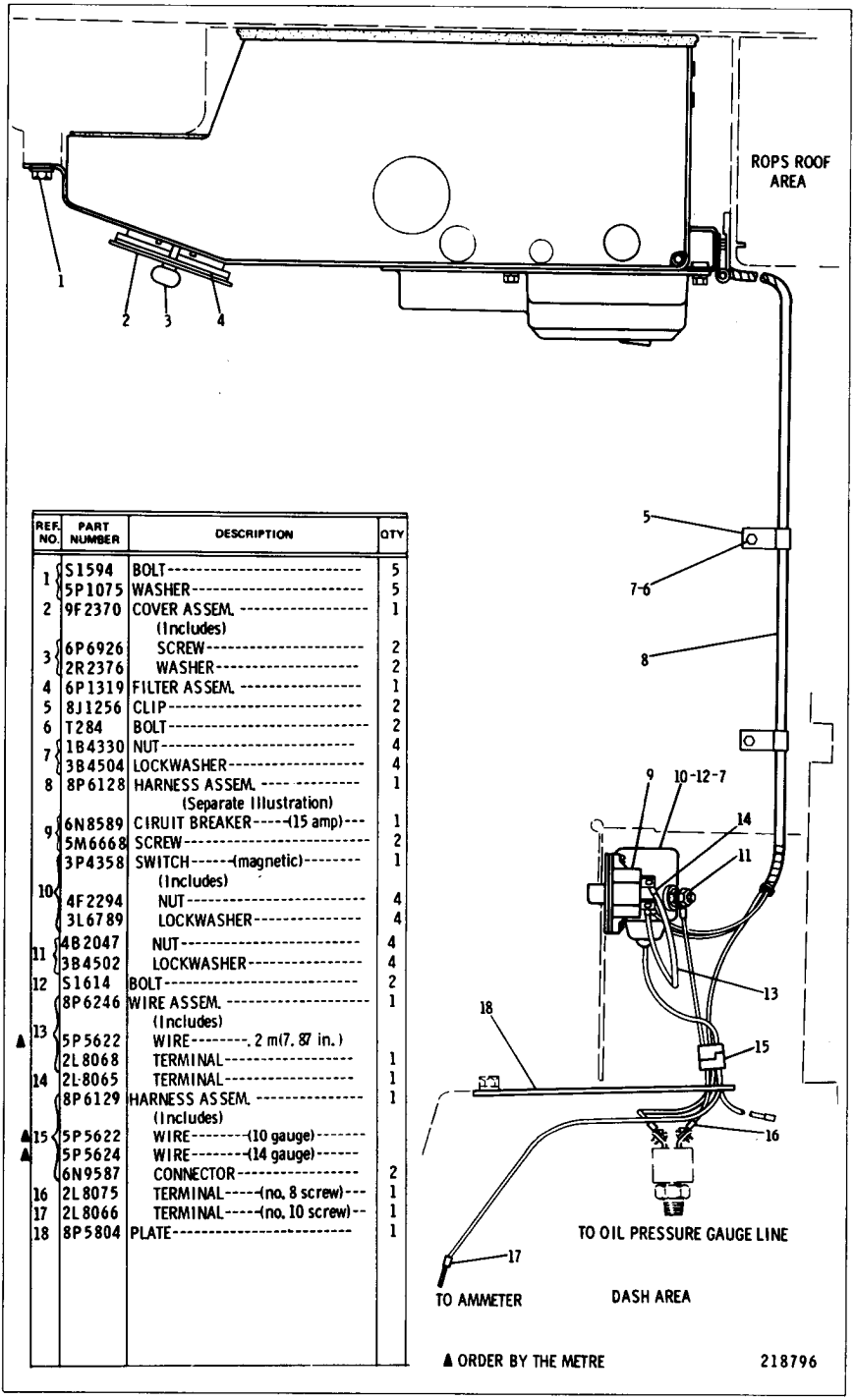

REF. NO.	PART NUMBER	DESCRIPTION	QTY
1	S1594	BOLT	5
	5P1075	WASHER	5
2	9F2370	COVER ASSEM. (Includes)	1
3	6P6926	SCREW	2
	2R2376	WASHER	2
4	6P1319	FILTER ASSEM.	1
5	8J1256	CLIP	2
6	T284	BOLT	2
7	1B4330	NUT	4
	3B4504	LOCKWASHER	4
8	8P6128	HARNESS ASSEM. (Separate Illustration)	1
9	6N8589	CIRUIT BREAKER-(15 amp)	1
	5M6668	SCREW	2
10	3P4358	SWITCH-(magnetic) (Includes)	1
	4F2294	NUT	4
	3L6789	LOCKWASHER	4
11	4B2047	NUT	4
	3B4502	LOCKWASHER	4
12	S1614	BOLT	2
13	8P6246	WIRE ASSEM. (Includes)	1
▲	5P5622	WIRE-2 m(7.87 in.)	
	2L8068	TERMINAL	1
14	2L8065	TERMINAL	1
	8P6129	HARNESS ASSEM. (Includes)	1
▲15	5P5622	WIRE-(10 gauge)	
▲	5P5624	WIRE-(14 gauge)	
	6N9587	CONNECTOR	2
16	2L8075	TERMINAL-(no. 8 screw)	1
17	2L8066	TERMINAL-(no. 10 screw)	1
18	8P5804	PLATE	1

8P2131 CAB PRESSURIZER GROUP—Part 1 of 3—Type 2
Part of 8P2124 Roll-Over Protective System Arrangement listed on Pages 152B and 153
8P6128 Harness parts are shown on Page 167. AN ATTACHMENT

8P2131 CAB PRESSURIZER GROUP—Part 2 of 3—Type 2

Part of 8P2124 Roll-Over Protective System Arrangement listed on Pages 152B & 153

8P6368 Harness parts are shown on Page 167B. AN ATTACHMENT

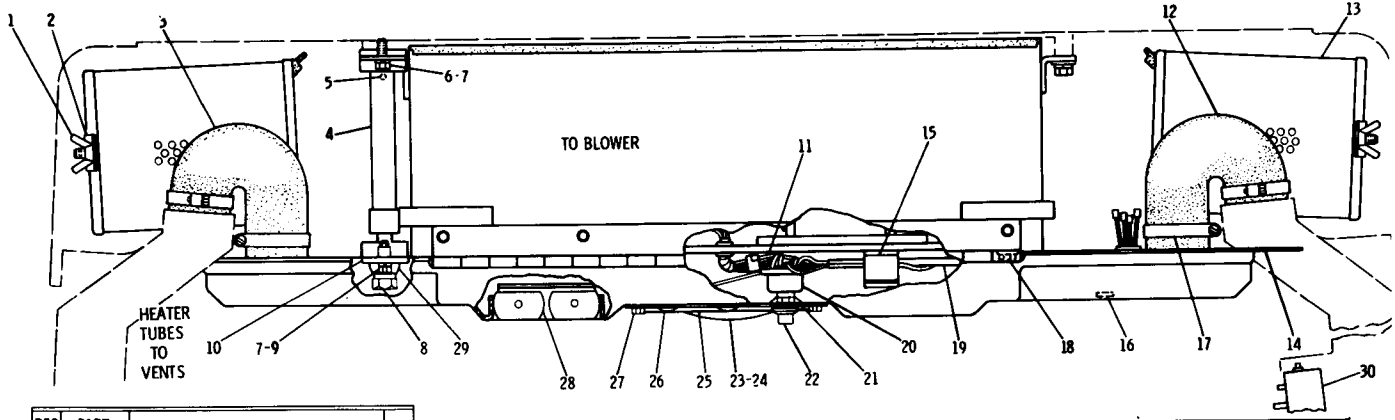

	REF. NO.	PART NUMBER	DESCRIPTION	QTY
	1	2P9498	NUT	4
	2	8P9587	STRAP	2
●	3	5P3915	HOSE—65 cm(25.6 in.)	
	4	6P4147	TUBE ASSEM.	1
	5	4H1641	PIN	1
C	6	T102	BOLT	2
	7	3B4506	LOCKWASHER	4
	8	6P5812	SCREW ASSEM.	1
	9	S1594	BOLT	2
	10	6P4152	BRACKET	1
	11	9P2046	HARNESS ASSEM. (Includes)	1
▲		5P5624	WIRE—(14 gauge)	
▲		5P5623	WIRE—(16 gauge)	
		2L8065	TERMINAL	1
		2L8075	TERMINAL	1
●	12	5P3915	HOSE—65 cm(25.6 in.)	
	13	2V36	FILTER	2

C	14	7G1367	DUCT ASSEM.	1
C	15	319195	CLIP	1
	16	2D3406	BUTTON—2.54mm(1 in.) dia. hole	1
	17	2J6540	CLAMP	4
	18	S1614	BOLT	10
		3B4504	LOCKWASHER	10
		4B4276	WASHER	10
	19	8P6368	HARNESS ASSEM. (Separate Illustration)	1
	20	6P3236	SWITCH ASSEM.	1
	21	2P4339	NUT	1
	22	1P6509	KNOB	1
	23	9M4192	LAMP ASSEM. (Includes)	1
		1S3291	DOOR ASSEM.	1
		1S3290	BULB	1
		2F2860	SCREW	2

	24	1H2204	SCREW ASSEM.	3
		4B2047	NUT	3
	25	8P3710	PLATE	1
	26	302283	PLUG	2
	27	310243	SCREW	4
	28	6P5673	LOUVER	4
	29	6P5564	ROD	1
	30	6P8689	LOUVER	2

▲ ORDER BY THE METRE

C INDICATES CHANGE

● ORDER BY THE CENTIMETRE

218797

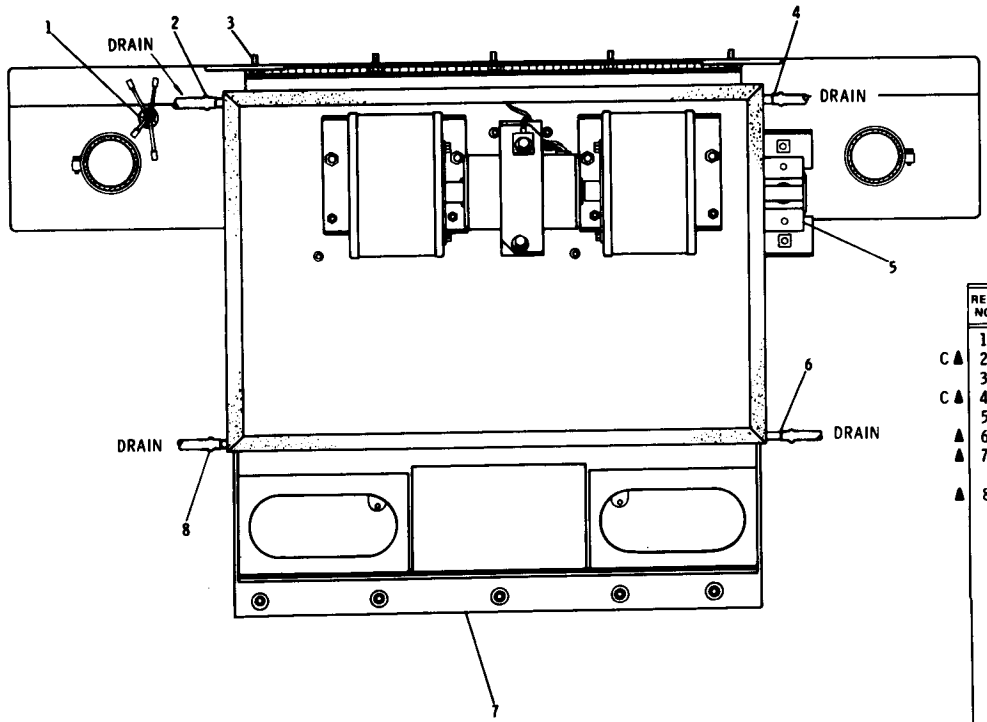

	REF. NO.	PART NUMBER	DESCRIPTION	QTY
	1	9D3768	GROMMET	1
C▲	2	5P6129	TUBE-----.86 m(34.06 in.)	
	3	S1615	BOLT	5
C▲	4	5P6129	TUBE-----.86 m(34.06 in.)	
	5	6P4151	BRACKET	1
▲	6	5P6129	TUBE-----.23 m(9.06 in.)	
▲	7	9P5089	PRESSURIZER GROUP----- (Separate Illustration)	1
▲	8	5P6129	TUBE-----.23 m(9.06 in.)	

▲ ORDER BY THE METRE
C INDICATES CHANGE

218798

8P2131 CAB PRESSURIZER GROUP—Part 3 of 3—Type 2
Part of 8P2124 Roll-Over Protective System Arrangement listed on Pages 152B and 153
9P5089 Pressurizer parts are shown on Page 163B. AN ATTACHMENT

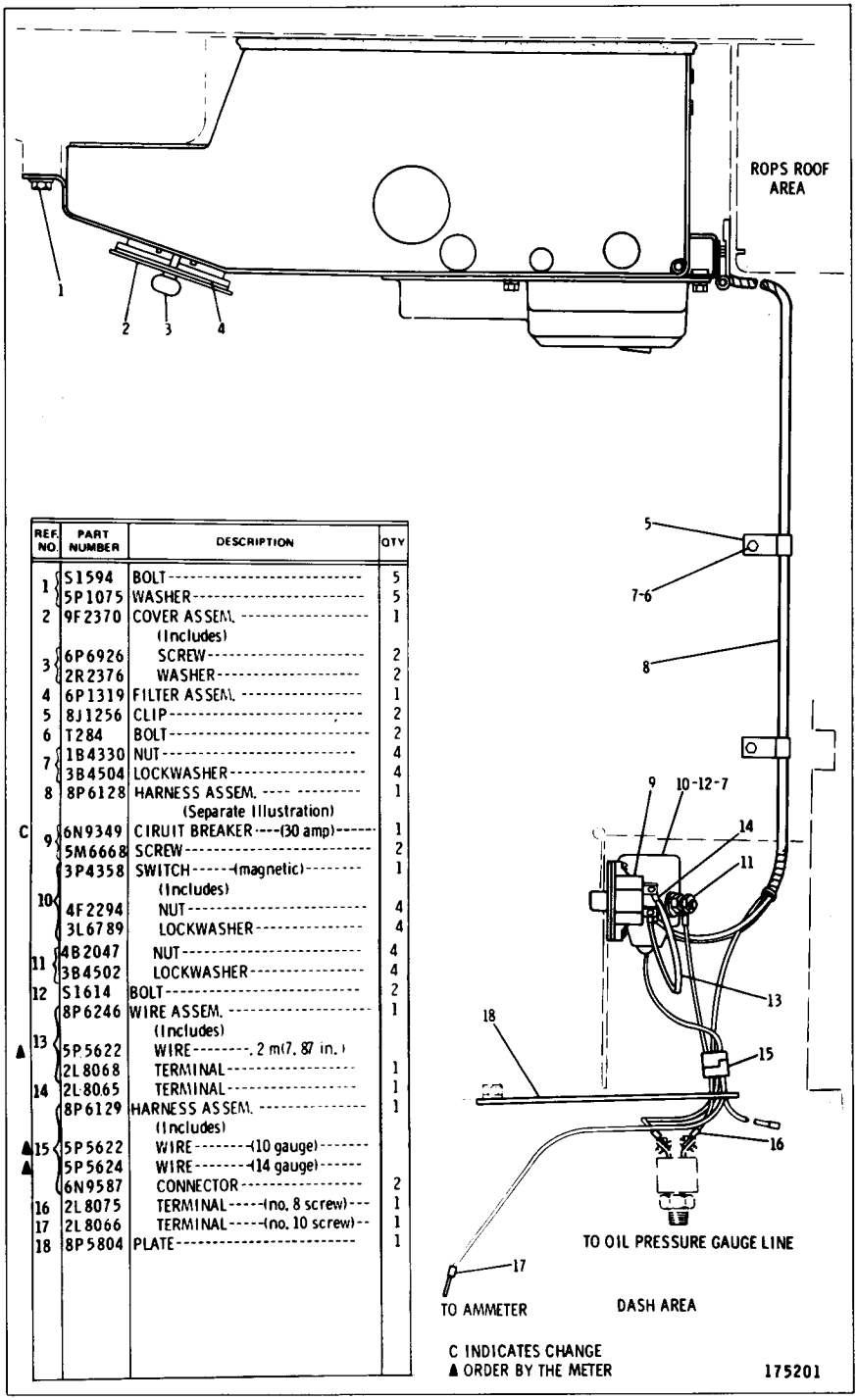

REF. NO.	PART NUMBER	DESCRIPTION	QTY
1	S1594	BOLT	5
	5P1075	WASHER	5
2	9F2370	COVER ASSEM. (Includes)	1
3	6P6926	SCREW	2
	2R2376	WASHER	2
4	6P1319	FILTER ASSEM.	1
5	8J1256	CLIP	2
6	T284	BOLT	2
7	1B4330	NUT	4
	3B4504	LOCKWASHER	4
8	8P6128	HARNESS ASSEM. (Separate Illustration)	1
C 9	6N9349	CIRUIT BREAKER-(30 amp)	1
	5M6668	SCREW	2
	3P4358	SWITCH-(magnetic) (Includes)	1
10	4F2294	NUT	4
	3L6789	LOCKWASHER	4
11	4B2047	NUT	4
	3B4502	LOCKWASHER	4
12	S1614	BOLT	2
13	8P6246	WIRE ASSEM. (Includes)	1
▲	5P5622	WIRE-2 m(7. 87 in.)	
	2L8068	TERMINAL	1
14	2L8065	TERMINAL	1
	8P6129	HARNESS ASSEM. (Includes)	1
▲15	5P5622	WIRE-(10 gauge)	
▲	5P5624	WIRE-(14 gauge)	
	6N9587	CONNECTOR	2
16	2L8075	TERMINAL-(no. 8 screw)	1
17	2L8066	TERMINAL-(no. 10 screw)	1
18	8P5804	PLATE	1

C INDICATES CHANGE
▲ ORDER BY THE METER

175201

8P2131 CAB PRESSURIZER GROUP—Part 1 of 3—Type 3
Part of 8P2124 Roll-Over Protective System Arrangement listed on Pages 152B & 153
8P6128 Harness parts are shown on Page 167. AN ATTACHMENT

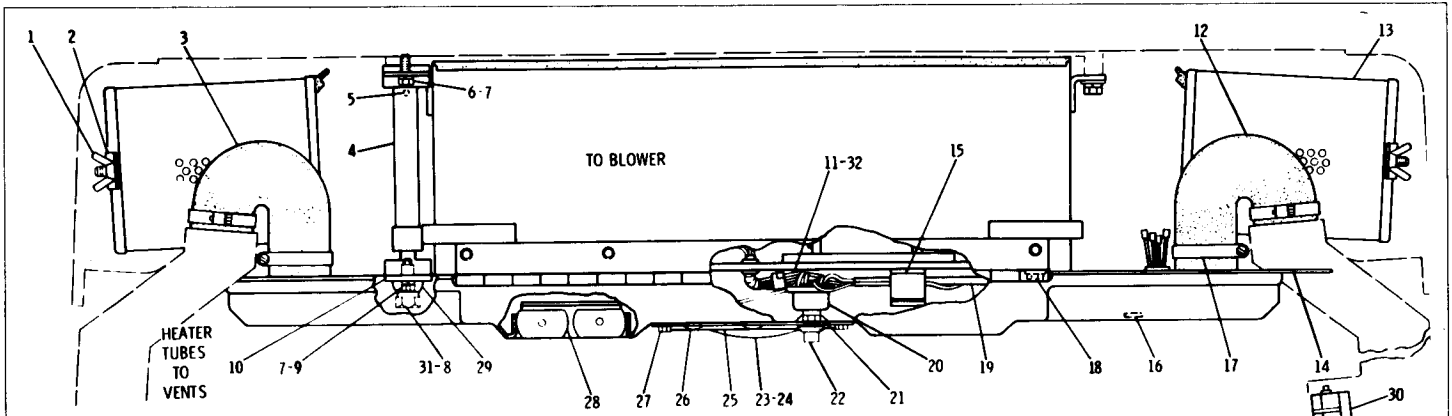

REF NO	PART NUMBER	DESCRIPTION	QTY
1	2P9498	NUT	4
2	8P9587	STRAP	2
● 3	5P3915	HOSE---65 cm(25.6 in.)	
4	6P4147	TUBE ASSEM.	1
5	4H1641	PIN	1
6	T102	BOLT	2
7	3B4506	LOCKWASHER	4
8	6P5812	SCREW ASSEM.	1
9	S1594	BOLT	2
10	6P4152	BRACKET	1
11	9P2046	HARNESS ASSEM. (Includes)	1
▲	5P5624	WIRE---(14 gauge)	
▲	5P5623	WIRE---(16 gauge)	
	2L8065	TERMINAL	1
	2L8075	TERMINAL	1
● 12	5P3915	HOSE---65 cm(25.6 in.)	
13	2V36	FILTER	2
14	7G1367	DUCT ASSEM.	1
15	319195	CLIP	1
16	2D3406	BUTTON---2.54mm(1 in.) dia. hole	1
17	2J6540	CLAMP	4
18	S1614	BOLT	10
C	5P4115	WASHER	10
19	8P6368	HARNESS ASSEM. (Separate Illustration)	1
20	6P3236	SWITCH ASSEM.	1
21	2P4339	NUT	1
22	1P6509	KNOB	1
	9M4192	LAMP ASSEM. (Includes)	1
23	1S3291	DOOR ASSEM.	1
C	7N9943	LAMP	1
	2F2860	SCREW	2
24	1H2204	SCREW ASSEM.	3
	4B2047	NUT	3
25	8P3710	PLATE	1
26	302283	PLUG	2
27	310243	SCREW	4
28	6P5673	LOUVER	4
29	6P5564	ROD	1
30	6P8689	LOUVER	2
C	5P6458	SEAL	4
C 31	4D3704	WASHER	2
C 32	3S2093	STRAP	2

▲ ORDER BY THE METER C INDICATES CHANGE ● ORDER BY THE CENTIMETER 175202

8P2131 CAB PRESSURIZER GROUP—Part 2 of 3—Type 3
Part of 8P2124 Roll-Over Protective System Arrangement listed on Pages 152B and 153
8P6368 Harness parts are shown on Page 167B. AN ATTACHMENT

8P2131 CAB PRESSURIZER GROUP—Part 3 of 3—Type 3

Part of 8P2124 Roll-Over Protective System Arrangement listed on Pages 152B and 153

9P5089 Pressurizer parts are shown on Page 163B. AN ATTACHMENT

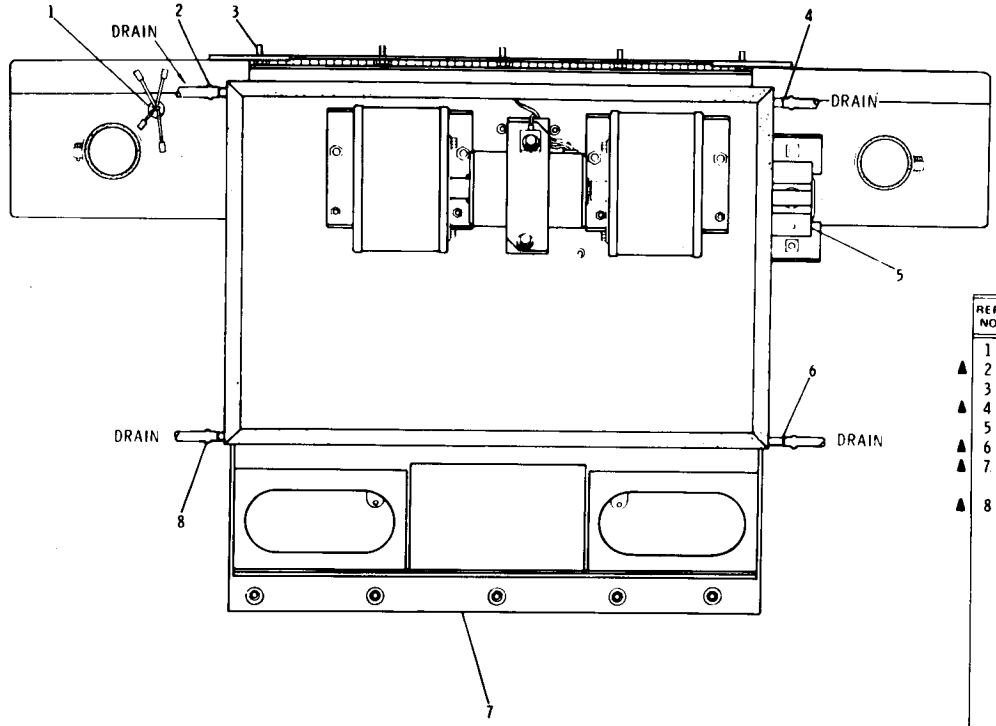

REF NO	PART NUMBER	DESCRIPTION	QTY
1	9D3768	GROMMET	1
▲ 2	5P6129	TUBE-----.86 m(34.06 in.)	
3	S1615	BOLT	5
▲ 4	5P6129	TUBE-----.86 m(34.06 in.)	
5	6P4151	BRACKET	1
▲ 6	5P6129	TUBE-----.23 m(9.06 in.)	
▲ 7	9P5089	PRESSURIZER GROUP (Separate Illustration)	1
▲ 8	5P6129	TUBE-----.23 m(9.06 in.)	

▲ ORDER BY THE METER

175203

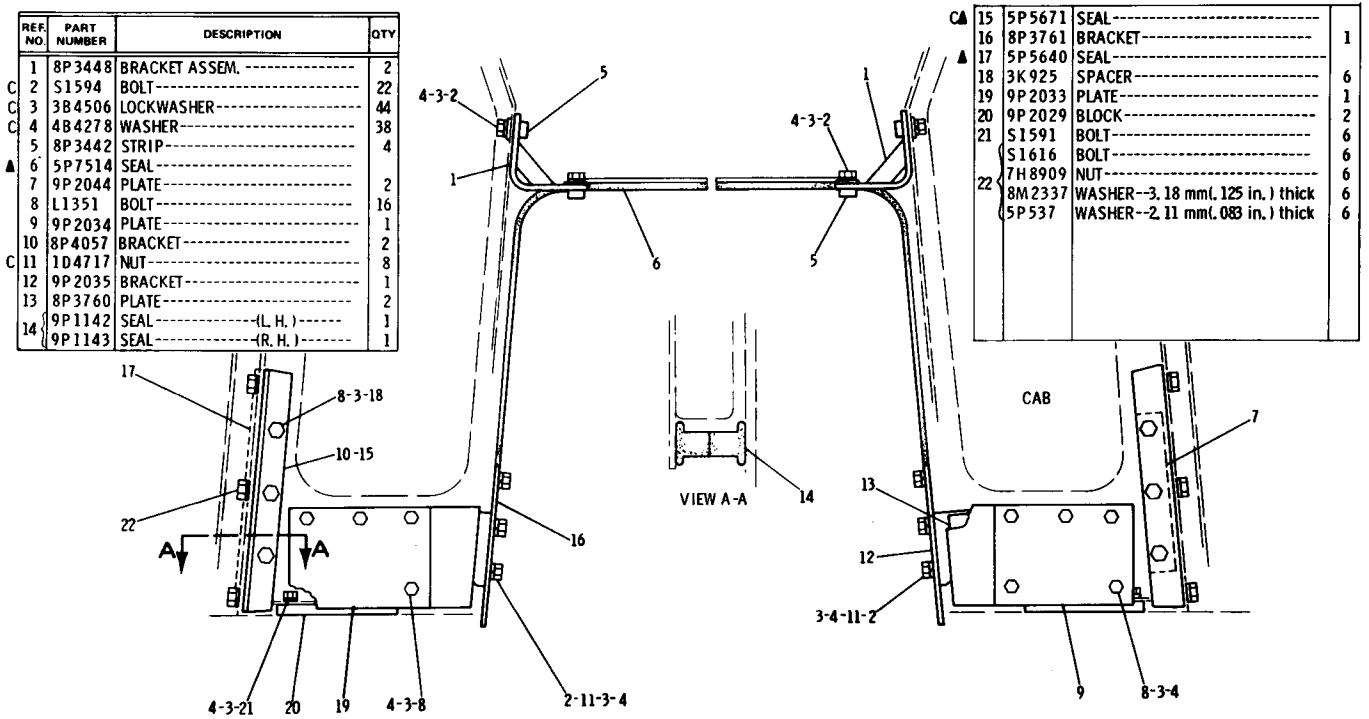

REF. NO.	PART NUMBER	DESCRIPTION	QTY
1	8P3448	BRACKET ASSEM.	2
C 2	S1594	BOLT	22
C 3	3B4506	LOCKWASHER	44
C 4	4B4278	WASHER	38
5	8P3442	STRIP	4
▲ 6	5P7514	SEAL	
7	9P2044	PLATE	2
8	L1351	BOLT	16
9	9P2034	PLATE	1
10	8P4057	BRACKET	2
C 11	1D4717	NUT	8
12	9P2035	BRACKET	1
13	8P3760	PLATE	2
14	9P1142	SEAL (L. H.)	1
	9P1143	SEAL (R. H.)	1

CA	REF. NO.	PART NUMBER	DESCRIPTION	QTY
	15	5P5671	SEAL	
	16	8P3761	BRACKET	1
▲	17	5P5640	SEAL	
	18	3K925	SPACER	6
	19	9P2033	PLATE	1
	20	9P2029	BLOCK	2
	21	S1591	BOLT	6
	22	S1616	BOLT	6
		7H8909	NUT	6
		8M2337	WASHER--3.18 mm(.125 in.) thick	6
		5P537	WASHER--2.11 mm(.083 in.) thick	6

C INDICATES CHANGE
▲ ORDER BY THE METRE-USE AS REQUIRED
213903

8P3864 CAB MOUNTING GROUP—Part 1
Part of 8P2124 Roll-Over Protective System Arrangement listed on Page 153
AN ATTACHMENT

8P3864 CAB MOUNTING GROUP—Part 2

Part of 8P2124 Roll-over Protective System Arrangement listed on Page 153

AN ATTACHMENT

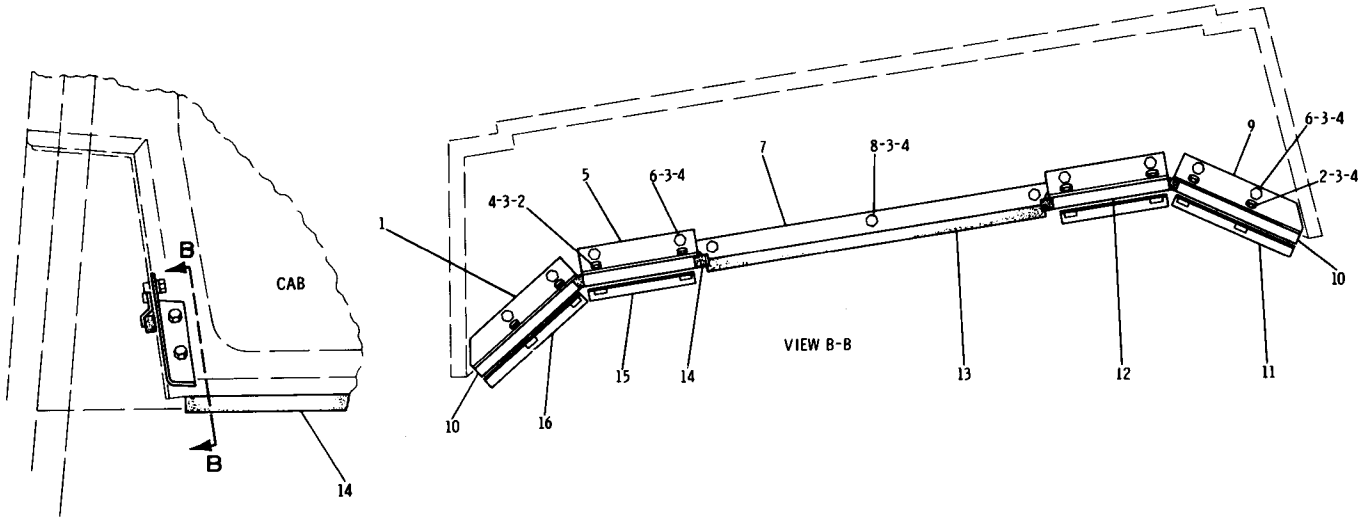

REF. NO.	PART NUMBER	DESCRIPTION	QTY
1	8P3350	BRACKET	1
2	S1590	BOLT	8
3	3B4506	LOCKWASHER	19
4	3K925	SPACER	19
5	8P3348	BRACKET	2
6	S1594	BOLT	8
7	8P3346	BRACKET ASSEM.	1
8	L1351	BOLT	3
9	8P3351	BRACKET	1
10	8P3356	SPACER	2
11	9P2037	ANGLE ASSEM.	1
12	8P3352	SPACER	2
▲13	5P5755	SEAL	
▲14	5P7514	SEAL	
15	9P2043	ANGLE ASSEM.	2
16	9P2042	ANGLE ASSEM.	1

▲ ORDER BY THE METRE-USE AS REQUIRED

213053

	REF. NO.	PART NUMBER	DESCRIPTION	QTY.
	1	8P3448	BRACKET ASSEM.	2
	2	S1594	BOLT	22
C	3	5P1075	WASHER	38
C ▲	4	5P7513	SEAL	
	5	8P3442	STRIP	4
C ▲	6	5P7514	SEAL	
	7	9P2044	PLATE	2
C	8	L1351	BOLT	10
	9	9P1143	SEAL-(R. H.)	1
	10	8P4057	BRACKET	2
	11	S1616	BOLT	6
	12	9P2035	BRACKET	1
	13	8P3760	PLATE	2
	14	9P1142	SEAL-(L. H.)	1
C ▲	15	5P5671	SEAL	
	16	8P3761	BRACKET	1
▲	17	5P5640	SEAL	
	18	7H8909	NUT	6
	19	8M2377	WASHER----3.18 mm(.125 in.)thick	6
		5P537	WASHER----2.11 mm(.083 in.)thick	6
	20	9P2029	BLOCK	2
	21	S1591	BOLT	6

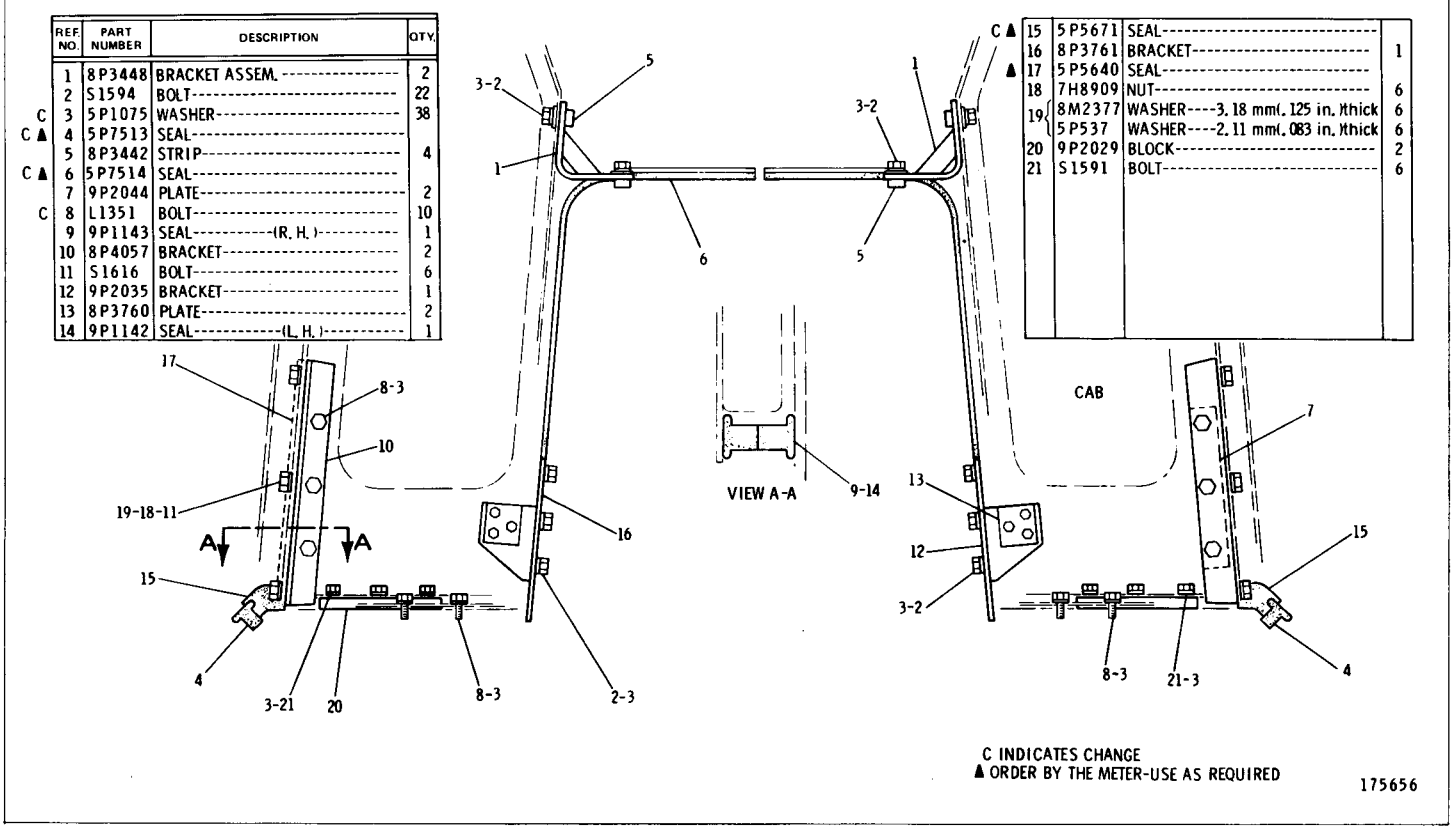

8P3864 CAB MOUNTING GROUP—Part 1—Type 2
Part of 8P2124 Roll-Over Protective System Arrangement listed on Page 153
AN ATTACHMENT

8P3864 CAB MOUNTING GROUP—Part 2—Type 2
Part of 8P2124 Roll-Over Protective System Arrangement listed on Page 153
AN ATTACHMENT

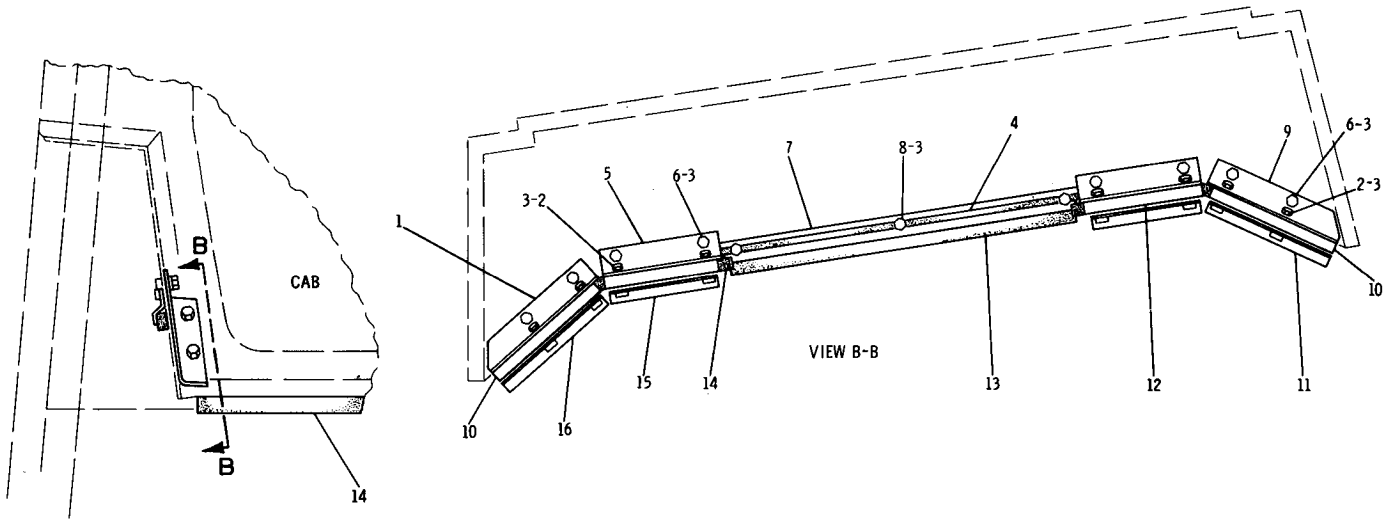

	REF. NO.	PART NUMBER	DESCRIPTION	QTY.
	1	8P3350	BRACKET	1
	2	S1590	BOLT	8
C	3	5P1075	WASHER	19
C▲	4	5P5637	SEAL	
	5	8P3348	BRACKET	2
	6	S1594	BOLT	8
	7	8P3346	BRACKET ASSEM.	1
	8	L1351	BOLT	3
	9	8P3351	BRACKET	1
	10	8P3356	SPACER	2
	11	9P2037	ANGLE ASSEM.	1
	12	8P3352	SPACER	2
▲	13	5P5755	SEAL	
C ▲	14	5P7514	SEAL	
	15	9P2043	ANGLE ASSEM.	2
	16	9P2042	ANGLE ASSEM.	1

C INDICATES CHANGE

▲ ORDER BY THE METER-USE AS REQUIRED

175998

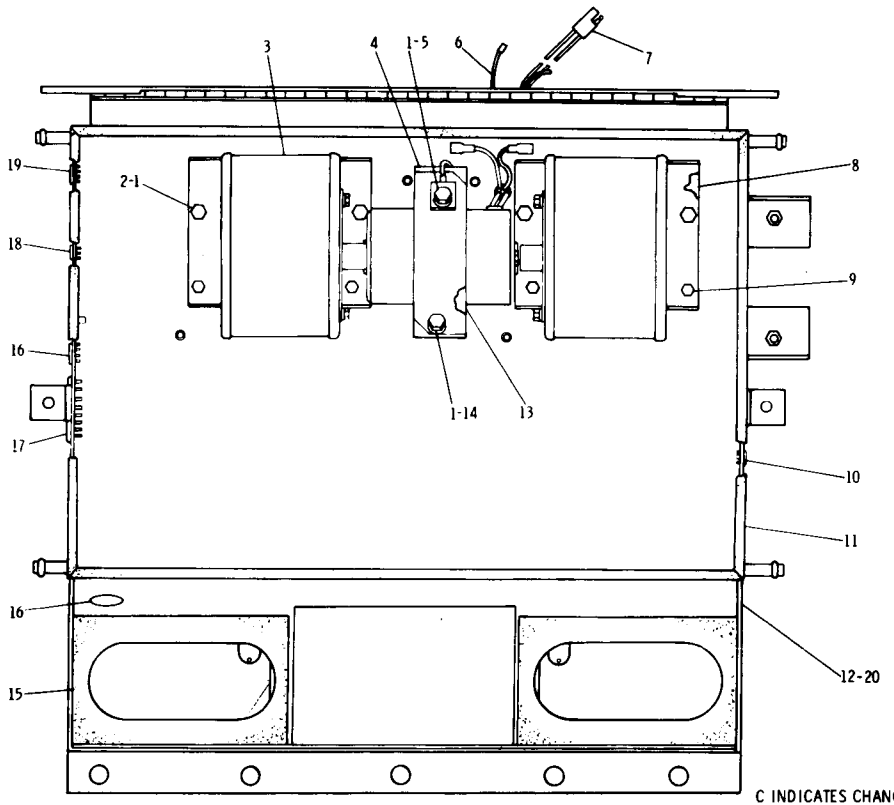

REF. NO.	PART NUMBER	DESCRIPTION	QTY
1	S1594	BOLT	6
	3B4506	LOCKWASHER	6
2	1D4717	NUT	4
3	9P3788	BLOWER ASSEM. (Separate Illustration)	1
4	6P1298	STRAP	1
5	2H4499	LOCK	1
	9P6897	WIRE ASSEM. (Includes)	1
C▲ 6	5P5629	WIRE-.36 m(14 in.)	
	4S1988	TERMINAL---(dome light)	1
	2L8079	TERMINAL	1
	8P6385	HARNESS ASSEM. (Includes)	1
▲ 7	5P5623	WIRE-(16 gauge)	
▲	5P5624	WIRE-(14 gauge)	
	5P4571	TERMINAL	6
8	6P1296	SEAL	2
	2A762	BOLT	4
9	1B4330	NUT	4
	3B4504	LOCKWASHER	4
10	3D9871	BUTTON	4
▲ 11	5P5657	SEAL-2.25 m(88.58 in.)	
12	9P2385	CASE ASSEM.	1
▲ 13	5P5908	SEAL-.31 m(12.20 in.)	
14	4B4278	WASHER	1
15	8P2303	SEAL	2
16	7D4786	PLUG	3
17	6P1294	PLUG	1
18	5K3546	BUTTON	1
19	4S6336	BUTTON	1
20	7L6479	PLUG-(fits 7.87 mm(.31 in.) hole)	5

C INDICATES CHANGE

▲ ORDER BY THE METRE

217020

9P5089 BASIC PRESSURIZER GROUP—Type 1
Part of 8P2131 Cab Pressurizer, 8P2146 Air Conditioner and 8P4914 Heater Groups shown on Pages 161, 161D, 180, 181A, 186 & 186A. 9P3788 Blower parts are shown on Page 168

9P5089 BASIC PRESSURIZER GROUP—Type 2

Part of 8P2131 Cab Pressurizer, 8P2146 Air Conditioner and 8P4914 Heater Group shown on Pages 161, 161D, 180, 181A, 186 & 186A
9P3788 Blower parts are shown on Page 168. AN ATTACHMENT

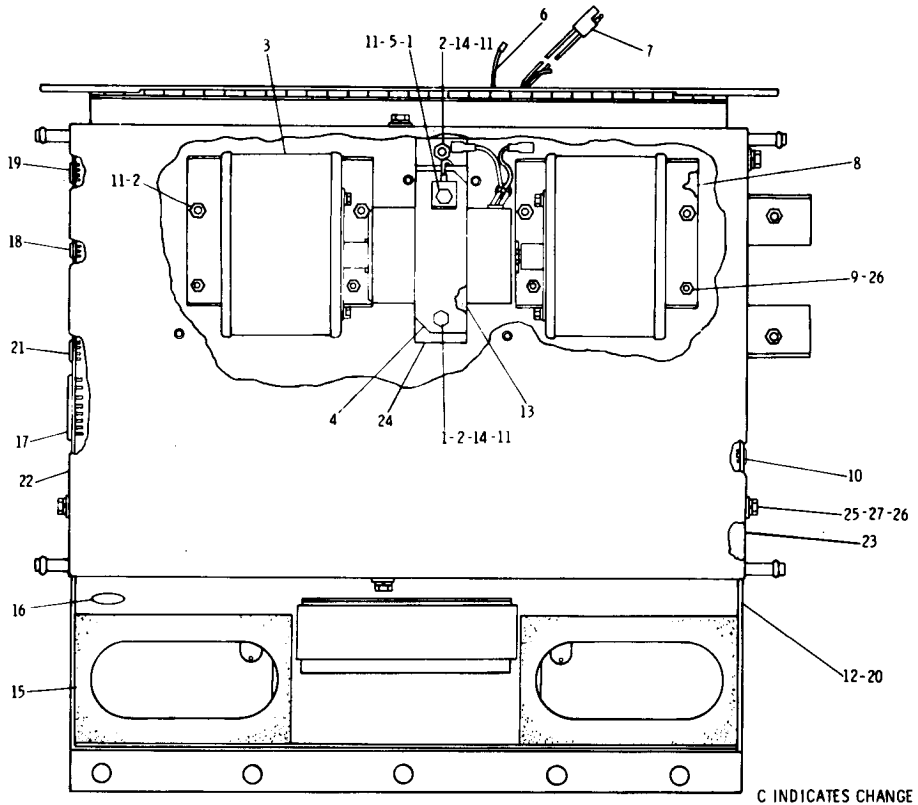

C INDICATES CHANGE

	REF. NO.	PART NUMBER	DESCRIPTION	QTY
C	1	S1594	BOLT	2
C	2	1D4717	NUT	6
	3	9P3788	BLOWER ASSEM. (Separate Illustration)	1
	4	6P1298	STRAP	1
	5	2H4499	LOCK	1
		9P6897	WIRE ASSEM. (Includes)	1
▲	6	5P5629	WIRE-----.36 m (14 in.)	
		4S1988	TERMINAL----(dome light)----	1
		2L8079	TERMINAL	1
		8P6385	HARNESS ASSEM. (Includes)	1
▲	7	5P5623	WIRE----------(16 gauge)	
▲		5P5624	WIRE----------(14 gauge)	
		5P4571	TERMINAL	6
	8	6P1296	SEAL	2
	9	1B4330	NUT	4
	10	3D9871	BUTTON	4
C	11	3B4506	LOCKWASHER	8
C	12	7G3057	CASE ASSEM.	1
▲	13	5P5908	SEAL----------.31 m(12.20 in)	
C	14	4B4278	WASHER	3
	15	8P2303	SEAL	2
C	16	7D4786	PLUG	1
	17	6P1294	PLUG	1
	18	5K3546	BUTTON	1
	19	4S6336	BUTTON	1
	20	7L6479	PLUG---(fits 7.87mm(.31 in.)hole)	5
C	21	1V9019	PLUG	2
C	22	7G3000	COVER ASSEM. (Includes)	1
	23	7G2999	SEAL	1
C	24	7G2377	BRACKET ASSEM.	1
C	25	S1614	BOLT	6
C	26	3B4504	LOCKWASHER	10
C	27	4B4276	WASHER	6

▲ ORDER BY THE METRE

169044

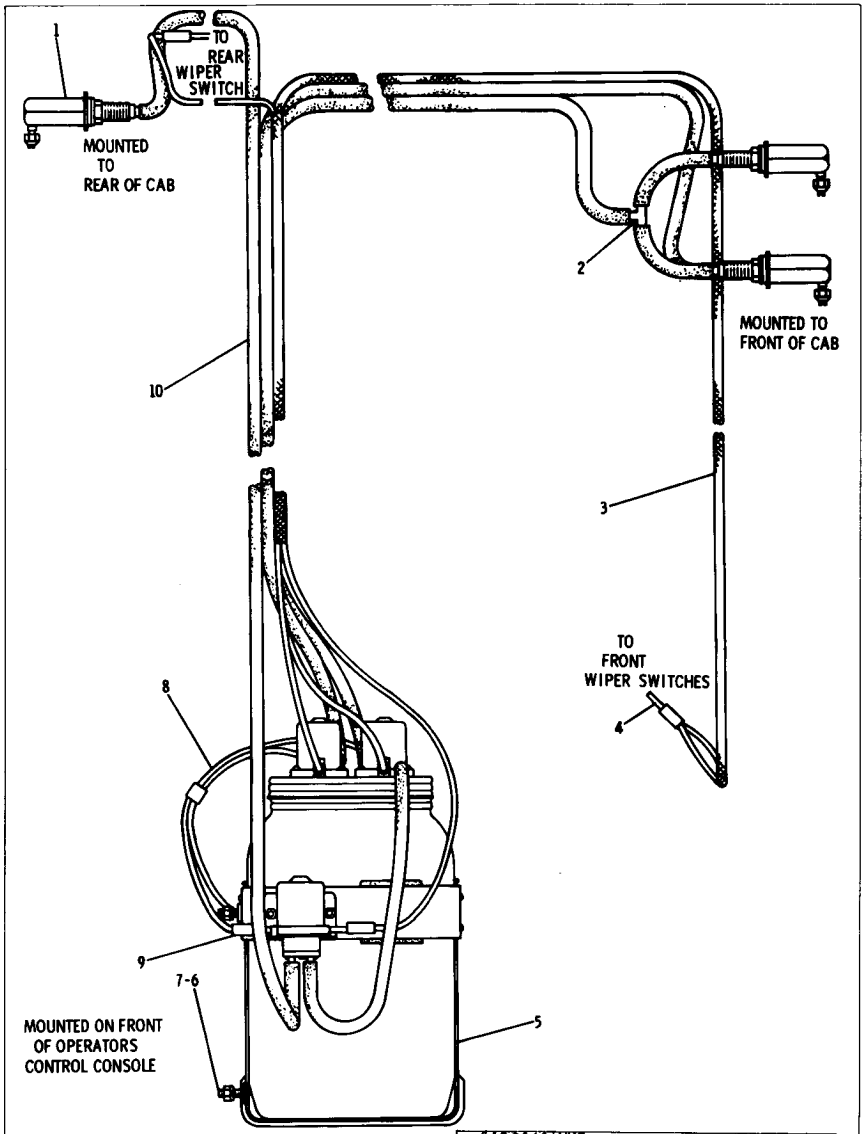

REF. NO.	PART NUMBER	DESCRIPTION	QTY
1	9P2369	JET ASSEM.	4
2	6K9632	TEE	1
3	9P5505	HARNESS ASSEM. (Includes)	1
▲	5P5624	WIRE--------(use as required)-	
4	5P4571	TERMINAL------(blade)-----	6
5	5P7762	WASHER GROUP (Separate Illustration)	1
C 6	3S6895	SCREW	3
7	4B2049	NUT	3
	7H2079	LOCKWASHER	3
	9P5506	WIRE ASSEM. (Includes)	1
▲ 8	5P5621	WASHER-----.6 m(23.63 in.)	
	2L8076	TERMINAL----(ring-crimp)----	1
9	5P4571	TERMINAL----(blade)--------	3
▲ 10	5P5992	HOSE----------8.8 m(346in.)	

C INDICATES CHANGE ▲ ORDER BY THE METRE 216076

8P9495 FRONT AND REAR WINDOWS WASHER GROUP
Part of 8P2124 Roll-Over Protective System Arrangement listed on Page 153
5P7762 Wiper parts are shown on Page 165. AN ATTACHMENT

8P2127 WINDSHIELD WIPER GROUP—Type 1

Part of 8P2125 Roll-Over Protective System Arrangement listed on Page 154

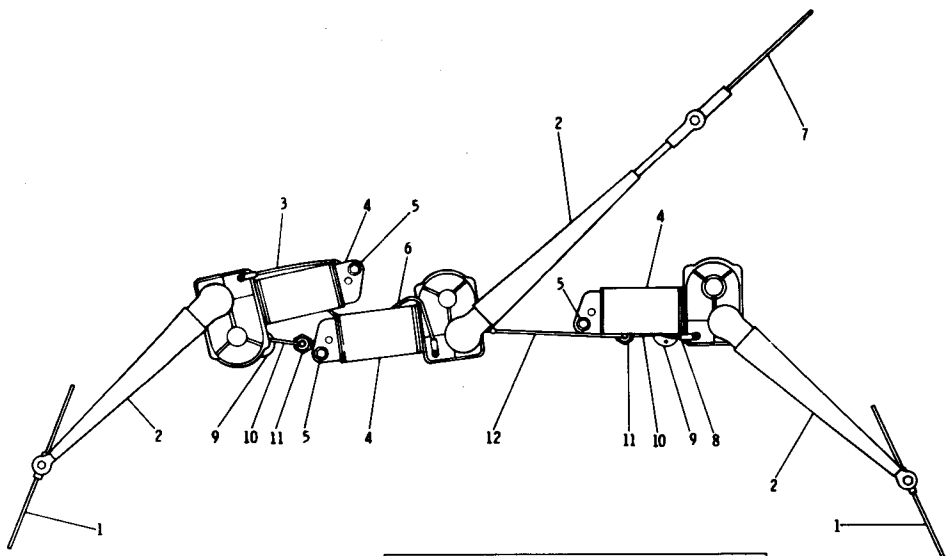

REF. NO.	PART NUMBER	DESCRIPTION	QTY
1	5P5436	BLADE---------20.3 cm(8 in.) long	2
2	5P5346	ARM---------(adjustable)----------	3
C 3	9P5512	WIRE ASSEM. ---------- (Includes)	1
▲	5P5624	WIRE----------.8 m(31.5 in.)	
	5P4571	TERMINAL----------	2
	2L8075	TERMINAL-----(no. 8 screw)----	2

C INDICATES CHANGE

	5D178	MOTOR ASSEM. ---------- (Each Includes)	3
4	4D7468	NUT----------	1
	1K502	WASHER------(steel)----------	1
	4D7464	WASHER------(rubber)--------	1
	8L6521	BOLT----------	3
	4B2049	NUT----------	3
5	9F5599	LOCKWASHER----------	3
	9F9831	WASHER----------	3
C	9P5508	WIRE ASSEM. ---------- (Includes)	1
▲ 6	5P5624	WIRE----------.32 m(12.60 in.)	
	5P4571	TERMINAL----------	1
	2L8078	TERMINAL-7.94mm(.31in.)screw	1
7	9D1242	BLADE-------35.56 cm(14 in.) long	1
C	9P5507	WIRE ASSEM. ---------- (Includes)	1
▲ 8	5P5624	WIRE----------.5 m(19.7 in.)	
	5P4571	TERMINAL----------	2
	2L8075	TERMINAL----------	1
C	1V7362	SWITCH ASSEM. -----(wiper)----	2
9		(Each Includes)	
	7N4033	KNOB----------	1
C	9P5509	WIRE ASSEM. ---------- (Each Includes)	2
▲ 10	5P5624	WIRE--------.16 m(6.3 in.)	
	5P4571	TERMINAL----------	2
C	4K5122	HOLDER----------	2
C 11	9K1896	FUSE----------(3.5 amp)-----	2
C	9P5510	WIRE ASSEM. ---------- (Includes)	1
▲ 12	5P5624	WIRE--------.21 m(8.27 in.)	
	5P4571	TERMINAL----------	1
	2L8078	TERMINAL7.94 mm(.31 in.)screw	1

▲ ORDER BY THE METRE-USE AS REQUIRED

165929

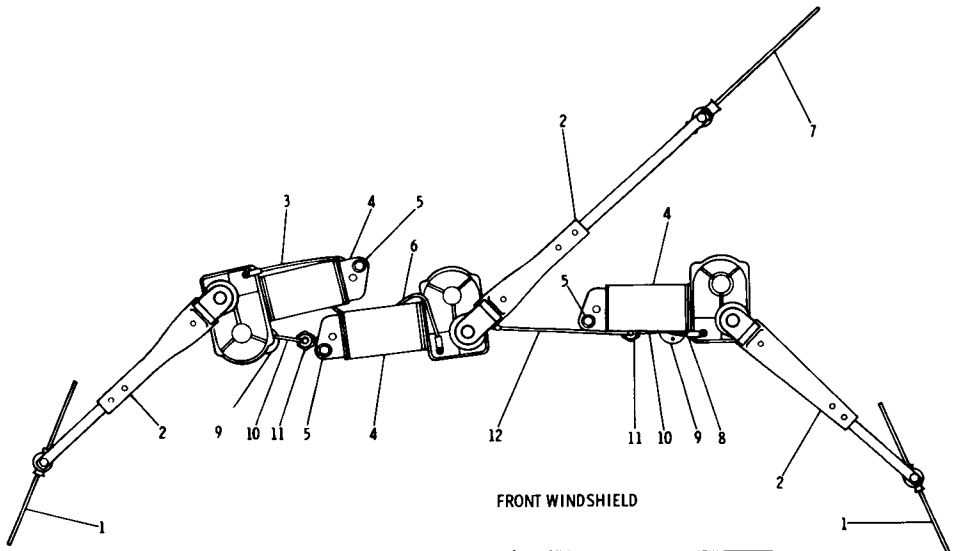

REF. NO.	PART NUMBER	DESCRIPTION	QTY
1	5P5436	BLADE---------20.3 cm(8 in.) long	2
2	5P5346	ARM---------(adjustable)----------	3
	9P5512	WIRE ASSEM. ----------	1
		(Includes)	
▲ 3	5P5624	WIRE----------.8 m(31.5 in.)	
	5P4571	TERMINAL----------	2
	2L8075	TERMINAL-----(no. 8 screw)----	2

C INDICATES CHANGE

REF. NO.	PART NUMBER	DESCRIPTION	QTY
	5D178	MOTOR ASSEM. ----------	3
		(Each Includes)	
4	4D7468	NUT----------	1
	1K502	WASHER------(steel)----------	1
	4D7464	WASHER------(rubber)--------	1
	8L6521	BOLT----------	3
5	4B2049	NUT----------	3
	9F5599	LOCKWASHER----------	3
	9F9831	WASHER----------	3
	9P5508	WIRE ASSEM. ----------	1
		(Includes)	
▲ 6	5P5624	WIRE----------.32 m(12.60 in.)	
	5P4571	TERMINAL----------	1
	2L8078	TERMINAL-7.94mm(.31in.)screw	1
7	9D1242	BLADE--------35.56 cm(14 in.) long	1
	9P5507	WIRE ASSEM. ----------	1
		(Includes)	
▲ 8	5P5624	WIRE----------.5 m(19.7 in.)	
	5P4571	TERMINAL----------	2
	2L8075	TERMINAL----------	1
C	1V7362	SWITCH ASSEM. -----(wiper)----	2
9		(Includes)	
	7N4033	KNOB----------	1
	9P5509	WIRE ASSEM. ----------	2
		(Each Includes)	
10 ▲	5P5624	WIRE--------.16 m(6.3 in.)	
	5P4571	TERMINAL----------	2
11	4K5122	HOLDER----------	2
	9K1896	FUSE----------(3.5 amp)------	2
	9P5510	WIRE ASSEM. ----------	1
		(Includes)	
▲ 12	5P5624	WIRE--------.21 m(8.27 in.)	
	5P4571	TERMINAL----------	1
	2L8078	TERMINAL7.94 mm(.31 in.)screw	1

▲ ORDER BY THE METRE-USE AS REQUIRED

167389

8P2127 WINDSHIELD WIPER GROUP—Part 1—Type 2
Part of 8P2125 Roll-Over Protective System Arrangement listed on Page 154
AN ATTACHMENT

8P2127 WINDSHIELD WIPER GROUP—Part 2—Type 2
Part of 8P2125 Roll-Over Protective System Arrangement listed on Page 154
8P9982 Wiper parts are shown on Page 166. AN ATTACHMENT

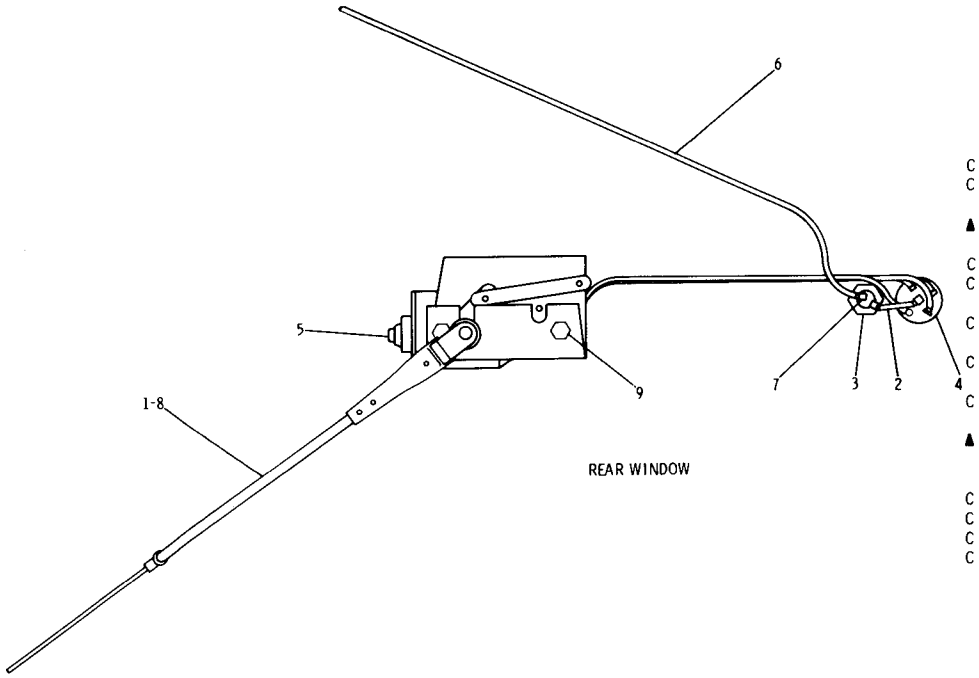

	REF. NO.	PART NUMBER	DESCRIPTION	QTY
C	1	9D1242	BLADE	1
C	2	9P5509	WIRE ASSEM. (Includes)	1
▲		5P5624	WIRE---.16 m(6.3 in.)	
		5P4571	TERMINAL	2
C	3	4K5122	HOLDER	1
C		9K1896	FUSE---(3.5 amp)	1
		1V7362	SWITCH ASSEM.---(wiper) (Includes)	1
C	4	7N4033	KNOB	1
C	5	8P9982	WIPER GROUP (Separate Illustration)	1
C	6	9P5511	WIRE ASSEM. (Includes)	1
▲		5P5624	WIRE---1.9 m(74.8 in.)	
		5P5694	TERMINAL	1
	7	5P4571	TERMINAL	1
C	8	9P1721	ARM ASSEM.	1
C		6F7027	BOLT	2
C	9	3B4506	LOCKWASHER	2
C		1H3244	LOCKWASHER---(shakeproof)	2

C INDICATES CHANGE
▲ ORDER BY THE METRE-USE AS REQUIRED

167390

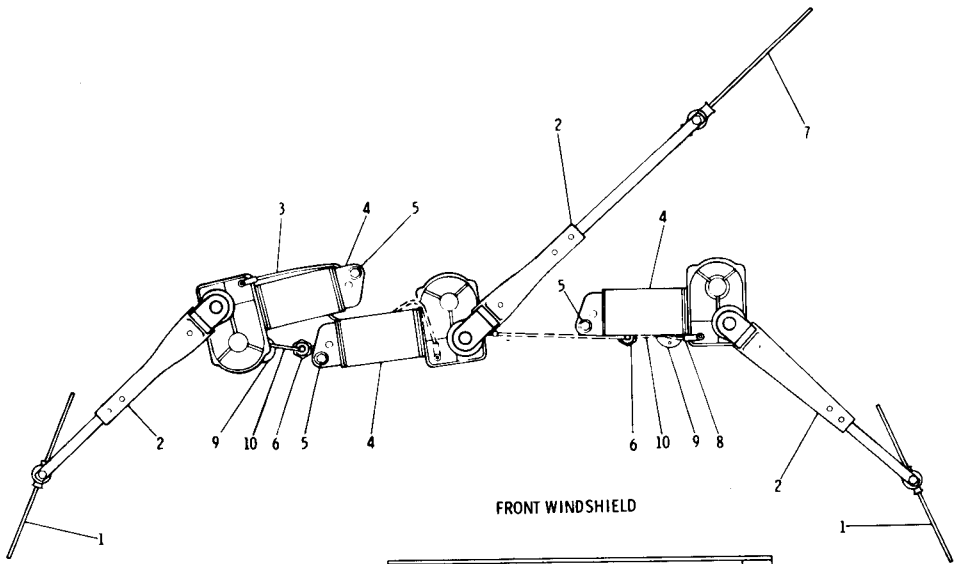

REF. NO.	PART NUMBER	DESCRIPTION	QTY
1	5P5436	BLADE---------20.3 cm(8 in.) long	2
2	5P5346	ARM---------(adjustable)----------	3
	9P5512	WIRE ASSEM. ----------	1
		(Includes)	
▲ 3	5P5624	WIRE----------.8 m(31.5 in.)	
	5P4571	TERMINAL----------	2
	2L8075	TERMINAL-----(no. 8 screw)----	2

	5D178	MOTOR ASSEM. ----------	3
		(Each Includes)	
4	4D7468	NUT----------	1
	1D502	WASHER-------(steel)--------	1
	4D7464	WASHER------(rubber)-------	1
	8L6521	BOLT----------	3
5	4B2049	NUT----------	3
	9F5599	LOCKWASHER----------	3
	9F9831	WASHER----------	3
6	4K5122	HOLDER----------	2
	9K1896	FUSE---------(3.5 amp)----------	2
7	9D1242	BLADE----35.56 cm(14 in.) long---	1
	9P5507	WIRE ASSEM. ----------	1
		(Includes)	
▲ 8	5P5624	WIRE-------.5 m(19.7 in.)	
	5P4571	TERMINAL----------	2
	2L8075	TERMINAL----------	1
	1V7362	SWITCH ASSEM. ----(wiper)------	2
9		(Includes)	
	7N4033	KNOB----------	1
	9P5509	WIRE ASSEM. ----------	2
		(Each Includes)	
▲ 10	5P5624	WIRE----------.16 m(6.3 in.)	
	5P4571	TERMINAL----------	2

▲ ORDER BY THE METER-USE AS REQUIRED 174122

8P2127 WINDSHIELD WIPER GROUP—Part 1—Type 3
Part of 8P2125 Roll-Over Protective System Arrangement listed on Pages 154 and 154A
AN ATTACHMENT

8P2127 WINDSHIELD WIPER GROUP—Part 2—Type 3
Part of 8P2125 Roll-Over Protective System Arrangement listed on Pages 154 and 154A
1V3079 Wiper parts are shown on Page 164F. AN ATTACHMENT

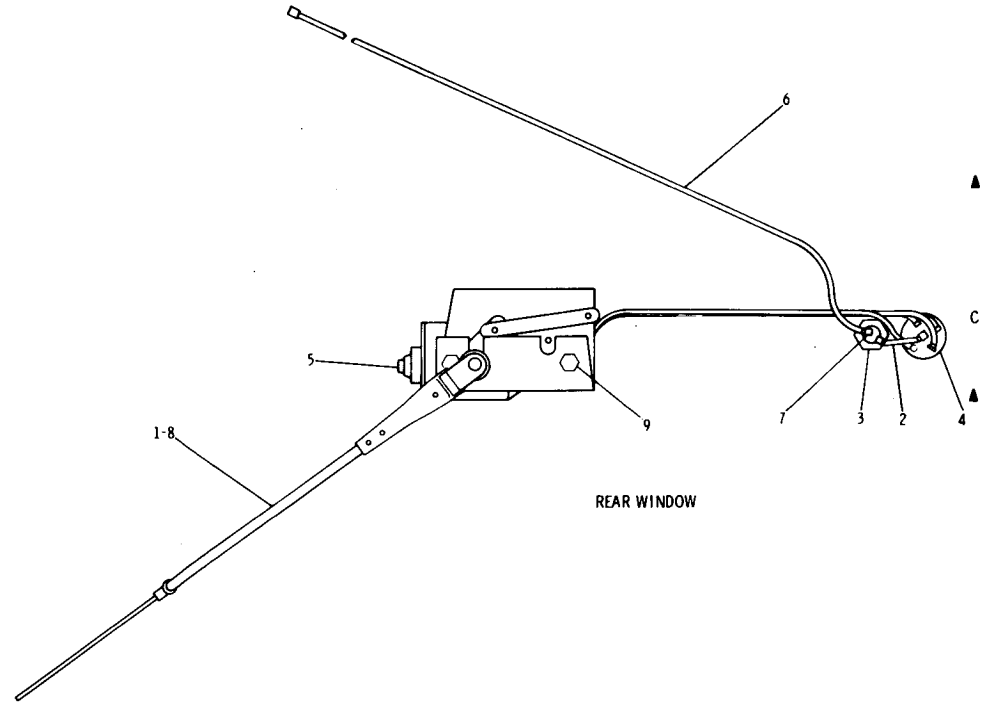

REF. NO.	PART NUMBER	DESCRIPTION	QTY.
1	9D1242	BLADE	1
2	9P5509	WIRE ASSEM. (Includes)	1
▲	5P5624	WIRE-----. 16 m(6. 3 in.)	
	5P4571	TERMINAL	2
3	4K5122	HOLDER	1
	9K1896	FUSE----------(3. 5 amp)-------	1
4	1V7362	SWITCH ASSEM. ---(wiper)------- (Includes)	1
	7N4033	KNOB	1
C 5	1V3079	WIPER GROUP (Separate Illustration)	1
6	9P5511	WIRE ASSEM. (Includes)	1
▲	5P5624	WIRE-----1. 9 m(74. 8 in.)	
	5P5694	TERMINAL	1
7	5P4571	TERMINAL	1
8	9P1721	ARM ASSEM.	1
9	6F7027	BOLT	2
	3B4506	LOCKWASHER	2
	1H3244	LOCKWASHER----(shakeproof)----	2

C INDICATES CHANGE
▲ ORDER BY THE METER-USE AS REQUIRED

174123

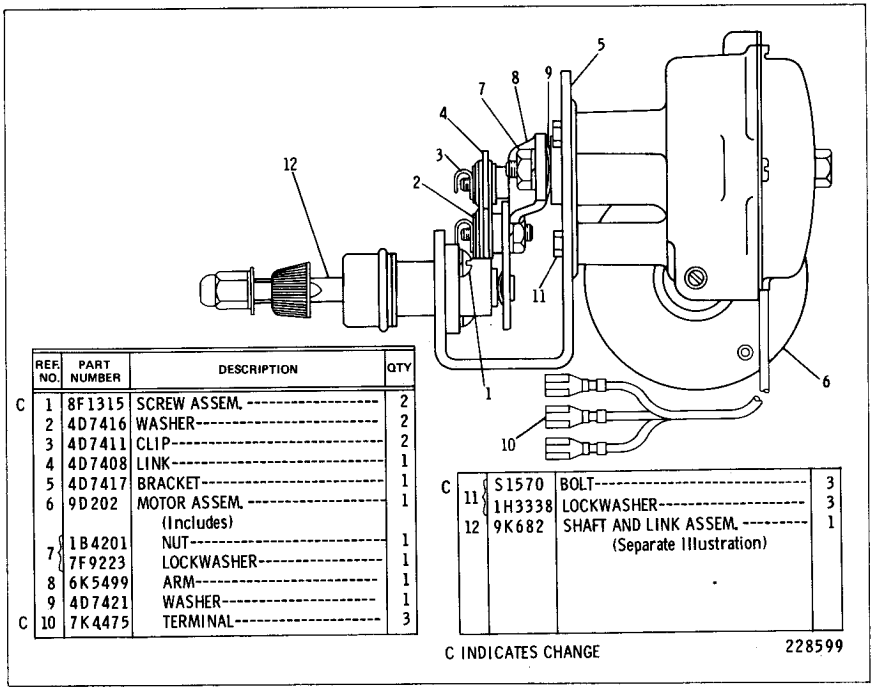

	REF. NO.	PART NUMBER	DESCRIPTION	QTY
C	1	8F1315	SCREW ASSEM.	2
	2	4D7416	WASHER	2
	3	4D7411	CLIP	2
	4	4D7408	LINK	1
	5	4D7417	BRACKET	1
	6	9D202	MOTOR ASSEM. (Includes)	1
	7	1B4201	NUT	1
		7F9223	LOCKWASHER	1
	8	6K5499	ARM	1
	9	4D7421	WASHER	1
C	10	7K4475	TERMINAL	3
C	11	S1570	BOLT	3
		1H3338	LOCKWASHER	3
	12	9K682	SHAFT AND LINK ASSEM. (Separate Illustration)	1

C INDICATES CHANGE

228599

1V3079 BASIC WIPER GROUP—24 Volt—Replaced by 1V4358
Part of 8P2127 Windshield Wiper Group shown on Page 164E
9K682 Shaft and Link parts are shown on Page 167. AN ATTACHMENT

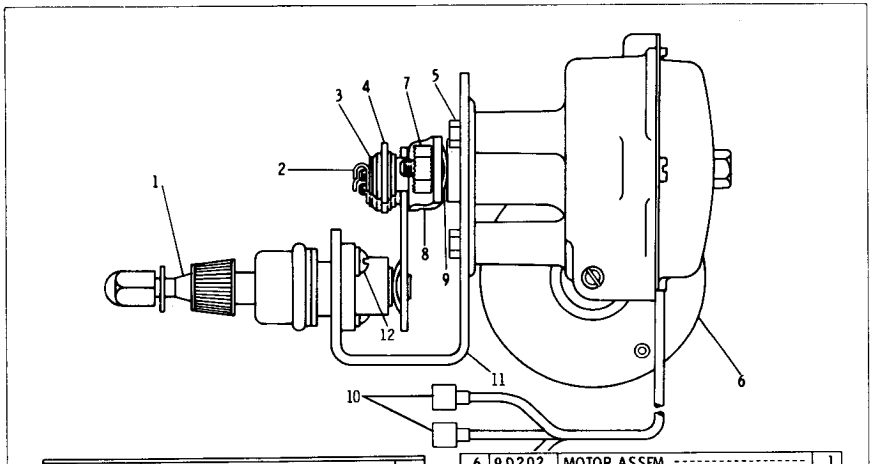

	REF. NO.	PART NUMBER	DESCRIPTION	QTY
	1	9K682	SHAFT & LINK ASSEM. (Separate Illustration)	1
	2	4D7411	CLIP	2
	3	4D7416	SPACER	2
	4	4D7408	LINK	1
C	5	S1570	BOLT	3
		1H3338	LOCKWASHER	3
	6	9D202	MOTOR ASSEM.	1
	7	1B4201	NUT	1
		7F9223	LOCKWASHER	1
	8	6K5499	ARM	1
	9	4D7421	WASHER	1
C	10	7K4475	TERMINAL	3
	11	4D7417	BRACKET	1
	12	8F1315	SCREW ASSEM.	2

C INDICATES CHANGE

228598

1V4358 BASIC WIPER GROUP—24 Volt—Field Installation
9K682 Shaft and Link parts are shown on Page 167

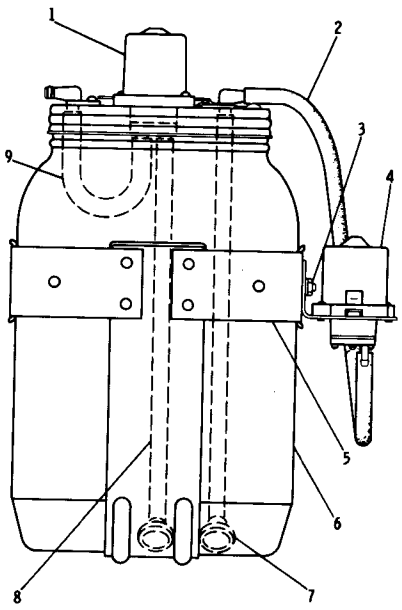

REF. NO.	PART NUMBER	DESCRIPTION	QTY
1	5P7776	COVER ASSEM.	1
▲ 2	5P5992	HOSE. 250 m(9. 843 in.)	
3	2N3478	SCREW	2
	4B2047	NUT	2
	9F8125	WASHER	2
4	5P7775	PUMP ASSEM.	1
5	9J8835	BRACKET ASSEM.	1
6	9J5952	RESERVOIR	1
7	9D6896	STRAINER	3
▲ 8	5P5992	HOSE. 229 m(9. 016 in.)	
▲ 9	5P5992	HOSE. 115 m(4. 528 in.)	

▲ ORDER BY THE METRE

212599

5P7762 WINDSHIELD WASHER GROUP
Part of 8P9495 Washer Group shown on Page 164

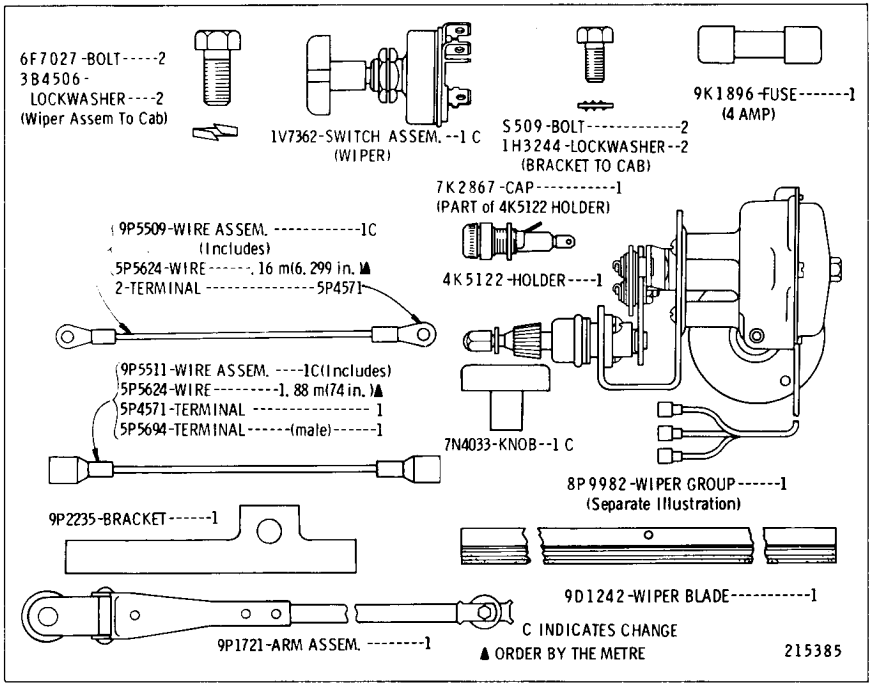

8P2136 REAR WINDOW WIPER GROUP
Part of 8P2125 Roll-Over Protective System Arrangement listed on Page 154
8P9982 Wiper parts are shown on Page 166

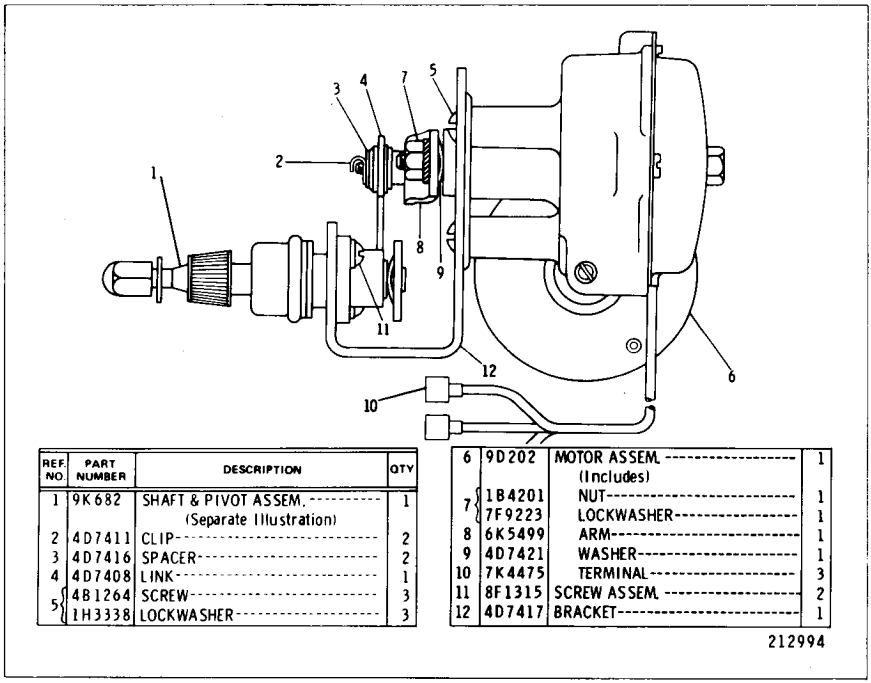

REF. NO.	PART NUMBER	DESCRIPTION	QTY
1	9K682	SHAFT & PIVOT ASSEM. (Separate Illustration)	1
2	4D7411	CLIP	2
3	4D7416	SPACER	2
4	4D7408	LINK	1
5	4B1264	SCREW	3
	1H3338	LOCKWASHER	3
6	9D202	MOTOR ASSEM. (Includes)	1
7	1B4201	NUT	1
	7F9223	LOCKWASHER	1
8	6K5499	ARM	1
9	4D7421	WASHER	1
10	7K4475	TERMINAL	3
11	8F1315	SCREW ASSEM.	2
12	4D7417	BRACKET	1

212994

8P9982 WIPER GROUP
Part of 8P2127 & 8P2136 Wiper Groups shown on Pages 164C & 166
9K682 Shaft and Link parts are shown on Page 167

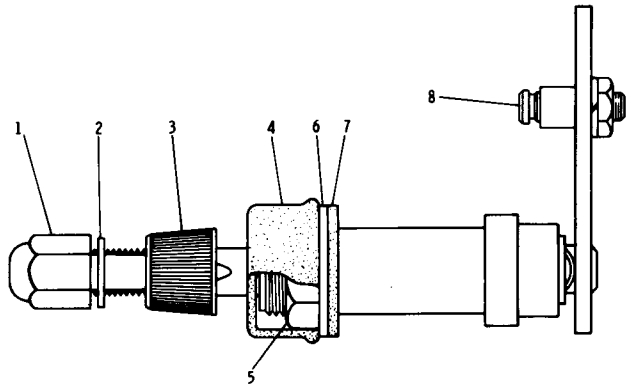

REF. NO.	PART NUMBER	DESCRIPTION	QTY
1	8D237	NUT	1
2	9F5644	LOCKWASHER	1
3	1V3658	DRIVER	1
4	1V3657	CAP	1
5	1V3656	NUT	1
6	4B1550	WASHER	1
7	9S8016	GASKET	1
8	1V3655	STUD	1
	9M1311	NUT	1
	1H3244	LOCKWASHER	1

119884

9K682 SHAFT AND LINK ASSEMBLY
Part of 8P9982 Wiper Group shown on Page 166

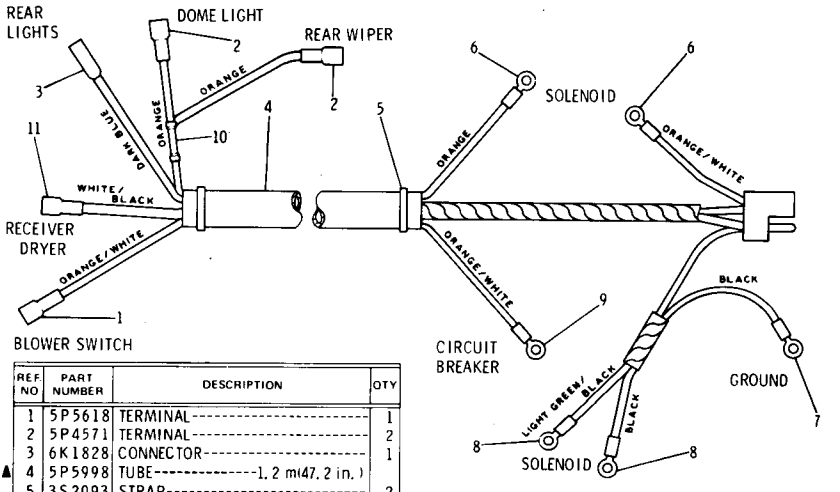

	REF NO	PART NUMBER	DESCRIPTION	QTY
	1	5P5618	TERMINAL	1
	2	5P4571	TERMINAL	2
	3	6K1828	CONNECTOR	1
▲	4	5P5998	TUBE-1.2 m(47.2 in.)	
	5	3S2093	STRAP	2
C	6	2L8068	TERMINAL	2
	7	2L8079	TERMINAL-(ground)	1
	8	2L8076	TERMINAL	2
	9	2L8065	TERMINAL	1
C	10	2S1043	SPLICE	1
C	11	5P5694	CONNECTOR	1

C INDICATES CHANGE

	THE FOLLOWING WIRES ARE AVAILABLE:	
▲	5P5622	WIRE-(10 gauge)
▲	5P5624	WIRE-(14 gauge)

▲ ORDER BY THE METRE

216071

8P6128 HARNESS ASSEMBLY
Part of 8P2131 Cab Pressurizer Group shown on Page 159. AN ATTACHMENT

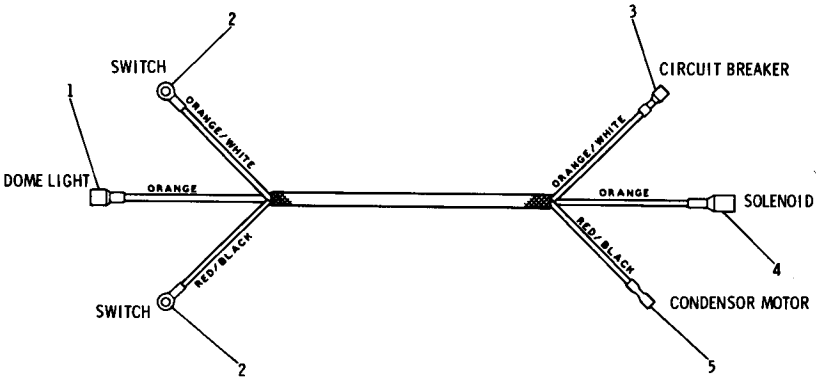

REF. NO.	PART NUMBER	DESCRIPTION	QTY
1	5P4571	TERMINAL	1
2	2L8065	TERMINAL	2
3	6N9018	TERMINAL	1
4	5P5694	TERMINAL	1
5	6N9587	CONNECTOR	1

THE FOLLOWING WIRES ARE AVAILABLE:

▲	5P5622	WIRE---------(10 gauge)----------
▲	5P5621	WIRE---------(12 gauge)----------
▲	5P5624	WIRE---------(14 gauge)----------

▲ ORDER BY THE METRE

213437

8P6368 HARNESS ASSEMBLY
Part of 8P2131 Cab Pressurizer Group shown on Page 160

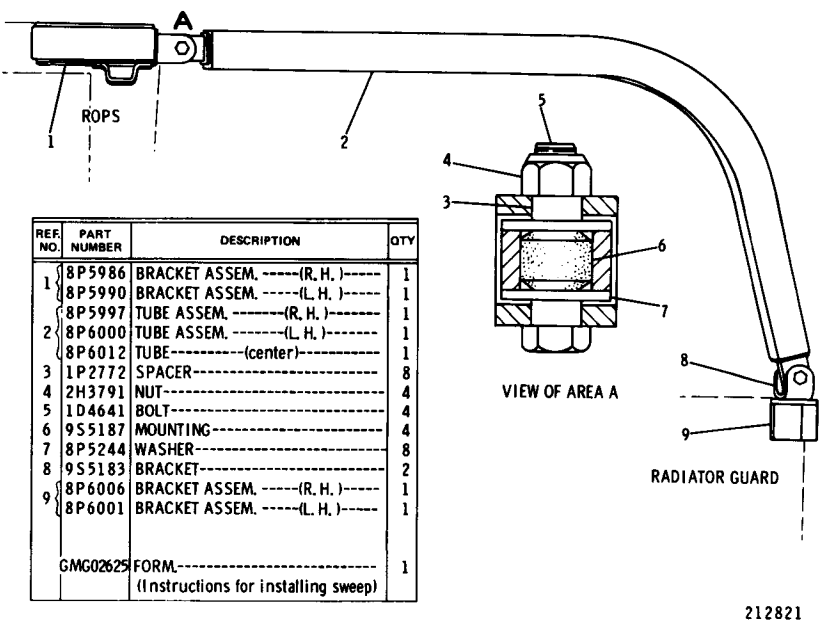

REF. NO.	PART NUMBER	DESCRIPTION	QTY
1	8P5986	BRACKET ASSEM. -----(R. H.)-----	1
	8P5990	BRACKET ASSEM. -----(L. H.)-----	1
2	8P5997	TUBE ASSEM. --------(R. H.)--------	1
	8P6000	TUBE ASSEM. --------(L. H.)--------	1
	8P6012	TUBE----------(center)----------	1
3	1P2772	SPACER----------	8
4	2H3791	NUT----------	4
5	1D4641	BOLT----------	4
6	9S5187	MOUNTING----------	4
7	8P5244	WASHER----------	8
8	9S5183	BRACKET----------	2
9	8P6006	BRACKET ASSEM. -----(R. H.)-----	1
	8P6001	BRACKET ASSEM. -----(L. H.)-----	1
	GMG02625	FORM---------- (Instructions for installing sweep)	1

212821

8P2134 SWEEP GROUP—Type 1
AN ATTACHMENT

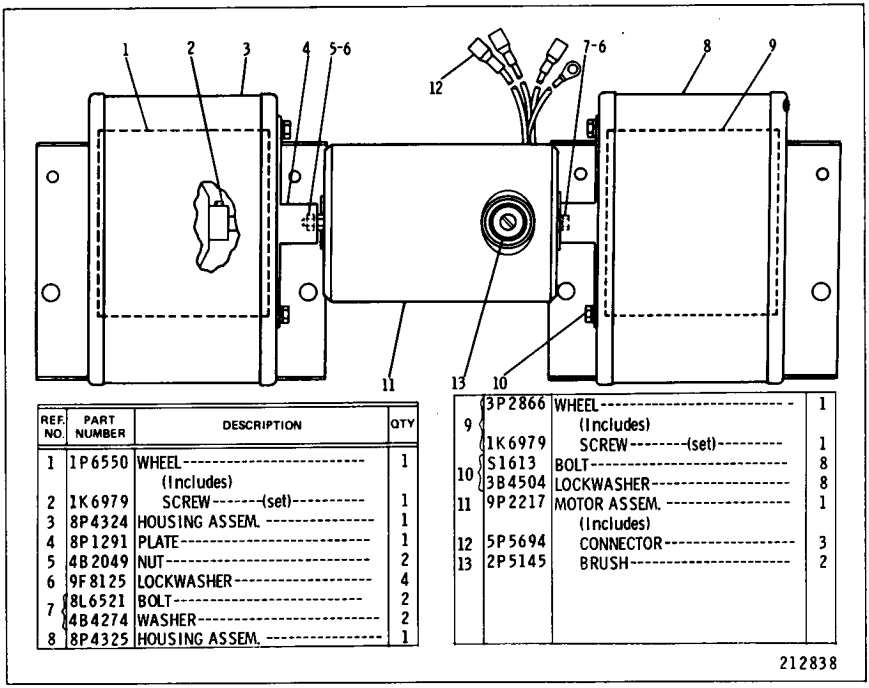

REF. NO.	PART NUMBER	DESCRIPTION	QTY
1	1P6550	WHEEL (Includes)	1
2	1K6979	SCREW-------(set)----------	1
3	8P4324	HOUSING ASSEM. ----------	1
4	8P1291	PLATE----------	1
5	4B2049	NUT----------	2
6	9F8125	LOCKWASHER----------	4
7	8L6521	BOLT----------	2
	4B4274	WASHER----------	2
8	8P4325	HOUSING ASSEM. ----------	1
9	3P2866	WHEEL---------- (Includes)	1
	1K6979	SCREW-------(set)---------	1
10	S1613	BOLT----------	8
	3B4504	LOCKWASHER----------	8
11	9P2217	MOTOR ASSEM. ---------- (Includes)	1
12	5P5694	CONNECTOR----------	3
13	2P5145	BRUSH----------	2

212838

9P3788 BLOWER GROUP
Part of 8P2131 Cab Pressurizer Group shown on Page 161

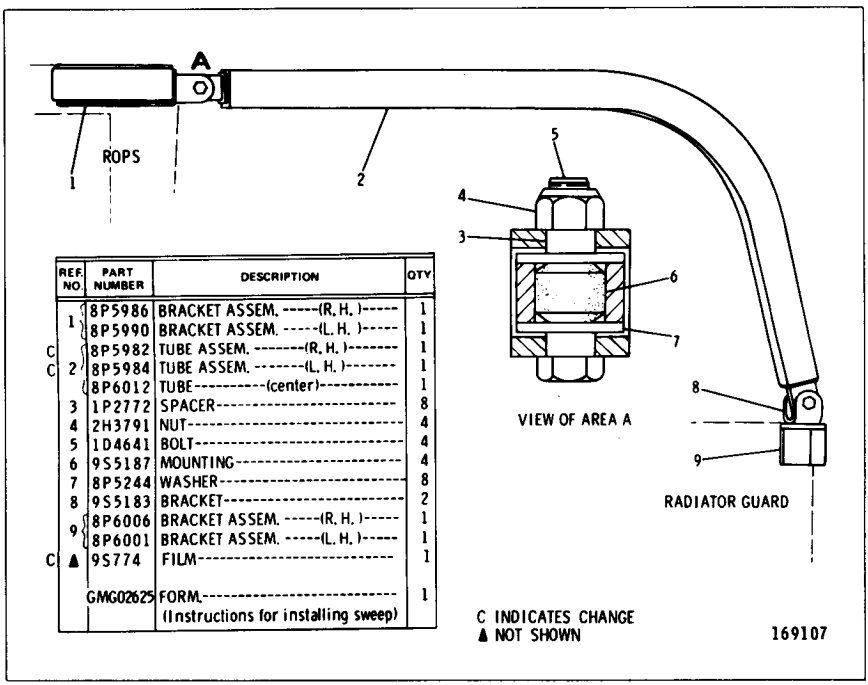

REF. NO.	PART NUMBER	DESCRIPTION	QTY
1	8P5986	BRACKET ASSEM. -----(R. H.)-----	1
	8P5990	BRACKET ASSEM. -----(L. H.)-----	1
C	8P5982	TUBE ASSEM. --------(R. H.)--------	1
C 2	8P5984	TUBE ASSEM. --------(L. H.)--------	1
	8P6012	TUBE----------(center)----------	1
3	1P2772	SPACER----------	8
4	2H3791	NUT----------	4
5	1D4641	BOLT----------	4
6	9S5187	MOUNTING----------	4
7	8P5244	WASHER----------	8
8	9S5183	BRACKET----------	2
9	8P6006	BRACKET ASSEM. -----(R. H.)-----	1
	8P6001	BRACKET ASSEM. -----(L. H.)-----	1
C ▲	9S774	FILM----------	1
	GMG02625	FORM.---------- (Instructions for installing sweep)	1

C INDICATES CHANGE
▲ NOT SHOWN

169107

8P2134 SWEEP GROUP—Type 2
AN ATTACHMENT

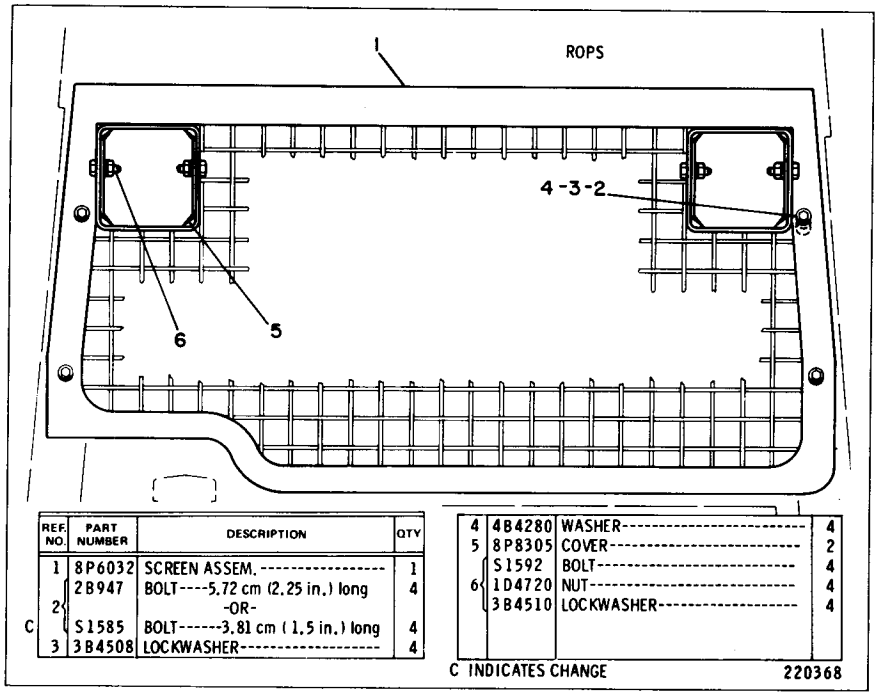

REF. NO.	PART NUMBER	DESCRIPTION	QTY
1	8P6032	SCREEN ASSEM.	1
2	2B947	BOLT----5.72 cm (2.25 in.) long	4
		-OR-	
C 2	S1585	BOLT------3.81 cm (1.5 in.) long	4
3	3B4508	LOCKWASHER	4
4	4B4280	WASHER	4
5	8P8305	COVER	2
6	S1592	BOLT	4
	1D4720	NUT	4
	3B4510	LOCKWASHER	4

C INDICATES CHANGE 220368

8P2132 PROTECTIVE SCREEN GROUP
FOR USE WITH OPEN ROPS. AN ATTACHMENT

8P9496 PROTECTIVE SCREEN GROUP
FOR USE WITH HEATER, AIR CONDITIONER, CAB OR ENCLOSED ROPS
AN ATTACHMENT

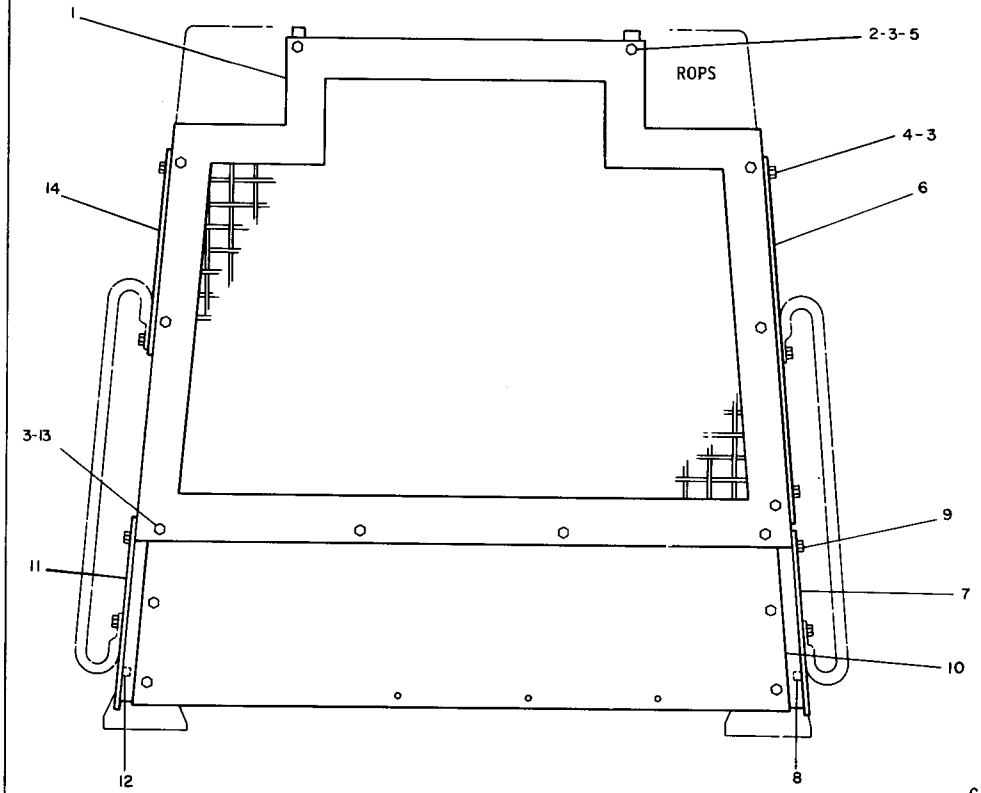

	REF. NO.	PART NUMBER	DESCRIPTION	QTY.
	1	9P3532	SCREEN ASSEM.	1
	2	1D4566	BOLT	2
	3	3B4508	LOCKWASHER	20
		4B4280	WASHER	20
	4	6H1717	BOLT	5
C	5	6J427	SPACER	2
	6	9P3542	SCREEN ASSEM.	1
	7	9P4189	BRACKET ASSEM. (Includes)	1
C		1F748	NUT	3
C	8	2K7051	BAR	1
	9	S1585	BOLT	4
	10	9P4182	PLATE ASSEM. (Includes)	1
C		6S5038	BOSS	2
	11	9P4190	BRACKET ASSEM. (Includes)	1
C		1F748	NUT	3
C	12	2K7051	BAR	1
	13	S1587	BOLT	13
	14	9P3543	SCREEN ASSEM.	1

C INDICATES CHANGE

228807

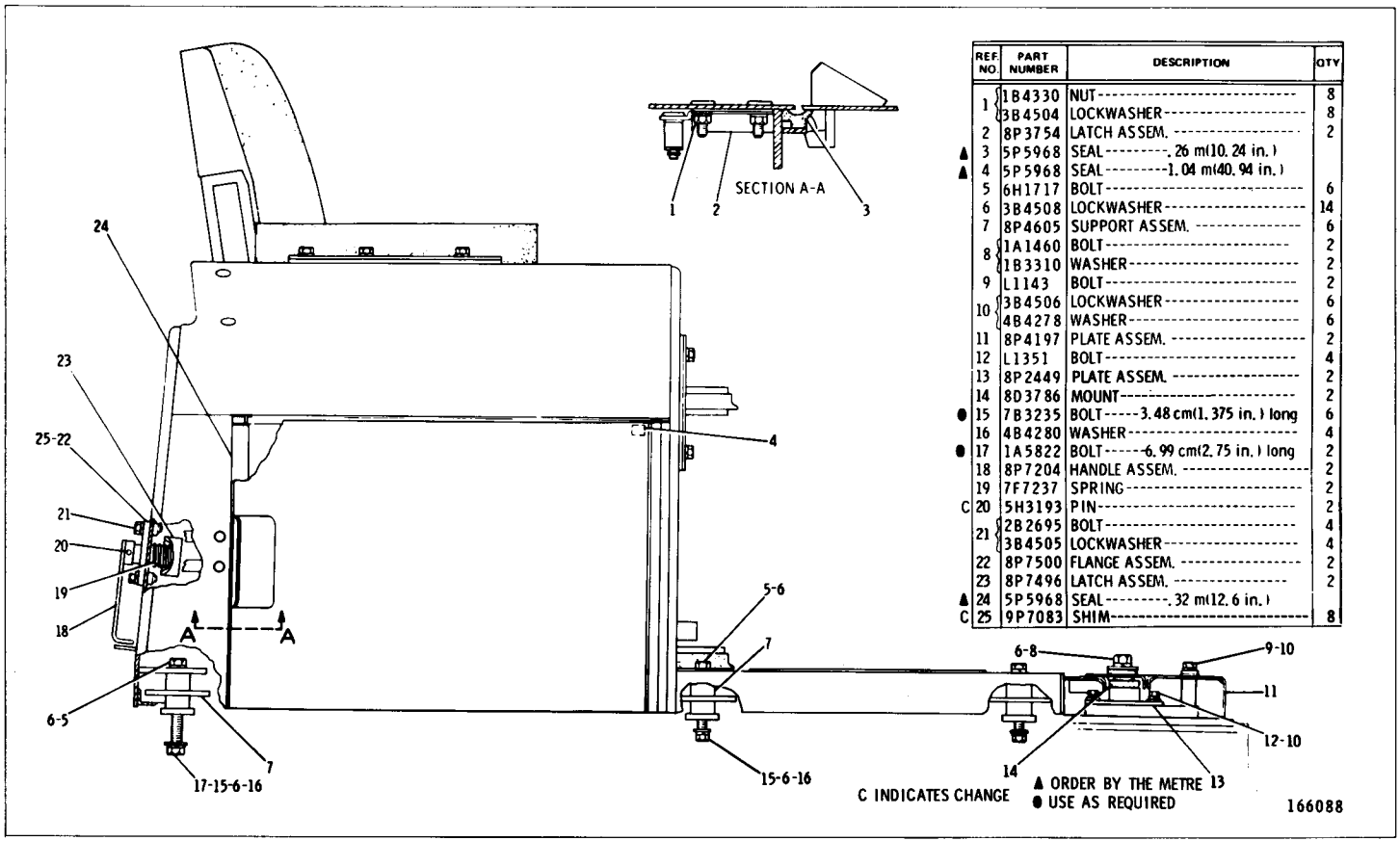

REF. NO.	PART NUMBER	DESCRIPTION	QTY
1	1B4330	NUT	8
	3B4504	LOCKWASHER	8
2	8P3754	LATCH ASSEM.	2
▲ 3	5P5968	SEAL-. 26 m(10. 24 in.)	
▲ 4	5P5968	SEAL-1. 04 m(40. 94 in.)	
5	6H1717	BOLT	6
6	3B4508	LOCKWASHER	14
7	8P4605	SUPPORT ASSEM.	6
8	1A1460	BOLT	2
	1B3310	WASHER	2
9	L1143	BOLT	2
10	3B4506	LOCKWASHER	6
	4B4278	WASHER	6
11	8P4197	PLATE ASSEM.	2
12	L1351	BOLT	4
13	8P2449	PLATE ASSEM.	2
14	8D3786	MOUNT	2
● 15	7B3235	BOLT-3.48 cm(1. 375 in.) long	6
16	4B4280	WASHER	4
● 17	1A5822	BOLT-6. 99 cm(2. 75 in.) long	2
18	8P7204	HANDLE ASSEM.	2
19	7F7237	SPRING	2
C 20	5H3193	PIN	2
21	2B2695	BOLT	4
	3B4505	LOCKWASHER	4
22	8P7500	FLANGE ASSEM.	2
23	8P7496	LATCH ASSEM.	2
▲ 24	5P5968	SEAL-. 32 m(12. 6 in.)	
C 25	9P7083	SHIM	8

8P4901 SUPPORT AND SEAT GROUP—Part 1 of 3
Serial No. 6X1 to 6X367 inclusive

8P4901 SUPPORT AND SEAT GROUP—Part 2 of 3
Serial No. 6X1 to 6X367 inclusive
5S45 Seat, 2G6731 and 2G6732 Belt parts are shown on Pages 173 & 174

REF. NO.	PART NUMBER	DESCRIPTION	QTY
1	4H3001	PLUG	14
2	8P4877	COVER ASSEM. (Includes)	1
▲	5P7246	SEAL-.68 m(26.8 in.)	
3	L1351	BOLT	4
4	3B4506	LOCKWASHER	16
5	T703	BOLT	8
6	5S45	SEAT ASSEM. (Separate Illustration)	1
7	8H9167	CUSHION	2
▲ 8	5P5638	SEAL-.56 m(22.05 in.)	
9	8P2452	SUPPORT ASSEM.	1

REF. NO.	PART NUMBER	DESCRIPTION	QTY
10	6D4709	BELT GROUP (Includes)	1
	2G6731	BELT GROUP (Separate Illustration)	1
		-OR-	
	2G6732	BELT GROUP (Separate Illustration)	1
11	S1594	BOLT	4
	4B4278	WASHER	4

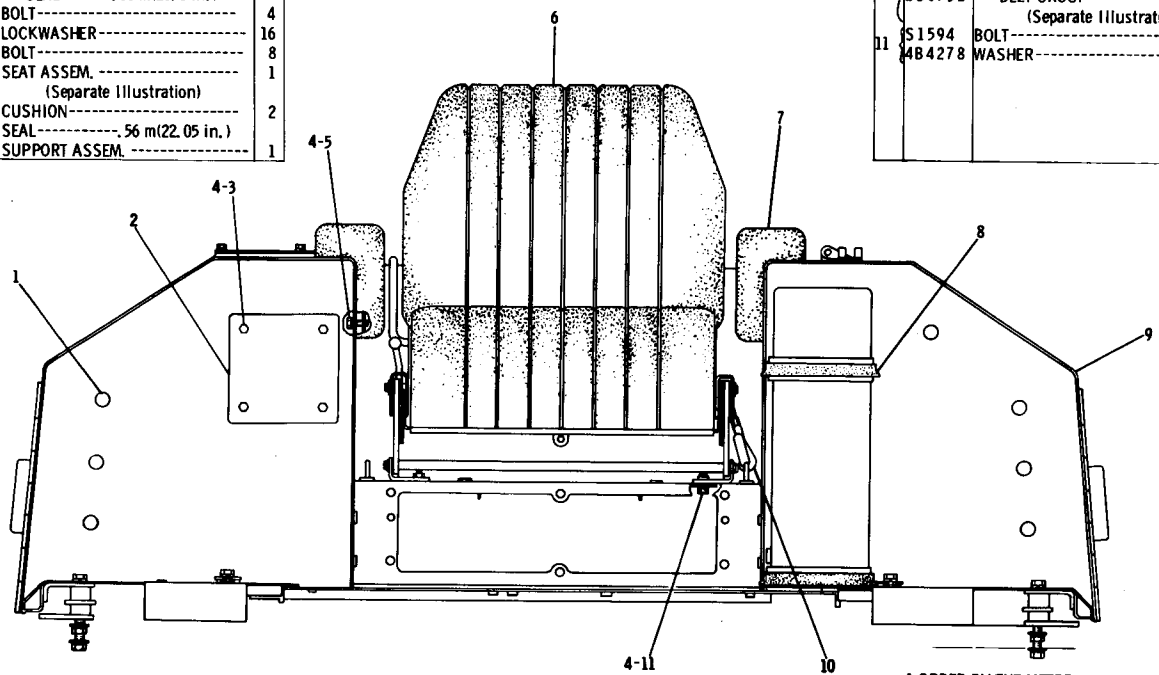

▲ ORDER BY THE METRE

212665

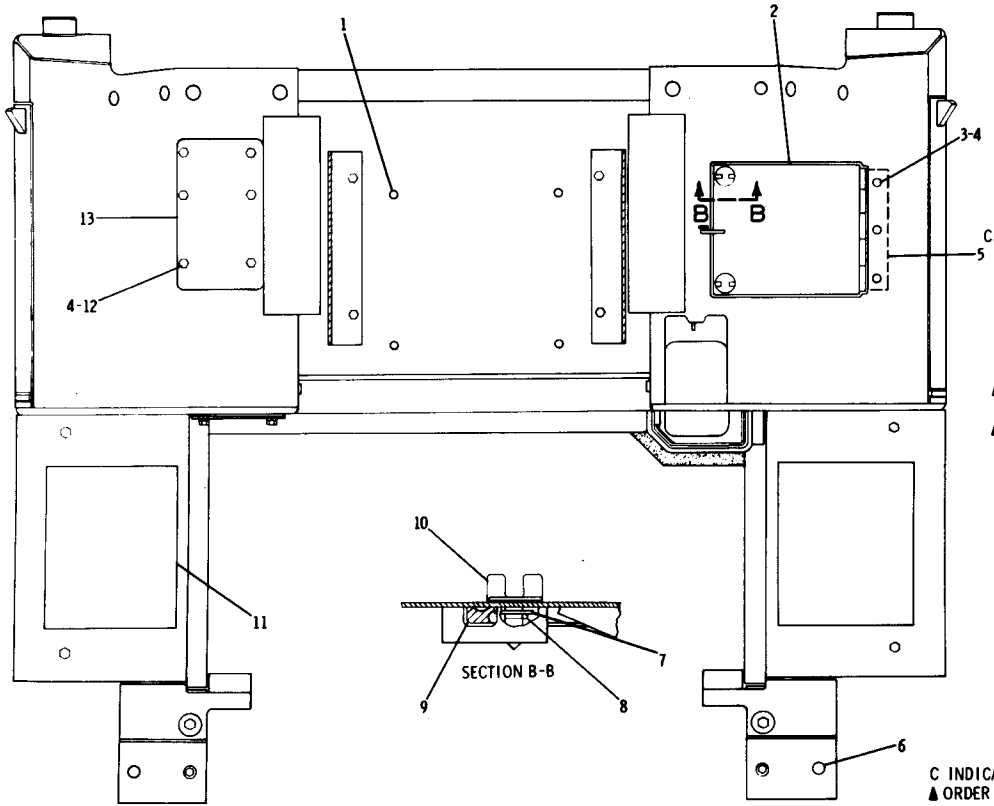

REF. NO.	PART NUMBER	DESCRIPTION	QTY
1	9D3737	PLUG	4
2	8P3561	DOOR ASSEM.	1
	5P5968	SEAL-----.61 m(24.01 in.)	
3	1D4676	BOLT	3
	1D4717	NUT	3
4	3B4506	LOCKWASHER	9
5	8P3855	PLATE ASSEM.	1
6	8D7970	PLUG	2
7	4B4280	WASHER	2
8	3B4610	COTTER PIN	2
▲ 9	5P5968	SEAL-----.27 m(10.63 in.)	
10	6D1746	BOLT	2
▲ 11	5P5897	COATING-----.5 m(19.69 in.)	
12	S1594	BOLT	6
13	8P4824	COVER	1
	8P4825	SEAL	1

C INDICATES CHANGE
▲ ORDER BY THE METRE

166089

8P4901 SUPPORT AND SEAT GROUP—Part 3 of 3
Serial No. 6X1 to 6X367 inclusive

8P49001 SUPPORT AND SEAT GROUP—Part 1 of 3
Serial No. 6X368 to 6X382 inclusive

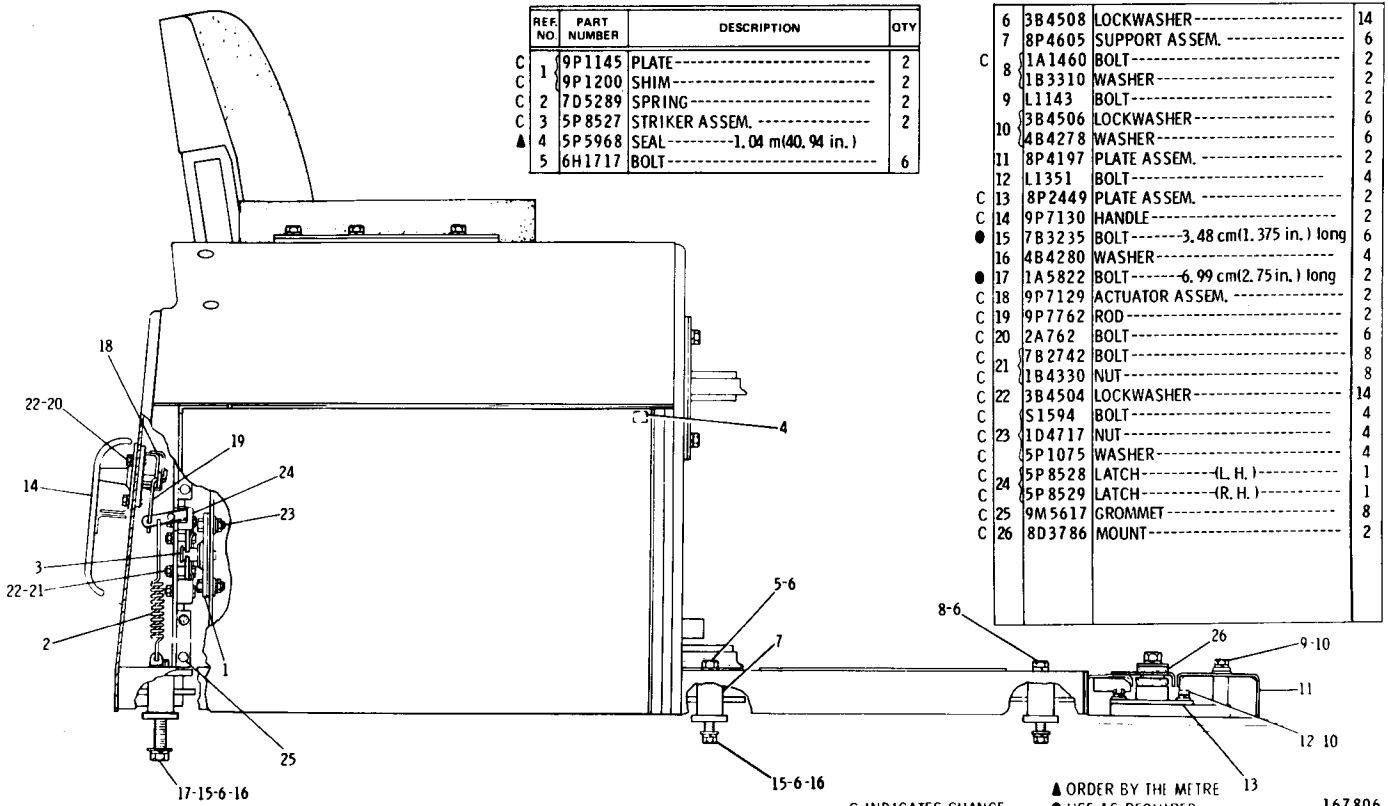

	REF. NO.	PART NUMBER	DESCRIPTION	QTY
C	1	9P1145	PLATE	2
C		9P1200	SHIM	2
C	2	7D5289	SPRING	2
C	3	5P8527	STRIKER ASSEM.	2
▲	4	5P5968	SEAL—1.04 m(40.94 in.)	
	5	6H1717	BOLT	6

	6	3B4508	LOCKWASHER	14
	7	8P4605	SUPPORT ASSEM.	6
C	8	1A1460	BOLT	2
		1B3310	WASHER	2
	9	L1143	BOLT	2
	10	3B4506	LOCKWASHER	6
		4B4278	WASHER	6
	11	8P4197	PLATE ASSEM.	2
	12	L1351	BOLT	4
C	13	8P2449	PLATE ASSEM.	2
C	14	9P7130	HANDLE	2
●	15	7B3235	BOLT—3.48 cm(1.375 in.) long	6
	16	4B4280	WASHER	4
●	17	1A5822	BOLT—6.99 cm(2.75 in.) long	2
C	18	9P7129	ACTUATOR ASSEM.	2
C	19	9P7762	ROD	2
C	20	2A762	BOLT	6
C	21	7B2742	BOLT	8
C		1B4330	NUT	8
C	22	3B4504	LOCKWASHER	14
C		S1594	BOLT	4
C	23	1D4717	NUT	4
C		5P1075	WASHER	4
C	24	5P8528	LATCH—(L. H.)	1
C		5P8529	LATCH—(R. H.)	1
C	25	9M5617	GROMMET	8
C	26	8D3786	MOUNT	2

C INDICATES CHANGE

▲ ORDER BY THE METRE
● USE AS REQUIRED

REF. NO.	PART NUMBER	DESCRIPTION	QTY
1	4H3001	PLUG	14
	8P4877	COVER ASSEM. (Includes)	1
2	5P7246	SEAL-------.68 m(26.8 in.)	
3	L1351	BOLT	4
4	3B4506	LOCKWASHER	16
5	T703	BOLT	8
6	5S45	SEAT ASSEM. (Separate Illustration)	1
7	8H9167	CUSHION	2
8	5P5638	SEAL----------.56 m(22.05 in.)	
9	8P2452	SUPPORT ASSEM.	1

10	6D4709	BELT GROUP (Includes)	1
	2G6731	BELT GROUP (Separate Illustration) -OR-	1
	2G6732	BELT GROUP (Separate Illustration)	1
11	S1594	BOLT	4
	4B4278	WASHER	4

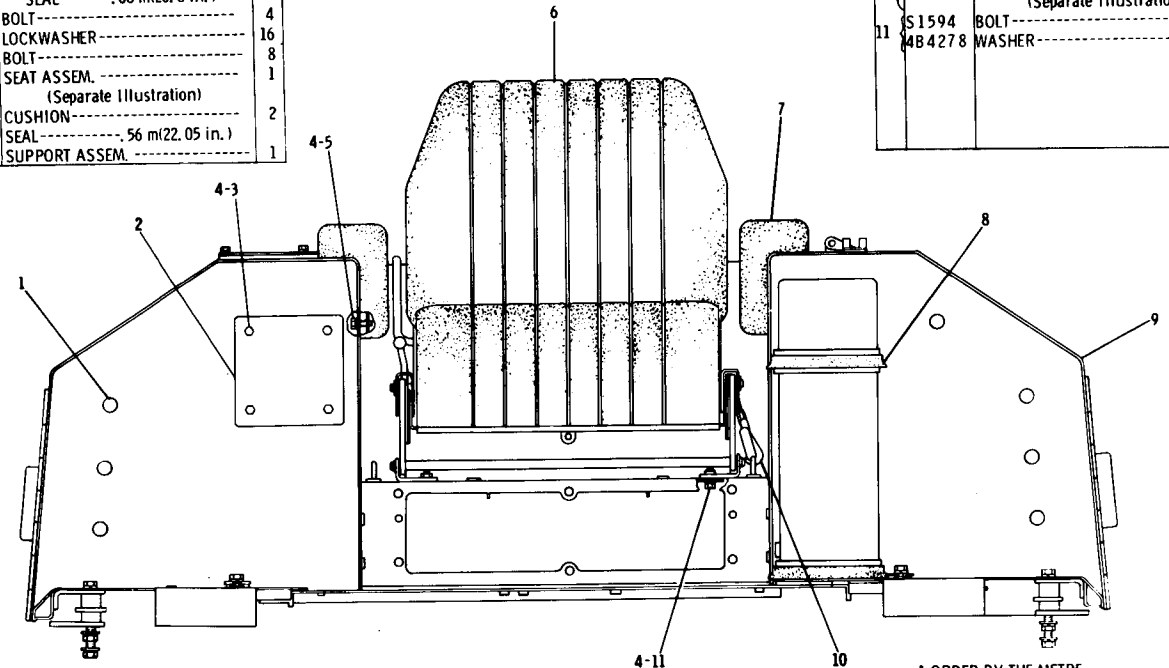

C INDICATES CHANGE

▲ ORDER BY THE METRE

167807

8P4901 SUPPORT AND SEAT GROUP—Part 2 of 3
Serial No. 6X368 to 6X382 inclusive
5S45 Seat, 2G6731 and 2G6732 Belt parts are shown on Pages 173 and 174

8P4901 SUPPORT AND SEAT GROUP—Part 3 of 3
Serial No. 6X368 to 6X382 inclusive

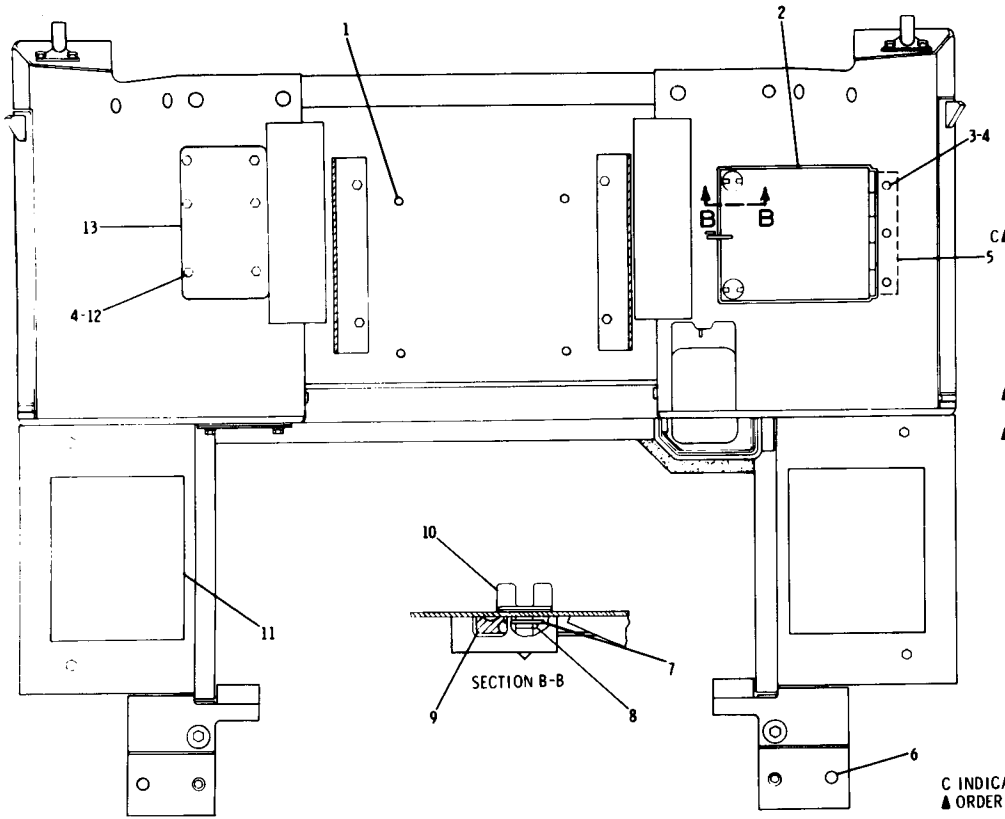

REF. NO.	PART NUMBER	DESCRIPTION	QTY
1	9D3737	PLUG	4
2	8P3561	DOOR ASSEM.	1
	5P5968	SEAL, .61 m(24.01 in.)	
3	1D4676	BOLT	3
	1D4717	NUT	3
4	3B4506	LOCKWASHER	9
5	8P3855	PLATE ASSEM.	1
6	8D7970	PLUG	2
7	4B4280	WASHER	2
8	3B4610	COTTER PIN	2
▲ 9	5P5968	SEAL, .27 m(10.63 in.)	
10	6D1746	BOLT	2
▲ 11	5P5897	COATING, .5 m(19.69 in.)	
12	S1594	BOLT	6
13	8P4824	COVER	1
	8P4825	SEAL	1

C INDICATES CHANGE
▲ ORDER BY THE METRE

167808

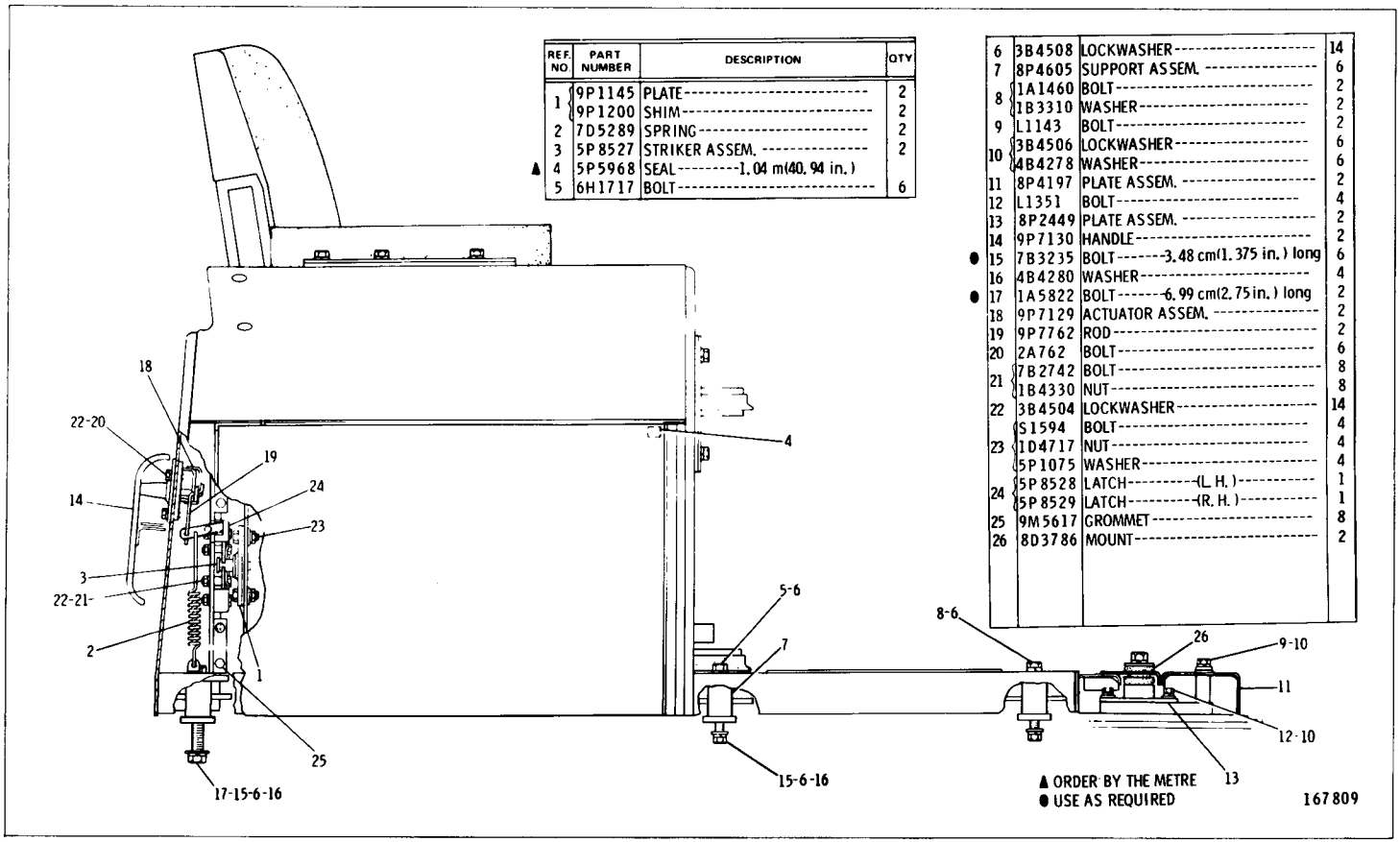

REF. NO.	PART NUMBER	DESCRIPTION	QTY
1	9P1145	PLATE	2
	9P1200	SHIM	2
2	7D5289	SPRING	2
3	5P8527	STRIKER ASSEM.	2
▲ 4	5P5968	SEAL---1.04 m(40.94 in.)	
5	6H1717	BOLT	6
6	3B4508	LOCKWASHER	14
7	8P4605	SUPPORT ASSEM.	6
8	1A1460	BOLT	2
	1B3310	WASHER	2
9	L1143	BOLT	2
10	3B4506	LOCKWASHER	6
	4B4278	WASHER	6
11	8P4197	PLATE ASSEM.	2
12	L1351	BOLT	4
13	8P2449	PLATE ASSEM.	2
14	9P7130	HANDLE	2
● 15	7B3235	BOLT---3.48 cm(1.375 in.) long	6
16	4B4280	WASHER	4
● 17	1A5822	BOLT---6.99 cm(2.75 in.) long	2
18	9P7129	ACTUATOR ASSEM.	2
19	9P7762	ROD	2
20	2A762	BOLT	6
21	7B2742	BOLT	8
	1B4330	NUT	8
22	3B4504	LOCKWASHER	14
	S1594	BOLT	4
23	1D4717	NUT	4
	5P1075	WASHER	4
24	5P8528	LATCH---(L.H.)	1
	5P8529	LATCH---(R.H.)	1
25	9M5617	GROMMET	8
26	8D3786	MOUNT	2

8P4901 SUPPORT AND SEAT GROUP—Part 1 of 3
Serial No. 6X383 to 6X398 inclusive

8P4901 SUPPORT AND SEAT GROUP—Part 2 of 3
Serial No. 6X383 to 6X398 inclusive
3V7114 Belt and 5S45 Seat parts are shown on Pages 172K and 173

REF NO	PART NUMBER	DESCRIPTION	QTY
1	4H3001	PLUG	14
2	8P4877	COVER ASSEM. (Includes)	1
▲	5P7246	SEAL-.68 m(26.8 in.)	
3	L1351	BOLT	4
4	3B4506	LOCKWASHER	16
5	T703	BOLT	8
6	5S45	SEAT ASSEM. (Separate Illustration)	1
7	8H9167	CUSHION	2
▲ 8	5P5638	SEAL-.56 m(22.05 in.)	
9	8P2452	SUPPORT ASSEM.	1

	REF NO	PART NUMBER	DESCRIPTION	QTY
C	10	1V2929	BELT GROUP (Includes)	1
		3V7114	BELT GROUP (Separate Illustration)	1
			-OR-	
		4V2124	BELT GROUP (No Serviceable Parts)	1
	11	S1594	BOLT	4
		4B4278	WASHER	4
C	12	3B4605	COTTER PIN	2
C	13	8S933	EYEBOLT	2
C		8S934	NUT	2

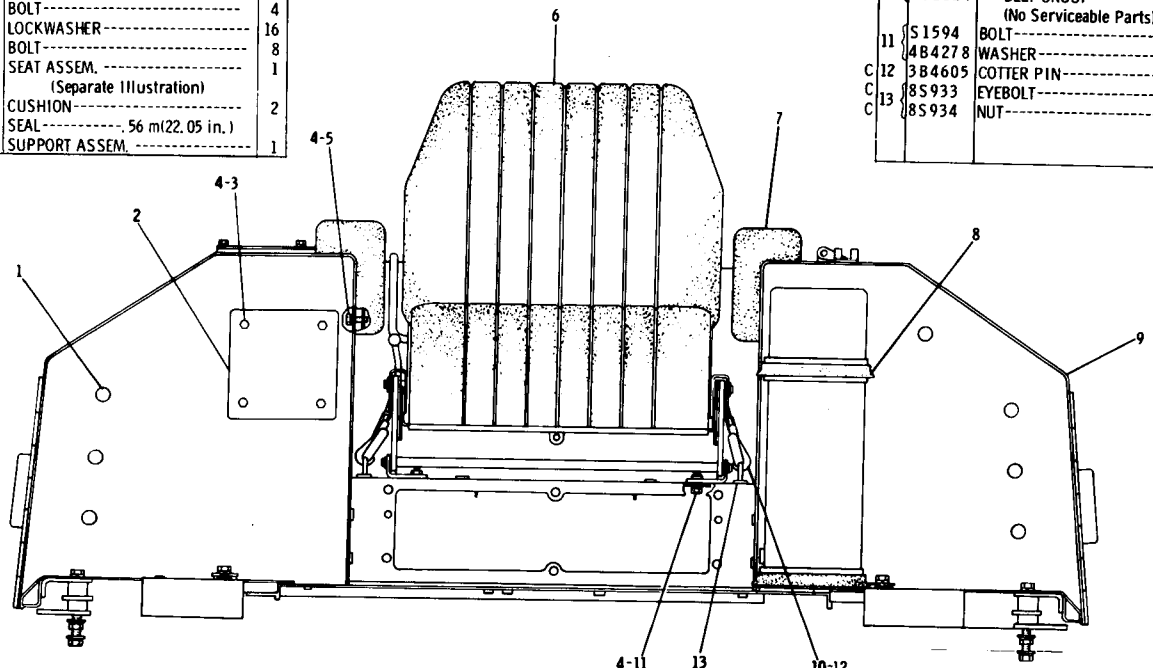

C INDICATES CHANGE

▲ ORDER BY THE METRE

167810

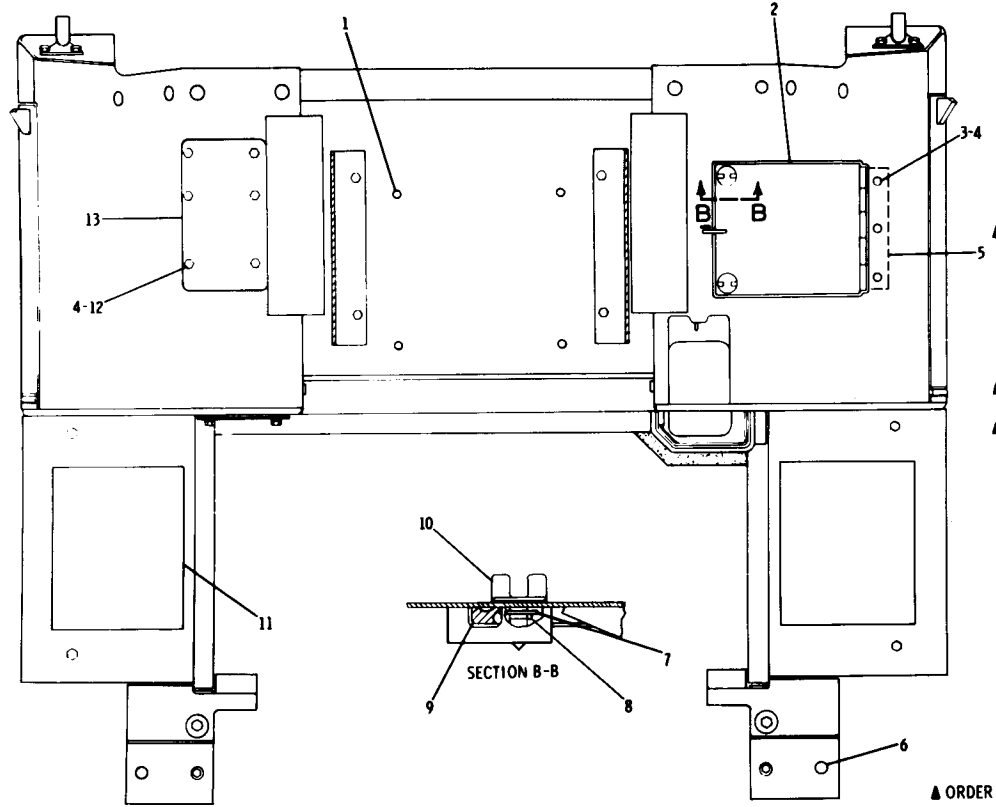

REF NO.	PART NUMBER	DESCRIPTION	QTY
1	9D3737	PLUG	4
2	8P3561	DOOR ASSEM.	1
▲	5P5968	SEAL-----.61 m(24.01 in.)	
3	1D4676	BOLT	3
	1D4717	NUT	3
4	3B4506	LOCKWASHER	9
5	8P3855	PLATE ASSEM.	1
6	8D7970	PLUG	2
7	4B4280	WASHER	2
8	3B4610	COTTER PIN	2
▲ 9	5P5968	SEAL----------.27 m(10.63 in.)	
10	6D1746	BOLT	2
▲ 11	5P5897	COATING---------.5 m(19.69 in.)	
12	S1594	BOLT	6
13	8P4824	COVER	1
	8P4825	SEAL	1

▲ ORDER BY THE METRE

167811

8P4901 SUPPORT AND SEAT GROUP—Part 3 of 3
Serial No. 6X383 to 6X398 inclusive

8P4901 SUPPORT AND SEAT GROUP—Part 1 of 3
Serial No. 6X399 to 6X621 inclusive

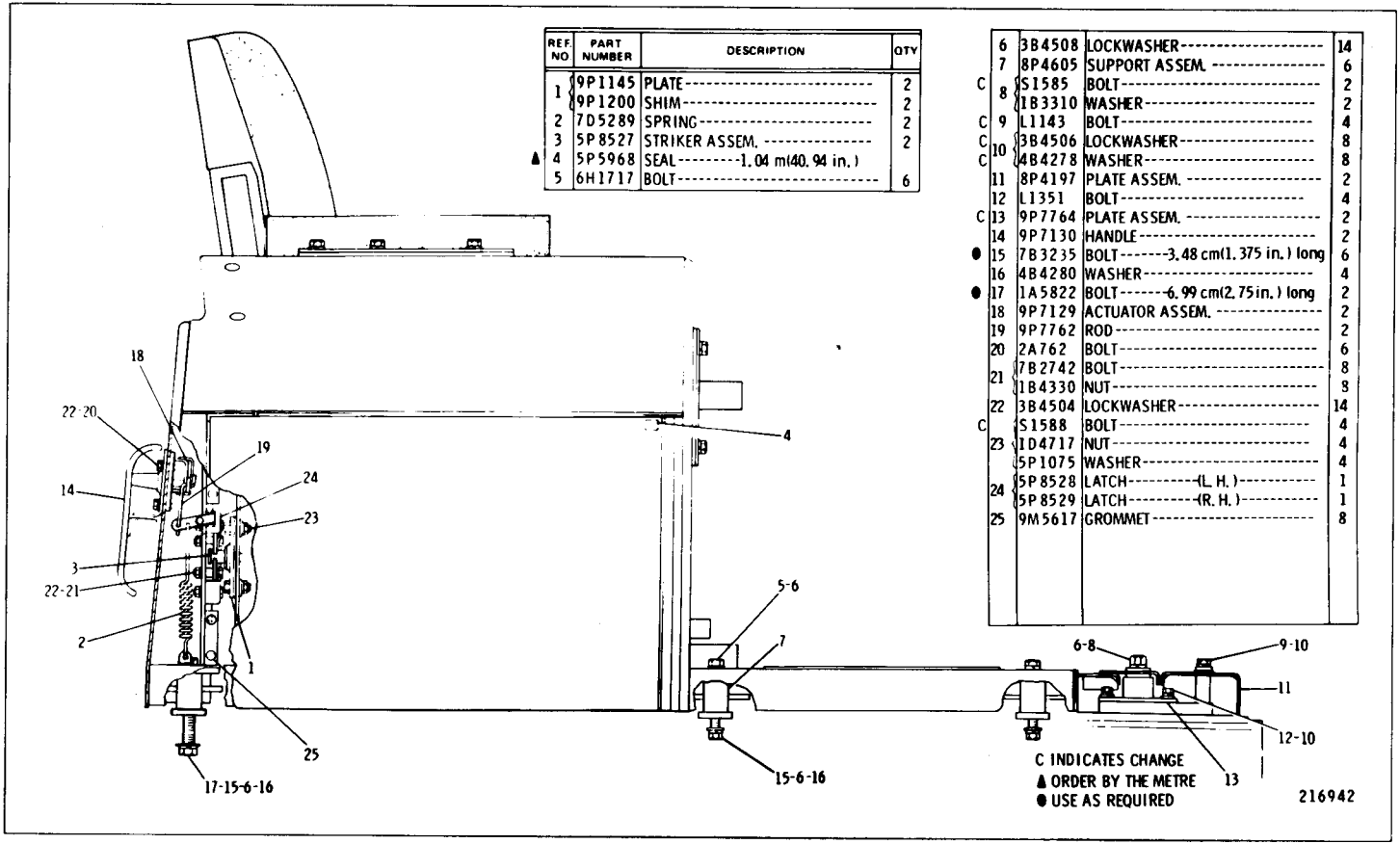

REF. NO	PART NUMBER	DESCRIPTION	QTY
1	9P1145	PLATE	2
	9P1200	SHIM	2
2	7D5289	SPRING	2
3	5P8527	STRIKER ASSEM.	2
▲ 4	5P5968	SEAL---1.04 m(40.94 in.)	
5	6H1717	BOLT	6
6	3B4508	LOCKWASHER	14
7	8P4605	SUPPORT ASSEM.	6
C 8	S1585	BOLT	2
	1B3310	WASHER	2
C 9	L1143	BOLT	4
C 10	3B4506	LOCKWASHER	8
C	4B4278	WASHER	8
11	8P4197	PLATE ASSEM.	2
12	L1351	BOLT	4
C 13	9P7764	PLATE ASSEM.	2
14	9P7130	HANDLE	2
● 15	7B3235	BOLT---3.48 cm(1.375 in.) long	6
16	4B4280	WASHER	4
● 17	1A5822	BOLT---6.99 cm(2.75 in.) long	2
18	9P7129	ACTUATOR ASSEM.	2
19	9P7762	ROD	2
20	2A762	BOLT	6
21	7B2742	BOLT	8
	1B4330	NUT	8
22	3B4504	LOCKWASHER	14
C	S1588	BOLT	4
23	1D4717	NUT	4
	5P1075	WASHER	4
24	5P8528	LATCH---(L. H.)	1
	5P8529	LATCH---(R. H.)	1
25	9M5617	GROMMET	8

REF. NO	PART NUMBER	DESCRIPTION	QTY
1	4H3001	PLUG	14
2	8P4877	COVER ASSEM. (Includes)	1
▲	5P7246	SEAL-.68 m(26.8 in.)	
3	L1351	BOLT	4
4	3B4506	LOCKWASHER	16
5	T703	BOLT	8
6	5S45	SEAT ASSEM. (Separate Illustration)	1
7	8H9167	CUSHION	2
8	8S933	EYEBOLT	2
	8S934	NUT	2

9	8P2452	SUPPORT ASSEM. (Includes)	1
C 10	9F2978	NUT-(weld)	42
C 11	9P5384	BOSS ASSEM. (Includes)	1
12	4J4191	PLUG	1
C 13	1F748	NUT-(weld)	2
C 14	9F6445	NUT-(weld)	7
C 15	8P2491	NUT-(weld)	9

16	1V2929	BELT GROUP (Includes)	1
	3V7114	BELT GROUP (Separate Illustration)	1
		-OR-	
	4V2124	BELT GROUP (No Serviceable Parts)	1
17	S1594	BOLT	4
	4B4278	WASHER	4
18	3B4605	COTTER PIN	2

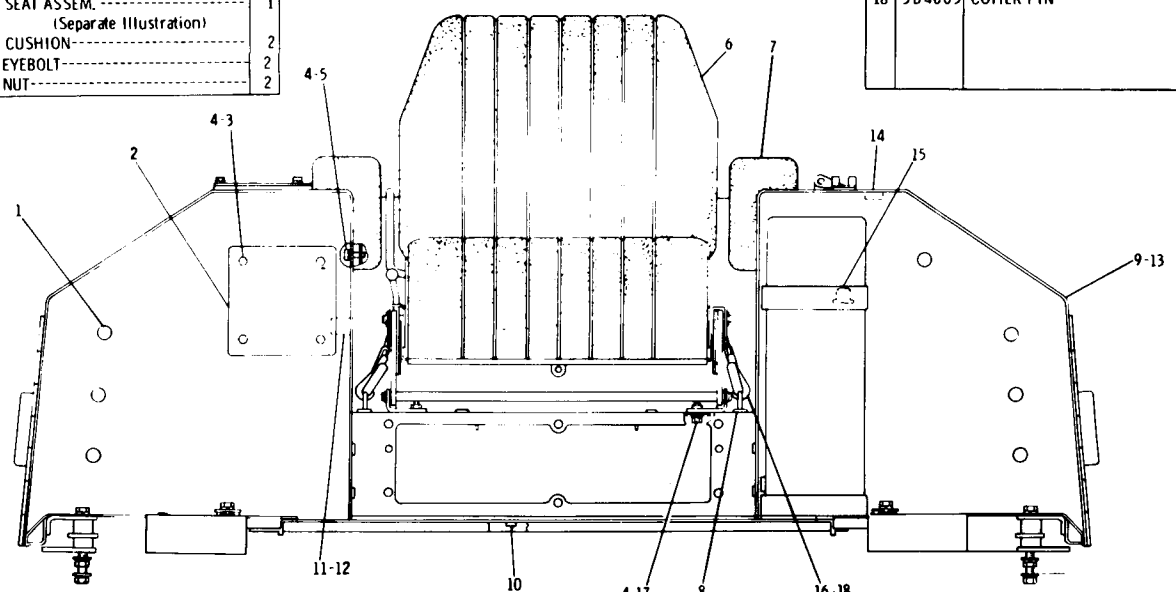

C INDICATES CHANGE

▲ ORDER BY THE METRE

165932

8P4901 SUPPORT AND SEAT GROUP—Part 2 of 3
Serial No. 6X399 to 6X621 inclusive
3V7114 Belt and 5S45 Seat parts are shown on Pages 172K and 173

8P4901 SUPPORT AND SEAT GROUP—Part 3 of 3
Serial No. 6X399 6X621 inclusive

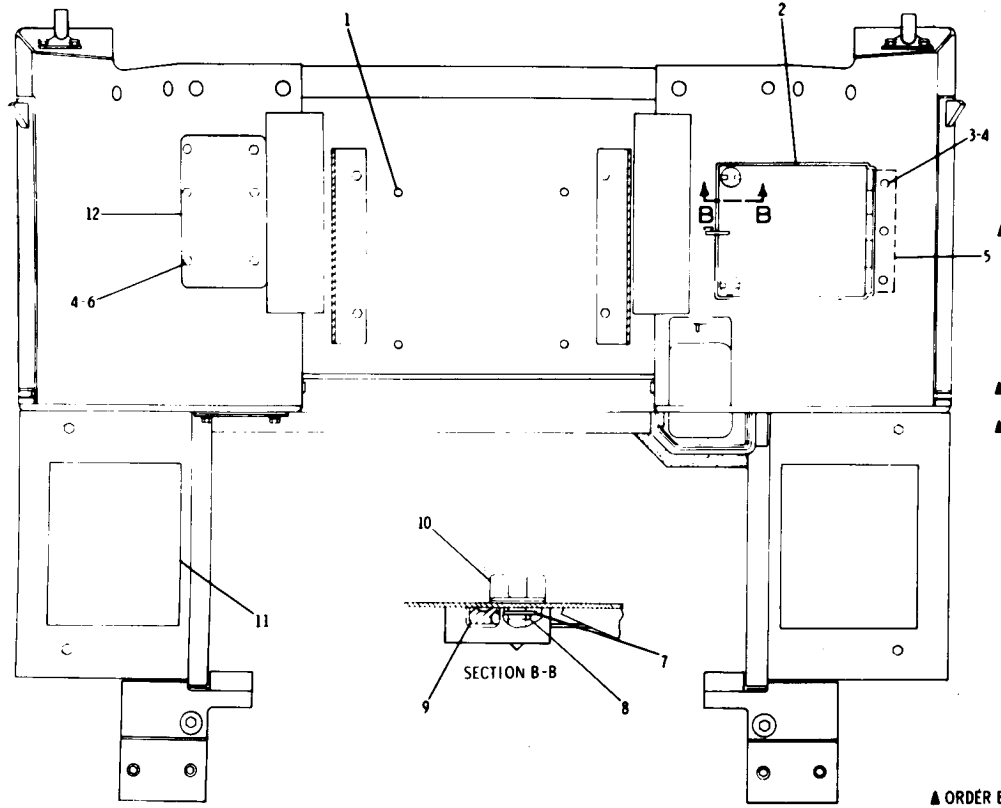

REF NO	PART NUMBER	DESCRIPTION	QTY
1	9D3737	PLUG	4
2	8P3561	DOOR ASSEM.	1
▲	5P5968	SEAL-.61 m(24.01 in.)	
3	1D4676	BOLT	3
	1D4717	NUT	3
4	3B4506	LOCKWASHER	9
5	8P3855	PLATE ASSEM.	1
6	S1594	BOLT	6
7	4B4280	WASHER	2
8	3B4610	COTTER PIN	2
▲	5P5968	SEAL-.27 m(10.63 in.)	
10	6D1746	BOLT	2
▲	5P5897	COATING-.5 m(19.69 in.)	
12	8P4824	COVER	1
	8P4825	SEAL	1

▲ ORDER BY THE METRE

216944

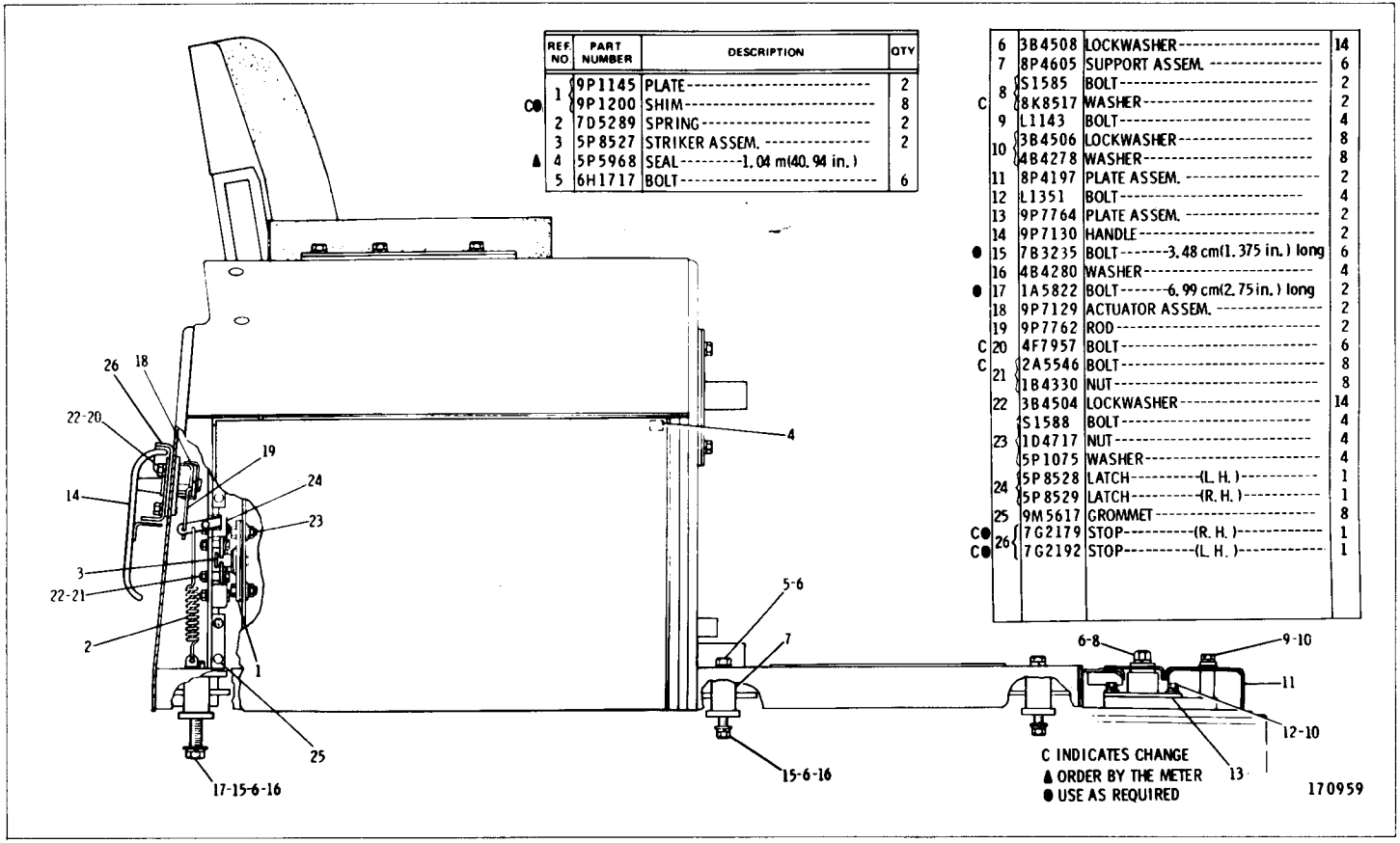

8P4901 SUPPORT AND SEAT GROUP—Part 1 of 3
Serial No. 6X622 to 6X654 inclusive

8P4901 SUPPORT AND SEAT GROUP—Part 2 of 3

Serial No. 6X622 to 6X654 inclusive

3V7114 Belt and 5S45 Seat parts are shown on Pages 172K and 173

REF. NO.	PART NUMBER	DESCRIPTION	QTY
1	4H3001	PLUG	14
2	8P4877	COVER ASSEM. (Includes)	1
▲	5P7246	SEAL-.68 m(26.8 in.)	
3	L1351	BOLT	4
4	3B4506	LOCKWASHER	16
5	T703	BOLT	8
6	5S45	SEAT ASSEM. (Separate Illustration)	1
7	8H9167	CUSHION	2
8	8S933	EYEBOLT	2
	8S934	NUT	2
9	8P2452	SUPPORT ASSEM. (Includes)	1
C 10	9F2978	NUT-(weld)	40
11	9P5384	BOSS ASSEM. (Includes)	1
12	4J4191	PLUG	1
13	1F748	NUT-(weld)	2
14	9F6445	NUT-(weld)	7
15	8P2491	NUT-(weld)	9
16	1V2929	BELT GROUP (Includes)	1
	3V7114	BELT GROUP (Separate Illustration) -OR-	1
	4V2124	BELT GROUP (No Serviceable Parts)	1
17	S1594	BOLT	4
	4B4278	WASHER	4
18	3B4605	COTTER PIN	2

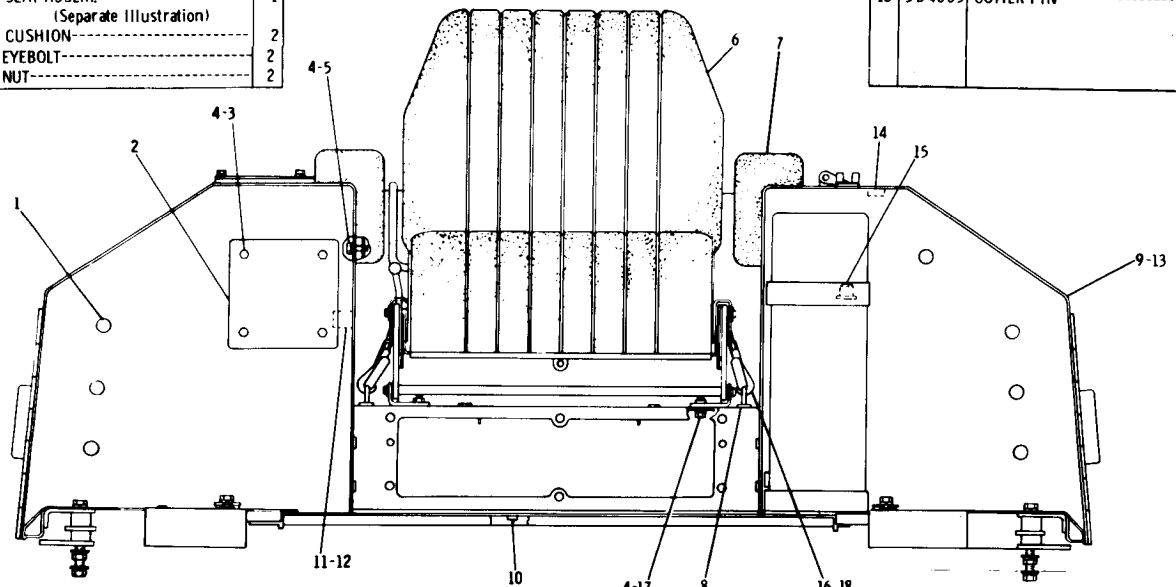

C INDICATES CHANGE

▲ ORDER BY THE METER

170960

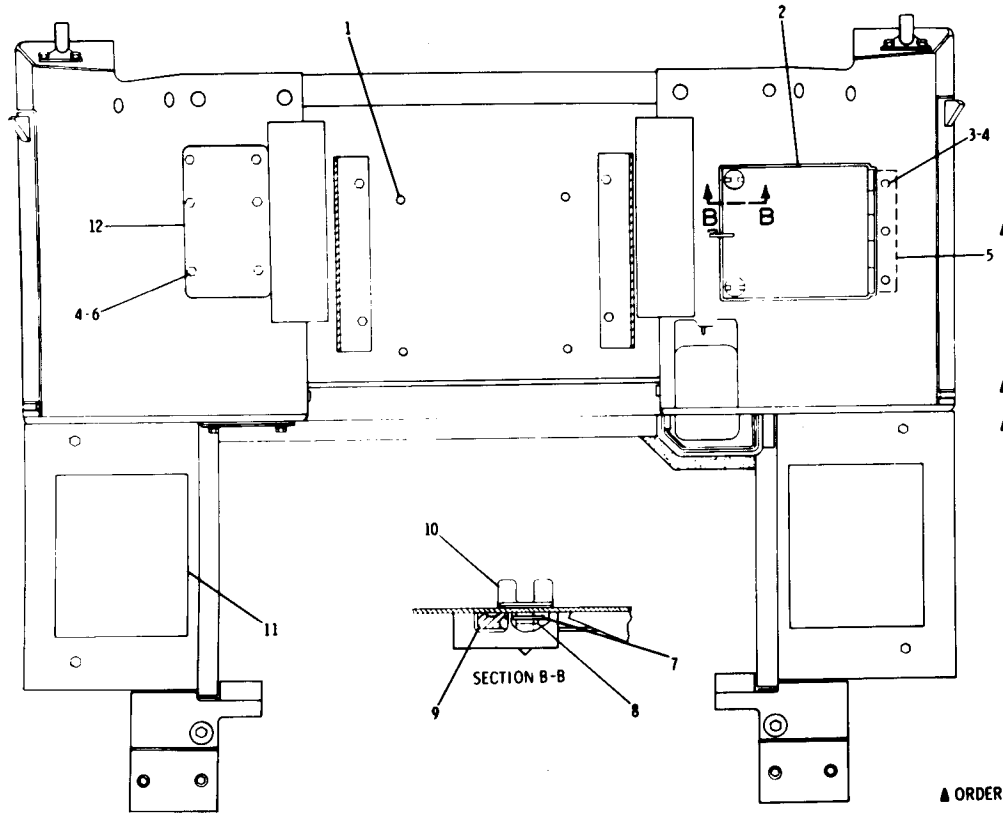

REF. NO.	PART NUMBER	DESCRIPTION	QTY
1	9D3737	PLUG	4
2	8P3561	DOOR ASSEM.	1
▲	5P5968	SEAL-------.61 m(24.01 in.)----	
3	1D4676	BOLT	3
	1D4717	NUT	3
4	3B4506	LOCKWASHER	9
5	8P3855	PLATE ASSEM.	1
6	S1594	BOLT	6
7	4B4280	WASHER	2
8	3B4610	COTTER PIN	2
▲ 9	5P5968	SEAL---------.27 m(10.63 in.)---	
10	6D1746	BOLT	2
▲ 11	5P5897	COATING-----.5 m(19.69 in.)----	
12	8P4824	COVER	1
	8P4825	SEAL	1

▲ ORDER BY THE METRE

216944

8P4901 SUPPORT AND SEAT GROUP—Part 3 of 3
Serial No. 6X622 to 6X654 inclusive

8P4901 SUPPORT AND SEAT GROUP—Part 1 of 3
Serial No. 6X655—Up

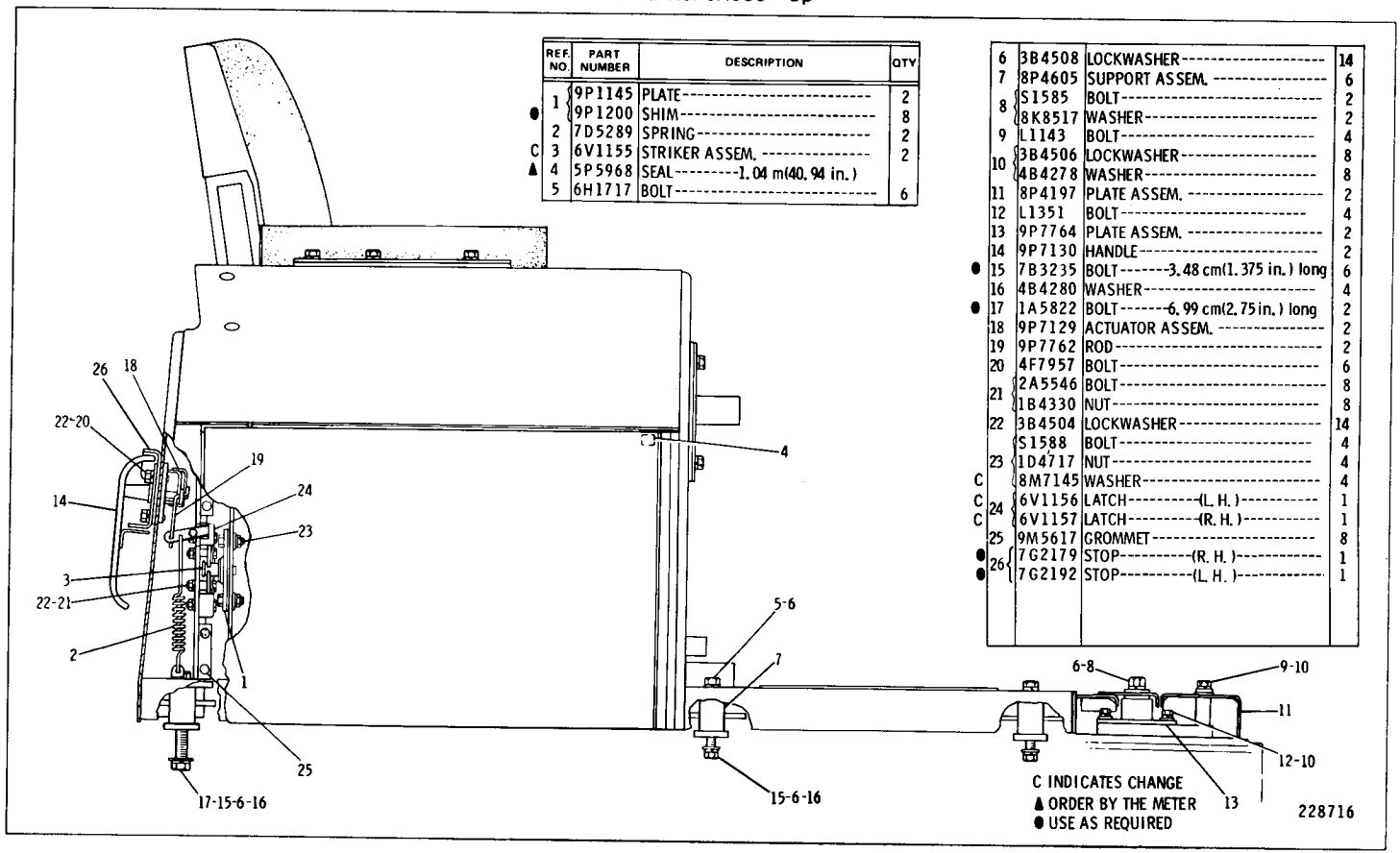

REF. NO.	PART NUMBER	DESCRIPTION	QTY
1	9P1145	PLATE	2
● 1	9P1200	SHIM	8
2	7D5289	SPRING	2
C 3	6V1155	STRIKER ASSEM.	2
▲ 4	5P5968	SEAL—1.04 m(40.94 in.)	
5	6H1717	BOLT	6
6	3B4508	LOCKWASHER	14
7	8P4605	SUPPORT ASSEM.	6
8	S1585	BOLT	2
8	8K8517	WASHER	2
9	L1143	BOLT	4
10	3B4506	LOCKWASHER	8
10	4B4278	WASHER	8
11	8P4197	PLATE ASSEM.	2
12	L1351	BOLT	4
13	9P7764	PLATE ASSEM.	2
14	9P7130	HANDLE	2
● 15	7B3235	BOLT—3.48 cm(1.375 in.) long	6
16	4B4280	WASHER	4
● 17	1A5822	BOLT—6.99 cm(2.75 in.) long	2
18	9P7129	ACTUATOR ASSEM.	2
19	9P7762	ROD	2
20	4F7957	BOLT	6
21	2A5546	BOLT	8
21	1B4330	NUT	8
22	3B4504	LOCKWASHER	14
23	S1588	BOLT	4
23	1D4717	NUT	4
C	8M7145	WASHER	4
C 24	6V1156	LATCH—(L. H.)	1
C 24	6V1157	LATCH—(R. H.)	1
25	9M5617	GROMMET	8
● 26	7G2179	STOP—(R. H.)	1
● 26	7G2192	STOP—(L. H.)	1

REF NO	PART NUMBER	DESCRIPTION	QTY
1	4H3001	PLUG	14
2	8P4877	COVER ASSEM.	1
▲	5P7246	SEAL-----.7m(27.6)-----	
3	L1351	BOLT	4
4	3B4506	LOCKWASHER	16
5	T703	BOLT	8
6	5S45	SEAT ASSEM. (Separate Illustration)	1
7	8H9167	CUSHION	2
8	8S933	EYEBOLT	2
	8S934	NUT	2

9	8P2452	SUPPORT ASSEM. (Includes)	1
10	9F2978	NUT-------(weld)-----	40
11	9P5384	BOSS ASSEM. (Includes)	1
12	4J4191	PLUG	1
13	1F748	NUT-------(weld)-----	2
14	9F6445	NUT-------(weld)-----	7
15	8P2491	NUT-------(weld)-----	9

C	16	1V2959	BELT GROUP	1
	17	5S1594	BOLT	4
		4B4278	WASHER	4
	18	3B4605	COTTER PIN	2

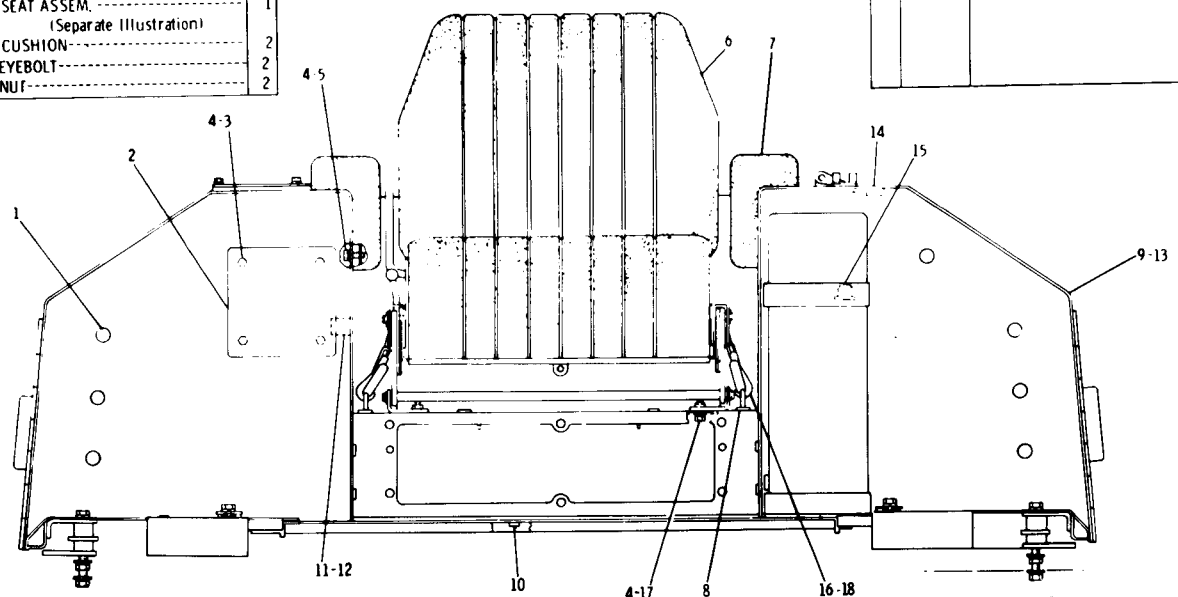

C INDICATES CHANGE

▲ ORDER BY THE METER- - USE AS REQUIRED

224989

8P4901 SUPPORT AND SEAT GROUP—Part 2 of 3
Serial No. 6X655—Up
5S45 Seat parts are shown on Page 173

8P4901 SUPPORT AND SEAT GROUP—Part 3 of 3
Serial No. 6X655—Up

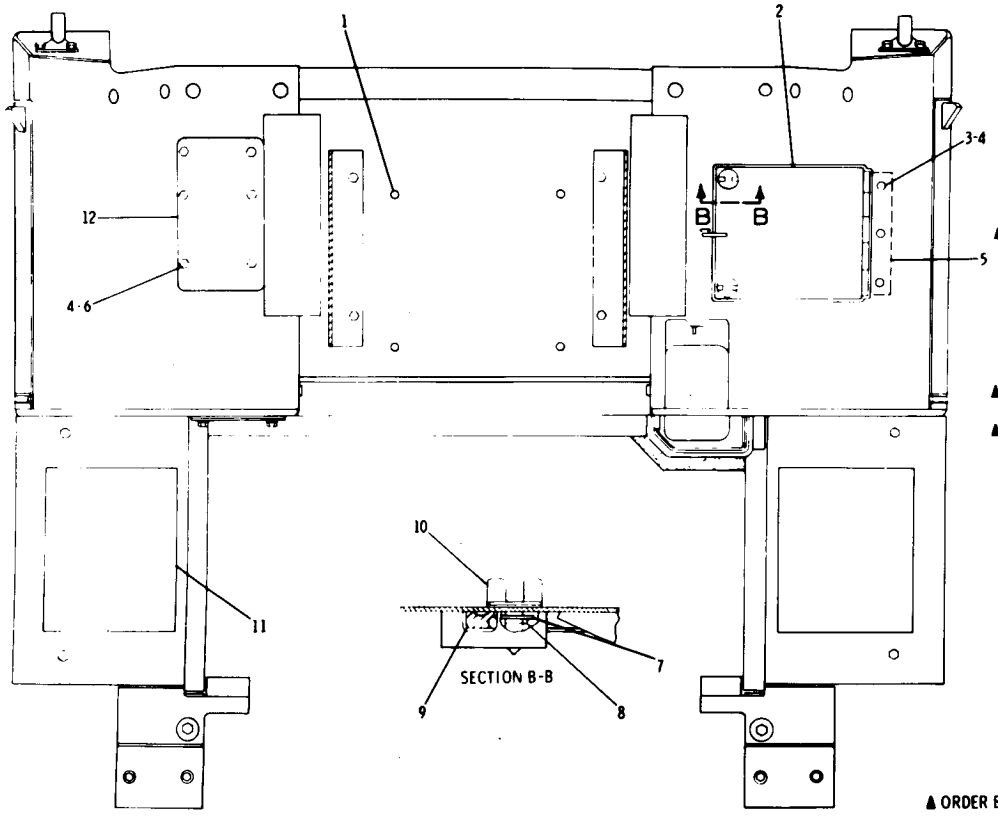

REF. NO.	PART NUMBER	DESCRIPTION	QTY
1	9D3737	PLUG	4
2	8P3561	DOOR ASSEM.	1
▲	5P5968	SEAL-------.61 m(24.01 in.)----	
3	1D4676	BOLT	3
	1D4717	NUT	3
4	3B4506	LOCKWASHER	9
5	8P3855	PLATE ASSEM.	1
6	S1594	BOLT	6
7	4B4280	WASHER	2
8	3B4610	COTTER PIN	2
▲	9	5P5968	SEAL---------.27 m(10.63 in.)---
10	6D1746	BOLT	2
▲	11	5P5897	COATING-----.5 m(19.69 in.)----
12	8P4824	COVER	1
	8P4825	SEAL	1

▲ ORDER BY THE METRE

216944

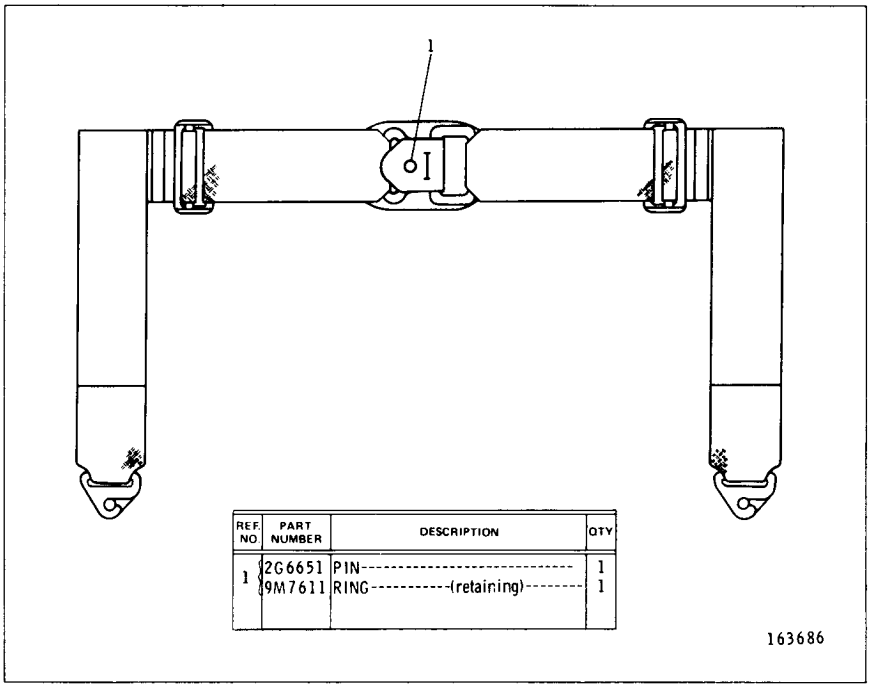

REF. NO.	PART NUMBER	DESCRIPTION	QTY
1	2G6651	PIN	1
	9M7611	RING----------(retaining)--------	1

3V7114 BELT GROUP
Serial No. 6X383—Up
Part of 8P4901 Support and Seat Group shown on Pages 172E, 172H and 172J-2

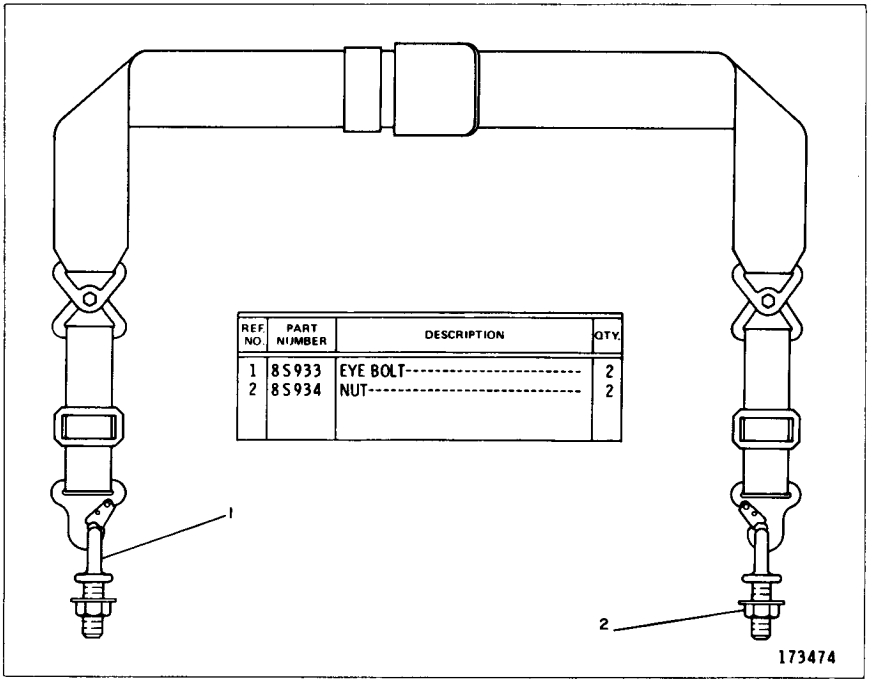

REF. NO.	PART NUMBER	DESCRIPTION	QTY.
1	8S933	EYE BOLT	2
2	8S934	NUT	2

8K9002 SEAT BELT GROUP
Provides Field Replacement for 1V2960 shown on Page 174C

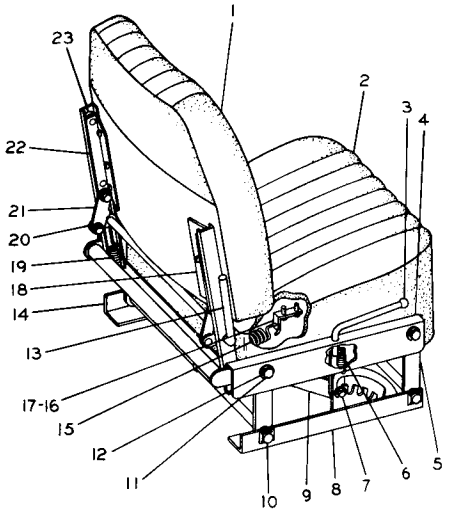

REF. NO.	PART NUMBER	DESCRIPTION	QTY
1	7S5387	CUSHION ASSEM.	1
2	7S5390	CUSHION ASSEM.	1
3	7S5380	KNOB	1
4	7S5391	FRAME ASSEM.	1
	7S5750	FRAME ASSEM.	1
5	7S5753	LEVER ASSEM.	2
6	7S5758	SPRING	1
7	T883	WASHER	2
	7S5757	RING	2
8	7S5751	ANGLE ASSEM. -----(R.H.)-----	1
9	7S5754	LEVER ASSEM.	1
10	7S5759	NUT	4
11	7S5755	PIN	4
12	2R364	RING	8
13	7S5385	LINK ASSEM.	1
14	7S5752	ANGLE ASSEM. ------(L.H.)----	1
15	7S5388	SPRING	1
16	7S5389	BRACKET	1
17	2K7115	SCREW	12
	4F2293	LOCKWASHER	12
18	7S5381	BRACKET ASSEM. -----(R.H.)-----	1
19	7S5383	SPRING	2
20	7S5757	RING	4
21	7S5384	LINK	2
22	7S5382	BRACKET ASSEM. -----(L.H.)-----	1
23	7S5386	ROLLER	4
	7F3494	WASHER	2

113556

5S45 SEAT ASSEMBLY
Part of 8P4901 Support and Seat Group shown on Pages 171, 172H, 172J-2 & 172J-5

REF. NO.	PART NUMBER	DESCRIPTION	QTY
1	2P6695	CUSHION	1
2	2P6696	CUSHION	1
3	2P6694	SHOCK ABSORBER	1
	7S4294	SPRING	2
4	2P6689	SPRING	2
5	2P6693	SPRING	1
6	2P6691	SPRING	1
7	2P6690	SPRING	2
		THE FOLLOWING KITS ARE AVAILABLE:	
	7G1692	KIT--(Seat and Back Cushion) (Includes Pins and Washers)	1
	9P2038	KIT--(Bearing and Wiper) (Includes Bearings, Bushers and Wipers)	1

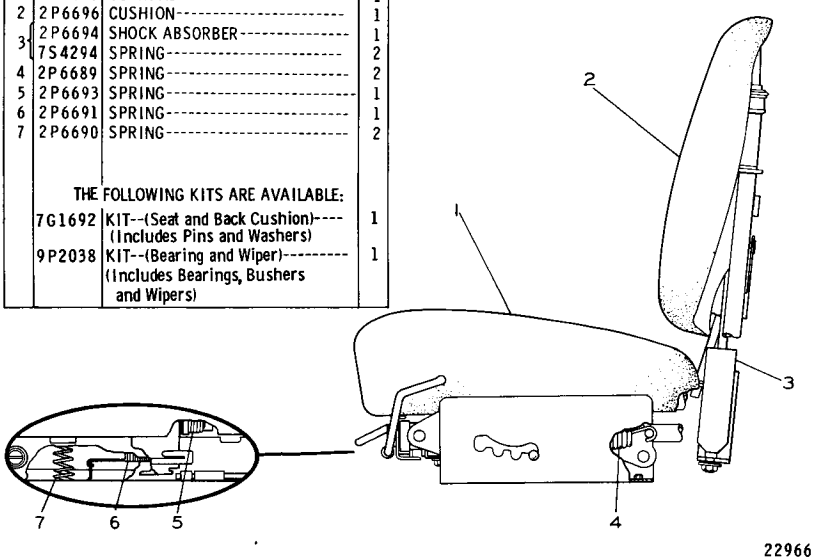

229662

8P8777 BOSTROM SEAT GROUP
AN ATTACHMENT

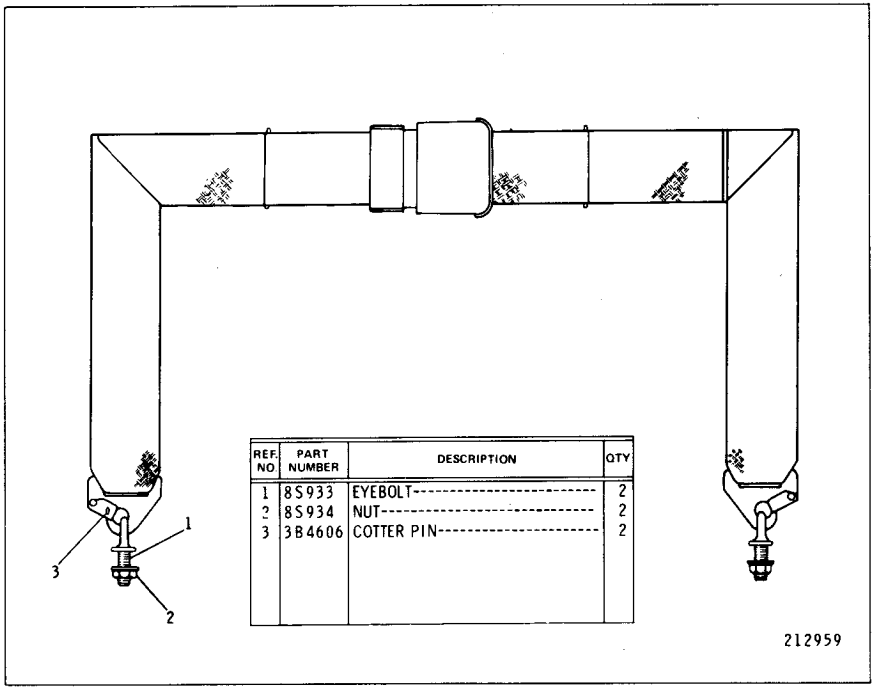

REF. NO	PART NUMBER	DESCRIPTION	QTY
1	8S933	EYEBOLT	2
2	8S934	NUT	2
3	3B4606	COTTER PIN	2

2G6731 SEAT BELT GROUP
Serial No. 6X1 to 6X382 inclusive. Part of 8P4901 Support and Seat Group shown on Pages 171 and 172B

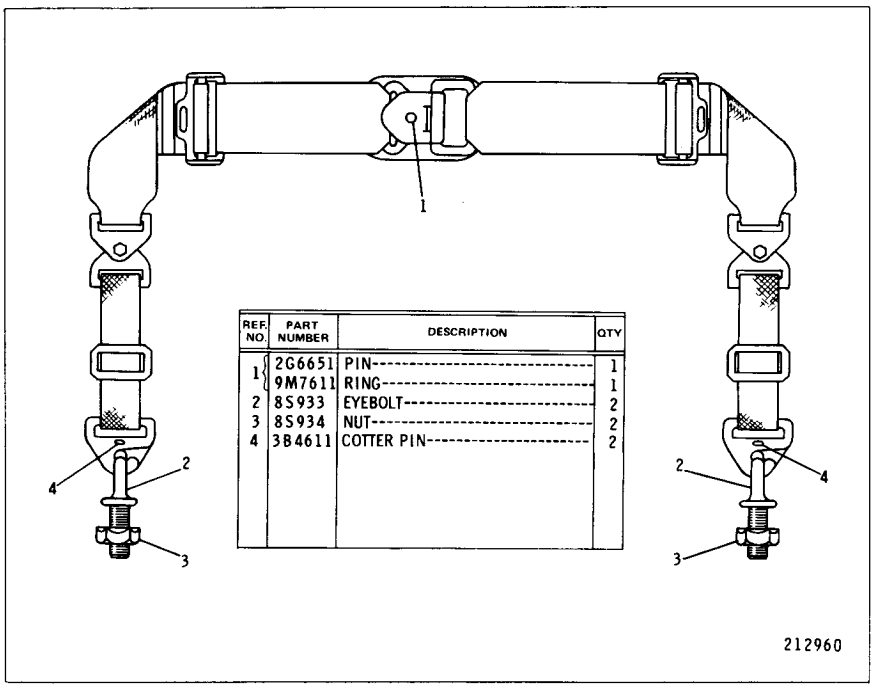

REF. NO.	PART NUMBER	DESCRIPTION	QTY
1	2G6651	PIN	1
	9M7611	RING	1
2	8S933	EYEBOLT	2
3	8S934	NUT	2
4	3B4611	COTTER PIN	2

2G6732 SEAT BELT GROUP
Serial No. 6X1 to 6X382 inclusive. Part of 8P4901 Support and Seat Group shown on Pages 171 and 172B

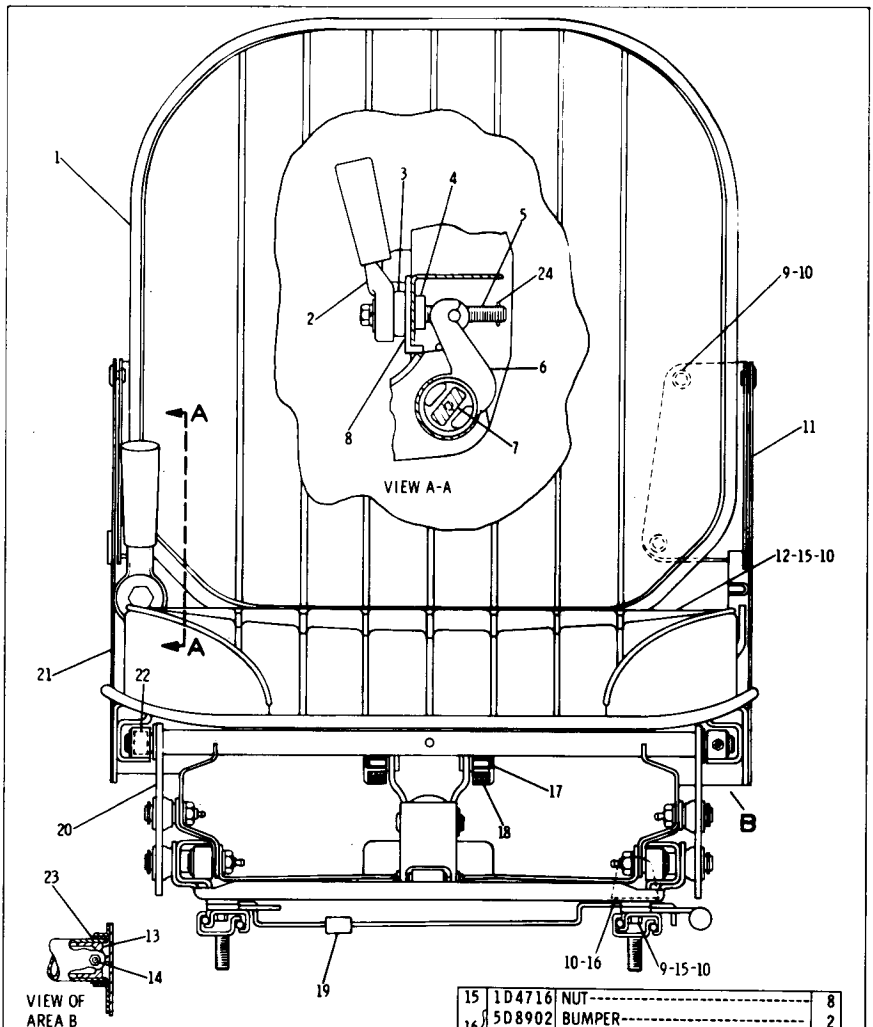

REF. NO.	PART NUMBER	DESCRIPTION	QTY
1	8S168	CUSHION ASSEM.	1
2	1V757	LEVER ASSEM.	1
3	7S9391	BEARING	1
4	7S7800	WASHER	1
5	7S7801	PIN	1
6	7S7804	YOKE	1
7	7S9305	BAR SET	1
8	3V8714	BRACKET	1
9	4B1328	SCREW	8
10	3B4505	LOCKWASHER	14
11	7K9772	PANEL ASSEM. (L. H.)	1
12	7S7791	CUSHION ASSEM.	1
	4B4277	WASHER	4
13	7S7805	RETAINER	1
14	7S7799	FITTING	2
15	1D4716	NUT	8
16	5D8902	BUMPER	2
	1B4202	NUT	2
17	7S7793	BEARING	2
18	7S7789	BUMPER	2
19	3V268	CLIP	1
20	2V7961	SUSPENSION ASSEM. (Separate Illustration)	1
21	1V5746	PANEL ASSEM. (R. H.)	1
22	8S4345	BEARING	1
23	8S4346	BEARING	1
24	3K4897	PIN (spring)	1
	8K7223	KIT (seat adjuster) (Includes 2 Adjusters and Latch Wire)	1
	7S4339	KIT (shock absorber) (Includes Shock Assem. & Shaft)	1

211469

3V8715 SEAT GROUP
Part of 7G9585 Suspension Seat Group shown on Page 174C
2V7961 Seat parts are shown on Page 174B. AN ATTACHMENT

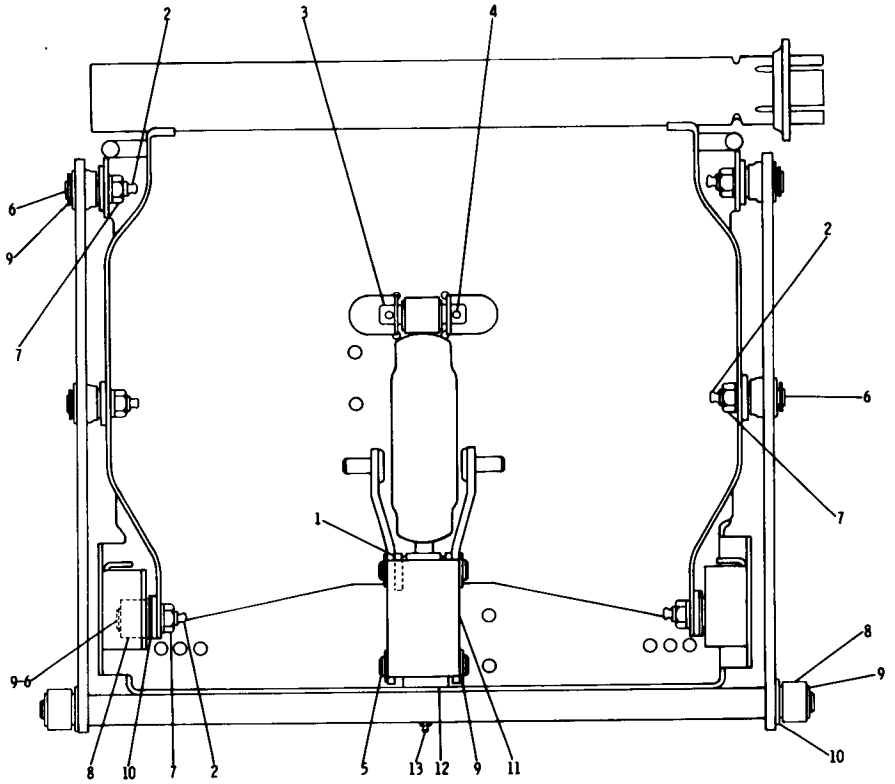

REF. NO.	PART NUMBER	DESCRIPTION	QTY
1	7S9885	WASHER	2
2	7S7799	FITTING	6
3	7S9871	SHAFT	1
4	6H3956	PIN	2
5	7S9870	SHAFT	1
6	7S9867	STUD	6
7	3K6060	LOCKNUT	6
	3B4506	LOCKWASHER	6
8	7S9866	BEARING ASSEM.	4
9	7S5757	RING	10
10	7S9884	WASHER	4
11	7S9873	BRACKET ASSEM.	1
12	7S9869	BEARING	2
13	7S9868	FITTING	1
14	7S9870	SHAFT	1
15	7S9885	WASHER	2
	7S4339	KIT---------(shock absorber)------ (Includes Shock Absorber Assem. and Shaft)	1

160110

2V7961 SEAT SUSPENSION ASSEMBLY
Part of 3V8715 Seat Group shown on Page 174A
AN ATTACHMENT

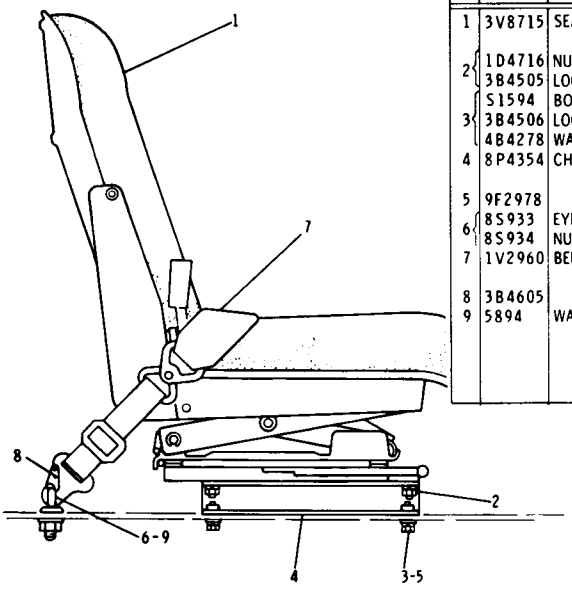

REF. NO.	PART NUMBER	DESCRIPTION	QTY.
1	3V8715	SEAT GROUP---------- (Separate Illustration)	1
2	1D4716	NUT----------	4
	3B4505	LOCKWASHER----------	4
3	S1594	BOLT----------	4
	3B4506	LOCKWASHER----------	4
	4B4278	WASHER----------	4
4	8P4354	CHANNEL ASSEM. ---------- (Each Includes)	2
5	9F2978	NUT----------	2
6	8S933	EYEBOLT----------	2
	8S934	NUT----------	2
7	1V2960	BELT GROUP---------- (Includes)	1
8	3B4605	COTTER PIN----------	2
9	5894	WASHER----------	4

7G9585 SUSPENSION SEAT GROUP
3V8715 Seat parts are shown on Page 174A
AN ATTACHMENT

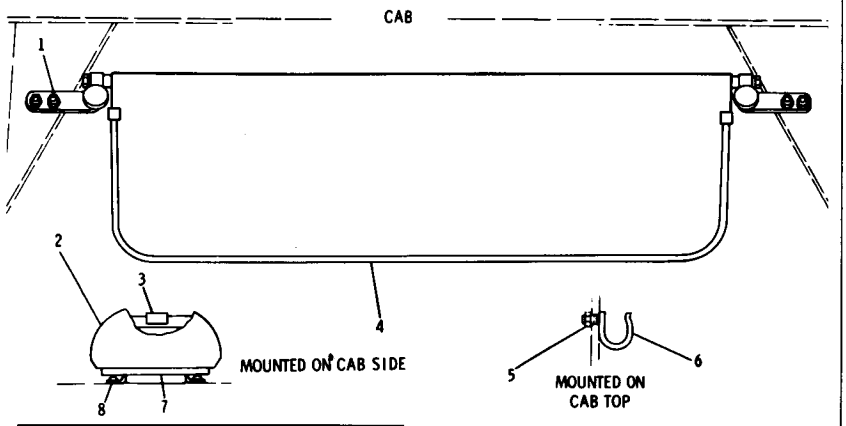

REF. NO.	PART NUMBER	DESCRIPTION	QTY
1	684020	STUD	4
	2D6235	NUT	4
	4B4674	WASHER	4
2	6P8430	TRAY-----(ash)-----	1
▲ 3	5P5672	SEAL-----.025 m(.98 in.)	
4	9P2432	VISOR ASSEM.	1
5	7F7615	SCREW	2
	9S5937	NUT	2
6	6P8431	HOOK	1
7	6P7606	SEAT	1
8	9M5733	RIVET	2

▲ ORDER BY THE METRE

212830

8P2140 CAB ACCESSORY GROUP
AN ATTACHMENT

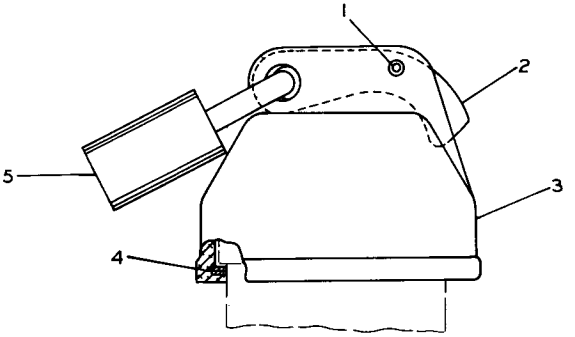

▲ Not Part of Protection Cover Group 5D1910

REF. NO.	PART NUMBER	DESCRIPTION	QTY
1	1L5072	DOWEL	1
2	9M7394	LEVER	1
3	5D1911	COVER	1
4	2J7761	RING	1
5	Not Serv	PADLOCK (For Service of Padlock & Key Order 8S7949 Padlock Group)	1
▲	8M439	KEY (NOT SHOWN)	2

113719

5D1910 PROTECTION COVER GROUP—Hydraulic Tank Cap
AN ATTACHMENT

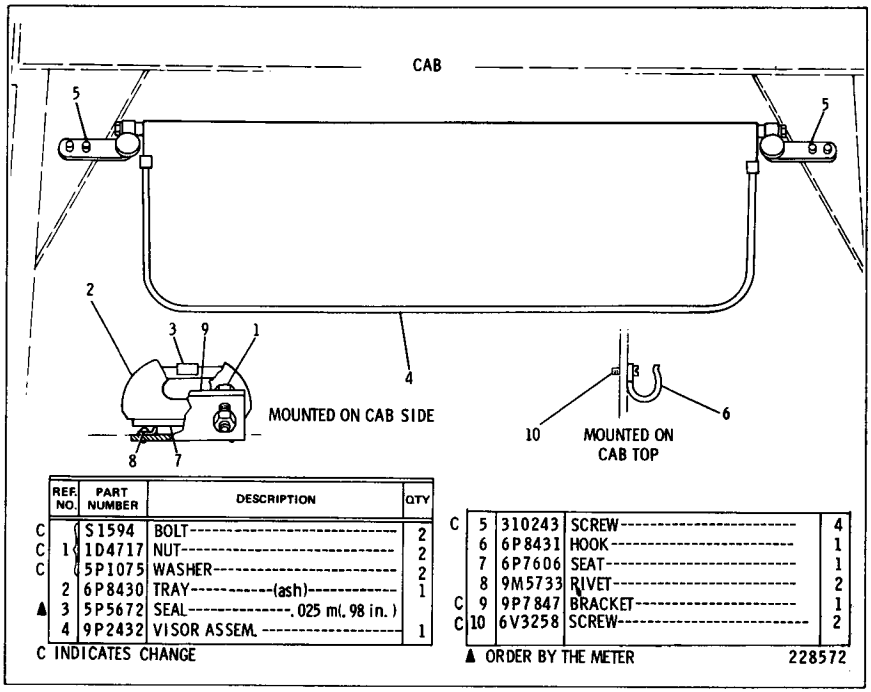

	REF. NO.	PART NUMBER	DESCRIPTION	QTY
C		S1594	BOLT----------	2
C	1	1D4717	NUT----------	2
C		5P1075	WASHER----------	2
	2	6P8430	TRAY----------(ash)----------	1
▲	3	5P5672	SEAL----------.025 m(.98 in.)	
	4	9P2432	VISOR ASSEM.----------	1

C INDICATES CHANGE

C	5	310243	SCREW----------	4
	6	6P8431	HOOK----------	1
	7	6P7606	SEAT----------	1
	8	9M5733	RIVET----------	2
C	9	9P7847	BRACKET----------	1
C	10	6V3258	SCREW----------	2

▲ ORDER BY THE METER

228572

8P2140 CAB ACCESSORY GROUP—Type 2

		CONSISTS OF:	PAGE
1	8P2145	AIR CONDITIONER ARRANGEMENT	177
1	6N206	REFRIGERANT COMPRESSOR GROUP	177
1	9P2045	COMPRESSOR HARNESS ASSEMBLY	179
1	6N9349	CIRCUIT BREAKER (30 AMP)	
1	5P7137	FILM	

8P5419 AIR CONDITIONER ARRANGEMENT—Cools Only
AN ATTACHMENT

		CONSISTS OF:	PAGE
1	6N206	REFRIGERANT COMPRESSOR ARRANGEMENT	177
1	9P5227	AIR CONDITIONER ARRANGEMENT	176A
1	5P7137	FILM	

8P5420 AIR CONDITIONING ARRANGEMENT—Cools and Heats
AN ATTACHMENT

		CONSISTS OF:	PAGE
1	9G3699	HEATER LINES GROUP	185B
1	8P2149	AIR CONDITIONER LINES GROUP	184
1	8P3148	MOUNTING AND CONDENSER GROUP	182
1	9P2045	COMPRESSOR HARNESS ASSEMBLY	179
1	8P2146	AIR CONDITIONER GROUP	180
	- OR -		
1	9P5225	AIR CONDITIONER GROUP	179B
1	5F9757	GROMMET--HARNESS	

9P5227 AIR CONDITIONER ARRANGEMENT—Heats and Cools
Part of 8P5420 Air Conditioner Arrangement listed on Page 176
AN ATTACHMENT

		CONSISTS OF:	PAGE
1	8P2146	AIR CONDITIONER GROUP	180
1	8P2149	AIR CONDITIONER LINES GROUP	184
1	8P3148	CONDENSER GROUP	182

8P2145 AIR CONDITIONER ARRANGEMENT—Cools Only
Part of 8P5419 Air Conditioner Arrangement listed on Page 176

		CONSISTS OF:	PAGE
1	4N6016	REFRIGERANT COMPRESSOR GROUP	178
1	6N1134	FUMES DISPOSAL GROUP ..... SERIAL NO. 6X1 TO 6X735 INCLUSIVE	30
		- OR -	
1	8N233	FUMES DISPOSAL GROUP ..... SERIAL NO. 6X1 TO 6X735 INCLUSIVE	31
1	9L6125	VEE BELT	
1	4N6381	COMPRESSOR DRIVE PULLEY ASSEMBLY	
		CONSISTING OF:	
6	4S6137	STUD	

6N206 REFRIGERANT COMPRESSOR ARRANGEMENT
Part of 7N3997 Engine Arrangement and 8P5419 and 8P5420 Air Conditioner Arrangements listed on Pages 3 and 176

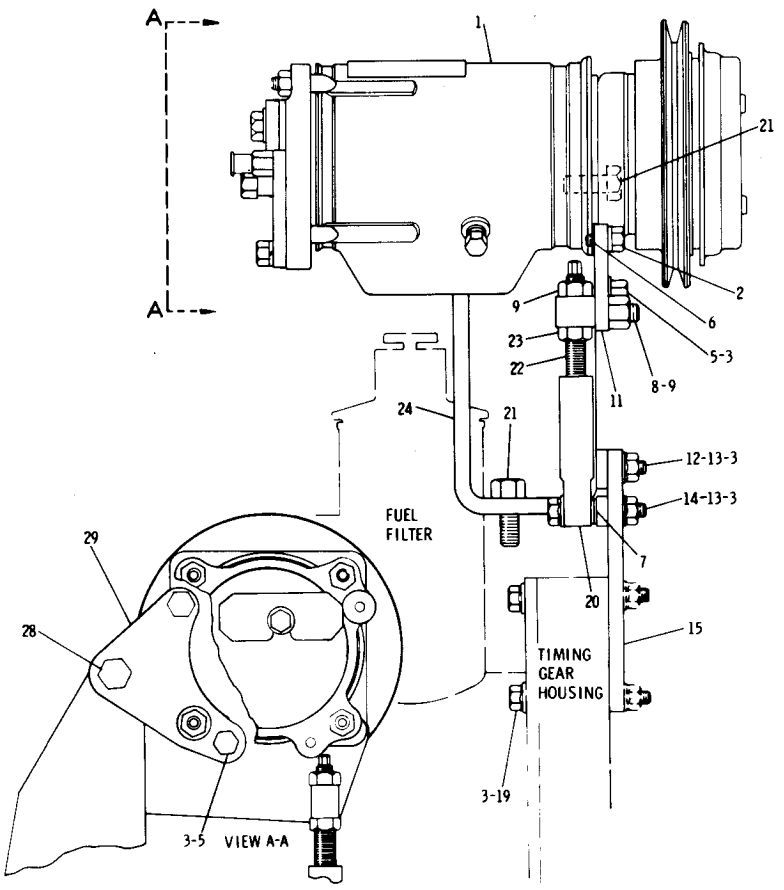

	REF. NO.	PART NUMBER	DESCRIPTION	QTY
	1	1P2780	COMPRESSOR GROUP---------- (Separate Illustration)	1
	2	4B9883	BOLT----------	2
		9M1974	WASHER----------	2
C	3	5M2894	WASHER----------	15
C	5	S1594	BOLT----------	3
	6	6B6122	WASHER----------	1
C	7	4B4278	WASHER----------	2
	8	1P2237	SWIVEL----------	1
	9	1D4719	NUT----------	2
	11	4N6010	PLATE----------	1
C	12	S1571	BOLT----------	2
C	13	1D4717	NUT----------	3
C	14	L2070	BOLT----------	1
	15	4N6297	SUPPORT ASSEM.----------	1

C	19	T573	BOLT----------	3
	20	1P2238	END----------	1
	21	S1595	BOLT----------	2
	22	1P2236	ROD ASSEM.----------	1
	23	1D5117	NUT----------	1
	24	2P6539	SUPPORT ASSEM.----------	1
		1F748	NUT----------	1
		7B3235	BOLT----------	1
	28	4B4280	WASHER--.095 in. (2.41 mm) thick	1
		8S8320	SPACER--.69 in. (17.53 mm) thick	1
	29	4N6011	PLATE----------	1

C INDICATES CHANGE A164 J. WALKER

4N6016 REFRIGERANT COMPRESSOR GROUP—Type 1
Part of 6N206 Refrigerant Compressor Arrangement listed on Page 177
1P2780 Refrigerant Compressor parts are shown on Page 179
AN ATTACHMENT

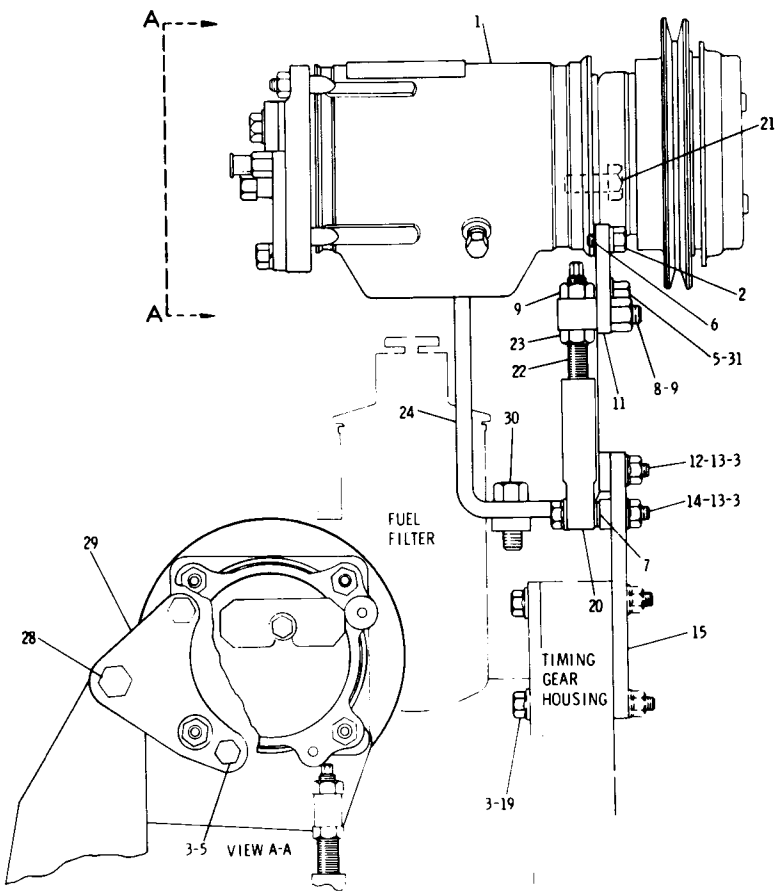

	REF. NO.	PART NUMBER	DESCRIPTION	QTY
C	1	7N4297	COMPRESSOR GROUP (Separate Illustration)	1
	2	4B9883	BOLT	2
		9M1974	WASHER	2
C	3	5M2894	WASHER	14
	5	S1594	BOLT	3
	6	6B6122	WASHER	1
C	7	4B4278	WASHER---(use as required)	2
	8	1P2237	SWIVEL	1
	9	1D4719	NUT	2
	11	4N6010	PLATE	1
	12	S1571	BOLT	2
	13	1D4717	NUT	3
	14	L2070	BOLT	1
	15	4N6297	SUPPORT ASSEM.	1
	19	T573	BOLT	3
	20	1P2238	END	1
C	21	S1595	BOLT	1
	22	1P2236	ROD ASSEM.	1
	23	1D5117	NUT	1
	24	2P6539	SUPPORT ASSEM.	1
		1F748	NUT	1
	28	7B3235	BOLT	1
		4B4280	WASHER--.095 in. (2.41 mm) thick	1
		8S8320	SPACER--.69 in. (17.53 mm) thick	1
	29	4N6011	PLATE	1
C	30	S1585	BOLT	1
C		7N2597	SPACER	1
C	31	9L9132	WASHER	1

C INDICATES CHANGE 171215

4N6016 REFRIGERANT COMPRESSOR GROUP—Type 2
Part of 6N206 Refrigerant Compressor Arrangement listed on Page 177
7N4297 Clutch and Refrigerant Compressor parts are shown on Page 178B
AN ATTACHMENT

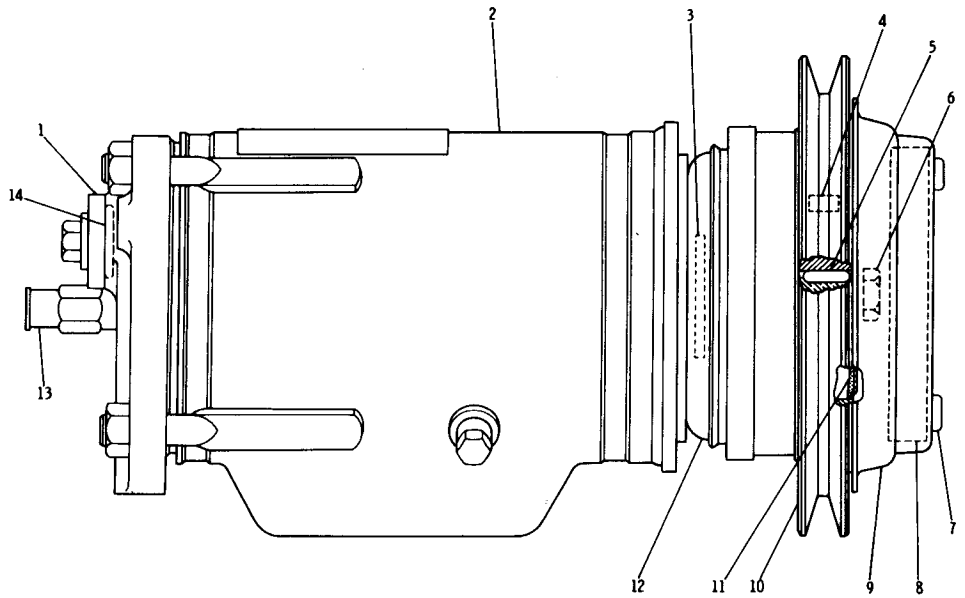

REF. NO.	PART NUMBER	DESCRIPTION	QTY
1	1P6356	PLATE	1
2	1P6416	COMPRESSOR ASSEM.	1
3	7N4293	SEAL KIT-----(refrigerant)------- (Includes shield assem., rings, seals, nut, seal kit, key and sleeve)	1
4	7N4289	BEARING KIT (Includes bearing, seals, rings, nut, key, sleeve and shield group)	1
5	7N809	KEY	1
C 6	9P8750	NUT	1
7	145111	SCREW	3
8	7N4294	DRIVE CLUTCH KIT (Includes drive assem. nut, key, shield assem., rings, seals and sleeve)	1
9	6N1116	COVER KIT------(dust)---------- (Includes cover and screws)	1
10	7N4290	PULLEY KIT (Includes pulley assem., seals, shield group, rings, nut, key and sleeve)	1
11	7N4291	SEAL KIT--------(dust)------- (Includes shield group, seals, key, nut, rings and sleeve)	1
12	7N4292	COIL KIT (Includes coil assem., shield assem., seals, rings, nut, key and sleeve)	1
13	1P6355	VALVE ASSEM.	1
14	1H8171	SEAL	2

C INDICATES CHANGE

214785

7N4297 CLUTCH AND REFRIGERANT COMPRESSOR GROUP
Part of 4N6016 Refrigerant Compressor Arrangement listed on Page 178A
AN ATTACHMENT

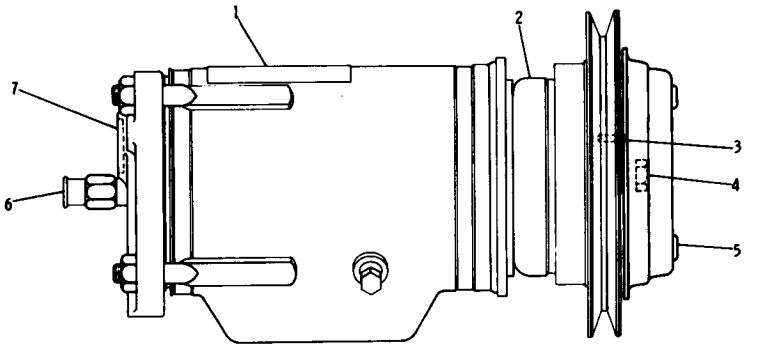

	REF. NO.	PART NUMBER	DESCRIPTION	QTY
	1	1P6416	COMPRESSOR GROUP----------	1
C	2	7N4295	REFRIGERANT COMPRESSOR KIT-- (Includes coil assem., cover kit, drive assem., key, nut, pulley assem., rings, seals, seal kit, shield group and sleeve.)	1
C	3	7N809	KEY----------	1
C	4	6N8639	NUT----------	1
C	5	145111	SCREW----------	3
	6	1P6355	VALVE ASSEM.----------	1
C	7	1H8171	SEAL----------	2

C INDICATES CHANGE 213717

1P2780 REFRIGERANT COMPRESSOR GROUP
Part of 4N6016 Refrigerant Compressor Group shown on Page 178

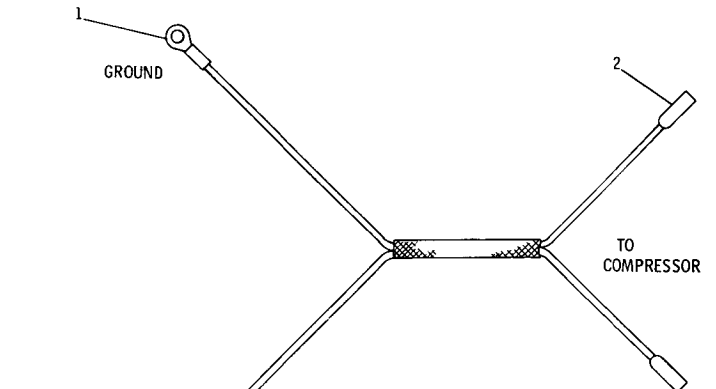

	REF. NO.	PART NUMBER	DESCRIPTION	QTY
	1	2L8079	TERMINAL-------(ground)--------	1
C	2	9G1906	CONNECTOR ASSEM.----------	2
	3	5P6725	CONNECTOR ASSEM.----------	1

C INDICATES CHANGE 228817

9P2045 COMPRESSOR HARNESS ASSEMBLY
Part of 8P5419 & 9P5227 Air Condtioner Arrangements listed on Pages 176 & 176A

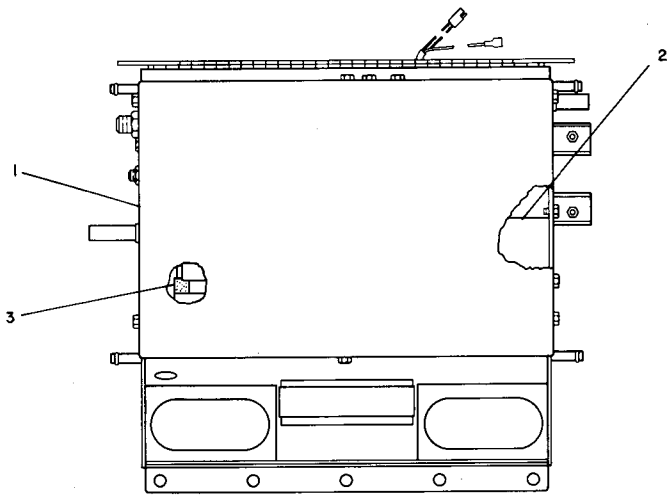

REF. NO.	PART NUMBER	DESCRIPTION	QTY.
1	8P2146	CONDITIONER GROUP---------- (Separate Illustration)	1
2	9G3764	HEATER GROUP---------- (Separate Illustration)	1
▲ 3	5P5671	SEAL--------.25 m(9.8 in.)	

▲ ORDER BY THE METER 176040

9P5225 AIR CONDITIONER GROUP
Part of 9P5227 Air Conditioner Arrangement listed on Page 176A. 8P2146 Air Conditioner and 9G3764 Heater parts are shown on Pages 180 through 181D and on Pages 186C & 186D. AN ATTACHMENT

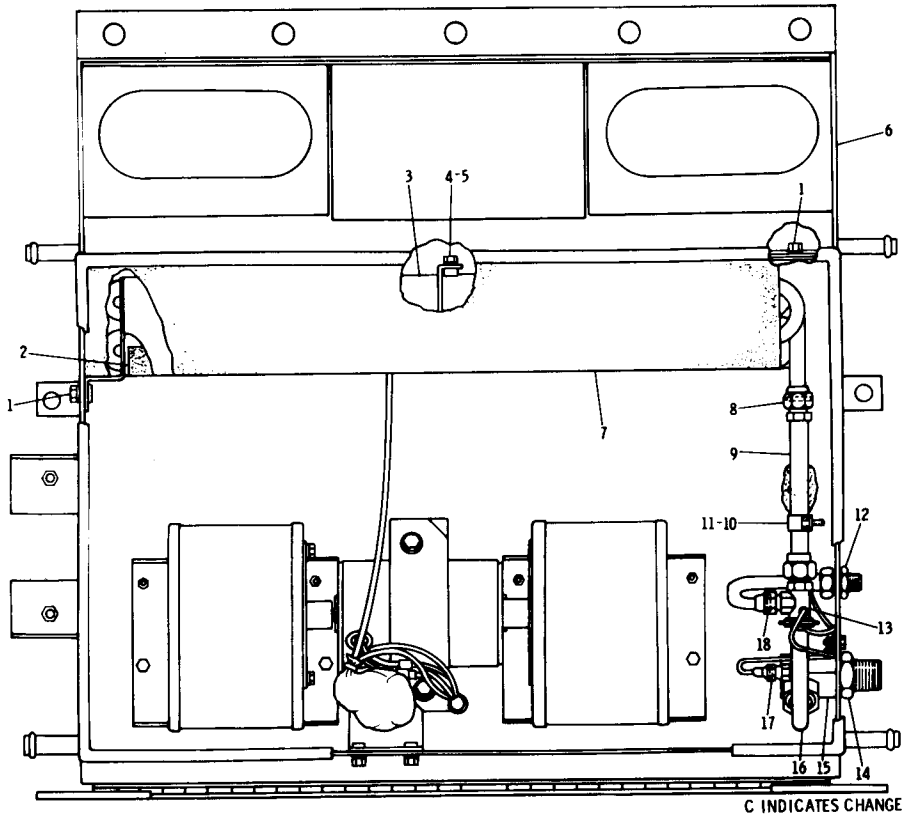

REF. NO.	PART NUMBER	DESCRIPTION	QTY
1	T102	BOLT	4
	3B4506	LOCKWASHER	4
▲ 2	5P5671	SEAL---1.08 m(42.52 in.)	
3	8P4709	COIL	1
C 4	S1614	BOLT	1
5	3B4504	LOCKWASHER	2
C 6	9P5089	PRESSURIZER GROUP (Separate Illustration)	1
7	8P4882	SEAL	1
8	6M5062	SEAL	2
9	8P3599	TUBE ASSEM.	1
10	8J1256	CLIP	1
C 11	2A762	BOLT	1
12	1B9982	NUT	1
	1K4702	WASHER	1
C 13	2G401	VALVE	1
14	6P1303	NUT	1
15	9P2185	FITTING ASSEM.	1
16	9P2188	TUBE ASSEM.	1
	5L4758	SEAL	2
17	5P6458	SEAL	1
18	5F9144	SEAL	1

▲ ORDER BY THE METRE

215941

8P2146 AIR CONDITIONER GROUP—Part 1
Part of 9P5227 and 8P2145 Air Conditioner Arrangements listed on Pages 176A & 177
9P5089 Pressurizer parts are shown on Pages 163A & 163B

8P2146 AIR CONDITIONER GROUP—Part 2
Part of 9P5227 and 8P2145 Air Conditioner Arrangements listed on Pages 176A & 177

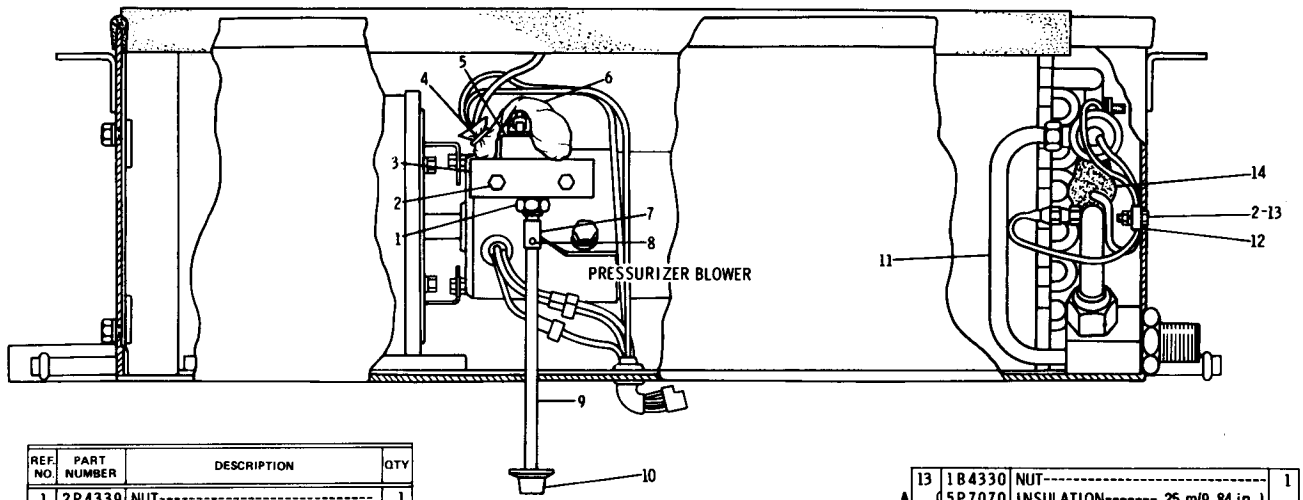

	REF. NO.	PART NUMBER	DESCRIPTION	QTY
	1	2P4339	NUT	1
	2	2A762	BOLT	3
		3B4504	LOCKWASHER	3
	3	8P2111	BRACKET ASSEM.	1
	4	677135	STRAP	1
C	5	9P3498	SWITCH-------(thermostat)-------	1
	6	1V9647	BAG	1
	7	8P3597	SLEEVE	1
	8	3H1118	PIN	2
	9	8P3598	ROD	1
	10	1P6509	KNOB	1
	11	8P4710	TUBE ASSEM.	1
	12	1P6525	CLAMP	1

	13	1B4330	NUT	1
▲	14	5P7070	INSULATION-------. 25 m(9. 84 in.)	
		6P1299	CLAMP	1
		1P6524	SCREW	1
C		SMHS7000	FORM------(installing switch)-----	1

C INDICATES CHANGE ▲ ORDER BY THE METRE

215394

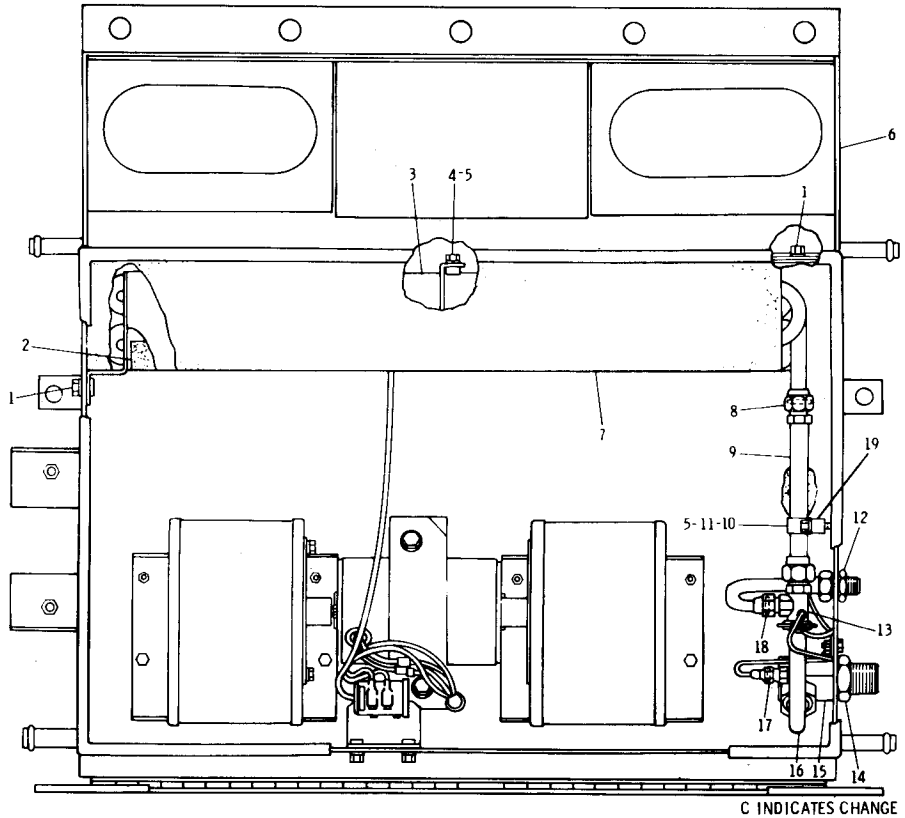

	REF. NO.	PART NUMBER	DESCRIPTION	QTY
	1	T102	BOLT	4
		3B4506	LOCKWASHER	4
C▲	2	5P5671	SEAL (.54 m(21.26 in.)	
	3	8P4709	COIL	1
	4	S1614	BOLT	1
	5	3B4504	LOCKWASHER	2
	6	9P5089	PRESSURIZER GROUP (Separate Illustration)	1
C	7	7G3616	SEAL	1
	8	6M5062	SEAL	2
	9	8P3599	TUBE ASSEM.	1
	10	8J1256	CLIP	1
C	11	1B4330	NUT	1
	12	1B9982	NUT	1
		1K4702	WASHER	1
	13	2G401	VALVE	1
	14	6P1303	NUT	1
	15	9P2185	FITTING ASSEM.	1
	16	9P2188	TUBE ASSEM.	1
		5L4758	SEAL	2
	17	5P6458	SEAL	1
	18	5F9144	SEAL	1
C	19	3S6696	SPACER	1

C INDICATES CHANGE

▲ ORDER BY THE METRE

220614

8P2146 AIR CONDITIONER GROUP—Part 1—Type 2
Part of 9P5227 and 8P2145 Air Conditioner Arrangements listed on Pages 176A and 177
9P5089 Pressurizer parts are shown on Pages 163A and 163B. AN ATTACHMENT

8P2146 AIR CONDITIONER GROUP—Part 2—Type 2
Part of 9P5227 and 8P2145 Air Conditioner Arrangements listed on Pages 176A and 177
AN ATTACHMENT

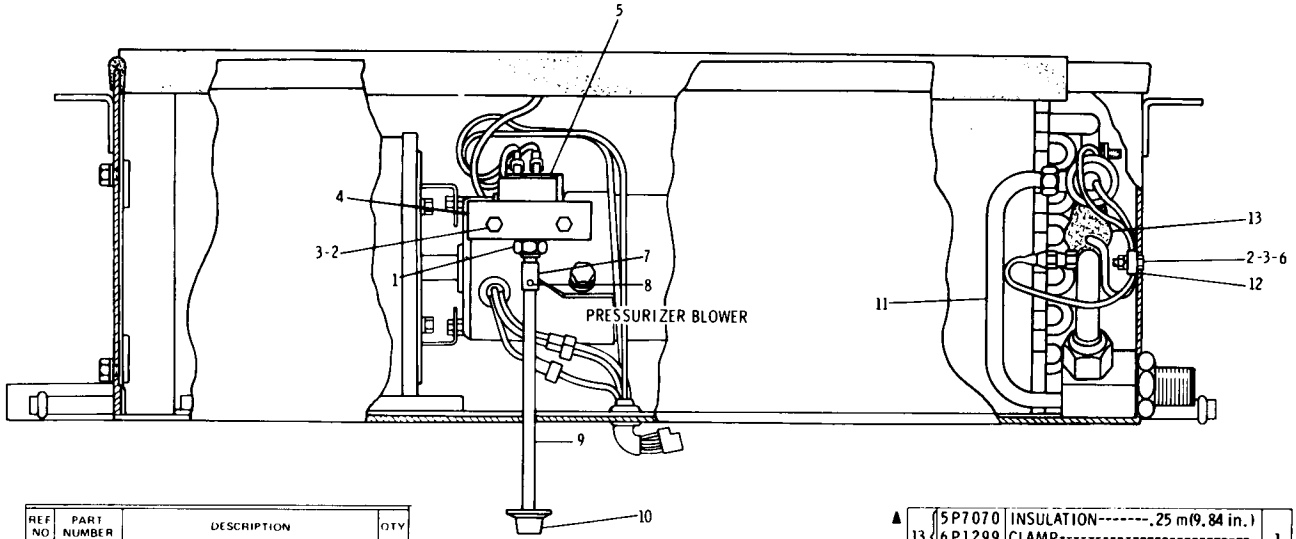

REF NO	PART NUMBER	DESCRIPTION	QTY
1	2P4339	NUT----------	1
2	2A762	BOLT----------	3
3	3B4504	LOCKWASHER----------	3
4	8P2111	BRACKET ASSEM.----------	1
5	9P3498	SWITCH------(thermostat)--------	1
6	1B4330	NUT----------	1
7	8P3597	SLEEVE----------	1
8	3H1118	PIN----------	2
9	8P3598	ROD----------	1
10	1P6509	KNOB----------	1
11	8P4710	TUBE ASSEM.----------	1
12	1P6525	CLAMP----------	1

▲ 13	5P7070	INSULATION-------.25 m(9.84 in.)	
	6P1299	CLAMP----------	1
	1P6524	SCREW----------	1
	SMHS7000	FORM------(installing switch)------	1

C INDICATES CHANGE ▲ ORDER BY THE METRE 220615

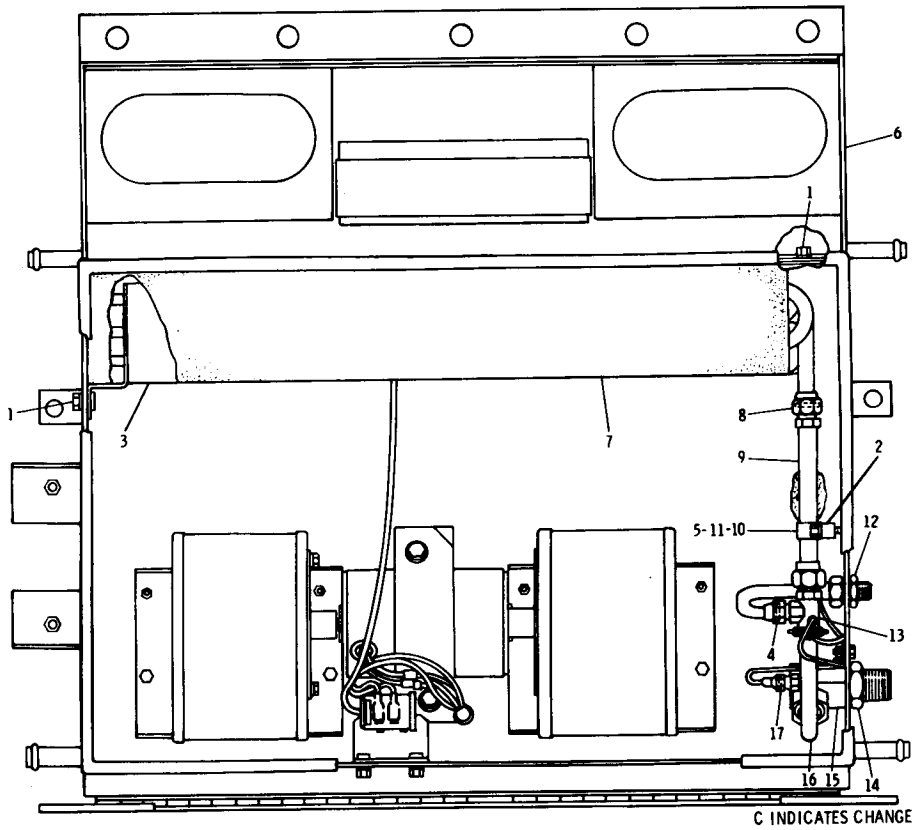

	REF. NO.	PART NUMBER	DESCRIPTION	QTY.
	1	T102	BOLT	4
		3B4506	LOCKWASHER	4
	2	3S6696	SPACER	1
C	3	7G3474	COIL	1
	4	5F9144	SEAL	1
C	5	3B4504	LOCKWASHER	1
	6	9P5089	PRESSURIZER GROUP (Separate Illustration)	1
	7	7G3616	SEAL	1
	8	6M5062	SEAL	2
	9	8P3599	TUBE ASSEM.	1
	10	8J1256	CLIP	1
	11	1B4330	NUT	1
	12	1B9982	NUT	1
		1K4702	WASHER	1
	13	2G401	VALVE	1
	14	6P1303	NUT	1
	15	9P2185	FITTING ASSEM.	1
	16	9P2188	TUBE ASSEM.	1
		5L4758	SEAL	2
	17	5P6458	SEAL	1

C INDICATES CHANGE

175850

8P2146 AIR CONDITIONER GROUP—Part 1—Type 3
Part of 9P5227 and 8P2145 Air Conditioner Arrangements listed on Pages 176A & 177
9P5089 Pressurizer parts are shown on Pages 163A and 163B. AN ATTACHMENT

8P2146 AIR CONDITIONER GROUP—Part 2—Type 3
Part of 9P5227 and 8P2145 Air Conditioner Arrangements listed on Pages 176A and 177
AN ATTACHMENT

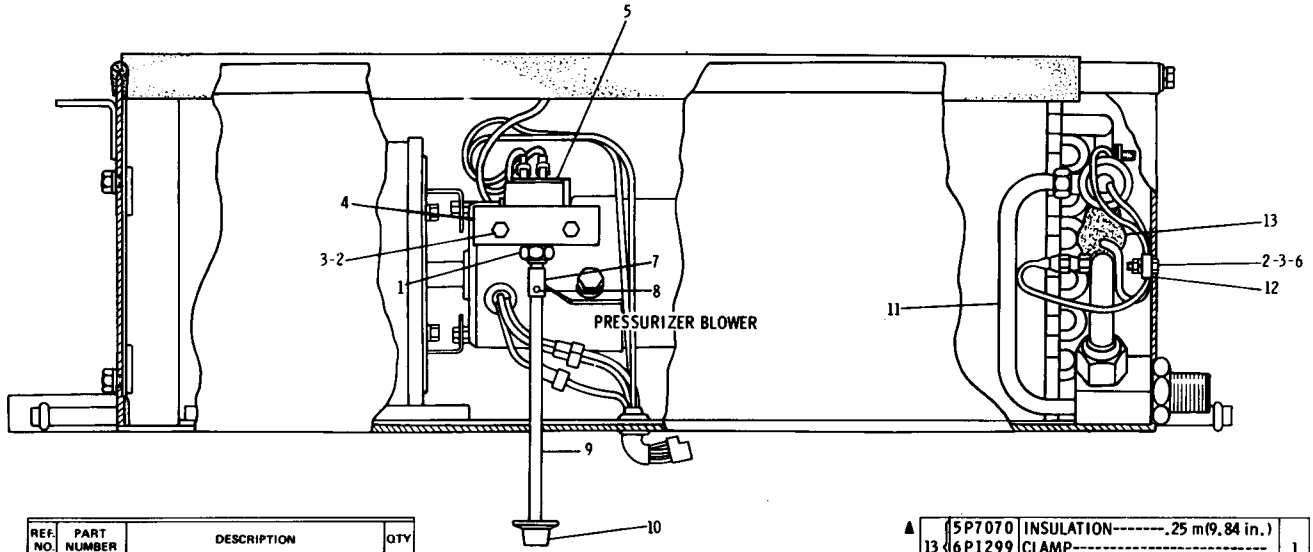

REF. NO.	PART NUMBER	DESCRIPTION	QTY
1	2P4339	NUT----------	1
2	2A762	BOLT----------	3
3	3B4504	LOCKWASHER----------	3
4	8P2111	BRACKET ASSEM.----------	1
5	9P3498	SWITCH------(thermostat)--------	1
6	1B4330	NUT----------	1
7	8P3597	SLEEVE----------	1
8	3H1118	PIN----------	2
9	8P3598	ROD----------	1
10	1P6509	KNOB----------	1
11	8P4710	TUBE ASSEM.----------	1
12	1P6525	CLAMP----------	1

▲	13	5P7070	INSULATION-------.25 m(9.84 in.)	
		6P1299	CLAMP----------	1
		1P6524	SCREW----------	1
		SMHS7000	FORM----(Installing Switch)-----	1

▲ ORDER BY THE METER

175851

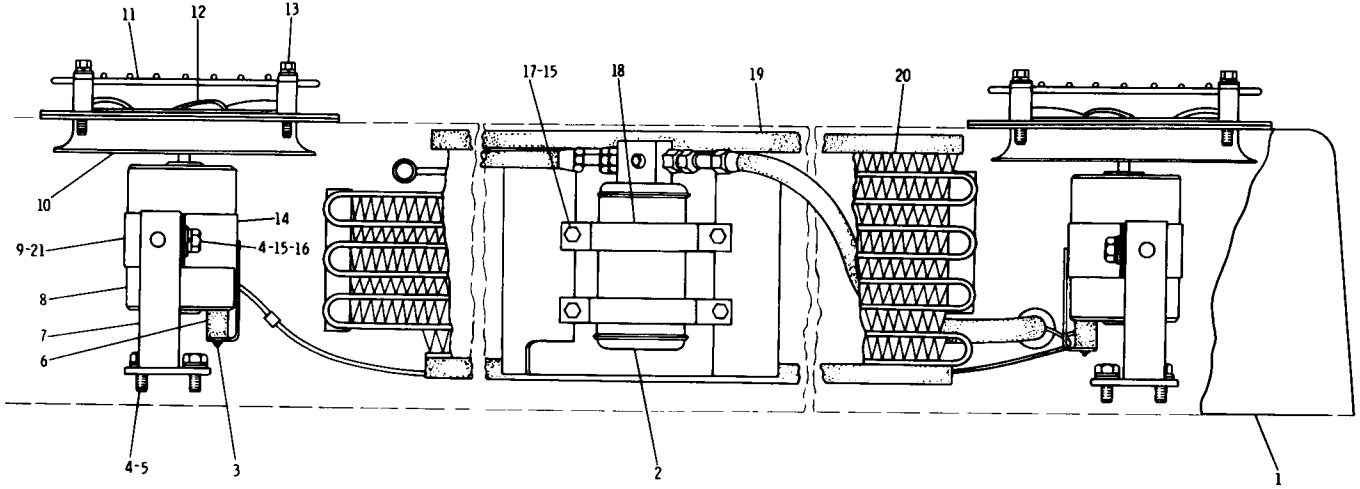

REF. NO.	PART NUMBER	DESCRIPTION	QTY
1	8P3138	GRILL ASSEM.	1
2	9D6888	DRYER	1
3	2H6622	SCREW	2
	6L7101	SPACER	2
4	S509	BOLT	10
5	5P1075	WASHER	6
6	8P7567	BUMPER ASSEM.	2
7	9P252	PLATE ASSEM.	2
8	9P2218	MOTOR ASSEM. (Each Includes)	2
	2P5145	BRUSH	2
	5P5610	CONNECTOR----(push type)----	1
	2L7018	PAD	1
9	2P4556	STRAP	2
10	9P247	ORIFICE ASSEM.	2
11	9P245	GUARD ASSEM.	2
12	3P7995	FAN	2
13	1B2714	BOLT	8
	3B4504	LOCKWASHER	8
	4B5269	WASHER	8
14	9P2424	STRAP ASSEM.	2
15	3B4506	LOCKWASHER	8
16	4B4278	WASHER	4
17	S1588	BOLT	4
18	8D7644	CLAMP	4
▲	5P5656	SEAL----------.4 m(15.76 in.)	
▲ 19	5P5921	SEAL----------1.3 m(51.2 in.)	
20	8P5089	COIL	1
▲ 21	5P5908	SEAL----------.7 m(27.6 in.)	

▲ ORDER BY THE METRE

214088

8P3148 CONDENSER GROUP—Part 1
Part of 9P5227 and 8P2145 Air Conditioner Arrangements listed on Pages 176A and 177

8P3148 CONDENSER GROUP—Part 2

Part of 9P5227 & 8P2145 Air Conditioner Arrangements listed on Pages 176A & 177

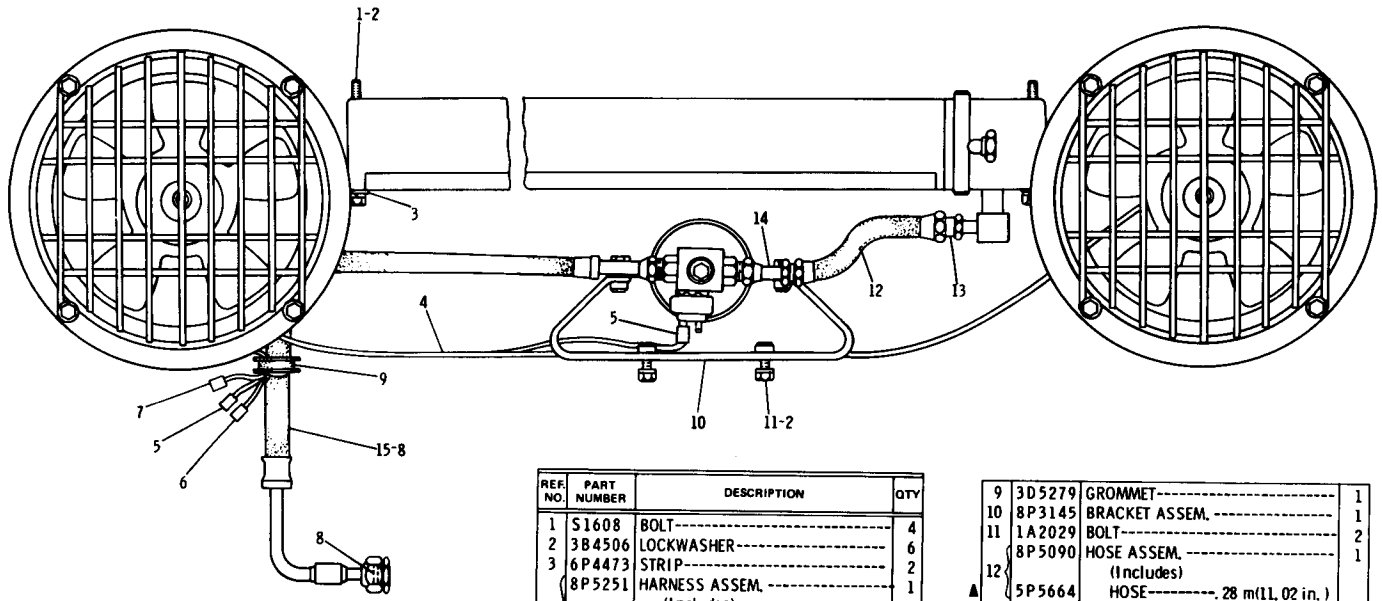

REF. NO.	PART NUMBER	DESCRIPTION	QTY
1	S1608	BOLT	4
2	3B4506	LOCKWASHER	6
3	6P4473	STRIP	2
	8P5251	HARNESS ASSEM. (Includes)	1
▲ 4	5P5624	WIRE-(14 gauge)	
▲ 4	5P5621	WIRE-(12 gauge)	
4	6K1828	CONNECTOR-(motor)	2
4	2S1043	BUTT	1
C 5	5P4571	TERMINAL-(dryer & connector)	3
6	7K9689	CONNECTOR-(connector)	1
C 7	5P5694	TERMINAL-(thermostat)	1
8	5F9144	SEAL	4
9	3D5279	GROMMET	1
10	8P3145	BRACKET ASSEM.	1
11	1A2029	BOLT	2
12	8P5090	HOSE ASSEM. (Includes)	1
▲ 12	5P5664	HOSE-.28 m(11.02 in.)	
13	5P2493	FITTING-(straight)	1
14	9D4507	FITTING-(90°)	1
15	8P3137	HOSE ASSEM.	1

C INDICATES CHANGE

▲ ORDER BY THE METRE

213914

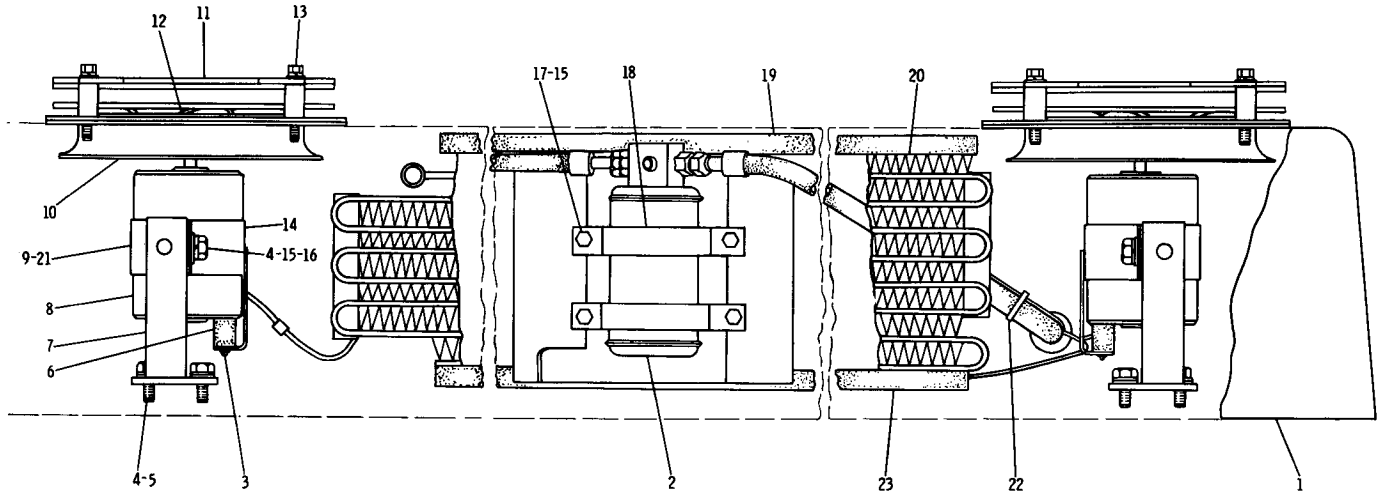

REF. NO.	PART NUMBER	DESCRIPTION	QTY
1	8P3138	GRILL ASSEM.	1
2	9D6888	DRYER	1
3	2H6622	SCREW	2
	6L7101	SPACER	2
4	S509	BOLT	10
5	5P1075	WASHER	6
6	8P7567	BUMPER ASSEM.	2
7	9P252	PLATE ASSEM.	2
	9P2218	MOTOR ASSEM. (Each Includes)	2
8	2P5145	BRUSH	2
	5P5610	CONNECTOR----(push type)----	1
	2L7018	PAD	1
9	2P4556	STRAP	2
10	9P247	ORIFICE ASSEM.	2
C 11	7G1289	GUARD ASSEM.	2
12	3P7995	FAN	2
	1B2714	BOLT	8
13	3B4504	LOCKWASHER	8
	4B5269	WASHER	8
14	9P2424	STRAP ASSEM.	2
15	3B4506	LOCKWASHER	8
16	4B4278	WASHER	4
17	S1588	BOLT	4
18	8D7644	CLAMP	4
C ▲ 19	5P5962	SEAL----1.3 m(51.2 in.)	
20	8P5089	COIL	1
▲ 21	5P5908	SEAL----.7 m(27.6 in.)	
C 22	3S2093	STRAP	3
▲ 23	5P5921	SEAL----1.3 m(51.2 in.)	

C INDICATES CHANGE

▲ ORDER BY THE METER

228823

8P3148 CONDENSER GROUP—Part 1—Type 2

Part of 9P5227 and 8P2145 Air Conditioner Arrangements listed on Pages 176A & 177

8P3148 CONDENSER GROUP—Part 2—Type 2

Part of 9P5227 and 8P2145 Air Conditioner Arrangements listed on Pages 176A & 177

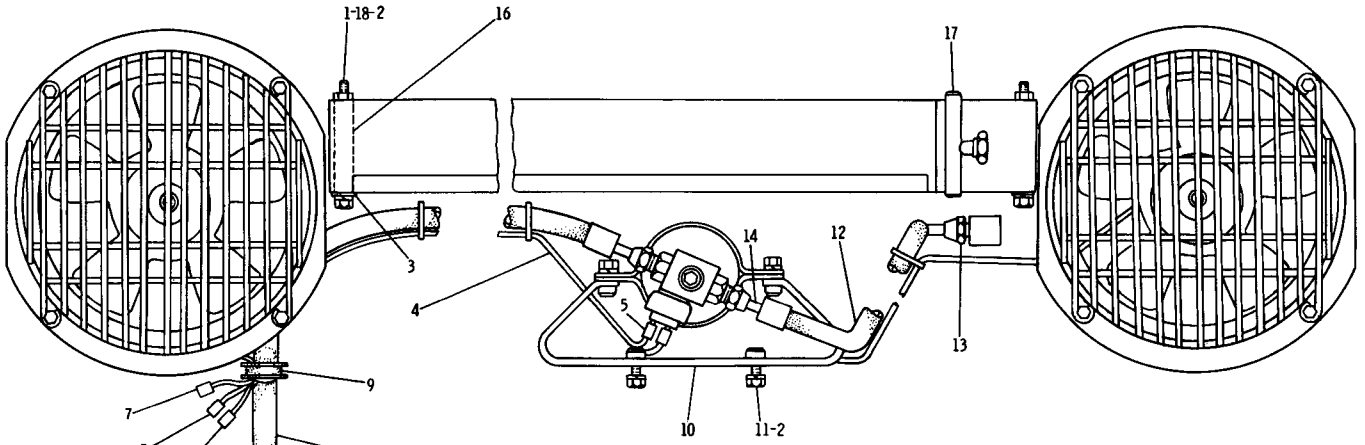

REF. NO.	PART NUMBER	DESCRIPTION	QTY
1	S1608	BOLT	4
2	3B4506	LOCKWASHER	6
3	6P4473	STRIP	2
4	8P5251	HARNESS ASSEM. (Includes)	1
▲ 4	5P5624	WIRE—(14 gauge)	
▲ 4	5P5621	WIRE—(12 gauge)	
4	6K1828	CONNECTOR—(motor)	2
4	2S1043	BUTT	1
C 5	5P4571	TERMINAL-(dryer & connector)	3
6	7K9689	CONNECTOR—(connector)	1
C 7	5P5694	TERMINAL—(thermostat)	1
8	5F9144	SEAL	4
9	3D5279	GROMMET	1
10	8P3145	BRACKET ASSEM.	1
11	1A2029	BOLT	2
12	8P5090	HOSE ASSEM. (Includes)	1
▲ 12	5P5664	HOSE—.28 m(11.02 in.)	
13	5P2493	FITTING—(straight)	1
14	9D4507	FITTING—(90°)	1
15	8P3137	HOSE ASSEM.	1
C 16	7K3245	TUBE	4
C ▲ 17	5P7070	INSULATION—.25 m(9.8 in.)	
C 18	2K4973	LOCKNUT	4

C INDICATES CHANGE

▲ ORDER BY THE METER

228816

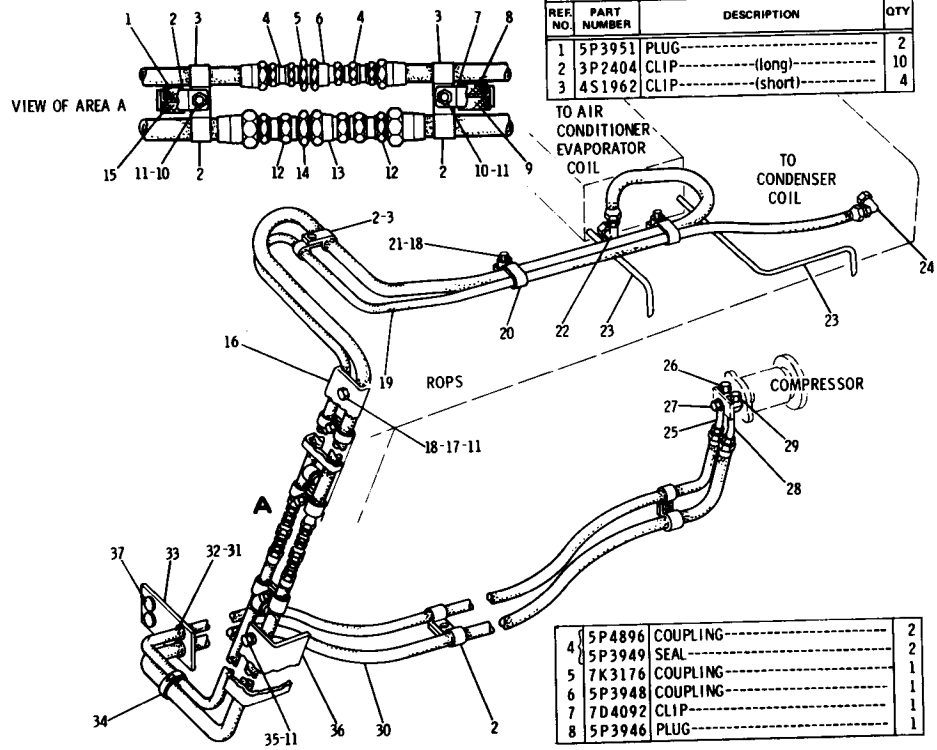

REF. NO.	PART NUMBER	DESCRIPTION	QTY
1	5P3951	PLUG	2
2	3P2404	CLIP----------(long)----------	10
3	4S1962	CLIP----------(short)----------	4

4	5P4896	COUPLING	2
	5P3949	SEAL	2
5	7K3176	COUPLING	1
6	5P3948	COUPLING	1
7	7D4092	CLIP	1
8	5P3946	PLUG	1

9	5P3945	CAP	1
10	1D4717	NUT	5
11	3B4506	LOCKWASHER	9
12	5P4898	COUPLING	2
	5P3944	SEAL	2
13	5P3929	COUPLING	1
14	5P3928	COUPLING	1
15	5P3950	CAP	1
16	9P3538	GUARD ASSEM. (Includes)	1
17	4H8282	SPACER	2
18	S1590	BOLT	4
▲ 19	5P5645	HOSE----------6,7 m(263.8 in.)	
20	6D1641	CLIP	2
21	1B4971	SPACER	2
22	5P6673	COUPLING	1
	1S8947	SEAL	1
▲ 23	5P5674	TUBE----------2,5 m(98,43 in.)	
24	9D4508	COUPLING	1
	6M5062	SEAL	1
25	5P7198	COUPLING (Includes)	1
26	2L1224	CAP	1
27	S1748	BOLT	1
	4B4278	WASHER	1
28	5P7199	COUPLING (Includes)	1
29	2L1224	CAP	1
▲ 30	5P5676	HOSE----------6,6 m(259,9 in.)	
31	8P4928	BUSHING	1
32	8P4927	BUSHING	1
33	9P2598	PLATE	1
34	7K1181	STRAP	2
35	L1351	BOLT	2
36	9P3536	GUARD	1
C 37	9P6571	PLUG-------(use as required)---	2

▲ ORDER BY THE METRE
C INDICATES CHANGE

167528

8P2149 AIR CONDITIONER LINES GROUP
Part of 9P5227 and 8P2145 Air Conditioner Arrangements listed on Pages 176A & 177

8P2149 AIR CONDITIONER LINES GROUP—Type 2

Part of 8P5227 and 8P2145 Air Conditioner Arrangements listed on Pages 176A and 177

AN ATTACHMENT

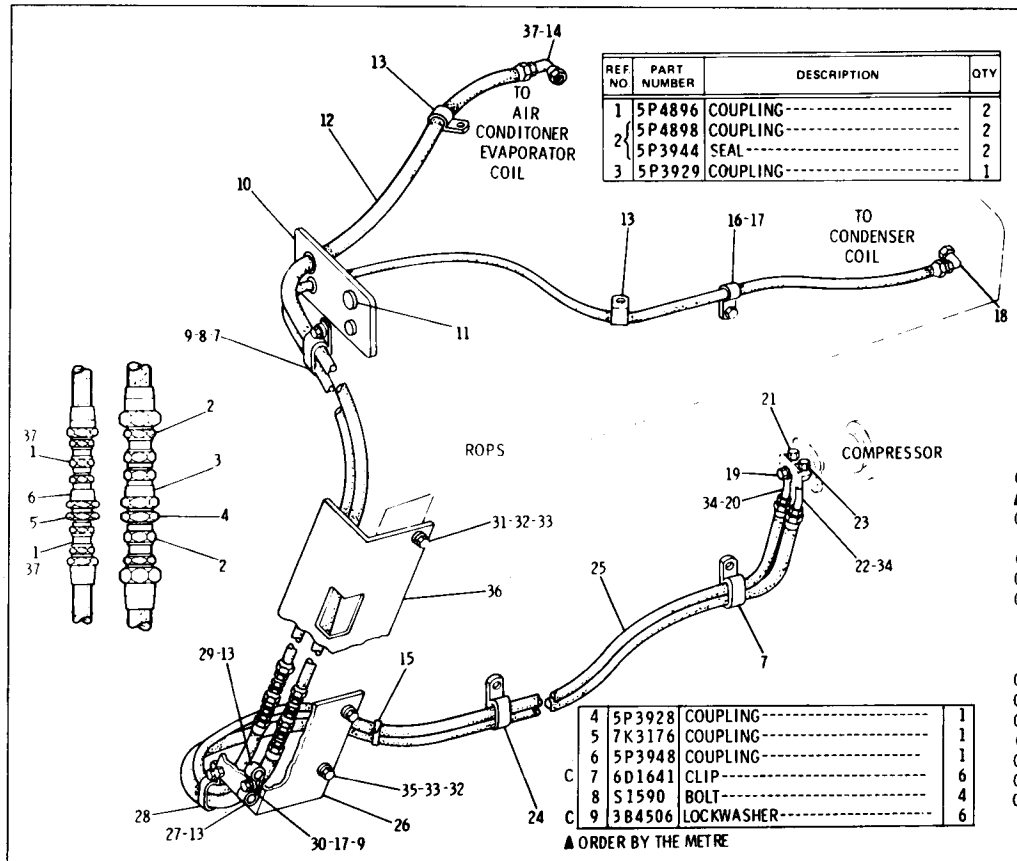

REF NO	PART NUMBER	DESCRIPTION	QTY
1	5P4896	COUPLING	2
2	5P4898	COUPLING	2
	5P3944	SEAL	2
3	5P3929	COUPLING	1
4	5P3928	COUPLING	1
5	7K3176	COUPLING	1
6	5P3948	COUPLING	1
C 7	6D1641	CLIP	6
8	S1590	BOLT	4
C 9	3B4506	LOCKWASHER	6
	9P2598	PLATE	1
10	8P4928	BUSHING	1
	8P4927	BUSHING	1
11	9P6571	PLUG	2
▲ 12	5P5676	HOSE — 6.6 m (259.9 in.)	
C 13	3P2404	CLIP	5
14	5P6673	COUPLING	1
15	7K1181	STRAP	2
C 16	4S1962	CLIP	1
C	T102	BOLT	1
C 17	1D4717	NUT	3
18	9D4508	COUPLING	1
	6M5062	SEAL	1
19	S1748	BOLT	1
	4B4278	WASHER	1
20	5P7198	COUPLING (Includes)	1
21	2L1224	CAP	1
22	5P7199	COUPLING (Includes)	1
23	2L1224	CAP	1
C 24	8M2769	CLIP	1
▲ 25	5P5645	HOSE — 6.7 m (263.8 in.)	
C 26	9P8678	PLATE	1
27	5P3950	CAP	1
C	5P3951	PLUG	1
C 28	5P6994	CLIP	1
C	1K6705	BOLT	1
29	5P3946	PLUG	1
	5P3945	CAP	1
30	L1351	BOLT	2
C 31	6H1717	BOLT	3
C 32	4B4280	WASHER	5
C 33	3B4508	LOCKWASHER	5
C 34	1H8171	SEAL	2
C 35	S1585	BOLT	2
C 36	9P8676	PLATE	1
C 37	1S8947	SEAL	3

▲ ORDER BY THE METRE

C INDICATES CHANGE

221308

REF. NO.	PART NUMBER	DESCRIPTION	QTY
	1 8P4914	HEATER GROUP (Separate Illustration)	1
C	2 9P2598	PLATE	1
	2 8P4926	BUSHING	2
	3 1P3956	TUBE	2
	4 6D1641	CLIP	8
C	5 9P3540	GUARD ASSEM. (Includes)	1
	5 4H8282	SPACER	2
C	6 S509	BOLT	7
	7 3B4506	LOCKWASHER	16
	8 5D1026	CLAMP	10
	9 6P8855	SPACER	2
	10 L1351	BOLT	2
	11 9P3537	GUARD	1
C	12 1D4717	NUT	6
	13 7K1181	STRAP	6
▲	14 5P767	HOSE------1600 cm(629.92 in.)	
	15 4S1962	CLIP	10
	16 1V6585	VALVE	1
	16 6B1628	BUSHING	1
	17 8F8151	COCK	1
	17 6B4661	BUSHING	1
	18 S1590	BOLT	2
●	19 9P6572	PLUG----3.49 cm(1.37 in.) hole	1
●	19 9P6573	PLUG----3.81 cm(1.5 in.) hole	1
C	20 6D4636	CLIP	3

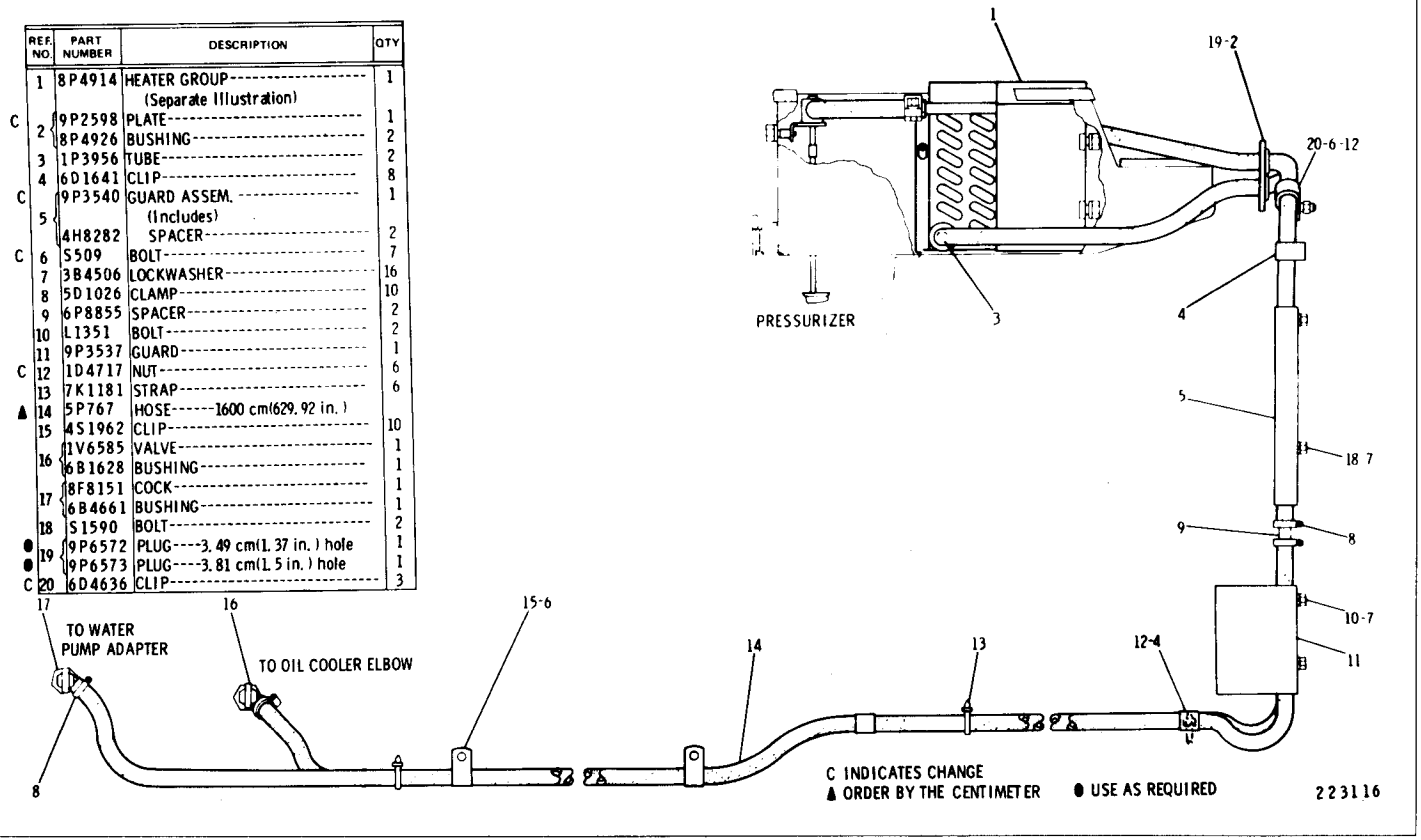

8P2138 CAB HEATER GROUP—Type 1
Also part of 9P5227 Air Conditioner Arrangement listed on Page 176A
8P4914 Heater parts are shown on Pages 186 & 186A. AN ATTACHMENT

8P2138 CAB HEATER GROUP—Type 2

Also part of 9P5227 Air Conditioner Arrangement listed on Page 176A

8P4914 Heater parts are shown on Pages 186 and 186A. AN ATTACHMENT

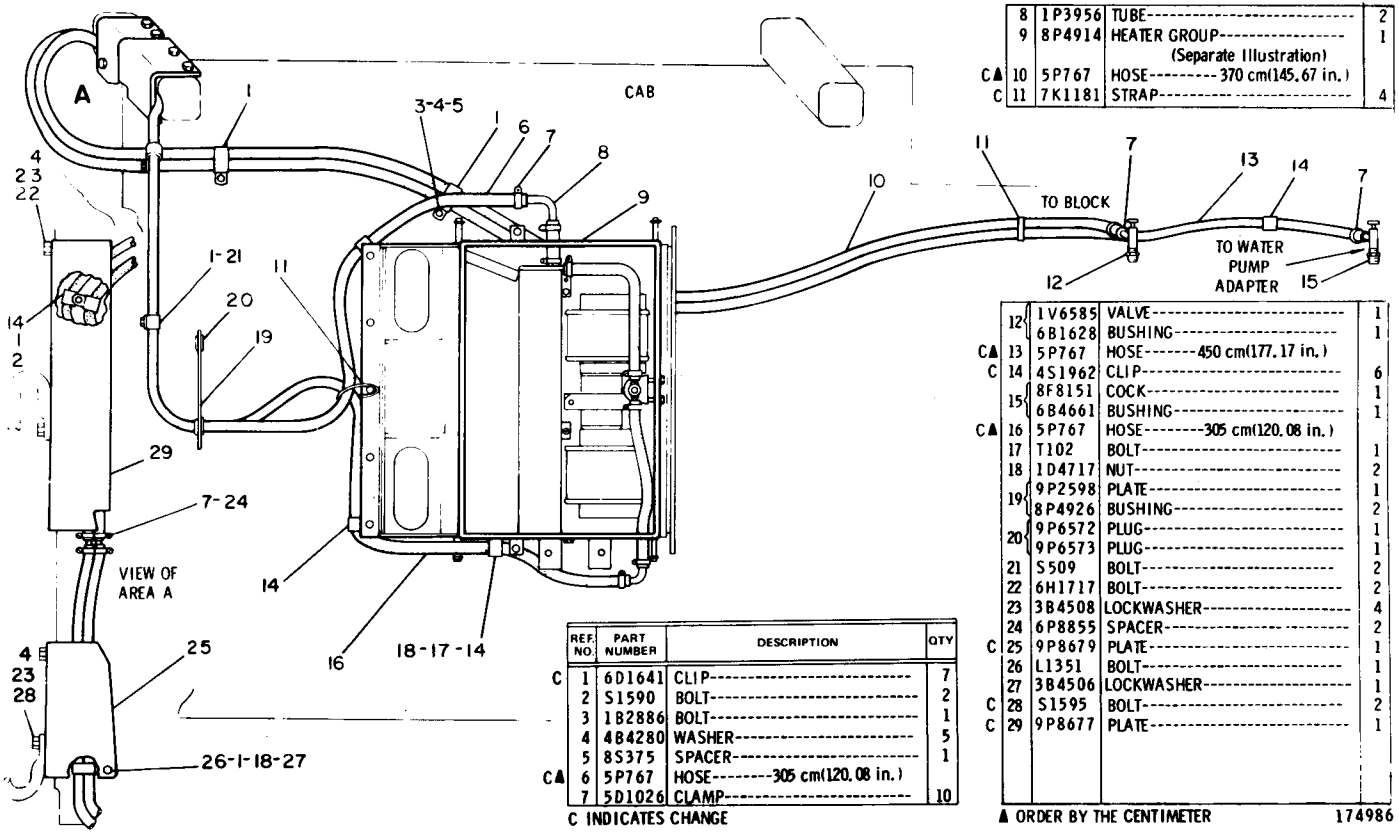

	REF. NO.	PART NUMBER	DESCRIPTION	QTY
C	1	6D1641	CLIP	7
	2	S1590	BOLT	2
	3	1B2886	BOLT	1
	4	4B4280	WASHER	5
	5	8S375	SPACER	1
CA	6	5P767	HOSE--------305 cm(120.08 in.)	
	7	5D1026	CLAMP	10
	8	1P3956	TUBE	2
	9	8P4914	HEATER GROUP (Separate Illustration)	1
CA	10	5P767	HOSE---------370 cm(145.67 in.)	
C	11	7K1181	STRAP	4
	12	1V6585	VALVE	1
		6B1628	BUSHING	1
CA	13	5P767	HOSE-------450 cm(177.17 in.)	
C	14	4S1962	CLIP	6
	15	8F8151	COCK	1
		6B4661	BUSHING	1
CA	16	5P767	HOSE--------305 cm(120.08 in.)	
	17	T102	BOLT	1
	18	1D4717	NUT	2
	19	9P2598	PLATE	1
		8P4926	BUSHING	2
	20	9P6572	PLUG	1
		9P6573	PLUG	1
	21	S509	BOLT	2
	22	6H1717	BOLT	2
	23	3B4508	LOCKWASHER	4
	24	6P8855	SPACER	2
C	25	9P8679	PLATE	1
	26	L1351	BOLT	1
	27	3B4506	LOCKWASHER	1
C	28	S1595	BOLT	2
C	29	9P8677	PLATE	1

C INDICATES CHANGE

▲ ORDER BY THE CENTIMETER

174986

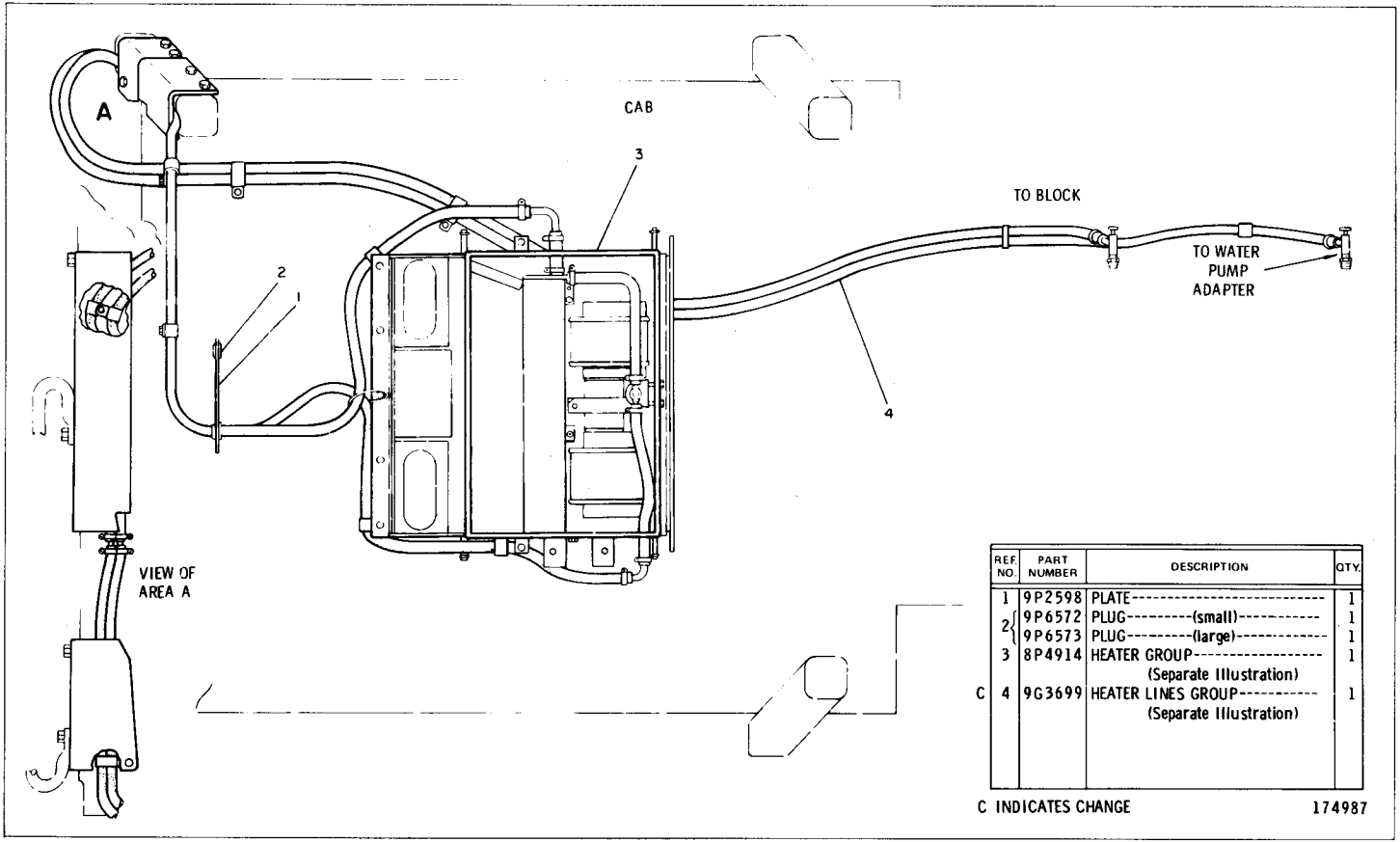

REF. NO.	PART NUMBER	DESCRIPTION	QTY.
1	9P2598	PLATE	1
2	9P6572	PLUG---------(small)----------	1
	9P6573	PLUG---------(large)----------	1
3	8P4914	HEATER GROUP (Separate Illustration)	1
C 4	9G3699	HEATER LINES GROUP (Separate Illustration)	1

C INDICATES CHANGE 174987

8P2138 CAB HEATER GROUP—Type 3
Also part of 9P5227 Air Conditioner Arrangement listed on Page 176A
9G3699 Heater Lines and 8P4914 Heater parts are shown on Pages 185B and 186
AN ATTACHMENT

9G3699 HEATER LINES GROUP
Part of 8P2138 Cab Heater Group shown on Page 185A
AN ATTACHMENT

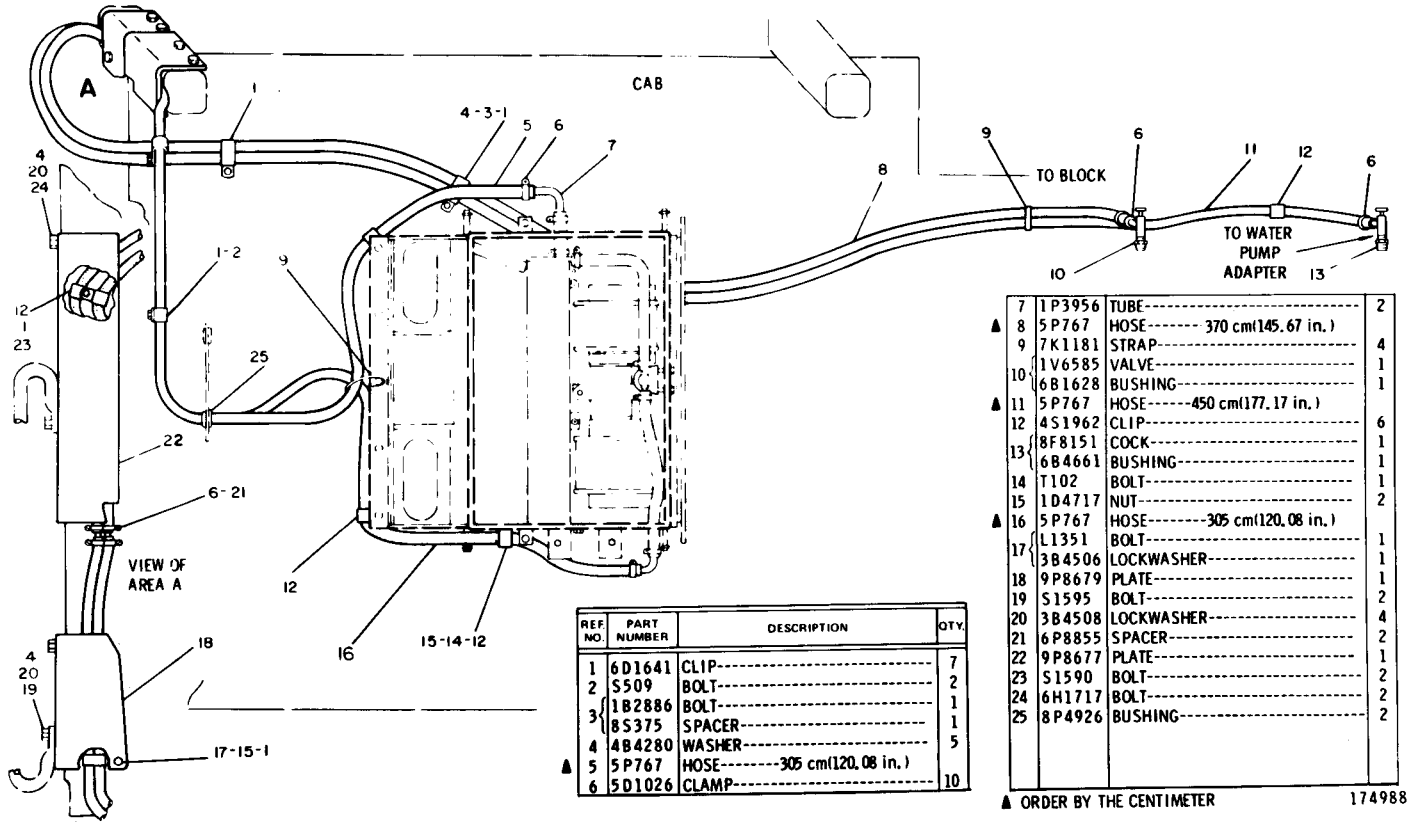

REF. NO.	PART NUMBER	DESCRIPTION	QTY.
1	6D1641	CLIP	7
2	S509	BOLT	2
3	1B2886	BOLT	1
	8S375	SPACER	1
4	4B4280	WASHER	5
▲ 5	5P767	HOSE--------305 cm(120.08 in.)	
6	5D1026	CLAMP	10
7	1P3956	TUBE	2
▲ 8	5P767	HOSE------- 370 cm(145.67 in.)	
9	7K1181	STRAP	4
10	1V6585	VALVE	1
	6B1628	BUSHING	1
▲ 11	5P767	HOSE------450 cm(177.17 in.)	
12	4S1962	CLIP	6
13	8F8151	COCK	1
	6B4661	BUSHING	1
14	T102	BOLT	1
15	1D4717	NUT	2
▲ 16	5P767	HOSE--------305 cm(120.08 in.)	
17	L1351	BOLT	1
	3B4506	LOCKWASHER	1
18	9P8679	PLATE	1
19	S1595	BOLT	2
20	3B4508	LOCKWASHER	4
21	6P8855	SPACER	2
22	9P8677	PLATE	1
23	S1590	BOLT	2
24	6H1717	BOLT	2
25	8P4926	BUSHING	2

▲ ORDER BY THE CENTIMETER

174988

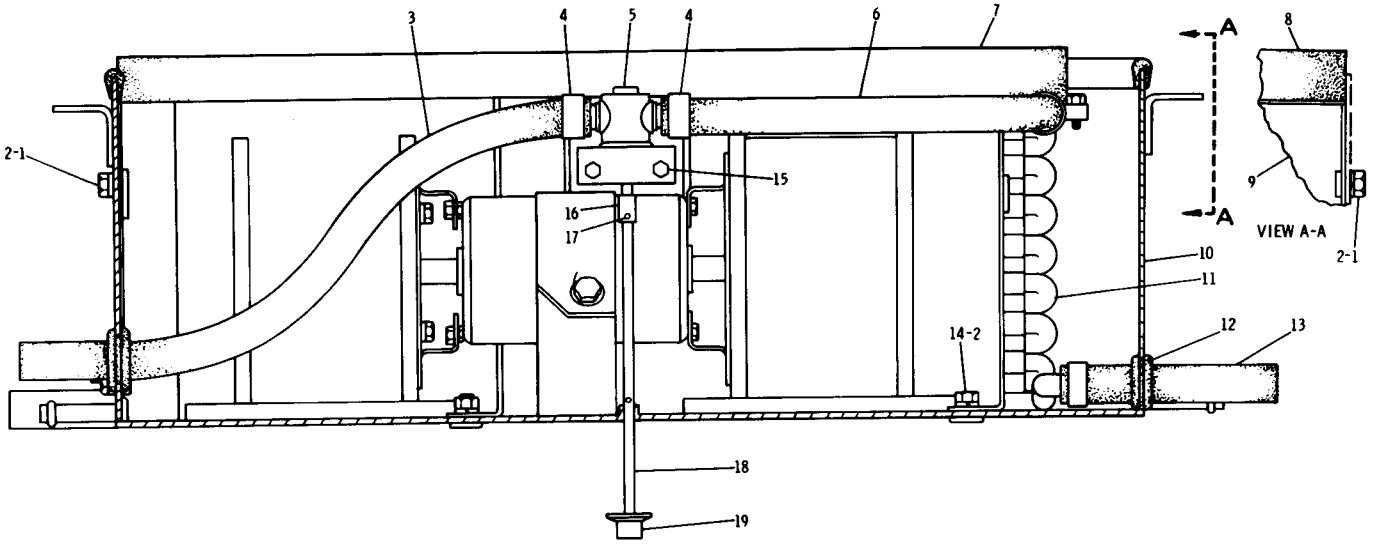

REF. NO.	PART NUMBER	DESCRIPTION	QTY
1	T102	BOLT	4
2	3B4506	LOCKWASHER	6
C▲ 3	5P767	HOSE---44.50 cm(17.52 in.)	
4	1B1169	CLAMP	4
5	3P7994	VALVE	1
▲ 6	5P767	HOSE---38.10 cm(15 in.)	
7	8P4881	SEAL	1
● 8	5P5671	SEAL---.135 m(5.32 in.)	

C INDICATES CHANGE

9	8P4884	BAFFLE ASSEM.	1
C 10	9P5089	PRESSURIZER GROUP (Separate Illustration)	1
11	3P7993	COIL	1
12	3K9520	GROMMET	2
▲ 13	5P767	HOSE---10.20 cm(4.02 in.)	
14	1D4717	NUT	2

▲ ORDER BY THE CENTIMETRE

C	7B2742	BOLT	2
15	3B4504	LOCKWASHER	2
	8P6099	SPACER	2
16	8P3597	SLEEVE	1
17	3H1118	PIN	2
18	8P3600	ROD	1
19	1P6509	KNOB	1

● ORDER BY THE METRE

213904

8P4914 HEATER GROUP—Type 1
Part of 8P2138 Cab Heater Group shown on Page 185
9P5089 Pressurizer parts are shown on Pages 163A and 163B
AN ATTACHMENT

8P4914 HEATER GROUP—Type 2
Part of 8P2138 Cab Heater Group shown on Page 185
9P5089 Pressurizer parts are shown on Pages 163A and 163B
AN ATTACHMENT

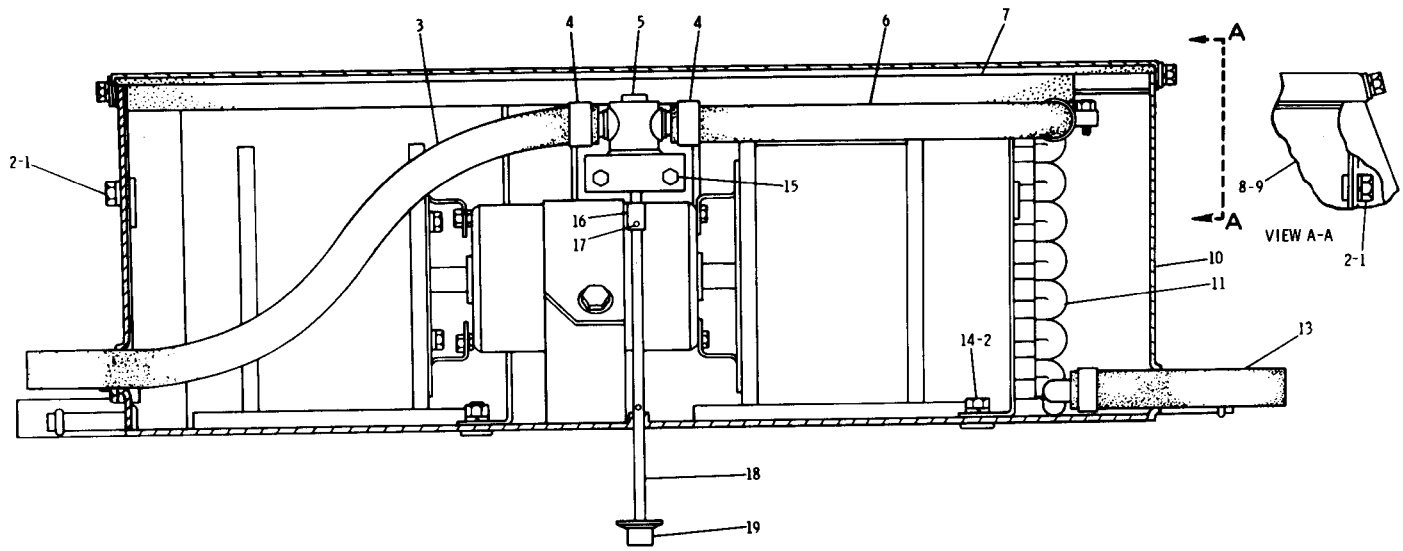

REF. NO.	PART NUMBER	DESCRIPTION	QTY
1	T102	BOLT	4
2	3B4506	LOCKWASHER	6
▲ 3	5P767	HOSE—44.50 cm(17.52 in.)	
4	1B1169	CLAMP	4
5	3P7994	VALVE	1
▲ 6	5P767	HOSE—38.10 cm(15 in.)	
C 7	7G3615	SEAL	1
● 8	5P5671	SEAL—.135 m(5.32 in.)	

C INDICATES CHANGE

9	8P4884	BAFFLE ASSEM.	1
10	9P5089	PRESSURIZER GROUP (Separate Illustration)	1
11	3P7993	COIL	1
▲ 13	5P767	HOSE—10.20 cm(4.02 in.)	
14	1D4717	NUT	2

▲ ORDER BY THE CENTIMETER

15	7B2742	BOLT	2
	3B4504	LOCKWASHER	2
	8P6099	SPACER	2
16	8P3597	SLEEVE	1
17	3H1118	PIN	2
18	8P3600	ROD	1
19	1P6509	KNOB	1

● ORDER BY THE METER

227450

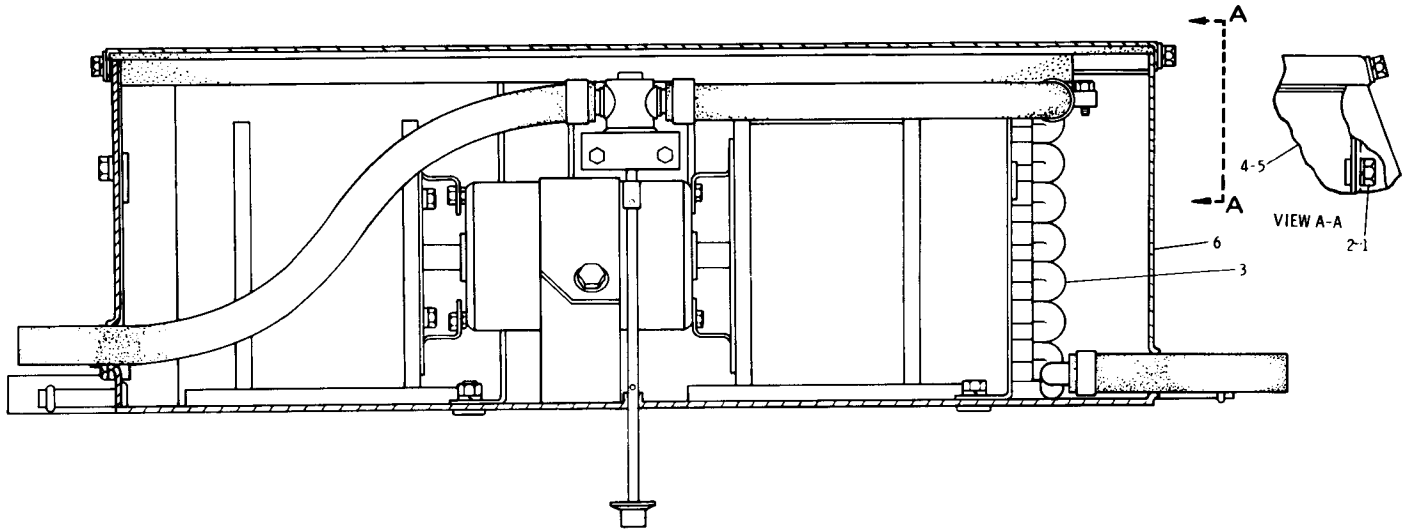

REF. NO.	PART NUMBER	DESCRIPTION	QTY.
1	T102	BOLT----------	2
2	3B4506	LOCKWASHER----------	2
3	9G3764	CAB HEATER GROUP---------- (Separate Illustration)	1

▲	4	5P5671	SEAL----------.135 m(5.32 in.)	
	5	8P4884	BAFFLE ASSEM.----------	1
	6	9P5089	PRESSUREIZER GROUP---------- (Separate Illustration)	1

▲ ORDER BY THE METER
C INDICATES CHANGE

174989

8P4914 HEATER GROUP—Type 3
Part of 8P2138 Cab Heater Group shown on Page 185
9P5089 Pressurizer and 9G3764 Heater parts are shown on Pages 163A, 163B and 186C
AN ATTACHMENT

9G3764 CAB HEATER GROUP—Type 1
Part of 9P5225 Air Conditioner and 8P4914 Heater Groups shown on Pages 179B and 186B
AN ATTACHMENT

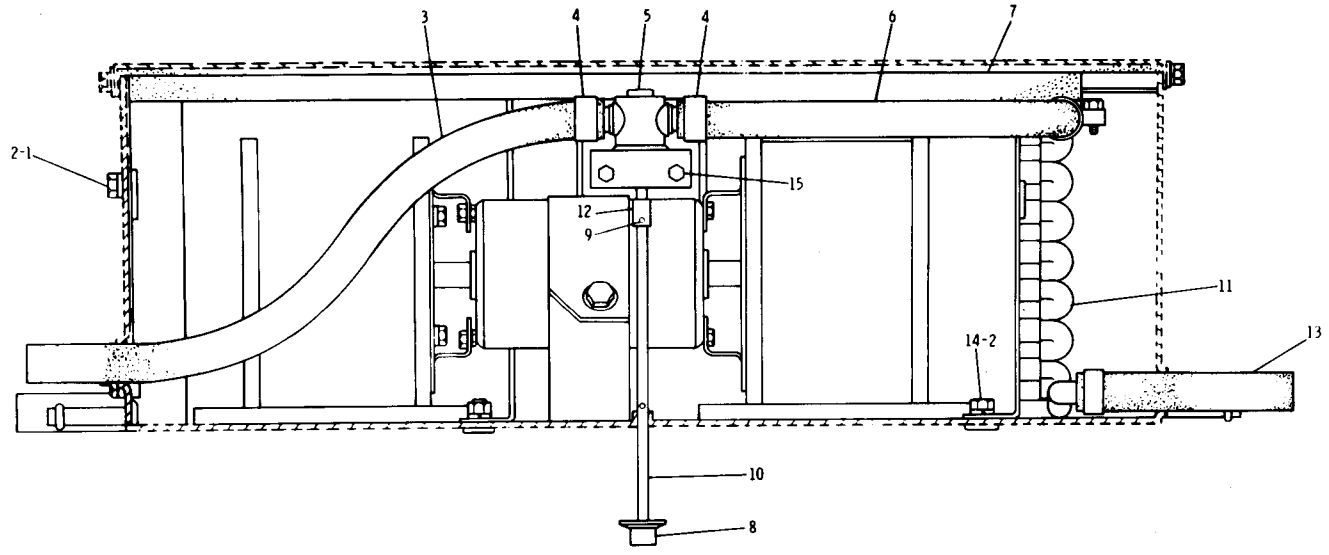

REF. NO.	PART NUMBER	DESCRIPTION	QTY.
1	T102	BOLT	2
2	3B4506	LOCKWASHER	4
▲ 3	5P767	HOSE---44.50 cm(17.52 in.)	
4	5D1026	CLAMP	4
5	3P7994	VALVE	1

▲	6	5P767	HOSE---38.10 cm(15 in.)	
	7	7G3615	SEAL	1
	8	1P6509	KNOB	1
	9	3H1118	PIN	2
	10	8P3600	ROD	1
	11	3P7993	COIL	1
	12	8P3597	SLEEVE	1

▲ ORDER BY THE CENTIMETER

▲	13	5P767	HOSE---10.20 cm(4.02 in.)	
	14	1D4717	NUT	2
	15	7B2742	BOLT	2
		3B4504	LOCKWASHER	2
		8P6099	SPACER	2

174990

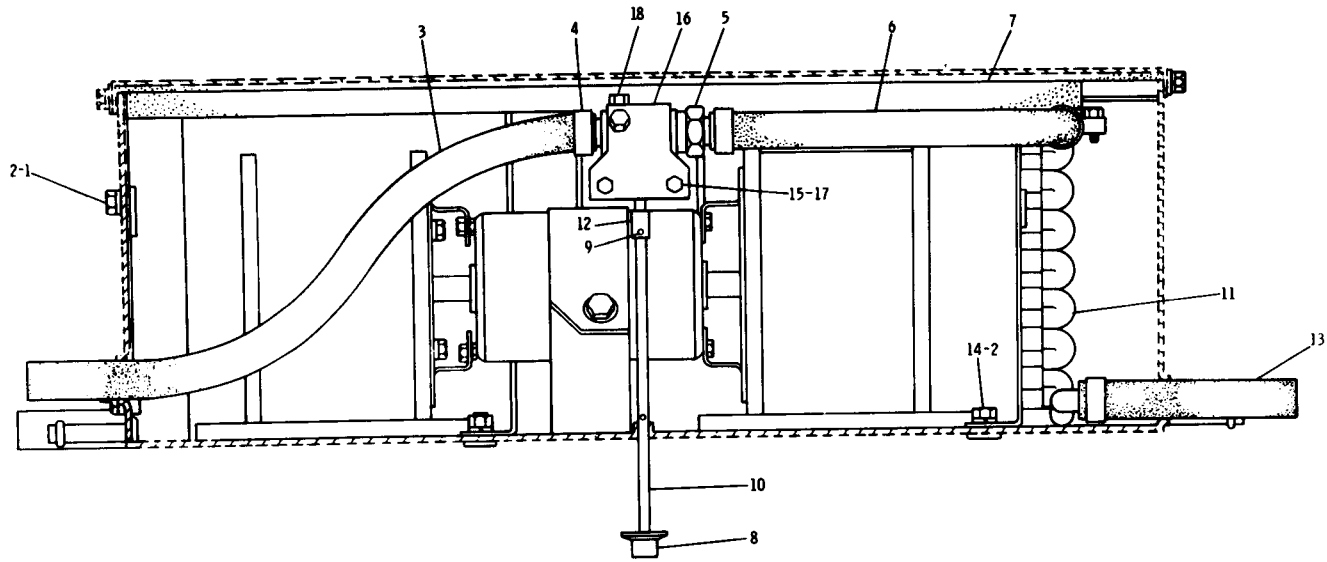

REF. NO.	PART NUMBER	DESCRIPTION	QTY.
1	T102	BOLT	2
2	3B4506	LOCKWASHER	4
▲ 3	5P767	HOSE--44.50 cm(17.52 in.)	
4	5D1026	CLAMP	4
C 5	7G8699	VALVE	1
▲ 6	5P767	HOSE--38.10cm(15 in.)	
7	7G3615	SEAL	1
8	1P6509	KNOB	1
9	3H1118	PIN	2
10	8P3600	ROD	1
11	3P7993	COIL	1
12	8P3597	SLEEVE	1
▲ 13	5P767	HOSE--10.20 cm(4.02 in.)	
14	1D4717	NUT	2
15	7B2742	BOLT	2
	3B4504	LOCKWASHER	2
	8P6099	SPACER	2
C 16	9G931	BRACKET ASSEM. (Includes)	1
17	9F6445	NUT	2
C 18	2L5317	SCREW	2
C	8F1434	LOCKWASHER	2

C INDICATES CHANGE

▲ ORDER BY THE CENTIMETER

175849

9G3764 CAB HEATER GROUP—Type 2
Part of 9P5225 Air Conditioner and 8P4914 Heater Groups shown on Pages 179B and 186B
AN ATTACHMENT

8P7307 ELECTRIC HORN GROUP—Forward Warning
Serial No. 6X1 to 6X366 inclusive

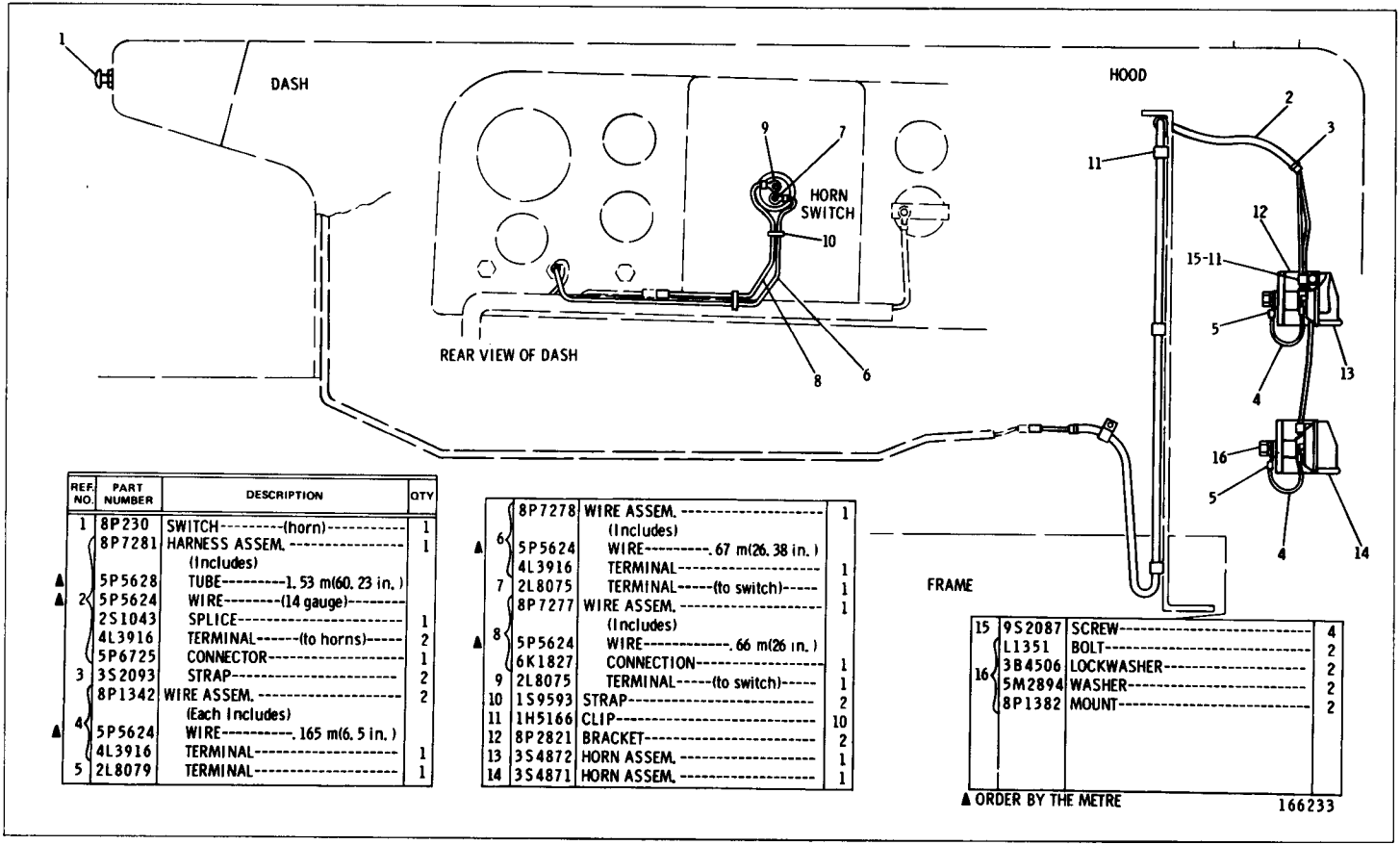

REF. NO.	PART NUMBER	DESCRIPTION	QTY
1	8P230	SWITCH--------(horn)----------	1
	8P7281	HARNESS ASSEM. ----------	1
		(Includes)	
▲	5P5628	TUBE---------1.53 m(60.23 in.)	
▲ 2	5P5624	WIRE--------(14 gauge)--------	
	2S1043	SPLICE----------	1
	4L3916	TERMINAL------(to horns)-----	2
	5P6725	CONNECTOR----------	1
3	3S2093	STRAP----------	2
	8P1342	WIRE ASSEM. ----------	2
		(Each Includes)	
▲ 4	5P5624	WIRE----------.165 m(6.5 in.)	
	4L3916	TERMINAL----------	1
5	2L8079	TERMINAL----------	1

	8P7278	WIRE ASSEM. ----------	1
		(Includes)	
▲ 6	5P5624	WIRE----------.67 m(26.38 in.)	
	4L3916	TERMINAL----------	1
7	2L8075	TERMINAL-----(to switch)-----	1
	8P7277	WIRE ASSEM. ----------	1
		(Includes)	
▲ 8	5P5624	WIRE----------.66 m(26 in.)	
	6K1827	CONNECTION----------	1
9	2L8075	TERMINAL-----(to switch)-----	1
10	1S9593	STRAP----------	2
11	1H5166	CLIP----------	10
12	8P2821	BRACKET----------	2
13	3S4872	HORN ASSEM. ----------	1
14	3S4871	HORN ASSEM. ----------	1

15	9S2087	SCREW----------	4
	L1351	BOLT----------	2
	3B4506	LOCKWASHER----------	2
16	5M2894	WASHER----------	2
	8P1382	MOUNT----------	2

▲ ORDER BY THE METRE

166233

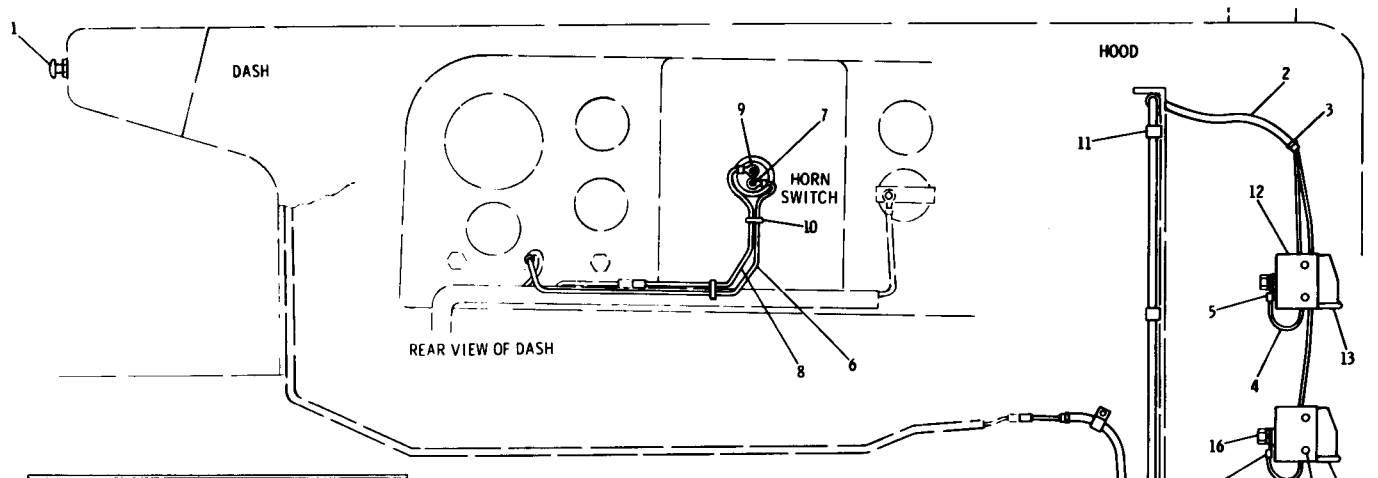

REF. NO	PART NUMBER	DESCRIPTION	QTY
1	8P230	SWITCH---------(horn)----------	1
2	8P7281	HARNESS ASSEM. ---------- (Includes)	1
▲	5P5628	TUBE---------1.53 m(60.23 in.)	
▲	5P5624	WIRE---------(14 gauge)--------	
	2S1043	SPLICE----------	1
	4L3916	TERMINAL------(to horns)-----	2
	5P6725	CONNECTOR----------	1
C 3	1S9593	STRAP----------	2
4	8P1342	WIRE ASSEM. ---------- (Each Includes)	2
▲	5P5624	WIRE----------.165 m(6.5 in.)	
	4L3916	TERMINAL----------	1
5	2L8079	TERMINAL----------	1

C INDICATES CHANGE

6	8P7278	WIRE ASSEM. ---------- (Includes)	1
▲	5P5624	WIRE---------.67 m(26.38 in.)	
	4L3916	TERMINAL----------	1
7	2L8075	TERMINAL-----(to switch)-----	1
8	8P7277	WIRE ASSEM. ---------- (Includes)	1
▲	5P5624	WIRE----------.66 m(26 in.)	
	6K1827	CONNECTION----------	1
9	2L8075	TERMINAL-----(to switch)-----	1
10	1S9593	STRAP----------	2
11	1H5166	CLIP----------	6
12	9P7903	BRACKET----------	2
13	3S4872	HORN ASSEM. ----------	1
14	3S4871	HORN ASSEM. ----------	1

15	9S2087	SCREW----------	4
16	L1351	BOLT----------	2
	3B4506	LOCKWASHER----------	2
	5M2894	WASHER----------	2
	8P1382	MOUNT----------	2

▲ ORDER BY THE METRE

217932

9P7904 ELECTRIC HORN GROUP—Forward Warning
Serial No. 6X367 to 6X419 and 6X459—Up

9P7904 ELECTRIC HORN GROUP—Forward Warning
Serial No. 6X420 to 6X458 inclusive

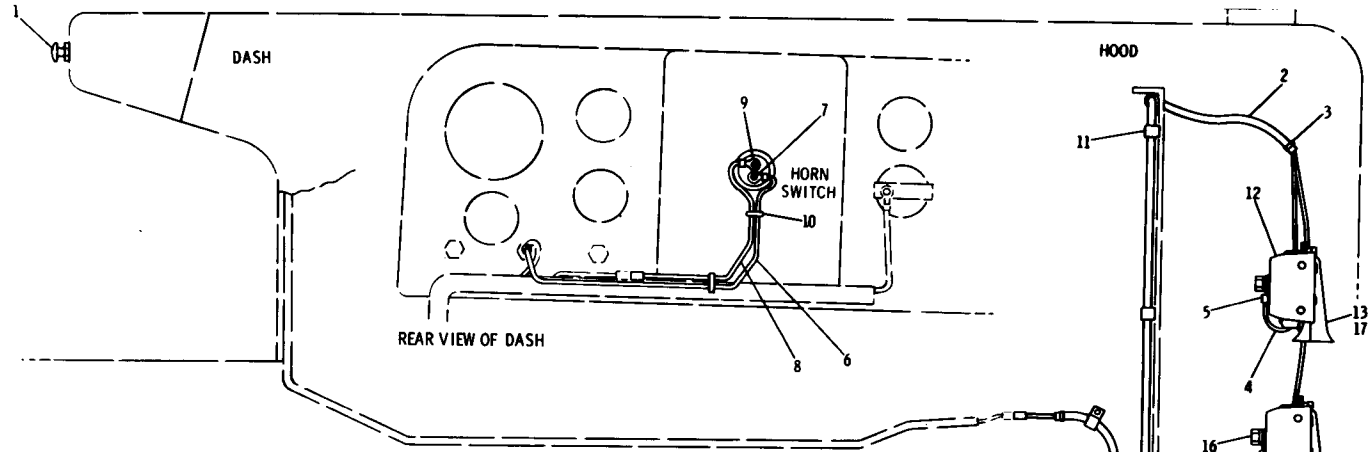

REF. NO	PART NUMBER	DESCRIPTION	QTY
1	8P230	SWITCH---------(horn)----------	1
	8P7281	HARNESS ASSEM. ----------	1
		(Includes)	
▲	5P5628	TUBE---------1.53 m(60.23 in.)	
▲ 2	5P5624	WIRE---------(14 gauge)--------	
	2S1043	SPLICE----------	1
	4L3916	TERMINAL------(to horns)-----	2
	5P6725	CONNECTOR----------	1
3	1S9593	STRAP----------	2
	8P1342	WIRE ASSEM. ----------	2
		(Each Includes)	
▲ 4	5P5624	WIRE----------.165 m(6.5 in.)	
	4L3916	TERMINAL----------	1
5	2L8079	TERMINAL----------	1

C INDICATES CHANGE

	8P7278	WIRE ASSEM. ----------	1
6		(Includes)	
▲	5P5624	WIRE---------.67 m(26.38 in.)	
	4L3916	TERMINAL----------	1
7	2L8075	TERMINAL-----(to switch)-----	1
	8P7277	WIRE ASSEM. ----------	1
		(Includes)	
8			
▲	5P5624	WIRE----------.66 m(26 in.)	
	6K1827	CONNECTION----------	1
9	2L8075	TERMINAL-----(to switch)-----	1
10	1S9593	STRAP----------	2
11	1H5166	CLIP----------	6
C 12	7G2606	BRACKET----------	2
C 13	7N9356	HORN ASSEM. ----------	1
C 14	7N9357	HORN ASSEM. ----------	1

15	9S2087	SCREW----------	4
C	S1615	BOLT----------	2
C 16	2D6235	LOCKNUT----------	2
C	5P537	WASHER----------	2
C	5P6914	SETSCREW----------	6
C 17	9S5937	NUT----------	6
C	9F8125	LOCKWASHER----------	6

▲ ORDER BY THE METRE

217933

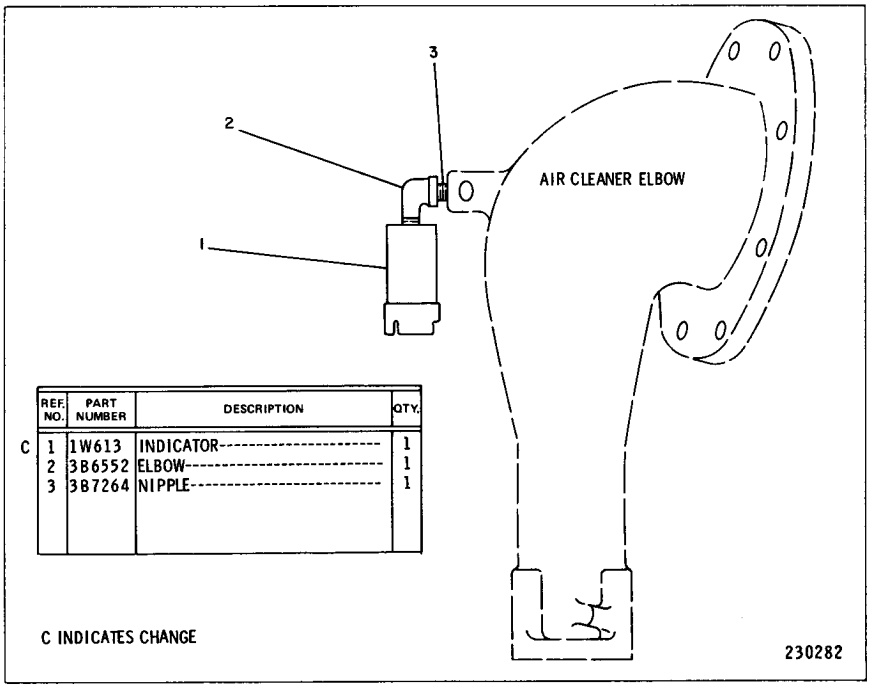

	REF. NO.	PART NUMBER	DESCRIPTION	QTY.
C	1	1W613	INDICATOR	1
	2	3B6552	ELBOW	1
	3	3B7264	NIPPLE	1

C INDICATES CHANGE

230282

8S2541 AIR FILTER SERVICE INDICATOR GROUP
Serial No. 6X1 to 6X748 inclusive

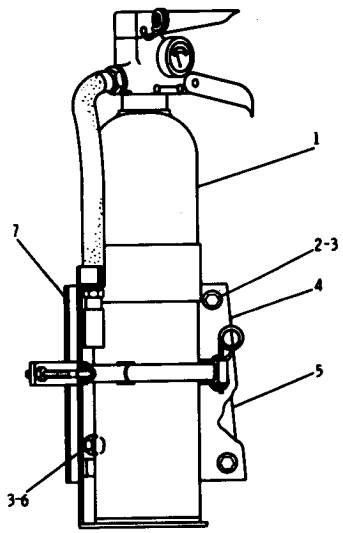

	REF. NO.	PART NUMBER	DESCRIPTION	QTY
	1	8K4738	EXTINGUISHER	1
C	2	9B7237	BOLT	3
	3	5P1075	WASHER	7
	4	9P2697	BRACKET	1
	5	9P2044	PLATE	1
	6	S1594	BOLT	4
		1D4717	NUT	4
	7	8K4737	BRACKET	1

C INDICATES CHANGE

215139

8P6869 FIRE EXTINGUISHER GROUP
AN ATTACHMENT

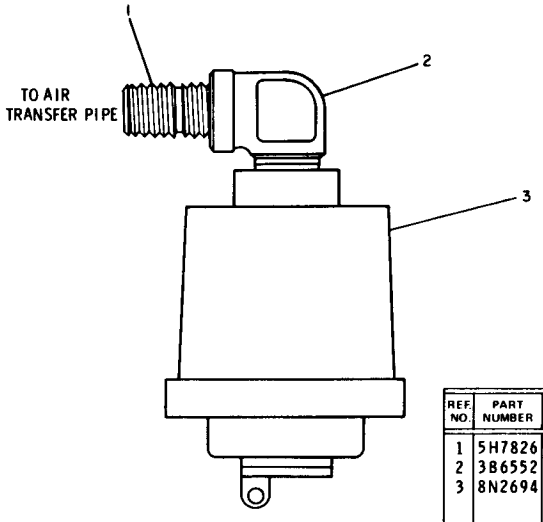

REF. NO.	PART NUMBER	DESCRIPTION	QTY.
1	5H7826	NIPPLE----------	1
2	3B6552	ELBOW----------	1
3	8N2694	INDICATOR----------	1

224183

8N3179 AIR FILTER SERVICE INDICATOR GROUP
Serial No. 6X749—Up

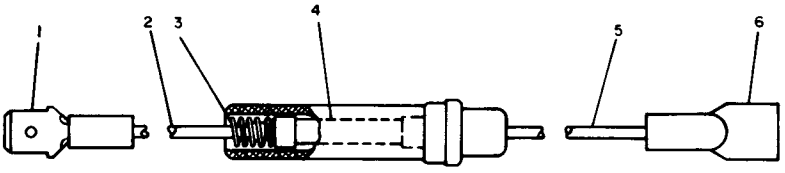

REF NO.	PART NUMBER	DESCRIPTION	QTY.
1	4S1988	TERMINAL----------	1
▲ 2	5P5624	WIRE----------.08m (3.15 in.)	
3	2S5013	SPRING----------	1
4	2S6024	FUSE----------(5 amp)----------	1
	2S8708	CONTACT----------	2
▲ 5	5P5624	WIRE-----.06 m (2.36 in.)	
6	5P4571	TERMINAL----------	1

▲ ORDER BY THE METER

174551

7N8292 FUSE HOLDER, FUSE AND WIRE KIT—Field Installation
Provides protection from overload failure of 6N5905 Hour Meter without sealed vent holes. Those hour meters with vent holes have a white dash mark under two central figures

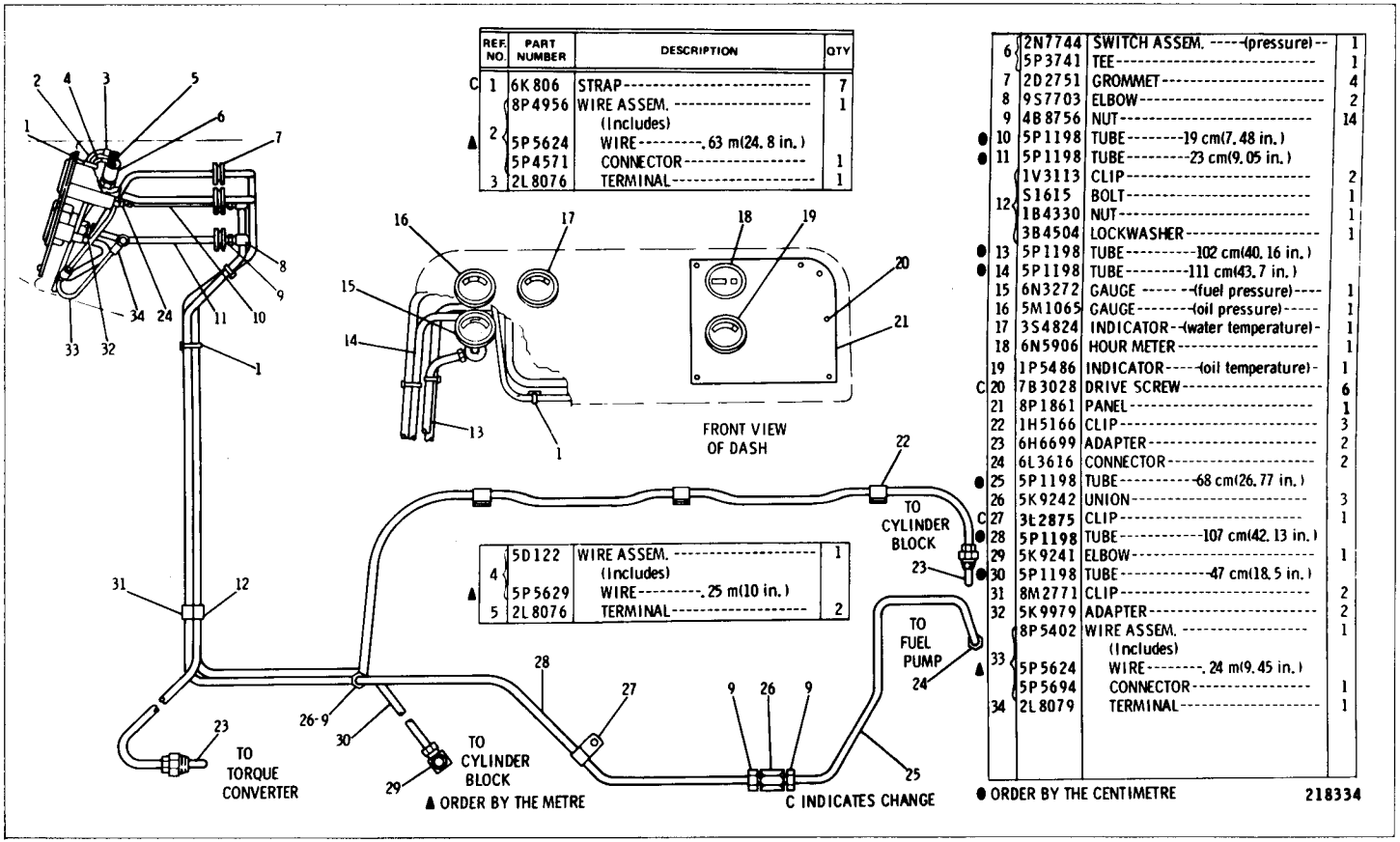

REF. NO.	PART NUMBER	DESCRIPTION	QTY
C 1	6K806	STRAP	7
2	8P4956	WIRE ASSEM. (Includes)	1
▲ 2	5P5624	WIRE-.63 m(24.8 in.)	
2	5P4571	CONNECTOR	1
3	2L8076	TERMINAL	1
4	5D122	WIRE ASSEM. (Includes)	1
▲ 4	5P5629	WIRE-.25 m(10 in.)	
5	2L8076	TERMINAL	2
6	2N7744	SWITCH ASSEM. -(pressure)	1
6	5P3741	TEE	1
7	2D2751	GROMMET	4
8	9S7703	ELBOW	2
9	4B8756	NUT	14
● 10	5P1198	TUBE-19 cm(7.48 in.)	
● 11	5P1198	TUBE-23 cm(9.05 in.)	
12	1V3113	CLIP	2
12	S1615	BOLT	1
12	1B4330	NUT	1
12	3B4504	LOCKWASHER	1
● 13	5P1198	TUBE-102 cm(40.16 in.)	
● 14	5P1198	TUBE-111 cm(43.7 in.)	
15	6N3272	GAUGE -(fuel pressure)	1
16	5M1065	GAUGE-(oil pressure)	1
17	3S4824	INDICATOR-(water temperature)	1
18	6N5906	HOUR METER	1
19	1P5486	INDICATOR-(oil temperature)	1
C 20	7B3028	DRIVE SCREW	6
21	8P1861	PANEL	1
22	1H5166	CLIP	3
23	6H6699	ADAPTER	2
24	6L3616	CONNECTOR	2
● 25	5P1198	TUBE-68 cm(26.77 in.)	
26	5K9242	UNION	3
C 27	3L2875	CLIP	1
● 28	5P1198	TUBE-107 cm(42.13 in.)	
● 29	5K9241	ELBOW	1
● 30	5P1198	TUBE-47 cm(18.5 in.)	
31	8M2771	CLIP	2
32	5K9979	ADAPTER	2
33	8P5402	WIRE ASSEM. (Includes)	1
▲ 33	5P5624	WIRE-.24 m(9.45 in.)	
33	5P5694	CONNECTOR	1
34	2L8079	TERMINAL	1

8P4329 GAUGE GROUP
Serial No. 6X1 to 6X462 inclusive

8P4329 ENGINE GAUGE GROUP
Serial No. 6X463—Up

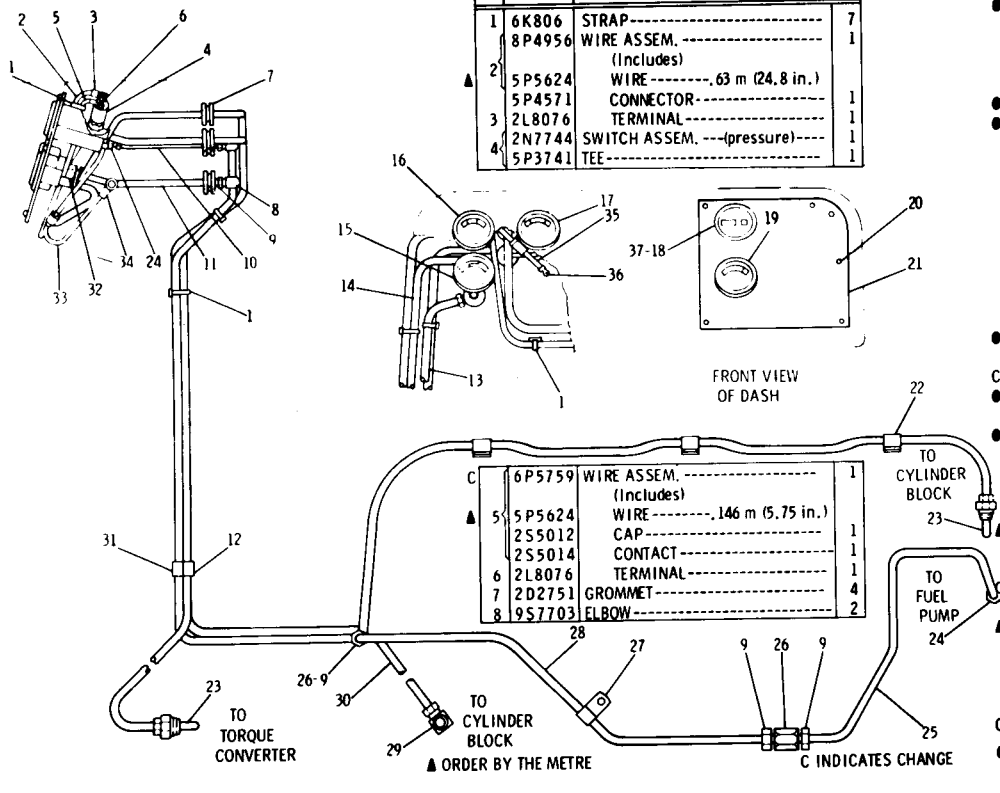

REF. NO.	PART NUMBER	DESCRIPTION	QTY
1	6K806	STRAP	7
2	8P4956	WIRE ASSEM. (Includes)	1
▲	5P5624	WIRE-----.63 m (24.8 in.)	
	5P4571	CONNECTOR	1
3	2L8076	TERMINAL	1
4	2N7744	SWITCH ASSEM. ---(pressure)----	1
	5P3741	TEE	1

	REF. NO.	PART NUMBER	DESCRIPTION	QTY
C	5	6P5759	WIRE ASSEM. (Includes)	1
▲		5P5624	WIRE-----.146 m (5.75 in.)	
		2S5012	CAP	1
		2S5014	CONTACT	1
	6	2L8076	TERMINAL	1
	7	2D2751	GROMMET	4
	8	9S7703	ELBOW	2

	REF. NO.	PART NUMBER	DESCRIPTION	QTY
	9	4B8756	NUT	14
●	10	5P1198	TUBE----------19 cm(7.48 in.)	
●	11	5P1198	TUBE----------23 cm (9.05 in.)	
	12	1V3113	CLIP	2
		S1615	BOLT	1
		1B4330	NUT	1
		3B4504	LOCKWASHER	1
●	13	5P1198	TUBE----------102 cm (40.16 in.)	
●	14	5P1198	TUBE----------111 cm (43.7 in.)	
	15	6N3272	GAUGE-------(fuel pressure)------	1
	16	5M1065	GAUGE--------(oil pressure)------	1
	17	3S4824	INDICATOR--(water temperature)--	1
	18	6N5906	HOUR METER	1
	19	1P5486	INDICATOR-----(oil temperature)--	1
	20	7B3028	DRIVE SCREW	6
	21	8P1861	PANEL	1
	22	1H5166	CLIP	3
	23	6H6699	ADAPTER	2
	24	6L3616	CONNECTOR	2
●	25	5P1198	TUBE----------68 cm(26.77 in.)	
	26	5K9242	UNION	3
C	27	4D8948	CLIP	1
●	28	5P1198	TUBE----------107 cm (42.13 in.)	
	29	5K9241	ELBOW	1
●	30	5P1198	TUBE----------47 cm(18.5 in)	
	31	8M2771	CLIP	2
	32	5K9979	ADAPTER	2
	33	8P5402	WIRE ASSEM. (Includes)	1
		5P5624	WIRE----------.24 m(9.45 in.)	
		5P5694	CONNECTOR	1
	34	2L8079	TERMINAL	1
	35	8P9365	WIRE ASSEM. (Includes)	1
▲		5P5624	WIRE-----.152 m (5.98 in.)	
		2S5011	BODY	1
		2S5013	SPRING	1
		2S5014	CONTACT	1
	36	2L8076	TERMINAL	1
C	37	2S6024	FUSE--------(5 amp)----------	1

▲ ORDER BY THE METRE
C INDICATES CHANGE
● ORDER BY THE CENTIMETRE
220099

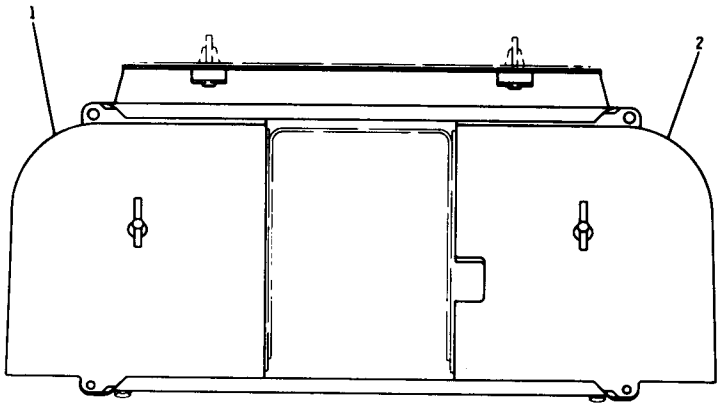

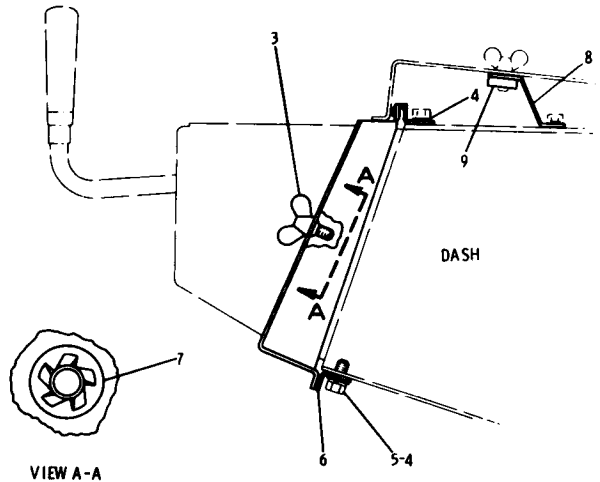

VIEW A-A

REF. NO.	PART NUMBER	DESCRIPTION	QTY
1	8P8223	COVER ASSEM.	1
2	8P9285	COVER ASSEM.	1
3	4K487	BOLT	2
4	4B4278	WASHER	4
5	S509	BOLT	2
	3B4506	LOCKWASHER	2
6	8P9284	GUIDE	2
7	5P6883	RETAINER	2
C 8	9P3782	BRACKET ASSEM. (Includes)	1
9	6S3829	LUG	2
▲	8S7949	PADLOCK GROUP (Includes)	1
▲	8M439	KEY	1

▲ NOT SHOWN C INDICATES CHANGE

227407

8P4314 VANDALISM GUARD GROUP
CANNOT BE USED WITH ENCLOSED ROPS
AN ATTACHMENT

9S7977 HAND TOOL GROUP

8F9866 Grease Gun parts are shown on Page 192

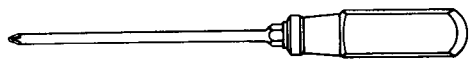

9S1738 SCREWDRIVER
NO. 2 PHILLIPS



2P8250 STRAP WRENCH ASSEM.



5S9569 SOCKET

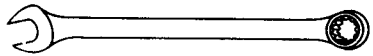

8H8503 WRENCH (5/16" Opening)
8H8505 WRENCH (3/8" Opening)
8H8513 WRENCH (7/8" Opening)
8H8508 WRENCH (9/16" Opening)
8H8509 WRENCH (5/8" Opening)
8H8511 WRENCH (3/4" Opening)
8H8515 WRENCH (1" Opening)



1F1157 SCREWDRIVER



5S9568 SOCKET



C 5P1763 SOCKET

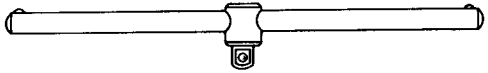

5S9566 WRENCH



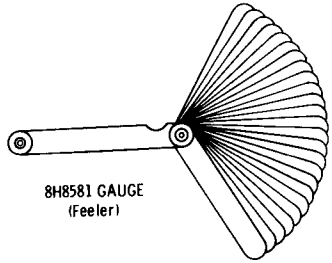

8H8581 GAUGE
(Feeler)

8H8549 SOCKET (9/16" Opening)
8H8554 SOCKET (7/8" Opening)
8H8555 SOCKET (15/16" Opening)
8H8556 SOCKET (1" Opening)
9S1730 SOCKET (11/8" Opening)

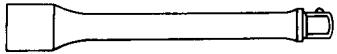

5S9567 EXTENSION

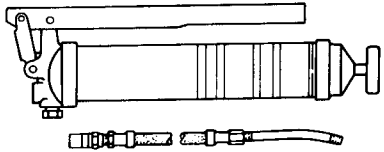

8F9866 GREASE GUN (Lever)
(See Separate Illustration)

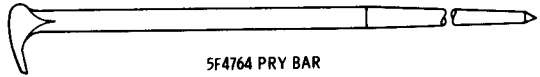

5F4764 PRY BAR

C INDICATES CHANGE

201200

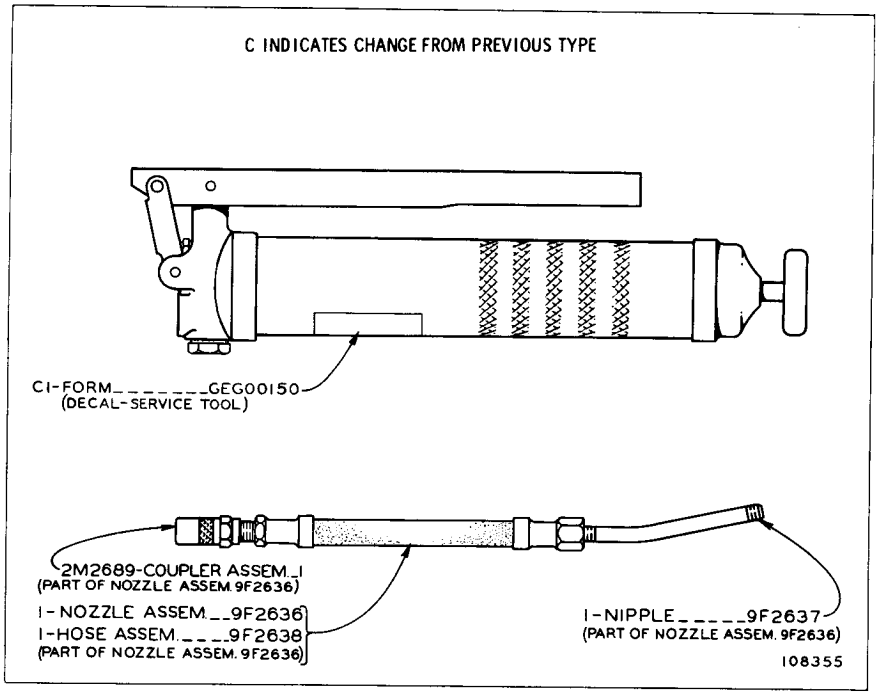

8F9866 GREASE GUN
Part of 9S7977 Hand Tool Group shown on Page 191

ENGINE GASKET KITS

5P9115	VALVE GRINDING SERIAL No. 3N52495 TO 3N69599 INCLUSIVE
6V853	VALVE GRINDING SERIAL No. 3N69600 TO 3N79762 INCLUSIVE
6V2210	VALVE GRINDING SERIAL No. 3N79763--UP
5P9099	CENTRAL AND LOWER STRUCTURE
5P8768	SINGLE CYLINDER LINER
5P9100	FRONT STRUCTURE
6V896	REAR STRUCTURE
6V900	TURBOCHARGER INSTALLATION
5P9418	ENGINE AND TRANSMISSION OIL COOLER
5P9461	FUEL SYSTEM
5P8771	WATER PUMP SERIAL No. 3N52495 TO 3N69599 INCLUSIVE
5P9898	WATER PUMP SERIAL No. 3N69600--UP

OTHER GASKET KITS

5P361	TRANSMISSION OVERHAUL
9S1058	TORQUE CONVERTER

GASKET KITS

QUANTITY USED	PART NUMBER	DESCRIPTION
1	5H8450	PLATE--TRACTOR NUMBER ON REAR FACE OF BEVEL GEAR & STEERING CLUTCH CASE
1	3N3790	PLATE--ENGINE SERIAL NUMBER ON UPPER REAR L.H. SIDE OF CYLINDER BLOCK
1	6V1721	PLATE--MASTER SERIAL NUMBER IN OPERATOR'S COMPARTMENT ON LOWER R.H. DASH PLATE
1	5P8197	PLATE--WARNING VERTICAL SURFACE ADJACENT TO PARKING BRAKE LEVER
1	5P9664	FILM--PARKING BRAKE VERTICAL SURFACE ADJACENT TO PARKING BRAKE LEVER
1	5P9673	FILM--PARKING BRAKE VERTICAL SURFACE ADJACENT TO PARKING BRAKE LEVER
10	4B4158	DRIVE SCREW
1	5P6371	TRANSFER GROUP
		CONSISTING OF:
1	.....	FILM--CATERPILLAR ON TOP OF RADIATOR GUARD
2	1P9878	FILM--CAT ON EACH SIDE OF HOOD
1	8S8958	FILM--CATERPILLAR ON BACK OF FUEL TANK
2	8S3923	FILM--CORPORATE SYMBOL ON EACH SIDE OF FUEL TANK GUARD
2	5P6382	FILM--D6D ON EACH SIDE OF FUEL TANK GUARD
1	6H6000	FILM--WARNING ON DASH
1	5P4310	FILM--CAUTION FRONT TOP OF R.H. CONSOLE
1	8S3696	FILM--STARTING ON DASH

NAME PLATES AND TRANSFERS



1P2305 ELECTRIC TERMINAL KIT

(Insulated)
(Includes terminals, wire joints and crimping tool)

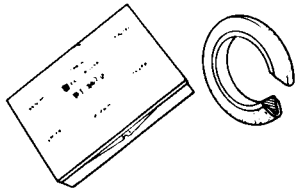

9S3138 SEAL KIT

(Includes 28 metal - backed seals)

Qty.	Nominal Size	Part No.
2	1/2 inch (1, 27 cm)	5J1583
6	3/4 inch (1, 905 cm)	6J3575
6	1 inch (2, 54 cm)	6J3600
6	1 1/4 inch (3, 175 cm)	6J3625
4	1 1/2 inch (3, 81 cm)	6J3650
4	2 inches (5, 08 cm)	6J3800

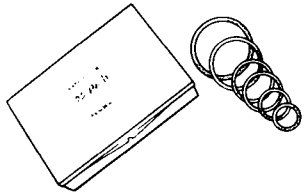

9S3135 SEAL KIT

(Includes 60 rubber O-ring seals)

Qty.	Nominal Size	Part No.
10	1/2 inch (1, 27 cm)	4J5140
10	3/4 inch (1, 905 cm)	4J5267
10	1 inch (2, 54 cm)	4J0520
10	1 1/4 inch (3, 175 cm)	4J0522
10	1 1/2 inch (3, 81 cm)	4J0524
10	2 inches (5, 08 cm)	4J0527

THREADED INSERTS KITS

Master (Includes inserts and tools)

Coarse	Fine	Size
9S3700	9S3500	Assorted

Repair (Includes inserts and tools)

9S3510	9S3509	#10
9S3512	9S3511	1/4
9S3514	9S3513	5/16
9S3618	9S3515	3/8
9S3620	9S3619	7/16
9S3622	9S3621	1/2
9S3624	9S3623	9/16
9S3626	9S3625	5/8
9S3628	9S3627	3/4
9S3630	9S3629	7/8
9S3632	9S3631	1
9S3633		1 1/8
9S3635		1 1/4
9S3637		1 1/2

Refill (Includes inserts)

9S3674	9S3673	#10
9S3649	9S3639	1/4
9S3650	9S3640	5/16
9S3651	9S3641	3/8
9S3652	9S3642	7/16
9S3653	9S3643	1/2
9S3654	9S3644	9/16
9S3655	9S3645	5/8
9S3656	9S3646	3/4
9S3657	9S3647	7/8
9S3658	9S3648	1
9S3675		1 1/8
9S3677		1 1/4
9S3679		1 1/2

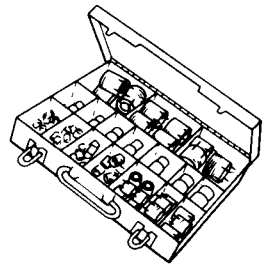

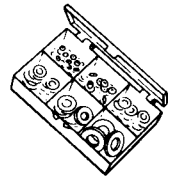

HARDWARE ASSORTMENT KITS

8S7198 Course Thread Hex Nut
8S7197 Fine Thread Hex Nut
8S7196 Lockwasher Assortment
8S7195 Flatwasher Assortment
8S7193 Woodruff Key Assortment

139338



GASKET CEMENT

5H2471 8 oz. (227 g)

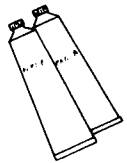

EPOXY CEMENT

5M2941 2 - 2 oz. (57g) Tube

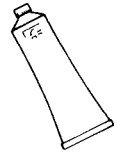

BEARING LUBRICANT

2S3230 14 1/2 oz. (411 g)

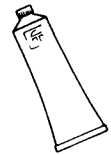

GASKET SEALER

4H5363 11 oz. (312 g)
(fast drying-hard setting)
8H5137 11 oz. (312 g)
(non-hardening)



ANTI-SEIZURE COMPOUND

4S9416 16 oz. (454 g) Aerosol
9M3710 16 oz. (454 g) Paste



GLASS OR PLASTIC CEMENT

3S1831 1 pint (0.473 L)



LIQUID GASKET

7M7260 8 oz. (227 g)



SEALING COMPOUND

5S1454 1 pint (0.473 L)



GREASE - SILICONE

4L7464 8 oz. (227 g)



SILICONE FLUID

8M553 145 cc.
9M5165 150 cc.



GREASE GUN CARTRIDGE

1P808 14 1/2 oz. (411 gms)

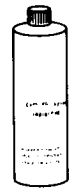

COOLING SYSTEM INHIBITOR

3P2043 1 pint (0.473 L)
P0001 1 case of 12
3P2044 1 quart (0.946 L)
P0002 1 case of 12

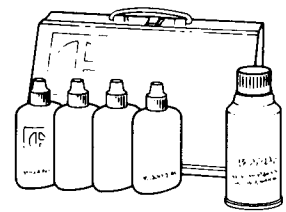

9S3262 SEALANT REPAIR KIT

contains:

Bearing Mount	7M7456	1 2/3 fl. oz. (50 cc)
Thread Lock	9S3263	1 2/3 fl. oz. (50 cc)
Pipe Sealant	9S3264	1 2/3 fl. oz. (50 cc)
Retaining Compound	9S3265	1 2/3 fl. oz. (50 cc)
Quick Cure Primer	8M8060	6 oz. (170 g) Aerosol



CHAIN & CABLE LUBRICANT

9S6106 16 oz. (454 g) Aerosol
2P2737 Case of 12

BELT DRESSING

9S6107 16 oz. (454 g) Aerosol
2P2738 Case of 12

ELECTRO-INSULATION SPRAY

9S6108 16 oz. (454 g) Aerosol
2P2739 Case of 12

PENETRATING OIL

9S6109 16 oz. (454 g) Aerosol
2P2740 Case of 12

BATTERY SAVER & CLEANER

9S6110 16 oz. (454 g) Aerosol
2P2741 Case of 12

139339

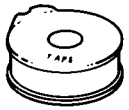

ELECTRICAL TAPE

1P810 (plastic) 2/3" (20mm) width
66 ft. (20m) length
9B4287 (cloth) 3/4" (20mm) width
30 ft. (9M) length
(Plastic tape comes in dispenser.
Cloth tape does not.)



BUTTON PLUGS

Hole Diameter Inches	Hole Diameter mm	Part Number
.219	5,6	4L0820
.310	7,9	7L6479
.380	9,7	5L6688
.438	11,1	4L0821
.469	11,9	3D9871
.484	12,3	8M3839
.500	12,7	3D9872
.625	15,9	2M4009
.687	17,5	6K2660
.750	19,0	5K3546
.875	22,2	5H4871
1.000	25,4	2D3406
1.250	31,8	4S6336
1.375	34,9	4F8711
1.500	38,1	3L1979
2.000	50,8	1L6377
2.250	57,2	7M3248
2.500	63,5	3L8852
3.000	76,2	1L6366

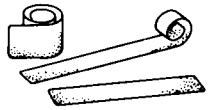

9S8703 ANTI-SKID TREADS

(May be ordered by foot lengths up to 60 feet (18,30m), width 4" (100mm)



MAGNETIC DRAIN PLUGS

Type	Thread Size-Threads Per Inch	Head Inches	A Inches	A mm	Part No.
I	5/8 - 11	7/8 Hex	1 3/16	26,9	5K1555
I	5/8 - 18	7/8 Hex	3/4	19,1	2R166
I	7/8 - 14	1 1/8 Hex	1 3/16	30,2	3H4190
I	1 1/8 - 12	1 1/2 Hex	1 1/2	38,1	8M3837
I	1 1/8 - 12	1 1/2 Hex	1 7/8	47,8	2J1559
I	1 1/2 - 12	1 Hex	1 1/2	38,1	8M5576
I	1 1/2 - 12	1 7/8 Hex	1 7/8	47,8	2D8390
II	1/2 - 14	9/16 Sq.	1 1/8	28,5	2F3628
II	3/4	5/8 Sq.	1 1/4	31,8	2H3865
II	7/8 - 14	7/8 Hex	1 5/8	41,3	2R1491
II	1 Std. Pipe Thd.	13/16 Sq.	1 7/16	36,6	2H3864
II	1 1/4 Std. Pipe Thd.	15/16 Sq.	1 11/16	42,9	2H3863
II	1 1/4 Std. Pipe Thd.	15/16 Sq.	1 3/8	35,0	7H3664
III	3/4 - 14 Pipe Thd., Fine	1/2 Sq.	1 3/16	30,2	5D1894
III	1 - 11 1/2 Pipe Thd., Fine	1/2 Sq.	1 5/16	33,4	2K744
III	1 1/4 - 11 1/2 Pipe Thd., Fine	3/4 Sq.	13/16	20,6	5S4017
III	2 - 12	3/4 Sq.	1 11/16	42,9	8B6599

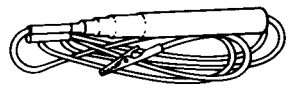

8S4627 CIRCUIT TESTER

(Maximum Capacity: 10 oms)

139340

MEMORANDA

SPECIFICATIONS

(SUBJECT TO CHANGE WITHOUT NOTICE)

Weight, shipping (approximate) . . . . . 31,652 lbs.

DIMENSIONS

Length . . . . . 12' 11.2"
Height (to top of stack) . . . . . 10' 1/2"
Height (to top of fuel tank) . . . . . 6' 8 1/2"
Width . . . . . 9' 11"
Gauge (center to center tracks) . . . . . 83"
Ground clearance . . . . . 12 1/4"

ATTACHMENTS

Additional equipment such as Brush Guards, Hydraulic Controls, Lighting System, etc., are available at extra cost. Consult your Caterpillar-Dealer.

MACHINE SERIAL NUMBER PLATE LOCATION

Serial number plate are located on the back of the transmission case, in operator's compartment on lower right-hand dash plate and on the left-hand side of the cylinder block.

CARACTÉRISTIQUES

(PEUVENT ÊTRE MODIFIÉES SANS PRÉAVIS)

Poids (approx.), en ordre d'expédition. . . . . 14 400 kg

DIMENSIONS

Longueur. . . . . 3 940 mm
Hauteur (tuyau d'échappement compris) . . . . . 3 060 mm
Hauteur (au sommet du réservoir de carburant) . . . . . 2 045 mm
Largeur . . . . . 3 025 mm
Voie (entre centres des chaînes) . . . . . 2 110 mm
Garde au sol . . . . . 310 mm

ACCESSOIRES

Les équipements tels que tôle pare-broussailles, commandes hydrauliques, éclairage, etc., sont facultatifs et facturés en sus. Consulter le concessionnaire Caterpillar.

MARQUAGE DU NUMÉRO DE SÉRIE

Les plaques portant le numéro de série sont situées sur la face arrière du bâti, sur la tôle inférieure droite de tablier et du côté gauche du bloc-cylindres.

ESPECIFICACIONES

(SUJETAS ACAMBIO SIN PREVIO AVISO)

Peso de embarque aproximado . . . . . 14 400 kg

DIMENSIONES

Largo	3940 mm
Alto (a la parte superior del tubo de escape)	3060 mm
Altura (a la parte superior del combustible)	2045 mm
Ancho	3025 mm
Trocha (de centro a centro de los carriles)	2110 mm
Despeje desde el suelo	310 mm

ACCESORIOS

Equipo adicional, tal como protecciones del cárter y protecciones contra maleza, hoja topadora, controles hidráulicos, sistema de luces, cabinas, etc., se suministra a precio extra. Consulte al distribuidor de Caterpillar.

UBICACION DE LA PLACA CON EL NUMERO DE SERIE DE LA MAQUINA

Las placas con el número de serie de la máquina están colocadas detrás de la caja de la corona, en el compartimiento del operador en la parte inferior derecha del tablero de instrumentos y en el lado izquierdo del bloque de motor.

ESPECIFICAÇÕES

(SUJEITAS A ALTERAÇÕES SEM AVISO PRÉVIO)

Peso de embarque, aproximado	14 400 kg

DIMENSÕES

Comprimento	3 940 mm
Altura (inclusive o tubo de escape)	3 240 mm
Altura (ao alto do tanque de combustível)	2 045 mm
Largura	3 025 mm
Bitola (centro a centro das esteiras)	2 110 mm
Altura livre por baixo	310 mm

ACESSÓRIOS

Existem disponíveis equipamentos extras tais como guarda-mato, comandos hidráulicos, sistema de iluminação, etc. Consulte o seu Revendedor Caterpillar.

SITUAÇÃO DO NÚMERO DE SÉRIE

Existem placas com o número de série atrás da caixa da coroa, no lado direito inferior do painel de instrumentos e no lado esquerdo do bloco do motor.

TECHNISCHE DATEN

(UNVERBINDLICH, ÄNDERUNGEN VORBEHALTEN)

Versandgewicht, etwa.	14 400 kg

ABMESSUNGEN

Länge	3 940 mm
Höhe (Oberkante Auspuff)	3 060 mm
Höhe (Oberkante Kraftstofftank)	2 045 mm
Breite	3 025 mm
Spurweite	2 110 mm
Bodenfreiheit	310 mm

ZUBEHÖR

Zusätzliche Ausrüstung wie Motorseitenverkleidungen, Hydraulikanlagen, Beleuchtungsanlage usw. sind gegen Aufpreis erhältlich. Fragen Sie Ihren Caterpillar-Händler.

LAGE DER SERIENNUMMERNSCHILDER

Seriennummernschilder befinden sich rückwärts am Getriebegehäuse, rechts unten am Armaturenbrett im Fahrerstand und links am Motorblock.

PRINTED IN U.S.A. FORM SEBP1142