CATERPILLAR

D6D

SEBP1296-01
JUNHO1985

RUTHZIL TRATOR COMERCIAL DE PEÇAS LTDA 11 97083-6812 ROLANDO CITRANGU

parts

D6D LGP Tractor
Powershift

Powered by 3306 Engine

6X1115-Up (Vehicle)
8Z1827-Up (Engine)
2HA1-Up (Transmission)
7X1920-Up (Hydraulic)
8X5800-Up (Hydraulic)
21H351-Up (Bulldozer)
35U2261-Up (Winch)

FORM SEBP1296

CONTENTS

ALPHABETICAL INDEX OF GROUPS__ 3
CONVERSION EQUIVALENT
TABLES INSIDE BACK COVER
ORDERING PARTS_____ 2
QUICK REFERENCE
CHART INSIDE FRONT COVER
USING THE PARTS BOOK_____2

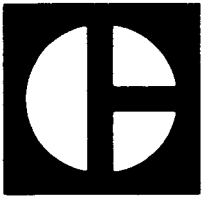

PARTS BOOK

D6D LGP
TRACTOR
POWERED BY
3306 ENGINE

SERIAL NUMBER
6X1115—UP (VEHICLE)
8Z1827—UP (ENGINE)
2HA1—UP (TRANSMISSION)
7X1920—UP (HYDRAULIC)
8X5800—UP (HYDRAULIC)
21H351—UP (BULLDOZER)
35U2261—UP (WINCH)

REVISION PUBLISHED JUNE 1985
CATERPILLAR TRACTOR CO.
PUBLICATIONS DIV.—G.O.
PEORIA, ILL. U.S.A.

QUICK REFERENCE GUIDE TO MAJOR SECTIONS

REPLACEMENT ITEMS AND SCHEMATIC
BASIC ENGINE
LUBRICATION SYSTEM
COOLING SYSTEM
INTAKE AND EXHAUST SYSTEM
FUEL SYSTEM AND GOVERNOR
STARTING AND ELECTRICAL SYSTEM
POWER TRAIN – POWER TRANSMISSION UNIT
STEERING CLUTCHES AND BRAKES
CHASSIS AND UNDERCARRIAGE
HYDRAULIC SYSTEM
IMPLEMENTS
CAB, GAUGES AND ACCESSORIES

MACHINE IDENTIFICATION Caterpillar machines are identified with SERIAL NUMBERS. Serial numbers are assigned to the chassis and to the engine. The chassis and the engine also carry ARRANGEMENT NUMBERS and in some cases MODIFICATION NUMBERS. These numbers are shown on the serial number plates and on the master plate in the operator's compartment. For the location of the serial number plates, refer to the Specification Section at the back of this Parts Book.

Caterpillar dealers need these numbers to determine which components were included on the machine when it was assembled at the factory. This permits accurate identification of replacement part numbers.

ORDERING PARTS Quality Caterpillar Replacement parts are available from Caterpillar dealers throughout the world. Their parts stocks are up to date and include all parts normally required to protect your investment in Caterpillar machines. When ordering parts, your order should specify the quantity, part number, part name and the serial number, arrangement number and any modification numbers of the machine for which the parts are needed. If in doubt about the part number, please provide your dealer with a complete description of the needed item.

HOW TO USE THE PARTS BOOK Caterpillar Parts Books include illustrations of the groups or assemblies which make up the machine. These illustrations show the standard components plus many of the attachments available for the machine.

The alphabetical index located in the front part of the book should be used to determine the page number on which specific illustrations are shown. Reference to those pages will identify each of the individual serviceable parts.

Captions The caption under each illustration identifies the part number and name of the group or assembly shown. If more than one illustration is included for any group, the caption identifies the specific machine serial numbers to which each illustration applies. In some cases it is not possible to determine the specific machine serial numbers to which different illustrations are applicable. In those cases the caption identifies the illustration as "First Type", "Second Type", etc. Reference to the actual group or assembly is necessary in those cases to determine which illustration should be used.

Captions provide additional information such as page numbers where illustrations of sub assemblies are shown, information reguarding quantities used and other information intended to assist the user in determining parts needs.

Indented Part Names Within each illustration is a parts list identifying each serviceable part in the illustration. When a part name is indented in this list, it means that serviceable item is a part of the serviceable item under which it is indented.

Abbreviations and Symbols

▲ ●	Used to call attention to additional information shown elsewhere within the illustration.	
R.H.	Right Hand	Refers to the side of the machine as viewed from the operator's compartment.
L.H.	Left Hand	
C	Indicates changes from the previous illustration of the same group or assembly.	
O.D.	Outside Diameter	
I.D.	Inside Diameter	
N/S	Not Serviced	
Assem.	Assembly	
in.	Inch	
ft	Foot	
cm	Centimeter	
dm	Decimeter	

Note: Continuing improvement and advancement of product design may cause changes to your machine which may not be included in this publication. Each publication is reviewed and revised, as required, to update and include these changes in later editions.

Whenever a question arises regarding your Caterpillar product, or this publication, please consult your Caterpillar dealer for the latest available information.

IDENTIFICATION DE LA MACHINE Toutes les machines Caterpillar portent un NUMÉRO DE SÉRIE. Les châssis et les moteurs ont aussi un numéro de série. Ils peuvent également avoir des NUMÉROS DE VERSION et, dans certains cas, de MODIFICATION. Ces numéros figurent sur les plaques de série et sur la plaque signalétique principale qui se trouve dans le poste de conduite. Pour connaître l'emplacement des plaques signalétiques, se reporter au chapitre intitulé "Specifications", à la fin du Catalogue de pièces.

Les concessionnaires Caterpillar doivent connaître tous ces numéros pour savoir quels composants ont été employés lors du montage en usine, et trouver plus facilement le numéro des pièces de rechange.

COMMANDE DE PIÈCES Les concessionnaires Caterpillar fournissent dans le monde entier des pièces de rechange Caterpillar. Les stocks de pièces sont perpétuellement remis à jour et comptent toutes les pièces nécessaires pour assurer la bonne marche de votre machine Caterpillar. Lors des commandes de pièces, mentionnez la quantité, le numéro des pièces, le nom et le numéro de série, le numéro de version et, le cas échéant, le numéro de modification de la machine concernée. En cas de doute sur le numéro de pièce, il conviendra de fournir au concessionnaire une description complète de la pièce en question.

UTILISATION DU CATALOGUE DE PIÈCES Le Catalogue de pièces comporte des illustrations des groupes ou ensembles qui composent la machine. Les illustrations représentent les composants standard plus les accessoires disponibles.

Au début du catalogue figure un index alphabétique qui renvoie aux pages et illustrations correspondantes. Toutes les pièces de la machine avec leurs numéros figurent dans ces pages.

Légendes Chaque illustration comporte une légende comprenant le numéro de pièce, la désignation du groupe ou celle de l'ensemble. Si à un groupe donné correspondent plusieurs illustrations, la légende indiquera le numéro de série de chaque machine spécifique. Dans ce cas, les dessins comportent la mension "Premier type", "Deuxième type", etc. Pour déterminer quelles illustrations utiliser, il faudra connaître la référence du groupe ou de l'ensemble correspondant.

Les légendes indiquent également les numéros de page des plans des sous-ensembles, les quantités utilisées et autres renseignements destinés à aider l'utilisateur à déterminer quelles sont les pièces nécessaires.

Numéros de pièce en retrait Chaque illustration comporte la liste des pièces qui la constituent et que l'on peut se procurer. Lorsqu'une désignation de pièce est en retrait de cette liste, cela veut dire que l'article en regard fait partie de l'ensemble sous lequel il figure.

Abréviations et symboles

▲ ●	Symbole utilisé pour attirer l'attention sur une information supplémentaire figurant ailleurs dans l'illustration.	
R.H.	Côté droit	Vu à partir du poste de conduite.
L.H.	Côté gauche	
C	Indique les changements par rapport à l'illustration précédente réprésentant le même groupe ou ensemble.	
O.D.	Diamètre extérieur	
I.D.	Diamètre intérieur	
N/S	Non remplaçable	
Assem.	Ensemble	
in.	pouce	
ft	pied	
cm	centimètre	
dm	décimètre	

Nota : En raison du progrès technique et des améliorations continuelles apportées au matériel, votre machine comporte peut-être des modifications qui n'apparaissent pas dans la présente publication. Les éditions ultérieures seront revues et corrigées en conséquence.

En cas de doute sur un détail de votre machine Caterpillar ou sur le texte de la présente publication, adressez-vous à votre concessionnaire Caterpillar.

MAQUINAS Las máquinas Caterpillar se identifican por medio de NUMEROS DE SERIE. Se asignan números de serie al chasis y al motor. El chasis y el motor también tienen NUMEROS DE DISPOSICION o ARREGLO y en algunos casos, NUMEROS DE MODIFICACION. Estos números se muestran en las placas de números de serie y en la placa maestra en el compartimiento del operador. La ubicación de las placas de números de serie se indica en la sección de Especificaciones en la parte de atrás de este Catálogo de Piezas.
Los distribuidores Caterpillar necesitan estos números para poder determinar qué componentes se incluyeron en la máquina cuando ésta se armó en la fábrica. Esto permitirá identificación exacta de los números de pieza de los repuestos.

COMO PEDIR REPUESTOS Los distribuidores Caterpillar en todo el mundo tienen disponibles piezas de repuesto Caterpillar de calidad. Sus existencias están actualizadas e incluyen todas las piezas normalmente requeridas para proteger su inversión en máquinas Caterpillar. Al pedir repuestos, especifique en su pedido la cantidad, el número de pieza, el nombre de la pieza y el número de serie, el número de disposición y cualquier número de modificación de la máquina para la cual se necesitan los repuestos. Si tiene dudas con respecto al número de pieza, suministre al distribuidor una descripción completa de la pieza que necesita.

COMO USAR ESTE CATALOGO Los Catálogos de Piezas Caterpillar tienen las ilustraciones de los grupos o conjuntos que componen la máquina. Estas ilustraciones muestran los componentes estándar además de muchos de los accesorios disponibles para la máquina.

Se debe utilizar el índice alfabético en la parte anterior de este catálogo para determinar el número de la página en la que aparecen las ilustraciones correspondientes. En dichas páginas se identifica cada una de las piezas que se suministran.

Títulos El título debajo de cada ilustración identifica el número de pieza y el nombre del grupo o conjunto indicado. Si para cualquier grupo se incluye más de una ilustración, el título identifica los números de serie de la máquina correspondientes a cada ilustración. En algunos casos no es posible determinar los números de serie de la máquina correspondientes a las diferentes ilustraciones. En esos casos, el título identifica la ilustración como "Primer tipo", "Segundo tipo", etc. Es necesario referirse al grupo o conjunto en sí en estos casos para determinar qué ilustración se debe utilizar.

Los títulos suministran información adicional, tal como los números de las páginas en que aparecen las ilustraciones de los subconjuntos, las cantidades utilizadas y demás datos para ayudar al usuario a determinar las piezas o repuestos que necesita.

Nombres de pieza indentados Dentro de cada ilustración aparece una lista de piezas que identifica cada pieza que se suministra indicada en la ilustración. Cuando el nombre de una pieza aparece indentado en esta lista, significa que esta pieza forma parte del artículo que se suministra debajo del cual se ha indentado.

Abreviaturas y símbolos

▲ ● Utilizado para indicar que hay información adicional al respecto en alguna otra parte de la ilustración.

R.H. Lado derecho. Se refiere al lado de la máquina, visto desde el compartimiento del operador.

L.H. Lado izquierdo.

C Indica cambios con respecto a la ilustración anterior del mismo grupo o conjunto.

O.D. Diámetro exterior

I.D. Diámetro interior

N/S No se suministra

Assem. Conjunto

in. Pulgada

ft Pie

cm Centímetro

dm Decímetro

Nota: Las continuas mejoras y los avances en el diseño de los productos podrían haber causado cambios en su máquina que tal vez no estén incluidos en esta publicación. Cada publicación se revisa y actualiza, según sea necesario, para incluir estos cambios en ediciones posteriores.
Cuando tenga alguna pregunta con respecto a su máquina Caterpillar, o a esta publicación, sírvase consultar al distribuidor Caterpillar a fin de obtener la información más reciente.

IDENTIFICAÇÃO DA MÁQUINA As máquinas Caterpillar são identificadas por NÚMEROS DE SÉRIE e DO ARRANJO, atribuídos tanto ao chassi como ao motor. Em alguns casos há ainda um NÚMERO DA MODIFICAÇÃO. Esses números estão escritos nas placas do número de série e na placa mestra que se encontra no compartimento do operador. A localização das placas de número de série está indicada na secção de Especificações, na parte de trás deste catálogo.

Os revendedores Caterpillar necessitam esses números para determinar que componentes foram originalmente instalados na máquina. Isto permite uma identificação extra dos números das peças sobressalentes.

COMO OBTER PEÇAS Os revendedores Caterpillar no mundo inteiro têm disponíveis peças sobressalentes Caterpillar, de qualidade. Os seus estoques são atualizados e incluem todas as peças normalmente necessárias para proteger o seu investimento nos produtos Caterpillar. Ao fazer um pedido de peças especifique a quantidade, o número de referência e o nome de cada peça, bem como o número de série, do arranjo e da modificação (se houver) da máquina a que as peças se destinam. Se tiver dúvida quanto ao número de referência duma peça, dê ao seu revendedor uma descrição completa do item desejado.

COMO USAR O CATÁLOGO DE PEÇAS Os catálogos de peças Caterpillar incluem ilustrações dos grupos ou conjuntos de que se compõem as máquinas. Estas ilustrações mostram os componentes standard e muitos dos acessórios disponíveis para elas.

O índice alfabético no início do catálogo dá o número da primeira página em que se encontra uma determinada ilustração. Vendo nestas páginas se pode identificar cada uma das peças individuais que existe à venda.

Legendas das Ilustrações A legenda de cada ilustração identifica o número e o nome do grupo mostrado. Se houver mais de uma ilustração para o mesmo grupo, a legenda indicará os números de série a que cada uma se aplica. Às vezes não é possível determinar os números de série específicos para um grupo de ilustrações. Em tais casos as legendas as identificam como "First Type" (Primeiro Tipo), "Second Type" (Segundo Tipo), etc. Será então necessário referir-se ao grupo ou conjunto real para saber qual a ilustração que se aplica.

As legendas dão ainda informações adicionais, tais como os números de páginas onde ilustrações de sub conjuntos são encontradas, informações sobre quantidades usadas e outras mais que possam ajudar no pedido de peças.

Nomes de Peças Embutidos Cada ilustração apresenta uma lista de todas as peças correspondentes que existem à venda individualmente. Quando o nome da peça aparece embutido (mais para dentro), significa que a peça pode ser obtida separadamente, porém já está incluída no item sob o qual o nome está embutido.

Abreviaturas e Símbolos

▲ ●	Usados para indicar que existem informações adicionais em outra parte da ilustração.
R.H.	"Right Hand" (Lado Direito)
L.H.	"Left Hand" (Lado Esquerdo) (Referem-se ao lado da máquina vista da plataforma de operação para a frente.)
C	"Change". Indica modificação da ilustração anterior do mesmo grupo ou conjunto.
O.D.	"Outside Diameter" (Diâm. externo)
I.D.	"Inside Diameter" (Diâm. interno)
N/S	"Not Serviced" (Não disponível separadamente)
Assem.	"Assembly" (Conjunto)
in.	"inch" (polegada)
ft	"foot" (pé de comprimento — 30,5 cm)

Nota:
O contínuo processo de desenvolvimento e melhoria dos produtos pode ocasionar mudanças em seu equipamento que não estejam ainda incluidas neste catálogo. Cada nova edição é revisada para atualizar e incluir estas modificações.

Quando em dúvida sobre o seu produto Caterpillar, ou esta publicação, consulte o seu Revendedor Caterpillar para obter a última informação disponível.

GERÄTE-IDENTIFIKATION Alle Caterpillar-Geräte werden durch SERIENNUMMERN (SERIAL NUMBERS) identifiziert. Fahrwerk und Motor haben Seriennummern sowie BAUGRUPPENNUMMERN (ARRANGEMENT NUMBERS) und in einigen Fällen ÄNDERUNGSNUMMERN (MODIFICATION NUMBERS). Diese Nummern befinden sich auf den Seriennummernplatten und auf der Hauptplatte im Fahrerhaus. Die Lage dieser Platten wird im Abschnitt "Specifications" dieses Parts Book angegeben.

Die Caterpillar-Händler benötigen diese Nummern, um festzustellen, welche Bauteile bei der Montage des Geräts im Werk verwendet wurden, und um die richtigen Ersatzteilnummern finden zu können.

BESTELLEN VON ERSATZTEILEN Caterpillar-Ersatzteile von hoher Qualität sind bei den Caterpillar-Händlern weltweit erhältlich. Ihre Ersatzteillager befinden sich auf dem neuesten Stand und es sind alle Teile lieferbar, die normalerweise nötig sind, um zu garantieren, daß sich der Kauf Ihres Caterpillar-Geräts gelohnt hat. Bei der Bestellung von Teilen müssen Anzahl, Teilnummer, Bezeichnung und die Seriennummer, Baugruppennummer und gegebenenfalls die Änderungsnummern des Geräts angegeben werden, für das die Teile benötigt werden. Kann die Seriennummer nicht genau festgestellt werden, muß der Händler eine genaue Beschreibung des benötigten Teils erhalten.

GEBRAUCH DES PARTS BOOK In den Caterpillar Parts Books befinden sich Abbildungen der Baugruppen, aus denen sich das Gerät zusammensetzt. Diese Abbildungen zeigen die Standardbauteile und viele der für das Gerät lieferbaren Zusatzausrüstungen.

Das alphabetische Inhaltsverzeichnis vorn im Buch wird verwendet, um die Seite festzustellen, auf der sich eine bestimmte Abbildung befindet. Durch Bezugnahme auf diese Seiten kann jedes der zu liefernden Teile identifiziert werden.

Bildlegenden Die Legende unter jeder Abbildung gibt die Nummer und Bezeichnung des Teils oder der Baugruppe an. Wenn sich mehr als eine Abbildung einer bestimmten Baugruppe im Buch befindet, werden in der Bildlegende die genauen Seriennummern der Geräte aufgeführt, auf die sich die Abbildung bezieht. In einigen Fällen ist es nicht möglich, die Seriennummern der Geräte festzustellen, auf die sich verschiedene Abbildungen beziehen. In der Bildunterschrift werden diese Abbildungen mit "Type 1", "Type 2" usw. identifiziert. In diesem Fall muß Bezug auf das Teil oder die Baugruppe genommen werden, um festzustellen, welche Abbildung verwendet werden muß.

Weiterhin geben die Bildlegenden Auskunft über die Seiten, auf denen Teilgruppen gezeigt werden, über die Anzahl usw.; dies soll dem Verbraucher bei der Wahl der benötigten Teile helfen.

Eingerückte Teilebezeichnungen In jeder Abbildung befindet sich eine Ersatzteilliste, in der alle lieferbaren Teile aufgeführt werden. Wenn eine Bezeichnung in der Liste eingerückt ist, bedeutet dies, daß das entsprechende Teil zu der Gruppe gehört, unter der es eingerückt wurde.

Abkürzungen und Symbole

▲ ●	Weisen darauf hin, daß sich an einer anderen Stelle der Abbildung zusätzliche Angaben befinden.
R.H.	rechts Die entsprechende Seite des
L.H.	links Geräts vom Fahrerhaus aus gesehen.
C	Bezeichnet Änderungen gegenüber der vorherigen Abbildung desselben Teils oder derselben Baugruppe.
O.D.	Äußerer Durchmesser
I.D.	Innerer Durchmesser
N/S	Nicht lieferbar
Assem.	Zusammengesetztes Teil
in.	Zoll
ft	Fuß
cm	Zentimeter
dm	Dezimeter

Hinweis: Verbesserungen, die ständig an unseren Geräten vorgenommen werden, können Änderungen an Ihrem Gerät zur Folge haben, die möglicherweise in dieser Veröffentlichung nicht erwähnt sind. Jede Veröffentlichung wird nach Bedarf überarbeitet und erneuert. Änderungen werden in späteren Ausgaben berücksichtigt.

Wenn Sie Fragen in bezug auf Ihr Caterpillar-Gerät oder diese Veröffentlichung haben, wenden Sie sich bitte an Ihren Caterpillar-Händler.

REPLACEMENT ITEMS

The following chart provides a convenient listing of those items which require occasional replacement during normal operation or maintenance.

	PART NO.	QTY. USED	PAGE NO.
BATTERIES — 12 Volt	4S9261	2	66
BREATHERS			
Crankcase — Breather Assem.	8S248	1	31
Bevel Gear Case	3D9142	1	126
COOLING SYSTEM			
Relief Valve Assem.	2S3080	1	32
FILTERS			
Air Cleaner			
Element Assem. — Primary	1P7716	1	41
Element Assem. — Secondary	1P7360	1	41
Cab Pressurizer — Filter Assem.	2V36 &	2	225
	6P1319	1	224
Crankcase — Filter Assem.	2P4004	1	28
Fuel			
Filter Assem.	1P2299	1	61
Hydraulic			
Tank — Element Assem.	4J816 or	2	158
(Use with Fire Resistant Fluid)	3G5653	2	158
Transmission & Steering Clutch			
Element Assem.	4J6064 or	1	113
(Use with Fire Resistant Fluid)	1U2094	1	113
Screen	3S3875	1	113
Seal	5F149	1	113
GASKETS			
Hydraulic Filler Cap	3G361 &	1	158
	9H6454	1	158
Radiator Filler Cap	2P3230	1	33
Valve Cover	8S1605	1	14
HOSES — Fumes Disposal	8S780	10.16 cm	31
LAMPS			
Front & Rear — Sealed Units	1M5898	4	91
SEAT BELT	6D4709	1	236
VEE BELTS			
Alternator & Fan	7M4707	(Includes 2 Belts)	16
Refrigerant Compressor	9L6125	1	243
WINDSHIELD WIPER BLADE	9D1242 &	2	229
(Front & Rear)	5P5436	2	229

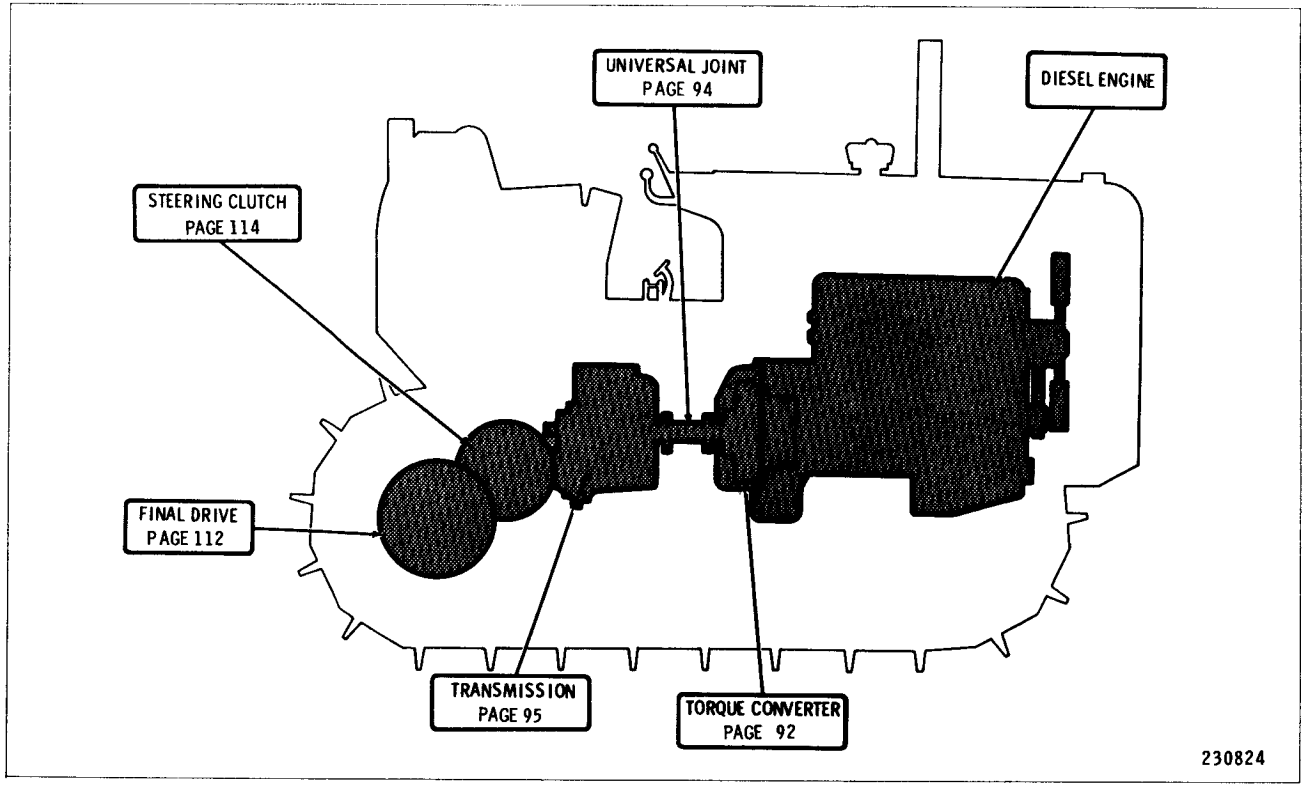
UNIVERSAL JOINT
PAGE 94
DIESEL ENGINE
STEERING CLUTCH
PAGE 114
FINAL DRIVE
PAGE 112
TRANSMISSION
PAGE 95
TORQUE CONVERTER
PAGE 92
230824

Power Train

INDEX

A

Name — Page

Accessory Drive — Rear Gears 24
Air Cleaner 41
Air Conditioner 248
Air Conditioner Arrangement 242
Air Conditioner Lines 247
Air Lines — Engine 40
Air Filter Service Indicator 258
Alternator 71

B

Back-Up Warning 92
Basic Air Conditioner 252
Basic Pressurizer — Cab 227
Battery 66
Battery and Wiring 65
Bearings — Camshaft 7
Blade Edge and Bit 187
Blade — Bulldozer 188
Blower — Pressurizer 228
Brake Band 125
Brake Hydraulic Mechanism 126
Breather — Brake Mechanism 126
Breather — Engine 31
Bulldozer Arrangements 186

Name — Page

Bulldozer Lines 176

C

Cab Accessory 217
Cab Heater 253
Cab Mounting 222
Cab Liner 221
Cab Pressurizer 224
Cable Case and Guide —
Towing Winch 197
Camshaft 11
Clutch and Refrigerant Compressor ...246
Connecting Rod and Piston 11
Crankcase Guard 134
Crankshaft 8
Crankshaft Bearing Replacements 10
Crankshaft Seals 10
Crankshaft Service Thrust Plate 9
Cylinder Block 6
Cylinder Block Cover 8
Cylinder Bracket — Bulldozer 190
Cylinder Head 12
Cylinder Head Cover 13
Cylinder Head Fastener 13
Cylinder — Lift — Bulldozer 182
Cylinder — Hydraulic — Blade Tilt 181

D

Damper — Engine 15
Dash 144

Name Page

Disconnect Switch 70
Drain Lines — Fuel Housing 60
Drawbar — Fixed 133

E

Edge and Bit — Blade 187
Engine Arrangements 4
Engine Enclosure 138
Engine Gauges 259
Engine Mounting Parts 21
Engine Support 21
Ether Starting Aid 93
Equalizer Bar 130
Exhaust Manifold 46
Exhaust Manifold Fastener 46

F

Fan and Guard — Blower 34
Fan Drive 16
Fan Pulley 16
Fan — Reversible 34
Fender 139
Fender Support 140
Filter — Air Cleaner 41
Filter — Cab Pressurizer 224
Filter — Engine Oil 28
Filter — Fuel 61
Filter — Hydraulic Tank 158
Filter — Transmission and
Steering Clutch 113
Filter — Winch Oil 210
Filter — Primary Fuel 63

Name Page

Final Drive — Lower Half 117
Final Drive — Upper Half 116
Fire Extinguisher 261
Floorplate 141
Flywheel 22
Flywheel Housing 23
Frame and Case 128
Front Gear — Timing 18
Front Housing Cover 20
Front Housing Fastener — Timing Gear 20
Front Housing — Timing Gear 19
Front Idler 146
Fuel Filter 61
Fuel Lines 58
Fuel Tank 61
Fuel Priming Pump 60
Fuel Pump — Boost 62
Fuel Pump — Electrical — Boost 63
Fumes Disposal 31
Fuse Holder, Fuse and Wire Kit 258

G

Gasket Kits.....263
Gauges 259
Gauge—Power Train Oil.....111
Governor Control 56
Governor Cover.....55
Governor and Fuel Injection Pump ..47
Guard—Crankcase 134
Guard—Fuel Tank 136
Guard—Precleaner 42
Guard—Radiator.....136
Guard—Radiator Hinged 137
Guard—Recoil Mechanism.....145
Guard—Track Roller 152

Name Page

Guard — Vandalism 260
Grease Gun 261

H

Harness — Air Conditioner Compressor 244
Harness — Battery and Wiring 68
Harness — Pressurizer 228
Harness — Washer and Wiper 232
Heater Lines 256
Hood and Dash 142
Housing and Regulator 36
Horn — Electric 257
Hoses — Upper and Lower Radiator .. 33
Hydraulic Control Arrangements 157
Hydraulic Tank Cap Protection Cover .164
Hydraulic Tank Mounting 164

I

Implement Linkage — Bulldozer 184

J

Jacket Water Heater 39

K

Key — Cab Door 218
Kit — Alternator Repair 73
Kit — Starting Motor Repair 80

Name Page

Kit — Water Pump Rebuild 35

L

Lamp — Flood 91
Latch — Door Hold Back 217
Lifting — Engine 15
Lighting 88
Liner — Cylinder Block 6
Linkage — Governor Control 56
Linkage — Implement — Bulldozer 184
Linkage — Steering Brake 122
Linkage — Steering Clutch Control 118
Linkage — Transmission Control 104

M

Magnetic Screen — Power Train Lines .113
Magnetic Screen — Winch 210
Mirror 216
Mounting and Condenser —
Air Conditioner 250
Muffler 43

N

Name Plates and Films 264
Non ROPS Conversion Arrangement ..215
Non ROPS Mounting Conversion
Arrangement 130
Nozzle — Fuel Injection 59

O

Oil Cooler — Engine 37

Name Page

Oil Cooler—Transmission 38
Oil Filler—Engine 27
Oil Filter 28
Oil Level Gauge 26
Oil Level Gauge—Power Train 111
Oil Lines—Engine 30
Oil Pan 25
Oil Pan Fastener 25
Oil Pump—Engine 28

P

Padlock — Fuel Tank Cap 62
Padlock — Hydraulic Tank Cap 164
Padlock — Oil Filler Cap 27
Padlock — Oil Level Gauge 26
Padlock — Radiator Cap 34
Padlock — Vandalism Guard 260
Pedal — Steering Brake 124
Piston Rings 11
Planetary Transmission 100
Power Train Oil Lines 110
Power Train Schematic 28
Precleaner Guard 42
Prescreener 42
Protection Cover — Fuel Tank Cap ... 62
Protection Cover — Oil Filler Cap 27
Protection Cover — Oil Level Gauge .. 26
Protection Cover — Radiator Cap 34
Protective Screen — ROPS 233
Pull Hook — Front 133
Pulley — Crankshaft 17
Pump — Fuel Injection 51
Pump Lines — Hydraulic 174
Pump Lines — Winch 175
Pump — Gear — Power Train Oil 114
Pump — Gear — Winch 173
Pump — Gear — Hydraulic Control ...173
Pump — Scavenge — Torque Divider .. 98
Push Arm and Brace — Bulldozer 189

R

Radiator 32
Radiator Hinged Guard 137
Radiator Grill Hinged Plate 137
Rain Cap — Exhaust 41B
Rear Gears — Accessory Drive 24
Recoil Mechanism Guard 145
Refrigerant Compressor 245
Refrigerant Compressor Arrangement .243
Regulator — Water Temperature 36
ROPS Arrangement 213
ROPS — Enclosed 218
ROPS — Mounting 131
ROPS — Open 212
Rockerarm — Valve Mechanism 14

S

Safety Brace — ROPS 221
Seals — Fuel Pump Housing 59
Seat Support 238
Seat — Suspension 239
Shaft and Link — Windshield Wiper ..233
Solenoid Switch — Starting Motor 87
Specifications 266
Sprocket — Segmented 115
Starting Motor — Electric 78
Steering Brake 122
Steering Clutch 121
Steering Clutch Control 118
Supplemental Cooling 39
Support and Seat 236
Sweep 235
Switch — Disconnect 70

Name Page

Switch — Solenoid — Starting Motor .. 87
Switch — Starter 70

T

Tank and Valve—Hydraulic 158
Thermostat—Water Temperature ... 36
Tilt Cylinder Lines ..... 180 & 183
Tilt Cylinder Arrangement 180
Tools—Hand 262
Torque Chart 265
Torque Control 54
Torque Divider 94
Towing Winch Control 208
Towing Winch Arrangement 191
Track 153
Track Carrier Roller 150
Track Roller 148
Track Roller Frame 151
Track Roller Guard 152
Transfer Gears—Transmission 109
Transmission Arrangement 99
Transmission Control 104
Transmission Hydraulic Control ... 103
Trunnion—Bulldozer 18
Trunnion—Engine 17
Turbocharger 44
Turbocharger Lines 43

U

Universal Joint — Torque Divider 98

V

Valve Mechanism 14
Valve Mechanism Cover 14

Name Page

Valve — Basic — Hydraulic 165
Valve — Bulldozer Lines 172
Valve — Control — Steering Clutch ... 120
Valve — Control — Winch 166
Valve — Intake and Exhaust 12
Valve — Pressure Control — Hydraulic 171
Valve — Pressure Control — Transmission 106
Valve — Relief — Hydraulic Control .. 166
Valve — Relief — Torque Divider 97
Valve — Relief — Transmission 108
Valve — Selector — Hydraulic 169
Valve — Selector and Pressure Control — Hydraulic 167
Valve — Selector and Pressure Control — Winch 167
Vandalism Guard 260
Vee Belt — Air Conditioner 243
Vee Belts — Supplemental Cooling ... 39

W

Washer and Wiper 229
Washer and Wiper Control 230
Water Lines 36
Water Pump 35
Water Separator 64
Winch 200
Winch Arrangement 191
Winch Control 206
Winch Conversion 193
Winch Conversion Arrangement 192
Winch Drive 199
Winch Fairlead 211
Winch Mounting 199
Winch Roller Guide 198

INDEX ALPHABÉTIQUE

Moteur de base (Page 4)

Désignation	Page
Arbre à cames	11
Bielles et pistons	11
Bloc-cylindres	6
Bloc-cylindres (couvercle)	8
Bride de levage	15
Carter avant	19
Carter avant (boulonnerie)	20
Carter avant (couvercle)	20
Carter inférieur	25
Carter inférieur (boulonnerie)	25
Carter de volant	23
Coussinets de vilebrequin	10
Culasse	12
Culasse (boulonnerie)	13
Culasse (couvercle)	13
Damper	15
Engrenage arrière (entraînements secondaires)	24
Engrenage de distribution avant	18
Ensemble moteur	4
Joint de vilebrequin	10
Pièces de fixation du moteur	21
Plaque de butée de rechange de vilebrequin	9
Poulie de ventilateur	16
Poulie de vilebrequin	17
Soupapes (couvercle)	14
Soupapes et train de commande	14
Support moteur	21
Tourillon	17
Ventilateur (entraînement)	16
Vilebrequin	8
Volant	22

Circuit de graissage (Page 26)

Désignation	Page
Canalisations d'huile	30
Chapeau de sécurité (bouchon de tubulure de remplissage d'huile)	27
Couvercle de protection (jauge de niveau d'huile)	26
Filtre à huile	28
Jauge de niveau d'huile	26
Pompe à huile	28
Reniflard	31
Tubulure de remplissage d'huile	27
Tuyauterie d'évacuation de vapeurs	31

Circuit de refroidissement (Page 32)

Désignation	Page
Chapeau de sécurité (bouchon de radiateur)	34
Circuit de refroidissement de secours	39
Pompe à eau	35
Radiateur	32
Réchauffeur d'eau de cylindres	39
Refroidisseur d'huile de transmission	38
Refroidisseur d'huile moteur	37
Thermostat et boîtier	36
Tuyauterie d'eau	36
Ventilateur soufflant et protecteur	34

Admission et échappement (Page 40)

Désignation	Page
Canalisations d'air	40
Canalisations de turbocompresseur	43
Collecteur d'échappement	46
Collecteur d'échappement (boulonnerie)	46
Filtre à air	41
Préfiltre (protecteur)	42
Silencieux d'échappement	43
Tamis de préfiltre à air	42
Turbocompresseur	44
Volet du tuyau d'échappement	41B

Alimentation en carburant et régulateur (Page 47)

Désignation	Page
Butée élastique de course de crémaillère	54
Canalisations de carburant	58
Canalisations de retour	60
Chapeau de sécurité (réservoir de carburant)	62
Électropompe à carburant	63
Filtre à carburant	61
Pompe d'amorçage	60
Pompe d'injection	62
Régulateur (couvercle)	55
Régulateur (timonerie extérieure)	56
Régulateur et pompe d'injection	47
Réservoir de carburant	61
Séparateur d'eau	64
Tuyauterie d'injection	59

Circuit électrique et démarrage (Page 65)

Alternateur	71
Avertisseur de recul	92
Batterie et câblage	65
Démarreur électrique	78
Éclairage	88
Injection d'éther	93

Train de transmission (Page 94)

Canalisations d'huile	110
Coupleur différentiel	94
Réducteur latéral	116
Soupape régulatrice de pression	107
Train de transmission (schéma)	28
Transmission	99
Vitesses (commande)	104

Embrayages de direction et freinage (Page 118)

Désignation	Page
Embrayages de direction	121
Embrayages de direction (commande)	118
Freins de direction	122
Servo hydraulique des freins	126

Bâti et train de roulement (Page 128)

Barre d'attelage (non oscillante)	133
Bâti AR et châssis	128
Capot	142
Chaînes de roulement	153
Châssis porteurs	151
Crochet de halage	133
Galets inférieurs (boudin double)	149
Galets inférieurs (boudin simple)	148
Galets supérieurs	150
Garde-boue	139
Garde-boue (support)	140
Grilles pour compartiment moteur	138
Groupe de pose pour bâti de sécurité	131
Groupe de transformation pour machines sans ROPS	130
Protège-carter moteur	134
Protège-galets	152
Protège-radiateur	136
Protège-radiateur sur charnières	137
Roues AV	146
Tablier	142
Tendeur hydraulique (capot protecteur)	145
Tôle de plate-forme	141
Tôle de protection du réservoir de carburant	136
Traverse de suspension	130

Circuit hydraulique (Page 157)

Désignation	Page
Chapeau de sécurité (bouchon de réservoir hydraulique)	164
Commande hydraulique	157
Vérin d'inclinaison	180
Vérin hydraulique	181

Équipement de travail (Page 186)

Bulldozer	186
Galets-guide (câble de treuil)	198
Groupe de transformation (treuil)	196
Rouleaux guide-câble (treuil)	211
Support de vérin	190
Treuil	191, 200

Cabine, instruments de contrôle et accessoires (Page 212)

Accessoires de cabine	217
Avertisseur électrique	257
Barre pare-branches	235
Bâti de protection ROPS	212, 213
Cabine (groupe de montage)	222
Chauffage de cabine	254
Climatiseur	252
Climatiseur (refroidissement et chauffage)	242
Compresseur de climatiseur	243
Compresseur de climatiseur (faisceau de câblage)	244
Couvercle de protection de tableau de bord	260
Fusible, porte-fusible et fils	258
Grille AR	233
Groupe de transformation (sans bâti de protection ROPS)	215
Indicateur de colmatage du filtre à air	258
Instruments de contrôle	259
Siège (Bostrom)	242
Siège à suspension	239
Siège et support	236
Surpresseur d'air de cabine	224

Divers (Page 261)

Caractéristiques	267
Extincteur	261
Jeux de joints	263
Outil à main	262
Plaques signalétiques et instructions sur film	264

INDICE

Motor Básico (Página 4)

Nombre	Página
Amortiguador de vibraciones	15
Arbol de levas	11
Armellas de levantamiento	15
Bielas y pistones	11
Bloque de motor	6
Caja delantera	19
Caja del volante	23
Cárter	25
Cigüeñal	8
Cojinetes de bancada	10
Cojinetes de bancada y plancha de empuje	9
Conjunto de motor	4
Culata	12
Engranajes de distribución	18
Herrajes de la caja delantera	20
Herrajes de la culata	9
Herrajes del cárter	25
Herrajes del montaje delantero	21
Mando de accesorios de los engranajes delanteros	24
Mando del ventilador	16
Mecanismo de la válvula	14
Muñón	17
Polea del cigueñal	17
Polea del ventilador	16
Sello del cigüeñal	10
Soporte del motor	21
Tapa de la caja delantera	20
Tapa de la culata	13
Tapa del bloque de motor	8
Tapa del mecanismo de las válvulas	14
Volante	22

Sistema de Lubricación (Página 26)

Nombre	Página
Bomba del aceite	28
Filtro del aceite	28
Protección de la varilla indicadora del nivel del aceite	26
Respiradero	31
Tapa protectora del tubo de llenado del aceite del motor	27
Tuberías del aceite del motor	30
Tubo de llenado del aceite del motor	27
Varilla indicadora del nivel del aceite	26

Sistema de Enfriamiento (Página 32)

Nombre	Página
Bomba del agua	35
Caja y regulador	36
Calentador del agua de las camisas	39
Enfriador del aceite de la transmision	38
Enfriador del aceite del motor	37
Radiador	32
Sistema de enfriamiento de suministro	39
Tapa protectora del radiador	34
Tuberías del agua	36
Ventilador insuflador y proteccion	34

Sistema de Admisión y Escape (Página 40)

Nombre	Página
Antefiltro especial	42
Filtro de aire	41
Herrajes para múltiple de escape	46
Múltiple de escape	46
Protector del antefiltro	42
Silenciador	43
Tapa contra la lluvia	41B
Tuberías de aire	40
Tuberías del turboalimentador	43
Turboalimentador	44

Sistema del Combustible y Regulador (Página 47)

Nombre	Página
Bomba de combustible eléctrico	63
Bomba de cebado de combustible	60
Bomba de combustible	62
Control del regulador	56
Control de par	54
Filtro del combustible	61
Regulador y bomba de ineyección del combustible	47
Separador de agua	64
Tanque del combustible	61
Tapa del regulador	55
Tapa protectora del tanque del combustible	62
Tuberías de combustible	58
Tuberías de drenado	60
Tuberías de inyección del combustible	59

Sistema de Arranque Eléctrico (Página 65)

Alarma de retroceso	92
Alternador	71
Arranque por éter	93
Batería y alambrado	65
Motor de arranque eléctrico	78
Sistema de luces	88

Tren de Potencia — Unidad de Transmisión de Fuerza (Página 94)

Conjunto de la transmisión	99
Control de la transmisión	104
Divisor de par	94
Mando final	116
Tren de potencia esquemático	28
Tuberías de aceite del tren de potencia	110
Válvula de control de presión	107

Sistema de Dirección y Frenos (Página 118)

Nombre	Página
Control de embrague de dirección	118
Embrague de dirección	121
Freno de dirección	122
Mecanismo hidráulico del freno	126

Chasís y Tren de Rodaje (Página 128)

Barra de tiro fija	133
Barra compensadora	130
Bastidor de los rodillos inferiores	151
Bastidor y caja	128
Cadena	153
Capota y tablero	142
Cubierta del motor	138
Gancho delantero	133
Montaje de la estructura protectora contra vuelcos	131
Plancha del piso	141
Proteccion del cárter	134
Protección de los rodillos inferiores	152
Protección del radiador	136
Protección del mecanismo tensor	145
Protección del tanque del combustible	136
Reja engoznada del radiador	137
Rodillos inferiores de doble pestaña	149
Rodillos inferiores de un pestaña	148
Rodillos superiores	150
Rueda guía	146
Sin montaje de la estructura protectora contra vuelcos	130
Soporte del tapabarro	140
Tapabarro	138

Sistema Hidráulico (Página 157)

Nombre — Página

Cilindro hidráulico. 181
Conjunto del control hidráulico . . 157
Conjunto del cilindro de inclinación 180
Tapa protectora del tanque hidráulico 164

Implementos (Página 186)

Conjunto de la hoja empujadora. . 186
Conjunto del malacate 191
Conversión del malacate 196
Defensa del cable del malacate. 98
Malacate 200
Polea guía del malacate. 211
Soporte del cilindro 190

Cabina, Instrumentos y Accesorios (Página 212)

Acondicionador de aire. 252
Asiento 242
Bocina eléctrica. 257
Cabina de accesorios 217
Calentador de la cabina. 254

Nombre — Página

Compresor de la cabina. 224
Conjunto del acondicionador de aire – calienta y enfría 242
Conjunto del compresor del refrigerante 243
Conjunto de herrajes del compresor. 244
Conjunto de la estructura protectora contra vuelcos 215
Estructura protectora contra vuelcos. 212
Indicador de servicio del filtro de aire. 258
Instrumentos del motor. . . . 259
Montaje de la cabina 222
Portafusibles, fusibles y juego de alambrado 258
Protección sobre el motor 235
Protección contra vandalismo . . . 260
Rejilla protectora 233
Sistema de la protección contra vuelcos. 213
Soporte y asiento 236
Suspensión del asiento 239

Materiales Diversos (Página 261)

Calcomanías y placas de identificación 264
Especificaciones 268
Extinguidor contra incendios. . . . 261
Herramientas 262
Juegos de empaquetadura 263

ÍNDICE

Partes da máquina relativas ao motor (Página 4)

Designação	Página
Amortecedor do virabrequim	15
Arranjo básico do motor	4
Biela e pistão	11
Bloco do motor	6
Cabeçote	12
Caixa das engrenagens de distribuição	19
Caixa do volante	23
Cárter de óleo do motor	25
Comando do ventilador	16
Eixo comando das válvulas	11
Engrenagem de comando traseiro	24
Engrenagens de distribuição	18
Mancais principais do motor	10
Mecanismo das válvulas	14
Munhão	17
Olhal de levantamento	15
Fixadores da caixa das engrenagens de distribuição	20
Fixadores para o cabeçote	13
Fixadores para o cárter	25
Fixadores para o motor	21
Mancal de encosto do virabrequim	9
Polia do ventilador	16
Polia do virabrequim	17
Suporte do motor	21
Tampa da caixa das engrenagens de distribuição	20
Tampa do bloco do motor	8
Tampa do cabeçote	13
Tampa superior do motor	14
Vedador do virabrequim	10
Virabrequim	8
Volante do motor	22

Sistema de lubrificação (Página 26)

Designação	Página
Bocal de enchimento do cárter	27
Bomba de óleo	28
Filtro de óleo	28
Respiro	31
Tampa do bocal de enchimento de óleo do motor com cadeado	27
Tampa da vareta de nível do óleo do motor com cadeado	26
Tubulações do óleo	30
Vareta de nível do óleo do motor	26
Ventilação do cárter	31

Sistema de arrefecimento (Página 32)

Designação	Página
Aquecedor d'água do motor	39
Arrefecedor do sistema de transmissão	38
Arrefecedor de óleo do motor	37
Arrefecimento suplemental	39
Bomba d'água	35
Radiador	32
Termostato	36
Tampa do radiador com cadeado	34
Tubos d'água	36
Ventilador insuflador e protetor	34

Sistema de admissão e escape (Página 40)

Designação	Página
Coletor de escape	46
Fixadores do coletor de escape	46
Pré-purificador com tela	42
Purificador de ar	41
Protetor do pré-purificador	42
Silenciador	43
Tampa do tubo de descarga	41B
Tubos de ar	40
Tubulações de óleo do turbocompressor	43
Turbocompressor	44

Sistema de combustível e governador (Página 47)

Designação	Página
Bomba de combustível	62
Bomba de purgação do combustível	60
Bomba elétrica de combustível	63
Controle de aceleração	56
Filtro de combustível	61
Governador e bomba injetora de combustível	47
Mola de controle do torque	54
Separador d'água	64
Tampa do tanque de combustível com cadeado	62
Tampa no governador	55
Tanque de combustível	61
Tubos de drenagem	60
Tubos injetores de combustível	59
Tubulações de combustível	58

Sistema elétrico e de partida (Página 65)

Alarme de marcha à ré	92
Alternador	71
Bateria e instalação elétrica	65
Injetor de éter	93
Motor de arranque elétrico	78
Sistema de iluminação	88

Sistema de transmissão (Página 94)

Comando final	116
Controle das marchas	104
Diagrama do sistema de transmissão	26
Divisor de torque	94
Sistema de transmissão	99
Tubulações de óleo do sistema de transmissão	110
Válvula de controle de pressão	107

Embreagens de direção e freios (Página 118)

Designação	Página
Controle da embreagem de direção	118
Embreagem de direção	121
Freios da máquina	122
Reforçador hidráulico dos freios	126

Chassi e material rodante (Página 128)

Armação dos roletes de esteira	151
Arranjo de conversão para estrutura não ROPS	130
Barra de suspensão	130
Barra de tração fixa	133
Capô e painel	142
Chapa do piso	141
Chassi e caixa da coroa	128
Cobertura do motor	138
Esteira	153
Gancho dianteiro	133
Grade do radiador com dobradiças	137
Montagem da estrutura contra capotagem	131
Pára-lamas	139
Protetor do cárter	134
Protetor do radiador	136
Protetor do tanque de combustível	136
Protetor dos roletes de esteira	152
Roda-guia	146
Rolete inferior de flange duplo	149
Rolete inferior de flange singelo	148
Rolete superior	150
Suporte do pára-lama	140
Tampa da mola tensora	145

Sistema hidráulico (Página 157)

Designação — Página

Cilindro de inclinação 180
Cilindro hidráulico 181
Comando hidráulico 157
Tampa do reservatório hidráulico com cadeado 164

Implementos (Página 186)

Conversão do guincho 196
Guia dos roletes 198
Guincho 191, 200
Lâmina 186
Roldanas de guia 211

Cabine, indicadores e acessórios (Página 212)

Acessório da cabine 217
Aquecedor da cabine 254
Assento – suspensão 239
Assento Bostrom 242
Assento e suporte 173
Barras de proteção do capô 235

Designação — Página

Buzina elétrica 257
Compressor do refrigerador de ar . 243
Condicionador de ar – refrigeração e califação 242
Conversão para estrutura não ROPS 215
Estrutura contra capotagem 212, 213
Indicador de limpeza do purificador de ar 258
Indicador do motor 259
Instalação elétrica do compressor . 244
Jogo de fusível, suporte e fio 258
Refrigerador de ar da cabine 252
Tampas com cadeado 260
Tela de proteção 233
Suporte da cabine 222

Equipamento para manutenção e diversos (Página 261)

Decalcomanias e placas 264
Especificações 269
Extintor de incêndio 261
Ferramentas manuais 262
Jogos de juntas 263

INHALTSVERZEICHNIS

Motor (Seite 4)

Bezeichnung	Seite
Dämpfer	15
Hinteres Nockenwellenzahnrad	24
Huböse	15
Kurbellager	10
Kurbelwelle	8
Kurbelwellen-Ersatzdrucklager	9
Kurbelwellendichtung	10
Lüfterantrieb	16
Lüfterriemenscheibe	16
Montagezapfen	17
Motorauflager	21
Motorausführung	4
Motorblock	6
Motorblockdeckel	8
Motor-Halteteile	21
Nockenwelle	11
Ölwanne	25
Ölwannen-Halteteile	25
Pleuelstange und Kolben	11
Riemenscheibe der Kurbelwelle	17
Schwungscheibe	22
Schwungscheibengehäuse	23
Stirnrad	18
Stirnradgehäuse	19
Stirnradgehäusedeckel	20
Stirnradgehäuse-Halteteile	20
Ventildeckel	14
Ventilsteuerung	14
Zylinderkopf	12
Zylinderkopfdeckel	13
Zylinderkopf-Halteteile	13

Schmiersystem (Seite 26)

Bezeichnung	Seite
Entdunster	31
Entlüfter	31
Öleinfüllstutzen	27
Ölleitungen	30
Ölmeßstab	26
Schmierfilter	28
Schmierpumpe	28
Schutzkappe des Öleinfüllstutzens	27
Schutzkappe des Ölmeßstabs	26

Kühlsystem (Seite 32)

Bezeichnung	Seite
Drucklüfter und Verkleidung	34
Getriebeölkühler	38
Kühlerkappe	34
Kühlernetz	32
Kühlwasserheizung	39
Motorölkühler	37
Thermostat und Gehäuse	36
Wasserleitungen	36
Wasserpumpe	35
Zusatzkühlung	39

Ansaug- und Abgasanlage (Seite 40)

Bezeichnung	Seite
Auspuffkrümmer	46
Auspuffkrümmer-Halteteile	46
Druckluftleitungen	40
Luftreiniger	41
Regenfänger	41B
Schalldämpfer	43
Turbolader	44
Turboladerölleitungen	43
Vorabscheider	42
Vorreinigerschutz	42

Kraftstoffanlage und Regler (Seite 47)

Bezeichnung	Seite
Ablaßleitungen	60
Kraftstoffeinspritzleitungen	59
Kraftstoffentlüftungspumpe	60
Kraftstoffilter	61

Bezeichnung	Seite
Kraftstoffleitungen	58
Kraftstoffpumpe	62
Kraftstoffpumpe, elektr.	63
Kraftstofftank	61
Regler und Kraftstoff-einspritzpumpe	47
Reglerdeckel	55
Reglersteuerung	56
Tankkappe	62
Wasserabscheider	64
Zahnstangenanschlag	54

Anlasser und elektr. Anlage (Seite 65)

Anlasser, elektr.	78
Ätherstarthilfe	93
Batterie und Verdrahtung	65
Beleuchtungsanlage	88
Rückfahrwarnhorn	92

Kraftübertragung — Getriebe (Seite 94)

Differentialwandler	94
Drucksteuerventil	107
Getriebe — Teilliste	99
Ölleitungen der Kraftübertragung	110
Schaltgestänge	104
Schemazeichnung — Kraftübertragung	2B
Seitenantrieb	116

Lenkkupplungen und Bremsen (Seite 118)

Bremshydraulik	126
Lenkbremse	122
Lenkkupplung	121
Lenkkupplungsgestänge	118

Fahr- und Laufwerk (Seite 128)

Bezeichnung	Seite
Bodenplatte	141
Doppelflanschrolle	149
Einzelflanschrolle	148
Frontzughaken	133
Kühlerschutz	136
Kühlerschutz mit Scharnieren	137
Laufkette	153
Laufrollenführung	152
Laufwerksrahmen	151
Leitrad	146
Motorhaube und Armaturenbrett	142
Motorverkleidung	138
Panzerwanne	134
Quertraverse	130
Rahmen und Gehäuse	128
Schutzbleche	139
Schutzblechträger	140
Schutzblechträger-Umbausatz — ohne Überrollschutz	130
Stützrollen	150
Tankverkleidung	136
Überroll-Schutzdachauflager	131
Verkleidung des Kettenspanners	145
Zughaken, starr	133

Hydraulikanlage (Seite 157)

Hydrauliksteuerung — Teilliste	157
Hydrauliktankkappe	164
Hydraulikzylinder	181
Neigezylinder — Teilliste	180

Anbaugeräte (Seite 186)

Planiereinrichtung — Teilliste	186
Rollenführung	198
Rollenturm	211
Seilwinde	200
Seilwinde — Teilliste	191
Seilwinden-Umbausatz	196
Zylinderstrebe	190

Fahrerhaus, Anzeigen und Zubehör (Seite 212)

Bezeichnung	Seite
Bostrom-Fahrersitz	242
Fahrerhaus-Anbausatz	222
Fahrerhausbelüftung	224
Fahrerhausheizung	254
Fahrerhauszubehör	217
Fahrersitz, gefedert	239
Fahrersitz und Unterbau	236
Hupe, elektr.	257
Klimaanlage	252
Kompressorverdrahtung	244
Kühlkompressor – Teilliste	243
Luftfilter-Wartungsanzeige	258
Motoranzeige	259
Schutzabdecke	260
Schutzbügel	235
Schutzgitter	233
Sicherungshalter, Sicherung und Verdrahtung	258
Überrollschutz	213
Überroll-Schutzkabine	212
Umbausatz – ohne Überrollschutz	215
Vollklimaanlage	242

Wartungsmesser und Zubehör (Seite 261)

Abziehbilder und Aufkleber	264
Dichtungssätze	263
Feuerlöscher	261
Technische Daten	270
Werkzeuge	262

		CONSISTS OF:	PAGE
CENTRAL STRUCTURE			
1	7N8016	CYLINDER BLOCK GROUP	6
1	7N9779	CYLINDER BLOCK COVER GROUP	8
1	6N8079	CRANKSHAFT GROUP	9
1	2P6226	CRANKSHAFT SEAL GROUP	10
6	8N2531	CONNECTING ROD AND PISTON GROUP	11
	- OR -		
6	1W6588	CONNECTING ROD AND PISTON GROUP	11B
1	2P6202	CAMSHAFT GROUP	11
UPPER STRUCTURE			
1	7N8876	CYLINDER HEAD GROUP	12
1	2P6531	CYLINDER HEAD COVER GROUP	13
1	7N9536	CYLINDER HEAD FASTENER GROUP	13
1	7N8026	VALVE MECHANISM GROUP	14
1	8N4745	VALVE MECHANISM COVER GROUP	14
1	7N7858	ENGINE LIFTING GROUP	15
	- OR -		
1	1W5566	ENGINE LIFTING GROUP	15B
FRONT STRUCTURE			
1	2P9641	FRONT HOUSING GROUP	19
1	4N5162	FRONT HOUSING COVER GROUP	20
1	2P6498	FRONT HOUSING FASTENER GROUP	20
1	2P9642	FRONT TIMING GEAR GROUP	18
1	7N9589	TRUNNION GROUP	17
1	7N2887	CRANKSHAFT PULLEY GROUP	17
1	1W2457	ENGINE SUPPORT GROUP	21
1	2P7838	DAMPER GROUP	15
REAR STRUCTURE			
1	6N2514	FLYWHEEL HOUSING GROUP	23
1	7S7874	FLYWHEEL GROUP	22
1	2P8161	REAR GEAR GROUP--ACCESSORY DRIVE	24
LOWER STRUCTURE			
1	2P6152	OIL PAN GROUP	25
1	2P6206	OIL PAN FASTENER GROUP	25

7N1398 ENGINE ARRANGEMENT—Part 1
3306 Engine Serial No. 8Z1827—Up. NOTE: WHEN ORDERING PARTS GIVE ARRANGEMENT NUMBER AND SERIAL NUMBER

		CONSISTS OF:	PAGE
LUBRICATION SYSTEM			
1	2P6493	OIL LEVEL GAUGE GROUP	26
1	2P1784	ENGINE OIL PUMP GROUP	28
1	2P6105	ENGINE OIL LINES GROUP	30
1	2P6475	OIL FILTER GROUP	28
1	4N5139	OIL FILLER GROUP	27
1	1P4244	BREATHER GROUP	31
COOLING SYSTEM			
1	7N5909	WATER PUMP GROUP	35
1	7N7211	WATER LINES GROUP	36
1	2P6215	ENGINE OIL COOLER GROUP	37
1	7N3520	TRANSMISSION OIL COOLER GROUP	38
INTAKE AND EXHAUST SYSTEM			
1	8N2669	TURBOCHARGER GROUP	44
1	6N25	TURBOCHARGER OIL LINES GROUP	43
1	7N3884	AIR LINES GROUP	44
1	6N164	EXHAUST MANIFOLD GROUP	46
1	4N9586	EXHAUST MANIFOLD FASTENER GROUP	46
FUEL SYSTEM AND GOVERNOR			
1	1P2299	FUEL FILTER ASSEMBLY	61
1	4N4314	FUEL PRIMING PUMP GROUP	60
1	1N4807	GOVERNOR AND FUEL INJECTION PUMP GROUP	47
1	7N1646	FUEL INJECTION LINES GROUP	59
1	4N4510	GOVERNOR COVER GROUP	55
1	7N3616	DRAIN LINES GROUP	60

NOTE: REFER TO INDEX FOR PAGE LOCATION OF GASKET KITS

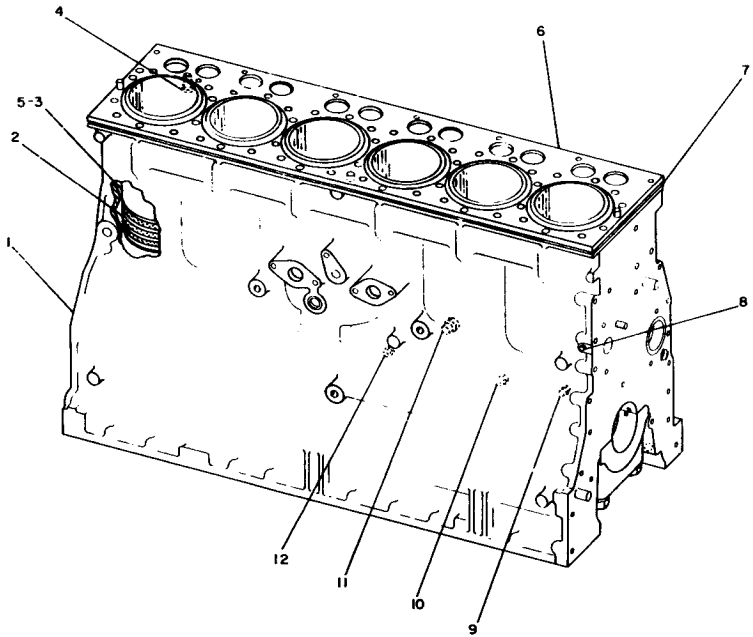

REF NO	PART NUMBER	DESCRIPTION	QTY
1	6N8124	BLOCK ASSEM. (Separate Illustration)	1
2	5S6670	SEAL	18
3	2P8889	LINER	6
4	3S5496	SEAL	1
5	9L5854	BAND	6
6	7N7998	PLATE	1
7	7N7997	GASKET	1
8	5M6214	PLUG	1
9	7H3171	PLUG	1
10	5M6213	PLUG	4
11	8M9307	PLUG	1
	6F7062	GASKET	1
12	3J5389	PLUG	2

222405

7N8016 CYLINDER BLOCK GROUP
Engine Serial No. 8Z1827 to 8Z2961 inclusive
6N8124 Block parts are shown on Page 7

7N8016 CYLINDER BLOCK GROUP
Engine Serial No. 8Z2962—Up
7N6550 Block parts are shown on Page 6B

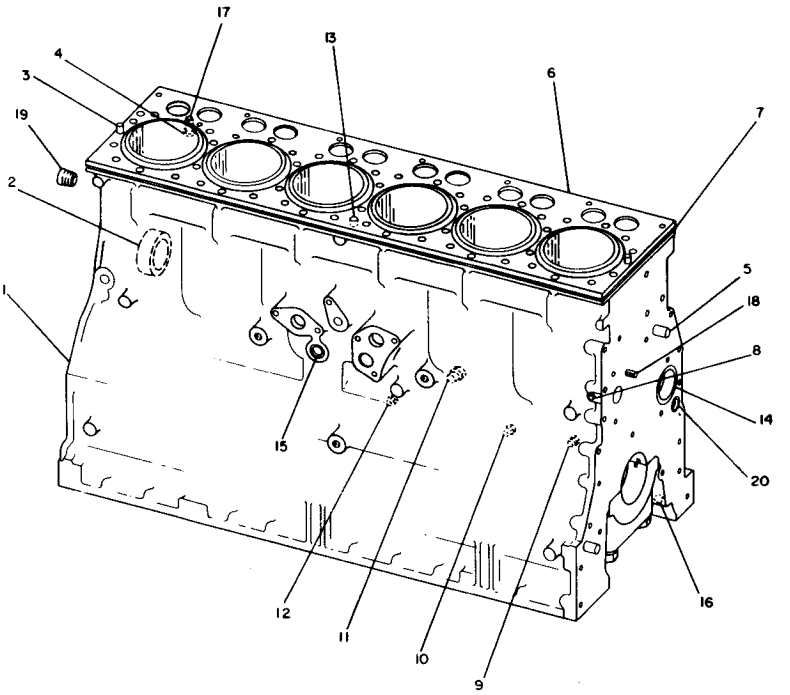

REF. NO.	PART NUMBER	DESCRIPTION	QTY.
1	7N6550	BLOCK ASSEM. (Separate Illustration)	1
2	7M4046	BEARING	4
3	8K1207	DOWEL	2
4	3S5496	SEAL	1
5	8B6349	DOWEL	2
6	7N7998	PLATE	1
7	7N7997	GASKET	1
8	5M6214	PLUG	1
9	7H3171	PLUG	1
10	5M6213	PLUG	4
11	8M9307	PLUG	1
	6F7062	WASHER	1
12	3J5389	PLUG	2
13	5B7652	DOWEL	2
14	8N4110	BEARING	1
15	4B5387	PLUG	2
16	4B9782	BALL	1
17	1S9540	DOWEL	1
18	5S8462	STUD	1
C 19	3J6019	PLUG	1
C 20	4B3938	PLUG	1

C INDICATES CHANGE

301741

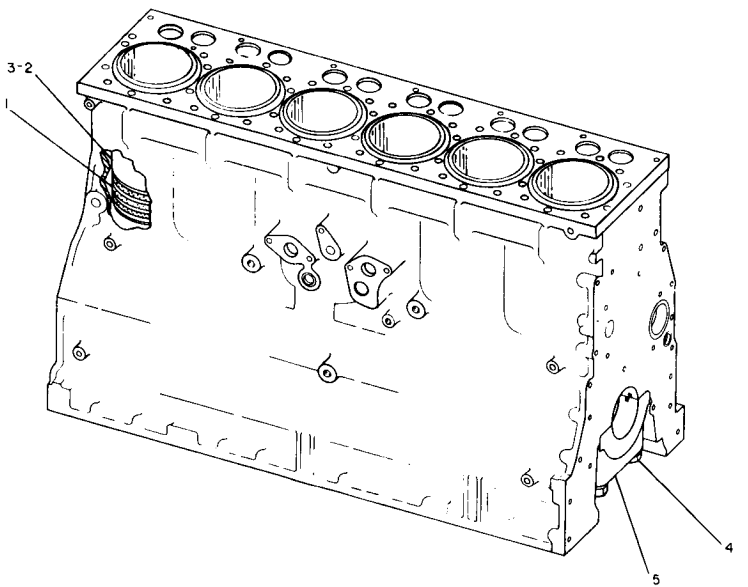

REF. NO.	PART NUMBER	DESCRIPTION	QTY.
1	5S6670	SEAL	18
2	2P8889	LINER	6
3	9L5854	BAND	6
4	7S3224	BOLT	14
	2S5658	WASHER	14
5	6N8003	CAP	7

231970

7N6550 CYLINDER BLOCK ASSEMBLY
Engine Serial No. 8Z2962—Up
Part of 7N8016 Cylinder Block Group shown on Page 6A. For Field Replacement order 1N3576 shown on Page 6C

1N3576 CYLINDER BLOCK GROUP
Engine Serial No. 8Z2962—Up
Provides Field Replacement for 7N6550 shown on Page 6B

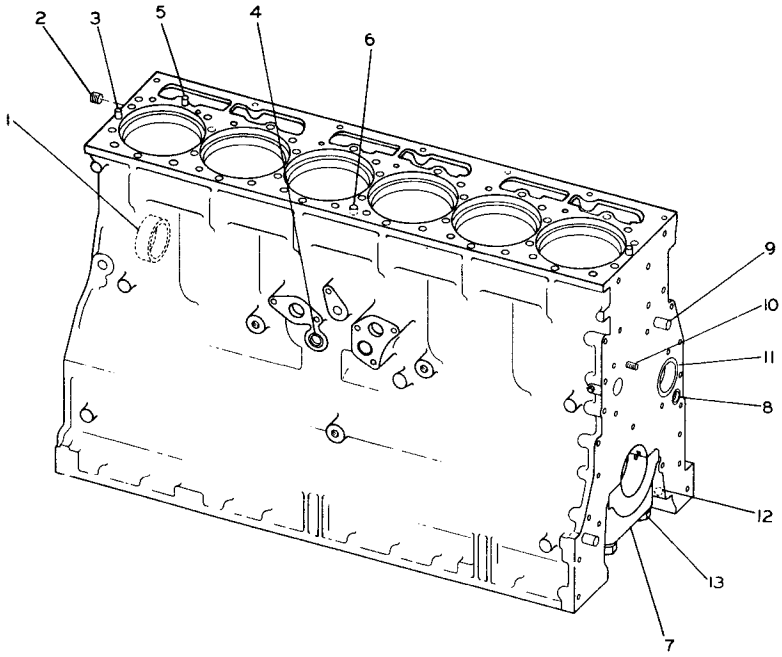

REF. NO.	PART NUMBER	DESCRIPTION	QTY
1	7M4046	BEARING	4
2	2B858	PLUG	1
3	8K1207	DOWEL	2
4	4B5387	PLUG	1
5	1S9540	DOWEL	1
6	5B7652	DOWEL	2
7	6N8003	BEARING CAP	7
8	4B3938	PLUG	1
9	8B6349	DOWEL	2
10	5S8462	STUD	1
11	8N4110	BEARING	1
12	4B9782	BALL	1
13	7S3224	BOLT	14
	2S5658	WASHER	14

231968

6N8124 CYLINDER BLOCK ASSEMBLY

Part of 7N8016 Cylinder Block Group shown on Page 6

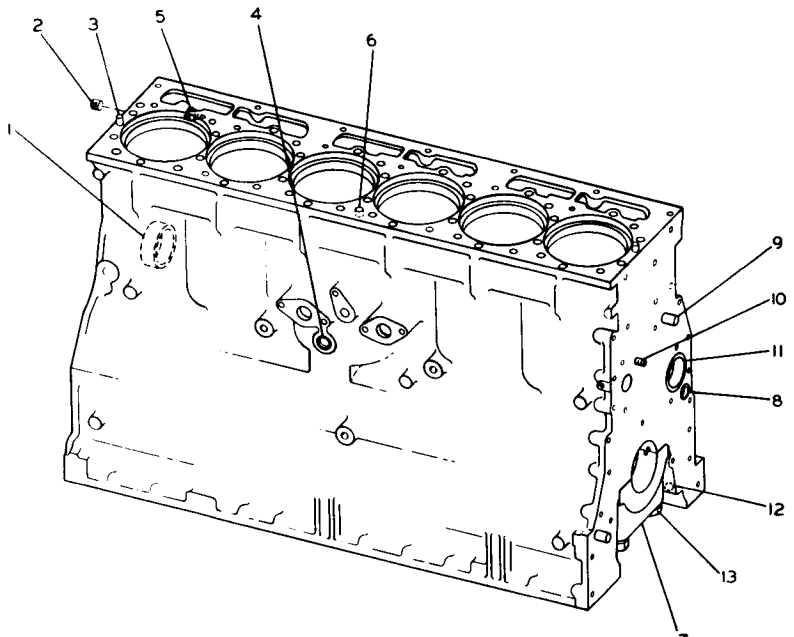

REF NO	PART NUMBER	DESCRIPTION	QTY
1	7M4046	BEARING	4
2	2B858	PLUG	1
3	8K1207	DOWEL	2
4	4B5387	PLUG	1
5	1S9540	DOWEL	1
6	5B7652	DOWEL	2
7	6N8003	BEARING CAP	7
8	4B3938	PLUG	1
9	8B6349	DOWEL	2
10	5S8462	STUD	1
C 11	8N4110	BEARING	1
12	4B9782	BALL	1
13	7S3224	BOLT	14
	2S5658	WASHER	14
		THE FOLLOWING REPAIR KIT IS AVAILABLE:	
	6N7727	KIT---(cylinder block) (Includes Orifice, Plugs, Dowels, Sleeve and Bolts)	1
	SMHS6809	FORM (Installing Cylinder Block Service Group)	1

C INDICATES CHANGE

226957

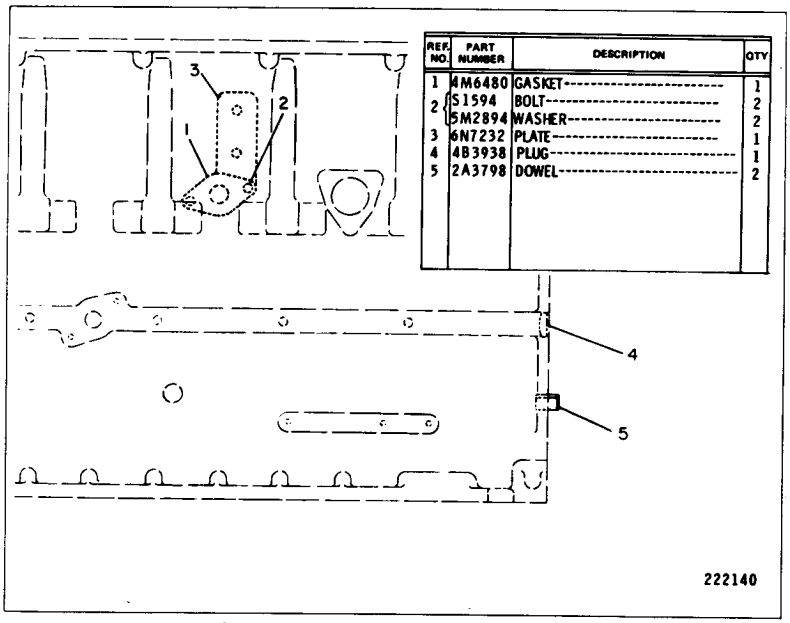

REF. NO.	PART NUMBER	DESCRIPTION	QTY
1	4M6480	GASKET	1
2	1S1594	BOLT	2
	5M2894	WASHER	2
3	6N7232	PLATE	1
4	4B3938	PLUG	1
5	2A3798	DOWEL	2

7N9779 CYLINDER BLOCK COVER GROUP

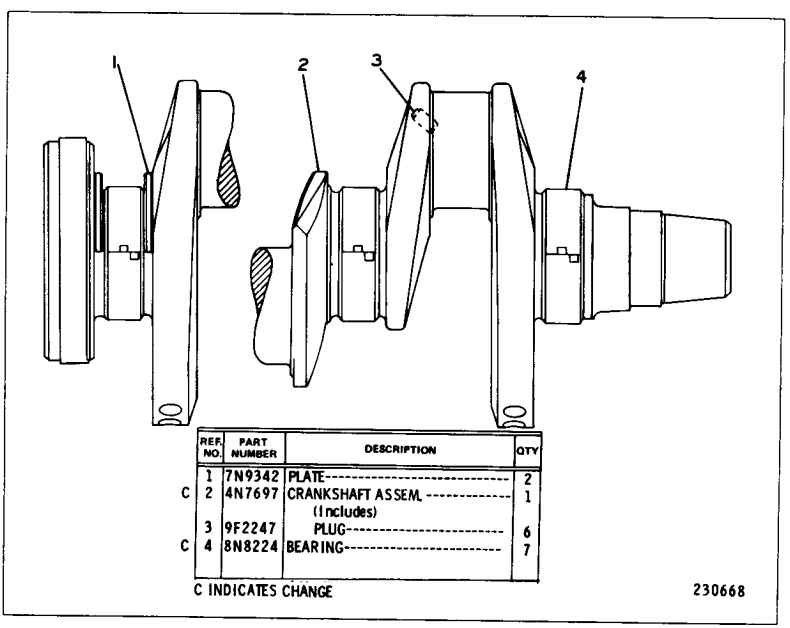

	REF. NO.	PART NUMBER	DESCRIPTION	QTY
	1	7N9342	PLATE	2
C	2	4N7697	CRANKSHAFT ASSEM. (Includes)	1
	3	9F2247	PLUG	6
C	4	8N8224	BEARING	7

C INDICATES CHANGE

6N8079 CRANKSHAFT GROUP

4N7697 Crankshaft Assembly is replaced by 4N7693 shown on Page 9

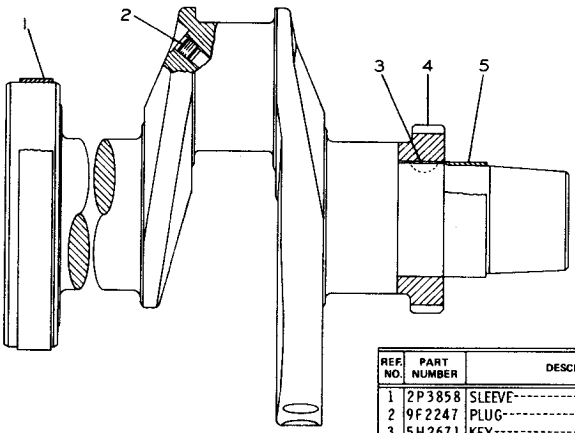

	REF. NO.	PART NUMBER	DESCRIPTION	QTY
	1	2P3858	SLEEVE	1
	2	9F2247	PLUG	6
	3	5H2671	KEY	1
C	4	7N4525	GEAR---(40 teeth)	1
	5	2P3859	SLEEVE	1
		GMG02327	FORM (Installing Crankshaft)	1

C INDICATES CHANGE 229687

4N7693 CRANKSHAFT ASSEMBLY — Field Replacement

1	7N9343	THRUST PLATE
1	.....	FORM SMHS7060

CRANKSHAFT SERVICE THRUST PLATE — Field Installation
Provides a Thrust Plate to be used in the event a "Wide" Thrust Journal Crankshaft is installed in a Spacer Plate Cylinder

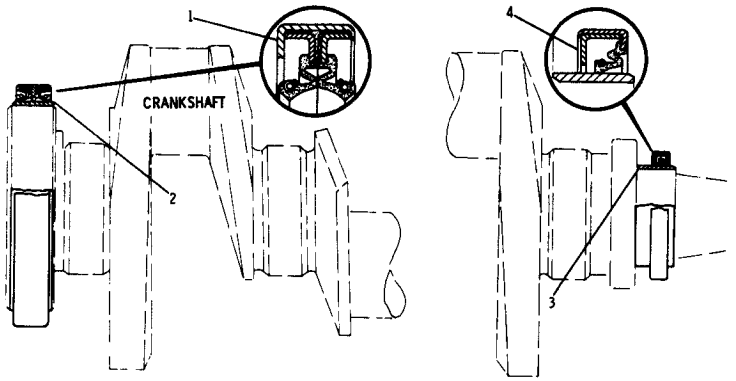

	REF. NO.	PART NUMBER	DESCRIPTION	QTY
C	1	6N8853	SEAL	1
	2	2P3858	SLEEVE	1
	3	2P3859	SLEEVE	1
	4	5S6296	SEAL	1

C INDICATES CHANGE 210718

2P6226 CRANKSHAFT SEAL GROUP

CYLINDER BLOCK NOT REBORED			
CRANKSHAFT GROUND FOR UNDERSIZE BEARING I.D. OF	.25 MM	.51 MM	.76 MM
MAIN QTY. 7	8N8225	8N8226	8N8227
CYLINDER BLOCK REBORED (.51 MM) (BEARING OVERSIZE O.D.)			
CRANKSHAFT GROUND FOR UNDERSIZE BEARING I.D. OF	0 (STANDARD)	.25 MM	
MAIN QTY. 7	8N8228	8N8229	

O.D.--OUTSIDE DIAMETER
I.D.--INSIDE DIAMETER

CRANKSHAFT BEARING REPLACEMENTS

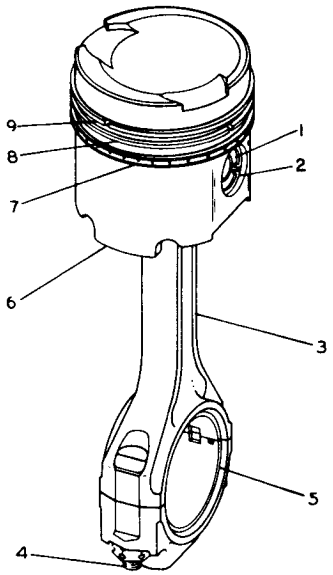

REF NO	PART NUMBER	DESCRIPTION	QTY
1	7N9805	PIN	1
2	1S9543	RETAINER	2
3	8N1721	ROD ASSEM. (Includes)	1
	8N1849	BEARING	1
4	1P9956	BOLT	2
	5S6348	NUT	2
5	4N6258	BEARING (Standard)	1
	2S502	BEARING, .254mm(.01 in.)undersize	1
	2S503	BEARING, .508mm(.02 in.)undersize	1
	7M7826	BEARING, .762mm(.03 in.)undersize	1
6	8N2533	PISTON GROUP (Includes)	1
7	9L6934	RING (Oil)	1
8	9L6933	RING (Intermediate)	1
9	9L6932	RING (Top)	1
	9L6935	RING GROUP (Consists of Complete Set of Rings For One Piston)	1

225437

8N2531 CONNECTING ROD AND PISTON GROUP—6 Required
Engine Serial No. 8Z1827 to 8Z7680 inclusive

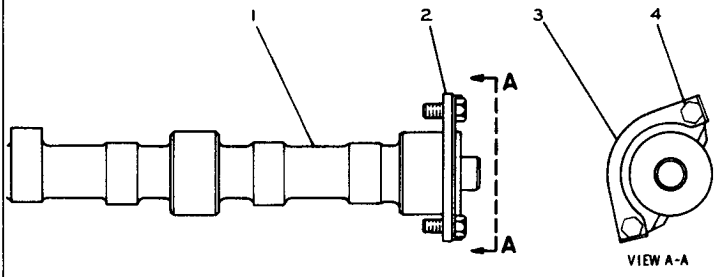

	REF. NO.	PART NUMBER	DESCRIPTION	QTY
C	1	8N3981	CAMSHAFT	1
	2	7S2204	WASHER	1
	3	8S1491	LOCK	1
	4	5509	BOLT	2

C INDICATES CHANGE

226144

2P6202 CAMSHAFT GROUP

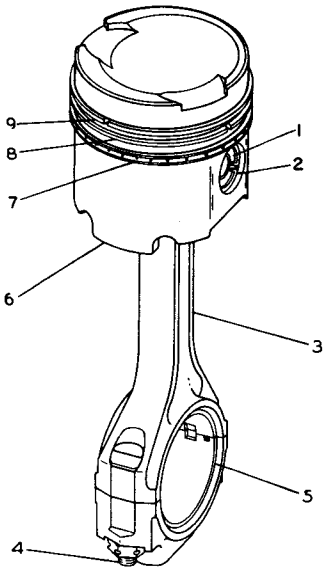

REF. NO.	PART NUMBER	DESCRIPTION	QTY.
1	7N9805	PIN	1
2	1S9543	RETAINER	2
3	8N1721	ROD ASSEM. (Includes)	1
	8N1849	BEARING	1
4	1P9956	BOLT	2
	5S6348	NUT	2
5	8N8219	BEARING (Standard)	1
	2S502	BEARING (.01 in.)undersize	1
	2S503	BEARING (.02 in.)undersize	1
	7M7826	BEARING (.03 in.)undersize	1
6	1W6757	BODY ASSEM.	1
7	9L6934	RING (oil)	1
8	5S6750	RING (intermediate)	1
9	9S3029	RING (top)	1

234318

1W6588 CONNECTING ROD AND PISTON GROUP—6 Required
Engine Serial No. 8Z7681—Up

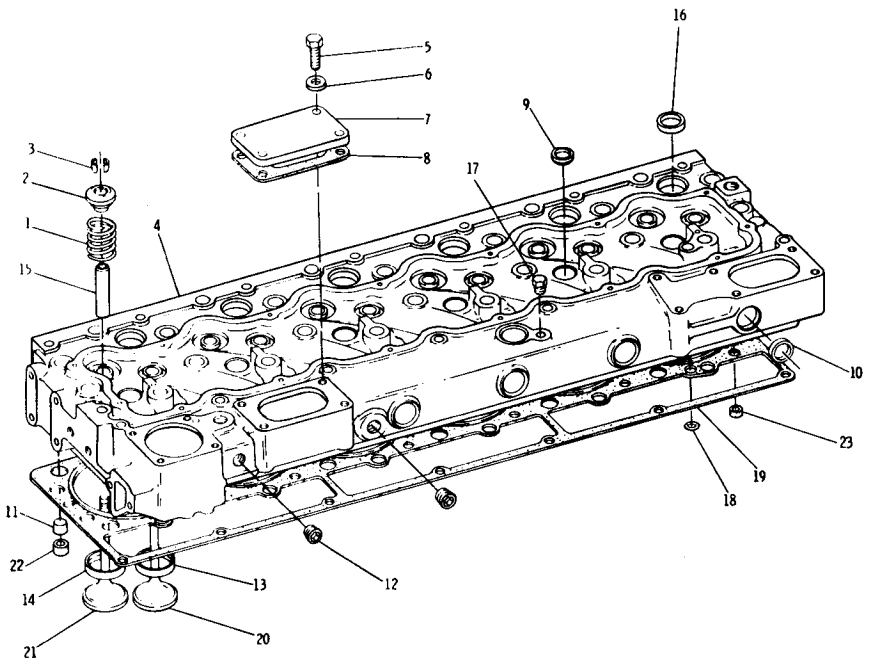

NOTE	REF NO	PART NUMBER	QTY	DESCRIPTION
	1	7S7144	12	SPRING
C	2	1W5300	12	ROTOCOIL AS.
				(EACH INCLUDES)
		8N7782	1	ROTOCOIL AS
		6N7174	1	SHIELD
	3	2A4429	24	LOCK
	4	8N6796	1	HEAD AS.
	5	0S1594	4	BOLT
	6	5M2894	4	WASHER
	7	1P6367	1	COVER
	8	5S6735	1	GASKET
	9	3B0623	6	PLUG
	10	3S8313	7	PLUG
	11	1S3062	18	DIRECTOR
	12	2B0858	3	PLUG
	13	7N4448	6	INSERT (INTAKE)
	14	8N0435	6	INSERT (EXHAUST)
	15	2P1262	12	GUIDE
	16	3P1896	12	PLUG
	17	7H3171	1	PLUG
	18	3S5496	1	SEAL
	19	7N7999	1	GASKET
	20	6N9915	6	VALVE (INTAKE)
	21	6N9916	6	VALVE (EXHAUST)
C	22	4W8087	18	SEAL
	23	7N8018	6	SEAL

C INDICATES CHANGE

322590

7N8876 CYLINDER HEAD GROUP

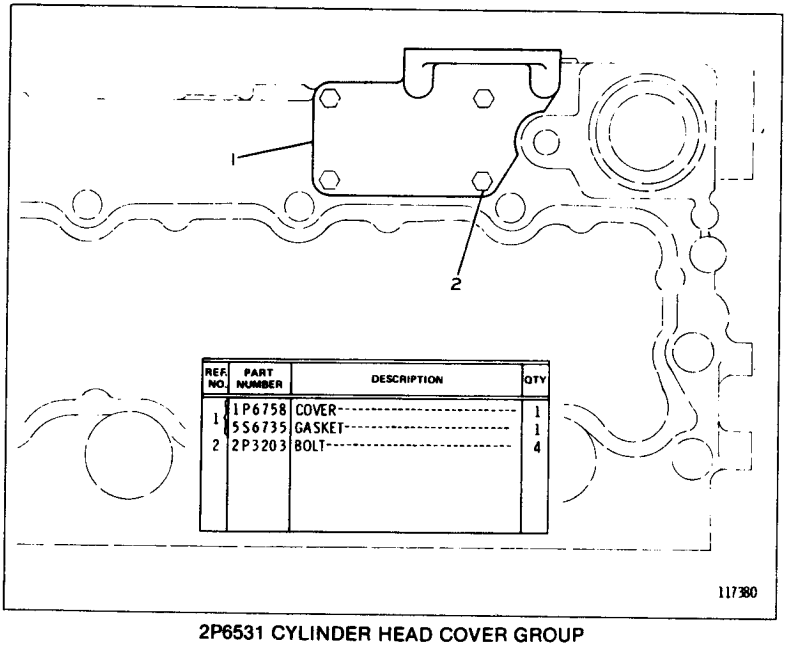

REF. NO.	PART NUMBER	DESCRIPTION	QTY.
1	1P6758	COVER	1
	5S6735	GASKET	1
2	2P3203	BOLT	4

2P6531 CYLINDER HEAD COVER GROUP

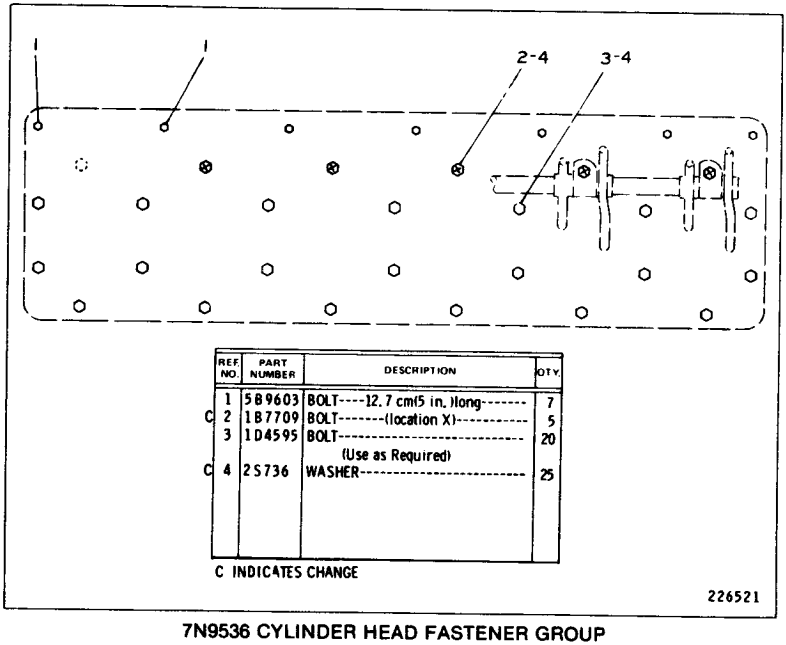

REF. NO.	PART NUMBER	DESCRIPTION	QTY.
1	5B9603	BOLT----12.7 cm(5 in.)long	7
C 2	1B7709	BOLT-------(location X)	5
3	1D4595	BOLT	20
		(Use as Required)	
C 4	2S736	WASHER	25

C INDICATES CHANGE

7N9536 CYLINDER HEAD FASTENER GROUP

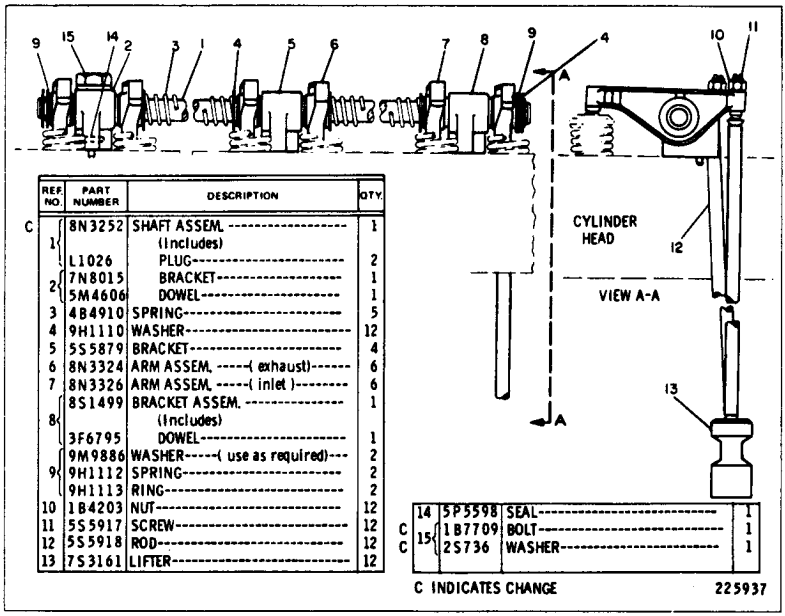

	REF. NO.	PART NUMBER	DESCRIPTION	QTY.
C	1	8N3252	SHAFT ASSEM. (Includes)	1
		L1026	PLUG	2
	2	7N8015	BRACKET	1
		5M4606	DOWEL	1
	3	4B4910	SPRING	5
	4	9H1110	WASHER	12
	5	5S5879	BRACKET	4
	6	8N3324	ARM ASSEM. -----(exhaust)------	6
	7	8N3326	ARM ASSEM. -----(inlet)--------	6
	8	8S1499	BRACKET ASSEM. (Includes)	1
		3F6795	DOWEL	1
	9	9M9886	WASHER-----(use as required)---	2
		9H1112	SPRING	2
		9H1113	RING	2
	10	1B4203	NUT	12
	11	5S5917	SCREW	12
	12	5S5918	ROD	12
	13	7S3161	LIFTER	12
	14	5P5598	SEAL	1
C	15	1B7709	BOLT	1
C		2S736	WASHER	1

C INDICATES CHANGE 225937

7N8026 VALVE MECHANISM GROUP

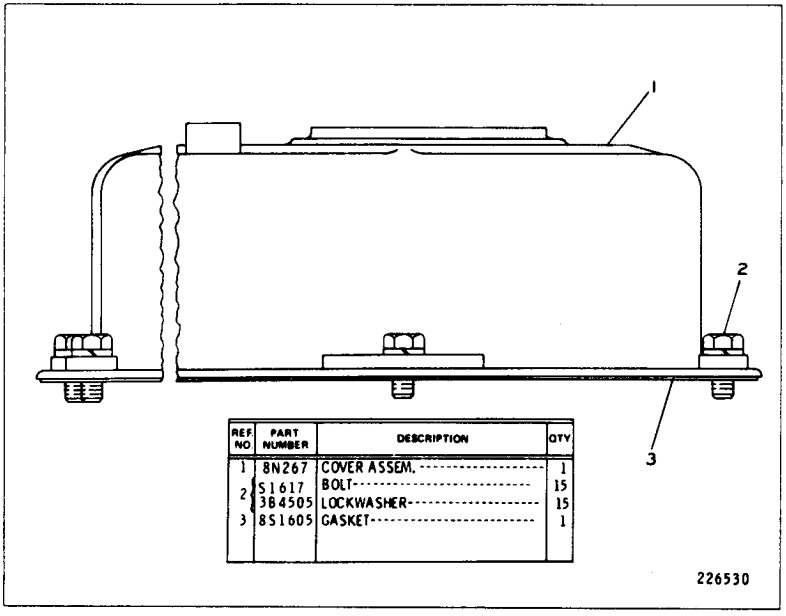

REF. NO	PART NUMBER	DESCRIPTION	QTY
1	8N267	COVER ASSEM.	1
2	S1617	BOLT	15
	3B4505	LOCKWASHER	15
3	8S1605	GASKET	1

226530

8N4745 VALVE MECHANISM COVER GROUP

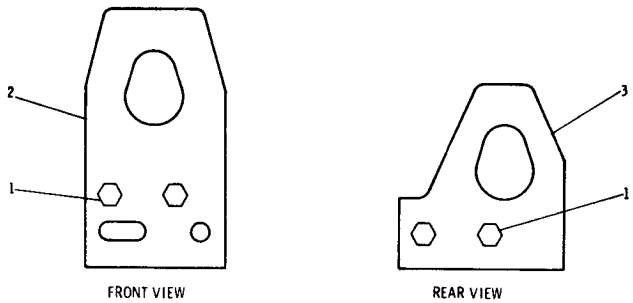

	REF. NO.	PART NUMBER	DESCRIPTION	QTY
C	1	4B3823	BOLT	4
		5P8245	WASHER	4
	2	6N7650	PLATE	1
	3	7N7859	PLATE	1

C INDICATES CHANGE

181881

7N7858 ENGINE LIFTING GROUP
Engine Serial No. 8Z1827 to 8Z3013 inclusive

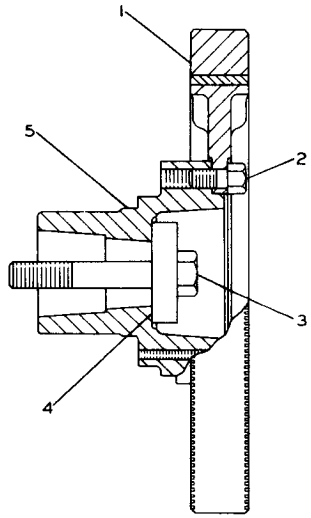

	REF. NO.	PART NUMBER	DESCRIPTION	QTY
C	1	7N9312	DAMPER ASSEM.	1
	2	S1595	BOLT	6
	3	7B5163	BOLT	1
C	4	8N794	WASHER	1
	5	2P1818	HUB	1

C INDICATES CHANGE

229683

2P7838 DAMPER GROUP

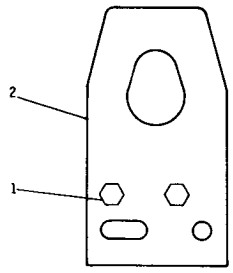

FRONT VIEW

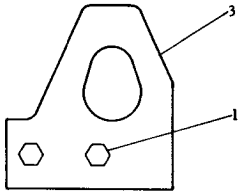

REAR VIEW

REF. NO.	PART NUMBER	DESCRIPTION	QTY
1	4B3823	BOLT	4
	5P8245	WASHER	4
2	6N7650	PLATE	1
3	7N7859	PLATE	1

179368

1W5566 LIFTING GROUP
Engine Serial No. 8Z3014 to 8Z4065 inclusive

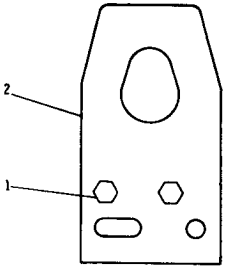

FRONT VIEW

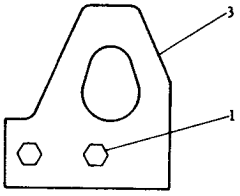

REAR VIEW

	REF. NO.	PART NUMBER	DESCRIPTION	QTY
C	1	6V1999	BOLT	4
C		8D5054	WASHER	4
C	2	8N8721	PLATE	1
C	3	8N8722	PLATE	1

C INDICATES CHANGE

181882

7N7858 ENGINE LIFTING GROUP
Engine Serial No. 8Z4066—Up

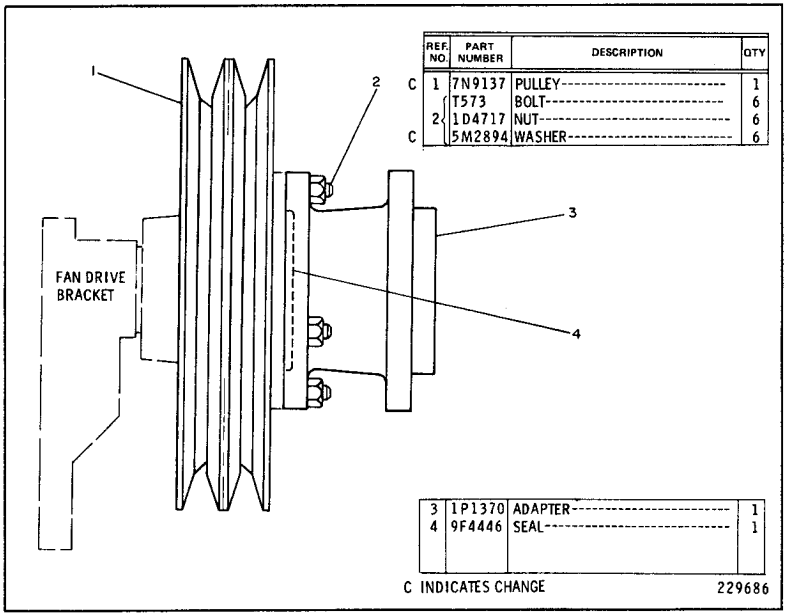

REF. NO.	PART NUMBER	DESCRIPTION	QTY
C 1	7N9137	PULLEY	1
	T573	BOLT	6
2	1D4717	NUT	6
C	5M2894	WASHER	6
3	1P1370	ADAPTER	1
4	9F4446	SEAL	1

C INDICATES CHANGE 229686

7N4102 FAN PULLEY GROUP
7M4707 Vee Belt Set, Consisting of 2 Belts, is used

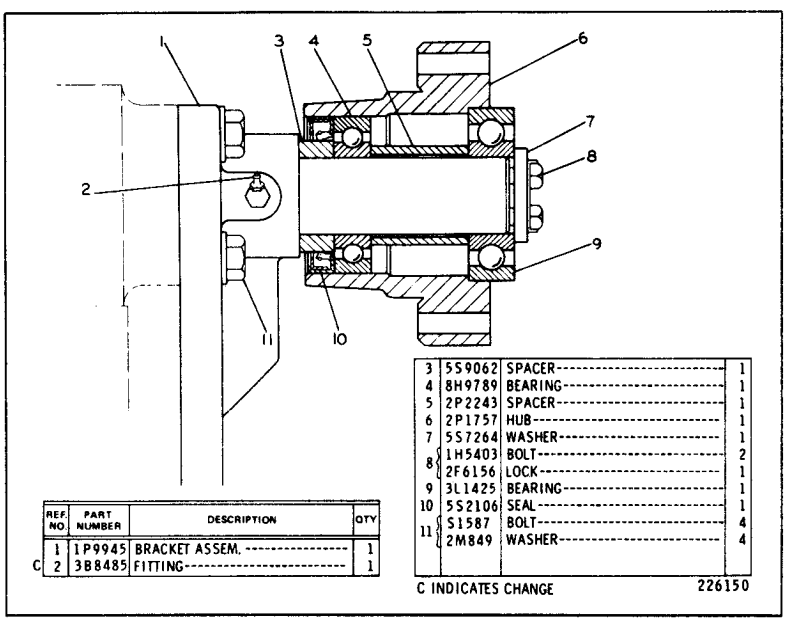

REF. NO.	PART NUMBER	DESCRIPTION	QTY
1	1P9945	BRACKET ASSEM.	1
C 2	3B8485	FITTING	1
3	5S9062	SPACER	1
4	8H9789	BEARING	1
5	2P2243	SPACER	1
6	2P1757	HUB	1
7	5S7264	WASHER	1
8	1H5403	BOLT	2
	2F6156	LOCK	1
9	3L1425	BEARING	1
10	5S2106	SEAL	1
11	S1587	BOLT	4
	2M849	WASHER	4

C INDICATES CHANGE 226150

2P7831 FAN DRIVE GROUP
Serial No. 6X1115 to 6X1179 inclusive

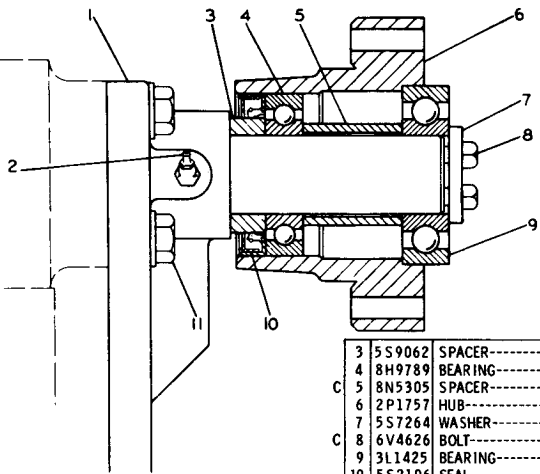

REF. NO.	PART NUMBER	DESCRIPTION	QTY
1	1P9945	BRACKET ASSEM.	1
2	3B8485	FITTING	1

	3	5S9062	SPACER	1
	4	8H9789	BEARING	1
C	5	8N5305	SPACER	1
	6	2P1757	HUB	1
	7	5S7264	WASHER	1
C	8	6V4626	BOLT	2
	9	3L1425	BEARING	1
	10	5S2106	SEAL	1
	11	S1587	BOLT	4
		2M849	WASHER	4

C INDICATES CHANGE 234092

2P7831 FAN DRIVE GROUP
Serial No. 6X1180—Up

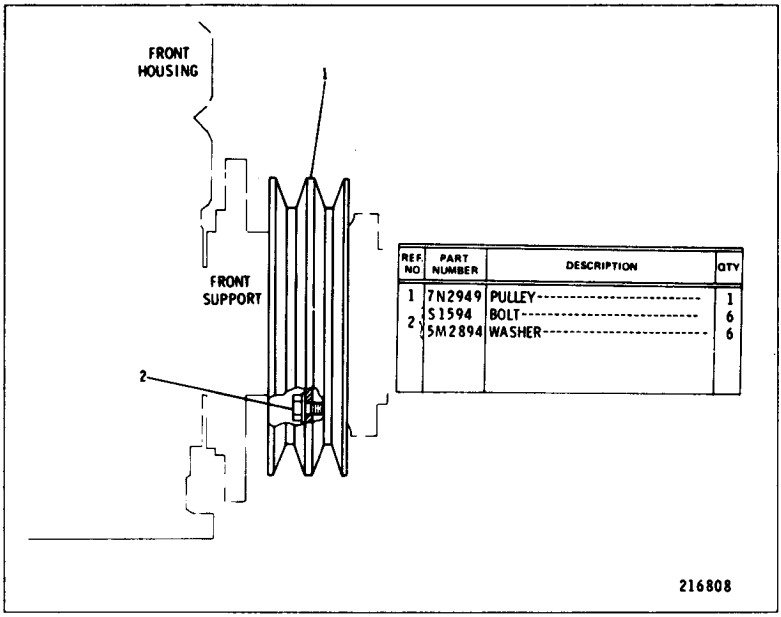

REF. NO.	PART NUMBER	DESCRIPTION	QTY
1	7N2949	PULLEY	1
2	S1594	BOLT	6
	5M2894	WASHER	6

7N2887 CRANKSHAFT PULLEY GROUP
Note: 7M4707 Vee Belt Set, includes 2 belts, is used

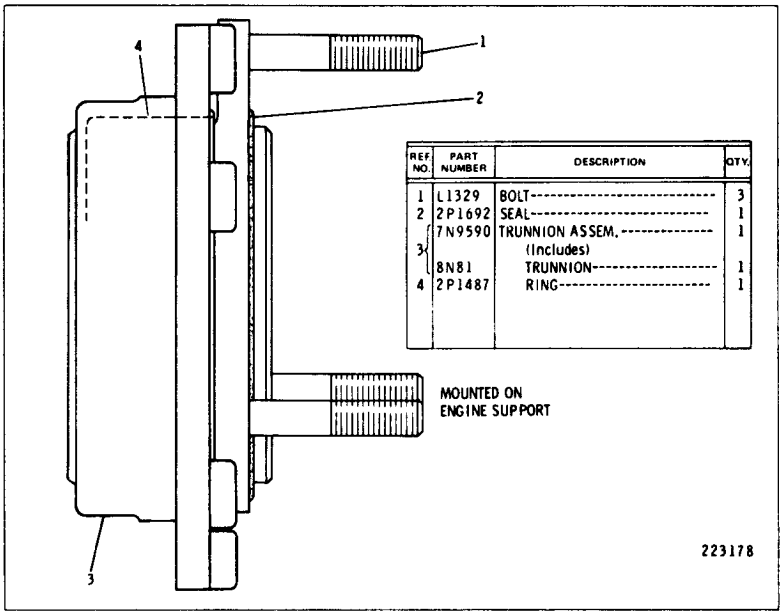

REF. NO.	PART NUMBER	DESCRIPTION	QTY.
1	L1329	BOLT	3
2	2P1692	SEAL	1
3	7N9590	TRUNNION ASSEM.	1
		(Includes)	
	8N81	TRUNNION	1
4	2P1487	RING	1

7N9589 TRUNNION GROUP

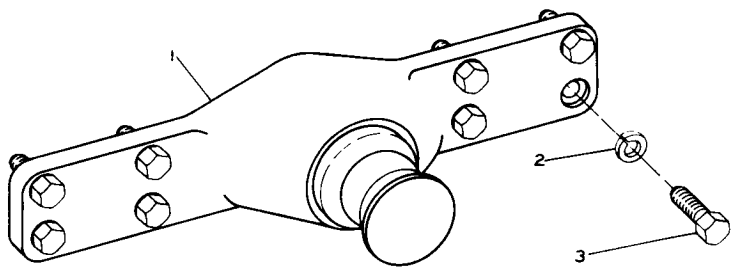

REF. NO.	PART NUMBER	DESCRIPTION	QTY
1	5A8065	TRUNNION ASSEM.	2
2	3B4516	LOCKWASHER	16
3	1D4635	BOLT	16

115558

5S8064 TRUNNION GROUP
AN ATTACHMENT

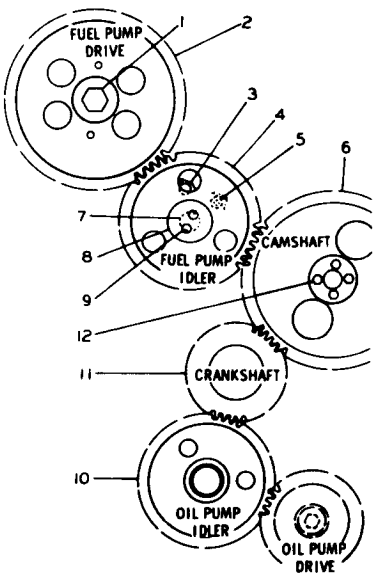

	REF. NO.	PART NUMBER	DESCRIPTION	QTY.
	1	S1603	BOLT	1
		4N3371	WASHER	1
C	2	7N3536	GEAR-(80 teeth)	1
	3	L1351	BOLT	2
C	4	7N4791	GEAR ASSEM. -(57 teeth) (Includes)	1
		5S7630	BEARING	1
	5	5B9079	NUT	1
		5S7611	LOCK	1
C	6	7N3515	GEAR-(80 teeth)	1
C	7	8N4959	SHAFT	1
C	8	8N4960	PLATE	1
C	9	S1618	BOLT	2
C	10	7N4716	GEAR-(60 teeth)	1
		2P1168	BEARING	1
C	11	7N4525	GEAR-(40 teeth)	1
		5H2671	KEY	1
	12	S1748	BOLT	4

C INDICATES CHANGE

226714

2P9642 FRONT GEAR GROUP—Timing
Engine Serial No. 8Z1827 to 8Z10008 inclusive

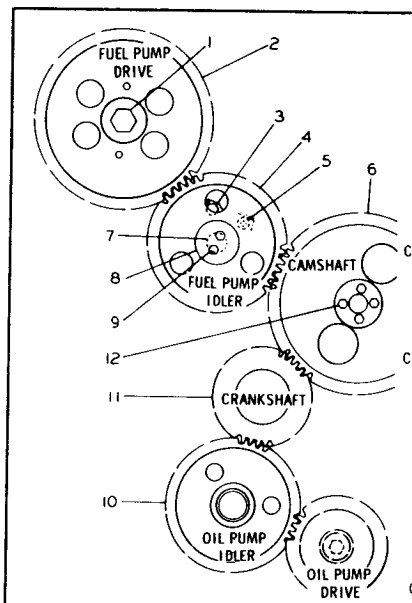

REF. NO.	PART NUMBER	DESCRIPTION	QTY.
1	S1603	BOLT	1
	4N3371	WASHER	1
2	7N3536	GEAR-------(80 teeth)----------	1
3	L1351	BOLT	2
4	7N4791	GEAR ASSEM. -----(57 teeth)----- (Includes)	1
	5S7630	BEARING	1
5	5B9079	NUT	1
	5S7611	LOCK	1
6	1W4402	GEAR---------(80 teeth)----------	1
7	8N4959	SHAFT	1
8	8N4960	PLATE	1
9	S1618	BOLT	2
10	7N4716	GEAR----------(60 teeth)-------	1
	2P1168	BEARING	1
11	1W4405	GEAR----------(40 teeth)--------	1
	5H2671	KEY	1
12	S1748	BOLT	4

C INDICATES CHANGE

300757

2P9642 FRONT GEAR GROUP—Timing
Engine Serial No. 8Z10009—Up

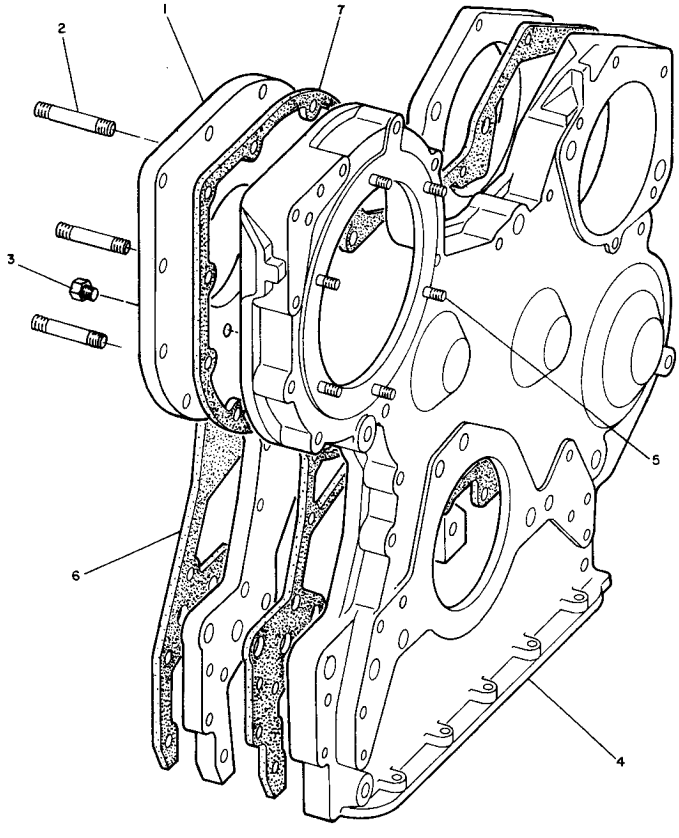

	REF. NO.	PART NUMBER	DESCRIPTION	QTY.
	1	6N9060	PLATE ASSEM.	1
C		1W7110	PLATE	1
	2	4M8743	STUD	3
C	3	5M6214	PLUG	1
	4	8N109	HOUSING ASSEM.	1
	5	2S42	STUD	6
	6	8N110	GASKET	1
C	7	1W3900	GASKET	1

C INDICATES CHANGE

304412

2P9641 FRONT HOUSING GROUP — Timing Gear

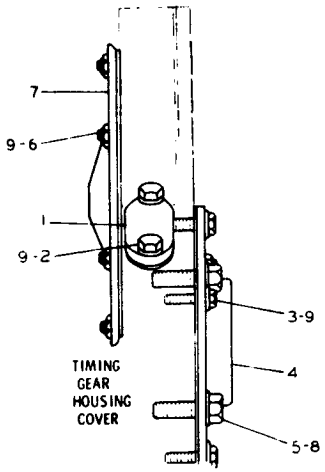

	REF NO	PART NUMBER	DESCRIPTION	QTY
	1	4N4526	COVER	1
		2P2720	GASKET	1
C	2	L1351	BOLT	2
C	3	3B1915	BOLT	3
	4	2P218	COVER	1
C		2P220	GASKET	1
	5	S1566	BOLT	4
C	6	1B4203	NUT	6
C	7	2P8701	COVER	1
C		6N7887	GASKET	1
C	8	5P8247	WASHER	2
C	9	5M2894	WASHER	11

C INDICATES CHANGE 222132

4N5162 FRONT HOUSING COVER GROUP

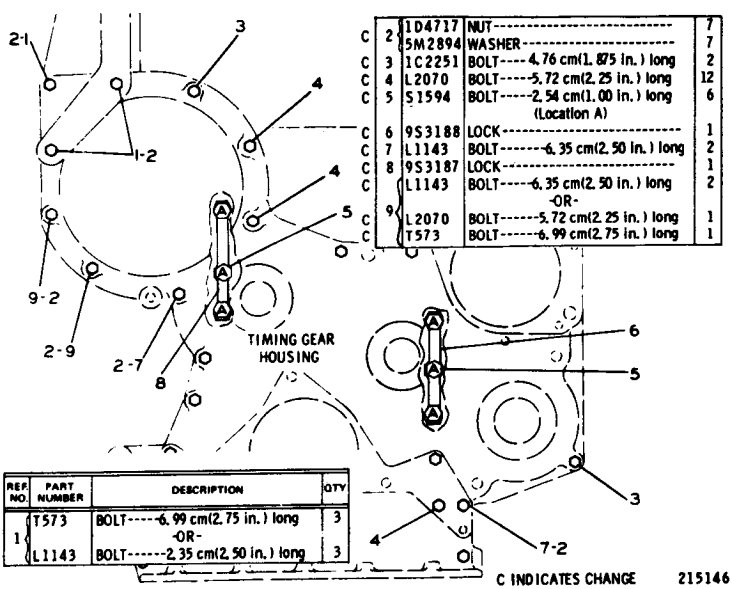

	REF NO	PART NUMBER	DESCRIPTION	QTY
C	1	T573	BOLT-----6.99 cm(2.75 in.) long	3
			-OR-	
		L1143	BOLT------2.35 cm(2.50 in.) long	3

	REF NO	PART NUMBER	DESCRIPTION	QTY
C	2	1D4717	NUT	7
		5M2894	WASHER	7
C	3	1C2251	BOLT----4.76 cm(1.875 in.) long	2
C	4	L2070	BOLT-----5.72 cm(2.25 in.) long	12
C	5	S1594	BOLT-----2.54 cm(1.00 in.) long (Location A)	6
C	6	9S3188	LOCK	1
C	7	L1143	BOLT------6.35 cm(2.50 in.) long	2
C	8	9S3187	LOCK	1
C	9	L1143	BOLT-----6.35 cm(2.50 in.) long	2
			-OR-	
C		L2070	BOLT------5.72 cm(2.25 in.) long	1
C		T573	BOLT------6.99 cm(2.75 in.) long	1

C INDICATES CHANGE 215146

2P6498 FRONT HOUSING FASTENER GROUP—Timing Gear
Engine Serial No. 8Z1827 to 8Z10008 inclusive

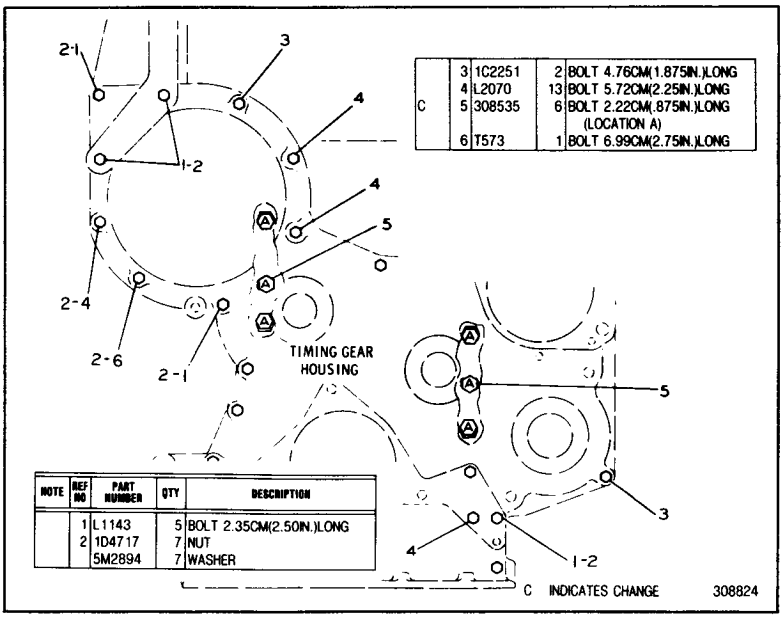

	3	1C2251	2	BOLT 4.76CM(1.875IN.)LONG
	4	L2070	13	BOLT 5.72CM(2.25IN.)LONG
C	5	308535	6	BOLT 2.22CM(.875IN.)LONG (LOCATION A)
	6	T573	1	BOLT 6.99CM(2.75IN.)LONG

NOTE	REF NO	PART NUMBER	QTY	DESCRIPTION
	1	L1143	5	BOLT 2.35CM(2.50IN.)LONG
	2	1D4717	7	NUT
		5M2894	7	WASHER

2P6498 FRONT HOUSING FASTENER GROUP—Timing Gear
Engine Serial No. 8Z10009—Up

CONSISTS OF:

2	2J3506	NUT--FRONT SUPPORT TO FRAME
8	1B2886	BOLT--CAP TO BASE TO FRAME
2	1D4614	BOLT--FRONT SUPPORT TO FRAME
8	8M4791	WASHER--BOLT TO CAP
1	1D4717	NUT--FRONT SUPPORT TO FRAME
8	6N1957	SHIM (.032)--FLYWHEEL HOUSING TO FRAME
8	6N1958	SHIM (.065)--FLYWHEEL HOUSING TO FRAME
8	6N1956	SHIM (.014)--FLYWHEEL HOUSING TO FRAME
4	5P8248	WASHER--FRONT SUPPORT TO FRAME
1	6N2004	SCREW--LOCATOR

1W2766 ENGINE MOUNTING GROUP

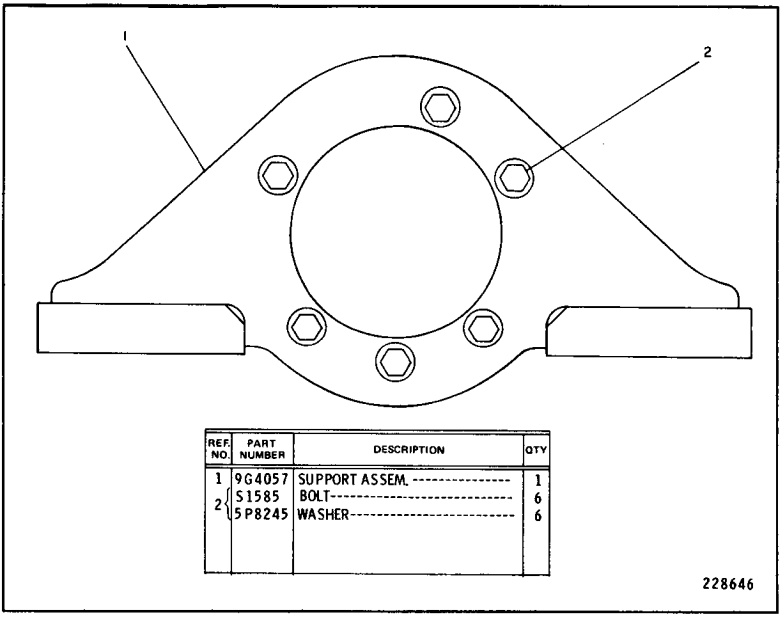

REF. NO.	PART NUMBER	DESCRIPTION	QTY
1	9G4057	SUPPORT ASSEM.	1
2	S1585	BOLT	6
	5P8245	WASHER	6

228646

1W2457 ENGINE SUPPORT GROUP—Front

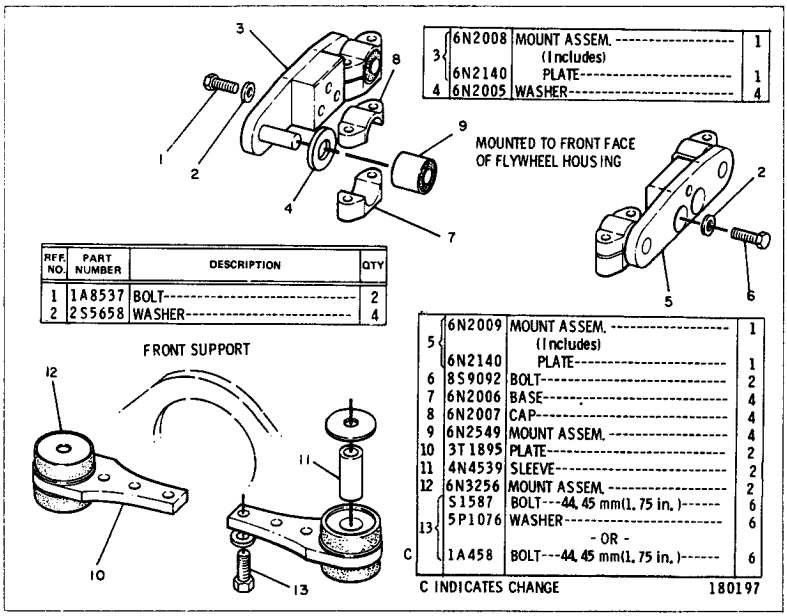

3	6N2008	MOUNT ASSEM. (Includes)	1
	6N2140	PLATE	1
4	6N2005	WASHER	4

REF. NO.	PART NUMBER	DESCRIPTION	QTY
1	1A8537	BOLT	2
2	2S5658	WASHER	4

5	6N2009	MOUNT ASSEM. (Includes)	1
	6N2140	PLATE	1
6	8S9092	BOLT	2
7	6N2006	BASE	4
8	6N2007	CAP	4
9	6N2549	MOUNT ASSEM.	4
10	3T1895	PLATE	2
11	4N4539	SLEEVE	2
12	6N3256	MOUNT ASSEM.	2
13	S1587	BOLT---44.45 mm(1.75 in.)	6
	5P1076	WASHER	6
		- OR -	
C	1A458	BOLT---44.45 mm(1.75 in.)	6

C INDICATES CHANGE 180197

6N2579 ENGINE SUPPORT GROUP — Rear

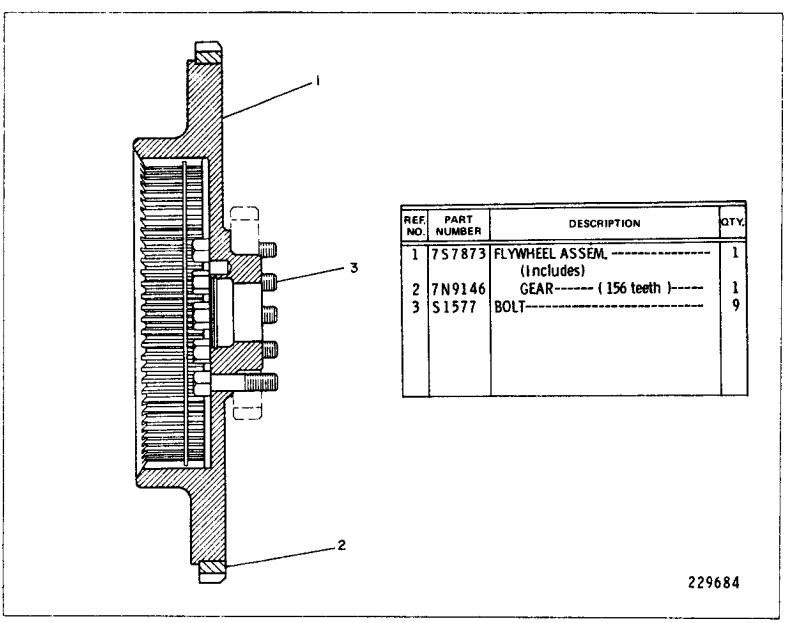

REF. NO.	PART NUMBER	DESCRIPTION	QTY.
1	7S7873	FLYWHEEL ASSEM. (Includes)	1
2	7N9146	GEAR------ (156 teeth)-----	1
3	S1577	BOLT	9

229684

7S7874 FLYWHEEL GROUP

6N2514 FLYWHEEL HOUSING GROUP

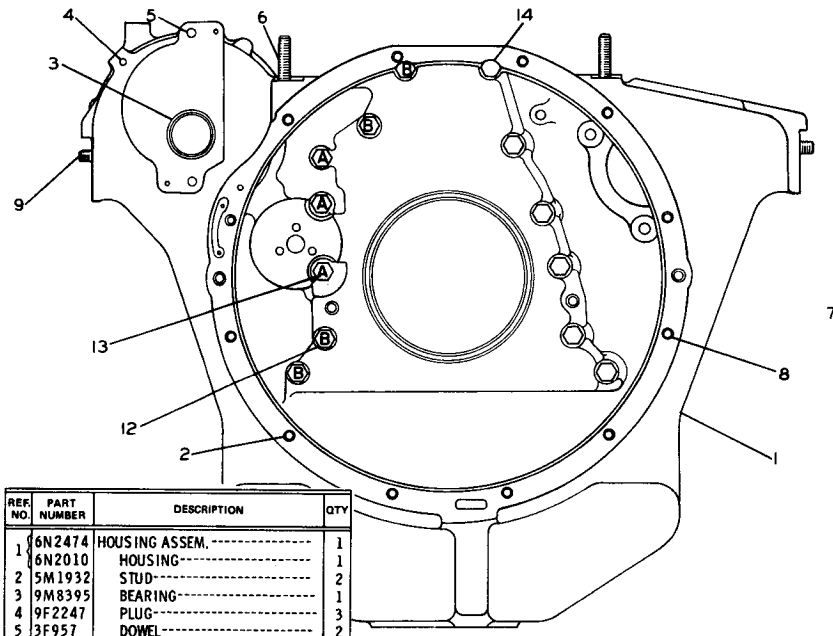

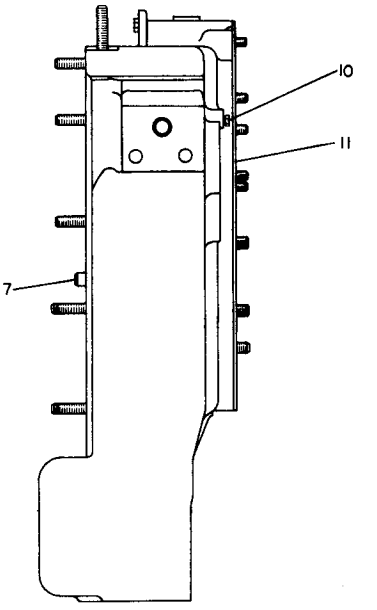

REF. NO.	PART NUMBER	DESCRIPTION	QTY
1	6N2474	HOUSING ASSEM.	1
	6N2010	HOUSING	1
2	5M1932	STUD	2
3	9M8395	BEARING	1
4	9F2247	PLUG	3
5	3F957	DOWEL	2
6	3D472	STUD	2
7	2A3798	DOWEL	2
8	3D490	STUD	10
9	4D8148	DOWEL	2
10	5M6213	PLUG	1
11	9H5921	GASKET	1
12	1A1460	BOLT (Marked B)	4
13	S1585	BOLT (Marked A)	3
14	2B947	BOLT	6

230403

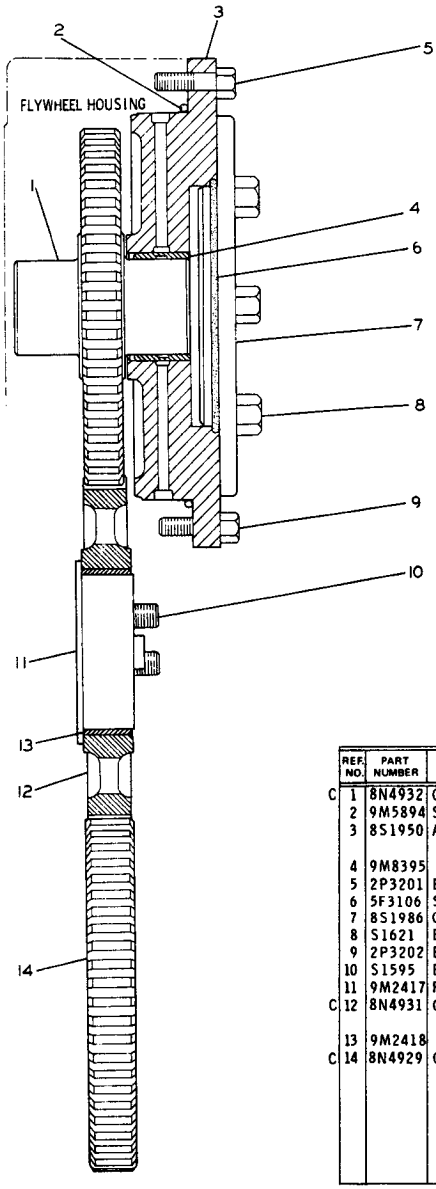

	REF. NO.	PART NUMBER	DESCRIPTION	QTY
C	1	8N4932	GEAR----------(57 teeth)-------	1
	2	9M5894	SEAL----------	1
	3	8S1950	ADAPTER ASSEM.---------- (Includes)	1
	4	9M8395	BEARING----------	1
	5	2P3201	BOLT----------	1
	6	5F3106	SEAL----------	1
	7	8S1986	COVER----------	1
	8	S1621	BOLT----------	4
	9	2P3202	BOLT----------	6
	10	S1595	BOLT----------	3
	11	9M2417	RETAINER----------	1
C	12	8N4931	GEAR ASSEM.--------(56 teeth)---- (Includes)	1
	13	9M2418	BEARING----------	1
C	14	8N4929	GEAR----------(57 teeth)-----	1

C INDICATES CHANGE

228655

2P8161 REAR GEAR GROUP-ACCESSORY DRIVE

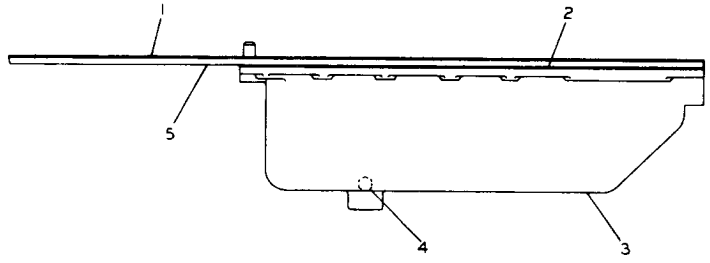

REF. NO.	PART NUMBER	DESCRIPTION	QTY
1	4M2969	GASKET	1
2	8S1965	GASKET	1
3	9S5417	PAN	1
4	4B7739	PLUG	1
5	2P1738	PLATE ASSEM.	1

117213

2P6152 OIL PAN GROUP
Engine Serial No. 8Z1827 to 4615, 4699, 4700, 4705, 4707, 4709 to 4711, 4713, 4716, and 8Z4722 inclusive

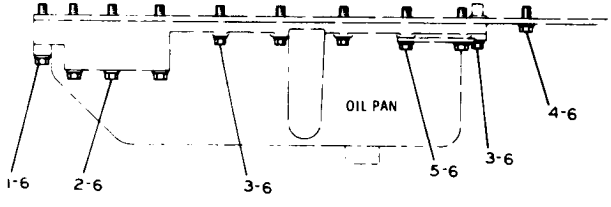

	REF. NO.	PART NUMBER	DESCRIPTION	QTY.
	1	T573	BOLT	5
	2	L1352	BOLT	3
B C	3	S1591	BOLT	20
	4	L1351	BOLT	18
B	5	5M2894	WASHER	46

C INDICATES CHANGE
B-USE AS REQUIRED

306746

2P6206 OIL PAN FASTENER GROUP

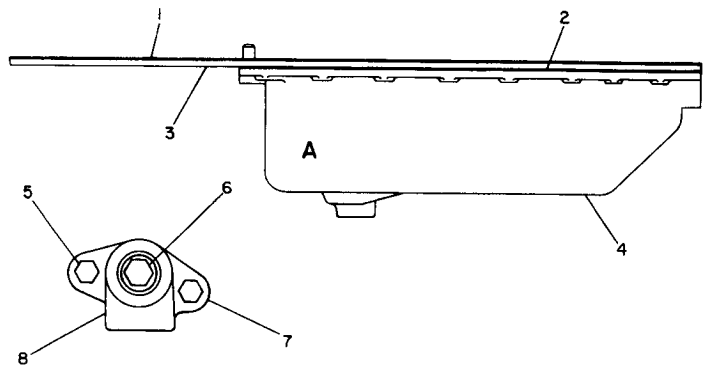

REAR VIEW OF AREA A

REF. NO.	PART NUMBER	DESCRIPTION	QTY.
1	4M2969	GASKET	1
2	8S1965	GASKET	1
3	2P1738	PLATE ASSEM.	1

C	4	4N7820	OIL PAN GROUP (Includes)	1
		8N6184	PAN	1
	5	3B1915	BOLT	2
C	6	5N8780	PLUG	1
	7	8N6854	GASKET	1
	8	8N6849	ADAPTER	1

C INDICATES CHANGE 302368

2P6152 OIL PAN GROUP
Engine Serial No. 8Z4616 to 4698, 4701 to 4704, 4706, 4708, 4712, 4714, 4715, 4717 to 4721 and 8Z4723—Up

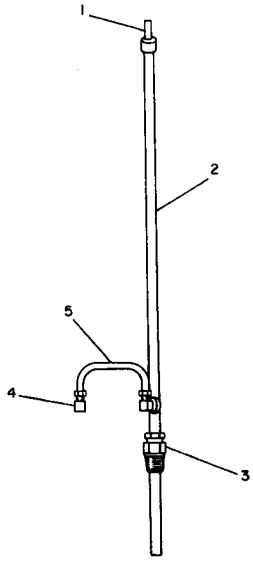

REF. NO.	PART NUMBER	DESCRIPTION	QTY.
1	8S3995	GAUGE ASSEM.	1
2	2P2547	TUBE ASSEM.	1
3	8S1326	FITTING	1
		(Includes)	
	8F8998	NUT	1
4	5K9243	ELBOW	2
5	2P2697	TUBE ASSEM.	1

233749

2P6493 OIL LEVEL GAUGE GROUP

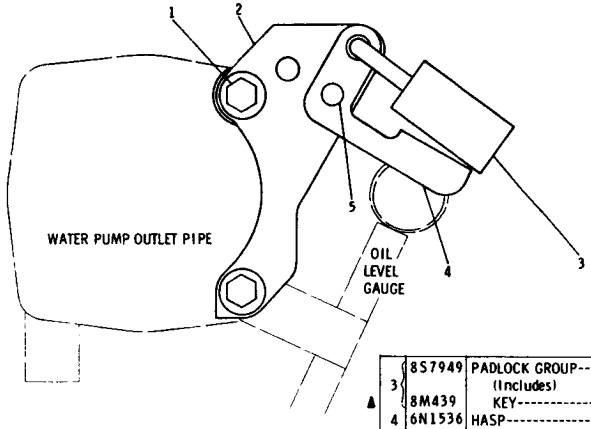

	REF. NO.	PART NUMBER	DESCRIPTION	QTY
C	1	S1591	BOLT	2
		5M2894	WASHER	2
C	2	6N7325	BRACKET	1

	REF. NO.	PART NUMBER	DESCRIPTION	QTY
	3	8S7949	PADLOCK GROUP	1
			(Includes)	
▲		8M439	KEY	2
	4	6N1536	HASP	1
	5	6N2011	RIVET	1
C		8H3526	WASHER	1

▲ NOT PART OF 6N1568 PROTECTION GROUP C INDICATES CHANGE 211204

6N1568 PROTECTION COVER GROUP—Oil Level Gauge
Replaced by 1N4297 shown on Page 27B
AN ATTACHMENT

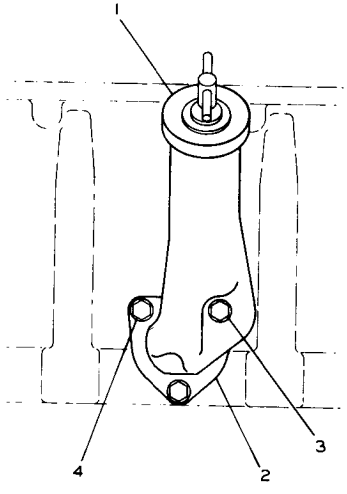

REF. NO.	PART NUMBER	DESCRIPTION	QTY
1	7S1803	CAP ASSEM.	1
	9S1434	PIPE	1
2	7S1801	ANCHOR	1
	5S8055	GASKET	1
3	2P3206	BOLT	1
4	2P3201	BOLT	2

117217

4N5139 OIL FILLER GROUP

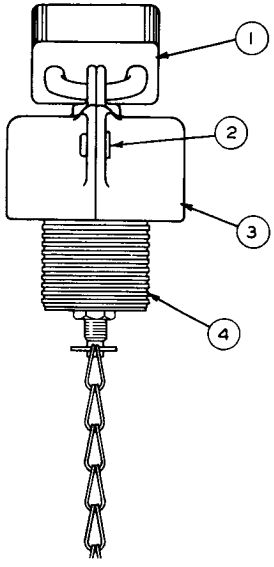

NOTE: For service of Key and Padlock order 8S7949 Padlock Group

REF NO.	PART NUMBER	DESCRIPTION	QTY
1	Not Serv.	PADLOCK	1
	▲ 8M439	KEY	2
2	8S4212	RIVET	2
3	Not Serv.	COVER	2
4	7S1803	CAP ASSEM.	1

▲ Not part of 8S3747 Protection Cover Group

111307

8S3747 PROTECTION COVER GROUP—Oil Filler Cap
Replaced by 1N4296 shown on Page 27B
AN ATTACHMENT

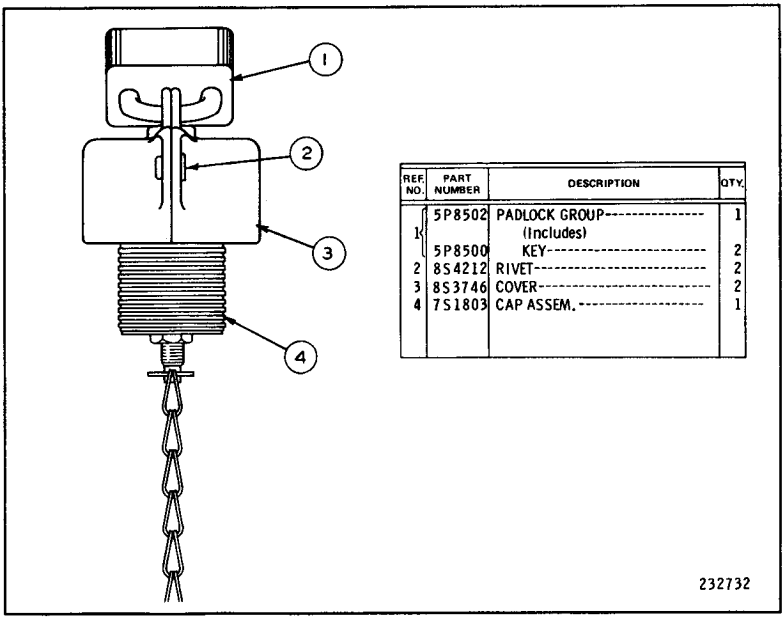

REF. NO.	PART NUMBER	DESCRIPTION	QTY.
1	5P8502	PADLOCK GROUP	1
		(Includes)	
	5P8500	KEY	2
2	8S4212	RIVET	2
3	8S3746	COVER	2
4	7S1803	CAP ASSEM.	1

1N4296 VANDALISM PROTECTION GROUP—Oil Filler Cap
AN ATTACHMENT

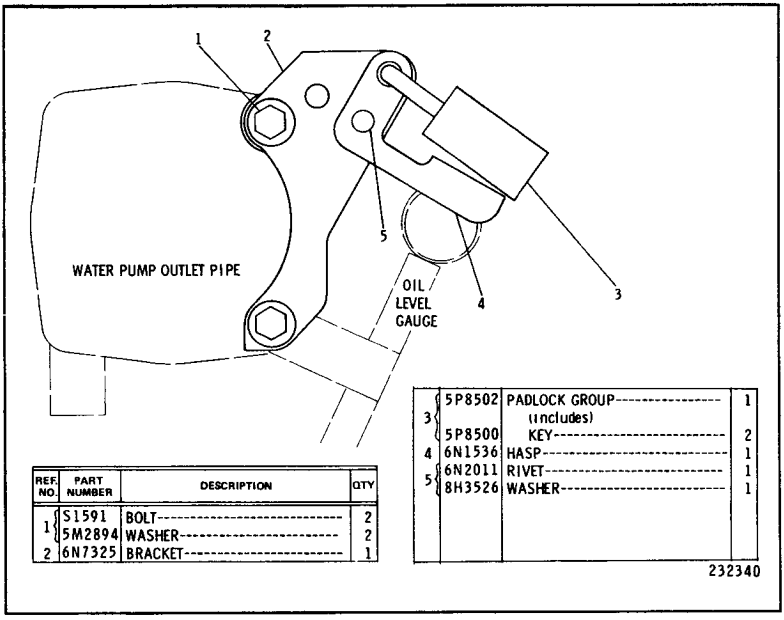

REF. NO.	PART NUMBER	DESCRIPTION	QTY
1	S1591	BOLT	2
	5M2894	WASHER	2
2	6N7325	BRACKET	1

3	5P8502	PADLOCK GROUP	1
		(Includes)	
	5P8500	KEY	2
4	6N1536	HASP	1
5	6N2011	RIVET	1
	8H3526	WASHER	1

1N4297 VANDALISM PROTECTION GROUP—Oil Level Gauge
Single Key Security System
AN ATTACHMENT

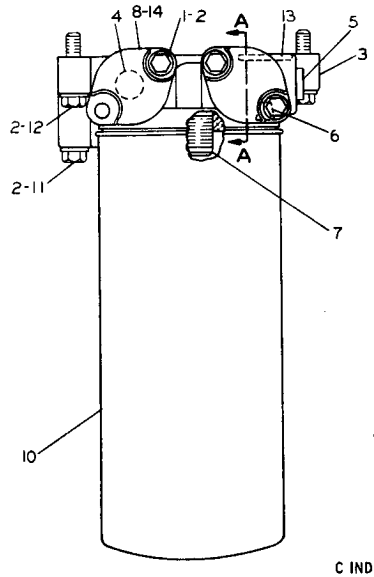

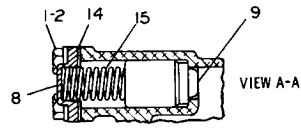

	REF. NO.	PART NUMBER	DESCRIPTION	QTY.
	1	S1618	BOLT	3
	2	9M1974	WASHER	8
	3	8N6212	BASE ASSEM. (Includes)	1
	4	2R5657	PLUG-2.54 cm(1 in.)thread	3
	5	2B858	PLUG-1.27 cm(.5 in.) thread	1
	6	7H3171	PLUG	1
	7	2P2537	STUD	1
C	8	8N6986	COVER	2
	9	1P1367	PLUNGER	2
	10	2P4004	FILTER ASSEM.	1
	11	1D4540	BOLT-6.99 cm(2.75 in.) long	1
	12	1B9575	BOLT-4.44 cm(1.75 in.)long-	3
	13	8M4432	SEAL	2
C	14	8N6985	GASKET	2
	15	8M3182	SPRING	2

C INDICATES CHANGE 227300

2P6475 OIL FILTER GROUP

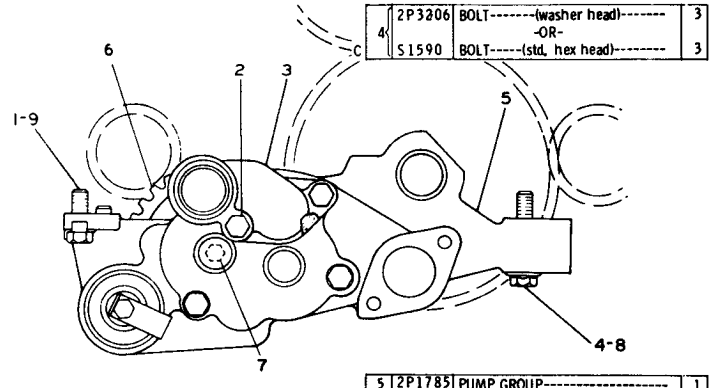

	REF. NO.	PART NUMBER	DESCRIPTION	QTY.
	1	8M7587	LOCK	2
	2	2P3210	BOLT-(washer head) -OR-	1
C	2	S1619	BOLT-(std. hex head)	1
	3	4N5353	ELBOW	1
	3	2P8746	GASKET	1
	4	2P3206	BOLT-(washer head) -OR-	3
C	4	S1590	BOLT-(std. hex head)	3
	5	2P1785	PUMP GROUP (Separate Illustration)	1
C	6	8S497	GEAR-(40 teeth)	1
C	6	8M5599	KEY	1
C	7	S1590	BOLT	1
C	7	1P7346	WASHER	1
C	8	5M2894	WASHER	2
	9	1A2029	BOLT-28.5 mm(1.125 in.) long- -OR-	2
C	9	3B1915	BOLT-34.9 mm(1.375 in.) long-	2

C INDICATES CHANGE 228633

2P1784 OIL PUMP GROUP
Serial No. 8Z1827 To 8Z20670 Inclusive
2P1785-Page 29

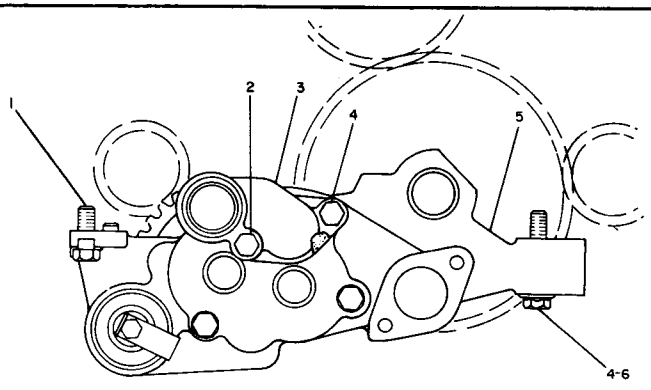

NOTE	REF NO	PART NUMBER	QTY	DESCRIPTION
	1	3B1915	2	BOLT
		8M7587	2	LOCK
	2	0S1619	1	BOLT
	3	4N5353	1	ELBOW
		2P8746	1	GASKET
	4	0S1590	3	BOLT
CY	5	6N2642	1	PUMP GROUP
	6	5M2894	2	WASHER

C INDICATES CHANGE

Y SEPARATE ILLUSTRATION 322023

2P1784 OIL PUMP GROUP
Serial No. 8Z20671-Up
6N2642-Page 28A

CONSISTS OF: PAGE

1 4W2448 OIL PUMP GROUP 28B

1 7W0507 GEAR (40 TEETH)

1 8M5599 KEY

1 1P7346 WASHER

1 0S1590 BOLT

6N2642 OIL PUMP GROUP -TWO SECTION GEAR
Serial No. 8Z20671-Up
Part Of 2P1784 Oil Pump

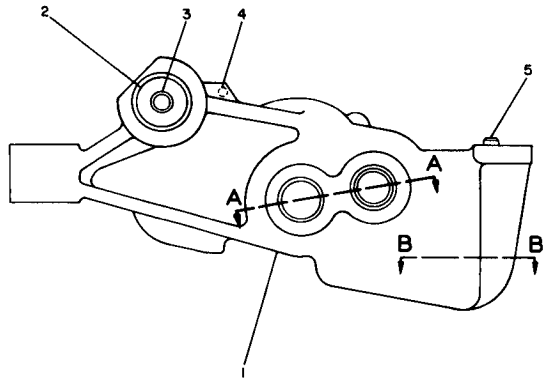

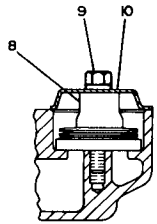

SECTION B-B

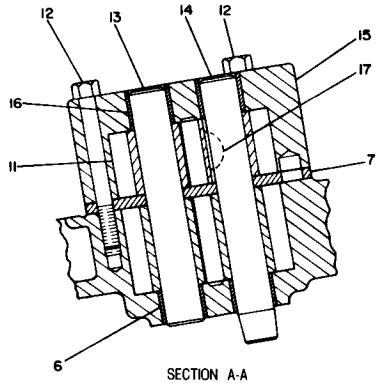

SECTION A-A

NOTE	REF NO	PART NUMBER	QTY	DESCRIPTION
	1	4W2322	1	BODY AS.
	2	2P1170	1	SHAFT AS.
	3	6F7172	1	DOWEL
	4	4B9880	1	BALL
	5	1F1006	1	DOWEL
	6	8S6511	2	BEARING
	7	2P1781	1	SPACER
	8	4N8385	1	VALVE AS.
	9	2B2694	1	BOLT
		9M1974	1	WASHER
	10	4N3732	1	COVER
	11	6N1036	2	GEAR (8 TEETH)
	12	0T0065	3	BOLT
	13	8S0493	1	SHAFT AS.
	14	2P6245	1	SHAFT AS.
	15	4W2321	1	BODY AS.
	16	8S6511	2	BEARING
	17	1B8709	1	KEY

322085

4W2448 OIL PUMP GROUP-TWO SECTION GEAR
Serial No. 8Z20671-Up
Part Of 6N2642 Oil Pump

2P1785 GEAR PUMP GROUP
Engine Serial No. 8Z1827 to 3593, 4540 to 8Z4544 inclusive
Part of 2P1784 Oil Pump Group shown on Page 28

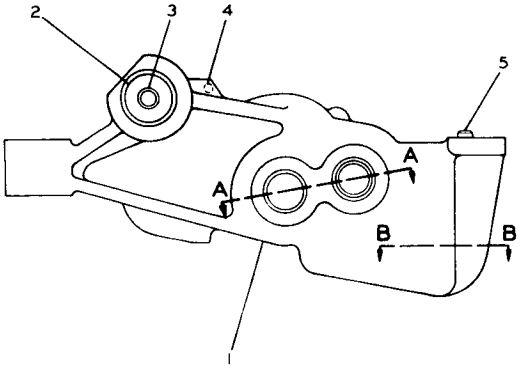

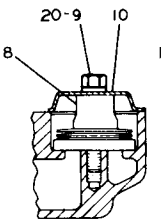

SECTION B-B

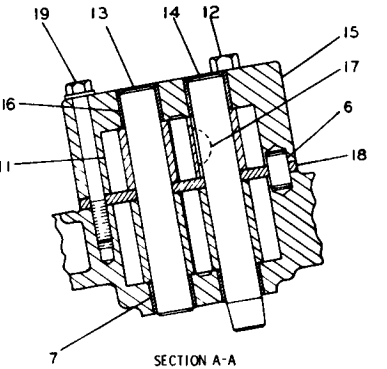

SECTION A-A

REF. NO.	PART NUMBER	DESCRIPTION	QTY
1	2P685	BODY ASSEM.	1
2	2P1170	SHAFT ASSEM.	1
3	6F7172	DOWEL	1
4	4B9880	BALL	1
5	1F1006	DOWEL	1
6	1M3735	DOWEL	2
7	8S6511	BEARING	2

C	8	4N8385	VALVE ASSEM.	1
C	9	2B2694	BOLT	1
	10	4N3732	COVER	1
C	11	6N1036	GEAR (8 Teeth)	2
C	12	T65	BOLT	2
C	13	8S493	SHAFT ASSEM.	1
	14	2P6245	SHAFT ASSEM.	1

	15	4N4055	BODY ASSEM.	1
	16	8S6511	BEARING	2
	17	1B8709	KEY	1
	18	2P1781	SPACER	1
C	19	2M3403	BOLT	1
C		5M2894	WASHER	1
C	20	9M1974	WASHER	1

C INDICATES CHANGE

217789

2P1785 GEAR PUMP GROUP
Engine Serial No. 8Z3594 to 4539 and 8Z4545—Up
Part of 2P1784 Oil Pump Group shown on Page 28

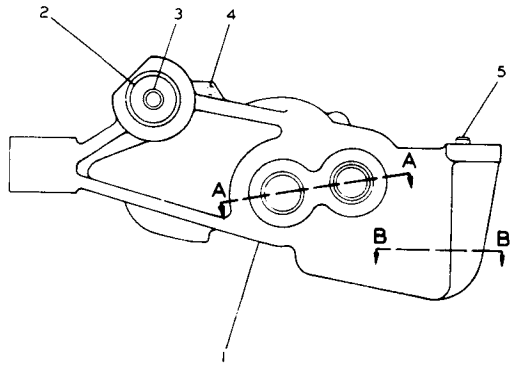

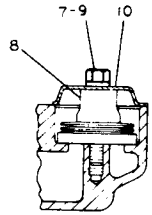

SECTION B-B

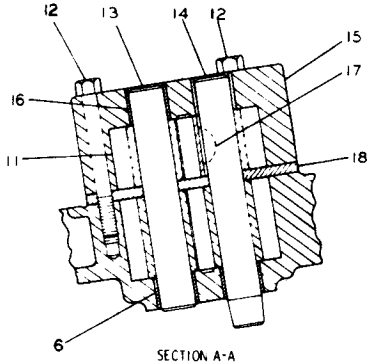

SECTION A-A

	REF NO.	PART NUMBER	DESCRIPTION	QTY.
C	1	8N8636	BODY ASSEM.	1
	2	2P1170	SHAFT ASSEM.	1
	3	6F7172	DOWEL	1
	4	4B9880	BALL	1
	5	1F1006	DOWEL	1
	6	8S6511	BEARING	2
	7	9M1974	WASHER	1

C INDICATES CHANGE

	8	4N8385	VALVE ASSEM.	1
	9	2B2694	BOLT	1
	10	4N3732	COVER	1
	11	6N1036	GEAR-----(8 teeth)	2
C	12	T65	BOLT	2
	13	8S493	SHAFT ASSEM.	1
	14	2P6245	SHAFT ASSEM.	1

15	4N4055	BODY ASSEM.	1
16	8S6511	BEARING	2
17	1B8709	KEY	1
18	2P1781	SPACER	1

C INDICATES CHANGE

308836

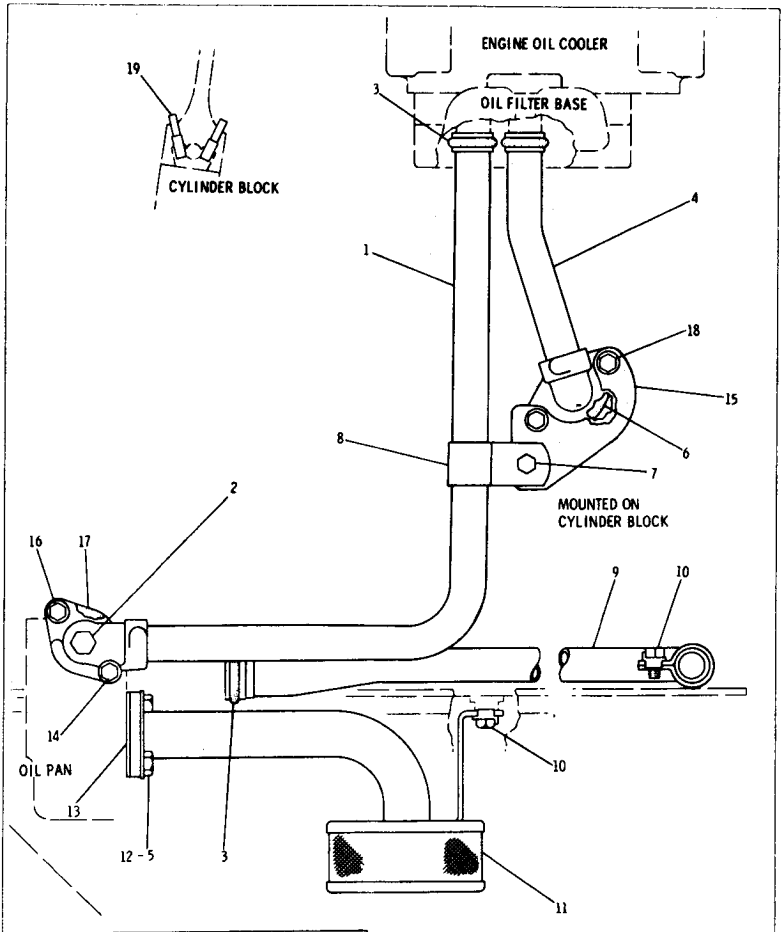

REF. NO.	PART NUMBER	DESCRIPTION	QTY.
C 1	8N7318	TUBE ASSEM. (Includes)	1
2	5M6213	PLUG	1
3	9M4849	SEAL	3
C 4	8N7315	TUBE ASSEM.	1
C 5	S1594	BOLT	2
6	7F7590	GASKET	1
C 7	L1351	BOLT	1
C	1D4717	NUT	1
C 8	9L9132	WASHER	1
C	8M2769	CLIP	1
9	2P1739	TUBE ASSEM.	1
10	T102	BOLT	2
	L364	LOCK	2
11	2P1751	BELL ASSEM.	1
12	8S8874	LOCK	1
13	8M904	GASKET	1
14	L2070	BOLT	1
C 15	8N5739	BRACKET	1
16	1A2029	BOLT	1
17	2M5407	GASKET	1
C	S1571	BOLT	2
C 18	8D5898	SPACER	2
C	5M2894	WASHER	2
19	2S1541	ORIFICE	6

C INDICATES CHANGE 233556

2P6105 OIL LINES GROUP
Engine Serial No. 8Z1827 to 8Z14978 inclusive

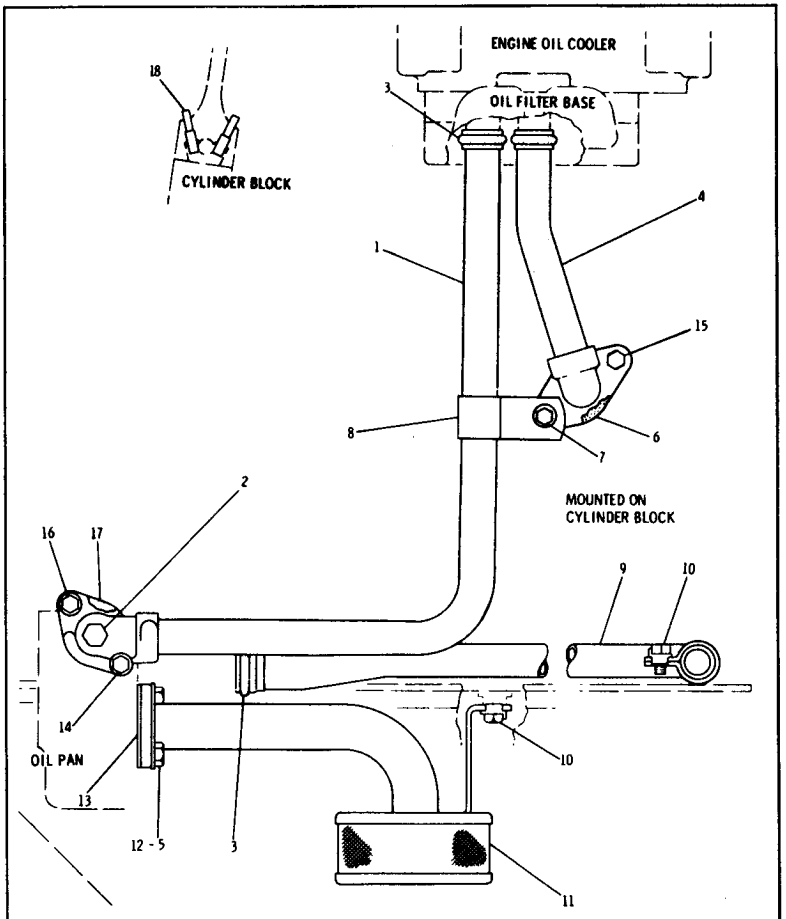

REF. NO.	PART NUMBER	DESCRIPTION	QTY.
1	8N7318	TUBE ASSEM.	1
2	5M6213	PLUG	1
3	9M4849	SEAL	3
4	8N7315	TUBE ASSEM.	1
5	S1594	BOLT	2
6	7F7590	GASKET	1
C	S1571	BOLT	1
C 7	1L5081	SPACER	1
C	5M2894	WASHER	1
C 8	3P2404	CLIP	1
9	2P1739	TUBE ASSEM.	1
10	T102	BOLT	2
	L364	LOCK	2
11	2P1751	BELL ASSEM.	1
12	8S8874	LOCK	1
13	8M904	GASKET	1
14	L2070	BOLT	1
C 15	S1594	BOLT	1
16	1A2029	BOLT	1
17	2M5407	GASKET	1
C 18	2S1541	ORIFICE	6

C INDICATES CHANGE 304462

2P6105 ENGINE OIL LINES GROUP
Engine Serial No. 8Z14979—Up

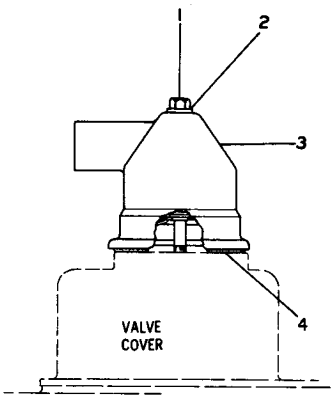

	REF. NO.	PART NUMBER	DESCRIPTION	QTY.
	1	3H3243	BOLT	1
	2	4K9890	WASHER	1
	3	8S248	BREATHER ASSEM.	1
C	4	4L9564	SEAL	1

C INDICATES CHANGE 227531

1P4244 BREATHER GROUP

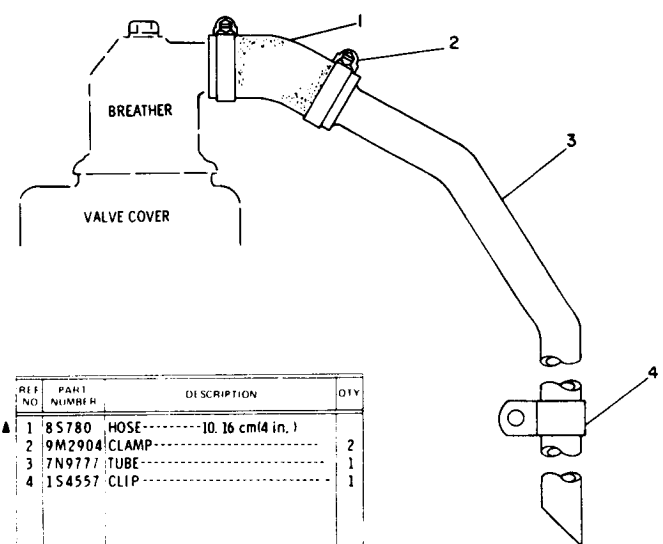

	REF NO	PART NUMBER	DESCRIPTION	QTY
▲	1	8S780	HOSE---------10. 16 cm(4 in.)	
	2	9M2904	CLAMP	2
	3	7N9777	TUBE	1
	4	1S4557	CLIP	1

▲ ORDER BY THE CENTIMETRE 220613

8N233 FUMES DISPOSAL GROUP — Crankcase Breather
Also part of 6N206 Refrigerant Compressor Arrangement listed on Page 243

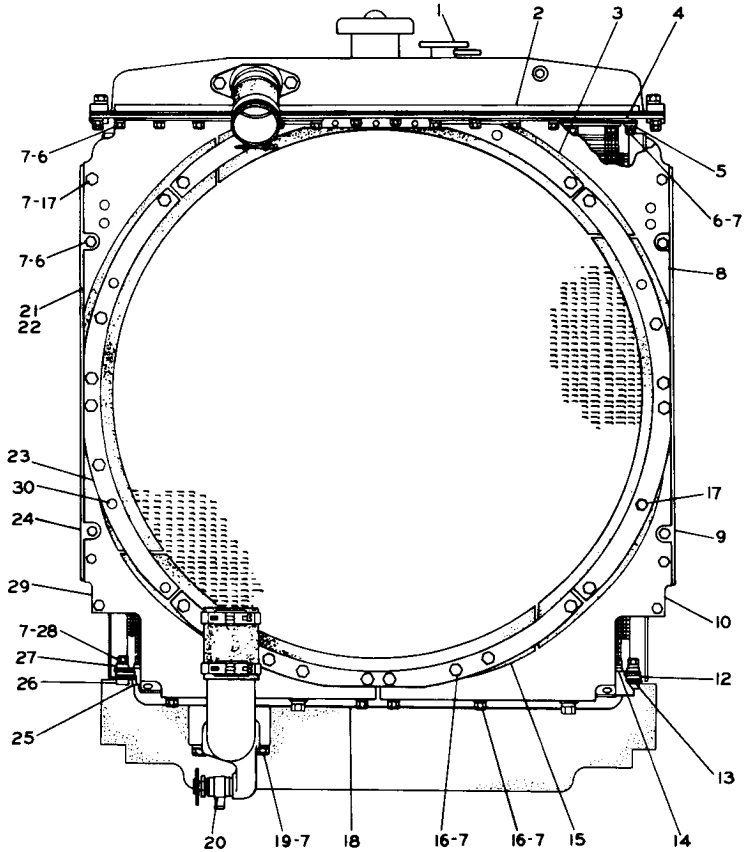

REF. NO.	PART NUMBER	DESCRIPTION	QTY
1	2S3080	CAP ASSEM.	1
2	1P2296	STRIP	1
3	1P7785	BAFFLE ASSEM.	1
4	6N4952	GASKET	1
5	1P7316	STRIP	2
6	S1588	BOLT	35
7	5M2894	WASHER	99
8	4N5725	SHIELD ASSEM.	1
	5M9621	STUD	2
	9F2978	NUT	2
9	1P7828	BAFFLE ASSEM.	1
10	4N5723	SHIELD ASSEM.	1
	9F2978	NUT	4
	7M7794	STUD	1
11	5M9621	STUD	1
12	1P7121	PLATE	1
13	6N4955	GASKET	2
14	1P7343	STRIP	4
15	1P7786	BAFFLE	3
16	S1594	BOLT	28
17	S509	BOLT	4
18	1P7812	TANK ASSEM.	1
19	8F6974	BOLT	2
20	8F8151	COCK	1
21	4N5722	SHIELD ASSEM.	1
	5M9621	STUD	2
22	9F2978	NUT	2
23	1P7783	STRIP	3
24	1P7956	BAFFLE ASSEM.	1
25	1P7318	STRIP	2
26	1P7315	STRIP	2
27	1P9169	STRIP	2
28	S1591	BOLT	30
29	4N5724	SHIELD ASSEM.	1
	9F2978	NUT	4
30	5M9621	STUD	2

229292

7N5128 RADIATOR GROUP — Rear View

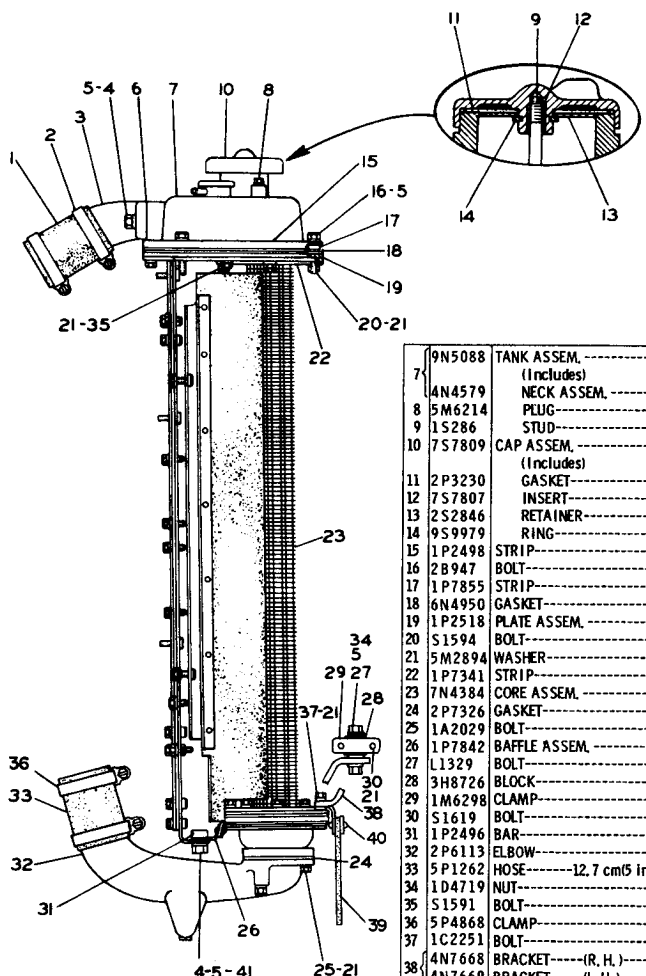

REF. NO.	PART NUMBER	DESCRIPTION	QTY.
▲ 1	5P1263	HOSE---------11.43 cm(4.5 in.)	
2	5P598	CLAMP----------	2
3	1P2635	ELBOW----------	1
4	7B3235	BOLT----------	4
5	2M849	WASHER--4.76 mm(.188 in.)thick-	14
6	1P6434	GASKET----------	1

▲ ORDER BY THE CENTIMETER

7	9N5088	TANK ASSEM.----------	1
		(Includes)	
	4N4579	NECK ASSEM.----------	1
8	5M6214	PLUG----------	1
9	1S286	STUD----------	1
10	7S7809	CAP ASSEM.----------	1
		(Includes)	
11	2P3230	GASKET----------	1
12	7S7807	INSERT----------	1
13	2S2846	RETAINER----------	1
14	9S9979	RING----------	1
15	1P2498	STRIP----------	2
16	2B947	BOLT----------	4
17	1P7855	STRIP----------	1
18	6N4950	GASKET----------	1
19	1P2518	PLATE ASSEM.----------	1
20	S1594	BOLT----------	4
21	5M2894	WASHER----------	32
22	1P7341	STRIP----------	2
23	7N4384	CORE ASSEM.----------	1
24	2P7326	GASKET----------	1
25	1A2029	BOLT----------	1
26	1P7842	BAFFLE ASSEM.----------	1
27	L1329	BOLT----------	2
28	3H8726	BLOCK----------	2
29	1M6298	CLAMP----------	4
30	S1619	BOLT----------	4
31	1P2496	BAR----------	1
32	2P6113	ELBOW----------	1
33	5P1262	HOSE--------12.7 cm(5 in.)	
34	1D4719	NUT----------	2
35	S1591	BOLT----------	19
36	5P4868	CLAMP----------	2
37	1C2251	BOLT----------	2
38	4N7668	BRACKET------(R. H.)----------	1
	4N7669	BRACKET------(L. H.)----------	1
39	1P6384	BAFFLE ASSEM.----------	1
		(Includes)	
	1P6385	BAFFLE----------	1
	1P6386	PLATE----------	1
40	6B4594	RIVET----------	8
	2P9610	STRIP----------	1
	1F1605	WASHER----------	1
41	4B4280	WASHER--2.38 mm(.094 in.)thick--	2

C INDICATES CHANGE

229293

7N5128 RADIATOR GROUP — Side View

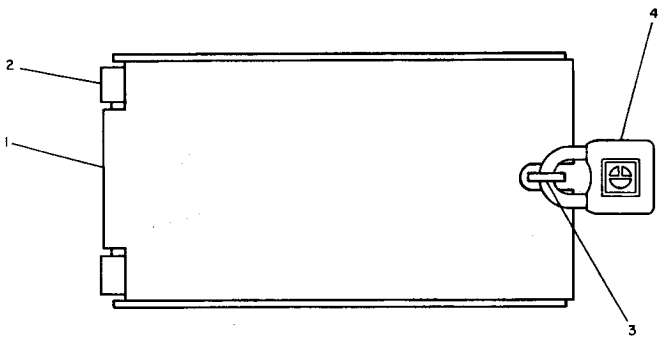

REF. NO.	PART NUMBER	DESCRIPTION	QTY.
1	2P6379	COVER ASSEM. (Includes)	1
2	2B4330	SPACER	2
3	4K8651	TAB	1

4	5P8502	PADLOCK GROUP (Includes)	1
▲	5P8500	KEY	2

▲ NOT PART OF 9G8849 PROTECTIVE COVER GROUP

226982

9G8849 PROTECTION COVER GROUP — Radiator Cap
AN ATTACHMENT

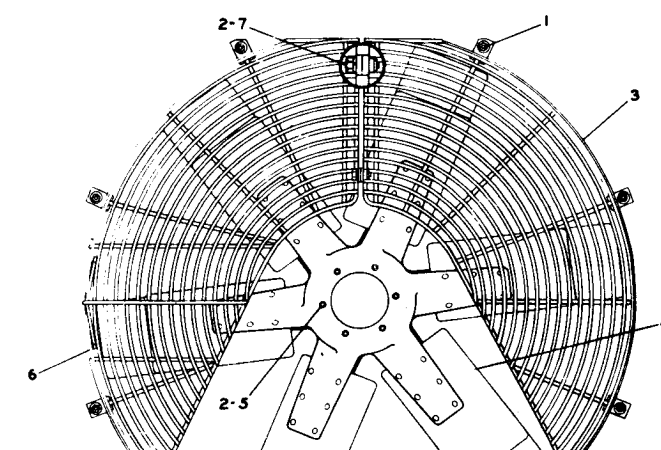

	REF. NO.	PART NUMBER	DESCRIPTION	QTY
C	1	2K4973	NUT	8
C		4B4278	WASHER	8
	2	3B4506	LOCKWASHER	7

3	1P7763	GUARD ASSEM. -----(R. H.)-----	1
4	7S546	SPIDER ASSEM.	1
5	3B1915	BOLT	6
6	1P7764	GUARD ASSEM. -------(L. H.)----	1
7	S509	BOLT	2

C INDICATES CHANGE

212670

1P7878 BLOWER FAN AND GUARD GROUP
Note: 1P8484 Reversible Fan Assembly is available

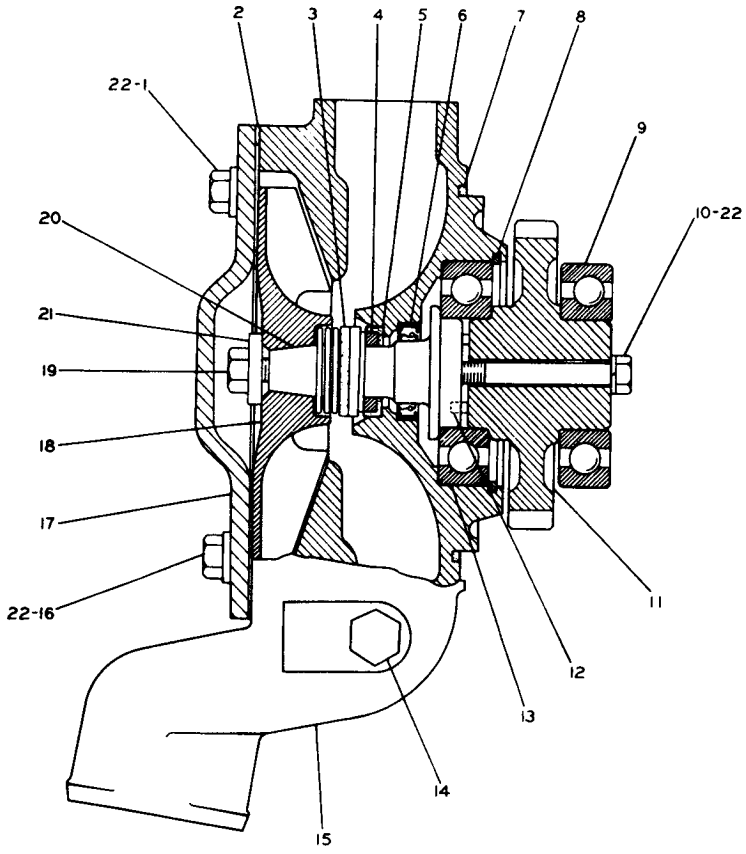

1W7053-REBUILD KIT----------1
(Includes parts marked ▲)

	REF. NO.	PART NUMBER	DESCRIPTION	QTY
	1	L1351	BOLT	2
C	2	8N5928	GASKET	1
	3	4N6556	SEAL ASSEM.	1
	4	8S7762	RING	1
	5	8S8821	SEAL	1
	6	8H9520	SEAL	1
	7	5F3106	SEAL	1
▲	8	1K6985	RING	1
▲	9	8H9789	BEARING	1
▲	10	S1619	BOLT	1
C	11	7N5193	GEAR---(40 teeth)	1
	12	2L5893	PIN	2
▲	13	6H3957	BEARING	1
	14	5M6213	PLUG	1
C	15	1W4619	HOUSING	1
	16	T55	BOLT	2
C	17	8N5929	COVER	1
	18	7N5910	IMPELLER	1
▲	19	4L6454	BOLT	1
▲	20	7N5899	SHAFT	1
▲	21	9M6527	WASHER	1
▲	22	5M2894	WASHER	5

C INDICATES CHANGE

234310

7N5909 WATER PUMP GROUP
Engine Serial No. 8Z1827 to 8Z9292 inclusive

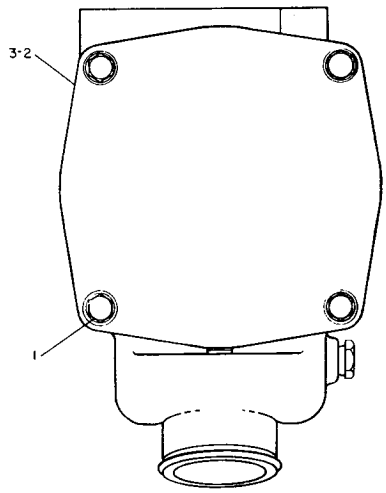

REF. NO.	PART NUMBER	DESCRIPTION	QTY.
1	T55	BOLT	2
	5M2894	WASHER	2
2	1W3060	PUMP GROUP (Separate Illustration)	1
3	5F3106	SEAL	1

236224

7N5909 WATER PUMP GROUP
Engine Serial No. 8Z9293 to 8Z19090 inclusive
1W3060 Pump parts are shown on Page 35B

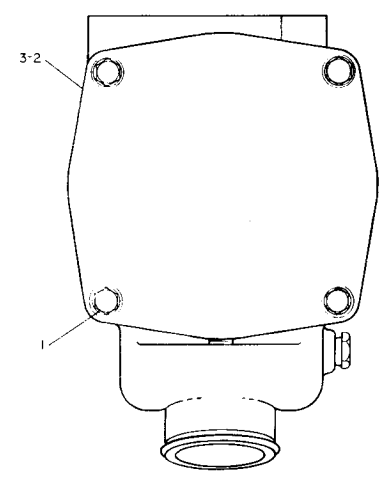

NOTE	REF NO	PART NUMBER	QTY	DESCRIPTION
	1	T55	2	BOLT
		5M2894	2	WASHER
CY	2	2W8001	1	PUMP GROUP
	3	5F3106	1	SEAL

C INDICATES CHANGE
Y SEPARATE ILLUSTRATION

312593

7N5909 WATER PUMP GROUP
Engine Serial No. 8Z19091—Up
2W8001 Pump parts are shown on Page 35D

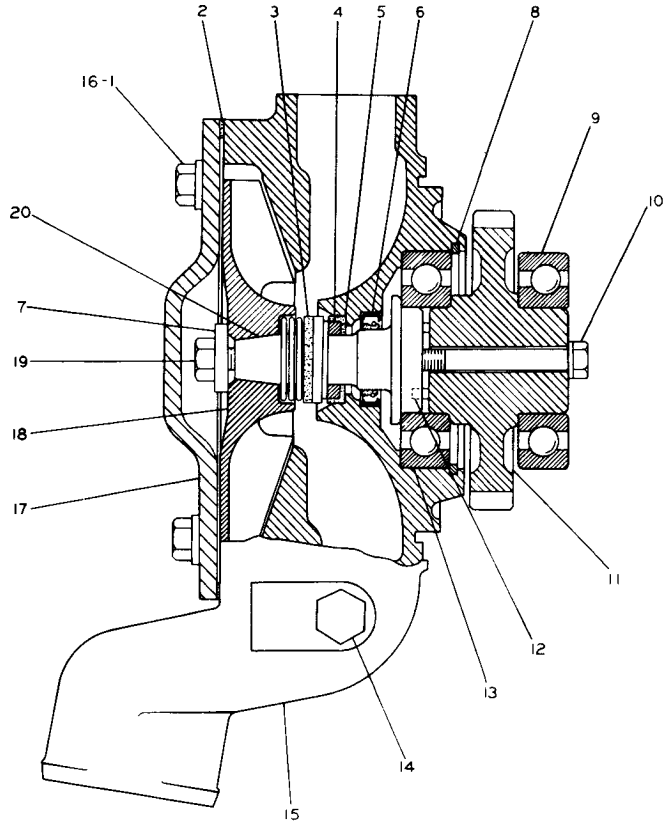

	REF. NO.	PART NUMBER	DESCRIPTION	QTY
	1	L1351	BOLT	2
	2	8N5928	GASKET	1
	3	4N6556	SEAL ASSEM.	1
	4	8S7762	RING	1
	5	8S8821	SEAL	1
	6	6V3988	SEAL	1
C▲	7	9M6527	WASHER	2
▲	8	1K6985	RING	1
▲	9	8H9789	BEARING	1
C▲	10	L1352	BOLT	1
	11	7N5193	GEAR-------(40 teeth)	1
	12	2L5893	PIN	2
▲	13	6H3957	BEARING	1

C INDICATES CHANGE

	14	5M6213	PLUG	1
	15	1W4619	HOUSING	1
C	16	5M2894	WASHER	2
	17	8N5929	COVER	1
	18	7N5910	IMPELLER	1
▲	19	4L6454	BOLT	1
▲	20	7N5899	SHAFT	1
			THE FOLLOWING REPAIR KIT IS AVAILABLE:	
C		1W7053	KIT--------(rebuild) (Includes all parts marked ▲)	1

303533

1W3060 WATER PUMP GROUP
Engine Serial No. 8Z9293 to 8Z19090 inclusive
Part of 7N5909 Water Pump Group shown on Page 35A

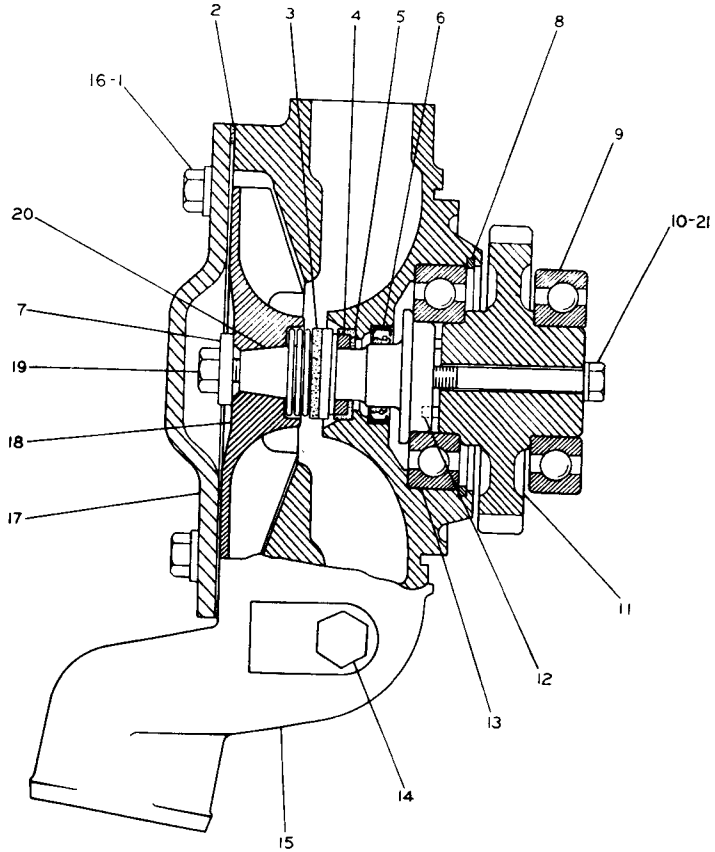

NOTE	REF NO	PART NUMBER	QTY	DESCRIPTION
	1	L1351	2	BOLT
	2	8N5928	1	GASKET
	3	6N9312	1	SEAL GROUP
	4	8S7762	1	RING
	5	8S8821	1	SEAL
	6	6V3988	1	SEAL
R	7	9M6527	2	WASHER
R	8	1K6985	1	RING
R	9	8H9789	1	BEARING
	10	3B8428	1	BOLT
C	11	7W0450	1	GEAR (40 TEETH)
	12	2L5893	2	PIN
R	13	6H3957	1	BEARING
	14	5M6213	1	PLUG
	15	1W4619	1	HOUSING
	16	5M2894	2	WASHER
	17	8N5929	1	COVER
	18	7N5910	1	IMPELLER
R	19	4L6454	1	BOLT
R	20	2W7255	1	SHAFT
	21	4S9191	1	WASHER
				THE FOLLOWING REPAIR KIT IS AVAILABLE:
		6V9906	1	KIT (REBUILD) (INCL. ALL PARTS MARKED R)

C INDICATES CHANGE

331920

2W8001 WATER PUMP GROUP
Engine Serial No. 8Z19091-Up
Part Of 7N5909 Water Pump

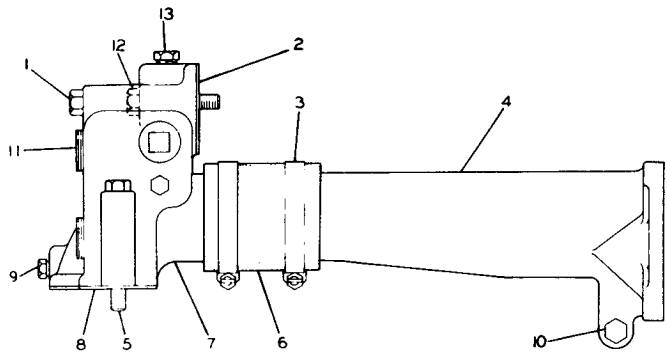

REF NO	PART NUMBER	DESCRIPTION	QTY
1	T65	BOLT	1
2	2P6132	GASKET	1
3	5P4868	CLAMP	2
4	2P2511	PIPE	1
5	S1619	BOLT	2
▲ 6	5P1260	HOSE-7.62 cm(3 in.)	
7	7N172	ELBOW	1
8	7N200	GASKET	1
9	5M6213	PLUG	2
10	S1588	BOLT	1
11	1B5174	PLUG	3
12	S1590	BOLT	1
13	3J5390	PLUG	1

▲ ORDER BY THE CENTIMETRE

216810

7N7211 WATER LINES GROUP

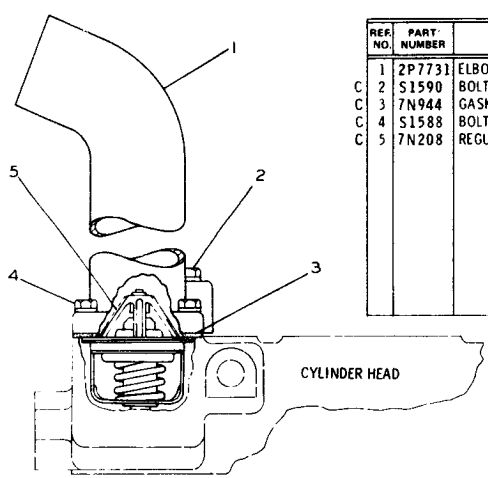

	REF. NO.	PART NUMBER	DESCRIPTION	QTY
	1	2P7731	ELBOW	1
C	2	S1590	BOLT	1
C	3	7N944	GASKET	1
C	4	S1588	BOLT	3
C	5	7N208	REGULATOR	1

C INDICATES CHANGE

212666

2P8173 HOUSING AND REGULATOR GROUP
Serial No. 6X1115 to 6X1189 inclusive

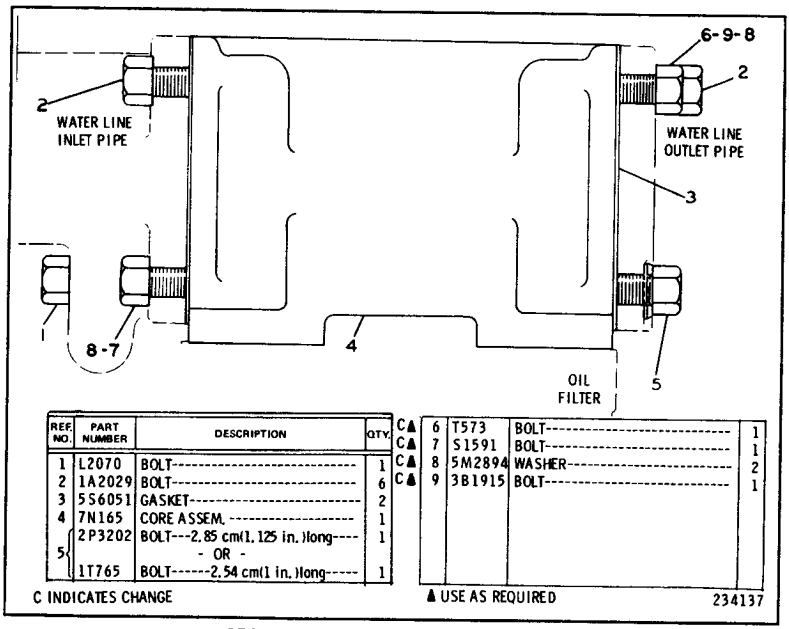

REF. NO.	PART NUMBER	DESCRIPTION	QTY.
1	L2070	BOLT	1
2	1A2029	BOLT	6
3	5S6051	GASKET	2
4	7N165	CORE ASSEM.	1
5	2P3202	BOLT---2.85 cm(1.125 in.)long	1
		- OR -	
	1T765	BOLT------2.54 cm(1 in.)long	1

	REF. NO.	PART NUMBER	DESCRIPTION	QTY
C▲	6	T573	BOLT	1
C▲	7	S1591	BOLT	1
C▲	8	5M2894	WASHER	2
C▲	9	3B1915	BOLT	1

C INDICATES CHANGE

▲ USE AS REQUIRED 234137

2P6215 ENGINE OIL COOLER GROUP

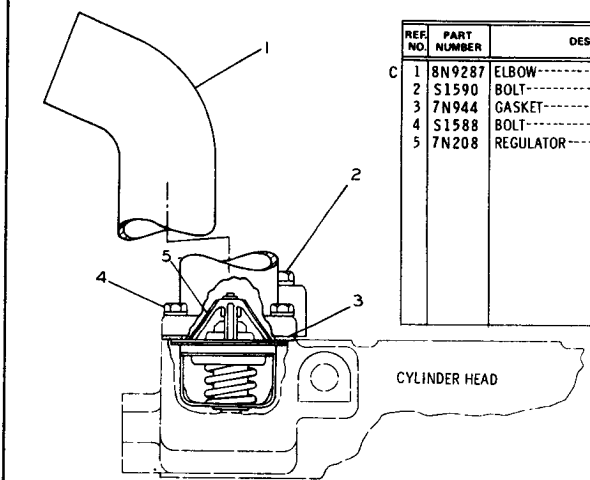

	REF. NO.	PART NUMBER	DESCRIPTION	QTY
C	1	8N9287	ELBOW	1
	2	S1590	BOLT	1
	3	7N944	GASKET	1
	4	S1588	BOLT	3
	5	7N208	REGULATOR	1

C INDICATES CHANGE 181050

2P8173 HOUSING AND REGULATOR GROUP
Serial No. 6X1190—Up

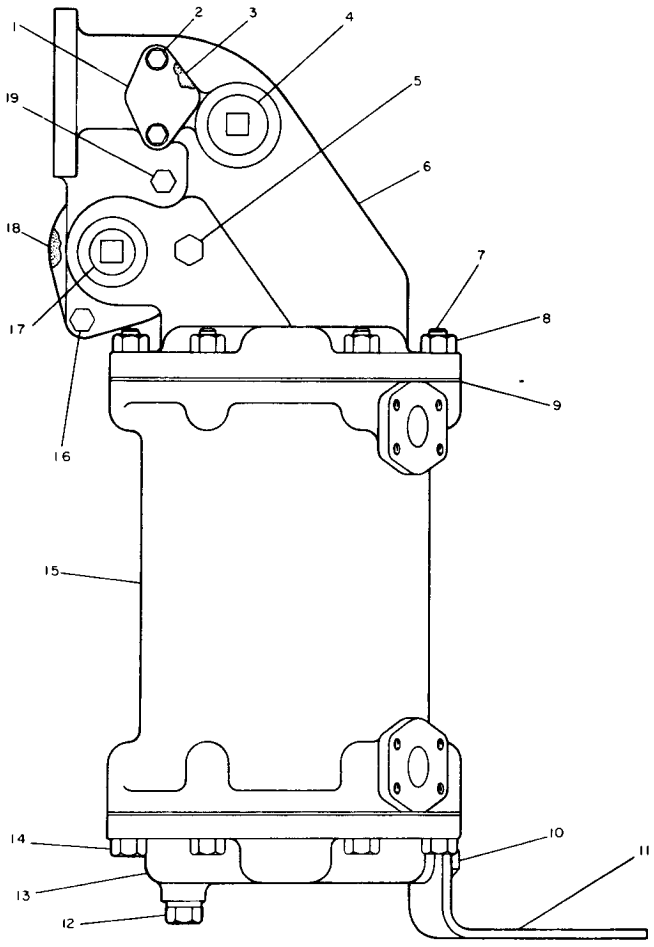

NOTE	REF NO	PART NUMBER	QTY	DESCRIPTION
	1	4N3840	1	COVER
	2	0S1617	2	BOLT
		9M1974	2	WASHER
	3	4N3841	1	GASKET
	4	3B0551	1	PLUG
	5	3J5390	1	PLUG
	6	7N3340	1	BONNET
	7	9M5082	6	STUD
	8	1D4718	6	NUT
	9	2S0795	2	GASKET
	10	0S1595	1	BOLT
		5P8245	1	WASHER
	11	7N3331	1	BRACKET
	12	2H8829	1	PLUG
		6F7062	1	GASKET
	13	7N3512	1	BONNET
	14	4F8965	6	BOLT
	15	7N3521	1	CORE AS.
	16	0S1591	1	BOLT
	17	1B5174	1	PLUG
C	18	2W4561	1	GASKET
	19	0L1352	1	BOLT

C INDICATES CHANGE

323896

7N3520 TRANSMISSION OIL COOLER GROUP

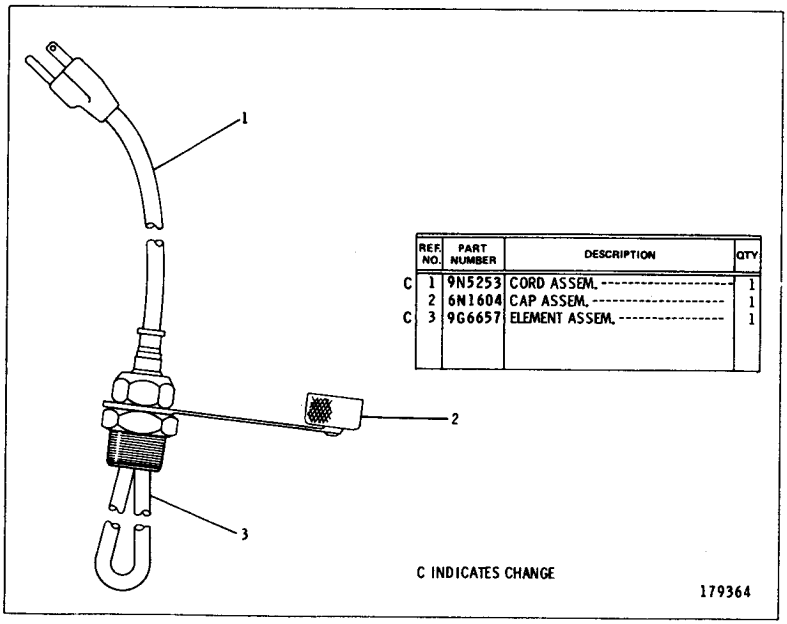

	REF. NO.	PART NUMBER	DESCRIPTION	QTY.
C	1	9N5253	CORD ASSEM.	1
	2	6N1604	CAP ASSEM.	1
C	3	9G6657	ELEMENT ASSEM.	1

4N3586 JACKET WATER HEATER GROUP
AN ATTACHMENT

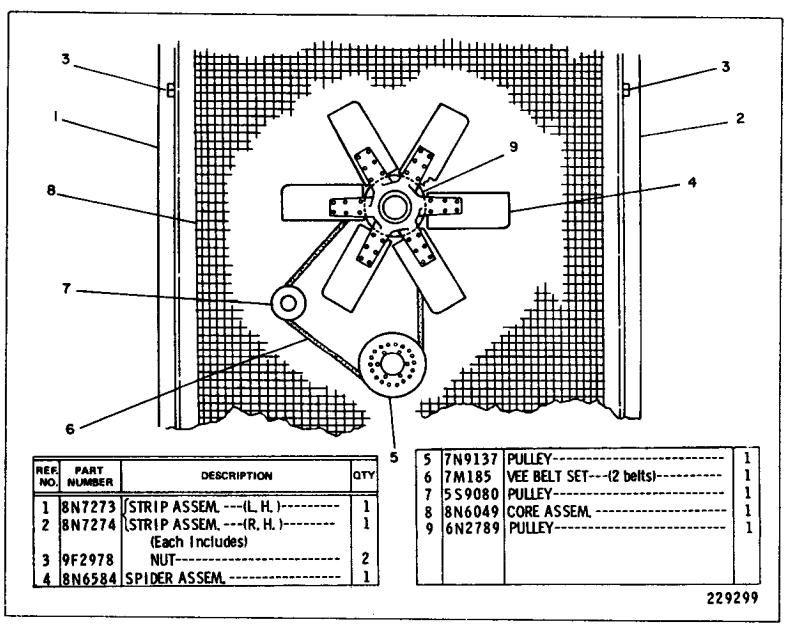

REF. NO.	PART NUMBER	DESCRIPTION	QTY.
1	8N7273	STRIP ASSEM. ---(L. H.)--------	1
2	8N7274	STRIP ASSEM. ---(R. H.)-------- (Each Includes)	1
3	9F2978	NUT----------	2
4	8N6584	SPIDER ASSEM. ----------	1
5	7N9137	PULLEY----------	1
6	7M185	VEE BELT SET---(2 belts)----------	1
7	5S9080	PULLEY----------	1
8	8N6049	CORE ASSEM. ----------	1
9	6N2789	PULLEY----------	1

1N4909 SUPPLEMENTAL COOLING GROUP
FOR USE IN AREAS WHERE THERE IS A LARGE AMOUNT OF DEBRIS
AN ATTACHMENT

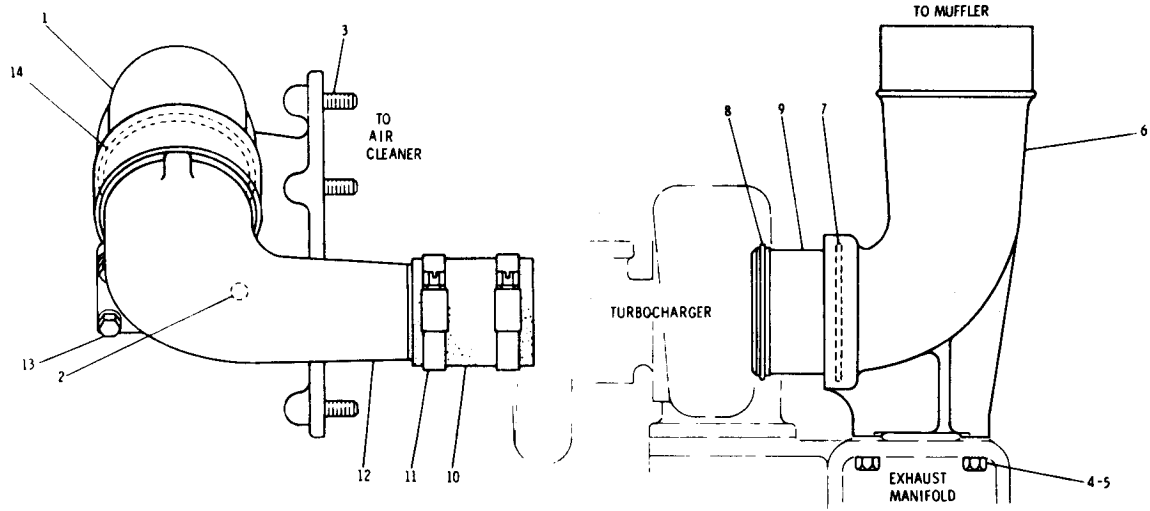

REF. NO.	PART NUMBER	DESCRIPTION	QTY
1	4N8246	PIPE	1
2	7M1674	ELEMENT	1
3	9M2151	STUD	8
4	S1571	BOLT	3
5	1B5355	NUT	3
6	4N9213	ELBOW--------(exhaust)---------	1
7	5L8855	SEAL---------(ring)----------	1
8	6N9	SEAL---------(ring)----------	1
9	4N8591	COUPLING	1
▲ 10	5P1263	HOSE----------10.16 cm (4 in.)	
11	5P598	CLAMP	2
12	4N8466	ELBOW	1
13	1A2029	BOLT	3
14	5H7704	SEAL	2

▲ ORDER BY THE CENTIMETRE

170302

7N4098 AIR LINES GROUP

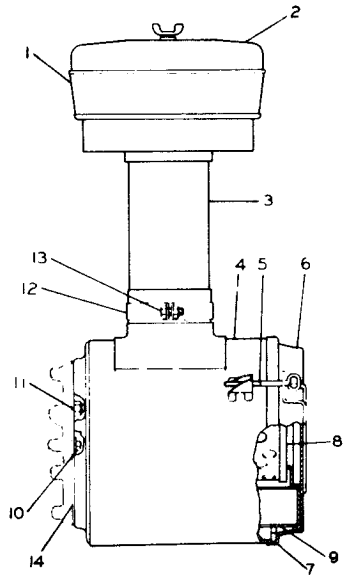

REF. NO.	PART NUMBER	DESCRIPTION	QTY
1	5L7942	PRECLEANER GROUP (Includes)	1
	6H8021	BODY	1
2	9M5201	COVER ASSEM.	1
C 3	4N8017	PIPE	1
4	2P1482	AIR CLEANER GROUP (Includes)	1
5	9M3695	ROD ASSEM.	2
6	1P7748	CUP ASSEM. (Includes)	1
C 7	9M8513	GASKET	1
8	1P7360	ELEMENT ASSEM. -(secondary)-	1
9	1P7716	ELEMENT ASSEM. -(primary)-	1
10	1T822	BOLT	2
	3B4506	LOCKWASHER	2
11	2K4973	LOCKNUT	8
C 12	6F8814	CLAMP	1
C 13	S1571	BOLT	1
C	1B5355	NUT	1
14	1P6832	GASKET	1

C INDICATES CHANGE 216620

2P1484 AIR CLEANER GROUP

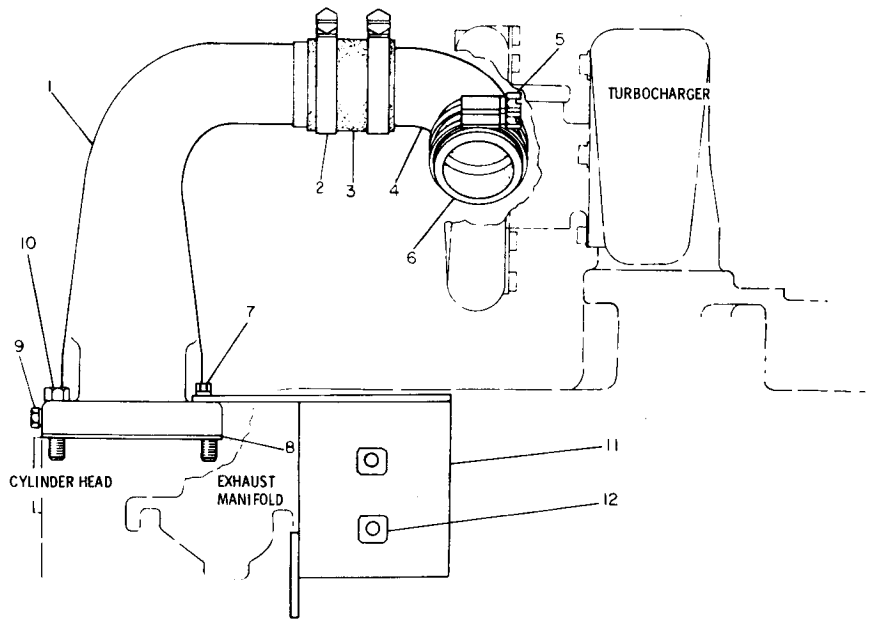

REF. NO.	PART NUMBER	DESCRIPTION	QTY.
1	4N8320	ELBOW	1
2	5P4868	CLAMP	2
3	4N9215	HOSE	1
4	7N8063	ELBOW	1
5	5P597	CLAMP	2
6	4N9216	HOSE	1
7	S1571	BOLT-----44.45 mm (1.75 in.) long	2
		-OR-	
C	S1590	BOLT-----50.8 mm (2 in.) long----	2
C	5M2894	WASHER	2
8	5S6735	GASKET	1
9	5M6213	PLUG	1
10	S1571	BOLT	2
C 11	7V8907	BRACKET ASSEM. (Includes)	1
12	9F2978	NUT	2

C INDICATES CHANGE

237047

7N3884 AIR LINES GROUP
Engine Serial No. 8Z1827 to 8Z8187 inclusive

7N3884 AIR LINES GROUP
Serial No. 8Z8188—Up

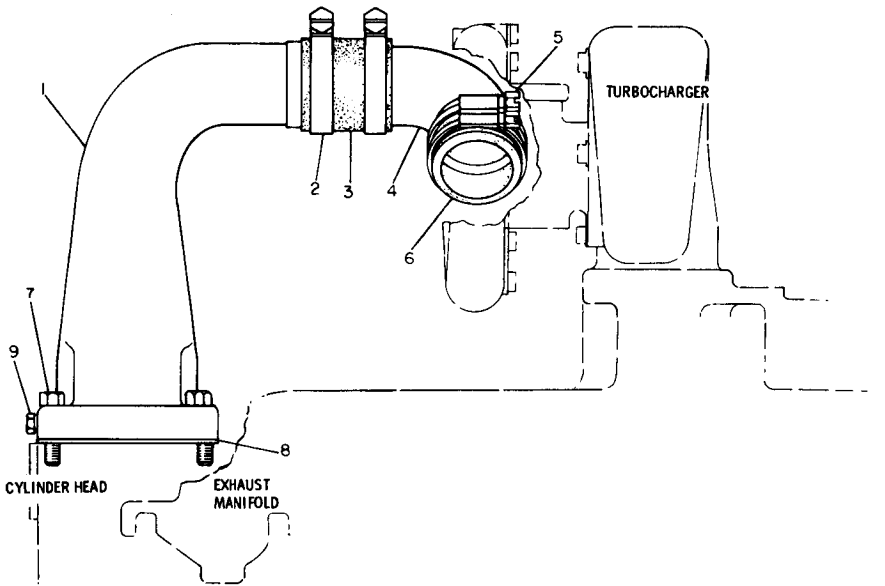

	REF. NO.	PART NUMBER	DESCRIPTION	QTY.
	1	4N8320	ELBOW	1
	2	5P4868	CLAMP	2
	3	4N9215	HOSE	1
	4	7N8063	ELBOW	1
	5	5P597	CLAMP	2
	6	4N9216	HOSE	1
C	7	S1571	BOLT	4
	8	5S6735	GASKET	1
	9	5M6213	PLUG	1

C INDICATES CHANGE

300658

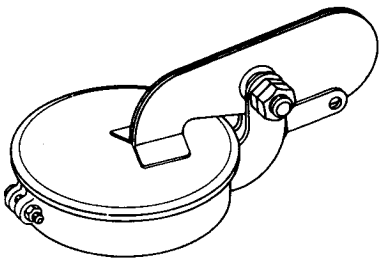

THE INDIVIDUAL PARTS OF THIS
ASSEMBLY ARE NOT SERVICED SEPARATELY

217936

7S1784 RAIN CAP ASSEMBLY

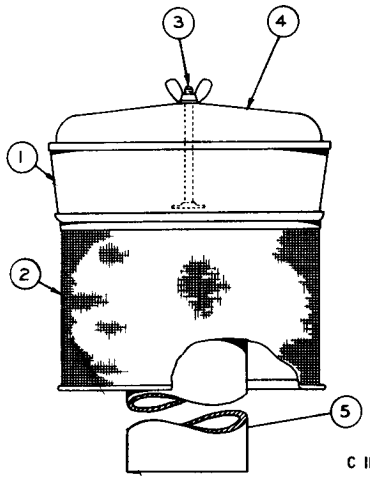

	REF. NO.	PART NUMBER	DESCRIPTION	QTY
	1	9S601	PRESCREENER ASSEM.	1
		6H8021	BODY	1
	2	9S614	SLEEVE ASSEM.	1
	3	3S2966	BOLT	1
		3S9228	WASHER	1
	4	9M5201	COVER ASSEM.	1
C	5	8S2381	STACK	1

C INDICATES CHANGE

229302

7N6470 PRESCREENER ASSEMBLY
AN ATTACHMENT

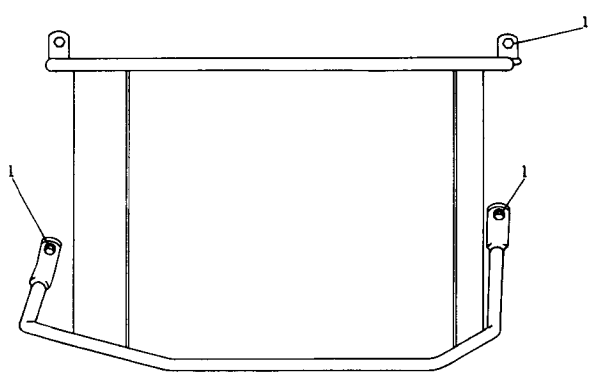

	REF. NO.	PART NUMBER	DESCRIPTION	QTY
		S1594	BOLT	4
	1	1D4717	NUT	4
C		5P1075	WASHER	4

C INDICATES CHANGE

229300

8P5415 PRECLEANER GUARD GROUP

C INDICATES CHANGE FROM PREVIOUS TYPE

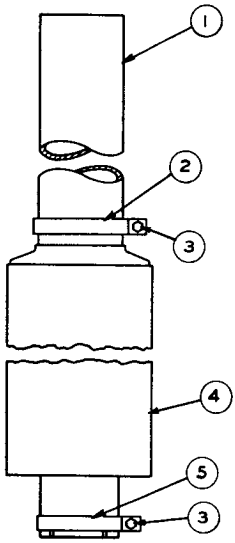

REF. NO.	PART NUMBER	DESCRIPTION	QTY.	
1	9S1768	PIPE	1	C
2	6F8815	CLAMP	1	
3	S1591	BOLT	2	
	1B5355	NUT	2	
4	7S8443	MUFFLER	1	
5	7H4266	CLAMP	1	

126221

7S6741 MUFFLER GROUP

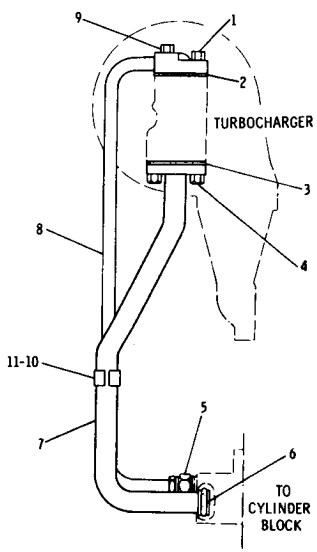

REF. NO.	PART NUMBER	DESCRIPTION	QTY	
1	4B3388	BOLT	1	
2	1S6595	GASKET	1	
3	1P1255	GASKET	1	
4	1A2029	BOLT	2	
5	3R5387	CONNECTOR	1	
6	9M4849	SEAL	1	
7	1N3410	TUBE ASSEM. -------(drain)-------	1	
8	1N4040	TUBE ASSEM. ------(supply)-------	1	C
9	1B2790	BOLT	1	
10	6N6033	CLIP	2	
11	S1617	BOLT	1	
	1D4716	NUT	1	
	9M1974	WASHER	2	C

C INDICATES CHANGE

229470

6N25 TURBOCHARGER LINES GROUP
Engine Serial No. 8Z1827 To 8Z19861 Inclusive

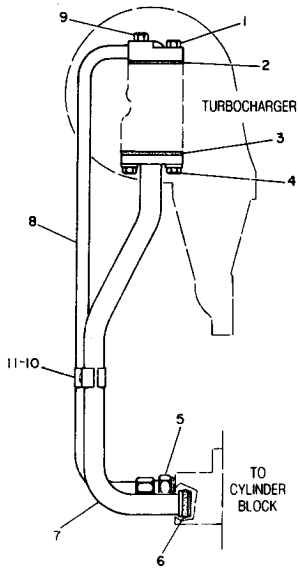

NOTE	REF NO	PART NUMBER	QTY	DESCRIPTION
	1	4B3388	1	BOLT
	2	1S6595	1	GASKET
	3	1P1255	1	GASKET
	4	1A2029	2	BOLT
C		5M2894	2	WASHER
	5	3R5387	1	CONNECTOR
	6	9M4849	1	SEAL
C	7	4W2183	1	TUBE AS. (DRAIN)
	8	1N4040	1	TUBE AS. (SUPPLY)
	9	1B2790	1	BOLT
	10	6N6033	2	CLIP
	11	0S1617	1	BOLT
		1D4716	1	NUT
		9M1974	2	WASHER

C INDICATES CHANGE

316928

6N0025 TURBOCHARGER OIL LINES GROUP
Engine Serial No. 8Z19862-Up

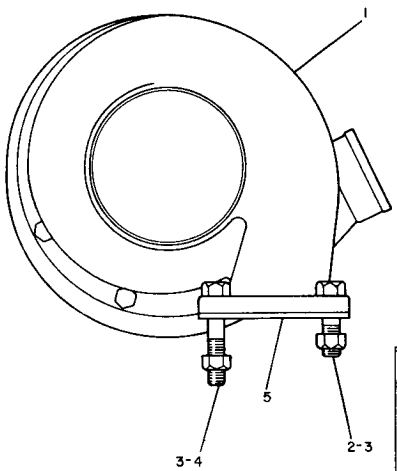

NOTE	REF NO	PART NUMBER	QTY	DESCRIPTION
Y	1	7N7748	1	TURBOCHARGER GROUP
C	2	9L2295	2	BOLT
C	3	2N2766	4	LOCKNUT
C	4	7L6443	2	BOLT
	5	1P451	1	GASKET

Y SEPARATE ILLUSTRATION C INDICATES CHANGE 315751

8N2669 TURBOCHARGER GROUP
7N7748 Turbocharger Parts Are Shown On Page 44

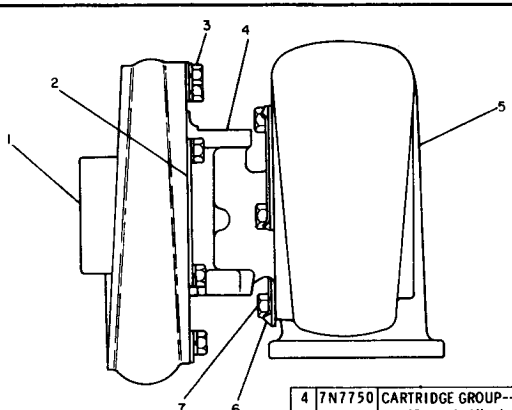

REF NO.	PART NUMBER	DESCRIPTION	QTY.
1	7N7746	HOUSING-----(compressor)------	1
2	1P715	PLATE----------	4
3	S1614	BOLT----------	8
	3B4504	LOCKWASHER----------	8

	4	7N7750	CARTRIDGE GROUP---------- (Separate Illustration)	1
	5	7N7747	HOUSING----(turbine)----------	1
	6	6N1523	LOCK----------	2
		6N1522	PLATE----------	2
	7	6N2145	BOLT----------	4
▲	8	4N8155	NAMEPLATE----------	1
▲		8H3710	SCREW----------	1

▲ NOT SHOWN-MOUNTED ON CARTRIDGE HOUSING 225434

7N7748 TURBOCHARGER GROUP
Part Of 8N2669 Turbocharger Group Shown On Page 44
7N7750 Cartridge Parts Are Shown On Page 45

7N7750 CARTRIDGE GROUP

Part of 7N7748 Turbocharger Group shown on Page 44

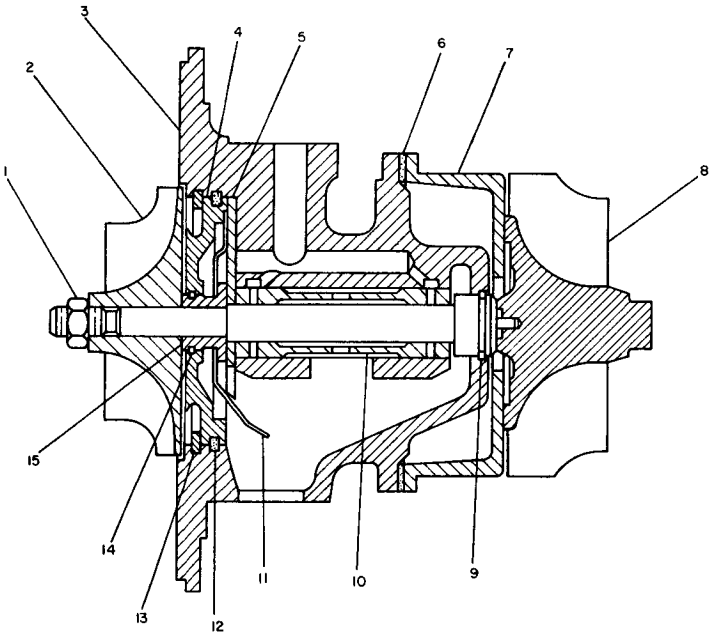

	REF. NO.	PART NUMBER	DESCRIPTION	QTY.
●	1	7N456	NUT	1
	2	7N7749	WHEEL	1
	3	6N1529	HOUSING ASSEM. (Includes)	1
		6N1530	PIN	2
	4	6N1527	INSERT	1
	5	6N1528	BEARING	1
●	6	6N4357	GASKET	1
	7	6N1531	SHROUD	1
	8	6N1532	SHAFT AND WHEEL ASSEM.	1
C	9	1N3806	RING	1
●	10	6N1533	BEARING	1
●	11	6N1534	DEFLECTOR	1
●	12	5P5757	SEAL	1
●	13	5S4546	RING	1
●	14	6N1526	RING	1
●	15	6N1535	SLEEVE	1
▲		2S1507	NAMEPLATE	1
▲		8H3710	SCREW	1
		6N7242	KIT-----(Cartridge) (Includes parts marked ●)	1
	SMHS6774		FORM (Installation of cartridge kit)	1

C INDICATES CHANGE

▲ NOT SHOWN

228972

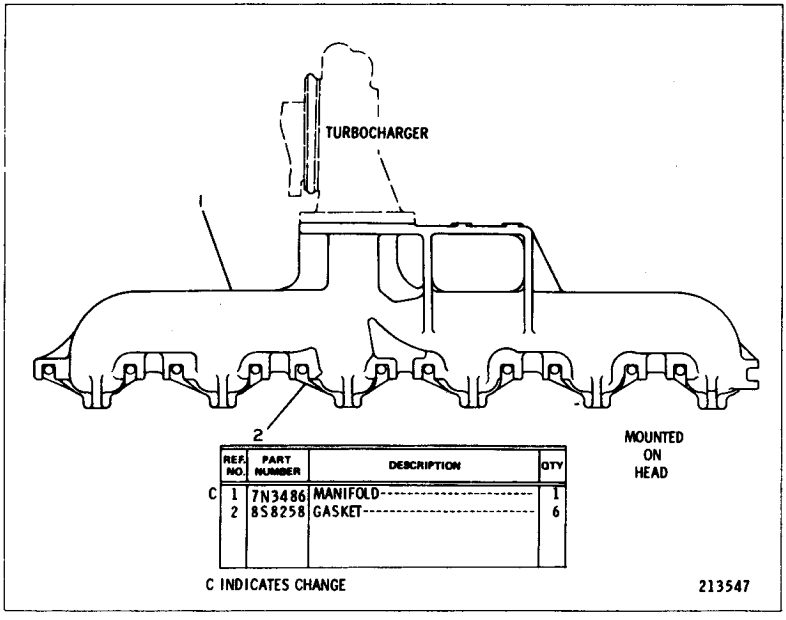

	REF. NO.	PART NUMBER	DESCRIPTION	QTY
C	1	7N3486	MANIFOLD	1
	2	8S8258	GASKET	6

6N164 EXHAUST MANIFOLD GROUP

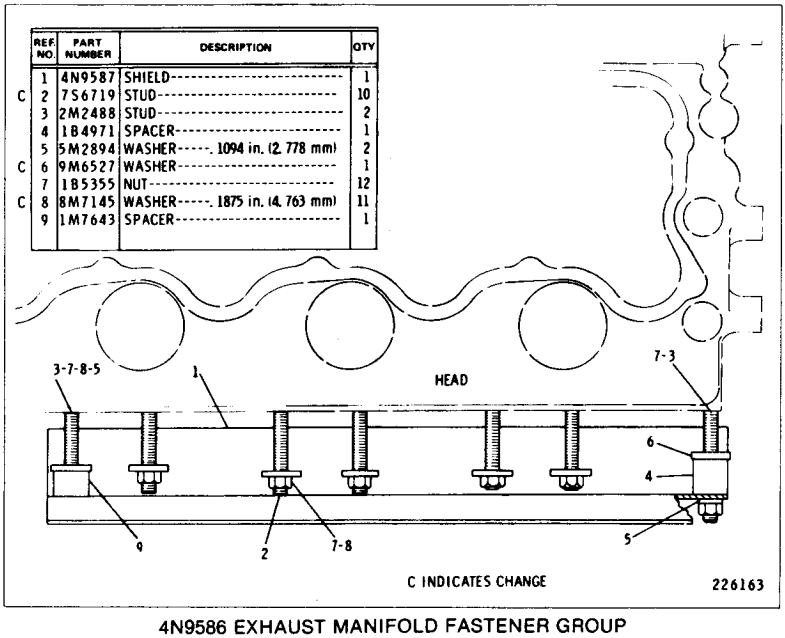

	REF. NO.	PART NUMBER	DESCRIPTION	QTY
	1	4N9587	SHIELD	1
C	2	7S6719	STUD	10
	3	2M2488	STUD	2
	4	1B4971	SPACER	1
	5	5M2894	WASHER-----. 1094 in. (2. 778 mm)	2
C	6	9M6527	WASHER	1
	7	1B5355	NUT	12
C	8	8M7145	WASHER-----. 1875 in. (4. 763 mm)	11
	9	1M7643	SPACER	1

4N9586 EXHAUST MANIFOLD FASTENER GROUP

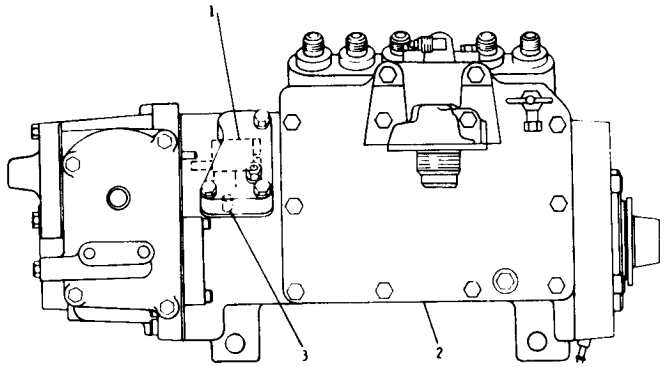

	REF. NO	PART NUMBER	DESCRIPTION	QTY
C	1	6N3586	TORQUE CONTROL GROUP--------- (Separate Illustration)	1
	2	1N4806	FUEL INJECTION PUMP GROUP---- (Separate Illustration)	1

3	4N443	PIN----------	1

C INDICATES CHANGE 179382

1N4807 GOVERNOR AND FUEL INJECTION PUMP GROUP—For Field Replacement order 7N2177

1N4806 Governor and 6N3586 Torque Control parts are shown on Pages 48 and 54

		CONSISTS OF:	PAGE
1	7N2193	GOVERNOR & FUEL INJECTION PUMP GROUP ...	49
1	.....	FORM SMHS6728	

7N2177 GOVERNOR AND FUEL INJECTION PUMP GROUP—Field Installation

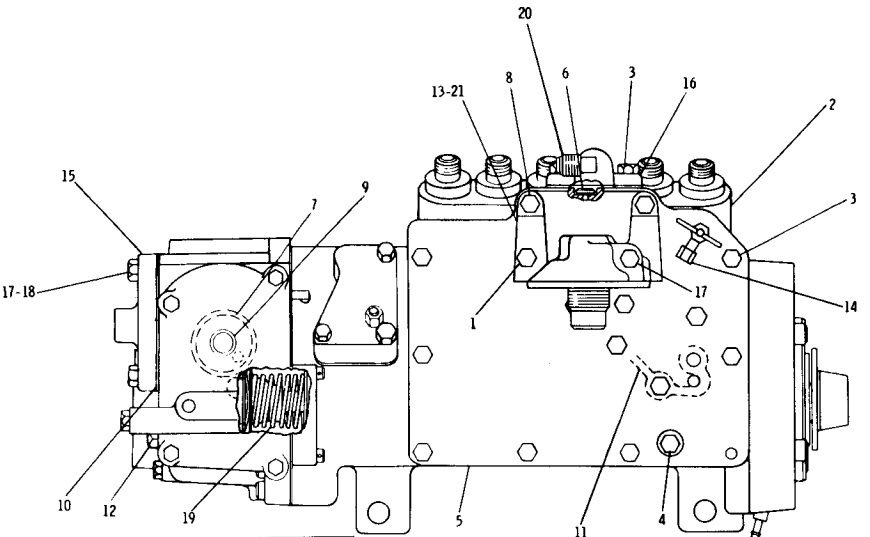

REF. NO.	PART NUMBER	DESCRIPTION	QTY
1	9F7022	BOLT-------3.81 cm(1.5 in.)long---	1
2	7N1738	FUEL INJECTION PUMP GROUP---- (Separate Illustration)	1
3	S1615	BOLT----------	13
4	9S4180	PLUG----------	1
	4J7533	SEAL----------	1

5	4N4351	COVER----------	1
	4N9057	GASKET----------	1
6	4N9336	DISC----------	1
7	4N4366	SPRING----------	1
8	9F6580	BOLT----------	2
9	4N4320	SHAFT ASSEM.----------	1
10	4N159	GASKET----------	1

11	4N4431	GASKET----------	1
	6N2810	CHANNEL----------	1
12	9S4191	PLUG----------	1
	3J1907	SEAL----------	1
13	6N2843	GASKET----------	1
14	7N450	VALVE ASSEM.----------	1
15	4N53	COVER----------	1
16	4N7572	ELBOW----------	1
	4N9337	GASKET----------	1
17	8S4710	BOLT----10.16 cm(4 in.)long-----	3
18	S1616	BOLT----2.54 cm(1 in.)long-------	1
19	4N4223	SPRING----------	1
20	4N1828	ELBOW----------	1
21	4N5490	BASE ASSEM.---------- (Includes)	1
	9S4167	STUD----------	1

228653

1N4806 GOVERNOR AND FUEL INJECTION PUMP GROUP
Part of 1N4807 Governor and Fuel Injection Pump Group shown on Page 47
7N1738 Governor parts are shown on Pages 51 through 53

7N2193 GOVERNOR AND FUEL INJECTION PUMP GROUP
Part of 7N2177 Governor and Fuel Injection Pump Group shown on Page 47
7N1738 Governor and 6N599 Torque Control parts are shown on Pages 50 through 54

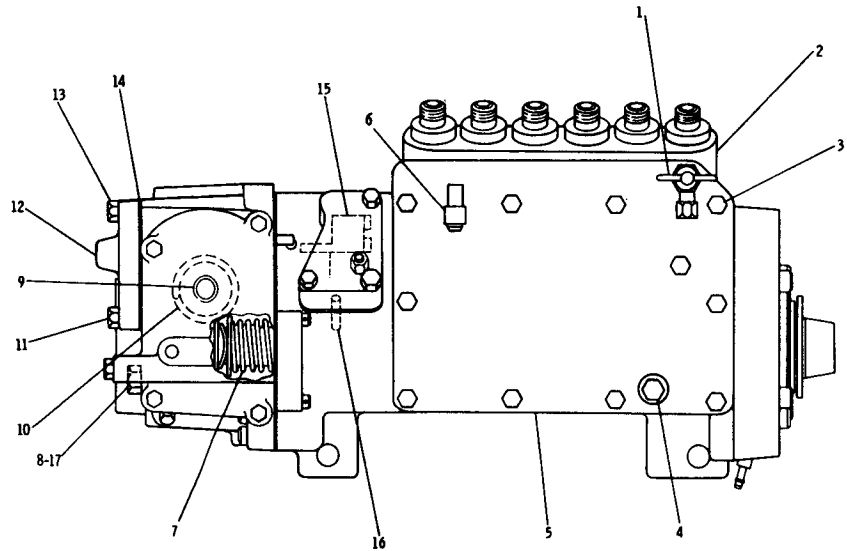

REF. NO.	PART NUMBER	DESCRIPTION	QTY
1	7N450	VALVE ASSEM.	1
2	7N1738	PUMP GROUP (Separate Illustration)	1
3	S1615	BOLT	10
4	9S4180	PLUG (drain)	1
	4J7533	SEAL	1
5	7N2058	COVER	1
	4N9057	GASKET	1
6	4N1828	ELBOW	1
C 7	4N4223	SPRING	1
8	3J1907	SPRING	1
9	4N4320	SHAFT ASSEM.	1
10	4N4366	SPRING	1
11	8S4710	BOLT	2
12	4N53	COVER	1
13	S1616	BOLT	1
14	4N159	GASKET	1
C 15	6N599	CONTROL GROUP (Separate Illustration)	1
16	4N443	PIN	1
17	9S4191	COVER	1

C INDICATES CHANGE

229494

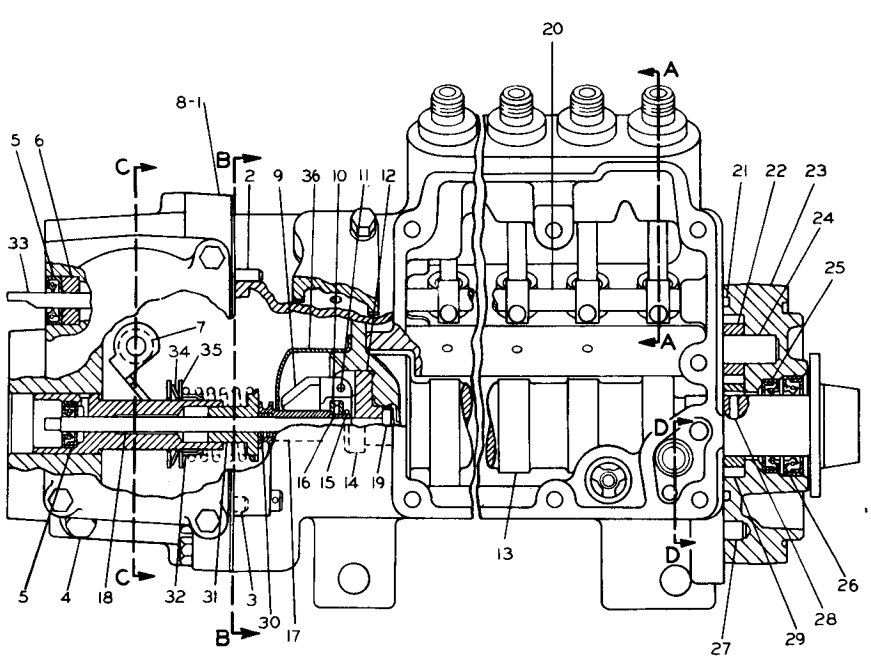

NOTE	REF NO	PART NUMBER	QTY	DESCRIPTION
	1	6N5324	1	HOUSING AS.
	2	4N2333	1	DOWEL
	3	8S6814	2	DOWEL
	4	4N5050	1	PLUG
	5	4N260	2	SEAL
	6	6N2578	1	BEARING
C	7	2W4037	1	SEAL
	8	9S4180	1	PLUG
		4J7533	1	SEAL
	9	4N425	3	WEIGHT
	10	4N2927	2	RACE
	11	4N511	3	DOWEL
	12	8N2663	1	CARRIER
	13	6N4451	1	CAMSHAFT
	14	8N2662	3	BOLT
	15	4N2953	1	RING
C	16	7M7219	1	BEARING
	17	4N434	1	RISER
	18	4N9018	1	SHAFT
	19	4N9019	1	DOWEL
	20	4N572	1	SHAFT AS.
	21	5M6509	1	SEAL
	22	4N406	1	GEAR (10 TEETH)
	23	9L6863	1	BODY AS.
		4N5050	1	PLUG
	24	8H9804	1	SHAFT
	25	4N636	1	SEAL
	26	4N1584	1	SEAL
	27	8S6814	1	DOWEL
	28	4N3779	1	KEY
	29	4N429	1	GEAR (15 TEETH)
	30	6N6662	1	SPRING
	31	6N4655	1	DASH POT AS.
	32	6N7451	1	SEAT
	33	4N927	1	SHAFT AS.
	34	6N2956	1	WASHER (SPRING)
	35	6N2957	2	WASHER
	36	4N1723	1	SHIELD

C INDICATES CHANGE 315864

7N1738 GOVERNOR & FUEL INJECTION PUMP GROUP–PART 1 OF 4
Part Of 1N4806 & 7N2193 Governor & Fuel Injection Pump Groups Shown On
Pages 48 & 49

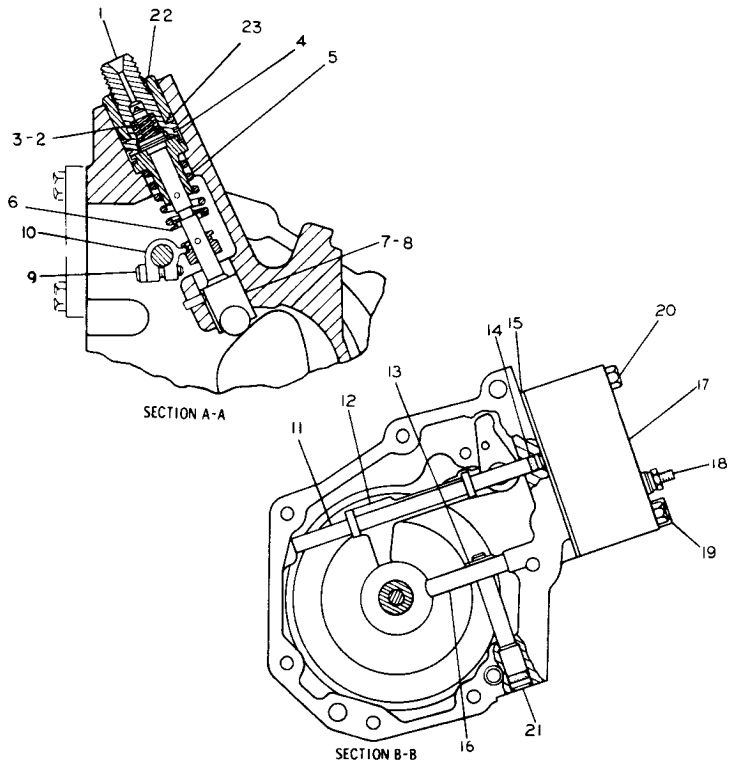

	REF. NO.	PART NUMBER	DESCRIPTION	QTY.
C	1	7N5301	PUMP ASSEM.	6
		8N1417	BONNET	1
	2	8N1415	SPRING	1
	3	8N1414	CHECK ASSEM.	1
	4	5N224	RING	1
	5	9N5862	SPRING	1
	6	4N2728	WASHER	1
	7	6N6794	LIFTER	6
	8	4N2685	ROLLER	6
	9	2N2658	BOLT	6
	10	4N1763	LEVER	6
	11	4N528	SHAFT	1
	12	4N2677	LEVER ASSEM.	1
	13	2M7819	RING	1
	14	3H442	SEAL	1
	15	4N508	GASKET	1

REF. NO.	PART NUMBER	DESCRIPTION	QTY.
16	4N445	LEVER	1
17	4N1591	COVER ASSEM.	1
	6N411	COVER	1
	6N412	MACHINE SCREW	1
18	4B2042	NUT	1
	3B4501	LOCKWASHER	1
	1P7326	WASHER-1.52mm(.06 in.) thick	1
	8F1326	WASHER-1.52mm(.06 in.) thick	1
19	2P3200	BOLT	1
	1J9671	SEAL	1
20	2M5471	BOLT	2
21	4N523	DOWEL	1
	2D6392	SEAL	1
22	4N218	BUSHING	6
23	6F6672	SEAL	6

C INDICATES CHANGE

229973

7N1738 GOVERNOR AND FUEL INJECTION PUMP GROUP — Part 2 of 4
Part of 1N4806 and 7N2193 Governor and Fuel Injection Pump Groups shown on Pages 48 and 49

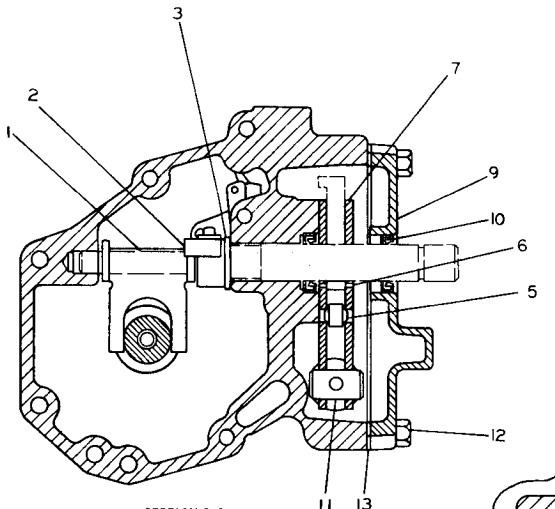

SECTION C-C

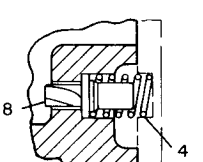

SECTION D-D

NOTE	REF NO	PART NUMBER	QTY	DESCRIPTION
	1	4N1881	1	LEVER
	2	4N448	1	LEVER AS.
		9L8571	1	DOWEL
	3	8F5368	1	WASHER
	4	4N605	1	SPRING
	5	4N8179	1	PIN
	6	4N444	2	SPACER
	7	6N5482	2	PLATE
	8	4N1767	1	VALVE
	9	4N687	1	COVER AS.
C	10	2W4037	1	SEAL
	11	9S8601	1	PIN
	12	S1616	4	BOLT
	13	4N402	1	GASKET

C INDICATES CHANGE

315865

7N1738 GOVERNOR & FUEL INJECTION PUMP GROUP–PART 3 OF 4
Part Of 1N4806 & 7N2193 Governor & Fuel Injection Pump Groups
Shown On Pages 48 & 49

7N1738 GOVERNOR AND FUEL INJECTION PUMP GROUP — Part 4 of 4

Part of 1N4806 and 7N2193 Governor and Fuel Injection Pump Groups shown on Pages 48 and 49

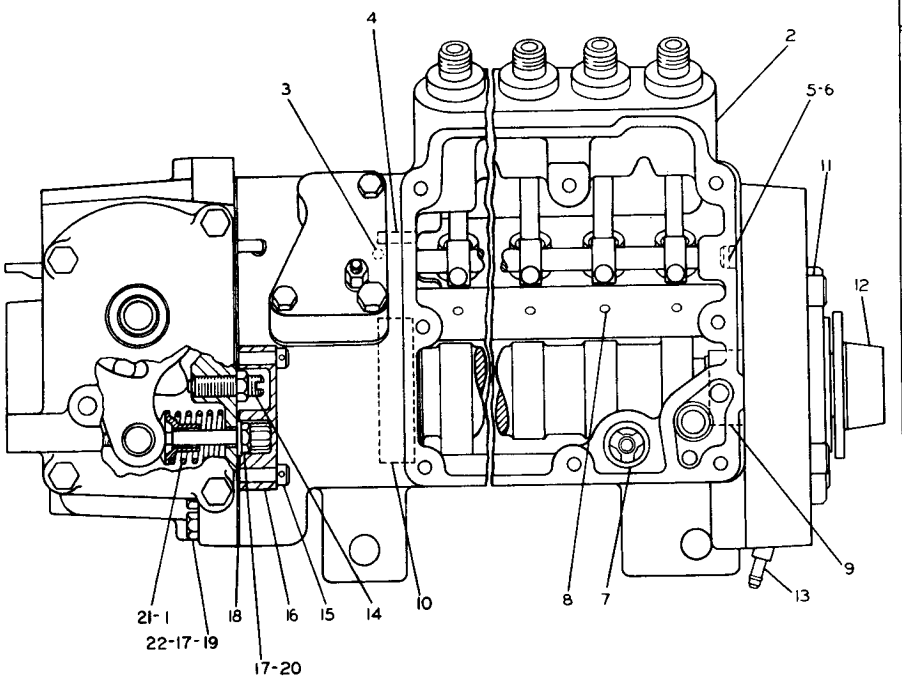

REF. NO.	PART NUMBER	DESCRIPTION	QTY.
1	4N116	GUIDE	1
2	8N1570	HOUSING ASSEM. (Includes)	1
3	4N5481	STUD	1
4	4N2333	PIN	1
5	4N1826	DOWEL	1
6	2D6392	SEAL	1
7	1P2298	VALVE ASSEM.	1
8	8N984	PIN	6
9	6N1078	BEARING	1
10	8N628	BEARING	1
11	5J5314	BOLT	4
12	4N2954	SLEEVE	1
13	1P4001	FITTING	1
14	4N54	SCREW	1
	5B3180	NUT	1
15	1P2497	BOLT	2
16	4N5578	COVER	1
	4N49	GASKET	1
17	1P9925	BOLT--6.35 cm(2.50 in.)	2
18	4N594	GASKET	1
19	2A4781	BOLT--6.99 cm(2.75 in.) long	1
20	6N7523	WASHER	1
21	9S8632	SPRING	1
22	3B8695	BOLT--8.89 cm(3.5 in.) long	1
	6N7523	WASHER	1

229974

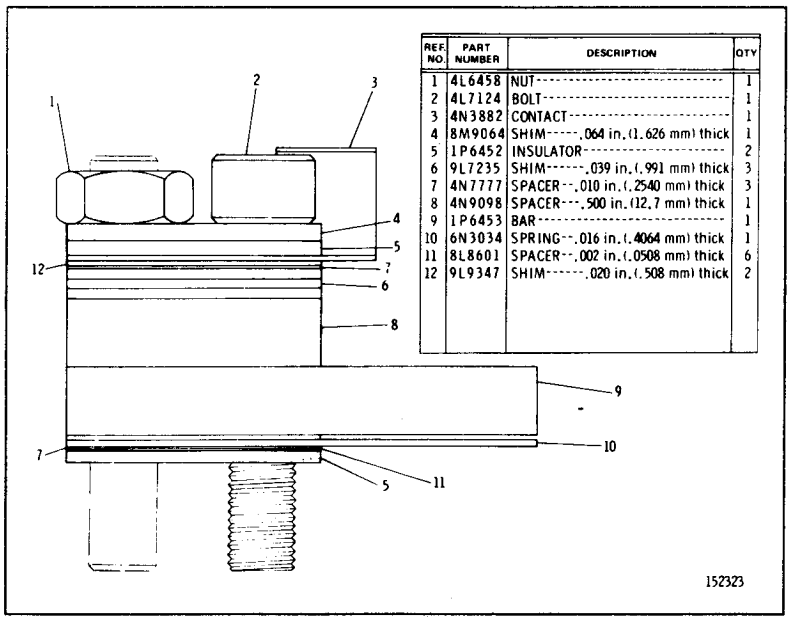

REF. NO.	PART NUMBER	DESCRIPTION	QTY
1	4L6458	NUT	1
2	4L7124	BOLT	1
3	4N3882	CONTACT	1
4	8M9064	SHIM-----.064 in. (1.626 mm) thick	1
5	1P6452	INSULATOR	2
6	9L7235	SHIM-----.039 in. (.991 mm) thick	3
7	4N7777	SPACER---.010 in. (.2540 mm) thick	3
8	4N9098	SPACER---.500 in. (12.7 mm) thick	1
9	1P6453	BAR	1
10	6N3034	SPRING--.016 in. (.4064 mm) thick	1
11	8L8601	SPACER---.002 in. (.0508 mm) thick	6
12	9L9347	SHIM-----.020 in. (.508 mm) thick	2

6N3586 TORQUE CONTROL GROUP
Part of 1N4807 Governor and Fuel Injection Pump Group shown on Page 47

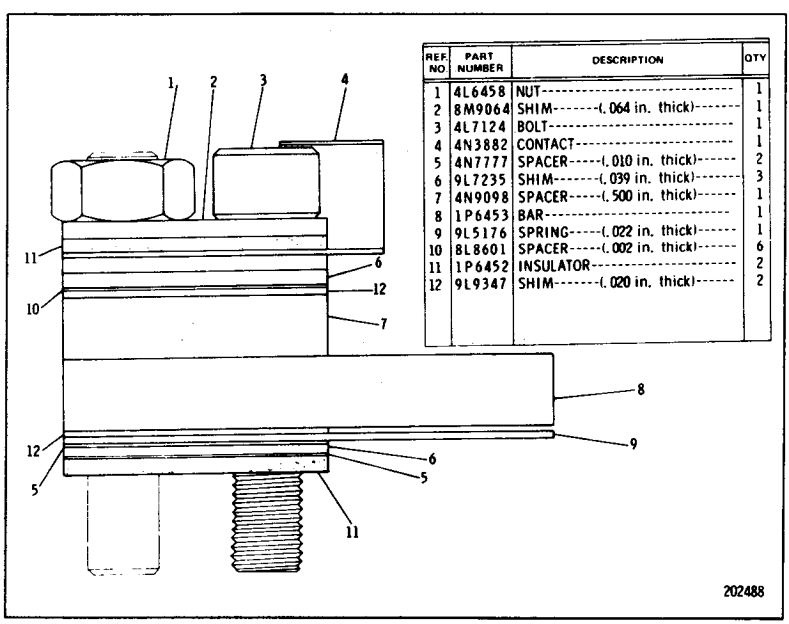

REF. NO.	PART NUMBER	DESCRIPTION	QTY
1	4L6458	NUT	1
2	8M9064	SHIM-----(.064 in. thick)-----	1
3	4L7124	BOLT	1
4	4N3882	CONTACT	1
5	4N7777	SPACER-----(.010 in. thick)-----	2
6	9L7235	SHIM-----(.039 in. thick)-----	3
7	4N9098	SPACER-----(.500 in. thick)-----	1
8	1P6453	BAR	1
9	9L5176	SPRING-----(.022 in. thick)-----	1
10	8L8601	SPACER-----(.002 in. thick)-----	6
11	1P6452	INSULATOR	2
12	9L9347	SHIM-----(.020 in. thick)-----	2

6N599 TORQUE CONTROL GROUP
Part of 7N2193 Governor and Fuel Injection Pump Group shown on Page 49

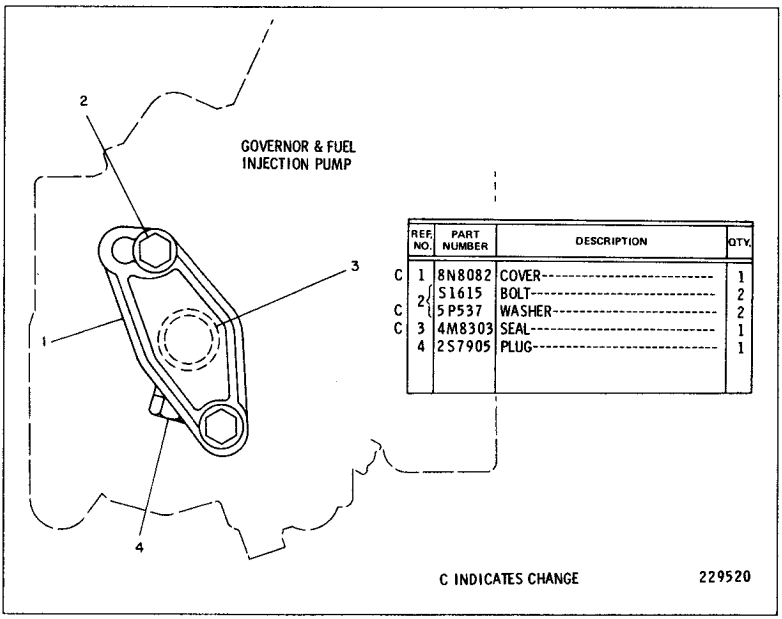

	REF. NO.	PART NUMBER	DESCRIPTION	QTY.
C	1	8N8082	COVER	1
	2	S1615	BOLT	2
C		5P537	WASHER	2
C	3	4M8303	SEAL	1
	4	2S7905	PLUG	1

4N4510 GOVERNOR COVER GROUP

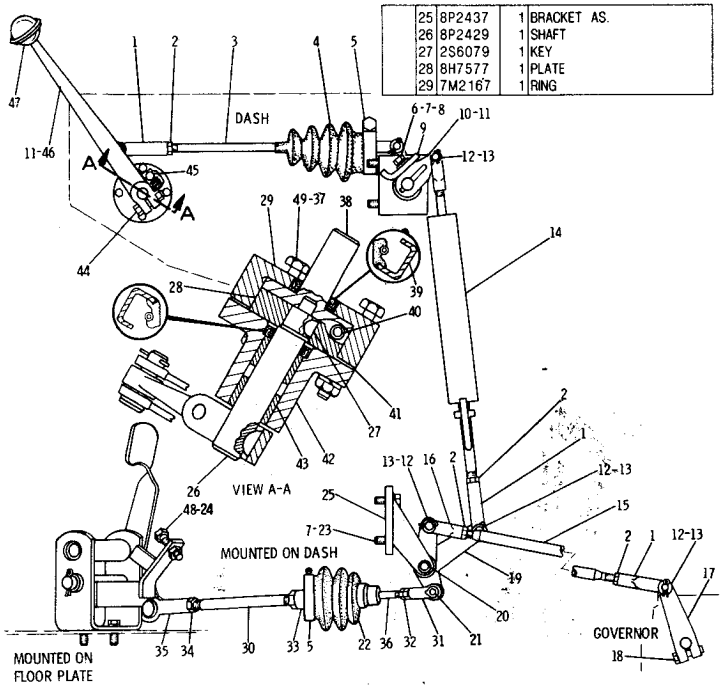

	25	8P2437	1	BRACKET AS.
	26	8P2429	1	SHAFT
	27	2S6079	1	KEY
	28	8H7577	1	PLATE
	29	7M2167	1	RING

NOTE	REF NO	PART NUMBER	QTY	DESCRIPTION
	1	1A9252	4	END
	2	5B9079	5	NUT
	3	1P4573	1	ROD
	4	8P7317	1	BOOT
	5	5P597	2	CLAMP
	6	S1591	1	BOLT
	7	3B4506	3	LOCKWASHER
	8	4B4278	1	WASHER
	9	8P3167	1	ANGLE
C	10	6D5707	1	LEVER
C	11	1B8704	2	KEY
	12	9H6673	4	PIN
	13	3B4615	4	COTTER PIN
	14	8P2451	1	ROD AS.
	15	8P2445	1	ROD
	16	1F5403	1	END
	17	1V26	1	LEVER
	18	4B3388	1	BOLT
	19	8P2441	1	BELLCRANK AS.
		3K6662	2	BEARING
	20	8P2443	1	SHAFT
		6H3956	1	PIN
	21	3D8752	1	NUT
	22	8P7792	1	BOOT
C	23	S1588	2	BOLT
	24	1B2578	1	NUT

	30	8P2454	1	ROD AS.
		8P2455	1	ROD
	31	9K8757	1	END
	32	1A8285	1	NUT
	33	8P2456	1	TUBE
		8H9523	1	SPRING
	34	1B4430	2	NUT
	35	5J557	1	END
C	36	8P2458	1	ROD
	37	1B4330	4	NUT
		3B4504	4	LOCKWASHER
	38	8P2430	1	SHAFT AS.
		2S6091	2	DOWEL
	39	8H9180	2	SEAL
	40	5H7152	1	SPRING
	41	7M6955	1	GASKET
	42	8P2426	1	SUPPORT AS.
	43	9F5647	1	BEARING
	44	3B1915	1	BOLT
		1D4717	1	NUT
	45	8H9182	2	ROLLER
		8H9186	2	SPRING
	46	8M6770	1	LEVER
	47	7F8092	1	KNOB
C	48	4B3611	1	SETSCREW
	49	8B2377	3	BOLT 50.80MM(2IN.)LONG
		1B2713	1	BOLT 44.45MM(1.75IN.)LONG

C INDICATES CHANGE 313429

8P2457 GOVERNOR CONTROL GROUP — Part 1

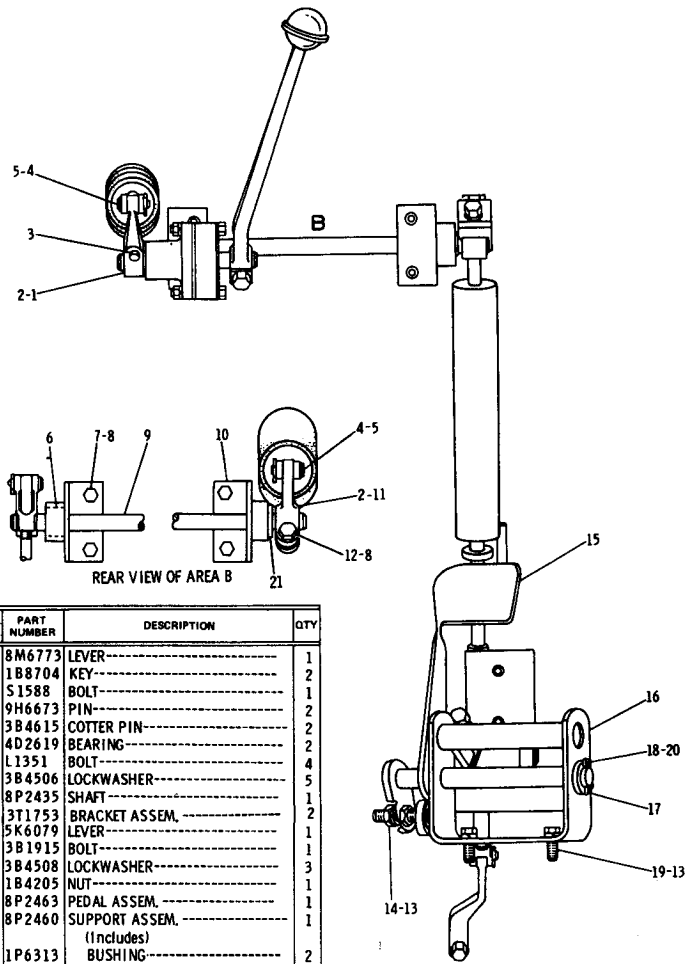

REF. NO.	PART NUMBER	DESCRIPTION	QTY
1	8M6773	LEVER	1
2	1B8704	KEY	2
3	S1588	BOLT	1
4	9H6673	PIN	2
5	3B4615	COTTER PIN	2
6	4D2619	BEARING	2
7	L1351	BOLT	4
8	3B4506	LOCKWASHER	5
9	8P2435	SHAFT	1
C 10	3T1753	BRACKET ASSEM.	2
11	5K6079	LEVER	1
12	3B1915	BOLT	1
13	3B4508	LOCKWASHER	3
14	1B4205	NUT	1
15	8P2463	PEDAL ASSEM.	1
16	8P2460	SUPPORT ASSEM. (Includes)	1
17	1P6313	BUSHING	2
18	3B4617	COTTER PIN	1
19	S1595	BOLT	2
20	1A2812	WASHER	1
C 21	2S7593	WASHER	1

C INDICATES CHANGE

230337

8P2457 GOVERNOR CONTROL GROUP — Part 2

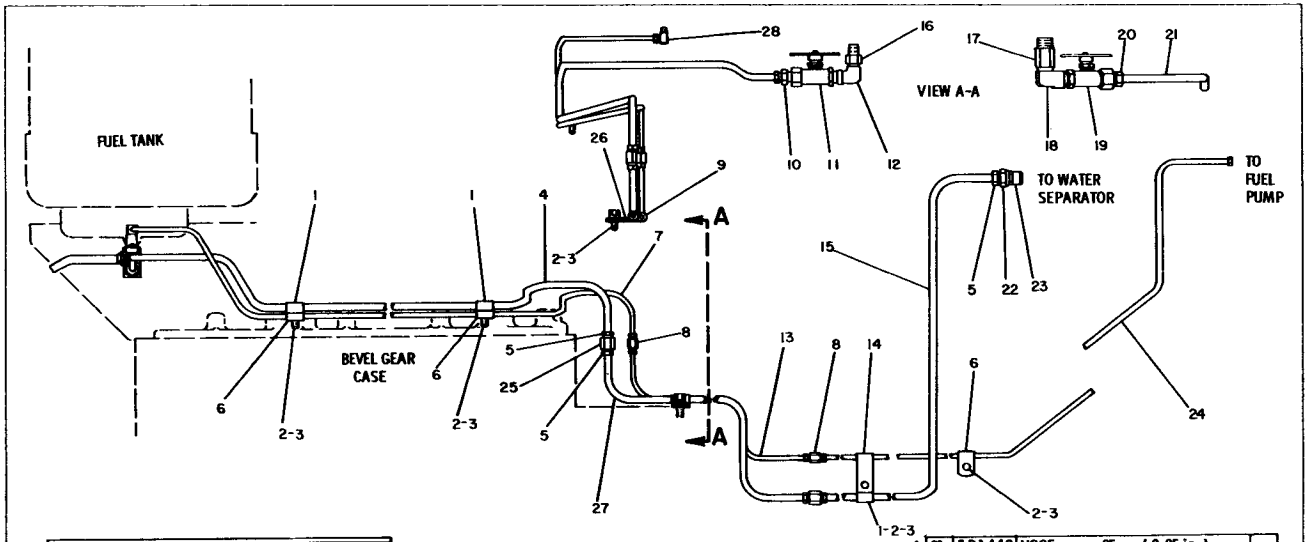

REF. NO.	PART NUMBER	DESCRIPTION	QTY.
1	8B6127	CLIP	3
2	S509	BOLT	5
3	5M2894	WASHER	8
▲ 4	5P1200	TUBE——135 cm (53.15 in.)	
5	2K8851	NUT	6
6	6H3068	CLIP	3
7	9P4486	TUBE ASSEM.	1
8	5K9242	UNION	2
9	4K8179	CLIP	1
10	5K9248	CONNECTOR	1
11	5P7090	VALVE	1
12	32143	ELBOW	1
13	9P3438	TUBE ASSEM.	1
14	5K430	CLIP	1
▲ 15	5P1200	TUBE——128 cm (50.4 in.)	
16	5K6875	ADAPTER	1
17	6L5652	ADAPTER	1
18	9L3560	ELBOW	1
19	5P6940	VALVE	1
20	2R8613	ADAPTER	1
▲ 21	5P1442	HOSE——25 cm (9.85 in.)	
22	5K9246	CONNECTOR	1
23	5P4675	ADAPTER	1
	1J9671	SEAL	1
24	3T1690	TUBE ASSEM.	1
25	7K1456	UNION	2
26	7B1597	CLIP	1
▲ 27	5P1200	TUBE——65 cm (25.60 in.)	
28	5K9243	ELBOW	1

▲ ORDER BY THE CENTIMETER

228647

3T339 FUEL LINES GROUP

7N1646 FUEL INJECTION LINES GROUP

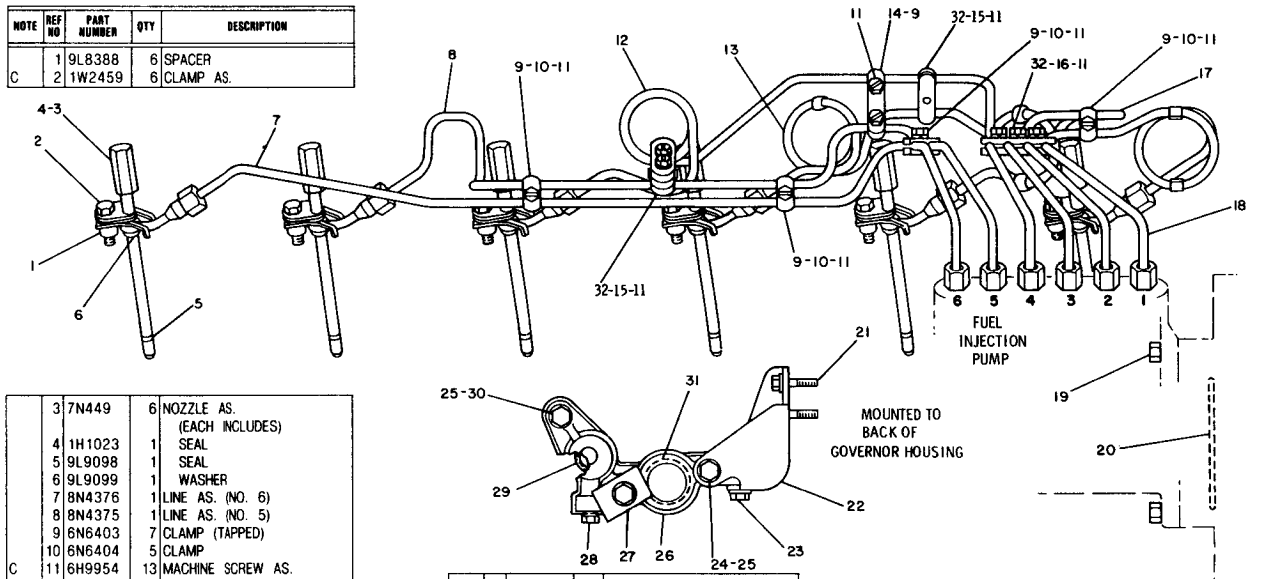

NOTE	REF NO	PART NUMBER	QTY	DESCRIPTION
	1	9L8388	6	SPACER
C	2	1W2459	6	CLAMP AS.
	3	7N449	6	NOZZLE AS. (EACH INCLUDES)
	4	1H1023	1	SEAL
	5	9L9098	1	SEAL
	6	9L9099	1	WASHER
	7	8N4376	1	LINE AS. (NO. 6)
	8	8N4375	1	LINE AS. (NO. 5)
	9	6N6403	7	CLAMP (TAPPED)
	10	6N6404	5	CLAMP
C	11	6H9954	13	MACHINE SCREW AS.
	12	8N4374	1	LINE AS. (NO. 4)
	13	8N4373	1	LINE AS. (NO. 3)
	14	1N3139	1	CLAMP AS.
C	15	7N4417	2	CLAMP AS.
	16	6N5125	1	CLAMP AS.
	17	8N4372	1	LINE AS. (NO. 2)
	18	8N4371	1	LINE AS. (NO 1)
	19	1B4203	3	NUT
	20	2H3934	1	SEAL
	21	2A5546	2	BOLT
		5P537	2	WASHER
	22	6N4682	1	BRACKET
	23	2B2695	2	BOLT
		9M1974	2	WASHER
	24	S1619	2	BOLT
	25	5M2894	3	WASHER
	26	2P5641	1	ADAPTER
	27	4D9786	1	BLOCK
	28	5M6214	1	PLUG
	29	8M5253	1	SEAL
	30	1A2029	1	BOLT
	31	8M5248	1	SEAL
C	32	6N5124	3	CLAMP (TAPPED)

C INDICATES CHANGE

316866

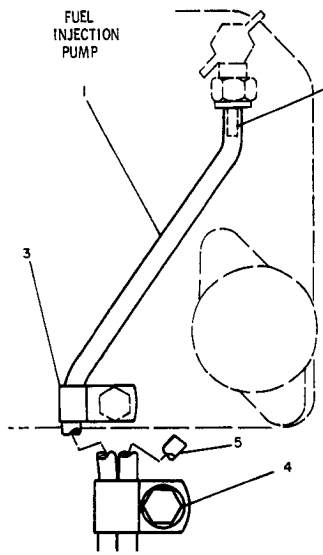

	REF. NO.	PART NUMBER	DESCRIPTION	QTY
▲	1	5P6011	TUBE----------, 6 m(23.62 in.)	
	2	7K8332	INSERT----------	1
	3	1A5350	CLIP----------	1
C		5K2298	CLIP----------	1
C	4	2H3755	BOLT----------	1
C		9M1974	WASHER----------	1
C▲	5	5P6011	TUBE-----(Drain)---, 4m(15.7 in.)	

▲ ORDER BY THE METER
C INDICATES CHANGE

181762

7N3616 DRAIN LINES GROUP

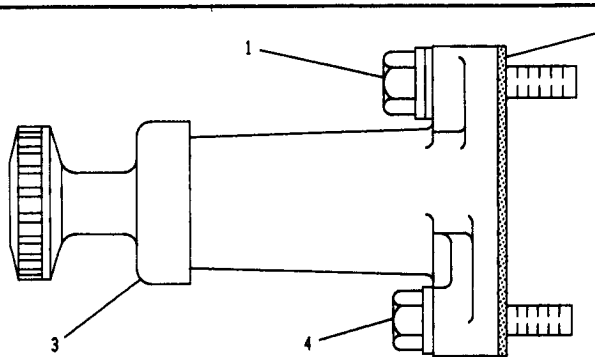

NOTE	REF NO	PART NUMBER	QTY	DESCRIPTION
C	1	1H5514	1	BOLT
CB		9M1974	2	WASHER
	2	1P0436	1	GASKET
C	3	4W0788	1	PUMP AS.
		1P2298	2	VALVE AS.
		7F8607	1	SEAL
		4T0302	1	WASHER (FELT)
	4	9F7022	1	BOLT
		5P0537	1	WASHER

B-USE AS REQUIRED C-INDICATES CHANGE

329406

4N4314 FUEL PRIMING PUMP GROUP

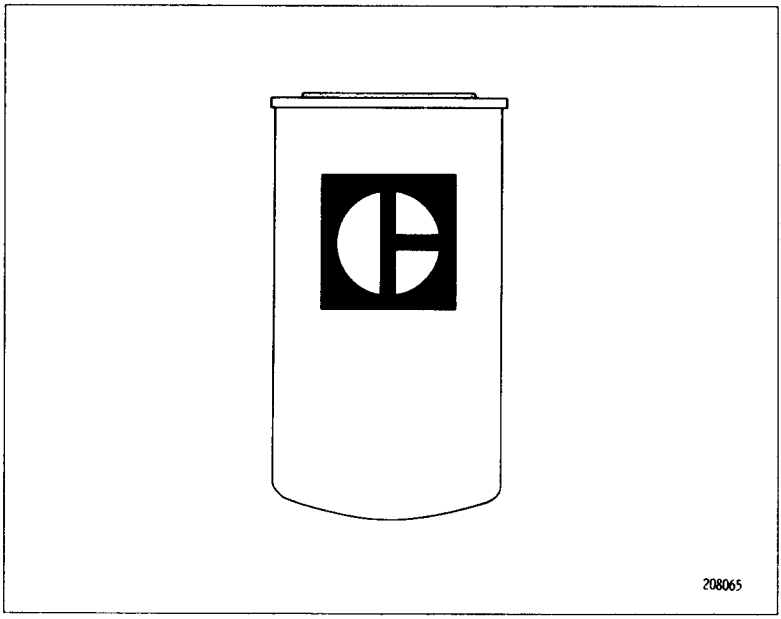

1P2299 FUEL FILTER ASSEMBLY

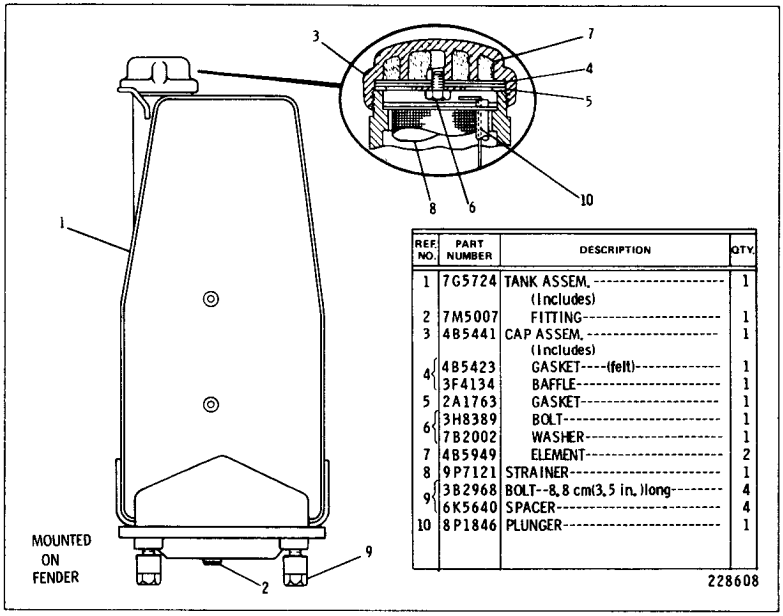

REF. NO.	PART NUMBER	DESCRIPTION	QTY.
1	7G5724	TANK ASSEM. (Includes)	1
2	7M5007	FITTING	1
3	4B5441	CAP ASSEM. (Includes)	1
4	4B5423	GASKET----(felt)	1
	3F4134	BAFFLE	1
5	2A1763	GASKET	1
6	3H8389	BOLT	1
	7B2002	WASHER	1
7	4B5949	ELEMENT	2
8	9P7121	STRAINER	1
9	3B2968	BOLT--8, 8 cm(3, 5 in.)long	4
	6K5640	SPACER	4
10	8P1846	PLUNGER	1

9G6090 FUEL TANK GROUP

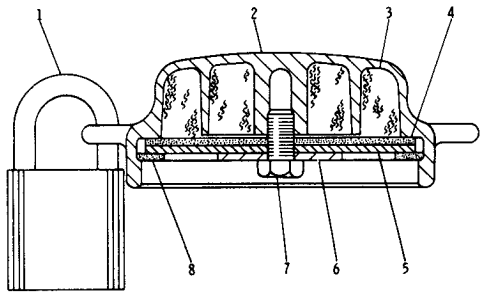

REF. NO.	PART NUMBER	DESCRIPTION	QTY.
1	5P8502	PADLOCK GROUP---------- (Includes)	1
▲	5P8500	KEY----------	2

▲ NOT PART OF 9G8847 GROUP

2	9G6082	CAP ASSEM.---------- (Includes)	1
	8P408	CAP----------	1
3	4B5949	ELEMENT----------	2
4	4B5423	GASKET----------	1
5	3F4134	BAFFLE----------	1
6	7B2002	WASHER----------	1
7	3H8389	SCREW----------	1
8	2A1763	GASKET----------	1

228815

9G8847 PROTECTION COVER GROUP — Fuel Tank Cap
AN ATTACHMENT

		CONSISTS OF:	PAGE
1	8H4681	PRIMARY FUEL FILTER GROUP	63
1	6N6	FUEL PUMP ASSEMBLY	
1	.....	FORM SMHS7468	

8N3569 FUEL PUMP GROUP — Boost-24 Volt — Field Installation
Provides positive pressure to the sleeve metering fuel system components on the suction side of the fuel transfer pump

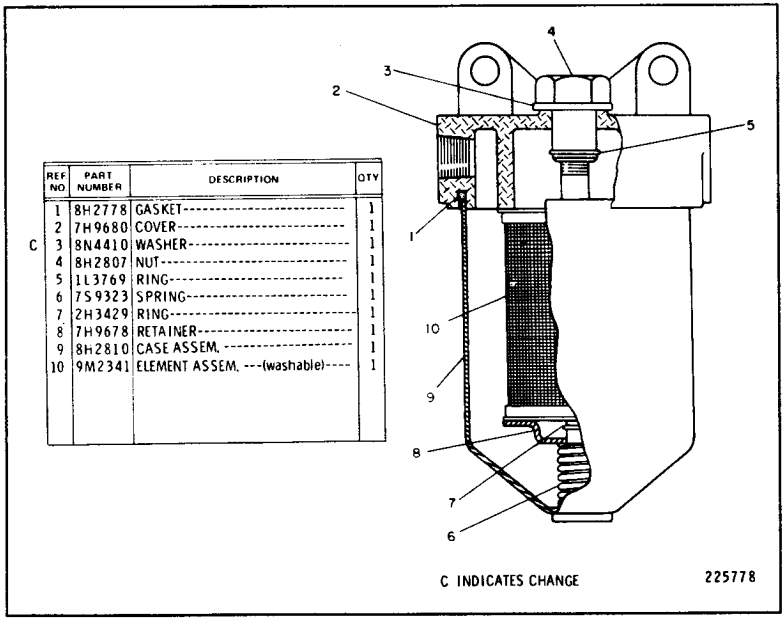

REF NO	PART NUMBER	DESCRIPTION	QTY
1	8H2778	GASKET	1
2	7H9680	COVER	1
C 3	8N4410	WASHER	1
4	8H2807	NUT	1
5	1L3769	RING	1
6	7S9323	SPRING	1
7	2H3429	RING	1
8	7H9678	RETAINER	1
9	8H2810	CASE ASSEM.	1
10	9M2341	ELEMENT ASSEM. ---(washable)----	1

8H4681 PRIMARY FUEL FILTER—Type 1
Part of 8N3569 and 9N5458 Fuel Pump Groups shown on Pages 62 and 63

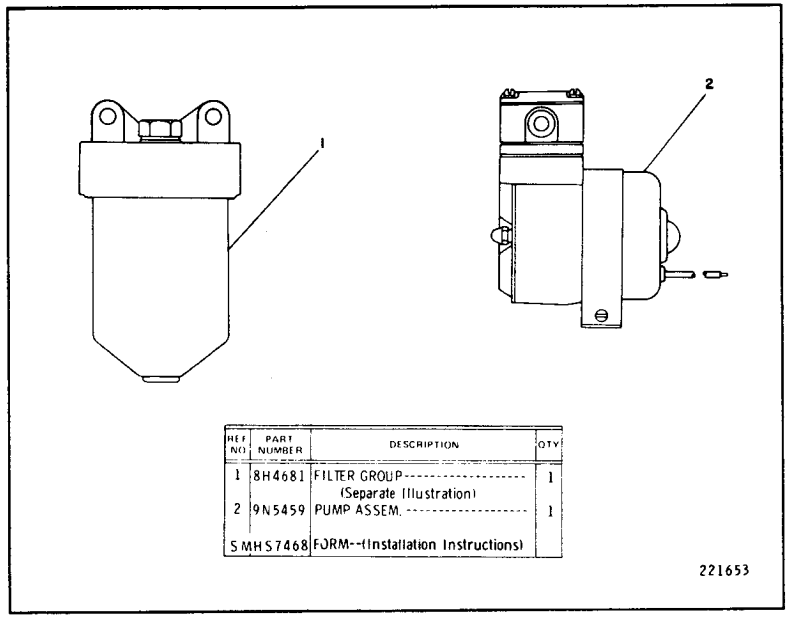

REF NO	PART NUMBER	DESCRIPTION	QTY
1	8H4681	FILTER GROUP (Separate Illustration)	1
2	9N5459	PUMP ASSEM.	1
	SMHS7468	FORM--(Installation Instructions)	

9N5458 ELECTRICAL FUEL PUMP—Boost—24 Volt
8H4681 Filter parts are shown on Page 63

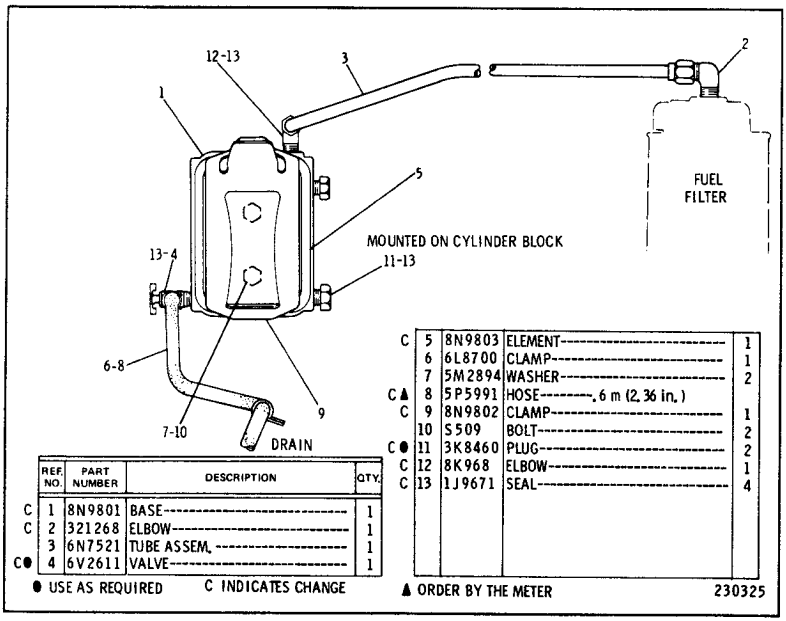

	REF. NO.	PART NUMBER	DESCRIPTION	QTY.
C	1	8N9801	BASE	1
C	2	321268	ELBOW	1
	3	6N7521	TUBE ASSEM.	1
C●	4	6V2611	VALVE	1
C	5	8N9803	ELEMENT	1
	6	6L8700	CLAMP	1
	7	5M2894	WASHER	2
C▲	8	5P5991	HOSE--------, 6 m (2.36 in.)	
C	9	8N9802	CLAMP	1
	10	S509	BOLT	2
C●	11	3K8460	PLUG	2
C	12	8K968	ELBOW	1
C	13	1J9671	SEAL	4

● USE AS REQUIRED C INDICATES CHANGE ▲ ORDER BY THE METER 230325

7N9781 WATER SEPARATOR GROUP

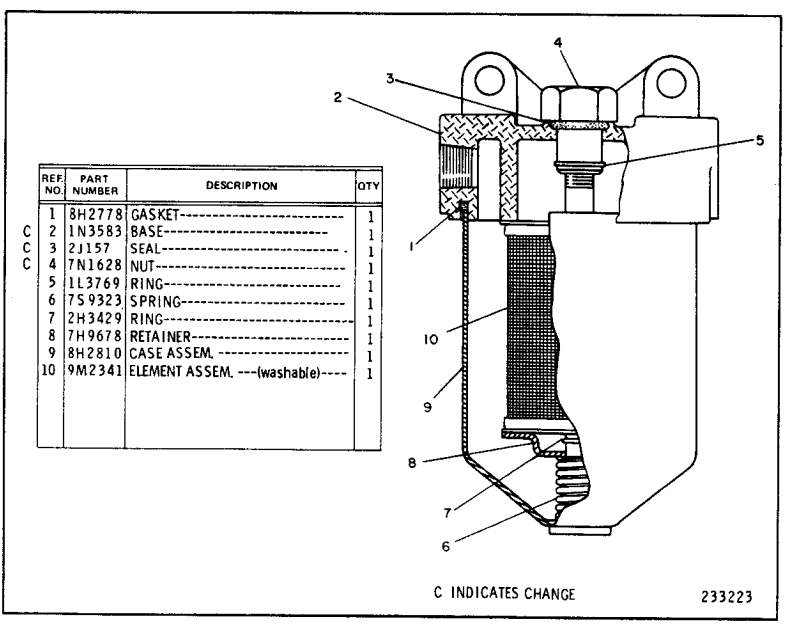

	REF. NO.	PART NUMBER	DESCRIPTION	QTY
	1	8H2778	GASKET	1
C	2	1N3583	BASE	1
C	3	2J157	SEAL	1
C	4	7N1628	NUT	1
	5	1L3769	RING	1
	6	7S9323	SPRING	1
	7	2H3429	RING	1
	8	7H9678	RETAINER	1
	9	8H2810	CASE ASSEM.	1
	10	9M2341	ELEMENT ASSEM. ---(washable)----	1

C INDICATES CHANGE 233223

8H4681 PRIMARY FUEL FILTER GROUP—Type 2
Part of 8N3569 and 9N5458 Fuel Pump Groups shown on Pages 62 and 63

9G6035 BATTERY AND WIRING GROUP—Part 1 of 3
Serial No. 6X1115 to 6X1179 inclusive
7N718 Switch parts are shown on Page 70

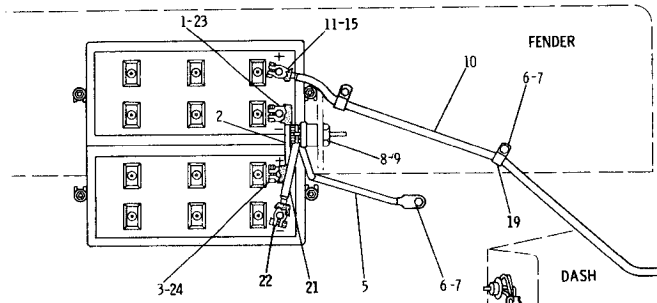

REF. NO.	PART NUMBER	DESCRIPTION	QTY.
1	5M9205	TERMINAL ASSEM. ----- (-) ----- (Includes)	1
	1M6119	BOLT	1
	1M6120	NUT	1
▲ 2	5P747	CABLE----------31 cm(12.21 in.)	1
3	5M9204	TERMINAL ASSEM. -----(+) ----- (Includes)	1
	1M6119	BOLT	1
	1M6120	NUT	1
4	7S1912	CLIP	1
▲ 5	8P8237	CABLE ASSEM. ---------- (Includes)	1
	5P747	CABLE------108 cm(42.52 in.)	
	375197	BOOT	1
	1S7252	TERMINAL	2
6	S509	BOLT	3
7	3B4506	LOCKWASHER	3
8	7N718	SWITCH ASSEM. ---------- (Separate Illustration)	1
9	8H8648	PLATE	1

	7G4936	CABLE ASSEM. ----------	1
▲ 10	5P747	CABLE---246.4 cm(97 in.)	
▲	5P694	CONDUIT---233.7 cm(92 in.)	
	3S6049	TERMINAL ASSEM. ---- (+)--	1
11	1M6119	BOLT	1
	1M6120	NUT	1
12	1S2244	BOOT	2
13	1S4915	LINER	2
	3S2093	TIE	2
14	1S7251	TERMINAL	1
15	8N1725	COVER	1
16	8N869	COVER	1

17	3B4508	LOCKWASHER	2
18	1S1015	CLIP	1
19	1S994	CLIP	2
20	L1329	BOLT	2
	3S3158	PIPE	2
	9G200	CABLE ASSEM. ----------	1
21	5P747	CABLE----------40 cm(15.7 in.)	
	375197	BOOT	1
	1S7252	TERMINAL	1
	7N5274	COVER	1
22	3S6050	TERMINAL ASSEM. ----------	1
	1M6119	BOLT	1
	1M6120	NUT	1
23	9G3	COVER	1
24	9G4	COVER	1

▲ ORDER BY THE CENTIMETER

226988

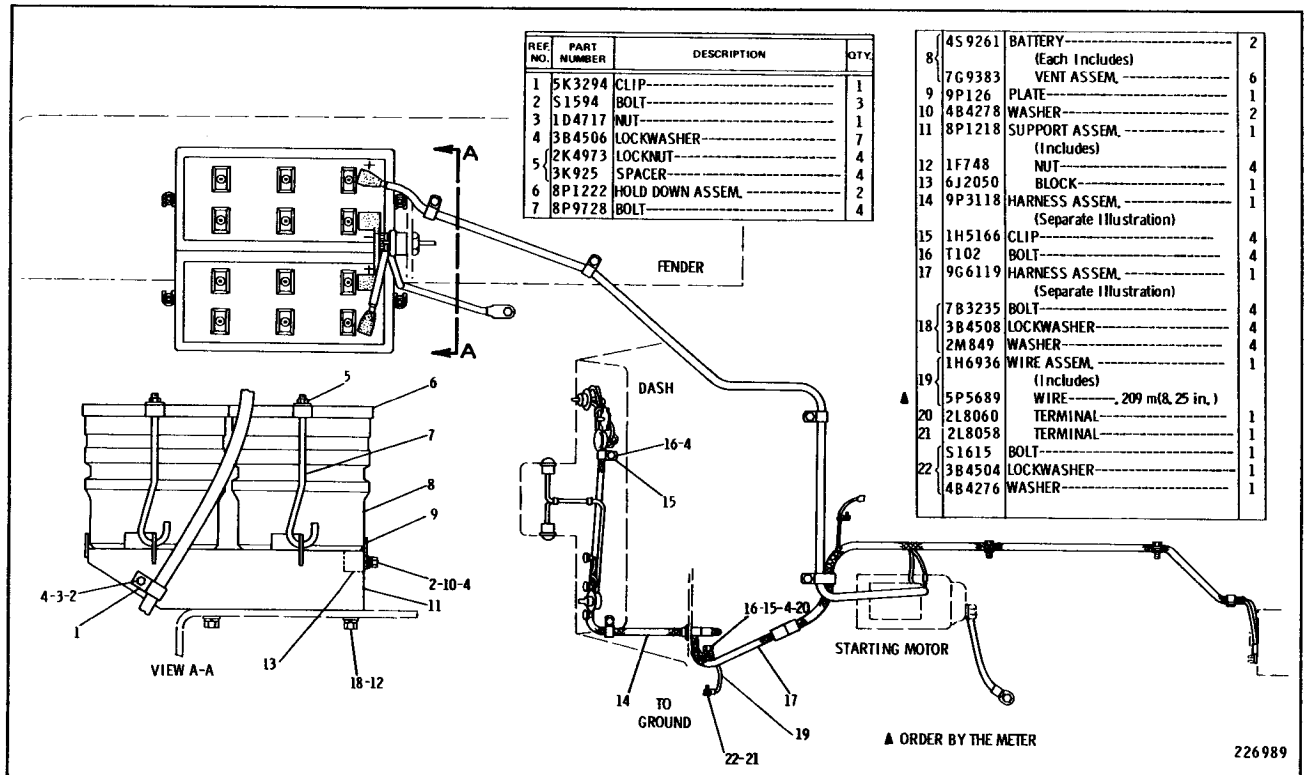

REF. NO.	PART NUMBER	DESCRIPTION	QTY.
1	5K3294	CLIP	1
2	S1594	BOLT	3
3	1D4717	NUT	1
4	3B4506	LOCKWASHER	7
5	2K4973	LOCKNUT	4
	3K925	SPACER	4
6	8P1222	HOLD DOWN ASSEM.	2
7	8P9728	BOLT	4

8	4S9261	BATTERY (Each Includes)	2
	7G9383	VENT ASSEM.	6
9	9P126	PLATE	1
10	4B4278	WASHER	2
11	8P1218	SUPPORT ASSEM. (Includes)	1
12	1F748	NUT	4
13	6J2050	BLOCK	1
14	9P3118	HARNESS ASSEM. (Separate Illustration)	1
15	1H5166	CLIP	4
16	T102	BOLT	4
17	9G6119	HARNESS ASSEM. (Separate Illustration)	1
18	7B3235	BOLT	4
	3B4508	LOCKWASHER	4
	2M849	WASHER	4
19	1H6936	WIRE ASSEM. (Includes)	1
▲	5P5689	WIRE ——— .209 m(8.25 in.)	
20	2L8060	TERMINAL	1
21	2L8058	TERMINAL	1
22	S1615	BOLT	1
	3B4504	LOCKWASHER	1
	4B4276	WASHER	1

9G6035 BATTERY AND WIRING GROUP—Part 2 of 3
Serial No. 6X1115 to 6X1179 inclusive
9P3118 and 9G6119 Harness parts are shown on Pages 68 & 69

9G6035 BATTERY AND WIRING GROUP—Part 3 of 3
Serial No. 6X1115 to 6X1179 inclusive
9G6120 Harness and 9G1480 Switch parts are shown on Pages 69 and 70

REF. NO.	PART NUMBER	DESCRIPTION	QTY.
1	8P7353	WIRE ASSEM. (Includes)	1
▲	5P5624	WIRE-------. 155 m(6. 102 in.)	
	4L3916	TERMINAL--(female)----------	1
2	2L8075	TERMINAL----------	1
3	7S6402	SWITCH ASSEM. --(three position) (Includes)	1
	7S5432	KNOB----------	1
	7H27	NUT----------	1
	1H4393	LOCKWASHER----------	3
	9B7242	SCREW----------	3
4	3S8642	LAMP ASSEM. ---------- (Each Includes)	2
	6N8742	BODY ASSEM. ----------	1
	2D1959	BULB----------	1
5	4S6313	WIRE ASSEM. ---------- (Includes)	1
▲	5P5632	WIRE----------. 1 m(3. 94 in.)	
	2L8066	TERMINAL----------	2
6	9S173	CIRCUIT BREAKER----(60 amp)---	1
7	4B1223	SCREW----------	2
C 8	9G1480	SWITCH GROUP---(heat-start)---- (Separate Illustration)	1
9	8M7892	AMMETER------(60 amp)----------	1
10	1S9593	STRAP----------	4
11	4K5122	HOLDER----------	3
12	8M8948	FUSE-----(15 amp)----------	2
13	2S6024	FUSE--------(5 amp)----------	1
14	4D7794	CLIP----------	1
15	S509	BOLT----------	2
16	3B4506	LOCKWASHER----------	2
17	9G6120	HARNESS ASSEM. ---------- (Separate Illustration)	1
18	2M287	CLIP----------	2
19	S1624	BOLT----------	2
	3B4510	LOCKWASHER----------	2

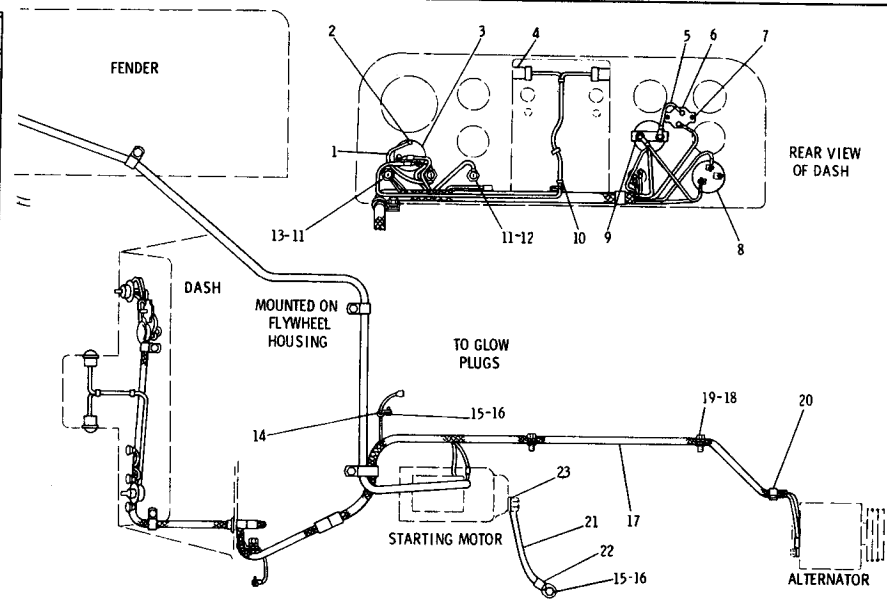

20	1H5166	CLIP----------	1
21	3S8624	CABLE ASSEM. ---------- (Includes)	1
●	5P747	CABLE------26 cm(10. 25 in.)	
22	1S7252	TERMINAL----------	1
23	1S7251	TERMINAL----------	1

● ORDER BY THE CENTI METER C INDICATES CHANGE ▲ ORDER BY THE METER

230338

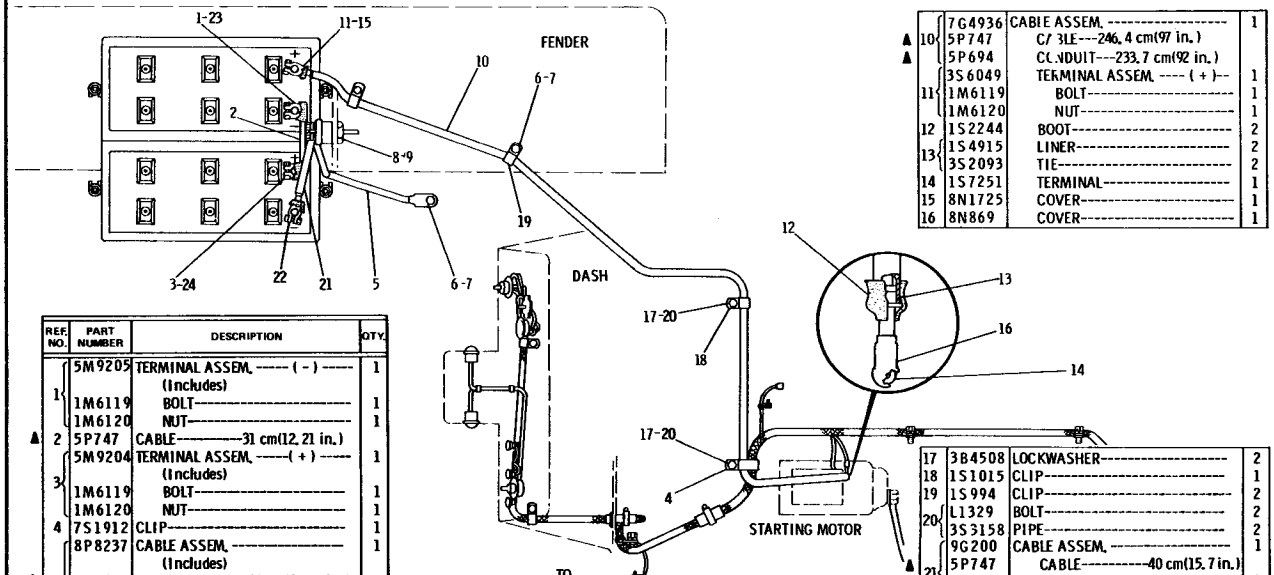

REF. NO.	PART NUMBER	DESCRIPTION	QTY.
1	5M9205	TERMINAL ASSEM. ----- (-) ----- (Includes)	1
	1M6119	BOLT----------	1
	1M6120	NUT----------	1
▲ 2	5P747	CABLE----------31 cm(12.21 in.)	
3	5M9204	TERMINAL ASSEM. -----(+) ----- (Includes)	1
	1M6119	BOLT----------	1
	1M6120	NUT----------	1
4	7S1912	CLIP----------	1
5	8P8237	CABLE ASSEM. ---------- (Includes)	1
▲	5P747	CABLE------108 cm(42.52 in.)	
	375197	BOOT----------	1
	1S7252	TERMINAL----------	2
6	S509	BOLT----------	3
7	3B4506	LOCKWASHER----------	3
8	7N718	SWITCH ASSEM. ---------- (Separate Illustration)	1
9	8H8648	PLATE----------	1

	7G4936	CABLE ASSEM. ----------	1
▲ 10	5P747	C/ 3LE----246.4 cm(97 in.)	
▲	5P694	CONDUIT---233.7 cm(92 in.)	
	3S6049	TERMINAL ASSEM. ---- (+)--	1
11	1M6119	BOLT----------	1
	1M6120	NUT----------	1
12	1S2244	BOOT----------	2
13	1S4915	LINER----------	2
	3S2093	TIE----------	2
14	1S7251	TERMINAL----------	1
15	8N1725	COVER----------	1
16	8N869	COVER----------	1

17	3B4508	LOCKWASHER----------	2
18	1S1015	CLIP----------	1
19	1S994	CLIP----------	2
20	L1329	BOLT----------	2
	3S3158	PIPE----------	2
21	9G200	CABLE ASSEM. ----------	1
	5P747	CABLE----------40 cm(15.7 in.)	
	375197	BOOT----------	1
	1S7252	TERMINAL----------	1
22	7N5274	COVER----------	1
	3S6050	TERMINAL ASSEM. ----------	1
	1M6119	BOLT----------	1
	1M6120	NUT----------	1
23	9G3	COVER----------	1
24	9G4	COVER----------	1

▲ ORDER BY THE CENTIMETER

9G6035 BATTERY & WIRING GROUP-PART 1 OF 3
Serial No. 6X1180 To 6X1507 Inclusive
7N718 Switch Parts Are Shown On Page 70

9G6035 BATTERY & WIRING GROUP–PART 2 OF 3.

Serial No. 6X1180 To 6X1507 Inclusive

9P3118 And 9G6119 Harness Parts Are Shown On Pages 68 And 69

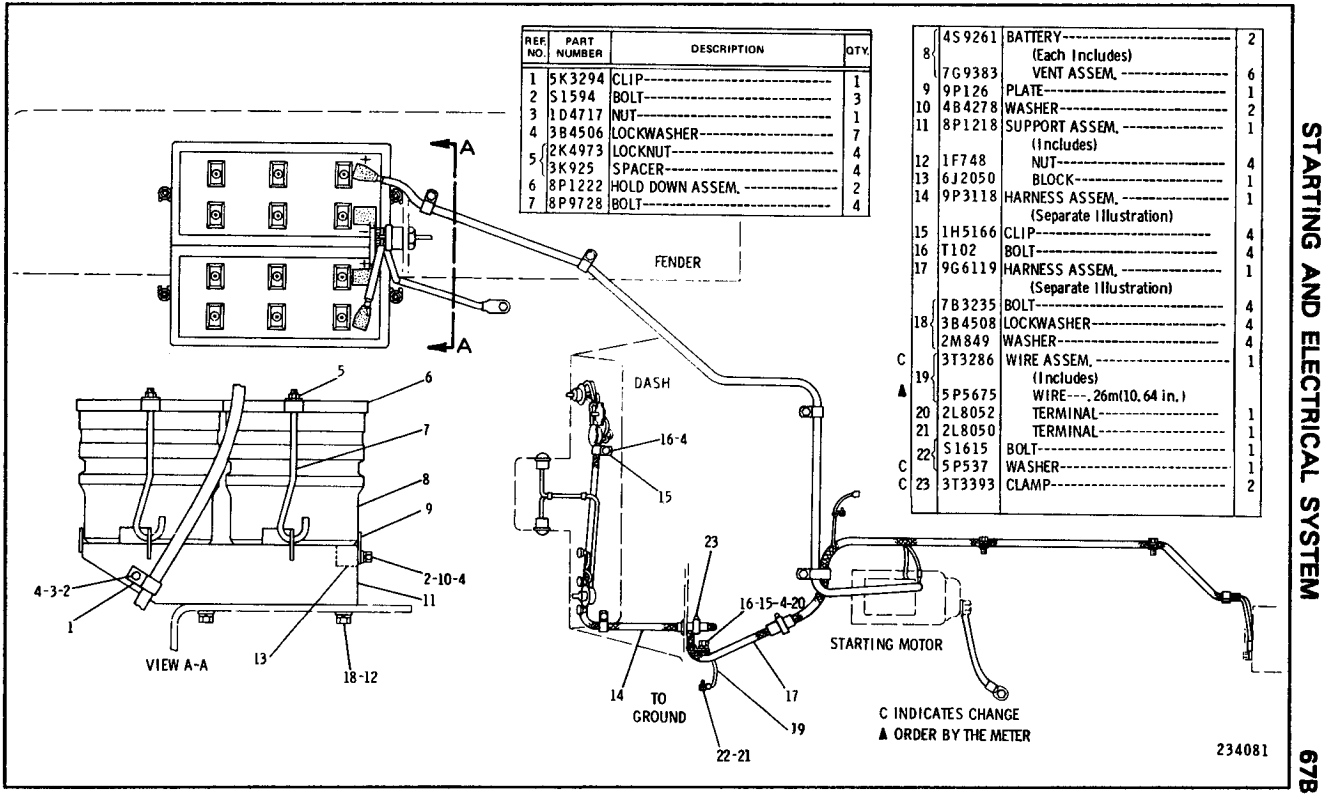

REF. NO.	PART NUMBER	DESCRIPTION	QTY.
1	5K3294	CLIP	1
2	S1594	BOLT	3
3	1D4717	NUT	1
4	3B4506	LOCKWASHER	7
5	2K4973	LOCKNUT	4
	3K925	SPACER	4
6	8P1222	HOLD DOWN ASSEM.	2
7	8P9728	BOLT	4

	REF. NO.	PART NUMBER	DESCRIPTION	QTY.
	8	4S9261	BATTERY (Each Includes)	2
		7G9383	VENT ASSEM.	6
	9	9P126	PLATE	1
	10	4B4278	WASHER	2
	11	8P1218	SUPPORT ASSEM. (Includes)	1
	12	1F748	NUT	4
	13	6J2050	BLOCK	1
	14	9P3118	HARNESS ASSEM. (Separate Illustration)	1
	15	1H5166	CLIP	4
	16	T102	BOLT	4
	17	9G6119	HARNESS ASSEM. (Separate Illustration)	1
	18	7B3235	BOLT	4
		3B4508	LOCKWASHER	4
		2M849	WASHER	4
C	19	3T3286	WIRE ASSEM. (Includes)	1
▲		5P5675	WIRE---, 26m(10.64 in.)	
	20	2L8052	TERMINAL	1
	21	2L8050	TERMINAL	1
	22	S1615	BOLT	1
C		5P537	WASHER	1
C	23	3T3393	CLAMP	2

REF. NO.	PART NUMBER	DESCRIPTION	QTY.
1	8P7353	WIRE ASSEM. (Includes)	1
▲	5P5624	WIRE-------, 155 m(6.102 in.)	
	4L3916	TERMINAL--(female)---------	1
2	2L8075	TERMINAL----------	1
3	7S6402	SWITCH ASSEM. --(three position) (Includes)	1
	7S5432	KNOB----------	1
	7H27	NUT----------	1
	1H4393	LOCKWASHER----------	3
	9B7242	SCREW----------	3
4	3S8642	LAMP ASSEM. ---------- (Each Includes)	2
	6N8742	BODY ASSEM. ----------	1
	2D1959	BULB----------	1
5	4S6313	WIRE ASSEM. ---------- (Includes)	1
▲	5P5632	WIRE----------, 1 m(3, 94 in.)	
	2L8066	TERMINAL----------	2
6	9S173	CIRCUIT BREAKER----(60 amp)---	1
7	4B1223	SCREW----------	2
8	9G1480	SWITCH GROUP---(heat-start)---- (Separate Illustration)	1
9	8M7892	AMMETER------(60 amp)---------	1
10	1S9593	STRAP----------	4
11	4K5122	HOLDER----------	3
12	8M8948	FUSE-----(15 amp)----------	2
13	2S6024	FUSE--------(5 amp)----------	1
14	4D7794	CLIP----------	1
15	S509	BOLT----------	2
16	3B4506	LOCKWASHER----------	2
17	9G6120	HARNESS AS ---------- (Separate Illustration)	1
18	2M287	CLIP----------	2
19	S1624	BOLT----------	2
	3B4510	LOCKWASHER----------	2

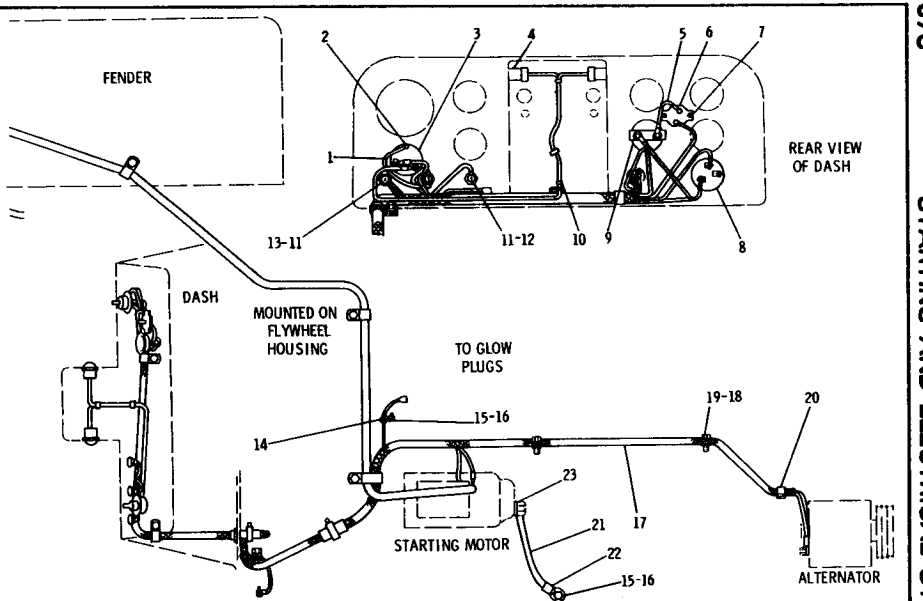

20	1H5166	CLIP----------	1
21 ●	3S8624	CABLE ASSEM. ---------- (Includes)	1
	5P747	CABLE-----26 cm(10, 25 in.)	
22	1S7252	TERMINAL----------	1
23	1S7251	TERMINAL----------	1

● ORDER BY THE CENTI METER

▲ ORDER BY THE METER

234082

9G6035 BATTERY & WIRING GROUP-PART 3 OF 3
Serial No. 6X1180 To 6X1507 Inclusive
9G6120 Harness And 9G1480 Switch Parts Are Shown On Pages 69 And 70

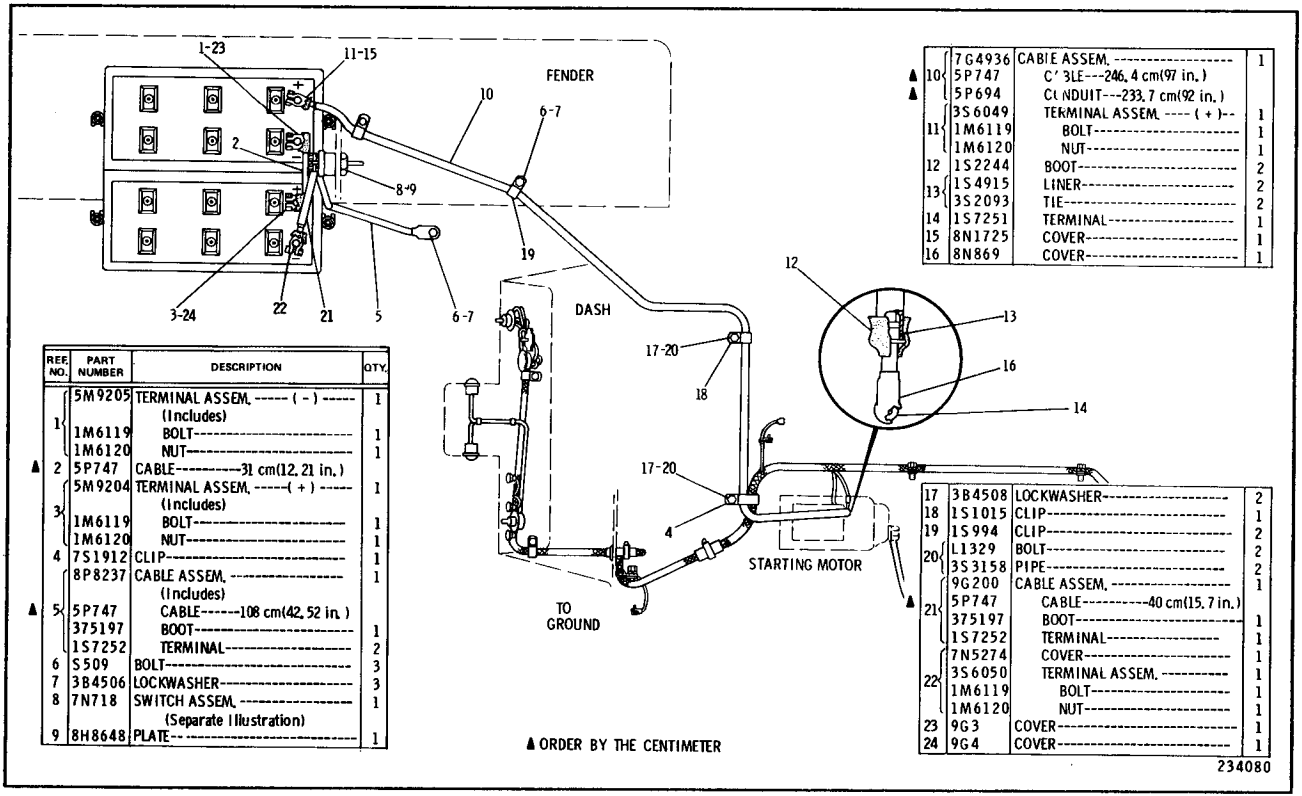

REF. NO.	PART NUMBER	DESCRIPTION	QTY.
1	5M9205	TERMINAL ASSEM. ----- (-) ----- (Includes)	1
	1M6119	BOLT----------	1
	1M6120	NUT----------	1
▲ 2	5P747	CABLE----------31 cm(12.21 in.)	
3	5M9204	TERMINAL ASSEM. -----(+) ----- (Includes)	1
	1M6119	BOLT----------	1
	1M6120	NUT----------	1
4	7S1912	CLIP----------	1
5	8P8237	CABLE ASSEM. ---------- (Includes)	1
▲	5P747	CABLE------108 cm(42.52 in.)	
	375197	BOOT----------	1
	1S7252	TERMINAL----------	2
6	S509	BOLT----------	3
7	3B4506	LOCKWASHER----------	3
8	7N718	SWITCH ASSEM. ---------- (Separate Illustration)	1
9	8H8648	PLATE----------	1

	7G4936	CABLE ASSEM. ----------	1
▲ 10	5P747	CABLE---246.4 cm(97 in.)	
▲	5P694	CONDUIT---233.7 cm(92 in.)	
	3S6049	TERMINAL ASSEM. ---- (+)--	1
11	1M6119	BOLT----------	1
	1M6120	NUT----------	1
12	1S2244	BOOT----------	2
13	1S4915	LINER----------	2
	3S2093	TIE----------	2
14	1S7251	TERMINAL----------	1
15	8N1725	COVER----------	1
16	8N869	COVER----------	1

17	3B4508	LOCKWASHER----------	2
18	1S1015	CLIP----------	1
19	1S994	CLIP----------	2
20	L1329	BOLT----------	2
	3S3158	PIPE----------	2
	9G200	CABLE ASSEM. ----------	1
21	5P747	CABLE----------40 cm(15.7 in.)	
	375197	BOOT----------	1
	1S7252	TERMINAL----------	1
	7N5274	COVER----------	1
22	3S6050	TERMINAL ASSEM. ----------	1
	1M6119	BOLT----------	1
	1M6120	NUT----------	1
23	9G3	COVER----------	1
24	9G4	COVER----------	1

▲ ORDER BY THE CENTIMETER

234080

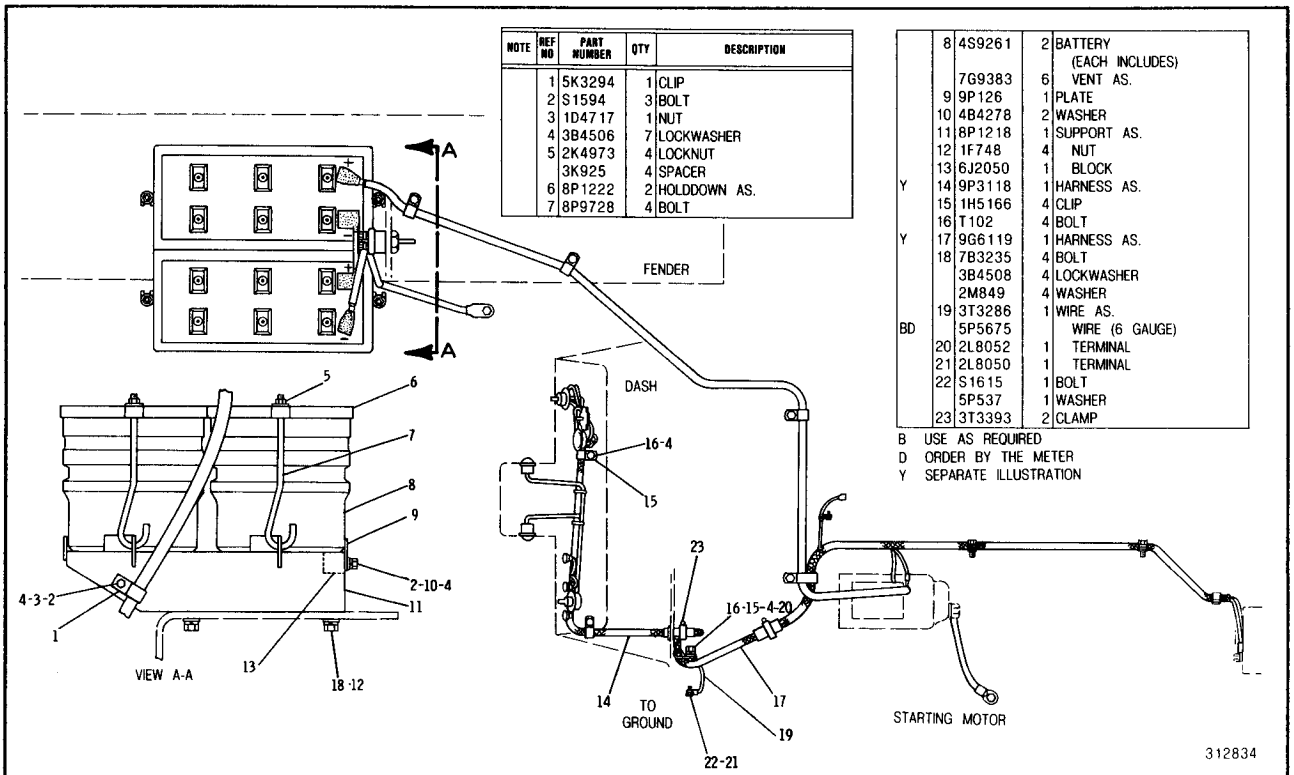

NOTE	REF NO	PART NUMBER	QTY	DESCRIPTION
	1	5K3294	1	CLIP
	2	S1594	3	BOLT
	3	1D4717	1	NUT
	4	3B4506	7	LOCKWASHER
	5	2K4973	4	LOCKNUT
		3K925	4	SPACER
	6	8P1222	2	HOLDDOWN AS.
	7	8P9728	4	BOLT
	8	4S9261	2	BATTERY
				(EACH INCLUDES)
		7G9383	6	VENT AS.
	9	9P126	1	PLATE
	10	4B4278	2	WASHER
	11	8P1218	1	SUPPORT AS.
	12	1F748	4	NUT
	13	6J2050	1	BLOCK
Y	14	9P3118	1	HARNESS AS.
	15	1H5166	4	CLIP
	16	T102	4	BOLT
Y	17	9G6119	1	HARNESS AS.
	18	7B3235	4	BOLT
		3B4508	4	LOCKWASHER
		2M849	4	WASHER
	19	3T3286	1	WIRE AS.
BD		5P5675		WIRE (6 GAUGE)
	20	2L8052	1	TERMINAL
	21	2L8050	1	TERMINAL
	22	S1615	1	BOLT
		5P537	1	WASHER
	23	3T3393	2	CLAMP

B USE AS REQUIRED
D ORDER BY THE METER
Y SEPARATE ILLUSTRATION

9G6035 BATTERY & WIRING GROUP-PART 2 OF 3
Serial No. 6X1508 To 6X1578 Inclusive
9P3118-Page 68,9G6119-Page 69

9G6035 BATTERY & WIRING GROUP–PART 3 OF 3

Serial No. 6X1508 To 6X1578 Inclusive

9G6120–Page 69,9G1480–Page 70,3T8073–Page 71

NOTE	REF NO	PART NUMBER	QTY	DESCRIPTION
	1	8P7353	1	WIRE AS.
BD		5P5624		WIRE (14 GAUGE)
		4L3916	1	TERMINAL (FEMALE)
	2	2L8075	1	TERMINAL
	3	7S6402	1	SWITCH AS. (3 POSITION)
		7S5432	1	KNOB
		7H27	1	NUT
		1H4393	3	LOCKWASHER
		9B7242	3	SCREW
CY	4	3T8073	2	LAMP AS.
	5	4S6313	1	WIRE AS.
BD		5P5632		WIRE (10 GAUGE)
		2L8066	2	TERMINAL
	6	9S173	1	CIRCUIT BREAKER (60 AMP)
	7	4B1223	2	SCREW
Y	8	9G1480	1	SWITCH GP. (HEAT-START)
	9	8M7892	1	AMMETER (60 AMP)
C	10	1S9593	2	STRAP
	11	4K5122	3	HOLDER AS. (FUSE) (EACH INCLUDES)
		6T8115	1	NUT
		7N2867	1	CAP
	12	8M8948	2	FUSE (15 AMP)
	13	2S6024	1	FUSE (5 AMP)
	14	4D7794	1	CLIP
	15	S509	2	BOLT
	16	3B4506	2	LOCKWASHER
Y	17	9G6120	1	HARNESS AS.
	18	2M287	2	CLIP
	19	S1624	2	BOLT
		3B4510	2	LOCKWASHER
	20	1H5166	1	CLIP
	21	3S8624	1	CABLE AS.
BE		5P747		CABLE (00 GAUGE)
	22	1S7252	1	TERMINAL
	23	1S7251	1	TERMINAL

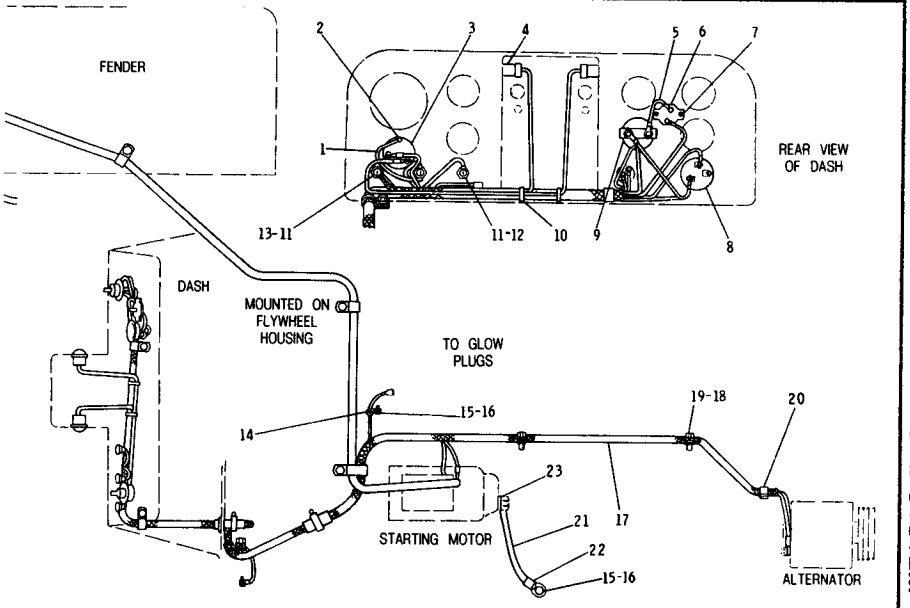

B USE AS REQUIRED
C INDICATES CHANGE
D ORDER BY THE METER
E ORDER BY THE CENTIMETER
Y SEPARATE ILLUSTRATION

312835

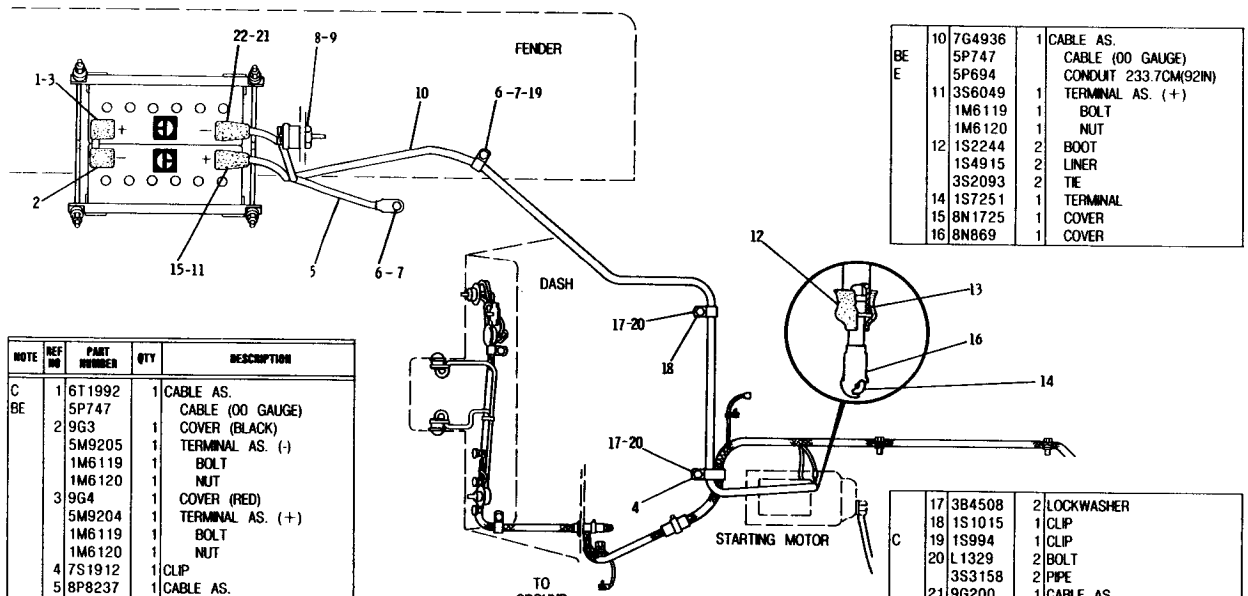

NOTE	REF NO	PART NUMBER	QTY	DESCRIPTION
C	1	6T1992	1	CABLE AS.
BE		5P747		CABLE (00 GAUGE)
	2	9G3	1	COVER (BLACK)
		5M9205	1	TERMINAL AS. (-)
		1M6119	1	BOLT
		1M6120	1	NUT
	3	9G4	1	COVER (RED)
		5M9204	1	TERMINAL AS. (+)
		1M6119	1	BOLT
		1M6120	1	NUT
	4	7S1912	1	CLIP
	5	8P8237	1	CABLE AS.
BE		5P747		CABLE (00 GAUGE)
		375197	1	BOOT
		1S7252	2	TERMINAL
C	6	S509	2	BOLT
C	7	3B4506	2	LOCKWASHER
Y	8	7N718	1	SWITCH AS. (DISCONNECT)
	9	8H8648	1	PLATE
	10	7G4936	1	CABLE AS.
BE		5P747		CABLE (00 GAUGE)
E		5P694		CONDUIT 233.7CM(92IN)
	11	3S6049	1	TERMINAL AS. (+)
		1M6119	1	BOLT
		1M6120	1	NUT
	12	1S2244	2	BOOT
		1S4915	2	LINER
		3S2093	2	TIE
	14	1S7251	1	TERMINAL
	15	8N1725	1	COVER
	16	8N869	1	COVER
	17	3B4508	2	LOCKWASHER
	18	1S1015	1	CLIP
C	19	1S994	1	CLIP
	20	L1329	2	BOLT
		3S3158	2	PIPE
	21	9G200	1	CABLE AS.
BE		5P747		CABLE (00 GAUGE)
		375197	1	BOOT
		1S7252	1	TERMINAL
	22	7N5274	1	COVER
		3S6050	1	TERMINAL AS.
		1M6119	1	BOLT
		1M6120	1	NUT

B USE AS REQUIRED
C INDICATES CHANGE
E ORDER BY THE CENTIMETER
Y SEPARATE ILLUSTRATION

317052

9G6035 BATTERY & WIRING GROUP-PART 1 OF 3
Serial No. 6X1579 To 6X1622 Inclusive
7N718-Page 70

9G6035 BATTERY & WIRING GROUP-PART 2 OF 3

Serial No. 6X1579 To 6X1622 Inclusive

9P3118-Page 68,9G6119-Page 69

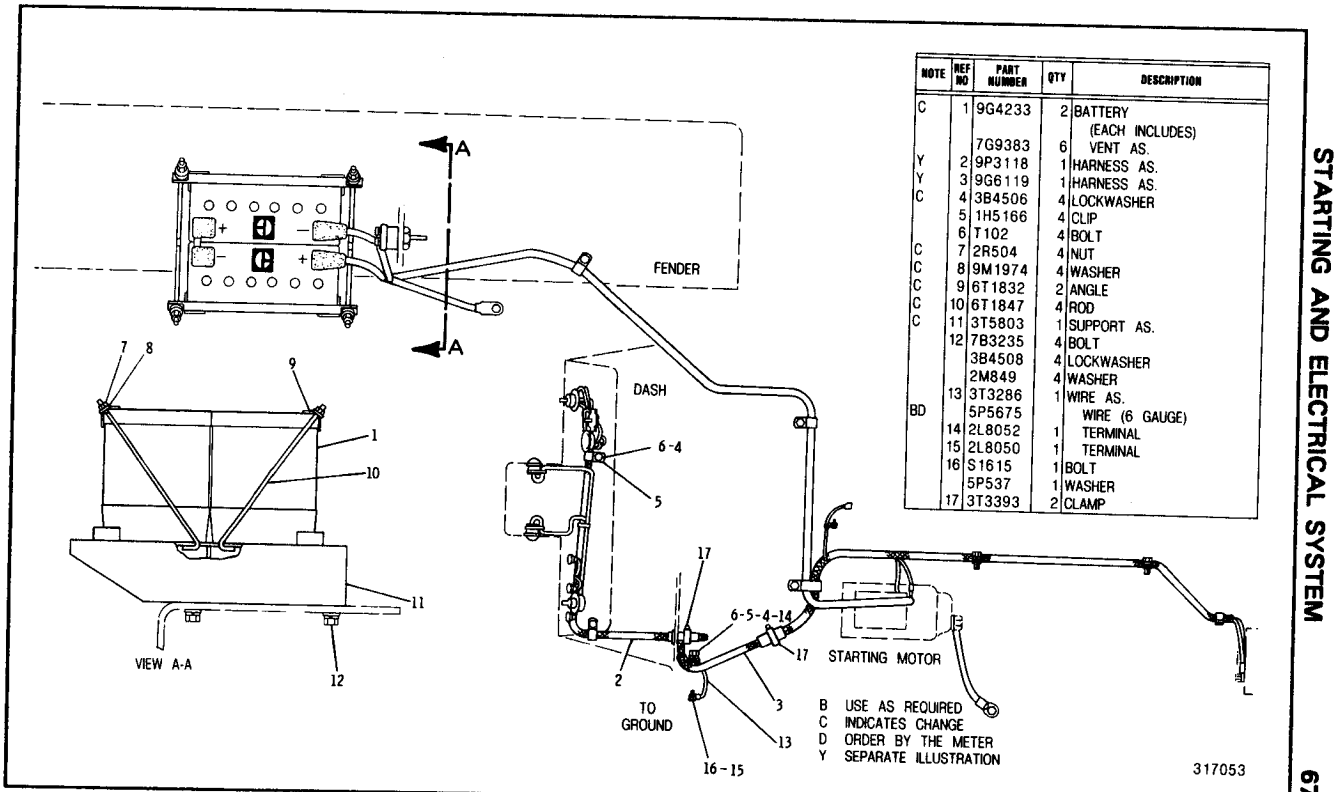

NOTE	REF NO	PART NUMBER	QTY	DESCRIPTION
C	1	9G4233	2	BATTERY
				(EACH INCLUDES)
		7G9383	6	VENT AS.
Y	2	9P3118	1	HARNESS AS.
Y	3	9G6119	1	HARNESS AS.
C	4	3B4506	4	LOCKWASHER
	5	1H5166	4	CLIP
	6	T102	4	BOLT
C	7	2R504	4	NUT
C	8	9M1974	4	WASHER
C	9	6T1832	2	ANGLE
C	10	6T1847	4	ROD
C	11	3T5803	1	SUPPORT AS.
	12	7B3235	4	BOLT
		3B4508	4	LOCKWASHER
		2M849	4	WASHER
	13	3T3286	1	WIRE AS.
BD		5P5675		WIRE (6 GAUGE)
	14	2L8052	1	TERMINAL
	15	2L8050	1	TERMINAL
	16	S1615	1	BOLT
		5P537	1	WASHER
	17	3T3393	2	CLAMP

NOTE	REF NO	PART NUMBER	QTY	DESCRIPTION
	1	8P7353	1	WIRE AS.
BD		5P5624		WIRE (14 GAUGE)
		4L3916	1	TERMINAL (FEMALE)
	2	2L8075	1	TERMINAL
	3	7S6402	1	SWITCH AS. (3 POSITION)
		7S5432	1	KNOB
		7H0027	1	NUT
		1H4393	3	LOCKWASHER
		9B7242	3	SCREW
Y	4	3T8073	2	LAMP AS.
	5	4S6313	1	WIRE AS.
BD		5P5632		WIRE (10 GAUGE)
		2L8066	2	TERMINAL
	6	9S0173	1	CIRCUIT BREAKER (60 AMP)
C		6V8378	2	NUT
C		8F1434	2	LOCKWASHER
	7	4B1223	2	SCREW
Y	8	9G1480	1	SWITCH GP. (HEAT-START)
	9	8M7892	1	AMMETER (60 AMP)
C	10	1S9593	3	STRAP
	11	4K5122	3	HOLDER
				(EACH INCLUDES)
C		6T8115	1	NUT
C		7N2867	1	CAP
	12	8M8948	2	FUSE (15 AMP)
	13	2S6024	1	FUSE (5 AMP)
	14	4D7794	1	CLIP
	15	0S0509	2	BOLT
	16	3B4506	2	LOCKWASHER
Y	17	9G6120	1	HARNESS AS.
	18	2M0287	2	CLIP
	19	0S1624	2	BOLT
		3B4510	2	LOCKWASHER
	20	1H5166	1	CLIP
	21	3S8624	1	CABLE AS.
BE		5P0747		CABLE (00 GAUGE)
	22	1S7252	1	TERMINAL
	23	1S7251	1	TERMINAL

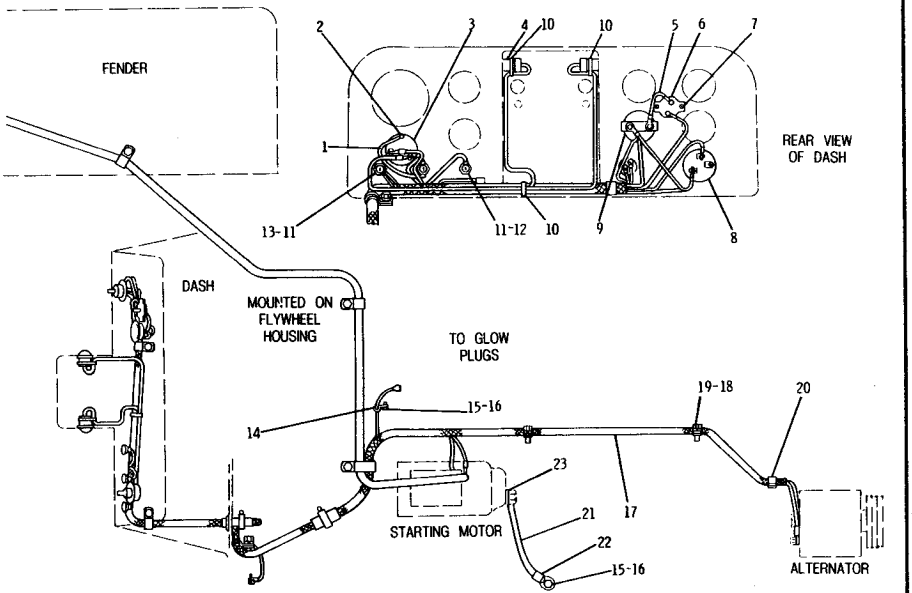

B USE AS REQUIRED
C INDICATES CHANGE
D ORDER BY THE METER
E ORDER BY THE CENTIMETER
Y SEPARATE ILLUSTRATION

317054

9G6035 BATTERY & WIRING GROUP-PART 3 OF 3
Serial No. 6X1579 To 6X1622 Inclusive
9G6120-Page 69,9G1480-Page 70,3T8073-Page 71

9G6035 BATTERY & WIRING GROUP–PART 1 OF 3

Serial No. 6X1623–Up
7N718–Page 70

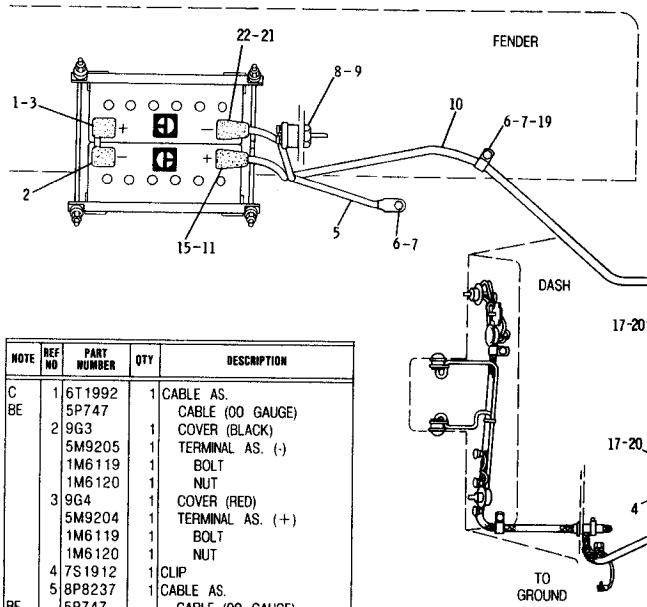

NOTE	REF NO	PART NUMBER	QTY	DESCRIPTION
C	1	6T1992	1	CABLE AS.
BE		5P747		CABLE (00 GAUGE)
	2	9G3	1	COVER (BLACK)
		5M9205	1	TERMINAL AS. (-)
		1M6119	1	BOLT
		1M6120	1	NUT
	3	9G4	1	COVER (RED)
		5M9204	1	TERMINAL AS. (+)
		1M6119	1	BOLT
		1M6120	1	NUT
	4	7S1912	1	CLIP
	5	8P8237	1	CABLE AS.
BE		5P747		CABLE (00 GAUGE)
		375197	1	BOOT
		1S7252	2	TERMINAL
C	6	S509	2	BOLT
C	7	3B4506	2	LOCKWASHER
Y	8	7N718	1	SWITCH AS. (DISCONNECT)
	9	8H8648	1	PLATE
	10	7G4936	1	CABLE AS.
BE		5P747		CABLE (00 GAUGE)
CE		5P695		CONDUIT 233.7CM(92IN)
	11	3S6049	1	TERMINAL AS. (+)
		1M6119	1	BOLT
		1M6120	1	NUT
	12	1S2244	2	BOOT
		1S4915	2	LINER
		3S2093	2	TIE
	14	1S7251	1	TERMINAL
	15	8N1725	1	COVER
	16	8N869	1	COVER
	17	3B4508	2	LOCKWASHER
	18	1S1015	1	CLIP
C	19	1S994	1	CLIP
	20	L1329	2	BOLT
		3S3158	2	PIPE
	21	9G200	1	CABLE AS.
BE		5P747		CABLE (00 GAUGE)
		375197	1	BOOT
		1S7252	1	TERMINAL
	22	7N5274	1	COVER
		3S6050	1	TERMINAL AS.
		1M6119	1	BOLT
		1M6120	1	NUT

B USE AS REQUIRED
C INDICATES CHANGE
E ORDER BY THE CENTIMETER
Y SEPARATE ILLUSTRATION

317083

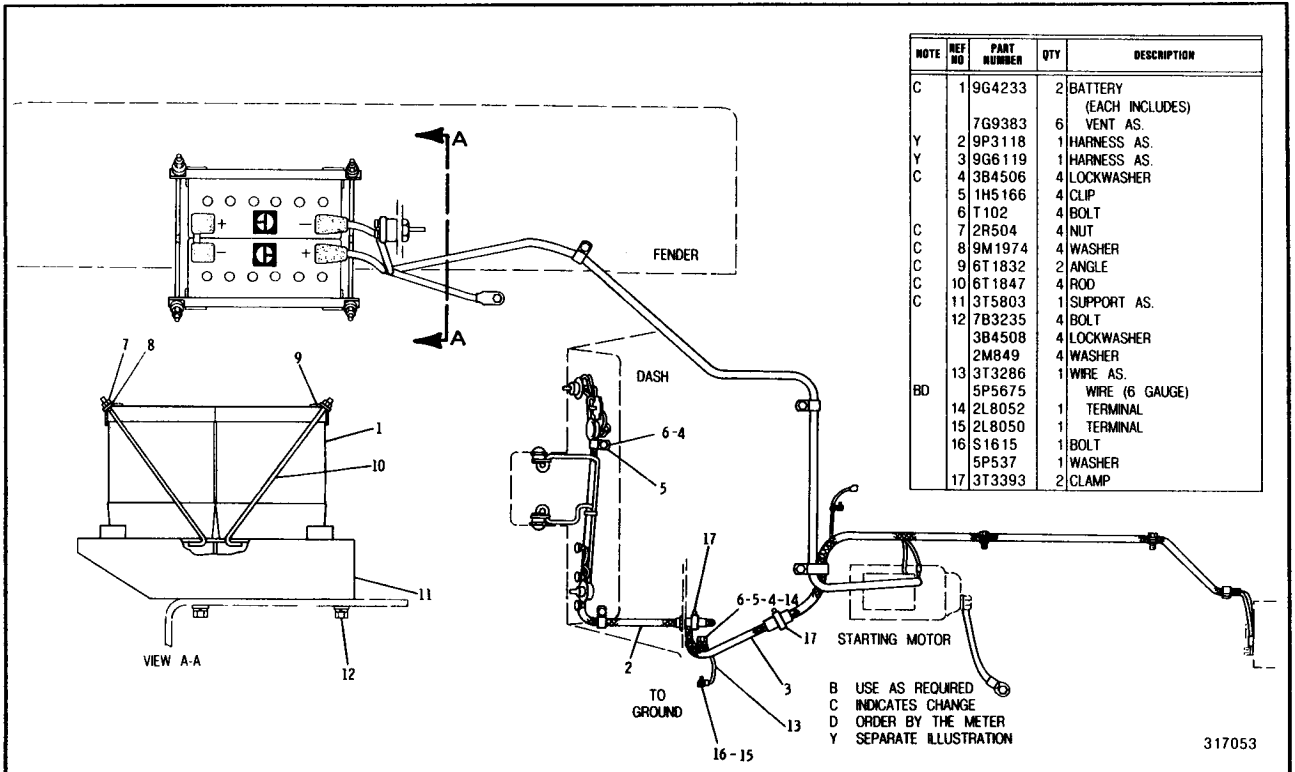

NOTE	REF NO	PART NUMBER	QTY	DESCRIPTION
C	1	9G4233	2	BATTERY
				(EACH INCLUDES)
		7G9383	6	VENT AS.
Y	2	9P3118	1	HARNESS AS.
Y	3	9G6119	1	HARNESS AS.
C	4	3B4506	4	LOCKWASHER
	5	1H5166	4	CLIP
	6	T102	4	BOLT
C	7	2R504	4	NUT
C	8	9M1974	4	WASHER
C	9	6T1832	2	ANGLE
C	10	6T1847	4	ROD
C	11	3T5803	1	SUPPORT AS.
	12	7B3235	4	BOLT
		3B4508	4	LOCKWASHER
		2M849	4	WASHER
	13	3T3286	1	WIRE AS.
BD		5P5675		WIRE (6 GAUGE)
	14	2L8052	1	TERMINAL
	15	2L8050	1	TERMINAL
	16	S1615	1	BOLT
		5P537	1	WASHER
	17	3T3393	2	CLAMP

9G6035 BATTERY & WIRING GROUP-PART 2 OF 3
Serial No. 6X1623-Up
9P3118-Page 68,9G6119-Page69

9G6035 BATTERY & WIRING GROUP-PART 3 OF 3

Serial No. 6X1623-Up

9G6120-Page 69,9G1480-Page 70

NOTE	REF NO	PART NUMBER	QTY	DESCRIPTION
	1	8P7353	1	WIRE AS.
BD		5P5624		WIRE (14 GAUGE)
		4L3916	1	TERMINAL (FEMALE)
	2	2L8075	1	TERMINAL
	3	7S6402	1	SWITCH AS. (3 POSITION)
		7S5432	1	KNOB
		7H27	1	NUT
		1H4393	3	LOCKWASHER
		9B7242	3	SCREW
C	4	3S8642	2	LAMP AS.
				(EACH INCLUDES)
		6N8742	1	BODY AS.
		2D1959	1	BULB
	5	4S6313	1	WIRE AS.
BD		5P5632		WIRE (10 GAUGE)
		2L8066	2	TERMINAL
	6	9S173	1	CIRCUIT BREAKER (60 AMP)
		6V8378	2	NUT
		8F1434	2	LOCKWASHER
	7	4B1223	2	SCREW
Y	8	9G1480	1	SWITCH GP. (HEAT-START)
	9	8M7892	1	AMMETER (60 AMP)
	10	1S9593	3	STRAP
	11	4K5122	3	HOLDER
				(EACH INCLUDES)
		6T8115	1	NUT
		7N2867	1	CAP
	12	8M8948	2	FUSE (15 AMP)
	13	2S6024	1	FUSE (5 AMP)
	14	4D7794	1	CLIP
	15	S509	2	BOLT
	16	3B4506	2	LOCKWASHER
Y	17	9G6120	1	HARNESS AS.
	18	2M287	2	CLIP
	19	S1624	2	BOLT
		3B4510	2	LOCKWASHER

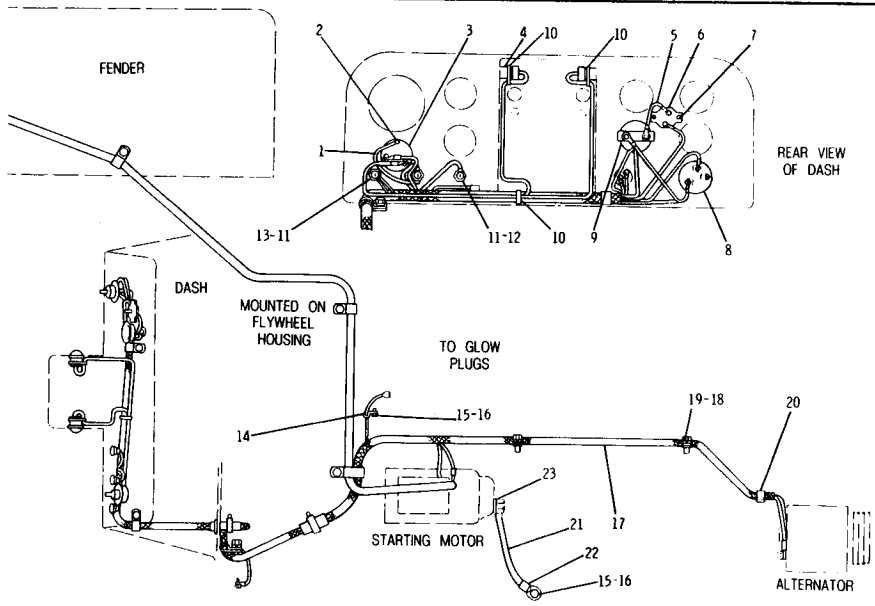

	20	1H5166	1	CLIP
	21	3S8624	1	CABLE AS.
BE		5P747		CABLE (00 GAUGE)
	22	1S7252	1	TERMINAL
	23	1S7251	1	TERMINAL

B USE AS REQUIRED
C INDICATES CHANGE
D ORDER BY THE METER
E ORDER BY THE CENTIMETER
Y SEPARATE ILLUSTRATION

317084

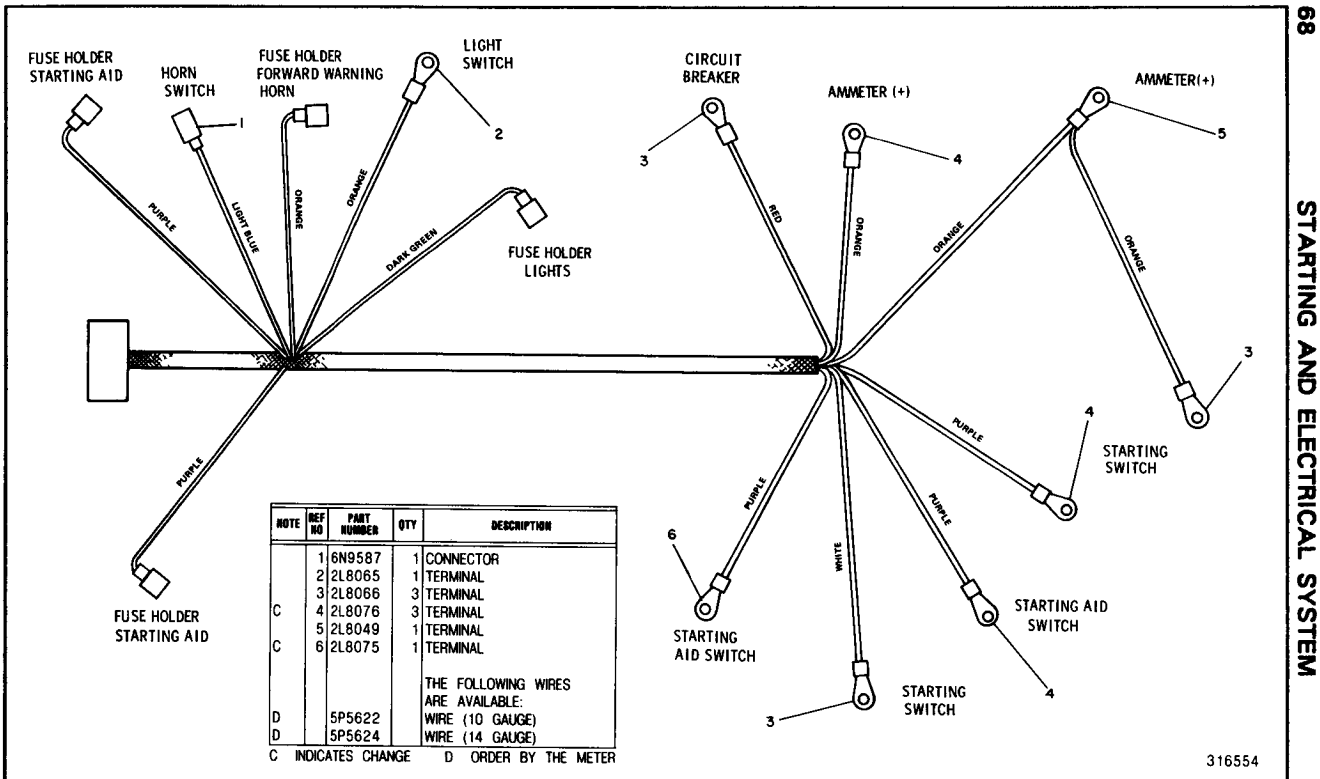

NOTE	REF NO	PART NUMBER	QTY	DESCRIPTION
	1	6N9587	1	CONNECTOR
	2	2L8065	1	TERMINAL
	3	2L8066	3	TERMINAL
C	4	2L8076	3	TERMINAL
	5	2L8049	1	TERMINAL
C	6	2L8075	1	TERMINAL
				THE FOLLOWING WIRES ARE AVAILABLE:
D		5P5622		WIRE (10 GAUGE)
D		5P5624		WIRE (14 GAUGE)

C INDICATES CHANGE D ORDER BY THE METER

9P3118 HARNESS ASSEMBLY
Part Of 9G6035 Battery & Wiring

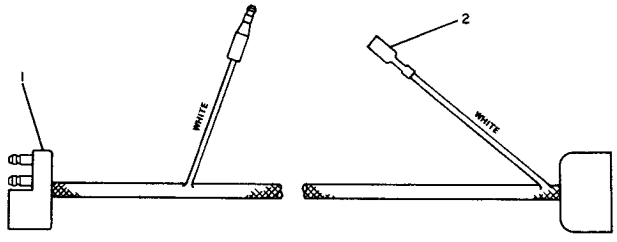

REF. NO.	PART NUMBER	DESCRIPTION	QTY.
1	5P3160	CONNECTOR ASSEM.	1
2	6N9587	CONNECTOR	1
		THE FOLLOWING WIRES ARE AVAILABLE:	
▲	5P5622	WIRE-----(10 gauge)	
▲	5P5624	WIRE-----(14 gauge)	

▲ ORDER BY THE METER

226991

9G6119 HARNESS ASSEMBLY
Part of 9G6035 Battery and Wiring Group shown on Page 66

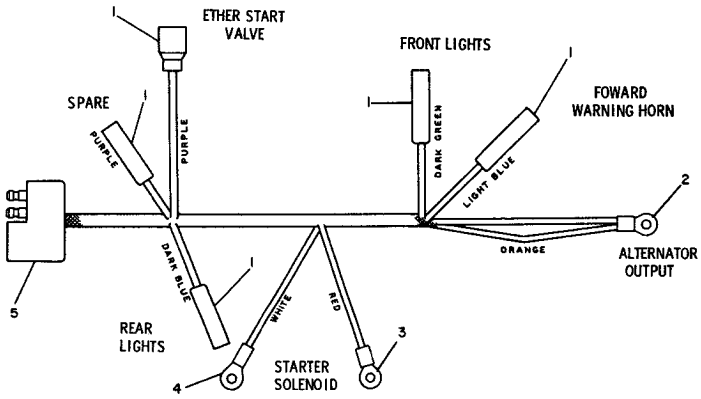

REF. NO.	PART NUMBER	DESCRIPTION	QTY.
1	6N9587	TERMINAL	5
2	2L8054	TERMINAL	1
3	2L8071	TERMINAL	1
4	2L8066	TERMINAL	1

5	5P3160	CONNECTOR	1
		THE FOLLOWING WIRES ARE AVAILABLE:	
▲	5P5622	WIRE-----(10 gauge)	
▲	5P5624	WIRE-----(14 gauge)	

▲ ORDER BY THE METER

226992

9G6120 HARNESS ASSEMBLY
Part of 9G6035 Battery and Wiring Group shown on Page 67

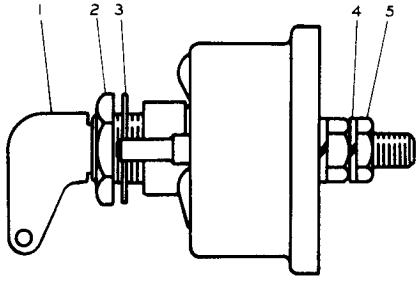

NOTE	REF NO	PART NUMBER	QTY	DESCRIPTION
	1	8H5306	1	KEY
	2	8H5303	1	NUT
	3	2H3922	1	WASHER
C	4	9F5644	2	LOCKWASHER
C	5	6F7045	2	NUT

C INDICATES CHANGE

313370

7N718 DISCONNECT SWITCH ASSEMBLY
Part of 9G6035 Battery and Wiring Group shown on Page 65

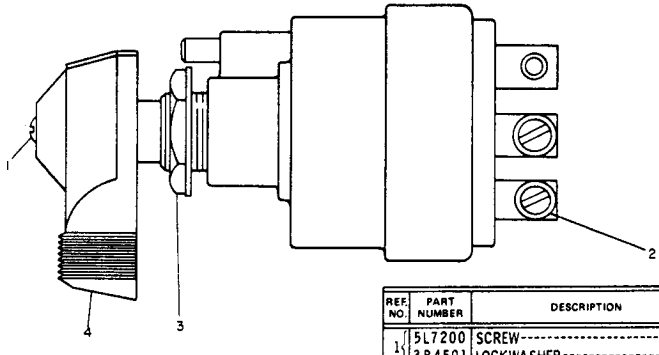

REF. NO.	PART NUMBER	DESCRIPTION	QTY.
1	5L7200	SCREW	1
1	3B4501	LOCKWASHER	1
2	9F9327	SCREW	3
2	9F8125	LOCKWASHER	3
3	7H27	NUT	1
3	6F253	LOCKWASHER	1
4	8F3437	LEVER	1

226353

9G1480 STARTER SWITCH GROUP
Part of 9G6035 Battery and Wiring Group shown on Page 67

CONSISTS OF: PAGE

1 5S9088 ALTERNATOR..... 76
1 1H6936 WIRE ASSEMBLY--ALTERNATOR TO ENGINE

CONSISTS OF:
1 2L8060 TERMINAL--NO.8 WIRE--3/8 SCREW
1 2L8058 TERMINAL--NO.8 WIRE--3/8 SCREW

DM-5P5689 WIRE

8N1084 ALTERNATOR GROUP-24 VOLT, 50 AMPERE
Also Part Of 9G7393 ROPS Arrangement Shown On Page 213

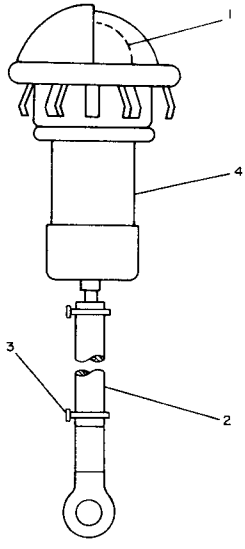

NOTE	REF NO	PART NUMBER	QTY	DESCRIPTION
	1	2D1959	1	LAMP
D	2	5P5628		TUBE .7M(27.6 IN.)
	3	1S9593	2	STRAP
	4	6N8742	1	BODY AS.

D ORDER BY THE METER 312875

3T8073 LAMP GROUP
Serial No. 6X1508-Up
Part Of 9G6035 Battery & Wiring

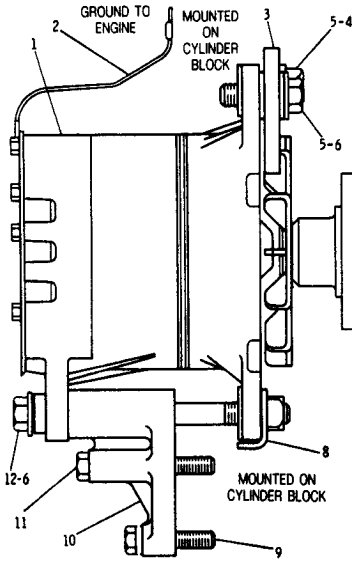

NOTE	REF NO	PART NUMBER	QTY	DESCRIPTION
Y	1	6N9294	1	ALTERNATOR GROUP
C	2	4N5092	1	WIRE ASSEM.
D		5P5622		WIRE .16M (6.5 IN.)
		2L8066	1	TERMINAL (SMALL)
		2L8069	1	TERMINAL (LARGE)
	3	8S4183	1	STRAP
	4	2S6735	1	SPACER
	5	S1585	2	BOLT
	6	8M4791	4	WASHER
	7	9S6129	1	PULLEY
	8	9S1240	1	NUT ASSEM.
		1F748	1	NUT
	9	2D2285	1	BOLT
	10	7S6723	1	BRACKET
	11	7F1866	1	BOLT
	12	1D4574	1	BOLT

C INDICATES CHANGE
D ORDER BY THE METER
Y SEPARATE ILLUSTRATION

306378

6N5468 ALTERNATOR GROUP—24 Volt, 35 Ampere
6N9294 Alternator parts are shown on Page 72
Note: 7M4707 Vee Belt Set, consisting of 2 belts, is available

		CONSISTS OF:	PAGE
1	9G8255	ALTERNATOR GROUP (DELCO-REMY)	74
	- OR -		
1	7N9720	ALTERNATOR GROUP	73

6N9294 ALTERNATOR GROUP—24 Volt, 35 Ampere
Serial No. 6X1115 to 6X1341 Inclusive
Part of 6N5468 Alternator Group shown on Page 72

		CONSISTS OF:	PAGE
1	7N9720	ALTERNATOR GROUP	73
		- OR -	
1	3T6352	ALTERNATOR GROUP--DELCO-REMY	75A
		- OR -	
1	9G4574	ALTERNATOR GROUP	

6N9294 ALTERNATOR GROUP-24 VOLT, 35 AMPERE
Serial No. 6X1342-Up
Part Of 6N5468 Alternator

7N9720 ALTERNATOR GROUP-24 VOLT, 35 AMPERE-TYPE 1
Part Of 6N9294 Alternator

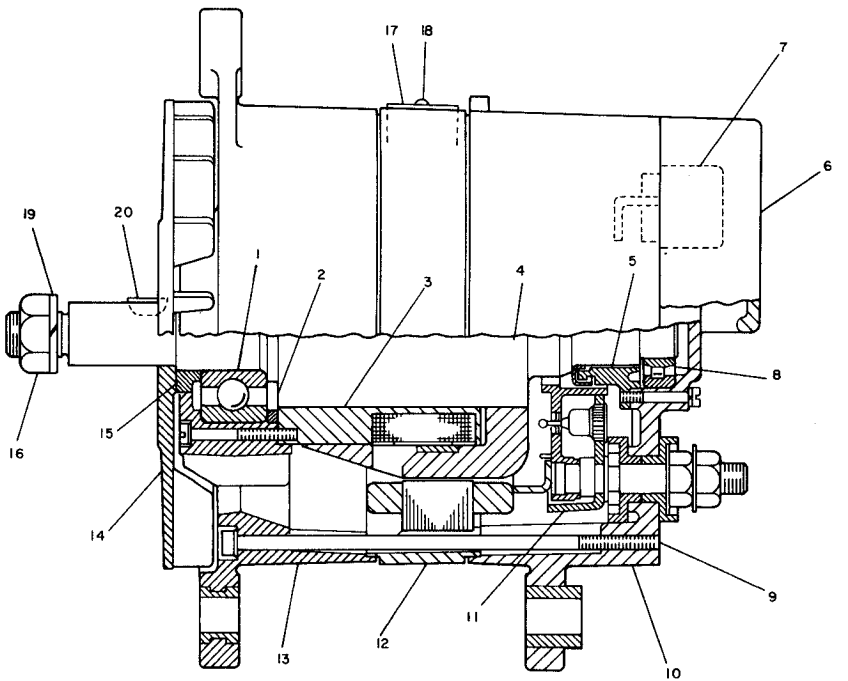

C INDICATES CHANGE

NOTE	REF NO	PART NUMBER	QTY	DESCRIPTION
	1	9G7551	1	BEARING
	2	9G7548	1	RING
	3	9G7558	1	COIL ASSEM.
	4	9G7560	1	ROTOR ASSEM.
	5	9G7553	1	RING
	6	9G7562	1	COVER ASSEM.
	7	9G7567	1	REGULATOR ASSEM.
	8	9G7552	1	BEARING
	9	9G7557	1	SCREW ASSEM.
	10	9G7568	1	FRAME ASSEM.
	11	9G7563	1	DIODE ASSEM.
	12	9G7561	1	STATOR ASSEM.
	13	9G7566	1	FRAME
	14	9G7564	1	FAN
	15	9G7549	1	SPACER
	16	2K4821	1	LOCKNUT
C	17	3T5962	1	NAMEPLATE
C	18	2H3880	2	SCREW (DRIVE)
C	19	3B4510	1	LOCKWASHER
C	20	1B8705	1	KEY
				THE FOLLOWING REPAIR KITS ARE AVAILABLE:
		9G7554	1	KIT (GROUND TERMINAL) (INCLUDES NUTS & LOCKWASHERS)
		9G7555	1	KIT (OUTPUT TERMINAL) (INCLUDES NUTS, WASHERS & BUSHINGS)
		9G7556	1	KIT (CAPACITOR) (INCLUDES CAPACITOR, SCREW LOCKWASHER & WASHER)
		9G7559	1	KIT (RELAY TERMINAL) (INCLUDES SPLICE, TUBE, NUT, TERMINAL, LOCKWASHER, WASHERS, AND BUSHING)
		9G7565	1	KIT (REGULATOR TERMINAL) (INCLUDES NUTS, LOCKWASHERS, WASHERS AND BUSHING)

309353

7N9720 ALTERNATOR GROUP-24 VOLT, 35 AMPERE-TYPE 2
Part Of 6N9294 Alternator

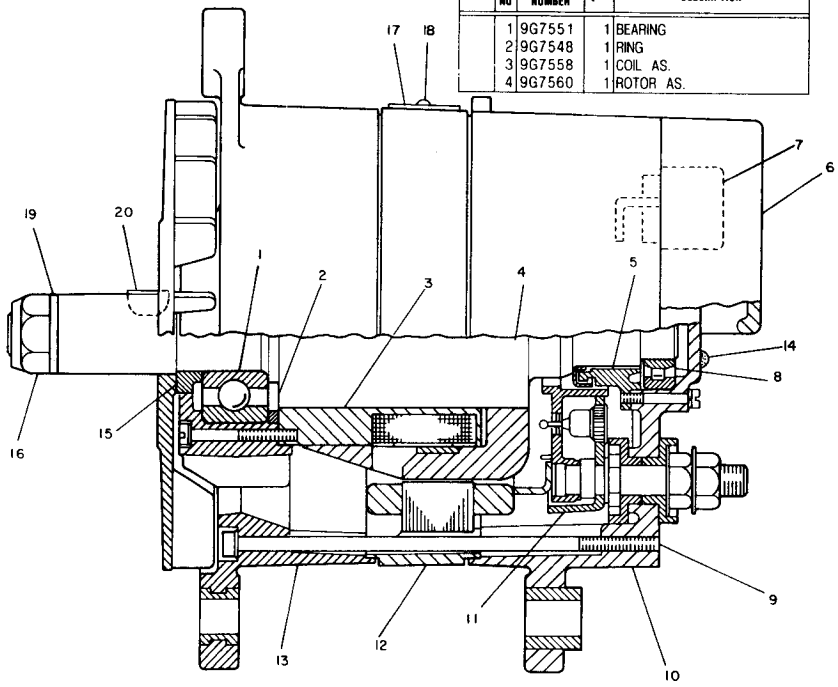

NOTE	REF NO	PART NUMBER	QTY	DESCRIPTION
	1	9G7551	1	BEARING
	2	9G7548	1	RING
	3	9G7558	1	COIL AS.
	4	9G7560	1	ROTOR AS.

C INDICATES CHANGE

	5	9G7553	1	RING
	6	9G7562	1	COVER AS.
	7	9G7567	1	REGULATOR AS.
	8	9G7552	1	BEARING
	9	9G7557	4	SCREW AS.
	10	9G7568	1	FRAME AS.
	11	3T1887	1	DIODE AS.
	12	9G7561	1	STATOR AS.
	13	9G7566	1	FRAME
C	14	9L6770	1	CAP
	15	9G7549	1	SPACER
	16	2K4821	1	LOCKNUT
	17	3T5962	1	NAMEPLATE
	18	2H3880	2	SCREW (DRIVE)
C	19	5P8247	1	LOCKWASHER
	20	1B8705	1	KEY
				THE FOLLOWING REPAIR KITS ARE AVAILABLE:
		9G7554	1	KIT (GROUND TERMINAL) (INCLUDES NUTS & LOCKWASHERS)
		9G7555	1	KIT (OUTPUT TERMINAL) (INCLUDES NUTS, WASHERS & BUSHINGS)
		9G7556	1	KIT (CAPACITOR) (INCL. CAPACITOR, SCREW, LOCKWASHER & WASHER)
		9G7559	1	KIT (RELAY TERMINAL) (INCL. SPLICE, TUBE, NUT, TERMINAL, LOCKWASHER, WASHERS & BUSHING)
		9G7565	1	KIT (REGULATOR TERMINAL) (INCL. NUTS, LOCKWASHERS, WASHERS & BUSHING)
C		7T0816	1	KIT (FAN) (INCL. FAN, SUPPORT PLATE & SPACER)

325531

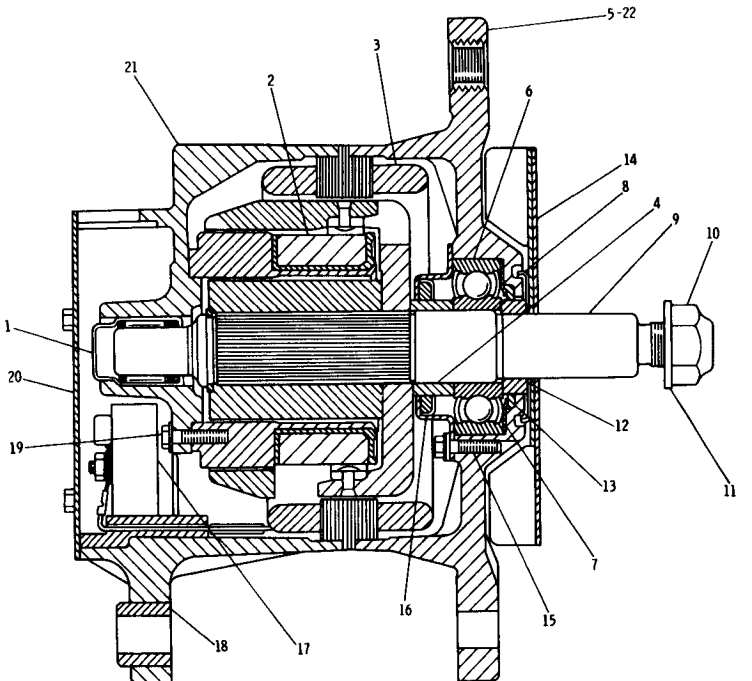

REF. NO.	PART NUMBER	DESCRIPTION	QTY
1	5P6920	BEARING	1
2	7N7806	COIL ASSEM.	1
3	7N7804	STATOR ASSEM.	1
4	7N7795	COLLAR	1
5	7N7810	FRAME ASSEM.	1
6	5P9514	BEARING	1
7	9L2140	PLATE	1
8	9L6782	SHIELD	1
9	7N7800	ROTOR ASSEM.	1
10	2K4821	LOCKNUT	1
11	7F7621	WASHER	1
12	9L6783	COLLAR	1
13	9L2139	WASHER	1
14	9N1210	FAN ASSEM.	1
15	7N9020	SCREW ASSEM.	3
16	9L2137	RETAINER ASSEM.	1
17	7N7122	RECTIFIER ASSEM.	1
18	9S2396	BUSHING	1
19	9S2007	SCREW	4
20	7N7809	PLATE	1
21	7N7805	HOUSING	1
22	7N9024	BOLT	4

228795

9G8255 ALTERNATOR GROUP—Delco-Remy—24 Volt, 35 Ampere—Part 1
Serial No. 6X1115 to 6X1341 inclusive
Part of 6N9294 Alternator Group shown on Page 72

9G8255 ALTERNATOR GROUP—Delco-Remy—24 Volt, 35 Ampere—Part 2
Serial No. 6X1115 to 6X1341 inclusive
Part of 6N9294 Alternator Group shown on Page 72

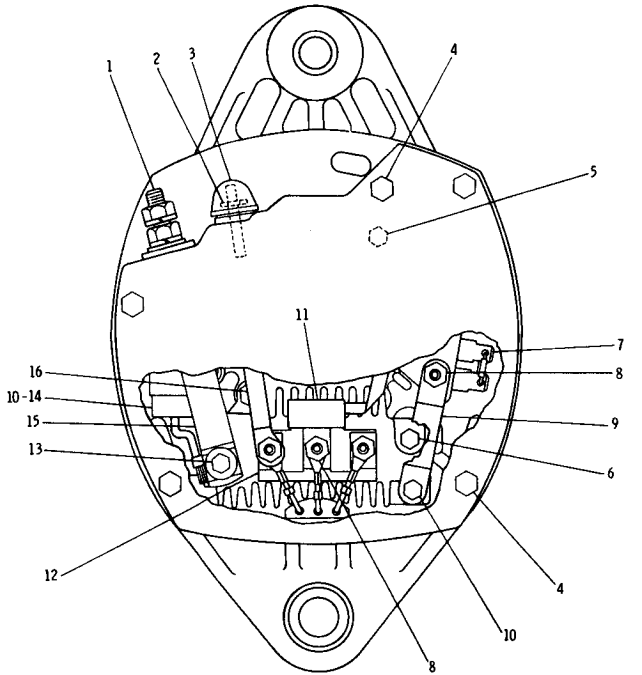

REF. NO.	PART NUMBER	DESCRIPTION	QTY.
1	7N7807	TERMINAL KIT-----(output)------- (Includes Insulator, Screw, Washers, Lockwasher, Nut &Adapter)	1
2	7N7808	TERMINAL KIT---------- (Includes Stud, Bushings, Washers & Nut Assem.)	1
3	9L6770	CAP----------	1
4	8N740	SCREW ASSEM.----------	5
5	7N9022	SCREW ASSEM.----------	2
	9N938	WASHER----------	2
6	7N9023	SCREW ASSEM.----------	2
7	7N7799	REGULATOR ASSEM.----------	1
8	6N1869	NUT ASSEM.----------	4
9	7N7811	CONNECTOR----------	1
10	7N9018	SCREW ASSEM.----------	3
11	9N1202	DIODE ASSEM.----------	1
12	7N7797	INSULATOR----------	2
13	7N9021	SCREW ASSEM.----------	1
	7N7796	BUSHING----------	1
14	7N7802	CAPACITOR ASSEM.----------	1
	3N4082	BRACKET----------	1
15	7N7798	CONNECTOR----------	1
16	7N7801	CONNECTOR----------	1

228796

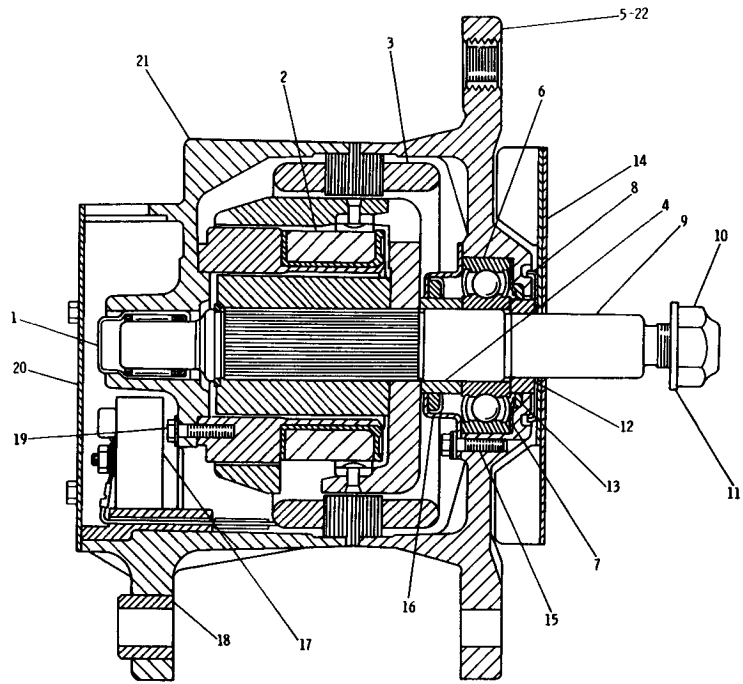

REF. NO.	PART NUMBER	DESCRIPTION	QTY
1	5P6920	BEARING	1
2	7N7806	COIL ASSEM.	1
3	7N7804	STATOR ASSEM.	1
4	7N7795	COLLAR	1
5	7N7810	FRAME ASSEM.	1
6	5P9514	BEARING	1
7	9L2140	PLATE	1
8	9L6782	SHIELD	1
9	7N7800	ROTOR ASSEM.	1
10	2K4821	LOCKNUT	1
11	7F7621	WASHER	1
12	9L6783	COLLAR	1
13	9L2139	WASHER	1
14	9N1210	FAN ASSEM.	1
15	7N9020	SCREW ASSEM.	3
16	9L2137	RETAINER ASSEM.	1
17	7N7122	RECTIFIER ASSEM.	1
18	9S2396	BUSHING	1
19	9S2007	SCREW	4
20	7N7809	PLATE	1
21	7N7805	HOUSING	1
22	7N9024	BOLT	4

235181

3T6352 ALTERNATOR GROUP—24 Volt, 35 Ampere—Part 1
Serial No. 6X1342—Up
Part of 6N9294 Alternator Group listed on Page 72A

3T6352 ALTERNATOR GROUP—24 Volt, 35 Ampere—Part 2
Serial No. 6X1342—Up
Part of 6N9294 Alternator Group listed on Page 72A

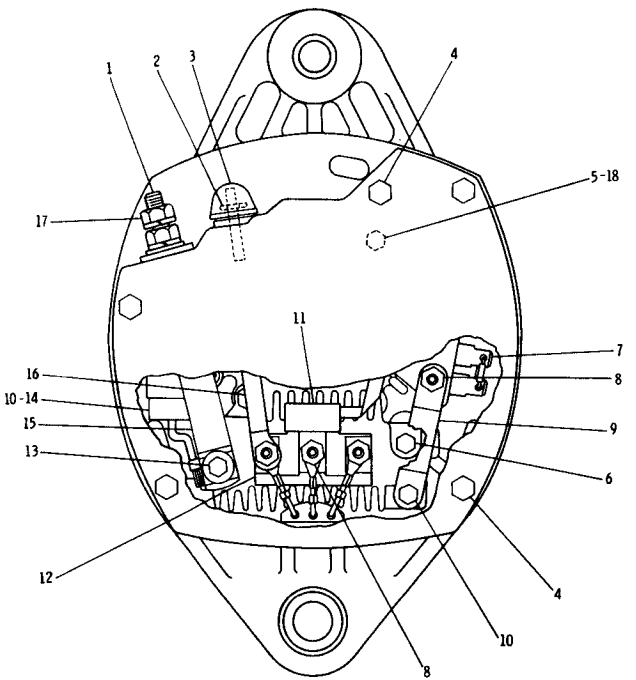

	REF. NO.	PART NUMBER	DESCRIPTION	QTY
	1	7N7807	TERMINAL KIT-----(output)------ (Includes Insulator, Screw, Washers, Lockwasher, Nut &Adapter)	1
	2	7N7808	TERMINAL KIT---------- (Includes Stud, Bushings, Washers & Nut Assem.)	1
	3	9L6770	CAP----------	1
	4	8N740	SCREW ASSEM.----------	5
C	5	6N1872	SCREW ASSEM.----------	2
		9N938	WASHER -11.17mm(.44 in.)O. D.---	2
	6	7N9023	SCREW ASSEM.----------	2
	7	3T6353	REGULATOR ASSEM.----------	1
	8	6N1869	NUT ASSEM.----------	4
	9	7N7811	CONNECTOR----------	1
	10	7N9018	SCREW ASSEM.----------	3
	11	9N1202	DIODE ASSEM.----------	1
	12	7N7797	INSULATOR----------	2
	13	7N9021	SCREW ASSEM.----------	1
		7N7796	BUSHING----------	1
	14	7N7802	CAPACITOR ASSEM.----------	1
		3N4082	BRACKET----------	1
	15	7N7798	CONNECTOR----------	1
	16	7N7801	CONNECTOR----------	1
C	17	5L4426	NUT----------	1
C		3B4504	LOCKWASHER----------	1
C		3P9901	WASHER----------	1
C	18	3H240	WASHER-9.65mm(.38 in.)O. D.----	2

C INDICATES CHANGE 304807

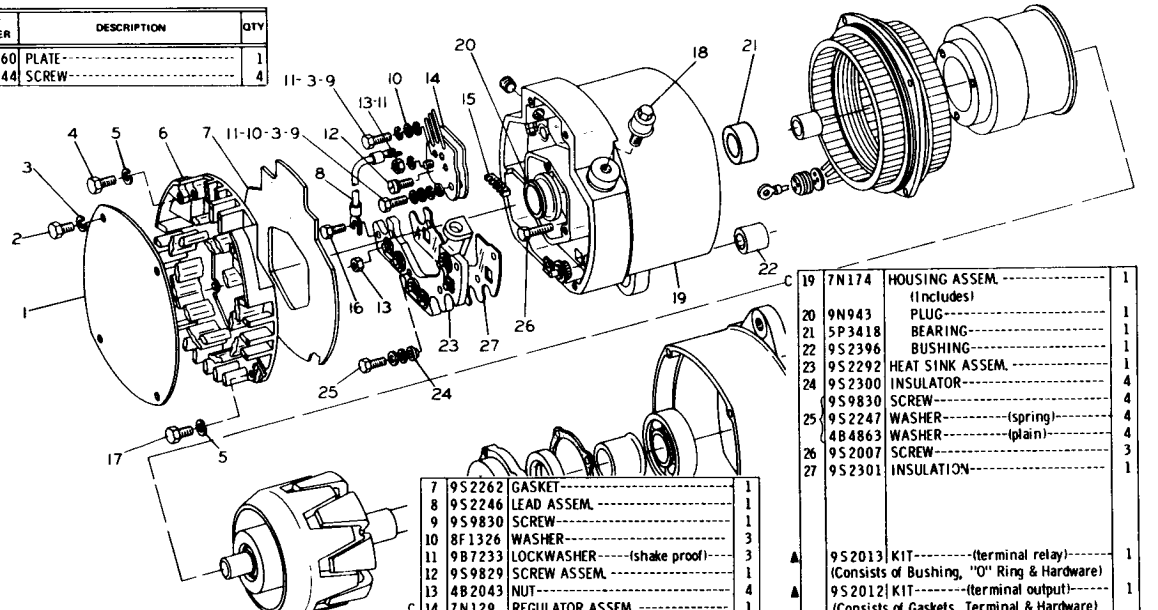

REF NO	PART NUMBER	DESCRIPTION	QTY
1	9S2260	PLATE	1
2	9S2544	SCREW	4
3	8H878	LOCKWASHER	6
4	9S2438	SCREW	2
5	7H2079	LOCKWASHER	7
6	9S2255	COVER	1
7	9S2262	GASKET	1
8	9S2246	LEAD ASSEM.	1
9	9S9830	SCREW	1
10	8F1326	WASHER	3
11	9B7233	LOCKWASHER-----(shake proof)----	3
12	9S9829	SCREW ASSEM.	1
13	4B2043	NUT	4
C 14	7N129	REGULATOR ASSEM.	1
15	9S2250	GROMMET	1
16	9S2542	SCREW	1
17	9S2437	SCREW	5
18	9S2389	STUD ASSEM.	1
C 19	7N174	HOUSING ASSEM. (Includes)	1
20	9N943	PLUG	1
21	5P3418	BEARING	1
22	9S2396	BUSHING	1
23	9S2292	HEAT SINK ASSEM.	1
24	9S2300	INSULATOR	4
	9S9830	SCREW	4
25	9S2247	WASHER----------(spring)--------	4
	4B4863	WASHER----------(plain)--------	4
26	9S2007	SCREW	3
27	9S2301	INSULATION	1
▲	9S2013	KIT---------(terminal relay)------- (Consists of Bushing, "O" Ring & Hardware)	1
▲	9S2012	KIT---------(terminal output)------ (Consists of Gaskets, Terminal & Hardware)	1
▲	9S2290	KIT----------(heat sink)---------- (Diode Junction Hardware)	1
▲	9S2291	KIT----------(heat sink)---------- (Positive Diode Hardware)	1

C INDICATES CHANGE

▲ NOT PART OF 5S9088 ALTERNATOR ASSEM. 162528

5S9088 ALTERNATOR ASSEMBLY—24 Volt, 50 Ampere—Part 1—Type 1
Part of 8N1084 Alternator Group shown on Page 71

5S9088 ALTERNATOR ASSEMBLY—24 Volt, 50 Ampere—Part 2—Type 1
Part of 8N1084 Alternator Group shown on Page 71

	REF. NO.	PART NUMBER	DESCRIPTION	QTY
C	1	5P3419	RACE	1
	2	9S2248	FIELD COIL AND SUPPORT ASSEM.	1
	3	9S2004	STATOR ASSEM.	1
	4	9S2006	INSULATOR	1
	5	9S2005	GROMMET	1
	6	9S2014	CLIP	3
	7	9S2302	ROTOR ASSEM.	1
	8	9S2390	RETAINER ASSEM.	1
	9	9S2391	SEAL	1
	10	9S2256	GASKET	1
	11	9S2261	COLLAR	1
	12	2F5721	BEARING	1
	13	2P5616	FRAME	1
	14	3B4502	LOCKWASHER	4
	15	9S2009	BOLT	4
	16	9S2391	SEAL	1
	17	9S2254	COLLAR	1
	18	9S2252	SLINGER	1
	19	9S2008	SCREW	4
	20	9S2258	FAN AND BAFFLE ASSEM.	1
	21	7F7621	WASHER	1
	22	2K4821	LOCKNUT	1

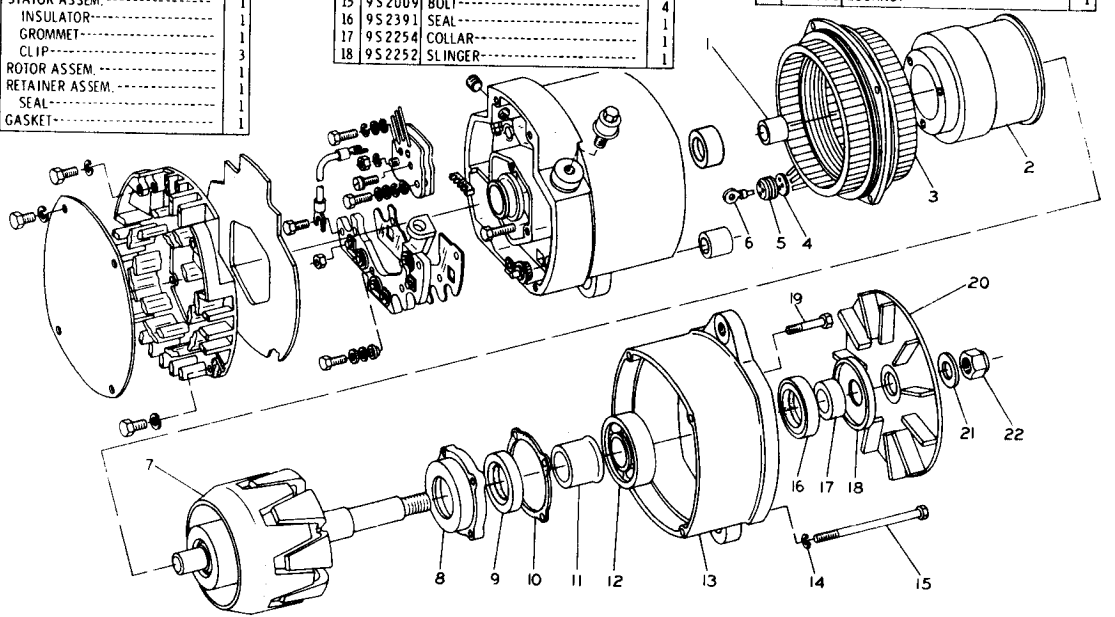

C INDICATES CHANGE

162529

		CONSISTS OF:	PAGE
1	9G9538	ALTERNATOR GROUP--24 VOLT, 50 AMPERE ...	77B
	- OR -		
1	3T1888	ALTERNATOR GROUP--DELCO-REMY ..... 24 VOLT, 50 AMPERE	77C

5S9088 ALTERNATOR ASSEMBLY—24 Volt, 50 Ampere—Type 2
Part of 8N1084 Alternator Group shown on Page 71

9G9538 ALTERNATOR GROUP-24 VOLT, 50 AMPERE
Part Of 5S9088 Alternator

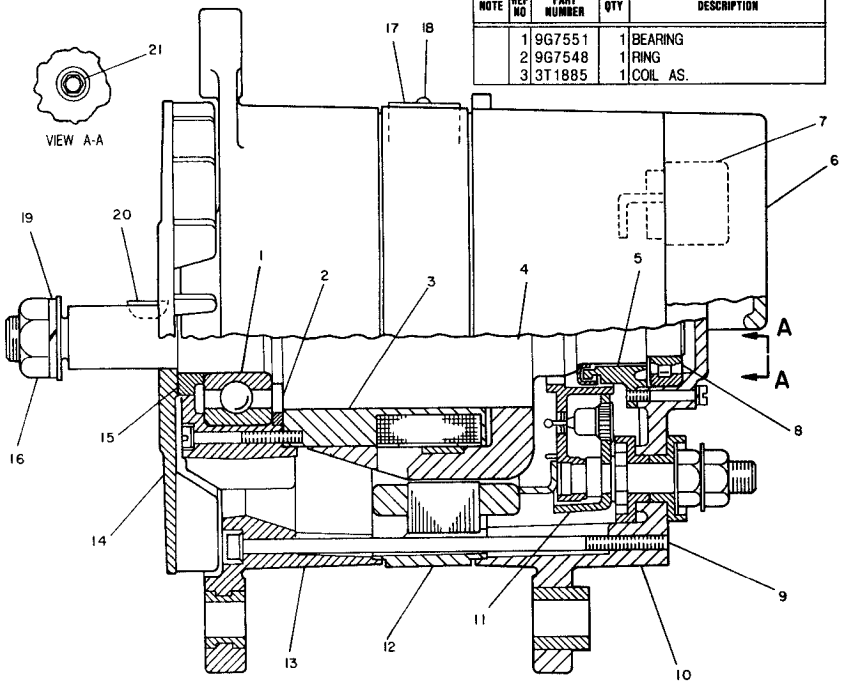

NOTE	REF NO	PART NUMBER	QTY	DESCRIPTION
	1	9G7551	1	BEARING
	2	9G7548	1	RING
	3	3T1885	1	COIL AS.
	4	9G7560	1	ROTOR AS.
	5	9G7553	1	RING
	6	9G7562	1	COVER AS.
	7	9G7567	1	REGULATOR AS.
	8	9G7552	1	BEARING
	9	9G7557	4	SCREW AS.
	10	9G7568	1	FRAME AS.
	11	3T1887	1	DIODE AS.
	12	3T1886	1	STATOR AS.
	13	9G7566	1	FRAME
	14	9G7564	1	FAN
	15	9G7549	1	SPACER
	16	2K4821	1	LOCKNUT
		7K7621	1	WASHER
C	17	3T5962	1	NAMEPLATE
C	18	2H3880	2	SCREW (DRIVE)
C	19	5P8247	1	WASHER
C	20	1B8705	1	KEY
C	21	9L6770	1	CAP
				THE FOLLOWING REPAIR KITS ARE AVAILABLE:
		9G7554	1	KIT (GROUND TERMINAL) (INCL. NUTS & LOCKWASHERS)
		9G7555	1	KIT (OUTPUT TERMINAL) (INCL. NUTS, WASHERS & BUSHINGS)
		9G7556	1	KIT (CAPACITOR) (INCL. CAPACITOR, SCREW, LOCKWASHER & WASHER)
		9G7559	1	KIT (RELAY TERMINAL) (INCL. SPLICE, TUBE, NUT, TERMINAL, LOCKWASHER, WASHERS & BUSHING)
		9G7565	1	KIT (REGULATOR TERMINAL) (INCL. NUTS, LOCKWASHERS, WASHERS & BUSHING)

C INDICATES CHANGE

328673

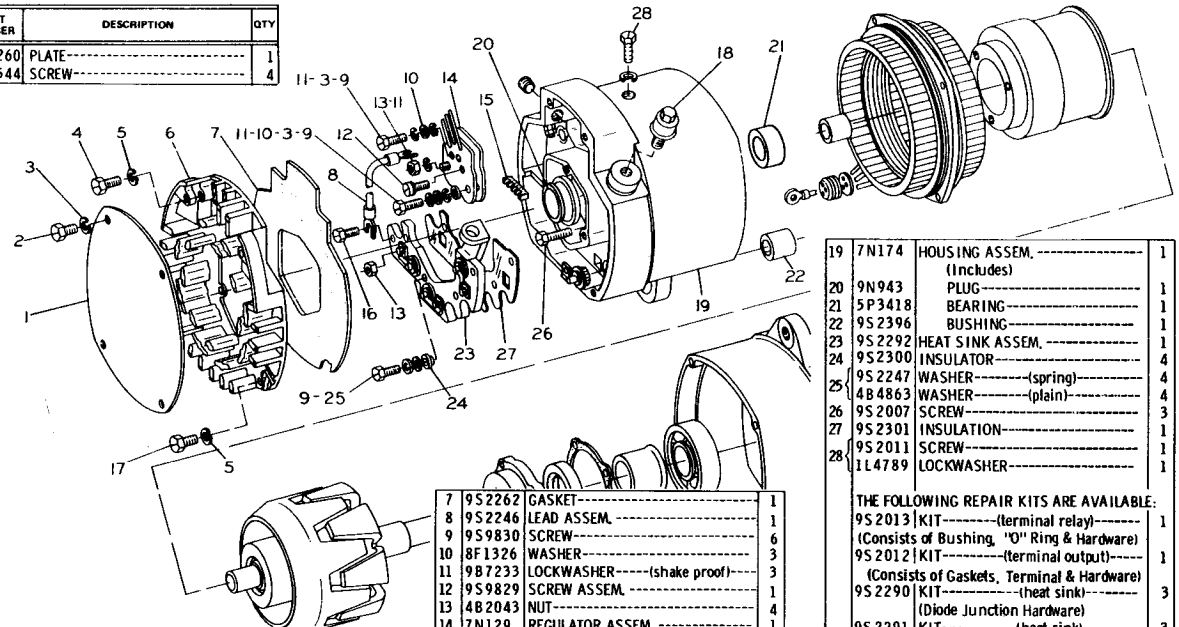

REF. NO.	PART NUMBER	DESCRIPTION	QTY
1	9S2260	PLATE	1
2	9S2544	SCREW	4
3	8H878	LOCKWASHER	6
4	9S2438	SCREW	2
5	7H2079	LOCKWASHER	7
6	9S2255	COVER	1
7	9S2262	GASKET	1
8	9S2246	LEAD ASSEM.	1
9	9S9830	SCREW	6
10	8F1326	WASHER	3
11	9B7233	LOCKWASHER-----(shake proof)----	3
12	9S9829	SCREW ASSEM.	1
13	4B2043	NUT	4
14	7N129	REGULATOR ASSEM.	1
15	9S2250	GROMMET	1
16	9S2542	SCREW	1
17	9S2437	SCREW	5
18	9S2389	STUD ASSEM.	1
19	7N174	HOUSING ASSEM. (Includes)	1
20	9N943	PLUG	1
21	5P3418	BEARING	1
22	9S2396	BUSHING	1
23	9S2292	HEAT SINK ASSEM.	1
24	9S2300	INSULATOR	4
25	9S2247	WASHER---------(spring)----------	4
	4B4863	WASHER---------(plain)----------	4
26	9S2007	SCREW	3
27	9S2301	INSULATION	1
28	9S2011	SCREW	1
	1L4789	LOCKWASHER	1
		THE FOLLOWING REPAIR KITS ARE AVAILABLE:	
	9S2013	KIT---------(terminal relay)-------- (Consists of Bushing, "O" Ring & Hardware)	1
	9S2012	KIT----------(terminal output)------ (Consists of Gaskets, Terminal & Hardware)	1
	9S2290	KIT-----------(heat sink)--------- (Diode Junction Hardware)	3
	9S2291	KIT-----------(heat sink)--------- (Positive Diode Hardware)	3
	SMHS7290	FORM (Installation & Adjustment of Regulator Assem.)	1

233893

3T1888 ALTERNATOR GROUP—Delco-Remy—24 Volt, 50 Ampere—Part 1
Part of 5S9088 Alternator Assembly listed on Page 77A

3T1888 ALTERNATOR GROUP—Delco Remy—24 Volt, 50 Ampere—Part 2
Part of 5S9088 Alternator Assembly listed on Page 77A

REF. NO.	PART NUMBER	DESCRIPTION	QTY.
1	5P3419	RACE	1
2	9S2248	FIELD COIL AND SUPPORT ASSEM.	1
3	9S2004	STATOR ASSEM. (Includes)	1
4	9S2006	INSULATOR	1
5	9S2005	GROMMET	1
6	9S2014	CLIP	3
7	9S2302	ROTOR ASSEM.	1
8	9S2390	RETAINER ASSEM. (Includes)	1
9	9S2391	SEAL	1
10	9S2256	GASKET	1
11	9S2261	COLLAR	1
12	2F5721	BEARING	1
13	2P5616	FRAME	1
14	3B4502	LOCKWASHER	4
15	9S2009	SCREW	4
16	9S2391	SEAL	1
17	9S2254	COLLAR	1
18	9S2252	SLINGER	1
19	9S2008	SCREW	4
20	9S2258	FAN AND BAFFLE ASSEM.	1
21	7F7621	WASHER	1
22	2K4821	LOCKNUT	1

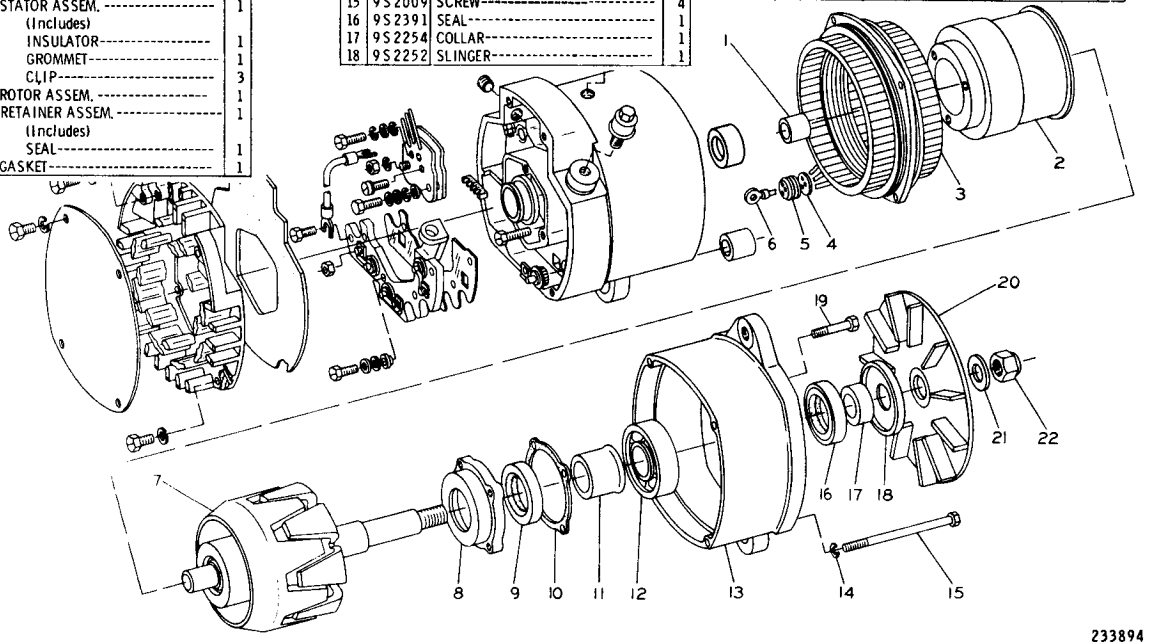

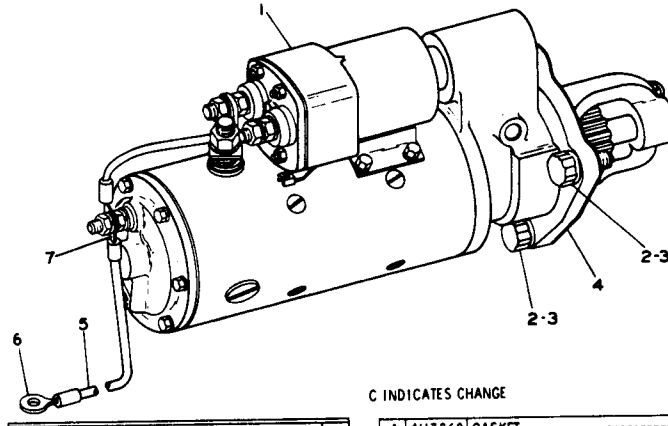

C INDICATES CHANGE

	REF. NO.	PART NUMBER	DESCRIPTION	QTY
C	1	2P3926	MOTOR ASSEM. (Separate Illustration)	1
C	2	7J8902	BOLT	3
C	3	8D5054	WASHER	3
	4	4H7869	GASKET	1
	5	9F4337	WIRE ASSEM. (Includes)	1
C ▲		5P6641	WIRE, .229 m (9 in.)	1
C	6	2L8052	TERMINAL-(ground)	1
C	7	2L8054	TERMINAL	1

▲ ORDER BY THE METRE 209124

8S3886 ELECTRIC STARTING MOTOR GROUP—24 Volt—Type 1
FOR USE IN TEMPERATURES OF 0 DEGREES FAHRENHEIT OR BELOW
2P3926 Starting Motor parts are shown on Pages 84, 85 and 86. AN ATTACHMENT

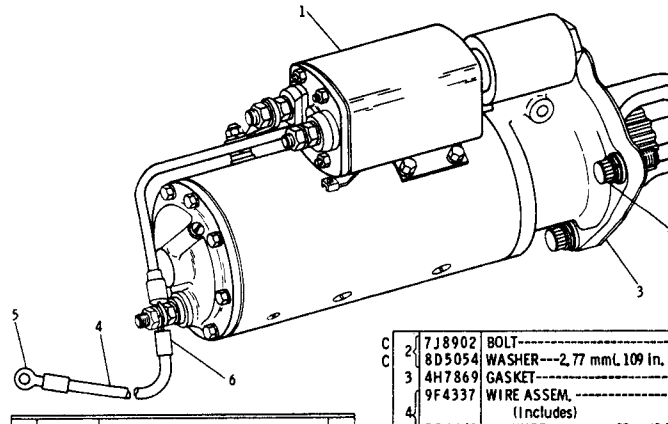

	REF. NO.	PART NUMBER	DESCRIPTION	QTY
	1	4N3181	MOTOR GROUP (Includes)	1
C●		9G4338	MOTOR GROUP---(Prestolite)---OR-	1
●		4N3182	MOTOR GROUP---(Delco-Remy)-	1
C	2	7J8902	BOLT	3
C		8D5054	WASHER---2.77 mm(.109 in.) thick	3
	3	4H7869	GASKET	1
	4	9F4337	WIRE ASSEM. (Includes)	1
▲		5P6641	WIRE---------.23 m (9 in.)	
	5	2L8054	TERMINAL---(ground)--------	1
	6	2L8052	TERMINAL	1

C INDICATES CHANGE ● SEPARATE ILLUSTRATION ▲ ORDER BY THE METER 229068

7S3622 ELECTRIC STARTING MOTOR GROUP—24 Volt
Serial No. 6X1115 to 6X1169 inclusive
4N3182 and 9G4338 Starting Motor parts are shown on Pages 79 through 83

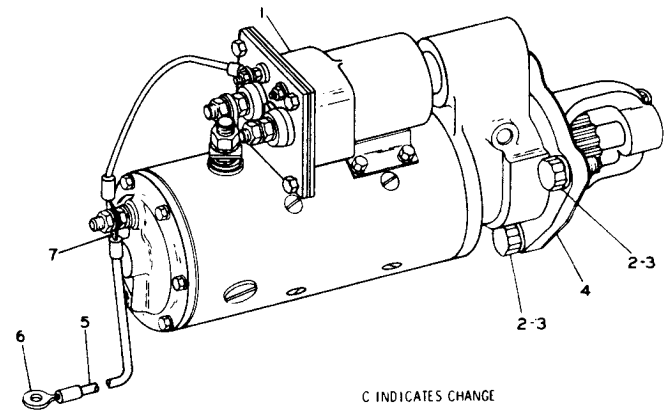

C INDICATES CHANGE

	REF. NO.	PART NUMBER	DESCRIPTION	QTY.
C	1	3T2776	MOTOR ASSEM. (Separate Illustration)	1
	2	7J8902	BOLT	3
	3	8D5054	WASHER	3

	REF. NO.	PART NUMBER	DESCRIPTION	QTY.
	4	4H7869	GASKET	1
CD	5	9F4337	WIRE ASSEM. (Includes)	1
		5P5675	WIRE----.23m(9.06 in.)	1
	6	2L8052	TERMINAL------(ground)------	1
	7	2L8054	TERMINAL	1

D-ORDER BY THE METER 304705

8S3886 ELECTRIC STARTING MOTOR GROUP—24 Volt—Type 2
FOR USE IN TEMPERATURES OF 0 DEGREES FAHRENHEIT OR BELOW
3T2776 Motor parts are shown on Pages 86E through 86G
AN ATTACHMENT

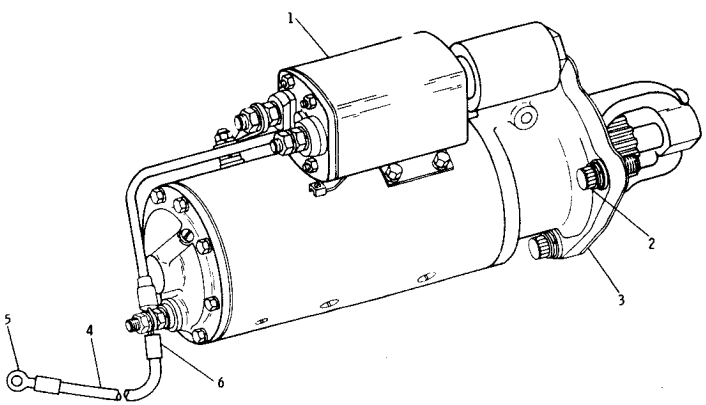

	REF. NO.	PART NUMBER	DESCRIPTION	QTY.
	1	4N3181	MOTOR GROUP (Separate Illustration)	1
	2	7J8902	BOLT	3
		8D5054	WASHER--2.77 mm (.109 in.)thick	3
	3	4H7869	GASKET	1

C INDICATES CHANGE

	REF. NO.	PART NUMBER	DESCRIPTION	QTY.
C▲	4	9F4337	WIRE ASSEM. (Includes)	1
		5P5675	WIRE----.3m(11.8 in.)	
	5	2L8054	TERMINAL------(ground)-----	1
	6	2L8052	TERMINAL	1

▲ ORDER BY THE METER 304575

7S3622 ELECTRIC STARTING MOTOR GROUP—24 Volt
Serial No. 6X1170—Up
4N3181 Motor parts are listed on Page 78B

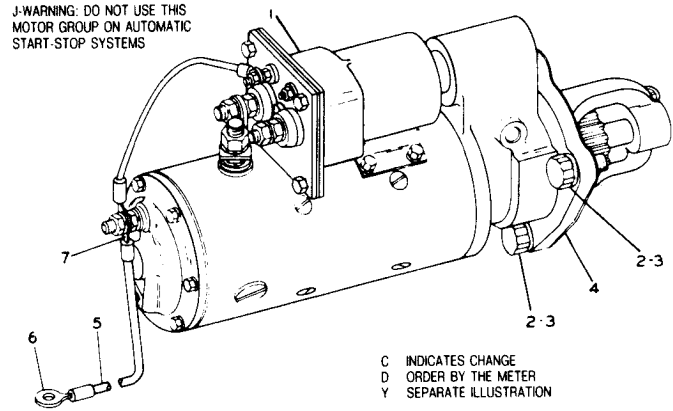

C INDICATES CHANGE
D ORDER BY THE METER
Y SEPARATE ILLUSTRATION

NOTE	REF NO	PART NUMBER	QTY	DESCRIPTION
CJY	1	3T8946	1	MOTOR GROUP
	2	7J8902	3	BOLT
	3	8D5054	3	WASHER
	4	4H7869	1	GASKET
	5	9F4337	1	WIRE ASSEM.
CD		5P5675		WIRE .23M (9.06IN.)
	6	2L8052	1	TERMINAL (GROUND)
	7	2L8054	1	TERMINAL

308830

8S3886 ELECTRIC STARTING MOTOR GROUP—24 Volt—Type 3
FOR USE IN TEMPERATURES OF 0 DEGREES FAHRENHEIT OR BELOW
3T8946 Motor parts are shown on Pages 86H through 86K
AN ATTACHMENT

CONSISTS OF: PAGE

1 9G4338 ELECTRIC STARTING MOTOR GROUP 82
PRESTOLITE

1 3T2647 ELECTRIC STARTING MOTOR GROUP 86-87
DELCO-REMY

1 3T6305 ELECTRIC STARTING MOTOR GROUP 86-87

4N3181 ELECTRIC STARTING MOTOR GROUP—24 Volt
Part of 7S3622 Electric Starting Motor Group shown on Page 78A

6T1387 LOW TEMPERATURE STARTING ARRANGEMENT-24 VOLT-TYPE 1

Serial No. 6X1579-Up
3T2776-Page 86E

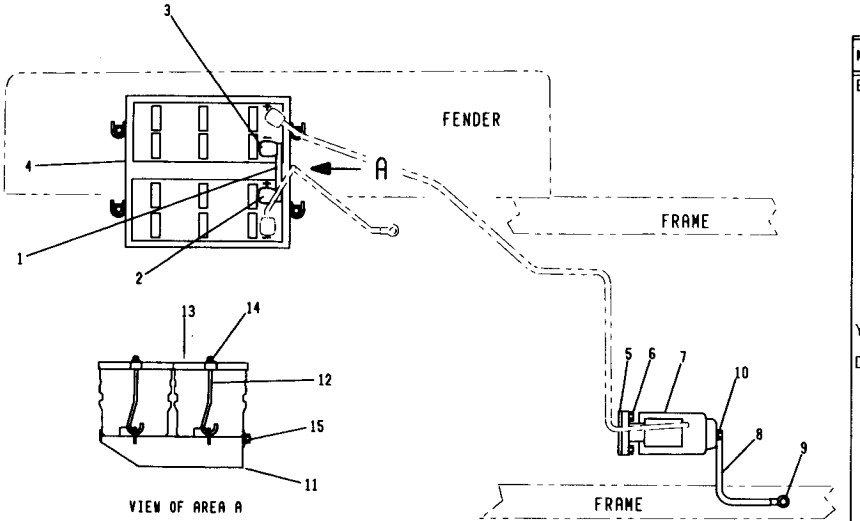

NOTE	REF NO	PART NUMBER	QTY	DESCRIPTION
E	1	5P747		CABLE 15CM (5.91IN.)
	2	9G4	1	COVER
		5M9204	1	TERMINAL AS. (POSITIVE)
		1M6119	1	BOLT
		1M6120	1	NUT
	3	9G3	1	COVER
		5M9205	1	TERMINAL AS. (NEGATIVE)
		1M6119	1	BOLT
		1M6120	1	NUT
	4	9G4232	2	BATTERY (EACH INCLUDES)
		7G9383	6	VENT AS.
	5	4H7869	1	GASKET
	6	7J8902	3	BOLT
		8D5054	3	WASHER
Y	7	3T2776	1	MOTOR GP (EL. STARTING)
	8	9F4337	1	WIRE AS.
D		5P5675		WIRE (6 GAUGE)
	9	2L8054	1	TERMINAL (GROUND)
	10	2L8052	1	TERMINAL
	11	8P1218	1	SUPPORT AS.
		1F748	4	NUT
		6J2050	1	BLOCK
	12	8P9728	4	BOLT
	13	8P1222	2	HOLDDOWN AS.
	14	2K4973	4	LOCKNUT
		3K925	4	SPACER
	15	9P126	1	PLATE
		S1594	2	BOLT
		5M2894	2	WASHER
		SMHS8282	1	FORM (INSTRUCTIONS FOR INSTALLING BATTERIES)

D-ORDER BY THE METER

E-ORDER BY THE CENTIMETER

Y-SEPARATE ILLUSTRATION

* 316950

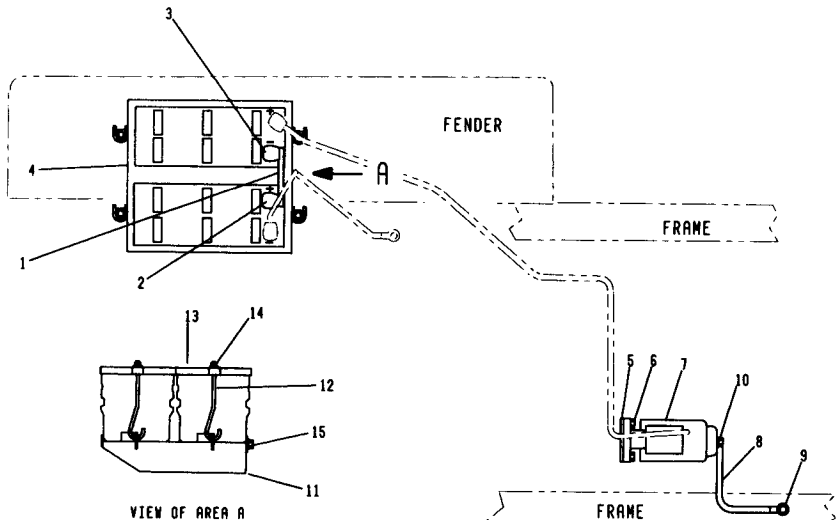

NOTE	REF NO	PART NUMBER	QTY	DESCRIPTION
E	1	5P747		CABLE 15CM (5.91IN.)
	2	9G4	1	COVER
		5M9204	1	TERMINAL AS. (POSITIVE)
		1M6119	1	BOLT
		1M6120	1	NUT
	3	9G3	1	COVER
		5M9205	1	TERMINAL AS. (NEGATIVE)
		1M6119	1	BOLT
		1M6120	1	NUT
	4	9G4232	2	BATTERY
				(EACH INCLUDES)
		7G9383	6	VENT AS.
	5	4H7869	1	GASKET
	6	7J8902	3	BOLT
		8D5054	3	WASHER
CY	7	3T8946	1	MOTOR GP (EL. STARTING)
	8	9F4337	1	WIRE AS.
D		5P5675		WIRE (6 GAUGE)
	9	2L8054	1	TERMINAL (GROUND)
	10	2L8052	1	TERMINAL
	11	8P1218	1	SUPPORT AS.
		1F748	4	NUT
		6J2050	1	BLOCK
	12	8P9728	4	BOLT
	13	8P1222	2	HOLDDOWN AS.
	14	2K4973	4	LOCKNUT
		3K925	4	SPACER
	15	9P126	1	PLATE
		S1594	2	BOLT
		5M2894	2	WASHER
		SMHS8282	1	FORM (INSTRUCTIONS FOR INSTALLING BATTERIES)

C-INDICATES CHANGE D-ORDER BY THE METER E-ORDER BY THE CENTIMETER Y-SEPARATE ILLUSTRATION * 316993

6T1387 LOW TEMPERATURE STARTING ARRANGEMENT-24 VOLT-TYPE 2
Serial No. 6X1579-Up
3T8946-Page 86H

4N3182 ELECTRIC STARTING MOTOR GROUP—Delco-Remy—24 Volt—Part 1 of 3

Serial No. 6X1115 to 6X1169 inclusive. Part of 7S3622 Starting Motor Group shown on Page 78
4M1812 Switch parts are shown on Page 87

REF. NO.	PART NUMBER	DESCRIPTION	QTY
1	7F4556	BOLT	4
2	1L4789	LOCKWASHER	4
3	4M1844	FRAME ASSEM.	1
4	7S9826	PLUG	1
C 5	9G4100	BUSHING	1
6	2B4602	PLUG	1
7	9F2547	WICK	1
8	2L8166	WASHER	1
9	4M1868	ARMATURE ASSEM.	1
10	3L3380	BUSHING	1
11	4M1839	COIL ASSEM.	1
12	9H3757	WASHER	2
13	7F3494	WASHER	1
14	4M1841	CONNECTOR	1
15	1D5117	NUT	2

C	16	4M1812	SWITCH ASSEM. (Separate Illustration)	1
	17	6H3622	SCREW ASSEM.	4
	18	3B4508	LOCKWASHER	1
	19	3F379	SCREW	8
	20	2N3145	INSULATOR	1
	21	4M1831	PLUG	2
	22	4M1832	GASKET	2
	23	1H2629	STRIP	2
	24	8H1141	SHOE	4
C	GM	G00012	FORM (Installing Electric Starting Motor)	1

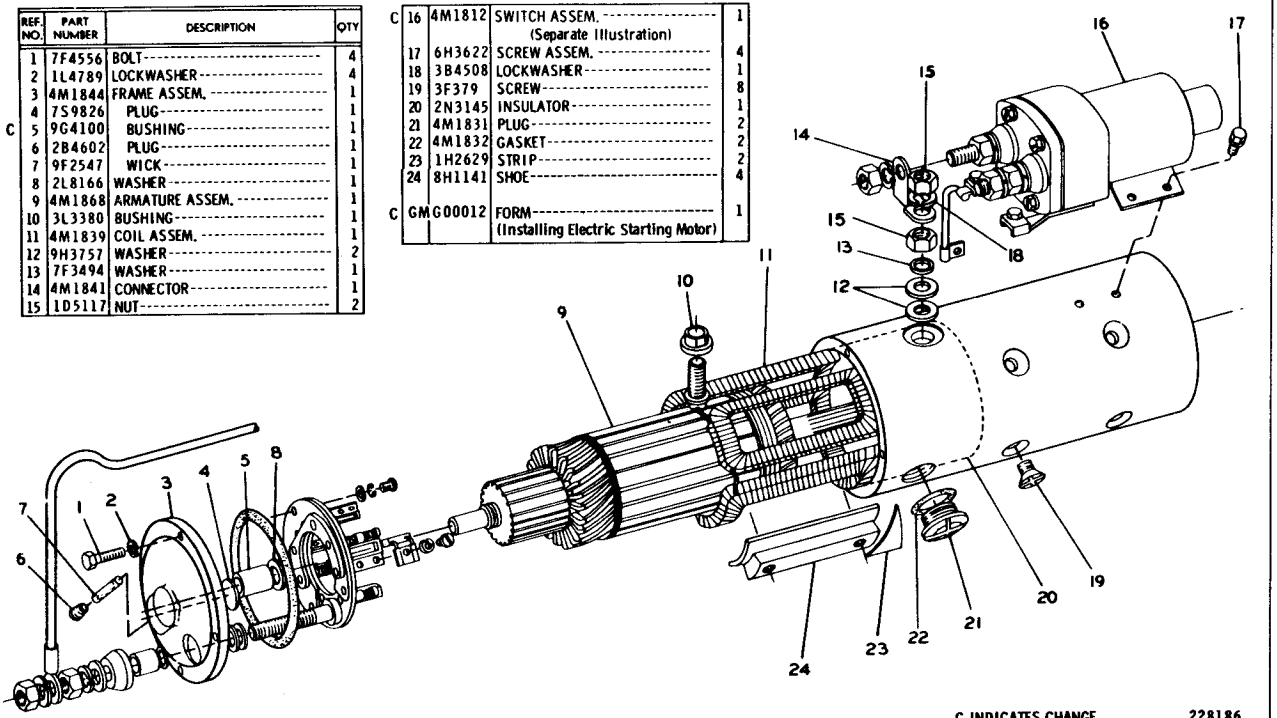

C INDICATES CHANGE

228186

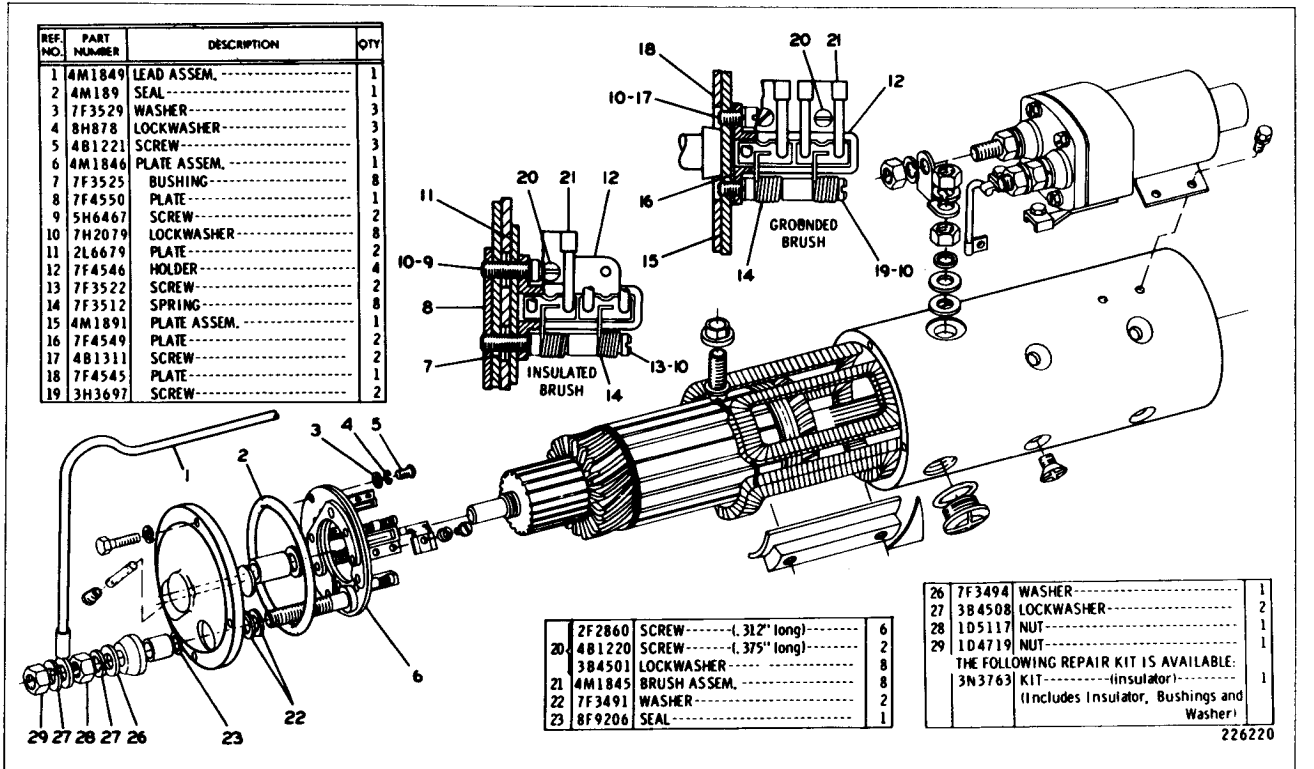

REF. NO.	PART NUMBER	DESCRIPTION	QTY
1	4M1849	LEAD ASSEM.	1
2	4M189	SEAL	1
3	7F3529	WASHER	3
4	8H878	LOCKWASHER	3
5	4B1221	SCREW	3
6	4M1846	PLATE ASSEM.	1
7	7F3525	BUSHING	8
8	7F4550	PLATE	1
9	5H6467	SCREW	2
10	7H2079	LOCKWASHER	8
11	2L6679	PLATE	2
12	7F4546	HOLDER	4
13	7F3522	SCREW	2
14	7F3512	SPRING	8
15	4M1891	PLATE ASSEM.	1
16	7F4549	PLATE	2
17	4B1311	SCREW	2
18	7F4545	PLATE	1
19	3H3697	SCREW	2

20	2F2860	SCREW-------(.312" long)	6
	4B1220	SCREW-------(.375" long)	2
	3B4501	LOCKWASHER	8
21	4M1845	BRUSH ASSEM.	8
22	7F3491	WASHER	2
23	8F9206	SEAL	1

26	7F3494	WASHER	1
27	3B4508	LOCKWASHER	2
28	1D5117	NUT	1
29	1D4719	NUT	1
	THE FOLLOWING REPAIR KIT IS AVAILABLE:		
	3N3763	KIT----------(Insulator)---------- (Includes Insulator, Bushings and Washer)	1

4N3182 ELECTRIC STARTING MOTOR GROUP—Delco-Remy—24 Volt—Part 2 of 3
Serial No. 6X1115 to 6X1169 inclusive. Part of 7S3622 Starting Motor Group shown on Page 78

4N3182 ELECTRIC STARTING MOTOR GROUP—Delco-Remy—24 Volt—Part 3 of 3

Serial No. 6X1115 to 6X1169 inclusive. Part of 7S3622 Starting Motor Group shown on Page 78

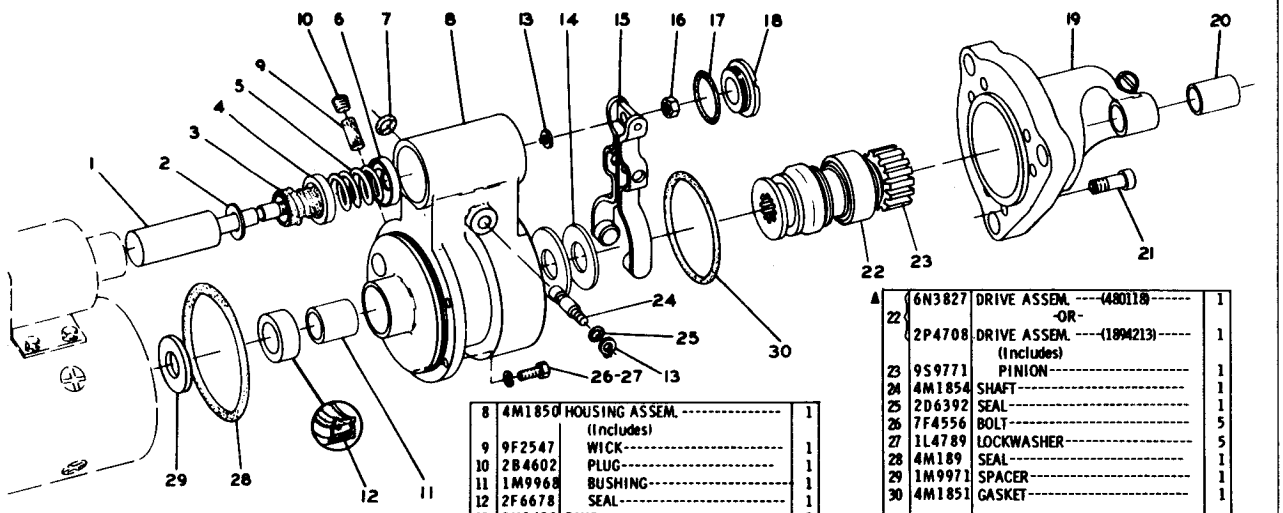

REF. NO.	PART NUMBER	DESCRIPTION	QTY
1	4M1855	PLUNGER ASSEM.	1
	FM055075	FORM---(installation instructions)	1
2	2S4027	WASHER	1
3	4M1829	BOOT	1
4	4M1828	RETAINER	1
5	9M7609	SPRING	1
6	4M1827	RETAINER	1
7	1H1023	SEAL	1
8	4M1850	HOUSING ASSEM. (Includes)	1
9	9F2547	WICK	1
10	2B4602	PLUG	1
11	1M9968	BUSHING	1
12	2F6678	SEAL	1
13	2H3429	RING	2
14	4L2729	WASHER	1
15	4M1853	LEVER ASSEM.	1
16	3F2617	NUT	1
17	4M1832	GASKET	1
18	4M1831	PLUG	1
19	1S297	HOUSING ASSEM. (Includes)	1
20	4M1896	BUSHING	1
21	4M1833	SCREW---1.50 in. (38.10 mm) long	5
	7M336	SCREW---.875 in. (22.23 mm) long	1

A 22	6N3827	DRIVE ASSEM. ----(480118)---- -OR-	1
	2P4708	DRIVE ASSEM. ----(1894213)---- (Includes)	1
23	9S9771	PINION	1
24	4M1854	SHAFT	1
25	2D6392	SEAL	1
26	7F4556	BOLT	5
27	1L4789	LOCKWASHER	5
28	4M189	SEAL	1
29	1M9971	SPACER	1
30	4M1851	GASKET	1
		THE FOLLOWING REPAIR KITS ARE AVAILABLE FOR 2P4708 DRIVE ASSEM.:	
	7N6098	KIT---(spring)---- (Includes Cup & Spring)	1
	9S9825	KIT---(cup)---- (Includes Cup & Washers)	1
	4S9459	KIT---(washer)---- (Includes Cup & Washers)	1
	FM035152	FORM. ---(cup kit installation)--	1

226221

A NOT PART OF 4N3182 MOTOR GROUP

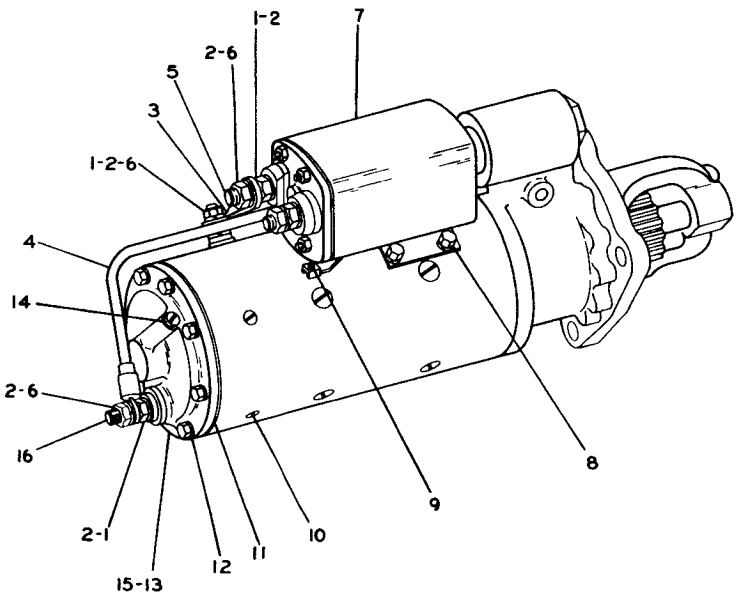

REF. NO.	PART NUMBER	DESCRIPTION	QTY
1	1D5117	NUT---------(jam)----------	4
2	3B4508	LOCKWASHER----------	8
3	4N9405	CONNECTOR----------	1
4	4N9404	LEAD ASSEM.----------	1
5	2P8819	KIT-----(Field Terminal Stud)----- (Includes Stud, Bushing & Washers)	1
6	1D4719	NUT----------	4
7	9S7976	SOLENOID ASSEM.---------- (Separate Illustration)	1
8	6H3622	SCREW----------	4
	3B4504	LOCKWASHER----------	4
	3K6116	WASHER----------	4
9	4M3217	SCREW----------	2
10	4B1220	SCREW----------	3
11	8S1553	GASKET----------	1
12	3B4502	LOCKWASHER----------	7
13	1P7831	HEAD ASSEM.-(Commutator End)- (Includes)	1
14	2B4602	PLUG----------	1
15	1P7832	KIT----(Bearing & Wick)---------	1
16	4N9403	KIT-(Commutator End Terminal Stud) (Includes Stud, Bushing & Washers)	1

229069

9G4338 ELECTRIC STARTING MOTOR GROUP-PRESTOLITE-24 VOLT-PART 1 OF 2-TYPE 1
Part Of 7S3622 & 4N3181 Starting Motors
9S7976-Page 87

9G4338 ELECTRIC STARTING MOTOR GROUP-PRESTOLITE-24 VOLT-PART 2 OF 2-TYPE 1

Part Of 7S3622 & 4N3181 Starting Motors

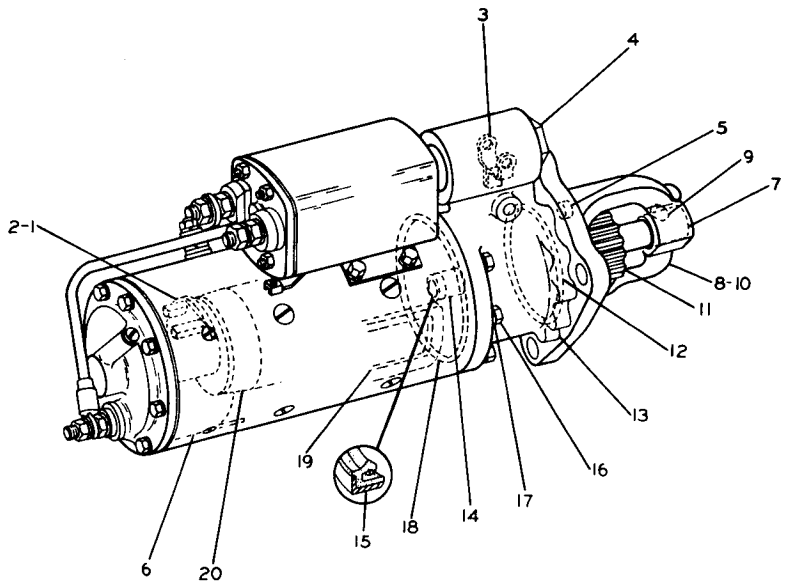

REF. NO.	PART NUMBER	DESCRIPTION	QTY.
1	2P8822	PLATE ASSEM.	1
2	4N9401	KIT--(Includes 6 Brushes)	1
	2P8868	KIT--(Includes 8 Springs)	1
3	2P8825	SHIFT YOKE ASSEM.	1
4	2P8817	KIT--(Yoke Adjusting) (Includes Plugs, Pin, Gasket & Nut)	1
5	8S1535	KIT--(Includes 6 Plugs)	1
6	4N9402	KIT--(Includes 10 Insulations)	1
7	8S4684	KIT--(Bearing & Wick)	1
8	9G5854	HOUSING ASSEM.--(Pinion) (Includes)	1
9	2B4602	PLUG	1
10	8S4680	KIT--(Includes 10 Seals)	1
11	9G5587	DRIVE ASSEM.	1
12	2H3931	SEAL	1
13	2P8824	HOUSING ASSEM. (Includes)	1
	2B4602	PLUG	1
14	8S2226	BUSHING	1
15	8S2225	SEAL	1
16	L1340	SCREW	7
	2P8816	KIT--(Includes Housing Screws)	1
17	3B4504	LOCKWASHER	7
18	4M189	SEAL	1
19	2N8818	KIT--(Field Coil) (Includes Coils, Gaskets & Screws)	1
20	8S1546	ARMATURE ASSEM.	1
	8S8075	KIT--(Armature Thrust Washers)	1

229070

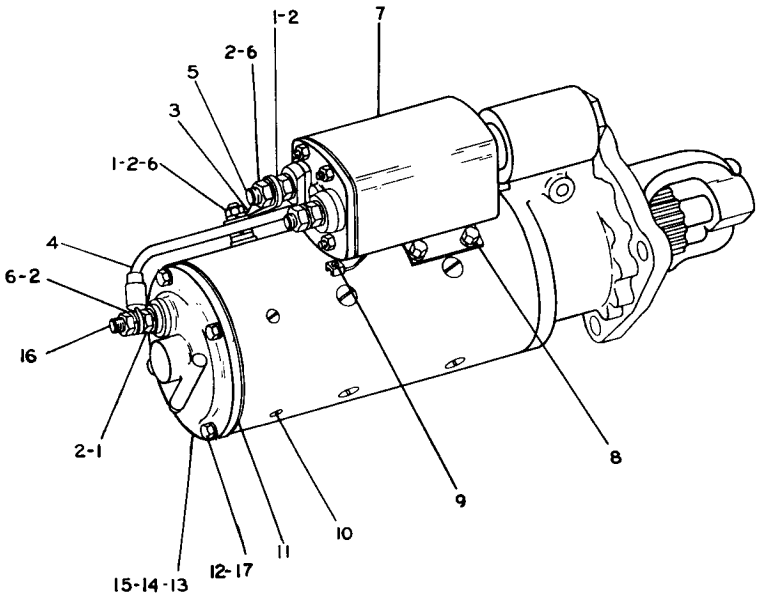

	REF. NO.	PART NUMBER	DESCRIPTION	QTY
	1	1D5117	NUT---------(jam)----------	4
	2	3B4508	LOCKWASHER----------	8
	3	4N9405	CONNECTOR----------	1
	4	4N9404	LEAD ASSEM.----------	1
	5	2P8819	KIT-----(Field Terminal Stud)----- (Includes Stud, Bushing & Washers)	1
	6	1D4719	NUT----------	4
C	7	3T3369	SOLENOID ASSEM.---------- (Separate Illustration)	1
	8	6H3622	SCREW----------	4
		3B4504	LOCKWASHER----------	4
		3K6116	WASHER----------	4
	9	4M3217	SCREW----------	2
	10	4B1220	SCREW----------	3
	11	8S1553	GASKET----------	1
C	12	3B4502	LOCKWASHER----------	4
	13	1P7831	HEAD ASSEM.-(Commutator End)- (Includes)	1
	14	2B4602	PLUG----------	1
	15	1P7832	KIT----(Bearing & Wick)---------	1
	16	4N9403	KIT-(Commutator End Terminal Stud) (Includes Stud, Bushing & Washers)	1
C	17	9L9850	SCREW----------	4

C INDICATES CHANGE

181283

9G4338 ELECTRIC STARTING MOTOR GROUP-PRESTOLITE-24 VOLT-PART 1 OF 2-TYPE 2

Part Of 7S3622 & 4N3181 Starting Motors

3T3369-Page 87B

9G4338 ELECTRIC STARTING MOTOR GROUP-PRESTOLITE-24 VOLT-PART 2 OF 2-TYPE 2

Part Of 7S3622 & 4N3181 Starting Motors

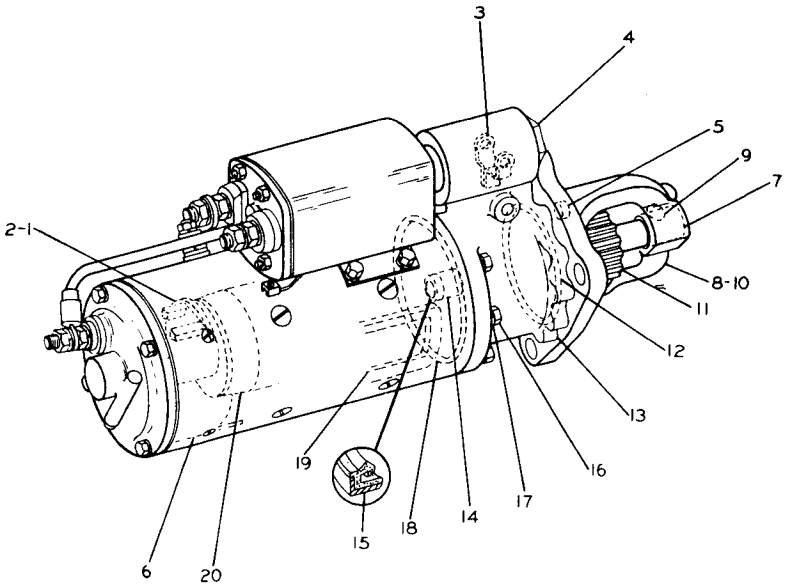

REF. NO.	PART NUMBER	DESCRIPTION	QTY.
1	2P8822	PLATE ASSEM.	1
2	4N9401	KIT--(Includes 6 Brushes)	1
	2P8868	KIT--(Includes 8 Springs)	1
3	2P8825	SHIFT YOKE ASSEM.	1
4	2P8817	KIT--(Yoke Adjusting) (Includes Plugs, Pin, Gasket & Nut)	1
5	8S1535	KIT--(Includes 6 Plugs)	1
6	4N9402	KIT--(Includes 10 Insulations)	1
7	8S4684	KIT--(Bearing & Wick)	1
8	9G5854	HOUSING ASSEM.--(Pinion) (Includes)	1
9	2B4602	PLUG	1
10	8S4680	KIT--(Includes 10 Seals)	1
C 11	4N4517	DRIVE ASSEM.	1
12	2H3931	SEAL	1
13	2P8824	HOUSING ASSEM. (Includes)	1
	2B4602	PLUG	1
14	8S2226	BUSHING	1
15	8S2225	SEAL	1
16	L1340	SCREW	7
	2P8816	KIT--(Includes Housing Screws)	1
17	3B4504	LOCKWASHER	7
18	4M189	SEAL	1
C 19	2P8818	KIT--(Field Coil) (Includes Coils, Gaskets & Screws)	1
20	8S1546	ARMATURE ASSEM.	1
	8S8075	KIT--(Armature Thrust Washers)	1

C INDICATES CHANGE

312531

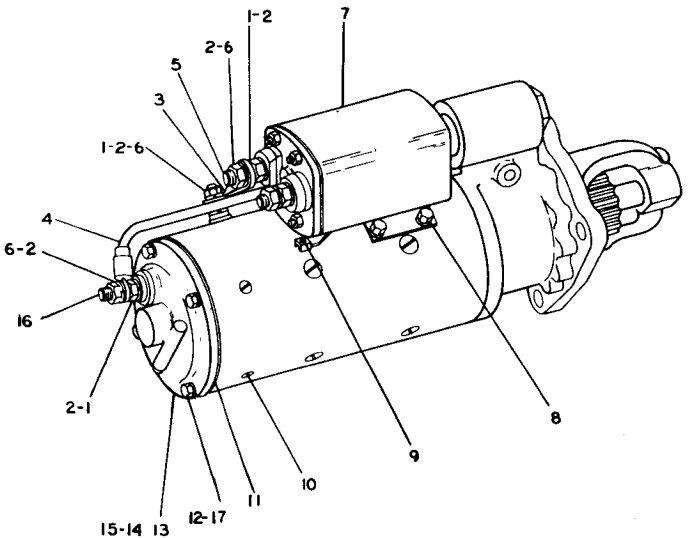

	REF. NO.	PART NUMBER	DESCRIPTION	QTY
	1	1D5117	NUT---------(jam)----------	4
	2	3B4508	LOCKWASHER----------	8
	3	4N9405	CONNECTOR----------	1
	4	4N9404	LEAD ASSEM.----------	1
	5	2P8819	KIT-----(Field Terminal Stud)----- (Includes Stud, Bushing & Washers)	1
	6	1D4719	NUT----------	4
C	7	3T8635	SOLENOID ASSEM.---------- (Separate Illustration)	1
	8	6H3622	SCREW----------	4
		3B4504	LOCKWASHER----------	4
		3K6116	WASHER----------	4
	9	4M3217	SCREW----------	2
	10	4B1220	SCREW----------	3
	11	8S1553	GASKET----------	1
	12	3B4502	LOCKWASHER----------	4
	13	1P7831	HEAD ASSEM.-(Commutator End)- (Includes)	1
	14	2B4602	PLUG----------	1
	15	1P7832	KIT----(Bearing & Wick)----------	1
	16	4N9403	KIT-(Commutator End Terminal Stud) (Includes Stud, Bushing & Washers)	1
	17	9L9850	SCREW----------	4

C INDICATES CHANGE

305183

9G4338 ELECTRIC STARTING MOTOR GROUP—Prestolite—24 Volt—Part 1—Type 3
Part of 7S3622 & 4N3181 Starting Motor Group shown on Pages 78 & 78B
3T8635 Solenoid parts are shown on Page 87B

9G4338 ELECTRIC STARTING MOTOR GROUP—Prestolite—24 Volt—Part 2—Type 3
Part of 7S3622 & 4N3181 Starting Motor Group shown on Pages 78 and 78B

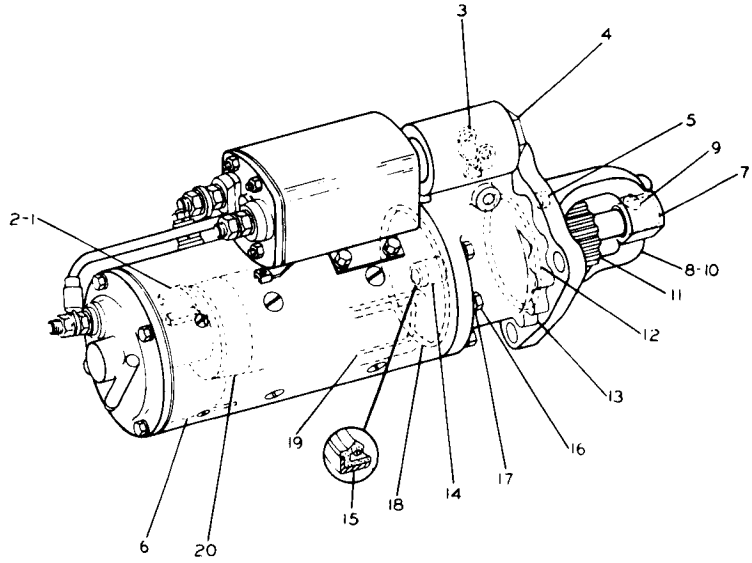

	REF NO	PART NUMBER	DESCRIPTION	QTY.
	1	2P8822	PLATE ASSEM.	1
	2	4N9401	KIT--(Includes 6 Brushes)	1
		2P8868	KIT--(Includes 8 Springs)	1
	3	2P8825	SHIFT YOKE ASSEM.	1
	4	2P8817	KIT--(Yoke Adjusting) (Includes Plugs, Pin, Gasket & Nut)	1
	5	8S1535	KIT--(Includes 6 Plugs)	1
	6	4N9402	KIT--(Includes 10 Insulations)	1
	7	8S4684	KIT--(Bearing & Wick)	1
	8	9G5854	HOUSING ASSEM. --(Pinion) (Includes)	1
	9	2B4602	PLUG	1
	10	8S4680	KIT--(Includes 10 Seals)	1
C	11	3T8572	DRIVE ASSEM.	1
	12	2H3931	SEAL	1
	13	2P8824	HOUSING ASSEM. (Includes)	1
		2B4602	PLUG	1
	14	8S2226	BUSHING	1
	15	8S2225	SEAL	1
	16	L1340	SCREW	7
		2P8816	KIT--(Includes Housing Screws)	1
	17	3B4504	LOCKWASHER	7
	18	4M189	SEAL	1
C	19	2P8818	KIT--(Field Coil) (Includes Coils, Gaskets & Screws)	1
	20	8S1546	ARMATURE ASSEM.	1
		8S8075	KIT--(Armature Thrust Washers)	1

C INDICATES CHANGE

312530

REF. NO.	PART NUMBER	DESCRIPTION	QTY
1	7F4556	BOLT	6
2	1L4789	LOCKWASHER	6
3	7M328	FRAME ASSEM.	1
4	7S9826	PLUG	1
5	7F3506	BUSHING	1
6	9F2247	PLUG	1
7	9F2547	WICK	1
8	7S9825	GASKET	1
9	7M8651	ARMATURE ASSEM.	1
10	3L3380	BUSHING	1
11	7M324	COIL ASSEM.	1
12	9H3757	WASHER	2
13	7F3494	WASHER	1
14	7M326	CONNECTOR	1
15	1D5117	NUT	2

C	16	4M1812	SWITCH ASSEM. (Separate Illustration)	1
	17	6H3622	SCREW ASSEM.	4
	18	3B4508	LOCKWASHER	1
	19	9F9298	SCREW	12
	20	7M325	INSULATOR	1
	21	4M1831	PLUG	3
	22	4M1832	GASKET	3
	23	1H2629	STRIP	3
	24	7F3488	SHOE	6
	25	7M327	WASHER	1

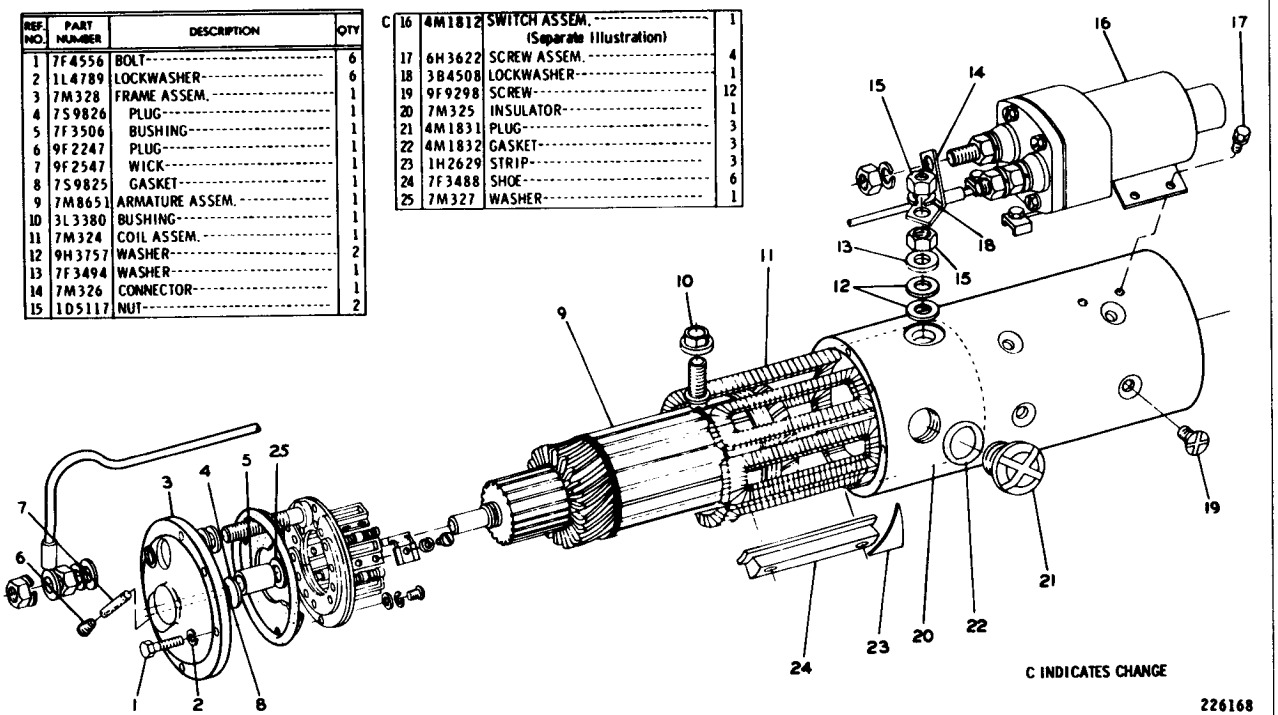

2P3926 ELECTRIC STARTING MOTOR GROUP — 24 Volt — Part 1 of 3
Part of 8S3886 Starting Motor Group shown on Page 78
4M1812 Switch parts are shown on Page 87. AN ATTACHMENT

2P3926 ELECTRIC STARTING MOTOR GROUP — 24 Volt — Part 2 of 3
Part of 8S3886 Starting Motor Group shown on Page 78
AN ATTACHMENT

REF. NO.	PART NUMBER	DESCRIPTION	QTY
1	4M1849	LEAD ASSEM.	1
2	2J8163	SEAL	1
3	7F3529	WASHER	3
4	8H878	LOCKWASHER	3
5	4B1221	SCREW	3
6	7M330	PLATE ASSEM.	1
7	7F3525	WASHER	12
8	7F3520	PLATE	1
9	5H6467	SCREW	3
10	7H2079	LOCKWASHER	12
11	2L6679	PLATE	3
12	7F3513	HOLDER	6
13	7F3522	SCREW	3
14	7F3512	SPRING	12
15	7M331	PLATE ASSEM.	1
16	7F3521	PLATE	3
17	7F7611	SCREW	3
18	7M332	PLATE	1
19	3H3697	SCREW	3

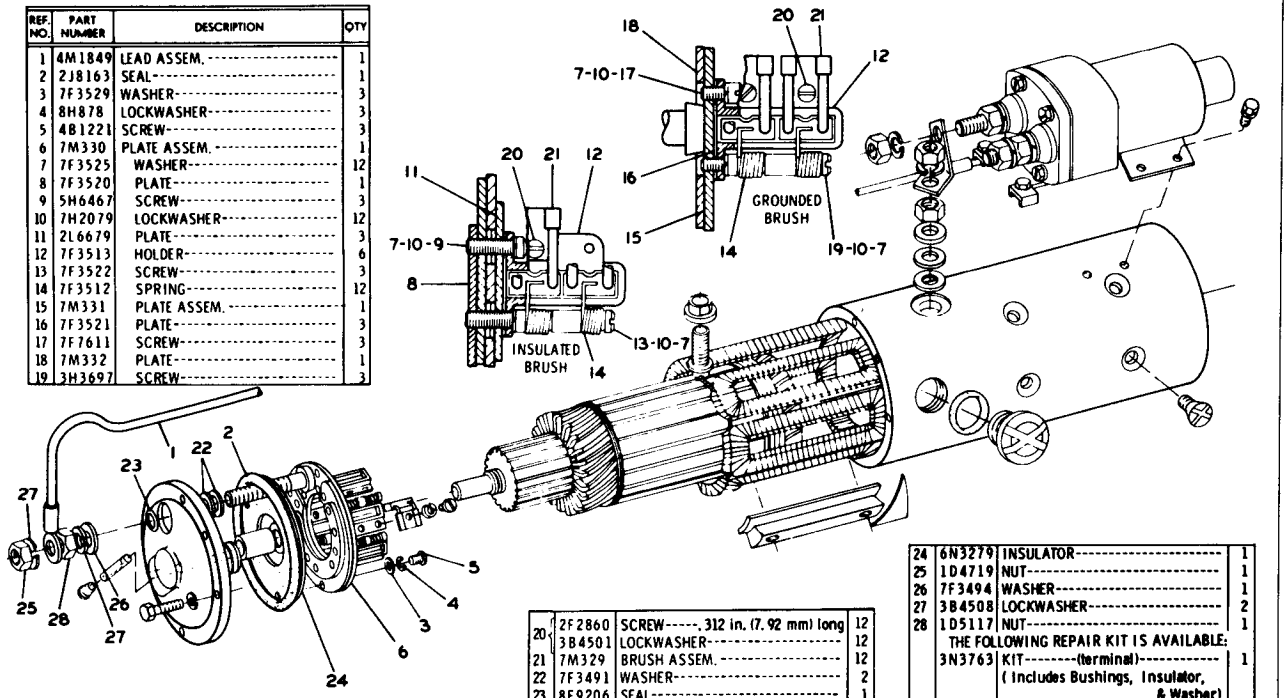

20	2F2860	SCREW-----.312 in. (7.92 mm) long	12
	3B4501	LOCKWASHER	12
21	7M329	BRUSH ASSEM.	12
22	7F3491	WASHER	2
23	8F9206	SEAL	1

24	6N3279	INSULATOR	1
25	1D4719	NUT	1
26	7F3494	WASHER	1
27	3B4508	LOCKWASHER	2
28	1D5117	NUT	1
	THE FOLLOWING REPAIR KIT IS AVAILABLE:		
	3N3763	KIT---------(terminal)---------- (Includes Bushings, Insulator, & Washer)	1

226169

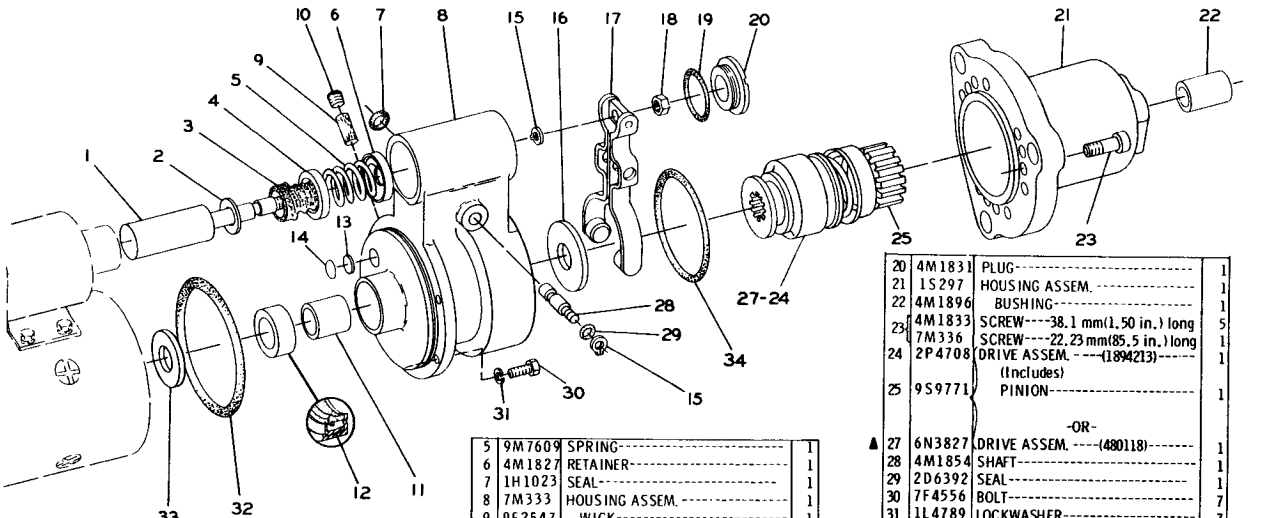

REF. NO.	PART NUMBER	DESCRIPTION	QTY
1	4M1855	PLUNGER ASSEM.	1
	FM055075	FORM--(Installation Instructions)	1
2	2S4027	WASHER	1
3	4M1829	BOOT	1
4	4M1828	RETAINER	1
5	9M7609	SPRING	1
6	4M1827	RETAINER	1
7	1H1023	SEAL	1
8	7M333	HOUSING ASSEM.	1
9	9F2547	WICK	1
10	9F2247	PLUG	1
11	1M9968	BUSHING	1
12	2F6678	SEAL	1
13	7S9826	PLUG	1
14	7S9825	GASKET	1
15	2H3429	RING	2
16	4L2729	WASHER	1
17	4M1853	LEVER ASSEM.	1
18	3F2617	NUT	1
19	4M1832	GASKET	1

▲ NOT PART OF 2P3926 STARTING MOTOR GROUP

20	4M1831	PLUG	1
21	1S297	HOUSING ASSEM.	1
22	4M1896	BUSHING	1
23	4M1833	SCREW---38.1 mm(1.50 in.) long	5
	7M336	SCREW---22.23 mm(85.5 in.) long	1
24	2P4708	DRIVE ASSEM. ---(1894213) (Includes)	1
25	9S9771	PINION	1
		-OR-	
▲ 27	6N3827	DRIVE ASSEM. ---(480118)	1
28	4M1854	SHAFT	1
29	2D6392	SEAL	1
30	7F4556	BOLT	7
31	1L4789	LOCKWASHER	7
32	2J8163	SEAL	1
33	1M9971	SPACER	1
34	4M1851	GASKET	1

THE FOLLOWING REPAIR KITS ARE AVAILABLE FOR 2P4708 DRIVE ASSEM.:

7N6098	KIT---(spring)
4S9459	KIT---(washer)
GMG00012	FORM (Electric Starting Motor Changeover)

226170

2P3926 ELECTRIC STARTING MOTOR GROUP — 24 Volt — Part 3 of 3
Part of 8S3886 Starting Motor Group shown on Page 78
AN ATTACHMENT

3T2647 ELECTRIC STARTING MOTOR GROUP—Delco-Remy—24 Volt—Part 1 of 3

Serial No. 6X1170—Up

Part of 4N3181 Electric Starting Motor Group listed on Page 78B

3T4704 Solenoid parts are shown on Page 87A

NOTE	REF NO	PART NUMBER	QTY	DESCRIPTION
	1	3T3422	1	WIRE ASSEM.
D		5P5621		WIRE .23M(9.06IN.)
		2L8071	1	TERMINAL (LARGE)
		2L8066	1	TERMINAL (SMALL)
C	2	3L3380	1	BUSHING
C	3	3H3680	4	NUT
C	4	4B4280	4	WASHER
	5	369823	4	BOLT
C	6	9B453	1	LOCKWASHER
	7	3T4701	1	FRAME ASSEM.
	8	9G4513	1	BUSHING
	9	3T3424	1	PLUG
	10	3T3423	1	CUP
	11	7F3491	2	WASHER
	12	4M189	1	SEAL
	13	8F5368	1	WASHER
	14	3T3106	3	SCREW ASSEM.
	15	8H1141	4	SHOE
	16	6H3622	4	SCREW
	17	2N3145	1	INSULATOR
	18	4M1839	1	COIL ASSEM.
	19	3F379	8	SCREW
	20	7L2894	2	GASKET
	21	4M1831	2	PLUG
	22	9H3757	2	WASHER
CY	23	3T4704	1	SOLENOID ASSEM.
	24	4M1841	1	CONNECTOR

C INDICATES CHANGE
D ORDER BY THE METER
Y SEPARATE ILLUSTRATION

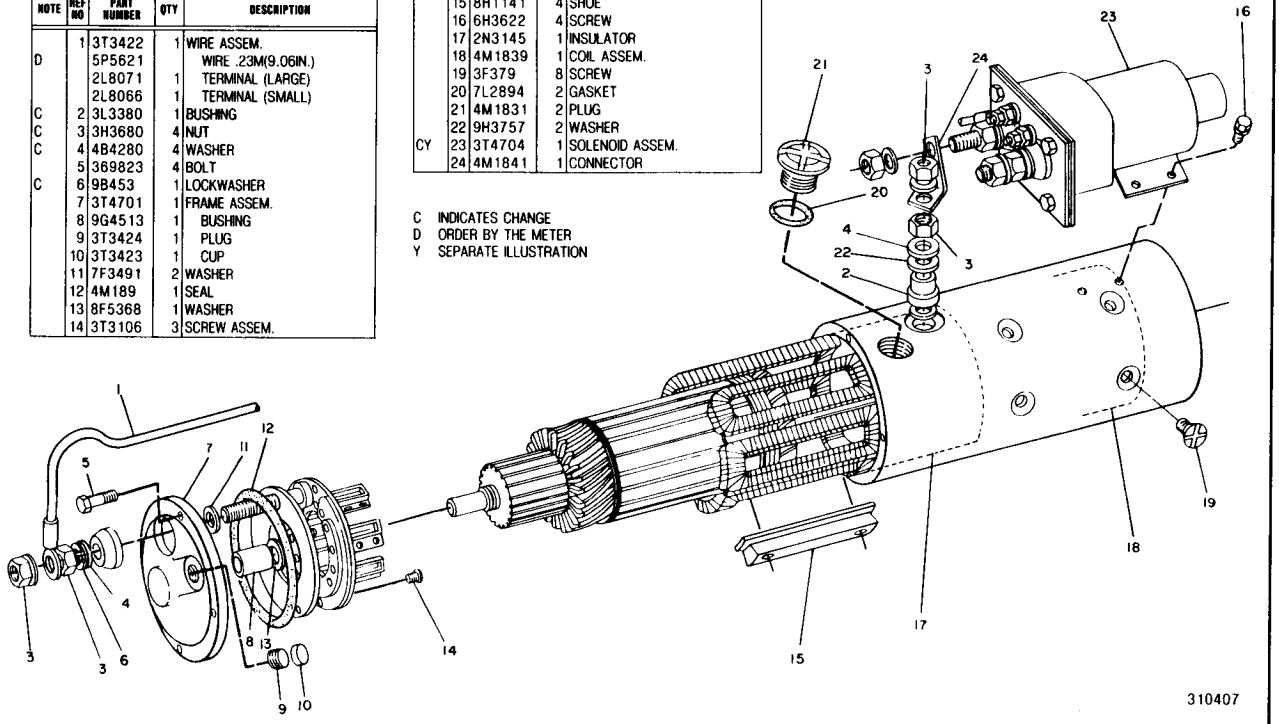

REF. NO.	PART NUMBER	DESCRIPTION	QTY.
1	4M1868	ARMATURE ASSEM.	1
2	3T4703	BRUSH ASSEM.	4
3	9S2542	SCREW	6
4	3T4705	PLATE ASSEM. (Includes)	1
5	3T4706	INSULATOR	1
6	3T4711	SCREW ASSEM.	8
7	2L6679	PLATE	2
8	3T4712	HOLDER ASSEM.	4
9	3T4710	PLATE	2
10	3T4709	PLATE	2
11	7F3525	WASHER	4

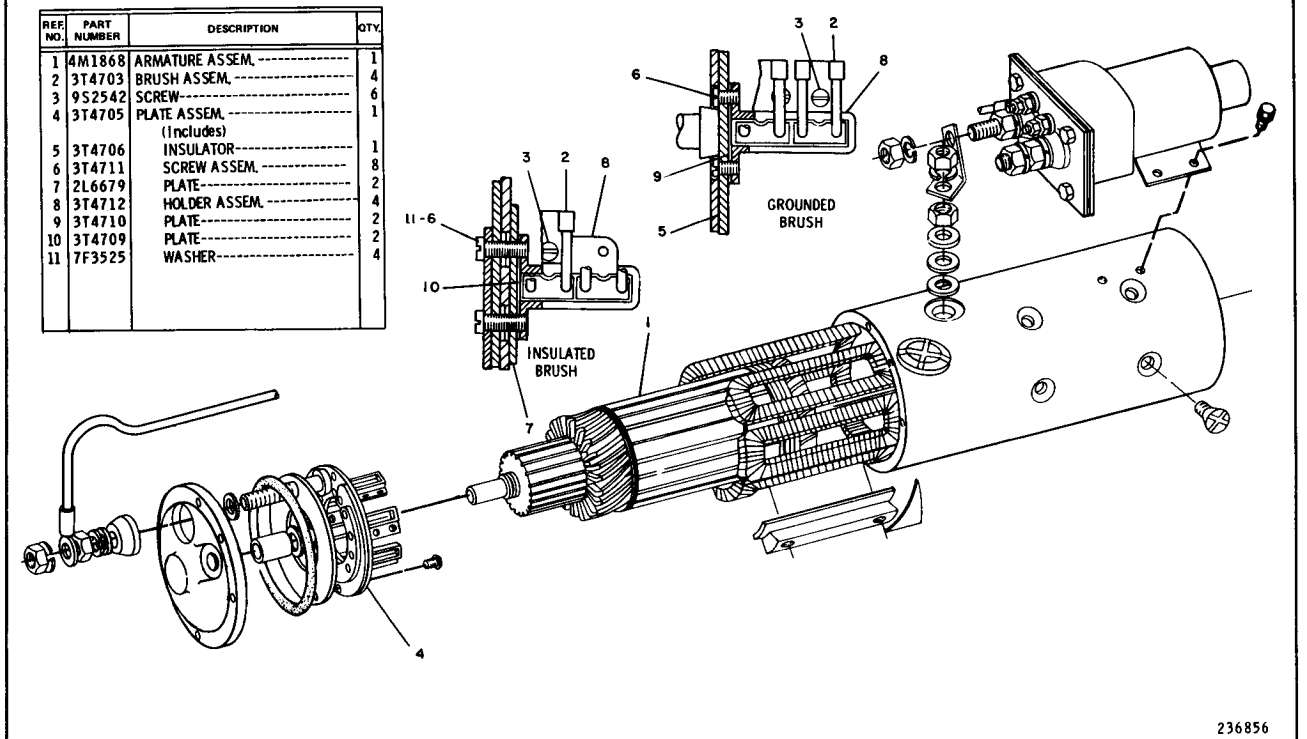

3T2647 ELECTRIC STARTING MOTOR GROUP—Delco-Remy—24 Volt—Part 2 of 3
Serial No. 6X1170—Up
Part of 4N3181 Electric Starting Motor Group listed on Page 78B

3T2647 ELECTRIC STARTING MOTOR GROUP—Delco-Remy—24 Volt—Part 3 of 3
Serial No. 6X1170—Up
Part of 4N3181 Electric Starting Motor Group listed on Page 78B

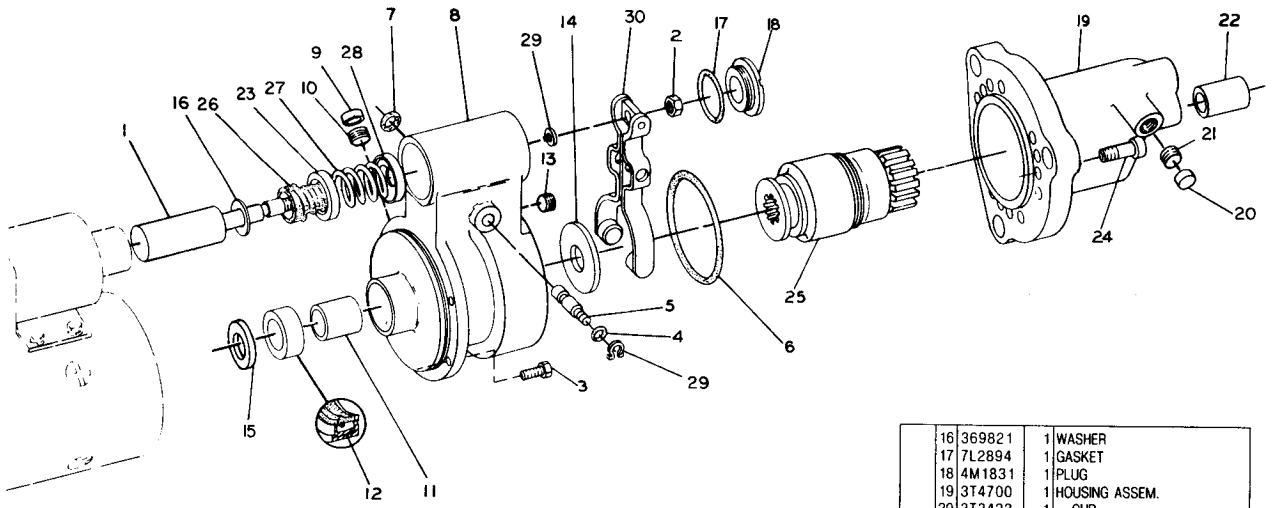

NOTE	REF NO	PART NUMBER	QTY	DESCRIPTION
	1	9M7606	1	PLUNGER ASSEM.
	2	5M3034	1	LOCKNUT
	3	369823	5	BOLT
	4	2D6392	1	SEAL
	5	4M1854	1	SHAFT
	6	4M1851	1	GASKET
	7	1H1023	1	SEAL
	8	3T4702	1	HOUSING ASSEM.
	9	3T3423	1	CUP
	10	3T3424	1	PLUG
	11	9G9817	1	BUSHING
	12	2F6678	1	SEAL
	13	3T3433	1	PLUG
	14	4L2729	1	WASHER
	15	1M9971	1	SPACER
	16	369821	1	WASHER
	17	7L2894	1	GASKET
	18	4M1831	1	PLUG
	19	3T4700	1	HOUSING ASSEM.
	20	3T3423	1	CUP
	21	3T3424	1	PLUG
	22	9G9818	1	BUSHING
	23	4M1828	1	RETAINER
	24	4M1833	5	SCREW 38MM(1.50IN.)LONG
		7M336	1	SCREW 22MM(.875IN.)LONG
	25	6N3827	1	DRIVE ASSEM.
	26	4M1829	1	BOOT
	27	9M7609	1	SPRING
	28	4M1827	1	RETAINER
	29	9M7611	2	RING
	30	4M1853	1	LEVER ASSEM.

310408

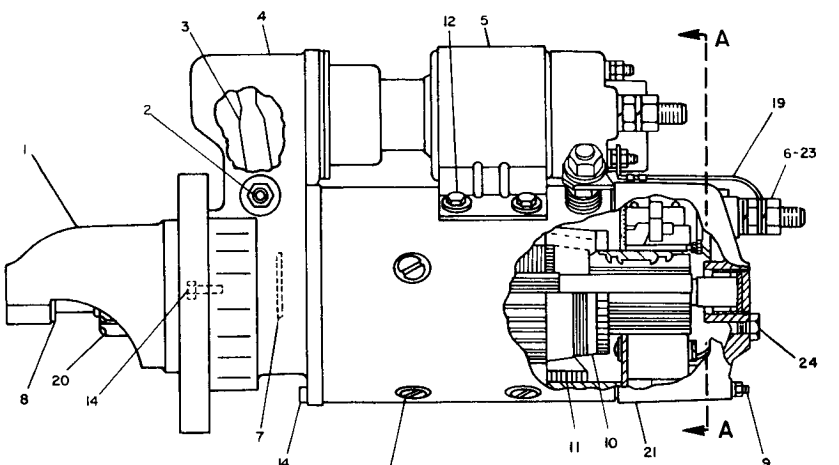

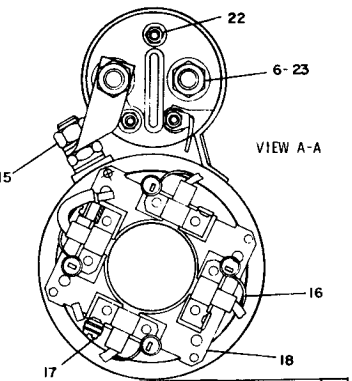

REF. NO.	PART NUMBER	DESCRIPTION	QTY.
1	3T7022	HOUSING ASSEM.	1
2	3T852	NUT	1
	3T861	SCREW	1
3	3T863	LEVER	1
4	3T864	HOUSING ASSEM.	1
	3T842	BEARING ASSEM.	1
5	3T868	SOLENOID ASSEM.	1
6	1D4719	NUT	2
7	3T7021	PLATE	2
8	3T7020	WASHER	1
9	3T847	SCREW	4
	3T851	NUT	4
10	3T867	ARMATURE ASSEM.	1
11	3T865	COIL ASSEM.	1
12	3T7024	SCREW	4
	4B4674	WASHER	4
13	3T850	SCREW	8
14	3T849	SCREW	12
15	3T853	NUT	2
15	3T858	SPRING	4
17	3T848	SCREW	4
18	3T862	PLATE ASSEM.	1
19	3T4716	WIRE ASSEM.	1
	5P5621	WIRE - 2 m(7.87 in.)	1
	2L8071	TERMINAL-(large)	1
	2L8067	TERMINAL-(small)	1
20	4N4517	DRIVE ASSEM.	1
21	3T7025	COVER	1
22	4B2049	NUT	1
	3B4502	LOCKWASHER	1
23	3B4508	LOCKWASHER	2
24	3T7018	PLUG	1
	3T7019	WASHER	1
F	3T5962	NAMEPLATE	1
F	2H3880	SCREW	2
		THE FOLLOWING REPAIR KITS ARE AVAILABLE:	
	3T844	KIT-(Brush-Includes brushes)	1
	3T2768	KIT-(Seal-Includes seals & rings)	1
	3T2769	KIT-(Hardware-Includes wire assems., nuts, washers, lockwashers, bushing, and bar)	
	3T7017	KIT-(Bearing-Includes seal, bearings, & spacers)	1

F=NOT SHOWN

305337

3T6305 ELECTRIC STARTING MOTOR GROUP—24 Volt
Serial No. 6X1170—Up
Part of 4N3181 Electric Starting Motor Group listed on Page 78B

3T2776 ELECTRIC STARTING MOTOR GROUP—Part 1 of 3—Replaced by 3T8946
Part of 8S3886 Electric Starting Motor Group on Page 78A
3T3421 Solenoid parts are shown on Page 87A. AN ATTACHMENT

REF. NO.	PART NUMBER	DESCRIPTION	QTY.
1	369823	BOLT	6
2	1L4789	LOCKWASHER	6
3	3T3418	FRAME ASSEM. (Includes)	1
4	3T3423	CUP	1
5	9G4367	BUSHING	1
6	3T3424	PLUG	1
7	3H3680	NUT	1
8	7M327	WASHER	1
9	7M8651	ARMATURE ASSEM.	1
10	3L3380	BUSHING	1
11	7M324	COIL ASSEM.	1
12	9H3757	WASHER	2
13	7F3494	WASHER	1
14	7M326	CONNECTOR	1
15	3H3681	NUT	1
16	3T3421	SOLENOID ASSEM.	1
17	6H3622	SCREW ASSEM.	4
18	9F4976	LOCKWASHER	1
19	3F379	SCREW	12
20	7M325	INSULATOR	1
21	4M1831	PLUG	3
22	7L2894	GASKET	3
23	1H2629	STRIP	3
24	7F3488	SHOE	6

1-SEPARATE ILLUSTRATION

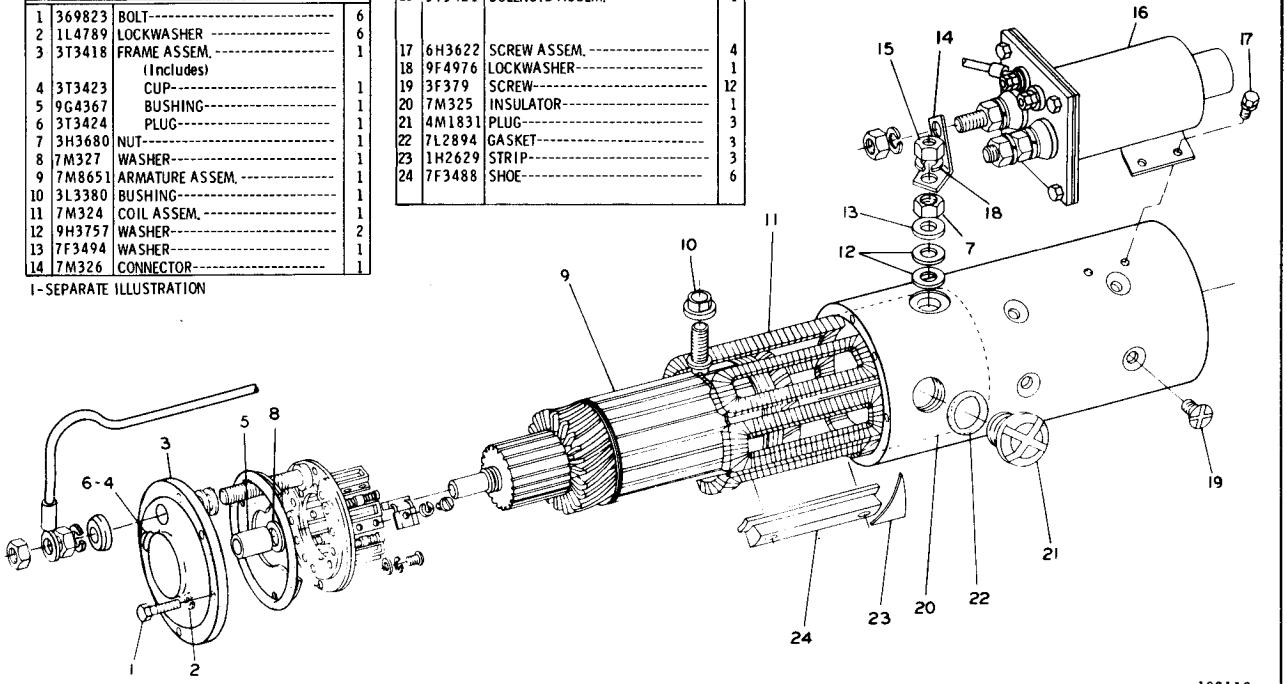

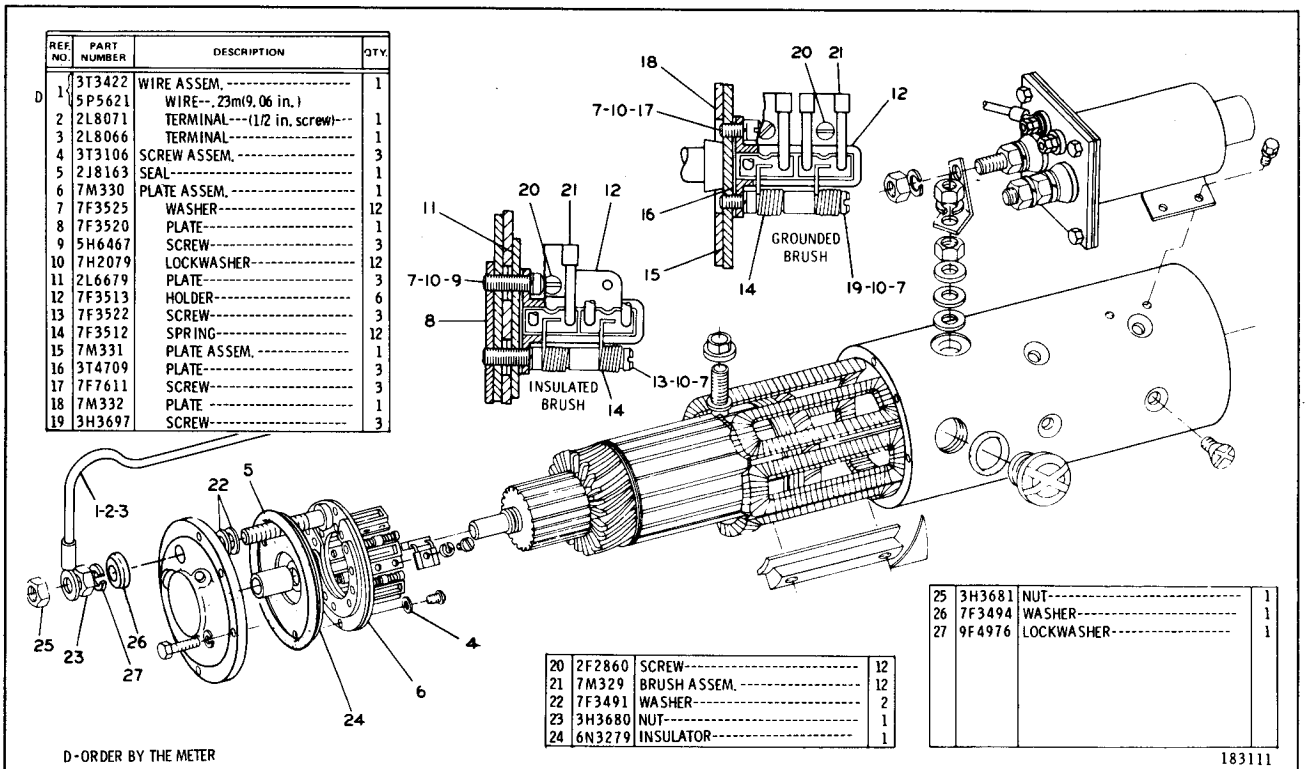

REF. NO.	PART NUMBER	DESCRIPTION	QTY.
D 1	3T3422	WIRE ASSEM.	1
	5P5621	WIRE--, 23m(9.06 in.)	
2	2L8071	TERMINAL---(1/2 in. screw)---	1
3	2L8066	TERMINAL	1
4	3T3106	SCREW ASSEM.	3
5	2J8163	SEAL	1
6	7M330	PLATE ASSEM.	1
7	7F3525	WASHER	12
8	7F3520	PLATE	1
9	5H6467	SCREW	3
10	7H2079	LOCKWASHER	12
11	2L6679	PLATE	3
12	7F3513	HOLDER	6
13	7F3522	SCREW	3
14	7F3512	SPRING	12
15	7M331	PLATE ASSEM.	1
16	3T4709	PLATE	3
17	7F7611	SCREW	3
18	7M332	PLATE	1
19	3H3697	SCREW	3

20	2F2860	SCREW	12
21	7M329	BRUSH ASSEM.	12
22	7F3491	WASHER	2
23	3H3680	NUT	1
24	6N3279	INSULATOR	1

25	3H3681	NUT	1
26	7F3494	WASHER	1
27	9F4976	LOCKWASHER	1

D-ORDER BY THE METER

183111

3T2776 ELECTRIC STARTING MOTOR GROUP—Part 2 of 3—Replaced by 3T8946
Part of 8S3886 Electric Starting Motor Group shown on Page 78A
AN ATTACHMENT

3T2776 ELECTRIC STARTING MOTOR GROUP—Part 3 of 3—Replaced by 3T8946
Part of 8S3886 Electric Starting Motor Group shown on Page 78A
AN ATTACHMENT

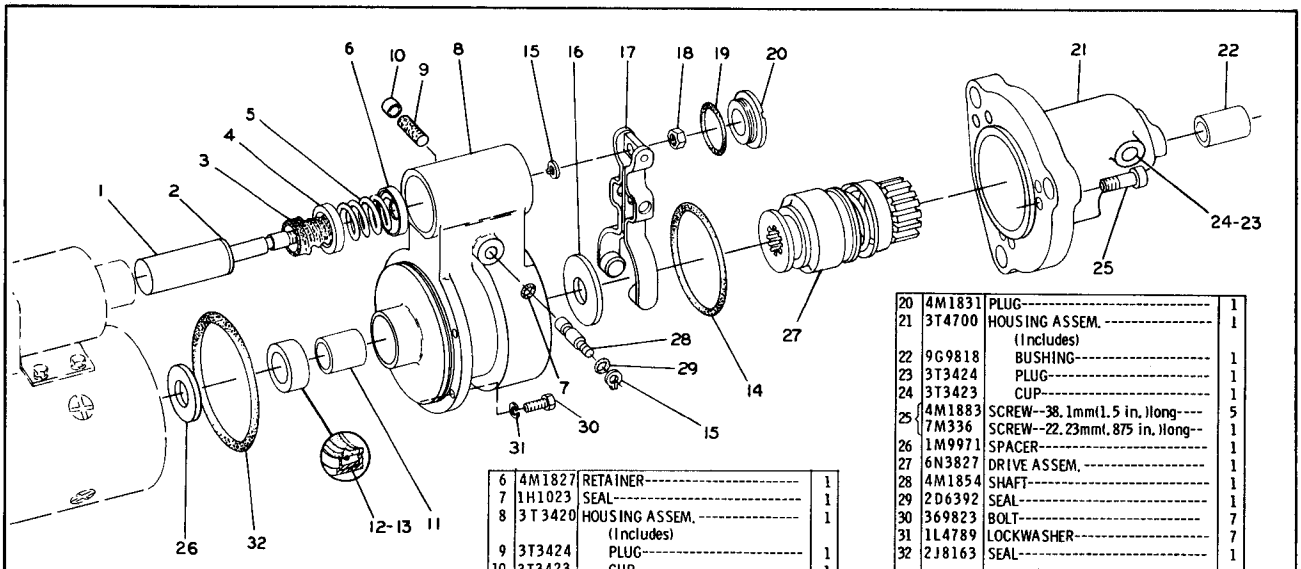

REF. NO.	PART NUMBER	DESCRIPTION	QTY.
1	9M7606	PLUNGER ASSEM.	1
2	369821	WASHER	1
3	4M1829	BOOT	1
4	4M1828	RETAINER	1
5	9M7609	SPRING	1
6	4M1827	RETAINER	1
7	1H1023	SEAL	1
8	3T3420	HOUSING ASSEM. (Includes)	1
9	3T3424	PLUG	1
10	3T3423	CUP	1
11	9G9817	BUSHING	1
12	2F6678	SEAL	1
13	3T3433	PLUG	1
14	4M1851	GASKET	1
15	9M7611	RING	2
16	4L2729	WASHER	1
17	4M1853	LEVER ASSEM.	1
18	5M3034	LOCKNUT	1
19	7L2894	GASKET	1
20	4M1831	PLUG	1
21	3T4700	HOUSING ASSEM. (Includes)	1
22	9G9818	BUSHING	1
23	3T3424	PLUG	1
24	3T3423	CUP	1
25	4M1883	SCREW--38.1mm(1.5 in.)long	5
	7M336	SCREW--22.23mm(.875 in.)long	1
26	1M9971	SPACER	1
27	6N3827	DRIVE ASSEM.	1
28	4M1854	SHAFT	1
29	2D6392	SEAL	1
30	369823	BOLT	7
31	1L4789	LOCKWASHER	7
32	2J8163	SEAL	1

237244

NOTE	REF NO	PART NUMBER	QTY	DESCRIPTION
	1	369823	6	BOLT
C	2	7F3488	6	SHOE
	3	3T3418	1	FRAME ASSEM.
	4	3T3423	1	CUP
	5	9G4101	1	BUSHING
	6	3T3424	1	PLUG
	7	3H3680	1	NUT
	8	7M327	1	WASHER
	9	7M8651	1	ARMATURE ASSEM.
	10	3L3380	1	BUSHING
	11	7M324	1	COIL ASSEM.
	12	9H3757	2	WASHER
	13	7F3494	1	WASHER
	14	7M326	1	CONNECTOR
	15	3H3681	1	NUT
Y	16	3T3421	1	SOLENOID ASSEM
	17	6H3622	4	SCREW ASSEM.
	18	9F4976	1	LOCKWASHER
	19	3F379	12	SCREW
	20	7M325	1	INSULATOR
	21	4M1831	3	PLUG
	22	7L2894	3	GASKET
	23	1H2629	3	STRIP

C INDICATES CHANGE

Y SEPARATE ILLUSTRATION

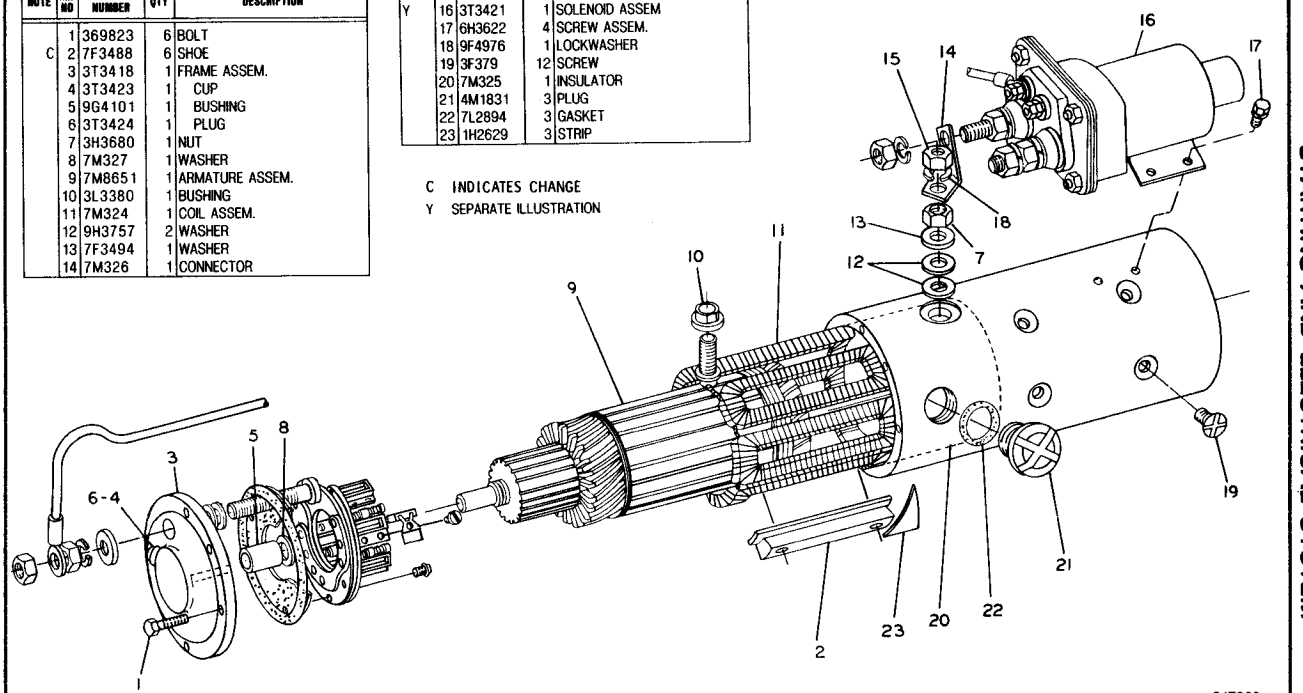

3T8946 ELECTRIC STARTING MOTOR GROUP-24 VOLT-PART 1 OF 3-REPLACES 3T2776

Part Of 8S3886 Electric Starting Motor Group Shown On Page 78B

3T3421 Solenoid Parts Are Shown On Page 87A. An Attachment

3T8946 ELECTRIC STARTING MOTOR GROUP—24 Volt—Part 2 of 3—Replaces 3T2776
Part of 8S3886 Electric Starting Motor Group shown on Page 78B
AN ATTACHMENT

NOTE	REF NO	PART NUMBER	QTY	DESCRIPTION
	1	3T3422	1	WIRE ASSEM.
D		5P5621		WIRE 23M (9.06 IN.)
	2	2L8071	1	TERMINAL (1/2 IN. SCREW)
	3	2L8066	1	TERMINAL
	4	3T3106	3	SCREW ASSEM.
	5	2J8163	1	SEAL
	6	3T9525	1	PLATE ASSEM.
	7	6T371	1	INSULATOR
	8	6T372	1	PLATE
	9	3T4709	3	PLATE
	10	7F3525	6	WASHER
	11	2L6679	3	PLATE
	12	3T4710	3	PLATE
	13	5P6298	12	SCREW
		9F5599	12	LOCKWASHER
	14	6T363	6	HOLDER ASSEM. (EACH INCLUDES)
	15	3T9494	1	SPRING (BRUSH)

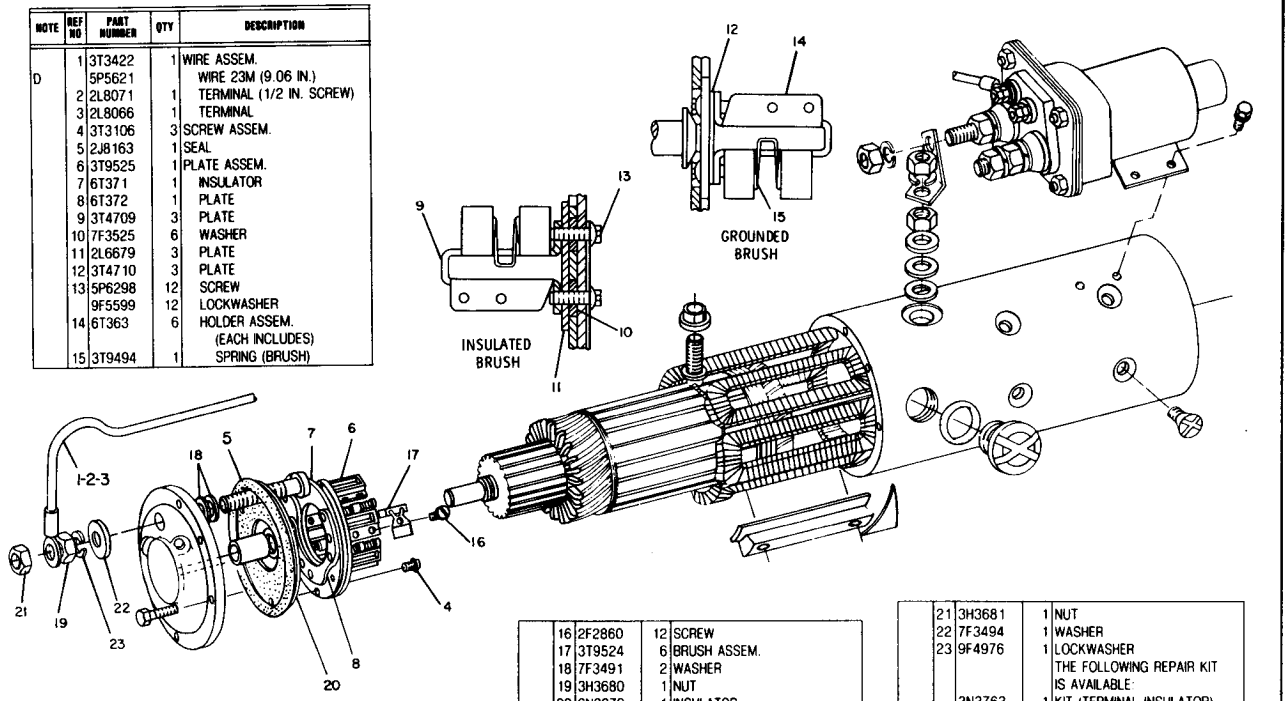

16	2F2860	12	SCREW
17	3T9524	6	BRUSH ASSEM.
18	7F3491	2	WASHER
19	3H3680	1	NUT
20	6N3279	1	INSULATOR

21	3H3681	1	NUT
22	7F3494	1	WASHER
23	9F4976	1	LOCKWASHER
			THE FOLLOWING REPAIR KIT IS AVAILABLE:
	3N3763	1	KIT (TERMINAL INSULATOR)

D ORDER BY THE METER

308832

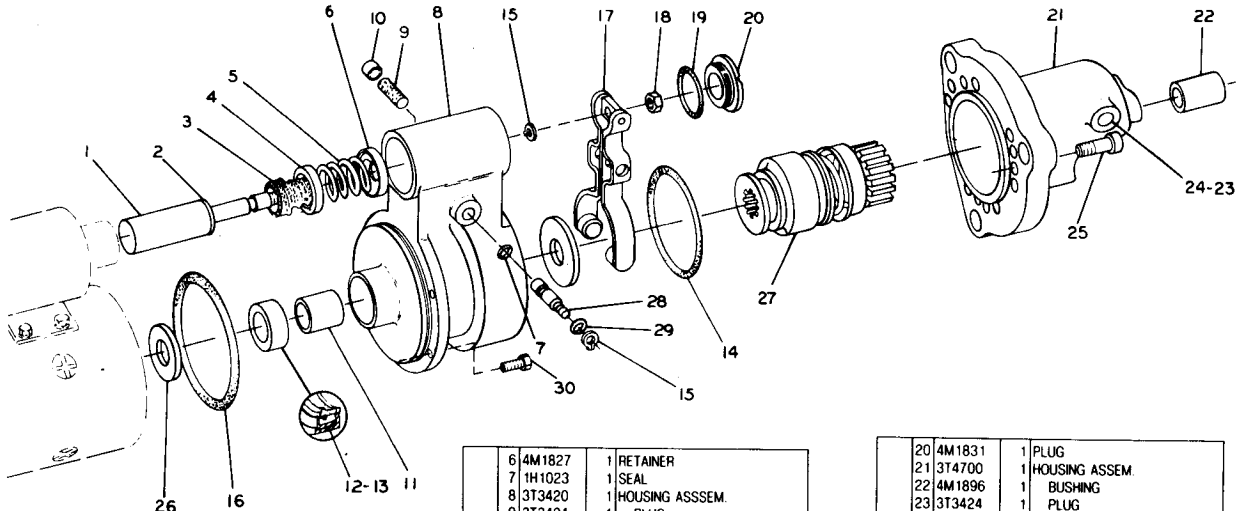

NOTE	REF NO	PART NUMBER	QTY	DESCRIPTION
	1	9M7606	1	PLUNGER ASSEM.
	2	369821	1	WASHER
	3	4M1829	1	BOOT
	4	4M1828	1	RETAINER
	5	9M7609	1	SPRING
	6	4M1827	1	RETAINER
	7	1H1023	1	SEAL
	8	3T3420	1	HOUSING ASSSEM.
	9	3T3424	1	PLUG
	10	3T3423	1	CUP
	11	1M9968	1	BUSHING
	12	2F6678	1	SEAL
	13	3T3433	1	PLUG
	14	4M1851	1	GASKET
	15	9M7611	2	RING
	16	2J8163	1	SEAL
	17	4M1853	1	LEVER ASSEM.
	18	5M3034	1	LOCKNUT
	19	7L2894	1	GASKET
	20	4M1831	1	PLUG
	21	3T4700	1	HOUSING ASSEM.
	22	4M1896	1	BUSHING
	23	3T3424	1	PLUG
	24	3T3423	1	CUP
	25	4M1833	5	SCREW
				38.1MM (1.5 IN.) LONG
		7M336	1	SCREW
				22.23MM (.875 IN.) LONG
	26	1M9971	1	SPACER
	27	6N3827	1	DRIVE ASSEM.
	28	4M1854	1	SHAFT
	29	2D6392	1	SEAL
	30	369823	7	BOLT

308833

3T8946 ELECTRIC STARTING MOTOR GROUP—24 Volt—Part 3 of 3—Replaces 3T2776
Part of 8S3886 Electric Starting Motor Group shown on Page 78B
AN ATTACHMENT

	REF. NO.	PART NUMBER	DESCRIPTION	QTY
C	1	7N1269	TERMINAL ASSEM.	1
	1	4M1834	PLATE	1
	2	7F4907	STRIP	1
	3	3H3681	NUT	2
	4	3B4508	LOCKWASHER	4
	5	3H3680	NUT	2
	6	7F3494	WASHER	2
	7	4M1836	INSULATOR	2
	8	4M1837	BUSHING	2
	9	7F4906	STUD	1
	10	4M2800	TERMINAL	1
	11	7N1271	TERMINAL ASSEM.	1
	12	4M5274	SCREW (hex head)	1
			- OR -	
C	12	5P9132	SCREW (truss head)	1
	13	1P3879	LEAD ASSEM.	1
	14	4M3217	SCREW	2
C	15	9G6770	CONTACT ASSEM.	1
	16	4M1813	CASE ASSEM.	1
	17	1F73	CLIP	2
	18	4M1815	SPRING	1
	19	9M7657	NUT	4
			- OR -	
	19	9S4489	SCREW ASSEM.	4
	20	9S4490	GASKET	4

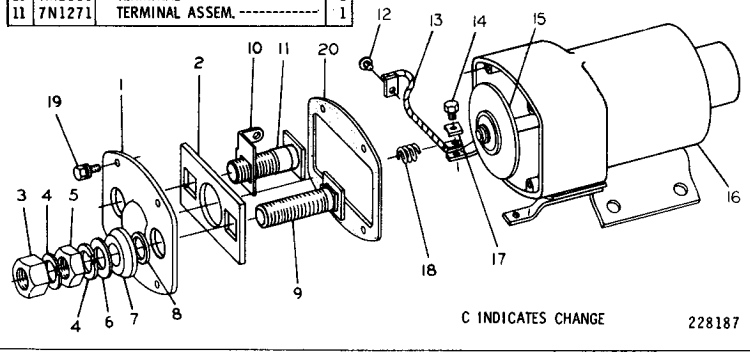

4M1812 SOLENOID SWITCH ASSEMBLY
Part of 4N3182 and 2P3926 Electric Starting Motor Groups shown on Pages 79 and 84

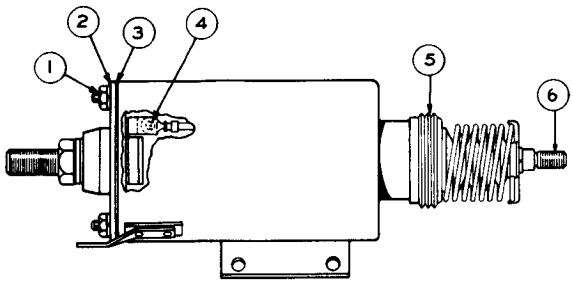

	REF NO.	PART NUMBER	DESCRIPTION	QTY
C	1	9M7657	NUT	4
	2	8S8023	COVER ASSEM.	1
	3	8S8024	GASKET (Part of 8S8023 Cover Assem.)	1
	4	9B7235	SCREW	1
		9M7233	LOCKWASHER	1
	5	8S1528	BOOT	1
	6	8S8021	CORE ASSEM.	1

The following Repair Kits are available:
8S1524-KIT (Terminal Stud-Battery) 1
8S1525-KIT (Terminal Stud-Motor) 1
9S8688-KIT (Core-Contact End) 1
8S1527-KIT (Core-Yoke End) 1

C INDICATES CHANGE

115899

9S7976 SOLENOID SWITCH ASSEMBLY
Part of 9G4338 Electric Starting Motor Group shown on Page 82

NOTE	REF NO	PART NUMBER	QTY	DESCRIPTION
	1	9G6770	1	CONTACT ASSEM.
	2	4M1815	1	SPRING
	3	4M5274	3	SCREW
	4	6T1121	1	GASKET
	5	454065	4	SCREW
		4B4274	8	WASHER
		6V8378	4	NUT
	6	6T1120	1	BUSHING
	7	6T1124	1	TERMINAL ASSEM.
	8	3H3680	3	NUT
		4B4280	3	WASHER
		9F4976	2	LOCKWASHER
	9	4B2049	3	NUT
		4B4274	3	WASHER
		3B4502	2	LOCKWASHER
	10	6T362	1	INSULATOR

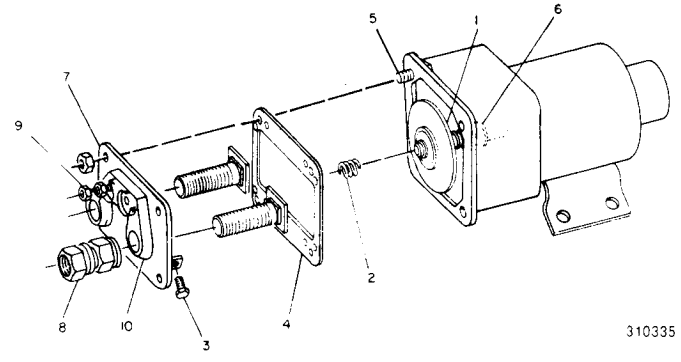

3T4704 SOLENOID ASSEMBLY—24 Volt
Serial No. 6X1170—Up
Part of 3T2647 Electric Starting Motor Group shown on Page 86A

REF NO.	PART NUMBER	DESCRIPTION	QTY.
1	9G6770	CONTACT ASSEM.	1
2	4M1815	SPRING	1
3	4M5274	SCREW	3
4	6T1121	GASKET	1
5	454065	SCREW	4
	4B4274	WASHER	8
	4B2049	NUT	4
6	6T1120	BUSHING	1
7	6T1119	TERMINAL ASSEM. (Includes)	1
8	3H3680	NUT	3
	4B4280	WASHER	3
	9F4976	LOCKWASHER	2
9	4B2049	NUT	3
	4B4274	WASHER	3
	3B4502	LOCKWASHER	2
10	6T362	INSULATOR	1
SMHS7843		FORM (Installing Solenoid Assem.)	1

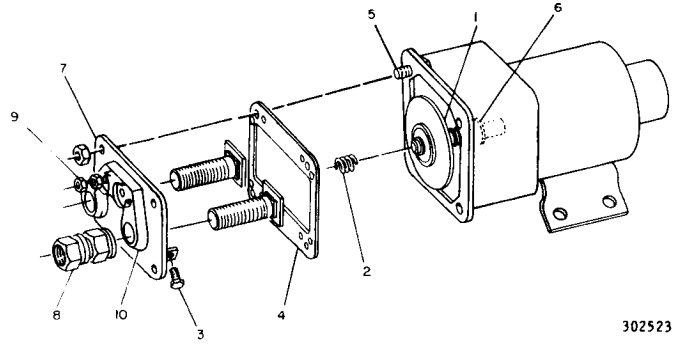

3T3421 SOLENOID ASSEMBLY
Part of 3T2776 & 3T3421 Electric Starting Motor Groups shown on Pages 86E & 86H
Also provides Field Replacement for 3T4704. AN ATTACHMENT

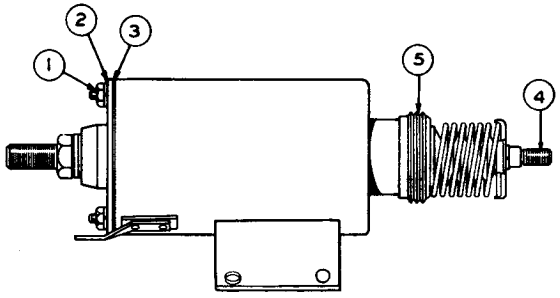

REF. NO.	PART NUMBER	DESCRIPTION	QTY.
1	9M7657	NUT	4
2	8S8023	COVER ASSEM. (Includes)	1
3	8S8024	GASKET	1
4	3T3370	CORE ASSEM.	1
5	8S1528	BOOT	1

The following Repair Kits are available:

8S1524-KIT--------(Terminal Stud-Battery)-------- 1
8S1525-KIT---------(Terminal Stud-Motor)-------- 1
9S8688-KIT----------(Core-Contact End)---------- 1
8S1527-KIT----------(Core-Yoke End)---------- 1

181240

3T3369 SOLENOID SWITCH ASSEMBLY
Part of 9G4338 Electric Starting Motor Group shown on Page 83A

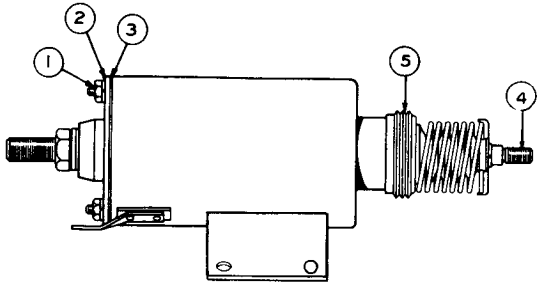

REF. NO.	PART NUMBER	DESCRIPTION	QTY.
1	9M7657	NUT	4
2	8S8023	COVER ASSEM. (Includes)	1
3	8S8024	GASKET	1
4	3T3370	CORE ASSEM.	1
5	8S1528	BOOT	1

THE FOLLOWING REPAIR KITS ARE AVAILABLE:

C6T3701-KIT---------(Terminal)---------- 1
9S8688-KIT----------(Core-Contact End)---------- 1
8S1527-KIT----------(Core-Yoke End)---------- 1

C INDICATES CHANGE

305791

3T8635 SOLENOID SWITCH ASSEMBLY—24 Volt
Part of 9G4338 Electric Starting Motor Group shown on Page 83C

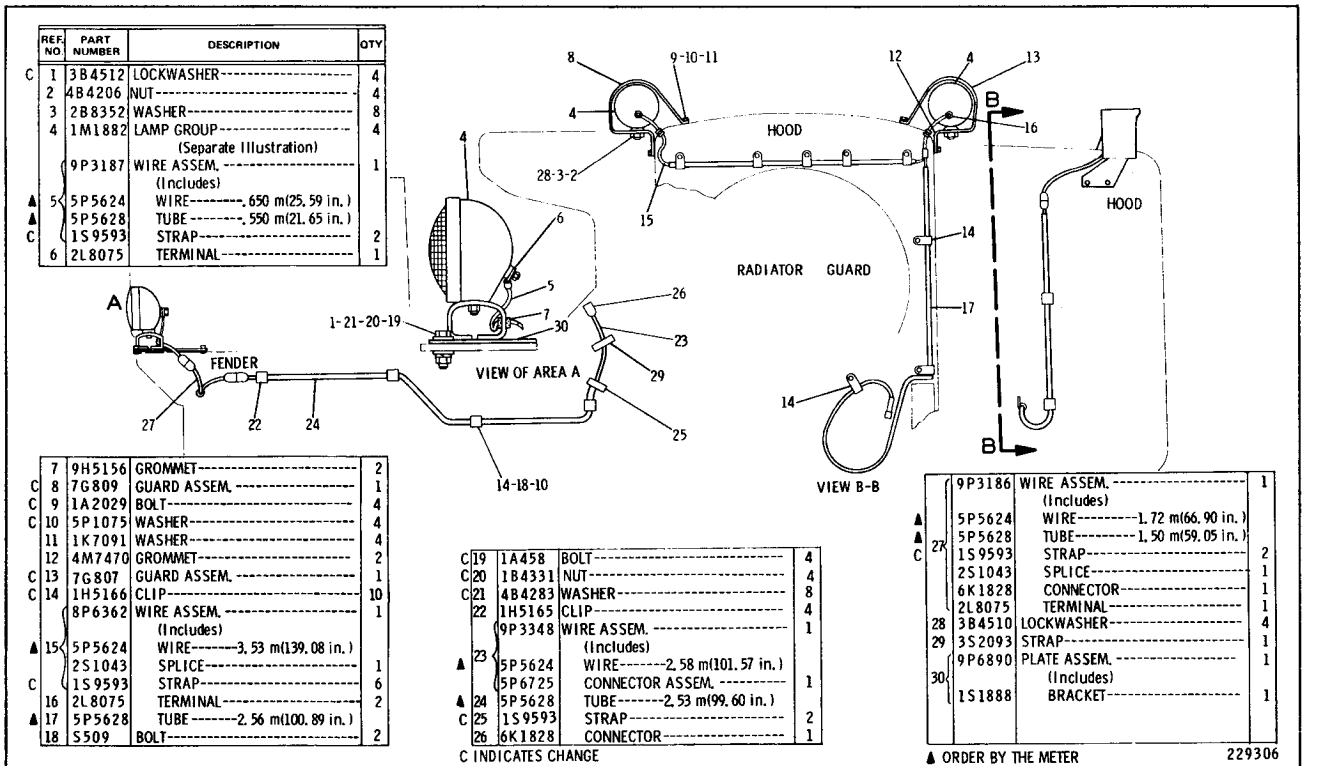

REF. NO.	PART NUMBER	DESCRIPTION	QTY
C 1	3B4512	LOCKWASHER	4
2	4B4206	NUT	4
3	2B8352	WASHER	8
4	1M1882	LAMP GROUP (Separate Illustration)	4
	9P3187	WIRE ASSEM. (Includes)	1
▲ 5	5P5624	WIRE-----.650 m(25.59 in.)	
▲	5P5628	TUBE-----.550 m(21.65 in.)	
C	1S9593	STRAP	2
6	2L8075	TERMINAL	1
7	9H5156	GROMMET	2
C 8	7G809	GUARD ASSEM.	1
C 9	1A2029	BOLT	4
C 10	5P1075	WASHER	4
11	1K7091	WASHER	4
12	4M7470	GROMMET	2
C 13	7G807	GUARD ASSEM.	1
C 14	1H5166	CLIP	10
	8P6362	WIRE ASSEM. (Includes)	1
▲ 15	5P5624	WIRE-------3.53 m(139.08 in.)	
	2S1043	SPLICE	1
C	1S9593	STRAP	6
16	2L8075	TERMINAL	2
▲ 17	5P5628	TUBE-------2.56 m(100.89 in.)	
18	S509	BOLT	2
C 19	1A458	BOLT	4
C 20	1B4331	NUT	4
C 21	4B4283	WASHER	8
22	1H5165	CLIP	4
	9P3348	WIRE ASSEM. (Includes)	1
23	5P5624	WIRE-------2.58 m(101.57 in.)	
	5P6725	CONNECTOR ASSEM.	1
▲ 24	5P5628	TUBE-------2.53 m(99.60 in.)	
C 25	1S9593	STRAP	2
26	6K1828	CONNECTOR	1
	9P3186	WIRE ASSEM. (Includes)	1
▲	5P5624	WIRE---------1.72 m(66.90 in.)	
▲	5P5628	TUBE---------1.50 m(59.05 in.)	
C 27	1S9593	STRAP	2
	2S1043	SPLICE	1
	6K1828	CONNECTOR	1
	2L8075	TERMINAL	1
28	3B4510	LOCKWASHER	4
29	3S2093	STRAP	1
30	9P6890	PLATE ASSEM. (Includes)	1
	1S1888	BRACKET	1

C INDICATES CHANGE

▲ ORDER BY THE METER

229306

8P6570 LIGHTING GROUP—4 Lamp—24 Volt—Type 1
FOR USE WITHOUT ROPS
1M1882 Lamp parts are shown on Page 91
AN ATTACHMENT

8P6570 LIGHTING GROUP-4 LAMP-24 VOLT-TYPE 2

For Use Without ROPS. 1M1882 Lamp Parts Are Shown On Page 91.An Attachment

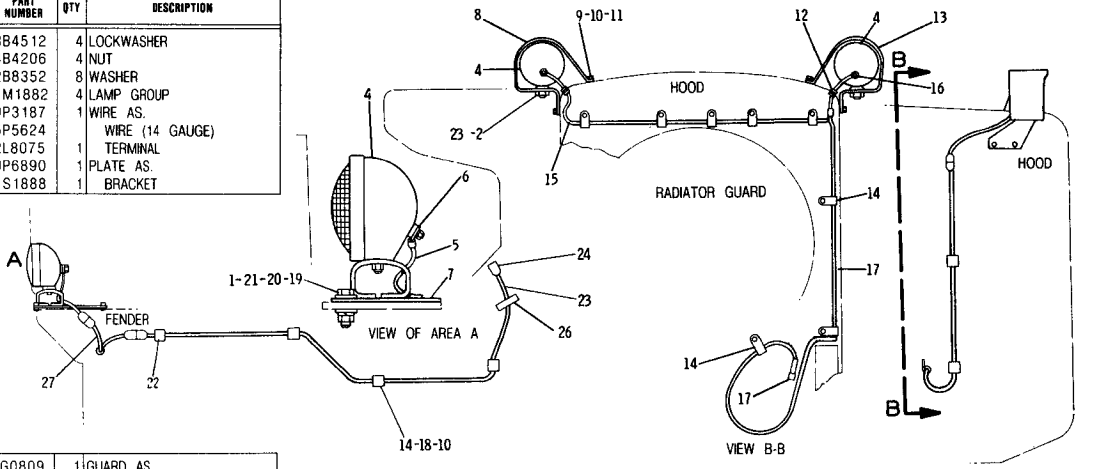

NOTE	REF NO	PART NUMBER	QTY	DESCRIPTION
C	1	3B4512	4	LOCKWASHER
	2	4B4206	4	NUT
	3	2B8352	8	WASHER
Y	4	1M1882	4	LAMP GROUP
	5	9P3187	1	WIRE AS.
BD		5P5624		WIRE (14 GAUGE)
	6	2L8075	1	TERMINAL
	7	9P6890	1	PLATE AS.
		1S1888	1	BRACKET
C	8	7G0809	1	GUARD AS.
C	9	1A2029	4	BOLT
C	10	5P1075	4	WASHER
	11	1K7091	4	WASHER
	12	4M7470	2	GROMMET
C	13	7G0807	1	GUARD AS.
C	14	1H5166	10	CLIP
	15	8P6362	1	WIRE AS.
BD		5P5624		WIRE (14 GAUGE)
		2S1043	1	SPLICE
C		1S9593	6	STRAP
	16	2L8075	2	TERMINAL
C	17	5P5610	1	CONNECTOR
	18	0S0509	2	BOLT
C	19	1A0458	4	BOLT
C	20	1B4331	4	NUT
C	21	4B4283	8	WASHER
	22	1H5165	4	CLIP
	23	9P3348	1	WIRE AS.
BD		5P5624		WIRE (14 GAUGE)
C		5P5610	1	CONNECTOR
BCD	24	6N9587	1	CONNECTOR
C	25	3B4510	4	LOCKWASHER
	26	6N9587	1	STRAP
	27	9P3186	1	WIRE AS.
BCD		5P5624		WIRE (14 GAUGE)
C		5P5610	1	CONNECTOR (SMALL)
C		6N9587	1	CONNECTOR (LARGE)
		2L8075	1	TERMINAL

B USE AS REQUIRED

C INDICATES CHANGE

D ORDER BY THE METER

316627

8P6569 LIGHTING GROUP—4 Lamp—24 Volt—Type 1
FOR USE WITH OPEN ROLL-OVER PROTECTIVE STRUCTURE AND SWEEPS
1M1882 Lamp parts are shown on Page 91. AN ATTACHMENT

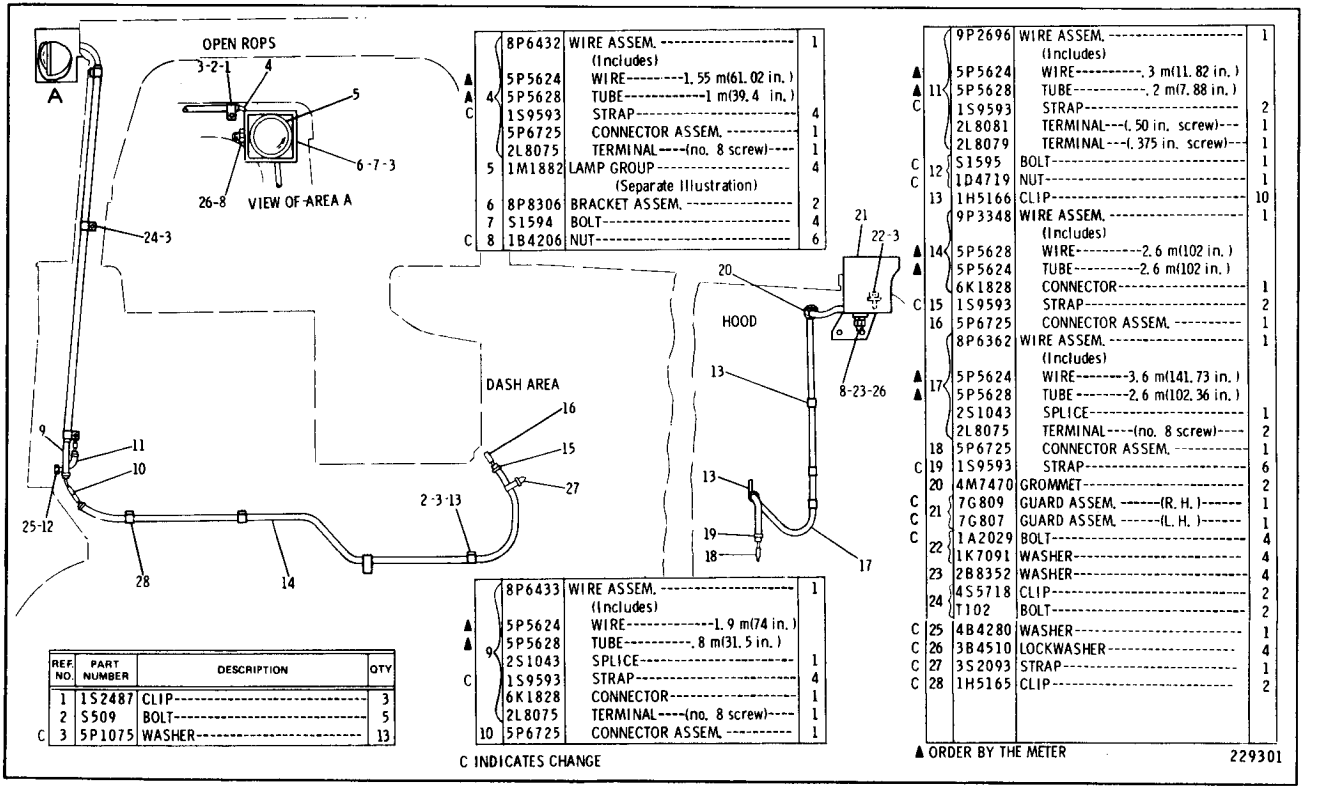

		8P6432	WIRE ASSEM. (Includes)	1
▲	4	5P5624	WIRE---1.55 m(61.02 in.)	
▲		5P5628	TUBE---1 m(39.4 in.)	
C		1S9593	STRAP	4
		5P6725	CONNECTOR ASSEM.	1
		2L8075	TERMINAL---(no. 8 screw)---	1
	5	1M1882	LAMP GROUP (Separate Illustration)	4
	6	8P8306	BRACKET ASSEM.	2
	7	S1594	BOLT	4
C	8	1B4206	NUT	6

		8P6433	WIRE ASSEM. (Includes)	1
▲	9	5P5624	WIRE---1.9 m(74 in.)	
▲		5P5628	TUBE---.8 m(31.5 in.)	
		2S1043	SPLICE	1
C		1S9593	STRAP	4
		6K1828	CONNECTOR	1
		2L8075	TERMINAL---(no. 8 screw)---	1
	10	5P6725	CONNECTOR ASSEM.	1

		9P2696	WIRE ASSEM. (Includes)	1
▲	11	5P5624	WIRE---.3 m(11.82 in.)	
▲		5P5628	TUBE---.2 m(7.88 in.)	
C		1S9593	STRAP	2
		2L8081	TERMINAL---(.50 in. screw)---	1
		2L8079	TERMINAL---(.375 in. screw)---	1
C	12	S1595	BOLT	1
C		1D4719	NUT	1
	13	1H5166	CLIP	10
		9P3348	WIRE ASSEM. (Includes)	1
▲	14	5P5628	WIRE---2.6 m(102 in.)	
▲		5P5624	TUBE---2.6 m(102 in.)	
		6K1828	CONNECTOR	1
C	15	1S9593	STRAP	2
	16	5P6725	CONNECTOR ASSEM.	1
		8P6362	WIRE ASSEM. (Includes)	1
▲	17	5P5624	WIRE---3.6 m(141.73 in.)	
▲		5P5628	TUBE---2.6 m(102.36 in.)	
		2S1043	SPLICE	1
		2L8075	TERMINAL---(no. 8 screw)---	2
	18	5P6725	CONNECTOR ASSEM.	1
C	19	1S9593	STRAP	6
	20	4M7470	GROMMET	2
C	21	7G809	GUARD ASSEM.---(R.H.)---	1
C		7G807	GUARD ASSEM.---(L.H.)---	1
C	22	1A2029	BOLT	4
		1K7091	WASHER	4
	23	2B8352	WASHER	4
	24	4S5718	CLIP	2
		T102	BOLT	2
C	25	4B4280	WASHER	1
C	26	3B4510	LOCKWASHER	4
C	27	3S2093	STRAP	1
C	28	1H5165	CLIP	2

REF. NO.	PART NUMBER	DESCRIPTION	QTY
1	1S2487	CLIP	3
2	S509	BOLT	5
C 3	5P1075	WASHER	13

C INDICATES CHANGE

▲ ORDER BY THE METER

229301

8P6569 LIGHTING GROUP—4 Lamp—24 Volt—Type 2
FOR USE WITH OPEN ROPS AND SWEEPS
1M1882 Lamp parts are shown on Page 91. AN ATTACHMENT

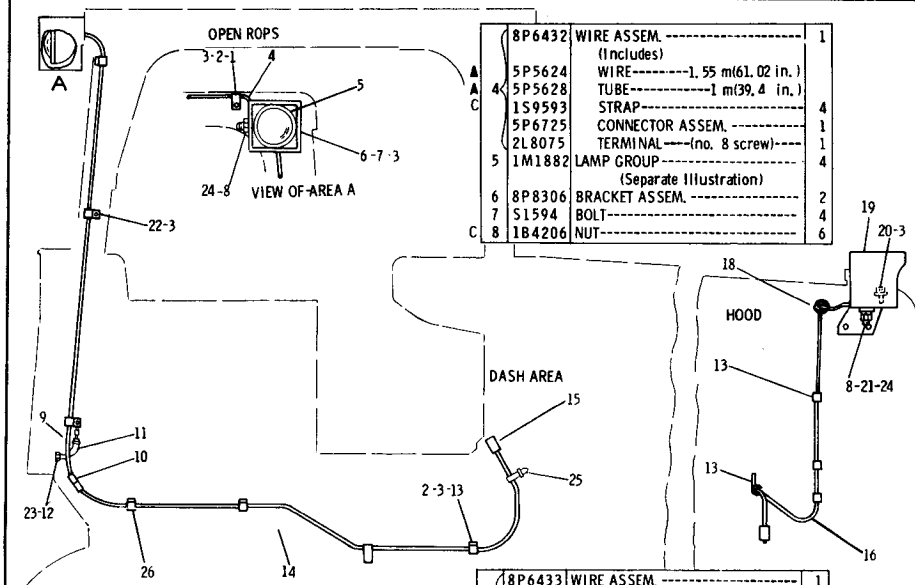

	8P6432	WIRE ASSEM. (Includes)		1
▲	5P5624	WIRE	1.55 m(61.02 in.)	
▲ 4	5P5628	TUBE	1 m(39.4 in.)	
C	1S9593	STRAP		4
	5P6725	CONNECTOR ASSEM.		1
	2L8075	TERMINAL	(no. 8 screw)	1
5	1M1882	LAMP GROUP (Separate Illustration)		4
6	8P8306	BRACKET ASSEM.		2
7	S1594	BOLT		4
C 8	1B4206	NUT		6

	9P2696	WIRE ASSEM. (Includes)		1
▲	5P5624	WIRE	.3 m(11.82 in.)	
▲ 11	5P5628	TUBE	.2 m(7.88 in.)	
C	1S9593	STRAP		2
	2L8081	TERMINAL	(.50 in. screw)	1
	2L8079	TERMINAL	(.375 in. screw)	1
C 12	S1595	BOLT		1
C	1D4719	NUT		1
13	1H5166	CLIP		10
	9P3348	WIRE ASSEM. (Includes)		1
▲ 14	5P5628	WIRE	2.6 m(102 in.)	
C	6N9587	CONNECTOR		1
C 15	5P5610	CONNECTOR		1
	8P6362	WIRE ASSEM. (Includes)		1
▲ 16	5P5624	WIRE	3.6 m(141.73 in.)	
	2L8075	TERMINAL	(no. 8 screw)	2
C 17	5P5610	CONNECTOR		1
18	4M7470	GROMMET		2
C	7G809	GUARD ASSEM.	(R. H.)	1
C 19	7G807	GUARD ASSEM.	(L. H.)	1
C	1A2029	BOLT		4
20	1K7091	WASHER		4
21	2B8352	WASHER		4
	4S5718	CLIP		2
22	T102	BOLT		2
C 23	4B4280	WASHER		1
C 24	3B4510	LOCKWASHER		4
C 25	3S2093	STRAP		1
C 26	1H5165	CLIP		2

	8P6433	WIRE ASSEM. (Includes)		1
▲	5P5624	WIRE	1.9 m(74 in.)	
▲ 9	5P5628	TUBE	.8 m(31.5 in.)	
	2S1043	SPLICE		1
C	1S9593	STRAP		4
	6K1828	CONNECTOR		1
	2L8075	TERMINAL	(no. 8 screw)	1
10	5P6725	CONNECTOR ASSEM.		1

REF. NO.	PART NUMBER	DESCRIPTION	QTY
1	1S2487	CLIP	3
2	S509	BOLT	5
C 3	5P1075	WASHER	13

C INDICATES CHANGE

▲ ORDER BY THE METER

180901

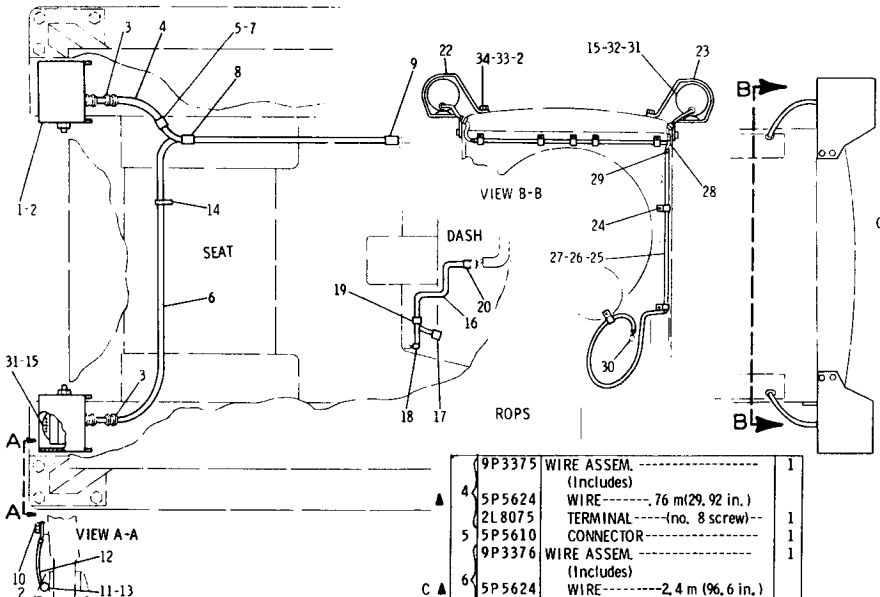

REF. NO	PART NUMBER	DESCRIPTION	QTY
1	8P8306	BRACKET ASSEM.	2
	1S1594	BOLT	4
2	5P1075	WASHER	7
3	5P7856	GROMMET	4
	9P3375	WIRE ASSEM. (Includes)	1
4 ▲	5P5624	WIRE-.76 m(29.92 in.)	
	2L8075	TERMINAL-(no. 8 screw)	1
5	5P5610	CONNECTOR	1
	9P3376	WIRE ASSEM. (Includes)	1
6 C ▲	5P5624	WIRE-2.4 m (96.6 in.)	
	2L8075	TERMINAL-(no. 8 screw)	1
C 7	6N9587	CONNECTOR	1
C 8	2S1043	SPLICE	1
9	5P5610	CONNECTOR	1
10	T102	BOLT	1
11	S1595	BOLT	1
	1D4719	NUT	1
	4B4280	WASHER	1
	9P2696	WIRE ASSEM. (Includes)	1
▲	5P5624	WIRE-.25 m(9.843 in.)	
▲ 12	5P5628	TUBE-.2 m(7.784 in.)	
C	1S9593	STRAP	2
	2L8081	TERMINAL-(.5 in. screw)	1
13	2L8079	TERMINAL-(.375 in. screw)	1
14	3S2093	STRAP	1
15	3B4510	LOCKWASHER	4
	9P3374	WIRE ASSEM. (Includes)	1
16 C ▲	5P5624	WIRE-.78 m(30.71 in.)	
C 17	5P4571	TERMINAL	1
C 18	4S1988	TERMINAL	1
C 19	2S1043	SPLICE	1
20	5P5610	CONNECTOR	1
21	4M7470	GROMMET	2
C 22	7G807	GUARD ASSEM.-(L.H.)	1
C 23	7G809	GUARD ASSEM.-(R.H.)	1
24	1H5166	CLIP	8
25	8P6362	WIRE ASSEM. (Includes)	1
▲	5P5624	WIRE-3.6 m(139.075 in.)	
▲ 26	5P5628	TUBE-2.6 m(100.91 in.)	
27	2L8075	TERMINAL-(male)	2
28	2S1043	BUTT	1
C 29	1S9593	STRAP	6
30	5P5610	CONNECTOR	1
	1M1882	LAMP GROUP (Separate Illustration)	4
31	1B4206	NUT	6
32	2B8352	WASHER	4
33	1K7091	WASHER	4
C 34	1A2029	BOLT	4

C INDICATES CHANGE

▲ ORDER BY THE METER

229307

9P3386 LIGHTING GROUP—4 Lamp—24 Volt—Type 1
FOR USE WITH ENCLOSED ROPS
1M1882 Lamp parts are shown on Page 91. AN ATTACHMENT

9P3386 LIGHTING GROUP—4 Lamp—24 Volt—Type 2
FOR USE WITH ENCLOSED ROPS
1M1882 Lamp parts are shown on Page 91. AN ATTACHMENT

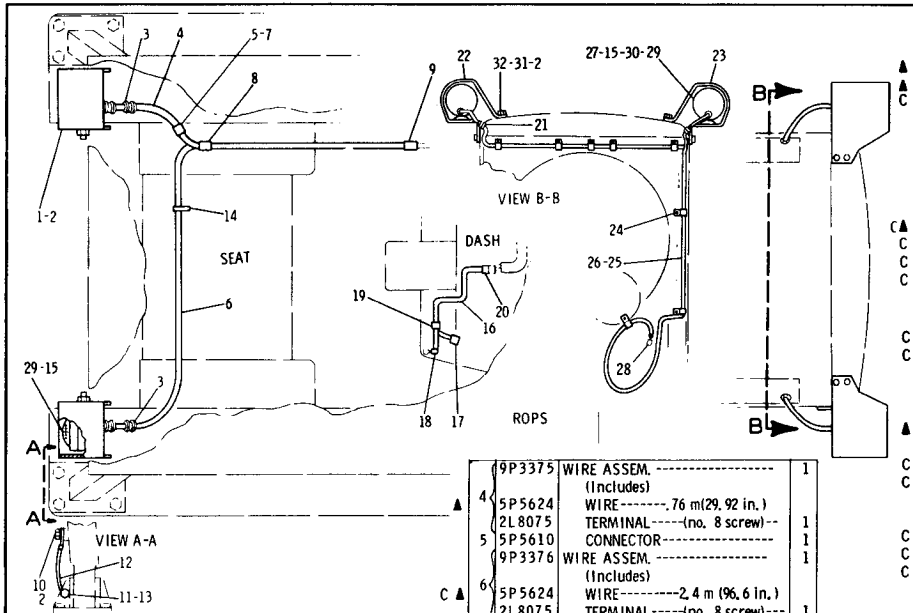

REF NO	PART NUMBER	DESCRIPTION	QTY
1	8P8306	BRACKET ASSEM.	2
	S1594	BOLT	4
2	5P1075	WASHER	7
3	5P7856	GROMMET	4

	REF NO	PART NUMBER	DESCRIPTION	QTY
	4	9P3375	WIRE ASSEM. (Includes)	1
▲		5P5624	WIRE-------.76 m(29.92 in.)	
		2L8075	TERMINAL-----(no. 8 screw)--	1
	5	5P5610	CONNECTOR	1
	6	9P3376	WIRE ASSEM. (Includes)	1
C ▲		5P5624	WIRE---------2.4 m (96.6 in.)	
		2L8075	TERMINAL-----(no. 8 screw)---	1
C	7	6N9587	CONNECTOR	1
C	8	2S1043	SPLICE	1
	9	5P5610	CONNECTOR	1
	10	T102	BOLT	1
	11	S1595	BOLT	1
		1D4719	NUT	1
		4B4280	WASHER	1

C INDICATES CHANGE

	REF NO	PART NUMBER	DESCRIPTION	QTY
		9P2696	WIRE ASSEM. (Includes)	1
▲		5P5624	WIRE-------.25 m(9.843 in.)	
▲ C	12	5P5628	TUBE--------.2 m(7.784 in.)	
		1S9593	STRAP	2
		2L8081	TERMINAL------(.5 in. screw)---	1
	13	2L8079	TERMINAL---(.375 in. screw)--	1
	14	3S2093	STRAP	1
	15	3B4510	LOCKWASHER	4
	16	9P3374	WIRE ASSEM. (Includes)	1
C ▲		5P5624	WIRE-------.78 m(30.71 in.)	
C	17	5P4571	TERMINAL	1
C	18	4S1988	TERMINAL	1
C	19	2S1043	SPLICE	1
	20	5P5610	CONNECTOR	1
	21	4M7470	GROMMET	2
C	22	7G807	GUARD ASSEM. --------(L.H.)----	1
C	23	7G809	GUARD ASSEM. --------(R.H.)----	1
	24	1H5166	CLIP	8
	25	8P6362	WIRE ASSEM. (Includes)	1
▲	26	5P5624	WIRE----3.6 m (139.075 in.)	
	27	2L8075	TERMINAL	2
C	28	5P5610	CONNECTOR	1
C	29	1M1882	LAMP GROUP (Separate Illustration)	4
		1B4206	NUT	6
C	30	2B8352	WASHER	4
C	31	1K7091	WASHER	4
C	32	1A2029	BOLT	4

▲ ORDER BY THE METER

180900

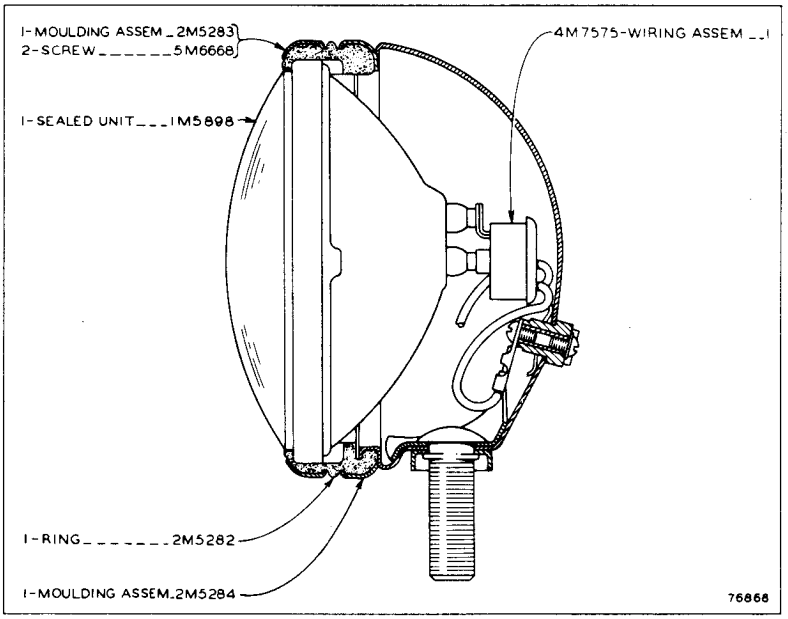

1M1882 FLOOD LAMP ASSEMBLY
Part of 8P6570, 8P6569 and 9P3386 Lighting Groups shown on Pages 88, 89 and 90
AN ATTACHMENT

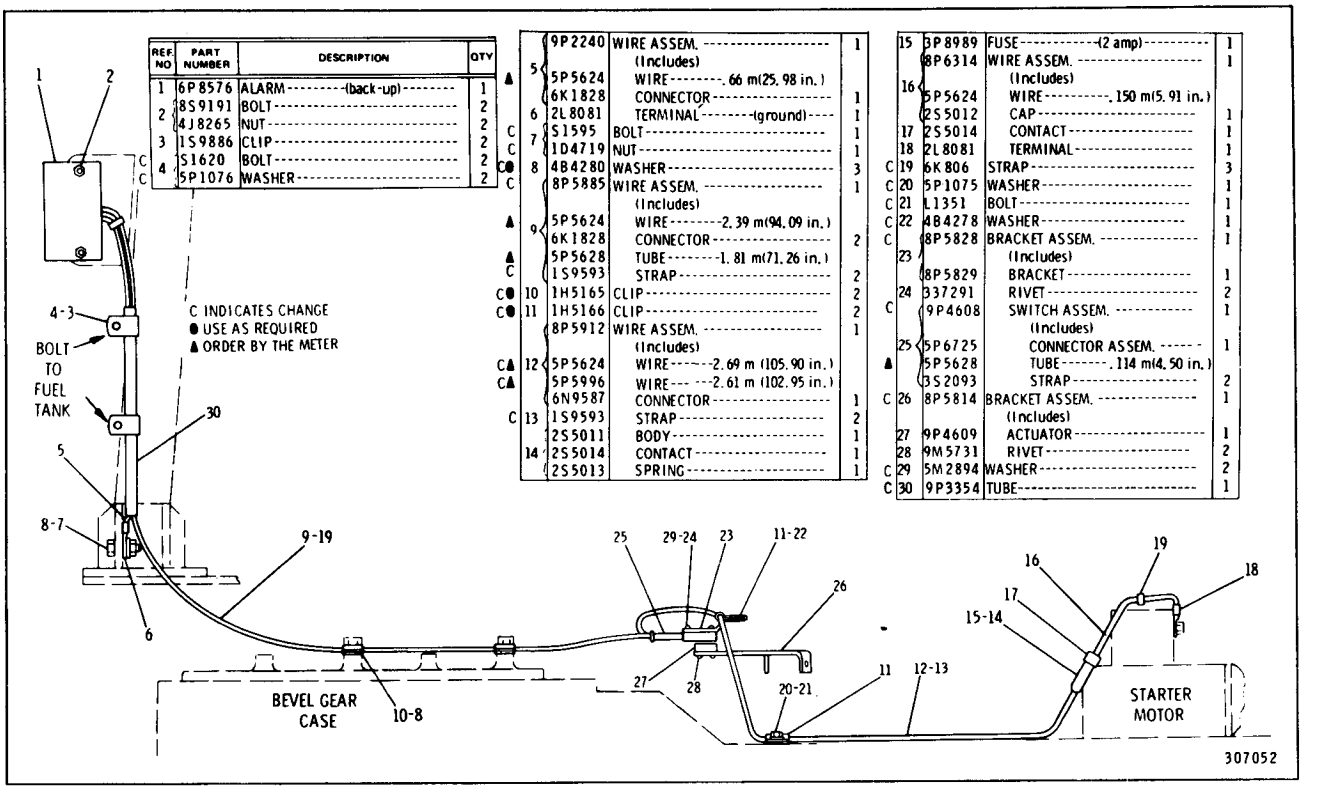

REF NO	PART NUMBER	DESCRIPTION	QTY	
1	6P8576	ALARM----------(back-up)----------	1	▲
2	8S9191	BOLT----------	2	
	4J8265	NUT----------	2	C
3	1S9886	CLIP----------	2	C
4	1S1620	BOLT----------	2	C●
	5P1076	WASHER----------	2	C

5	9P2240	WIRE ASSEM. (Includes)	1	
	5P5624	WIRE----------.66 m(25.98 in.)		▲
	6K1828	CONNECTOR----------	1	
6	2L8081	TERMINAL--------(ground)----	1	
7	1S1595	BOLT----------	1	C
	1D4719	NUT----------	1	C
8	4B4280	WASHER----------	3	C●
9	8P5885	WIRE ASSEM. (Includes)	1	C
	5P5624	WIRE--------2.39 m(94.09 in.)		▲
	6K1828	CONNECTOR----------	2	
	5P5628	TUBE--------1.81 m(71.26 in.)		▲
	1S9593	STRAP----------	2	C
10	1H5165	CLIP----------	2	C●
11	1H5166	CLIP----------	2	C●
12	8P5912	WIRE ASSEM. (Includes)	1	
	5P5624	WIRE--------2.69 m (105.90 in.)		C▲
	5P5996	WIRE--------2.61 m (102.95 in.)		C▲
	6N9587	CONNECTOR----------	1	
13	1S9593	STRAP----------	2	C
14	2S5011	BODY----------	1	
	2S5014	CONTACT----------	1	
	2S5013	SPRING----------	1	

15	3P8989	FUSE----------(2 amp)----------	1	
16	8P6314	WIRE ASSEM. (Includes)	1	
	5P5624	WIRE----------.150 m(5.91 in.)		
	2S5012	CAP----------	1	
17	2S5014	CONTACT----------	1	
18	2L8081	TERMINAL----------	1	
19	6K806	STRAP----------	3	C
20	5P1075	WASHER----------	1	C
21	L1351	BOLT----------	1	C
22	4B4278	WASHER----------	1	C
23	8P5828	BRACKET ASSEM. (Includes)	1	C
	8P5829	BRACKET----------	1	
24	337291	RIVET----------	2	
25	9P4608	SWITCH ASSEM. (Includes)	1	C
	5P6725	CONNECTOR ASSEM.------	1	
	5P5628	TUBE--------.114 m(4.50 in.)		▲
	3S2093	STRAP----------	2	
26	8P5814	BRACKET ASSEM. (Includes)	1	C
27	9P4609	ACTUATOR----------	1	
28	9M5731	RIVET----------	2	
29	5M2894	WASHER----------	2	C
30	9P3354	TUBE----------	1	C

8P7063 BACK-UP WARNING GROUP
Serial No. 6X1115 to 6X1305 inclusive

8P7063 BACK-UP WARNING GROUP
Serial No. 6X1306—Up

REF. NO.	PART NUMBER	DESCRIPTION	QTY.
	3T1815	ALARM----------(back-up)---------- (Includes)	1
	4B2043	NUT----------	4
	1H4393	WASHER----------	2
1	9G9019	WIRE ASSEM. ---------- (Includes)	2
	5P5624	WIRE-----.30m(11.81 in.)	
	2L8075	TERMINAL----------	1
	5P5610	CONNECTOR----------	1
2	8S9191	BOLT----------	2
	4J8265	NUT----------	2
3	1S9886	CLIP----------	2
4	S1620	BOLT----------	2
	5P1076	WASHER----------	2

▲ ORDER BY THE METER
C INDICATES CHANGE
● USE AS REQUIRED

5	9P2240	WIRE ASSEM. ---------- (Includes)	1
	5P5624	WIRE---------.66 m(25.98 in.)	
6	6K1828	CONNECTOR----------	1
7	2L8081	TERMINAL-------(ground)----	1
8	S1595	BOLT----------	1
	1D4719	NUT----------	1
	4B4280	WASHER----------	3
9	8P5885	WIRE ASSEM. ---------- (Includes)	1
	5P5624	WIRE--------2.39 m(94.09 in.)	
	6K1828	CONNECTOR----------	2
	5P5628	TUBE--------1.81 m(71.26 in.)	
	1S9593	STRAP----------	2
10	1H5165	CLIP----------	2
11	1H5166	CLIP----------	2
12	8P5912	WIRE ASSEM. ---------- (Includes)	1
	5P5624	WIRE-------2.69 m (105.90 in.)	
	5P5996	WIRE--- ---2.61 m (102.95 in.)	
	6N9587	CONNECTOR----------	1
13	1S9593	STRAP----------	2
14	2S5011	BODY----------	1
	2S5014	CONTACT----------	1
	2S5013	SPRING----------	1

15	3P8989	FUSE----------(2 amp)----------	1
	8P6314	WIRE ASSEM. ---------- (Includes)	1
16	5P5624	WIRE----------.150 m(5.91 in.)	
	2S5012	CAP----------	1
17	2S5014	CONTACT----------	1
18	2L8081	TERMINAL----------	1
19	6K806	STRAP----------	3
20	5P1075	WASHER----------	1
21	L1351	BOLT----------	1
22	4B4278	WASHER----------	1
23	8P5828	BRACKET ASSEM. ---------- (Includes)	1
	8P5829	BRACKET----------	1
24	337291	RIVET----------	2
25	9P4608	SWITCH ASSEM. ---------- (Includes)	1
	5P6725	CONNECTOR ASSEM. ------	1
▲	5P5628	TUBE--------.114 m(4.50 in.)	
	3S2093	STRAP----------	2
26	8P5814	BRACKET ASSEM. ---------- (Includes)	1
27	9P4609	ACTUATOR----------	1
28	9M5731	RIVET----------	2
29	5M2894	WASHER----------	4
C 30	9P3354	TUBE----------	1

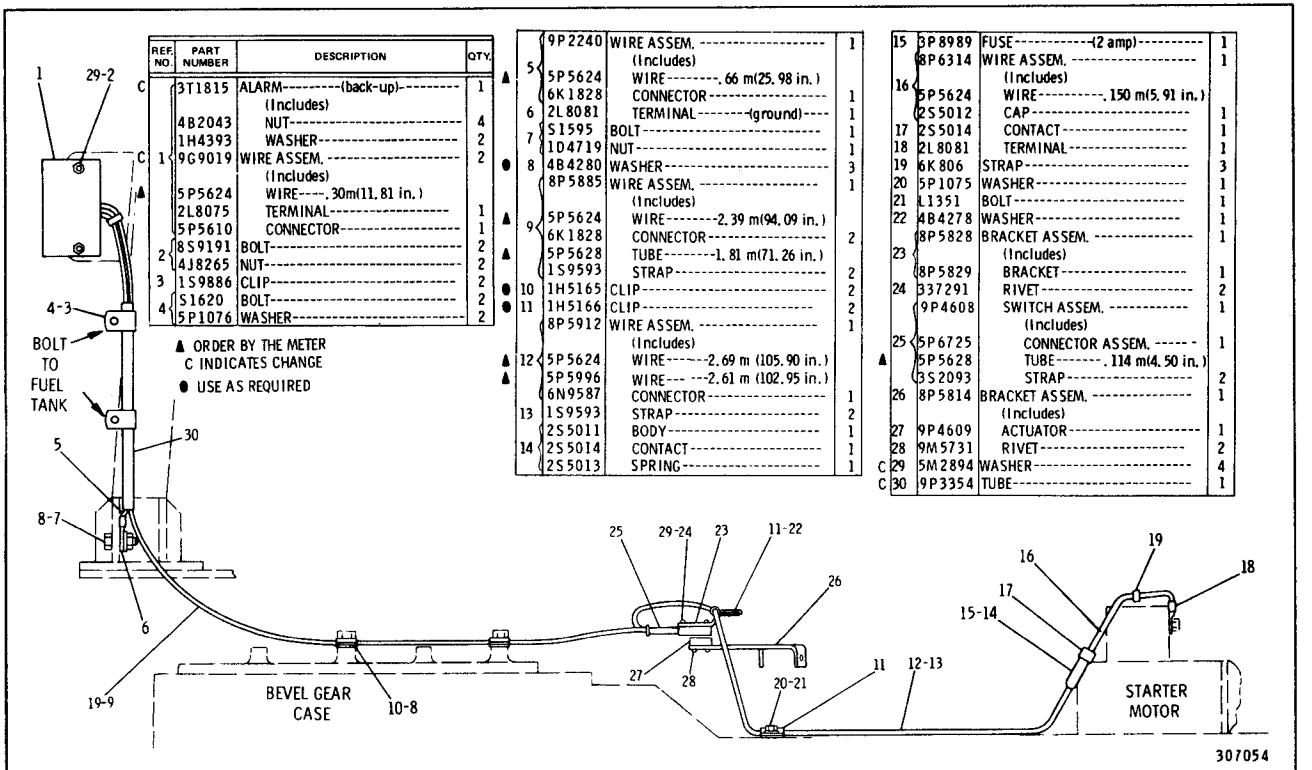

9G4706 ETHER STARTING AID GROUP
AN ATTACHMENT

REF. NO.	PART NUMBER	DESCRIPTION	QTY.
1	5P5610	CONNECTOR----------	1
▲ 2	5P5624	WIRE----------, 8 m (31.5 in.)	
3	6N9995	ATOMIZER ASSEM. ----------	1
4	9P3121	TUBE----------	1
5	2B2404	CLIP----------	1
	3D5102	GROMMET----------	1
6	6N9587	CONNECTOR----------	2
7	6N5899	SWITCH-----(temperature)-------	1
▲ 8	5P5624	WIRE---------, 11 m (4.34 in.)	
9	2L8075	TERMINAL----------	1
C 10	S1618	BOLT ----------	4
	1D4716	NUT----------	4
11	6N7674	VALVE ASSEM. ---------(24 volt)--- (Includes)	1
12	5P5610	CONNECTOR----------	2
13	3T157	SUPPORT ASSEM. ----------	1
14	7N2059	CLAMP ASSEM. ----------	1
15	2V1713	TAG------(starting aid)----------	1
16	3T306	SWITCH-------(starting aid)------	1
17	5P7907	CONNECTOR----------	1
	5P6313	NUT----------	1
	5P6314	SLEEVE----------	1
C 18	5P4116	WASHER----------	4
C 19	S1587	BOLT---44mm(1.75 in.)long-------	1
C	1B8074	WASHER--13 mm(.531 in.)thick--	1
C 20	5P8245	WASHER---3mm(.118 in.)thick----	2
C 21	1A1460	BOLT--50.8 mm(2 in.)long--------	1
C	1P2841	SPACER----------	1

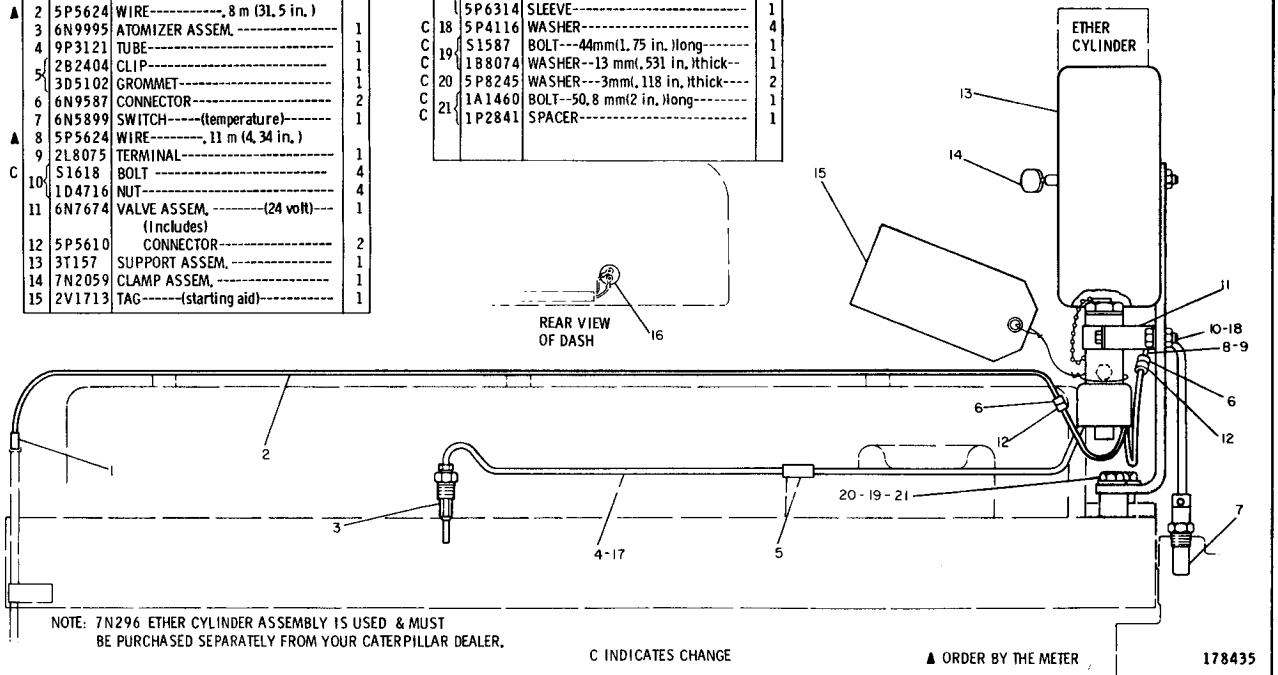

NOTE: 7N296 ETHER CYLINDER ASSEMBLY IS USED & MUST BE PURCHASED SEPARATELY FROM YOUR CATERPILLAR DEALER.

C INDICATES CHANGE

▲ ORDER BY THE METER

178435

9G4706 ETHER STARTING AID GROUP–TYPE 2
An Attachment

NOTE	REF NO	PART NUMBER	QTY	DESCRIPTION
	1	5P5610	1	CONNECTOR
D	2	5P5624		WIRE .8M (31.5 IN.)
	3	6N9995	1	ATOMIZER ASSEM.
	4	9P3121	1	TUBE
	5	2B2404	1	CLIP
		3D5102	1	GROMMET
	6	6N9587	2	CONNECTOR
	7	6N5899	1	SWITCH (WATER TEMP.)
C		6V8376	1	SCREW
C		9B7233	1	LOCKWASHER
D	8	5P5624		WIRE .11M (4.34 IN.)
	9	2L8075	1	TERMINAL
C	10	S1618	6	BOLT
C		1D4716	6	NUT
	11	6N7674	1	VALVE ASSEM. (24 VOLT)
	12	5P5610	2	CONNECTOR
	13	5T157	1	SUPPORT ASSEM.
C	14	7N2059	2	CLAMP ASSEM.
	15	2V1713	1	TAG (STARTING AID)

C	16	3T3453	1	SWITCH (STARTING AID)
C		6V8370	1	NUT
C		2H3922	1	LOCKWASHER
C	17	6V8363	2	SCREW
C		8F1434	2	LOCKWASHER
C	18	5P4116	6	WASHER
C	19	S1594	1	BOLT
C	20	S1591	1	BOLT
C	21	5M2894	2	WASHER
CB	22	2A4256	1	SPACER
C	23	3T1417	1	BRACE
C	24	6H1717	2	BOLT
	25	5P7907	1	CONNECTOR
		5P6313	1	NUT
		5P6314	1	SLEEVE

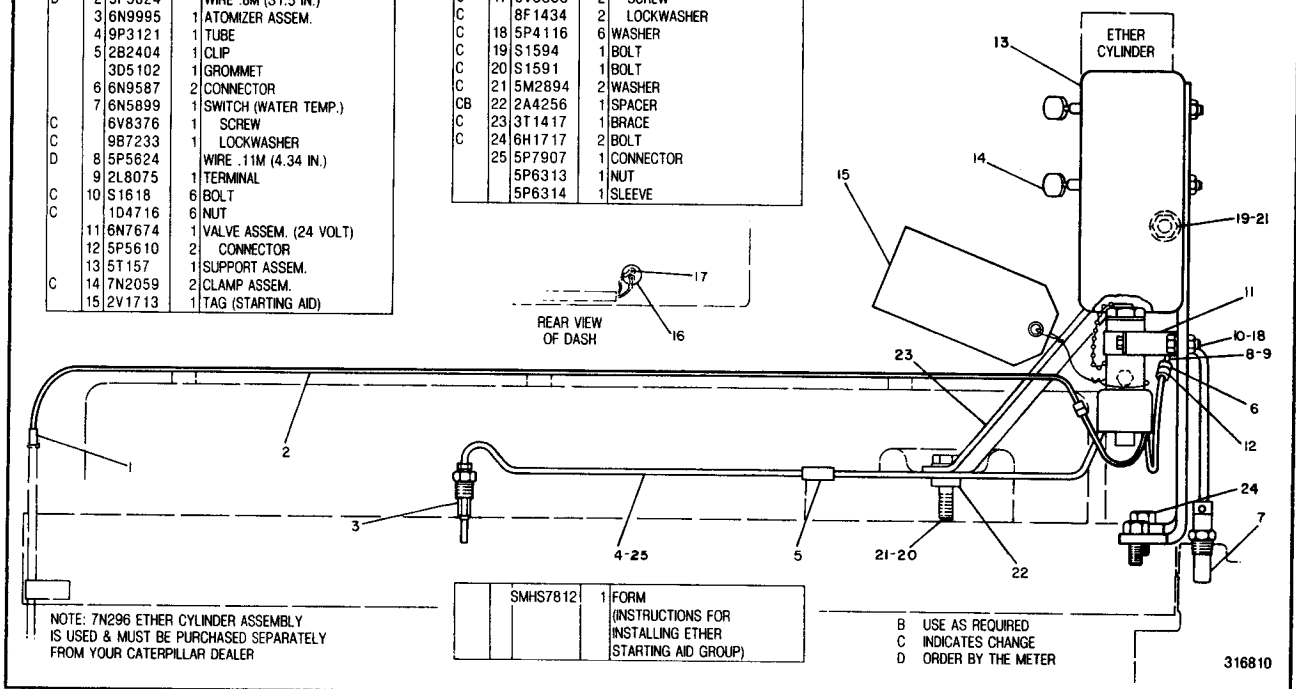

NOTE: 7N296 ETHER CYLINDER ASSEMBLY IS USED & MUST BE PURCHASED SEPARATELY FROM YOUR CATERPILLAR DEALER

	SMHS7812	1	FORM (INSTRUCTIONS FOR INSTALLING ETHER STARTING AID GROUP)

B USE AS REQUIRED
C INDICATES CHANGE
D ORDER BY THE METER

316810

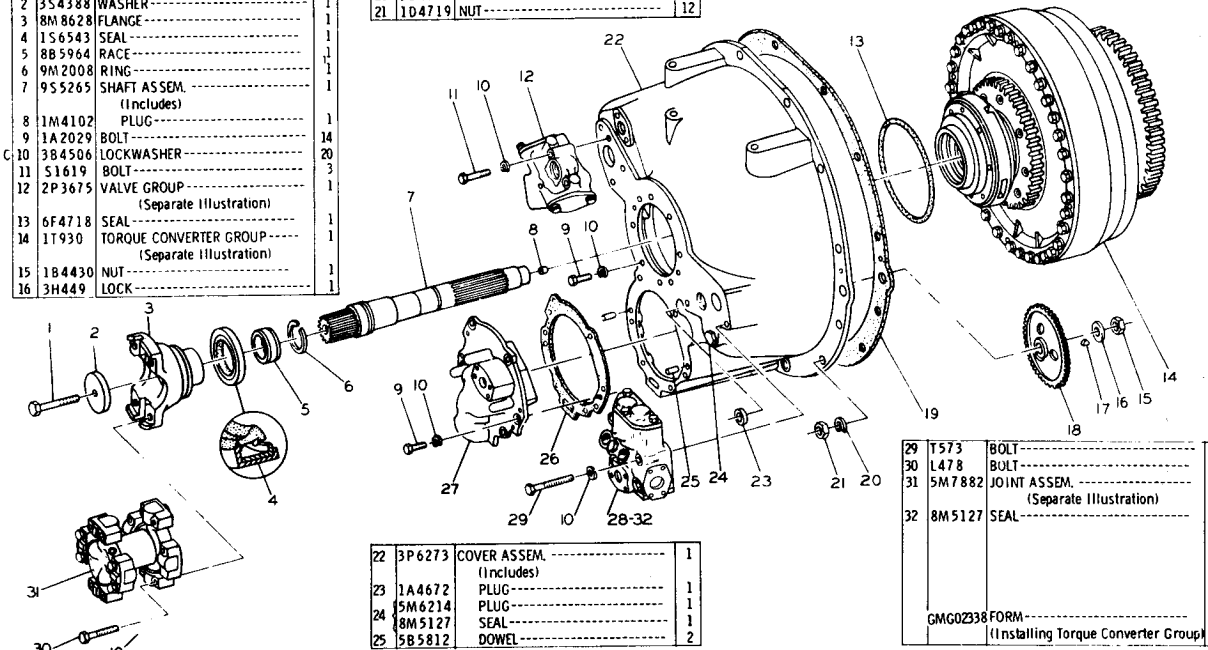

REF NO	PART NUMBER	DESCRIPTION	QTY
1	L139	BOLT	1
2	3S4388	WASHER	1
3	8M8628	FLANGE	1
4	1S6543	SEAL	1
5	8B5964	RACE	1
6	9M2008	RING	1
7	9S5265	SHAFT ASSEM. (Includes)	1
8	1M4102	PLUG	1
9	1A2029	BOLT	14
C 10	3B4506	LOCKWASHER	20
11	S1619	BOLT	3
12	2P3675	VALVE GROUP (Separate Illustration)	1
13	6F4718	SEAL	1
14	1T930	TORQUE CONVERTER GROUP (Separate Illustration)	1
15	1B4430	NUT	1
16	3H449	LOCK	1

17	1B8705	KEY	1
18	5M5822	GEAR (43 teeth)	1
19	5M6604	GASKET	1
20	3B4508	LOCKWASHER	12
21	1D4719	NUT	12

26	4M5876	GASKET	1
27	5M7864	PUMP GROUP	1
28	9P1533	VALVE GROUP (Separate Illustration)	1

22	3P6273	COVER ASSEM. (Includes)	1
23	1A4672	PLUG	1
24	5M6214	PLUG	1
	8M5127	SEAL	1
25	5B5812	DOWEL	2

29	T573	BOLT	3
30	L478	BOLT	8
31	5M7882	JOINT ASSEM. (Separate Illustration)	1
32	8M5127	SEAL	1
	GMG02338	FORM (Installing Torque Converter Group)	1

C INDICATES CHANGE 214591

9P2633 TORQUE DIVIDER GROUP — Part 1
1T930 Torque Converter, 2P3675, 9P1533 Valve, 5M7864 Pump and 5M7882 Joint parts
are shown on Pages 96 through 98

9P2633 TORQUE DIVIDER GROUP — Part 2

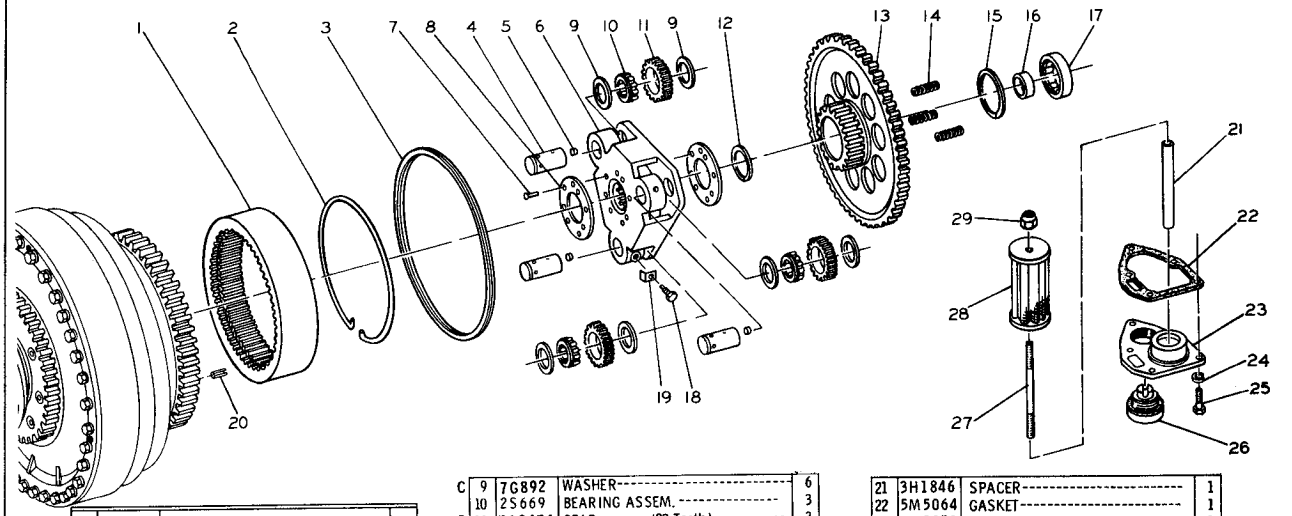

REF. NO.	PART NUMBER	DESCRIPTION	QTY
1	5M6208	GEAR-------(82 Teeth)----------	1
2	5M7878	RING----------	1
3	9M1976	RING----------	1
C 4	5M6198	SHAFT----------	3
C 5	2A3746	PLUG----------	3
6	9S5267	CARRIER ASSEM.----------	1
C 7	5P6943	RIVET----------	5
8	8P1958	WASHER----------	2

C 9	7G892	WASHER----------	6
10	2S669	BEARING ASSEM.----------	3
C 11	7G2474	GEAR--------(23 Teeth)----------	3
12	5H6480	RING----------	1
13	9M2028	GEAR--------(66 Teeth)----------	1
14	1K7041	SPRING----------	3
15	2D1523	RING----------	1
16	9M2014	RACE----------	1
17	9H8712	BEARING ASSEM.----------	1
18	1K6978	SCREW----------	3
19	5M7877	LOCK----------	3
20	2K5986	PIN----------	2

21	3H1846	SPACER----------	1
22	5M5064	GASKET----------	1
23	5M5071	COVER----------	1
24	3B4506	LOCKWASHER----------	5
25	1A2029	BOLT----------	5
26	8B6599	PLUG----------	1
	1L1124	GASKET----------	1
27	9B1484	STUD----------	1
28	4H2978	SCREEN ASSEM.----------	1
29	2F8616	NUT----------	1
		(Mounted on flywheel housing)	

C INDICATES CHANGE

229690

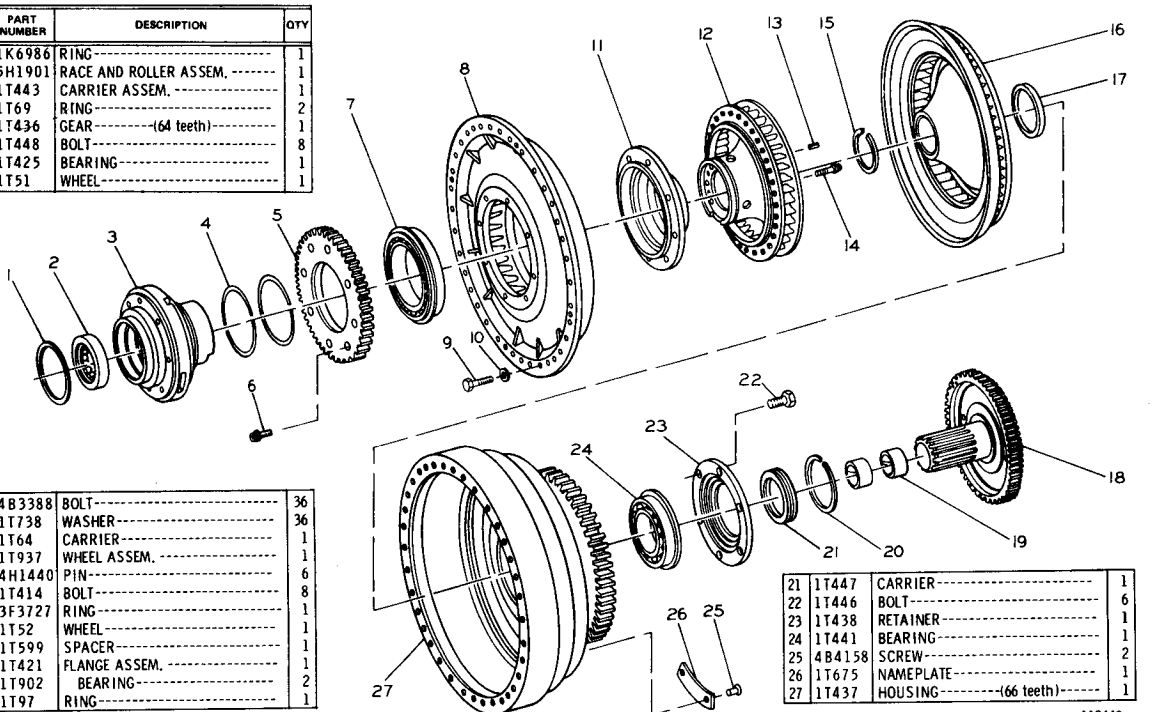

REF. NO.	PART NUMBER	DESCRIPTION	QTY
1	1K6986	RING	1
2	5H1901	RACE AND ROLLER ASSEM.	1
3	1T443	CARRIER ASSEM.	1
4	1T69	RING	2
5	1T436	GEAR--(64 teeth)	1
6	1T448	BOLT	8
7	1T425	BEARING	1
8	1T51	WHEEL	1
9	4B3388	BOLT	36
10	1T738	WASHER	36
11	1T64	CARRIER	1
12	1T937	WHEEL ASSEM.	1
13	4H1440	PIN	6
14	1T414	BOLT	8
15	3F3727	RING	1
16	1T52	WHEEL	1
17	1T599	SPACER	1
18	1T421	FLANGE ASSEM.	1
19	1T902	BEARING	2
20	1T97	RING	1
21	1T447	CARRIER	1
22	1T446	BOLT	6
23	1T438	RETAINER	1
24	1T441	BEARING	1
25	4B4158	SCREW	2
26	1T675	NAMEPLATE	1
27	1T437	HOUSING--(66 teeth)	1

1T930 TORQUE CONVERTER GROUP
Torque Converter Serial No. 50T1-Up
Part of 9P2633 Torque Divider Group shown on Page 94

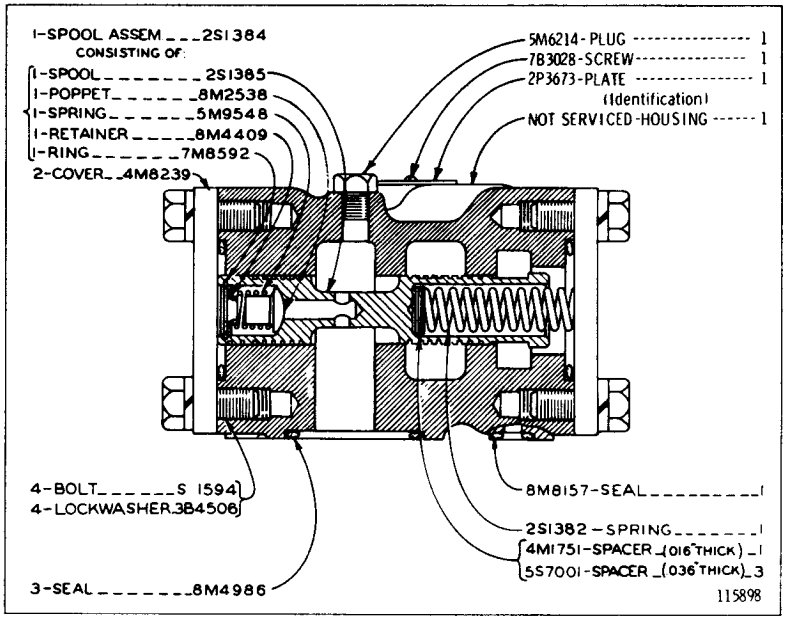

2P3675 RELIEF VALVE GROUP
Part of 9P2633 Torque Divider Group shown on Page 94

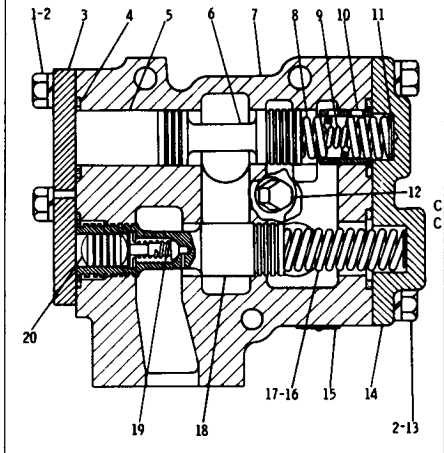

REF. NO.	PART NUMBER	DESCRIPTION	QTY
1	S1594	BOLT	4
2	3B4506	LOCKWASHER	7
3	2M1656	COVER	2

4	8M5254	SEAL	6
5	7M5814	SPACER	1
6	1K8362	SPOOL	1
7	3P362	HOUSING	1
8	8M8627	SPRING -------(outer)------	1
9	4M5912	SPRING -------(inner)------	1
10	9M2058	STOP	1
11	7M1397	SPACER--, 92 mm(.036 in.)	2
	5M3492	SPACER--, 26 mm(.010 in.)	2
		(Use as Required)	
C 12	9S4191	PLUG	3
C	3J1907	SEAL	3
13	S1591	BOLT	3
14	7M1345	COVER	1
15	9P1532	PLATE----(identification)----	1
	7B3028	SCREW	1
16	7M8499	SPRING	1
17	5M9622	SPACER--1.58mm(.062 in.)	1
	5M9623	SPACER--, 92 mm(.036 in.)	1
	5M9624	SPACER--, 26 mm(.010 in.)	1
		(Use as Required)	
18	3P2755	SPOOL ASSEM.	
		(Includes)	
	8M1013	RETAINER	1
	3D8317	RING	1
19	4M2381	SPRING	1
	1S2121	PLUNGER	1
20	2M7041	SLUG	1

C INDICATES CHANGE 166276

9P1553 RELIEF VALVE GROUP
Part of 9S2633 Torque Divider Group shown on Page 94

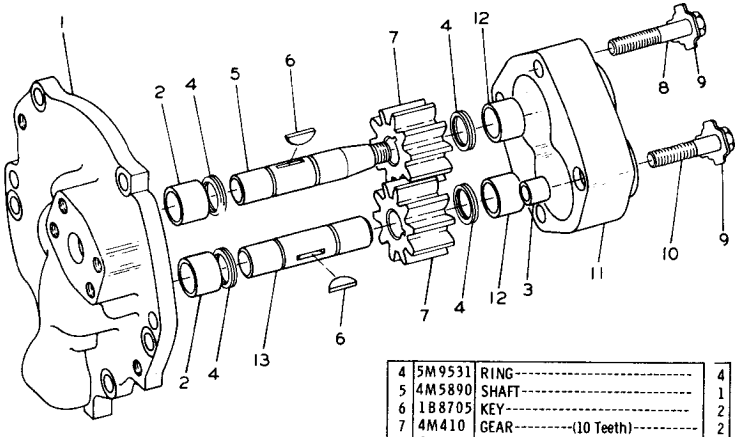

REF. NO.	PART NUMBER	DESCRIPTION	QTY.
1	5M5013	COVER ASSEM.	1
2	4H9705	BEARING	2
3	5M4987	DOWEL	2
4	5M9531	RING	4
5	4M5890	SHAFT	1
6	1B8705	KEY	2
7	4M410	GEAR-(10 Teeth)	2
8	S1571	BOLT-(1.75" long)	2
9	L364	LOCK	4
10	S1590	BOLT-(2" long)	2
11	4M5857	BODY ASSEM.	1
12	4H9705	BEARING	2
13	4M5889	SHAFT	1

112437

5M7864 SCAVENGE PUMP GROUP
Part of 9P2633 Torque Divider Group shown on Page 94

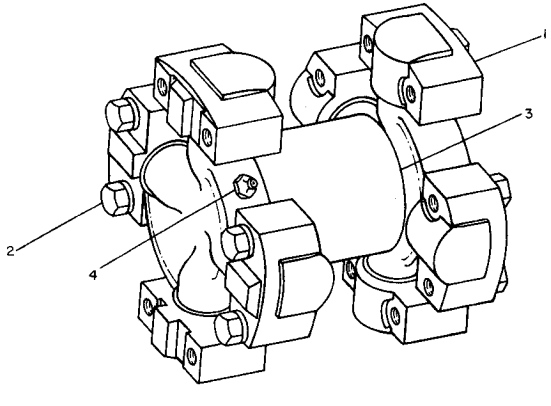

REF. NO.	PART NUMBER	DESCRIPTION	QTY.
1	1S9670	SPIDER AND BEARING ASSEM.	2
C 2	L478	BOLT	8
C 2	3V2431	WASHER	8
3	9M2036	PLATE	1
4	3H122	FITTING	2

C INDICATES CHANGE

230334

5M7882 UNIVERSAL JOINT ASSEMBLY
Part of 9P2633 Torque Divider Group shown on Page 94

7G4245 TRANSMISSION ARRANGEMENT

Transmission Serial No. 2HA1-Up

7G4244-Page 100,8M6350-Page 103,7G4491-Page 108,9M2041-Page 109

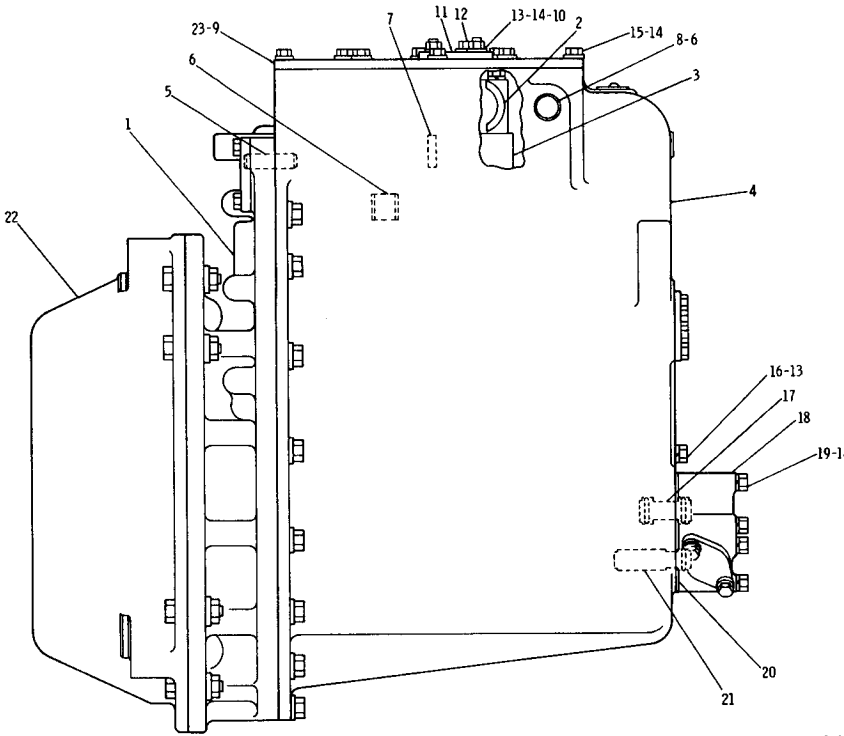

	REF. NO.	PART NUMBER	DESCRIPTION	QTY
	1	9M2041	GEAR GROUP	1
	2	8M6350	CONTROL GROUP	1
	3	7G4244	PLANETARY GROUP (Separate Illustration)	1
	4	1P4459	CASE ASSEM. (Includes)	1
	5	5M1932	STUD	3
C	6	8H8175	BEARING	4
	7	1M3833	DOWEL	2
	8	3B623	PLUG	1
	9	9M2053	COVER ASSEM. (Includes)	1
		2S6548	FITTING	1
	10	7M7794	STUD	4
	11	5M9653	COVER	1
		5M9654	GASKET	1
	12	9S4191	PLUG	1
		3J1907	SEAL	1
	13	1D4717	NUT	4
	14	3B4506	LOCKWASHER	28
	15	S1594	BOLT	14
	16	3B1915	BOLT	6
	17	2S486	SLEEVE	1
		8M4437	SEAL	2
	18	7G4491	VALVE GROUP (Separate Illustration)	1
	19	S1619	BOLT	4
	20	8M8621	GASKET	1
	21	2S4957	SLEEVE	1
		8M4437	SEAL	1
	22	2S6450	COVER GROUP (For Shipping and Storage-Includes Covers, Gaskets, and Hardware)	1
	23	9M2051	GASKET	1

C INDICATES CHANGE

238079

REF. NO.	PART NUMBER	DESCRIPTION	QTY
	8M8645	PLATE	1
1	7M8479	DOWEL-(Long)	1
	7M8480	DOWEL-(Short)	1
2	2M3974	RING	1
3	5M7936	OUTER RACE & ROLLER ASSEM.	1
	5M7934	INNER RACE	1
4	9M1997	BEARING	1
5	3P5078	SPACER	1
6	3S6931	RING	1
7	3S4388	WASHER	1
8	L139	BOLT	1
9	1S6543	SEAL	1
10	8M8628	FLANGE	1
11	1T43	BEARING	1
12	8M8619	CAGE	1
13	8F6230	SEAL	1
14	1K6986	RING	2
15	1M498	RING	2
16	5P8091	BOLT	3
17	2M849	WASHER	3
18	9M1502	CAGE	1
19	8M8677	CARRIER	1
20	9M1503	RING	2
21	1M8652	RING	1
22	8P6803	SHAFT ASSEM. (Includes)	1
	9M2001	DOWEL	1
23	5M7923	SHAFT	1
24	9M2004	BEARING	1

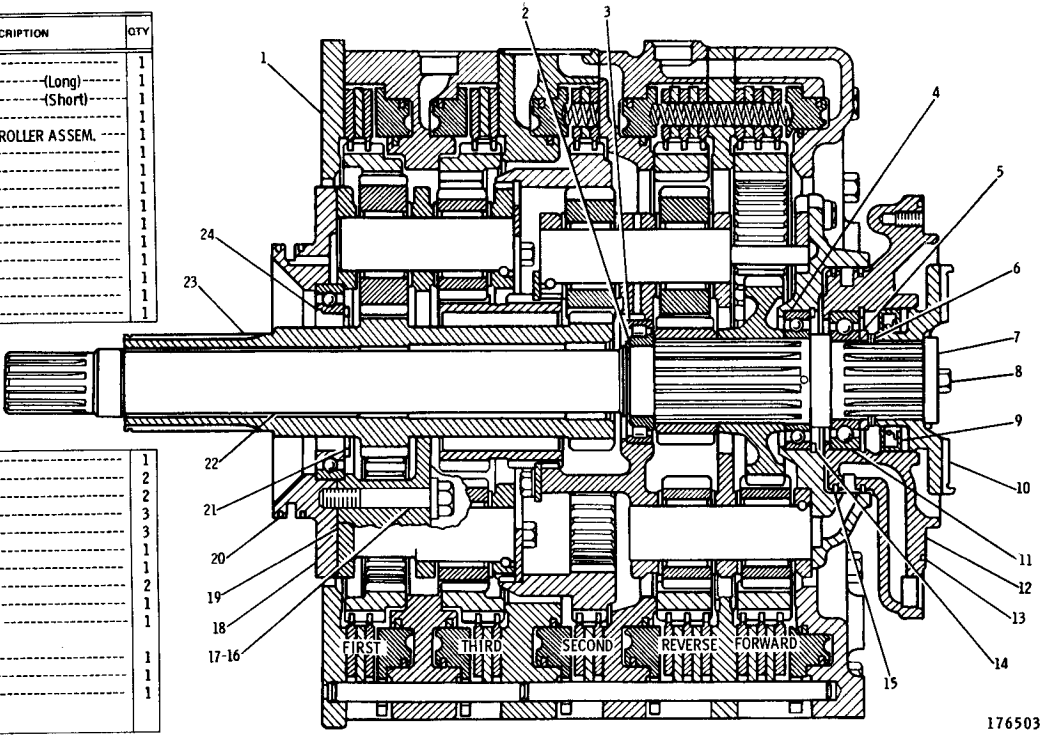

7G4244 PLANETARY TRANSMISSION GROUP — Part 1 of 3
Part of 7G4245 Transmission Arrangement shown on Page 99

7G4244 PLANETARY TRANSMISSION GROUP — Part 2 of 3
Part of 7G4245 Transmission Arrangement shown on Page 99

	REF. NO.	PART NUMBER	DESCRIPTION	QTY
	1	5M6126	BEARING	21
		7G894	WASHER	42
C	2	7G2513	GEAR-(26 teeth)	6
	3	9M2049	GEAR-(96 and 80 teeth)	2
C	4	8P8679	DISC. ASSEM.	6
	5	2P4472	PLATE	7
	6	8M8644	HOUSING	1
C	7	7G2476	GEAR-(20 teeth)	6
	8	4S8708	HOUSING	1
		7M8480	DOWEL-(short)	2
		7M8479	DOWEL-(long)	2
	9	4M9592	SPRING	30
	10	9P5379	HOUSING	1
C	11	7G2475	GEAR-(24 teeth)	3
	12	8M8646	PLATE ASSEM. (Includes)	1
		7M8479	DOWEL	2
		2D6642	BALL	2
	13	4M1678	SPRING	10
	14	9M2013	HOUSING ASSEM. (Includes)	1
		2D6642	BALL	2
	15	5M6211	SHAFT	3
	16	2D6642	BALL	3
	17	5D353	BOLT	6
		6H4208	LOCK	3
	18	5M6212	TUBE	3
	19	8M8623	GEAR-(40 teeth)	1
	20	4S8718	CAGE	1
	21	5M7900	BOLT	9
	22	2M849	WASHER	9
	23	5M6120	GEAR-(23 teeth)	1
	24	9M1501	PLATE	3
	25	5K9107	BOLT	15
	26	1S6527	PLATE	3
	27	8M8509	LOCK	3

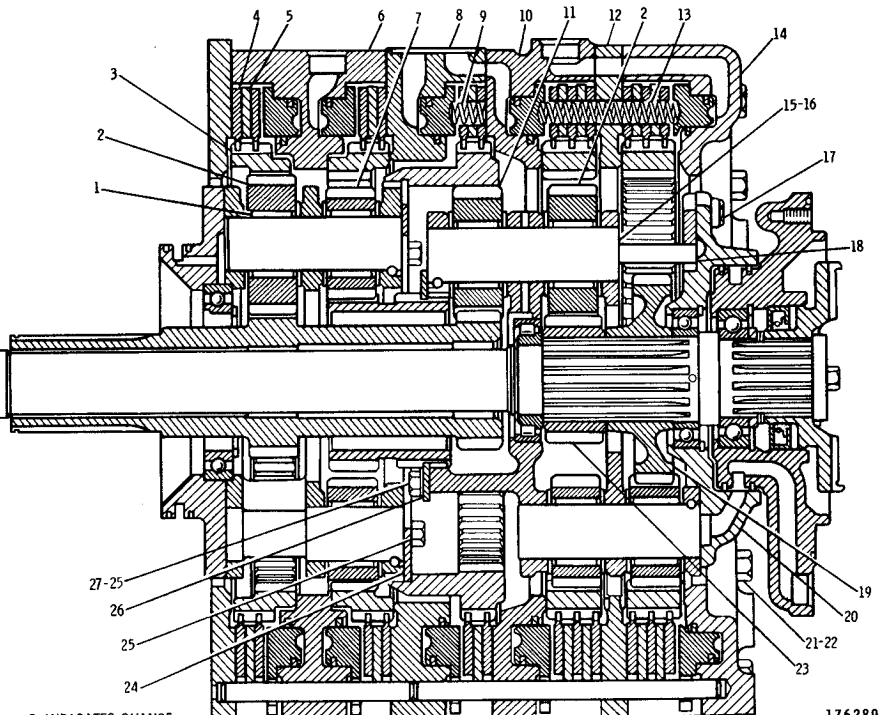

C INDICATES CHANGE

REF. NO.	PART NUMBER	DESCRIPTION	QTY
1	9M1995	GEAR----------(35 teeth)--------	1
2	5M6210	SHAFT----------	3
3	2D6642	BALL----------	9
● 4	7M1177	RING----------(Standard)--------	1
●	6P8267	RING - 0.39 mm(.015 in.) Oversize	1
●	9P2944	RING - 0.77 mm(.030 in.) Oversize	1
● 5	5M6132	RING----------(Standard)--------	4
●	6P8264	RING - 0.39 mm(.015 in.) Oversize	4
●	6P8258	RING - 0.77 mm(.030 in.) Oversize	4
6	8M8649	PISTON----------	1
7	9M1990	DOWEL----------	5
8	5M7841	GEAR----(96 and 80 teeth)---------	2
9	9P5254	DISC ASSEM.----------	6
10	9P5363	PISTON----------	1
C 11	7G2476	GEAR----------(20 teeth)--------	6
12	9M1500	SHAFT----------	3
13	5M7875	CARRIER----------	1
14	5M7869	GEAR-----(96 and 74 teeth)-------	1
15	8M8650	PISTON----------	3
16	4M1641	DOWEL----------	5
17	9M1996	SHAFT----------	3
● 18	5M6141	RING--------(Standard)----------	4
●	6P8266	RING - 0.39 mm(.015 in.) Oversize	4
●	9P2945	RING - 0.77 mm(.030 in.) Oversize	4
19	6K7917	BOLT----------	3
	2M706	LOCK----------	3

	9P5364	RING-------(Standard)----------	1
		- OR -	
C 20	3T2571	RING-------0.38 mm O.S. -------	1
		- OR -	
	3T2572	RING-------0.76 mm O.S. -------	1
	6V1720	PLATE------Serial Number)-------	1
	7B3028	SCREW----------	2
		(Mounted on Case Assem.)	

● NOT PART OF 7G4244 PLANETARY TRANSMISSION GROUP
▲ NOT SHOWN

C INDICATES CHANGE

181049

7G4244 PLANETARY TRANSMISSION GROUP — Part 3 of 3
Part of 7G4245 Transmission Arrangement shown on Page 99

8M6350 TRANSMISSION HYDRAULIC CONTROL GROUP
Part of 7G4245 Transmission Arrangement shown on Page 99
8P7791 Control and 1P6591 Valve parts are shown on Pages 106 and 108

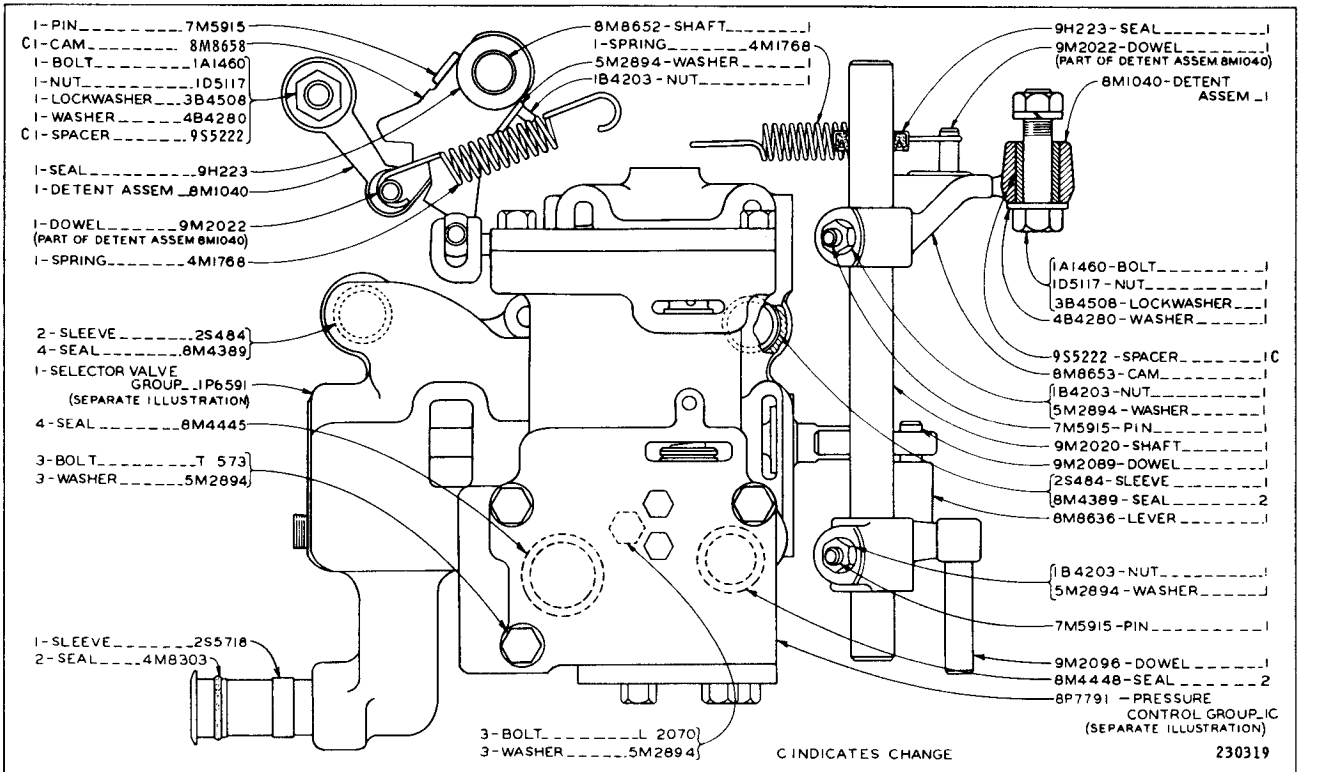

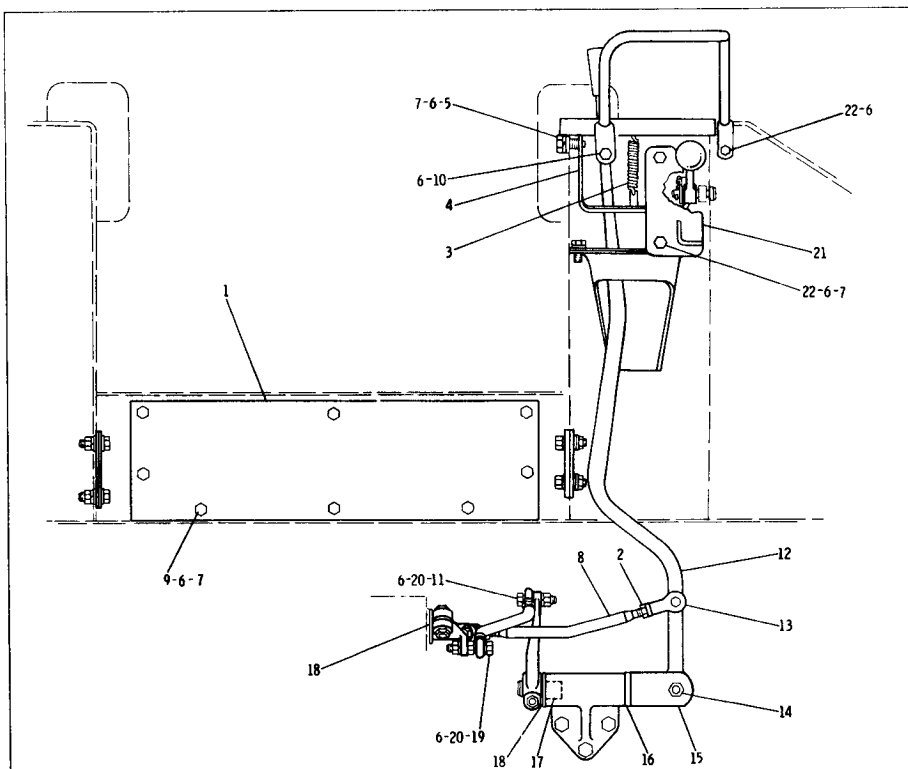

	REF. NO.	PART NUMBER	DESCRIPTION	QTY
C	1	8P3548	COVER	1
	2	5B9079	NUT	2
	3	5M9813	SPRING	1
	4	8P2272	LEVER ASSEM. (Includes)	1
		3R4762	PIN	1
	5	4D9483	SCREW	2
C	6	3B4506	LOCKWASHER	16
C	7	4B4278	WASHER	12
	8	8P2425	ROD	1
	9	S1594	BOLT	8
	10	1A2029	BOLT	1
	11	S1591	BOLT	1
	12	8P2422	LEVER ASSEM. (Includes)	1
		5H3895	BEARING	1
	13	4D4064	ROD END	2
	14	1A1460	BOLT	1
		2M7167	SPACER	1
		1K6872	LOCKNUT	1
	15	8P1876	SHAFT ASSEM.	1
	16	9S1385	SPACER	1
	17	7P4190	BEARING	2
	18	8B4037	WASHER	2
	19	4M496	BOLT	1
		4M497	NUT-----9,53 mm (.375 in.) thick	1
	20	1D4717	NUT-----8,34 mm (.328 in.) thick	2
C	21	9G6544	COVER ASSEM.	1
C	22	S509	BOLT	3

C INDICATES CHANGE 229688

8P4063 TRANSMISSION CONTROL GROUP — Part 1

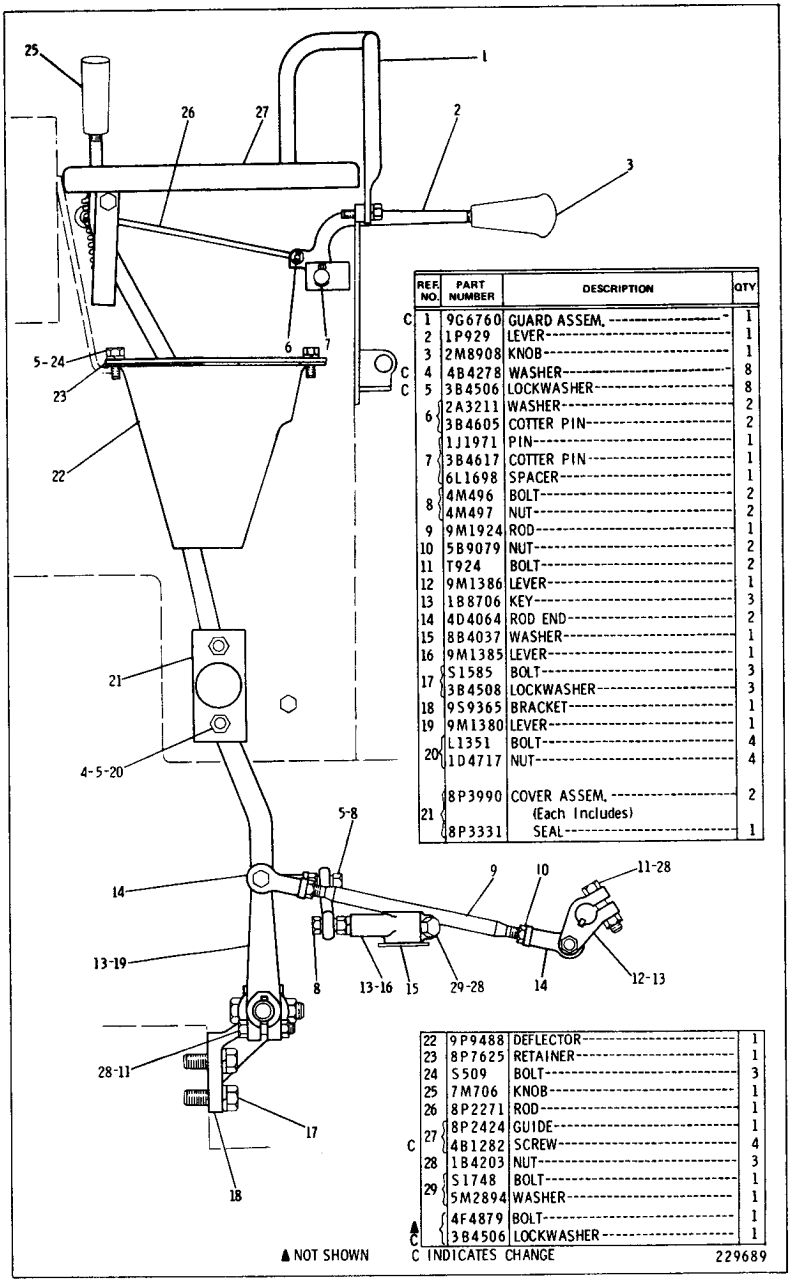

REF. NO.	PART NUMBER	DESCRIPTION	QTY
C 1	9G6760	GUARD ASSEM.	1
2	1P929	LEVER	1
3	2M8908	KNOB	1
4	4B4278	WASHER	8
C 5	3B4506	LOCKWASHER	8
6	2A3211	WASHER	2
	3B4605	COTTER PIN	2
7	1J1971	PIN	1
	3B4617	COTTER PIN	1
	6L1698	SPACER	1
8	4M496	BOLT	2
	4M497	NUT	2
9	9M1924	ROD	1
10	5B9079	NUT	2
11	T924	BOLT	2
12	9M1386	LEVER	1
13	1B8706	KEY	3
14	4D4064	ROD END	2
15	8B4037	WASHER	1
16	9M1385	LEVER	1
17	S1585	BOLT	3
	3B4508	LOCKWASHER	3
18	9S9365	BRACKET	1
19	9M1380	LEVER	1
20	L1351	BOLT	4
	1D4717	NUT	4
21	8P3990	COVER ASSEM. (Each Includes)	2
	8P3331	SEAL	1

22	9P9488	DEFLECTOR	1
23	8P7625	RETAINER	1
24	S509	BOLT	3
25	7M706	KNOB	1
26	8P2271	ROD	1
27	8P2424	GUIDE	1
C	4B1282	SCREW	4
28	1B4203	NUT	3
29	S1748	BOLT	1
	5M2894	WASHER	1
▲ C	4F4879	BOLT	1
	3B4506	LOCKWASHER	1

▲ NOT SHOWN C INDICATES CHANGE 229689

8P4063 TRANSMISSION CONTROL GROUP — Part 2

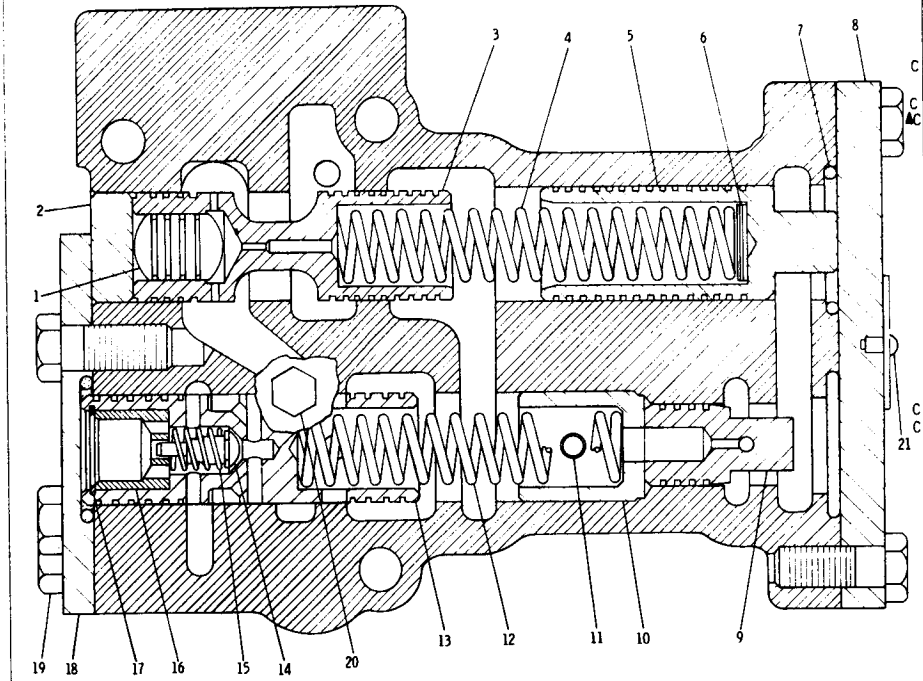

REF NO	PART NUMBER	DESCRIPTION	QTY
1	2M7041	SLUG	1
2	1P8612	STOP	1
3	9M2025	SPOOL	1
4	9P4213	SPRING	1
5	8S9198	PISTON	1
6	5M7915	SPACER--0.77 mm(.030 in.) thick	2
	5M7914	SPACER--0.26 mm(.010 in.) thick	1
7	8M5248	SEAL	3
8	9S2753	COVER	1
9	3P391	VALVE	1
10	1P9665	RETAINER	1
11	6D3036	DOWEL	2
12	8M8132	SPRING	1
13	6P4711	SPOOL ASSEM. (Includes)	1
14	6P8848	PLUNGER	1
15	9H2367	SPRING	1
16	6P4717	SLEEVE	1
17	2M8191	RING	1
18	1P8573	COVER	1
19	S1594	BOLT	7
20	5M6214	PLUG	2
21	9G9075	PLATE--(Identification)	1
	7B3028	SCREW	1
	SMHS6943	FORM (Installing Control Valves)	1

▲ USE AS REQUIRED

C INDICATES CHANGE

182860

8P7791 PRESSURE CONTROL VALVE GROUP
Part of 8M6350 Transmission Hydraulic Control Group shown on Page 103
For Field Replacement order 8P7790 shown on Page 107

8P7790 PRESSURE CONTROL VALVE GROUP — Field Installation

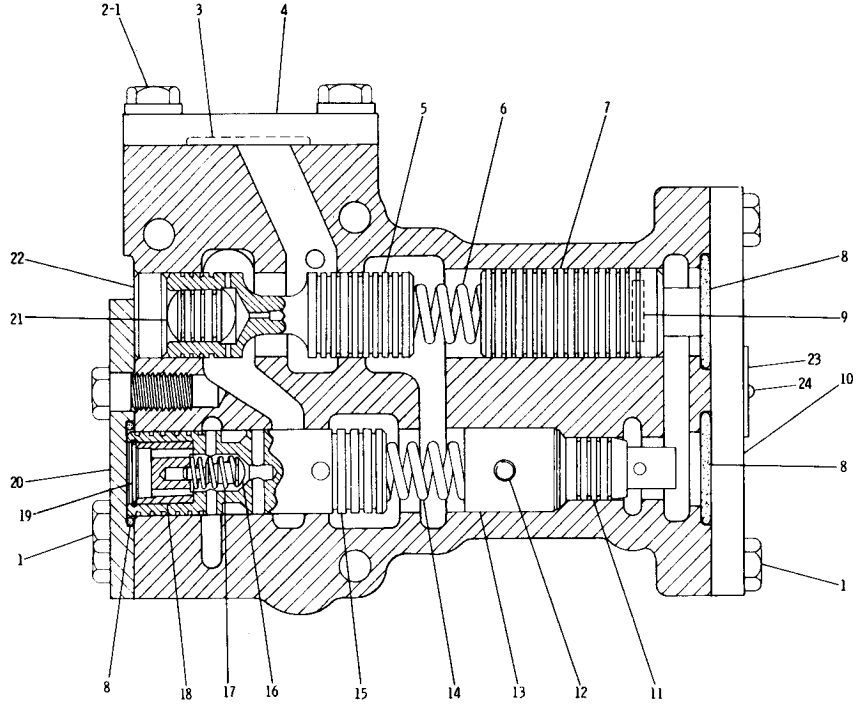

	REF NO	PART NUMBER	DESCRIPTION	QTY
	1	S1594	BOLT	9
	2	5M2894	WASHER	2
	3	8M4433	SEAL	1
	4	1P9666	COVER	1
	5	9M2025	SPOOL	1
	6	3P394	SPRING	1
	7	8S9198	PISTON	1
	8	8M5248	SEAL	3
C	9	5M7914	SPACER----. 254 mm(. 010 in.) thick	1
C		5M7915	SPACER----. 914 mm(. 036 in.) thick	2
	10	9S2753	COVER	1
	11	3P391	VALVE	1
	12	6D3036	DOWEL	2
	13	1P9665	RETAINER	1
	14	8M8132	SPRING	1
	15	6P4711	SPOOL ASSEM. (Includes)	1
	16	6P8848	PLUNGER	1
	17	9H2367	SPRING	1
	18	6P4717	SLEEVE	1
	19	2M8191	RING	1
	20	1P8573	COVER	1
	21	2M7041	SLUG	1
	22	1P8612	STOP	1
C	23	9G9076	PLATE	1
C	24	7B3028	DRIVE SCREW	1
▲		5M6214	PLUG	2
▲		4B9880	BALL	2
		SMHS6943	FORM (Installing Control Valves)	1

▲ NOT SHOWN C INDICATES CHANGE 304663

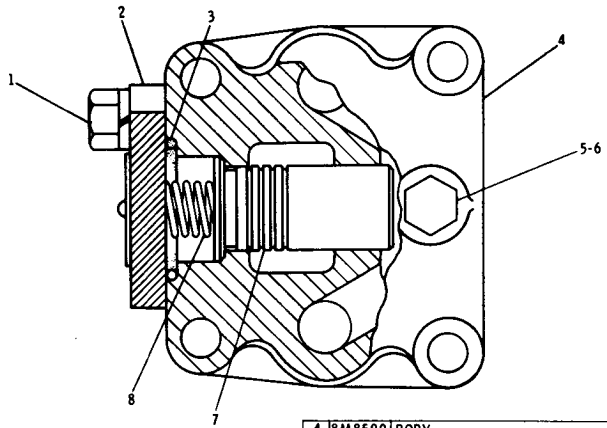

REF. NO.	PART NUMBER	DESCRIPTION	QTY
1	S1594	BOLT	2
	3B4506	LOCKWASHER	2
2	4M8815	COVER	1
3	8M5254	SEAL	1
4	8M8599	BODY	1
5	9S4191	PLUG	1
6	3J1907	SEAL	1
7	8M8598	SPOOL	1
8	2S5816	SPRING	1

218740

7G4491 RELIEF VALVE GROUP
Part of 7G4245 Transmission Arrangement shown on Page 99

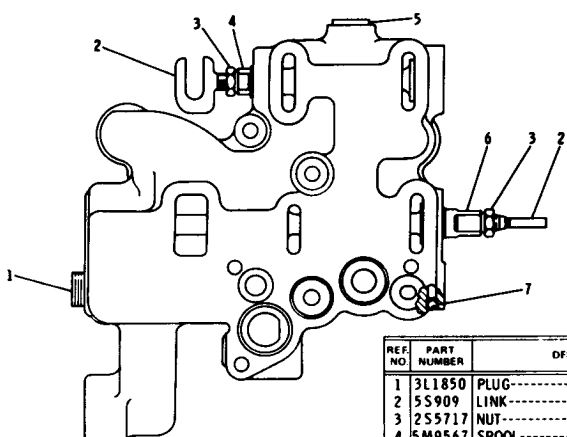

REF. NO.	PART NUMBER	DESCRIPTION	QTY
1	3L1850	PLUG	2
2	5S909	LINK	2
3	2S5717	NUT	2
4	5M9567	SPOOL	1
5	9S8005	PLUG	1
	3K360	SEAL	1
6	1P6596	SPOOL	1
7	2D6642	BALL	1

147455

1P6591 SELECTOR VALVE GROUP
Part of 8M6350 Transmission Hydraulic Control Group shown on Page 103

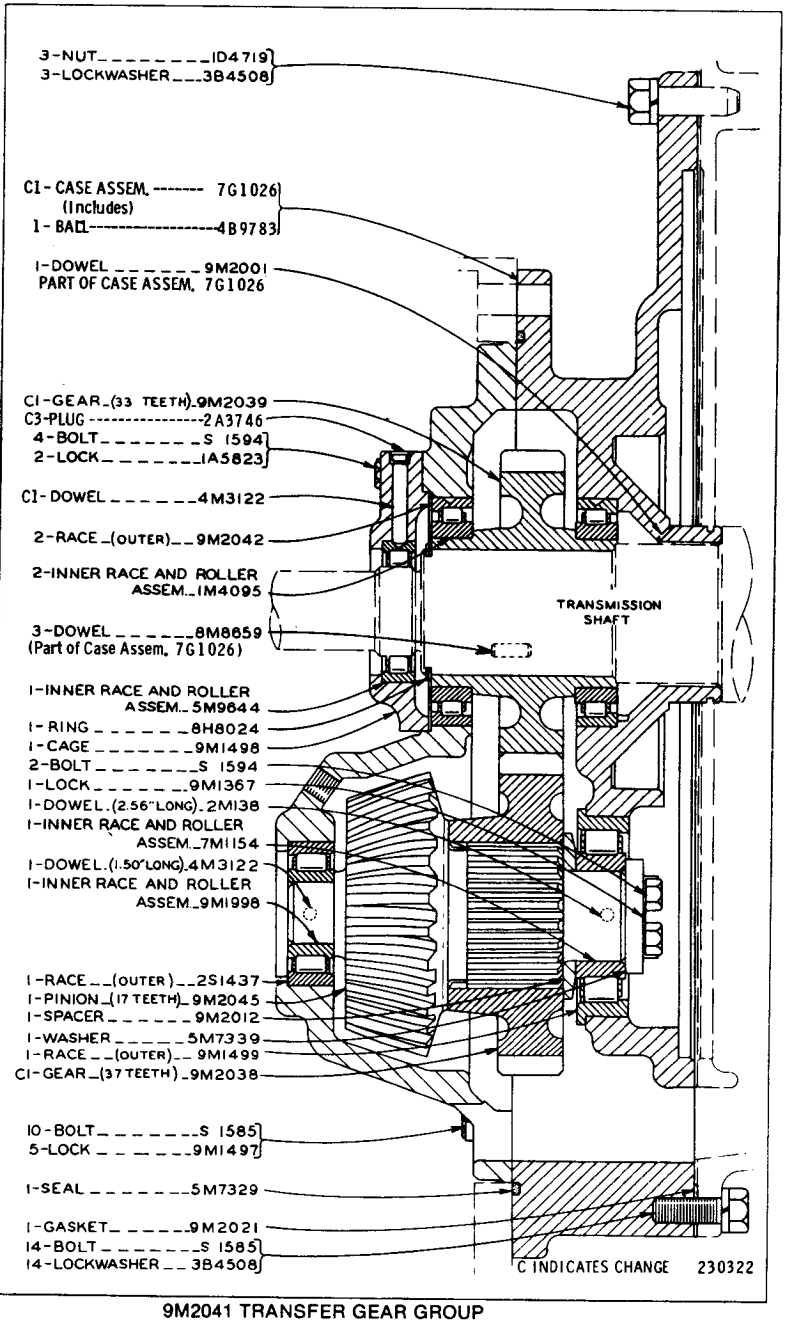

9M2041 TRANSFER GEAR GROUP

Part of 7G4245 Transmission Arrangement shown on Page 99

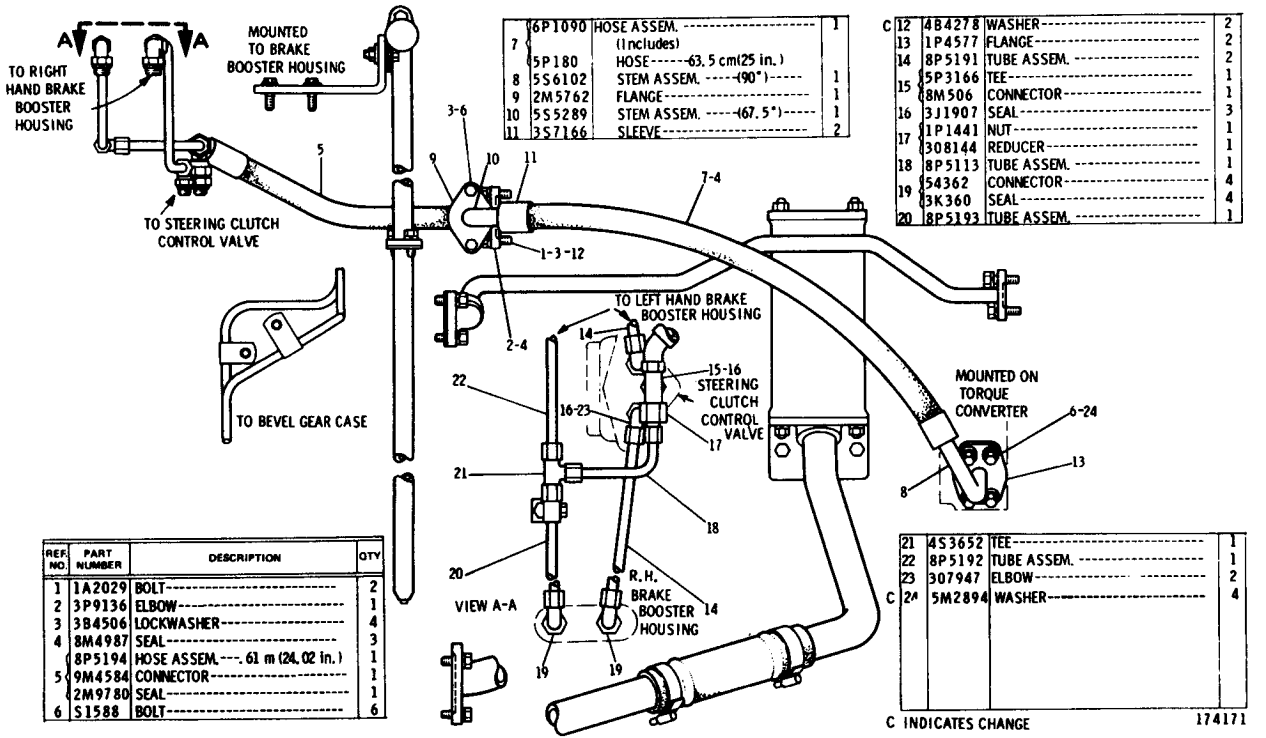

7	6P1090	HOSE ASSEM. (Includes)	1
	5P180	HOSE------63.5 cm(25 in.)	
8	5S6102	STEM ASSEM. -----(90°)-----	1
9	2M5762	FLANGE----------	1
10	5S5289	STEM ASSEM. -----(67.5°)-----	1
11	3S7166	SLEEVE----------	2

C 12	4B4278	WASHER----------	2
13	1P4577	FLANGE----------	2
14	8P5191	TUBE ASSEM. ----------	2
15	5P3166	TEE----------	1
	8M506	CONNECTOR----------	1
16	3J1907	SEAL----------	3
17	1P1441	NUT----------	1
	308144	REDUCER----------	1
18	8P5113	TUBE ASSEM. ----------	1
19	54362	CONNECTOR----------	4
	3K360	SEAL----------	4
20	8P5193	TUBE ASSEM. ----------	1

REF. NO.	PART NUMBER	DESCRIPTION	QTY
1	1A2029	BOLT----------	2
2	3P9136	ELBOW----------	1
3	3B4506	LOCKWASHER----------	4
4	8M4987	SEAL----------	3
	8P5194	HOSE ASSEM.---.61 m (24.02 in.)	1
5	9M4584	CONNECTOR----------	1
	2M9780	SEAL----------	1
6	S1588	BOLT----------	6

21	4S3652	TEE----------	1
22	8P5192	TUBE ASSEM. ----------	1
23	307947	ELBOW----------	2
C 24	5M2894	WASHER----------	4

C INDICATES CHANGE

174171

8P5223 POWER TRAIN OIL LINES GROUP — Right Hand Side View — Part 1 of 3

8P5223 POWER TRAIN OIL LINES GROUP — Right Hand Side View — Part 2 of 3
9M8669 Screen parts are shown on Page 113

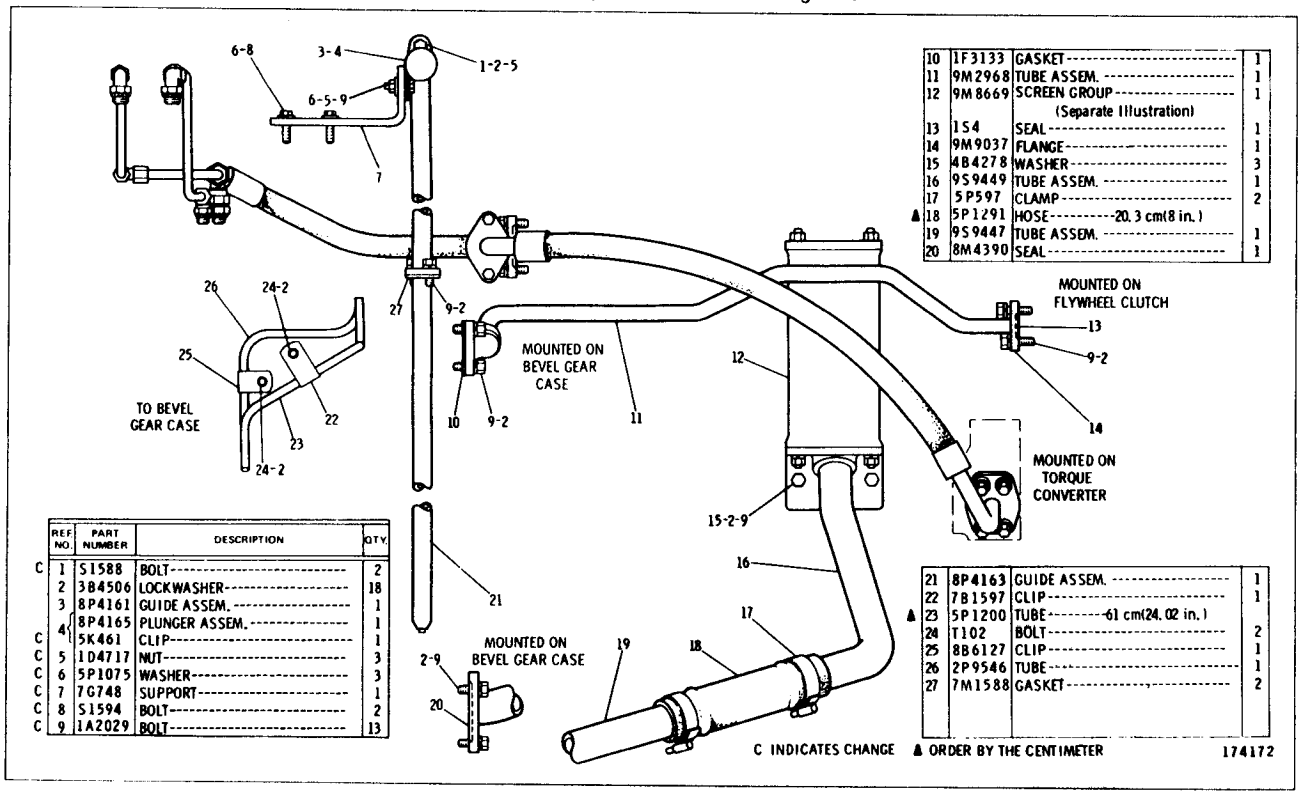

REF NO.	PART NUMBER	DESCRIPTION	QTY.
C 1	S1588	BOLT	2
2	3B4506	LOCKWASHER	18
3	8P4161	GUIDE ASSEM.	1
4	8P4165	PLUNGER ASSEM.	1
C	5K461	CLIP	1
C 5	1D4717	NUT	3
C 6	5P1075	WASHER	3
C 7	7G748	SUPPORT	1
C 8	S1594	BOLT	2
C 9	1A2029	BOLT	13
10	1F3133	GASKET	1
11	9M2968	TUBE ASSEM.	1
12	9M8669	SCREEN GROUP (Separate Illustration)	1
13	1S4	SEAL	1
14	9M9037	FLANGE	1
15	4B4278	WASHER	3
16	9S9449	TUBE ASSEM.	1
17	5P597	CLAMP	2
▲ 18	5P1291	HOSE — 20.3 cm (8 in.)	
19	9S9447	TUBE ASSEM.	1
20	8M4390	SEAL	1
21	8P4163	GUIDE ASSEM.	1
22	7B1597	CLIP	1
▲ 23	5P1200	TUBE — 61 cm (24.02 in.)	
24	T102	BOLT	2
25	8B6127	CLIP	1
26	2P9546	TUBE	1
27	7M1588	GASKET	2

C INDICATES CHANGE ▲ ORDER BY THE CENTIMETER 174172

	REF NO	PART NUMBER	DESCRIPTION	QTY
	1	1A2029	BOLT	9
C	2	3B4506	LOCKWASHER	20
C	3	4B4278	WASHER	4
	4	9M5962	ELBOW	1
	5	S1571	BOLT	1
C	6	S1588	BOLT	32
	7	8M4987	SEAL	6
	8	8M4436	SEAL	2
	9	5P597	CLAMP	2
▲	10	5P1291	HOSE---------20.3 cm(8 in.)	
	11	4D9517	CLIP	1
	12	3P8117	HOSE ASSEM.--------.71 m(28 in.)	1
	13	3P6816	PUMP GROUP (Separate Illustration)	1
C	14	1P1556	HOSE ASSEM.----.85 m(33.38 in.)	1
C	15	1P4577	FLANGE	10
C	16	7S1636	PLATE	1
	17	1D4717	NUT	6
	18	3S1741	FILTER GROUP (Separate Illustration)	1
C	19	9P3440	TUBE ASSEM.	1
	20	8S2957	BRACKET	1
	21	L2070	BOLT	2
	22	2K5232	SPACER	1
	23	6F127	SPACER	1
C	24	8F8882	SEAL	1
	25	307947	ELBOW	1
	26	336042	SEAL	2
	27	9S9393	TUBE ASSEM.	1
	28	307942	ELBOW	1
C	29	7G8032	PLATE	1
	30	5S803	HOSE ASSEM.------.69 m(27 in.)	1
	31	1P4576	FLANGE	4
		8M4988	SEAL	2
	32	5S786	HOSE ASSEM.------.26 m(10.3 in.)	1
	33	9M2740	TUBE ASSEM.	1
	34	S1619	BOLT	2
C	35	5M2894	WASHER	28

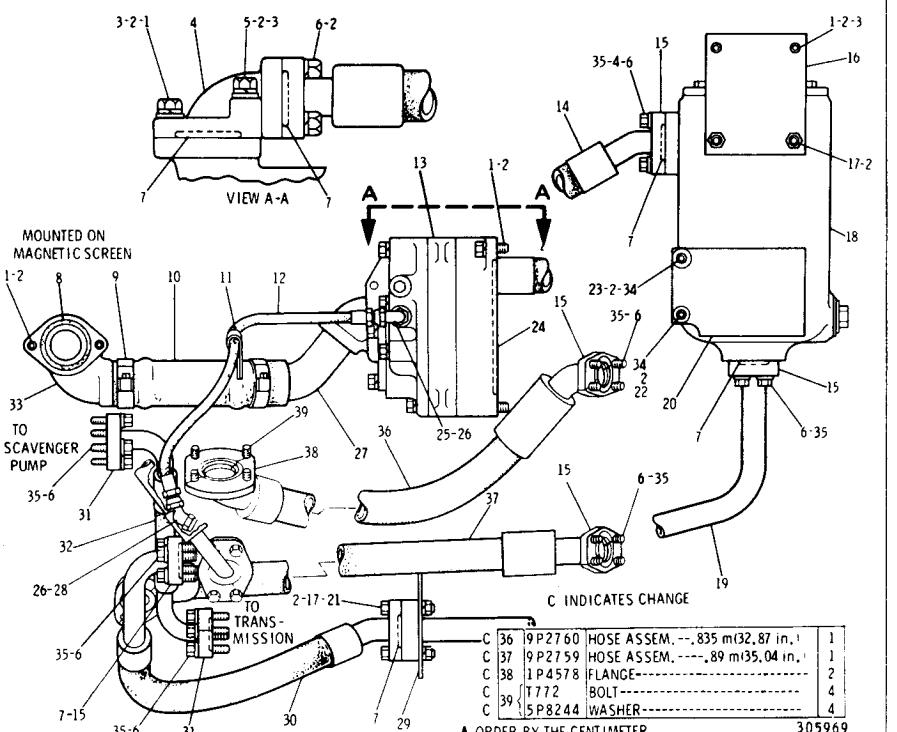

C	36	9P2760	HOSE ASSEM.--.835 m(32.87 in.)	1
C	37	9P2759	HOSE ASSEM.----.89 m(35.04 in.)	1
C	38	1P4578	FLANGE	2
C	39	T772	BOLT	4
C		5P8244	WASHER	4

8P5223 POWER TRAIN OIL LINES GROUP — Right Hand Side View — Part 3 of 3

3S1741 Filter and 3P6816 Pump Parts are shown on Pages 113 and 114

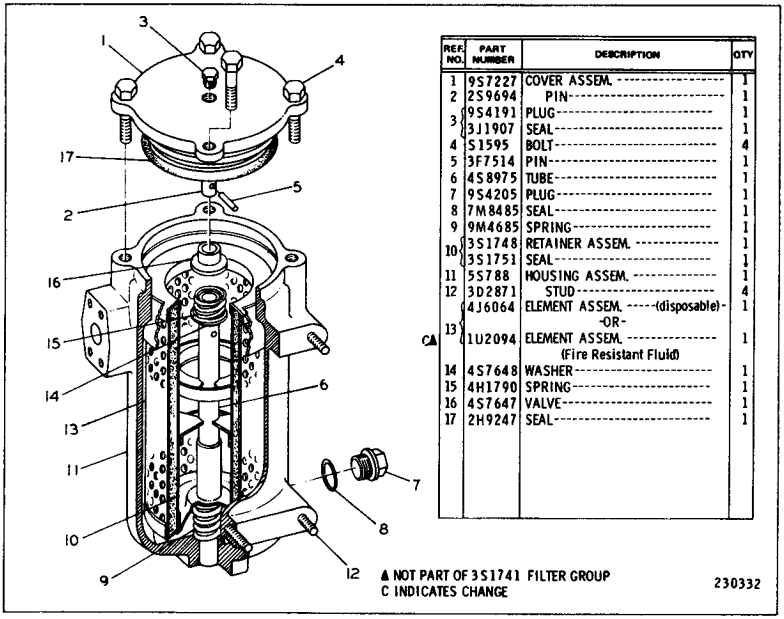

REF. NO.	PART NUMBER	DESCRIPTION	QTY
1	9S7227	COVER ASSEM.	1
2	2S9694	PIN	1
3	9S4191	PLUG	1
	3J1907	SEAL	1
4	S1595	BOLT	4
5	3F7514	PIN	1
6	4S8975	TUBE	1
7	9S4205	PLUG	1
8	7M8485	SEAL	1
9	9M4685	SPRING	1
10	3S1748	RETAINER ASSEM.	1
	3S1751	SEAL	1
11	5S788	HOUSING ASSEM.	1
12	3D2871	STUD	4
C▲ 13	4J6064	ELEMENT ASSEM. (disposable)	1
		-OR-	
	1U2094	ELEMENT ASSEM. (Fire Resistant Fluid)	1
14	4S7648	WASHER	1
15	4H1790	SPRING	1
16	4S7647	VALVE	1
17	2H9247	SEAL	1

▲ NOT PART OF 3S1741 FILTER GROUP
C INDICATES CHANGE

230332

3S1741 TRANSMISSION AND STEERING CLUTCH FILTER GROUP
Part of 8P5223 Power Train Oil Lines Group shown on Page 112

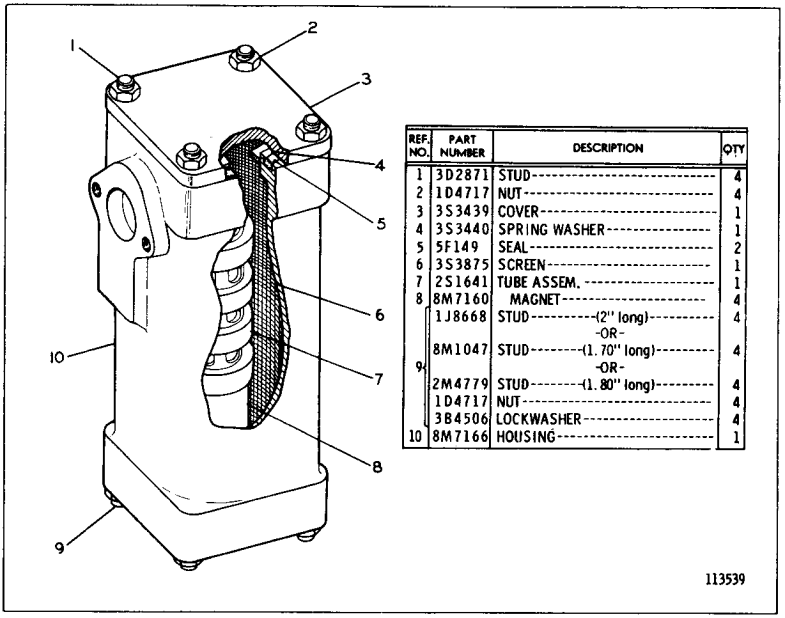

REF. NO.	PART NUMBER	DESCRIPTION	QTY
1	3D2871	STUD	4
2	1D4717	NUT	4
3	3S3439	COVER	1
4	3S3440	SPRING WASHER	1
5	5F149	SEAL	2
6	3S3875	SCREEN	1
7	2S1641	TUBE ASSEM.	1
8	8M7160	MAGNET	4
9	1J8668	STUD (2" long)	4
		-OR-	
	8M1047	STUD (1.70" long)	4
		-OR-	
	2M4779	STUD (1.80" long)	4
	1D4717	NUT	4
	3B4506	LOCKWASHER	4
10	8M7166	HOUSING	1

113539

9M8669 MAGNETIC SCREEN GROUP
Part of 8P5223 Power Train Oil Lines Group shown on Page 111

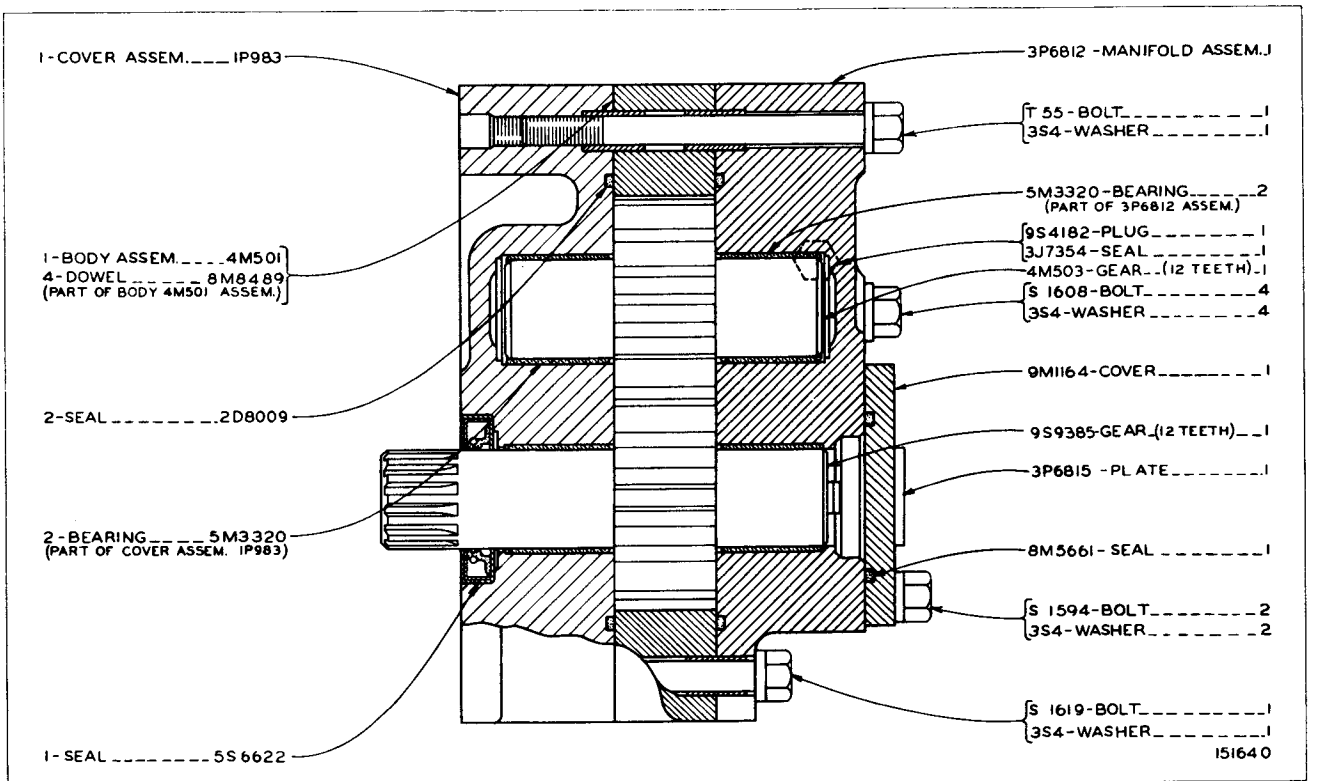

3P6816 GEAR PUMP GROUP
Part of 8P5223 Power Train Oil Lines Group shown on Page 112

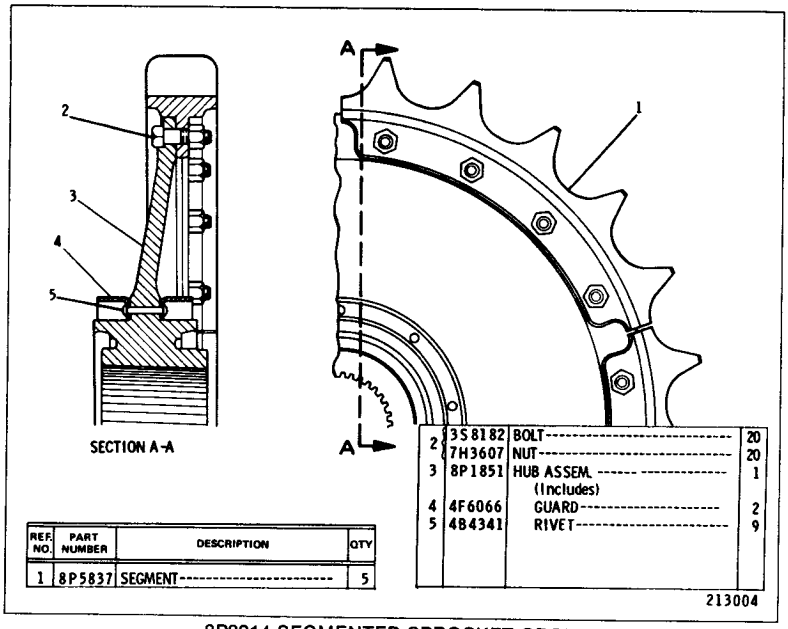

REF. NO.	PART NUMBER	DESCRIPTION	QTY
1	8P5837	SEGMENT	5

2	3S8182	BOLT	20
	7H3607	NUT	20
3	8P1851	HUB ASSEM. (Includes)	1
4	4F6066	GUARD	2
5	4B4341	RIVET	9

8P8914 SEGMENTED SPROCKET GROUP
Part of 5A7837 Final Drive Group shown on Page 117

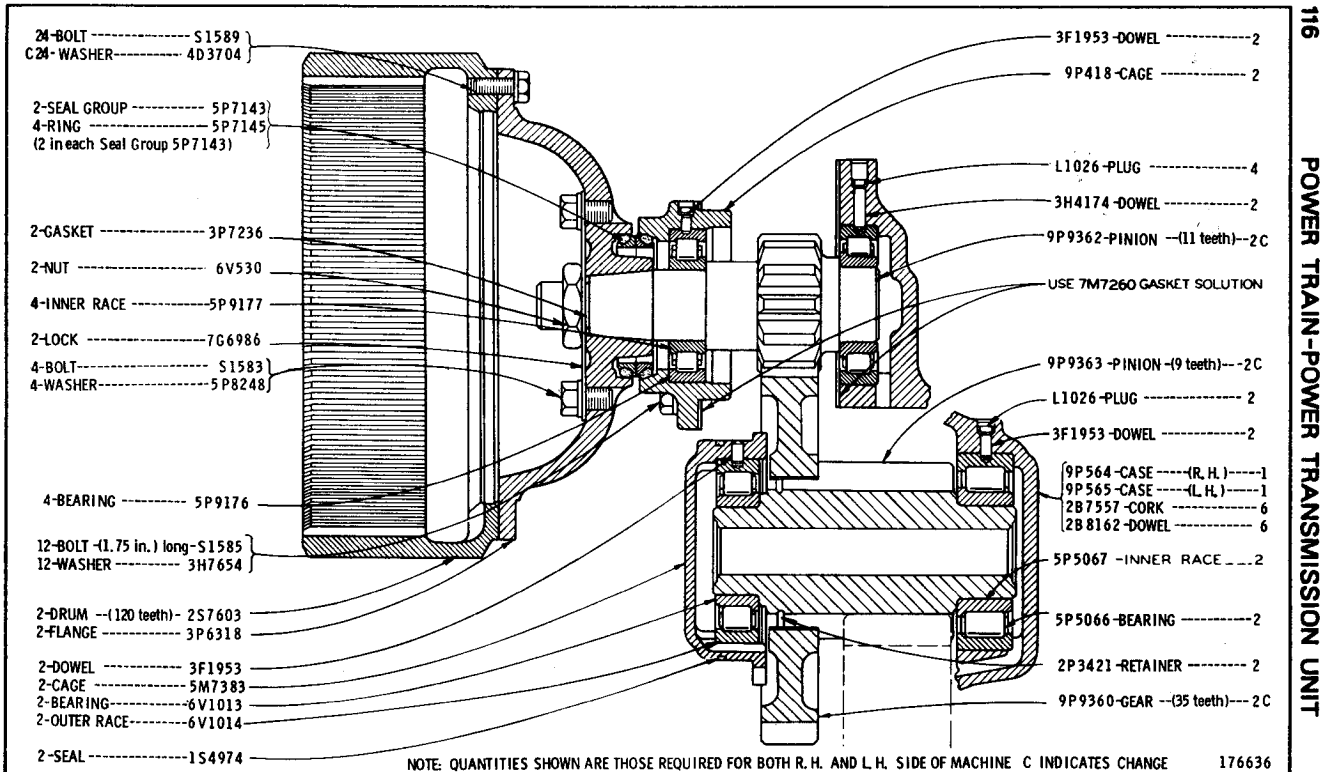

5A7837 FINAL DRIVE GROUP-UPPER HALF-PART 1 OF 2
Serial No. 6X1115 To 6X1339 Inclusive

5A7837 FINAL DRIVE GROUP-LOWER HALF-PART 2 OF 2

Serial No. 6X1115 To 6X1339 Inclusive

8P8914-Page 115

Note: Quantities Shown Are Those Required For Both R.H. & L.H. Sides

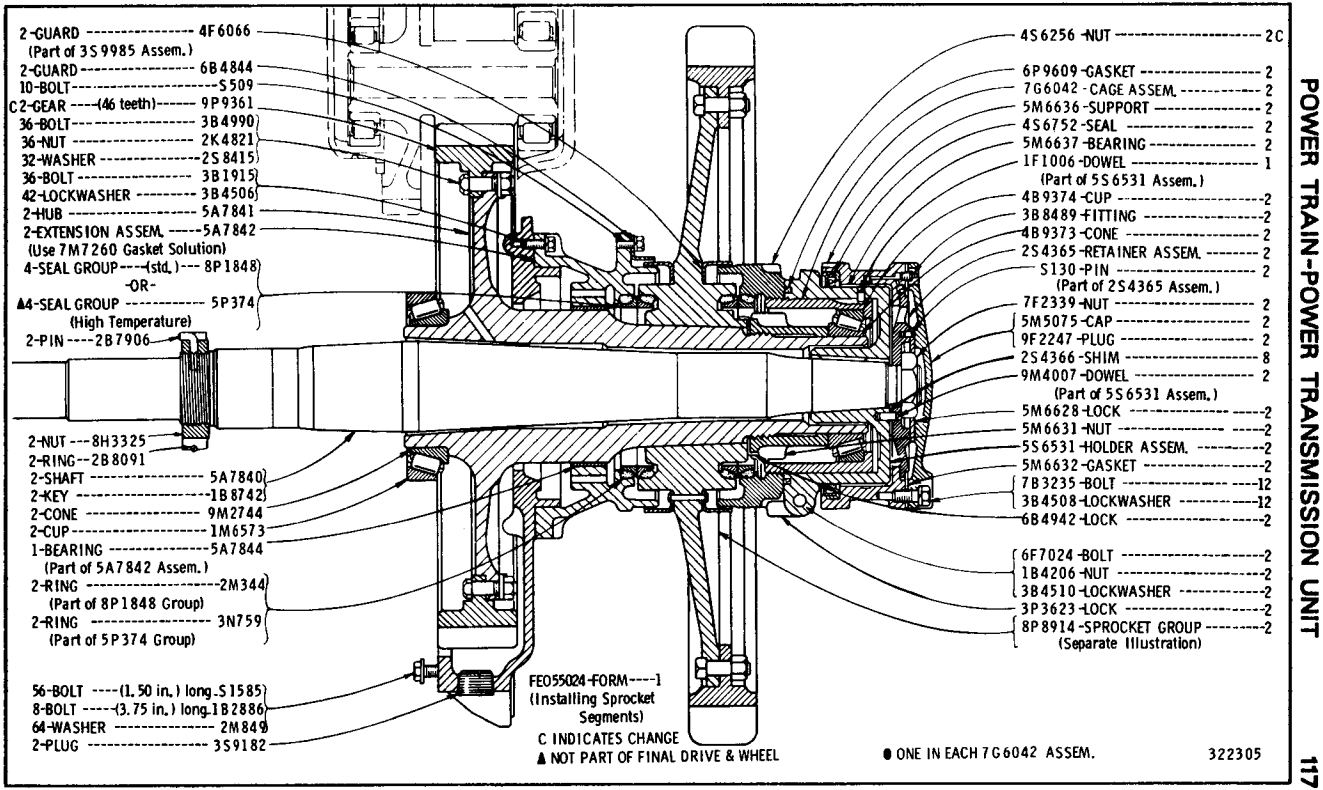

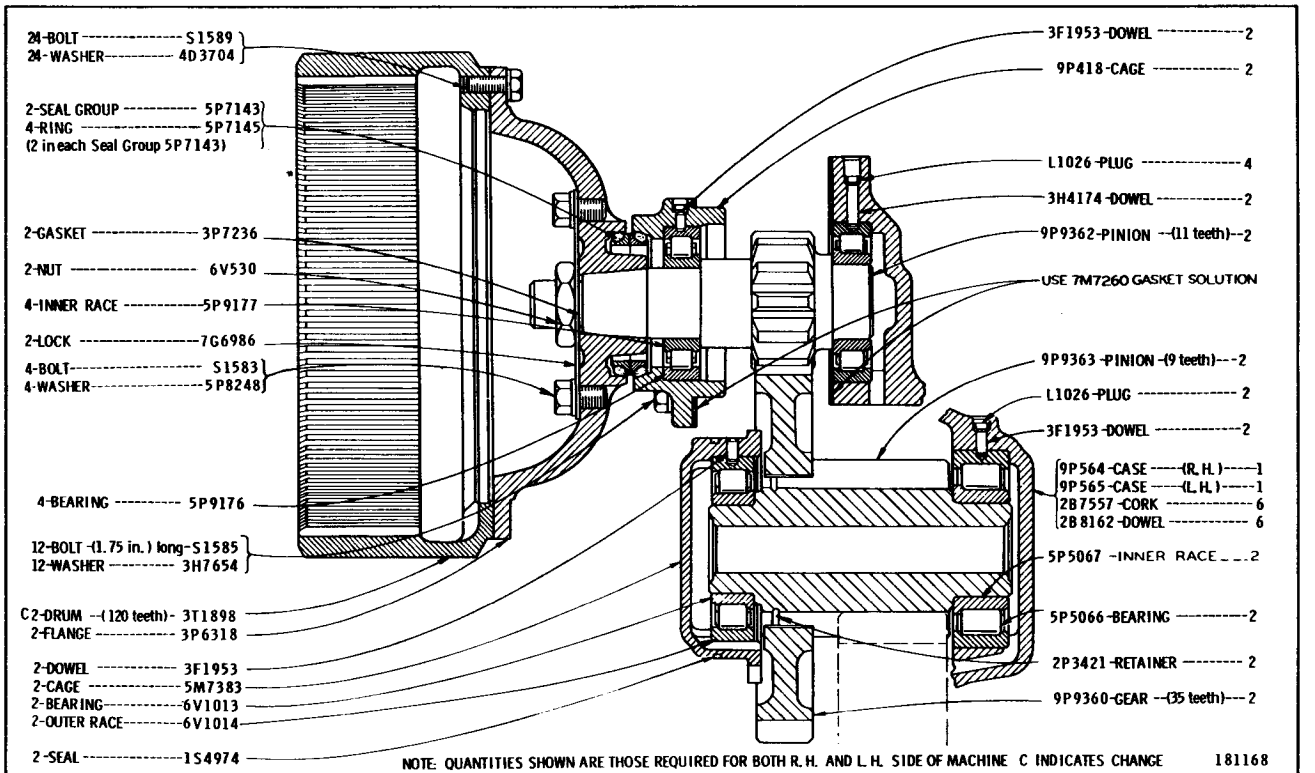

5A7837 FINAL DRIVE GROUP—Upper Half
Serial No. 6X1340—Up

5A7837 FINAL DRIVE GROUP-LOWER HALF

Serial No. 6X1340-Up

8P8914-Page 115

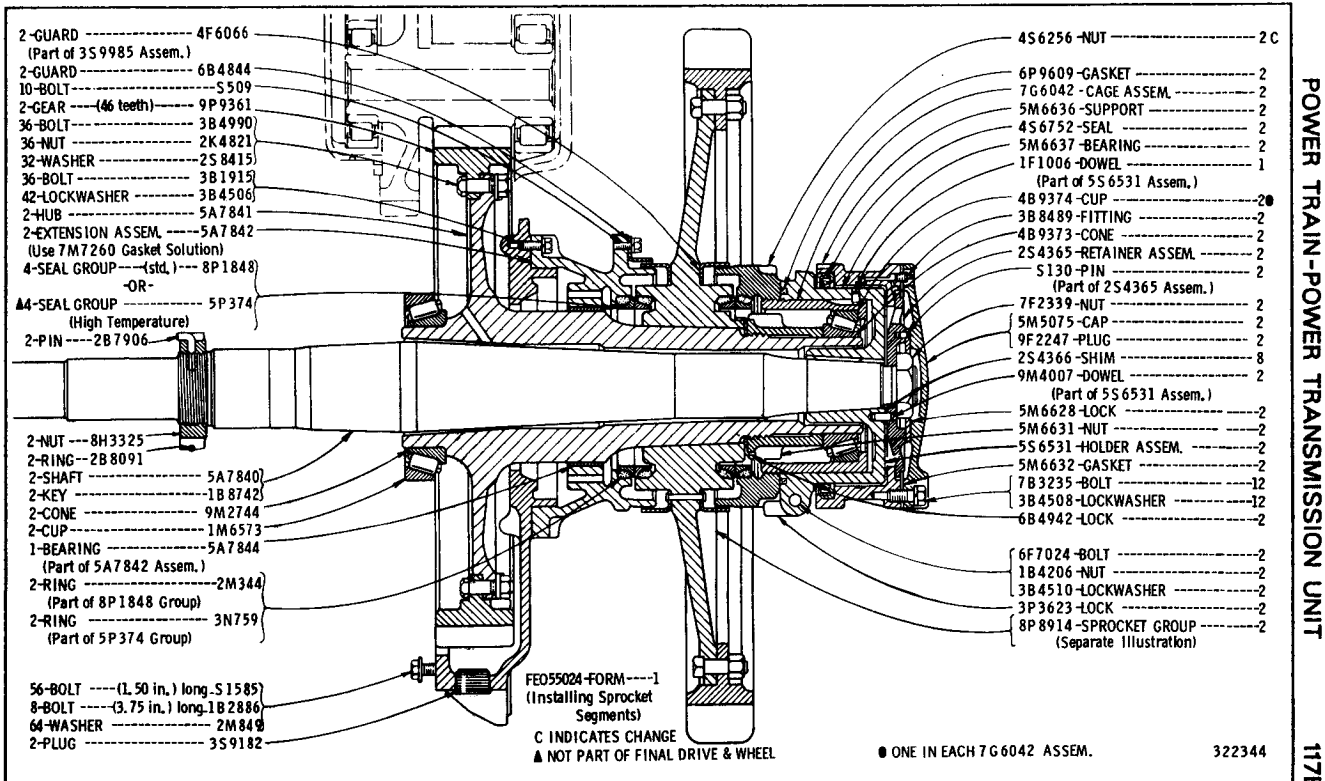

REF. NO.	PART NUMBER	DESCRIPTION	QTY
1	L829	HANDLE	2
2	8P3409	BRACKET ASSEM. (Each Includes)	2
	9F2978	NUT	2
3	1P2878	ROLLER	4
4	8P3410	ROD	2
5	9S1354	NUT	2
6	4K5563	END	2
C 7	7H9397	PIN	2
C	1H1200	PIN (spring)	2
8	9M5884	BUMPER	2
9	1M1341	ROD END	2
10	8P2971	ROD	2
11	5B9079	NUT	4
12	2K400	END	2
13	1B676	PIN	8
14	3B4615	COTTER PIN	12
15	3D8525	LEVER	1
16	1B8706	KEY	2
17	8M4990	SEAL	1
18	1S4	SEAL	2
19	S1588	BOLT	2
20	8P3205	LEVER	1
	8P3262	LEVER (R. H.)	1
21	8P3261	LEVER (L. H.)	1
	6K8088	BEARING	4
22	9S1328	WASHER	4
	8P9821	WASHER (spring)	4
23	1A8827	PIN	4
24	T102	BOLT	4
	3B4506	LOCKWASHER	4

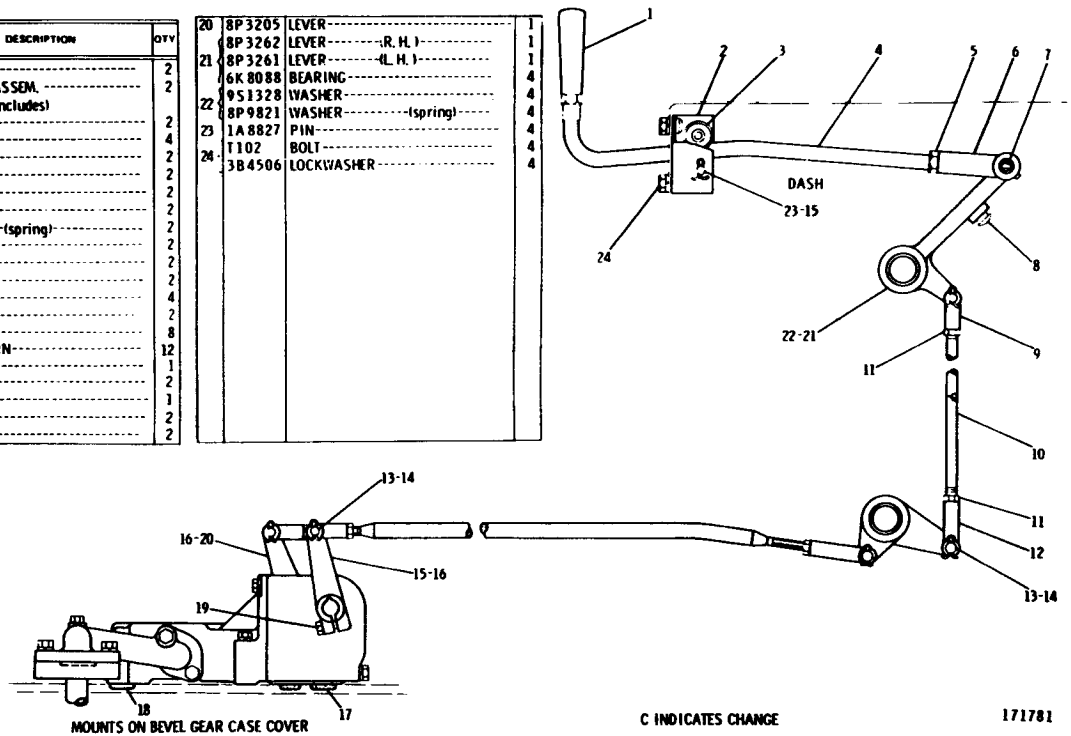

8P4366 STEERING CLUTCH CONTROL GROUP—Part 1
Serial No. 6X1115 to 6X1440 inclusive

8P4366 STEERING CLUTCH CONTROL GROUP—Part 2
Serial No. 6X1115 to 6X1440 inclusive
8P5199 Valve parts are shown on Page 120

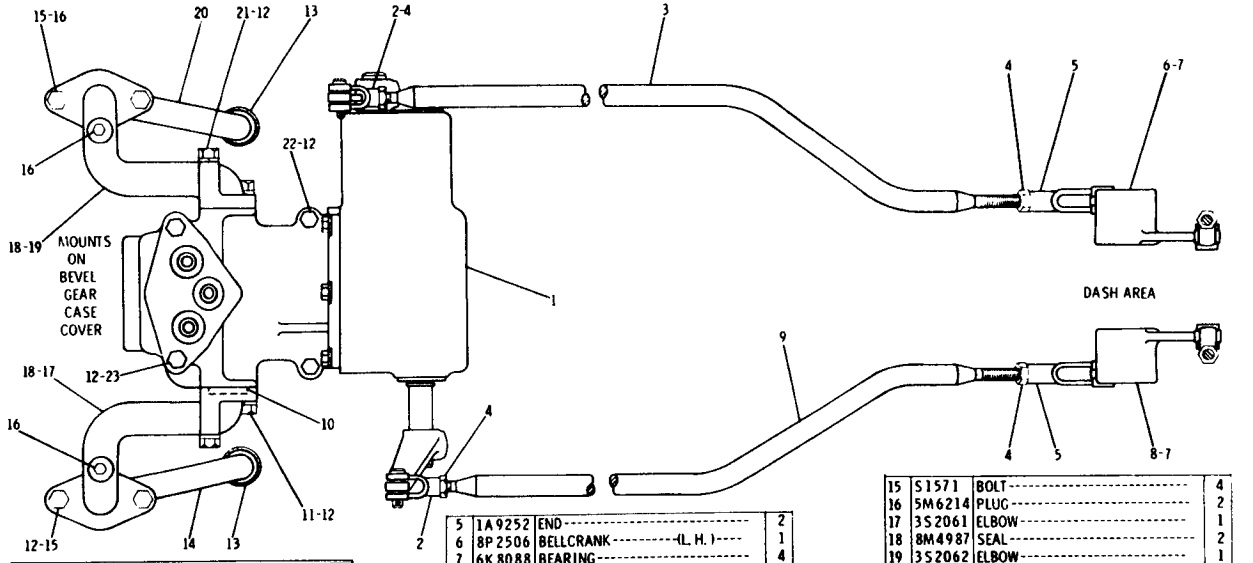

REF NO	PART NUMBER	DESCRIPTION	QTY
1	8P5199	VALVE GROUP (Separate Illustration)	1
2	1M1341	END	2
3	8P2519	ROD	1
4	5B9079	NUT	4
5	1A9252	END (L. H.)	2
6	8P2506	BELLCRANK (L. H.)	1
7	6K8088	BEARING	4
8	8P2505	BELLCRANK (R. H.)	1
9	8P2517	ROD	1
C 10	8M4445	SEAL	2
11	1A2029	BOLT	2
C 12	3B4506	LOCKWASHER	12
13	8M4446	SEAL	2
14	2S4301	TUBE ASSEM.	1
15	S1571	BOLT	4
16	5M6214	PLUG	2
17	3S2061	ELBOW	1
18	8M4987	SEAL	2
19	3S2062	ELBOW	1
20	2S4302	TUBE ASSEM.	1
21	L2070	BOLT	2
22	L1143	BOLT	2
C 23	L1352	BOLT	2

C INDICATES CHANGE

166498

NOTE	REF NO	PART NUMBER	QTY	DESCRIPTION
	1	L829	2	HANDLE
	2	8P3409	2	BRACKET ASSEM. (EACH INCLUDES)
		9F2978	2	NUT
	3	1P2878	4	ROLLER
	4	8P3410	2	ROD
	5	9S1354	2	NUT
	6	4K5563	2	END
	7	7H9397	2	PIN
		1H1200	2	PIN (SPRING)
	8	9M5884	2	BUMPER
	9	1M1341	2	ROD END
	10	8P2971	2	ROD
	11	5B9079	4	NUT
	12	2K400	2	END
	13	1B676	8	PIN
C	14	3B4615	12	COTTER PIN
C	15	7G9990	1	LEVER
	16	S1591	1	BOLT
	17	8M4990	1	SEAL
	18	1S4	2	SEAL
C	19	S1588	1	BOLT

C	20	5H6799	1	LEVER
	21	8P3262	1	LEVER (R.H.)
		8P3261	1	LEVER (L.H.)
		6K8088	4	BEARING
	22	9S1328	4	WASHER
		8P9821	4	WASHER (SPRING)
	23	1A8827	4	PIN
	24	T102	4	BOLT
		3B4506	4	LOCKWASHER
C	25	1D4717	1	NUT

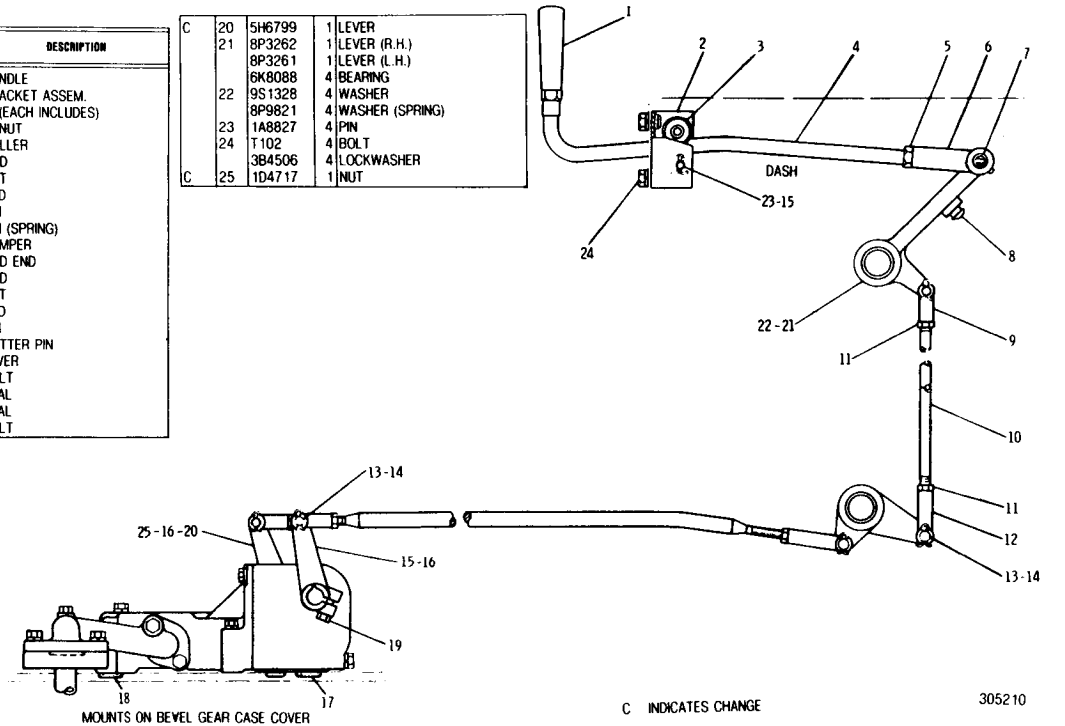

8P4366 STEERING CLUTCH CONTROL GROUP—Part 1
Serial No. 6X1441—Up

8P4366 STEERING CLUTCH CONTROL GROUP—Part 2
Serial No. 6X1441—Up
3T8203 Valve parts are shown on Page 120A

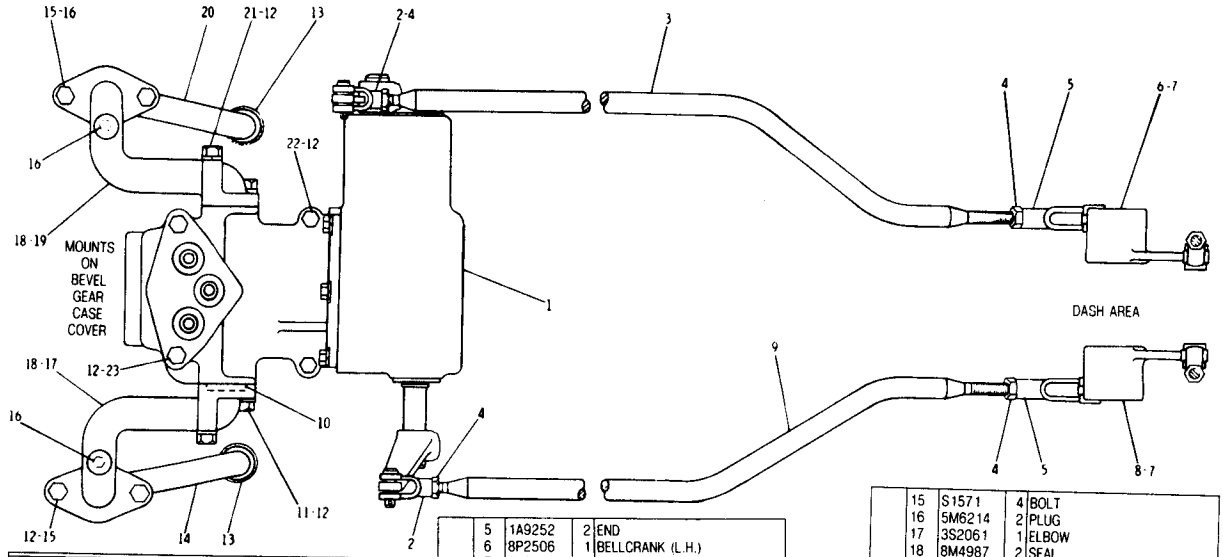

NOTE	REF NO	PART NUMBER	QTY	DESCRIPTION
CY	1	3T8203	1	VALVE GROUP
	2	1M1341	2	END
	3	8P2519	1	ROD
	4	5B9079	4	NUT
	5	1A9252	2	END
	6	8P2506	1	BELLCRANK (L.H.)
	7	6K8088	4	BEARINC
	8	8P2505	1	BELLCRANK (R.H.)
	9	8P2517	1	ROD
	10	8M4445	2	SEAL
	11	1A2029	2	BOLT
	12	3B4506	12	LOCKWASHER
	13	8M4446	2	SEAL
	14	2S4301	1	TUBE ASSEM.
	15	S1571	4	BOLT
	16	5M6214	2	PLUG
	17	3S2061	1	ELBOW
	18	8M4987	2	SEAL
	19	3S2062	1	ELBOW
	20	2S4302	1	TUBE ASSEM.
	21	L2070	2	BOLT
	22	L1143	2	BOLT
	23	L1352	2	BOLT

Y SEPARATE ILLUSTRATION

C INDICATES CHANGE

305211

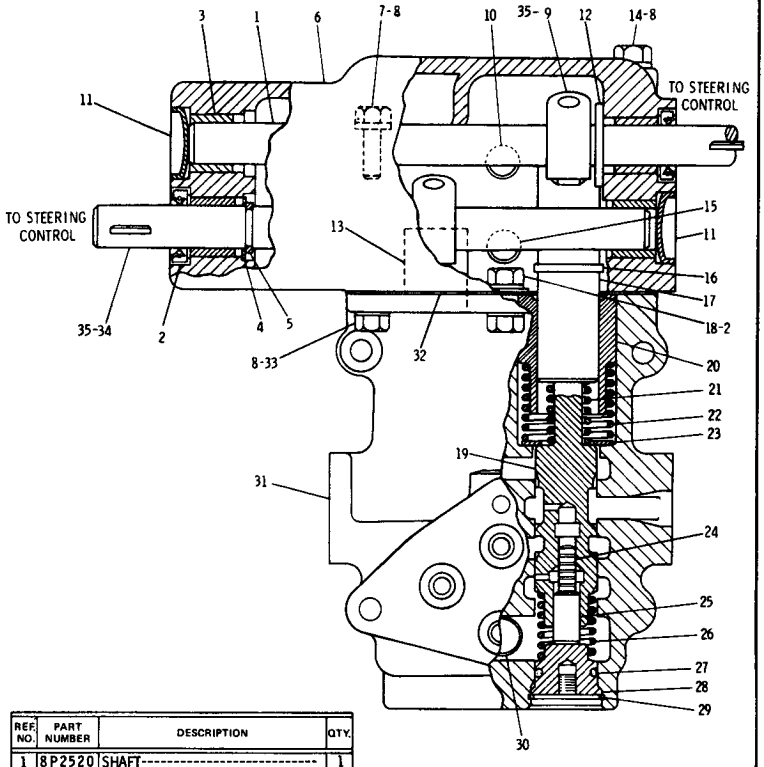

REF. NO.	PART NUMBER	DESCRIPTION	QTY.
1	8P2520	SHAFT	1
2	9H223	SEAL	2
3	8H8175	BEARING	4
4	3B9363	WASHER	1
5	3S7005	RING	1
6	8P8043	HOUSING	1
7	T65	BOLT	1
C 8	5M2894	WASHER	6
9	2P4045	LEVER	2
	S1588	BOLT	2
10	2S8413	STANDPIPE	1
11	3S8313	PLUG	2
12	4B4283	WASHER	1
13	8S1016	PLUNGER	1
14	1A5183	BOLT	1
15	8S5716	STANDPIPE	1
16	1H4148	RING	1
17	8S1015	PLUNGER	1
18	S509	BOLT	1
	3K925	WASHER	1
C	3P3774	VALVE ASSEM.	2
19	3K9042	RING	2
	L1365	WASHER	2
20	8S1043	BUSHING	2
21	5J4698	SPRING (inner)	2
22	8S5753	SPRING (outer)	2
23	2H1730	WASHER	2
24	3P3716	SLUG	2
25	3P3717	PISTON	2
26	2S8398	SPRING	2
27	8M4445	SEAL	2
28	2S8399	PLUG	2
29	8H1037	RING	2
30	2S8412	STANDPIPE	1
31	6P968	HOUSING	1
32	2S8414	GASKET	1
33	S1594	BOLT	3
34	8P3301	SHAFT	1
C 35	1B8706	KEY	4

C INDICATES CHANGE 182856

8P5199 CONTROL VALVE GROUP
Serial No. 6X1115 to 6X1440 inclusive
Part of 8P4366 Steering Clutch Control Group shown on Page 119

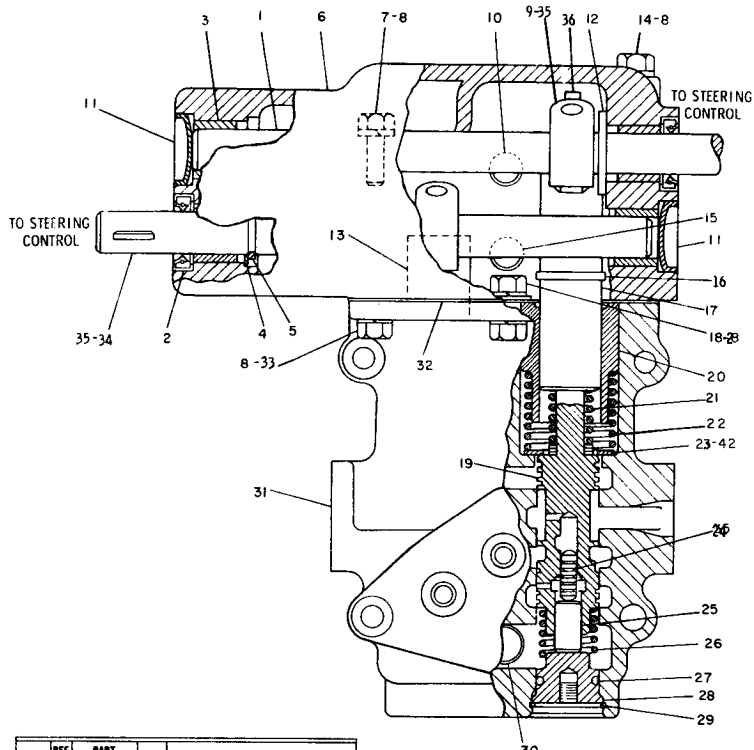

NOTE	REF NO	PART NUMBER	QTY	DESCRIPTION
	1	8P2520	1	SHAFT
	2	9H223	2	SEAL
	3	8H8175	4	BEARING
	4	3B9363	1	WASHER
	5	3S7005	1	RING
	6	8P8043	1	HOUSING
	7	T65	1	BOLT
C	8	5M2894	6	WASHER
C	9	2S8396	2	LEVER
		S1588	2	BOLT
	10	2S8413	1	STANDPIPE
	11	3S8313	2	PLUG
	12	4B4283	1	WASHER
	13	8S1016	1	PLUNGER
	14	1A5183	1	BOLT
	15	8S5716	1	STANDPIPE
	16	1H4148	1	RING
	17	8S1015	1	PLUNGER
	18	S509	1	BOLT
		3K925	1	WASHER
C	19	9P8197	2	VALVE
	20	8S1043	2	BUSHING
	21	5J4698	2	SPRING (INNER)
	22	8S5753	2	SPRING (OUTER)
C	23	3T9981	2	WASHER
	24	3P3716	2	SLUG
	25	3P3717	2	PISTON
	26	2S8398	2	SPRING
	27	8M4445	2	SEAL
	28	2S8399	2	PLUG
	29	8H1037	2	RING
	30	2S8412	1	STANDPIPE
	31	6P968	1	HOUSING
	32	2S8414	1	GASKET
	33	S1594	3	BOLT
	34	8P3301	1	SHAFT
C	35	1B8706	4	KEY
	36	2S8411	2	ROLLER
C		3B4615	2	COTTER PIN
		1B676	2	PIN

C INDICATES CHANGE

315440

3T8203 CONTROL VALVE GROUP
Serial No. 6X1441-Up
Part Of 8P4366 Steering Clutch Control

5M7745 STEERING CLUTCH GROUP
Serial No. 6X1115 to 6X1339 inclusive

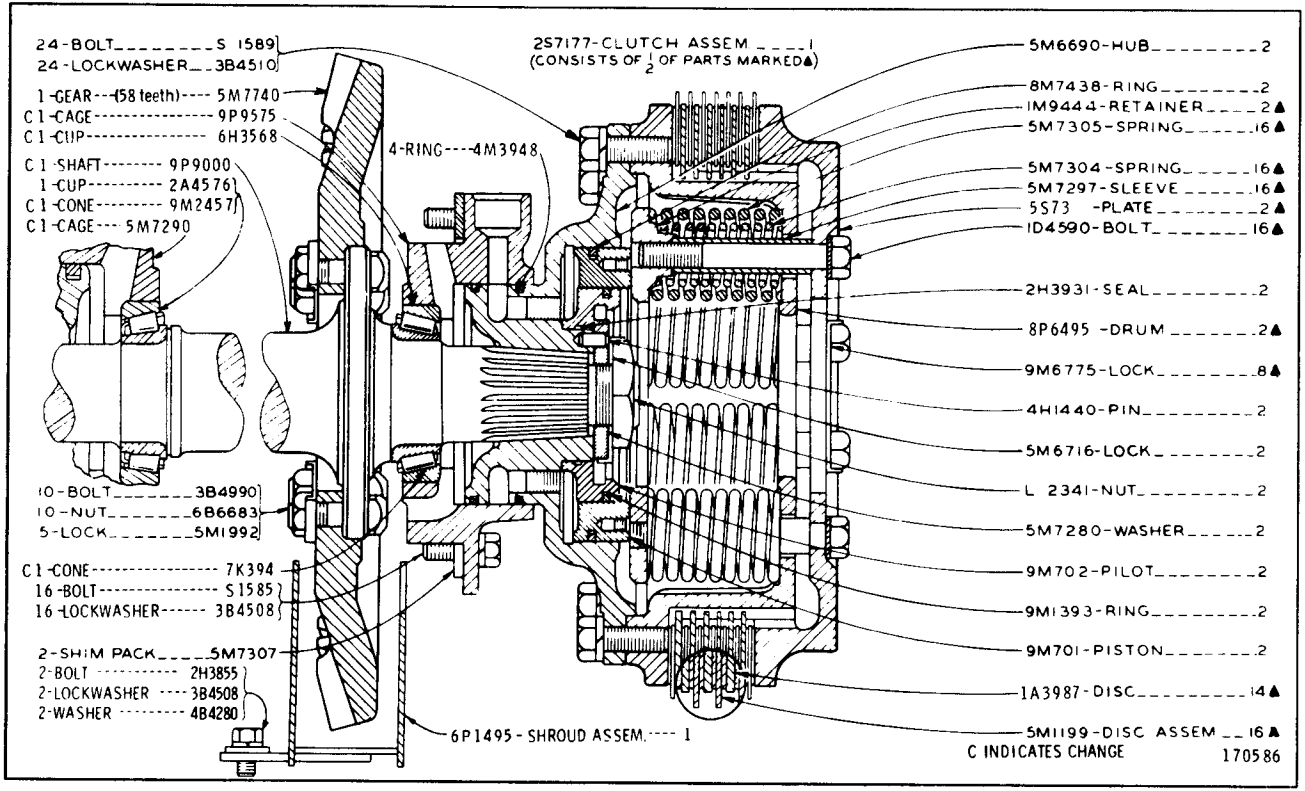

5M7745 STEERING CLUTCH GROUP
Serial No. 6X1340—Up

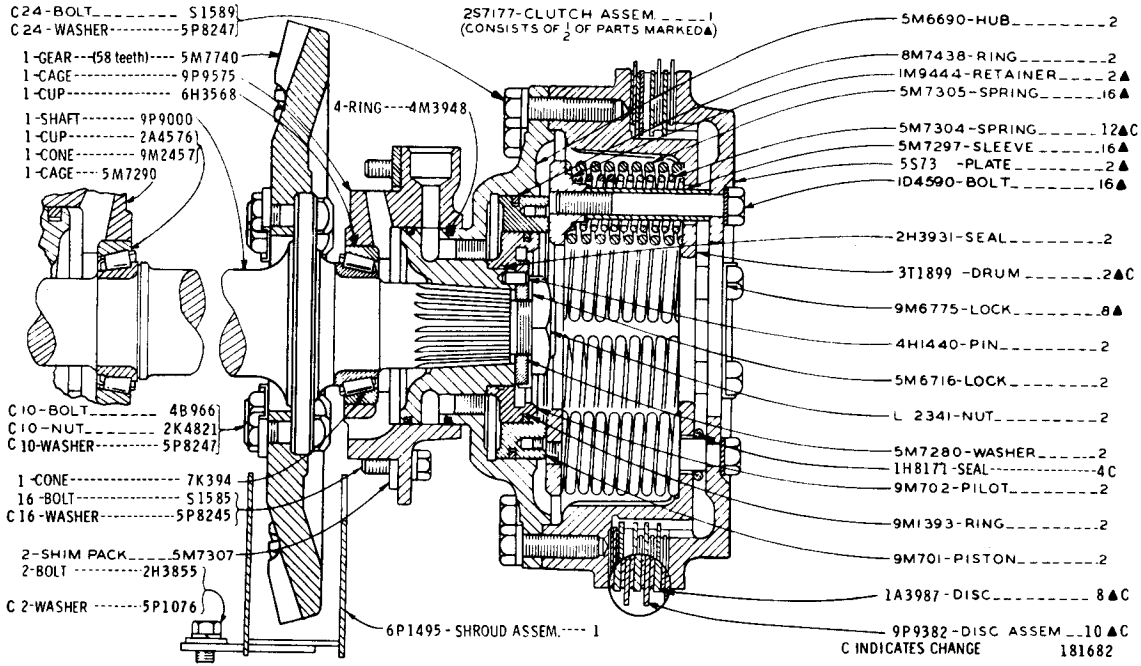

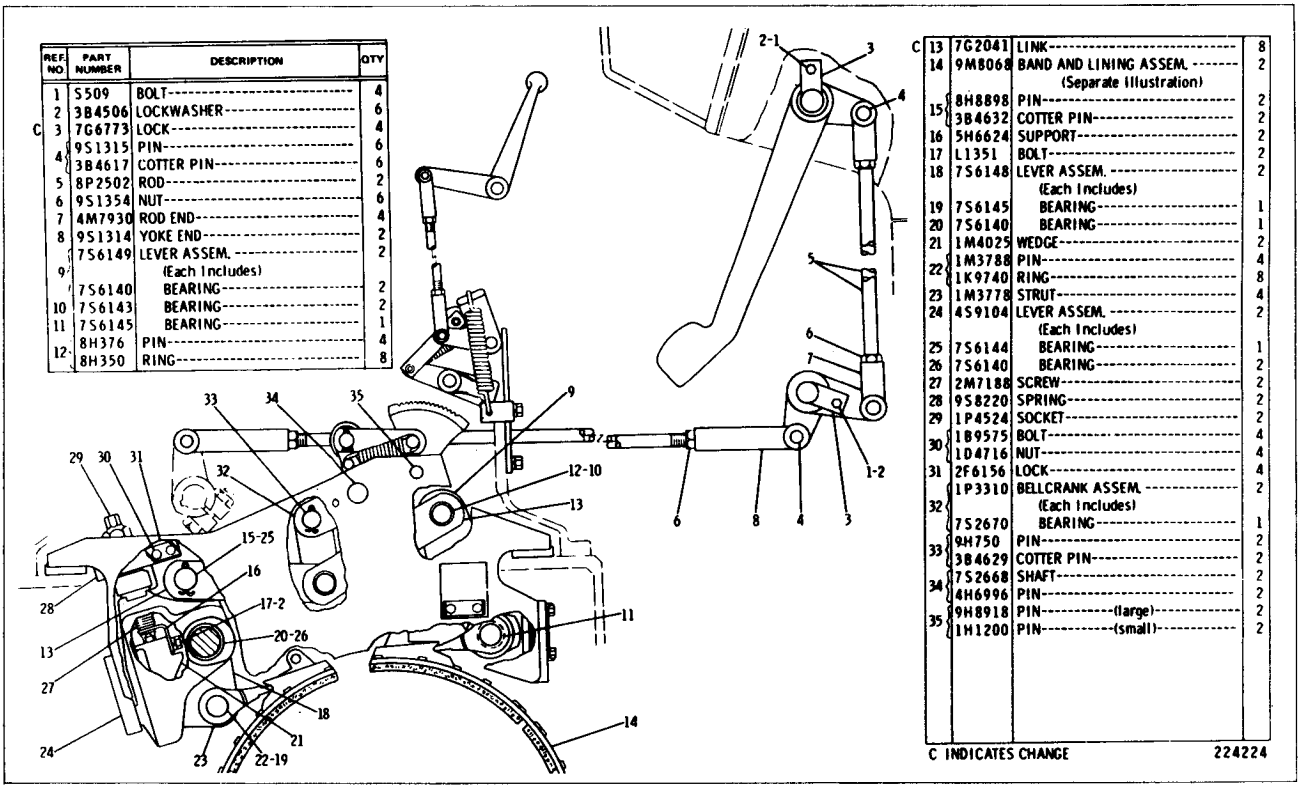

REF. NO.	PART NUMBER	DESCRIPTION	QTY
1	S509	BOLT	4
2	3B4506	LOCKWASHER	6
C 3	7G6773	LOCK	4
4	9S1315	PIN	6
	3B4617	COTTER PIN	6
5	8P2502	ROD	2
6	9S1354	NUT	6
7	4M7930	ROD END	4
8	9S1314	YOKE END	2
9	7S6149	LEVER ASSEM. (Each Includes)	2
	7S6140	BEARING	2
10	7S6143	BEARING	2
11	7S6145	BEARING	1
12	8H376	PIN	4
	8H350	RING	8

C 13	7G2041	LINK	8
14	9M8068	BAND AND LINING ASSEM. (Separate Illustration)	2
15	8H8898	PIN	2
	3B4632	COTTER PIN	2
16	5H6624	SUPPORT	2
17	L1351	BOLT	2
18	7S6148	LEVER ASSEM. (Each Includes)	2
19	7S6145	BEARING	1
20	7S6140	BEARING	1
21	1M4025	WEDGE	2
22	1M3788	PIN	4
	1K9740	RING	8
23	1M3778	STRUT	4
24	4S9104	LEVER ASSEM. (Each Includes)	2
25	7S6144	BEARING	1
26	7S6140	BEARING	2
27	2M7188	SCREW	2
28	9S8220	SPRING	2
29	1P4524	SOCKET	2
30	1B9575	BOLT	4
	1D4716	NUT	4
31	2F6156	LOCK	4
32	1P3310	BELLCRANK ASSEM. (Each Includes)	2
	7S2670	BEARING	1
33	9M750	PIN	2
	3B4629	COTTER PIN	2
34	7S2668	SHAFT	2
	4H6996	PIN	2
35	9H8918	PIN (large)	2
	1H1200	PIN (small)	2

C INDICATES CHANGE 224224

8P4935 STEERING BRAKE GROUP — Part 1 of 3
9M8068 Band and Lining parts are shown on Page 125

8P4935 STEERING BRAKE GROUP — Part 2 of 3

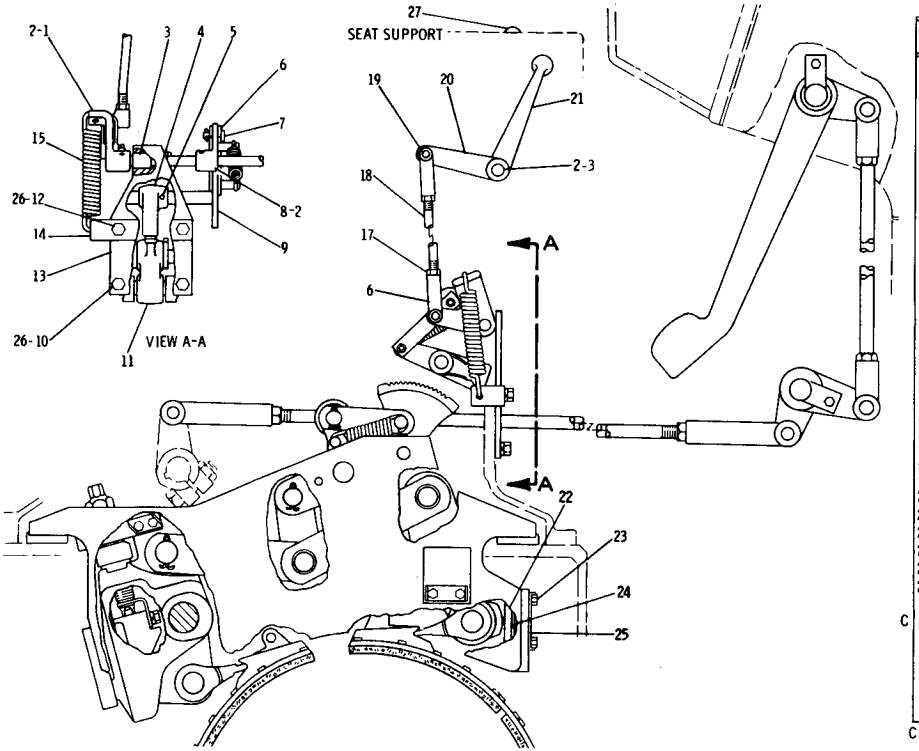

REF. NO.	PART NUMBER	DESCRIPTION	QTY
1	8P3175	LEVER	1
2	6H3956	PIN	4
3	5P1901	BEARING	3
4	3P5206	PAWL	2
5	1H1200	PIN	2
6	6P2772	PLATE	4
7	1A2457	PIN	2
	L261	WASHER	2
	3B4607	COTTER PIN	2
8	8P3173	LEVER	2
9	8P3170	LEVER ASSEM.	1
10	S1594	BOLT	2
11	3P6105	RATCHET	2
12	1A2029	BOLT	2
13	8P3168	COVER ASSEM.	1
	7S2780	GASKET	1
14	8P3181	BRACKET	1
15	8D8456	SPRING	1
16	2K400	YOKE END	2
17	5B9079	NUT	2
18	8P3174	ROD	1
19	1B676	PIN	2
	3B4615	COTTER PIN	2
20	8P3177	LEVER ASSEM.	1
21	8P3176	LEVER	1
22	8H372	PLATE	2
23	3B1915	BOLT	4
24	8H8871	SHIM	4
25	6H4208	LOCK	2
26	3B4506	LOCKWASHER	4
C 27	3D9871	BUTTON	1

C INDICATES CHANGE 230318

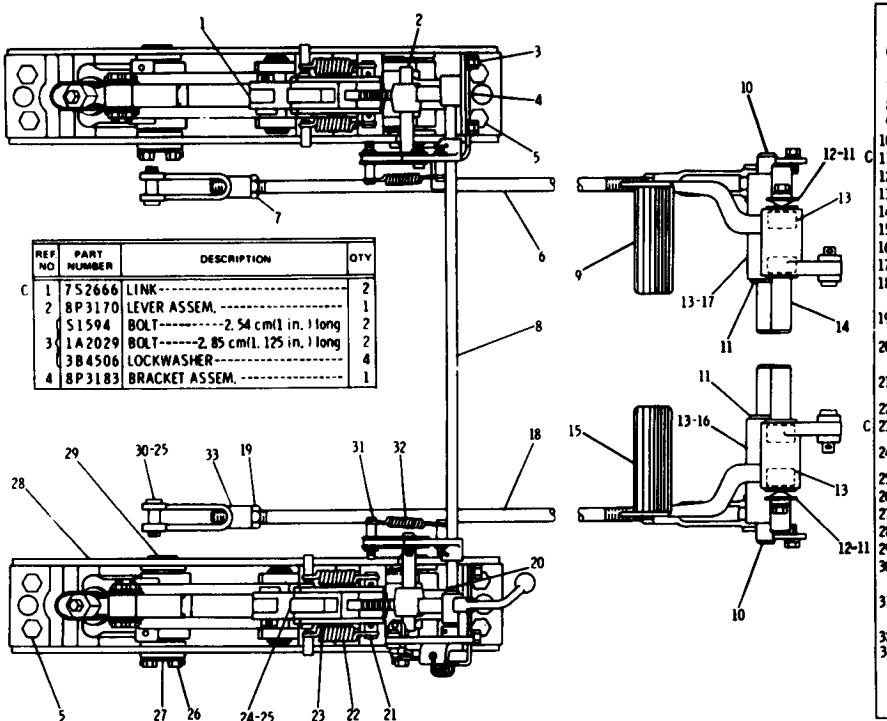

REF NO	PART NUMBER	DESCRIPTION	QTY
C 1	7S2666	LINK	2
2	8P3170	LEVER ASSEM.	1
3	S1594	BOLT--2.54 cm(1 in.) long	2
	1A2029	BOLT--2.85 cm(1.125 in.) long	2
	3B4506	LOCKWASHER	4
4	8P3183	BRACKET ASSEM.	1

5	4B4043	BOLT	8
	3B4510	LOCKWASHER	8
6	8P2512	ROD ASSEM. (Includes)	1
7	1B4206	NUT	1
8	8P3182	SHAFT	1
9	8P1870	PEDAL	1
10	8P2507	SHAFT	2
11	9S1328	WASHER	8
12	8P9821	WASHER--(spring)	2
13	6K8088	BEARING	8
14	8P3475	SHAFT	2
15	8P1871	PEDAL	1
16	8P2503	BELLCRANK	1
17	8P2504	BELLCRANK	1
18	8P2511	ROD	1
19	9S1354	NUT	1
20	3B4615	COTTER PIN	1
	9S201	WASHER	1
21	1M424	PIN--(large)	2
	3H6660	PIN--(small)	4
22	1H2320	SPRING	4
C 23	7G2926	LINK	4
24	1P1650	ROLLER	2
	2B974	PIN	2
25	3B4617	COTTER PIN	4
26	T102	BOLT	8
27	5B2200	LOCK	4
28	8P524	SUPPORT ASSEM.	2
29	8H352	SHAFT ASSEM.	4
30	9S1315	PIN	2
	6P4406	PIN	4
31	L261	WASHER	4
	3B4607	COTTER PIN	4
32	9D1058	SPRING	2
33	9S1314	END	1

C INDICATES CHANGE 224225

8P4935 STEERING BRAKE GROUP — Part 3 of 3

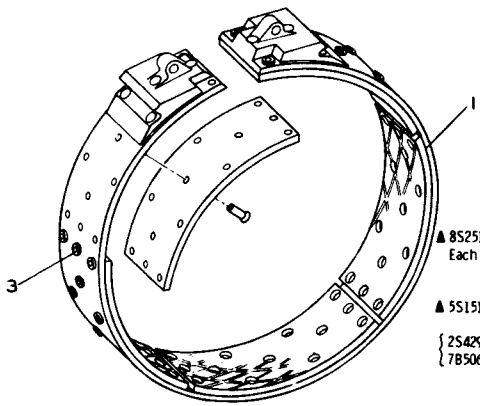

▲ 8S2515-BRAKE LINING GROUP-(molded) -2
Each consisting of a complete set of Linings and Rivets for one Brake

▲ 5S1513-BRAKE LINING GROUP--(woven)-2
Each consisting of:
2S4297-LINING ---------(woven)--------5
7B5060-RIVET ---------- 65

REF. NO.	PART NUMBER	DESCRIPTION	QTY
1	5S5658	LINING----------	5
3	7B5060	RIVET----------	65

▲ NOT PART OF 9M8068 BRAKE ASSEM.

200433

9M8068 BRAKE BAND ASSEMBLY — 2 Required
Part of 8P4935 Steering Brake Group shown on Page 122

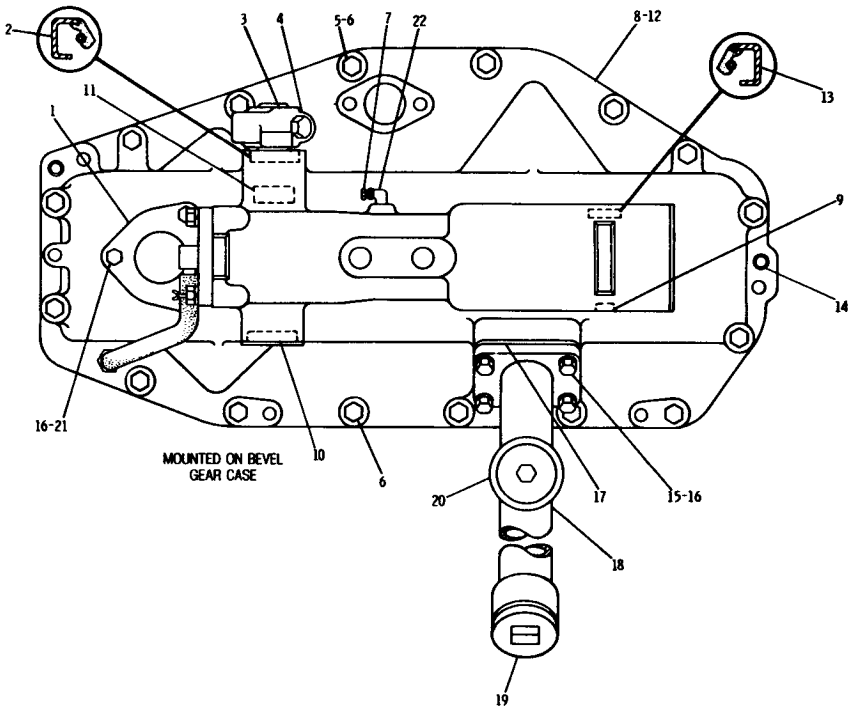

NOTE	REF NO	PART NUMBER	QTY	DESCRIPTION
	1	9H8889	2	COVER
		9H8890	2	GASKET
C	2	2P6286	1	SEAL
	3	8P2514	1	LEVER
		1B8719	1	KEY
	4	S1589	1	BOLT
	5	9S1366	16	BOLT
		3B4508	16	LOCKWASHER
	6	1F1609	1	SPACER
	7	5M6214	2	PLUG
	8	8P1191	1	HOUSING ASSEM.
C		3S8313	1	PLUG
		2S8359	1	SLEEVE
	9	5B1866	1	PLUG
	10	L1021	1	PLUG
	11	1J3710	2	BEARING
	12	7M7260		LIQUID GASKET
	13	5H1190	1	SEAL
C	14	5M7937	4	DOWEL
C	15	S1588	4	BOLT 31.75MM(1.25 IN.)LONG
				OR
		S1591	4	BOLT 38.10MM(1.50 IN.)LONG
	16	3B4506	10	LOCKWASHER
	17	8P2680	1	GASKET
	18	8P1217	1	SPOUT
	19	L827	1	PLUG
		L1124	1	GASKET
C	20	9G5127	1	BREATHER
	21	L1351	6	BOLT
C	22	3B6552	2	ELBOW

C INDICATES CHANGE

305316

8P1216 BRAKE HYDRAULIC MECHANISM GROUP—R.H.—Part 1

8P1216 BRAKE HYDRAULIC MECHANISM GROUP—L.H.—Part 2

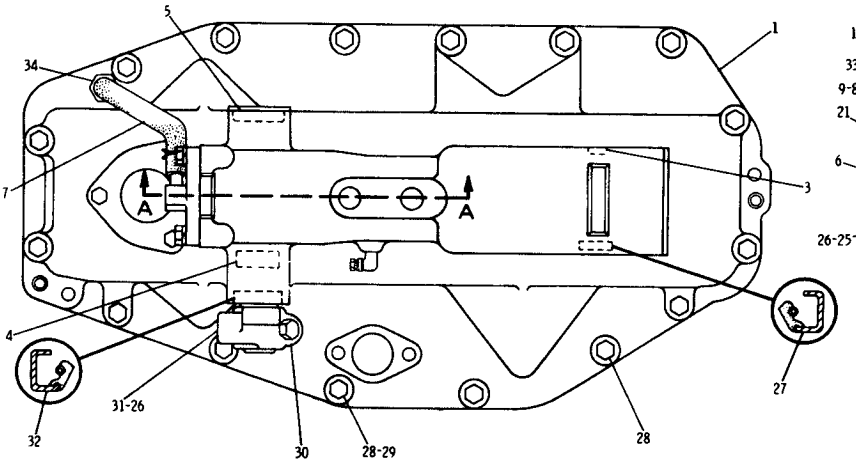

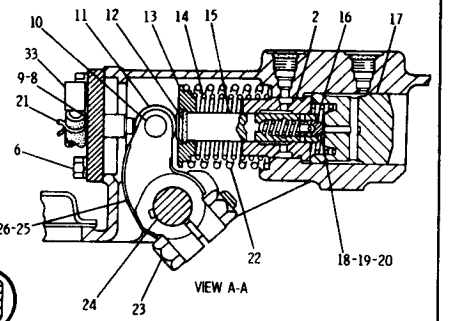

NOTE	REF NO	PART NUMBER	QTY	DESCRIPTION
	1	8P1190	1	HOUSING ASSEM.
C		3S8313	1	PLUG
	2	2S8359	1	SLEEVE
	3	5B1866	1	PLUG
	4	1J3710	1	BEARING
	5	L1021	1	PLUG
	6	1A2029	8	BOLT
		3B4506	8	LOCKWASHER
CE	7	5P1442		HOSE 50.8CM (20 IN.)
	8	8P8255	2	COVER ASSEM.

E ORDER BY THE CENTIMETER

	9	7M7260		LIQUID GASKET
	10	3H1977	2	PIN
		3B4617	2	COTTER PIN
	11	6B7687	2	ROLLER
	12	4H8158	2	RING
	13	2S8416	2	RETAINER
	14	9H7553	2	SPRING (INNER)
	15	5S6880	2	PLUNGER
	16	7J2025	2	SPRING
	17	8P1186	2	PISTON
	18	2S8571	2	VALVE
C	19	5P6717	2	RING

C INDICATES CHANGE

C	20	5M3389	2	SPRING
C	21	3S5096	4	CLAMP
	22	9H7534	2	SPRING (OUTER)
	23	8S9092	2	BOLT
		1D4720	2	NUT
	24	7S3842	2	SHAFT
	25	9H7657	2	LEVER
	26	1B8719	3	KEY
	27	5H1190	1	SEAL
	28	9S1366	16	BOLT
		3B4508	16	LOCKWASHER
C	29	1F1609	1	SPACER
	30	S1589	1	BOLT
	31	8P2515	1	LEVER
C	32	2P6286	1	SEAL
C	33	672935	2	FITTING
C	34	5P7175	2	FITTING

305317

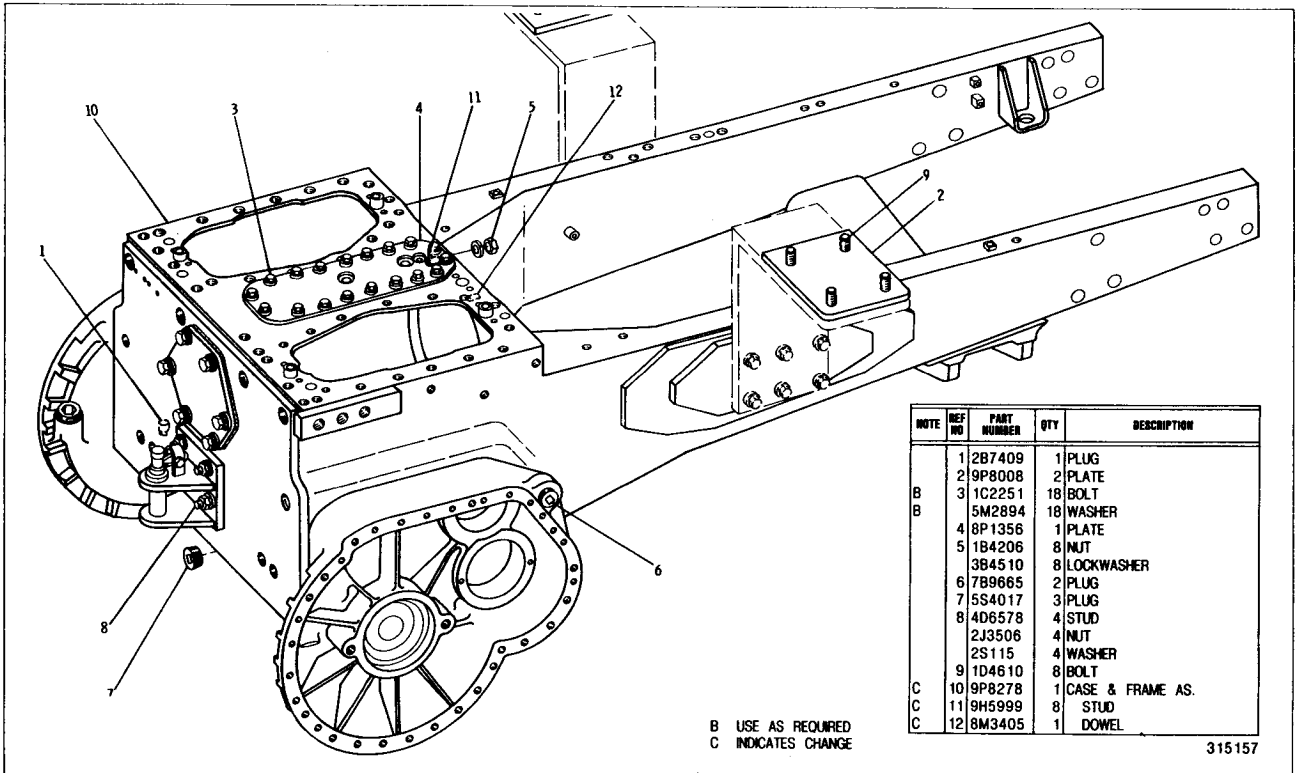

NOTE	REF NO	PART NUMBER	QTY	DESCRIPTION
	1	2B7409	1	PLUG
	2	9P8008	2	PLATE
B	3	1C2251	18	BOLT
B		5M2894	18	WASHER
	4	8P1356	1	PLATE
	5	1B4206	8	NUT
		3B4510	8	LOCKWASHER
	6	7B9665	2	PLUG
	7	5S4017	3	PLUG
	8	4D6578	4	STUD
		2J3506	4	NUT
		2S115	4	WASHER
	9	1D4610	8	BOLT
C	10	9P8278	1	CASE & FRAME AS.
C	11	9H5999	8	STUD
C	12	8M3405	1	DOWEL

B USE AS REQUIRED
C INDICATES CHANGE

315157

8P4173 FRAME AND CASE GROUP — Part 1

8P4173 FRAME AND CASE GROUP — Part 2

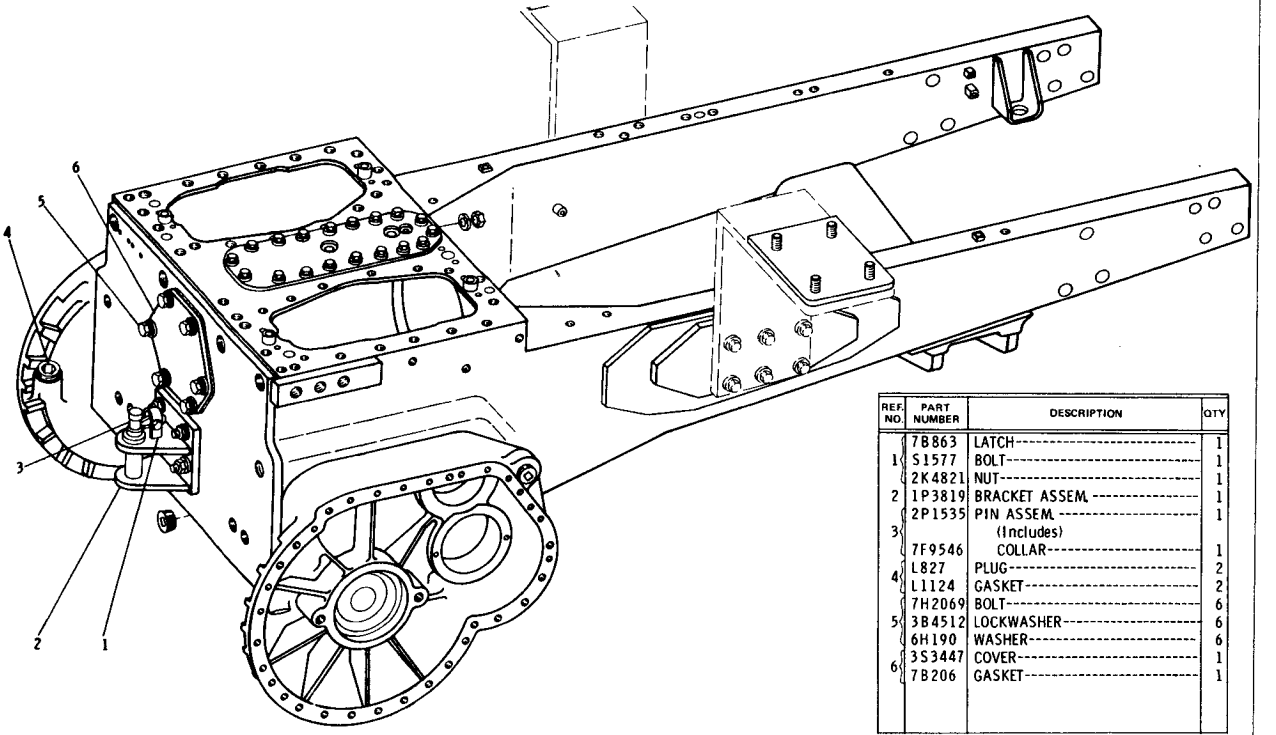

REF. NO.	PART NUMBER	DESCRIPTION	QTY
	7B863	LATCH	1
1	S1577	BOLT	1
	2K4821	NUT	1
2	1P3819	BRACKET ASSEM.	1
	2P1535	PIN ASSEM.	1
3		(Includes)	
	7F9546	COLLAR	1
4	L827	PLUG	2
	L1124	GASKET	2
	7H2069	BOLT	6
5	3B4512	LOCKWASHER	6
	6H190	WASHER	6
6	3S3447	COVER	1
	7B206	GASKET	1

229297

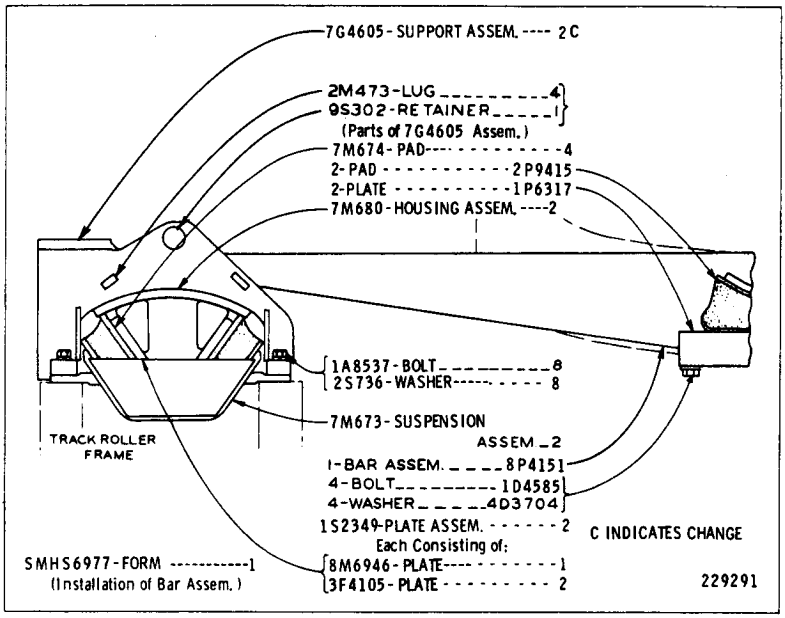

8P4150 EQUALIZER BAR GROUP
6T8907 Pad Assembly is available

		Consists of:	Page
1	9G6924	Fender Support Group	140
4	1A458	Bolt--To Plate Assembly	
1	9G6523	Cover Assembly--To Fender	
1	9G6534	Cover Assembly--To Fender	
4	V375	Bolt	
4	5P1076	Washer	

9G6923 NON ROPS MOUNTING CONVERSION ARRANGEMENT
FOR USE WITH THE REDESIGNED ROPS SUPPORT
AN ATTACHMENT

6T3687 EQUALIZER BAR GROUP
An Attachment

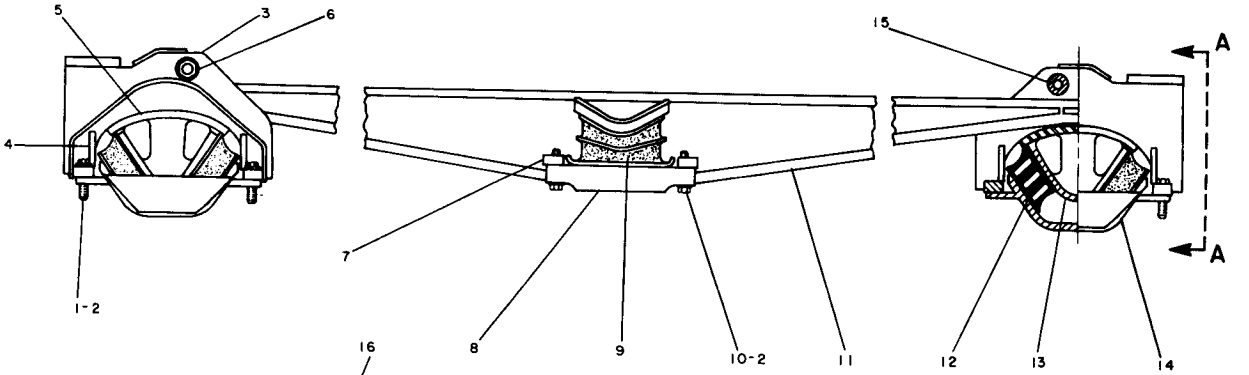

NOTE	REF NO	PART NUMBER	QTY	DESCRIPTION
	1	1A8537	12	BOLT
	2	5P8247	16	WASHER
	3	6T1702	2	SUPPORT AS.
				(EACH INCLUDES)
		2M0473	4	LUG
	4	8H0852	2	PLATE
	5	7M0680	2	HOUSING AS.
	6	5P8250	4	WASHER
		1D4645	2	BOLT
		1B4333	2	NUT
	7	6T1710	4	SPACER
	8	6T1711	2	PLATE
	9	6T8907	2	PAD AS.
	10	0S1625	4	BOLT
	11	6T1699	1	BAR AS.
	12	6T0956	4	PAD AS.
	13	1S2349	2	PLATE AS.
				(EACH INCLUDES)
		8M6946	1	PLATE (LARGE)
		3F4105	1	PLATE (SMALL)
	14	6T1709	2	SUSPENSION AS.
	15	6T1708	2	BUSHING
	16	6T1715	1	GUARD AS. (R.H.)
		6T1717	1	GUARD AS. (L.H.)
	17	6T1714	2	GUARD

328347

9G6075 ROLL-OVER PROTECTIVE STRUCTURE MOUNTING GROUP

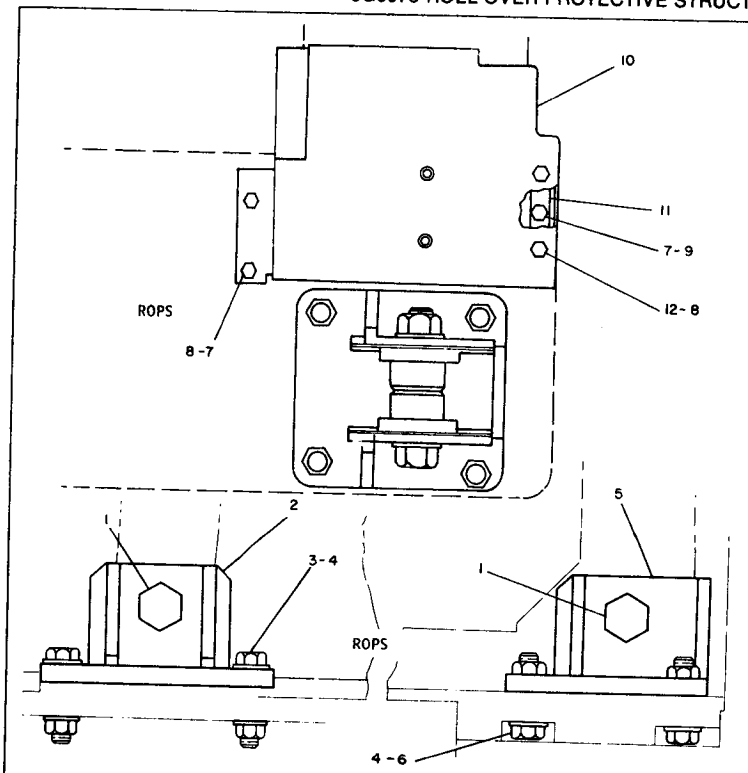

REF. NO.	PART NUMBER	DESCRIPTION	QTY
1	1D4643	BOLT	4
	2J3507	NUT	4
	8J7415	WASHER	8
	8P2575	BUSHING	8
2	8P2539	PAD ASSEM.	2
3	3B2968	BOLT	8
4	2J3506	NUT	16
	2S115	WASHER	24
5	8P2536	PAD ASSEM. -----(R. H.)----------	1
	8P2537	PAD ASSEM. -----(L. H.)----------	1
6	1D4608	BOLT	8
7	S1594	BOLT	6
8	5P1075	WASHER	8
9	3B4506	LOCKWASHER	2
10	9G6873	COVER ASSEM. -----(R. H.)-----	1
	9G6880	COVER ASSEM. -------(L. H.)------	1
11	9G6879	PLATE	2
12	L2070	BOLT	4

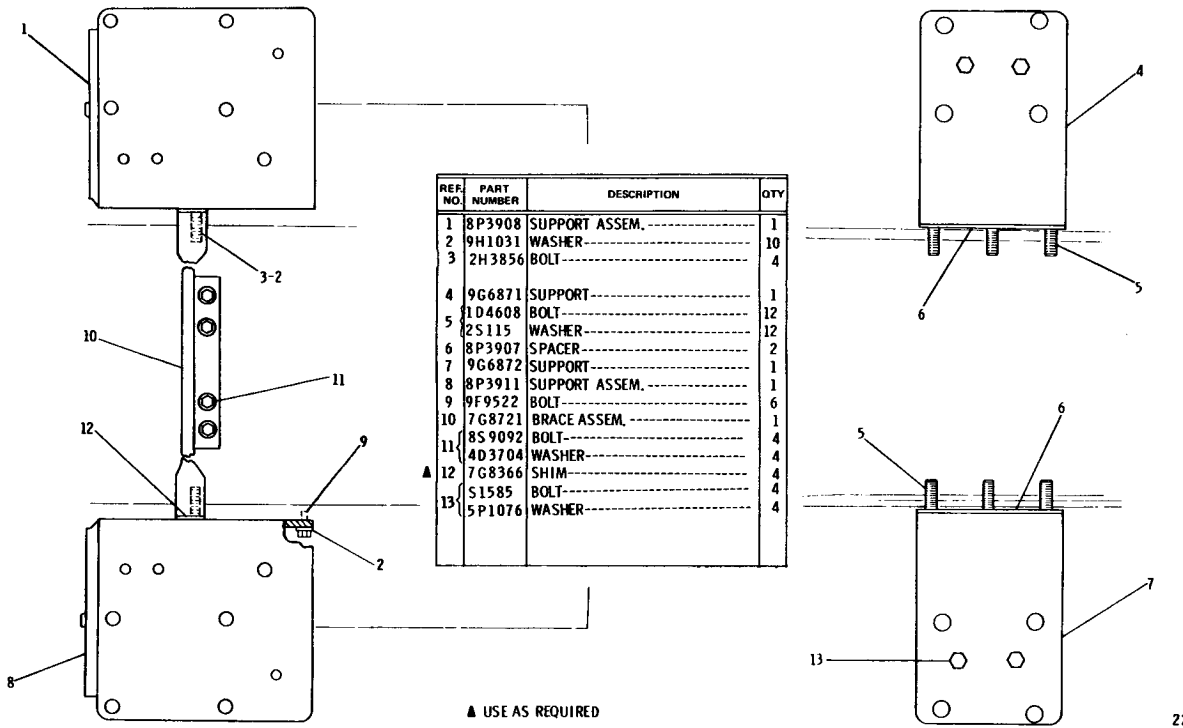

REF. NO.	PART NUMBER	DESCRIPTION	QTY
1	8P3908	SUPPORT ASSEM.	1
2	9H1031	WASHER	10
3	2H3856	BOLT	4
4	9G6871	SUPPORT	1
5	1D4608	BOLT	12
	2S115	WASHER	12
6	8P3907	SPACER	2
7	9G6872	SUPPORT	1
8	8P3911	SUPPORT ASSEM.	1
9	9F9522	BOLT	6
10	7G8721	BRACE ASSEM.	1
11	8S9092	BOLT	4
	4D3704	WASHER	4
▲ 12	7G8366	SHIM	4
13	S1585	BOLT	4
	5P1076	WASHER	4

▲ USE AS REQUIRED

9G6076 ROLL-OVER PROTECTIVE STRUCTURE MOUNTING GROUP

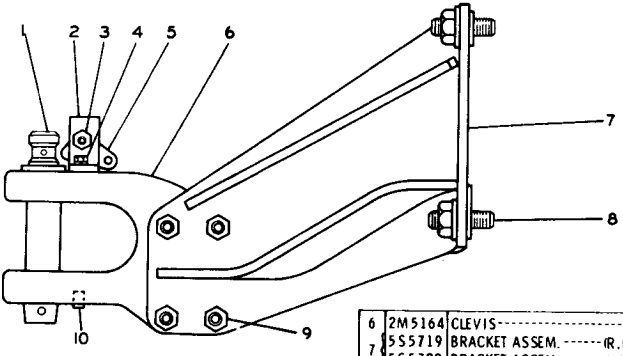

	REF. NO.	PART NUMBER	DESCRIPTION	QTY
	1	7F9547	PIN ASSEM.	1
	2	4M4649	PLATE	1
C	3	S1577	BOLT	1
		2K4821	LOCKNUT	1
	4	S1594	BOLT	2
		3B4506	LOCKWASHER	2
	5	7B863	LATCH	1

	6	2M5164	CLEVIS	1
	7	5S5719	BRACKET ASSEM. (R.H.)	1
		5S5720	BRACKET ASSEM. (L.H.)	1
C	8	5D3118	STUD	6
		2J3507	NUT	6
		3K5234	WASHER	6
	9	2H3750	BOLT	4
		6B6682	NUT	4
		4D6989	WASHER	8
	10	5B7267	CORK	2

C INDICATES CHANGE 209448

5M7811 FIXED DRAWBAR GROUP
AN ATTACHMENT

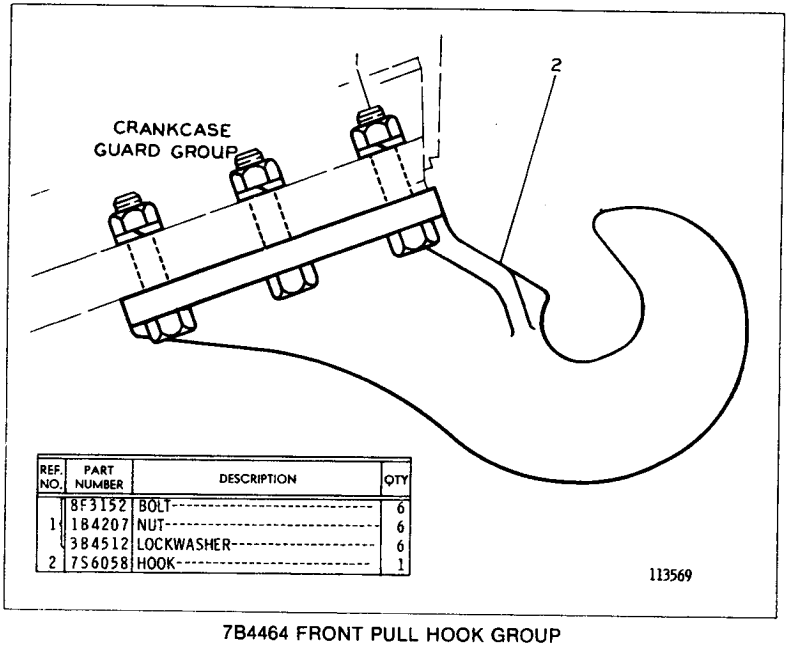

REF. NO.	PART NUMBER	DESCRIPTION	QTY
1	8F3152	BOLT	6
	1B4207	NUT	6
	3B4512	LOCKWASHER	6
2	7S6058	HOOK	1

113569

7B4464 FRONT PULL HOOK GROUP

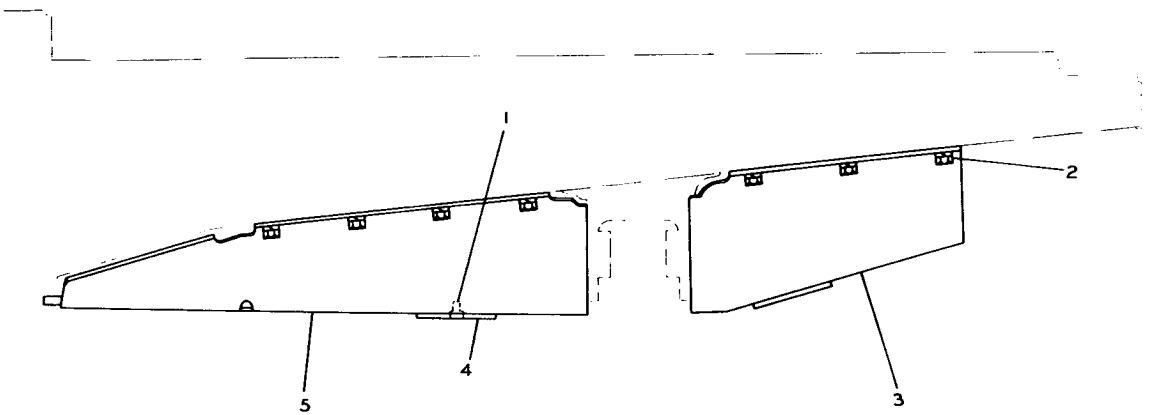

REF. NO.	PART NUMBER	DESCRIPTION	QTY
1	S1621	BOLT	4
	3B4508	WASHER	4
2	1A458	BOLT	14
	3B4512	LOCKWASHER	14
	4B4283	WASHER	14
3	1P7257	GUARD ASSEM.	1
4	5A8101	COVER	2
5	1P7211	GUARD ASSEM.	1

115623

1P6998 CRANKCASE GUARD GROUP

3P526 CRANKCASE GUARD GROUP — Extreme Service
AN ATTACHMENT

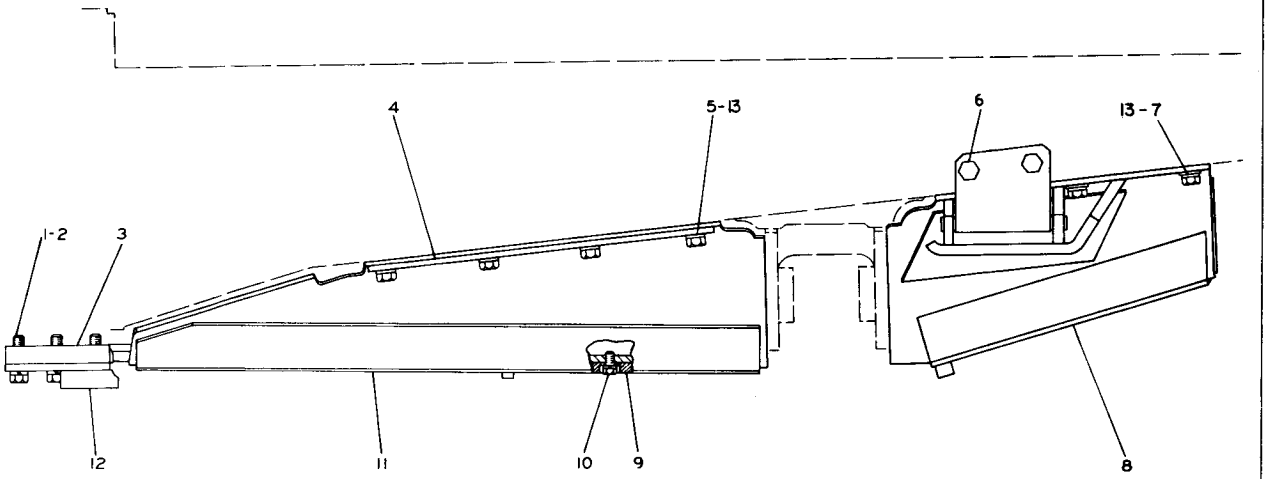

	REF. NO.	PART NUMBER	DESCRIPTION	QTY
	1	1D4610	BOLT	6
C	2	3B4512	LOCKWASHER	6
	3	5S1654	SPACER	2
	4	3P1031	STRIP	2
	5	L1178	BOLT	8
	6	6F4991	BOLT	2
	7	1A458	BOLT	4
	8	3P601	GUARD ASSEM.	1
	9	5S8101	COVER	2
	10	S1621	BOLT	4
		3B4508	LOCKWASHER	4
	11	3P978	GUARD ASSEM.	1
	12	5S1655	BRACKET ASSEM. (R.H.)	1
		5S1656	BRACKET ASSEM. (L.H.)	1
C	13	5P8248	WASHER	12

C INDICATES CHANGE

229328

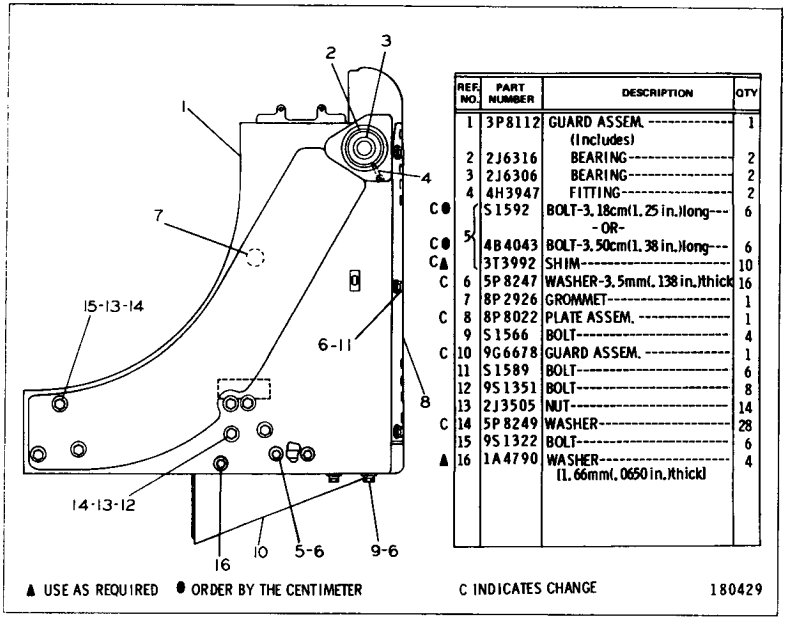

REF. NO.	PART NUMBER	DESCRIPTION	QTY
	1 3P8112	GUARD ASSEM. (Includes)	1
	2 2J6316	BEARING	2
	3 2J6306	BEARING	2
	4 4H3947	FITTING	2
C●	5 S1592	BOLT-3.18cm(1.25 in.)long -OR-	6
C●	5 4B4043	BOLT-3.50cm(1.38 in.)long	6
C▲	3T3992	SHIM	10
C	6 5P8247	WASHER-3.5mm(.138 in.)thick	16
	7 8P2926	GROMMET	1
C	8 8P8022	PLATE ASSEM.	1
	9 S1566	BOLT	4
C	10 9G6678	GUARD ASSEM.	1
	11 S1589	BOLT	6
	12 9S1351	BOLT	8
	13 2J3505	NUT	14
C	14 5P8249	WASHER	28
	15 9S1322	BOLT	6
▲	16 1A4790	WASHER (1.66mm(.0650 in.)thick)	4

▲ USE AS REQUIRED ● ORDER BY THE CENTIMETER C INDICATES CHANGE 180429

2P1563 RADIATOR GUARD GROUP

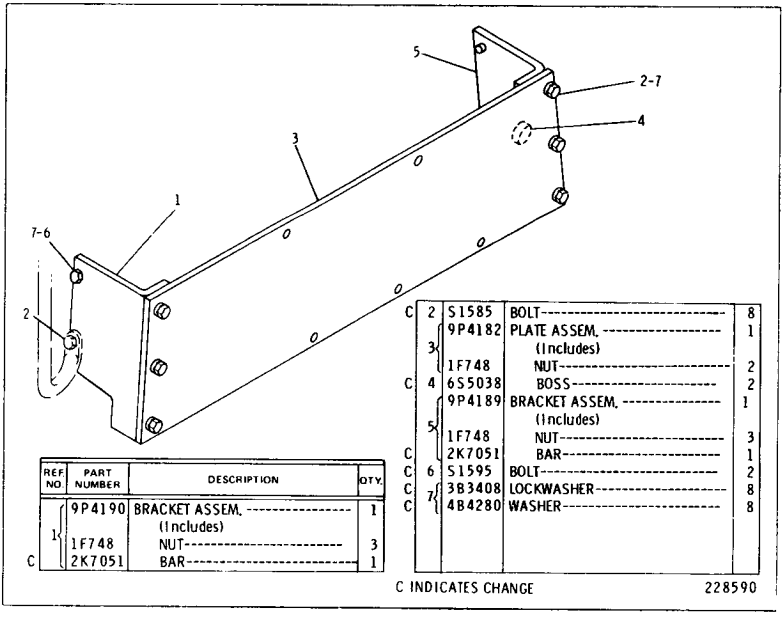

REF NO.	PART NUMBER	DESCRIPTION	QTY.
1	9P4190	BRACKET ASSEM. (Includes)	1
	1F748	NUT	3
C	2K7051	BAR	1

C	2	S1585	BOLT	8
3		9P4182	PLATE ASSEM. (Includes)	1
		1F748	NUT	2
C	4	6S5038	BOSS	2
5		9P4189	BRACKET ASSEM. (Includes)	1
		1F748	NUT	3
C		2K7051	BAR	1
C	6	S1595	BOLT	2
C	7	3B3408	LOCKWASHER	8
C	7	4B4280	WASHER	8

C INDICATES CHANGE 228590

8P2141 FUEL TANK GUARD GROUP
AN ATTACHMENT

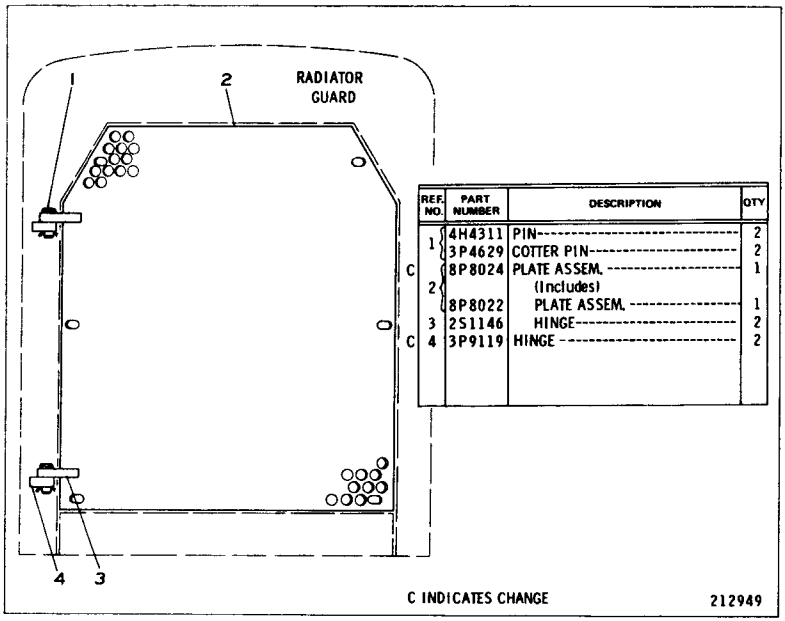

	REF. NO.	PART NUMBER	DESCRIPTION	QTY
	1	4H4311	PIN	2
		3P4629	COTTER PIN	2
C	2	8P8024	PLATE ASSEM.	1
			(Includes)	
		8P8022	PLATE ASSEM.	1
	3	2S1146	HINGE	2
C	4	3P9119	HINGE	2

C INDICATES CHANGE 212949

3P524 RADIATOR GRILL HINGED PLATE GROUP
AN ATTACHMENT

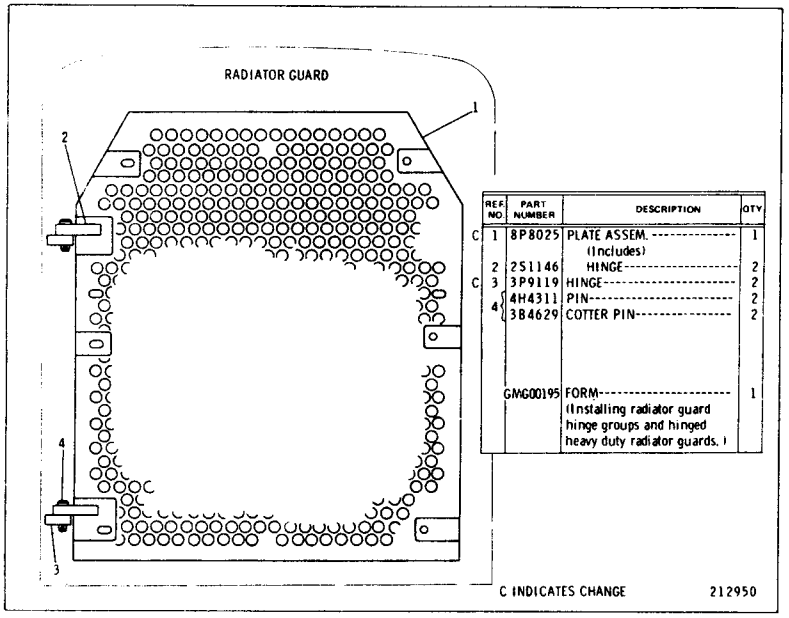

	REF. NO.	PART NUMBER	DESCRIPTION	QTY
C	1	8P8025	PLATE ASSEM.	1
			(Includes)	
	2	2S1146	HINGE	2
C	3	3P9119	HINGE	2
	4	4H4311	PIN	2
		3B4629	COTTER PIN	2
		GMG00195	FORM (Installing radiator guard hinge groups and hinged heavy duty radiator guards.)	1

C INDICATES CHANGE 212950

3P525 RADIATOR HINGED GUARD GROUP — Heavy Duty
AN ATTACHMENT

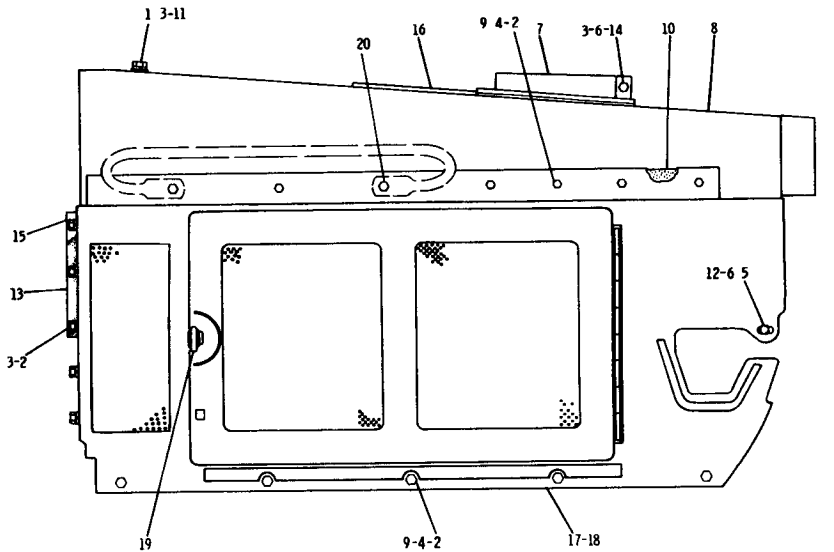

NOTE	REF NO	PART NUMBER	QTY	DESCRIPTION
	1	S509	2	BOLT
	2	L1351	30	BOLT
C	3	3B4506	13	LOCKWASHER
	4	2K4973	20	LOCKNUT
C	5	3B1915	2	BOLT
C	6	1D4717	3	NUT
	7	8P4178	1	CLAMP AS.
	8	8P4346	1	HOOD AS.
	9	5M2894	20	WASHER
	10	8P6120	2	GASKET
C	11	4B4278	2	WASHER
C	12	8M4069	4	WASHER
D	13	5P5923		SEAL .23M(9.06IN.)
	14	S1594	1	BOLT
	15	8P4183	1	PLATE AS (R.H.)
		8P4185	1	PLATE AS. (L.H.)
				(EACH INCLUDES)
		9F2978	5	NUT
	16	8S2572	1	GROMMET
C	17	8P5046	1	ENCLOSURE ARM (L.H.)
C	18	8P5044	1	ENCLOSURE ARM (R.H.)
	19	9B1783	2	FASTENER
		4B7033	2	SPRING
		3B5301	2	COTTER PIN
		1A4784	2	WASHER
	20	S1587	4	BOLT
		1D4719	4	NUT
		3B4508	4	LOCKWASHER
		4B4280	4	WASHER

C INDICATES CHANGE

D ORDER BY THE METER

313652

8P5649 ENGINE ENCLOSURE GROUP
AN ATTACHMENT

9G6904 FENDER GROUP

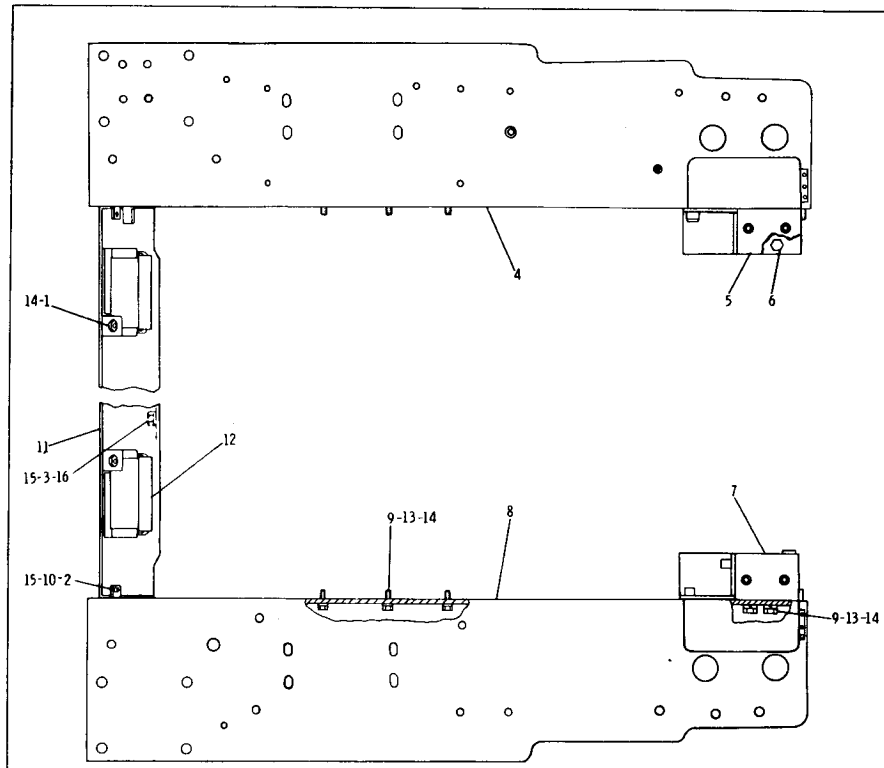

REF. NO.	PART NUMBER	DESCRIPTION	QTY
1	6D1746	BOLT	2
	3B4610	COTTER PIN	2
2	S509	BOLT	2
3	5P1075	WASHER------(conical)	2
4	9G8015	FENDER ASSEM.	1
5	9G9235	SUPPORT ASSEM.	1
6	S1566	BOLT	6
	3B4510	LOCKWASHER	6
C 7	9G9391	SUPPORT ASSEM.	1
8	9G8017	FENDER ASSEM.	1
9	S1595	BOLT	10
10	3B4506	LOCKWASHER	2
11	9P110	PLATE ASSEM. (Includes)	1
12	9P109	HINGE	2
13	3B4508	LOCKWASHER	10
14	4B4280	WASHER	12
15	4B5271	WASHER	4
16	S1594	BOLT	2

C INDICATES CHANGE

228642

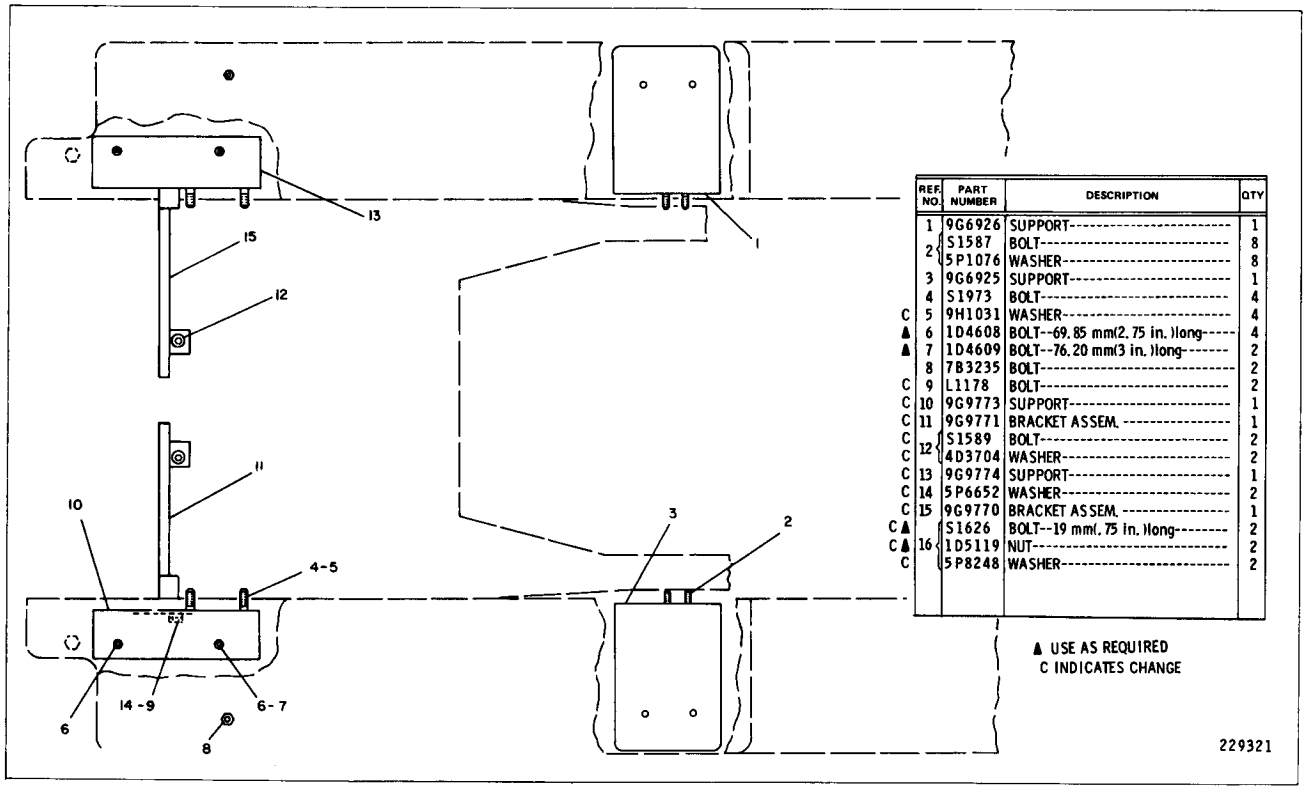

	REF. NO.	PART NUMBER	DESCRIPTION	QTY
	1	9G6926	SUPPORT	1
	2	S1587	BOLT	8
		5P1076	WASHER	8
	3	9G6925	SUPPORT	1
	4	S1973	BOLT	4
C	5	9H1031	WASHER	4
▲	6	1D4608	BOLT--69.85 mm(2.75 in.)long	4
▲	7	1D4609	BOLT--76.20 mm(3 in.)long	2
	8	7B3235	BOLT	2
C	9	L1178	BOLT	2
C	10	9G9773	SUPPORT	1
C	11	9G9771	BRACKET ASSEM.	1
C	12	S1589	BOLT	2
C		4D3704	WASHER	2
C	13	9G9774	SUPPORT	1
C	14	5P6652	WASHER	2
C	15	9G9770	BRACKET ASSEM.	1
C▲		S1626	BOLT--19 mm(.75 in.)long	2
C▲	16	1D5119	NUT	2
C		5P8248	WASHER	2

▲ USE AS REQUIRED
C INDICATES CHANGE

9G6924 FENDER SUPPORT GROUP
Part of 9G6923 Non ROPS Mounting Conversion Arrangement listed on Page 130
AN ATTACHMENT

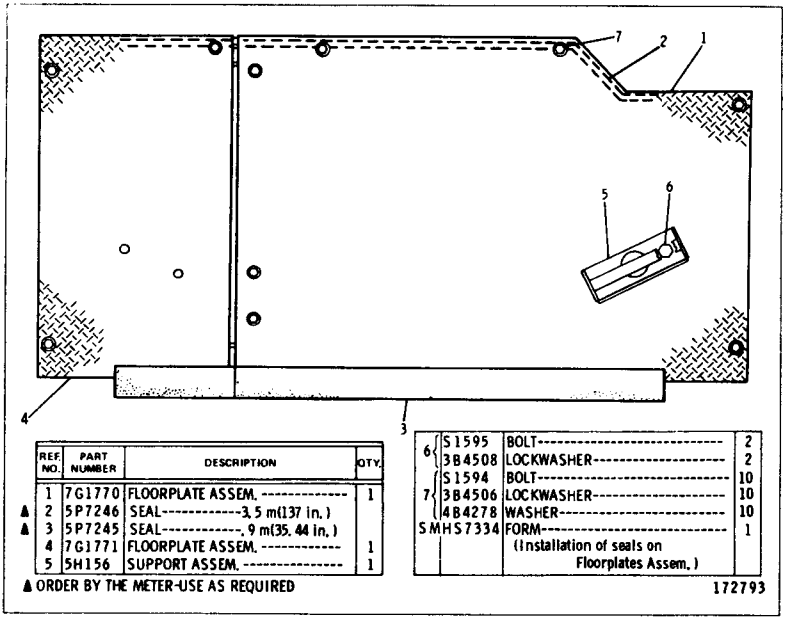

REF. NO.	PART NUMBER	DESCRIPTION	QTY.
1	7G1770	FLOORPLATE ASSEM. ----------	1
▲ 2	5P7246	SEAL----------3.5 m(137 in.)	
▲ 3	5P7245	SEAL----------.9 m(35.44 in.)	
4	7G1771	FLOORPLATE ASSEM. ----------	1
5	5H156	SUPPORT ASSEM. ----------	1

6	1S1595	BOLT----------	2
	3B4508	LOCKWASHER----------	2
7	1S1594	BOLT----------	10
	3B4506	LOCKWASHER----------	10
	4B4278	WASHER----------	10
	SMHS7334	FORM----------	1
		(Installation of seals on Floorplates Assem.)	

▲ ORDER BY THE METER-USE AS REQUIRED

172793

7G1775 FLOORPLATE GROUP

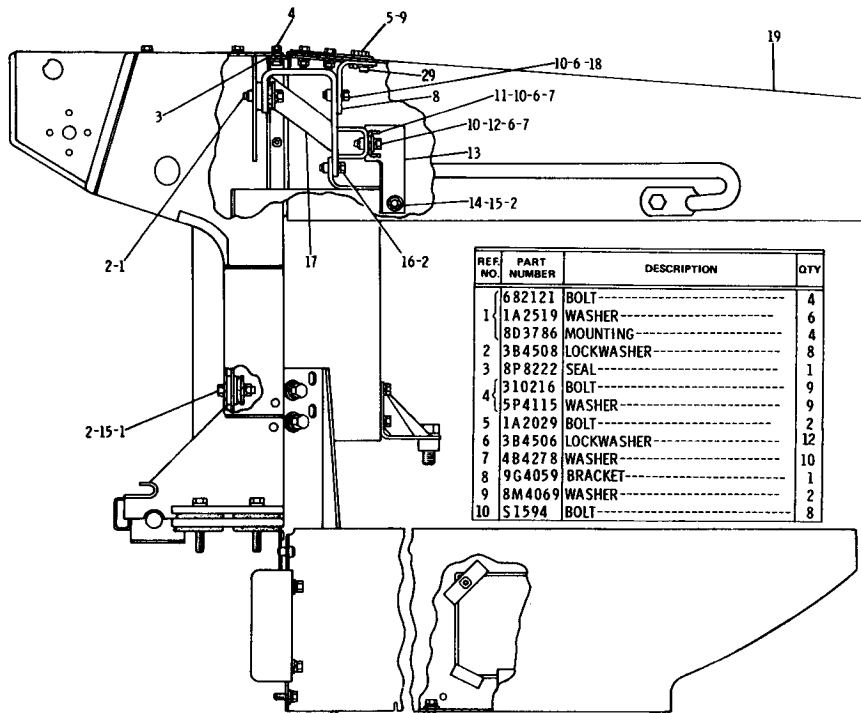

REF. NO.	PART NUMBER	DESCRIPTION	QTY
1	682121	BOLT	4
	1A2519	WASHER	6
	8D3786	MOUNTING	4
2	3B4508	LOCKWASHER	8
3	8P8222	SEAL	1
4	310216	BOLT	9
	5P4115	WASHER	9
5	1A2029	BOLT	2
6	3B4506	LOCKWASHER	12
7	4B4278	WASHER	10
8	9G4059	BRACKET	1
9	8M4069	WASHER	2
10	S1594	BOLT	8
11	8P6690	CHANNEL	1
12	1D4717	NUT	4
13	8P6691	BRACKET-(R. H.)	1
	8P6692	BRACKET-(L. H.)	1
14	7B3235	BOLT	2
	4B5273	WASHER	2
15	1D4719	NUT	4
16	S1621	BOLT	2
17	8P5495	PLATE ASSEM. (Each Includes)	2
18	9F2978	NUT	2
19	8P3530	HOOD ASSEM.	1
20	8P3527	COVER ASSEM.	1
21	L1351	BOLT	10
22	3R6757	SPACER	2
23	S1571	BOLT	4
24	2S2109	BRACKET	2
25	9M3835	LATCH ASSEM.	2
26	2M5795	PIN	2
	3B4607	COTTER PIN	2
27	9M3839	HOOK ASSEM.	2
28	5P1075	WASHER	10
29	9G1237	STRIP ASSEM.	1

228661

9G7382 HOOD & DASH GROUP-PART 1 OF 3
Serial No. 6X1115 To 6X1536 Inclusive

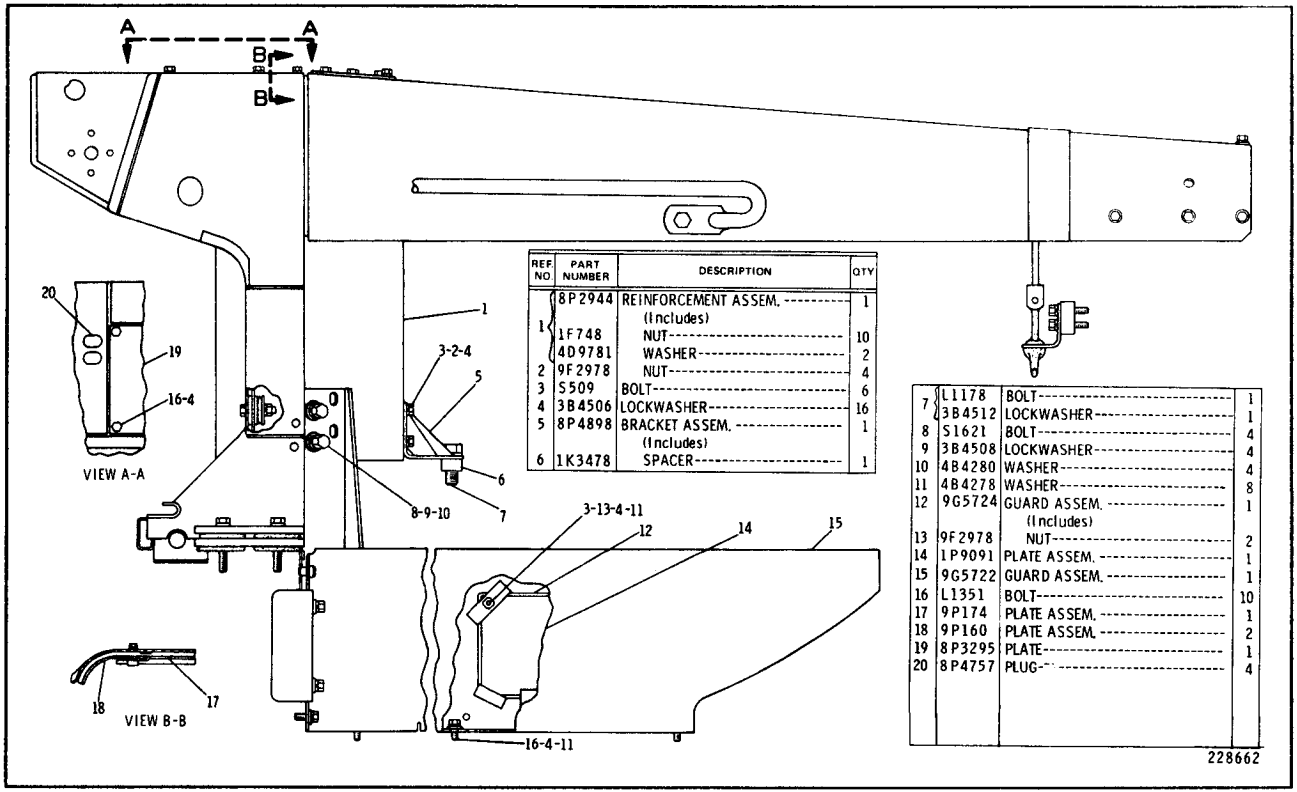

REF. NO.	PART NUMBER	DESCRIPTION	QTY
1	8P2944	REINFORCEMENT ASSEM. (Includes)	1
	1F748	NUT	10
	4D9781	WASHER	2
2	9F2978	NUT	4
3	S509	BOLT	6
4	3B4506	LOCKWASHER	16
5	8P4898	BRACKET ASSEM. (Includes)	1
6	1K3478	SPACER	1
7	L1178	BOLT	1
	3B4512	LOCKWASHER	1
8	S1621	BOLT	4
9	3B4508	LOCKWASHER	4
10	4B4280	WASHER	4
11	4B4278	WASHER	8
12	9G5724	GUARD ASSEM. (Includes)	1
13	9F2978	NUT	2
14	1P9091	PLATE ASSEM.	1
15	9G5722	GUARD ASSEM.	1
16	L1351	BOLT	10
17	9P174	PLATE ASSEM.	1
18	9P160	PLATE ASSEM.	2
19	8P3295	PLATE	1
20	8P4757	PLUG	4

228662

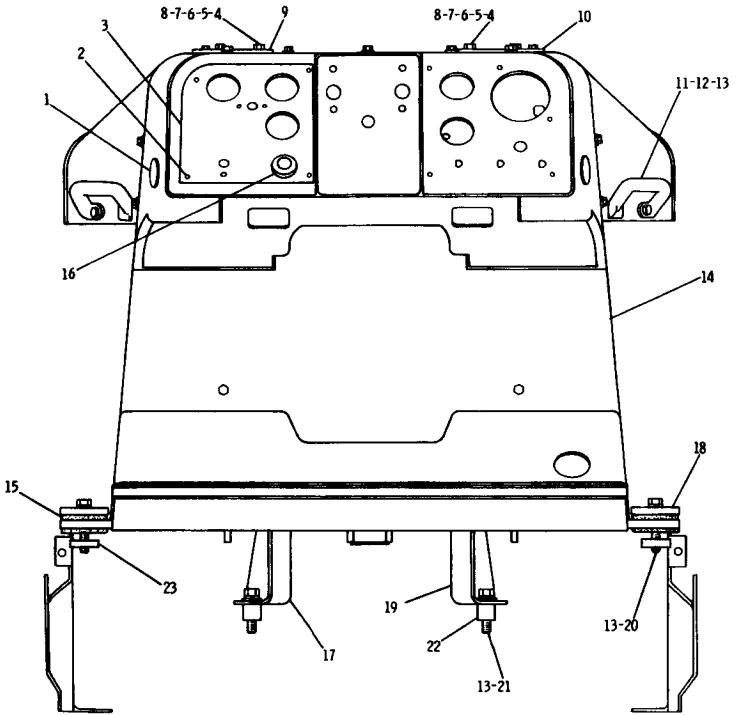

REF. NO.	PART NUMBER	DESCRIPTION	QTY
1	4F8711	PLUG	2
2	7B3028	DRIVE SCREW	4
3	7V1566	PANEL	1
4	S509	BOLT	5
5	1D4717	NUT	5
6	3B4506	LOCKWASHER	5
7	4B4278	WASHER-------(small)----	5
8	7K3222	WASHER-------(large)----	5
9	2P9673	COVER----------(L.H.)-------	1
10	2P9674	COVER----------(R.H.)-------	1
11	7G2819	HANDLE	2
12	S1595	BOLT	2
	4J4144	WASHER	2
	1D4719	NUT	2
13	3B4508	LOCKWASHER	8
14	7G9737	DASH ASSEM.	1
15	8P3595	BUSHING	8
16	5P4935	PLUG	1
17	8P8443	PLATE ASSEM.	1
18	8P3185	PLATE	2
19	8P8444	PLATE ASSEM.	1
20	L1329	BOLT	4
21	2B947	BOLT	2
	4B4280	WASHER	2
22	1F9341	SPACER	2
C 23	3T2302	PLATE	2

C INDICATES CHANGE 180456

9G7382 HOOD & DASH GROUP-PART 3 OF 3
Serial No. 6X1115 To 6X1536 Inclusive

9G7382 HOOD & DASH GROUP-PART 1 OF 3
Serial No. 6X1537 To 6X1678 Inclusive

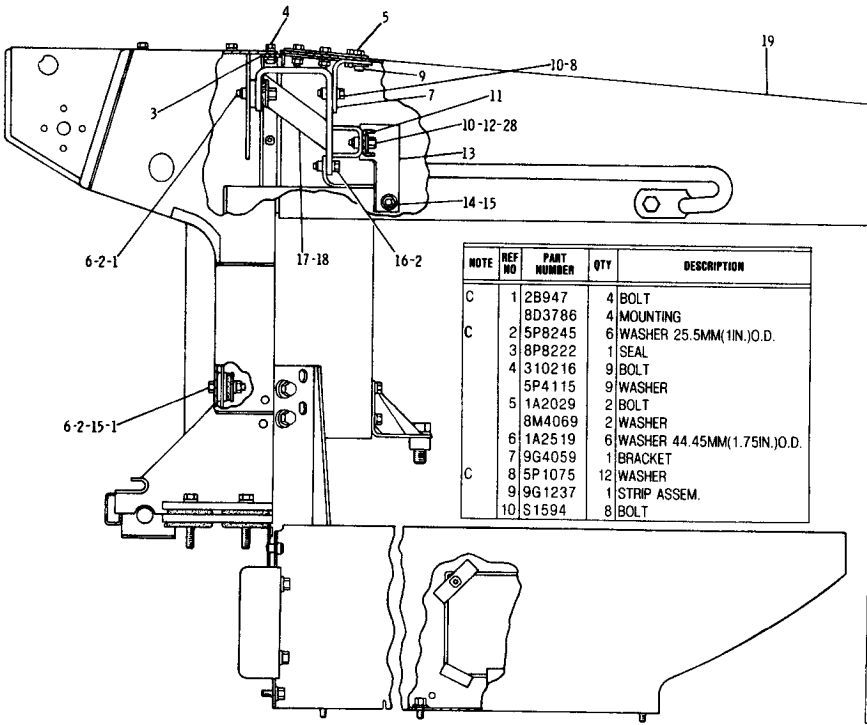

	11	8P6690	1	CHANNEL
	12	1D4717	4	NUT
	13	8P6691	1	BRACKET (R.H.)
		8P6692	1	BRACKET (L.H.)

NOTE	REF NO	PART NUMBER	QTY	DESCRIPTION
C	1	2B947	4	BOLT
		8D3786	4	MOUNTING
C	2	5P8245	6	WASHER 25.5MM(1IN.)O.D.
	3	8P8222	1	SEAL
	4	310216	9	BOLT
		5P4115	9	WASHER
	5	1A2029	2	BOLT
		8M4069	2	WASHER
	6	1A2519	6	WASHER 44.45MM(1.75IN.)O.D.
	7	9G4059	1	BRACKET
C	8	5P1075	12	WASHER
	9	9G1237	1	STRIP ASSEM.
	10	S1594	8	BOLT

	14	7B3235	2	BOLT
C		5P1076	4	WASHER
	15	1D4719	4	NUT
	16	S1621	2	BOLT
	17	8P5495	2	PLATE ASSEM. (EACH INCLUDES)
	18	9F2978	2	NUT
	19	8P3530	1	HOOD ASSEM.
	20	8P3527	1	COVER ASSEM.
C	21	S509	10	BOLT
	22	3R6757	2	SPACER
	23	S1571	4	BOLT
	24	2S2109	2	BRACKET
	25	9M3835	2	LATCH ASSEM.
	26	2M5795	2	PIN
		3B4607	2	COTTER PIN
	27	9M3839	2	HOOK ASSEM.
C	28	5M2894	14	WASHER

C INDICATES CHANGE

307787

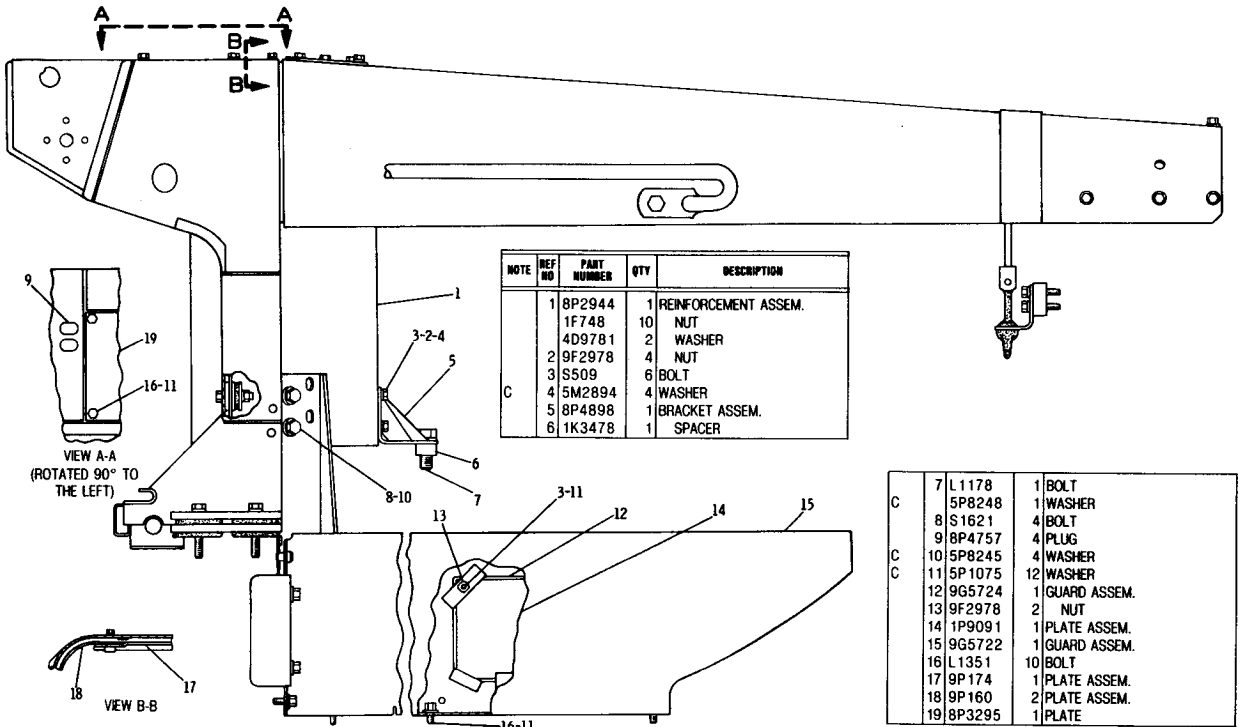

NOTE	REF NO	PART NUMBER	QTY	DESCRIPTION
	1	8P2944	1	REINFORCEMENT ASSEM.
		1F748	10	NUT
		4D9781	2	WASHER
	2	9F2978	4	NUT
	3	S509	6	BOLT
C	4	5M2894	4	WASHER
	5	8P4898	1	BRACKET ASSEM.
	6	1K3478	1	SPACER
	7	L1178	1	BOLT
C		5P8248	1	WASHER
	8	S1621	4	BOLT
	9	8P4757	4	PLUG
C	10	5P8245	4	WASHER
C	11	5P1075	12	WASHER
	12	9G5724	1	GUARD ASSEM.
	13	9F2978	2	NUT
	14	1P9091	1	PLATE ASSEM.
	15	9G5722	1	GUARD ASSEM.
	16	L1351	10	BOLT
	17	9P174	1	PLATE ASSEM.
	18	9P160	2	PLATE ASSEM.
	19	8P3295	1	PLATE

C INDICATES CHANGE

307788

9G7382 HOOD & DASH GROUP-PART 2 OF 3
Serial No. 6X1537 To 6X1678 Inclusive

9G7382 HOOD & DASH GROUP–PART 3 OF 3
Serial No. 6X1537 To 6X1678 Inclusive

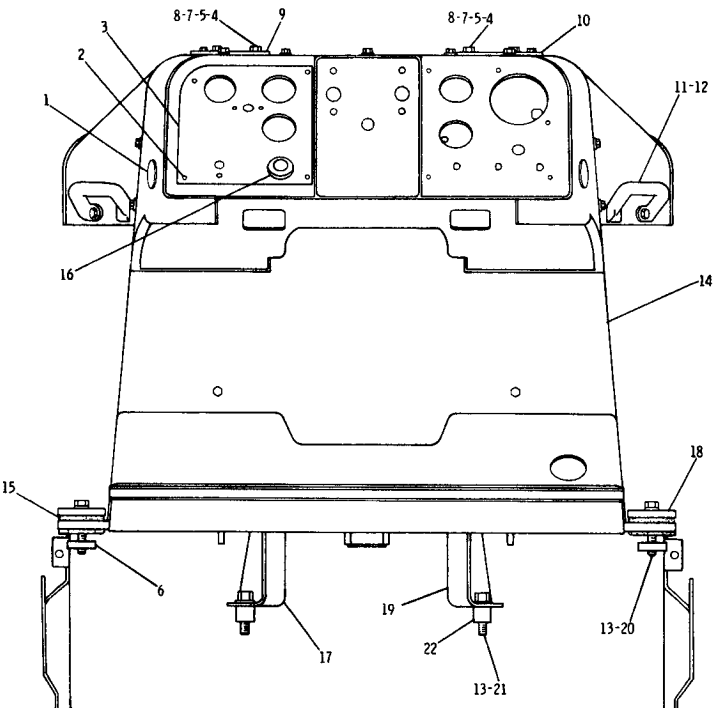

NOTE	REF NO	PART NUMBER	QTY	DESCRIPTION
	1	4F8711	2	PLUG
	2	7B3028	4	DRIVE SCREW
	3	7V1566	1	PANEL
	4	S509	5	BOLT
	5	1D4717	5	NUT
	6	3T2302	2	PLATE
C	7	5P1075	5	WASHER (SMALL)
	8	7K3222	5	WASHER (LARGE)
	9	2P9673	1	COVER (L.H.)
	10	2P9674	1	COVER (R.H.)
	11	7G2819	2	HANDLE
	12	S1595	2	BOLT
C		5P1076	4	WASHER
		1D4719	2	NUT
C	13	5P8245	6	WASHER
	14	7G9737	1	DASH ASSEM.
	15	8P3595	8	BUSHING
C	16	3T7856	1	PLUG
	17	8P8443	1	PLATE ASSEM.
	18	8P3185	2	PLATE
	19	8P8444	1	PLATE ASSEM.
	20	L1329	4	BOLT
	21	1A1460	2	BOLT
	22	1F9341	2	SPACER

C INDICATES CHANGE

307789

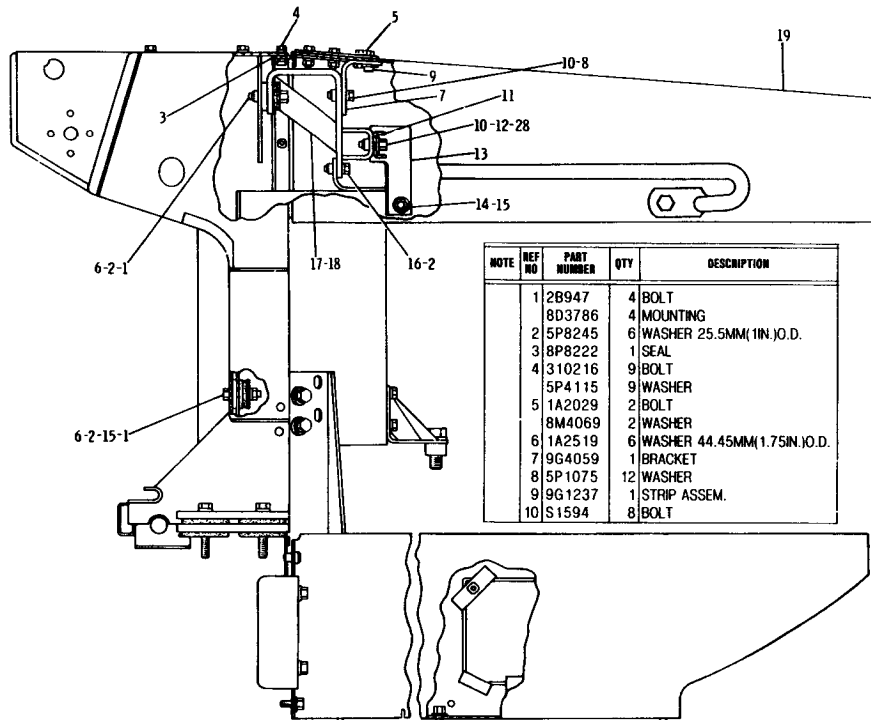

NOTE	REF NO	PART NUMBER	QTY	DESCRIPTION
	1	2B947	4	BOLT
		8D3786	4	MOUNTING
	2	5P8245	6	WASHER 25.5MM(1IN.)O.D.
	3	8P8222	1	SEAL
	4	310216	9	BOLT
		5P4115	9	WASHER
	5	1A2029	2	BOLT
		8M4069	2	WASHER
	6	1A2519	6	WASHER 44.45MM(1.75IN.)O.D.
	7	9G4059	1	BRACKET
	8	5P1075	12	WASHER
	9	9G1237	1	STRIP ASSEM.
	10	S1594	8	BOLT

	11	8P6690	1	CHANNEL
	12	1D4717	4	NUT
	13	8P6691	1	BRACKET (R.H.)
		8P6692	1	BRACKET (L.H.)

	14	7B3235	2	BOLT
		5P1076	4	WASHER
	15	1D4719	4	NUT
	16	S1621	2	BOLT
	17	8P5495	2	PLATE ASSEM.
				(EACH INCLUDES)
	18	9F2978	2	NUT
	19	8P3530	1	HOOD ASSEM.
C	20	6T3502	1	COVER ASSEM.
	21	S509	10	BOLT
	22	3R6757	2	SPACER
	23	S1571	4	BOLT
	24	2S2109	2	BRACKET
	25	9M3835	2	LATCH ASSEM.
	26	2M5795	2	PIN
		3B4607	2	COTTER PIN
	27	9M3839	2	HOOK ASSEM.
	28	5M2894	14	WASHER

C INDICATES CHANGE

323233

9G7382 HOOD & DASH GROUP-PART 1 OF 3
Serial No. 6X1679-Up

9G7382 HOOD & DASH GROUP-PART 2 OF 3
Serial No. 6X1679-Up

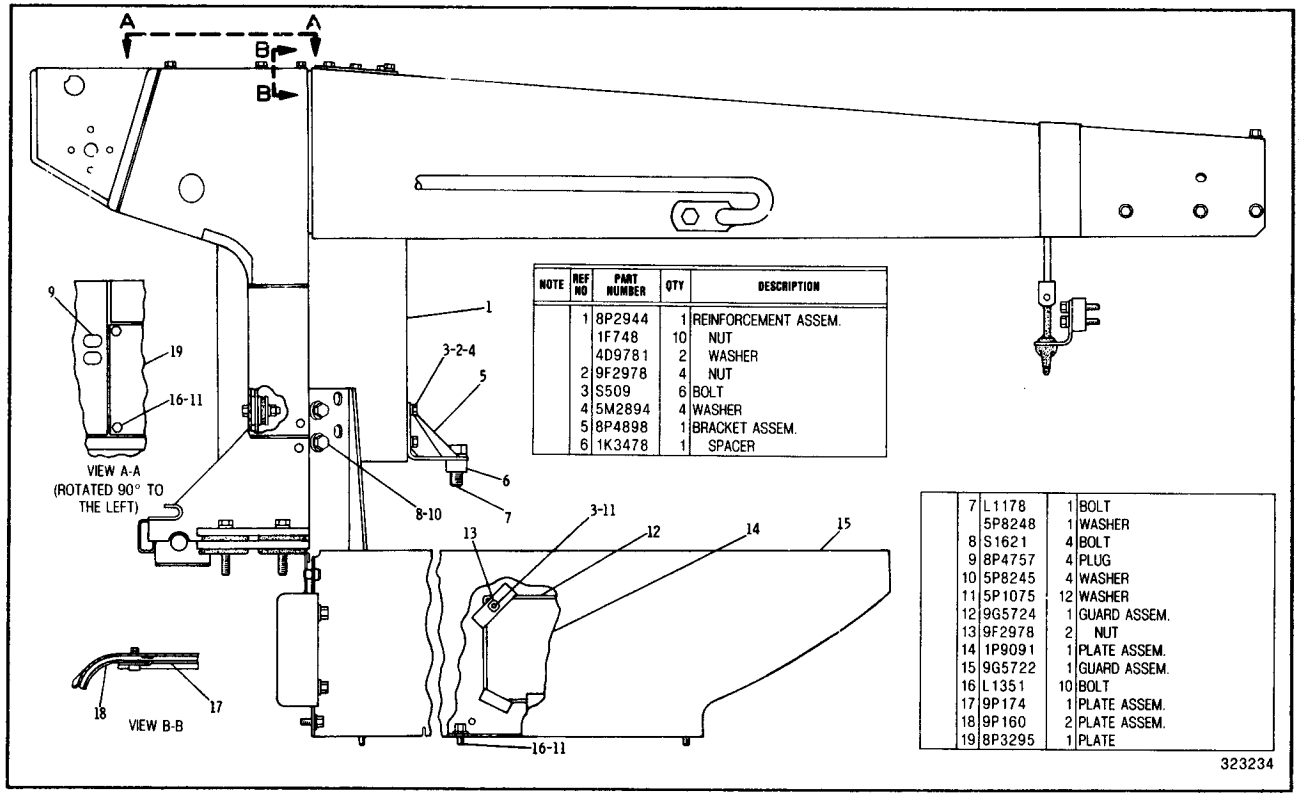

NOTE	REF NO	PART NUMBER	QTY	DESCRIPTION
	1	8P2944	1	REINFORCEMENT ASSEM.
		1F748	10	NUT
		4D9781	2	WASHER
	2	9F2978	4	NUT
	3	S509	6	BOLT
	4	5M2894	4	WASHER
	5	8P4898	1	BRACKET ASSEM.
	6	1K3478	1	SPACER
	7	L1178	1	BOLT
		5P8248	1	WASHER
	8	S1621	4	BOLT
	9	8P4757	4	PLUG
	10	5P8245	4	WASHER
	11	5P1075	12	WASHER
	12	9G5724	1	GUARD ASSEM.
	13	9F2978	2	NUT
	14	1P9091	1	PLATE ASSEM.
	15	9G5722	1	GUARD ASSEM.
	16	L1351	10	BOLT
	17	9P174	1	PLATE ASSEM.
	18	9P160	2	PLATE ASSEM.
	19	8P3295	1	PLATE

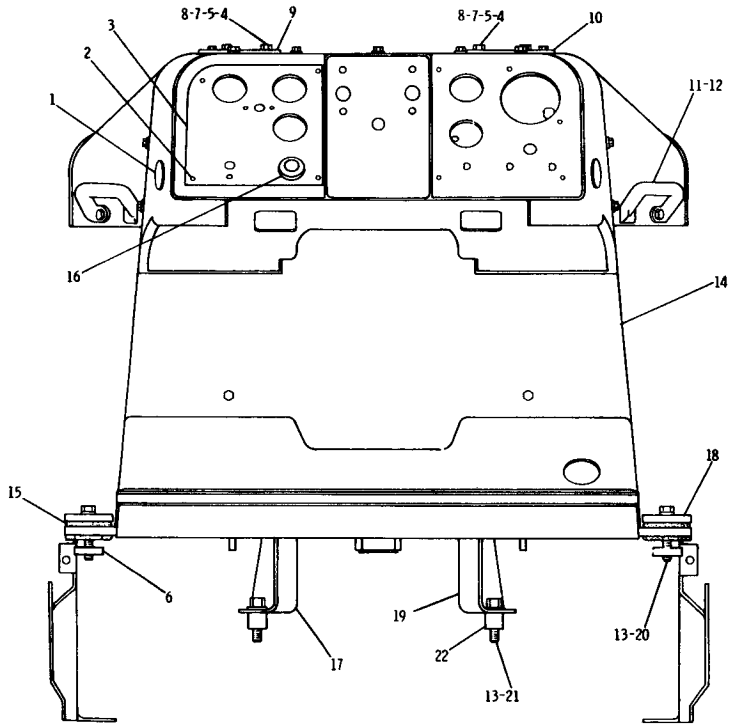

NOTE	REF NO	PART NUMBER	QTY	DESCRIPTION
	1	4F8711	2	PLUG
	2	7B3028	4	DRIVE SCREW
C	3	6T5810	1	PANEL
	4	S509	5	BOLT
	5	1D4717	5	NUT
	6	3T2302	2	PLATE
	7	5P1075	5	WASHER (SMALL)
	8	7K3222	5	WASHER (LARGE)
	9	2P9673	1	COVER (L.H.)
	10	2P9674	1	COVER (R.H.)
	11	7G2819	2	HANDLE
	12	S1595	2	BOLT
		5P1076	4	WASHER
		1D4719	2	NUT
	13	5P8245	6	WASHER
	14	7G9737	1	DASH ASSEM.
	15	8P3595	8	BUSHING
	16	3T7856	1	PLUG
	17	8P8443	1	PLATE ASSEM.
	18	8P3185	2	PLATE
	19	8P8444	1	PLATE ASSEM.
	20	L1329	4	BOLT
	21	1A1460	2	BOLT
	22	1F9341	2	SPACER

C INDICATES CHANGE

323235

9G7382 HOOD & DASH GROUP-PART 3 OF 3
Serial No. 6X1679-Up

5A7778 RECOIL MECHANISM GUARD GROUP

Note: Quantities shown are those required for both R.H. and L.H. Sides

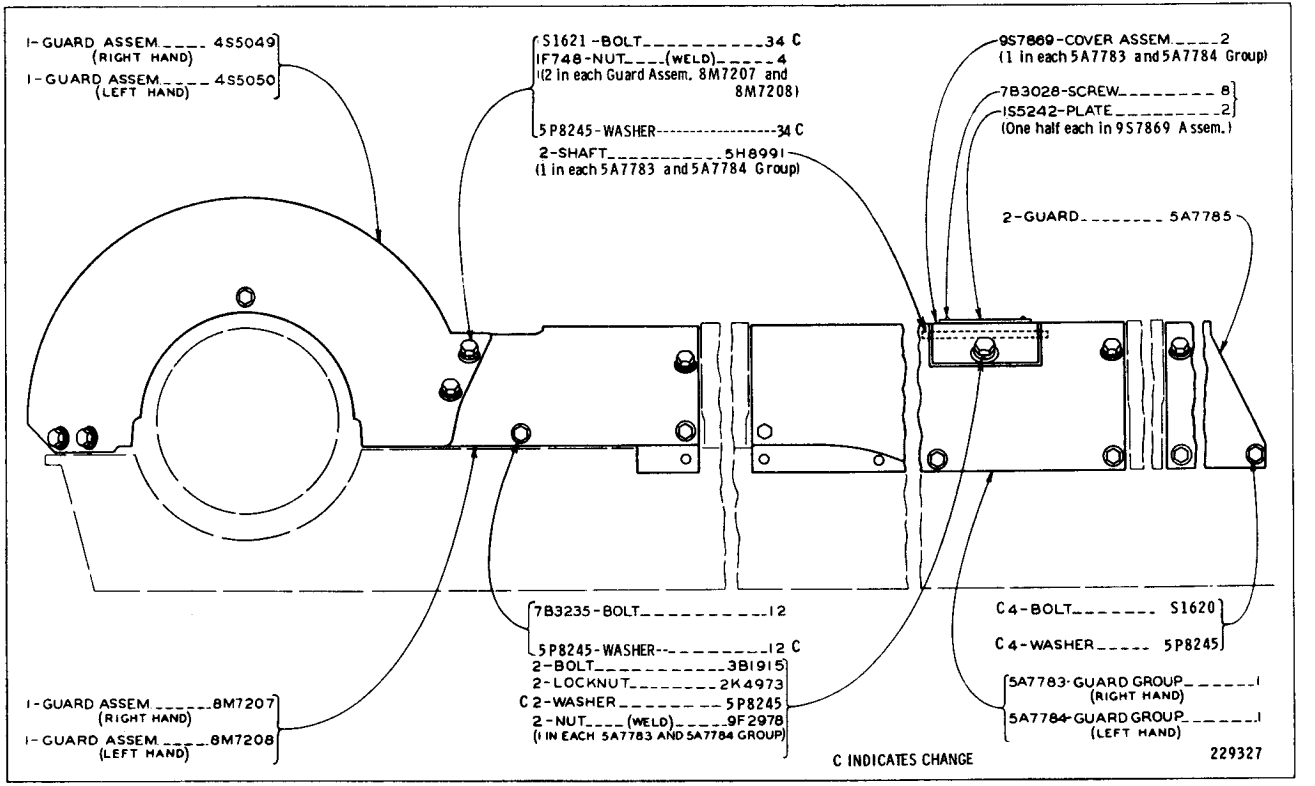

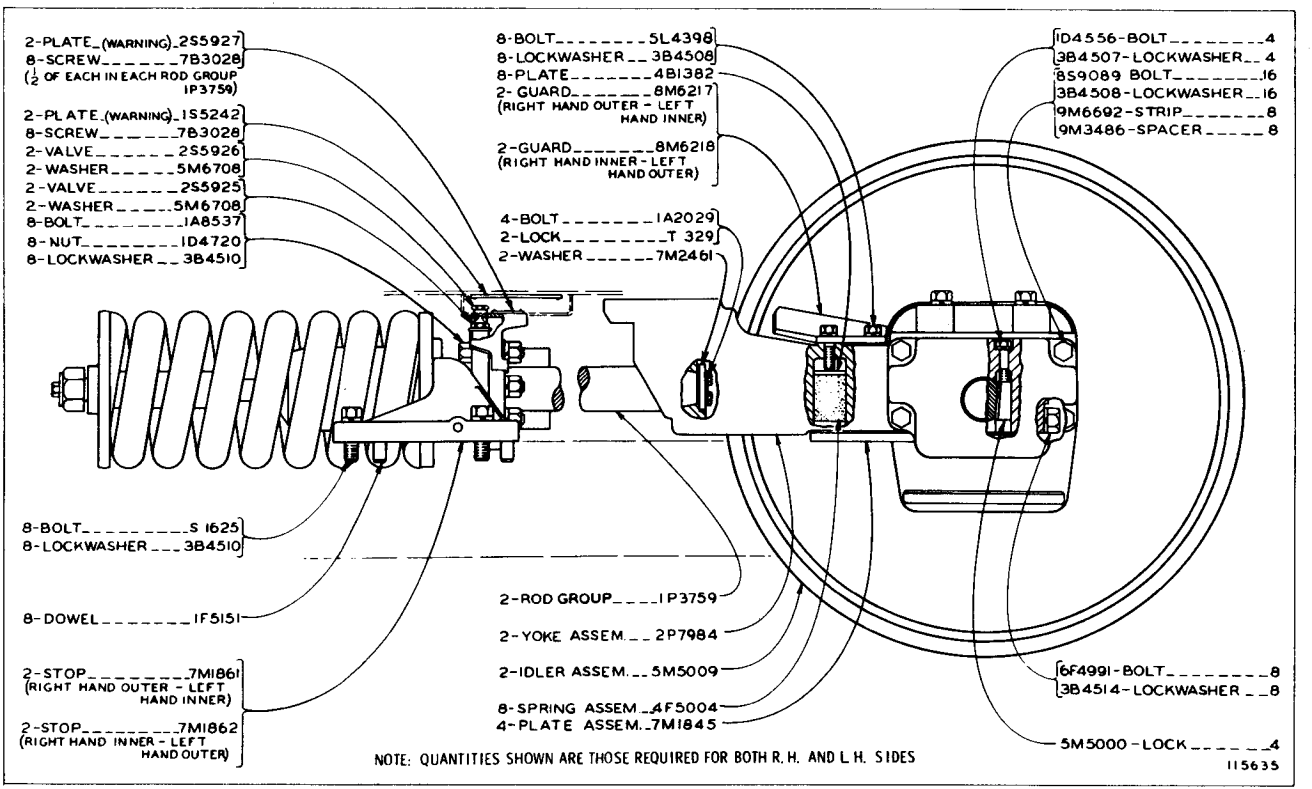

5A8085 FRONT IDLER GROUP — Part 1

5A8085 FRONT IDLER GROUP — Section Views — Part 2

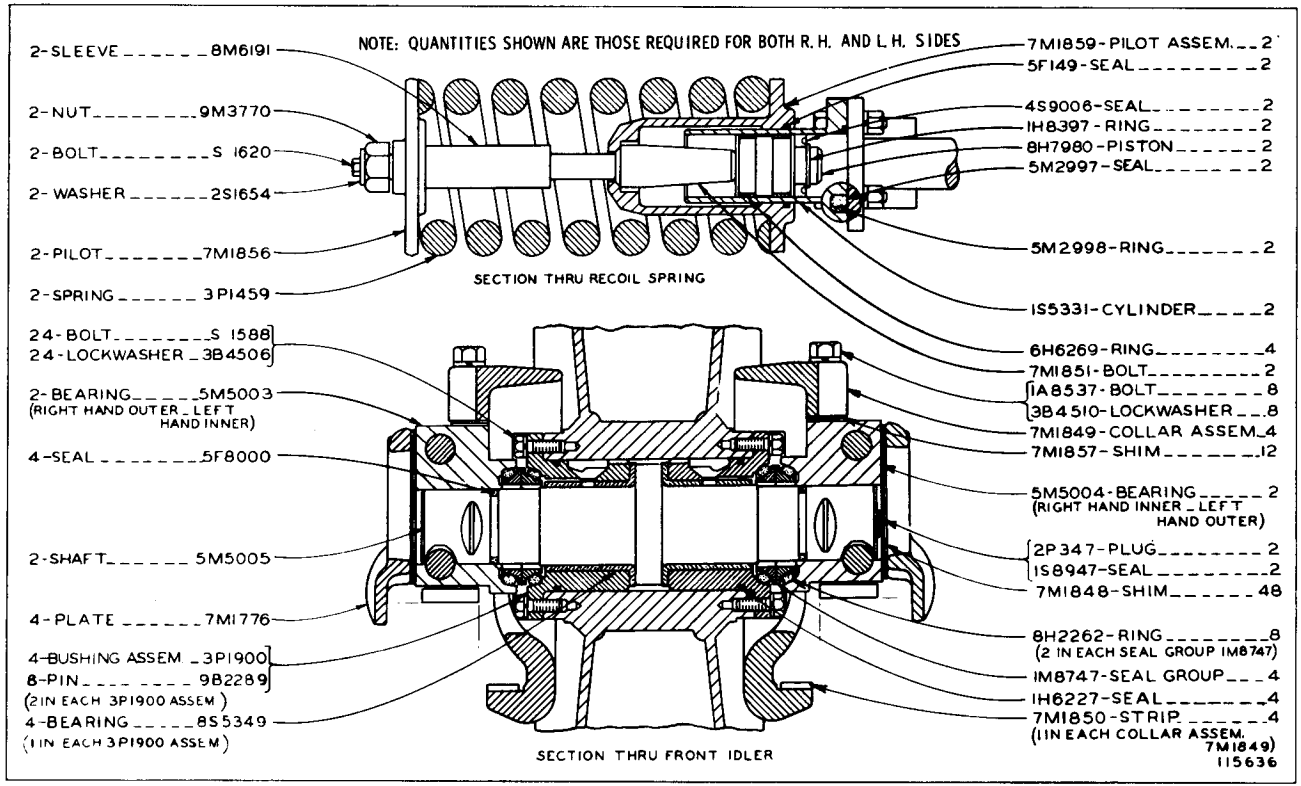

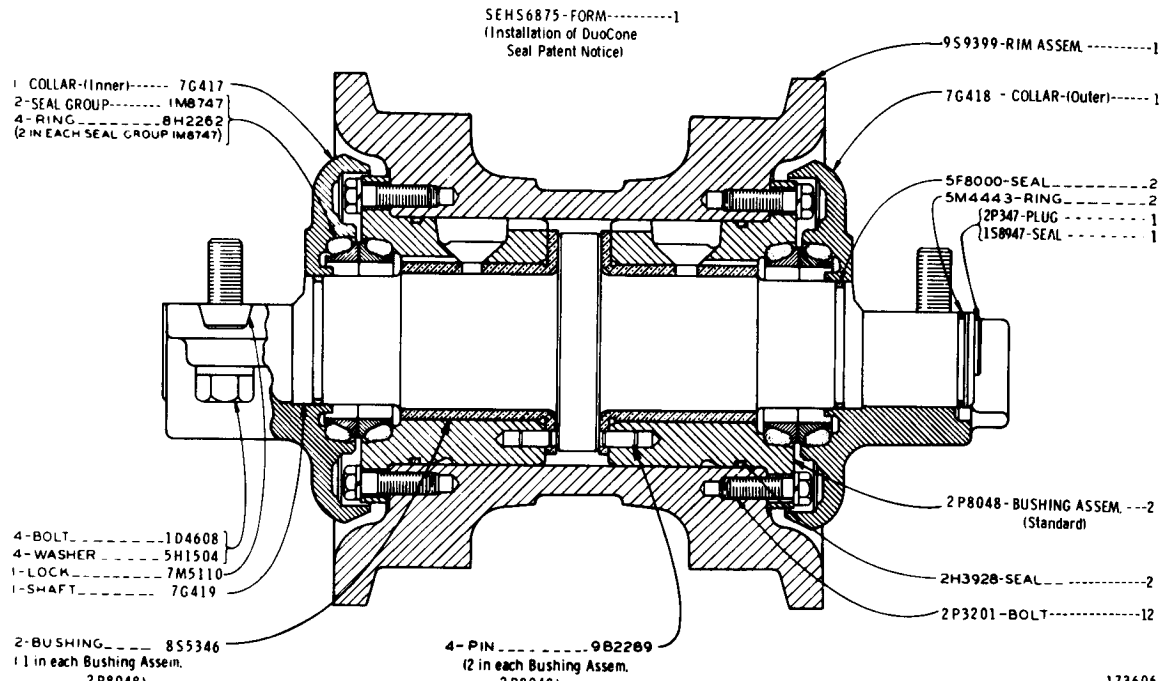

7G421 TRACK ROLLER GROUP—Single Flange—6 Required
Serial No. 6X1115 to 6X1157 inclusive

9G8029 TRACK ROLLER GROUP—Single Flange—6 Required
Serial No. 6X1158—Up

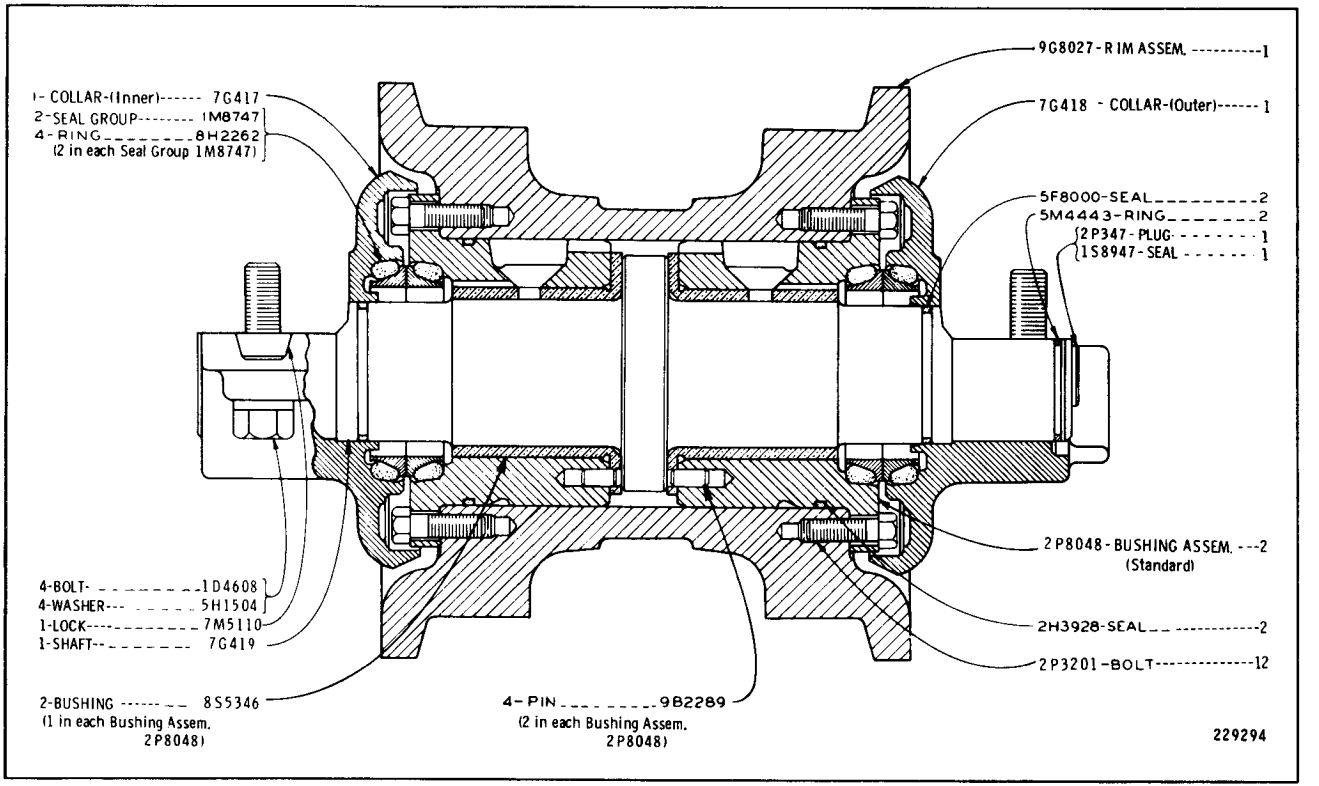

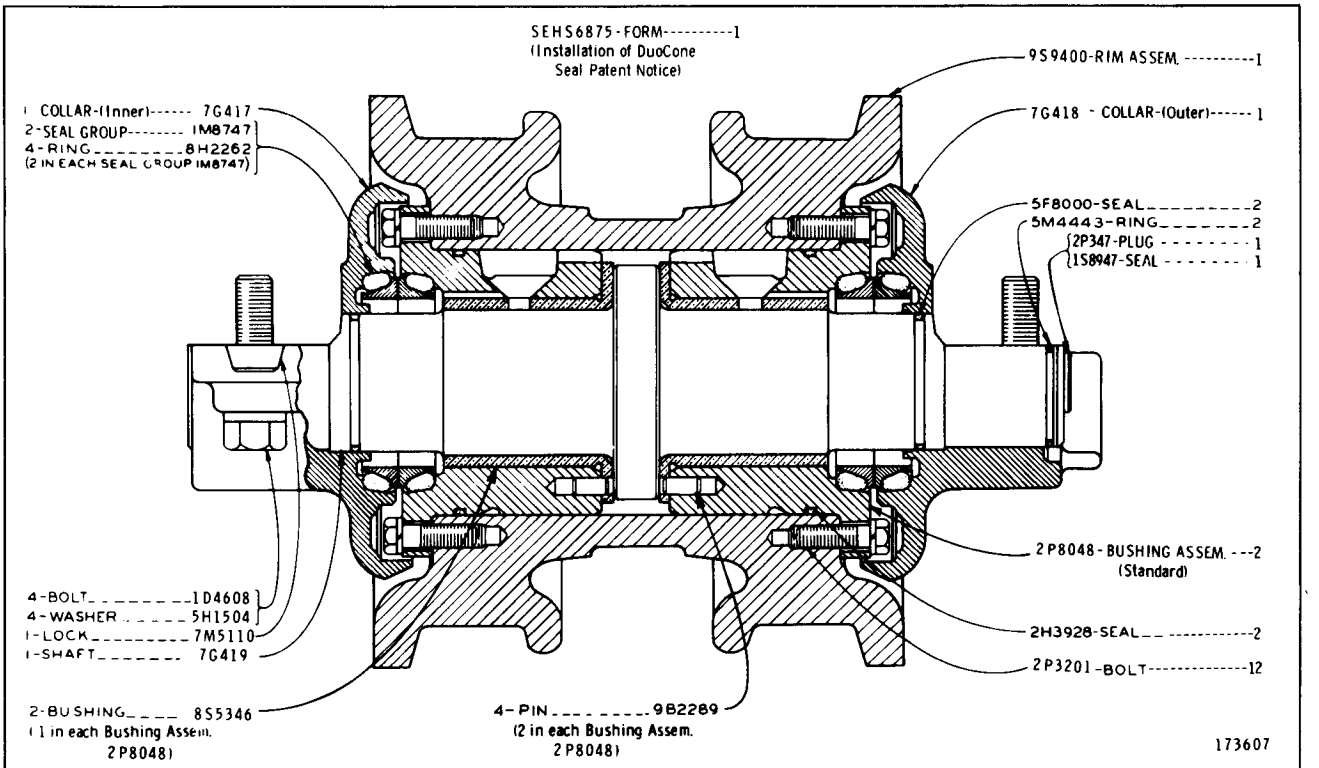

7G423 TRACK ROLLER GROUP—Double Flange—8 Required
Serial No. 6X1115 to 6X1122 inclusive

9G8034 TRACK ROLLER GROUP—Double Flange—8 Required
Serial No. 6X1123—Up

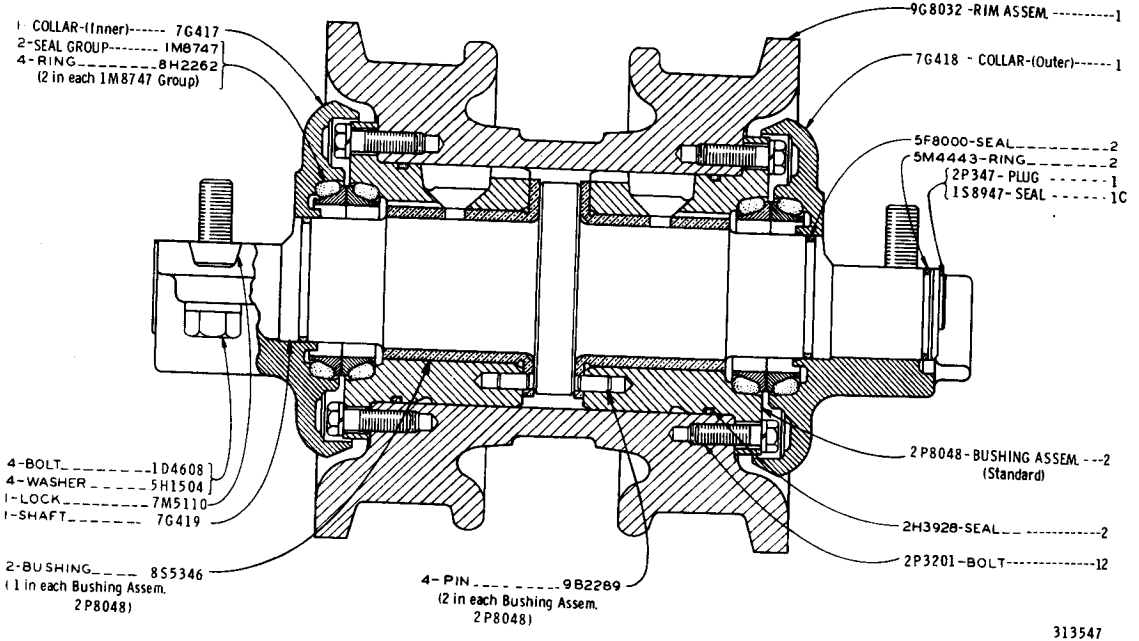

REF. NO.	PART NUMBER	DESCRIPTION	QTY
1	9S8320	ROLLER ASSEM.	1
2	9S3567	COLLAR ASSEM. (Includes)	1
3	1M4291	DOWEL	2
4	9S3565	SHAFT	1
5	1H9696	SEAL	1
6	1M7914	RING	1
7	1M8747	SEAL GROUP (Includes)	1
8	8H2262	SEAL	2
9	9S3582	CONE	2
10	9S3581	CUP	2
C 11	8P6188	PLATE	1
12	2H6338	SEAL	1
13	T703	BOLT	2
	T329	LOCK	1
14	2P347	PLUG	1
15	1S8947	SEAL	1
16	S1594	BOLT	3
	3B4506	LOCKWASHER	3
17	5M2043	COVER	1

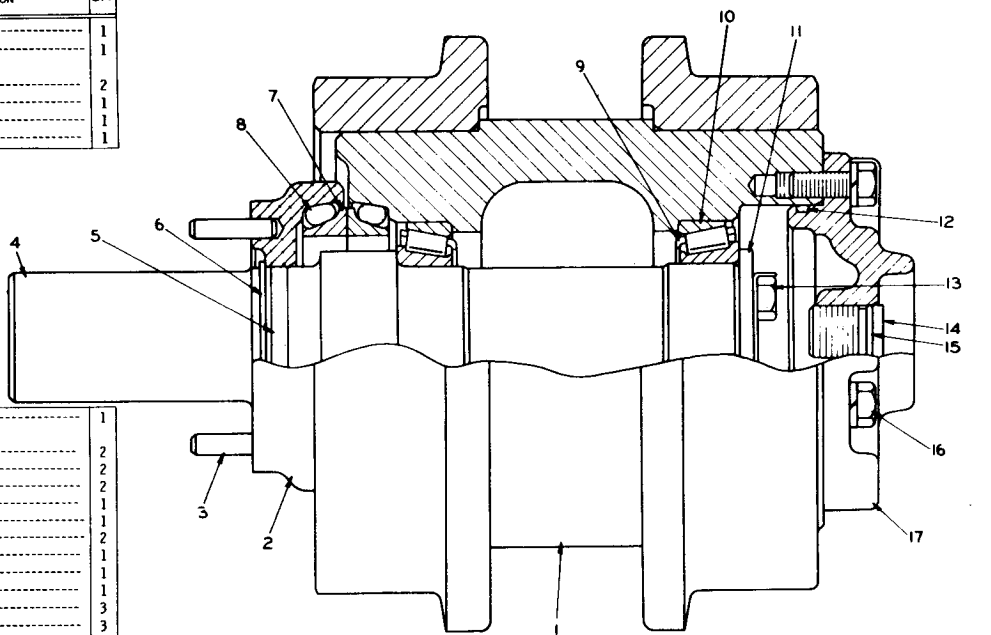

C INDICATES CHANGE 220503

9S2730 TRACK CARRIER ROLLER GROUP—4 Required
Serial No. 6X1115 to 6X1336 inclusive

3T3206 TRACK CARRIER ROLLER GROUP—4 Required
Serial No. 6X1337—Up

REF. NO.	PART NUMBER	DESCRIPTION	QTY.
1	9S8320	ROLLER ASSEM.	1
2	9S3567	COLLAR ASSEM. (Includes)	1
3	1M4291	DOWEL	2
4	3T3207	SHAFT	1
5	1H9696	SEAL	1
6	1M7914	RING	1
7	1M8747	SEAL GROUP (Includes)	1
8	8H2262	SEAL	2
9	9S3582	CONE	2
10	9S3581	CUP	2
11	8P6188	PLATE	1
12	2H6338	SEAL	1
13	5K9107	BOLT	2
14	2P347	PLUG	1
15	1S8947	SEAL	1
16	S1594	BOLT	3
17	5M2043	COVER	1

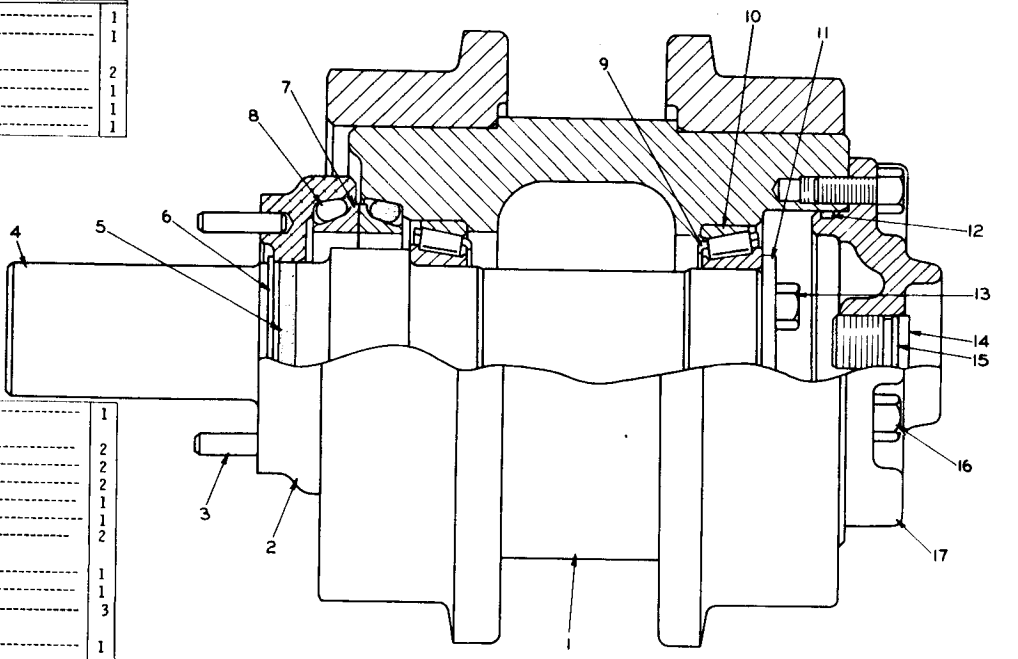

232910

7G8571 TRACK ROLLER FRAME GROUP

NOTE: QUANTITIES SHOWN ARE THOSE REQUIRED FOR BOTH R.H. & L.H. SIDES

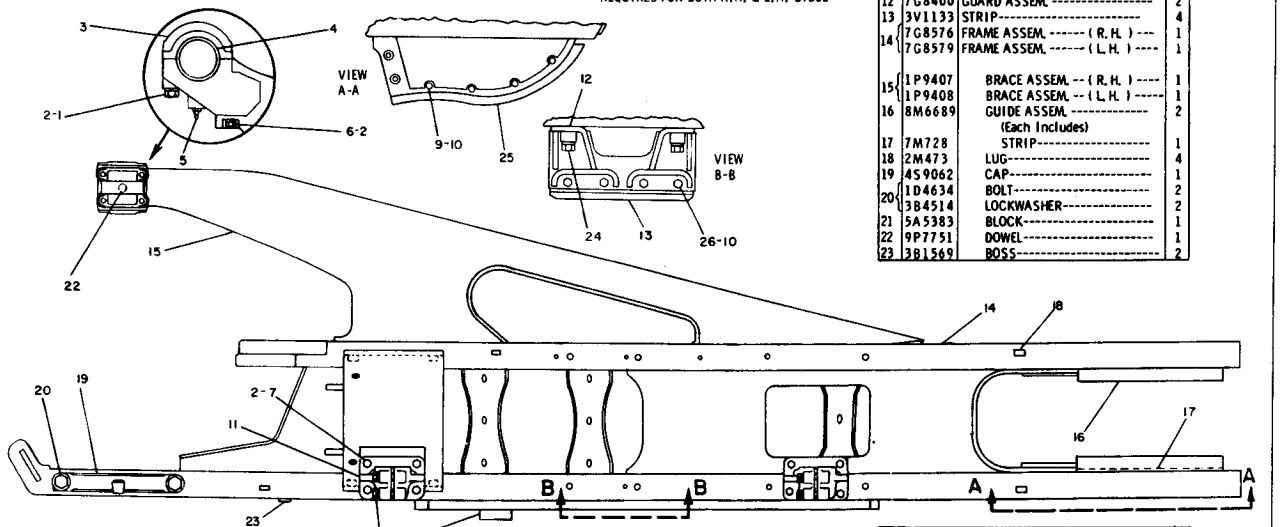

REF. NO.	PART NUMBER	DESCRIPTION	QTY.
1	L1169	BOLT	4
2	3B4510	LOCKWASHER	32
3	7M699	CAP	2
	9P7752	DOWEL	2
4	7M1822	SHELL	4
5	3B8490	FITTING	2
6	1D4593	BOLT	4
7	1A1135	BOLT	16
8	1B4367	BOLT	8
9	7B3235	BOLT	24
10	3B4508	LOCKWASHER	40
11	1S8734	BRACKET	4
12	7G8400	GUARD ASSEM.	2
13	3V1133	STRIP	4
14	7G8576	FRAME ASSEM. (R.H.)	1
	7G8579	FRAME ASSEM. (L.H.)	1
15	1P9407	BRACE ASSEM. (R.H.)	1
	1P9408	BRACE ASSEM. (L.H.)	1
16	8M6689	GUIDE ASSEM. (Each Includes)	2
17	7M728	STRIP	1
18	2M473	LUG	4
19	4S9062	CAP	1
20	1D4634	BOLT	2
	3B4514	LOCKWASHER	2
21	5A5383	BLOCK	1
22	9P7751	DOWEL	1
23	3B1569	BOSS	2
24	1D4608	BOLT	8
	2S115	WASHER	8
	3P4133	SPACER	8
25	9S8245	STRIP (L.H. Outer-Front, R.H. Inner-Front & R.H. Rear)	3
	9S8246	STRIP (R.H. Outer-Front, L.H. Inner-Front & L.H. Rear)	3
26	6H1717	BOLT	16

173609

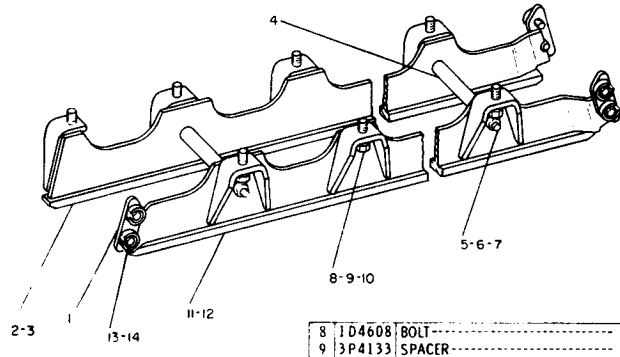

REF NO	PART NUMBER	DESCRIPTION	QTY
1	2M4668	RETAINER	6
2	7G8527	GUARD ASSEM. ---(Inner R. H.)--	1
3	7G8532	GUARD ASSEM ---(Inner L. H.)--	1
4	7M2530	TUBE	8
5	7M2531	ROD	8
6	1B4206	NUT	16
7	3B4510	LOCKWASHER	16
8	1D4608	BOLT	26
9	3P4133	SPACER	26
10	2S115	WASHER	26
11	7G8533	GUARD ASSEM. ---(outer R. H.)---	1
12	7G8528	GUARD ASSEM. ---(outer L. H.)---	1
13	S1595	BOLT	12
14	3B4508	LOCKWASHER	12

175003

7G8529 TRACK ROLLER GUARD GROUP

CONSISTS OF:

36	3P1109	BUSHING-TRACK
72	6T1529	SEAL ASSEMBLY
36	9G1642	STOPPER
36	7G4408	PLUG

6T3580 SEAL & BUSHING GROUP-TRACK
Field Installation

3P1151 TRACK GROUP — 927 mm (36.50 in.) — Grouser Shoe — 2 Required — Sealed and Lubricated

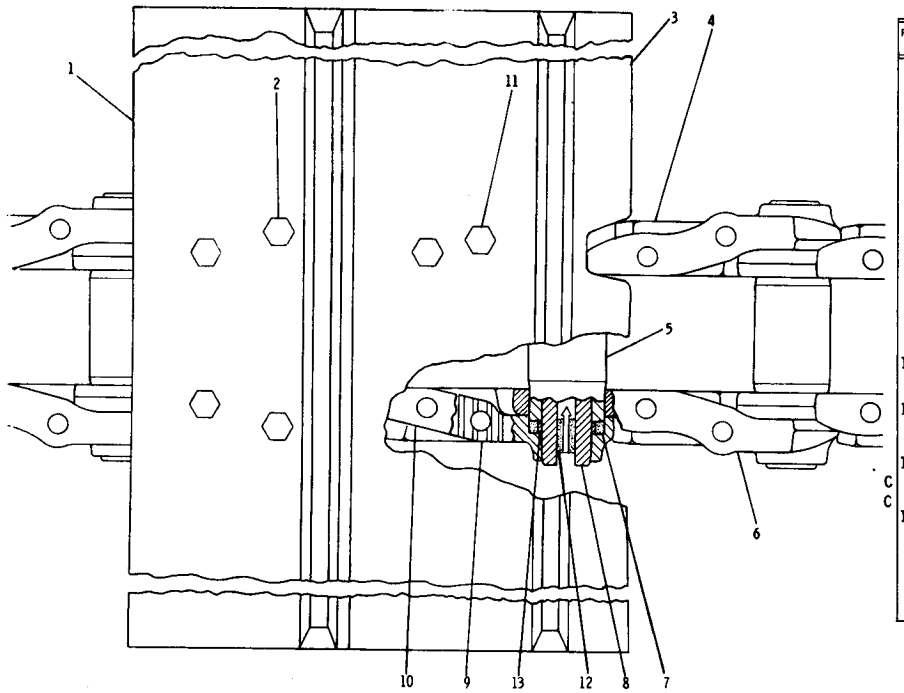

REF. NO.	PART NUMBER	DESCRIPTION	QTY
1	1P2062	SHOE	40
2	1S1859	BOLT	160
	1S1860	NUT	160
3	3P1132	SHOE-(master)	1
4	3P1110	LINK ASSEM. (Includes)	1
	3P1113	LINK-(L. H.)	40
5	3P1109	BUSHING	41
6	3P1112	LINK-(R. H.)	40
7	3P1107	SEAL ASSEM.	82
8	3P1108	PIN	41
9	3P1114	LINK-(master) (R. H. - Pin End)	1
	3P1115	LINK-(master) (L. H. - Pin End)	1
10	3P1116	LINK-(master) (R. H. - Bushing End)	1
	3P1117	LINK-(master) (L. H. - Bushing End)	1
11	9S1838	BOLT	4
12	3P3080	PLUG-(black)	41
	3P1103	STOPPER	41
		- OR -	
	7G4408	PLUG-(clear)	41
	9G1642	STOPPER	41
13	3P1104	RING	82

C INDICATES CHANGE

229304

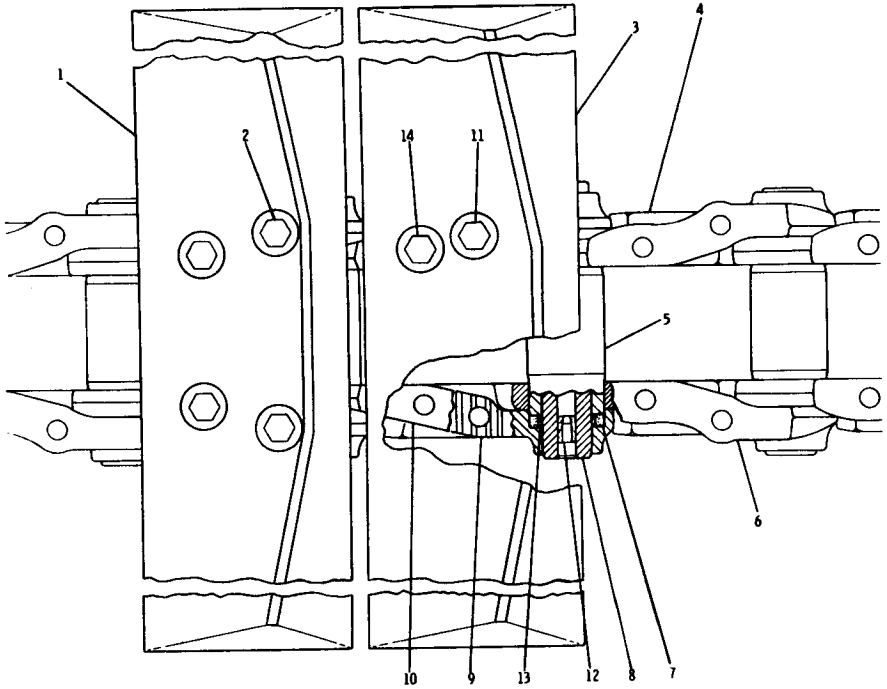

REF. NO.	PART NUMBER	DESCRIPTION	QTY
1	3P1134	SHOE	40
C	5A7524	BOLT-90.06 mm(3.90 in.) long	80
2	1S1859	BOLT-54.61 mm(2.15 in.) long	80
C	1S1860	NUT	160
3	3P1133	SHOE-(master)	1
	3P1119	LINK ASSEM.	1
4		(Includes)	
	3P1113	LINK-(L. H.)	40
5	3P1109	BUSHING	41
6	3P1112	LINK-(R. H.)	40
C 7	3P1107	SEAL ASSEM.	82
8	3P1108	PIN	41
	3P1114	LINK-(master) (R. H. -PIN END)	1
9	3P1115	LINK-(master) (L. H. -PIN END)	1
	3P1116	LINK-(master) (R. H. -BUSHING END)	1
10	3P1117	LINK-(master) (L. H. -BUSHING END)	1
11	3P1111	BOLT-138.93 mm(5.47 in.) long	2
	3P3080	PLUG-(short)	41
	3P1103	STOPPER	41
12		- OR -	
C	7G4408	PLUG-(long)	41
C	9G1642	STOPPER	41
13	3P1104	RING	82
14	8S1838	BOLT-107.2mm(4.22 in.) long	2

C INDICATES CHANGE

229308

3P1150 TRACK GROUP — 927 mm (36.50 in.) — LGP Shoe — 2 Required — Sealed and Lubricated
AN ATTACHMENT

3P1101 TRACK GROUP — 927 mm (36.50 in.) — Grouser Shoe — 2 Required — Sealed Non-Lubricated
AN ATTACHMENT

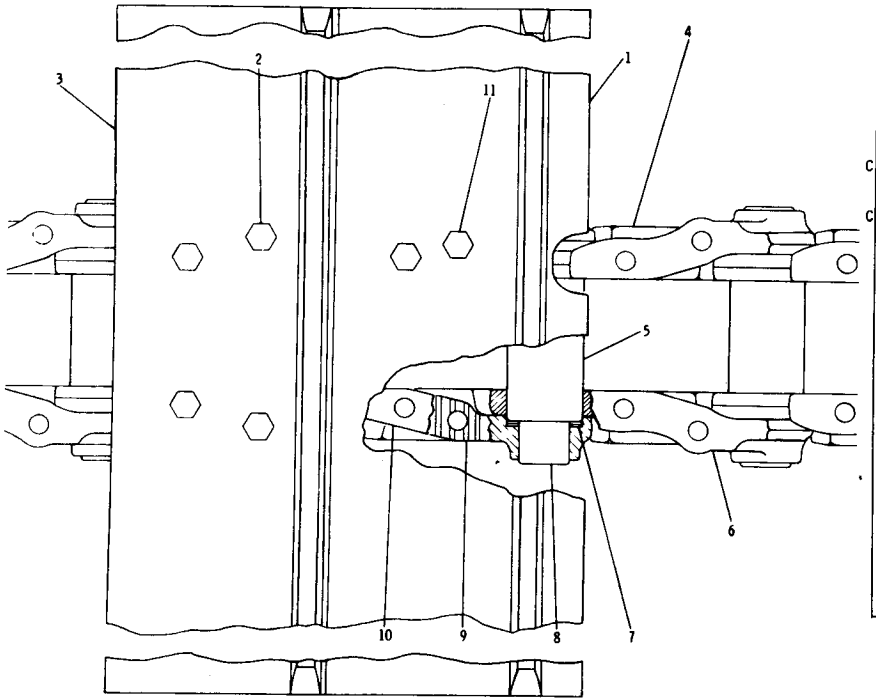

	REF. NO.	PART NUMBER	DESCRIPTION	QTY
C	1	3P1132	SHOE--------(master)----------	1
	2	1S1859	BOLT----------	160
		1S1860	NUT----------	160
C	3	1P2062	SHOE----------	40
	4	3P5927	LINK ASSEM. ----------	1
			(Includes)	
		3P1113	LINK---------(L. H.)---------	40
	5	4M5991	BUSHING----------	41
	6	3P1112	LINK---------(R. H.)---------	40
	7	8M7231	SEAL----------	164
	8	4M5989	PIN----------	41
	9	3P1114	LINK---------(master)--------	1
			(R. H. -Pin End)	
		3P1115	LINK---------(master)-------	1
			(L. H. -Pin End)	
	10	3P1116	LINK---------(master)---------	1
			(R. H. -Bushing End)	
		3P1117	LINK---------(master)--------	1
			(L. H. -Bushing End)	
	11	9S1838	BOLT----------	4

C INDICATES CHANGE

157690

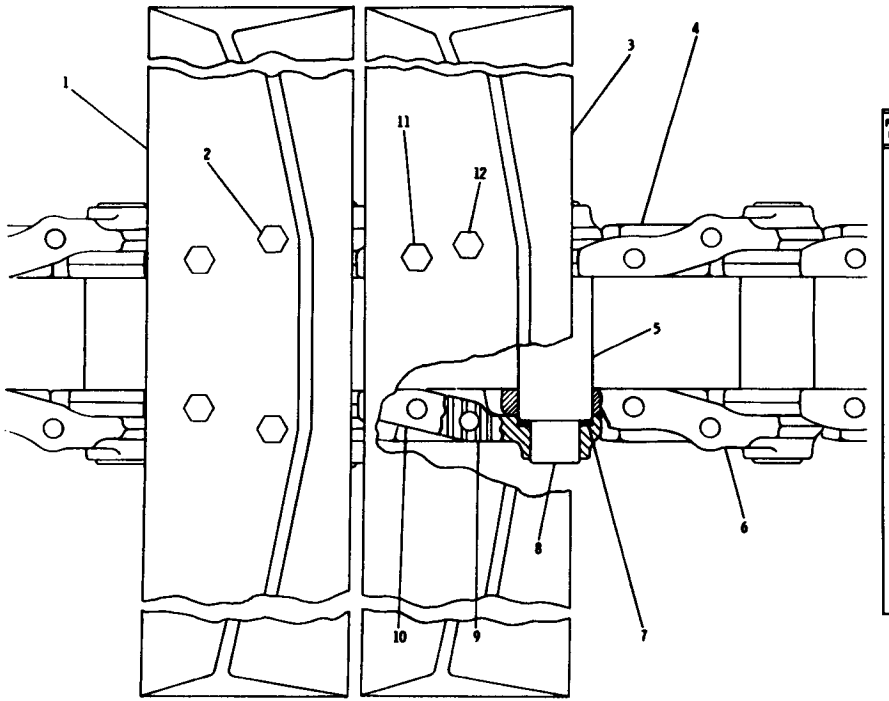

REF. NO.	PART NUMBER	DESCRIPTION	QTY
1	3P1134	SHOE	40
	5A7524	BOLT----3.90 in. (90.06 mm) long	80
2	1S1859	BOLT----2.15 in. (54.76 mm) long	80
	1S1860	NUT	160
3	3P1133	SHOE---------(master)----------	1
4	3P1087	LINK ASSEM. ---------- (Includes)	1
	3P1113	LINK-------(L. H.)----------	40
5	4M5991	BUSHING	41
6	3P1112	LINK-------(R. H.)----------	40
7	8M7231	SEAL	164
8	4M5989	PIN	41
9	3P1114	LINK---------(master)------- (R. H. - Pin End)	1
	3P1115	LINK--------(master)-------- (L. H. - Pin End)--------	1
	3P1116	LINK-------(master)--------- (R. H. - Bushing End)	1
10	3P1117	LINK-------(master)--------- (L. H. - Bushing End)	1
11	9S1838	BOLT--4.22 in. (107.18 mm)long	2
12	3P1111	BOLT--5.47 in. (138.93 mm)long	2

3P1102 TRACK GROUP — 927 mm (36.50 in.) — LGP Shoe — Sealed Non-Lubricated
AN ATTACHMENT

		Consists of:	Page
1	8P4157	Hydraulic Tank Mounting Group	164
1	9P2410	Bulldozer Lines Group	179
1	8P4167	Pump Lines Group	174
1	8P5038	Implement Linkage Group	184
1	3G1731	Valve and Tank Group	158
1	3G4768	Gear Pump Group	173
1	7S4128	Film	
1	.....	Form SMHS6817	

9P7023 HYDRAULIC CONTROL ARRANGEMENT — Bulldozer

		Consists of:	Page
1	8P4157	Hydraulic Tank Mounting Group	164
1	9P2410	Bulldozer Lines Group	179
1	8P5039	Implement Linkage Group	185
1	3G1732	Valve and Tank Group	160
1	8P4167	Pump Lines Group	174
1	9P477	Tilt Cylinder Lines Group	183
1	3G4768	Gear Pump Group	173
1	7S4128	Film	
1	.....	Form SMHS6817	

9P7022 HYDRAULIC CONTROL ARRANGEMENT — Bulldozer and Blade Tilt

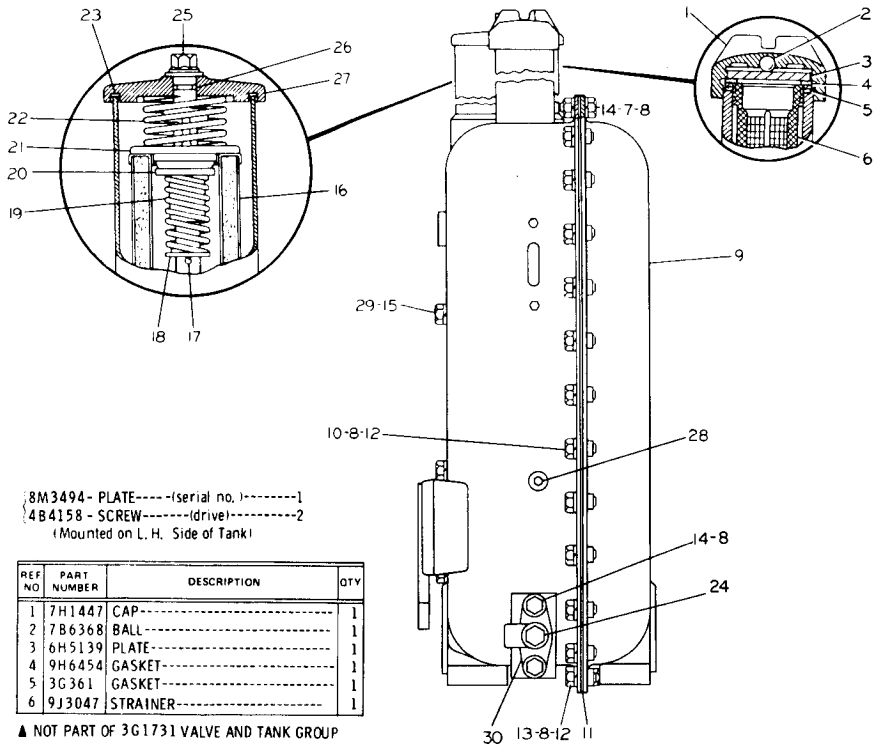

7	1D4717	NUT	3
	5B9627	WASHER	3
8	3B4506	LOCKWASHER	42
9	3G7229	COVER ASSEM.	1
10	9F2978	NUT	29
11	3H9523	GASKET	1
12	L1351	BOLT---2.22 cm (.875 in.) long	37
13	9F2978	NUT	4
14	1A2029	BOLT	5
15	S1595	BOLT	2
▲ 16	4J816	ELEMENT ASSEM. ---(disposable)---	2
		-OR-	
	3G5653	ELEMENT (fire resistant fluid)	2
17	2M8729	PIN	1
18	3J1997	RETAINER	1
19	7F9802	SPRING	1
20	5J1096	VALVE GROUP	1
21	5J1095	SEAT	1
22	9J8775	SPRING	1
23	3J1991	GASKET	1
24	4B7739	PLUG	1
25	7J5590	BOLT	1
26	8F9206	SEAL	1
27	4J596	COVER	1
28	9S8004	PLUG	1
	3J1907	SEAL	1
29	3B4508	LOCKWASHER	2
30	8H9819	ADAPTER	1
	8H9818	GASKET	1

229485

8M3494 - PLATE-----(serial no.)--------1
4B4158 - SCREW-------(drive)----------2
(Mounted on L.H. Side of Tank)

REF NO	PART NUMBER	DESCRIPTION	QTY
1	7H1447	CAP	1
2	7B6368	BALL	1
3	6H5139	PLATE	1
4	9H6454	GASKET	1
5	3G361	GASKET	1
6	9J3047	STRAINER	1

▲ NOT PART OF 3G1731 VALVE AND TANK GROUP

3G1731 TANK AND VALVE GROUP — Single Valve — Part 1
Hydraulic Serial No. 7X1920-Up
Part of 9P7023 Hydraulic Control Arrangement listed on Page 157

3G1731 TANK AND VALVE GROUP — Single Valve — Part 2

Hydraulic Serial No. 7X1920-Up

Part of 9P7023 Hydraulic Control Arrangement listed on Page 157

9J9403 Control Valve parts are shown on Page 162

REF. NO.	PART NUMBER	DESCRIPTION	QTY
1	9J9403	VALVE GROUP---------- (Separate Illustration)	1

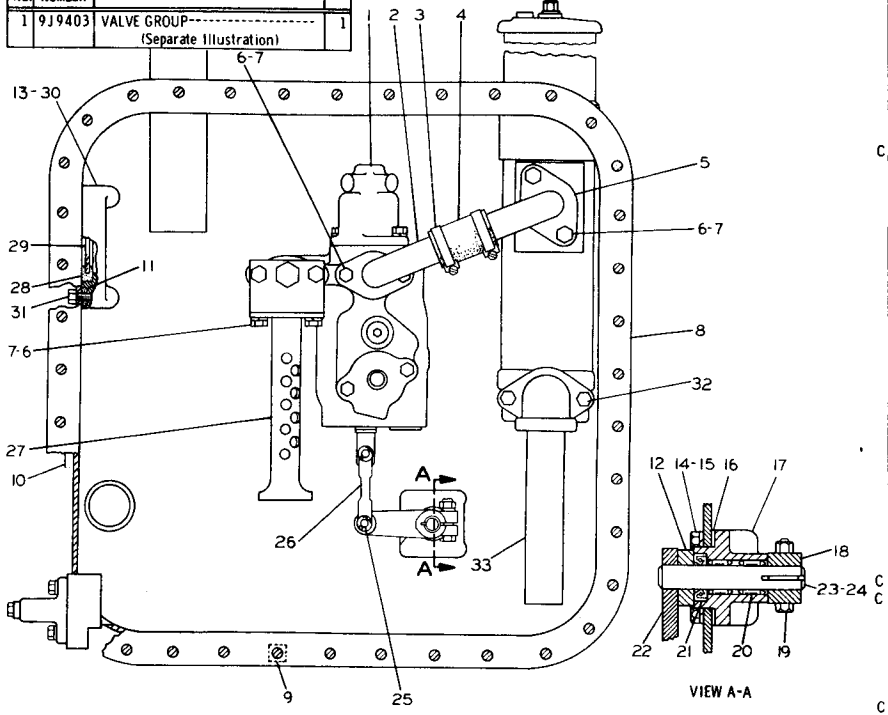

2	8J3539	TUBE ASSEM.	1
3	1J9778	CLAMP	2
4	8J2660	HOSE	1
5	8J1803	TUBE ASSEM.	1
6	S1621	BOLT	6
7	3B4508	LOCKWASHER	6
8	3G2712	TANK ASSEM.	1
9	9F2978	NUT	4
10	5J3306	FITTING	1
C 11	5H6005	SEAL	2
12	2H5746	ADAPTER	1
13	3G5980	PLATE	1
14	1A2029	BOLT	4
15	3B4506	LOCKWASHER	4
16	4J8425	GASKET	1
17	8J1841	HOUSING	1
18	2J6074	LEVER ASSEM.	1
	7H3912	BUSHING	1
19	S1591	BOLT	1
	1D4717	NUT	1
20	7F7983	BEARING	2
21	3J4407	SEAL	1
22	8J2654	LEVER ASSEM.	1
	2J1345	LEVER	1
23	8J2652	SHAFT	1
24	1B8706	KEY	1
25	1J4384	PIN	2
	3B4615	COTTER PIN	2
26	7H3932	ROD	1
27	8J2509	TUBE ASSEM.	1
28	4J8251	GROMMET	1
29	4J8252	GLASS	1
C 30	3G2692	RETAINER	1
C 31	5D353	BOLT	2
32	310219	BOLT	2
	5M2894	WASHER	2
33	3G4074	TUBE ASSEM.	1

C INDICATES CHANGE

229486

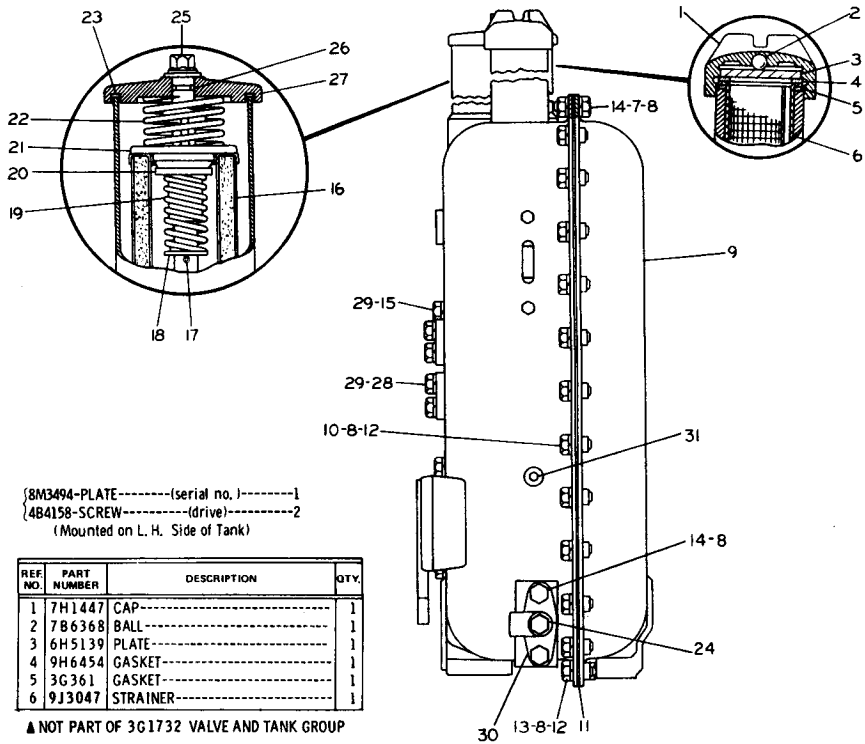

7	1D4717	NUT	3
	5B9627	WASHER	3
8	3B4506	LOCKWASHER	42
9	3G7229	COVER ASSEM.	1
10	9F2978	NUT	29
11	3H9523	GASKET	1
12	L1351	BOLT---2.22 cmt. 875 in.) long	37
13	9F2978	NUT	4
14	1A2029	BOLT	5
15	S1595	BOLT	2
▲16	4J816	ELEMENT ASSEM. --(Disposable)	2
		-OR-	
	3G5653	ELEMENT (Fire Resistant Fluid)	2
17	2M8729	PIN	1
18	3J1997	RETAINER	1
19	7F9802	SPRING	1
20	5J1096	VALVE	1
21	5J1095	SEAT	1
22	9J8775	SPRING	1
23	3J1991	GASKET	1
24	4B7739	PLUG	1
25	7J5590	BOLT	1
26	8F9206	SEAL	1
27	4J596	COVER	1
28	S1585	BOLT	4
	2J6195	COVER	2
	4J519	SEAL	2
29	3B4508	LOCKWASHER	6
30	8H9819	ADAPTER	1
	8H9818	GASKET	1
31	9S8004	PLUG	1
	3J1907	SEAL	1

8M3494-PLATE--------(serial no.)--------1
4B4158-SCREW----------(drive)----------2
(Mounted on L. H. Side of Tank)

REF. NO.	PART NUMBER	DESCRIPTION	QTY.
1	7H1447	CAP	1
2	7B6368	BALL	1
3	6H5139	PLATE	1
4	9H6454	GASKET	1
5	3G361	GASKET	1
6	9J3047	STRAINER	1

▲NOT PART OF 3G1732 VALVE AND TANK GROUP

229488

3G1732 HYDRAULIC TANK AND VALVE GROUP — Two Valve — Part 1
Hydraulic Serial No. 8X5800-Up
Part of 9P7022 Hydraulic Control Arrangement listed on Page 157

3G1732 HYDRAULIC TANK AND VALVE GROUP — Two Valve — Part 2

Hydraulic Serial No. 8X5800-Up

Part of 9P7022 Hydraulic Control Arrangement listed on Page 157

9J9833 Valve parts are shown on Page 163

REF. NO.	PART NUMBER	DESCRIPTION	QTY
1	9J9833	VALVE GROUP (Separate Illustration)	1
2	8J3539	TUBE ASSEM.	1
3	310219	BOLT	2
	5M2894	WASHER	2

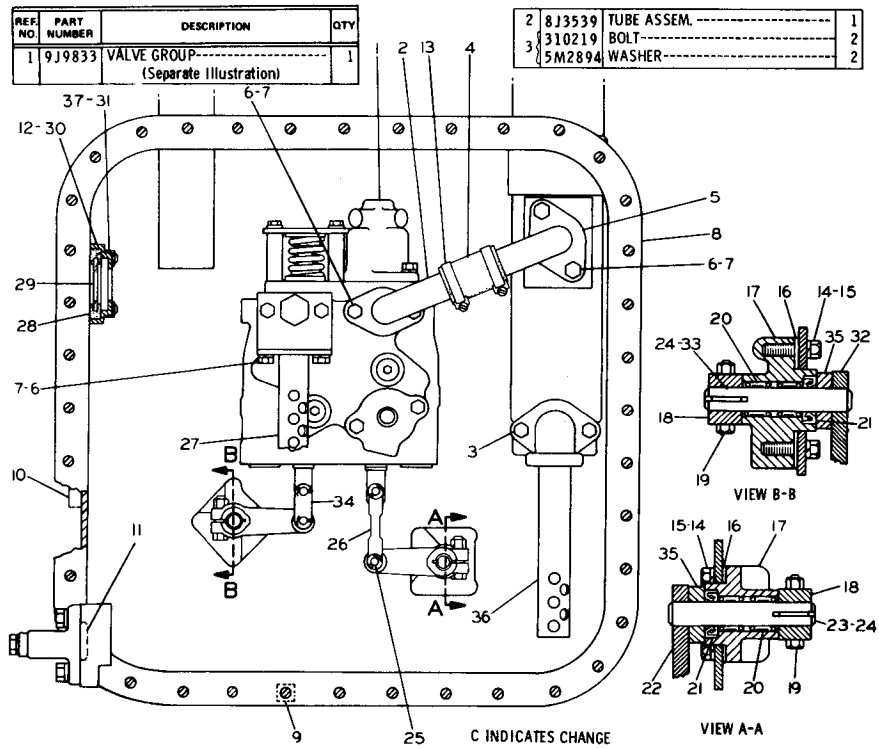

C INDICATES CHANGE

4	8J2660	HOSE	1
5	8J1803	TUBE ASSEM.	1
6	S1621	BOLT	6
7	3B4508	LOCKWASHER	6
8	3G2708	TANK ASSEM.	1
9	9F2978	NUT----(weld)	4
10	5J3306	FITTING	1
11	4J8996	SEAL	1
12	3G5980	PLATE	1
13	1J9778	CLAMP	2
14	1A2029	BOLT	8
15	3B4506	LOCKWASHER	8
16	4J8425	GASKET	2
17	8J1841	HOUSING	2
18	2J6074	LEVER ASSEM.	2
	7H3912	BUSHING	1
19	S1591	BOLT	2
	1D4717	NUT	2
20	7F7983	BEARING	4
21	3J4407	SEAL	2
22	8J2654	LEVER ASSEM.	1
	2J1345	LEVER	1
23	8J2652	SHAFT	1
24	1B8706	KEY	2
25	1J4384	PIN	4
	3B4615	COTTER PIN	4
26	7H3932	ROD	1
27	8J2509	TUBE ASSEM.	1
28	4J8251	GROMMET	1
29	4J8252	GLASS	1
C 30	3G2692	RETAINER	1
C 31	5D353	BOLT	2
32	8J2653	LEVER ASSEM.	1
	2J1345	LEVER	1
33	8J2652	SHAFT	1
34	5H2207	LINK	2
35	2H5746	ADAPTER	2
36	3G4074	TUBE ASSEM.	1
C 37	5H6005	SEAL	2

229489

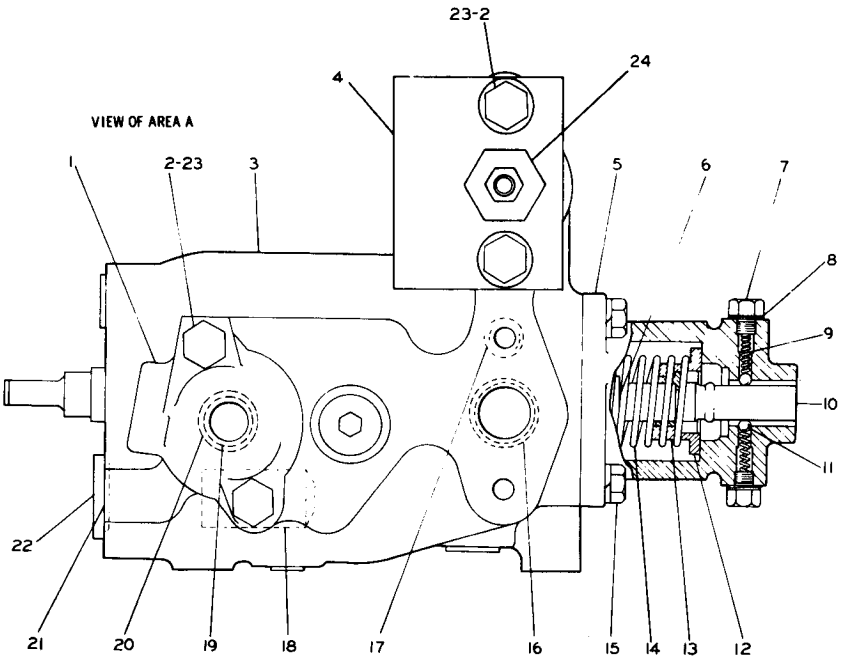

REF. NO.	PART NUMBER	DESCRIPTION	QTY.
1	8J3554	HOUSING	1
2	V375	BOLT	4
3	9J7193	VALVE GROUP (Separate Illustration)	1
4	8J5449	BODY	1
5	6J9992	RETAINER	1
6	8J3557	SPACER	1
7	7J1767	PLUG	4
8	6J6516	SHIM	8
9	6J9996	SPRING	4
10	8J3556	DETENT	1
11	5H1472	BALL	4
12	5J9092	SPACER	1
13	5J9091	SPACER	1
14	4J5105	SPRING	1
15	1A2029	BOLT	2
	3B4506	LOCKWASHER	2
16	4J8997	SEAL	5
17	6F6672	SEAL	10
18	5J9078	VALVE	2
	2A5885	SPRING	1
19	5J9098	SPRING	1
20	4J519	SEAL	1
21	4K1388	SEAL	1
22	9S8009	PLUG	1
23	3B4508	LOCKWASHER	4
C 24	3G8078	VALVE GROUP (Separate Illustration)	1

C INDICATES CHANGE

171196

9J9403 CONTROL VALVE GROUP
Hydraulic Serial No. 7X1920 To 7X2286 Inclusive
9J7193-Page 165,3G8078-Page 166
Part Of 3T1731 Tank & Valve

9J9403 CONTROL VALVE GROUP
Hydraulic Serial No. 7X2287-Up
1U4662-Page 165A,3G8078-Page 166
Part Of 3G1731 Tank & Valve

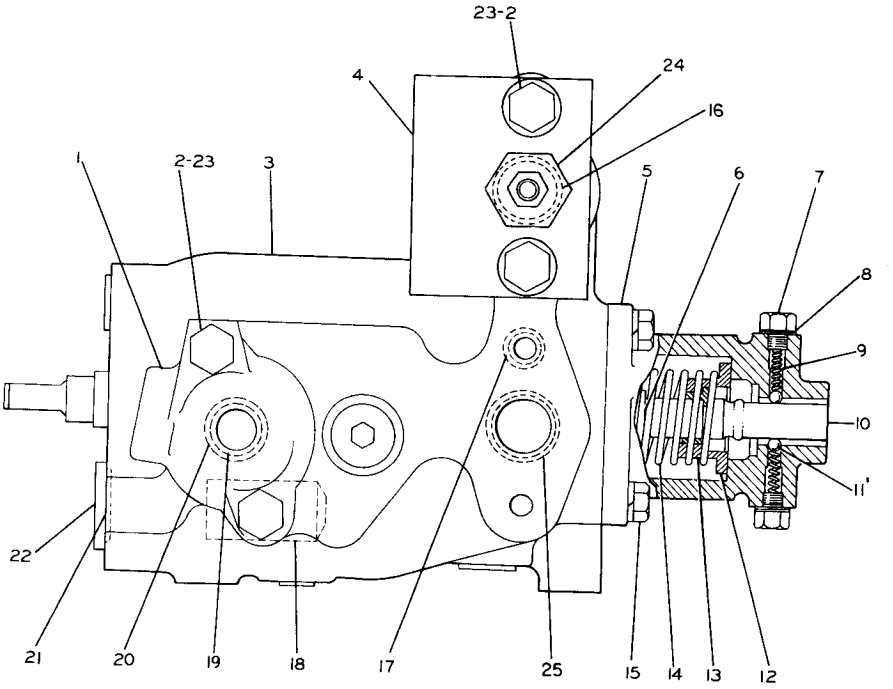

NOTE	REF NO	PART NUMBER	QTY	DESCRIPTION
	1	8J3554	1	HOUSING
	2	0V0375	4	BOLT
CY	3	1U4662	1	VALVE GROUP
	4	8J5449	1	BODY
	5	6J9992	1	RETAINER
	6	8J3557	1	SPACER
	7	7J1767	4	PLUG
	8	6J6516	8	SHIM
	9	6J9996	4	SPRING
	10	8J3556	1	DETENT
	11	5H1472	4	BALL
	12	5J9092	1	SPACER
	13	5J9091	1	SPACER
	14	4J5105	1	SPRING
	15	1A2029	2	BOLT
		3B4506	2	LOCKWASHER
C	16	4J8997	1	SEAL 35.23MM(1.38IN)O.D.
C	17	2J0157	10	SEAL
	18	5J9078	2	VALVE
		2A5885	1	SPRING
	19	5J9098	1	SPRING
	20	4J0519	1	SEAL
	21	4K1388	1	SEAL
	22	9S8009	1	PLUG
	23	3B4508	4	LOCKWASHER
Y	24	3G8078	1	VALVE GROUP
C	25	1P3703	4	SEAL 38.40MM(1.51IN)O.D.

C INDICATES CHANGE
Y SEPARATE ILLUSTRATION

316610

9J9833 CONTROL VALVE GROUP

Part of 3G1732 Hydraulic Tank and Valve shown on Page 161
9J7194 and 3G8078 Valve parts are shown on Pages 165 and 166

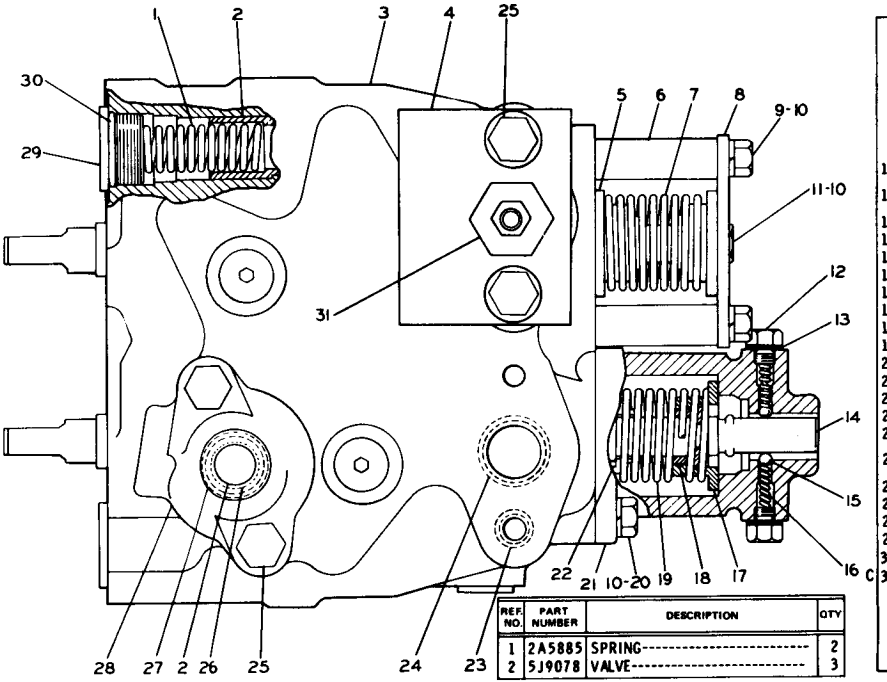

REF. NO.	PART NUMBER	DESCRIPTION	QTY
1	2A5885	SPRING	2
2	5J9078	VALVE	3

3	9J7194	VALVE GROUP (Separate Illustration)	1
4	8J5449	BODY	1
5	5J9088	SPACER	2
6	8J3639	SPACER	2
7	3J4121	SPRING	1
8	8J3640	PLATE	1
9	T573	BOLT	2
10	3B4506	LOCKWASHER	5
11	L1351	BOLT	1
	6B7949	WASHER	1
12	7J1767	PLUG	4
13	6J6516	SHIM	8
14	8J3556	DETENT	1
15	5H1472	BALL	4
16	6J9996	SPRING	4
17	5J9092	SPACER	1
18	5J9091	SPACER	1
19	4J5105	SPRING	1
20	1A2029	BOLT	2
21	6J9992	RETAINER	1
22	8J3557	SPACER	1
23	6F6672	SEAL	14
24	4J8997	SEAL	7
25	V375	BOLT	4
	3B4508	LOCKWASHER	4
26	5J9098	SPRING	1
27	4J519	SEAL	1
28	8J3554	HOUSING	1
29	9S8009	PLUG	2
30	4K1388	SEAL	2
C 31	3G8078	VALVE GROUP (Separate Illustration)	1

C INDICATES CHANGE

172101

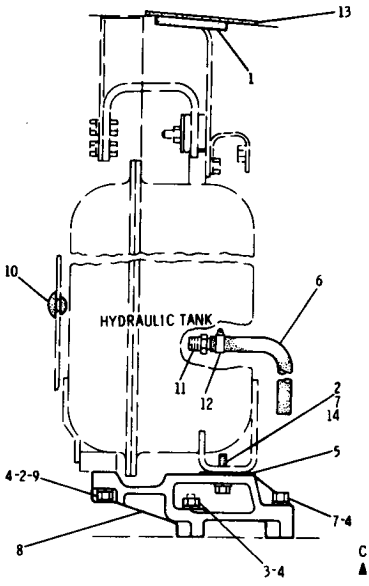

	REF. NO.	PART NUMBER	DESCRIPTION	QTY.
	1	3J4586	GROMMET	1
	2	7B3235	BOLT-(L. H. Support)	2
C	3	1D4719	NUT	2
C	4	3B4508	LOCKWASHER	7
	5	3J3372	SHIM-(Use as required)	8
▲	6	5P1694	HOSE-38.1 cm (15 in.)	
	7	2B947	BOLT	2
	8	8P1184	SUPPORT-(R. H.)	1
		8P1185	SUPPORT-(L. H.)	1
C	9	S1587	BOLT-(R. H. Support)	1
C	10	6V1178	BUTTON	2
C	11	308491	CONNECTOR	1
C	12	5D1026	CLAMP	1
C	13	7G5266	SEAL	1
C●	14	5P8245	WASHER	1
C	15	1A1460	BOLT	1

● USE AS REQUIRED -R. H. SIDE

C INDICATES CHANGE
▲ ORDER BY THE CENTIMETER

229315

8P4157 HYDRAULIC TANK MOUNTING GROUP
Part of 9P7023 and 9P7022 Hydraulic Control Arrangement listed on Page 157
AN ATTACHMENT

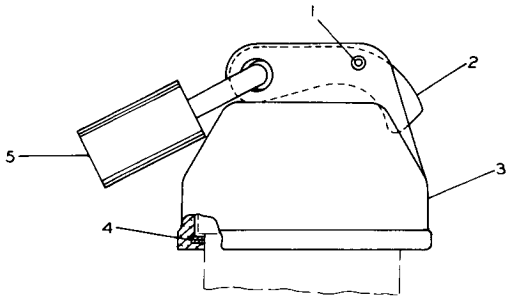

REF. NO.	PART NUMBER	DESCRIPTION	QTY
1	1L5072	DOWEL	1
2	9M7394	LEVER	1
3	5D1911	COVER	1
4	2J7761	RING	1

5	5P8502	PADLOCK GROUP (Includes)	1
▲	5P8500	KEY	2

▲ NOT PART OF 9G9288 PROTECTION COVER GROUP

228813

9G9288 HYDRAULIC TANK CAP PROTECTION COVER GROUP
AN ATTACHMENT

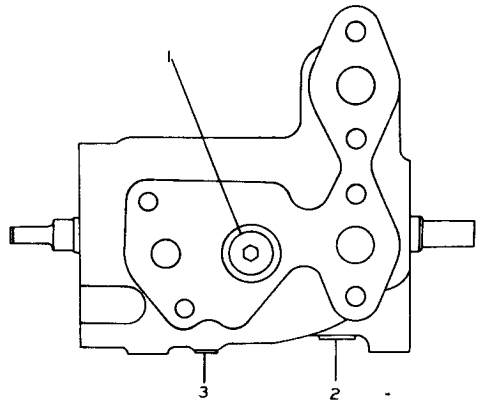

REF. NO.	PART NUMBER	DESCRIPTION	QTY
1	9S8006	PLUG	1
	2M9780	SEAL	1
2	9S8005	PLUG	2
	3K360	SEAL	2
3	9S8003	PLUG	1
	1J9671	SEAL	1

206260

9J7193 VALVE GROUP
Hydraulic Serial No. 7X1920 To 7X2286 Inclusive
Part Of 9J9403 Control Valve

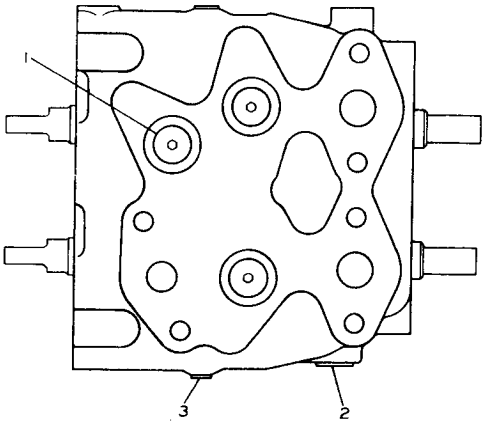

REF. NO.	PART NUMBER	DESCRIPTION	QTY
1	9S8006	PLUG	3
	2M9780	SEAL	3
2	9S8005	PLUG	3
	3K360	SEAL	3
3	9S8003	PLUG	2
	1J9671	SEAL	2

206259

9J7194 BASIC VALVE GROUP
Part Of 9J9833 Control Valve Group Shown On Page 163

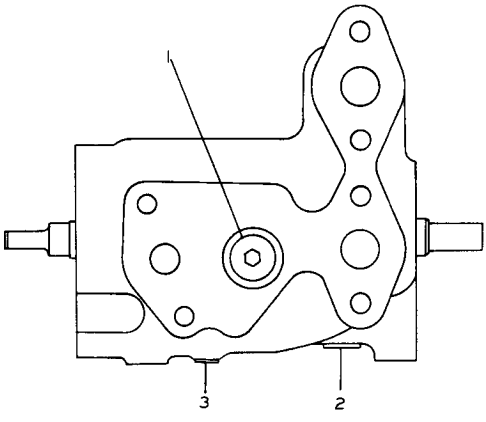

NOTE	REF NO	PART NUMBER	QTY	DESCRIPTION
	1	9S8006	1	PLUG
		2M9780	1	SEAL
	2	9S8005	2	PLUG
		3K0360	2	SEAL
	3	9S8003	1	PLUG
		1J9671	1	SEAL

316613

1U4662 VALVE GROUP
Hydraulic Serial No. 7X2287-Up
Part Of 9J9403 Control Valve

		CONSIST OF:	PAGE:
1	4T7598	VALVE GROUP	166.01
		-OR-	
1	4T4065	VALVE GROUP	166.02

THE FOLLOWING SERVICE REPAIR KIT IS AVAILABLE:

4T8694 SEAL KIT

3G8078 RELIEF VALVE GROUP
4T7598-Page 166.01 & 4T4065-Page 166.02
Part Of 9J9403 & 9J9833 Valve Groups-Pages 162 & 163

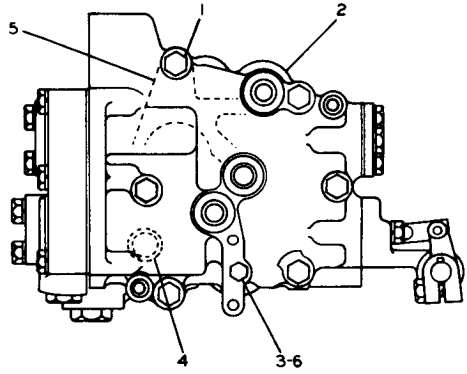

REF. NO.	PART NUMBER	DESCRIPTION	QTY
1	7F3425	BOLT-----14.61 cm(5.75 in.) long--	4
	5B2638	BOLT-----13.34 cm(5.25 in.) long--	1
	8S9191	BOLT-----10.16 cm(4 in.) long----	1
	5M2894	WASHER----------	6

	REF. NO.	PART NUMBER	DESCRIPTION	QTY
	2	2P3640	VALVE GROUP---------- (Separate Illustration)	1
	3	1D4538	BOLT-----5.72 cm(2.25 in.) long	1
			-OR-	
C	3	1D4539	BOLT-----6.35 cm(2.50 in.) long	1
C	4	8B4967	SEAL----------	3
C	5	8P16	GASKET----------	1
	6	9M1974	WASHER----------	1

C INDICATES CHANGE

208951

1P7528 CONTROL VALVE GROUP
Part Of 1P8626 Winch Arrangement Listed On Page 191
2P3640 Valve Parts Are Shown On Page 167

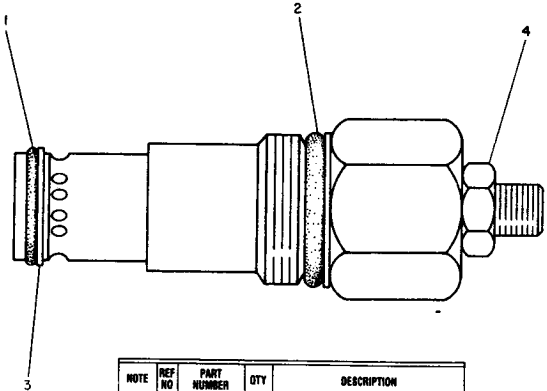

NOTE	REF NO	PART NUMBER	QTY	DESCRIPTION
	1	6V5142	1	SEAL
	2	617539	1	SEAL
	3	9J6367	1	RING
	4	3G3726	1	NUT

331794

4T7598 RELIEF VALVE GROUP
Part Of 3G8078 Relief Valve

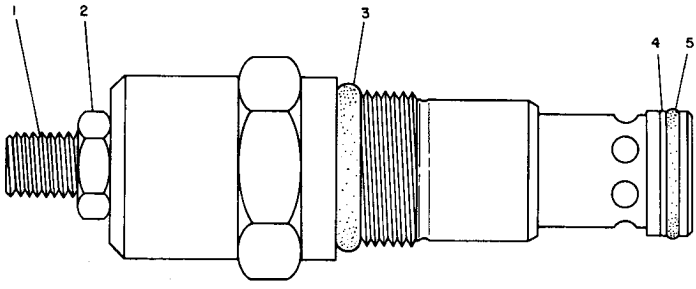

NOTE	REF NO	PART NUMBER	QTY	DESCRIPTION
	1	4T8690	1	SCREW
	2	4T8691	1	NUT

	3	617539	1	SEAL
	4	9J6367	1	RING
	5	6V5142	1	SEAL

331793

4T4065 RELIEF VALVE GROUP
Part Of 3G8078 Relief Valve

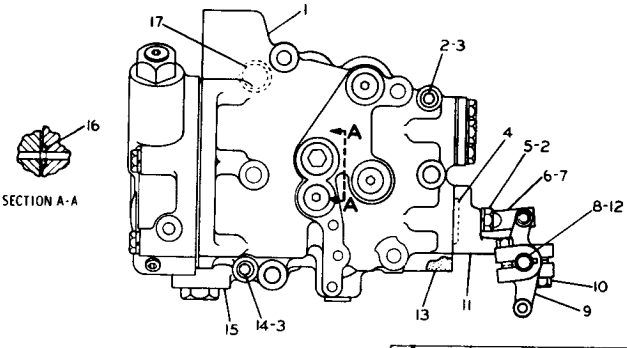

	REF. NO.	PART NUMBER	DESCRIPTION	QTY
C	1	8P1392	VALVE GROUP-----(Pressure)----- (Separate Illustration)	1
	2	3S4346	BOLT	1
	3	9M1974	WASHER	4
	4	3D2992	SEAL	1
	5	1B7182	BOLT	2
	6	1P5130	LINK	2
	7	9S1303	PIN	2
		3B4607	COTTER PIN	2
	8	2P6969	SHAFT	1
		1B8702	KEY	2
	9	6P9367	LEVER	2
	10	2B2695	BOLT	2
	11	2P6971	BRACKET ASSEM.	1
		9H2400	BEARING	2
	12	4B4280	WASHER	2
	13	2P3650	GASKET	1
	14	6L4783	BOLT	1
	15	3P4121	VALVE GROUP-----(Selector)----- (Separate Illustration)	1
	16	2H5001	SEAL	1
	17	5F7054	SEAL	4

C INDICATES CHANGE 168275

2P3640 SELECTOR AND PRESSURE CONTROL VALVE GROUP
Part of 1P7528 Control Valve Group shown on Page 166
3P4121 and 8P1392 Valve parts are shown on Pages 169 and 171

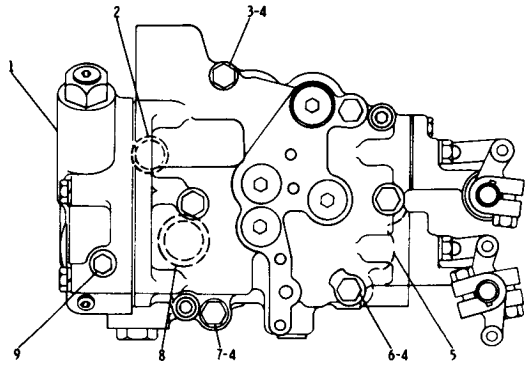

REF. NO	PART NUMBER	DESCRIPTION	QTY
1	8P11	VALVE GROUP----- (Separate Illustration)	1
2	5H8038	SEAL	1
3	7F3425	BOLT	4
4	5M2894	WASHER	6
5	8P16	GASKET	1
6	5B2638	BOLT	1
7	8S9191	BOLT	1
8	8B4967	SEAL	3
9	1D4539	BOLT	1
	9M1974	WASHER	1

208952

8P13 SELECTOR AND PRESSURE CONTROL VALVE GROUP
Part of 9G565 and 9G567 Winch Conversion
Groups shown on Pages 193 and 195
8P11 Valve parts are shown on Page 168

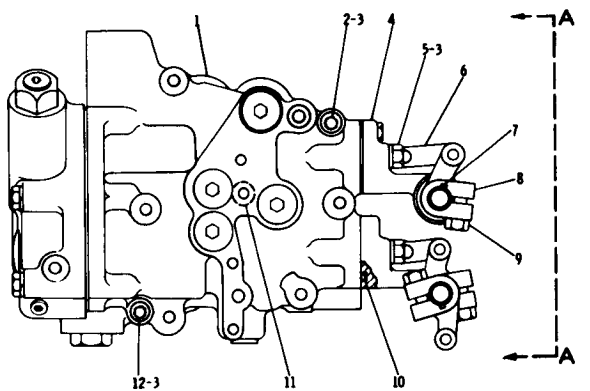

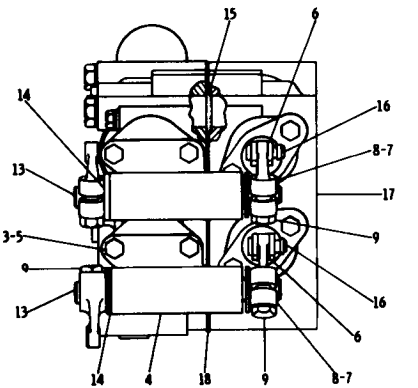

VIEW A-A

REF. NO.	PART NUMBER	DESCRIPTION	QTY
1	8P1392	VALVE GROUP -----(pressure)----- (Separate Illustration)	1
2	3S4346	BOLT	1
3	9M1974	WASHER	6
4	2P6971	BRACKET ASSEM.	2
5	1B7182	BOLT	4
6	1P5130	LINK	4
7	1B8702	KEY	4
8	6P9367	LEVER	4
9	2B2695	BOLT	4
10	3D2992	SEAL	2
11	2H5001	SEAL	1
12	6L4783	BOLT	1
13	2P6969	SHAFT	2
14	4B4280	WASHER	4
15	5F7054	SEAL	4
16	9S1303	PIN	4
	3B4607	COTTER PIN	4
17	8P12	VALVE GROUP -----(selector)----- (Separate Illustration)	1
18	2P3650	GASKET	1

208953

8P11 SELECTOR AND PRESSURE CONTROL VALVE GROUP
Part of 8P13 Selector and Pressure Control Valve Group shown on Page 167.
8P12 and 8P1392 Valve parts are shown on Pages 170 and 171. AN ATTACHMENT

3P4121 SELECTOR VALVE GROUP

Part of 2P3640 Selector and Pressure Control Valve Group shown on Page 167

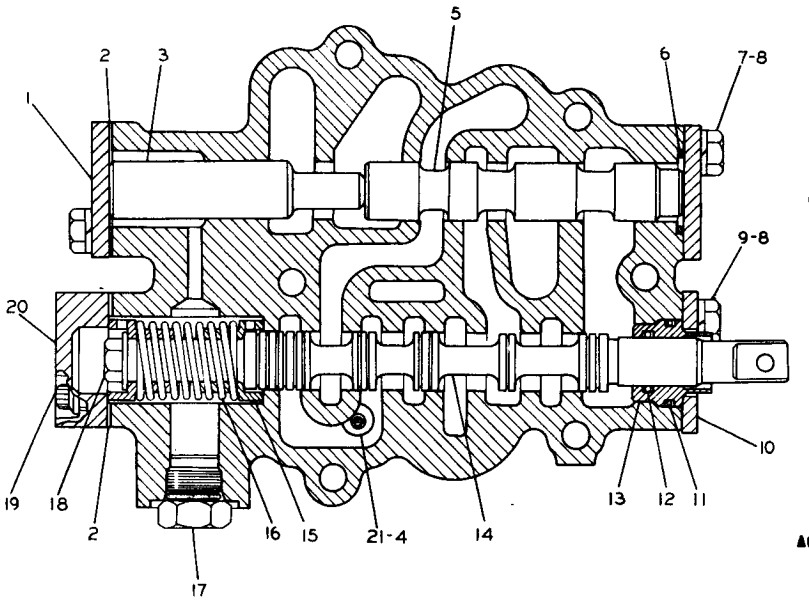

	REF. NO.	PART NUMBER	DESCRIPTION	QTY
	1	6B830	COVER	2
	2	3P218	GASKET	2
	3	2P3683	STOP	2
	4	5F9144	SEAL	1
	5	2P3639	SPOOL	1
	6	3H107	SEAL	1
	7	2B2695	BOLT	4
C	8	3B4505	LOCKWASHER	6
	9	S1617	BOLT	2
	10	1P6217	FLANGE	1
	11	4D9986	SEAL	1
	12	8M5260	SEAL	1
	13	3S2682	BUSHING	1
	14	2P3617	SPOOL	1
	15	3P220	RETAINER	2
	16	3P3202	SPRING	1
	17	9S4185	PLUG	1
		3K360	SEAL	1
	18	S1618	BOLT	1
		1T738	WASHER	1
C	19	1T414	BOLT	2
C	20	8P4299	COVER	1
	21	3P4117	VALVE ASSEM.	1
		1L5316	PIN	1
		5B9318	BALL	1
▲C	22	3K5762	PLUG	1

C INDICATES CHANGE
▲ NOT SHOWN

230330

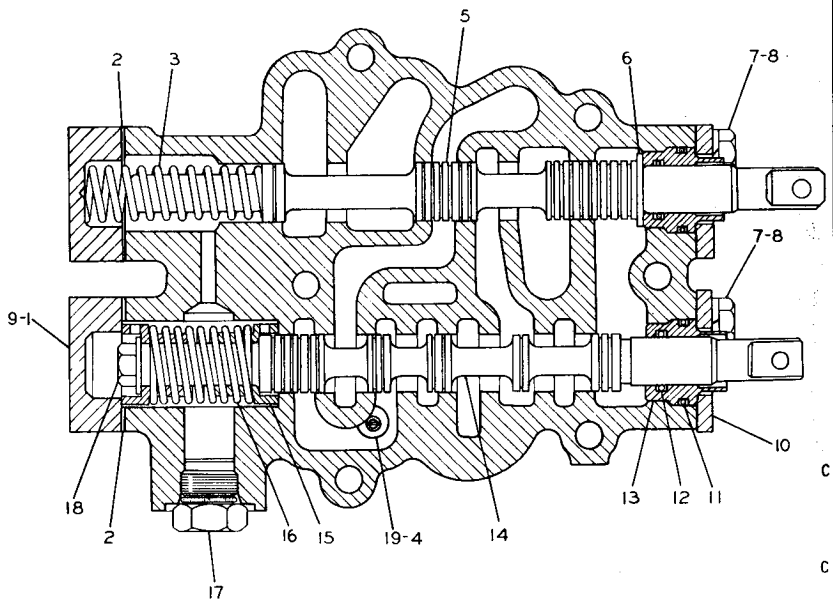

REF. NO.	PART NUMBER	DESCRIPTION	QTY
1	8P4299	COVER	2
2	3P218	GASKET	2
3	2S3620	SPRING	1
4	5F9144	SEAL	1
5	8P14	SPOOL	1
6	2A995	WASHER	1
7	S1617	BOLT	4
8	3B4505	LOCKWASHER	4
9	1T414	BOLT	4
10	1P6217	FLANGE	2
11	4D9986	SEAL	2
12	8M5260	SEAL	2
13	3S2682	BUSHING	2
14	2P3617	SPOOL	1
15	3P220	RETAINER	2
16	3P3202	SPRING	1
17	9S4185	PLUG	1
	3K360	SEAL	1
18	S1618	BOLT	1
	1T738	WASHER	1
19	3P4117	VALVE ASSEM. (Includes)	1
	1L5316	PIN	1
	5B9318	BALL	1
C ▲	7H3171	PLUG	1

C INDICATES CHANGE

▲ NOT SHOWN

228956

8P12 SELECTOR VALVE GROUP
Part of 8P11 Selector and Pressure Control Valve Group shown on Page 168
AN ATTACHMENT

8P1392 PRESSURE CONTROL VALVE GROUP

Part of 2P3640 and 8P11 Selector and Pressure Control Valve Groups shown on Pages 167 and 168
AN ATTACHMENT

REF. NO.	PART NUMBER	DESCRIPTION	QTY.
1	8P345	BODY ASSEM. (Includes)	1
2	4B9880	BALL	1
3	2P3646	PISTON	1
4	3P5168	SPRING ASSEM.	1
5	2M1168	SLUG	2
6	6B830	COVER	1
	3P218	GASKET	1
7	2B2695	BOLT	2
8	3B4505	LOCKWASHER	6
9	1P3216	SPRING	2
10	3P2767	SPOOL	2
11	3P5169	SPRING ASSEM.	1
12	6F5559	SEAL	1
13	2P3644	GASKET	1
14	2B2694	BOLT	3
15	4K2039	SEAL	1
16	3P2847	RETAINER	1
17	1H9696	SEAL	1
18	9S8005	PLUG	1
	3K360	SEAL	1
19	9S8004	PLUG	4
	3J1907	SEAL	4
20	3P4660	SPOOL	1
21	8P346	SPRING	1
22	1B7182	BOLT	1
23	8P325	STOP ASSEM. (Includes)	1
	5H9809	DOWEL	1
24	9S8003	PLUG	1
	1J9671	SEAL	1
25	6P9959	PLUG	1
	2M9780	SEAL	1
26	9S8001	PLUG	1
	4J7533	SEAL	1
	SMHS6709	FORM (Installation Instructions for Body Assem.)	1

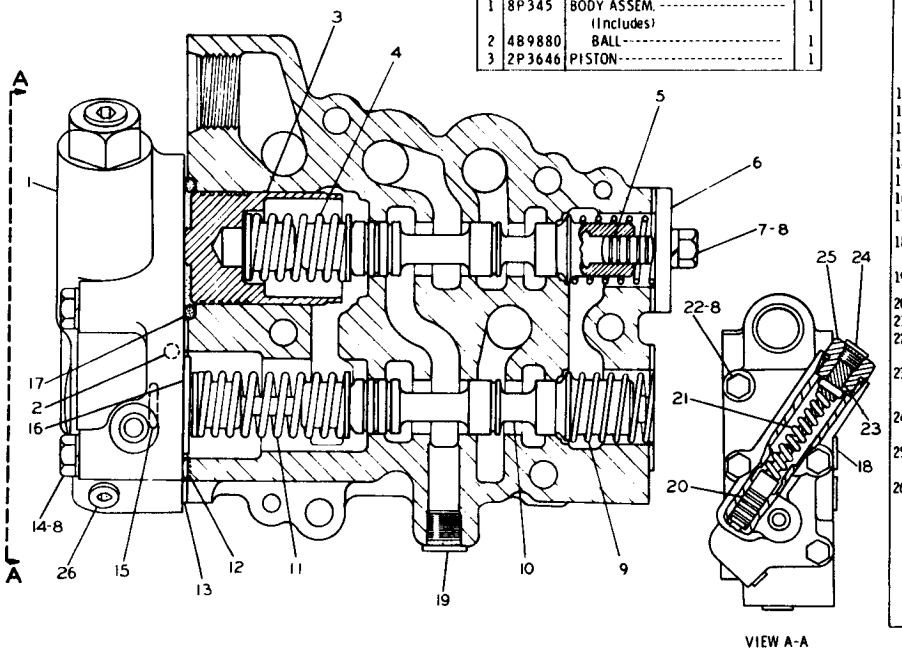

VIEW A-A

208955

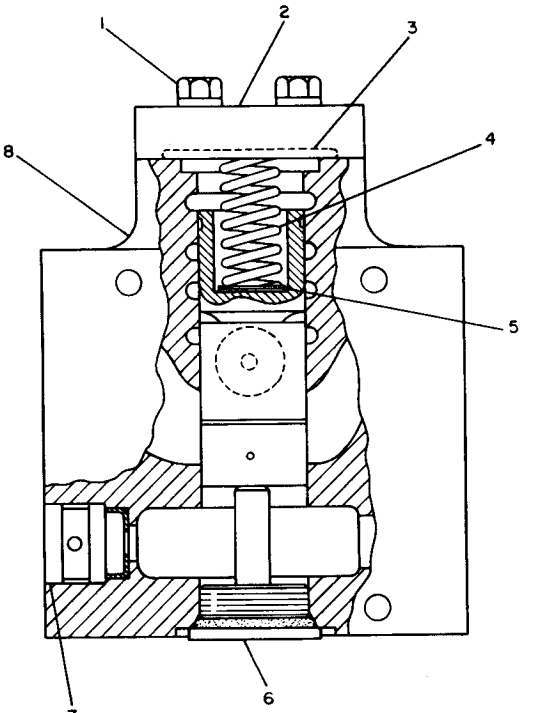

REF. NO.	PART NUMBER	DESCRIPTION	QTY
1	S1591	BOLT	4
	5M2894	WASHER	4
2	9J8063	COVER	1
3	4J527	SEAL	1
4	7M1297	SPRING	1
5	3L6670	RETAINER	4
6	9J8065	PLUG	1
	2S4078	SEAL	1
7	3G5856	SPACER	1
8	9J8066	VALVE GROUP	1

220998

9J8067 VALVE GROUP
Part of 9P2410 Bulldozer Lines Group shown on Page 179
AN ATTACHMENT

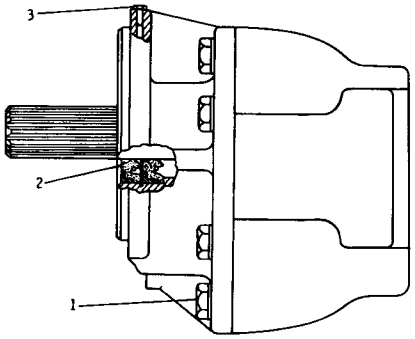

	REF. NO.	PART NUMBER	DESCRIPTION	QTY
	1	S1595	BOLT	8
		6J2391	WASHER	8
C	2	6V1899	SEAL	2
		3G1280	SPACER	1

C	3	3G7242	PLUG	1
			THE FOLLOWING REPAIR KIT IS AVAILABLE:	
		9J765	KIT-----(seal)----- (Includes Seals, & Retainer)	1

C INDICATES CHANGE 229317

3G4768 GEAR PUMP GROUP
Part of 9P7023 and 9P7022 Hydraulic Control Arrangement listed on Page 157
AN ATTACHMENT

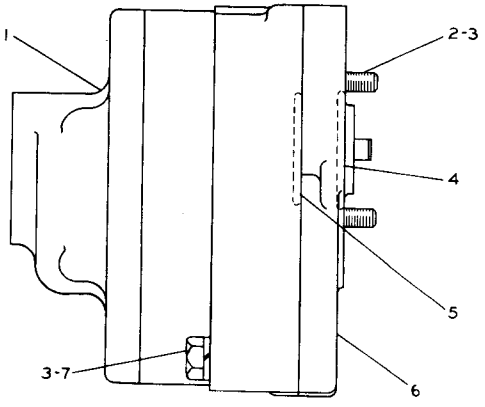

REF. NO.	PART NUMBER	DESCRIPTION	QTY
1	1P6752	PUMP GROUP (See Separate Illustration)	1
2	1T765	BOLT	2

3	3B4506	LOCKWASHER	4
4	7F8267	SEAL	1
5	6F711	SEAL	1
6	1P6747	ADAPTER	1
7	L2070	BOLT	2

114103

1P6751 GEAR PUMP GROUP
Part of 8P2319 Winch Arrangement listed on Page 191
1P6752 Pump parts are shown on Page 174. AN ATTACHMENT

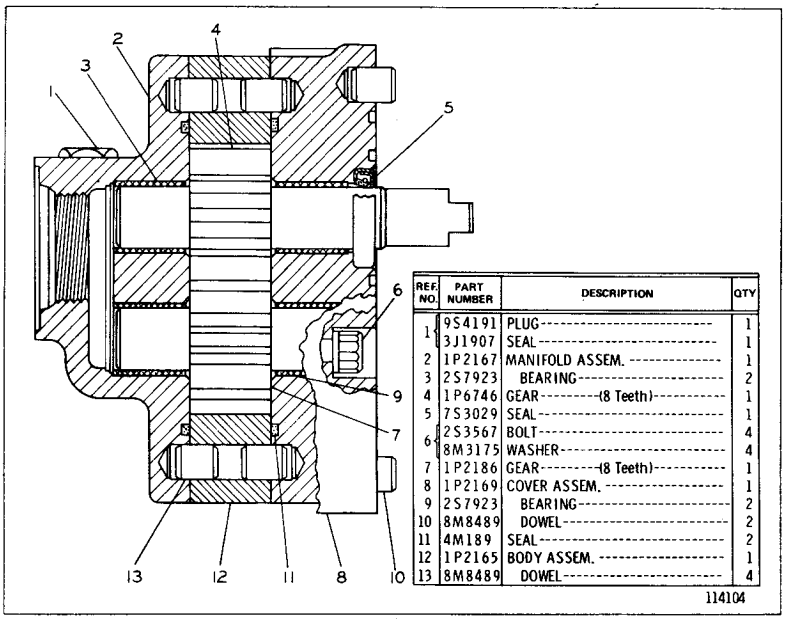

REF. NO.	PART NUMBER	DESCRIPTION	QTY
1	9S4191	PLUG	1
	3J1907	SEAL	1
2	1P2167	MANIFOLD ASSEM.	1
3	2S7923	BEARING	2
4	1P6746	GEAR (8 Teeth)	1
5	7S3029	SEAL	1
6	2S3567	BOLT	4
	8M3175	WASHER	4
7	1P2186	GEAR (8 Teeth)	1
8	1P2169	COVER ASSEM.	1
9	2S7923	BEARING	2
10	8M8489	DOWEL	2
11	4M189	SEAL	2
12	1P2165	BODY ASSEM.	1
13	8M8489	DOWEL	4

1P6752 BASIC GEAR PUMP GROUP
Part of 1P6751 Gear Pump Group shown on Page 173
AN ATTACHMENT

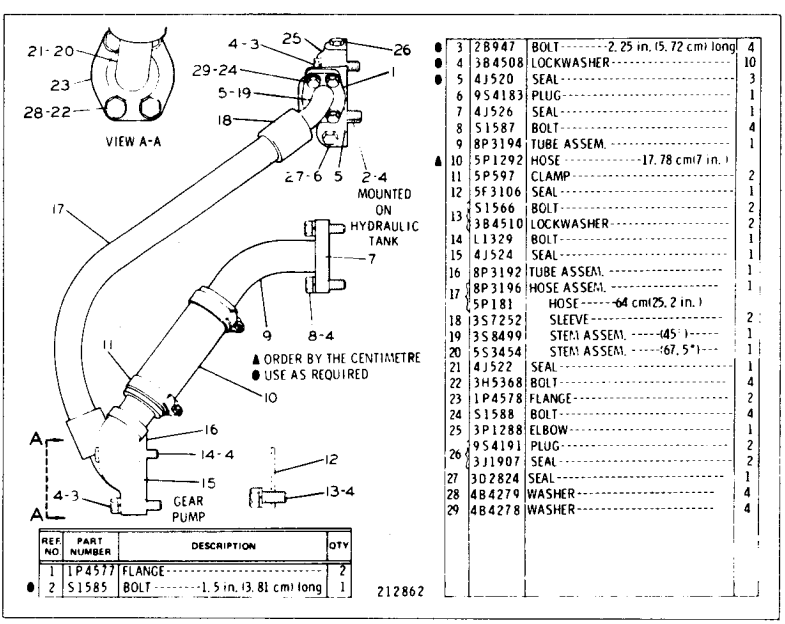

REF. NO.	PART NUMBER	DESCRIPTION	QTY
1	1P4577	FLANGE	2
● 2	S1585	BOLT (1.5 in. (3.81 cm) long	1
● 3	2B947	BOLT (2.25 in. (5.72 cm) long	4
● 4	3B4508	LOCKWASHER	10
● 5	4J520	SEAL	3
6	9S4183	PLUG	1
7	4J526	SEAL	1
8	S1587	BOLT	4
9	8P3194	TUBE ASSEM.	1
▲ 10	5P1292	HOSE (17.78 cm (7 in.)	
11	5P597	CLAMP	2
12	5F3106	SEAL	1
13	S1566	BOLT	2
	3B4510	LOCKWASHER	2
14	L1329	BOLT	1
15	4J524	SEAL	1
16	8P3192	TUBE ASSEM.	1
17	8P3196	HOSE ASSEM.	1
	5P181	HOSE (64 cm (25.2 in.)	
18	3S7252	SLEEVE	2
19	3S8499	STEM ASSEM. (45°)	1
20	5S3454	STEM ASSEM. (67.5°)	1
21	4J522	SEAL	1
22	3H5368	BOLT	4
23	1P4578	FLANGE	2
24	S1588	BOLT	4
25	3P1288	ELBOW	1
26	9S4191	PLUG	2
	3J1907	SEAL	2
27	3D2824	SEAL	1
28	4B4279	WASHER	4
29	4B4278	WASHER	4

8P4167 PUMP LINES GROUP
Part of 9P7023 and 9P7022 Hydraulic Control Arrangement listed on Page 157
AN ATTACHMENT

8P4826 PUMP LINES GROUP
Part of 8P2319 Winch Arrangement listed on Page 191
AN ATTACHMENT

REF. NO.	PART NUMBER	DESCRIPTION	QTY
1	5D1225	BRACKET	1
2	1S509	BOLT	1
	1D4717	NUT	1
3	3B4506	LOCKWASHER	5
4	7D1553	CLIP	1
5	9P1382	HOSE ASSEM. --1.78 m(69.88 in.)	1
6	2R6276	CONNECTOR	1
7	3D2824	SEAL	2
8	4D6082	BOLT	1
	3B4610	COTTER PIN	1
9	4B4280	WASHER	3

10	9P2075	PLATE ASSEM. (Includes)	1
	2K3656	BAR	1
11	6K1049	HINGE	1
12	S1594	BOLT	4
13	9P1857	BRACKET ASSEM.	2
14	4J522	SEAL	1
C 15	2R8613	ADAPTER	1
16	3B6497	ELBOW	1

17	5B7319	NIPPLE	1
C 18	5P1442	HOSE ASSEM. ---82.5 cm(32.4 in.)	1
	S1571	BOLT	1
19	4B4278	WASHER	1
	6H7127	LUG	1
20	4S4455	CLIP	1
21	1B2886	BOLT	1
	8S375	SPACER	1
22	8D9947	CLIP	1
23	9P1381	HOSE ASSEM. ---2.18 m(85.63 in.)	1
24	307944	ELBOW	1
C 25	6M5652	ELBOW	1
	2S4078	SEAL	1
C ▲	S1595	BOLT	1
C ▲	1D4719	NUT	1
C ▲	5P8245	WASHER	1

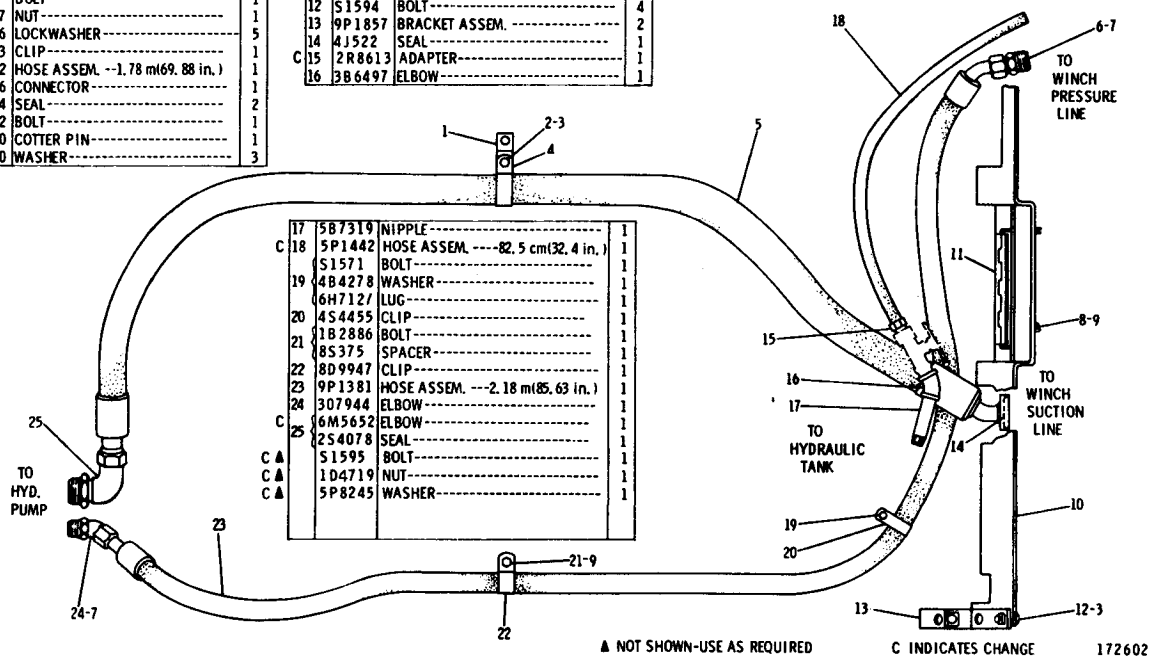

▲ NOT SHOWN-USE AS REQUIRED C INDICATES CHANGE 172602

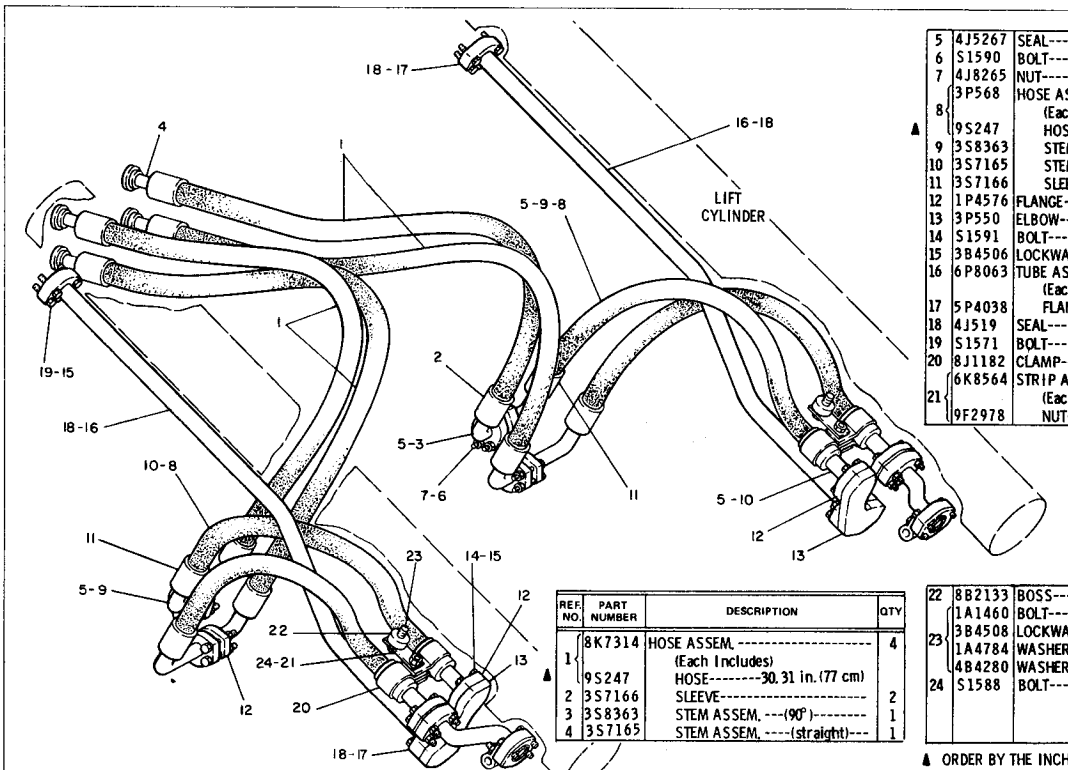

REF. NO.	PART NUMBER	DESCRIPTION	QTY
1	8K7314	HOSE ASSEM.	4
		(Each Includes)	
	9S247	HOSE--------30.31 in. (77 cm)	
2	3S7166	SLEEVE	2
3	3S8363	STEM ASSEM. ---(90°)--------	1
4	3S7165	STEM ASSEM. ----(straight)---	1
5	4J5267	SEAL	8
6	S1590	BOLT	8
7	4J8265	NUT	8
8	3P568	HOSE ASSEM.	2
		(Each Includes)	
	9S247	HOSE---25.19 in. (64 cm)	
9	3S8363	STEM ASSEM. ---(90°)--------	1
10	3S7165	STEM ASSEM. --(straight)----	1
11	3S7166	SLEEVE	2
12	1P4576	FLANGE	16
13	3P550	ELBOW	2
14	S1591	BOLT	8
15	3B4506	LOCKWASHER	28
16	6P8063	TUBE ASSEM.	2
		(Each Includes)	
17	5P4038	FLANGE	2
18	4J519	SEAL	4
19	S1571	BOLT	20
20	8J1182	CLAMP	4
21	6K8564	STRIP ASSEM.	2
		(Each Includes)	
	9F2978	NUT	1
22	8B2133	BOSS	2
23	1A1460	BOLT	2
	3B4508	LOCKWASHER	2
	1A4784	WASHER-----2.65mm(.104 in.)thick	2
	4B4280	WASHER--2.42 mm(.095 in.)thick-	2
24	S1588	BOLT	2

▲ ORDER BY THE INCH

229329

9P8113 BULLDOZER LINES GROUP — Part 1
Part of 3G5330 Bulldozer Arrangement listed on Page 186

9P8113 BULLDOZER LINES GROUP — Part 2

Part of 3G5330 Buildozer Arrangement listed on Page 186

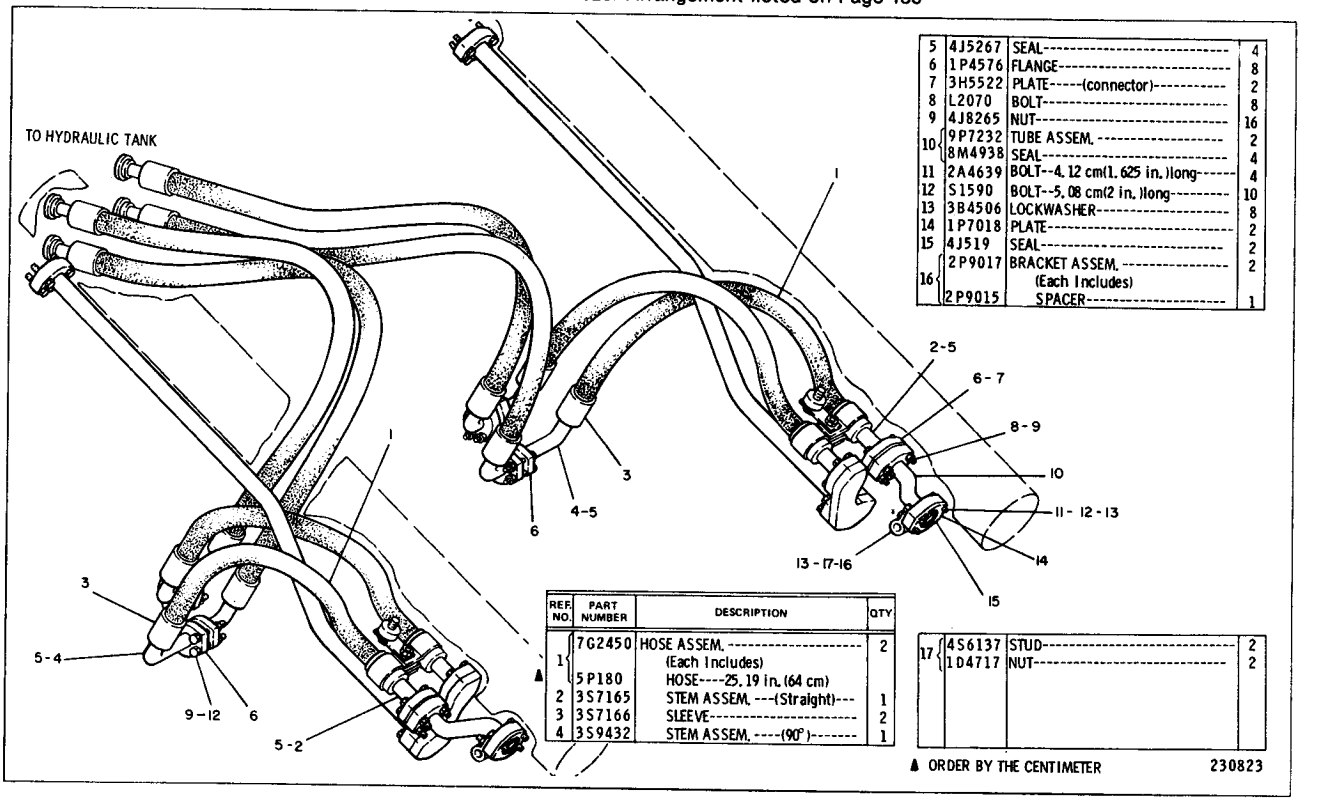

REF. NO.	PART NUMBER	DESCRIPTION	QTY.
1	7G2450	HOSE ASSEM. (Each Includes)	2
▲	5P180	HOSE----25.19 in. (64 cm)	
2	3S7165	STEM ASSEM. ---(Straight)---	1
3	3S7166	SLEEVE----------	2
4	3S9432	STEM ASSEM. ----(90°)-------	1

5	4J5267	SEAL----------	4
6	1P4576	FLANGE----------	8
7	3H5522	PLATE-----(connector)----------	2
8	L2070	BOLT----------	8
9	4J8265	NUT----------	16
10	9P7232	TUBE ASSEM. ----------	2
	8M4938	SEAL----------	4
11	2A4639	BOLT--4.12 cm(1.625 in.)long------	4
12	S1590	BOLT--5.08 cm(2 in.)long---------	10
13	3B4506	LOCKWASHER----------	8
14	1P7018	PLATE----------	2
15	4J519	SEAL----------	2
16	2P9017	BRACKET ASSEM. ---------- (Each Includes)	2
	2P9015	SPACER----------	1

17	4S6137	STUD----------	2
	1D4717	NUT----------	2

▲ ORDER BY THE CENTIMETER

230823

REF. NO.	PART NUMBER	DESCRIPTION	QTY
▲ 1	7K151	HOSE ASSEM.	4
	9S247	HOSE---34.10 in. (87 cm)	
2	3S7165	STEM ASSEM.	1
3	3S7166	SLEEVE	2
4	3S8363	STEM ASSEM.	1
5	4J5267	SEAL	12

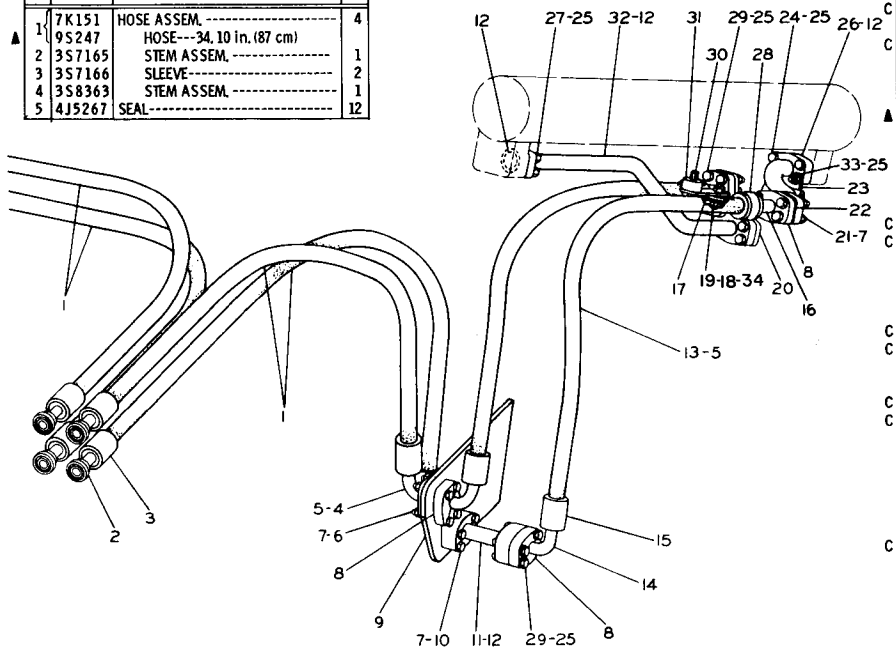

	REF. NO.	PART NUMBER	DESCRIPTION	QTY
C	6	S1590	BOLT	8
	7	4J8265	NUT	24
C	8	2K190	FLANGE	24
	9	2P9023	PLATE	2
C	10	L1143	BOLT	16
	11	3P1075	TUBE ASSEM.	2
	12	4J519	SEAL	10
▲	13	3P568	HOSE ASSEM.	4
		9S247	HOSE---25. in. (64 cm)	
	14	3S8363	STEM ASSEM.	1
	15	3S7166	SLEEVE	2
	16	3S7165	STEM ASSEM.	1
	17	6K8564	STRIP ASSEM.	2
	18	9F2978	NUT	1
C	19	S1588	BOLT	2
C		4B4280	WASHER--2.4mm(.095 in.)	2
	20	3P550	ELBOW	2
	21	L1143	BOLT	8
	22	3H5522	PLATE	2
	23	2P9017	BRACKET ASSEM.	2
C	24	7H7954	BOLT	2
C	25	3B4506	LOCKWASHER	40
	26	3P1882	TUBE ASSEM.	2
	27	S1571	BOLT	20
C	28	8J1182	CLAMP	4
C	29	S1591	BOLT	16
	30	1A1460	BOLT	2
		3B4508	LOCKWASHER	2
	31	8B2133	BOSS	2
	32	3P1880	TUBE ASSEM.	2
	33	S373	STUD	2
		1D4717	NUT	2
C	34	1A4784	WASHER--2.6 mm(.104 in.)	2

NOTE: QUANTITIES SHOWN ARE THOSE REQUIRED FOR BOTH R.H. AND L.H. SIDES

▲ ORDER BY THE INCH
C INDICATES CHANGE

229319

2P6058 BULLDOZER LINES GROUP
Part of 3G4208 Bulldozer Arrangement listed on Page 186

9P2410 BULLDOZER LINES GROUP
Part of 9P7023 and 9P7022 Hydraulic Control Arrangements listed on Page 157
9J8067 Valve parts are shown on Page 172. AN ATTACHMENT

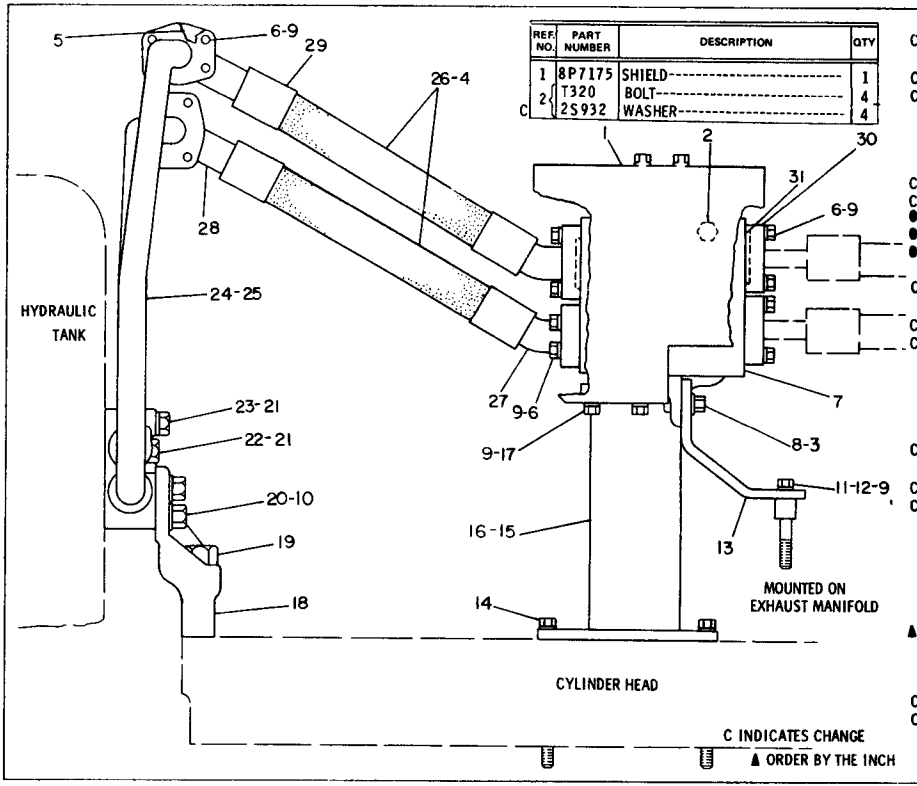

REF. NO.	PART NUMBER	DESCRIPTION	QTY
1	8P7175	SHIELD	1
2	T320	BOLT	4
C	2S932	WASHER	4

C	3	5P1075	WASHER	4
	4	4J520	SEAL	4
C	5	1P4577	FLANGE	8
C	6	S1588	BOLT	32
	7	9J8067	VALVE GROUP (Separate Illustration)	1
	8	3B1915	BOLT	2
C	9	5M2894	WASHER	35
C	10	5P1076	WASHER	2
●	11	S1619	BOLT	1
●		2B941	SPACER	1
●	12	L2070	BOLT	1
	13	6P9396	BRACKET	1
C	14	7F3425	BOLT----146 mm(5.75 in.)long	2
			- OR -	
C		5F4899	BOLT----139 mm(5.50 in.)long	2
C		5M2894	WASHER	2
	15	6P9398	SUPPORT ASSEM. (Includes)	1
	16	9F2978	NUT	2
	17	S509	BOLT	2
	18	8P1189	BRACKET	1
C	19	1D4610	BOLT	1
C	20	1D4566	BOLT	2
C	21	5P8245	WASHER	2
	22	9S1366	BOLT	1
	23	L1329	BOLT	1
	24	8P7176	TUBE ASSEM.	1
	25	4J519	SEAL	2
	26	6P9399	HOSE ASSEM. (Each Includes)	2
▲		8S9355	HOSE----12.6in.(3.2 cm)	
	27	3S8497	STEM ASSEM. ----(22.5°)	1
	28	7S577	STEM ASSEM. --(90°)	1
	29	3S7252	SLEEVE	2
C	30	1P4576	FLANGE	8
C	31	4J5267	SEAL	4

C INDICATES CHANGE
▲ ORDER BY THE INCH
● USE AS REQUIRED
180899

		CONSISTS OF:	PAGE
1	3G6662	TILT CYLINDER LINES GROUP	180
1	2J1402	HYDRAULIC CYLINDER GROUP	181

3G6663 TILT CYLINDER ARRANGEMENT
USED IN CONJUNCTION WITH 9P7022 HYDRAULIC CONTROL ARRANGEMENT

CONSISTS OF:

2	2P8108	HOSE ASSEMBLY TO TILT CYLINDER
2	S1621	BOLT--GUARD TO BOSS
2	2P6588	HEAD--FITTING TO CYLINDER
2	6J499	LUG
2	3K360	SEAL--FITTING TO HEAD
2	3G6645	GUARD--TO HOSE ASSEMBLY
2	54362	FITTING--HOSE ASSEMBLY TO HEAD
4	1P4576	FLANGE--HEAD TO CYLINDER
2	4J5267	SEAL--HEAD TO CYLINDER
8	S1588	BOLT
1	6J333	GUARD ASSEMBLY
4	S1595	BOLT
10	8P8245	WASHER
8	5M2894	WASHER

3G6662 TITL CYLINDER LINES GROUP
Part of 3G6663 Tilt Cylinder Arrangement listed on Page 180
AN ATTACHMENT

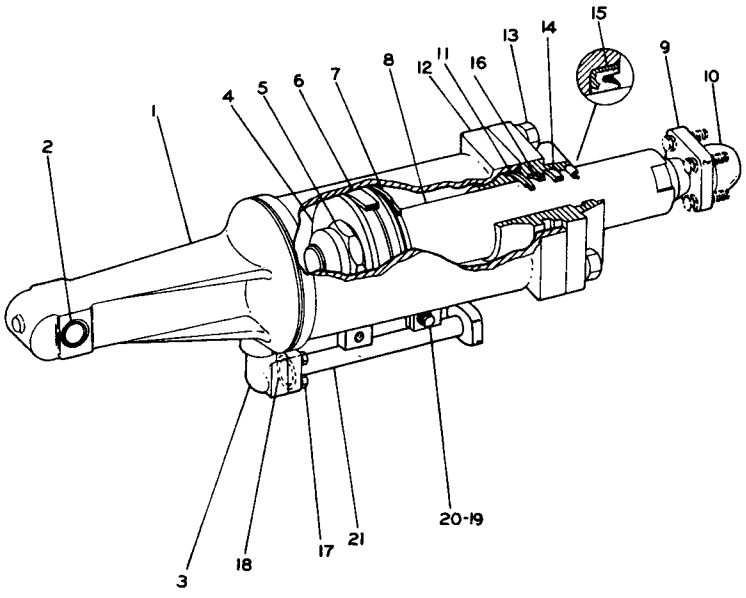

	REF. NO.	PART NUMBER	DESCRIPTION	QTY
	1	6J337.	CYLINDER ASSEM. (Includes)	1
	2	2J8489	BEARING	1
	3	2K44	ELBOW	1
	4	3J9704	PISTON	1
	5	2J564	NUT	1
	6	3J9703	RING	1
	7	5J4991	SEAL ASSEM.	1
	8	2J1424	ROD ASSEM. (Includes)	1
	9	3F6612	CAP	1
	10	3F6492	BALLSTUD	1
	11	2K4472	SEAL	1
		2K4473	RING	1
C	12	3G9912	HEAD	1
	13	1D4709	BOLT	4
C		5P8250	WASHER	4
C	14	5J8300	SEAL	1
	15	2J1411	SEAL	1
C	16	6J6915	SEAL	1
	17	S1571	BOLT	4
	18	4J519	SEAL	1
C	19	3B4506	LOCKWASHER	1
	20	S1594	BOLT	1
		1D4717	NUT	1
		4B4278	WASHER	1
	21	8J5818	TUBE ASSEM.	1

C INDICATES CHANGE

176233

2J1402 HYDRAULIC CYLINDER GROUP — Blade Tilt — (Change 22) — 165 mm (6.5") Bore x 127 mm (5") Stroke
Part of 3G6663 Tilt Cylinder Arrangement listed on Page 180
AN ATTACHMENT

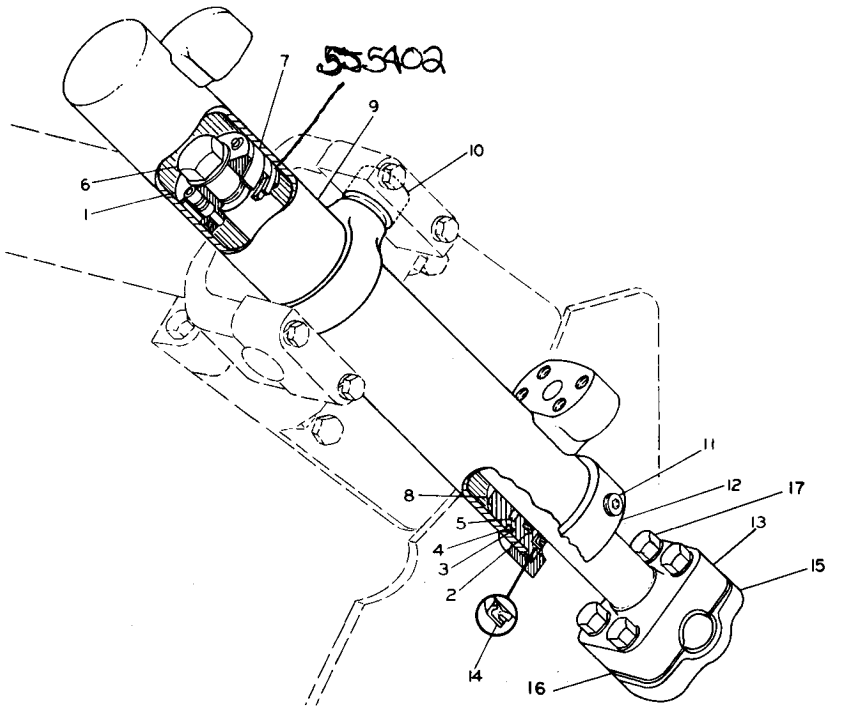

REF. NO.	PART NUMBER	DESCRIPTION	QTY
C 1	9J2007	PISTON ASSEM.	1
2	5J964	SEAL	1
3	2K6830	RING	1
4	1H8128	SEAL	1
5	5J3620	SEAL	1
C 6	5P1839	BOLT	1
6	8J4359	WASHER	1
7	1M1571	RING	1
8	7J8295	HEAD	1
9	8J6867	CYLINDER ASSEM. (Includes)	1
10	4J6374	BEARING	2
C 11	8J5912	SCREW	1
12	7J6461	CROWN	1
13	8J6866	ROD ASSEM.	1
14	1K6982	SEAL	1
C 15	3J6559	CAP	1
C 16	3J6572	SHIM	12
C 17	3B2968	BOLT	4
C	5P8248	LOCKWASHER	4

C INDICATES CHANGE 229311

8J6868 LIFT CYLINDER GROUP — (Changes 2,4) — 101.6 mm (4") Bore x 1045.9 mm (41.18") Stroke — 2 Required
Part of 3G5330 Bulldozer Arrangement listed on Page 186
AN ATTACHMENT

9P477 TILT CYLINDER LINES GROUP

Part of 9P7022 Hydraulic Control Arrangement listed on Page 157

AN ATTACHMENT

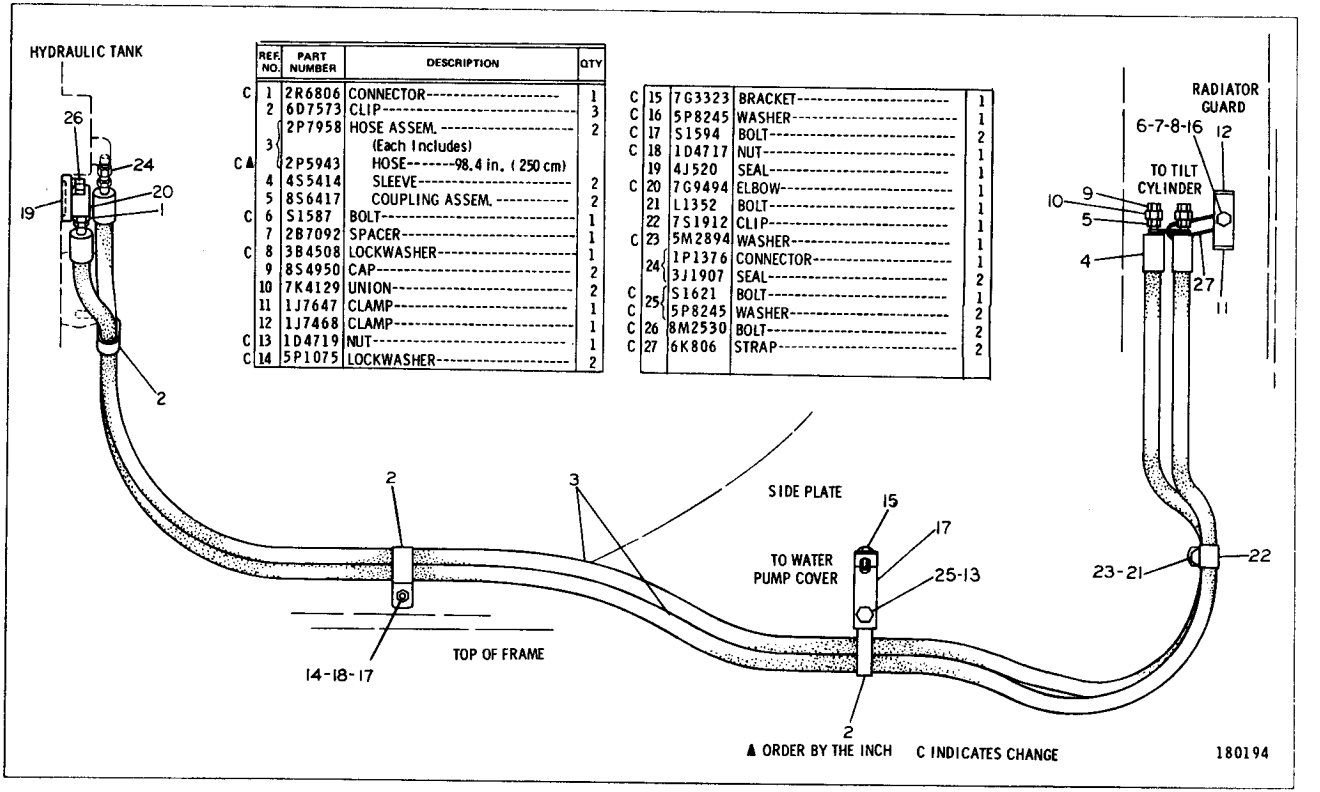

	REF. NO.	PART NUMBER	DESCRIPTION	QTY
C	1	2R6806	CONNECTOR	1
	2	6D7573	CLIP	3
	3	2P7958	HOSE ASSEM. (Each Includes)	2
C▲		2P5943	HOSE--98.4 in. (250 cm)	
	4	4S5414	SLEEVE	2
	5	8S6417	COUPLING ASSEM.	2
C	6	S1587	BOLT	1
	7	2B7092	SPACER	1
C	8	3B4508	LOCKWASHER	1
	9	8S4950	CAP	2
	10	7K4129	UNION	2
	11	1J7647	CLAMP	1
	12	1J7468	CLAMP	1
C	13	1D4719	NUT	1
C	14	5P1075	LOCKWASHER	2
C	15	7G3323	BRACKET	1
C	16	5P8245	WASHER	1
C	17	S1594	BOLT	2
C	18	1D4717	NUT	1
	19	4J520	SEAL	1
C	20	7G9494	ELBOW	1
	21	L1352	BOLT	1
	22	7S1912	CLIP	1
C	23	5M2894	WASHER	1
	24	1P1376	CONNECTOR	1
		3J1907	SEAL	2
C	25	S1621	BOLT	1
C		5P8245	WASHER	2
C	26	8M2530	BOLT	2
C	27	6K806	STRAP	2

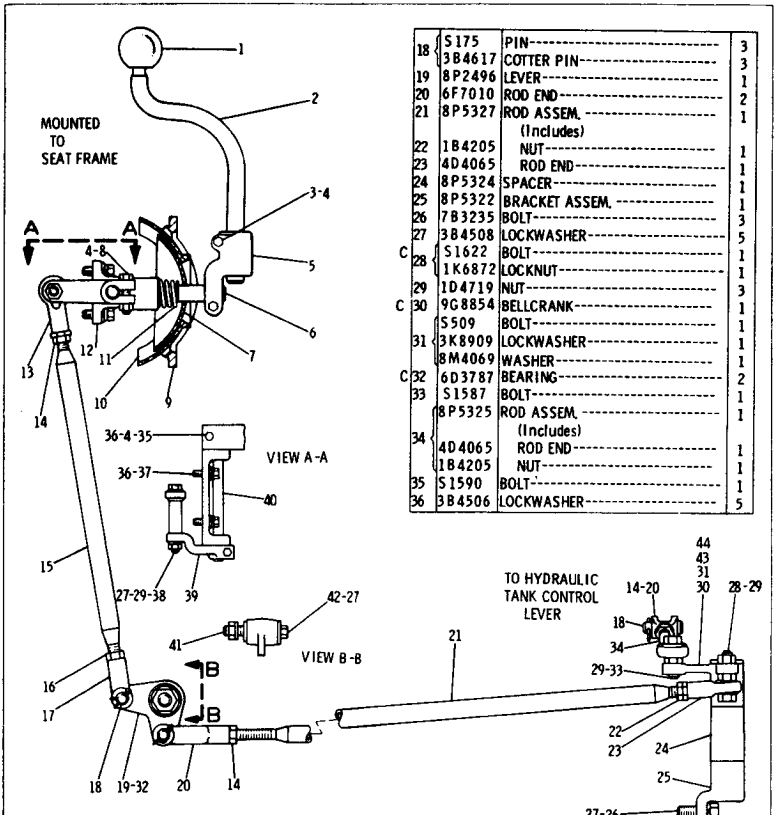

REF. NO.	PART NUMBER	DESCRIPTION	QTY
1	2A1736	HANDLE	1
2	8P2480	LEVER	1
3	S1571	BOLT	2
4	1D4717	NUT	4
5	9P468	CLAMP	1
6	8P5048	LEVER ASSEM.	1
7	8P7352	SEAL	1
8	S1591	BOLT	1
9	6P5209	COVER	1
	4B1291	SCREW	4
10	6P5208	GUIDE	1
11	2J7295	SPRING	1
12	6P5205	BRACKET ASSEM. (Includes)	1
	9F5647	BEARING	2
13	4D4065	ROD END	1
14	1B4205	NUT	3
15	8P3391	ROD ASSEM. (Includes)	1
16	1B4205	NUT	1
17	2M8340	ROD END	1
18	S175	PIN	3
	3B4617	COTTER PIN	3
19	8P2496	LEVER	1
20	6F7010	ROD END	2
21	8P5327	ROD ASSEM. (Includes)	1
22	1B4205	NUT	1
23	4D4065	ROD END	1
24	8P5324	SPACER	1
25	8P5322	BRACKET ASSEM.	1
26	7B3235	BOLT	3
27	3B4508	LOCKWASHER	5
C 28	S1622	BOLT	1
	1K6872	LOCKNUT	1
29	1D4719	NUT	3
C 30	9G8854	BELLCRANK	1
31	S509	BOLT	1
	3K8909	LOCKWASHER	1
	8M4069	WASHER	1
C 32	6D3787	BEARING	2
33	S1587	BOLT	1
34	8P5325	ROD ASSEM. (Includes)	1
	4D4065	ROD END	1
	1B4205	NUT	1
35	S1590	BOLT	1
36	3B4506	LOCKWASHER	5
37	S1588	BOLT	4
	4B4278	WASHER	4
38	S1573	BOLT	1
39	8P2483	LEVER	1
40	3P3942	SHAFT	1
	1B8704	KEY	1
	5S9704	SHAFT	2
41	1D4720	NUT	1
	3B4510	LOCKWASHER	1
42	2H3855	BOLT	1
	1J8965	WASHER	1
C 43	6D5974	BEARING	2
C 44	3B8489	FITTING	1
C	5P8166	FILM (Mounted on R.H. Operator's Platform)	1

C INDICATES CHANGE 229313

8P5038 IMPLEMENT LINKAGE GROUP — Bulldozer
Part of 9P7023 Hydraulic Control Arrangement listed on Page 157
AN ATTACHMENT

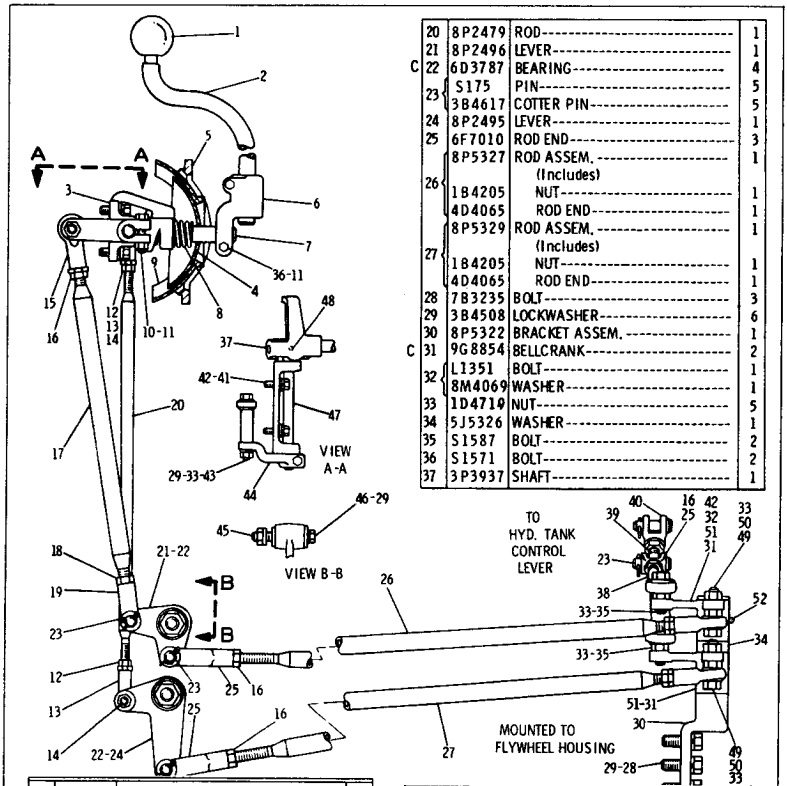

REF. NO.	PART NUMBER	DESCRIPTION	QTY
1	2A1736	HANDLE	1
2	8P2480	LEVER	1
3	6P5205	BRACKET ASSEM. (Includes)	1
	9F5647	BEARING	2
4	8P7352	SEAL	1
5	6P5209	COVER	1
	4B1291	SCREW	4
6	9P468	CLAMP	1
7	8P2481	LEVER ASSEM. (Includes)	1
	9F5647	BEARING	2
8	2J7295	SPRING	1
9	6P5208	GUIDE	1
10	S1591	BOLT	1
11	1D4717	NUT	3
12	5B9079	NUT	2
13	5J5315	ROD END	2
14	2L6267	LOCKNUT	2
15	4D4065	ROD END	1
16	1B4205	NUT	4
17	8P3391	ROD ASSEM. (Includes)	1
18	1B4205	NUT	1
19	2M8340	ROD END	1
20	8P2479	ROD	1
21	8P2496	LEVER	1
C 22	6D3787	BEARING	4
23	S175	PIN	5
	3B4617	COTTER PIN	5
24	8P2495	LEVER	1
25	6F7010	ROD END	3
26	8P5327	ROD ASSEM. (Includes)	1
	1B4205	NUT	1
	4D4065	ROD END	1
27	8P5329	ROD ASSEM. (Includes)	1
	1B4205	NUT	1
	4D4065	ROD END	1
28	7B3235	BOLT	3
29	3B4508	LOCKWASHER	6
30	8P5322	BRACKET ASSEM.	1
C 31	9G8854	BELLCRANK	2
32	L1351	BOLT	1
	8M4069	WASHER	1
33	1D4719	NUT	5
34	5J5326	WASHER	1
35	S1587	BOLT	2
36	S1571	BOLT	2
37	3P3937	SHAFT	1
38	8P5325	ROD ASSEM.	1
	4D4065	ROD END	1
	1B4205	NUT	1
39	8P5331	ROD ASSEM.	1
	1B4205	NUT	2
	4D4065	ROD END	1
40	2M8340	ROD END	1
C 41	S1588	BOLT	4
	4B4278	WASHER	4
42	3B4506	LOCKWASHER	5
43	S1573	BOLT	1
44	8P2483	LEVER	1
	5S9704	SHAFT	2
45	1D4720	NUT	2
	3B4510	LOCKWASHER	2
46	2H3855	BOLT	2
	1J8965	WASHER	2
47	3P3935	SHAFT ASSEM.	1
	1B8704	KEY	1
48	7L811	PIN	1
49	S1622	BOLT	2
50	1K6872	LOCKNUT	2
C 51	6D5974	BEARING	4
C 52	3B8489	FITTING	2
C	5P8161	FILM -------(not shown)---------- (Mounted on R.H. Operator's Platform)	1

C INDICATES CHANGE 229314

8P5039 IMPLEMENT LINKAGE GROUP — Bulldozer and Blade Tilt
Part of 9P7022 Hydraulic Control Arrangement listed on Page 157
AN ATTACHMENT

	CONSISTS OF:		PAGE
1	3G4154	BULLDOZER ARRANGEMENT--STRAIGHT	187
1	5J9210	CYLINDER BRACKET GROUP	190
1	9P8113	BULLDOZER LINES GROUP	176
2	8J6868	CYLINDER GROUP	180

3G5330 BULLDOZER ARRANGEMENT — Straight
AN ATTACHMENT

	CONSISTS OF:		PAGE
1	3G4154	BULLDOZER ARRANGEMENT	187
1	5J9210	CYLINDER BRACKET GROUP	190
1	2P6058	BULLDOZER LINES GROUP	178
2	8J6868	CYLINDER GROUP	180

3G4208 BULLDOZER ARRANGEMENT — Straight — For Brazil Market
AN ATTACHMENT

		CONSISTS OF:	PAGE
1	3G4153	BLADE GROUP	188
1	5S8064	TRUNNION GROUP	18
1	5S9099	PUSH ARM AND BRACE GROUP	189

3G4154 BULLDOZER ARRANGEMENT — Straight
Bulldozer Serial No. 21H1-Up

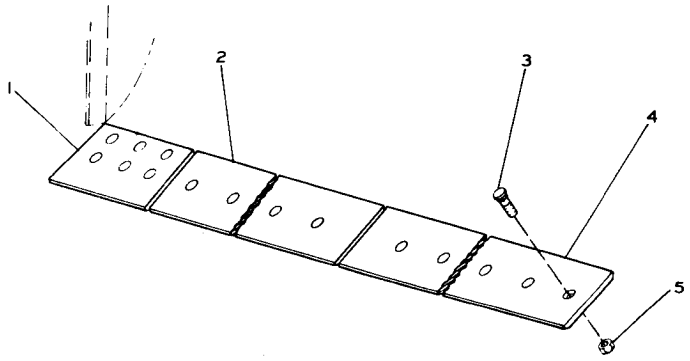

REF. NO	PART NUMBER	DESCRIPTION	QTY
1	8J7162	END BIT--------(R. H.)----------	1
	8J7163	END BIT--------(L. H.)----------	1
2	7J9478	CUTTING EDGE----------	2
3	4F7827	BOLT----------	31
4	8J7156	CUTTING EDGE----------	1
5	2J3506	NUT----------	31

115556

7J8503 EDGE AND BIT GROUP
Part of 3G4153 Blade Group shown on Page 188
AN ATTACHMENT

REF. NO.	PART NUMBER	DESCRIPTION	QTY
1	5P4020	PLATE-------(serial number)------	1
	4B4158	DRIVE SCREW----------	2
2	7J8503	EDGE AND BIT GROUP---------- (Separate Illustration)	1

3	3G4152	BLADE ASSEM. ---------- (Includes)	1
4	4J3471	SOCKET---------(R. H.)------	1
	4J3472	SOCKET---------(L. H.)-------	1
5	3Y23	SHOE----------(R. H.)-------	1
	3Y24	SHOE----------(L. H.)--------	1
6	7J8393	RETAINER----------	2
7	5A7945	SOCKET ASSEM. ----------	2
8	6J8183	BRACKET----------	2
9	6J774	TRUNNION----------	2

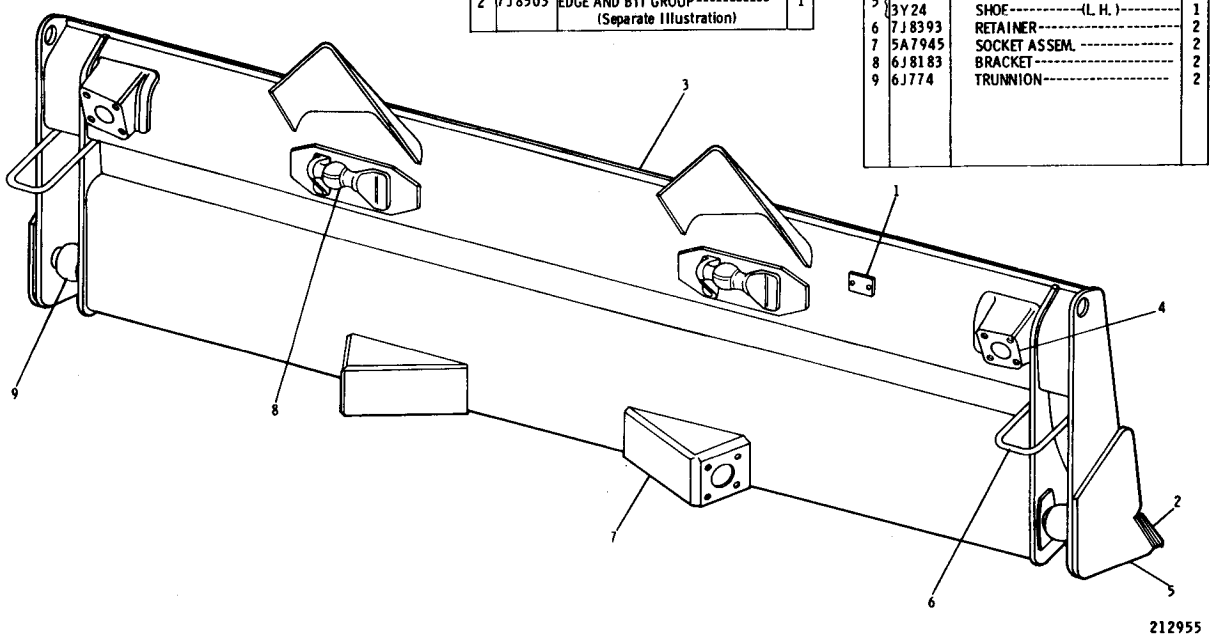

3G4153 BLADE GROUP
Part of 3G4154 Bulldozer Arrangement listed on Page 187
7J8503 Edge and Bit parts are shown on Page 187

5S9099 PUSH ARM AND BRACE GROUP
Part of 3G4154 Bulldozer Arrangement listed on Page 187

REF. NO.	PART NUMBER	DESCRIPTION	QTY
1	6F2905	CAP	2
2	5B5473	BOLT	4
	4F1204	NUT	4
	3K5234	WASHER	4
3	5A9102	ARM ASSEM. (L.H.)	1
4	4J3590	BEARING	1
5	4J3592	BRACKET	1
6	3J4285	BEARING	1
7	4J1616	BRACKET	1
8	3F6185	PIN	2
9	4F255	PIN	4
	3B4626	COTTER PIN	4

19	L1169	BOLT	8
20	3F6608	SHIM	14
21	3J4284	CAP	2

22	2B7408	PLUG	4
23	3F4971	PIN	2
24	2J6118	SCREW	2
25	1D4585	BOLT	4
	1D4720	NUT	4
26	3J2452	CAP	2
27	S1844	BOLT	8
	2J3506	NUT	8
28	5A9101	ARM ASSEM. (R.H.)	1
	4J1616	BRACKET	1
29	4J3590	BEARING	1
30	3J4285	BEARING	1
31	4J3591	BRACKET	1
32	2J6121	ARM ASSEM.	2
33	3J7460	SPACER	2
34	4J2000	BALLSTUD	1
35	3J2452	CAP	2
36	3F4956	SHIM	14
37	S1756	BOLT	8

10	4J3583	SCREW	2
11	3B8489	FITTING	2
12	7J2758	BRACE ASSEM.	2
13	6J1042	LUG	1
14	4J3582	BALLSTUD	1
15	3F6612	CAP	1
16	3F4854	KNOB	1
17	6F3908	HANDLE ASSEM.	1
18	4J3589	CAP	2

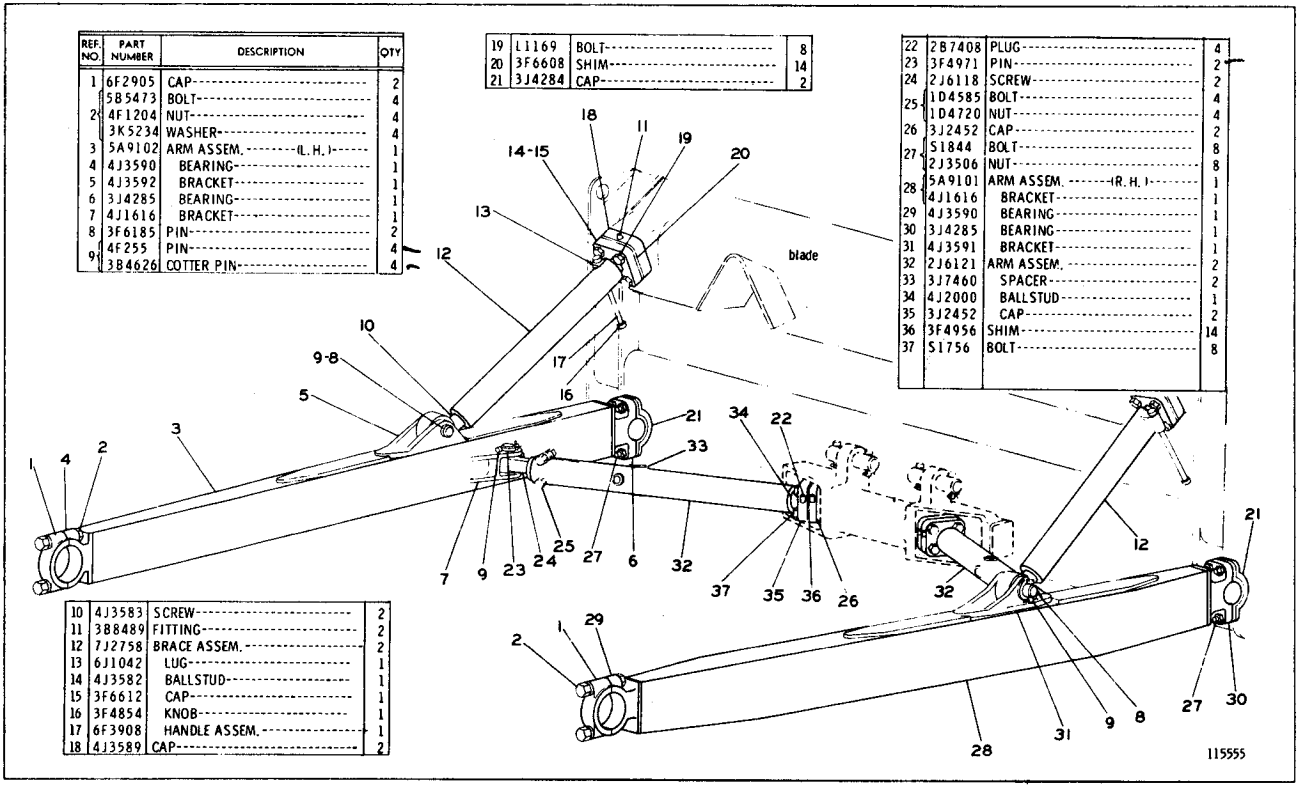

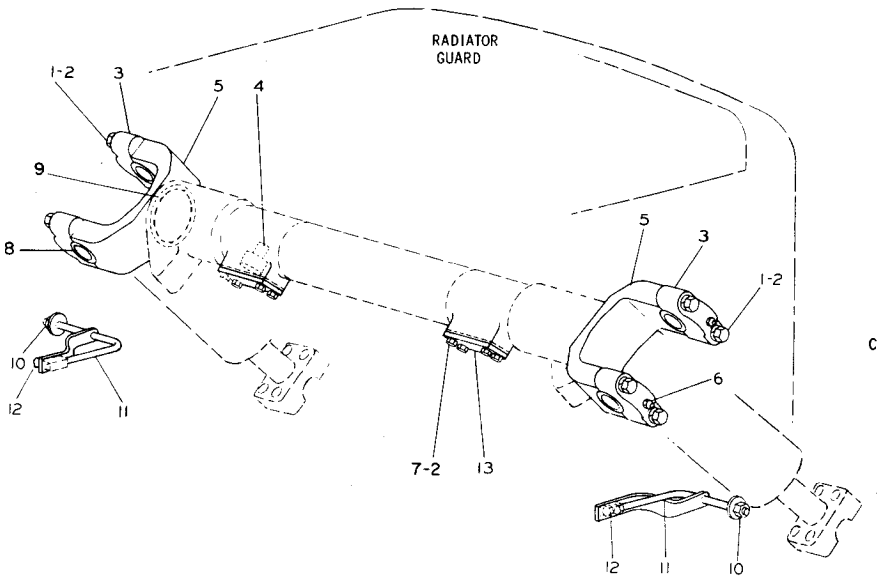

REF. NO.	PART NUMBER	DESCRIPTION	QTY
1	2B947	BOLT	8
2	3B4508	LOCKWASHER	16
3	4J6327	CAP	4
4	5J6161	PIN	2
5	5J6156	YOKE	2
6	3B8489	FITTING	4
7	S1595	BOLT	8
8	4J6326	BEARING	8
9	2J6305	SEAL	2
10	2H3788	NUT	2
	4B4280	WASHER	2
C 11	9J1903	LINK ASSEM.	2
12	T772	BOLT	2
	1D4718	NUT	2
13	5J6162	PLATE	2

C INDICATES CHANGE

5J9210 CYLINDER BRACKET GROUP—Type 1
AN ATTACHMENT

5J9210 CYLINDER BRACKET GROUP-TYPE 2
An Attachment

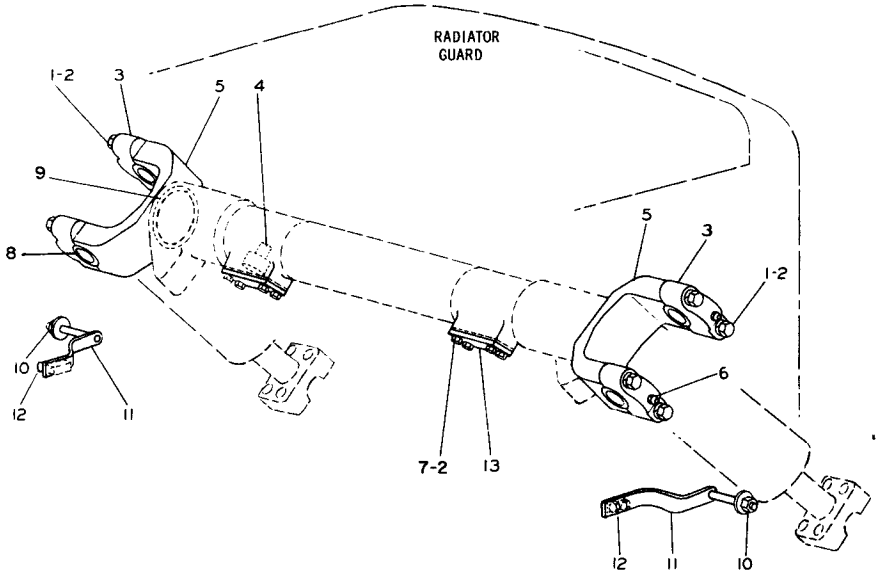

NOTE	REF NO	PART NUMBER	QTY	DESCRIPTION
	1	2B947	8	BOLT
	2	3B4508	16	LOCKWASHER
	3	4J6327	4	CAP
	4	5J6161	2	PIN
	5	5J6156	2	YOKE
	6	3B8489	4	FITTING
	7	S1595	8	BOLT
C	8	4J6326	4	BEARING
	9	2J6305	2	SEAL
	10	2H3788	2	NUT
		4B4280	2	WASHER
C	11	3Y7923	2	LINK AS.
	12	T772	2	BOLT
		1D4718	2	NUT
	13	5J6162	2	PLATE
C		8J7067	2	GASKET

C INDICATES CHANGE

316840

		Consists of:	Page
1	1P6751	Gear Pump Group	173
1	1P8626	Winch Arrangement	191
1	1P8916	Winch Drive Group	199
1	8P4826	Pump Lines Group	175
1	8P5694	Winch Control Group	206

8P2319 WINCH ARRANGEMENT — Standard Speed
AN ATTACHMENT

		Consists of:	Page
1	1P7528	Control Valve Group	166
1	1P8631	Winch Group	200
1	8P1506	Cable Case and Guide Group	197
1	6V527	Plate--Winch Number	
4	4B4158	Screw--Drive	

1P8626 TOWING WINCH ARRANGEMENT
Winch Serial No. 35U2261-Up
Also part of 8P2319 Winch Arrangement listed on Page 191

		Consists of:	Page
1	8P5693	Control Group--Towing Winch	208
1	9G567	Conversion Group--Winch	194

9G2799 WINCH CONVERSION ARRANGEMENT — Disconnect — Low Speed
MUST BE USED IN CONJUNCTION WITH 8P2319 SHOWN ON PAGE 191
AN ATTACHMENT

		Consists of:	Page
1	8P5693	Control Group--Winch Towing	208
1	9G565	Conversion Group--Winch	193

9G2800 WINCH CONVERSION ARRANGEMENT — Disconnect — Standard Speed
MUST BE USED IN CONJUNCTION WITH 8P2319 SHOWN ON PAGE 191
AN ATTACHMENT

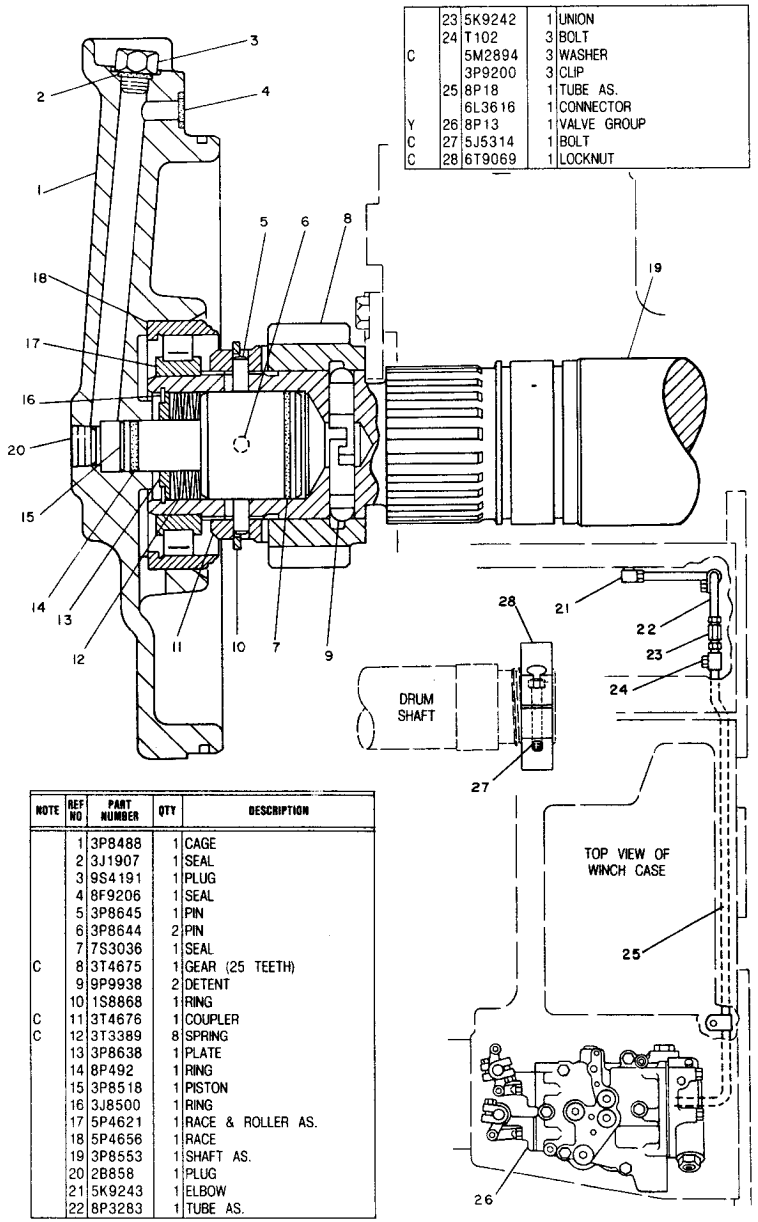

	23	5K9242	1	UNION
	24	T102	3	BOLT
C		5M2894	3	WASHER
		3P9200	3	CLIP
	25	8P18	1	TUBE AS.
		6L3616	1	CONNECTOR
Y	26	8P13	1	VALVE GROUP
C	27	5J5314	1	BOLT
C	28	6T9069	1	LOCKNUT

NOTE	REF NO	PART NUMBER	QTY	DESCRIPTION
	1	3P8488	1	CAGE
	2	3J1907	1	SEAL
	3	9S4191	1	PLUG
	4	8F9206	1	SEAL
	5	3P8645	1	PIN
	6	3P8644	2	PIN
	7	7S3036	1	SEAL
C	8	3T4675	1	GEAR (25 TEETH)
	9	9P9938	2	DETENT
	10	1S8868	1	RING
C	11	3T4676	1	COUPLER
C	12	3T3389	8	SPRING
	13	3P8638	1	PLATE
	14	8P492	1	RING
	15	3P8518	1	PISTON
	16	3J8500	1	RING
	17	5P4621	1	RACE & ROLLER AS.
	18	5P4656	1	RACE
	19	3P8553	1	SHAFT AS.
	20	2B858	1	PLUG
	21	5K9243	1	ELBOW
	22	8P3283	1	TUBE AS.

C INDICATES CHANGE Y SEPARATE ILLUSTRATION

316764

9G565 WINCH CONVERSION GROUP–DISCONNECT–STANDARD SPEED
Winch Serial No. 35U2261–Up
Must Be Used In Conjunction With 8P2319 Shown On Page 191
8P13–Page 167
An Attachment

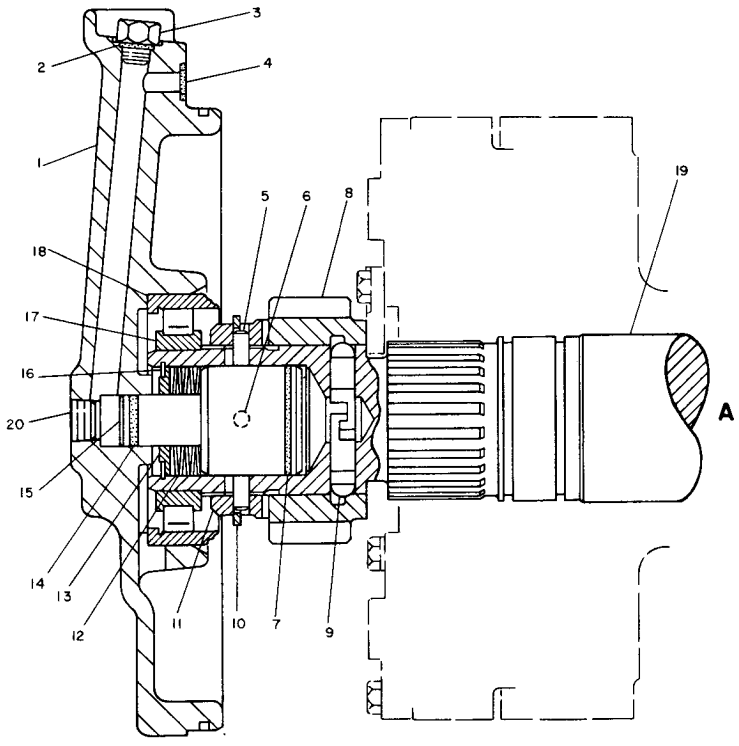

REF. NO.	PART NUMBER	DESCRIPTION	QTY.
1	3P8488	CAGE	1
2	3J1907	SEAL	1
3	9S4191	PLUG	1
4	8F9206	SEAL	1
5	3P8645	PIN	1
6	3P8644	PIN	2
7	7S3036	SEAL	1
8	3P8404	GEAR------(25 teeth)	1
9	9P9938	DETENT	2
10	1S8868	RING	1
11	3P8405	COUPLER	1
12	3P8643	SPRING	8
13	3P8638	PLATE	1
14	8P492	RING	1
15	3P8518	PISTON	1
16	3J8500	RING	1
17	5P4621	RACE AND ROLLER ASSEM.	1
18	5P4656	RACE	1
19	3P8553	SHAFT ASSEM.	1
20	2B858	PLUG	1

174760

9G567 WINCH CONVERSION GROUP — Part 1
Winch Serial No. 35U2261-Up
MUST BE USED IN CONJUNCTION WITH 8P2319 SHOWN ON PAGE 191
Also part of 9G2799 Winch Conversion Arrangement listed on Page 192
AN ATTACHMENT

9G567 WINCH CONVERSION GROUP — Part 2
Winch Serial No. 35U2261-Up
MUST BE USED IN CONJUNCTION WITH 8P2319 SHOWN ON PAGE 191
Also part of 9G2799 Winch Conversion Arrangement listed on Page 192
8P13 Valve parts are shown on Page 167. AN ATTACHMENT

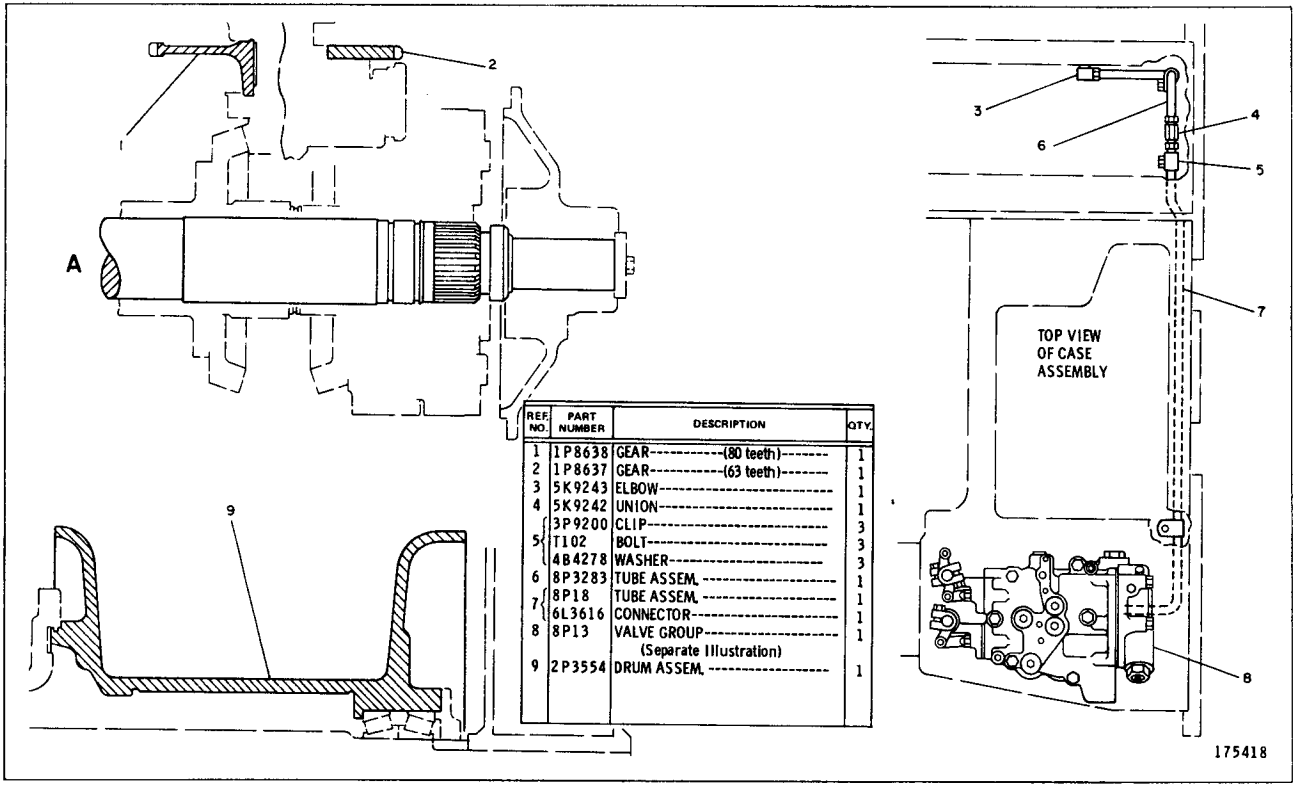

REF. NO.	PART NUMBER	DESCRIPTION	QTY.
1	1P8638	GEAR----------(80 teeth)-------	1
2	1P8637	GEAR----------(63 teeth)-------	1
3	5K9243	ELBOW----------	1
4	5K9242	UNION----------	1
5	3P9200	CLIP----------	3
	T102	BOLT----------	3
	4B4278	WASHER----------	3
6	8P3283	TUBE ASSEM. ----------	1
7	8P18	TUBE ASSEM. ----------	1
	6L3616	CONNECTOR----------	1
8	8P13	VALVE GROUP----------	1
		(Separate Illustration)	
9	2P3554	DRUM ASSEM. ----------	1

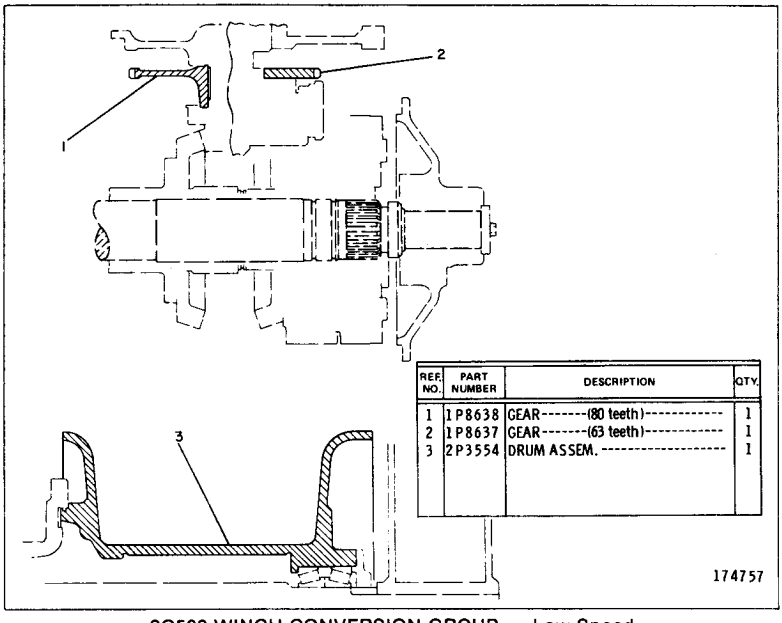

REF. NO.	PART NUMBER	DESCRIPTION	QTY.
1	1P8638	GEAR-------(80 teeth)----------	1
2	1P8637	GEAR-------(63 teeth)----------	1
3	2P3554	DRUM ASSEM.----------	1

9G563 WINCH CONVERSION GROUP — Low Speed
Winch Serial No. 35U2261-Up
MUST BE USED IN CONJUNCTION WITH 8P2319 SHOWN ON PAGE 191
AN ATTACHMENT

8P1506 CABLE CASE & GUIDE GROUP
Winch Serial No. 35U2261 To 35U3661 Inclusive

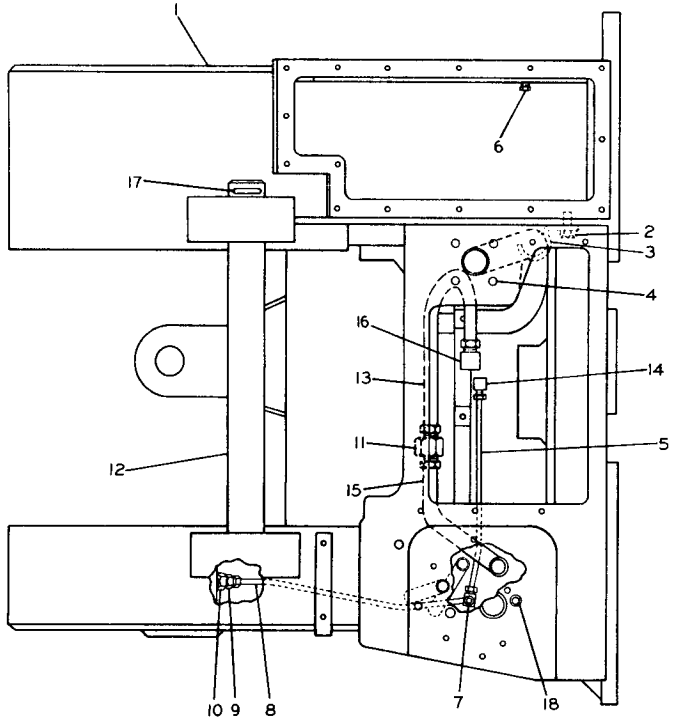

REF. NO.	PART NUMBER	DESCRIPTION	QTY
1	8P1504	CASE ASSEM. (Includes)	1
2	T102	BOLT	1
	4B4278	WASHER	1
3	2P3572	CLAMP	1
4	2M1538	STUD	4
5	6P7820	TUBE ASSEM.	1
6	5M6214	PLUG	1
7	9L9045	TEE	1
8	1P9279	TUBE ASSEM.	1
9	5K9239	CONNECTOR	1
10	2P4439	ADAPTER	1
11	5K9249	UNION	1
12	1P9265	SHAFT	1
13	8P7623	TUBE ASSEM.	1
14	5K9243	ELBOW	1
15	8P7622	TUBE ASSEM.	1
	7F8607	SEAL	1
C 16	5K9240	ELBOW	1
17	3B5325	COTTER PIN	2
18	9F2247	PLUG	1

C INDICATES CHANGE

180586

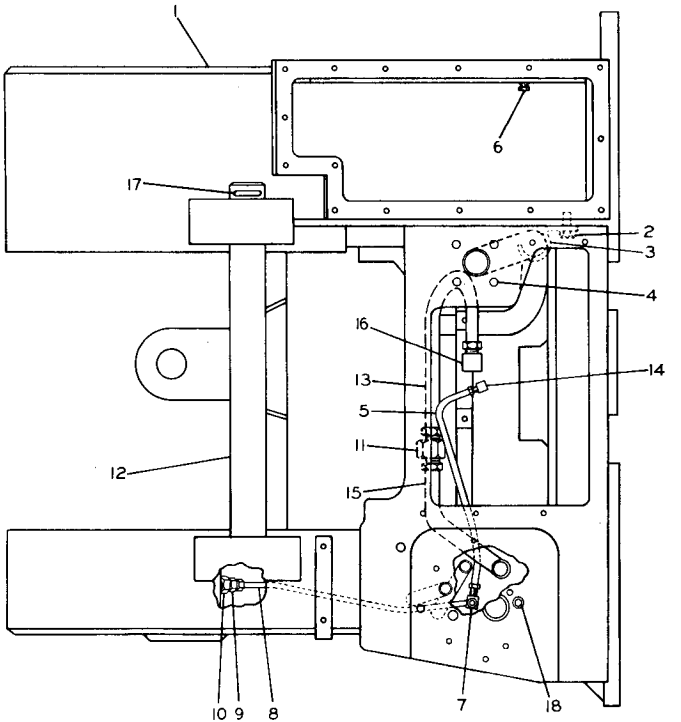

NOTE	REF NO	PART NUMBER	QTY	DESCRIPTION
	1	8P1504	1	CASE AS.
	2	T102	1	BOLT
		4B4278	1	WASHER
	3	2P3572	1	CLAMP
	4	2M1538	4	STUD
C	5	6T1145	1	TUBE AS.
	6	5M6214	1	PLUG
C	7	6K8498	1	TEE
C	8	6T1146	1	TUBE AS.
C	9	5K9246	1	CONNECTOR
	10	2P4439	1	ADAPTER
	11	5K9249	1	UNION
	12	1P9265	1	SHAFT
	13	8P7623	1	TUBE AS.
C	14	5K9235	1	ELBOW
	15	8P7622	1	TUBE AS.
		7F8607	1	SEAL
	16	5K9240	1	ELBOW
	17	3B5325	2	COTTER PIN
	18	9F2247	1	PLUG

C INDICATES CHANGE

316913

8P1506 CABLE CASE AND GUIDE GROUP
Winch Serial No. 35U3662-Up

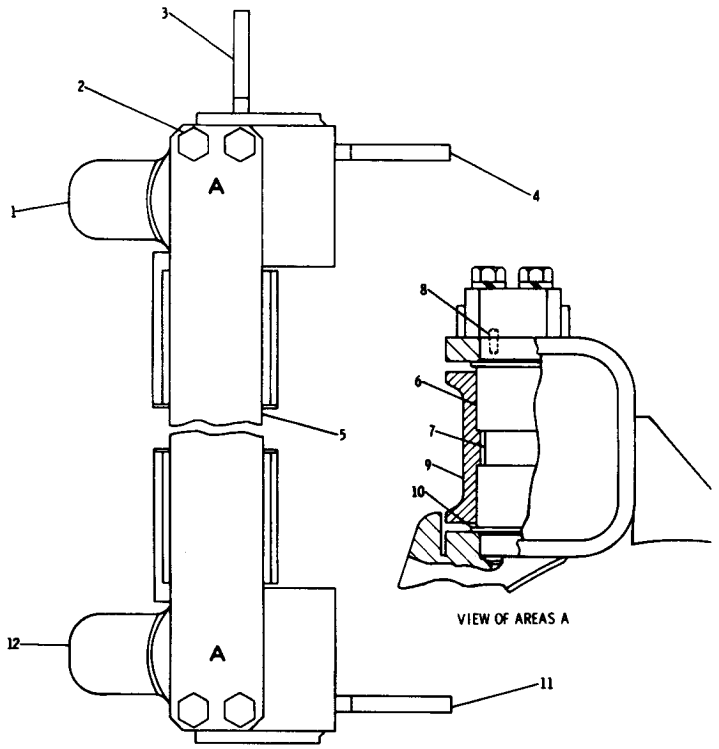

REF. NO.	PART NUMBER	DESCRIPTION	QTY
1	8P2394	SUPPORT ASSEM. ----(L. H.)------	1
2	S1625	BOLT----------	4
	3B4510	LOCKWASHER----------	4
3	2P2949	GUSSET----------	1
4	2P6882	GUSSET----------	1
5	2P6884	BAR ASSEM. ----------	1
6	7J9884	BEARING----------	4
7	2P3559	SHAFT ASSEM. ---------- (Each Includes)	2
8	9S1307	DOWEL----------	1
9	8P2933	ROLLER----------	2
10	2P3558	SLEEVE----------	4

11	2P6881	GUSSET----------	1
12	8P2395	SUPPORT ASSEM. ----(R. H.)------	1
	SMHS6746	FORM ---------- (Installing Roller Groups)	1

208948

8P2396 WINCH ROLLER GUIDE GROUP — Top View
Winch Serial No. 35U2261-Up
AN ATTACHMENT

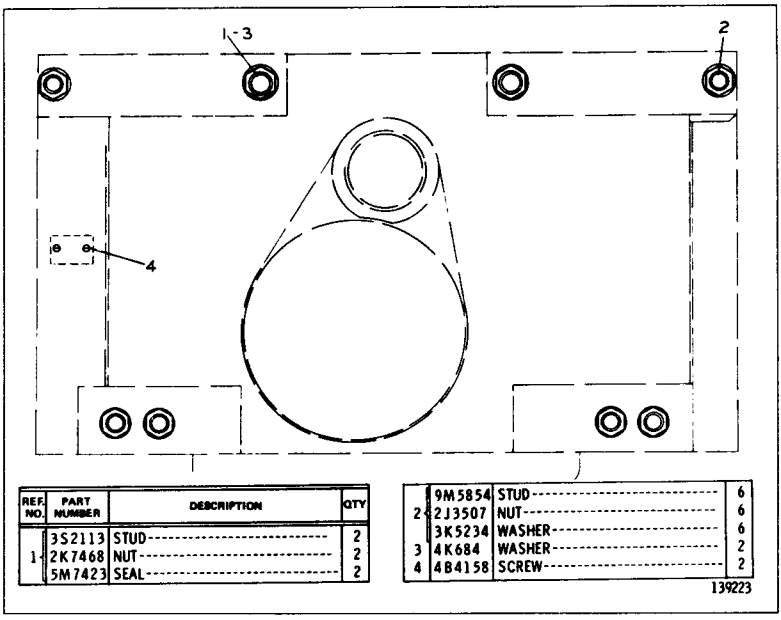

REF. NO.	PART NUMBER	DESCRIPTION	QTY
1	3S2113	STUD	2
	2K7468	NUT	2
	5M7423	SEAL	2
2	9M5854	STUD	6
	2J3507	NUT	6
	3K5234	WASHER	6
3	4K684	WASHER	2
4	4B4158	SCREW	2

1P8951 WINCH MOUNTING GROUP
Part of 8P2319 Winch Arrangement listed on Page 191
AN ATTACHMENT

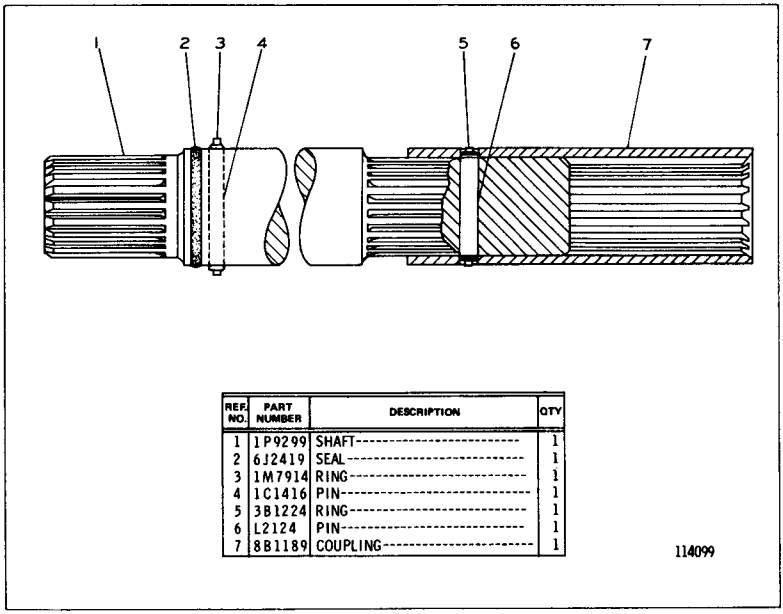

REF. NO.	PART NUMBER	DESCRIPTION	QTY
1	1P9299	SHAFT	1
2	6J2419	SEAL	1
3	1M7914	RING	1
4	1C1416	PIN	1
5	3B1224	RING	1
6	L2124	PIN	1
7	8B1189	COUPLING	1

1P8916 WINCH DRIVE GROUP
Part of 8P2319 Winch Arrangement listed on Page 191
AN ATTACHMENT

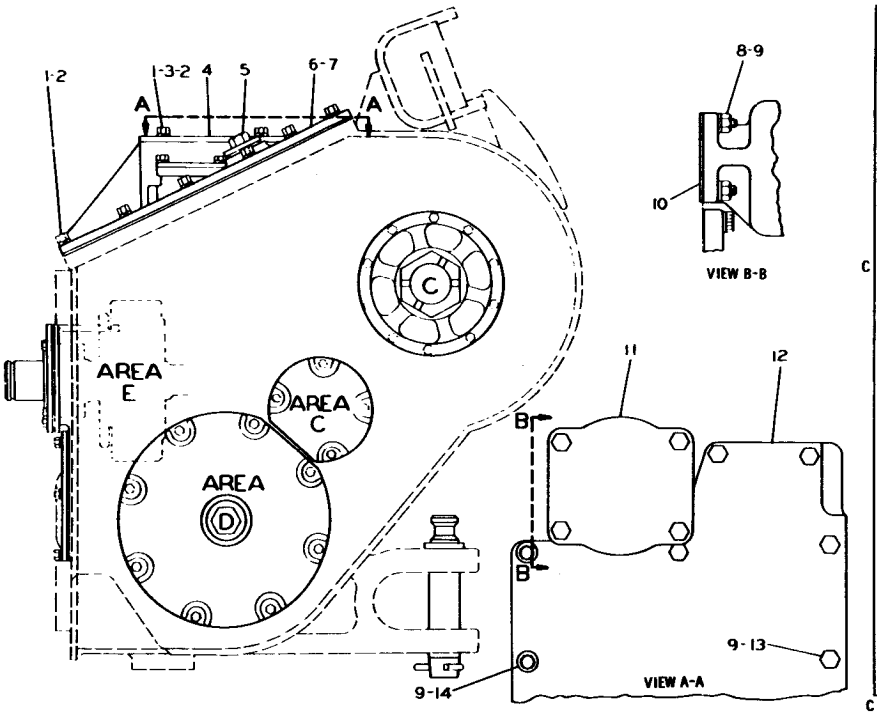

	REF. NO.	PART NUMBER	DESCRIPTION	QTY
	1	S1594	BOLT-----172.54 cm(100 in.) long	17
	2	3B4506	LOCKWASHER-----------	19
	3	6L3670	BOLT-----19.69 cm(7.75 in.) long	2
	4	8P54	COVER ASSEM. ----------	1
	5	5H7110	PLUG----------	1
		L1124	GASKET----------	1
	6	3P4603	COVER ASSEM. ---------- (Includes)	1
		6B9002	BOSS----------	1
	7	3P4602	GASKET----------	1
	8	1D4717	NUT----------	4
	9	5M2894	WASHER----------	17
C	10	2P6896	GASKET----------	1
	11	2P7020	SCREEN GROUP---------- (Separate Illustration)	1
	12	6P7930	COVER----------	1
		6P7825	GASKET----------	1
	13	3B1915	BOLT----------	10
	14	1T765	BOLT----------	3

C INDICATES CHANGE 171872

1P8631 WINCH GROUP--STANDARD WINCH GEARS & DRUM WITHOUT DRUM DISCONNECT
Part 1 Of 6
Winch Serial No. 35U2261 To 35U3661 Inclusive
2P7020-Page 210

1P8631 WINCH GROUP–STANDARD WINCH GEARS & DRUM WITHOUT DRUM DISCONNECT

Part 2 Of 6

Winch Serial No. 35U2261 To 35U3661 Inclusive

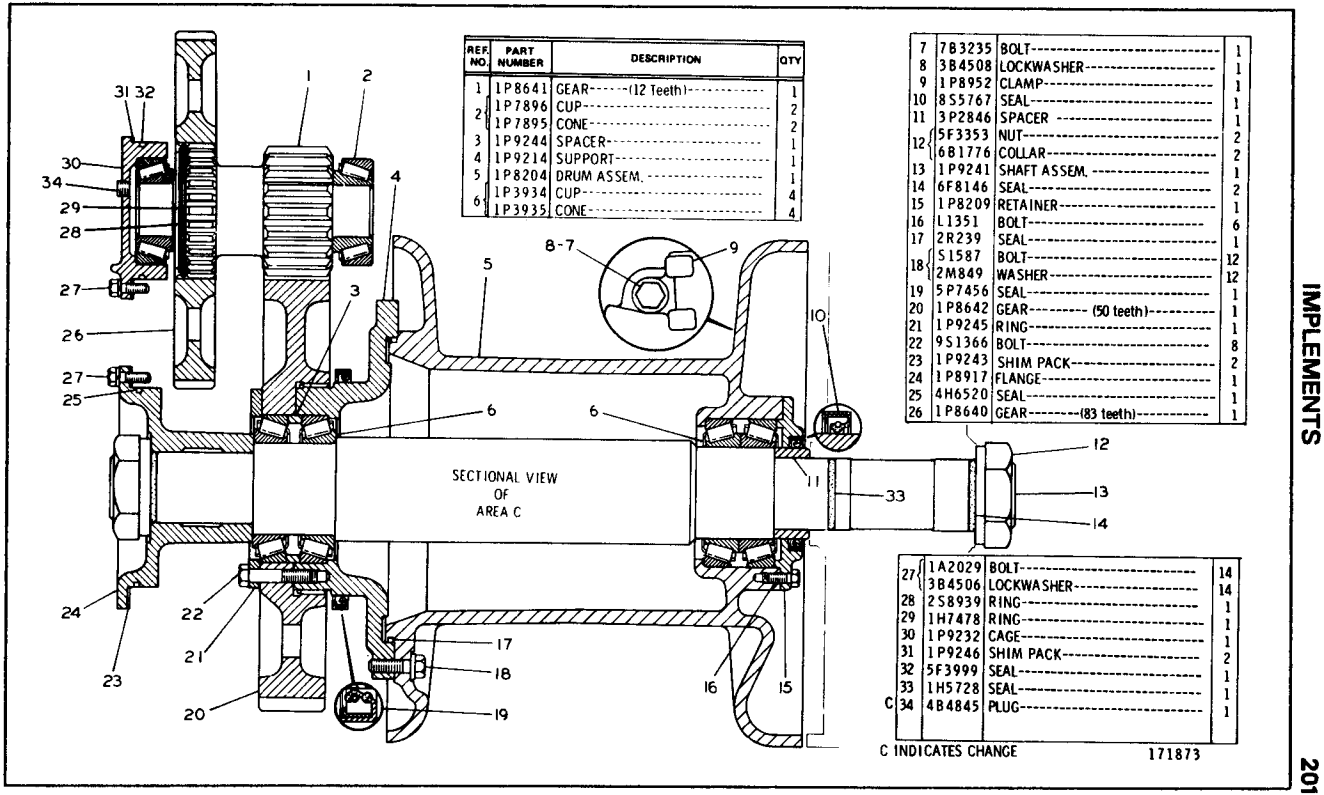

REF. NO.	PART NUMBER	DESCRIPTION	QTY
1	1P8641	GEAR-----(12 Teeth)----------	1
2	1P7896	CUP----------	2
	1P7895	CONE----------	2
3	1P9244	SPACER----------	1
4	1P9214	SUPPORT----------	1
5	1P8204	DRUM ASSEM.----------	1
6	1P3934	CUP----------	4
	1P3935	CONE----------	4
7	7B3235	BOLT----------	1
8	3B4508	LOCKWASHER----------	1
9	1P8952	CLAMP----------	1
10	8S5767	SEAL----------	1
11	3P2846	SPACER ----------	1
12	5F3353	NUT----------	2
	6B1776	COLLAR----------	2
13	1P9241	SHAFT ASSEM.----------	1
14	6F8146	SEAL----------	2
15	1P8209	RETAINER----------	1
16	L1351	BOLT----------	6
17	2R239	SEAL----------	1
18	S1587	BOLT----------	12
	2M849	WASHER----------	12
19	5P7456	SEAL----------	1
20	1P8642	GEAR--------- (50 teeth)---------	1
21	1P9245	RING----------	1
22	9S1366	BOLT----------	8
23	1P9243	SHIM PACK----------	2
24	1P8917	FLANGE----------	1
25	4H6520	SEAL----------	1
26	1P8640	GEAR--------(83 teeth)---------	1
27	1A2029	BOLT----------	14
	3B4506	LOCKWASHER----------	14
28	2S8939	RING----------	1
29	1H7478	RING----------	1
30	1P9232	CAGE----------	1
31	1P9246	SHIM PACK----------	2
32	5F3999	SEAL----------	1
33	1H5728	SEAL----------	1
C 34	4B4845	PLUG----------	1

C INDICATES CHANGE

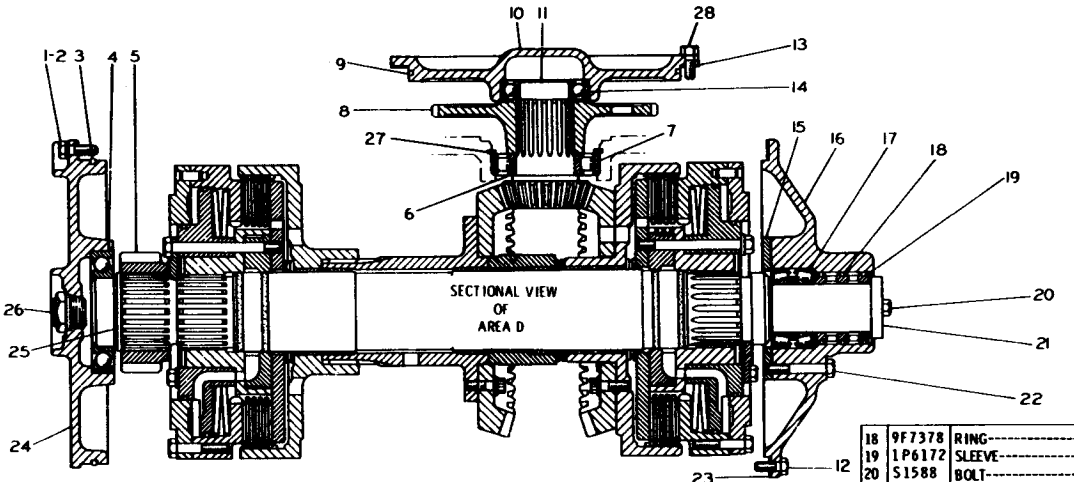

REF. NO.	PART NUMBER	DESCRIPTION	QTY
1	1A2029	BOLT	8
C 2	3B4506	LOCKWASHER	8
3	2R239	SEAL	1
4	7B7515	BEARING	1
5	1P8639	GEAR-------(25 Teeth)	1
6	2K1738	RACE AND ROLLER ASSEM.	1
C 7	5P9066	RACE	1
8	1P8636	GEAR-----(71 Teeth)	1
9	5H4909	SEAL	1
10	1P6174	CAGE	1
11	1P9251	PINION	1
C 12	S1594	BOLT	9
13	1P6175	SHIM PACK	4
14	1T43	BEARING	1
15	1P4232	RETAINER	1
16	1P5290	MANIFOLD	1
17	9S3581	CUP	2
	9S3582	CONE	2
18	9F7378	RING	3
19	1P6172	SLEEVE	1
20	S1588	BOLT	2
21	1P6180	WASHER	1
22	L1143	BOLT	4
23	1P6178	SHIM PACK	2
24	1P9247	CAGE	1
25	1M4093	RING	1
26	4J4742	BODY ASSEM.	1
	7M8485	SEAL	1
C 27	5M4480	RING	1
C 28	L1351	BOLT	6

C INDICATES CHANGE

171874

1P8631 WINCH GROUP–STANDARD WINCH GEARS & DRUM WITHOUT DRUM DISCONNECT
Part 3 Of 6
Winch Serial No. 35U2261 To 35U3661 Inclusive

1P8631 WINCH GROUP-STANDARD WINCH GEARS & DRUM WITHOUT DRUM DISCONNECT

Part 4 Of 6

Winch Serial No. 35U2261 To 35U3661 Inclusive

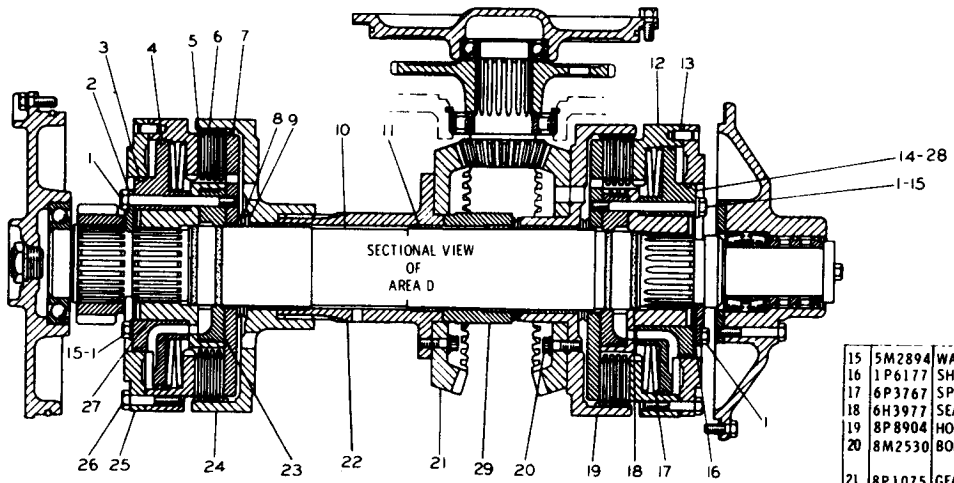

REF. NO.	PART NUMBER	DESCRIPTION	QTY
1	1A5964	BOLT----11.43 cm(4.5 in.) long	16
2	1P6176	PLATE	4
3	1S9497	RING	2
4	8S3371	RING	2
5	2P4371	DISC ASSEM.	10
6	2P4370	PLATE	8
7	1P6167	PLATE	2
8	1P6070	BEARING	3
9	1P6071	RACE	6
10	1P9248	SHAFT ASSEM.	1
11	2P1005	BEARING	6
12	1P6179	HUB ASSEM.	2
13	8B1312	DOWEL	2
14	1P6158	MANIFOLD	2
15	5M2894	WASHER	4
16	1P6177	SHIM PACK	2
17	6P3767	SPRING	4
18	6H3977	SEAL	4
19	8P8904	HOUSING	1
20	8M2530	BOLT	16
21	8P1075	GEAR---(51 Teeth)	2
22	8P8905	SHAFT	1
23	1P6701	MANIFOLD	2
24	1P8662	HOUSING	1
25	1P6153	PLATE	2
26	S1590	BOLT	16
27	1P8651	HUB	2
28	5P6446	BOLT----5.08 cm(2 in.)--	4
29	8P8906	SPACER	1

171875

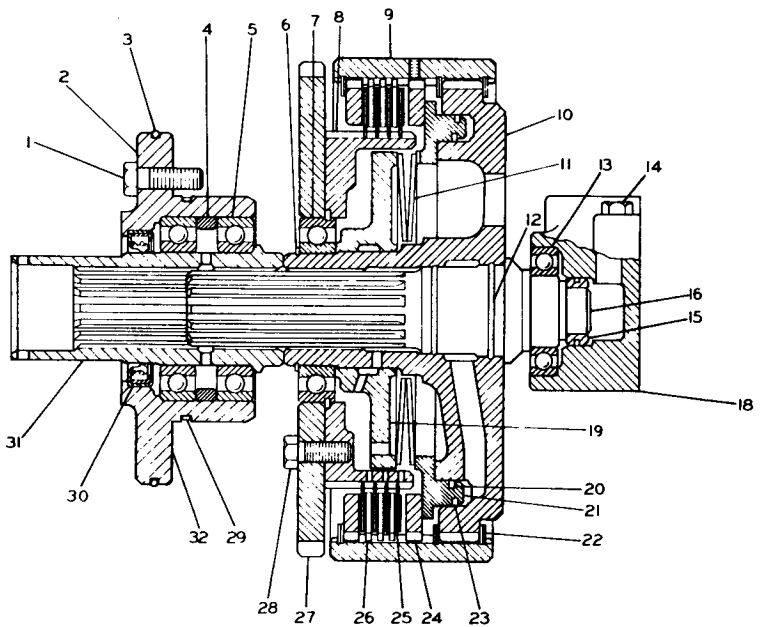

SECTIONAL VIEW OF AREA E

REF. NO.	PART NUMBER	DESCRIPTION	QTY
1	S1588	BOLT	4
2	1P8644	CAGE	1
3	6F4718	SEAL	1
4	1P9257	SPACER	1
5	9M1997	BEARING	2
6	4K4284	RING	1
7	3K526	BEARING	1
8	1P8661	HUB	1
9	8P2670	GEAR-------(70 Teeth)-	1
10	6P7828	HOUSING	1
11	1P9258	SPRING	2
12	6J2419	SEAL	2
13	2S3029	BEARING	1
14	4F9351	BOLT	3
15	2P3672	CARRIER	1
	1P9252	RING	1
16	6P7827	SHAFT	1
18	6P7826	CAGE	1
19	1P7543	HOUSING	1
20	1P9261	RING	1
21	1P7542	PISTON	1
22	1P9254	RING	3
23	1P9260	RING	1
24	1P7544	PLATE	2
25	2P3719	DISC ASSEM.	4
26	1P9256	PLATE	3
27	1P8635	GEAR-------(72 Teeth)-	1
28	S1594	BOLT	8
29	1H6227	SEAL	1
30	7H7107	SEAL	1
31	1P8663	COUPLING	1
32	7M7260	LIQUID GASKET	

171876

1P8631 WINCH GROUP–STANDARD WINCH GEARS AND DRUM WITHOUT DRUM DISCONNECT
Part 5 Of 6
Winch Serial No. 35U2261 To 35U3661 Inclusive

1P8631 WINCH GROUP-STANDARD WINCH GEARS & DRUM WITHOUT DRUM DISCONNECT

Part 6 Of 6

Winch Serial No. 35U2261 To 35U3661 Inclusive

2P5830-Page 210

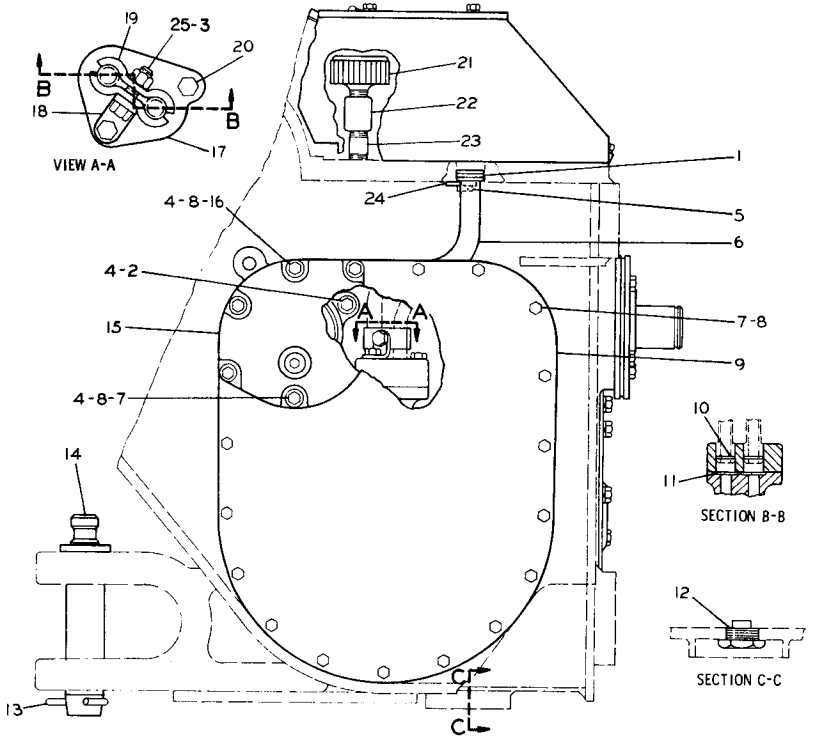

	REF. NO.	PART NUMBER	DESCRIPTION	QTY
	1	4F8946	SEAL	2
	2	S1594	BOLT	2
C	3	2L6267	LOCKNUT	1
	4	4B4278	WASHER	8
	5	T102	BOLT	1
	6	2P5853	TUBE ASSEM.	1
C	7	S1588	BOLT	17
	8	3B4506	LOCKWASHER	21
	9	2P5738	COVER ASSEM.	1
		2P3637	GASKET	1
	10	4J5351	SEAL	2
	11	5H2767	SEAL	2
	12	2D8390	PLUG	1
		6F4868	GASKET	1
	13	3B5319	COTTER PIN	1
	14	7F9541	PIN ASSEM.	1
		7F9543	COLLAR	1
		2P5830	FILTER GROUP	1
	15		(Separate Illustration)	
		5F3999	SEAL	1
	16	2A4639	BOLT	4
	17	2P1053	FLANGE	1
	18	2P4438	BRACKET	1
	19	2P4437	CLAMP	2
	20	S1590	BOLT	2
	21	8S5820	BREATHER	1
	22	3B6488	COUPLING	1
	23	3B7262	NIPPLE	1
	24	6P8678	PLATE	1
C	25	1A2209	BOLT	1

C INDICATES CHANGE

230329

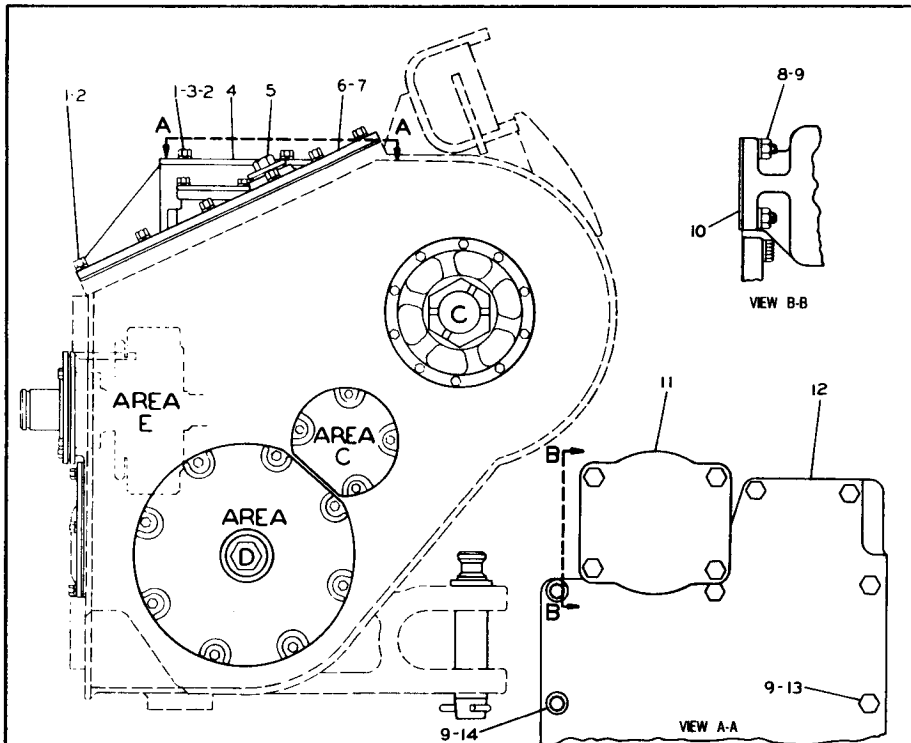

NOTE	REF NO	PART NUMBER	QTY	DESCRIPTION
	1	S1594	17	BOLT 2.54 CM(1 IN.) LG
	2	3B4506	19	LOCKWASHER
	3	6L3670	2	BOLT 19.69CM(7.75IN)LG
	4	8P54	1	COVER AS.
	5	5H7110	1	PLUG
		L1124	1	GASKET
	6	3P4603	1	COVER AS.
		6B9002	1	BOSS
	7	3P4602	1	GASKET
	8	1D4717	4	NUT
	9	5M2894	17	WASHER
	10	2P6896	1	GASKET
Y	11	2P7020	1	SCREEN GROUP
	12	6P7930	1	COVER
		6P7825	1	GASKET
	13	3B1915	10	BOLT
	14	1T765	3	BOLT

Y SEPARATE ILLUSTRATION

316884

1P8631 WINCH GROUP-STANDARD WINCH GEARS & DRUM WITHOUT DRUM DISCONNECT
Part 1 Of 6
Winch Serial No. 35U3662-Up
2P7020-Page 210

1P8631 WINCH GROUP-STANDARD WINCH GEARS & DRUM WITHOUT DRUM DISCONNECT

Part 2 Of 6

Winch Serial No. 35U3662-Up

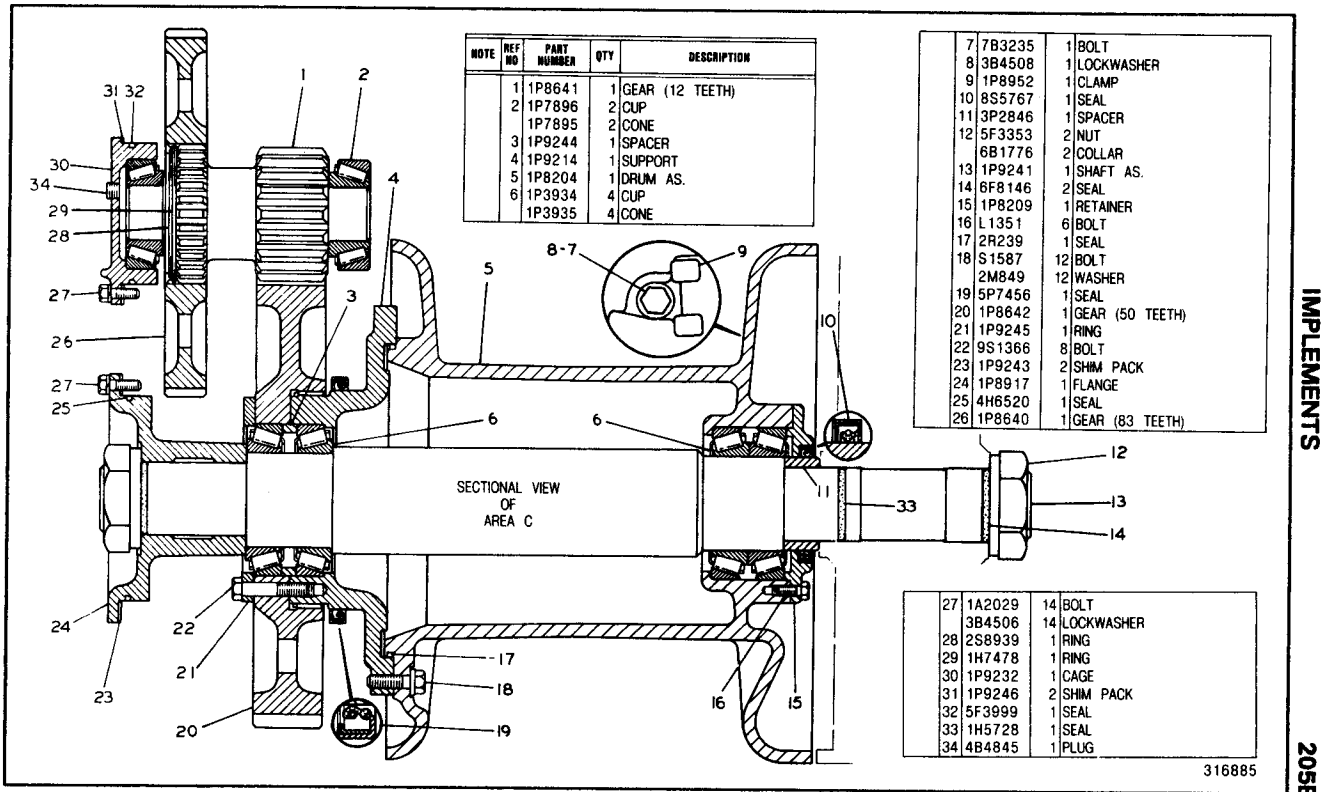

NOTE	REF NO	PART NUMBER	QTY	DESCRIPTION
	1	1P8641	1	GEAR (12 TEETH)
	2	1P7896	2	CUP
		1P7895	2	CONE
	3	1P9244	1	SPACER
	4	1P9214	1	SUPPORT
	5	1P8204	1	DRUM AS.
	6	1P3934	4	CUP
		1P3935	4	CONE
	7	7B3235	1	BOLT
	8	3B4508	1	LOCKWASHER
	9	1P8952	1	CLAMP
	10	8S5767	1	SEAL
	11	3P2846	1	SPACER
	12	5F3353	2	NUT
		6B1776	2	COLLAR
	13	1P9241	1	SHAFT AS.
	14	6F8146	2	SEAL
	15	1P8209	1	RETAINER
	16	L1351	6	BOLT
	17	2R239	1	SEAL
	18	S1587	12	BOLT
		2M849	12	WASHER
	19	5P7456	1	SEAL
	20	1P8642	1	GEAR (50 TEETH)
	21	1P9245	1	RING
	22	9S1366	8	BOLT
	23	1P9243	2	SHIM PACK
	24	1P8917	1	FLANGE
	25	4H6520	1	SEAL
	26	1P8640	1	GEAR (83 TEETH)
	27	1A2029	14	BOLT
		3B4506	14	LOCKWASHER
	28	2S8939	1	RING
	29	1H7478	1	RING
	30	1P9232	1	CAGE
	31	1P9246	2	SHIM PACK
	32	5F3999	1	SEAL
	33	1H5728	1	SEAL
	34	4B4845	1	PLUG

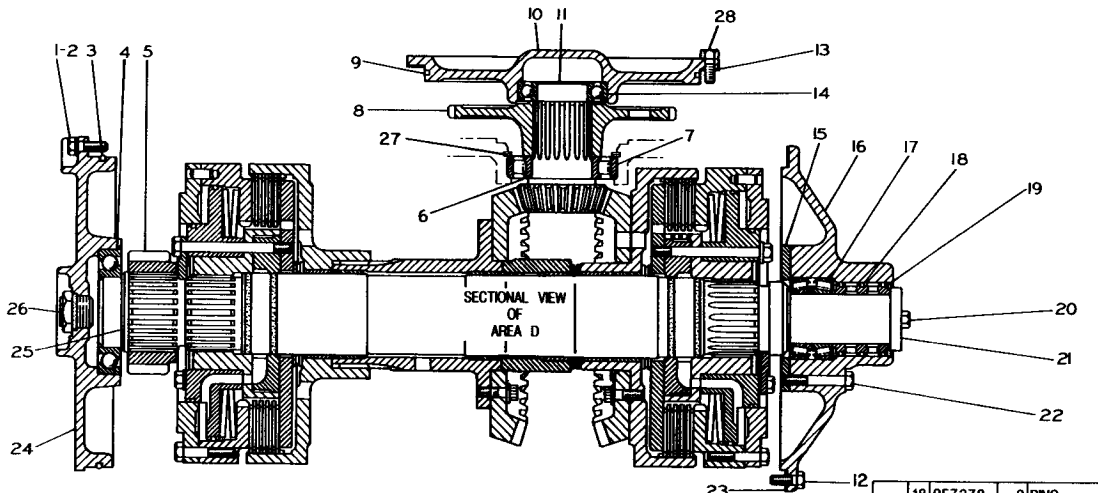

NOTE	REF NO	PART NUMBER	QTY	DESCRIPTION
	1	1A2029	8	BOLT
	2	3B3406	8	LOCKWASHER
	3	2R239	1	SEAL
	4	7B7515	1	BEARING
	5	1P8639	1	GEAR (25 TEETH)
	6	2K1738	1	RACE & ROLLER AS.
	7	5P9066	1	RACE
	8	1P8638	1	GEAR (80 TEETH)
	9	5H4909	1	SEAL
	10	1P6174	1	CAGE
	11	1P9251	1	PINION
	12	S1594	9	BOLT
	13	1P6175	4	SHIM PACK
	14	1T43	1	BEARING
	15	1P4232	1	RETAINER
	16	1P5290	1	MANIFOLD
	17	9S3581	2	CUP
		9S3582	2	CONE
	18	9F7378	3	RING
	19	1P6172	1	SLEEVE
	20	S1588	2	BOLT
	21	1P6180	4	WASHER
	22	L1143	4	BOLT
	23	1P6178	2	SHIM PACK
	24	1P9247	1	CAGE
	25	1M4093	1	RING
	26	4J4742	1	BODY AS.
		7M8485	1	SEAL
	27	5M4480	1	RING
	28	L1351	6	BOLT

316886

1P8631 WINCH GROUP-STANDARD WINCH GEARS & DRUM WITHOUT DRUM DISCONNECT
Part 3 Of 6
Winch Serial No. 35U3662-Up

1P8631 WINCH GROUP-STANDARD WINCH GEARS & DRUM WITHOUT DRUM DISCONNECT
Part 4 Of 6
Winch Serial No. 35U3662-Up

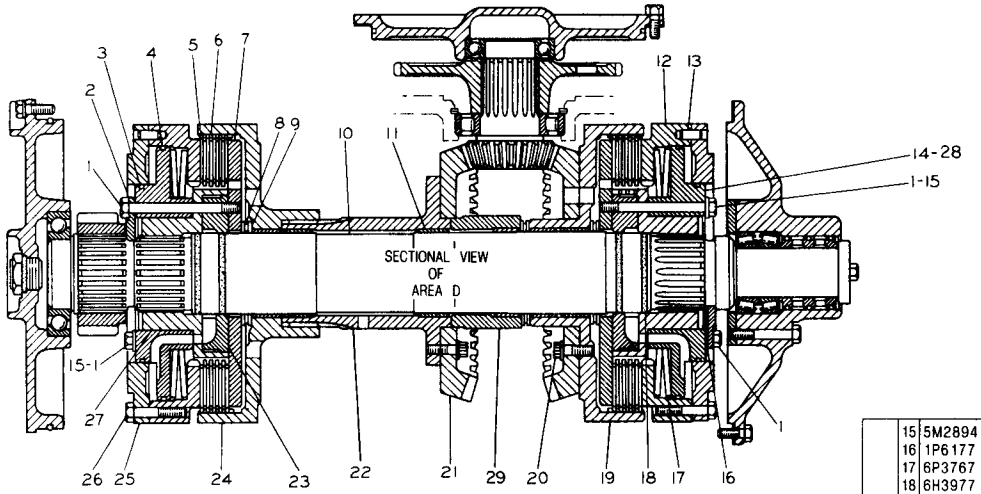

NOTE	REF NO	PART NUMBER	QTY	DESCRIPTION
	1	1A5964	16	BOLT 11.43CM(4.5IN)LG
	2	1P6176	4	PLATE
	3	1S9497	2	RING
	4	8S3371	2	RING
	5	2P4371	10	DISC AS.
	6	2P4370	8	PLATE
	7	1P6167	2	PLATE
	8	1P6070	3	BEARING
	9	1P6071	6	RACE
	10	1P9248	1	SHAFT AS.
	11	2P1005	6	BEARING
	12	1P6179	2	HUB AS.
	13	8B1312	2	DOWEL
	14	1P6158	2	MANIFOLD
	15	5M2894	4	WASHER
	16	1P6177	2	SHIM PACK
	17	6P3767	4	SPRING
	18	6H3977	4	SEAL
	19	8P8904	1	HOUSING
	20	8M2530	16	BOLT
	21	8P1075	2	GEAR (51 TEETH)
	22	8P8905	1	SHAFT
	23	1P6701	2	MANIFOLD
	24	1P8662	1	HOUSING
	25	1P6153	2	PLATE
	26	S1590	16	BOLT
	27	1P8651	2	HUB
	28	5P6446	4	BOLT 5.08CM(2 IN.)LONG
	29	8P8906	1	SPACER

316887

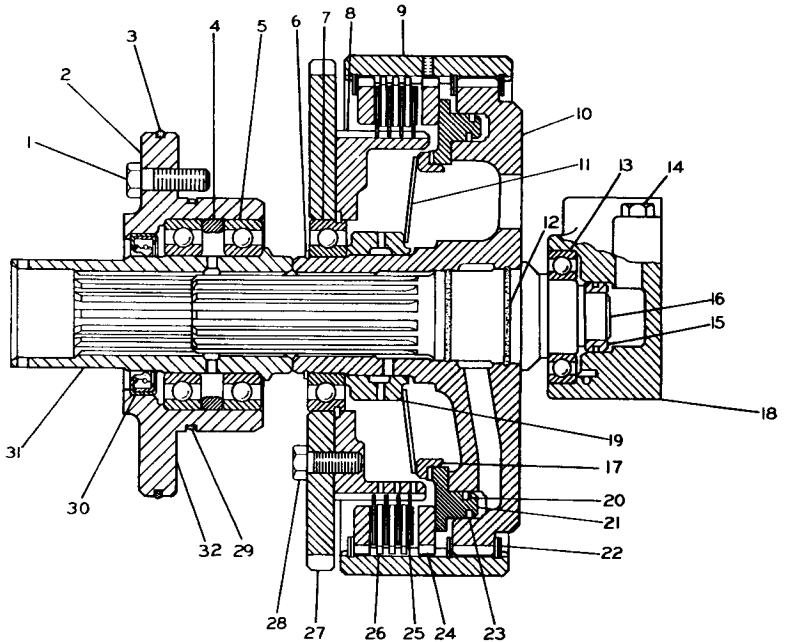

SECTIONAL VIEW OF AREA E

NOTE	REF NO	PART NUMBER	QTY	DESCRIPTION
	1	S1588	4	BOLT
	2	1P8644	1	CAGE
	3	6F4718	1	SEAL
	4	1P9257	1	SPACER
	5	9M1997	2	BEARING
	6	4K4284	1	RING
C	7	6V6686	1	BEARING
	8	1P8661	1	HUB
	9	8P2670	1	GEAR (70 TEETH)
	10	6P7828	1	HOUSING
C	11	1P9258	1	SPRING
	12	6J2419	2	SEAL
C	13	6V958	1	BEARING
C	14	5K4781	2	BOLT
	15	2P3672	1	CARRIER
		1P9252	1	RING
C	16	6T1412	1	SHAFT
C	17	6T1410	1	SPACER
C	18	6T1411	1	CAGE
C	19	6T1409	1	SPACER
	20	1P9261	1	RING
	21	1P7542	1	PISTON
	22	1P9254	3	RING
	23	1P9260	1	RING
	24	1P7544	2	PLATE
	25	2P3719	4	DISC AS.
	26	1P9256	3	PLATE
	27	1P8635	1	GEAR (72 TEETH)
	28	S1594	8	BOLT
	29	1H6227	1	SEAL
	30	7H7107	1	SEAL
	31	1P8663	1	COUPLING
B	32	7M7260		LIQUID GASKET

C INDICATES CHANGE

316888

1P8631 WINCH GROUP-STANDARD WINCH GEARS & DRUM WITHOUT DRUM DISCONNECT
Part 5 Of 6
Winch Serial No. 35U3662-Up

1P8631 WINCH GROUP-STANDARD WINCH GEARS & DRUM WITHOUT DRUM DISCONNECT

Part 6 Of 6
Winch Serial No. 35U3662-Up
2P5830-Page 210

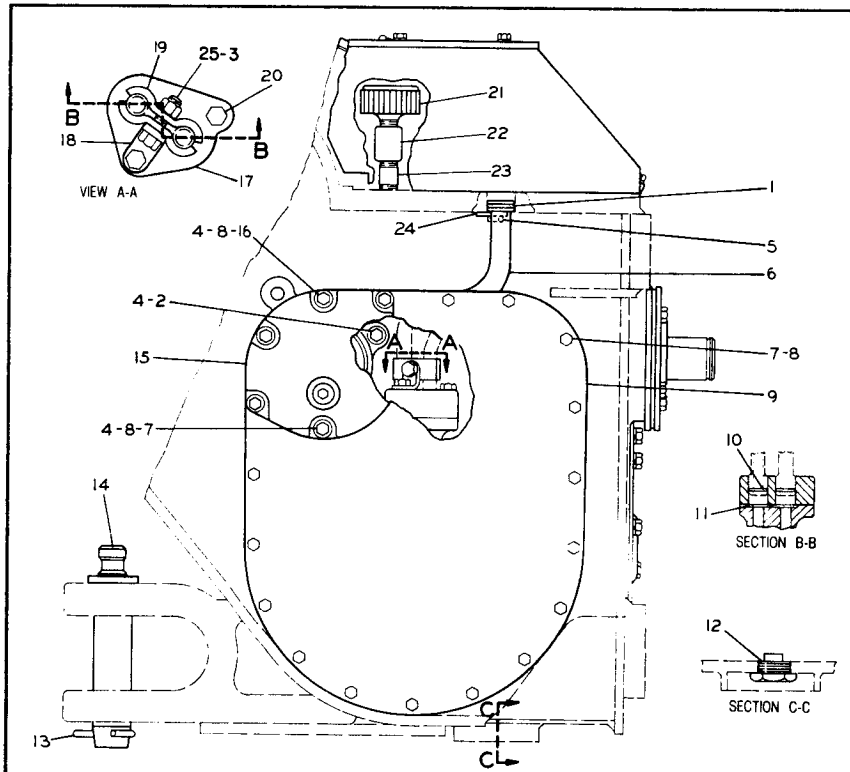

NOTE	REF NO	PART NUMBER	QTY	DESCRIPTION
	1	4F8946	2	SEAL
	2	S1594	2	BOLT
	3	2L6267	1	LOCKNUT
	4	4B4278	8	WASHER
	5	T102	1	BOLT
	6	2P5853	1	TUBE AS.
	7	S1588	17	BOLT
	8	3B4506	21	LOCKWASHER
	9	2P5738	1	COVER AS.
		2P3637	1	GASKET
	10	4J5351	2	SEAL
	11	5H2767	2	SEAL
	12	2D8390	1	PLUG
		6F4868	1	GASKET
	13	3B5319	1	COTTER PIN
	14	7F9541	1	PIN AS.
		7F9543	1	COLLAR
Y	15	2P5830	1	FILTER GROUP
		5F3999	1	SEAL
	16	2A4639	4	BOLT
	17	2P1053	1	FLANGE
	18	2P4438	1	BRACKET
	19	2P4437	2	CLAMP
	20	S1590	2	BOLT
	21	8S5820	1	BREATHER
	22	3B6488	1	COUPLING
	23	3B7262	1	NIPPLE
	24	6P8678	1	PLATE
	25	1A2209	1	BOLT

Y SEPARATE ILLUSTRATION

316889

REF. NO.	PART NUMBER	DESCRIPTION	QTY
1	8P4866	PLATE	1
2	7D4786	PLUG	1
3	8S7048	ROD END	1
4	3B4504	LOCKWASHER	1
5	6F612	NUT	2
6	1A9579	BOLT	1
	1D4716	NUT	1
	3B4505	LOCKWASHER	1
7	9M1974	WASHER	2
8	2P6973	CLAMP ASSEM. (Each Includes)	2
	2H1190	DOWEL	1
9	8L8413	STRAP	2
10	S1616	BOLT	1
	6D8554	NUT	1
11	6L7751	ROD END	1
12	1B7182	BOLT	1
C 13	3P2299	CABLE ASSEM.	1
14	2K4973	NUT	1
	3L9689	WASHER	1

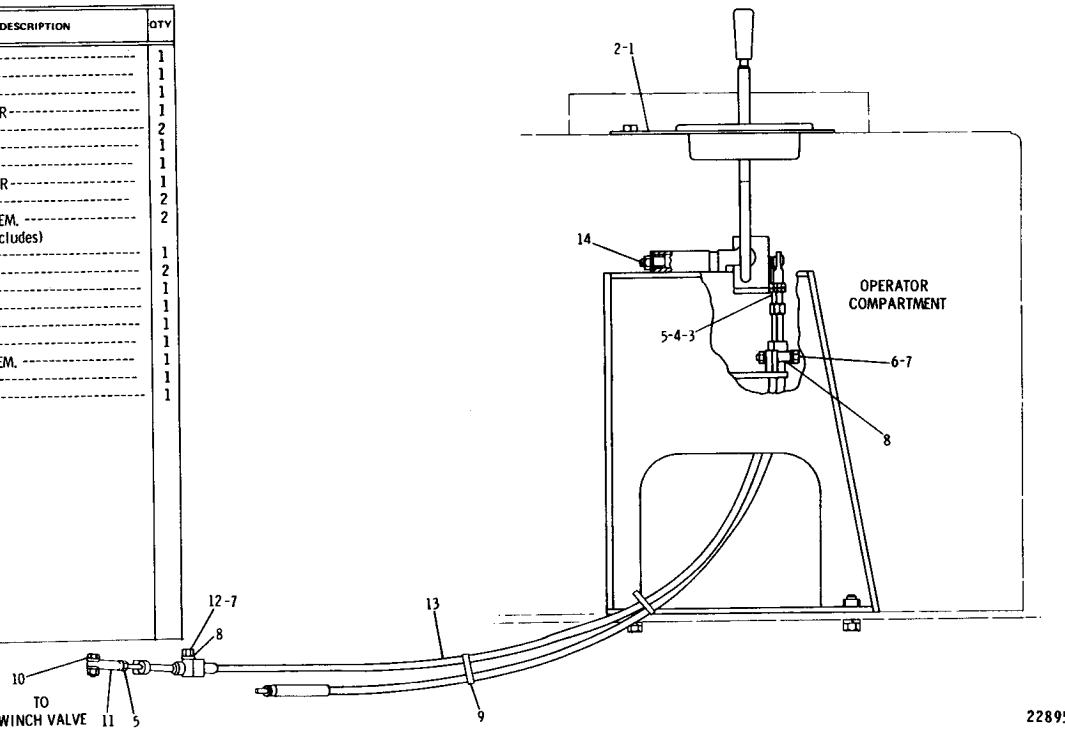

C INDICATES CHANGE

8P5694 WINCH CONTROL GROUP—Without Drum Disconnect—Side View—Type 1
Also part of 8P2319 Winch Arrangement listed on Page 191
AN ATTACHMENT

8P5694 WINCH CONTROL GROUP—Without Drum Disconnect—Front View—Type 1
Also part of 8P2319 Winch Arrangement listed on Page 191
AN ATTACHMENT

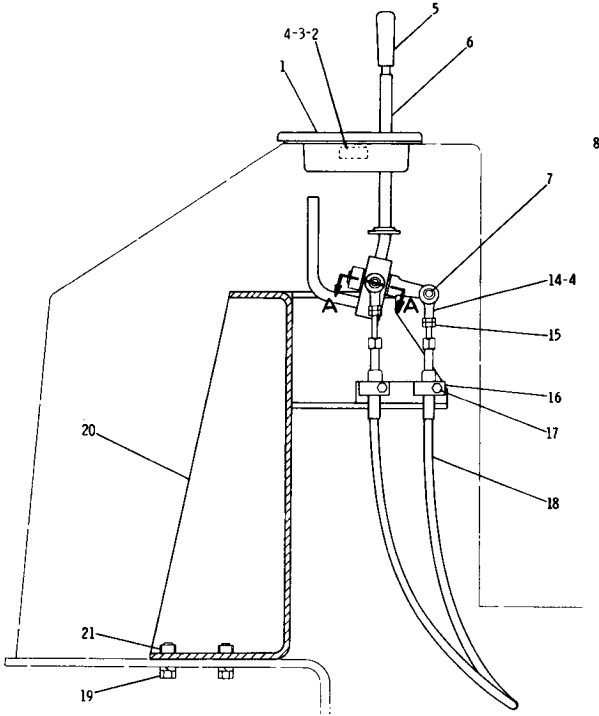

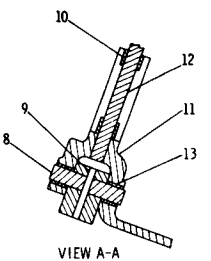

VIEW A-A

	REF. NO.	PART NUMBER	DESCRIPTION	QTY
	1	6P5661	GUIDE	1
C		5B7431	SCREW	4
	2	3P5938	SPRING	1
C	3	4B1284	SCREW	1
		1B4330	NUT	1
	4	3B4504	LOCKWASHER	2
	5	7M706	KNOB	1
	6	8P4872	LEVER ASSEM.	1
	7	S1597	BOLT	1
		2L9038	LOCKNUT	1
	8	2P6008	SHAFT	1
	9	2H2525	PIN	1
	10	9H2400	BEARING	2
	11	2P6001	BELLCRANK ASSEM. (Includes)	1
	12	2P6009	SHAFT	1
	13	9H2400	BEARING	2
	14	6L7751	ROD END	1
	15	6F612	NUT	1
	16	2P6973	CLAMP ASSEM. (Includes)	1
		2H1190	DOWEL	1
	17	1A9579	BOLT	1
		1D4716	NUT	1
		3B4505	LOCKWASHER	1
		9M1974	WASHER	1
C	18	3P2300	CABLE ASSEM.	1
	19	7B3235	BOLT	4
		3B4508	LOCKWASHER	4
	20	8P5007	SUPPORT ASSEM. (Includes)	1
	21	1F748	NUT (weld)	4

C INDICATES CHANGE

228952

REF. NO.	PART NUMBER	DESCRIPTION	QTY
1	8P4866	PLATE	1
2	7D4786	PLUG	1
3	8S7048	ROD END	1
4	3B4504	LOCKWASHER	1
5	6F612	NUT	2
6	1A9579	BOLT	1
	1D4716	NUT	1
	3B4505	LOCKWASHER	1
7	9M1974	WASHER	2
C 8	9G9979	CLAMP	2
9	8L8413	STRAP	2
10	1S1616	BOLT	1
	6D8554	NUT	1
11	6L7751	ROD END	1
12	1B7182	BOLT	1
13	3P2299	CABLE ASSEM.	1
14	2K4973	NUT	1
	3L9689	WASHER	1

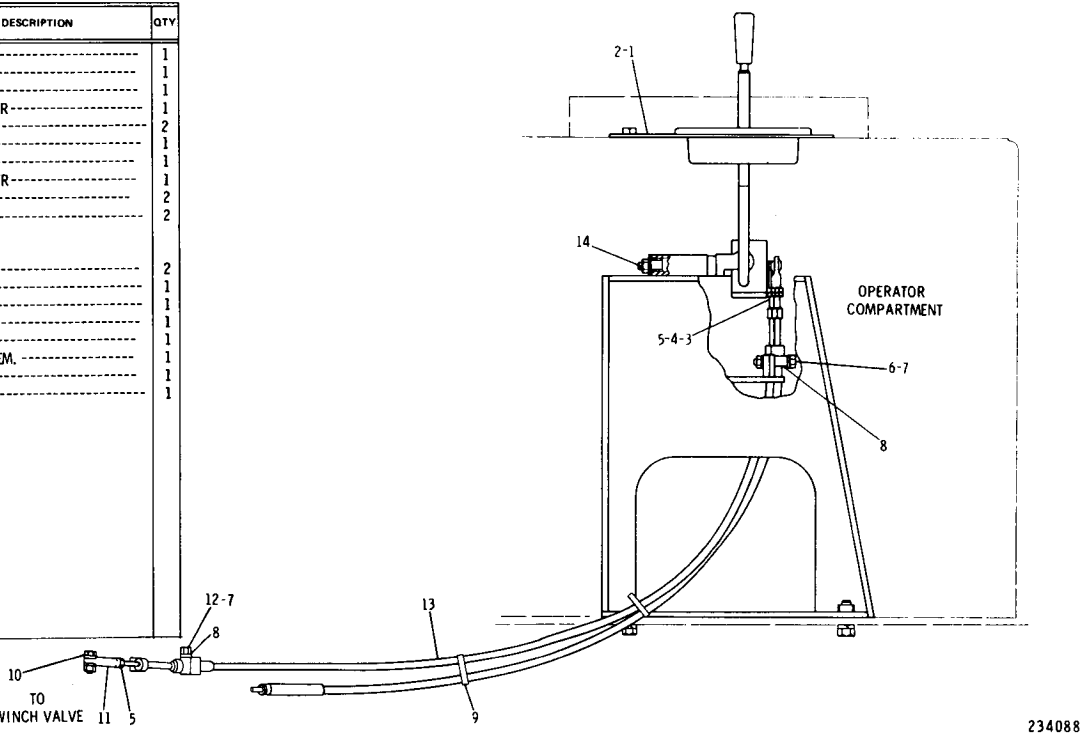

C INDICATES CHANGE

8P5694 WINCH CONTROL GROUP—Without Drum Disconnect—Side View—Type 2
Also part of 8P2319 Winch Arrangement listed on Page 191
AN ATTACHMENT

8P5694 WINCH CONTROL GROUP—Without Drum Disconnect—Front View—Type 2
Also part of 8P2319 Winch Arrangement listed on Page 191
AN ATTACHMENT

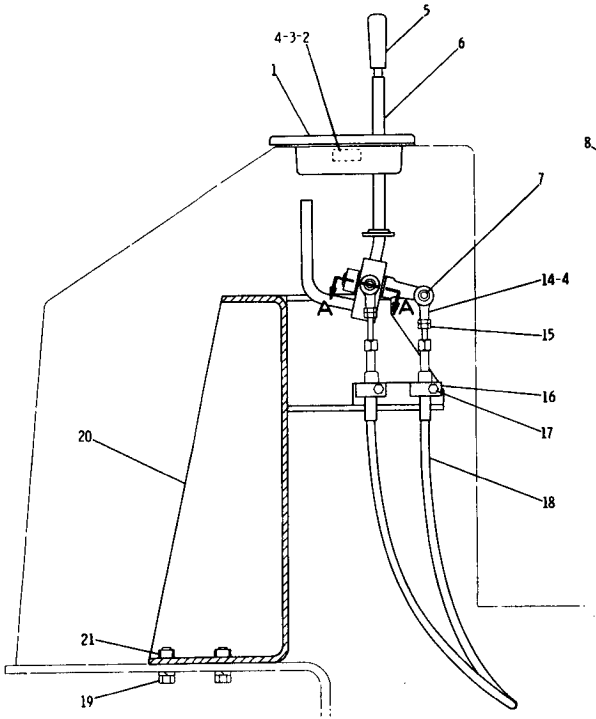

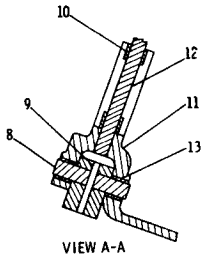

VIEW A-A

REF. NO.	PART NUMBER	DESCRIPTION	QTY
1	6P5661	GUIDE	1
	5B7431	SCREW	4
2	3P5938	SPRING	1
3	4B1284	SCREW	1
	1B4330	NUT	1
4	3B4504	LOCKWASHER	2
5	7M706	KNOB	1
6	8P4872	LEVER ASSEM.	1
7	S1597	BOLT	1
	2L9038	LOCKNUT	1
8	2P6008	SHAFT	1
9	2H2525	PIN	1
10	9H2400	BEARING	2
11	2P6001	BELLCRANK ASSEM. (Includes)	1
12	2P6009	SHAFT	1
13	9H2400	BEARING	2
14	6L7751	ROD END	1
15	6F612	NUT	1
C 16	9G9979	CLAMP	1
17	1A9579	BOLT	1
	1D4716	NUT	1
	3B4505	LOCKWASHER	1
	9M1974	WASHER	1
18	3P2300	CABLE ASSEM.	1
19	7B3235	BOLT	4
	3B4508	LOCKWASHER	4
20	8P5007	SUPPORT ASSEM. (Includes)	1
21	1F748	NUT—(weld)	4

C INDICATES CHANGE

234089

REF. NO.	PART NUMBER	DESCRIPTION	QTY
1	7M706	KNOB	1
C 2	7G45	ROD	1
C 3	S1591	BOLT	2
C 4	1D4717	NUT	4
C 5	3B4506	LOCKWASHER	2
C 6	9P9992	PLATE ASSEM.	1
C 7	5P1075	WASHER	3
C 8	1B8704	KEY	2
9	6F612	NUT	4
10	1A9579	BOLT	2
	1D4716	NUT	2
	3B4505	LOCKWASHER	2
11	9M1974	WASHER	4
12	2P6973	CLAMP ASSEM.	4
		(Each Includes)	
	2H1190	DOWEL	1
13	8L8413	STRAP	2
14	S1616	BOLT	2
	6D8554	NUT	2
C 15	6L7751	ROD END	5
16	1B7182	BOLT	2
17	8P28	SPACER	1
C 18	3P2299	CABLE ASSEM.	2
19	2H3767	COTTER PIN	2
20	4B4280	WASHER	6
C 21	9H2400	BEARING	4
22	8P4862	SHAFT	1
23	8P4863	SHAFT	1
24	4M8799	SPRING	1
25	8P4871	ROD	1
C 26	9P9991	LEVER	1
27	2K4973	NUT	1
	3L9689	WASHER	1

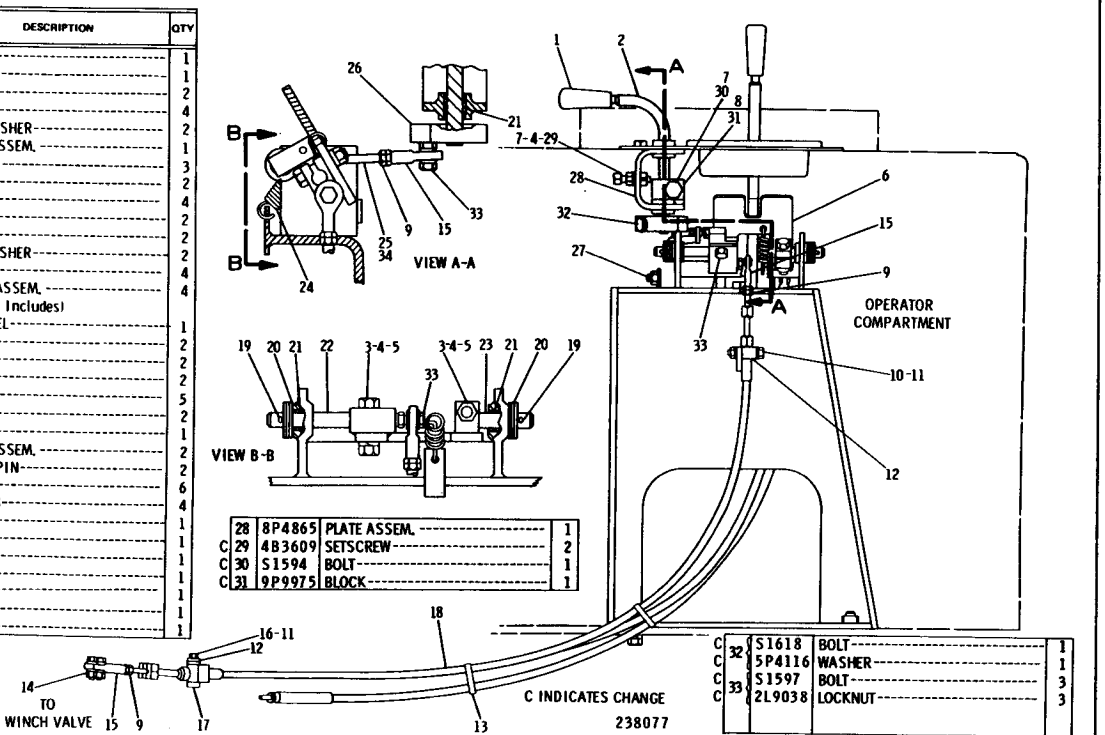

28	8P4865	PLATE ASSEM.	1
C 29	4B3609	SETSCREW	2
C 30	S1594	BOLT	1
C 31	9P9975	BLOCK	1

C 32	S1618	BOLT	1
C	5P4116	WASHER	1
C 33	S1597	BOLT	3
C	2L9038	LOCKNUT	3

8P5693 TOWING WINCH CONTROL GROUP—With Cable Drum Disconnect—Side View—Type 1
Also part of 9G2799 and 9G2800 Winch Conversion Arrangement listed on Page 192
AN ATTACHMENT

8P5693 TOWING WINCH CONTROL GROUP—With Cable Drum Disconnect—Front View—Type 1
Also part of 9G2799 and 9G2800 Winch Conversion Arrangement listed on Page 192
AN ATTACHMENT

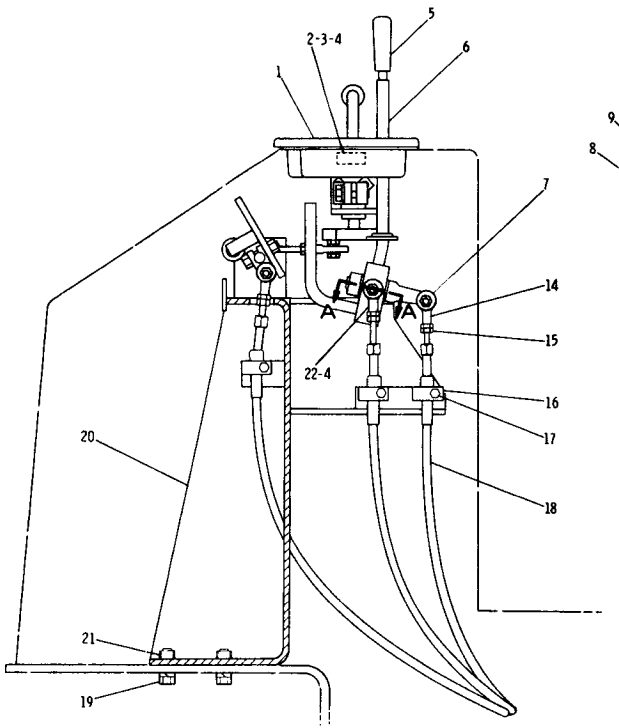

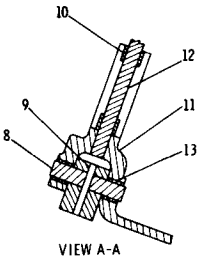

VIEW A-A

REF. NO.	PART NUMBER	DESCRIPTION	QTY
1	6P5661	GUIDE	1
C	5B7431	SCREW	4
2	3P5938	SPRING	1
C 3	4B1284	SCREW	1
	1B4330	NUT	1
4	3B4504	LOCKWASHER	2
5	7M706	KNOB	1
6	8P4872	LEVER ASSEM.	1
7	S1597	BOLT	1
	2L9038	LOCKNUT	1
8	2P6008	SHAFT	1
9	2H2525	PIN	1
10	9H2400	BEARING	2
11	2P6001	BELLCRANK ASSEM. (Includes)	1
12	2P6009	SHAFT	1
13	9H2400	BEARING	2
14	6L7751	ROD END	1
15	6F612	NUT	3
16	2P6973	CLAMP ASSEM. (Includes)	1
	2H1190	DOWEL	1
17	1A9579	BOLT	1
	1D4716	NUT	1
	3B4505	LOCKWASHER	1
	9M1974	WASHER	1
C 18	3P2300	CABLE ASSEM.	1
19	7B3235	BOLT	4
	3B4508	LOCKWASHER	4
20	8P4852	SUPPORT ASSEM. (Includes)	1
21	1F748	NUT (weld)	4
C 22	8S7048	ROD END	1

C INDICATES CHANGE 228954

NOTE	REF NO	PART NUMBER	QTY	DESCRIPTION
	1	7M706	1	KNOB
	2	7G45	1	ROD (GEAR SHIFT)
	3	S1591	2	BOLT
	4	1D4717	4	NUT
	5	3B4506	2	LOCKWASHER
C	6	9P9992	1	LEVER
	7	5P1075	3	WASHER
	8	1B8704	2	KEY
	9	6F612	4	NUT
	10	1A9579	2	BOLT
		1D4716	2	NUT
		3B4505	2	LOCKWASHER
	11	9M1974	4	WASHER
C	12	9G9979	4	CLAMP
	13	8L8413	2	STRAP
	14	S1616	2	BOLT
		6D8554	2	NUT
	15	6L7751	5	ROD END
	16	1B7182	2	BOLT
	17	8P28	1	SPACER
	18	3P2299	2	CABLE AS.
	19	2H3767	2	COTTER PIN
	20	4B4280	6	WASHER
C	21	9H2400	4	BEARING
	22	8P4862	1	SHAFT
	23	8P4863	1	SHAFT
	24	4M8799	1	SPRING
	25	8P4871	1	ROD
	26	9P9991	1	LEVER
	27	2K4973	1	NUT
		3L9689	1	WASHER

C INDICATES CHANGE

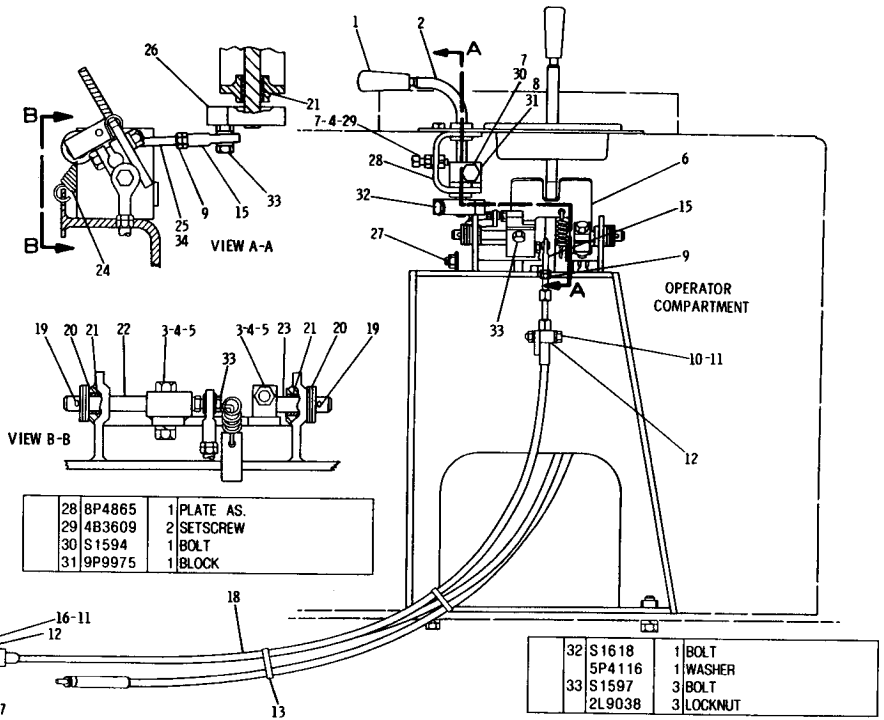

28	8P4865	1	PLATE AS.
29	4B3609	2	SETSCREW
30	S1594	1	BOLT
31	9P9975	1	BLOCK

32	S1618	1	BOLT
	5P4116	1	WASHER
33	S1597	3	BOLT
	2L9038	3	LOCKNUT

8P5693 TOWING WINCH CONTROL GROUP–WITH CABLE DRUM DISCONNECT–SIDE VIEW
Part 1 Of 2–Type 2
An Attachment

S/N 3693 TOWING WINCH CONTROL GROUP -WITH CABLE DRUM DISCONNECT-FRONT VIEW
Part 2 Of 2-Type 2
An Attachment

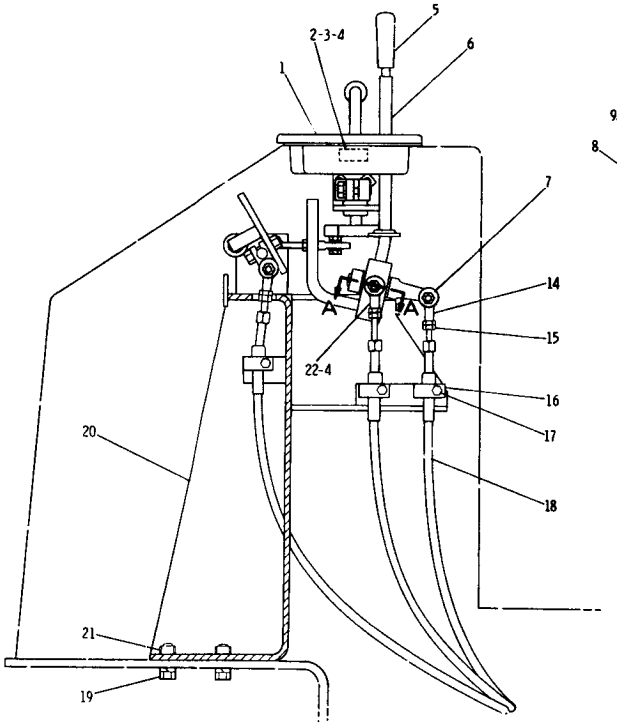

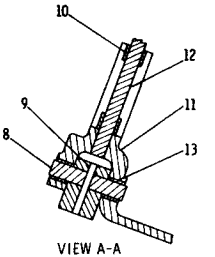

VIEW A-A

NOTE	REF NO	PART NUMBER	QTY	DESCRIPTION
	1	6P5661	1	GUIDE
		5B7431	4	SCREW
	2	3P5938	1	SPRING
	3	4B1284	1	SCREW
		1B4330	1	NUT
	4	3B4504	2	LOCKWASHER
	5	7M706	1	KNOB
	6	8P4872	1	LEVER AS. (GEAR SHIFT)
	7	S1597	1	BOLT
		2L9038	1	LOCKNUT
	8	2P6008	1	SHAFT
	9	2H2525	1	PIN
	10	9H2400	2	BEARING
	11	2P6001	1	BELLCRANK AS.
	12	2P6009	1	SHAFT
	13	9H2400	2	BEARING
	14	6L7751	1	ROD END
	15	6F612	3	NUT
C	16	9G9979	1	CLAMP
	17	1A9579	1	BOLT
		1D4716	1	NUT
		3B4505	1	LOCKWASHER
		9M1974	1	WASHER
	18	3P2300	1	CABLE AS.
	19	7B3235	4	BOLT
		3B4508	4	LOCKWASHER
	20	8P4852	1	SUPPORT AS.
	21	1F748	4	NUT (WELD)
	22	8S7048	1	ROD END

C INDICATES CHANGE

317970

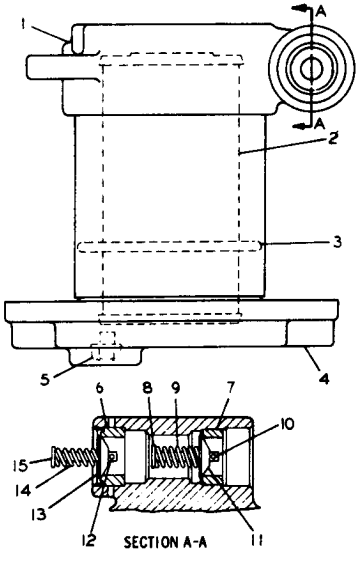

	REF. NO.	PART NUMBER	DESCRIPTION	QTY
	1	2P5832	BASE ASSEM.	1
	2	2P5834	ELEMENT	1
	3	2H4145	SEAL	1
	4	2P5818	COVER	1
	5	9S4180	PLUG	1
		4J7533	SEAL	1
	6	6L4470	COLLAR	1
	7	1P2195	VALVE ASSEM.	1
		9L674	COLLAR	1
	8	1P5274	PIN	1
	9	1K7041	SPRING	1
	10	3H3433	PIN	1
	11	9L672	VALVE	1
C	12	7L820	PIN	1
	13	9L672	VALVE	1
	14	8F2621	SPRING	1
	15	1P5274	PIN	1

C INDICATES CHANGE

118051

2P5830 OIL FILTER GROUP
Part of 1P8631 Winch Group shown on Page 205
AN ATTACHMENT

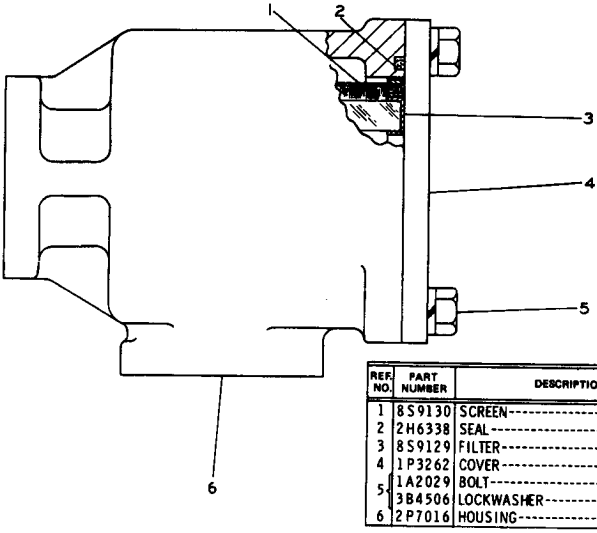

REF. NO.	PART NUMBER	DESCRIPTION	QTY
1	8S9130	SCREEN	1
2	2H6338	SEAL	1
3	8S9129	FILTER	1
4	1P3262	COVER	1
5	1A2029	BOLT	4
	3B4506	LOCKWASHER	4
6	2P7016	HOUSING	1

113067

2P7020 MAGNETIC SCREEN GROUP
Part of 1P8631 Winch Group shown on Page 200
AN ATTACHMENT

9P7729 WINCH FAIRLEAD GROUP
Winch Serial No. 35U2261—Up
AN ATTACHMENT

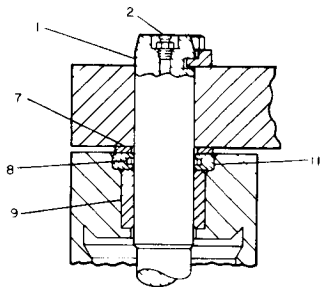

VIEW OF AREA A

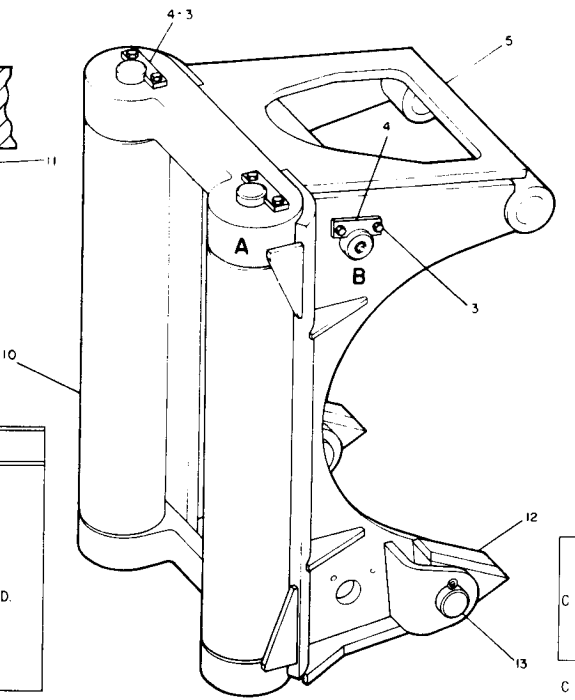

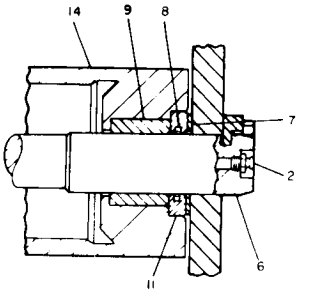

VIEW OF AREA B

NOTE	REF NO	PART NUMBER	QTY	DESCRIPTION
	1	9P7731	2	SHAFT
	2	3B8489	6	FITTING
C	3	7S9372	6	BOLT
C	4	9G8253	3	CLIP
	5	9P7730	1	FRAME ASSEM.
	6	6P3471	1	SHAFT
	7	9P9726	6	WASHER
	8	3D2898	6	SEAL 48.8MM(1.925IN.)I.D.
		5P8476	6	SEAL 44.07MM (1.735IN.)I.D.
	9	7J6250	6	BEARING
	10	9P7735	2	ROLLER ASSEM.
	11	9P7453	6	CARRIER
	12	9P7732	2	SUPPORT
	13	1P7545	2	PIN
		3B5325	2	COTTER PIN
C	14	9P7452	1	ROLLER ASSEM
		SMHS6847	1	FORM (INSTALLATION OF 55 & 56 WINCH)

C INDICATES CHANGE

308217

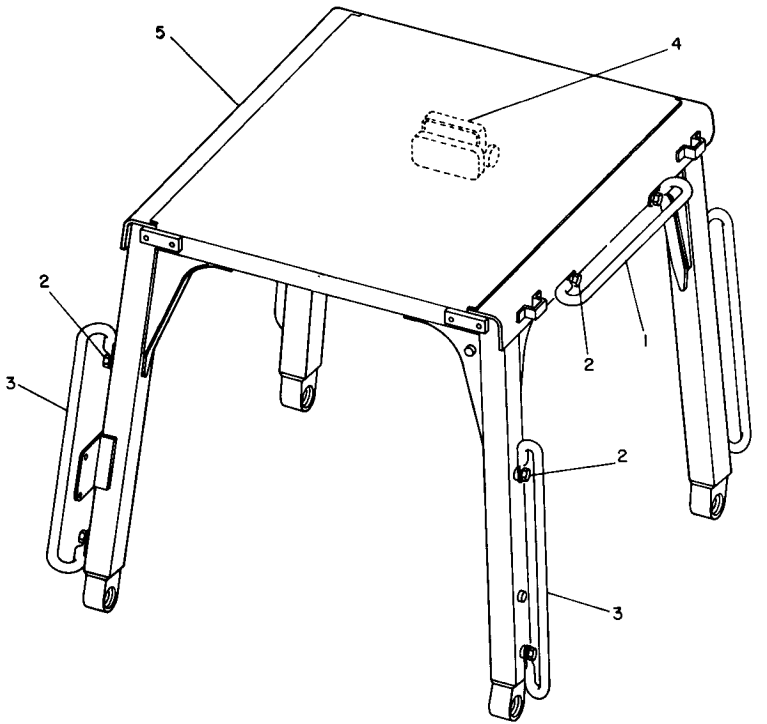

REF. NO.	PART NUMBER	DESCRIPTION	QTY
1	8P8299	GRABIRON	2
2	S1621	BOLT	12
	3B4508	LOCKWASHER	12
	4B4280	WASHER	12
3	9P7853	GRABIRON	4
4	9P9392	MIRROR GROUP (Separate Illustration)	1
5	9G6868	ROLLOVER ASSEM.	1

9G6074 ROLL-OVER PROTECTIVE STRUCTURE GROUP — Open
9P9392 Mirror parts are shown on Page 216

		CONSISTS OF:	PAGE
1	9G7396	ROLL-OVER PROTECTIVE SYSTEM	214
1	8N1084	ALTERNATOR GROUP	71
1	8P8283	MISCELLANEOUS COVER GROUP	

CONSISTS OF:

	1	3P9091	BOOT--RIPPER LINKAGE
	2	8P3870	PLATE--BOOT TO DASH
	2	8P3202	BOOT--TO DASH
	1	8P6363	PLUG--TORQUE CONVERTER OPENING ON DIRECT DRIVE TO DASH
	1	8P6364	PLUG--TACH CABLE OPENING TO DASH
	3	4B1282	SCREW--TO BOTTOM OF WINCH CONTROL CASTING
	1	6P8863	PLATE--TO BOTTOM OF WINCH CONTROL CASTING
	1	6P8861	PLATE--TO WINCH CONTROL LEVER
	1	6P8862	PLATE--TO WINCH CONTROL LEVER
	1	2J7295	SPRING--TO WINCH CONTROL LEVER
	6	L1351	BOLT--PLATE--BOOT TO DASH
	6	3B4506	LOCKWASHER--PLATE--BOOT TO DASH
	2	9S3335	BULB--DASH
	2	5P7856	GROMMET--FOR LIGHT WIRES
	1	S1594	BOLT--TO STOP BRACKET
	1	9P8348	BRACKET--STOP
	1	9M5884	BUMPER--TO STOP BRACKET
	1	9P7989	BOLT--TO POWER SHIFT CONSOLE
19	DM	5P782	SEAL--TO COVER
	1M	5P5611	SEAL--TO COVER ASSEMBLY
6	DM	3P646	SEALER
	1	8P7624	PLATE--INSIDE CONSOLE
	3	S509	BOLT--TO PLATE
	3	3B4506	LOCKWASHER--TO BOLT
	2	4S6336	BUTTON--PLUG CONDENSER HOLES
	2	S509	BOLT--PLUG DRYER HOLES
	2	1D4717	NUT--PLUG DRYER HOLES

9G7393 ROLL-OVER PROTECTIVE SYSTEM ARRANGEMENT
Enclosed with Sound Suppression
AN ATTACHMENT

		Consists of:	Page
1	9G6870	Roll-Over Protective System Arrangement.	215
1	8P2129	Safety Brace Group	221
1	9G6902	Cab Liner Group	221
1	9G8298	Cab Pressurizer Group	224
1	9G6897	Cab Mounting Group	222
1	9P9392	Mirror Group	216
1	9G7478	Washer and Wiper Control Group	230
2	4V8015	Latch Group	217
6	3B4506	Lockwasher	
8	S1621	Bolt	
8	3B4508	Lockwasher	
8	4B4280	Washer	
4	9P7853	Grab Iron	
1	9P1034	Plate	
2	9P1579	Cover	
8	4F7957	Bolt	
5	S1614	Bolt	
13	3B4504	Lockwasher	
5	4B4276	Washer	
3	T102	Bolt	
3	5P1075	Washer	
1	9P5053	Plate	
1	9P5052	Plate Assembly	
2	9P2639	Gasket	
2	S1594	Bolt	
4	S509	Bolt	

9G7396 ROLL-OVER PROTECTIVE SYSTEM ARRANGEMENT — With Sound Suppression
Part of 9G7393 Roll-Over Protective Arrangement listed on Page 213
AN ATTACHMENT

		CONSISTS OF:	PAGE
1	9G6854	ROLL-OVER PROTECTIVE SYSTEM GROUP	218
1	7G6541	WASHER AND WIPER GROUP	229

9G6870 ROLL-OVER PROTECTIVE SYSTEM ARRANGEMENT
Part of 9G7396 Roll-Over Protective Arrangement listed on Page 214
AN ATTACHMENT

		CONSISTS OF:	
2	8P9830	GRAB IRON ASSEMBLY	
		CONSISTS OF:	
	1	8P9831	IRON
	2	8P9841	PLATE
2	S1620	BOLT--TO GRAB IRON	
4	3B4508	LOCKWASHER--TO GRAB IRON	
8	1D4608	BOLT ROPS MOUNTING BRACKET TO FENDER REAR	
1	9P6891	PLATE ASSEMBLY--TO FENDER REAR	
		CONSISTS OF:	
	1	4V1204	PLATE
	2	8P2813	BOSS
	1	1S1888	BRACKET
8	3B4512	LOCKWASHER--ROPS MOUNTING BRACKET TO FENDER REAR	
16	4B4283	WASHER--ROPS MOUNTING BRACKET TO FENDER REAR	
8	1B4331	NUT--ROPS MOUNTING BRACKET TO FENDER REAR	
1	3T1686	PLATE	
1	3T1687	PLATE	
4	2A1538	BOLT	
4	5P8248	WASHER	

9G6921 NON ROPS CONVERSION ARRANGEMENT
FOR USE WITH REDESIGNED ROPS SUPPORT
AN ATTACHMENT

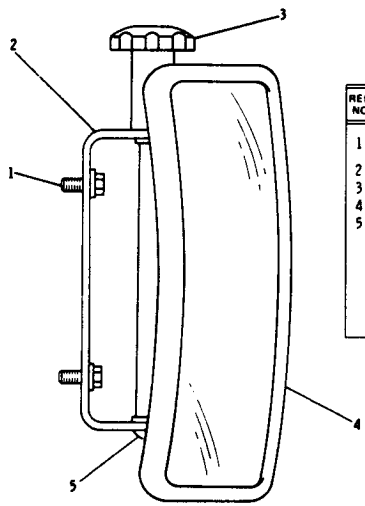

REF. NO.	PART NUMBER	DESCRIPTION	QTY
1	L1351	BOLT	2
	5P1075	WASHER	2
2	9P9390	BRACKET	1
3	9P9388	KNOB	1
4	5P6874	MIRROR	1
5	5K9179	BOLT	1

216983

9P9392 MIRROR GROUP
Part of 9G6074 Roll-Over Protective Structure Group and 9G7396 Roll-Over Protective System Arrangement shown on Pages 212 and 214

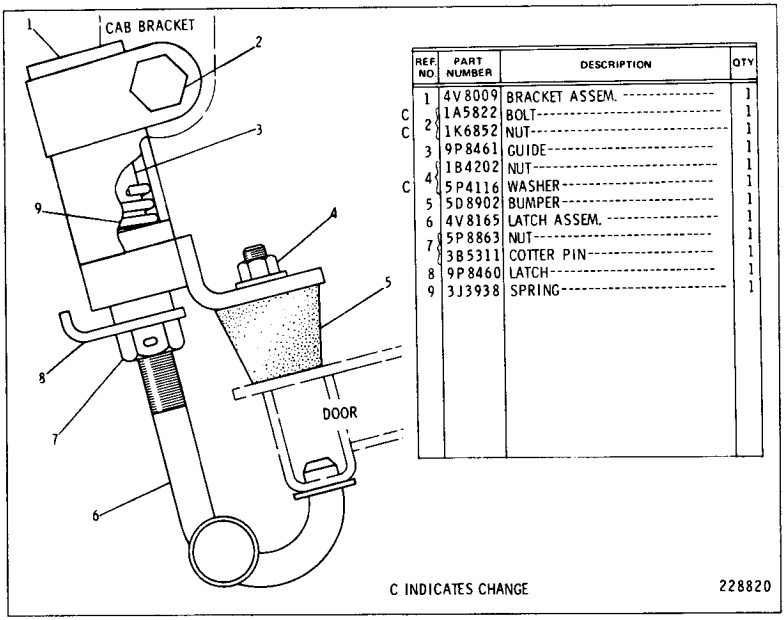

REF. NO.	PART NUMBER	DESCRIPTION	QTY
1	4V8009	BRACKET ASSEM.	1
C 2	1A5822	BOLT	1
C 2	1K6852	NUT	1
3	9P8461	GUIDE	1
4	1B4202	NUT	1
C 4	5P4116	WASHER	1
5	5D8902	BUMPER	1
6	4V8165	LATCH ASSEM.	1
7	5P8863	NUT	1
	3B5311	COTTER PIN	1
8	9P8460	LATCH	1
9	3J3938	SPRING	1

4V8015 LATCH GROUP — Door Hold Back
Part of 9G7396 Roll-Over Protective System Arrangement listed on Page 214

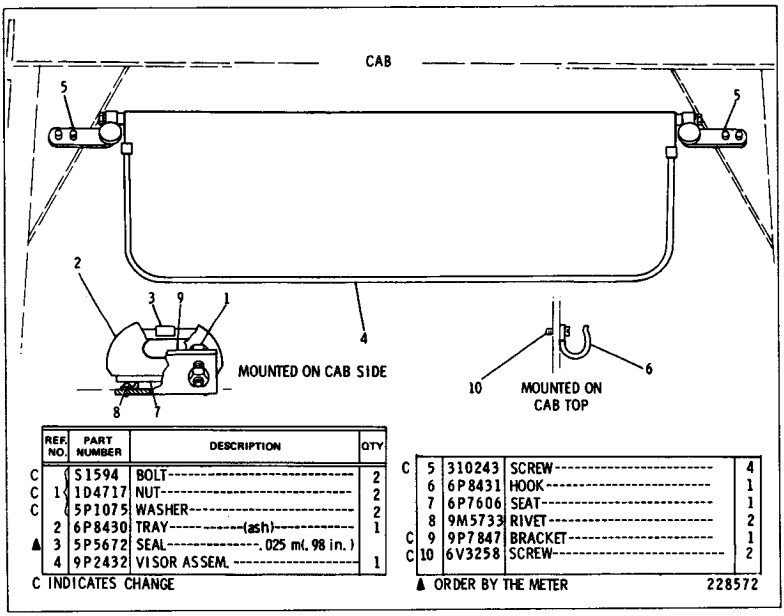

REF. NO.	PART NUMBER	DESCRIPTION	QTY
C	S1594	BOLT	2
C 1	1D4717	NUT	2
C	5P1075	WASHER	2
2	6P8430	TRAY-----(ash)-----	1
▲ 3	5P5672	SEAL-----.025 m(.98 in.)	
4	9P2432	VISOR ASSEM.	1

C 5	310243	SCREW	4
6	6P8431	HOOK	1
7	6P7606	SEAT	1
8	9M5733	RIVET	2
C 9	9P7847	BRACKET	1
C 10	6V3258	SCREW	2

8P2140 CAB ACCESSORY GROUP
AN ATTACHMENT

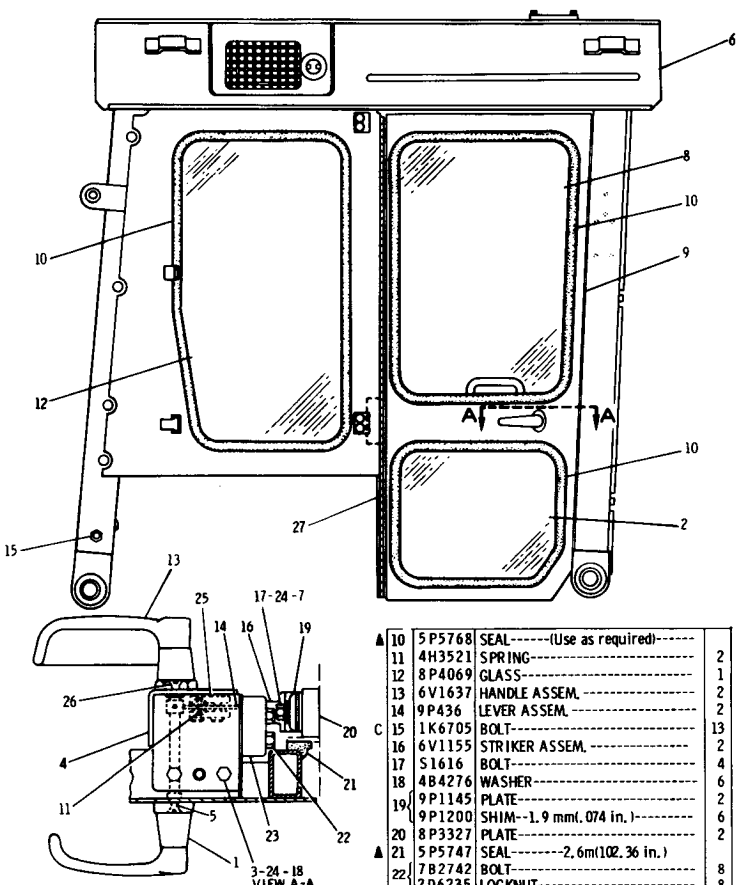

	REF. NO.	PART NUMBER	DESCRIPTION	QTY
C	1	6V2714	HANDLE ASSEM. (Each Includes)	2
		5K4340	KEY	1
	2	8P3326	GLASS	1
	3	S1615	BOLT	6
	4	9P1395	COVER ASSEM. -(R. H.)	1
		9P1396	COVER ASSEM. -(L. H.)	1
C	5	6V1841	SCREW	4
	6	9G6827	CAB ASSEM.	1
	7	9N869	WASHER	4
	8	8P3325	GLASS	1
C	9	9G6865	DOOR ASSEM. (Includes)	1
		9D6621	NUT	2
▲	10	5P5768	SEAL-(Use as required)	
	11	4H3521	SPRING	2
	12	8P4069	GLASS	1
	13	6V1637	HANDLE ASSEM.	2
	14	9P436	LEVER ASSEM.	2
C	15	1K6705	BOLT	13
	16	6V1155	STRIKER ASSEM.	2
	17	S1616	BOLT	4
	18	4B4276	WASHER	6
	19	9P1145	PLATE	2
		9P1200	SHIM-1.9 mm(.074 in.)	6
	20	8P3327	PLATE	2
▲	21	5P5747	SEAL-2.6m(102.36 in.)	
	22	7B2742	BOLT	8
		2D6235	LOCKNUT	8
	23	6V3295	LATCH-(R. H.)	1
		6V3296	LATCH-(L. H.)	1
	24	3B4504	LOCKWASHER	10
	25	9P6894	LEVER	2
		9P6895	PIN	4
C	26	4M190	SCREW	4
C	27	8P3323	HINGE	2
●		6V888	FILM-(Instruction) (Film to be placed next to exterior door handles)	1

● NOT SHOWN C INDICATES CHANGE

▲ ORDER BY THE METER 180246

9G6854 ROLL-OVER PROTECTIVE STRUCTURE GROUP—Part 1 of 3—Type 1
Part of 9G6870 Roll-Over Protective System Arrangement listed on Page 215
AN ATTACHMENT

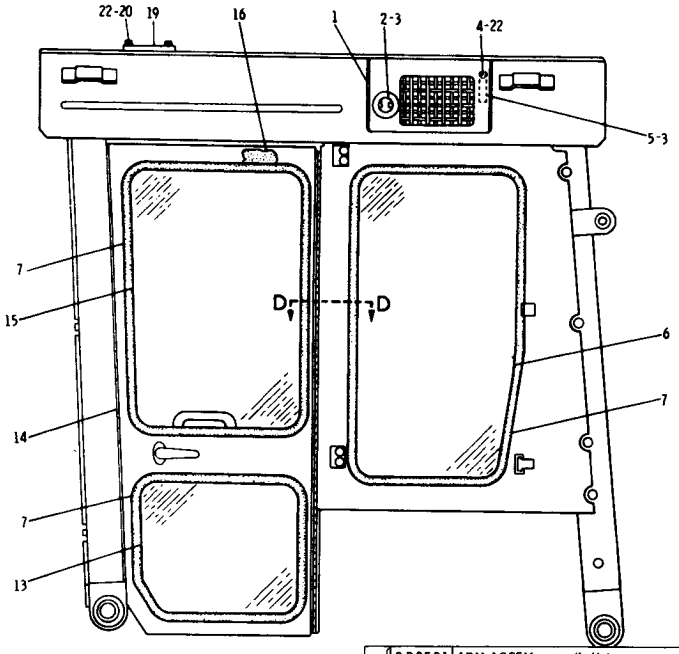

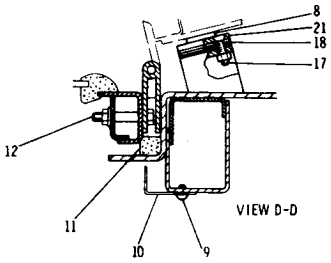

REF. NO.	PART NUMBER	DESCRIPTION	QTY.
1	8P9736	DOOR ASSEM. -----(L. H.)---------	1
	8P9779	DOOR ASSEM. -----(R. H.)---------	1
	8P9588	SHIM---(Use as required)---------	4
2	4D6082	BOLT----------	2
	4B4280	WASHER----------	2
3	3B4610	COTTER PIN----------	4
4	L1351	BOLT----------	4
	4B4278	WASHER----------	4

5	8P9591	ARM ASSEM. -----(L. H.) --------	1
	8P9594	ARM ASSEM. -----(R. H.)---------	1
6	8P4069	GLASS----------	1
▲ 7	5P5768	SEAL----(Use as required)--------	
8	9M5884	BUMPER----------	8
9	167150	SCREW----------	3
10	9G6856	ANGLE----------	1
▲ 11	5P5640	SEAL---------2.9 m(114.11 in.)	
12	1B2713	BOLT----------	18
	7H8909	LOCKNUT----------	16
	4B4276	WASHER----------	18
	8M2337	WASHER----------	16
13	8P3326	GLASS----------	1
14	9G6857	DOOR ASSEM. ---------- (Includes)	1
C	9D6621	NUT----------	2
15	8P3325	GLASS----------	1
▲ 16	5P5747	SEAL---------1.25 m(49.22 in.)	
17	7D6921	SCREW----------	8
	8F8052	LOCKWASHER----------	8
18	9P7845	SHIM--1.6mm(.063 in.)thick------	8
	9P7846	SHIM--.8 mm(.031 in.)thick------	8
19	9P1811	COVER----------	1
	9P1810	GASKET----------	1
20	S509	BOLT----------	2
21	9P7844	PLATE----------	4
22	3B4506	LOCKWASHER----------	6

C INDICATES CHANGE

▲ ORDER BY THE METER

229337

9G6854 ROLL-OVER PROTECTIVE STRUCTURE GROUP—Part 2 of 3—Type 1
Part of 9G6870 Roll-Over Protective System Arrangement listed on Page 215
AN ATTACHMENT

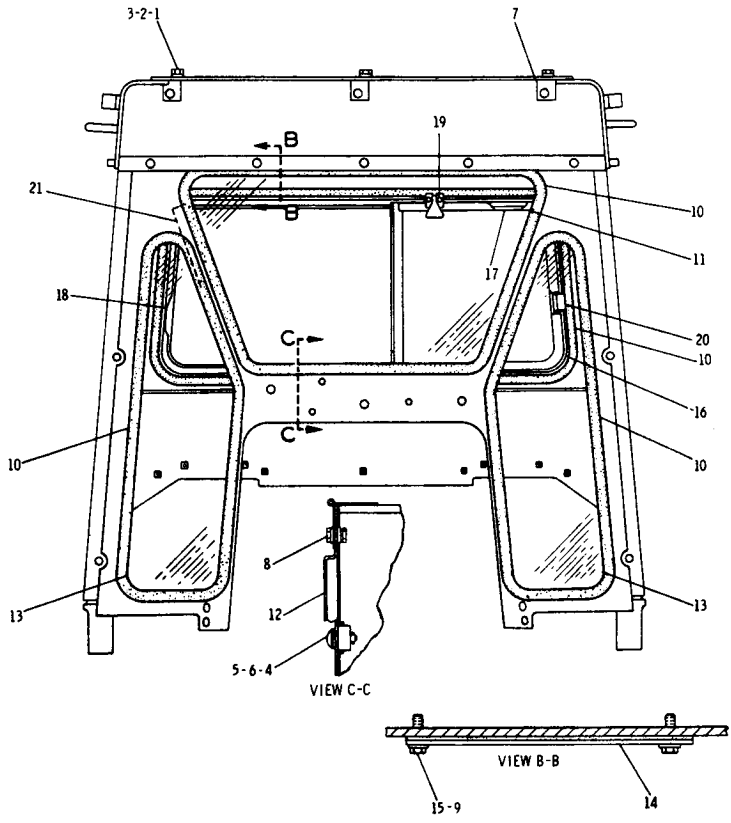

REF. NO.	PART NUMBER	DESCRIPTION	QTY
1	S1594	BOLT-------2.54 cm (1 in.) long	3
2	1D4717	NUT----------	3
3	3B4506	LOCKWASHER----------	3
4	5P7518	RETAINER----------	2
5	5P7519	NUT----------	2
6	5P9034	STUD----------	2
7	8P3142	BRACKET ASSEM.----------	3
8	8L6521	BOLT----------	5
	4B2049	NUT----------	5
	3B4502	LOCKWASHER----------	5
	4B4274	WASHER----------	10
9	5P4115	LOCKWASHER----------	14
▲ 10	5P5768	SEAL----------(use as required)	
11	8P3762	GLASS----------	1
12	9G6855	DOOR----------	1
13	8P3763	GLASS----------	1
14	8P3880	PLATE----------	1
	8P3881	GASKET----------	1
15	687624	SCREW----------	14
16	9P9385	WINDOW ASSEM.---------- (Includes)	1
	9P9387	GLASS----------	1
▲ 17	5P8918	SEAL---------1.3 m(51.19 in.)	
▲ 18	5P5680	SEAL--------2.54 m(100 in.)	
19	2H6622	SCREW----------	2
20	9P7860	LOCK ASSEM.----------	1
	9P7859	SCREW----------	2
21	9G8808	COVER----------	1
	5P7924	SCREW----------	3
●	6V3247	PLATE---------(Identification)-----	1
●	6V3245	PLATE---------(ROPS Warning)----	1
●	347044	RIVET----------	6

● NOT SHOWN ▲ ORDER BY THE METER-USE AS REQUIRED 228569

9G6854 ROLL-OVER PROTECTIVE STRUCTURE GROUP—Part 3 of 3—Type 1
Part of 9G6870 Roll-Over Protective System Arrangement listed on Page 215
AN ATTACHMENT

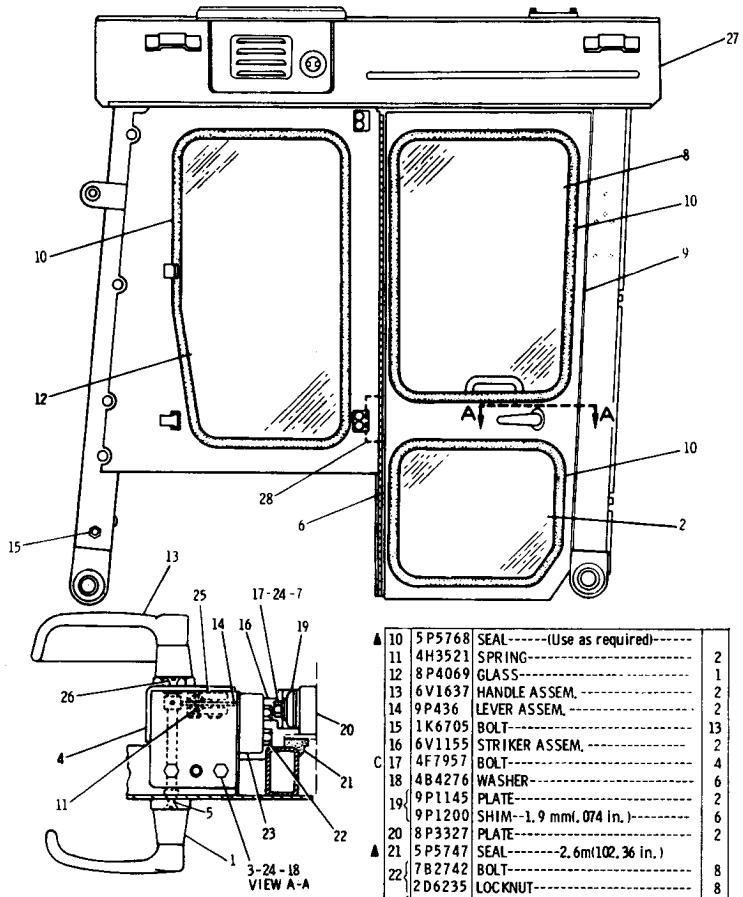

REF. NO.	PART NUMBER	DESCRIPTION	QTY
1	6V2714	HANDLE ASSEM. (Each Includes)	2
	5K4340	KEY	1
2	8P3326	GLASS	1
3	S1615	BOLT	6
4	9P1395	COVER ASSEM. -(R. H.)	1
	9P1396	COVER ASSEM. -(L. H.)	1
5	6V1841	SCREW	4
6	8P3323	HINGE	4
7	9N869	WASHER	4
8	8P3325	GLASS	1
9	9G6865	DOOR ASSEM. (Includes)	1
	9D6621	NUT	2

● NOT SHOWN C INDICATES CHANGE

	REF. NO.	PART NUMBER	DESCRIPTION	QTY
▲	10	5P5768	SEAL-(Use as required)	
	11	4H3521	SPRING	2
	12	8P4069	GLASS	1
	13	6V1637	HANDLE ASSEM.	2
	14	9P436	LEVER ASSEM.	2
	15	1K6705	BOLT	13
	16	6V1155	STRIKER ASSEM.	2
C	17	4F7957	BOLT	4
	18	4B4276	WASHER	6
	19	9P1145	PLATE	2
		9P1200	SHIM--1.9 mm(.074 in.)	6
	20	8P3327	PLATE	2
▲	21	5P5747	SEAL-2.6m(102.36 in.)	
	22	7B2742	BOLT	8
		2D6235	LOCKNUT	8
	23	6V3295	LATCH-(R. H.)	1
		6V3296	LATCH-(L. H.)	1
	24	3B4504	LOCKWASHER	10
	25	9P6894	LEVER	2
		9P6895	PIN	4
	26	4M190	SCREW	4
	27	9G6827	CAB ASSEM. (Includes)	1
C	28	3T2940	DUCT	2
●		6V888	FILM-(Instruction) (Film to be placed next to exterior door handles)	1

▲ ORDER BY THE METER 181082

9G6854 ROLL-OVER PROTECTIVE STRUCTURE GROUP—Part 1 of 3—Type 2
Part of 9G6870 ROPS Arrangement listed on Page 215
AN ATTACHMENT

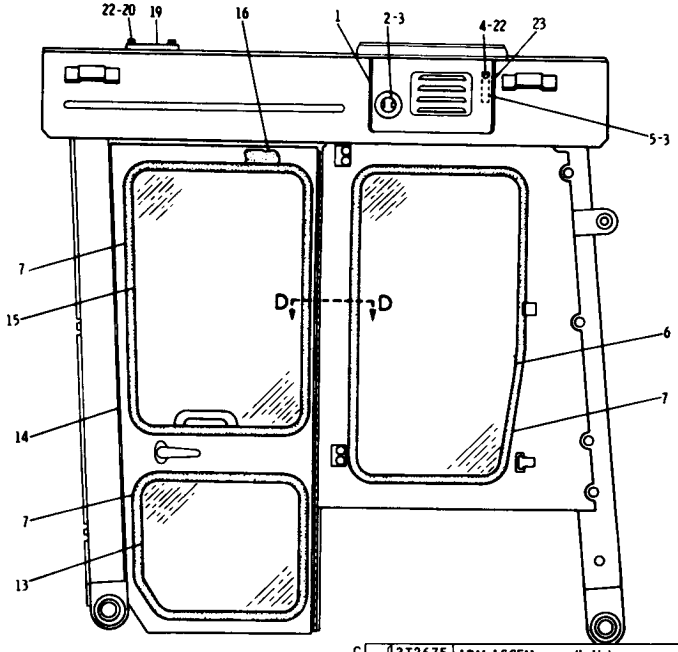

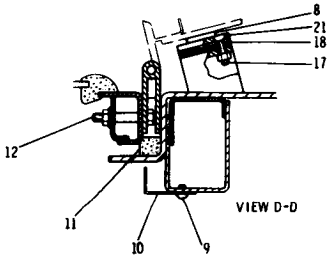

	REF. NO.	PART NUMBER	DESCRIPTION	QTY.
C	1	3T2762	DOOR ASSEM. -----(L. H.)---------	1
C		3T2761	DOOR ASSEM. -----(R. H.)---------	1
C		618803	SHIM---(Use as required)---------	8
	2	4D6082	BOLT----------	2
		4B4280	WASHER----------	2
C	3	3B4610	COTTER PIN----------	6
	4	L1351	BOLT----------	4
C		5P1075	WASHER----------	4

C	5	3T2675	ARM ASSEM. -----(L. H.)---------	1
C		3T2676	ARM ASSEM. -----(R. H.)---------	1
	6	8P4069	GLASS----------	1
▲	7	5P5768	SEAL----(Use as required)--------	
	8	9M5884	BUMPER----------	8
	9	167150	SCREW----------	3
	10	9G6856	ANGLE----------	1
▲	11	5P5640	SEAL---------2.9 m(114.11 in.)	
	12	1B2713	BOLT----------	18
		7H8909	LOCKNUT----------	16
		4B4276	WASHER----------	18
		8M2337	WASHER----------	16
	13	8P3326	GLASS----------	1
	14	9G6857	DOOR ASSEM. (Includes)	1
		9D6621	NUT----------	2
	15	8P3325	GLASS----------	1
▲	16	5P5747	SEAL---------1.25 m(49.22 in.)	
	17	7D6921	SCREW----------	8
		8F8052	LOCKWASHER----------	8
	18	9P7845	SHIM--1.6mm(.063 in.)thick-----	8
		9P7846	SHIM--.8 mm(.031 in.)thick-----	8
	19	9P1811	COVER----------	1
	20	S509	BOLT----------	2
	21	9P7844	PLATE----------	4
C	22	3B4506	LOCKWASHER----------	2
C▲	23	6V2768	SEAL----------1.57m (61.81 in.)	

C INDICATES CHANGE

▲ ORDER BY THE METER

181083

9G6854 ROLL-OVER PROTECTIVE STRUCTURE GROUP—Part 2 of 3—Type 2
Part of 9G6870 ROPS Arrangement listed on Page 215
AN ATTACHMENT

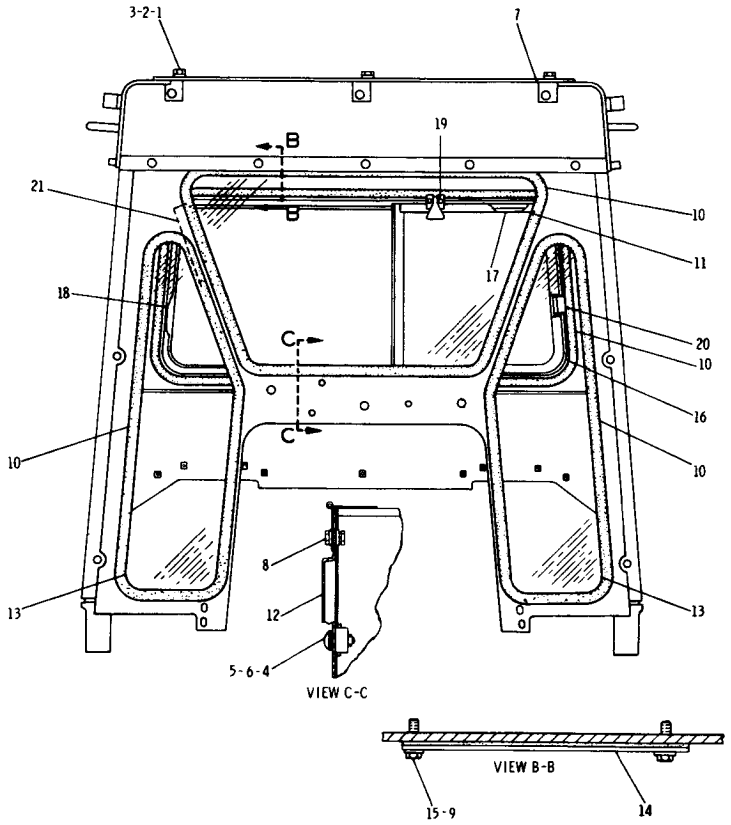

REF. NO.	PART NUMBER	DESCRIPTION	QTY
1	S1594	BOLT-------2.54 cm (1 in.) long	3
2	1D4717	NUT----------	3
3	3B4506	LOCKWASHER----------	3
4	5P7518	RETAINER----------	2
5	5P7519	NUT----------	2
6	5P9034	STUD----------	2
7	8P3142	BRACKET ASSEM. ----------	3
8	8L6521	BOLT----------	5
	4B2049	NUT----------	5
	3B4502	LOCKWASHER----------	5
	4B4274	WASHER----------	10
9	5P4115	LOCKWASHER----------	14
▲ 10	5P5768	SEAL----------(use as required)	
11	8P3762	GLASS----------	1
12	9G6855	DOOR----------	1
13	8P3763	GLASS----------	1

14	8P3880	PLATE----------	1
	8P3881	GASKET----------	1
C 15	5P7921	SCREW----------	14
16	9P9385	WINDOW ASSEM. ---------- (Includes)	1
	9P9387	GLASS----------	1
▲ 17	5P8918	SEAL---------1.3 m(51.19 in.)	
▲ 18	5P5680	SEAL--------2.54 m(100 in.)	
19	2H6622	SCREW----------	2
20	9P7860	LOCK ASSEM. ----------	1
	9P7859	SCREW----------	2
21	9G8808	COVER----------	1
	5P7924	SCREW----------	3
●	6V3247	PLATE---------(Identification)-----	1
C ●	5P7132	PLATE---------(ROPS Warning)----	1
●	347044	RIVET----------	6

C INDICATES CHANGE ● NOT SHOWN ▲ ORDER BY THE METER-USE AS REQUIRED 181084

9G6854 ROLL-OVER PROTECTIVE STRUCTURE GROUP—Part 3 of 3—Type 2
Part of 9G6870 ROPS Arrangement listed on Page 215
AN ATTACHMENT

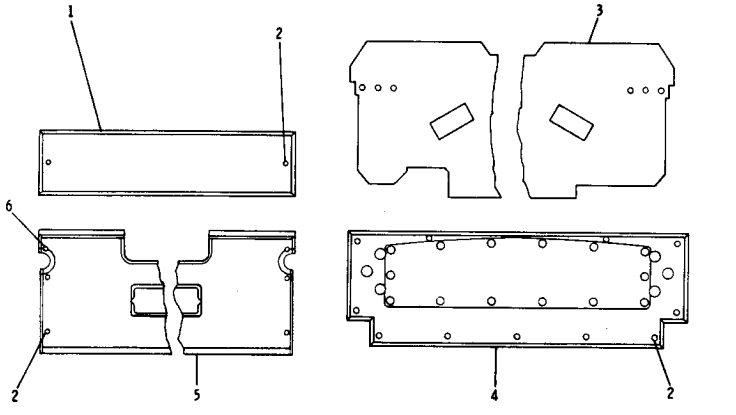

	REF. NO.	PART NUMBER	DESCRIPTION	QTY
	1	9P1376	LINER--(mounted in cab ceiling)---	1
C	2	9G4176	BUTTON----------	15
	3	9G6903	FLOORMAT--(mounted on floorplate)	1
	4	8P3668	LINER--(mounted in cab ceiling)---	1
	5	9P1377	LINER--(mounted in cab ceiling)---	1
C	6	6P815	BUTTON----------	4

C INDICATES CHANGE 301422

9G6902 CAB LINER GROUP—Sound Suppression—Type 2
Part of 9G7396 Roll-Over Protective System Arrangement listed on Page 214
AN ATTACHMENT

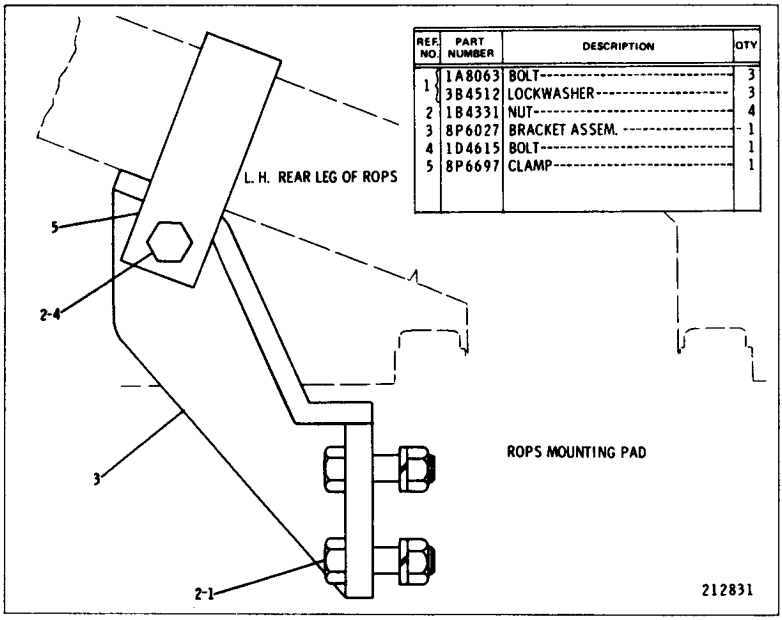

REF. NO.	PART NUMBER	DESCRIPTION	QTY
1	1A8063	BOLT	3
	3B4512	LOCKWASHER	3
2	1B4331	NUT	4
3	8P6027	BRACKET ASSEM.	1
4	1D4615	BOLT	1
5	8P6697	CLAMP	1

8P2129 SAFETY BRACE GROUP
Part of 9G7396 Roll-Over Protective System Arrangement listed on Page 214
AN ATTACHMENT

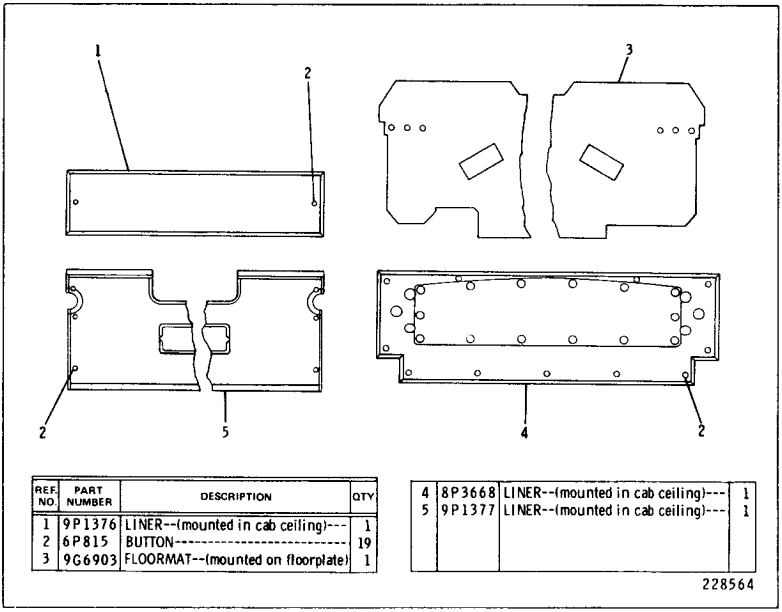

REF. NO.	PART NUMBER	DESCRIPTION	QTY
1	9P1376	LINER--(mounted in cab ceiling)	1
2	6P815	BUTTON	19
3	9G6903	FLOORMAT--(mounted on floorplate)	1
4	8P3668	LINER--(mounted in cab ceiling)	1
5	9P1377	LINER--(mounted in cab ceiling)	1

9G6902 CAB LINER GROUP—Sound Suppression
Part of 9G7396 Roll-Over Protective System Arrangement listed on Page 214
AN ATTACHMENT

NOTE	REF NO	PART NUMBER	QTY	DESCRIPTION
	1	8P3448	2	BRACKET AS.
	2	S1594	8	BOLT
	3	5P1075	48	WASHER
	4	9G6901	1	PLATE
	5	8P3442	4	STRIP
BD	6	TP7514		SEAL
	7	9P2044	2	PLATE
	8	L1351	20	BOLT
	9	9G6900	1	PLATE
	10	9G6898	1	ANGEL
	11	S1615	6	BOLT
	12	9P2035	1	BRACKET
	13	8P3760	2	PLATE
	14	S1590	6	BOLT

	15	9P2029	2	BLOCK
	16	8P3761	1	BRACKET
BD	17	5P5640		SEAL
	18	7H8909	6	NUT
	19	5P4115	6	WASHER (CONICAL)
		5P537	6	WASHER
	20	9G6899	1	ANGLE
BD	21	5P5755		SEAL
	22	S1588	14	BOLT

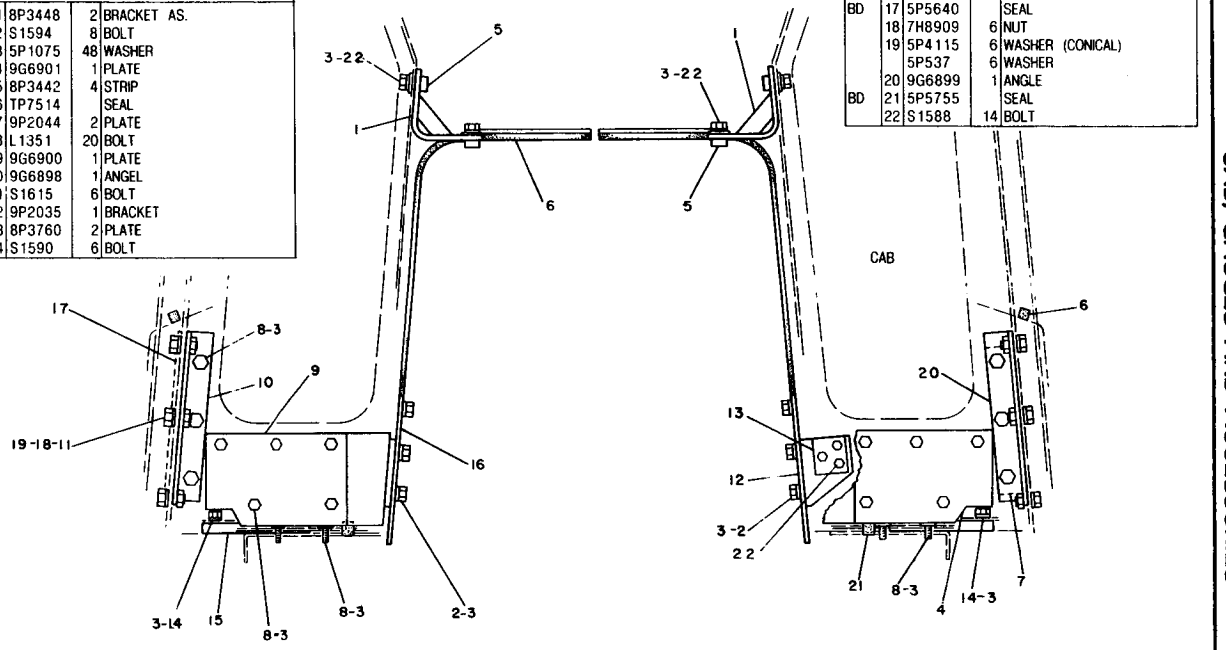

B USE AS REQUIRED D ORDER BY THE METER

316827

9G6897 CAB MOUNTING GROUP-PART 1 OF 2
An Attachment

9G6897 CAB MOUNTING GROUP-PART 2 OF 2
An Attachment

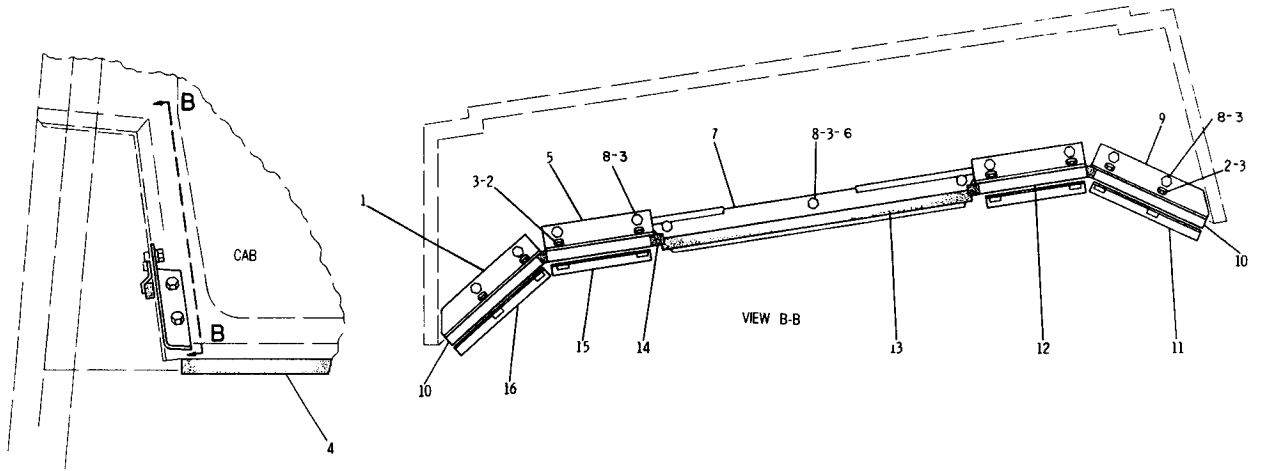

NOTE	REF NO	PART NUMBER	QTY	DESCRIPTION
	1	8P3350	1	BRACKET
	2	S1590	8	BOLT
	3	5P1075	19	WASHER
BD	4	5P5649		SEAL
	5	8P3348	2	BRACKET

BD	6	5P5637		SEAL
	7	8P3346	1	BRACKET AS.
	8	L1351	11	BOLT
	9	8P3351	1	BRACKET
	10	8P3356	2	SPACER
	11	9P2037	1	ANGLE AS.
	12	8P3352	2	SPACER

B USE AS REQUIRED

BD	13	5P5755		SEAL
BD	14	5P7514		SEAL
	15	9P2043	2	ANGLE AS.
	16	9P2042	1	ANGLE AS.

D ORDER BY THE METER

316828

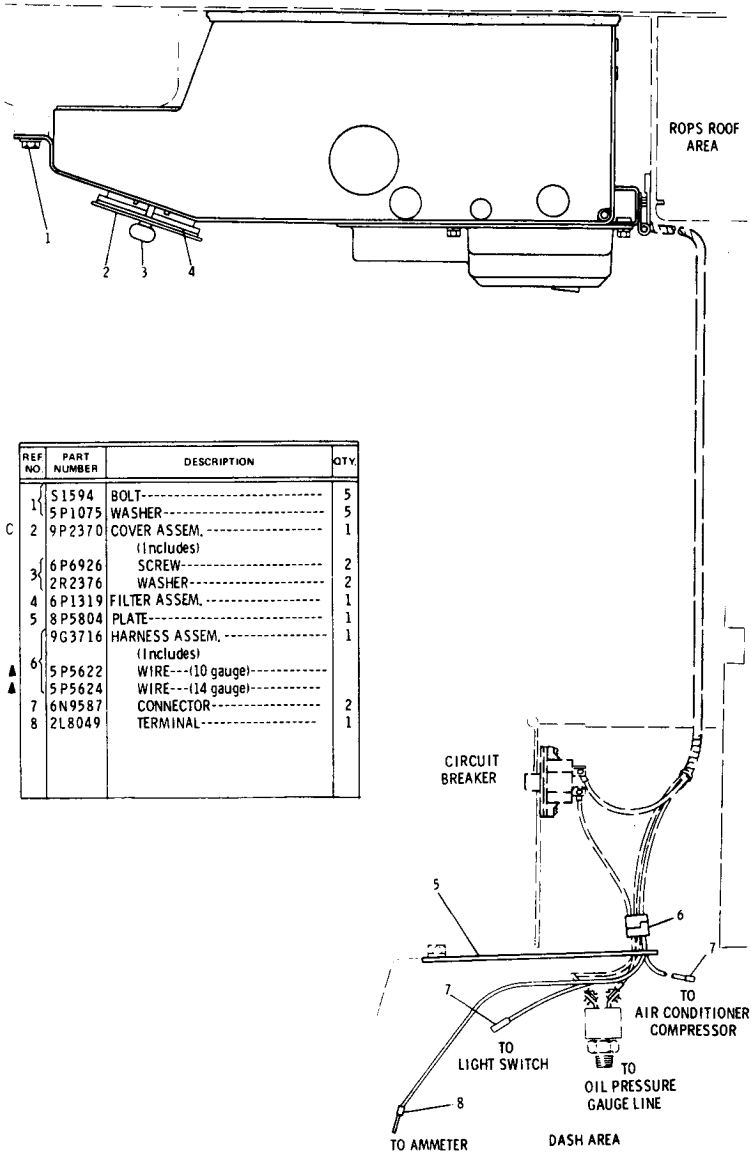

REF NO.	PART NUMBER	DESCRIPTION	QTY.
1	S1594	BOLT	5
	5P1075	WASHER	5
C 2	9P2370	COVER ASSEM. (Includes)	1
3	6P6926	SCREW	2
	2R2376	WASHER	2
4	6P1319	FILTER ASSEM.	1
5	8P5804	PLATE	1
6	9G3716	HARNESS ASSEM. (Includes)	1
▲	5P5622	WIRE---(10 gauge)	
▲	5P5624	WIRE---(14 gauge)	
7	6N9587	CONNECTOR	2
8	2L8049	TERMINAL	1

C INDICATES CHANGE ▲ ORDER BY THE METER 310855

9G8298 CAB PRESSURIZER GROUP–PART 1 OF 3–TYPE 1
An Attachment

9G8298 CAB PRESSURIZER GROUP-PART 2 OF 3-TYPE 1

8P6368-Page 228
An Attachment

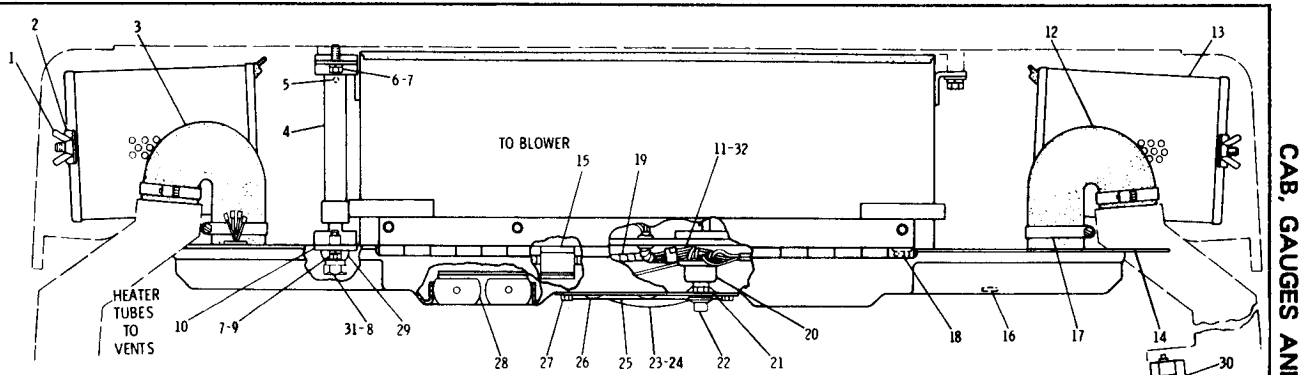

	REF. NO	PART NUMBER	DESCRIPTION	QTY
C	1	2B9498	NUT	4
	2	8P9587	STRAP	2
●	3	5P3915	HOSE----65 cm(25.6 in.)	
	4	6P4147	TUBE ASSEM.	1
	5	4H1641	PIN	1
	6	T102	BOLT	2
	7	3B4506	LOCKWASHER	4
	8	6P5812	SCREW ASSEM.	1
	9	S1594	BOLT	2
	10	6P4152	BRACKET	1
	11	9P2046	HARNESS ASSEM. (Includes)	1
▲		5P5624	WIRE----(14 gauge)	
▲		5P5623	WIRE----(16 gauge)	
		2L8065	TERMINAL	1
		2L8075	TERMINAL	1
●	12	5P3915	HOSE----65 cm(25.6 in.)	
	13	2V36	FILTER	2

14	7G1367	DUCT ASSEM.	1
15	319195	CLIP	1
16	2D3406	BUTTON----2.54mm(1 in.) dia. hole	1
17	2J6540	CLAMP	4
18	S1614	BOLT	10
	5P4115	WASHER	10
19	8P6368	HARNESS ASSEM. (Separate Illustration)	1
20	6P3236	SWITCH ASSEM.	1
21	2P4339	NUT	1
22	1P6509	KNOB	1
23	9M4192	LAMP ASSEM. (Includes)	1
	1S3291	DOOR ASSEM.	1
	7N9943	LAMP	1
	2F2860	SCREW	2
24	1H2204	SCREW ASSEM.	3
	4B2047	NUT	3

25	8P3710	PLATE	1
26	302283	PLUG	2
27	310243	SCREW	4
28	6P5673	LOUVER	4
29	6P5564	ROD	1
30	6P8689	LOUVER	2
	5P6458	SEAL	4
31	4D3704	WASHER	2
32	3S2093	STRAP	2

▲ ORDER BY THE METER C INDICATES CHANGE

● ORDER BY THE CENTIMETER

311191

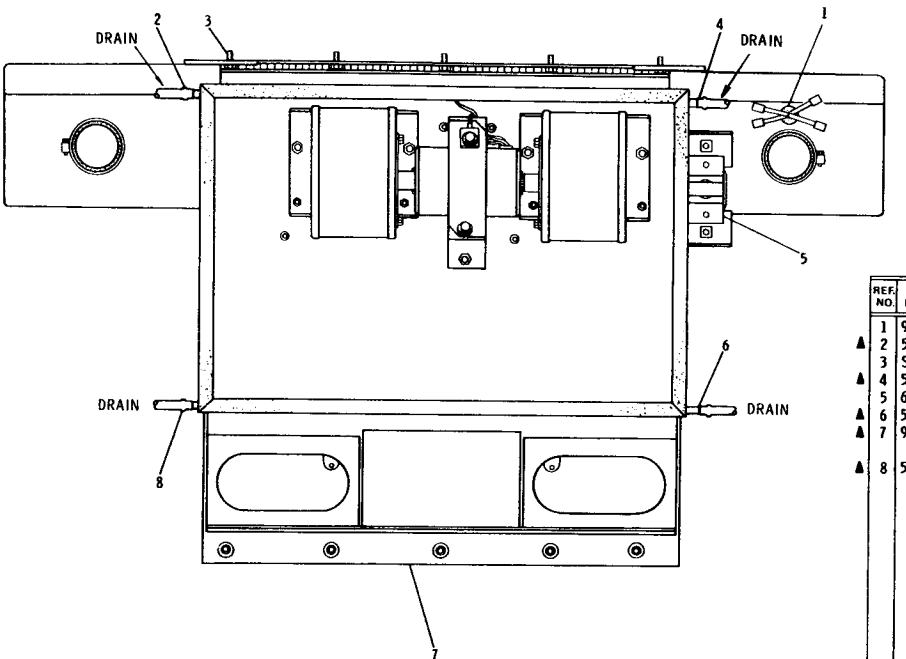

	REF. NO.	PART NUMBER	DESCRIPTION	QTY
	1	9D3768	GROMMET	1
▲	2	5P6129	TUBE-----.86 m(34.06 in.)	
	3	S1615	BOLT	5
▲	4	5P6129	TUBE-----.86 m(34.06 in.)	
	5	6P4151	BRACKET	1
▲	6	5P6129	TUBE-----.23 m(9.06 in.)	
▲	7	9P5089	PRESSURIZER GROUP---------- (Separate Illustration)	1
▲	8	5P6129	TUBE-----.23 m(9.06 in.)	

▲ ORDER BY THE METER

228563

9G8298 CAB PRESSURIZER GROUP-PART 3 OF 3-TYPE 1
9P5089-Page 227
An Attachment

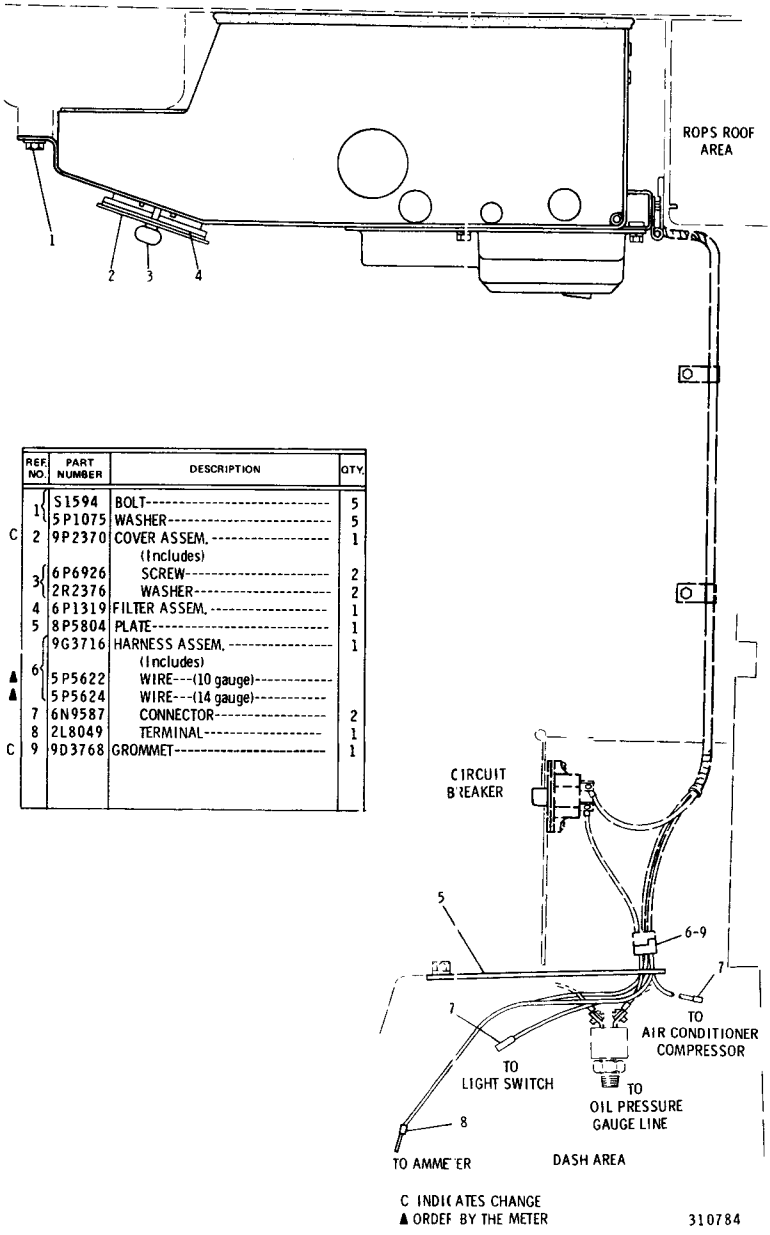

	REF. NO.	PART NUMBER	DESCRIPTION	QTY.
	1	S1594	BOLT	5
		5P1075	WASHER	5
C	2	9P2370	COVER ASSEM. (Includes)	1
	3	6P6926	SCREW	2
		2R2376	WASHER	2
	4	6P1319	FILTER ASSEM.	1
	5	8P5804	PLATE	1
	6	9G3716	HARNESS ASSEM. (Includes)	1
▲		5P5622	WIRE---(10 gauge)	
▲		5P5624	WIRE---(14 gauge)	
	7	6N9587	CONNECTOR	2
	8	2L8049	TERMINAL	1
C	9	9D3768	GROMMET	1

9G8298 CAB PRESSURIZER GROUP–PART 1 OF 3–TYPE 2
An Attachment

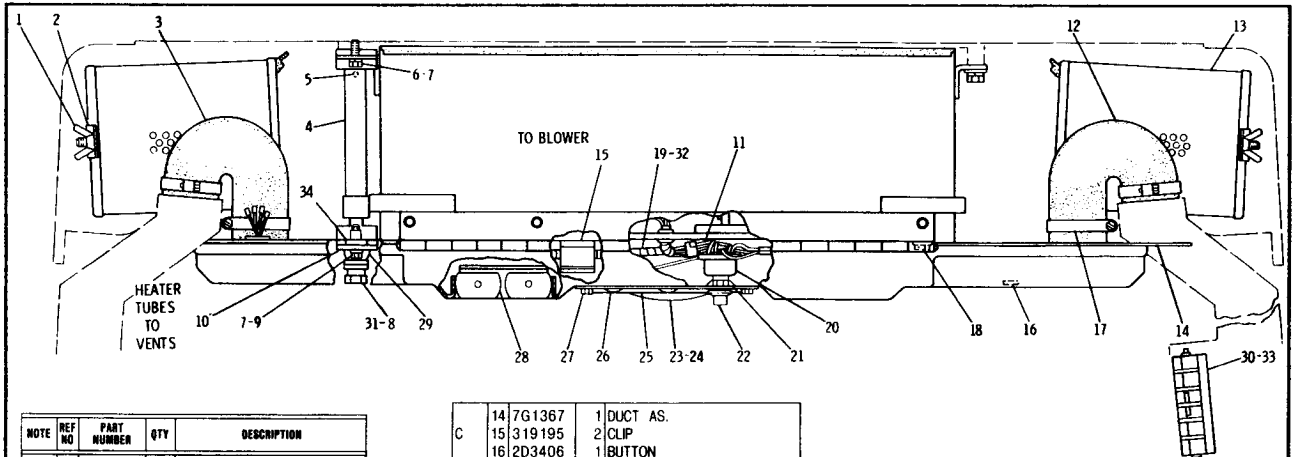

NOTE	REF NO	PART NUMBER	QTY	DESCRIPTION
C	1	2B9498	4	NUT
	2	8P9587	2	STRAP
E	3	5P3915		HOSE 65CM(25.6IN.)
	4	6P4147	1	TUBE AS.
	5	4H1641	1	PIN
C	6	L1351	2	BOLT
C	7	5M2894	4	WASHER
	8	6P5812	1	SCREW AS.
C	9	S1588	2	BOLT
	10	6P4152	1	BRACKET
	11	9P2046	1	HARNESS AS.
D		5P5624		WIRE (14 GAUGE)
D		5P5623		WIRE (16 GAUGE)
C		2L8075	4	TERMINAL
E	12	5P3915		HOSE 65CM(25.6IN.)
	13	2V36	2	FILTER
	14	7G1367	1	DUCT AS.
C	15	319195	2	CLIP
	16	2D3406	1	BUTTON
				2.54MM(1IN.)DIA. HOLE
	17	2J6540	4	CLAMP
	18	S1614	10	BOLT
		5P4115	10	WASHER
Y	19	8P6368	1	HARNESS AS.
	20	6P3236	1	SWITCH AS. (FAN SPEED)
C		6V8362	5	SCREW
C		9B7233	5	LOCKWASHER
	21	2P4339	1	NUT
	22	1P6509	1	KNOB
C	23	6T4864	1	LAMP AS. (DOME)
		1S3291	1	DOOR AS.
		7N9943	1	LAMP
		2F2860	2	SCREW
	24	1H2204	3	SCREW AS.
		4B2047	3	NUT
	25	8P3710	1	PLATE
	26	302283	2	PLUG
	27	310243	4	SCREW
	28	6P5673	4	LOUVER
	29	6P5564	1	ROD
C	30	7G2172	2	LOUVER AS.
				(EACH INCLUDES)
		6P8689	1	LOUVER
		6P8690	1	BEVEL
	31	5P8247	2	WASHER
C	32	315644	1	CLIP 31.8MM(1.25IN.)
	33	5P6458	4	SEAL
C	34	8M7145	2	WASHER

C INDICATES CHANGE D ORDER BY THE METER E ORDER BY THE CENTIMETER Y SEPARATE ILLUSTRATION 316860

9G8298 CAB PRESSURIZER GROUP-PART 2 OF 3-TYPE 2
8P6368-Page 228
An Attachment

9G8298 CAB PRESSURIZER GROUP-PART 3 OF 3-TYPE 2

9P5089-Page 227

An Attachment

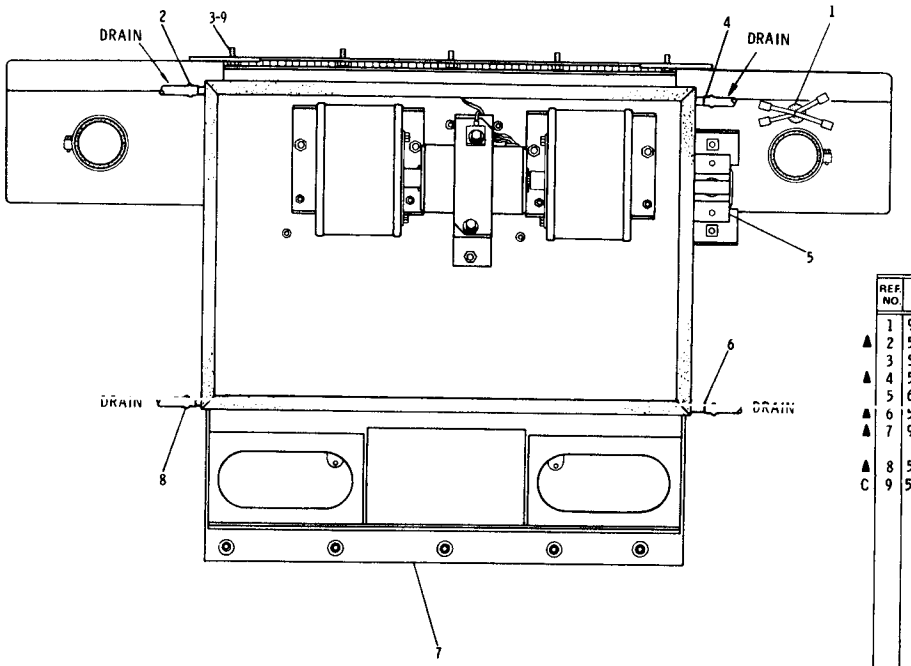

REF NO.	PART NUMBER	DESCRIPTION	QTY
1	9D3768	GROMMET	1
▲ 2	5P6129	TUBE-.86 m(34.06 in.)	
3	S1615	BOLT	5
▲ 4	5P6129	TUBE-.86 m(34.06 in.)	
5	6P4151	BRACKET	1
▲ 6	5P6129	TUBE-.23 m(9.06 in.)	
▲ 7	9P5089	PRESSURIZER GROUP (Separate Illustration)	1
▲ 8	5P6129	TUBE-.23 m(9.06 in.)	
C 9	5P537	WASHER	5

▲ ORDER BY THE METER

C INDICATES CHANGE

236070

9P5089 BASIC PRESSURIZER GROUP

Part of 9G8298 Cab Pressurizer, 8P2146 Air Conditioner and 8P4914 Heater Groups are shown on Pages 226, 248 & 255
9P3788 Blower parts are shown on Page 228

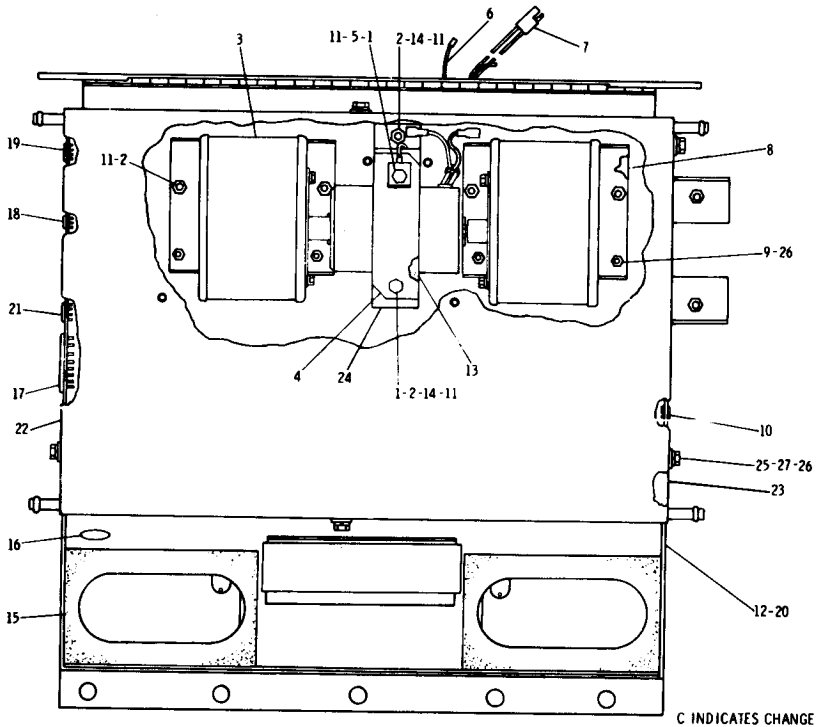

C INDICATES CHANGE

	REF. NO.	PART NUMBER	DESCRIPTION	QTY
C	1	S1594	BOLT	2
C	2	1D4717	NUT	6
	3	9P3788	BLOWER ASSEM. (Separate Illustration)	1
	4	6P1298	STRAP	1
	5	2H4499	LOCK	1
		9P6897	WIRE ASSEM. (Includes)	1
▲	6	5P5629	WIRE, 36 m (14 in.)	
		4S1988	TERMINAL (dome light)	1
		2L8079	TERMINAL	1
		8P6385	HARNESS ASSEM. (Includes)	1
▲	7	5P5623	WIRE (16 gauge)	
▲		5P5624	WIRE (14 gauge)	
		5P4571	TERMINAL	6
	8	6P1296	SEAL	2
	9	1B4330	NUT	4
	10	3D9871	BUTTON	4
C	11	3B4506	LOCKWASHER	8
C	12	7G3057	CASE ASSEM.	1
▲	13	5P5908	SEAL, 31 m(12.20 in)	
C	14	4B4278	WASHER	3
	15	8P2303	SEAL	2
C	16	7D4786	PLUG	1
	17	6P1294	PLUG	1
	18	5K3546	BUTTON	1
	19	4S6336	BUTTON	1
	20	7L6479	PLUG (fits 7.87mm(.31 in.)hole)	5
C	21	1V9019	PLUG	2
C	22	7G3000	COVER ASSEM. (Includes)	1
	23	7G2999	SEAL	1
C	24	7G2377	BRACKET ASSEM.	1
C	25	S1614	BOLT	6
C	26	3B4504	LOCKWASHER	10
C	27	4B4276	WASHER	6

▲ ORDER BY THE METRE

169044

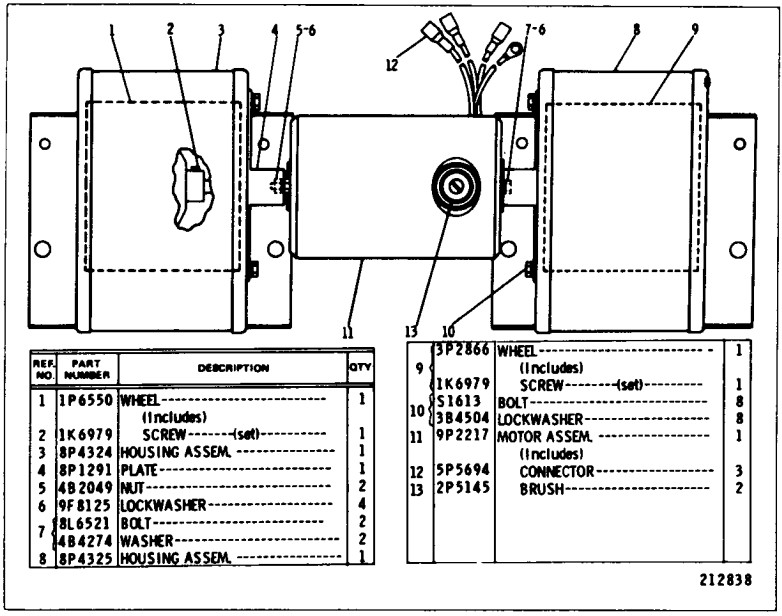

REF. NO.	PART NUMBER	DESCRIPTION	QTY
1	1P6550	WHEEL (Includes)	1
2	1K6979	SCREW-----(set)	1
3	8P4324	HOUSING ASSEM.	1
4	8P1291	PLATE	1
5	4B2049	NUT	2
6	9F8125	LOCKWASHER	4
7	8L6521	BOLT	2
	4B4274	WASHER	2
8	8P4325	HOUSING ASSEM.	1
9	3P2866	WHEEL (Includes)	1
	1K6979	SCREW-----(set)	1
10	5I1613	BOLT	8
	3B4504	LOCKWASHER	8
11	9P2217	MOTOR ASSEM. (Includes)	1
12	5P5694	CONNECTOR	3
13	2P5145	BRUSH	2

212838

9P3788 BLOWER ASSEMBLY
Part of 9P5089 Basic Pressurizer Group shown on Page 227
AN ATTACHMENT

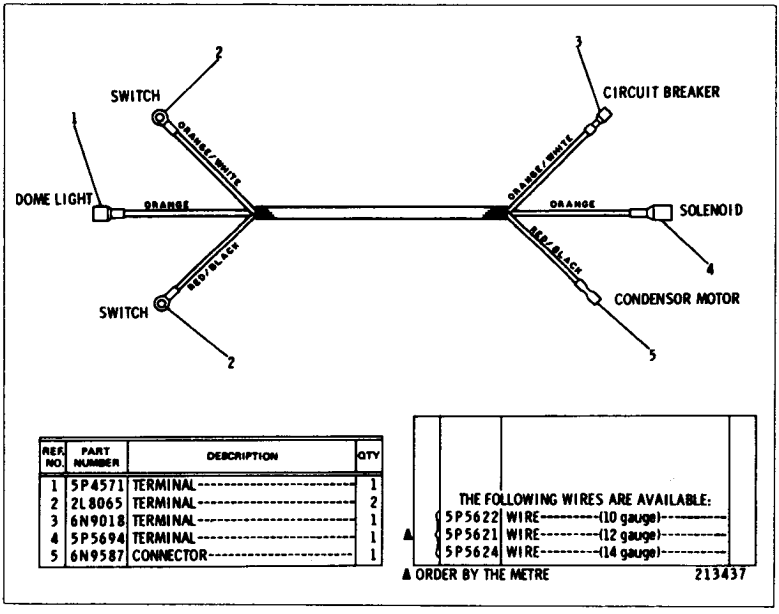

REF. NO.	PART NUMBER	DESCRIPTION	QTY
1	5P4571	TERMINAL	1
2	2L8065	TERMINAL	2
3	6N9018	TERMINAL	1
4	5P5694	TERMINAL	1
5	6N9587	CONNECTOR	1

THE FOLLOWING WIRES ARE AVAILABLE:

▲	5P5622	WIRE----------(10 gauge)----------	
	5P5621	WIRE----------(12 gauge)----------	
	5P5624	WIRE----------(14 gauge)----------	

▲ ORDER BY THE METRE

213437

8P6368 HARNESS ASSEMBLY
Part of 9G8298 Cab Pressurizer Group shown on Pages 225 & 226B
AN ATTACHMENT

7G6541 WASHER AND WIPER GROUP—Type 1

Part of 9G6870 Roll-Over Protective System Arrangement listed on Page 215
1V3079 Wiper, 7G8734 and 9G8107 Harness parts are shown on Pages 230, 232 and 232A
AN ATTACHMENT

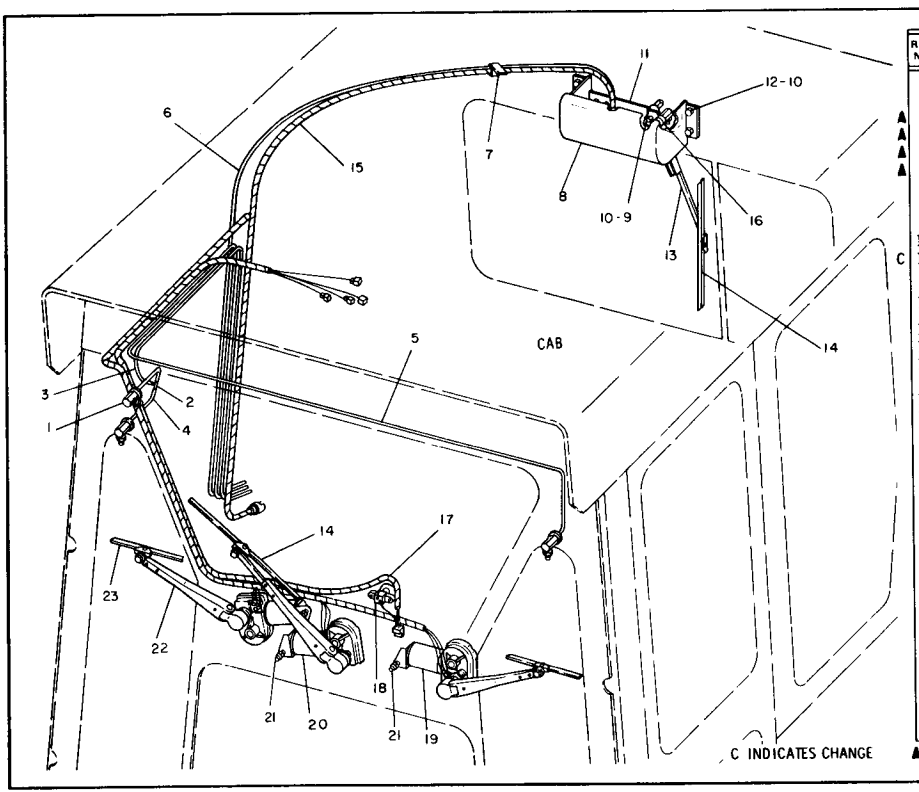

REF. NO.	PART NUMBER	DESCRIPTION	QTY.
1	9P2369	JET ASSEM.	4
2	6K9632	TEE	1
▲ 3	5P5992	HOSE---2.15 m(84.6 in.)	
▲ 4	5P5992	HOSE---2.40 m(9.44 in.)	
▲ 5	5P5992	HOSE---3.50 m(137.7 in.)	
▲ 6	5P5992	HOSE---2.55 m(100 in.)	
7	1V3593	CLIP	1
8	7G8735	COVER	1
9	6F7027	BOLT	2
10	3B4504	LOCKWASHER	6
11	1V3079	WIPER GROUP (Separate Illustration)	1
12	1B4330	NUT	4
	4B4276	WASHER	4
13	9P1721	ARM ASSEM.	1
14	9D1242	BLADE	2
15	7G8734	HARNESS ASSEM. (Separate Illustration)	1
16	6D4972	SPACER	1
17	9G8107	HARNESS ASSEM. (Separate Illustration)	1
18	6N9349	CIRCUIT BREAKER	1
	5M6668	SCREW	2
19	9G156	MOTOR ASSEM.	1
	4D7468	NUT	1
	1K502	WASHER-1.19mm(.046 in.)thick	1
	4D7464	WASHER-1.59 mm(.63 in.)thick	1
20	9G155	MOTOR ASSEM.	2
	4D7468	NUT	1
	1K502	WASHER-1.19 mm(.046 in.)thick	1
	4D7464	WASHER-1.59mm(.63 in.)thick	1
21	8L6521	BOLT	3
	4B2049	NUT	3
	9F5599	LOCKWASHER	3
	9F9831	WASHER	3
22	5P5346	ARM	3
23	5P5436	BLADE	2

C INDICATES CHANGE

▲ ORDER BY THE METER

228571

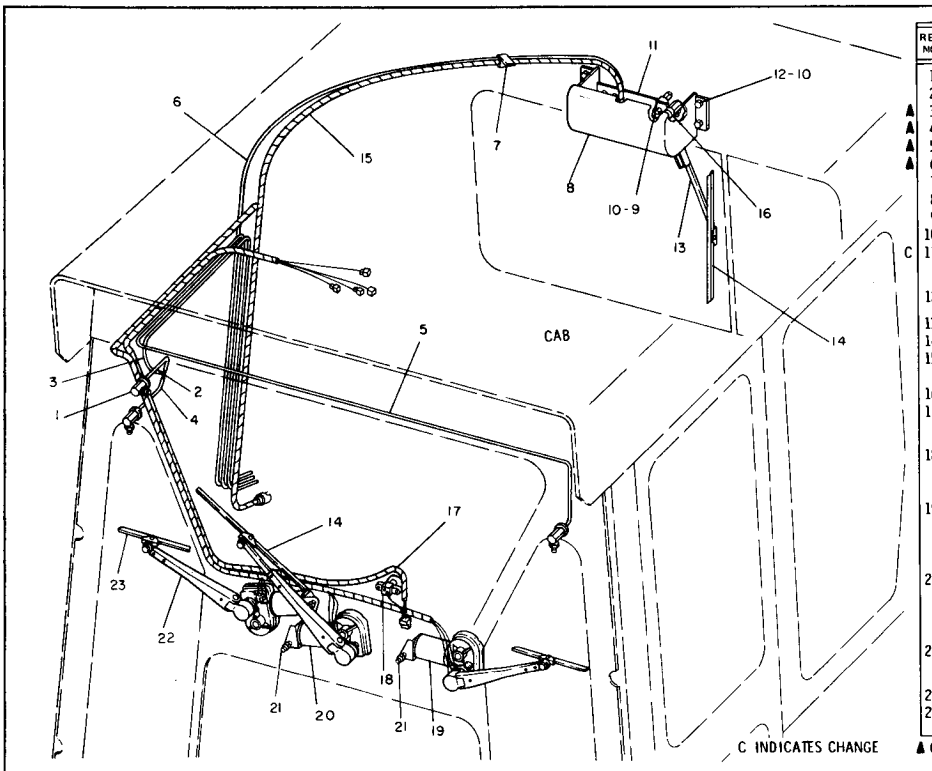

REF. NO.	PART NUMBER	DESCRIPTION	QTY.
1	9P2369	JET ASSEM.	4
2	6K9632	TEE	1
▲ 3	5P5992	HOSE---2.15 m(84.6 in.)	
▲ 4	5P5992	HOSE---2.40 m(9.44 in.)	
▲ 5	5P5992	HOSE---3.50 m(137.7 in.)	
▲ 6	5P5992	HOSE---2.55 m(100 in.)	
7	1V3593	CLIP	1
8	7G8735	COVER	1
9	6F7027	BOLT	2
10	3B4504	LOCKWASHER	6
C 11	3T183	WIPER GROUP (Separate Illustration)	1
12	1B4330	NUT	4
	4B4276	WASHER	4
13	9P1721	ARM ASSEM.	1
14	9D1242	BLADE	2
15	7G8734	HARNESS ASSEM. (Separate Illustration)	1
16	6D4972	SPACER	1
17	9G8107	HARNESS ASSEM. (Separate Illustration)	1
18	6N9349	CIRCUIT BREAKER	1
	5M6668	SCREW	2
19	9G156	MOTOR ASSEM.	1
	4D7468	NUT	1
	1K502	WASHER-1.19mm(.046 in.)thick	1
	4D7464	WASHER-1.59 mm(.63 in.)thick	1
20	9G155	MOTOR ASSEM.	2
	4D7468	NUT	1
	1K502	WASHER-1.19 mm(.046 in.)thick	1
	4D7464	WASHER-1.59mm(.63 in.)thick	1
21	8L6521	BOLT	3
	4B2049	NUT	3
	9F5599	LOCKWASHER	3
	9F9831	WASHER	3
22	5P5346	ARM	3
23	5P5436	BLADE	2

C INDICATES CHANGE

▲ ORDER BY THE METER

233729

7G6541 WASHER AND WIPER GROUP—Type 2
Part of 9G6870 Roll-Over Protective System Arrangement listed on Page 215
3T183 Wiper, 9G8107 and 7G8734 Harness parts are shown on Pages 229B, 232 and 232A
AN ATTACHMENT

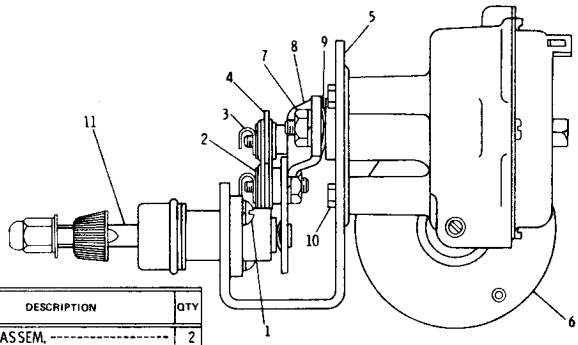

REF. NO.	PART NUMBER	DESCRIPTION	QTY
1	8F1315	SCREW ASSEM.	2
2	4D7416	WASHER	2
3	4D7411	CLIP	2
4	4D7408	LINK	1
5	4D7417	BRACKET	1
6	9G9316	MOTOR ASSEM. (Includes)	1
7	1B4201	NUT	1
	7F9223	LOCKWASHER	1
8	2G1345	ARM	1
9	4D7421	WASHER	1
10	S1570	BOLT	3
	1H3338	LOCKWASHER	3
11	9K682	SHAFT AND LINK ASSEM. (Separate Illustration)	1

236068

3T183 WIPER GROUP—For Field Replacement order 3T175
Part of 7G6541 Washer and Wiper Group shown on Page 229A
9K682 Shaft and Link parts are shown on Page 233

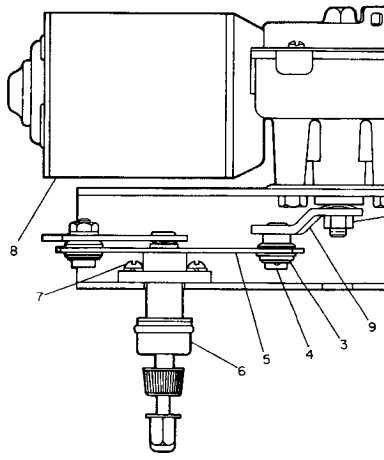

REF. NO.	PART NUMBER	DESCRIPTION	QTY.
1	S1570	BOLT	3
	1H3338	LOCKWASHER	3

2	4D7417	BRACKET	1
3	4D7416	WASHER	2
4	4D7411	CLIP	2
5	4D7408	LINK	1
6	9K682	SHAFT & LINK ASSEM. (Separate Illustration)	1
7	8F1315	SCREW ASSEM.	2
8	9G9316	MOTOR ASSEM. (Includes)	1
9	2G1345	ARM	1
10	1B4201	NUT	1
	7F9223	LOCKWASHER	1
	4D7421	WASHER	1

231295

3T175 WIPER GROUP—Field Installation
9K682 Shaft and Link parts are shown on Page 233

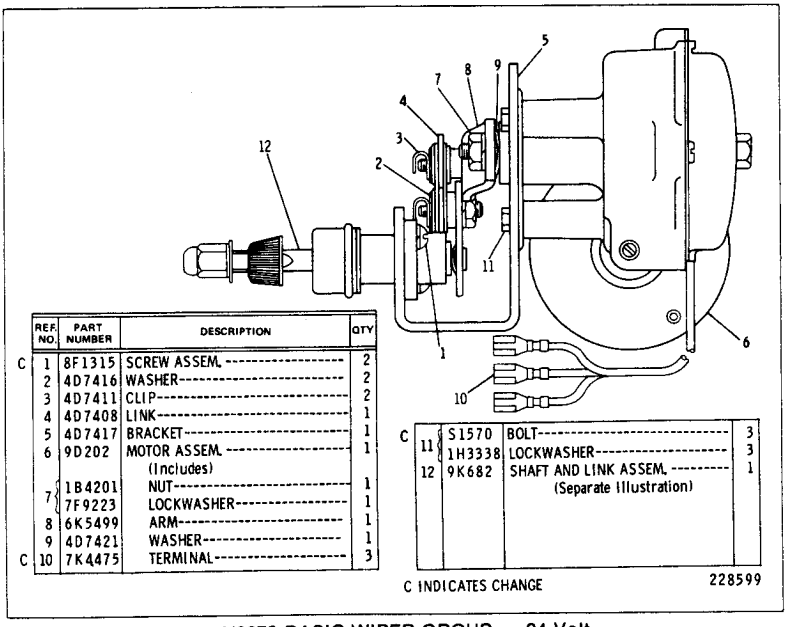

	REF. NO.	PART NUMBER	DESCRIPTION	QTY
C	1	8F1315	SCREW ASSEM.	2
	2	4D7416	WASHER	2
	3	4D7411	CLIP	2
	4	4D7408	LINK	1
	5	4D7417	BRACKET	1
	6	9D202	MOTOR ASSEM. (Includes)	1
	7	1B4201	NUT	1
		7F9223	LOCKWASHER	1
	8	6K5499	ARM	1
	9	4D7421	WASHER	1
C	10	7K4475	TERMINAL	3
C	11	S1570	BOLT	3
		1H3338	LOCKWASHER	3
	12	9K682	SHAFT AND LINK ASSEM. (Separate Illustration)	1

C INDICATES CHANGE 228599

1V3079 BASIC WIPER GROUP — 24 Volt
Part of 7G6541 Washer and Wiper Group shown on Page 229
9K682 Shaft and Link parts are shown on Page 233
AN ATTACHMENT

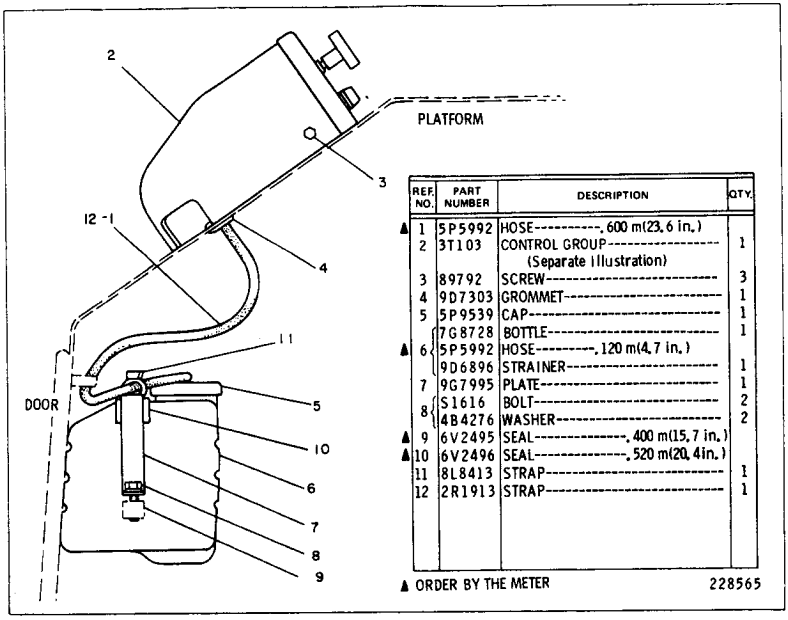

	REF. NO.	PART NUMBER	DESCRIPTION	QTY.
▲	1	5P5992	HOSE, 600 m(23.6 in.)	
	2	3T103	CONTROL GROUP (Separate Illustration)	1
	3	89792	SCREW	3
	4	9D7303	GROMMET	1
	5	5P9539	CAP	1
	6	7G8728	BOTTLE	1
▲		5P5992	HOSE, 120 m(4.7 in.)	
		9D6896	STRAINER	1
	7	9G7995	PLATE	1
	8	S1616	BOLT	2
		4B4276	WASHER	2
▲	9	6V2495	SEAL, 400 m(15.7 in.)	
▲	10	6V2496	SEAL, 520 m(20.4 in.)	
	11	8L8413	STRAP	1
	12	2R1913	STRAP	1

▲ ORDER BY THE METER 228565

9G7478 WASHER AND WIPER CONTROL GROUP
Part of 9G7396 Roll-Over Protective Arrangement listed on Page 214
3T103 Control parts are shown on Page 231
AN ATTACHMENT

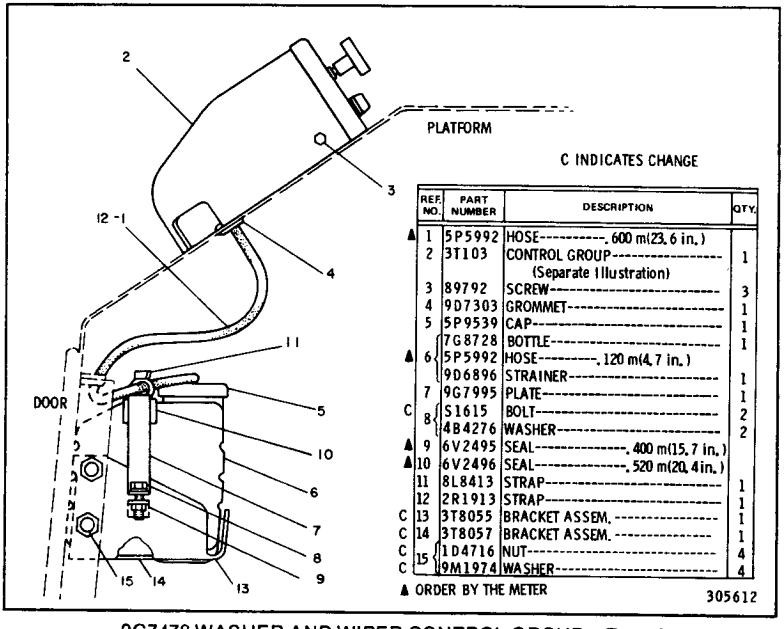

	REF. NO.	PART NUMBER	DESCRIPTION	QTY.
▲	1	5P5992	HOSE----------, 600 m(23, 6 in.)	
	2	3T103	CONTROL GROUP---------- (Separate Illustration)	1
	3	89792	SCREW----------	3
	4	9D7303	GROMMET----------	1
	5	5P9539	CAP----------	1
	6	7G8728	BOTTLE----------	1
▲	6	5P5992	HOSE----------, 120 m(4, 7 in.)	
	6	9D6896	STRAINER----------	1
	7	9G7995	PLATE----------	1
C	8	S1615	BOLT----------	2
	8	4B4276	WASHER----------	2
▲	9	6V2495	SEAL----------, 400 m(15, 7 in.)	
▲	10	6V2496	SEAL----------, 520 m(20, 4 in.)	
	11	8L8413	STRAP----------	1
	12	2R1913	STRAP----------	1
C	13	3T8055	BRACKET ASSEM.----------	1
C	14	3T8057	BRACKET ASSEM.----------	1
C	15	1D4716	NUT----------	4
C	15	9M1974	WASHER----------	4

▲ ORDER BY THE METER

305612

9G7478 WASHER AND WIPER CONTROL GROUP—Type 2
Part of 9G7396 Roll-Over Protective Arrangement listed on Page 214
3T103 Control parts are shown on Page 231. AN ATTACHMENT

3T103 WASHER AND WIPER GROUP
Part of 9G7478 Washer and Wiper Control Group shown on Page 230
AN ATTACHMENT

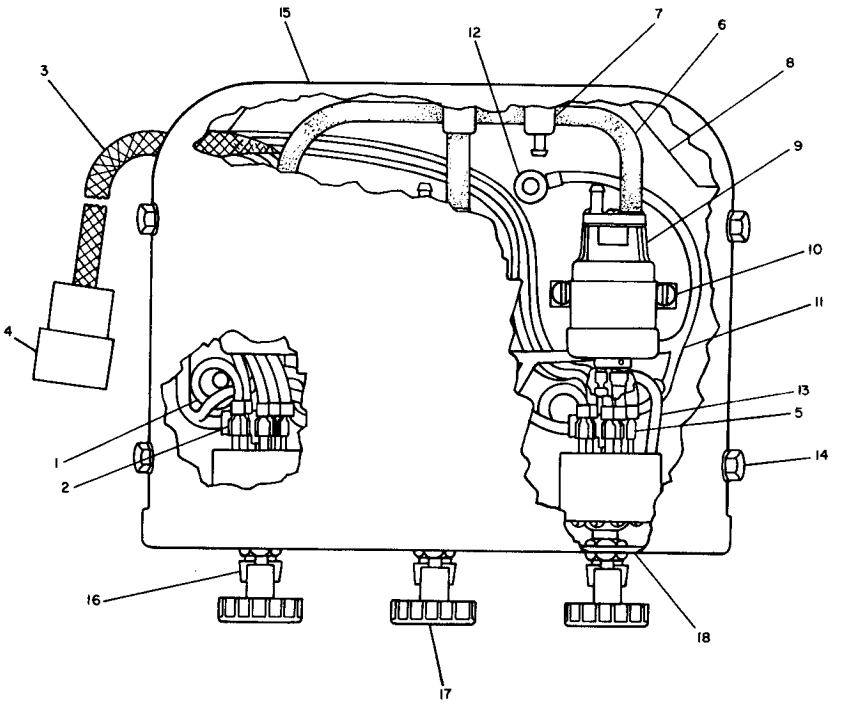

REF. NO.	PART NUMBER	DESCRIPTION	QTY.
	7G8732	WIRE ASSEM.	3
1		(Each Includes)	
▲	5P5623	WIRE----, 180 m(7.08 in.)	
2	5P4571	TERMINAL	2
	7G8733	HARNESS ASSEM.	1
3		(Includes)	
▲	5P5623	WIRE----------(16 gauge)	
▲	5P5624	WIRE----------(14 gauge)	
	9G3673	HOUSING	1
4	7N7779	SOCKET	5
	7N7780	PIN	5
5	5P4571	TERMINAL	9
▲ 6	5P5992	HOSE------, 230 m(9.05 in.)	
7	6K9632	TEE	2
	7G6307	PLATE ASSEM.	1
8		(Includes)	
	9F6445	NUT	4
9	9G8963	PUMP ASSEM.	3
	4B1226	SCREW	6
10	8F1434	LOCKWASHER	6
	7G8731	WIRE ASSEM.	1
11		(Includes)	
▲	5P5623	WIRE--------, 590 m(23 in.)	
	5P4571	TERMINAL	3
12	2L8079	TERMINAL	1
	7G8729	WIRE ASSEM.	3
13		(Each Includes)	
▲	5P5623	WIRE--------, 180 m(7.08 in.)	
	5P4571	TERMINAL	1
14	9S2011	SCREW	4
15	7G6542	COVER	1
	4K5122	HOLDER	3
16	9K1896	FUSE----------(4 amp)	3
	1V7362	SWITCH----------(washer-wiper)	3
17		(Each Includes)	
	7N4033	KNOB	1
18	7G6308	PANEL	1

▲ ORDER BY THE METER

228566

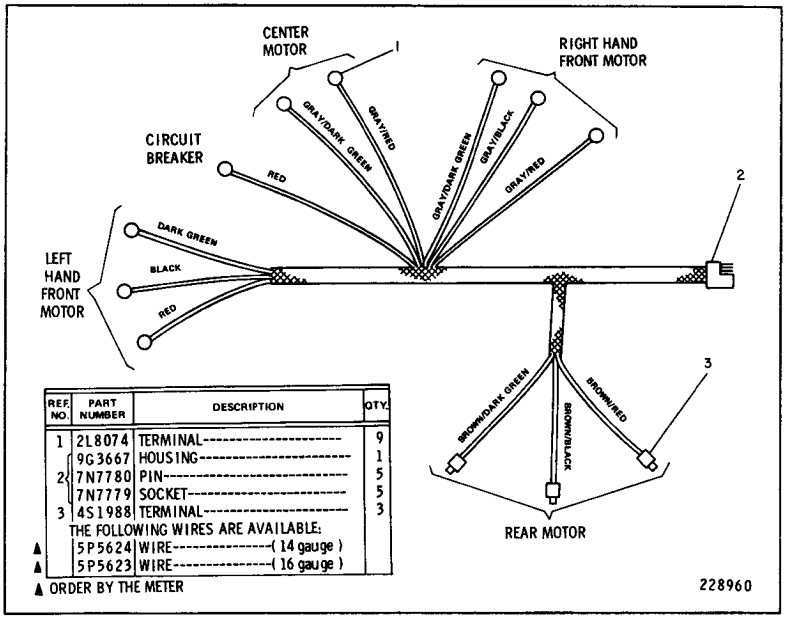

REF. NO.	PART NUMBER	DESCRIPTION	QTY.
1	2L8074	TERMINAL----------	9
2	9G3667	HOUSING----------	1
	7N7780	PIN----------	5
	7N7779	SOCKET----------	5
3	4S1988	TERMINAL----------	3
	THE FOLLOWING WIRES ARE AVAILABLE:		
▲	5P5624	WIRE----------(14 gauge)	
▲	5P5623	WIRE----------(16 gauge)	

▲ ORDER BY THE METER

228960

7G8734 HARNESS ASSEMBLY—Type 1
Part of 7G6541 Washer and Wiper Group shown on Pages 229 and 229A
AN ATTACHMENT

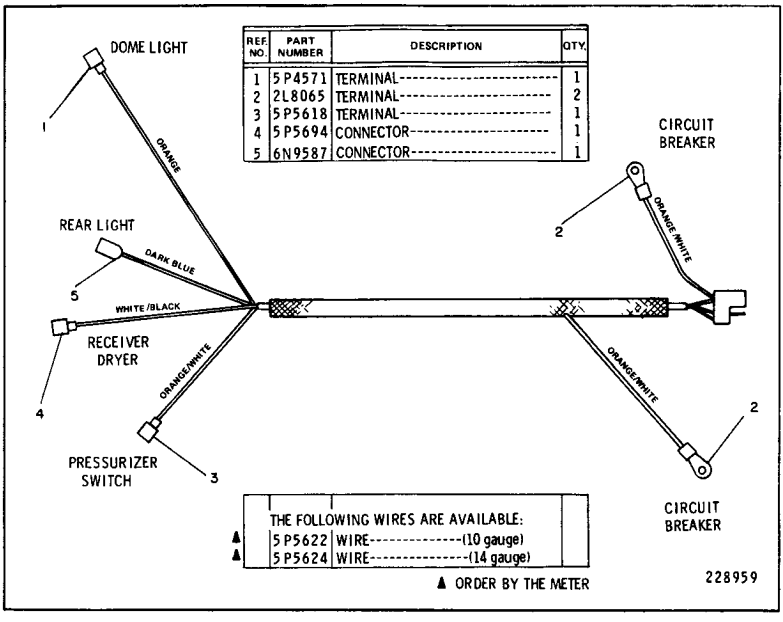

REF. NO.	PART NUMBER	DESCRIPTION	QTY.
1	5P4571	TERMINAL----------	1
2	2L8065	TERMINAL----------	2
3	5P5618	TERMINAL----------	1
4	5P5694	CONNECTOR----------	1
5	6N9587	CONNECTOR----------	1

	THE FOLLOWING WIRES ARE AVAILABLE:	
▲	5P5622	WIRE----------(10 gauge)
▲	5P5624	WIRE----------(14 gauge)

▲ ORDER BY THE METER

228959

9G8107 HARNESS ASSEMBLY
Part of 7G6541 Washer and Wiper Group shown on Pages 229 and 229A
AN ATTACHMENT

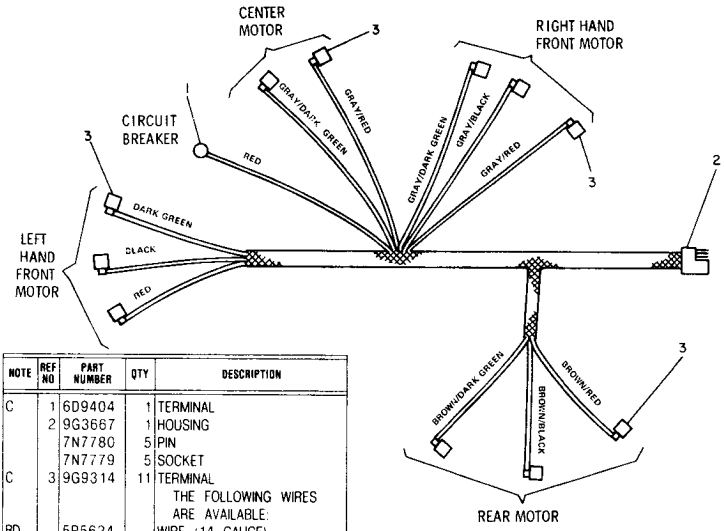

NOTE	REF NO	PART NUMBER	QTY	DESCRIPTION
C	1	6D9404	1	TERMINAL
	2	9G3667	1	HOUSING
		7N7780	5	PIN
		7N7779	5	SOCKET
C	3	9G9314	11	TERMINAL
				THE FOLLOWING WIRES ARE AVAILABLE:
BD		5P5624		WIRE (14 GAUGE)
BD		5P5623		WIRE (16 GAUGE)

B USE AS REQUIRED C INDICATES CHANGE D ORDER BY THE METER 316808

7G8734 HARNESS ASSEMBLY-TYPE 2
Part Of 7G6541 Washer & Wiper
An Attachment

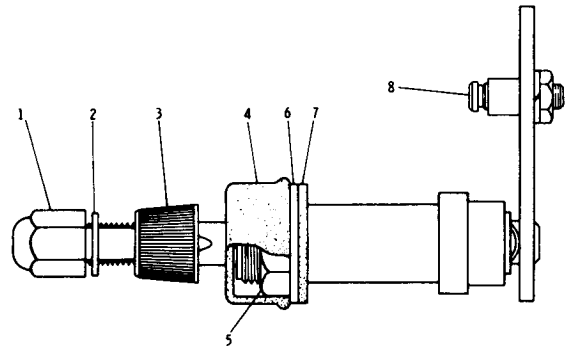

REF. NO.	PART NUMBER	DESCRIPTION	QTY
1	8D237	NUT	1
2	9F5644	LOCKWASHER	1
3	1V3658	DRIVER	1
4	1V3657	CAP	1
5	1V3656	NUT	1
6	4B1550	WASHER	1
7	9S8016	GASKET	1
8	1V3655	STUD	1
	9M1311	NUT	1
	1H3244	LOCKWASHER	1

119884

9K862 SHAFT AND LINK ASSEMBLY
Part of 3T183, 3T175 and 1V3079 Basic Wiper Group shown on Pages 229B & 230
AN ATTACHMENT

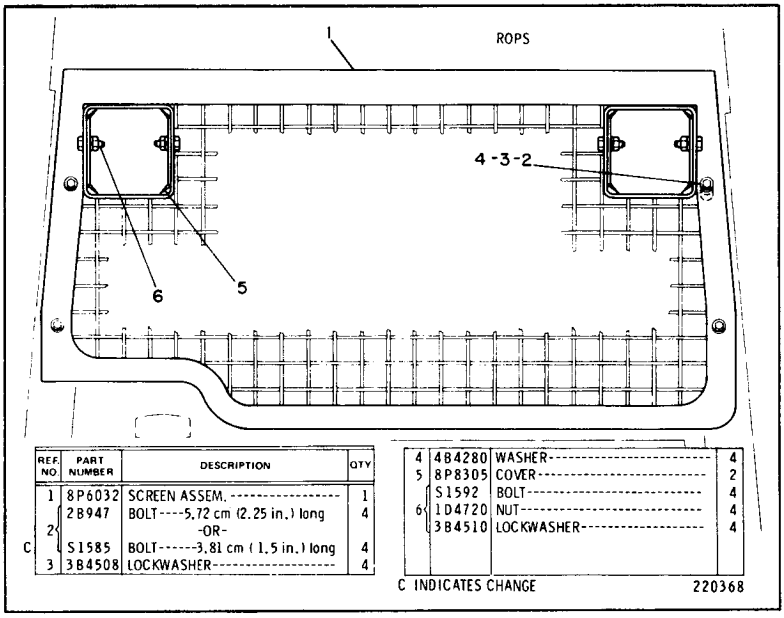

REF. NO.	PART NUMBER	DESCRIPTION	QTY
1	8P6032	SCREEN ASSEM.	1
2	2B947	BOLT----5.72 cm (2.25 in.) long	4
		-OR-	
C	S1585	BOLT------3.81 cm (1.5 in.) long	4
3	3B4508	LOCKWASHER	4
4	4B4280	WASHER	4
5	8P8305	COVER	2
6	S1592	BOLT	4
	1D4720	NUT	4
	3B4510	LOCKWASHER	4

C INDICATES CHANGE 220368

8P2132 PROTECTIVE SCREEN GROUP
FOR USE WITH OPEN ROPS
AN ATTACHMENT

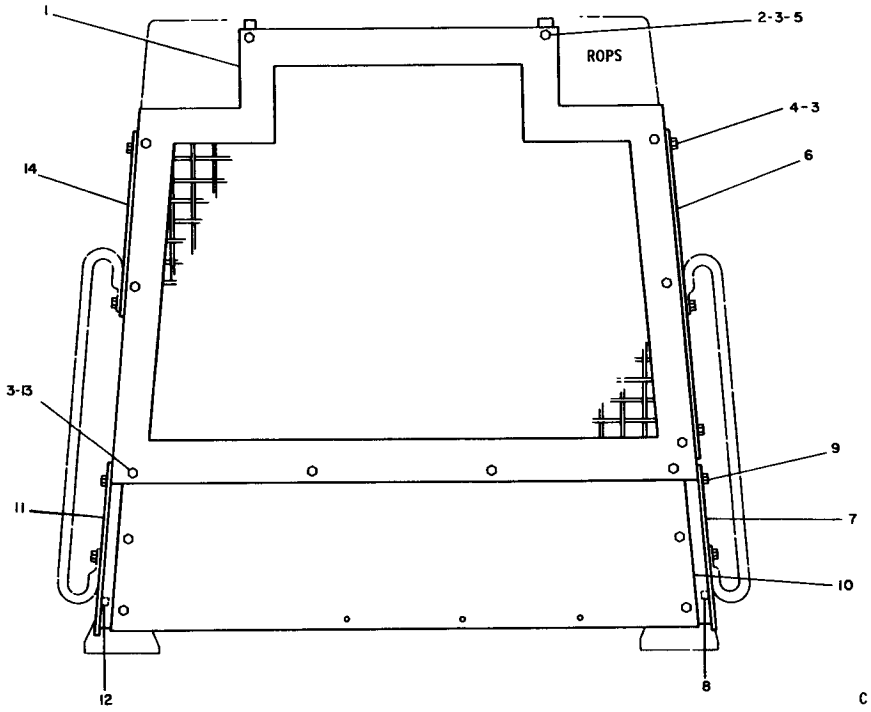

	REF. NO.	PART NUMBER	DESCRIPTION	QTY.
	1	9P3532	SCREEN ASSEM.	1
	2	1D4566	BOLT	2
	3	3B4508	LOCKWASHER	20
		4B4280	WASHER	20
	4	6H1717	BOLT	5
C	5	6J427	SPACER	2
	6	9P3542	SCREEN ASSEM.	1
	7	9P4189	BRACKET ASSEM. (Includes)	1
C		1F748	NUT	3
C	8	2K7051	BAR	1
	9	S1585	BOLT	4
	10	9P4182	PLATE ASSEM. (Includes)	1
C		6S5038	BOSS	2
	11	9P4190	BRACKET ASSEM. (Includes)	1
C		1F748	NUT	3
C	12	2K7051	BAR	1
	13	S1587	BOLT	13
	14	9P3543	SCREEN ASSEM.	1

C INDICATES CHANGE

228807

8P9496 PROTECTIVE SCREEN GROUP
FOR USE WITH HEATER, AIR CONDITIONER, CAB OR ENCLOSED ROPS
AN ATTACHMENT

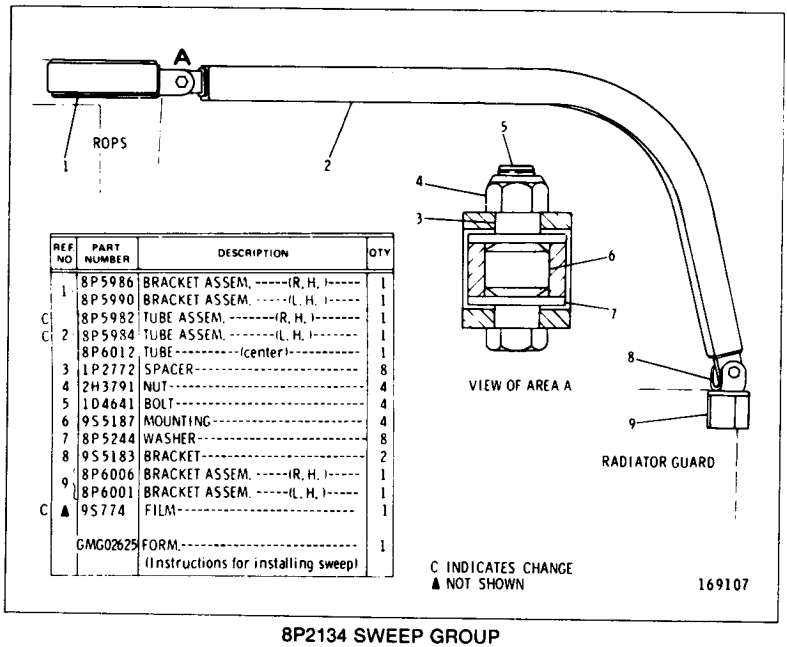

	REF NO	PART NUMBER	DESCRIPTION	QTY
	1	8P5986	BRACKET ASSEM. -----(R. H.)-----	1
		8P5990	BRACKET ASSEM. -----(L. H.)-----	1
C		8P5982	TUBE ASSEM. -------(R. H.)-------	1
C	2	8P5984	TUBE ASSEM. -------(L. H.)-------	1
		8P6012	TUBE----------(center)----------	1
	3	1P2772	SPACER----------	8
	4	2H3791	NUT----------	4
	5	1D4641	BOLT----------	4
	6	9S5187	MOUNTING----------	4
	7	8P5244	WASHER----------	8
	8	9S5183	BRACKET----------	2
	9	8P6006	BRACKET ASSEM. -----(R. H.)-----	1
		8P6001	BRACKET ASSEM. -----(L. H.)-----	1
C	▲	9S774	FILM----------	1
		GMG02625	FORM.---------- (Instructions for installing sweep)	1

8P2134 SWEEP GROUP
AN ATTACHMENT

REF. NO.	PART NUMBER	DESCRIPTION	QTY.
▲ 1	5P5968	SEAL----.595 m(23.42 in.)	
2	L1351	BOLT----------	4
3	5M2894	WASHER----------	18
4	8P4877	COVER ASSEM.---------- (Includes)	1
▲	5P7246	SEAL--,680 m(26.78 in.)	
5	8H3526	WASHER----------	4
6	T703	BOLT----------	8
7	8H9167	CUSHION ASSEM.----------	2
8	5S45	SEAT ASSEM.---------- (Separate Illustration)	1
9	9M5733	RIVET----------	1
	5P7957	LANYARD----------	1
10	9M5884	BUMPER----------	2
11	9G9962	BRACKET----------	2

12	9G9302	SUPPORT GROUP---------- (Separate Illustration)	1
13	V375	BOLT----------	2
14	7B3235	BOLT----------	2
15	5P8245	WASHER----------	6
16	1A5822	BOLT----------	2
17	9G6543	COVER----------	1

18	S509	BOLT----------	4
19	7V9507	SEAT BELT GROUP---------- (Separate Illustration)	1
20	9G7190	PLATE----------	6
21	4H3001	PLUG----------	14
22	8S933	EYEBOLT----------	2
23	8S934	NUT----------	2
24	S1594	BOLT----------	6
25	9G6180	CHANNEL ASSEM.----------	1
26	9G6177	CHANNEL ASSEM.----------	1
27	8M7145	WASHER----------	4

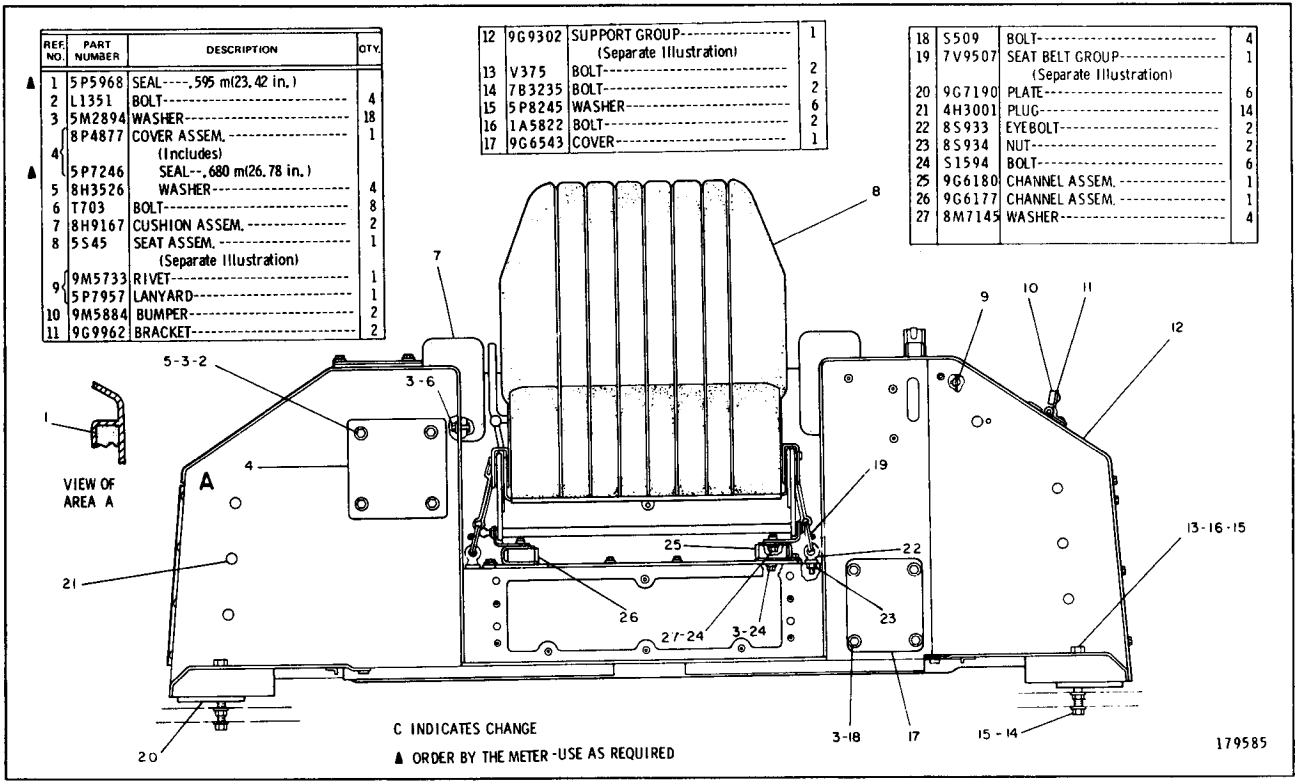

9G5920 SUPPORT AND SEAT GROUP—Part 1
Serial No. 6X1115 to 6X1442 inclusive
9G9302 Support, 5S45 Seat and 7V9507 Belt parts are shown on Pages 238, 239 and 239B

9G5920 SUPPORT AND SEAT GROUP—Part 2
Serial No. 6X1115 to 6X1442 inclusive

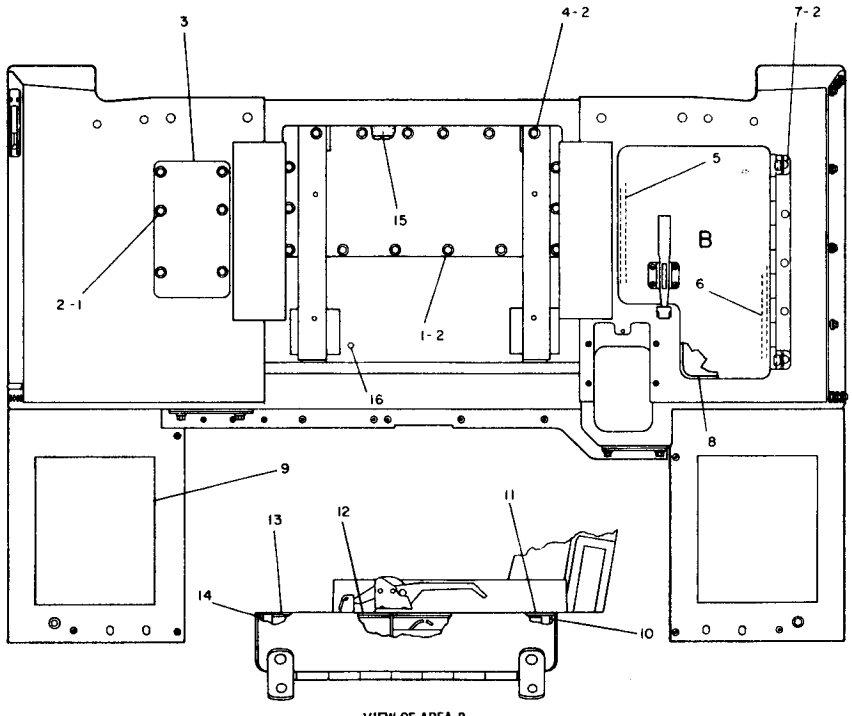

VIEW OF AREA B

REF. NO.	PART NUMBER	DESCRIPTION	QTY.
1	S1594	BOLT	18
2	5M2894	WASHER	22
3	8P4824	COVER	1
	8P4825	SEAL	1
4	S1590	BOLT	2
▲ 5	6V3449	SEAL---1.62 m(63.78 in.)	
▲ 6	5P5637	SEAL----.435 m(17.13 in.)	
7	1D4676	BOLT	2
	1D4717	NUT	2
8	9G5974	TRAY ASSEM.	1
▲ 9	5P5897	COATING----.5 m(19.68 in.)	
▲ 10	5P5637	SEAL-------.305 m(12.01 in.)	
▲ 11	5P5637	SEAL-------.285 m(11.23 in.)	
▲ 12	5P5637	SEAL-------.115 m(4.53 in.)	
▲ 13	5P5637	SEAL-------.130 m(5.12 in.)	
▲ 14	5P5637	SEAL-------.180 m(7.09 in.)	
15	9G5953	SEAL	1
C 16	5P7988	PLUG	1
●	5P7958	SLEEVE-----(not shown)--------	1

● NOT PART OF 9G5920 SUPPORT & SEAT GROUP

▲ ORDER BY THE METER

C INDICATES CHANGE

232393

NOTE	REF NO	PART NUMBER	QTY	DESCRIPTION
CBD	1	5P8310		SEAL .595M (23.42 IN.)
	2	L1351	4	BOLT
	3	5M2894	18	WASHER
	4	8P4877	1	COVER ASSEM.
BD		5P7246		SEAL .680M (26.78 IN.)
	5	8H3526	4	WASHER
	6	T703	8	BOLT
	7	8H9167	2	CUSHION ASSEM.
Y	8	5S45	1	SEAT ASSEM.
	9	9M5733	1	RIVET
		5P7957	1	LANYARD
	10	9M5884	2	BUMPER
C	11	3T8824	2	BRACKET

Y	12	9G9302	1	SUPPORT GROUP
	13	V375	2	BOLT
	14	7B3235	2	BOLT
	15	5P8245	6	WASHER
	16	1A5822	2	BOLT
	17	9G6543	1	COVER

	18	S509	4	BOLT
Y	19	7V9507	1	SEAT BELT GROUP
	20	9G7190	6	PLATE
C	21	3T7857	14	PLUG
	22	8S933	2	EYEBOLT
	23	8S934	2	NUT
	24	S1594	6	BOLT
	25	9G6180	1	CHANNEL ASSEM.
	26	9G6177	1	CHANNEL ASSEM.
	27	8M7145	4	WASHER
C	28	3T8823	1	CLIP
C	29	S1614	2	BOLT
C		1B4330	2	NUT

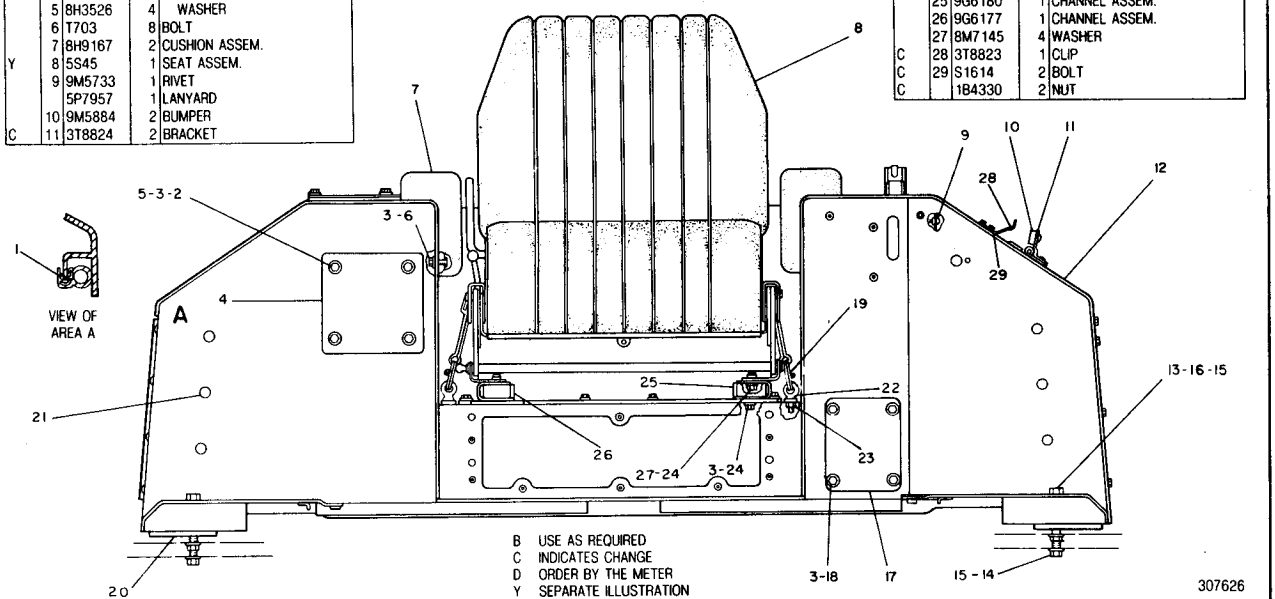

9G5920 SUPPORT AND SEAT GROUP—Part 1
Serial No. 6X1443—Up
9G9302 Support, 5S45 Seat and 7V9507 Belt parts are shown on Pages 238, 239 and 239B

9G5920 SUPPORT AND SEAT GROUP—Part 2
Serial No. 6X1443—Up

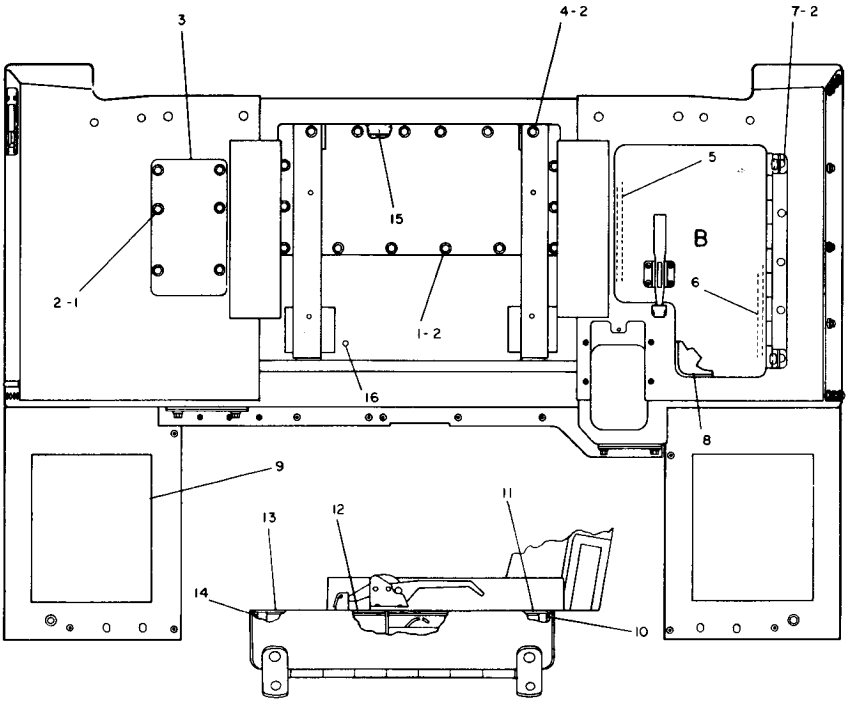

VIEW OF AREA B

NOTE	REF NO	PART NUMBER	QTY	DESCRIPTION
	1	S1594	18	BOLT
	2	5M2894	22	WASHER
	3	8P4824	1	COVER
		8P4825	1	SEAL
	4	S1590	2	BOLT
C	5	3T8852	1	SEAL
D	6	5P5637		SEAL .435M (17.13 IN.)
	7	1D4676	2	BOLT
		1D4717	2	NUT
	8	9G5974	1	TRAY ASSEM.
D	9	5P5897		COATING .5M (19.68 IN.)
D	10	5P5637		SEAL .305M (12.01 IN.)
D	11	5P5637		SEAL .285M (11.23 IN.)
D	12	5P5637		SEAL .115M (4.53 IN.)
D	13	5P5637		SEAL .130M 5.12 IN.)
D	14	5P5637		SEAL .180M (7.09 IN.)
	15	9G5953	1	SEAL
	16	5P7988	1	PLUG
AF		5P7958	1	SLEEVE

A NOT PART OF THIS GROUP
C INDICATES CHANGE
D ORDER BY THE METER
F NOT SHOWN

307627

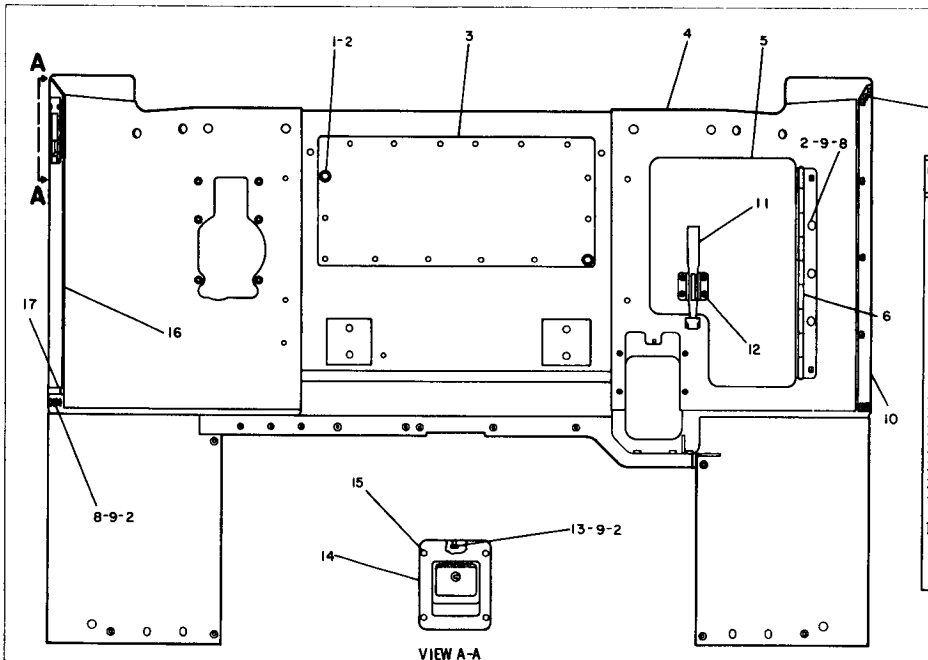

REF. NO.	PART NUMBER	DESCRIPTION	QTY.
1	S1594	BOLT	2
2	5M2894	WASHER	19
3	9G5954	PLATE	1
4	9G5900	SUPPORT ASSEM.	1
5	9G5951	DOOR ASSEM. (Includes)	1
6	9G5964	HINGE	1
7	S509	BOLT	9
8	1D4676	BOLT	7
9	1D4717	NUT	8
10	3T408	COVER	1
11	9G6264	LATCH ASSEM.	1
12	6V2370	RIVET	4
13	5V8309	STRIKER ASSEM.	1
14	5V8308	LATCH ASSEM.	1
15	6V2491	RIVET	4
16	9G5957	DOOR ASSEM. (Includes)	1
17	9G5963	HINGE	1

9G9302 SEAT SUPPORT GROUP
Part of 9G5920 Support and Seat Group shown on Page 236
AN ATTACHMENT

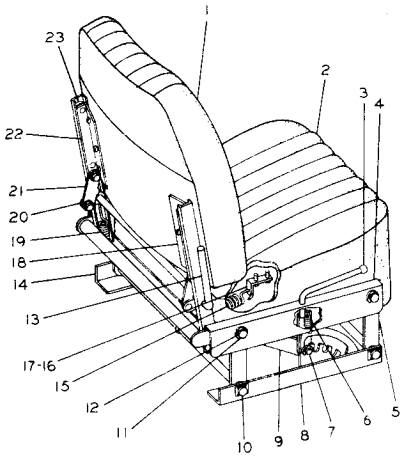

REF. NO	PART NUMBER	DESCRIPTION	QTY
1	7S5387	CUSHION ASSEM.	1
2	7S5390	CUSHION ASSEM.	1
3	7S5380	KNOB	1
4	7S5391	FRAME ASSEM.	1
	7S5750	FRAME ASSEM.	1
5	7S5753	LEVER ASSEM.	2
6	7S5758	SPRING	1
7	T883	WASHER	2
	7S5757	RING	2
8	7S5751	ANGLE ASSEM. ---(R. H.)---	1
9	7S5754	LEVER ASSEM.	1
10	7S5759	NUT	4
11	7S5755	PIN	4
12	2R364	RING	8
13	7S5385	LINK ASSEM.	1
14	7S5752	ANGLE ASSEM. ---(L. H.)---	1
15	7S5388	SPRING	1
16	7S5389	BRACKET	1
17	2K7115	SCREW	12
	4F2293	LOCKWASHER	12
18	7S5381	BRACKET ASSEM. ---(R. H.)---	1
19	7S5383	SPRING	2
20	7S5757	RING	4
21	7S5384	LINK	2
22	7S5382	BRACKET ASSEM. ---(L. H.)---	1
23	7S5386	ROLLER	4
	7F3494	WASHER	2

113556

5S45 SEAT ASSEMBLY
Part of 9G5920 Support and Seat Group shown on Page 236
AN ATTACHMENT

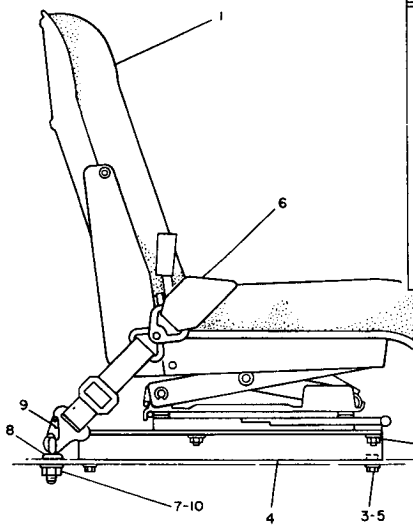

REF. NO.	PART NUMBER	DESCRIPTION	QTY.
1	3V8715	SEAT GROUP (Separate Illustration)	1
2	1D4716	NUT	4
	9M1974	WASHER	4
3	S1594	BOLT	4
	5M2894	WASHER	4
4	9G6178	BRACKET ASSEM. ---(R. H.)---	1
	9G6179	BRACKET ASSEM. ---(L. H.)--- (Each Includes)	1
5	9F2978	NUT	1
6	8K9002	SEAT BELT GROUP (Includes)	1
7	8S934	NUT	2
8	8S933	EYEBOLT	2
9	3B4606	COTTER	2
10	5894	WASHER	4

228814

9G9931 SUSPENSION SEAT GROUP—Type 1
3V8715 Seat parts are shown on Page 240
AN ATTACHMENT

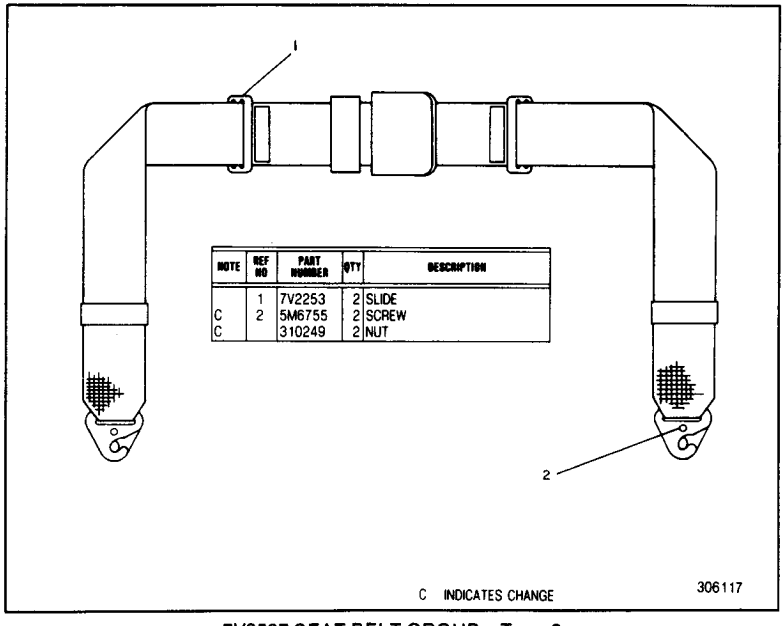

NOTE	REF NO	PART NUMBER	QTY	DESCRIPTION
	1	7V2253	2	SLIDE
C	2	5M6755	2	SCREW
C		310249	2	NUT

C INDICATES CHANGE

7V9507 SEAT BELT GROUP—Type 2
Part of 9G5920 Support and Seat Group shown on Page 236

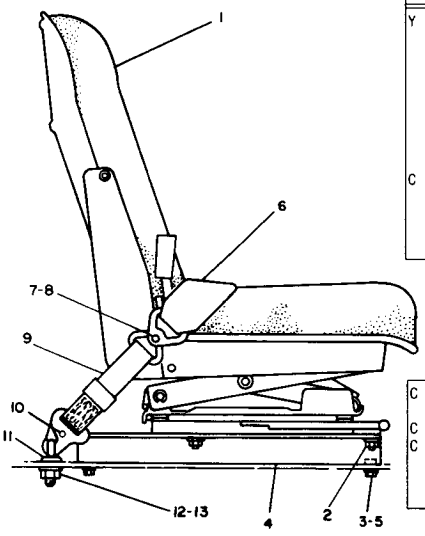

NOTE	REF NO	PART NUMBER	QTY	DESCRIPTION
Y	1	3V8715	1	SEAT GROUP
	2	1D4716	4	NUT
		9M1974	4	WASHER
	3	S1594	4	BOLT
		5M2894	4	WASHER
	4	9G6179	1	BRACKET AS. (R.H.)
		9G6178	1	BRACKET AS. (L.H.)
				(EACH BRACKET AS. INCL.)
	5	9F2978	1	NUT
C	6	7G2998	1	SEAT BELT GROUP
		8D6899	1	BELT GROUP
		7V2253	2	SLIDE
	7	8S934	2	NUT
	8	5V5262	2	BOLT
C	9	7V9502	2	BELT
				(EACH INCLUDES)
C	10	5M6755	1	SCREW
C		310249	1	NUT
	11	8S933	2	EYEBOLT
	12	8S934	2	NUT
	13	5894	4	WASHER

C INDICATES CHANGE
Y SEPARATE ILLUSTRATION

316839

9G9931 SUSPENSION SEAT GROUP-TYPE 2
3V8715-Page 240A
An Attachment

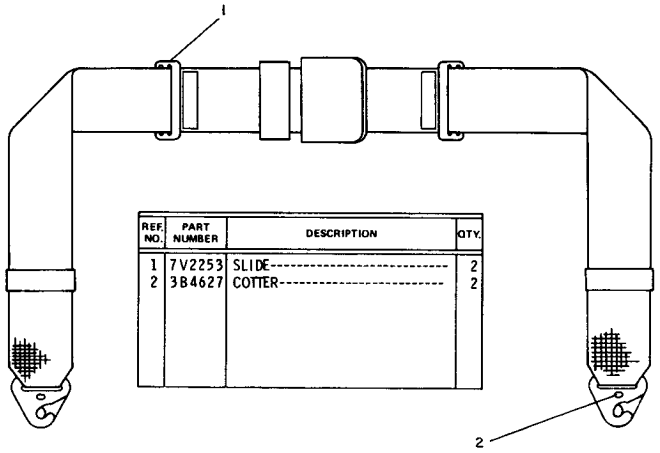

REF. NO.	PART NUMBER	DESCRIPTION	QTY.
1	7V2253	SLIDE----------	2
2	3B4627	COTTER----------	2

179584

7V9507 SEAT BELT GROUP
Part Of 9G5920 Support & Seat Group Shown On Page 236

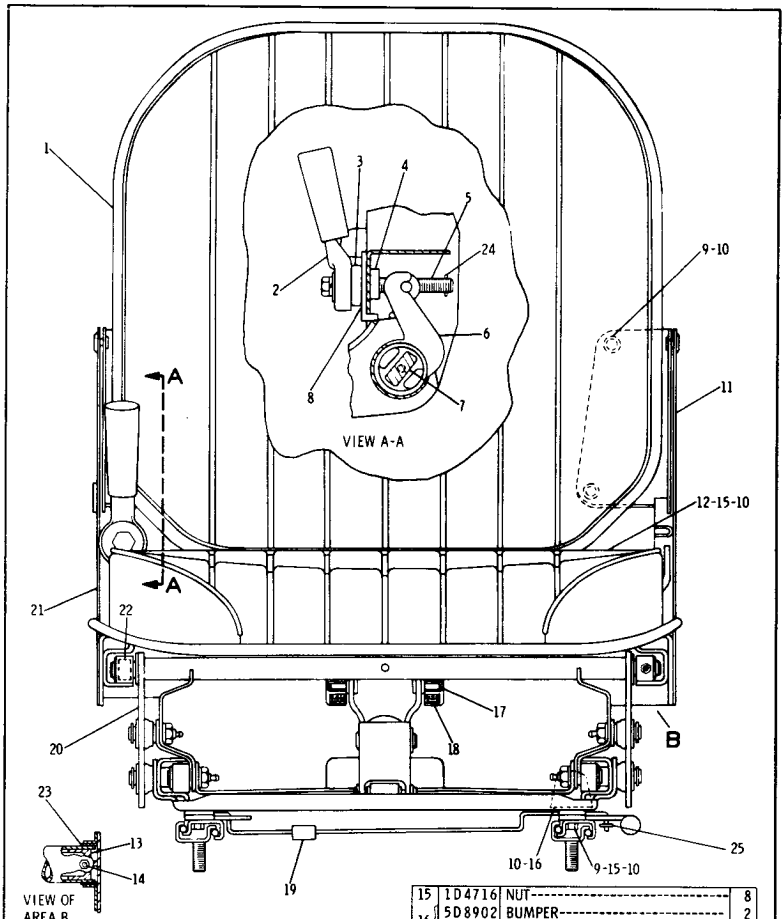

REF. NO.	PART NUMBER	DESCRIPTION	QTY
1	8S168	CUSHION ASSEM.	1
2	1V757	LEVER ASSEM.	1
3	7S9391	BEARING	1
4	7S7800	WASHER	1
5	7S7801	PIN	1
6	7S7804	YOKE	1
7	7S9305	BAR SET	1
C 8	4V4860	BRACKET	1
9	4B1328	SCREW	8
10	3B4505	LOCKWASHER	14
11	7K9772	PANEL ASSEM. -----(L. H.)-----	1
12	7S7791	CUSHION ASSEM.	1
	4B4277	WASHER	4
13	7S7805	RETAINER	1
14	7S7799	FITTING	2
15	1D4716	NUT	8
16	5D8902	BUMPER	2
	1B4202	NUT	2
17	7S7793	BEARING	2
18	7S7789	BUMPER	2
19	3V268	CLIP	1
20	2V7961	SUSPENSION ASSEM. (Separate Illustration)	1
21	1V5746	PANEL ASSEM. ------(R. H.)------	1
22	8S4345	BEARING	1
23	8S4346	BEARING	1
24	3K4897	PIN----------(spring)----------	1
C 25	5V525	CLIP	1
	8K7223	KIT----------(seat adjuster)------- (Includes 2 Adjusters and Latch Wire)	1
	7S4339	KIT---------(shock absorber)------ (Includes Shock Assem. & Shaft)	1

C INDICATES CHANGE 228818

3V8715 SEAT GROUP—Type 1
Part of 9G9931 Suspension Seat Group shown on Page 239
2V7961 Seat parts are shown on Page 241
AN ATTACHMENT

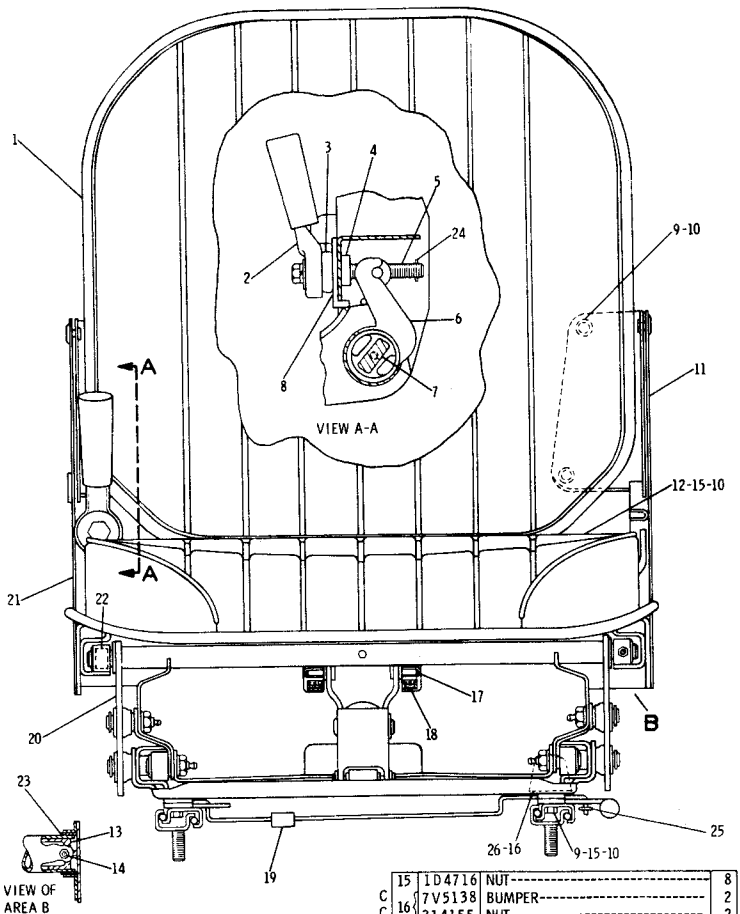

REF. NO	PART NUMBER	DESCRIPTION	QTY
1	8S168	CUSHION ASSEM.	1
2	1V757	LEVER ASSEM.	1
3	7S9391	BEARING	1
4	7S7800	WASHER	1
5	7S7801	PIN	1
6	7S7804	YOKE	1
7	7S9305	BAR SET	1
8	4V4860	BRACKET	1
9	4B1328	SCREW	8
10	3B4505	LOCKWASHER	12
11	7K9772	PANEL ASSEM. -----(L. H.)-----	1
12	7S7791	CUSHION ASSEM.	1
	4B4277	WASHER	4
13	7S7805	RETAINER	1
14	7S7799	FITTING	2
15	1D4716	NUT	8
C 16	7V5138	BUMPER	2
C	314155	NUT	2
17	7S7793	BEARING	2
18	7S7789	BUMPER	2
19	3V268	CLIP	1
20	2V7961	SUSPENSION ASSEM. (Separate Illustration)	1
21	1V5746	PANEL ASSEM. -----(R. H.)-----	1
22	8S4345	BEARING	1
23	8S4346	BEARING	1
24	3K4897	PIN----------(spring)----------	1
25	5V525	CLIP	1
C 26	3K4910	SCREW	2
	8K7223	KIT----------(seat adjuster)------- (Includes 2 Adjusters and Latch Wire)	1
	7S4339	KIT----------(shock absorber)------ (Includes Shock Assem. & Shaft)	1

C INDICATES CHANGE 232404

3V8715 SEAT GROUP—Type 2
Part of 9G9931 Suspension Seat Group shown on Page 239B
2V7961 Seat parts are shown on Page 241
AN ATTACHMENT

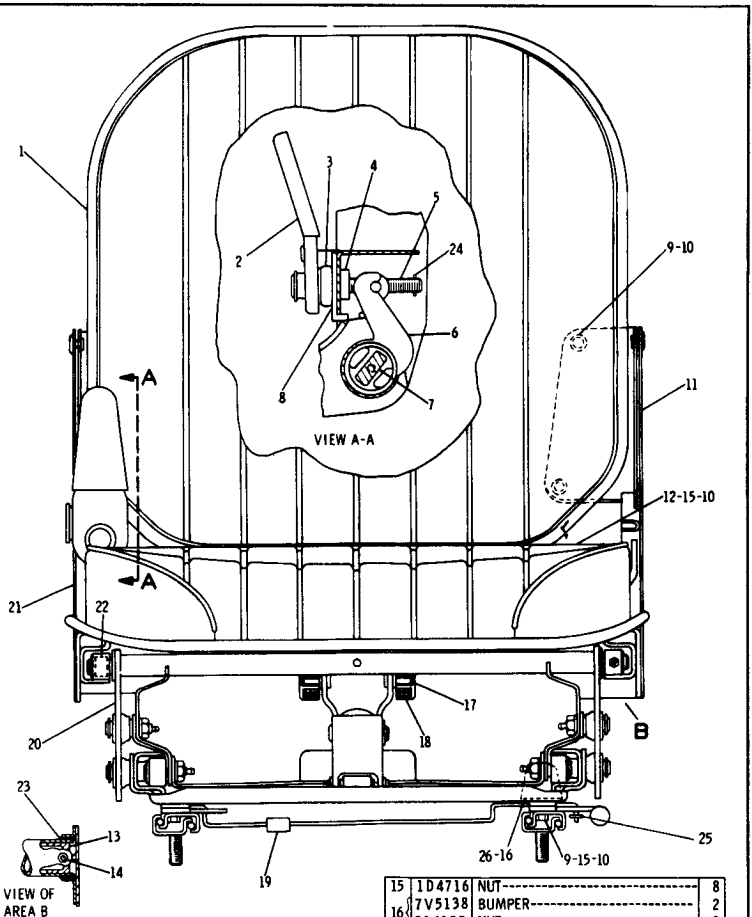

	REF. NO.	PART NUMBER	DESCRIPTION	QTY
	1	8S168	CUSHION ASSEM.	1
C	2	1V757	LEVER ASSEM.	1
	3	7S9391	BEARING	1
	4	7S7800	WASHER	1
	5	7S7801	PIN	1
	6	7S7804	YOKE	1
	7	7S9305	BAR SET	1
C	8	8V5135	BRACKET	1
	9	4B1328	SCREW	8
	10	3B4505	LOCKWASHER	12
	11	7K9772	PANEL ASSEM. -----(L. H.)-----	1
	12	7S7791	CUSHION ASSEM.	1
		4B4277	WASHER	4
	13	7S7805	RETAINER	1
	14	7S7799	FITTING	2
	15	1D4716	NUT	8
	16	7V5138	BUMPER	2
		314155	NUT	2
	17	7S7793	BEARING	2
	18	7S7789	BUMPER	2
	19	3V268	CLIP	1
	20	2V7961	SUSPENSION ASSEM. (Separate Illustration)	1
	21	1V5746	PANEL ASSEM. -----(R. H.)-----	1
	22	8S4345	BEARING	1
	23	8S4346	BEARING	1
	24	3K4897	PIN----------(spring)----------	1
	25	5V525	CLIP	1
	26	3K4910	SCREW	2
		8K7223	KIT----------(seat adjuster)------- (Includes 2 Adjusters and Latch Wire)	1
		7S4339	KIT---------(shock absorber)------ (Includes Shock Assem. & Shaft)	1

C INDICATES CHANGE 307646

3V8715 SEAT GROUP—Type 3
Part of 9G9931 Suspension Seat Group shown on Page 239B
2V7961 Seat parts are shown on Page 241. AN ATTACHMENT

2V7961 SEAT SUSPENSION ASSEMBLY
Part of 3V8715 Seat Group shown on Page 240
AN ATTACHMENT

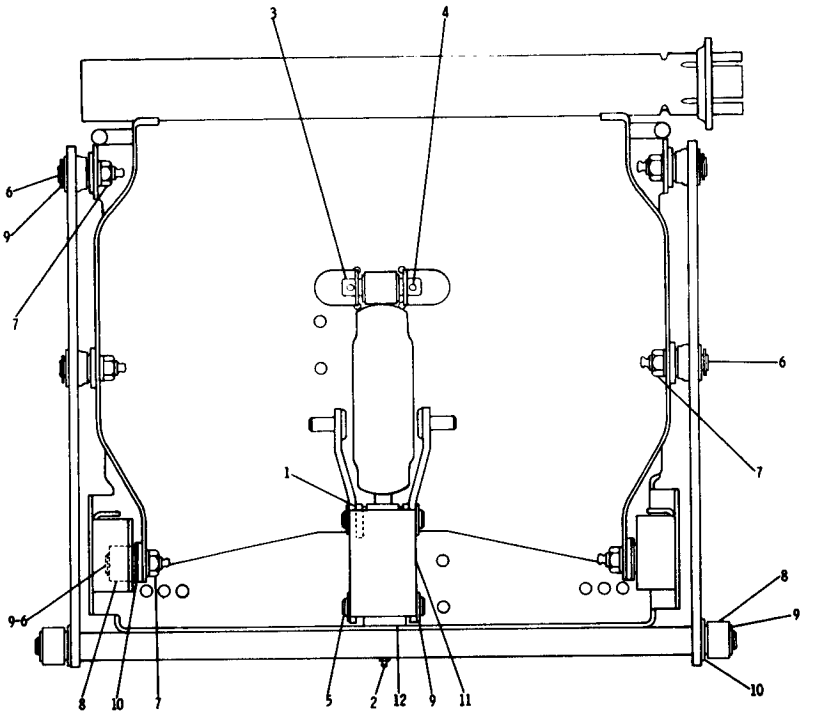

REF NO.	PART NUMBER	DESCRIPTION	QTY.
1	7S9885	WASHER	2
2	7S9868	FITTING	1
3	7S9871	SHAFT	1
4	6H3956	PIN	2
5	7S9870	SHAFT	1
6	7S9867	STUD	6
7	3K6060	LOCKNUT	6
	3B4506	LOCKWASHER	6
8	7S9866	BEARING ASSEM.	4
9	7S5757	RING	10
10	7S9884	WASHER	4
11	7S9873	BRACKET ASSEM.	1
12	7S9869	BEARING	2
	7S4339	KIT (shock absorber) (Includes Shock Absorber Assem. and Shaft)	1

REF. NO.	PART NUMBER	DESCRIPTION	QTY
1	2P6695	CUSHION	1
2	2P6696	CUSHION	1
3	2P6694	SHOCK ABSORBER	1
	7S4294	SPRING	2
4	2P6689	SPRING	2
5	2P6693	SPRING	1
6	2P6691	SPRING	1
7	2P6690	SPRING	2
		THE FOLLOWING KITS ARE AVAILABLE:	
	7G1692	KIT--(Seat and Back Cushion) (Includes Pins and Washers)	1
	9P2038	KIT--(Bearing and Wiper) (Includes Bearings, Bushers and Wipers)	1

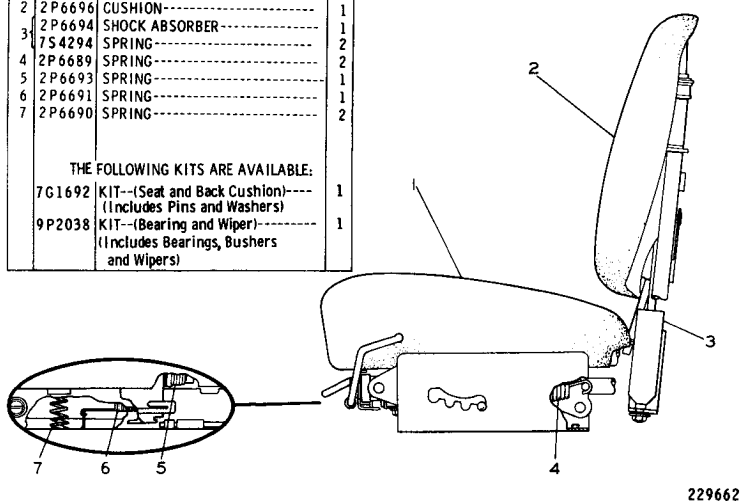

8P8777 BOSTROM SEAT GROUP
AN ATTACHMENT

		CONSISTS OF:	PAGE
1	6N206	REFRIGERANT COMPRESSOR ARRANGEMENT	243
1	9P5227	AIR CONDITIONER ARRANGEMENT	243

8P5420 AIR CONDITIONER ARRANGEMENT — Cools and Heats
AN ATTACHMENT

		Consists of:	Page
1	9G3699	Heater Lines Group	256
1	8P2149	Air Conditioner Lines Group	247
1	8P3148	Mounting and Condenser Group	250
1	9P2045	Compressor Harness Assembly	244
1	9P5225	Air Conditioner Group	252
1	5F9757	Grommet--Harness	
1	341432	Strap--Harness Assembly to Compressor	

9P5227 AIR CONDITIONER ARRANGEMENT — Heats and Cools
Part of 8P5420 Air Conditioner Arrangement listed on Page 242
AN ATTACHMENT

		Consists of:	Page
1	4N6016	Refrigerant Compressor Group	245
1	8N233	Fumes Disposal Group	31
1	9L6125	Vee Belt	
1	4N6381	Compressor Drive Pulley Assembly	
		Consisting of:	
	6	4S6137 Stud	

6N206 REFRIGERANT COMPRESSOR ARRANGEMENT
Part of 8P5420 Air Conditioner Arrangement listed on Page 242
AN ATTACHMENT

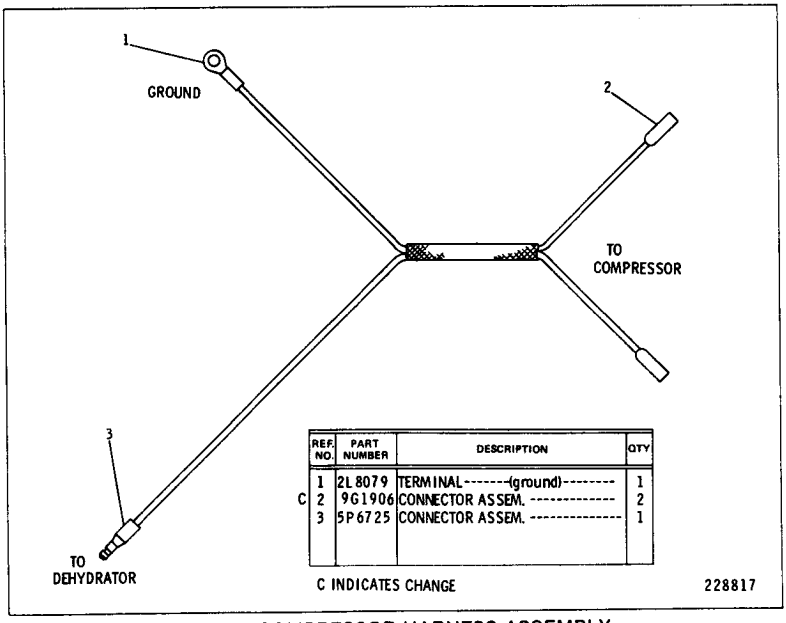

	REF. NO.	PART NUMBER	DESCRIPTION	QTY
	1	2L8079	TERMINAL-------(ground)--------	1
C	2	9G1906	CONNECTOR ASSEM. ----------	2
	3	5P6725	CONNECTOR ASSEM. ----------	1

C INDICATES CHANGE

228817

9P2045 COMPRESSOR HARNESS ASSEMBLY
Part of 9P5227 Air Conditioner Arrangement listed on Page 243
AN ATTACHMENT

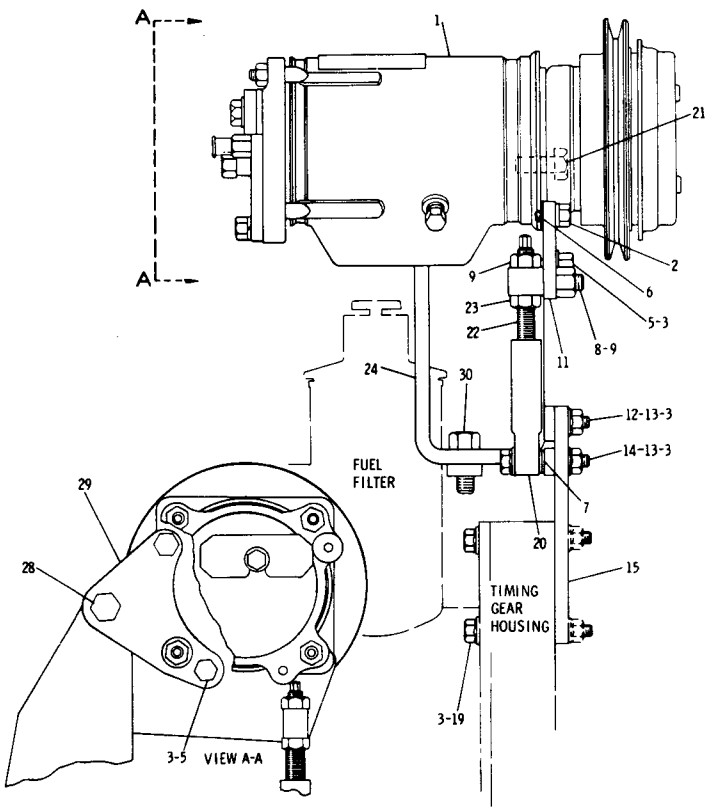

	REF. NO.	PART NUMBER	DESCRIPTION	QTY
C	1	7N4297	COMPRESSOR GROUP---------- (Separate Illustration)	1
	2	4B9883	BOLT----------	2
		9M1974	WASHER----------	2
C	3	5M2894	WASHER----------	15
	5	S1594	BOLT----------	3
	6	6B6122	WASHER----------	1
C	7	4B4278	WASHER----(use as required)-----	2
	8	1P2237	SWIVEL----------	1
	9	1D4719	NUT----------	2
	11	4N6010	PLATE----------	1
	12	S1571	BOLT----------	2
	13	1D4717	NUT----------	3
	14	L2070	BOLT----------	1
	15	4N6297	SUPPORT ASSEM.----------	1

	19	T573	BOLT----------	3
	20	1P2238	END----------	1
C	21	S1595	BOLT----------	1
	22	1P2236	ROD ASSEM.----------	1
	23	1D5117	NUT----------	1
	24	2P6539	SUPPORT ASSEM.----------	1
		1F748	NUT----------	1
		7B3235	BOLT----------	1
	28	4B4280	WASHER----------	1
C		8N3525	SPACER----------	1
	29	4N6011	PLATE----------	1
C	30	S1585	BOLT----------	1
C		7N2597	SPACER----------	1

C INDICATES CHANGE

229322

4N6016 REFRIGERANT COMPRESSOR GROUP
Part of 6N206 Refrigerant Compressor Arrangement listed on Page 243
7N4297 Compressor parts are shown on Page 246
AN ATTACHMENT

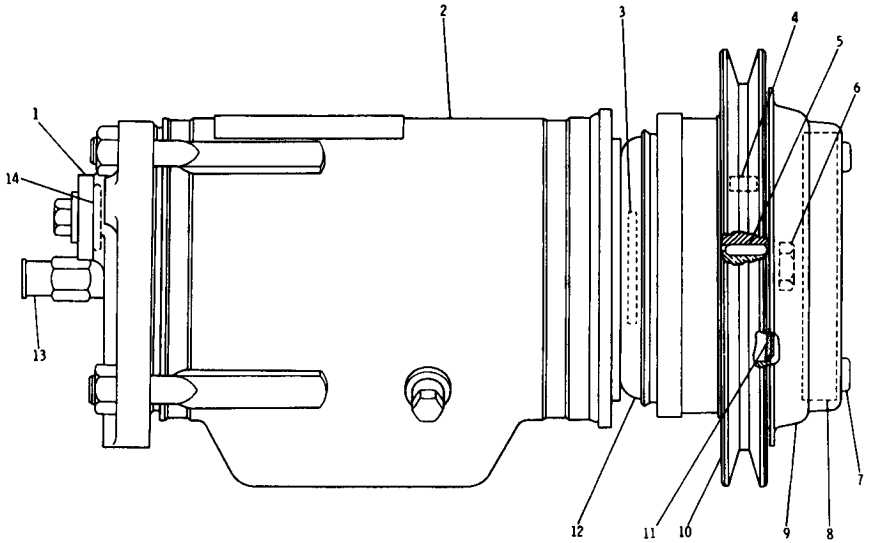

C INDICATES CHANGE

NOTE	REF NO	PART NUMBER	QTY	DESCRIPTION
	1	1P6356	1	PLATE
	2	1P6416	1	COMPRESSOR ASSEM.
C	3	1P6357	1	SEAL KIT (REFRIGERANT) (INCLUDES RETAINER, RINGS & SEALS)
C	4	1P6360	1	BEARING KIT
	5	7N809	1	KEY
C	6	9P8750	1	NUT
	7	145111	3	SCREW
C	8	1P6361	1	DRIVE CLUTCH KIT
	9	6N1116	1	COVER KIT (DUST) (INCLUDES COVER AND SCREWS)
C	10	7N4300	1	PULLEY KIT (REFRIGERANT COMP.)
	11	7N4291	1	SEAL KIT (DUST) (INCLUDES SHIELD GROUP, SEALS, KEY, NUT, RINGS AND SLEEVE)
C	12	7N4287	1	COIL KIT (CLUTCH)
	13	1P6355	1	VALVE ASSEM.
	14	1H8171	2	SEAL

306020

7N4297 CLUTCH AND REFRIGERANT COMPRESSOR GROUP
Part of 4N6016 Refrigerant Compressor Group shown on Page 245
AN ATTACHMENT

8P2149 AIR CONDITIONER LINES GROUP
Part of 9P5227 Air Conditioner Arrangement listed on Page 243
AN ATTACHMENT

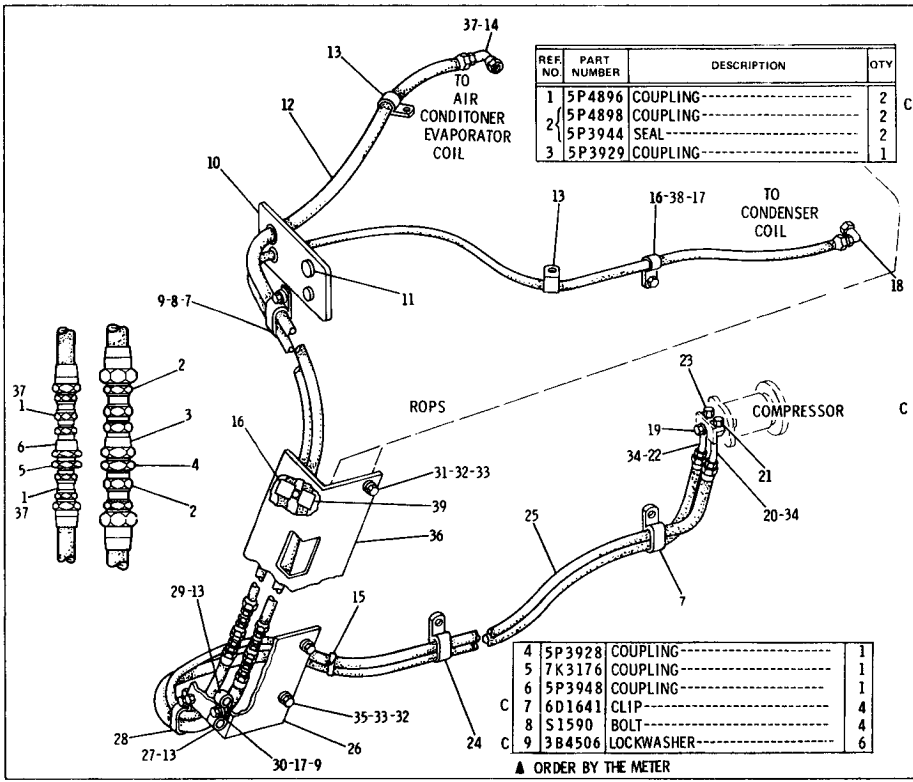

REF. NO.	PART NUMBER	DESCRIPTION	QTY
1	5P4896	COUPLING	2
2	5P4898	COUPLING	2
	5P3944	SEAL	2
3	5P3929	COUPLING	1
4	5P3928	COUPLING	1
5	7K3176	COUPLING	1
6	5P3948	COUPLING	1
C 7	6D1641	CLIP	4
8	S1590	BOLT	4
C 9	3B4506	LOCKWASHER	6
	9P2598	PLATE	1
10	8P4928	BUSHING	1
	8P4927	BUSHING	1
11	9P6571	PLUG	2
C ▲ 12	5P5676	HOSE-----7.4m(293.3 in.)	
C 13	3P2404	CLIP	5
14	5P6673	COUPLING	1
C 15	7K1181	STRAP	4
C 16	4S1962	CLIP	3
C 17	1D4717	NUT	3
18	9D4508	COUPLING	1
	6M5062	SEAL	1
19	S1748	BOLT	1
	4B4278	WASHER	1
C 20	6V876	COUPLING (Includes)	1
21	2L1224	CAP	1
C 22	6V875	COUPLING (Includes)	1
23	2L1224	CAP	1
C 24	8M2769	CLIP	1
C ▲ 25	5P5645	HOSE----7.3 m(287.4 in.)	
C 26	9P8678	PLATE	1
27	5P3950	CAP	1
C	5P3951	PLUG	1
C	5P6994	CLIP	1
C 28	1K6705	BOLT	1
29	5P3946	PLUG	1
	5P3945	CAP	1
30	L1351	BOLT	2
C 31	6H1717	BOLT	3
C 32	4B4280	WASHER	5
C 33	3B4508	LOCKWASHER	5
C 34	1H8171	SEAL	2
C 35	S1595	BOLT	2
C 36	9P8676	PLATE	1
C 37	1S8947	SEAL	3
C 38	T102	BOLT	1
C 39	4S4455	CLIP	2

▲ ORDER BY THE METER

C INDICATES CHANGE

229324

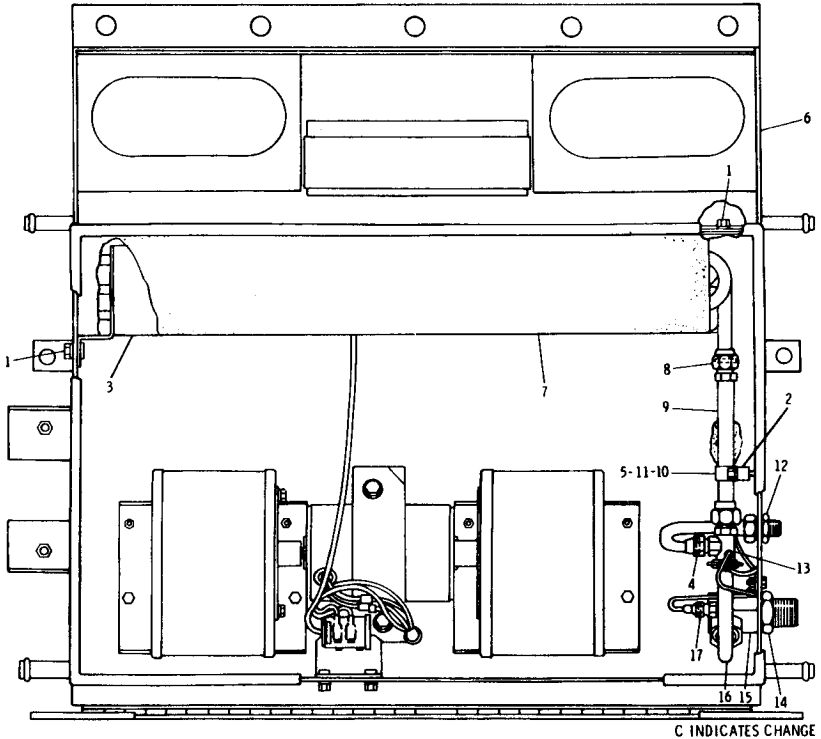

REF NO.	PART NUMBER	DESCRIPTION	QTY
1	T102	BOLT	4
	3B4506	LOCKWASHER	4
2	3S6696	SPACER	1
C 3	7G3474	COIL	1
4	5F9144	SEAL	1
C 5	3B4504	LOCKWASHER	1
6	9P5089	PRESSURIZER GROUP (Separate Illustration)	1
7	7G3616	SEAL	1
8	6M5062	SEAL	2
9	8P3599	TUBE ASSEM.	1
10	8J1256	CLIP	1
11	1B4330	NUT	1
12	1B9982	NUT	1
	1K4702	WASHER	1
13	2G401	VALVE	1
14	6P1303	NUT	1
15	9P2185	FITTING ASSEM.	1
16	9P2188	TUBE ASSEM.	1
	5L4758	SEAL	2
17	5P6458	SEAL	1

C INDICATES CHANGE

175850

8P2146 AIR CONDITIONER GROUP — Part 1
Part of 9P5225 Basic Air Conditioner Group shown on Page 252
9P5089 Pressurizer parts are shown on Page 227

8P2146 AIR CONDITIONER GROUP — Part 2
Part of 9P5225 Basic Air Conditioner Group shown on Page 252
AN ATTACHMENT

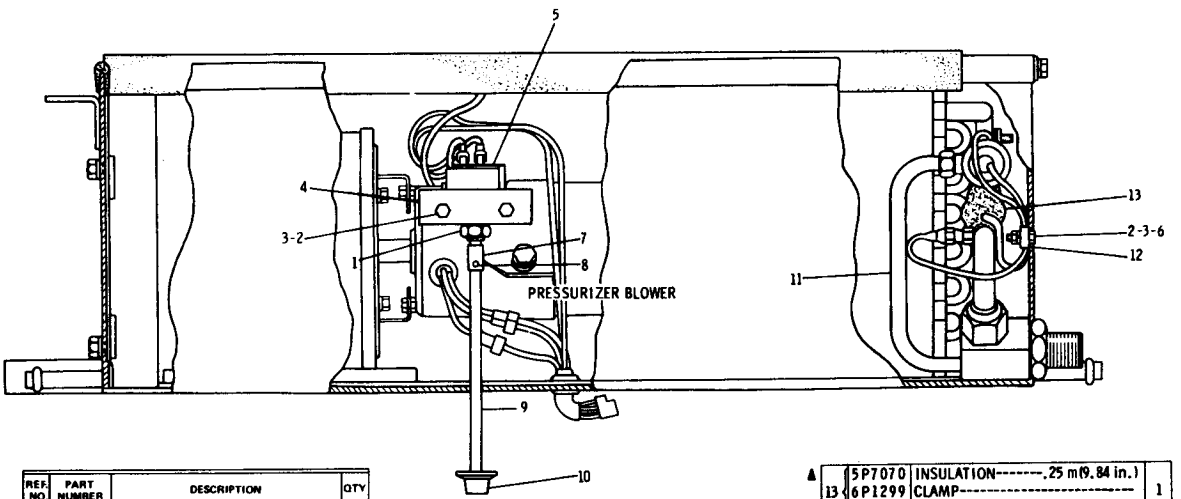

REF. NO.	PART NUMBER	DESCRIPTION	QTY
1	2P4339	NUT	1
2	2A762	BOLT	3
3	3B4504	LOCKWASHER	3
4	8P2111	BRACKET ASSEM.	1
5	9P3498	SWITCH-----(thermostat)--------	1
6	1B4330	NUT	1
7	8P3597	SLEEVE	1
8	3H1118	PIN	2
9	8P3598	ROD	1
10	1P6509	KNOB	1
11	8P4710	TUBE ASSEM.	1
12	1P6525	CLAMP	1

▲ 13	5P7070	INSULATION-------.25 m(9.84 in.)	
	6P1299	CLAMP	1
	1P6524	SCREW	1
	SMHS7000	FORM----(Installing Switch)-----	1

▲ ORDER BY THE METER

175851

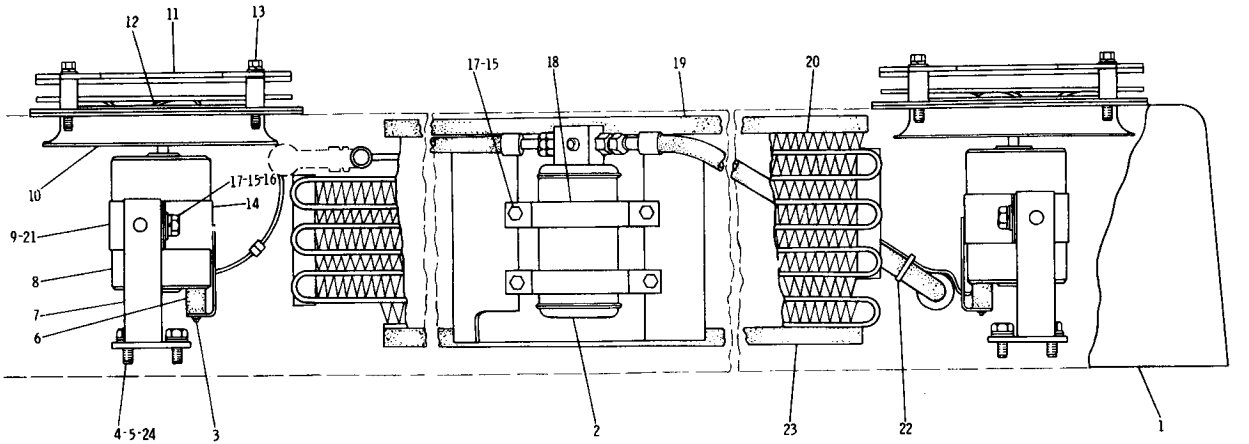

REF. NO.	PART NUMBER	DESCRIPTION	QTY
1	8P3138	GRILL ASSEM.	1
2	9D6888	DRYER	1
3	2H6622	SCREW	2
	6L7101	SPACER	2
C 4	L1351	BOLT	6
5	5P1075	WASHER	6
6	8P7567	BUMPER ASSEM.	2
7	9P252	PLATE ASSEM.	2
	9P2218	MOTOR ASSEM.	2
		(Each Includes)	
8	2P5145	BRUSH	2
	5P5610	CONNECTOR----(push type)----	1
	2L7018	PAD	1
9	2P4556	STRAP	2
10	9P247	ORIFICE ASSEM.	2
C 11	7G1289	GUARD ASSEM.	2
12	3P7995	FAN	2
	1B2714	BOLT	8
13	3B4504	LOCKWASHER	8
	4B5269	WASHER	8
14	9P2424	STRAP ASSEM.	2
15	3B4506	LOCKWASHER	8
16	4B4278	WASHER	4
C 17	S1588	BOLT	8
▲ 18	8D7644	CLAMP	4
C ▲ 19	5P5962	SEAL----------1.3 m(51.2 in.)	
20	8P5089	COIL	1
▲ 21	5P5908	SEAL----------.7 m(27.6 in.)	
C 22	3S2093	STRAP	3
▲ 23	5P5921	SEAL----------1.3 m(51.2 in.)	
24	3J3372	SHIM	4

C INDICATES CHANGE

▲ ORDER BY THE METER

178938

8P3148 MOUNTING AND CONDENSER GROUP — Part 1
Part of 9P5227 Air Conditioner Arrangement listed on Page 243
AN ATTACHMENT

8P3148 MOUNTING AND CONDENSER GROUP — Part 2
Part of 9P5227 Air Conditioner Arrangement listed on Page 243
AN ATTACHMENT

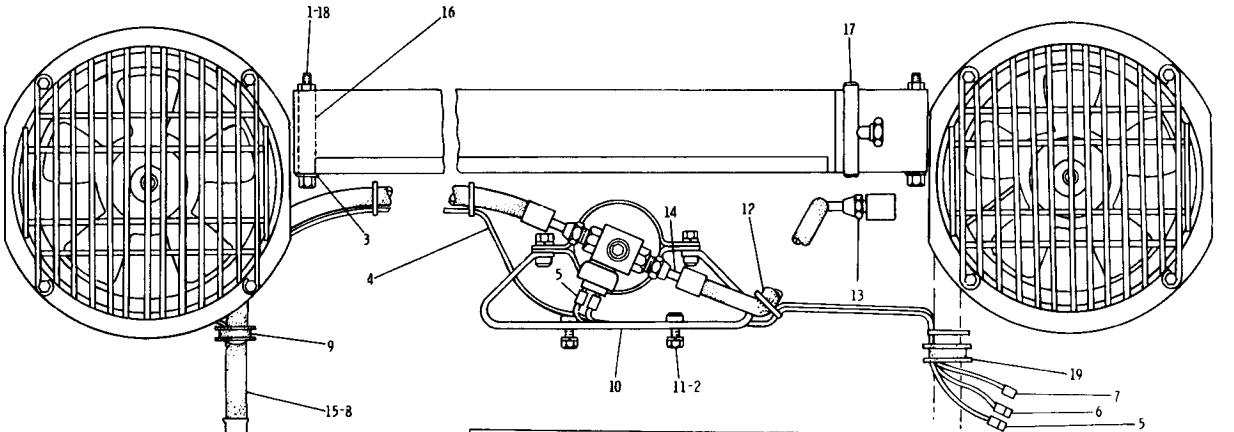

REF. NO.	PART NUMBER	DESCRIPTION	QTY
1	S1608	BOLT	4
C 2	3B4506	LOCKWASHER	2
3	6P4473	STRIP	2
	8P5251	HARNESS ASSEM. (Includes)	1
▲ 4	5P5624	WIRE-(14 gauge)	
▲ 4	5P5621	WIRE-(12 gauge)	
4	6K1828	CONNECTOR-(motor)	2
4	2S1043	BUTT	1
C 5	5P4571	TERMINAL-(dryer & connector)	3
6	7K9689	CONNECTOR-(connector)	1
C 7	5P5694	TERMINAL-(thermostat)	1
8	5F9144	SEAL	4

C INDICATES CHANGE

9	3D5279	GROMMET	1
10	8P3145	BRACKET ASSEM.	1
11	1A2029	BOLT	2
	8P5090	HOSE ASSEM.	1
12		(Includes)	
▲	5P5664	HOSE-28 m(11.02 in.)	
13	5P2493	FITTING-(straight)	1
14	9D4507	FITTING-(90°)	1
15	8P3137	HOSE ASSEM.	1
C 16	7K3245	TUBE	4
C ▲ 17	5P7070	INSULATION-.25 m(9.8 in.)	
C 18	2K4973	LOCKNUT	4
C 19	3D6209	GROMMET	1

▲ ORDER BY THE METER

178939

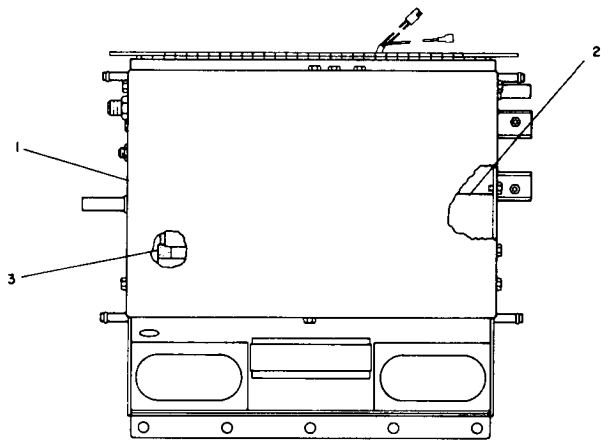

REF. NO.	PART NUMBER	DESCRIPTION	QTY.
1	8P2146	CONDITIONER GROUP---------- (Separate Illustration)	1
2	9G3764	HEATER GROUP---------- (Separate Illustration)	1
▲ 3	5P5671	SEAL--------.25 m(9.8 in.)	

▲ ORDER BY THE METER

176040

9P5225 BASIC AIR CONDITIONER GROUP
Part of 9P5227 Air Conditioner Arrangement listed on Page 243
8P2146 Air Conditioner and 9G3764 Heater parts are shown on Pages 248, 249 and 253
AN ATTACHMENT

9G3764 CAB HEATER GROUP
Part of 9P5225 Air Conditioner and 8P4914 Heater Groups shown on Pages 252 and 255
AN ATTACHMENT

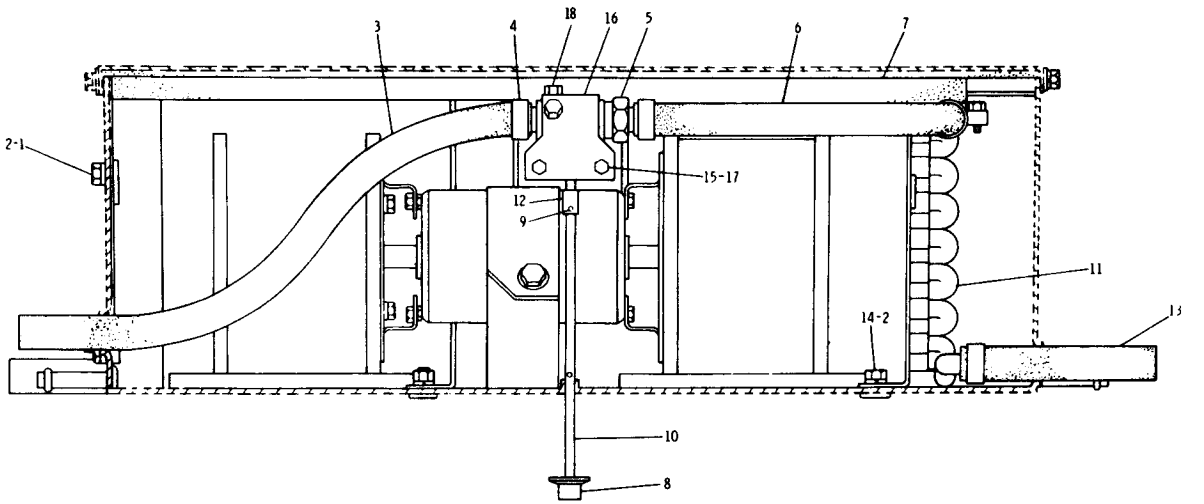

	REF. NO.	PART NUMBER	DESCRIPTION	QTY.
	1	T102	BOLT	2
	2	3B4506	LOCKWASHER	4
▲	3	5P767	HOSE---44.50 cm(17.52 in.)	
	4	5D1026	CLAMP	4
C	5	7G8699	VALVE	1
▲	6	5P767	HOSE---38.10cm(15 in.)	
	7	7G3615	SEAL	1
	8	1P6509	KNOB	1

C INDICATES CHANGE

	9	3H1118	PIN	2
	10	8P3600	ROD	1
	11	3P7993	COIL	1
	12	8P3597	SLEEVE	1
▲	13	5P767	HOSE---10.20 cm(4.02 in.)	
	14	1D4717	NUT	2
	15	7B2742	BOLT	2
		3B4504	LOCKWASHER	2
		8P6099	SPACER	2

▲ ORDER BY THE CENTIMETER

C	16	9G931	BRACKET ASSEM. (Includes)	1
	17	9F6445	NUT	2
C	18	2L5317	SCREW	2
C		8F1434	LOCKWASHER	2

175849

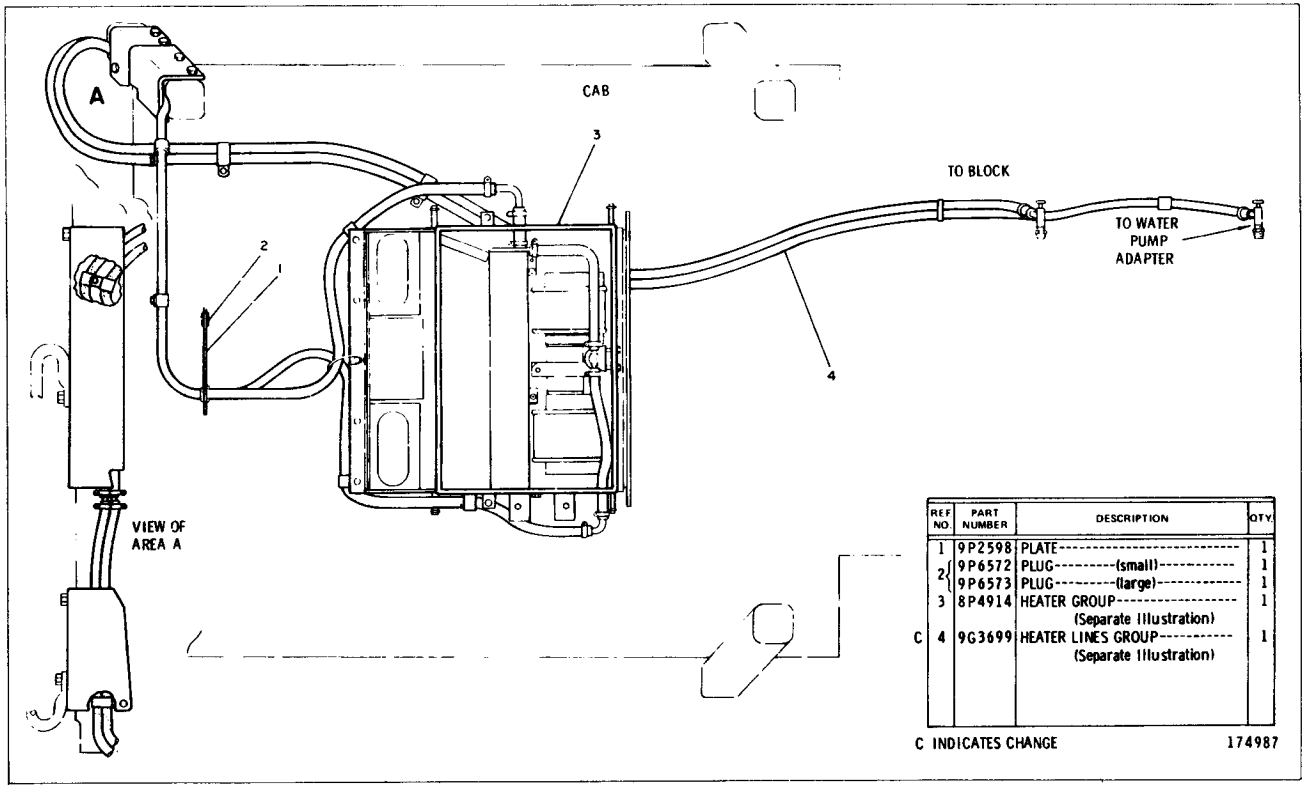

REF NO.	PART NUMBER	DESCRIPTION	QTY.
1	9P2598	PLATE	1
2	9P6572	PLUG---(small)	1
2	9P6573	PLUG---(large)	1
3	8P4914	HEATER GROUP (Separate Illustration)	1
C 4	9G3699	HEATER LINES GROUP (Separate Illustration)	1

C INDICATES CHANGE 174987

8P2138 CAB HEATER GROUP
8P4914 and 9G3699 Heater parts are shown on Pages 255 and 256
AN ATTACHMENT

8P4914 HEATER GROUP
Part of 8P2138 Cab Heater Group shown on Page 254
9P5089 Pressurizer and 9G3764 Heater parts are shown on Pages 227 and 253
AN ATTACHMENT

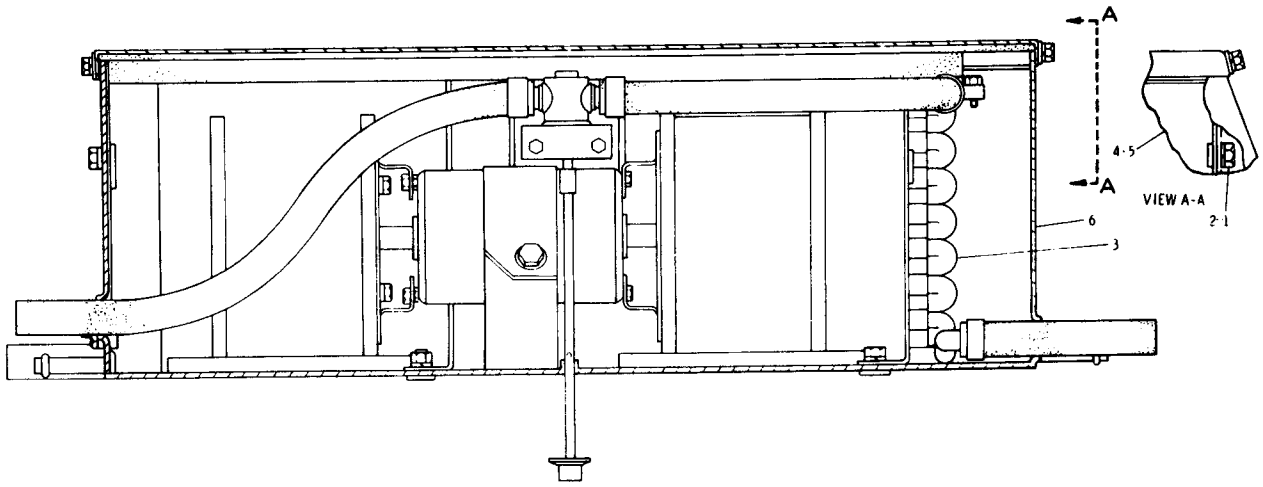

REF NO	PART NUMBER	DESCRIPTION	QTY.
1	T102	BOLT----------	2
2	3B4506	LOCKWASHER----------	2
3	9G3764	CAB HEATER GROUP---------- (Separate Illustration)	1

▲	4	5P5671	SEAL----------, 135 m(5.32 in.)	
	5	8P4884	BAFFLE ASSEM.----------	1
	6	9P5089	PRESSUREIZER GROUP---------- (Separate Illustration)	1

▲ ORDER BY THE METER
C INDICATES CHANGE

174989

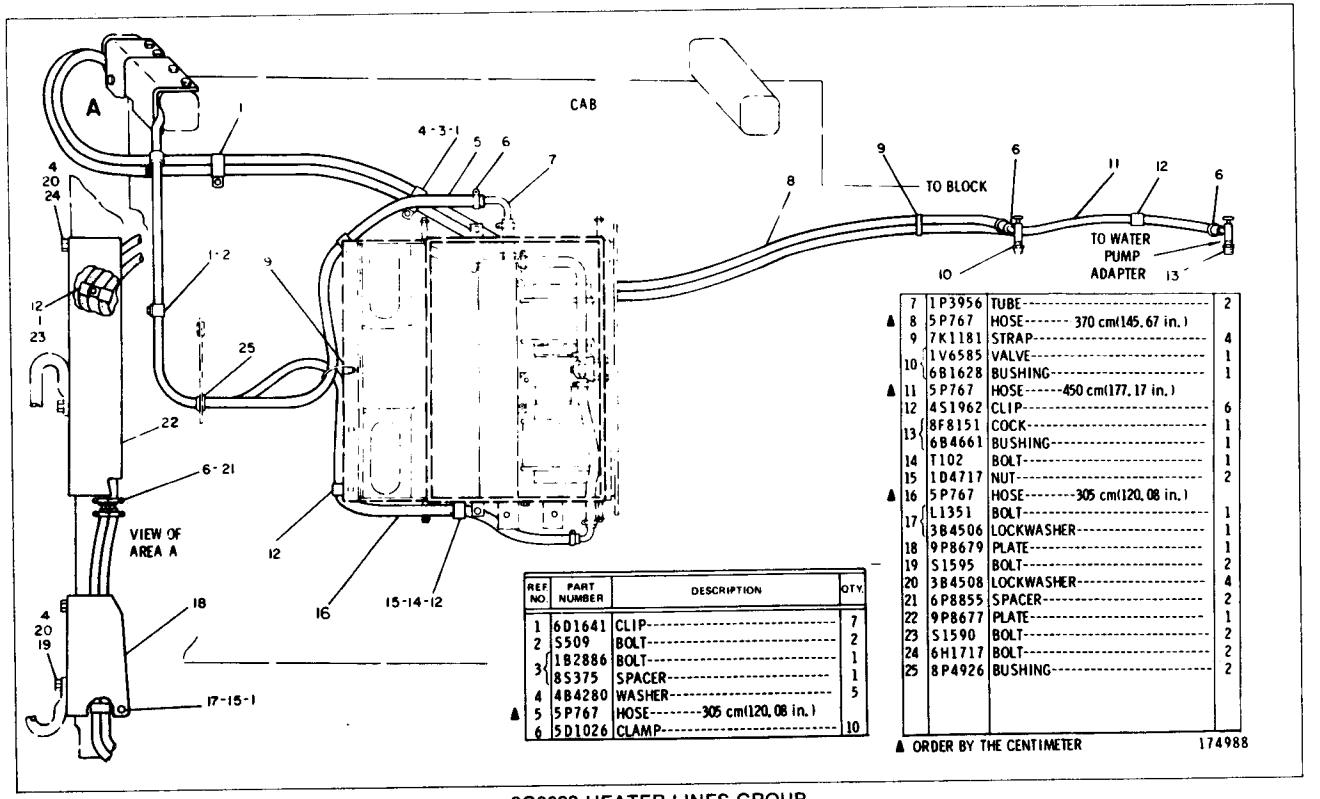

REF NO.	PART NUMBER	DESCRIPTION	QTY.
1	6D1641	CLIP	7
2	S509	BOLT	2
3	1B2886	BOLT	1
	8S375	SPACER	1
4	4B4280	WASHER	5
▲ 5	5P767	HOSE--------305 cm(120.08 in.)	
6	5D1026	CLAMP	10
7	1P3956	TUBE	2
▲ 8	5P767	HOSE------- 370 cm(145.67 in.)	
9	7K1181	STRAP	4
10	1V6585	VALVE	1
	6B1628	BUSHING	1
▲ 11	5P767	HOSE------450 cm(177.17 in.)	
12	4S1962	CLIP	6
13	8F8151	COCK	1
	6B4661	BUSHING	1
14	T102	BOLT	1
15	1D4717	NUT	2
▲ 16	5P767	HOSE--------305 cm(120.08 in.)	
17	L1351	BOLT	1
	3B4506	LOCKWASHER	1
18	9P8679	PLATE	1
19	S1595	BOLT	2
20	3B4508	LOCKWASHER	4
21	6P8855	SPACER	2
22	9P8677	PLATE	1
23	S1590	BOLT	2
24	6H1717	BOLT	2
25	8P4926	BUSHING	2

▲ ORDER BY THE CENTIMETER 174988

9G3699 HEATER LINES GROUP
Part of 9P5227 Air Conditioner and 8P2138 Cab Heater Groups shown on Pages 243 and 254
AN ATTACHMENT

9P7904 ELECTRIC HORN GROUP—Forward Warning
Serial No. 6X1115 to 6X1479 inclusive
AN ATTACHMENT

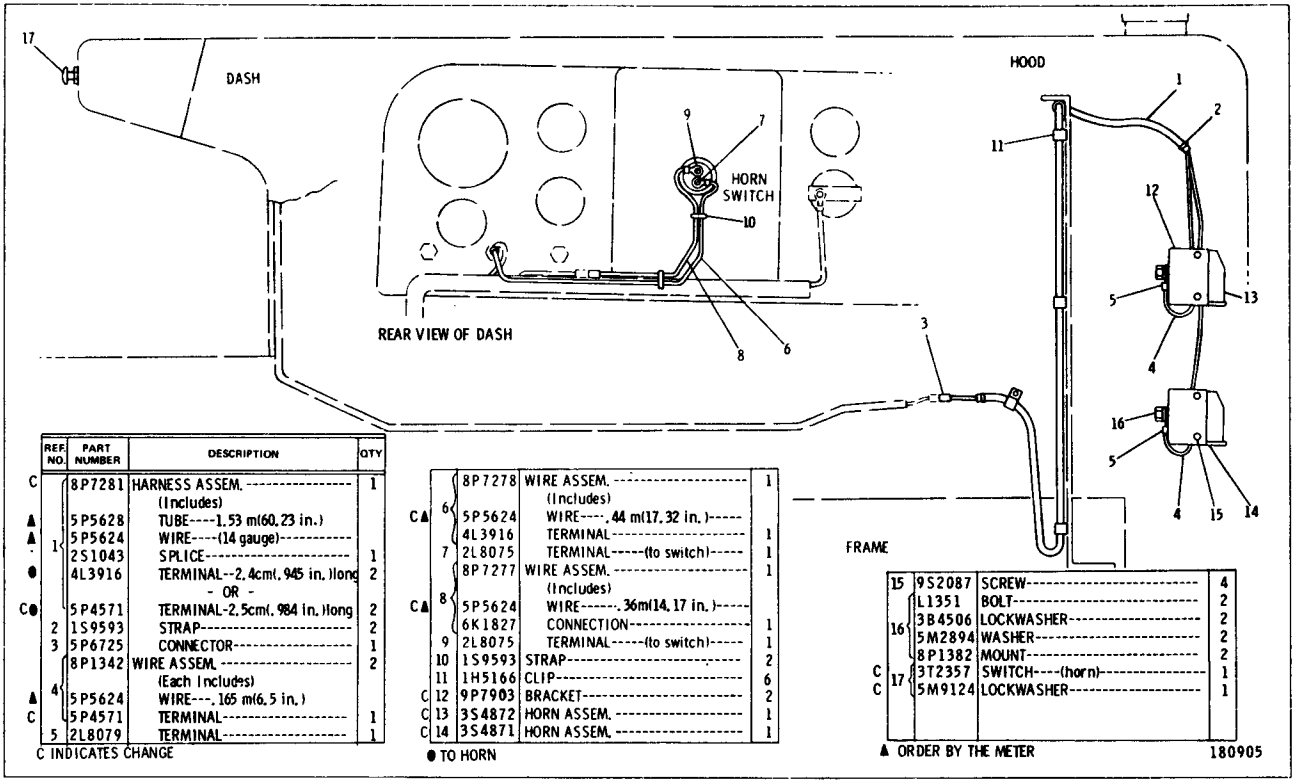

REF. NO.	PART NUMBER	DESCRIPTION	QTY
C	8P7281	HARNESS ASSEM. (Includes)	1
▲	5P5628	TUBE----1.53 m(60.23 in.)	
▲	5P5624	WIRE----(14 gauge)	
· 1	2S1043	SPLICE	1
●	4L3916	TERMINAL--2.4cm(.945 in.)long	2
		- OR -	
C●	5P4571	TERMINAL-2.5cm(.984 in.)long	2
2	1S9593	STRAP	2
3	5P6725	CONNECTOR	1
	8P1342	WIRE ASSEM. (Each Includes)	2
▲ 4	5P5624	WIRE---.165 m(6.5 in.)	
C	5P4571	TERMINAL	1
5	2L8079	TERMINAL	1

C INDICATES CHANGE

	8P7278	WIRE ASSEM. (Includes)	1
C▲ 6	5P5624	WIRE----.44 m(17.32 in.)	
	4L3916	TERMINAL	1
7	2L8075	TERMINAL-----(to switch)	1
	8P7277	WIRE ASSEM. (Includes)	1
C▲ 8	5P5624	WIRE------.36m(14.17 in.)	
	6K1827	CONNECTION	1
9	2L8075	TERMINAL-----(to switch)	1
10	1S9593	STRAP	2
11	1H5166	CLIP	6
C 12	9P7903	BRACKET	2
C 13	3S4872	HORN ASSEM.	1
C 14	3S4871	HORN ASSEM.	1

● TO HORN

15	9S2087	SCREW	4
	L1351	BOLT	2
	3B4506	LOCKWASHER	2
16	5M2894	WASHER	2
	8P1382	MOUNT	2
C	3T2357	SWITCH----(horn)	1
C 17	5M9124	LOCKWASHER	1

▲ ORDER BY THE METER

180905

3T2316 ELECTRIC HORN GROUP—Forward Warning
Serial No. 6X1480—Up

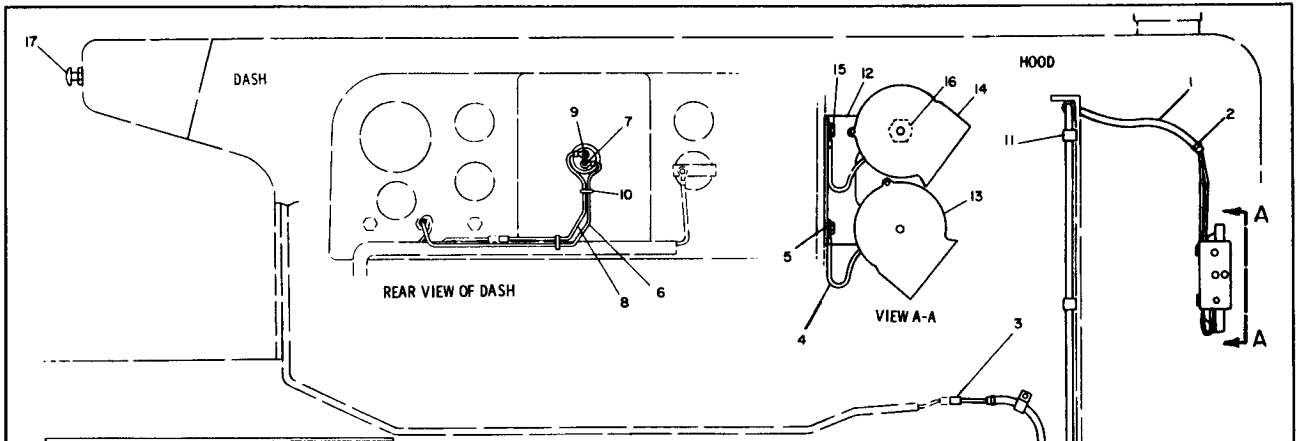

REF. NO.	PART NUMBER	DESCRIPTION	QTY
1	8P7281	HARNESS ASSEM. (Includes)	1
▲	5P5628	TUBE----1.53 m(60.23 in.)	
▲	5P5624	WIRE----(14 gauge)	
	2S1043	SPLICE	1
●	58673	TERMINAL	2
●	6T1381	BODY	2
2	1S9593	STRAP	2
3	5P6725	CONNECTOR	1
4	8P1342	WIRE ASSEM. (Each Includes)	2
▲	5P5624	WIRE---.165 m(6.5 in.)	
	5P4571	TERMINAL	1
5	2L8079	TERMINAL	1

6	8P7278	WIRE ASSEM. (Includes)	1
▲	5P5624	WIRE----.44 m(17.32 in.)	
	5P4571	TERMINAL	1
7	2L8076	TERMINAL-----(to switch)-----	1
8	8P7277	WIRE ASSEM. (Includes)	1
▲	5P5624	WIRE------.36m(14.17 in.)	
	5P5610	CONNECTOR	1
9	2L8076	TERMINAL-----(to switch)-----	1
10	1S9593	STRAP	2
11	1H5166	CLIP	6
12	9G9300	BRACKET	1
13	3S4872	HORN ASSEM.	1
14	3S4871	HORN ASSEM.	1

15	319831	SCREW	2
16	3S4701	NUT	2
17	8P230	SWITCH----(horn)	1

● TO HORN

▲ ORDER BY THE METER

180196

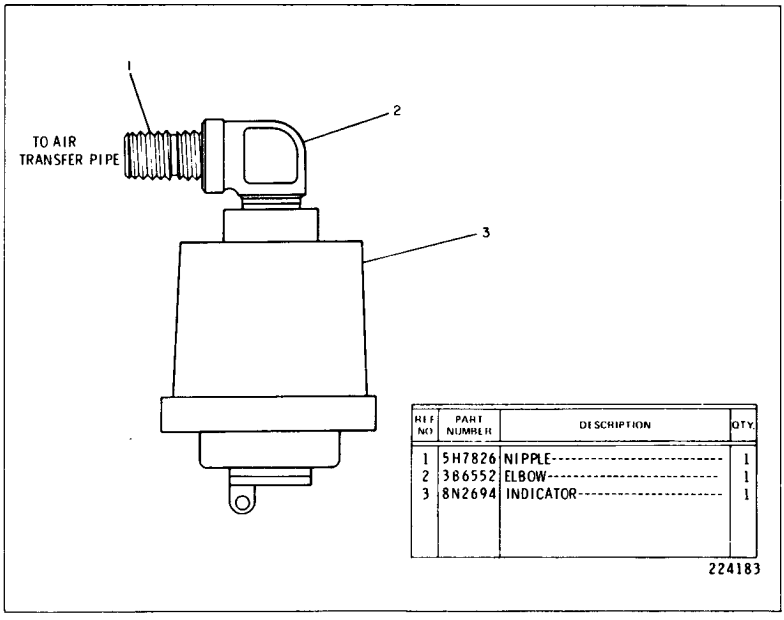

REF NO	PART NUMBER	DESCRIPTION	QTY.
1	5H7826	NIPPLE	1
2	3B6552	ELBOW	1
3	8N2694	INDICATOR	1

224183

8N3179 AIR FILTER SERVICE INDICATOR GROUP
AN ATTACHMENT

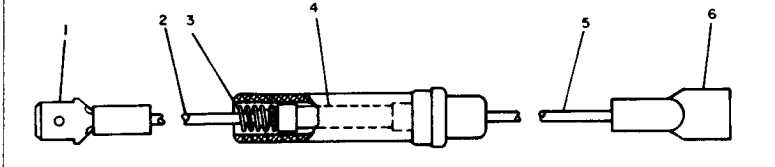

REF NO	PART NUMBER	DESCRIPTION	QTY.
1	4S1988	TERMINAL	1
▲ 2	5P5624	WIRE-----.08m (3.15 in.)	
3	2S5013	SPRING	1
4	2S6024	FUSE----------(5 amp)----------	1
	2S8708	CONTACT	2
▲ 5	5P5624	WIRE-----.06 m (2.36 in.)	
6	5P4571	TERMINAL	1

▲ ORDER BY THE METER

174551

7N8292 FUSE HOLDER, FUSE AND WIRE KIT — Field Installation
Provides protection from overload failure of 6N5906 Hour Meter without sealed vent holes. Those hour meters with vent holes have a white dash mark under two central figures

9G5883 ENGINE GAUGE GROUP
Serial No. 6X1115 to 6X1178 inclusive

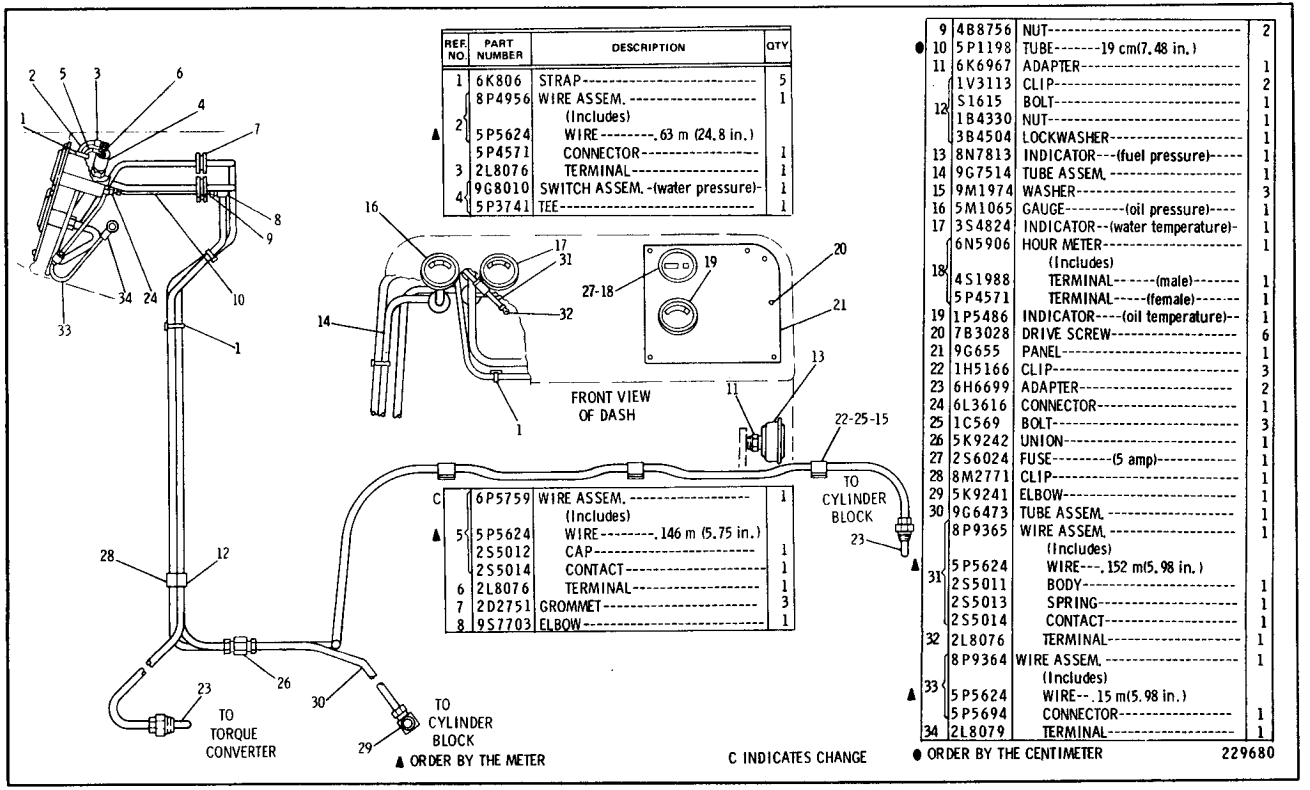

REF. NO.	PART NUMBER	DESCRIPTION	QTY
1	6K806	STRAP	5
2	8P4956	WIRE ASSEM. (Includes)	1
▲	5P5624	WIRE-.63 m (24.8 in.)	
	5P4571	CONNECTOR	1
3	2L8076	TERMINAL	1
4	9G8010	SWITCH ASSEM.-(water pressure)	1
	5P3741	TEE	1
C	6P5759	WIRE ASSEM. (Includes)	1
▲ 5	5P5624	WIRE-.146 m (5.75 in.)	
	2S5012	CAP	1
	2S5014	CONTACT	1
6	2L8076	TERMINAL	1
7	2D2751	GROMMET	3
8	9S7703	ELBOW	1
9	4B8756	NUT	2
● 10	5P1198	TUBE-------19 cm(7.48 in.)	
11	6K6967	ADAPTER	1
	1V3113	CLIP	2
12	1S1615	BOLT	1
	1B4330	NUT	1
	3B4504	LOCKWASHER	1
13	8N7813	INDICATOR---(fuel pressure)	1
14	9G7514	TUBE ASSEM.	1
15	9M1974	WASHER	3
16	5M1065	GAUGE---------(oil pressure)	1
17	3S4824	INDICATOR--(water temperature)	1
	6N5906	HOUR METER (Includes)	1
18	4S1988	TERMINAL------(male)	1
	5P4571	TERMINAL-----(female)	1
19	1P5486	INDICATOR----(oil temperature)	1
20	7B3028	DRIVE SCREW	6
21	9G655	PANEL	1
22	1H5166	CLIP	3
23	6H6699	ADAPTER	2
24	6L3616	CONNECTOR	1
25	1C569	BOLT	3
26	5K9242	UNION	1
27	2S6024	FUSE---------(5 amp)	1
28	8M2771	CLIP	1
29	5K9241	ELBOW	1
30	9G6473	TUBE ASSEM.	1
	8P9365	WIRE ASSEM. (Includes)	1
▲ 31	5P5624	WIRE---.152 m(5.98 in.)	
	2S5011	BODY	1
	2S5013	SPRING	1
	2S5014	CONTACT	1
32	2L8076	TERMINAL	1
	8P9364	WIRE ASSEM. (Includes)	1
▲ 33	5P5624	WIRE--.15 m(5.98 in.)	
	5P5694	CONNECTOR	1
34	2L8079	TERMINAL	1

▲ ORDER BY THE METER
C INDICATES CHANGE
● ORDER BY THE CENTIMETER
229680

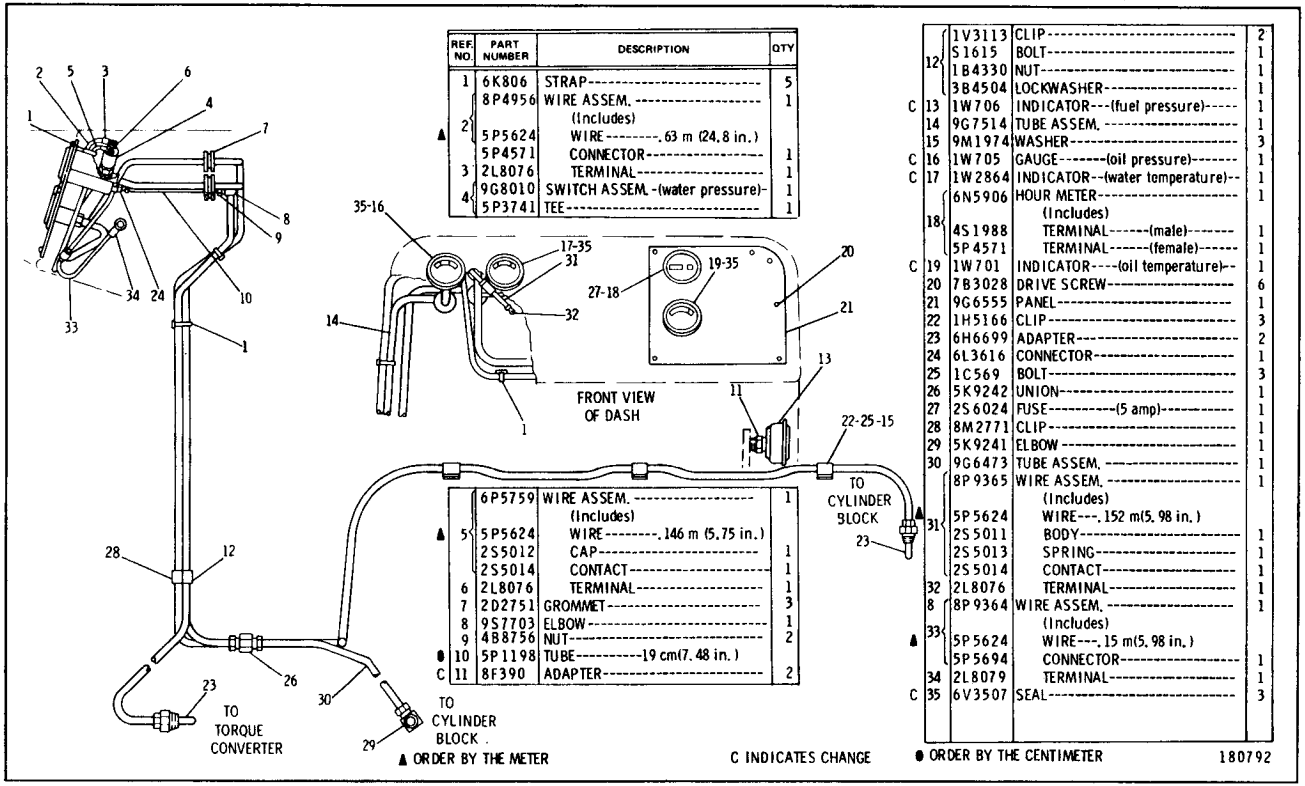

REF. NO.	PART NUMBER	DESCRIPTION	QTY
1	6K806	STRAP	5
2	8P4956	WIRE ASSEM. (Includes)	1
▲	5P5624	WIRE-----.63 m (24.8 in.)	
	5P4571	CONNECTOR	1
3	2L8076	TERMINAL	1
4	9G8010	SWITCH ASSEM.-(water pressure)-	1
	5P3741	TEE	1
	6P5759	WIRE ASSEM. (Includes)	1
▲ 5	5P5624	WIRE-----.146 m (5.75 in.)	
	2S5012	CAP	1
	2S5014	CONTACT	1
6	2L8076	TERMINAL	1
7	2D2751	GROMMET	3
8	9S7703	ELBOW	1
9	4B8756	NUT	2
● 10	5P1198	TUBE----------19 cm(7.48 in.)	
C 11	8F390	ADAPTER	2
12	1V3113	CLIP	2
	S1615	BOLT	1
	1B4330	NUT	1
	3B4504	LOCKWASHER	1
C 13	1W706	INDICATOR---(fuel pressure)-----	1
14	9G7514	TUBE ASSEM.	1
15	9M1974	WASHER	3
C 16	1W705	GAUGE-------(oil pressure)-------	1
C 17	1W2864	INDICATOR--(water temperature)--	1
18	6N5906	HOUR METER (Includes)	1
	4S1988	TERMINAL------(male)-------	1
	5P4571	TERMINAL------(female)------	1
C 19	1W701	INDICATOR----(oil temperature)--	1
20	7B3028	DRIVE SCREW	6
21	9G6555	PANEL	1
22	1H5166	CLIP	3
23	6H6699	ADAPTER	2
24	6L3616	CONNECTOR	1
25	1C569	BOLT	3
26	5K9242	UNION	1
27	2S6024	FUSE----------(5 amp)----------	1
28	8M2771	CLIP	1
29	5K9241	ELBOW	1
30	9G6473	TUBE ASSEM.	1
31	8P9365	WIRE ASSEM. (Includes)	1
▲	5P5624	WIRE---.152 m(5.98 in.)	
	2S5011	BODY	1
	2S5013	SPRING	1
	2S5014	CONTACT	1
32	2L8076	TERMINAL	1
8	8P9364	WIRE ASSEM. (Includes)	1
▲ 33	5P5624	WIRE---.15 m(5.98 in.)	
	5P5694	CONNECTOR	1
34	2L8079	TERMINAL	1
C 35	6V3507	SEAL	3

9G5883 GAUGE GROUP
Serial No. 6X1179 to 6X1491 inclusive

9G5883 GAUGE GROUP
Serial No. 6X1492—Up

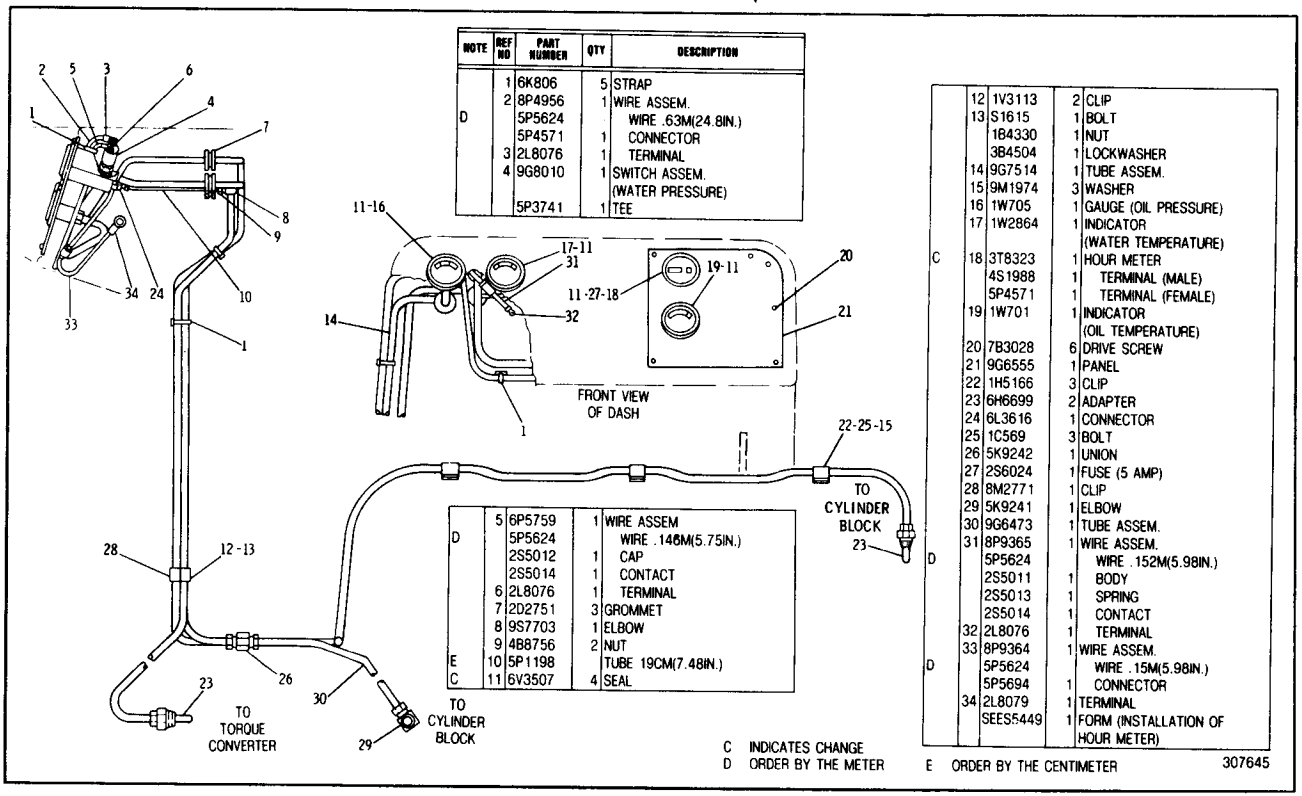

NOTE	REF NO	PART NUMBER	QTY	DESCRIPTION
	1	6K806	5	STRAP
	2	8P4956	1	WIRE ASSEM.
D		5P5624		WIRE .63M(24.8IN.)
		5P4571	1	CONNECTOR
	3	2L8076	1	TERMINAL
	4	9G8010	1	SWITCH ASSEM. (WATER PRESSURE)
		5P3741	1	TEE

NOTE	REF NO	PART NUMBER	QTY	DESCRIPTION
	5	6P5759	1	WIRE ASSEM
D		5P5624		WIRE .146M(5.75IN.)
		2S5012	1	CAP
		2S5014	1	CONTACT
	6	2L8076	1	TERMINAL
	7	2D2751	3	GROMMET
	8	9S7703	1	ELBOW
	9	4B8756	2	NUT
E	10	5P1198		TUBE 19CM(7.48IN.)
C	11	6V3507	4	SEAL

NOTE	REF NO	PART NUMBER	QTY	DESCRIPTION
	12	1V3113	2	CLIP
	13	S1615	1	BOLT
		1B4330	1	NUT
		3B4504	1	LOCKWASHER
	14	9G7514	1	TUBE ASSEM.
	15	9M1974	3	WASHER
	16	1W705	1	GAUGE (OIL PRESSURE)
	17	1W2864	1	INDICATOR (WATER TEMPERATURE)
C	18	3T8323	1	HOUR METER
		4S1988	1	TERMINAL (MALE)
		5P4571	1	TERMINAL (FEMALE)
	19	1W701	1	INDICATOR (OIL TEMPERATURE)
	20	7B3028	6	DRIVE SCREW
	21	9G6555	1	PANEL
	22	1H5166	3	CLIP
	23	6H6699	2	ADAPTER
	24	6L3616	1	CONNECTOR
	25	1C569	3	BOLT
	26	5K9242	1	UNION
	27	2S6024	1	FUSE (5 AMP)
	28	8M2771	1	CLIP
	29	5K9241	1	ELBOW
	30	9G6473	1	TUBE ASSEM.
	31	8P9365	1	WIRE ASSEM.
D		5P5624		WIRE .152M(5.98IN.)
		2S5011	1	BODY
		2S5013	1	SPRING
		2S5014	1	CONTACT
	32	2L8076	1	TERMINAL
	33	8P9364	1	WIRE ASSEM.
D		5P5624		WIRE .15M(5.98IN.)
		5P5694	1	CONNECTOR
	34	2L8079	1	TERMINAL
		SEES5449	1	FORM (INSTALLATION OF HOUR METER)

C INDICATES CHANGE
D ORDER BY THE METER
E ORDER BY THE CENTIMETER

307645

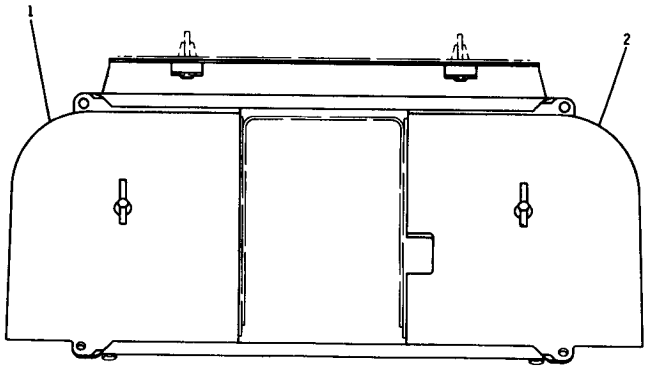

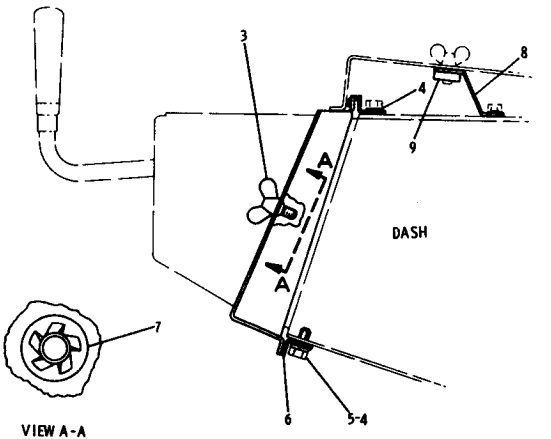

REF. NO.	PART NUMBER	DESCRIPTION	QTY
1	8P8223	COVER ASSEM.	1
2	8P9285	COVER ASSEM.	1
3	4K487	BOLT	2
4	4B4278	WASHER	4
5	S509	BOLT	2
	3B4506	LOCKWASHER	2
6	8P9284	GUIDE	2
7	5P6883	RETAINER	2
8	9P3782	BRACKET ASSEM. (Includes)	1
9	6S3829	LUG	2
▲	5P8502	PADLOCK GROUP (Each Includes)	2
●	5P8500	KEY	2

● NOT PART OF 9G8848 VANDALISM GUARD GROUP

▲ NOT SHOWN

226983

9G8848 VANDALISM GUARD GROUP
AN ATTACHMENT

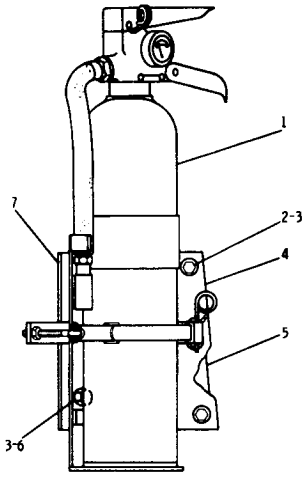

	REF. NO.	PART NUMBER	DESCRIPTION	QTY
	1	8K4738	EXTINGUISHER	1
C	2	9B7237	BOLT	3
	3	5P1075	WASHER	7
	4	9P2697	BRACKET	1
	5	9P2044	PLATE	1
	6	S1594	BOLT	4
		1D4717	NUT	4
	7	8K4737	BRACKET	1

C INDICATES CHANGE 215139

8P6869 FIRE EXTINGUISHER GROUP
Note: 8K4738 Extinguisher must be procured locally
AN ATTACHMENT

C INDICATES CHANGE FROM PREVIOUS TYPE

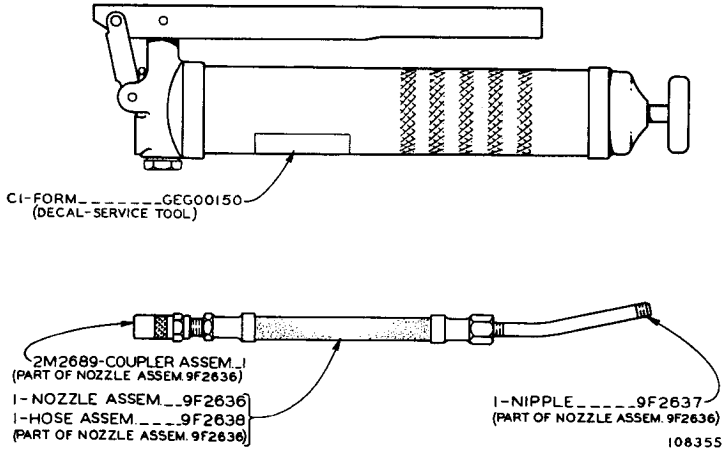

8F9866 GREASE GUN
Part of 9S7977 Hand Tool Group shown on Page 262

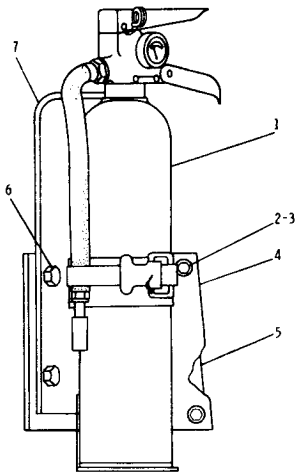

	REF. NO.	PART NUMBER	DESCRIPTION	QTY
	1	8K4738	EXTINGUISHER	1
	2	9B7237	BOLT	3
	3	5P1075	WASHER	7
	4	9P2697	BRACKET	1
	5	9P2044	PLATE	1
C	6	1S1588	BOLT	4
		1D4717	NUT	4
C1	7	3T8432	MOUNTING GROUP	1

1-SEPARATE ILLUSTRATION
C INDICATES CHANGE

182857

8P6869 FIRE EXTINGUISHER GROUP—Type 2
3T8432 Extinguisher parts are shown on Page 261B

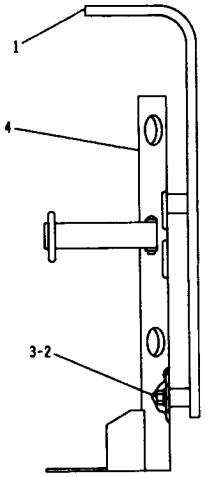

NOTE	REF NO	PART NUMBER	QTY	DESCRIPTION
	1	3T6974	1	BRACKET ASSEM.
	2	S509	4	BOLT
	3	5M2894	4	WASHER
	4	3T7409	1	BRACKET

182858

3T8432 FIRE EXTINGUISHER MOUNTING GROUP
Part of 8P6869 Fire Extinguisher Group shown on Page 261B

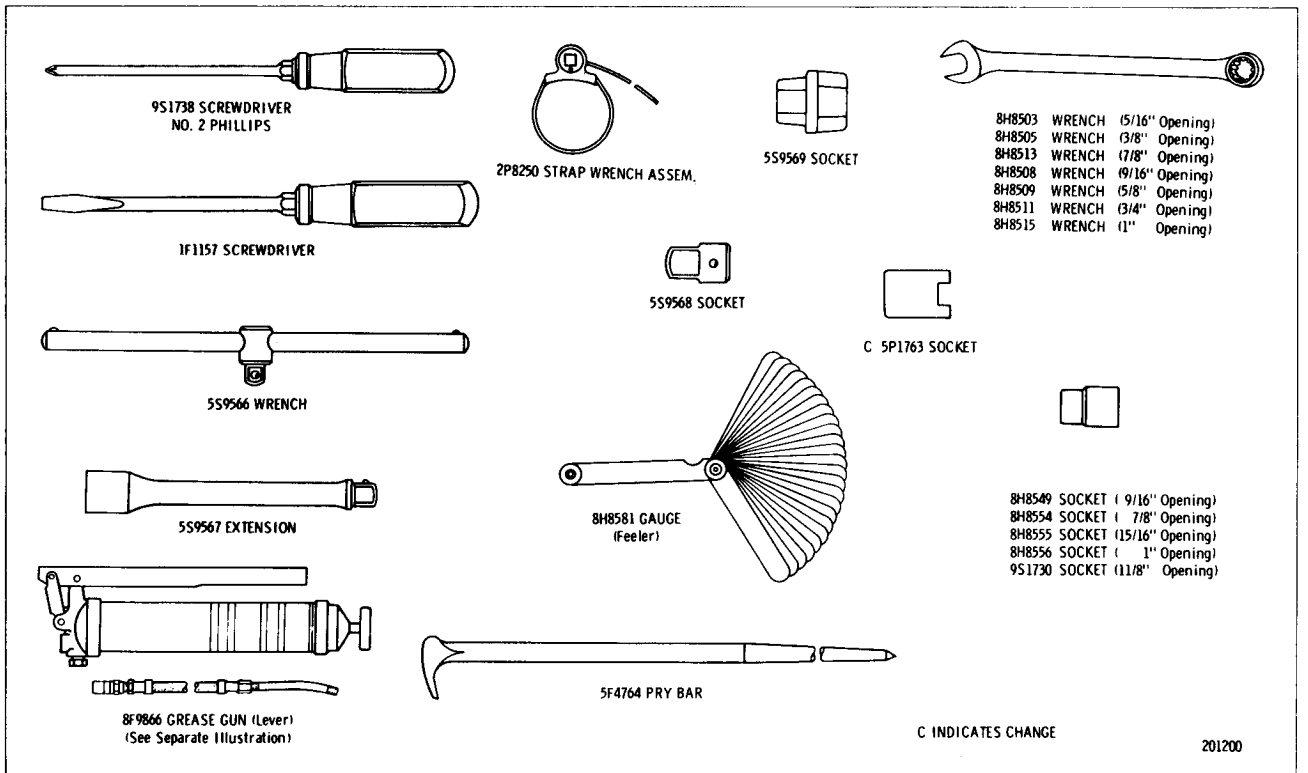

9S7977 HAND TOOL GROUP
8F9866 Grease Gun parts are shown on Page 261

ENGINE GASKET KITS

6V2971	Valve Grinding
6V1752	Central and Lower Structure
5P8768	Single Cylinder Liner
6V2912	Front Structure
6V2921	Rear Structure
5P9898	Water Pump
6V900	Turbocharger Installation
6V3727	Oil Cooler and Lines
5P9461	Fuel System

OTHER GASKET KITS

6V8039	Torque Converter
6V8037	Transmission
6V1142	Planetary
6V8038	Hydraulic Control
6V1147	Transfer Gear
6V8040	Power Train Oil Lines

QUANTITY USED	PART NUMBER	DESCRIPTION
1	5H8450	PLATE--SERIAL NUMBER (TRACTOR) ON REAR FACE OF BEVEL GEAR & STEERING CLUTCH CASE
1	8M3494	PLATE--SERIAL NUMBER (HYDRAULIC) EXTREME L.H. SIDE AT TOP OF TANK ASSEMBLY
1	3N3790	PLATE--SERIAL NUMBER (ENGINE) ON UPPER REAR L.H. SIDE OF CYLINDER BLOCK
1	5P4020	PLATE--SERIAL NUMBER (BULLDOZER) UPPER R.H. CORNER OF BLADE
1	5P8197	PLATE--WARNING VERTICAL SURFACE ADJACENT TO PARKING BRAKELEVER
1	6V527	PLATE--SERIAL NUMBER (WINCH) L.H. SIDE OF WINCH--FORWARD EDGE
1	6V1720	PLATE--SERIAL NUMBER (TRANSMISSION) ON TRANSMISSION
1	6V1721	PLATE--SERIAL NUMBER (MASTER) ON OPERATOR'S COMPARTMENT ON LOWER R.H. DASH PLATE
1	5P6807	FILM--LUBRICATION VERTICAL SURFACE ON R.H. CONSOLE
1	5P9673	FILM--PARKING BRAKE VERTICAL SURFACE ADJACENT TO PARKING BRAKE LEVER
12	4B4158	DRIVE SCREW
1	5P6371	TRANSFER GROUP CONSISTING OF:
1	8S5496	FILM--CATERPILLAR ON TOP OF RADIATOR GUARD
2	1P9878	FILM--CAT ON EACH SIDE OF HOOD
1	8S8958	FILM--CATERPILLAR ON BACK OF FUEL TANK
2	8S3923	FILM--CORPORATE SYMBOL ON EACH SIDE OF FUEL TANK GUARD
2	5P6382	FILM--D6D ON EACH SIDE OF FUEL TANK GUARD
1	6H6000	FILM--WARNING ON DASH
1	5P8517	FILM--CAUTION FRONT TOP OF R.H. CONSOLE
1	8S3696	FILM--STARTING ON DASH

NAME PLATES AND FILMS

TORQUE REQUIREMENTS FOR CATERPILLAR BOLTS, NUTS AND TAPERLOCK STUDS

GROUND ENGAGING AND CUTTING EDGE BOLTS AND NUTS

Round dome shaped head
Proof Load 120,000 psi minimum
Tensile Strength 150,000 psi minimum
Hardness Rockwell C 33 to 39
Sizes 1/2 thru 5/8



Seven Radial Dashes
Round Dome Shaped Head
Proof Load 135,000 psi minimum
Tensile Strength 160,000 psi minimum
Hardness Rockwell C 36 to 42
Sizes 3/4 thru 1-1/4



TORQUE REQUIREMENTS FOR PLOW BOLTS

THREAD DIAMETER		STANDARD TORQUE	
inches	millimeters	lb.ft.	N·m
5/8	15.88	195 ± 20	265 ± 25
3/4	19.05	350 ± 50	475 ± 70
7/8	22.22	565 ± 85	765 ± 115
1	25.40	900 ± 110	1220 ± 150
1-1/4	31.75	1500 ± 185	2000 ± 250

GENERAL TIGHTENING TORQUE FOR BOLTS, NUTS AND TAPERLOCK STUDS

The following charts give the standard torque values for bolts, nuts and taperlock studs of SAE Grade 5 or better quality. Exceptions are given in the Service Manuals where needed.



THREAD DIAMETER		STANDARD TORQUE	
inches	millimeters	lb.ft.	N·m
Standard thread 		Use these torques for bolts and nuts with standard threads (conversions are approximate).	
1/4	6.35	9 ± 3	12 ± 4
5/16	7.94	18 ± 5	25 ± 4
3/8	9.53	32 ± 5	45 ± 7
7/16	11.11	50 ± 10	70 ± 15
1/2	12.70	75 ± 10	100 ± 15
9/16	14.29	110 ± 15	150 ± 20
5/8	15.88	150 ± 20	200 ± 25
3/4	19.05	265 ± 35	360 ± 50
7/8	22.23	420 ± 60	570 ± 80
1	25.40	640 ± 80	875 ± 100
1-1/8	28.58	800 ± 100	1100 ± 150
1-1/4	31.75	1000 ± 120	1350 ± 175
1-3/8	34.93	1200 ± 150	1600 ± 200
1-1/2	38.10	1500 ± 200	2000 ± 275
		Use these torques for bolts and nuts on hydraulic valve bodies.	
5/16	7.94	13 ± 2	20 ± 3
3/8	9.53	24 ± 2	35 ± 3
7/16	11.11	39 ± 2	50 ± 3
1/2	12.70	60 ± 3	80 ± 4
5/8	15.88	118 ± 4	160 ± 6
Taperlock stud 		Use these torques for studs with Taperlock threads.	
1/4	6.35	5 ± 2	7 ± 3
5/16	7.94	10 ± 3	15 ± 5
3/8	9.53	20 ± 3	30 ± 5
7/16	11.11	30 ± 5	40 ± 10
1/2	12.70	40 ± 5	55 ± 10
9/16	14.29	60 ± 10	80 ± 15
5/8	15.88	75 ± 10	100 ± 15
3/4	19.05	110 ± 15	150 ± 20
7/8	22.23	170 ± 20	230 ± 30
1	25.40	260 ± 30	350 ± 40
1-1/8	28.58	320 ± 30	400 ± 40
1-1/4	31.75	400 ± 40	550 ± 50
1-3/8	34.93	480 ± 40	650 ± 50
1-1/2	38.10	550 ± 50	750 ± 70



1P2305 ELECTRIC TERMINAL KIT

(Insulated)
(Includes terminals, wire joints and crimping tool)

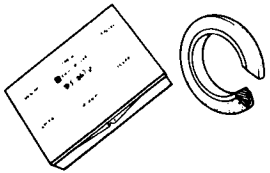

9S3138 SEAL KIT

(Includes 28 metal - backed seals)

Qty.	Nominal Size	Part No.
2	1/2 inch (1, 27 cm)	5J1583
6	3/4 inch (1, 905 cm)	6J3575
6	1 inch (2, 54 cm)	6J3600
6	1 1/4 inch (3, 175 cm)	6J3625
4	1 1/2 inch (3, 81 cm)	6J3650
4	2 inches (5, 08 cm)	6J3800

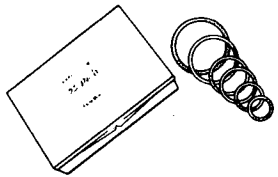

9S3135 SEAL KIT

(Includes 60 rubber O-ring seals)

Qty.	Nominal Size	Part No.
10	1/2 inch (1, 27 cm)	4J5140
10	3/4 inch (1, 905 cm)	4J5267
10	1 inch (2, 54 cm)	4J0520
10	1 1/4 inch (3, 175 cm)	4J0522
10	1 1/2 inch (3, 81 cm)	4J0524
10	2 inches (5, 08 cm)	4J0527

THREADED INSERTS KITS

Master (Includes inserts and tools)

Coarse	Fine	Size
9S3700	9S3500	Assorted

Repair (Includes inserts and tools)

9S3510	9S3509	#10
9S3512	9S3511	1/4
9S3514	9S3513	5/16
9S3618	9S3515	3/8
9S3620	9S3619	7/16
9S3622	9S3621	1/2
9S3624	9S3623	9/16
9S3626	9S3625	5/8
9S3628	9S3627	3/4
9S3630	9S3629	7/8
9S3632	9S3631	1
9S3633		1 1/8
9S3635		1 1/4
9S3637		1 1/2

Refill (Includes inserts)

9S3674	9S3673	#10
9S3649	9S3639	1/4
9S3650	9S3640	5/16
9S3651	9S3641	3/8
9S3652	9S3642	7/16
9S3653	9S3643	1/2
9S3654	9S3644	9/16
9S3655	9S3645	5/8
9S3656	9S3646	3/4
9S3657	9S3647	7/8
9S3658	9S3648	1
9S3675		1 1/8
9S3677		1 1/4
9S3679		1 1/2

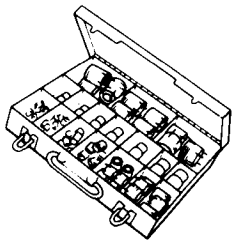

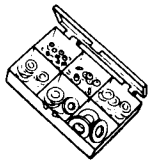

HARDWARE ASSORTMENT KITS

8S7198 Course Thread Hex Nut
8S7197 Fine Thread Hex Nut
8S7196 Lockwasher Assortment
8S7195 Flatwasher Assortment
8S7193 Woodruff Key Assortment

139338



GASKET CEMENT

5H2471 8 oz. (227 g)

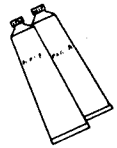

EPOXY CEMENT

5M2941 2 - 2 oz. (57g) Tube

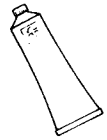

BEARING LUBRICANT

2S3230 14 1/2 oz. (411 g)



GASKET SEALER

4H5363 11 oz. (312 g)
(fast drying-hard setting)
8H5137 11 oz. (312 g)
(non-hardening)



ANTI-SEIZURE COMPOUND

4S9416 16 oz. (454 g) Aerosol
9M3710 16 oz. (454 g) Paste



GLASS OR PLASTIC CEMENT

3S1831 1 pint (0.473 L)



LIQUID GASKET

7M7260 8 oz. (227 g)



SEALING COMPOUND

5S1454 1 pint (0.473 L)



GREASE - SILICONE

4L7464 8 oz. (227 g)



SILICONE FLUID

8M553 145 cc.
9M5165 150 cc.



GREASE GUN CARTRIDGE

1P808 14 1/2 oz. (411 gms)



COOLING SYSTEM INHIBITOR

3P2043 1 pint (0.473 L)
P0001 1 case of 12
3P2044 1 quart (0.946 L)
P0002 1 case of 12

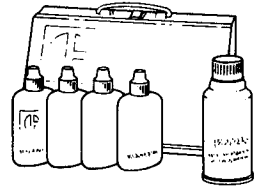

9S3262 SEALANT REPAIR KIT

contains:

Bearing Mount	7M7456	1 2/3 fl. oz. (50 cc)
Thread Lock	9S3263	1 2/3 fl. oz. (50 cc)
Pipe Sealant	9S3264	1 2/3 fl. oz. (50 cc)
Retaining Compound	9S3265	1 2/3 fl. oz. (50 cc)
Quick Cure Primer	8M8060	6 oz. (170 g) Aerosol



CHAIN & CABLE LUBRICANT

9S6106 16 oz. (454 g) Aerosol
2P2737 Case of 12

BELT DRESSING

9S6107 16 oz. (454 g) Aerosol
2P2738 Case of 12

ELECTRO-INSULATION SPRAY

9S6108 16 oz. (454 g) Aerosol
2P2739 Case of 12

PENETRATING OIL

9S6109 16 oz. (454 g) Aerosol
2P2740 Case of 12

BATTERY SAVER & CLEANER

9S6110 16 oz. (454 g) Aerosol
2P2741 Case of 12

139339

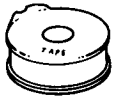

ELECTRICAL TAPE

1P810 (plastic) 2/3" (20mm) width
66 ft. (20m) length
9B4287 (cloth) 3/4" (20mm) width
30 ft. (9M) length
(Plastic tape comes in dispenser. Cloth tape does not.)

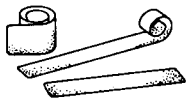

9S8703 ANTI-SKID TREADS

(May be ordered by foot lengths up to 60 feet (18,30m), width 4" (100mm)

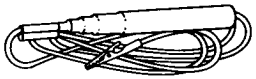

8S4627 CIRCUIT TESTER

(Maximum Capacity: 10 oms)



BUTTON PLUGS

Hole Diameter Inches	Hole Diameter mm	Part Number
.219	5,6	4L0820
.310	7,9	7L6479
.380	9,7	5L6688
.438	11,1	4L0821
.469	11,9	3D9871
.484	12,3	8M3839
.500	12,7	3D9872
.625	15,9	2M4009
.687	17,5	6K2660
.750	19,0	5K3546
.875	22,2	5H4871
1.000	25,4	2D3406
1.250	31,8	4S6336
1.375	34,9	4F8711
1.500	38,1	3L1979
2.000	50,8	1L6377
2.250	57,2	7M3248
2.500	63,5	3L8852
3.000	76,2	1L6366



MAGNETIC DRAIN PLUGS

Type	Thread Size-Threads Per Inch	Head	A Inches	A mm	Part No.
I	5/8 - 11	7/8 Hex	1 3/16	26,9	5K1555
I	5/8 - 18	7/8 Hex	3/4	19,1	2R166
I	7/8 - 14	1 1/8 Hex	1 3/16	30,2	3H4190
I	1 1/8 - 12	1 1/2 Hex	1 1/2	38,1	8M3837
I	1 1/8 - 12	1 1/2 Hex	1 7/8	47,8	2J1559
I	1 1/2 - 12	1 Hex	1 1/2	38,1	8M5576
I	1 1/2 - 12	1 7/8 Hex	1 7/8	47,8	2D8390
II	1/2 - 14	9/16 Sq.	1 1/8	28,5	2F3628
II	3/4	5/8 Sq.	1 1/4	31,8	2H3865
II	7/8 - 14	7/8 Hex	1 5/8	41,3	2R1491
II	1 Std. Pipe Thd.	13/16 Sq.	1 7/16	36,6	2H3864
II	1 1/4 Std. Pipe Thd.	15/16 Sq.	1 11/16	42,9	2H3863
II	1 1/4 Std. Pipe Thd.	15/16 Sq.	1 3/8	35,0	7H3664
III	3/4 - 14 Pipe Thd., Fine	1/2 Sq.	1 3/16	30,2	5D1894
III	1 - 11 1/2 Pipe Thd., Fine	1/2 Sq.	1 5/16	33,4	2K744
III	1 1/4 - 11 1/2 Pipe Thd., Fine	3/4 Sq.	13/16	20,6	5S4017
III	2 - 12	3/4 Sq.	1 11/16	42,9	8B6599

MEMORANDA

SPECIFICATIONS

(SUBJECT TO CHANGE WITHOUT NOTICE)

Weight, shipping (approximate):		
D6D LGP Tractor (with open ROPS)	14 500 kg	(31,925 lbs.)
6S LGP Bulldozer (equipped for use with hydraulic control)	2 110 kg	(4,650 lbs.)
Winch (Standard and Low Speed)	1 000 kg	(2,200 lbs.)
Hydraulic Controls:		
Tank & Valve:	empty	w/oil
Single Valve	95 kg (202 lbs.)	130 kg (290 lbs.)
Double Valve	115 kg (253 lbs.)	150 kg (334 lbs.)
Triple Valve	115 kg (253 lbs.)	150 kg (334 lbs.)
3rd Valve	20 kg (47 lbs.)	—
Pump	10 kg (24 lbs.)	—

DIMENSIONS

Length:		
D6D LGP Tractor (without bulldozer, winch, hydraulic control)	3 940 mm	(12' 11.2")
Height:		
D6D LGP Tractor	3 060 mm	(10 1/2")
6S LGP Bulldozer Blade	1 030 mm	(40.6")
Width:		
D6D LGP Tractor:		
without blade	3 025 mm	(9' 11")
with blade	3 710 mm	(12' 2")
Gauge (center to center tracks)	2 110 mm	(83")
Ground Clearance	310 mm	(12 1/4")
Winch Line Speed (meter/feet per minute):		
Bare Drum:		
Standard Speed	29.6 m	(97')
Low Speed	18.3 m	(60')
Full Drum:		
Standard Speed	50.3 m	(165')
Low Speed	39.3 m	(129')
Cable Size	19 mm	(3/4")
Drum Capacity (19 mm (3/4") Cable):		
Standard Speed	99.4 m	(326')
Low Speed	119.5 m	(392')

REFILL CAPACITIES (Approximate)

COMPARTMENT OR SYSTEM	U.S. MEASURE	METRIC MEASURE	IMPERIAL MEASURE
Engine Crankcase	7.25 gal.	27.50 ltr.	6 gal.
Transmission*, Bevel and Steering Clutches	24 gal.	92 ltr.	20 gal.
Final Drives (each) 3X, 4X, 5X	5 gal.	19 ltr.	4.25 gal.
6X	5.3 gal.	20 ltr.	4.41 gal.
Hydraulic System	11 gal.	41.75 ltr.	9.25 gal.
Cooling System	10.25 gal.	38.75 ltr.	8.50 gal.
Fuel Tank	78 gal.	295.25 ltr.	65 gal.
Winch	12.5 gal.	47.3 ltr.	10.4 gal.

SERIAL NUMBER PLATE LOCATION

MASTER PLATE – In operator's compartment on lower R. H. dash plate.
TRACTOR PLATE – On rear face of bevel gear and steering clutch case.
ENGINE PLATE – On upper rear L. H. side of cylinder block.
TRANSMISSION PLATE – On transmission.
BULLDOZER PLATE – Upper R. H. corner of blade.
HYDRAULIC PLATE – Extreme L. H. side at top of tank assembly.
WINCH PLATE – L. H. side of winch – forward edge.

CARACTÉRISTIQUES

(PEUVENT ÊTRE MODIFIÉES SANS PRÉAVIS)

Poids (approx.), en ordre d'expédition :		
Tracteur D6D à basse pression au sol (avec bâti de protection ROPS ouvert)		14 500 kg
Bulldozer 6S à basse pression au sol (pour utilisation avec commande hydraulique)		2 110 kg
Treuil (vitesses standard et petite)		1 000 kg
Commandes hydrauliques :	A vide	Avec huile
Réservoir et distributeur :		
Un distributeur	95 kg	130 kg
Deux distributeurs	115 kg	150 kg
Trois distributeurs	115 kg	150 kg
Troisième distributeur	20 kg	—
Pompe	10 kg	—

DIMENSIONS

Longueur :	
Tracteur D6D (sans bulldozer, treuil, commande hydraulique)	3 940 mm
Hauteur :	
Tracteur D6D à basse pression au sol	3 060 mm
Bulldozer 6S à basse pression au sol (lame)	1 030 mm
Largeur :	
Tracteur D6D à basse pression au sol :	
Sans lame	3 025 mm
Avec lame	3 230 mm
Voie (entre centres des chaînes)	2 110 mm
Garde au sol	310 mm
Vitesse linéaire (câble de treuil) :	
Tambour vide :	
Vitesse standard	29,6 m/mn
Petite vitesse	18,9 m/mn
Tambour plein :	
Vitesse standard	50,3 m/mn
Petite vitesse	39,3 m/mn
Diamètre du câble	19 mm
Capacité de tambour (câble d'un diamètre de 19 mm) :	
Vitesse standard	99,4 m
Petite vitesse	119,5 m

MARQUAGE DU NUMÉRO DE SÉRIE

PLAQUE PRINCIPALE — Sur la tôle inférieure droite de tablier dans le poste de conduite.
TRACTEUR — Sur la face arrière du bâti AR renfermant les embrayages de direction.
MOTEUR — Sur le côté supérieur gauche arrière du bloc-cylindres.
TRANSMISSION — Sur la transmission.
BULLDOZER — Au coin supérieur droit de lame.
COMMANDE HYDRAULIQUE — Sur le côté supérieur gauche du réservoir.
TREUIL — Sur le côté gauche du treuil, en avant.

ESPECIFICACIONES

(SUJETAS A CAMBIO SIN PREVIO AVISO)

Peso de embarque aproximado
- Tractor D6D B.P.S. (Baja Presión sobre el Suelo) (con ROPS abierta) . . . . . 14 500 kg
- Hoja Empujadora 6S B.P.S. (equipado, para utilizarse con el control hidráulico) . . . . . 2110 kg
- Malacate (con velocidad baja y estándar) . . . . . 1000 kg

Controles Hidráulicos:

Tanque y válvula:	Vacío	Con aceite
De una válvula	90 kg	130 kg
De dos válvulas	115 kg	150 kg
De tres válvulas	115 kg	150 kg
Tercera válvula	20 kg	—
Bomba	10 kg	—

DIMENSIONES

Longirud:
- Tractor D6D (sin hoja empujadora, malacate, control hidráulico) . . . . 3940 mm

Alto:
- Tractor D6D B.P.S. . . . . 3060 mm
- Hoja empujadora 6S B.P.S. . . . . 1030 mm

Ancho de la hoja empujadora D6D (B.P.S.):
- Sin la hoja . . . . . 3025 mm
- Con la hoja. . . . . 3710 mm

Entervía (cadenas de centro a centro) . . . . . 2110 mm

Despeje del suelo. . . . . 310 mm

Velocidad de los cables del malacate
- Tambor desnudo:
  - Velocidad estándar . . . . . 29,6 m
  - Velocidad baja . . . . . 18,13 m
- Tambor lleno:
  - Velocidad estándar . . . . . 50,3 m
  - Velocidad baja . . . . . 39,3 m

Tamaño del cable . . . . . 19 mm

Capacidad del tambor:
- Velocidad estándar . . . . . 99,4 m
- Velocidad baja . . . . . 119,5 m

UBICACION DE LAS PLACAS CON EL NUMERO DE SERIE DE LA MAQUINA

Placa Maestra — En el compartimiento del operador en el lado derecho inferior de la placa del tablero.

Placa del Tractor — En la cara trasera de la corona y la caja del embrague de dirección.

Placa del Motor — En el lado izquierdo de la parte trasera superior del bloque del motor.

Placa de la Transmisión — En la transmisión

Placa de la Hoja Enpujadora — En la esquina del lado derecho superior de la hoja.

Placa del Sistema Hidráulico — En el lado izquierdo extremo, encima del tanque.

Placa del Malacate — En el lado izquierdo de la hoja del malacate.

ESPECIFICAÇÕES

(SUJEITAS A ALTERAÇÕES SEM AVISO PRÉVIO)

Peso de embarque (aproximado):		
Trator (com estrutura ROPS aberta)		14 500 kg
Lâmina 6S (para uso com comando hidráulico)		2 110 kg
Guincho (velocidade normal e lento)		1 000 kg
Comando hidráulico:		
Reservatório e válvula:	Vazio	Cheio
Para uma só válvula	90 kg	130 kg
Para duas válvulas	115 kg	150 kg
Para três válvulas	115 kg	150 kg
Terceira válvula	20 kg	—
Bomba	10 kg	—

DIMENSÕES

Comprimento:	
Máquina (sem lâmina, guincho, comando hidráulico)	3 940 mm
Altura:	
Máquina	3 060 mm
Lâmina 6S	1 030 mm
Largura:	
Máquina (sem lâmina)	3 025 mm
Máquina (com lâmina)	3 710 mm
Bitola (centro a centro das esteiras)	2 110 mm
Altura livre por baixo	310 mm
Velocidade do cabo (metros por minuto):	
Tambor vazio:	
Velocidade normal	29,6 m
Velocidade lento	18,3 m
Tambor cheio:	
Velocidade normal	50,3 m
Velocidade lento	39,3 m
Diâmetro do cabo	19 mm
Capacidade do tambor (cabo de 19 mm):	
Velocidade normal	99,4 m
Velocidade lento	119,5 m

SITUAÇÃO DAS PLACAS COM OS NÚMEROS DE SÉRIE

PRINCIPAL: no lado direito inferior do painel de instrumentos,.
MÁQUINA: atrás da caixa da coroa e embreagem de direção.
MOTOR: no lado esquerdo superior do bloco do motor.
TRANSMISSÃO: na caixa de mudanças.
LÂMINA: no lado direito superior do lâmina.
COMANDO HIDRÁULICO: no lado esquerdo superior do reservatório hidráulico.
GUINCHO: no lado esquerdo do guincho, na frente.

TECHNISCHE DATEN

(UNVERBINDLICH, ÄNDERUNGEN VORBEHALTEN)

Versandgewicht, etwa:		
Kettendozer D6D (Moorausführung) (mit Überroll-Schutzdach)		14 500 kg
Schwenkschild 6S (für Moorausführung) (ausgerüstet für Hydrauliksteuerung)		2 110 kg
Seilwinde (Normal- und Kriechgang)		1 000 kg
Hydrauliksteuerung:		
Tank und Ventil:	leer	voll
Einzelventil	90 kg	130 kg
Doppelventil	115 kg	150 kg
Drillingsventil	115 kg	150 kg
Drittes Ventil	20 kg	–
Pumpe	10 kg	–

ABMESSUNGEN

Länge:	
Kettendozer D6D (Moorausführung) (ohne Planierschild, Seilwinde, Hydrauliksteuerung)	3 940 mm
Höhe:	
Kettendozer D6D (Moorausführung)	3 060 mm
Schwenkschild 6S	1 030 mm
Breite:	
Kettendozer D6D (Moorausführung):	
ohne Schild	3 025 mm
mit Schild	3 710 mm
Spurweite	2 110 mm
Bodenfreiheit	310 mm
Seilgeschwindigkeit (m/min):	
Leere Trommel:	
Normalgang	29,6 m
Kriechgang	18,3 m
Volle Trommel:	
Normalgang	50,3 m
Kriechgang	39,3 m
Seilstärke	19 mm
Fassungsvermögen der Seiltrommel (19 mm (3/4") Seil):	
Normalgang	99,4 m
Kriechgang	119,5 m

LAGE DER SERIENNUMMERNSCHILDER

SAMMELSCHILD – Unten rechts am Armaturenbrett im Fahrerhaus.
MASCHINE – Rückwärts am Tellerrad- und Lenkkupplungsgehäuse.
MOTOR – Oben links rückwärts am Motorblock.
GETRIEBE – Am Getriebegehäuse.
PLANIERSCHILD – Oben rechts an der Schildrückseite.
HYDRAULIK – Ganz links an der Tankoberseite.
SEILWINDE – Links vorne am Windengehäuse.