RUTHZIL TRATOR COMERCIAL DE PEÇAS LTDA 11 97083-6812 ROLANDO CITRANGULO

CATERPILLAR®

XEBP9733-01
JUNHO 1988

parts

D6D Tractor

Powered by 3116 Engine

6HC00001 — UP[Vehicle]
10Z05342 — UP[Engine]

XEBP9733-01

PARTS BOOK

D6D Tractor

Powered by 3306 Engine

SERIAL NUMBER

VEHICLE: 6HC1-UP
ENGINE: 10Z5342-UP
HYDRAULIC CONTROL:
37X2527-UP
38X2756-UP
39X1308-UP
BULLDOZER: 7CC1-UP
RIPPER: 12H3801-UP
WINCH: 36U1274-UP

PUBLISHED 6-1988

SHIN CATERPILLAR MITSUBISHI LTD.

MACHINE IDENTIFICATION Caterpillar machines are identified with SERIAL NUMBERS. Serial numbers are assigned to the chassis and to the engine. The chassis and the engine also carry ARRANGEMENT NUMBERS and in some cases MODIFICATION NUMBERS. These numbers are shown on the serial number plates and on the master plate in the operator's compartment. For the location of the serial number plates, refer to the Specification Section at the back of this Parts Book.

Caterpillar dealers need these numbers to determine which components were included on the machine when it was assembled at the factory. This permits accurate identification of replacement part numbers.

ORDERING PARTS Quality Caterpillar Replacement parts are available from Caterpillar dealers throughout the world. Their parts stocks are up to date and include all parts normally required to protect your investment in Caterpillar machines. When ordering parts, your order should specify the quantity, part number, part name and the serial number, arrangement number and any modification numbers of the machine for which the parts are needed. If in doubt about the part number, please provide your dealer with a complete description of the needed item.

HOW TO USE THE PARTS BOOK Caterpillar Parts Books include illustrations of the groups or assemblies which make up the machine. These illustrations show the standard components plus many of the attachments available for the machine.

The alphabetical index located in the front part of the book should be used to determine the page number on which specific illustrations are shown. Reference to those pages will identify each of the individual serviceable parts.

Captions The caption under each illustration identifies the part number and name of the group or assembly shown. If more than one illustration is included for any group, the caption identifies the specific machine serial numbers to which each illustration applies. In some cases it is not possible to determine the specific machine serial numbers to which different illustrations are applicable. In those cases the caption identifies the illustration as "First Type", "Second Type", etc. Reference to the actual group or assembly is necessary in those cases to determine which illustration should be used.

Captions provide additional information such as page numbers where illustrations of sub assemblies are shown, information reguarding quantities used and other information intended to assist the user in determining parts needs.

Indented Part Names Within each illustration is a parts list identifying each serviceable part in the illustration. When a part name is indented in this list, it means that serviceable item is a part of the serviceable item under which it is indented.

Abbreviations and Symbols

▲ ●		Used to call attention to additional information shown elsewhere within the illustration.
R.H.	Right Hand	Refers to the side of the machine as viewed from the operator's compartment.
L.H.	Left Hand	
C		Indicates changes from the previous illustration of the same group or assembly.
O.D.	Outside Diameter	
I.D.	Inside Diameter	
N/S	Not Serviced	
Assem.	Assembly	
in.	Inch	
ft	Foot	
cm	Centimetre	
dm	Decimetre	

Note: Continuing improvement and advancement of product design may cause changes to your machine which may not be included in this publication. Each publication is reviewed and revised, as required, to update and include these changes in later editions.

Whenever a question arises regarding your Caterpillar product, or this publication, please consult your Caterpillar dealer for the latest available information.

ALWAYS GIVE SERIAL NUMBER WHEN ORDERING PARTS

ONLY "CATERPILLAR" PARTS GIVE "CATERPILLAR" PERFORMANCE

COLLAR ABBREVIATION

RD	RED
WH	WHITE
OR	ORANGE
YL	YELLOW
PK	PINK
BK	BLACK
GY	GRAY
PU	PURPLE
BR	BROWN
GN	GREEN
BU	BLUE
T	TAN
DK/BU	DARK BLUE
DK/GN	DARK GREEN
LT/BU	LIGHT BLUE
LT/GN	LIGHT GREEN

INDEX

A

Name	Page
Accessory Drive	62
Air Cleaner	43
Air Conditioner	238
Air Conditioner Arrangement—Heats & Cools	233
Air Conditioner Lines	237
Air Filter Service Indicator	43
Air Lines	45, 46
Alternator	73
Alternator—Charging	71

B

Name	Page
Battery	81
Battery & Wiring	80
Blade	180
Blower—Cab Pressurizer	224
Blower Fan & Guard	37
Brake Band & Lining	119
Brake Hydraulic Mechanism	114
Brake—Steering	116
Breather—Engine Crankcase Oil	32
Brush Guard	133
Bulldozer Arrangement	179
Bulldozer Cylinder	174
Bulldozer Lines	167
Bulldozer Trunnion	179

C

Name	Page
Cab Heater	243
Cab Liner—ROPS	218
Cab Mounting	216
Cab Pressurizer—ROPS	221
Canopy	232
Camshaft	12
Cap—Engine Oil Filler	32
Cap—Fuel Tank	49
Cap—Fuel Tank Protection	55
Cap—Hydraulic Tank	152
Cap—Radiator	35
Cap—Radiator Protection Cover	36
Clutch—Flywheel	93
Clutch—Steering	113
Compressor—Refrigerant	236
Condenser—Air Conditioner	240
Connecting Rod & Piston	12
Control—Decelerator	52
Control—Flywheel Clutch	92
Control—Gearshift	97
Control—Governor	50
Control—Governor Torque	63
Control—Steering Clutch	110
Core—Radiator	36
Cover—Cylinder Block	11
Cover—Cylinder Head	15
Cover—Front Housing	18
Cover—Fuel Transfer Pump	61
Cover & Grab Iron	124
Cover—Valve Mechanism	16
Crankcase Guard	124
Crankshaft	10
Crankshaft Pulley	20
Crankshaft Seal	11
Cylinder Block	8
Cylinder Head	13
Cylinder Head Cover	15
Cylinder Head Fastener	15

D

Name	Page
Damper	23
Dash	129
Decelerater Control	52
Disconnect Switch—Battery	84
Door Hold Back Latch	218

Name	Page
Drawbar	125

E

Name	Page
Electric Horn	208
Engine Arrangement	7A
Engine Enclosure	132
Engine Lifting	17
Engine Oil Filler	32
Engine Oil Filter	41
Engine Oil Lines	31
Engine Oil Pump	29
Engine Support	21, 22
Equalizer Bar & Suspention	142
Ether Starting Aid	91
Exhaust Manifold	48
Exhaust Manifold Fastener	48
Exhaust Pipe—Muffler	47

F

Name	Page
Fan & Guard—Blower	37
Fan Drive	23
Fan—Reversible	37
Fastener—Cylinder Head	15
Fastener—Front Housing	18
Fastener—Oil Pan	27
Fasteners—Exhaust Manifold	48
Fender	127
Fender Support	126
Filler—Engine Oil	32
Filter—Fuel	56
Filter—Engine Oil	41
Filter—Transmission	106
Final Drive	108
Final Drive Wear Guard	107
Flood Lamp	89
Floorplate	128
Flywheel	25
Flywheel Clutch	93
Flywheel Clutch Control	92
Flywheel Housing	24
Frame & Case	122
Front Counterweight	138
Front Housing	17
Front Housing Cover	18
Front Housing Fastener	18
Front Idler	140
Front Pull Hook	125
Front Timing Gear	19
Fuel Filter	56
Fuel Injection Lines	67
Fuel Injection Pump	66
Fuel Lines	53
Fuel Priming Pump & Filter	56
Fuel Tank	49
Fuel Tank Guard	49
Fuel Tank Protection Cap	55
Fuel Transfer Pump Cover	61
Fumes Disposal—Engine Crankcase Breather	33

G

Name	Page
Gasket Kits	28
Gauge—Engine	206
Gauge—Engine Oil Level	28
Gauge—Fuel Pressure	207
Gauge—Oil Pressure	207
Gauge—Water Temperature	207
Gauges	206
Gear—Front Timing	19
Gearshift Control	97
Governor	64
Governor & Fuel Injection Pump	63
Governor Control	50
Grease Gun	246
Guard—Crankcase	124
Guard—Engine Side Upper	134
Guard—Radiator	137
Guard—Track Roller	147A
Guard—Track Roller Frame	144
Guard—Vandalism	135
Guards—Blower Fan	37

H

Name	Page
Hand Tools	245
Hood & Dash	129
Horn — Electric	208
Housing — Flywheel	24
Housing & Regulator	39
Hydraulic Control Arrangement	149
Hydraulic Hand Control	176
Hydraulic Tank Mounting	151

I

Idler — Front	140
Indicator — Air Filter Service	43

K

Key — Battery Disconnect Switch	84
Kits — Gasket	28
Kits — Related Repair	248

L

Lamp — Flood	89
Lighting & Wiring — 4 Lamp	86
Lines — Air	45
Lines — Air Conditioner	237
Lines — Bulldozer	167
Lines — Cab Heater	242
Lines — Engine Oil	31
Line — Fuel	53
Lines — Fuel Injection	67
Lines — Ripper	170
Lines — Tilt Cylinder	169
Lines — Turbocharger Oil	45
Lines — Water	39
Linkage — Flywheel Clutch Control	92
Linkage — Gearshift Control	97
Linkage — Governor Control	50
Linkage — Steering Brake	116
Linkage — Steering Clutch Control	110
Low Temperature Starting	90

M

Name	Page
Manifold — Exhaust	48
Mounting — Cab — ROPS	216
Mounting — Fuel Transfer Pump	60A
Mounting — ROPS	121
Muffler	47

N

Name Plates & Films	247
Neutral Start	89

O

Oil Cooler — Engine	41
Oil Cooler — Transmission	40
Oil Filler — Engine	32
Oil Filler Cap Protection Cover	33
Oil Filter	41
Oil Level Gauge	28
Oil Level Gauge Protection	29
Oil Lines — Engine	31
Oil Pan	27
Oil Pan Fastener	27
Oil Pump — Engine	29

P

Pedals — Steering Brake	118
Piston	12
Power Train Oil Lines	102
Precleaner — Air Cleaner	42
Prescreener	42
Primary Fuel Filter	57
Protection Cap — Fuel Tank	55
Protection Cap — Hydraulic Tank	151
Protection Cap — Oil Filler	33
Protection Cap — Radiator	36
Protection Cover — Oil Level Gauge	29
Pulley — Alternator	61
Pulley — Crankshaft	20
Pulley — Fan Drive	20
Pulley — Refrigerant Compressor	236
Pump — Engine Oil	29

Name	Page
Pump—Fuel Injection	66
Pump—Fuel Priming	56
Pump—Fuel Transfer	60
Pump—Water	38
Pump Lines—Hydraulic	172
Pump Lines—Power Train	103
Pump Lines—Winch	173

R

Radiator	34
Radiator Cap	35
Radiator Guard	137
Rear Gear	26
Refrigerant Compressor	235
Refrigerant Compressor Arrangement	233
Regulator—Housing	39
Reversible Fan	37
Ripper	185
Ripper Arrangement	184
Ripper Cylinder	175
Ripper Lines	170
Ripper Mounting	186
Rod & Piston	12
Roll-Over Protective System—Enclosed	213
Roll-Over Protective System—Open	209
Roll-Over Protective System Mounting	120

S

Safety Brace	219
Seal—Crankshaft	11
Seat	202
Seat & Support	199
Seat Belt	205
Segmented Sprocket	107
Service Meter	207
Specifications	250
Starting Motor—Electric—24 Volt	69
Steering Brake	116
Steering Brake Pedal	118
Steering Clutch	113
Steering Clutch Control	110
Support—Fender	126
Support—Front Engine	21
Suspension Seat	202
Sweep	136
Switch—Battery Disconnect	84
Switch—Starter	84

T

Tilt Cylinder Lines	169
Timing Gears—Front	19
Tools—Hand	245
Torque Control	63
Track	148
Track Carrier Roller	145
Track Roller—Double Flange	147
Track Roller Frame	143
Track Roller Frame Guard	144
Track Roller—Single Flange	146
Transmission	100
Trunnion—Bulldozer	179
Trunnion—Engine	19
Turbocharger	44
Turbocharger Oil Lines	45

V

Valves—Intake & Exhaust	13
Valve Mechanism	16
Valve Mechanism Cover	16
Vandalism Guard	135

W

Water Lines	39
Water Pump	38
Winch Arrangement	187
Wiring Diagram—Battery and Wiring	83

Consists of:

CENTRAL STRUCTURE

			Page
1	7N8016	Cylinder Block Group	8
1	7N9779	Cylinder Block Cover Group	11
1	6N8079	Crankshaft Group	10
1	2P6226	Crankshaft Seal Group	11
6	1W6588	Connecting Rod & Piston Group	12
1	2P6202	Camshaft Group	12

UPPER STRUCTURE

1	7N8876	Cylinder Head Group	13
1	7N9536	Cylinder Head Fastener Group	15
1	7N8026	Valve Mechanism Group	16
1	8N4745	Valve Mechanism Cover Group	16
1	7N7858	Engine Lifting Group	17
1	2P6531	Cylinder Head Cover Group	15

FRONT STRUCTURE

1	7N3999	Front Housing Group	17
1	2P6498	Front Housing Fastener Group	18
1	1W6445	Front Timing Gear Group	19
1	2P7838	Damper Group	23
1	1W2457	Engine Support Group	21
1	7N2887	Crankshaft Pulley Group	20
1	4N5162	Front Housing Cover Group	18
1	7N9589	Engine Trunnion Group	19

REAR STRUCTURE

1	6N2514	Flywheel Housing Group	24
1	7S7875	Flywheel Group	25
1	2P8161	Rear Gear Group	26

LOWER STRUCTURE

1	2P6152	Oil Pan Group	27
1	2P6206	Oil Pan Fastener Group	27
1	2P6493	Oil Level Gage Group	28

J34090E

Consists of:

LUBRICATION SYSTEM

			Page
1	2P1784	Engine Oil Pump Group	29
1	2P6105	Engine Oil Lines Group	31
1	1P4244	Breather Group	32
1	4N5139	Oil Filler Group	32

COOLING SYSTEM

1	7N5909	Water Pump Group	38
1	2W6779	Water Lines Group	39
1	2W5636	Filter Base & Engine Oil Cooler Group	41
1	2W6780	Transmission Oil Cooler Group	40

INTAKE & EXHAUST SYSTEM

1	7N3884	Air Lines Group	45
1	6N164	Exhaust Manifold Group	48
1	8N2669	Turbocharger Group	44
1	7N4001	Turbocharger Oil Lines Group	45
1	2P6534	Exhaust Manifold Fastener Group	48

FUEL SYSTEM

1	7W3326	Governor & Fuel Injection Pump Group	63
1	7N5769	Fuel Injection Lines Group	67
1	8N4515	Accessory Drive Group	62
1	1P6835	Primary Fuel Filter Group	57
1	8N9162	Fuel Priming Pump & Filter Group	56
1	7S4429	Fuel Transfer Pump Group	60
1	7N4077	Fuel Transfer Pump Cover Group	61

J34091E

Consists of:

CENTRAL STRUCTURE

			Page
1	8N5286	Cylinder Block Group	8
1	2Y8623	Cylinder Block Cover Group	11A
1	6N8079	Crankshaft Group	10
1	2P6226	Crankshaft Seal Group	11
6	1W6588	Connecting Rod & Piston Group	12
1	1N4406	Camshaft Group	12A

UPPER STRUCTURE

1	7N8876	Cylinder Head Group	13
1	7N9536	Cylinder Head Fastener Group	15
1	7N8026	Valve Mechanism Group	16
1	8N4745	Valve Mechanism Cover Group	16
1	7N7858	Engine Lifting Group	17
1	2P6531	Cylinder Head Cover Group	15

FRONT STRUCTURE

1	8N303	Front Housing Group	17A
1	8N872	Front Housing Fastener Group	18A
1	1W5634	Front Timing Gear Group	19A
1	7W1221	Damper Group	23A
1	1W2457	Engine Support Group	21
1	7N2887	Crankshaft Pulley Group	20
1	4N5162	Front Housing Cover Group	18
1	7N9589	Engine Trunnion Group	19

REAR STRUCTURE

1	6N2514	Flywheel Housing Group	24
1	7S7875	Flywheel Group	25
1	2P8161	Rear Gear Group	26

LOWER STRUCTURE

1	2P6152	Oil Pan Group	27
1	2P6206	Oil Pan Fastener Group	27
1	2P6493	Oil Level Gage Group	28

J34092E

Consists of:

LUBRICATION SYSTEM

			Page
1	2P1784	Engine Oil Pump Group	29
1	2P6105	Engine Oil Lines Group	31
1	1P4244	Breather Group	32
1	4N5139	Oil Filler Group	32

COOLING SYSTEM

1	7N5909	Water Pump Group	38
1	2W6779	Water Lines Group	39
1	2W5636	Filter Base & Engine Oil Cooler Group	41
1	2W6780	Transmission Oil Cooler Group	40

INTAKE & EXHAUST SYSTEM

1	7N3884	Air Lines Group	45
1	6N164	Exhaust Manifold Group	48
1	8N2669	Turbocharger Group	44
1	8N1501	Turbocharger Oil Lines Group	45A
1	1W4486	Exhaust Manifold Fastener Group	48A

FUEL SYSTEM

1	7C737	Governor & Fuel Injection Pump Group	63A
1	1W3609	Fuel Injection Lines Group	68
1	2W1011	Secondary Filter Group	56B
1	8N1180	Primary Fuel Filter Group	56A
1	2W1605	Drain Lines Group	55
1	2W4160	Fuel Transfer Pump & Mounting Group	60A

J34093E

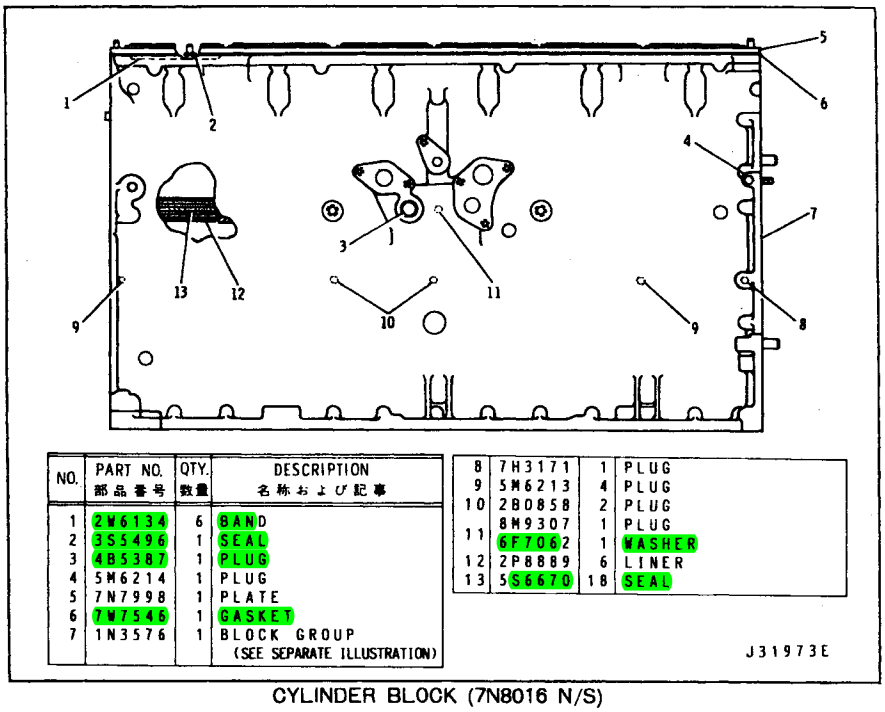

NO.	PART NO. 部品番号	QTY. 数量	DESCRIPTION 名称および記事
1	2W6134	6	BAND
2	3S5496	1	SEAL
3	4B5387	1	PLUG
4	5M6214	1	PLUG
5	7N7998	1	PLATE
6	7W7546	1	GASKET
7	1N3576	1	BLOCK GROUP (SEE SEPARATE ILLUSTRATION)
8	7H3171	1	PLUG
9	5M6213	4	PLUG
10	2B0858	2	PLUG
11	8M9307	1	PLUG
	6F7062	1	WASHER
12	2P8889	6	LINER
13	5S6670	18	SEAL

CYLINDER BLOCK (7N8016 N/S)

Effective with Serial No. 10Z5342~10Z13019

1N3576 Cylinder Block parts are shown on Page 9

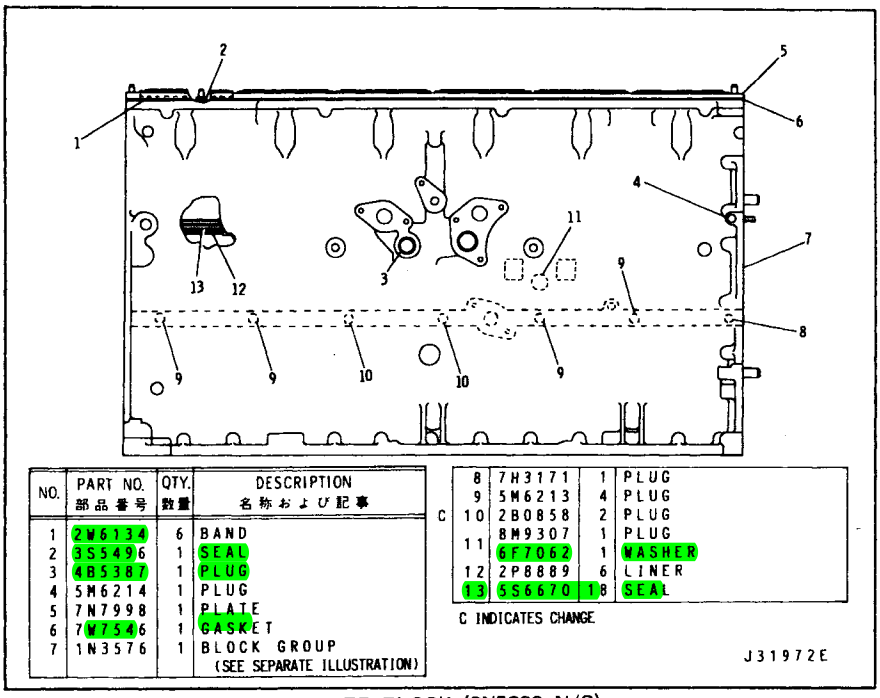

NO.	PART NO. 部品番号	QTY. 数量	DESCRIPTION 名称および記事
1	2W6134	6	BAND
2	3S5496	1	SEAL
3	4B5387	1	PLUG
4	5M6214	1	PLUG
5	7N7998	1	PLATE
6	7W7546	1	GASKET
7	1N3576	1	BLOCK GROUP (SEE SEPARATE ILLUSTRATION)
8	7H3171	1	PLUG
9	5M6213	4	PLUG
C 10	2B0858	2	PLUG
11	8M9307	1	PLUG
	6F7062	1	WASHER
12	2P8889	6	LINER
13	5S6670	18	SEAL

C INDICATES CHANGE

CYLINDER BLOCK (8N5286 N/S)

Effective with Serial No. 10Z13020-UP

1N3576 Cylinder Block parts are shown on Page 9

1N3576 CYLINDER BLOCK GROUP

Effective with Serial No. 10Z5342 – UP

Part of Cylinder Block

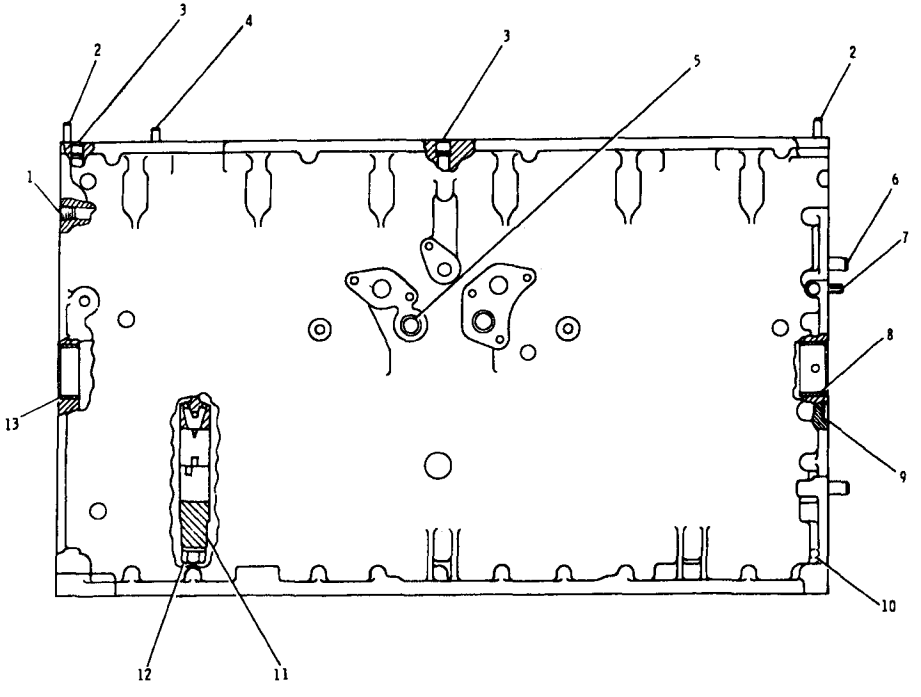

NO.	PART NO. 部品番号	DESCRIPTION 名称および記事	QTY. 数量
1	3J6019	PLUG	1
2	8K1207	DOWEL	2
3	5B7652	DOWEL	2
4	1S9540	DOWEL	1
5	4B5387	PLUG	1
6	8B6349	DOWEL	2
7	5S8462	STUD	1
8	8N4110	BEARING	1
9	4B3938	PLUG	1
10	4B9782	BALL	1
11	1P2717	CAP	7
12	7S3224	BOLT	14
	2S5658	WASHER	14
13	7M4046	BEARING	4
		The Following Kit are Available :	
	6N7727	KIT (CYLINDER BLOCK HARDWARE) (Include Orifice , Plug , Dowel , Sleeve)	1
	XJHS6809	FORM (Japanese)	1
	SMHS6809	FORM (English) (Installation Instruction of Cylinder Block)	1

J26196E

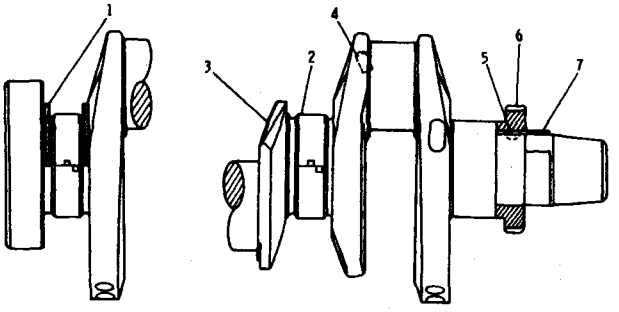

NO.	PART NO. 部品番号	QTY. 数量	DESCRIPTION 名称および記事
1	7N9342	2	PLATE
	4W5738	7	BEARING
●	8N8225	7	BEARING (1.25mm UNDERSIZE)
● 2	8N8226	7	BEARING (0.51mm UNDERSIZE)
●	8N8227	7	BEARING (0.76mm UNDERSIZE)
3	2W7458	1	CRANKSHAFT ASSEM.
4	9F2247	6	PLUG
5	5H2671	1	KEY
6	1W4405	1	GEAR (40 TEETH)
7	2P3859	1	SLEEVE

● NOT PART OF CRANKSHAFT 6N8079

J28460E

CRANKSHAFT (6N8079 N/S)

Effective with Serial No. 10Z5342 – UP

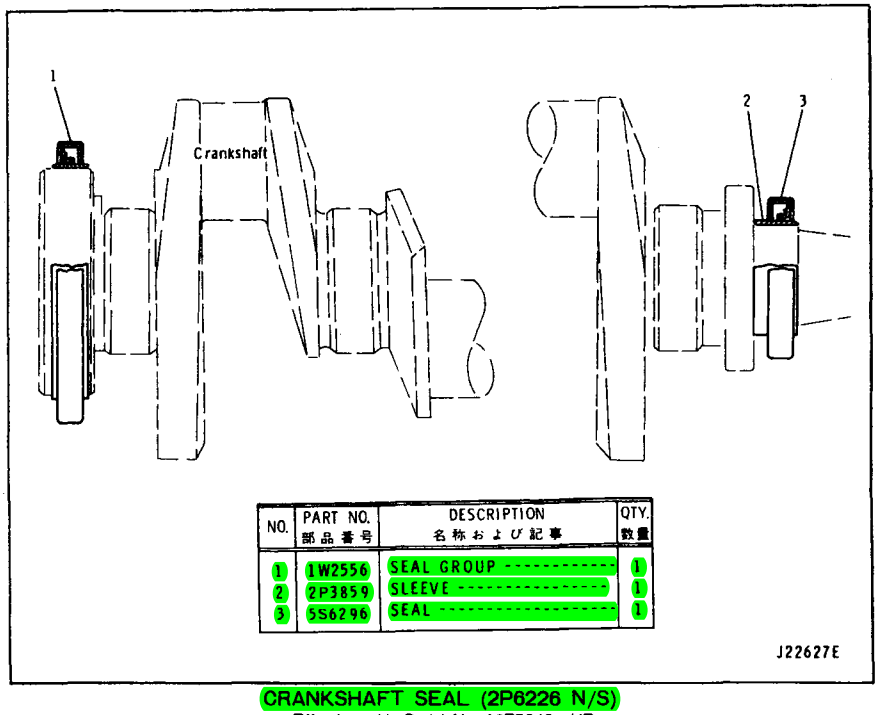

NO.	PART NO. 部品番号	DESCRIPTION 名称および記事	QTY. 数量
1	1W2556	SEAL GROUP ----------	1
2	2P3859	SLEEVE ----------	1
3	5S6296	SEAL ----------	1

CRANKSHAFT SEAL (2P6226 N/S)
Effective with Serial No. 10Z5342—UP

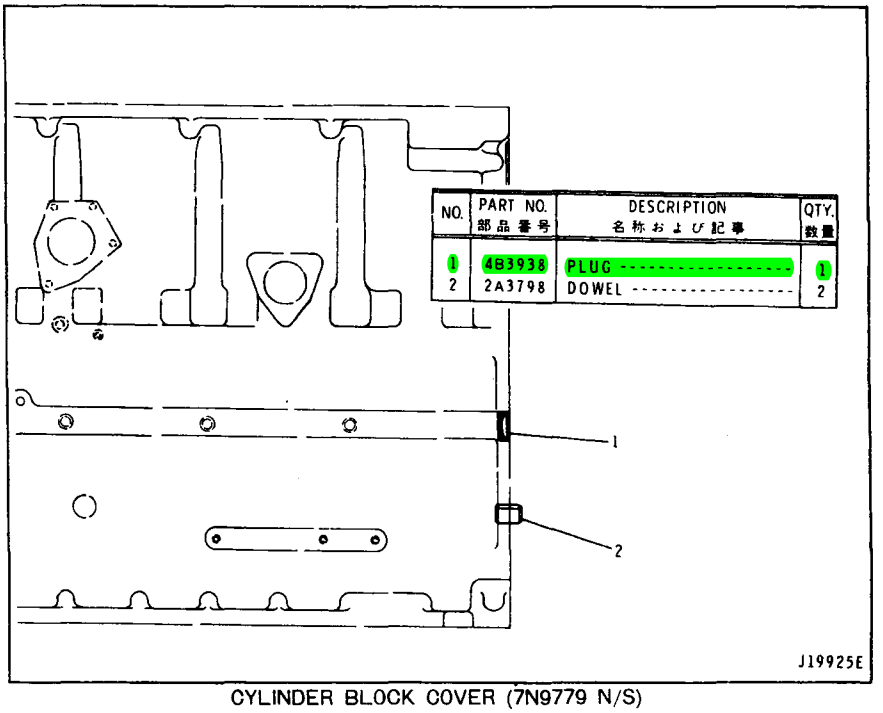

NO.	PART NO. 部品番号	DESCRIPTION 名称および記事	QTY. 数量
1	4B3938	PLUG ----------	1
2	2A3798	DOWEL ----------	2

CYLINDER BLOCK COVER (7N9779 N/S)
Effective with Serial No. 10Z5342~10Z12860

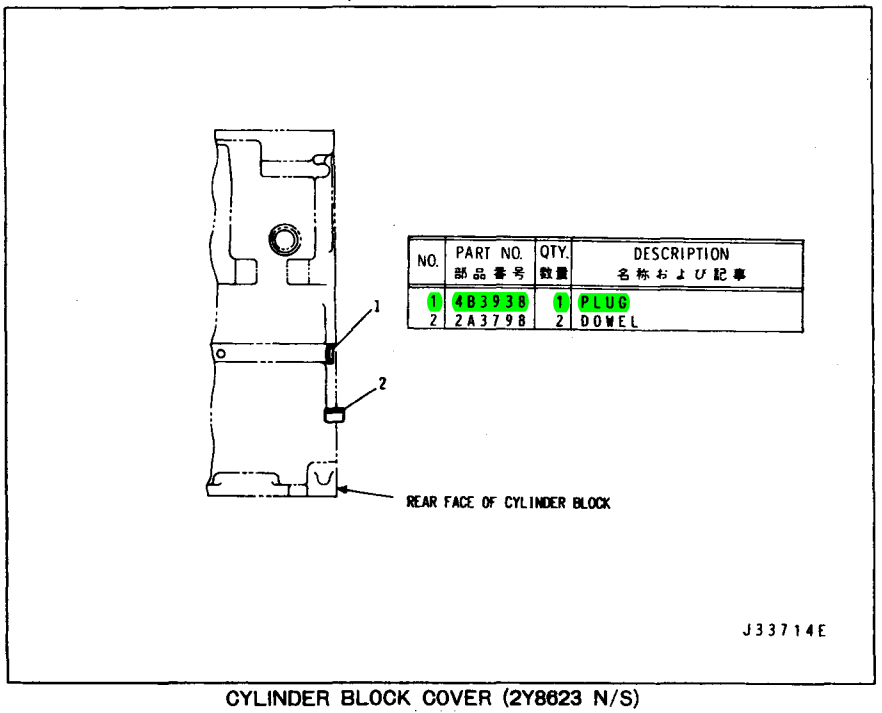

NO.	PART NO. 部品番号	QTY. 数量	DESCRIPTION 名称および記事
1	4B3938	1	PLUG
2	2A3798	2	DOWEL

CYLINDER BLOCK COVER (2Y8623 N/S)
Effective with Serial No. 10Z12861 – UP

MEMO

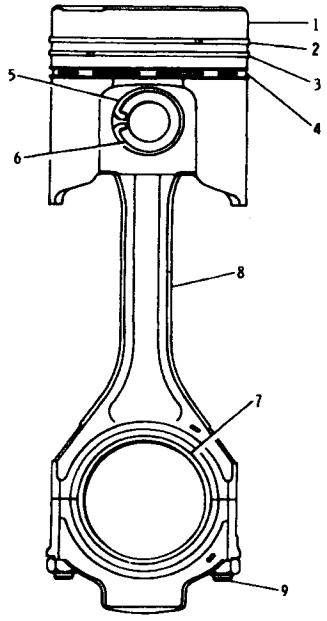

NO.	PART NO. 部品番号	DESCRIPTION 名称および記事	QTY. 数量
1	1W6759	PISTON GROUP ----------	1
▲ 2	9S3029	RING (Top) ----------	1
▲ 3	5S6750	RING (Intermediate) -----	1
▲ 4	9L6934	RING (Oil) ----------	1
5	1S9543	RETAINER ----------	2
6	7N9805	PIN ----------	1
7	4W5739	BEARING (Standerd) -------	1
	8N8221	BEARING (0.25mm Undersise)	1
	8N8222	BEARING (0.51mm Undersize)	1
	8N8223	BEARING (0.76mm Undersize)	1
8	8N1721	CONECTING ROD ASSEM. -------	1
	8N1849	BEARING ----------	1
9	1P9956	BOLT ----------	2
	5S6348	NUT ----------	2
		The Following Repair Kit is Available :	
	2W6091	RING GROUP----------	1
		(Consists of Parts Marked ▲)	

J27931E

CONNECTING ROD AND PISTON (1W6588 N/S)–6 Required
Effective with Serial No. 10Z5342–UP

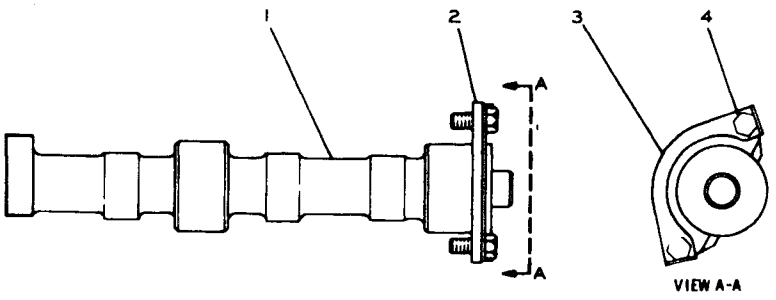

VIEW A-A

REF. NO.	PART NUMBER	DESCRIPTION	QTY
1	8N3981	CAMSHAFT----------	1
2	7S2204	WASHER----------	1
3	8S1491	LOCK----------	1
4	S509	BOLT----------	2

J20411E

CAMSHAFT (2P6202 N/S)
Effective with Serial No. 10Z5342–10Z13019

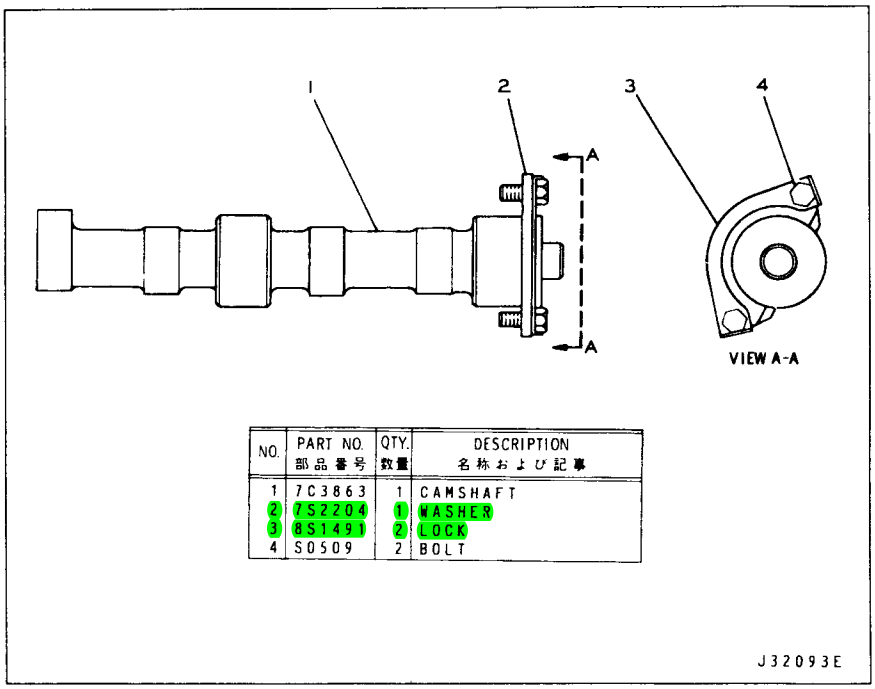

NO.	PART NO. 部品番号	QTY. 数量	DESCRIPTION 名称および記事
1	7C3863	1	CAMSHAFT
2	7S2204	1	WASHER
3	8S1491	2	LOCK
4	S0509	2	BOLT

CAMSHAFT (1N4406 N/S)

Effective with Serial No. 10Z13020 – UP

MEMO

CYLINDER HEAD (7N8876 N/S)

Effective with Serial No. 10Z5342–UP

8N6796 Cylinder Head parts are shown on Page 14

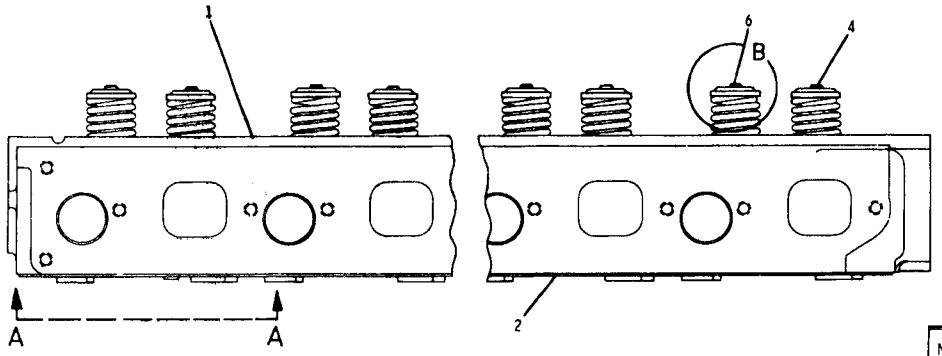

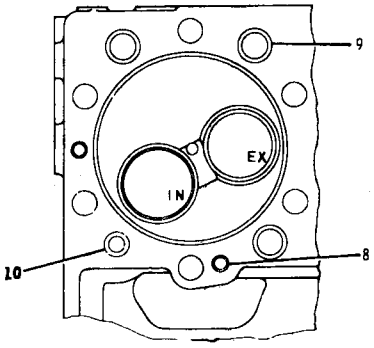

VIEW A - A

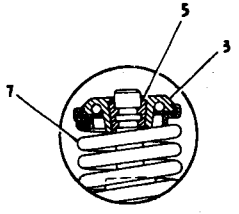

DETAIL B

NO.	PART NO. 部品番号	DESCRIPTION 名称および記事	QTY. 数量
1	8N6796	HEAD GROUP ---------- (See Separate Illustration)	1
2	7N7999	GASKET ----------	1
3	8N7782	ROTOCOIL ASSEM. -----	12
4	6N9916	VALVE (Exhaust) ---------	6
5	2A4429	LOCK ----------	24
6	6N9915	VALVE (Intake) ----------	6
7	7S7144	SPRING ----------	12
8	3S5496	SEAL (O-Ring) ----------	1
9	4W8087	SEAL (Water) ----------	18
10	7N8018	SEAL (Water) ----------	6

J29048E

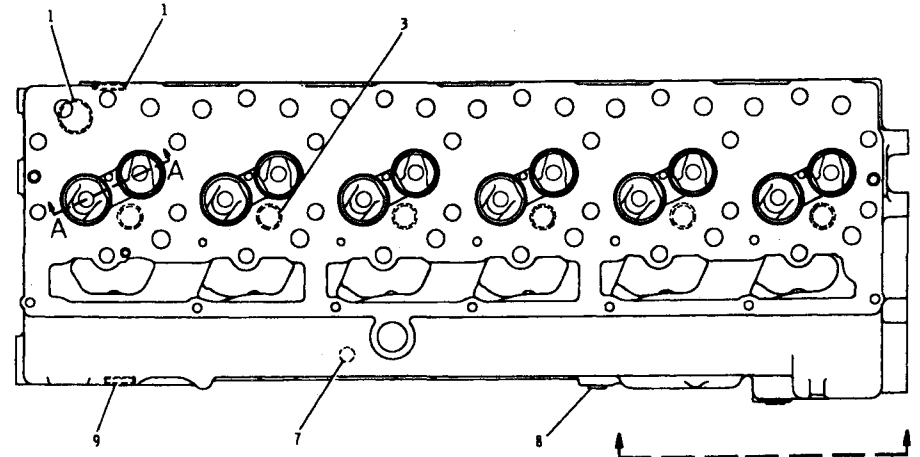

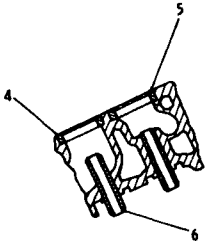

SECTION A - A

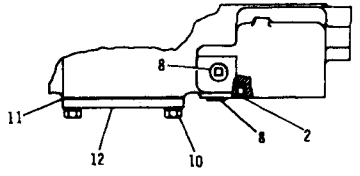

VIEW B - B

NO.	PART NO. 部品番号	QTY. 数量	DESCRIPTION 名称および記事
1	3P1896	12	PLUG
2	8N4485	1	VALVE ASSEM.
3	3B0623	6	PLUG
4	7N4448	6	INSERT(INTAKE)
5	2W4837	6	INSERT(EXHAUST)
6	2P1262	12	GUIDE
7	7H3171	1	PLUG
8	2B0858	3	PLUG
9	3S8313	7	PLUG
10	1S1594	4	BOLT
	5M2894	4	WASHER
11	5S6735	1	GASKET
12	1P6367	1	COVER

J34493E

8N6796 CYLINDER HEAD GROUP

Effective with Serial No. 10Z5342 – UP

Part of Cylinder Head

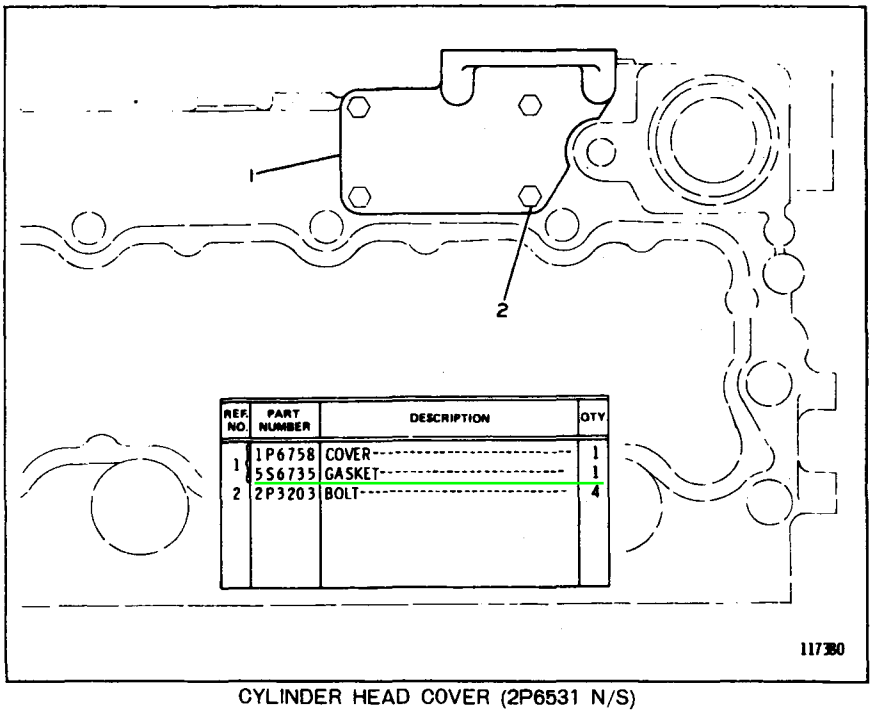

REF. NO.	PART NUMBER	DESCRIPTION	QTY
1	1P6758	COVER	1
	5S6735	GASKET	1
2	2P3203	BOLT	4

CYLINDER HEAD COVER (2P6531 N/S)
Effective with Serial No. 10Z5342–UP

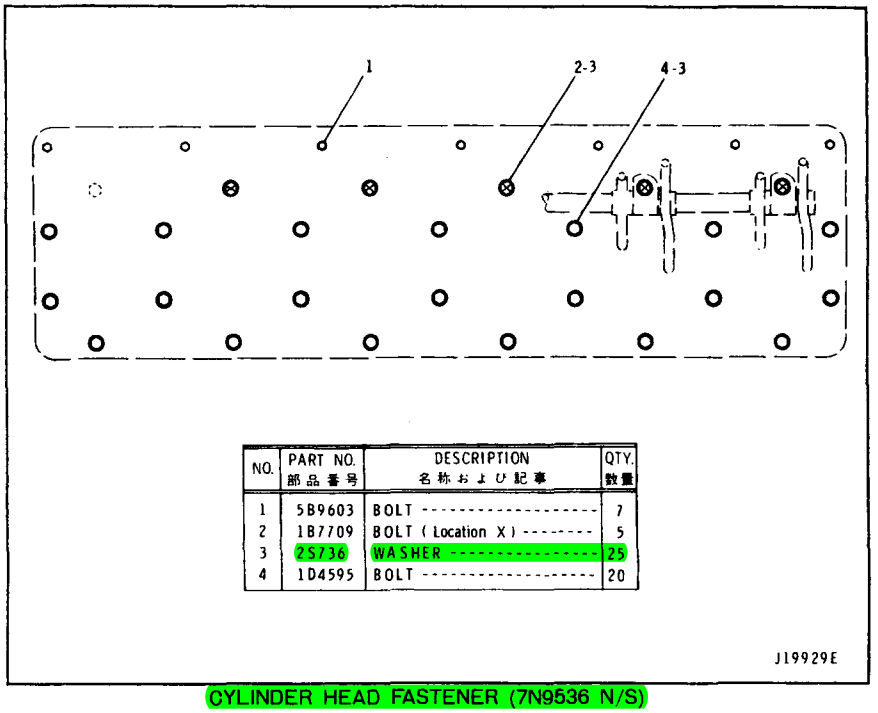

NO.	PART NO. 部品番号	DESCRIPTION 名称および記事	QTY. 数量
1	5B9603	BOLT	7
2	1B7709	BOLT (Location X)	5
3	2S736	WASHER	25
4	1D4595	BOLT	20

CYLINDER HEAD FASTENER (7N9536 N/S)
Effective with Serial No. 10Z5342–UP

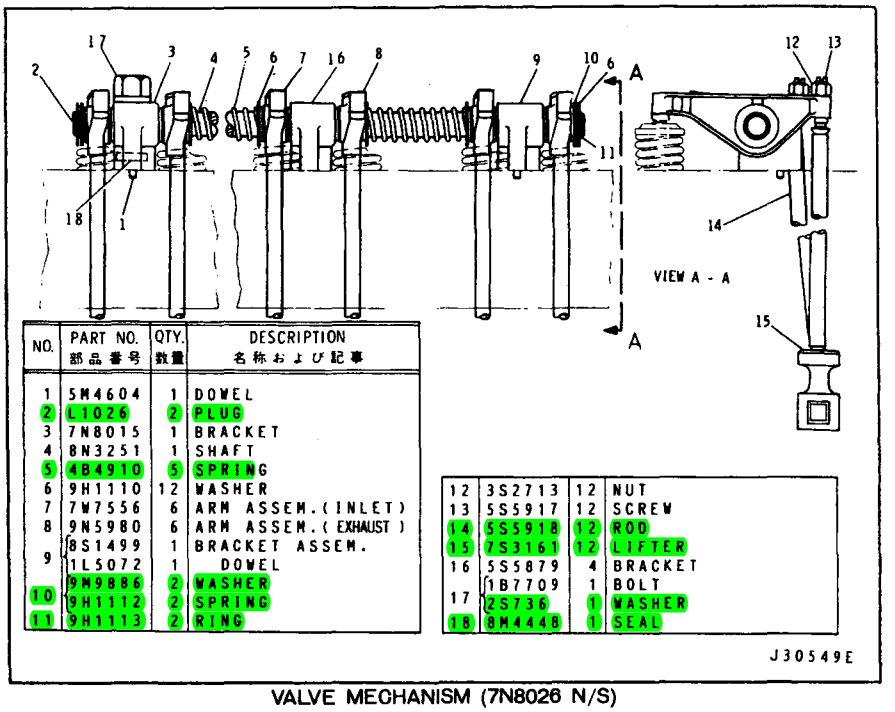

NO.	PART NO. 部品番号	QTY. 数量	DESCRIPTION 名称および記事
1	5M4604	1	DOWEL
2	L1026	2	PLUG
3	7N8015	1	BRACKET
4	8N3251	1	SHAFT
5	4B4910	5	SPRING
6	9H1110	12	WASHER
7	7W7556	6	ARM ASSEM.(INLET)
8	9N5980	6	ARM ASSEM.(EXHAUST)
9	8S1499	1	BRACKET ASSEM.
	1L5072	1	DOWEL
	9M9886	2	WASHER
10	9H1112	2	SPRING
11	9H1113	2	RING
12	3S2713	12	NUT
13	5S5917	12	SCREW
14	5S5918	12	ROD
15	7S3161	12	LIFTER
16	5S5879	4	BRACKET
17	1B7709	1	BOLT
	2S736	1	WASHER
18	8M4448	1	SEAL

VALVE MECHANISM (7N8026 N/S)
Effective with Serial No. 10Z5342–UP

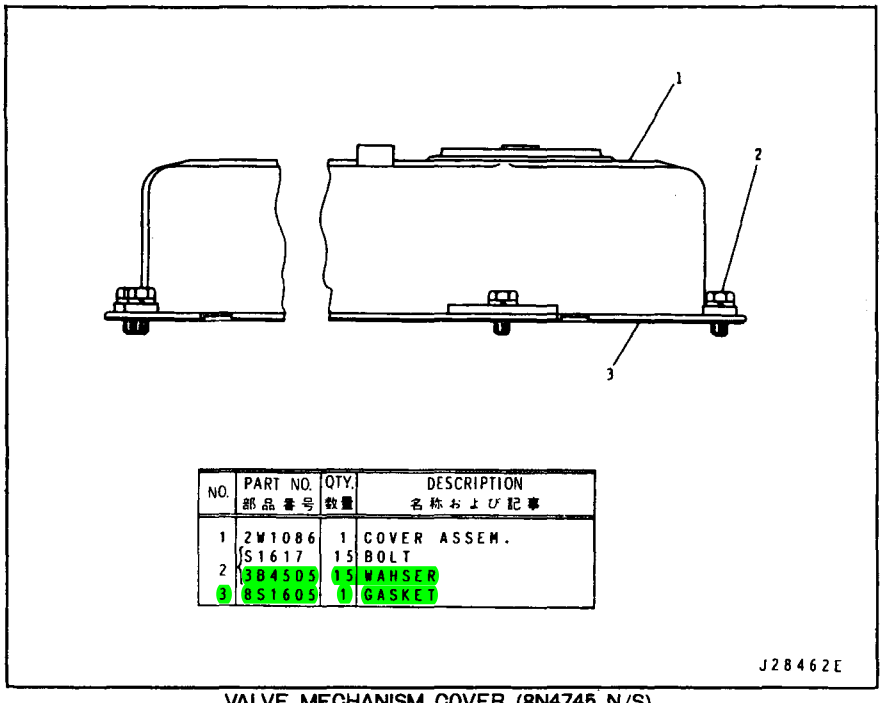

NO.	PART NO. 部品番号	QTY. 数量	DESCRIPTION 名称および記事
1	2W1086	1	COVER ASSEM.
	S1617	15	BOLT
2	3B4505	15	WASHER
3	8S1605	1	GASKET

VALVE MECHANISM COVER (8N4745 N/S)
Effective with Serial No. 10Z5342–UP

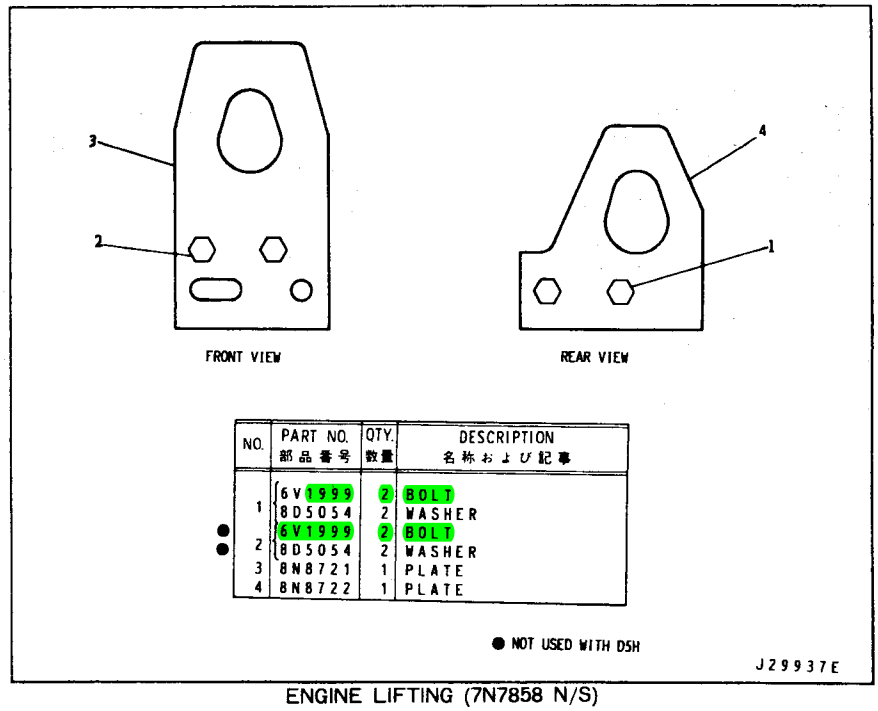

	NO.	PART NO. 部品番号	QTY. 数量	DESCRIPTION 名称および記事
	1	6V1999	2	BOLT
		8D5054	2	WASHER
●	2	6V1999	2	BOLT
●		8D5054	2	WASHER
	3	8N8721	1	PLATE
	4	8N8722	1	PLATE

● NOT USED WITH D5H

J29937E

ENGINE LIFTING (7N7858 N/S)
Effective with Serial No. 10Z5342—UP

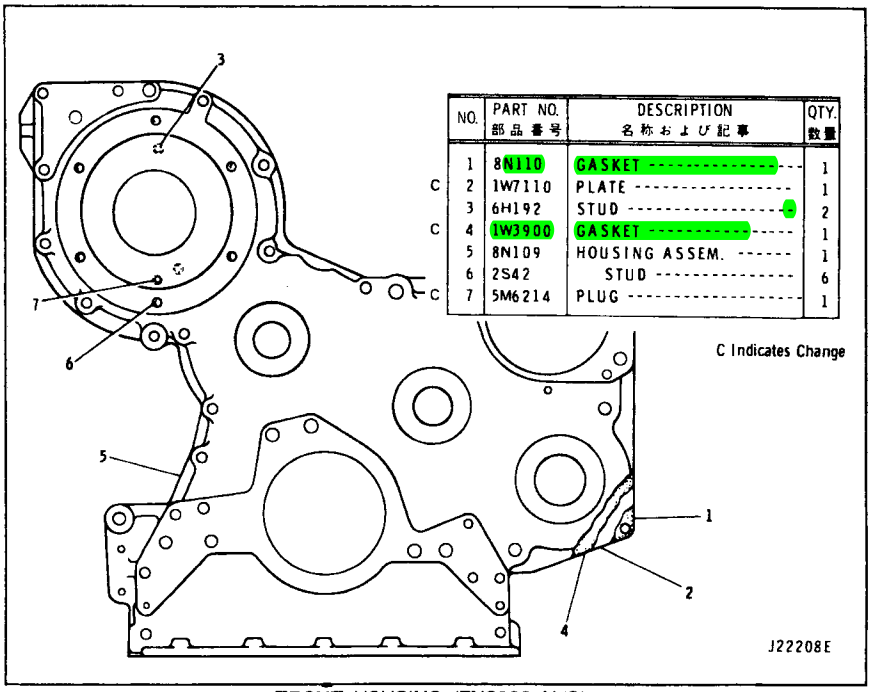

	NO.	PART NO. 部品番号	DESCRIPTION 名称および記事	QTY. 数量
	1	8N110	GASKET	1
C	2	1W7110	PLATE	1
	3	6H192	STUD	2
C	4	1W3900	GASKET	1
	5	8N109	HOUSING ASSEM.	1
	6	2S42	STUD	6
C	7	5M6214	PLUG	1

C Indicates Change

FRONT HOUSING (7N3999 N/S)
Effective with Serial No. 10Z5342~10Z13019

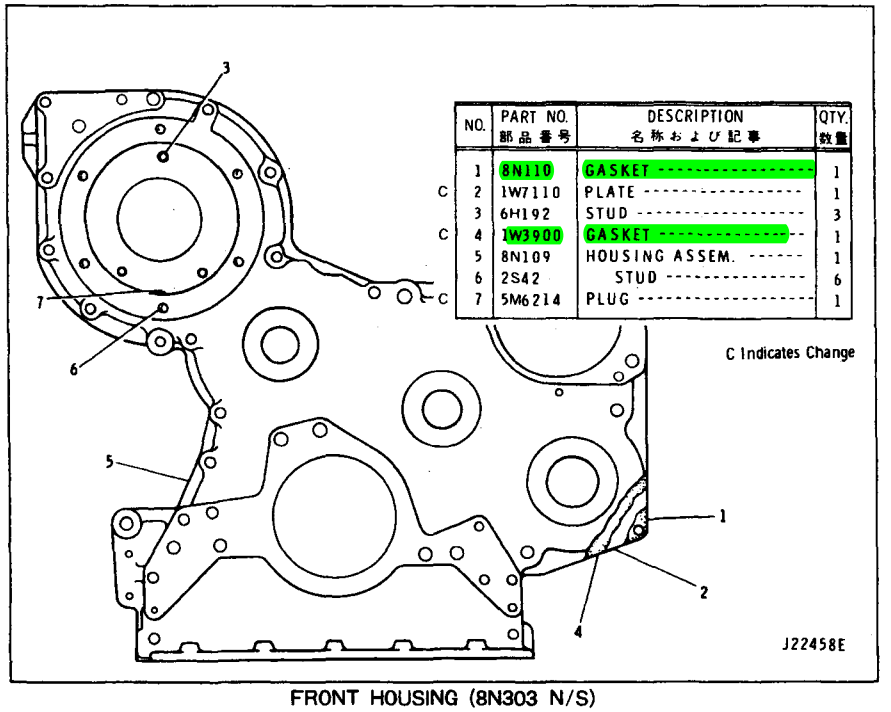

	NO.	PART NO. 部品番号	DESCRIPTION 名称および記事	QTY. 数量
	1	8N110	GASKET	1
C	2	1W7110	PLATE	1
	3	6H192	STUD	3
C	4	1W3900	GASKET	1
	5	8N109	HOUSING ASSEM.	1
	6	2S42	STUD	6
C	7	5M6214	PLUG	1

C Indicates Change

FRONT HOUSING (8N303 N/S)

Effective with Serial No. 10Z13020−UP

MEMO

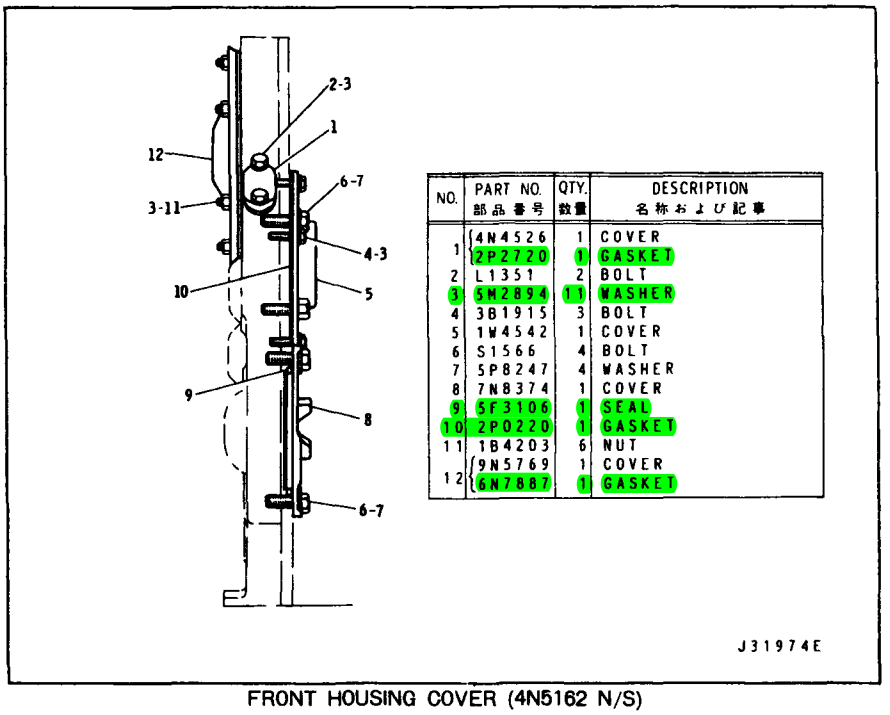

NO.	PART NO. 部品番号	QTY. 数量	DESCRIPTION 名称および記事
1	4N4526	1	COVER
	2P2720	1	GASKET
2	L1351	2	BOLT
3	5M2894	11	WASHER
4	3B1915	3	BOLT
5	1W4542	1	COVER
6	S1566	4	BOLT
7	5P8247	4	WASHER
8	7N8374	1	COVER
9	5F3106	1	SEAL
10	2P0220	1	GASKET
11	1B4203	6	NUT
12	9N5769	1	COVER
	6N7887	1	GASKET

FRONT HOUSING COVER (4N5162 N/S)
Effective with Serial No. 10Z5342–UP

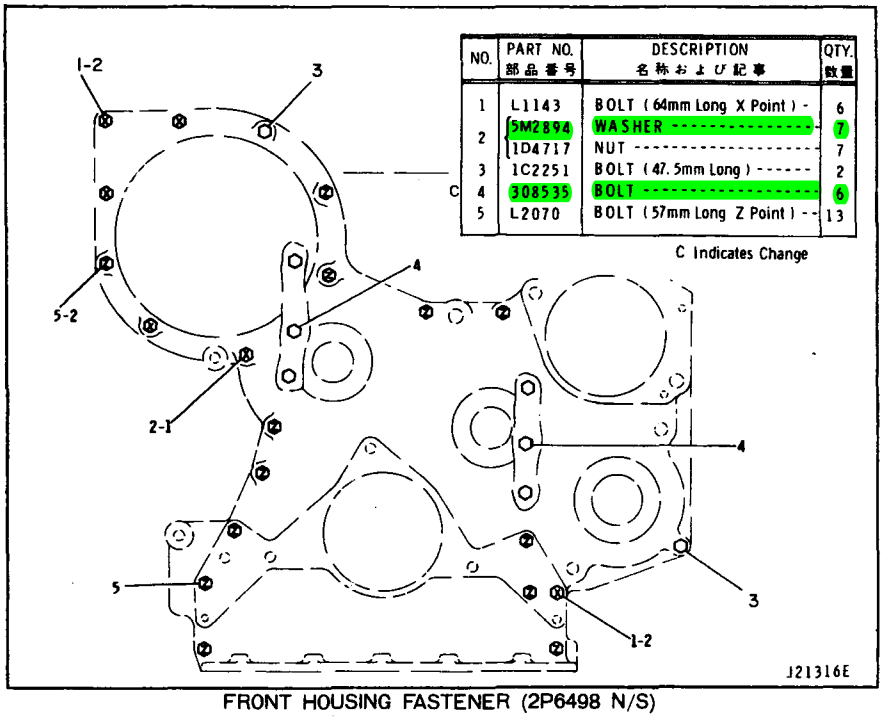

NO.	PART NO. 部品番号	DESCRIPTION 名称および記事	QTY. 数量
1	L1143	BOLT (64mm Long X Point) -	6
2	5M2894	WASHER ----------	7
	1D4717	NUT ----------	7
3	1C2251	BOLT (47.5mm Long) ------	2
4	308535	BOLT ----------	6
5	L2070	BOLT (57mm Long Z Point) --	13

C Indicates Change

FRONT HOUSING FASTENER (2P6498 N/S)
Effective with Serial No. 10Z5342~10Z13019

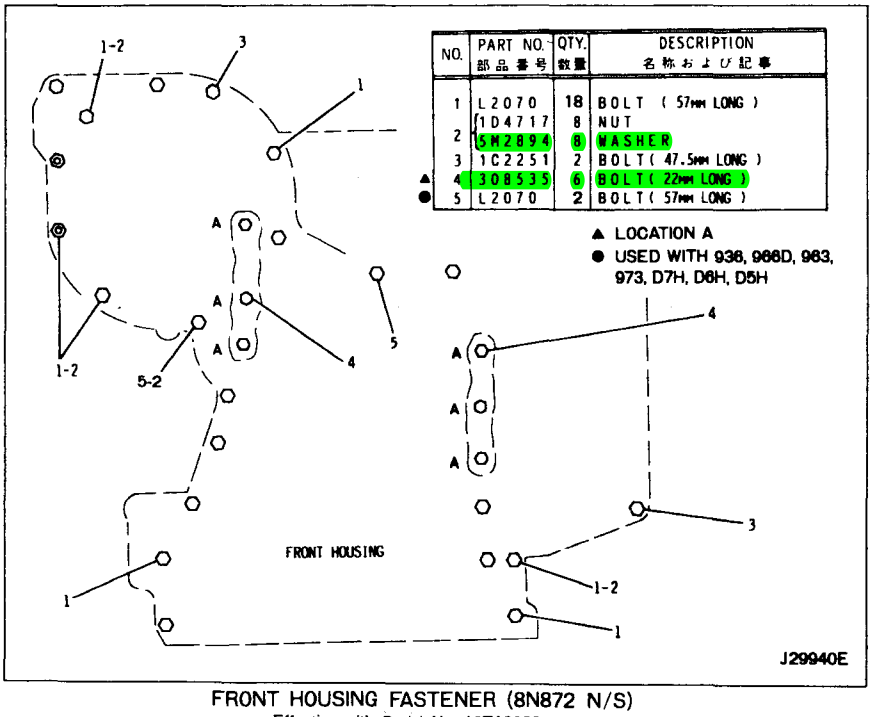

NO.	PART NO. 部品番号	QTY. 数量	DESCRIPTION 名称および記事
1	L2070	18	BOLT (57MM LONG)
	1D4717	8	NUT
2	5M2894	8	WASHER
3	1C2251	2	BOLT (47.5MM LONG)
▲ 4	308535	6	BOLT (22MM LONG)
● 5	L2070	2	BOLT (57MM LONG)

▲ LOCATION A
● USED WITH 936, 966D, 963, 973, D7H, D6H, D5H

FRONT HOUSING FASTENER (8N872 N/S)
Effective with Serial No. 10Z13020−UP

MEMO

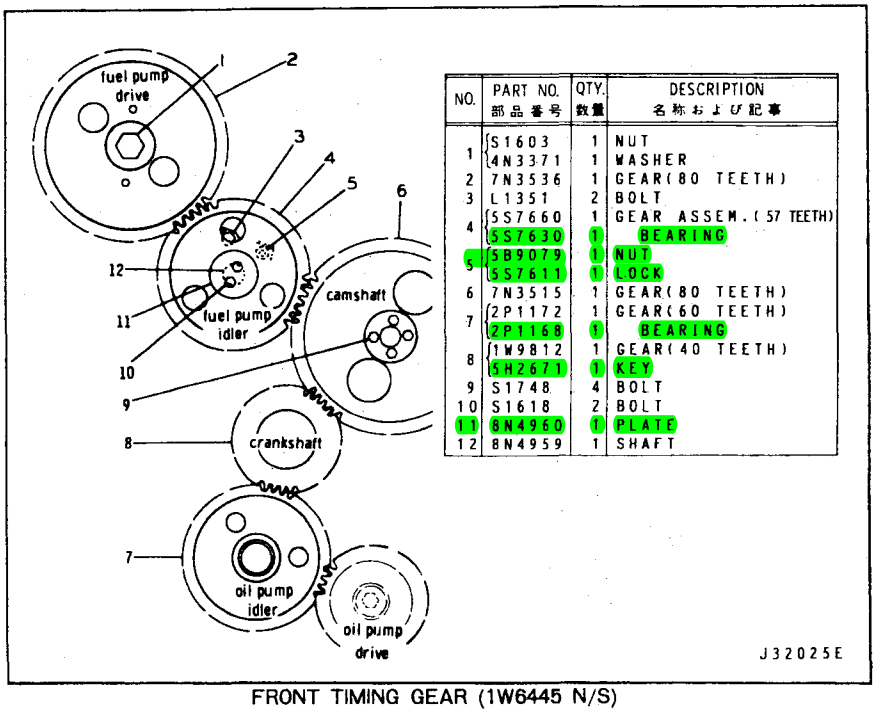

NO.	PART NO. 部品番号	QTY. 数量	DESCRIPTION 名称および記事
1	1S1603	1	NUT
	4N3371	1	WASHER
2	7N3536	1	GEAR(80 TEETH)
3	L1351	2	BOLT
4	5S7660	1	GEAR ASSEM.(57 TEETH)
	5S7630	1	BEARING
5	5B9079	1	NUT
	5S7611	1	LOCK
6	7N3515	1	GEAR(80 TEETH)
7	2P1172	1	GEAR(60 TEETH)
	2P1168	1	BEARING
8	1W9812	1	GEAR(40 TEETH)
	5H2671	1	KEY
9	S1748	4	BOLT
10	S1618	2	BOLT
11	8N4960	1	PLATE
12	8N4959	1	SHAFT

FRONT TIMING GEAR (1W6445 N/S)
Effective with Serial No. 10Z5342~10Z13019

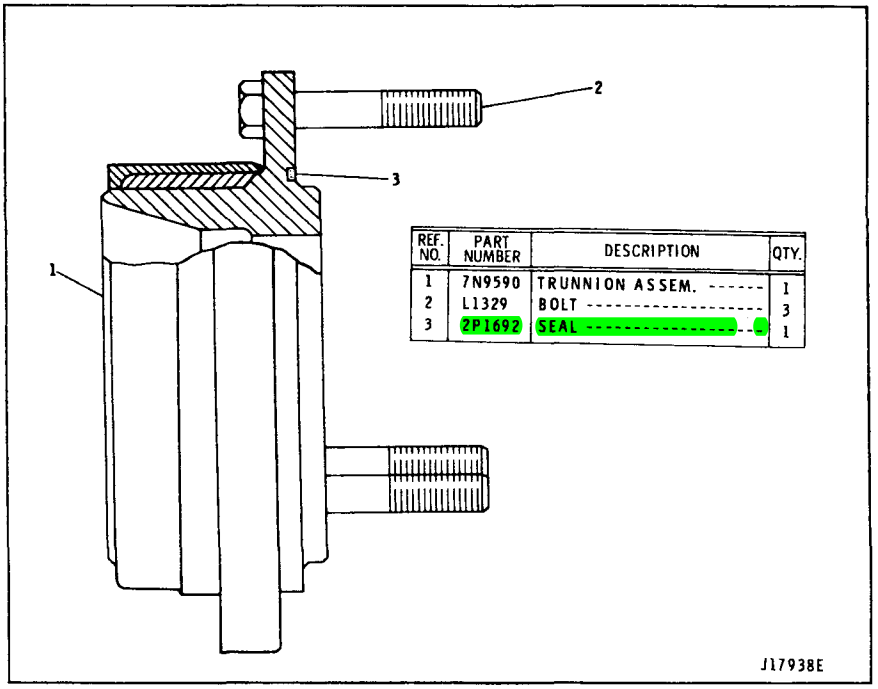

REF. NO.	PART NUMBER	DESCRIPTION	QTY.
1	7N9590	TRUNNION ASSEM.	1
2	L1329	BOLT	3
3	2P1692	SEAL	1

TRUNNION (7N9589 N/S)
Effective with Serial No. 10Z5342—UP

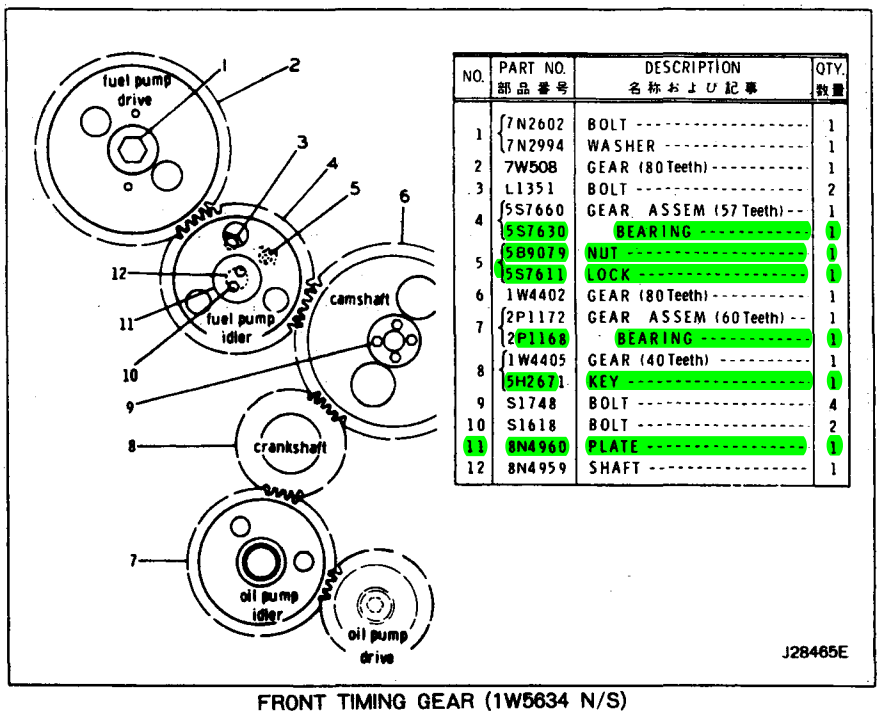

NO.	PART NO. 部品番号	DESCRIPTION 名称および記事	QTY. 数量
1	7N2602	BOLT	1
	7N2994	WASHER	1
2	7W508	GEAR (80 Teeth)	1
3	L1351	BOLT	2
4	5S7660	GEAR ASSEM (57 Teeth)	1
	5S7630	BEARING	1
5	5B9079	NUT	1
	5S7611	LOCK	1
6	1W4402	GEAR (80 Teeth)	1
7	2P1172	GEAR ASSEM (60 Teeth)	1
	2P1168	BEARING	1
8	1W4405	GEAR (40 Teeth)	1
	5H2671	KEY	1
9	S1748	BOLT	4
10	S1618	BOLT	2
11	8N4960	PLATE	1
12	8N4959	SHAFT	1

FRONT TIMING GEAR (1W5634 N/S)

Effective with Serial No. 10Z13020−UP

MEMO

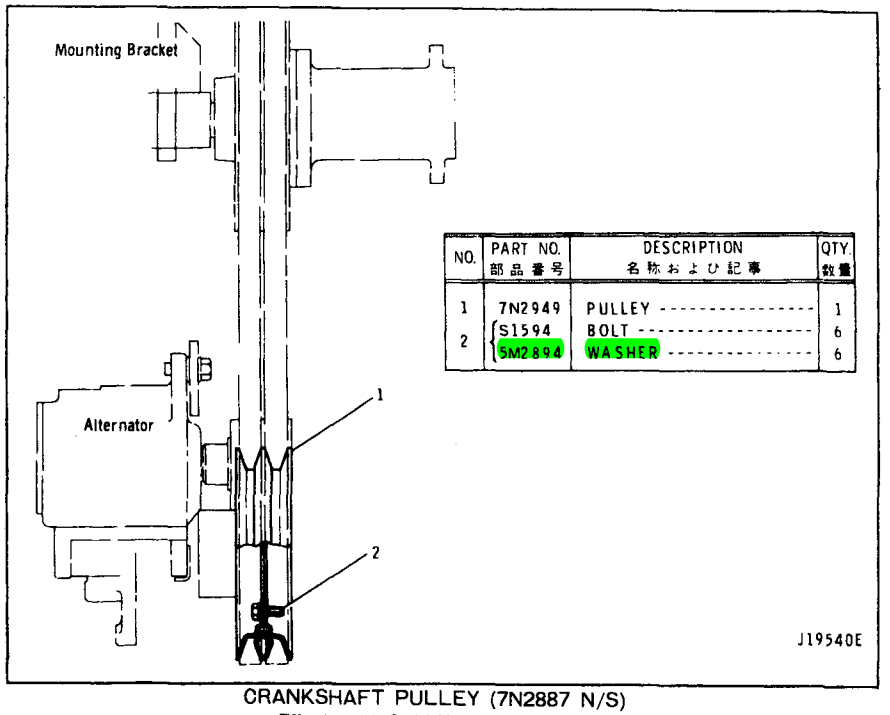

NO.	PART NO. 部品番号	DESCRIPTION 名称および記事	QTY. 数量
1	7N2949	PULLEY	1
2	S1594	BOLT	6
	5M2894	WASHER	6

CRANKSHAFT PULLEY (7N2887 N/S)
Effective with Serial No. 10Z5342 – UP

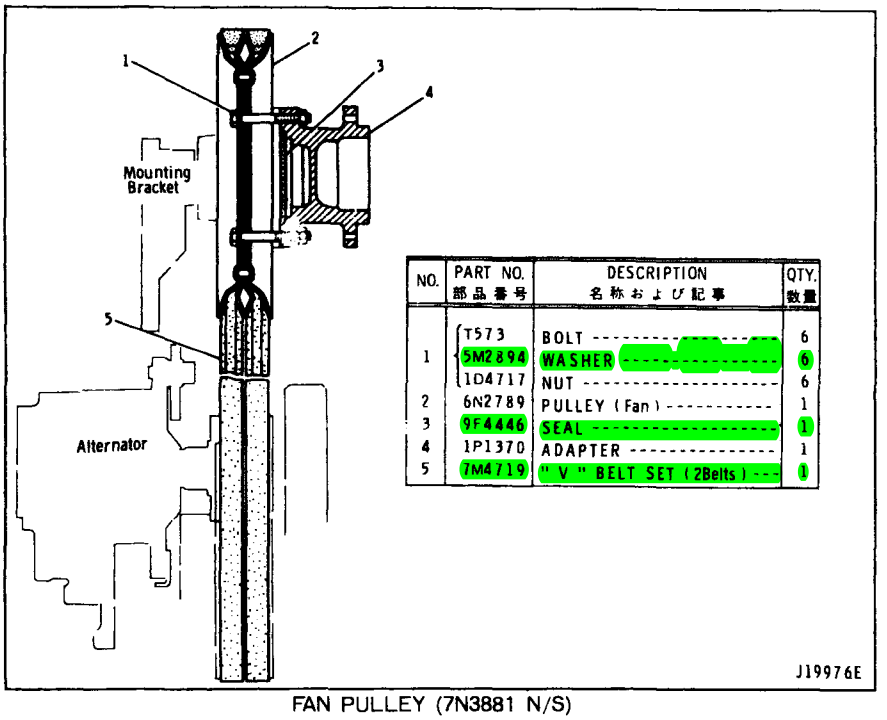

NO.	PART NO. 部品番号	DESCRIPTION 名称および記事	QTY. 数量
1	T573	BOLT	6
	5M2894	WASHER	6
	1D4717	NUT	6
2	6N2789	PULLEY (Fan)	1
3	9F4446	SEAL	1
4	1P1370	ADAPTER	1
5	7M4719	"V" BELT SET (2Belts)	1

FAN PULLEY (7N3881 N/S)
Effective with Serial No. 6HC1 – UP

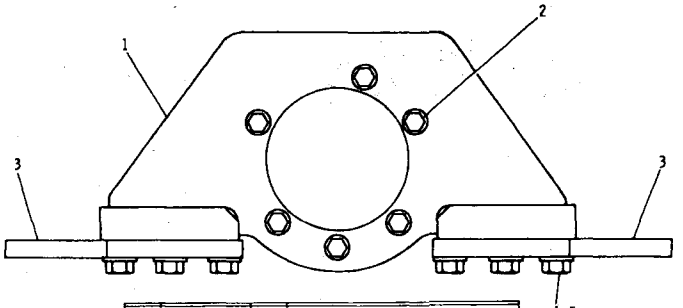

NO.	PART NO. 部品番号	QTY. 数量	DESCRIPTION 名称および記事
1	9G4057	1	SUPPORT
2	S1585	6	BOLT
	5P8245	6	WASHER
3	3T1895	2	PLATE
4	L1178	6	BOLT
5	5P8248	6	WASHER

J31799E

ENGINE SUPPORT (1W2457 N/S) – Front
Effective with Serial No. 10Z5342 – UP

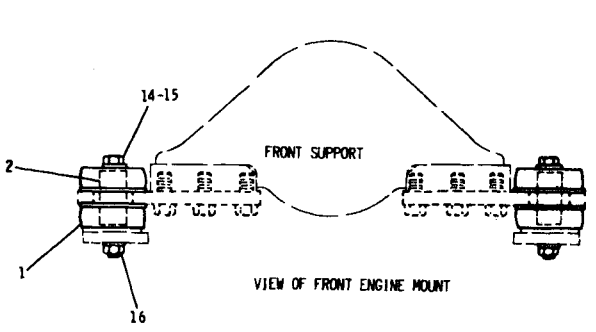

VIEW OF FRONT ENGINE MOUNT

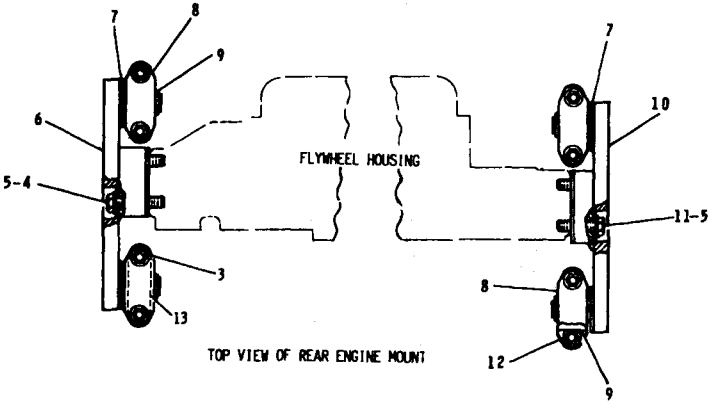

TOP VIEW OF REAR ENGINE MOUNT

NO.	PART NO. 部品番号	QTY. 数量	DESCRIPTION 名称および記事
1	6N3256	2	MOUNT ASSEM.
2	4N4539	2	SLEEVE
● 3	1B2886	8	BOLT
●	8M4791	8	WASHER
4	1A8537	2	BOLT
5	2S5658	4	WASHER
6	6N2008	1	MOUNT ASSEM.
7	6N2005	4	WASHER
8	6N2007	4	CAP
9	6N2549	4	MOUNT ASSEM.
10	6N2009	1	MOUNT ASSEM.
11	8S9092	2	BOLT
12	6N2006	4	BASE
●	6N1956	8	SHIM (0.4mm THICK)
● 13	6N1957	8	SHIM (0.8mm THICK)
●	6V1958	8	SHIM (1.6mm THICK)
● 14	1D4614	2	BOLT
● 15	5P8248	4	WASHER
● 16	2J3506	2	NUT

●NOT PART OF ENGINE SUPPORT
(6N2579 N/S)

J31798E

ENGINE SUPPORT (6N2579 N/S)
Effective with Serial No. 6HC1−UP

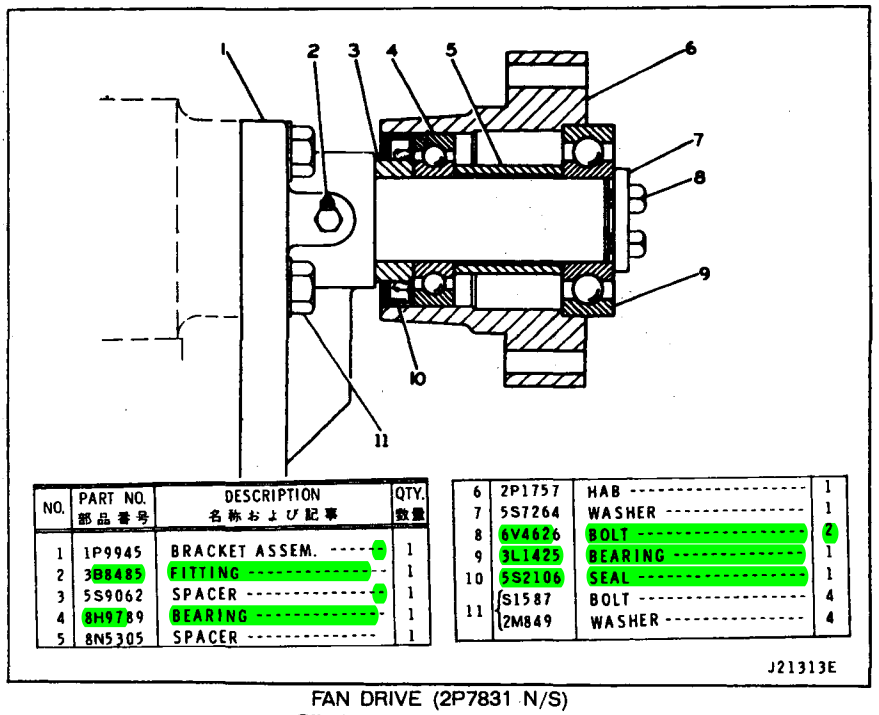

NO.	PART NO. 部品番号	DESCRIPTION 名称および記事	QTY. 数量
1	1P9945	BRACKET ASSEM.	1
2	3B8485	FITTING	1
3	5S9062	SPACER	1
4	8H9789	BEARING	1
5	8N5305	SPACER	1
6	2P1757	HAB	1
7	5S7264	WASHER	1
8	6V4626	BOLT	2
9	3L1425	BEARING	1
10	5S2106	SEAL	1
11	1S1587	BOLT	4
	2M849	WASHER	4

FAN DRIVE (2P7831 N/S)
Effective with Serial No. 6HC1 – UP

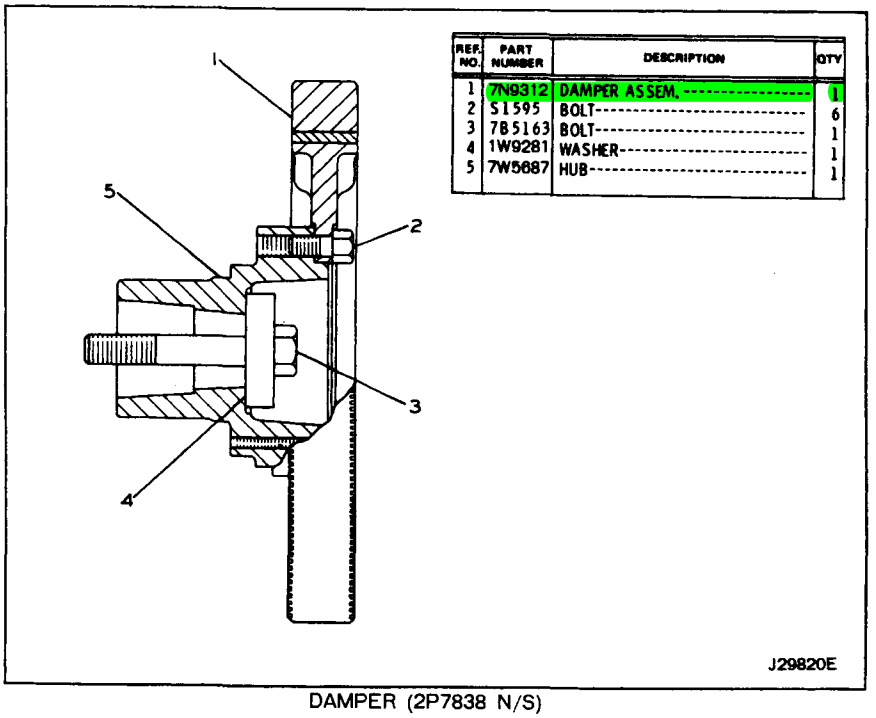

REF. NO.	PART NUMBER	DESCRIPTION	QTY
1	7N9312	DAMPER ASSEM.	1
2	S1595	BOLT	6
3	7B5163	BOLT	1
4	1W9281	WASHER	1
5	7W5687	HUB	1

DAMPER (2P7838 N/S)
Effective with Serial No. 10Z5342 – 10Z12860

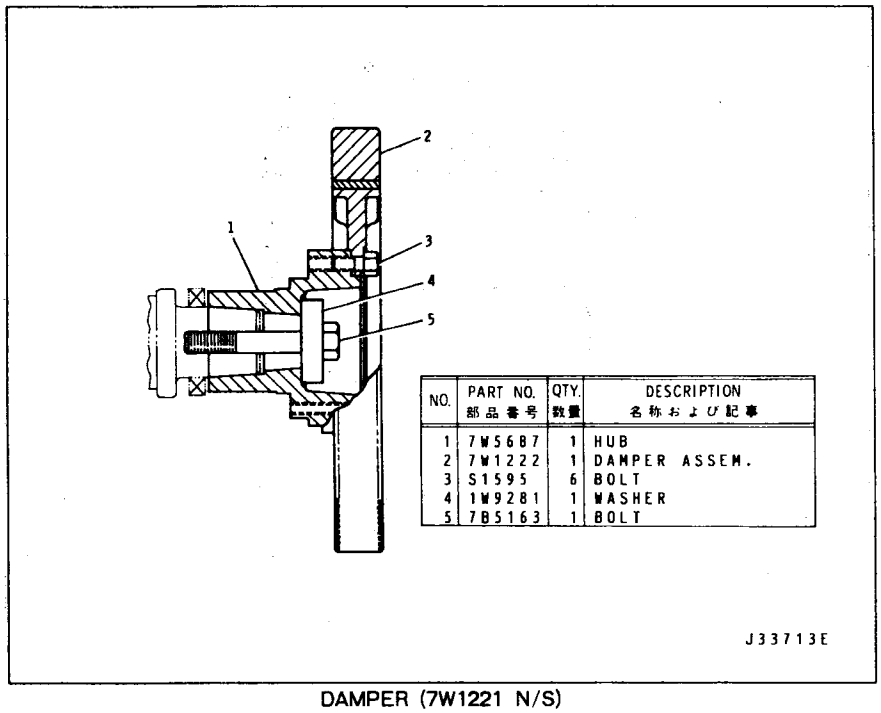

NO.	PART NO. 部品番号	QTY. 数量	DESCRIPTION 名称および記事
1	7W5687	1	HUB
2	7W1222	1	DAMPER ASSEM.
3	S1595	6	BOLT
4	1W9281	1	WASHER
5	7B5163	1	BOLT

DAMPER (7W1221 N/S)
Effective with Serial No. 10Z12861 – UP

MEMO

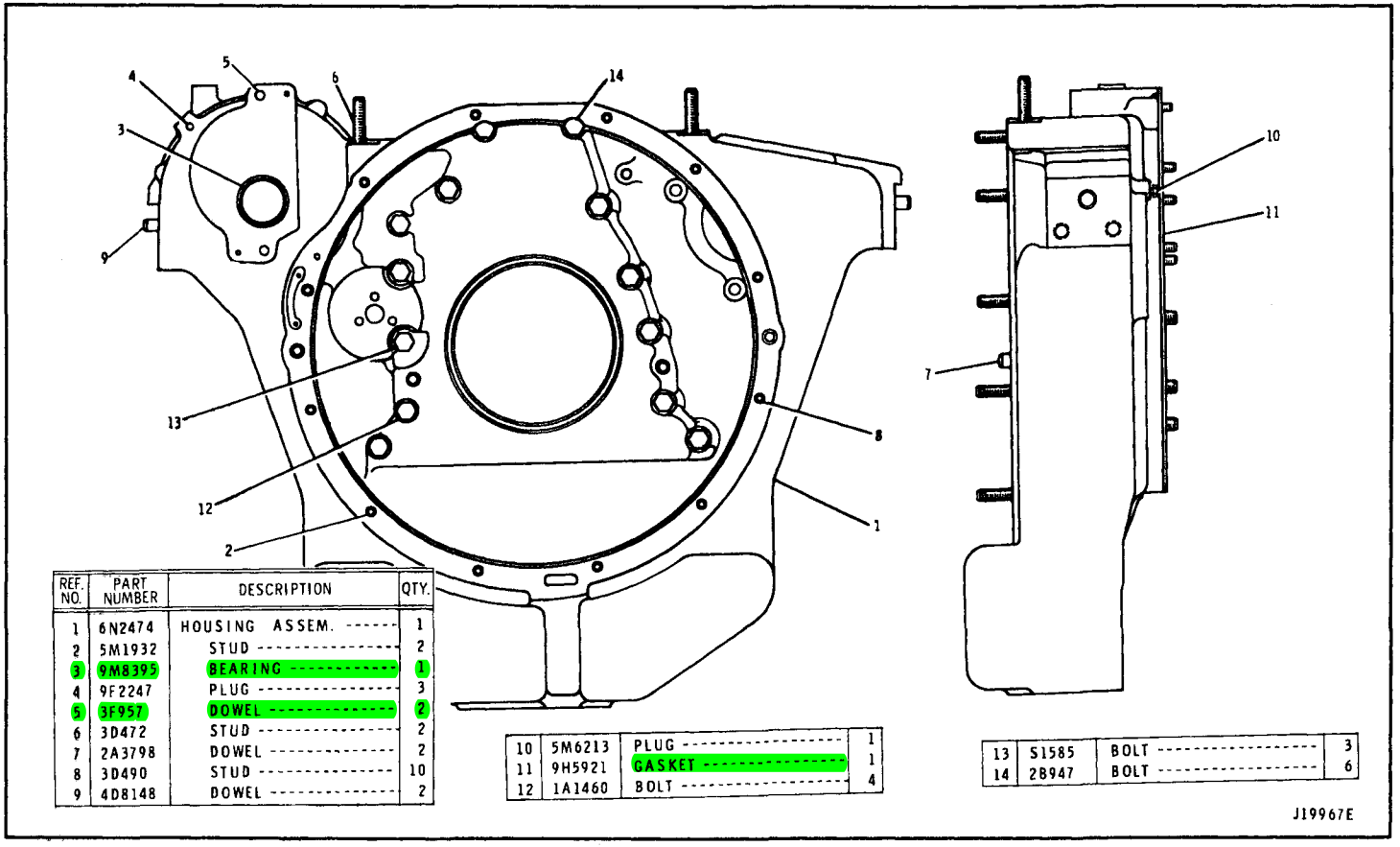

REF. NO.	PART NUMBER	DESCRIPTION	QTY.
1	6N2474	HOUSING ASSEM.	1
2	5M1932	STUD	2
3	9M8395	BEARING	1
4	9F2247	PLUG	3
5	3F957	DOWEL	2
6	3D472	STUD	2
7	2A3798	DOWEL	2
8	3D490	STUD	10
9	4D8148	DOWEL	2
10	5M6213	PLUG	1
11	9H5921	GASKET	1
12	1A1460	BOLT	4
13	S1585	BOLT	3
14	2B947	BOLT	6

FLYWHEEL HOUSING (6N2514 N/S)
Effective with Serial No. 10Z5342—UP

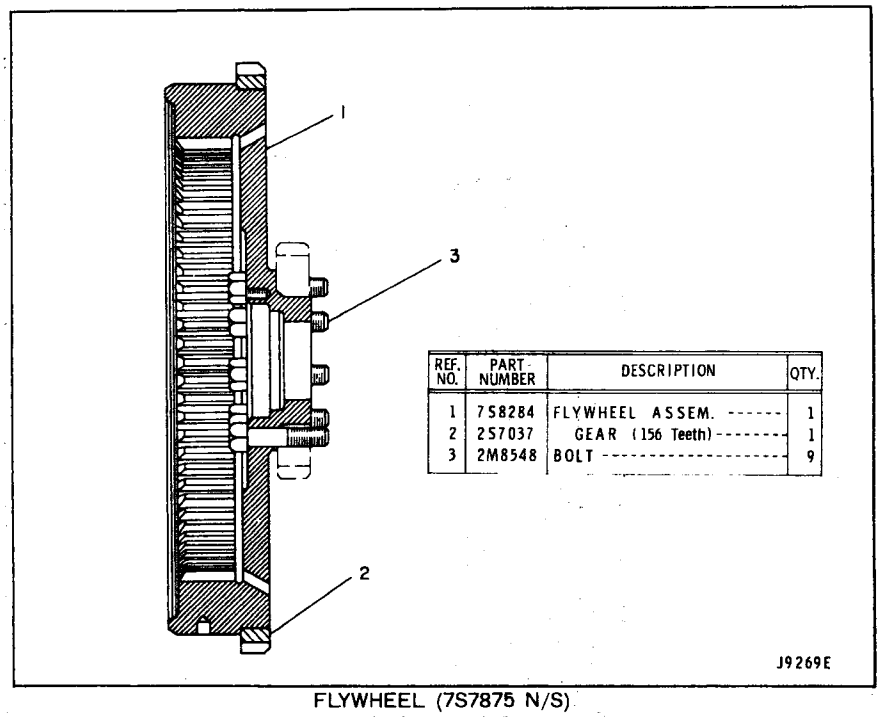

REF. NO.	PART NUMBER	DESCRIPTION	QTY.
1	7S8284	FLYWHEEL ASSEM. ------	1
2	2S7037	GEAR (156 Teeth) --------	1
3	2M8548	BOLT ----------	9

FLYWHEEL (7S7875 N/S)
Effective with Serial No. 10Z5342—UP

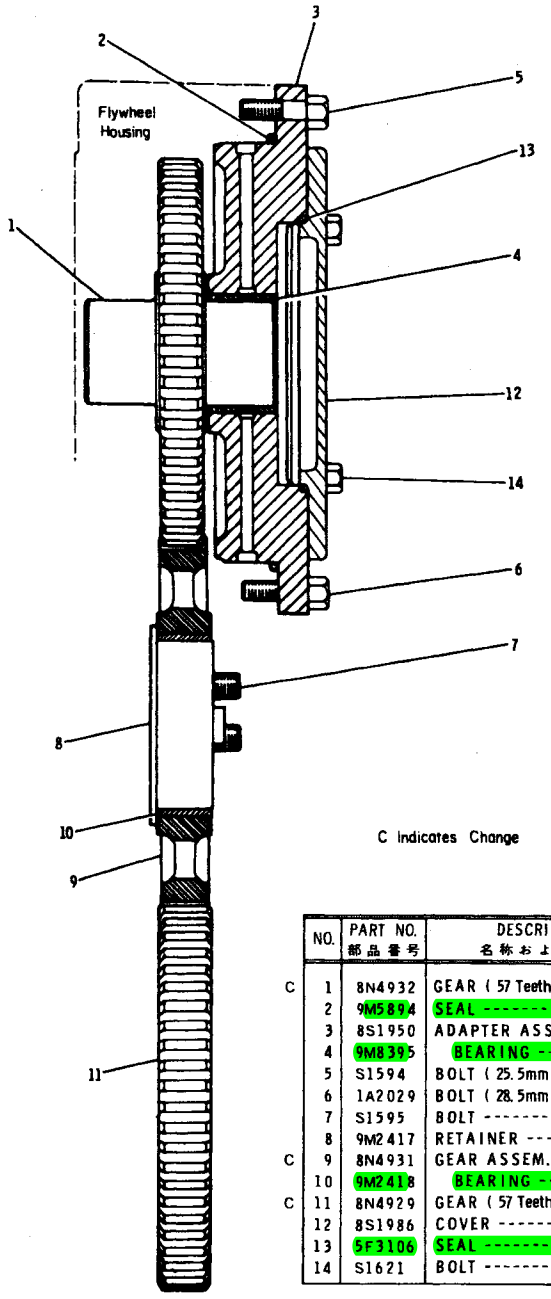

C Indicates Change

	NO.	PART NO. 部品番号	DESCRIPTION 名称および記事	QTY. 数量
C	1	8N4932	GEAR (57 Teeth)	1
	2	9M5894	SEAL	1
	3	8S1950	ADAPTER ASSEM.	1
	4	9M8395	BEARING	1
	5	S1594	BOLT (25.5mm Long)	1
	6	1A2029	BOLT (28.5mm Long)	6
	7	S1595	BOLT	3
	8	9M2417	RETAINER	1
C	9	8N4931	GEAR ASSEM.	1
	10	9M2418	BEARING	1
C	11	8N4929	GEAR (57 Teeth)	1
	12	8S1986	COVER	1
	13	5F3106	SEAL	1
	14	S1621	BOLT	4

J19632E

REAR GEAR (2P8161 N/S)
Effective with Serial No. 10Z5342–UP

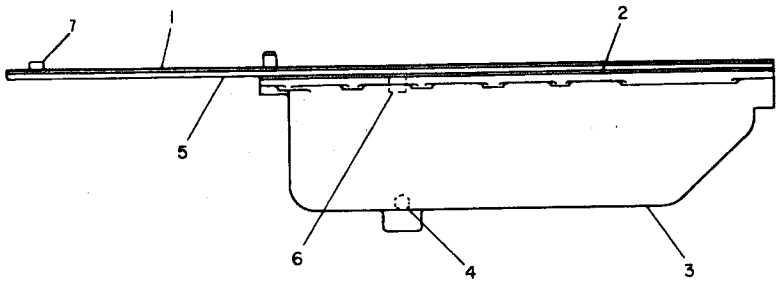

NO.	PART NO. 部品番号	QTY. 数量	DESCRIPTION 名称および記事
1	4M2969	1	GASKET
2	8S1965	1	GASKET
3	8S6086	1	PAN
4	4B7739	1	PLUG
5	2P1738	1	PLATE ASSEM.
6	1S5304	1	LUG
7	4D9376	1	BOSS

J29049E

OIL PAN (2P6152 N/S)
Effective with Serial No. 10Z5342–UP

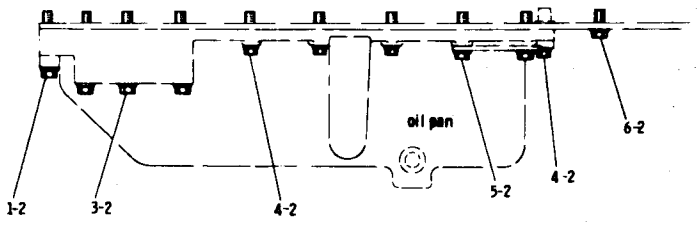

REF. NO.	PART NUMBER	DESCRIPTION	QTY.
1	T573	BOLT (70mm Long)	5
2	5M2894	WASHER	46
3	L1352	BOLT (82.5mm Long)	3
4	S1591	BOLT (38mm Long)	18
5	1C2251	BOLT (47.5mm Long)	2
6	S1594	BOLT (25.5mm Long)	18

J13234E

OIL PAN FASTENER (2P6206 N/S)
Effective with Serial No. 10Z5342–UP

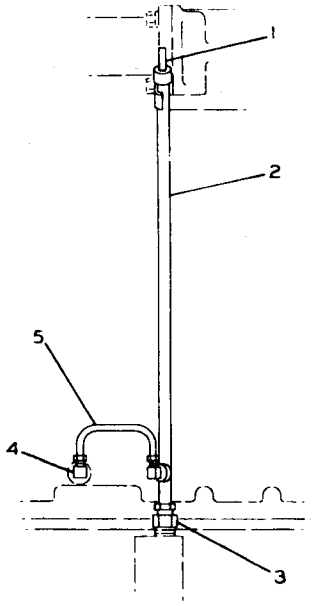

REF. NO.	PART NUMBER	DESCRIPTION	QTY.
1	8S3995	GAGE ASSEM. (English) ---	1
		- OR -	
	5A6298	GAGE ASSEM. (Japanese) --	1
2	2P2547	TUBE ASSEM. ----------	1
3	8S1326	FITTING ----------	1
	8F8998	NUT ----------	1
4	5K9243	ELBOW ----------	2
5	2P2697	TUBE ASSEM. ----------	1
	4B8756	NUT ----------	2

J9190E

OIL LEVEL GAUGE (2P6493 N/S)
Effective with Serial No. 10Z5342–UP

6V2971	Valve Grinding	
6V1752	Central and Lower Structure	
5P8768	Single Cylinder Liner	Liner
6V2912	Front Structure	
6V2921	Rear Structure	
5P9898	Water Pump (Effective with Serial No. 10Z1~10Z608)	
6V4750	Water Pump (Effective with Serial No. 10Z609–UP)	
6V2515	Oil Cooler	
3Y8809	Fuel System	
6V900	Turbocharger Installation	

J24431E

GASKET KITS
Effective with Serial No. 10Z5342–UP

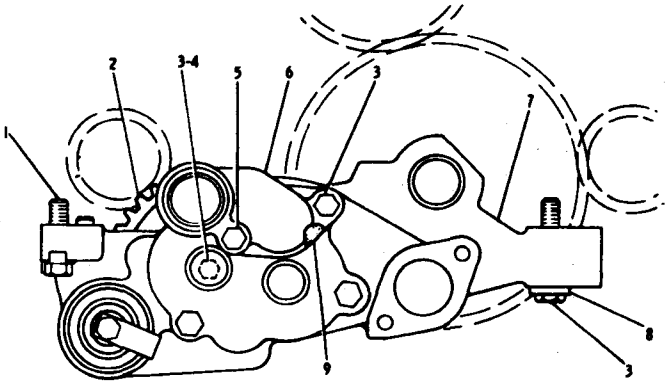

NO.	PART NO. 部品番号	DESCRIPTION 名称および記事	QTY. 数量
1	3B1915	BOLT	2
	8M7587	LOCK	2
2	8S497	GEAR (40 Teeth)	1
	8M5599	KEY	1
3	S1590	BOLT	4
4	1P7346	WASHER	1
5	S1619	BOLT	1
6	4N5353	ELBOW	1
7	4W2448	PUMP GROUP (See Separate Illustration)	1
8	T329	LOCK	1
9	2P8746	GASKET	1

J28575E

ENGINE OIL PUMP (2P1784 N/S)
Effective with Serial No. 10Z5342—UP
4W2448 Gear Pump parts are shown on Page 30

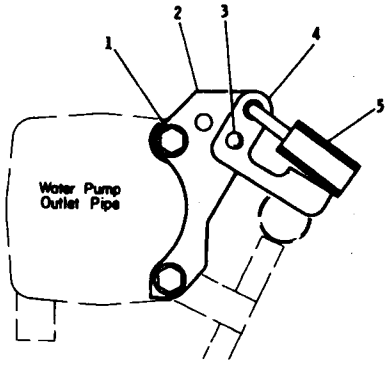

NO.	PART NO. 部品番号	DESCRIPTION 名称および記事	QTY. 数量
1	S1591	BOLT	2
	5M2894	WASHER	2
2	6N7325	BRACKET	1
3	6N2011	RIVET	1
	8H3526	WASHER	1
4	6N1536	HASP	1
5	5P8502	PADLOCK GROUP	1
	5P8500	KEY	2

J20754E

OIL LEVEL GAUGE PROTECTION (1N4297 N/S)
AN ATTACHMENT

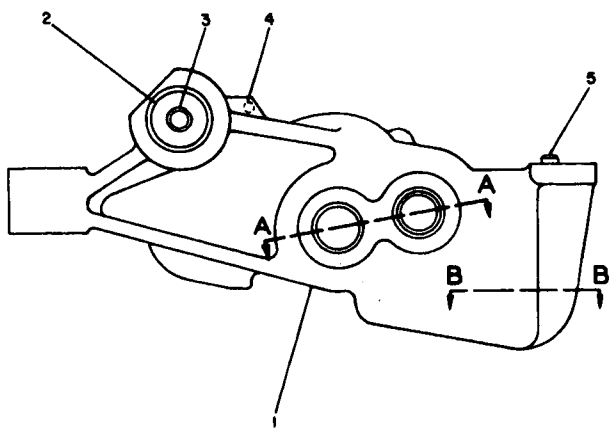

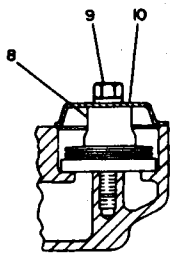

SECTION B-B

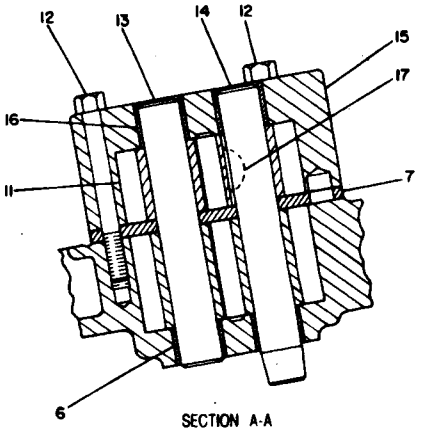

SECTION A-A

NO.	PART NO. 部品番号	QTY. 数量	DESCRIPTION 名称および記事
1	4W2322	1	BODY ASSEM.
2	2P1170	1	SHAFT ASSEM.
3	4B9782	1	BALL
4	4B9880	1	BALL
5	1F1006	1	DOWEL
6	8S6511	2	BEARING
7	2P1781	1	SPACER
8	4N8385	1	VALVE ASSEM.
	2B2694	1	BOLT
9	9M1974	1	WASHER
10	4N3732	1	COVER
11	6N1036	2	GEAR (8 TEETH)
12	T65	3	BOLT
13	8S493	1	SHAFT ASSEM.
14	2P6245	1	SHAFT ASSEM.
15	4W2321	1	BODY ASSEM.
16	8S6511	2	BEARING
17	1B8709	1	KEY

J28576E

4W2448 GEAR PUMP GROUP

Effective with Serial No. 10Z5342-UP

Part of Engine Oil Pump

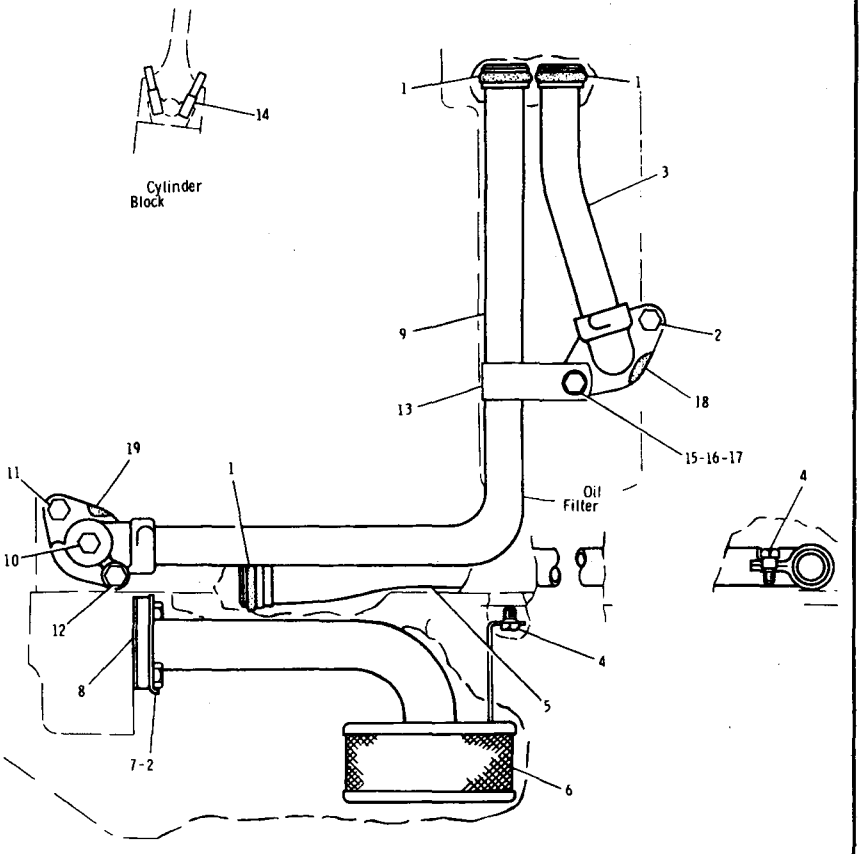

C Indicates Change

NO.	PART NO. 部品番号	DESCRIPTION 名称および記事	QTY 数量
1	9M4849	SEAL	3
C 2	S1594	BOLT	3
3	8N7315	TUBE ASSEM.	1
4	T102	BOLT	2
	L364	LOCK	2
5	2P1739	TUBE ASSEM.	1
6	2P1751	BELL ASSEM.	1
7	8S8874	LOCK	1
8	8M904	GASKET	1
9	8N7318	TUBE ASSEM.	1
10	5M6213	PLUG	1
11	1A2029	BOLT (28.6mm Long)	1
12	L2070	BOLT (57.2mm Long)	1
C 13	3P2404	CLIP	1
14	2S1541	ORIFICE	6
C 15	S1571	BOLT	1
C 16	5M2894	WASHER	1
C 17	1L5081	SPACER	1
18	7F7590	GASKET	1
19	2M5407	GASKET	1

J22730E

ENGINE OIL LINES (2P6105 N/S)

Effective with Serial No. 10Z5342–UP

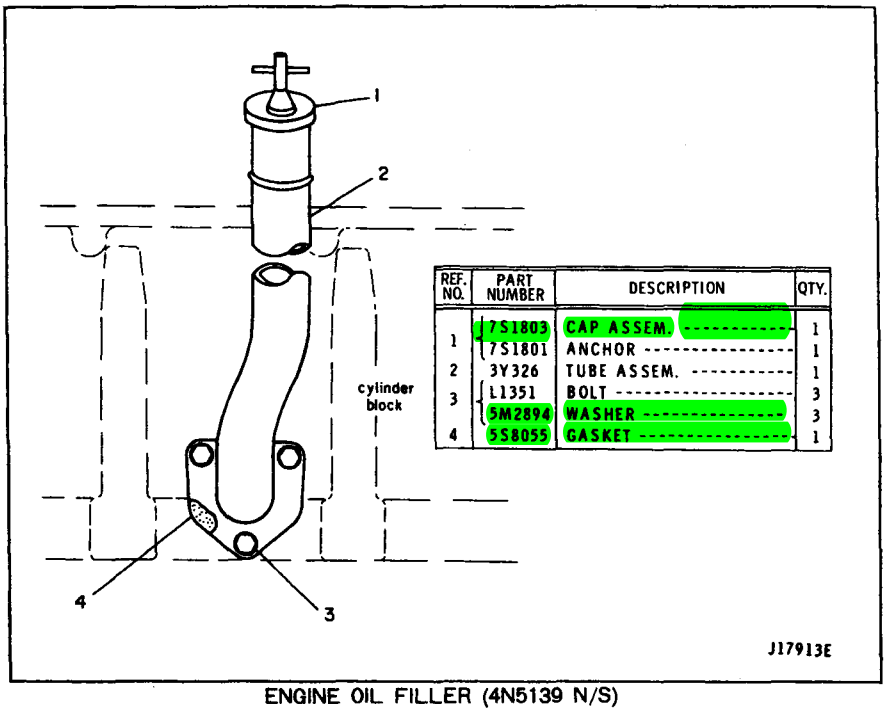

REF. NO.	PART NUMBER	DESCRIPTION	QTY.
1	7S1803	CAP ASSEM.	1
	7S1801	ANCHOR	1
2	3Y326	TUBE ASSEM.	1
3	L1351	BOLT	3
	5M2894	WASHER	3
4	5S8055	GASKET	1

ENGINE OIL FILLER (4N5139 N/S)
Effective with Serial No. 10Z5342–UP

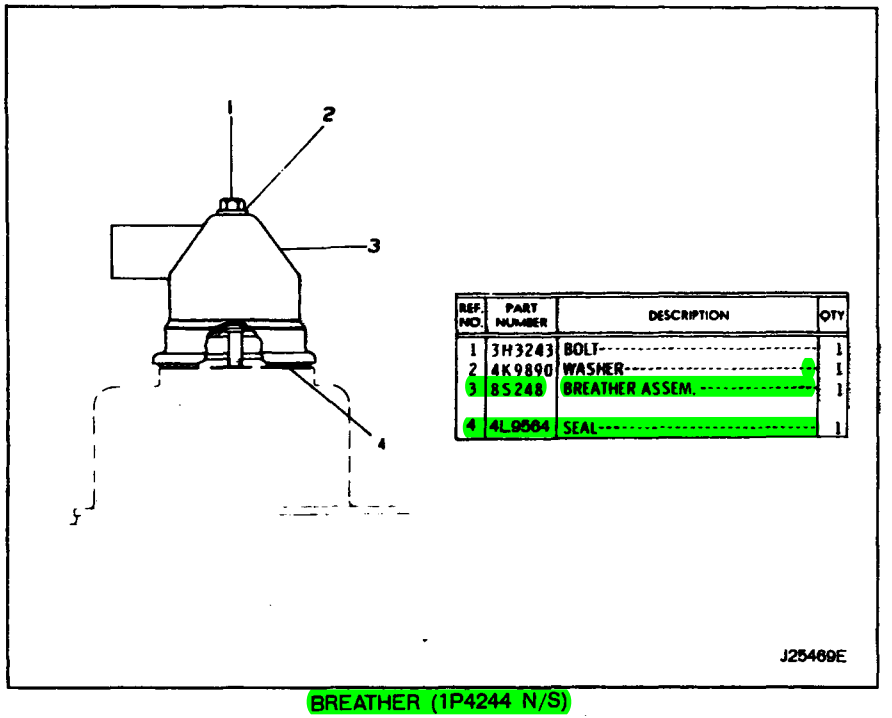

REF. NO.	PART NUMBER	DESCRIPTION	QTY
1	3H3243	BOLT	1
2	4K9890	WASHER	1
3	8S248	BREATHER ASSEM.	1
4	4L9864	SEAL	1

BREATHER (1P4244 N/S)
Effective with Serial No. 10Z5342–UP

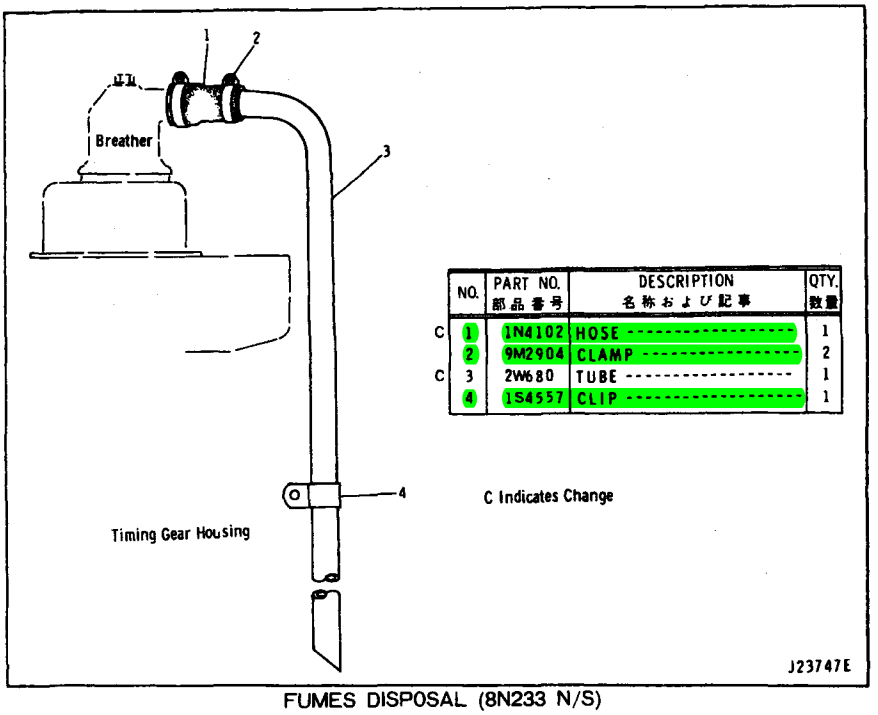

	NO.	PART NO. 部品番号	DESCRIPTION 名称および記事	QTY. 数量
C	1	1N4102	HOSE	1
	2	9M2904	CLAMP	2
C	3	2W680	TUBE	1
	4	1S4557	CLIP	1

C Indicates Change

FUMES DISPOSAL (8N233 N/S)
Effective with Serial No. 6HC1—UP

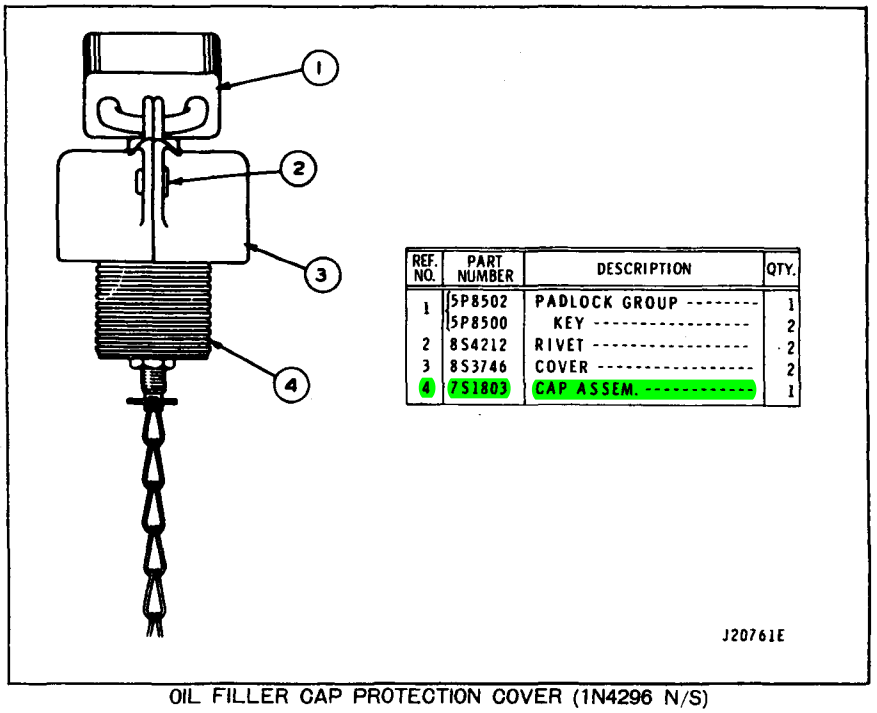

REF. NO.	PART NUMBER	DESCRIPTION	QTY.
1	5P8502	PADLOCK GROUP	1
	5P8500	KEY	2
2	8S4212	RIVET	2
3	8S3746	COVER	2
4	7S1803	CAP ASSEM.	1

OIL FILLER CAP PROTECTION COVER (1N4296 N/S)
AN ATTACHMENT

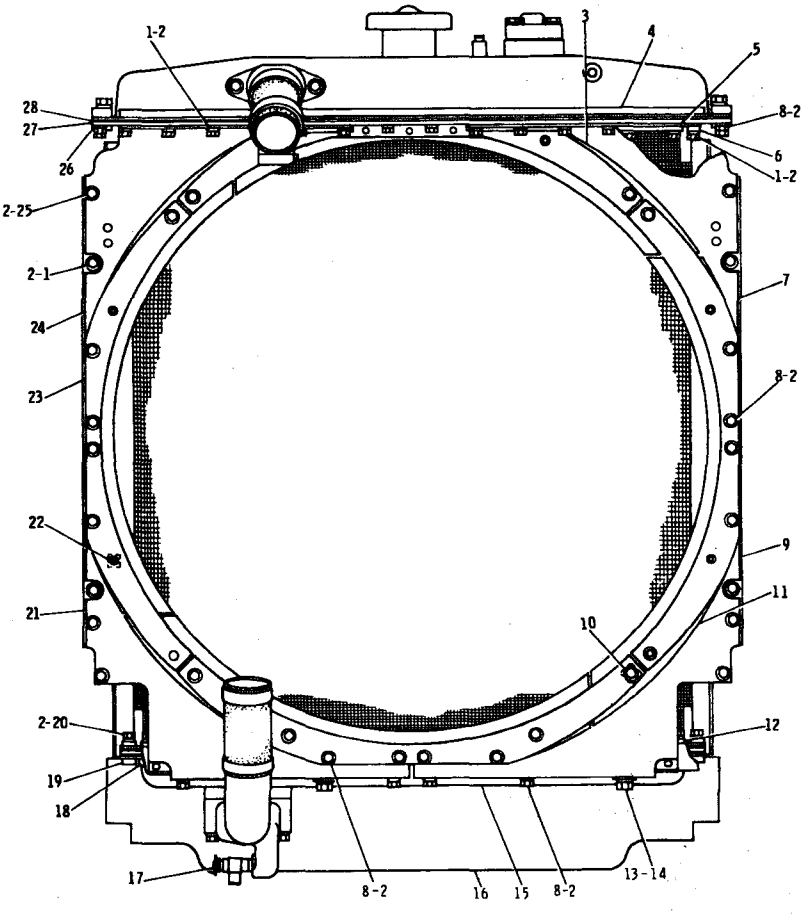

C INDICATES CHANGE J32840E

	NO.	PART NO. 部品番号	QTY. 数量	DESCRIPTION 名称および記事
C	1	9B7237	35	BOTL
C	2	5P1075	101	WASHER
	3	1P7785	1	BAFFLE ASSEM.
		8H5305	3	WASHER
		6B4594	3	RIVET
	4	1P2296	1	STRIP
	5	6N4952	1	GASKET
	6	1P7316	2	STRIP
	7	4N5725	1	SHIELD ASSEM.(R.H.)
		9F2978	2	NUT(WELD)
		5M9621	2	STUD
C	8	4L6454	32	BOLT
C	9	4N5723	1	SHIELD ASSEM.(R.H.)
		5M9621	2	STUD
	10	9F2978	4	NUT(WELD)
	11	1P7786	3	BAFFLE
	12	1P7343	4	STRIP
	13	7B3235	2	BOLT
	14	2M0849	2	WASHER
		4B4280	2	WASHER
	15	4N7450	1	TANK ASSEM.
	16	1P6384	1	BAFFLE ASSEM.
		6B4594	8	RIVET
		1F1605	1	WASHER
	17	8F8151	1	COCK
	18	1P7318	2	STRIP
	19	1P7315	2	STRIP
C	20	4L9337	30	BOLT
	21	4N5724	1	SHIELD ASSEM.(L.H.)
		9F2978	4	NUT(WELD)
	22	5M9621	2	STUD
	23	1P7783	3	STRIP
	24	4N5722	1	SHIELD ASSEM.(L.H.)
		9F2978	2	NUT(WELD)
		5M9621	2	STUD
	25	S0509	4	BOLT
	26	1P7341	2	STRIP
	27	1P2518	1	PLATE ASSEM.
C		6J2237	19	BOSS
	28	6N4950	1	GASKET

RADIATOR (7N5128 N/S)—Part 1 of 2

Effective with Serial No. 6HC1—UP

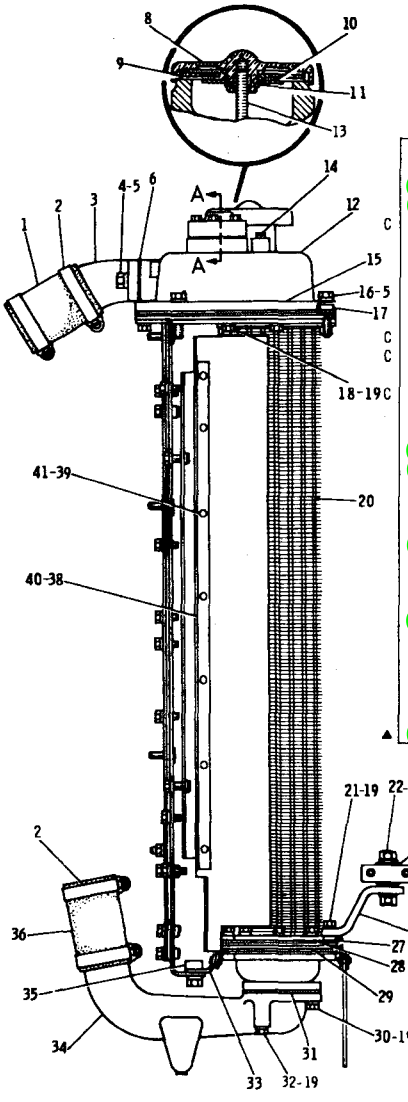

	NO.	PART NO.	QTY.	DESCRIPTION
		部品番号	数量	名称および記事
▲	1	5P1263		HOSE---12cm
C	2	5P4868	4	CLAMP
	3	1P2635	1	ELBOW
	4	7B3235	2	BOLT
	5	2M0849	12	WASHER
	6	1P6434	1	GASKET
C	7	5S1213	1	PLATE
	8	7S7809	1	CAP ASSEM.
	9	2P3230	1	GASKET
	10	2S2846	1	RETAINER
	11	9S9979	1	RING
C	12	2W8366	1	TANK ASSEM.
	13	1S0286	1	STUD
	14	5M6214	1	PLUG
	15	1P2498	2	STRIP
	16	2B0947	4	BOLT
	17	1P7855	1	STRIP
C	18	4L9337	19	BOLT
C	19	5P1075	30	WASHER
	20	7N4384	1	CORE ASSEM.
	21	8T2501	4	BOLT
	22	L1329	2	BOLT
		1D4719	2	NUT
	23	3H8726	2	BLOCK
	24	1M6298	4	CLAMP
	25	S1619	4	BOLT
	26	4N7668	1	BRACKET(R.H.)
		4N7669	1	BRACKET(L.H.)
	27	6N4955	2	GASKET
	28	1P9169	2	STRIP
	29	1P7121	1	PLATE
	30	1A2029	1	BOLT
	31	2P7326	1	GASKET
	32	8F6974	2	BOLT
	33	1P7842	1	BAFFLE ASSEM.
		6B4594	8	RIVET
	34	2P6113	1	ELBOW
	35	1P2496	1	BAR
▲	36	5P1262		HOSE ---13cm
	38	1P7828	1	BAFFLE ASSEM.(R.H.)
		9F2978	2	NUT(WELD)
	39	6B4594	7	RIVET
	40	1P7956	1	BAFFLE ASSEM.(L.H.)
		9F2978	2	NUT(WELD)
	41	6B4594	7	RIVET
C	42	5S4629	2	GASKET
C	43	1A9579	5	BOLT
C	44	9M1974	5	WASHER
C	45	5S1218	1	VALVE ASSEM.
C	46	5S1211	1	COVER

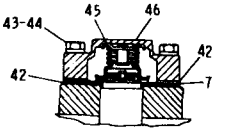

SECTION A - A

C INDICATES CHANGE
▲ ORDER BY THE CM

J32842E

RADIATOR (7N5128 N/S)—Part 2 of 2
Effective with Serial No. 6HC1—UP

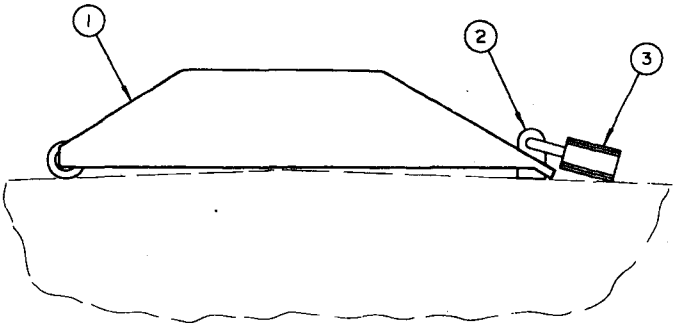

NO.	PART NO. 部品番号	DESCRIPTION 名称および記事	QTY. 数量
1	2P6379	COVER ASSEM.	1
2	4K8651	TAB	1
3	5P8502	PADLOCK GROUP	1
	5P8500	KEY	2

J20709E

RADIATOR CAP PROTECTION COVER (9G8849 N/S)
AN ATTACHMENT

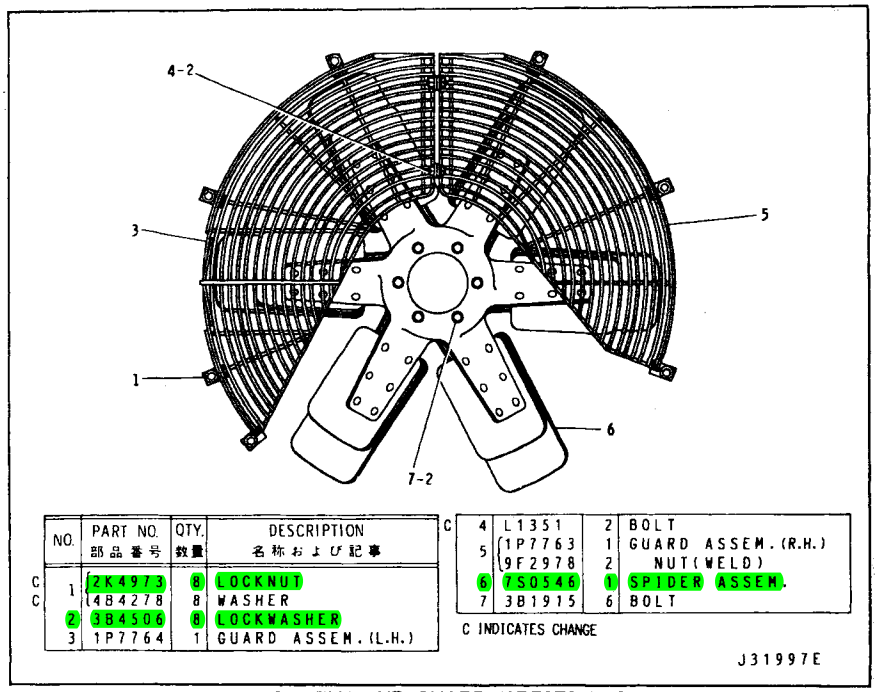

	NO.	PART NO. 部品番号	QTY. 数量	DESCRIPTION 名称および記事
C	1	2K4973	8	LOCKNUT
C		4B4278	8	WASHER
	2	3B4506	8	LOCKWASHER
	3	1P7764	1	GUARD ASSEM.(L.H.)

C	4	L1351	2	BOLT
	5	1P7763	1	GUARD ASSEM.(R.H.)
		9F2978	2	NUT(WELD)
	6	7S0546	1	SPIDER ASSEM.
	7	3B1915	6	BOLT

C INDICATES CHANGE

J31997E

BLOWER FAN AND GUARD (1P7878 N/S)
Effective with Serial No. 6HC1 – UP

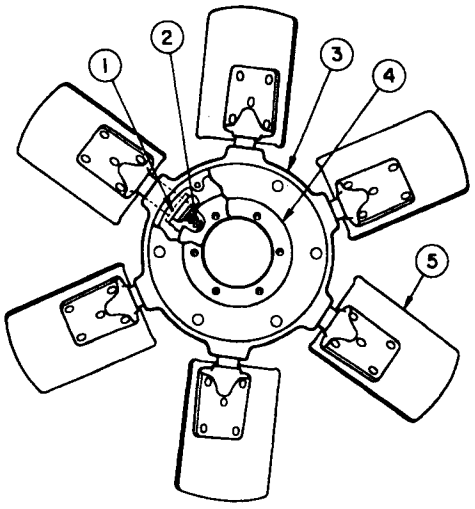

REF. NO.	PART NUMBER	DESCRIPTION	QTY.
1	3S4077	WASHER	6
2	1S7675	SPRING	6
3	1S9251	COVER	2
4	Not Serv.	HUB	1
5	8S7094	BLADE ASSEM.	6

J11031E

1P8494 REVERSIBLE FAN ASSEMBLY
AN ATTACHMENT

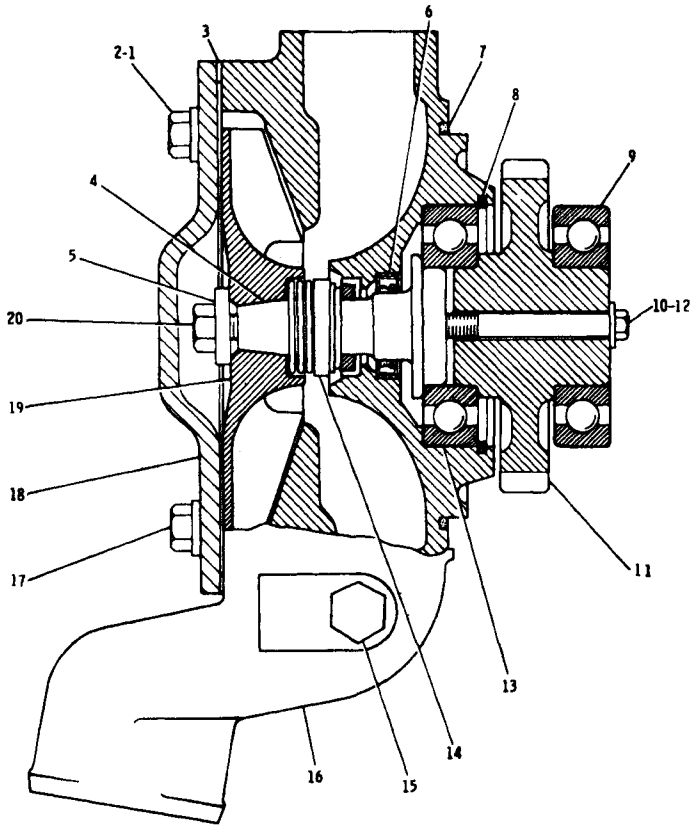

	NO.	PART NO. 部品番号	QTY. 数量	DESCRIPTION 名称および記事
	1	L1351	2	BOLT
C	2	5M2894	2	WASHER
	3	8N5928	1	GASKET
	4	2W7255	1	SHAFT
	5	9M6527	1	WASHER
C	6	8T5919	1	SEAL
●	7	5F3106	1	SEAL
	8	1K6985	1	RING
	9	8H9789	1	BEARING
C	10	3B8428	1	BOLT
C	11	4W88	1	GEAR
C	12	4S9191	1	WASHER
	13	6H3957	1	BEARING
C	14	4W3864	1	SEAL ASSEM.
	15	5M6213	1	PLUG
	16	1W4619	1	HOUSING
		T55	2	BOLT
●	17	5M2894	2	WASHER
	18	8N5929	1	COVER
	19	7N5910	1	IMPELLAR
	20	4L6454	1	BOLT

● NOT PARTS OF 2W8001 PUMP GROUP
C INDICATES CHANGE

J29645E

2W8001 WATER PUMP GROUP (7N5909 N/S)

Effective with Serial No. 10Z5342 – UP

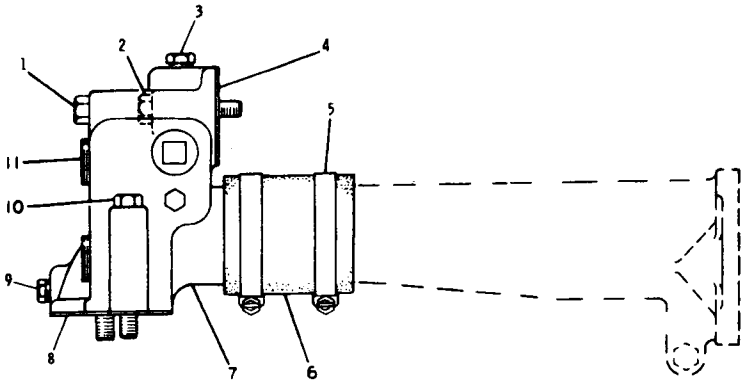

NO.	PART NO. 部品番号	QTY. 数量	DESCRIPTION 名称および記事
1	T65	1	BOLT
2	S1590	1	BOLT
3	3J5390	1	PLUG
4	2P6132	1	GASKET
▲ 5	5P4868	2	CLAMP
▲ 6	5P1260		HOSE--- 8cm
7	7N172	1	ELBOW
8	7N200	1	GASKET
9	5M6213	2	PLUG
10	S1619	2	BOLT
11	1B5174	3	PLUG

▲ ORDER BY THE CENTIMETER

J25245E

WATER LINES (2W6779 N/S)
Effective with Serial No. 10Z5342–UP

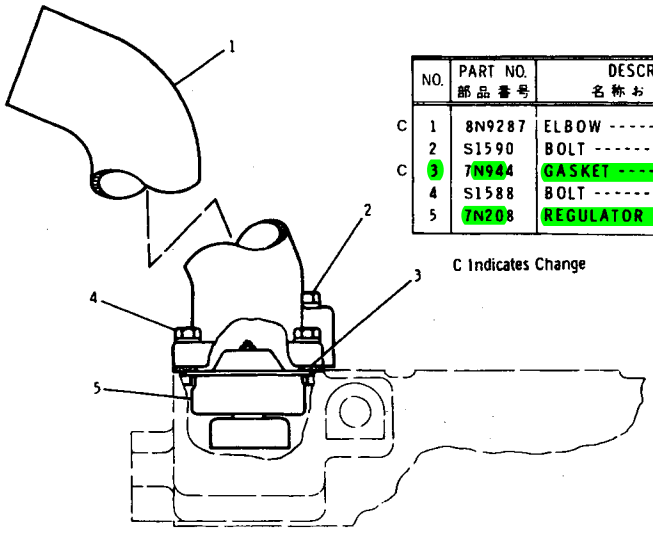

NO.	PART NO. 部品番号	DESCRIPTION 名称および記事	QTY. 数量
C 1	8N9287	ELBOW	1
2	S1590	BOLT	1
C 3	7N944	GASKET	1
4	S1588	BOLT	3
5	7N208	REGULATOR	1

C Indicates Change

J20667E

HOUSING AND REGULATOR (2P8173 N/S)
Effective with Serial No. 6HC1–6HC30b

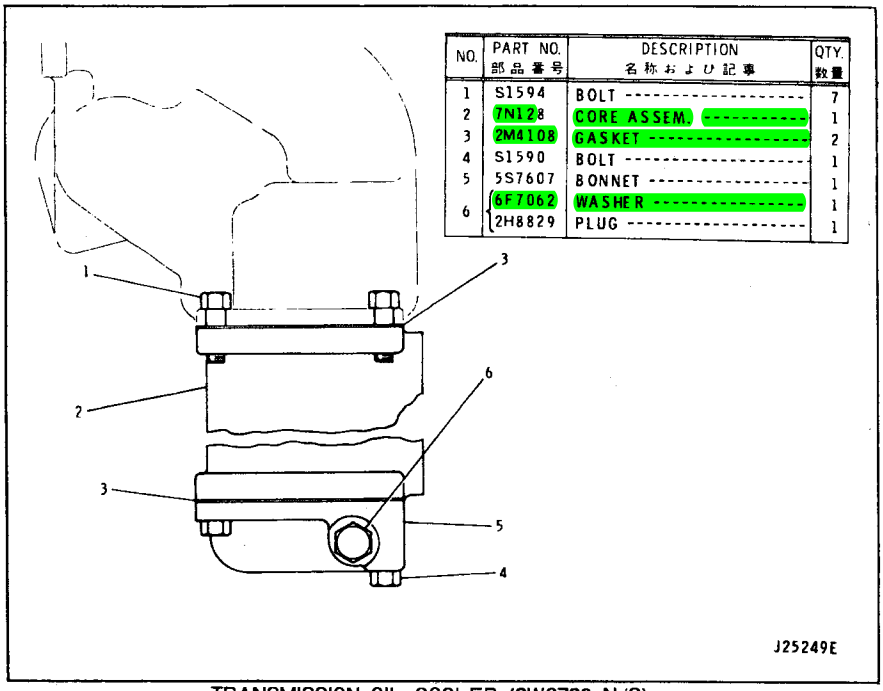

NO.	PART NO. 部品番号	DESCRIPTION 名称および記事	QTY. 数量
1	S1594	BOLT	7
2	7N128	CORE ASSEM.	1
3	2M4108	GASKET	2
4	S1590	BOLT	1
5	5S7607	BONNET	1
6	6F7062	WASHER	1
	2H8829	PLUG	1

TRANSMISSION OIL COOLER (2W6780 N/S)
Effective with Serial No. 10Z5342–UP

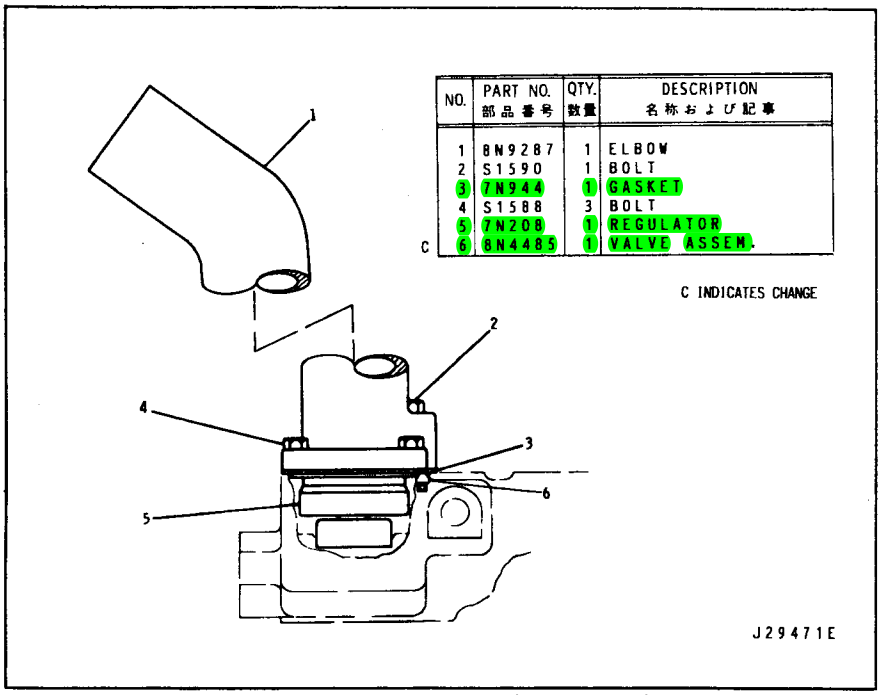

NO.	PART NO. 部品番号	QTY. 数量	DESCRIPTION 名称および記事
1	8N9287	1	ELBOW
2	S1590	1	BOLT
3	7N944	1	GASKET
4	S1588	3	BOLT
5	7N208	1	REGULATOR
C 6	8N4485	1	VALVE ASSEM.

C INDICATES CHANGE

HOUSING AND REGULATOR (2P8173 N/S)
Effective with Serial No. 6HC306–UP

FILTER BASE AND ENGINE OIL COOLER (2W5636 N/S)

Effective with Serial No. 10Z5342–UP

Filter Base & Engine Oil Cooler parts are shown on Page 41A

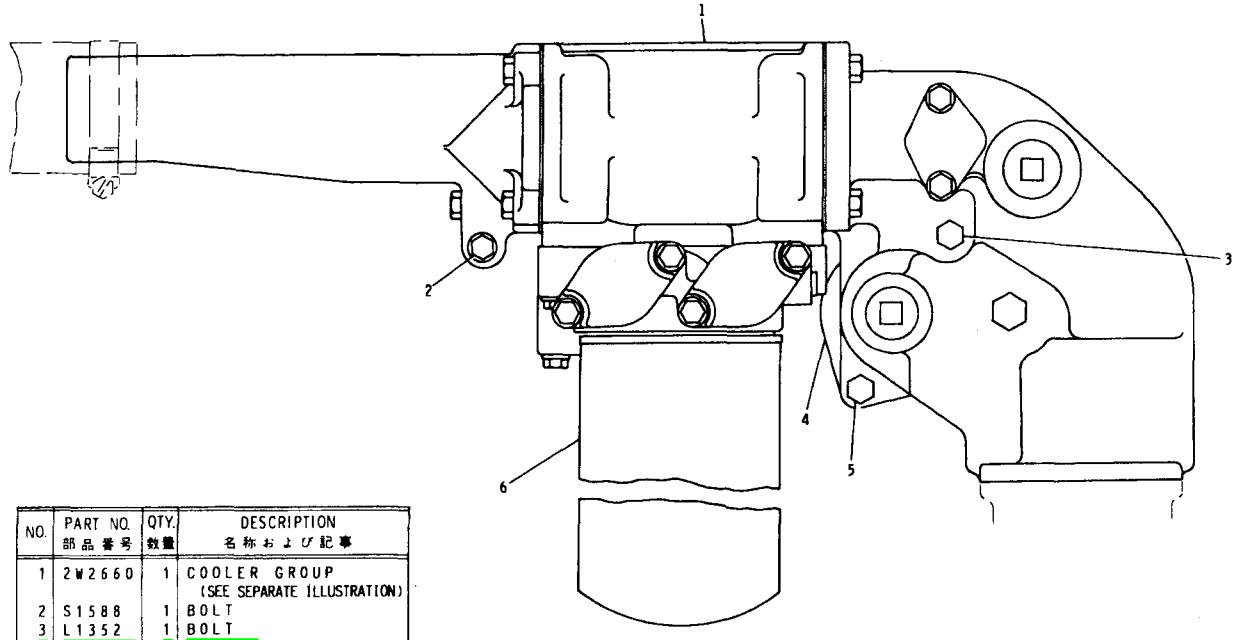

NO.	PART NO. 部品番号	QTY. 数量	DESCRIPTION 名称および記事
1	2W2660	1	COOLER GROUP (SEE SEPARATE ILLUSTRATION)
2	S1588	1	BOLT
3	L1352	1	BOLT
4	2W4561	1	GASKET
5	S1591	1	BOLT
6	3Y0900	1	FILTER ASSEM. (FOR JAPAN)
	2P4004	1	FILTER ASSEM. (FOR OUTSIDE JAPAN)

J31978E

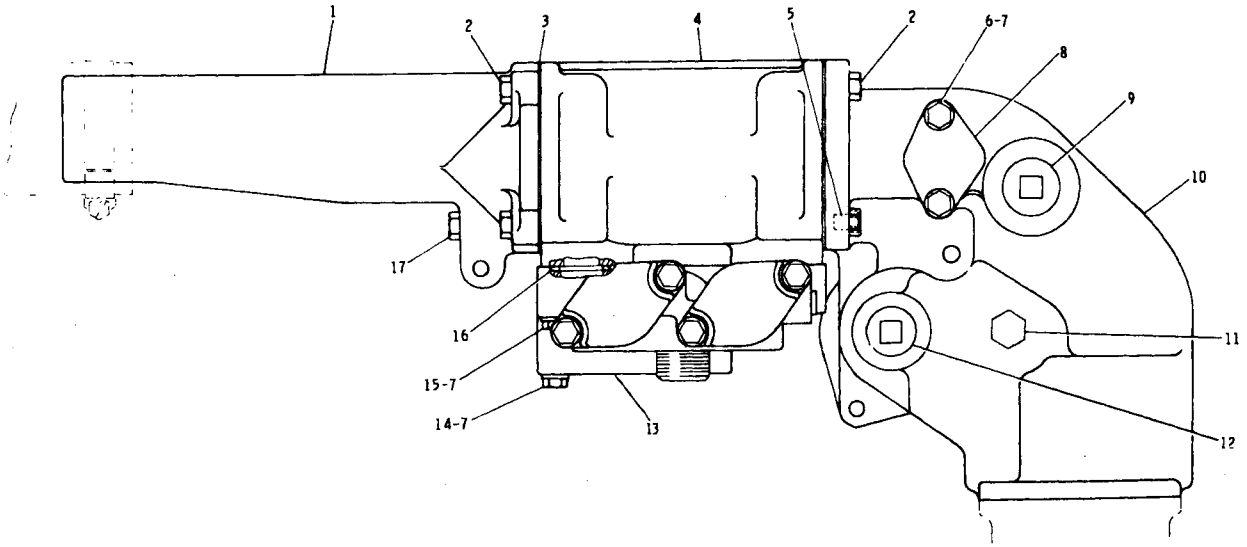

NO.	PART NO. 部品番号	QTY. 数量	DESCRIPTION 名称および記事
1	2P2511	1	PIPE
2	1A2029	6	BOLT
3	5S6051	2	GASKET
4	7N0165	1	CORE ASSEM.
5	1T0765	1	BOLT
6	2B2695	2	BOLT
7	9M1974	6	WASHER
8	4N3840	1	COVER
	4N3841	1	GASKET

9	3B0551	1	PLUG
10	6N0125	1	BONNET
11	3J5390	1	PLUG
12	1B5174	1	PLUG
13	8N4457	1	BASE GROUP (SEE SEPARATE ILLUSTRATION)
14	1D4540	1	BOLT
15	1H5514	3	BOLT
16	8M4432	2	SEAL
17	L2070	1	BOLT

J31979E

FILTER BASE AND ENGINE OIL COOLER (2W2660 N/S)

Effective with Serial No. 10Z5342-UP

Part of Filter Base & Engine Oil Cooler (2W5636 N/S)

Oil Filter Base parts are shown on Page 41B

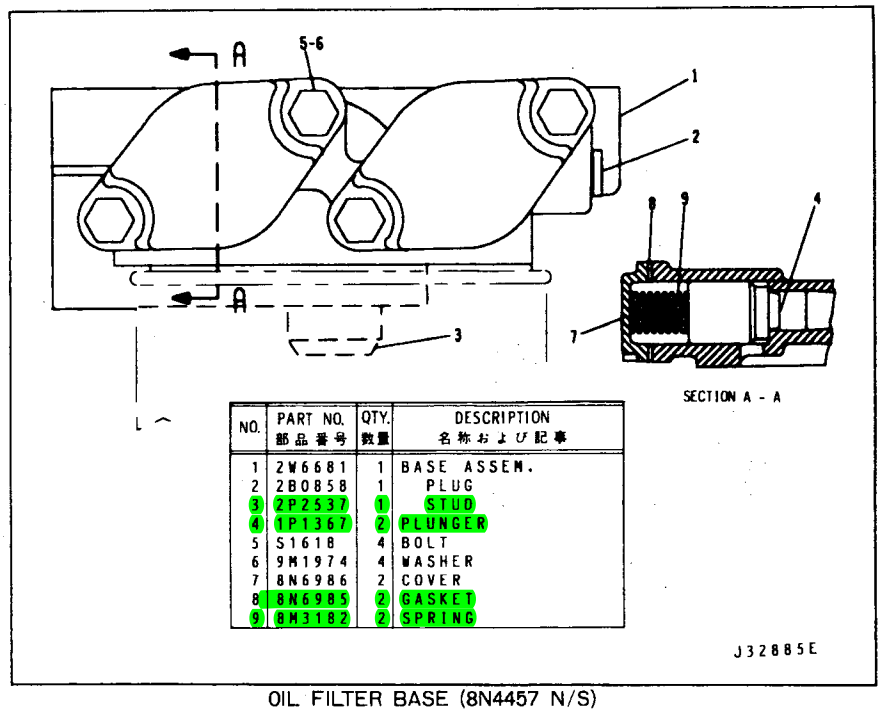

NO.	PART NO. 部品番号	QTY. 数量	DESCRIPTION 名称および記事
1	2W6681	1	BASE ASSEM.
2	2B0858	1	PLUG
3	2P2537	1	STUD
4	1P1367	2	PLUNGER
5	S1618	4	BOLT
6	9M1974	4	WASHER
7	8N6986	2	COVER
8	8N6985	2	GASKET
9	8M3182	2	SPRING

OIL FILTER BASE (8N4457 N/S)
Effective with Serial No. 10Z5342-UP
Part of Filter Base & Engine Oil Cooler (2W2660 N/S)

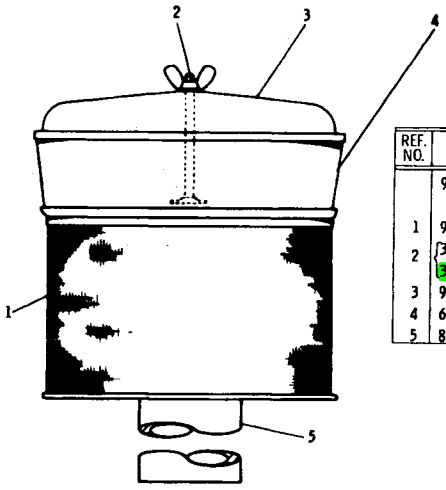

REF. NO.	PART NUMBER	DESCRIPTION	QTY.
	9S601	PRESCREANER ASSEM. -- Consists of:	1
1	9S614	SLEEVE ASSEM. -------	1
2	3S2966	BOLT ----------	1
	3S9228	WASHER ----------	1
3	9M5201	COVER ASSEM. -------	1
4	6H8021	BODY ----------	1
5	8S2381	STACK ASSEM. ---------	1

J14297E

PRESCREENER (7N6470 N/S)
AN ATTACHMENT

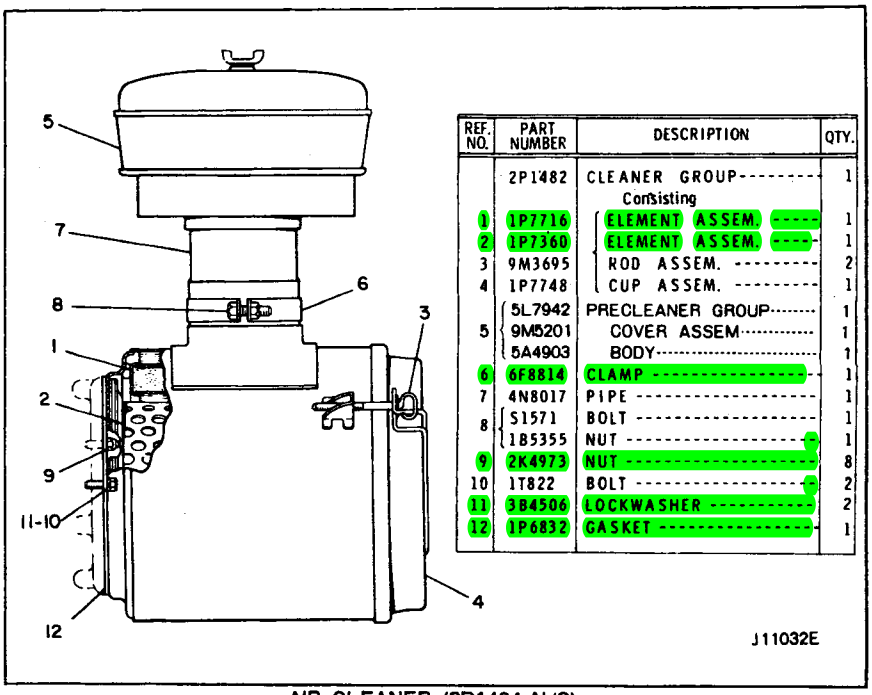

REF. NO.	PART NUMBER	DESCRIPTION	QTY.
	2P1482	CLEANER GROUP	1
		Consisting	
1	1P7716	ELEMENT ASSEM.	1
2	1P7360	ELEMENT ASSEM.	1
3	9M3695	ROD ASSEM.	2
4	1P7748	CUP ASSEM.	1
	5L7942	PRECLEANER GROUP	1
5	9M5201	COVER ASSEM	1
	5A4903	BODY	1
6	6F8814	CLAMP	1
7	4N8017	PIPE	1
8	S1571	BOLT	1
	1B5355	NUT	1
9	2K4973	NUT	8
10	1T822	BOLT	2
11	3B4506	LOCKWASHER	2
12	1P6832	GASKET	1

AIR CLEANER (2P1484 N/S)
Effective with Serial No. 6HC1 – UP

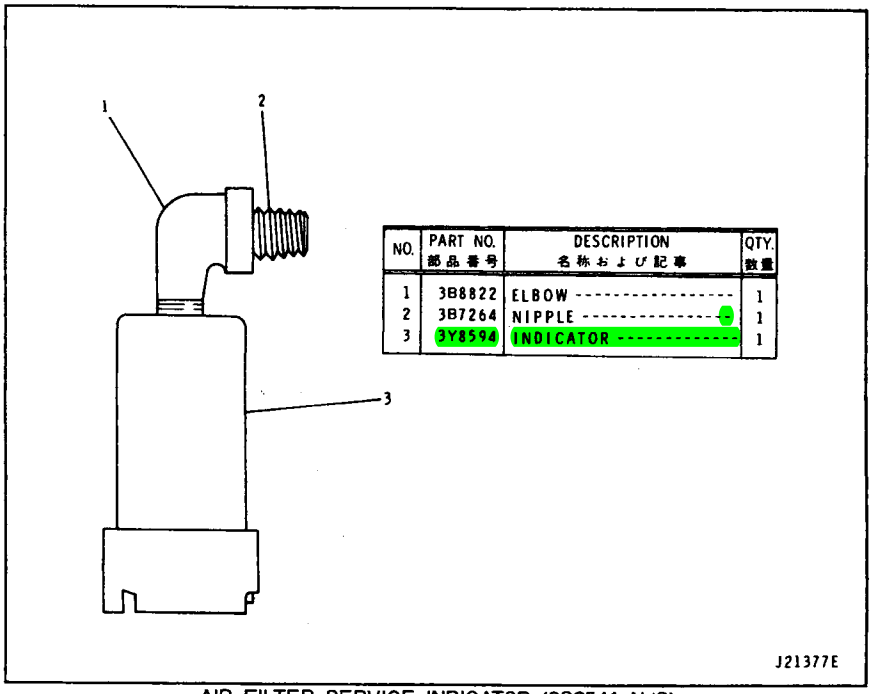

NO.	PART NO. 部品番号	DESCRIPTION 名称および記事	QTY. 数量
1	3B8822	ELBOW	1
2	3B7264	NIPPLE	1
3	3Y8594	INDICATOR	1

AIR FILTER SERVICE INDICATOR (8S2541 N/S)
Effective with Serial No. 6HC1 – UP

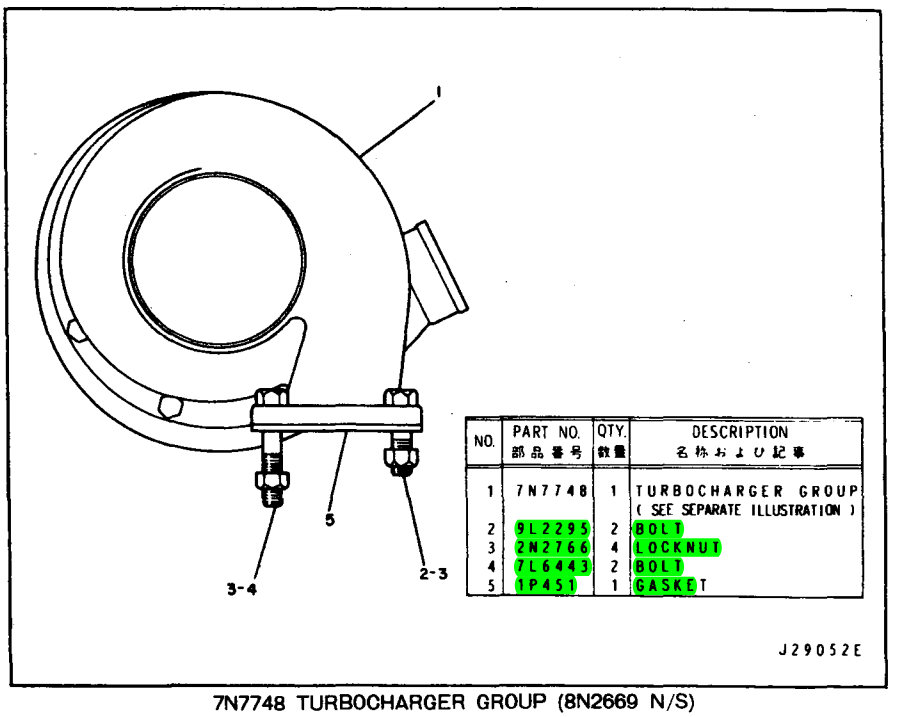

NO.	PART NO. 部品番号	QTY. 数量	DESCRIPTION 名称および記事
1	7N7748	1	TURBOCHARGER GROUP (SEE SEPARATE ILLUSTRATION)
2	9L2295	2	BOLT
3	2N2766	4	LOCKNUT
4	7L6443	2	BOLT
5	1P451	1	GASKET

7N7748 TURBOCHARGER GROUP (8N2669 N/S)
Effective with Serial No. 10Z5342 – UP
7N7748 Turbo charger parts are shown below

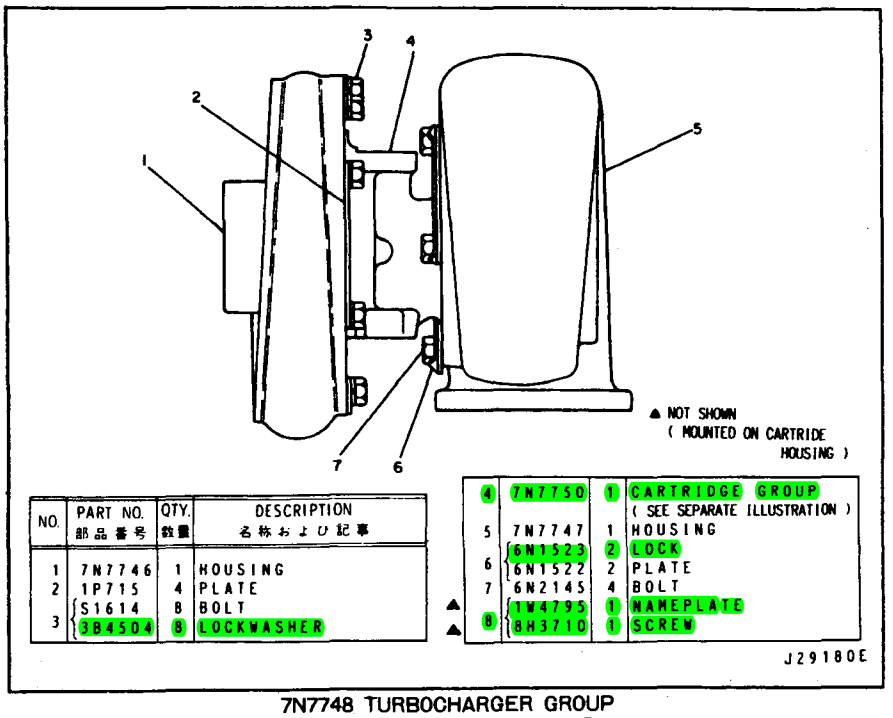

NO.	PART NO. 部品番号	QTY. 数量	DESCRIPTION 名称および記事
1	7N7746	1	HOUSING
2	1P715	4	PLATE
3	S1614	8	BOLT
	3B4504	8	LOCKWASHER
4	7N7750	1	CARTRIDGE GROUP (SEE SEPARATE ILLUSTRATION)
5	7N7747	1	HOUSING
6	6N1523	2	LOCK
	6N1522	2	PLATE
7	6N2145	4	BOLT
▲	1W4795	1	NAMEPLATE
8 ▲	8H3710	1	SCREW

7N7748 TURBOCHARGER GROUP
Effective with Serial No. 10Z5342 – UP
Part of Turbocharger (8N2669 N/S)
7N7750 Cartridge parts are shown on Page 44A

7N7750 TURBOCHARGER CARTRIDGE GROUP

Effective with Serial No. 1OZ5342 – UP
Part of 7N7748 Turbocharger Group

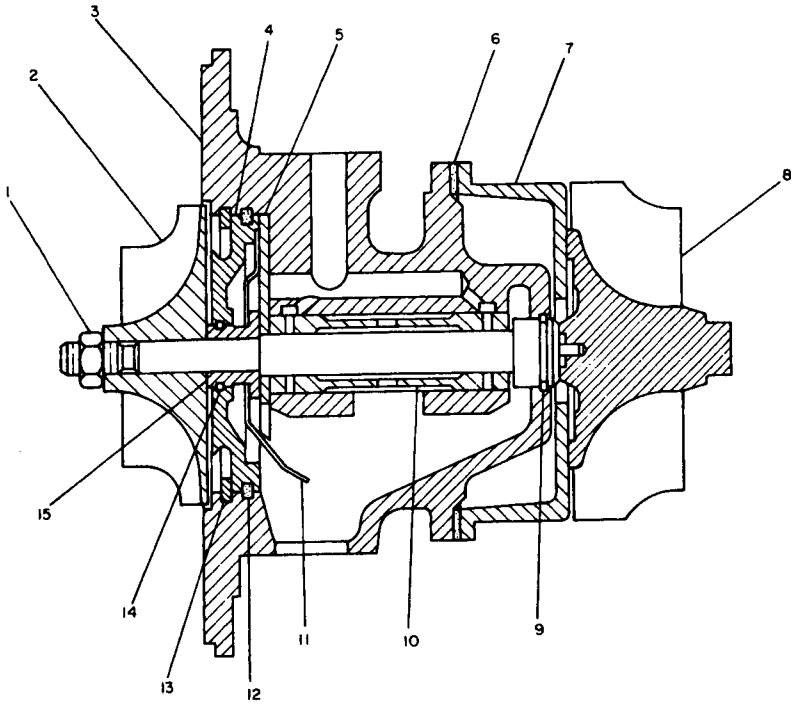

NO.	PART NO. 部品番号	QTY. 数量	DESCRIPTION 名称および記事
1	7N456	1	NUT
2	7N7749	1	WHEEL
3	3Y9360	1	HOUSING ASSEM.
	6N1530	1	PIN
4	6N1527	1	INSERT
5	6N1528	1	BEARING
6	2W2409	1	GASKET
7	6N1531	1	SHROUD
8	6N1532	1	SHAFT & WHEEL ASSEM.
9	1N3806	1	RING
10	6N1533	1	BEARING
11	6N1534	1	DEFLECTOR
12	5P5757	1	SEAL
13	5S4546	1	RING
14	6N1526	1	RING
15	6N1535	1	SLEEVE
			THE FOLLOWING SEAL REPAIR KIT IS AVAILABLE :
	2W722	1	CARTRIDGE KIT (CONSISTS OF SEAL RING & GASKET) XJXS6774 FORM (JAPANESE) SMHS6774 FORM (ENGLISH)

J291B1E

MEMO

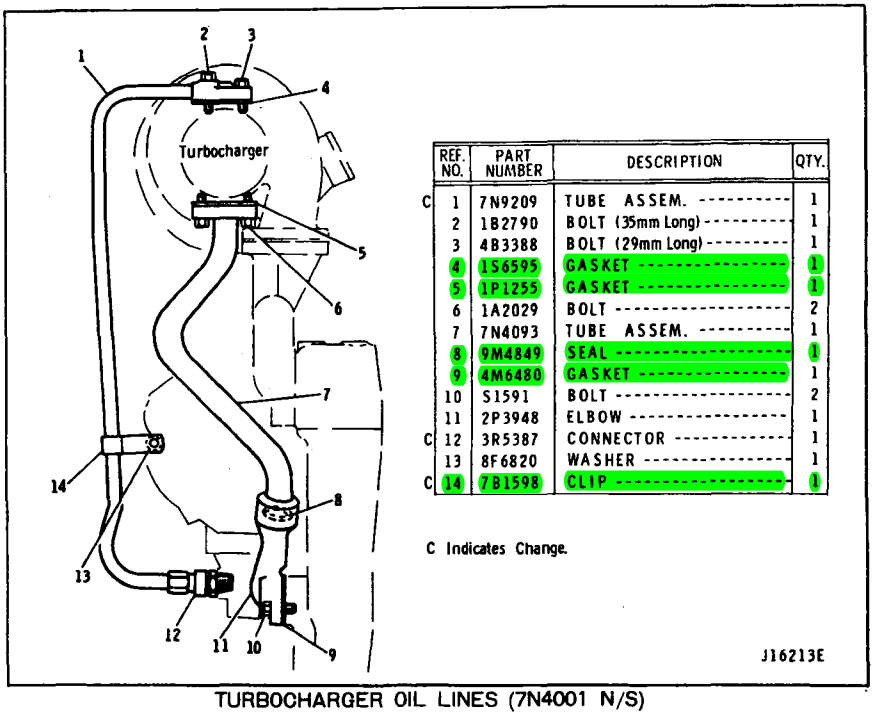

	REF. NO.	PART NUMBER	DESCRIPTION	QTY.
C	1	7N9209	TUBE ASSEM.	1
	2	1B2790	BOLT (35mm Long)	1
	3	4B3388	BOLT (29mm Long)	1
	4	1S6595	GASKET	1
	5	1P1255	GASKET	1
	6	1A2029	BOLT	2
	7	7N4093	TUBE ASSEM.	1
	8	9M4849	SEAL	1
	9	4M6480	GASKET	1
	10	S1591	BOLT	2
	11	2P3948	ELBOW	1
C	12	3R5387	CONNECTOR	1
	13	8F6820	WASHER	1
C	14	7B1598	CLIP	1

C Indicates Change.

TURBOCHARGER OIL LINES (7N4001 N/S)

Effective with Serial No. 10Z5342~10Z13019

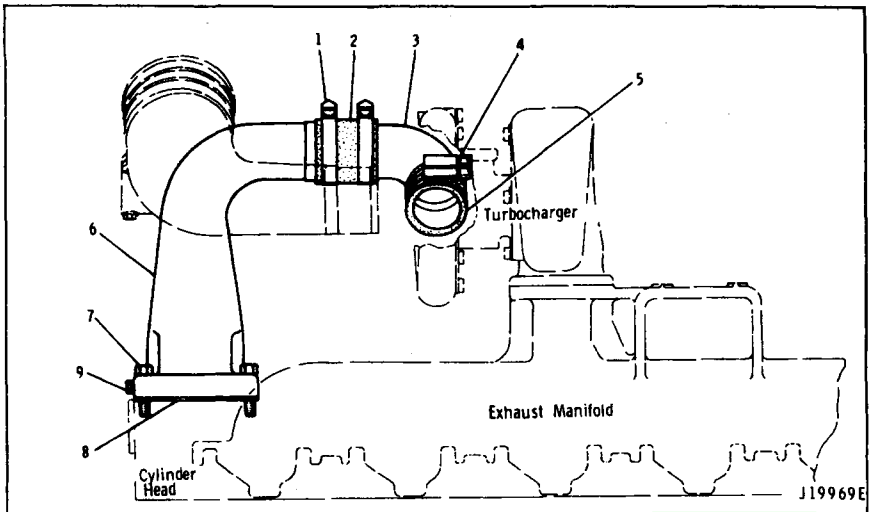

NO.	PART NO. 部品番号	DESCRIPTION 名称および記事	QTY. 数量
1	5P4868	CLAMP	2
2	4N9215	HOSE	1
3	4N8581	ELBOW	1
4	5P597	CLAMP	2
5	4N9311	HOSE	1
6	4N8320	ELBOW	1
7	S1571	BOLT	4
8	5S6735	GASKET	1
9	5M6213	PLUG	1

AIR LINES (7N3884 N/S)

Effective with Serial No. 10Z5342–UP

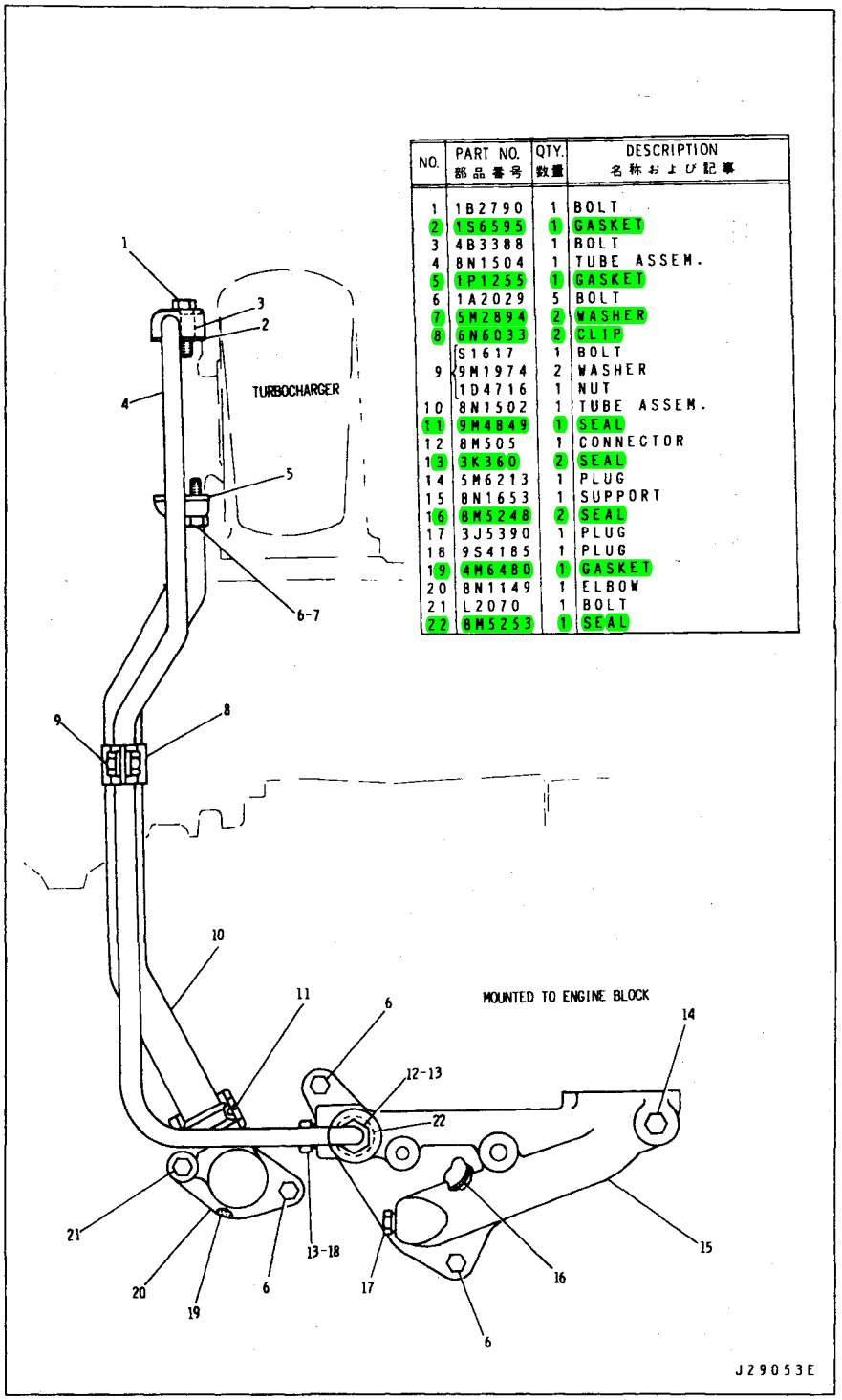

NO.	PART NO. 部品番号	QTY. 数量	DESCRIPTION 名称および記事
1	1B2790	1	BOLT
2	1S6595	1	GASKET
3	4B3388	1	BOLT
4	8N1504	1	TUBE ASSEM.
5	1P1255	1	GASKET
6	1A2029	5	BOLT
7	5M2894	2	WASHER
8	6N6033	2	CLIP
9	S1617	1	BOLT
	9M1974	2	WASHER
	1D4716	1	NUT
10	8N1502	1	TUBE ASSEM.
11	9M4849	1	SEAL
12	8M505	1	CONNECTOR
13	3K360	2	SEAL
14	5M6213	1	PLUG
15	8N1653	1	SUPPORT
16	8M5248	2	SEAL
17	3J5390	1	PLUG
18	9S4185	1	PLUG
19	4M6480	1	GASKET
20	8N1149	1	ELBOW
21	L2070	1	BOLT
22	8M5253	1	SEAL

TURBOCHARGER OIL LINES (8N1501 N/S)
Effective with Serial No. 10Z13020-UP

MEMO

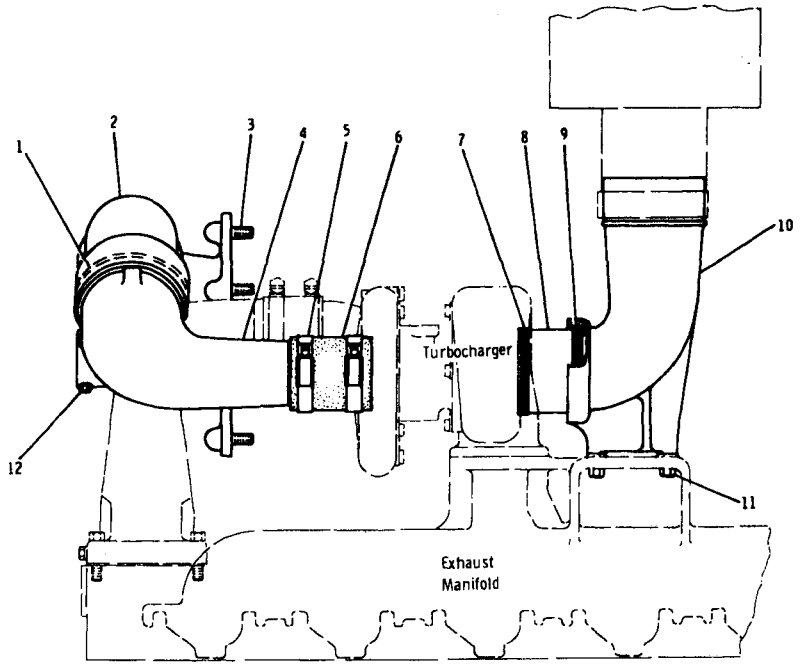

NO.	PART NO. 部品番号	DESCRIPTION 名称および記事	QTY. 数量
1	5H7704	SEAL	2
2	4N8305	PIPE ASSEM.	1
	7M1674	ELEMENT	1
3	9M2151	STUD	8
4	4N8466	ELBOW	1
5	5P598	CLAMP	2
6	5P1263	HOSE 9cm	
7	6N9	RING (Seal)	1
8	4N8591	COUPLING	1
9	5L8855	RING (Seal)	1
10	4N9213	ELBOW (Exhaust)	1
11	S1571	BOLT	3
	1B5355	NUT	3
12	1A2029	BOLT	3

▲ ORDER BY THE m

J19978E

AIR LINES (7N4098 N/S)

Effective with Serial No. 6HC1 – UP

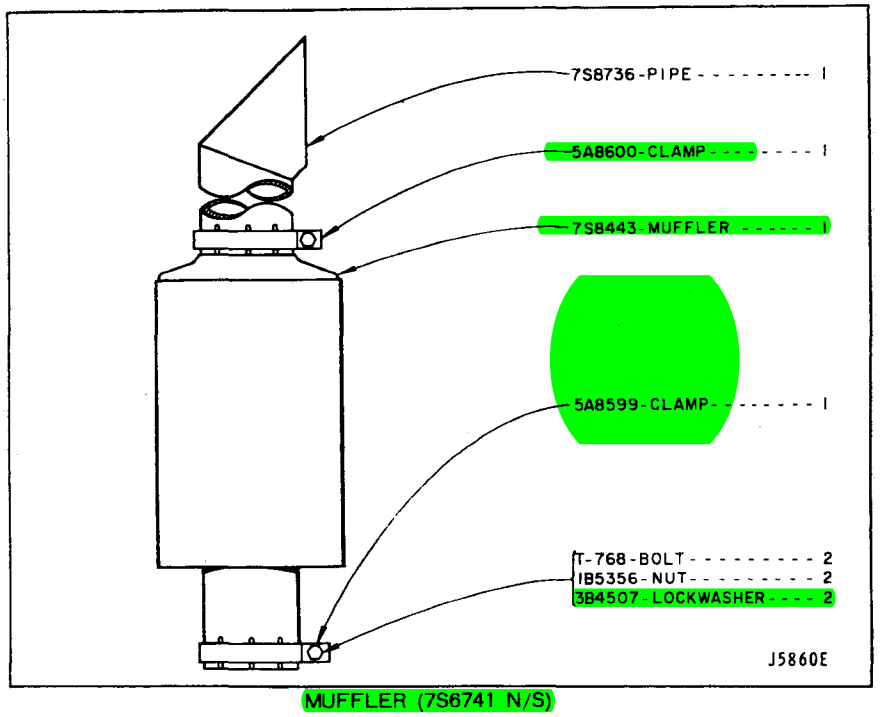

MUFFLER (7S6741 N/S)
Effective with Serial No. 6HC1—UP

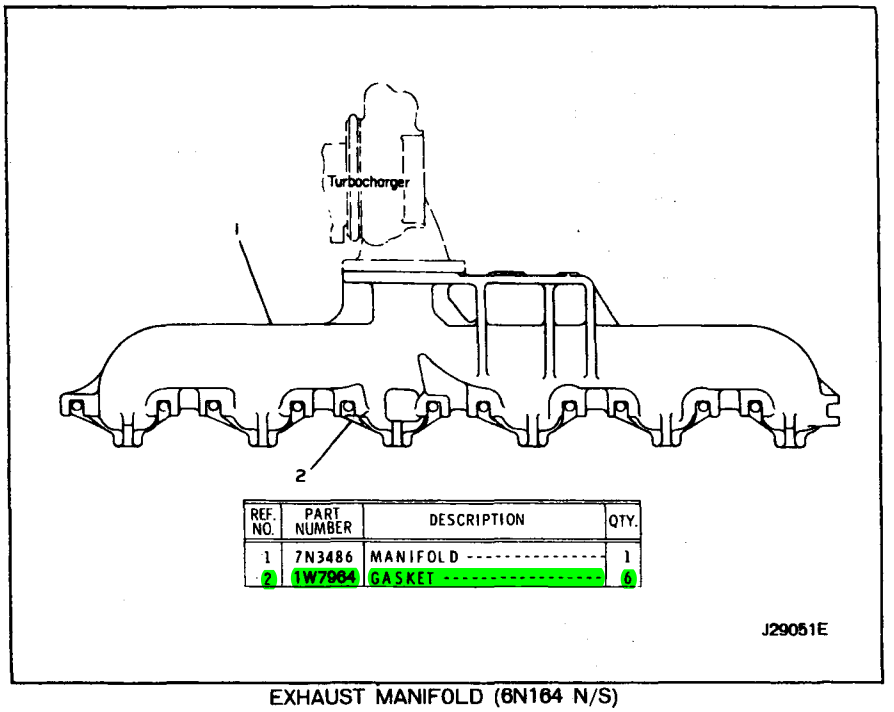

REF. NO.	PART NUMBER	DESCRIPTION	QTY.
1	7N3486	MANIFOLD	1
2	1W7964	GASKET	6

EXHAUST MANIFOLD (6N164 N/S)
Effective with Serial No. 10Z5342–UP

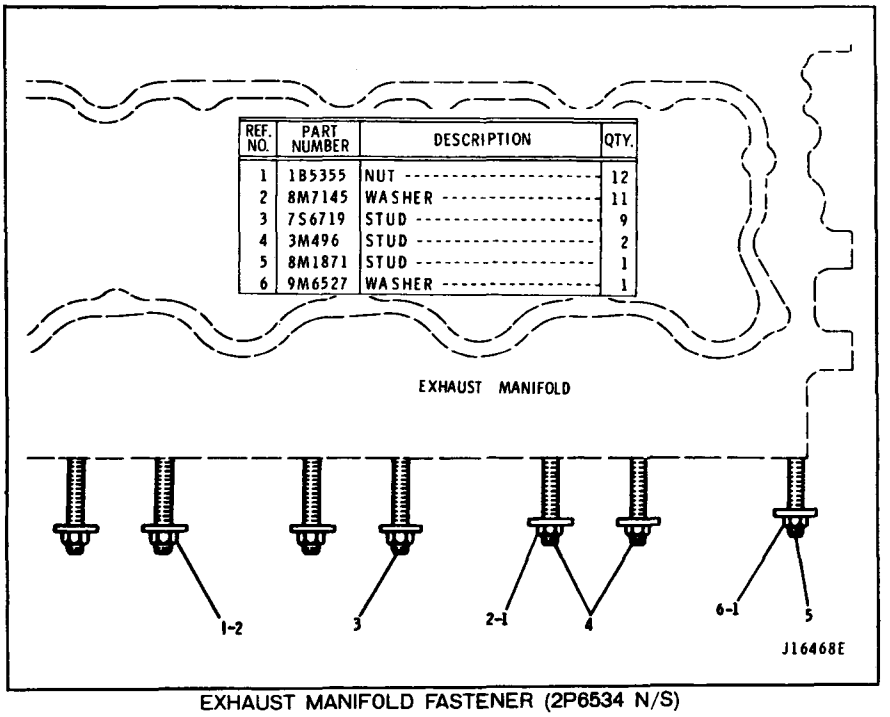

REF. NO.	PART NUMBER	DESCRIPTION	QTY.
1	1B5355	NUT	12
2	8M7145	WASHER	11
3	7S6719	STUD	9
4	3M496	STUD	2
5	8M1871	STUD	1
6	9M6527	WASHER	1

EXHAUST MANIFOLD FASTENER (2P6534 N/S)
Effective with Serial No. 10Z5342~10Z13019

NO.	PART NO. 部品番号	QTY. 数量	DESCRIPTION 名称および記事
1	1W7546	1	SHIELD
2	7S6719	10	STUD
3	2M2488	2	STUD
4	1B4971	1	SPACER
5	5M2894	2	WASHER (2.77mm THICK)
6	9M6527	1	WASHER (4.76mm THICK)
7	1B5355	12	NUT
8	8M7145	11	WAHSER
9	1M7643	1	SPACER

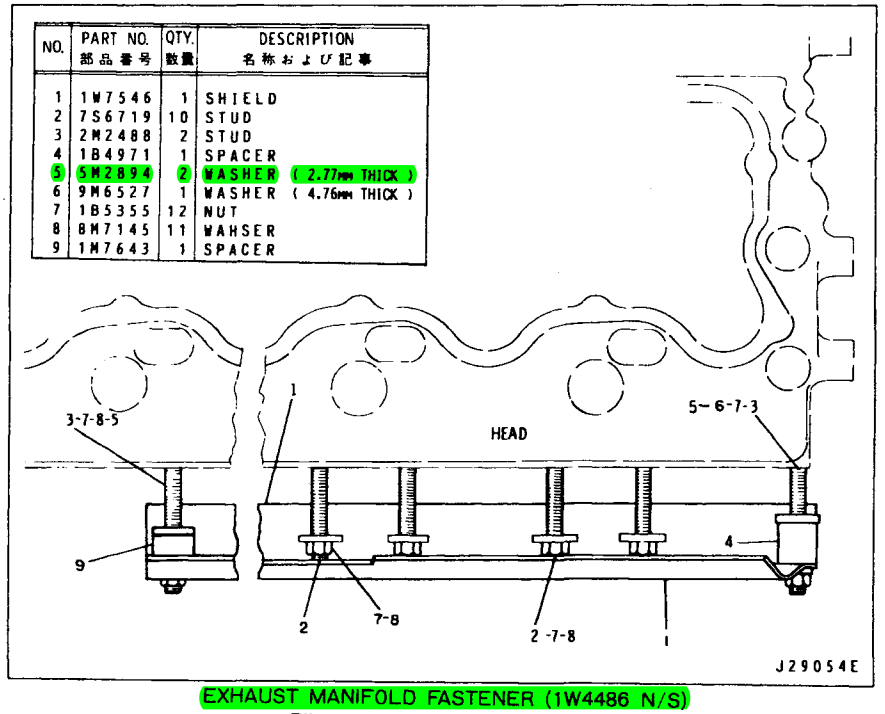

EXHAUST MANIFOLD FASTENER (1W4486 N/S)

Effective with Serial No. 10Z13020 – UP

MEMO

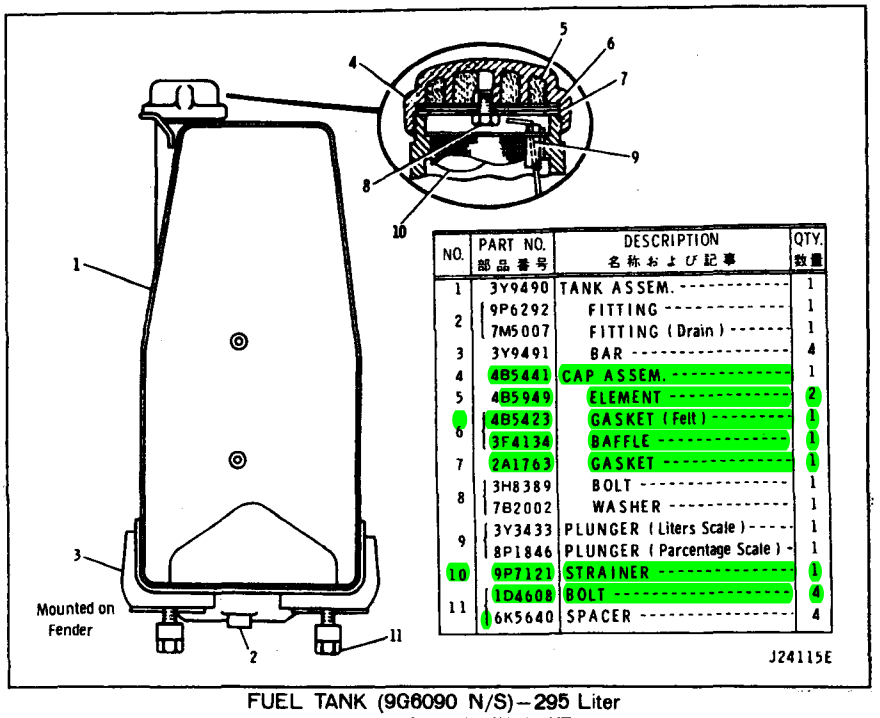

NO.	PART NO. 部品番号	DESCRIPTION 名称および記事	QTY. 数量
1	3Y9490	TANK ASSEM.	1
2	9P6292	FITTING	1
	7M5007	FITTING (Drain)	1
3	3Y9491	BAR	4
4	4B5441	CAP ASSEM.	1
5	4B5949	ELEMENT	2
6	4B5423	GASKET (Felt)	1
	3F4134	BAFFLE	1
7	2A1763	GASKET	1
8	3H8389	BOLT	1
	7B2002	WASHER	1
9	3Y3433	PLUNGER (Liters Scale)	1
	8P1846	PLUNGER (Parcentage Scale)	1
10	9P7121	STRAINER	1
11	1D4608	BOLT	4
	6K5640	SPACER	4

FUEL TANK (9G6090 N/S)–295 Liter
Effective with Serial No. 6HC1–UP

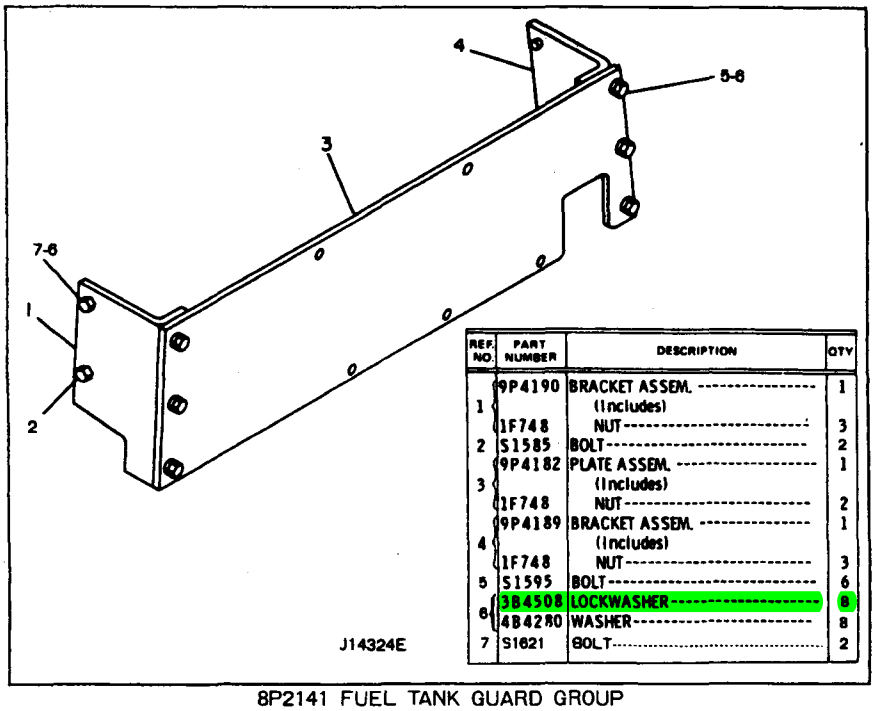

REF. NO.	PART NUMBER	DESCRIPTION	QTY
1	9P4190	BRACKET ASSEM. (Includes)	1
	1F748	NUT	3
2	S1585	BOLT	2
3	9P4182	PLATE ASSEM. (Includes)	1
	1F748	NUT	2
4	9P4189	BRACKET ASSEM. (Includes)	1
	1F748	NUT	3
5	S1595	BOLT	6
6	3B4508	LOCKWASHER	8
	4B4280	WASHER	8
7	S1621	BOLT	2

8P2141 FUEL TANK GUARD GROUP
AN ATTACHMENT

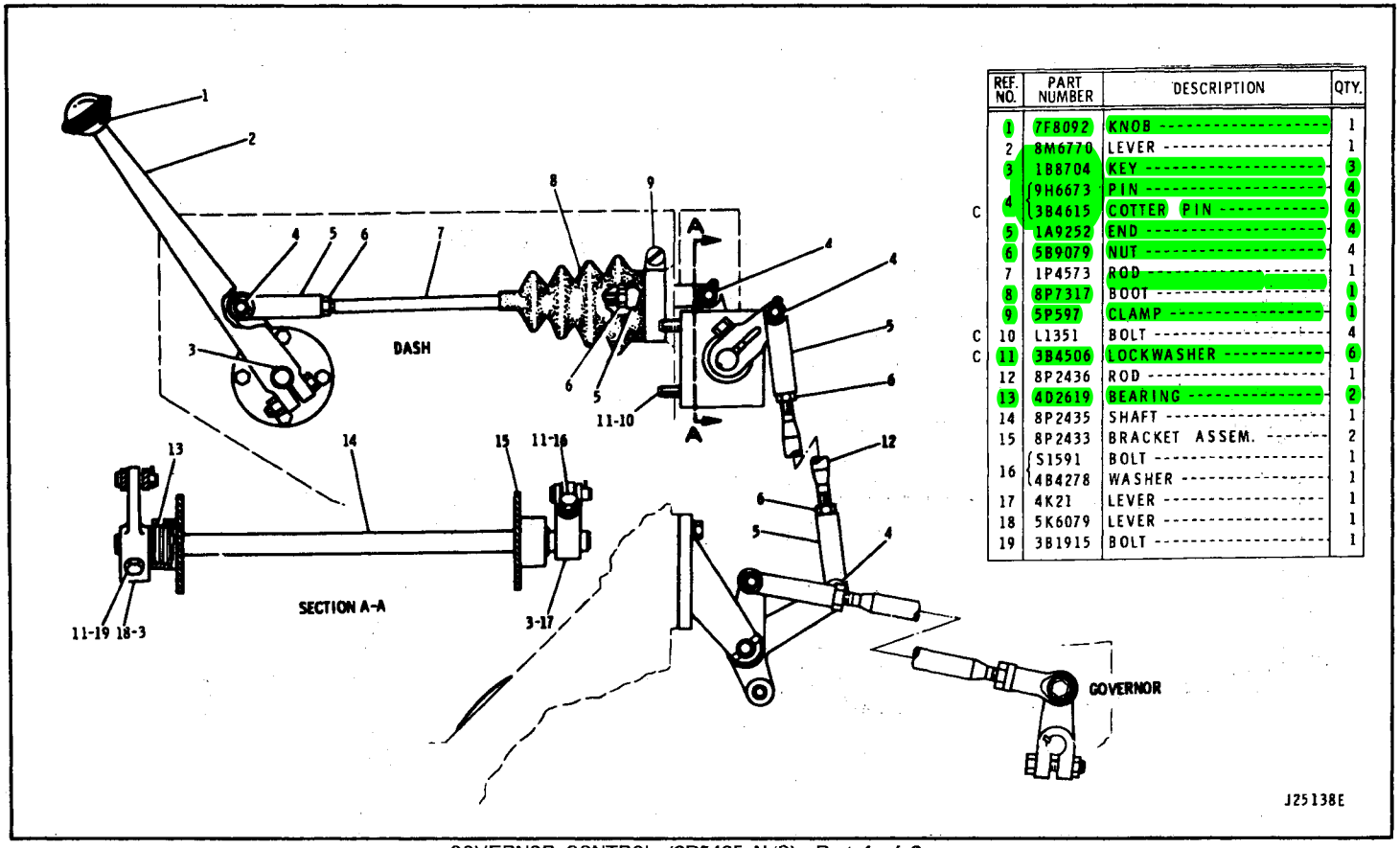

REF. NO.	PART NUMBER	DESCRIPTION	QTY.
1	7F8092	KNOB	1
2	8M6770	LEVER	1
3	1B8704	KEY	3
4	9H6673	PIN	4
C	3B4615	COTTER PIN	4
5	1A9252	END	4
6	5B9079	NUT	4
7	1P4573	ROD	1
8	8P7317	BOOT	1
9	5P597	CLAMP	1
C 10	L1351	BOLT	4
C 11	3B4506	LOCKWASHER	6
12	8P2436	ROD	1
13	4D2619	BEARING	2
14	8P2435	SHAFT	1
15	8P2433	BRACKET ASSEM.	2
16	S1591	BOLT	1
	4B4278	WASHER	1
17	4K21	LEVER	1
18	5K6079	LEVER	1
19	3B1915	BOLT	1

GOVERNOR CONTROL (9P5485 N/S)–Part 1 of 2

Effective with Serial No. 6HC1–6HC593

GOVERNOR CONTROL (9P5485 N/S)–Part 2 of 2

Effective with Serial No. 6HC1–6HC593

	NO.	PART NO. 部品番号	DESCRIPTION 名称および記事	QTY. 数量
	1	S1588	BOLT	3
	2	3B4506	LOCKWASHER	2
	3	8P2437	BRACKET ASSEM.	1
C	4	4D4064	END	1
C	5	6K4289	ROD	1
	6	5B9079	NUT	2
	7	1A9252	END	1
	8	9H6673	PIN	1
		3B4615	COTTER PIN	1
	9	T924	BOLT	1
		1B4203	NUT	1
	10	9P5385	LEVER	1
	11	8P2441	BELLCRANK ASSEM.	1
		3K6662	BEARING	2
	12	6H3956	PIN	1
	13	8P2443	SHAFT	1
	14	1L6377	BUTTON	1
	15	5H7152	SPRING	1
	16	7M6955	GASKET	1
	17	8P2426	SUPPORT ASSEM.	1
	18	9F5647	BEARING	2
	19	1B8704	KEY	2
		8P2429	SHAFT	1
C	20	1B8735	KEY	1
		8H7577	PLATE	1
	21	8M6773	LEVER	1
	22	8H9180	SEAL	2
	23	7M2167	RING	1
	24	8P2430	SHAFT ASSEM.	1
	25	1B2713	BOLT	1
	26	1B4330	NUT	4
		3B4504	LOCKWASHER	4
	27	3B1915	BOLT	1
		1D4717	NUT	1
	28	8B2377	BOLT	3
	29	8H9182	ROLLER	2
	30	8H9186	SPRING	2
	31	5B9627	WASHER	1
C	32	T627	BOLT	1
C	33	2F8616	NUT	1

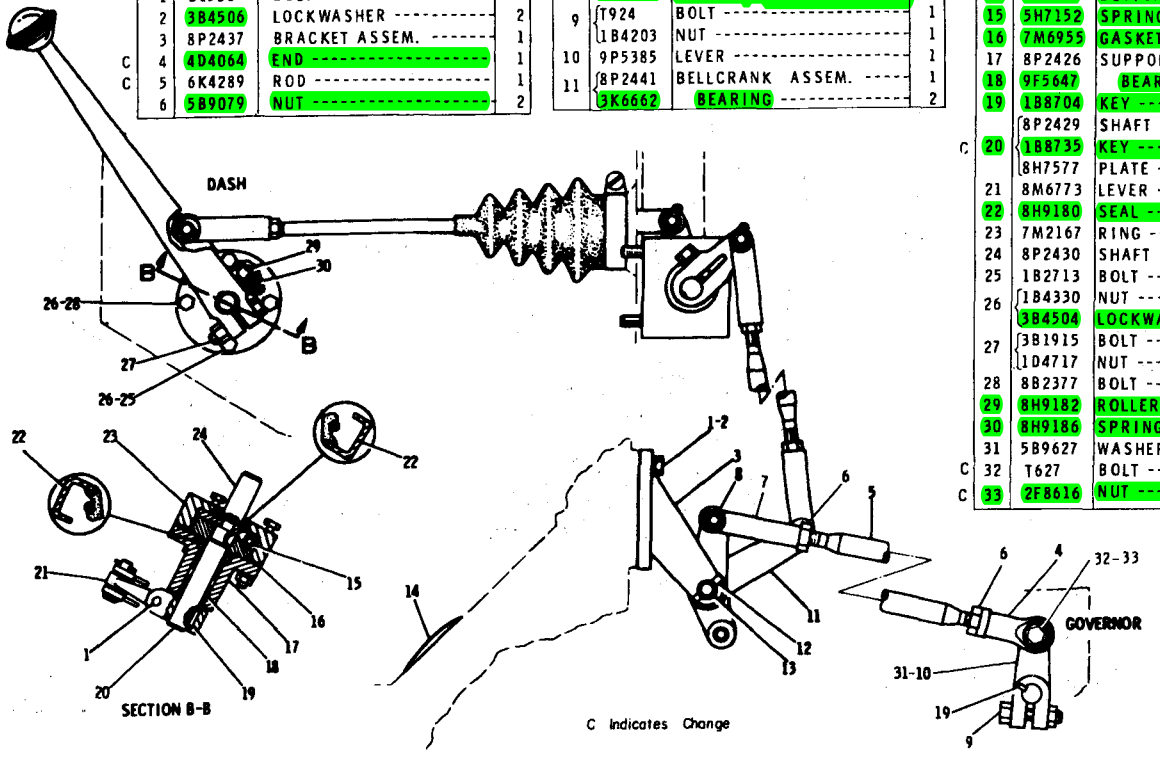

C Indicates Change

J25139E

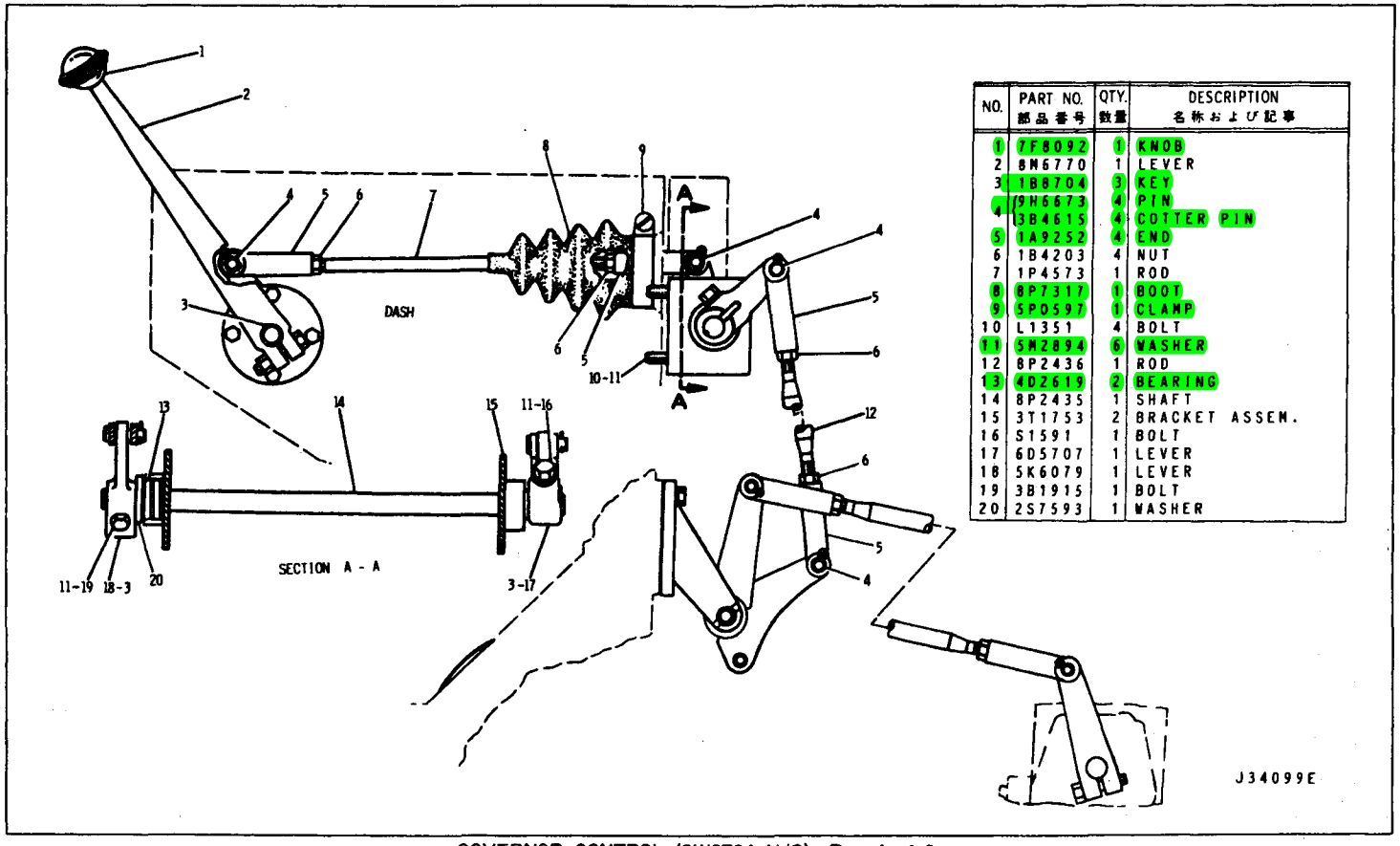

NO.	PART NO. 部品番号	QTY. 数量	DESCRIPTION 名称および記事
1	7F8092	1	KNOB
2	8M6770	1	LEVER
3	1B8704	3	KEY
4	9H6673	4	PIN
	3B4615	4	COTTER PIN
5	1A9252	4	END
6	1B4203	4	NUT
7	1P4573	1	ROD
8	8P7317	1	BOOT
9	5P0597	1	CLAMP
10	L1351	4	BOLT
11	5M2894	6	WASHER
12	8P2436	1	ROD
13	4D2619	2	BEARING
14	8P2435	1	SHAFT
15	3T1753	2	BRACKET ASSEM.
16	S1591	1	BOLT
17	6D5707	1	LEVER
18	5K6079	1	LEVER
19	3B1915	1	BOLT
20	2S7593	1	WASHER

GOVERNOR CONTROL (9W3764 N/S)–Part 1 of 2

Effective with Serial No. 6HC594–UP

GOVERNOR CONTROL (9W3764 N/S) – Part 2 of 2

Effective with Serial No. 6HC594 – UP

NO.	PART NO. 部品番号	QTY. 数量	DESCRIPTION 名称および記事
1	S1588	3	BOLT
2	5M2894	2	WASHER
3	8P2437	1	BRACKET ASSEM.
4	1A9252	1	END
5	9W3791	1	ROD
6	1B4203	2	NUT
7	1F5403	1	END
	9H6673	2	PIN
8	3B4615	2	COTTER PIN
9	4B3388	1	BOLT
10	1V0026	1	LEVER
11	9W3770	2	BELLCRANK ASSEM.
	3K6662	2	BEARING
12	6H3956	1	PIN
13	8P2443	1	SHAFT
14	1L6377	1	PLUG
15	5H7152	1	SPRING
16	7M6955	1	GASKET
17	8P2426	1	SUPPORT ASSEM.
18	9F5647	2	BEARING
19	1B8704	1	KEY
	8P2429	1	SHAFT
20	1B8735	1	KEY
	8H7577	1	PLATE
21	8M6773	1	LEVER
22	8H9180	2	SEAL
23	7M2167	1	RING
24	8P2430	1	SHAFT ASSEM.
25	1B2713	1	BOLT
26	1B4330	4	NUT
	5P0537	4	WASHER
27	3B1915	1	BOLT
	1D4717	1	NUT
28	8B2377	3	BOLT
29	8H9182	2	ROLLER
30	8H9186	2	SPRING

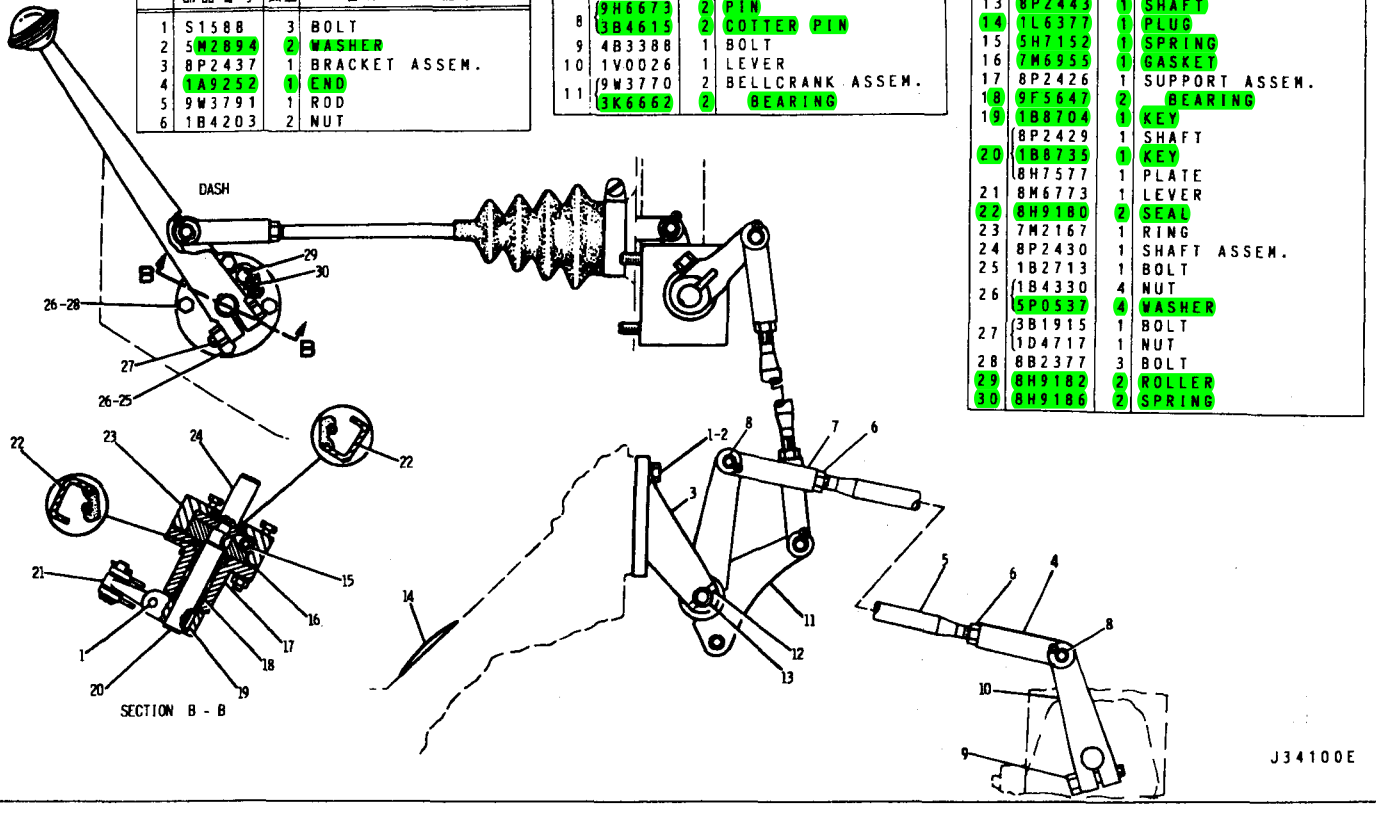

NO.	PART NO. 部品番号	DESCRIPTION 名称および記事	QTY. 数量
1	8P3167	ANGLE	1
2	8P2451	ROD ASSEM.	1
3	8P7792	BOOT	1
4	8P2455	ROD	1
5	9K8757	END	1
6	1A8285	NUT	1
7	8H9523	SPRING	1
8	8P2456	TUBE	1
9	1B4430	NUT	2
10	5J557	END	1
11	8P2458	ROD	1
12	3D8752	NUT	1
13	1B4205	NUT	1
	3B4508	LOCKWASHER	1
14	8P2460	SUPPORT ASSEM.	1
15	3B4617	COTTER PIN	1
16	1A2812	WASHER	1
17	8P2463	PEDAL ASSEM.	1
18	5S1588	BOLT	1
	1B2578	NUT	1
19	5P597	CLAMP	1

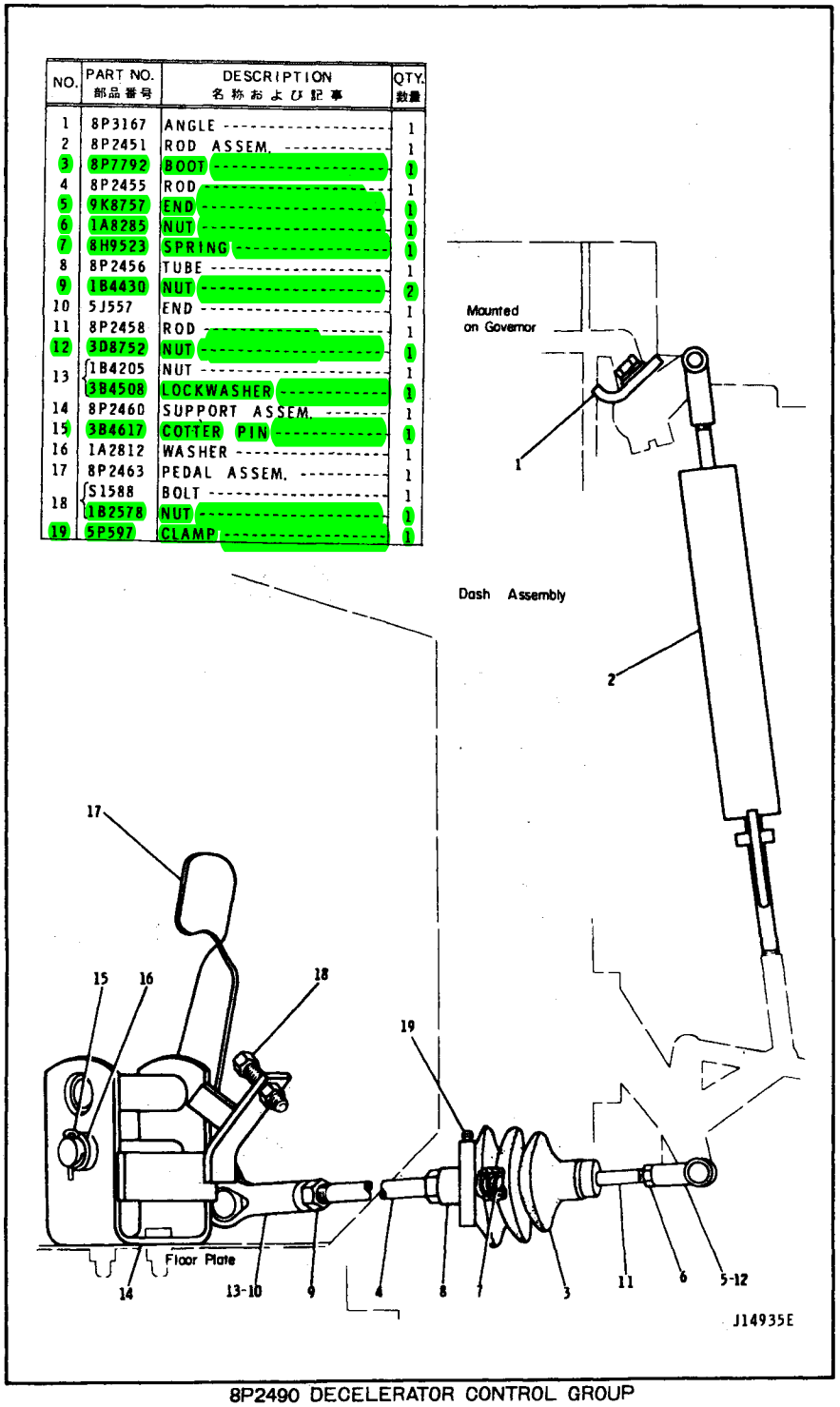

8P2490 DECELERATOR CONTROL GROUP
AN ATTACHMENT

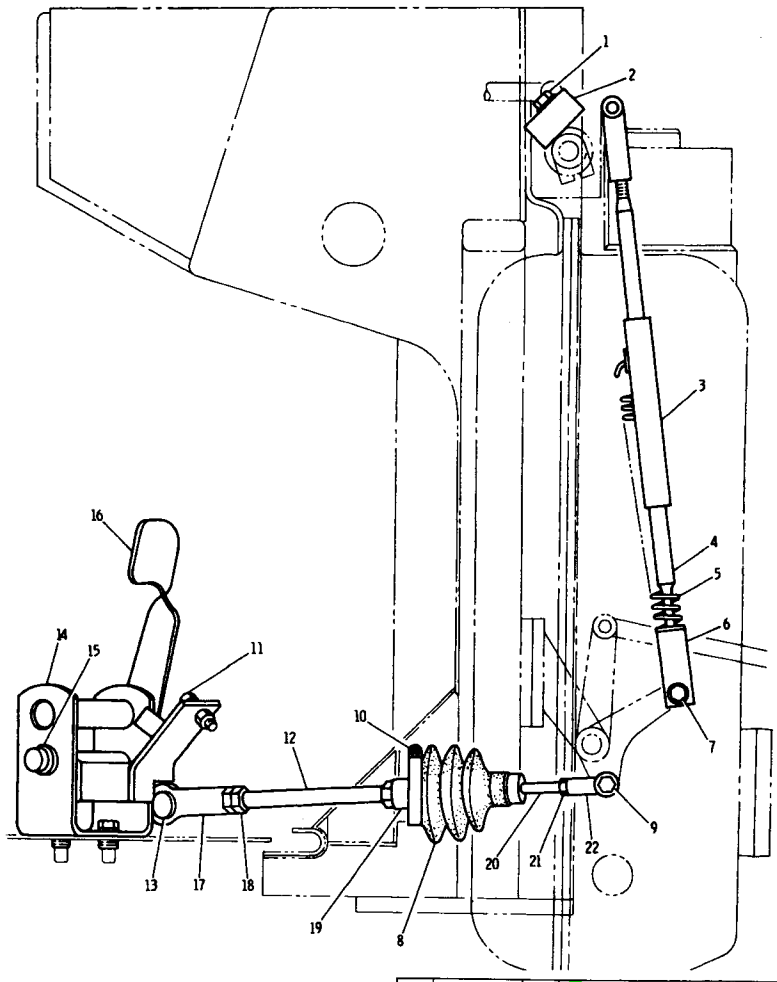

NO.	PART NO. 部品番号	QTY. 数量	DESCRIPTION 名称および記事
1	L1143	1	BOLT
	5P1075	1	WASHER
2	9V7112	1	BLOCK
3	9W3767	1	ROD ASSEM.
4	9W3769	1	ROD
5	4B6493	1	SPRING
6	1V0844	1	STRIP
7	9K0922	1	PIN
	3B4615	1	COTTER PIN
	1L5081	1	SPACER
8	8P7792	1	BOOT
9	3D8752	1	LOCKNUT
10	5P0597	1	CLAMP
11	S1588	1	BOLT
	1D4717	1	NUT
12	8P2455	1	ROD
13	1B4205	1	NUT
	5P8245	1	WASHER
14	8P2460	1	SUPPORT ASSEM.
15	1A2812	1	WASHER
	3B4617	1	COTTER PIN
16	8P2463	1	PEDAL ASSEM.
17	5J0557	1	ROD END
18	1B4430	2	NUT
19	8P2456	1	TUBE
	8H9523	1	SPRING
20	8P2458	1	ROD
21	1A8285	1	NUT
22	6V1033	1	ROD END

J34098E

DECELERATOR CONTROL (9W3766 N/S)
AN ATTACHMENT

MEMO

FUEL LINES (9G5504 N/S)

Effective with Serial No. 6HC1~6HC593

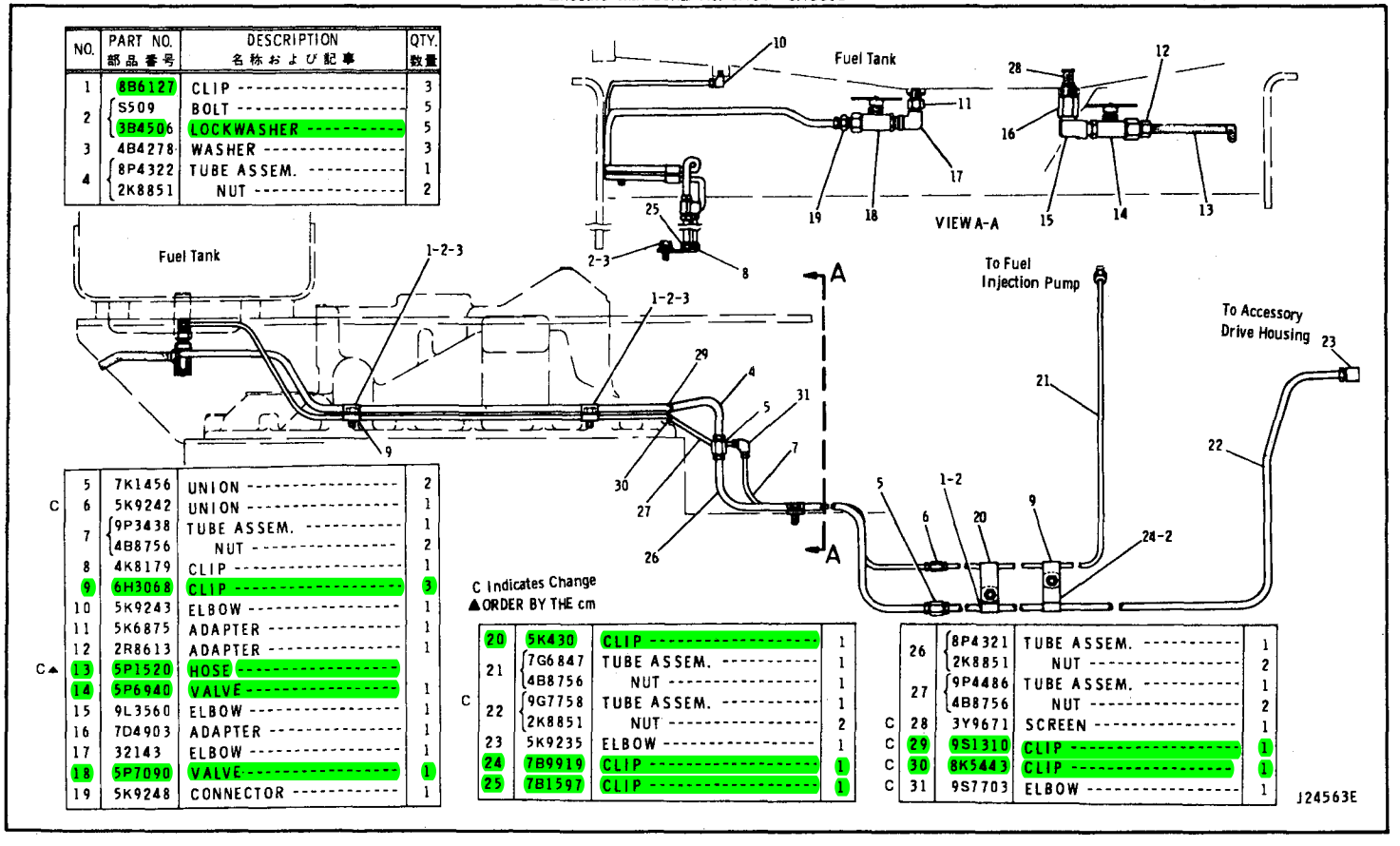

NO.	PART NO. 部品番号	DESCRIPTION 名称および記事	QTY. 数量
1	8B6127	CLIP	3
2	S509	BOLT	5
	3B4506	LOCKWASHER	5
3	4B4278	WASHER	3
4	8P4322	TUBE ASSEM.	1
	2K8851	NUT	2
5	7K1456	UNION	2
C 6	5K9242	UNION	1
7	9P3438	TUBE ASSEM.	1
	4B8756	NUT	2
8	4K8179	CLIP	1
9	6H3068	CLIP	3
10	5K9243	ELBOW	1
11	5K6875	ADAPTER	1
12	2R8613	ADAPTER	1
C▲ 13	5P1520	HOSE	
14	5P6940	VALVE	1
15	9L3560	ELBOW	1
16	7D4903	ADAPTER	1
17	32143	ELBOW	1
18	5P7090	VALVE	1
19	5K9248	CONNECTOR	1
20	5K430	CLIP	1
21	7G6847	TUBE ASSEM.	1
	4B8756	NUT	1
C 22	9G7758	TUBE ASSEM.	1
	2K8851	NUT	2
23	5K9235	ELBOW	1
24	7B9919	CLIP	1
25	7B1597	CLIP	1
26	8P4321	TUBE ASSEM.	1
	2K8851	NUT	2
27	9P4486	TUBE ASSEM.	1
	4B8756	NUT	2
C 28	3Y9671	SCREEN	1
C 29	9S1310	CLIP	1
C 30	8K5443	CLIP	1
C 31	9S7703	ELBOW	1

C Indicates Change
▲ORDER BY THE cm

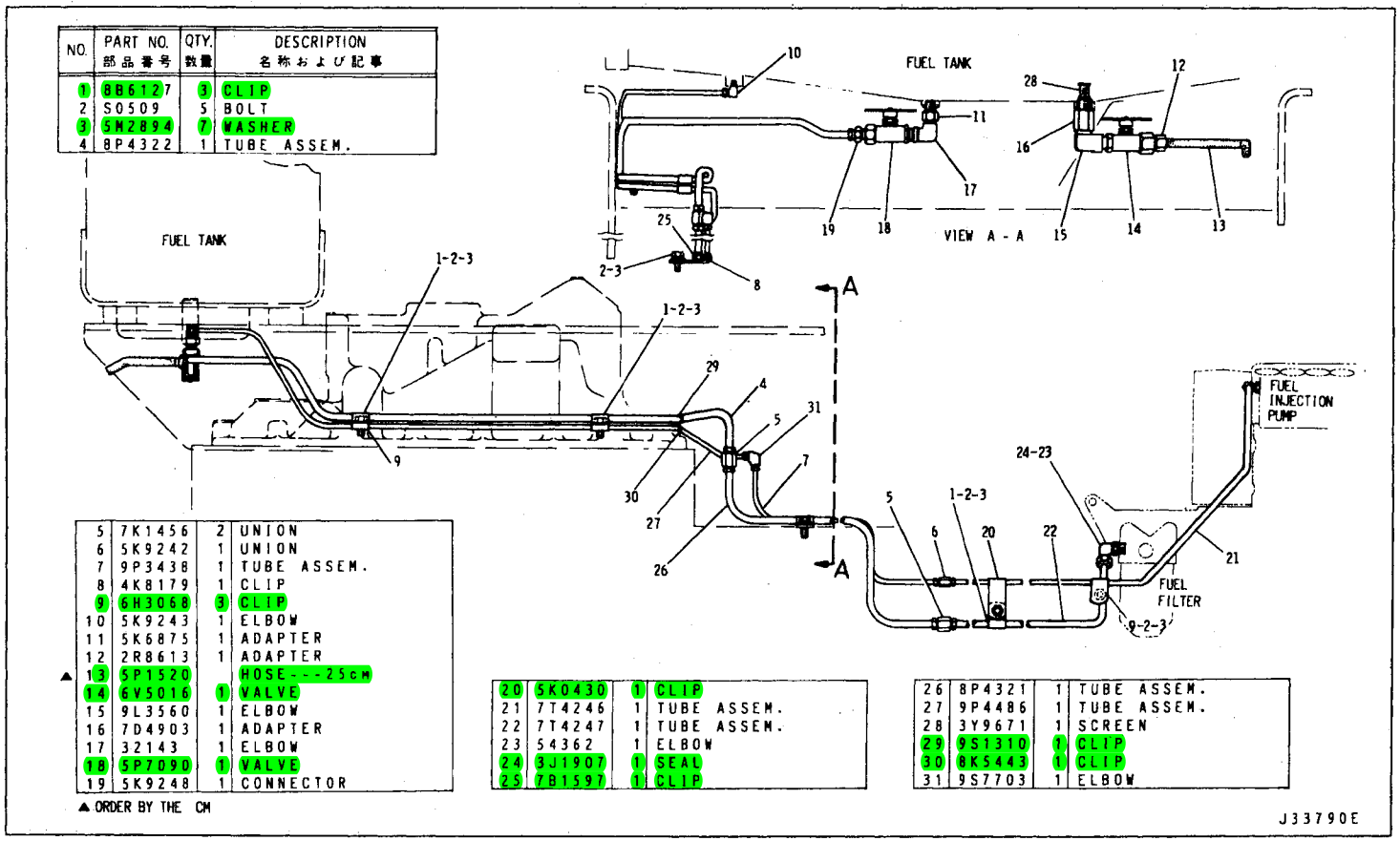

NO.	PART NO. 部品番号	QTY. 数量	DESCRIPTION 名称および記事
1	8B6127	3	CLIP
2	S0509	5	BOLT
3	5M2894	7	WASHER
4	8P4322	1	TUBE ASSEM.

5	7K1456	2	UNION
6	5K9242	1	UNION
7	9P3438	1	TUBE ASSEM.
8	4K8179	1	CLIP
9	6H3068	3	CLIP
10	5K9243	1	ELBOW
11	5K6875	1	ADAPTER
12	2R8613	1	ADAPTER
▲ 13	5P1520		HOSE - - - 25cM
14	6V5016	1	VALVE
15	9L3560	1	ELBOW
16	7D4903	1	ADAPTER
17	32143	1	ELBOW
18	5P7090	1	VALVE
19	5K9248	1	CONNECTOR

▲ ORDER BY THE CM

20	5K0430	1	CLIP
21	7T4246	1	TUBE ASSEM.
22	7T4247	1	TUBE ASSEM.
23	54362	1	ELBOW
24	3J1907	1	SEAL
25	7B1597	1	CLIP

26	8P4321	1	TUBE ASSEM.
27	9P4486	1	TUBE ASSEM.
28	3Y9671	1	SCREEN
29	9S1310	1	CLIP
30	8K5443	1	CLIP
31	9S7703	1	ELBOW

FUEL LINES (9W3694 N/S)

Effective with Serial No. 6HC594 – UP

MEMO

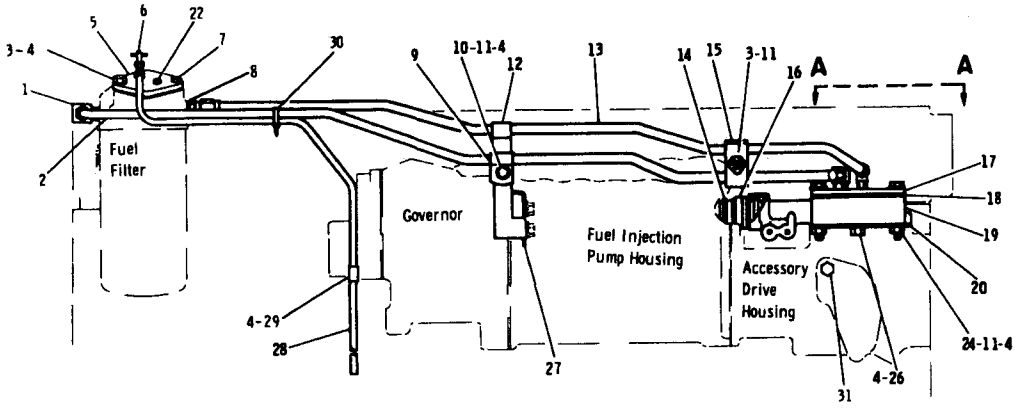

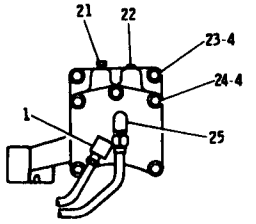

NO.	PART NO. 部品番号	DESCRIPTION 名称および記事	QTY. 数量
1	5K9235	ELBOW	2
2	7N4950	TUBE ASSEM.	1
	2K8851	NUT	2
3	S1618	BOLT (25.5mm Long)	2
4	9M1974	WASHER	14
5	4N6121	COVER	1
	1P436	GASKET	1
6	6D238	VALVE ASSEM.	1
7	4F7957	BOLT (22mm Long)	1
8	2R6806	CONNECTOR	1
	3J1907	SEAL	1
9	2H7829	CLIP	1
10	2H3755	BOLT	1
11	1D4716	NUT	4
12	9K6060	CLIP	1
13	7N4949	TUBE ASSEM.	1
14	9H4557	SEAL	2
15	3Y5364	CLAMP	2
16	2P7713	ADAPTER	1
17	4N6126	COVER	1
18	5S9060	GASKET	1
19	5S6333	ADAPTER	1
20	7N4634	GASKET	1
21	5M6214	PLUG	1
22	9F2247	PLUG	2
23	4B3388	BOLT (29mm Long)	2
24	2B2694	BOLT (51mm Long)	5
25	321268	ELBOW	1
26	1B9575	BOLT	1
27	2W2518	BRACKET	1
▲ 28	5P6011	TUBE ---------- 1m	
29	4H3218	CLIP	1
30	3S2093	STRAP	1
31	9S4182	PLUG	1
	3J7354	SEAL	1

▲ ORDER BY THE m

J23885E

FUEL FILTER LINES (2W2516 N/S)

Part of 2W2926 Refrigerant Compressor Arrangement listed on Page 233

AN ATTACHMENT

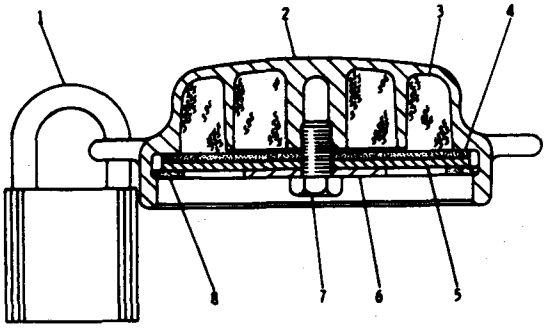

REF. NO.	PART NUMBER	DESCRIPTION	QTY.
1	5P8502	PADLOCK GROUP -------	1
	5P8500	KEY ----------	2

2	9G6082	CAP ASSEM. ----------	1
3	4B5949	ELEMENT ----------	2
4	4B5423	GASKET ----------	1
5	3F4134	BAFFLE ----------	1
6	7B2002	WASHER ----------	1
7	3H8389	SCREW ----------	1
8	2A1763	GASKET ----------	1

J20758E

FUEL TANK PROTECTION CAP (9G8847 N/S)
AN ATTACHMENT

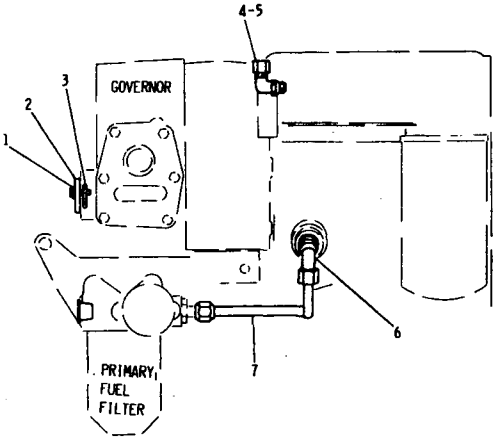

	NO.	PART NO. 部品番号	QTY. 数量	DESCRIPTION 名称および記事
C	1	5P537	2	WASHER
		S1615	2	BOLT
C	2	4W7629	1	COVER

C	3	4M8303	1	SEAL
C	4	307946	1	ELBOW
C	5	3J7354	1	SEAL
		307947	1	ELBOW
	6	3J1907	1	SEAL
	7	1W6629	1	TUBE ASSEM.

J27542E

DRAIN LINES (2W1605 N/S)
Effective with Serial No. 10Z13020-UP

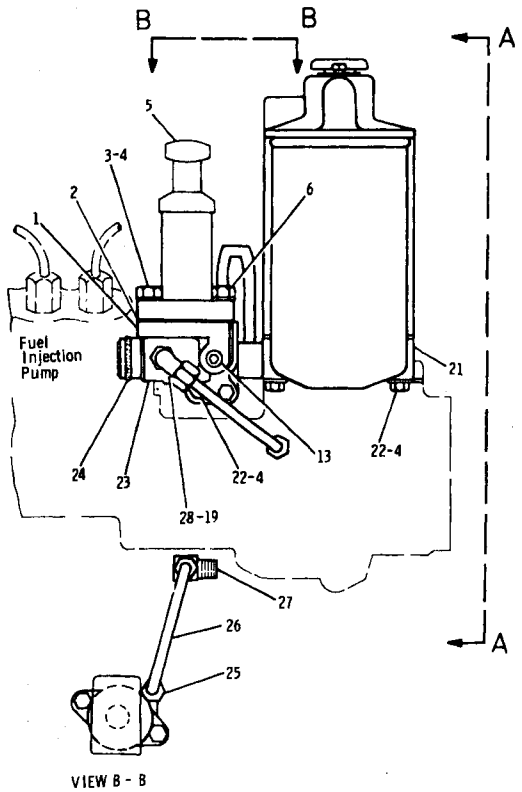

VIEW B - B

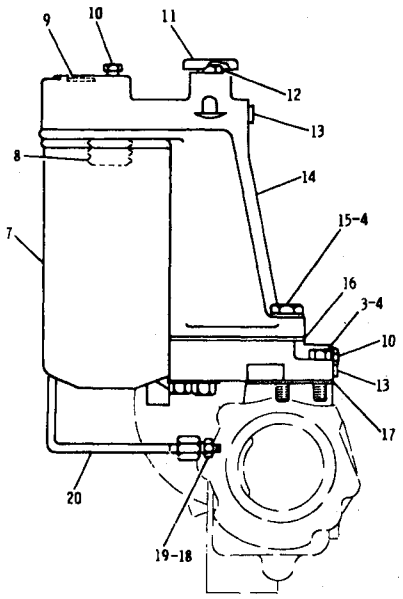

VIEW A - A

NO.	PART NO. 部品番号	DESCRIPTION 名称および記事	QTY. 数量
1	8N1344	BASE	1
2	1P436	GASKET	1
3	4B3388	BOLT	3
4	9M1974	WASHER	11
5	4W788	PUMP ASSEM.	1
	1P2298	VALVE ASSEM.	2
	4T302	FELT	1
6	9F6580	BOLT	1
	5P537	WASHER	1
7	1W8633	FILTER ASSEM.	1
8	9S4167	STUD	1
9	1H9722	PLUG	1
10	5M6214	PLUG	2
11	2A1927	NIDLE ASSEM.	1
12	7F3901	SEAT	1
13	9F2247	PLUG	3
14	1N4452	BASE	1
15	1D4538	BOLT	3
16	5S9060	GASKET	1
17	7N4634	GASKET	1
18	3J7352	CONNECTOR	1
19	3J7354	SEAL	2
20	8N1438	TUBE ASSEM.	1
21	5S6333	ADAPTER	1
22	1B9575	BOLT	5
23	2P7713	ADAPTER	1
24	9H4557	SEAL	2
25	6L3616	CONNECTOR	1
26	8N1439	TUBE ASSEM.	1
	4B8756	NUT	2
27	5K9243	ELBOW	1
28	3D7946	ELBOW	1

J25780E

FUEL PRIMING PUMP AND FILTER (8N9162 N/S)

Effective with Serial No. 10Z5342~10Z13019

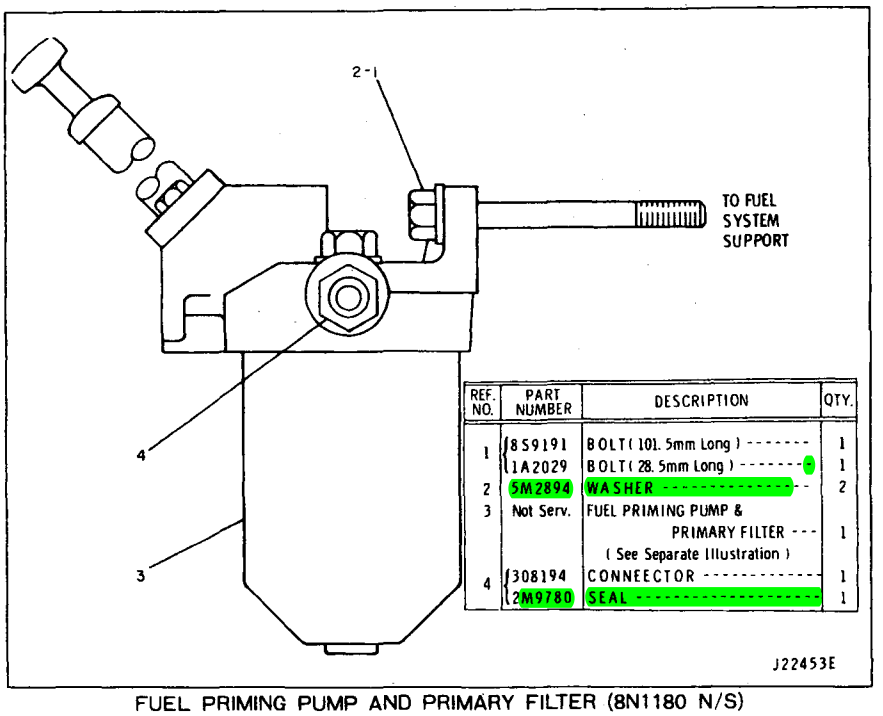

REF. NO.	PART NUMBER	DESCRIPTION	QTY.
1	8S9191	BOLT (101.5mm Long)	1
	1A2029	BOLT (28.5mm Long)	1
2	5M2894	WASHER	2
3	Not Serv.	FUEL PRIMING PUMP & PRIMARY FILTER (See Separate Illustration)	1
4	308194	CONNECTOR	1
	2M9780	SEAL	1

FUEL PRIMING PUMP AND PRIMARY FILTER (8N1180 N/S)

Effective with Serial No. 10Z13020–UP

Fuel Priming Pump & Primary Filter parts are shown below

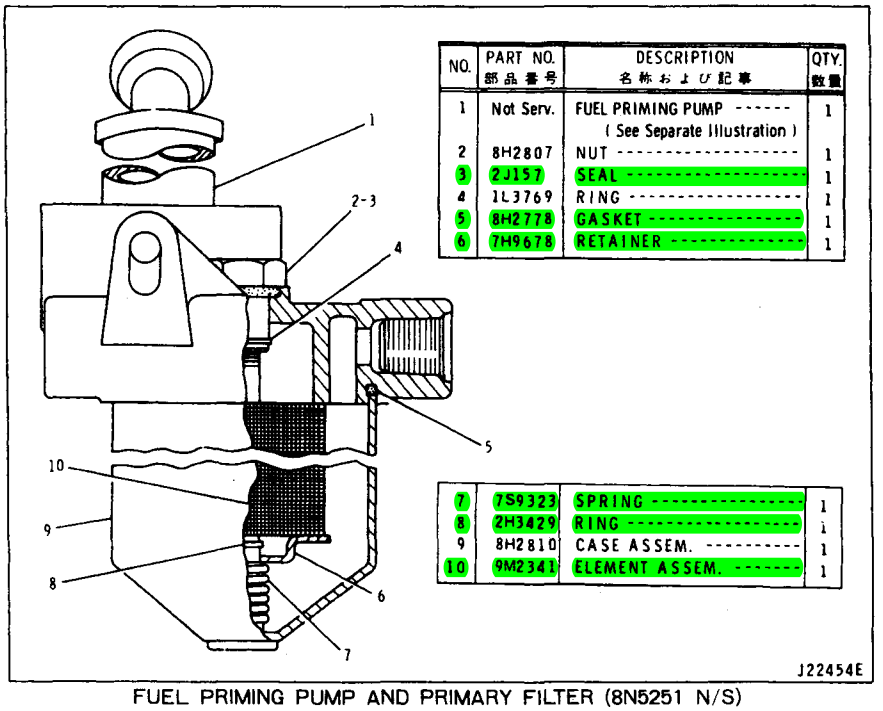

NO.	PART NO. 部品番号	DESCRIPTION 名称および記事	QTY. 数量
1	Not Serv.	FUEL PRIMING PUMP (See Separate Illustration)	1
2	8H2807	NUT	1
3	2J157	SEAL	1
4	1L3769	RING	1
5	8H2778	GASKET	1
6	7H9678	RETAINER	1
7	7S9323	SPRING	1
8	2H3429	RING	1
9	8H2810	CASE ASSEM.	1
10	9M2341	ELEMENT ASSEM.	1

FUEL PRIMING PUMP AND PRIMARY FILTER (8N5251 N/S)

Effective with Serial No. 10Z13020–UP

Part of Fuel Priming Pump & Primary Filter (8N1180 N/S)

Fuel Priming Pump parts are shown on Page 56B

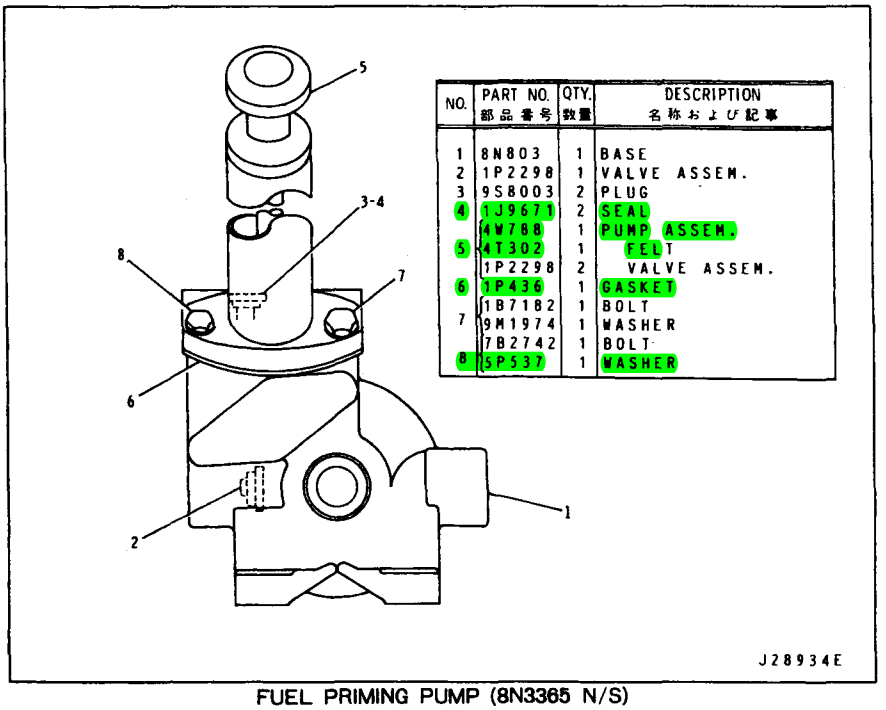

NO.	PART NO. 部品番号	QTY. 数量	DESCRIPTION 名称および記事
1	8N803	1	BASE
2	1P2298	1	VALVE ASSEM.
3	9S8003	2	PLUG
4	1J9671	2	SEAL
	4W788	1	PUMP ASSEM.
5	4T302	1	FELT
	1P2298	2	VALVE ASSEM.
6	1P436	1	GASKET
	1B7182	1	BOLT
7	9M1974	1	WASHER
	7B2742	1	BOLT
8	5P537	1	WASHER

FUEL PRIMING PUMP (8N3365 N/S)
Effective with Serial No. 10Z13020−UP
Part of Fuel Priming Pump & Primary Filter (8N5251 N/S)

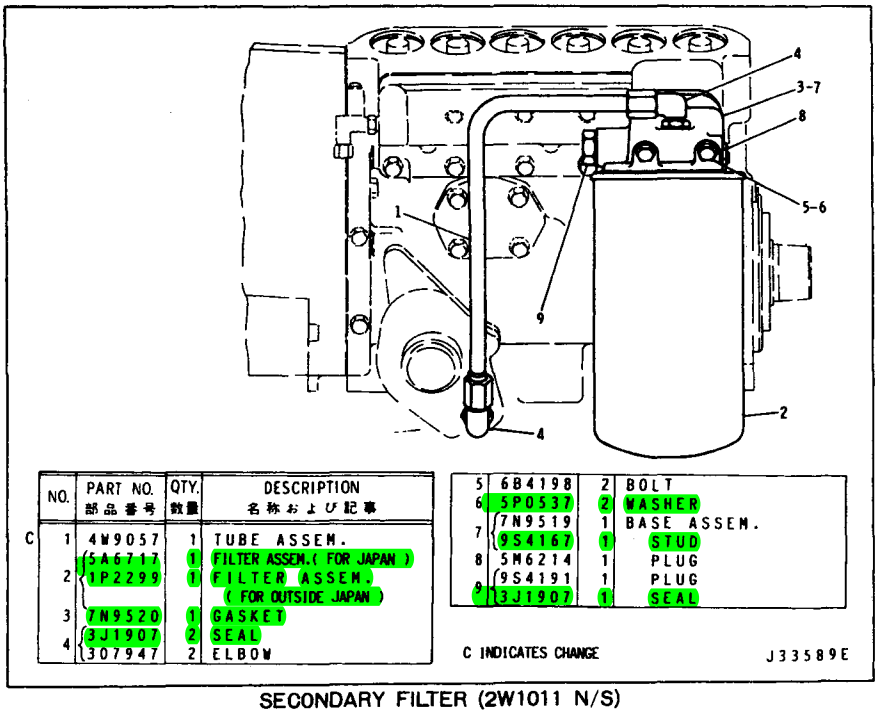

	NO.	PART NO. 部品番号	QTY. 数量	DESCRIPTION 名称および記事
C	1	4W9057	1	TUBE ASSEM.
	2	5A6717	1	FILTER ASSEM.(FOR JAPAN)
		1P2299	1	FILTER ASSEM. (FOR OUTSIDE JAPAN)
	3	7N9520	1	GASKET
	4	3J1907	2	SEAL
		307947	2	ELBOW
	5	6B4198	2	BOLT
	6	5P0537	2	WASHER
	7	7N9519	1	BASE ASSEM.
		9S4167	1	STUD
	8	5M6214	1	PLUG
	9	9S4191	1	PLUG
		3J1907	1	SEAL

C INDICATES CHANGE

SECONDARY FILTER (2W1011 N/S)
Effective with Serial No. 10Z13020−UP

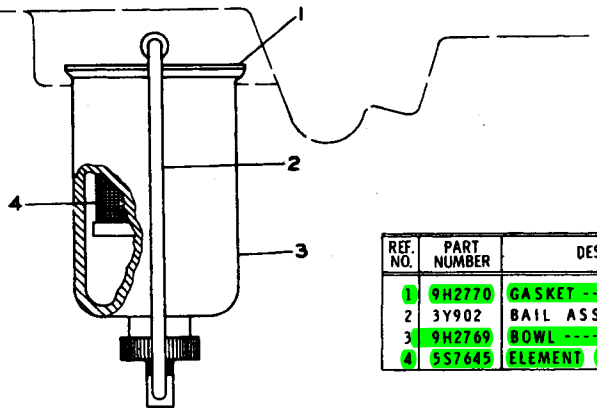

REF. NO.	PART NUMBER	DESCRIPTION	QTY.
1	9H2770	GASKET	1
2	3Y902	BAIL ASSEM.	1
3	9H2769	BOWL	1
4	5S7645	ELEMENT ASSEM.	1

J9123E

PRIMARY FUEL FILTER (1P6835 N/S)
Effective with Serial No. 10Z5342~10Z13019

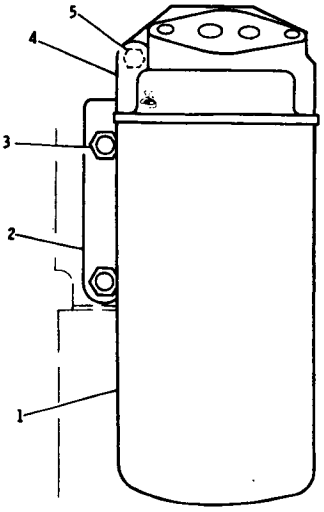

REF. NO.	PART NUMBER	DESCRIPTION	QTY.
1	5A6717	FILTER ASSEM. (For Japan)	1
	1P2299	FILTER ASSEM. (For Outside Japan)	1
2	6N856	SUPPORT	1
3	3B1915	BOLT	2
4	4N3295	BASE	1
5	S1594	BOLT	2

J15773E

FUEL FILTER (7N4948 N/S)
Part of 2W2926 Refrigerant Compressor Arrangement listed on Page 233
AN ATTACHMENT

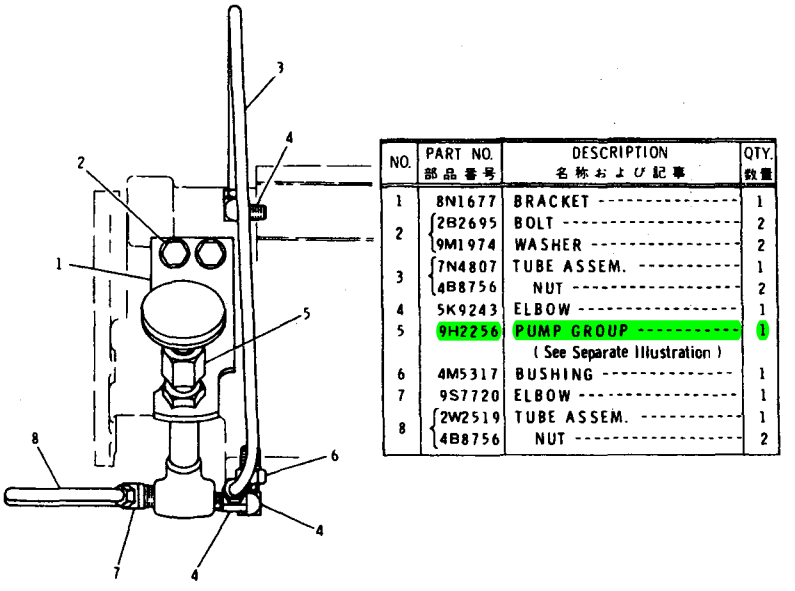

NO.	PART NO. 部品番号	DESCRIPTION 名称および記事	QTY. 数量
1	8N1677	BRACKET	1
2	2B2695	BOLT	2
	9M1974	WASHER	2
3	7N4807	TUBE ASSEM.	1
	4B8756	NUT	2
4	5K9243	ELBOW	1
5	9H2256	PUMP GROUP	1
		(See Separate Illustration)	
6	4M5317	BUSHING	1
7	9S7720	ELBOW	1
8	2W2519	TUBE ASSEM.	1
	4B8756	NUT	2

FUEL PRIMING PUMP (2W2517 N/S)

Part of 2W2926 Refrigerant Compressor Arrangement listed on Page 233

9H2256 Priming Pump parts are shown on Page 59

AN ATTACHMENT

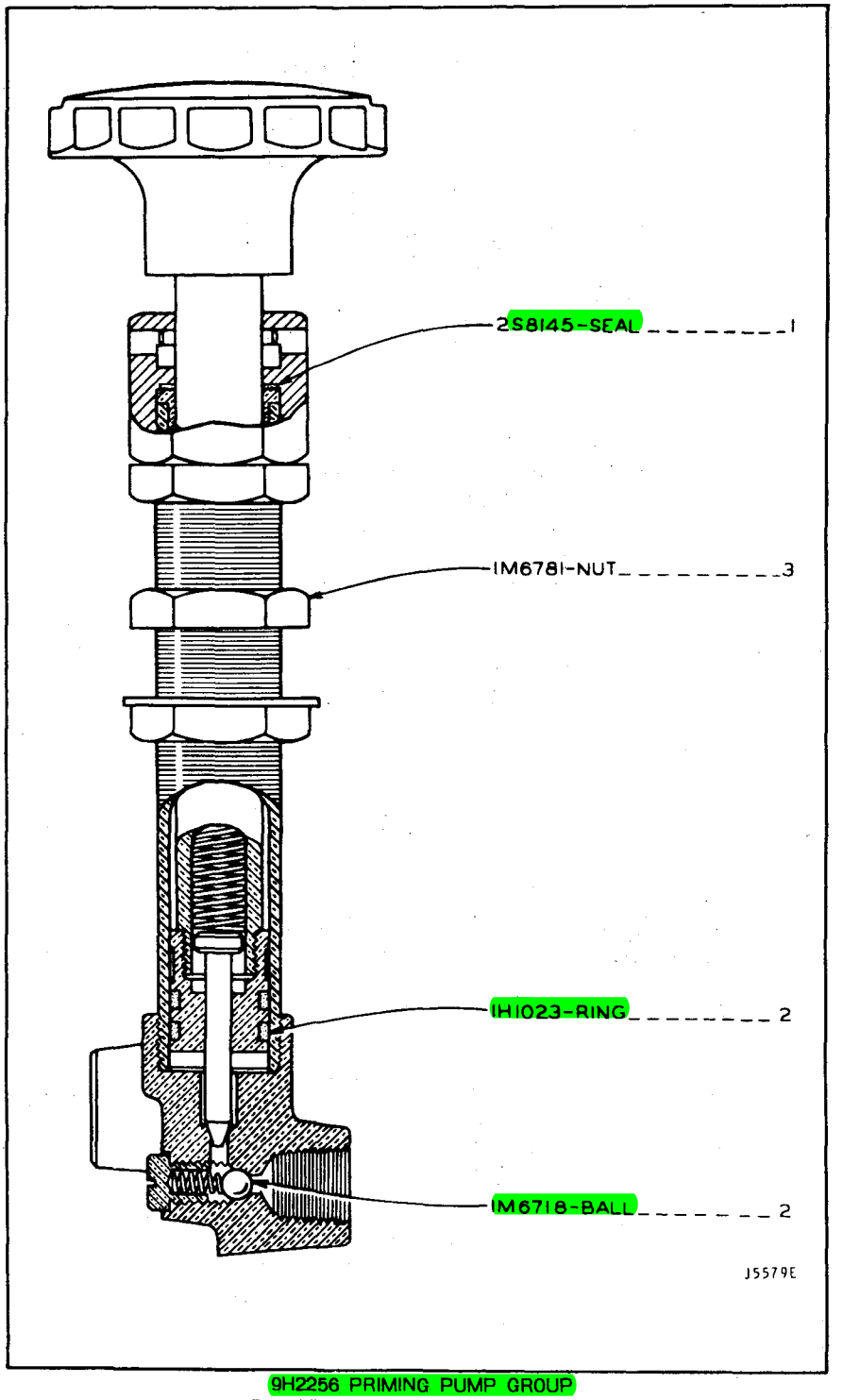

9H2256 PRIMING PUMP GROUP
Part of Fuel Priming Pump shown on Page 58
AN ATTACHMENT

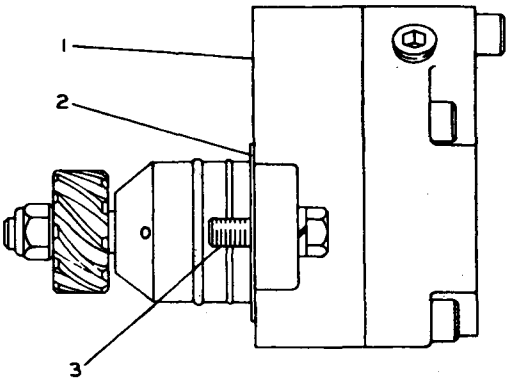

REF. NO.	PART NUMBER	DESCRIPTION	QTY.
1	4N4864	PUMP GROUP ---------- (See Separate Illustration)	1
2	7S2374	GASKET ----------	1
3	4B3388	BOLT ----------	2
	3B4505	LOCKWASHER ----------	2

J9126E

FUEL TRANSFER PUMP (7S4429 N/S)

Effective with Serial No. 10Z5342~10Z13019
4N4864 Transfer Pump parts are shown below

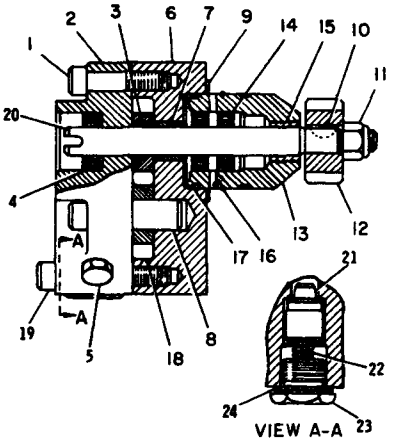

	REF. NO.	PART NUMBER	DESCRIPTION	QTY.
	1	9F6641	SCREW ----------	4
C	2	7N6379	COVER ASSEM. ----------	1
	3	7S4433	FERRULE ----------	2
	4	4N4249	SEAL ----------	1
C	5	3K8460	PLUG ----------	1
C		1J9671	SEAL ----------	1
	6	7S4434	BODY ASSEM. ----------	1
	7	8F6058	BEARING ----------	1
C	8	4N3944	SHAFT ----------	1
	9	7S2374	GASKET ----------	1
	10	3H1489	KEY ----------	1
	11	2F8616	NUT ----------	1
	12	8H9806	GEAR (11Teeth-Drive) -------	1
	13	4N4865	CAGE ASSEM. ----------	1
	14	4N4248	SEAL ----------	2
	15	8F6058	BEARING ----------	1
	16	7S4439	RING ----------	1
	17	6J2419	SEAL ----------	2
	18	8S4368	GEAR (10Teeth-Idler) -------	1
	19	7S6701	SCREW ----------	2
	20	4N4870	SHAFT ASSEM. (10Teeth-Drive) --	1
	21	8M874	PLUNGER ASSEM. -------	1
	22	8M3210	SPRING ----------	1
	23	7S4440	BOLT ----------	1
	24	4N7465	GASKET ----------	1

C Indicates Change.

J16438E

4N4864 TRANSFER PUMP GROUP

Effective with Serial No. 10Z5342~10Z13019
Part of Fuel Transfer Pump shown above

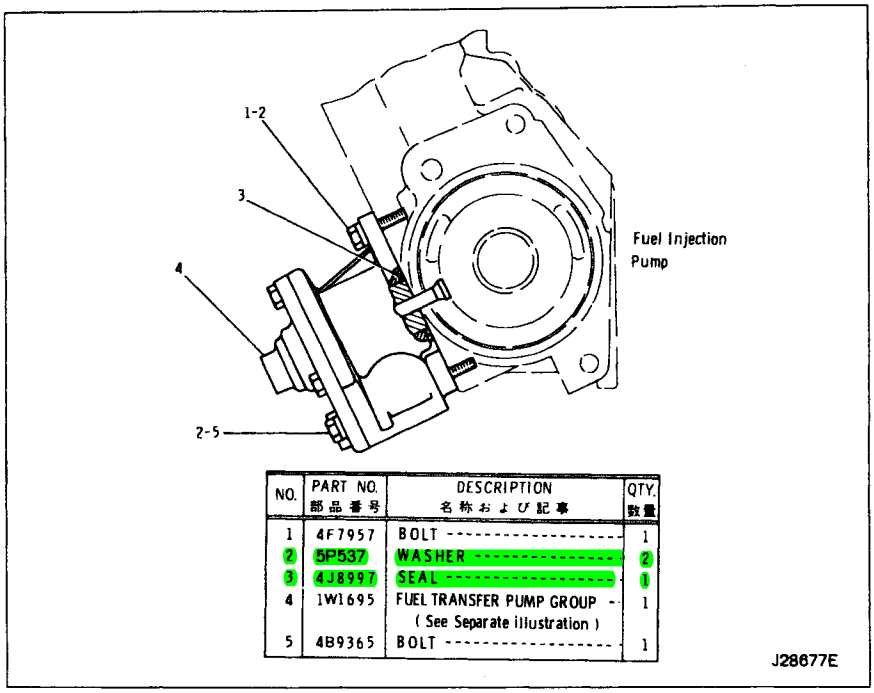

NO.	PART NO. 部品番号	DESCRIPTION 名称および記事	QTY. 数量
1	4F7957	BOLT	1
2	5P537	WASHER	2
3	4J8997	SEAL	1
4	1W1695	FUEL TRANSFER PUMP GROUP - (See Separate illustration)	1
5	4B9365	BOLT	1

FUEL TRANSFER PUMP AND MOUNTING (2W4160 N/S)

Effective with Serial No. 10Z13020 – UP

1W1695 Fuel Transfer Pump parts are shown below

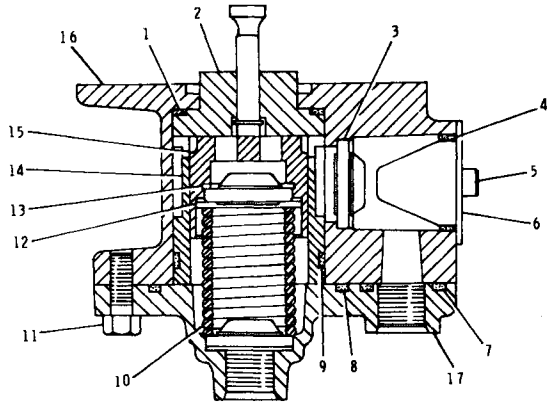

NO.	PART NO. 部品番号	QTY. 数量	DESCRIPTION 名称および記事
1	6J2419	1	SEAL
2	1W5912	1	TAPPET ASSEM.
3	7W402	3	VALVE ASSEM.
4	3D2824	1	SEAL
5	6D8498	2	SCREW
6	8N2640	1	COVER
7	6F6672	1	SEAL
8	3D2898	1	SEAL
9	5P8215	1	SEAL
10	7W134	1	SPRING
11	S1615	2	BOLT
12	8N2637	1	WAHSER
13	7W801	1	SEAL
14	8N2641	1	SLEEVE
15	1W1669	1	PISTON
16	1W1698	1	HOUSING
17	1W1699	1	COVER

1W1695 FUEL TRANSFER PUMP GROUP

Effective with Serial No. 10Z13020 – UP

Part of Fuel Transfer Pump & Mounting

MEMO

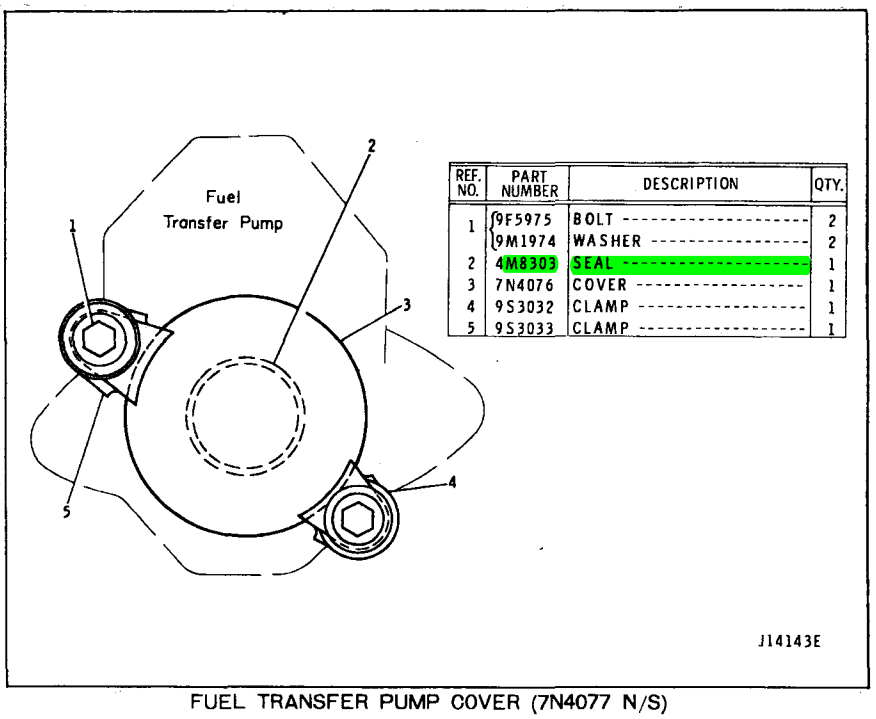

REF. NO.	PART NUMBER	DESCRIPTION	QTY.
1	9F5975	BOLT	2
	9M1974	WASHER	2
2	4M8303	SEAL	1
3	7N4076	COVER	1
4	9S3032	CLAMP	1
5	9S3033	CLAMP	1

FUEL TRANSFER PUMP COVER (7N4077 N/S)

Effective with Serial No. 10Z5342~10Z13019

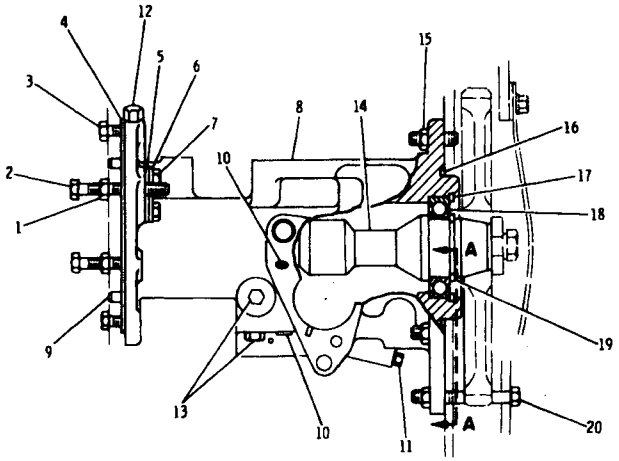

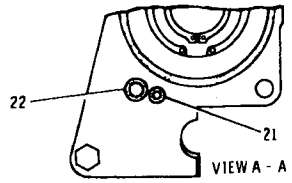

NO.	PART NO. 部品番号	DESCRIPTION 名称および記事	QTY. 数量
1	9L2796	BOLT	1
2	1B9575	BOLT	2
3	1S1618	BOLT	3
4	8H9220	GASKET	1
5	8H9788	GASKET	1
6	8H9787	COVER	1
7	2H3755	BOLT	2
8	8N4516	HOUSING ASSEM.	1
9	2H1190	DOWEL	2
10	9F2247	PLUG	2
11	5M6214	PLUG	1
12	9S4180	PLUG	1
	4J7533	SEAL	1
13	5M6213	PLUG	2
14	7N3626	SHAFT	1
15	1B4203	NUT	2
16	2H3934	SEAL	1
17	8J484	RING	1
18	4L9825	BEARING	1
19	2L6965	RING	1
20	S1619	BOLT	1
	1D4717	NUT	1
21	8F7219	SEAL	1
22	1J9671	SEAL	1

J19542E

ACCESSORY DRIVE (8N4515 N/S)

Effective with Serial No. 10Z5342~10Z13019

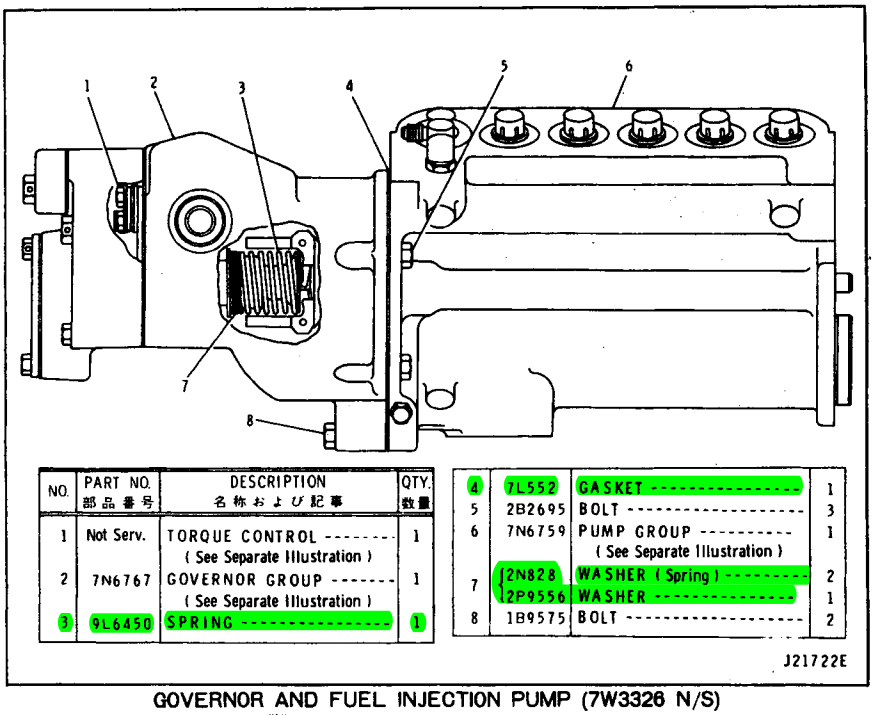

NO.	PART NO. 部品番号	DESCRIPTION 名称および記事	QTY. 数量
1	Not Serv.	TORQUE CONTROL (See Separate Illustration)	1
2	7N6767	GOVERNOR GROUP (See Separate Illustration)	1
3	9L6450	SPRING	1
4	7L552	GASKET	1
5	2B2695	BOLT	3
6	7N6759	PUMP GROUP (See Separate Illustration)	1
7	2N828	WASHER (Spring)	2
	2P9556	WASHER	1
8	1B9575	BOLT	2

J21722E

GOVERNOR AND FUEL INJECTION PUMP (7W3326 N/S)

Effective with Serial No. 10Z5342~10Z13019

Torque Control, 7N6767 Governor and 7N6759 Fuel Injection Pump parts are shown on Pages 63, 64 and 66

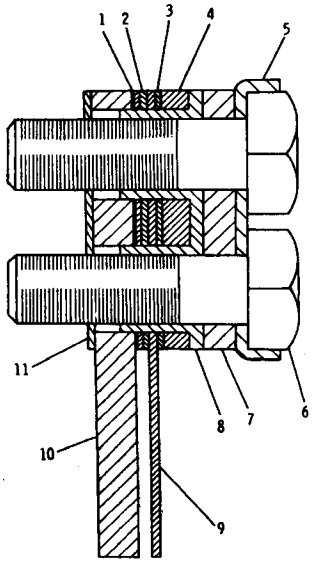

NO.	PART NO. 部品番号	DESCRIPTION 名称および記事	QTY. 数量
1	4N7777	SPACER (0.25mm Thick)	1
2	9L7235	SHIM (1.02mm Thick)	2
3	8S4317	CONTACT (0.45mm Thick)	1
4	5S2620	SPACER	1
5	9M6292	LOCK	1
6	3Y405	BOLT	2
7	8M9062	RETAINER	1
8	1P6452	INSULATOR	1
9	6N3034	SPRING (0.16mm Thick)	1
10	2S7391	BAR	1
11	1P9958	INSULATOR	1

J26162E

TORQUE CONTROL (7W3325 N/S)

Effective with Serial No. 10Z5342~10Z13019

Part of Governor & Fuel Injection Pump

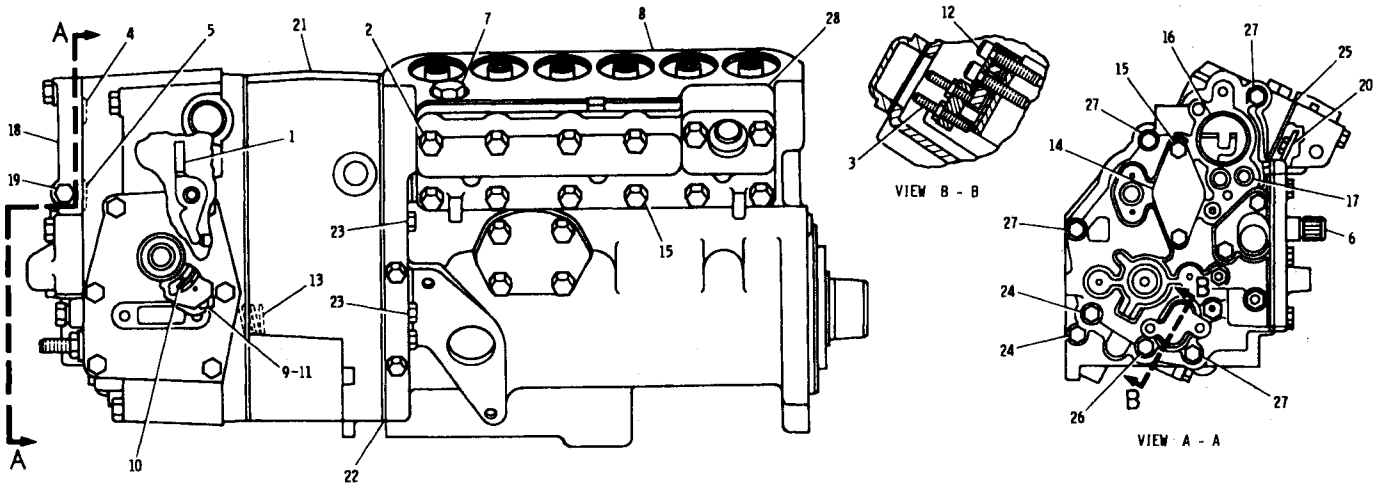

NO.	PART NO. 部品番号	QTY. 数量	DESCRIPTION 名称および記事
1	4W5734	1	LEVER ASSEM.
	6V6835	1	SETSCREW
	4B2049	1	NUT
2	8B2377	4	BOLT
3	5H6552	1	SETSCREW
	8L5832	1	NUT
4	8J8343	1	SEAL
5	3S5879	1	SEAL
6	8N3088	1	SHAFT ASSEM.
7	9S4191	1	PLUG
	3J1907	1	SEAL
8	2W0256	1	FUEL INJECTION PUMP (SEE SEPARATE ILLUSTRATION)
9	7N2176	1	PIN
10	8N3094	1	SPRING
11	7N1052	1	DOWEL
12	1W8668	1	CONTROL GROUP (SEE SEPARATE ILLUSTRATION)
13	9M3160	1	SPRING
14	2W5448	1	COVER
	2W5447	1	GASKET
15	4F7957	8	BOLT
16	8M8515	1	SEAL
17	6P6620	1	SEAL
18	8N3799	1	COVER
19	9S4180	1	PLUG
	4J7533	1	SEAL
20	8N5784	1	DEFLECTOR
	S1614	3	BOLT
21	2W6559	1	GOVERNOR GROUP (SEE SEPARATE ILLUSTRATION)
22	7N8768	1	GASKET
23	6B4198	2	BOLT
24	8F8178	2	BOLT
25	7N9554	1	GASKET
26	2S7383	1	BOLT
27	4N1761	4	BOLT
28	7N9907	1	COVER

J34816E

GOVERNOR AND FUEL INJECTION PUMP (7C737 N/S)

Effective with Serial No. 10Z13020 – UP

Torque Control, 2W6559 Governor and 2W256 Fuel Injection Pump parts are shown on Pages 63B, 65A and 66A

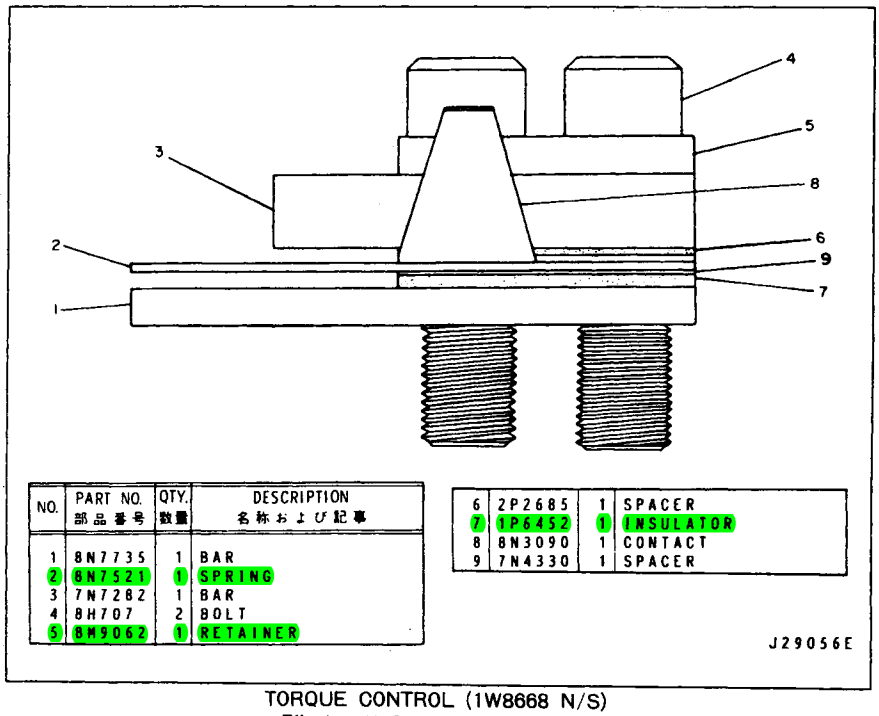

NO.	PART NO. 部品番号	QTY. 数量	DESCRIPTION 名称および記事
1	8N7735	1	BAR
2	8N7521	1	SPRING
3	7N7282	1	BAR
4	8H707	2	BOLT
5	8M9062	1	RETAINER
6	2P2685	1	SPACER
7	1P6452	1	INSULATOR
8	8N3090	1	CONTACT
9	7N4330	1	SPACER

TORQUE CONTROL (1W8668 N/S)
Effective with Serial No. 10Z13020-UP
Part of Governor & Fuel Injection Pump (7C737 N/S)

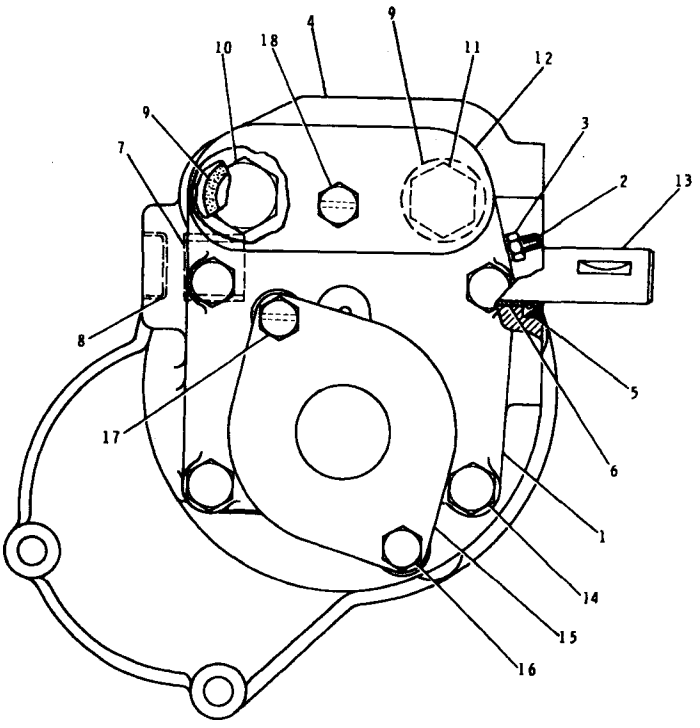

NO.	PART NO. 部品番号	DESCRIPTION 名称および記事	QTY. 数量
1	8N5889	COVER ASSEM.	1
2	2S7387	SCREW	1
	2S7307	INSULATOR	2
3	4B2042	NUT	1
	8F1326	WASHER	2
	3B4501	LOCKWASHER	1
4	8N3268	HOUSING ASSEM.	1
	4N4572	GUID	1
5	9S4671	SEAL	1
6	9S798	BEARING	1
7	8S134	BEARING	1
8	4F4585	PLUG	1

9	2J157	SEAL	2
10	7N8915	SCREW (Low Idle)	1
11	8S8952	SCREW (High Idle)	1
12	5L8992	COVER	1
	5L8991	GASKET	1
13	9M4789	SHAFT	1
14	2B2694	BOLT	4
15	2N4386	COVER	1
	8L3873	GASKET	1
16	2A762	BOLT	1
17	S1347	CAPSCREW	1
18	6L1756	BOLT	1

J19545E

7N6767 GOVERNOR GROUP – Part 1 of 2
Effective with Serial No. 10Z5342~10Z13019
Part of Governor & Fuel Injection Pump

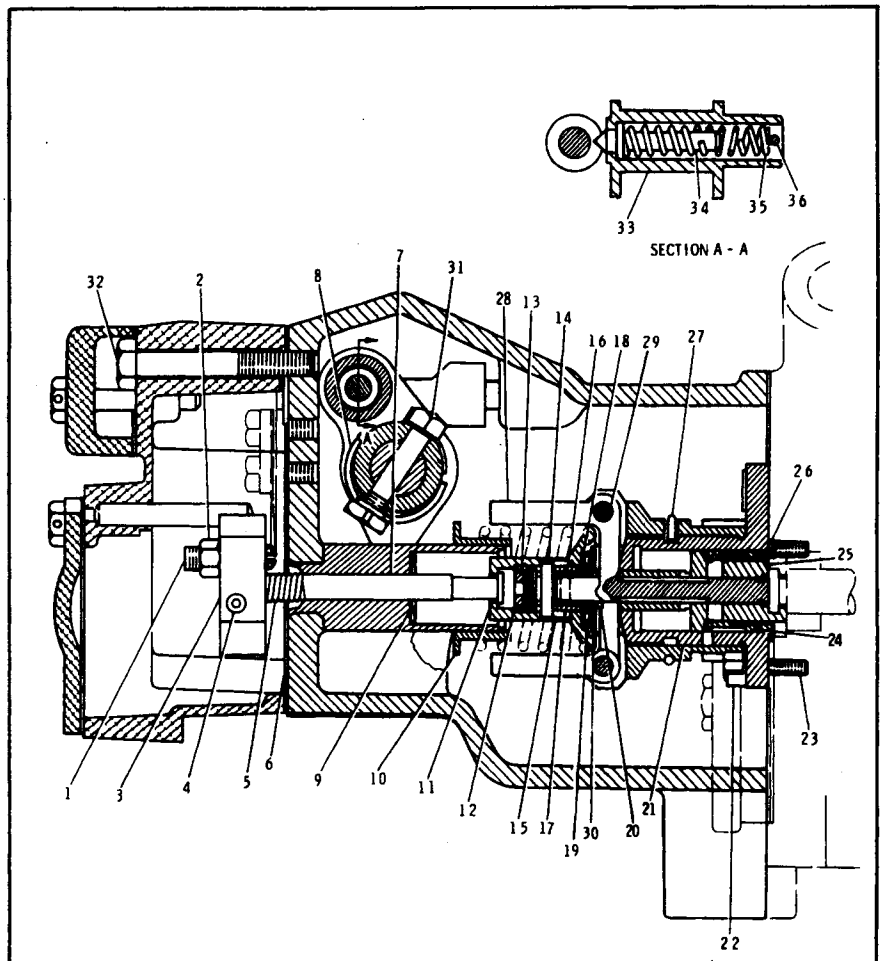

NO.	PART NO. 部品番号	DESCRIPTION 名称および記事	QTY. 数量
1	8L4155	SCREW	1
2	1B4201	NUT	1
3	8N4512	COLLER	1
4	9M4704	SCREW	1
5	3P131	SPRING	1
6	2S7314	GASKET	1
7	7N5634	BOLT	1
8	9S4673	BAND ASSEM.	1
9	8H9181	SPRING	1
10	6N3504	SEAT	1
11	8N7440	SEAT	1
12	4N3702	WASHER	1
13	4N5549	SPRING	1
14	2P8630	DOWEL	1
15	4N3887	RING	1
16	8N8887	DOWEL	1
17	8N8888	GUIDE	1
18	7M7193	RACE	1
19	7M7219	BEARING	1
20	8N8886	SLEEVE	1
21	4N3507	CYLINDER	1
22	9M6293	LOCK	1
23	S1615	BOLT	3
24	5P9757	SEAL	1
25	8N6979	PISTON ASSEM.	1
26	8N6977	SLEEVE	1
27	7B8105	LOCK	1
28	2N479	WEIGHT ASSEM.	1
29	1S5440	DOWEL	2
30	6N8195	RACE	1
31	9S4468	BOLT	1
	2F4159	LOCK	1
32	2B2694	BOLT	1
33	9S4466	LEVER ASSEM.	1
34	9M9788	PLUNGER	1
35	5S9635	SPRING	1
36	5H1351	PIN	1

J19546E

7N6767 GOVERNOR GROUP – Part 2 of 2
Effective with Serial No. 10Z5342~10Z13019
Part of Governor & Fuel Injection Pump

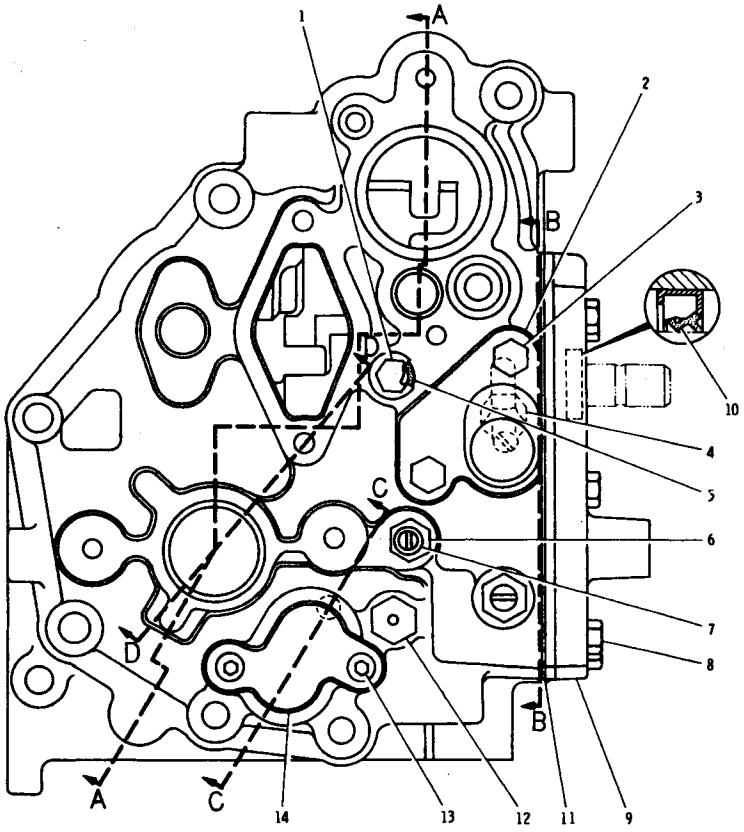

NO.	PART NO. 部品番号	QTY. 数量	DESCRIPTION 名称および記事
1	1W6523	1	PLUG
2	8N3259	1	COVER
	8N3263	1	GASKET
3	5P6945	2	BOLT
4	7N2594	1	SETSCREW
	7N8775	1	NUT
5	3J7354	1	SEAL
6	4N5485	1	BODY
	5F9144	1	SEAL
7	4N5484	1	VALVE
	6H9691	1	SEAL
8	S1616	6	BOLT
9	7N8780	1	COVER ASSEM.
10	5P3272	1	SEAL
11	7N8779	1	GASKET
12	3P0009	1	INSULATOR
13	1P2497	2	BOLT
14	8N3258	1	COVER
	8N3264	1	GASKET

J33584E

2W6559 GOVERNOR GROUP – Part 1 of 3
Effective with Serial No. 10Z13020 – UP
Part of Governor & Fuel Injection Pump (7C737 N/S)

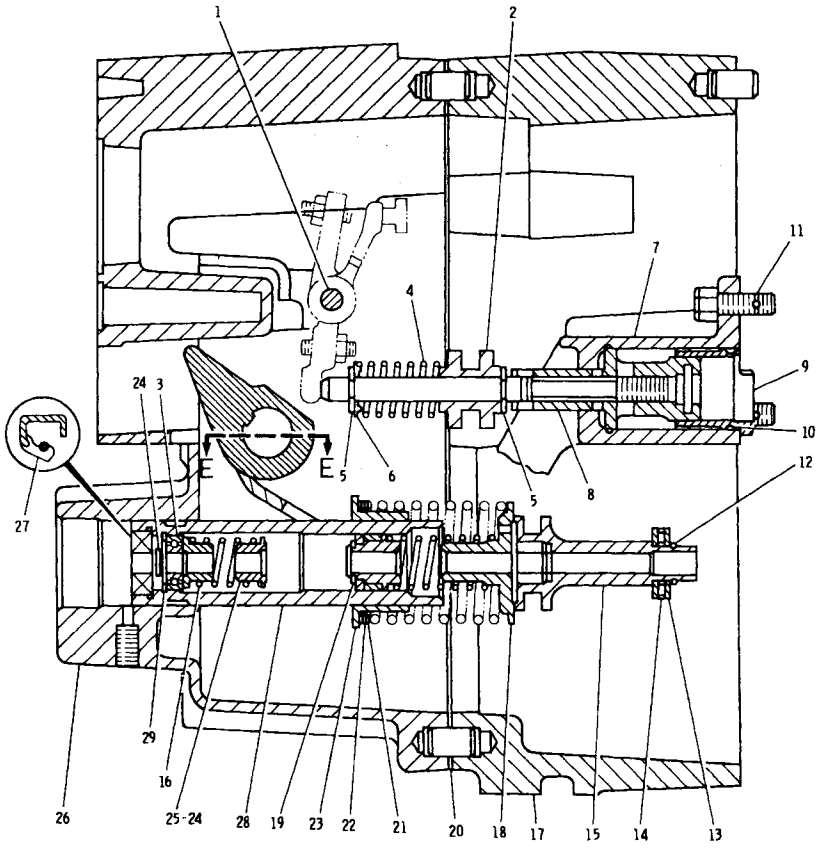

SECTION A - A

NO.	PART NO. 部品番号	QTY. 数量	DESCRIPTION 名称および記事
1	7N8785	1	SHAFT
2	1N3800	1	SLEEVE
3	4N0432	1	BEARING
4	2W2216	1	SPRING
5	2M7819	2	RING
6	1N3802	1	SEAT
7	8N2507	1	PISTON ASSEM.
	8N2505	1	VALVE
	7N7271	1	LEVER
	3G3835	1	PIN
8	1W4098	1	PISTON
9	8N3089	1	SLEEVE
10	5P9757	1	SEAL
11	310216	3	BOLT
12	4N2953	1	RING
13	4N2927	2	RACE
14	7M7219	1	BEARING
15	4W6868	1	RISER
16	3K5733	1	SPRING
17	8N2495	1	HOUSING ASSEM.
	8S6814	4	DOWEL (12.7MM LONG)
	4F6024	2	DOWEL (8MM LONG)
18	8N2503	1	DASHPOT ASSEM.
	4N6407	1	SPOOL
	4N6406	1	RING
19	4N6404	1	RING
20	8N2496	1	GASKET
21	2N0828	2	WASHER
22	2P9556	1	WASHER
23	6N3504	1	SHEET
24	7N8821	2	RING
25	7N7270	2	SLEEVE
26	8N2501	1	HOUSING ASSEM.
	1P2298	1	VALVE ASSEM.
	2F2290	1	PLUG
27	4N0260	1	SEAL
28	8N2499	1	GUIDE
29	3D8317	1	RING

J33585E

2W6559 GOVERNOR GROUP – Part 2 of 3
Effective with Serial No. 10Z13020 – UP
Part of Governor & Fuel Injection Pump (7G737 N/S)

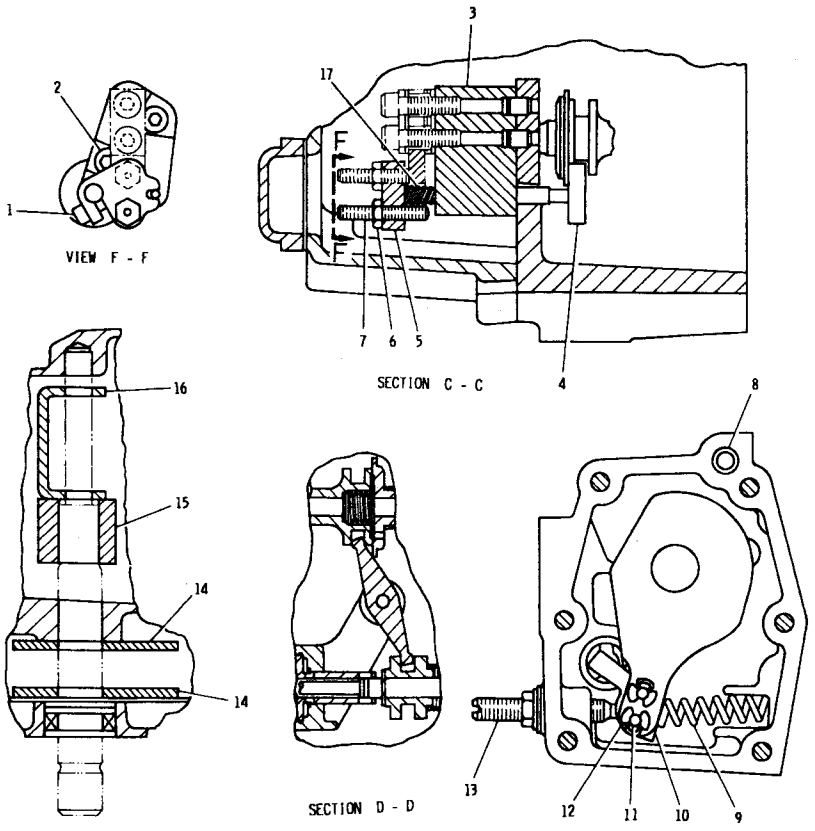

NO.	PART NO. 部品番号	QTY. 数量	DESCRIPTION 名称および記事
1	6D3897	1	BOLT
2	6L5897	2	BOLT
3	2W6104	1	BLOCK ASSEM.
	2W6103	1	DOWEL
4	2W5161	1	BOLT
5	8N3256	1	COLLAR
6	4B2049	1	NUT
7	5H6552	1	SETSCREW
8	7N8821	1	RING
9	2W7400	1	SPRING
10	8N3087	1	STOP
11	7N2172	2	PIN
12	7N2171	4	RING
13	7N2594	1	SETSCREW
	7W4272	1	NUT
14	2W9305	2	PLATE
15	8N3168	1	LEVER
16	2W6102	1	LEVER
17	1W4243	1	SPRING

J335586E

2W6559 GOVERNOR GROUP—Part 3 of 3
Effective with Serial No. 10Z13020—UP
Part of Governor & Fuel Injection Pump (7C737 N/S)

MEMO

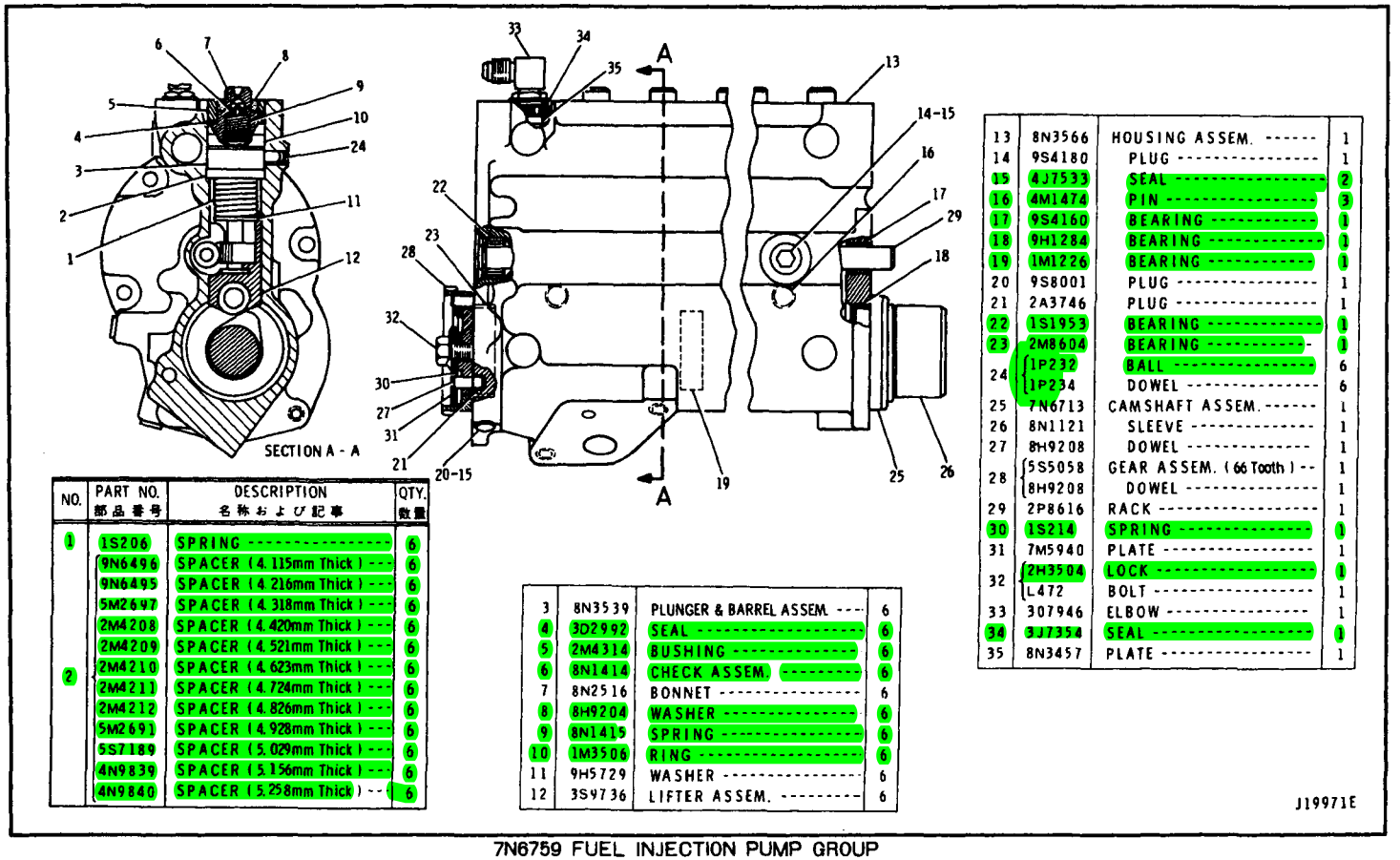

NO.	PART NO. 部品番号	DESCRIPTION 名称および記事	QTY. 数量
1	1S206	SPRING	6
	9N6496	SPACER (4.115mm Thick)	6
	9N6495	SPACER (4.216mm Thick)	6
	5M2697	SPACER (4.318mm Thick)	6
	2M4208	SPACER (4.420mm Thick)	6
	2M4209	SPACER (4.521mm Thick)	6
2	2M4210	SPACER (4.623mm Thick)	6
	2M4211	SPACER (4.724mm Thick)	6
	2M4212	SPACER (4.826mm Thick)	6
	5M2691	SPACER (4.928mm Thick)	6
	5S7189	SPACER (5.029mm Thick)	6
	4N9839	SPACER (5.156mm Thick)	6
	4N9840	SPACER (5.258mm Thick)	6

3	8N3539	PLUNGER & BARREL ASSEM.	6
4	3D2992	SEAL	6
5	2M4314	BUSHING	6
6	8N1414	CHECK ASSEM.	6
7	8N2516	BONNET	6
8	8H9204	WASHER	6
9	8N1415	SPRING	6
10	1M3506	RING	6
11	9H5729	WASHER	6
12	3S9736	LIFTER ASSEM.	6

13	8N3566	HOUSING ASSEM.	1
14	9S4180	PLUG	1
15	4J7533	SEAL	2
16	4M1474	PIN	3
17	9S4160	BEARING	1
18	9H1284	BEARING	1
19	1M1226	BEARING	1
20	9S8001	PLUG	1
21	2A3746	PLUG	1
22	1S1953	BEARING	1
23	2M8604	BEARING	1
24	1P232	BALL	6
	1P234	DOWEL	6
25	7N6713	CAMSHAFT ASSEM.	1
26	8N1121	SLEEVE	1
27	8H9208	DOWEL	1
28	5S5058	GEAR ASSEM. (66 Tooth)	1
	8H9208	DOWEL	1
29	2P8616	RACK	1
30	1S214	SPRING	1
31	7M5940	PLATE	1
32	2H3504	LOCK	1
	L472	BOLT	1
33	307946	ELBOW	1
34	3J7354	SEAL	1
35	8N3457	PLATE	1

7N6759 FUEL INJECTION PUMP GROUP

Effective with Serial No. 10Z5342~10Z13019

Part of Governor & Fuel Injection Pump

2W256 FUEL INJECTION PUMP GROUP

Effective with Serial No. 10Z13020-UP

Part of Governor & Fuel Injection Pump (7C737 N/S)

1W3487 Fuel Pump Housing, Fuel Injection Pump and Camshaft parts are shown on Pages 66B and 66C

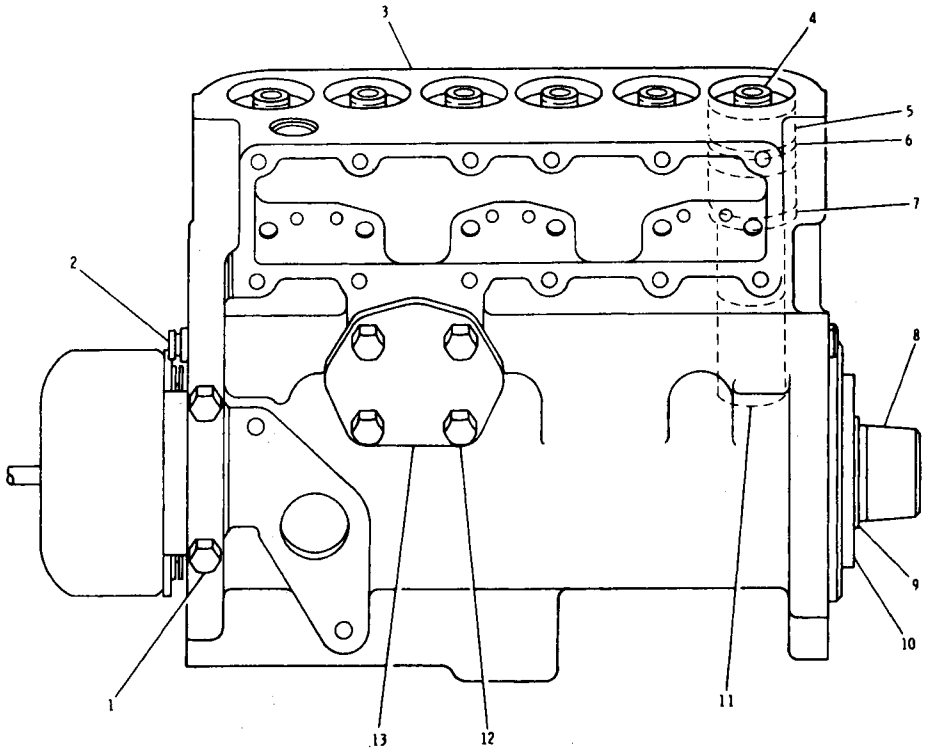

NO.	PART NO. 部品番号	DESCRIPTION 名称および記事	QTY. 数量
	9S4180	PLUG	2
1	4J7533	SEAL	2
2	1W3286	RACK	1
3	1W3487	HOUSING ASSEM. (See Separate Illustration)	1
4	Not Serv.	FUEL INJECTION PUMP (See Separate Illustration)	6
5	8N5117	BUSHING	6
6	3D2992	SEAL	6
7	4W6869	SPACER	6
8	Not Serv.	CAMSHAFT (See Separate Illustration)	1
9	7N8421	RING	1
10	8N2487	WASHER	1
11	8N2489	LIFTER ASSEM.	6
12	S1615	BOLT	4
13	7N1047	COVER	1
	7N1046	GASKET	1

J28666E

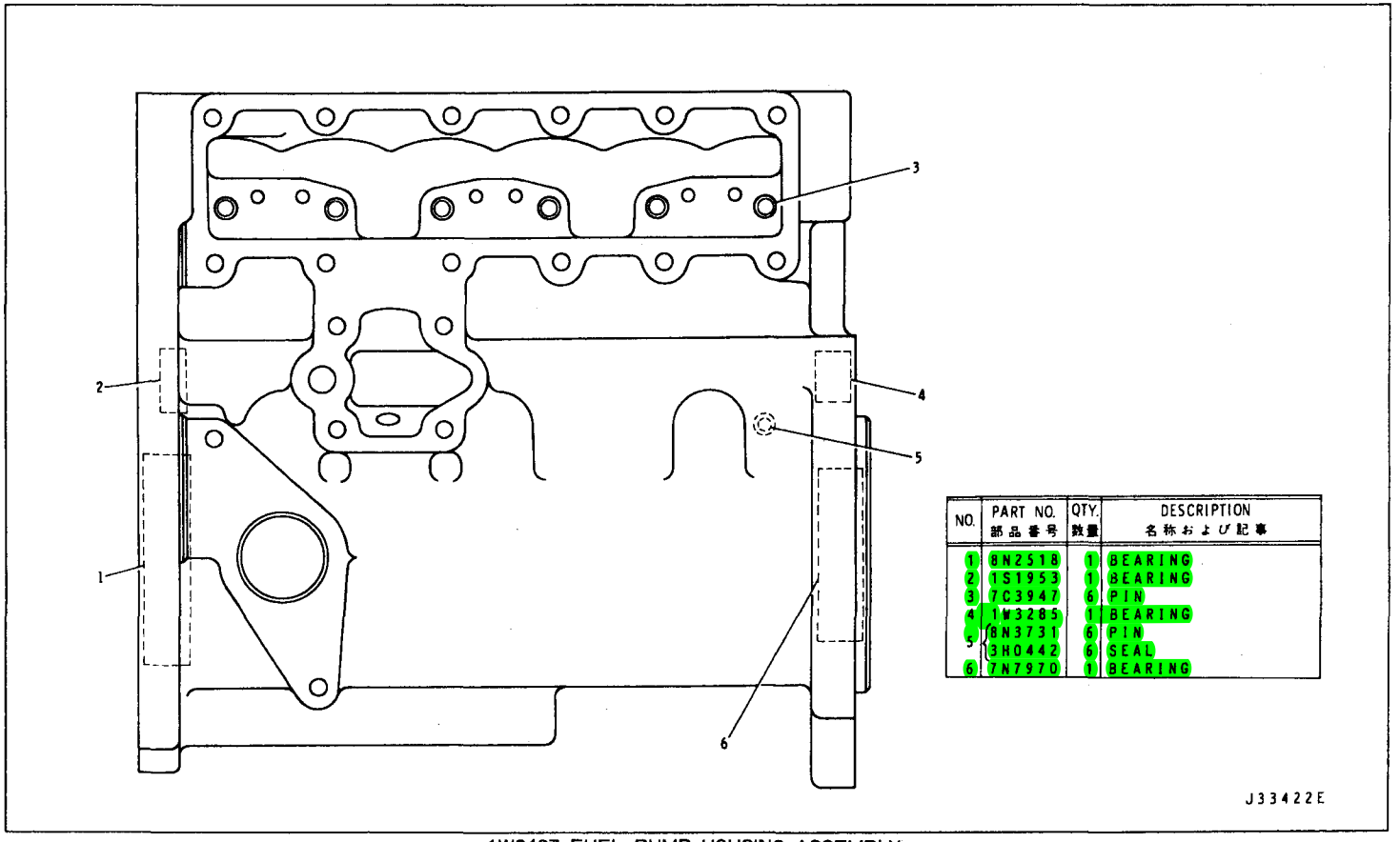

NO.	PART NO. 部品番号	QTY. 数量	DESCRIPTION 名称および記事
1	8N2518	1	BEARING
2	1S1953	1	BEARING
3	7C3947	6	PIN
4	1W3285	1	BEARING
5	8N3731	6	PIN
	3H0442	6	SEAL
6	7N7970	1	BEARING

1W3487 FUEL PUMP HOUSING ASSEMBLY
Part of 2W256 Fuel Injection Pump Group

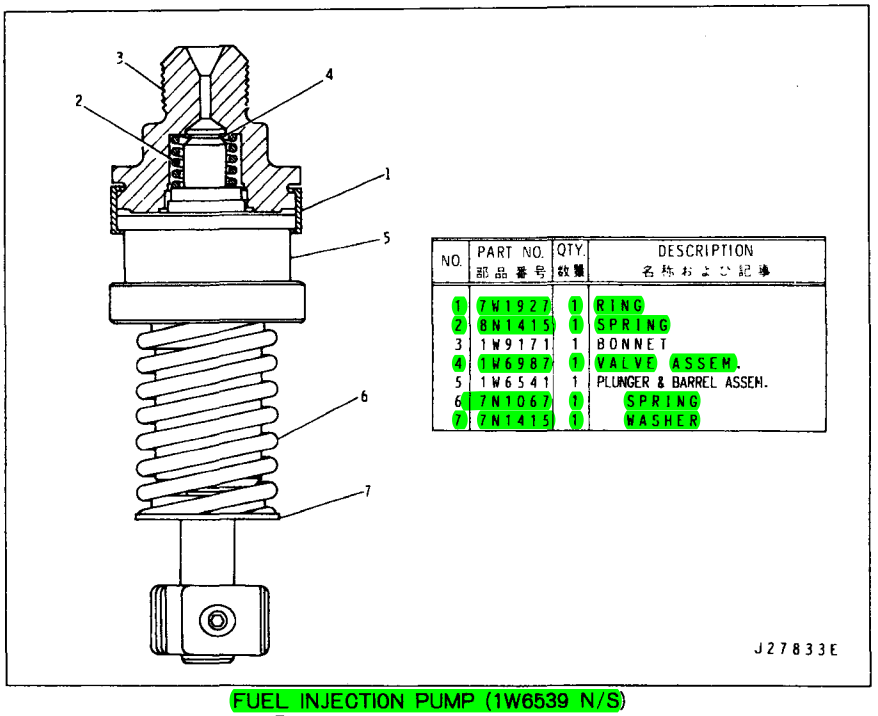

NO.	PART NO. 部品番号	QTY. 数量	DESCRIPTION 名称および記事
1	7W1927	1	RING
2	8N1415	1	SPRING
3	1W9171	1	BONNET
4	1W6987	1	VALVE ASSEM.
5	1W6541	1	PLUNGER & BARREL ASSEM.
6	7N1067	1	SPRING
7	7N1415	1	WASHER

FUEL INJECTION PUMP (1W6539 N/S)
Part of 2W256 Fuel Injection Pump Group

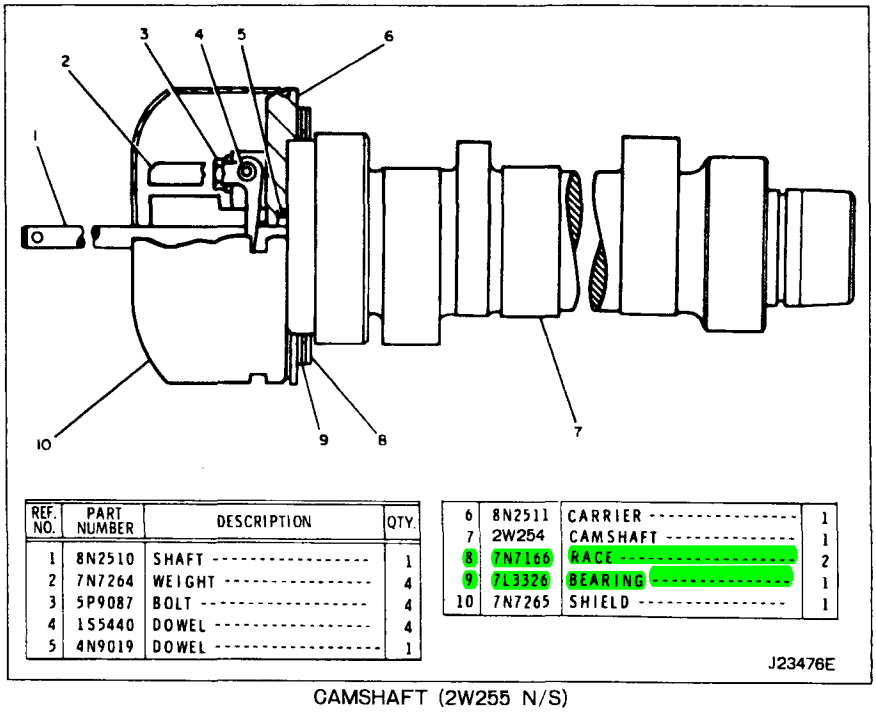

REF. NO.	PART NUMBER	DESCRIPTION	QTY.
1	8N2510	SHAFT	1
2	7N7264	WEIGHT	4
3	5P9087	BOLT	4
4	1S5440	DOWEL	4
5	4N9019	DOWEL	1
6	8N2511	CARRIER	1
7	2W254	CAMSHAFT	1
8	7N7166	RACE	2
9	7L3326	BEARING	1
10	7N7265	SHIELD	1

CAMSHAFT (2W255 N/S)
Part of 2W256 Fuel Injection Pump Group

MEMO

FUEL INJECTION LINES (7N5769 N/S)

Effective with Serial No. 10Z5342~10Z13019

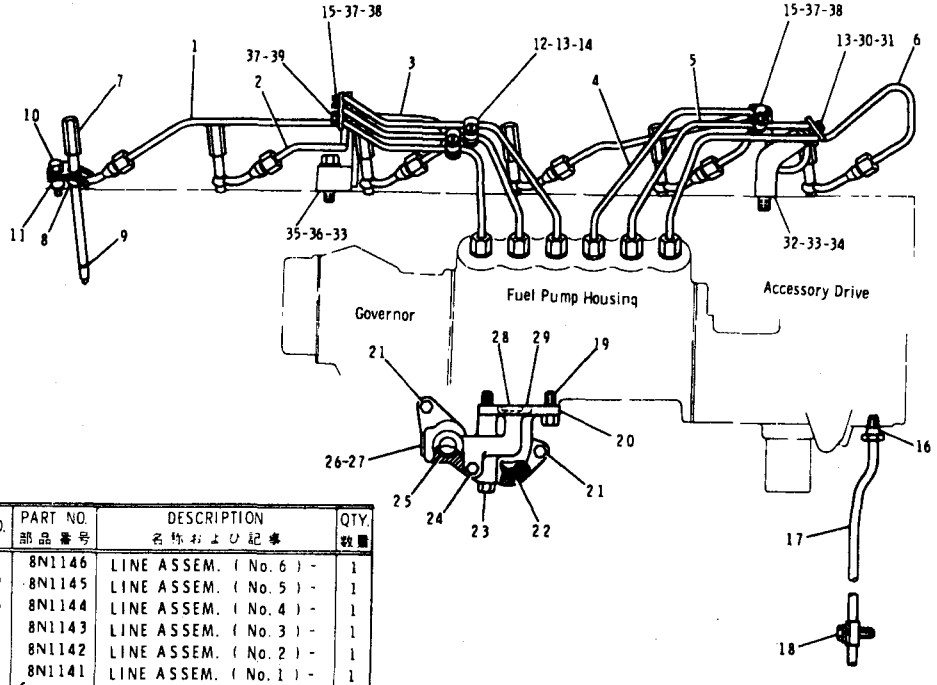

NO.	PART NO. 部品番号	DESCRIPTION 名称および記事	QTY. 数量
1	8N1146	LINE ASSEM. (No. 6) -	1
2	8N1145	LINE ASSEM. (No. 5) -	1
3	8N1144	LINE ASSEM. (No. 4) -	1
4	8N1143	LINE ASSEM. (No. 3) -	1
5	8N1142	LINE ASSEM. (No. 2) -	1
6	8N1141	LINE ASSEM. (No. 1) -	1
7	7N449	NOZZLE ASSEM. -------	6
	1H1023	SEAL ----------	1
8	9L9099	WASHER ----------	1
9	9L9098	SEAL ----------	1

C	10	1W2459	CLAMP ASSEM ---------	6
	11	9L8388	SPACER ----------	6
C	12	6N6403	CLAMP (Threaded) --------	2
C	13	6N6404	CLAMP ----------	4
C	14	6H9954	SCREW ASSEM. ---------	2
C	15	5P4939	SCREW ASSEM. ---------	2
	16	1P9328	FITTING ----------	1
▲C	17	5P6007	TUBE ---------- 0.6m	
	18	S509	BOLT ----------	1
		5M2894	WASHER ----------	1
		9S1350	CLIP ----------	1
	19	S1594	BOLT ----------	1
	20	3N3696	BRACKET ----------	1
	21	1A2029	BOLT ----------	2
	22	4F7391	SEAL ----------	1
	23	S1608	BOLT ----------	1
	24	S1619	BOLT ----------	1
	25	7F8607	SEAL ----------	1
	26	7H3171	PLUG (Small) ----------	1
	27	2B858	PLUG (Large) ----------	1
	28	8F3469	SEAL (Small) ----------	1
	29	2H3932	SEAL (Large) ----------	1
C	30	4F7957	BOLT ----------	1
C	31	3B4504	LOCKWASHER ----------	1
C	32	L2070	BOLT ----------	1
C	33	5M2894	WASHER ----------	2
C	34	1W9778	BRACKET ASSEM. -------	1
C	35	1W9776	BRACKET ASSEM. -------	1
C	36	S1591	BOLT ----------	1
C	37	9L8715	CLAMP ----------	4
C	38	9L8716	CLAMP (Threaded) -------	2
C	39	7M9831	SCREW ----------	1
C		3B4502	LOCKWASHER ----------	1

C Indicates Change
▲ ORDER BY THE m

J22851E

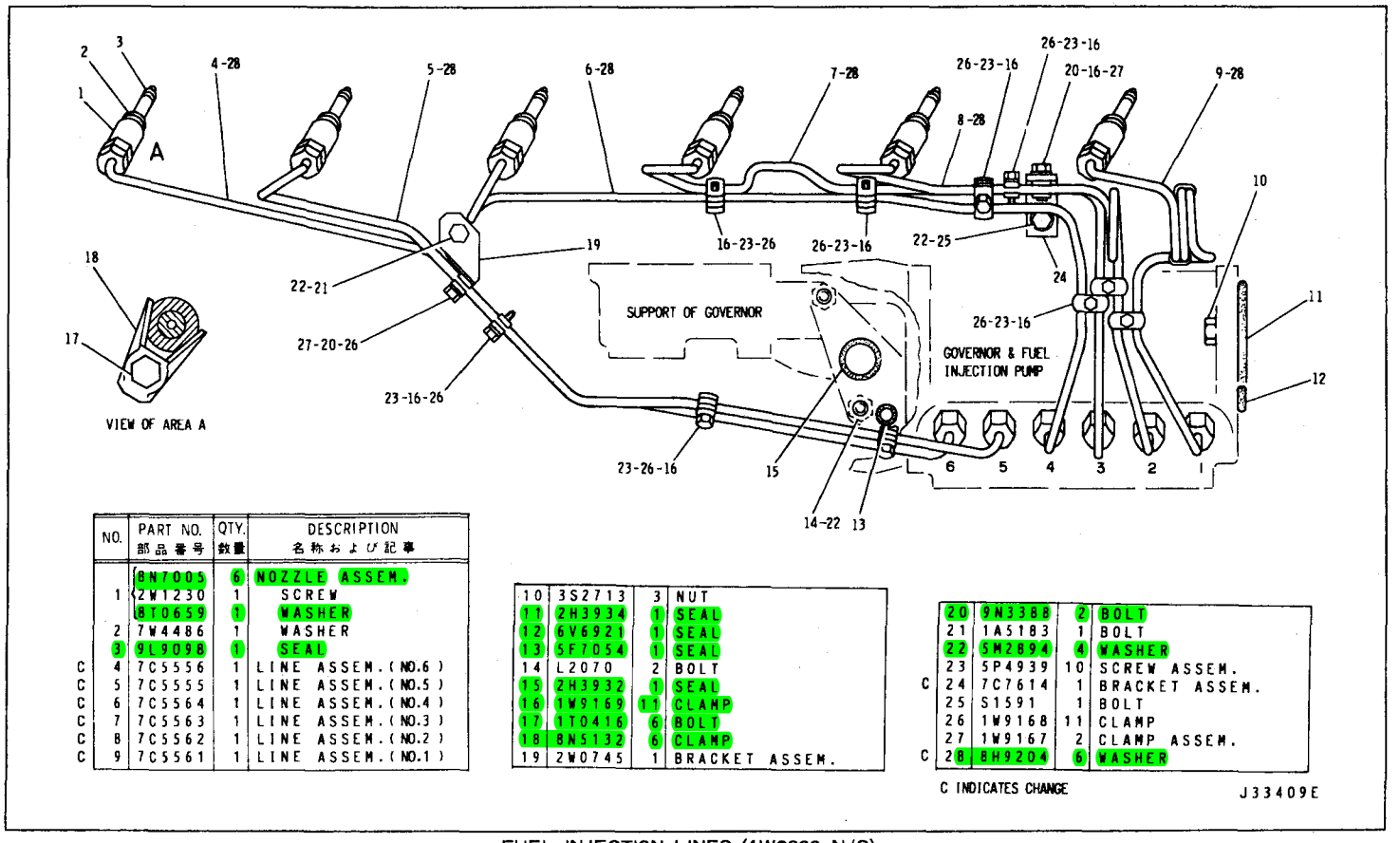

	NO.	PART NO. 部品番号	QTY. 数量	DESCRIPTION 名称および記事
		8N7005	6	NOZZLE ASSEM.
	1	2W1230	1	SCREW
		8T0659	1	WASHER
	2	7W4486	1	WASHER
	3	9L9098	1	SEAL
C	4	7C5556	1	LINE ASSEM.(NO.6)
C	5	7C5555	1	LINE ASSEM.(NO.5)
C	6	7C5564	1	LINE ASSEM.(NO.4)
C	7	7C5563	1	LINE ASSEM.(NO.3)
C	8	7C5562	1	LINE ASSEM.(NO.2)
C	9	7C5561	1	LINE ASSEM.(NO.1)

10	3S2713	3	NUT
11	2H3934	1	SEAL
12	6V6921	1	SEAL
13	5F7054	1	SEAL
14	L2070	2	BOLT
15	2H3932	1	SEAL
16	1W9169	11	CLAMP
17	1T0416	6	BOLT
18	8N5132	6	CLAMP
19	2W0745	1	BRACKET ASSEM.

	20	9N3388	2	BOLT
	21	1A5183	1	BOLT
	22	5M2894	4	WASHER
	23	5P4939	10	SCREW ASSEM.
C	24	7C7614	1	BRACKET ASSEM.
	25	S1591	1	BOLT
	26	1W9168	11	CLAMP
	27	1W9167	2	CLAMP ASSEM.
C	28	8H9204	6	WASHER

C INDICATES CHANGE

J33409E

FUEL INJECTION LINES (1W3609 N/S)
Effective with Serial No. 10Z13020−UP

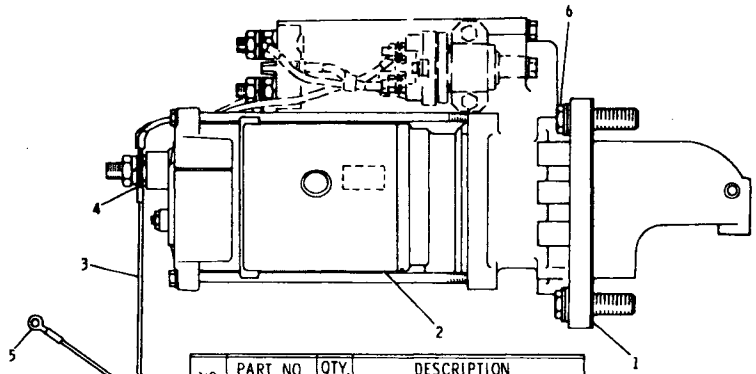

NO.	PART NO. 部品番号	QTY. 数量	DESCRIPTION 名称および記事
1	4H7869	1	GASKET
C	3Y8850	1	MOTOR GROUP (FOR JAPAN)
	4N3181	1	MOTOR GROUP (FOR OUTSIDE JAPAN) (SEE SEPARATE ILLUSTRATION)
2			
3	3N539	1	WIRE ASSEM.
4	2L8054	1	TERMINAL
5	2L8052	1	TERMINAL
6	7J8902	3	BOLT
	8D5054	3	WASHER

C INDICATES CHANGE

J31536E

ELECTRIC STARTING MOTOR (7S3622 N/S)

Effective with Serial No. 6HC1—UP
4N3181 Starting Motor Group listed shown below

Consists of:

			page
1	3Y8850	Starting Motor Group (Mitsubishi Electric)	70
	—or—		
1	9G4338	Starting Motor Group (Prestolite)	70D
	—or—		
1	3T2647	Starting Motor Group (Delco Remy)	70A
	—or—		
1	3T6305	Starting Motor Group (Robert Bosch)	70F

J26801E

4N3181 STARTING MOTOR GROUP

Effective with Serial No. 6HC1—6HC305
Part of Electric Starting Motor shown on above

Consists of:

			Page
1	9G4338	Starting Motor Group (Prestolite)	70D
		— or —	
1	3T2647	Starting Motor Group (Delco Remy)	70A
		— or —	
1	3T6305	Starting Motor Group (Robert Bosch)	70F

J31537E

4N3181 STARTING MOTOR GROUP – Type 1
Effective with Serial No. 6HC306 – UP
Part of Starting Motor (7S3622 N/S)

Consists of:

			Page
1	8C3651	Starting Motor Group (Delco Remy)	70C-1
		— or —	
1	3T6305	Starting Motor (Robert Bosch)	70F

J33430E

4N3181 STARTING MOTOR GROUP – Type 2
Effective with Serial No. 6HC306 – UP
Part of Starting Motor (7S3622 N/S)

MEMO

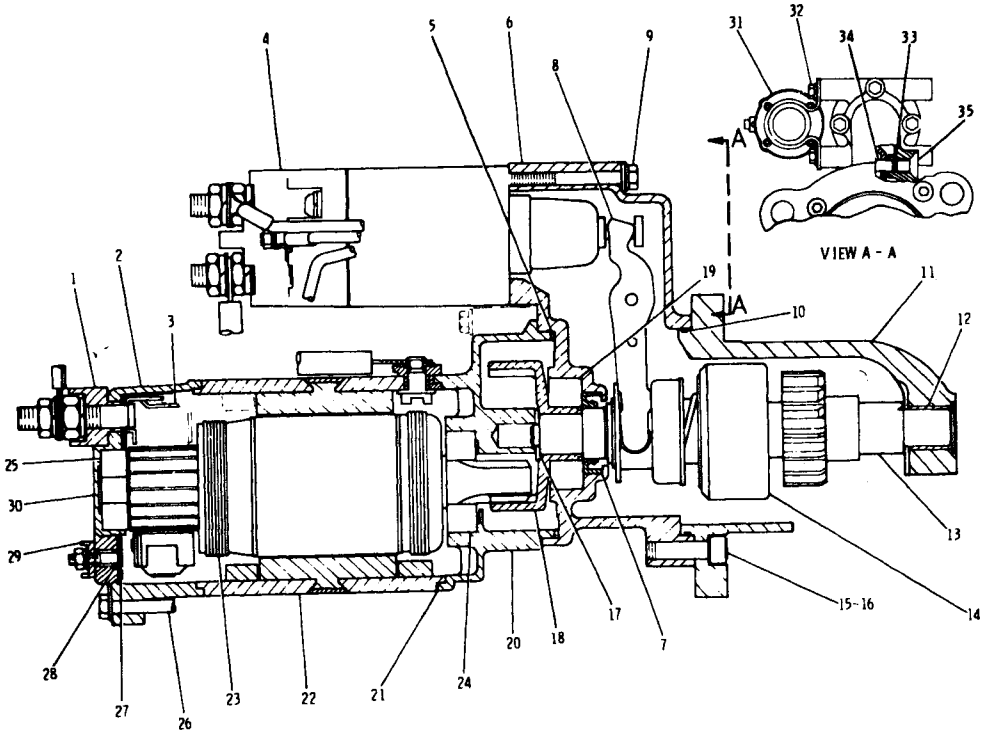

NO.	PART NO. 部品番号	QTY. 数量	DESCRIPTION 名称および記事
1	4Y369	1	INSULATOR
2	4Y372	1	INSULATOR
3	{4Y349	1	HOLDER ASSEM.
	4Y350	4	SPRING
	4Y351	1	BRUSH SET
4	{4Y346	1	SWITCH ASSEM.
	{4Y347	1	BOOT
5	4Y356	1	GASKET
6	4Y374	1	HOUSING ASSEM.
7	4Y375	1	SEAL
8	4Y344	1	LEVER
9	4Y345	1	SCREW KIT
10	4Y371	1	SEAL
11	4Y352	1	HOUSING ASSEM.
12	4Y353	1	FRONT METAL
13	4Y354	1	RETAINER KIT
14	4Y973	1	DRIVE ASSEM.
15	5A3604	6	BOLT
16	4Y376	6	WASHER
17	4Y364	1	WASHER KIT
18	4Y357	1	SHAFT ASSEM.
19	4Y358	1	BEARING
20	4Y360	1	HOUSING
21	4Y366	2	GASKET
22	{4Y365	1	CASE ASSEM.
	{4Y351	1	BRUSH SET
23	4Y361	1	ARMARTURE SET
24	4Y362	1	BEARING
25	4Y363	1	BEARING
26	4Y370	1	BOLT KIT
27	4Y373	1	PLATE
28	4Y367	1	RING KIT
29	4Y368	1	INSULATOR
30	4Y348	1	HOUSING
31	4Y359	1	SWITCH ASSEM.
32	4Y343	1	HARDWARE KIT
33	5A7175	1	GASKET
34	5A7174	1	PIN
35	5A7176	1	SCREW

STARTING MOTOR (3Y8850 N/S)—Mitsubishi Electric
Effective with Serial No. 6HC1~6HC305
Part of 4N3181 Starting Motor Group listed on Page 69

STARTING MOTOR (3T2647 N/S) – Delco Remy – Part 1 of 3

Effective with Serial No. 6HC1 – UP

Part of 4N3181 Starting Motor Group listed on Page 69

7T8854 Solenoid parts are shown on Page 70G

NO.	PART NO. 部品番号	QTY. 数量	DESCRIPTION 名称および記事
	3T3422	1	WIRE ASSEM.
1	2L8071	1	TERMINAL
	2L8066	1	TERMINAL
2	3L3380	1	BUSHING
3	3H3680	4	NUT
4	4B4280	4	WASHER
5	369823	4	BOLT
6	9B453	1	LOCKWASHER
7	3T4701	1	FRAME ASSEM.
8	9G4100	1	BUSHING
9	3T3424	1	PLUG
10	3T3423	1	CUP
11	7F3491	2	WASHER
12	4M189	1	SEAL
13	8F5368	1	WASHER
14	3T3106	3	SCREW ASSEM.
15	8H1141	4	SHOE

16	6H3622	4	SCREW
17	2N3145	1	INSULATOR
18	4M1839	1	COIL ASSM.
19	3F379	8	SCREW
20	7L2894	2	GASKET
21	4M1831	2	PLUG
22	9H375	2	WASHER
23	3R8801	1	CLAMP
	7T8854	1	SOLENOID ASSEM. (See Separate Illustration)
24	4M1841	1	CONNECTOR
			THE FOLLOWING REPAIR KIT IS AVILABLE
	3N3763	1	KIT (TERMINAL) (INCLUDES INSULATOR BUSHING AND WASHER)

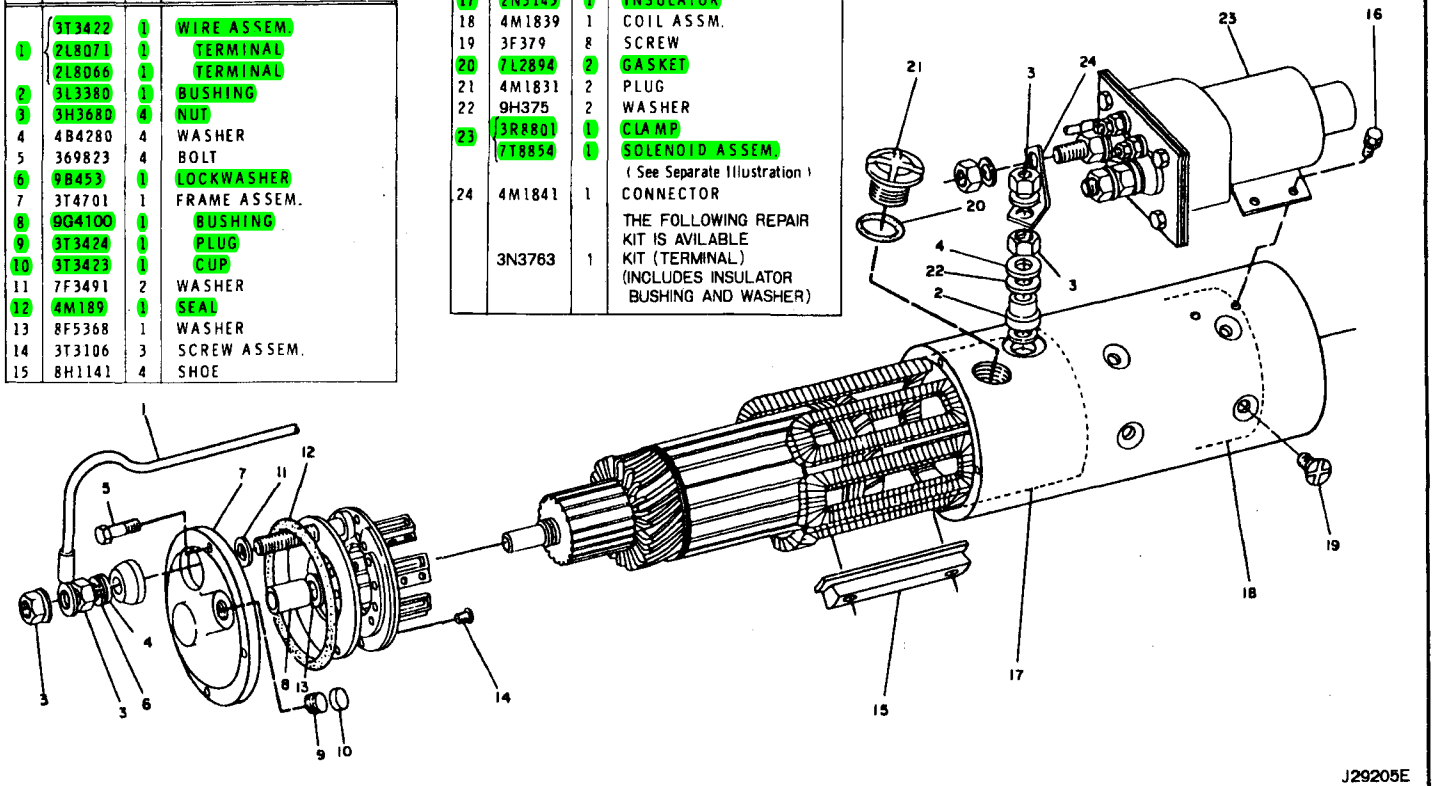

NO.	PART NO. 部品番号	QTY. 数量	DESCRIPTION 名称および記事
1	4M1868	1	ARMATURE ASSEM.
2	3T4703	4	BRUSH ASSEM.
3	9S2542	4	SCREW
4	3T4705	1	PLATE ASSEM.
5	3T4706	1	INSULATOR
6	3T4711	8	SCREW ASSEM.
7	2L6679	2	PLATE
8	3T4712	4	HOLDER ASSEM.
9	3T4710	2	PLATE
10	3T4709	2	PLATE
11	7F3525	4	WASHER

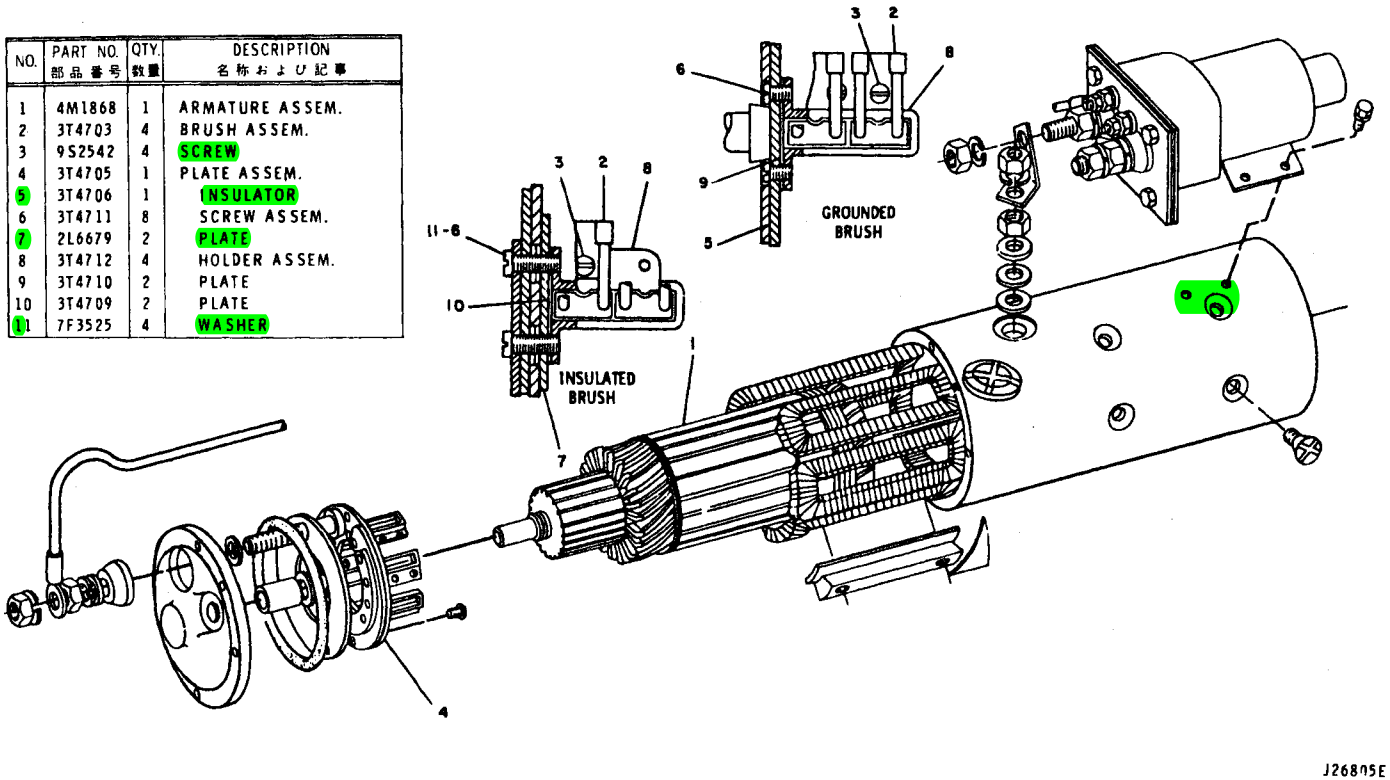

STARTING MOTOR (3T2647 N/S) – Delco Remy – Part 2 of 3

Effective with Serial No. 6HC1 – UP

Part of 4N3181 Starting Motor Group listed on Page 69

STARTING MOTOR (3T2647 N/S) – Delco Remy – Part 3 of 3

Effective with Serial No. 6HC1 – UP

Part of 4N3181 Starting Motor Group listed on Page 69

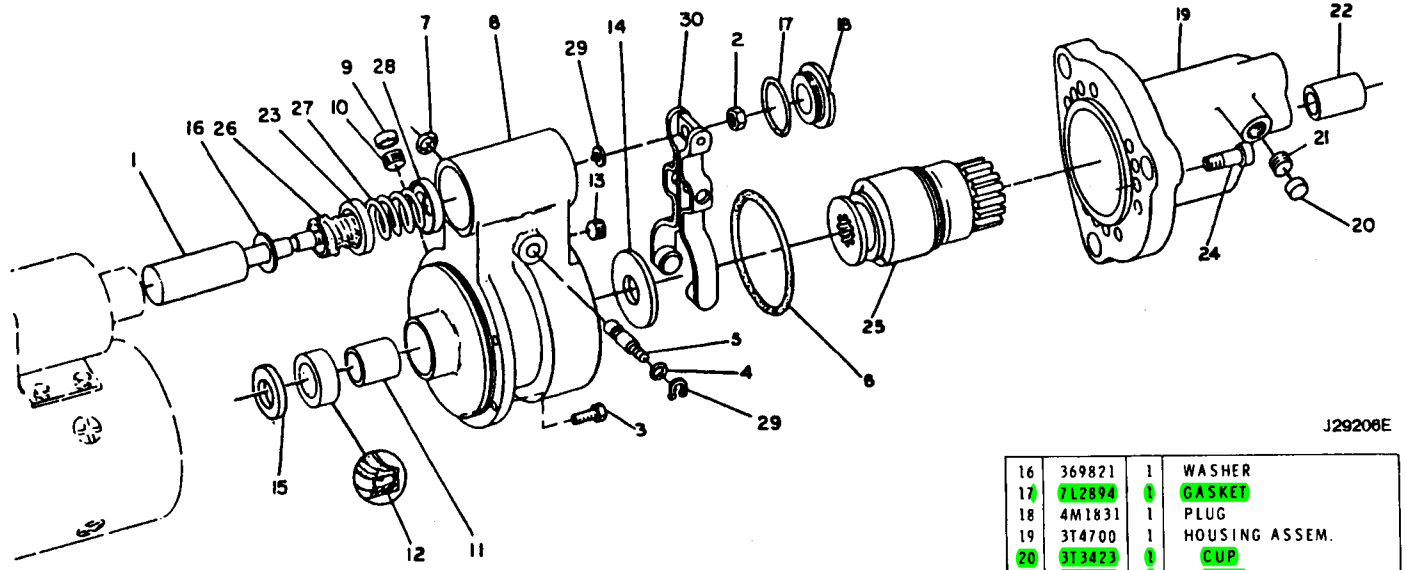

NO.	PART NO. 部品番号	QTY. 数量	DESCRIPTION 名称および記事
1	9M7606	1	PLUNGER ASSEM.
2	5M3034	1	LOCKNUT
3	369823	5	BOLT
4	2D6392	1	SEAL
5	4M1854	1	SHAFT
6	4M1851	1	GASKET
7	1H1023	1	SEAL
8	3T4702	1	HOUSING ASSEM.
9	3T3423	1	CUP
10	3T3424	1	PLUG
11	1M9968	1	BUSHING
12	2F6678	1	SEAL
13	3T3433	1	PLUG
14	4L2729	1	WASHER
15	1M9971	1	SPACER
16	369821	1	WASHER
17	7L2894	1	GASKET
18	4M1831	1	PLUG
19	3T4700	1	HOUSING ASSEM.
20	3T3423	1	CUP
21	3T3424	1	PLUG
22	4M1898	1	BUSHING
23	4M1828	1	RETAINER
24	4M1833	5	SCREW (38mm Long)
	7M336	1	SCREW (22mm Long)
25	6N3827	1	DRIVE ASSEM.
26	4M1829	1	BOOT
27	9M7609	1	SPRING
28	4M1827	1	RETAINER
29	9M7611	2	RING
30	4M1853	1	LEVER ASSEM.

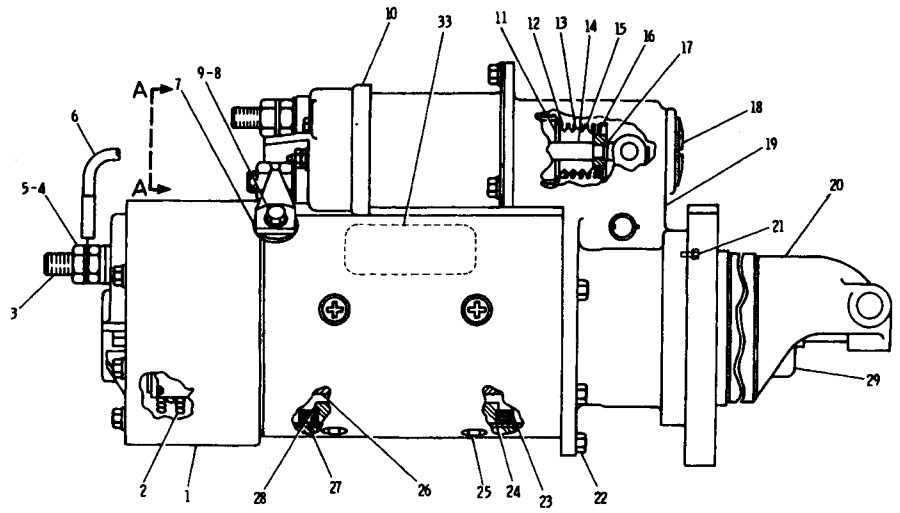

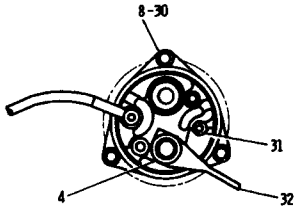

VIEW A - A

NO.	PART NO. 部品番号	QTY. 数量	DESCRIPTION 名称および記事
1	7T3279	1	HOUSING ASSEM.
2	7T3278	1	HOLDER ASSEM.
3	8T8566	1	TERMINAL ASSEM.
4	3H3680	3	NUT
	4B4280	3	WASHER
5	9B0453	1	LOCKWASHER
6	3T3422	1	WIRE ASSEM.
7	7T3451	1	INSULATOR
	8T8569	1	INSULATOR
8	5S7349	4	BOLT
9	7F4920	1	WASHER
10	7T0258	1	SOLENOID ASSEM.
11	369821	1	WASHER
12	4M1828	1	RETAINER
13	7T3269	1	BOOT
14	7T3270	1	PLUNGER ASSEM.
15	9M7609	1	SPRING
16	4M1827	1	RETAINER
17	2H3429	1	RING
18	4M1831	1	PLUG
19	7T3973	1	HOUSING ASSEM.
20	7T3974	1	HOUSING ASSEM.
21	7M0336	6	SCREW
22	369823	5	BOLT
23	7T3277	1	COIL ASSEM.
24	1H2629	2	STRIP
25	3F0379	8	SCREW
26	7T3276	1	ARMATURE ASSEM.
27	7T3454	1	INSULATOR
28	8H1141	4	SHOE
29	6N3827	1	DRIVE ASSEM.
30	4B4274	3	WASHER
31	6V8378	1	NUT
	8F1434	1	LOCKWASHER
32	7T3271	1	CONNECTOR
33	8C4171	1	PLATE
			THE FOLLOWING REPAIRKIT ARE AVAILABLE:
	8C3655	1	BRUSH KIT (INCLUDES BRUSH, SPRING, SCREW, SEAL & SCREW ASSEM.)
	7T3267	1	BUSHING KIT (INCLUDES SEAL, GASKET, BUSHING, SCREW - ASSEM., SPACER, RETAINER, NUT, PLUG & CUP)
	7T3268	1	LEVER KIT (INCLUDES LEVER ASSEM., SEAL, NUT, GASKET & RETAINER)
	8T9884	1	INSULATOR KIT (INCLUDES INSULATOR, & BUSHING)

J33431E

STARTING MOTOR (8C3651 N/S) – Delco Remy

Part of 4N3181 Starting Motor Group shown on Page 69A

MEMO

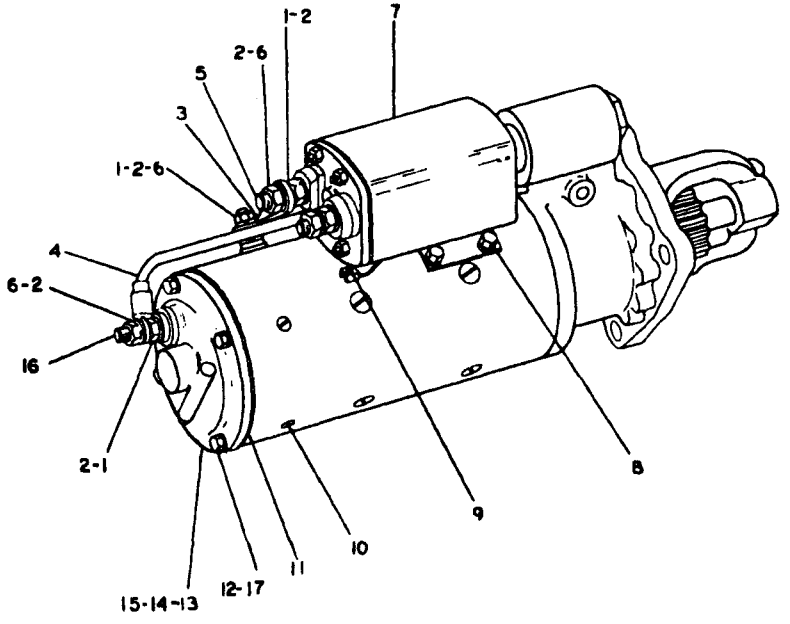

NO.	PART NO. 部品番号	QTY. 数量	DESCRIPTION 名称および記事
1	1D5117	4	NUT
2	3B4508	8	LOCKWASHER
3	4N9405	1	CONNECTOR
4	4N9404	1	LEAD ASSEM.
5	2P8819	1	KIT (Fld. Terminal Stud) (Includes Stud Bushing Washer)
6	1D4719	4	NUT
7	3T8635	1	SOLENOID ASSEM. (See Separate Illustration)
8	6H3622	4	SCREW
	3B4504	4	LOCKWASHER
	3K6116	4	WASHER
9	4M3217	2	SCREW
10	4B1220	3	SCREW
11	8S1553	1	GASKET
12	3B4502	4	LOCKWASHER
13	1P7831	1	HEAD ASSEM.
14	2B4602	1	PLUG
15	1P7832	1	KIT (Bearing & Wick)
16	4N9403	1	KIT (Commutator End Terminal) (Includes Stud Bushing Washer)
17	9L9850	4	SCREW

J26802E

STARTING MOTOR (9G4338 N/S) – Prestolite – Part 1 of 2

Effective with Serial No. 6HC1 – UP

Part of 4N3181 Starting Motor Group listed on Page 69

3T8635 Solenoid parts are shown on Page 70G

STARTING MOTOR (9G4338 N/S) – Prestolite – Part 2 of 2

Effective with Serial No. 6HC1 – UP

Part of 4N3181 Starting Motor Group listed on Page 69

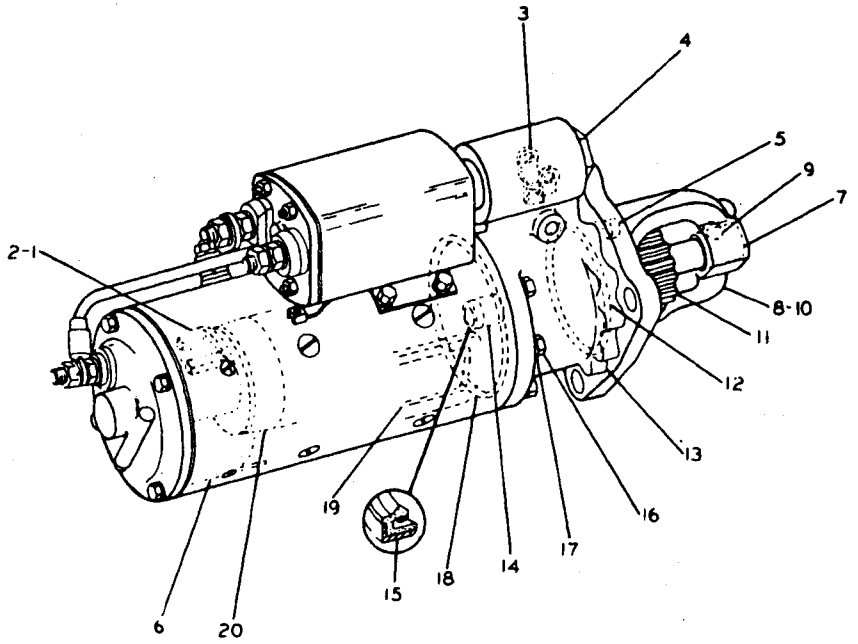

NO.	PART NO. 部品番号	QTY. 数量	DESCRIPTION 名称および記事
1	2P8822	1	PLATE ASSEM.
2	4N9401	1	KIT (Includes 6Brushes)
	2P8868	1	KIT (Includes 8Spring)
3	2P8825	1	YOKE ASSEM.
4	2P8817	1	KIT (Yoke Adjusting) (Includes Plug, Pin, Gasket, Nut)
5	8S1535	1	KIT (Includes 6 Plugs)
6	4N9402	1	KIT (Includes 10 Insulations)
7	8S4684	1	KIT (Bearing & Wick)
8	9G5854	1	HOUSING ASSEM.
9	2B4602	1	PLUG
10	8S4680	1	KIT (Includes 10 Seals)
11	3T8572	1	DRIVE ASSEM.
12	2H3931	1	SEAL
13	2P8824	1	HOUSING ASSEM.
	2B4602	1	PLUG
14	8S2226	1	BUSHING
15	8S2225	1	SEAL
16	L1340	7	SCREW
	2P8816	1	KIT (Includes Housing Screw)
17	3B4504	7	LOCKWASHER
18	4M189	1	SEAL
19	2P8818	1	KIT (Fild Coil) (Includes Coil, Gasket Screw)
20	8S1546	1	ARMATURE ASSEM.
	8S8075	1	KIT (Armature Thrust Washer)

J26803E

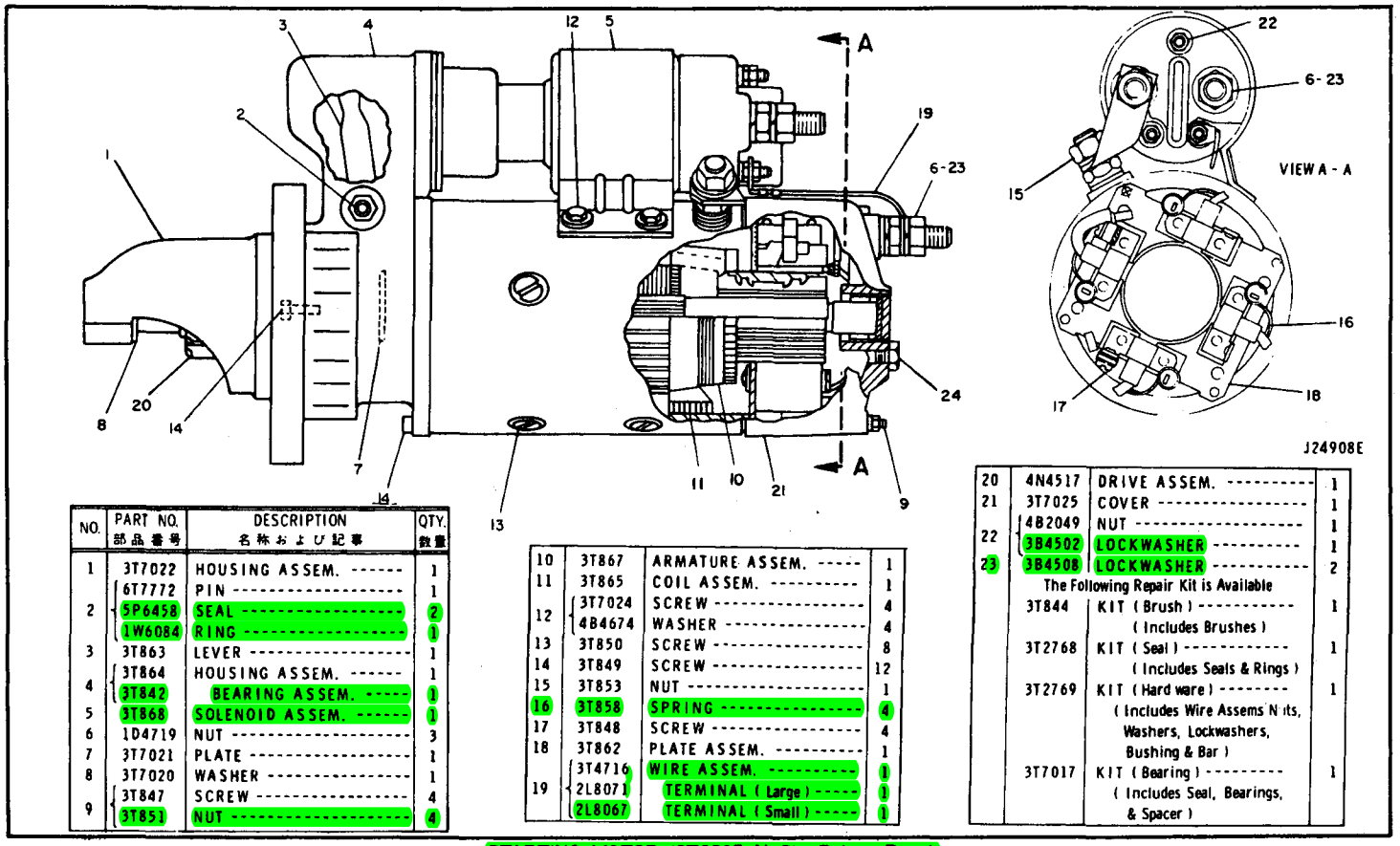

NO.	PART NO. 部品番号	DESCRIPTION 名称および記事	QTY. 数量
1	3T7022	HOUSING ASSEM.	1
2	6T7772	PIN	1
	5P6458	SEAL	2
	1W6084	RING	1
3	3T863	LEVER	1
4	3T864	HOUSING ASSEM.	1
	3T842	BEARING ASSEM.	1
5	3T868	SOLENOID ASSEM.	1
6	1D4719	NUT	3
7	3T7021	PLATE	1
8	3T7020	WASHER	1
9	3T847	SCREW	4
	3T851	NUT	4

10	3T867	ARMATURE ASSEM.	1
11	3T865	COIL ASSEM.	1
12	3T7024	SCREW	4
	4B4674	WASHER	4
13	3T850	SCREW	8
14	3T849	SCREW	12
15	3T853	NUT	1
16	3T858	SPRING	4
17	3T848	SCREW	4
18	3T862	PLATE ASSEM.	1
19	3T4716	WIRE ASSEM.	1
	2L8071	TERMINAL (Large)	1
	2L8067	TERMINAL (Small)	1

20	4N4517	DRIVE ASSEM.	1
21	3T7025	COVER	1
	4B2049	NUT	1
22	3B4502	LOCKWASHER	1
23	3B4508	LOCKWASHER	2
	The Following Repair Kit is Available		
	3T844	KIT (Brush) (Includes Brushes)	1
	3T2768	KIT (Seal) (Includes Seals & Rings)	1
	3T2769	KIT (Hard ware) (Includes Wire Assems Nits, Washers, Lockwashers, Bushing & Bar)	1
	3T7017	KIT (Bearing) (Includes Seal, Bearings, & Spacer)	1

STARTING MOTOR (3T6305 N/S) – Robert Bosch

Effective with Serial No. 6HC1 – UP

Part of 4N3181 Starting Motor Group listed on Page 69

NO.	PART NO. 部品番号	QTY. 数量	DESCRIPTION 名称および記事
1	9G6770	1	CONTACT ASSEM.
2	4M1815	1	SPRING
3	4M5274	3	SCREW
4	7T9123	1	GASKET
5	454065	4	SCREW
	4B4274	8	WASHER
	4B2049	4	NUT
6	6T1120	1	BUSHING
7	6T1119	1	TERMINAL ASSEM.
8	3H3680	3	NUT
	4B4280	3	WASHER
	9F4976	2	LOCKWASHER
9	4B2049	3	NUT
	4B4274	3	WASHER
	3B4502	2	LOCKWASHER
10	6T362	1	INSULATOR
	SMHS7843	1	FORM (Installation Instruction)

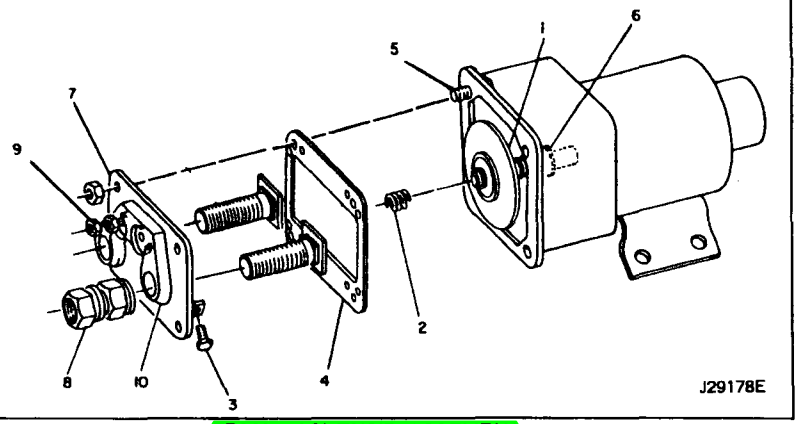

7T8854 SOLENOID ASSEMBLY

Part of Starting Motor (3T2647 N/S) shown on Page 70A

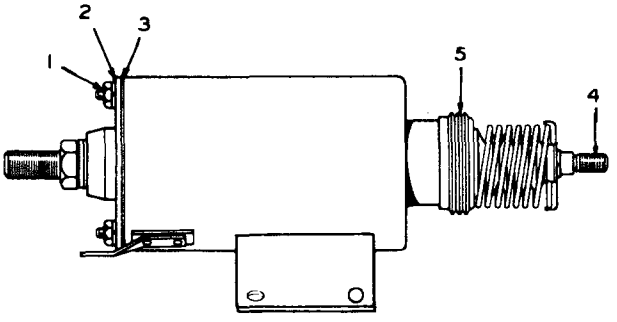

NO.	PART NO. 部品番号	QTY. 数量	DESCRIPTION 名称および記事
1	9M7657	4	NUT
2	8S8023	1	COVER ASSEM.
3	8S8024	1	GASKET
4	3T3370	1	COVER ASSEM.
5	8S1528	1	BOOT

			The Following Kit are Available :
	6T3701	1	KIT (Terminal)
	9S8688	1	KIT (Core - Yoke End)
	8S1527	1	KIT (Core - Contact End)

J26807E

3T8635 SOLENOID ASSEMBLY

Part of Starting Motor (9G4338 N/S) shown on Page 70D

MEMO

CHARGING ALTERNATOR (6N5468 N/S)

Effective with Serial No. 6HC1 – UP

6N9294 Charging Alternator parts are shown on Page 72

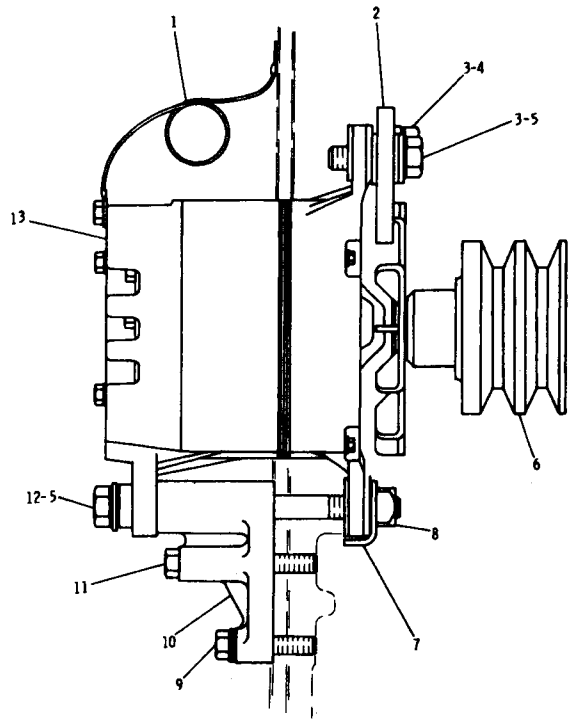

NO.	PART NO. 部品番号	DESCRIPTION 名称および記事	QTY. 数量
	4N5092	WIRE ASSEM. ----------	1
1	2L8069	TERMINAL ----------	1
	2L8066	TERMINAL ----------	1
2	8S4183	STRAP ----------	1
3	S1585	BOLT ----------	2
4	2S6735	SPACER ----------	1
5	8M4791	WASHER ----------	3
6	9S6129	PULLEY ----------	1
7	9S1240	NUT ASSEM. ----------	1
8	1F748	NUT (Weld) ----------	1
9	S1571	BOLT ----------	1
10	7S6723	BRACKET ----------	1
11	L1352	BOLT ----------	1
12	1D4574	BOLT ----------	1
13	6N9294	ALTERNATOR GROUP ---- (See Separate illustration)	1

J25772E

Consists of:

			Page
1	3T6352	Alternator Group	74

—OR—

			Page
1	7N9720	Alternator Group	76

—OR—

			Page
1	9G4574	Alternator Group	73

J25789E

6N9294 CHARGING ALTERNATOR GROUP—24 Volt, 35 Ampere

Effective with Serial No. 6HC1—UP
Part of Charging Alternator shown on Page 71
Only separate parts Serviced

Consists of:

			Page
1	5S9088	ALTERNATOR GROUP	72A
1	1H6936	WIRE ASSEM	
1	2L8060	TERMINAL	
1	2L8058	TERMINAL	

J18626E

CHARGING ALTERNATOR (8N1084 N/S)—24 Volt, 50 Ampere
Part of 3Y8206 R.O.P.S. Arrangement listed on Page 211
AN ATTACHMENT

Consists of:

			Page
1	6T7223	Alternator Group	79 C
		—or—	
1	3T1888	Alternator Group	78
		—or—	
1	9G9538	Alternator Group	77

J26475E

5S9088 ALTERNATOR GROUP—24 Volt, 50 Ampere
Part of Charging Alternator listed on Page 72
Only separate parts Serviced
AN ATTACHMENT

MEMO

ALTERNATOR (9G4574 N/S)—Nippondenso

Effective with Serial No. 6HC1—UP

Part of 6N9294 Charging Alternator Group

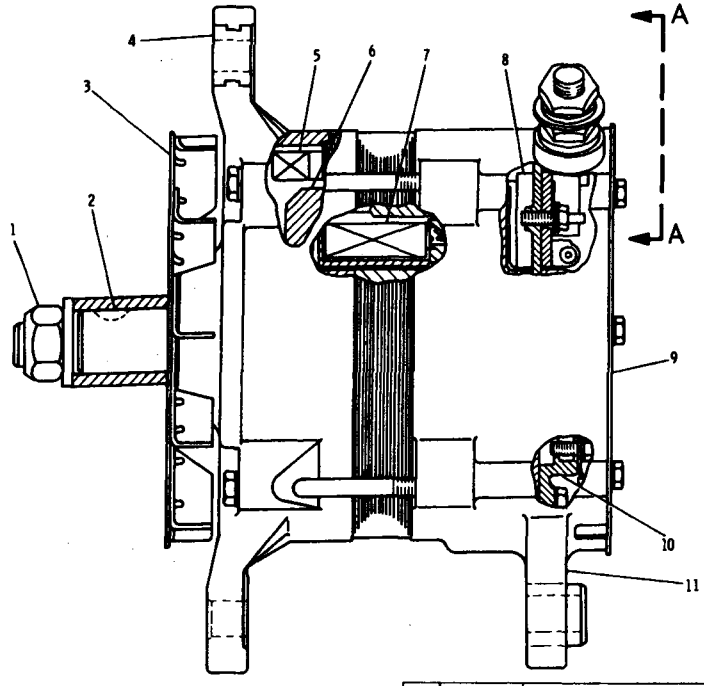

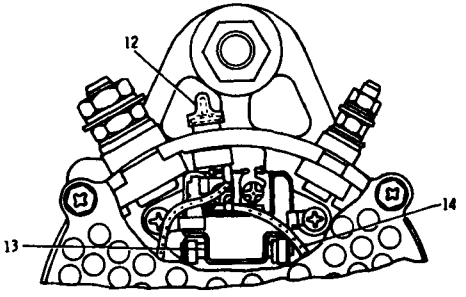

NO.	PART NO. 部品番号	DESCRIPTION 名称および記事	QTY. 数量
1	2K4821	LOCKNUT	1
	5P8247	WASHER	1
2	1B8705	KEY	1
3	7T2793	FAN ASSEM.	1
4	7T2792	FRAME ASSEM.	1
5	7T2794	STATOR ASSEM.	1
6	7T2790	ROTOR ASSEM.	1
7	7T2791	COIL ASSEM.	1
8	7T2798	REGULATOR ASSEM.	1
9	7T2797	COVER	1
10	7T2796	HOLDER ASSEM.	1
11	7T2795	FRAME ASSEM.	1
12	9L6770	CAP	1
13	7T2801	CONDENSER	1
14	7T2802	WIRE ASSEM.	1

The Following Kits are Available:

7T2799	KIT (Bearing) (Includes Three Bearings)	1
7T2800	KIT (Terminal Large)	1
7T2805	KIT (Terminal Small)	1
7T2803	KIT (Hard Wear) (Includes Bolts, Screws, & Washers)	1
7T2816	KIT (Hard Wear) (Includes Collars, Plates, Ring & Bolts)	1
7T2804	KIT (Terminal) (Includes Wire Assem. Cap, Bushing and Bolt)	1

J25356E

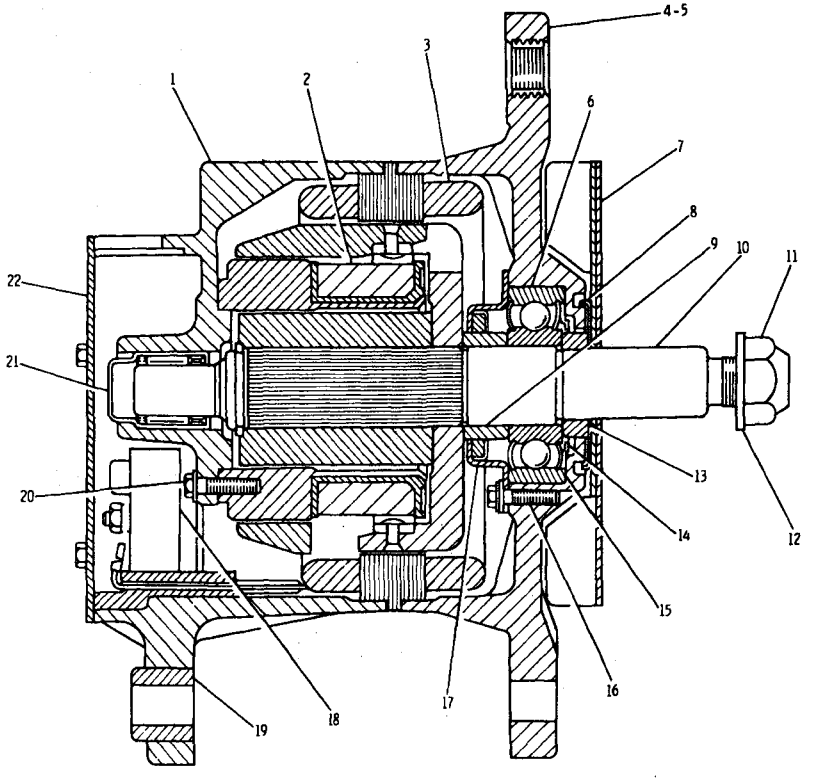

NO.	PART NO. 部品番号	DESCRIPTION 名称および記事	QTY. 数量
1	7N7805	HOUSING ASSEM.	1
2	7N7806	COIL ASSEM.	1
3	7N7804	STATOR ASSEM.	1
4	7N7810	FRAME ASSEM.	1
5	7N9024	BOLT	4
6	5P9514	BEARING	1
7	9N1210	FAN ASSEM.	1
8	9L6782	SHIELD	1
9	7N7795	COLLAR	1
10	7N7800	ROTOR ASSEM.	1
11	2K4821	LOCKNUT	1
12	7F7621	WASHER	1
13	9L6783	COLLAR	1
14	9L2139	WASHER	1
15	9L2140	PLATE	1
16	7N9020	SCREW ASSEM.	3
17	9L2137	RETAINER ASSEM.	1
18	7N7122	RECTIFIER ASSEM.	1
19	9S2396	BUSHING	1
20	9S2007	SCREW	4
21	5P6920	BEARING	1
22	7N7809	PLATE	1

J18854E

ALTERNATOR (3T6352 N/S)—Delco Remy—Part 1 of 2

Effective with Serial No. 6HC1—UP

Part of 6N9294 Charging Alternator Group

ALTERNATOR (3T6352 N/S)—Delco Remy—Part 2 of 2

Effective with Serial No. 6HC1—UP

Part of 6N9294 Charging Alternator Group

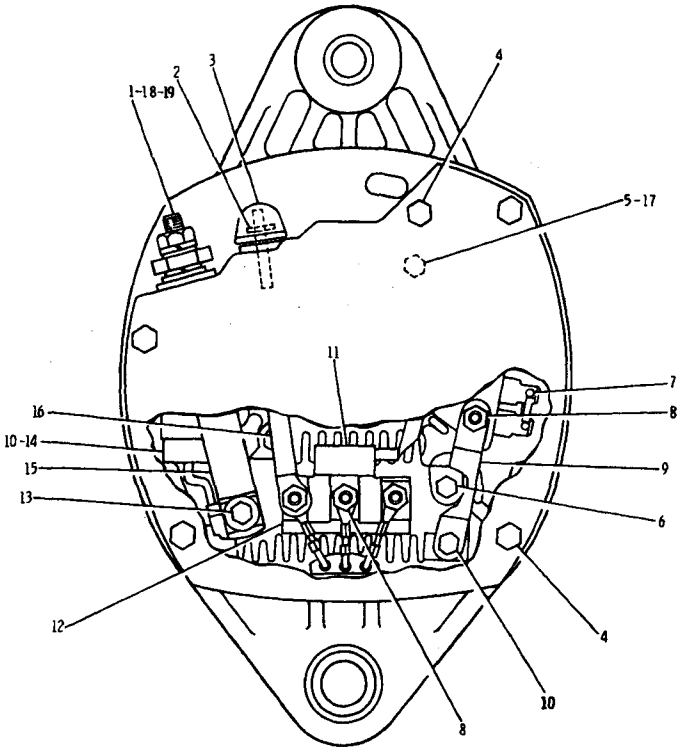

NO.	PART NO. 部品番号	QTY. 数量	DESCRIPTION 名称および記事
1	7N7807	1	TERMINAL KIT (OUTPUT) (INCLUDES INSULATOR, SCREW, LOCKWASHER, NUT & ADAPTER)
2	7N7808	1	TERMINAL KIT (INCLUDES STUD, BUSHING & NUT ASSEM.)
3	9L6770	1	CAP
4	8N0740	5	SCREW ASSEM.
5	6N1872	2	SCREW ASSEM.
	9N0938	2	WASHER
6	7N9023	2	SCREW ASSEM.
7	3T6354	1	REGULATOR ASSEM.
8	6N1869	4	NUT ASSEM.
9	7N7811	1	CONNECTOR
10	7N9018	3	SCREW ASSEM.
11	9N1202	1	DIODE ASSEM.
12	7N7797	2	INSULATOR
13	7N9021	1	SCREW ASSEM.
	7N7796	1	BUSHING
14	7N7802	1	CAPACITOR ASSEM.
	3N4082	1	BRACKET
15	7N7798	1	CONNECTOR
16	7N7801	1	CONNECTOR
17	3H0240	2	WASHER
18	5L4426	1	NUT
	3B4504	1	LOCKWASHER
	3P9901	1	WASHER
19	7T9930	1	NUT

J33424E

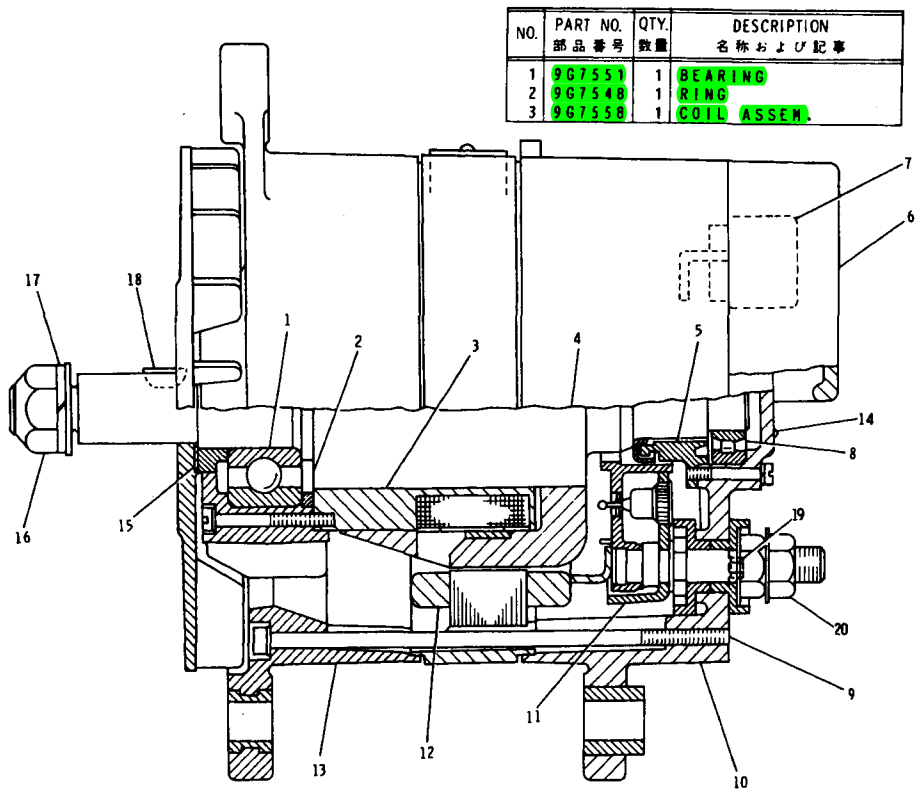

NO.	PART NO. 部品番号	QTY. 数量	DESCRIPTION 名称および記事
1	9G7551	1	BEARING
2	9G7548	1	RING
3	9G7558	1	COIL ASSEM.
4	9G7560	1	ROTOR ASSEM.
5	9G7553	1	RING
6	9G7562	1	COVER ASSEM.
7	9G7567	1	REGULATOR ASSEM.
8	9G7552	1	BEARING
9	9G7557	1	SCREW ASSEM.
10	9G7568	1	FRAME ASSEM.
11	3T1887	1	DIODE ASSEM.
12	9G7561	1	STATOR ASSEM.
13	9G7566	1	FRAME
14	9L6770	1	CAP
15	9G7549	1	SPACER
16	2K4821	1	LOCKNUT
17	5P8247	1	WASHER
18	1B8705	1	KEY
19	6V8127	1	NUT
	4B4276	2	WASHER
20	3S1546	1	NUT
			THE FOLLOWING REPAIRKIT ARE AVAILABLE:
	9G7554	1	KIT(GROUND TERMINAL) (INCLUDES NUT & LOCKWASHER)
	9G7555	1	KIT(OUTPUT TERMINAL) (INCLUDES NUT,WASHER&BUSHING)
	7G7556	1	KIT(CAPACITOR) (INCLUDES CAPACTOR,SCREW, LOCKWASHER & WASHER)
	9G7559	1	KIT(RELAY TERMINAL) (INCLUDES SPLICE,TUBE,NUT, TERMINAL,LOCKWASHER,WASHER, & BUSHING)
	9G7565	1	KIT(REGULATOR TERMINAL) (INCLUDES NUT,LOCKWASHER & BUSHING)
	7T0816	1	KIT(FAN KIT)

ALTERNATOR (7N9720 N/S)—Robert Bosch
Effective with Serial No. 6HC1—UP
Part of 6N9294 Charging Alternator Group

ALTERNATOR (9G9538 N/S) – Robert Bosch

Part of Alternator listed on Page 72A

AN ATTACHMENT

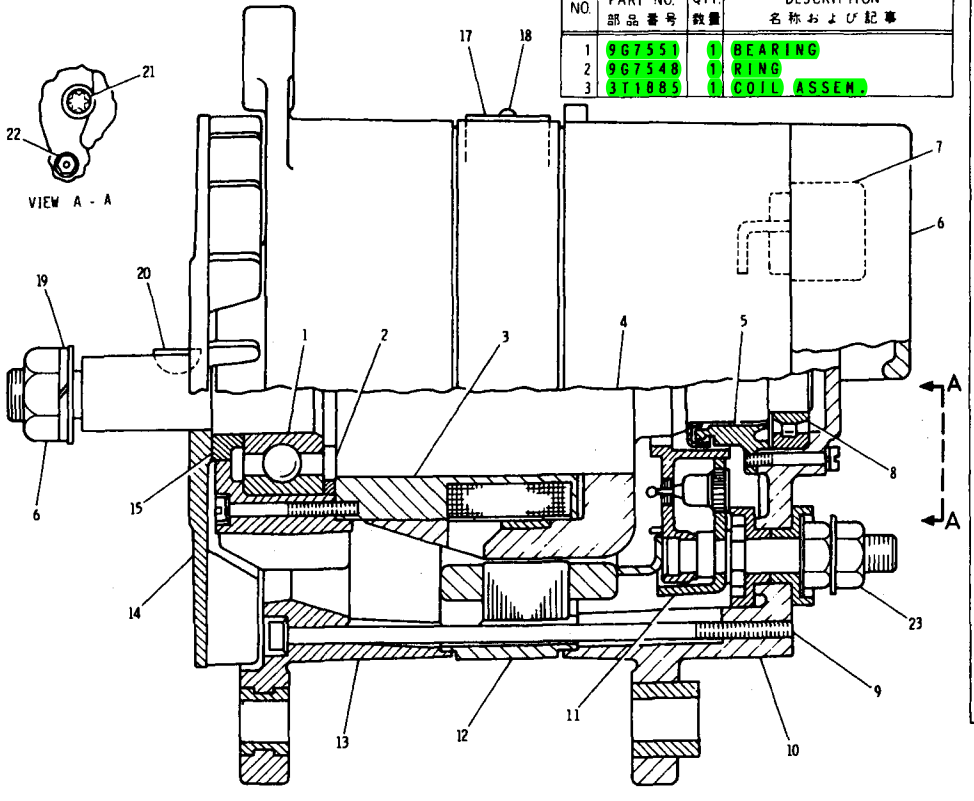

NO.	PART NO. 部品番号	QTY. 数量	DESCRIPTION 名称および記事
1	9G7551	1	BEARING
2	9G7548	1	RING
3	3T1885	1	COIL ASSEM.
4	9G7560	1	ROTOR ASSEM.
5	9G7553	1	RING
6	9G7562	1	COVER ASSEM.
7	9G7567	1	REGULATOR ASSEM.
8	9G7552	1	BEARING
9	9G7557	4	SCREW ASSEM.
10	9G7568	1	FRAME ASSEM.
11	3T1887	1	DIODE ASSEM.
12	3T1886	1	STATOR ASSEM.
13	9G7566	1	FRAME
14	9G7564	1	FAN
15	9G7549	1	SPACER
16	2K4821	1	LOCKNUT
	7F7621	1	WASHER
17	3T5962	1	NAMEPLATE
18	2H3880	2	DRIVE SCREW
19	5P8247	1	WASHER
20	1B8705	1	KEY
21	9L6770	1	CAP
22	6V8127	1	NUT
	4B4276	2	WASHER
23	3S1546	1	NUT
			THE FOLLOWING REPAIR KITS ARE AVAILABLE:
	9G7554	1	KIT (GROUND TERMINAL) (INCLUDES NUT & LOCKWASHERS)
	9G7555	1	KIT (OUTPUT TERMINAL) (INCLUDES NUTS,WASHER & BUSHING)
	9G7556	1	KIT (CAPACITOR)(INCLUDES CAPACITOR,SCREW,LOCKWASHER & BUSHING)
	9G7559	1	KIT (RELAY TERNMINAL) (INCLUDES SPLICE,TUBE,NUT, TERMINAL,LOCKWASHER, & BUSHING)
	9G7565	1	KIT (REGULATOR TERMINAL) (INCLUDES NUTS,LOCKWASHER, & BUSHING)

J33649E

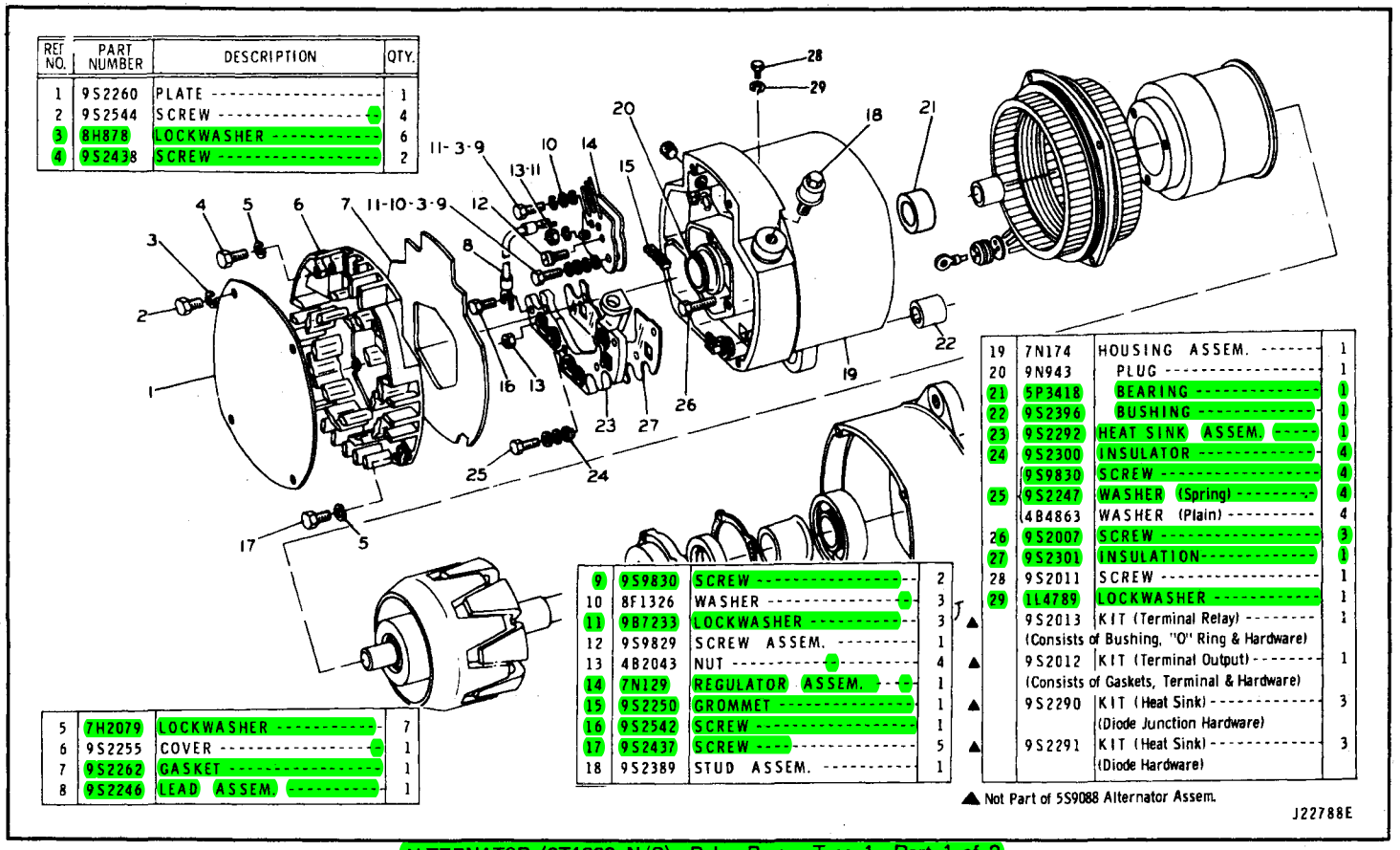

REF NO.	PART NUMBER	DESCRIPTION	QTY.
1	9S2260	PLATE	1
2	9S2544	SCREW	4
3	8H878	LOCKWASHER	6
4	9S2438	SCREW	2
5	7H2079	LOCKWASHER	7
6	9S2255	COVER	1
7	9S2262	GASKET	1
8	9S2246	LEAD ASSEM.	1
9	9S9830	SCREW	2
10	8F1326	WASHER	3
11	9B7233	LOCKWASHER	3
12	9S9829	SCREW ASSEM.	1
13	4B2043	NUT	4
14	7N129	REGULATOR ASSEM.	1
15	9S2250	GROMMET	1
16	9S2542	SCREW	1
17	9S2437	SCREW	5
18	9S2389	STUD ASSEM.	1
19	7N174	HOUSING ASSEM.	1
20	9N943	PLUG	1
21	5P3418	BEARING	1
22	9S2396	BUSHING	1
23	9S2292	HEAT SINK ASSEM.	1
24	9S2300	INSULATOR	4
	9S9830	SCREW	4
25	9S2247	WASHER (Spring)	4
	4B4863	WASHER (Plain)	4
26	9S2007	SCREW	3
27	9S2301	INSULATION	1
28	9S2011	SCREW	1
29	1L4789	LOCKWASHER	1
▲	9S2013	KIT (Terminal Relay) (Consists of Bushing, "O" Ring & Hardware)	1
▲	9S2012	KIT (Terminal Output) (Consists of Gaskets, Terminal & Hardware)	1
▲	9S2290	KIT (Heat Sink) (Diode Junction Hardware)	3
▲	9S2291	KIT (Heat Sink) (Diode Hardware)	3

▲ Not Part of 5S9088 Alternator Assem.

J22788E

ALTERNATOR (3T1888 N/S) – Delco Remy – Type 1 – Part 1 of 2

Part of 5S9088 Alternator Group listed on Page 72A

AN ATTACHMENT

ALTERNATOR (3T1888 N/S) – Delco Remy – Type 1 – Part 2 of 2

Part of 5S9088 Alternator Group listed on Page 72A

AN ATTACHMENT

REF. NO.	PART NUMBER	DESCRIPTION	QTY.
1	5P3419	RACE	1
2	9S2248	FIELD COIL AND SUPPORT ASSEM.	1
3	9S2004	STATOR ASSEM.	1
4	9S2006	INSULATOR	1
5	9S2005	GROMMET	1
6	9S2014	CLIP	3
7	9S2302	ROTOR ASSEM.	1
8	9S2390	RETAINER ASSEM.	1
9	9S2391	SEAL	1
10	9S2256	GASKET	1
11	9S2261	COLLAR	1
12	2F5721	BEARING	1
13	2P5616	FRAME	1
14	3B4502	LOCKWASHER	4
15	9S2009	BOLT	4
16	9S2391	SEAL	1
17	9S2254	COLLAR	1
18	9S2252	SLINGER	1
19	9S2008	SCREW	4
20	9S2258	FAN AND BAFFLE ASSEM.	1
21	7F7621	WASHER	1
22	2K4821	LOCKNUT	1

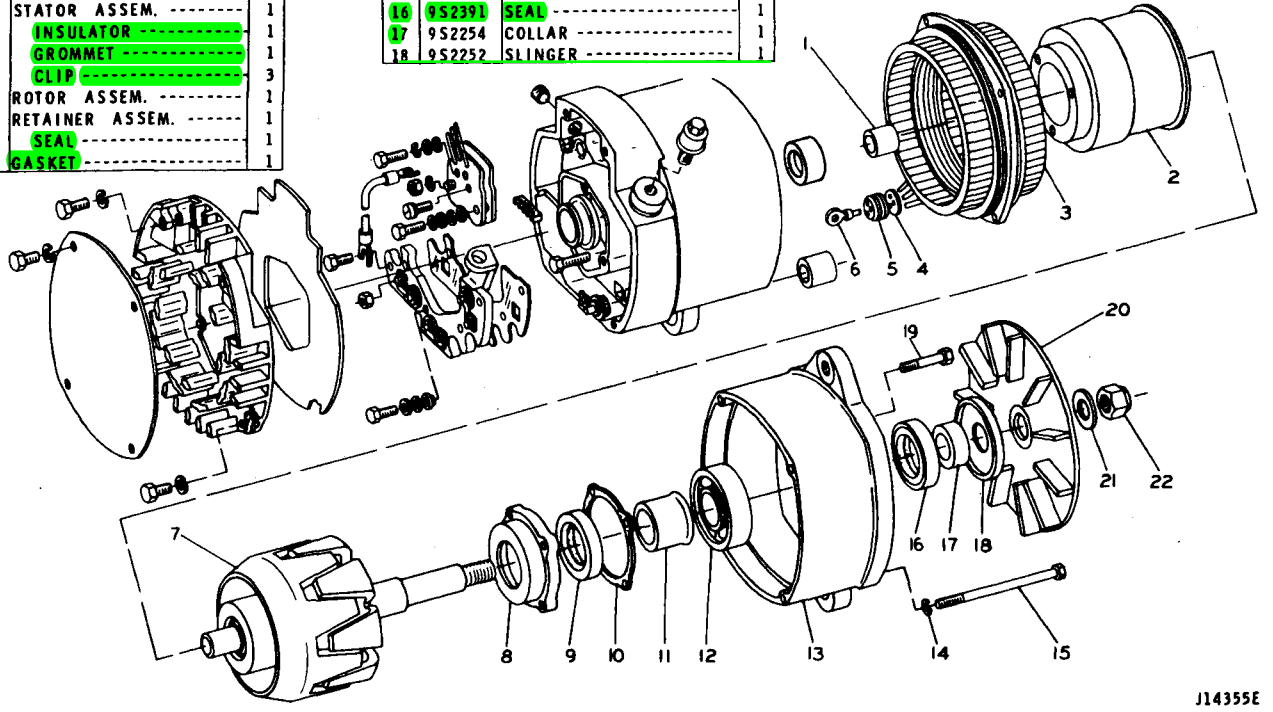

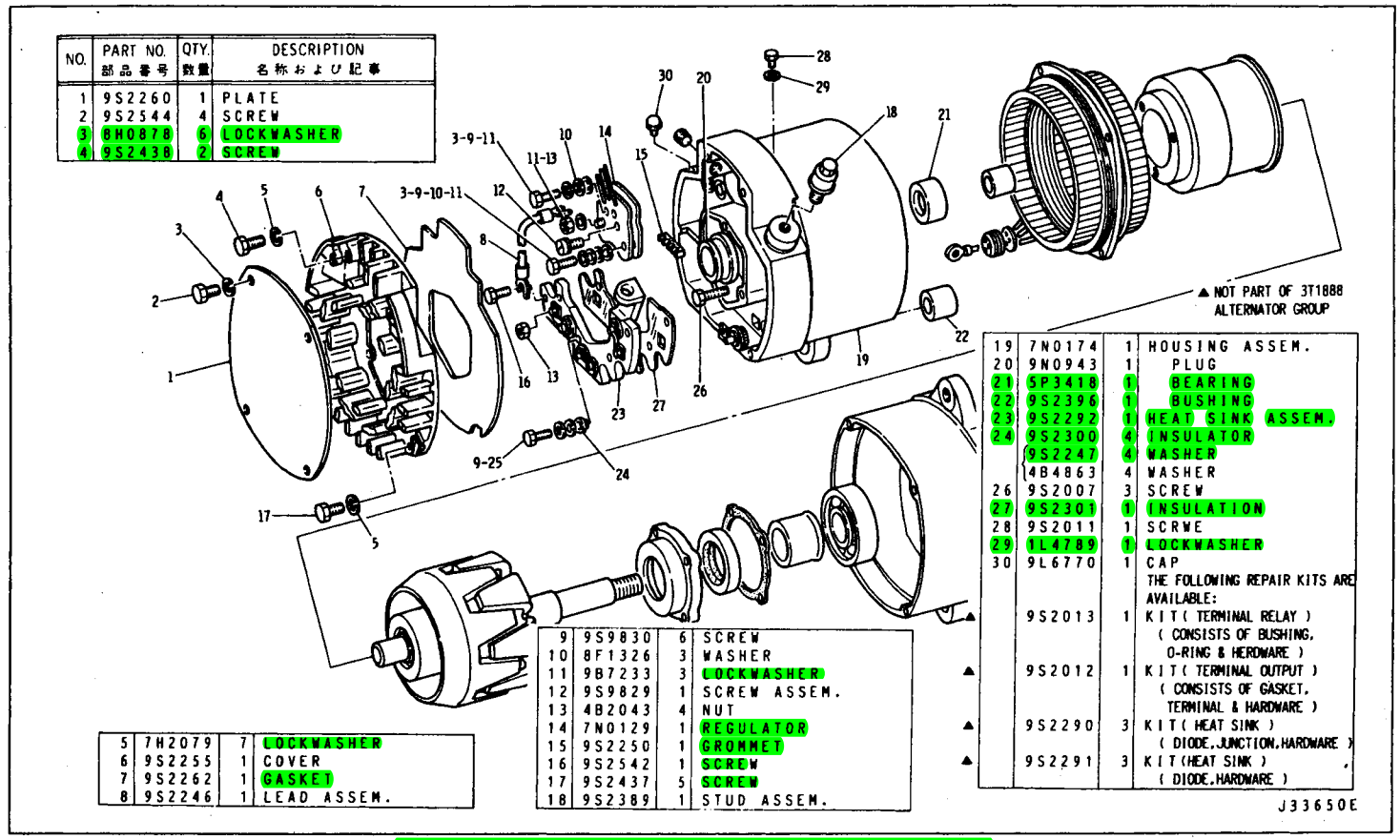

NO.	PART NO. 部品番号	QTY. 数量	DESCRIPTION 名称および記事
1	9S2260	1	PLATE
2	9S2544	4	SCREW
3	8H0878	6	LOCKWASHER
4	9S2438	2	SCREW
5	7H2079	7	LOCKWASHER
6	9S2255	1	COVER
7	9S2262	1	GASKET
8	9S2246	1	LEAD ASSEM.
9	9S9830	6	SCREW
10	8F1326	3	WASHER
11	9B7233	3	LOCKWASHER
12	9S9829	1	SCREW ASSEM.
13	4B2043	4	NUT
14	7N0129	1	REGULATOR
15	9S2250	1	GROMMET
16	9S2542	1	SCREW
17	9S2437	5	SCREW
18	9S2389	1	STUD ASSEM.
19	7N0174	1	HOUSING ASSEM.
20	9N0943	1	PLUG
21	5P3418	1	BEARING
22	9S2396	1	BUSHING
23	9S2292	1	HEAT SINK ASSEM.
24	9S2300	4	INSULATOR
	9S2247	4	WASHER
	4B4863	4	WASHER
26	9S2007	3	SCREW
27	9S2301	1	INSULATION
28	9S2011	1	SCRWE
29	1L4789	1	LOCKWASHER
30	9L6770	1	CAP
			THE FOLLOWING REPAIR KITS ARE AVAILABLE:
	9S2013	1	KIT(TERMINAL RELAY) (CONSISTS OF BUSHING, O-RING & HERDWARE)
▲	9S2012	1	KIT(TERMINAL OUTPUT) (CONSISTS OF GASKET, TERMINAL & HARDWARE)
▲	9S2290	3	KIT(HEAT SINK) (DIODE,JUNCTION,HARDWARE)
▲	9S2291	3	KIT(HEAT SINK) (DIODE,HARDWARE)

ALTERNATOR (3T1888 N/S)—Delco Remy—Type 2—Part 1 of 2

Part of 5S9088 Alternator Group listed on Page 72A

AN ATTACHMENT

ALTERNATOR (3T1888 N/S)–Delco Remy–Type 2–Part 2 of 2

Part of 5S9088 Alternator Group listed on Page 72A

AN ATTACHMENT

NO.	PART NO. 部品番号	QTY. 数量	DESCRIPTION 名称および記事
1	5P3419	1	RACE
2	9S2248	1	FIELD COIL & SUPPORT ASSEM.
3	9S2004	1	STATOR ASSEM.
4	9S2006	1	INSULATOR
5	9S2005	1	GROMMET
6	9S2014	3	CLIP
7	9S2302	1	ROTOR ASSEM.
8	9S2390	1	RETAINER
9	9S2391	1	SEAL
10	9S2256	1	GASKET
11	9S2261	1	COLLAR
12	5P7807	1	BEARING
13	2P5616	1	FRAME
14	9S2391	1	SEAL
15	9S2009	4	BOLT
16	2K4821	1	LOCKNUT
17	9S2254	1	COLLAR
18	9S2252	1	SLINGER
19	9S2008	4	SCREW
20	9S2258	1	FAN & BAFFLE ASSEM.
21	7F7621	1	WASHER
22	3B4502	4	LOCKWASHER
23	5P3418	1	BEARING

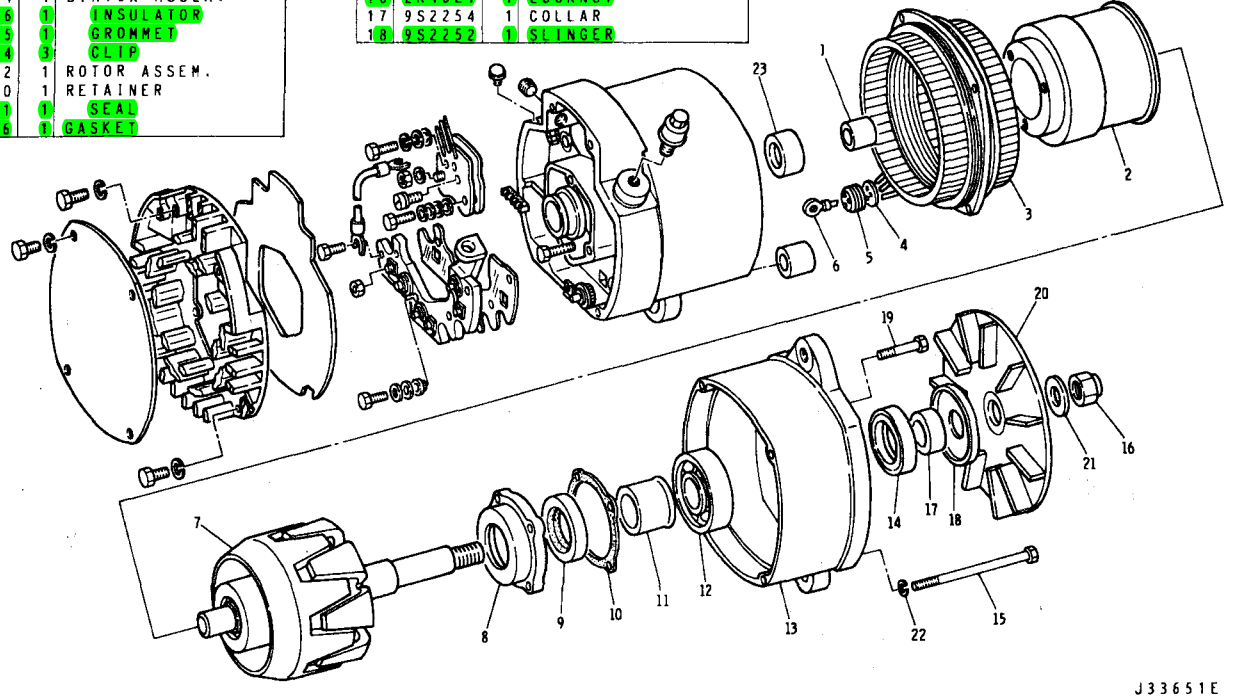

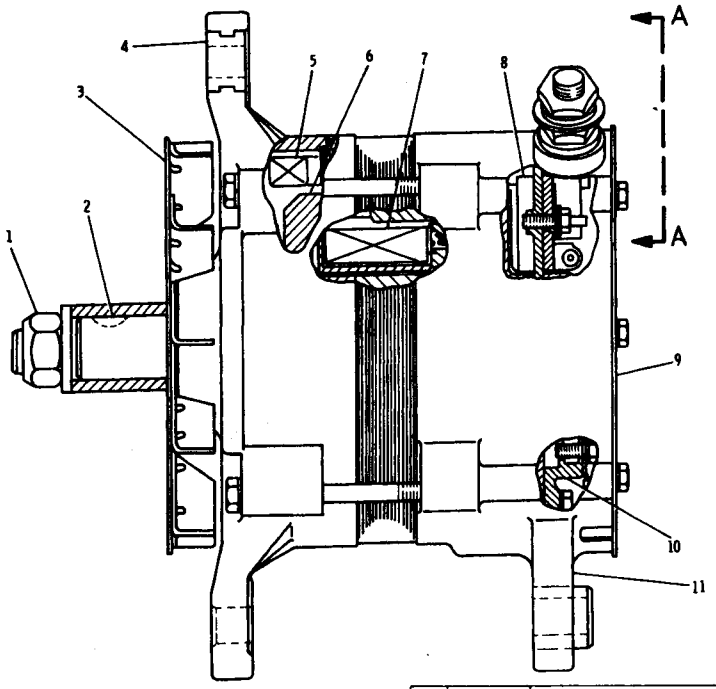

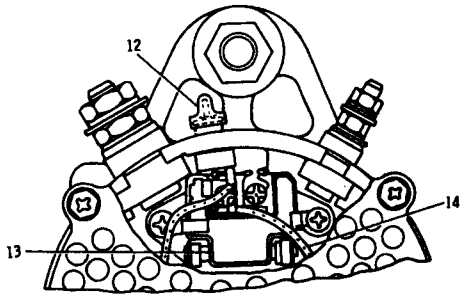

NO.	PART NO. 部品番号	DESCRIPTION 名称および記事	QTY. 数量
1	2K4821	LOCKNUT	1
	5P8247	WASHER	1
2	1B8705	KEY	1
3	7T2793	FAN ASSEM.	1
4	7T2792	FRAME ASSEM.	1
5	7T6418	STATOR ASSEM.	1
6	7T2790	ROTOR ASSEM.	1
7	7T6417	COIL ASSEM.	1
8	7T2798	REGULATOR ASSEM.	1
9	7T2797	COVER	1
10	7T6416	HOLDER ASSEM.	1
11	7T2795	FRAME ASSEM.	1
12	9L6770	CAP	1
13	7T2801	CONDENSER	1
14	7T2802	WIRE ASSEM.	1

The Following Kits are Available:

7T2799	KIT (Bearing) (Includes Three Bearings)	1
7T2800	KIT (Terminal Large)	1
7T2805	KIT (Terminal Small)	1
7T2803	KIT (Hard Ware) (Includes Bolts, Screws, & Washers)	1
7T2816	KIT (Hard Ware) (Includes Collars, Plates, Ring & Bolts)	1
7T2804	KIT (Terminal) (Includes Wire Assem., Cap, Bushing and Bolt)	1

J26353E

ALTERNATOR (6T7223 N/S) – Nippondenso

Part of Alternator listed on Page 72A

AN ATTACHMENT

MEMO

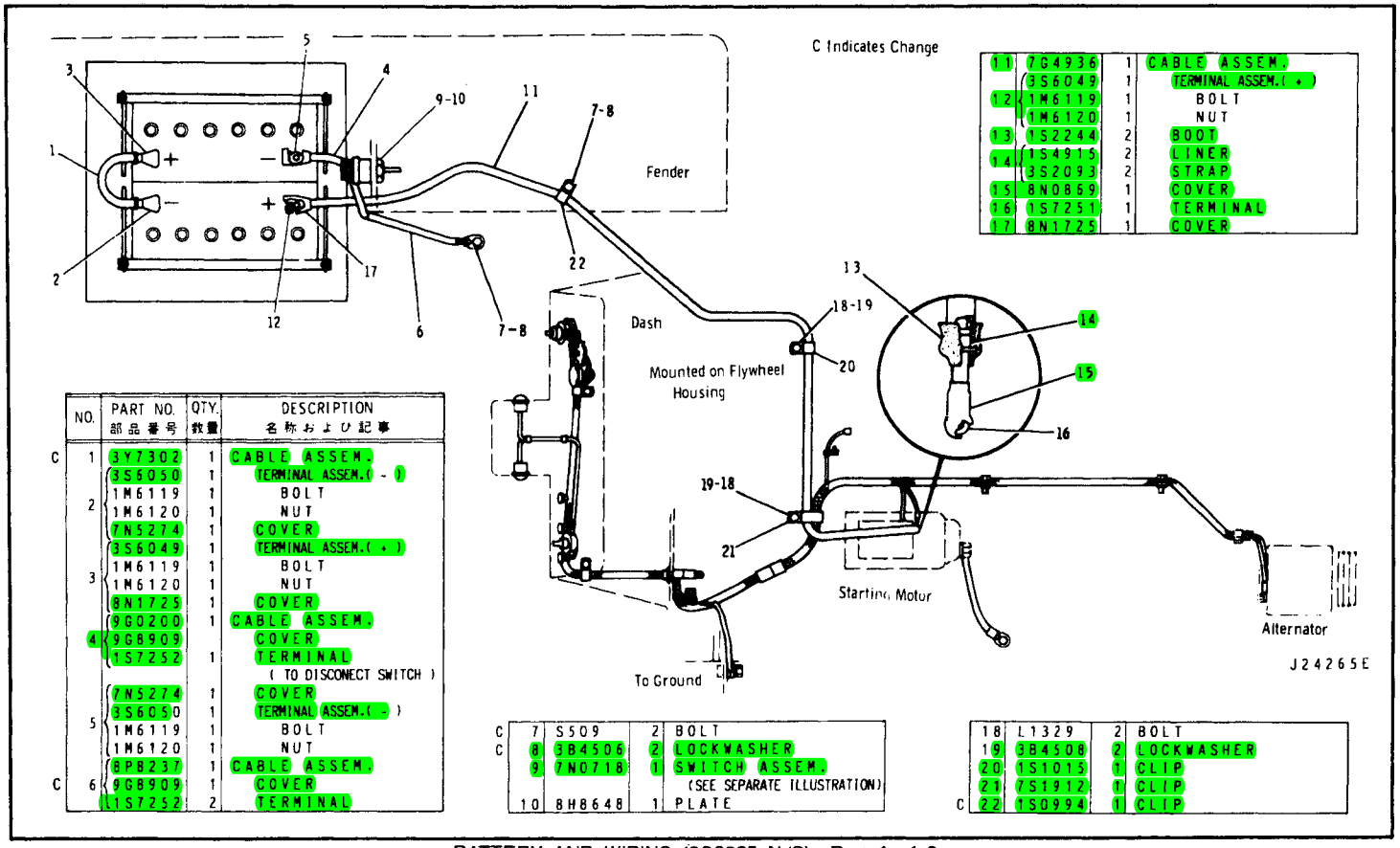

	NO.	PART NO. 部品番号	QTY. 数量	DESCRIPTION 名称および記事
C	1	3Y7302	1	CABLE ASSEM.
		3S6050	1	TERMINAL ASSEM.(-)
	2	1M6119	1	BOLT
		1M6120	1	NUT
		7N5274	1	COVER
		3S6049	1	TERMINAL ASSEM.(+)
	3	1M6119	1	BOLT
		1M6120	1	NUT
		8N1725	1	COVER
	4	9G0200	1	CABLE ASSEM.
		9G8909		COVER
		1S7252	1	TERMINAL
				(TO DISCONECT SWITCH)
		7N5274	1	COVER
	5	3S6050	1	TERMINAL ASSEM.(-)
		1M6119	1	BOLT
		1M6120	1	NUT
		8P8237	1	CABLE ASSEM.
C	6	9G8909	1	COVER
		1S7252	2	TERMINAL

C	7	S509	2	BOLT
C	8	3B4506	2	LOCKWASHER
	9	7N0718	1	SWITCH ASSEM.
				(SEE SEPARATE ILLUSTRATION)
	10	8H8648	1	PLATE

	11	7G4936	1	CABLE ASSEM.
		3S6049	1	TERMINAL ASSEM.(+)
	12	1M6119	1	BOLT
		1M6120	1	NUT
	13	1S2244	2	BOOT
	14	1S4915	2	LINER
		3S2093	2	STRAP
	15	8N0869	1	COVER
	16	1S7251	1	TERMINAL
	17	8N1725	1	COVER

	18	L1329	2	BOLT
	19	3B4508	2	LOCKWASHER
	20	1S1015	1	CLIP
	21	7S1912	1	CLIP
C	22	1S0994	1	CLIP

BATTERY AND WIRING (9G6035 N/S)–Part 1 of 3

Effective with Serial No. 6HC1~6HC305

7N718 Disconnect Switch parts are shown on Page 84

BATTERY AND WIRING (9G6035 N/S)—Part 2 of 3

Effective with Serial No. 6HC1~6HC305

9P3118 Harness parts are shown on Page 85

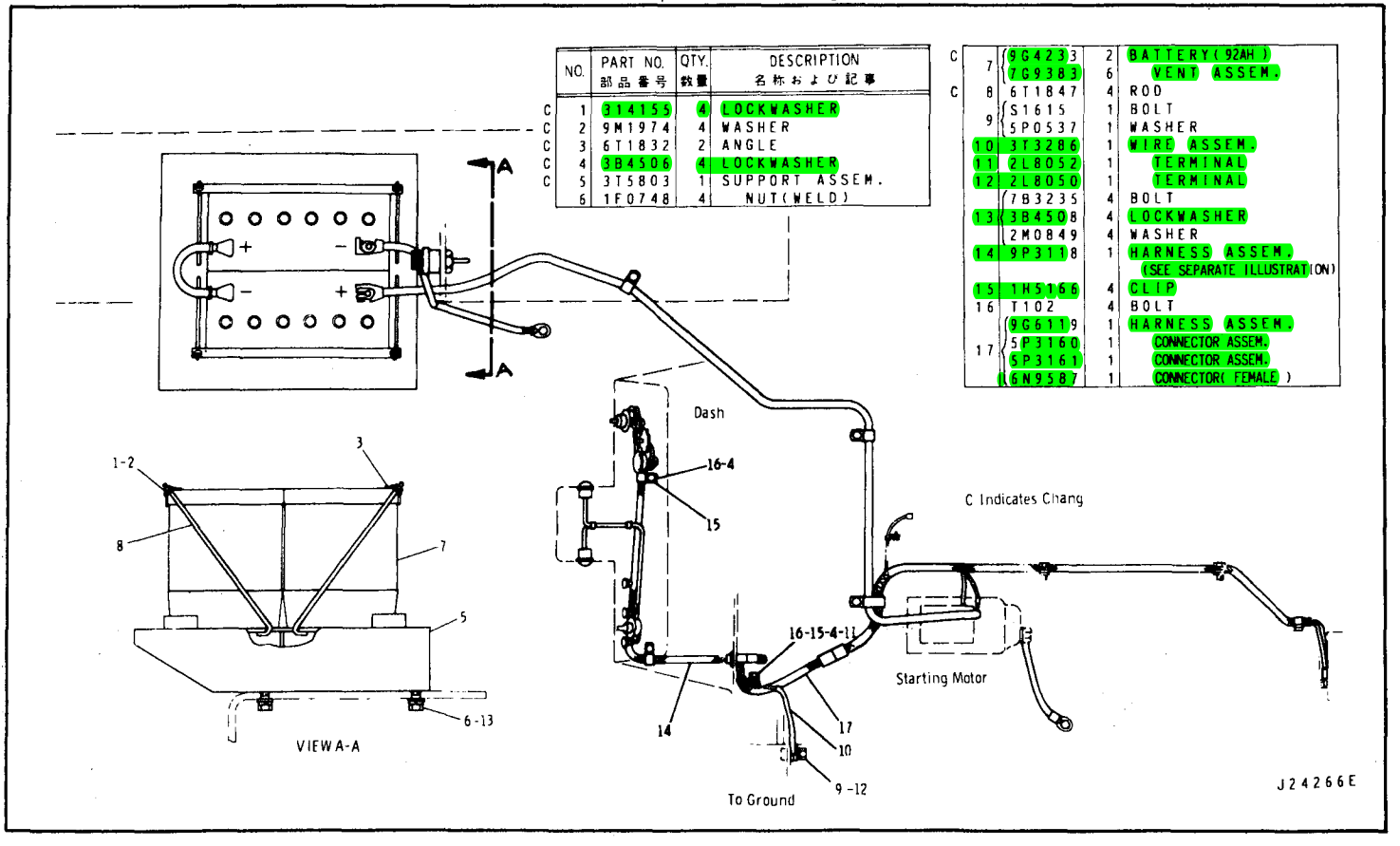

	NO.	PART NO. 部品番号	QTY. 数量	DESCRIPTION 名称および記事
C	1	314155	4	LOCKWASHER
C	2	9M1974	4	WASHER
C	3	6T1832	2	ANGLE
C	4	3B4506	4	LOCKWASHER
C	5	3T5803	1	SUPPORT ASSEM.
	6	1F0748	4	NUT(WELD)

C	7	9G4233	2	BATTERY(92AH)
		7G9383	6	VENT ASSEM.
C	8	6T1847	4	ROD
	9	S1615	1	BOLT
		5P0537	1	WASHER
	10	3T3286	1	WIRE ASSEM.
	11	2L8052	1	TERMINAL
	12	2L8050	1	TERMINAL
	13	7B3235	4	BOLT
		3B4508	4	LOCKWASHER
		2M0849	4	WASHER
	14	9P3118	1	HARNESS ASSEM. (SEE SEPARATE ILLUSTRATION)
	15	1H5166	4	CLIP
	16	T102	4	BOLT
	17	9G6119	1	HARNESS ASSEM.
		5P3160	1	CONNECTOR ASSEM.
		5P3161	1	CONNECTOR ASSEM.
		6N9587	1	CONNECTOR(FEMALE)

NO.	PART NO. 部品番号	DESCRIPTION 名称および記事	QTY. 数量
	8P7353	WIRE ASSEM. ----------	1
1	4L3916	TERMINAL (Female) ----	1
2	2L8075	TERMINAL ----------	1
	7S6402	SWITCH ASSEM. (Three Position)	1
	7S5432	KNOB ----------	1
3	7H27	NUT ----------	1
	1H4393	LOCKWASHER --------	3
	9B7242	SCREW ----------	3
	3T8073	LAMP ASSEM. ----------	2
	6N8742	BODY ASSEM. -------	1
4	2D1959	LAMP ----------	1
▲	5P5628	TUBE --------- 0.7m	
	1S9593	STRAP ----------	2
	4S6313	WIRE ASSEM. ----------	1
C 5	2L8066	TERMINAL ----------	2
6	9S173	CIRCUIT BREAKER (60°) -	1
7	4B1223	SCREW ----------	2
8	9G1480	SWITCH GROUP (Starter)	1
		(See Separate Illustration)	
9	8M7892	AMMETER (60°) ----------	1
C 10	1S9593	STRAP ----------	3
	4K5122	HOLDER ----------	3
11	7N2867	CAP ----------	1
12	8M8948	FUSE (15A) ----------	2
13	2S6024	FUSE (5A) ----------	1
14	4D7794	CLIP ----------	1
15	S509	BOLT ----------	2
16	3B4506	LOCKWASHER ----------	2
17	9G6120	HARNESS ASSEM. ------	1
		(See Separate Illustration)	
18	2M287	CLIP ----------	2
	S1624	BOLT ----------	2
19	3B4510	LOCKWASHER ----------	2
20	1H5166	CLIP ----------	1

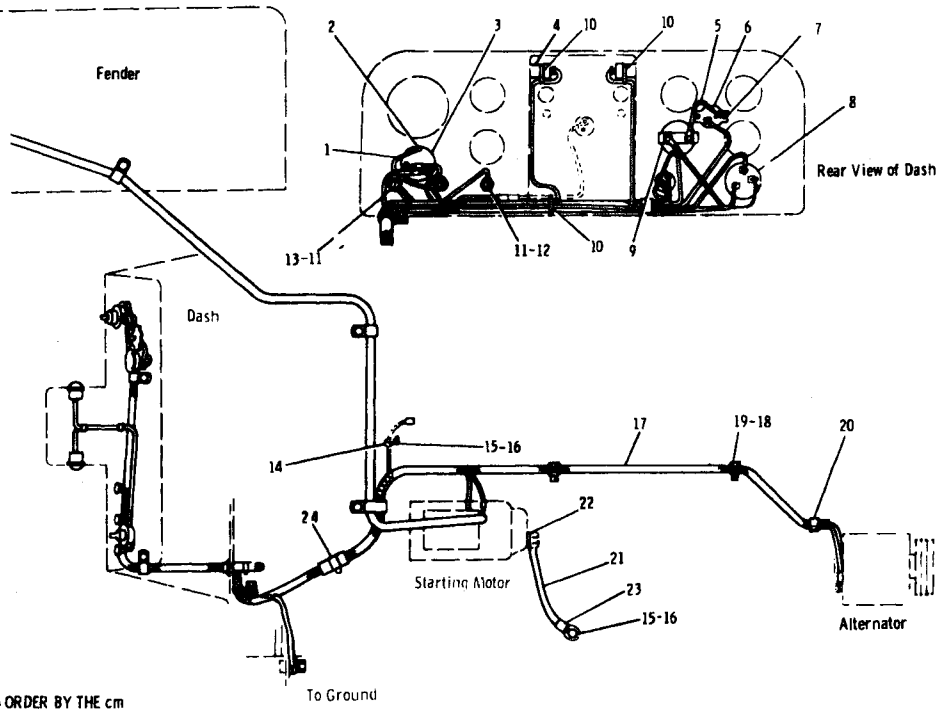

▲ ORDER BY THE cm

21	3S8624	CABLE ASSEM. ----------	1
22	2M912	TERMINAL (12.7mm Screw)	1
23	2M913	TERMINAL (9.5mm Screw)	1
24	3T3393	CLAMP ----------	2

J24267E

BATTERY AND WIRING (9G6035 N/S)—Part 3 of 3

Effective with Serial No. 6HC1~6HC305

9G1480 Starter Switch and 9G6120 Harness parts are shown on Pages 84 and 85

BATTERY AND WIRING (9G6035 N/S)—Part 1 of 3

Effective with Serial No. 6HC306—UP

7N718 Disconnect Switch parts are shown on Page 84

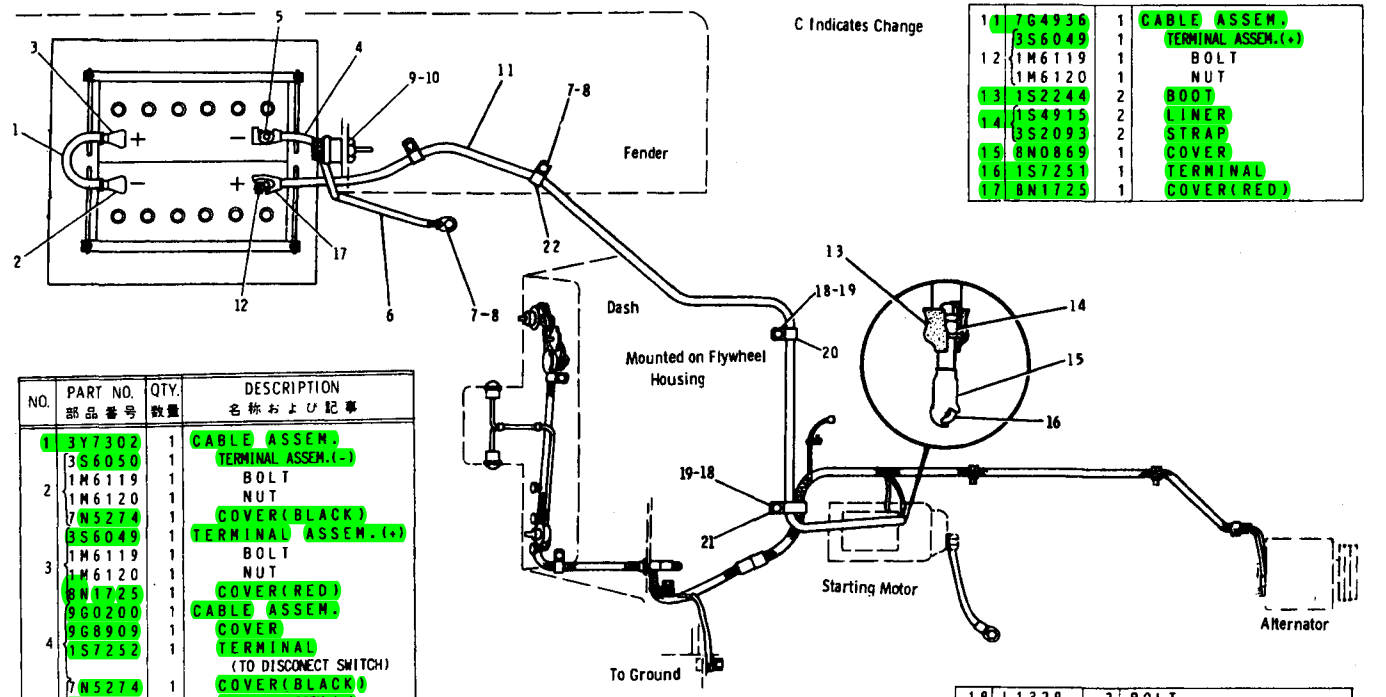

NO.	PART NO. 部品番号	QTY. 数量	DESCRIPTION 名称および記事
1	3Y7302	1	CABLE ASSEM.
	3S6050	1	TERMINAL ASSEM.(-)
2	1M6119	1	BOLT
	1M6120	1	NUT
	7N5274	1	COVER(BLACK)
	3S6049	1	TERMINAL ASSEM.(+)
3	1M6119	1	BOLT
	1M6120	1	NUT
	8N1725	1	COVER(RED)
	9G0200	1	CABLE ASSEM.
4	9G8909	1	COVER
	1S7252	1	TERMINAL
			(TO DISCONECT SWITCH)
	7N5274	1	COVER(BLACK)
	3S6050	1	TERMINAL ASSEM.(-)
5	1M6119	1	BOLT
	1M6120	1	NUT
	6P8237	1	CABLE ASSEM.
6	9G8909	1	COVER
	1S7252	2	TERMINAL

11	7G4936	1	CABLE ASSEM.	
	3S6049	1	TERMINAL ASSEM.(+)	
12	1M6119	1	BOLT	
	1M6120	1	NUT	
13	1S2244	2	BOOT	
14	1S4915	2	LINER	
	3S2093	2	STRAP	
15	8N0869	1	COVER	
16	1S7251	1	TERMINAL	
17	8N1725	1	COVER(RED)	

C	7	S0509	3	BOLT
C	8	5P1079	3	LOCKWASHER
	9	7N0718	1	DISCONNECT SWITCH ASSEM. (SEE SEPARATE ILLUSTRATION)
	10	8H8648	1	PLATE

	18	L1329	2	BOLT
C	19	5P1076	2	WASHER
	20	1S1015	1	CLIP
	21	7S1912	1	CLIP
C	22	1S0994	2	CLIP

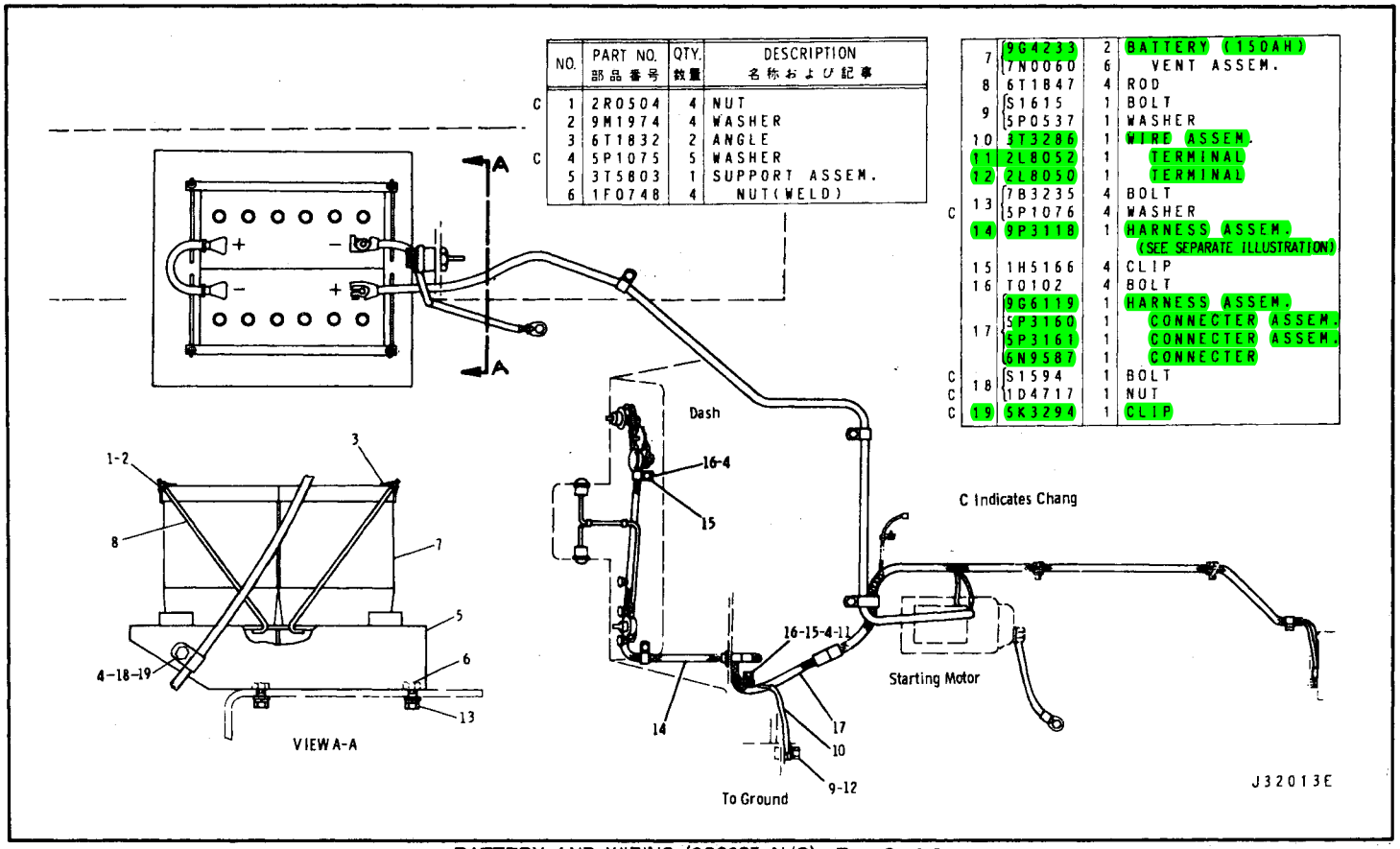

	NO.	PART NO. 部品番号	QTY. 数量	DESCRIPTION 名称および記事
C	1	2R0504	4	NUT
	2	9M1974	4	WASHER
	3	6T1832	2	ANGLE
C	4	5P1075	5	WASHER
	5	3T5803	1	SUPPORT ASSEM.
	6	1F0748	4	NUT(WELD)

	7	9G4233	2	BATTERY (150AH)
		7N0060	6	VENT ASSEM.
	8	6T1847	4	ROD
	9	S1615	1	BOLT
		5P0537	1	WASHER
	10	3T3286	1	WIRE ASSEM.
	11	2L8052	1	TERMINAL
	12	2L8050	1	TERMINAL
	13	7B3235	4	BOLT
C		5P1076	4	WASHER
	14	9P3118	1	HARNESS ASSEM. (SEE SEPARATE ILLUSTRATION)
	15	1H5166	4	CLIP
	16	T0102	4	BOLT
	17	9G6119	1	HARNESS ASSEM.
		5P3160	1	CONNECTER ASSEM.
		5P3161	1	CONNECTER ASSEM.
		6N9587	1	CONNECTER
C	18	S1594	1	BOLT
C		1D4717	1	NUT
C	19	6K3294	1	CLIP

BATTERY AND WIRING (9G6035 N/S)—Part 2 of 3

Effective with Serial No. 6HC306—UP

9P3118 Harness parts are shown on Page 85

BATTERY AND WIRING (9G6035 N/S)—Part 3 of 3

Effective with Serial No. 6HC306—UP

9G1480 Starter Switch and 9G6120 Harness parts are shown on Pages 84 and 85

	NO.	PART NO. 部品番号	QTY. 数量	DESCRIPTION 名称および記事
		8P7353	1	WIRE ASSEM.
	1	4L3916	1	TERMINAL
	2	2L8075	1	TERMINAL
		7S6402	1	SWITCH ASSEM.
		7S5432	1	KNOB
	3	7H0027	1	NUT
		1H4393	3	LOCKWASHER
		9B7242	3	SCREW
		6N8742	1	BODY ASSEM.
	4	2D1959	1	LAMP
		4S6313	1	WIRE ASSEM.
	5	2L8066	2	TERMINAL
		9S0173	1	CIRCUIT BREAKER (60A)
	6	6V8378	2	NUT
		8F1434	2	LOCKWASHRE
	7	4B1223	2	SCREW
C	8	9W1077	1	START SWITCH ASSEM. (SEE SEPARATE ILLUSTRATION)
		1W8914	1	AMMETER (60A)
C	9	6V3507	1	SEAL
	10	1S9593	3	STRAP
		4K5122	3	FUSE HOLDER ASSEM.
	11	7N2867	1	CAP
		6T8115	1	NUT
	12	8M8948	2	FUSE (15A)
	13	2S6024	1	FUSE (5A)
	14	4D7794	1	CLIP
	15	S0509	2	BOLT
C	16	5P1075	2	WASHER
	17	9G6120	1	HARNESS ASSEM. (SEE SEPARATE ILLUSTRATION)
	18	2M0287	2	CLIP
	19	S1624	2	BOLT
C		5P8247	2	WASHER
	20	1H5166	1	CLIP

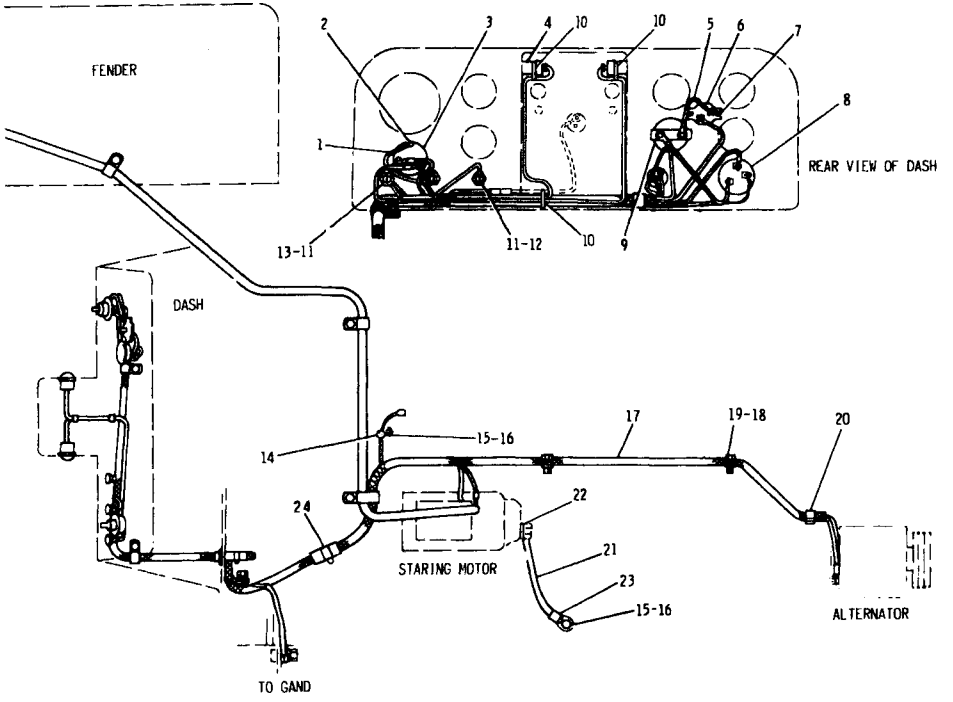

	21	3S8624	1	CABLE ASSEM.
C	22	1S7251	1	TERMINAL
	23	2M0913	1	TERMINAL
	24	3T3393	2	CLAMP

C INDICATES CHANGE

J32867E

MEMO

BATTERY AND WIRING (9G6035 N/S) – Wiring Diagram

Effective with Serial No. 6HC1 – UP

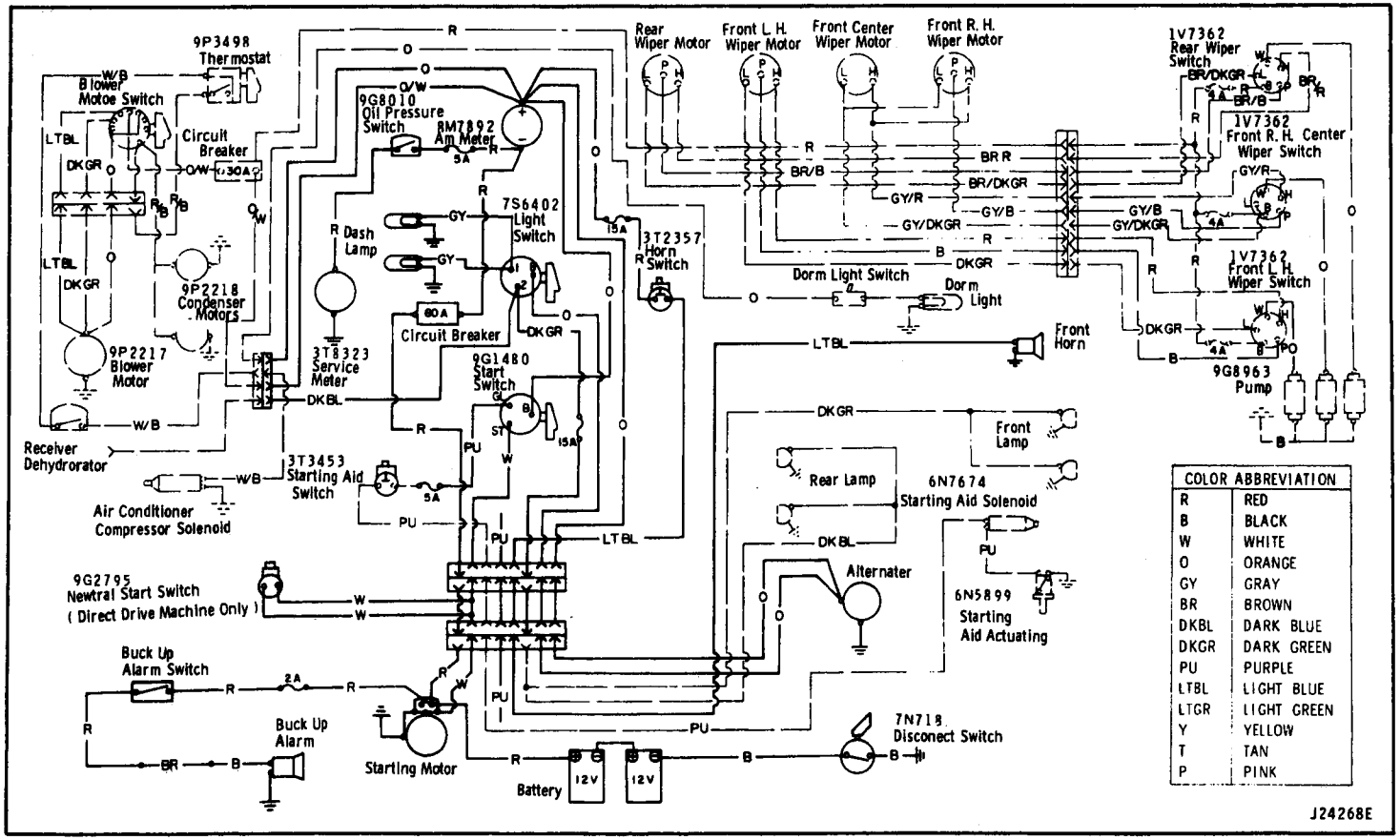

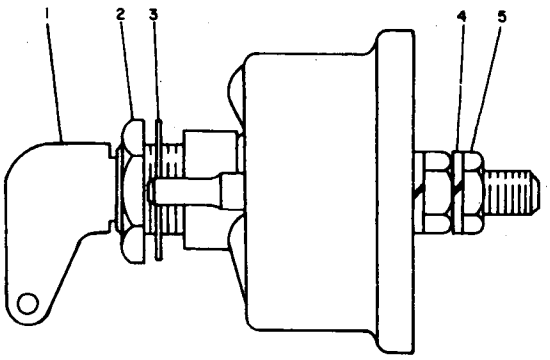

NO.	PART NO. 部品番号	QTY. 数量	DESCRIPTION 名称および記事
1	8H5306	1	KEY
2	8H5303	1	NUT
3	2H3922	1	LOCKWASHER
4	9F5644	2	LOCKWASHER
5	6F7045	2	NUT

J30139E

7N718 DISCONNECT SWITCH ASSEMBLY

Effective with Serial No. 6HC1 – UP

Part of Battery & Wiring

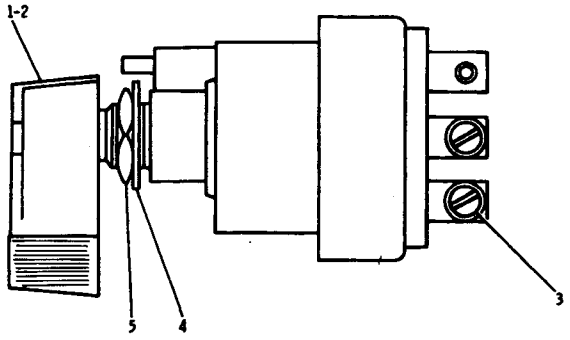

NO.	PART NO. 部品番号	DESCRIPTION 名称および記事	QTY. 数量
1	8F3437	LEVER	1
2	5L7200	SCREW	1
	3B4501	LOCKWASHER	1

3	9F9327	SCREW	3
	9F8125	LOCKWASHER	3
4	6F253	LOCKWASHER	1
5	7H27	NUT	1

J18852E

9G1480 STARTER SWITCH ASSEMBLY

Effective with Serial No. 6HC1 – UP

Part of Battery & Wiring

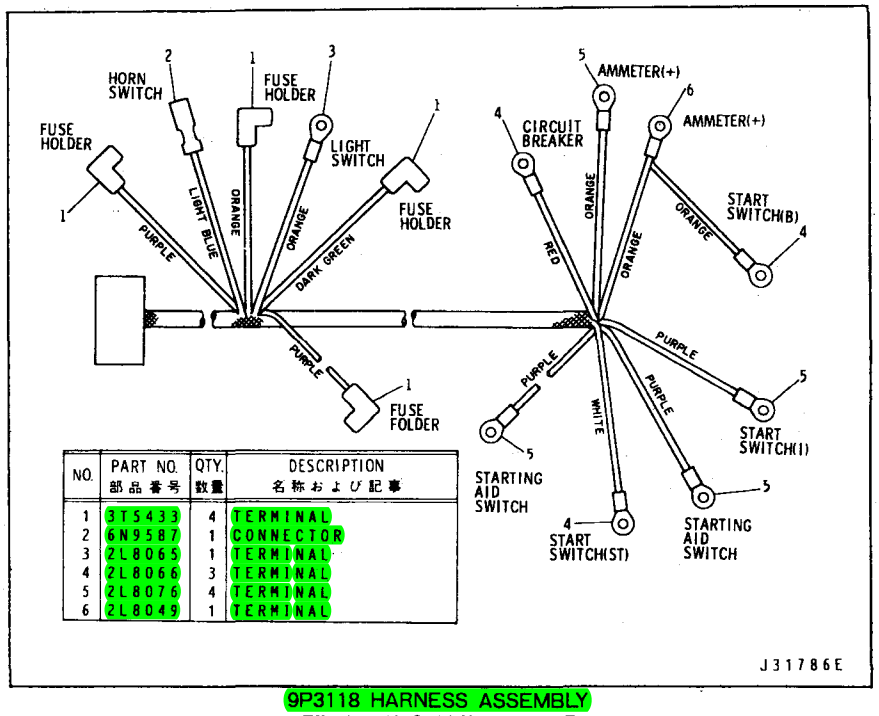

NO.	PART NO. 部品番号	QTY. 数量	DESCRIPTION 名称および記事
1	3T5433	4	TERMINAL
2	6N9587	1	CONNECTOR
3	2L8065	1	TERMINAL
4	2L8066	3	TERMINAL
5	2L8076	4	TERMINAL
6	2L8049	1	TERMINAL

9P3118 HARNESS ASSEMBLY

Effective with Serial No. 6HC1—UP

Part of Battery & Wiring

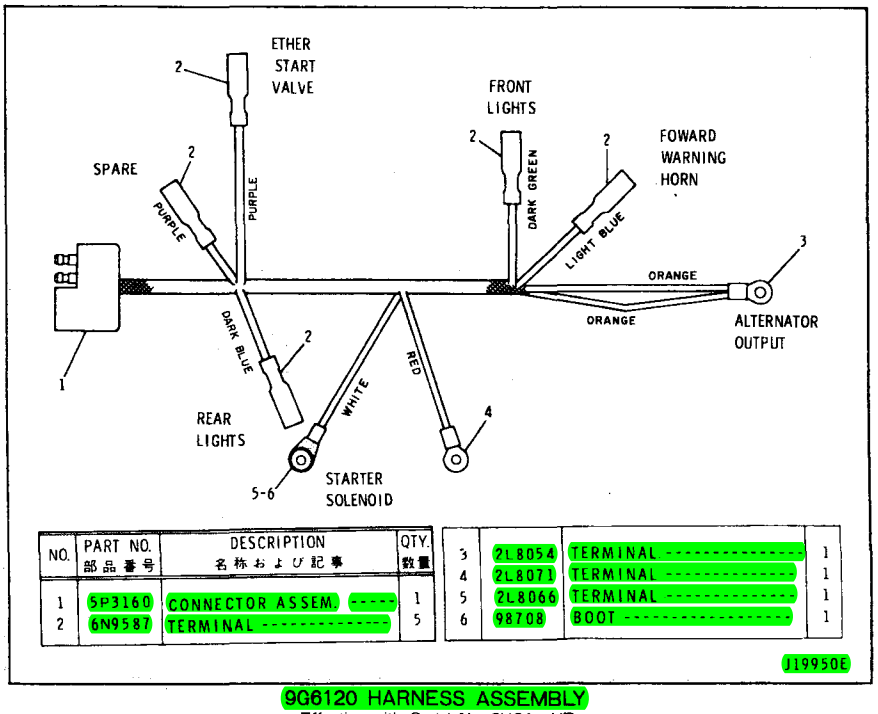

NO.	PART NO. 部品番号	DESCRIPTION 名称および記事	QTY. 数量
1	5P3160	CONNECTOR ASSEM.	1
2	6N9587	TERMINAL	5
3	2L8054	TERMINAL	1
4	2L8071	TERMINAL	1
5	2L8066	TERMINAL	1
6	98708	BOOT	1

9G6120 HARNESS ASSEMBLY

Effective with Serial No. 6HC1—UP

Part of Battery & Wiring

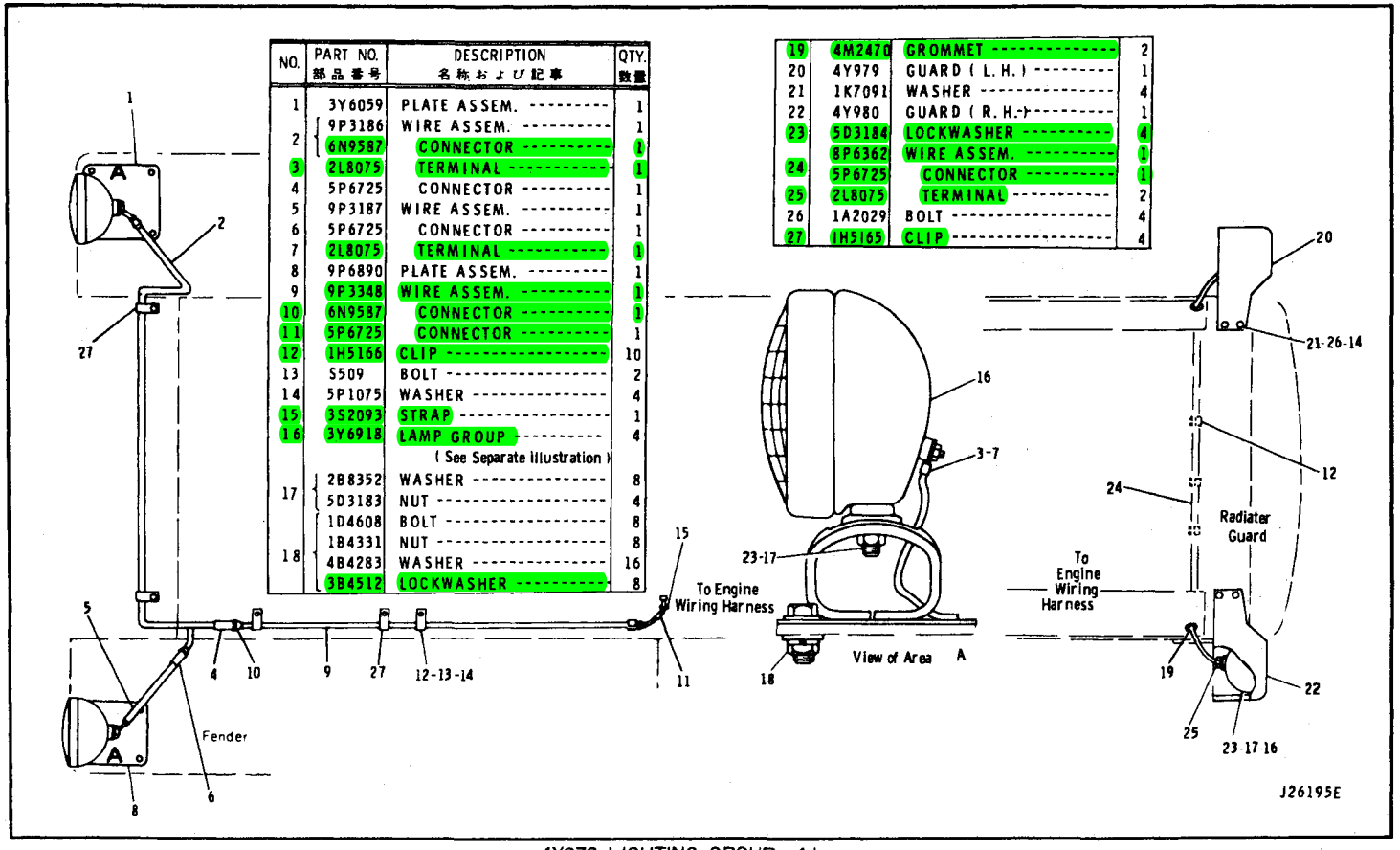

NO.	PART NO. 部品番号	DESCRIPTION 名称および記事	QTY. 数量
1	3Y6059	PLATE ASSEM.	1
2	9P3186	WIRE ASSEM.	1
	6N9587	CONNECTOR	1
3	2L8075	TERMINAL	1
4	5P6725	CONNECTOR	1
5	9P3187	WIRE ASSEM.	1
6	5P6725	CONNECTOR	1
7	2L8075	TERMINAL	1
8	9P6890	PLATE ASSEM.	1
9	9P3348	WIRE ASSEM.	1
10	6N9587	CONNECTOR	1
11	5P6725	CONNECTOR	1
12	1H5166	CLIP	10
13	S509	BOLT	2
14	5P1075	WASHER	4
15	3S2093	STRAP	1
16	3Y6918	LAMP GROUP	4
		(See Separate Illustration)	
17	2B8352	WASHER	8
	5D3183	NUT	4
	1D4608	BOLT	8
18	1B4331	NUT	8
	4B4283	WASHER	16
	3B4512	LOCKWASHER	8

19	4M2470	GROMMET	2
20	4Y979	GUARD (L. H.)	1
21	1K7091	WASHER	4
22	4Y980	GUARD (R. H.)	1
23	5D3184	LOCKWASHER	4
	8P6362	WIRE ASSEM.	1
24	5P6725	CONNECTOR	1
25	2L8075	TERMINAL	2
26	1A2029	BOLT	4
27	1H5165	CLIP	4

4Y978 LIGHTING GROUP—4 Lamp

Flood Lamp parts are shown on Page 89

AN ATTACHMENT

LIGHTING (4Y994 N/S)–4 Lamp

Flood Lamp parts are shown on Page 89

For use with Enclosed R.O.P.S.

AN ATTACHMENT

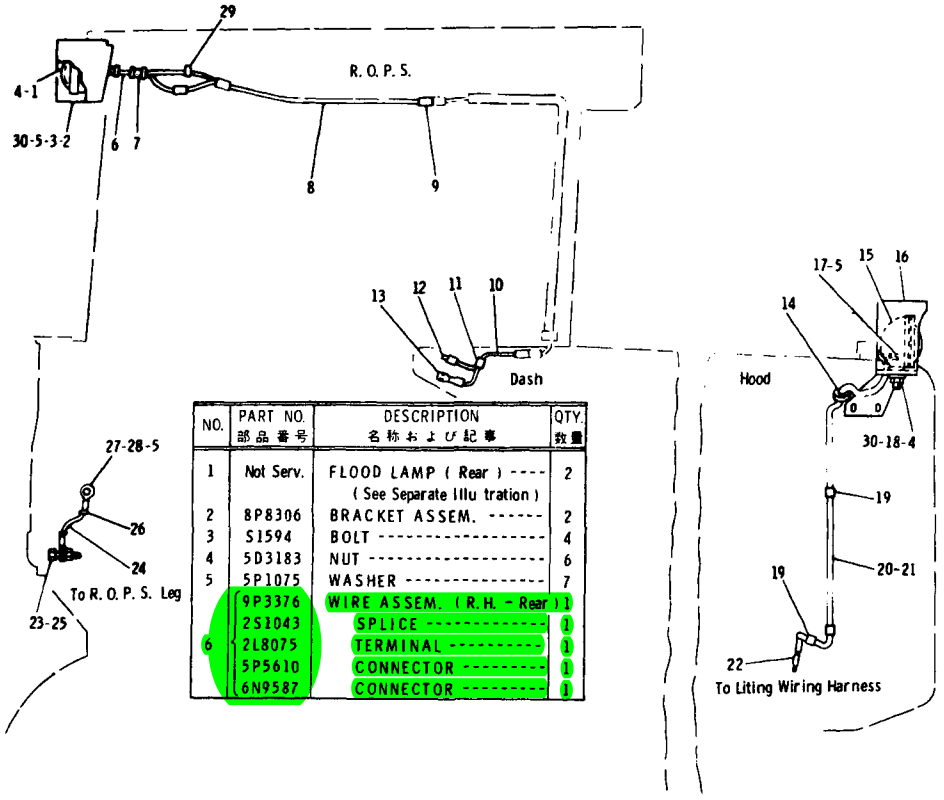

NO.	PART NO. 部品番号	DESCRIPTION 名称および記事	QTY. 数量
1	Not Serv.	FLOOD LAMP (Rear) ---- (See Separate Illu tration)	2
2	8P8306	BRACKET ASSEM. ------	2
3	S1594	BOLT ----------	4
4	5D3183	NUT ----------	6
5	5P1075	WASHER ----------	7
6	9P3376	WIRE ASSEM. (R.H. - Rear)	1
	2S1043	SPLICE ----------	1
	2L8075	TERMINAL ----------	1
	5P5610	CONNECTOR ---------	1
	6N9587	CONNECTOR ---------	1
7	5P7856	GROMMET ----------	4
8	9P3375	WIRE ASSEM. (L.H. - Rear)	1
	2L8075	TERMINAL ----------	1
9	5P5610	CONNECTOR ---------	1
10	9P3374	WIRE ASSEM. ----------	1
	5P5610	CONNECTOR ---------	1
11	2S1043	SPLICE ----------	1
12	4S1988	TERMINAL ----------	1
13	5P4571	TERMINAL ----------	1
14	4M7470	GROMMET ----------	2
15	Not Serv.	FLOOD LAMP (Front) ---- (See Separate Illustration)	2
16	4Y980	GUARD (L. H.) ---------	1
	4Y979	GUARD (R. H.) ---------	1
17	1A2029	BOLT ----------	4
	1K7091	WASHER ----------	4
18	2B8352	WASHER ----------	4
19	1H5166	CLIP ----------	8
20	8P6362	WIRE ASSEM. ----------	1
21	2L8075	TERMINAL ----------	2
22	5P5610	CONNECTOR -------	1
23	S1595	BOLT ----------	1
	1D4719	NUT ----------	1
	4B4280	WASHER ----------	1
24	9P2696	WIRE ASSEM. ----------	1
25	2L8081	TERMINAL ----------	1
26	3S2093	STRAP ----------	2
27	2L8079	TERMINAL ----------	1
28	T102	BOLT ----------	1
29	3S2093	STRAP ----------	1
30	5D3184	LOCKWASHER ----------	4

J26549E

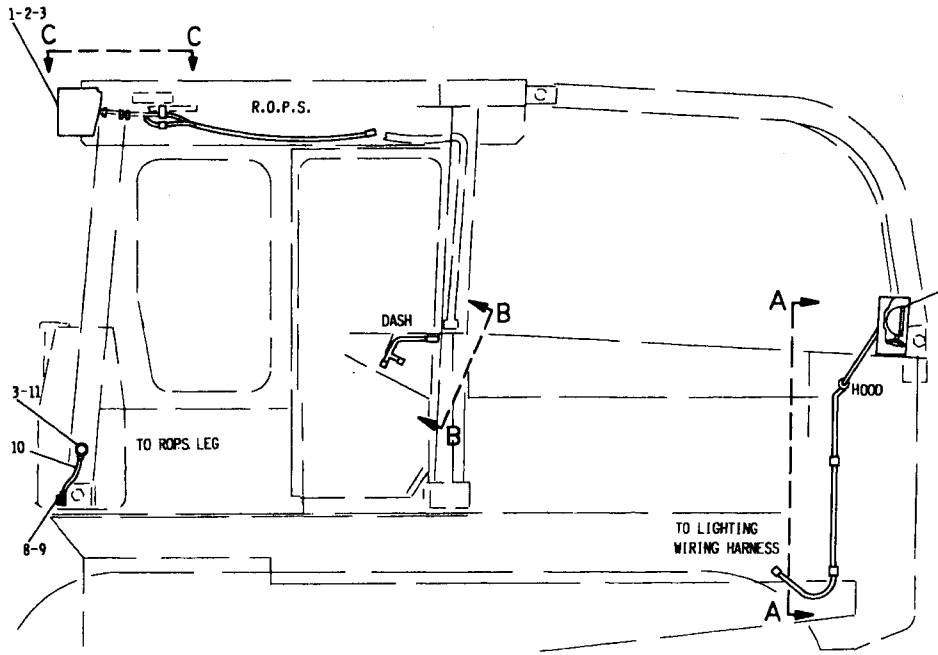

NO.	PART NO. 部品番号	QTY. 数量	DESCRIPTION 名称および記事
1	8P8306	2	BRACKET ASSEM.
2	S1594	4	BOLT
3	5P1075	5	WASHER
4	3B4510	2	LOCKWASHER
5	3Y6918	2	FLOOD LAMP GROUP (FRONT) (SEE SEPARATE ILLUSTRATION)
6	2B8352	4	WASHER
7	1B4206	2	NUT
8	S1595	1	BOLT
	1D4719	1	NUT
9	4B4280	1	WASHER
	9P2696	1	WIRE ASSEM.
10	2L8079	1	TERMINAL ASSEM.
	3S2093	2	STRAP
	2L8081	1	TERMINAL
11	T0102	1	BOLT

LIGHTING (9P3696 N/S)－4 Lamp－Part 1 of 2

Flood Lamp parts are shown on Page 89

For use with Enclosed R.O.P.S.

AN ATTACHMENT

LIGHTING (9P3696 N/S)—4 Lamp—Part 2 of 2

Flood Lamp parts are shown on Page 89

For use with Enclosed R.O.P.S.

AN ATTACHMENT

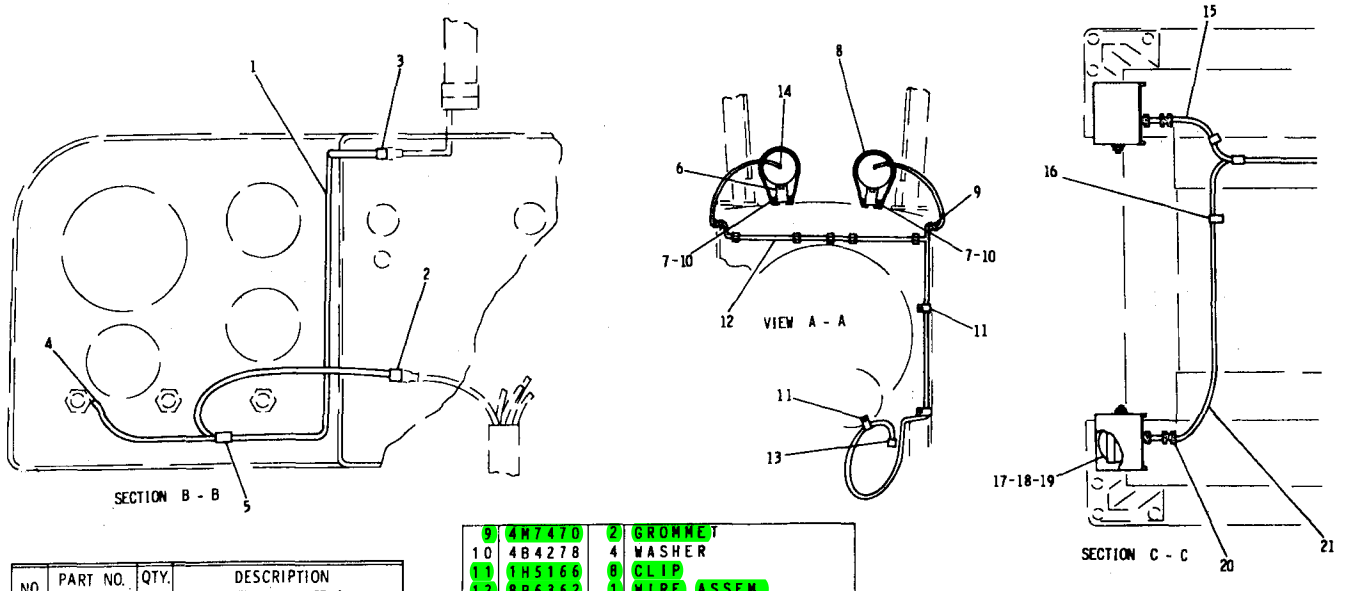

NO.	PART NO. 部品番号	QTY. 数量	DESCRIPTION 名称および記事
1	9P3374	1	WIRE ASSEM.
2	4S1988	1	TERMINAL
3	5P6725	1	CONNECTOR ASSEM.
4	5P4571	1	TERMINAL
5	2S1043	1	SPLICE
6	1S1888	2	BRACKET
7	1S1591	8	BOLT
	5P1075	8	WASHER
8	3M5983	2	GUARD
9	4M7470	2	GROMMET
10	4B4278	4	WASHER
11	1H5166	8	CLIP
12	8P6362	1	WIRE ASSEM.
13	5P6725	1	CONNECTOR ASSEM.
14	2L8075	2	TERMINAL
	9P3375	1	WIRE ASSEM. (L.H.-REAR)
15	5P6725	1	CONNECTOR ASSEM.
	2L8075	1	TERMINAL
16	3S2093	1	STRAP
17	1B4206	4	NUT
18	3B4510	2	LOCKWASHER
19	3Y6919	2	FLOOD LAMP GROUP (REAR) (SEE SEPARATE ILLUSTRATION)
20	5P7856	4	GROMMET
	9P3376	1	WIRE ASSEM. (R.H.-REAR)
21	5P6725	1	CONNECTOR ASSEM.
	2L8075	1	TERMINAL
	2S1043	1	SPLICE

J32289E

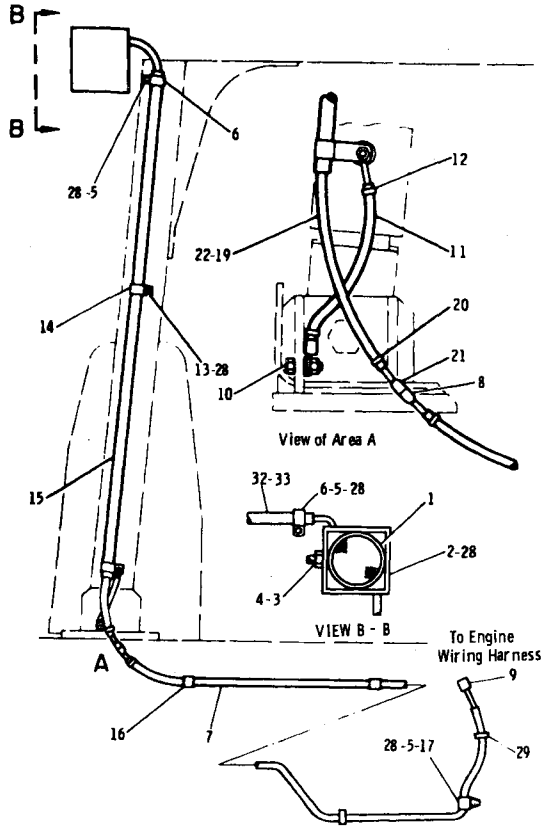

NO.	PART NO. 部品番号	DESCRIPTION 名称および記事	QTY. 数量
1	Not Serv.	FLOOD LAMP (Rear) ----	2
		(See Separate Illustration)	
2	8P8306	BRACKET ASSEM. ------	2
	S1594	BOLT ----------	4
3	5D3183	NUT ----------	6
4	5D3184	WASHER ----------	4
5	S509	BOLT ----------	5
6	1S2487	CLIP ----------	3
7	9P3348	WIRE ASSEM. ----------	1
8	6N9587	CONNECTOR ---------	2
9	5P5610	CONNECTOR ASSEM. -	1
10	S1595	BOLT ----------	1
	4B4280	WASHER ----------	1
	1D4719	NUT ----------	1
11	9P2696	WIRE ASSEM. ----------	1
	2L8079	TERMINAL ----------	1
	2L8081	TERMINAL ----------	1
12	3S2093	STRAP ----------	2
13	T102	BOLT ----------	2
14	4S5718	CLIP ----------	2
15	9P3351	TUBE ----------	1
16	1H5165	CLIP ----------	2
17	1H5166	CLIP ----------	10
18	1A2029	BOLT ----------	4
	1K7091	WASHER ----------	4
19	8P6433	WIRE ASSEM. ----------	1
	2S1043	SPLICE ----------	1
	2L8075	TERMINAL ----------	1
20	3S2093	STRAP ----------	4
21	5P5610	CONNECTOR ---------	1
22	6N9587	CONNECTOR ---------	1
23	4M7470	GROMMET ----------	2
24	2B8352	WASHER ----------	4
25	8P6362	WIRE ASSEM. ----------	1
	5P5610	CONNECTOR ---------	1
26	2L8075	TERMINAL ----------	2
27	4Y979	GUARD (R. H.) ---------	1
28	5P1075	LOCKWASHER ----------	13
29	3S2093	STRAP ----------	1
30	Not Serv.	FLOOD LAMP (Front) ----	2
		(See Separate Illustration)	
31	4Y980	GUARD (L. H.) ---------	1
32	9P4730	TUBE ----------	1
33	8P6432	WIRE ASSEM. ----------	1
	2L8075	TERMINAL ----------	1
	5P5610	CONNECTOR ---------	1

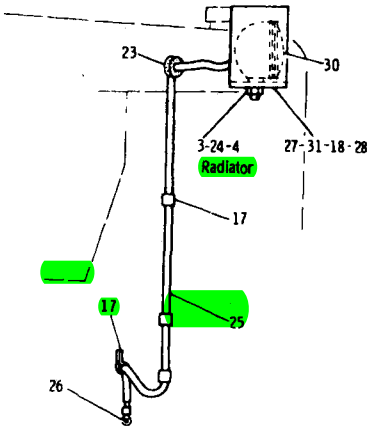

LIGHTING (4Y993 N/S)–4 Lamp

Flood Lamp parts are shown on Page 89

For use with Open R.O.P.S.

AN ATTACHMENT

LIGHTING (4Y1616 N/S)−4 Lamp

Flood Lamp (3Y6918 N/S) parts are shown on Page 89

AN ATTACHMENT

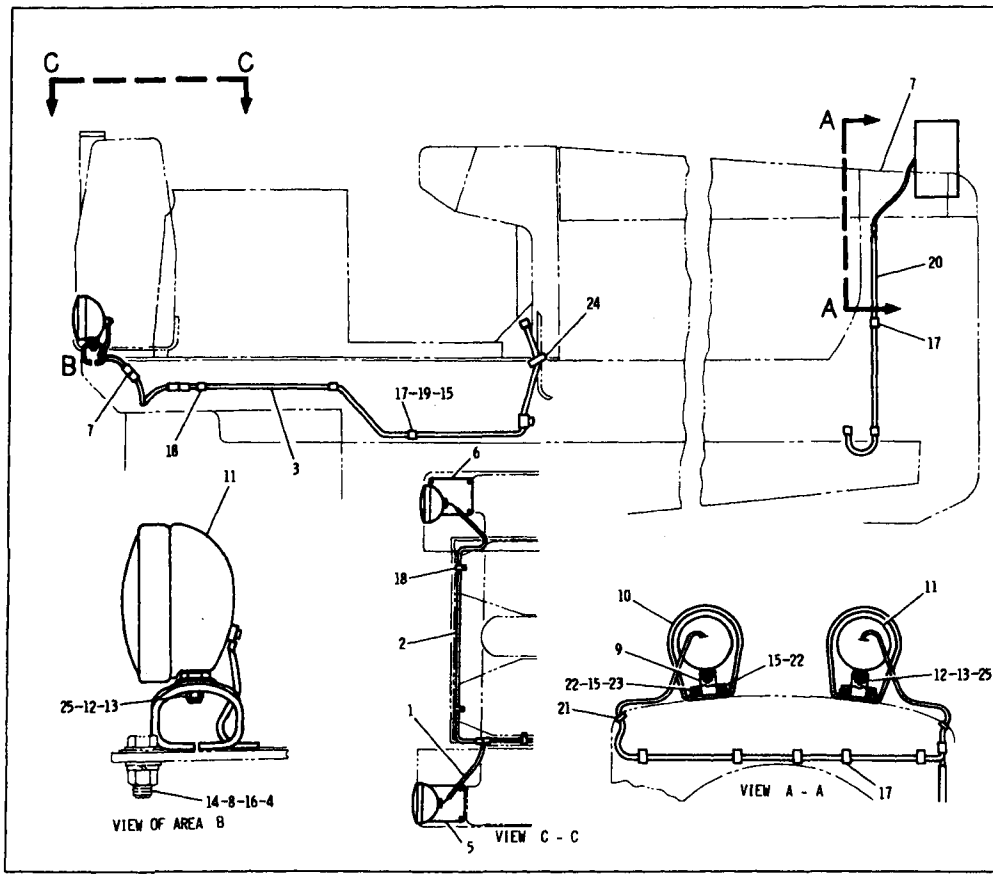

NO.	PART NO. 部品番号	QTY. 数量	DESCRIPTION 名称および記事
	9P3187	1	WIRE ASSEM.
1	5P6725	1	CONNECTOR ASSEM.
	2L8075	1	TERMINAL
	9P3186	1	WIRE ASSEM.
2	6N9587	1	TERMINAL
	2L8075	1	TERMINAL
	9P3348	1	WIRE ASSEM.
3	6N9587	1	TERMINAL
	5P6725	1	CONNECTOR ASSEM.
4	3B4512	8	LOCKWASHER
5	9P6890	1	PLATE ASSEM.
6	3Y6059	1	PLATE ASSEM.
7	4Y1876	1	COVER ASSEM.
8	4B4283	16	WASHER
9	1S1888	2	BRACKET
10	3M5983	2	GUARD
11	3Y6918	4	FLOOD LAMP GROUP (SEE SEPARATE ILLUSTRATION)
12	2B8352	8	WASHER
13	5D3183	4	NUT
14	1A0458	8	BOLT
15	5P1075	10	WASHER
16	1B4331	8	NUT
17	1H5166	10	CLIP
18	1H5165	4	CLIP
19	S0509	2	BOLT
	8P6362	1	WIRE ASSEM.
20	2L8075	2	TERMINAL
	5P6725	1	CONNECTOR ASSEM.
21	4M7470	2	GROMMET
22	S1591	8	BOLT
23	4B4278	4	WASHER
24	3S2093	1	STRAP
25	5D3184	4	WASHER

J34820E

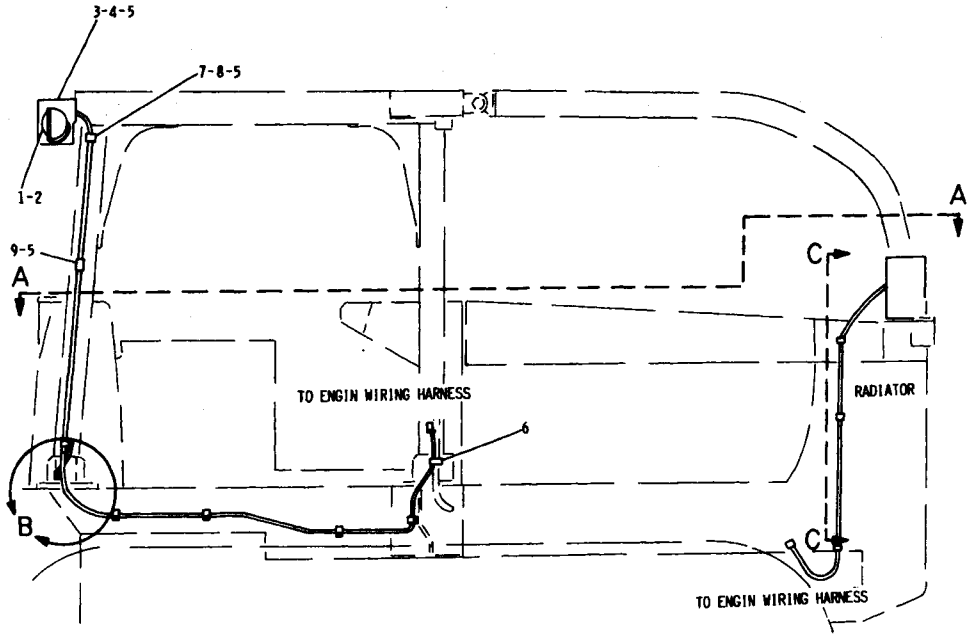

NO.	PART NO. 部品番号	QTY. 数量	DESCRIPTION 名称および記事
1	2K4821	2	LOCKNUT
2	3Y6919	2	FLOOD LAMP GROUP (SEE SEPARATE ILLUSTRATION)
3	S1594	4	BOLT
4	8P8306	2	BRACKET ASSEM.
5	5P1075	9	WASHER
6	3S2093	1	STRAP
7	9P4730	1	TUBE
	8P6432	1	WIRE ASSEM.(TO L.H.REAR LAMP)
	2L8075	1	TERMINAL
	5P6725	1	CONNECTOR ASSEM.
8	1S2487	3	CLIP
	S0509	3	BOLT
9	4S5718	2	CLIP
	T0102	2	BOLT

J32287E

LIGHTING (9P2068 N/S)-4 Lamp-Part 1 of 2

Flood Lamp parts are shown on Page 89

For use with Open R.O.P.S.

AN ATTACHMENT

LIGHTING (9P2068 N/S)−4 Lamp−Part 2 of 2

Flood Lamp parts are shown on Page 89

For use with Open R.O.P.S.

AN ATTACHMENT

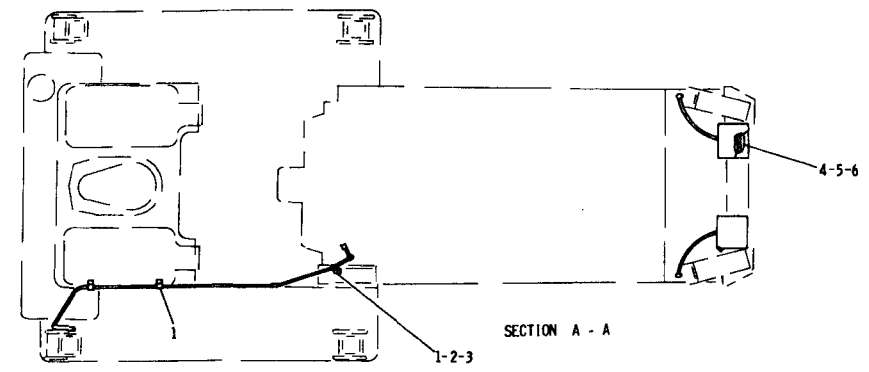

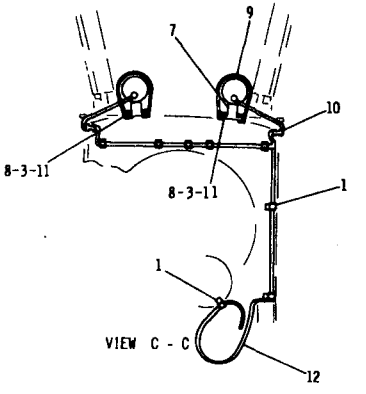

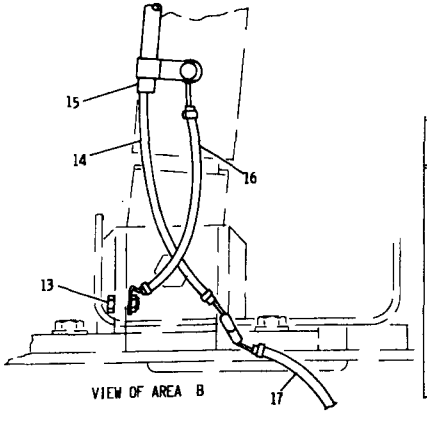

NO.	PART NO. 部品番号	QTY. 数量	DESCRIPTION 名称および記事
1	1H5166	11	CLIP
2	S0509	1	BOLT
3	5P1075	9	WASHER
4	3Y6918	2	FLOOD LAMP GROUP (SEE SEPARATE ILLUSTRATION)
5	2B8352	4	WASHER
6	2K4821	2	LOCKNUT
7	1S1888	2	BRACKET
8	S1591	8	BOLT
9	3M5983	2	GUARD
10	4M7470	2	GROMMET
11	4B4278	4	WASHER

12	8P6362	1	WIRE ASSEM.
	2L8075	2	TERMINAL
	5P6725	1	CONNECTOR ASSEM.
13	1D4719	1	NUT
	4B4280	1	WASHER
	S1595	1	BOLT
14	8P6433	1	WIRE ASSEM.
	2L8075	1	TERMINAL
	3S2093	4	STRAP
	5P6725	1	CONNECTOR ASSEM.
	6N9587	1	CONNECTOR
	2S1043	1	SPLICE
15	9P3351	1	TUBE
16	9P2696	1	WIRE ASSEM.
	2L8079	1	TERMINAL ASSEM.
	2L8081	1	TERMINAL
	3S2093	2	STRAP
17	9P3348	1	WIRE ASSEM.
	6N9587	1	CONNECTOR
	5P6725	1	CONNECTOR ASSEM.

J32288E

MEMO

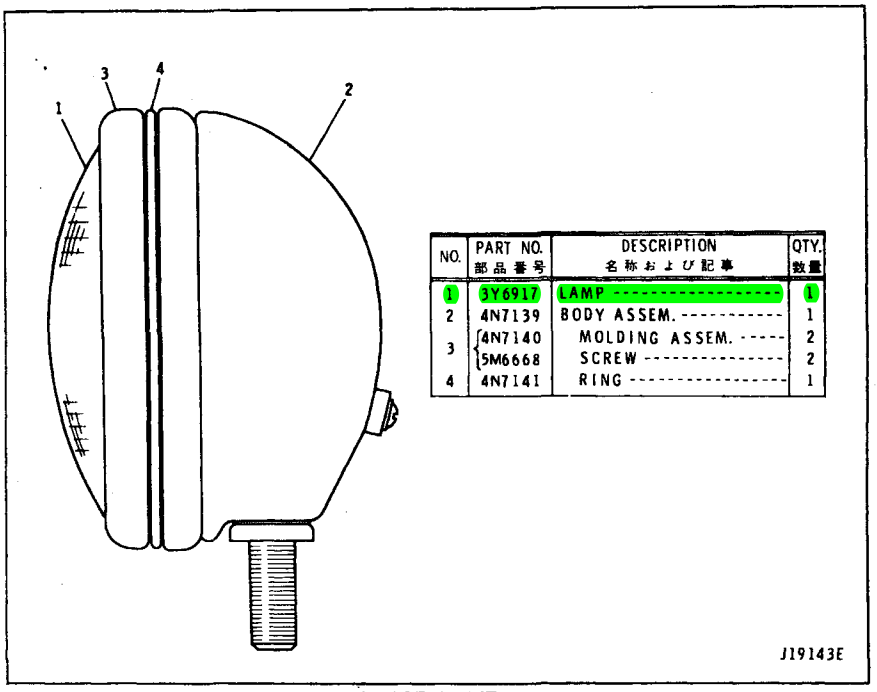

NO.	PART NO. 部品番号	DESCRIPTION 名称および記事	QTY. 数量
1	3Y6917	LAMP	1
2	4N7139	BODY ASSEM.	1
3	4N7140	MOLDING ASSEM.	2
	5M6668	SCREW	2
4	4N7141	RING	1

FLOOD LAMP
Part of Lighting
AN ATTACHMENT

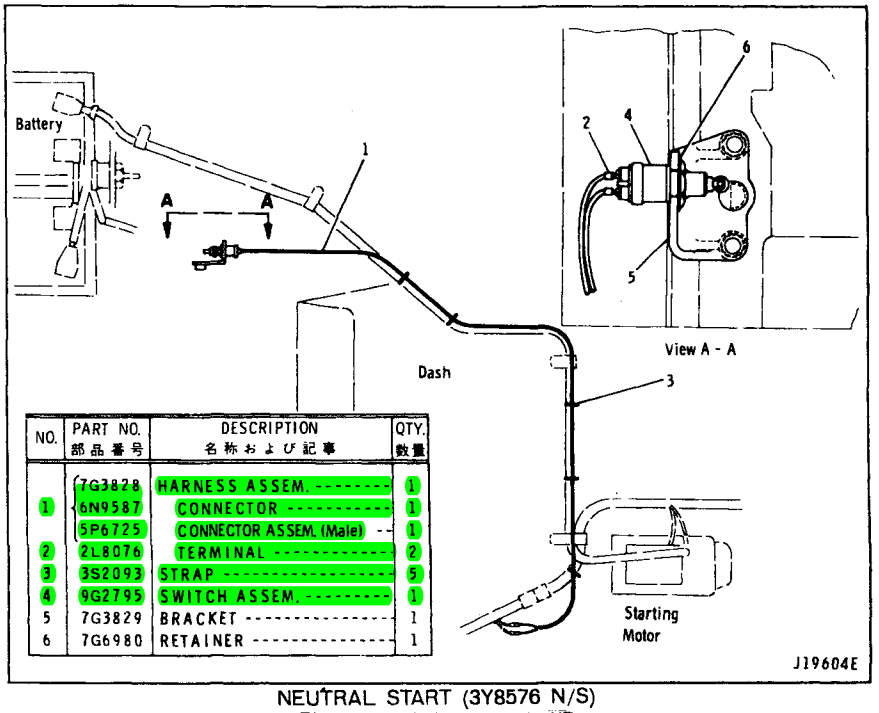

NO.	PART NO. 部品番号	DESCRIPTION 名称および記事	QTY. 数量
1	7G3828	HARNESS ASSEM.	1
	6N9587	CONNECTOR	1
	5P6725	CONNECTOR ASSEM. (Male)	1
2	2L8076	TERMINAL	2
3	3S2093	STRAP	5
4	9G2795	SWITCH ASSEM.	1
5	7G3829	BRACKET	1
6	7G6980	RETAINER	1

NEUTRAL START (3Y8576 N/S)
Effective with Serial No. 6HC1—UP

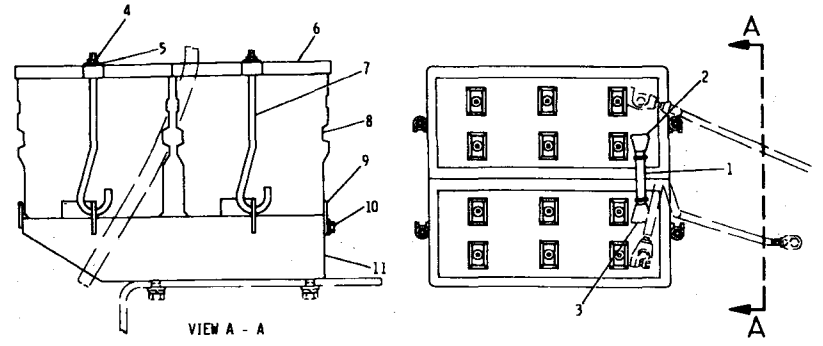

NO.	PART NO. 部品番号	QTY. 数量	DESCRIPTION 名称および記事
1	3Y9045	1	CABLE ASSEM.
2	3S6050	1	TERMINAL ASSEM. (-)
	1M6119	1	BOLT
	1M6120	1	NUT
	7N5274	1	COVER (BLACK)
3	3S6049	1	TERMINAL ASSEM. (+)
	1M6119	1	BOLT
	1M6120	1	NUT
	8N1725	1	COVER (RED)
4	4J8265	4	NUT
5	3K925	4	SPACER
6	8P1222	2	HOLD DOWN ASSEM.
7	8P9728	4	BOLT
8	9G4232	2	BATTERY (172AH-12V)
	7N60	6	VENT ASSEM.
9	9P126	1	PLATE
10	S1594	2	BOLT
	5M2894	2	WASHER
11	8P1218	1	SUPPORT ASSEM.
	1F748	4	NUT (WELD)
	9F2978	8	NUT (WELD)

J30976E

LOW TEMPERATURE STARTING (3Y9881 N/S)
AN ATTACHMENT

ETHER STARTING AID (9G4706 N/S)
AN ATTACHMENT

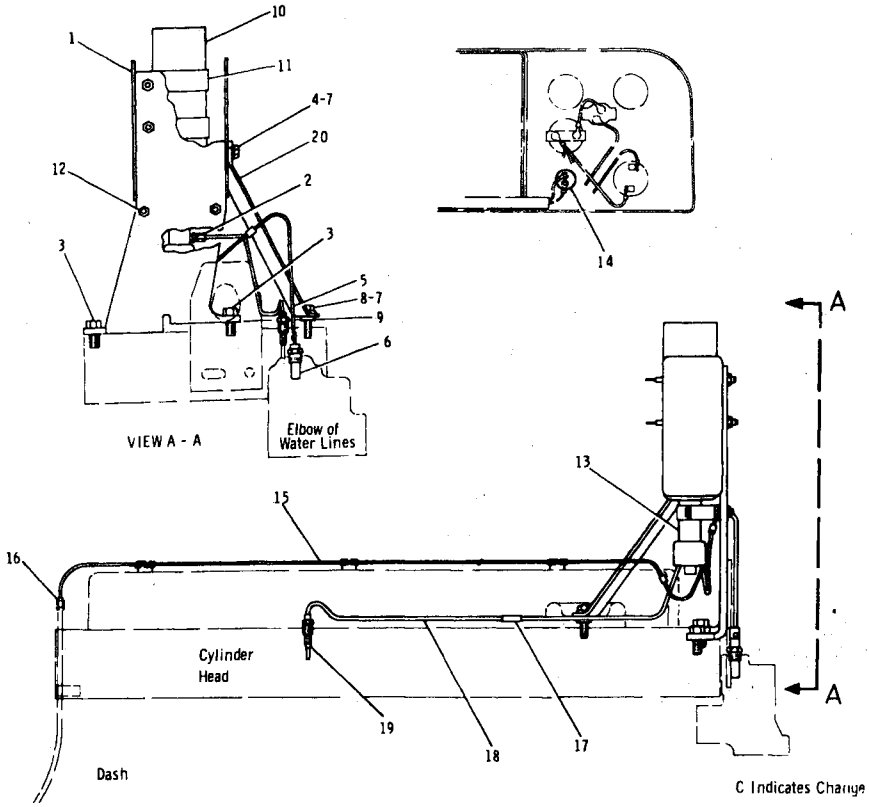

	NO.	PART NO. 部品番号	DESCRIPTION 名称および記事	QTY. 数量
	1	3T157	SUPPORT ASSEM	1
		7D8627	LUG	1
	2	5P7907	CONNECTOR	1
		5P6313	NUT	1
		5P6314	SLEEVE	1
	3	6H1717	BOLT	2
	4	S1594	BOLT	1
	5	9G3005	WIRE ASSEM.	1
		6N9587	CONNECTOR	1
		2L8075	TERMINAL	1
	6	6N5899	SWITCH (Temp.)	1
	7	5M2894	WASHER	2
	8	S1591	BOLT	1
	9	2A4256	SPACER (For D5B Tractor Only)	1
	10	9G8211	CYLINDER ASSEM. (Ether)	1
C	11	7N2059	CLAMP ASSEM.	2
C		S1618	BOLT	6
C	12	5P4116	WASHER	6
C		1D4716	NUT	6
	13	6N7674	VALVE ASSEM.	1
		5P5610	CONNECTOR	2
C	14	3T3453	SWITCH	1
	15	9G3006	WIRE ASSEM.	1
		6N9587	CONNECTOR	1
	16	5P6725	CONNECTOR ASSEM.	1
	17	2B2404	CLIP	1
		3D5102	GROMMET	1
	18	9P3121	TUBE	1
	19	6N9995	ATOMIZER ASSEM.	1
	20	3T1417	BRACE	1
		XJHS7812	FORM (Japanese)	1
		SMHS7812	FORM (English)	1

C Indicates Change

J23603E

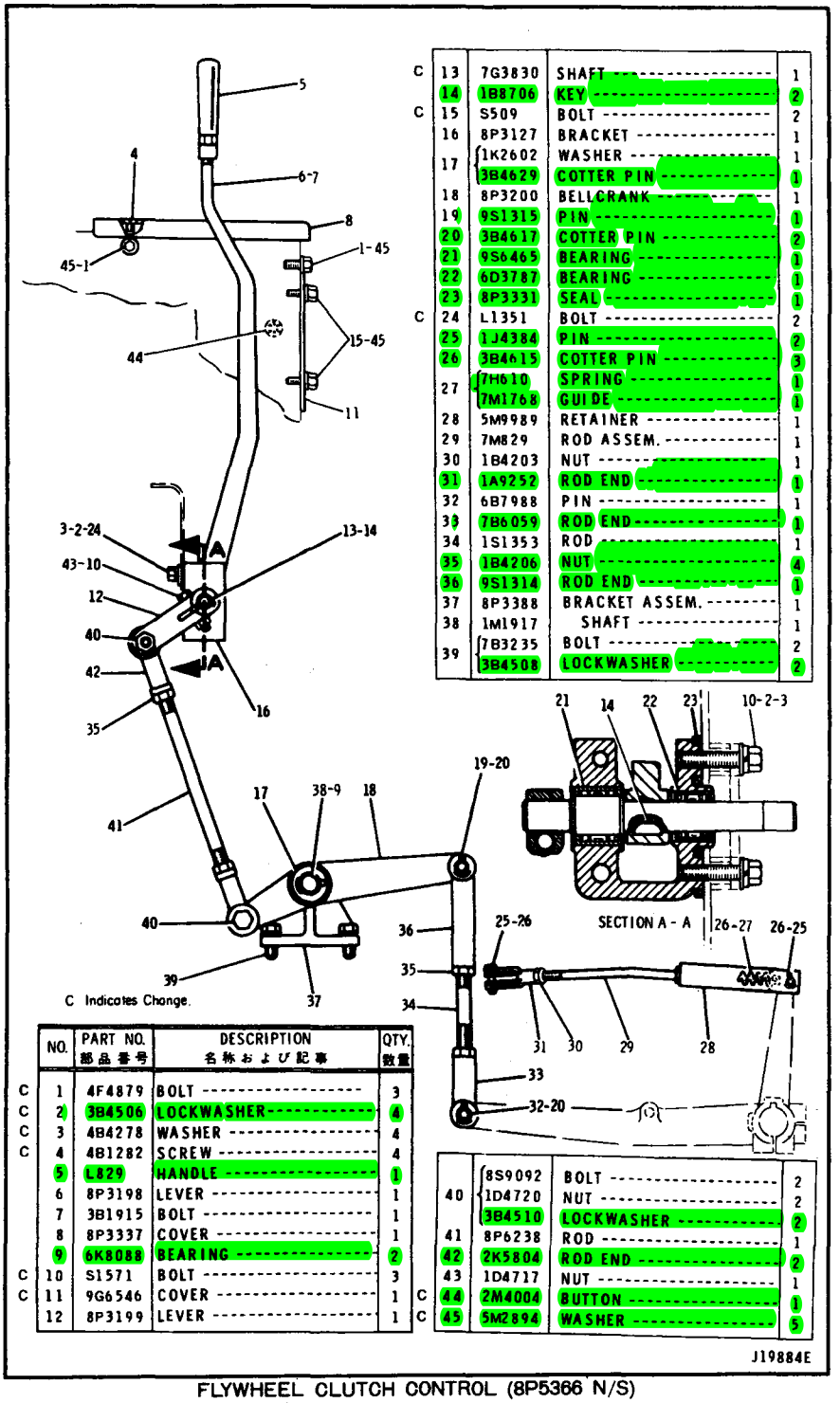

	NO.	PART NO. 部品番号	DESCRIPTION 名称および記事	QTY. 数量
C	1	4F4879	BOLT	3
C	2	3B4506	LOCKWASHER	4
C	3	4B4278	WASHER	4
C	4	4B1282	SCREW	4
	5	L829	HANDLE	1
	6	8P3198	LEVER	1
	7	3B1915	BOLT	1
	8	8P3337	COVER	1
	9	6K8088	BEARING	2
C	10	S1571	BOLT	3
C	11	9G6546	COVER	1
	12	8P3199	LEVER	1
C	13	7G3830	SHAFT	1
	14	1B8706	KEY	2
C	15	S509	BOLT	2
	16	8P3127	BRACKET	1
	17	1K2602	WASHER	1
		3B4629	COTTER PIN	1
	18	8P3200	BELLCRANK	1
	19	9S1315	PIN	1
	20	3B4617	COTTER PIN	2
	21	9S6465	BEARING	1
	22	6D3787	BEARING	1
	23	8P3331	SEAL	1
C	24	L1351	BOLT	2
	25	1J4384	PIN	2
	26	3B4615	COTTER PIN	3
	27	7H610	SPRING	1
		7M1768	GUIDE	1
	28	5M9989	RETAINER	1
	29	7M829	ROD ASSEM.	1
	30	1B4203	NUT	1
	31	1A9252	ROD END	1
	32	6B7988	PIN	1
	33	7B6059	ROD END	1
	34	1S1353	ROD	1
	35	1B4206	NUT	4
	36	9S1314	ROD END	1
	37	8P3388	BRACKET ASSEM.	1
	38	1M1917	SHAFT	1
	39	7B3235	BOLT	2
		3B4508	LOCKWASHER	2
	40	8S9092	BOLT	2
		1D4720	NUT	2
		3B4510	LOCKWASHER	2
	41	8P6238	ROD	1
	42	2K5804	ROD END	2
	43	1D4717	NUT	1
C	44	2M4004	BUTTON	1
C	45	5M2894	WASHER	5

C Indicates Change.

J19884E

FLYWHEEL CLUTCH CONTROL (8P5366 N/S)

Effective with Serial No. 6HC1—UP

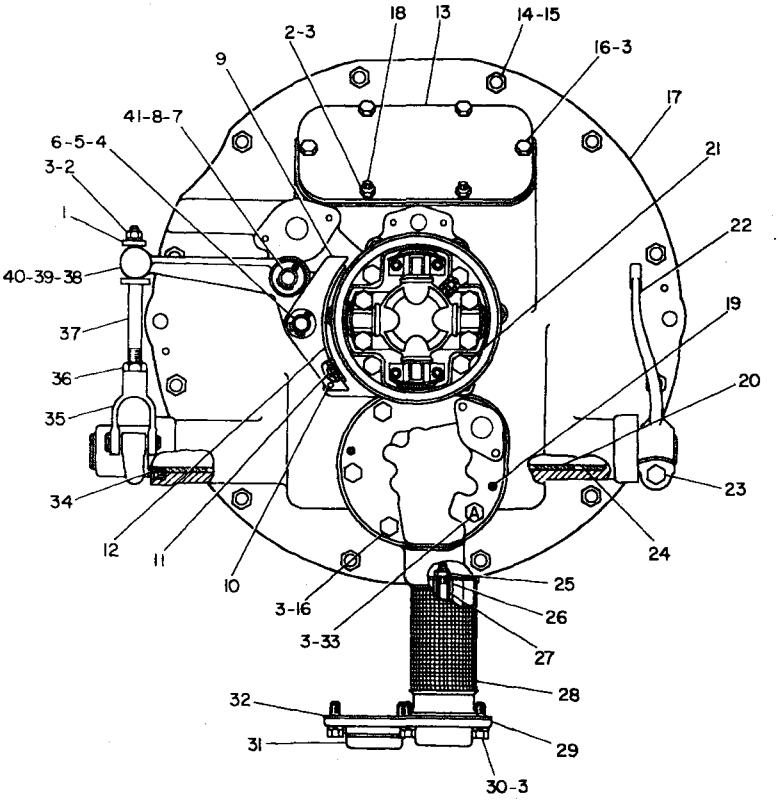

NO.	PART NO. 部品番号	QTY. 数量	DESCRIPTION 名称および記事
1	3P4939	1	WASHER
2	1D4717	3	NUT
3	3B4506	16	LOCKWASHER
4	6B7988	1	PIN
5	3B4617	1	COTTER PIN
6	1F9489	1	WASHER
7	3B4628	1	COTTER PIN
8	1H8933	1	PIN
9	9W472	1	SHOE ASSEM.
10	1H8934	1	PIN
11	6B4284	4	RIVET
12	9W473	1	LINING
13	1H8459	1	COVER
	1H8460	1	GASKET
14	1D4719	12	NUT
15	3B4508	12	LOCKWASHER
16	S1594	7	BOLT
17	5S5712	1	COVER ASSEM.
18	3D2871	2	STUD
19	2A3630	2	PIN
20	5F2636	4	BEARING
21	1T448	4	BOLT
22	5M9974	1	LEVER

23	S1600	1	BOLT
	1B4206	1	NUT
	1P1566	1	SHAFT
24	1B8721	2	KEY
25	2F8616	1	NUT
26	3H1846	1	SPACER
27	7B533	1	STUD
28	4H2978	1	SCREEN ASSEM.
29	5M5071	1	COVER
30	1A2029	5	BOLT
31	8B6599	1	PLUG
	L1124	1	GASKET
32	5M5064	1	GASKET
33	S1588	1	BOLT
34	7B2174	2	SEAL
35	1K6555	1	YOKE
36	1B4430	1	NUT
37	2S1167	1	ROD ASSEM.
38	L1604	1	LOCK
39	1K485	1	WASHER
40	1P1636	1	LEVER ASSEM.
41	4H3662	1	BEARING

J29641E

FLYWHEEL CLUTCH (5M5070 N/S)—Part 1 of 3

Effective with Serial No. 6HC1—UP

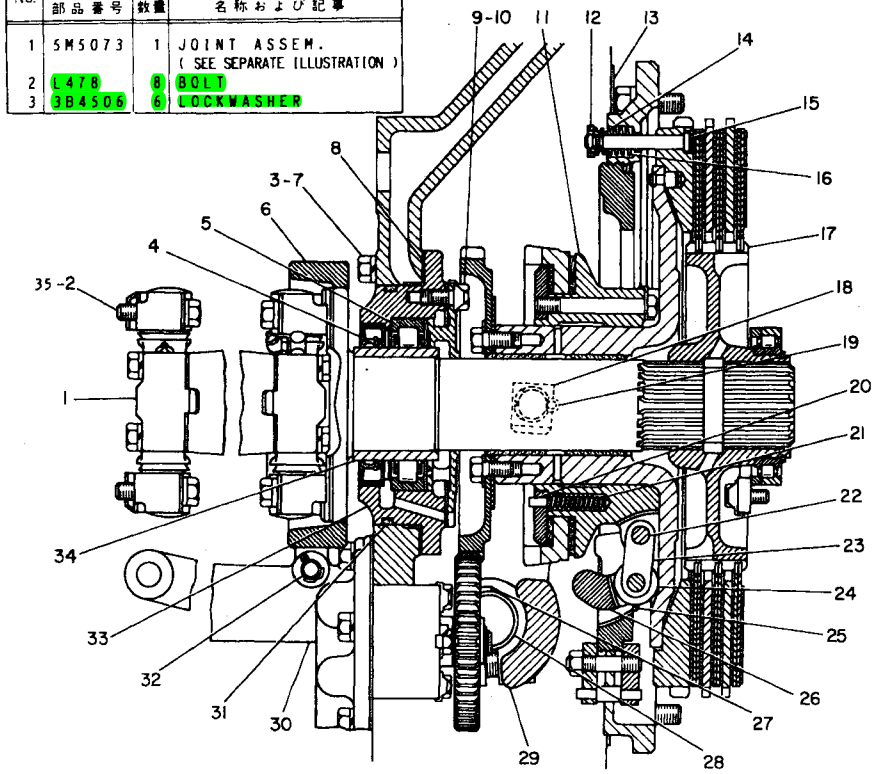

NO.	PART NO. 部品番号	QTY. 数量	DESCRIPTION 名称および記事
1	5M5073	1	JOINT ASSEM. (SEE SEPARATE ILLUSTRATION)
2	L478	8	BOLT
3	3B4506	6	LOCKWASHER
4	8M8110	1	SEAL
5	8B5965	1	RACE & ROLLER ASSEM.
6	1H8937	1	DURM
7	S1571	6	BOLT
8	1P7045	1	GASKET
9	S509	6	BOLT
10	L364	6	LOCK
11	2H4482	1	COLLAR
12	5F4061	4	RETAINER
13	5M6604	1	GASKET
14	2A4429	8	LOCK
15	2H4438	4	STUD
16	2H4406	4	SPRING
17	6P169	1	HUB (64 TEETH)
18	9F7095	2	BLOCK
19	3B4628	2	COTTER PIN
20	3H2646	4	PIN
21	5B3097	4	SPRING
22	2H4498	8	SHAFT
23	2H5048	4	LINK
24	2H5047	8	ROLLER
25	9F7101	8	BUSHING
26	2H5046	4	LINK
27	1B8724	2	KEY
28	1P1567	1	SHAFT
29	1P1570	1	YOKE
	1A1135	2	BOLT
	8M9577	1	LEVER
30	S1601	1	BOLT
	1B4206	1	NUT
31	9M3786	1	SEAL
	1K6543	1	PIN
32	3B4617	1	COTTER PIN
33	1P7044	1	CAGE
34	1H8261	1	RACE
35	3V2431	8	WASHER

J29642E

FLYWHEEL CLUTCH (5M5070 N/S) – Part 2 of 3

Effective with Serial No. 6HC1 – UP

5M5073 Universal Joint parts are shown on Page 96

FLYWHEEL CLUTCH (5M5070 N/S)—Part 3 of 3

Effective with Serial No. 6HC1—UP

9S6590 Oil Pump parts are shown on Page 96

NO.	PART NO. 部品番号	QTY. 数量	DESCRIPTION 名称および記事
1	9M8119	1	RETAINER
2	5509	4	BOLT
3	1H8330	2	LOCK
4	1H8466	1	GASKET

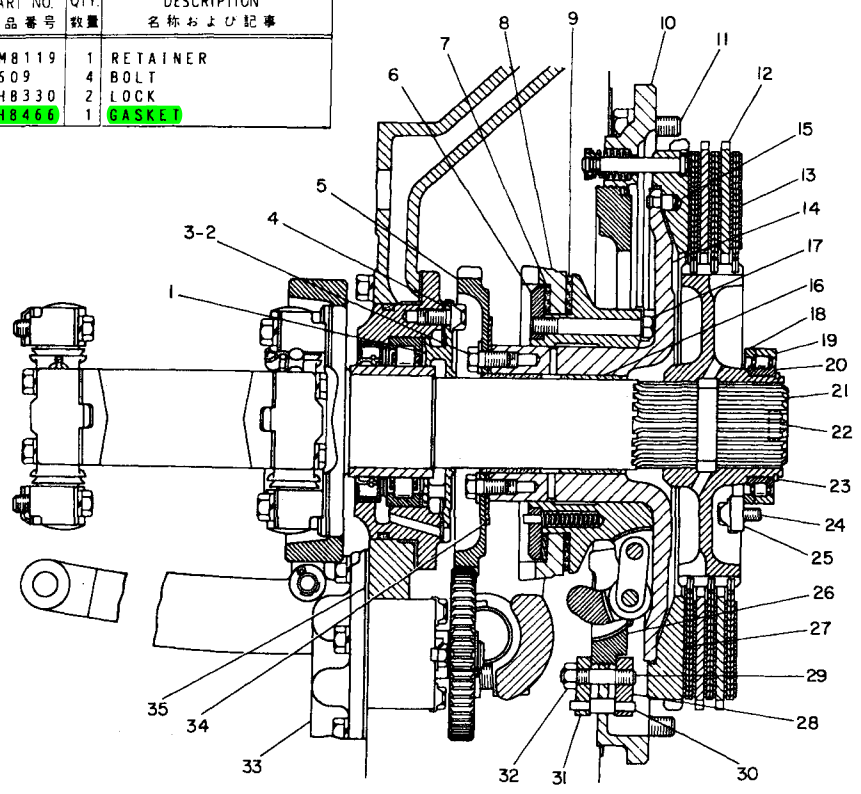

5	1H8382	1	GEAR (46 TEETH)
6	2H4450	1	WASHER
7	8M4000	1	WASHER
8	5H5500	1	COLLAR
9	8M3999	1	WASHER
10	2M2290	1	BRACKET
11	7B3235	8	BOLT
	3B4508	8	LOCKWASHER
12	3P3241	2	PLATE
13	3Y7363	3	DISC ASSEM.
14	4H4021	1	PLATE ASSEM.
15	3Y1823	1	PIN
16	1H8396	2	BUSHING
17	2H5330	4	BOLT
	2H4499	4	LOCK
18	2H3526	1	PLATE
19	2H3525	1	RACE
20	2H3517	1	RACE & ROLLER ASSEM.
21	9M8117	1	SHAFT
22	4F4585	1	PLUG
23	2H3548	1	RING
24	2B2695	3	BOLT
	5H5652	3	LOCK
25	3K7124	3	RETAINER ASSEM.
26	1S8764	1	RING
27	1M9177	1	PLATE
28	3H7347	2	LOCK ASSEM.
29	2F7036	1	STUD
30	2H4385	1	PIN
31	2H4386	2	PLATE
32	1B4203	2	NUT
33	9S6590	1	PUMP GROUP (SEE SEPARATE ILLUSTRATION)
34	3H2645	1	WASHER
35	5S5751	1	GASKET

J29643E

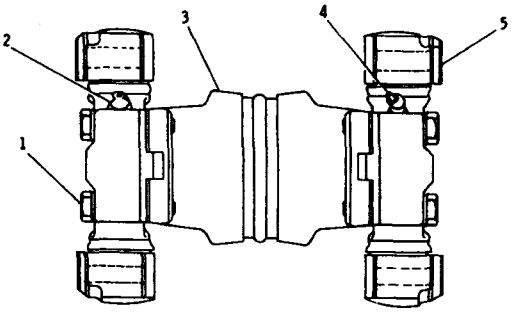

NO.	PART NO. 部品番号	DESCRIPTION 名称および記事	QTY. 数量
1	1L478	BOLT	8
	3V2431	WASHER	8
2	3H122	FITTING	1
3	5M5072	PLATE	1
4	3B8486	FITTING	1
5	1S9670	SPIDER & BEARING ASSEM.	2

J25975E

5M5073 UNIVERSAL JOINT ASSEMBLY
Effective with Serial No. 6HC1–UP
Part of Flywheel Clutch

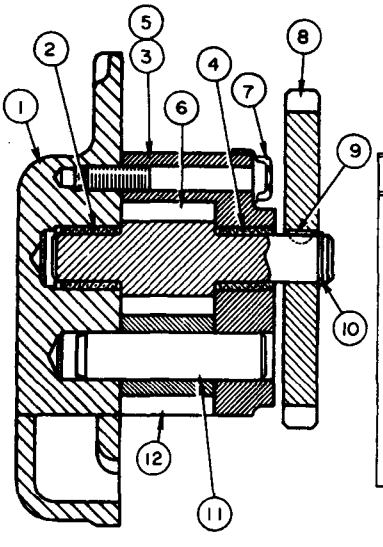

REF. NO.	PART NUMBER	DESCRIPTION	QTY.
1	5S5736	COVER ASSEM.	1
2	1H3136	BEARING	1
3	9S6588	BODY ASSEM.	1
4	9S6864	BEARING	1
5	2A3630	DOWEL	2
6	9S6586	GEAR (10 Teeth - Drive)	1
7	1D4538	BOLT	6
	2A5328	LOCK	6
8	3S8800	GEAR (25 Teeth)	1
9	5H2532	KEY	1
10	1H8399	RING	1
11	1H7481	SHAFT	1
12	9S6585	GEAR (10 Teeth - Idler)	1

J11040E

9S6590 OIL PUMP GROUP
Effective with Serial No. 6HC1–UP
Part of Flywheel Clutch

	NO.	PART NO. 部品番号	QTY. 数量	DESCRIPTION 名称および記事
	1	3Y7116	1	COVER
	2	L1351	6	BOLT
C	3	5M2894	7	WASHER
	4	7G7425	1	LEVER
	5	S1571	1	BOLT
		1D4717	1	NUT
C	6	3Y8642	1	LEVER
	7	L829	1	HANDLE
	8	2A1736	1	HANDLE

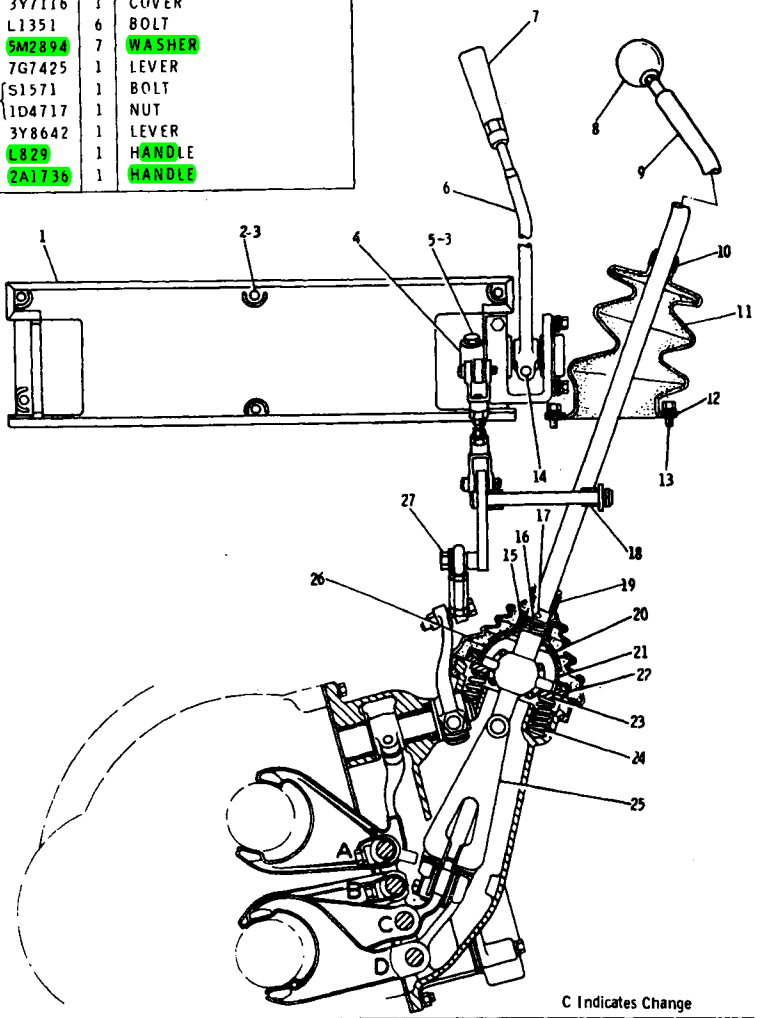

C Indicates Change

	9	8P4386	1	LEVER ASSEM.
		3P5822	1	PIN
	10	5D1026	1	CLAMP
C	11	8P3083	1	BOOT
	12	3P9935	1	RETAINER
	13	S1616	8	BOLT
C		5P537	8	WASHER
	14	S1588	1	BOLT
	15	L887	1	COVER
	16	L1045	1	SPRING
	17	3B4618	1	COTTER PIN
	18	6D3787	1	BEARING

	19	2S3440	1	CLAMP
	20	L888	1	COVER
		L974	1	PACKING
	21	1A5592	1	COVER
	22	7D7204	2	PLATE
		3D8799	3	GASKET
	23	1A6775	1	RING
	24	V294	2	SPRING
	25	7M858	1	GATE
	26	8B6014	1	BOOT
	27	S1585	1	BOLT
		5P8245	1	WASHER

J26603E

GEARSHIFT CONTROL (8P4159 N/S)—Part 1 of 3

Effective with Serial No. 6HC1~6HC305

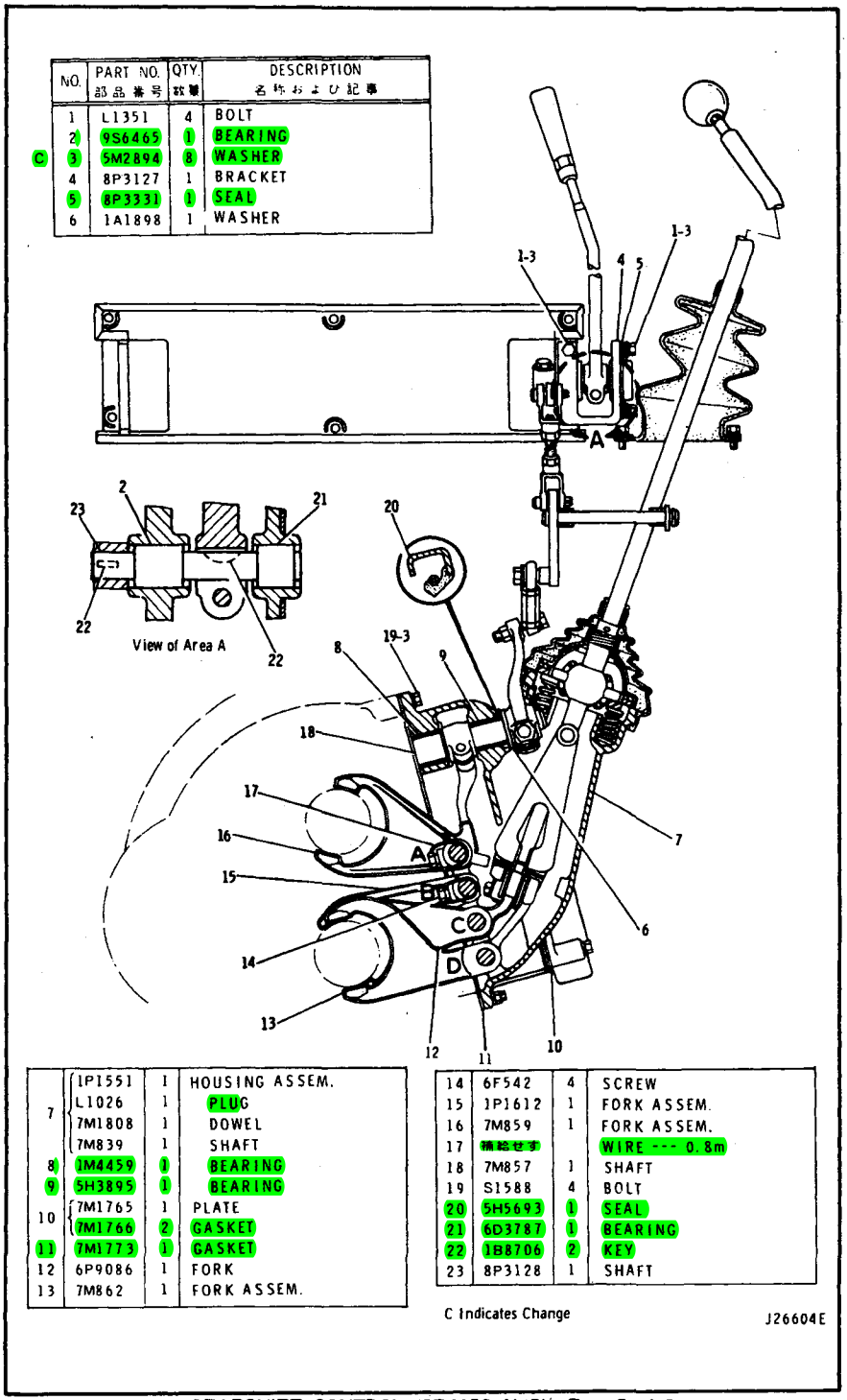

NO.	PART NO. 部品番号	QTY. 数量	DESCRIPTION 名称および記事
1	L1351	4	BOLT
2	9S6465	1	BEARING
C 3	5M2894	8	WASHER
4	8P3127	1	BRACKET
5	8P3331	1	SEAL
6	1A1898	1	WASHER
7	1P1551	1	HOUSING ASSEM.
	L1026	1	PLUG
	7M1808	1	DOWEL
	7M839	1	SHAFT
8	1M4459	1	BEARING
9	5H3895	1	BEARING
10	7M1765	1	PLATE
	7M1766	2	GASKET
11	7M1773	1	GASKET
12	6P9086	1	FORK
13	7M862	1	FORK ASSEM.
14	6F542	4	SCREW
15	1P1612	1	FORK ASSEM.
16	7M859	1	FORK ASSEM.
17	補給せず		WIRE --- 0.8m
18	7M857	1	SHAFT
19	S1588	4	BOLT
20	5H5693	1	SEAL
21	6D3787	1	BEARING
22	1B8706	2	KEY
23	8P3128	1	SHAFT

C Indicates Change

J26604E

GEARSHIFT CONTROL (8P4159 N/S)—Part 2 of 3

Effective with Serial No. 6HC1~6HC305

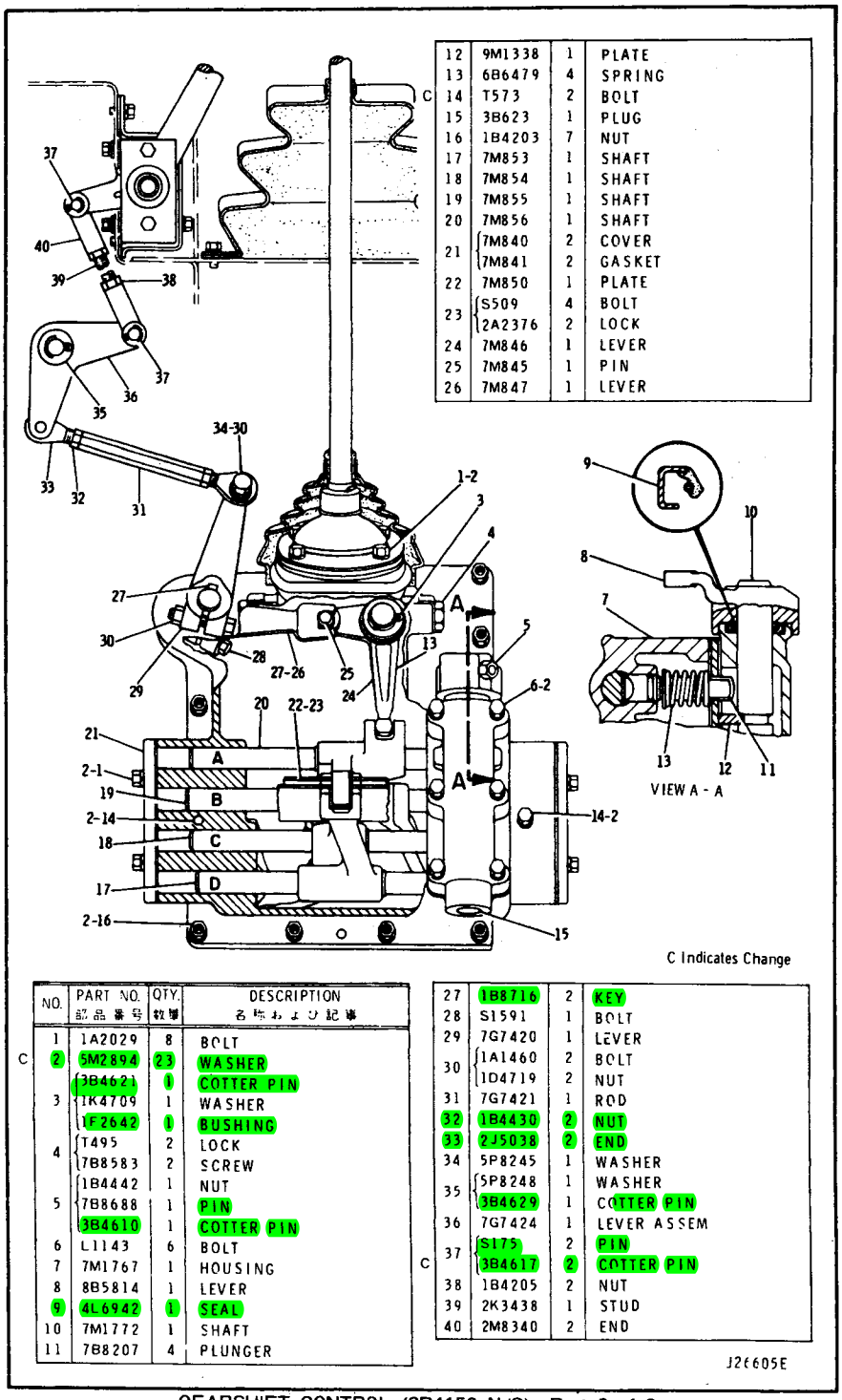

	NO.	PART NO. 部品番号	QTY. 数量	DESCRIPTION 名称および記事
	1	1A2029	8	BOLT
C	2	5M2894	23	WASHER
	3	3B4621	1	COTTER PIN
		1K4709	1	WASHER
		1F2642	1	BUSHING
	4	T495	2	LOCK
		7B8583	2	SCREW
	5	1B4442	1	NUT
		7B8688	1	PIN
		3B4610	1	COTTER PIN
	6	L1143	6	BOLT
	7	7M1767	1	HOUSING
	8	8B5814	1	LEVER
	9	4L6942	1	SEAL
	10	7M1772	1	SHAFT
	11	7B8207	4	PLUNGER
	12	9M1338	1	PLATE
	13	6B6479	4	SPRING
	14	T573	2	BOLT
	15	3B623	1	PLUG
	16	1B4203	7	NUT
	17	7M853	1	SHAFT
	18	7M854	1	SHAFT
	19	7M855	1	SHAFT
	20	7M856	1	SHAFT
	21	7M840	2	COVER
		7M841	2	GASKET
	22	7M850	1	PLATE
	23	S509	4	BOLT
		2A2376	2	LOCK
	24	7M846	1	LEVER
	25	7M845	1	PIN
	26	7M847	1	LEVER
	27	1B8716	2	KEY
	28	S1591	1	BOLT
	29	7G7420	1	LEVER
	30	1A1460	2	BOLT
		1D4719	2	NUT
	31	7G7421	1	ROD
	32	1B4430	2	NUT
	33	2J5038	2	END
	34	5P8245	1	WASHER
	35	5P8248	1	WASHER
		3B4629	1	COTTER PIN
	36	7G7424	1	LEVER ASSEM
C	37	S175	2	PIN
		3B4617	2	COTTER PIN
	38	1B4205	2	NUT
	39	2K3438	1	STUD
	40	2M8340	2	END

GEARSHIFT CONTROL (8P4159 N/S)—Part 3 of 3

Effective with Serial No. 6HC1—6HC305

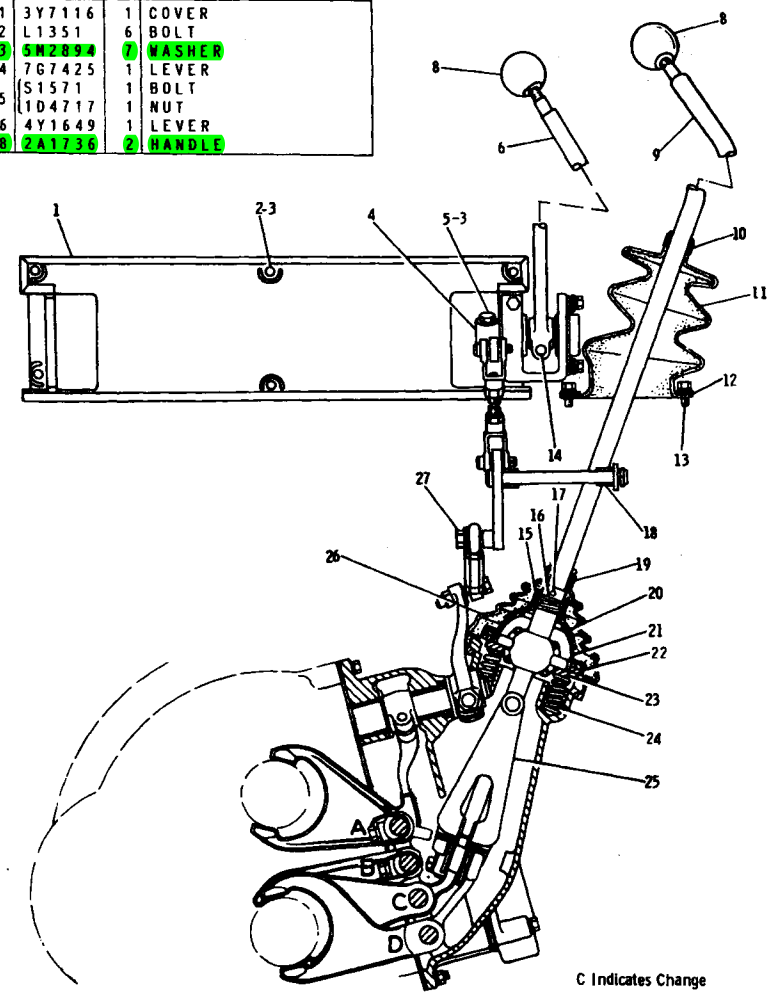

C Indicates Change

NO.	PART NO. 部品番号	QTY. 数量	DESCRIPTION 名称および記事
1	3Y7116	1	COVER
2	L1351	6	BOLT
3	9M2894	7	WASHER
4	7G7425	1	LEVER
5	S1571	1	BOLT
	1D4717	1	NUT
C 6	4Y1649	1	LEVER
C 8	2A1736	2	HANDLE
9	8P4386	1	LEVER ASSEM.
	3P5822	1	PIN
10	5D1026	1	CLAMP
11	8P3083	1	BOOT
12	3P9935	1	RETAINER
13	S1616	8	BOLT
	5P0537	8	WASHER
14	S1588	1	BOLT
15	L0887	1	COVER
16	L1045	1	SPRING
17	3B4618	1	COTTER PIN
18	6D3787	2	BEARING
19	2S3440	1	CLAMP
20	L0888	1	COVER
	L0974	1	PACKING
21	1A5592	1	COVER
22	7D7204	2	PLATE
	3D8799	3	GASKET
23	1A6775	1	RING
24	V0294	2	SPRING
25	7M0858	1	GATE
26	8B6014	1	BOOT
27	S1585	1	BOLT
	5P8245	1	WASHER

J31995E

GEARSHIFT CONTROL (8P4159 N/S)—Part 1 of 3

Effective with Serial No. 6HC306—UP

NO.	PART NO. 部品番号	QTY. 数量	DESCRIPTION 名称および記事
1	L1351	4	BOLT
2	9S6465	1	BEARING
3	5M2894	8	WASHER
4	8P3127	1	BRACKET
5	8P3331	1	SEAL
6	1A1898	1	WASHER

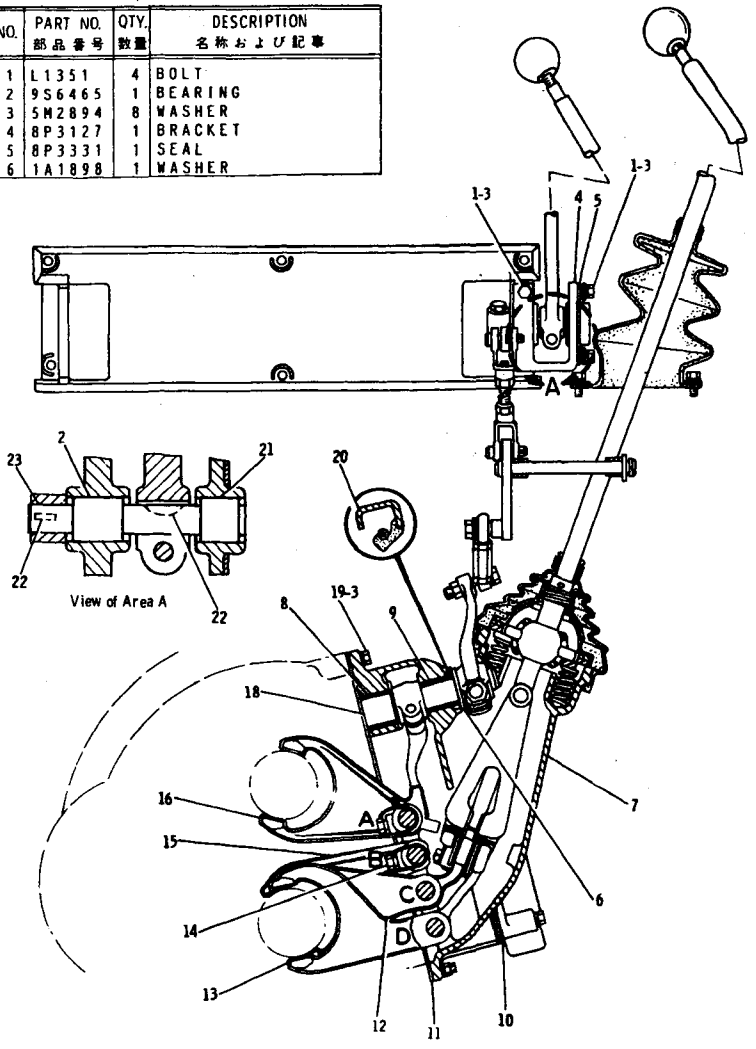

7	1P1551	1	HOUSING ASSEM.
	L1026	1	PLUG
	7M1808	1	DOWEL
	7M0839	1	SHAFT
8	1M4459	1	BEARING
9	5H3895	1	BEARING
10	7M1765	1	PLATE
	7M1766	2	GASKET
11	7M1773	1	GASKET
12	6P9086	1	FORK
13	7M0862	1	FORK ASSEM.

14	6F0542	4	SCREW
15	1P1612	1	FORK ASSEM.
16	7M0859	1	FORK ASSEM.
18	7M0857	1	SHAFT
19	S1588	4	BOLT
20	5H5693	1	SEAL
21	6D3787	1	BEARING
22	1B8706	2	KEY
23	8P3128	1	SHAFT

J31996E

GEARSHIFT CONTROL (8P4159 N/S)—Part 2 of 3

Effective with Serial No. 6HC306—UP

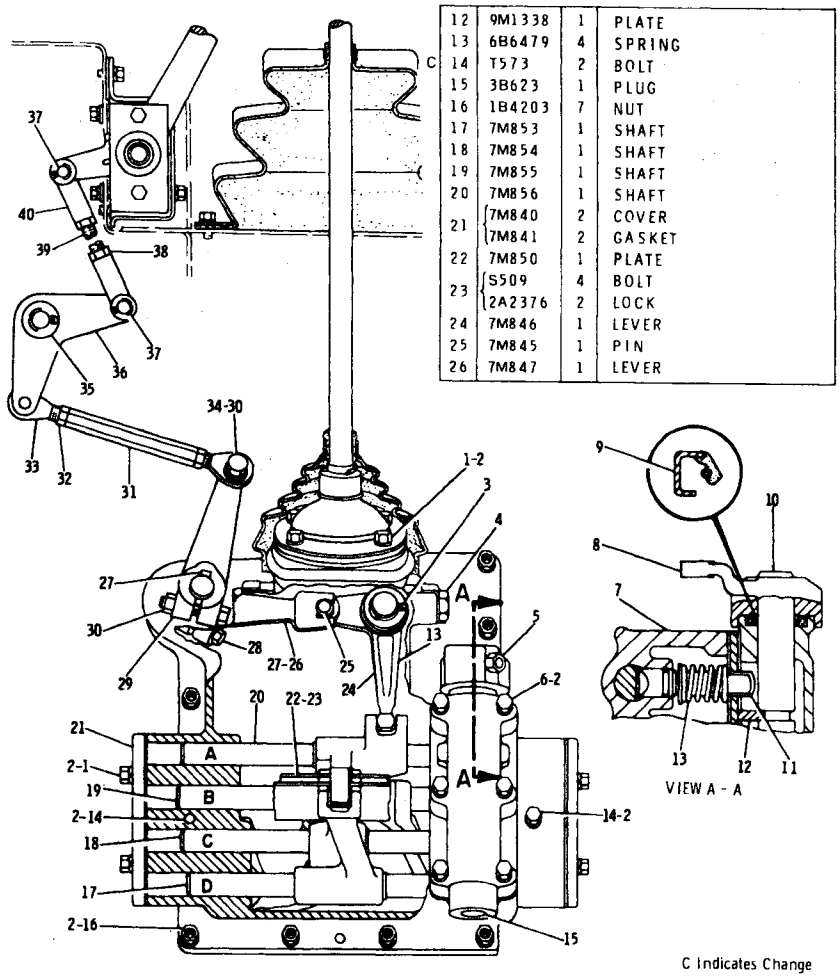

NO.	PART NO. 部品番号	QTY. 数量	DESCRIPTION 名称および記事
1	1A2029	8	BOLT
C 2	5M2894	23	WASHER
	3B4621	1	COTTER PIN
3	1K4709	1	WASHER
	1F2642	1	BUSHING
4	T495	2	LOCK
	7B8583	2	SCREW
	1B4442	1	NUT
5	7B8688	1	PIN
	3B4610	1	COTTER PIN
6	L1143	6	BOLT
7	7M1767	1	HOUSING
8	8B5814	1	LEVER
9	4L6942	1	SEAL
10	7M1772	1	SHAFT
11	7B8207	4	PLUNGER
12	9M1338	1	PLATE
13	6B6479	4	SPRING
C 14	T573	2	BOLT
15	3B623	1	PLUG
16	1B4203	7	NUT
17	7M853	1	SHAFT
18	7M854	1	SHAFT
19	7M855	1	SHAFT
20	7M856	1	SHAFT
21	7M840	2	COVER
	7M841	2	GASKET
22	7M850	1	PLATE
23	S509	4	BOLT
	2A2376	2	LOCK
24	7M846	1	LEVER
25	7M845	1	PIN
26	7M847	1	LEVER
27	1B8716	2	KEY
28	S1591	1	BOLT
29	7G7420	1	LEVER
30	1A1460	2	BOLT
	1D4719	2	NUT
31	7G7421	1	ROD
32	1B4430	2	NUT
33	2J5038	2	END
34	5P8245	1	WASHER
35	5P8248	1	WASHER
	3B4629	1	COTTER PIN
36	7G7424	1	LEVER ASSEM
C 37	S175	2	PIN
	3B4617	2	COTTER PIN
38	1B4205	2	NUT
39	2K3438	1	STUD
40	2M8340	2	END

J2E605E

GEARSHIFT CONTROL (8P4159 N/S)—Part 3 of 3

Effective with Serial No. 6HC306—UP

MEMO

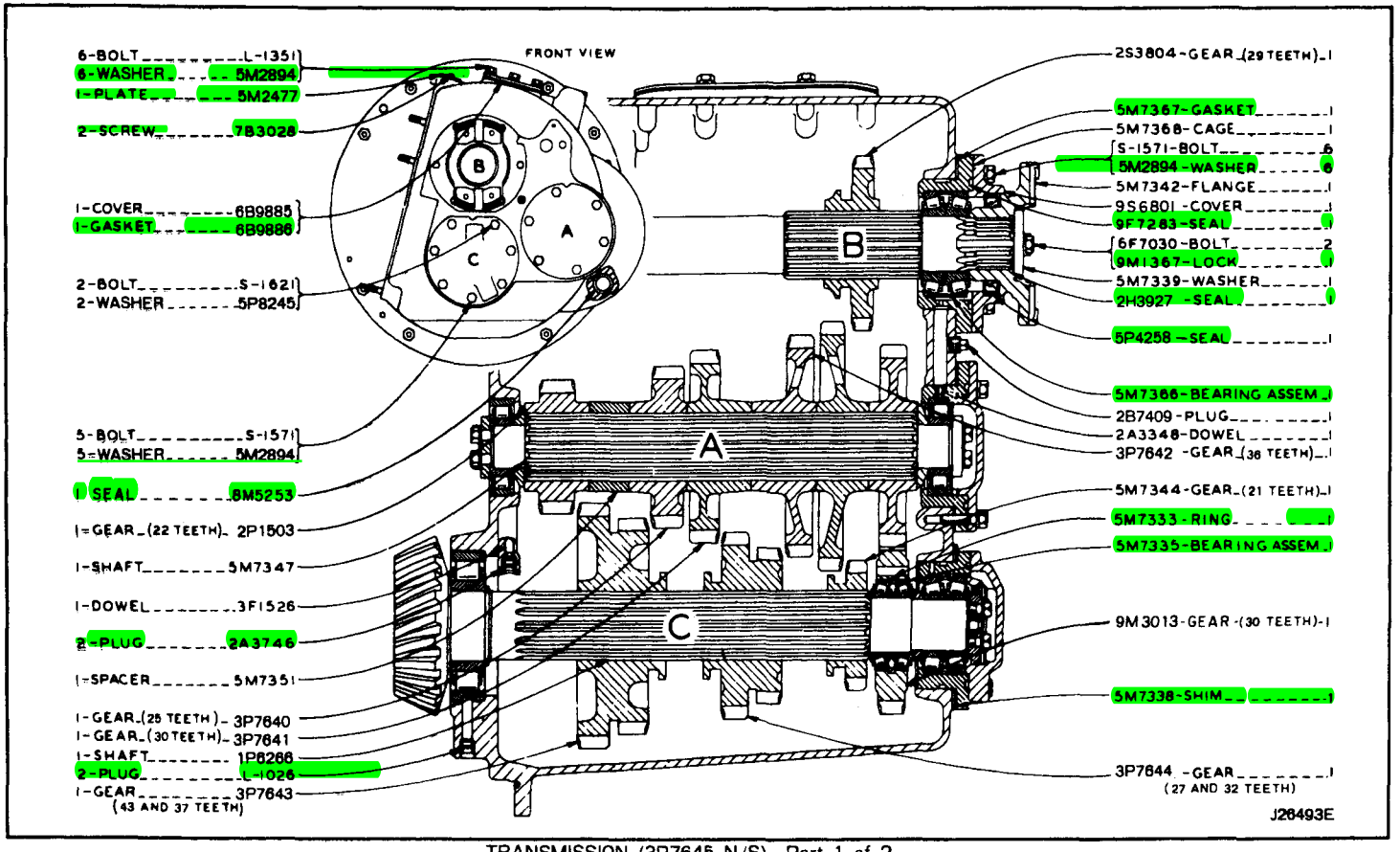

TRANSMISSION (3P7645 N/S)—Part 1 of 2

Effective with Serial No. 6HC1—6HC305

TRANSMISSION (3P7645 N/S)—Part 2 of 2

Effective with Serial No. 6HC1~6HC305

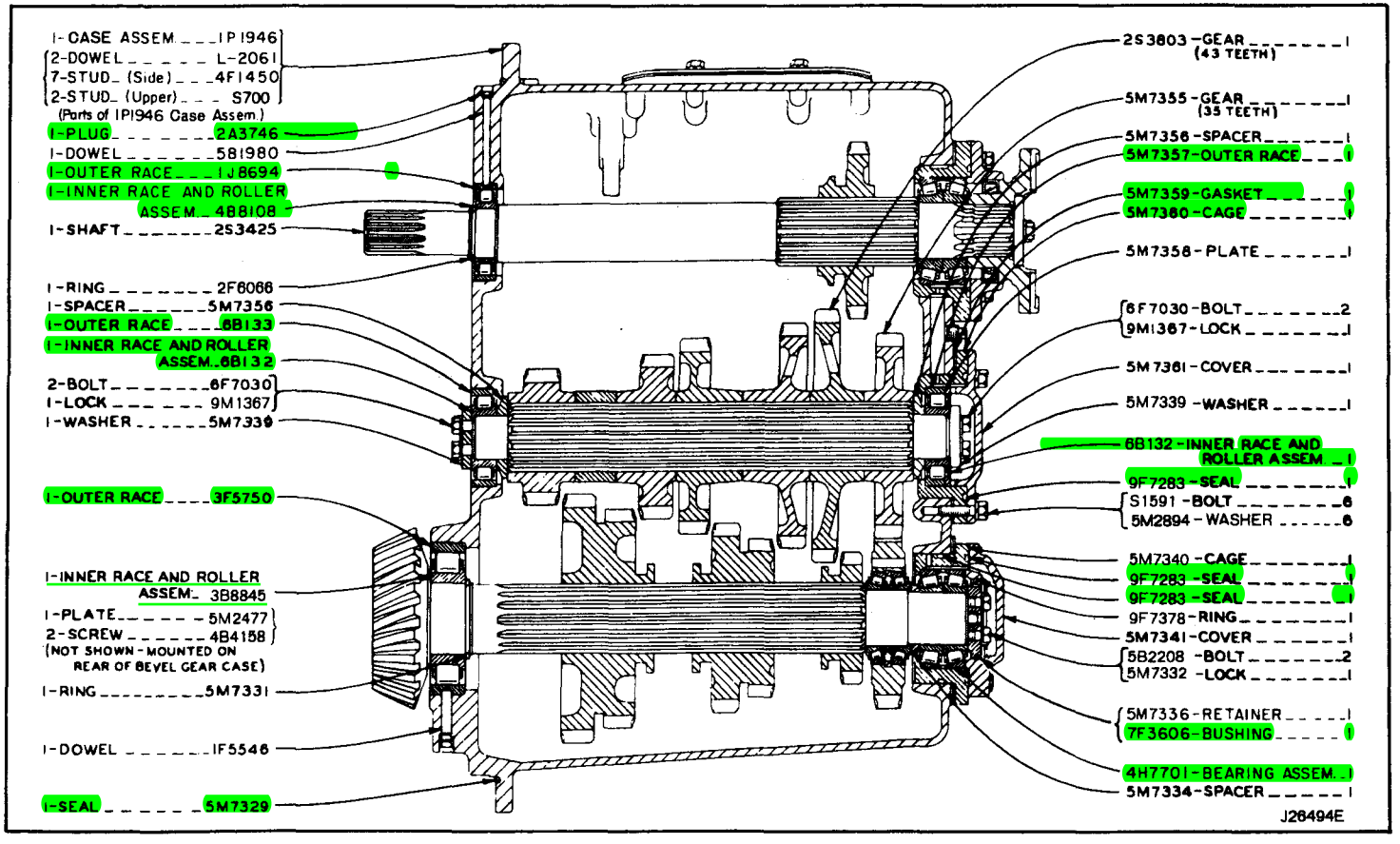

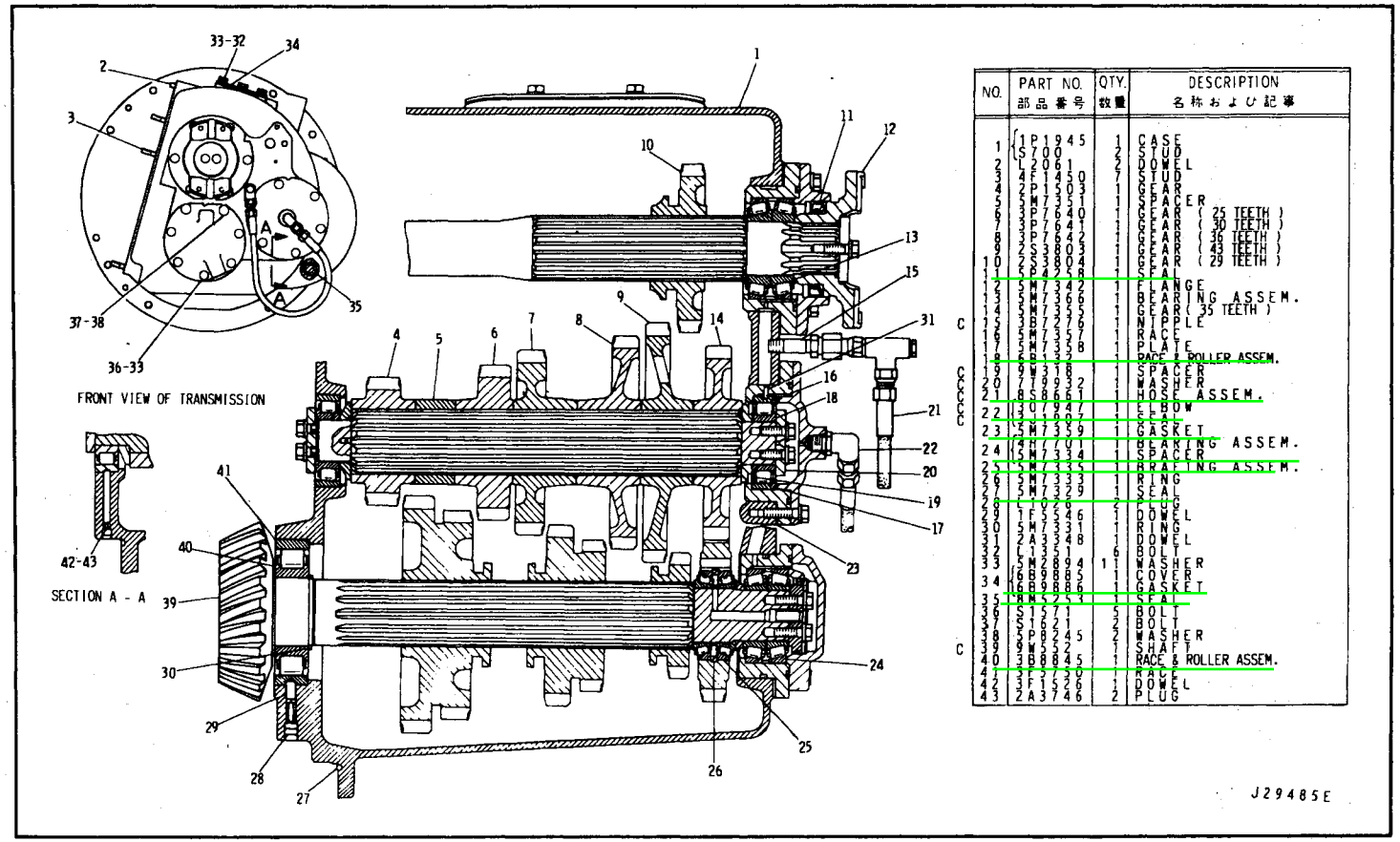

NO.	PART NO. 部品番号	QTY. 数量	DESCRIPTION 名称および記事	
1	1P1945	1	CASE	
	S7001	2	STUD	
2	L2061	2	DOWEL	
3	4F1450	7	STUD	
4	2P1503	1	GEAR	
5	5M7351	1	SPACER	
6	3P7640	1	GEAR (25 TEETH)	
7	3P7641	1	GEAR (30 TEETH)	
8	3P7642	1	GEAR (36 TEETH)	
9	2S3803	1	GEAR (43 TEETH)	
10	2S3804	1	GEAR (29 TEETH)	
11	5P4258	1	SEAL	
12	5M7342	1	FLANGE	
13	5M7366	1	BEARING ASSEM.	
14	5M7355	1	GEAR (35 TEETH)	
15	3B7276	1	NIPPLE	
16	5M7357	1	RACE	
17	5M7358	1	PLATE	
18	6B1322	1	RACE & ROLLER ASSEM.	
19	9W3188	1	SPACER	
20	7T9932	1	WASHER	
21	8S8661	1	HOSE ASSEM.	
22	3D7947	1	ELBOW	
23	5M7359	1	GASKET	
24	4M7701	1	BEARING ASSEM.	
25	5M7334	1	SPACER	
26	5M7335	1	BRAKING ASSEM.	
27	5M7339	1	RING	
28	1D7328	1	SEAL	
29	1F5546	2	DOWEL	
30	5M7331	1	RING	
31	2A3348	1	DOWEL	
32	L1351	6	BOLT	
33	5M2894	11	WASHER	
34	6B9885	1	COVER	
35	6B9886	1	GASKET	
36	5M7353	1	SEAL	
37	S1571	5	BOLT	
38	S1521	2	BOLT	
39	5P8545	2	WASHER	
40	9W2552	1	SHAFT	
41	3B8845	1	RACE & ROLLER ASSEM.	
42	3F5730	1	RACE	
43	3F1526	1	DOWEL	
	2A3746	2	PLUG	

TRANSMISSION (3P7645 N/S)－Part 1 of 2
Effective with Serial No. 6HC306～6HC365

TRANSMISSION (3P7645 N/S)—Part 2 of 2

Effective with Serial No. 6HC306—6HC365

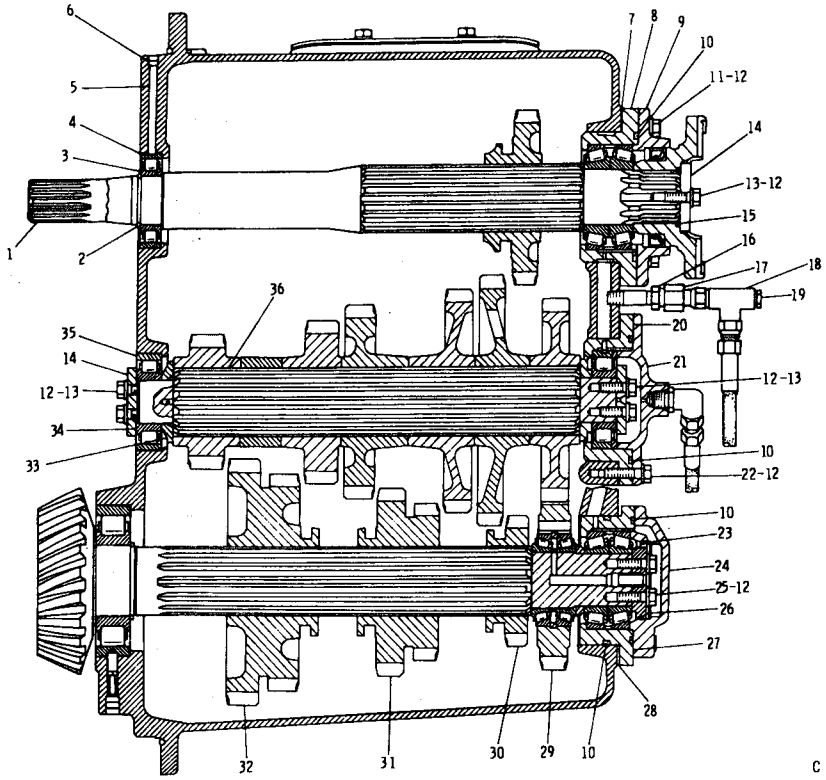

	NO.	PART NO. 部品番号	QTY. 数量	DESCRIPTION 名称および記事
C	1	9W550	1	SHAFT
	2	2F6066	1	RING
	3	4B8108	1	RACE & ROLLER ASSEM.
	4	1J8694	1	RACE
	5	5B1980	1	DOWEL
	6	2A3746	1	PLUG
	7	5M7367	1	GASKET
	8	5M7368	1	CAGE
	9	9S6801	1	COVER
	10	9F7283	4	SEAL
	11	S1571	6	BOLT
C	12	5M2894	20	WASHER
	13	6F7030	6	BOLT
	14	5M7339	2	WASHER
	15	2H3927	1	SEAL
C	16	3B7722	1	BUSHING
C	17	9J6190	1	UNION
C	18	6S2365	1	TEE
C	19	5M6213	1	PLUG
C	20	7T9934	1	CAGE
C	21	4Y1935	1	COVER
	22	S1591	6	BOLT
	23	9F7378	1	RING
	24	5M7341	1	COVER
	25	5B2208	2	BOLT
	26	5M7336	1	RETAINER
		7F3606	1	SLEEVE
	27	5M7340	1	CAGE
	28	5M7338	1	SHIM PACK
	29	9M3013	1	GEAR (30 TEETH)
	30	5M7344	1	GEAR (21 TEETH)
	31	7P7644	1	GEAR (27 & 32 TEETH)
	32	3P7643	1	GEAR (43 & 37 TEETH)
C	33	9W318	1	SPACER
	34	6B132	1	RACE & ROLLER ASSEM.
	35	6B133	1	RACE
C	36	7T9931	1	COUNTERSHAFT

C INDICATES CHANGE

J29486E

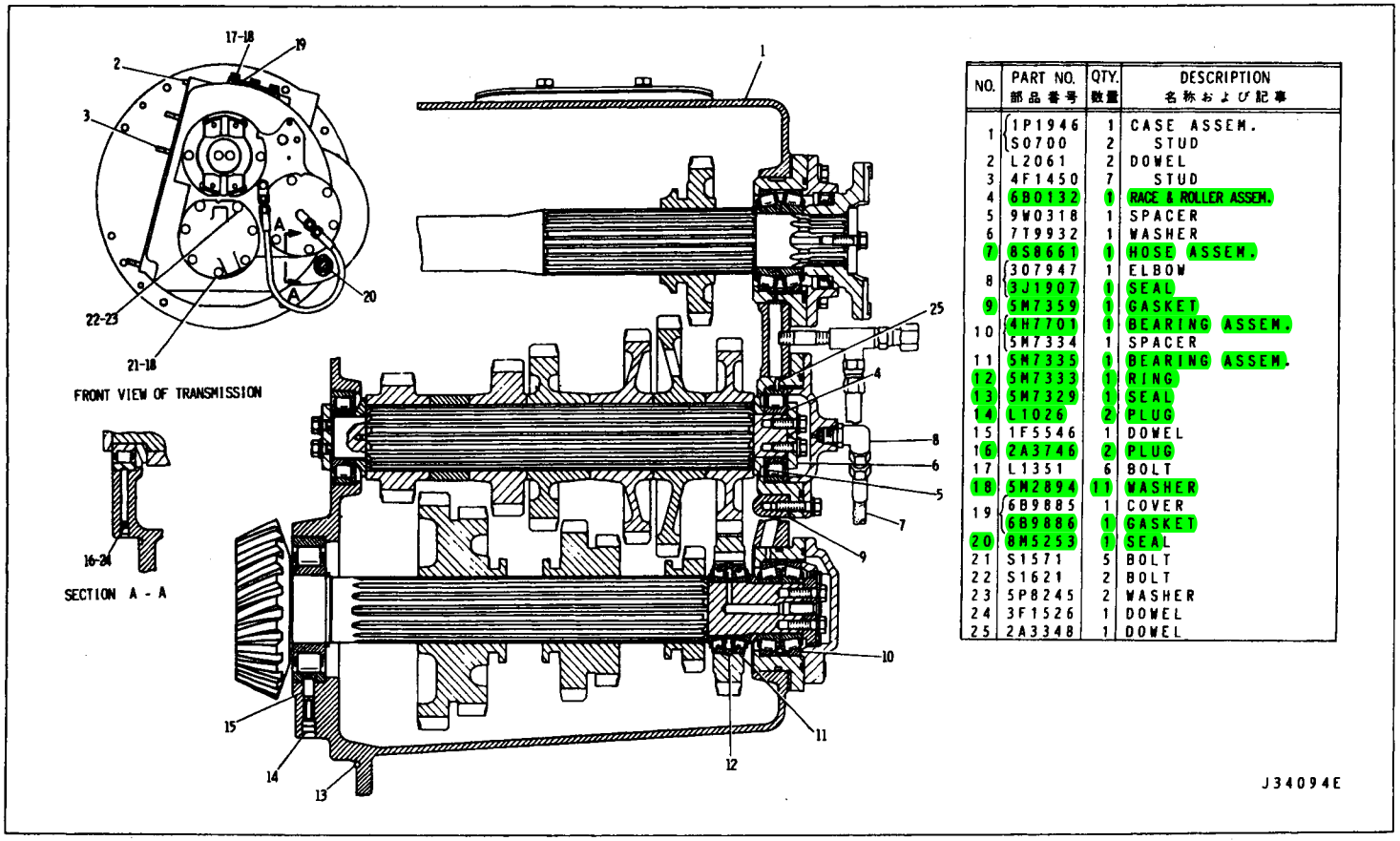

NO.	PART NO. 部品番号	QTY. 数量	DESCRIPTION 名称および記事
1	1P1946	1	CASE ASSEM.
	S0700	2	STUD
2	L2061	2	DOWEL
3	4F1450	7	STUD
4	6B0132	1	RACE & ROLLER ASSEM.
5	9W0318	1	SPACER
6	7T9932	1	WASHER
7	8S8661	1	HOSE ASSEM.
8	307947	1	ELBOW
	3J1907	1	SEAL
9	5M7359	1	GASKET
10	4M7701	1	BEARING ASSEM.
	5M7334	1	SPACER
11	5M7335	1	BEARING ASSEM.
12	5M7333	1	RING
13	5M7329	1	SEAL
14	L1026	2	PLUG
15	1F5546	1	DOWEL
16	2A3746	2	PLUG
17	L1351	6	BOLT
18	5M2894	11	WASHER
19	6B9885	1	COVER
	6B9886	1	GASKET
20	8M5253	1	SEAL
21	S1571	5	BOLT
22	S1621	2	BOLT
23	5P8245	2	WASHER
24	3F1526	1	DOWEL
25	2A3348	1	DOWEL

TRANSMISSION (3P7645 N/S)－Part 1 of 3

Effective with Serial No. 6HC366－UP

TRANSMISSION (3P7645 N/S) – Part 2 of 3

Effective with Serial No. 6HC366 – UP

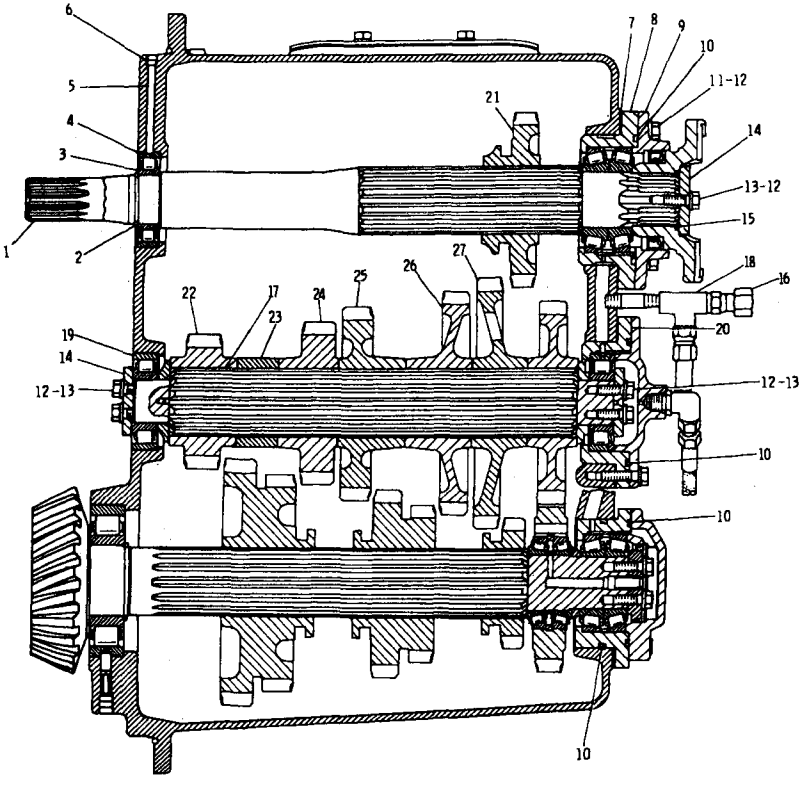

NO.	PART NO. 部品番号	QTY. 数量	DESCRIPTION 名称および記事
1	9W0550	1	SHAFT
2	2F6066	1	RING
3	4B8108	1	RACE & ROLLER ASSEM.
4	1J8694	1	RACE
5	5B1980	1	DOWEL
6	2A3746	1	PLUG
7	5M7367	1	GASKET
8	5M7368	1	CAGE
9	9S6801	1	COVER
10	9F7283	4	SEAL
11	S1571	6	BOLT
12	5M2894	12	WASHER
13	6F7030	6	BOLT
14	5M7339	2	WASHER
15	2H3927	1	SEAL
C 16	8S4950	1	CAP
17	7T9931	1	COUNTERSHAFT
18	6S2365	1	TEE
19	6B0133	1	RACE
20	7T9934	1	CAGE
21	2S3804	1	GEAR (29TEETH)
22	2P1503	1	GEAR (22TEETH)
23	5M7351	1	SPACER
24	3P7640	1	GEAR (25TEETH)
25	3P7641	1	GEAR (30TEETH)
26	3P7642	1	GEAR (36TEETH)
27	2S3803	1	GEAR (43TEETH)

C INDICATES CHANGE

J34095E

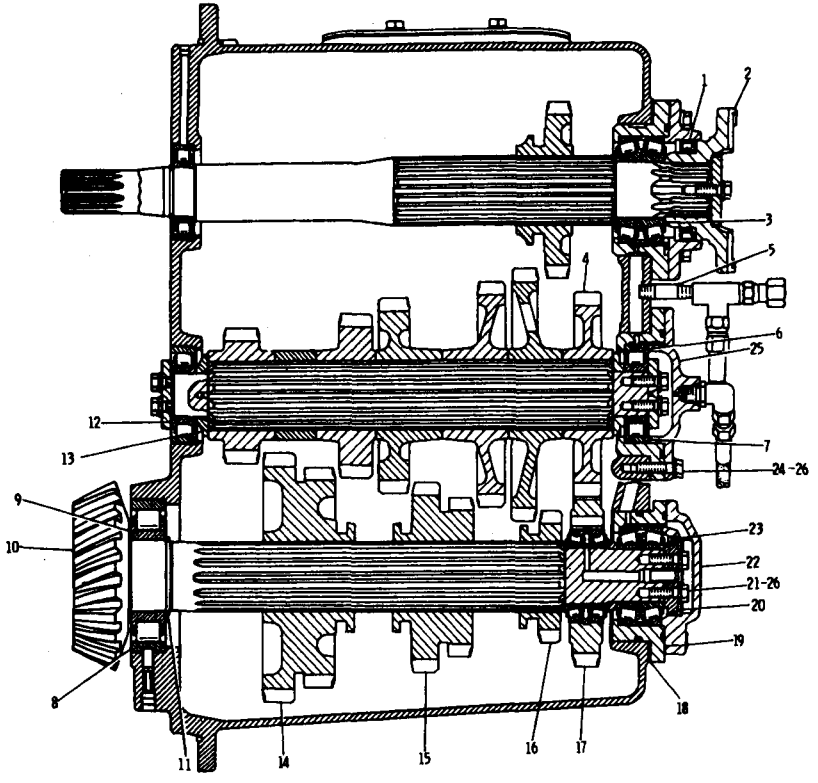

NO.	PART NO. 部品番号	QTY. 数量	DESCRIPTION 名称および記事
1	5P4258	1	SEAL
2	5M7342	1	FLANGE
3	5M7366	1	BEARING ASSEM.
4	5M7355	1	GEAR(35TEETH)
5	3B7276	1	NIPPLE
6	5M7357	1	RACE
7	5M7358	1	PLATE
8	3F5750	1	RACE
9	3B8845	1	RACE & ROLLER ASSEM.
10	9W0552	1	SHAFT
11	5M7331	1	RING
12	6B0132	1	RACE & ROLLER ASSEM.
13	9W0318	1	SPACER
14	3P7643	1	GEAR(43 & 37 TEETH)
15	3P7644	1	GEAR(27 & 32 TEETH)
16	5M7344	1	GEAR(21TEETH)
17	9M3013	1	GEAR(30TEETH)
18	5M7338	1	SHIM PACK
19	5M7340	1	CAGE
20	5M7336	1	RETAINER
	7F3606	1	SLEEVE
21	5B2208	2	BOLT
22	5M7341	1	COVER
23	9F7378	1	RING
24	S1591	6	BOLT
25	4Y1935	1	COVER
26	5M2894	8	WASHER

J34177E

TRANSMISSION (3P7645 N/S)－Part 3 of 3

Effective with Serial No. 6HC366－UP .

MEMO

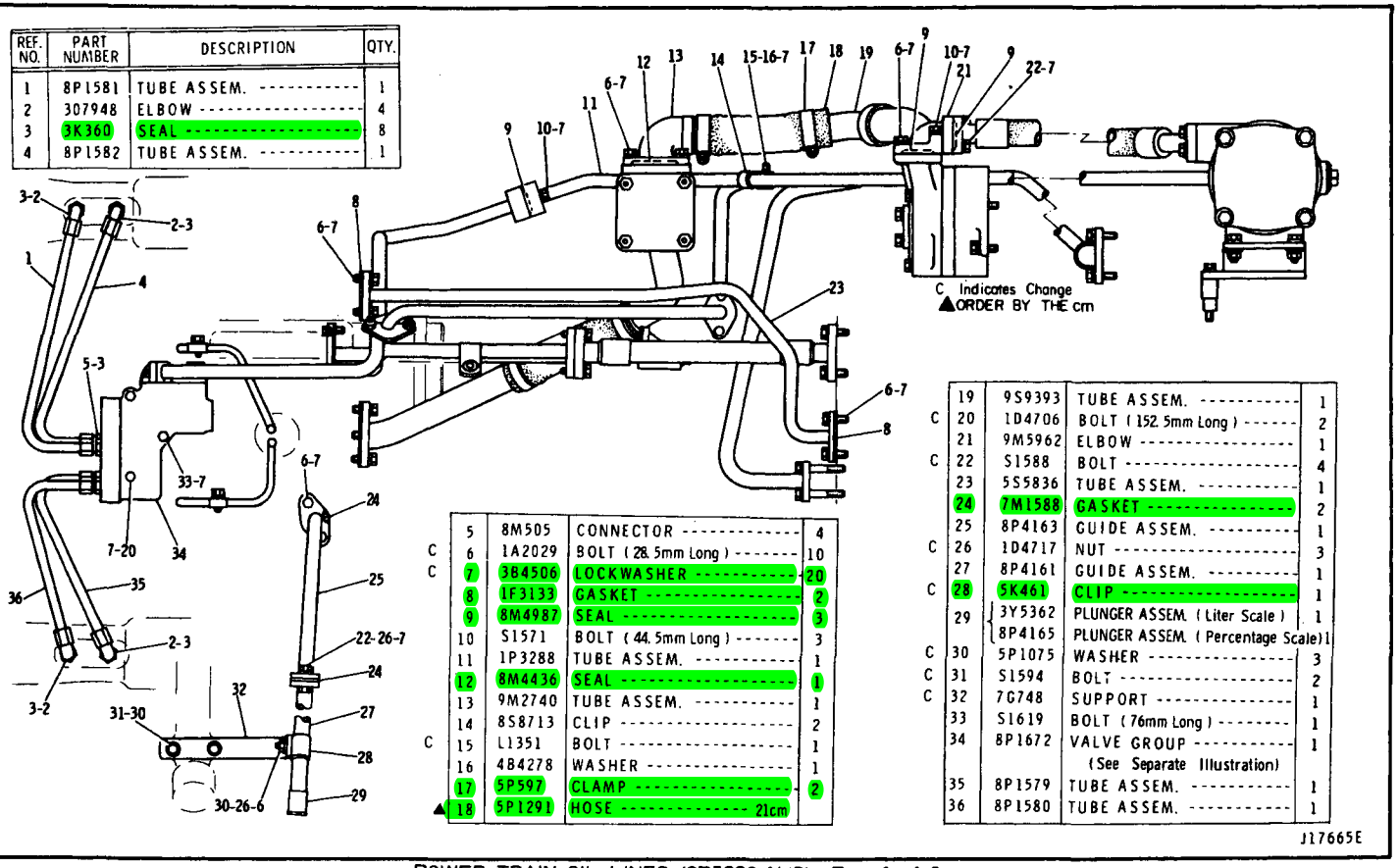

REF. NO.	PART NUMBER	DESCRIPTION	QTY.
1	8P1581	TUBE ASSEM.	1
2	307948	ELBOW	4
3	3K360	SEAL	8
4	8P1582	TUBE ASSEM.	1

	5	8M505	CONNECTOR	4
C	6	1A2029	BOLT (28.5mm Long)	10
C	7	3B4506	LOCKWASHER	20
	8	1F3133	GASKET	2
	9	8M4987	SEAL	3
	10	S1571	BOLT (44.5mm Long)	3
	11	1P3288	TUBE ASSEM.	1
	12	8M4436	SEAL	1
	13	9M2740	TUBE ASSEM.	1
	14	8S8713	CLIP	2
C	15	L1351	BOLT	1
	16	4B4278	WASHER	1
	17	5P597	CLAMP	2
▲	18	5P1291	HOSE 21cm	

	19	9S9393	TUBE ASSEM.	1
C	20	1D4706	BOLT (152.5mm Long)	2
	21	9M5962	ELBOW	1
C	22	S1588	BOLT	4
	23	5S5836	TUBE ASSEM.	1
	24	7M1588	GASKET	2
	25	8P4163	GUIDE ASSEM.	1
C	26	1D4717	NUT	3
	27	8P4161	GUIDE ASSEM.	1
C	28	5K461	CLIP	1
	29	3Y5362	PLUNGER ASSEM. (Liter Scale)	1
		8P4165	PLUNGER ASSEM. (Percentage Scale)	1
C	30	5P1075	WASHER	3
C	31	S1594	BOLT	2
C	32	7G748	SUPPORT	1
	33	S1619	BOLT (76mm Long)	1
	34	8P1672	VALVE GROUP (See Separate Illustration)	1
	35	8P1579	TUBE ASSEM.	1
	36	8P1580	TUBE ASSEM.	1

POWER TRAIN OIL LINES (8P5222 N/S)–Part 1 of 3

Effective with Serial No. 6HC1–UP

8P1672 Relief Valve parts are shown on Page 105

POWER TRAIN OIL LINES (8P5222 N/S) – Part 2 of 3

Effective with Serial No. 6HC1 – UP

9M8669 Magnetic Screen, 3P6814 Gear Pump and Transmission Filter parts are shown on Pages 105 and 106

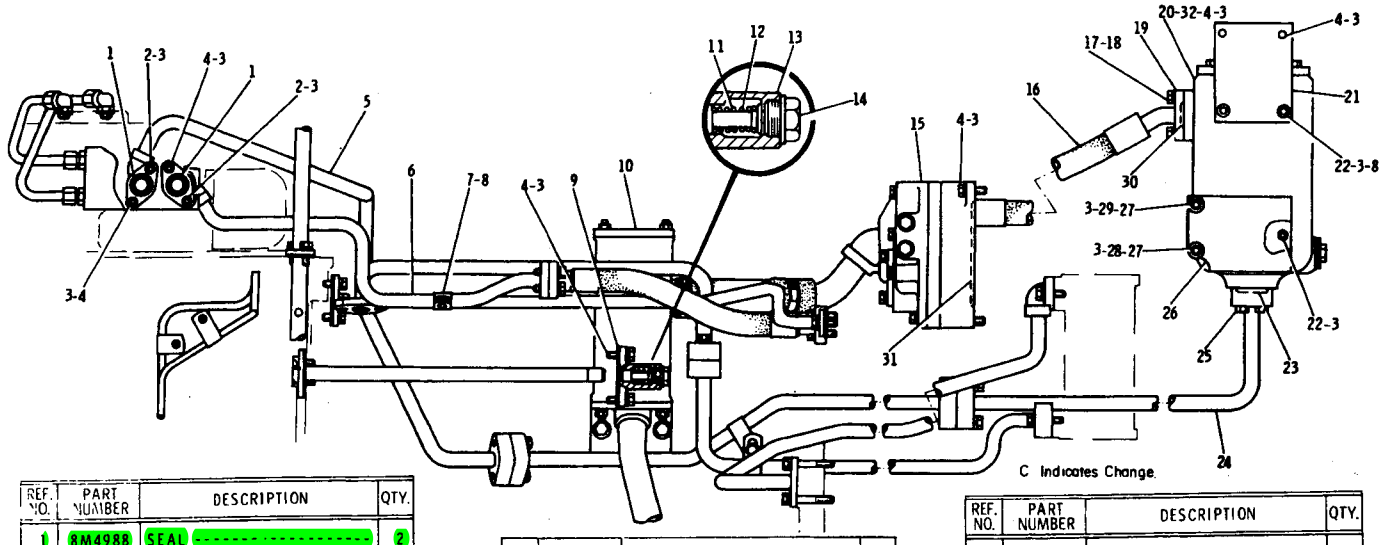

C Indicates Change.

REF. NO.	PART NUMBER	DESCRIPTION	QTY.
1	8M4988	SEAL	2
2	S1590	BOLT (51mmLong)	2
3	3B4506	LOCKWASHER	18
4	1A2029	BOLT (28.5mmLong)	10
5	8P2952	TUBE ASSEM	1
6	8P2950	TUBE ASSEM	1
7	9F5977	CLIP	1
C 8	4B4278	WASHER	3
9	9M1408	GASKET	1
10	9M8669	SCREEN GROUP (See Separate Illustration)	1
11	5F5523	SPRING	1
12	9M1448	VALVE	1

	REF. NO.	PART NUMBER	DESCRIPTION	QTY.
	13	5S6882	HOUSING ASSEM.	1
		6H1810	DOWEL	1
	14	5B5946	PLUG	1
		6B9186	GASKET	1
	15	3P6814	PUMP GRUUP (See Separate Illustration)	1
	16	1P1556	HOSE ASSEM.	1
	17	S1588	BOLT	4
C	18	5M2894	WASHER	4
	19	1P4577	FLANGE	2
	20	Not Serv.	TRANSMISSION FILTER (See Separate Illustration)	1

REF. NO.	PART NUMBER	DESCRIPTION	QTY.
21	7S1636	PLATE	1
22	1D4717	NUT	4
23	1P3703	SEAL	1
24	7S3987	TUBE ASSEM.	1
25	S1571	BOLT	4
26	8S2957	BRACKET	1
27	S1619	BOLT	2
28	2K5232	SPACER (46mm Long)	1
29	6F127	SPACER (28.6mm Long)	1
30	8M4987	SEAL	1
31	8F8882	SEAL	1
32	8M4436	SEAL	1

J17666F

NO.	PART NO. 部品番号	QTY. 数量	DESCRIPTION 名称および記事
1	1D4717	2	NUT
2	3B4506	22	LOCKWASHER
3	8S0481	1	TUBE ASSEM.
4	8M4987	8	SEAL
5	1P4577	2	FLANGE

	6	S1591	4	BOLT
C	7	5M2894	4	WASHER
	8	5S5840	1	HOSE ASSEM.
	9	S1571	6	BOLT
	10	S1588	4	BOLT
	11	7S1872	1	TUBE ASSEM.
	12	L1143	2	BOLT
	13	7S3985	1	TUBE ASSEM.
	14	5P0597	2	CLAMP
▲	15	5P1291		HOSE---21cm
	16	9S9447	1	TUBE ASSEM.
	17	1A2029	6	BOLT

	18	8M4390	1	SEAL
C	19	4B4278	3	WASHER
	20	9S9449	1	TUBE ASSEM.
C	21	7T9829	1	TUBE ASSEM.

	22	1S3520	1	GASKET
	23	S1594	2	BOLT
		L0364	2	LOCK
	24	7B1597	1	CLIP
▲	25	5P1200		TUBE---34cm
	26	T0102	2	BOLT
	27	8B6127	1	CLIP
▲	28	5P1200		TUBE---39cm

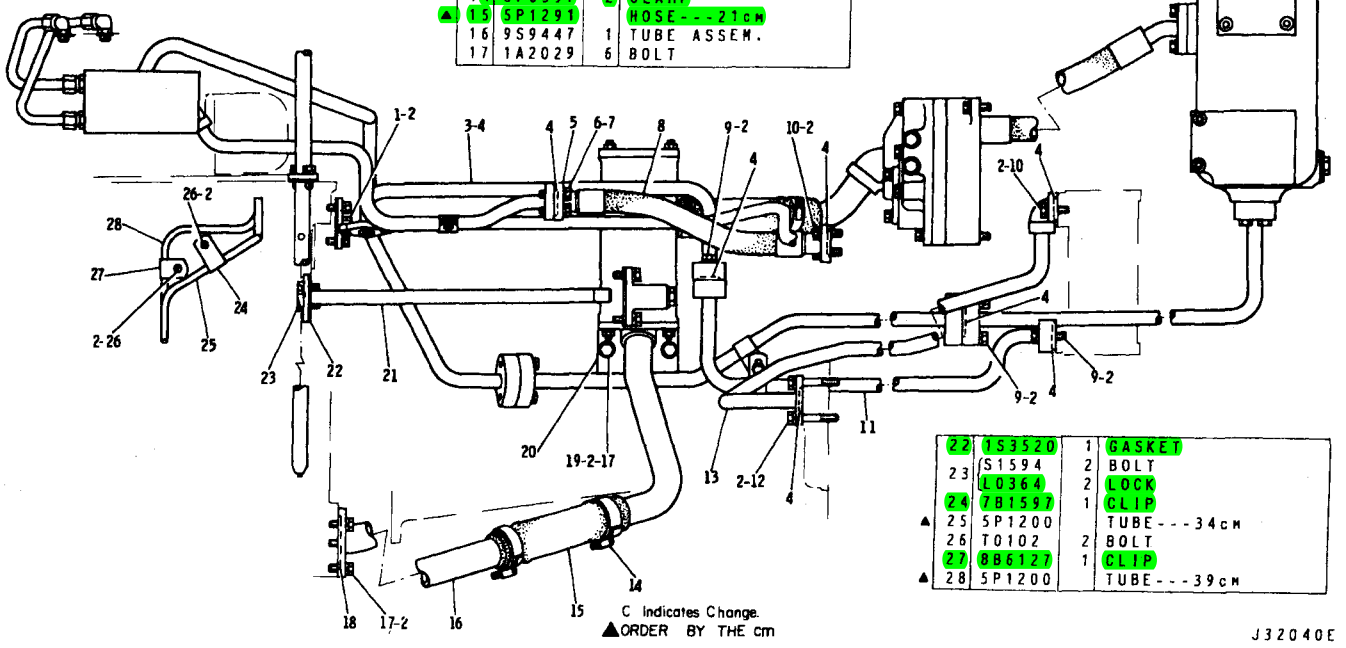

POWER TRAIN OIL LINES (8P5222 N/S)—Part 3 of 3

Effective with Serial No. 6HC1—UP

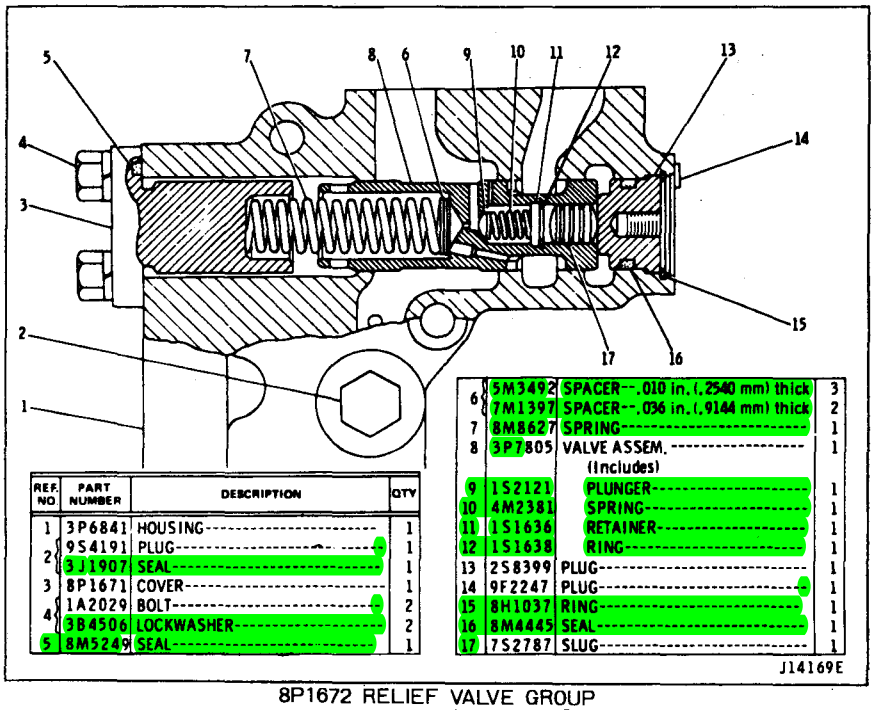

REF. NO	PART NUMBER	DESCRIPTION	QTY
1	3P6841	HOUSING	1
2	9S4191	PLUG	1
	3J1907	SEAL	1
3	8P1671	COVER	1
4	1A2029	BOLT	2
	3B4506	LOCKWASHER	2
5	8M5249	SEAL	1
6	5M3492	SPACER--.010 in. (.2540 mm) thick	3
	7M1397	SPACER--.036 in. (.9144 mm) thick	2
7	8M8627	SPRING	1
8	3P7805	VALVE ASSEM. (Includes)	1
9	1S2121	PLUNGER	1
10	4M2381	SPRING	1
11	1S1636	RETAINER	1
12	1S1638	RING	1
13	2S8399	PLUG	1
14	9F2247	PLUG	1
15	8H1037	RING	1
16	8M4445	SEAL	1
17	7S2787	SLUG	1

8P1672 RELIEF VALVE GROUP
Effective with Serial No. 6HC1—UP
Part of Power Train Oil Lines

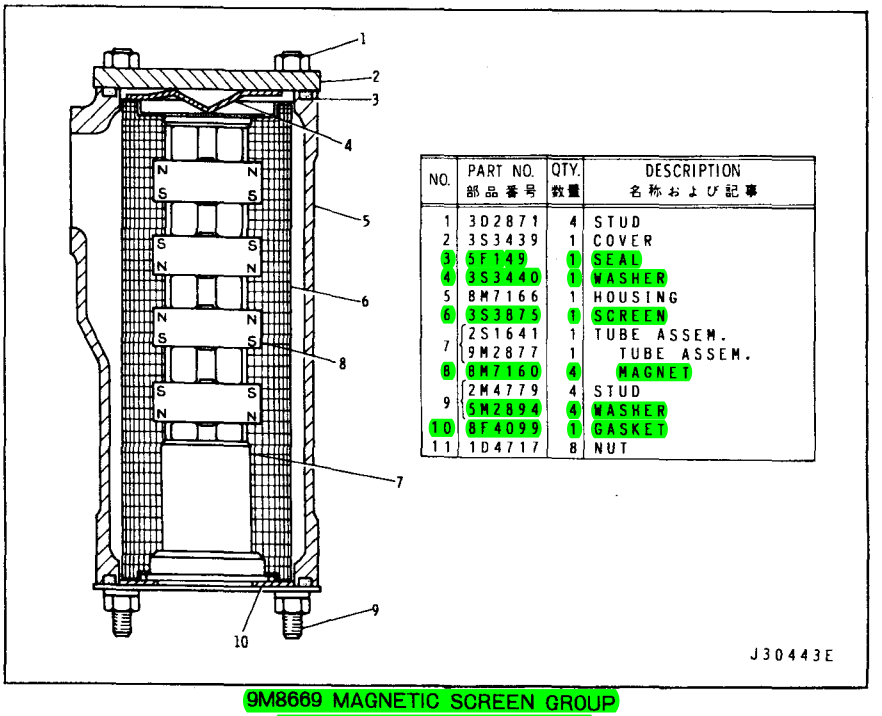

NO.	PART NO. 部品番号	QTY. 数量	DESCRIPTION 名称および記事
1	3D2871	4	STUD
2	3S3439	1	COVER
3	5F149	1	SEAL
4	3S3440	1	WASHER
5	8M7166	1	HOUSING
6	3S3875	1	SCREEN
7	2S1641	1	TUBE ASSEM.
	9M2877	1	TUBE ASSEM.
8	8M7160	4	MAGNET
9	2M4779	4	STUD
	5M2894	4	WASHER
10	8F4099	1	GASKET
11	1D4717	8	NUT

9M8669 MAGNETIC SCREEN GROUP
Effective with Serial No. 6HC1—6HC305
Part of Power Train Oil Lines

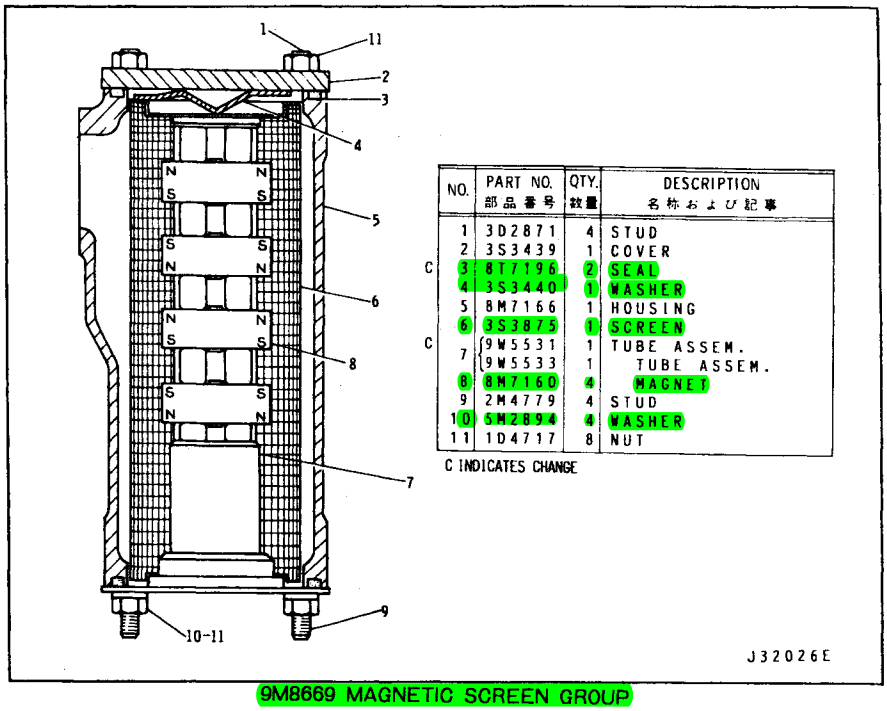

	NO.	PART NO. 部品番号	QTY. 数量	DESCRIPTION 名称および記事
	1	3D2871	4	STUD
	2	3S3439	1	COVER
C	3	8T7196	2	SEAL
	4	3S3440	1	WASHER
	5	8M7166	1	HOUSING
	6	3S3875	1	SCREEN
C	7	9W5531	1	TUBE ASSEM.
		9W5533	1	TUBE ASSEM.
	8	8M7160	4	MAGNET
	9	2M4779	4	STUD
	10	5M2894	4	WASHER
	11	1D4717	8	NUT

C INDICATES CHANGE

9M8669 MAGNETIC SCREEN GROUP

Effective with Serial No. 6HC306-UP

Part of Power Train Oil Lines

MEMO

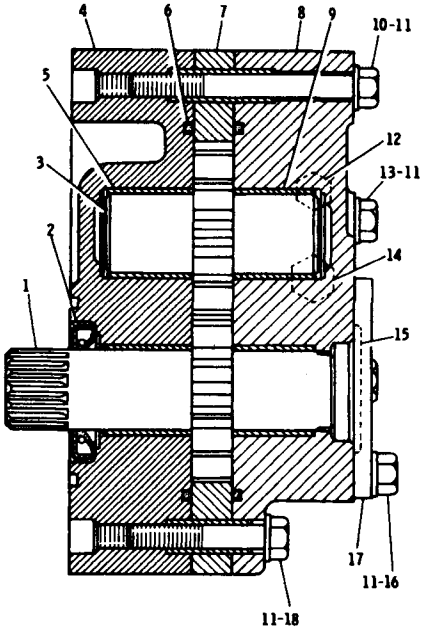

REF. NO.	PART NUMBER	DESCRIPTION	QTY.
1	7S3882	GEAR (Oil Pump - 12 Teeth)	1
2	5S6622	SEAL	1
3	7S3883	GEAR (Oil Pump - 12 Teeth)	1
4	1P983	COVER ASSEM.	1
5	5M3320	BEARING	2
6	2D8009	SEAL	2
7	9H909	BODY ASSEM.	1
	1M3736	DOWEL	2
8	3P6812	MANIFOLD ASSEM.	1
9	5M3320	BEARING	2
10	S1608	BOLT (95mm Long)	1
11	3S4	WASHER	8
12	9S4182	PLUG	1
	3J7354	SEAL	1
13	L1352	BOLT (82mm Long)	4
14	9S4191	PLUG	1
	3J1907	SEAL	1
15	8M5661	SEAL	1
16	S1594	BOLT (25.5mm Long)	2
17	9M1164	COVER	1
18	L1143	BOLT (63.5mm Long)	1

J11558E

3P6814 GEAR PUMP GROUP
Effective with Serial No. 6HC1 – UP
Part of Power Train Oil Lines

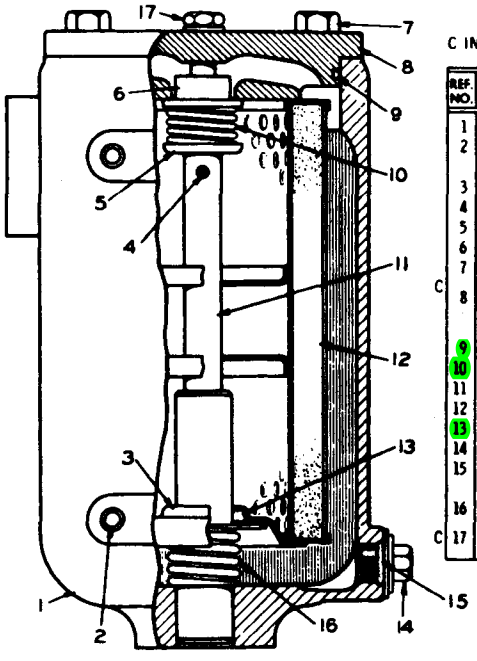

C INDICATES CHANGE FROM PREVIOUS TYPE

	REF. NO.	PART NUMBER	DESCRIPTION	QTY
	1	5S788	HOUSING ASSEM.	1
	2	3D2871	STUD	4
			(Part of 5S788 Assem.)	
	3	3S1748	RETAINER ASSEM.	1
	4	3F7514	PIN	1
	5	4S7648	WASHER	1
	6	4S7647	VALVE	1
	7	S1595	BOLT	4
C	8	9S7227	COVER ASSEM.	1
		2S9694	PIN	1
			(Part of 9S7227 Assem.)	
	9	2H9247	SEAL	1
	10	4H1790	SPRING	1
	11	4S8975	TUBE	1
	12	4J6064	ELEMENT ASSEM. -(Disposable)-	1
	13	3S1751	SEAL	1
	14	4S5858	PLUG ASSEM.	1
	15	7M8485	SEAL	1
			(Part of 4S5858 Assem.)	
	16	9M4685	SPRING	1
C	17	9S4191	PLUG	1
		3J1907	SEAL	1

127715JE

TRANSMISSION FILTER (3S1741 N/S)
Effective with Serial No. 6HC1 – UP
Part of Power Train Oil Lines

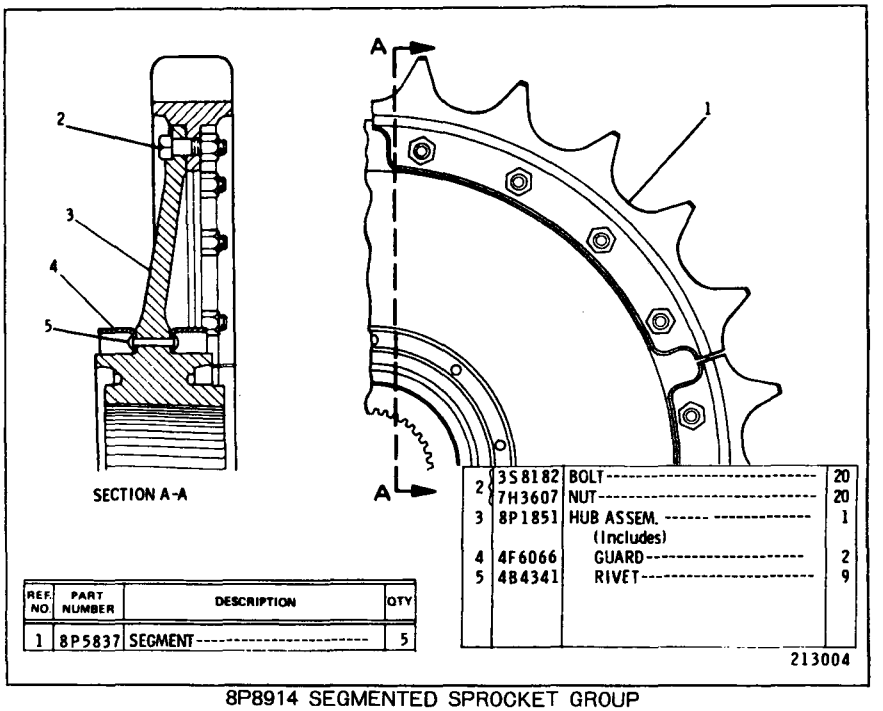

REF. NO.	PART NUMBER	DESCRIPTION	QTY
1	8P5837	SEGMENT	5

2	3S8182	BOLT	20
	7H3607	NUT	20
3	8P1851	HUB ASSEM. (Includes)	1
4	4F6066	GUARD	2
5	4B4341	RIVET	9

8P8914 SEGMENTED SPROCKET GROUP
Effective with Serial No. 6HC1-UP
Part of Final Drive shown on Page 109

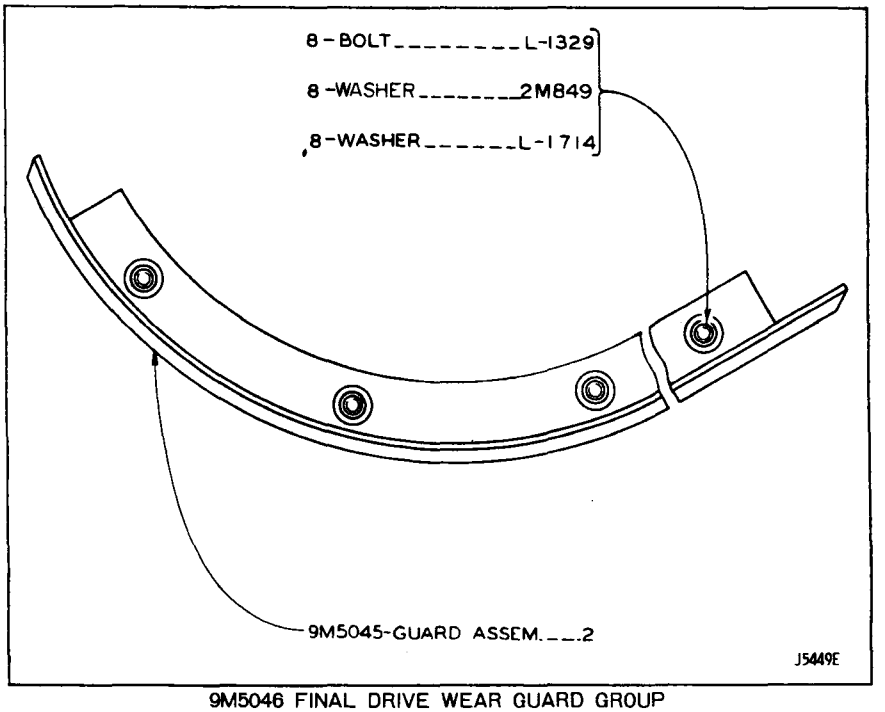

9M5046 FINAL DRIVE WEAR GUARD GROUP
AN ATTACHMENT

Note : Quantites Shown Are Those Requirecl For Both R.H. & L.H. Final Drives.

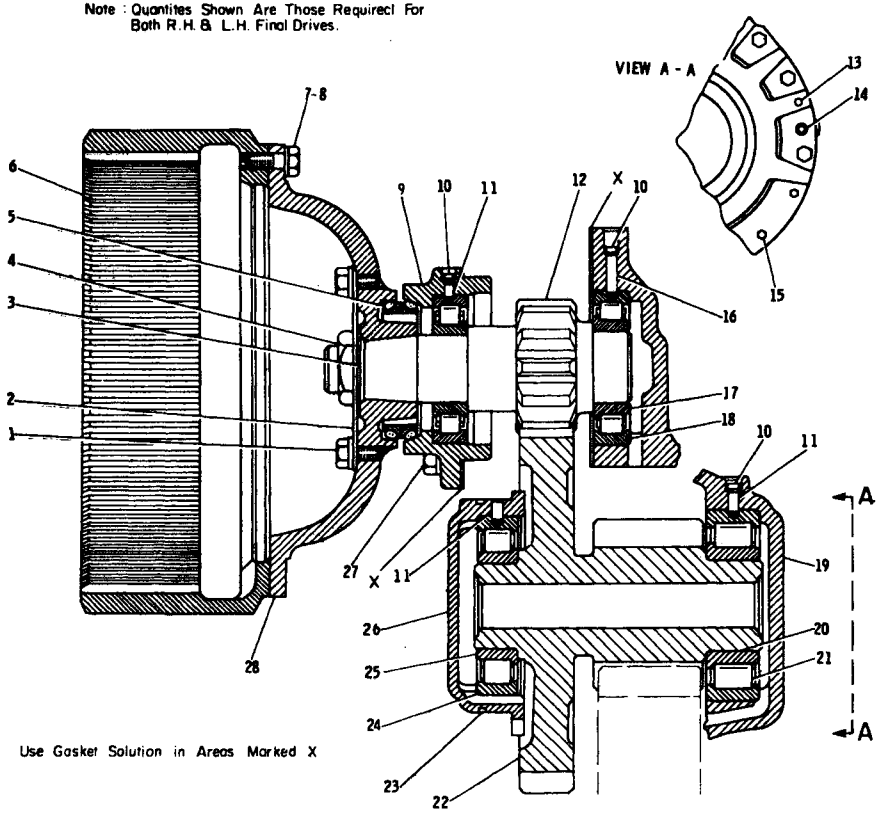

Use Gasket Solution in Areas Marked X

NO.	PART NO. 部品番号	DESCRIPTION 名称および記事	QTY. 数量
1	1S1583	BOLT	4
	5P8248	WASHER	4
2	7G6986	LOCK	2
3	3P7236	GASKET	2
4	6V530	NUT	2
5	5P7143	SEAL GROUP	2
	5P7145	RING	2
6	2S7603	DRUM	2
7	S1589	BOLT	24
8	5P8247	WASHER	24
9	9P418	CAGE	2
10	L1026	PLUG	6
11	3F1953	DOWEL	6
12	9P9362	PINION (11 Teeth)	2
13	2B7557	CORK	6
14	2B8162	DOWEL	6
15	1B2886	BOLT	8
	2M849	WASHER	8
16	3H4174	DOWEL	2
17	5P9177	RACE (Inner)	4
18	5P9176	BEARING (Outer)	4
19	3Y5776	CASE (R.H.)	1
	3Y5777	CASE (L.H.)	1
20	5P5067	RACE (Inner)	2
21	5P5066	BEARING (Outer)	2
22	3Y7992	GEAR & PINION (35&9 Teeth)	2
23	1S4974	SEAL	2
24	6V1013	BEARING (Outer)	2
25	6V1014	RACE (Inner)	2
26	5M7383	CAGE	2
27	S1585	BOLT	12
	3H7654	WASHER	12
28	3P6318	FLANGE	2

J26171E

FINAL DRIVE (7T7410 N/S)—Part 1 of 2

Effective with Serial No. 6HC1~6HC264

FINAL DRIVE (7T7410 N/S)—Part 2 of 2

Effective with Serial No. 6HC1~6HC264

8P8914 Segemented Sprocket parts are shown on Page 107

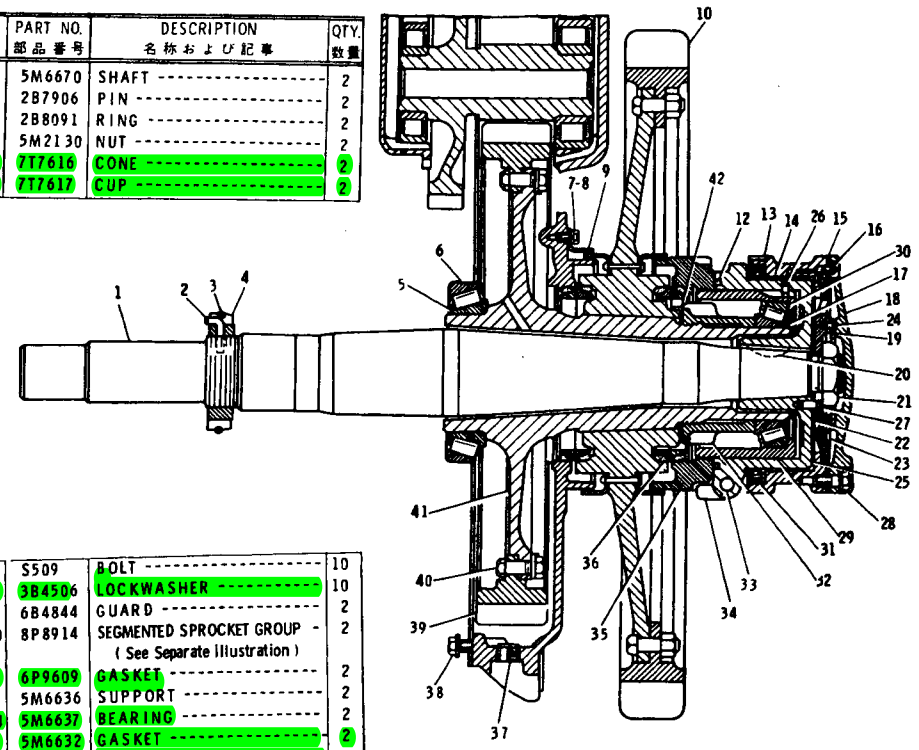

NO.	PART NO. 部品番号	DESCRIPTION 名称および記事	QTY. 数量
1	5M6670	SHAFT	2
2	2B7906	PIN	2
3	2B8091	RING	2
4	5M2130	NUT	2
5	7T7616	CONE	2
6	7T7617	CUP	2
7	S509	BOLT	10
8	3B4506	LOCKWASHER	10
9	6B4844	GUARD	2
10	8P8914	SEGMENTED SPROCKET GROUP (See Separate Illustration)	2
12	6P9609	GASKET	2
13	5M6636	SUPPORT	2
14	5M6637	BEARING	2
15	5M6632	GASKET	2
16	3B8489	FITTING	2
17	7T7614	CONE	2
18	5M5075	CUP	2
	9F2247	PLUG	2
19	5M6628	LOCK	2
20	1B8742	KEY	2
21	7F2339	NUT	2
22	2S4366	SHIM	8
23	2S4365	RETAINER	2
24	S130	PIN	2
25	5S6531	HOLDER ASSEM.	2
26	8M6521	DOWEL	1
27	9M4007	DOWEL	2
28	7B3235	BOLT	12
	3B4508	LOCKWASHER	12
29	7T7432	CAGE ASSEM.	2
30	7T7615	CUP	1
31	4S6752	SEAL	2
32	5M6631	NUT	2
33	6F7024	BOLT	2
	3B4510	LOCKWASHER	2
	1B4206	NUT	2
34	3P3623	LOCK	2
35	4S6256	NUT	2
36	8P1848	SEAL GROUP	4
	2M344	RING	2
37	3S9182	PLUG	2
38	S1585	BOLT	56
	2M849	WASHER	56
39	9P9361	GEAR (46 Teeth)	2
40	3B4990	BOLT	36
	5M6623	LOCK	18
	6B6683	NUT	36
41	5M6651	HUB	2
42	6B4942	LOCK	2

Note: Quantities Shown Are Those Required For Both R.H. & L.H. Final Drives.

J26172E

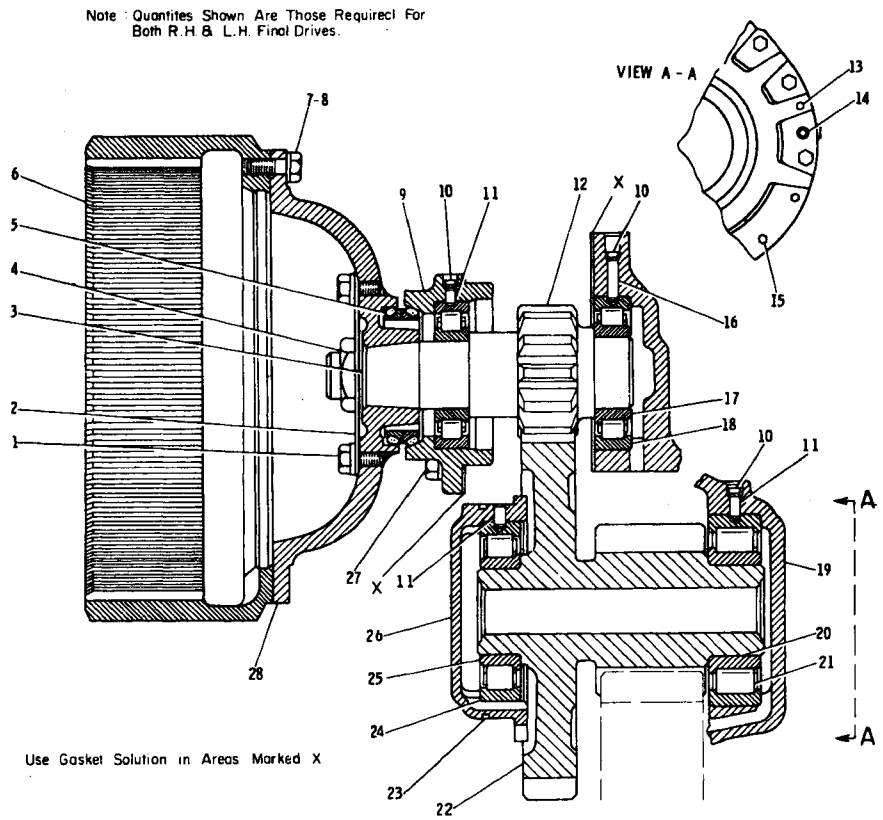

NO.	PART NO. 部品番号	DESCRIPTION 名称および記事	QTY. 数量
1	1S1583	BOLT	4
	5P8248	WASHER	4
2	7G6986	LOCK	2
3	3P7236	GASKET	2
4	6V530	NUT	2
5	5P7143	SEAL GROUP	2
	5P7145	RING	2
6	2S7603	DRUM	2
7	S1589	BOLT	24
8	5P8247	WASHER	24
9	9P418	CAGE	2
10	L1026	PLUG	6
11	3F1953	DOWEL	6
12	9P9362	PINION (11 Teeth)	2
13	2B7557	CORK	6
14	2B8162	DOWEL	6
15	1B2886	BOLT	8
	2M849	WASHER	8
16	3H4174	DOWEL	2
17	5P9177	RACE (Inner)	4
18	5P9176	BEARING (Outer)	4
19	3Y5776	CASE (R.H.)	1
	3Y5777	CASE (L.H.)	1
20	5P5067	RACE (Inner)	2
21	5P5066	BEARING (Outer)	2
22	3Y7992	GEAR & PINION (35&9 Teeth)	2
23	1S4974	SEAL	2
24	6V1013	BEARING (Outer)	2
25	6V1014	RACE (Inner)	2
26	5M7383	CAGE	2
27	S1585	BOLT	12
	3H7654	WASHER	12
28	3P6318	FLANGE	2

J26171E

FINAL DRIVE (7T7410 N/S) – Part 1 of 2
Effective with Serial No. 6HC265~6HC305

FINAL DRIVE (7T7410 N/S)—Part 2 of 2

Effective with Serial No. 6HC265~6HC305

8P8914 Segmented Sprocket parts are shown on Page 107

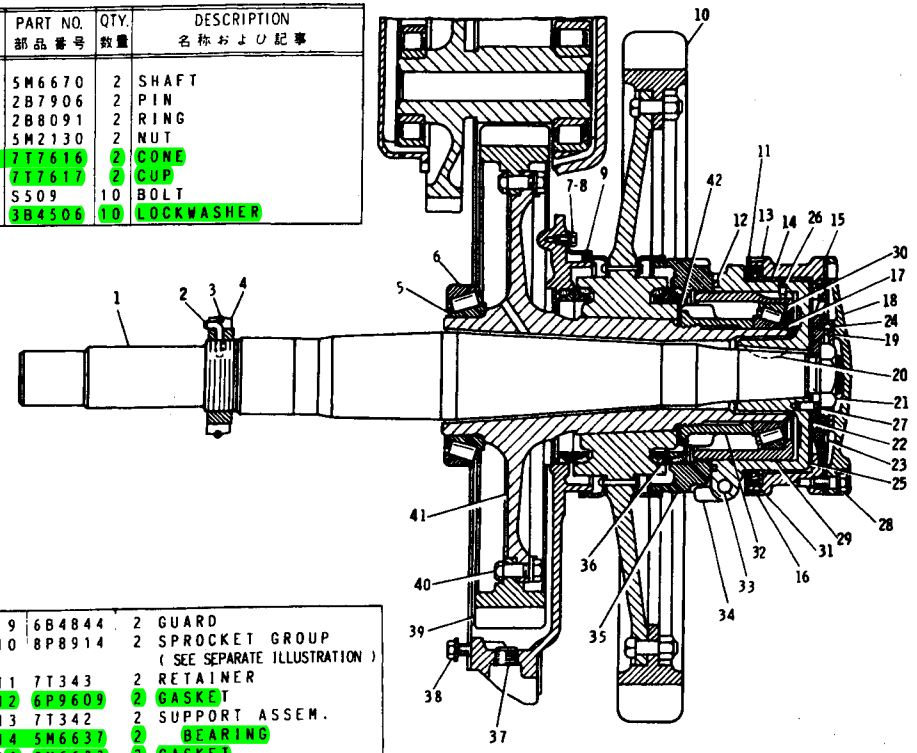

NO.	PART NO. 部品番号	QTY. 数量	DESCRIPTION 名称および記事
1	5M6670	2	SHAFT
2	2B7906	2	PIN
3	2B8091	2	RING
4	5M2130	2	NUT
5	7T7616	2	CONE
6	7T7617	2	CUP
7	S509	10	BOLT
8	3B4506	10	LOCKWASHER
9	6B4844	2	GUARD
10	8P8914	2	SPROCKET GROUP (SEE SEPARATE ILLUSTRATION)
C 11	7T343	2	RETAINER
12	6P9609	2	GASKET
C 13	7T342	2	SUPPORT ASSEM.
14	5M6637	2	BEARING
15	5M6632	2	GASKET
C 16	4B1281	16	SCREW
17	7T7614	2	CONE
C	7T287	2	CAP
C 18	9S8005	2	PLUG
C	3K360	2	SEAL
19	5M6628	2	LOCK
20	1B8742	2	KEY
21	7F2339	2	NUT
22	2S4366	8	SHIM
23	2S4365	2	RETAINER ASSEM.
24	S130	2	PIN
25	5S6531	2	HOLDER ASSEM.
26	8M6521	1	DOWEL
27	9M4007	2	DOWEL
28	7B3235	12	BOLT
	3B4508	12	LOCKWASHER
29	7T7432	2	CAGE ASSEM.
30	7T7615	1	CUP
C 31	8T85	2	SEAL
32	5M6631	2	NUT
33	6F7024	2	BOLT
	1B4206	2	NUT
	3B4510	2	LOCKWASHER
34	3P3623	2	LOCK
35	4S6256	2	NUT
36	8P1848	4	SEAL GROUP
	2M344	2	RING
37	3S9182	2	PLUG
38	S1585	56	BOLT
	2M849	56	WASHER
39	9P9361	2	GEAR (46 TEETH)
40	3B4990	36	BOLT
	6B6683	36	NUT
	5M6623	18	LOCK
41	5M6651	2	HUB
42	6B4942	2	LOCK

Note Quantities Shown Are Those Required For Both R.H. & L.H. Final Drives.
C Indicates Change.

C INDICATES CHANGE

J28998E

Note : Quantites Shown Are Those Requirecl For Both R.H.& L.H. Final Drives.

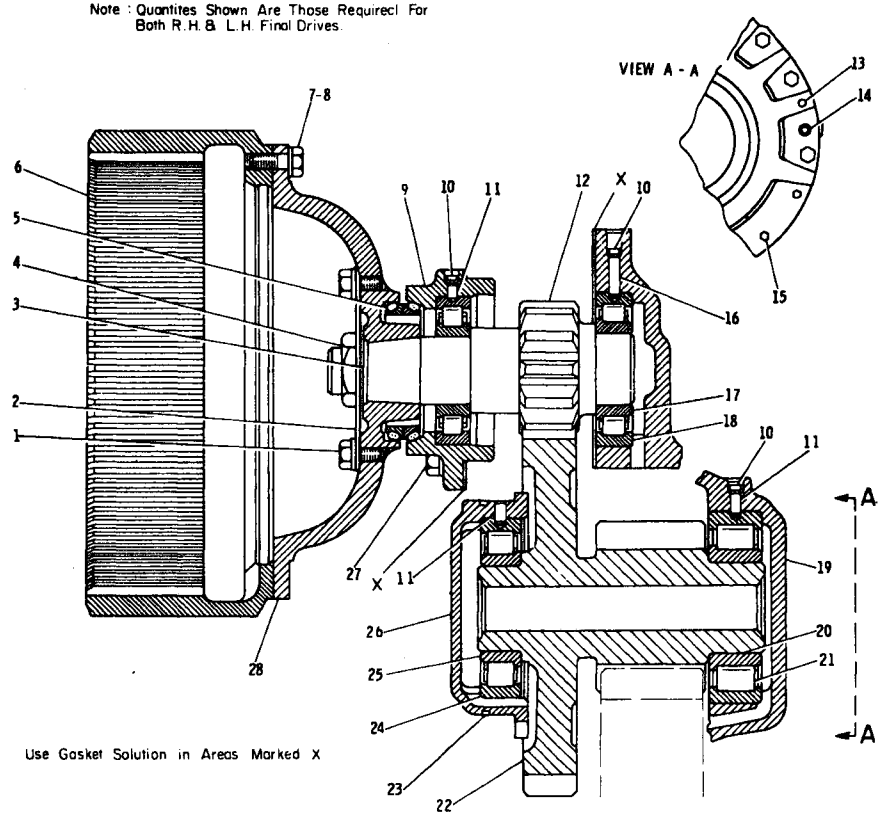

Use Gasket Solution in Areas Marked X

NO.	PART NO. 部品番号	DESCRIPTION 名称および記事	QTY. 数量
1	S1583	BOLT	4
	5P8248	WASHER	4
2	7G6986	LOCK	2
3	3P7236	GASKET	2
4	6V530	NUT	2
5	5P7143	SEAL GROUP	2
	5P7145	RING	2
6	2S7603	DRUM	2
7	S1589	BOLT	24
8	5P8247	WASHER	24
9	9P418	CAGE	2
10	L1026	PLUG	6
11	3F1953	DOWEL	6
12	9P9362	PINION (11 Teeth)	2
13	2B7557	CORK	6
14	2B8162	DOWEL	6
15	1B2886	BOLT	8
	2M849	WASHER	8
16	3H4174	DOWEL	2
17	5P9177	RACE (Inner)	4
18	5P9176	BEARING (Outer)	4
19	3Y5776	CASE (R.H.)	1
	3Y5777	CASE (L.H.)	1
20	5P5067	RACE (Inner)	2
21	5P5066	BEARING (Outer)	2
22	3Y7992	GEAR & PINION (35&9 Teeth)	2
23	1S4974	SEAL	2
24	6V1013	BEARING (Outer)	2
25	6V1014	RACE (Inner)	2
26	5M7383	CAGE	2
27	S1585	BOLT	12
	3H7654	WASHER	12
28	3P6318	FLANGE	2

J26171E

FINAL DRIVE (7T7410 N/S)—Part 1 of 2

Effective with Serial No. 6HC306—UP

FINAL DRIVE (7T7410 N/S)—Part 2 of 2

Effective with Serial No. 6HC306—UP

8P8914 Segmented Sprocket parts are shown on Page 107

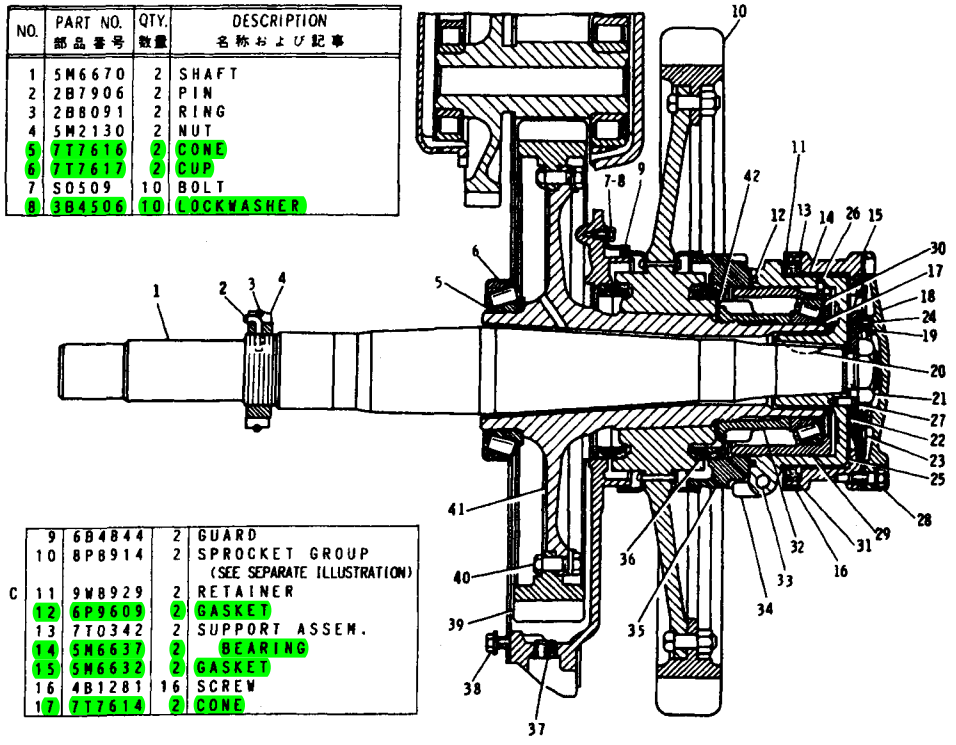

NO.	PART NO. 部品番号	QTY. 数量	DESCRIPTION 名称および記事
1	5M6670	2	SHAFT
2	2B7906	2	PIN
3	2B8091	2	RING
4	5M2130	2	NUT
5	7T7616	2	CONE
6	7T7617	2	CUP
7	S0509	10	BOLT
8	3B4506	10	LOCKWASHER
9	6B4844	2	GUARD
10	8P8914	2	SPROCKET GROUP (SEE SEPARATE ILLUSTRATION)
C 11	9W8929	2	RETAINER
12	6P9609	2	GASKET
13	7T0342	2	SUPPORT ASSEM.
14	5M6637	2	BEARING
15	5M6632	2	GASKET
16	4B1281	16	SCREW
17	7T7614	2	CONE
18	7T0287	2	CAP
	9S8005	2	PLUG
	3K0360	2	SEAL
19	5M6628	2	LOCK
20	1B8742	2	KEY
21	7F2339	2	NUT
22	2S4366	8	SHIM
23	2S4365	2	RETAINER ASSEM.
24	S0130	2	PIN
25	5S6531	2	HOLDER ASSEM.
26	8M6521	1	DOWEL
27	9M4007	2	DOWEL
28	7B3235	12	BOLT(35MM)
	3B4508	12	WASHER
29	7T7432	2	CAGE ASSEM.
30	7T7615	1	CUP
C 31	9W7989	2	SEAL
32	5M6631	2	NUT
33	6F7024	2	BOLT
	1B4206	2	NUT
	3B4510	2	LOCKWASHER
34	3P3623	2	LOCK
35	4S6256	2	NUT
C 36	9G5341	4	SEAL GROUP
	2M0344	2	RING
37	3S9182	2	PLUG
38	S1585	56	BOLT
	2M0849	56	WASHER
39	9P9361	2	GEAR(46TEETH)
	3B4990	36	BOLT
40	6B6683	36	NUT
	5M6623	18	LOCK
41	5M6651	2	HUB
42	6B4942	2	LOCK

Note: Quantities Shown Are Those Required For Both R.H. & L.H. Final Drives.
C Indicates Change.

J32554E

NO.	PART NO. 部品番号	DESCRIPTION 名称および記事	QTY. 数量
1	L829	HANDLE	2
2	T102	BOLT	4
	3B4506	LOCKWASHER	4
3	1P2878	ROLLER	4
4	8P3410	ROD	2
5	9S1354	NUT	2
6	4K5563	END	2
7	7H9397	PIN	2
	1H1200	PIN (Spring)	2
8	9M5884	BUMPER	2
9	8P3262	LEVER (R. H.)	1
	8P3261	LEVER (L. H.)	1
	6K8088	BEARING	4
10	1M1341	ROD END	2
11	8P2971	ROD	2
12	2K400	END	2
13	1B676	PIN	6
14	3B4615	COTTER PIN	10
15	7G9990	LEVER	1
16	1B8706	KEY	2
C 17	8M4990	SEAL	1
C 18	S1588	BOLT	1
19	1S4	SEAL	2
20	8M4987	SEAL	2
21	7M7260	LIQUID GASKET	
C 22	5H6799	LEVER	1
23	5B9079	NUT	4
C▲ 24	9S1328	WASHER	6
	8P9821	WASHER (Spring)	4
25	1A8827	PIN	4
26	8P3409	BRACKET ASSEM.	2
27	9F2978	NUT (Weld)	2
C 28	S1591	BOLT	1
C	1D4717	NUT	1

▲ Use as Required
C Indicates Change

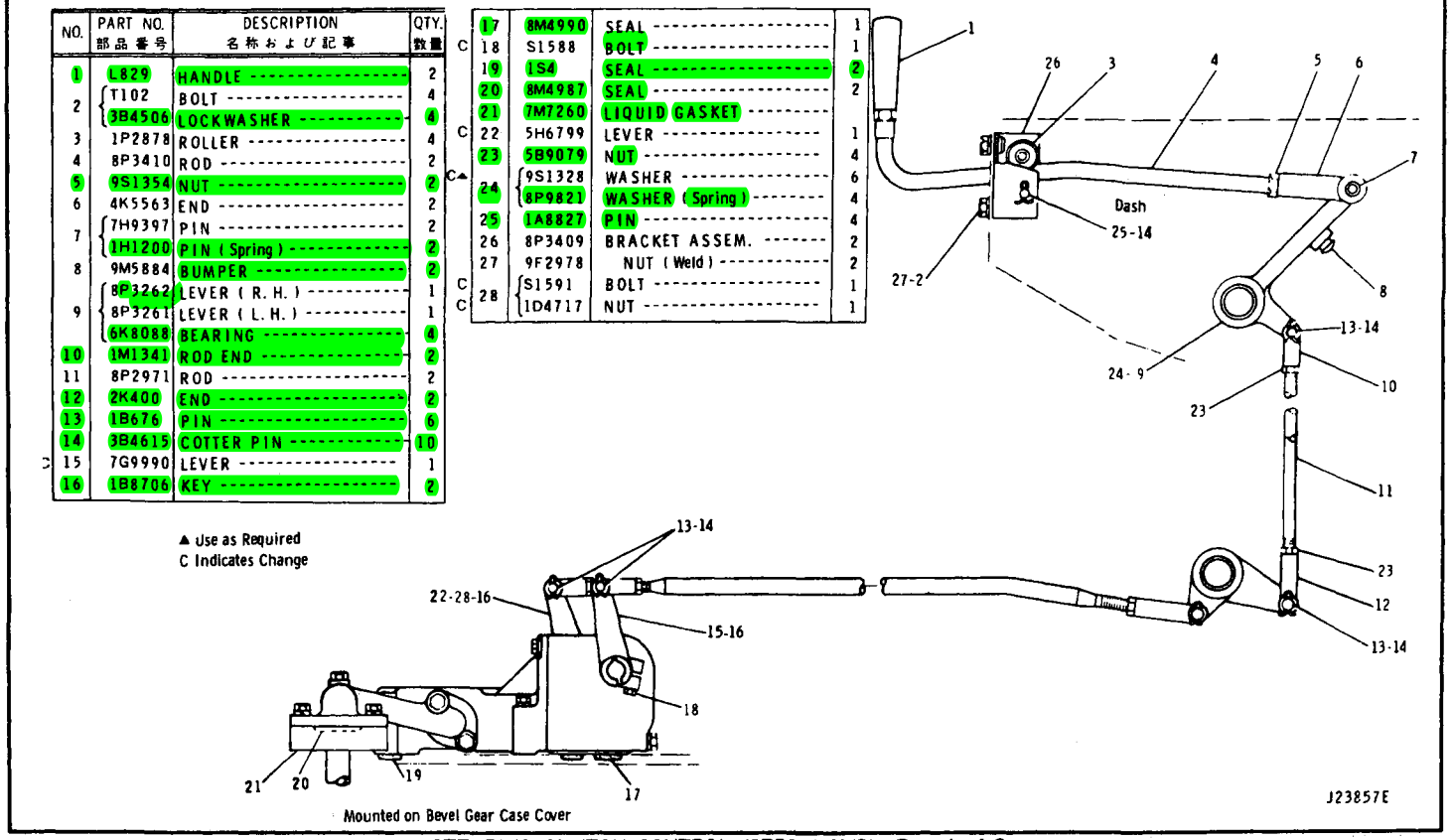

Mounted on Bevel Gear Case Cover

STEERING CLUTCH CONTROL (8P5200 N/S)–Part 1 of 2

Effective with Serial No. 6HC1–UP

STEERING CLUTCH CONTROL (8P5200 N/S)—Part 2 of 2

Effective with Serial No. 6HC1—UP

3T8204 Control Valve parts are shown on Page 112

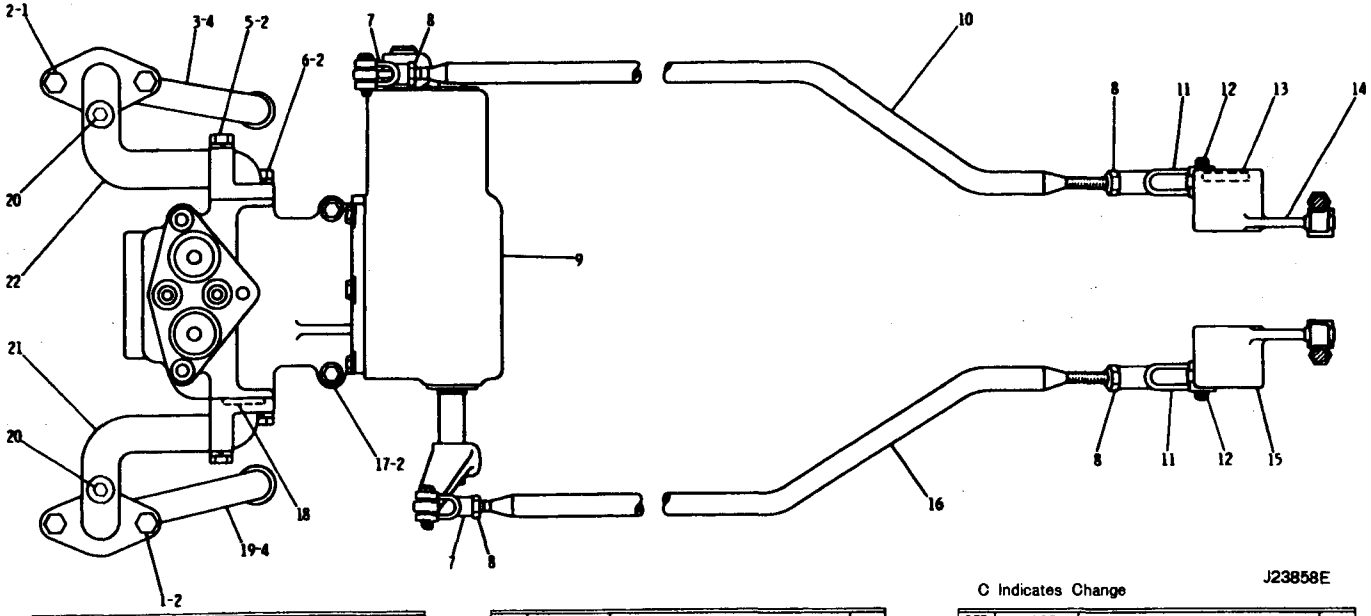

J23858E

C Indicates Change

REF. NO.	PART NUMBER	DESCRIPTION	QTY.
1	S1571	BOLT	4
2	3B4506	LOCKWASHER	10
3	2S4302	TUBE ASSEM.	1
4	8M4446	SEAL	2
5	L2070	BOLT	2
6	1A2029	BOLT	2
7	1M1341	YOKE END	2
8	5B9079	NUT	4

	REF. NO.	PART NUMBER	DESCRIPTION	QTY.
C	9	3T8204	VALVE GROUP (See Separate Illustration)	1
	10	8P2519	ROD	1
	11	1A9252	YOKE END	2
	12	1B676	PIN	2
		3B4615	COTTER PIN	2
	13	6K8088	BEARING	4
	14	8P2506	BELLCRANK	1

REF. NO.	PART NUMBER	DESCRIPTION	QTY.
15	8P2505	BELLCRANK	1
16	8P2517	ROD	1
17	L1143	BOLT	2
18	8M4445	SEAL	2
19	2S4301	TUBE ASSEM.	1
20	5M6214	PLUG	2
21	3S2061	ELBOW	1
22	3S2062	ELBOW	1

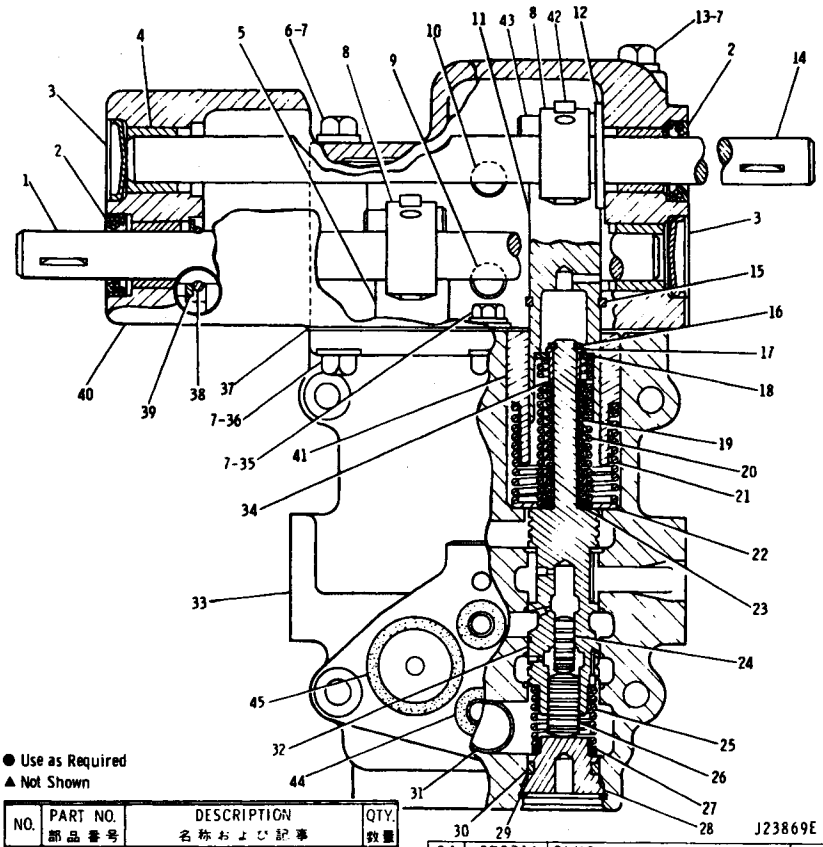

● Use as Required
▲ Not Shown

NO.	PART NO. 部品番号	DESCRIPTION 名称および記事	QTY. 数量
1	8P3301	SHAFT	1
2	9H223	SEAL	2
3	3S8313	PLUG	2
4	8H8175	BEARING	4
5	9P8186	PLUNGER (71.5mm Long)	1
6	T65	BOLT	1
7	5M2894	WASHER	6
8	2S8396	LEVER	2
	1B8706	KEY	2
	S1588	BOLT	2
9	8S5716	STANDPIPE	1
10	2S8413	STANDPIPE	1
11	9P8185	PLUNGER (104mm Long)	1
12	4B4283	WASHER	1
13	1A5183	BOLT	1
14	8P2520	SHAFT	1
15	1H4148	RING	2
16	6L8598	RING	2
17	3T1100	SLEEVE	2
18	9P8218	WASHER	2
19	3T8080	SPRING	2
20	3T8081	SPRING	2
21	8S5753	SPRING	2
22	3T9981	WASHER	2
● 23	7G6005	SHIM (0.25mm Thick)	20
24	3P3716	SLUG	2
25	9P8308	SPRING	2
26	9P8196	SLUG	2
● 27	7G4271	SHIM (0.25mm Long)	12
28	2S8399	PLUG	2
29	2D6398	RING	2
30	8M4445	SEAL	2
31	2S8412	STANDPIPE	1
32	9P8197	VALVE	2
33	9P8000	HOUSING	1
34	9P8217	WASHER	2
35	S509	BOLT	1
	3K925	WASHER	1
36	S1594	BOLT	3
37	2S8414	GASKET	1
38	3S7005	RING	1
39	3B9363	WASHER	1
40	8P8043	HOUSING	1
41	9P7913	BUSHING	2
42	2S8411	ROLLER	2
43	3B4615	COTTER PIN	2
	1B676	PIN	2
44	8M8282	SEAL	2
45	8M4987	SEAL	2
▲	Not Serv.	PLATE	1
	7B3028	SCREW	1

3T8204 CONTROL VALVE GROUP
Effective with Serial No. 6HC1—UP
Part of Steering Clutch Control

STEERING CLUTCH (8S2557 N/S)

Effective with Serial No. 6HC1—UP

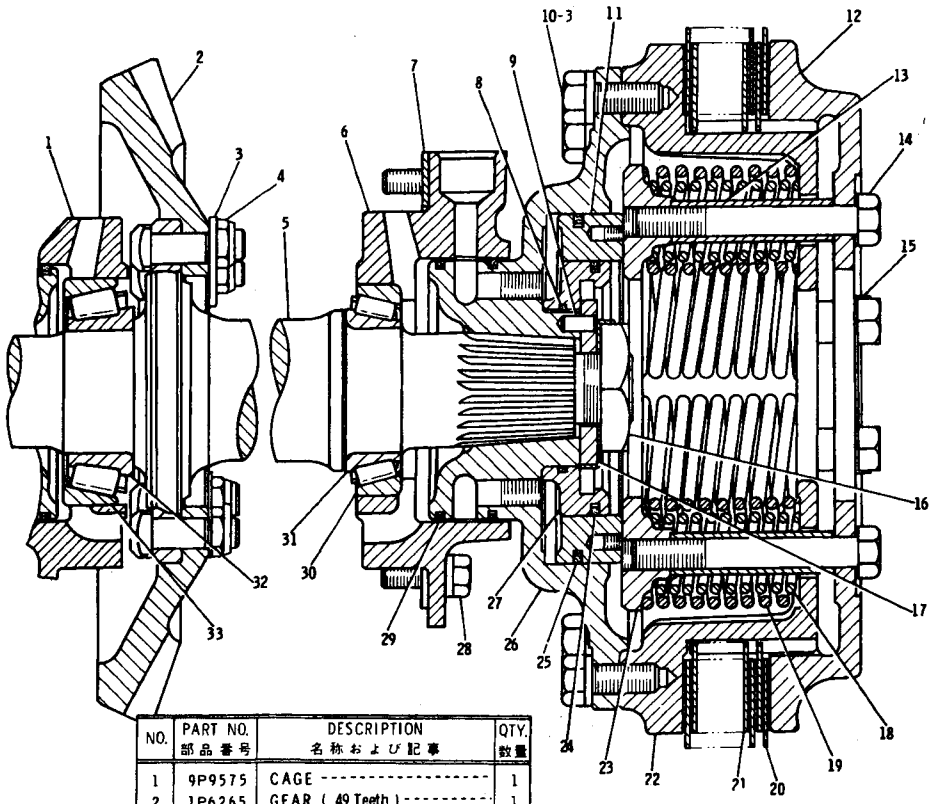

NO.	PART NO. 部品番号	DESCRIPTION 名称および記事	QTY. 数量
1	9P9575	CAGE	1
2	1P6265	GEAR (49 Teeth)	1

C Indicates Change

C	3	5P8247	WASHER	34
C	4	4B966	BOLT	10
		2K4821	NUT	10
	5	9P9000	SHAFT	1
	6	5M7290	CAGE	1
	7	5M7307	SHIM PACK	2
	8	2H3931	SEAL	2
	9	4H1440	PIN	2
	10	S1589	BOLT	24
	11	9M701	PISTON	2
	12	5S73	PLATE	2
	13	5M7297	SLEEVE	16
	14	1D4590	BOLT	16
	15	9M6775	LOCK	8
	16	L2341	NUT	2
		5M6716	LOCK	2
	17	5M7280	WASHER	2
C	18	5M7304	SPRING (Outside)	12
	19	5M7305	SPRING (Inside)	16
C	20	4Y709	DISC ASSEM.	10
C	21	1A3987	DISC	8
C	22	3T1899	DRUM	2
	23	1M9444	RETIANER	2
	24	9M1393	RING	2
	25	8M7438	RING	2
	26	5M6690	HUB	2
	27	9M702	PILOT	2
	28	S1585	BOLT	16
C		5P8245	WASHER	16
	29	4M3948	RING	4
	30	2A4576	CUP	1
	31	9M2457	CONE	1
	32	7K394	CONE	1
	33	6M3568	CUP	1

J26509E

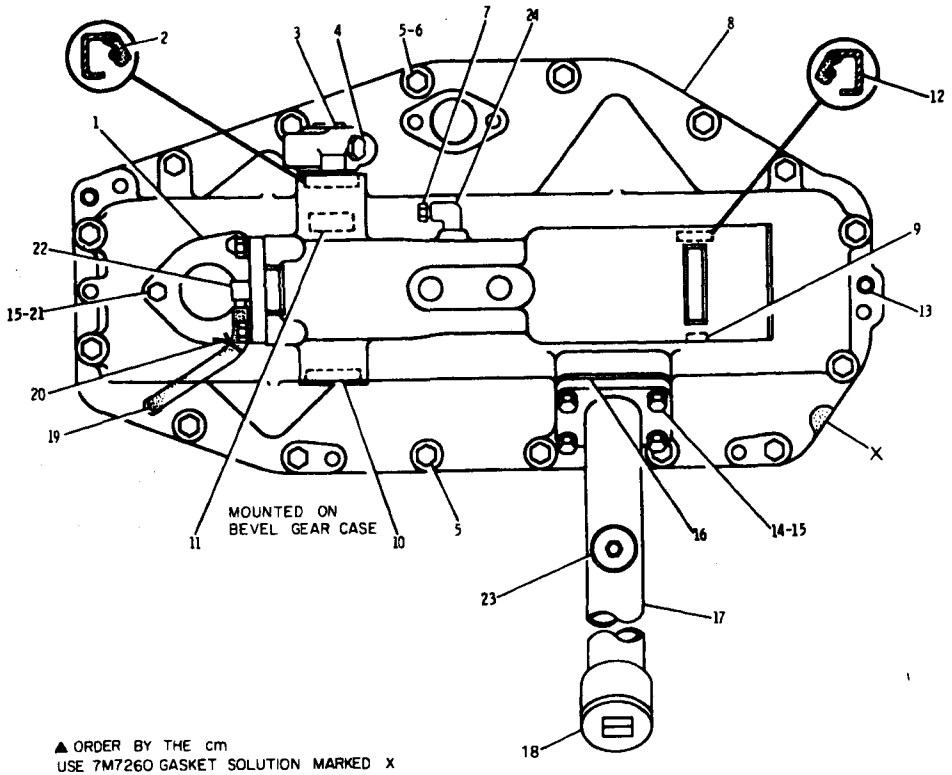

NO.	PART NO. 部品番号	DESCRIPTION 名称および記事	QTY. 数量
1	9H8889	COVER	2
	9H8890	GASKET	2
2	2P6286	SEAL	1
3	8P2514	LEVER	1
	1B8719	KEY	1
4	S1589	BOLT	1
5	9S1366	BOLT	16
	3B4508	LOCKWASHER	16
6	1K4649	SPACER	1
7	5M6214	PLUG	1
8	8P1191	HOUSING ASSEM.	1
	2S8359	SLEEVE	1
9	5B1866	PLUG	1
10	L1021	PLUG	1
11	1J3710	BEARING	2
12	5H1190	SEAL	1
13	5M7937	DOWEL	4
14	S1588	BOLT	4
15	3B4506	LOCKWASHER	10
16	8P2680	GASKET	1
17	8P1217	SPOUT	1
18	L827	PLUG	1
	L1124	GASKET	1
▲19	5P1520	HOSE 26cm	
	5P7175	NIPPLE	1
20	3S5096	CLAMP	2
21	L1351	BOLT	6
22	672935	FITTING	1
23	4H6112	BREATHER	1
24	3B6552	ELBOW	1

J19148E

BRAKE HYDRAULIC MECHANISM (8P1216 N/S)—Part 1 of 2

Effective with Serial No. 6HC1~6HC305

BRAKE HYDRAULIC MECHANISM (8P1216 N/S)–Part 2 of 2

Effective with Serial No. 6HC1~6HC305

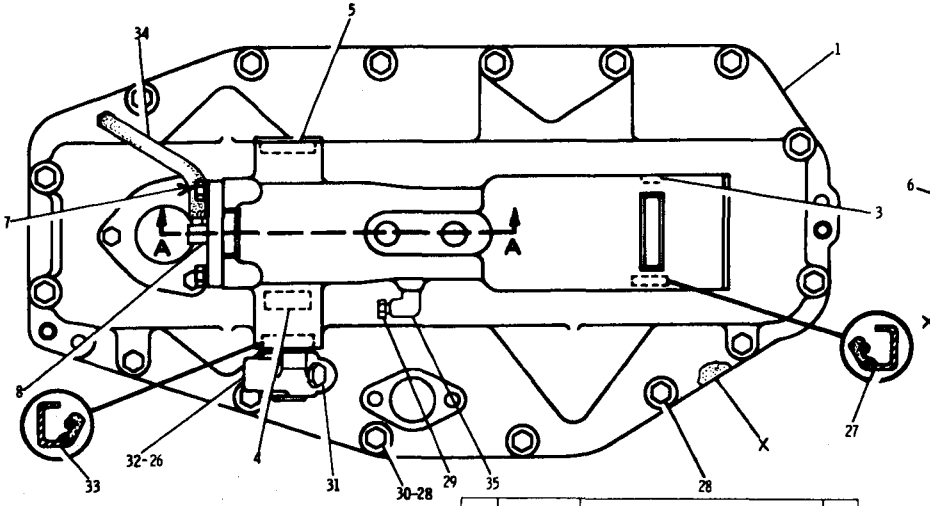

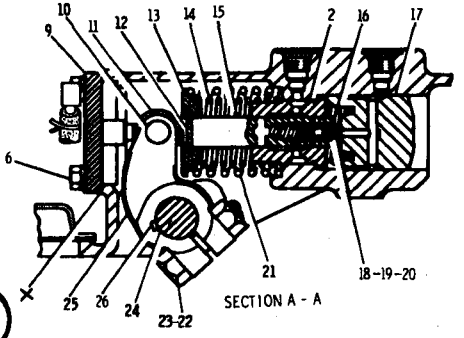

SECTION A - A

USE 7M7260 GASKET SOLUTION MARKED X

▲ORDER BY THE cm

J19149E

NO.	PART NO. 部品番号	DESCRIPTION 名称および記事	QTY. 数量
1	8P1190	HOUSING ASSEM.	1
2	2S8359	SLEEVE	1
3	5B1866	PLUG	1
4	LJ3710	BEARING	2
5	L1021	PLUG	1
6	1A2029	BOTL	8
	3B4506	LOCKWASHER	8
7	3S5096	CLAMP	2
8	672935	FITTING	1
9	8P8255	COVER ASSEM.	2
10	3H1977	PIN	2
	3B4617	COTTER PIN	2
11	6B7687	ROLLER	2
12	4H8158	RING	2
13	2S8416	RETAINER	2
14	9H7553	SPRING (Inner)	2
15	5S6880	PLUNGER	2
16	7J2025	SPRING	2
17	8P1186	PISTON	2
18	2S8571	VALVE	2
19	5P6717	RING	2
20	5M3389	SPRING	2
21	9H7534	SPRING(Outer)	2
22	8S9092	BOLT	2
23	1D4720	NUT	2
24	7S3842	SHAFT	2
25	9H7657	LEVER	2
26	1B8719	KEY	3
27	5H1190	SEAL	1
28	9S1366	BOLT	16
	3B4508	LOCKWASHER	16
29	5M6214	PLUG	1
30	1K4649	SPACER	1
31	S1589	BOLT	1
32	8P2515	LEVER	1
33	2P6286	SEAL	1
▲ 34	5P1520	HOSE 26cm	
	5P7175	NIPPLE	1
35	3B6552	ELBOW	1

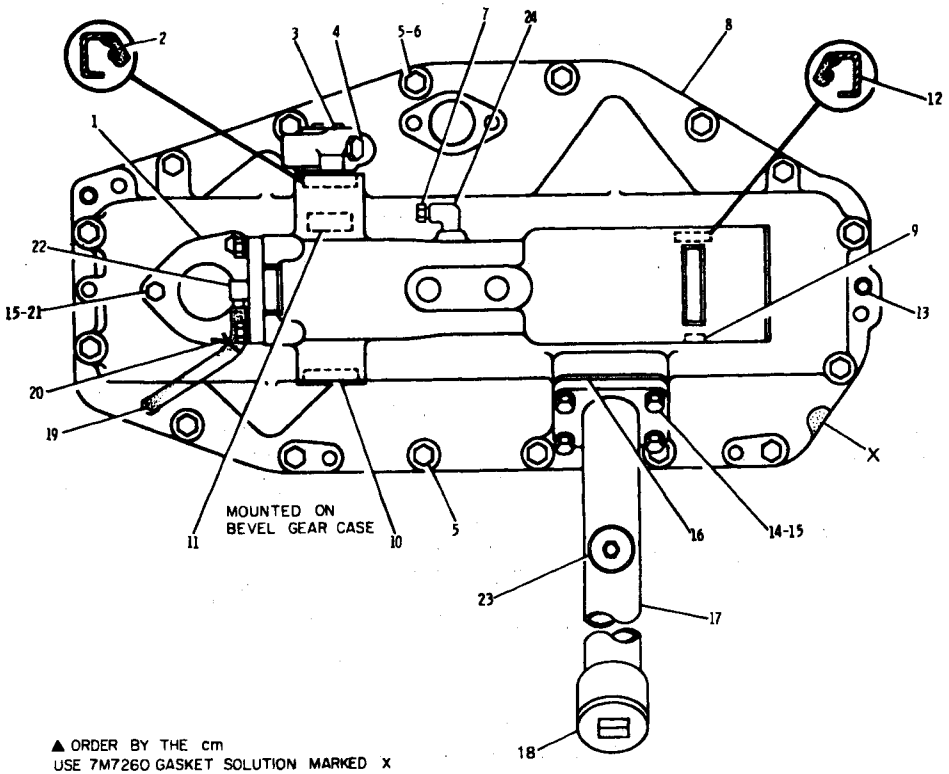

NO.	PART NO. 部品番号	DESCRIPTION 名称および記事	QTY. 数量
1	9H8889	COVER	2
	9H8890	GASKET	2
2	2P6286	SEAL	1
3	8P2514	LEVER	1
	1B8719	KEY	1
4	S1589	BOLT	1
5	9S1366	BOLT	16
	3B4508	LOCKWASHER	16
6	1K4649	SPACER	1
7	5M6214	PLUG	1
8	8P1191	HOUSING ASSEM.	1
	2S8359	SLEEVE	1
9	5B1866	PLUG	1
10	L1021	PLUG	1
11	1J3710	BEARING	2
12	5H1190	SEAL	1
13	5M7937	DOWEL	4
14	S1588	BOLT	4
15	3B4506	LOCKWASHER	10
16	8P2680	GASKET	1
17	8P1217	SPOUT	1
18	L827	PLUG	1
	L1124	GASKET	1
▲ 19	5P1520	HOSE 26cm	
	5P7175	NIPPLE	1
20	3S5096	CLAMP	2
21	L1351	BOLT	6
22	672935	FITTING	1
23	4H6112	BREATHER	1
24	3B6552	ELBOW	1

BRAKE HYDRAULIC MECHANISM (8P1216 N/S)–Part 1 of 2

Effective with Serial No. 6HC306–UP

BRAKE HYDRAULIC MECHANISM (8P1216 N/S)—Part 2 of 2

Effective with Serial No. 6HC306—UP

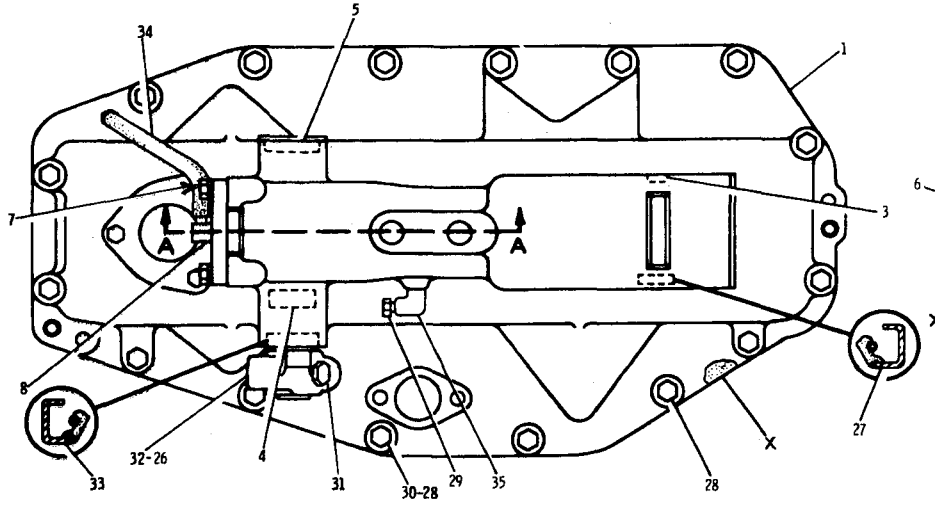

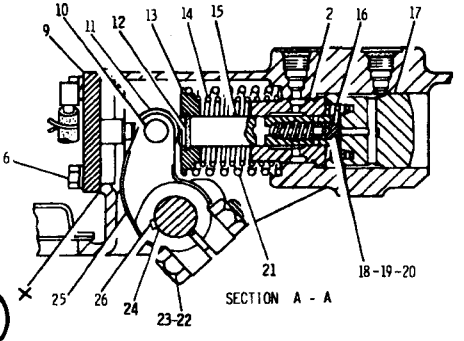

▲ORDER BY THE cm
C INDICATES CHANGE
USE 7M7260 GASKET SOLUTION
IN AREAS MARKED X

NO.	PART NO. 部品番号	QTY. 数量	DESCRIPTION 名称および記事
1	8P1190	1	HOUSING
2	2S8359	1	SLEEVE
3	5B1866	1	PLUG
4	1J3710	2	BEARING
5	L1021	1	PLUG
6	1A2029	8	BOLT
	3B4506	8	LOCKWASHER
7	3S5096	2	CLAMP
8	672935	1	FITTING
9	8P8255	2	COVER ASSEM.
10	3H1977	2	PIN
	3B4617	2	COTTER PIN
11	6B7687	2	ROLLER
12	4H8158	2	RING
13	2S8416	2	RETAINER
14	9H7553	2	SPRING(INNER)
C 15	9W8900	2	PLUNGER
16	7J2025	2	SPRING
17	8P1186	2	PISTON
18	2S8571	2	VALVE
C 19	8C7362	2	RING
20	5M3389	2	SPRING
21	9H7534	2	SPRING(OUTER)
22	8S9092	2	BOLT
23	1D4720	2	NUT
24	7S3842	2	SHAFT
25	9H7657	2	LEVER
26	1B8719	3	KEY
27	5H1190	1	SEAL
28	9S1366	16	BOLT
	3B4508	16	WASHER
29	5M6214	1	PLUG
30	1K4649	1	SPACER
31	S1589	1	BOLT
32	8P2515	1	LEVER
33	2P6286	1	SEAL
▲ 34	5P1520		HOSE---26cm
	5P7175	1	NIPPLE
35	3B6552	1	ELBOW

J32137E

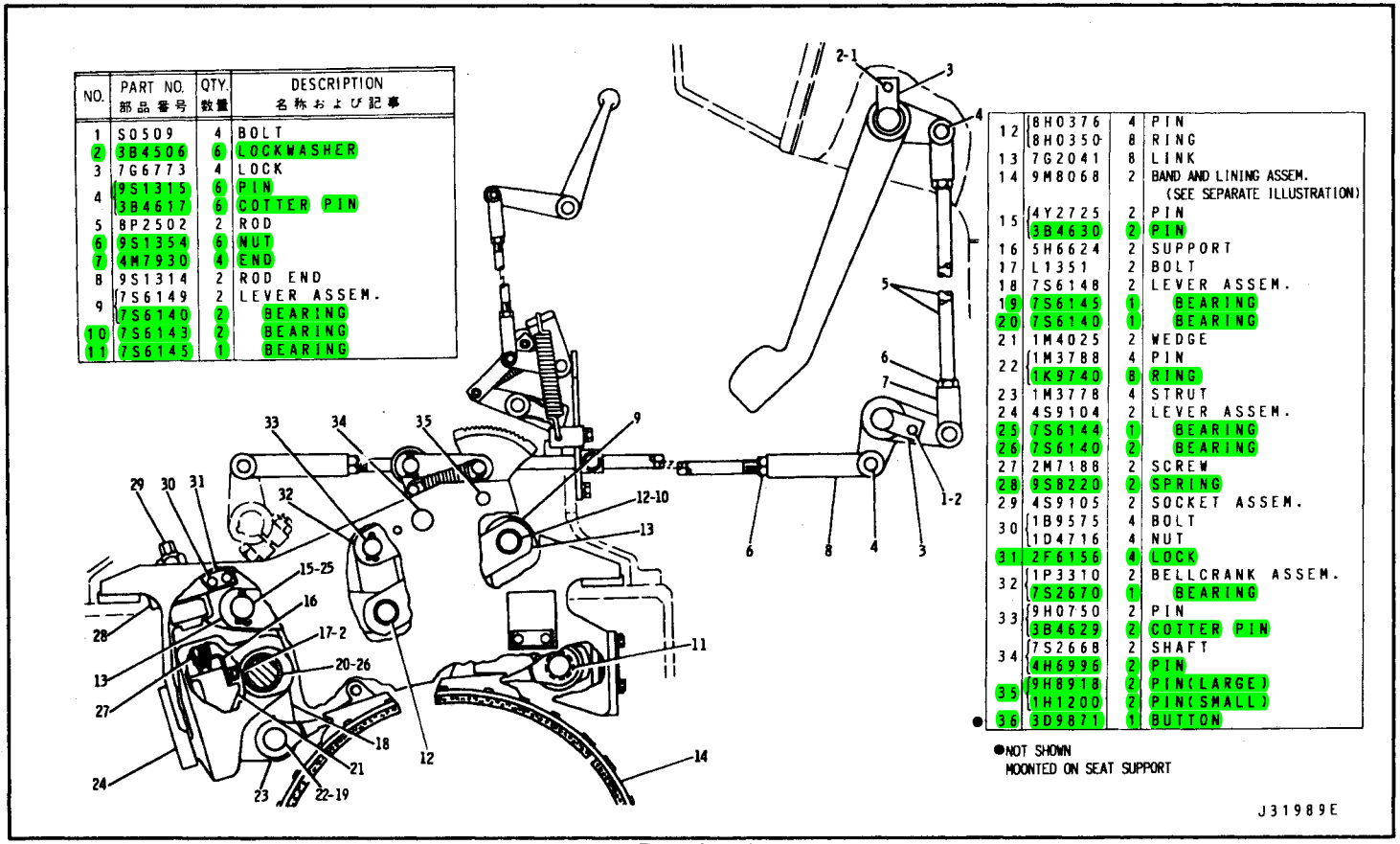

NO.	PART NO. 部品番号	QTY. 数量	DESCRIPTION 名称および記事
1	50509	4	BOLT
2	3B4506	6	LOCKWASHER
3	7G6773	4	LOCK
4	9S1315	6	PIN
	3B4617	6	COTTER PIN
5	8P2502	2	ROD
6	9S1354	6	NUT
7	4M7930	4	END
8	9S1314	2	ROD END
9	7S6149	2	LEVER ASSEM.
	7S6140	2	BEARING
10	7S6143	2	BEARING
11	7S6145	1	BEARING
12	8H0376	4	PIN
	8H0350	8	RING
13	7G2041	8	LINK
14	9M8068	2	BAND AND LINING ASSEM. (SEE SEPARATE ILLUSTRATION)
15	4Y2725	2	PIN
	3B4630	2	PIN
16	5H6624	2	SUPPORT
17	L1351	2	BOLT
18	7S6148	2	LEVER ASSEM.
19	7S6145	1	BEARING
20	7S6140	1	BEARING
21	1M4025	2	WEDGE
22	1M3788	4	PIN
	1K9740	8	RING
23	1M3778	4	STRUT
24	4S9104	2	LEVER ASSEM.
25	7S6144	1	BEARING
26	7S6140	2	BEARING
27	2M7188	2	SCREW
28	9S8220	2	SPRING
29	4S9105	2	SOCKET ASSEM.
30	1B9575	4	BOLT
	1D4716	4	NUT
31	2F6156	4	LOCK
32	1P3310	2	BELLCRANK ASSEM.
	7S2670	1	BEARING
33	9H0750	2	PIN
	3B4629	2	COTTER PIN
34	7S2668	2	SHAFT
	4H6996	2	PIN
35	9H8918	2	PIN(LARGE)
	1H1200	2	PIN(SMALL)
36	3D9871	1	BUTTON

●NOT SHOWN
MOUNTED ON SEAT SUPPORT

STEERING BRAKE (7G7419 N/S)—Part 1 of 3
Effective with Serial No. 6HC1—UP
9M8068 Band & Lining parts are shown on Page 119

STEERING BRAKE (7G7419 N/S)–Part 2 of 3

Effective with Serial No. 6HC1–UP

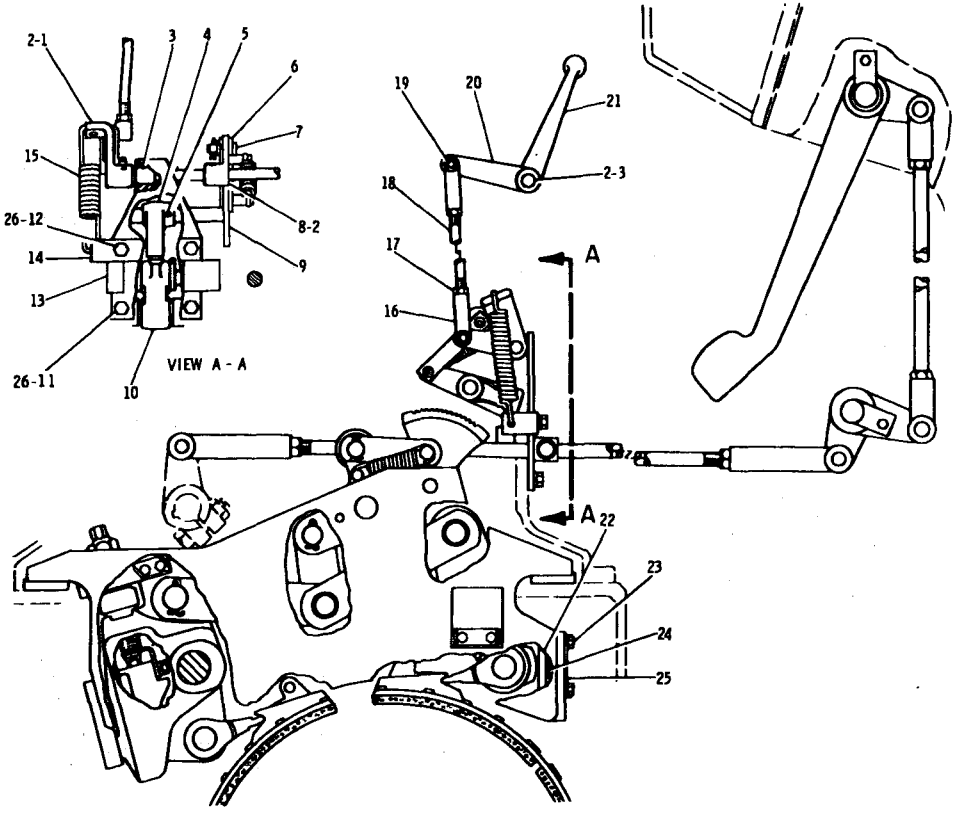

REF. NO.	PART NUMBER	DESCRIPTION	QTY.
1	8P3175	LEVER	1
2	6H3956	PIN	4
3	5P1901	BEARING	3
4	3P5206	PAWL	2
5	1H1200	PIN	2
6	6P2772	PLATE	4
7	1A2457	PIN	2
	L261	WASHER	2
	3B4607	COTTER PIN	2
8	8P3173	LEVER	2
9	8P3170	LEVER ASSEM.	1
10	3P6105	RATCHET	2
11	S1594	BOLT	2
12	1A2029	BOLT	2
13	7G7418	COVER ASSEM.(R.H.)	1
	8P3168	COVER ASSEM.(L.H.)	1
	7S2780	GASKET	2
14	8P3181	BRACKET	1
15	8D8456	SPRING	1
16	2K400	YOKE END	2
17	5B9079	NUT	2
18	8P3174	ROD	1
19	1B676	PIN	2
	3B4615	COTTER PIN	2
20	8P3177	LEVER ASSEM.	1
21	8P3176	LEVER	1
22	8H372	PLATE	2
23	3B1915	BOLT	4
24	8H8871	SHIM (3.21mm Thick)	4
25	6H4208	LOCK	2
26	3B4506	LOCKWASHER	4

J18006E

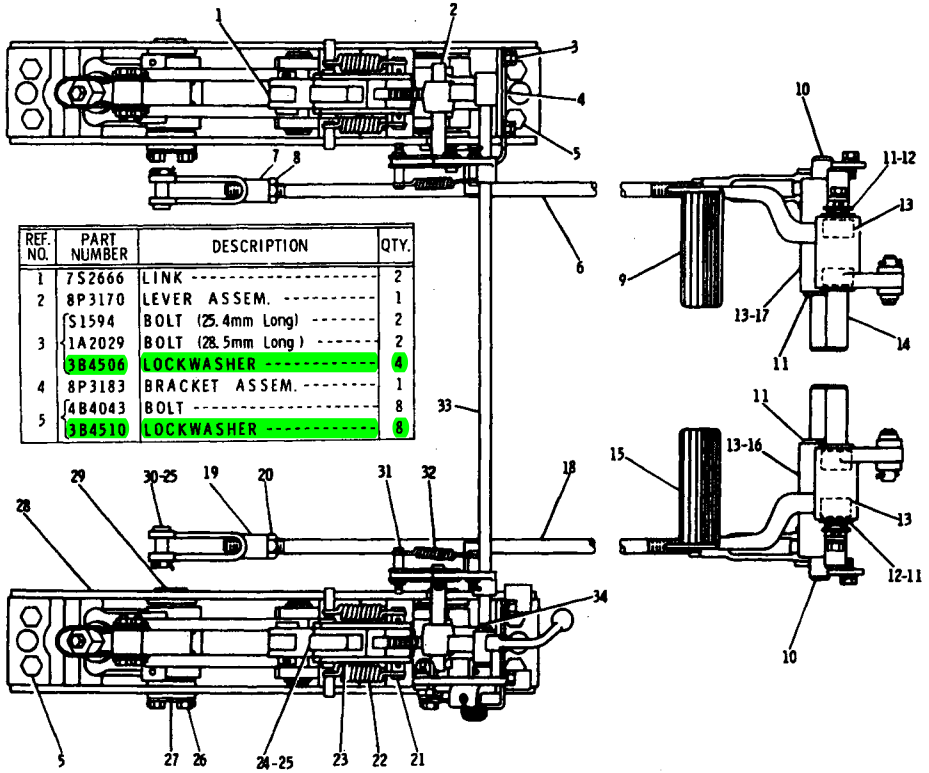

REF. NO.	PART NUMBER	DESCRIPTION	QTY.
1	7S2666	LINK	2
2	8P3170	LEVER ASSEM.	1
3	S1594	BOLT (25.4mm Long)	2
	1A2029	BOLT (28.5mm Long)	2
	3B4506	LOCKWASHER	4
4	8P3183	BRACKET ASSEM.	1
5	4B4043	BOLT	8
	3B4510	LOCKWASHER	8

REF. NO.	PART NUMBER	DESCRIPTION	QTY.
6	8P2512	ROD ASSEM.	1
7	9S1314	END	1
8	1B4206	NUT	1
9	8P1870	PEDAL	1
10	8P2507	SHAFT	2
11	9S1328	WASHER	8
12	8P9821	WASHER	2
13	6K8088	BEARING	8
14	8P3475	SHAFT	2
15	8P1871	PEDAL	1
16	8P2503	BELLCRANK	1
17	8P2504	BELLCRANK	1
18	8P2511	ROD	1
19	9S1314	END	1
20	9S1354	NUT	1
21	1M424	PIN (Large)	2
	3H6660	PIN (Small)	4
22	1H2320	SPRING	4
23	7G2926	LINK	4
24	1P1650	ROLLER	2
	2B974	PIN	2
25	3B4617	COTTER PIN	4
26	T102	BOLT	8
27	5B2200	LOCK	4
28	8P524	SUPPORT ASSEM.	2
	1M382	PIN	2
29	8H352	SHAFT ASSEM.	4
30	9S1315	PIN	2
31	6P4406	PIN	4
	L261	WASHER	4
	3B4607	COTTER PIN	4
32	9D1058	SPRING	2
33	8P3182	SHAFT	1
34	3B4615	COTTER PIN	1
	9S201	WASHER	1

J18007E

STEERING BRAKE (7G7419 N/S)–Part 3 of 3

Effective with Serial No. 6HC1–UP

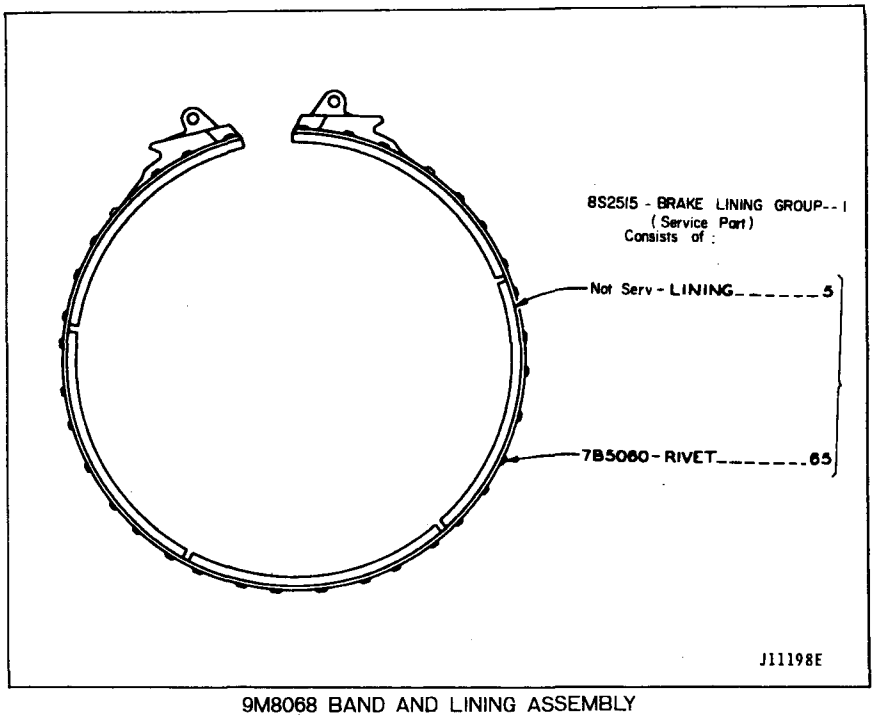

9M8068 BAND AND LINING ASSEMBLY
Effective with Serial No. 6HC1 – UP
Part of Steering Brake shown on Page 116

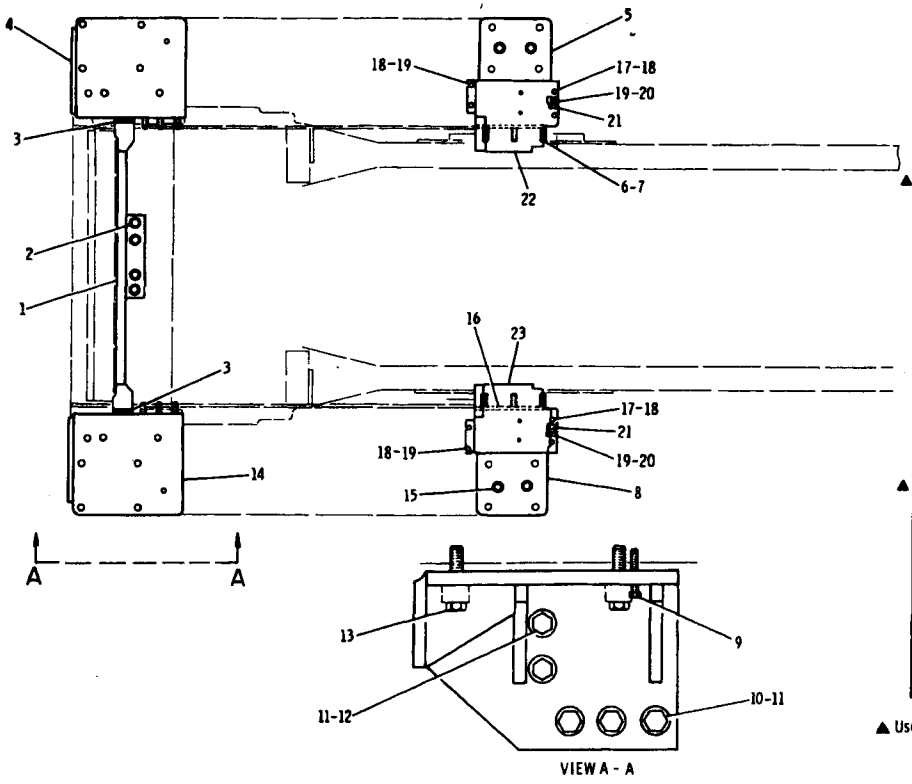

NO.	PART NO. 部品番号	DESCRIPTION 名称および記事	QTY. 数量
1	7G8721	BRACE ASSEM.	1
2	8S9092	BOLT	4
	4D3704	WASHER	4
▲3	7G8366	SHIM (0.25mm Thick)	4
4	8P3908	SUPPORT ASSEM. (L.H.)	1
5	9G6871	SUPPORT (L.H.)	1
6	1D4608	BOLT	12
7	2S115	WASHER	12
8	9G6872	SUPPORT (R.H.)	1
9	1A5822	BOLT	2
10	9F9522	BOLT	6
11	9H1031	WASHER	10
12	2H3856	BOLT	4
13	3B2968	BOLT	4
14	8P3911	SUPPORT ASSEM. (R.H.)	1
15	S1585	BOLT	4
	5P1076	WASHER	4
▲16	8P3907	SPACER	2
17	L2070	BOLT	4
18	5P1075	WASHER	8
19	S1594	BOLT	6
20	3B4506	WASHER	2
21	9G6879	PLATE	2
22	9G6880	COVER ASSEM. (L.H.)	1
	9F2978	NUT (Weld)	4
23	9G6873	COVER ASSEM. (R.H.)	1
	9F2978	NUT (Weld)	4

▲ Use as Required

J20027E

ROLL-OVER PROTECTIVE SYSTEM MOUNTING (3Y8638 N/S)
AN ATTACHMENT

ROLL-OVER PROTECTIVE SYSTEM MOUNTING (9G6075 N/S)

Part of 3Y7720 and 3Y8206 R.O.P.S. Arrangements listed on Pages 210 and 211

AN ATTACHMENT

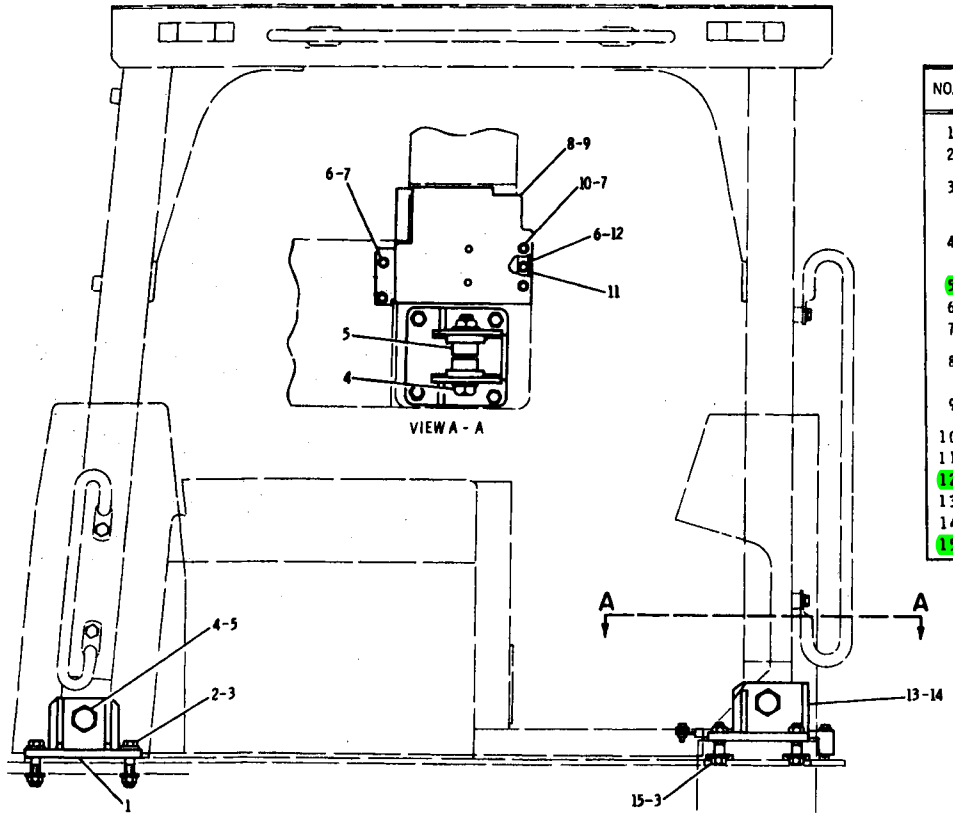

NO.	PART NO. 部品番号	DESCRIPTION 名称および記事	QTY. 数量
1	8P2539	PAD ASSEM.	2
2	3B2968	BOLT	8
3	2S115	WASHER	24
	2J3506	NUT	16
4	1D4643	BOLT	4
	8J7415	WASHER	8
	2J3507	NUT	4
5	8P2575	BUSHING	8
6	S1594	BOLT	6
7	5P1075	WASHER	8
8	9G6873	COVER ASSEM. (R.H.)	1
	9F2978	NUT	4
9	9G6880	COVER ASSEM. (L.H.)	1
	9F2978	NUT	4
10	L2070	BOLT	4
11	9G6879	PLATE	2
12	3B4506	WASHER	2
13	8P2536	PAD ASSEM. (R.H.)	1
14	8P2537	PAD ASSEM. (L.H.)	1
15	1D4608	BOLT	8

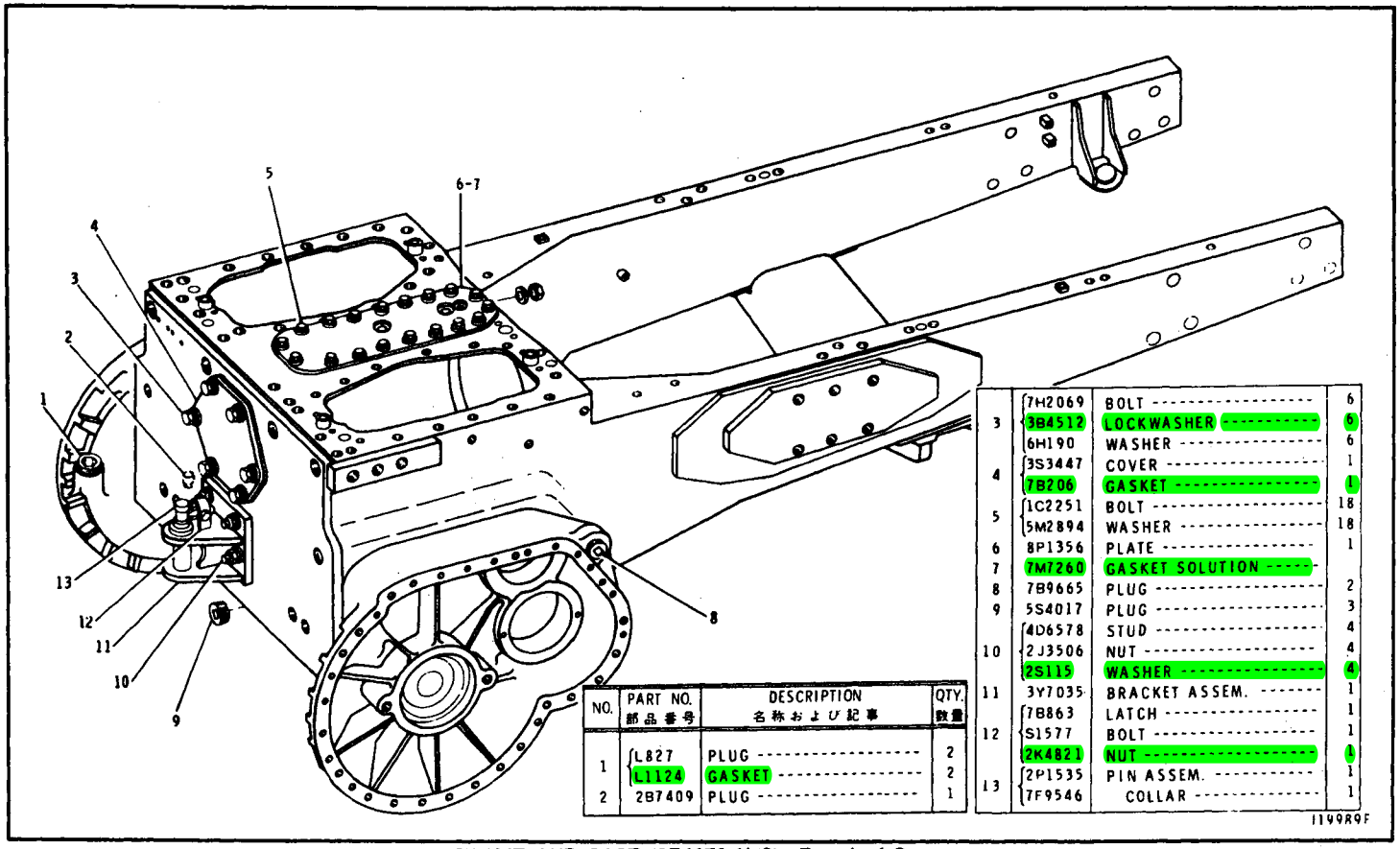

NO.	PART NO. 部品番号	DESCRIPTION 名称および記事	QTY. 数量
1	L827	PLUG	2
	L1124	GASKET	2
2	2B7409	PLUG	1

	7H2069	BOLT	6
3	3B4512	LOCKWASHER	6
	6H190	WASHER	6
	3S3447	COVER	1
4	7B206	GASKET	1
	1C2251	BOLT	18
5	5M2894	WASHER	18
6	8P1356	PLATE	1
7	7M7260	GASKET SOLUTION	
8	7B9665	PLUG	2
9	5S4017	PLUG	3
	4D6578	STUD	4
10	2J3506	NUT	4
	2S115	WASHER	4
11	3Y7035	BRACKET ASSEM.	1
	7B863	LATCH	1
12	S1577	BOLT	1
	2K4821	NUT	1
	2P1535	PIN ASSEM.	1
13	7F9546	COLLAR	1

1199R9F

FRAME AND CASE (8P4173 N/S)–Part 1 of 2

Effective with Serial No. 6HC1–UP

FRAME AND CASE (8P4173 N/S)–Part 2 of 2

Effective with Serial No. 6HC1–UP

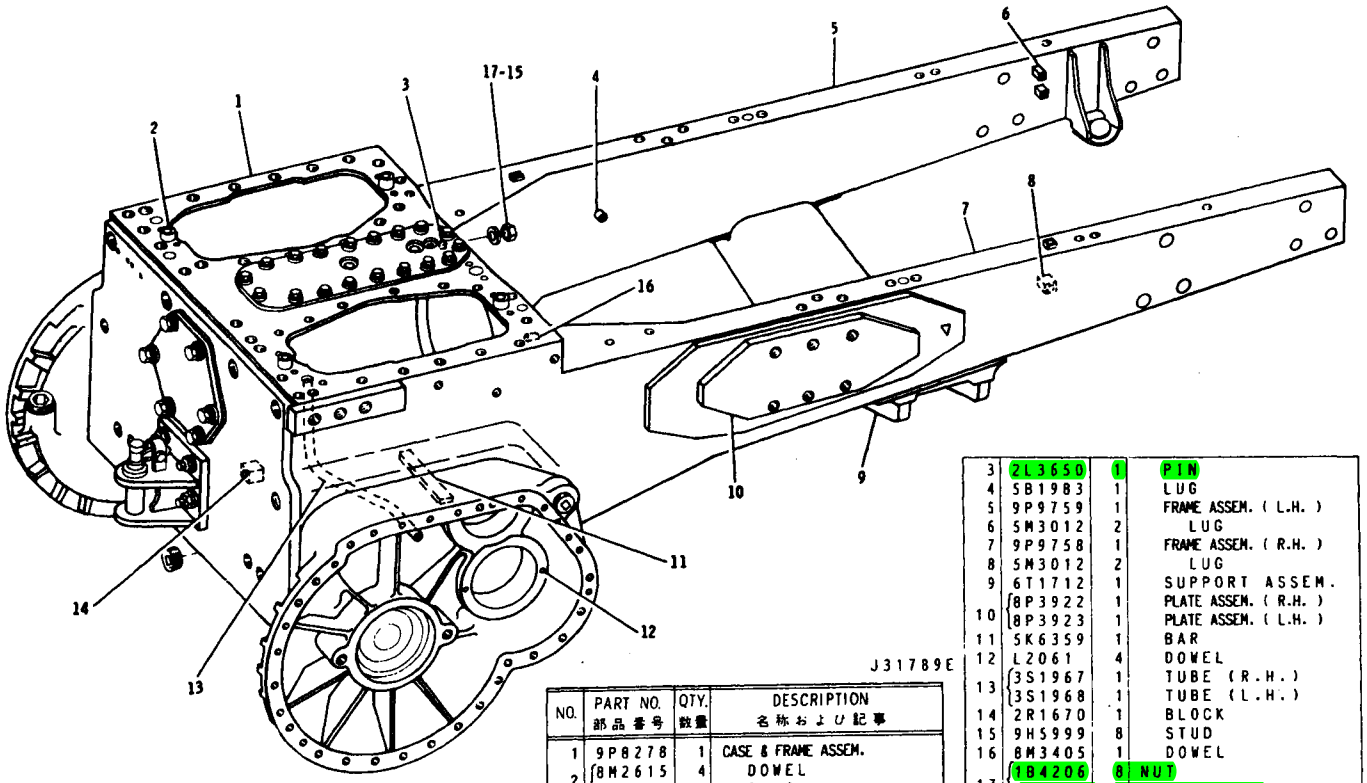

NO.	PART NO. 部品番号	QTY. 数量	DESCRIPTION 名称および記事
1	9P8278	1	CASE & FRAME ASSEM.
2	8M2615	4	DOWEL
	4L6943	4	RING
3	2L3650	1	PIN
4	5B1983	1	LUG
5	9P9759	1	FRAME ASSEM. (L.H.)
6	5M3012	2	LUG
7	9P9758	1	FRAME ASSEM. (R.H.)
8	5M3012	2	LUG
9	6T1712	1	SUPPORT ASSEM.
10	8P3922	1	PLATE ASSEM. (R.H.)
	8P3923	1	PLATE ASSEM. (L.H.)
11	5K6359	1	BAR
12	L2061	4	DOWEL
13	3S1967	1	TUBE (R.H.)
	3S1968	1	TUBE (L.H.)
14	2R1670	1	BLOCK
15	9H5999	8	STUD
16	8M3405	1	DOWEL
17	1B4206	8	NUT
	3B4510	8	LOCKWASHER

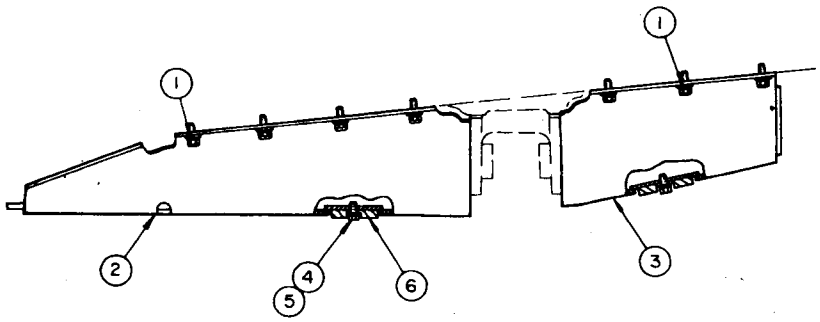

REF. NO.	PART NUMBER	DESCRIPTION	QTY.
	1A458	BOLT	14
1	3B4512	LOCKWASHER	14
	4B4283	WASHER	14
2	1P7211	GUARD ASSEM.	1

REF. NO.	PART NUMBER	DESCRIPTION	QTY.
3	1P7257	GUARD ASSEM.	1
4	S-1621	BOLT	4
5	3B4508	LOCKWASHER	4
6	5A8101	COVER	2

J7065E

CRANKCASE GUARD (1P6998 N/S)
AN ATTACHMENT

Consists of:

1	9G6523	COVER ASSEM. (R.H.)	Mounted on Front upper side of Fender
2	9F2978	NUT (Weld)	
1	9G6534	COVER ASSEM. (L.H.)	
2	9F2978	NUT (Weld)	
4	L2070	BOLT (57.0mm Long)	
4	S1594	BOLT (25.5mm Long)	
8	5P1075	WASHER	
4	V375	BOLT	Fender Support to Fender
4	5P1076	WASHER	
2	8P9830	GRAB IRON ASSEM.	Mounted on both sides of Fuel Tank
4	S1620	BOLT	
4	3B4508	LOCKWASHER	

J19276E

COVER AND GRAB IRON (3Y8168 N/S)
Effective with Serial No. 6HC1 – UP
For use without R.O.P.S. and R.O.P.S. Mounting or Canopy

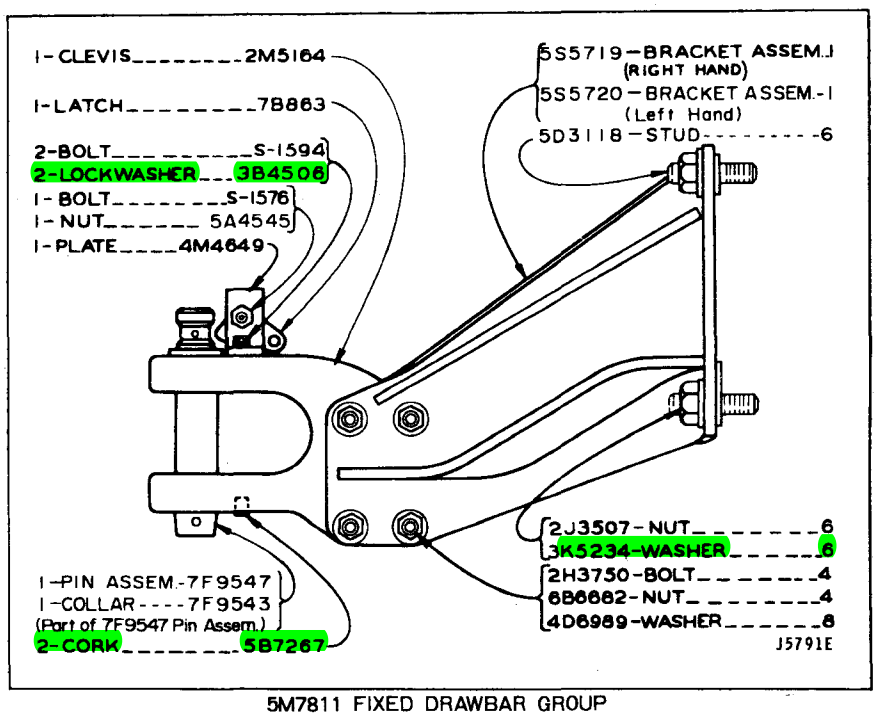

5M7811 FIXED DRAWBAR GROUP
AN ATTACHMENT

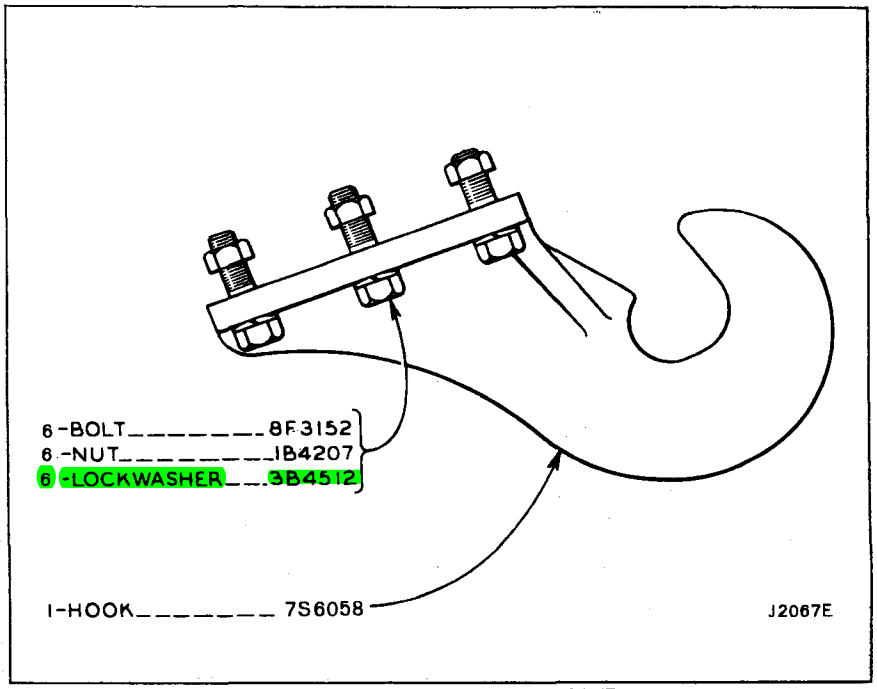

7B4464 FRONT PULL HOOK GROUP
AN ATTACHMENT

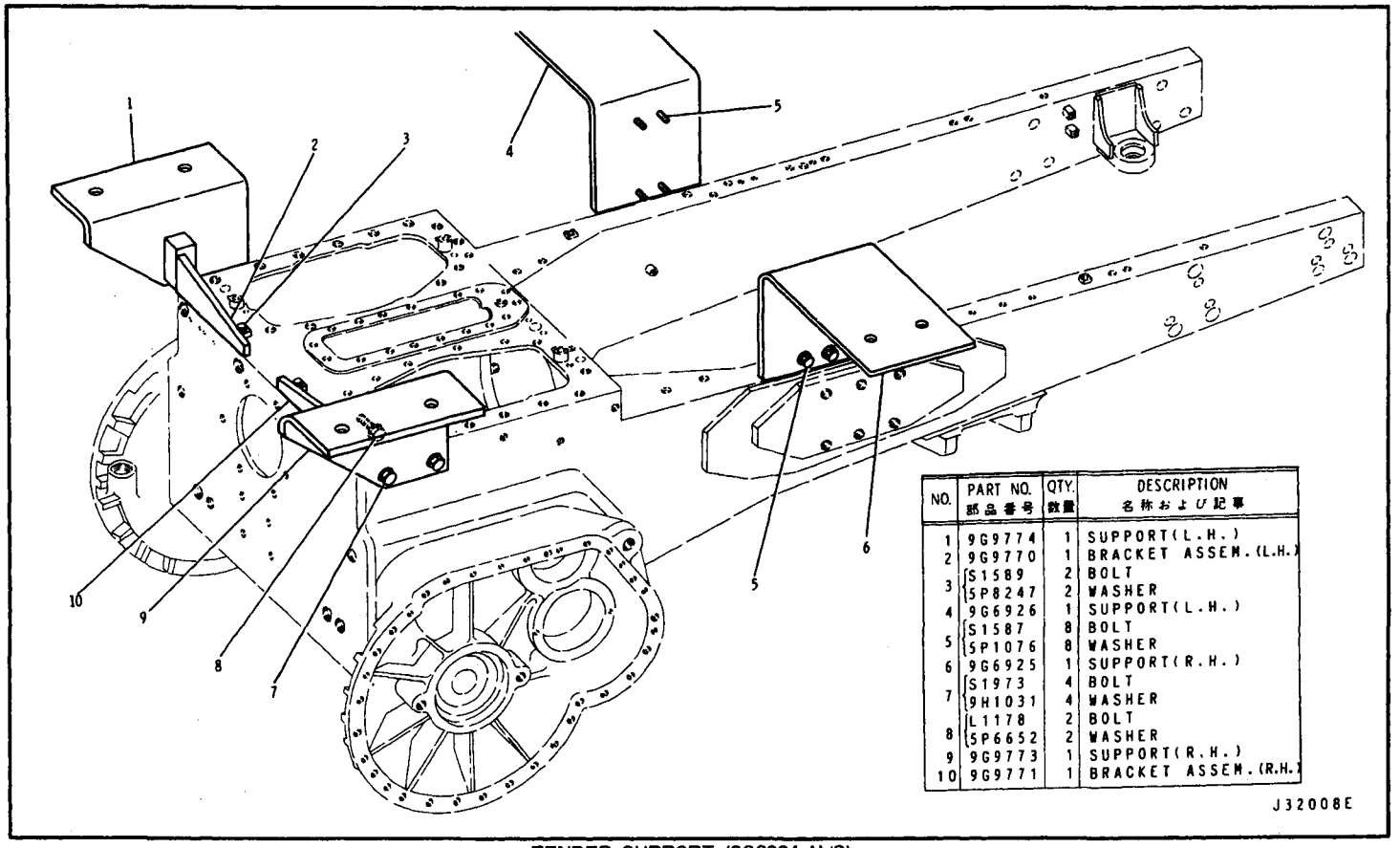

NO.	PART NO. 部品番号	QTY. 数量	DESCRIPTION 名称および記事
1	9G9774	1	SUPPORT(L.H.)
2	9G9770	1	BRACKET ASSEM.(L.H.)
3	S1589	2	BOLT
	5P8247	2	WASHER
4	9G6926	1	SUPPORT(L.H.)
5	S1587	8	BOLT
	5P1076	8	WASHER
6	9G6925	1	SUPPORT(R.H.)
7	S1973	4	BOLT
	9H1031	4	WASHER
	L1178	2	BOLT
8	5P6652	2	WASHER
9	9G9773	1	SUPPORT(R.H.)
10	9G9771	1	BRACKET ASSEM.(R.H.)

FENDER SUPPORT (9G6924 N/S)
Effective with Serial No. 6HC1-UP

FENDER (9G6904 N/S)

Effective with Serial No. 6HC1 -- UP

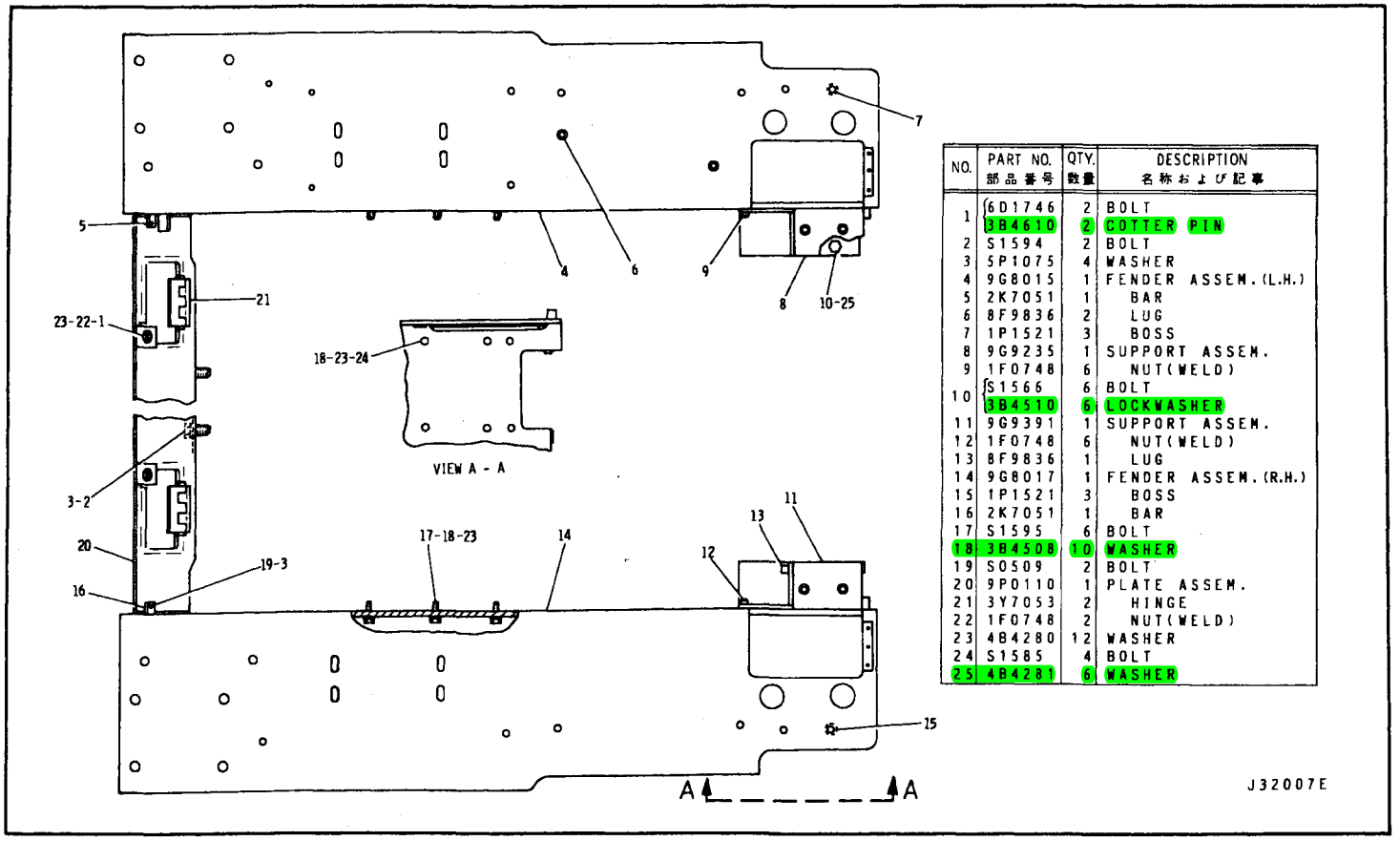

NO.	PART NO. 部品番号	QTY. 数量	DESCRIPTION 名称および記事
1	6D1746	2	BOLT
	3B4610	2	COTTER PIN
2	S1594	2	BOLT
3	SP1075	4	WASHER
4	9G8015	1	FENDER ASSEM.(L.H.)
5	2K7051	1	BAR
6	8F9836	2	LUG
7	1P1521	3	BOSS
8	9G9235	1	SUPPORT ASSEM.
9	1F0748	6	NUT(WELD)
10	S1566	6	BOLT
	3B4510	6	LOCKWASHER
11	9G9391	1	SUPPORT ASSEM.
12	1F0748	6	NUT(WELD)
13	8F9836	1	LUG
14	9G8017	1	FENDER ASSEM.(R.H.)
15	1P1521	3	BOSS
16	2K7051	1	BAR
17	S1595	6	BOLT
18	3B4508	10	WASHER
19	S0509	2	BOLT
20	9P0110	1	PLATE ASSEM.
21	3Y7053	2	HINGE
22	1F0748	2	NUT(WELD)
23	4B4280	12	WASHER
24	S1585	4	BOLT
25	4B4281	6	WASHER

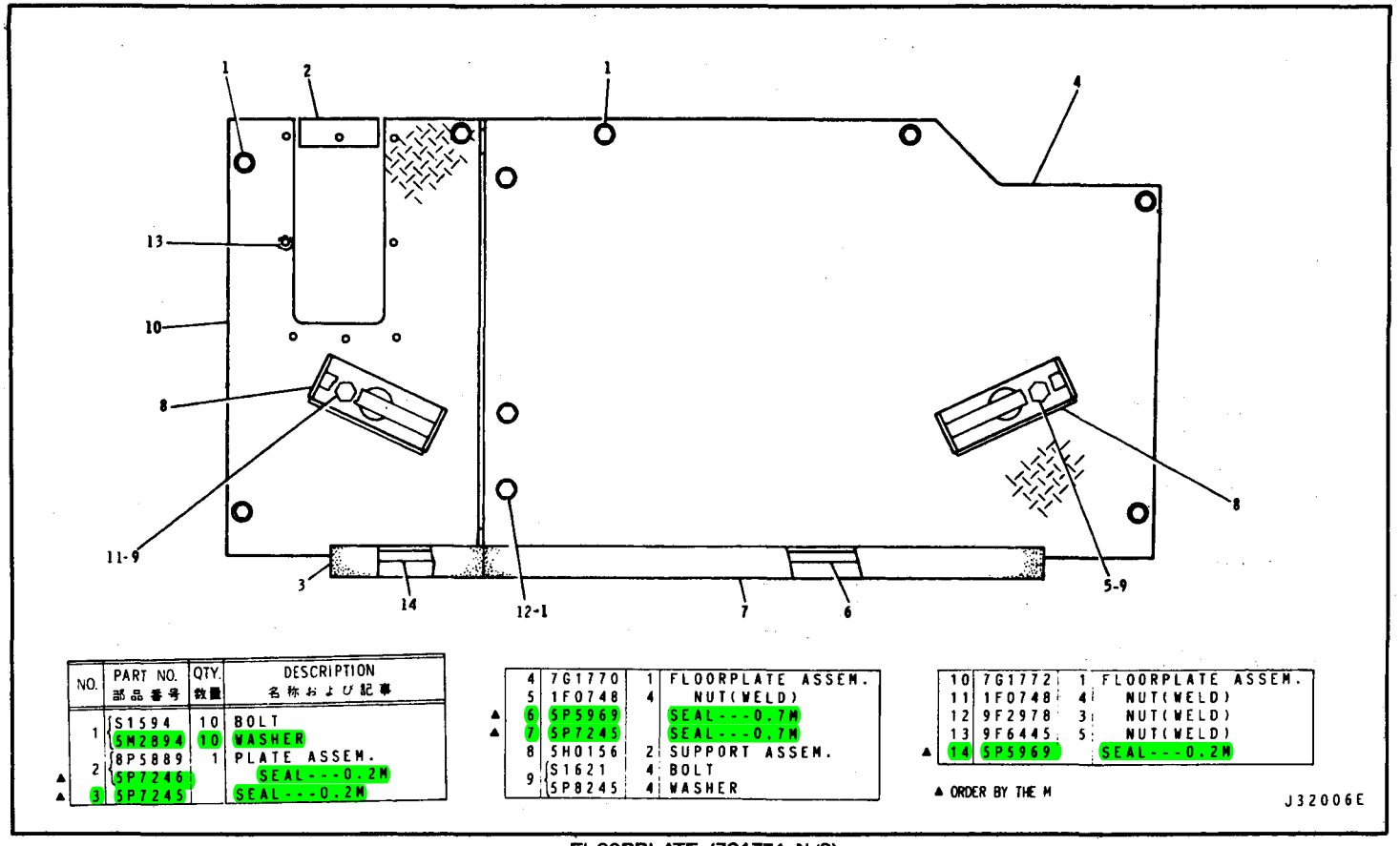

NO.	PART NO. 部品番号	QTY. 数量	DESCRIPTION 名称および記事
1	S1594	10	BOLT
	SM2894	10	WASHER
2	8P5889	1	PLATE ASSEM.
▲	5P7246		SEAL---0.2M
▲ 3	5P7245		SEAL---0.2M

4	7G1770	1	FLOORPLATE ASSEM.
5	1F0748	4	NUT(WELD)
▲ 6	5P5969		SEAL---0.7M
▲ 7	5P7245		SEAL---0.7M
8	5H0156	2	SUPPORT ASSEM.
9	S1621	4	BOLT
	5P8245	4	WASHER

10	7G1772	1	FLOORPLATE ASSEM.
11	1F0748	4	NUT(WELD)
12	9F2978	3	NUT(WELD)
13	9F6445	5	NUT(WELD)
▲ 14	5P5969		SEAL---0.2M

▲ ORDER BY THE M

J32006E

FLOORPLATE (7G1774 N/S)

Effective with Serial No. 6HC1—UP

HOOD AND DASH (9G7382 N/S)—Part 1 of 3

Effective with Serial No. 6HC1—UP

C Indicates Change

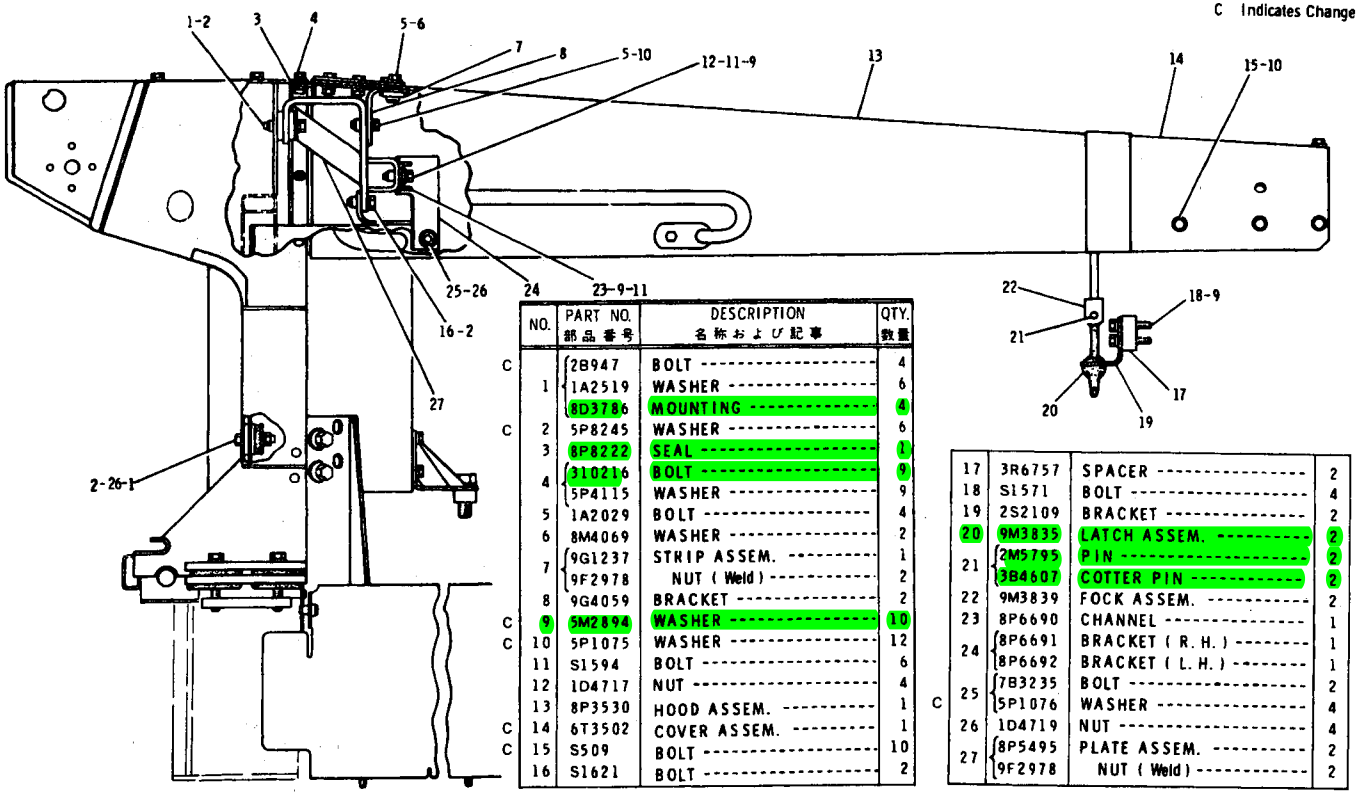

	NO.	PART NO. 部品番号	DESCRIPTION 名称および記事	QTY. 数量
C	1	2B947	BOLT	4
		1A2519	WASHER	6
		8D3786	MOUNTING	4
C	2	5P8245	WASHER	6
	3	8P8222	SEAL	1
	4	310216	BOLT	9
		5P4115	WASHER	9
	5	1A2029	BOLT	4
	6	8M4069	WASHER	2
	7	9G1237	STRIP ASSEM.	1
		9F2978	NUT (Weld)	2
	8	9G4059	BRACKET	2
C	9	5M2894	WASHER	10
C	10	5P1075	WASHER	12
	11	S1594	BOLT	6
	12	1D4717	NUT	4
	13	8P3530	HOOD ASSEM.	1
C	14	6T3502	COVER ASSEM.	1
C	15	S509	BOLT	10
	16	S1621	BOLT	2

17	3R6757	SPACER	2
18	S1571	BOLT	4
19	2S2109	BRACKET	2
20	9M3835	LATCH ASSEM.	2
21	2M5795	PIN	2
	3B4607	COTTER PIN	2
22	9M3839	FOCK ASSEM.	2
23	8P6690	CHANNEL	1
24	8P6691	BRACKET (R. H.)	1
	8P6692	BRACKET (L. H.)	1
25	7B3235	BOLT	2
C	5P1076	WASHER	4
26	1D4719	NUT	4
27	8P5495	PLATE ASSEM.	2
	9F2978	NUT (Weld)	2

J24728E

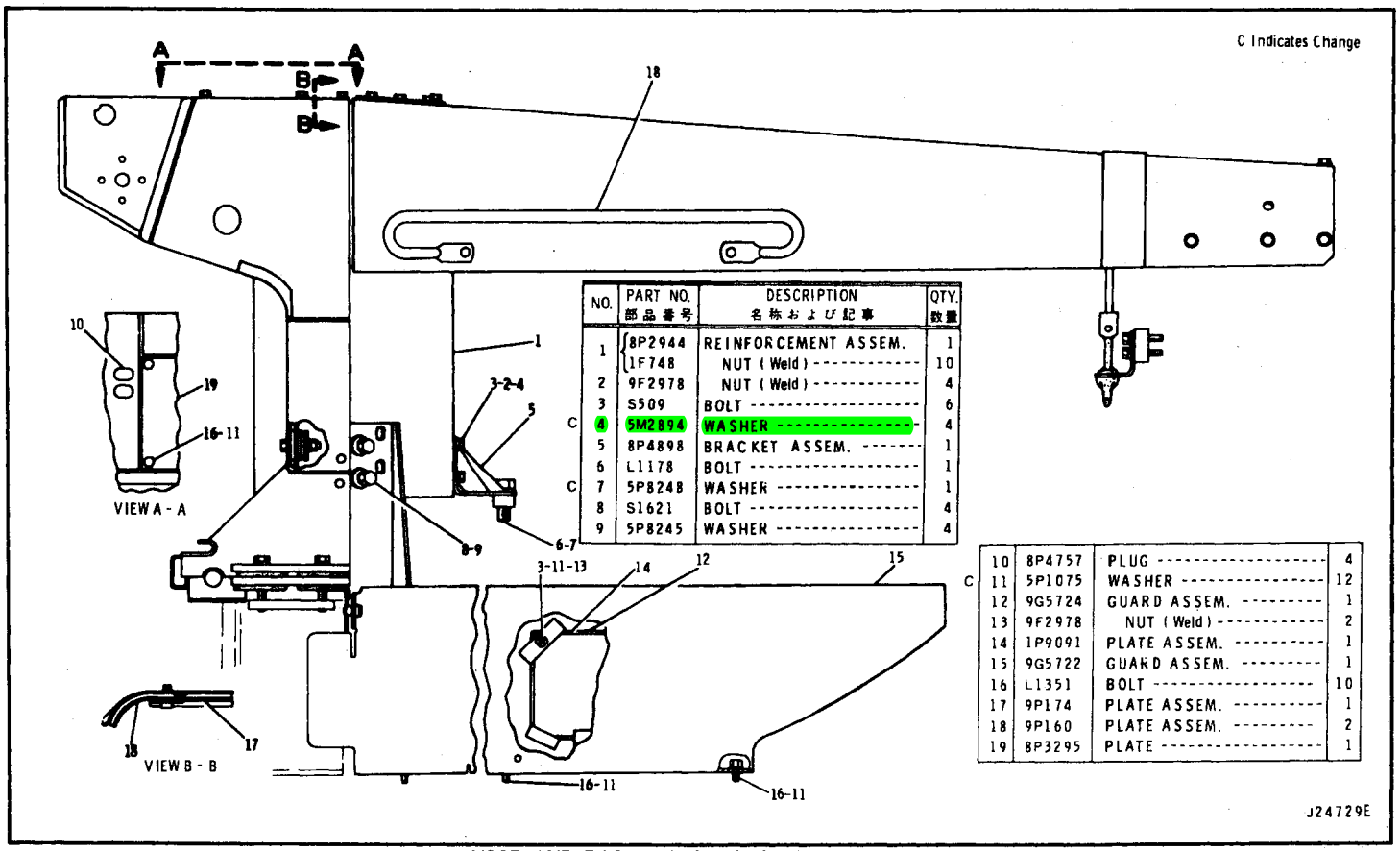

NO.	PART NO. 部品番号	DESCRIPTION 名称および記事	QTY. 数量
1	8P2944	REINFORCEMENT ASSEM.	1
	1F748	NUT (Weld)	10
2	9F2978	NUT (Weld)	4
3	S509	BOLT	6
C 4	5M2894	WASHER	4
5	8P4898	BRACKET ASSEM.	1
6	L1178	BOLT	1
C 7	5P8248	WASHER	1
8	S1621	BOLT	4
9	5P8245	WASHER	4
10	8P4757	PLUG	4
C 11	5P1075	WASHER	12
12	9G5724	GUARD ASSEM.	1
13	9F2978	NUT (Weld)	2
14	1P9091	PLATE ASSEM.	1
15	9G5722	GUARD ASSEM.	1
16	L1351	BOLT	10
17	9P174	PLATE ASSEM.	1
18	9P160	PLATE ASSEM.	2
19	8P3295	PLATE	1

HOOD AND DASH (9G7382 N/S)—Part 2 of 3

Effective with Serial No. 6HC1—UP

HOOD AND DASH (9G7382 N/S) – Part 3 of 3

Effective with Serial No. 6HC1 – UP

C Indicates Change

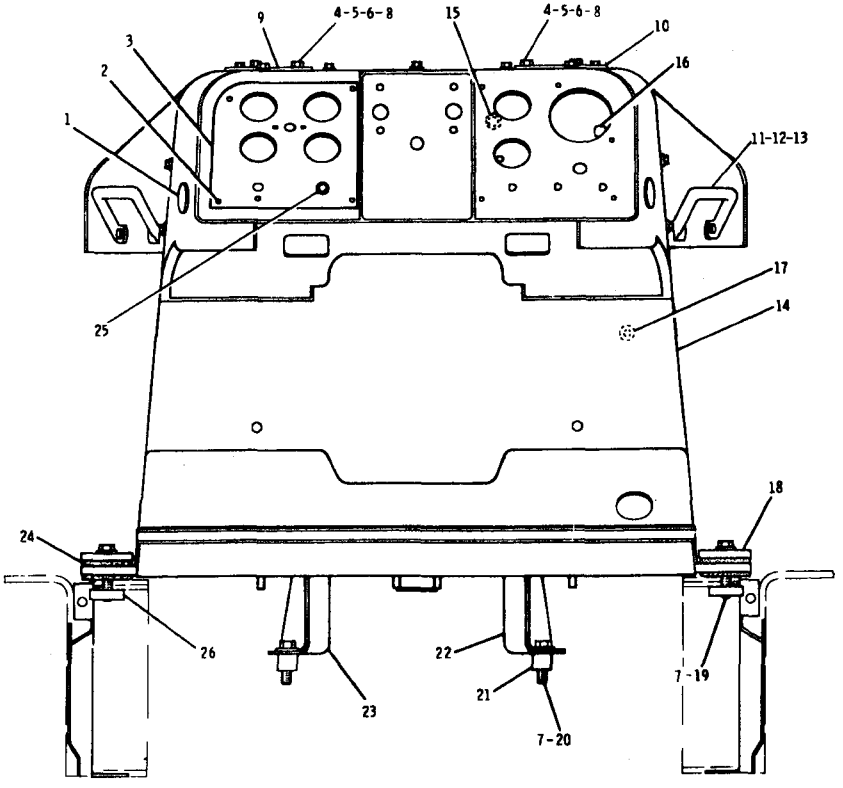

	NO.	PART NO. 部品番号	DESCRIPTION 名称および記事	QTY. 数量
	1	4F8711	PLUG	2
	2	7B3028	DRIVE SCREW	4
	3	7V1566	PANEL	1
	4	S509	BOLT	5
	5	1D4717	NUT	5
C	6	5P1075	WASHER	5
	7	5P8245	WASHER	6
	8	7K3222	WASHER	5
	9	2P9673	COVER (L. H.)	2
	10	2P9674	COVER (R. H.)	2
	11	7G2819	GRAB IRON	2
	12	S1595	BOLT	2
		1D4719	NUT	2
C	13	5P1076	WASHER	4
	14	7G9737	DASH ASSEM.	1
		9F6445	NUT (Weld)	2
	15	1F748	NUT (Weld)	2
	16	9F2978	NUT (Weld)	26
	17	4D9376	BOSS	4
	18	8P3185	PLATE	2
	19	L1329	BOLT	4
	20	2B947	BOLT	2
	21	1F9341	SPCAER	2
	22	8P8444	PLATE ASSEM.	1
	23	8P8443	PLATE ASSEM.	1
	24	8P3595	BUSHING	8
C	25	3T7856	PLUG	1
	26	3T2302	PLATE	2

J24730E

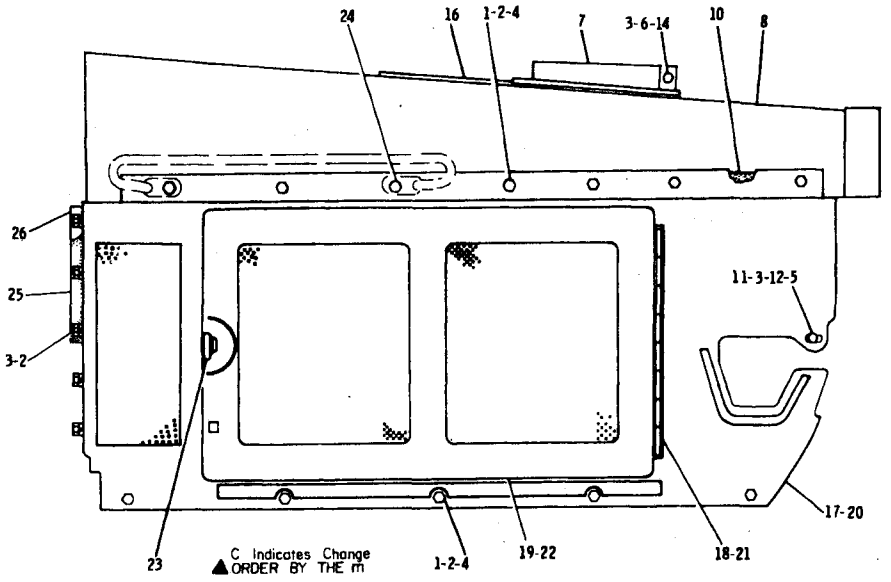

	REF. NO.	PART NUMBER	DESCRIPTION	QTY.
C	1	2K4973	LOCKNUT	20
C	2	L1351	BOLT	30
C	3	3B4506	LOCKWASHER	13
C	4	5M2894	WASHER	20
	5	1A2029	BOLT	2
C	6	1D4717	NUT	1

	7	8P4178	CLAMP ASSEM.	1
	8	8P4346	HOOD ASSEM.	1
	10	8P6120	GASKET	2
C	11	4B4278	WASHER	2
	12	4B3785	FERRULE	2
		9F2978	NUT (Weld)	2
	14	S1594	BOLT	1
	16	8S2572	GROMMET	1
	17	8P5046	ENCLOSURE ASSEM. (L.H.)	1
	18	8S317	HINGE	1
	19	8S340	DOOR ASSEM.	1
	20	8P5044	ENCLOSURE ASSEM. (R.H.)	1
	21	8S317	HINGE	1
	22	8S340	DOOR ASSEM.	1
		9B1783	FASTENER	2
	23	4B7033	SPRING	2
		3B5301	COTTER PIN	2
		1A4784	WASHER	2
		S1587	BOLT	4
	24	1D4719	NUT	4
		3B4508	LOCKWASHER	4
		4B4280	WASHER	4
▲	25	5P5923	SEAL — 0.5m	
		8P4183	PLATE ASSEM. (R.H.)	1
	26	9F2978	NUT (Weld)	5
		8P4185	PLATE ASSEM. (L.H.)	1
		9F2978	NUT (Weld)	5

J17732E

ENGINE ENCLOSURE (8P5649 N/S)
AN ATTACHMENT

8P6971 BRUSH GUARD GROUP
AN ATTACHMENT

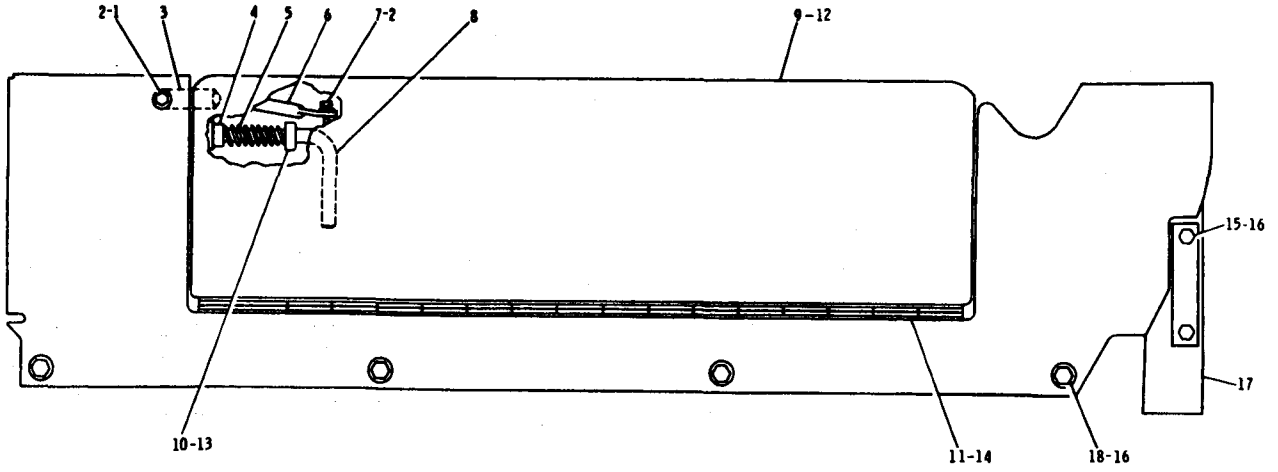

REF. NO.	PART NUMBER	DESCRIPTION	QTY.
1	S1588	BOLT	2
	1D4717	NUT	2
2	3B4506	LOCKWASHER	4
	4B4278	WASHER	6
3	8P7376	BRACE	1
4	9S2075	SPACER	4
	6H3956	PIN	4
5	6B533	SPRING	4
6	8P7377	BRACE	1
7	S509	BOLT	2

REF. NO.	PART NUMBER	DESCRIPTION	QTY.
8	2M6095	HANDLE	4
9	8P7368	GUARD ASSEM. (R.H.)	1
	9S2077	DOOR	1
10	5M9498	GUIDE	6
11	8S1777	HINGE	1
12	8P7367	GUARD ASSEM. (L.H.)	1
	9S2077	DOOR	1
13	5M9498	GUIDE	6
14	8S1777	HINGE	1
15	S1621	BOLT	4

REF. NO.	PART NUMBER	DESCRIPTION	QTY.
16	3B4508	LOCKWASHER	12
17	9P6195	PLATE ASSEM.	2
	6H1717	BOLT	8
18	1D4719	NUT	8
	4B4280	WASHER	8

J14289E

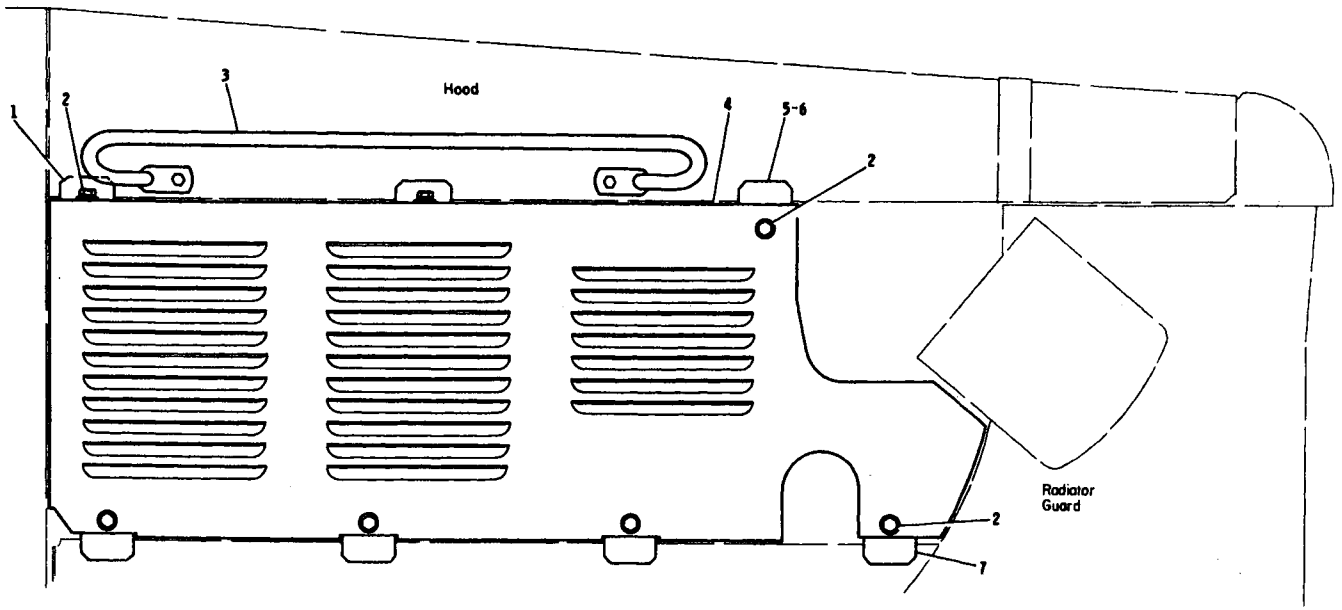

REF. NO.	PART NUMBER	DESCRIPTION	QTY.
1	3Y5506	PLATE ASSEM.	4
	1F748	NUT (Weld)	1
	S1621	BOLT	14
2	3B4508	LOCKWASHER	14
	4B4280	WASHER	14

REF. NO.	PART NUMBER	DESCRIPTION	QTY.
3	8P8300	GRAB IRON	2
4	3Y5496	GUARD ASSEM. (R.H.)	1
	3Y5498	GUARD ASSEM. (L.H.)	1
5	3Y5502	PLATE ASSEM. (R.H.)	1
	1F748	NUT (Weld)	1

REF. NO.	PART NUMBER	DESCRIPTION	QTY.
6	3Y5504	PLATE ASSEM. (L.H.)	1
	1F748	NUT (Weld)	1
7	3Y4125	BRACKET ASSEM.	8
	1F748	NUT (Weld)	1

J14302E

ENGINE SIDE UPPER GUARD (3Y5500 N/S)
AN ATTACHMENT

VANDALISM GUARD (9G8848 N/S)
AN ATTACHMENT

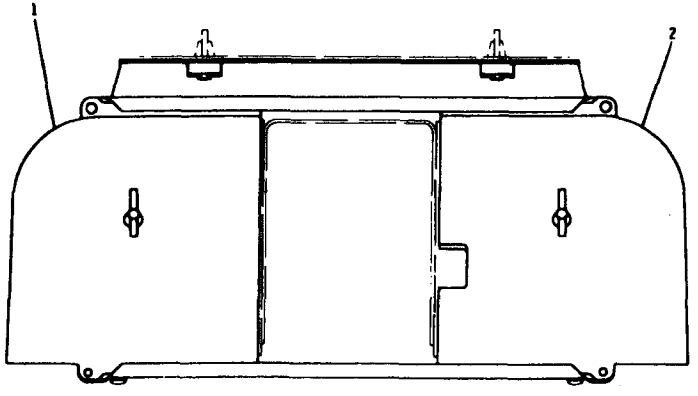

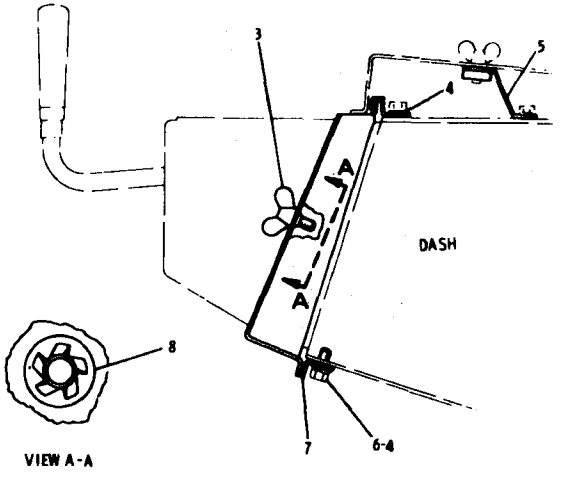

REF. NO.	PART NUMBER	DESCRIPTION	QTY.
1	8P8223	COVER ASSEM.	1
2	8P9285	COVER ASSEM.	1
3	4K487	BOLT	2
4	4B4278	WASHER	4
5	9P3782	BRACKET ASSEM.	1
6	S509	BOLT	2
	3B4506	LOCKWASHER	2

▲Not shown

	REF. NO.	PART NUMBER	DESCRIPTION	QTY.
	7	8P9284	GUIDE	2
	8	5P6883	RETAINER	2
▲	9	5P8502	PADLOCK GROUP	2
▲		5P8500	KEY	2

J20759E

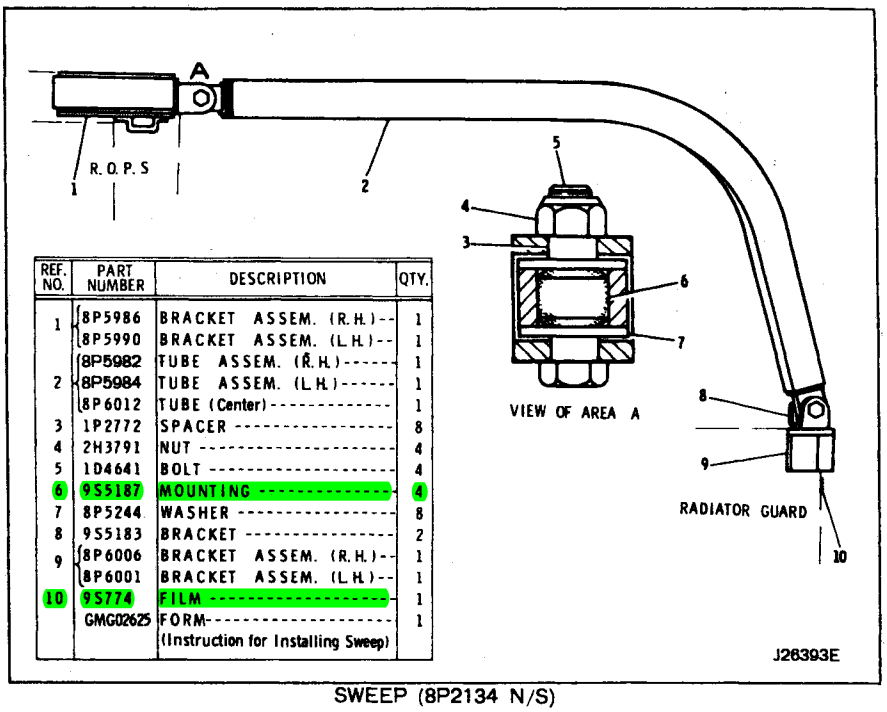

REF. NO.	PART NUMBER	DESCRIPTION	QTY.
1	8P5986	BRACKET ASSEM. (R.H.)	1
	8P5990	BRACKET ASSEM. (L.H.)	1
2	8P5982	TUBE ASSEM. (R.H.)	1
	8P5984	TUBE ASSEM. (L.H.)	1
	8P6012	TUBE (Center)	1
3	1P2772	SPACER	8
4	2H3791	NUT	4
5	1D4641	BOLT	4
6	9S5187	MOUNTING	4
7	8P5244	WASHER	8
8	9S5183	BRACKET	2
9	8P6006	BRACKET ASSEM. (R.H.)	1
	8P6001	BRACKET ASSEM. (L.H.)	1
10	9S774	FILM	1
	GMG02625	FORM (Instruction for Installing Sweep)	1

SWEEP (8P2134 N/S)
AN ATTACHMENT

RADIATOR GUARD (7T7415 N/S)

Effective with Serial No. 6HC1～6HC305

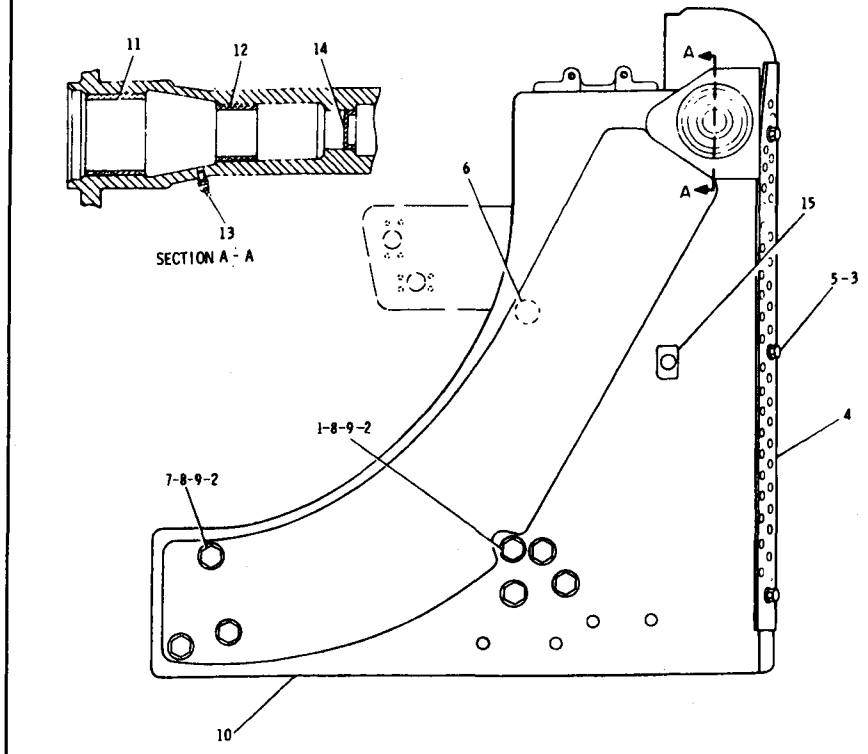

NO.	PART NO. 部品番号	DESCRIPTION 名称および記事	QTY. 数量
1	9S1351	BOLT	8
2	5D4281	WASHER	14
3	5P8247	WASHER	6
4	8P8022	PLATE ASSEM.	1
5	S1589	BOLT	6
6	8P2926	GROMMET	1
7	9S1322	BOLT	6
8	2J3505	NUT	14
9	5P8249	WASHER	14
10	7T7414	GUARD ASSEM.	1
11	2J6316	BEARING	2
12	2J6306	BEARING	2
13	4H3947	FITTING	2
14	T199	PLUG	2
15	2J3207	PIN	2

J26163E

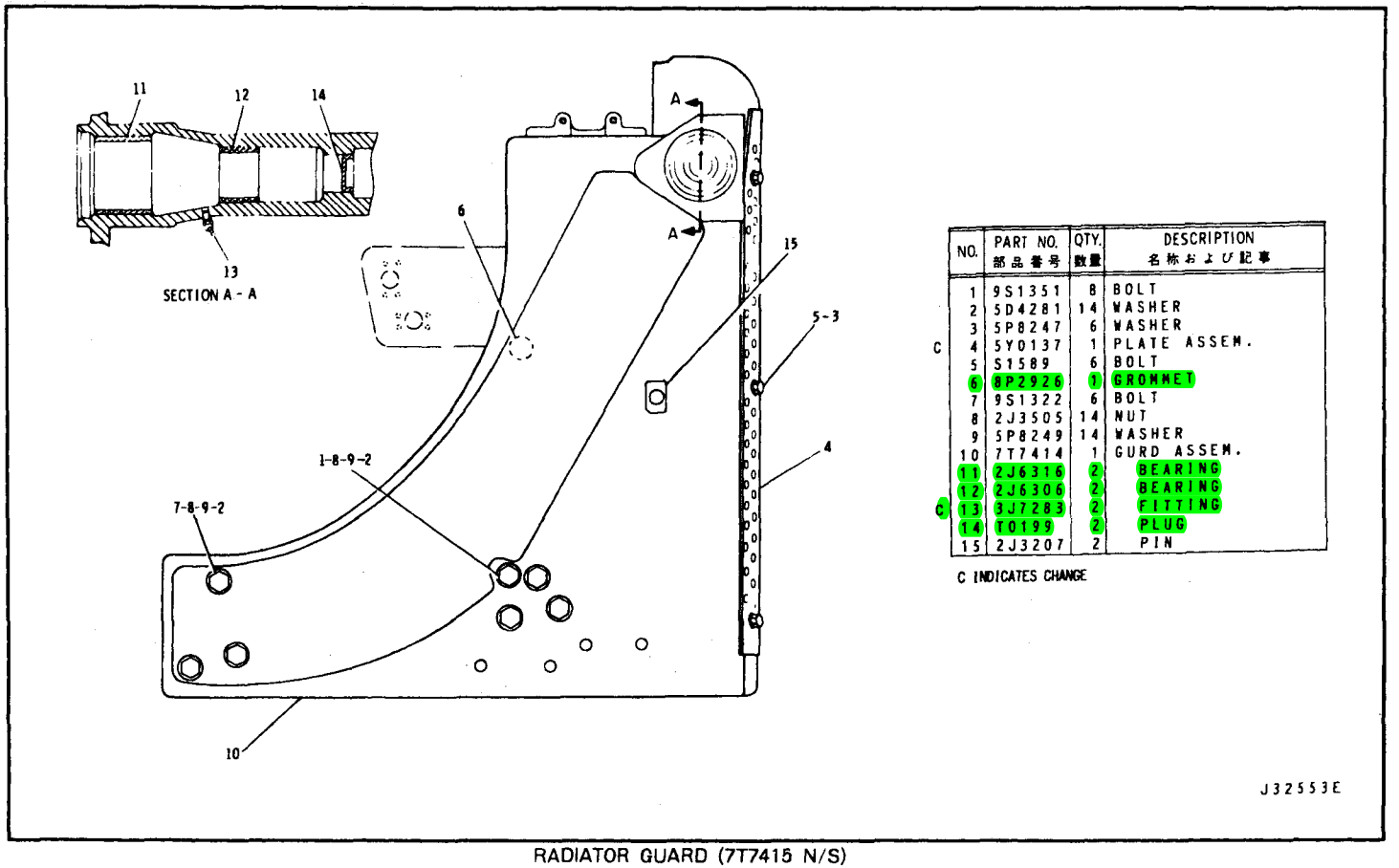

	NO.	PART NO. 部品番号	QTY. 数量	DESCRIPTION 名称および記事
	1	9S1351	8	BOLT
	2	5D4281	14	WASHER
	3	5P8247	6	WASHER
C	4	5Y0137	1	PLATE ASSEM.
	5	S1589	6	BOLT
	6	8P2926	1	GROMMET
	7	9S1322	6	BOLT
	8	2J3505	14	NUT
	9	5P8249	14	WASHER
	10	7T7414	1	GURD ASSEM.
	11	2J6316	2	BEARING
	12	2J6306	2	BEARING
C	13	3J7283	2	FITTING
	14	T0199	2	PLUG
	15	2J3207	2	PIN

C INDICATES CHANGE

RADIATOR GUARD (7T7415 N/S)
Effective with Serial No. 6HC306-UP .

MEMO

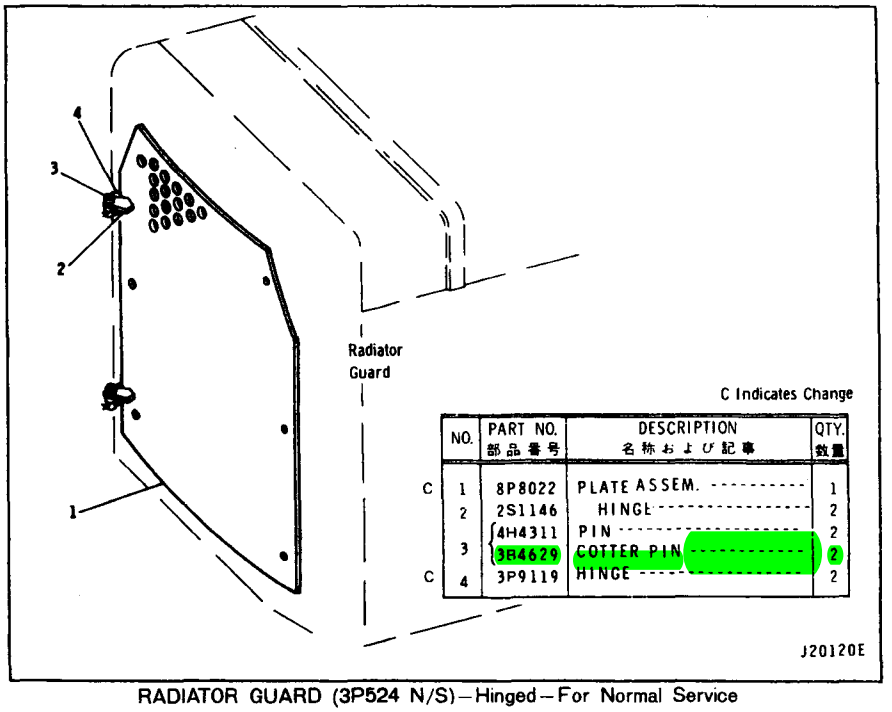

C Indicates Change

	NO.	PART NO. 部品番号	DESCRIPTION 名称および記事	QTY. 数量
C	1	8P8022	PLATE ASSEM.	1
	2	2S1146	HINGE	2
	3	4H4311	PIN	2
C		3B4629	COTTER PIN	2
	4	3P9119	HINGE	2

RADIATOR GUARD (3P524 N/S)—Hinged—For Normal Service
AN ATTACHMENT

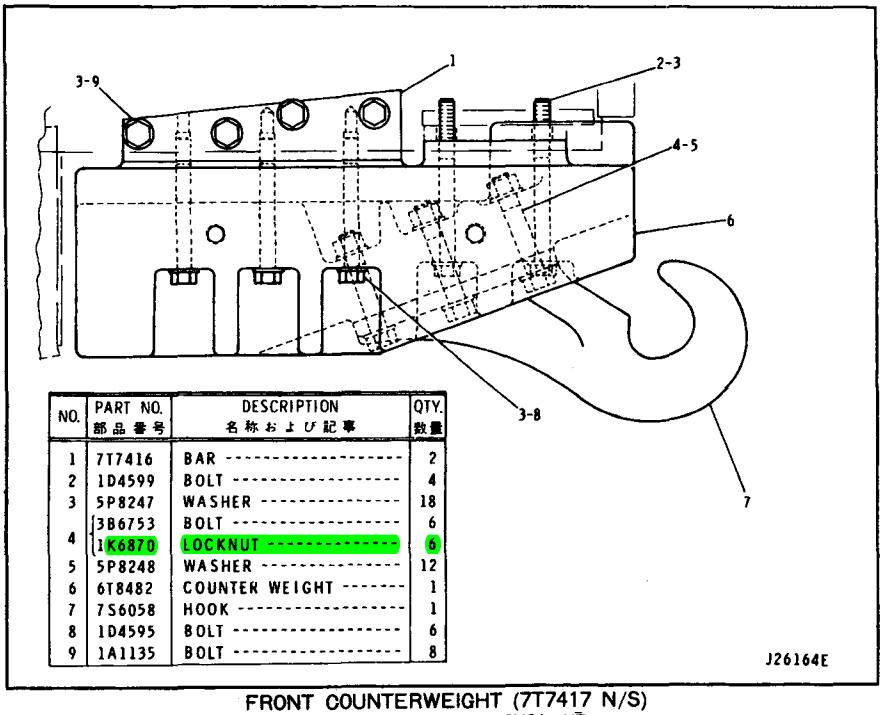

NO.	PART NO. 部品番号	DESCRIPTION 名称および記事	QTY. 数量
1	7T7416	BAR	2
2	1D4599	BOLT	4
3	5P8247	WASHER	18
4	3B6753	BOLT	6
	1K6870	LOCKNUT	6
5	5P8248	WASHER	12
6	6T8482	COUNTER WEIGHT	1
7	7S6058	HOOK	1
8	1D4595	BOLT	6
9	1A1135	BOLT	8

FRONT COUNTERWEIGHT (7T7417 N/S)
Effective with Serial No. 6HC1—UP

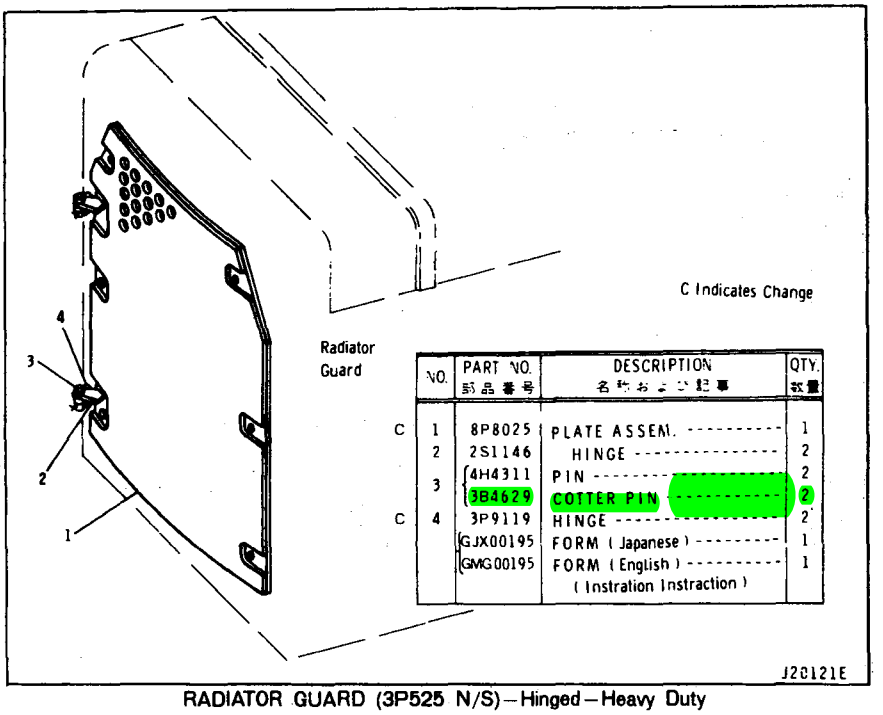

	NO.	PART NO. 部品番号	DESCRIPTION 名称および記事	QTY. 数量
C	1	8P8025	PLATE ASSEM.	1
	2	2S1146	HINGE	2
	3	4H4311	PIN	2
		3B4629	COTTER PIN	2
C	4	3P9119	HINGE	2
		GJX00195	FORM (Japanese)	1
		GMG00195	FORM (English) (Instration Instraction)	1

RADIATOR GUARD (3P525 N/S)—Hinged—Heavy Duty
AN ATTACHMENT

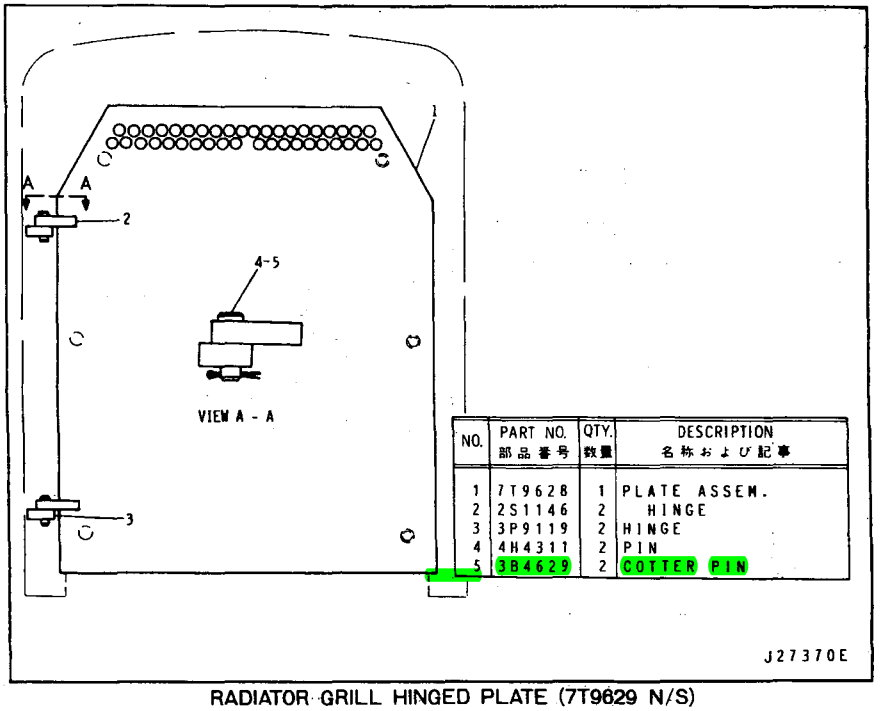

NO.	PART NO. 部品番号	QTY. 数量	DESCRIPTION 名称および記事
1	7T9628	1	PLATE ASSEM.
2	2S1146	2	HINGE
3	3P9119	2	HINGE
4	4H4311	2	PIN
5	3B4629	2	COTTER PIN

RADIATOR GRILL HINGED PLATE (7T9629 N/S)
AN ATTACHMENT

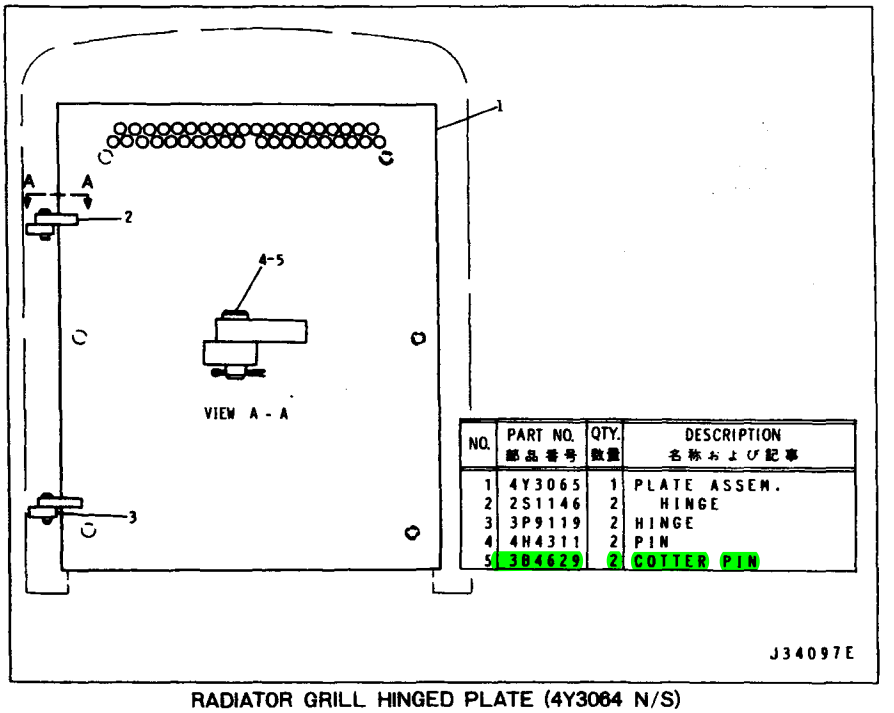

NO.	PART NO. 部品番号	QTY. 数量	DESCRIPTION 名称および記事
1	4Y3065	1	PLATE ASSEM.
2	2S1146	2	HINGE
3	3P9119	2	HINGE
4	4H4311	2	PIN
5	3B4629	2	COTTER PIN

RADIATOR GRILL HINGED PLATE (4Y3064 N/S)
AN ATTACHMENT

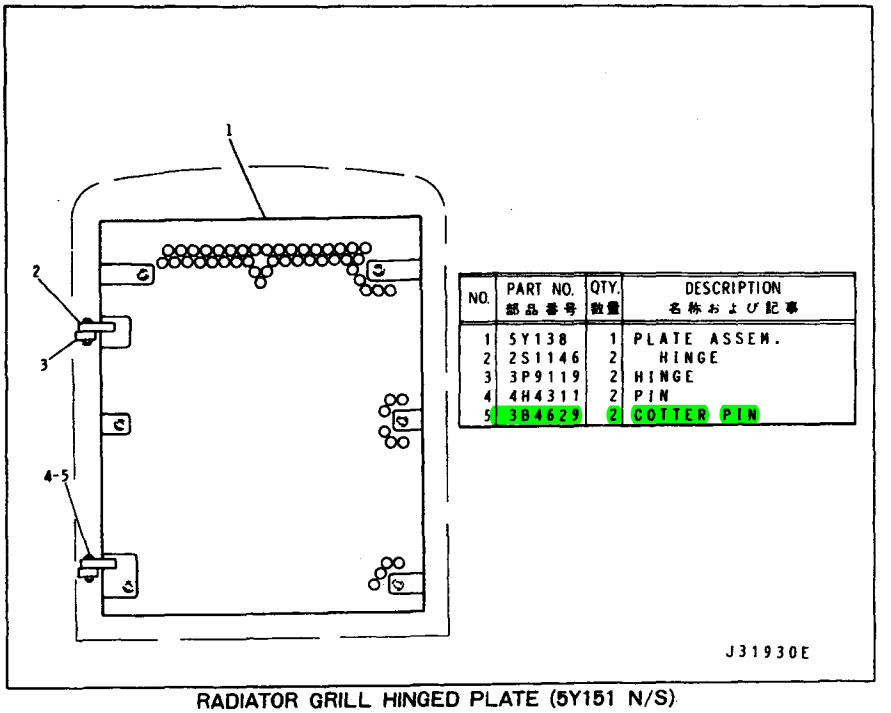

NO.	PART NO. 部品番号	QTY. 数量	DESCRIPTION 名称および記事
1	5Y138	1	PLATE ASSEM.
2	2S1146	2	HINGE
3	3P9119	2	HINGE
4	4H4311	2	PIN
5	3B4629	2	COTTER PIN

RADIATOR GRILL HINGED PLATE (5Y151 N/S)
AN ATTACHMENT

MEMO

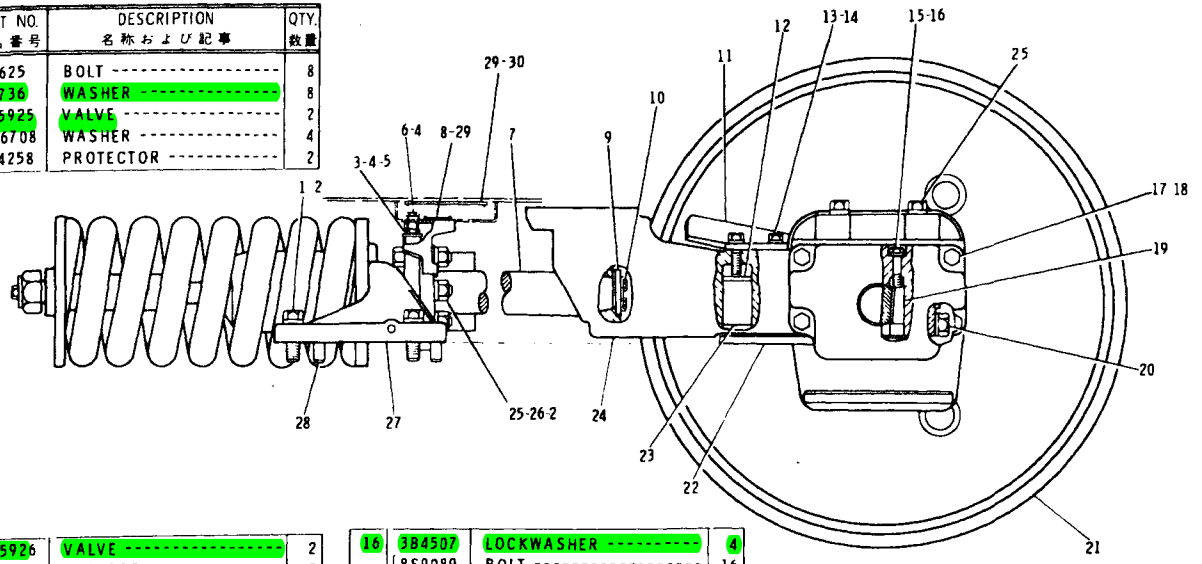

NO.	PART NO. 部品番号	DESCRIPTION 名称および記事	QTY. 数量
1	S1625	BOLT	8
2	2S736	WASHER	8
3	2S5925	VALVE	2
4	5M6708	WASHER	4
5	3Y4258	PROTECTOR	2
6	2S5926	VALVE	2
7	9G6476	ROD ASSEM.	2
8	2S5927	PLATE (Wirering)	2
9	7M2461	WASHER	2
10	1A2029	BOLT	4
	T329	LOCK	2
11	8M6217	GUARD (R. H. Outer-L.H. Inner)	2
	8M6218	GUARD (L.H. Outer - R. H. Inner)	2
12	4B1382	PLATE	8
13	5L4398	BOLT	8
14	5P8245	WASHER	8
15	1D4556	BOLT	4
16	3B4507	LOCKWASHER	4
17	8S9089	BOLT	16
	3B4508	LOCKWASHER	16
18	9M3486	SPACER	8
	9M6692	STRIP	8
19	5M5000	LOCK	4
20	6F4991	BOLT	8
	5P8249	WASHER	8
21	5M5009	IDLER ASSEM.	2
22	7M1845	PLATE ASSEM.	4
23	4F5004	SPRING ASSEM.	8
24	2P7984	YOKE ASSEM.	2
25	1A8537	BOLT	16
	5P8247	WASHER	16
26	1D4720	NUT	8
27	7M1861	STOP (R.H. Outer - L.H. Inner)	2
	7M1862	STOP (R.H. Inner - L.H. Outer)	2
28	1F5151	DOWEL	8
29	7B3028	SCREW	16
30	1S5242	PLATE	2

J26167E

FRONT IDLER (9G6070 N/S)—Part 1 of 2

Effective with Serial No. 6HC1—UP

FRONT IDLER (9G6070 N/S)–Part 2 of 2

Effective with Serial No. 6HC1–UP

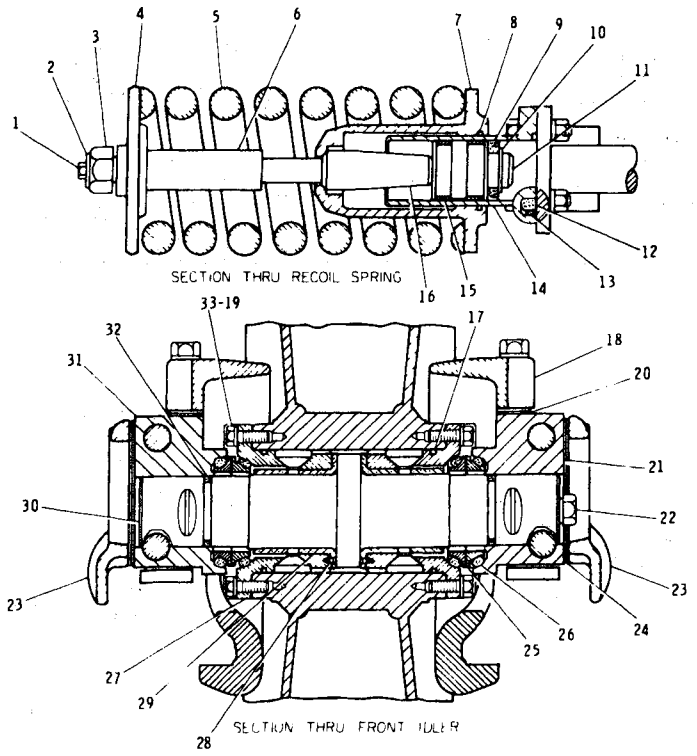

NO.	PART NO. 部品番号	DESCRIPTION 名称および記事	QTY. 数量
1	S1620	BOLT	2
2	2S1654	WASHER	2
3	9M3770	NUT	2
4	7M1856	PILOT	2
5	3P1459	SPRING	2
6	8M6191	SLEEVE	2
7	7M1859	PILOT ASSEM.	2
8	5F149	SEAL	2
9	4S9006	SEAL	2
10	1H8397	RING	2
11	8H7980	PISTON	2
12	5M2997	SEAL	2
13	5M2998	RING	2
14	1S5331	CYLINDER	2
15	6H6269	RING	4
16	7M1851	BOLT	2
17	1H6227	SEAL	4
18	9G8303	COLLAR	4
19	5M2894	WASHER	24
20	7M1857	SHIM	12
21	5M5004	BEARING (R.H. Inner - L.H. Outer)	2
22	2P347	PLUG	2
	1S8947	SEAL	2
23	7M1776	PLATE	4
24	7M1848	SHIM	48
25	1M8747	SEAL GROUP	4
26	8H2262	RING	2
27	3P1900	BUSHING ASSEM.	4
28	3Y9516	PIN	2
29	8P5197	BEARING ASSEM.	1
30	5M5005	SHAFT	2
31	5M5003	BEARING(R.H. Outer-L.H. Inner)	2
32	5F8000	SEAL	4
33	S1588	BOLT	24

J26168E

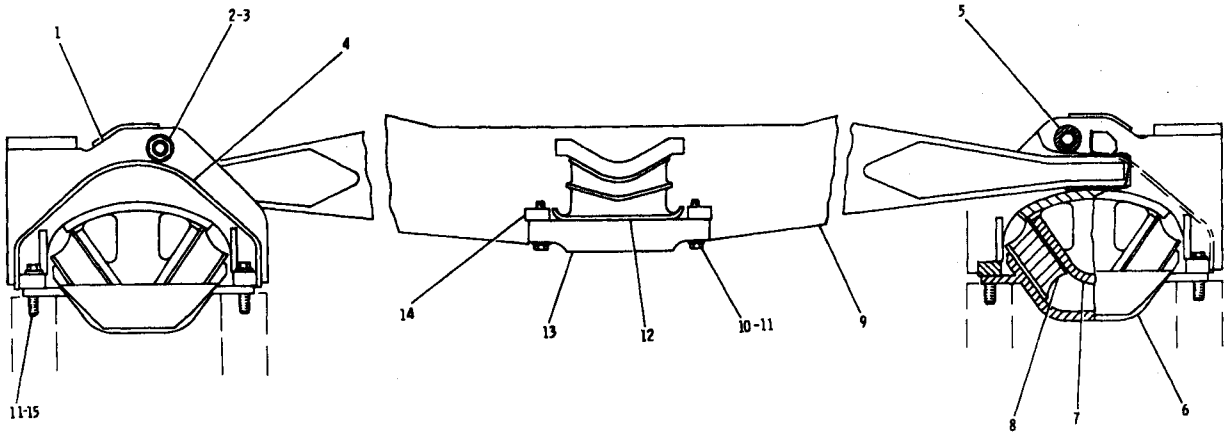

NO.	PART NO. 部品番号	DESCRIPTION 名称および記事	QTY. 数量
1	6T1702	SUPPORT ASSEM.	2
	2M473	LUG	4
2	1B4333	NUT	2
	1D4645	BOLT	2
3	5P8250	WASHER	4
4	7M680	HOUSING ASSEM.	2
5	6T1708	BUSHING	2
6	6T1709	SUSPENSION ASSEM.	2
7	1S2349	PLATE ASSEM.	2
	3F4105	PLATE	1
8	6T956	PAD ASSEM.	4
9	7T7509	BAR ASSEM.	1
10	S1625	BOLT	4
11	5P8247	WASHER	16
12	6T8907	PAD ASSEM.	2
13	6T1711	PLATE	2
14	6T1710	SPACER	4
15	1A8537	BOLT	12

J26165E

EQUALIZER BAR (7T7431 N/S)

Effective with Serial No. 6HC1 – UP

TRACK ROLLER FRAME (7T7404 N/S)

Effective with Serial No. 6HC1—UP

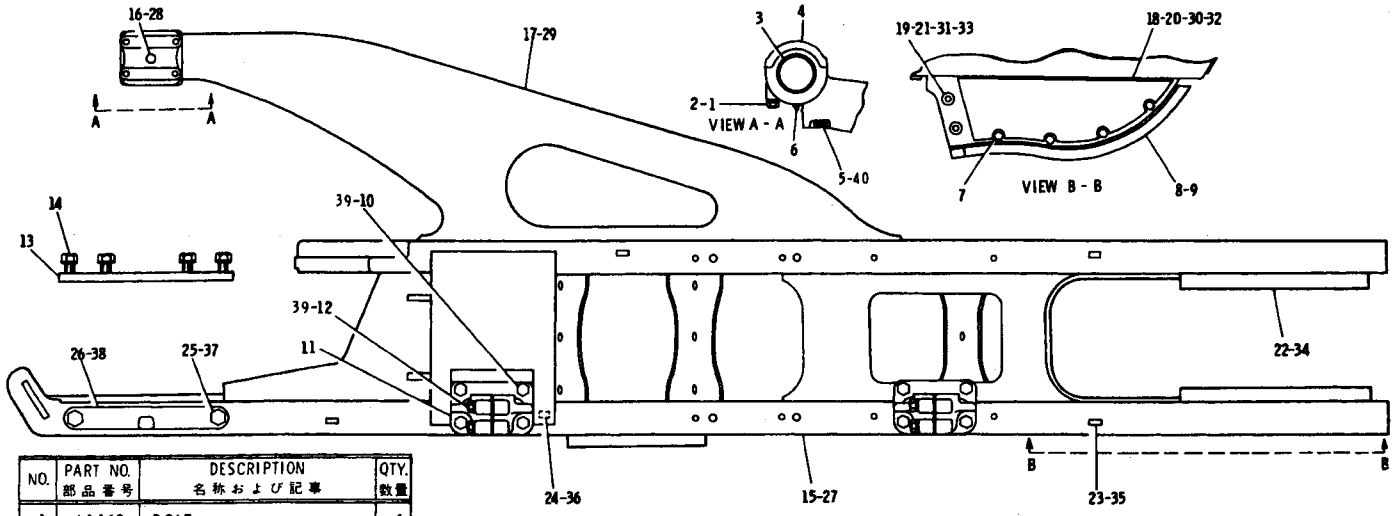

NO.	PART NO. 部品番号	DESCRIPTION 名称および記事	QTY. 数量
1	L1169	BOLT	4
2	5P8247	WASHER	4
3	7M1822	SHELL	4
4	7M699	CAP	2
	9P7752	DOWEL	2
5	1D4593	BOLT	4
6	3B8490	FITTING	2
7	7B3235	BOLT	24
	5P8245	WASHER	24
8	9S8245	STRIP (R.H. Front Inner, R.H. Rear Outer & L.H. Front Outer)	3
9	9S8246	STRIP (L.H. Front Inner, L.H. Rear Outer & R.H. Front Outer)	3
10	1A1135	BOLT	16
11	1S8734	BRACKET	4
12	1B4367	BOLT	8
13	7G8389	GUARD	2
	S1626	BOLT	8
14	5P8248	WASHER	8
15	7T7408	FRAME ASSEM. (R.H.)	1
16	9P7751	DOWEL	1
17	9S9625	BRACE ASSEM. (R.H.)	1
18	7G8513	GUARD ASSEM. (Outer - Front)	1
19	9M3781	NUT (Weld)	2
20	7G8517	GUARD ASSEM. (Inner Front - Outer Rear)	2
21	9M3781	NUT (Weld)	2
22	9G8299	GUIDE	2
23	2M473	LUG	6
24	1F748	NUT (Weld)	6
25	1D4634	BOLT	2
	3B4514	LOCKWASHER	2
26	4S9062	CAP	1
27	7T7409	FRAME ASSEM. (L.H.)	1
28	9P7751	DOWEL	1
29	9M736	BRACE (L.H.)	1
30	7G8513	GUARD ASSEM. (Inner Front - Outer Rear)	2
31	9M3781	NUT (Weld)	2
32	7G8517	GUARD ASSEM. (Outer - Front)	1
33	9M3781	NUT(Weld)	2
34	9G8299	GUIDE	2
35	2M473	LUG	6
36	1F748	NUT (Weld)	6
37	1D4634	BOLT	2
	3B4514	LOCKWASHER	2
38	4S9062	CAP	1
39	2S736	WASHER	24
40	5P8247	WASHER	4

J26169E

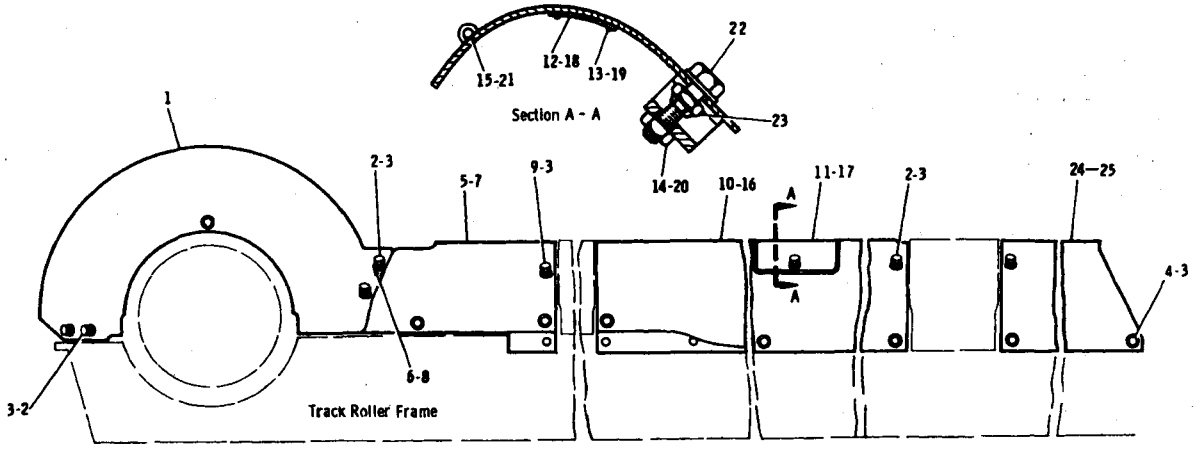

NO.	PART NO. 部品番号	DESCRIPTION 名称および記事	QTY. 数量
1	4S5049	GUARD ASSEM. (R. H.)	1
	4S5050	GUARD ASSEM. (L. H.)	1
2	6H1717	BOLT	34
3	5P1076	WASHER	52
4	2H3855	BOLT	6
5	8M7207	GUARD ASSEM. (R. H.)	1
6	1F748	NUT (Weld)	2
7	8M7208	GUARD ASSEM. (L. H.)	1
8	1F748	NUT (Weld)	2
9	7B3235	BOLT	12
10	7T7402	GUARD ASSEM. (R. H.)	1
11	5A8431	COVER ASSEM.	1
12	1S5242	PLATE (Warning)	1
13	7B3028	SCREW	4
14	9F2978	NUT (Weld)	1
15	5H8991	SHAFT	1
16	7T7403	GUARD ASSEM. (L. H.)	1
17	5A8431	COVER ASSEM.	1
18	1S5242	PLATE (Warning)	1
19	7B3028	SCREW	4
20	9F2978	NUT (Weld)	1
21	5H8991	SHAFT	1
22	5P1075	WASHER	2
	3B1915	BOLT	2
23	2K4973	LOCKNUT	2
24	7T7399	GUARD (L. H.)	1
25	4Y969	GUARD (R. H.)	1

J26387E

TRACK ROLLER FRAME GUARD (7T7398 N/S)

Effective with Serial No. 6HC1 – UP

3T3206 TRACK CARRIER ROLLER GROUP – 4 Groups Required

Effective with Serial No. 6HC1 – UP

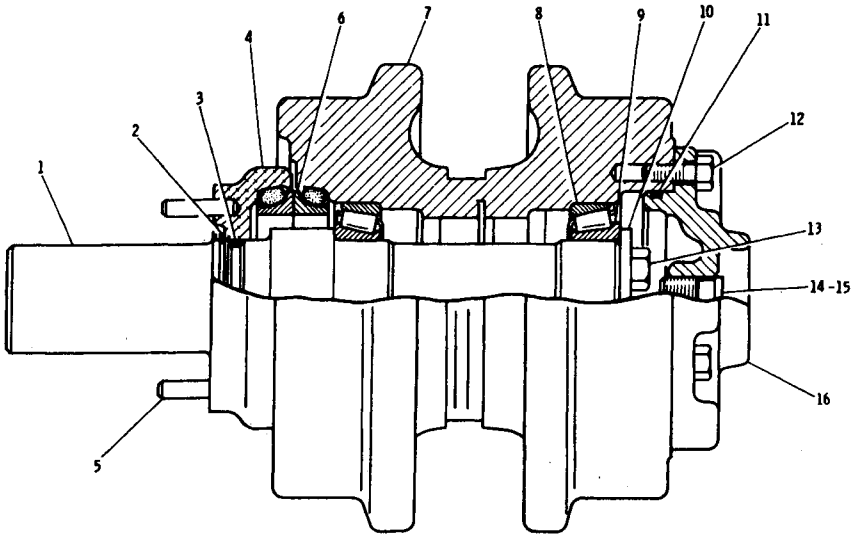

番号	部品番号	名称および記事	数量
1	3T3207	SHAFT	1
2	1M7914	RING	1
3	1H9696	SEAL	1
4	9S3567	COLLER ASSEM.	1
5	1M4291	DOWEL	2
6	1M8747	SEAL GROUP	1
	8H2262	RING	2
7	9S8320	ROLLER ASSEM.	1
8	9S3581	CUP	2
9	9S3582	CORN	2
10	8P6188	PLATE	1
11	2H6338	SEAL	1
12	S1594	BOLT	3
13	5K9107	BOLT	2
14	2P347	PLUG	1
15	1S8947	SEAL	1
16	5M2043	COVER	1

J21460E

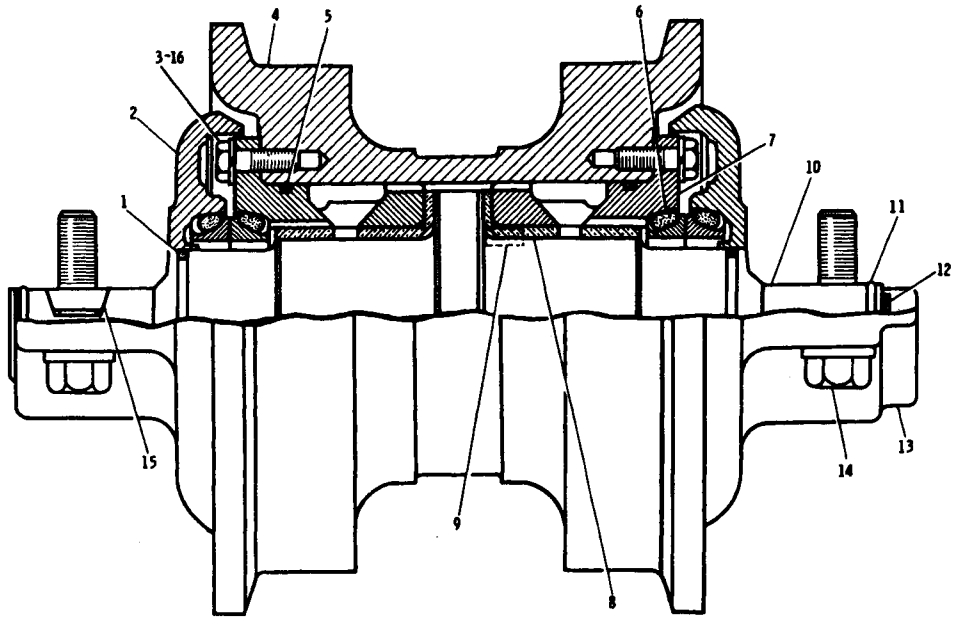

NO.	PART NO. 部品番号	DESCRIPTION 名称および記事	QTY. 数量
1	5F8000	SEAL	2
2	7G417	COLLER (Inner)	1
3	1A2029	BOLT	12
4	9G8027	RIM ASSEM.	1
5	2H3928	SEAL	2
6	1M8747	SEAL GROUP	2
	8H2262	RING	2
7	2P8048	BUSHING	2
8	8P5197	BEARING ASSEM.	1
9	9B2289	PIN	2
10	7G419	SHAFT	1
11	5M4443	RING	2
12	2P347	PLUG	1
	1S8947	SEAL	1
13	7G418	COLLER (Outer)	1
14	1D4608	BOLT	4
	5H1504	WASHER	4
15	7M5110	LOCK	1
16	3B4506	LOCKWASHER	12

J21462E

9G8029 TRACK ROLLER GROUP—Single Flange—6 Groups Required

Effective with Serial No. 6HC1—UP

Roller Arrangement: D-S-D-S-D-D-S

9G8034 TRACK ROLLER GROUP – Double Flange – 8 Groups Required

Effective with Serial No. 6HC1 – UP
Roller Arrangement: D-S-D-S-D-D-S

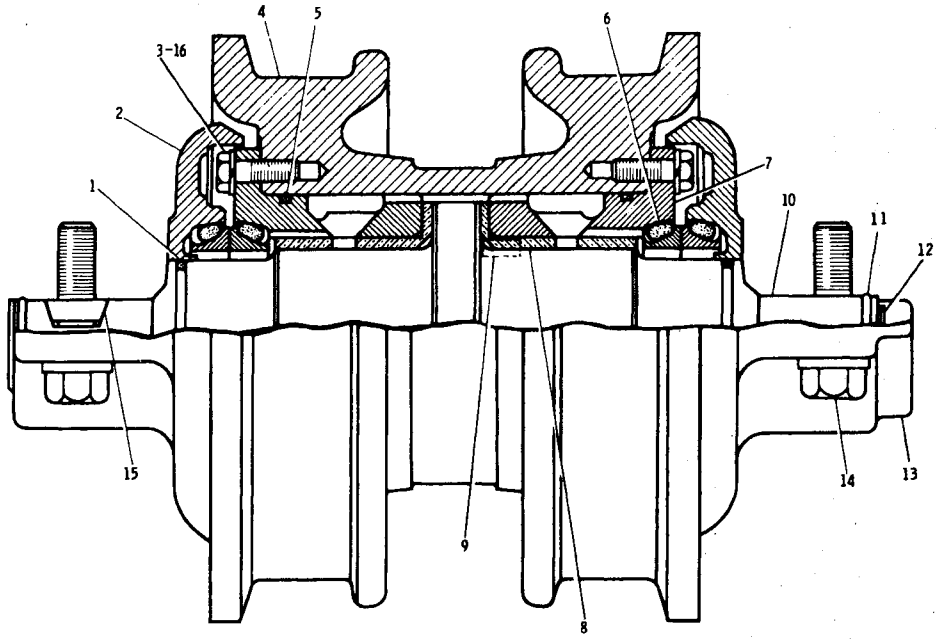

NO.	PART NO. 部品番号	DESCRIPTION 名称および記事	QTY. 数量
1	5F8000	SEAL	2
2	7G417	COLLAR (Inner)	1
3	1A2029	BOLT	12
4	9G8032	RIM ASSEM	1
5	2H3928	SEAL	2
6	1M8747	SEAL GROUP	2
	8H2262	RING	2
7	2P8048	BUSHING ASSEM	2
8	8P5197	BEARING ASSEM	1
9	9B2289	PIN	2
10	7G419	SHAFT	1
11	5M4443	RING	2
12	2P347	PLUG	1
	1S8947	SEAL	1
13	7G418	COLLER (Outer)	1
14	1D4608	BOLT	4
	5H1504	WASHER	4
15	7M5110	LOCK	1
16	3B4506	LOCKWASHER	12

J21461E

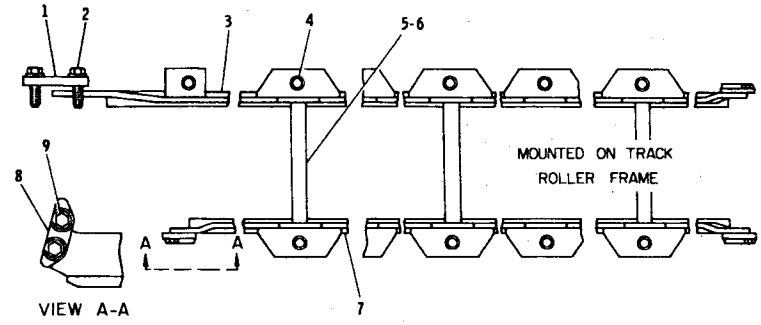

NO.	PART NO. 部品番号	QTY. 数量	DESCRIPTION 名称および記事
1	7M2527	2	PLATE
2	2A1538	4	BOLT
	3B4512	4	LOCKWASHER
3	9G7634	1	GUARD ASSEM. (INNER - R.H.)
	9G7636	1	GUARD ASSEM. (INNER - L.H.)
4	1D4608	26	BOLT
	2S0115	26	WASHER
	3P4133	26	SPACER
5	7M2530	6	TUBE
	7M2532	6	ROD ASSEM.
6	1B4206	6	NUT
	3B4510	12	LOCKWASHER
	9G7638	1	GUARD ASSEM. (OUTER - R.H.)
7	9G7643	1	GUARD ASSEM. (OUTER - L.H.)
8	2M4668	6	RETAINER
9	S1595	12	BOLT
	3B4508	12	LOCKWASHER

J34821E

TRACK ROLLER GUARD (9G7639 N/S)
AN ATTACHMENT

MEMO

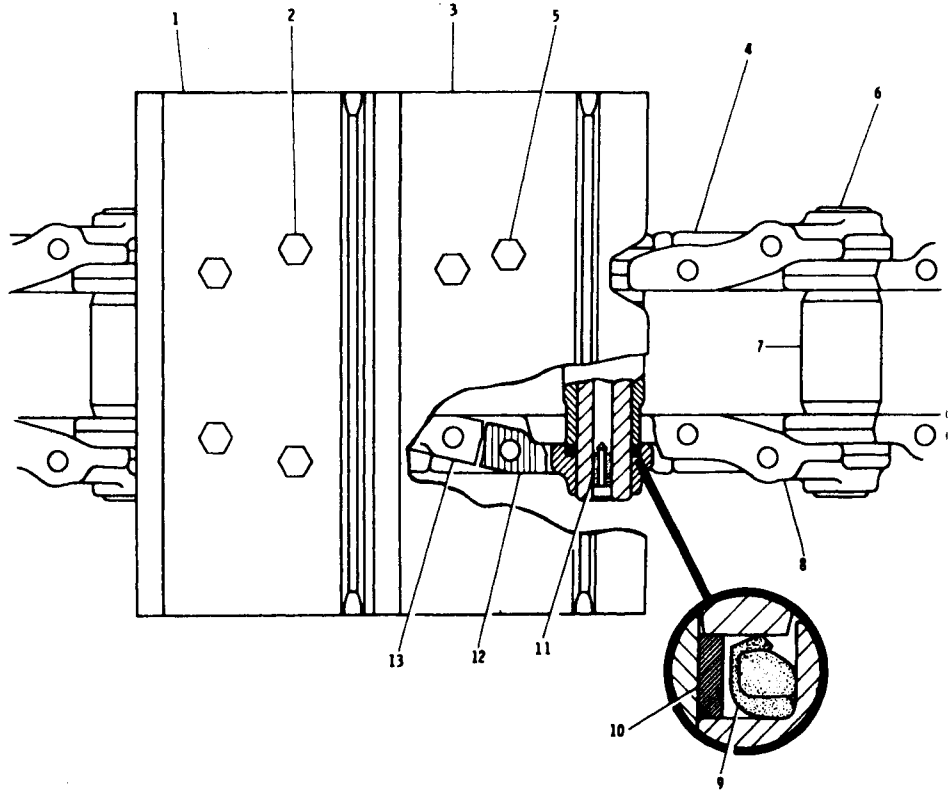

NO.	PART NO. 部品番号	DESCRIPTION 名称および記事	QTY. 数量
1	7S9558	SHOE	38
2	1S1859	BOLT	152
	1S1860	NUT	152
3	3P1125	SHOE (Master)	1
4	3P1120	LINK ASSEM.	1
	3P1113	LINK (L.H.)	38
5	9S1838	BOLT	4
6	3P1108	PIN	39
7	3P1109	BUSHING	39
8	3P1112	LINK (R.H.)	38
9	6T1529	SEAL ASSEM.	78
10	3P1104	RING	78
11	9G1642	STOPPER	39
	7G4408	PLUG	39
12	3P1114	LINK (Master) (R.H. - Pin End)	1
	3P1115	LINK (Master) (L.H. - Pin End)	1
13	3P1116	LINK (Master) (R.H. - Bushing End)	1
	3P1117	LINK (Master) (L.H. - Bushing End)	1

3T3164 TRACK GROUP – 559mm (22") Single Grouser Shoe – 2 Groups Required

Effective with Serial No. 6HC1 – UP

		CONSISTS OF:	PAGE
1	3G1731	TANK AND VALVE GROUP	152
1	3G4768	GEAR PUMP GROUP	165
1	8P3363	BULLDOZER LINES GROUP	167
1	8P4157	HYDRAULIC TANK MOUNTING GROUP	151
1	8P4167	PUMP LINES GROUP	172
1	8P5038	IMPLEMENT LINKAGE GROUP	176
1	7S4128	FILM	

J14164E

8P3074 HYDRAULIC CONTROL ARRANGEMENT – Bulldozer – Type 1
Effective with Serial No. 37X2527 – UP
Only Separate parts Serviced

		CONSISTS OF:	PAGE
1	3G1732	TANK AND VALVE GROUP	154
1	3G4768	GEAR PUMP GROUP	165
1	8P3363	BULLDOZER LINES GROUP	167
1	8P4157	HYDRAULIC TANK MOUNTING GROUP	151
1	8P4167	PUMP LINES GROUP	172
1	8P5039	IMPLEMENT LINKAGE GROUP	177
1	9P477	TILT CYLINDER LINES GROUP	169
1	7S4128	FILM	

J14165E

8P3075 HYDRAULIC CONTROL ARRANGEMENT – Bulldozer and Blade Tilt – Type 1
Effective with Serial No. 38X2756 – UP
Only separate parts Serviced

Consists of:

			Page
1	3G9791	Tank & Valve Group	156
1	4J487	External Auxilialy Valve Group	161
1	3G4768	Gear Pump Group	165
1	8P4167	Pump Lines Group	172
1	8P4157	Hydraulic Tank Mounting Group	151
1	8P4398	Ripper Lines Group	170
1	8P3363	Bulldozer Lines Group	167
1	8P5038	Bulldozer Control Linkage Group	176
1	8P5040	Ripper Control Linkage Group	178
1	7S4128	Film (163 Hydraulic Control)	

J20154E

8P3076 HYDRAULIC CONTROL ARRANGEMENT – Bulldozer and Ripper – Type 1
Effective with Serial No. 39X1308 – UP
Only separate parts Serviced

Consists of:

			Page
1	3G9791	Tank & Valve Group	156
1	4J487	External Auxilialy Valve Group	161
1	3G4768	Gear Pump Group	165
1	8P4167	Pump Lines Group	172
1	8P4157	Hydraulic Tank Mounting Group	151
1	8P4398	Ripper Lines Group	170
1	9P477	Tilt Cylinder Lines Group	169
1	8P3363	Bulldozer Lines Group	167
1	8P5039	Bulldozer & Tilt Control Linkage Group	177
1	8P5040	Ripper Control Linkage Group	178
1	7S4128	Film (163 Hydraulic Control)	

J20155E

8P3077 HYDRAULIC CONTROL ARRANGEMENT – Bulldozer, Blade Tilt and Ripper – Type 1
Effective with Serial No. 39X1308 – UP
Only separate parts Serviced

		CONSISTS OF:	PAGE
1	9T493	TANK AND VALVE GROUP	153 A
1	3G4768	GEAR PUMP GROUP	165
1	8P3363	BULLDOZER LINES GROUP	167
1	8P4157	HYDRAULIC TANK MOUNTING GROUP	151
1	8P4167	PUMP LINES GROUP	172
1	8P5038	IMPLEMENT LINKAGE GROUP	176
1	7S4128	FILM	

J31775E

8P3074 HYDRAULIC CONTROL ARRANGEMENT – Bulldozer – Type 2
Effective with Serial No. 37X2527 – UP
Only separate parts Serviced

		Consists of:	Page
1	9T494	Tank & Valve Group	155 A
1	3G4768	Gear Pump Group	165
1	8P3363	Bulldozer Lines Group	167
1	8P4157	Hydraulic Tank Mounting Group	151
1	8P4167	Pump Lines Group	172
1	8P5039	Bulldozer & Tilt Control Linkage Group	177 A
1	9P477	Tilt Cylinder Lines Group	169
1	7S4128	Film 1163 Hydraulic Control)	

J31916E

8P3075 HYDRAULIC CONTROL ARRANGEMENT – Bulldozer and Blade Tilt – Type 2
Effective with Serial No. 38X2758 – UP
Only separate parts Serviced

Consists of:

			Page
1	9T492	TANK & VALVE GROUP	157A
1	4J487	EXTERNAL AUXILIARY VALVE GROUP	161
1	3G4768	GEAR PUMP GROUP	165
1	8P4167	PUMP LINES GROUP	172
1	8P4157	HYDRAULIC TANK MOUNTING GROUP	151
1	8P4398	RIPPER LINES GROUP	171A
1	8P3363	BULLDOZER LINES GROUP	167
1	8P5038	BULLDOZER CONTROL LINKAGE GROUP	176
1	8P5040	RIPPER CONTROL LINKAGE GROUP	178
1	7S4128	FILM (163 HYDRAULIC CONTROL)	

J32817E

8P3076 HYDRAULIC CONTROL ARRANGEMENT – Bulldozer and Ripper – Type 2
Effective with Serial No. 39X1308 – UP
Only separate parts Serviced

Consists of:

			Page
1	9T492	Tank & Valve Group	157A
1	4J487	External Auxiliary Valve Group	161
1	3G4768	Gear Pump Group	165
1	8P4167	Pump Lines Group	172
1	8P4157	Hydraulic Tank Mounting Group	151
1	8P4398	Ripper Lines Group	171A
1	9P477	Tilt Cylinder Lines Group	169
1	8P3363	Bulldozer Lines Group	167
1	8P5039	Bulldozer & Tilt Control Linkage Group	177A
1	8P5040	Ripper Control Linkage Group	178
1	7S4128	Film (163 Hydraulic Control)	

J31918E

8P3077 HYDRAULIC CONTROL ARRANGEMENT – Bulldozer, Blade Tilt and Ripper – Type 2
Effective with Serial No. 39X1308 – UP
Only separate parts Serviced

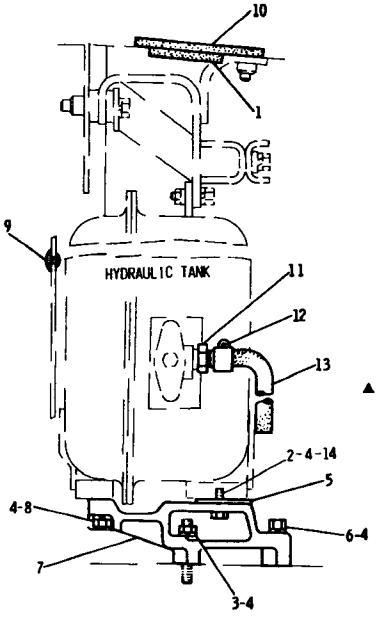

NO.	PART NO. 部品番号	QTY. 数量	DESCRIPTION 名称および記事
1	3J4586	1	GROMMET
2	7B3235	2	BOLT
3	1D4719	2	NUT
4	3B4508	7	WASHER
5	3J3372	8	SHIM
6	9S1366	2	BOLT
7	8P1184	1	SUPPORT (R.H.)
	8P1185	1	SUPPORT (L.H.)
	S1587	1	BOLT (45MM LONG)
8	1A1460	1	BOLT (51MM LONG)
9	6V1178	2	PLUG
10	7G5266	1	SEAL
11	308491	1	CONNECTOR
12	5D1026	1	CLAMP
▲ 13	5P1505		HOSE ---38CM
14	5P8245	1	WASHER

▲ ORDER BY THE CENTIMETER

J31780E

8P4157 HYDRAULIC TANK MOUNTING GROUP

Part of 8P3074, 8P3075, 8P3076 and 8P3077 Hydraulic Control Arrangements listed on Pages 149 and 150

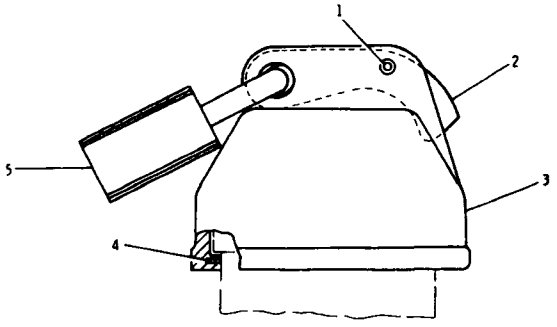

NO.	PART NO. 部品番号	DESCRIPTION 名称および記事	QTY. 数量
1	1L5072	DOWEL	1
2	9M7394	LEVER	1
3	5D1911	COVER	1
4	2J7761	RING	1
5	5P8502	PADLOCK GROUP	1
	5P8500	KEY	2

J20685E

HYDRAULIC TANK CAP PROTECTION COVER (9G9288 N/S)

AN ATTACHMENT

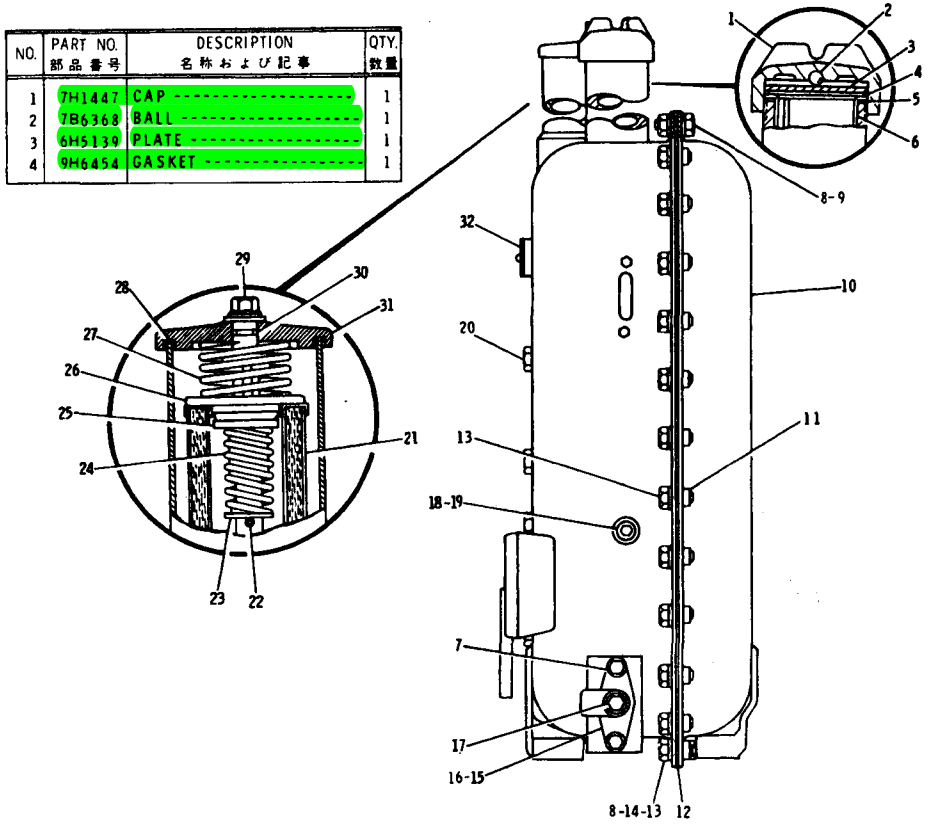

NO.	PART NO. 部品番号	DESCRIPTION 名称および記事	QTY. 数量
1	7H1447	CAP	1
2	7B6368	BALL	1
3	6H5139	PLATE	1
4	9H6454	GASKET	1

C Indicates Change

	5	3G361	GASKET	1
	6	9J3047	STRAINER	1
C	7	1A2029	BOLT	2
C	8	1D4717	NUT	7
C		5M2894	WASHER	14
C	9	343557	BOLT (Mark X) (See Part 2)	3
	10	3G7229	COVER ASSEM.	1
	11	9F2978	NUT (Weld)	29
	12	3H9523	GASKET	1
C	13	5K9107	BOLT	33
C	14	5D353	BOLT (Mark Y) (See Part 2)	4
	15	8H9819	ADAPTER	1
	16	8H9818	GASKET	1
	17	4B7739	PLUG	1
	18	9S8004	PLUG	1
	19	3J1907	SEAL	1
C	20	9M6590	BOLT	2
	21	4J816	ELEMENT ASSEM.	2
	22	2M8729	PIN	1
	23	3J1997	RETAINER	1
	24	7F9802	SPRING	1
	25	5J1096	VALVE	1
	26	5J1095	SEAT	1
	27	9J8775	SPRING	1
	28	3J1991	GASKET	1
	29	3Y6037	BOLT ASSEM.	1
	30	8F9206	SEAL	1
	31	4J596	COVER	1
	32	Not Serv.	PLATE (Serial No.)	1
		7B3028	DRIVE SCREW	2

J21282E

TANK AND VALVE (3G1731 N/S)–Single Valve–Part 1 of 2

Effective with Serial No. 37X2527–UP

Part of 8P3074 Hydraulic Control Arrangement listed on Page 149

TANK AND VALVE (3G1731 N/S)—Single Valve—Part 2 of 2

Effective with Serial 37X2527—UP

Part of 8P3074 Hydraulic Control Arrangement listed on Page 149

9J9403 Valve parts are shown on Page 158

NO.	PART NO. 部品番号	DESCRIPTION 名称および記事	QTY. 数量
1	9J9403	VALVE GROUP ---------- (See Separate Illustration)	1
2	8J3539	TUBE ASSEM. ----------	1

C Indicates Change

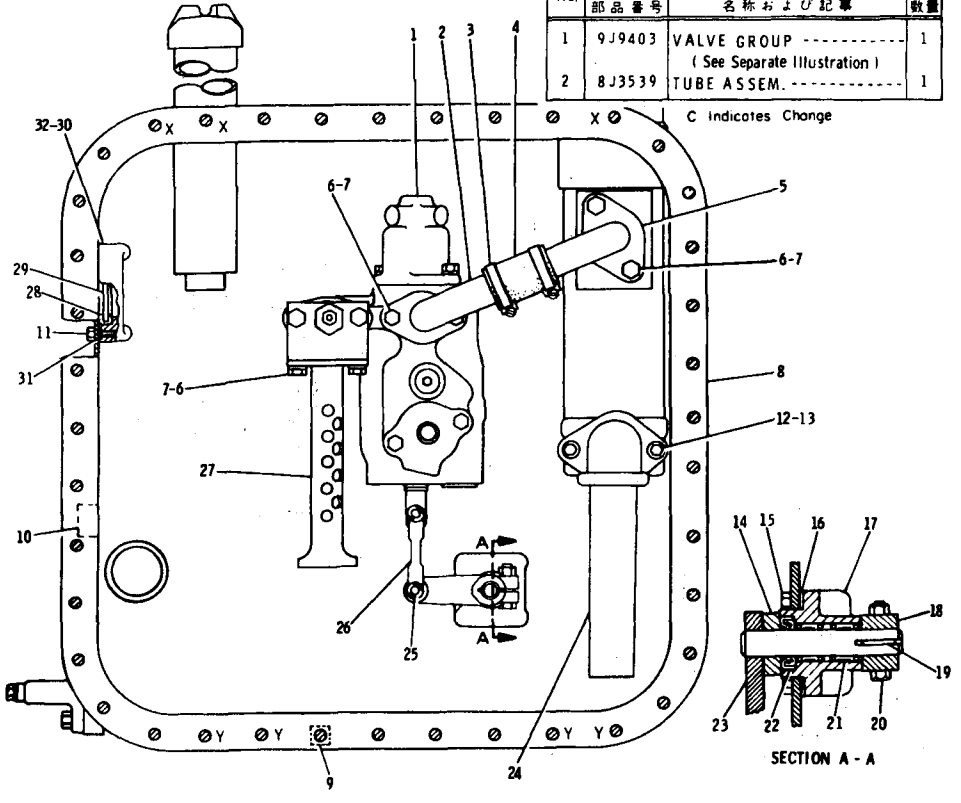

SECTION A - A

	3	9M2904	CLAMP ----------	2
	4	8J2660	HOSE ----------	1
	5	8J1803	TUBE ASSEM. ----------	1
	6	S1621	BOLT ----------	6
C	7	5P8245	WASHER ----------	6
	8	3G2712	TANK ASSEM. ----------	1
		1F748	NUT (Weld) ----------	1
	9	9F2978	NUT (Weld) ----------	4
	10	5J3306	FITTING ----------	1
	11	5D353	BOLT ----------	2
	12	310219	BOLT ----------	2
	13	5M2894	WASHER ----------	2
	14	2H5746	ADAPTER ----------	1
	15	1A2029	BOLT ----------	4
C	16	1U4599	GASKET ----------	1
	17	8J1841	HOUSING ----------	1
	18	2J6074	LEVER ASSEM. ----------	1
		7H3912	BUSHING ----------	1
	19	1B8706	KEY ----------	1
	20	S1591	BOLT ----------	1
		1D4717	NUT ----------	1
	21	7F7983	BEARING ----------	2
	22	3J4407	SEAL ----------	1
	23	8J2654	LEVER ASSEM. ----------	1
	24	3G4074	TUBE ASSEM. ----------	1
	25	1J4384	PIN ----------	2
		3B4615	COTTER PIN ----------	2
	26	7H3932	ROD ----------	1
	27	8J2509	TUBE ASSEM. ----------	1
	28	4J8251	GROMMET ----------	1
	29	4J8252	GLASS ----------	1
	30	3G2692	RETAINER ----------	1
	31	5H6005	SEAL ----------	2
	32	3G5980	PLATE ----------	1

J21283E

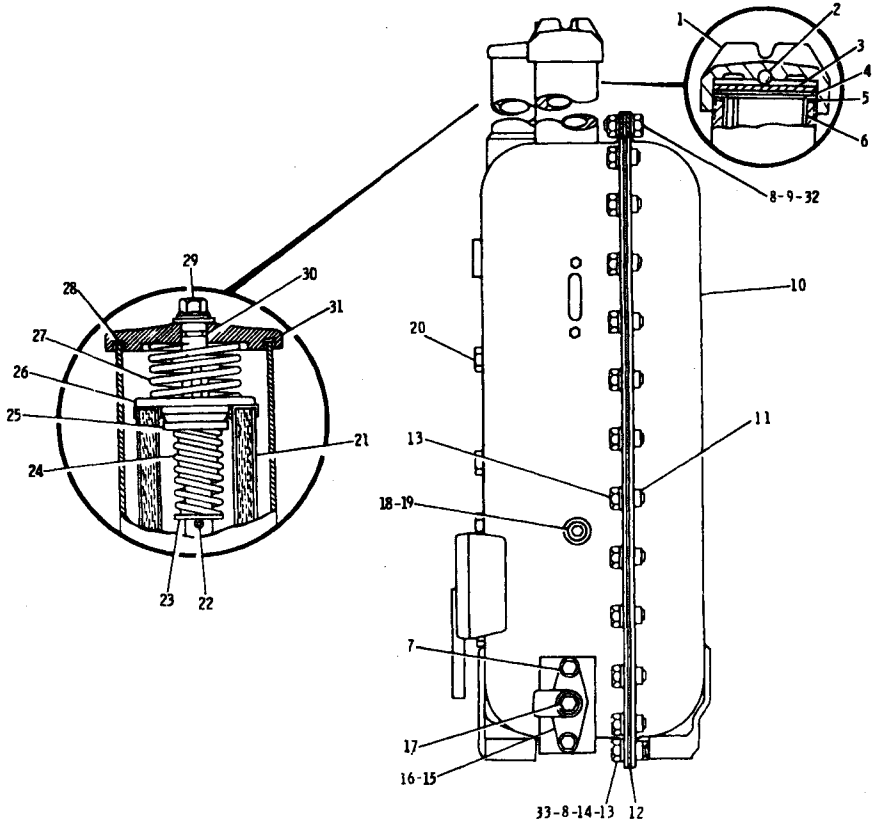

NO.	PART NO. 部品番号	QTY. 数量	DESCRIPTION 名称および記事
1	7H1447	1	CAP
2	4B9782	1	BALL
3	6H5139	1	PLATE
4	9H6454	1	GASKET
5	3G361	1	GASKET
6	9J3047	1	STRAINER
7	1A2029	2	BOLT
8	5M2894	14	WASHER
9	343557	3	BOLT (MARK X)
10	3G7229	1	COVER ASSEM.
11	9F2978	29	NUT (WELD)
12	3H9523	1	GASKET
13	5K9107	33	BOLT
14	308535	4	BOLT (MARK Y)
15	8H9819	1	ADAPTER
16	8H9818	1	GASKET
17	4B7739	1	PLUG
18	9S8004	1	PLUG
19	3J1907	1	SEAL
20	9M6590	2	BOLT
21	4J816	2	ELEMENT ASSEM.
22	2M8729	1	PIN
23	3J1997	1	RETAINER
24	7F9802	1	SPRING
25	5J1096	1	VALVE
26	5J1095	1	SEAT
27	9J8775	1	SPRING
28	3J1991	1	GASKET
29	3Y6937	1	BOLT ASSEM.
30	8F9206	1	SEAL
31	4J596	1	COVER
32	1D4717	3	NUT
33	6H8346	4	NUT

J31776E

TANK AND VALVE (9T493 N/S)—Part 1 of 2
Effective with Serial No. 37X2527—UP
Part of 8P3074 Hydraulic Control Arrangement listed on Page 150A
AN ATTACHMENT

TANK AND VALVE (9T493 N/S)-Part 2 of 2

Effective with Serial No. 37X2527-UP

Part of 8P3074 Hydraulic Control Arrangement listed on Page 150A

9T174 Control Valve parts are shown on Page 158A

AN ATTACHMENT

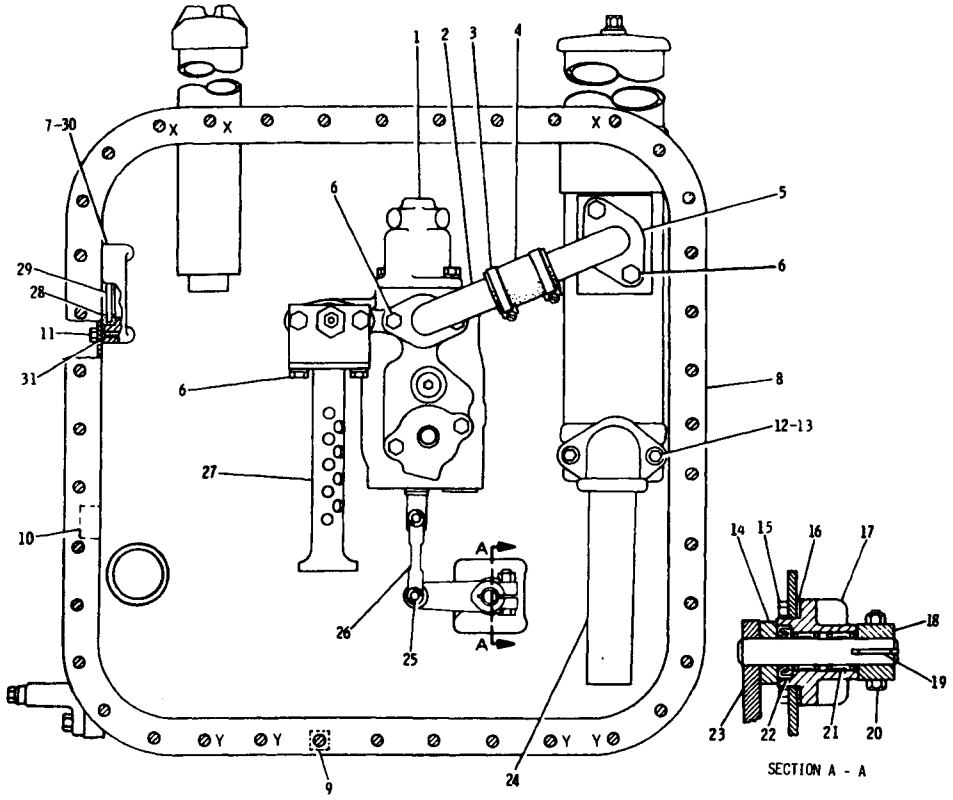

SECTION A - A

NO.	PART NO. 部品番号	QTY. 数量	DESCRIPTION 名称および記事
1	9T174	1	VALVE GROUP (SEE SEPARATE ILLUSTRATION)
2	8J3539	1	TUBE ASSEM.
3	9M2904	2	CLAMP
4	8J2660	1	HOSE
5	8J1803	1	TUBE ASSEM.
6	6K5718	6	BOLT
7	3G5980	1	PLATE
8	3G2712	1	TANK ASSEM.
	1F748	1	NUT (WELD)
9	9F2978	4	NUT (WELD)
10	5J3306	1	FITTING
11	S1594	2	BOLT
12	310219	2	BOLT
13	5M2894	2	WASHER
14	2H5746	1	ADAPTER
15	1A2029	4	BOLT
16	1U4599	1	GASKET
17	8J1841	1	HOUSING
18	2J6074	1	LEVER ASSEM.
	7H3912	1	BUSHING
19	1B8706	1	KEY
20	S1591	1	BOLT
	2K4973	1	LOCKNUT
21	7F7983	2	BEARING
22	6V7371	1	SEAL
23	8J2654	1	LEVER
24	3G4074	1	TUBE ASSEM.
25	1J4384	2	PIN
	3B4615	2	COTTER PIN
26	7H3932	1	ROD
27	8J2509	1	TUBE ASSEM.
28	4J8251	1	GROMMET
29	4J8252	1	GLASS
30	3G2692	1	RETAINER
31	5H6005	2	SEAL

J31777E

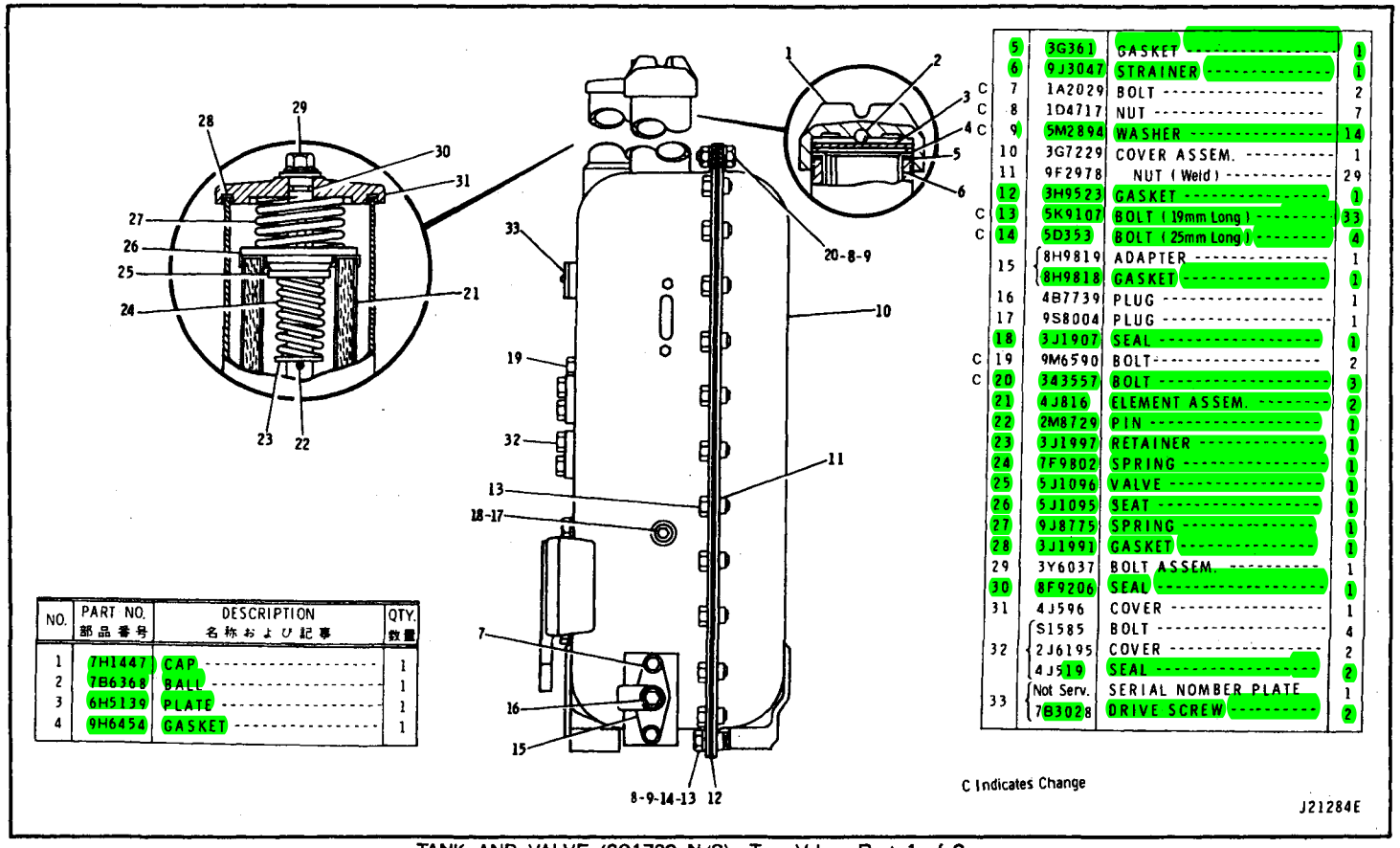

NO.	PART NO. 部品番号	DESCRIPTION 名称および記事	QTY. 数量
1	7H1447	CAP	1
2	7B6368	BALL	1
3	6H5139	PLATE	1
4	9H6454	GASKET	1

	5	3G361	GASKET	1
	6	9J3047	STRAINER	1
C	7	1A2029	BOLT	2
C	8	1D4717	NUT	7
C	9	5M2894	WASHER	14
	10	3G7229	COVER ASSEM.	1
	11	9F2978	NUT (Weld)	29
	12	3H9523	GASKET	1
C	13	5K9107	BOLT (19mm Long)	33
C	14	5D353	BOLT (25mm Long)	4
	15	8H9819	ADAPTER	1
		8H9818	GASKET	1
	16	4B7739	PLUG	1
	17	9S8004	PLUG	1
	18	3J1907	SEAL	1
C	19	9M6590	BOLT	2
C	20	343557	BOLT	3
	21	4J816	ELEMENT ASSEM.	2
	22	2M8729	PIN	1
	23	3J1997	RETAINER	1
	24	7F9802	SPRING	1
	25	5J1096	VALVE	1
	26	5J1095	SEAT	1
	27	9J8775	SPRING	1
	28	3J1991	GASKET	1
	29	3Y6037	BOLT ASSEM.	1
	30	8F9206	SEAL	1
	31	4J596	COVER	1
	32	S1585	BOLT	4
		2J6195	COVER	2
		4J519	SEAL	2
	33	Not Serv.	SERIAL NOMBER PLATE	1
		7B3028	DRIVE SCREW	2

C Indicates Change

J21284E

TANK AND VALVE (3G1732 N/S) – Two Valve – Part 1 of 2

Effective with Serial No. 38X2756 – UP

Part of 8P3075 Hydraulic Control Arrangement listed on Page 149

TANK AND VALVE (3G1732 N/S)—Two Valve—Part 2 of 2

Effective with Serial No. 38X2756—UP

Part of 8P3075 Hydraulic Control Arrangement listed on Page 149

9J9833 Control Valve parts are shown on Page 159

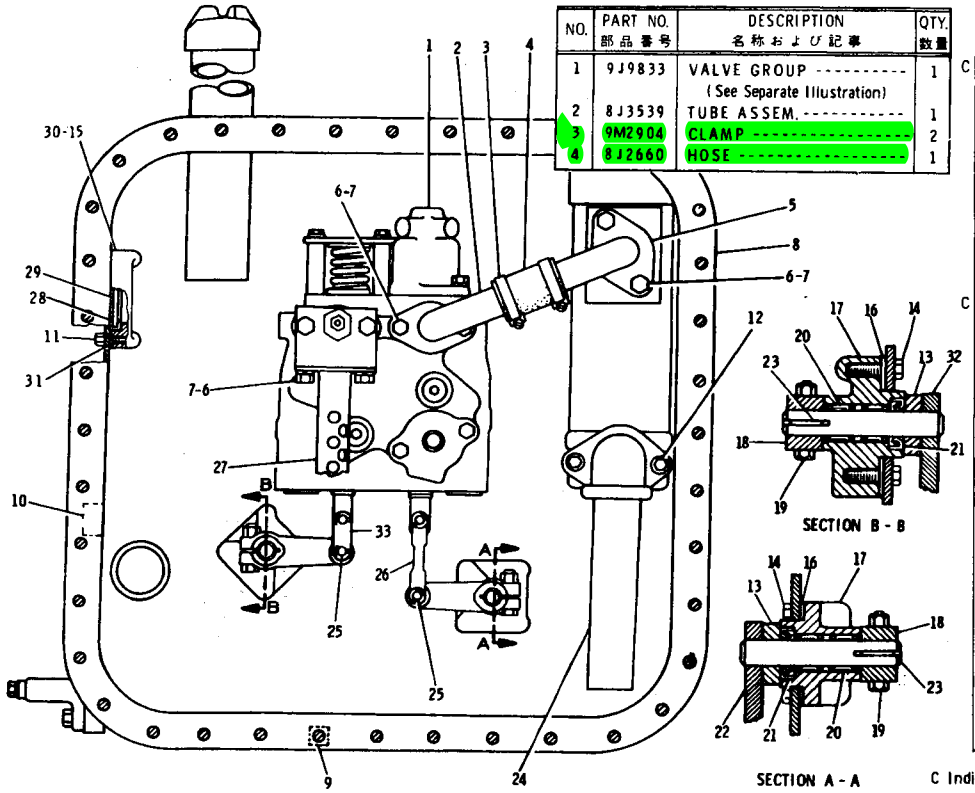

NO.	PART NO. 部品番号	DESCRIPTION 名称および記事	QTY. 数量	
1	9J9833	VALVE GROUP ---------- (See Separate Illustration)	1	C
2	8J3539	TUBE ASSEM. ----------	1	
3	9M2904	CLAMP ----------	2	
4	8J2660	HOSE ----------	1	

5	8J1803	TUBE ASSEM. ----------	1	
6	S1621	BOLT ----------	6	
7	5P8245	WASHER ----------	6	C
8	3G2708	TANK ASSEM. ----------	1	
	1F748	NUT (Weld) ----------	1	
9	9F2978	NUT (Weld) ----------	4	
10	5J3306	FITTING ----------	1	
11	5D353	BOLT ----------	2	
12	310219	BOLT ----------	2	
	5M2894	WASHER ----------	2	
13	2H5746	ADAPTER ----------	2	
14	1A2029	BOLT ----------	8	
15	3G5980	PLATE ----------	1	
16	1U4599	GASKET ----------	2	C
17	8J1841	HOUSING ----------	2	
18	2J6074	LEVER ASSEM. ----------	2	
	7H3912	BUSHING ----------	1	
19	S1591	BOLT ----------	2	
	1D4717	NUT ----------	2	
20	7F7983	BEARING ----------	4	
21	3J4407	SEAL ----------	2	
22	8J2654	LEVER ASSEM. ----------	1	
23	1B8706	KEY ----------	2	
24	3G4074	TUBE ASSEM. ----------	1	
25	1J4384	PIN ----------	4	
	3B4615	COTTER PIN ----------	4	
26	7H3932	ROD ----------	1	
27	8J2509	TUBE ASSEM. ----------	1	
28	4J8251	GROMMET ----------	1	
29	4J8252	GLASS ----------	1	
30	3G2692	RETAINER ----------	1	
31	5H6005	SEAL ----------	2	
32	8J2653	LEVER ASSEM. ----------	1	
33	5H2207	LINK ----------	2	

C Indicates Change

J21285E

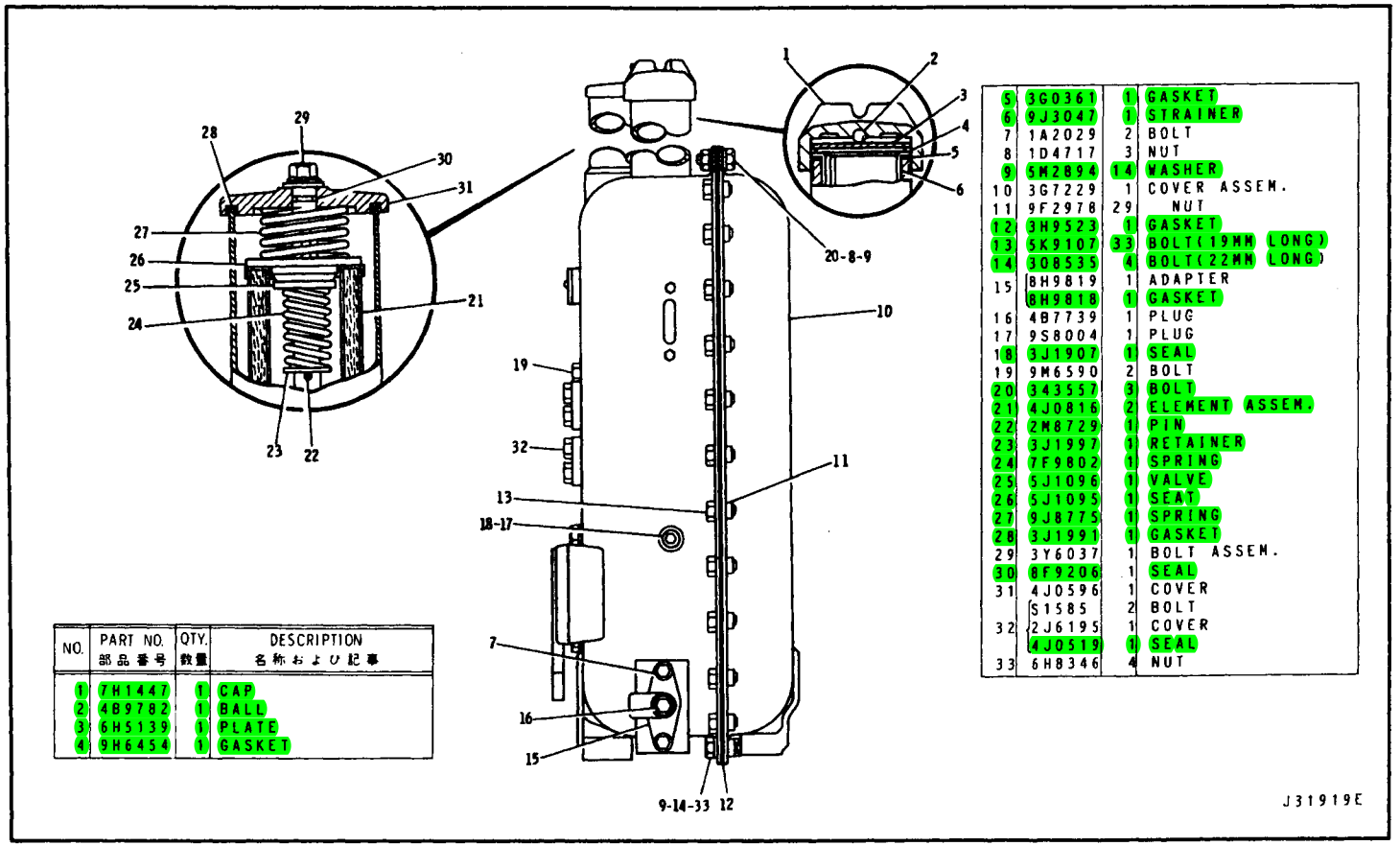

NO.	PART NO. 部品番号	QTY. 数量	DESCRIPTION 名称および記事
1	7H1447	1	CAP
2	4B9782	1	BALL
3	6H5139	1	PLATE
4	9H6454	1	GASKET

5	3G0361	1	GASKET
6	9J3047	1	STRAINER
7	1A2029	2	BOLT
8	1D4717	3	NUT
9	5M2894	14	WASHER
10	3G7229	1	COVER ASSEM.
11	9F2978	29	NUT
12	3H9523	1	GASKET
13	5K9107	33	BOLT(19MM LONG)
14	3D8535	4	BOLT(22MM LONG)
15	8H9819	1	ADAPTER
	8H9818	1	GASKET
16	4B7739	1	PLUG
17	9S8004	1	PLUG
18	3J1907	1	SEAL
19	9M6590	2	BOLT
20	3A3557	3	BOLT
21	4J0816	2	ELEMENT ASSEM.
22	2M8729	1	PIN
23	3J1997	1	RETAINER
24	7F9802	1	SPRING
25	5J1096	1	VALVE
26	5J1095	1	SEAT
27	9J8775	1	SPRING
28	3J1991	1	GASKET
29	3Y6037	1	BOLT ASSEM.
30	8F9206	1	SEAL
31	4J0596	1	COVER
	S1585	2	BOLT
32	2J6195	1	COVER
	4J0519	1	SEAL
33	6H8346	4	NUT

TANK AND VALVE (9T494 N/S)—Part 1 of 2

Effective with Serial No. 38X2756—UP

Part of 8P3075 Hydraulic Control Arrangement listed on Page 150A

TANK AND VALVE (9T494 N/S)—Part 2 of 2

Effective with Serial No. 38X2756—UP

Part of 8P3075 Hydraulic Control Arrangement listed on Page 150A

9T176 Control Valve parts are shown on Page 159A

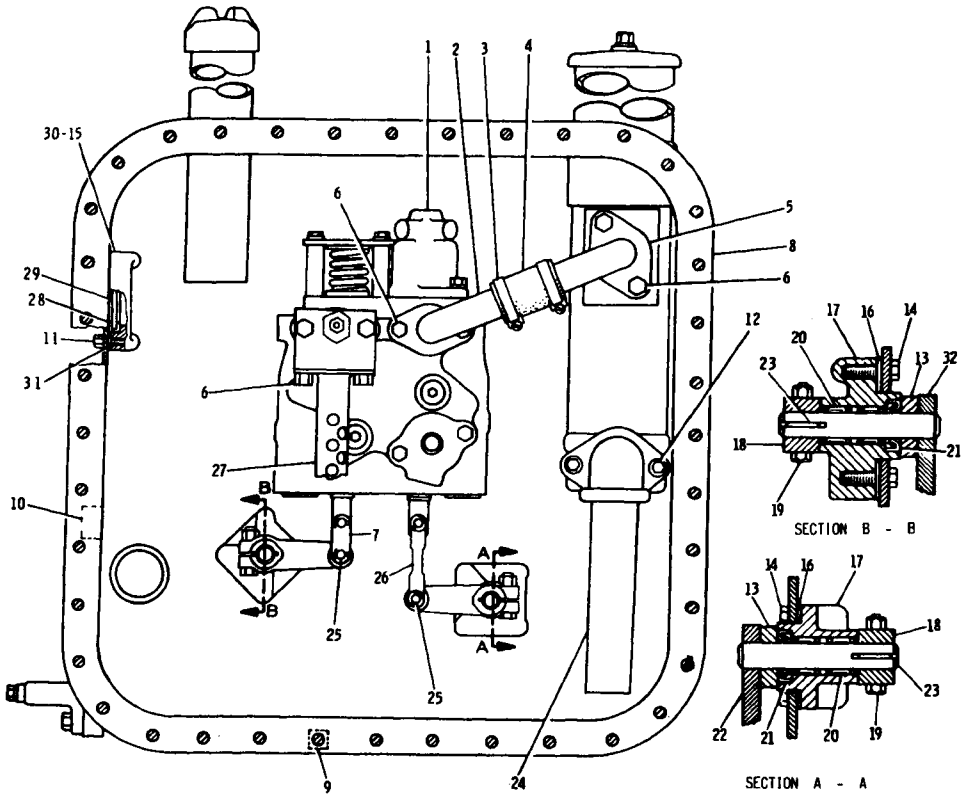

SECTION B - B

SECTION A - A

NO.	PART NO. 部品番号	QTY. 数量	DESCRIPTION 名称および記事
1	9T0176	1	VALVE GROUP (SEE SEPARATE ILLUSTRATION)
2	8J3539	1	TUBE ASSEM.
3	9M2094	2	CLAMP
4	8J2660	1	HOSE
5	8J1803	1	TUBE ASSEM.
6	6K5718	6	BOLT
7	5H2207	2	LINK
8	3G2708	1	TANK ASSEM.
9	9F2978	4	NUT
10	5J3306	1	FITTING
11	S1594	2	BOLT
12	3T0219	2	BOLT
	5M2894	2	WASHER
13	2H5746	2	ADAPTER
14	1A2029	8	BOLT
15	3G5980	1	PLATE
16	1U4599	2	GASKET
17	8J1841	2	HOUSING
18	2J6074	2	LEVER ASSEM.
	7H3912	1	BUSHING
19	S1591	2	BOLT
	2K4973	2	LOCKNUT
20	7F7983	4	BEARING
21	6V7371	2	SEAL
22	8J2654	1	LEVER
23	1B8706	2	KEY
24	3G4074	1	TUBE ASSEM.
25	1J4384	4	PIN
	3B4615	4	COTTER PIN
26	7H3932	1	ROD
27	8J2509	1	TUBE ASSEM.
28	4J8251	1	GROMMET
29	4J8252	1	GLASS
30	3G2692	1	RETAINER
31	5H6005	2	SEAL
32	8J2653	1	LEVER ASSEM.

J31920E

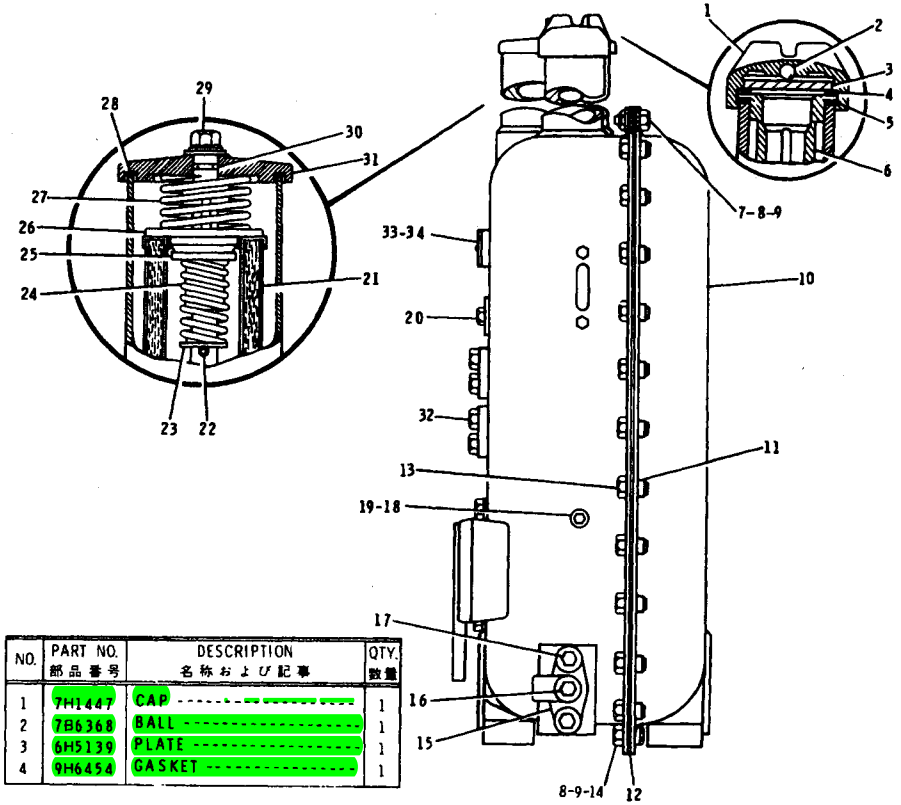

NO.	PART NO. 部品番号	DESCRIPTION 名称および記事	QTY. 数量
1	7H1447	CAP	1
2	7B6368	BALL	1
3	6H5139	PLATE	1
4	9H6454	GASKET	1

	5	3G361	GASKET	1
	6	9J3047	STRAINER	1
C	7	343557	BOLT	3
C	8	1D4717	NUT	7
C	9	5M2894	WASHER	14
	10	3G7229	COVER ASSEM.	1
	11	9F2978	NUT (Weld)	29
	12	3H9523	GASKET	1
C	13	5K9107	BOLT	33
C	14	5D353	BOLT	4
	15	8H9819	ADAPTER	1
		8H9818	GASKET	1
	16	4B7739	PLUG	1
	17	1A2029	BOLT	2
	18	9S8004	PLUG	1
	19	3J1907	SEAL	1
C	20	9M6590	BOLT	2
	21	4J816	ELEMENT ASSEM.	2
	22	2M8729	PIN	1
	23	3J1997	RETAINER	1
	24	7F9802	SPRING	1
	25	5J1096	VALVE	1
	26	5J1095	SEAT	1
	27	9J8775	SPRING	1
	28	3J1991	GASKET	1
	29	3Y6037	BOLT ASSEM.	1
	30	8F9206	SEAL	1
	31	4J596	COVER	1
	32	S1585	BOLT	4
		2J6195	COVER	2
		4J519	SEAL	2
	33	Not Serv.	SERIAL NUMBER PLATE	1
	34	7B3028	DRIVE SCREW	2

C Indicates Change

J21280E

TANK AND VALVE (3G9791 N/S) Two Valve with External Valve—Part 1 of 2

Effective with Serial No. 39X1308—UP

Part of 8P3076 and 8P3077 Hydraulic Control Arrangements listed on Page 150

TANK AND VALVE (3G9791 N/S) Two Valve with External Valve—Part 2 of 2

Effective with Serial No. 39X1308—UP

Part of 8P3076 and 8P3077 Hydraulic Control Arrangements listed on Page 150

9J9833 Valve Group parts are shown on Page 159

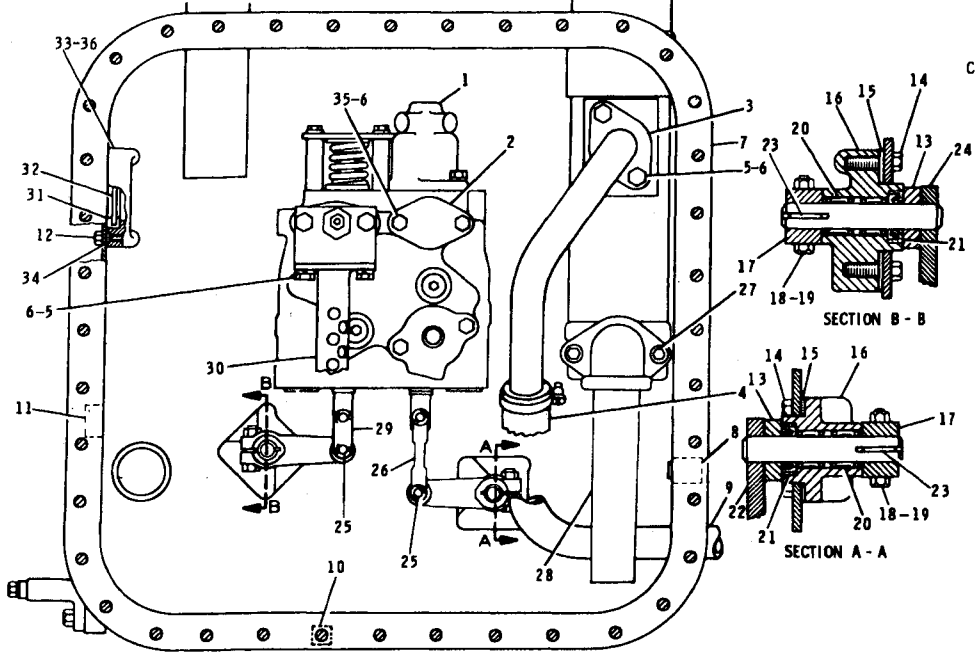

NO.	PART NO. 部品番号	DESCRIPTION 名称および記事	QTY. 数量
1	9J9833	VALVE GROUP ---------- (See Separate Illustration)	1
2	2J6195	COVER ----------	1
	4J519	SEAL ----------	1
3	8J1805	TUBE ASSEM. ----------	1
4	8J2660	HOSE ----------	1
	9M2904	CLAMP ----------	2
5	S1621	BOLT ----------	4
6	5P8245	WASHER ----------	6
7	3G9790	TANK ASSEM. ----------	1
8	5J338	BOSS ----------	1
9	3G9789	TUBE ----------	1
10	9F2978	NUT (Weld) ----------	4
11	5J3306	FITTING ----------	1
12	5D353	BOLT ----------	2
13	2H5746	ADAPTER ----------	2
14	1A2029	BOLT ----------	8
C 15	1U4599	GASKET ----------	2
16	8J1841	HOUSING ----------	2
17	2J6074	LEVER ASSEM. ----------	2
	7H3912	BUSHING ----------	1
18	S1591	BOLT ----------	2
19	1D4717	NUT ----------	2
20	7F7983	BEARING ----------	4
21	3J4407	SEAL ----------	2
22	8J2654	LEVER ASSEM. ----------	1
23	1B8706	KEY ----------	2
24	8J2653	LEVER ASSEM. ----------	1
25	1J4384	PIN ----------	4
	3B4615	COTTER PIN ----------	4
26	7H3932	ROD ----------	1
27	3J0219	BOLT ----------	2
	5M2894	WASHER ----------	2
28	3G4074	TUBE ASSEM. ----------	1
29	5H2207	RINK ----------	2
30	8J2509	TUBE ASSEM. ----------	1
31	4J8251	GROMMET ----------	1
32	4J8252	GLASS ----------	1
33	3G2692	RETAINER ----------	1
34	5H6005	SEAL ----------	2
35	S1595	BOLT ----------	2
36	3G5980	PLATE ----------	1

C Indicates Change

J21281E

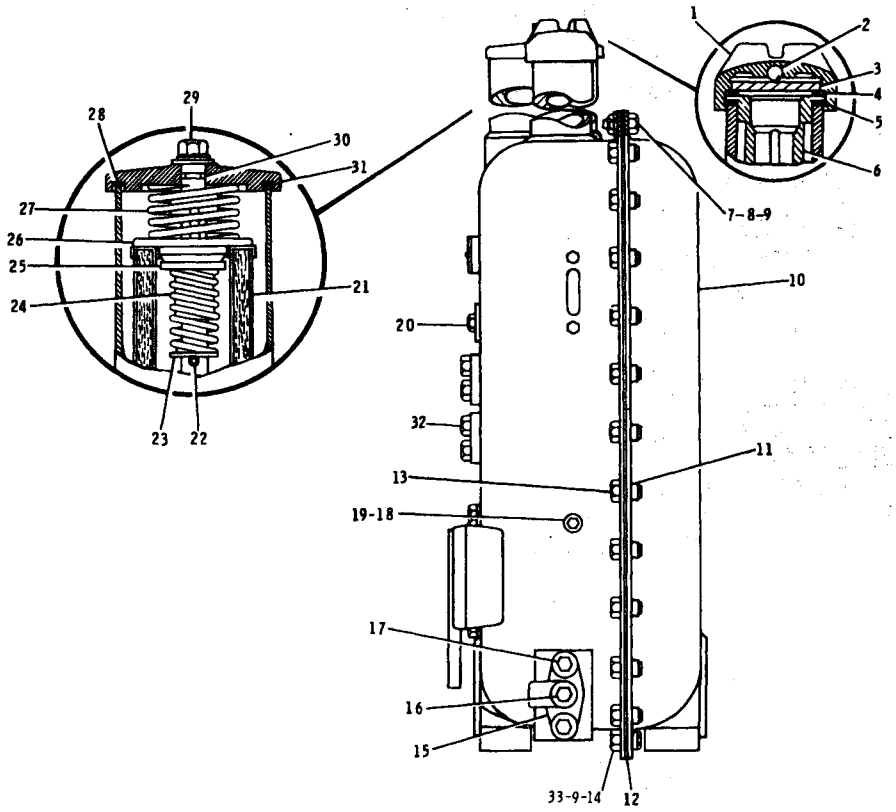

NO.	PART NO. 部品番号	QTY. 数量	DESCRIPTION 名称および記事
1	7H1447	1	CAP
2	4B9782	1	BALL
3	6H5139	1	PLATE
4	9H6454	1	GASKET
5	3G0361	1	GASKET
6	9J3047	1	STRAINER
7	343557	3	BOLT
8	1D4717	3	NUT
9	5M2894	14	WASHER
10	3G7229	1	COVER ASSEM.
11	9F2978	29	NUT
12	3H9523	1	GASKET
13	5K9107	33	BOLT
14	308535	4	BOLT
15	8H9819	1	ADAPTER
	8H9818	1	GASKET
16	4B7739	1	PLUG
17	1A2029	2	BOLT
18	9S8004	1	PLUG
19	3J1907	1	SEAL
20	9M6590	2	BOLT
21	4J0816	2	ELEMENT ASSEM.
22	2M8729	1	PIN
23	3J1997	1	RETAINER
24	7F9802	1	SPRING
25	5J1096	1	VALVE
26	5J1095	1	SEAT
27	9J8775	1	SPRING
28	3J1991	1	GASKET
29	3Y6037	1	BOLT ASSEM.
30	8F9206	1	SEAL
31	4J0596	1	COVER
	S1585	2	BOLT
32	2J6195	1	COVER
	4J0519	1	SEAL
33	6H8346	4	NUT

TANK AND VALVE (9T492 N/S)—Part 1 of 2

Effective with Serial No. 39X1308—UP

Part of 8P3076 and 8P3077 Hydraulic Control Arrangements listed on Page 150B

TANK AND VALVE (9T492 N/S)–Part 2 of 2

Effective with Serial No. 39X1308–UP

Part of 8P3076 and 8P3077 Hydraulic Control Arrangements listed on Page 150B

9T176 Control Valve parts are shown on Page 159A

NO.	PART NO. 部品番号	QTY. 数量	DESCRIPTION 名称および記事
1	9T0176	1	VALVE GROUP (SEE SEPARATE ILLUSTRATION)
2	2J6195	1	COVER
	4J0519	(1)	SEAL
3	8J1805	1	TUBE ASSEM.
4	8J2660	1	HOSE
	9M2904	2	CLAMP
5	6K5718	4	BOLT
6	3G5980	1	PLATE
7	3G9790	1	TANK ASSEM.
8	4T1075	1	BOSS
9	3G9789	1	TUBE
10	9F2978	4	NUT
11	5J3306	1	FITTING
12	S1594	2	BOLT
13	2H5746	2	ADAPTER
14	1A2029	8	BOLT
15	1U4599	2	GASKET
16	8J1841	2	HOUSING
17	2J6074	2	LEVER ASSEM.
	7H3912	1	BUSHING
18	S1591	2	BOLT
19	2K4973	2	LOCKNUT
20	7F7983	4	BEARRING
21	6V7371	2	SEAL
22	8J2654	2	LEVER
23	1B8706	2	KEY
24	8J2653	1	LEVER ASSEM.
25	1J4384	4	PIN
	3B4615	4	COTTER PIN
26	7H3932	1	ROD
27	3I0219	2	BOLT
	5M2894	2	WASHER
28	3G4074	1	TUBE ASSEM.
29	5H2207	2	LINK
30	8J2509	1	TUBE ASSEM.
31	4J8251	1	GROMMET
32	4J8252	1	GLASS
33	3G2692	1	RETAINER
34	5H6005	2	SEAL
35	5K8454	2	BOLT

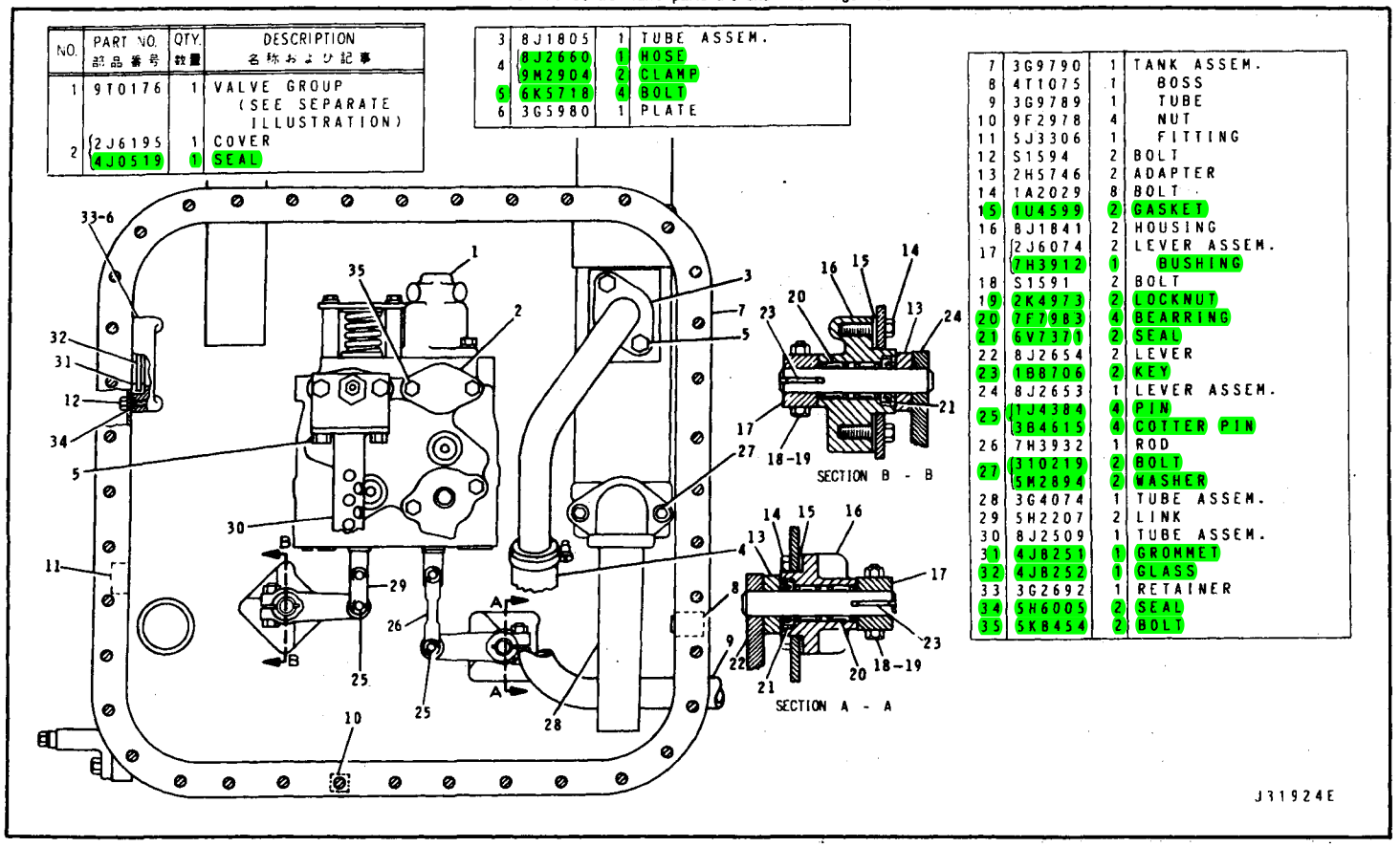

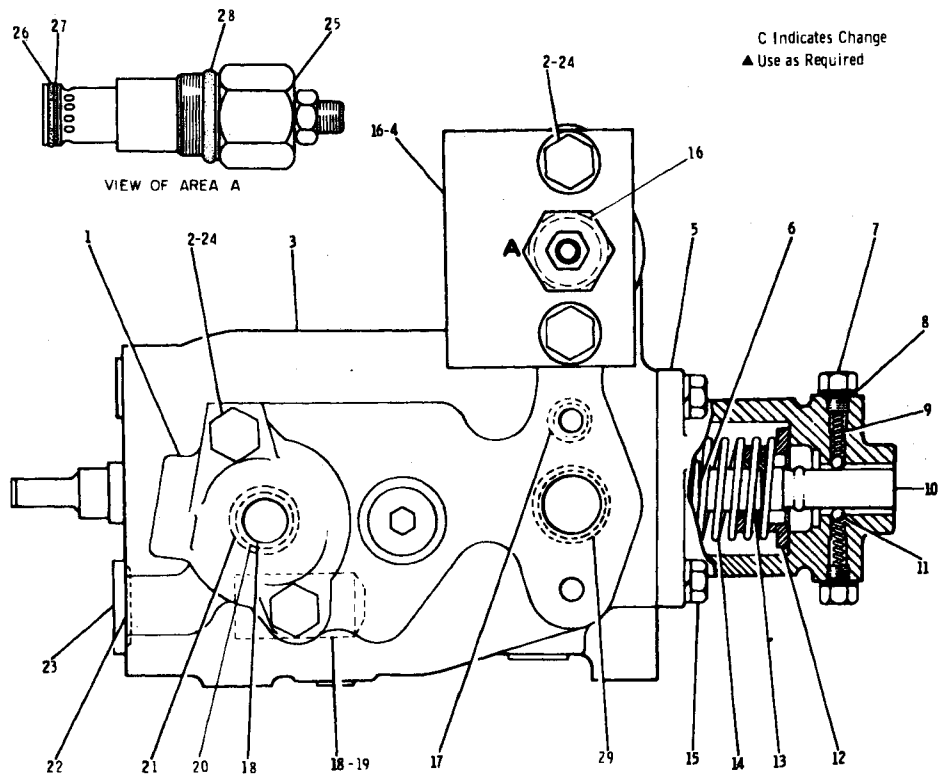

	NO.	PART NO. 部品番号	DESCRIPTION 名称および記事	QTY. 数量
	1	8J3554	HOUSING	1
	2	V375	BOLT	4
C	3	1U4662	VALVE GROUP (See Separate Illustration)	1
	4	8J5449	BODY	1
	5	6J9992	RETAINER	1
	6	8J3557	SPACER	1
	7	7J1767	PLUG	4
▲	8	6J6516	SHIM (0.25mm Thick)	24
	9	6J9996	SPRING	4
	10	8J3556	DETENT	1
	11	5H1472	BALL	4
	12	5J9092	SPACER	1
	13	5J9091	SPACER	1
	14	4J5105	SPRING	1
	15	1A2029	BOLT	2
		3B4506	LOCKWASHER	2
C	16	4J8997	SEAL	1
C	17	2J157	SEAL	10
	18	5J9078	VALVE	2
	19	2A5885	SPRING	1
	20	5J9098	SPRING	1
	21	4J519	SEAL	1
	22	4K1388	SEAL	1
	23	9S8009	PLUG	1
	24	3B4508	LOCKWASHER	4
	25	3G8078	VALVE GROUP	1
	26	7J9108	SEAL	1
	27	9J6367	RING	1
	28	1H8171	SEAL	1
C	29	1P3703	SEAL	4

9J9403 CONTROL VALVE GROUP

Part of Tank & Valve shown on Page 153

1U4662 Valve parts are shown on Page 160

9T174 CONTROL VALVE GROUP

Part of Tank and Valve (9T493 N/S)

9T173 Valve and 3G8078 Relief Valve parts are shown on Pages 160A and 160B

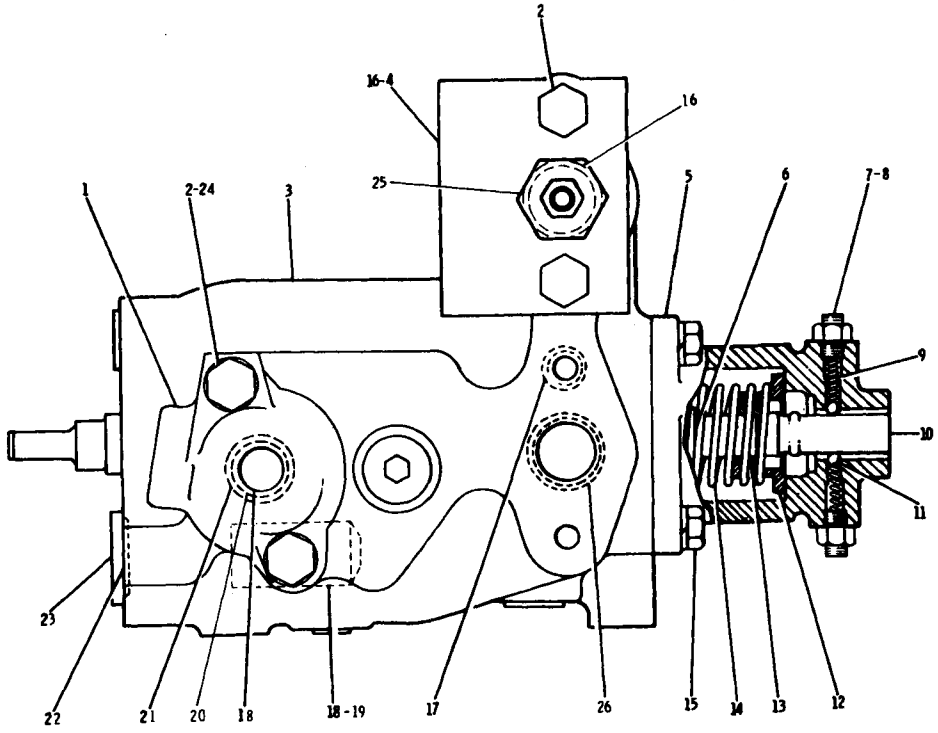

NO.	PART NO. 部品番号	QTY. 数量	DESCRIPTION 名称および記事
1	8J3554	1	HOUSING
2	5P8091	4	BOLT
3	9T173	1	VALVE GROUP (SEE SEPARATE ILLUSTRATION)
4	8J5449	1	BODY
	3G9806	1	RETAINER
5	3G8145	4	BEARING
6	8J3537	1	SPACER
7	1D5117	4	NUT
8	4B1771	4	SETSCREW
9	6J9996	4	SPRING
10	8J3556	1	DETENT
11	5H1472	4	BALL
12	5J9092	1	SPACER
13	5J9091	1	SPACER
14	4J5105	1	SPRING
	343557	2	BOLT
15	5M2894	2	WASHER
16	4J8997	1	SEAL
17	2J157	10	SEAL
18	5J9078	2	VALVE
19	2A5885	1	SPRING
20	5J9098	1	SPRING
21	4J519	1	SEAL
22	4K1388	1	SEAL
23	9S8009	1	PLUG
24	5P7213	2	WASHER
25	3G8078	1	VALVE GROUP (SEE SEPARATE ILLUSTRATION)
26	1P3703	4	SEAL

J31878E

MEMO

9J9833 CONTROL VALVE GROUP

Part of Tank and Valve shown on Pages 155 and 157

1U4663 Valve parts are shown on Page 160

C Indicates Change

▲Use as Required

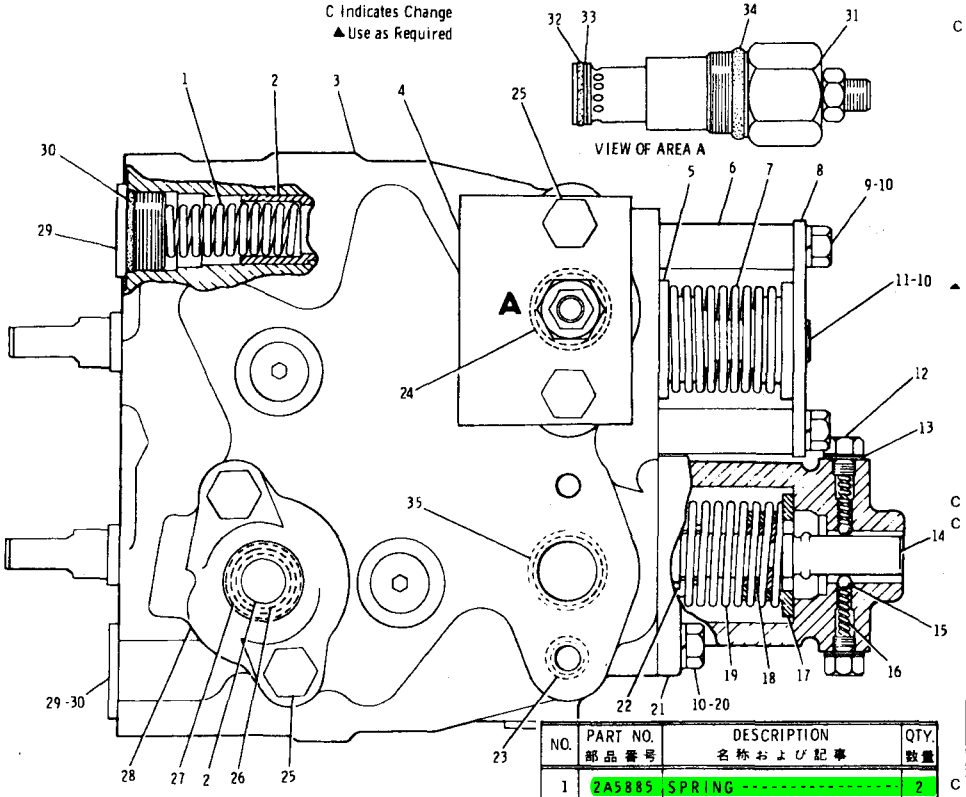

NO.	PART NO. 部品番号	DESCRIPTION 名称および記事	QTY. 数量
1	2A5885	SPRING	2
2	5J9078	VALVE	3

C	3	1U4663	VALVE GROUP (See Separate Illustration)	1
	4	8J5449	BODY	1
	5	5J9088	SPACER	2
	6	8J3639	SPACER	2
	7	3J4121	SPRING	1
	8	8J3640	PLATE	1
	9	T573	BOLT	2
	10	3B4506	LOCKWASHER	5
	11	L1351	BOLT	1
		6B7949	WASHER	1
	12	7J1767	PLUG	4
▲	13	6J6516	SHIM (0.25mm Thick)	24
	14	8J3556	DETENT	1
	15	5H1472	BALL	4
	16	6J9996	SPRING	4
	17	5J9092	SPACER	1
	18	5J9091	SPACER	1
	19	4J5105	SPRING	1
	20	1A2029	BOLT	2
	21	6J9992	RETAINER	1
	22	8J3557	SPACER	1
C	23	2J157	SEAL	14
C	24	4J8997	SEAL	1
	25	V375	BOLT	4
		3B4508	LOCKWASHER	4
	26	5J9098	SPRING	1
	27	4J519	SEAL	1
	28	8J3554	HOUSING	1
	29	9S8009	PLUG	2
	30	4K1388	SEAL	2
	31	3G8078	VALVE GROUP	1
	32	7J9108	SEAL	1
	33	9J6367	RING	1
	34	1H8171	SEAL	1
C	35	1P3703	SEAL	6

J21857E

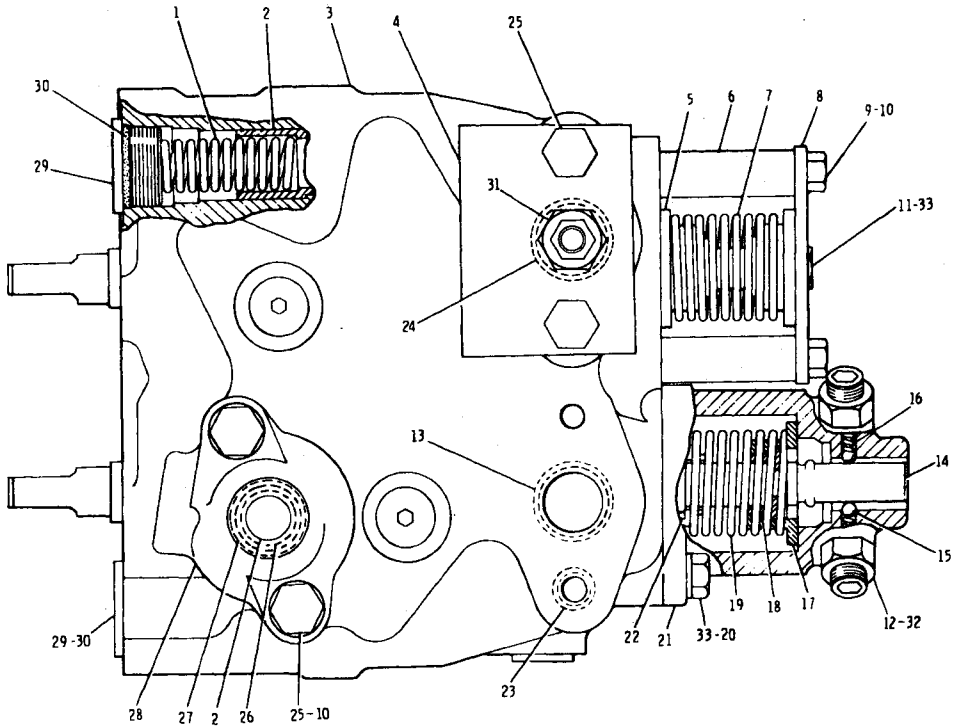

NO.	PART NO. 部品番号	QTY. 数量	DESCRIPTION 名称および記事
1	2A5885	2	SPRING
2	5J9078	3	VALVE
3	9T0175	1	VALVE GROUP (SEE SEPARATE ILLUSTRATION)
4	8J5449	1	BODY
5	5J9088	2	SPACER
6	8J3639	2	SPACER
7	3J4121	1	SPRING
8	8J3640	1	PLATE
9	6V0717	2	BOLT
10	5P7213	2	WASHER
11	L1351	1	BOLT
	6B7949	1	WASHER
12	1D5117	4	NUT
13	1P3703	6	SEAL
14	8J3556	1	DETENT
15	5H1472	4	BALL
16	6J9996	4	SPRING
17	5J9092	1	SPACER
18	5J9091	1	SPACER
19	4J5105	1	SPRING
20	343557	2	BOLT
21	3G9806	1	RETAINER ASSEM.
22	8J3557	1	SPACER
23	2J0157	14	SEAL
24	4J8997	1	SEAL
25	5P8091	4	BOLT
26	5J9098	1	SPRING
27	4J0519	1	SEAL
28	8J3554	1	HOUSING
29	9S8009	2	PLUG
30	4K1388	2	SEAL
31	3G8078	1	VALVE GROUP (SEE SEPARATE ILLUSTRATION)
32	4B1771	4	SETSCREW
33	5M2894	3	WASHER

J31921E

9T176 CONTROL VALVE GROUP
Part of Tank and Valves
9T175 and 3G8078 Relief Valve parts are shown on Pages 160A and 160B

MEMO

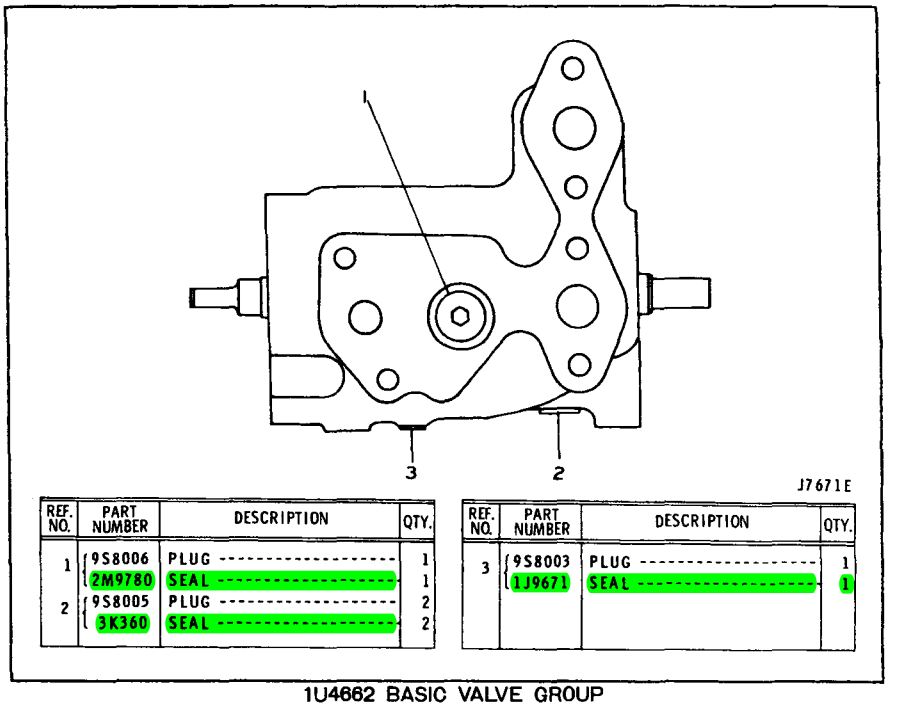

REF. NO.	PART NUMBER	DESCRIPTION	QTY.
1	9S8006	PLUG	1
	2M9780	SEAL	1
2	9S8005	PLUG	2
	3K360	SEAL	2

REF. NO.	PART NUMBER	DESCRIPTION	QTY.
3	9S8003	PLUG	1
	1J9671	SEAL	1

1U4662 BASIC VALVE GROUP
Part of 9J9403 Control Valve Group

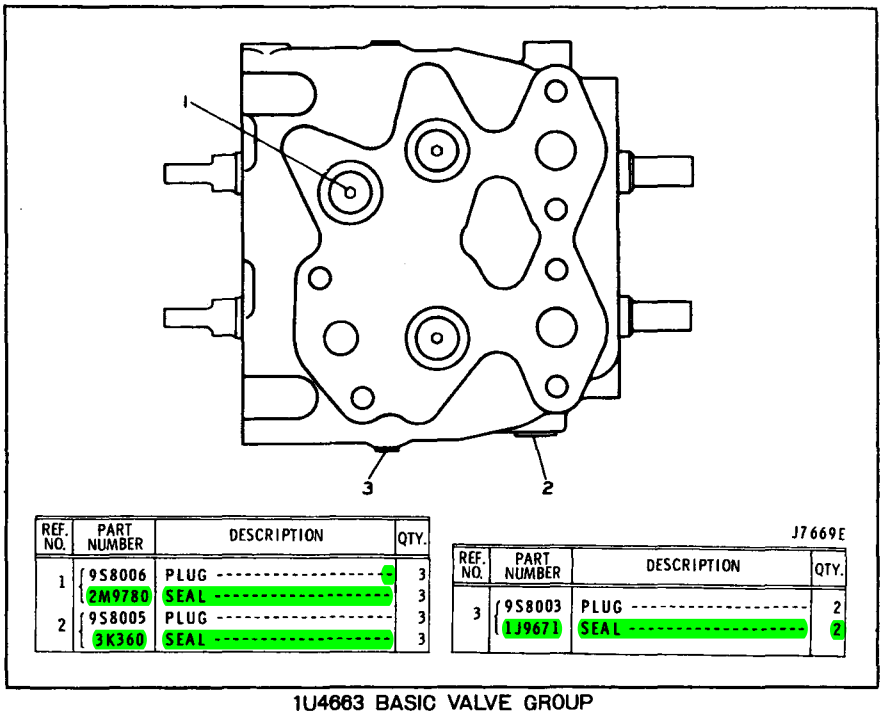

REF. NO.	PART NUMBER	DESCRIPTION	QTY.
1	9S8006	PLUG	3
	2M9780	SEAL	3
2	9S8005	PLUG	3
	3K360	SEAL	3

REF. NO.	PART NUMBER	DESCRIPTION	QTY.
3	9S8003	PLUG	2
	1J9671	SEAL	2

1U4663 BASIC VALVE GROUP
Part of 9J9833 Control Valve Group

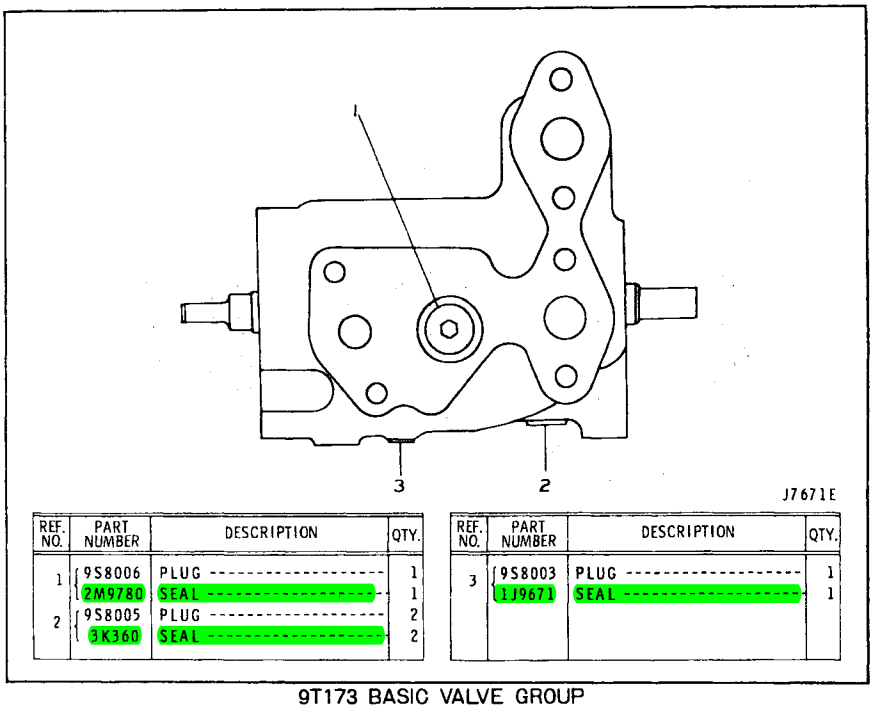

REF. NO.	PART NUMBER	DESCRIPTION	QTY.
1	9S8006	PLUG	1
	2M9780	SEAL	1
2	9S8005	PLUG	2
	3K360	SEAL	2

REF. NO.	PART NUMBER	DESCRIPTION	QTY.
3	9S8003	PLUG	1
	1J9671	SEAL	1

9T173 BASIC VALVE GROUP
Part of 9T174 Control Valve Group

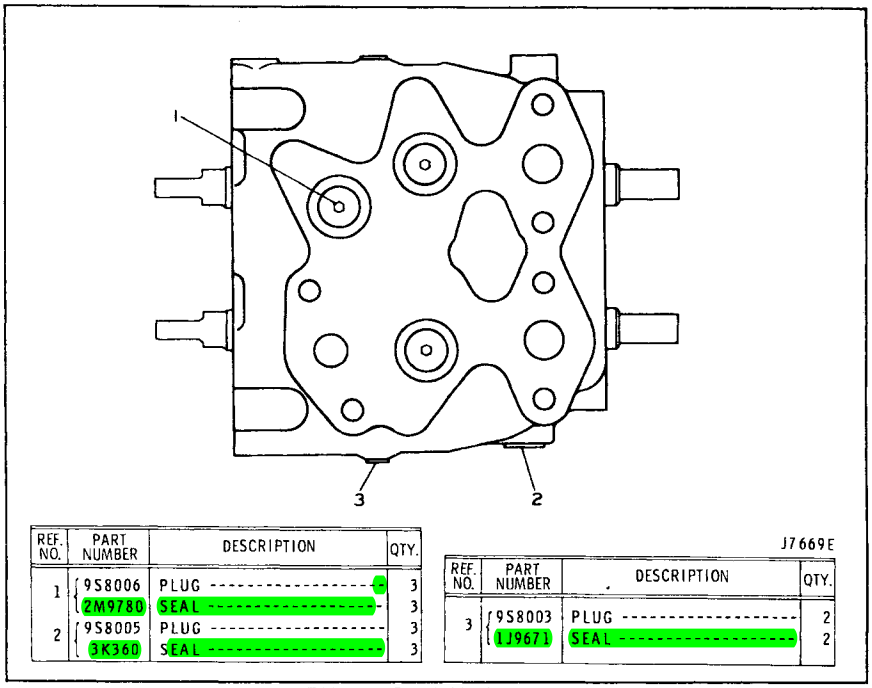

REF. NO.	PART NUMBER	DESCRIPTION	QTY.
1	9S8006	PLUG	3
	2M9780	SEAL	3
2	9S8005	PLUG	3
	3K360	SEAL	3

REF. NO.	PART NUMBER	DESCRIPTION	QTY.
3	9S8003	PLUG	2
	1J9671	SEAL	2

9T175 BASIC VALVE GROUP
Part of 9T176 Control Valve Group

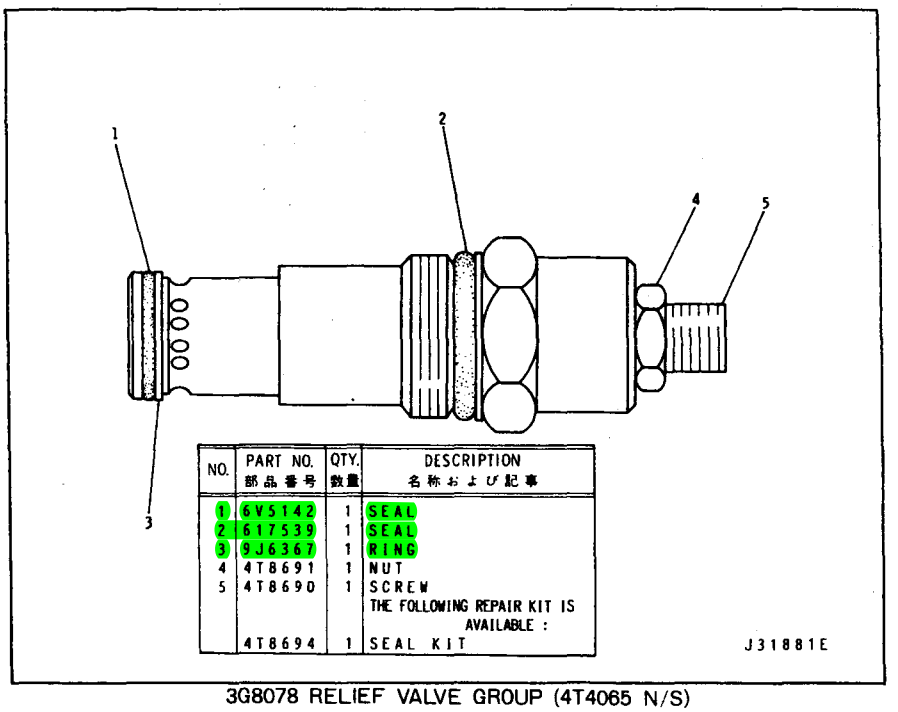

NO.	PART NO. 部品番号	QTY. 数量	DESCRIPTION 名称および記事
1	6V5142	1	SEAL
2	617539	1	SEAL
3	9J6367	1	RING
4	4T8691	1	NUT
5	4T8690	1	SCREW
			THE FOLLOWING REPAIR KIT IS AVAILABLE :
	4T8694	1	SEAL KIT

3G8078 RELIEF VALVE GROUP (4T4065 N/S)
Part of 9T174 Control Valve Group

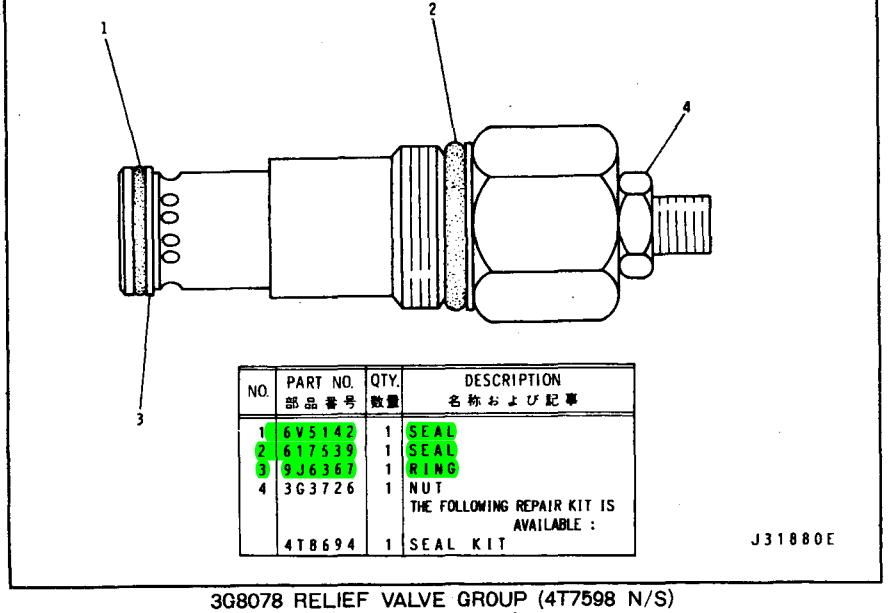

NO.	PART NO. 部品番号	QTY. 数量	DESCRIPTION 名称および記事
1	6V5142	1	SEAL
2	617539	1	SEAL
3	9J6367	1	RING
4	3G3726	1	NUT
			THE FOLLOWING REPAIR KIT IS AVAILABLE :
	4T8694	1	SEAL KIT

3G8078 RELIEF VALVE GROUP (4T7598 N/S)
Part of 9T176 Control Valve Group

4J487 EXTERNAL AUXILIARY VALVE GROUP

Part of 8P3076 and 8P3077 Hydraulic Control Arrangements listed on Page 150

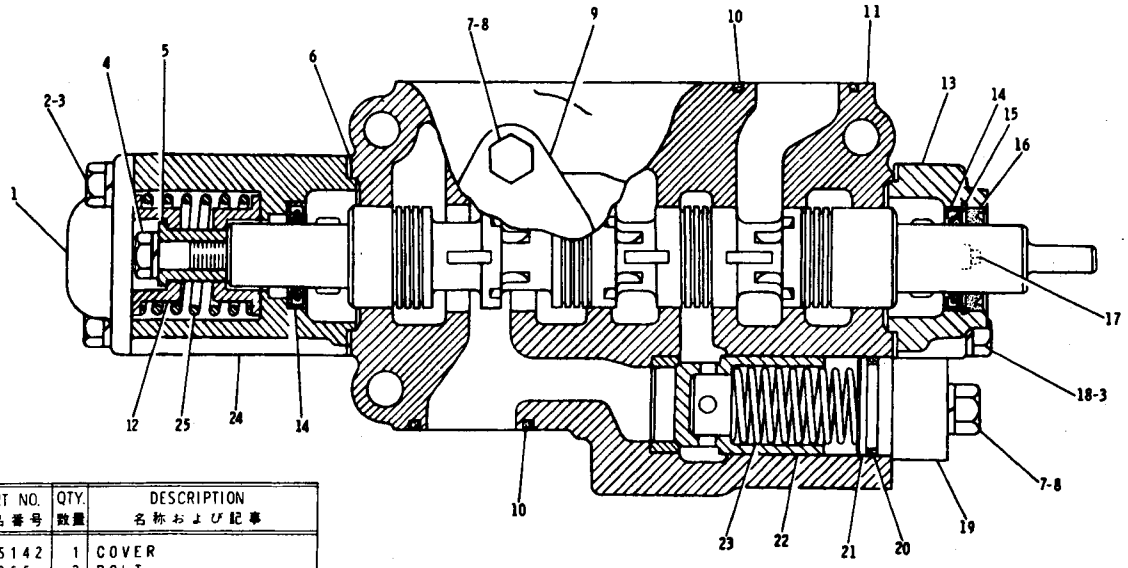

NO.	PART NO. 部品番号	QTY. 数量	DESCRIPTION 名称および記事
1	2J5142	1	COVER
2	T0055	2	BOLT
3	3B4506	4	LOCKWASHER
4	T0768	1	BOLT
	3B4507	1	LOCKWASHER
5	2J7169	1	SPACER
6	2J7188	2	GASKET
7	S1585	4	BOLT
8	3B4508	4	WASHER
9	2J8038	1	COVER
10	6F0711	5	SEAL
11	4J4617	1	BODY GROUP
12	2J7168	2	SPACER
13	9J4089	1	RETAINER
C 14	6V4253	2	SEAL
15	4M9298	1	RING
16	8J5963	1	SEAL
C 17	5M6214	1	PLUG
18	S1571	2	BOLT
19	4J5225	1	FRANGE
20	6F6673	1	SEAL
21	2J5820	1	PLUG
C 22	4J7415	1	VALVE
23	2J5845	1	SPRING
24	7J3897	1	RETAINER
25	4J3840	1	SPRING

C INDICATES CHANGE

J32819E

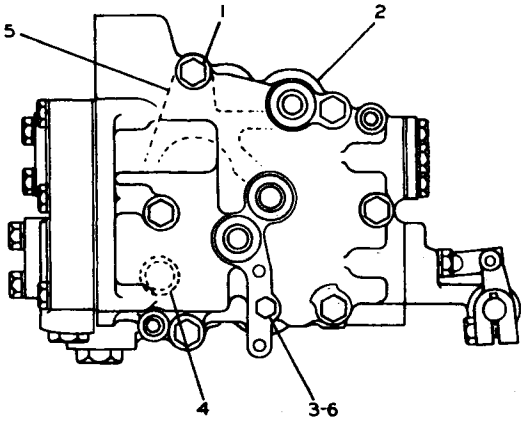

REF. NO.	PART NUMBER	DESCRIPTION	QTY
1	7F3425	BOLT-----14.61 cm(5.75 in.) long--	4
	5B2638	BOLT-----13.34 cm(5.25 in.) long--	1
	8S9191	BOLT-----10.16 cm(4 in.) long----	1
	5M2894	WASHER----------	6

	2	2P3640	VALVE GROUP---------- (Separate Illustration)	1
	3	1D4538	BOLT-----5.72 cm(2.25 in.) long -OR-	1
C	3	1D4539	BOLT-----6.35 cm(2.50 in.) long	1
C	4	8B4967	SEAL----------	3
C	5	8P16	GASKET----------	1
	6	9M1974	WASHER----------	1

C INDICATES CHANGE 208951

1P7528 CONTROL VALVE GROUP

Part of 1P8628 Towing Winch Arrangement listed on Page 187

Selector & Pressure Control Valve parts are shown below

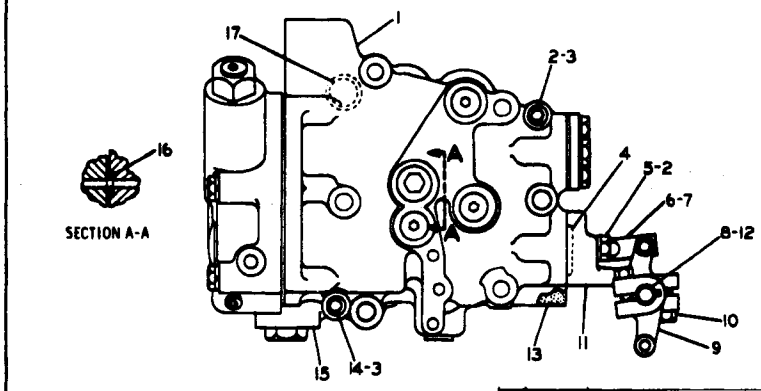

	REF. NO.	PART NUMBER	DESCRIPTION	QTY
C	1	8P1392	VALVE GROUP-----(Pressure)----- (Separate Illustration)	1
	2	3S4346	BOLT----------	1
	3	9M1974	WASHER----------	4
	4	3D2992	SEAL----------	1
	5	1B7182	BOLT----------	2
	6	1P5130	LINK----------	2
	7	9S1303	PIN----------	2
		3B4607	COTTER PIN----------	2

	8	2P6969	SHAFT----------	1
		1B8702	KEY----------	2
	9	6P9367	LEVER----------	2
	10	2B2695	BOLT----------	2
	11	2P6971	BRACKET ASSEM.----------	1
		9H2400	BEARING----------	2
	12	4B4280	WASHER----------	2
	13	2P3650	GASKET----------	1
	14	6L4783	BOLT----------	1
	15	3P4121	VALVE GROUP-----(Selector)------ (Separate Illustration)	1
	16	2H5001	SEAL----------	1
	17	5F7054	SEAL----------	4

C INDICATES CHANGE 168279

SELECTOR AND PRESSURE CONTROL VALVE (2P3640 N/S)

Part of 1P7528 Control Valve Group

3P4121 and 8P1392 Valve parts are shown on Pages 163 and 164

3P4121 SELECTOR VALVE GROUP

Part of Selector & Pressure Control Valve shown on Page 162

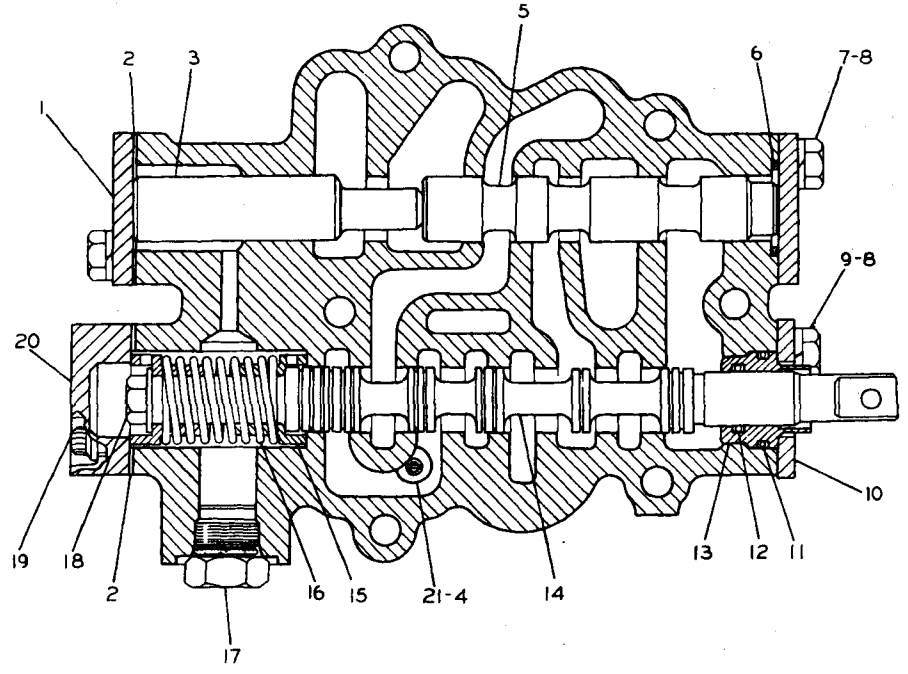

	REF. NO.	PART NUMBER	DESCRIPTION	QTY
	1	6B830	COVER	2
	2	3P218	GASKET	2
	3	2P3683	STOP	2
	4	5F9144	SEAL	1
	5	2P3639	SPOOL	1
	6	3H107	SEAL	1
	7	2B2695	BOLT	4
C	8	3B4505	LOCKWASHER	6
	9	S1617	BOLT	2
	10	1P6217	FLANGE	1
	11	4D9986	SEAL	1
	12	8M5260	SEAL	1
	13	3S2682	BUSHING	1
	14	2P3617	SPOOL	1
	15	3P220	RETAINER	2
	16	3P3202	SPRING	1
C	17	9S8005	PLUG	1
		3K360	SEAL	1
	18	S1618	BOLT	1
		1T738	WASHER	1
C	19	1T414	BOLT	2
C	20	8P4299	COVER	1
		3P4117	VALVE ASSEM.	1
	21	1L5316	PIN	1
		5B9318	BALL	1
▲C	22	3K5762	PLUG	1

C INDICATES CHANGE
▲ NOT SHOWN

235206

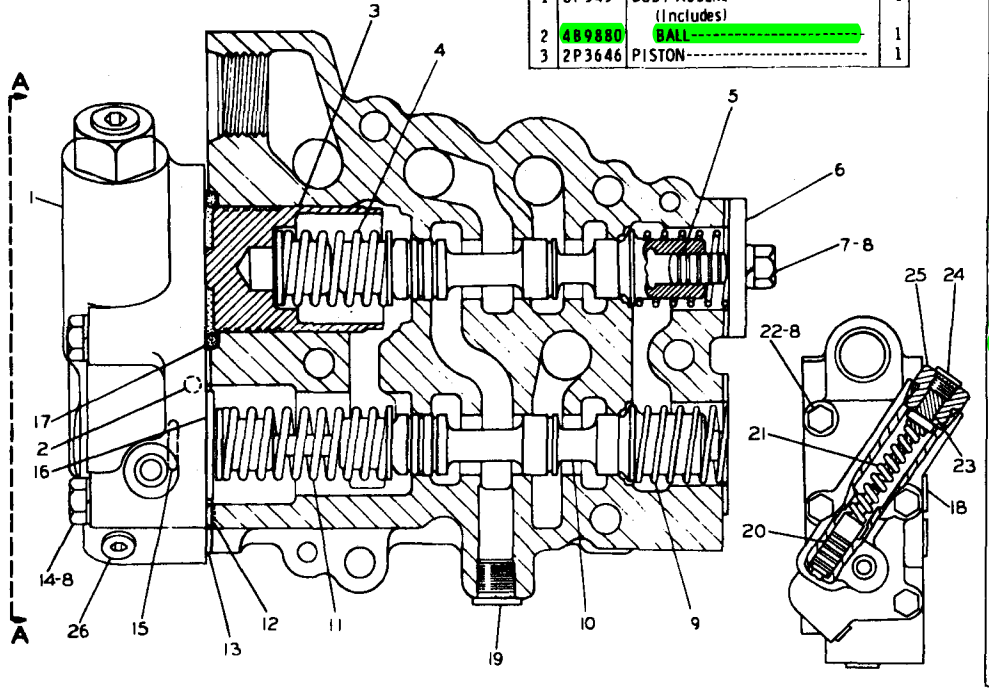

VIEW A-A

REF. NO.	PART NUMBER	DESCRIPTION	QTY
1	8P345	BODY ASSEM. (Includes)	1
2	4B9880	BALL	1
3	2P3646	PISTON	1
4	3P5168	SPRING ASSEM.	1
5	2M1168	SLUG	2
6	6B830	COVER	1
	3P218	GASKET	1
7	2B2695	BOLT	2
8	3B4505	LOCKWASHER	6
9	1P3216	SPRING	2
10	3P2767	SPOOL	2
11	3P5169	SPRING ASSEM.	1
12	6F5559	SEAL	1
13	2P3644	GASKET	1
14	2B2694	BOLT	3
15	4K2039	SEAL	1
16	3P2847	RETAINER	1
17	1H9696	SEAL	1
18	9S8005	PLUG	1
	3K360	SEAL	1
19	9S8004	PLUG	4
	3J1907	SEAL	4
20	3P4660	SPOOL	1
21	8P346	SPRING	1
22	1B7182	BOLT	1
23	8P325	STOP ASSEM. (Includes)	1
	5H9809	DOWEL	1
24	9S8003	PLUG	1
	1J9671	SEAL	1
25	6P9959	PLUG	1
	2M9780	SEAL	1
26	9S8001	PLUG	1
	4J7533	SEAL	1
	SMHS6709	FORM (Installation Instructions for Body Assem.)	1

208955

8P1392 PRESSURE CONTROL VALVE GROUP

Part of Selector & Pressure Control Valve show on Page 162

3G4768 GEAR PUMP GROUP

Part of 8P3074, 8P3075, 8P3076 and 8P3077 Hydraulic Control Arrangements listed on Pages 149 and 150

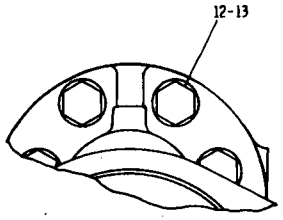

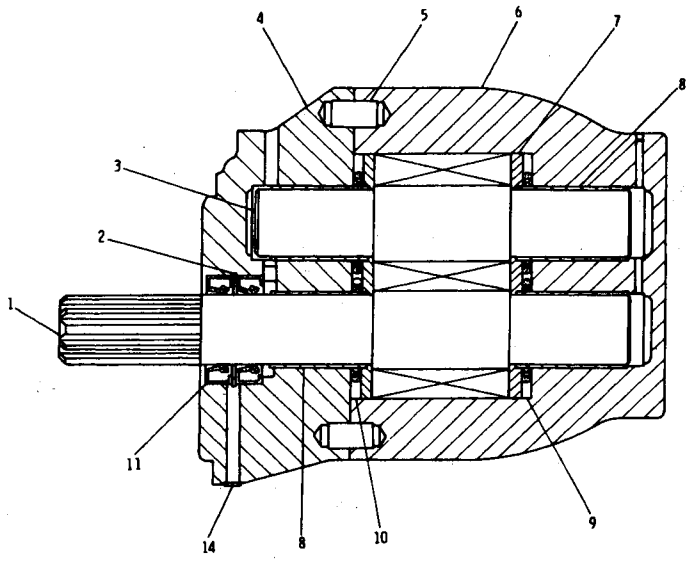

NO.	PART NO. 部品番号	QTY. 数量	DESCRIPTION 名称および記事
1	9T1253	1	SHAFT
2	83214	1	RING
3	9T1268	1	GEAR
4	9T2839	1	FLANGE ASSEM.
5	6J2386	2	DOWEL
6	9T1291	1	BODY ASSEM.
7	9T1276	2	PLATE (PRESSURE)
8	4T9298	4	BUSHING
9	4T9426	1	PLATE (ISOLATION)
10	4T9425	1	PLATE (ISOLATION)
11	6V1899	2	SEAL
12	S1595	8	BOLT
13	6J2391	8	WASHER
			THE FOLLOWING REPAIR KIT ARE AVAILABLE :
	9T1437	1	PLUG KIT
	9J4729	1	SEAL KIT

J31778E

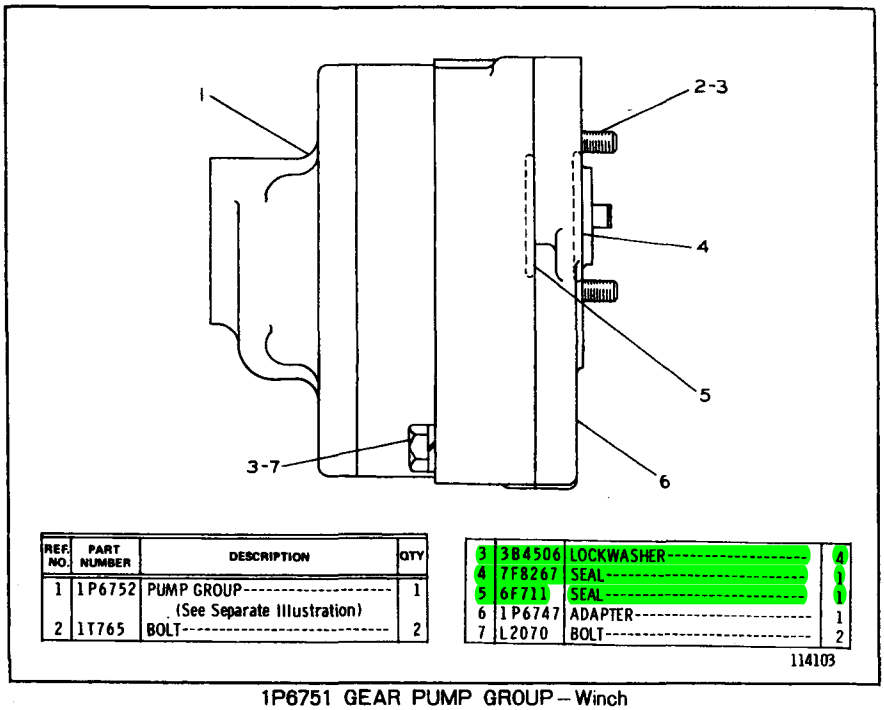

REF. NO.	PART NUMBER	DESCRIPTION	QTY
1	1P6752	PUMP GROUP---------- (See Separate Illustration)	1
2	1T765	BOLT----------	2
3	3B4506	LOCKWASHER----------	4
4	7F8267	SEAL----------	1
5	6F711	SEAL----------	1
6	1P6747	ADAPTER----------	1
7	L2070	BOLT----------	2

114103

1P6751 GEAR PUMP GROUP – Winch

Part of 8P2321 Winch Arrangement listed on Page 187

1P6752 Basic Gear Pump parts are shown below

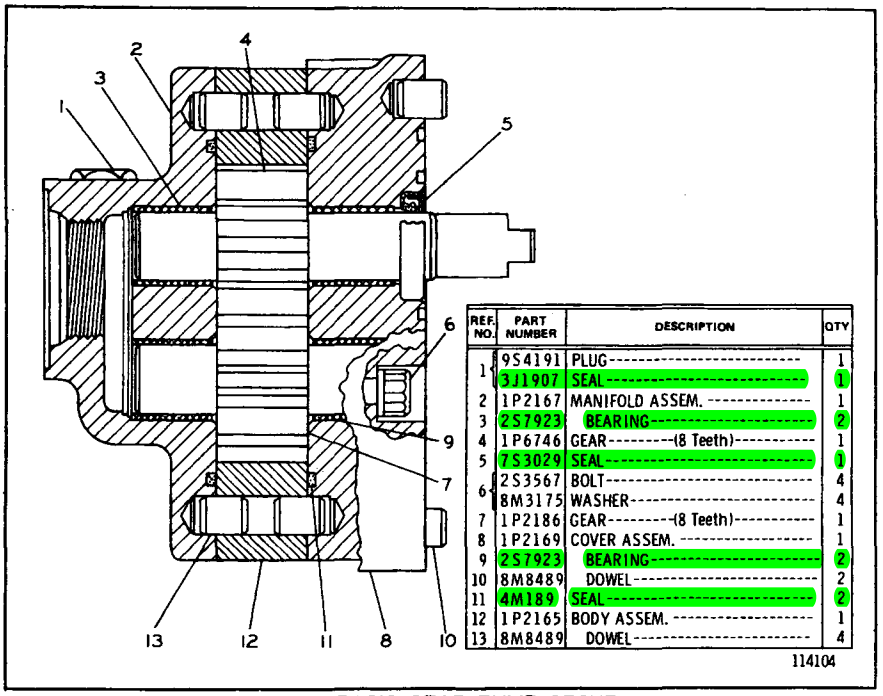

REF. NO.	PART NUMBER	DESCRIPTION	QTY
1	9S4191	PLUG----------	1
	3J1907	SEAL----------	1
2	1P2167	MANIFOLD ASSEM. ----------	1
3	2S7923	BEARING----------	2
4	1P6746	GEAR---------(8 Teeth)----------	1
5	7S3029	SEAL----------	1
6	2S3567	BOLT----------	4
	8M3175	WASHER----------	4
7	1P2186	GEAR---------(8 Teeth)----------	1
8	1P2169	COVER ASSEM. ----------	1
9	2S7923	BEARING----------	2
10	8M8489	DOWEL----------	2
11	4M189	SEAL----------	2
12	1P2165	BODY ASSEM. ----------	1
13	8M8489	DOWEL----------	4

114104

1P6752 BASIC GEAR PUMP GROUP

Part of 1P6751 Gear Pump Group

8P3363 BULLDOZER LINES GROUP

Part of 8P3074, 8P3075, 8P3076 and 8P3077 Hydraulic Control Arrangements listed on Pages 149 and 150

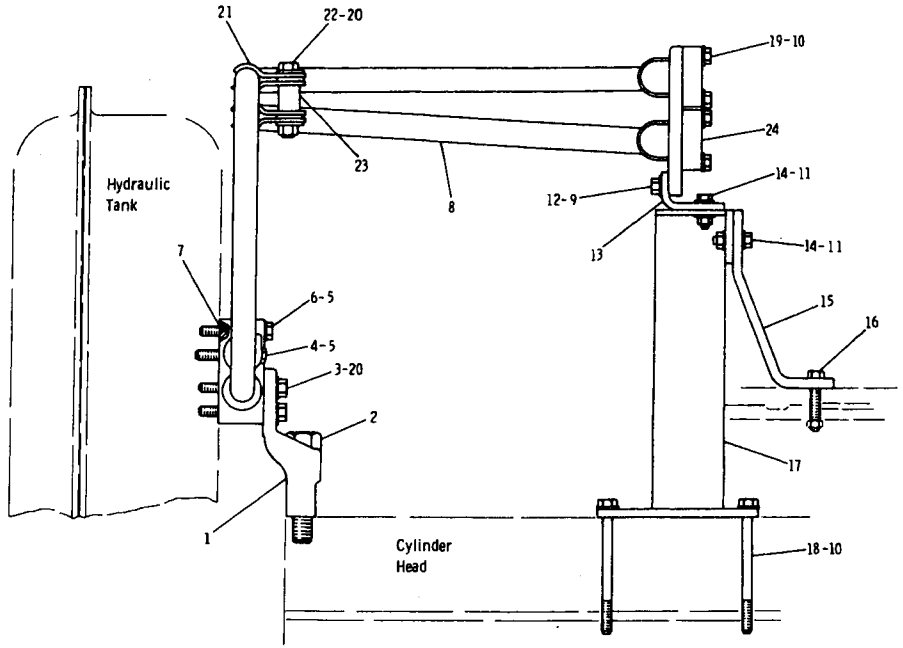

	NO.	PART NO. 部品番号	DESCRIPTION 名称および記事	QTY. 数量
	1	8P1189	BRACKET	1
	2	1D4610	BOLT	1
C		5P8248	WASHER	1
	3	1D4566	BOLT	2
	4	9S1366	BOLT	1
	5	5P8245	WASHER	2
	6	L1329	BOLT	1
	7	4J519	SEAL	2
	8	8P3377	TUBE ASSEM.	1
	9	1A2029	BOLT	2
	10	5M2894	WASHER	18
	11	5P1075	WASHER	8
	12	8M7145	WASHER	2
	13	3P4505	BRACKET	1
	14	3B1915	BOLT	4
		1D4717	NUT	4
	15	6P5449	PLATE	1
	16	L2070	BOLT	1
	17	6P5448	SUPPORT ASSEM.	1
	18	5F4899	BOLT	2
	19	S1588	BOLT	16
C	20	5P1076	WASHER	6
C	21	3Y8527	CLAMP	4
C	22	1A5822	BOLT	1
C		1D4719	NUT	1
C	23	1K4649	SPACER	1
	24	1P4576	FLANGE	8

C Indicates Change

J24396E

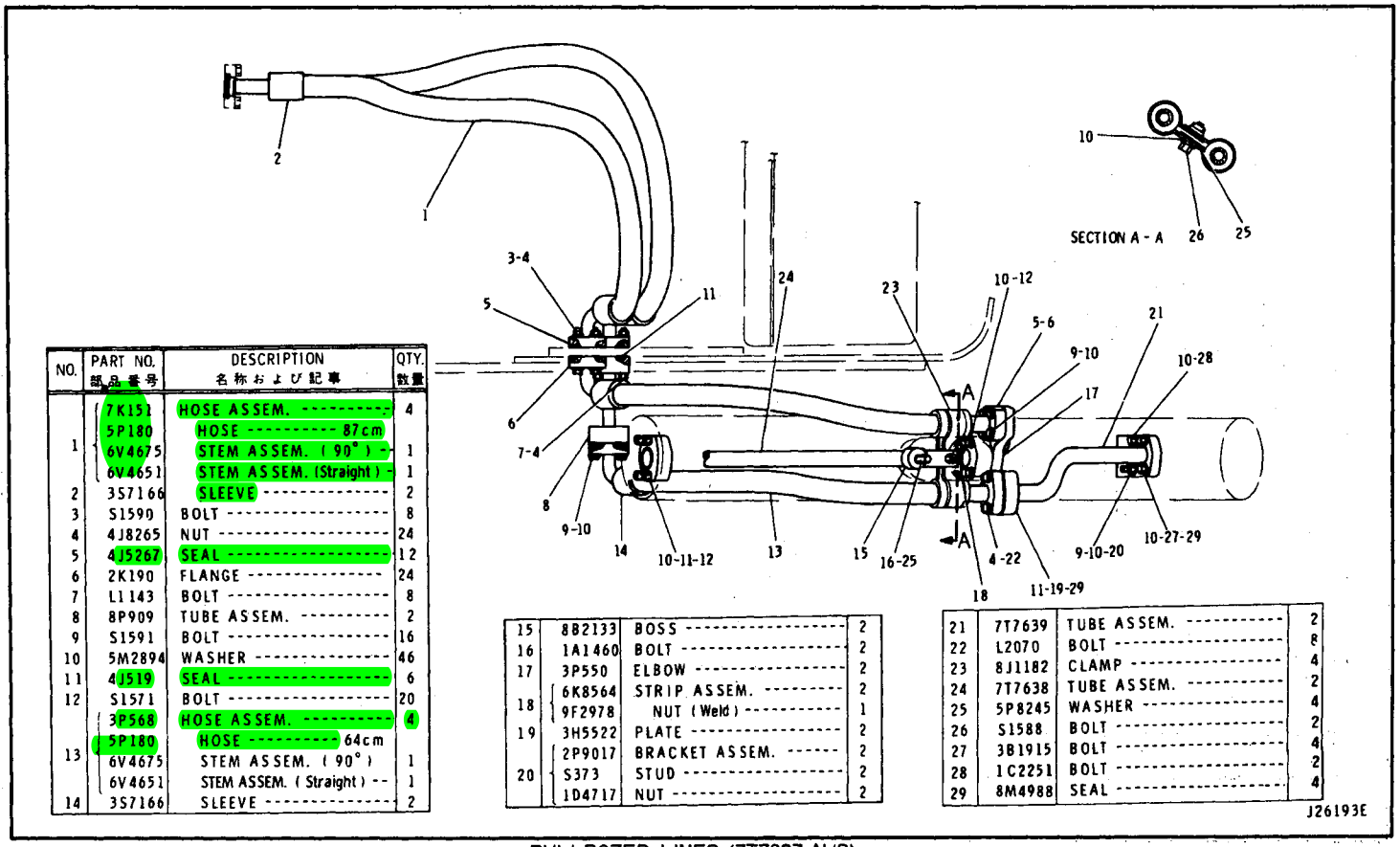

NO.	PART NO. 部品番号	DESCRIPTION 名称および記事	QTY. 数量
1	7K151	HOSE ASSEM. ----------	4
	5P180	HOSE ---------- 87cm	
	6V4675	STEM ASSEM. (90°)	1
	6V4651	STEM ASSEM. (Straight)	1
2	3S7166	SLEEVE ----------	2
3	S1590	BOLT ----------	8
4	4J8265	NUT ----------	24
5	4J5267	SEAL ----------	12
6	2K190	FLANGE ----------	24
7	L1143	BOLT ----------	8
8	8P909	TUBE ASSEM. ----------	2
9	S1591	BOLT ----------	16
10	5M2894	WASHER ----------	46
11	4J519	SEAL ----------	6
12	S1571	BOLT ----------	20
13	3P568	HOSE ASSEM. ----------	4
	5P180	HOSE ---------- 64cm	
	6V4675	STEM ASSEM. (90°)	1
	6V4651	STEM ASSEM. (Straight)	1
14	3S7166	SLEEVE ----------	2
15	8B2133	BOSS ----------	2
16	1A1460	BOLT ----------	2
17	3P550	ELBOW ----------	2
18	6K8564	STRIP ASSEM. ----------	2
	9F2978	NUT (Weld) ----------	1
19	3H5522	PLATE ----------	2
20	2P9017	BRACKET ASSEM. ------	2
	S373	STUD ----------	2
	1D4717	NUT ----------	2
21	7T7639	TUBE ASSEM. ----------	2
22	L2070	BOLT ----------	8
23	8J1182	CLAMP ----------	4
24	7T7638	TUBE ASSEM. ----------	2
25	5P8245	WASHER ----------	4
26	S1588	BOLT ----------	2
27	3B1915	BOLT ----------	4
28	1C2251	BOLT ----------	2
29	8M4988	SEAL ----------	4

BULLDOZER LINES (7T7637 N/S)

Part of 7T7636 Angling Bulldozer Arrangement listed on Page 179

9P477 TILT CYLINDER LINES GROUP

Part of 8P3075 and 8P3077 Hydraulic Control Arrangements listed on Pages 149 and 150

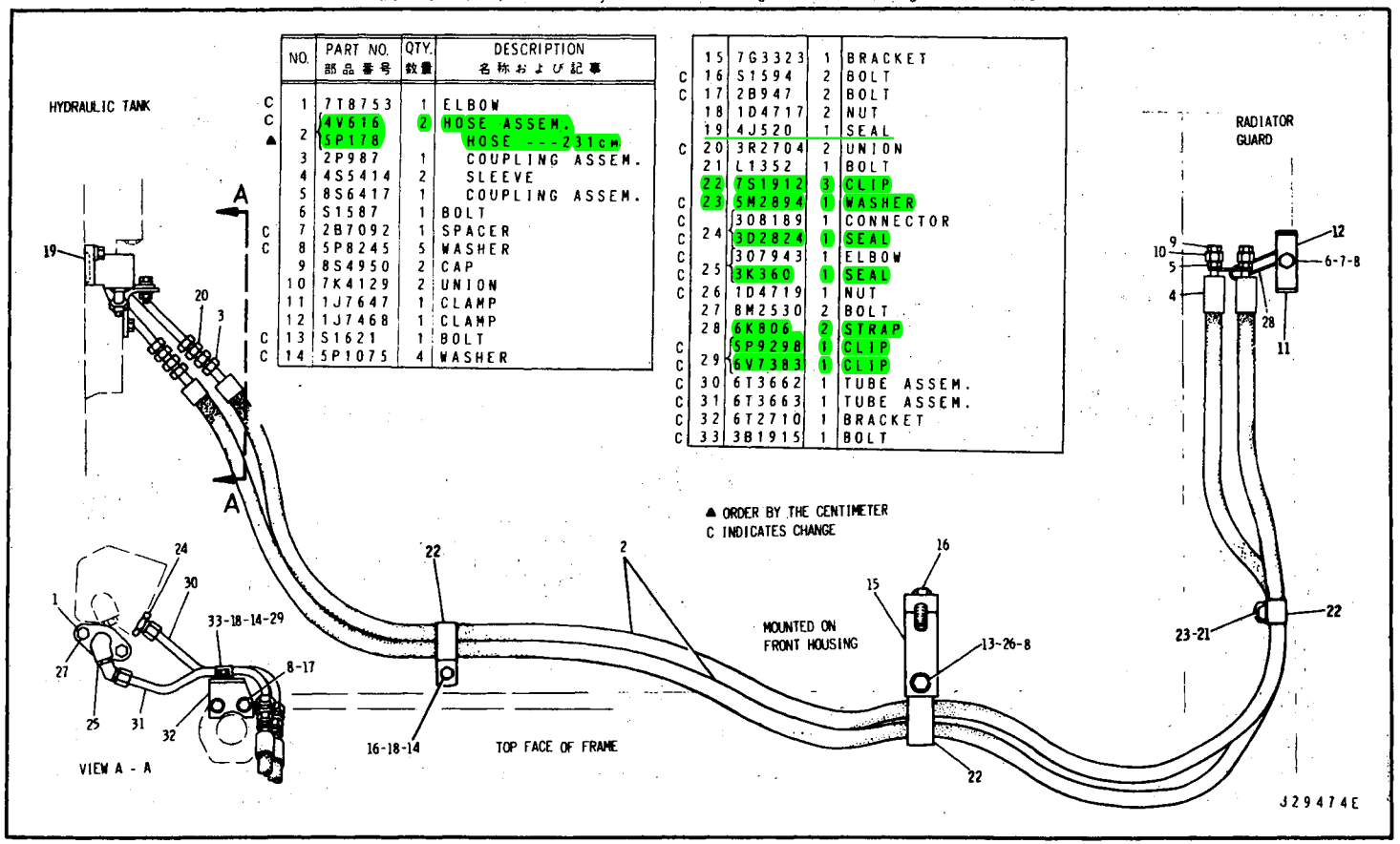

	NO.	PART NO. 部品番号	QTY. 数量	DESCRIPTION 名称および記事
C	1	7T8753	1	ELBOW
C	2	4V616	2	HOSE ASSEM.
▲		5P178		HOSE ---231cm
	3	2P987	1	COUPLING ASSEM.
	4	4S5414	2	SLEEVE
	5	8S6417	1	COUPLING ASSEM.
	6	S1587	1	BOLT
C	7	2B7092	1	SPACER
C	8	5P8245	5	WASHER
	9	8S4950	2	CAP
	10	7K4129	2	UNION
	11	1J7647	1	CLAMP
	12	1J7468	1	CLAMP
C	13	S1621	1	BOLT
C	14	5P1075	4	WASHER
	15	7G3323	1	BRACKET
C	16	S1594	2	BOLT
C	17	2B947	2	BOLT
	18	1D4717	2	NUT
	19	4J520	1	SEAL
C	20	3R2704	2	UNION
	21	L1352	1	BOLT
	22	7S1912	3	CLIP
C	23	5M2894	1	WASHER
C		308189	1	CONNECTOR
C	24	3D2824	1	SEAL
C		307943	1	ELBOW
C	25	3K360	1	SEAL
C	26	1D4719	1	NUT
	27	8M2530	2	BOLT
	28	6K806	2	STRAP
C		5P9298	1	CLIP
C	29	6V7383	1	CLIP
C	30	6T3662	1	TUBE ASSEM.
C	31	6T3663	1	TUBE ASSEM.
C	32	6T2710	1	BRACKET
C	33	3B1915	1	BOLT

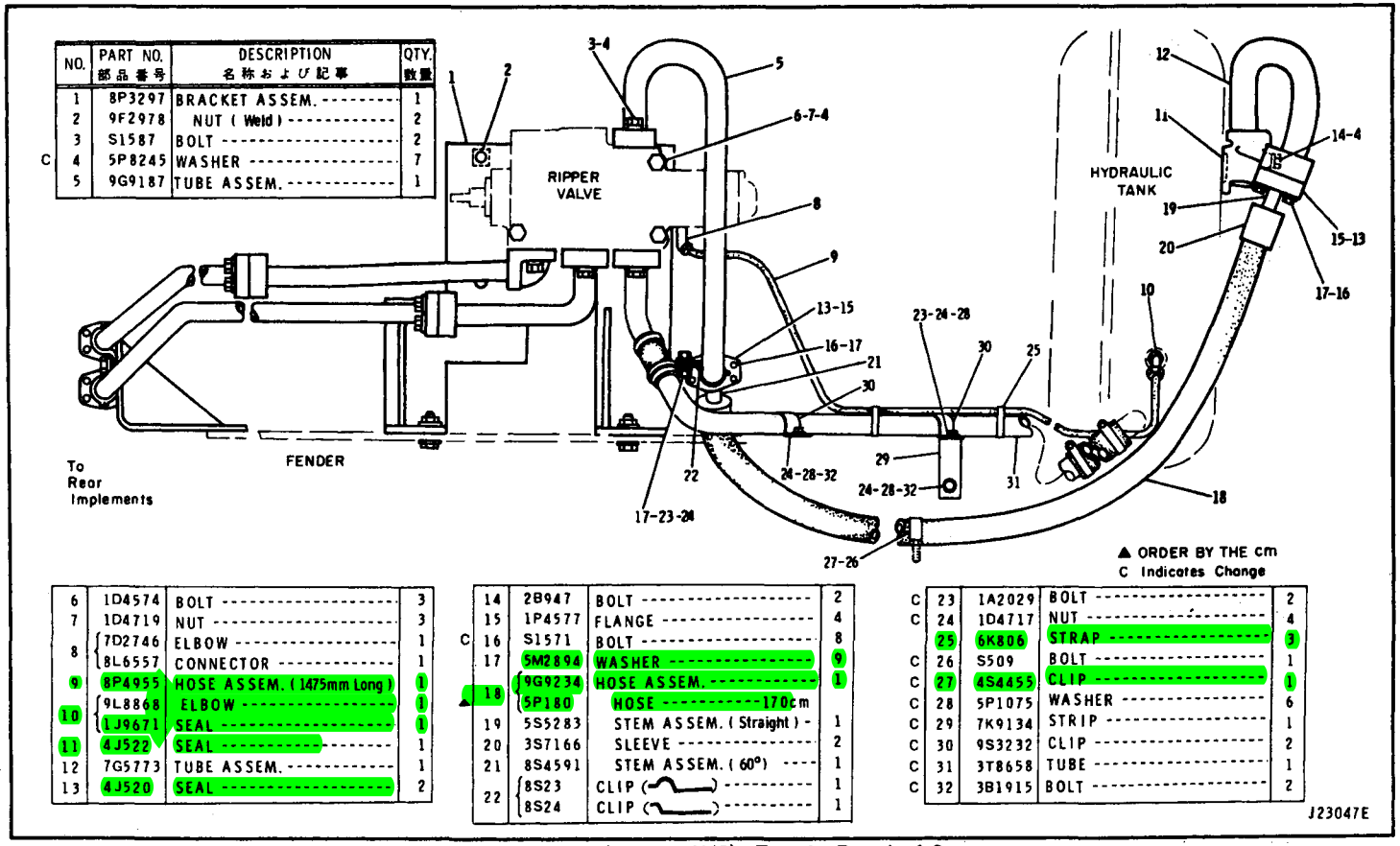

NO.	PART NO. 部品番号	DESCRIPTION 名称および記事	QTY. 数量
1	8P3297	BRACKET ASSEM.	1
2	9F2978	NUT (Weld)	2
3	S1587	BOLT	2
C 4	5P8245	WASHER	7
5	9G9187	TUBE ASSEM.	1
6	1D4574	BOLT	3
7	1D4719	NUT	3
8	7D2746	ELBOW	1
	8L6557	CONNECTOR	1
9	8P4955	HOSE ASSEM. (1475mm Long)	1
10	9L8868	ELBOW	1
	1J9671	SEAL	1
11	4J522	SEAL	1
12	7G5773	TUBE ASSEM.	1
13	4J520	SEAL	2
14	2B947	BOLT	2
15	1P4577	FLANGE	4
C 16	S1571	BOLT	8
17	5M2894	WASHER	9
▲ 18	9G9234	HOSE ASSEM.	1
	5P180	HOSE ----- 170cm	
19	5S5283	STEM ASSEM. (Straight)	1
20	3S7166	SLEEVE	2
21	8S4591	STEM ASSEM. (60°)	1
22	8S23	CLIP	1
	8S24	CLIP	1
C 23	1A2029	BOLT	2
C 24	1D4717	NUT	4
25	6K806	STRAP	3
C 26	S509	BOLT	1
C 27	4S4455	CLIP	1
C 28	5P1075	WASHER	6
C 29	7K9134	STRIP	1
C 30	9S3232	CLIP	2
C 31	3T8658	TUBE	1
C 32	3B1915	BOLT	2

RIPPER LINES (8P4398 N/S)–Type 1–Part 1 of 2

Part of 8P3076 and 8P3077 Hydraulic Control Arrangements listed on Page 150

RIPPER LINES (8P4398 N/S)—Type 1—Part 2 of 2

Part of 8P3076 and 8P3077 Hydraulic Control Arrangements listed on Page 150

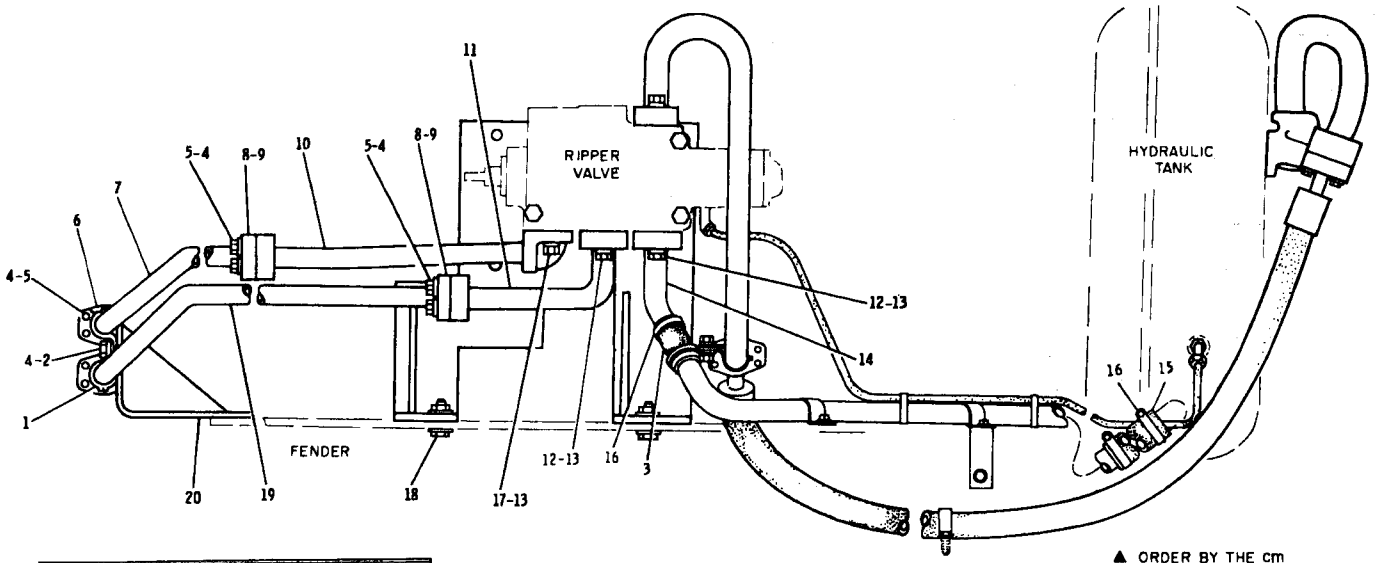

	NO.	PART NO. 部品番号	DESCRIPTION 名称および記事	QTY. 数量
	1	7S3916	CLIP ( )	2
		7S3919	CLIP ( )	2
	2	S1594	BOLT	2
C▲	3	5P6412	HOSE ----------10cm	
	4	5M2894	WASHER	18
	5	S1571	BOLT	16
	6	1P4576	FLANGE	4
	7	8P8194	TUBE ASSEM.	1
	8	1P4577	FLANGE	4
	9	4J520	SEAL	2
	10	8P8198	TUBE ASSEM.	1
	11	8P8196	TUBE ASSEM.	1
	12	S1587	BOLT	4
C	13	5P8245	WASHER	6
C	14	3T5958	TUBE ASSEM.	1
C▲	15	5P6412	HOSE ----------16cm	
C	16	5P2230	CLAMP	4
	17	S1585	BOLT	2
C	18	1A1460	BOLT	4
		1D4719	NUT	4
		5P1076	WASHER	8
	19	8P8192	TUBE ASSEM.	1
	20	8P4407	BRACKET ASSEM.	1
		9F2978	NUT (Weld)	2

▲ ORDER BY THE cm
C Indicates Change

J23048E

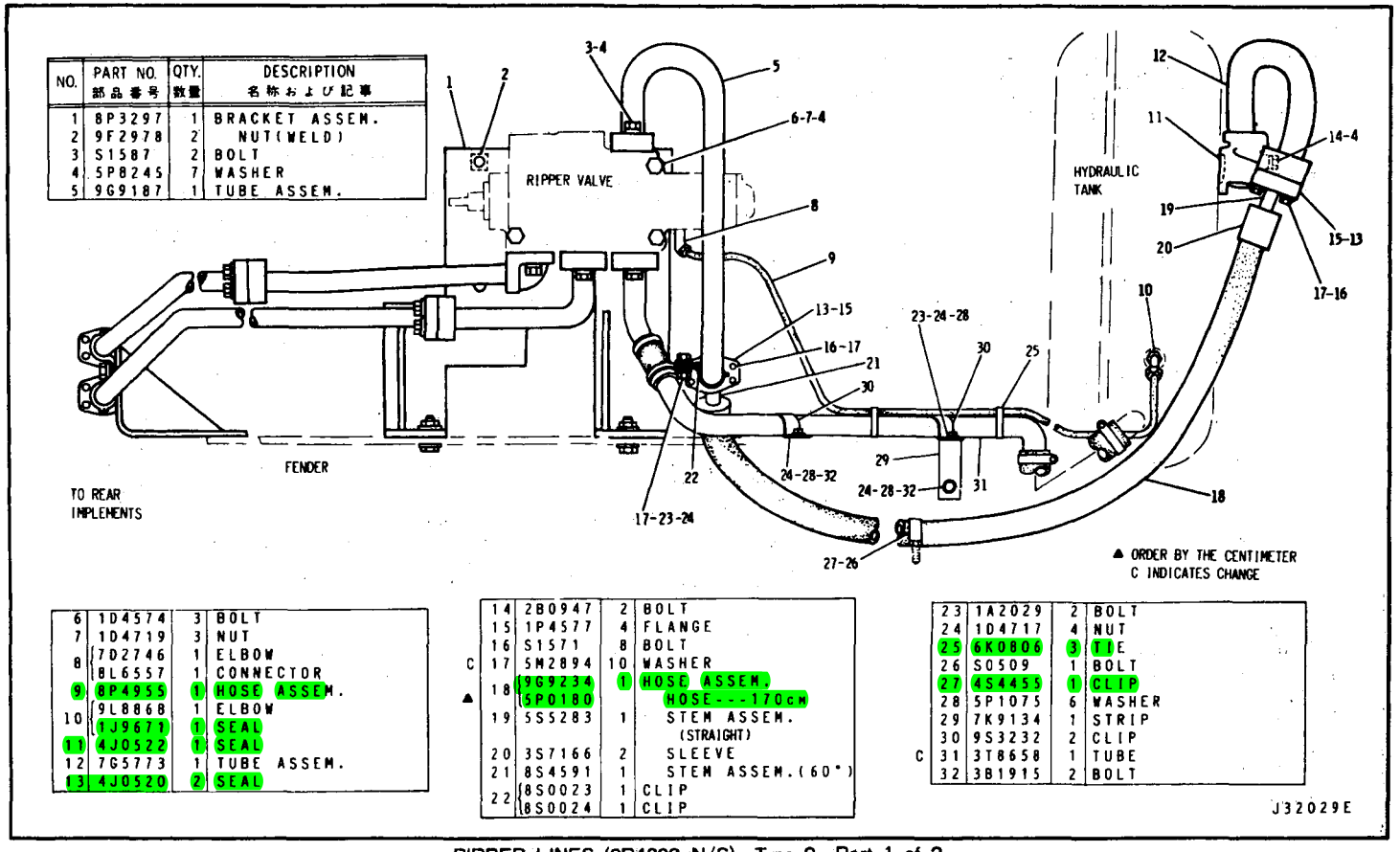

NO.	PART NO. 部品番号	QTY. 数量	DESCRIPTION 名称および記事
1	8P3297	1	BRACKET ASSEM.
2	9F2978	2	NUT(WELD)
3	S1587	2	BOLT
4	5P8245	7	WASHER
5	9G9187	1	TUBE ASSEM.
6	1D4574	3	BOLT
7	1D4719	3	NUT
8	7D2746	1	ELBOW
	8L6557	1	CONNECTOR
9	8P4955	1	HOSE ASSEM.
10	9L8868	1	ELBOW
	1J9671	1	SEAL
11	4J0522	1	SEAL
12	7G5773	1	TUBE ASSEM.
13	4J0520	2	SEAL
14	2B0947	2	BOLT
15	1P4577	4	FLANGE
16	S1571	8	BOLT
C 17	5M2894	10	WASHER
▲ 18	9G9234	1	HOSE ASSEM.
	5P0180		HOSE---170cm
19	5S5283	1	STEM ASSEM. (STRAIGHT)
20	3S7166	2	SLEEVE
21	8S4591	1	STEM ASSEM.(60°)
22	8S0023	1	CLIP
	8S0024	1	CLIP
23	1A2029	2	BOLT
24	1D4717	4	NUT
25	6K0806	3	TIE
26	S0509	1	BOLT
27	4S4455	1	CLIP
28	5P1075	6	WASHER
29	7K9134	1	STRIP
30	9S3232	2	CLIP
C 31	3T8658	1	TUBE
32	3B1915	2	BOLT

RIPPER LINES (8P4398 N/S)—Type 2—Part 1 of 2

Part of 8P3076 and 8P3077 Hydraulic Control Arrangements

RIPPER LINES (8P4398 N/S)－Type 2－Part 2 of 2

Part of 8P3076 and 8P3077 Hydraulic Control Arrangements

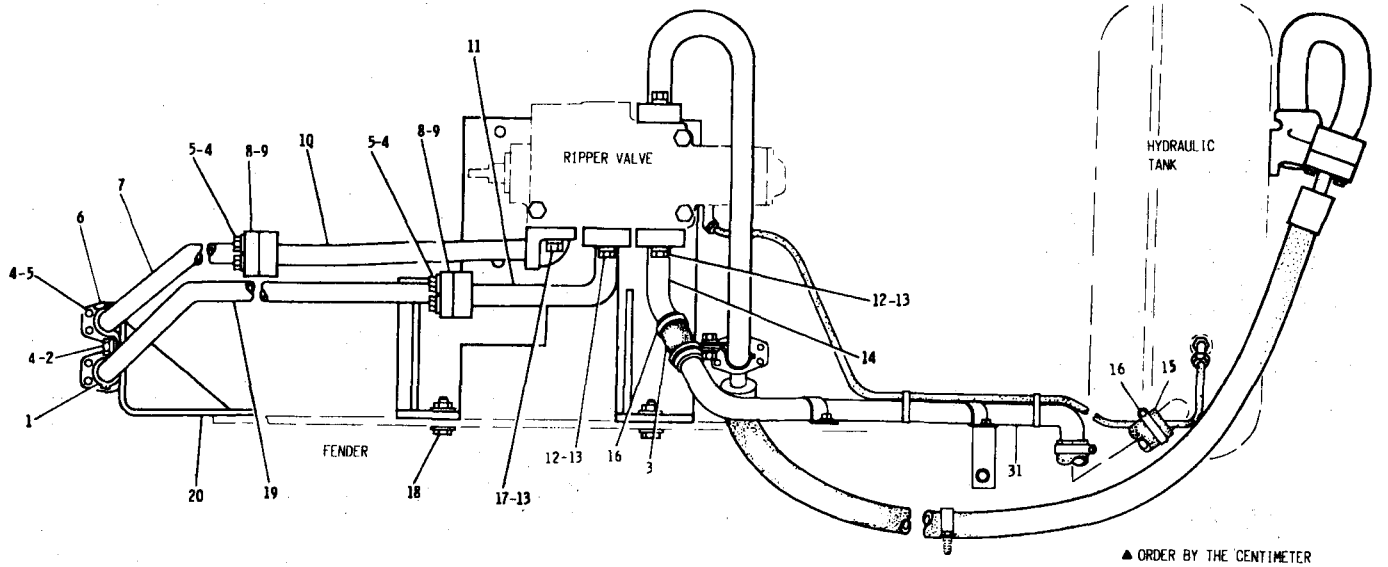

▲ ORDER BY THE CENTIMETER
C INDICATES CHANGE

NO.	PART NO. 部品番号	QTY. 数量	DESCRIPTION 名称および記事
1	7S3916	2	CLIP(TAB)
	7S3919	2	CLIP(SLOT)
2	S1594	2	BOLT
▲ 3	5P6412		HOSE---10cm
4	5M2894	18	WASHER
5	S1571	16	BOLT
6	1P4576	4	FLANGE
7	8P8194	1	TUBE ASSEM.
8	1P4577	4	FLANGE
9	4J0520	2	SEAL
10	8P8198	1	TUBE ASSEM.
11	8P8196	1	TUBE ASSEM.
12	S1587	4	BOLT
13	5P8245	6	WASHER
14	3T5958	1	TUBE ASSEM.
▲C 15	5P6412		HOSE---16cm
16	5P2230	4	CLAMP
17	S1585	2	BOLT
18	1A1460	4	BOLT
	1D4719	4	NUT
	5P1076	8	WASHER
19	8P8192	1	TUBE ASSEM.
20	8P4407	1	BRACKET ASSEM.
	9F2978	2	NUT(WELD)

J32030E

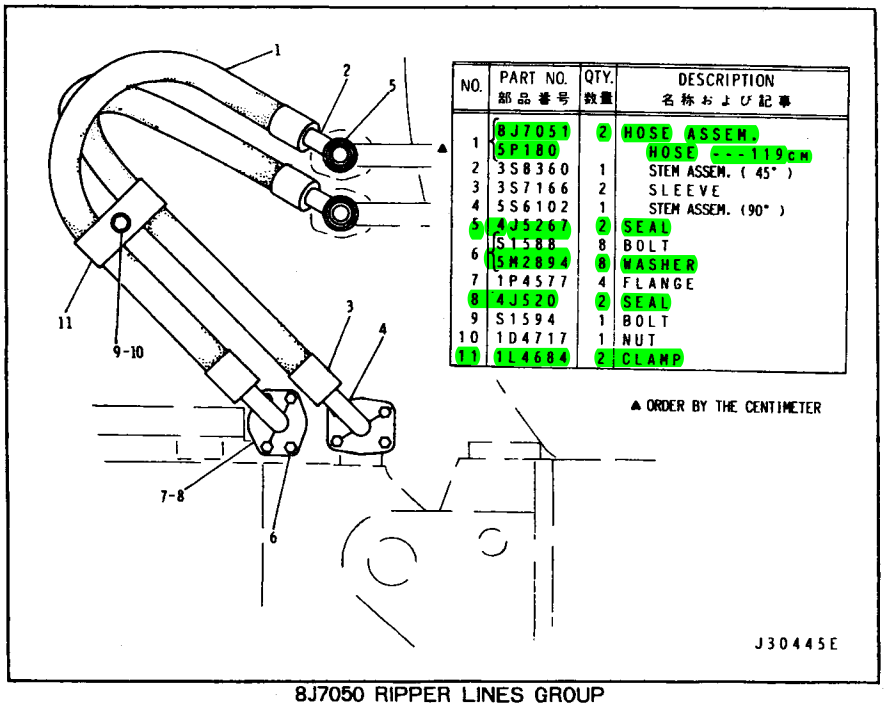

NO.	PART NO. 部品番号	QTY. 数量	DESCRIPTION 名称および記事
1	8J7051	2	HOSE ASSEM.
	5P180		HOSE ---119cm
2	3S8360	1	STEM ASSEM. (45°)
3	3S7166	2	SLEEVE
4	5S6102	1	STEM ASSEM. (90°)
5	4J5267	2	SEAL
6	S1588	8	BOLT
	5M2894	8	WASHER
7	1P4577	4	FLANGE
8	4J520	2	SEAL
9	S1594	1	BOLT
10	1D4717	1	NUT
11	1L4684	2	CLAMP

▲ ORDER BY THE CENTIMETER

8J7050 RIPPER LINES GROUP

Part of 8J7592 Ripper Arrangement listed on Page 184

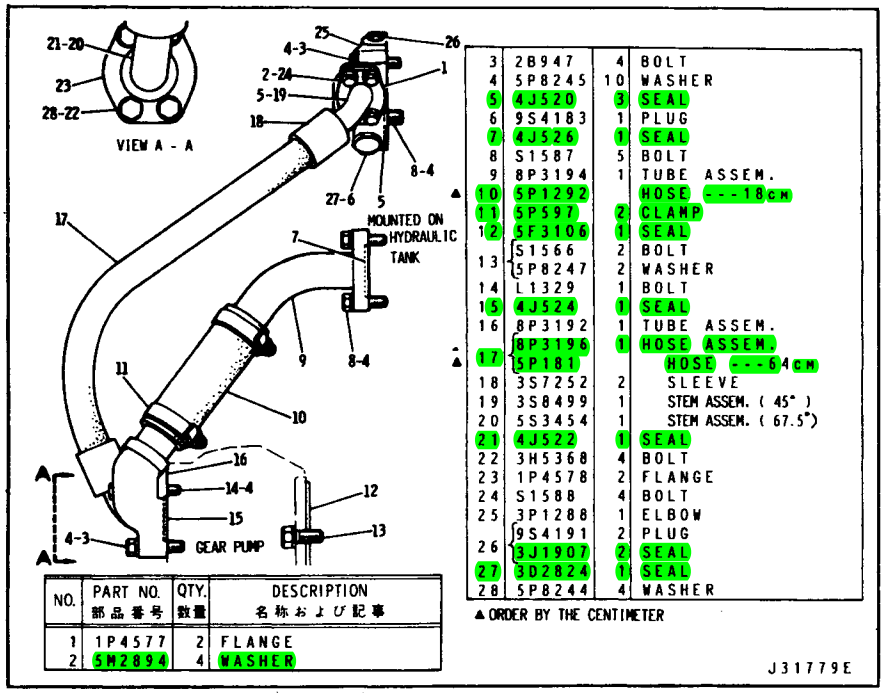

NO.	PART NO. 部品番号	QTY. 数量	DESCRIPTION 名称および記事
1	1P4577	2	FLANGE
2	5M2894	4	WASHER

3	2B947	4	BOLT
4	5P8245	10	WASHER
5	4J520	3	SEAL
6	9S4183	1	PLUG
7	4J526	1	SEAL
8	S1587	5	BOLT
9	8P3194	1	TUBE ASSEM.
10	5P1292		HOSE ---18cm
11	5P597	2	CLAMP
12	5F3106	1	SEAL
13	S1566	2	BOLT
	5P8247	2	WASHER
14	L1329	1	BOLT
15	4J524	1	SEAL
16	8P3192	1	TUBE ASSEM.
17	8P3196	1	HOSE ASSEM.
	5P181		HOSE ---64cm
18	3S7252	2	SLEEVE
19	3S8499	1	STEM ASSEM. (45°)
20	5S3454	1	STEM ASSEM. (67.5°)
21	4J522	1	SEAL
22	3H5368	4	BOLT
23	1P4578	2	FLANGE
24	S1588	4	BOLT
25	3P1288	1	ELBOW
26	9S4191	2	PLUG
	3J1907	2	SEAL
27	3D2824	1	SEAL
28	5P8244	4	WASHER

▲ ORDER BY THE CENTIMETER

J31779E

8P4167 PUMP LINES GROUP

Part of 8P3074, 8P3075, 8P3076 and 8P3077 Hydraulic Control Arrangements listed on Pages 149 and 150

8P4826 PUMP LINES GROUP – Winch

Part of 8P2321 Winch Arrangement listed on Page 187

REF. NO.	PART NUMBER	DESCRIPTION	QTY
1	5D1225	BRACKET	1
2	5S509	BOLT	1
	1D4717	NUT	1
3	3B4506	LOCKWASHER	5
4	7D1553	CLIP	1
5	9P1382	HOSE ASSEM. --1.78 m(69.88 in.)	1
6	2R6276	CONNECTOR	1
7	3D2824	SEAL	2
8	4D6082	BOLT	1
	3B4610	COTTER PIN	1
9	4B4280	WASHER	3
10	9P2075	PLATE ASSEM. (Includes)	1
	2K3656	BAR	1
11	6K1049	HINGE	1
12	5S1594	BOLT	4
13	9P1857	BRACKET ASSEM.	2
14	4J522	SEAL	1
C 15	2R8613	ADAPTER	1
16	3B6497	ELBOW	1
17	5B7319	NIPPLE	1
C 18	5P1442	HOSE ASSEM. ----82.5 cm(32.4 in.)	1
19	5S1571	BOLT	1
	4B4278	WASHER	1
	6H7127	LUG	1
20	4S4455	CLIP	1
21	1B2886	BOLT	1
	8S375	SPACER	1
22	8D9947	CLIP	1
23	9P1381	HOSE ASSEM. ---2.18 m(85.63 in.)	1
24	3D7944	ELBOW	1
C 25	6M5652	ELBOW	1
	2S4078	SEAL	1
C ▲	5S1595	BOLT	1
C ▲	1D4719	NUT	1
C ▲	5P8245	WASHER	1

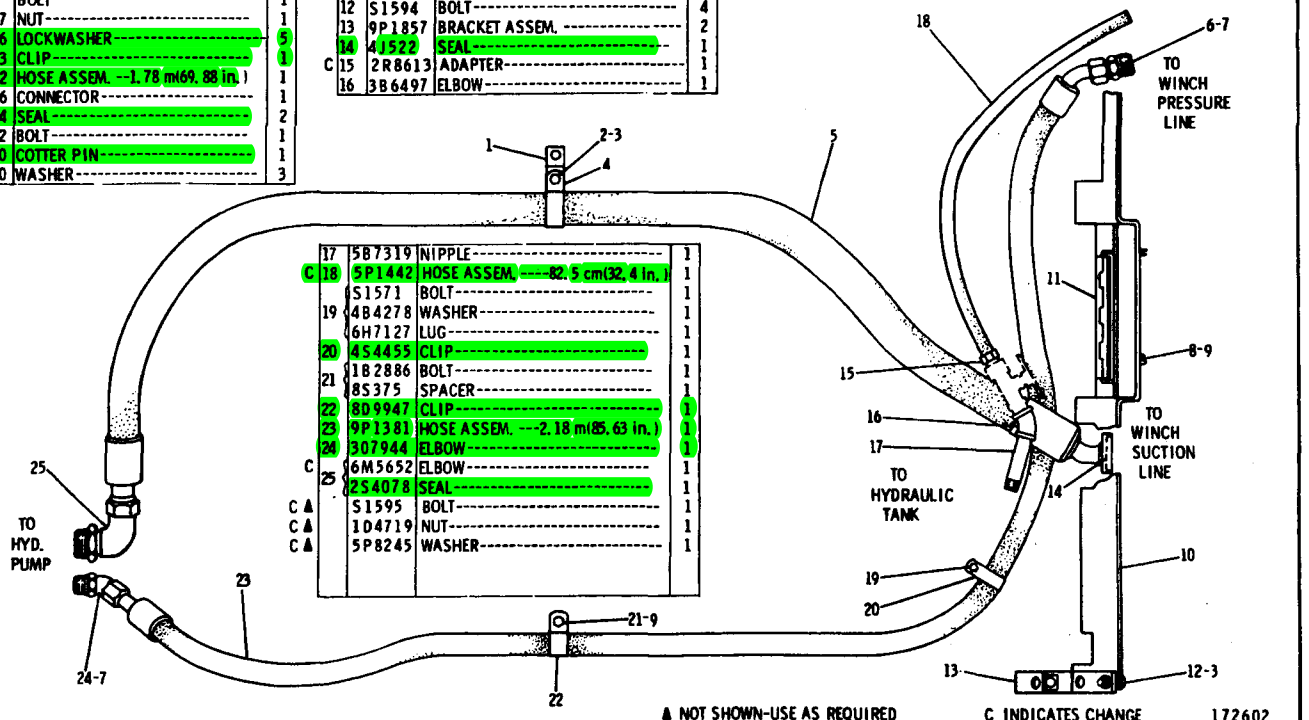

▲ NOT SHOWN-USE AS REQUIRED C INDICATES CHANGE 172602

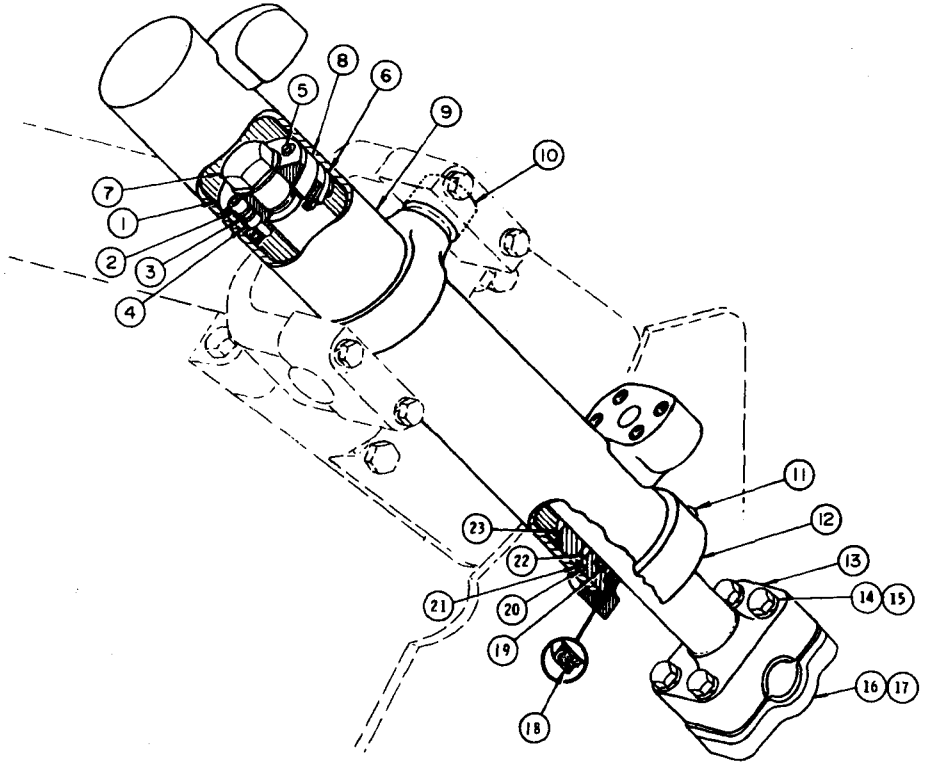

NO.	PART NO. 部品番号	DESCRIPTION 名称および記事	QTY. 数量
1	9J2007	PISTON ASSEM.	1
2	9J2010	INSERAT	2
3	9J2009	PLUNGER	1
4	8J9282	SPACER	2
5	9J2008	PLUNGER	1
6	5J5402	SEAL ASSEM.	1
7	5P1839	BOLT	1
	8J4359	WASHER	1
8	1M1571	RING	1
9	7J8301	CYLINDER ASSEM.	1
10	4J6374	BEARING	2
11	8J5912	SET SCREW	1
12	7J6461	GROWN	1
13	7J8294	ROD	1
14	3B2968	BOLT	4
15	5P8248	WASHER	4
16	3J6559	CAP	1
17	3J6572	SHIM	12
18	1K6982	SEAL	1
19	5J964	SEAL	1
20	2K6830	RING	1
21	1H8128	SEAL	1
22	3Y8949	SEAL	1
23	7J8295	HEAD	1

J22843E

7J8302 BULLDOZER CYLINDER GROUP—Type 1

Part of 7T7636 Angling Bulldozer Arrangement listed on Page 179

7J8302 BULLDOZER CYLINDER GROUP – Type 2

Part of 7T7636 Angling Bulldozer Arrangement listed on Page 179

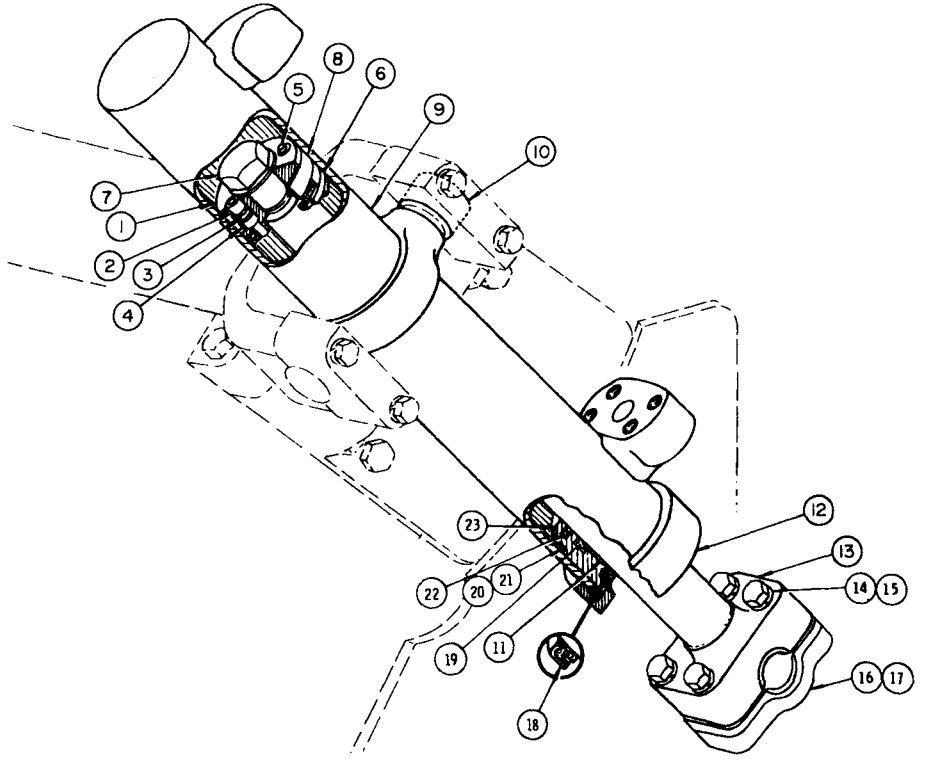

	NO.	PART NO. 部品番号	QTY. 数量	DESCRIPTION 名称および記事
	1	9J2007	1	PISTON ASSEM.
	2	9J2010	2	INSERT
	3	9J2009	1	PLUNGER
	4	8J9282	2	SPACER
	5	9J2008	1	PLUNGER
	6	5J5402	1	SEAL ASSEM.
	7	5P1839	1	BOLT
		8J4359	1	WASHER
	8	1M1571	1	RING
	9	7J8301	1	CYLINDER ASSEM.
	10	4J6374	2	BEARING
C	11	8T5668	1	RING
	12	7J6461	1	CROWN
	13	7J8294	1	ROD ASSEM.
	14	3B2968	4	BOLT
	15	5P8248	4	WASHER
	16	3J6559	1	CAP
	17	3J6572	12	SHIM
C	18	8C3840	1	SEAL
	19	5J0964	1	SEAL
	20	2K6830	1	RING
	21	1H8128	1	SEAL
C	22	8C3839	1	SEAL
C	23	9T4761	1	HEAD

C INDICATES CHANGE

J32843E

MEMO

8J1779 RIPPER CYLINDER GROUP

Part of 8J7592 Ripper Arrangement listed on Page 184

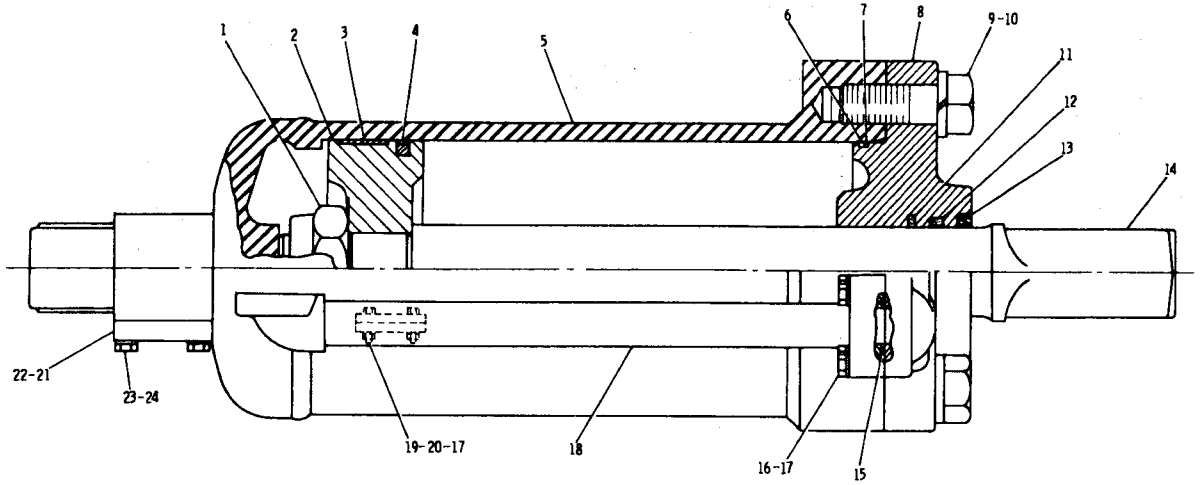

NO.	PART NO. 部品番号	QTY. 数量	DESCRIPTION 名称および記事
1	2J564	1	NUT
2	8J1772	1	PISTON
3	1J2674	1	RING
4	5J4993	1	SEAL ASSEM.
5	8J1778	1	CYLINDER ASSEM.
	2K4507	1	BEARING
6	2K2939	1	SEAL
7	2K2940	1	RING
8	8J1770	1	HEAD
9	1J2814	4	BOLT
10	3B4518	4	LOCKWASHER
11	5J3620	1	SEAL
12	5J964	1	SEAL
13	1K6982	1	SEAL
14	8J1777	1	ROD ASSEM.
	2K4507	1	BEARING
15	4F7391	1	SEAL
16	S1571	4	BOLT
17	3B4506	6	LOCKWASHER
18	8J1769	1	MANIFOLD ASSEM.
19	S1594	2	BOLT
20	1D4717	2	NUT
21	1H3305	2	FLANGE
22	4J520	1	SEAL
23	S1588	4	BOLT
24	5M2894	4	WASHER

J29470E

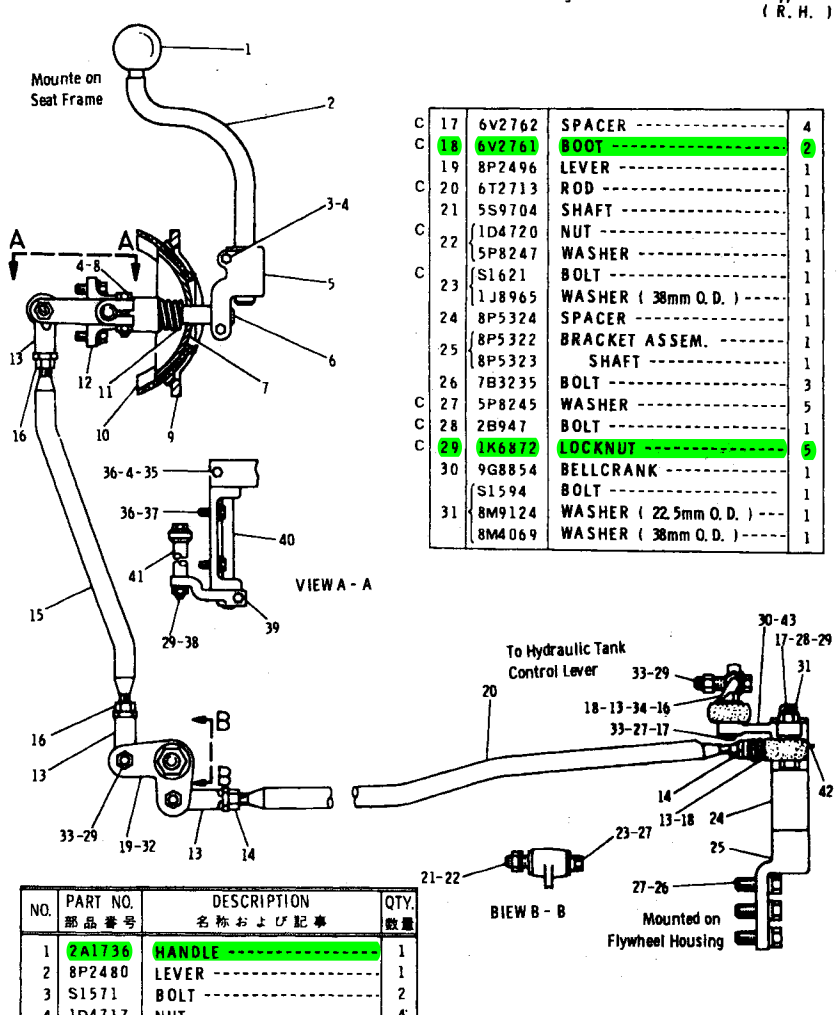

C	17	6V2762	SPACER	4
C	18	6V2761	BOOT	2
	19	8P2496	LEVER	1
C	20	6T2713	ROD	1
	21	5S9704	SHAFT	1
C	22	1D4720	NUT	1
		5P8247	WASHER	1
C	23	S1621	BOLT	1
		1J8965	WASHER (38mm O. D.)	1
	24	8P5324	SPACER	1
	25	8P5322	BRACKET ASSEM.	1
		8P5323	SHAFT	1
	26	7B3235	BOLT	3
C	27	5P8245	WASHER	5
C	28	2B947	BOLT	1
C	29	1K6872	LOCKNUT	5
	30	9G8854	BELLCRANK	1
	31	S1594	BOLT	1
		8M9124	WASHER (22.5mm O. D.)	1
		8M4069	WASHER (38mm O. D.)	1

NO.	PART NO. 部品番号	DESCRIPTION 名称および記事	QTY. 数量
1	2A1736	HANDLE	1
2	8P2480	LEVER	1
3	S1571	BOLT	2
4	1D4717	NUT	4
5	9P468	CLAMP	1
6	8P5048	LEVER ASSEM.	1
7	8P7352	SEAL	1
8	S1591	BOLT	1
9	6P5209	COVER	1
	4B1291	SCREW	4
10	6P5208	GUIDE	1
11	2J7295	SPRING	1
12	6P5205	BRACKET ASSEM.	1
	9F5647	BEARING	2
C 13	4D4065	ROD END	6
C 14	1B4205	NUT	2
C 15	6T1443	ROD	1
C 16	1B4430	NUT	4

	32	6D3787	BEARING	2
C	33	S1587	BOLT	4
C	34	6T1457	ROD	1
	35	S1590	BOLT	1
	36	5M2894	WASHER	5
	37	S1588	BOLT	4
	38	8S9089	BOLT	1
	39	8P2483	LEVER	1
	40	3P3942	SHAFT	1
		1B8704	KEY	2
	41	5V6103	SPACER	1
	42	3B8489	FITTING	1
	43	6D5974	BEARING	2
●		5P8166	FILM	1

J24560E

8P5038 HYDRAULIC HAND CONTROL GROUP – Bulldozer

Part of 8P3074 and 8P3076 Hydraulic Control Arrangements listed on Pages 149 and 150

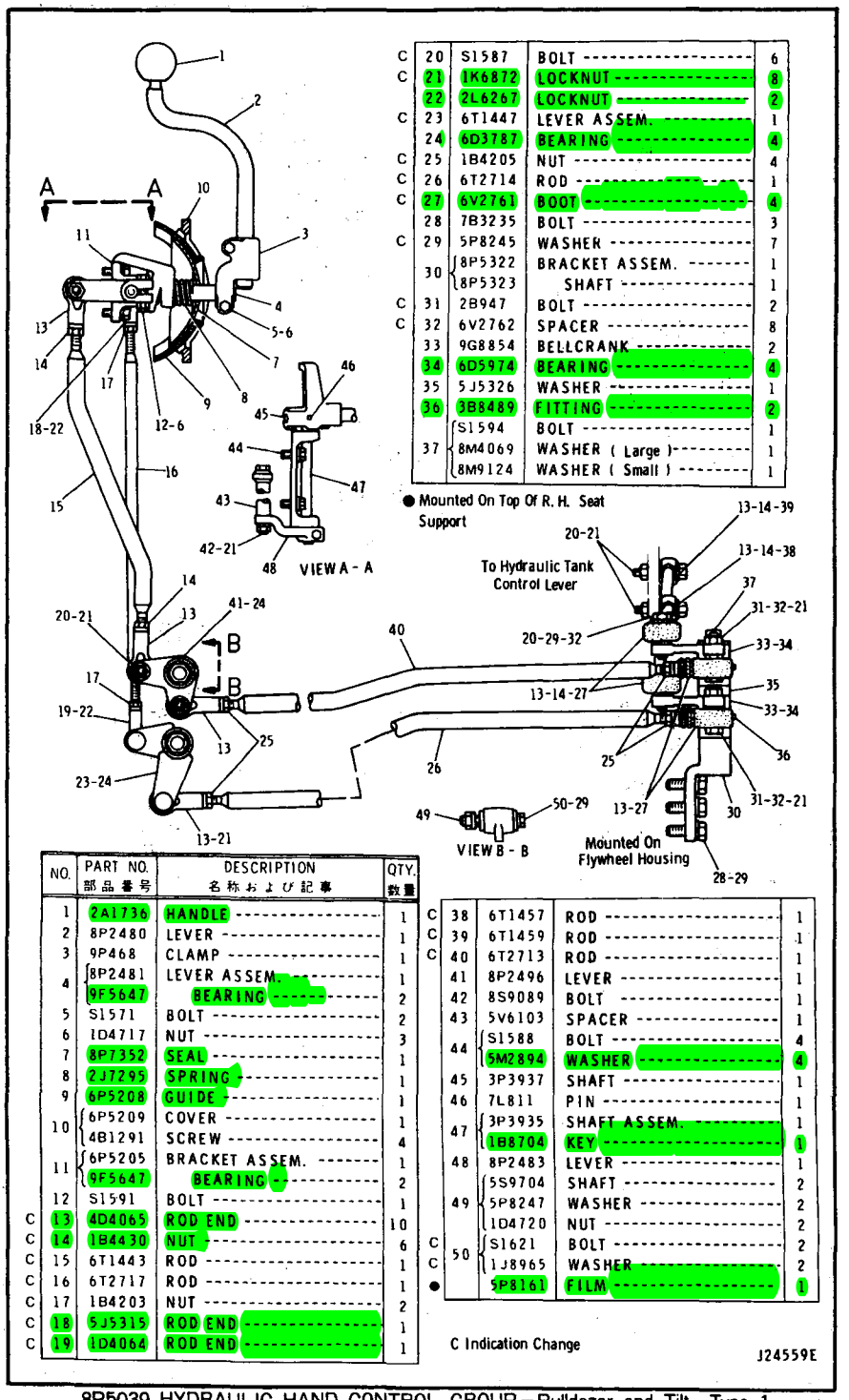

	NO.	PART NO. 部品番号	DESCRIPTION 名称および記事	QTY. 数量
	1	2A1736	HANDLE	1
	2	8P2480	LEVER	1
	3	9P468	CLAMP	1
	4	8P2481	LEVER ASSEM.	1
		9F5647	BEARING	2
	5	S1571	BOLT	2
	6	1D4717	NUT	3
	7	8P7352	SEAL	1
	8	2J7295	SPRING	1
	9	6P5208	GUIDE	1
	10	6P5209	COVER	1
		4B1291	SCREW	4
	11	6P5205	BRACKET ASSEM.	1
		9F5647	BEARING	2
	12	S1591	BOLT	1
C	13	4D4065	ROD END	10
C	14	1B4430	NUT	6
C	15	6T1443	ROD	1
C	16	6T2717	ROD	1
C	17	1B4203	NUT	2
C	18	5J5315	ROD END	1
C	19	1D4064	ROD END	1
C	20	S1587	BOLT	6
C	21	1K6872	LOCKNUT	8
	22	2L6267	LOCKNUT	2
C	23	6T1447	LEVER ASSEM.	1
	24	6D3787	BEARING	4
C	25	1B4205	NUT	4
C	26	6T2714	ROD	1
C	27	6V2761	BOOT	4
	28	7B3235	BOLT	3
C	29	5P8245	WASHER	7
	30	8P5322	BRACKET ASSEM.	1
		8P5323	SHAFT	1
C	31	2B947	BOLT	2
C	32	6V2762	SPACER	8
	33	9G8854	BELLCRANK	2
	34	6D5974	BEARING	4
	35	5J5326	WASHER	1
	36	3B8489	FITTING	2
	37	S1594	BOLT	1
		8M4069	WASHER (Large)	1
		8M9124	WASHER (Small)	1
C	38	6T1457	ROD	1
C	39	6T1459	ROD	1
C	40	6T2713	ROD	1
	41	8P2496	LEVER	1
	42	8S9089	BOLT	1
	43	5V6103	SPACER	1
	44	S1588	BOLT	4
		5M2894	WASHER	4
	45	3P3937	SHAFT	1
	46	7L811	PIN	1
	47	3P3935	SHAFT ASSEM.	1
		1B8704	KEY	1
	48	8P2483	LEVER	1
	49	5S9704	SHAFT	2
		5P8247	WASHER	2
		1D4720	NUT	2
C	50	S1621	BOLT	2
C		1J8965	WASHER	2
●		5P8161	FILM	1

8P5039 HYDRAULIC HAND CONTROL GROUP – Bulldozer and Tilt – Type 1

Part of 8P3075 and 8P3077 Hydraulic Control Arrangements listed on Pages 149 and 150

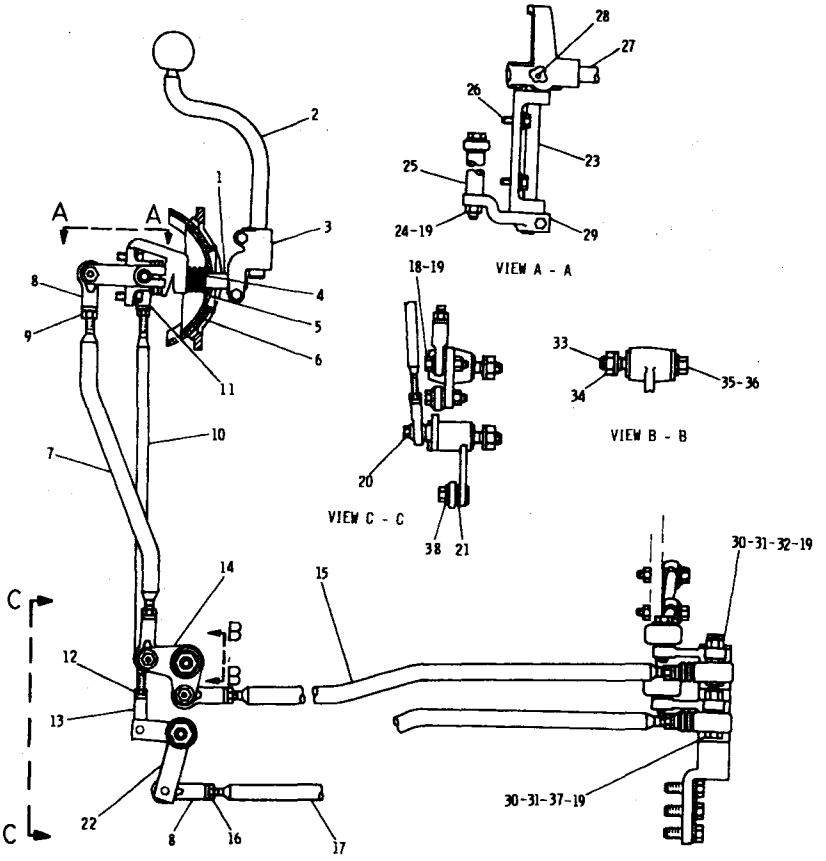

NO.	PART NO. 部品番号	QTY. 数量	DESCRIPTION 名称および記事
1	8P2481	1	LEVER ASSEM.
	9F5647	2	BEARING
2	8P2480	1	LEVER
3	9P468	1	CLAMP
4	2J7295	1	SPRING
5	8P7352	1	SEAL
6	6P5208	1	GUIDE
7	6T1443	1	ROD
8	4D4065	6	ROD END
9	1B4430	2	NUT
10	6T2717	1	ROD
11	5J5315	1	ROD END
12	1B4203	2	NUT
13	4D4064	1	ROD END
14	8P2496	1	LEVER
15	6T2713	1	ROD
16	1B4205	4	NUT
17	6T2714	1	ROD
18	S1587	2	BOLT
19	1K6872	5	LOCKNUT
20	5D353	1	BOLT
21	5P7213	1	WASHER
22	7T2015	1	LEVER ASSEM.
	3P3935	1	SHAFT ASSEM.
23	1B8704	1	KEY
24	8S9089	1	BOLT
25	5V6103	1	SPACER
	S1588	4	BOLT
26	5M2894	4	WASHER
27	3P3937	1	SHAFT
28	7L811	1	DOWEL
29	8P2483	1	LEVER
30	6V2762	4	SPACER
31	6V2761	2	BOOT
32	2B947	1	BOLT
33	5S9704	2	SHAFT
	1D4720	2	NUT
34	5P8247	2	WASHER
	S1621	2	BOLT
35	1J8965	2	WASHER
36	5P8245	2	WASHER
37	1A1460	1	BOLT
38	308538	1	BOLT

J31922E

8P5039 HYDRAULIC HAND CONTROL GROUP – Bulldozer and Tilt – Type 2 – Part 1 of 2

Part of 8P3075 and 8P3077 Hydraulic Control Arrangements

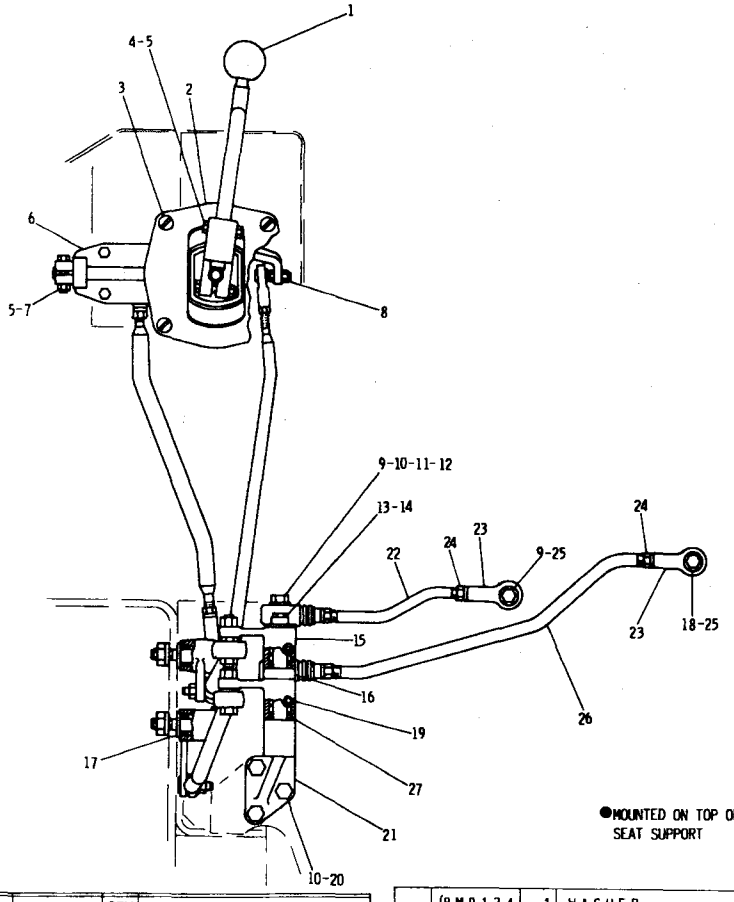

NO.	PART NO. 部品番号	QTY. 数量	DESCRIPTION 名称および記事
1	2A1736	1	HANDLE
2	6P5209	1	COVER
3	4B1291	4	SCREW
4	S1571	2	BOLT
5	1D4717	3	NUT
6	6P5205	1	BRACKET ASSEM.
	9F5647	2	BEARING
7	S1591	1	BOLT
8	2L6267	1	LOCKNUT
9	S1587	3	BOLT
10	5P8245	5	WASHER
11	6V2762	4	SPACER
12	6V2761	2	BOOT
13	S1594	1	BOLT
14	8M9124	1	WASHER
	8M4069	1	WASHER
15	9G8854	2	BELLCRANK
16	5J5326	1	WASHER
17	6D3787	4	BEARING
18	5K7143	1	BOLT
19	3B8489	2	FITTING
20	7B3235	3	BOLT
21	8P5322	1	BRACKET ASSEM.
	8P5323	1	SHAFT
22	6T1457	1	ROD
23	4D4065	4	ROD END
24	1B4430	4	NUT
25	1K6872	2	LOCKNUT
26	6T1459	1	ROD
27	6D5974	4	BEARING
●	5P8161	1	FILM

J31955E

8P5039 HYDRAULIC HAND CONTROL GROUP—Bulldozer and Tilt—Type 2—Part 2 of 2

Part of 8P3075 and 8P3077 Hydraulic Control Arrangements

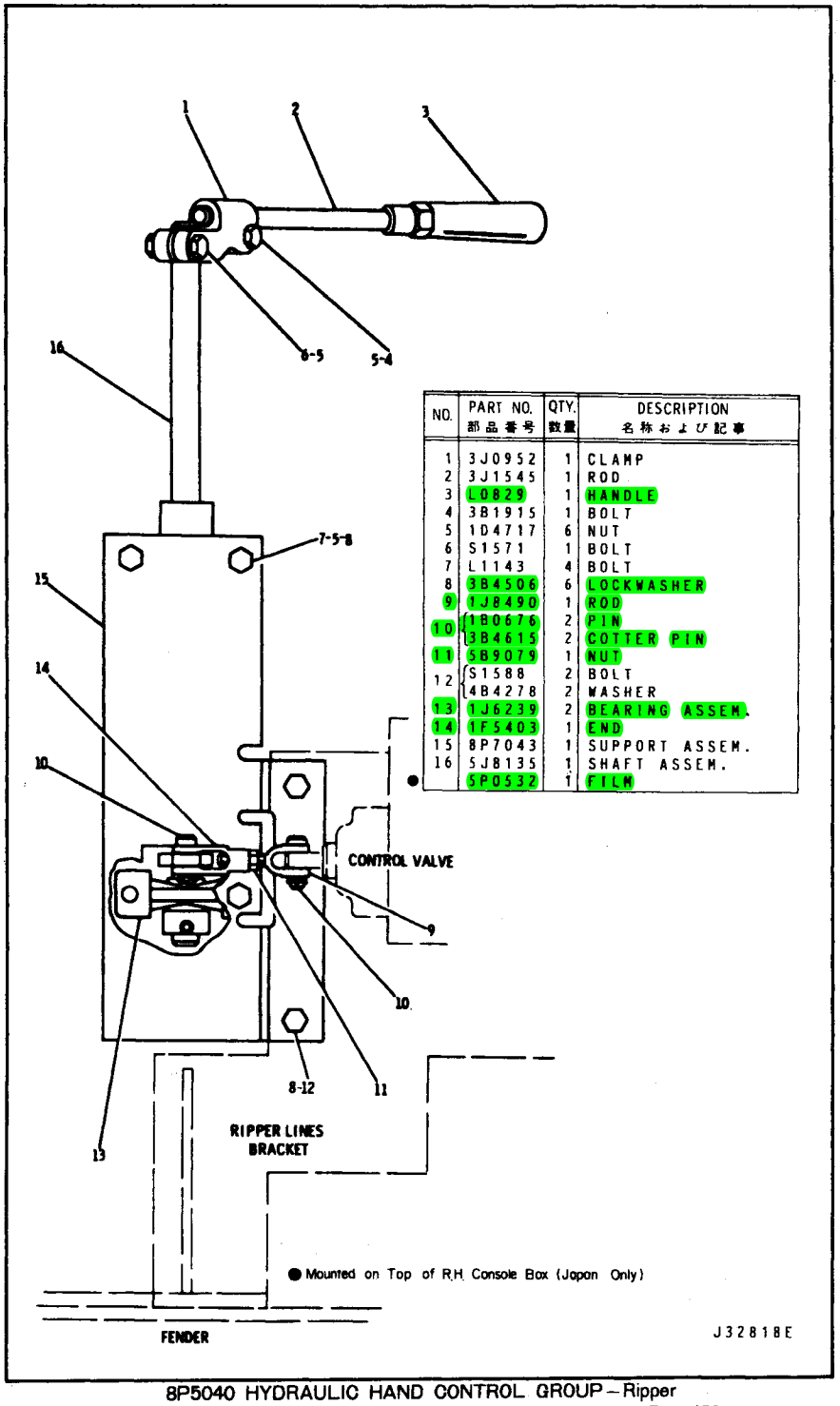

NO.	PART NO. 部品番号	QTY. 数量	DESCRIPTION 名称および記事
1	3J0952	1	CLAMP
2	3J1545	1	ROD
3	L0829	1	HANDLE
4	3B1915	1	BOLT
5	1D4717	6	NUT
6	S1571	1	BOLT
7	L1143	4	BOLT
8	3B4506	6	LOCKWASHER
9	1J8490	1	ROD
10	1B0676	2	PIN
	3B4615	2	COTTER PIN
11	5B9079	1	NUT
12	S1588	2	BOLT
	4B4278	2	WASHER
13	1J6239	2	BEARING ASSEM.
14	1F5403	1	END
15	8P7043	1	SUPPORT ASSEM.
16	5J8135	1	SHAFT ASSEM.
●	5P0532	1	FILM

8P5040 HYDRAULIC HAND CONTROL GROUP – Ripper

Part of 8P3076 and 8P3077 Hydraulic Control Arrangements listed on Page 150

Consists of:

			Page
1	7T8540	Angling Bulldozer Arrangement—Basic	
1	9J8528	Blade Group	180
1	9J9150	Brace Group	181
1	7T4625	C-Frame Group	182
1	4J2848	Trunnion Group	179
2	7J8302	Bulldozer Cylinder Group	174
1	7T7637	Bulldozer Lines Group	168
1	5J9210	Cylinder Bracket Group	183

J26192E

7T7636 ANGLING BULLDOZER ARRANGEMENT
Effective with Serial No. 7CC1—UP
Only separate parts Serviced

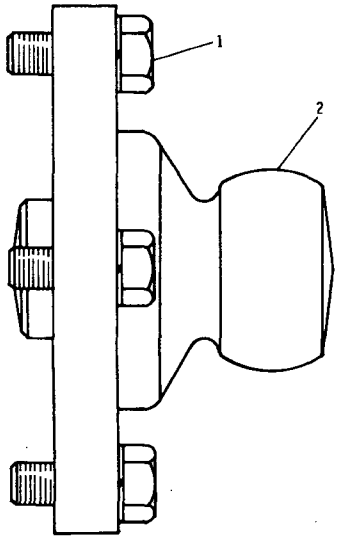

NO.	PART NO. 部品番号	QTY. 数量	DESCRIPTION 名称および記事
1	9F9522	12	BOLT
	3B4514	12	LOCKWASHER
2	4J2847	2	TRUNNION ASSEM.
	7J8698	1	TRUNNION

J32816E

TRUNNION (4J2848 N/S)
Part of 7T8540 Basic Angling Bulldozer Arrangement

▲Not Part of 9J8528 Blade Group

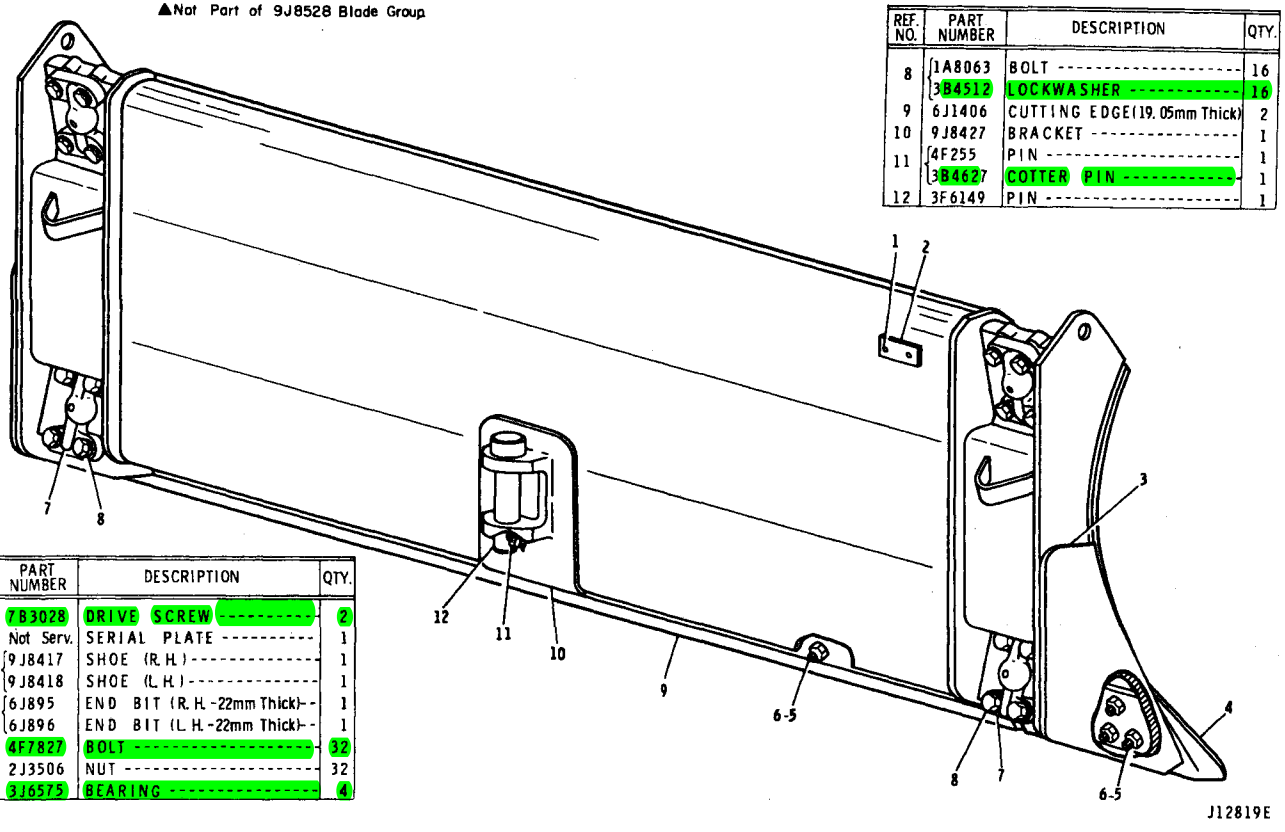

REF. NO.	PART NUMBER	DESCRIPTION	QTY.
8	1A8063	BOLT	16
	3B4512	LOCKWASHER	16
9	6J1406	CUTTING EDGE(19.05mm Thick)	2
10	9J8427	BRACKET	1
11	4F255	PIN	1
	3B4627	COTTER PIN	1
12	3F6149	PIN	1

REF. NO.	PART NUMBER	DESCRIPTION	QTY.
▲ 1	7B3028	DRIVE SCREW	2
▲ 2	Not Serv.	SERIAL PLATE	1
3	9J8417	SHOE (R.H.)	1
	9J8418	SHOE (L.H.)	1
4	6J895	END BIT (R.H.-22mm Thick)	1
	6J896	END BIT (L.H.-22mm Thick)	1
5	4F7827	BOLT	32
6	2J3506	NUT	32
7	3J6575	BEARING	4

9J8528 ANGLING BLADE GROUP

Effective with Serial No. 7CC1—UP

Part of 7T8540 Basic Angling Bulldozer Arrangement

9J9150 BRACE GROUP

Part of 7T8540 Basic Angling Bulldozer Arrangement

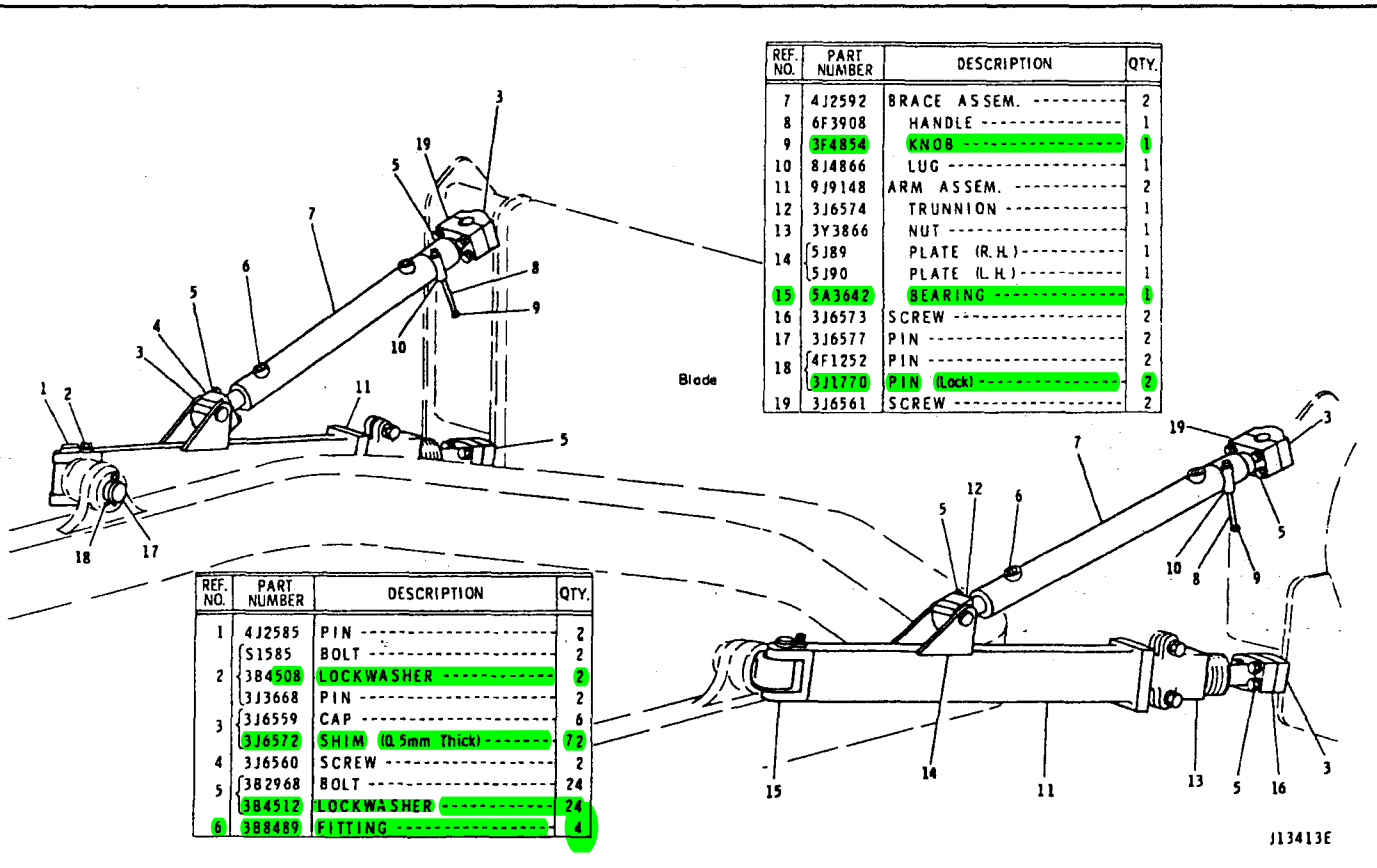

REF. NO.	PART NUMBER	DESCRIPTION	QTY.
7	4J2592	BRACE ASSEM.	2
8	6F3908	HANDLE	1
9	3F4854	KNOB	1
10	8J4866	LUG	1
11	9J9148	ARM ASSEM.	2
12	3J6574	TRUNNION	1
13	3Y3866	NUT	1
14	5J89	PLATE (R.H.)	1
	5J90	PLATE (L.H.)	1
15	5A3642	BEARING	1
16	3J6573	SCREW	2
17	3J6577	PIN	2
18	4F1252	PIN	2
	3J1770	PIN (Lock)	2
19	3J6561	SCREW	2

REF. NO.	PART NUMBER	DESCRIPTION	QTY.
1	4J2585	PIN	2
	S1585	BOLT	2
2	3B4508	LOCKWASHER	2
	3J3668	PIN	2
3	3J6559	CAP	6
	3J6572	SHIM (0.5mm Thick)	72
4	3J6560	SCREW	2
5	3B2968	BOLT	24
	3B4512	LOCKWASHER	24
6	3B8489	FITTING	4

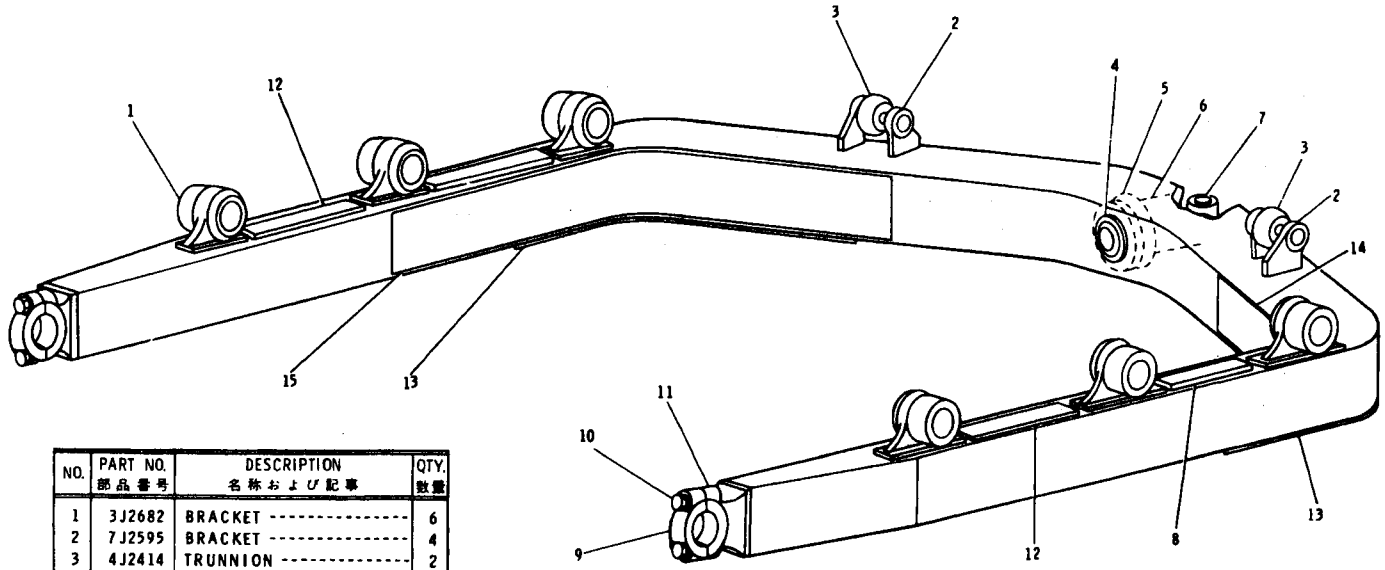

NO.	PART NO. 部品番号	DESCRIPTION 名称および記事	QTY. 数量
1	3J2682	BRACKET	6
2	7J2595	BRACKET	4
3	4J2414	TRUNNION	2
4	4F2152	COLLAR	1
5	3J1943	COLLAR	2
6	5J264	BEARING	1
7	7T3796	PIN	1
8	3J4604	PLATE	2
9	6F2905	CAP	2
10	5B5473	BOLT	4
	4F1204	NUT	4
	3K5234	WASHER	4

11	6F2904	BEARING	2
12	7T2214	PLATE	2
13	7T3795	PLATE	2
14	7T3793	PLATE (L. H.)	1
15	7T3794	PLATE (R. H.)	1

J26194E

7T4625 C-FRAME GROUP

Part of 7T8540 Basic Angling Bulldozer Arrangement

5J9210 CYLINDER BRACKET GROUP

Part of 7T7636 Angling Bulldozer Arrangement

C Indicates Change

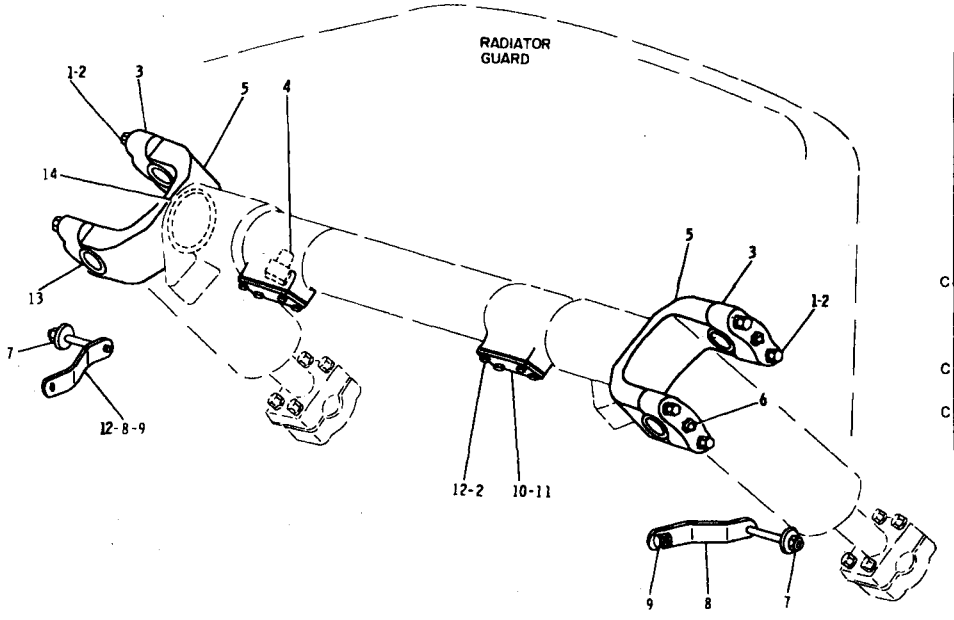

	NO.	PART NO. 部品番号	DESCRIPTION 名称および記事	QTY. 数量
	1	2B947	BOLT	8
	2	3B4508	LOCKWASHER	16
	3	4J6327	CAP	4
	4	5J6161	PIN	2
	5	5J6156	YOKE	2
	6	3B8489	FITTING	4
	7	2H3788	NUT	2
		4B4280	WASHER	2
C	8	3Y7923	LINK ASSEM.	2
	9	T772	BOLT	2
		1D4718	NUT	2
	10	5J6162	PLATE	2
C	11	8J7067	GASKET	2
	12	S1595	BOLT	8
C	13	4J6326	BEARING	4
	14	2J6305	SEAL	2

J22848E

Consists of:

			Page
1	8J7590	RIPPER ARRANGEMENT - Basic	185
1	3K9880	MOUNTING GROUP	186
1	8J1779	CYLINDER GROUP	175
1	8J7050	LINES GROUP - Ripper	172
1	8M4496	FILM (No. 6 RIPPER)	
1	434-30620	FORM (Japanese Instruction for Installing)	
	- OR -		
1	FE032008	FORM (English Instruction for Installing)	

J9056E

8J7592 RIPPER ARRANGEMENT
Effective with Serial No. 12H3801 – UP
Only separate parts Serviced

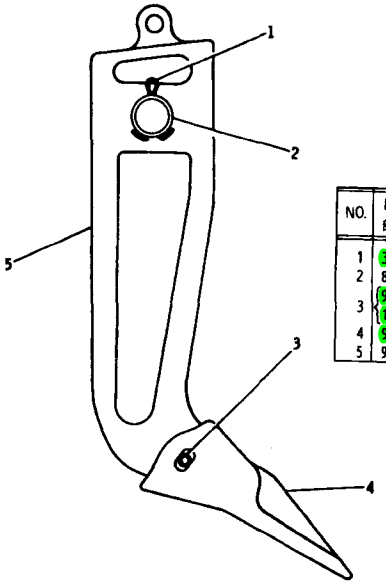

NO.	PART NO. 部品番号	QTY. 数量	DESCRIPTION 名称および記事
1	3B5325	2	COTTER PIN
2	8J2190	1	PIN
3	9W2678	1	PIN
	1U2405	1	RETAINER
4	9J8920	1	TIP
5	9J3139	1	SHANK

J32822E

8J2189 TOOTH GROUP
Part of Ripper shown on Page 185

RIPPER (8J7590 N/S)

Effective with Serial No. 12H3801 – UP
Part of 8J7592 Ripper Arrangement
8J2189 Tooth parts are shown on Page 184

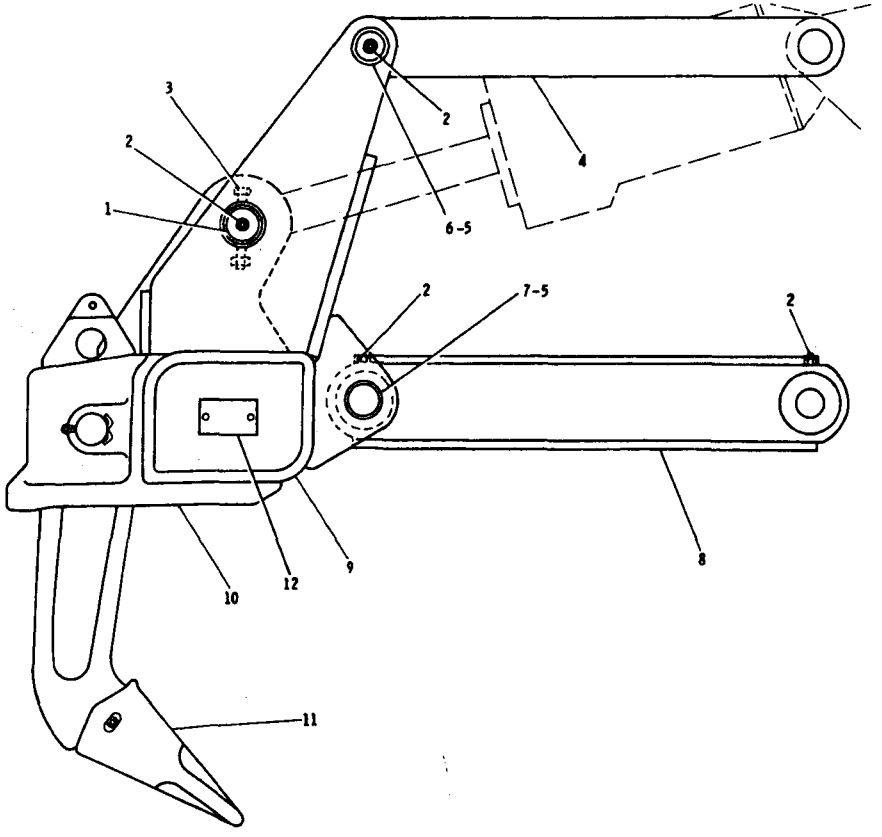

REF. NO.	PART NUMBER	DESCRIPTION	QTY.
1	2K4683	PIN	1
2	3B8489	FITTING	7
3	1D4572	BOLT	1
	1K6872	NUT	1
4	2K2306	LINK	2
5	3B5325	COTTER	4
6	2K6562	PIN	2
7	9J9598	PIN	2
8	5K2657	LINK ASSEM.	1
9	8J7130	CARRIAGE ASSEM.	1
10	5K7748	HOLDER	5
11	8J2189	TOOTH GROUP (See Separate Illustration)	3
12	Not Serv.	PLATE	1
	7B3028	SCREW (Drive)	2

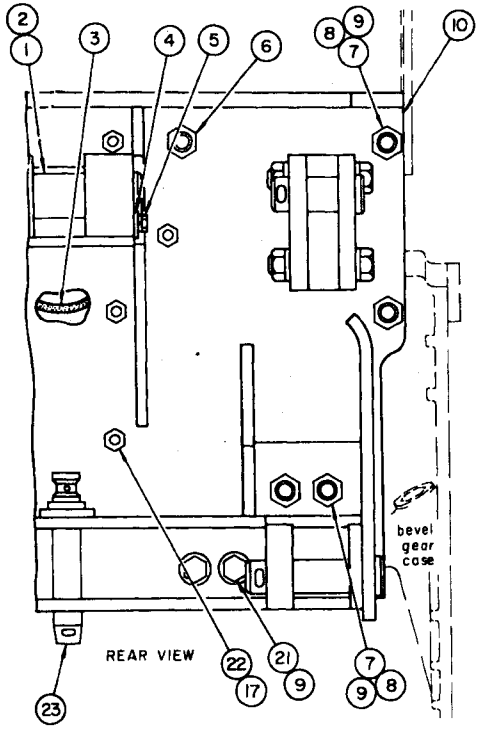

REF. NO.	PART NUMBER	DESCRIPTION	QTY.
1	3K9750	PIN	1
2	3B8489	FITTING	5
3	3K1516	SEAL	1
4	2K703	BAR	1
5	S-1621	BOLT	2
	3B4508	LOCKWASHER	2
6	3K9843	STUD	2
	3K9770	NUT	2
	4K684	WASHER	2
7	5D3118	STUD	8
8	2J3507	NUT	10
9	7M9650	WASHER	16
10	8J980	PLATE ASSEM.	1
11	4K4487	PLATE (R. H.)	1
	4K4488	PLATE (L. H.)	1
12	1D4643	BOLT	2
13	2K6563	PIN	2
14	3B5325	COTTER PIN	4
15	4K3927	SHIM (0.8mm Thick Necessary Used)	10
16	1D4609	BOLT	6
17	5H1504	WASHER	14
18	4K3613	PLATE ASSEM.	1
19	3B4647	COTTER PIN	4
20	2K6561	PIN	2
21	9S1363	BOLT	4
22	4K1079	STUD	8
	6B6682	NUT	8
23	7F9547	PIN ASSEM.	1
	7F9543	COLLAR	1
		(Part of 7F9547 Pin Assem.)	

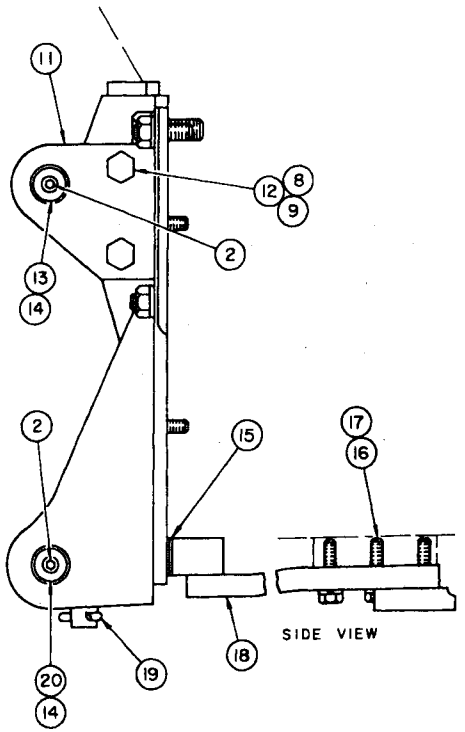

3K9880 RIPPER MOUNTING GROUP – Type 1

Part of 8J7592 Ripper Arrangement

RIPPER MOUNTING (3K9880 N/S)–Type 2

Part of 8J7592 Ripper Arrangement

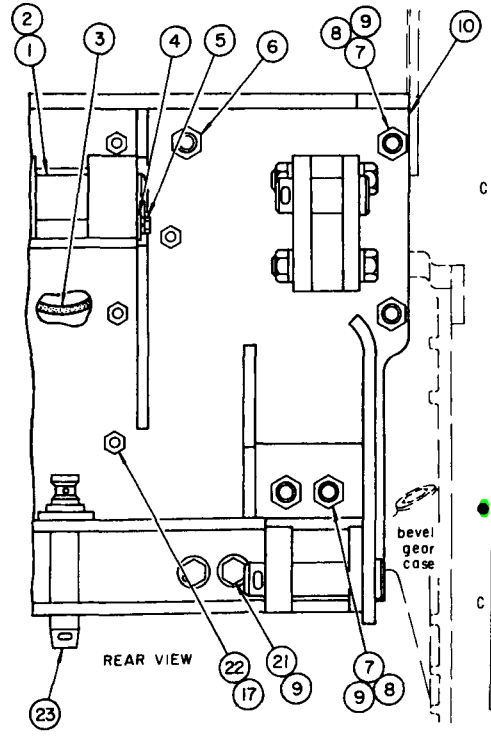

	NO.	PART NO. 部品番号	QTY. 数量	DESCRIPTION 名称および記事
	1	3K9750	1	PIN
C	2	3B8489	3	FITTING
	3	3K1516	1	SEAL
	4	2K0703	1	BAR
	5	S1621	2	BOLT
		3B4508	2	WASHER
	6	3K9843	2	STUD
		3K9770	2	NUT
		4K0684	2	WASHER
	7	5D3118	8	STUD
	8	2J3507	10	NUT
	9	7M9650	16	WASHER
	10	8J0980	1	PLATE ASSEM.
	11	4K4487	1	PLATE(R.H.)
		4K4488	1	PLATE(L.H.)
	12	1D4643	2	BOLT
	13	2K6563	2	PIN
	14	3B5325	4	COTTER PIN
●	15	4K3927	10	SHM(0.8mm THICK)
	16	1D4609	6	BOLT
	17	5H1504	14	WASHER
	18	4K3613	1	PLATE ASSEM.
	19	3B4647	1	PIN
C	20	9J9598	2	PIN
	21	9S1363	4	BOLT
	22	4K1079	8	STUD
		6B6682	8	NUT
	23	7F9547	1	PIN ASSEM.
		7F9543	1	COLLAR

C INDICATES CHANGE
● USE AS REQUIRED

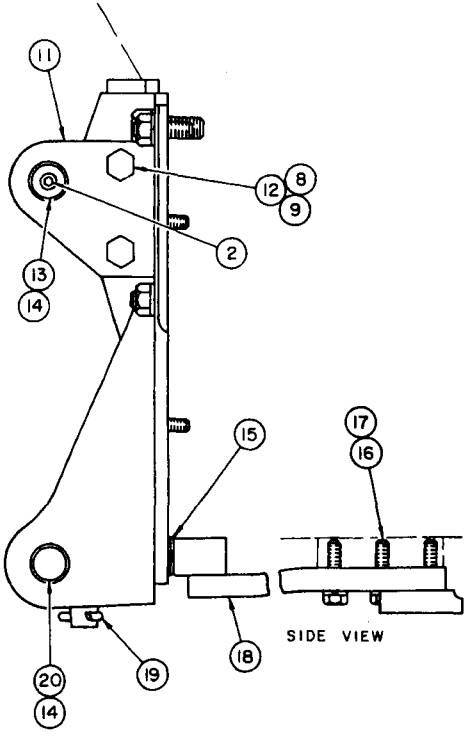

J32823E

MEMO

Consists of :

			Page
1	1P6751	Gear Pump Group	166
1	1P8628	Winch Arrangement	187
1	1P8916	Winch Drive Group	197
1	1P8951	Winch Mounting Group	197
1	8P4826	Pump Lines Group	173
1	8P5694	Winch Control Group	194

J26186E

8P2321 WINCH ARRANGEMENT – Standard Speed
AN ATTACHMENT

Consists of :

			Page
1	1P7528	Control Valve Group	162
1	1P8632	Winch Group	188
1	8P1506	Coble Guide and Case Group	196

J26187E

1P8628 TOWING WINCH ARRANGEMENT
Effective with Serial No. 36U1274 – UP
Part of 8P2321 Winch Arrangement

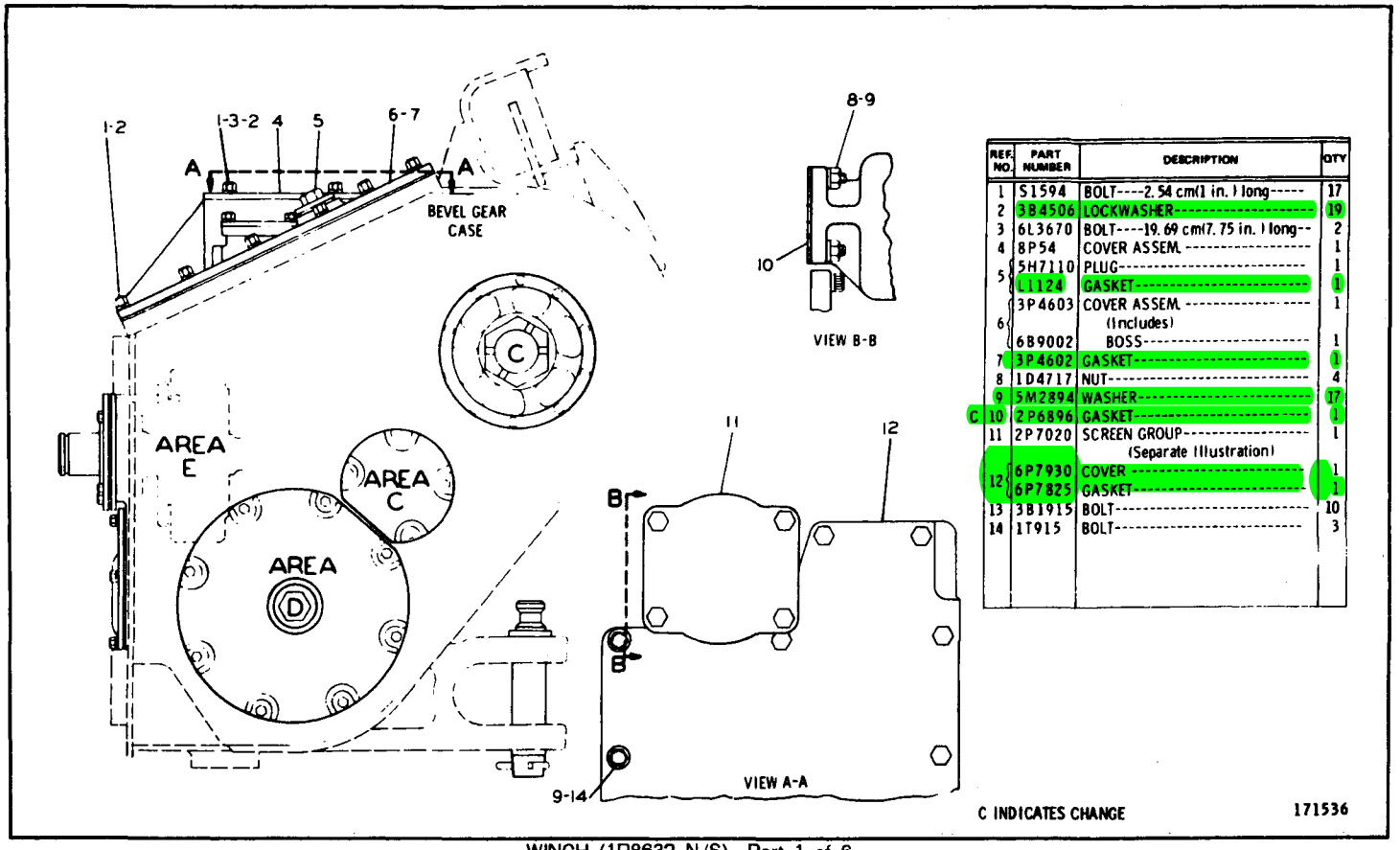

REF. NO.	PART NUMBER	DESCRIPTION	QTY
1	S1594	BOLT----2.54 cm(1 in.) long-----	17
2	3B4506	LOCKWASHER----------	19
3	6L3670	BOLT----19.69 cm(7.75 in.) long--	2
4	8P54	COVER ASSEM.----------	1
5	5H7110	PLUG----------	1
	L1124	GASKET----------	1
6	3P4603	COVER ASSEM.---------- (Includes)	1
	6B9002	BOSS----------	1
7	3P4602	GASKET----------	1
8	1D4717	NUT----------	4
9	5M2894	WASHER----------	17
C 10	2P6896	GASKET----------	1
11	2P7020	SCREEN GROUP---------- (Separate Illustration)	1
12	6P7930	COVER----------	1
	6P7825	GASKET----------	1
13	3B1915	BOLT----------	10
14	1T915	BOLT----------	3

WINCH (1P8632 N/S)—Part 1 of 6

Part of 1P8628 Towing Winch Arrangement listed on Page 187

2P7020 Screen parts are shown on Page 198

WINCH (1P8632 N/S)—Part 2 of 6

Part of 1P8628 Towing Winch Arrangement listed on Page 187

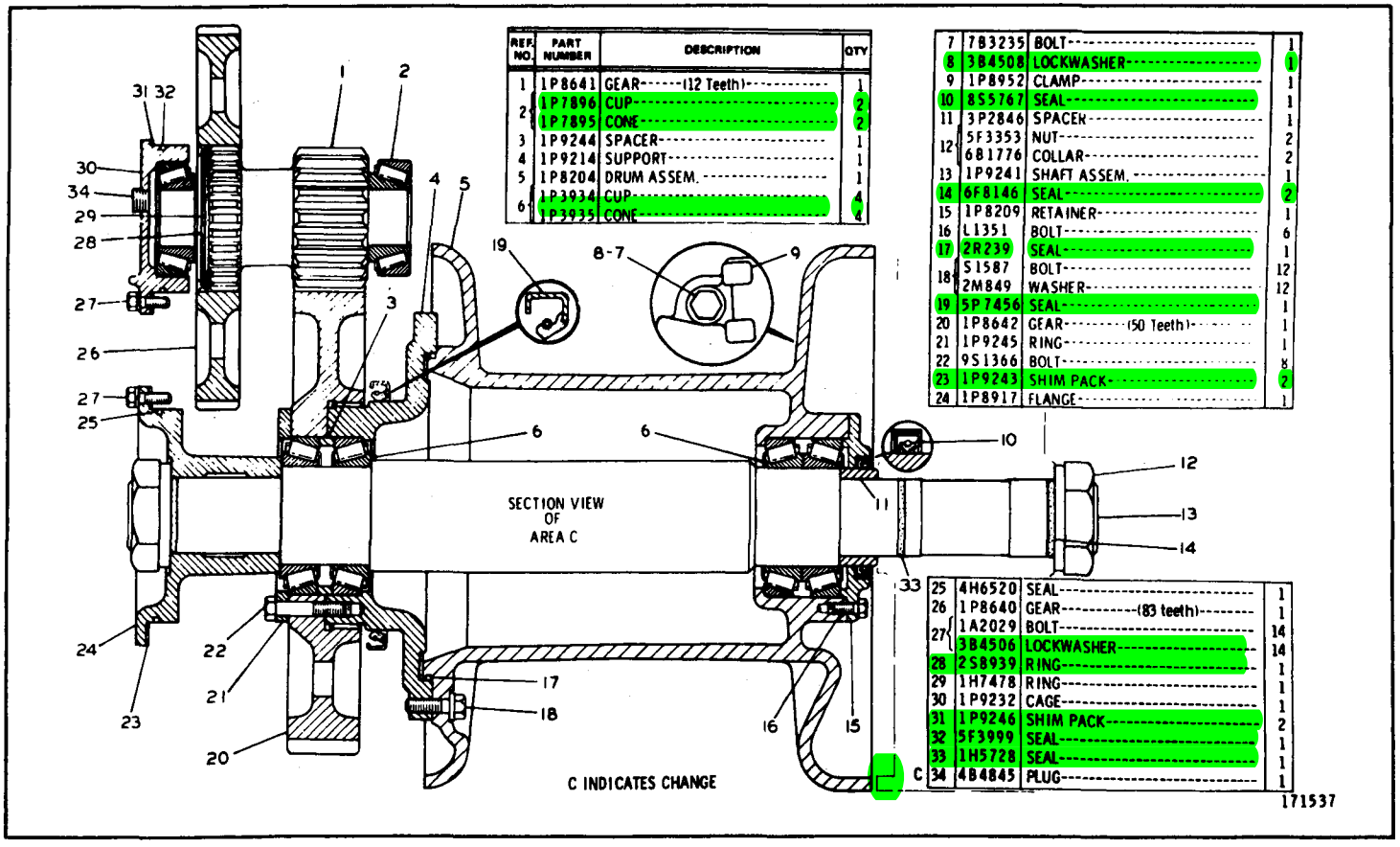

REF. NO.	PART NUMBER	DESCRIPTION	QTY
1	1P8641	GEAR------(12 Teeth)----------	1
2	1P7896	CUP----------	2
	1P7895	CONE----------	2
3	1P9244	SPACER----------	1
4	1P9214	SUPPORT----------	1
5	1P8204	DRUM ASSEM.----------	1
6	1P3934	CUP----------	4
	1P3935	CONE----------	4
7	7B3235	BOLT----------	1
8	3B4508	LOCKWASHER----------	1
9	1P8952	CLAMP----------	1
10	8S5767	SEAL----------	1
11	3P2846	SPACER----------	1
12	5F3353	NUT----------	2
	6B1776	COLLAR----------	2
13	1P9241	SHAFT ASSEM.----------	1
14	6F8146	SEAL----------	2
15	1P8209	RETAINER----------	1
16	L1351	BOLT----------	6
17	2R239	SEAL----------	1
18	S1587	BOLT----------	12
	2M849	WASHER----------	12
19	5P7456	SEAL----------	1
20	1P8642	GEAR---------(50 Teeth)----------	1
21	1P9245	RING----------	1
22	9S1366	BOLT----------	8
23	1P9243	SHIM PACK----------	2
24	1P8917	FLANGE----------	1
25	4H6520	SEAL----------	1
26	1P8640	GEAR----------(83 teeth)--------	1
27	1A2029	BOLT----------	14
	3B4506	LOCKWASHER----------	14
28	2S8939	RING----------	1
29	1H7478	RING----------	1
30	1P9232	CAGE----------	1
31	1P9246	SHIM PACK----------	2
32	5F3999	SEAL----------	1
33	1H5728	SEAL----------	1
C 34	4B4845	PLUG----------	1

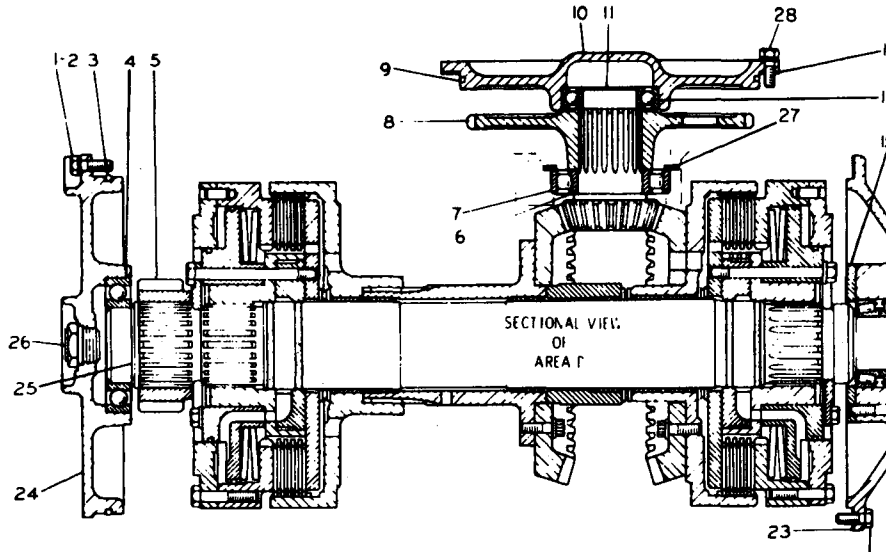

	REF. NO.	PART NUMBER	DESCRIPTION	QTY
	1	1A2029	BOLT	8
C	2	3B4506	LOCKWASHER	8
	3	2R239	SEAL	1
	4	7B7515	BEARING	1
	5	1P8639	GEAR-(25 Teeth)	1
	6	2K1738	RACE AND ROLLER ASSEM.	1
C	7	5P9066	RACE	1
	8	1P8638	GEAR-(80 Teeth)	1
	9	5H4909	SEAL	1
	10	1P6174	CAGE	1
	11	1P9251	PINION	1
C	12	S1594	BOLT	9
	13	1P6175	SHIM PACK	4
	14	1T43	BEARING	1
	15	1P4232	RETAINER	1
	16	1P5290	MANIFOLD	1
	17	9S3581	CUP	2
		9S3582	CONE	2
	18	9F7378	RING	3
	19	1P6172	SLEEVE	1
	20	S1588	BOLT	2
	21	1P6180	WASHER	4
	22	L1143	BOLT	4
	23	1P6178	SHIM PACK	2
	24	1P9247	CAGE	1
	25	1M4093	RING	1
	26	4J4742	BODY ASSEM.	1
		7M8485	SEAL	1
C	27	5M4480	RING	1
C	28	L1351	BOLT	6

C INDICATES CHANGE 171538

WINCH (1P8632 N/S)–Part 3 of 6

Part of 1P8628 Towing Winch Arrangement listed on Page 187

WINCH (1P8632 N/S)—Part 4 of 6

Part of 1P8628 Towing Winch Arrangement listed on Page 187

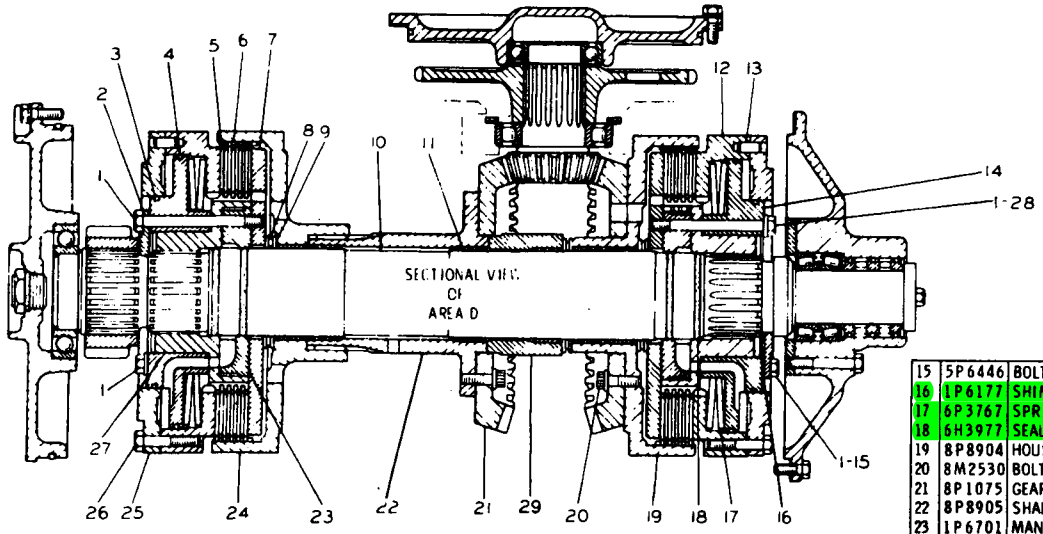

REF. NO.	PART NUMBER	DESCRIPTION	QTY
1	1A5964	BOLT-----11.43cm(4.5 in.) long	16
2	1P6176	PLATE----------	4
3	1S9497	RING----------	2
4	8S3371	RING----------	2
5	2P4371	DISC ASSEM.----------	10
6	2P4370	PLATE----------	8
7	1P6167	PLATE----------	2
8	1P6070	BEARING----------	3
9	1P6071	RACE----------	6
10	1P9248	SHAFT ASSEM.----------	1
11	2P1005	BEARING----------	6
12	1P6179	HUB ASSEM.---------- (Includes)	2
13	8B1312	DOWEL----------	2
14	1P6158	MANIFOLD----------	2
15	5P6446	BOLT-----5.08 cm(2 in.) long-----	4
16	1P6177	SHIM PACK----------	2
17	6P3767	SPRING----------	4
18	6H3977	SEAL----------	4
19	8P8904	HOUSING----------	1
20	8M2530	BOLT----------	16
21	8P1075	GEAR---------(51 Teeth)---------	2
22	8P8905	SHAFT----------	1
23	1P6701	MANIFOLD----------	2
24	1P8662	HOUSING----------	1
25	1P6153	PLATE----------	2
26	S1590	BOLT----------	16
27	1P8651	HUB----------	2
28	5M2894	WASHER----------	4
29	8P8906	SPACER----------	1

171539

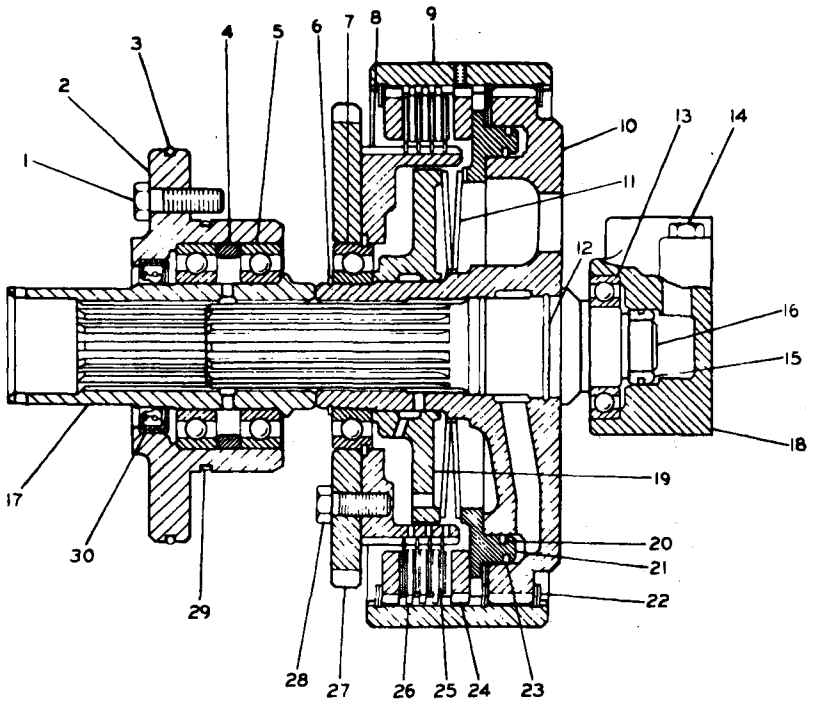

SECTIONAL VIEW OF AREA E

REF. NO.	PART NUMBER	DESCRIPTION	QTY.
1	S1588	BOLT	4
2	1P8644	CAGE	1
3	6F4718	SEAL	1
4	1P9257	SPACER	1
5	9M1997	BEARING	1
6	4K4284	RING	1
7	3K526	BEARING	1
8	1P8661	HUB	1
9	8P2670	GEAR-(70 teeth)	1
10	6P7828	HOUSING	1
11	1P9258	SPRING	2
12	6J2419	SEAL	2
13	2S3029	BEARING	1
14	4F9351	BOLT	3
15	2P3672	CARRIER	1
	1P9252	RING	1
16	6P7827	SHAFT	1
17	1P8663	COUPLING	1
18	6P7826	CAGE	1
19	1P7543	HOUSING	1
20	1P9261	RING	1
21	1P7542	PISTON	1
22	1P9254	RING	3
23	1P9260	RING	1
24	1P7544	PLATE	2
25	2P3719	DISC ASSEM.	4
26	1P9256	PLATE	3
27	1P8637	GEAR-(63 teeth)	1
28	S1594	BOLT	8
29	1H6227	SEAL	1
30	7H7107	SEAL	1

171540

WINCH (1P8632 N/S)—Part 5 of 6

Part of 1P8628 Towing Winch Arrangement listed on Page 187

WINCH (1P8632 N/S)—Part 6 of 6

Part of 1P8628 Towing Winch Arrangement listed on Page 187

2P5830 Filter parts are shown on Page 198

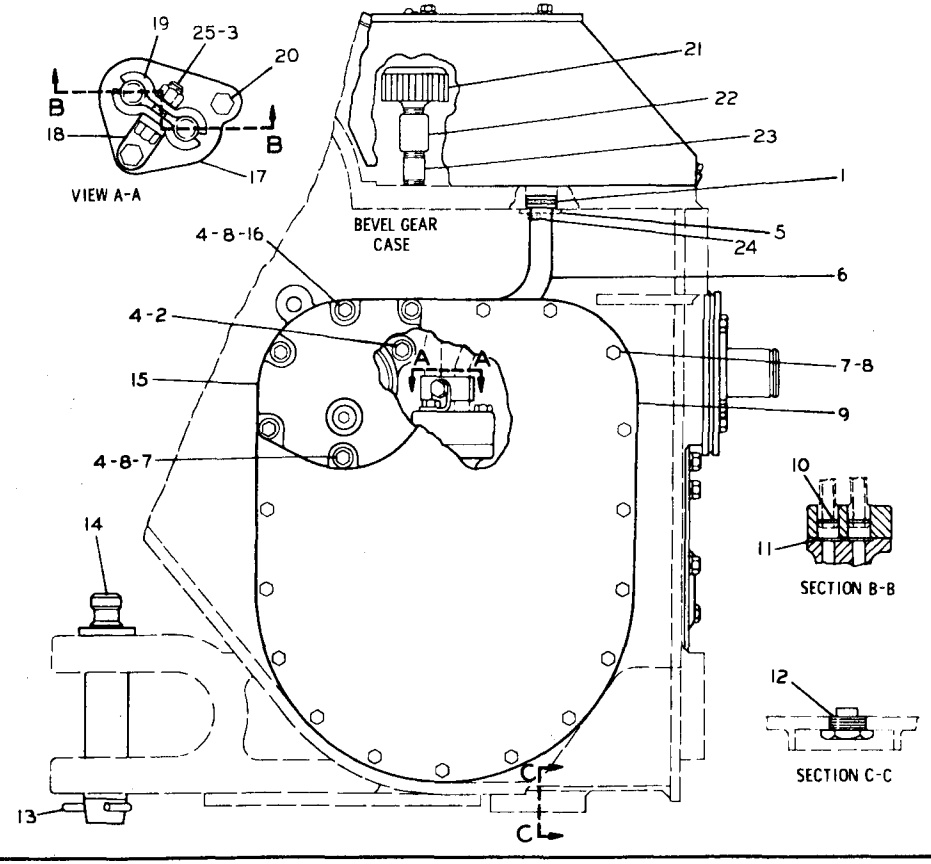

C	REF. NO.	PART NUMBER	DESCRIPTION	QTY.
	1	4F8946	SEAL	2
	2	S1594	BOLT	2
C	3	2L6267	LOCKNUT	1
	4	4B4278	WASHER	9
	5	6P8678	PLATE	1
	6	2P5853	TUBE ASSEM.	1
C	7	S1588	BOLT	17
	8	3B4506	LOCKWASHER	21
	9	2P5738	COVER ASSEM.	1
		2P3637	GASKET	1
	10	4J5351	SEAL	2
	11	5H2767	SEAL	2
	12	2D8390	PLUG	1
		6F4868	GASKET	1
	13	3B5319	COTTER PIN	1
	14	7F9541	PIN ASSEM.	1
		7F9543	COLLAR	1
	15	2P5830	FILTER GROUP	1
			(Separate Illustration)	
		6F3999	SEAL	1
	16	2A4639	BOLT	4
	17	2P1053	FLANGE	1
	18	2P4438	BRACKET	1
	19	2P4437	CLAMP	2
	20	S1590	BOLT	2
	21	8S5820	BREATHER	1
	22	3B6488	COUPLING	1
	23	3B7262	NIPPLE	1
	24	T102	BOLT	1
C	25	1A2209	BOLT	1

C INDICATES CHANGE

228833

REF. NO.	PART NUMBER	DESCRIPTION	QTY
1	8P4866	PLATE	1
2	7D4786	PLUG	1
3	8S7048	ROD END	1
4	3B4504	LOCKWASHER	1
5	6F612	NUT	2
	1A9579	BOLT	1
6	1D4716	NUT	1
	3B4505	LOCKWASHER	1
7	9M1974	WASHER	2
C 8	9G9979	CLAMP	2
9	8L8413	STRAP	2
10	1S1616	BOLT	1
	6D8554	NUT	1
11	6L7751	ROD END	1
12	1B7182	BOLT	1
13	3P2299	CABLE ASSEM.	1
14	2K4973	NUT	1
	3L9689	WASHER	1

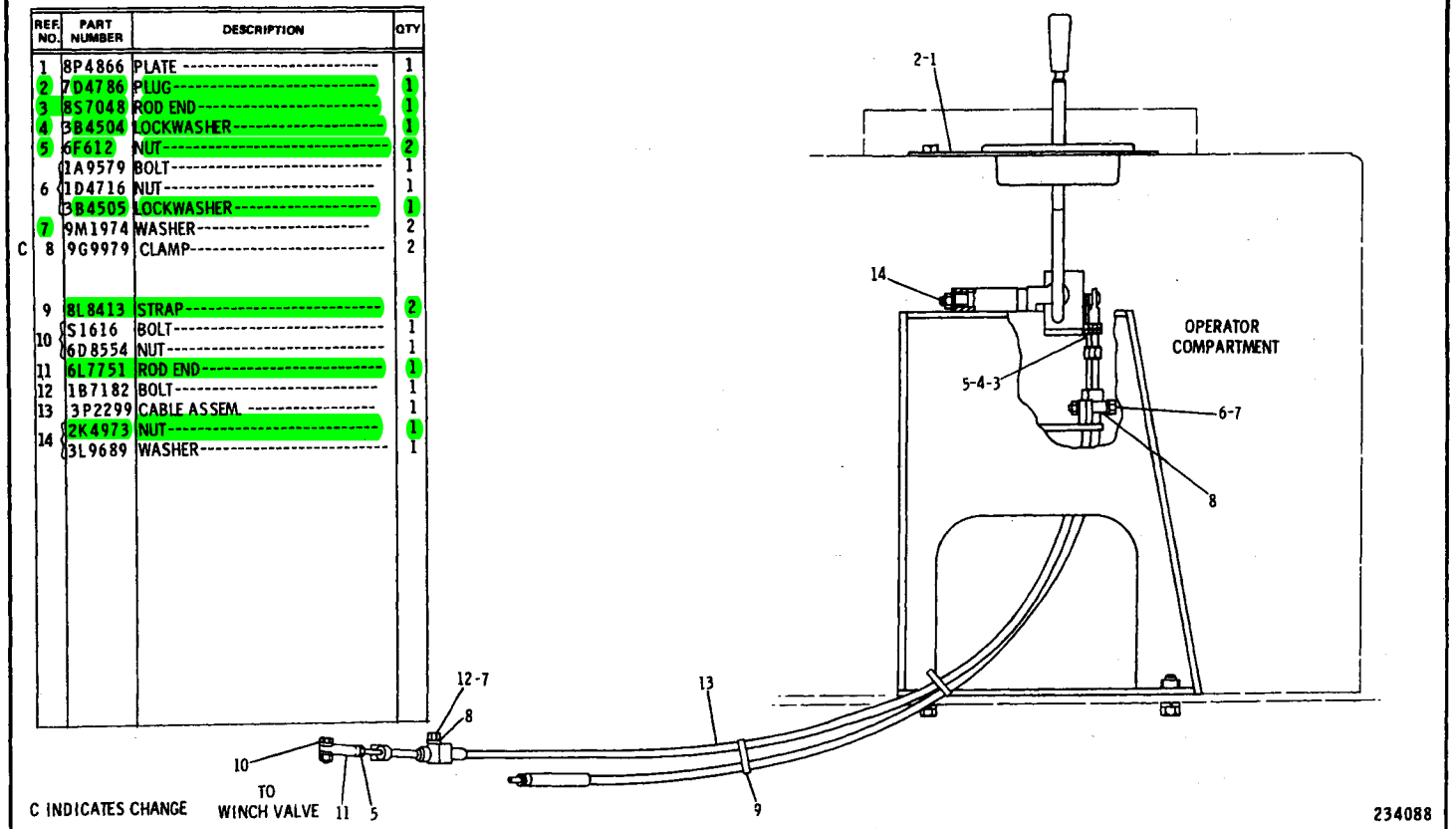

C INDICATES CHANGE

8P5694 WINCH CONTROL GROUP – Part 1 of 2

Part of 8P2321 Winch Arrangement listed on Page 187

8P5694 WINCH CONTROL GROUP—Part 2 of 2

Part of 8P2321 Winch Arrangement listed on Page 187

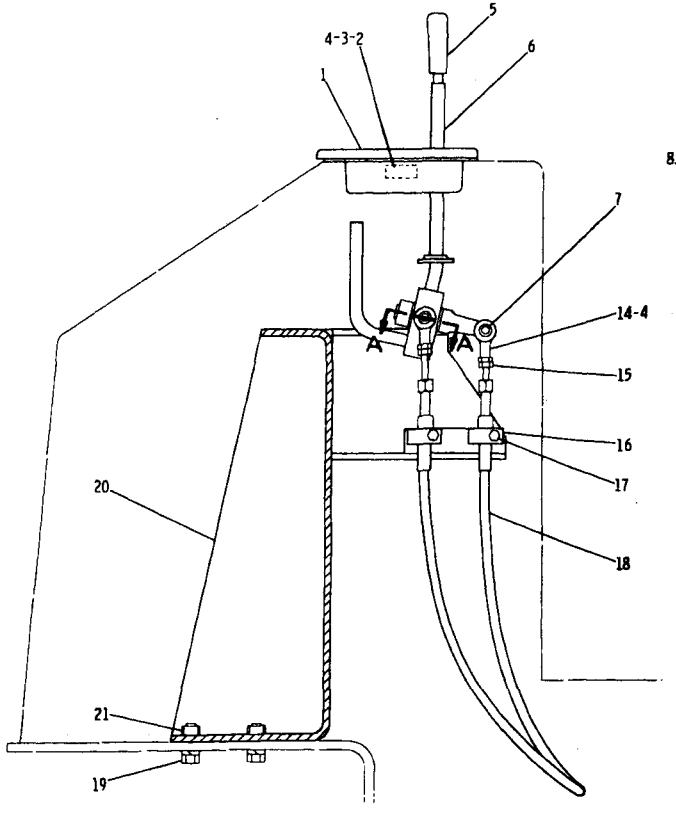

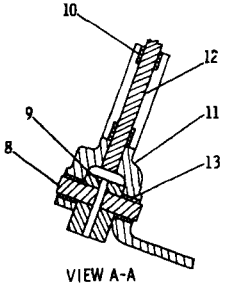

VIEW A-A

REF. NO.	PART NUMBER	DESCRIPTION	QTY
1	6P5661	GUIDE	1
	5B7431	SCREW	4
2	3P5938	SPRING	1
3	4B1284	SCREW	1
	1B4330	NUT	1
4	3B4504	LOCKWASHER	2
5	7M706	KNOB	1
6	8P4872	LEVER ASSEM.	1
7	S1597	BOLT	1
	2L9038	LOCKNUT	1
8	2P6008	SHAFT	1
9	2H2525	PIN	1
10	9H2400	BEARING	2
11	2P6001	BELLCRANK ASSEM. (Includes)	1
12	2P6009	SHAFT	1
13	9H2400	BEARING	2
14	6L7751	ROD END	1
15	6F612	NUT	1
C 16	9G9979	CLAMP	1
17	1A9579	BOLT	1
	1D4716	NUT	1
	3B4505	LOCKWASHER	1
	9M1974	WASHER	1
18	3P2300	CABLE ASSEM.	1
19	7B3235	BOLT	4
	3B4508	LOCKWASHER	4
20	8P5007	SUPPORT ASSEM. (Includes)	1
21	1F748	NUT----------(weld)----------	4

C INDICATES CHANGE

234089

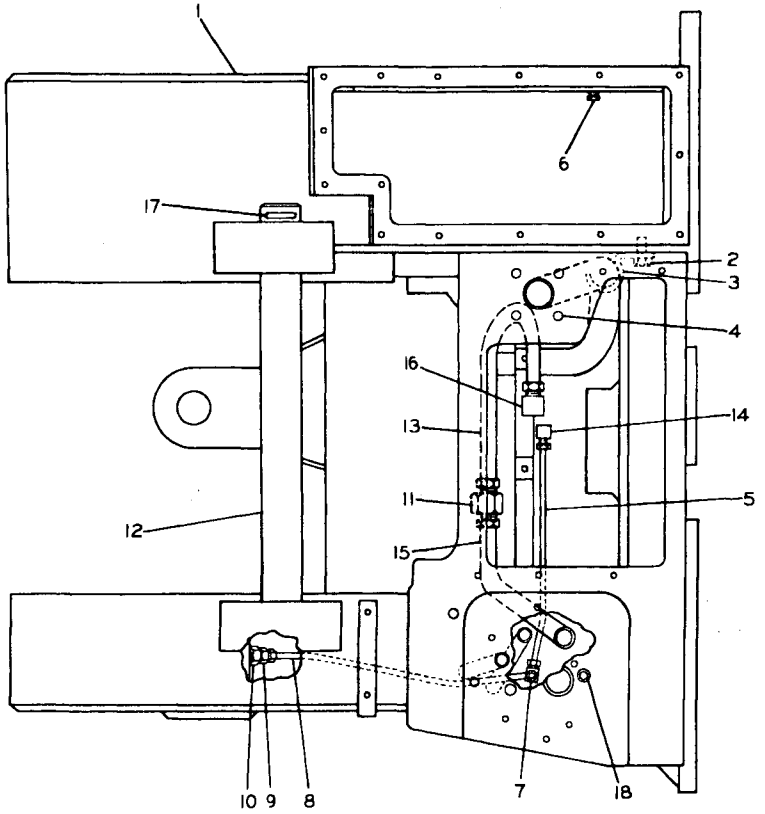

REF. NO.	PART NUMBER	DESCRIPTION	QTY
1	8P1504	CASE ASSEM. (Includes)	1
2	T102	BOLT	1
	4B4278	WASHER	1
3	2P3572	CLAMP	1
4	2M1538	STUD	4
5	6P7820	TUBE ASSEM.	1
6	5M6214	PLUG	1
7	9L9045	TEE	1
8	1P9279	TUBE ASSEM.	1
9	5K9239	CONNECTOR	1
10	2P4439	ADAPTER	1
11	5K9249	UNION	1
12	1P9265	SHAFT	1
13	8P7623	TUBE ASSEM.	1
14	5K9243	ELBOW	1
15	8P7622	TUBE ASSEM.	1
	7F8607	SEAL	1
C 16	5K9240	ELBOW	1
17	3B5325	COTTER PIN	2
18	9F2247	PLUG	1

C INDICATES CHANGE

180586

CABLE GUIDE AND CASE (8P1506 N/S)

Part of 1P8628 Towing Winch Arrangement listed on Page 187

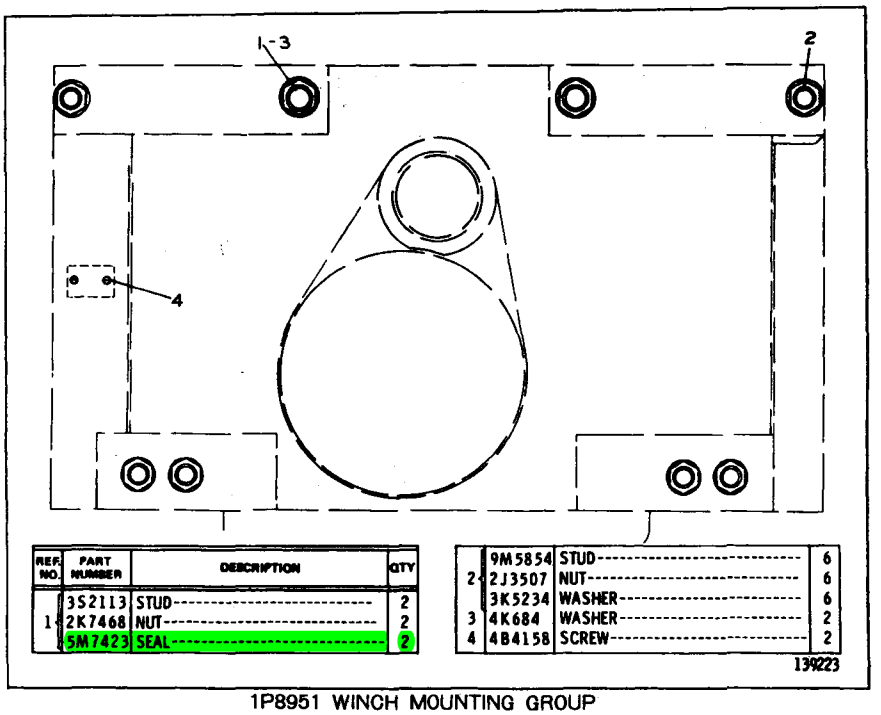

REF. NO.	PART NUMBER	DESCRIPTION	QTY
1	3S2113	STUD	2
	2K7468	NUT	2
	5M7423	SEAL	2
2	9M5854	STUD	6
	2J3507	NUT	6
	3K5234	WASHER	6
3	4K684	WASHER	2
4	4B4158	SCREW	2

139223

1P8951 WINCH MOUNTING GROUP

Part of 8P2321 Winch Arrangement listed on Page 187

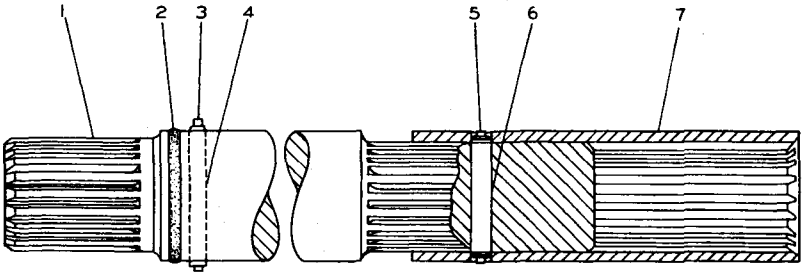

REF. NO.	PART NUMBER	DESCRIPTION	QTY
1	1P9299	SHAFT	1
2	6J2419	SEAL	1
3	1M7914	RING	1
4	1C1416	PIN	1
5	3B1224	RING	1
6	L2124	PIN	1
7	8B1189	COUPLING	1

114099

1P8916 WINCH DRIVE GROUP

Part of 8P2321 Winch Arrangement listed on Page 187

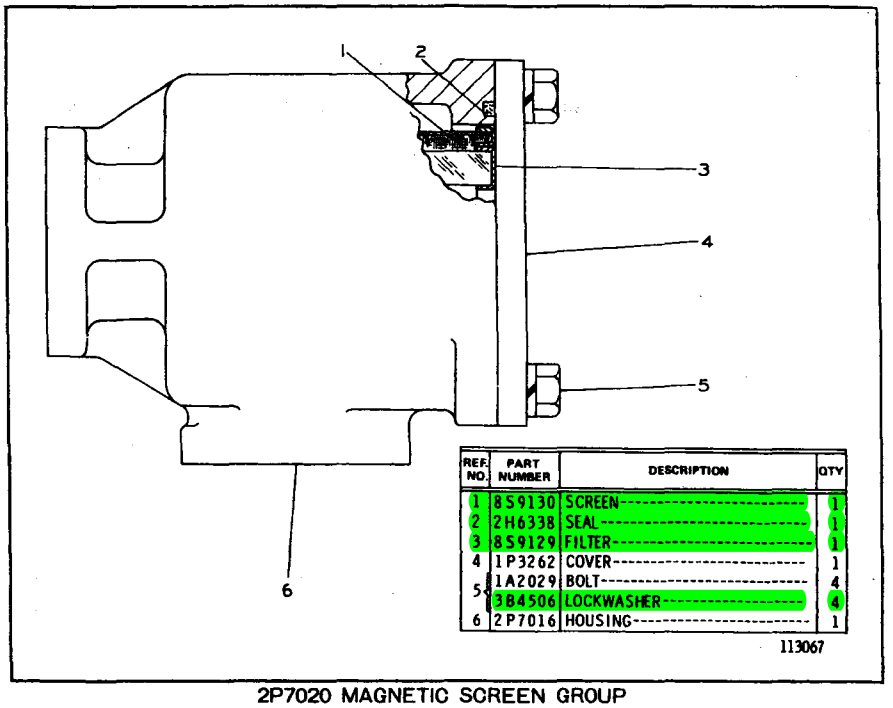

REF. NO.	PART NUMBER	DESCRIPTION	QTY
1	8S9130	SCREEN	1
2	2H6338	SEAL	1
3	8S9129	FILTER	1
4	1P3262	COVER	1
5	1A2029	BOLT	4
	3B4506	LOCKWASHER	4
6	2P7016	HOUSING	1

113067

2P7020 MAGNETIC SCREEN GROUP

Part of Winch Shown on Page 188

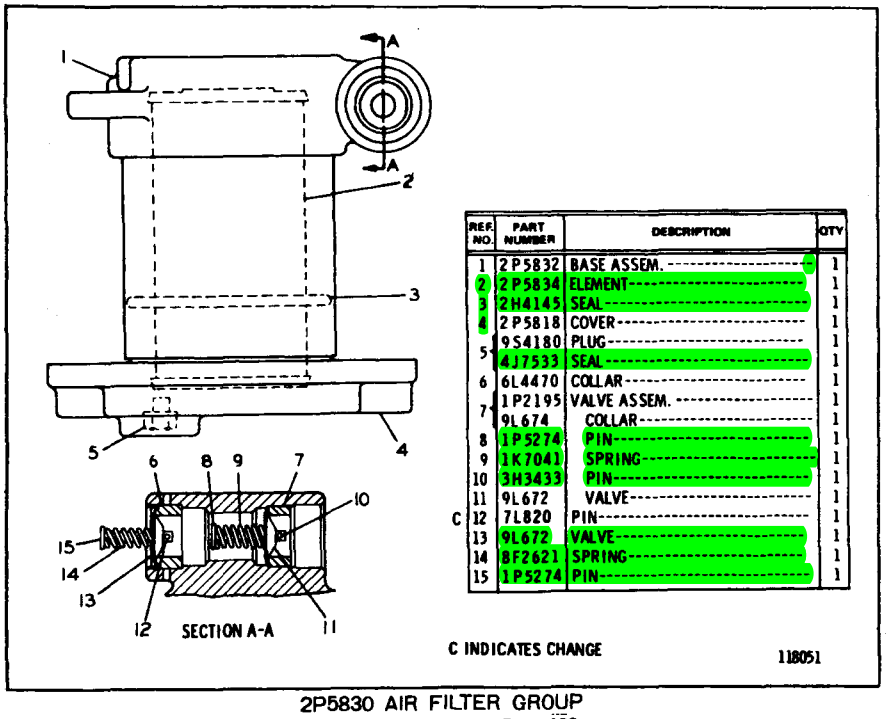

REF. NO.	PART NUMBER	DESCRIPTION	QTY
1	2P5832	BASE ASSEM.	1
2	2P5834	ELEMENT	1
3	2H4145	SEAL	1
4	2P5818	COVER	1
5	9S4180	PLUG	1
	4J7533	SEAL	1
6	6L4470	COLLAR	1
7	1P2195	VALVE ASSEM.	1
	9L674	COLLAR	1
8	1P5274	PIN	1
9	1K7041	SPRING	1
10	3H3433	PIN	1
11	9L672	VALVE	1
C 12	7L820	PIN	1
13	9L672	VALVE	1
14	8F2621	SPRING	1
15	1P5274	PIN	1

C INDICATES CHANGE

118051

2P5830 AIR FILTER GROUP

Part of Winch shown on Page 193

SEAT AND SUPPORT (9G5920 N/S)—Part 1 of 3

Effective with Serial No. 6HC1—UP

NO.	PART NO. 部品番号	QTY. 数量	DESCRIPTION 名称および記事
1	5V8309	1	STRIKER ASSEM.
2	1D4717	5	NUT
	5M2894	5	WASHER
3	6V2715	1	LATCH ASSEM.
	5P8500	1	KEY
4	8D7712	4	SCREW
	9S5937	4	NUT
5	1D4676	4	BOLT
6	V0375	2	BOLT
7	5P8245	6	WASHER
▲ 8	6P8310		SEAL---0.6M
▲ 9	5P5637	5	SEAL---0.18M
▲ 10	5P5637		SEAL---0.13M
▲ 11	5P5637		SEAL---0.12M
12	9M5733	1	RIVET
13	5P7957	1	LANYARD
▲ 14	5P5637		SEAL---0.29M
▲ 15	6P5637		SEAL---0.31M
16	9G5900	1	SUPPORT ASSEM.
	9F6445	7	NUT(WELD)
	8P2491	9	NUT(WELD)
	9F2978	65	NUT(WELD)
17	7B3235	4	BOLT
18	9G7190	6	PLATE
C 19	3T0408	1	COVER
20	9G5957	1	DOOR ASSEM.
C 21	S0509	9	BOLT
	5P1075	9	WASHER

● NOT PART OF SEAT SUPPORT

▲ ORDER BY THE M

C INDICATES CHANGE

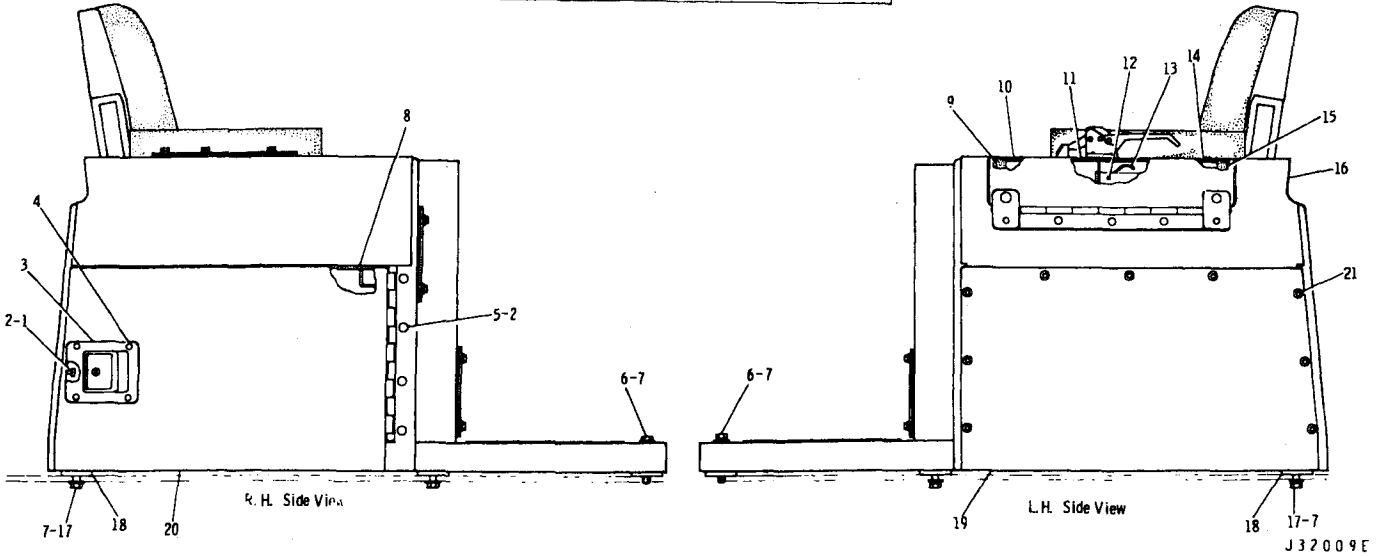

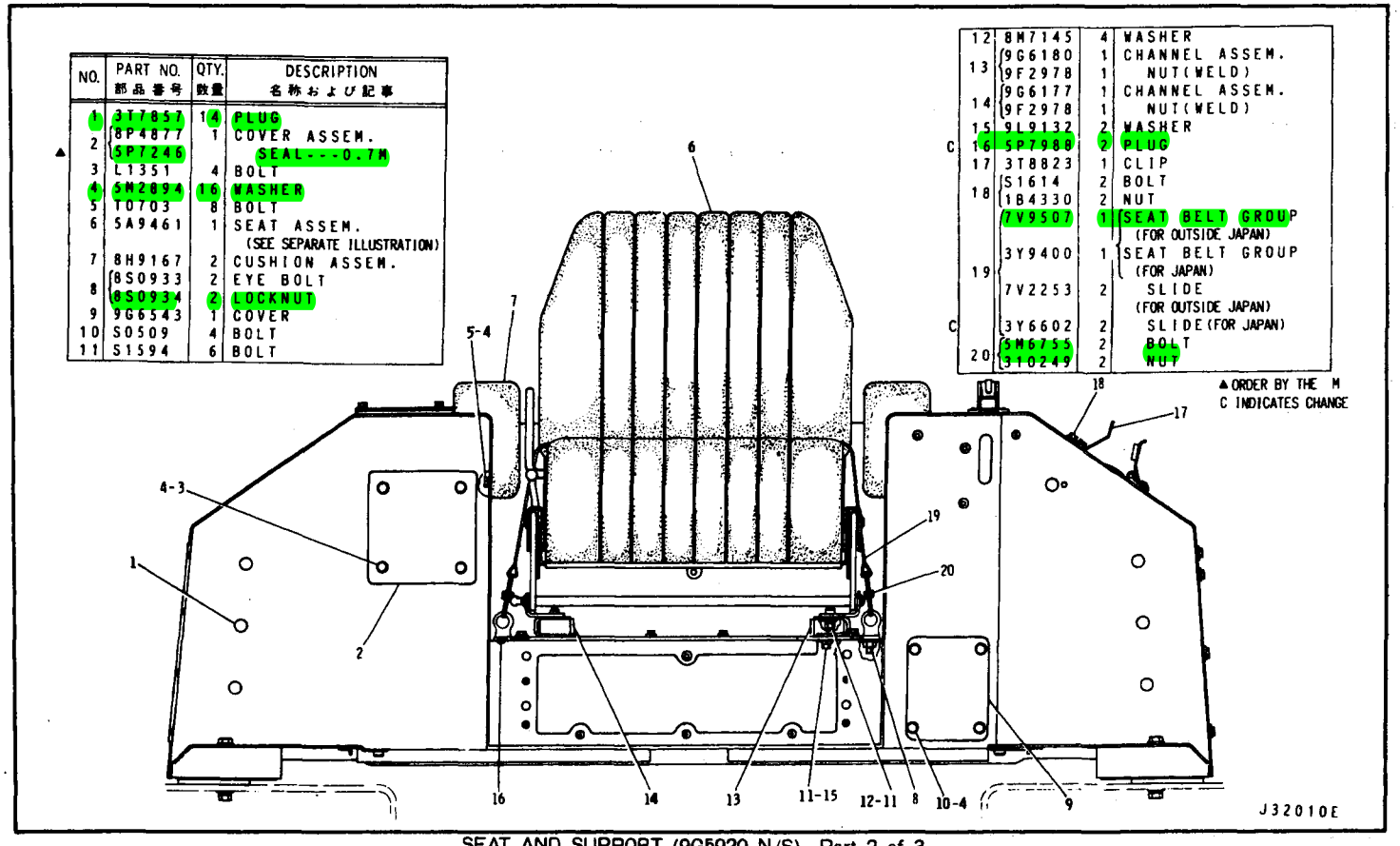

NO.	PART NO. 部品番号	QTY. 数量	DESCRIPTION 名称および記事
1	3T7857	14	PLUG
2	8P4877	1	COVER ASSEM.
▲	5P7246		SEAL---0.7M
3	L1351	4	BOLT
4	5M2894	16	WASHER
5	T0703	8	BOLT
6	5A9461	1	SEAT ASSEM. (SEE SEPARATE ILLUSTRATION)
7	8H9167	2	CUSHION ASSEM.
8	8S0933	2	EYE BOLT
	8S0934	2	LOCKNUT
9	9G6543	1	COVER
10	S0509	4	BOLT
11	S1594	6	BOLT
12	8M7145	4	WASHER
13	9G6180	1	CHANNEL ASSEM.
	9F2978	1	NUT(WELD)
14	9G6177	1	CHANNEL ASSEM.
	9F2978	1	NUT(WELD)
15	9L9132	2	WASHER
C 16	5P7988	2	PLUG
17	3T8823	1	CLIP
18	S1614	2	BOLT
	1B4330	2	NUT
	7V9507	1	SEAT BELT GROUP (FOR OUTSIDE JAPAN)
19	3Y9400	1	SEAT BELT GROUP (FOR JAPAN)
	7V2253	2	SLIDE (FOR OUTSIDE JAPAN)
C	3Y6602	2	SLIDE(FOR JAPAN)
20	5M6755	2	BOLT
	3T0249	2	NUT

▲ORDER BY THE M
C INDICATES CHANGE

SEAT AND SUPPORT (9G5920 N/S)–Part 2 of 3

Effective with Serial No. 6HC1–UP

5A9461 Seat parts are shown on Page 202

SEAT AND SUPPORT (9G5920 N/S)—Part 3 of 3

Effective with Serial No. 6HC1—UP

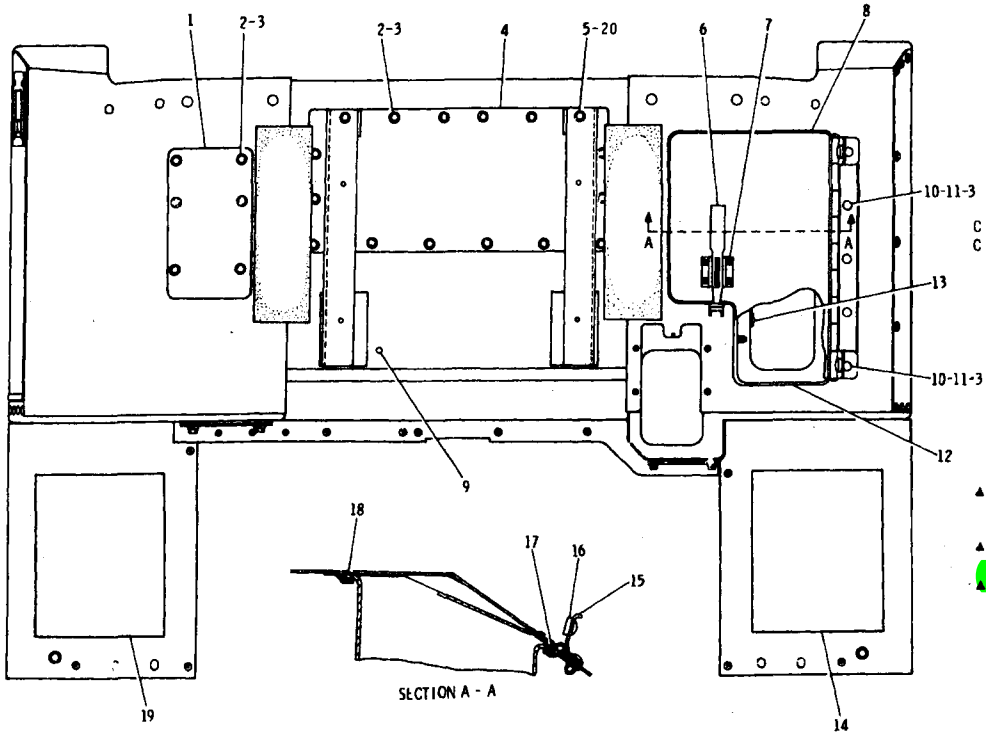

NO.	PART NO. 部品番号	QTY. 数量	DESCRIPTION 名称および記事
1	8P4824	1	COVER
	8P4825	1	SEAL
C 2	S1594	20	BOLT
C 3	SM2894	25	WASHER
4	9G5954	1	PLATE
	9G5953	1	SEAL
5	S1590	2	BOLT
6	9G6264	1	LATCH ASSEM.
7	6V2370	4	RIVET
8	9G5951	1	DOOR ASSEM.
9	5P7988	1	PLUG
10	1D4676	5	BOLT
11	1D4717	5	NUT
12	9G5974	1	TRAY ASSEM.
	3B4615	1	COTTER PIN
13	8D9558	4	RIVET
▲ 14	5P5897		COATING---0.25M
15	3T8824	2	BRACKET
16	9M5884	2	BUMPER
▲ 17	5P5637		SEAL---0.44M
18	3T8852	1	SEAL
▲ 19	5P5897		COATING---0.25M
20	9L9132	2	WASHER
	4B4278	2	WASHER

▲ ORDER BY THE m

C Indicates Change

J32011E

C Indicates Change

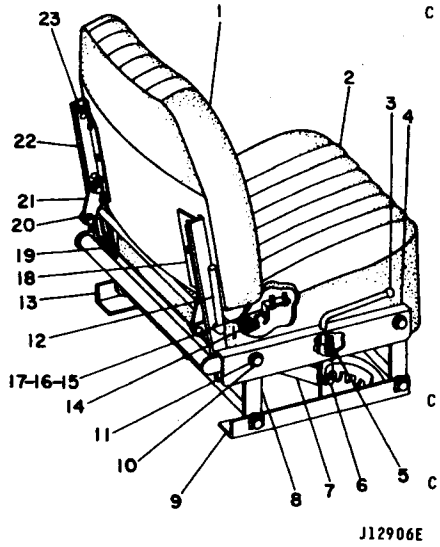

	REF. NO.	PART NUMBER	DESCRIPTION	QTY.
C	1	3Y4429	CUSHION ASSEM.	1
	2	3Y42	CUSHION ASSEM.	1
C	3	7S5380	KNOB	1
	4	3Y53	FRAME ASSEM.	1
		3Y590	FRAME ASSEM.	1
	5	3Y547	SPRING	1
	6	7S5757	RING	2
		4B4280	WASHER	2
	7	3Y595	LEVER ASSEM.	1
	8	3Y592	LEVER ASSEM.	2
	9	3Y593	ANGLE ASSEM. (R.H.)	1
	10	3Y596	PIN	4
	11	3Y51	RING	8
	12	3Y597	LINK ASSEM.	1
	13	3Y594	ANGLE ASSEM. (L.H.)	1
	14	3Y56	SPRING	1
	15	3Y55	BRACKET	1
	16	S1617	BOLT	12
		3B4505	LOCKWASHER	12
	17	4B4277	WASHER	2
C	18	3Y4427	BRACKET ASSEM. (R.H.)	1
	19	3Y52	SPRING	2
	20	7S5757	RING	4
	21	3Y50	LINK	2
C	22	3Y4428	BRACKET ASSEM. (L.H.)	1
	23	3Y49	ROLLER	4

5A9461 SEAT ASSEMBLY

Effective with Serial No. 6HC1—UP

Part of Seat and Support shown on Page 200

NO.	PART NO. 部品番号	DESCRIPTION 名称および記事	QTY. 数量
1	3Y4854	SEAT GROUP (See Separate Illustration)	1
2	9G6178	BRACKET ASSEM. (L. H.)	1
	9F2978	NUT (Weld)	1
3	9G6179	BRACKET ASSEM. (R. H.)	1
	9F2978	NUT (Weld)	1
4	1D4717	NUT	4
5	5M2894	WASHER	8
6	S1594	BOLT	4
7	7V9506	BELT GROUP (See Separate Illustration)	1

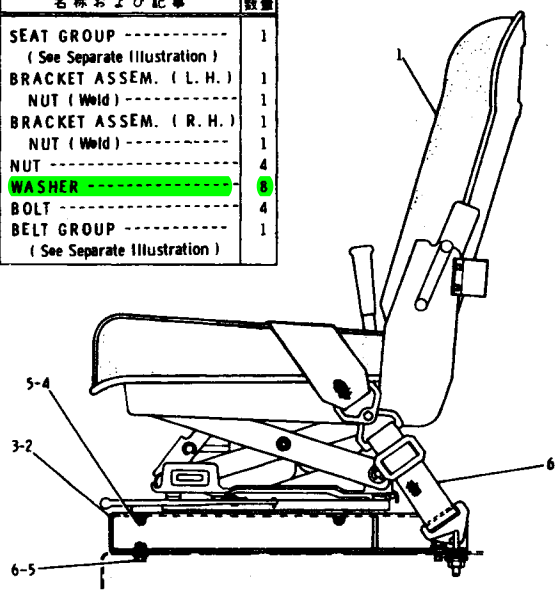

SUSPENSION SEAT (9G9931 N/S)

3Y4854 Seat and 7V9506 Seat Belt parts are shown on Pages 203 and 205

AN ATTACHMENT

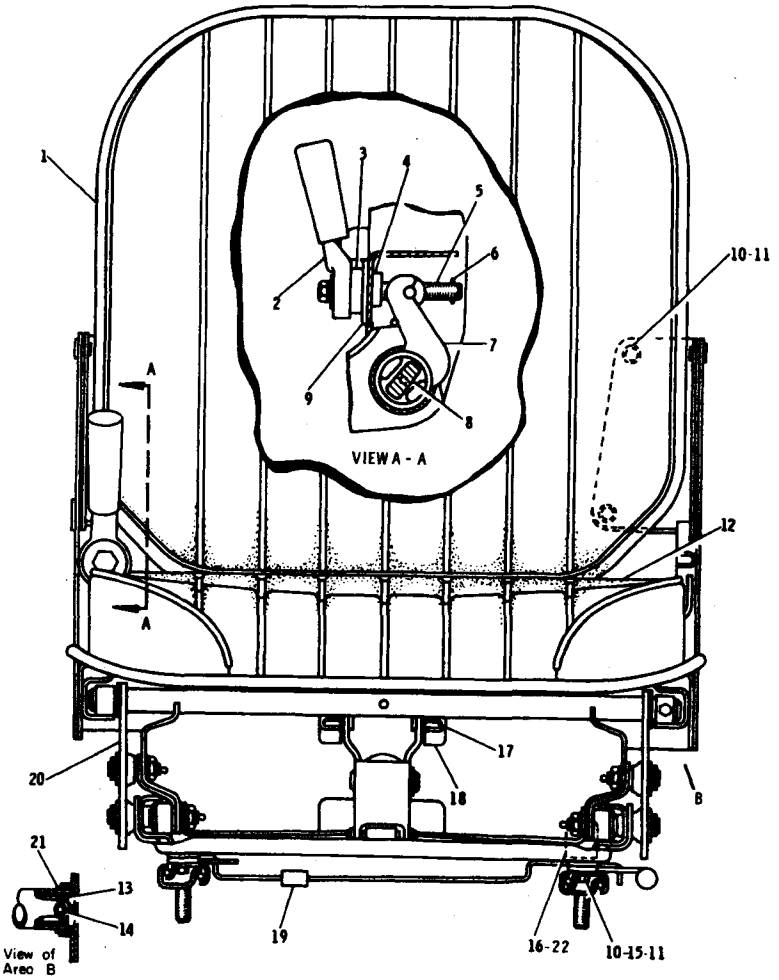

REF. NO.	PART NUMBER	DESCRIPTION	QTY.
1	8S168	CUSHION ASSEM.	1
2	1V757	LEVER ASSEM.	1
3	7S9391	BEARING	1
4	7S7800	WASHER	1
5	7S7801	PIN	1
6	3K4897	PIN	1
7	7S7804	YOKE	1
8	7S9305	BAR SET	1
C 9	4V4860	BRACKET	1
10	4B1328	SCREW	8
C 11	3B4505	LOCKWASHER	8
12	7S7791	CUSHION ASSEM.	1
13	7S7805	RETAINER	1
14	7S7799	FITTING	2
15	1D4716	NUT	4

REF. NO.	PART NUMBER	DESCRIPTION	QTY.
C 16	7V5138	BUMPER	2
C	314155	NUT	2
17	7S7793	BEARING	2
18	7S7789	BUMPER	2
19	3V268	CLIP	1
20	2V7961	SUSPENSION ASSEM. (See Separate Illustration)	1
21	8S4346	BEARING (L.H.)	1
	8S4345	BEARING (R.H.)	1
C 22	3K4910	SCREW	2
		The Following Repair Kit are Available	
	8K7223	KIT (Seat Adjuster) (Includes 2 Adjuster assem. and Latch Wire)	1

C Indicates Change

J19472E

3Y4854 SEAT GROUP
Part of Suspension Seat
2V7961 Suspension parts are shown on Page 204
AN ATTACHMENT

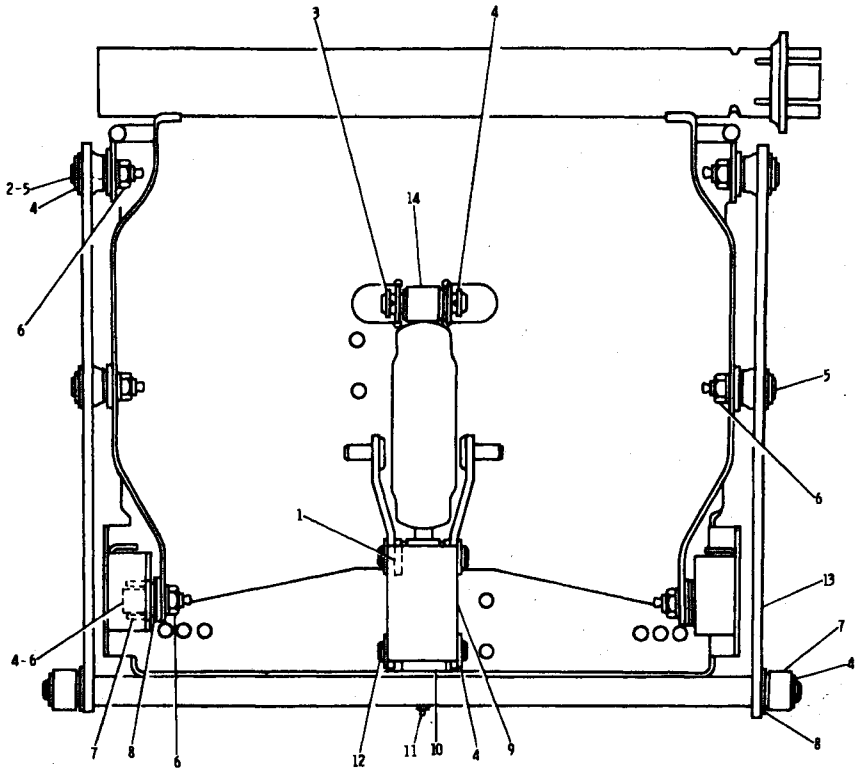

NO.	PART NO. 部品番号	QTY. 数量	DESCRIPTION 名称および記事
1	3Y5626	4	WASHER
2	8V3607	4	BEARING
3	3Y7012	1	SHAFT
4	7S5757	12	RING
5	7S9867	6	STUD
6	3N3182	6	LOCKNUT
7	7S9866	4	BEARING ASSEM.
8	7S9884	4	WASHER
9	7S9873	1	BEARING ASSEM.
10	7S9869	2	BEARING
11	7S9868	1	FITTING
12	7S9870	1	SHAFT
13	8V3605	1	LEVER ASSEM.
14	3K4787	4	BEARING
			THE FOLLOWING KIT ARE AVAILABLE:
	7S4339		KIT (SHOCK ABSORBER) (INCLUDES SHAFT & SHOCK ABSORBER ASSEM.)

2V7961 SUSPENSION ASSEMBLY
Part of 3Y4854 Seat Group
AN ATTACHMENT

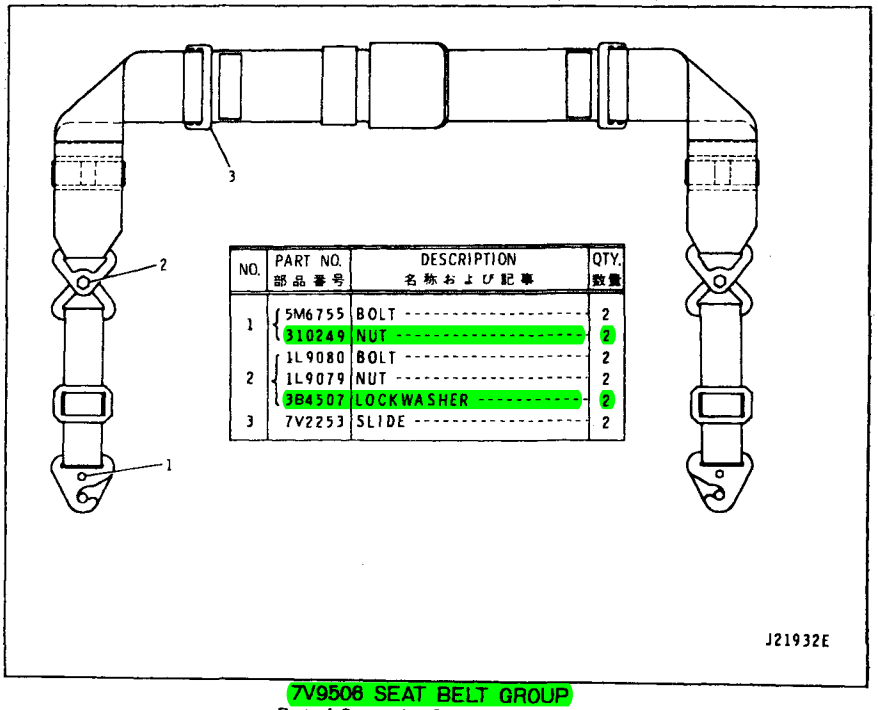

NO.	PART NO. 部品番号	DESCRIPTION 名称および記事	QTY. 数量
1	5M6755	BOLT	2
	310249	NUT	2
2	1L9080	BOLT	2
	1L9079	NUT	2
	3B4507	LOCKWASHER	2
3	7V2253	SLIDE	2

7V9506 SEAT BELT GROUP
Part of Suspension Seat (9G9931 N/S)
AN ATTACHMENT

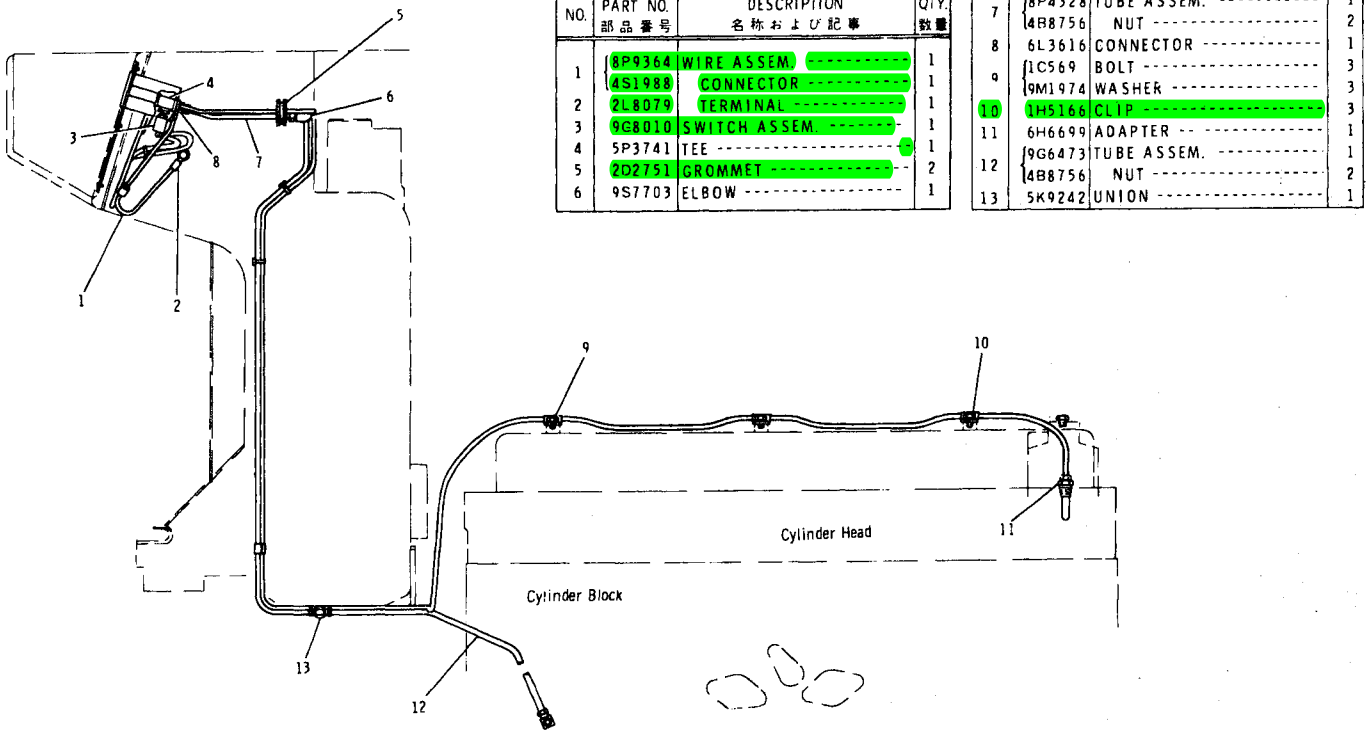

NO.	PART NO. 部品番号	DESCRIPTION 名称および記事	QTY. 数量
1	8P9364	WIRE ASSEM.	1
	4S1988	CONNECTOR	1
2	2L8079	TERMINAL	1
3	9G8010	SWITCH ASSEM.	1
4	5P3741	TEE	1
5	2D2751	GROMMET	2
6	9S7703	ELBOW	1
7	8P4328	TUBE ASSEM.	1
	4B8756	NUT	2
8	6L3616	CONNECTOR	1
9	1C569	BOLT	3
	9M1974	WASHER	3
10	1H5166	CLIP	3
11	6H6699	ADAPTER	1
12	9G6473	TUBE ASSEM.	1
	4B8756	NUT	2
13	5K9242	UNION	1

GAUGE (9G5884 N/S)—Part 1 of 2

Effective with Serial No. 6HC1—UP

GAUGE (9G5884 N/S)–Part 2 of 2

Effective with Serial No. 6HC1–UP

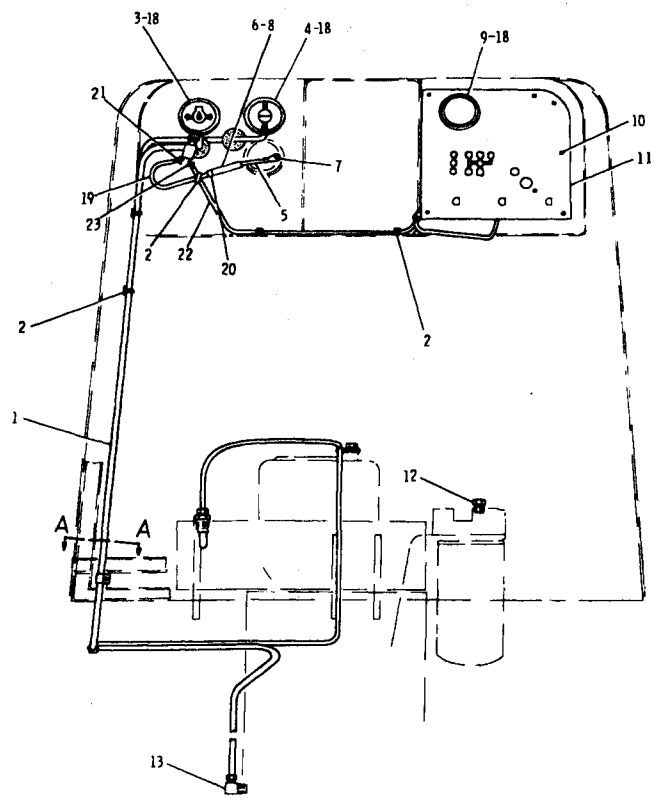

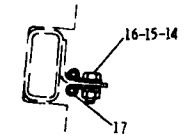

SECTION A - A

	NO.	PART NO. 部品番号	QTY. 数量	DESCRIPTION 名称および記事
	1	9G7514	1	TUBE ASSEM.
	2	6K0806	5	TIE
	3	1W0705	1	INDICATOR (OIL PRESSURE)
C	4	1W2864	1	INDICATOR (WATER TEMPERATURE)
	5	8P9365	1	WIRE ASSEM.
		2S5014	1	CONTACT
	6	2S5013	1	SPRING
		2S5011	1	BODY
	7	2L8076	1	TERMINAL
	8	2S6024	1	FUSE(5A)
C		9W1491	1	SERVICE METER
		8T0701	1	FILM
				- OR -
		8T0702	1	FILM
	9	8C5674	1	HARNESS ASSEM.
		6T6506	2	TERMINAL
		6T6505	2	HOUSING
		7K4474	1	CONNECTER
		5P4571	1	TERMINAL
	10	7B3028	6	SCREW
	11	9G3007	1	PANNEL
C	12	5M6214	1	PLUG
	13	5K9241	1	ELBOW
	14	S1615	1	BOLT
	15	3B4504	1	LOCKWASHER
	16	1B4330	1	NUT
	17	8M2771	2	CLIP
C	18	6V3507	3	SEAL
	19	6P5759	1	WIRE ASSEM.
	20	2S5012	1	CAP
		2S5014	1	CONTACT
	21	2L8076	1	TERMINAL
	22	8P4956	1	WIRE ASSEM.
		5P4571	1	TERMINAL
	23	2L8076	1	TERMINAL

C Indicates Change

J31791E

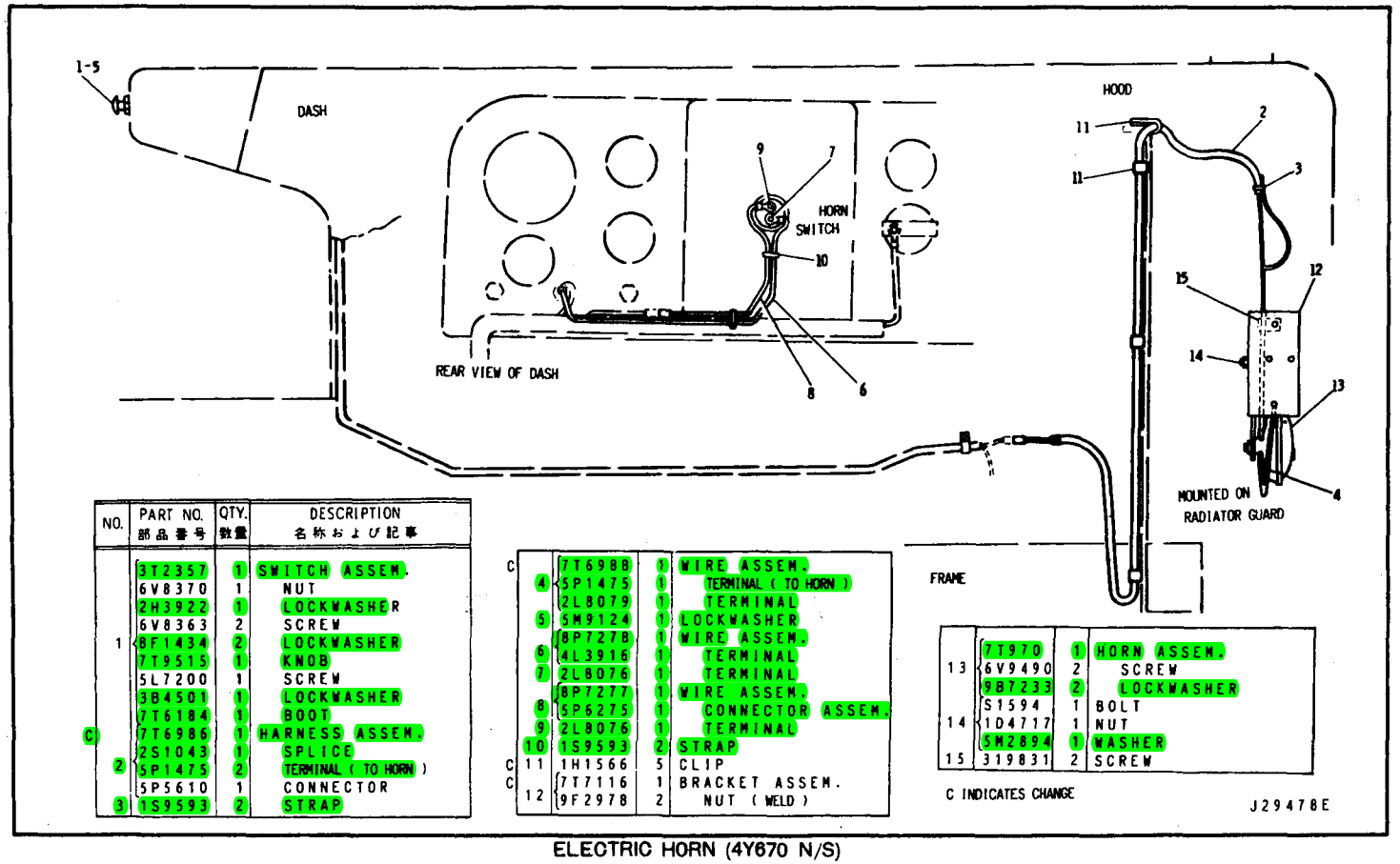

NO.	PART NO. 部品番号	QTY. 数量	DESCRIPTION 名称および記事
	3T2357	1	SWITCH ASSEM.
	6V8370	1	NUT
	2H3922	1	LOCKWASHER
	6V8363	2	SCREW
1	8F1434	2	LOCKWASHER
	7T9515	1	KNOB
	5L7200	1	SCREW
	3B4501	1	LOCKWASHER
	7T6184	1	BOOT
C	7T6986	1	HARNESS ASSEM.
	2S1043	1	SPLICE
2	5P1475	2	TERMINAL (TO HORN)
	5P5610	1	CONNECTOR
3	1S9593	2	STRAP
C	7T6988	1	WIRE ASSEM.
4	5P1475	1	TERMINAL (TO HORN)
	2L8079	1	TERMINAL
5	5M9124	1	LOCKWASHER
	8P7278	1	WIRE ASSEM.
6	4L3916	1	TERMINAL
7	2L8076	1	TERMINAL
	8P7277	1	WIRE ASSEM.
8	5P6275	1	CONNECTOR ASSEM.
9	2L8076	1	TERMINAL
10	1S9593	2	STRAP
C 11	1H1566	5	CLIP
C	7T7116	1	BRACKET ASSEM.
12	9F2978	2	NUT (WELD)
	7T970	1	HORN ASSEM.
13	6V9490	2	SCREW
	9B7233	2	LOCKWASHER
	S1594	1	BOLT
14	1D4717	1	NUT
	5M2894	1	WASHER
15	319831	2	SCREW

ELECTRIC HORN (4Y670 N/S)
Effective with Serial No. 6HC1 – UP

ROLL-OVER PROTECTIVE SYSTEM (9G6074 N/S)

Part of 3Y7720 R.O.P.S. Arrangement listed on Page 210
Mirror parts are shown on Page 219

AN ATTACHMENT

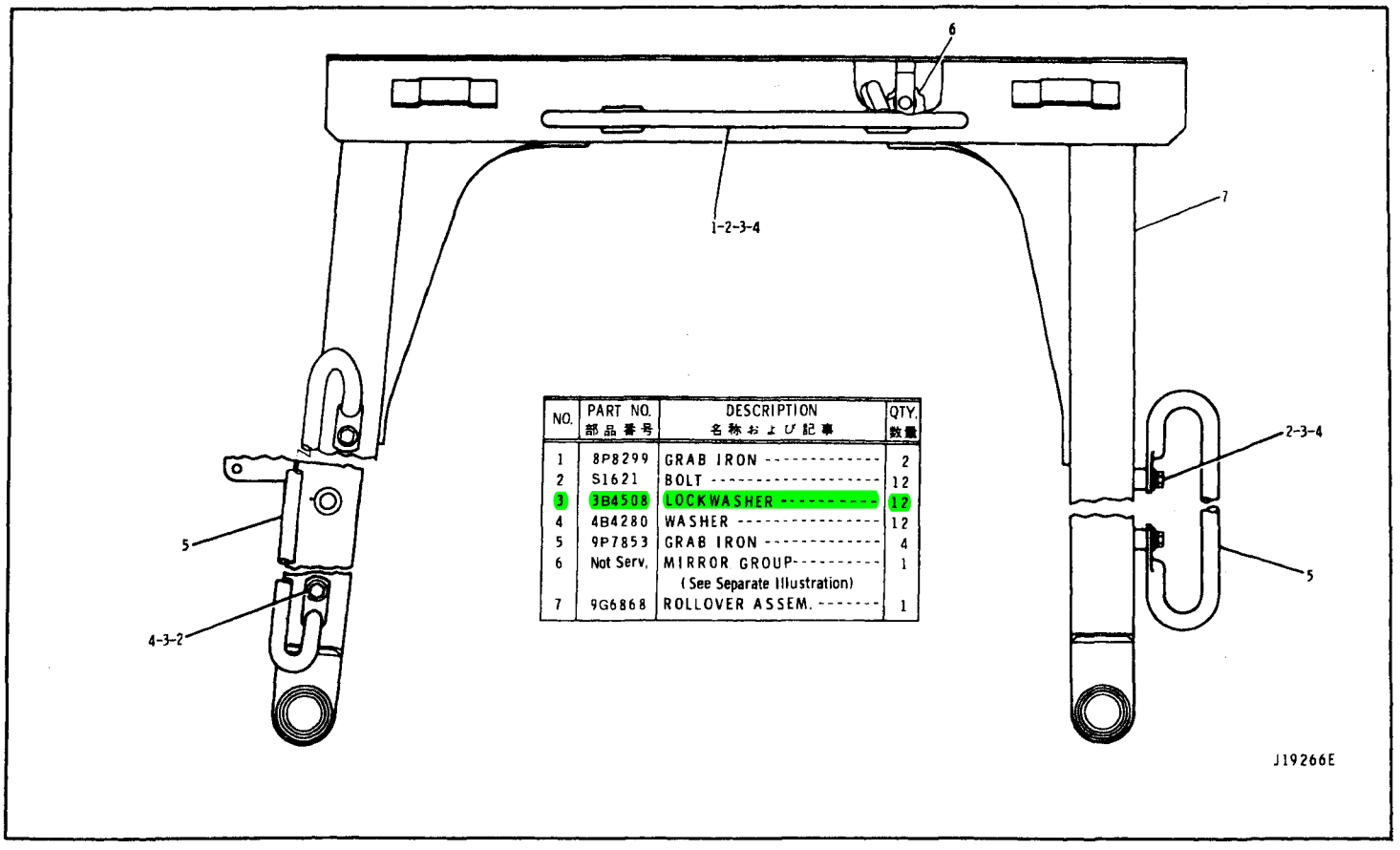

NO.	PART NO. 部品番号	DESCRIPTION 名称および記事	QTY. 数量
1	8P8299	GRAB IRON	2
2	S1621	BOLT	12
3	3B4508	LOCKWASHER	12
4	4B4280	WASHER	12
5	9P7853	GRAB IRON	4
6	Not Serv.	MIRROR GROUP (See Separate Illustration)	1
7	9G6868	ROLLOVER ASSEM.	1

Consists of:

			Page
1	9G6074	Roll-Over Protective System Group	209
1	9G6075	Roll-Over Protective System Mounting Group	121
1	6V3254	Plate	For Outside Japan
1	6V3245	Plate	For Outside Japan
6	347044	Rivet	For Outside Japan
1	3Y8401	Plate	For Japan
4	347044	Rivet	For Japan

J19268E

3Y7720 ROLL-OVER PROTECTIVE SYSTEM ARRANGEMENT – Open
Only separate parts Serviced
AN ATTACHMENT

Consists of:

			Page
1	9G7396	ROLL-OVER PROTECTIVE SYSTEM ARR.	212
1	8N1084	ALTERNATOR GROUP	72
1	9G6075	ROLL-OVER PROTECTIVE SYSTEM MOUNTING GROUP	121
1	6V3247	PLATE (For Outside Japan)	
1	6V3245	PLATE (For Outside Japan)	
6	347044	RIVET (For Outside Japan)	
1	3Y8401	PLATE (For Japan)	
4	347044	RIVET (For Japan)	
1	6P8861	PLATE ---To Winch Control Lever	
1	6P8862	PLATE ---To Winch Control Lever	
1	6P8863	PLATE ---To Bottom Of Winch Control Casting	
3	4B1282	SCREW---To Bottom Of Winch Control Casting	
1	2J7295	SPRING ---To Winch Control Lever	
2	8P3870	PLATE ---Boot To Dash	
2	8P3202	BOOT ---To Dash	
1	8P6363	PLUG ---Torque Conv. Opening On Dash (Only Direct Drive)	
1	8P6364	PLUG ---Tach. Cable Opening On Dash	
1	3P9091	BOOT ---To Ripper Linkage	
6	L1351	BOLT ---Plate – Boot To Dash	
6	3B4506	LOCKWASHER ---Plate – Boot To Dash	
2	9S3335	BULB ---To Dash	
2	5P7856	GROMMET ---To Opening For Light Wires	
1	9P7989	BOOT ---To Console (Only Power Shift)	
0.6m	5P9277	SEAL	
1	8P7624	PLATE ---To Inside Console	
3	S509	BOLT ---To Plate	
3	3B4506	LOCKWASHER ---To Plate	
2	4S6336	BUTTON---Pulg Condenser Holes	
2	S509	BOLT ---Pulg Dryer Holes	
2	1D4717	NUT---Pulg Dryer Holes	
2.6m	5P7246	SEAL ---To Floor Plate	
1	8P3547	COVER ASSEM.---To Seat Support (Only Power Shift)	
1.5m	5P7246	SEAL	
1	SMHS7631	FORM ---Installation Instruction	

J19247E

3Y8206 ROLL-OVER PROTECTIVE SYSTEM ARRANGEMENT – Enclosed
Only separate parts Serviced
AN ATTACHMENT

Consists of:

			Page
1	9G6854	Roll-Over Protective System Cab Group	213
1	8P2129	Safety Brace Group	219
1	9G6902	Cab Liner Group	218
1	9G8298	Cab Pressurizer Group	221
1	9G6897	Cab Mounting Group	216
1	7G6541	Washer & Wiper Group	226
1	9G7478	Washer Wiper Control Group	230
2	4V8015	Door Hold Back Latch Group	218
1	9P9392	Mirror Group	219
4	9P7853	Grab Iron	
8	S1621	Bolt	
8	3B4508	Lockwasher	To Grab Iron
8	4B4280	Washer	
1	9P1034	Plate—Mounted on R.O.P.S. Cab Front Upper	
5	S1614	Bolt	
5	3B4504	Lockwasher	
5	4B4276	Washer	To 9P1034 Plate
3	T102	Bolt	
3	5P1075	Washer	
2	9P1579	Cover—Mounted on R.O.P.S. Cab Ceiling Outer	
8	4F7957	Bolt	To 9P1579 Cover
8	3B4504	Lockwasher	
1	9P5053	Plate (Outer)	Mounted on R.O.P.S. Cab Rear
1	9P5052	Plate Assem (Inner)	
1	9P2639	Gasket	
2	S1594	Bolt	To 9P5053 Plate
2	3B4506	Lockwasher	
1	9P2639	Gasket	
4	S509	Bolt	To 9P5052 Plate Assem
4	3B4506	Lockwasher	

J19249E

9G7396 ROLL-OVER PROTECTIVE SYSTEM CAB ARRANGEMENT
Part of 9T8206 R.O.P.S. Arrangement listed on Page 211
Only separate parts Serviced
AN ATTACHMENT

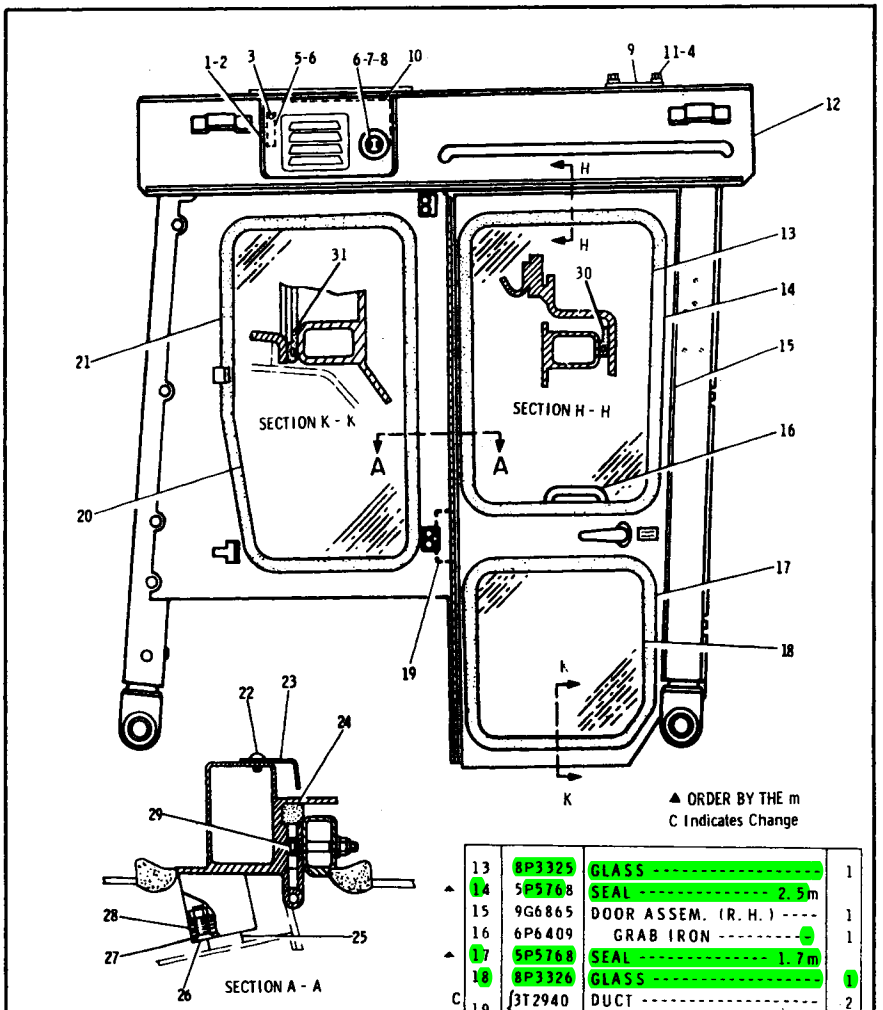

▲ ORDER BY THE m
C Indicates Change

NO.	PART NO. 部品番号	DESCRIPTION 名称および記事	QTY. 数量
C 1	3T2762	DOOR ASSEM. (L. H.)	1
C 1	3T2761	DOOR ASSEM. (R. H.)	1
C 2	618803	SHIM (Use as Required)	8
3	L1351	BOLT	4
C 3	5P1075	WASHER	4
C 4	3B4506	LOCKWASHER	2
C 5	3T2675	ARM ASSEM. (L. H.)	1
C 5	3T2676	ARM ASSEM. (R. H.)	1
C 6	3B4610	COTTER PIN	6
7	4D6082	BOLT	2
8	4B4280	WASHER	2
9	9P1811	COVER	1
▲C 10	6V2768	SEAL (Use as Required) 1.6m	
11	S509	BOLT	2
12	9G6827	CAB ASSEM.	1
13	8P3325	GLASS	1
▲ 14	5P5768	SEAL 2.5m	
15	9G6865	DOOR ASSEM. (R. H.)	1
16	6P6409	GRAB IRON	1
▲ 17	5P5768	SEAL 1.7m	
18	8P3326	GLASS	1
C 19	3T2940	DUCT	2
19	7K6536	RIVET	16
20	8P4069	GLASS	1
▲ 21	5P5768	SEAL 2.7m	
22	167150	SCREW	3
23	9G6856	ANGLE	1
▲ 24	5P5640	SEAL 2.9m	
25	9M5884	BUMPER	8
26	7D6921	SCREW	8
26	8F8052	LOCKWASHER	8
27	9P7844	PLATE	4
28	9P7846	SHIM (0.8mm Thick)	8
28	9P7845	SHIM (1.6mm Thick)	8
29	1B2713	BOLT	18
29	4B4276	WASHER	18
29	7H8909	LOCKNUT	16
29	8M2337	WASHER	16
▲ 30	5P5747	SEAL 1.3m	
▲ 31	5P5747	SEAL 0.9m	

J22852E

ROLL-OVER PROTECTIVE SYSTEM CAB (9G6854 N/S)—Type 1—Part 1 of 3
Part of 9G7396 R.O.P.S. Cab Arrangement listed on Page 212
AN ATTACHMENT

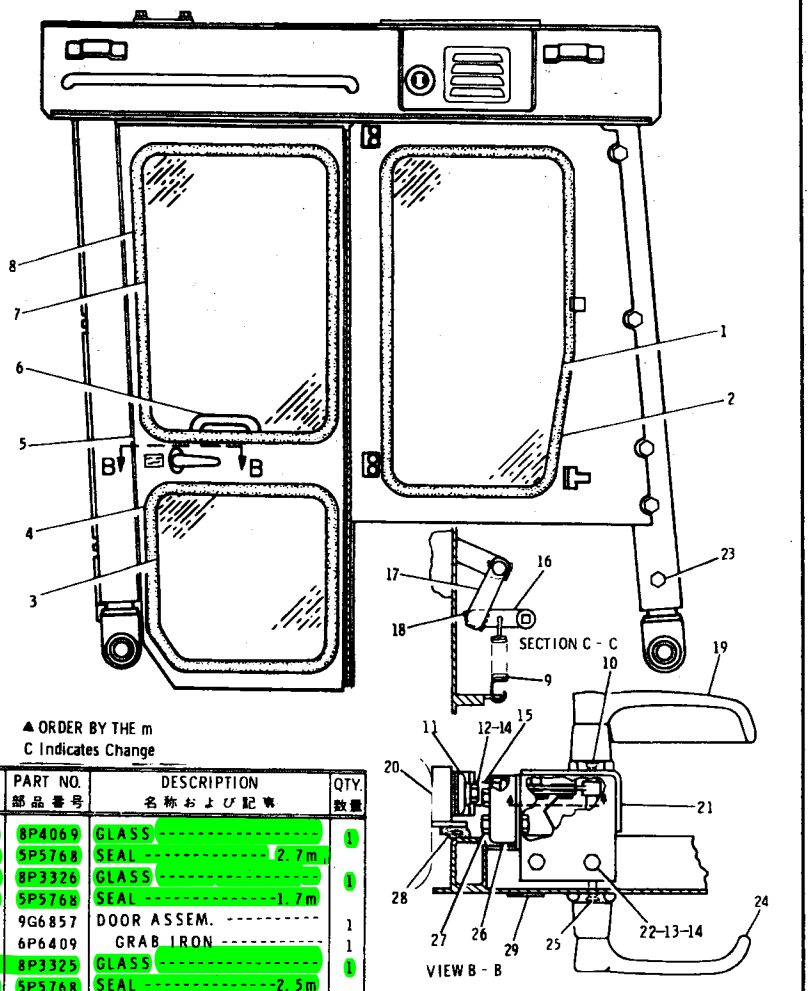

▲ ORDER BY THE m
C Indicates Change

	NO.	PART NO. 部品番号	DESCRIPTION 名称および記事	QTY. 数量
	1	8P4069	GLASS	1
▲	2	5P5768	SEAL ---------- 2.7m	
	3	8P3326	GLASS	1
▲	4	5P5768	SEAL ----------1.7m	
	5	9G6857	DOOR ASSEM.	1
	6	6P6409	GRAB IRON	1
	7	8P3325	GLASS	1
▲	8	5P5768	SEAL ----------2.5m	
	9	4H3521	SPRING	2
C	10	4M190	SCREW	4
	11	9P1145	PLATE	2
		9P1200	SHIM (1.9mm Thick)	6
C	12	4F7957	BOLT	4
		9N869	WASHER	4
	13	4B4276	WASHER	6
	14	3B4504	LOCKWASHER	10
	15	6V1155	STRIKER	2
	16	9P436	LEVER ASSEM.	2
	17	9P6894	LEVER	2
	18	9P6895	PIN	4
		3B5311	COTTER PIN	4
	19	6V1637	HANDLE ASSEM.	2
	20	8P3327	PLATE	2
	21	9P1395	COVER ASSEM. (R. H.)	1
		9P1396	COVER ASSEM. (L. H.)	1
	22	S1615	BOLT	6
	23	1K6705	BOLT	13
	24	6V2714	HANDLE ASSEM.	2
		5K4340	KEY	2
C	25	6V1841	SCREW	4
	26	6V3296	LATCH (L. H.)	1
		6V3295	LATCH (R. H.)	1
	27	7B2742	BOLT	8
		2D6235	LOCKNUT	8
▲	28	5P5747	SEAL ---------- 2.6m	
	29	6V888	FILM (For Outside Japan)	2
		3Y7948	FILM (For Japan)	2

J22853E

ROLL-OVER PROTECTIVE SYSTEM CAB (9G6854 N/S)—Type 1—Part 2 of 3
Part of 9G7396 R.O.P.S. Cab Arrangement listed on Page 212
AN ATTACHMENT

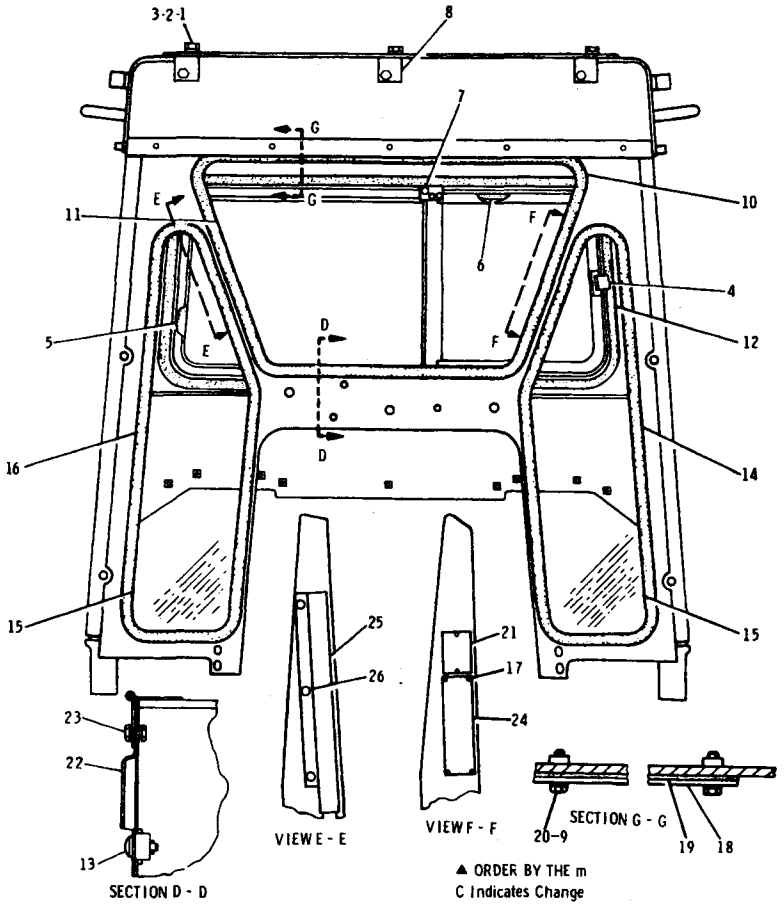

▲ ORDER BY THE m
C Indicates Change

NO.	PART NO. 部品番号	DESCRIPTION 名称および記事	QTY. 数量	
1	S1594	BOLT	3	
2	3B4506	LOCKWASHER	3	
3	1D4717	NUT	3	
4	9P9385	WINDOW ASSEM.	1	
	9P9387	GLASS	1	
▲ 5	5P5680	SEAL 2.6m		
▲ 6	5P8918	SEAL 1.3m		
7	9P7856	KNOB	1	
8	8P3142	BRACKET ASSEM.	3	
	9F2978	NUT (Weld)	1	
9	5P4115	WASHER	14	
▲ 10	5P5768	SEAL 3.0m		C
11	8P3762	GLASS	1	C
▲ 12	5P5768	SEAL 3.5m		
13	5P7518	RETAINER	2	
	5P7519	NUT	2	
	5P9034	STUD	2	
14	5P5768	SEAL 2.5m		
15	8P3763	GLASS	2	
16	5P5768	SEAL 2.5m		
17	347044	RIVET	6	
18	8P3880	PLATE	1	
19	8P3881	GASKET	1	
20	5P7921	SCREW	14	
21	6V3247	PLATE	1	
22	9G6855	DOOR	1	
	8L6521	BOLT	5	
23	3B4502	LOCKWASHER	5	
	4B2049	NUT	5	
	4B4274	WASHER	10	
24	5P7132	PLATE (For Outside Japan)	1	
	3Y5370	PLATE (For Japan)	1	
25	9G8808	COVER	1	
26	5P7924	SCREW	3	

J22854E

ROLL-OVER PROTECTIVE SYSTEM CAB (9G6854 N/S)—Type 1—Part 3 of 3

Part of 9G7396 R.O.P.S. Cab Arrangement listed on Page 212

AN ATTACHMENT

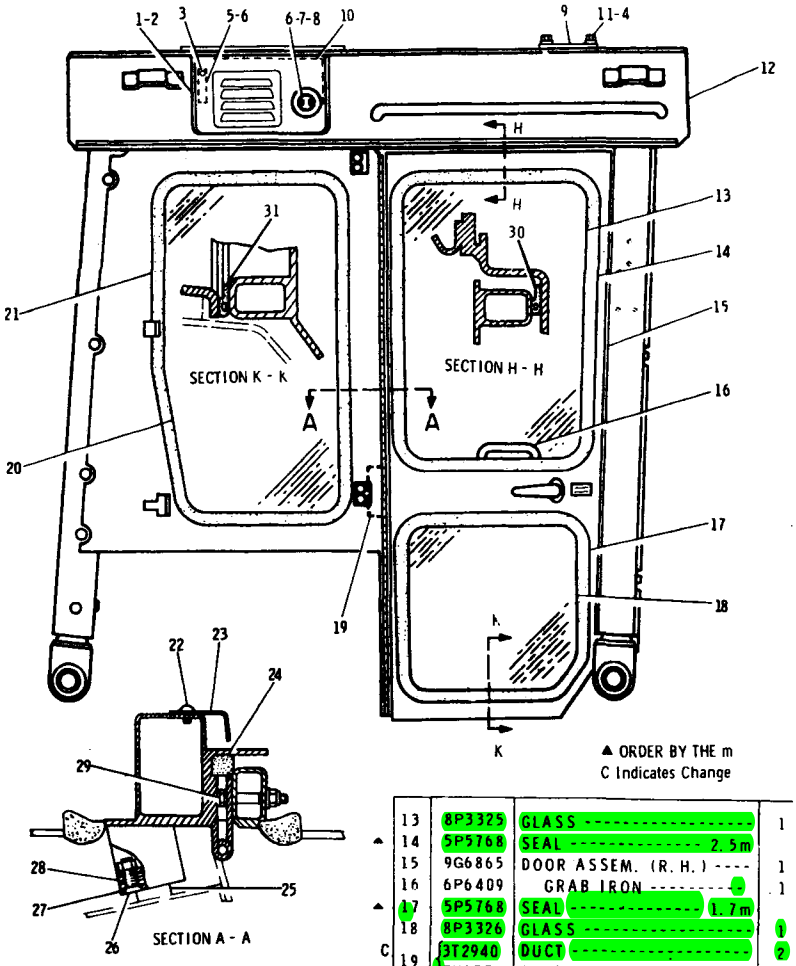

▲ ORDER BY THE m
C Indicates Change

	NO.	PART NO. 部品番号	DESCRIPTION 名称および記事	QTY. 数量
C	1	3T2762	DOOR ASSEM. (L. H.)	1
C		3T2761	DOOR ASSEM. (R. H.)	1
C	2	6I8803	SHIM (Use as Required)	8
	3	L1351	BOLT	4
C		5P1075	WASHER	4
C	4	3B4506	LOCKWASHER	2
C	5	3T2675	ARM ASSEM. (L. H.)	1
C		3T2676	ARM ASSEM. (R. H.)	1
C	6	3B4610	COTTER PIN	6
	7	4D6082	BOLT	2
	8	4B4280	WASHER	2
	9	9P1811	COVER	1
▲C	10	6V2768	SEAL (Use as Required) 1.6m	
	11	S509	BOLT	2
	12	9G6827	CAB ASSEM.	1
	13	8P3325	GLASS	1
	14	5P5768	SEAL 2.5m	
	15	9G6865	DOOR ASSEM. (R. H.)	1
	16	6P6409	GRAB IRON	1
	17	5P5768	SEAL 1.7m	
	18	8P3326	GLASS	1
C	19	3T2940	DUCT	2
		7K6536	RIVET	16
	20	8P4069	GLASS	1
	21	5P5768	SEAL 2.7m	
	22	167150	SCREW	3
	23	9G6856	ANGLE	1
	24	5P5640	SEAL 2.9m	
	25	9M5884	BUMPER	8
	26	7D6921	SCREW	8
		8F8052	LOCKWASHER	8
	27	9P7844	PLATE	4
	28	9P7846	SHIM (0.8mm Thick)	8
		9P7845	SHIM (1.6mm Thick)	8
	29	1B2713	BOLT	18
		4B4276	WASHER	18
		7H8909	LOCKNUT	16
		8M2337	WASHER	16
	30	5P5747	SEAL 1.3m	
	31	5P5747	SEAL 0.9m	

J22852E

ROLL-OVER PROTECTIVE SYSTEM CAB (9G6854 N/S)—Type 2—Part 1 of 3
Part of 9G7396 R.O.P.S. Cab Arrangement
AN ATTACHMENT

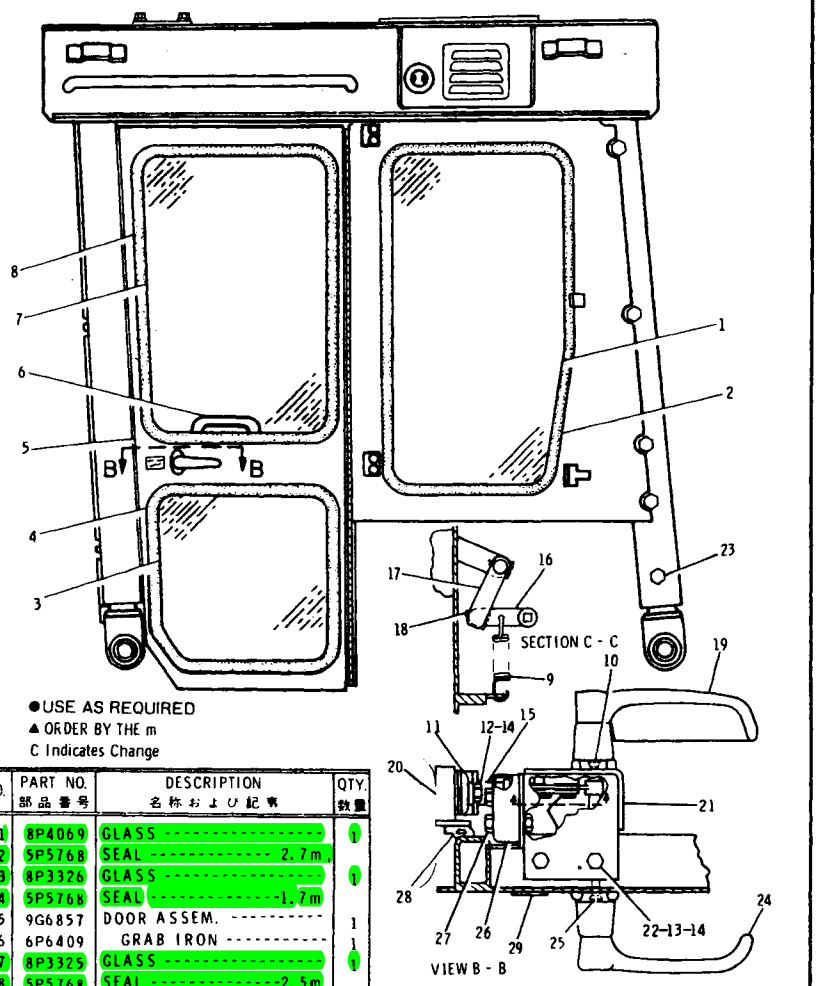

●USE AS REQUIRED
▲ORDER BY THE m
C Indicates Change

	NO.	PART NO. 部品番号	DESCRIPTION 名称および記号	QTY. 数量
	1	8P4069	GLASS	1
▲	2	5P5768	SEAL 2.7m	
	3	8P3326	GLASS	1
▲	4	5P5768	SEAL 1.7m	
	5	9G6857	DOOR ASSEM.	1
	6	6P6409	GRAB IRON	1
	7	8P3325	GLASS	1
▲	8	5P5768	SEAL 2.5m	
	9	4H3521	SPRING	2
	10	4M190	SCREW	4
	11	9P1145	PLATE	2
●		9P1200	SHIM (1.9mm Thick)	6
	12	4F7957	BOLT	4
		9N869	WASHER	4
	13	4B4276	WASHER	6
	14	3B4504	LOCKWASHER	10
	15	6V1155	STRIKER	2
	16	9P436	LEVER ASSEM.	2
	17	9P6894	LEVER	2
	18	9P6895	PIN	4
		3B5311	COTTER PIN	4
	19	6V1637	HANDLE ASSEM.	2
	20	8P3327	PLATE	2
	21	9P1395	COVER ASSEM. (R.H.)	1
		9P1396	COVER ASSEM. (L.H.)	1
	22	S1615	BOLT	6
	23	1K6705	BOLT	13
	24	6V2714	HANDLE ASSEM.	2
		5K4340	KEY	2
	25	6V1841	SCREW	4
C	26	6V6778	LATCH (L.H.)	1
C		6V6777	LATCH (R.H.)	1
	27	7B2742	BOLT	8
		2D6235	LOCKNUT	8
▲	28	5P5747	SEAL 2.6m	
	29	6V888	FILM (For Outside Japan)	2
		3Y7948	FILM (For Japan)	2

J29476E

ROLL-OVER PROTECTIVE SYSTEM CAB (9G6854 N/S)–Type 2–Part 2 of 3
Part of 9G7396 R.O.P.S. Cab Arrangement
AN ATTACHMENT

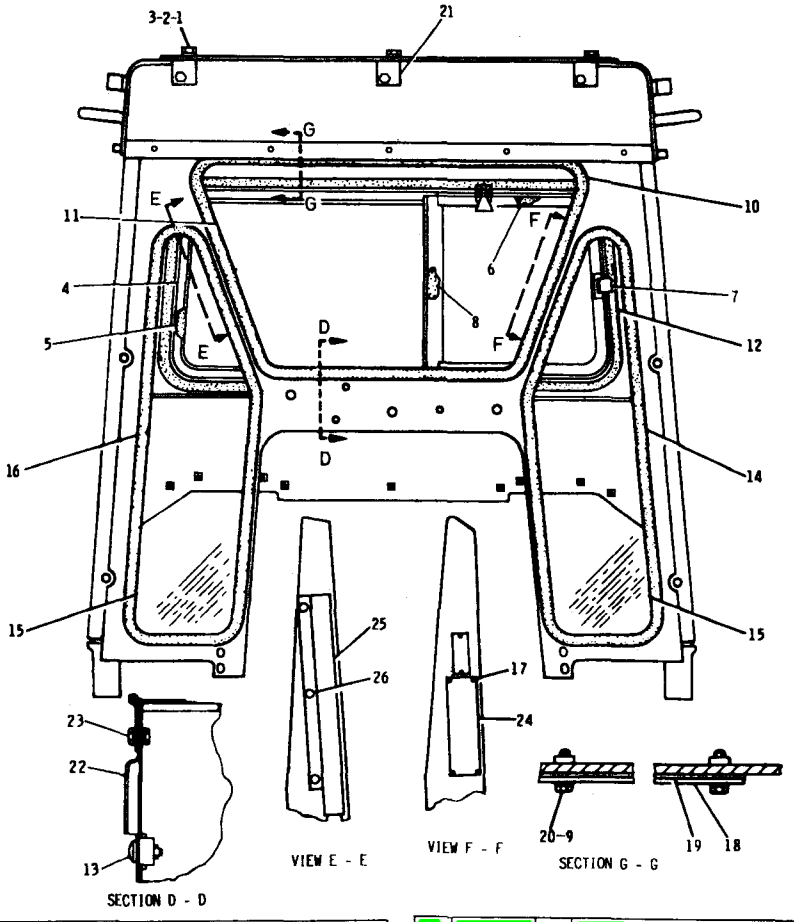

NO.	PART NO. 部品番号	QTY. 数量	DESCRIPTION 名称および記事
1	S1594	3	BOLT
2	3B4506	3	LOCKWASHER
3	1D4717	3	NUT
4	6T9954	1	WINDOW ASSEM.
	9P9387	1	GLASS
5	7T182	1	SEAL
▲ 6	5P8918		SEAL ---1.3M
	6T9955	1	SLIDE ASSEM.
7	7T1109	1	FILTER
8	7T183	1	SEAL
9	5P4115	14	WASHER
▲ 10	5P5768		SEAL ---3.0M
11	8P3762	1	GLASS
▲ 12	5P5768		SEAL ---3.5M
	5P7518	2	RETAINER
13	5P7519	2	NUT
	5P9034	2	STUD
▲ 14	5P5768		SEAL ---2.5M
15	8P3763	2	GLASS
▲ 16	5P5768		SEAL ---2.5M
17	347044	4	RIVET
18	8P3880	1	PLATE
19	8P3881	1	GASKET
20	5P7921	14	SCREW
	8P3142	3	BRACKET ASSEM.
21	9F2978	1	NUT (WELD)
22	9G6855	1	DOOR
	8L6521	5	BOLT
	3B4502	5	LOCKWASHER
23	4B2049	5	NUT
	4B4274	10	WASHER
	5P7132	1	PLATE
24			(FOR OUTSIDE JAPAN)
	3Y5370	1	PLATE (FOR JAPAN)
25	9G8808	1	COVER
26	5P7924	3	SCREW

▲ ORDER BY THE METER

J29477E

ROLL-OVER PROTECTIVE SYSTEM CAB (9G6854 N/S)—Type 2—Part 3 of 3

Part of 9G7396 R.O.P.S. Cab Arrangement

AN ATTACHMENT

MEMO

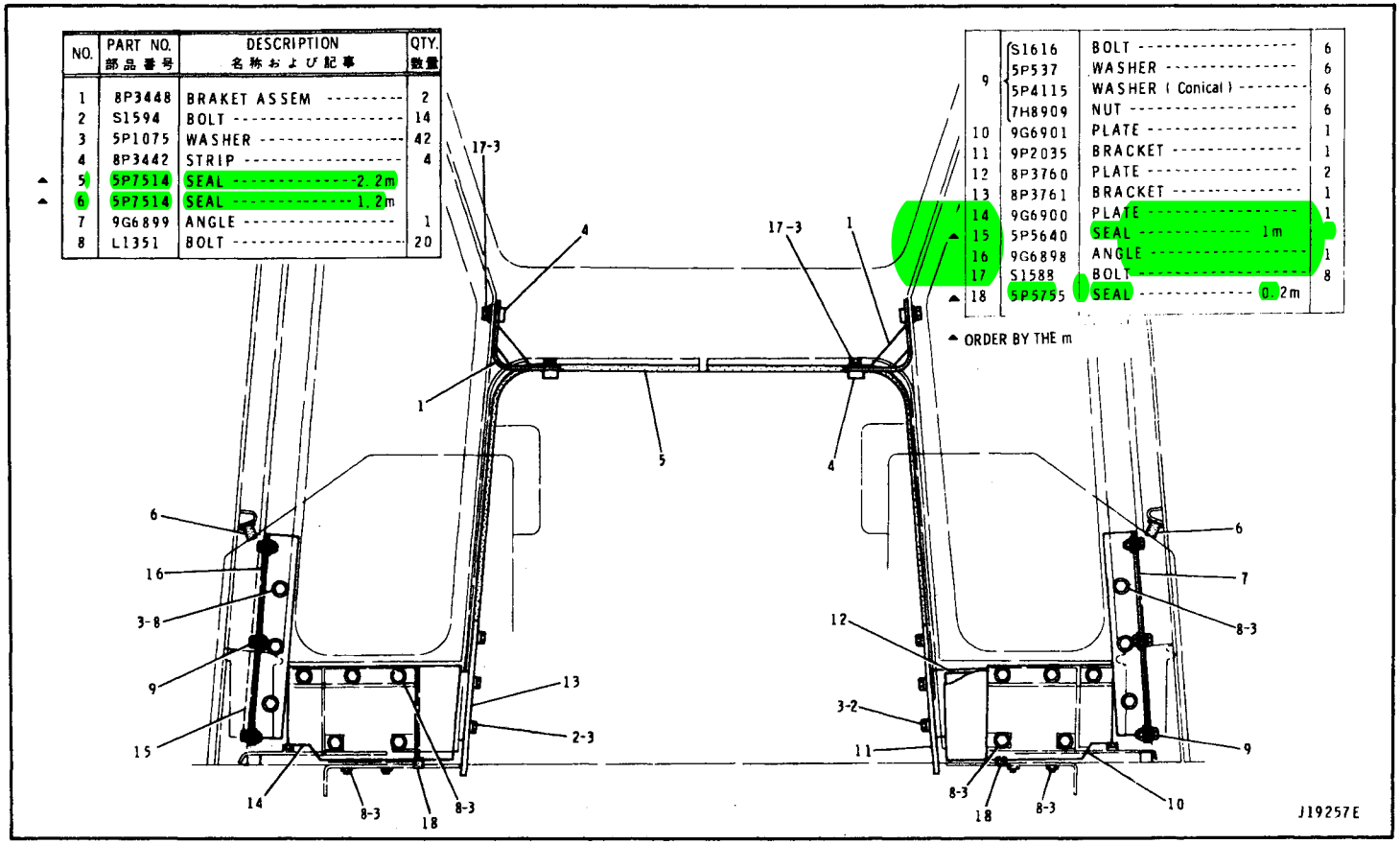

NO.	PART NO. 部品番号	DESCRIPTION 名称および記事	QTY. 数量
1	8P3448	BRAKET ASSEM	2
2	S1594	BOLT	14
3	5P1075	WASHER	42
4	8P3442	STRIP	4
▲ 5	5P7514	SEAL 2.2m	
▲ 6	5P7514	SEAL 1.2m	
7	9G6899	ANGLE	1
8	L1351	BOLT	20
9	S1616	BOLT	6
	5P537	WASHER	6
	5P4115	WASHER (Conical)	6
	7H8909	NUT	6
10	9G6901	PLATE	1
11	9P2035	BRACKET	1
12	8P3760	PLATE	2
13	8P3761	BRACKET	1
14	9G6900	PLATE	1
▲ 15	5P5640	SEAL 1m	
16	9G6898	ANGLE	1
17	S1588	BOLT	8
▲ 18	5P5795	SEAL 0.2m	

▲ ORDER BY THE m

CAB MOUNTING (9G6897 N/S)—Part 1 of 2

Part of 9G7396 R.O.P.S. Cab Arrangement listed on Page 212

AN ATTACHMENT

CAB MOUNTING (9G6897 N/S) – Part 2 of 2

Part of 9G7396 R.O.P.S. Cab Arrangement listed on Page 212

AN ATTACHMENT

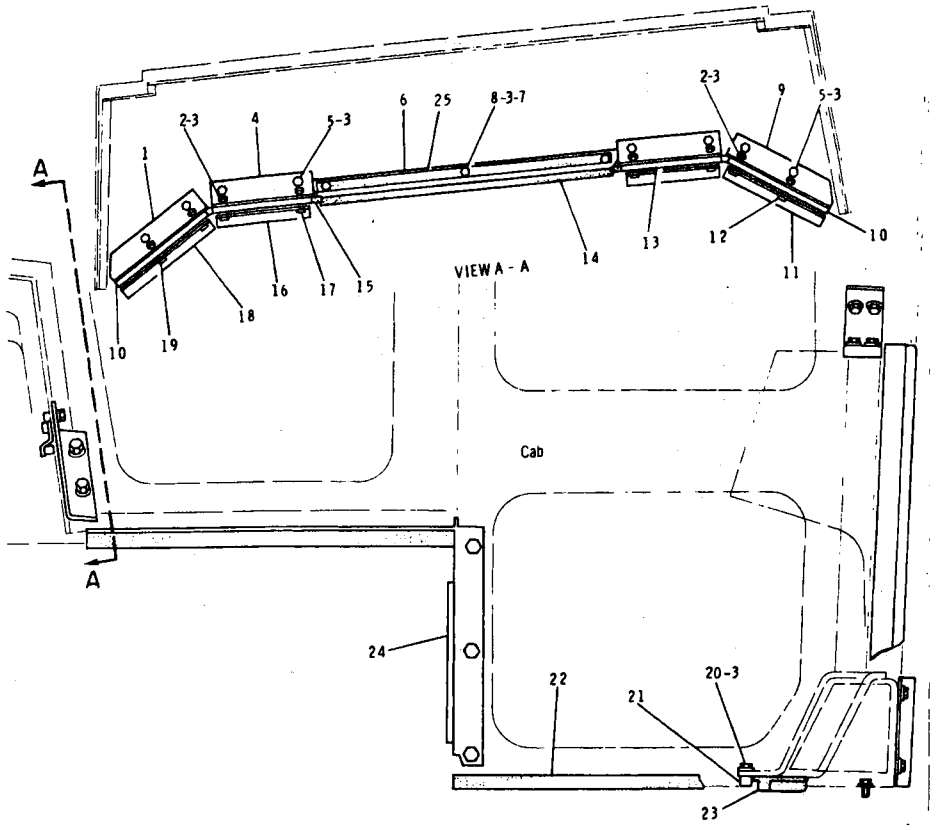

NO.	PART NO. 部品番号	DESCRIPTION 名称および記事	QTY. 数量
1	8P3350	BRACKET	1
2	S1590	BOLT	8
3	5P1075	WASHER	25
4	8P3348	BRACKET	2
5	S1594	BOLT	8
6	8P3346	BRACKET ASSEM.	1
7	9F2978	NUT (Weld)	3
8	L1351	BOLT	3
9	8P3351	BRACKET	1
10	8P3356	SPACER	2
11	9P2037	ANGLE ASSEM.	1
12	9F2978	NUT (Weld)	2
13	8P3352	SPACER	2
▲ 14	5P5755	SEAL ---------- 0.64m	
▲ 15	5P7514	SEAL ---------- 1.05m	
16	9P2043	ANGLE ASSEM.	2
17	9F2978	NUT (Weld)	2
18	9P2042	ANGLE ASSEM.	1
19	9F2978	NUT (Weld)	2
20	S1591	BOLT	6
21	9P2029	BLOCK	2
▲ 22	5P5649	SEAL ---------- 1m	
▲ 23	5P7514	SEAL ---------- 0.74m	
24	9P2044	PLATE	2
▲ 25	5P5637	SEAL ---------- 0.64m	

▲ ORDER BY THE m

J19258E

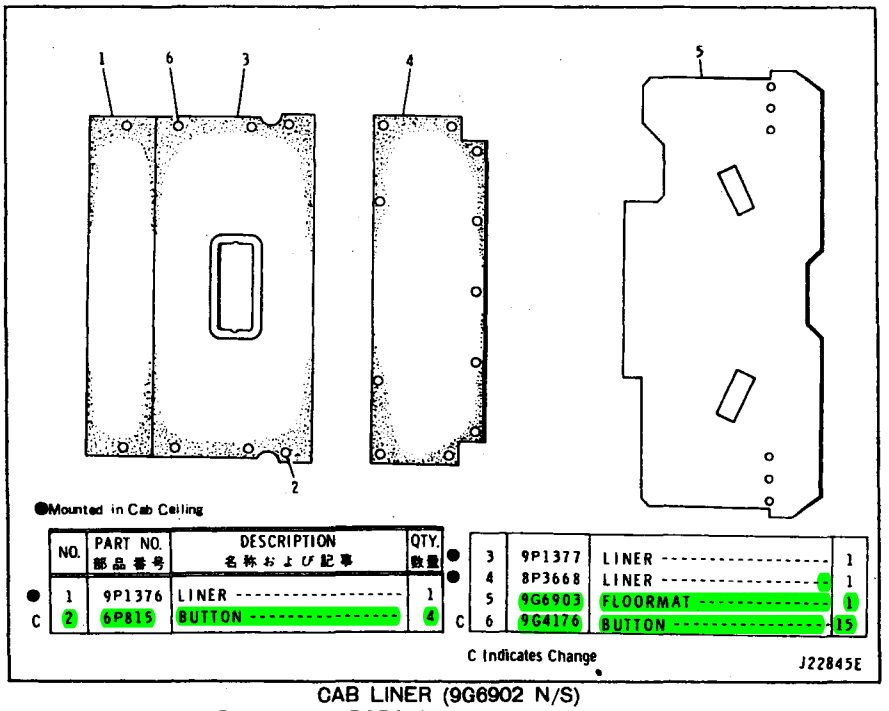

	NO.	PART NO. 部品番号	DESCRIPTION 名称および記事	QTY. 数量
●	1	9P1376	LINER	1
C	2	6P815	BUTTON	4
●	3	9P1377	LINER	1
●	4	8P3668	LINER	1
	5	9G6903	FLOORMAT	1
C	6	9G4176	BUTTON	15

CAB LINER (9G6902 N/S)

Part of 9G7396 R.O.P.S. Cab Arrangement listed on Page 212

AN ATTACHMENT

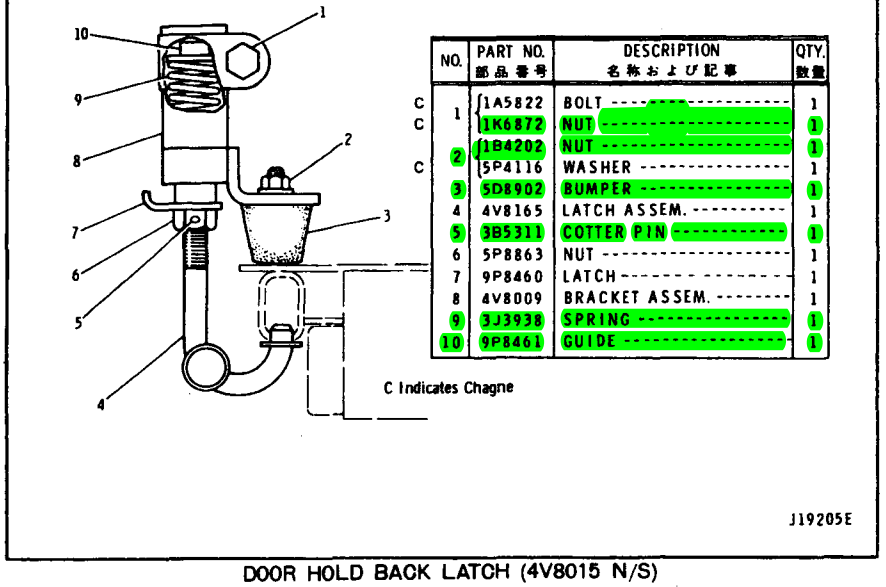

	NO.	PART NO. 部品番号	DESCRIPTION 名称および記事	QTY. 数量
C	1	1A5822	BOLT	1
C		1K6872	NUT	1
	2	1B4202	NUT	1
C		5P4116	WASHER	1
	3	5D8902	BUMPER	1
	4	4V8165	LATCH ASSEM.	1
	5	3B5311	COTTER PIN	1
	6	5P8863	NUT	1
	7	9P8460	LATCH	1
	8	4V8009	BRACKET ASSEM.	1
	9	3J3938	SPRING	1
	10	9P8461	GUIDE	1

DOOR HOLD BACK LATCH (4V8015 N/S)

Part of 9G7396 R.O.P.S. Cab Arrangement listed on Page 212

AN ATTACHMENT

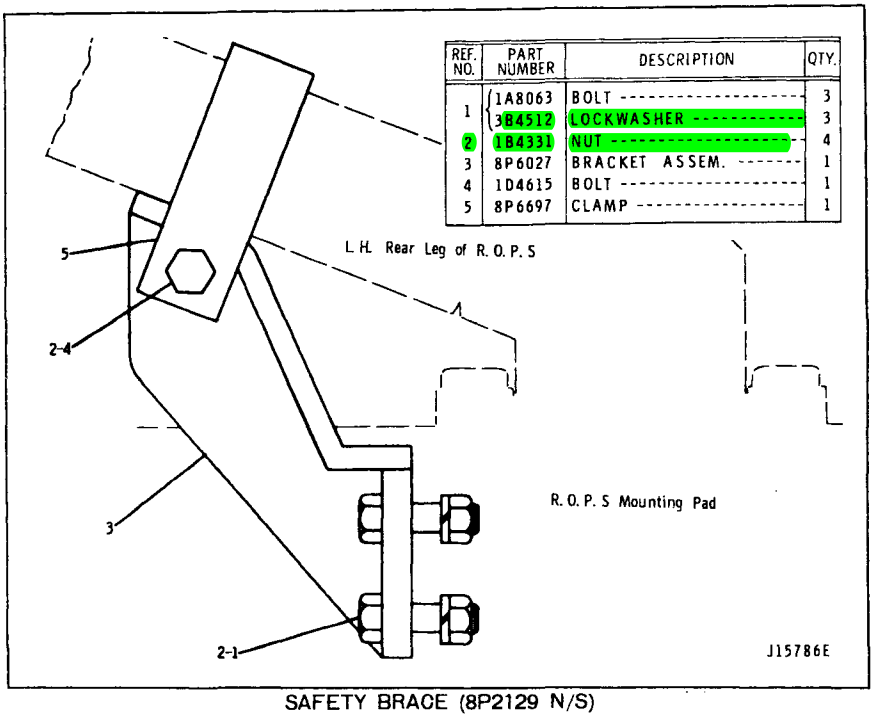

REF. NO.	PART NUMBER	DESCRIPTION	QTY.
1	1A8063	BOLT	3
	3B4512	LOCKWASHER	3
2	1B4331	NUT	4
3	8P6027	BRACKET ASSEM.	1
4	1D4615	BOLT	1
5	8P6697	CLAMP	1

SAFETY BRACE (8P2129 N/S)

Part of 9G7396 R.O.P.S. Cab Arrangement listed on Page 212

AN ATTACHMENT

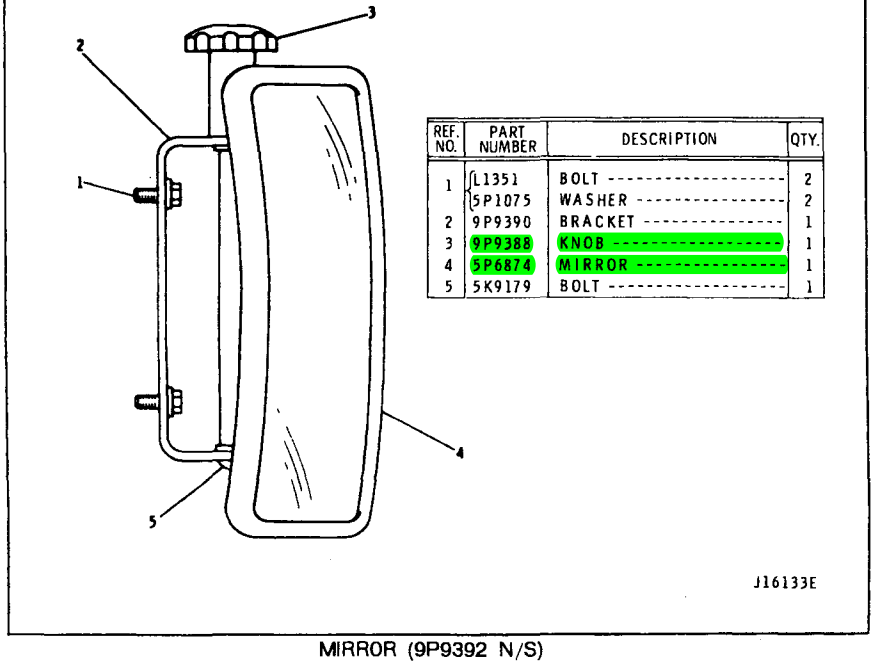

REF. NO.	PART NUMBER	DESCRIPTION	QTY.
1	L1351	BOLT	2
	5P1075	WASHER	2
2	9P9390	BRACKET	1
3	9P9388	KNOB	1
4	5P6874	MIRROR	1
5	5K9179	BOLT	1

MIRROR (9P9392 N/S)

Part of R.O.P.S. and 9G7396 R.O.P.S. Cab Arrangement shown on Pages 209 and 212

AN ATTACHMENT

MEMO

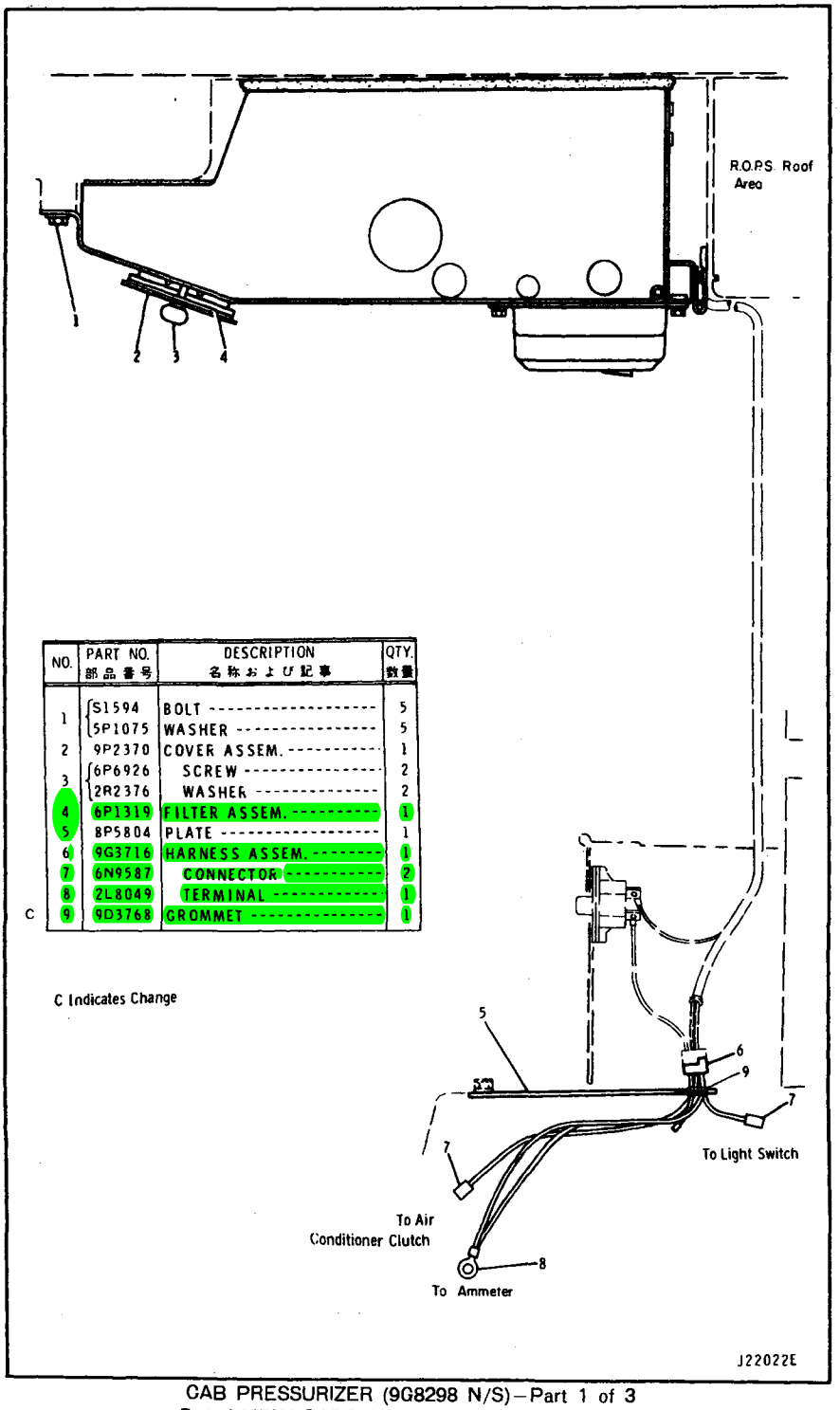

NO.	PART NO. 部品番号	DESCRIPTION 名称および記事	QTY. 数量
1	S1594	BOLT	5
	5P1075	WASHER	5
2	9P2370	COVER ASSEM.	1
3	6P6926	SCREW	2
	2R2376	WASHER	2
4	6P1319	FILTER ASSEM.	1
5	8P5804	PLATE	1
6	9G3716	HARNESS ASSEM.	1
7	6N9587	CONNECTOR	2
8	2L8049	TERMINAL	1
C 9	9D3768	GROMMET	1

C Indicates Change

CAB PRESSURIZER (9G8298 N/S)—Part 1 of 3

Part of 9G7396 R.O.P.S. Cab Arrangement listed on Page 212

AN ATTACHMENT

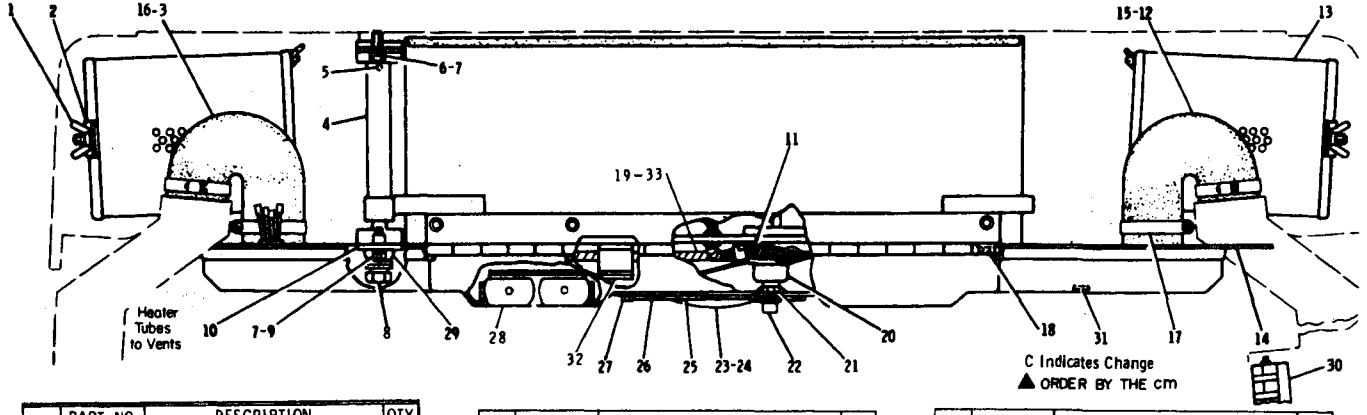

NO.	PART NO. 部品番号	DESCRIPTION 名称および記事	QTY. 数量
1	2B9498	NUT	4
2	8P9587	STRAP	2
▲ 3	5P3915	HOSE ----------65cm	
4	6P4147	TUBE ASSEM.	1
5	4H1641	PIN	1
6	T102	BOLT	2
7	3B4506	LOCKWASHER	4
8	6P5812	SCREW ASSEM.	1
	4D3704	WASHER	2
9	S1594	BOLT	2
10	6P4152	BRACKET	1
11	9P2046	HARNESS ASSEM.	1
	2L8065	TERMINAL	1
	2L8075	TERMINAL	1
▲ 12	5P3915	HOSE ----------65cm	
13	2V36	FILTER	2
14	7G1367	DUCT ASSEM.	1
	9P6976	COVER	1
15	8P3587	ADAPTER	1
16	9P2027	ADAPTER	1
17	2J6540	CLAMP	4
18	S1614	BOLT	10
	5P4115	WASHER	10
19	8P6368	HARNESS ASSEM.	1
		(See Separate Illustration)	
20	6P3236	SWITCH ASSEM.	1
21	2P4339	NUT	1
22	1P6509	KNOB	1
23	9M4192	LAMP ASSEM.	1
	1S3291	DOOR ASSEM.	1
	1S3290	VALVE	1
	2F2860	SCREW	2
24	1H2204	SCREW ASSEM.	3
	4B2047	NUT	3
25	8P3710	PLATE	1
26	302283	PLUG	2
27	310243	SCREW	4
28	6P5673	LOUVER	4
29	6P5564	ROD	1
C 30	7G2172	LOUVER ASSEM.	2
	5P6458	SEAL	4
31	2D3406	BUTTON(25.4mm Diameter)	1
C 32	319195	CLIP	2
C 33	315644	CLIP	1

CAB PRESSURIZER (9G8298 N/S)–Part 2 of 3

Part of 9G7396 R.O.P.S. Cab Arrangement listed on Page 212

8P6368 Harness parts are shown on Page 224

AN ATTACHMENT

CAB PRESSURIZER (9G8298 N/S)–Part 3 of 3

Part of 9G7396 R.O.P.S. Cab Arrangement listed on Page 212
9P5089 Pressurizer parts are shown on Page 225

AN ATTACHMENT

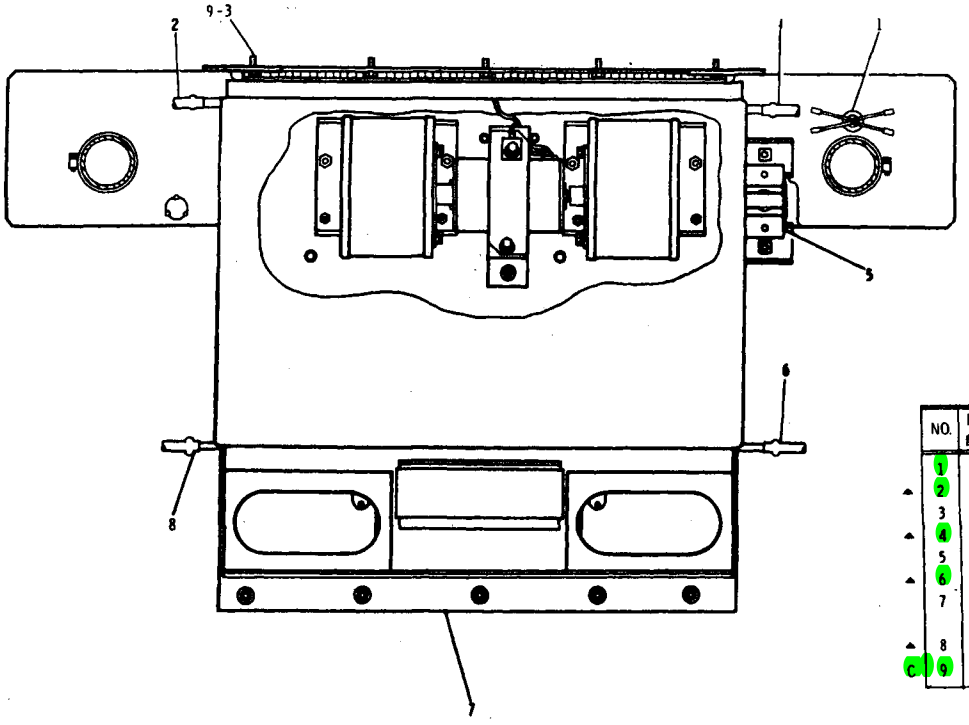

NO.	PART NO. 部品番号	DESCRIPTION 名称および記事	QTY. 数量
1	9D3768	GROMMET	1
▲ 2	5P4829	TUBE & 65dm	
3	S1615	BOLT	5
▲ 4	5P4829	TUBE & 65dm	
5	6P4151	BRACKET	1
▲ 6	5P4829	TUBE 2.3dm	
7	9P5089	PRESSURIZER GROUP (See Separate Illustration)	1
▲ 8	5P4829	TUBE 2.3dm	
C 9	5P537	WASHER	5

C Indicates Change
▲ORDER BY THE dm

J22024E

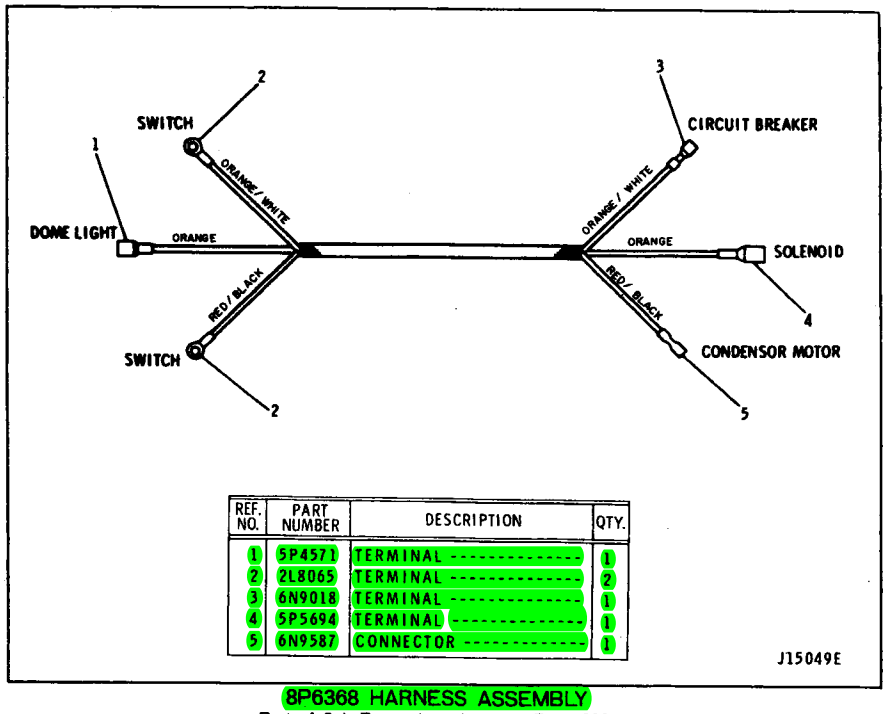

REF. NO.	PART NUMBER	DESCRIPTION	QTY.
1	5P4571	TERMINAL	1
2	2L8065	TERMINAL	2
3	6N9018	TERMINAL	1
4	5P5694	TERMINAL	1
5	6N9587	CONNECTOR	1

8P6368 HARNESS ASSEMBLY

Part of Cab Pressurizer shown on Page 222

AN ATTACHMENT

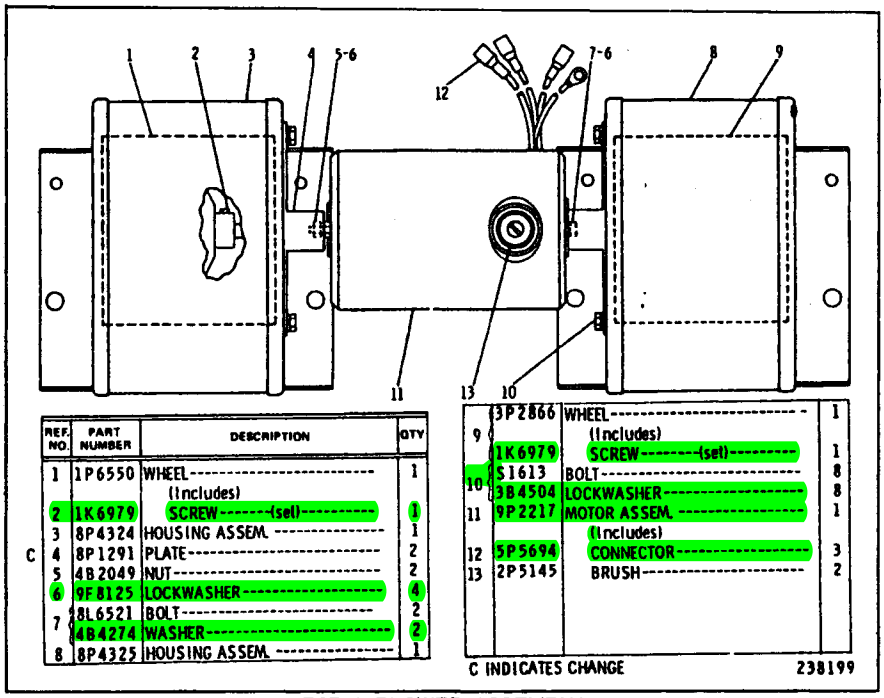

REF. NO.	PART NUMBER	DESCRIPTION	QTY
1	1P6550	WHEEL (Includes)	1
2	1K6979	SCREW-------(set)----------	1
3	8P4324	HOUSING ASSEM.	1
C 4	8P1291	PLATE	2
5	4B2049	NUT	2
6	9F8125	LOCKWASHER	4
7	8L6521	BOLT	2
	4B4274	WASHER	2
8	8P4325	HOUSING ASSEM.	1
9	3P2866	WHEEL (Includes)	1
	1K6979	SCREW-------(set)----------	1
10	S1613	BOLT	8
	3B4504	LOCKWASHER	8
11	9P2217	MOTOR ASSEM. (Includes)	1
12	5P5694	CONNECTOR	3
13	2P5145	BRUSH	2

C INDICATES CHANGE 238199

9P3788 BLOWER ASSEMBLY

Part of 9P5089 Pressurizer Group shown on Page 225

AN ATTACHMENT

9P5089 PRESSURIZER GROUP

Part of Cab Pressurizer and Air Conditioner shown on Pages 223 and 238
9P3788 Blower parts are shown on Page 224

AN ATTACHMENT

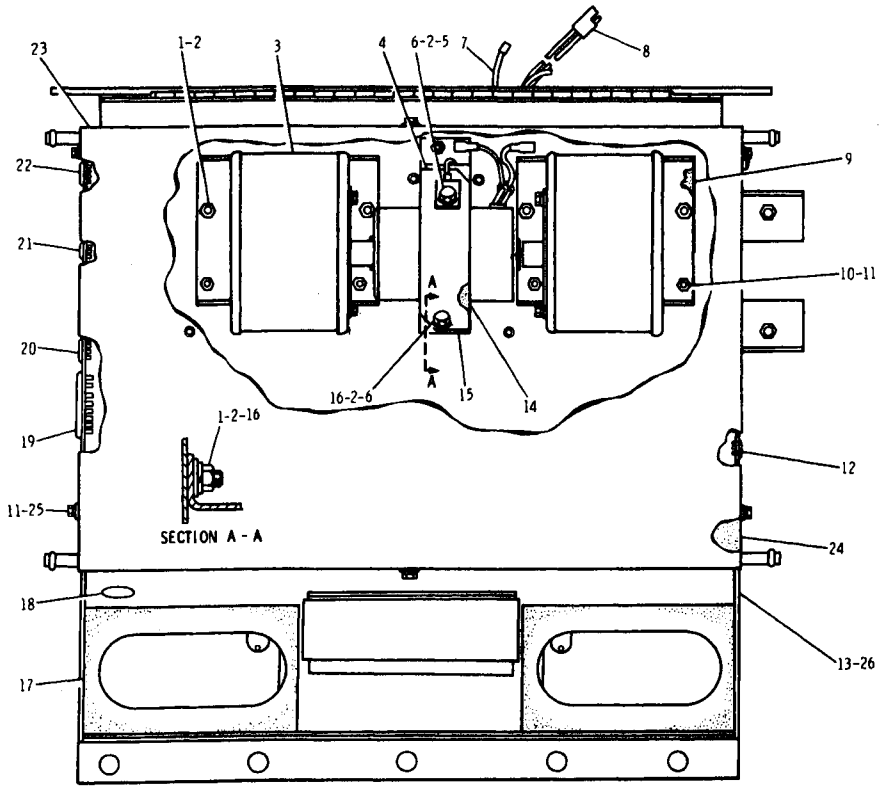

C Indicates Change
▲ ORDER BY THE m

	NO.	PART NO. 部品番号	DESCRIPTION 名称および記事	QTY. 数量
C	1	1D4717	NUT	6
C	2	3B4506	LOCKWASHER	8
	3	9P3788	BLOWER ASSEM. (See Separate Illustration)	1
	4	6P1298	STRAP	1
	5	2H4499	LOCK	1
C	6	S1594	BOLT	2
		9P6897	WIRE ASSEM.	1
	7	4S1988	TERMINAL(To Dome Light)	1
		2L8079	TERMINAL	1
	8	8P6385	HARNESS ASSEM.	1
		5P4571	TERMINAL	6
	9	6P1296	SEAL	2
	10	1B4330	NUT	4
C	11	3B4504	LOCKWASHER	10
	12	3D9871	BUTTON	4
C	13	7G3057	CASE ASSEM.	1
▲	14	5P5908	SEAL 0.31m	
C	15	7G2377	BRACKET ASSEM.	1
C	16	4B4278	WASHER	3
	17	8P2303	SEAL	2
C	18	7D4786	PLUG	1
	19	6P1294	PLUG	1
C	20	1V9019	PLUG	2
	21	5K3546	BUTTON	1
	22	4S6336	BUTTON	1
C	23	7G3000	COVER ASSEM.	1
	24	7G2999	SEAL	1
C	25	S1614	BOLT	6
C		4B4276	WASHER	6
	26	7L6479	PLUG(Fits 7.87mm Hole)	5

J18885E

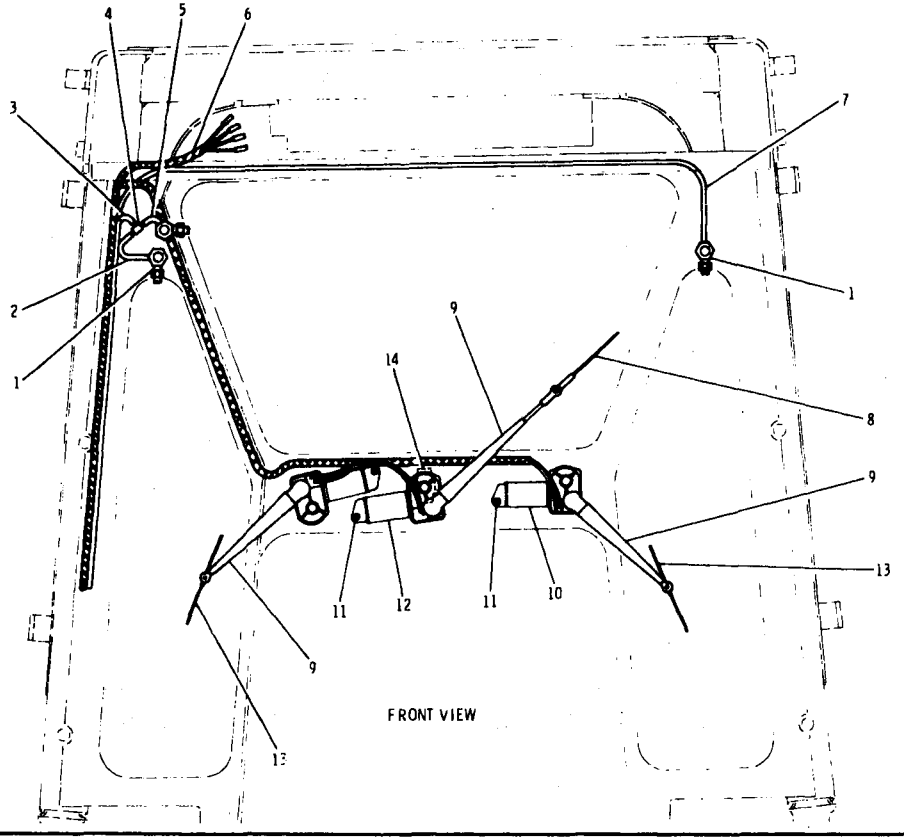

	NO.	PART NO. 部品番号	DESCRIPTION 名称および記事	QTY. 数量
	1	9P2369	JET ASSEM.	3
▲	2	5P5992	HOSE 0.05m	
▲	3	5P5992	HOSE 2.34m	
	4	6K9632	TEE	1
▲	5	5P5992	HOSE 0.05m	
	6	9G8107	HARNESS ASSEM. (See Separate Illustration)	1
▲	7	5P5992	HOSE 3.76m	
	8	9D1242	BLADE	1
	9	5P5346	ARM	3
C	10	3T7081	MOTOR ASSEM.	1
		4D7464	WASHER	1
		1K502	WASHER	1
		4D7468	NUT	1
	11	8L6521	BOLT	3
		4B4274	WASHER	3
		9F5599	LOCKWASHER	3
		4B2049	NUT	3
C	12	6T620	MOTOR ASSEM.	2
		4D7464	WASHER	1
		1K502	WASHER	1
		4D7468	NUT	1
	13	5P5436	BLADE	2
	14	6N9349	CIRCUIT BREAKER	1
		5M6668	SCREW	2

▲ ORDER BY THE m
C Indicates Change

J25679E

WASHER AND WIPER (7G6541 N/S)—Part 1 of 2
Part of 9G7396 R.O.P.S. Cab Arrangement listed on Page 212
9G8107 Harness parts are shown on Page 228
AN ATTACHMENT

WASHER AND WIPER (7G6541 N/S)—Part 2 of 2

Part of 9G7396 R.O.P.S. Cab Arrangement listed on Page 212
3T175 Wiper parts are shown on Page 229

AN ATTACHMENT

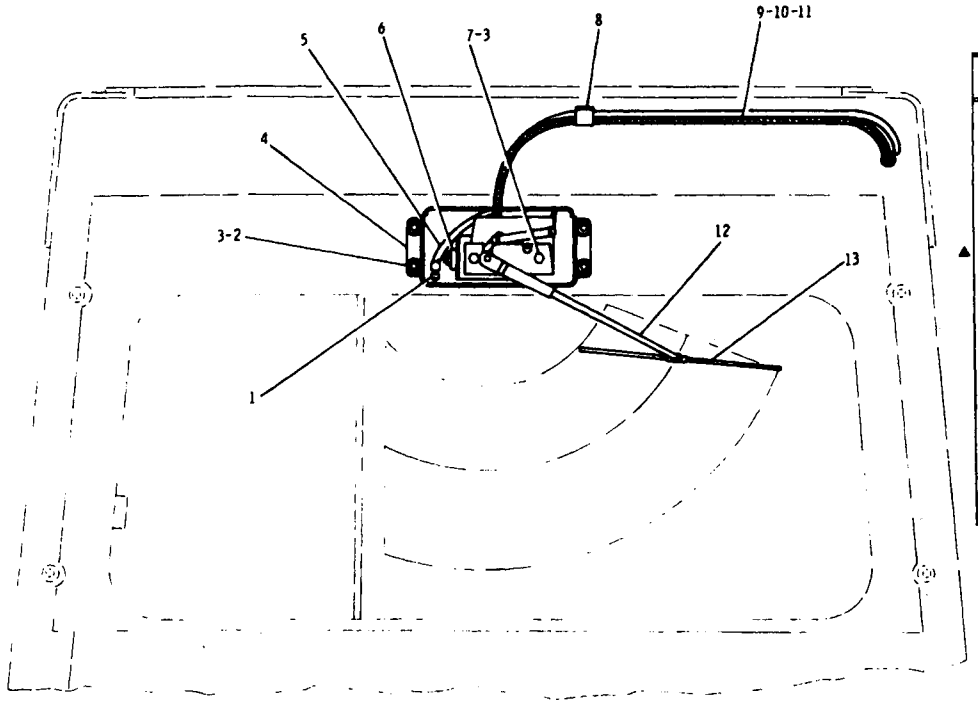

Rear View

NO.	PART NO. 部品番号	DESCRIPTION 名称および記事	QTY. 数量
1	9P2369	JET ASSEM.	1
	6D4972	SPACER	1
2	1B4330	NUT	4
	4B4276	WASHER	4
3	3B4504	LOCKWASHER	6
4	7G8735	COVER	1
5	5P5992	HOSE ----------2.9m	
6	3T175	WIPER GROUP	1
		(See separate Illustration)	
7	6F7027	BOLT	2
8	1V3593	CLIP	1
9	7G8734	HARNESS ASSEM.	1
	9G3667	HOUSING	1
	7N7780	PIN	5
	7N7779	SOCKET	5
10	2L8074	TERMINAL (Circuet Breaker)	1
11	9G9314	TERMINAL (Front&Rear Motor)	11
12	9P1721	ARM ASSEM.	1
13	9D1242	BRADE	1

▲ ORDER BY THE m
C Indicates Change

J26273E

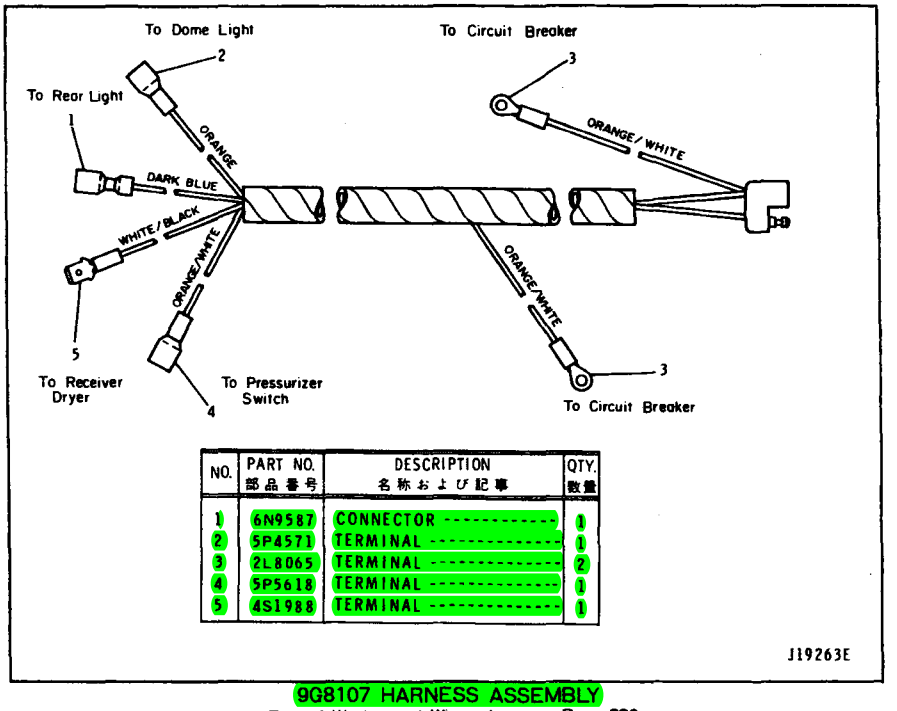

NO.	PART NO. 部品番号	DESCRIPTION 名称および記事	QTY. 数量
1	6N9587	CONNECTOR	1
2	5P4571	TERMINAL	1
3	2L8065	TERMINAL	2
4	5P5618	TERMINAL	1
5	4S1988	TERMINAL	1

9G8107 HARNESS ASSEMBLY

Part of Washer and Wiper shown on Page 226

AN ATTACHMENT

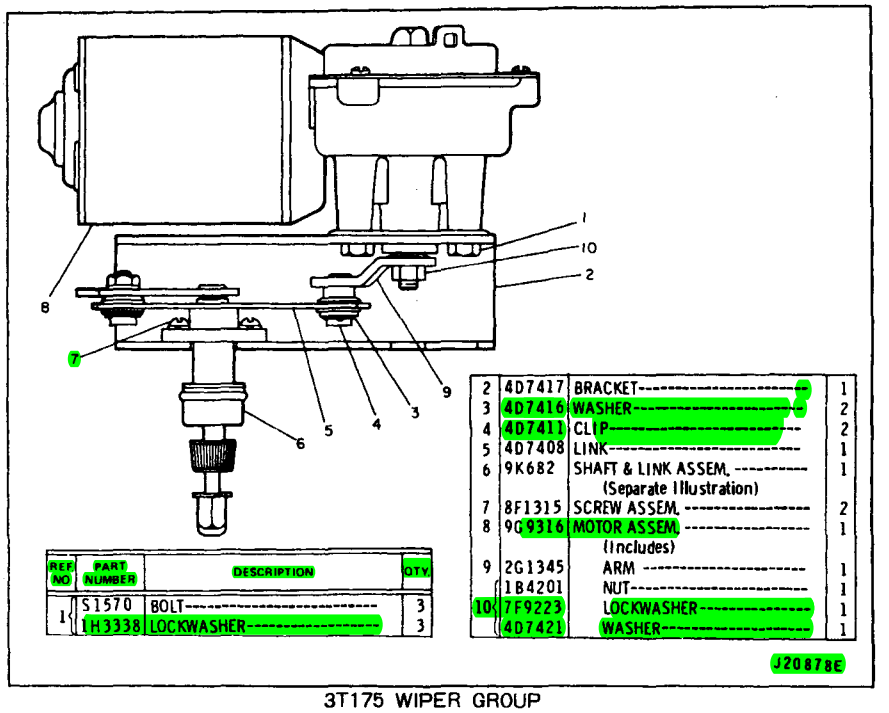

REF NO.	PART NUMBER	DESCRIPTION	QTY.
1	S1570	BOLT	3
	H3338	LOCKWASHER	3
2	4D7417	BRACKET	1
3	4D7416	WASHER	2
4	4D7411	CLIP	2
5	4D7408	LINK	1
6	9K682	SHAFT & LINK ASSEM. (Separate Illustration)	1
7	8F1315	SCREW ASSEM.	2
8	9G9316	MOTOR ASSEM. (Includes)	1
9	2G1345	ARM	1
	1B4201	NUT	1
10	7F9223	LOCKWASHER	1
	4D7421	WASHER	1

J20878E

3T175 WIPER GROUP

Part of Washer and Wiper shown on Page 227

9K682 Shaft & Link parts are shown below

AN ATTACHMENT

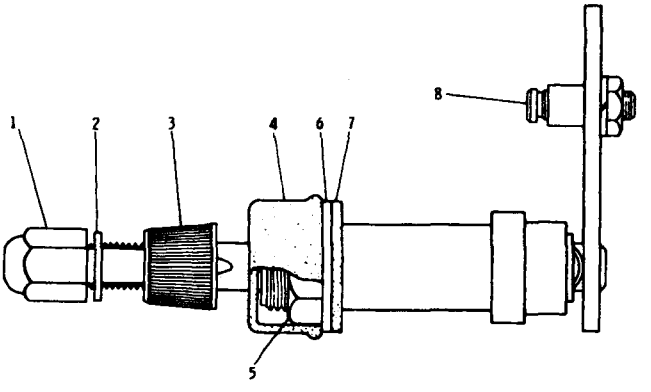

REF. NO.	PART NUMBER	DESCRIPTION	QTY
1	8D237	NUT	1
2	9F5644	LOCKWASHER	1
3	1V3658	DRIVER	1
4	1V3657	CAP	1
5	1V3656	NUT	1
6	4B1550	WASHER	1
7	9S8016	GASKET	1
	1V3655	STUD	1
8	9M1311	NUT	1
	1H3244	LOCKWASHER	1

119884

9K682 SHAFT AND LINK ASSEMBLY

Part of 3T175 Wiper Group

AN ATTACHMENT

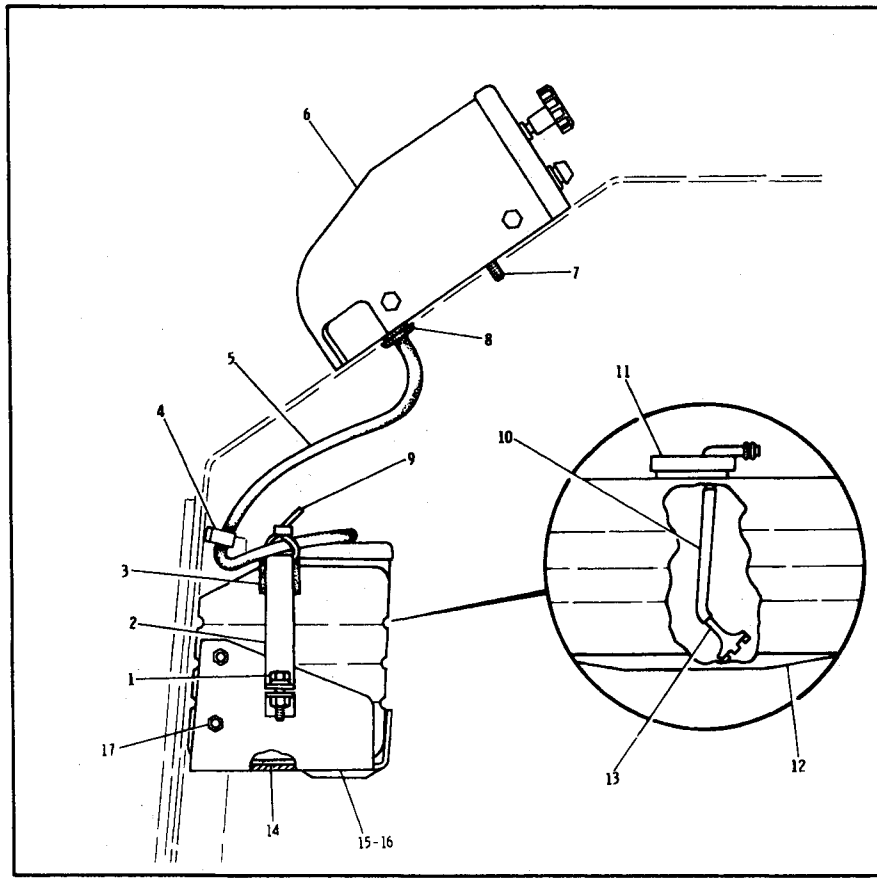

	NO.	PART NO. 部品番号	DESCRIPTION 名称および記事	QTY. 数量
	1	S1615	BOLT	2
		4B4276	WASHER	2
	2	9G7995	PLATE	1
▲	3	6V2496	SEAL 0.6m	
	4	2R1913	STRAP	1
▲	5	5P5992	HOSE 0.7m	
	6	Not Serv.	WASHER WIPER CONTROL (See Separate Illustration)	1
	7	89792	SCREW	3
	8	9D7303	GROMMET	1
	9	8L8413	STRAP	1
▲	10	5P5992	HOSE 0.2m	
	11	5P9539	CAP	1
	12	7G8728	BOTTLE	1
	13	9D6896	STRAINER	1
C ▲	14	6V2495	SEAL 0.3m	
C	15	3T8055	BRACKET ASSEM.(Front)	1
		9F6445	NUT (Weld)	1
C	16	3T8057	BRACKET ASSEM. (Rear)	1
		9F6445	NUT (Weld)	1
C	17	1D4716	NUT	4
		9M1974	WASHER	4

▲ ORDER BY THE m
C Indicates Change

J23668E

WASHER WIPER CONTROL (9G7478 N/S)

Part of 9G7396 R.O.P.S. Cab Arrangement listed on Page 212

Washer Wiper Control parts are shown on Page 231

AN ATTACHMENT

WASHER WIPER CONTROL (3T103 N/S)—Basic

Part of Washer Wiper Control shown on Page 230

AN ATTACHMENT

▲ ORDER BY THE m
C Indicates Change

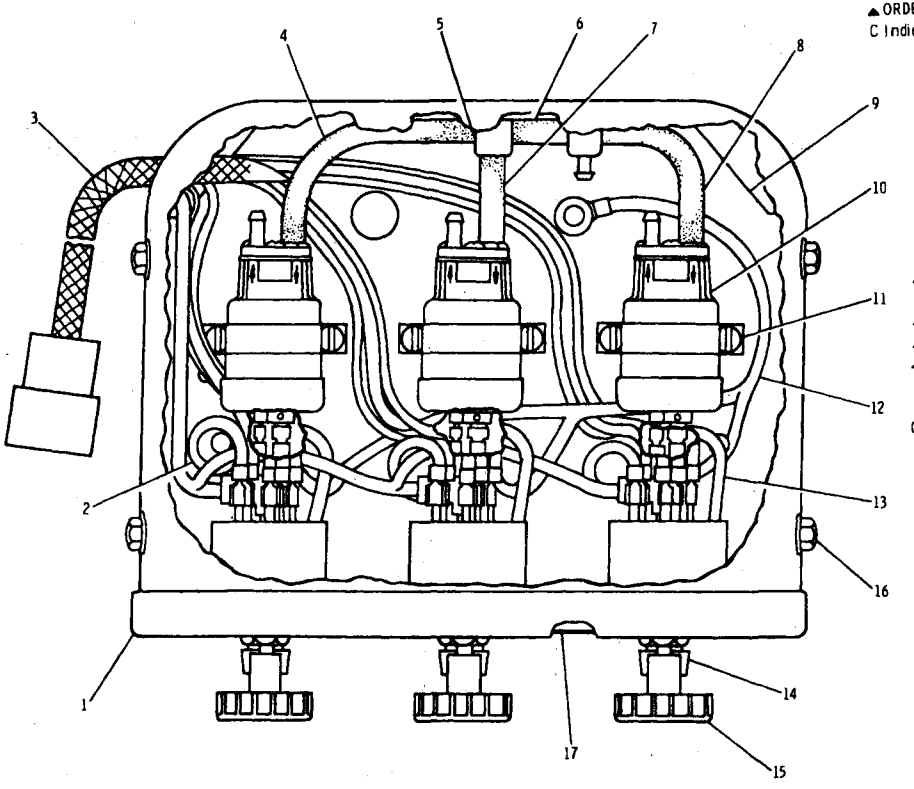

	NO.	PART NO. 部品番号	DESCRIPTION 名称および記事	QTY. 数量
	1	7G6542	COVER	1
		7G8732	WIRE ASSEM.	3
	2	5P4571	TERMINAL	2
		7G8733	HARNESS ASSEM.	1
		5P4571	TERMINAL	9
▲	4	5P5992	HOSE — 0.09m	
	5	6K9632	TEE	2
▲	6	5P5992	HOSE — 0.03m	
▲	7	5P5992	HOSE — 0.06m	
▲	8	5P5992	HOSE — 0.06m	
		7G6307	PLATE ASSEM.	1
	9	9F6445	NUT (Weld)	4
C	10	9G8963	PUMP ASSEM.	3
		8F1434	LOCKWASHER	6
	11	4B1226	SCREW	6
		7G8731	WIRE ASSEM.	1
	12	5P4571	TERMINAL	3
		2L8079	TERMINAL	1
		7G8729	WIRE ASSEM.	3
	13	5P4571	TERMINAL	1
	14	4K5122	HOLDER	3
		9K1896	FUSE	3
	15	1V7362	SWITCH	3
	16	9S2011	SCREW	4
	17	7G6308	PANEL	1

J20022E

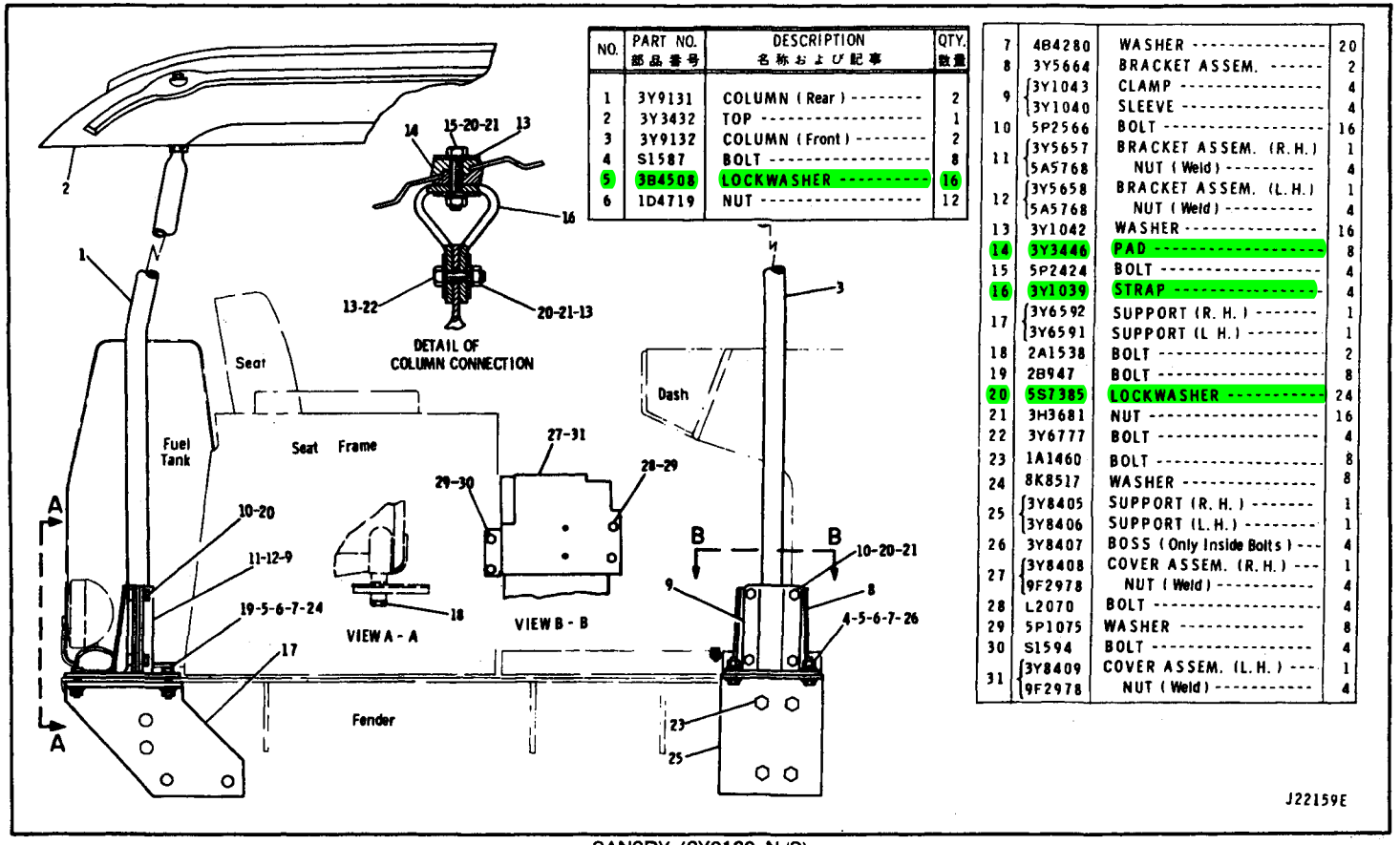

NO.	PART NO. 部品番号	DESCRIPTION 名称および記事	QTY. 数量
1	3Y9131	COLUMN (Rear) --------	2
2	3Y3432	TOP ----------	1
3	3Y9132	COLUMN (Front) --------	2
4	S1587	BOLT ----------	8
5	3B4508	LOCKWASHER ----------	16
6	1D4719	NUT ----------	12
7	4B4280	WASHER ----------	20
8	3Y5664	BRACKET ASSEM. ------	2
9	3Y1043	CLAMP ----------	4
	3Y1040	SLEEVE ----------	4
10	5P2566	BOLT ----------	16
11	3Y5657	BRACKET ASSEM. (R.H.)	1
	5A5768	NUT (Weld) ----------	4
12	3Y5658	BRACKET ASSEM. (L.H.)	1
	5A5768	NUT (Weld) ----------	4
13	3Y1042	WASHER ----------	16
14	3Y3446	PAD ----------	8
15	5P2424	BOLT ----------	4
16	3Y1039	STRAP ----------	4
17	3Y6592	SUPPORT (R. H.) -------	1
	3Y6591	SUPPORT (L H.) --------	1
18	2A1538	BOLT ----------	2
19	2B947	BOLT ----------	8
20	5S7385	LOCKWASHER ----------	24
21	3H3681	NUT ----------	16
22	3Y6777	BOLT ----------	4
23	1A1460	BOLT ----------	8
24	8K8517	WASHER ----------	8
25	3Y8405	SUPPORT (R. H.) -------	1
	3Y8406	SUPPORT (L.H.) --------	1
26	3Y8407	BOSS (Only Inside Bolts) ---	4
27	3Y8408	COVER ASSEM. (R.H.) ---	1
	9F2978	NUT (Weld) ----------	4
28	L2070	BOLT ----------	4
29	5P1075	WASHER ----------	8
30	S1594	BOLT ----------	4
31	3Y8409	COVER ASSEM. (L.H.) ---	1
	9F2978	NUT (Weld) ----------	4

CANOPY (3Y9139 N/S)
AN ATTACHMENT

Consists of:

			Page
1	2W2926	Refrigerant Compressor Arrangement	233
1	9P5227	Air Conditioner Arrangement	234
1	5P7137	Film	

J23864E

9P7385 AIR CONDITIONER ARRANGEMENT – Cools and Heats
Only separate parts Serviced
AN ATTACHMENT

Consists of:

			Page
1	4N6718	Refrigerant Compressor Group	235
1	7N4948	Fuel Filter Group	57
1	2W2516	Fuel Filter Lines Group	54
1	2W2517	Fuel Priming Pump Group	58
1	4N6381	Pulley Assembly	
6	4S6137	Stud	
1	2P6212	Vee Belt	

J23887E

2W2926 REFRIGERANT COMPRESSOR ARRANGEMENT
Part of 9P7385 Air Conditioner Arrangement
Only separate parts Serviced
AN ATTACHMENT

Consists of:

			Page
1	9P5225	Air Conditioner Group	234
1	8P2149	Air Conditioner Lines Group	237
1	8P3148	Basic Condenser Group	240
1	9G3699	Heater Lines Group	242
1	9P2045	Compressor Harness Assembly	244
1	5F9757	Grommet	
1	341432	Strap	

To Harness Assem.

J20136E

9P5227 AIR CONDITIONER ARRANGEMENT
Part of 9P7385 Air Conditioner Arrangement listed on Page 233
AN ATTACHMENT

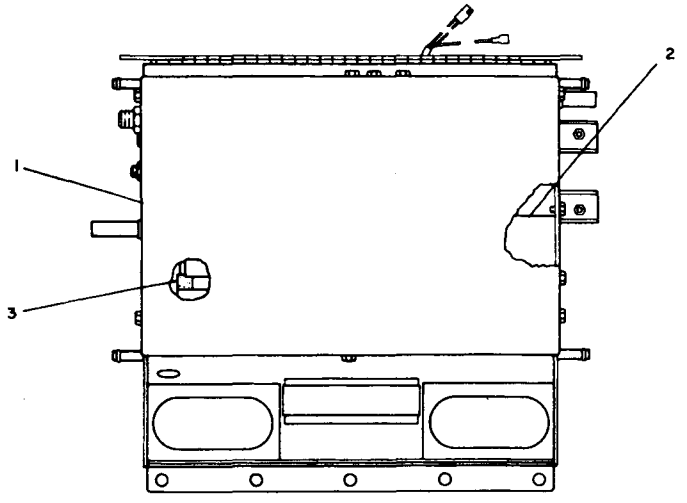

REF. NO.	PART NUMBER	DESCRIPTION	QTY.
1	Not Serv.	AIR CONDITIONER (Separate Illustration)	1
2	9G3764	HEATER GROUP (Separate Illustration)	1
▲ 3	5P5671	SEAL---------- 0.3m	

▲ ORDER BY THE m

J20144E

9P5225 AIR CONDITIONER GROUP
Part of 9P5227 Air Conditioner Arrangement
Air Conditioner and 9G3764 Cab Heater parts are shown on Pages 238 and 243
AN ATTACHMENT

4N6718 REFRIGERANT COMPRESSOR GROUP

Part of 2W2926 Refrigerant Compressor Arrangement

7N4297 Compressor parts are shown on Pages 236 and 236A

AN ATTACHMENT

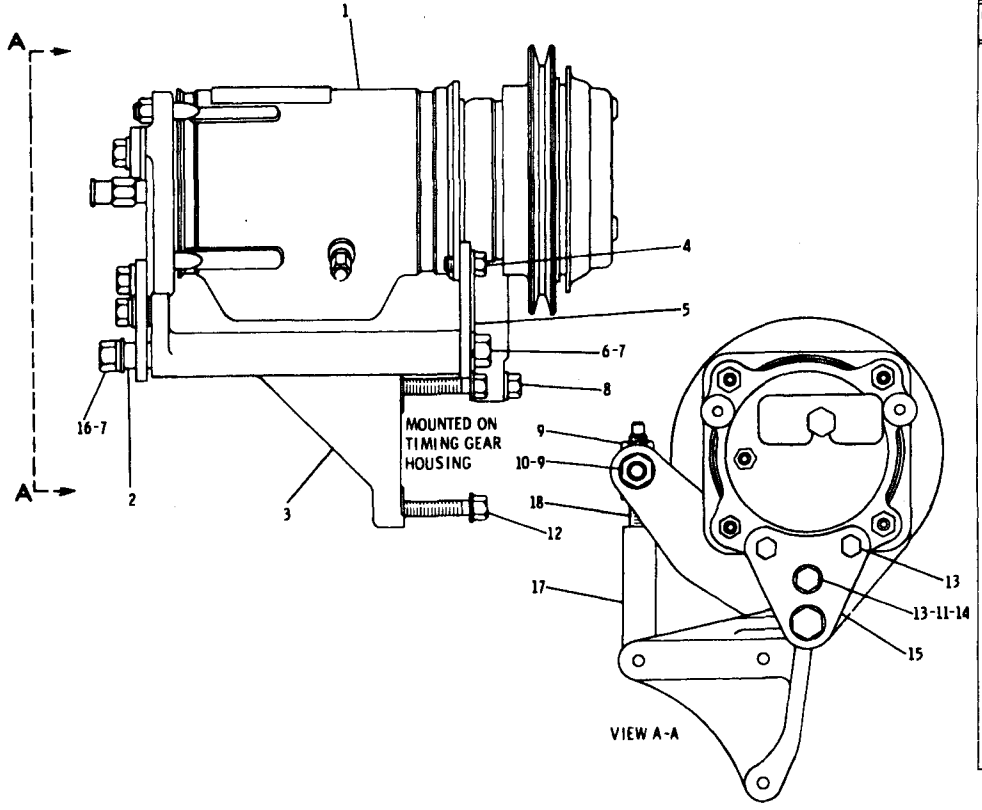

REF. NO	PART NUMBER	DESCRIPTION	QTY
1	7N4297	COMPRESSOR GROUP	1
		(Separate Illustration)	
2	8S8320	SPACER	1
3	4N7339	BRACKET	1
4	1A2343	BOLT	2
	3B4505	LOCKWASHER	2
5	4N6719	PLATE	1
6	4B3823	BOLT	1
7	3B4508	LOCKWASHER	2
8	2P1301	BOLT	1
	1K7091	WASHER	1
9	1D4719	NUT	2
10	1P2237	SWIVEL	1
11	4B4278	WASHER--.0625 in. (1.58 mm) thick	1
12	2P3208	BOLT	2
13	2P3201	BOLT	3
14	5M1822	WASHER--.0312 in. (0.79 mm) thick	3
15	4N6721	PLATE	1
16	S1587	BOLT	1
	4B4280	WASHER	1
17	1P2238	ROD END	1
18	1P2236	ROD ASSEM.	1
		(Includes)	
	1D5117	NUT	1

J15495E

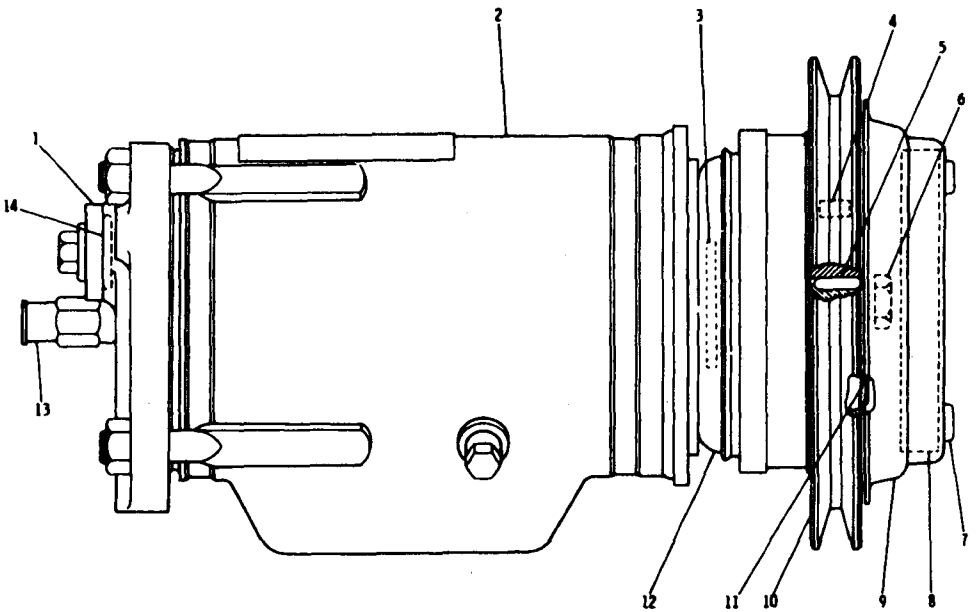

	REF. NO.	PART NUMBER	DESCRIPTION	QTY
	1	1P6356	PLATE	1
	2	1P6416	COMPRESSOR ASSEM.	1
▲	3	7N4293	SEAL KIT-----(refrigerant)------ (Includes shield assem., rings, seals, nut, seal kit, key and sleeve)	1
▲	4	7N4289	BEARING KIT (Includes bearing, seals, rings, nut, key, sleeve and shield group)	1
	5	7N809	KEY	1
	6	9P8750	NUT	1
	7	145111	SCREW	3
▲	8	7N4294	DRIVE CLUTCH KIT (Includes drive assem. nut, key, shield assem., rings, seals and sleeve)	1
▲	9	6N1116	COVER KIT------(dust)------ (Includes cover and screws)	1
▲	10	7N4290	PULLEY KIT (Includes pulley assem., seals, shield group, rings, nut, key and sleeve)	1
▲	11	7N4291	SEAL KIT--------(dust)-------- (Includes shield group, seals, key, nut, rings and sleeve)	1
▲	12	7N4292	COIL KIT (Includes coil assem., shield assem., seals, rings, nut, key and sleeve)	1
	13	1P6355	VALVE ASSEM.	1
	14	1H8171	SEAL	2

▲Not parts of 7N4297 Compressor Group

J15608E

7N4297 COMPRESSOR GROUP – Type 1

Part of 4N6718 Refrigerant Compressor Group shown on Page 235

AN ATTACHMENT

7N4297 COMPRESSOR GROUP – Type 2

Part of 4N6718 Refrigirant Compressor Group shown on Page 235

AN ATTACHMENT

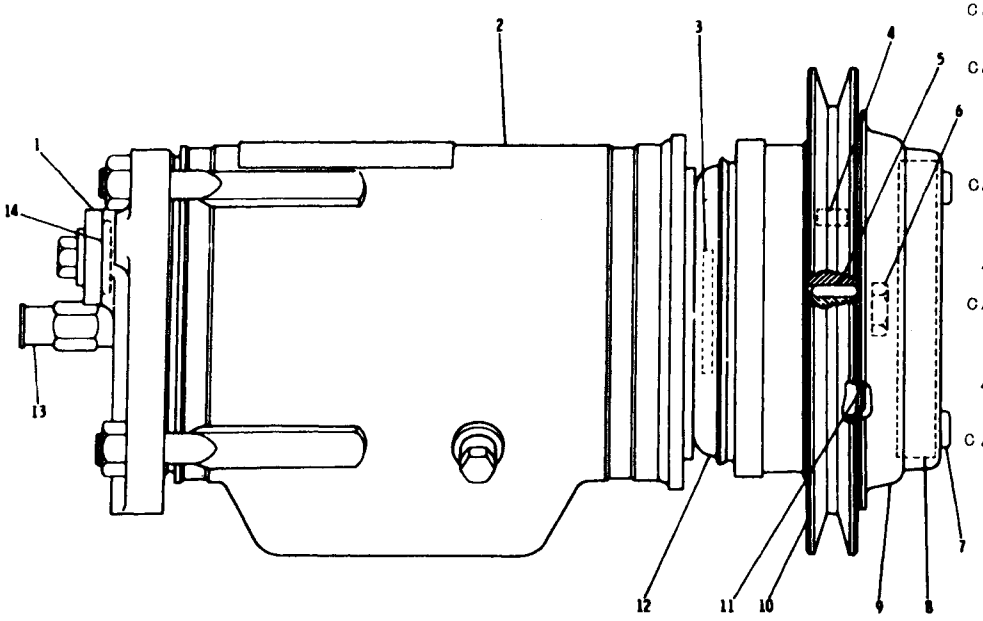

	REF. NO.	PART NUMBER	DESCRIPTION	QTY
	1	1P6356	PLATE	1
	2	1P8418	COMPRESSOR ASSEM.	1
C ▲	3	1P6357	SEAL KIT-----(refrigerant)------- (Includes shield assem., rings, seals, nut, seal kit, key and sleeve)	1
C ▲	4	1P6360	BEARING KIT---------- (Includes bearing, seals, rings, nut, key, sleeve and shield group)	1
	5	7N809	KEY----------	1
	6	9P8750	NUT----------	1
	7	145111	SCREW----------	3
C ▲	8	1P6361	DRIVE CLUTCH KIT---------- (Includes drive assem. nut, key, shield assem., rings, seals and sleeve)	1
▲	9	6N1116	COVER KIT------(dust)---------- (Includes cover and screws)	1
C ▲	10	7N4300	PULLEY KIT---------- (Includes pulley assem., seals, shield group, rings, nut, key and sleeve)	1
▲	11	7N4291	SEAL KIT--------(dust)---------- (Includes shield group, seals, key, nut, rings and sleeve)	1
C ▲	12	7N4287	COIL KIT---------- (Includes coil assem., shield assem., seals, rings, nut, key and sleeve)	1
	13	1P6355	VALVE ASSEM. ----------	1
	14	1H8171	SEAL----------	2

▲Not parts of 7N4297 Compressor Group

C Indicates change

J26288E

MEMO

AIR CONDITIONER LINES (8P2149 N/S)

Part of 9P5227 Air Conditioner Arrangement listed on Page 234

AN ATTACHMENT

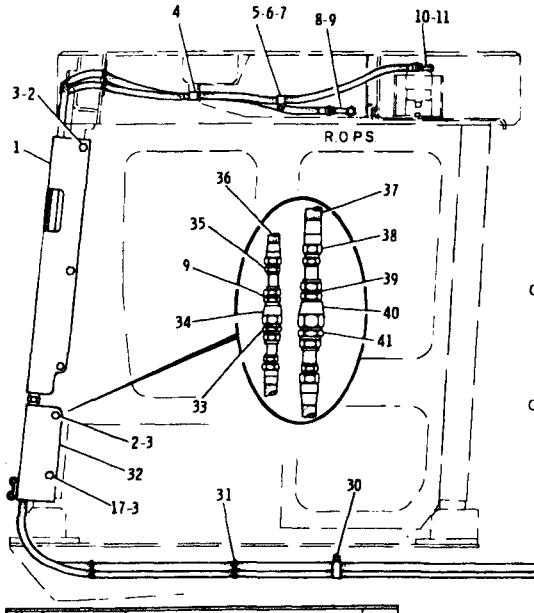

C	9	1S8947	SEAL	3
	10	9D4508	COUPLING	1
	11	6M5062	SEAL	1
		9P2598	PLATE	1
	12	8P4927	BUSHING	1
		8P4928	BUSHING	1
	13	9P6571	PLUG	2
C	14	6D1641	CLIP	4
	15	S1590	BOLT	4
	16	3B4506	LOCKWASHER	6
C	17	S1595	BOLT (32mm Long)	2
		5P3950	CAP	1
	18	5P3951	PLUG	1
		5P6994	CLIP	1
	19	1K6705	BOLT	1
	20	L1351	BOLT	2
	21	5P3945	CAP	1
		5P3946	PLUG	1
C▲	22	5P5645	HOSE ----------4.3m	
C	23	6V876	COUPLING	1
	24	2L1224	CAP	1
	25	S1748	BOLT	1
		4B4278	WASHER	1
	26	1H8171	SEAL	2
C	27	6V875	COUPLING	1
	28	2L1224	CAP	1
C▲	29	5P5676	HOSE ----------4.2m	

C	30	8M2769	CLIP	1
	31	7K1181	STRAP	4
	32	9P8678	PLATE	1
	33	7K3176	COUPLING	1
	34	5P3948	COUPLING	1
	35	5P4896	COUPLING	2
C▲	36	5P5645	HOSE ----------3.1m	
C▲	37	5P5676	HOSE ----------3.2m	
	38	5P4898	COUPLING	2
	39	5P3944	SEAL	2
	40	5P3929	COUPLING	1
	41	5P3928	COUPLING	1
C	42	4S4455	CLIP	2

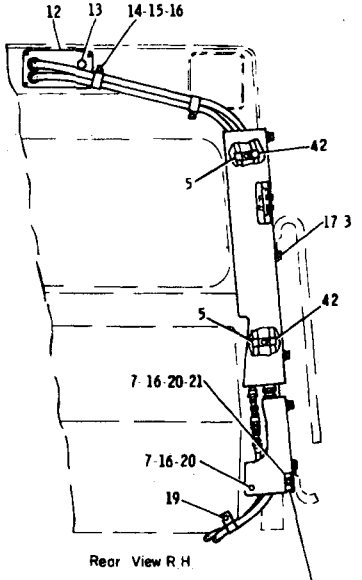

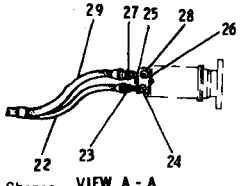

VIEW A - A

NO.	PART NO. 部品番号	DESCRIPTION 名称および記事	QTY. 数量
1	9P8676	PLATE	1
2	6H1717	BOLT (29mm Long)	3
3	4B4280	WASHER	5
	3B4508	LOCKWASHER	5
4	3P2404	CLIP	5
C 5	4S1962	CLIP	3
6	T102	BOLT	1
7	1D4717	NUT	3
8	5P6673	COUPLING	1

C Indicates Change

▲ORDER BY THE m

J20135E

C Indicates Change
▲ ORDER BY THE m

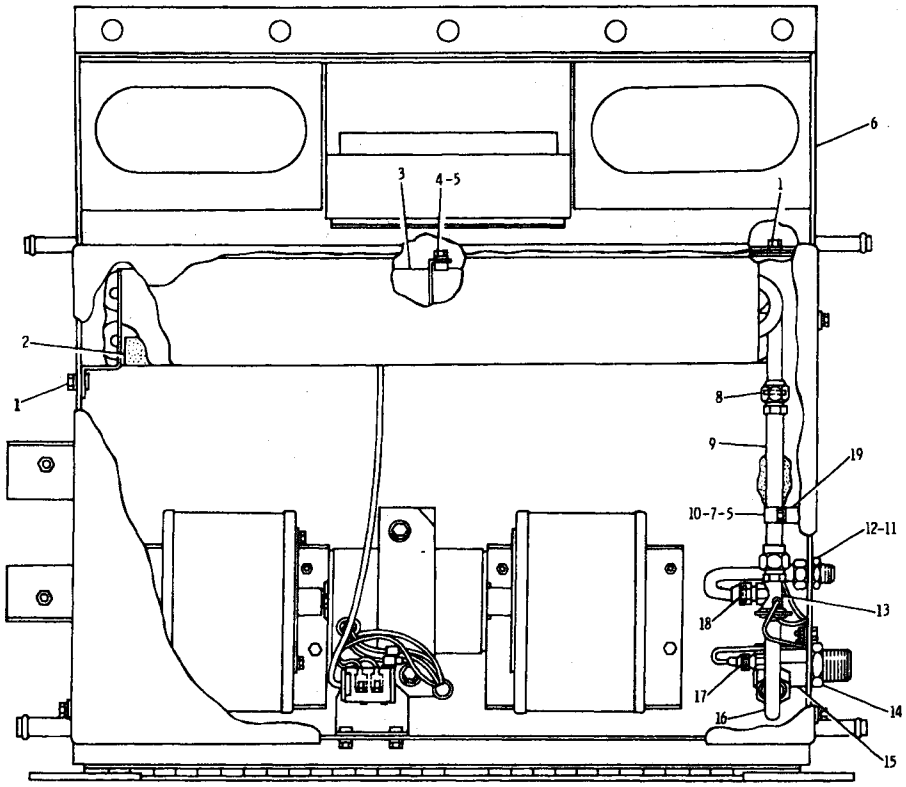

	NO.	PART NO. 部品番号	DESCRIPTION 名称および記事	QTY. 数量
	1	T102	BOLT	4
		3B4506	LOCKWASHER	4
▲	2	5P5671	SEAL ----------0.6m	
	3	8P4709	COIL	1
	4	S1614	BOLT	1
	5	3B4504	LOCKWASHER	2
	6	9P5089	PRESSURIZER GROUP (See Separate Illustration)	1
C	7	1B4330	NUT	1
	8	6M5062	SEAL	2
	9	8P3599	TUBE ASSEM.	1
	10	8J1256	CLIP	1
	11	1B9982	NUT	1
	12	1K4702	WASHER	1
	13	2G401	VALVE	1
	14	6P1303	NUT	1
	15	9P2185	FITTING ASSEM.	1
	16	9P2188	TUBE ASSEM.	1
		5L4758	SEAL	2
	17	5P6458	SEAL	1
	18	5F9144	SEAL	1
C	19	3S6696	SPACER	1

J18883E

AIR CONDITIONER (8P2146 N/S)—Part 1 of 2

Part of 9P5225 Air Conditioner Group shown on Page 234
9P5089 Pressurizer parts are shown on Page 225

AN ATTACHMENT

AIR CONDITIONER (8P2146 N/S)—Part 2 of 2

Part of 9P522b Air Conditioner Group shown on Page 234

AN ATTACHMENT

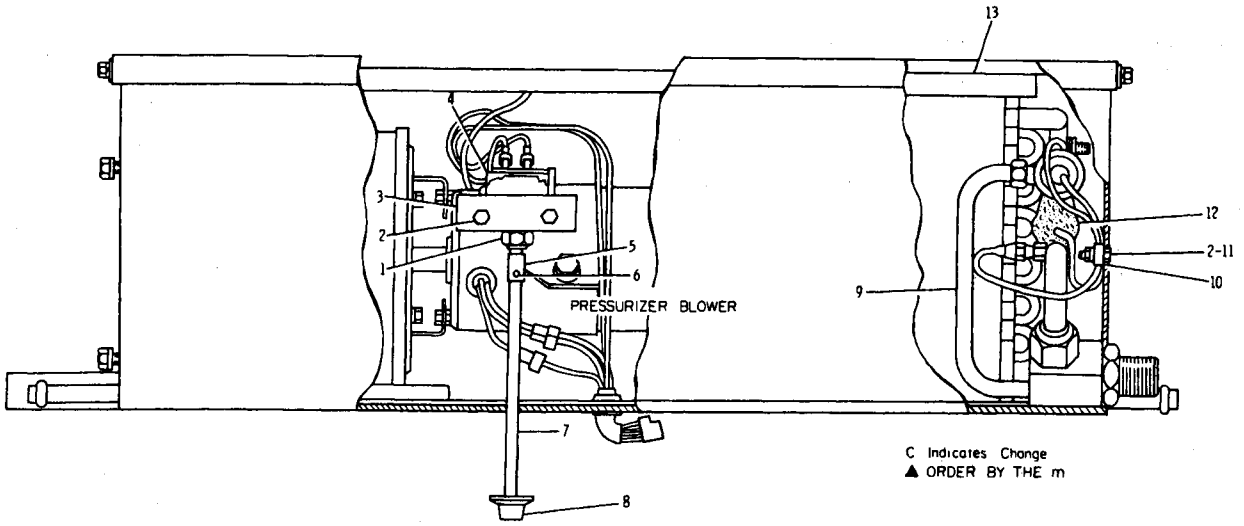

C Indicates Change
▲ ORDER BY THE m

NO.	PART NO. 部品番号	DESCRIPTION 名称および記事	QTY. 数量
1	2P4339	NUT	1
2	2A762	BOLT	3
	3B4504	LOCKWASHER	3
3	8P2111	BRACKET ASSEM.	1
4	9P3498	SWITCH(Thermostat)	1
5	8P3597	SLEEVE	1
6	3H1118	PIN	2
7	8P3598	ROD	1
8	1P6509	KNOB	1
9	8P4710	TUBE ASSEM.	1
10	1P6525	CLAMP	1
11	1B4330	NUT	1
▲	5P7070	INSULATION ---- 0.3m	
12	6P1299	CLAMP	1
	1P6524	SCREW	1
C 13	7G3610	SEAL	1

J18884E

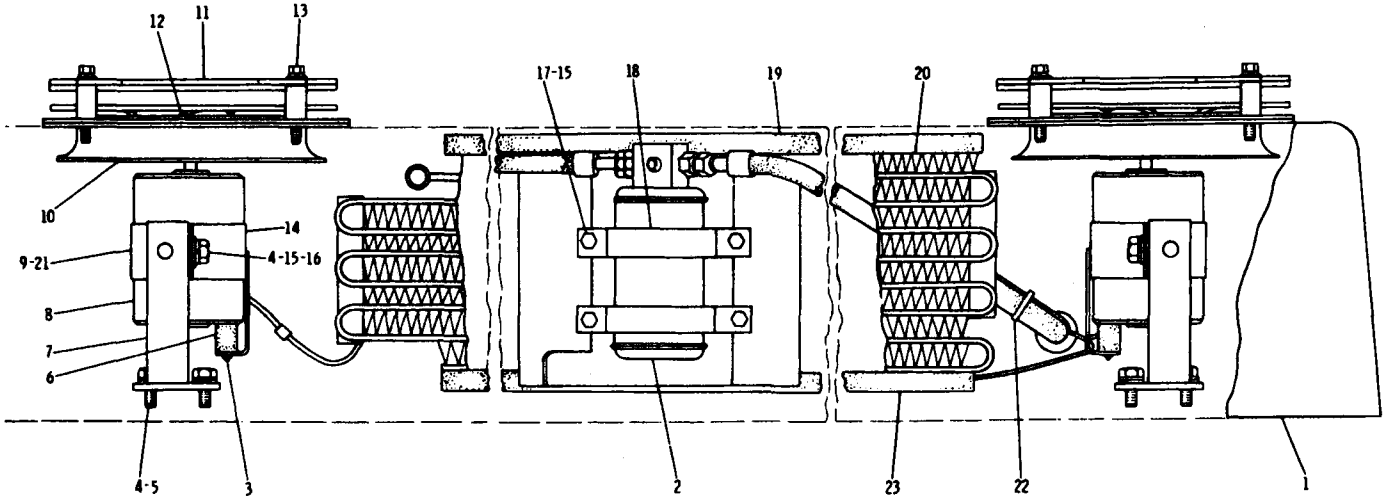

NO.	PART NO. 部品番号	DESCRIPTION 名称および記事	QTY. 数量
1	8P3138	GRILL ASSEM ----------	1
(2)	9D6888	DRYER ----------	(1)
3	2H6622	SCREW ----------	(2)
	6L7101	SPACER ----------	2
4	S509	BOLT ----------	10
5	5P1075	WASHER ----------	6
(6)	8P7567	BUMPER ASSEM -------	(2)
7	9P252	PLATE ASSEM ----------	2

	8	9P2218	MOTOR ASSEM. --------	(2)
		2P5145	BRUSH ----------	2
		5P5610	CONNECTOR(Push Type) --	1
		2L7018	PAD ----------	1
	(9)	2P4556	STRAP ----------	(2)
	10	9P247	ORIFICE ASSEM. -------	2
C	11	7G1289	GUARD ASSEM ---------	2
	12	3P7995	FAN ----------	2
		1B2714	BOLT ----------	8
	13	3B4504	LOCKWASHER ---------	8
		4B5269	WASHER ----------	8

	(14)	9P2424	STRAP ASSEM. ---------	(2)
	(15)	3B4506	LOCKWASHER ----------	(8)
	16	4B4278	WASHER ----------	4
	17	S1588	BOLT ----------	4
	18	8D7644	CLAMP ----------	4
▲C	(19)	5P5962	SEAL ---------- 1.3m	
	(20)	8P5089	COIL ----------	(1)
▲	(21)	5P5908	SEAL ---------- 0.7m	
C	(22)	3S2093	STRAP ----------	(3)
▲	(23)	5P5921	SEAL ---------- 1.3m	

C Indicates Change ▲ORDER BY THE m

J20142E

8P3148 BASIC CONDENSOR GROUP – Part 1 of 2

Part of 9P5227 Air Conditioner Arrangement listed on Page 234

AN ATTACHMENT

8P3148 BASIC CONDENSOR GROUP – Part 2 of 2

Part of 9P5227 Air Conditioner Arrangement listed on Page 234

AN ATTACHMENT

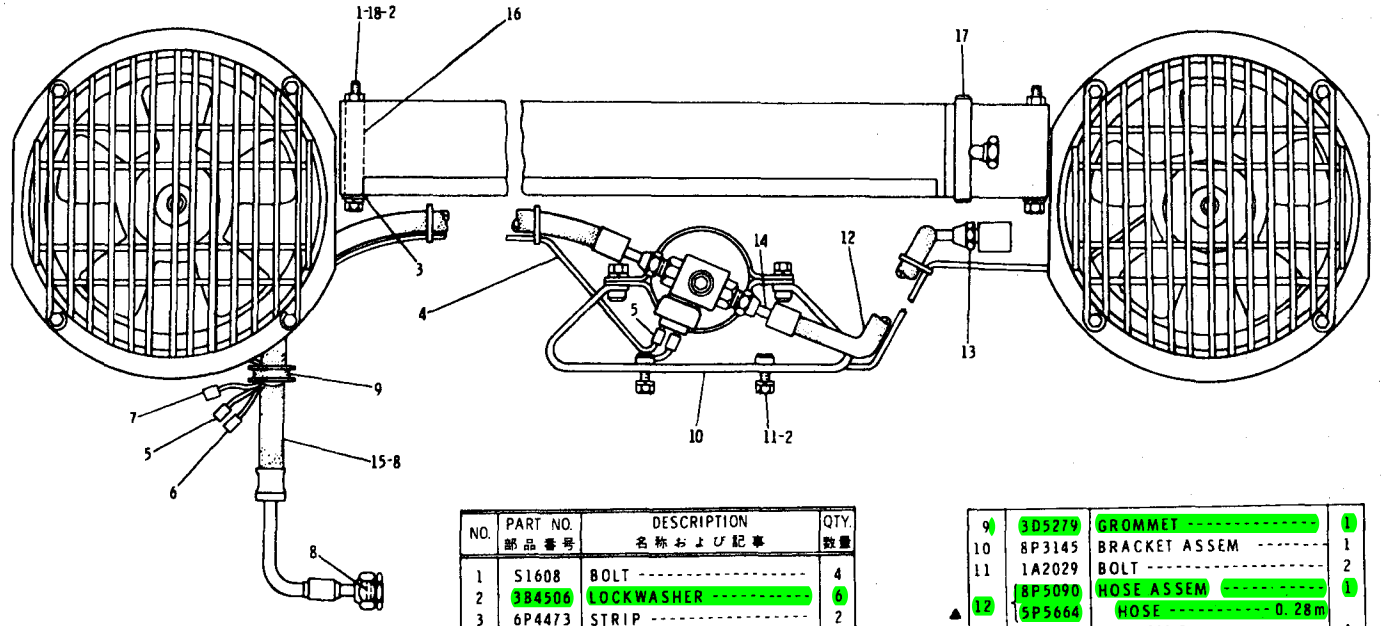

NO.	PART NO. 部品番号	DESCRIPTION 名称および記事	QTY. 数量
1	S1608	BOLT	4
2	3B4506	LOCKWASHER	6
3	6P4473	STRIP	2
4	8P5251	HARNESS ASSEM.	1
	6K1828	CONNECTOR (Motor)	2
	2S1043	BUTT	1
5	5P4571	TERMINAL (Dryer & Connector)	3
6	7K9689	CONNECTOR	1
7	5P5694	TERMINAL (Thermostat)	1
8	5F9144	SEAL	4
9	3D5279	GROMMET	1
10	8P3145	BRACKET ASSEM	1
11	1A2029	BOLT	2
12	8P5090	HOSE ASSEM	1
▲	5P5664	HOSE 0.28m	
13	5P2493	FITTING (Straight)	1
14	9D4507	FITTING (90°)	1
15	8P3137	HOSE ASSEM.	1
C	16 7K3245	TUBE	4
▲C	17 5P7070	INSULATION 0.25m	
C	18 2K4973	LOCKNUT	4

▲ ORDER BY THE m

C Indicates Change

J20143E

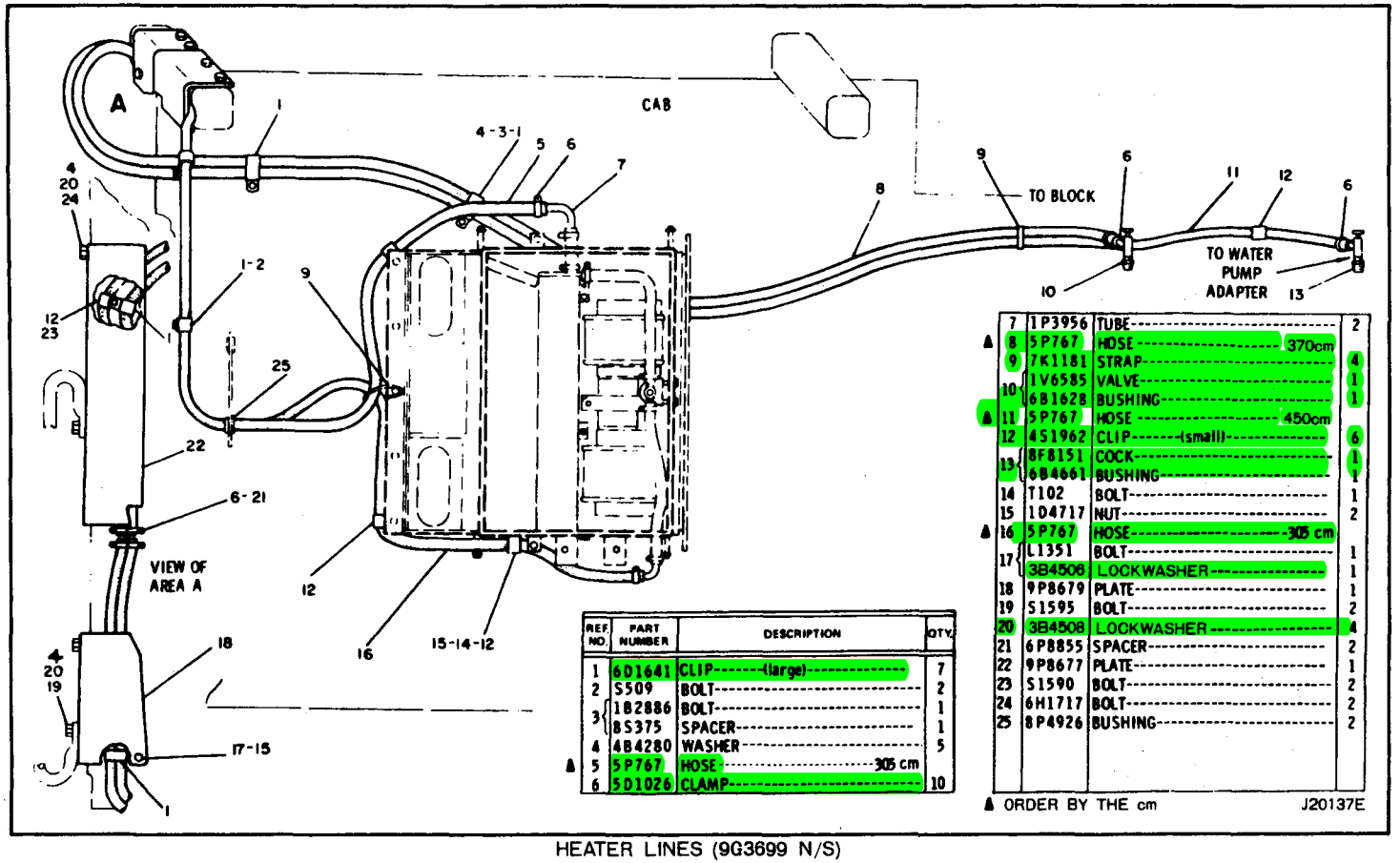

REF NO.	PART NUMBER	DESCRIPTION	QTY.
1	6D1641	CLIP-------(large)----------	7
2	S509	BOLT----------	2
3	1B2886	BOLT----------	1
	8S375	SPACER----------	1
4	4B4280	WASHER----------	5
▲ 5	5P767	HOSE----------305 cm	
6	5D1026	CLAMP----------	10
7	1P3956	TUBE----------	2
▲ 8	5P767	HOSE----------370cm	
9	7K1181	STRAP----------	4
10	1V6585	VALVE----------	1
	6B1628	BUSHING----------	1
▲ 11	5P767	HOSE----------450cm	
12	4S1962	CLIP-------(small)----------	6
13	8F8151	COCK----------	1
	6B4661	BUSHING----------	1
14	T102	BOLT----------	1
15	1D4717	NUT----------	2
▲ 16	5P767	HOSE----------305 cm	
17	L1351	BOLT----------	1
	3B4508	LOCKWASHER----------	1
18	9P8679	PLATE----------	1
19	S1595	BOLT----------	2
20	3B4508	LOCKWASHER----------	4
21	6P8855	SPACER----------	2
22	9P8677	PLATE----------	1
23	S1590	BOLT----------	2
24	6H1717	BOLT----------	2
25	8P4926	BUSHING----------	2

▲ ORDER BY THE cm J20137E

HEATER LINES (9G3699 N/S)

Part of 9P5227 Air Conditioner Arrangement listed on Page 234

AN ATTACHMENT

9G3764 CAB HEATER GROUP

Part of 9P5225 Air Conditioner Group shown on Page 234

AN ATTACHMENT

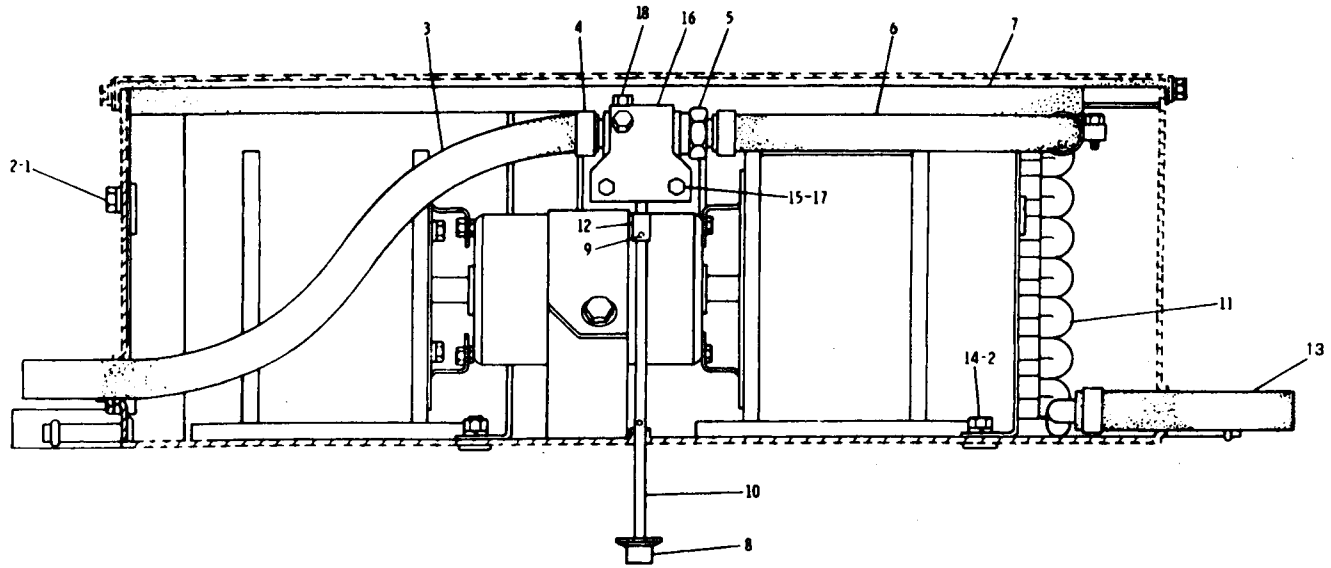

REF. NO.	PART NUMBER	DESCRIPTION	QTY.
1	T102	BOLT	2
2	3B4506	LOCKWASHER	4
▲ 3	5P767	HOSE 44.50 cm	
4	5D1026	CLAMP	4
5	7G8699	VALVE	1
▲ 6	5P767	HOSE 38.10cm	
7	7G3615	SEAL	1
8	1P6509	KNOB	1
9	3H1118	PIN	2
10	8P3600	ROD	1
11	3P7993	COIL	1
12	8P3597	SLEEVE	1
▲ 13	5P767	HOSE 10.20 cm	
14	1D4717	NUT	2
15	7B2742	BOLT	2
	3B4504	LOCKWASHER	2
	8P6099	SPACER	2
16	9G931	BRACKET ASSEM. (Includes)	1
17	9F6445	NUT	2
18	2L5317	SCREW	2
	8F1434	LOCKWASHER	2

▲ ORDER BY THE cm

J20145E

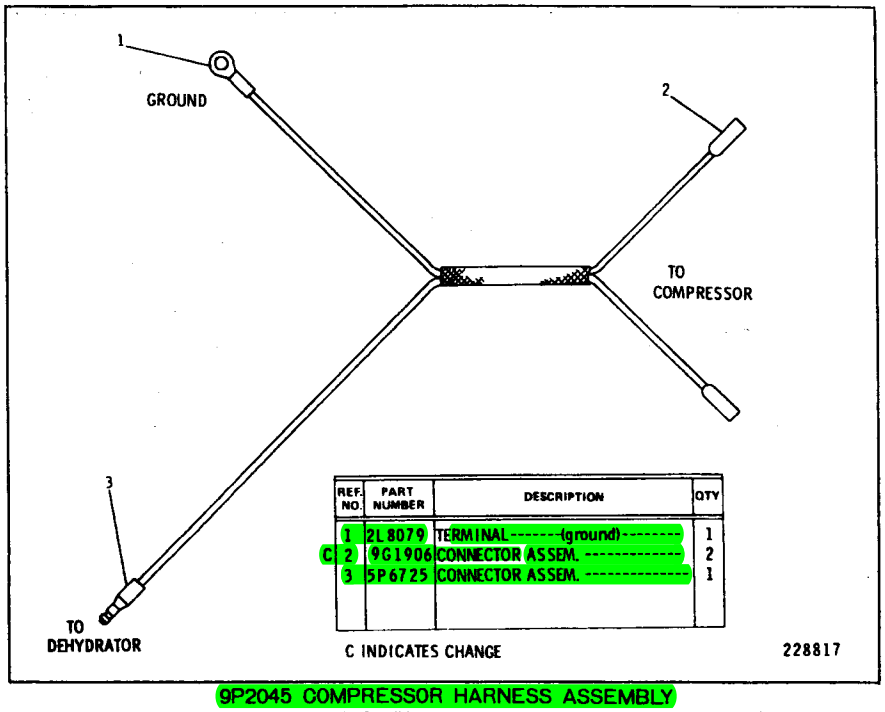

REF. NO.	PART NUMBER	DESCRIPTION	QTY
1	2L8079	TERMINAL-------(ground)-------	1
C 2	9G1906	CONNECTOR ASSEM. ----------	2
3	5P6725	CONNECTOR ASSEM. ----------	1

C INDICATES CHANGE

228817

9P2045 COMPRESSOR HARNESS ASSEMBLY

Part of 9P5227 Air Conditioner Arrangement listed on Page 234

AN ATTACHMENT

9S7977 TOOL GROUP

8F9866 Grease Gun parts are shown on Page 246

AN ATTACHMENT



9S1738 SCREWDRIVER
NO. 2 PHILLIPS

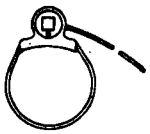

2P8250 STRAP WRENCH ASSEM.



5S9569 SOCKET

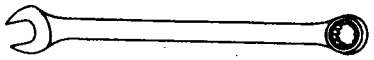

8H8503 WRENCH (5/16" Opening)
8H8505 WRENCH (3/8" Opening)
8H8513 WRENCH (7/8" Opening)
8H8508 WRENCH (9/16" Opening)
8H8509 WRENCH (5/8" Opening)
8H8511 WRENCH (3/4" Opening)
8H8515 WRENCH (1" Opening)
8H8507 WRENCH (1/2" Opening)

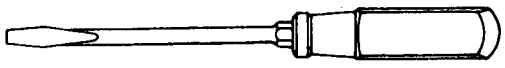

1F1157 SCREWDRIVER



8H8561 SOCKET



C 5P1763 SOCKET

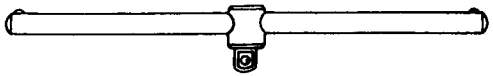

5S9566 WRENCH



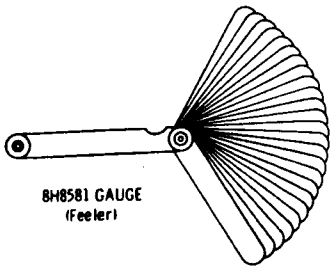

8H8581 GAUGE
(Feeler)

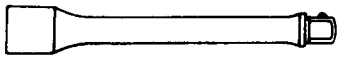

8H8559 EXTENSION

8H8549 SOCKET (9/16" Opening)
8H8554 SOCKET (7/8" Opening)
8H8555 SOCKET (15/16" Opening)
8H8556 SOCKET (1" Opening)
9S1730 SOCKET (1 1/16" Opening)
1S259 SOCKET (1/2" Opening)

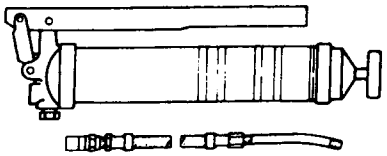

8F9866 GREASE GUN (Lever)
(See Separate Illustration)

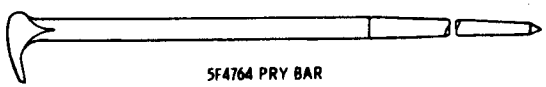

5F4764 PRY BAR

C INDICATES CHANGE

J26871E

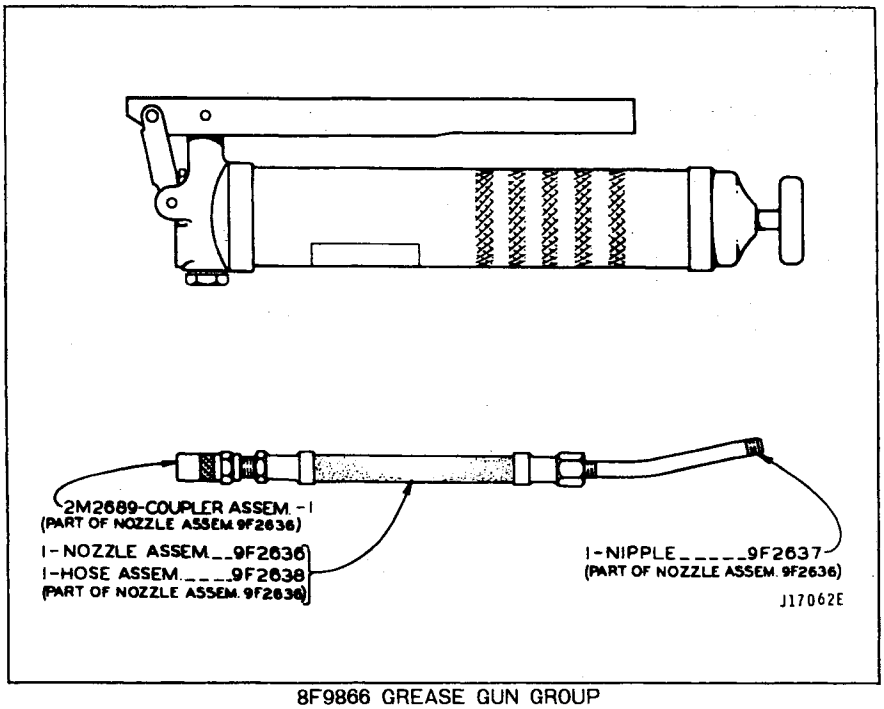

8F9866 GREASE GUN GROUP
Part of 9S7977 Tool Group shown on Page 245
AN ATTACHMENT

Quantity Used	Part Number	Description
1	Not Serv.	Plate·····Serial Number, Tractor & Engine (On R.H. side of Firewall under the Dash)
1	Not Serv.	Plate·····Tractor Serial Number (On L.H. side of Steering Clutch Case)
1	Not Serv.	Plate·····Engine Serial Number (On L.H. of Cylinder Block)
12	7B3028	Drive Screw
1	5P8197	Plate·····Warning (On top of Dash Console)
1	8S5496	Film·····"CATERPILLAR" (On front face of Radiator Guard)
1	8S8958	Film·····"CATERPILLAR" (On rear face of Fuel Tank)
2	1P9878	Film·····"CAT" (On each side of Hood)
2	8S3923	Film·····Corporate Symbol (On each side of Seat Support)
2	5P6382	Film·····"D6D" (On each side of Seat Support)
1	5P9673	Film·····Parking Brake (On vertical face near the Parking Brake Lever)
1	5P6802	Film·····Lubrication Instruction (On vertical face of R.H. Console)

J21542E

NAME PLATES AND FILMS
Effective with Serial No. 6HC1~6HC305

Quantity Used	Part Number	Description
1	Not Serv.	Plate---------SIN (On Upper Front L.H. Side of Steering Console)
1	Not Serv.	Plate---------PIN (Rear Side of Bevel Gear & Steering Clutch)
1	Not Serv.	Plate---------Engine Serial Number (On Upper Rear L.H. Side of Cylinder Block)
12	7B3028	Drive Screw
2	4B4158	Drive Screw
1	5P8197	Plate---------Warning (On Top of Dash Console)
1	8C6490	Film---------"CATERPILLER" (On Front Face of Radiator Guard)
1	8C6451	Film---------"CATERPILLAR" (On Rear Face of Fuel Tank)
2	8C3342	Film---------"CAT" (On each Side of Hood)
2	8C607	Plate---------Corporate Symbol (On each Side of Dash)
1	4Y3063	Film---------Stripe (D6D) (On R.H. Side of Seat Support)
1	4Y3067	Film---------Strip (D6D) (On L.H. Side of Seat Support)
2	8T4656	Film---------Logging Special (On each Side of Seat Support)

J32595E

NAME PLATES AND FILMS
Effective with Serial No. 6HC306—UP

MEMO

9S3138 SEAL KIT

(Includes 28 metal - backed seals)

Qty.	Nominal Size	Part No.
2	(1,27cm)	5J1583
6	(1,905cm)	6J3575
6	(2,54cm)	6J3600
6	(3,175cm)	6J3625
4	(3,81cm)	6J3650
4	(5,08cm)	6J3800

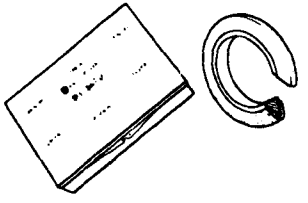

9S3135 SEAL KIT

(Includes 60 rubber O-ring seals)

Qty.	Nominal Size	Part No.
10	(1,27cm)	4J5140
10	(1,905cm)	4J5267
10	(2,54cm)	4J0520
10	(3,175cm)	4J0522
10	(3,81cm)	4J0524
10	(5,08cm)	4J0527

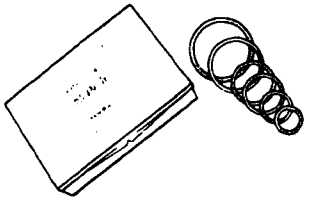

THREADED INSERTS KITS

Master (Includes inserts and tools)

Coarse	Fine	Size
9S3700	9S3500	Assorted

Repair (Includes inserts and tools)

9S3510	9S3509	#10
9S3512	9S3511	1/4
9S3514	9S3513	5/16
9S3618	9S3515	3/8
9S3620	9S3619	7/16
9S3622	9S3621	1/2
9S3624	9S3623	9/16
9S3626	9S3625	5/8
9S3628	9S3627	3/4
9S3630	9S3629	7/8
9S3632	9S3631	1
9S3633		1 1/8
9S3635		1 1/4
9S3637		1 1/2

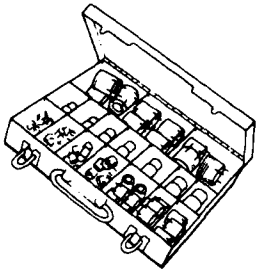

Refill (Includes inserts)

9S3674	9S3673	#10
9S3649	9S3639	1/4
9S3650	9S3640	5/16
9S3651	9S3641	3/8
9S3652	9S3642	7/16
9S3653	9S3643	1/2
9S3654	9S3644	9/16
9S3655	9S3645	5/8
9S3656	9S3646	3/4
9S3657	9S3647	7/8
9S3658	9S3648	1
9S3675		1 1/8
9S3677		1 1/4
9S3679		1 1/2

J17303E

RELATED REPAIR KITS

RELATED REPAIR KITS



LIQUID GASKET

7M7260 227g

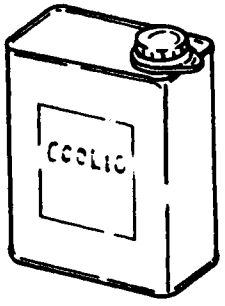

COOLIC

For Japan

5A4407	4 ℓ
5A5295	18 ℓ
5A5543	200 ℓ



ANTI-SEIZURE COMPOUND

9M3710 454g Paste



GREASE GUN CARTRIDGE

1P808(No. 2 Grade)	411g
5P960(Molybdenum)	411g
3Y7597	411g
(No. 1 Grade, For Japan)	



RUST INHIBITOR

3P2044	1.0 ℓ
6V3542	250m ℓ



REPAIR SEALANT

Bearing Mount	7M7456	50cc
Thread Lock	9S3263	50cc
Pipe Sealant	5P3413	50cc
Retaining Compound	9S3265	50cc

J21172E

SPECIFICATIONS

(SUBJECT TO CHANGE WITHOUT NOTICE)

WEIGHT AND DIMENSIONS

Weight :	
tractor only	12,800kg
with angling dozer	15,600kg
Length :	
tractor only	3,735mm
with angling dozer	5,185mm
Height :	
top of the fuel tank cap	2,150mm
top of the stack	3,105mm
Width :	
tractor only	2,390mm
with angling dozer	3,870mm
Gauge (center to center of tracks)	1,880mm
Ground Clearance (under the steering clutch case)	395mm
Maximum blabe lift :	
angling dozer	885mm
Maximum blabe down :	
angling dozer	385mm

CAPACITIES

	Initial Fill	Refill
Cooling system	36 ℓ	——
Fuel tank	295 ℓ	——
Lubrication system :		
Engine crankcase	29 ℓ	27.5 ℓ
Flywheel clutch	4 ℓ	98.5 ℓ
Steering clutch and Brake		
Transmission and bevel gear	99 ℓ	
Final drive (each side)	19 ℓ	19 ℓ
Hydraulic system :		
Tank only	44 ℓ	44 ℓ

MACHINE SERIAL NUMBER PLATES LOCATIONS

Serial number plates are mounted on the following locations.

Master (vehicle and engine)	on R.H. lower side of dash
Vehicle	on L.H. side of rear face of steering clutch case
Engine	on top rear L.H. side of cylinder block
Hydraulic	on top front L.H. side of hydraulic tank
Bulldozer	on top rear R.H. side of mold board

CATERPILLAR®

XEBP9733-01(6-88)

Printed in U.S.A.