CATERPILLAR®

SEBP4416-27
October 2009

RUTHZIL TRATOR COMERCIAL DE PEÇAS LTDA 11 97083-6812 ROLANDO CITRANGULO

Parts Manual

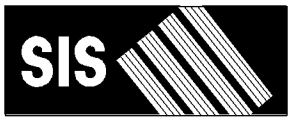

See "General Information" for New Parts Manual Features.

D6K LGP, XL TRACK-TYPE TRACTOR

DHA1-Up (Machine)
FBH1-Up (Machine)
C6E1-Up (Engine)
4041-Up (Ripper)
1MW1-Up (Angle Blade)
4101-Up (Angle Blade)
9EZ1-Up (Angle Blade)
S1B1-Up (Angle Blade)
S1C1-Up (Angle Blade)
S1D1-Up (Angle Blade)
S1T1-Up (Angle Blade)

Powered By C6.6 Engine
This Parts Manual is also Available in .PDF Format on Compact Disc(CD-ROM)-Caterpillar Form No. SERP4416-27

Product and Dealer Information

Note: For product identification plate locations, see the section “Product Identification Information” in the Operation and Maintenance Manual.

Delivery Date: _____

Product Information

Model: _____

Product Identification Number: _____

Engine Serial Number: _____

Transmission Serial Number: _____

Generator Serial Number: _____

Attachment Serial Numbers: _____

Attachment Information: _____

Customer Equipment Number: _____

Dealer Equipment Number: _____

Dealer Information

Name: _____ Branch: _____

Address: _____

_____

_____

	Dealer Contact	Phone Number	Hours
Sales:	_____	_____	_____
Parts:	_____	_____	_____
Service:	_____	_____	_____

MEMORANDA

TABLE OF CONTENTS

Name	Page
GENERAL INFORMATION	A5
REPAIR ALTERNATIVES	A8
SUPPLEMENTAL COOLANT ADDITIVES	A9
MAINTENANCE PARTS	A10
INDEX	A14
MACHINE ARRANGEMENT	1
CHASSIS AR	1
COMMON AR	1
FORESTRY AR	2
OPTION AR-CAB	2
OPTION AR-FUEL TANK	2
OPTION AR-GUARD	2
OPTION AR-RIPPER	3
ENGINE ARRANGEMENT	4
ENGINE AR	4
INSTALLATION AR-ENGINE	8
BASIC ENGINE	9
CAMSHAFT GP	9
COVER GP-ENGINE	10
COVER GP-VALVE MECHANISM	12
CRANKSHAFT GP	25
CYLINDER BLOCK GP	26
CYLINDER HEAD AS	30
CYLINDER HEAD GP	34
FLYWHEEL GP	38
HOUSING GP-FLYWHEEL	39
HOUSING GP-FRONT	43
LIFTING GP-ENGINE	47
MOUNTING GP-ENGINE	49
MOUNTING GP-ENGINE & XMSN	50
PAN GP-OIL	51
PISTON & ROD GP	57
PULLEY GP-CRANKSHAFT	58
ROCKER ARM GP	59
VALVE MECHANISM GP	61
LUBRICATION SYSTEM	63
BREATHER GP	63
FILLER GP-ENGINE OIL	64
FILTER GP-ENGINE OIL	66
OIL CHANGE GP-HIGH SPEED	67
PUMP GP-ENGINE OIL	71
VALVE GP-FLUID SAMPLING	72
COOLING SYSTEM	73
COOLER GP-ENGINE OIL	73
COOLING AR	76
COOLING AR-SUPPLEMENTAL	78
FAN & MOTOR GP	80
FASTENER GP-RADIATOR	82
FITTING GP-WATER LINES	83
LINES GP-WATER	84
PLUG GP-WATER LINES	87
PUMP GP-WATER	88
REGULATOR GP-TEMPERATURE	92
AIR INLET AND EXHAUST SYSTEM	93
AIR CLEANER GP	93
LINES GP-AIR	96
MANIFOLD GP-INLET	98
MUFFLER GP	100
PIPE GP-EXHAUST	101
TURBOCHARGER GP	102
FUEL SYSTEM	114
ADAPTER GP-FAST FILL FUEL	114
CAP GP-FUEL FILLER	115
FILTER GP-FUEL	117
FILTER GP-WATER SEP & FUEL	118
INJECTOR GP-FUEL	119
LINES GP-FUEL	123
PUMP & MTG GP-UNIT INJ HYD	133
PUMP GP-FUEL INJECTION	134
PUMP GP-FUEL PRM & WATER SEP	183
TANK GP-FUEL	188
ELECTRICAL AND STARTING SYSTEM	192
ALARM GP	192
ALTERNATOR GP-CHARGING	193
BLOCK GP-JUNCTION	198
CABLE AS-COILED	199
CONTROL GP-UNPROGRAMMED	200
ELECTRONICS AR-MACHINE	202
ELECTRONICS GP-COMMUNICATION	202
ELECTRONICS GP-IMPLEMENT	202
ELECTRONICS GP-MACHINE	203
ELECTRONICS GP-MONITOR	204
GLOW PLUG GP	210
GRADE CONTROL AR	213
GRADE CONTROL AR-LASER	223
GRADE CONTROL AR-SATELLITE	223
GRADE CONTROL GP	226
HARNESS AS-CONTROL	241
HEATER GP-JACKET WATER	242
INSTALLATION GP-COMMUNICATION	244
INSTALLATION GP-SECURITY	263
LAMP GP-FLOOD	264
LAMP GP-WARNING BEACON	266
LIGHTING GP-FLOOD	267
LIGHTING GP-WARNING BEACON	268
MAST GP	269
MOUNTING GP-GRADE CONTROL	270

TABLE OF CONTENTS

Name	Page
MOUNTING GP-RECEIVER	275
PANEL GP-FUSE	276
RADIO GP-COMMUNICATION	284
RECEIVER GP-LASER	284
RECEIVER GP-SATELLITE	284
SENSOR GP-LIQUID LEVEL	287
SENSOR GP-POSITION	288
SENSOR GP-PRESSURE	291
SENSOR GP-SPEED	292
SENSOR GP-TEMPERATURE	295
STARTING AID GP-ETHER	296
STARTING MOTOR GP-ELECTRIC	298
SWITCH GP-DISCONNECT	303
SWITCH GP-MAGNETIC	304
SWITCH GP-PRESSURE	305
SWITCH GP-ROTARY	306
SWITCH GP-TOGGLE	307
VALVE GP-ETHER STARTING	308
WIRING GP-CAB	309
WIRING GP-CHASSIS	313
WIRING GP-ENGINE	327
WIRING GP-PLATFORM	332
WIRING GP-SEAT	336
WIRING GP-WINCH	338
POWER TRAIN	342
ACTUATOR GP-PUMP	342
COUPLING GP-PUMP	343
FILTER GP-OIL	344
FINAL DRIVE & BRAKE GP	346
HEAD GP-MOTOR	354
HEAD GP-PUMP	356
LINES GP-CHARGE PRESSURE	358
LINES GP-DRAIN	362
LINES GP-HYDROSTATIC	364
LINES GP-POWER TRAIN COOLER	366
LINES GP-PUMP	368
MOTOR & MOUNTING GP	370
MOTOR GP-PISTON	371
MOUNTING GP-PUMP	373
POWER TRAIN AR	374
PUMP & MTG GP-POWER TRAIN	375
PUMP GP-CHARGE	376
PUMP GP-PISTON	378
ROTATING GP-MOTOR	383
ROTATING GP-PUMP	386
SEGMENT GP-SPROCKET	390
VALVE & MTG GP-SOLENOID	391
VALVE GP-FLUSHING	392
VALVE GP-MOTOR CONTROL	393
VALVE GP-PUMP CONTROL	394
VALVE GP-RELIEF	396
VALVE GP-TRANSMISSION CONTROL	400
FRAME AND BODY	402
CASE & FRAME GP	402
COUNTERWEIGHT GP	403
COVER GP-ACCESS	404
DOOR GP-ACCESS	409
DRAWBAR GP	410
ENCLOSURE GP-PLATFORM	411
GRILL GP-RADIATOR	412
GUARD GP-BOTTOM	420
GUARD GP-BRUSH	422
GUARD GP-FUEL TANK	424
GUARD GP-LIGHTING	430
GUARD GP-LINES	431
GUARD GP-RADIATOR	432
GUARD GP-REAR	434
HOOD & GUARD GP	435
HOOD GP	439
PANEL GP-SIDE	440
SCREEN GP	446
SUPPORT GP-HOOD	447
SUPPRESSION AR-SOUND	449
SWEEP GP	450
UNDERCARRIAGE	455
BAR GP-EQUALIZER	455
FRAME GP-TRACK ROLLER	460
GUARD GP-RECOIL MECHANISM	462
GUARD GP-SPROCKET	463
GUARD GP-TRACK GUIDE	465
GUARD GP-TRACK ROLLER	468
IDLER GP-FRONT	469
IDLER GP-TRACK	470
LINK AS-TRACK	471
LINK AS-TRACK BOX	477
PIVOT BAR GP	488
ROLLER GP-TRACK	490
ROLLER GP-TRACK CARRIER	492
SCRAPER GP-IDLER	493
SPRING GP-RECOIL	495
TRACK ADJUSTER & RECOIL GP	497
TRACK GP	498
UNDERCARRIAGE AR	508
STEERING AND BRAKING SYSTEM	510
MANIFOLD & VALVE GP	510
HYDRAULIC SYSTEM	511
ACCUMULATOR GP-PILOT OIL	511
ACTUATOR GP-HYDRAULIC	513
ACTUATOR GP-PUMP	514
CONTROL GP-WINCH & RIPPER	515
CYLINDER GP-ANGLING	517
CYLINDER GP-BULLDOZER LIFT	519
CYLINDER GP-BULLDOZER TILT	520
CYLINDER GP-RIPPER	521

TABLE OF CONTENTS

Name	Page
HEAD GP-PUMP	525
HYDRAULIC AR-3 VALVE	527
HYDRAULIC AR-4 VALVE	528
LINES GP-ANGLE & TILT	530
LINES GP-BULLDOZER	540
LINES GP-LIFT CYLINDER	541
LINES GP-PILOT	545
LINES GP-PUMP	547
LINES GP-RIPPER	553
LINES GP-WINCH	556
MANIFOLD GP-CONTROL & SOLENOID	566
MANIFOLD GP-CONTROL	567
MANIFOLD GP-VALVE	569
MOUNTING GP-VALVE	570
PIN GP-CYLINDER	571
PUMP & LINES AR	572
PUMP & LINES GP	573
PUMP GP-CHARGE	579
PUMP GP-PISTON	580
PUMP GP-PISTON & GEAR	582
ROTATING GP-PUMP	585
TANK & MTG GP-HYDRAULIC	588
TANK GP-HYDRAULIC	591
VALVE GP-BANK 3	592
VALVE GP-BANK 4	594
VALVE GP-CHECK	596
VALVE GP-CONTROL	598
VALVE GP-PUMP CONTROL	617
VALVE GP-RELIEF	620
VALVE GP-SOLENOID	623
IMPLEMENTS	627
C-FRAME GP-POWER ANGLING	627
LINK GP-PITCH	630
OPERATOR STATION	631
ACCESSORY GP-CAB	631
ADJUSTER GP-SEAT	633
AIR COMPRESSOR GP-SEAT	634
AIR CONDITIONER GP	636
ARM GP-SEAT SUSPENSION	643
ARMREST GP	646
CAB AR-ENCLOSED ROPS	650
CAB GP-ENCLOSED ROPS	650
CAB GP-FORESTRY	651
CANOPY AR	651
CANOPY GP	652
COMPRESSOR GP-REFRIGERANT	653
CONDENSER GP-REFRIGERANT	655
CONSOLE GP	657
CONSOLE GP-CONTROL	659
CONSOLE GP	660
CONSOLE GP-OPERATOR	661
CONTROL & MTG GP-PEDAL	663
CONTROL GP-HANDLE	664
CONTROL GP-JOYSTICK	669
CONTROL GP-RIPPER	678
CONTROL GP-UNPRGMED MONITOR	680
COVER GP-CAB	681
COVER GP-CONSOLE	697
DISPLAY GP-MONITOR	699
DOOR GP-CAB	700
HEATER GP-CAB	724
INSTALLATION GP-RADIO	732
INSTRUMENT GP	734
INSULATION GP-WEATHER	738
LINES GP-AIR CONDITIONER	739
LINES GP-HEATER	742
MIRROR GP-REAR VIEW	744
MONITOR AS	745
MOTOR GP-WINDOW WIPER	746
MOUNTING GP-CAB	753
MOUNTING GP-RADIO	754
PAN GP-BACKREST	755
PAN GP-SEAT	760
PEDAL GP-GOVERNOR & BRAKE	764
PLATFORM GP-OPERATOR	768
RADIO GP	769
RECLINER GP-SEAT	775
SCREEN GP-CAB	776
SCREEN GP-PROTECTION	779
SEAT BELT GP	780
SEAT GP	781
SEAT GP-SUSPENSION	789
SUPPORT GP-HYDRAULIC CONTROL	796
SUPPORT GP-STEERING CONTROL	798
SUSPENSION GP-SEAT	800
TRIM GP-CANOPY	803
WASHER GP-WINDOW	804
WINDOW GP-CAB	806
WIPER GP-WINDOW	812
WORK TOOLS	814
BLADE & EDGE GP-ANGLING	814
BLADE GP-ANGLING	818
CONTROL GP-WINCH	830
CONVERSION AR-WINCH	832
COVER GP-WINCH	833
EDGE GP-BIT & CUTTING	834
MOUNTING GP-MAST	839
MOUNTING GP-RIPPER	840
RIPPER AR	842
RIPPER GP	846
TOOTH GP-RIPPER	848
SERVICE EQUIPMENT AND SUPPLIES	852
FILM GP	852
LINES GP-DIAGNOSTIC	855

TABLE OF CONTENTS

Name	Page	Name	Page
PLATE & FILM GP	858		
PART NUMBER INDEX	B1		

GENERAL INFORMATION

1. MACHINE IDENTIFICATION

Caterpillar machines are identified by Product Identification Numbers (PIN). Some components included in a machine may be identified by Serial Numbers (S/N). Typical components that will be serialized include engines, transmissions, bulldozers, and rippers. The machine and engine are further identified by arrangement numbers and in some cases modification numbers. These numbers are shown on the product identification plate(s) and on the master plate in the operator's compartment.

Caterpillar dealers need all of these numbers to determine accurate parts identification.

SIS *New Feature*

Effective First Quarter 2001 the Caterpillar Product Identification Number (PIN) changed from 8 to 17 characters. In an effort to provide uniform equipment identification, Caterpillar and other construction equipment manufacturers are moving to comply with the latest version of the product identification numbering standard. Non-road machine PINs are defined by ISO 10261. The new PIN format will apply to all Caterpillar machines and generator sets. The PIN plates and frame marking will display the 17 character PIN. The new format will look like the following:

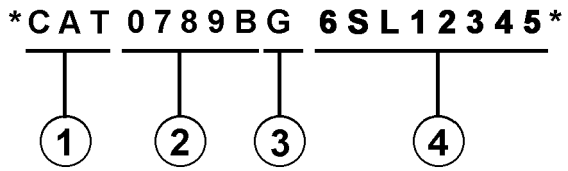

Where:

1. Caterpillar's World Manufacturing Code (characters 1-3)

2. Machine Descriptor (characters 4-8)

3. Check Character (character 9)

4. Machine Indicator Section (MIS) or Product Sequence Number (characters 10-17). These were previously referred to as the Serial Number.

Machines and generator sets produced before First Quarter 2001 will maintain their 8 character PIN format.

Components such as engines, transmissions, axles, etc. and work tools will continue to use an 8 character Serial Number (S/N).

2. ORDERING PARTS

WARNING

When replacement parts are required for this product Caterpillar recommends using Caterpillar replacement parts or parts with equivalent specifications including, but not limited to, physical dimensions, type, strength and material.

Failure to heed this warning can lead to premature failures, product damage, personal injury or death.

Quality Caterpillar replacement parts are available from Caterpillar dealers throughout the world. Their parts inventories are up to date and include all parts normally required to protect your investment in Caterpillar machines. Dealers may offer repair kits or remanufactured parts to allow selection of the most effective repair alternative for a particular situation. When ordering parts, your order should specify the quantity, part number, part name, and the serial number/product identification number of the machine for which the parts are needed.

3. PARTS MANUAL ORGANIZATION

Product information in this manual is presented as "information elements" that represent all of the components for the specific model. Engine Arrangement and Seat Group are examples of information elements. The information elements are organized alphabetically by part name and secondarily by part number within each major section of the manual.

4. TABLE OF CONTENTS

A table of contents (TOC) is found at the beginning of the manual. The TOC lists each section of the manual with a complete list of all information elements organized as they appear in the manual. Page numbers are provided for quick reference to detailed parts identification illustrations and serviceable consist lists.

5. MAINTENANCE PARTS INDEX

The Maintenance Parts Index, located near the beginning of the manual, references most frequently used maintenance part numbers, providing description, quantity, usage and page number. This information is organized alphabetically by part description.

6. INDEX

The index located near the front of the manual is an alphabetical listing of all information elements included in the manual. Page numbers are provided for quick reference to detailed parts identification illustrations and serviceable consist lists.

7. PART NUMBER INDEX

A numerical index listing all part numbers and the corresponding page number(s) appears at the back of the manual.

8. CAPTIONS

Captions located at the beginning of each information element identify the part number and part name along with additional descriptive information. PIN and S/N information found in each caption should be used to select correct information for a specific machine. Field replacement options, identification of optional attachment components, and where used ("part of") information is also provided.

The first line of a caption is shown in larger type font to indicate the beginning of an information element. Captions for additional pages that may be required to illustrate an information element will be shown in standard type font and will include the term *(contd.)* .

9. NON-SERVICED PARTS

In some instances it is necessary to display non-serviced parts that are a link to a lower level serviceable consist lists. These non-serviced part numbers are shown in *italic* type indicating that they are not available.

10. PARTS LIST REFERENCE NUMBERS

Numbers shown in the Ref No column correspond to numbers used in the associated graphic(s). An alphabetic suffix may be added to a reference number to identify lower level consist items. Numbers shown in the Graphic Ref column refer to the graphic number identifier displayed in the lower left corner of each illustration. The Graphic Ref number may be used in combination with the item Ref No to determine the correct part number. There may be intentional omission of a Ref No in a consist list as information is updated to reflect the latest serviceable part numbers.

11. INDENTED PART NAMES

When a part name is indented in a parts list, it is part of (included in) the group or assembly under which it is indented.

12. ILLUSTRATION REFERENCE LETTERS

When necessary, illustrations contain reference letters (A, B, C etc.) that are intended to track lines and harnesses from one point to another. They are also used to show where to reconnect illustrations that have been separated.

13. ABBREVIATIONS AND SYMBOLS

O.D. – Outside Diameter
I.D. – Inside Diameter
A – Not Part Of This Group
B – Use As Required
C – Change From Previous Type
D – Order By The Meter
E – Order By The Centimeter
F – Not Shown
G – Order By The Inch
I – Refer To Hydraulic Information System
M – Metric Part
R – Remfg Part May Be Available
Y – Separate Illustration
Z – Not Serviced Separately

SIS *New Feature*

14. DESCRIPTION OF TYPE CHANGES

Type - A type is defined as any configuration change that requires an additional Information Element for an Arrangement, Group, or Assembly. If serial number breaks for types are not available, a type # (Type 1, Type 2, etc.) will be displayed in the caption. These "type" changes are identified with a "C" note (change from previous type) in the Parts List. Only the "types" that apply to this Parts Manual will be included. Additional types may exist causing "C" notes to appear on an Information Element when no other types are shown.

15.<END>

This symbol indicates the end of an information element.

NOTE:

Continuing improvement and advancement of product design may cause changes to your machine which may not be included in this publication. Whenever a question arises regarding your Caterpillar product or this publication, please consult your Caterpillar dealer for the latest available information.

FRAME AND BODY

8E-3299 PLATFORM GP-CAB

PIN 3SK1-99999

SMCS-7253 100090751

NOTE	REF NO	GRAPHIC REF	PART NUMBER	QTY	PART NAME 1 2 3 4 5 6 (PRODUCT LEVEL)	SEE PAGE
	*	1	3T-3953	1	PLATE AS	
	2	1	6E-2992	25	BOLT (3/8-16X.750IN)	
	3	1	6F-1976	41	WASHER-HARD (3MM THK)	
	4	1	9F-1444	2	SUPPORT AS-FOOT	
	5	1	7P-2229	18	BOLT (1/2-13X1IN)	
		1	6F-	18	WASHER-HARD (4MM THK)	
	6	1	8E-8136		COVER AS-LH	
		1	9F-2978	6	NUT-WELD (3/8-16 THD)	
		1	1P-0188	1	CLIP	
	7	1	7S-3411	4	COVER	
	8		9J-0488	18	SCREW-HEAD (3/8-16X.875IN)	
	9	1	-4474	1	COVER	
		1	8E-897		GASKET	
	10	1	8E-3249	1		
		1	8E-3250	1	GASKET	
	11	1	3T-3638	1	HANDHOLD	
	12	1	8E-8978	1	COVER AS	
		1	9F-2978	8	NUT-WELD (3/8-16 THD)	
		1	8E-8979	1	GASKET	
	13	1	7T-0131	1	FLOORPLATE AS	
		1	1F-0748	4	NUT-WELD (1/2-13 THD)	
	14	1	7V-8067	1	PLUG-BUTTON	
	15	1	7T-0136	1	PLATE AS	
		1	9F-2978	5	NUT-WELD (3/8-16 THD)	
	16	1	7T-8066	1	COVER	
		1	7T-8779	1	GASKET	
	17	1	3T-3981	1	PLATE AS	
	18	1	6T-8364	4	BOLT (1/4-20X.625IN)	
M		1	9T-4205	4	WASHER-HARD (2MM THK)	
	19	1	6L-8494	1	FLOOR MAT	
	20	1	8E-8846	1	MODULE AS-OPERATOR	
	21	1	3T-3834	1	HANDHOLD	
	22	1	9F-8671	2	PLUG	
	23	2	6T-8364	4	BOLT (1/4-20X.625IN)	
M		2	9T-4205	4	WASHER-HARD (2MM THK)	
	24	2	6E-3062	17	BOLT (3/8-16X.750IN)	
	26	2	6F-1976	21	WASHER-HARD (3MM THK)	
	26	2	7T-0135	1	SEAL	
	27	2	7X-0975	2	BOLT (3/4-10X5IN)	
		2	7X-0682	2	WASHER-HARD (6MM THK)	
	28	2	3T-3452	2	PLATE	
	29	2	3T-3290	1	PLATE AS	
		2	7S-4828	8	SPACER	
	30	2	3T-8281	1	SEAL	
	31	2	7S-8817	1	GASKET	
	32	2	7S-8816	1	COVER AS	
		2	2R-3276	2	WASHER	
		2	6F-8926	2	SCREW-KNURLED	
	33	2	9W-3429	1	COVER	
	34	2	8E-8697	1	COVER	
	35	2	6D-3931	8	SCREW-SOCKET HEAD	
	36	2	9W-3142	8	MOUNTING	
	37	2	9W-8027	2	PLATE	
	38	2	7X-0990	2	BOLT (7/8-9X5IN)	
		2	7X-0672	2	WASHER-HARD	
	39	2	4L-8454	4	BOLT (3/8-16X1.0IN)	
	40	2	3T-4788	1	COVER	

12 FRAME AND BODY 1 of 4 SELP4570-01

FRAME AND BODY

8E-3299 PLATFORM GP-CAB (contd.)

100090751

NOTE	REF NO	GRAPHIC REF	PART NUMBER	QTY	PART NAME 1 2 3 4 5 6 (PRODUCT LEVEL)	SEE PAGE
	41	2	6E-2516	1	COVER	
	42	2	7T-0134	1	PLATE	
	43	2	7T-0138	1	GASKET	
	44	2	7S-8724	1	GASKET	
	45	2	7S-8723	1	COVER	
	46	2	6V-1950	2	PLUG-BUTTON	

M-METRIC PART

SELP4570-01 2 of 4 FRAME AND BODY 13

FRAME AND BODY

8E-3299 PLATFORM GP-CAB (contd.)

100090751

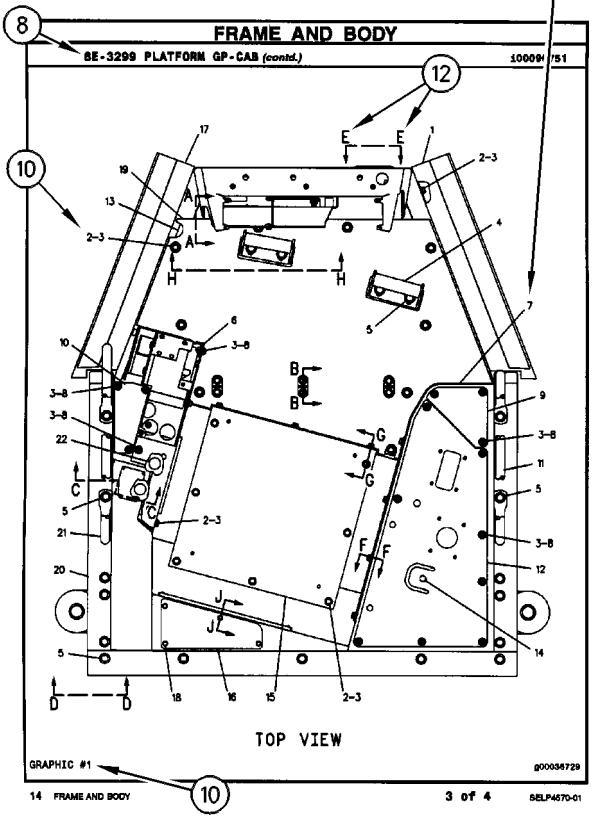

14 FRAME AND BODY 3 of 4 SELP4570-01

FRAME AND BODY

8E-3299 PLATFORM GP-CAB (contd.)

100090751

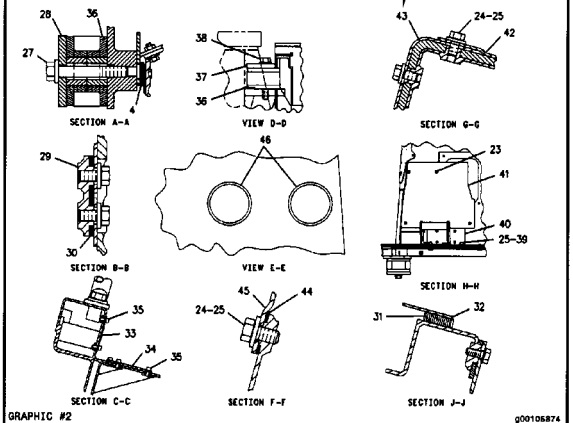

SELP4570-01 4 of 4 FRAME AND BODY 15

REPAIR ALTERNATIVES

REMANUFACTURED COMPONENTS

As an option when making repairs consider Caterpillar Remanufactured Components. Components that are available through the Caterpillar Remanufactured Program are identified three ways in the parts book:

- with the letter R in the note field of the parts list
- with an R* at the beginning of the first line of the caption
- with an *R at the end of the first line of the caption

Typical components included in the Remanufacturing Program include:

ALTERNATORS
CONNECTING RODS
CRANKSHAFTS - UNDERSIZE
CRANKSHAFTS - UPGRADE TO NEW
CYLINDER HEADS
ELECTRONIC CONTROL MODULES (ECM)
ELECTRONIC SENSORS
FUEL INJECTORS
FUEL NOZZLES
FUEL PUMPS
GOVERNORS
OIL PUMPS
PISTONS
SHORT BLOCKS
STARTERS
TURBOCHARGERS - COMPLETE
TURBOCHARGER CARTRIDGES
WATER PUMPS

Caterpillar Remanufactured engines for many engine arrangements are also available.

SUPPLEMENTAL COOLANT ADDITIVES

CUSTOMER BENEFITS:

Protects against cavitation, foam, erosion, corrosion, and scale buildup in cooling systems.

- Provides measured coolant conditioner.

DESCRIPTION:

Additives deplete from the coolant with normal operation. For this reason, Supplemental Coolant Additives (SCA) must be added to all heavy duty coolants at regular intervals. In addition, when not using a fully formulated, pre-charged antifreeze, like Caterpillar's DEAC, an initial charge of SCA must be added to the cooling system. The amount of SCA added to the system is dependent on the capacity of the system.

The SCA for initial fill is provided as a liquid. SCA's for maintenance intervals are available in liquid form and as a spin-on element. (No Spin-on available for 3600 Family of Engines)

NOTE:

The amount of SCA added at initial fill is not the same as the amount added at maintenance intervals.

The coolant additive elements can be used with any ethylene or propylene glycol type antifreeze which meets ASTM D4985 or ASTM D5345 Specifications.

NOTE:

For use with standard heavy duty coolant only, not for use with Extended Life Coolant.

PARTS NEEDED:

Cooling System Capacity		Liquid SCA at Initial Fill	Liquid SCA at Maintenance*	Spin-on SCA Maintenance Element*
Liters	Gallons			
22-30	(6-8)	3P-2044 (1)	6V-3542 (1)	111-2370 (1)
30-38	(8-10)	3P-2044 (1) 6V-3542 (1)	111-2372 (1)	111-2369 (1)
38-49	(10-13)	3P-2044 (1) 8T-1589 (1)	111-2372 (1)	111-2369 (1)
49-64	(13-17)	3P-2044 (2)	8T-1589 (1)	9N-3368 (1)
64-83	(17-22)	3P-2044 (2) 8T-1589 (1)	111-2372 (1) 6V-3542 (1)	111-2371 (1)
83-114	(22-30)	3P-2044 (3) 8T-1589 (1)	3P-2044 (1)	9N-3718 (1)
114-163	(30-43)	3P-2044 (5)	3P-2044 (1) 6V-3542 (1)	111-2371 (2)
163-242	(43-64)	3P-2044 (8)	3P-2044 (2)	9N-3718 (2)

** Normal maintenance period is 250 hrs. See your Operation and Maintenance Manual for complete coolant maintenance instructions.*

( ) Indicates quantity required.

MAINTENANCE PARTS

DESCRIPTION	PART NUMBER	QTY	WHERE USED	PAGE
AIR INLET AND EXHAUST SYSTEM				
FILTER ELEMENT AS-AIR (PRIMARY)	252-5001	1	AIR CLEANER GP	93
		1	AIR CLEANER GP	95
FILTER ELEMENT AS-AIR (SECONDARY)	252-5002	1	AIR CLEANER GP	93
		1	AIR CLEANER GP	95
BASIC ENGINE				
BREATHER (CRANKCASE)	298-4547	1	COVER GP-VALVE MECHANISM	21
FILTER ELEMENT-BREATHER (CRANKCASE)	185-3159	1	COVER GP-VALVE MECHANISM	12
		1	COVER GP-VALVE MECHANISM	15
		1	COVER GP-VALVE MECHANISM	18
GASKET-COVER (VALVE MECHANISM)	317-3064	1	COVER GP-VALVE MECHANISM	21
		1	COVER GP-VALVE MECHANISM	23
GASKET-VALVE COVER	278-4693	1	COVER GP-VALVE MECHANISM	12
		1	COVER GP-VALVE MECHANISM	15
		1	COVER GP-VALVE MECHANISM	18
PLUG-DRAIN (ENGINE OIL PAN)	294-8576	1	PAN GP-OIL	51
		1	PAN GP-OIL	53
		1	PAN GP-OIL	55
COOLING SYSTEM				
CAP AS-RADIATOR (COOLANT TANK)	185-1043	1	COOLING AR-SUPPLEMENTAL	78
GASKET-WATER REGULATOR (TEMPERATURE)	281-8744	1	REGULATOR GP-TEMPERATURE	92
REGULATOR AS-WATER TEMPERATURE (CONNECTOR INCLUDED)	277-2974	1	REGULATOR GP-TEMPERATURE	92

MAINTENANCE PARTS

DESCRIPTION	PART NUMBER	QTY	WHERE USED	PAGE
ELECTRICAL AND STARTING SYSTEM				
BATTERY (12-VOLT, MAINTENANCE FREE, WET)	9X-3404	2	WIRING GP-CHASSIS	315
		2	WIRING GP-CHASSIS	322
BELT-DRIVE	9X-8139	1	LAMP GP-WARNING BEACON	266
CIRCUIT BREAKER AS (105-AMPERE) (MAIN, ALTERNATE)	171-2212	2	PANEL GP-FUSE	276
		2	PANEL GP-FUSE	280
CIRCUIT BREAKER AS (15-AMPERE)	280-2709	4	PANEL GP-FUSE	276
		4	PANEL GP-FUSE	280
FUSE (10-AMPERE)	113-8490	14	PANEL GP-FUSE	276
		14	PANEL GP-FUSE	280
FUSE (15-AMPERE)	113-8491	14	PANEL GP-FUSE	276
		14	PANEL GP-FUSE	280
GLOW PLUG	292-9881	6	GLOW PLUG GP	211
	299-6953	6	GLOW PLUG GP	212
GLOW PLUG (24-VOLT)	226-8770	6	GLOW PLUG GP	210
KEY (BATTERY DISCONNECT)	8H-5306	1	SWITCH GP-DISCONNECT	303
KEY AS-ELECTRONIC (SECURITY) (GRAY)	206-5165	4	INSTALLATION GP-SECURITY	263
KEY AS-ELECTRONIC (SECURITY) (YELLOW)	206-5162	4	INSTALLATION GP-SECURITY	263
LAMP (24-VOLT, 70-WATT)	9X-7849	1	LAMP GP-WARNING BEACON	266
LAMP-HALOGEN (24-VOLT, 70-WATT)	9X-3463	1	LAMP GP-FLOOD	264
		1	LAMP GP-FLOOD	265
ENGINE ARRANGEMENT				
BELT-SERPENTINE	277-8713	1	INSTALLATION AR-ENGINE	8
FUEL SYSTEM				
CAP GP-FUEL FILLER (EXTREME SERVICE, LOCKABLE)	164-4858	1	CAP GP-FUEL FILLER	116
FILTER AS-FUEL (ULTRA HIGH EFFICIENCY)	319-0844	1	FILTER GP-FUEL	117
FILTER AS-FUEL (ULTRA HIGH EFFICIENCY) (SECONDARY)	306-9199	1	FILTER GP-FUEL	117
FILTER AS-WATER SEP & FUEL (PRIMARY)	326-1644	1	FILTER GP-WATER SEP & FUEL	118
STRAINER-FUEL	9P-7121	1	TANK GP-FUEL	190
		1	TANK GP-FUEL	191
HYDRAULIC SYSTEM				
BREATHER (HYDRAULIC TANK)	183-3873	1	TANK & MTG GP-HYDRAULIC	588
CAP AS-OIL FILLER (HYDRAULIC TANK FILL)	2W-6225	1	TANK & MTG GP-HYDRAULIC	588
FILTER-OIL (FLOW REGULATOR) (INLET MANIFOLD)	227-1197	1	MANIFOLD GP-VALVE	569
PLUG-DRAIN (HYDRAULIC TANK)	9J-7031	1	TANK GP-HYDRAULIC	591
SCREEN-SUCTION (HYDRAULIC TANK)	322-9703	2	TANK GP-HYDRAULIC	591

MAINTENANCE PARTS

DESCRIPTION	PART NUMBER	QTY	WHERE USED	PAGE
LUBRICATION SYSTEM				
BREATHER AS (CRANKCASE)	273-5711	1	BREATHER GP	63
CAP AS (HIGH SPEED OIL CHANGE)	8W-3214	1	OIL CHANGE GP-HIGH SPEED	67
		1	OIL CHANGE GP-HIGH SPEED	68
		1	OIL CHANGE GP-HIGH SPEED	69
CAP-OIL FILLER (ENGINE)	130-9888	1	FILLER GP-ENGINE OIL	64
		1	FILLER GP-ENGINE OIL	65
FILTER-ENGINE OIL	269-8325	1	FILTER GP-ENGINE OIL	66
OPERATOR STATION				
BLADE AS-WIPER (450-MM) (DOOR, LH)	125-8175	1	DOOR GP-CAB	706
		1	DOOR GP-CAB	708
		1	DOOR GP-CAB	710
		1	DOOR GP-CAB	718
		1	DOOR GP-CAB	720
		1	DOOR GP-CAB	722
BLADE AS-WIPER (450-MM) (DOOR, RH)	125-8175	1	DOOR GP-CAB	700
		1	DOOR GP-CAB	702
		1	DOOR GP-CAB	704
		1	DOOR GP-CAB	712
		1	DOOR GP-CAB	714
		1	DOOR GP-CAB	716
BLADE AS-WIPER (500-MM) (FRONT)	5C-8811	1	WIPER GP-WINDOW	812
BLADE AS-WIPER (500-MM) (REAR)	146-6433	1	WIPER GP-WINDOW	812
CAP-VENTED (WASHER BOTTLE)	261-1885	1	WASHER GP-WINDOW	804
CONSOLE GP (LH)	284-3752	1	COVER GP-CAB	681
		1	COVER GP-CAB	683
FILTER ELEMENT-CAB AIR (STANDARD EFFICIENCY)	209-8217	1	AIR CONDITIONER GP	640
FILTER GP-CAB AIR (STANDARD EFFICIENCY)	266-7765	1	AIR CONDITIONER GP	636
LAMP (24-VOLT, 10-WATT)	259-1286	1	COVER GP-CAB	681
		1	COVER GP-CAB	683
		1	COVER GP-CAB	686
LAMP GP-DOME (24-VOLT)	107-6032	1	COVER GP-CAB	681
RECEIVER-REFRIGERANT DRYER	271-7421	1	AIR CONDITIONER GP	636
SEAT BELT GP (RETRACTABLE)	272-2272	1	SEAT GP-SUSPENSION	791
		1	SEAT GP-SUSPENSION	792
		1	SEAT GP-SUSPENSION	793
		1	SEAT GP-SUSPENSION	794

MAINTENANCE PARTS

DESCRIPTION	PART NUMBER	QTY	WHERE USED	PAGE
POWER TRAIN				
FILTER-OIL (ADVANCED EFFICIENCY)	1G-8878	1	FILTER GP-OIL	344
		1	FILTER GP-OIL	345
FILTER-OIL (FIRE RESISTANT FLUID)	156-0214	1	FILTER GP-OIL	344
		1	FILTER GP-OIL	345
FILTER-OIL (ULTRA HIGH EFFICIENCY)	102-2828	1	FILTER GP-OIL	344
		1	FILTER GP-OIL	345
PLUG	7P-9571	6	FINAL DRIVE & BRAKE GP	346
		6	FINAL DRIVE & BRAKE GP	350
PLUG-BREATHER	1P-2943	1	MOUNTING GP-PUMP	373
PLUG-MAGNETIC (FINAL DRIVE, OIL CHECK)	6V-0439	2	FINAL DRIVE & BRAKE GP	346
		2	FINAL DRIVE & BRAKE GP	350
PLUG-MAGNETIC (FINAL DRIVE, OIL DRAIN)	3S-9182	2	FINAL DRIVE & BRAKE GP	346
		2	FINAL DRIVE & BRAKE GP	350
	6V-0439	2	FINAL DRIVE & BRAKE GP	346
		2	FINAL DRIVE & BRAKE GP	350
PLUG-MAGNETIC (FINAL DRIVE, OIL FILL)	6V-0439	2	FINAL DRIVE & BRAKE GP	346
		2	FINAL DRIVE & BRAKE GP	350
SCREEN-FILTER (PUMP CONTROL VALVE)	236-5157	1	VALVE GP-PUMP CONTROL	394

INDEX

Name	Page
A	
ACCESSORY GP-CAB	631
ACCUMULATOR GP-PILOT OIL–CHARGED	511
ACCUMULATOR GP-PILOT OIL–UNCHARGED	512
ACCUMULATOR-REFRIGERANT	739
ACTUATOR GP-HYDRAULIC	513
ACTUATOR GP-PUMP–HYDROSTATIC DRIVE	342
ACTUATOR GP-PUMP–WINCH	514
ADAPTER GP-FAST FILL FUEL	114
ADAPTER GP-OIL PAN DRAIN	51
	53
	55
ADJUSTER GP-SEAT	633
AIR CLEANER GP	93
	94
	95
AIR COMPRESSOR GP-SEAT	635
AIR COMPRESSOR GP-SEAT–HEAVY-DUTY	634
AIR CONDITIONER GP	636
	640
ALARM GP–ACTION	192
ALTERNATOR GP-CHARGING	193
	194
	196
ARM GP-SEAT SUSPENSION–CENTER	643
ARM GP-SEAT SUSPENSION–OUTER, LH	645
ARM GP-SEAT SUSPENSION–OUTER, RH	644
ARM GP-WINDOW WIPER (DOOR, LH)	718
	720
	722
ARM GP-WINDOW WIPER (DOOR, RH)	712
	714
	716
ARM GP-WINDOW WIPER (FRONT)	812
ARM GP-WINDOW WIPER (LH)	706
	708
	710
ARM GP-WINDOW WIPER (REAR)	812
ARM GP-WINDOW WIPER (RH)	700
	702
	704
ARMREST GP–LH	646
ARMREST GP–RH	648
B	
BAR GP-EQUALIZER	455
	458
	459
BAR GP-EQUALIZER–LGP	456
BASE GP-VALVE COVER & INJ HARN	21
	23
BATTERY (12-VOLT, MAINTENANCE FREE, WET)	315
	322
BATTERY COMPARTMENT DRIP PAN	55
BELT-DRIVE	266
BELT-SERPENTINE	8
BLADE & EDGE GP-ANGLING	814
	816
BLADE AS-WIPER (450-MM) (DOOR, LH)	706
	708
	710
	718
	720
	722
BLADE AS-WIPER (450-MM) (DOOR, RH)	700
	702
	704
	712
	714
	716
BLADE AS-WIPER (500-MM) (FRONT)	812
BLADE AS-WIPER (500-MM) (REAR)	812
BLADE GP-ANGLING	818
	820
	822
	823
	824
	826
	828
BLOCK GP-JUNCTION (BATTERY)	198
BLOCK GP-JUNCTION–BATTERY	198
BREATHER (CRANKCASE)	21
BREATHER (HYDRAULIC TANK)	588
BREATHER AS (CRANKCASE)	63
BREATHER GP–CRANKCASE	63
C	
C-FRAME GP-POWER ANGLING–FINE GRADING	627
	629
CAB AR-ENCLOSED ROPS	650
CAB GP-ENCLOSED ROPS	650
CAB GP-FORESTRY	651
CABLE AS-COILED–LASER RECEIVER	199
CAMSHAFT GP	9
CANOPY AR	651
CANOPY AR–HEATED	652
CANOPY GP	652
CAP AS (HIGH SPEED OIL CHANGE)	67
	68
	69
CAP AS-OIL FILLER (HYDRAULIC TANK FILL)	588
CAP AS-RADIATOR (COOLANT TANK)	78

INDEX

Name	Page
CAP GP-FUEL FILLER (EXTREME SERVICE, LOCKABLE)	116
CAP GP-FUEL FILLER–EXTREME SERVICE, LOCKABLE	115, 116
CAP-OIL FILLER (ENGINE)	64, 65
CAP-VENTED (WASHER BOTTLE)	804
CASE & FRAME GP	402
CHASSIS AR	1
CIRCUIT BREAKER AS (105-AMPERE) (MAIN, ALTERNATE)	276, 280
CIRCUIT BREAKER AS (15-AMPERE)	276, 280
COMMON AR–LGP	1
COMMON AR–XL	1
COMPRESSOR GP-REFRIGERANT	653, 654
CONDENSER GP-REFRIGERANT	655
CONSOLE GP (LH)	681, 683
CONSOLE GP–LH	657, 658, 660
CONSOLE GP-CONTROL–LH	659
CONSOLE GP-OPERATOR–LH	662
CONSOLE GP-OPERATOR–RH	661
CONTROL & MTG GP-PEDAL–GOVERNOR, BRAKE	663
CONTROL GP-ENGINE ELECTRONIC	152, 157, 162, 167
CONTROL GP-HANDLE–BULLDOZER CONTROL	665
CONTROL GP-HANDLE–GRADE CONTROL	666
CONTROL GP-HANDLE–STEERING, TRANSMISSION	667
CONTROL GP-HANDLE–WINCH–RIPPER, WINCH–RIPPER	664, 668
CONTROL GP-JOYSTICK–BULLDOZER	670, 677
CONTROL GP-JOYSTICK–ENCLOSED ROPS	671, 672
CONTROL GP-JOYSTICK–GRADE CONTROL	669, 676
CONTROL GP-JOYSTICK–OPEN ROPS	674, 675
CONTROL GP-JOYSTICK–STEERING, TRANSMISSION	673
CONTROL GP-MONITOR (MESSENGER)	680
CONTROL GP-POWER TRAIN	136
CONTROL GP-RIPPER	678, 679
CONTROL GP-UNPRGMED MONITOR	680
CONTROL GP-UNPROGRAMMED	141
CONTROL GP-UNPROGRAMMED (ENGINE)	146
CONTROL GP-UNPROGRAMMED (IMPLEMENT)	332, 334
CONTROL GP-UNPROGRAMMED (MACHINE)	332, 334
CONTROL GP-UNPROGRAMMED (PRODUCT LINK 300)	200
CONTROL GP-UNPROGRAMMED (WINCH)	201
CONTROL GP-UNPROGRAMMED–PRODUCT LINK 300	200
CONTROL GP-UNPROGRAMMED–WINCH	201
CONTROL GP-WINCH	830, 831
CONTROL GP-WINCH & RIPPER	515, 516
CONVERSION AR-WINCH	832
COOLER GP-ENGINE OIL	73
COOLING AR	76
COOLING AR-SUPPLEMENTAL	78
CORE AS-AFTERCOOLER	78
CORE AS-OIL COOLER (POWER TRAIN)	78
CORE AS-RADIATOR	78
COUNTERWEIGHT GP	403
COUPLING GP-FLEXIBLE	343
COUPLING GP-PUMP	343
COVER GP-ACCESS	404
COVER GP-ACCESS–HEAVY-DUTY	405
COVER GP-ACCESS–LH	408
COVER GP-ACCESS–RH	406
COVER GP-CAB	681, 683, 686
COVER GP-CAB–OPEN ROPS	689, 691, 693, 695
COVER GP-CONSOLE	697
COVER GP-CONSOLE–CANOPY	698
COVER GP-ENGINE–PTO	10, 11
COVER GP-VALVE MECHANISM	12, 15, 18, 21, 23
COVER GP-WINCH	833
CRANKSHAFT GP	25
CYLINDER BLOCK GP	26

INDEX

Name	Page
	28
CYLINDER GP-ANGLING–FINE GRADING	517
CYLINDER GP-BULLDOZER LIFT–FINE GRADING	519
CYLINDER GP-BULLDOZER TILT–FINE GRADING	520
CYLINDER GP-RIPPER–LIFT	521
	523
CYLINDER HEAD AS	30
	32
CYLINDER HEAD GP	34
	36

D

DISPLAY GP-MONITOR (CD610)	699
DISPLAY GP-MONITOR (CD700)	699
DISPLAY GP-MONITOR–CD610	699
DISPLAY GP-MONITOR–CD700	699
DOOR GP-ACCESS–LH	409
DOOR GP-CAB–LH	706
	708
	710
DOOR GP-CAB–LH–FORESTRY	718
	720
	722
DOOR GP-CAB–RH	700
	702
	704
DOOR GP-CAB–RH–FORESTRY	712
	714
	716
DRAWBAR GP	410

E

EDGE GP-BIT & CUTTING	834
	835
	836
	837
	838
ELECTRONICS AR-MACHINE	202
ELECTRONICS GP-COMMUNICATION–PRODUCT LINK 300	202
ELECTRONICS GP-IMPLEMENT–ACCUGRADE	202
ELECTRONICS GP-MACHINE	203
ELECTRONICS GP-MONITOR	204
	205
	206
	207
	208
	209
ENCLOSURE GP-PLATFORM	411
ENGINE AR	4
	7
ENGINE AR–JAPAN	6
EXTENSION GP-BACKREST (CLOTH)	792
	793
EXTENSION GP-BACKREST (VINYL)	791
	794

F

FAN & MOTOR GP–COOLING FAN	80
FASTENER GP-RADIATOR	82
FILLER GP-ENGINE OIL	64
	65
FILM GP	852
	854
FILM-FUSE PANEL	276
	280
FILM-IDENTIFICATION (ALTERNATOR)	276
	280
FILM-IDENTIFICATION (BIODEGRADABLE HYDRAULIC OIL)	861
FILM-IDENTIFICATION (COOLANT LEVEL)	78
FILM-IDENTIFICATION (DIAGNOSTICS PANEL)	856
FILM-IDENTIFICATION (GENERATOR, ELECTRICAL POWER)	276
	280
FILM-IDENTIFICATION (GROUP NO., SEQUENCE NO.) (CONDENSER)	640
FILM-IDENTIFICATION (GROUP NO., SEQUENCE NO.) (REFRIGERANT CONDENSER)	655
FILM-IDENTIFICATION (IGNITION SWITCH)	263
FILM-IDENTIFICATION (POWER RECEPTACLE, 12-VOLT)	311
	515
	516
	678
	679
	697
	830
	831
FILM-IDENTIFICATION (SERIAL NUMBER)	801
FILM-IDENTIFICATION (THROTTLE CONTROL SWITCH)	734
	736
FILM-INFORMATION (ARMREST ADJUSTMENT)	796
	798
FILM-INFORMATION (PRODUCT LINK, READ OMM)	246
	250
	254
	257

INDEX

Name	Page
	259
	261
FILM-INFORMATION (STARTING MOTOR)	302
FILM-INFORMATION (TIE-DOWN)	842
	844
	845
	858
	859
FILM-INSTRUCTION (BATTERY DISCONNECT)	858
	859
FILM-INSTRUCTION (BULLDOZER CONTROL)	213
	215
	218
	220
	753
FILM-INSTRUCTION (BULLDOZER, STER, CRUISE CNTL)	753
FILM-INSTRUCTION (HVAC WATER, DRAINING, FILLING)	640
	726
FILM-INSTRUCTION (KEY START SWITCH)	734
	736
FILM-INSTRUCTION (RIPPER CONTROL)	678
	679
FILM-INSTRUCTION (SEAT ADJUSTMENT)	800
FILM-INSTRUCTION (WINCH & RIPPER OPERATION)	515
	516
FILM-INSTRUCTION (WINCH CONTROL)	830
	831
FILM-INSTRUCTION (WINDOW CLEANING, READ OMM)	712
	714
	716
	718
	720
	722
FILM-WARNING (ACCUM, HIGH PRESS, READ OMM)	545
FILM-WARNING (BLADE, DO NOT CLIMB, READ OMM)	839
FILM-WARNING (DO NOT LIFT)	768
FILM-WARNING (HIGH PRESSURE, READ OMM)	861
FILM-WARNING (LASER TRANSMITTER)	839
FILM-WARNING (NO WELD, NO DRILL, READ OMM)	753
FILM-WARNING (PRODUCT LINK 300, U.S.)	860
FILM-WARNING (PRODUCT LINK, READ OMM)	861
FILM-WARNING (ROPS, FOPS, READ OMM)	753
FILTER AS-FUEL (ULTRA HIGH EFFICIENCY)	117
FILTER AS-FUEL (ULTRA HIGH EFFICIENCY) (SECONDARY)	117
FILTER AS-WATER SEP & FUEL (PRIMARY)	118
FILTER ELEMENT AS-AIR (PRIMARY)	93
	95
FILTER ELEMENT AS-AIR (SECONDARY)	93
	95
FILTER ELEMENT-BREATHER (CRANKCASE)	12
	15
	18
FILTER ELEMENT-CAB AIR (STANDARD EFFICIENCY)	640
FILTER GP-CAB AIR (STANDARD EFFICIENCY)	636
FILTER GP-ENGINE OIL	66
FILTER GP-FUEL	117
FILTER GP-OIL–POWER TRAIN, WINCH–POWER TRAIN	344
	345
FILTER GP-WATER SEP & FUEL	118
FILTER-ENGINE OIL	66
FILTER-OIL (ADVANCED EFFICIENCY)	344
	345
FILTER-OIL (FIRE RESISTANT FLUID)	344
	345
FILTER-OIL (FLOW REGULATOR) (INLET MANIFOLD)	569
FILTER-OIL (ULTRA HIGH EFFICIENCY)	344
	345
FINAL DRIVE & BRAKE GP	346
	350
FINAL DRIVE GP	350
FITTING GP-WATER LINES	83
FLOOR MAT-FRONT	753
FLOOR MAT-REAR	681
	683
	686
	689
	691
	693
	695
FLYWHEEL GP	38
FORESTRY AR	2
FRAME GP-TRACK ROLLER–LH	460
FRAME GP-TRACK ROLLER–RH	461
FUSE (10-AMPERE)	276
	280
FUSE (15-AMPERE)	276
	280

G

GASKET-COVER (VALVE MECHANISM)	21
	23

INDEX

Name	Page
GASKET-VALVE COVER	12, 15, 18
GASKET-WATER REGULATOR (TEMPERATURE)	92
GAUGE-OIL (ENGINE)	55
GAUGE-SIGHT (HYDRAULIC TANK OIL)	591
GLOW PLUG	211, 212
GLOW PLUG (24-VOLT)	210
GLOW PLUG GP	210, 211, 212
GRADE CONTROL AR–ENCLOSED ROPS	213, 215
GRADE CONTROL AR–OPEN ROPS	218, 220
GRADE CONTROL AR-LASER–ACCUGRADE, DUAL	223
GRADE CONTROL AR-LASER–ACCUGRADE, SINGLE	223
GRADE CONTROL AR-SATELLITE–ACCUGRADE, DUAL GNSS	224
GRADE CONTROL AR-SATELLITE–ACCUGRADE, SINGLE GNSS	225
GRADE CONTROL AR-SATELLITE–DUAL GPS	223
GRADE CONTROL AR-SATELLITE–SINGLE GPS	224
GRADE CONTROL GP–ENCLOSED ROPS	226, 228, 230
GRADE CONTROL GP–OPEN ROPS	232, 235, 238
GRILL GP-RADIATOR	412, 419
GRILL GP-RADIATOR–BOTTOM	415, 416
GRILL GP-RADIATOR–HEAVY-DUTY	413, 414
GRILL GP-RADIATOR–TOP	417, 418
GUARD GP-BOTTOM	420
GUARD GP-BOTTOM–HEAVY-DUTY	421
GUARD GP-BRUSH–OPEN ROPS	422
GUARD GP-FUEL TANK	424
GUARD GP-FUEL TANK–HEAVY-DUTY	426
GUARD GP-FUEL TANK–WINCH	428
GUARD GP-LIGHTING	430
GUARD GP-LINES–LIFT CYLINDER	431
GUARD GP-RADIATOR	432
GUARD GP-REAR	434
GUARD GP-RECOIL MECHANISM	462
GUARD GP-SPROCKET	463
GUARD GP-TRACK GUIDE–CENTER	465
GUARD GP-TRACK GUIDE–MODERATE SERVICE	466
GUARD GP-TRACK GUIDE–SYSTEMONE	467
GUARD GP-TRACK ROLLER	468
GUARD GP-VANDALISM	689, 691, 693, 695

H

Name	Page
HARNESS AS-CAB	309, 311
HARNESS AS-CONTROL	228, 230, 235, 238, 241, 246, 250, 252, 254, 259, 261, 309, 311
HARNESS AS-CONTROL (PRODUCT LINK)	244, 248, 257
HARNESS AS-ENGINE	327, 330
HARNESS AS-FRONT	213, 215, 218, 220
HARNESS AS-HEATER & AIR COND	655
HARNESS AS-MOTOR (BLOWER)	640, 726
HARNESS AS-PLATFORM	314, 321, 332, 334
HARNESS AS-POWER	314, 321
HARNESS AS-RADIO	733, 773, 774
HARNESS AS-SENSOR	314, 321, 336, 337
HARNESS AS-SOLENOID	327, 338, 340

INDEX

Name	Page
HARNESS AS-TRANSMISSION	314, 321
HARNESS AS-VALVE (SEAT AIR COMPRESSOR)	800
HARNESS AS-WIRING (ANGLE)	213, 215, 218, 220
HARNESS AS-WIRING (BULKHEAD)	213, 215, 218, 220
HARNESS AS-WIRING (CAB)	226, 232
HARNESS AS-WIRING (GLOBAL POSITIONING SYSTEM)	226, 228, 230, 232, 235, 238
HARNESS AS-WIRING (INJECTOR)	12, 15, 18, 21, 23
HARNESS AS-WIRING (LASER)	226, 228, 230, 232, 235, 238
HARNESS AS-WIRING (MAST)	269
HARNESS AS-WIRING (POWER SUPPLY MODULE)	213, 215, 218, 220
HARNESS AS-WIRING (RECEIVER, RH)	213, 215, 218, 220
HARNESS AS-WIRING (WINDOW WASHER)	804
HARNESS GP-PANEL	276, 280
HEAD GP-MOTOR–HYDROSTATIC DRIVE, LH	354
HEAD GP-MOTOR–HYDROSTATIC DRIVE, RH	355
HEAD GP-PUMP–HYDROSTATIC DRIVE, LH	356
HEAD GP-PUMP–HYDROSTATIC DRIVE, RH	357
HEAD GP-PUMP–WINCH	525
HEATER GP-CAB	726, 729, 730
HEATER GP-CAB–OPEN ROPS	724, 731
HEATER GP-JACKET WATER	242, 243
HOOD & GUARD GP–EEC	435
HOOD & GUARD GP–NACD	437
HOOD GP–EEC	439
HOUSING GP-FLYWHEEL	39, 41
HOUSING GP-FRONT	43, 45
HYDRAULIC AR-3 VALVE	527
HYDRAULIC AR-4 VALVE	528, 529

I

IDLER GP-FRONT	469
IDLER GP-TRACK	470
INDICATOR AS-AIR FILTER CHANGE	94
INJECTOR GP-FUEL	119, 120, 121, 122
INSTALLATION AR-ENGINE	8
INSTALLATION GP-COMMUNICATION–PRODUCT LINK 321SR	244, 246, 248, 250, 252, 254, 256, 257, 259, 261
INSTALLATION GP-RADIO	732
INSTALLATION GP-RADIO–SIRIUS SATELLITE	733
INSTALLATION GP-RADIO–XM SATELLITE	733
INSTALLATION GP-SECURITY–MACHINE SECURITY SYSTEM	263
INSTRUMENT GP	734
INSTRUMENT GP–OPEN ROPS	736
INSULATION GP-WEATHER	738

K

KEY (BATTERY DISCONNECT)	303
KEY AS-ELECTRONIC (SECURITY) (GRAY)	263
KEY AS-ELECTRONIC (SECURITY) (YELLOW)	263
KIT-PUMP ROTATING GROUP	386, 388
KIT-SENSOR	136

INDEX

Name	Page
	141
KIT-SENSOR (AIR PRESSURE)	136
	141
	146
	152
	157
	162
	167
	172
KIT-SENSOR (COOLANT TEMPERATURE)	136
	141
	146
	152
	157
	162
	167
	172
	178
KIT-SENSOR (ENGINE OIL PRESSURE)	146
	152
	157
	162
	167
	172
	178
KIT-SENSOR (ENGINE SPEED)	136
	141
	146
	153
	157
	162
	168
	173
	178
KIT-SENSOR (FUEL RAIL PRESSURE)	146
KIT-SENSOR (INTAKE AIR MANIFOLD)	178
KIT-SENSOR (INTAKE AIR TEMPERATURE)	136
	141
	146
	152
	157
	162
	167
	172
	178
KIT-SENSOR (OIL PRESSURE)	136
	141
KIT-SHIM (RELIEF VALVE)	398

L

LAMP (24-VOLT, 10-WATT)	681
	683
	686
LAMP (24-VOLT, 70-WATT)	266
LAMP GP-DOME (24-VOLT)	681
	683
	686
LAMP GP-FLOOD	264
	265
LAMP GP-WARNING BEACON	266
LAMP-HALOGEN (24-VOLT, 70-WATT)	264
	265
LIFTING GP-ENGINE	47
	48
LIGHTING GP-FLOOD–CAB FRONT, REAR	267
LIGHTING GP-WARNING BEACON	268
LINES GP-AIR–ATAAC	96
LINES GP-AIR CONDITIONER	739
LINES GP-ANGLE & TILT	530
LINES GP-ANGLE & TILT–FINE GRADING	532
	536
LINES GP-BULLDOZER–FINE GRADING	540
LINES GP-CHARGE PRESSURE	358
	360
LINES GP-DIAGNOSTIC	855
LINES GP-DRAIN	362
LINES GP-FUEL	123
	125
	129
LINES GP-HEATER	742
	743
LINES GP-HYDROSTATIC	364
LINES GP-LIFT CYLINDER	541
	543
LINES GP-PILOT	545
LINES GP-POWER TRAIN COOLER	366
LINES GP-PUMP	368
	547
	550
LINES GP-RIPPER	553
	554
LINES GP-WATER	84
LINES GP-WINCH	556
	561
LINK AS-TRACK BOX–LINK BOX	477
	479
	480
	481
	483
	484
	485
	486
LINK AS-TRACK BOX–LINK BOX, OFFSET	478
	482
LINK AS-TRACK BOX–SYSTEMONE	487
LINK AS-TRACK–SYSTEMONE	471
	473
	474
	475

INDEX

Name	Page
	476
LINK AS-TRACK–SYSTEMONE, OFFSET	472
LINK GP-ADJUSTABLE	706
	708
	710
	718
LINK GP-PITCH–FINE GRADING	630

M

MANIFOLD & VALVE GP–RETURN MANIFOLD	510
MANIFOLD GP-CONTROL & SOLENOID–IMPLEMENT CONTROL	566
MANIFOLD GP-CONTROL–DEMAND FAN	567
MANIFOLD GP-CONTROL–REVERSING FAN	568
MANIFOLD GP-EXHAUST	102
	105
MANIFOLD GP-INLET–AIR	98
	99
MANIFOLD GP-VALVE–INLET	569
MAST GP	269
MAST GP–SATELLITE RECEIVER	269
MAT-REAR	681
	683
	689
	691
	693
	695
MIRROR GP-REAR VIEW	744
MODULE GP-INTERFACE (KEY)	263
MONITOR AS–LIGHT BAR	745
MONITOR GP-OPERATOR	734
	736
MOTOR & MOUNTING GP–HYDROSTATIC DRIVE	370
MOTOR GP-GEAR (COOLING FAN)	80
MOTOR GP-PISTON–HYDROSTATIC DRIVE, LH	371
MOTOR GP-PISTON–HYDROSTATIC DRIVE, RH	372
MOTOR GP-WINDOW WIPER	750
	751
MOTOR GP-WINDOW WIPER–DOOR, LH	747
	750
MOTOR GP-WINDOW WIPER–DOOR, RH	748
	751
MOTOR GP-WINDOW WIPER–FRONT	746
	752
MOTOR GP-WINDOW WIPER–REAR	749
MOUNTING GP-CAB	753
MOUNTING GP-ENGINE	49
MOUNTING GP-ENGINE & XMSN	50
MOUNTING GP-GRADE CONTROL	270
	272
	274
MOUNTING GP-MAST–LASER RECEIVER	839
MOUNTING GP-MAST–SATELLITE RECEIVER	839
MOUNTING GP-PUMP	373
MOUNTING GP-RADIO–GRADE CONTROL	754
MOUNTING GP-RECEIVER–MAST	275
MOUNTING GP-RIPPER	840
MOUNTING GP-VALVE	570
MUFFLER GP	100

O

OIL CHANGE GP-HIGH SPEED–ENGINE	67
	68
	69
OPTION AR-CAB	2
OPTION AR-FUEL TANK	2
OPTION AR-GUARD	2
OPTION AR-GUARD–FRONT	3
OPTION AR-RIPPER	3

P

PADLOCK GP	1
	190
	191
	554
PAN GP-BACKREST–CLOTH	755
PAN GP-BACKREST–CLOTH, HEATED	756
PAN GP-BACKREST–LUMBAR	758
PAN GP-BACKREST–VINYL	757
PAN GP-BACKREST–VINYL, HEATED	759
PAN GP-OIL	51
	53
	55
PAN GP-SEAT	761
	763
PAN GP-SEAT–CLOTH	760
PAN GP-SEAT–CLOTH, HEATED	761
PAN GP-SEAT–VINYL	762
PAN GP-SEAT–VINYL, HEATED	763
PANEL GP-FUSE	276
	280
PANEL GP-SIDE–LH–EEC	444
PANEL GP-SIDE–LH–NACD	440
PANEL GP-SIDE–RH–EEC	443
PANEL GP-SIDE–RH–NACD	442
PEDAL GP-GOVERNOR & BRAKE	764
	766
PIN GP-CYLINDER–FINE GRADING	571
PIPE GP-EXHAUST	101
PISTON & ROD GP	57
PIVOT BAR GP–LGP	489
PIVOT BAR GP–XL	488

INDEX

Name	Page
PLATE & FILM GP	858, 859
PLATE & FILM GP–BIODEGRADABLE HYDRAULIC OIL	861
PLATE & FILM GP–INTERNATIONAL	861
PLATE & FILM GP–U.S.	860
PLATE-IDENTIFICATION (ENGINE STOP, RUN)	858, 859
PLATE-SERIAL NUMBER (BLADE)	814, 816, 818, 820, 824, 826, 828
PLATE-SERIAL NUMBER (RIPPER)	842, 844, 845
PLATE-WARNING (CRUSH HAZARD, READ OMM)	496
PLATE-WARNING (HIGH PRESSURE CYLINDER)	496
PLATFORM GP-OPERATOR	768
PLUG	346, 350
PLUG GP-WATER LINES	87
PLUG-BREATHER	373
PLUG-DRAIN (ENGINE OIL PAN)	51, 53, 55
PLUG-DRAIN (HYDRAULIC TANK)	591
PLUG-MAGNETIC (FINAL DRIVE, OIL CHECK)	346, 350
PLUG-MAGNETIC (FINAL DRIVE, OIL DRAIN)	346, 350
PLUG-MAGNETIC (FINAL DRIVE, OIL FILL)	346, 350
POWER TRAIN AR–LGP	374
POWER TRAIN AR–XL	374
PROTECTION GP-FUEL SYSTEM	117, 125, 129, 137, 142, 147, 153, 158, 163, 168, 173
PROTECTION GP-FUEL SYSTEM (LINE, LOW PRESSURE)	179
PULLEY GP-CRANKSHAFT	58
PUMP & LINES AR–HYDROSTATIC DRIVE	572
PUMP & LINES GP–IMPLEMENT, HYDRAULIC FAN	573, 576
PUMP & MTG GP-POWER TRAIN	375
PUMP & MTG GP-UNIT INJ HYD	133
PUMP GP-CHARGE–HYDROSTATIC DRIVE, LH	376
PUMP GP-CHARGE–HYDROSTATIC DRIVE, RH	377
PUMP GP-CHARGE–WINCH	579
PUMP GP-ENGINE OIL	71
PUMP GP-FUEL INJECTION	134, 135, 136, 141, 146, 151, 152, 157, 162, 167, 172, 177, 178
PUMP GP-FUEL PRM & WATER SEP	184
PUMP GP-FUEL PRM & WATER SEP–ELECTRIC	183, 186
PUMP GP-FUEL TRANSFER	133, 134, 177
PUMP GP-GEAR (REAR) (HYDRAULIC FAN)	582
PUMP GP-PISTON & GEAR–FRONT–IMPLEMENT	583
PUMP GP-PISTON & GEAR–IMPLEMENT, HYDRAULIC FAN	582
PUMP GP-PISTON–HYDROSTATIC DRIVE	378
PUMP GP-PISTON–HYDROSTATIC DRIVE, LH	379
PUMP GP-PISTON–HYDROSTATIC DRIVE, RH	381
PUMP GP-PISTON–WINCH	580
PUMP GP-WATER	88, 90

R

Name	Page
RADIO GP–AM/FM/WB CD PLAYER	769, 770, 771, 772
RADIO GP–AM/FM/WB/CD PLAYER	773, 774

INDEX

Name	Page
RADIO GP-COMMUNICATION–PRODUCT LINK 121SR	284
RECEIVER GP-LASER (LR410)	284
RECEIVER GP-LASER–DUAL	284
RECEIVER GP-LASER–SINGLE	284
RECEIVER GP-SATELLITE–ACCUGRADE, UPGRADE FROM GPS TO GNSS	286
RECEIVER GP-SATELLITE–DUAL GNSS, MS990	285
RECEIVER GP-SATELLITE–DUAL GPS, MS980	285
RECEIVER GP-SATELLITE–SINGLE GNSS, MS990	286
RECEIVER GP-SATELLITE–SINGLE GPS, MS980	284
RECEIVER-REFRIGERANT DRYER	636
RECLINER GP-SEAT	775
REGULATOR AS-VOLTAGE (24-VOLT) (ALTERNATOR)	193
REGULATOR AS-WATER TEMPERATURE (CONNECTOR INCLUDED)	92
REGULATOR GP-TEMPERATURE	92
RELAY AS (24-VOLT) (A/C CLUTCH SOLENOID)	332 334
RELAY AS (24-VOLT) (CONDENSER BLOWER MOTOR)	655
RELAY AS (24-VOLT) (FLOODLIGHTS)	309 311
RELAY AS (24-VOLT) (HORN)	332 334
RELAY AS (24-VOLT) (REVERSING FAN)	332 334
RIPPER AR	842 844 845
RIPPER GP	846
ROCKER ARM GP	59
ROLLER GP-TRACK	491
ROLLER GP-TRACK CARRIER–HEAVY-DUTY, SYSTEMONE	492
ROLLER GP-TRACK–SYSTEMONE	490
ROTATING GP-MOTOR–HYDROSTATIC DRIVE	383 385
ROTATING GP-PUMP (WINCH)	580
ROTATING GP-PUMP–HYDROSTATIC DRIVE, LH	386
ROTATING GP-PUMP–HYDROSTATIC DRIVE, RH	388
ROTATING GP-PUMP–IMPLEMENT, HYDRAULIC FAN	587
ROTATING GP-PUMP–WINCH	585

S

Name	Page
SCRAPER GP-IDLER	493 494
SCREEN GP–FRONT	446
SCREEN GP-CAB–OPEN ROPS, REAR	776
SCREEN GP-CAB–REAR, ENCLOSED ROPS	777
SCREEN GP-CAB–REAR, OPEN ROPS	778
SCREEN GP-PROTECTION–SIDES	779
SCREEN-FILTER (PUMP CONTROL VALVE)	394
SCREEN-SUCTION (HYDRAULIC TANK)	591
SEAL GP-DUO-CONE	346
SEAL-CRANKSHAFT (REAR)	39
SEAT BELT GP (RETRACTABLE)	791 792 793 794
SEAT BELT GP–RETRACTABLE	780
SEAT GP–CLOTH	781
SEAT GP–CLOTH, HEATED	783
SEAT GP–VINYL	785
SEAT GP–VINYL, HEATED	787
SEAT GP-SUSPENSION–CLOTH, AIR	789 792
SEAT GP-SUSPENSION–CLOTH, HEATED, AIR	790 793
SEAT GP-SUSPENSION–VINYL, AIR	789 791
SEAT GP-SUSPENSION–VINYL, HEATED–AIR	794 795
SEGMENT GP-SPROCKET	390
SENDER AS-FUEL LEVEL	190 191
SENSOR AS-ANGLE	225
SENSOR AS-LIQUID LEVEL (WATER SEPARATOR)	287
SENSOR AS-POSITION (BULLDOZER CONTROL)	670
SENSOR AS-POSITION (IMPLEMENT CONTROL)	669 676
SENSOR AS-POSITION (IMPLEMENT JOYSTICK)	677
SENSOR AS-TEMPERATURE (HYDRAULIC TANK OIL)	591
SENSOR GP-LIQUID LEVEL	287
SENSOR GP-LIQUID LEVEL (WATER SEPARATOR)	184 186
SENSOR GP-POSITION	288 289 290

INDEX

Name	Page
SENSOR GP-POSITION (GOVERNOR, BRAKE PEDAL)	764
SENSOR GP-POSITION (ROTARY) (GOVERNOR, BRAKE PEDAL)	766
SENSOR GP-POSITION (STEERING, TRANSMISSION)	673
SENSOR GP-PRESSURE	291
SENSOR GP-PRESSURE (HYDROSTATIC DRIVE)	314
	321
SENSOR GP-SPEED	135
	173
	292
	293
	294
SENSOR GP-SPEED (ENGINE)	178
	327
SENSOR GP-SPEED (SECONDARY, TIMING)	133
	134
	177
SENSOR GP-SPEED (TRACK, LH)	313
	320
SENSOR GP-SPEED (TRACK, RH)	313
	320
SENSOR GP-TEMPERATURE	295
SENSOR GP-TEMPERATURE (AIR TEMPERATURE CONTROL)	640
SENSOR GP-TEMPERATURE (FUEL)	184
	186
SENSOR-ANGLE (AS400C)	224
SENSOR-PRESSURE (FUEL)	152
	157
	162
	167
	172
	178
SERVICE GP-COMMUNICATION (PRODUCT LINK 300)	202
SERVICE GP-MONITOR	204
	205
	206
	208
	209
SOFTWARE GP-COMMUNICATION (PRODUCT LINK 300)	202
SOFTWARE GP-MACHINE	203
SOFTWARE GP-MONITOR	204
	205
	206
	207
	208
	209
	284
	699
SOFTWARE GP-POWER TRAIN	203
SOLENOID AS	617
SOLENOID AS (HYDROSTATIC PUMP)	394
SOLENOID AS (PILOT VALVE)	393
SOLENOID AS (WASTEGATE)	102
	105
	108
	111
SPRING GP-RECOIL	495
	496
STARTING AID GP-ETHER	296
	297
STARTING MOTOR GP-ELECTRIC	298
	299
	300
	301
	302
STRAINER-FUEL	190
	191
SUPPORT GP-HOOD–EEC	448
SUPPORT GP-HOOD–NACD	447
SUPPORT GP-HYDRAULIC CONTROL–RH	796
SUPPORT GP-STEERING CONTROL–LH	798
SUPPRESSION AR-SOUND–EEC	449
SUPPRESSION AR-SOUND–NACD	449
SUSPENSION GP-SEAT–AIR	800
SWEEP GP–ENCLOSED ROPS	452
SWEEP GP–FRONT	450
SWEEP GP–OPEN ROPS	453
SWEEP GP–OPEN ROPS, REAR	454
SWEEP GP–REAR–ENCLOSED ROPS	451
SWITCH (12-VOLT, 24-VOLT) (HEAT)	763
SWITCH (HEAT)	761
SWITCH AS (LOWER LIMIT)	269
SWITCH AS (UPPER LIMIT)	269
SWITCH AS-LIMIT (GOVERNOR, BRAKE PEDAL)	764
	766
SWITCH AS-LIMIT (PLUNGER) (SEAT ADJUSTMENT)	761
	763
SWITCH AS-LIMIT (SEAT ADJUSTMENT)	760
	762
SWITCH AS-PRESSURE (COMPRESSOR, HIGH SIDE)	739
SWITCH AS-PRESSURE (COMPRESSOR, LOW SIDE)	739
SWITCH AS-PRESSURE (FUEL)	184
SWITCH AS-ROCKER (24-VOLT) (REVERSING FAN)	604
	606
SWITCH AS-ROCKER (24-VOLT) (WINCH BRAKE)	515
	516
	830
	831

INDEX

Name	Page
SWITCH AS-ROCKER (24-VOLT) (WINCH FREESPOOL)	515, 516, 830, 831
SWITCH AS-ROCKER (AIR CONDITIONER CONTROL)	636
SWITCH AS-ROCKER (HYDRAULIC LOCKOUT)	734
SWITCH AS-ROCKER (IMPLEMENT LOCKOUT)	736
SWITCH AS-ROCKER (PARKING BRAKE ON, OFF)	734, 736
SWITCH AS-ROCKER (REAR WORK LIGHTS)	734
SWITCH AS-ROCKER (RIPPER CYL EXTEND, RETRACT)	515, 516
SWITCH AS-ROCKER (WARNING BEACON)	268
SWITCH AS-ROCKER (WIPER, WASHER FRONT)	734
SWITCH AS-ROCKER (WIPER, WASHER REAR)	734
SWITCH AS-ROCKER (WIPER, WASHER, LH DOOR)	734
SWITCH AS-ROCKER (WIPER, WASHER, RH DOOR)	734
SWITCH AS-ROCKER (WORK LIGHTS)	736
SWITCH AS-START (KEY)	734, 736
SWITCH GP-DIFF PRESSURE (FILTER BYPASS)	344, 345
SWITCH GP-DISCONNECT–BATTERY	303
SWITCH GP-MAGNETIC–MAIN RELAY	304
SWITCH GP-PRESSURE	305
SWITCH GP-ROTARY–THROTTLE POSITION	306
SWITCH GP-TOGGLE (FUEL PRIMING PUMP)	184, 186
SWITCH GP-TOGGLE–FUEL PRIMING PUMP	307
SWITCH-FUEL	186

T

Name	Page
TANK & MTG GP-HYDRAULIC	588, 590
TANK GP-EXPANSION	78
TANK GP-FUEL	188, 190
TANK GP-FUEL–FAST FILL	189, 191
TANK GP-HYDRAULIC	591
TANK GP-WINDOW WASHER	804
TOOTH GP-RIPPER	850, 851
TOOTH GP-RIPPER–CURVED	848
TOOTH GP-RIPPER–STRAIGHT	849
TRACK ADJUSTER & RECOIL GP	497
TRACK GP–2-REQUIRED, SYSTEMONE	498, 499, 500, 501, 502, 503, 504, 505, 506, 507
TRIM GP-CANOPY	803
TURBOCHARGER GP	102, 105, 108, 111

U

Name	Page
UNDERCARRIAGE AR–LGP	508
UNDERCARRIAGE AR–XL	509

V

Name	Page
VALVE & MTG GP-SOLENOID–OUTLET	391
VALVE AS-RELIEF	173
VALVE GP-BANK 3–BULLDOZER CONTROL	592, 593
VALVE GP-BANK 4–BULLDOZER, RIPPER	594, 595
VALVE GP-CAB HEATER	730, 731, 742
VALVE GP-CHECK	597
VALVE GP-CHECK (REVERSING FAN)	568
VALVE GP-CHECK–DEAD ENGINE LOWER	596
VALVE GP-CONTROL–BLADE ANGLE	611, 615
VALVE GP-CONTROL–BULLDOZER LIFT	609, 613
VALVE GP-CONTROL–BULLDOZER TILT	610, 614
VALVE GP-CONTROL–DEMAND FAN	598, 601
VALVE GP-CONTROL–REVERSING FAN	604, 606
VALVE GP-CONTROL–RIPPER	612, 616
VALVE GP-DIVERTER (REVERSING FAN)	568
VALVE GP-DRAIN (ENGINE OIL PAN)	51

INDEX

Name	Page
	55
VALVE GP-ETHER STARTING	308
VALVE GP-FLOW CONTROL (AUXILIARY, INLET)	569
VALVE GP-FLUID SAMPLING (ENGINE COOLANT)	84
VALVE GP-FLUID SAMPLING–ENGINE OIL	72
VALVE GP-FLUSHING–HYDROSTATIC DRIVE	392
VALVE GP-MOTOR CONTROL–HYDROSTATIC DRIVE	393
VALVE GP-PUMP CONTROL–PRESSURE, FLOW COMPENSATOR	394
VALVE GP-PUMP CONTROL–PRESSURE, FLOW COMPENSATOR–IMPLEMENT, HYDRAULIC FAN	619
VALVE GP-PUMP CONTROL–WINCH	617
VALVE GP-RELIEF (IMPLEMENT PILOT PRESSURE)	611
VALVE GP-RELIEF (INLET MANIFOLD)	569
VALVE GP-RELIEF (PUMP HEAD)	356
	357
VALVE GP-RELIEF (REVERSING FAN)	568
VALVE GP-RELIEF–CHARGE PRESSURE	396
	398
VALVE GP-RELIEF–CROSSOVER	399
VALVE GP-RELIEF–DEAD ENGINE LOWER, IMP PILOT	620
VALVE GP-RELIEF–IMPLEMENT PILOT OIL	621
VALVE GP-RELIEF–IMPLEMENT PILOT PRESSURE	622
VALVE GP-RELIEF–PRESSURE OVERRIDE	397
VALVE GP-SOLENOID	623
	624
	625
VALVE GP-SOLENOID (24 VDC) (WITHOUT HARDWARE)	626
VALVE GP-SOLENOID (24-VOLT) (DEMAND FAN)	567
	568
VALVE GP-SOLENOID (24-VOLT) (REVERSING FAN)	568
VALVE GP-SOLENOID (HYDRAULIC LOCKOUT)	391
VALVE GP-SOLENOID (HYDROSTATIC PRESSURE CUTOFF)	510
VALVE GP-SOLENOID (IMPLEMENT)	513
VALVE GP-SOLENOID (PARKING BRAKE)	510
VALVE GP-SOLENOID (PILOT PROPORTIONING)	566
VALVE GP-SOLENOID–WITH HARDWARE	626
VALVE GP-TRANSMISSION CONTROL–POWER TRAIN RETURN MANIFOLD	400
VALVE MECHANISM GP	61

W

Name	Page
WASHER GP-WINDOW	804
WATER SEP & FUEL PRM PUMP GP	183
	184
	186
WINDOW GP-CAB	806
	807
WINDOW GP-CAB–FORESTRY	808
	811
WINDOW GP-CAB–LH	810
WINDOW GP-CAB–RH	809
WIPER GP-WINDOW	812
WIRING GP-CAB	309
	311
WIRING GP-CHASSIS	313
	320
WIRING GP-ENGINE	327
	330
WIRING GP-PLATFORM	332
	334
WIRING GP-SEAT	336
	337
WIRING GP-WINCH	338
	340

MACHINE ARRANGEMENT

206-7270 CHASSIS AR

S/N: DHA1-UP; FBH1-UP

PART OF 206-7250, 206-7251 COMMON AR

SMCS-7000 **i03601705**

NOTE	PART NUMBER	QTY	PART NAME 1 2 3 4 5 6 (PRODUCT LEVEL)	SEE PAGE
Y	*278-2470*	1	C-FRAME GP-POWER ANGLING	629
Y	*249-3600*	1	CASE & FRAME GP	402
Y	*206-7245*	1	ENCLOSURE GP-PLATFORM	411
Y	*249-3606*	1	GUARD GP-REAR	434
Y	*249-3602*	1	PLATFORM GP-OPERATOR	768
	6V-1971	1	LITERATURE GP	
	246-2641	1	PADLOCK GP	
	5P-8500	1	KEY	
Y-SEPARATE ILLUSTRATION				

<END>

206-7250 COMMON AR–XL

S/N: FBH1-UP

SMCS-7000 **i02418728**

NOTE	PART NUMBER	QTY	PART NAME 1 2 3 4 5 6 (PRODUCT LEVEL)	SEE PAGE
Y	*206-7270*	1	CHASSIS AR	1
Y	*274-7674*	1	COOLING AR	76
Y	*206-7300*	1	ELECTRONICS AR-MACHINE	202
Y	**242-1356**	1	ENGINE AR	4
Y	*206-7280*	1	HYDRAULIC AR-3 VALVE	527
Y	*206-7294*	1	INSTALLATION AR-ENGINE	8
Y	*206-7260*	1	POWER TRAIN AR	374
Y	*271-6035*	1	UNDERCARRIAGE AR	509
Y-SEPARATE ILLUSTRATION				

<END>

206-7251 COMMON AR–LGP

S/N: DHA1-UP

SMCS-7000 **i02418730**

NOTE	PART NUMBER	QTY	PART NAME 1 2 3 4 5 6 (PRODUCT LEVEL)	SEE PAGE
Y	*206-7270*	1	CHASSIS AR	1
Y	*274-7674*	1	COOLING AR	76
Y	*206-7300*	1	ELECTRONICS AR-MACHINE	202
Y	**242-1356**	1	ENGINE AR	4
Y	*206-7280*	1	HYDRAULIC AR-3 VALVE	527
Y	*206-7294*	1	INSTALLATION AR-ENGINE	8
Y	*206-7261*	1	POWER TRAIN AR	374
Y	*206-7291*	1	UNDERCARRIAGE AR	508
Y-SEPARATE ILLUSTRATION				

<END>

MACHINE ARRANGEMENT

267-4943 FORESTRY AR

S/N: DHA1-UP; FBH1-UP
ENCLOSED ROPS
CANNOT BE USED WITH CANOPY AR, CAB AR
AN ATTACHMENT

SMCS-7000 **i02644930**

NOTE	PART NUMBER	QTY	PART NAME 1 2 3 4 5 6 (PRODUCT LEVEL)	SEE PAGE
Y	*267-2550*	1	CAB GP-FORESTRY	651
Y	*243-2156*	1	COMPRESSOR GP-REFRIGERANT	654
Y	*248-7070*	1	LINES GP-AIR CONDITIONER	739
Y	*248-7071*	1	LINES GP-HEATER	742
Y	*248-7069*	1	MOUNTING GP-CAB	753
Y	*251-5975*	1	WASHER GP-WINDOW	804
Y-SEPARATE ILLUSTRATION				

<END>

349-8349 OPTION AR-CAB

S/N: DHA1-UP; FBH1-UP
CANNOT BE USED WITH CANOPY, OPEN ROPS
AN ATTACHMENT

SMCS-7000, 7301 **i03697804**

NOTE	PART NUMBER	QTY	PART NAME 1 2 3 4 5 6 (PRODUCT LEVEL)	SEE PAGE
Y	*206-7310*	1	CAB AR-ENCLOSED ROPS	650
Y	*250-2120*	1	SEAT GP-SUSPENSION (WITH OPERATOR CONTROLS) (CLOTH, AIR)	789
Y-SEPARATE ILLUSTRATION				

<END>

349-8355 OPTION AR-FUEL TANK

S/N: DHA1-UP; FBH1-UP
CANNOT BE USED WITH FAST FILL TANK GP, PLATE & FILM GP - BIODEGRADABLE OIL
AN ATTACHMENT

SMCS-1273 **i03661241**

NOTE	PART NUMBER	QTY	PART NAME 1 2 3 4 5 6 (PRODUCT LEVEL)	SEE PAGE
Y	*206-7249*	1	TANK GP-FUEL	188
Y-SEPARATE ILLUSTRATION				

<END>

349-8352 OPTION AR-GUARD

S/N: DHA1-UP; FBH1-UP
AN ATTACHMENT

SMCS-7000 **i03661447**

NOTE	PART NUMBER	QTY	PART NAME 1 2 3 4 5 6 (PRODUCT LEVEL)	SEE PAGE
Y	*269-8084*	1	GRILL GP-RADIATOR	412
Y	*249-3604*	1	GUARD GP-BOTTOM (HEAVY-DUTY)	420
Y	*249-3190*	1	GUARD GP-FUEL TANK	424
Y-SEPARATE ILLUSTRATION				

<END>

MACHINE ARRANGEMENT

349-8354 OPTION AR-GUARD—FRONT

S/N: DHA1-UP; FBH1-UP
CANNOT BE USED WITH GUARD GP-CRANKCASE, GUARD GP-FUEL, GUARD GP-WINCH, CCONTROL AR-WINCH & RIPPER READY, WINCH AR, FRONT GRILL
AN ATTACHMENT

SMCS-7000 **i03661345**

NOTE	PART NUMBER	QTY	PART NAME 1 2 3 4 5 6 (PRODUCT LEVEL)	SEE PAGE
Y	*269-8091*	1	GRILL GP-RADIATOR	413
Y	*249-3604*	1	GUARD GP-BOTTOM	420
Y	*249-3190*	1	GUARD GP-FUEL TANK	424
Y-SEPARATE ILLUSTRATION				

<END>

349-8353 OPTION AR-RIPPER

S/N: DHA1-UP; FBH1-UP
FOR USE WITH 250-2112—PAGE 678, 250-2111—PAGE 697, RIPPER AR. CANNOT BE USED WITH WINCH, VALVE GP-BANK 3
AN ATTACHMENT

SMCS-7000 **i03661415**

NOTE	PART NUMBER	QTY	PART NAME 1 2 3 4 5 6 (PRODUCT LEVEL)	SEE PAGE
Y	*250-3852*	1	HYDRAULIC AR-4 VALVE	528
Y	*288-8129*	1	PUMP & LINES AR	572
Y	*250-2112*	1	CONTROL GP-RIPPER	678
Y-SEPARATE ILLUSTRATION				

<END>

ENGINE ARRANGEMENT

242-1356 ENGINE AR

S/N: C6E1-UP
104 BRAKE KW (140 BHP) AT 2000 RPM
PART OF 206-7250, 206-7251 COMMON AR

SMCS-1000 **i03737721**

NOTE	PART NUMBER	QTY	PART NAME 1 2 3 4 5 6 (PRODUCT LEVEL)	SEE PAGE
Y	*277-6080*	1	ALTERNATOR GP-CHARGING	194
Y	*280-2050*	1	BREATHER GP (CRANKCASE)	63
			S/N: C6E1-495	
Y	*279-8837*	1	CAMSHAFT GP	9
Y	*277-2976*	1	REGULATOR GP-TEMPERATURE (CONNECTOR INCLUDED)	92
Y	*277-2504*	1	COOLER GP-ENGINE OIL	73
Y	*280-2024*	1	COVER GP-VALVE MECHANISM	12
			S/N: C6E1-495	
Y	*305-8963*	1	COVER GP-VALVE MECHANISM	15
			S/N: C6E496-UP	
Y	*279-8762*	1	CRANKSHAFT GP	25
Y	*279-8711*	1	CYLINDER BLOCK GP	26
Y	*279-8821*	1	CYLINDER HEAD GP	34
Y	*280-1428*	1	FILLER GP-ENGINE OIL	64
Y	*305-7294*	1	FILTER GP-FUEL (PRIMARY AND SECONDARY)	117
Y	*277-2912*	1	FILTER GP-ENGINE OIL	66
Y	*279-9255*	1	FLYWHEEL GP	38
Y	*277-4410*	1	GLOW PLUG GP	210
			S/N: C6E1-408	
Y	*299-6957*	1	GLOW PLUG GP	212
			S/N: C6E409-UP	
Y	*279-8846*	1	HOUSING GP-FLYWHEEL	39
Y	*277-3014*	1	HOUSING GP-FRONT	43
Y	*279-9653*	1	LIFTING GP-ENGINE	48
Y	*305-7299*	1	LINES GP-FUEL	125
Y	*280-1292*	1	MANIFOLD GP-INLET	98
Y	*277-4541*	1	MOUNTING GP-ENGINE	49
Y	*280-1379*	1	PAN GP-OIL (ENGINE)	51
			S/N: C6E1-495	
Y	*305-7300*	1	PAN GP-OIL (ENGINE)	53
			S/N: C6E496-UP	
Y	*279-8780*	1	PISTON & ROD GP	57
Y	*279-9720*	1	PLUG GP-WATER LINES	87
Y	*274-1929*	1	PULLEY GP-CRANKSHAFT	58
Y	*277-4262*	1	PUMP GP-ENGINE OIL	71
Y	*278-5319*	1	PUMP GP-FUEL INJECTION	136
			S/N: C6E1-495	
Y	*310-0659*	1	PUMP GP-FUEL INJECTION	152
			S/N: C6E496-UP	
Y	*279-9692*	1	PUMP GP-FUEL INJECTION	151
			S/N: C6E1-484	
Y	*277-2939*	1	PUMP GP-WATER	88
Y	*277-1835*	1	STARTING MOTOR GP-ELECTRIC	298
			S/N: C6E1-408	
BLY	*301-8296*	1	STARTING MOTOR GP-ELECTRIC	301
			S/N: C6E409-UP	
BJY	*301-2744*	1	STARTING MOTOR GP-ELECTRIC	299
			S/N: C6E409-UP	
Y	*280-2458*	1	TURBOCHARGER GP	102
			S/N: C6E1-495	
Y	*305-5970*	1	TURBOCHARGER GP	108
			S/N: C6E496-UP	
Y	*277-4694*	1	VALVE GP-FLUID SAMPLING (ENGINE OIL)	72
Y	*279-8825*	1	VALVE MECHANISM GP	61
Y	*305-8977*	1	WIRING GP-ENGINE	330

ENGINE ARRANGEMENT

242-1356 ENGINE AR *(contd.)* i03737721

NOTE	PART NUMBER	QTY	PART NAME 1 2 3 4 5 6 (PRODUCT LEVEL)	SEE PAGE
	277-6990	1	CYLINDER BLOCK GP (SHORT)	

B-USE AS REQUIRED
J-USE AS PART SERVICE FOR MTTT/MTTL MACHINES, TT048H, TT049H, TT138H, TT139H, TT176H, TT177H
L-DO NOT USE AS PART SERV FOR MTTT/MTTL MACHINES,TT048H,TT049H,TT138H,TT139H,TT176H,TT177H
Y-SEPARATE ILLUSTRATION

ENGINE ARRANGEMENT

317-8530 ENGINE AR–JAPAN

S/N: DHA1-UP; FBH1-UP

AN ATTACHMENT

SMCS-1000 **i03691406**

NOTE	PART NUMBER	QTY	PART NAME 1 2 3 4 5 6 (PRODUCT LEVEL)	SEE PAGE
Y	**319-7261**	1	ENGINE AR	7

Y-SEPARATE ILLUSTRATION

ENGINE ARRANGEMENT

319-7261 ENGINE AR

S/N: C6E1-UP
114 BRAKE KW (152 BHP) AT 2100 RPM
PART OF 317-8530 ENGINE AR
AN ATTACHMENT

SMCS-1000 **i02968432**

NOTE	PART NUMBER	QTY	PART NAME 1 2 3 4 5 6 (PRODUCT LEVEL)	SEE PAGE
Y	*277-6080*	1	ALTERNATOR GP-CHARGING	194
Y	*279-8837*	1	CAMSHAFT GP	9
Y	*277-2504*	1	COOLER GP-ENGINE OIL	73
Y	*305-8963*	1	COVER GP-VALVE MECHANISM	15
Y	*277-4224*	1	COVER GP-ENGINE	10
Y	*279-8762*	1	CRANKSHAFT GP	25
Y	*279-8711*	1	CYLINDER BLOCK GP	26
Y	*279-8821*	1	CYLINDER HEAD GP	34
Y	*280-1428*	1	FILLER GP-ENGINE OIL	64
Y	*277-2912*	1	FILTER GP-ENGINE OIL	66
Y	*305-7294*	1	FILTER GP-FUEL (PRIMARY AND SECONDARY)	117
Y	*288-4011*	1	FITTING GP-WATER LINES	83
Y	*279-9255*	1	FLYWHEEL GP	38
Y	*279-8846*	1	HOUSING GP-FLYWHEEL	39
Y	*277-3014*	1	HOUSING GP-FRONT	43
Y	*279-9653*	1	LIFTING GP-ENGINE	48
Y	*305-7299*	1	LINES GP-FUEL	125
Y	*280-1292*	1	MANIFOLD GP-INLET	98
Y	*277-4541*	1	MOUNTING GP-ENGINE	49
Y	*305-7300*	1	PAN GP-OIL	53
Y	*279-8780*	1	PISTON & ROD GP	57
Y	*299-6957*	1	GLOW PLUG GP	212
Y	*274-1929*	1	PULLEY GP-CRANKSHAFT	58
Y	*277-4262*	1	PUMP GP-ENGINE OIL	71
Y	*320-3566*	1	PUMP GP-FUEL INJECTION	178
Y	*277-2939*	1	PUMP GP-WATER	88
Y	*277-2976*	1	REGULATOR GP-TEMPERATURE (CONNECTOR INCLUDED)	92
Y	*301-8296*	1	STARTING MOTOR GP-ELECTRIC	301
Y	*305-5970*	1	TURBOCHARGER GP	108
Y	*277-4694*	1	VALVE GP-FLUID SAMPLING (ENGINE OIL)	72
Y	*279-8825*	1	VALVE MECHANISM GP	61
Y	*305-8977*	1	WIRING GP-ENGINE	330
	277-6990	1	CYLINDER BLOCK GP (SHORT) (SHORT)	
	320-3576	1	ELECTRONICS GP-ENGINE RATINGS	

Y-SEPARATE ILLUSTRATION

ENGINE ARRANGEMENT

206-7294 INSTALLATION AR-ENGINE

S/N: DHA1-UP; FBH1-UP

PART OF 206-7250, 206-7251 COMMON AR

SMCS-1000 **i03748119**

NOTE	PART NUMBER	QTY	PART NAME 1 2 3 4 5 6 (PRODUCT LEVEL)	SEE PAGE
Y	*249-3720*	1	AIR CLEANER GP	94
Y	*288-0925*	1	FASTENER GP-RADIATOR	82
Y	*256-3464*	1	LIFTING GP-ENGINE	47
Y	*249-3721*	1	LINES GP-AIR	96
Y	*206-7248*	1	LINES GP-FUEL	123
Y	*251-4129*	1	LINES GP-WATER	84
Y	*249-3722*	1	MOUNTING GP-ENGINE & XMSN	50
Y	*249-3723*	1	MUFFLER GP	100
			S/N: DHA1-645, 1094-UP; FBH1-798, 1431-UP	
Y	*243-2157*	1	PIPE GP-EXHAUST	101
Y	*277-8748*	1	STARTING AID GP-ETHER	297
Y	*277-8731*	1	PUMP GP-FUEL PRM & WATER SEP	184
			S/N: DHA1-645; FBH1-798	
Y	*301-2710*	1	PUMP GP-FUEL PRM & WATER SEP	186
			S/N: DHA646-UP; FBH799-UP	
Y	*301-2768*	1	STARTING MOTOR GP-ELECTRIC	300
			S/N: DHA1094-UP; FBH1431-UP	
	277-8713	1	BELT-SERPENTINE	

Y-SEPARATE ILLUSTRATION

BASIC ENGINE

279-8837 CAMSHAFT GP

S/N: C6E1-UP
PART OF 242-1356, 319-7261 ENGINE AR
ALSO AN ATTACHMENT

SMCS-1210 **i03568646**

NOTE	REF NO	GRAPHIC REF	PART NUMBER	QTY	PART NAME 1 2 3 4 5 6 (PRODUCT LEVEL)	SEE PAGE
	1	1	**347-1132**	1	CAMSHAFT AS	
	1A	1	**1B-8736**	1	KEY-WOODRUFF	
	2	1	**278-5125**	12	TAPPET	
	3	1	**278-5126**	12	PUSHROD	

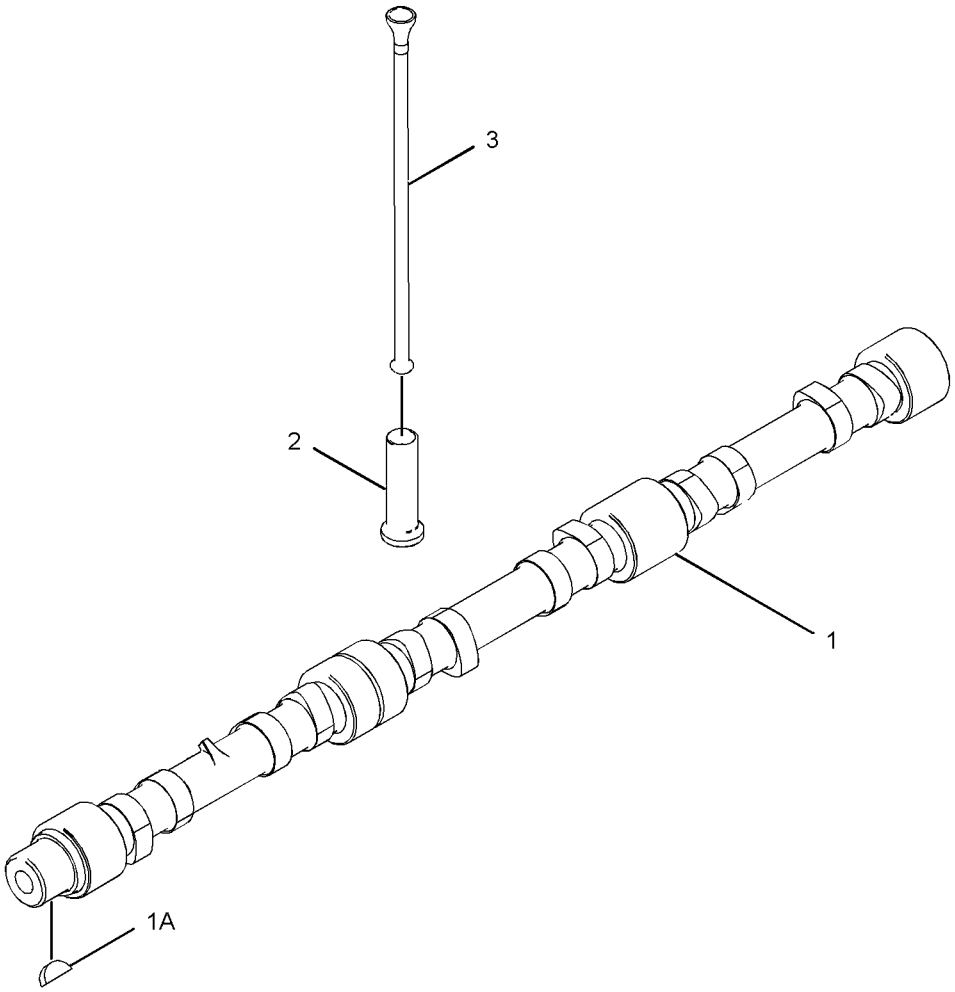

GRAPHIC #1 **<END>** g01296603

277-4224 COVER GP-ENGINE–PTO

S/N: C6E1-6519
PART OF 242-1356, 319-7261 ENGINE AR
ALSO AN ATTACHMENT

SMCS-1000 **i02386552**

NOTE	REF NO	GRAPHIC REF	PART NUMBER	QTY	PART NAME 1 2 3 4 5 6 (PRODUCT LEVEL)	SEE PAGE
	1	1	**209-5502**	1	COVER AS (POWER TAKE-OFF)	
	2	1	**209-5503**	1	SEAL-COVER	
	3	1	**111-8222**	5	BOLT (M8X16-MM)	
M	4	1	**100-4830**	1	BOLT (M10X1.5X20-MM)	
	5	1	**277-4223**	1	PLUG	

M-METRIC PART

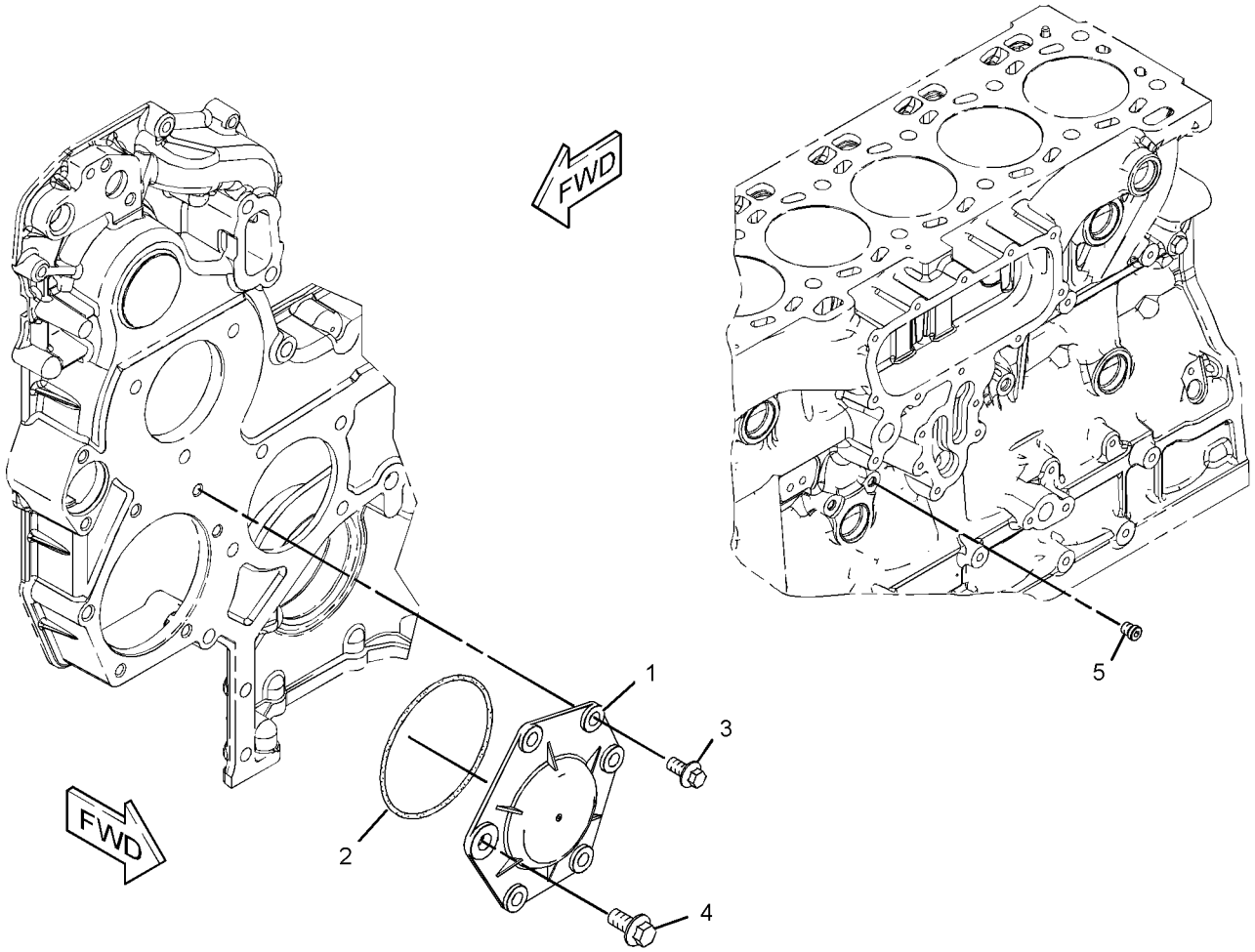

GRAPHIC #1 **<END>** g01195577

277-4224 COVER GP-ENGINE–PTO

S/N: C6E6520-UP
PART OF 319-7261 ENGINE AR
AN ATTACHMENT

SMCS-1000 **i03255874**

NOTE	REF NO	GRAPHIC REF	PART NUMBER	QTY	PART NAME 1 2 3 4 5 6 (PRODUCT LEVEL)	SEE PAGE
C	1	1	**329-7854**	1	PLATE AS	
	1A	1	**329-7856**	1	SEAL-O-RING	
	2	1	**111-8222**	5	BOLT (M8X16-MM)	
M	3	1	**100-4830**	1	BOLT (M10X1.5X20-MM)	
	4	1	**277-4223**	1	PLUG	

C-CHANGE FROM PREVIOUS TYPE
M-METRIC PART

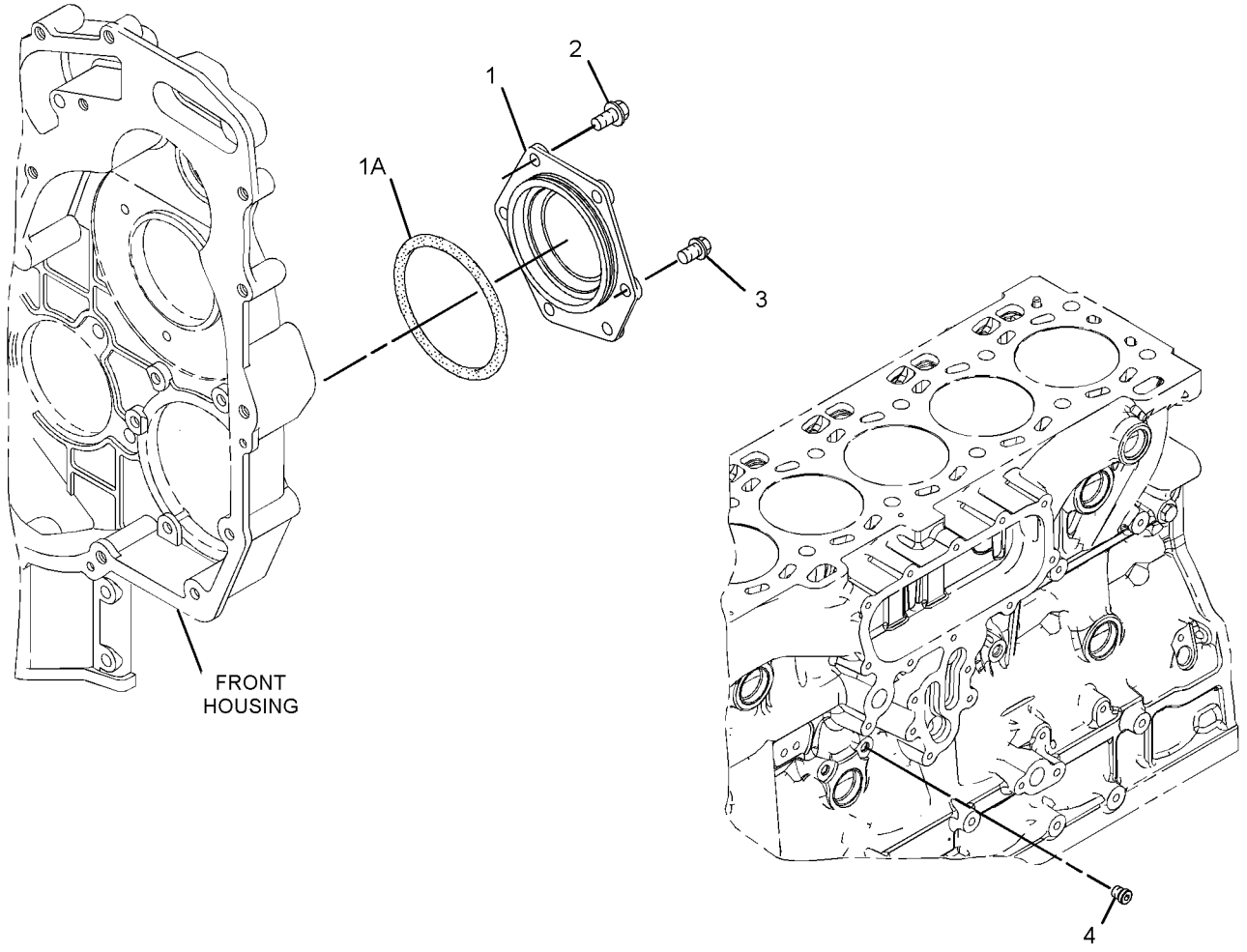

GRAPHIC #1 **<END>** g01682857

BASIC ENGINE

280-2024 COVER GP-VALVE MECHANISM

S/N: C6E1-495

PART OF 242-1356 ENGINE AR

SMCS-1107 **i03542777**

NOTE	REF NO	GRAPHIC REF	PART NUMBER	QTY	PART NAME 1 2 3 4 5 6 (PRODUCT LEVEL)	SEE PAGE
C	1	1	**295-1000**	1	COVER GP-VALVE MECHANISM	
	3	1	**295-1041**	1	ADAPTER	
	4	1	**278-4693**	1	GASKET-VALVE COVER	
	5	1	**278-4694**	1	BREATHER AS (CRANKCASE)	
	5A	2	**185-3159**	1	FILTER ELEMENT-BREATHER (CRANKCASE)	
	5B	2	**160-0526**	1	SEAL-O-RING	
	5C	2	**124-0506**	1	SEAL	
	6	1	**277-5030**	1	SEAL-O-RING	
	7	1	**295-1042**	4	SCREW-TAPPING	
	8	1	**277-5031**	15	BOLT-SPECIAL (SHOULDER)	
	9	1	**300-3965**	1	HOUSING AS	
	9A	1	**277-5063**	1	GASKET-COVER (BASE)	
	9B	1	**285-1975**	3	HARNESS AS-WIRING (INJECTOR)	
	9C	1	**277-5064**	3	SEAL-O-RING	
	9D	1	**277-5065**	3	CLIP	
	9E	1	**277-5066**	14	BOLT-SPECIAL (SHOULDER)	
	10	1	**277-5067**	6	SLEEVE	
	11	1	**234-3587**	1	HOSE-BREATHER (CRANKCASE)	
	12	1	**5D-1026**	2	CLAMP-BAND	
	13	1	**280-2017**	1	HOSE	
	14	1	**2S-3440**	2	CLAMP-HOSE	
	15	1	**280-2020**	1	BREATHER AS (CRANKCASE)	
	16	1	**6I-4374**	2	BOLT (M8X1.25X60-MM)	
	17	1	**280-2023**	1	HOSE	
	18	1	**278-5927**	1	TUBE-BREATHER	
	19	1	**277-5094**	1	COVER AS	
	19A	1	**277-5096**	1	SEAL-O-RING	
M	20	1	**6I-0217**	1	BOLT (M8X1.25X20-MM)	

C-CHANGE FROM PREVIOUS TYPE
M-METRIC PART

280-2024 **COVER GP-VALVE MECHANISM** *(contd.)* **i03542777**

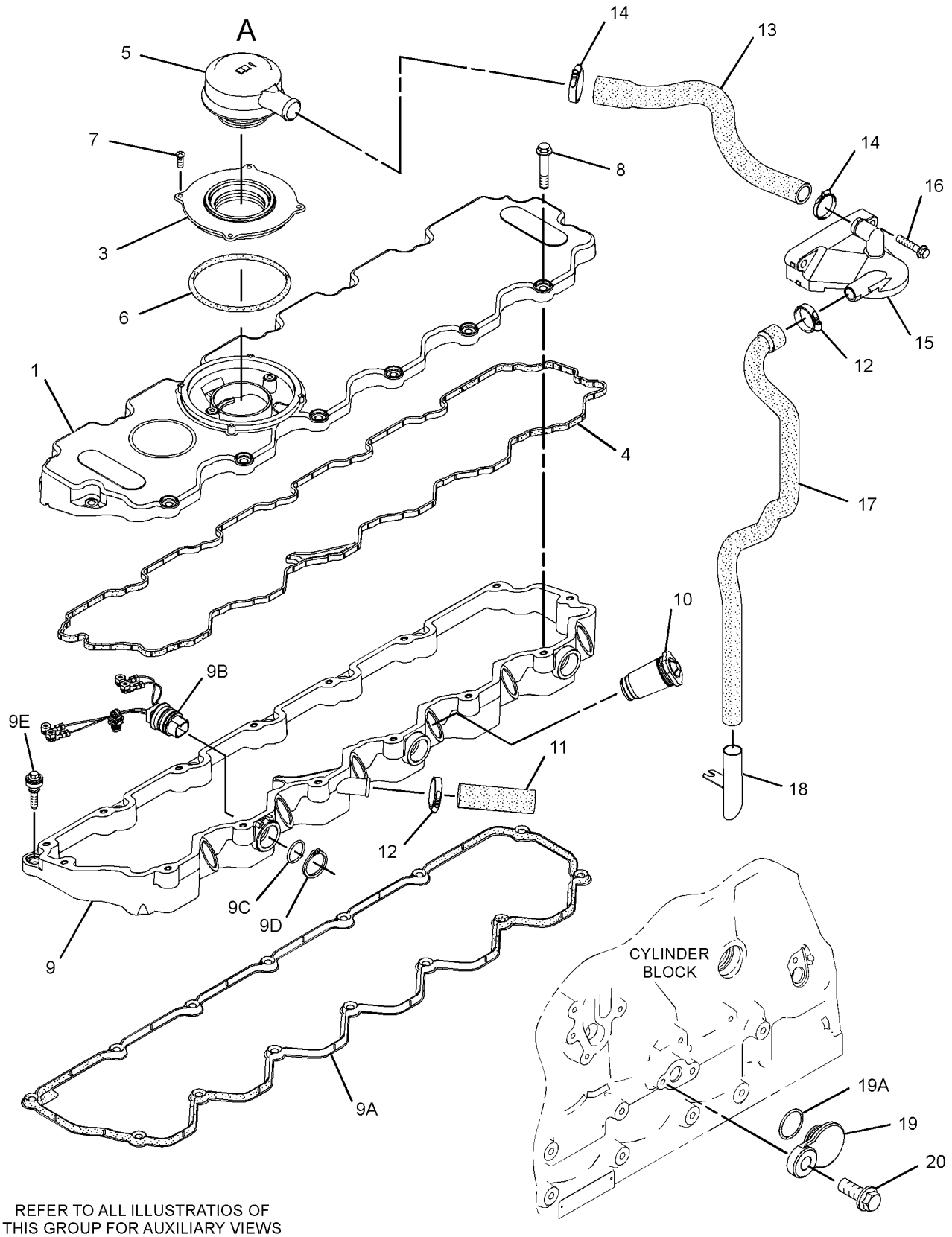

REFER TO ALL ILLUSTRATIOS OF THIS GROUP FOR AUXILIARY VIEWS

GRAPHIC #1

g01363245

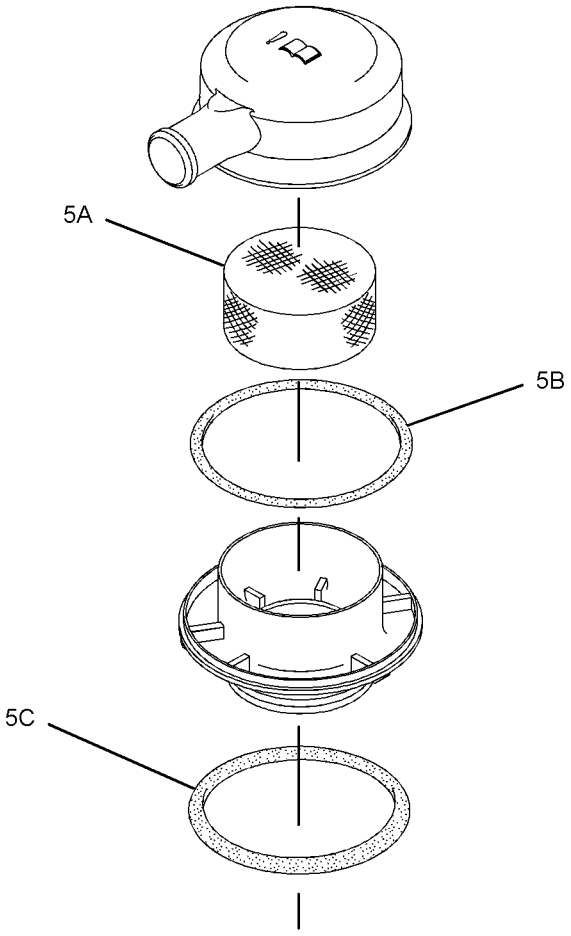

VIEW OF AREA A

GRAPHIC #2 **<END>** g01363246

305-8963 COVER GP-VALVE MECHANISM

S/N: C6E496-1544
PART OF 242-1356, 319-7261 ENGINE AR
ALSO AN ATTACHMENT

SMCS-1107 **i03542778**

NOTE	REF NO	GRAPHIC REF	PART NUMBER	QTY	PART NAME 1 2 3 4 5 6 (PRODUCT LEVEL)	SEE PAGE
M	1	1	**6I-0217**	1	BOLT (M8X1.25X20-MM)	
	2	1	**6I-0291**	1	NUT (M8X1.25-THD)	
	3	1	**103-1066**	2	CLAMP-HOSE	
M	4	1	**124-3815**	1	BOLT (M8X16X1.25-MM)	
	5	1	**228-8960**	1	CLIP	
	6	1	**277-5031**	15	BOLT-SPECIAL (SHOULDER)	
	7	1	**277-5067**	6	SLEEVE	
	8	1	**277-5094**	1	COVER AS	
	8A	1	**277-5096**	1	SEAL-O-RING	
	9	1	**278-5927**	1	TUBE-BREATHER	
	10	1	**295-1000**	1	COVER GP-VALVE MECHANISM	
	10A	1	**277-5030**	1	SEAL-O-RING	
	10B	1	**278-4693**	1	GASKET-VALVE COVER	
	10C	1	**295-1041**	1	ADAPTER	
	10D	1	**295-1042**	4	SCREW-TAPPING	
	10E	1	**278-4694**	1	BREATHER AS (CRANKCASE)	
	10F	2	**124-0506**	1	SEAL	
	10G	2	**160-0526**	1	SEAL-O-RING	
	10H	2	**185-3159**	1	FILTER ELEMENT-BREATHER (CRANKCASE)	
	11	1	**300-3965**	1	HOUSING AS	
	11A	1	**277-5063**	1	GASKET-COVER (VALVE)	
	11B	1	**277-5064**	3	SEAL-O-RING	
	11C	1	**277-5065**	3	CLIP	
	11D	1	**277-5066**	14	BOLT-SPECIAL (SHOULDER)	
	11E	1	**285-1975**	3	HARNESS AS-WIRING (INJECTOR)	
	12	1	**305-8964**	1	HOSE-BREATHER	

M-METRIC PART

305-8963 **COVER GP-VALVE MECHANISM** *(contd.)* **i03542778**

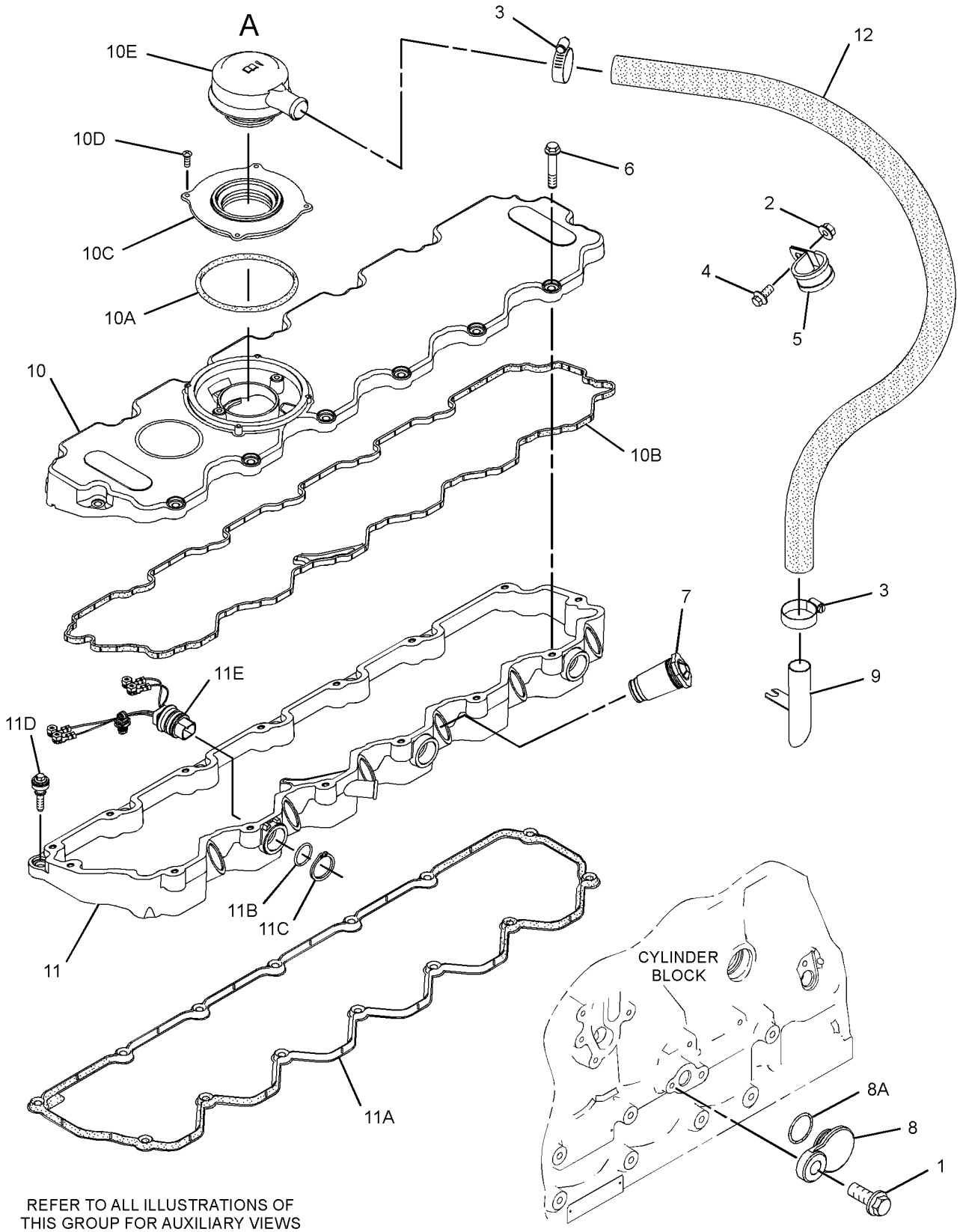

REFER TO ALL ILLUSTRATIONS OF THIS GROUP FOR AUXILIARY VIEWS

GRAPHIC #1

g01348652

305-8963 **COVER GP-VALVE MECHANISM** *(contd.)* **i03542778**

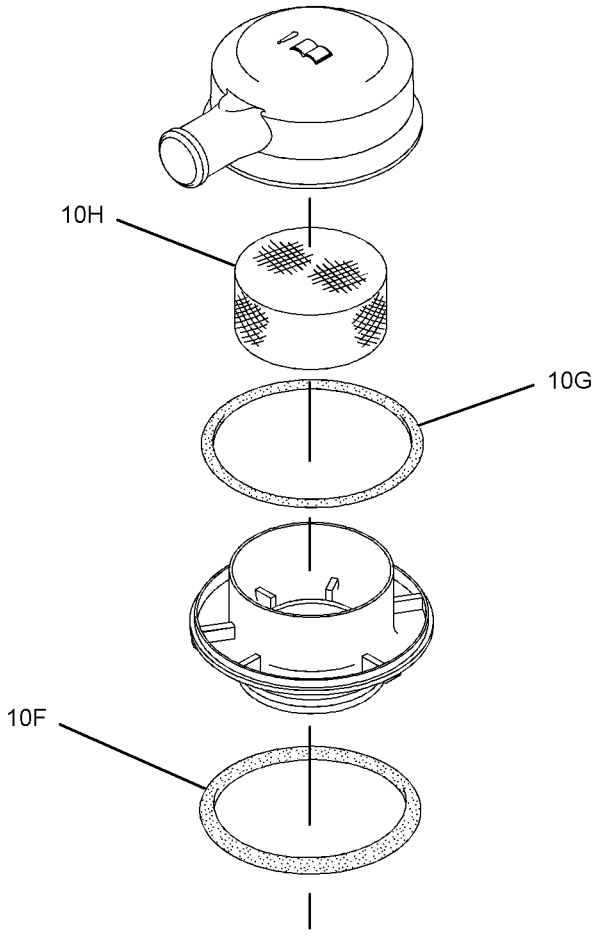

VIEW OF AREA A

GRAPHIC #2 **<END>** g01348654

BASIC ENGINE

305-8963 COVER GP-VALVE MECHANISM

S/N: C6E1545-2839
PART OF 242-1356, 319-7261 ENGINE AR
ALSO AN ATTACHMENT

SMCS-1107 **i03542781**

NOTE	REF NO	GRAPHIC REF	PART NUMBER	QTY	PART NAME 1 2 3 4 5 6 (PRODUCT LEVEL)	SEE PAGE
M	1	1	**6I-0217**	1	BOLT (M8X1.25X20-MM)	
	2	1	**6I-0291**	1	NUT (M8X1.25-THD)	
	3	1	**103-1066**	2	CLAMP-HOSE	
M	4	1	**124-3815**	1	BOLT (M8X16X1.25-MM)	
	5	1	**228-8960**	1	CLIP	
C	6	1	**277-5031**	9	BOLT-SPECIAL (SHOULDER)	
	7	1	**277-5067**	6	SLEEVE	
	8	1	**277-5094**	1	COVER AS	
	8A	1	**277-5096**	1	SEAL-O-RING	
	9	1	**278-5927**	1	TUBE-BREATHER	
	10	1	**295-1000**	1	COVER GP-VALVE MECHANISM	
	10A	1	**317-3580**	1	SEAL-O-RING	
	10B	1	**278-4693**	1	GASKET-VALVE COVER	
	10C	1	**300-3907**	1	ADAPTER	
	10D	1	**295-1042**	4	SCREW-TAPPING	
	10E	1	**278-4694**	1	BREATHER AS (CRANKCASE)	
	10F	2	**124-0506**	1	SEAL	
	10G	2	**160-0526**	1	SEAL-O-RING	
	10H	2	**185-3159**	1	FILTER ELEMENT-BREATHER (CRANKCASE)	
C	11	1	**312-3084**	1	COVER AS-CYLINDER HEAD	
	11A	1	**309-6664**	1	GASKET-COVER (VALVE)	
	11B	1	**277-5064**	3	SEAL-O-RING	
	11C	1	**277-5065**	3	CLIP	
	11E	1	**285-1975**	3	HARNESS AS-WIRING (INJECTOR)	
	12	1	**305-8964**	1	HOSE-BREATHER	
C	13	1	**298-4550**	6	BOLT-SPECIAL (SHOULDER)	

C-CHANGE FROM PREVIOUS TYPE
M-METRIC PART

305-8963 **COVER GP-VALVE MECHANISM** *(contd.)* **i03542781**

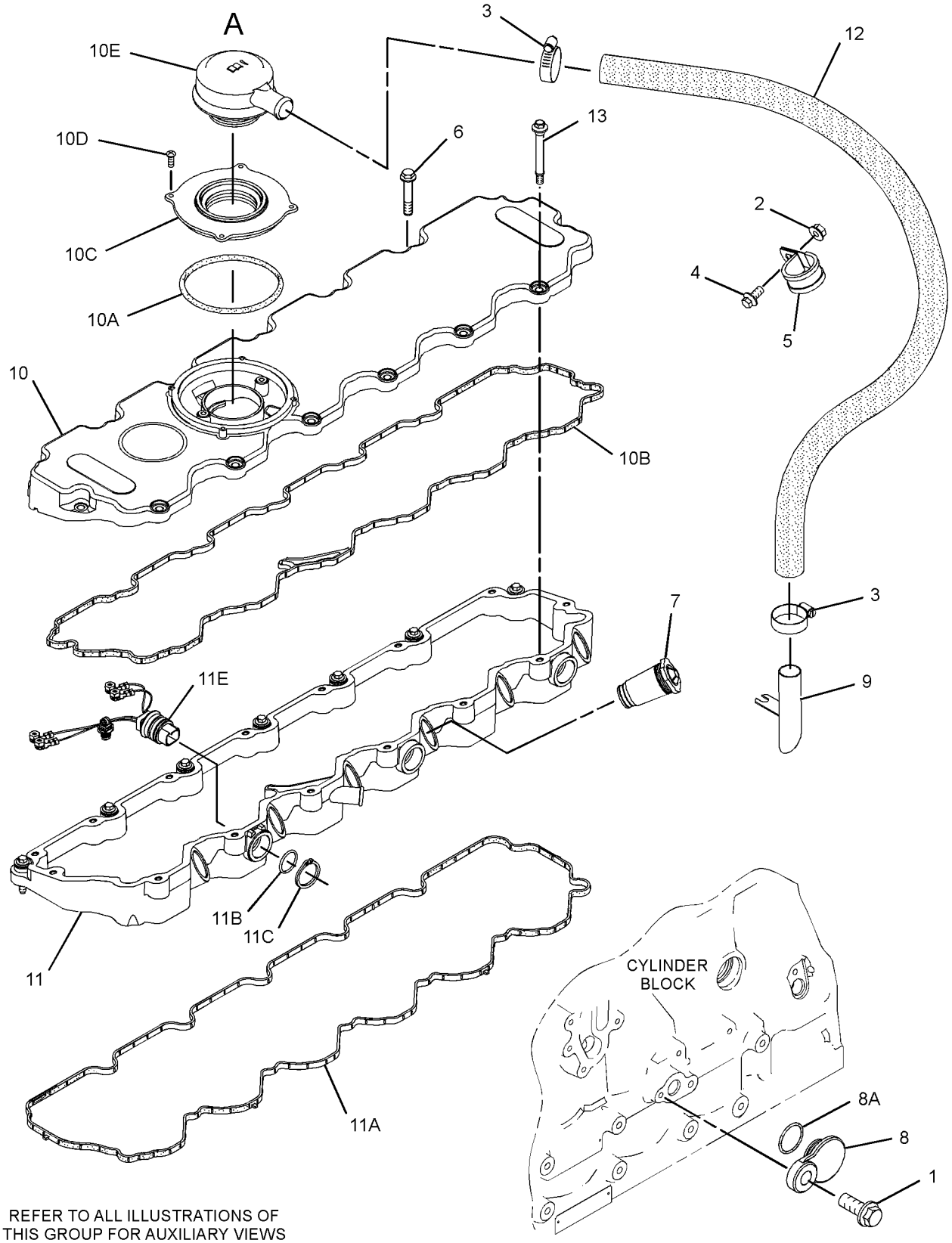

GRAPHIC #1 g01476781

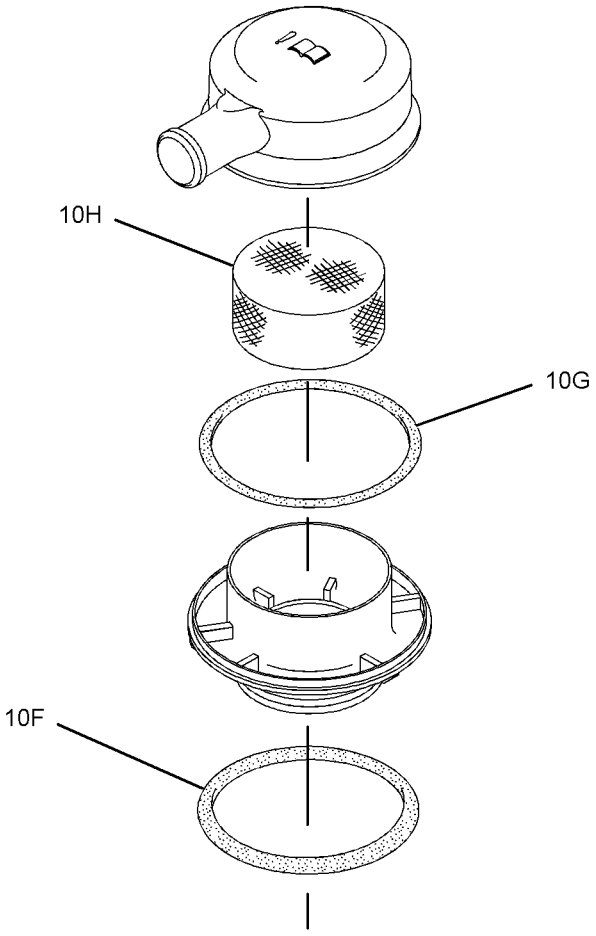

VIEW OF AREA A

GRAPHIC #2 **<END>** g01348654

305-8963 COVER GP-VALVE MECHANISM

S/N: C6E2840-6975
PART OF 242-1356, 319-7261 ENGINE AR
ALSO AN ATTACHMENT

SMCS-1107 **i03542780**

NOTE	REF NO	GRAPHIC REF	PART NUMBER	QTY	PART NAME 1 2 3 4 5 6 (PRODUCT LEVEL)	SEE PAGE
M	1	1	**6I-0217**	1	BOLT (M8X1.25X20-MM)	
	2	1	**6I-0291**	1	NUT (M8X1.25-THD)	
C	3	1	**032-9020**	1	CLIP	
M	4	1	**124-3815**	1	BOLT (M8X16X1.25-MM)	
C	5	1	**127-8281**	1	CLIP	
	6	1	**277-5031**	9	BOLT-SPECIAL (SHOULDER)	
	7	1	**277-5067**	6	SLEEVE	
	8	1	**277-5094**	1	COVER AS	
	8A	1	**277-5096**	1	SEAL-O-RING	
C	9	1	**7C-1281**	1	BRACKET	
C	10	1	**317-3065**	1	COVER GP-VALVE MECHANISM	
	10A	1	**317-3064**	1	GASKET-COVER (VALVE MECHANISM)	
	10B	1	**295-1042**	4	SCREW-TAPPING	
	10C	1	**326-7288**	1	BREATHER (CRANKCASE)	
	10D	1	**298-4547**	1	BREATHER (CRANKCASE)	
	10E	1	**326-7289**	1	SEAL-O-RING	
C	11	1	**317-2717**	1	BASE GP-VALVE COVER & INJ HARN	
	11A	1	**309-6664**	1	GASKET-COVER	
	11B	1	**277-5064**	3	SEAL-O-RING	
	11C	1	**277-5065**	3	CLIP	
	11E	1	**285-1975**	3	HARNESS AS-WIRING (INJECTOR)	
C	12	1	**320-9921**	1	HOSE	
	13	1	**298-4550**	6	BOLT-SPECIAL (SHOULDER)	
C	14	1	**162-1565**	1	SPRING (CRANKCASE BREATHER HOSE)	

C-CHANGE FROM PREVIOUS TYPE
M-METRIC PART

305-8963 **COVER GP-VALVE MECHANISM** *(contd.)* **i03542780**

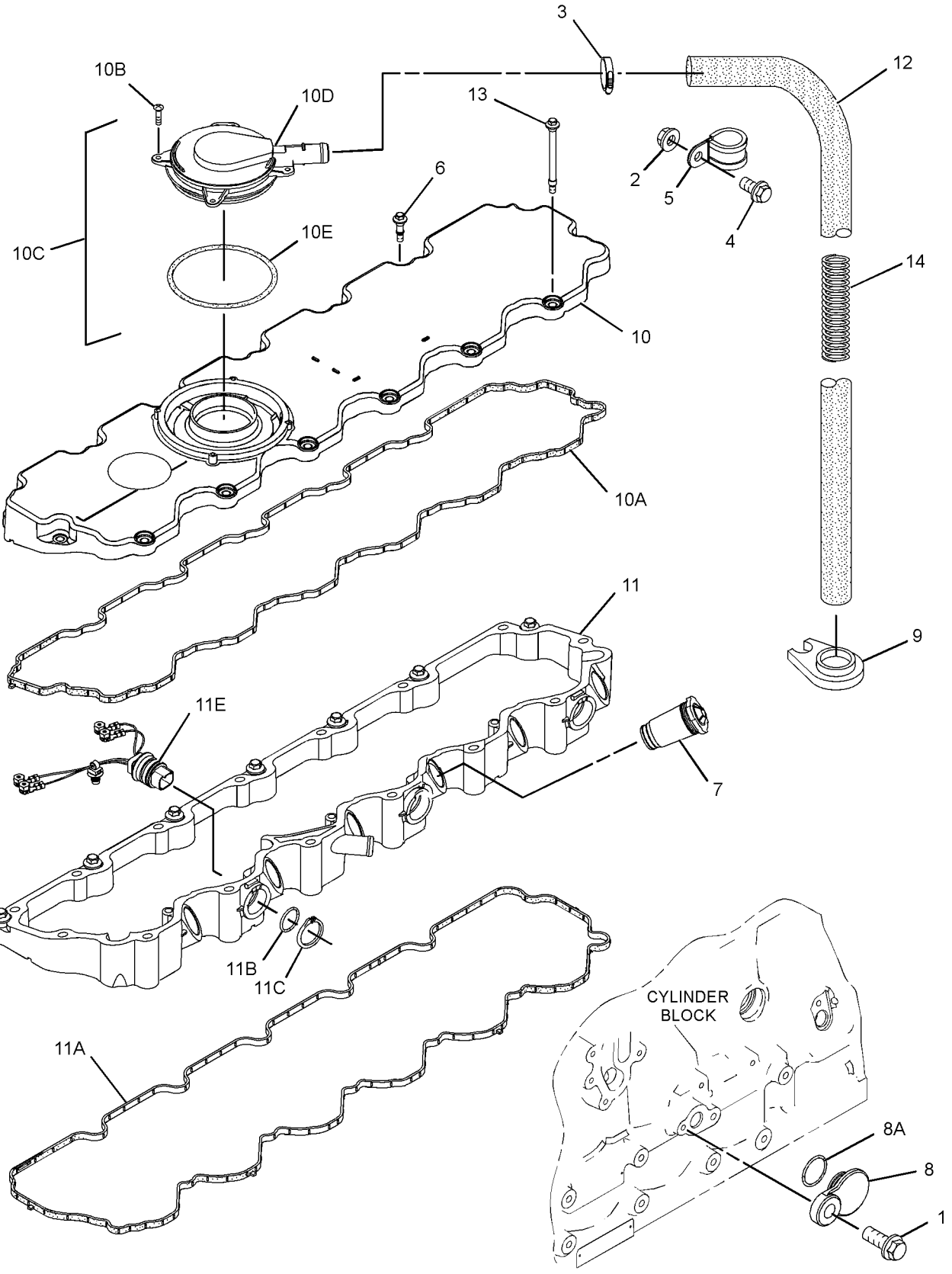

GRAPHIC #1 **<END>** g01521931

305-8963 COVER GP-VALVE MECHANISM

S/N: C6E6976-UP
PART OF 242-1356, 319-7261 ENGINE AR
ALSO AN ATTACHMENT

SMCS-1107 **i03334840**

NOTE	REF NO	GRAPHIC REF	PART NUMBER	QTY	PART NAME 1 2 3 4 5 6 (PRODUCT LEVEL)	SEE PAGE
	1	1	**6I-0291**	1	NUT (M8X1.25-THD)	
	3	1	**032-9020**	1	CLIP	
M	4	1	**124-3815**	1	BOLT (M8X16X1.25-MM)	
	5	1	**127-8281**	1	CLIP	
	6	1	**277-5031**	9	BOLT-SPECIAL (SHOULDER)	
	7	1	**277-5067**	6	SLEEVE	
	9	1	**7C-1281**	1	BRACKET	
	10	1	**317-3065**	1	COVER GP-VALVE MECHANISM	
	10A	1	**317-3064**	1	GASKET-COVER (VALVE MECHANISM)	
	11	1	**317-2717**	1	BASE GP-VALVE COVER & INJ HARN	
	11A	1	**309-6664**	1	GASKET-COVER	
	11B	1	**277-5064**	3	SEAL-O-RING	
	11C	1	**277-5065**	3	CLIP	
	11E	1	**285-1975**	3	HARNESS AS-WIRING (INJECTOR)	
	12	1	**320-9921**	1	HOSE	
	13	1	**298-4550**	6	BOLT-SPECIAL (SHOULDER)	
	14	1	**162-1565**	1	SPRING (CRANKCASE BREATHER HOSE)	

M-METRIC PART

305-8963 **COVER GP-VALVE MECHANISM** *(contd.)* **i03334840**

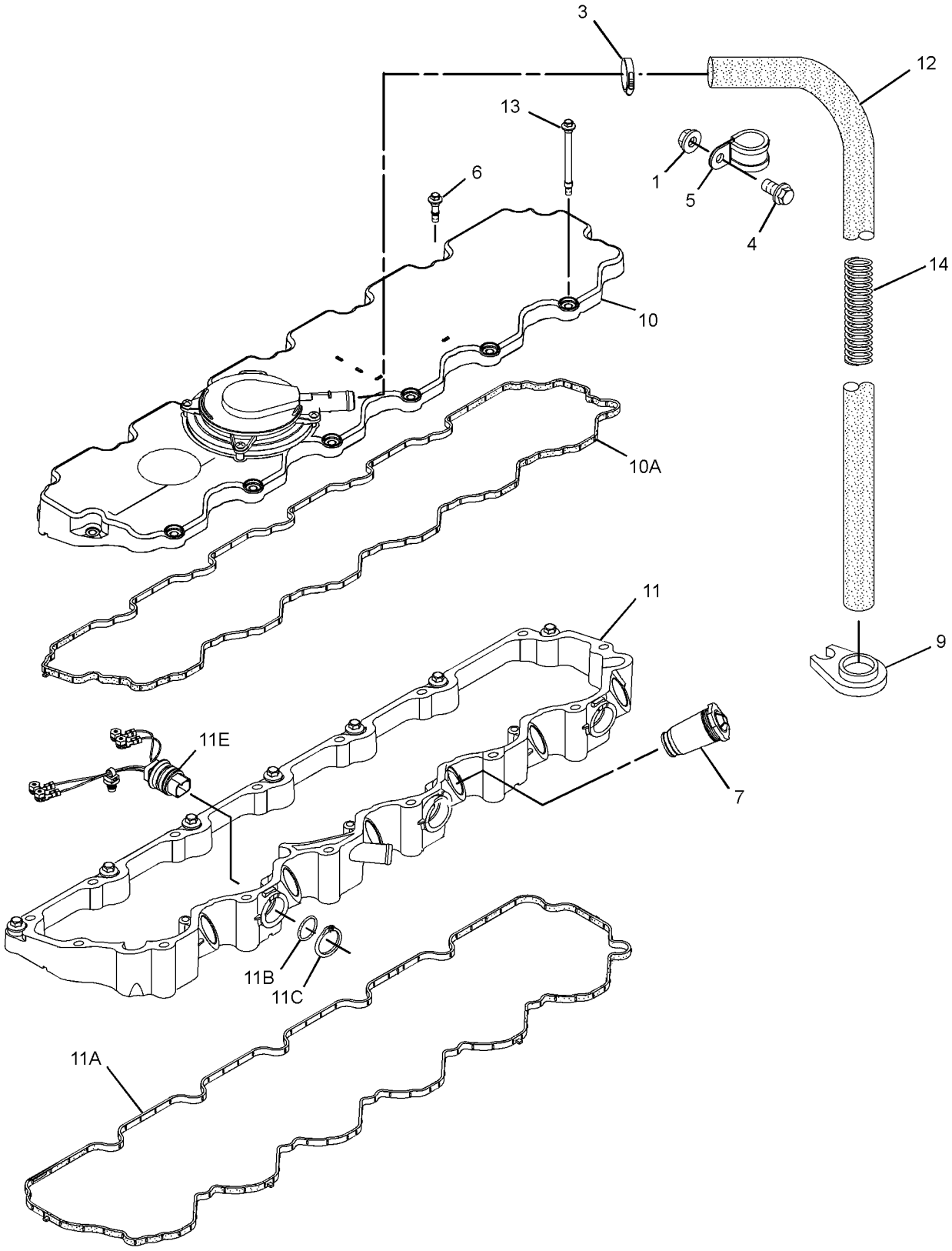

GRAPHIC #1 **<END>** g01728601

279-8762 CRANKSHAFT GP

S/N: C6E1-UP
PART OF 242-1356, 319-7261 ENGINE AR
ALSO AN ATTACHMENT

SMCS-1202 **i02713590**

NOTE	REF NO	GRAPHIC REF	PART NUMBER	QTY	PART NAME 1 2 3 4 5 6 (PRODUCT LEVEL)	SEE PAGE
	1	1	**276-7387**	1	CRANKSHAFT AS	
	1A	1	**1B-8736**	1	KEY-WOODRUFF	
	1B	1	**225-8839**	1	DOWEL	
	1C	1	**276-7388**	1	KIT-BEARING	
	1D	1	**276-7389**	1	KIT-BEARING	
	1E	1	**276-7390**	2	WASHER-THRUST	
	1F	1	**276-7391**	1	GEAR (34-TEETH)	
	2	1	**276-7393**	1	RING-TIMING	
	3	1	**276-7394**	3	BOLT	

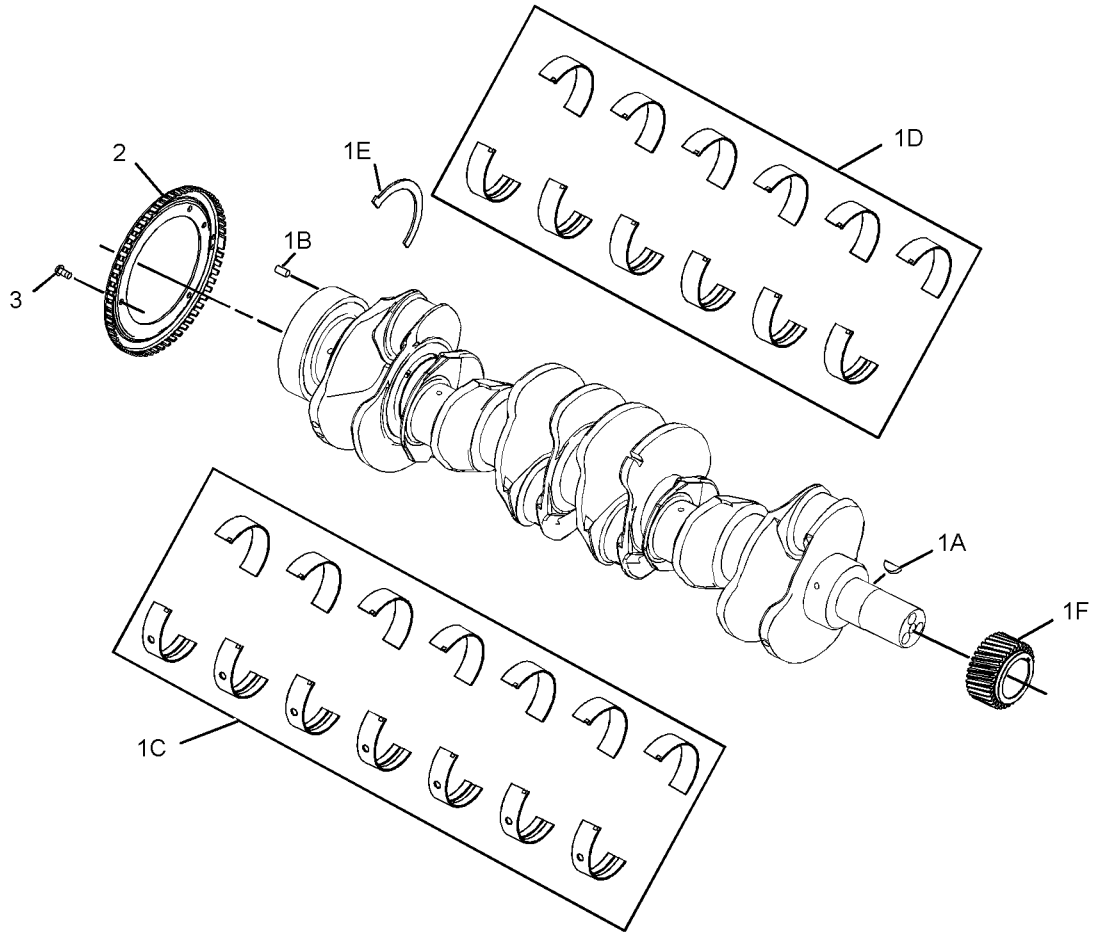

GRAPHIC #1 **<END>** g01366865

BASIC ENGINE

279-8711 CYLINDER BLOCK GP

S/N: C6E1-UP
PART OF 242-1356, 319-7261 ENGINE AR
ALSO AN ATTACHMENT

SMCS-1201 **i02721507**

NOTE	REF NO	GRAPHIC REF	PART NUMBER	QTY	PART NAME 1 2 3 4 5 6 (PRODUCT LEVEL)	SEE PAGE
	1	1	**292-0886**	1	HOUSING-REAR	
M	2	1	**209-9219**	8	BOLT (M8X1.25X16-MM)	
Y	3	1	**306-6845**	1	CYLINDER BLOCK GP	28

M-METRIC PART
Y-SEPARATE ILLUSTRATION

279-8711 **CYLINDER BLOCK GP** *(contd.)* **i02721507**

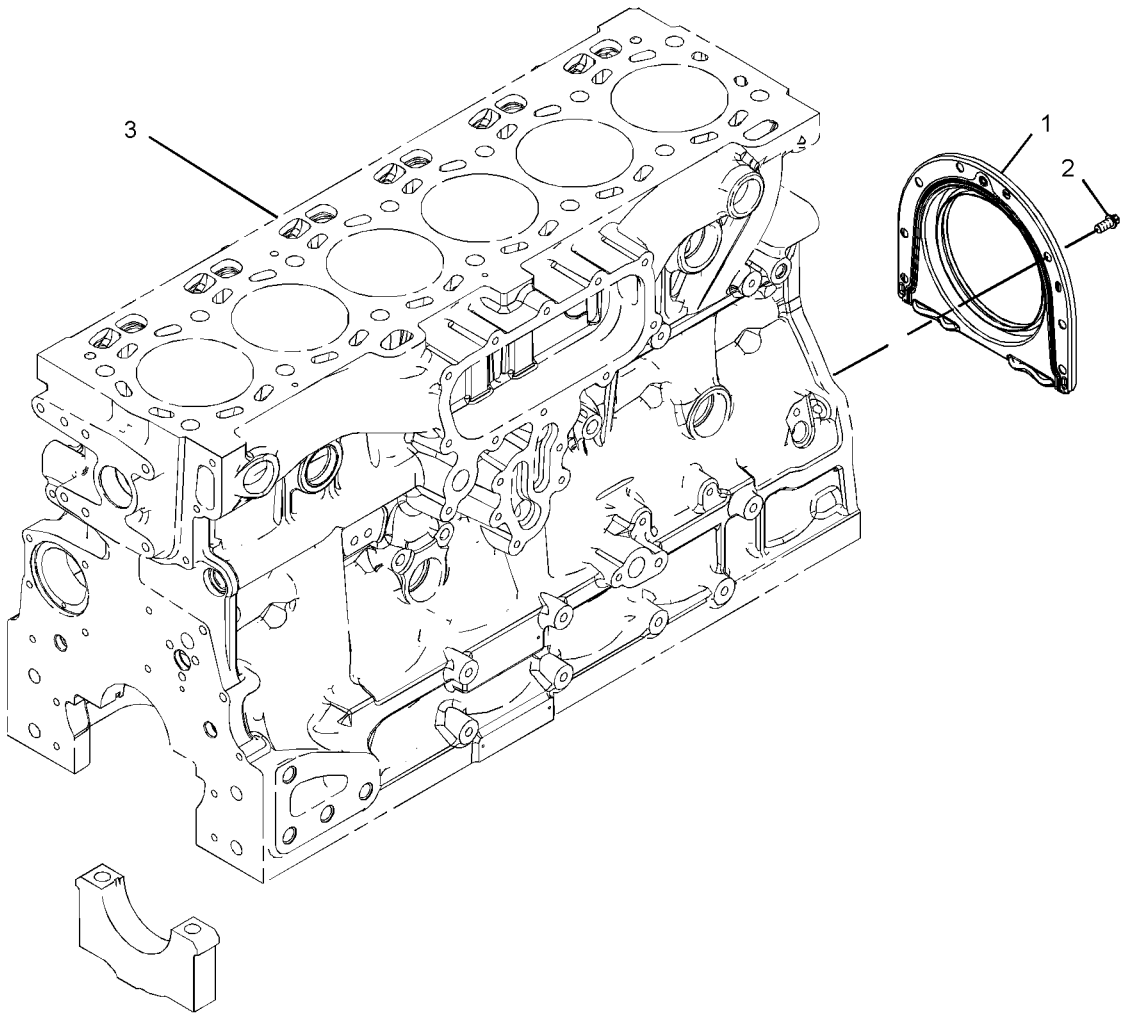

GRAPHIC #1 **<END>** g01365648

BASIC ENGINE

306-6845 CYLINDER BLOCK GP

S/N: C6E1-UP

PART OF 279-8711 CYLINDER BLOCK GP

ALSO AN ATTACHMENT

SMCS-1201 **i02702174**

NOTE	REF NO	GRAPHIC REF	PART NUMBER	QTY	PART NAME 1 2 3 4 5 6 (PRODUCT LEVEL)	SEE PAGE
	1	1	**2B-0858**	1	PLUG-PIPE	
	2	1	**067-6043**	5	PLUG-SIDE	
M	3	1	**100-4841**	6	BOLT (M6X1X10-MM)	
	4	1	**185-0884**	2	DOWEL	
	5	1	**225-8858**	1	PLUG	
	6	1	**232-1322**	1	PLUG	
	7	1	**232-7596**	1	PLUG	
	8	1	**232-7597**	2	PLUG	
	9	1	**232-7599**	2	PLUG	
	10	1	**276-5600**	14	BOLT-SPECIAL (BEARING CAP)	
	11	1	**276-5601**	1	BUSHING-CAMSHAFT	
	12	1	**276-5602**	6	PLUG-CORE	
	13	1	**276-5603**	1	SEAL-O-RING	
	14	1	**276-5604**	1	DOWEL	
	15	1	**276-5605**	6	JET AS-PISTON COOLING	

M-METRIC PART

306-6845 **CYLINDER BLOCK GP** *(contd.)* **i02702174**

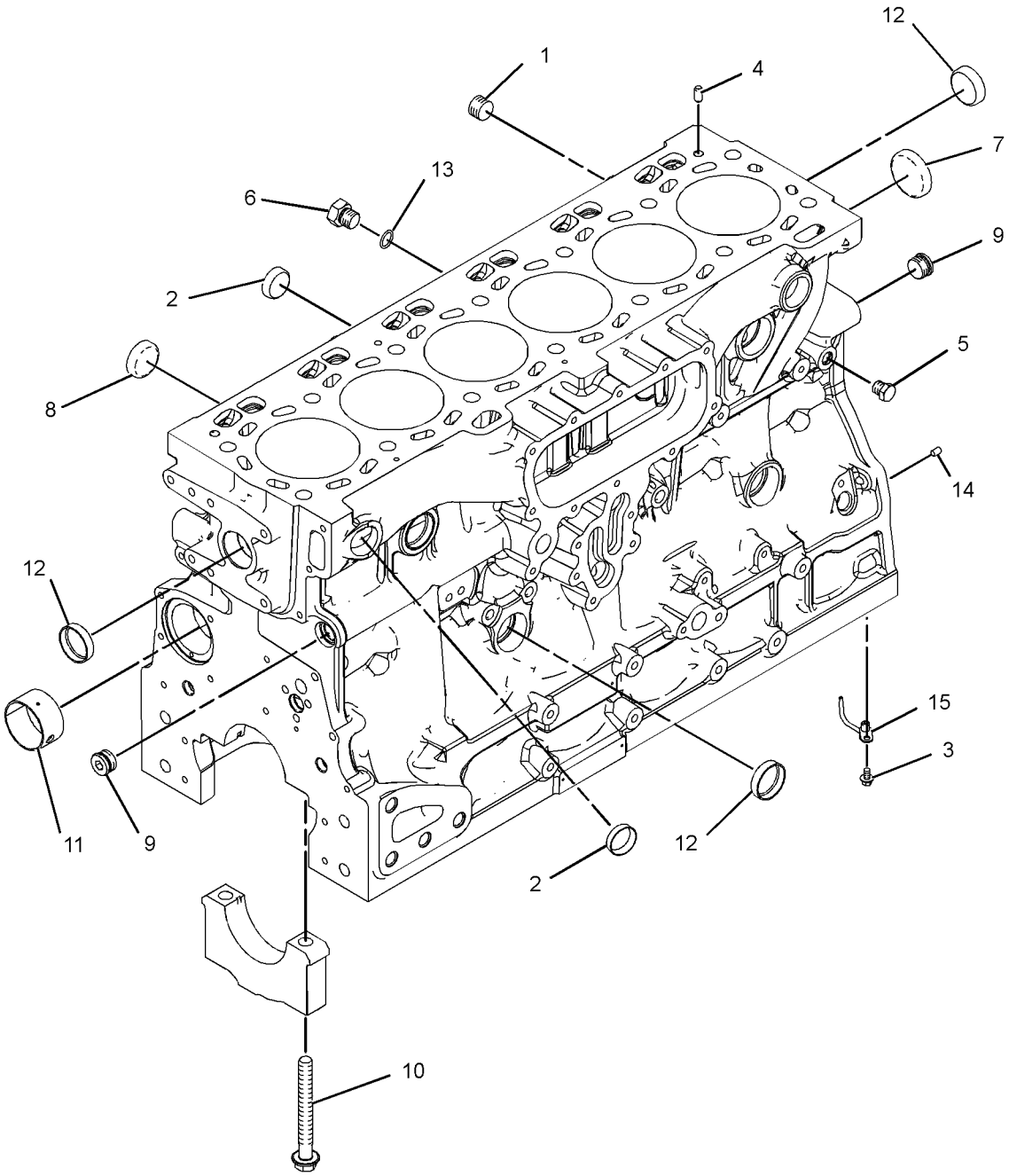

GRAPHIC #1 **<END>** g01339916

276-8115 CYLINDER HEAD AS

S/N: C6E1-UP

PART OF 279-8821 CYLINDER HEAD GP

ALSO AN ATTACHMENT

SMCS-1100, 1101 **i03419082**

NOTE	REF NO	GRAPHIC REF	PART NUMBER	QTY	PART NAME 1 2 3 4 5 6 (PRODUCT LEVEL)	SEE PAGE
	1	1	**2B-0858**	2	PLUG-PIPE	
	2	1	**199-9751**	1	SEAL-O-RING	
	3	1	**232-1322**	1	PLUG	
	4	1	**276-8116**	6	PLUG-CORE	
	5	1	**276-8117**	13	PLUG-CORE	
	6	1	**295-6661**	1	PLUG	
	7	1	**309-6678**	12	VALVE-INLET	
	8	1	**276-8123**	48	RETAINER	
	9	1	**339-9637**	12	VALVE-EXHAUST	
	10	1	**299-5511**	24	SEAL-VALVE STEM	
	11	1	**276-8132**	24	SPRING-VALVE	
	12	1	**276-8133**	24	CAP-VALVE	

276-8115 CYLINDER HEAD AS *(contd.)* **i03419082**

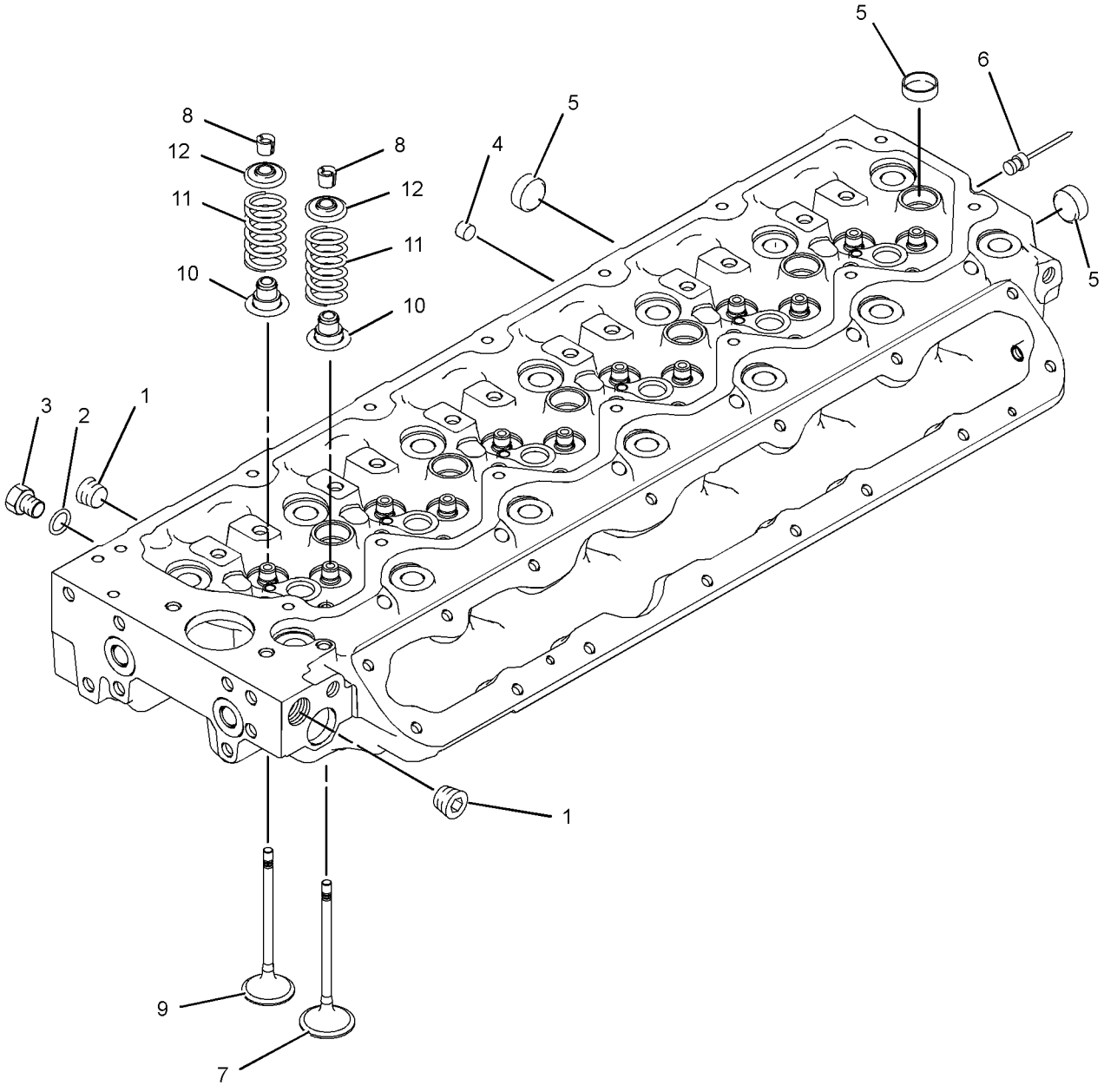

GRAPHIC #1 **<END>** g01235535

BASIC ENGINE

309-6663 CYLINDER HEAD AS

S/N: C6E1545-UP

PART OF 279-8821 CYLINDER HEAD GP

ALSO AN ATTACHMENT

SMCS-1100, 1101 **i03419107**

NOTE	REF NO	GRAPHIC REF	PART NUMBER	QTY	PART NAME 1 2 3 4 5 6 (PRODUCT LEVEL)	SEE PAGE
	1	1	**2B-0858**	2	PLUG-PIPE	
	2	1	**199-9751**	1	SEAL-O-RING	
	3	1	**232-1322**	1	PLUG	
	4	1	**276-8116**	6	PLUG-CORE	
	5	1	**276-8117**	13	PLUG-CORE	
	6	1	**276-8123**	48	RETAINER	
	7	1	**339-9637**	12	VALVE-EXHAUST	
J	8	1	**276-8132**	24	SPRING-VALVE	
	9	1	**276-8133**	24	CAP-VALVE	
	10	1	**295-6661**	1	PLUG	
	11	1	**299-5511**	24	SEAL-VALVE STEM	
	12	1	**309-6678**	12	VALVE-INLET	

J-SERVICED IN PAIRS

309-6663 CYLINDER HEAD AS *(contd.)* **i03419107**

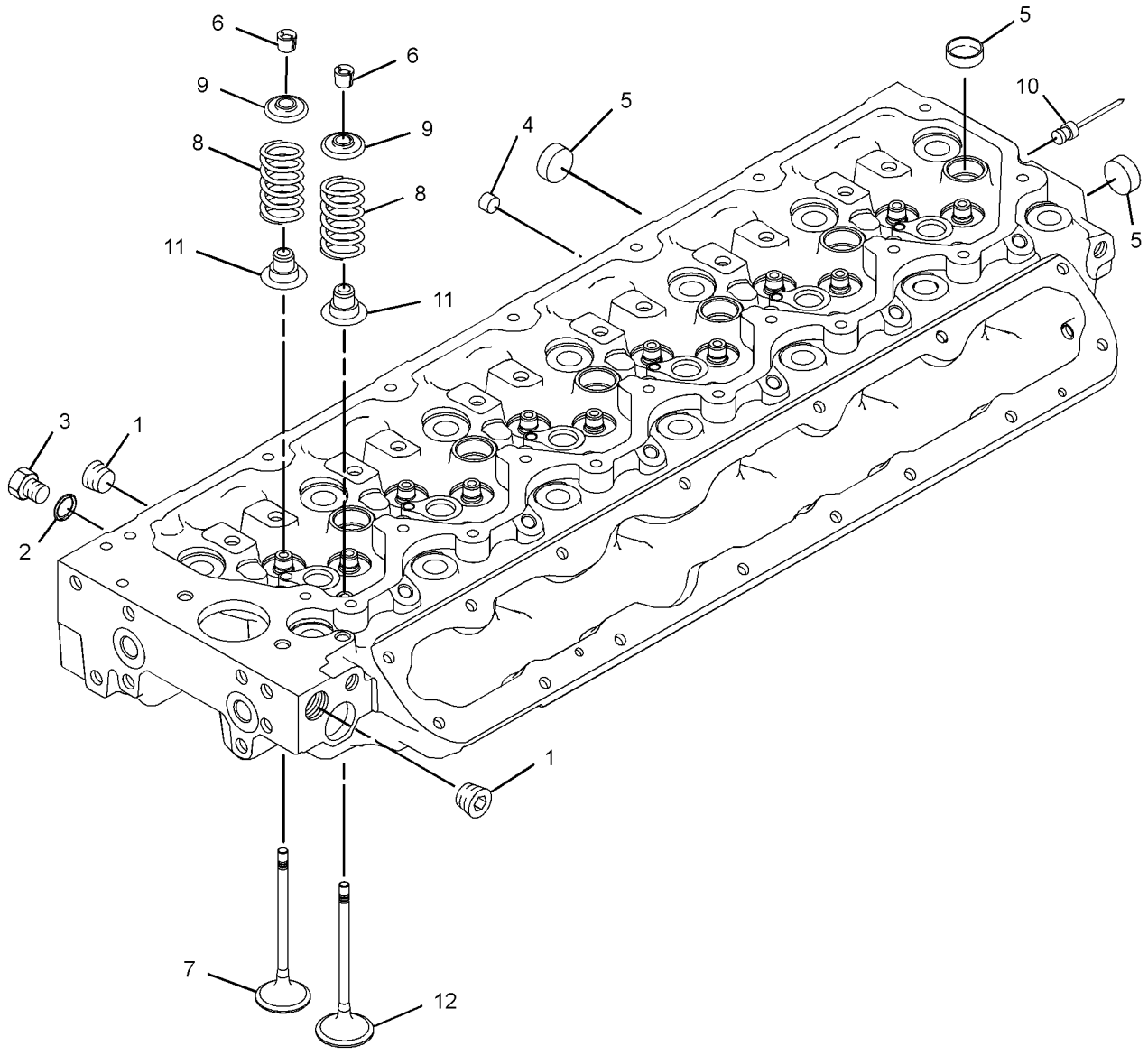

GRAPHIC #1 **<END>** g01400657

BASIC ENGINE

279-8821 CYLINDER HEAD GP

S/N: C6E1-1544
PART OF 242-1356, 319-7261 ENGINE AR
ALSO AN ATTACHMENT

SMCS-1100 **i02408128**

NOTE	REF NO	GRAPHIC REF	PART NUMBER	QTY	PART NAME 1 2 3 4 5 6 (PRODUCT LEVEL)	SEE PAGE
Y	1	1	**276-8115**	1	CYLINDER HEAD AS	30
	2	1	**276-8134**	14	BOLT-SPECIAL (CYLINDER HEAD)	
	3	1	**176-3141**	1	GASKET-HEAD	

Y-SEPARATE ILLUSTRATION

279-8821 **CYLINDER HEAD GP** *(contd.)* **i02408128**

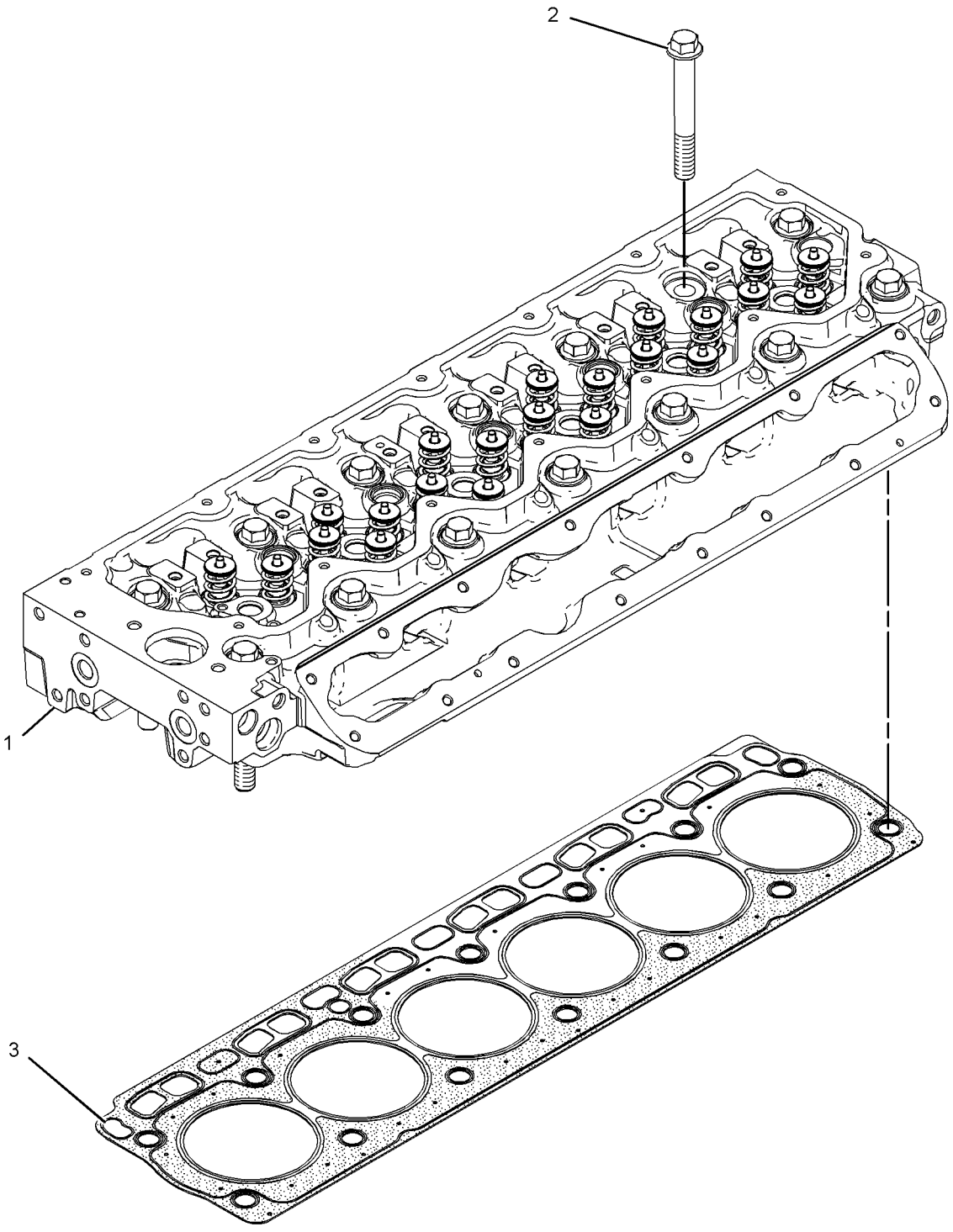

GRAPHIC #1 **<END>** g01291481

BASIC ENGINE

279-8821 CYLINDER HEAD GP

S/N: C6E1545-UP
PART OF 242-1356, 319-7261 ENGINE AR
ALSO AN ATTACHMENT

SMCS-1100 **i02783158**

NOTE	REF NO	GRAPHIC REF	PART NUMBER	QTY	PART NAME 1 2 3 4 5 6 (PRODUCT LEVEL)	SEE PAGE
CY	1	1	**309-6663**	1	CYLINDER HEAD AS	32
	2	1	**276-8134**	14	BOLT-SPECIAL (CYLINDER HEAD)	
	3	1	**176-3141**	1	GASKET-HEAD	

C-CHANGE FROM PREVIOUS TYPE
Y-SEPARATE ILLUSTRATION

279-8821 **CYLINDER HEAD GP** *(contd.)* **i02783158**

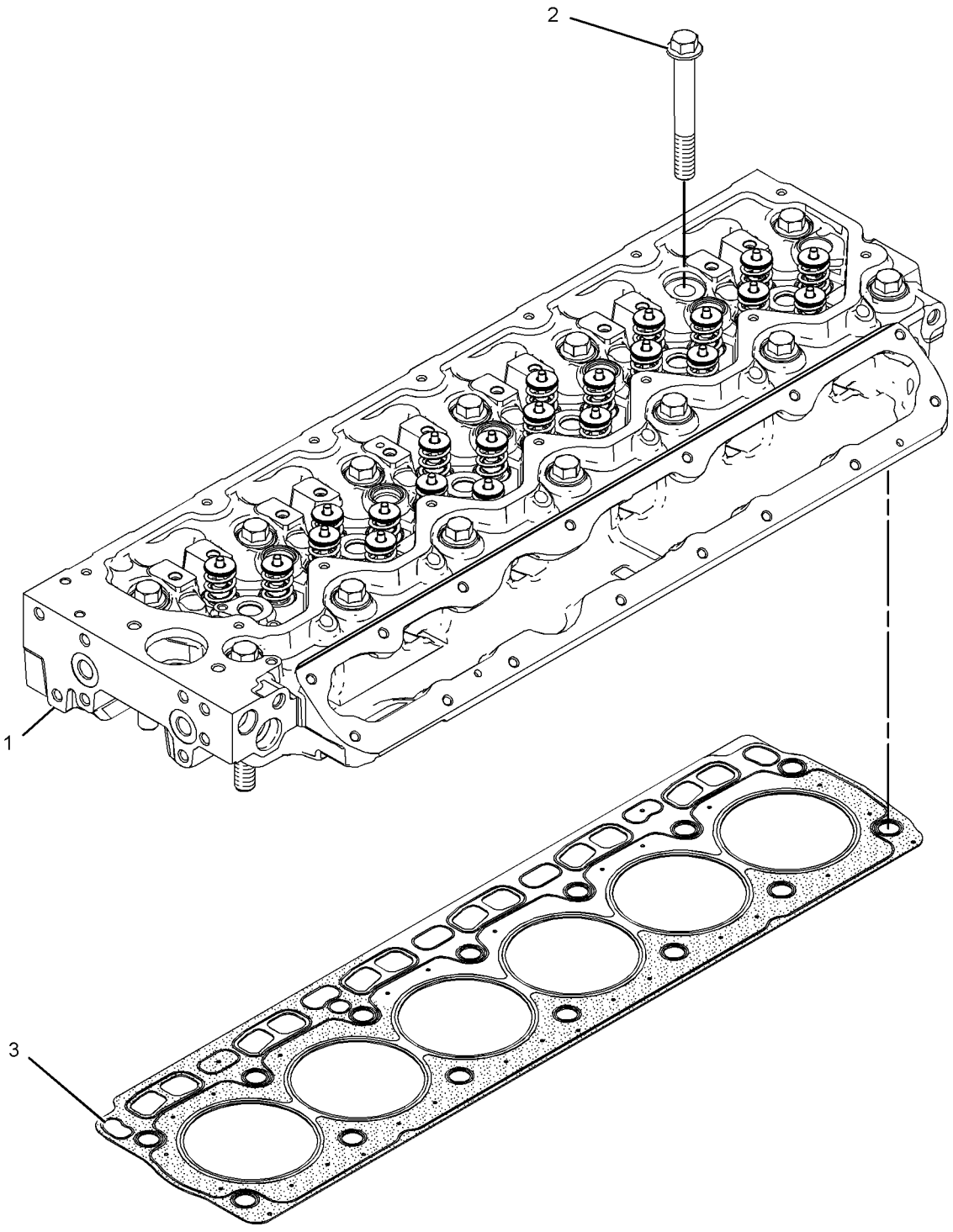

GRAPHIC #1 **<END>** g01291481

BASIC ENGINE

279-9255 FLYWHEEL GP

S/N: C6E1-UP
PART OF 242-1356, 319-7261 ENGINE AR
ALSO AN ATTACHMENT

SMCS-1156 **i02902904**

NOTE	REF NO	GRAPHIC REF	PART NUMBER	QTY	PART NAME 1 2 3 4 5 6 (PRODUCT LEVEL)	SEE PAGE
	1	1	**320-3669**	1	FLYWHEEL AS	
	1A	1	**277-0588**	1	GEAR-STARTING MOTOR RING	
	2	1	**5P-8245**	12	WASHER-HARD (13.5X25.5X3-MM THK)	
	3	1	**279-9254**	12	BOLT	

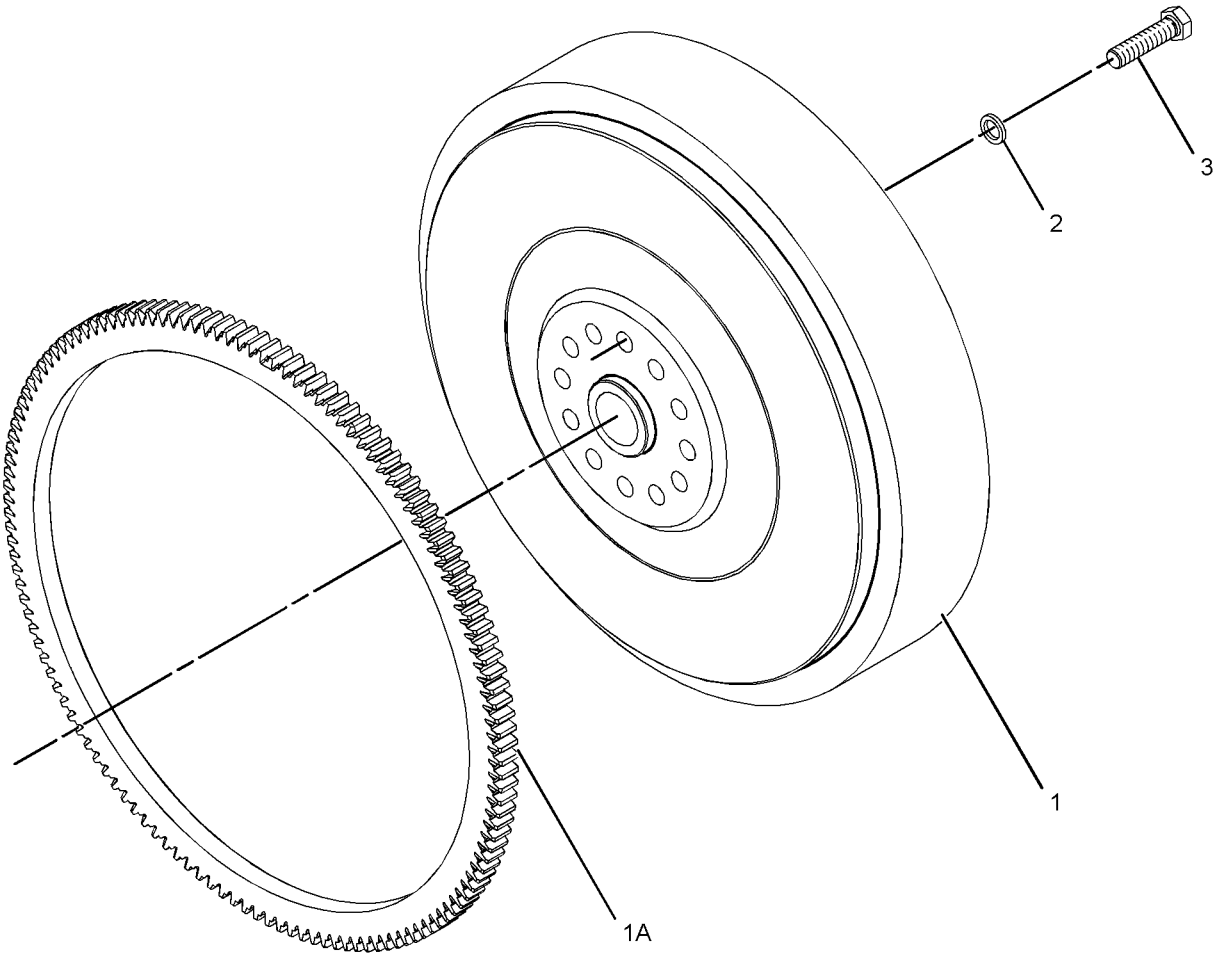

GRAPHIC #1 **<END>** g01194047

279-8846 HOUSING GP-FLYWHEEL

S/N: C6E1-UP
PART OF 242-1356 ENGINE AR
TYPE 1

SMCS-1157 **i02578202**

NOTE	REF NO	GRAPHIC REF	PART NUMBER	QTY	PART NAME 1 2 3 4 5 6 (PRODUCT LEVEL)	SEE PAGE
	1	1	**284-0071**	1	HOUSING-FLYWHEEL	
	2	1	**277-0116**	1	SEAL-CRANKSHAFT (REAR)	
	3	1	**277-0117**	1	GASKET	
	4	1	**277-0118**	1	SEAL	
	5	1	**277-0119**	4	BOLT	
	6	1	**277-0120**	2	BOLT	
	7	1	**277-0121**	2	PLUG	
	9	1	**287-8597**	2	DOWEL	
	10	1	**277-0122**	1	COVER	
	11	1	**290-5728**	1	GASKET	
M	12	1	**102-9941**	3	BOLT (M12X1.75X25-MM)	
F			**283-4662**	2	BOLT-FLANGE HEAD	

F-NOT SHOWN
M-METRIC PART

279-8846 **HOUSING GP-FLYWHEEL** *(contd.)* **i02578202**

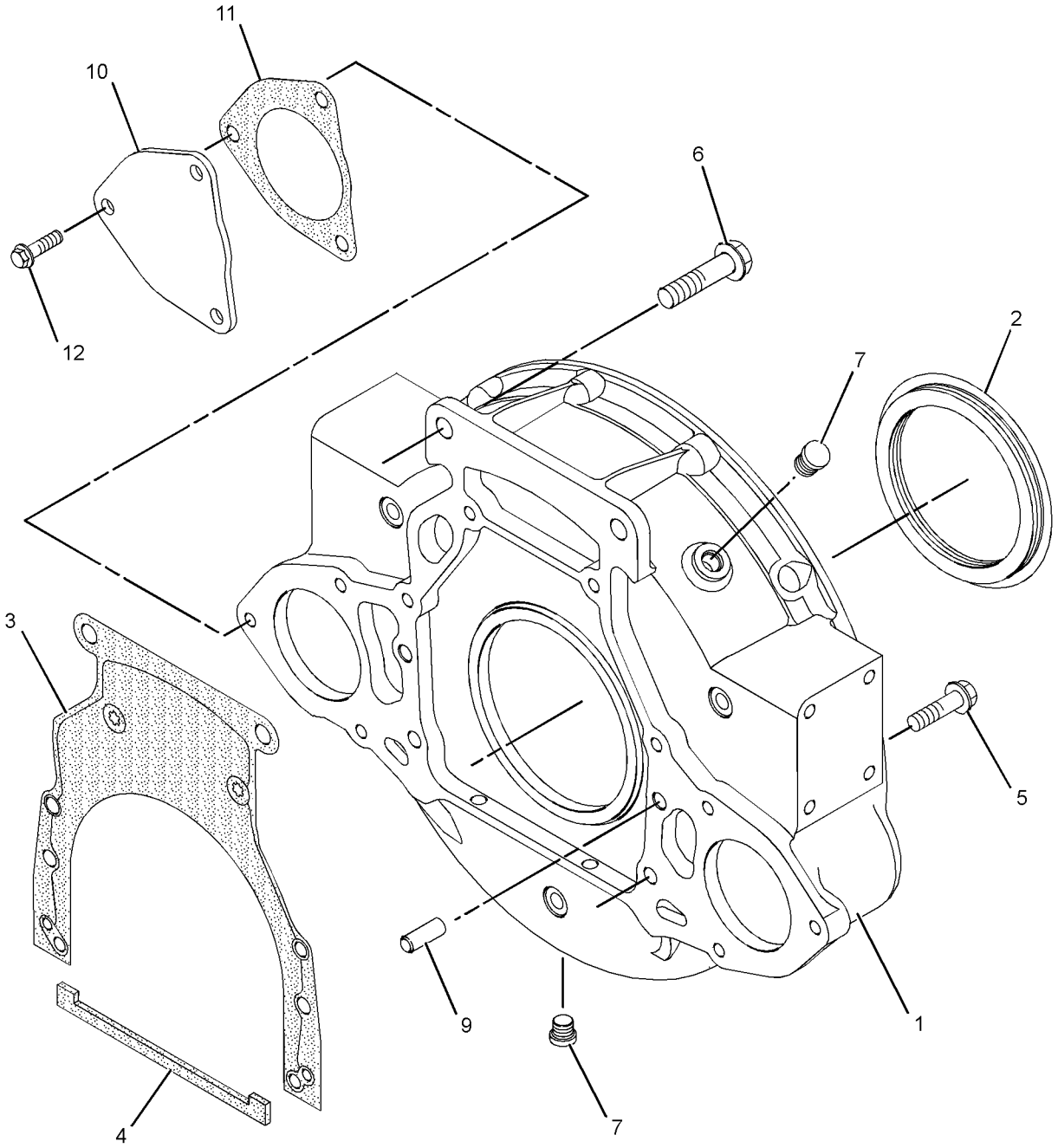

GRAPHIC #1 **<END>** g01263306

279-8846 HOUSING GP-FLYWHEEL

S/N: C6E1-UP
PART OF 242-1356, 319-7261 ENGINE AR
ALSO AN ATTACHMENT
TYPE 2

SMCS-1157 **i03385342**

NOTE	REF NO	GRAPHIC REF	PART NUMBER	QTY	PART NAME 1 2 3 4 5 6 (PRODUCT LEVEL)	SEE PAGE
	1	1	**284-0071**	1	HOUSING-FLYWHEEL	
	2	1	**336-0693**	1	COVER	
M	3	1	**102-9941**	3	BOLT (M12X1.75X25-MM)	
	4	1	**277-0118**	1	SEAL	
	5	1	**288-6974**	4	BOLT	
	6	1	**288-6975**	2	BOLT	
	7	1	**277-0121**	2	PLUG	
	9	1	**287-8597**	2	DOWEL	
F			**283-4662**	2	BOLT-FLANGE HEAD	

F-NOT SHOWN
M-METRIC PART

279-8846 **HOUSING GP-FLYWHEEL** *(contd.)* **i03385342**

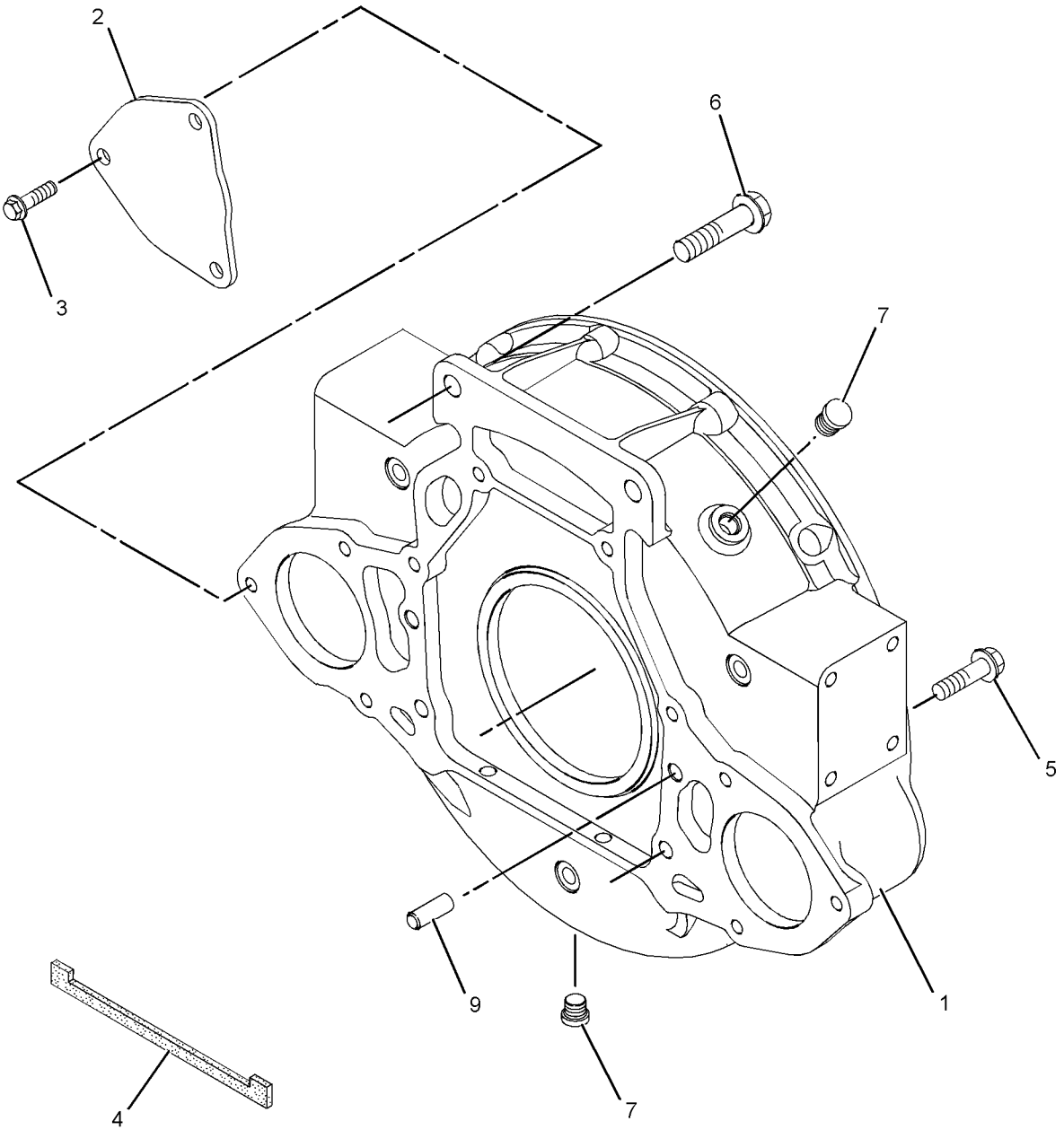

GRAPHIC #1 **<END>** g01330993

277-3014 HOUSING GP-FRONT

S/N: C6E1-UP
PART OF 242-1356 ENGINE AR
TYPE 1

SMCS-1151, 1162, 1206 **i02753409**

NOTE	REF NO	GRAPHIC REF	PART NUMBER	QTY	PART NAME 1 2 3 4 5 6 (PRODUCT LEVEL)	SEE PAGE
	1	1	**293-1874**	1	HOUSING-FRONT	
	2	1	**277-3012**	1	GASKET-COVER	
	3	1	**277-3013**	1	SEAL	
M	4	1	**6I-0217**	6	BOLT (M8X1.25X20-MM)	
M	5	1	**6I-0645**	4	BOLT (M8X1.25X25-MM)	
M	6	1	**101-3895**	2	BOLT (M8X1.25X35-MM)	
	7	1	**251-4336**	1	GEAR AS-IDLER (73-TEETH)	
M	8	1	**6I-0650**	3	BOLT (M10X1.5X65-MM)	
	9	1	**216-8634**	1	GEAR-CAMSHAFT (68-TEETH)	
	10	1	**1B-8736**	1	KEY-WOODRUFF	
	11	1	**133-1011**	1	WASHER	
	12	1	**067-6179**	1	DOWEL	
	13	1	**232-3666**	1	WASHER-THRUST	
M	14	1	**124-3815**	9	BOLT (M8X16X1.25-MM)	
M	15	1	**100-3751**	5	BOLT (M8X1.25X65-MM)	
M	16	1	**100-4830**	1	BOLT (M10X1.5X20-MM)	
	17	1	**7C-4616**	1	BOLT (M12X1.75X45-MM)	
	18	1	**282-9861**	1	HUB-IDLER GEAR	
	19	1	**295-1711**	1	PLATE-RETAINING	
	20	1	**226-8767**	1	COVER AS-FRONT	
	20A	1	**226-8766**	1	GASKET-COVER	

M-METRIC PART

277-3014 **HOUSING GP-FRONT** *(contd.)* **i02753409**

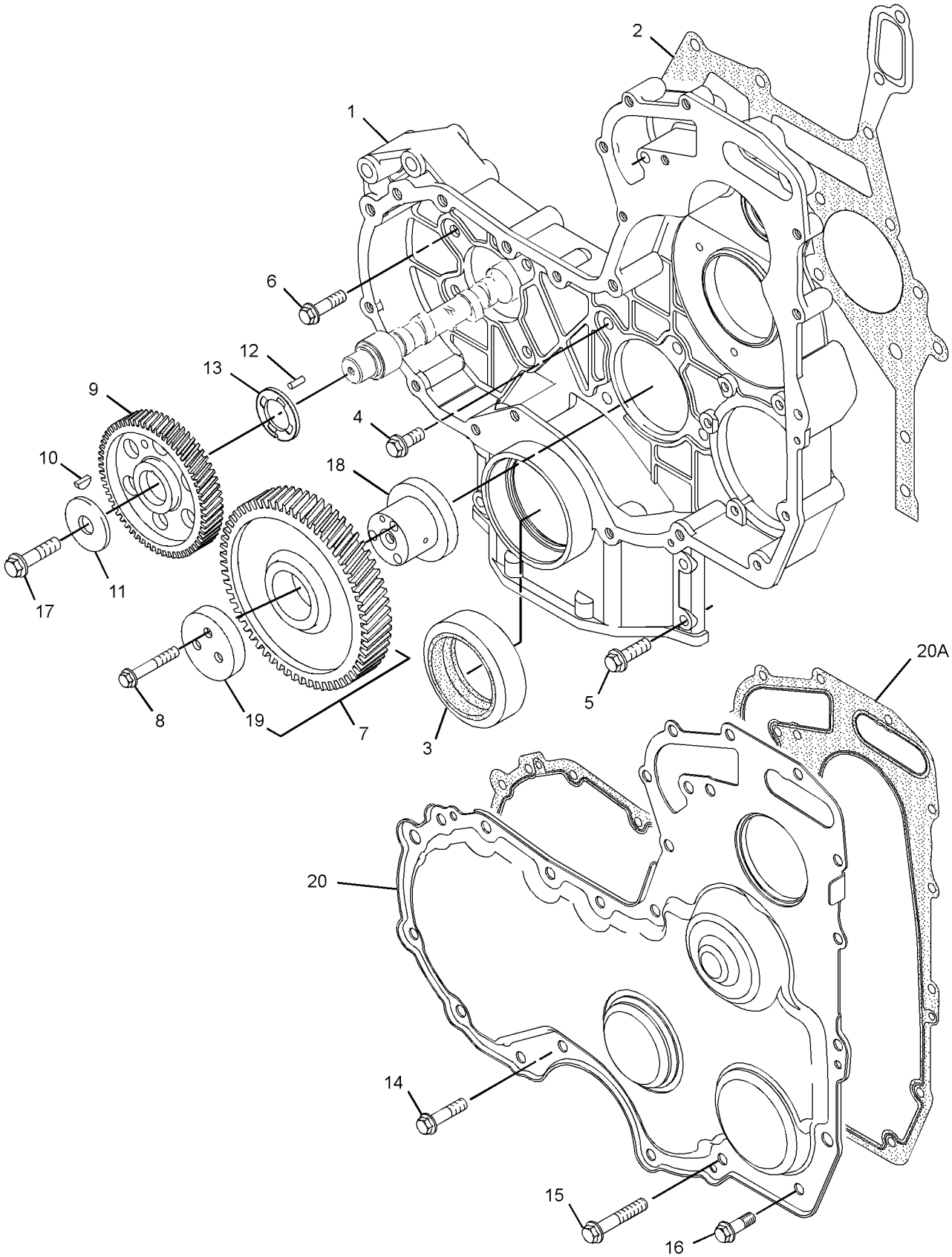

GRAPHIC #1 **<END>** g01379940

277-3014 HOUSING GP-FRONT

S/N: C6E1-UP
PART OF 242-1356, 319-7261 ENGINE AR
ALSO AN ATTACHMENT
TYPE 2

SMCS-1151, 1162, 1206 **i03528245**

NOTE	REF NO	GRAPHIC REF	PART NUMBER	QTY	PART NAME 1 2 3 4 5 6 (PRODUCT LEVEL)	SEE PAGE
	1	1	**326-5063**	1	HOUSING-FRONT	
	2	1	**277-3012**	1	GASKET-COVER	
	3	1	**277-3013**	1	SEAL	
M	4	1	**6I-0217**	6	BOLT (M8X1.25X20-MM)	
M	5	1	**6I-0645**	4	BOLT (M8X1.25X25-MM)	
M	6	1	**101-3895**	2	BOLT (M8X1.25X35-MM)	
C	7	1	**251-4336**	1	GEAR AS-IDLER (73-TEETH)	
CM	8	1	**6I-0650**	3	BOLT (M10X1.5X65-MM)	
	9	1	**216-8634**	1	GEAR-CAMSHAFT (68-TEETH)	
	10	1	**1B-8736**	1	KEY-WOODRUFF	
	11	1	**133-1011**	1	WASHER	
	12	1	**067-6179**	1	DOWEL	
	13	1	**232-3666**	1	WASHER-THRUST	
M	14	1	**124-3815**	9	BOLT (M8X16X1.25-MM)	
M	15	1	**100-3751**	5	BOLT (M8X1.25X65-MM)	
M	16	1	**100-4830**	1	BOLT (M10X1.5X20-MM)	
	17	1	**7C-4616**	1	BOLT (M12X1.75X45-MM)	
C	18	1	**324-0444**	1	HUB-IDLER GEAR	
C	19	1	**295-1711**	1	PLATE-RETAINING	
	20	1	**226-8767**	1	COVER AS-FRONT	
	20A	1	**226-8766**	1	GASKET-COVER	

C-CHANGE FROM PREVIOUS TYPE
M-METRIC PART

277-3014 **HOUSING GP-FRONT** *(contd.)* **i03528245**

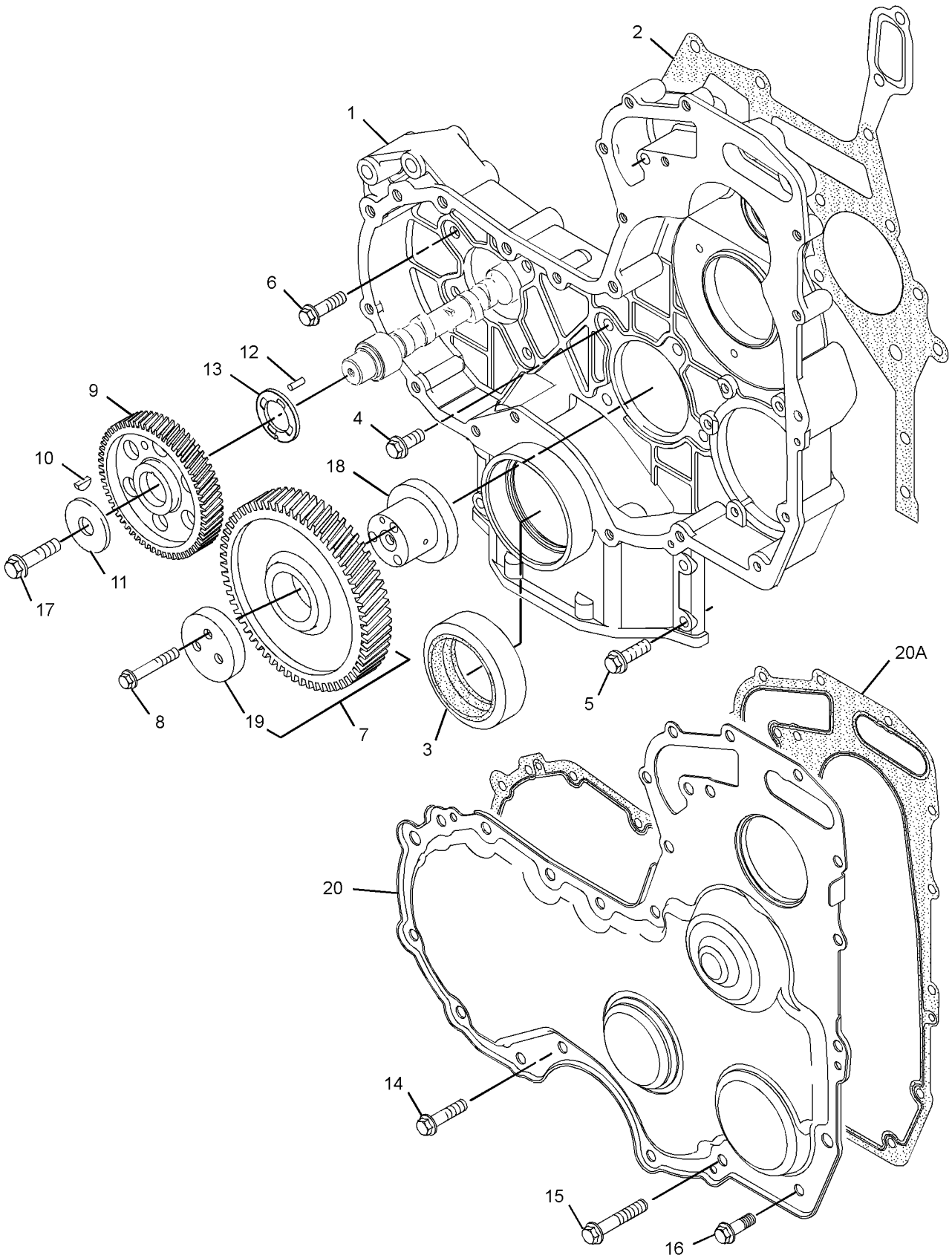

GRAPHIC #1 **<END>** g01386855

256-3464 LIFTING GP-ENGINE

S/N: DHA1-UP; FBH1-UP

PART OF 206-7294 INSTALLATION AR-ENGINE

SMCS-1122 **i02548273**

NOTE	REF NO	GRAPHIC REF	PART NUMBER	QTY	PART NAME 1 2 3 4 5 6 (PRODUCT LEVEL)	SEE PAGE
	1	1	**290-5623**	1	PLATE	
	2	1	**290-5624**	1	SPACER	
	3	1	**8T-4121**	4	WASHER-HARD (11X21X2.5-MM THK)	
M	4	1	**8T-4186**	4	BOLT (M10X1.5X40-MM)	

M-METRIC PART

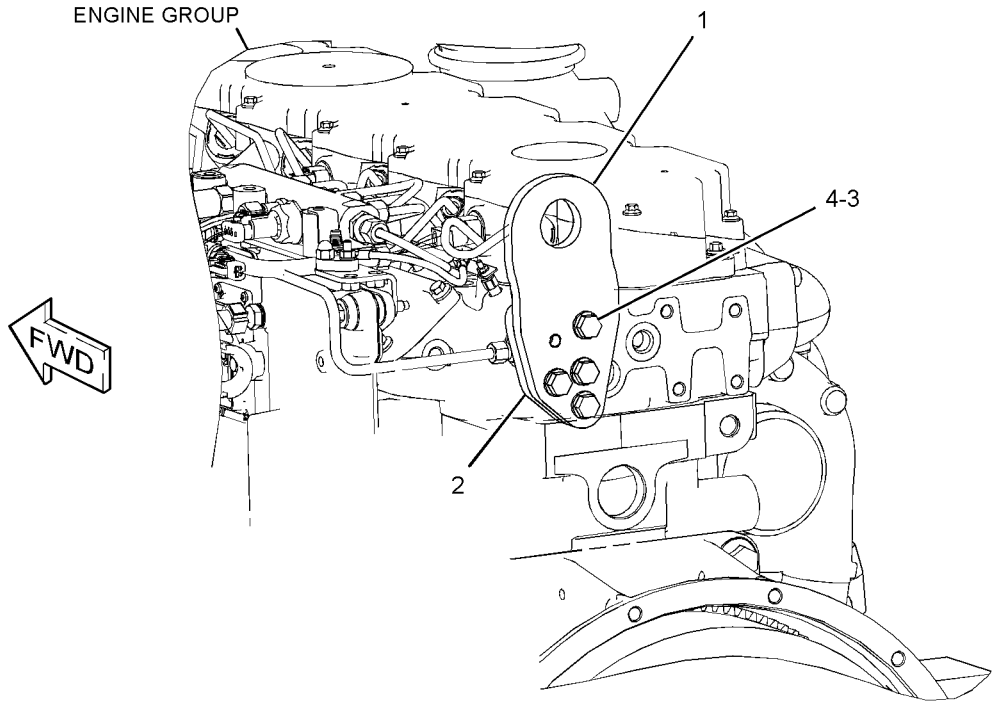

GRAPHIC #1 **<END>** g01286222

BASIC ENGINE

279-9653 LIFTING GP-ENGINE

S/N: C6E1-UP
PART OF 242-1356, 319-7261 ENGINE AR
ALSO AN ATTACHMENT

SMCS-1122 **i02389600**

NOTE	REF NO	GRAPHIC REF	PART NUMBER	QTY	PART NAME 1 2 3 4 5 6 (PRODUCT LEVEL)	SEE PAGE
	1	1	**279-9651**	1	PLATE-LIFTING	
M	2	1	**6I-0654**	4	BOLT (M10X1.5X25-MM)	
	3	1	**279-9652**	1	PLATE-LIFTING	

M-METRIC PART

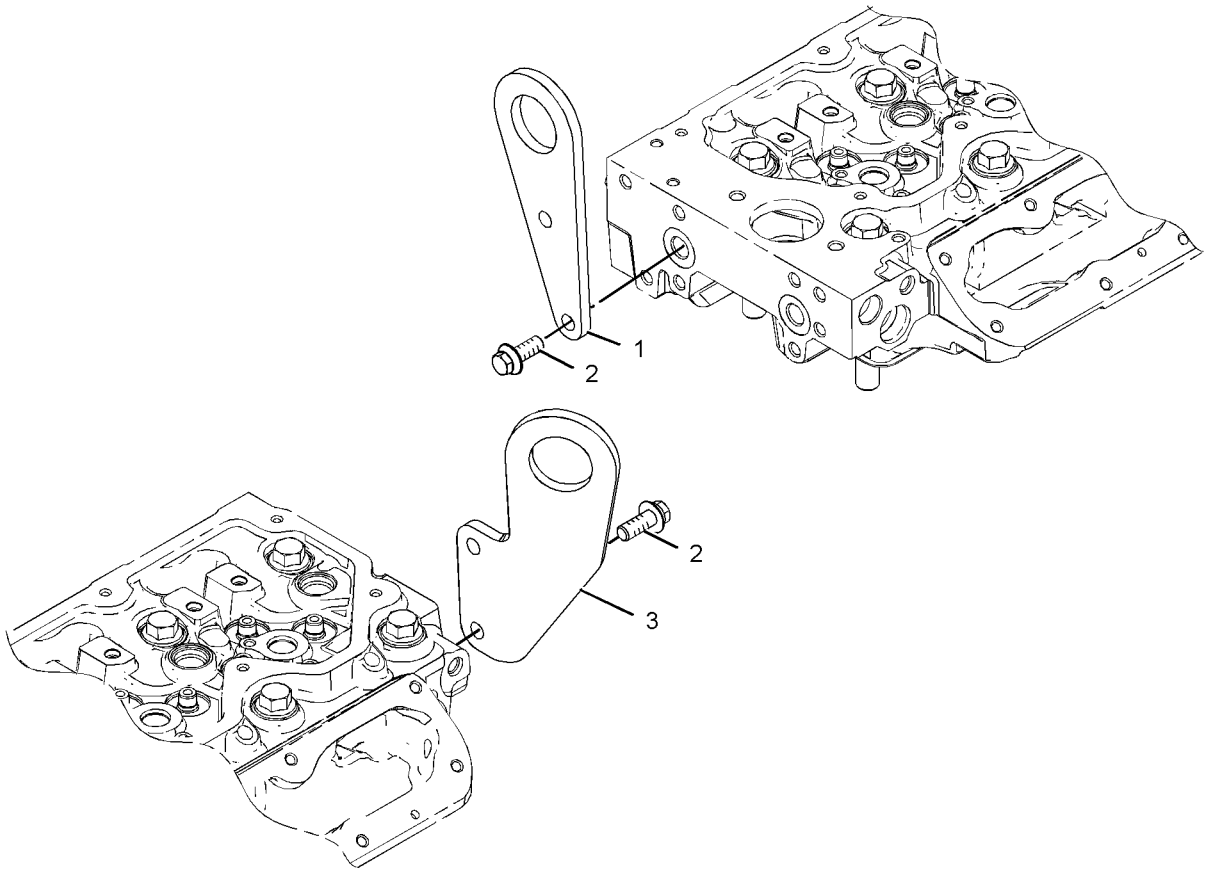

GRAPHIC #1 **<END>** g01195531

277-4541 MOUNTING GP-ENGINE

S/N: C6E1-UP
PART OF 242-1356, 319-7261 ENGINE AR
ALSO AN ATTACHMENT

SMCS-1152, 1153, 1154 **i02438381**

NOTE	REF NO	GRAPHIC REF	PART NUMBER	QTY	PART NAME 1 2 3 4 5 6 (PRODUCT LEVEL)	SEE PAGE
	1	1	**277-4490**	2	BRACKET-MOUNTING	
	2	1	**283-8302**	6	BOLT	
	3	1	**283-8301**	2	BOLT	

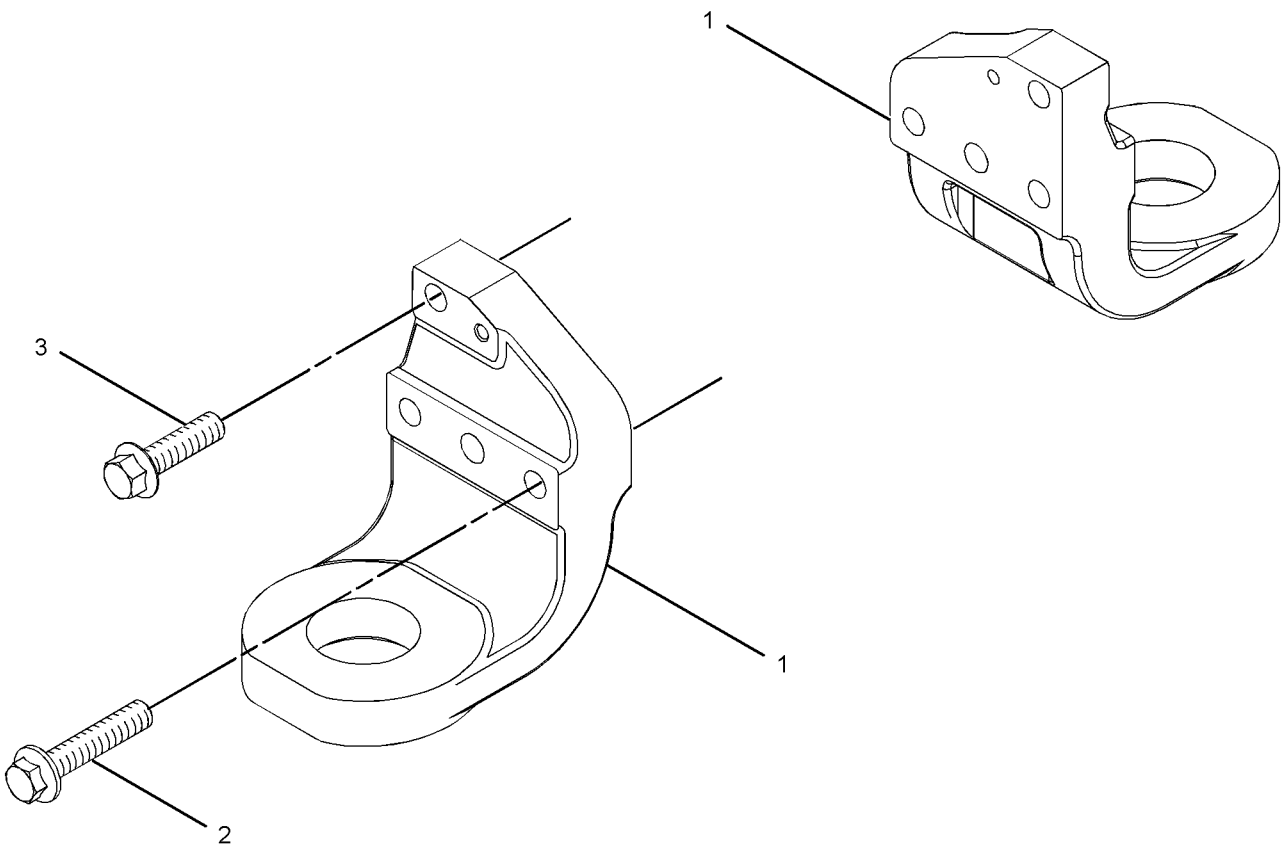

GRAPHIC #1 **<END>** g01193978

249-3722 MOUNTING GP-ENGINE & XMSN

S/N: DHA1-UP; FBH1-UP

PART OF 206-7294 INSTALLATION AR-ENGINE

SMCS-1152, 1154, 3082 **i02369410**

NOTE	REF NO	GRAPHIC REF	PART NUMBER	QTY	PART NAME 1 2 3 4 5 6 (PRODUCT LEVEL)	SEE PAGE
	1	1	**9W-6582**	4	SLEEVE	
	2	1	**9W-9930**	4	MOUNT AS	
	3	1	**243-2147**	2	SUPPORT-ENGINE	
M	4	1	**7X-2554**	4	BOLT (M16X2X70-MM)	
M	5	1	**7X-2555**	4	BOLT (M16X2X80-MM)	
	6	1	**8T-4123**	4	WASHER (22X35X3.5-MM THK)	
M	7	1	**8T-6381**	4	BOLT (M20X2.5X120-MM)	
	8	1	**9W-6584**	4	WASHER (20.5X114X10-MM THK)	
	9	1	**9X-8257**	8	WASHER (17.5X30X3.5-MM THK)	

M-METRIC PART

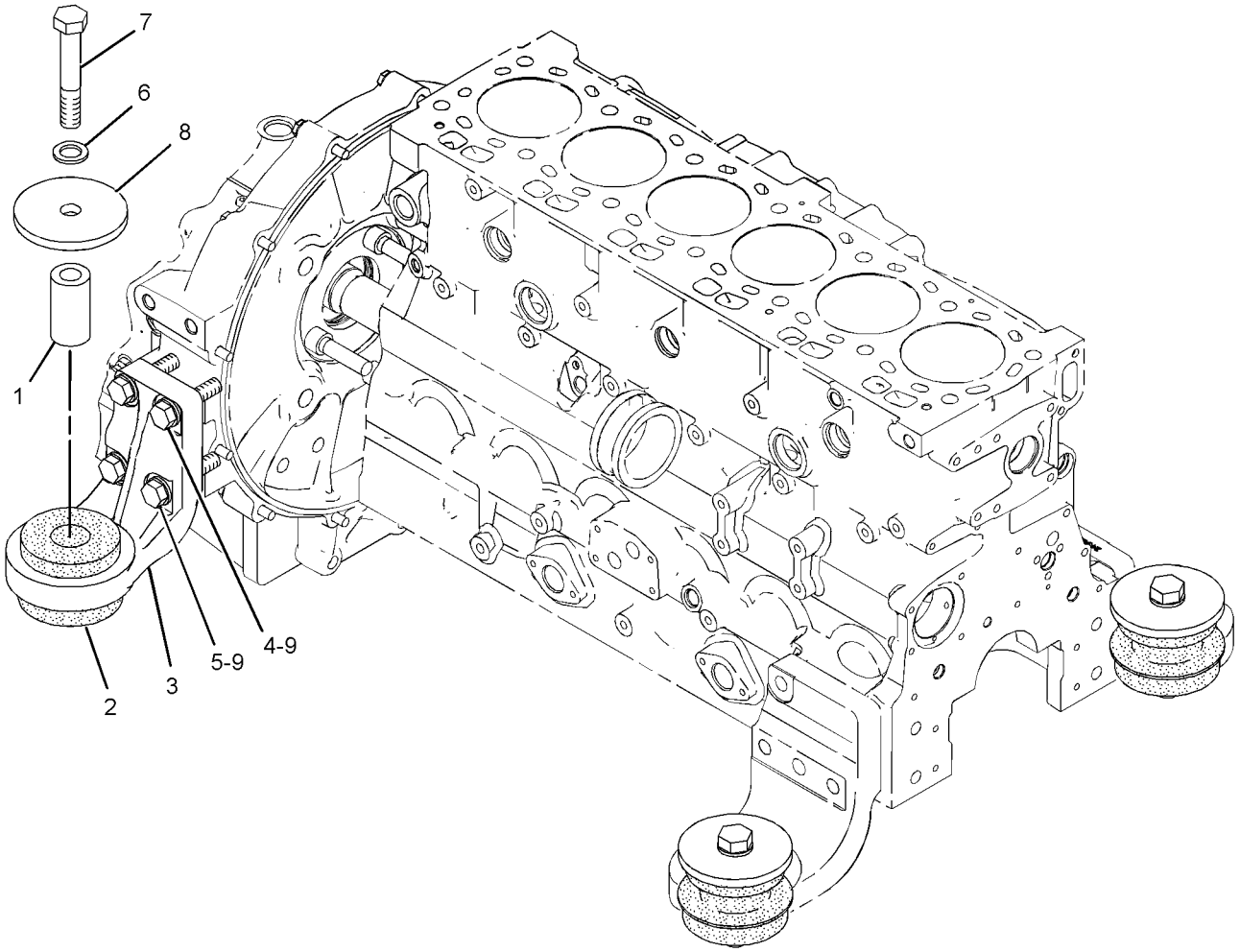

GRAPHIC #1 **<END>** g01188573

BASIC ENGINE

280-1379 PAN GP-OIL

S/N: C6E1-495

PART OF 242-1356 ENGINE AR

SMCS-1302 **i02681317**

NOTE	REF NO	GRAPHIC REF	PART NUMBER	QTY	PART NAME 1 2 3 4 5 6 (PRODUCT LEVEL)	SEE PAGE
	1	1	**289-8725**	1	PAN-OIL	
	2	1	**294-8578**	1	VALVE GP-DRAIN (ENGINE OIL PAN)	
	2A	1	**294-8576**	1	PLUG-DRAIN (ENGINE OIL PAN)	
	2B	1	**252-0787**	1	SEAL-O-RING	
M	3	1	**6I-0654**	2	BOLT (M10X1.5X25-MM)	
	4	1	**275-9884**	1	GASKET	
	5	1	**286-7847**	1	ADAPTER GP-OIL PAN DRAIN	
	6	1	**280-1383**	1	GASKET	
	7	1	**6I-0289**	1	PLUG	
	8	1	**275-9888**	28	BOLT-SPECIAL	
	9	1	**275-9889**	2	BOLT-SPECIAL	
	10	1	**276-0142**	6	BOLT-SPECIAL (TORX)	
	11	1	**6I-0572**	1	BOLT (M8X1.25X20-MM)	
	12	1	**280-1385**	1	TUBE AS-GAUGE	
	12A	1	**187-0555**	1	CLIP	
	12B	1	**6I-1497**	1	SEAL	
	13	1	**280-1387**	1	BRACKET	
M	14	1	**6I-0217**	1	BOLT (M8X1.25X20-MM)	
	15	1	**6I-0291**	1	NUT (M8X1.25-THD)	
	16	1	**302-5535**	1	GAUGE-OIL	
	16A	1	**275-9891**	2	SEAL-O-RING	
	17	1	**275-9897**	1	BRACKET	
	18	1	**280-1384**	1	TUBE-OIL SUCTION	
	18A	1	**236-5511**	1	CLIP-PIPE	
	19	1	**6I-4681**	1	GASKET	
M	20	1	**6I-0260**	2	BOLT (M8X1.25X25-MM)	

M-METRIC PART

280-1379 **PAN GP-OIL** *(contd.)* **i02681317**

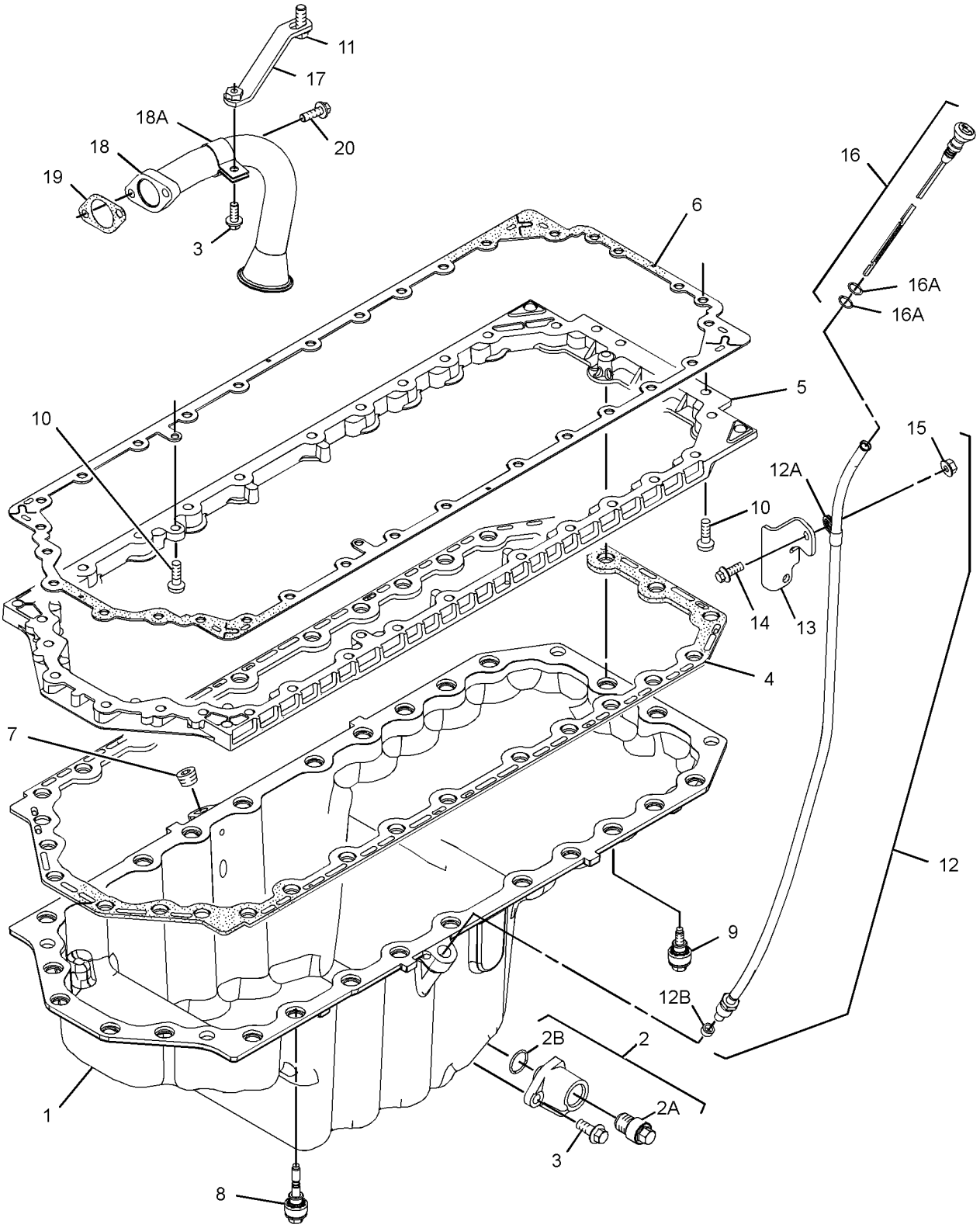

GRAPHIC #1 **<END>** g01324691

305-7300 PAN GP-OIL

S/N: C6E496-6838
PART OF 242-1356, 319-7261 ENGINE AR
ALSO AN ATTACHMENT

SMCS-1302 **i02984904**

NOTE	REF NO	GRAPHIC REF	PART NUMBER	QTY	PART NAME 1 2 3 4 5 6 (PRODUCT LEVEL)	SEE PAGE
M	1	1	**6I-0217**	1	BOLT (M8X1.25X20-MM)	
M	2	1	**6I-0260**	2	BOLT (M8X1.25X25-MM)	
	3	1	**6I-0289**	1	PLUG	
	4	1	**6I-0291**	1	NUT (M8X1.25-THD)	
	5	1	**6I-0572**	1	BOLT (M8X1.25X20-MM)	
M	6	1	**6I-0654**	2	BOLT (M10X1.5X25-MM)	
	7	1	**6I-4681**	1	GASKET	
	8	1	**275-9884**	1	GASKET	
	9	1	**275-9888**	28	BOLT-SPECIAL	
	10	1	**275-9889**	2	BOLT-SPECIAL	
	11	1	**275-9897**	1	BRACKET	
	12	1	**276-0142**	6	BOLT-SPECIAL (TORX)	
	13	1	**280-1383**	1	GASKET	
	14	1	**280-1384**	1	TUBE-OIL SUCTION	
	14A	1	**236-5511**	1	CLIP-PIPE	
	15	1	**280-1385**	1	TUBE AS-GAUGE	
	15A	1	**6I-1497**	1	SEAL	
	15B	1	**187-0555**	1	CLIP	
	16	1	**286-7847**	1	ADAPTER GP-OIL PAN DRAIN	
	17	1	**289-8725**	1	PAN-OIL	
	18	1	**326-1015**	1	VALVE GP-DRAIN (ENGINE OIL PAN)	
	18A	1	**326-5054**	1	SEAL-O-RING	
	18B	1	**294-8576**	1	PLUG-DRAIN (ENGINE OIL PAN)	
	19	1	**302-5535**	1	GAUGE-OIL	
	19A	1	**275-9891**	2	SEAL-O-RING	
	20	1	**305-7298**	1	BRACKET	

M-METRIC PART

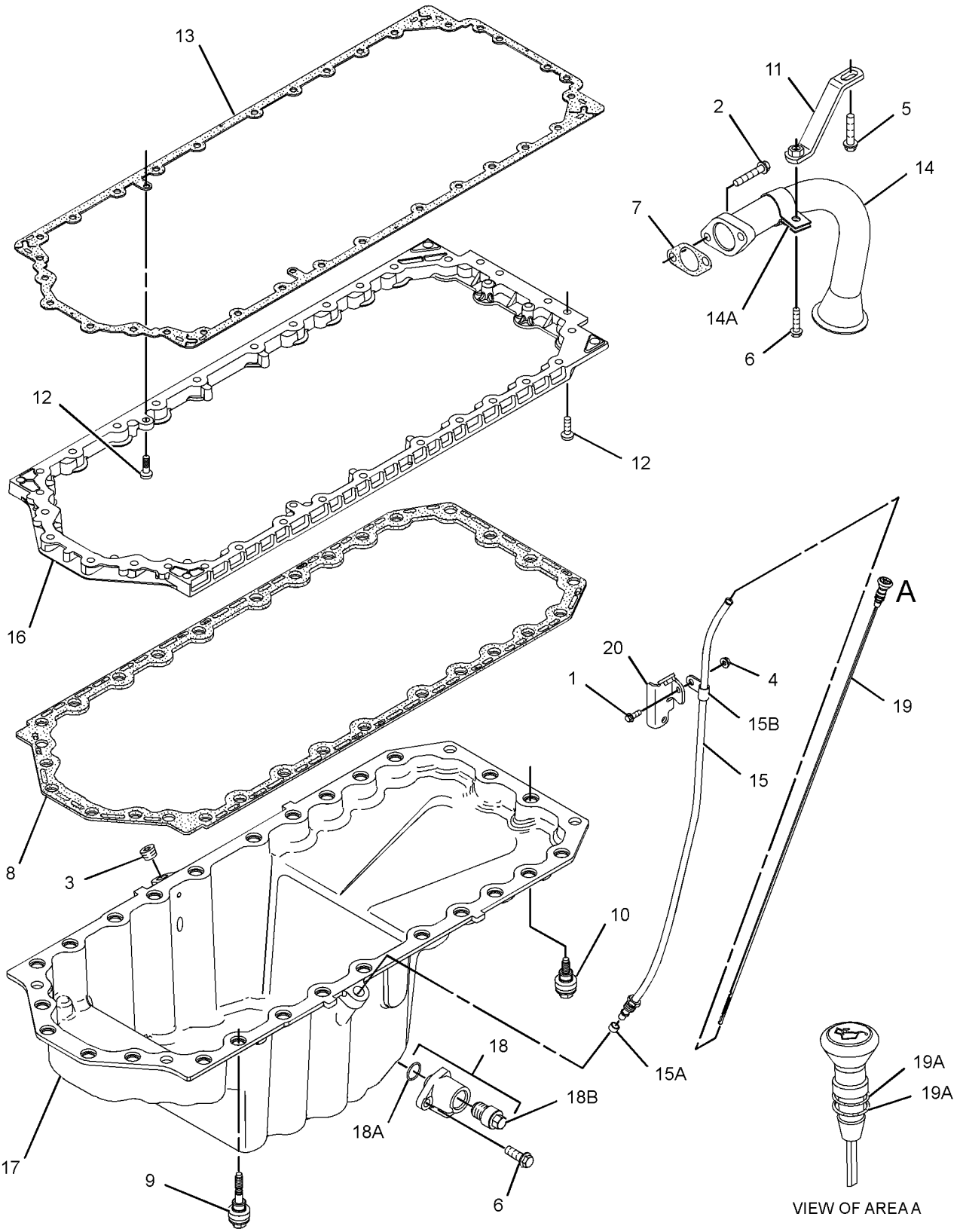

GRAPHIC #1 **<END>** g01420249

305-7300 PAN GP-OIL

S/N: C6E6839-UP
PART OF 242-1356, 319-7261 ENGINE AR
ALSO AN ATTACHMENT

SMCS-1302 **i03576939**

NOTE	REF NO	GRAPHIC REF	PART NUMBER	QTY	PART NAME 1 2 3 4 5 6 (PRODUCT LEVEL)	SEE PAGE
M	1	1	**6I-0217**	1	BOLT (M8X1.25X20-MM)	
M	2	1	**6I-0260**	2	BOLT (M8X1.25X25-MM)	
	3	1	**102-9690**	1	PLUG	
	4	1	**6I-0291**	1	NUT (M8X1.25-THD)	
	5	1	**6I-0572**	1	BOLT (M8X1.25X20-MM)	
M	6	1	**6I-0654**	2	BOLT (M10X1.5X25-MM)	
	7	1	**6I-4681**	1	GASKET	
	8	1	**275-9884**	1	GASKET	
J	9	1	**275-9888**	28	BOLT-SPECIAL	
J	10	1	**275-9889**	2	BOLT-SPECIAL	
	11	1	**275-9897**	1	BRACKET	
	12	1	**276-0142**	6	BOLT-SPECIAL (TORX)	
	13	1	**331-4400**	1	GASKET	
	14	1	**280-1384**	1	TUBE-OIL SUCTION	
	14A	1	**236-5511**	1	CLIP-PIPE	
	15	1	**280-1385**	1	TUBE AS-GAUGE	
	15A	1	**6I-1497**	1	SEAL	
	15B	1	**187-0555**	1	CLIP	
	16	1	**286-7847**	1	ADAPTER GP-OIL PAN DRAIN	
	17	1	**289-8725**	1	PAN-OIL	
	18	1	**326-1015**	1	VALVE GP-DRAIN (ENGINE OIL PAN)	
	18A	1	**326-5054**	1	SEAL-O-RING	
	18B	1	**294-8576**	1	PLUG-DRAIN (ENGINE OIL PAN)	
	19	1	**302-5535**	1	GAUGE-OIL (ENGINE)	
	19A	1	**275-9891**	2	SEAL-O-RING	
	20	1	**329-0064**	1	BRACKET	

J-SERVICED AS COMPLETE SET ONLY
M-METRIC PART

305-7300 **PAN GP-OIL** *(contd.)* **i03576939**

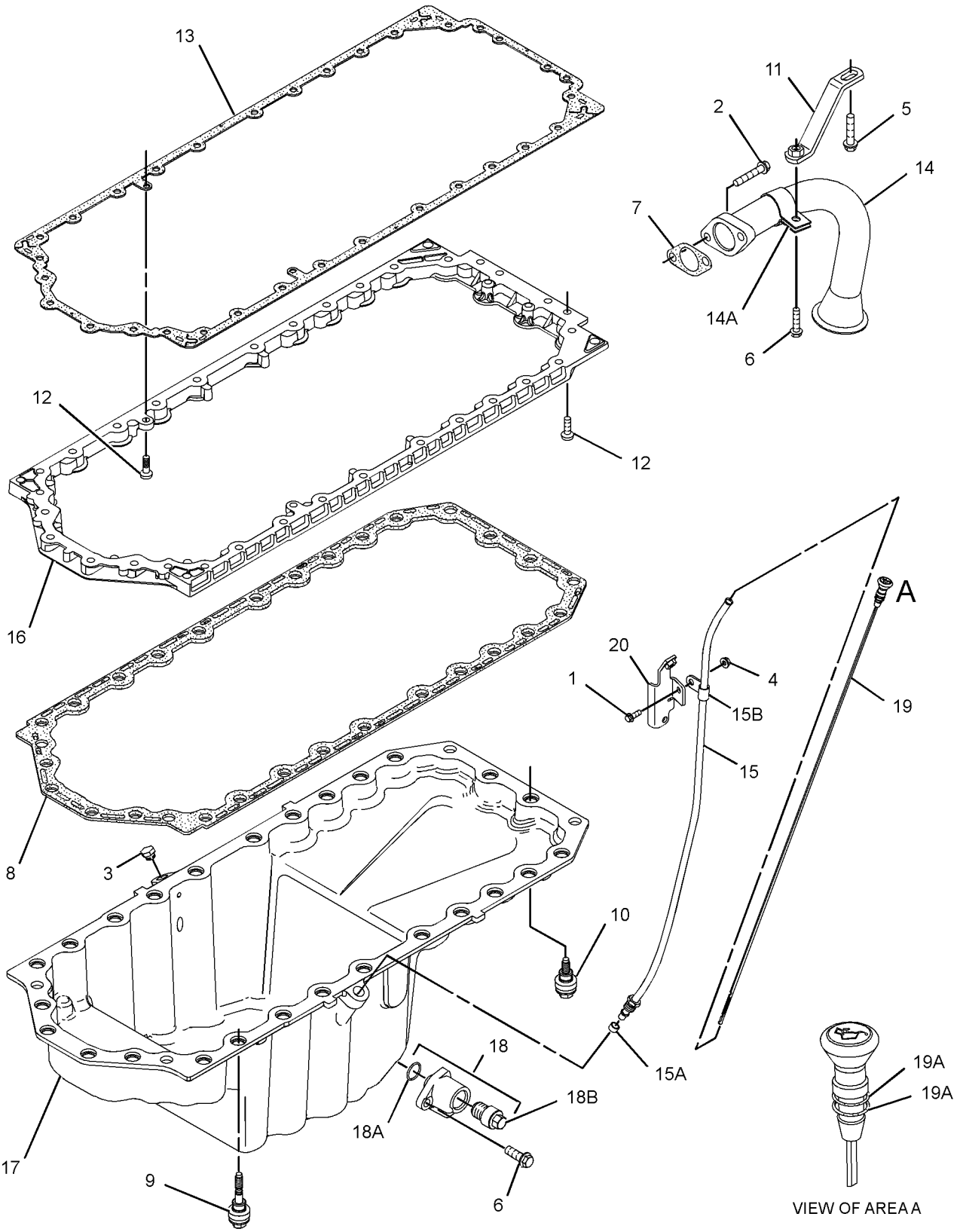

GRAPHIC #1 **<END>** g01810293

279-8780 PISTON & ROD GP

S/N: C6E1-UP
PART OF 242-1356, 319-7261 ENGINE AR
ALSO AN ATTACHMENT

SMCS-1225 **i02408127**

NOTE	REF NO	GRAPHIC REF	PART NUMBER	QTY	PART NAME 1 2 3 4 5 6 (PRODUCT LEVEL)	SEE PAGE
	1	1	**276-7475**	6	PISTON AS	
					(EACH INCLUDES)	
	2	1	**124-3536**	2	RING-RETAINING	
	3	1	**276-7476**	6	KIT-PISTON RING	
BJ	4	1	**276-7479**	6	ROD AS (F)	
					—OR—	
BJ			**276-7481**	6	ROD AS (L)	
					—OR—	
BJ			**276-7483**	6	ROD AS (J)	
					(EACH ROD AS INCLUDES)	
	5	1	**225-5439**	2	BOLT-SPECIAL (CONNECTING ROD)	
	6	1	**276-7478**	1	BUSHING	

B-USE AS REQUIRED
J-ENSURE THAT CORRECT ROD LENGTH IS FITTED

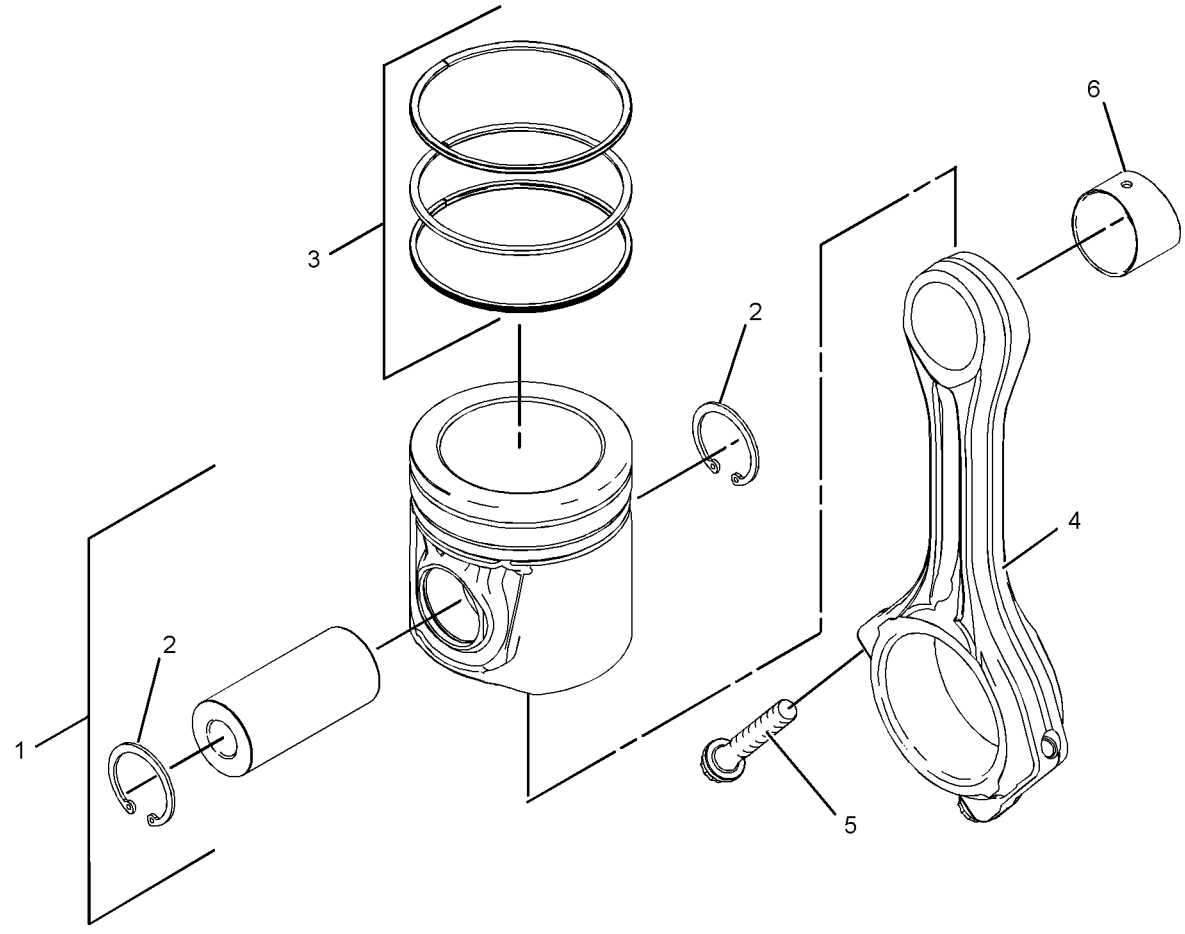

GRAPHIC #1 **<END>** g01214328

274-1929 PULLEY GP-CRANKSHAFT

S/N: C6E1-UP
PART OF 242-1356, 319-7261 ENGINE AR
ALSO AN ATTACHMENT

SMCS-1205 **i02386480**

NOTE	REF NO	GRAPHIC REF	PART NUMBER	QTY	PART NAME 1 2 3 4 5 6 (PRODUCT LEVEL)	SEE PAGE
	1	1	**274-1930**	1	DAMPER	
	2	1	**274-1931**	1	PULLEY	
	3	1	**274-1932**	1	HUB	
	4	1	**274-1933**	1	BLOCK	
	5	1	**274-1934**	3	BOLT-SPECIAL (TORX)	
	6	1	**274-1935**	6	BOLT	

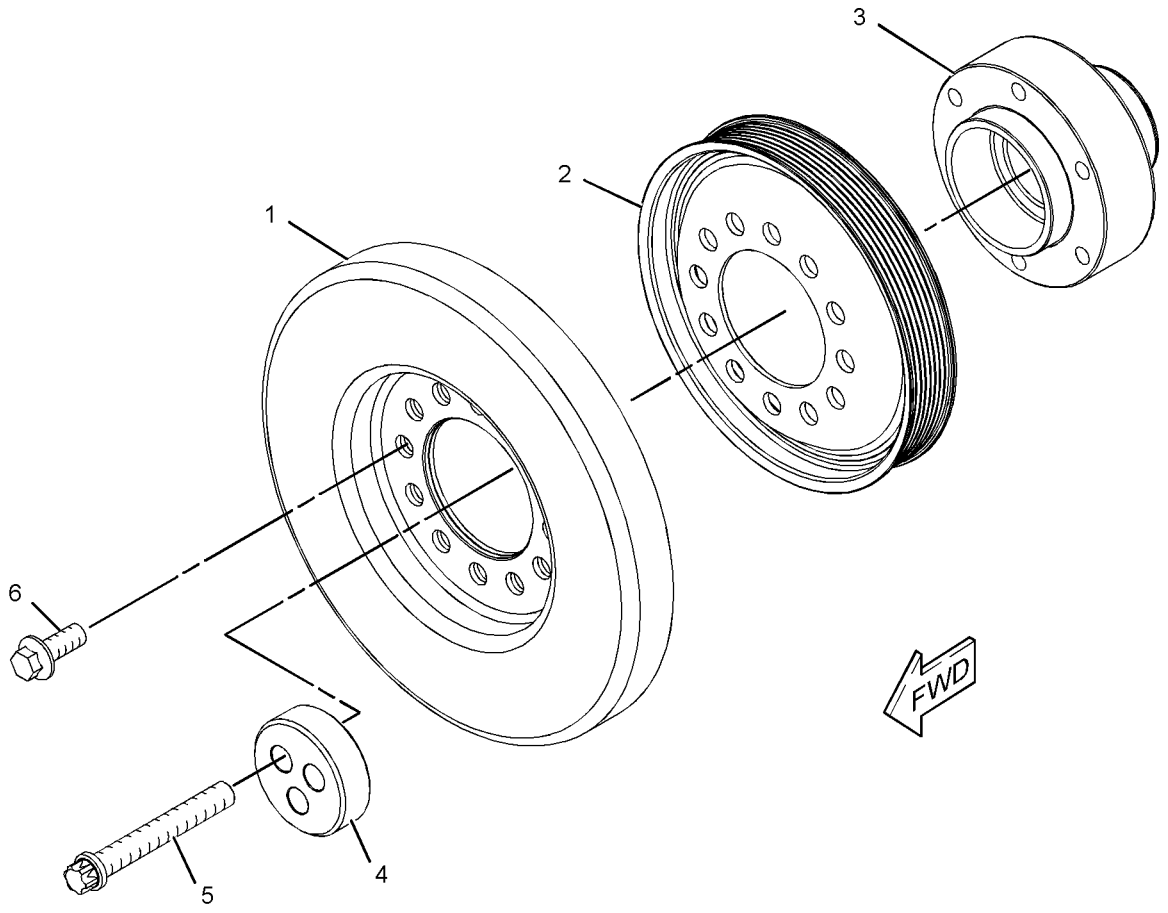

GRAPHIC #1 **<END>** g01193502

280-1911 ROCKER ARM GP

S/N: C6E1-UP

PART OF 279-8825 VALVE MECHANISM GP

ALSO AN ATTACHMENT

SMCS-1123 **i02419833**

NOTE	REF NO	GRAPHIC REF	PART NUMBER	QTY	PART NAME 1 2 3 4 5 6 (PRODUCT LEVEL)	SEE PAGE
	1	1	**276-9201**	1	CLIP	
	2	1	**276-9206**	5	SPRING-SHAFT	
	3	1	**276-9207**	1	SPRING-SHAFT	
	4	1	**277-5307**	1	SHAFT AS-ROCKER ARM	
	4A	1	**276-9200**	1	PLUG-SHAFT END	
	5	1	**278-5111**	6	ROCKER ARM AS	
					(EACH INCLUDES)	
	5A	1	**276-9230**	1	NUT	
	5B	1	**278-5113**	1	ADJUSTING SCREW (TORX)	
	6	1	**278-5112**	6	ROCKER ARM AS	
					(EACH INCLUDES)	
	6A	1	**276-9230**	1	NUT	
	6B	1	**278-5113**	1	ADJUSTING SCREW (TORX)	
	7	1	**280-1912**	6	BRACKET	
	8	1	**280-1913**	6	RETAINER	
	9	1	**280-1914**	12	BOLT (M8X1.25X55-MM)	

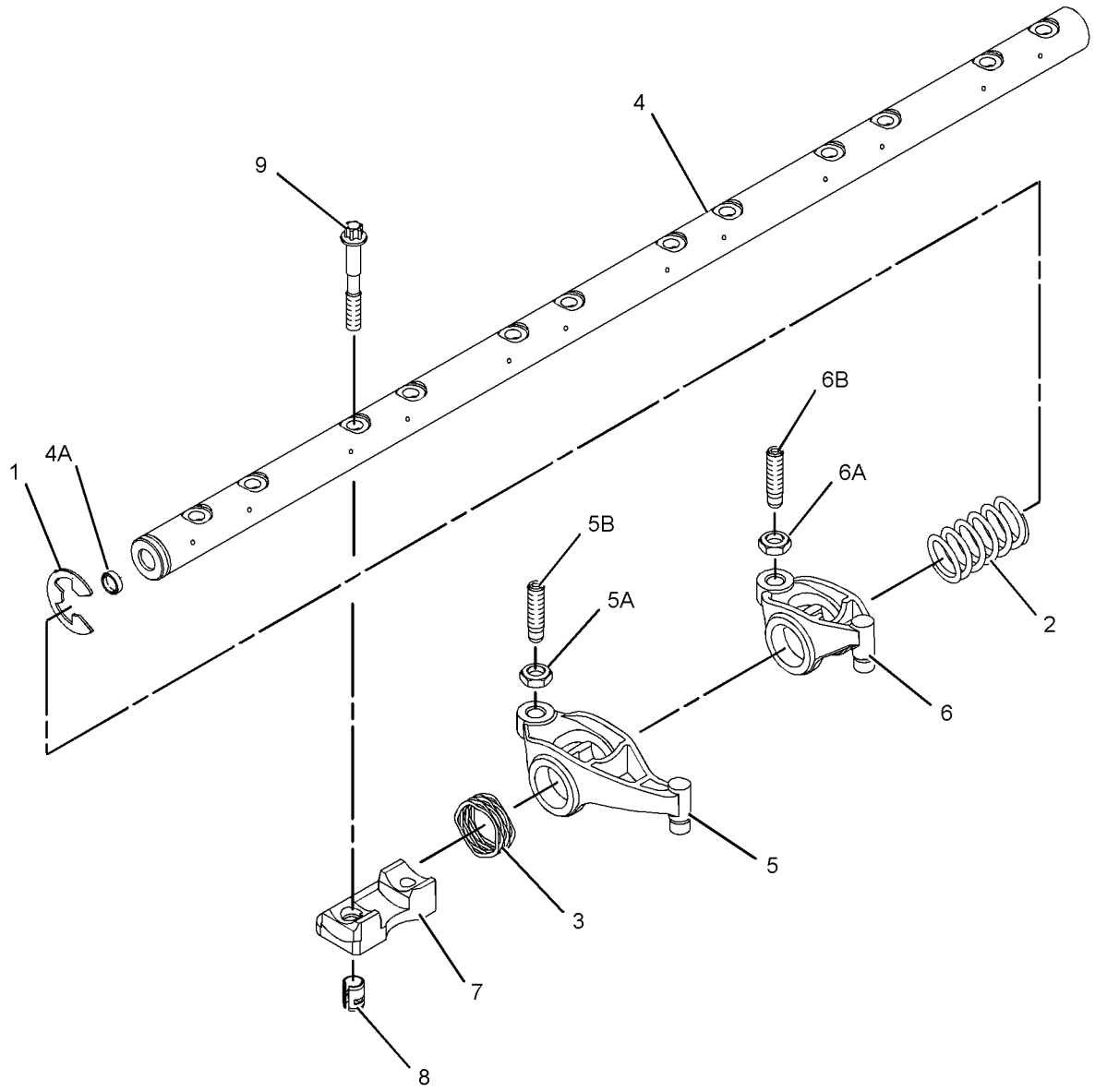

GRAPHIC #1 **<END>** g01235750

BASIC ENGINE

279-8825 VALVE MECHANISM GP

S/N: C6E1-UP
PART OF 242-1356, 319-7261 ENGINE AR
ALSO AN ATTACHMENT

SMCS-1102, 1121, 1123 **i03592493**

NOTE	REF NO	GRAPHIC REF	PART NUMBER	QTY	PART NAME 1 2 3 4 5 6 (PRODUCT LEVEL)	SEE PAGE
	1	1	**339-3397**	12	LINK	
Y	2	1	**280-1911**	1	ROCKER ARM GP	59

Y-SEPARATE ILLUSTRATION

279-8825 **VALVE MECHANISM GP** *(contd.)* **i03592493**

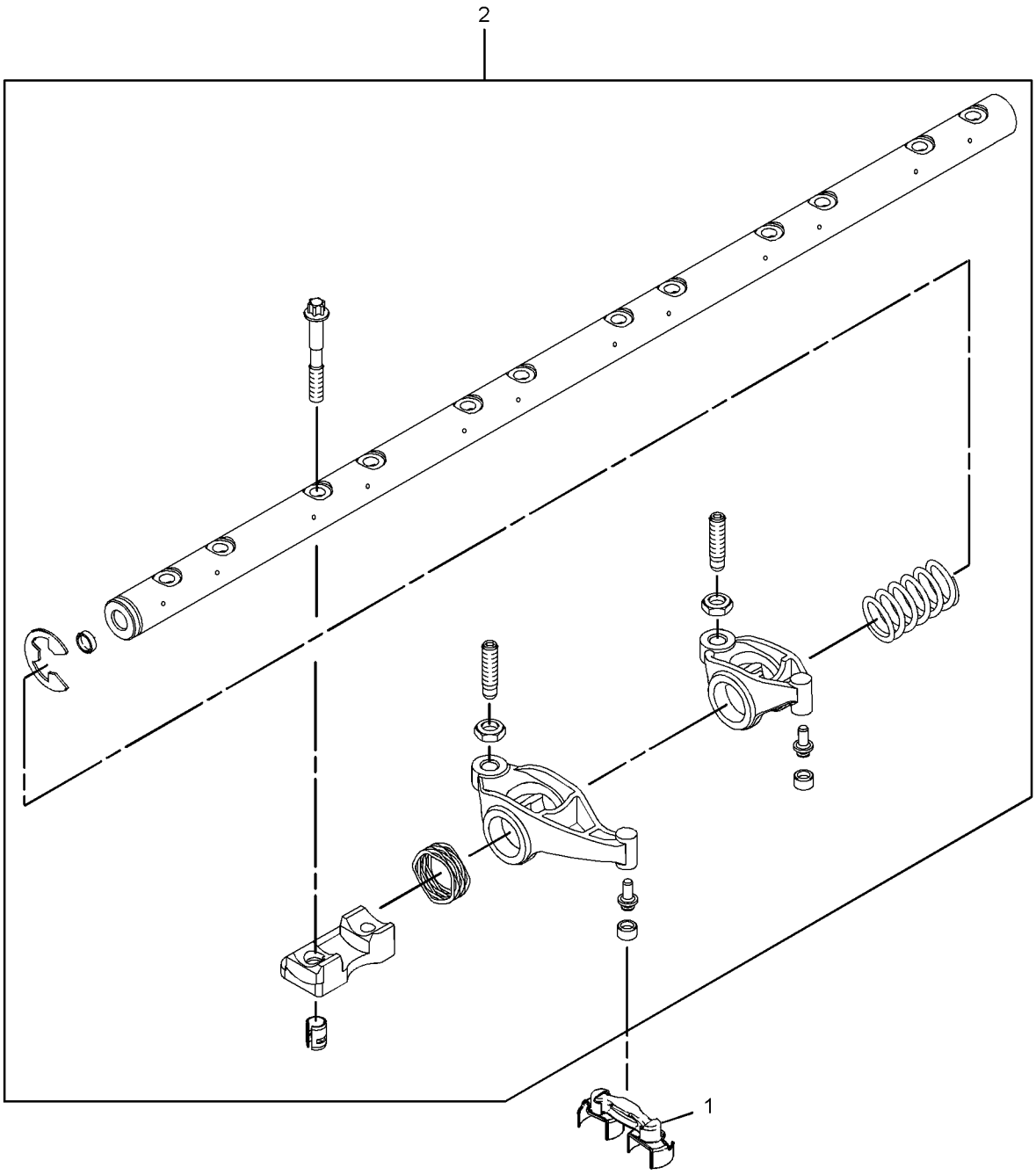

GRAPHIC #1 **<END>** g01923253

280-2050 BREATHER GP–CRANKCASE

S/N: C6E1-495

PART OF 242-1356 ENGINE AR

SMCS-1317 **i03086220**

NOTE	REF NO	GRAPHIC REF	PART NUMBER	QTY	PART NAME 1 2 3 4 5 6 (PRODUCT LEVEL)	SEE PAGE
	1	1	**273-5711**	1	BREATHER AS (CRANKCASE)	

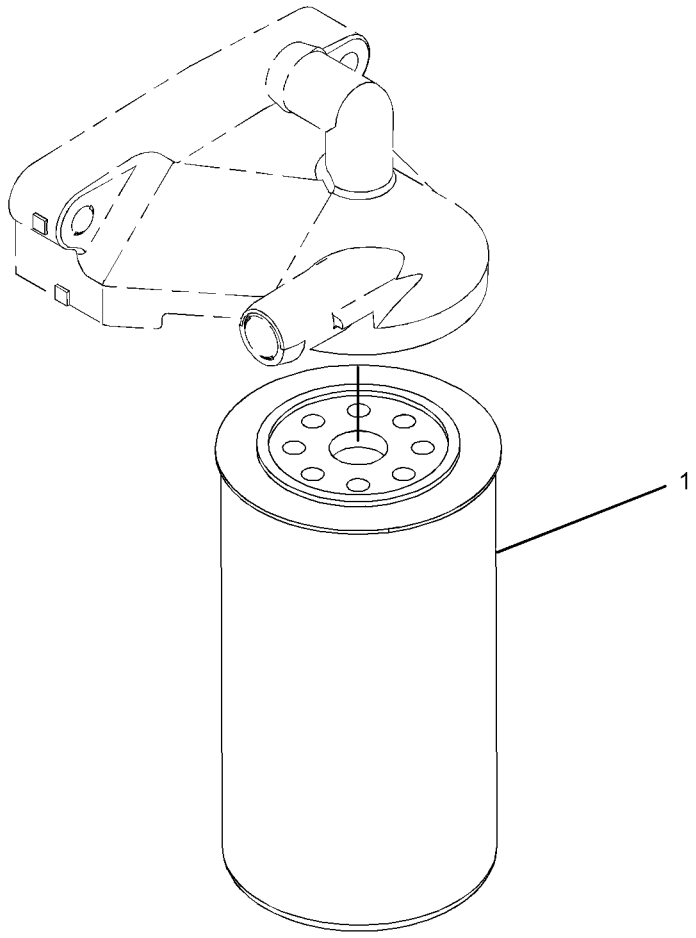

GRAPHIC #1 **<END>** g01567973

280-1428 FILLER GP-ENGINE OIL

S/N: C6E1-495
PART OF 242-1356, 319-7261 ENGINE AR
ALSO AN ATTACHMENT

SMCS-1316 **i02657394**

NOTE	REF NO	GRAPHIC REF	PART NUMBER	QTY	PART NAME 1 2 3 4 5 6 (PRODUCT LEVEL)	SEE PAGE
	1	1	**280-1429**	1	FILLER AS-OIL	
	2	1	**130-9888**	1	CAP-OIL FILLER (ENGINE)	
	2A	1	**113-1504**	1	SEAL-O-RING	
M	3	1	**100-4830**	1	BOLT (M10X1.5X20-MM)	
	4	1	**280-1430**	1	GASKET	
M	5	1	**6I-0254**	1	BOLT (M8X1.25X30-MM)	
	6	1	**288-6982**	1	ADAPTER AS	
	6A	1	**6I-1201**	1	SEAL-O-RING	
	7	1	**6I-4374**	1	BOLT (M8X1.25X60-MM)	
	8	1	**277-1974**	1	PLATE AS	
	8A	1	**277-1975**	1	SEAL-O-RING	
M	9	1	**6I-0217**	2	BOLT (M8X1.25X20-MM)	
M	10	1	**6I-0260**	2	BOLT (M8X1.25X25-MM)	

M-METRIC PART

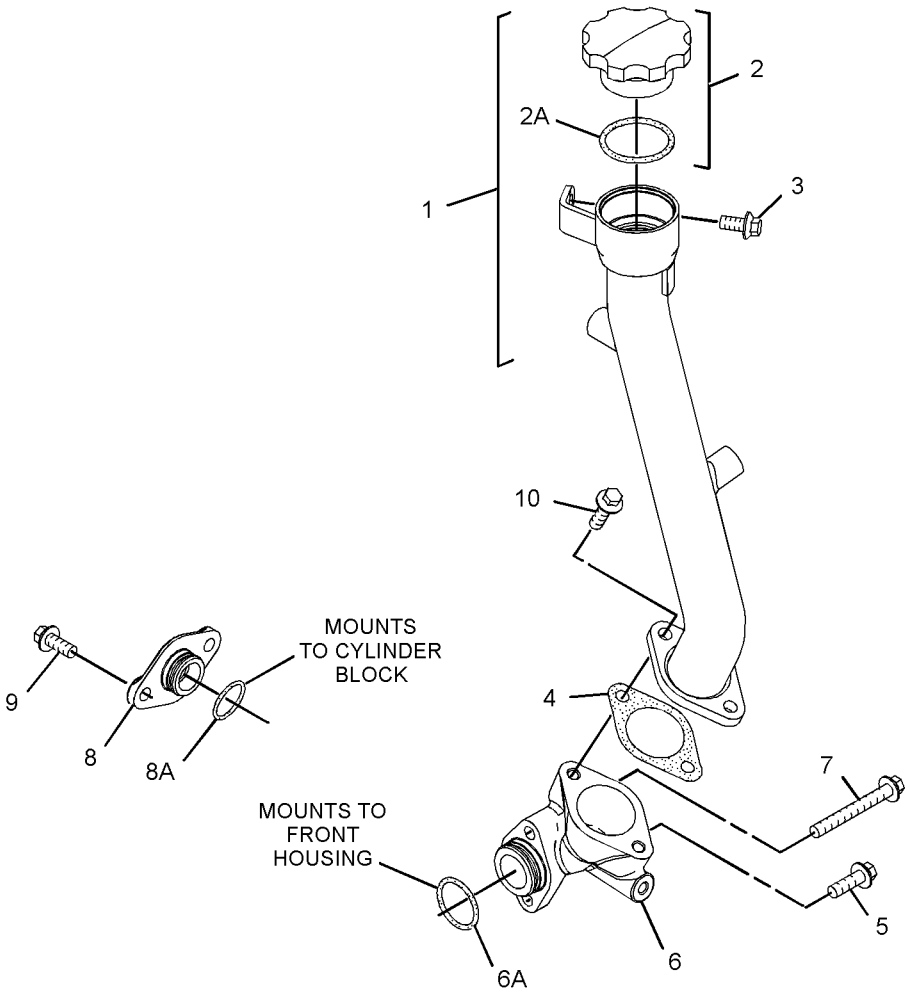

GRAPHIC #1 **<END>** g01386805

280-1428 FILLER GP-ENGINE OIL

S/N: C6E496-UP
PART OF 242-1356, 319-7261 ENGINE AR
ALSO AN ATTACHMENT

SMCS-1316 **i02829339**

NOTE	REF NO	GRAPHIC REF	PART NUMBER	QTY	PART NAME 1 2 3 4 5 6 (PRODUCT LEVEL)	SEE PAGE
C	1	1	**305-7396**	1	FILLER AS-OIL	
	2	1	**130-9888**	1	CAP-OIL FILLER (ENGINE)	
	2A	1	**113-1504**	1	SEAL-O-RING	
CM	3	1	**124-3815**	1	BOLT (M8X16X1.25-MM)	
	4	1	**280-1430**	1	GASKET	
M	5	1	**6I-0254**	1	BOLT (M8X1.25X30-MM)	
C	6	1	**317-3775**	1	FILLER GP-ENGINE OIL	
	6A	1	**306-2337**	1	SEAL-O-RING	
	7	1	**6I-4374**	1	BOLT (M8X1.25X60-MM)	
	8	1	**277-1974**	1	PLATE AS	
	8A	1	**277-1975**	1	SEAL-O-RING	
M	9	1	**6I-0217**	2	BOLT (M8X1.25X20-MM)	
C	10	1	**317-9299**	2	BOLT	
C	11	1	**305-7398**	1	WASHER	
C	12	1	**305-7397**	1	BRACKET	

C-CHANGE FROM PREVIOUS TYPE
M-METRIC PART

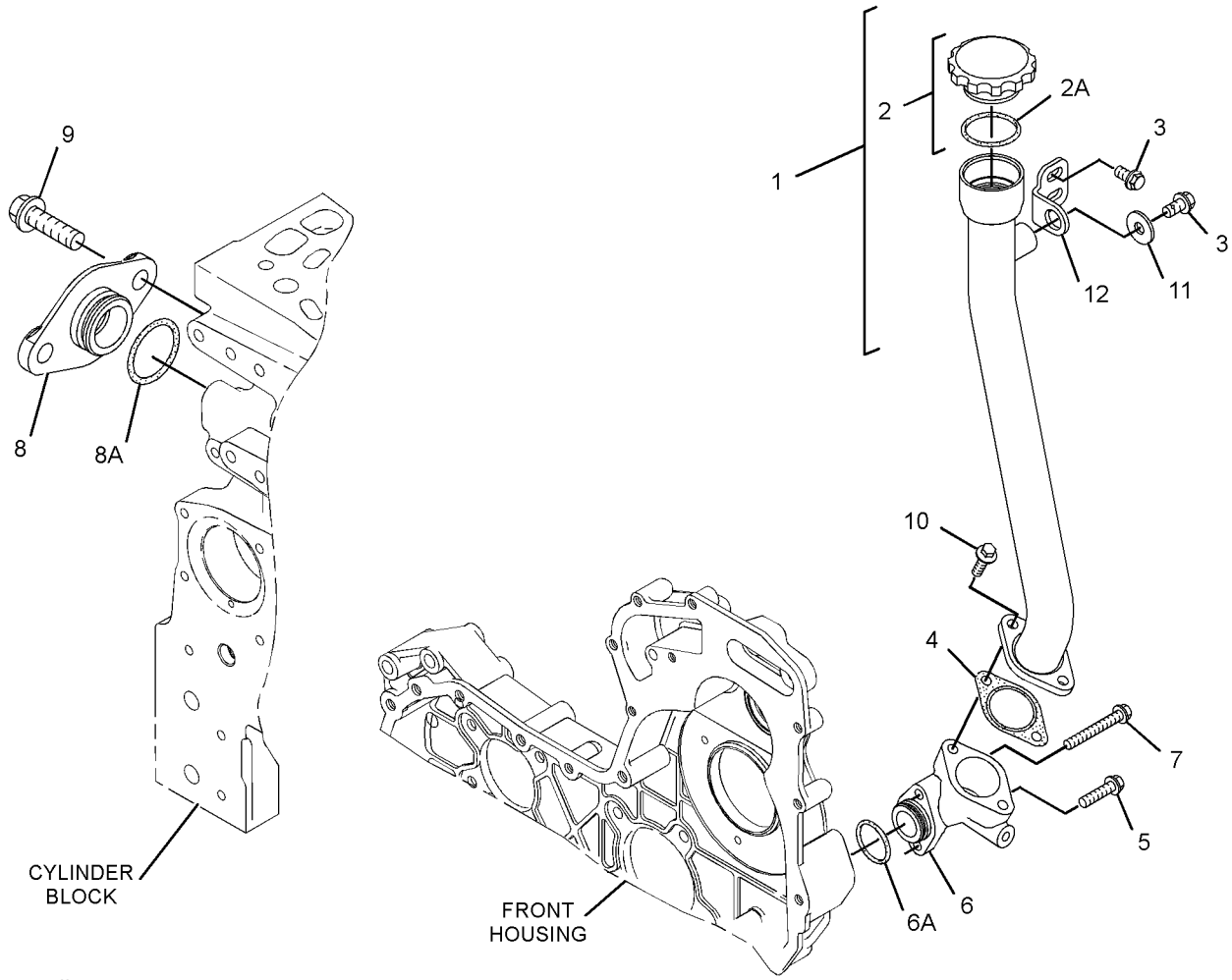

GRAPHIC #1 **<END>** g01522226

LUBRICATION SYSTEM

277-2912 FILTER GP-ENGINE OIL

S/N: C6E1-UP
PART OF 242-1356, 319-7261 ENGINE AR
ALSO AN ATTACHMENT

SMCS-1306, 1308 **i03327303**

NOTE	REF NO	GRAPHIC REF	PART NUMBER	QTY	PART NAME 1 2 3 4 5 6 (PRODUCT LEVEL)	SEE PAGE
	1	1	**269-8325**	1	FILTER-ENGINE OIL	

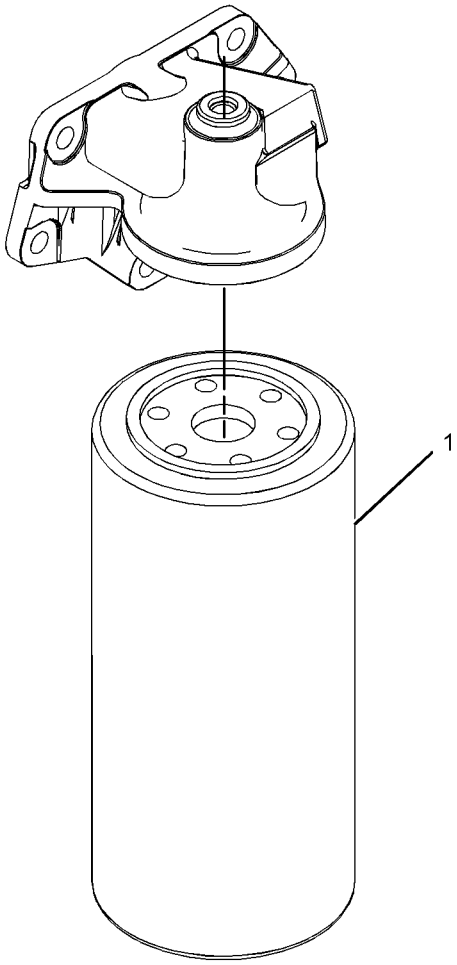

GRAPHIC #1 **<END>** g01198493

LUBRICATION SYSTEM

274-5983 OIL CHANGE GP-HIGH SPEED—ENGINE

S/N: DHA1-213; FBH1-338
AN ATTACHMENT

SMCS-1325 **i02815147**

NOTE	REF NO	GRAPHIC REF	PART NUMBER	QTY	PART NAME 1 2 3 4 5 6 (PRODUCT LEVEL)	SEE PAGE
	1	1	**8T-5373**	1	COUPLER-MALE	
	2	1	**8W-3214**	1	CAP AS (HIGH SPEED OIL CHANGE)	
	3	1	**200-6345**	3	MOUNT (DUAL SWIVEL)	
I	4	1	**300-1504**	1	HOSE AS	
	5	1	**301-2719**	1	BRACKET AS	
	6	1	*148-8327*	1	CONNECTOR AS	
		1	**6V-8637**	1	CONNECTOR	
		1	**3D-2824**	1	SEAL-O-RING	
		1	**6V-9746**	1	SEAL-O-RING	
	7	1	**2P-1293**	1	LOCKNUT (1-3/16-12-THD)	
	8	1	**3E-7430**	1	PLUG-PIPE	
	9	1	**6V-9746**	1	SEAL-O-RING	

I-REFER TO HYDRAULIC INFORMATION SYSTEM

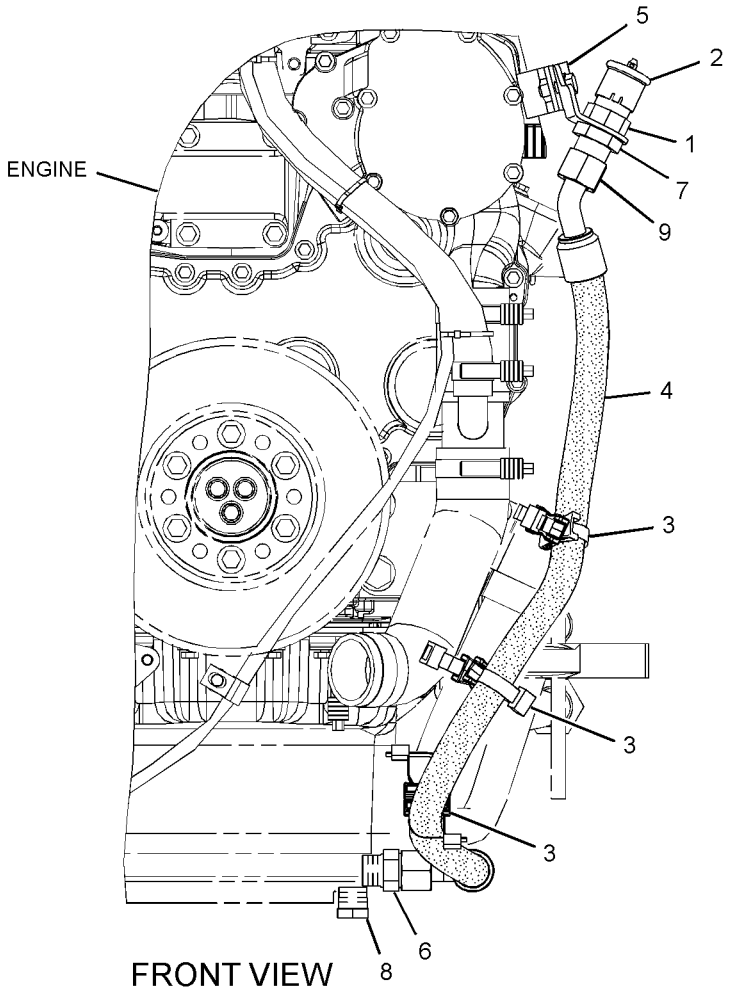

GRAPHIC #1

<END>

g01405912

LUBRICATION SYSTEM

274-5983 OIL CHANGE GP-HIGH SPEED—ENGINE

S/N: DHA214-344; FBH339-485

AN ATTACHMENT

SMCS-1325 **i02837365**

NOTE	REF NO	GRAPHIC REF	PART NUMBER	QTY	PART NAME 1 2 3 4 5 6 (PRODUCT LEVEL)	SEE PAGE
	1	1	**8T-5373**	1	COUPLER-MALE	
	2	1	**8W-3214**	1	CAP AS (HIGH SPEED OIL CHANGE)	
C	3	1	**200-6345**	3	MOUNT (DUAL SWIVEL)	
CI	4	1	**300-1504**	1	HOSE AS	
C	5	1	**301-2719**	1	BRACKET AS	
		1	**8T-4121**	1	WASHER-HARD (11X21X2.5-MM THK)	
M		1	**8T-4136**	1	BOLT (M10X1.5X25-MM)	
	6	1	*148-8327*	1	CONNECTOR AS	
		1	**6V-8637**	1	CONNECTOR	
		1	**3D-2824**	1	SEAL-O-RING	
		1	**6V-9746**	1	SEAL-O-RING	
	7	1	**2P-1293**	1	LOCKNUT (1-3/16-12-THD)	
	8	1	**3E-7430**	1	PLUG-PIPE	
	9	1	**6V-9746**	1	SEAL-O-RING	

C-CHANGE FROM PREVIOUS TYPE
I-REFER TO HYDRAULIC INFORMATION SYSTEM
M-METRIC PART

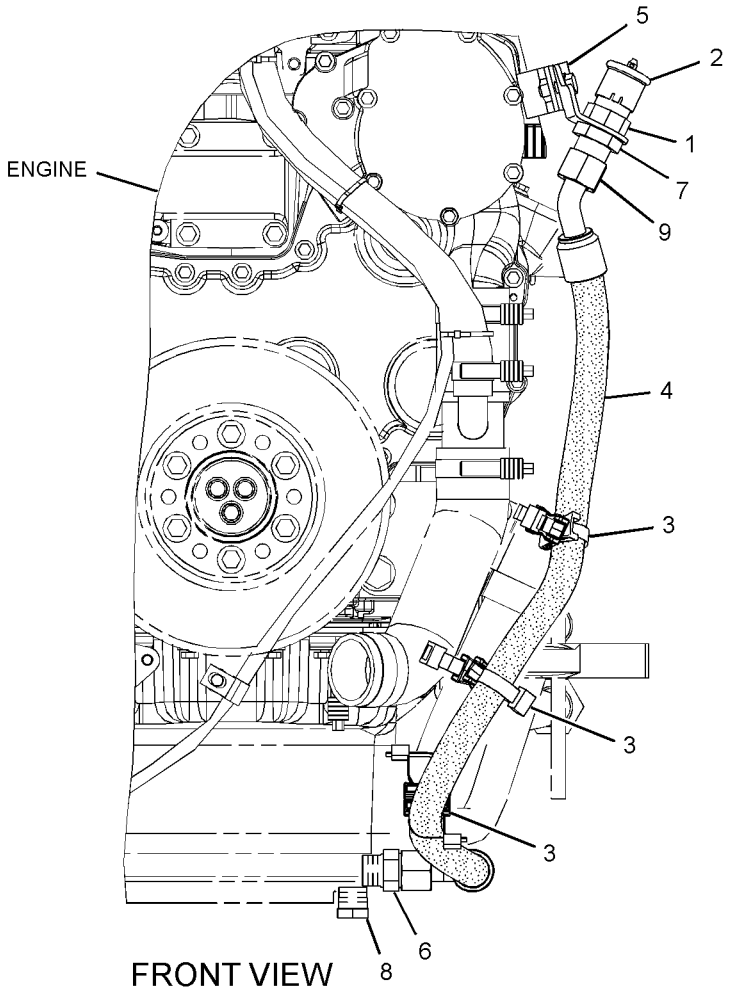

GRAPHIC #1 **<END>** g01405912

274-5983 OIL CHANGE GP-HIGH SPEED—ENGINE

S/N: DHA345-UP; FBH486-UP
AN ATTACHMENT

SMCS-1325 **i03697823**

NOTE	REF NO	GRAPHIC REF	PART NUMBER	QTY	PART NAME 1 2 3 4 5 6 (PRODUCT LEVEL)	SEE PAGE
	1	1	**8T-5373**	1	COUPLER-MALE	
	2	1	**8W-3214**	1	CAP AS (HIGH SPEED OIL CHANGE)	
C	3	1	**177-2215**	1	STRAP-DUAL CLAMP	
C	4	1	**308-9651**	1	BRACKET AS	
CI	5	1	**308-9653**	1	HOSE AS	
	6	1	*148-8327*	1	CONNECTOR AS	
		1	**6V-8637**	1	CONNECTOR	
		1	**3D-2824**	1	SEAL-O-RING	
		1	**6V-9746**	1	SEAL-O-RING	
	7	1	**2P-1293**	1	LOCKNUT (1-3/16-12-THD)	
	8	1	**3E-7430**	1	PLUG-PIPE	
C	9	1	**5P-7854**	1	CLIP	
C	10	1	**6V-1889**	1	CLIP	
	11	1	**6V-9746**	1	SEAL-O-RING	
C	12	1	**7X-7729**	2	WASHER (11X25X3-MM THK)	
CM	13	1	**8T-4133**	1	NUT (M10X1.5-THD)	
CM	14	1	**8T-4195**	1	BOLT (M10X1.5X30-MM)	

C-CHANGE FROM PREVIOUS TYPE
I-REFER TO HYDRAULIC INFORMATION SYSTEM
M-METRIC PART

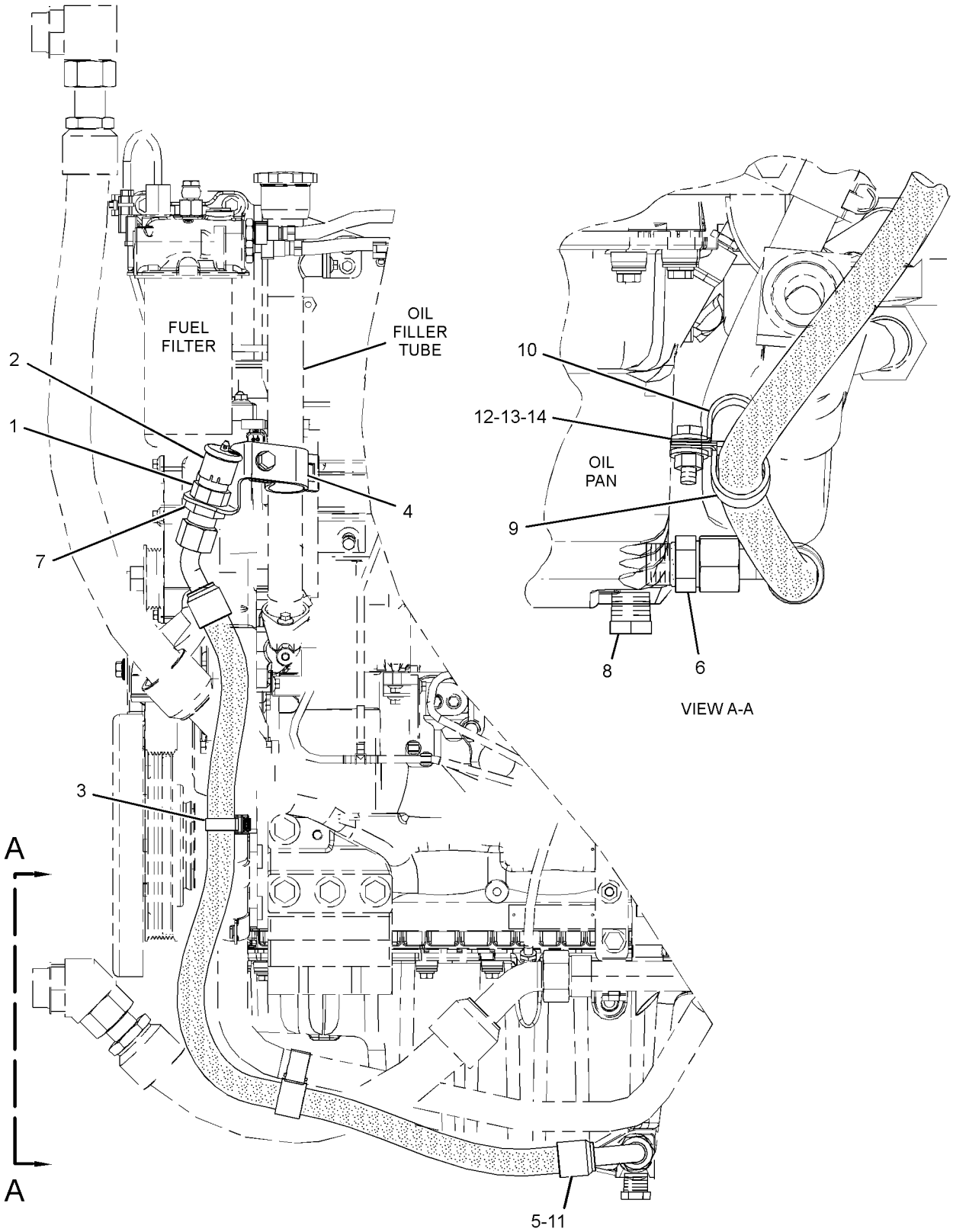

LEFT SIDE VIEW

GRAPHIC #1

<END>

g01404991

LUBRICATION SYSTEM

277-4262 PUMP GP-ENGINE OIL

S/N: C6E1-UP
PART OF 242-1356, 319-7261 ENGINE AR
ALSO AN ATTACHMENT

SMCS-1304, 1315 **i02751974**

NOTE	REF NO	GRAPHIC REF	PART NUMBER	QTY	PART NAME 1 2 3 4 5 6 (PRODUCT LEVEL)	SEE PAGE
	1	1	**312-4545**	1	PUMP-OIL (ENGINE)	
	2	1	**6I-1090**	4	BOLT (M8X1.25X40-MM)	

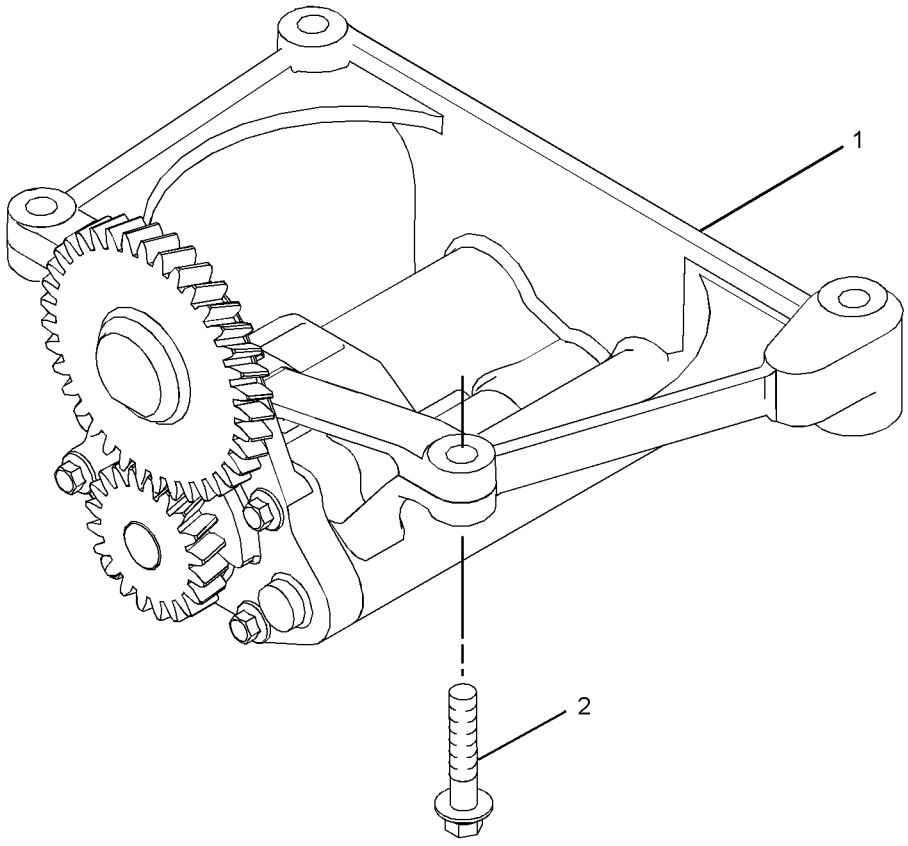

GRAPHIC #1 **<END>** g01380671

277-4694 VALVE GP-FLUID SAMPLING–ENGINE OIL

S/N: C6E1-UP
PART OF 242-1356, 319-7261 ENGINE AR
ALSO AN ATTACHMENT

SMCS-7542 **i02790074**

NOTE	REF NO	GRAPHIC REF	PART NUMBER	QTY	PART NAME 1 2 3 4 5 6 (PRODUCT LEVEL)	SEE PAGE
	1	1	**216-9633**	1	VALVE AS-FLUID SAMPLING	
	2	1	**8C-3445**	1	CAP-DUST	
	3	1	**232-3861**	1	PLUG (BLANKING)	
	4	1	**199-9267**	1	SEAL-O-RING	

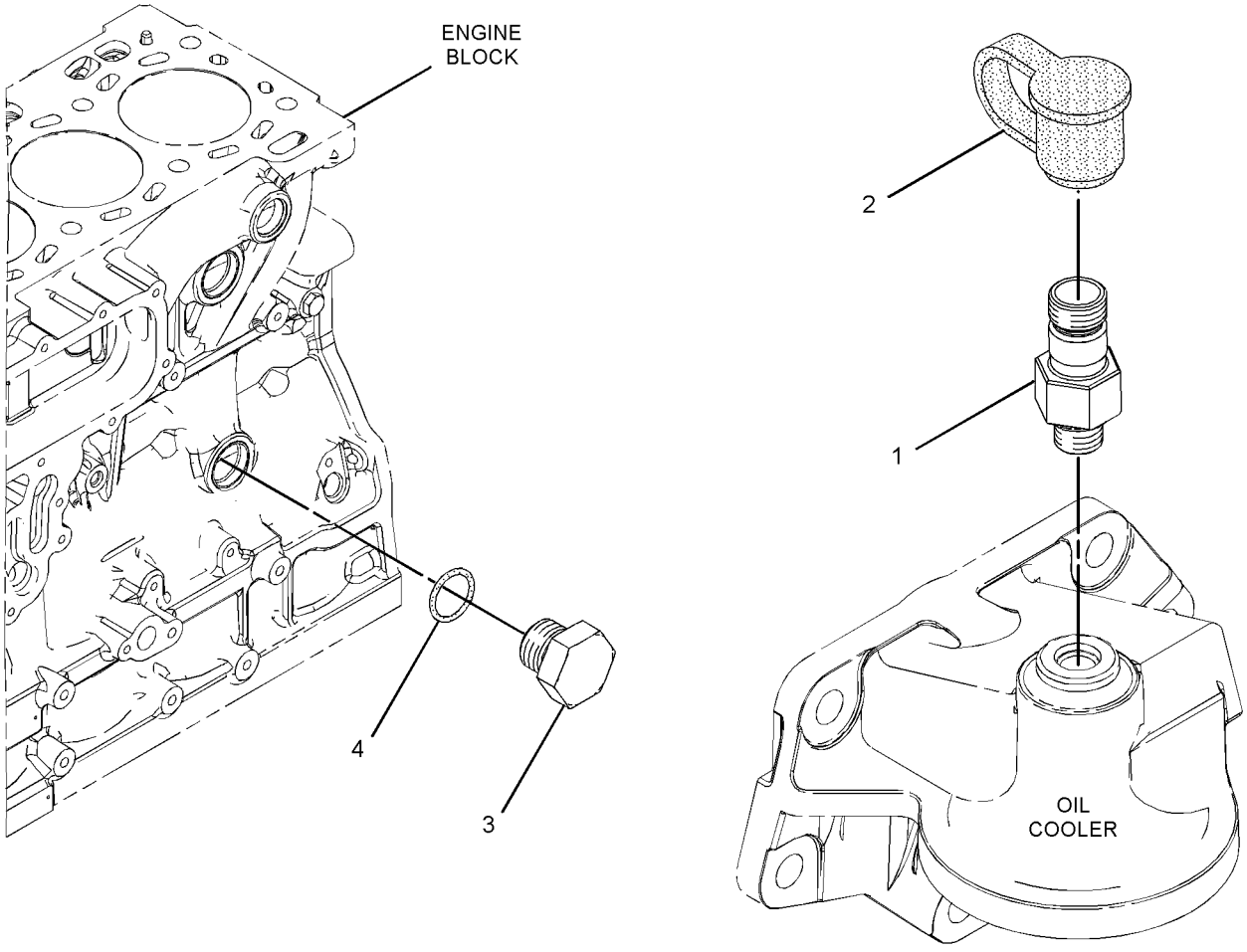

GRAPHIC #1 **<END>** g01198300

277-2504 COOLER GP-ENGINE OIL

S/N: C6E1-UP
PART OF 242-1356, 319-7261 ENGINE AR
ALSO AN ATTACHMENT

SMCS-1378 **i03011274**

NOTE	REF NO	GRAPHIC REF	PART NUMBER	QTY	PART NAME 1 2 3 4 5 6 (PRODUCT LEVEL)	SEE PAGE
M	1	1	**6I-0217**	8	BOLT (M8X1.25X20-MM)	
M	2	1,2	**6I-0260**	10	BOLT (M8X1.25X25-MM)	
	3	2	**6I-4709**	3	BOLT (M8X1.25X100-MM)	
M	4	2	**100-3751**	5	BOLT (M8X1.25X65-MM)	
	5	2	**295-8610**	1	COOLER AS-ENGINE OIL (ENGINE)	
M	5A	2	**6I-0260**	3	BOLT (M8X1.25X25-MM)	
	5B	2	**6I-0594**	4	NUT (M10X1.5-THD)	
	5C	2	**101-3917**	4	WASHER	
	5D	2	**101-7547**	4	WASHER	
	5E	2	**231-1455**	2	STUD	
	5F	2	**277-2500**	1	GASKET	
	5G	2	**277-2502**	2	STUD	
	5H	2	**277-2503**	3	PLUG	
	5J	2	**295-8613**	1	COOLER-OIL (ENGINE)	
	5K	2	**295-8615**	2	GASKET	
	6	1	**225-7944**	2	GASKET	
	7	1	**277-2538**	1	GASKET	
	8	2	**277-2526**	1	GASKET-FILTER	
	9	2	**277-2525**	1	HEAD AS-OIL FILTER	
	10	1	**232-3751**	2	PLATE (BLANKING)	
	11	1	**277-2537**	1	PLATE	

M-METRIC PART

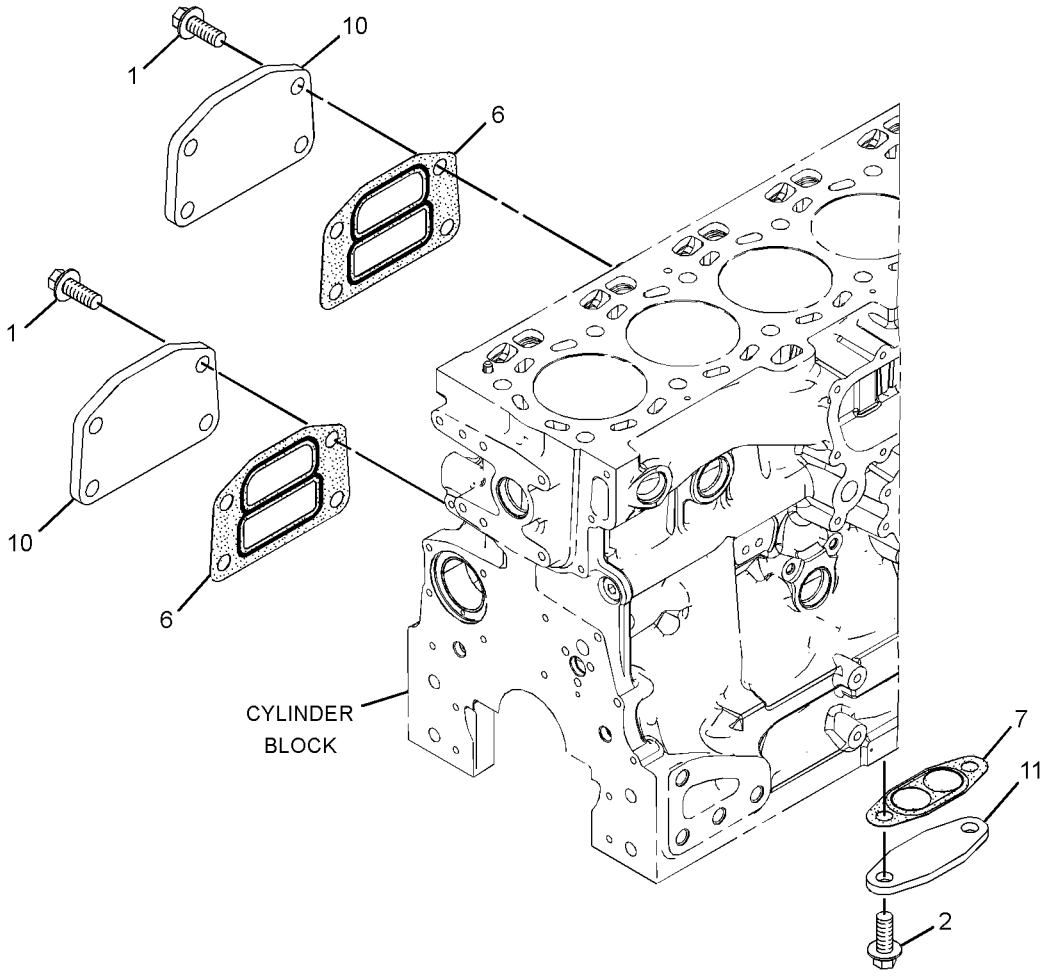

GRAPHIC #1 g01324633

277-2504 **COOLER GP-ENGINE OIL** *(contd.)* **i03011274**

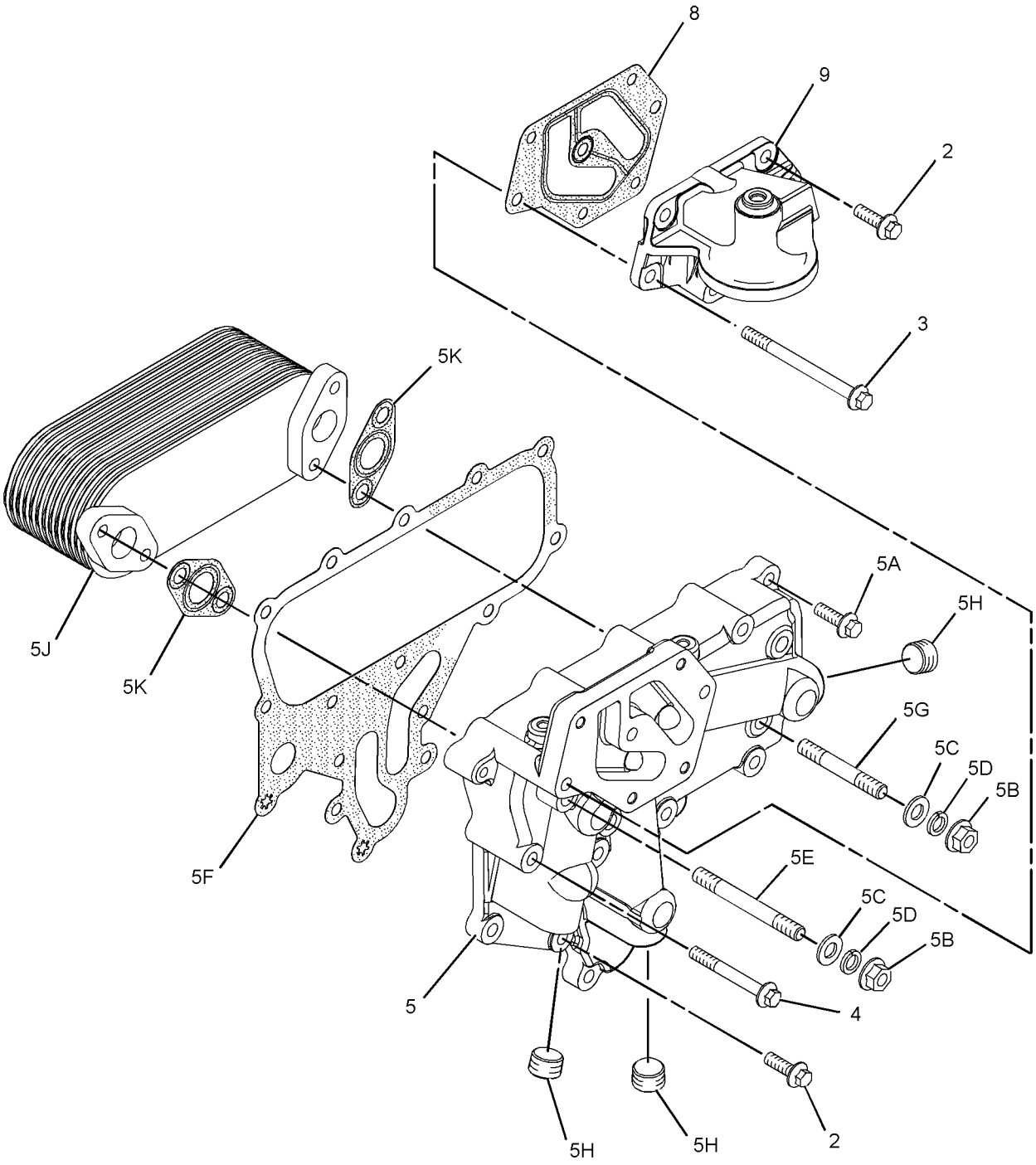

GRAPHIC #2 **<END>** g01324634

COOLING SYSTEM

274-7674 COOLING AR

S/N: DHA1-UP; FBH1-UP

PART OF 206-7250, 206-7251 COMMON AR

SMCS-1350 **i03139062**

NOTE	REF NO	GRAPHIC REF	PART NUMBER	QTY	PART NAME 1 2 3 4 5 6 (PRODUCT LEVEL)	SEE PAGE
Y	1	1	*267-8340*	1	GUARD GP-RADIATOR	432
Y	2	1	*269-5950*	1	COOLING AR-SUPPLEMENTAL	78
Y	3	1	*269-8121*	1	FAN & MOTOR GP (COOLING FAN)	80
	4	1	**284-1291**	2	PLATE AS	
	5	1	**288-0453**	1	SPACER (17.5X22X35-MM THK)	
	6	1	**198-4777**	6	WASHER-HARD (11X25X10-MM THK)	
	7	1	**5P-1076**	2	WASHER-HARD (13.5X30X4-MM THK)	
	8	1	**7X-3393**	2	WASHER-HARD (8.3X19X1.83-MM THK)	
	9	1	**7X-7729**	4	WASHER (11X25X3-MM THK)	
M	10	1	**8T-4195**	10	BOLT (M10X1.5X30-MM)	
M	11	1	**8T-4648**	1	BOLT (M12X1.75X70-MM)	
D	12	1	**5P-5962**		SEAL (0.1-M EACH)	
E	13	1	**277-3373**		SEAL (110-CM EACH)	

D-ORDER BY THE METER
E-ORDER BY THE CENTIMETER
M-METRIC PART
Y-SEPARATE ILLUSTRATION

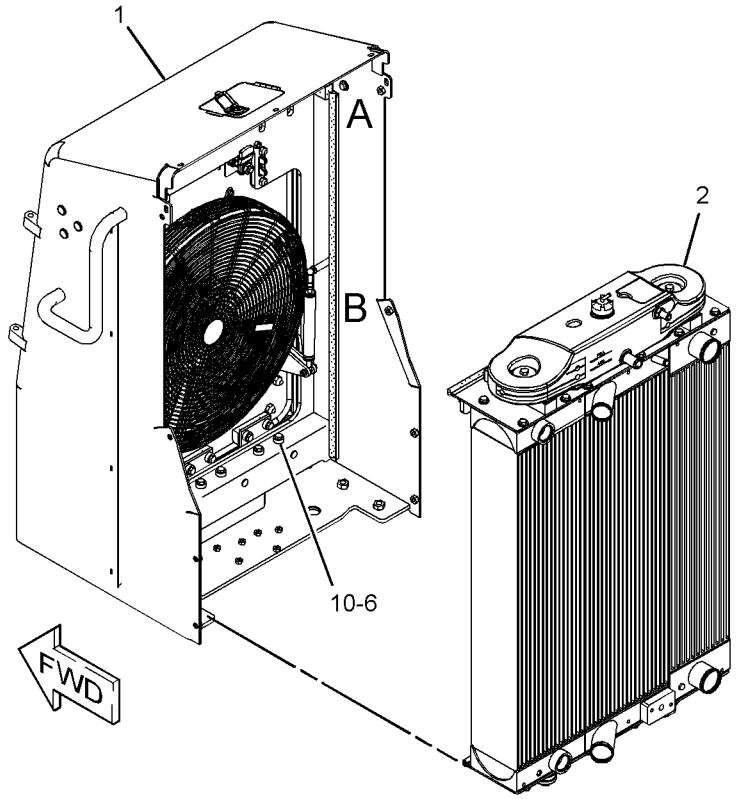

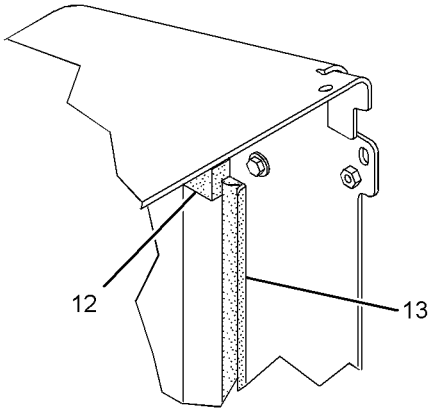

VIEW OF AREA A

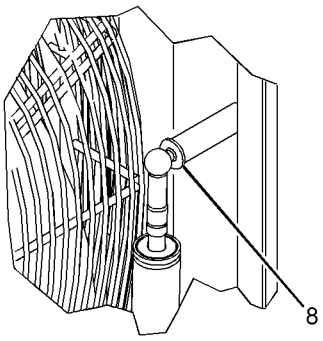

VIEW OF AREA B

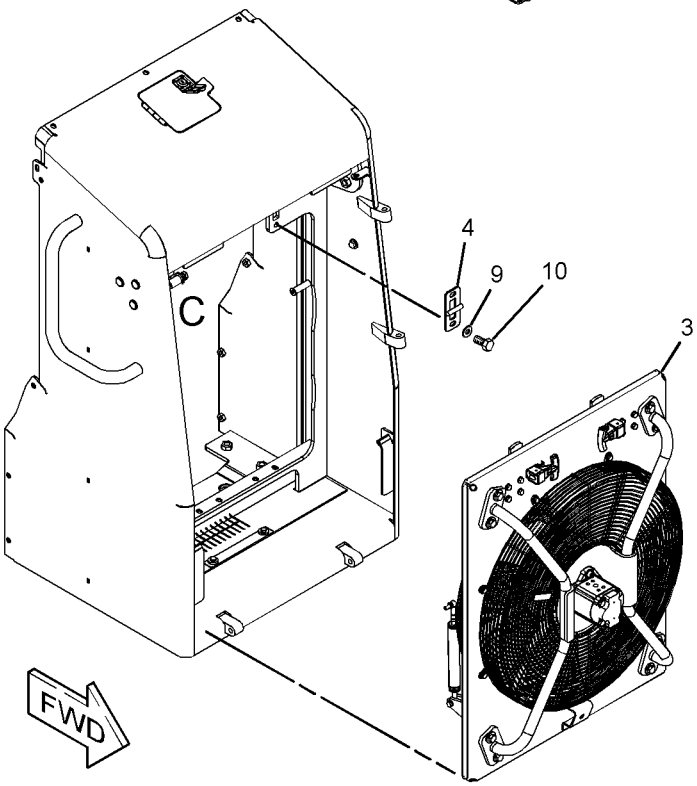

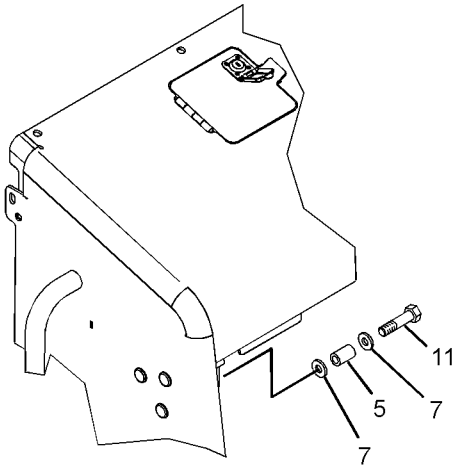

VIEW OF AREA C
(EXPLODED)

GRAPHIC #1 **<END>** g01416691

COOLING SYSTEM

269-5950 COOLING AR-SUPPLEMENTAL

S/N: DHA1-UP; FBH1-UP
PART OF 274-7674 COOLING AR

SMCS-1353 **i03717863**

NOTE	REF NO	GRAPHIC REF	PART NUMBER	QTY	PART NAME 1 2 3 4 5 6 (PRODUCT LEVEL)	SEE PAGE
	1	1	**187-7331**	8	MOUNT-RUBBER	
	2	1	**224-8472**	2	WASHER (25X55X4-MM THK)	
	3	1	**244-1792**	1	TANK GP-EXPANSION	
		1	**6V-8351**	1	SEAL-O-RING	
		1	**345-2204**	1	CONNECTOR	
		1	**185-1043**	1	CAP AS-RADIATOR (COOLANT TANK)	
		1	**260-3638**	1	FILM-IDENTIFICATION (COOLANT LEVEL)	
	4	1	**263-1233**	1	PLATE	
	5	1	**276-5071**	2	BRACKET AS	
					(EACH INCLUDES)	
M		1	**9X-6269**	2	NUT-WELD (M16X2-THD)	
	6	1	**286-6911**	1	CORE AS-AFTERCOOLER	
		1	**5M-6213**	2	PLUG-PIPE	
	7	1	**286-6912**	1	CORE AS-RADIATOR	
	8	1	**286-6913**	1	CORE AS-OIL COOLER (POWER TRAIN)	
	9	1	**286-9488**	1	PLATE AS (TOP)	
	10	1	**286-9489**	1	PLATE AS (BOTTOM)	
	11	1	**295-5297**	2	SPACER (12.75X18X5.25-MM THK)	
M	12	1	**118-4977**	2	BOLT (M16X2X65-MM)	
	13	1	**7G-8839**	2	SPACER (13.5X57X6-MM THK)	
	14	1	**7X-0515**	4	WASHER-HARD (17X35X5-MM THK)	
	15	1	**7X-0607**	4	WASHER-HARD (20X55X8-MM THK)	
M	16	1	**7X-2553**	4	BOLT (M16X2X40-MM)	
M	17	1	**7X-2555**	2	BOLT (M16X2X80-MM)	
	18	1	**7X-7729**	24	WASHER (11X25X3-MM THK)	
M	19	1	**8T-4136**	24	BOLT (M10X1.5X25-MM)	
M	20	1	**8T-4910**	2	BOLT (M12X1.75X60-MM)	
	21	1	**9X-8257**	4	WASHER (17.5X30X3.5-MM THK)	
D	22	1	**8T-6936**		SEAL (0.1-M EACH)	
D	22A	1	**8T-6936**		SEAL (0.6-M EACH)	
D	22B	1	**8T-6936**		SEAL (1.1-M EACH)	
E	23	1	**221-8310**		SEAL (74-CM EACH)	

D-ORDER BY THE METER
E-ORDER BY THE CENTIMETER
M-METRIC PART

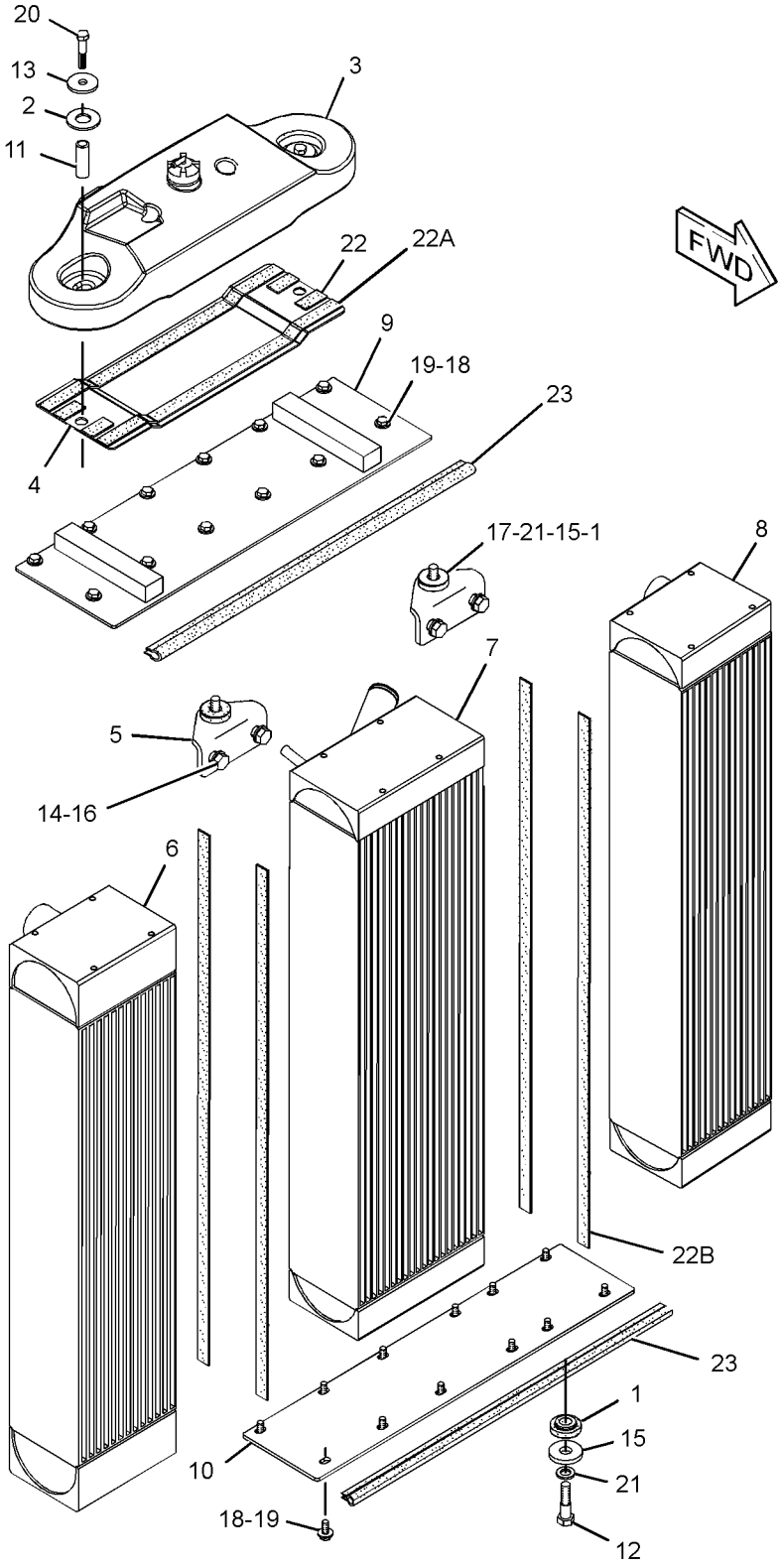

GRAPHIC #1 **<END>** g01322899

COOLING SYSTEM

269-8121 FAN & MOTOR GP—COOLING FAN

S/N: DHA1-UP; FBH1-UP
PART OF 274-7674 COOLING AR

SMCS-1356, 1386 **i03632314**

NOTE	REF NO	GRAPHIC REF	PART NUMBER	QTY	PART NAME 1 2 3 4 5 6 (PRODUCT LEVEL)	SEE PAGE
	1	1	**244-1817**	1	SEAL	
	2	1	**340-4325**	1	SUPPORT AS-FAN	
	3	1	**261-7504**	1	SPIDER AS-FAN (7-BLADE)	
	4	1	**264-3504**	2	BRACKET AS	
	5	1	**340-4329**	1	GUARD AS-FAN (EXTERNAL)	
	6	1	**269-7034**	1	GUARD AS-FAN (INTERIOR)	
	7	1	**269-7035**	1	ADAPTER-FAN	
	8	1	**274-7681**	3	HINGE AS	
	9	1	**286-6933**	2	TAPE-REFLECTIVE	
	10	1	**287-5702**	1	DOOR AS-ACCESS (COOLING FAN)	
	11	1	**295-1778**	2	CYLINDER AS	
	12	1	**295-2526**	2	PAWL	
	13	1	**296-6499**	2	LATCH AS	
					(EACH INCLUDES)	
M		1	**161-7615**	1	NUT (M22X1.5-THD)	
M		1	**098-5747**	2	NUT (M16X2-THD)	
		1	**9X-8257**	2	WASHER (17.5X30X3.5-MM THK)	
M	14	1	**099-3649**	2	BOLT (M8X1.25X40-MM)	
	15	1	**198-4777**	6	WASHER-HARD (11X25X10-MM THK)	
	16	1	**307-3170**	1	MOTOR GP-GEAR (COOLING FAN)	
		1	**3B-4508**	1	LOCKWASHER	
		1	**6B-6684**	1	NUT-FULL (1/2-20-THD)	
M	17	1	**5C-7261**	2	NUT (M8X1.25-THD)	
	18	1	**5P-1076**	8	WASHER-HARD (13.5X30X4-MM THK)	
	19	1	**5P-4116**	8	WASHER-HARD (8.8X20.5X2-MM THK)	
M	20	1	**8T-5666**	2	BOLT (M10X1.5X35-MM)	
	21	1	**8T-4121**	8	WASHER-HARD (11X21X2.5-MM THK)	
M	22	1	**8T-4136**	6	BOLT (M10X1.5X25-MM)	
M	23	1	**8T-4189**	8	BOLT (M8X1.25X20-MM)	
M	24	1	**8T-4196**	6	BOLT (M10X1.5X35-MM)	
	25	1	**8T-4224**	12	WASHER-HARD (8.8X16X2-MM THK)	
M	26	1	**8T-4908**	8	BOLT (M8X1.25X25-MM)	
M	27	1	**8T-4956**	8	BOLT (M12X1.75X35-MM)	

M-METRIC PART

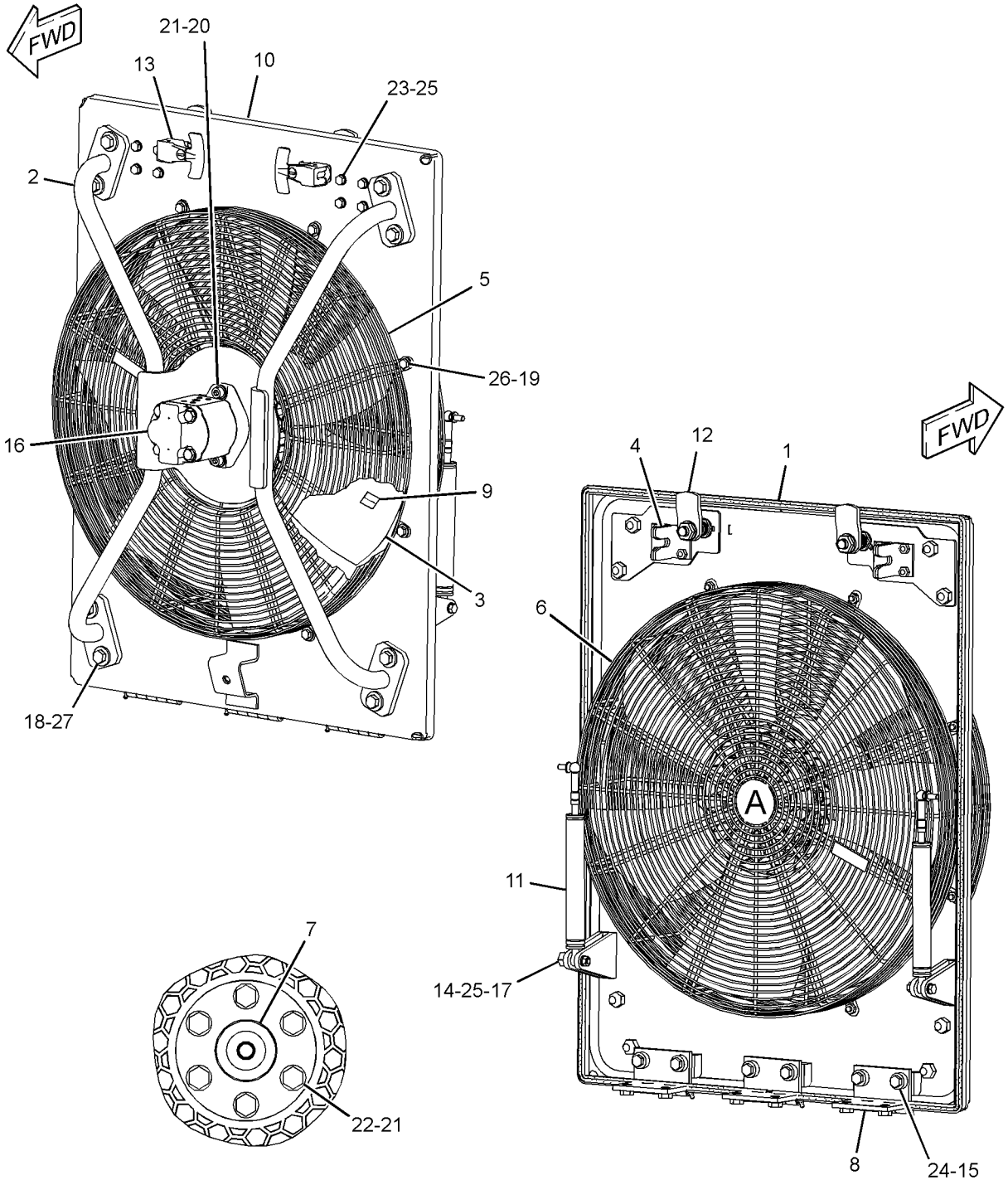

VIEW OF AREA A
(GUARD REMOVED)

GRAPHIC #1 **<END>** g01303564

288-0925 FASTENER GP-RADIATOR

S/N: DHA1-UP; FBH1-UP

PART OF 206-7294 INSTALLATION AR-ENGINE

SMCS-7155 **i02588251**

NOTE	REF NO	GRAPHIC REF	PART NUMBER	QTY	PART NAME 1 2 3 4 5 6 (PRODUCT LEVEL)	SEE PAGE
	1	1	**198-4780**	6	WASHER-HARD (17.5X32X8-MM THK)	
M	2	1	**8T-7338**	6	BOLT (M16X2X45-MM)	

M-METRIC PART

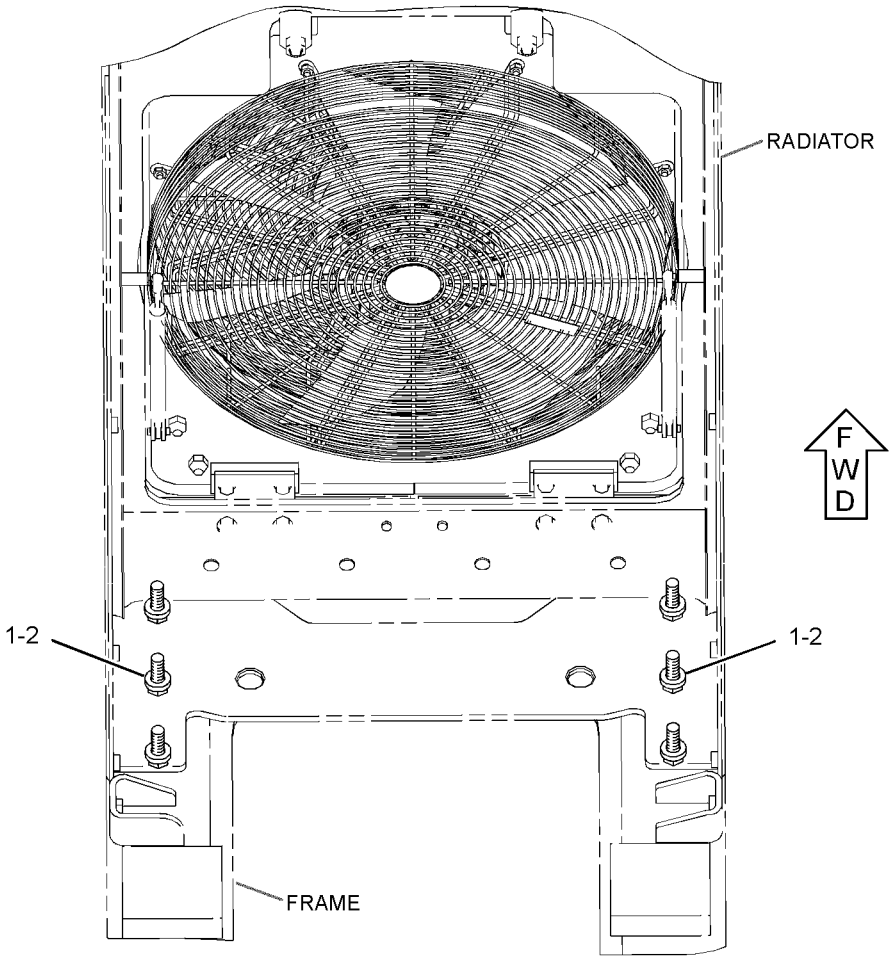

GRAPHIC #1 **<END>** g01304187

288-4011 FITTING GP-WATER LINES

S/N: C6E1-UP
PART OF 319-7261 ENGINE AR
AN ATTACHMENT

SMCS-1380 **i02564746**

NOTE	REF NO	GRAPHIC REF	PART NUMBER	QTY	PART NAME 1 2 3 4 5 6 (PRODUCT LEVEL)	SEE PAGE
	1	1	**2B-0858**	2	PLUG-PIPE	
	2	1	**134-3856**	2	ELBOW	

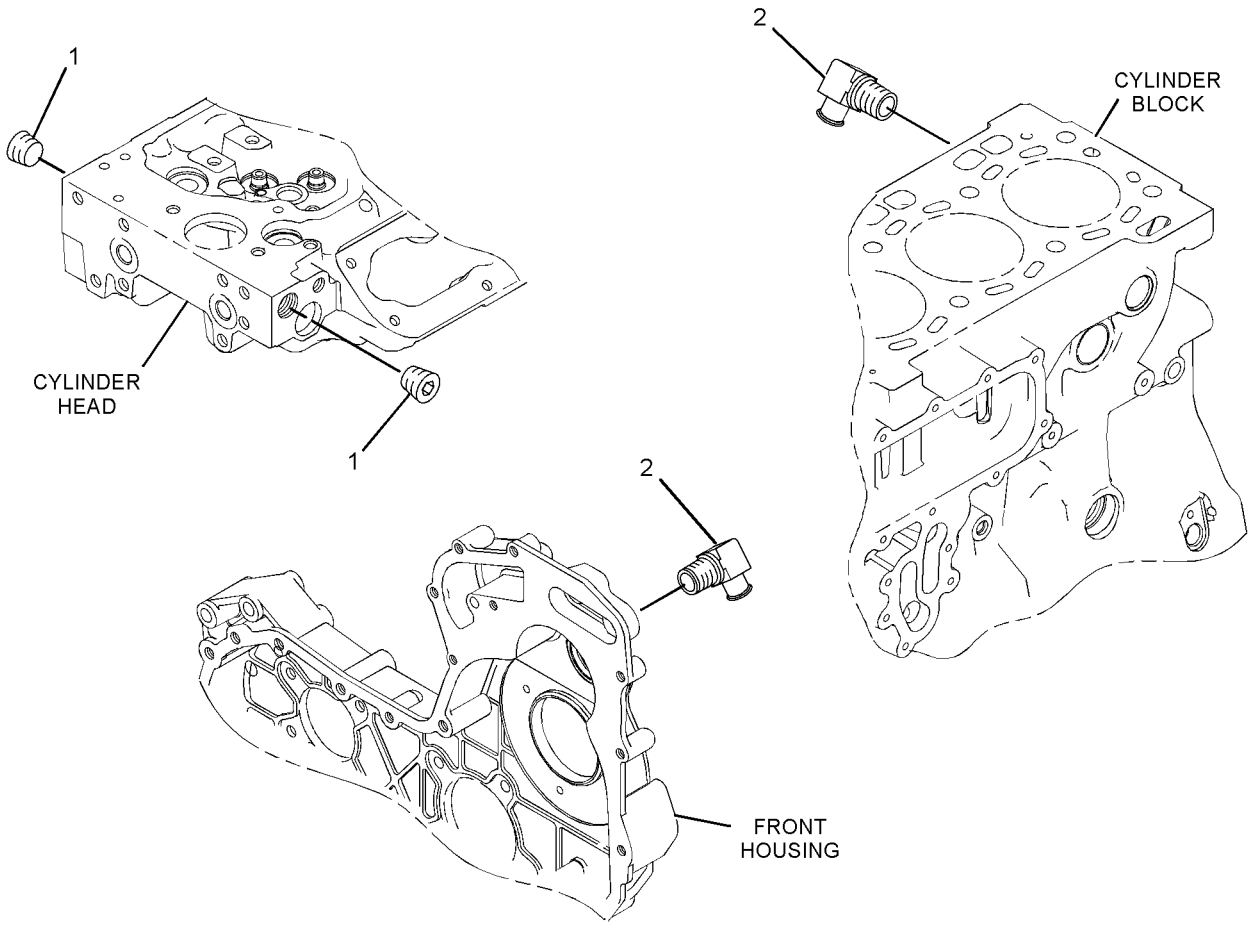

GRAPHIC #1 **<END>** g01291358

COOLING SYSTEM

251-4129 LINES GP-WATER

S/N: DHA1-UP; FBH1-UP

PART OF 206-7294 INSTALLATION AR-ENGINE

SMCS-1380 **i02958932**

NOTE	REF NO	GRAPHIC REF	PART NUMBER	QTY	PART NAME 1 2 3 4 5 6 (PRODUCT LEVEL)	SEE PAGE
	1	1,2	**3S-2093**	8	STRAP-CABLE	
	2	1	**5D-1026**	1	CLAMP-BAND	
	3	1	**6V-9208**	1	ELBOW	
	4	1	**1F-7567**	2	CLIP	
	5	2	**7X-7958**	2	CLAMP-HOSE	
	6	2	**8T-0154**	2	CLAMP-HOSE	
	7	2	**8T-6703**	6	CLAMP-HOSE	
	8	2	**091-7124**	1	SPACER (11X19X58-MM THK)	
	9	2	**157-0670**	1	CAP-DUST	
	10	2	*164-5597*	1	CONNECTOR AS	
		2	**8C-6868**	1	CONNECTOR	
		2	**6V-8397**	1	SEAL-O-RING	
	11	1	*184-6581*	1	CONNECTOR AS	
		1	**195-5830**	1	CONNECTOR	
		1	**3J-1907**	1	SEAL-O-RING	
	12	2	**204-2281**	2	STRAP-TIE	
	13	2	**200-6345**	1	MOUNT (DUAL SWIVEL)	
	14	1	**277-8707**	1	TUBE AS	
	15	1	**285-3429**	1	VALVE AS-DRAIN (ENGINE BLOCK, RADIATOR COOLANT)	
	16	2	**286-9549**	1	HOSE	
	17	2	**286-9550**	1	HOSE	
	18	2	**287-0427**	1	TUBE AS	
	19	2	**288-4513**	1	HOSE	
	20	1	**033-8248**	1	CLIP	
	22	2	**154-9024**	1	VALVE GP-FLUID SAMPLING (ENGINE COOLANT)	
	23	1	**198-4776**	2	WASHER-HARD (8.8X20X8-MM THK)	
	24	1	**1P-3702**	1	SEAL-RECTANGULAR	
	25	1	**2M-9780**	1	SEAL-O-RING	
	26	1,2	**5P-4961**	2	CLAMP-HOSE	
	27	2	**4D-7388**	1	CLIP	
	28	1	**5G-7817**	1	BOSS (11X25X18-MM THK)	
M	29	1	**7X-2537**	2	BOLT (M8X1.25X35-MM)	
	30	1,2	**8T-4121**	4	WASHER-HARD (11X21X2.5-MM THK)	
M	31	1	**8T-4137**	1	BOLT (M10X1.5X20-MM)	
M	32	2	**8T-4172**	1	BOLT (M10X1.5X80-MM)	
M	33	1	**8T-4186**	1	BOLT (M10X1.5X40-MM)	
M	34	1	**8T-6466**	1	BOLT (M10X1.5X60-MM)	
E	35	1	**6V-8523**		HOSE (28-CM)	
E	36	2	**136-1953**		HOSE (30-CM)	
E	37	1	**136-1953**		HOSE (31-CM)	
E	38	2	**8I-1362**		HOSE (135-CM)	
E	39	1	**8C-3681**		HOSE (210-CM)	
	40	1	**144-8344**	1	SPACER (11X19X20-MM THK)	

E-ORDER BY THE CENTIMETER
M-METRIC PART

251-4129 **LINES GP-WATER** *(contd.)* **i02958932**

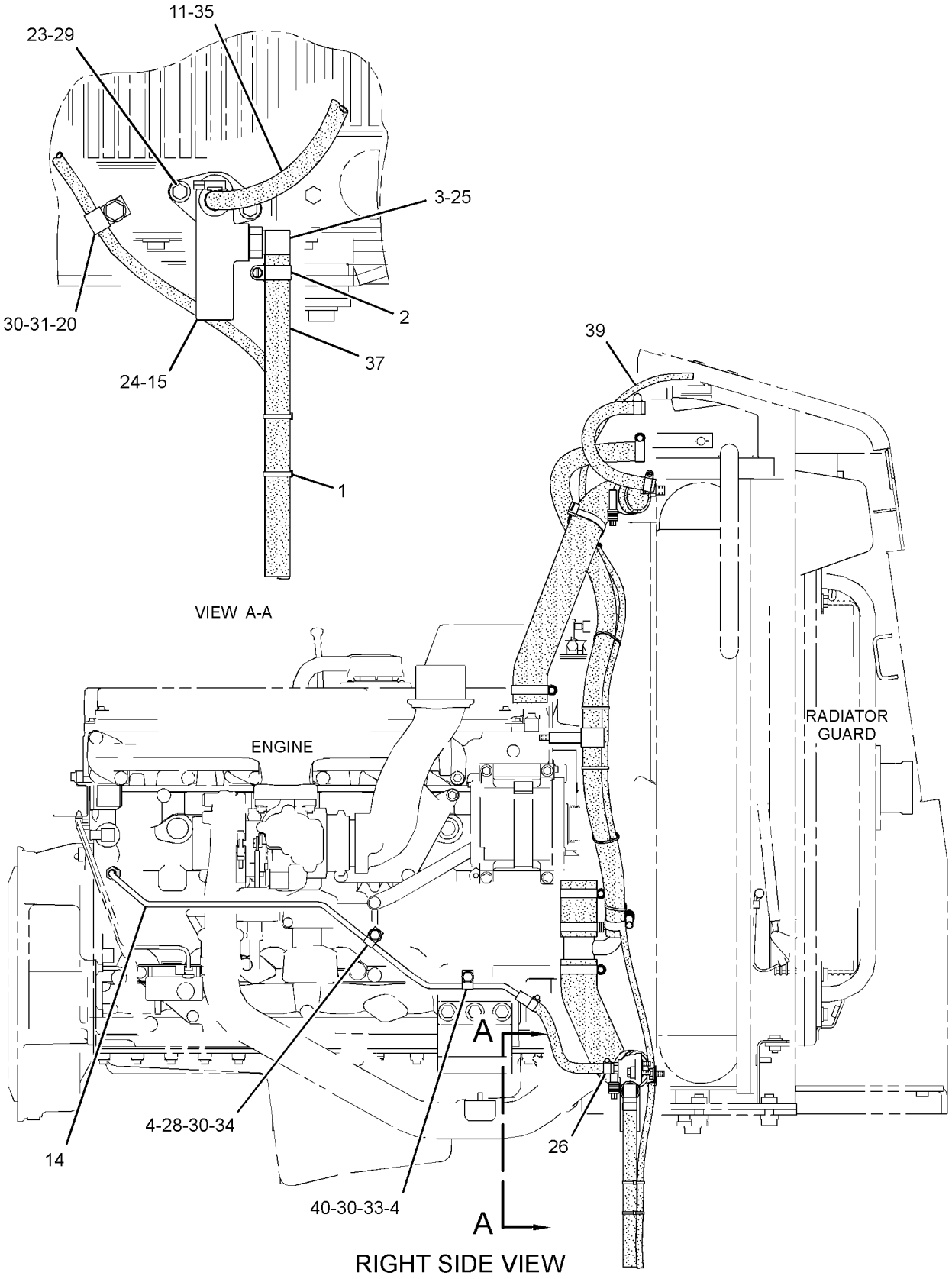

GRAPHIC #1 g01494095

251-4129 **LINES GP-WATER** *(contd.)* **i02958932**

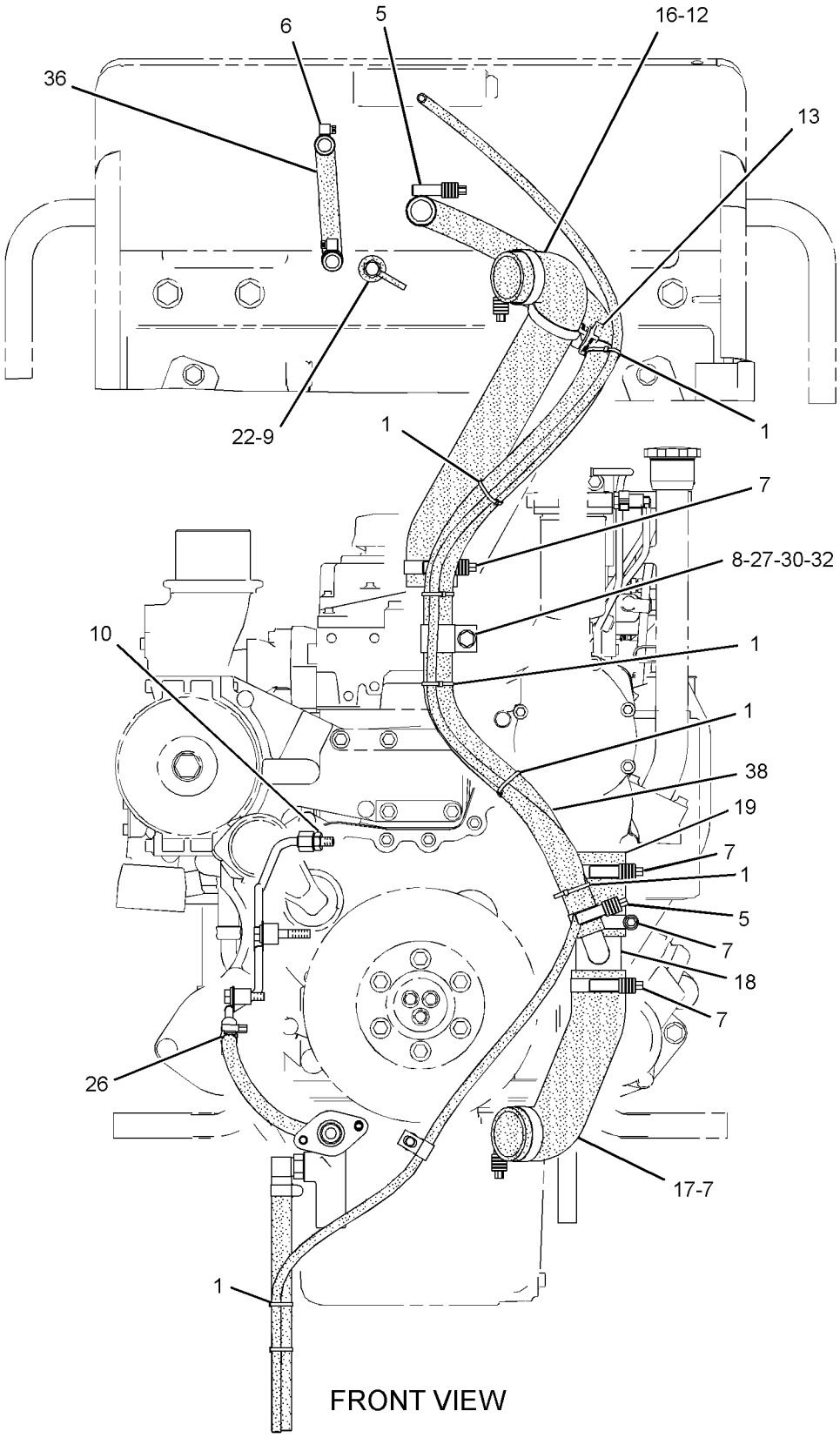

FRONT VIEW

GRAPHIC #2 **<END>** g01494096

279-9720 PLUG GP-WATER LINES

S/N: C6E1-UP

PART OF 242-1356 ENGINE AR

SMCS-1380 **i02638395**

NOTE	REF NO	GRAPHIC REF	PART NUMBER	QTY	PART NAME 1 2 3 4 5 6 (PRODUCT LEVEL)	SEE PAGE
	1	1	**7W-4669**	2	ADAPTER	
	2	1	**2B-0858**	1	PLUG-PIPE	

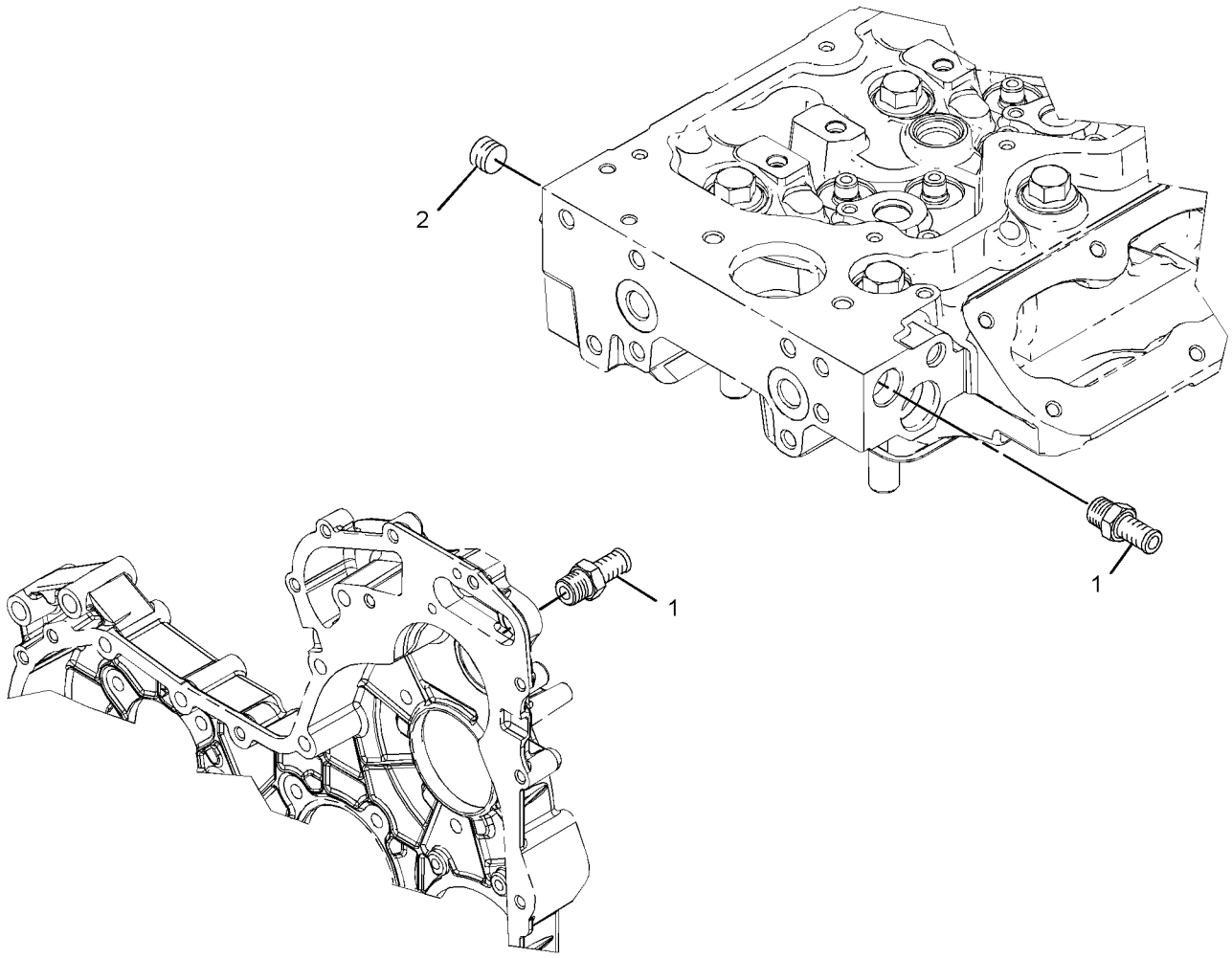

GRAPHIC #1 **<END>** g01193530

COOLING SYSTEM

277-2939 PUMP GP-WATER

S/N: C6E1-UP
PART OF 242-1356, 319-7261 ENGINE AR
ALSO AN ATTACHMENT
TYPE 1

SMCS-1361 **i02713429**

NOTE	REF NO	GRAPHIC REF	PART NUMBER	QTY	PART NAME 1 2 3 4 5 6 (PRODUCT LEVEL)	SEE PAGE
	1	1	**307-9843**	1	PUMP GP-WATER	
	1A	1	**287-7430**	1	GASKET-COVER	
	1B	1	**225-8019**	1	GASKET	
	1C	1	**278-3242**	2	BOLT-FLANGE HEAD	
M	5	1	**6I-0254**	2	BOLT (M8X1.25X30-MM)	
	6	1	**113-8129**	7	BOLT (M8X75-MM)	
	7	1	**277-2925**	1	CONNECTION AS	
	7A	1	**225-7738**	1	SEAL-O-RING	
	7B	1	**277-2923**	1	GASKET	
M	10	1	**6I-0217**	2	BOLT (M8X1.25X20-MM)	

M-METRIC PART

277-2939 **PUMP GP-WATER** *(contd.)* **i02713429**

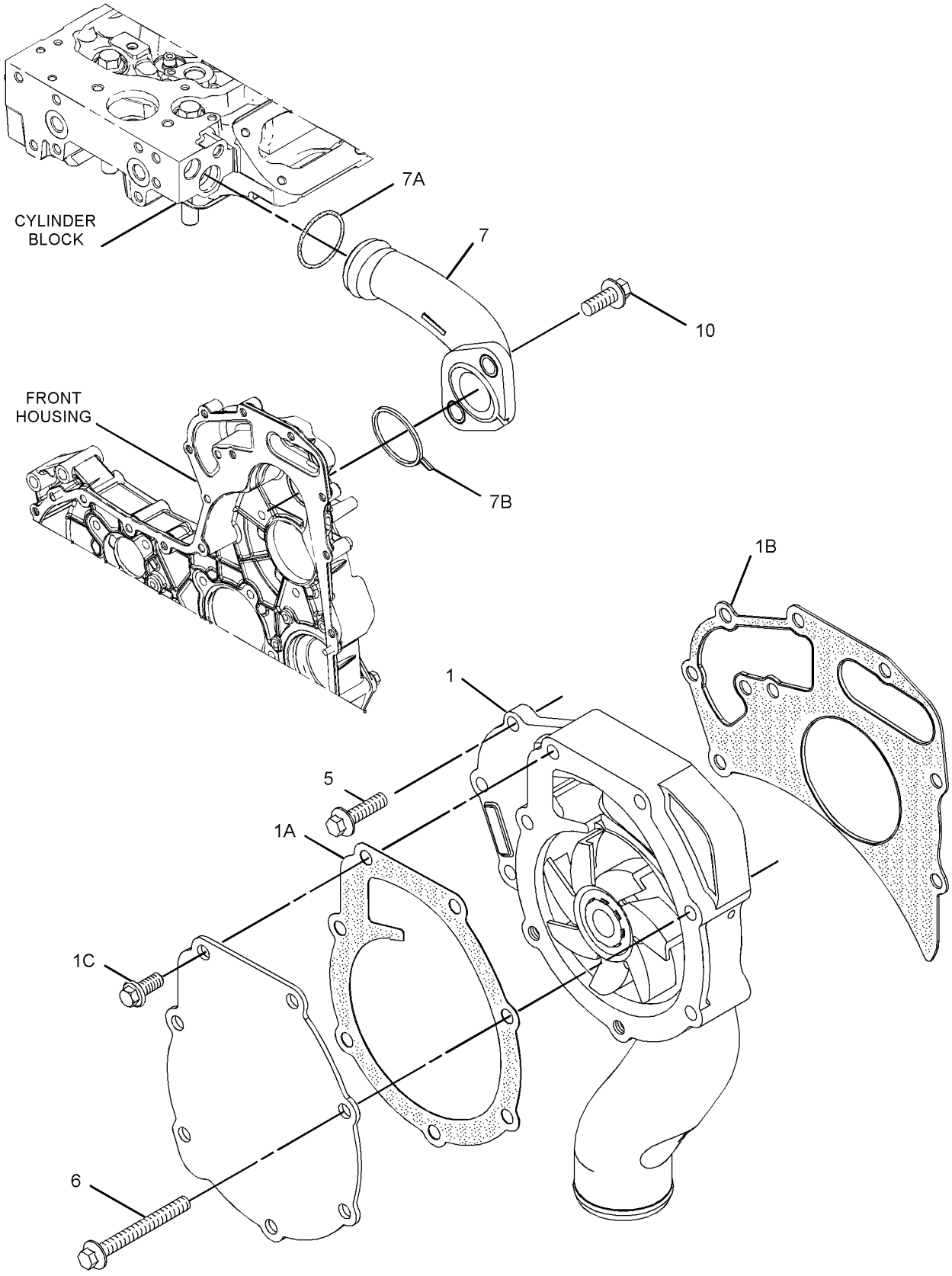

GRAPHIC #1 **<END>** g01365038

COOLING SYSTEM

277-2939 PUMP GP-WATER

S/N: C6E1-UP
PART OF 242-1356, 319-7261 ENGINE AR
ALSO AN ATTACHMENT
TYPE 2

SMCS-1361 **i03630246**

NOTE	REF NO	GRAPHIC REF	PART NUMBER	QTY	PART NAME 1 2 3 4 5 6 (PRODUCT LEVEL)	SEE PAGE
C	1	1	**322-9662**	1	PUMP GP-WATER	
	1A	1	**225-8019**	1	GASKET	
M	2	1	**6I-0254**	2	BOLT (M8X1.25X30-MM)	
	3	1	**113-8129**	7	BOLT (M8X1.25X75-MM)	
	4	1	**277-2925**	1	CONNECTION AS	
	4A	1	**225-7738**	1	SEAL-O-RING	
	4B	1	**277-2923**	1	GASKET	
M	5	1	**6I-0217**	2	BOLT (M8X1.25X20-MM)	

C-CHANGE FROM PREVIOUS TYPE
M-METRIC PART

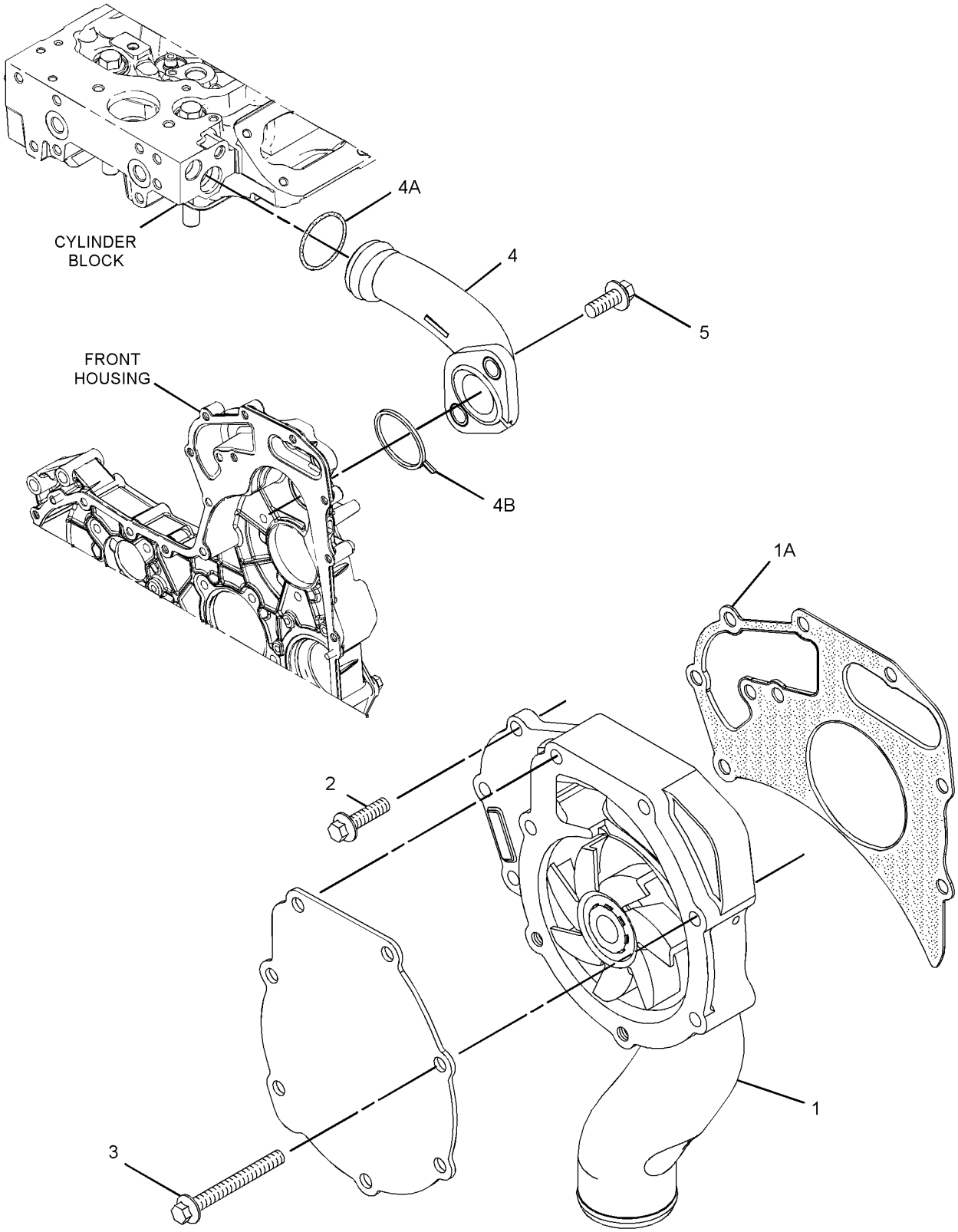

GRAPHIC #1 **<END>** g01947178

277-2976 REGULATOR GP-TEMPERATURE

S/N: C6E1-UP
PART OF 242-1356, 319-7261 ENGINE AR
ALSO AN ATTACHMENT

SMCS-1355 **i03010129**

NOTE	REF NO	GRAPHIC REF	PART NUMBER	QTY	PART NAME 1 2 3 4 5 6 (PRODUCT LEVEL)	SEE PAGE
	1	1	**277-2974**	1	REGULATOR AS-WATER TEMPERATURE (CONNECTOR INCLUDED)	
					(INCLUDES WATER TEMPERATURE REGULATOR)	
	2	1	**281-8744**	1	GASKET-WATER REGULATOR (TEMPERATURE)	
	3	1	**123-2899**	2	BOLT (M10X1.5X40-MM)	

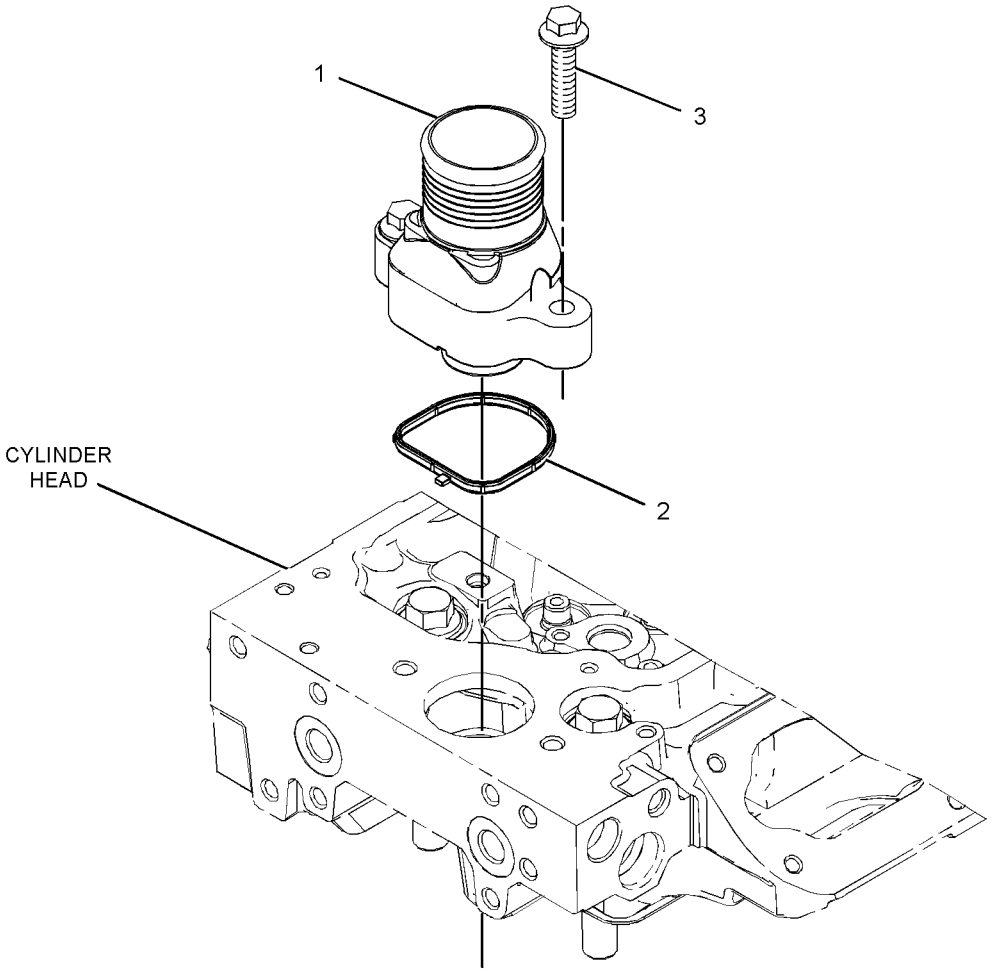

GRAPHIC #1 **<END>** g01195539

AIR INLET AND EXHAUST SYSTEM

240-8552 AIR CLEANER GP

S/N: DHA1-UP; FBH1-UP
PART OF 249-3720 AIR CLEANER GP
FIELD REPLACEMENT ORDER 266-9247—PAGE 95

SMCS-1051, 1054 **i02837795**

NOTE	REF NO	GRAPHIC REF	PART NUMBER	QTY	PART NAME 1 2 3 4 5 6 (PRODUCT LEVEL)	SEE PAGE
M	1	1	**244-1432**	1	BOLT-TEE (M10X1X80.8-MM)	
	2	1	**252-5001**	1	FILTER ELEMENT AS-AIR (PRIMARY)	
	3	1	**252-5002**	1	FILTER ELEMENT AS-AIR (SECONDARY)	
	4	1	**252-5003**	1	FRAME (AIR CLEANER ELEMENT)	
	5	1	**252-5004**	1	COVER	

M-METRIC PART

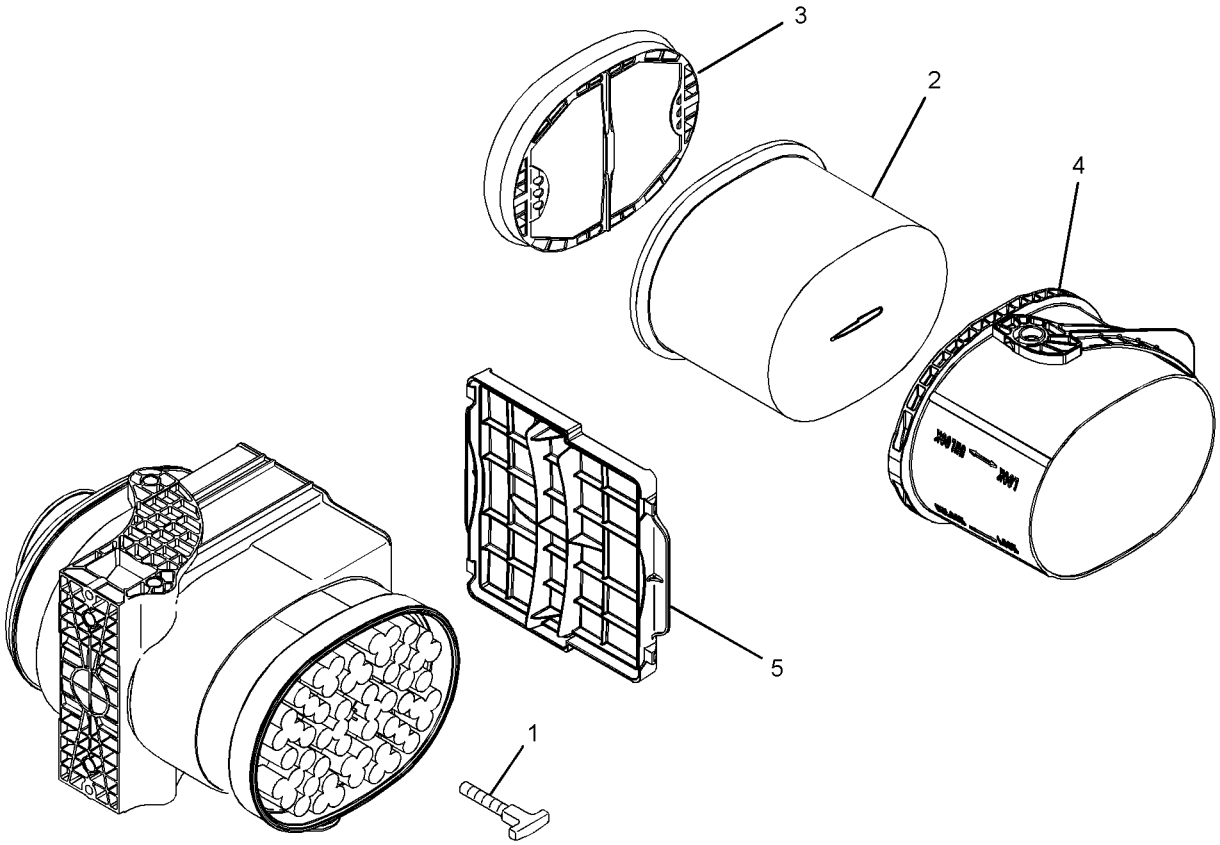

GRAPHIC #1 **<END>** g01191292

AIR INLET AND EXHAUST SYSTEM

249-3720 AIR CLEANER GP

S/N: DHA1-UP; FBH1-UP

PART OF 206-7294 INSTALLATION AR-ENGINE

SMCS-1051, 1054 **i02837829**

NOTE	REF NO	GRAPHIC REF	PART NUMBER	QTY	PART NAME 1 2 3 4 5 6 (PRODUCT LEVEL)	SEE PAGE
Y	1	1	*240-8552*	1	AIR CLEANER GP	93
	2	1	**277-8718**	1	BRACKET	
	3	1	**296-2735**	1	INDICATOR AS-AIR FILTER CHANGE	
	4	1	**8T-4121**	4	WASHER-HARD (11X21X2.5-MM THK)	
M	5	1	**8T-4137**	4	BOLT (M10X1.5X20-MM)	
M	6	1	**8T-4189**	3	BOLT (M8X1.25X20-MM)	
	7	1	**8T-4224**	3	WASHER-HARD (8.8X16X2-MM THK)	

M-METRIC PART
Y-SEPARATE ILLUSTRATION

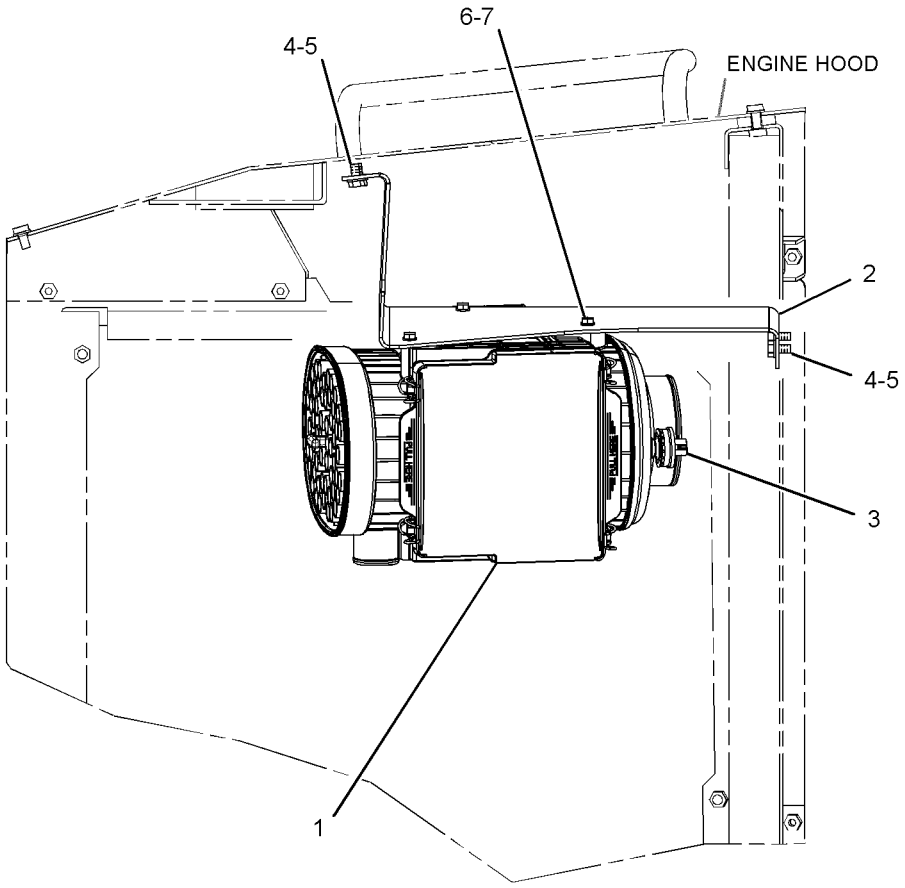

LEFT SIDE VIEW

GRAPHIC #1 **<END>** g01414985

AIR INLET AND EXHAUST SYSTEM

266-9247 AIR CLEANER GP

S/N: DHA1-UP; FBH1-UP
METAL THREADED INSERTS IN ALL MOUNTING HOLES
FIELD REPLACEMENT FOR 240-8552—PAGE 93

SMCS-1051, 1054 **i03026382**

NOTE	REF NO	GRAPHIC REF	PART NUMBER	QTY	PART NAME 1 2 3 4 5 6 (PRODUCT LEVEL)	SEE PAGE
M	1	1	**244-1432**	1	BOLT-TEE (M10X1X80.8-MM)	
	2	1	**252-5001**	1	FILTER ELEMENT AS-AIR (PRIMARY)	
	3	1	**252-5002**	1	FILTER ELEMENT AS-AIR (SECONDARY)	
	4	1	**252-5003**	1	FRAME (AIR CLEANER ELEMENT)	
	5	1	**252-5004**	1	COVER	

M-METRIC PART

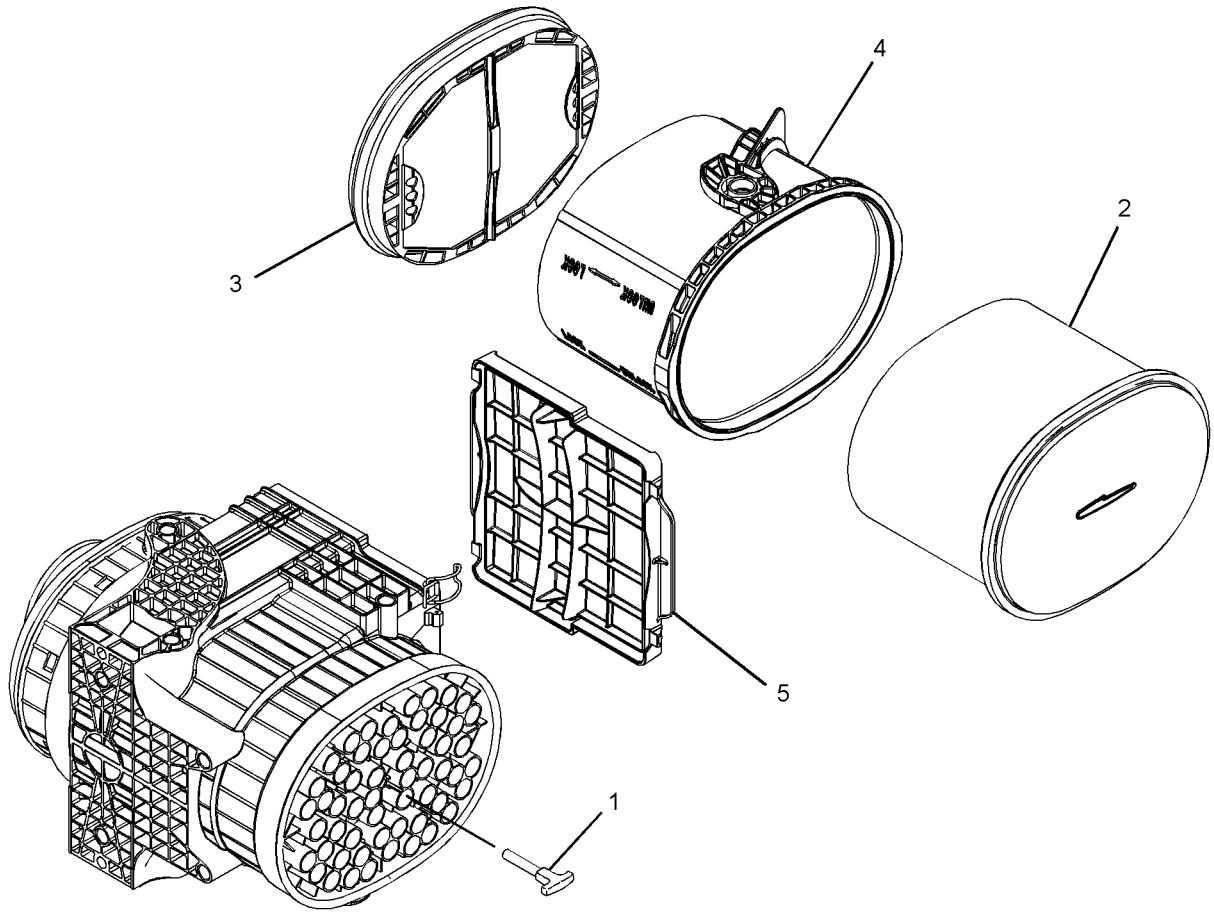

GRAPHIC #1 **<END>** g01201753

AIR INLET AND EXHAUST SYSTEM

249-3721 LINES GP-AIR–ATAAC

S/N: DHA1-UP; FBH1-UP

PART OF 206-7294 INSTALLATION AR-ENGINE

SMCS-1071 **i02788690**

NOTE	REF NO	GRAPHIC REF	PART NUMBER	QTY	PART NAME 1 2 3 4 5 6 (PRODUCT LEVEL)	SEE PAGE
	1	1	**2J-6540**	1	CLAMP-HOSE	
	2	1	**2S-3440**	3	CLAMP-HOSE	
	3	1	**5P-2230**	1	CLAMP-HOSE	
	4	1	**109-5351**	1	HOSE	
	5	1	**139-1398**	1	CLIP	
	6	1	**240-8555**	1	ELBOW-AIR INLET	
	7	1	**247-9730**	1	VALVE AS-CHECK (AIR CLEANER)	
	8	1	**252-1577**	1	HOSE	
	9	1	**260-0634**	1	TUBE	
	10	1	**261-2167**	1	HOSE	
	11	1	**267-6404**	1	HOSE	
	12	1	**267-6405**	1	HOSE	
	13	1	**267-6409**	1	TUBE AS	
	14	1	**277-8716**	1	BRACKET AS	
	15	1	**277-8719**	1	HOSE	
	16	1	**290-5626**	1	HOSE	
	17	1	**208-7448**	3	CLAMP	
	18	1	**209-4573**	1	CLAMP-V BAND	
	19	1	**209-4580**	1	CLAMP	
	20	1	**215-4012**	1	CLAMP	
	21	1	**221-8571**	3	CLAMP	
	22	1	**247-1925**	1	CLAMP	
	23	1	**5P-4116**	2	WASHER-HARD (8.8X20.5X2-MM THK)	
	24	1	**7X-7729**	1	WASHER (11X25X3-MM THK)	
	25	1	**8T-4121**	3	WASHER-HARD (11X21X2.5-MM THK)	
M	26	1	**8T-4137**	4	BOLT (M10X1.5X20-MM)	
M	27	1	**8T-4189**	2	BOLT (M8X1.25X20-MM)	
	28	1	**204-2281**	2	STRAP-TIE	
	29	1	**200-6345**	1	MOUNT (DUAL SWIVEL)	

M-METRIC PART

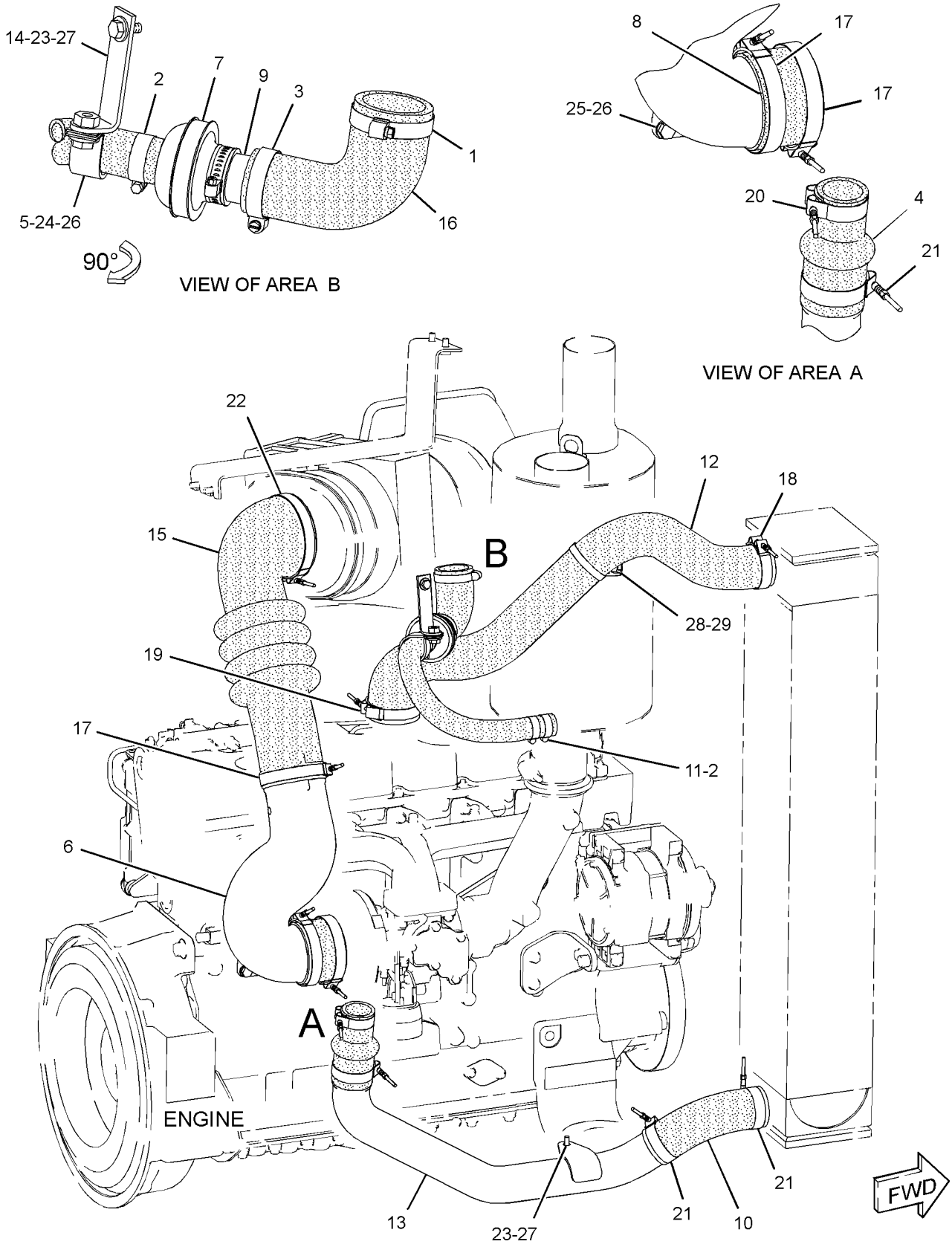

GRAPHIC #1 **<END>** g01416905

280-1292 MANIFOLD GP-INLET–AIR

S/N: C6E1-UP
PART OF 242-1356, 319-7261 ENGINE AR
ALSO AN ATTACHMENT
TYPE 1

SMCS-1058 **i02612650**

NOTE	REF NO	GRAPHIC REF	PART NUMBER	QTY	PART NAME 1 2 3 4 5 6 (PRODUCT LEVEL)	SEE PAGE
	1	1	**295-0912**	1	COVER AS	
	1A	1	**295-0913**	1	SEAL	
	1B	1	**295-0914**	2	DOWEL	
M	2	1	**6I-0645**	19	BOLT (M8X1.25X25-MM)	
	3	1	**280-1291**	1	ELBOW AS	
	4	1	**234-3030**	1	GASKET	
	5	1	**9F-2247**	1	PLUG-PIPE	

M-METRIC PART

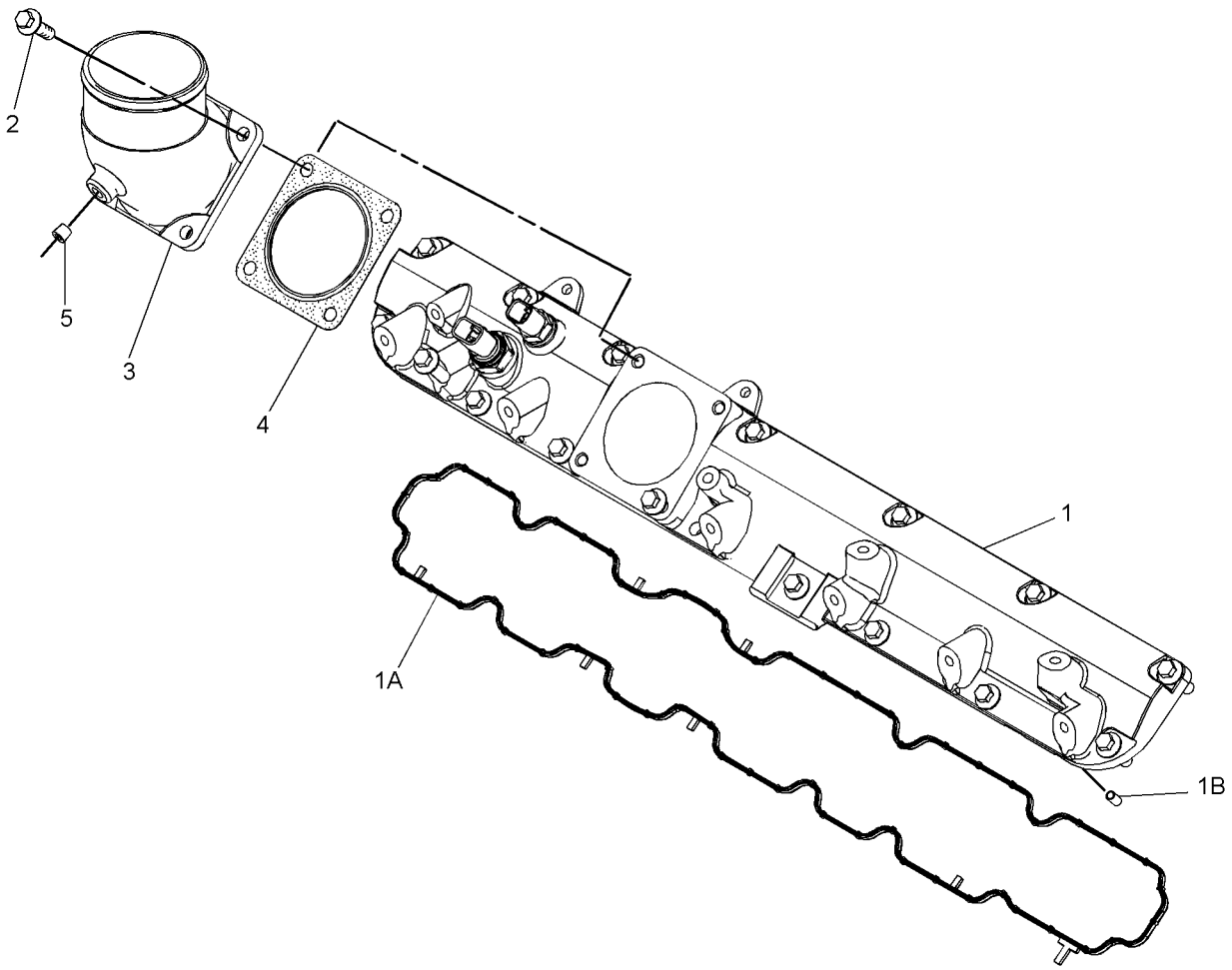

GRAPHIC #1 **<END>** g01270887

280-1292 MANIFOLD GP-INLET–AIR

S/N: C6E1-UP
PART OF 242-1356, 319-7261 ENGINE AR
ALSO AN ATTACHMENT
TYPE 2

SMCS-1058 **i03419091**

NOTE	REF NO	GRAPHIC REF	PART NUMBER	QTY	PART NAME 1 2 3 4 5 6 (PRODUCT LEVEL)	SEE PAGE
	1	1	**295-0912**	1	COVER AS	
	1A	1	**278-5128**	1	GASKET-MANIFOLD	
	1B	1	**277-4302**	2	DOWEL	
M	2	1	**6I-0645**	19	BOLT (M8X1.25X25-MM)	
C	3	1	**317-2684**	1	ELBOW GP-AIR INLET	
	3A	1	**238-8288**	1	GASKET-INLET	
	3B	1	**292-3462**	1	PLUG	

C-CHANGE FROM PREVIOUS TYPE
M-METRIC PART

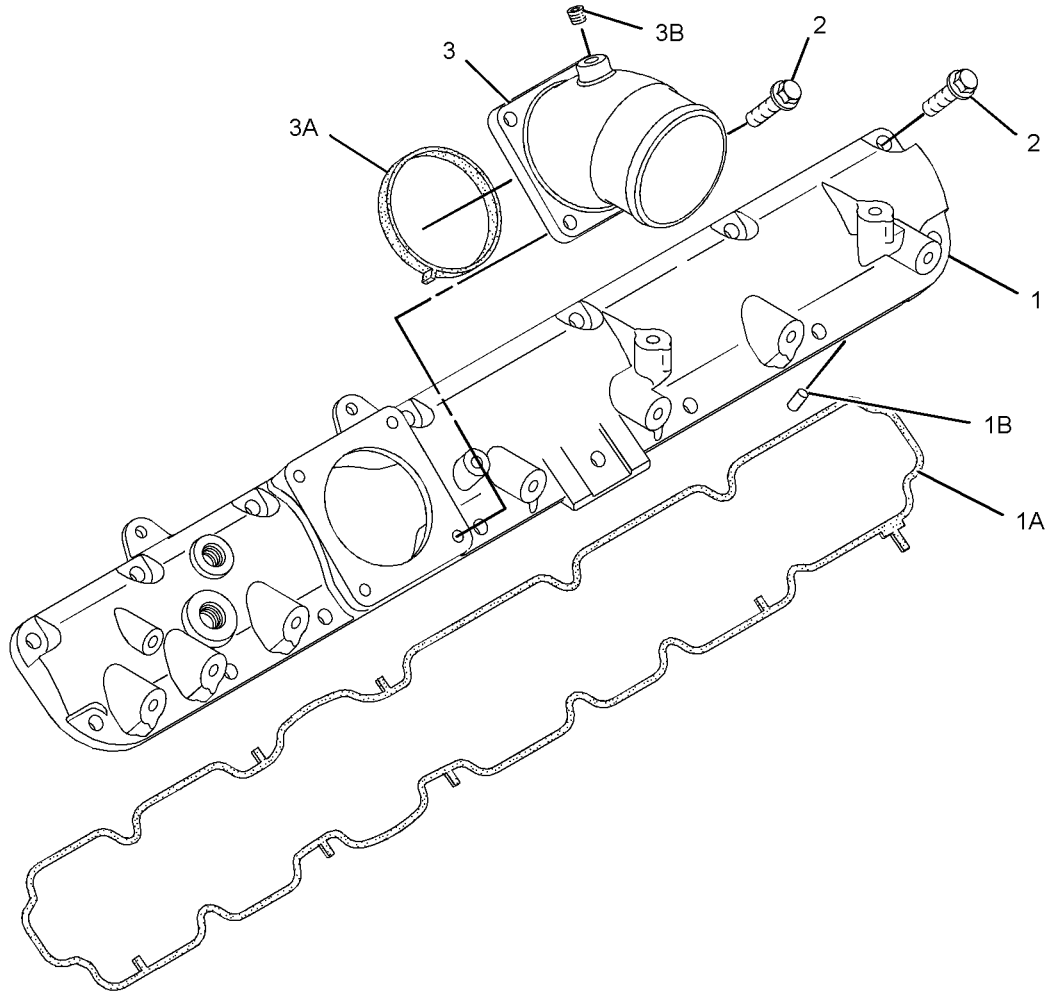

GRAPHIC #1 **<END>** g01636745

AIR INLET AND EXHAUST SYSTEM

249-3723 MUFFLER GP

S/N: DHA1-645, 1094-UP; FBH1-798, 1431-UP
PART OF 206-7294 INSTALLATION AR-ENGINE
ALSO AN ATTACHMENT

SMCS-1062 **i02742682**

NOTE	REF NO	GRAPHIC REF	PART NUMBER	QTY	PART NAME 1 2 3 4 5 6 (PRODUCT LEVEL)	SEE PAGE
	1	1	**290-5638**	1	MUFFLER AS	
		1	**9Y-8315**	1	CLAMP-PIPE	
	2	1	**301-2725**	1	BRACKET AS	
	3	1	**198-4777**	6	WASHER-HARD (11X25X10-MM THK)	
	4	1	**8T-4121**	3	WASHER-HARD (11X21X2.5-MM THK)	
M	5	1	**8T-4196**	9	BOLT (M10X1.5X35-MM)	

M-METRIC PART

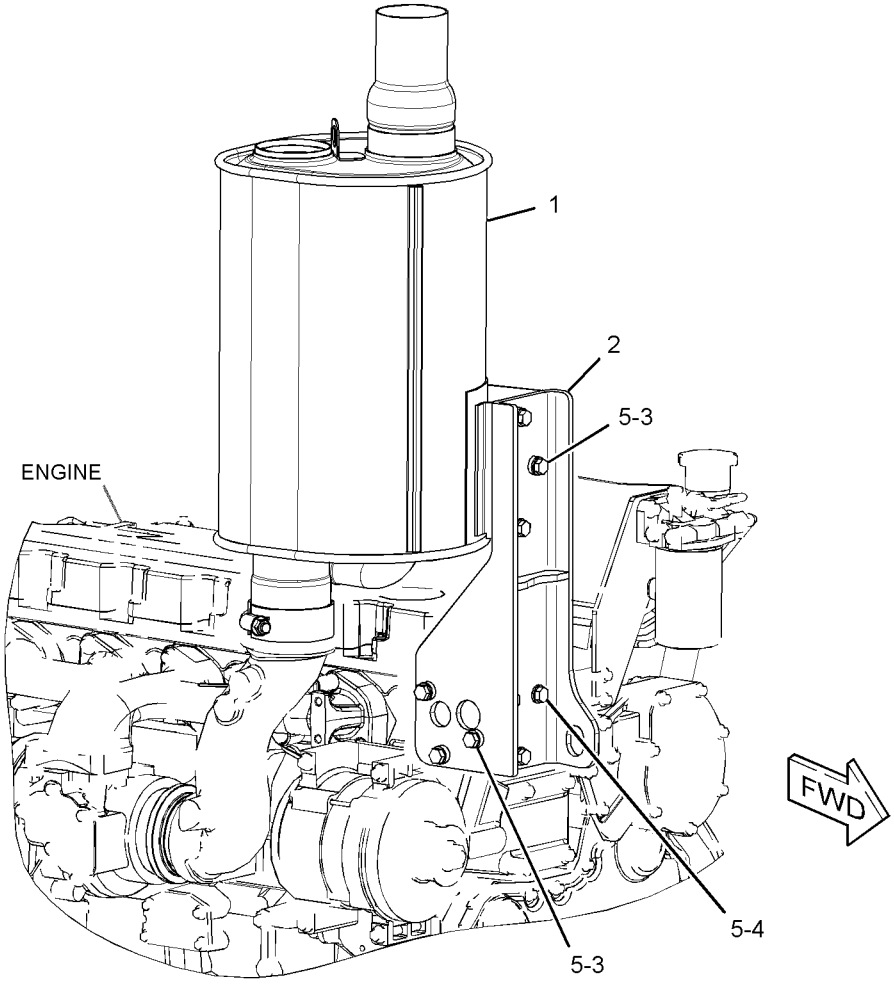

GRAPHIC #1 **<END>** g01378521

AIR INLET AND EXHAUST SYSTEM

243-2157 PIPE GP-EXHAUST

S/N: DHA1-UP; FBH1-UP

PART OF 206-7294 INSTALLATION AR-ENGINE

SMCS-1061 **i02563488**

NOTE	REF NO	GRAPHIC REF	PART NUMBER	QTY	PART NAME 1 2 3 4 5 6 (PRODUCT LEVEL)	SEE PAGE
	1	1	**243-2158**	1	PIPE-EXHAUST	
	2	1	**294-3067**	1	CLAMP-PIPE	

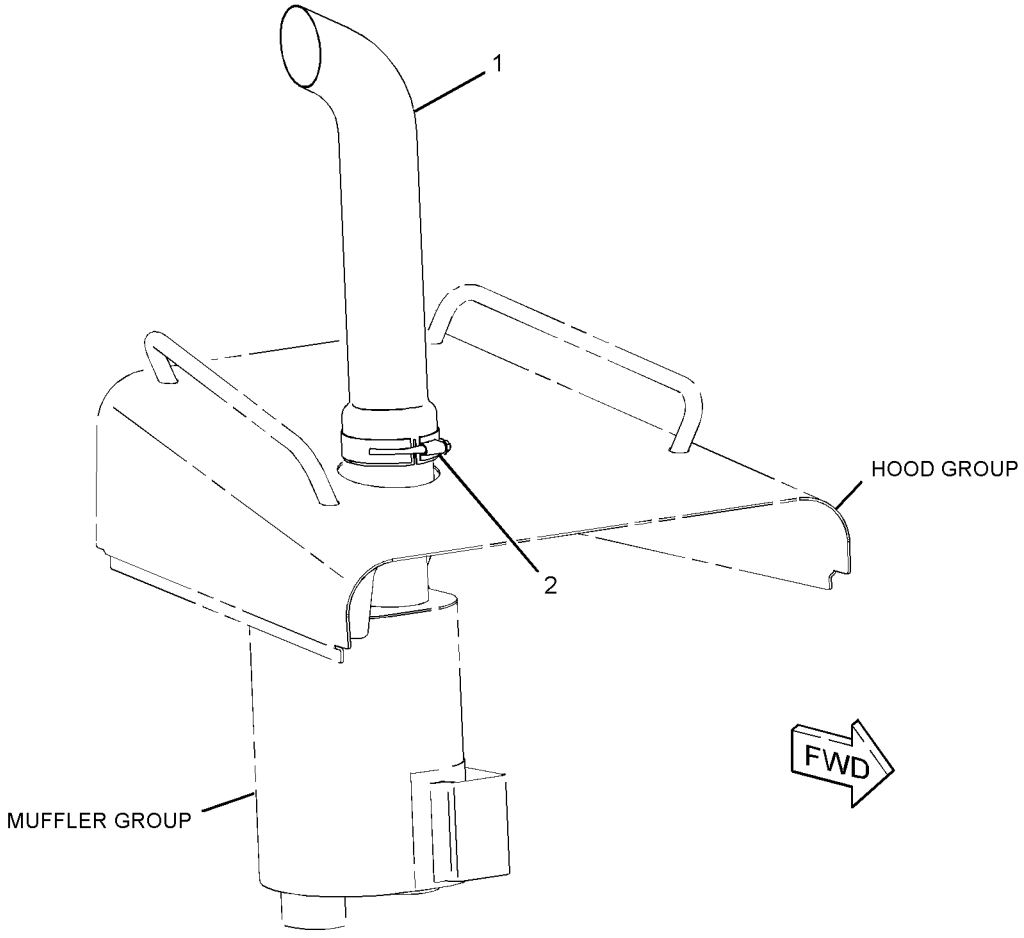

GRAPHIC #1 **<END>** g01285035

AIR INLET AND EXHAUST SYSTEM

280-2458 TURBOCHARGER GP

S/N: C6E1-UP

PART OF 242-1356 ENGINE AR

SMCS-1052, 1053 **i02870364**

NOTE	REF NO	GRAPHIC REF	PART NUMBER	QTY	PART NAME 1 2 3 4 5 6 (PRODUCT LEVEL)	SEE PAGE
	1	1	**280-2392**	1	TURBOCHARGER GP	
					(INCLUDES TURBOCHARGER AS, GASKET, STUD,	
					CLIP, NUTS, CLAMPS, AND HOSE)	
	11	1	**280-2407**	1	TUBE AS-TURBOCHARGER	
M	11A	1	**277-9938**	1	BOLT-SPECIAL (BANJO)	
	11B	1	**277-9939**	2	WASHER	
	11C	1	**277-9940**	1	SEAL-O-RING	
M	15	1	**6I-0217**	3	BOLT (M8X1.25X20-MM)	
	16	1	**280-2420**	1	TUBE AS-TURBOCHARGER	
	17	1	**278-0016**	1	GASKET	
	18	1	**278-0017**	1	GASKET	
	19	1	**280-2423**	1	ELBOW-EXHAUST	
	20	1	**067-6007**	1	PLUG	
	21	1	**210-6842**	3	BOLT-FLANGE HEAD	
	22	1	**280-2424**	1	ADAPTER	
	23	1	**288-2357**	1	MANIFOLD GP-EXHAUST	
	24	1	**279-9361**	2	GASKET-EXHAUST	
	25	1	**238-8292**	8	BOLT-FLANGE HEAD	
	26	1	**286-7851**	8	SPACER	
	27	1	**278-0361**	4	BOLT (M10X1.5X45-MM)	
	28	2	**278-0310**	1	SOLENOID AS (WASTEGATE)	
	29	2	**280-2441**	1	BRACKET	
M	30	2	**6I-0654**	3	BOLT (M10X1.5X25-MM)	
M	31	2	**6I-0593**	2	BOLT (M10X1.5X30-MM)	
	32	1	**280-2442**	1	TUBE AS	
	32A	1	**4B-8774**	1	NUT-FLARED	
	32B	1	**032-8047**	1	FERRULE	
	32C	1	**277-9605**	1	HOSE	
	32D	1	**107-2348**	2	CLIP	
	33	2	**280-2443**	1	TUBE AS	
	33A	2	**4B-8774**	1	NUT-FLARED	
	33B	2	**032-8047**	2	FERRULE	
	33C	2	**035-8014**	1	NUT (7/16-IN)	
	34	2	**6I-0817**	1	ADAPTER	
	35	2	**9Y-9381**	1	WASHER-HARD	
	36	2	**292-4829**	1	BRACKET	
	37	2	**277-9501**	1	ACTUATOR AS	
					(INCLUDES CLIPS, NUTS, AND HOSE)	
	38	2	**278-0314**	1	SPACER	
	39	2	**278-0315**	1	CLIP-PIPE	
	40	2	**278-0316**	5	CLIP	

M-METRIC PART

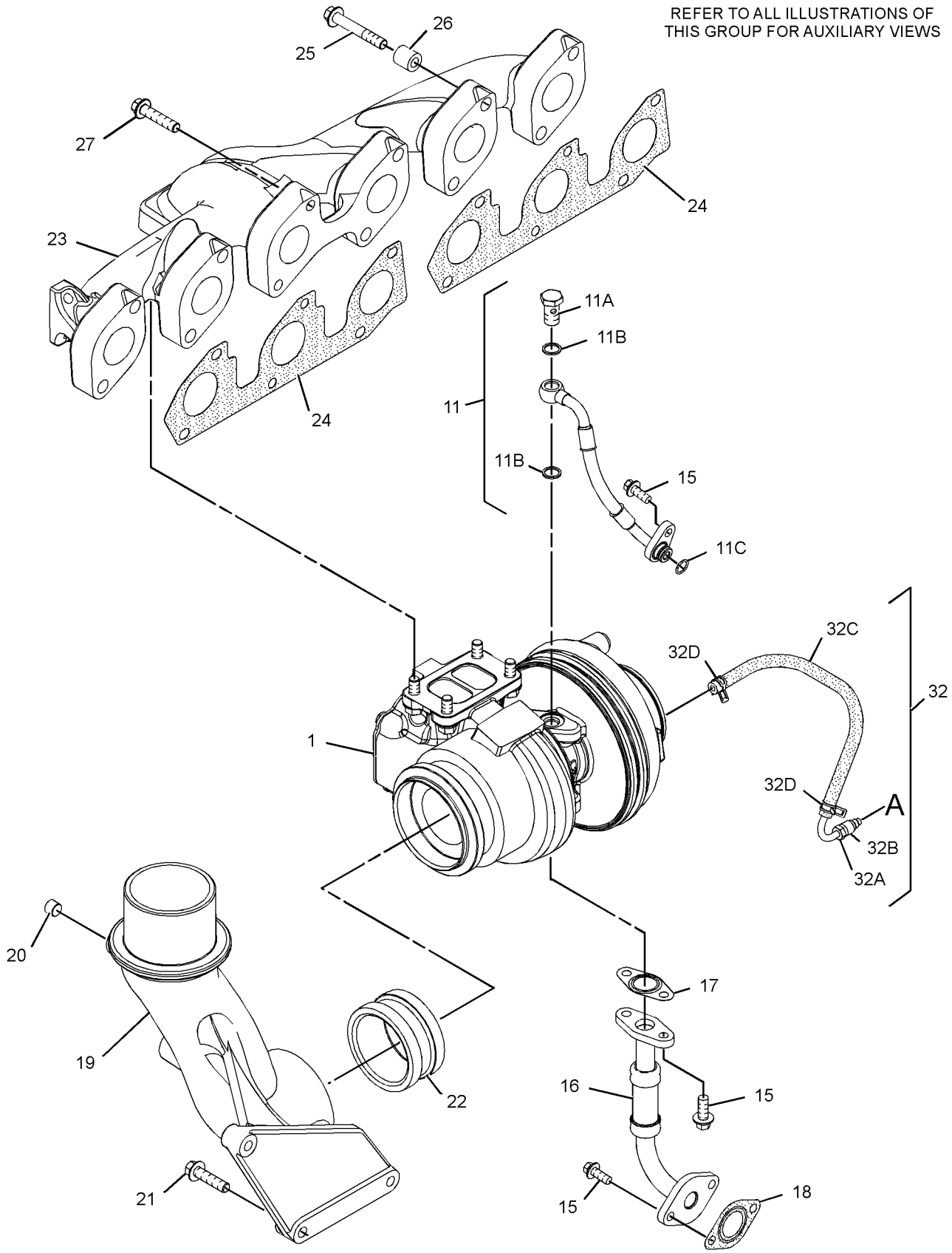

GRAPHIC #1

g01206681

280-2458 **TURBOCHARGER GP** *(contd.)* **i02870364**

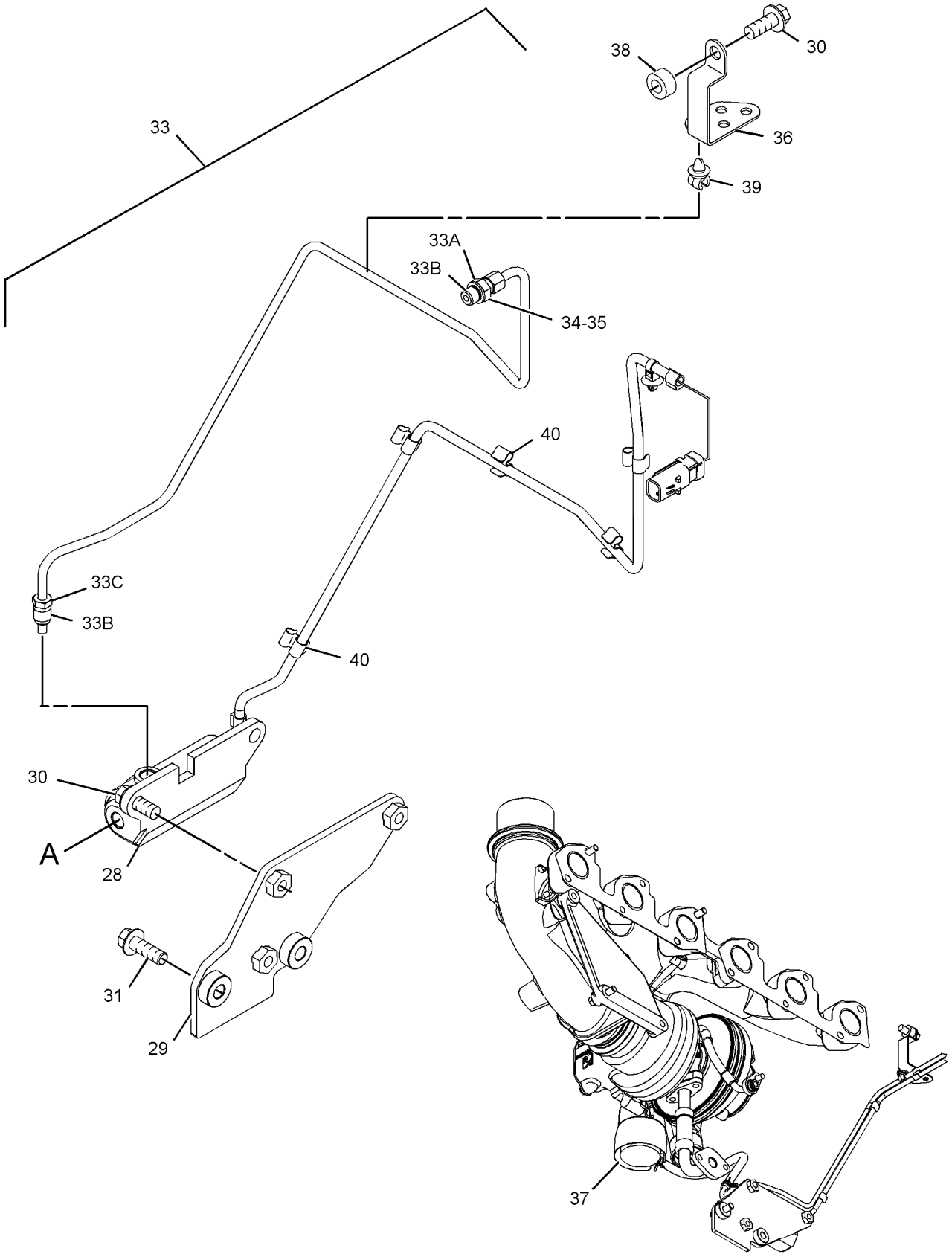

GRAPHIC #2 **<END>** g01206807

AIR INLET AND EXHAUST SYSTEM

280-2458 TURBOCHARGER GP

S/N: C6E1-495

PART OF 242-1356 ENGINE AR

SMCS-1052, 1053 **i02870365**

NOTE	REF NO	GRAPHIC REF	PART NUMBER	QTY	PART NAME 1 2 3 4 5 6 (PRODUCT LEVEL)	SEE PAGE
	1	2	**315-9810**	1	TURBOCHARGER	
	1A	2	**277-9602**	1	CLAMP	
	1B	2	**277-9603**	1	CLAMP	
	2	2	**278-0316**	5	CLIP	
	4	2	**292-4829**	1	BRACKET	
	5	2	**9Y-9381**	1	WASHER-HARD	
	6	2	**6I-0817**	1	ADAPTER	
	7	2	**280-2443**	1	TUBE AS	
	7A	2	**4B-8774**	1	NUT-FLARED	
	7B	2	**032-8047**	2	FERRULE	
	7C	2	**035-8014**	1	NUT (7/16-IN)	
	8	1	**295-5423**	1	TUBE AS	
	8A	1	**4B-8774**	1	NUT-FLARED	
	8B	1	**032-8047**	1	FERRULE	
	8C	1	**300-6520**	1	HOSE AS	
	8D	1	**107-2348**	2	CLIP	
CM	9	2	**6I-0593**	2	BOLT (M10X1.5X30-MM)	
M	10	2	**6I-0654**	2	BOLT (M10X1.5X25-MM)	
	11	1	**280-2407**	1	TUBE AS-TURBOCHARGER	
M	11A	1	**277-9938**	1	BOLT-SPECIAL (BANJO)	
	11B	1	**277-9939**	2	WASHER	
	11C	1	**277-9940**	1	SEAL-O-RING	
M	15	1	**6I-0217**	3	BOLT (M8X1.25X20-MM)	
	16	1	**280-2420**	1	TUBE AS-TURBOCHARGER	
	17	1	**278-0016**	1	GASKET	
	18	1	**278-0017**	1	GASKET	
	19	1	**280-2423**	1	ELBOW-EXHAUST	
	20	1	**067-6007**	1	PLUG	
	21	1	**210-6842**	3	BOLT-FLANGE HEAD	
	22	1	**280-2424**	1	ADAPTER	
	23	1	**288-2357**	1	MANIFOLD GP-EXHAUST	
	24	1	**279-9361**	2	GASKET-EXHAUST	
	25	1	**238-8292**	8	BOLT-FLANGE HEAD	
	26	1	**286-7851**	8	SPACER	
	27	1	**278-0361**	4	BOLT (M10X1.5X45-MM)	
	28	2	**278-0310**	1	SOLENOID AS (WASTEGATE)	
	29	2	**280-2441**	1	BRACKET	
	30	2	**6I-0563**	4	NUT (M10X1.5-THD)	
	31	2	**141-8589**	1	GASKET	
	32	2	**147-5553**	4	STUD	

C-CHANGE FROM PREVIOUS TYPE
M-METRIC PART

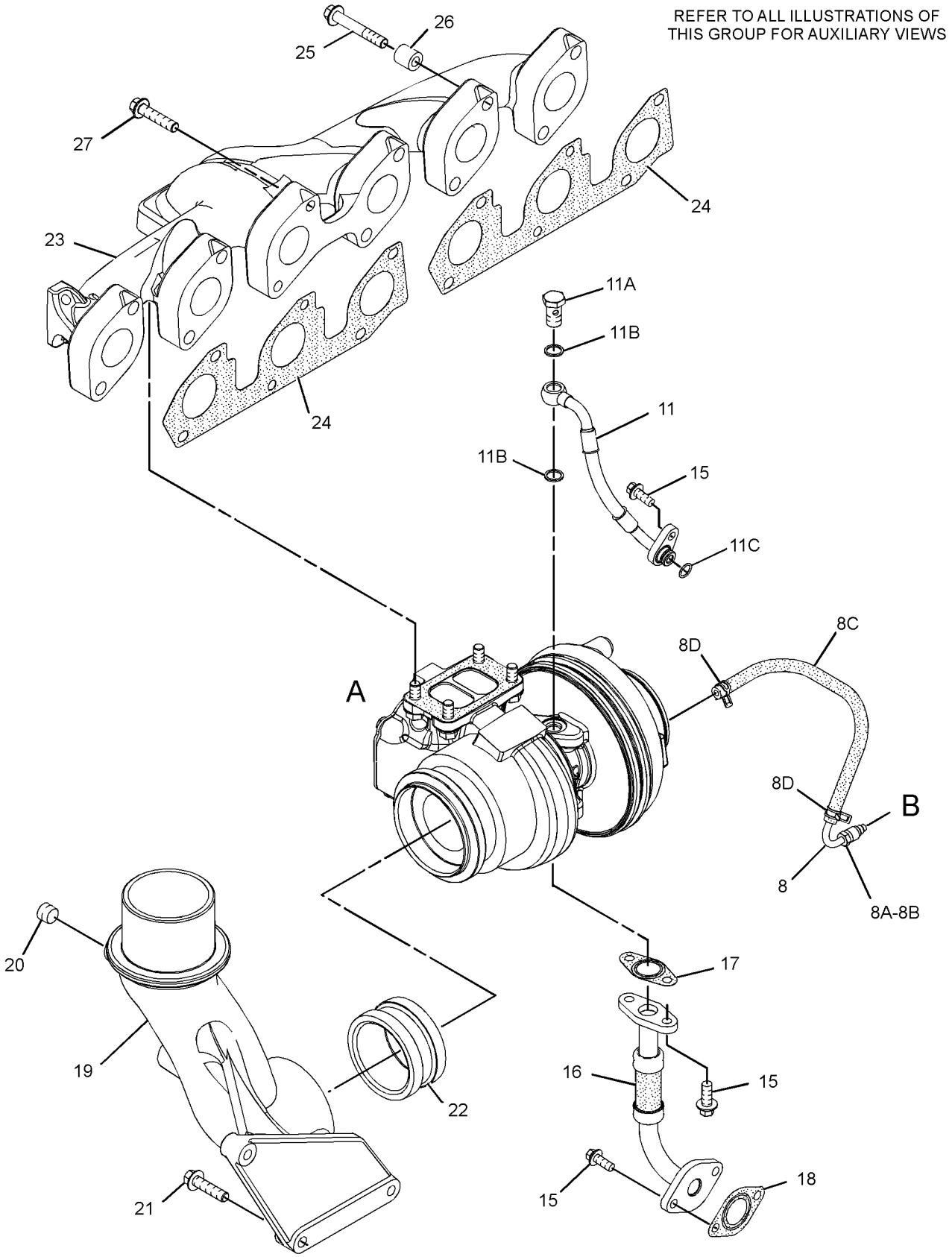

GRAPHIC #1

g01422206

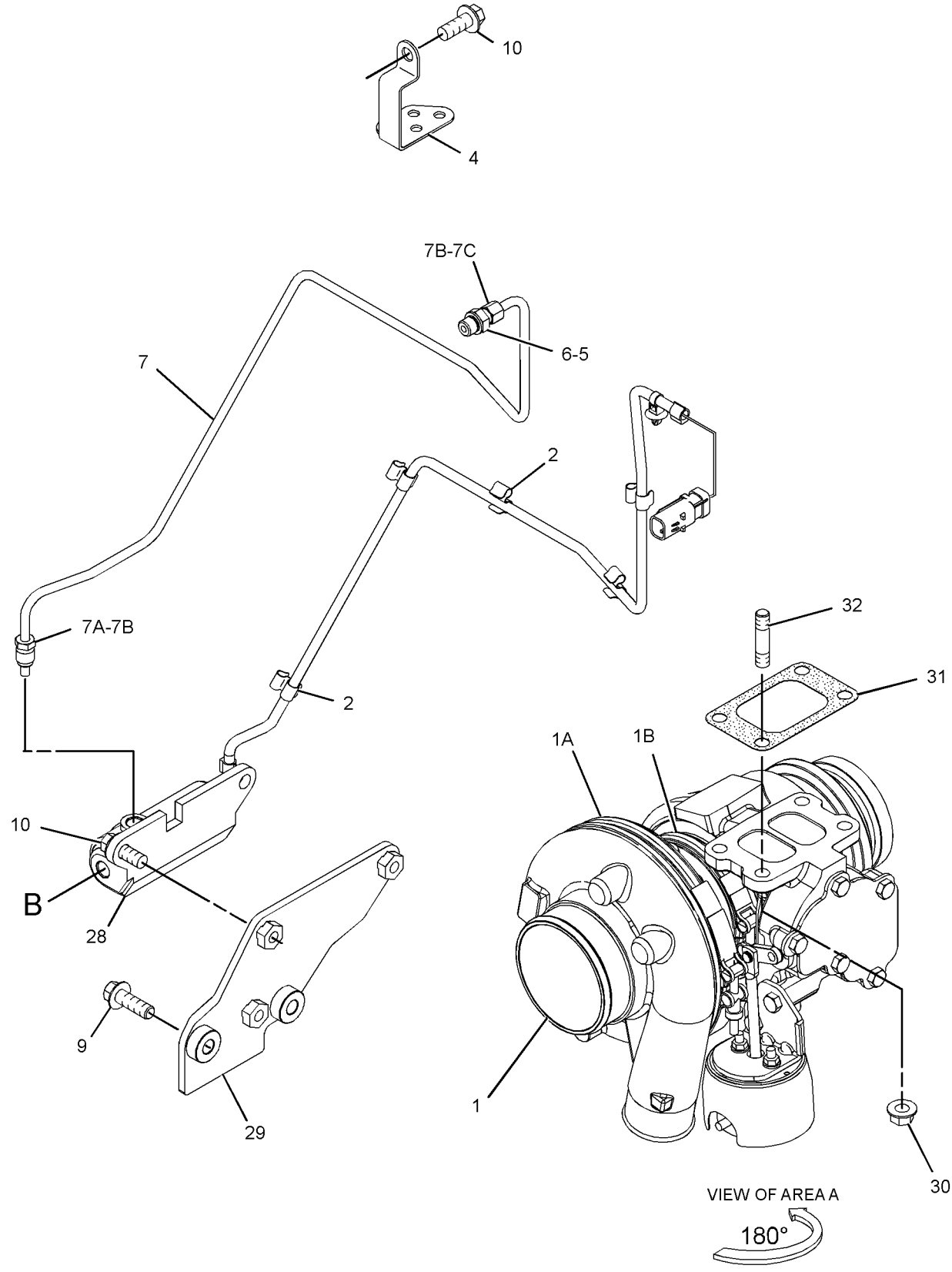

GRAPHIC #2 **<END>** g01423437

AIR INLET AND EXHAUST SYSTEM

305-5970 TURBOCHARGER GP

S/N: C6E496-3474
PART OF 242-1356, 319-7261 ENGINE AR
ALSO AN ATTACHMENT

SMCS-1052, 1053 **i03185922**

NOTE	REF NO	GRAPHIC REF	PART NUMBER	QTY	PART NAME 1 2 3 4 5 6 (PRODUCT LEVEL)	SEE PAGE
M	1	1	**6I-0217**	5	BOLT (M8X1.25X20-MM)	
M	3	2	**6I-0654**	2	BOLT (M10X1.5X25-MM)	
	4	2	**6I-0817**	1	ADAPTER	
	5	2	**9Y-9381**	1	WASHER-HARD	
	6	1	**067-6007**	1	PLUG	
	7	1	**210-6842**	3	BOLT-FLANGE HEAD	
	8	1	**238-8292**	12	BOLT-FLANGE HEAD	
M	9	2	**100-4830**	2	BOLT (M10X1.5X20-MM)	
	10	1	**278-0016**	1	GASKET	
	11	1	**278-0017**	1	GASKET	
	12	2	**278-0310**	1	SOLENOID AS (WASTEGATE)	
	14	1	**279-9361**	2	GASKET-EXHAUST	
	15	1	**280-2407**	1	TUBE AS-TURBOCHARGER	
M	15A	1	**277-9938**	1	BOLT-SPECIAL (BANJO)	
	15B	1	**277-9939**	2	WASHER	
	15C	1	**277-9940**	1	SEAL-O-RING	
	16	1	**280-2420**	1	TUBE AS-TURBOCHARGER	
	17	1	**280-2423**	1	ELBOW-EXHAUST	
	18	1	**280-2424**	1	ADAPTER	
	19	2	**330-9599**	1	BRACKET	
	20	2	**280-2443**	1	TUBE AS	
	20A	2	**035-8014**	1	NUT (7/16-IN)	
	20B	2	**032-8047**	2	FERRULE	
	20C	2	**4B-8774**	1	NUT-FLARED	
	21	1	**286-7851**	12	SPACER	
	22	1	**328-8709**	1	MANIFOLD-EXHAUST	
	23	2	**295-5423**	1	TUBE AS	
	23A	2	**4B-8774**	1	NUT-FLARED	
	23B	2	**032-8047**	1	FERRULE	
	23C	2	**300-6520**	1	HOSE AS	
	23D	2	**107-2348**	2	CLIP	
	24	2	**303-2116**	5	CLIP	
	25	1	**315-9810**	1	TURBOCHARGER	
	25A	1	**277-9603**	1	CLAMP	
	25B	1	**277-9602**	1	CLAMP	
	26	1	**141-8589**	1	GASKET	
	27	1	**147-5553**	4	STUD	
	28	1	**6I-0563**	4	NUT (M10X1.5-THD)	

M-METRIC PART

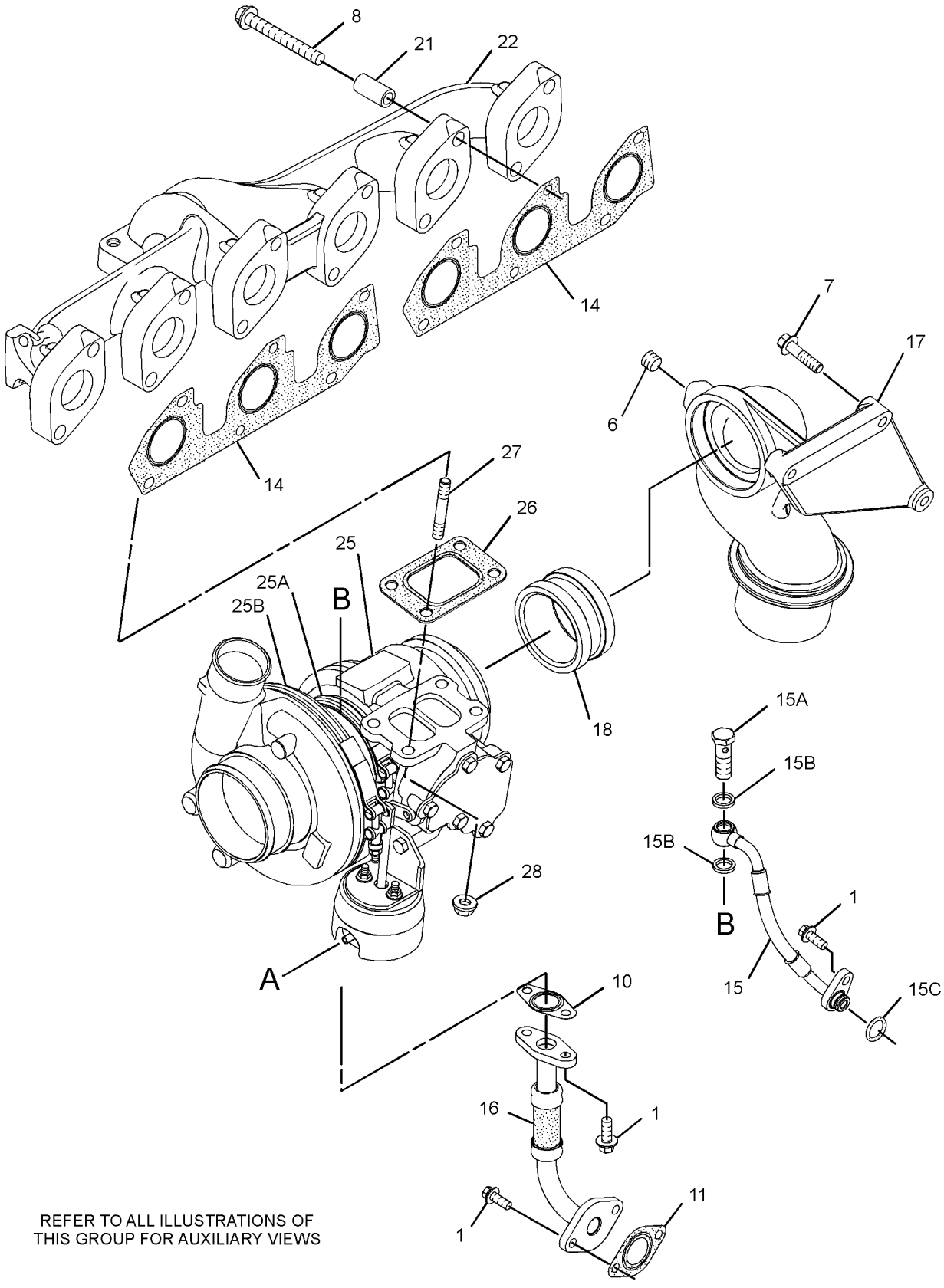

GRAPHIC #1 g01804293

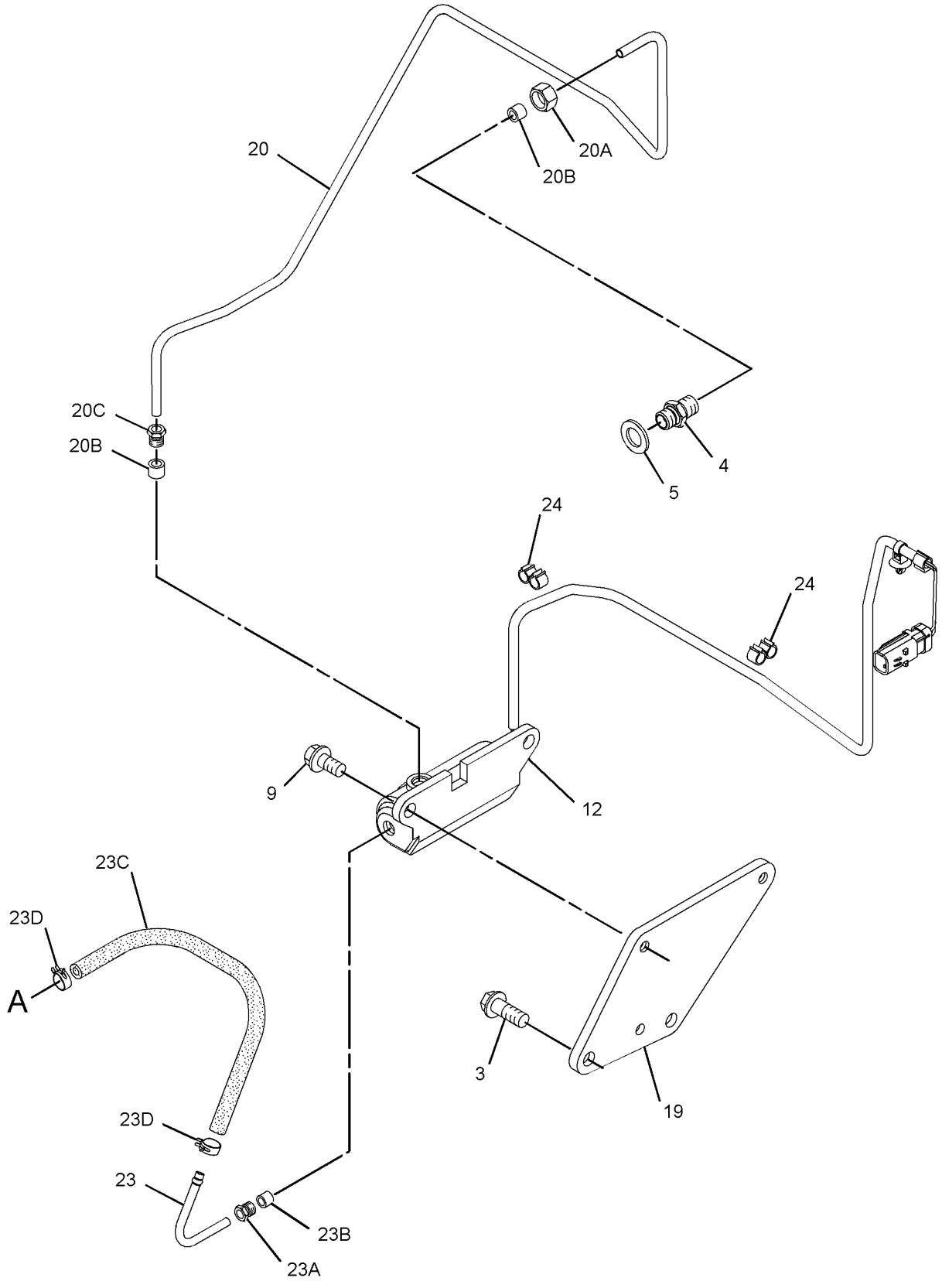

GRAPHIC #2 **<END>** g01804294

AIR INLET AND EXHAUST SYSTEM

305-5970 TURBOCHARGER GP

S/N: C6E3475-UP

PART OF 242-1356, 319-7261 ENGINE AR

ALSO AN ATTACHMENT

SMCS-1052, 1053 **i03185923**

NOTE	REF NO	GRAPHIC REF	PART NUMBER	QTY	PART NAME 1 2 3 4 5 6 (PRODUCT LEVEL)	SEE PAGE
M	1	1	**6I-0217**	5	BOLT (M8X1.25X20-MM)	
M	3	2	**6I-0654**	2	BOLT (M10X1.5X25-MM)	
	4	2	**6I-0817**	1	ADAPTER	
	5	2	**9Y-9381**	1	WASHER-HARD	
	6	1	**067-6007**	1	PLUG	
	7	1	**210-6842**	3	BOLT-FLANGE HEAD	
	8	1	**238-8292**	12	BOLT-FLANGE HEAD	
M	9	2	**100-4830**	2	BOLT (M10X1.5X20-MM)	
	10	1	**278-0016**	1	GASKET	
	11	1	**278-0017**	1	GASKET	
	12	2	**278-0310**	1	SOLENOID AS (WASTEGATE)	
	14	1	**279-9361**	2	GASKET-EXHAUST	
	15	1	**280-2407**	1	TUBE AS-TURBOCHARGER	
M	15A	1	**277-9938**	1	BOLT-SPECIAL (BANJO)	
	15B	1	**277-9939**	2	WASHER	
	15C	1	**277-9940**	1	SEAL-O-RING	
	16	1	**280-2420**	1	TUBE AS-TURBOCHARGER	
C	17	1	**320-2345**	1	ELBOW	
	18	1	**280-2424**	1	ADAPTER	
	19	2	**330-9599**	1	BRACKET	
	20	2	**280-2443**	1	TUBE AS	
	20A	2	**035-8014**	1	NUT (7/16-IN)	
	20B	2	**032-8047**	2	FERRULE	
	20C	2	**4B-8774**	1	NUT-FLARED	
	21	1	**286-7851**	12	SPACER	
	22	1	**328-8709**	1	MANIFOLD-EXHAUST	
	23	2	**295-5423**	1	TUBE AS	
	23A	2	**4B-8774**	1	NUT-FLARED	
	23B	2	**032-8047**	1	FERRULE	
	23C	2	**300-6520**	1	HOSE AS	
	23D	2	**107-2348**	2	CLIP	
	24	2	**303-2116**	6	CLIP	
	25	1	**315-9810**	1	TURBOCHARGER	
	25A	1	**277-9603**	1	CLAMP	
	25B	1	**277-9602**	1	CLAMP	
	26	1	**141-8589**	1	GASKET	
	27	1	**147-5553**	4	STUD	
	28	1	**6I-0563**	4	NUT (M10X1.5-THD)	

C-CHANGE FROM PREVIOUS TYPE
M-METRIC PART

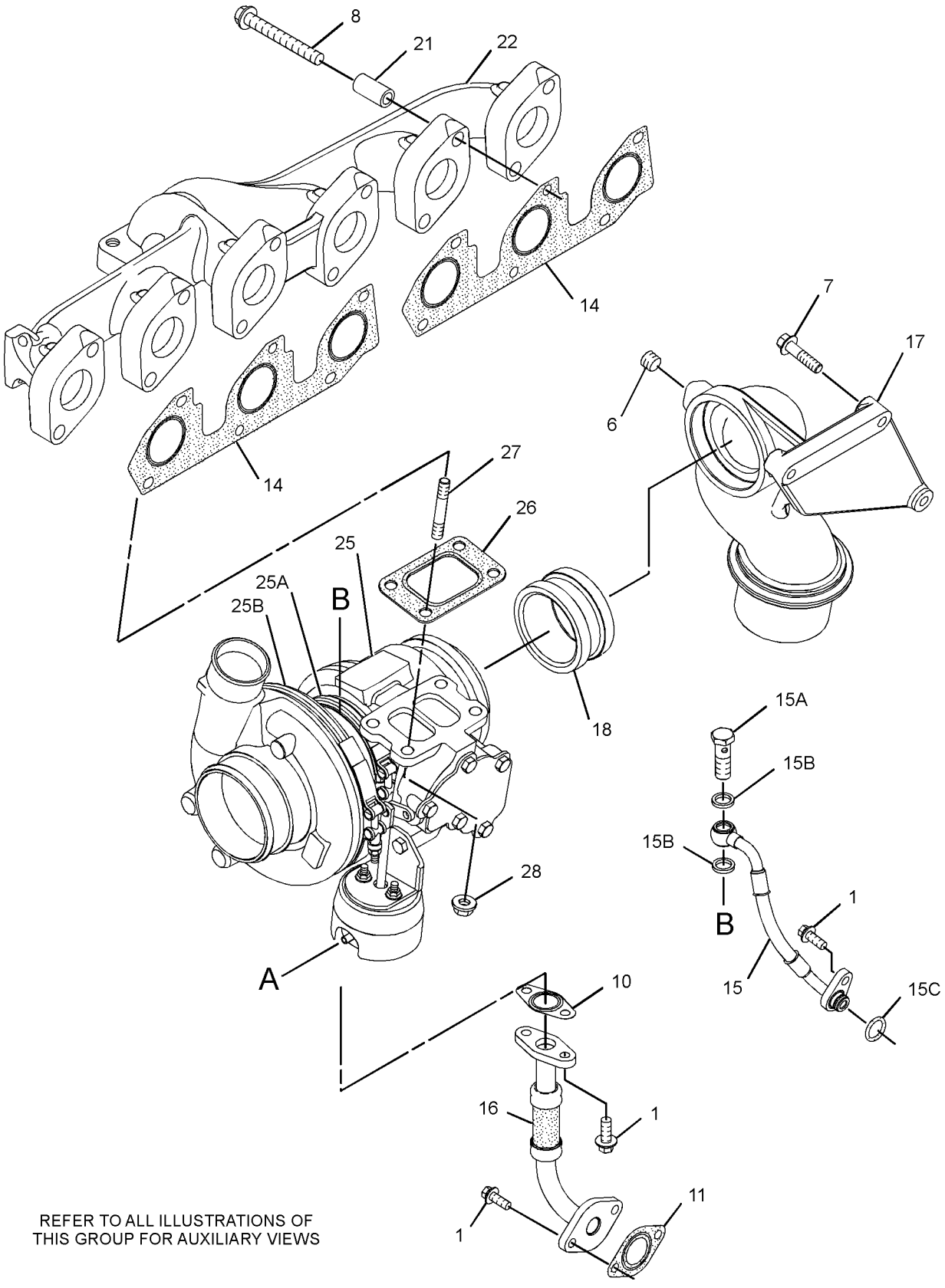

GRAPHIC #1

g01804293

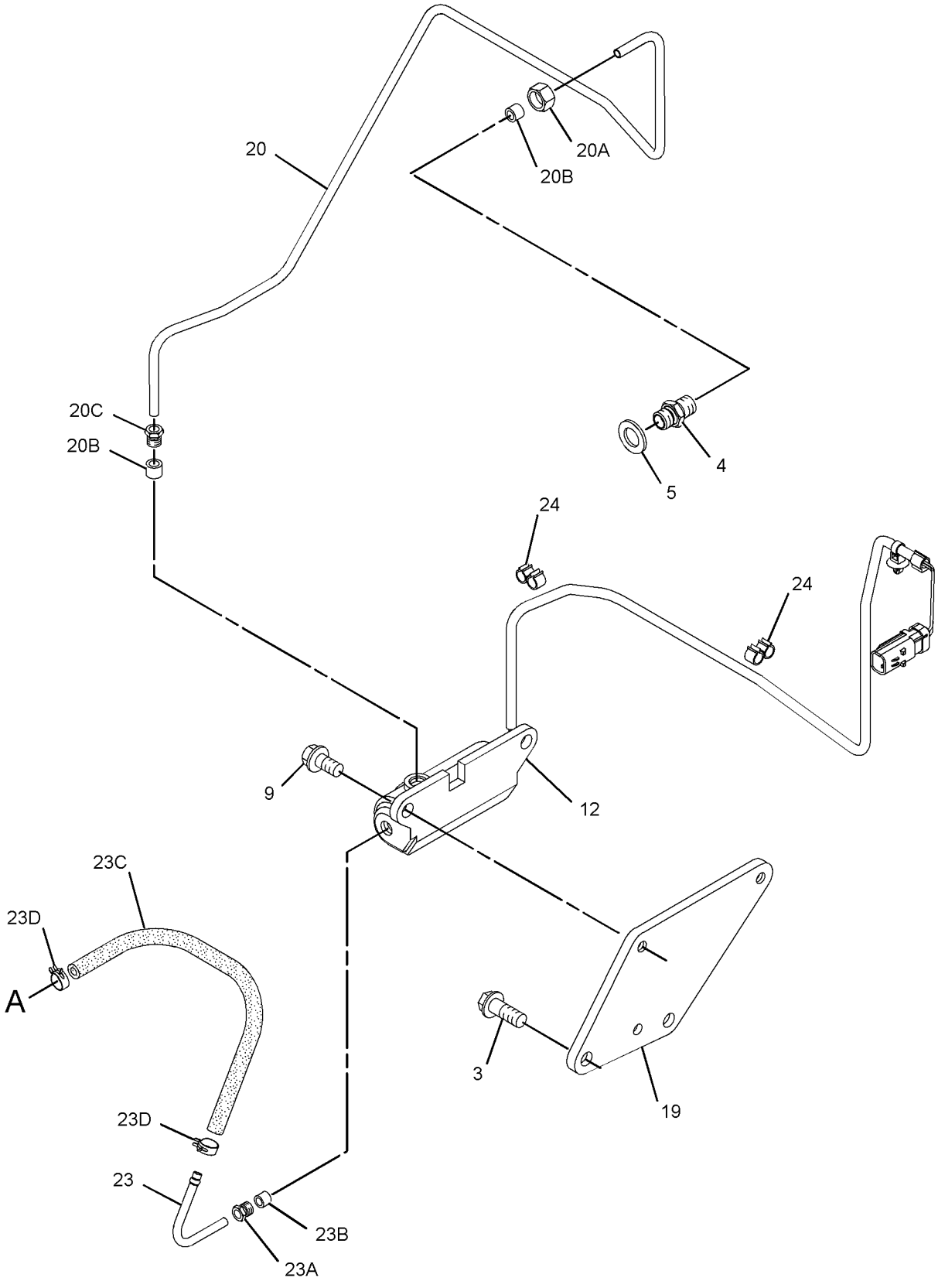

GRAPHIC #2 **<END>** g01804294

FUEL SYSTEM

288-5425 ADAPTER GP-FAST FILL FUEL

S/N: DHA1-UP; FBH1-UP
PART OF 288-5424 TANK GP-FUEL
AN ATTACHMENT

SMCS-1273, 1710 **i02582551**

NOTE	REF NO	GRAPHIC REF	PART NUMBER	QTY	PART NAME 1 2 3 4 5 6 (PRODUCT LEVEL)	SEE PAGE
	1	1	**188-5095**	1	VENT AS	
	2	1	**276-3276**	1	GASKET	
	3	1	**289-2544**	1	HOSE AS	
	4	1	**294-3279**	1	VALVE AS	
	5	1	*174-6118*	2	ELBOW AS	
					(EACH INCLUDES)	
		1	**100-7603**	1	ELBOW	
		1	**1J-9671**	1	SEAL-O-RING	
		1	**4J-5477**	1	SEAL-O-RING	
	6	1	**1H-8128**	1	SEAL-O-RING	
	7	1	**8T-4121**	12	WASHER-HARD (11X21X2.5-MM THK)	
M	8	1	**8T-4137**	12	BOLT (M10X1.5X20-MM)	

M-METRIC PART

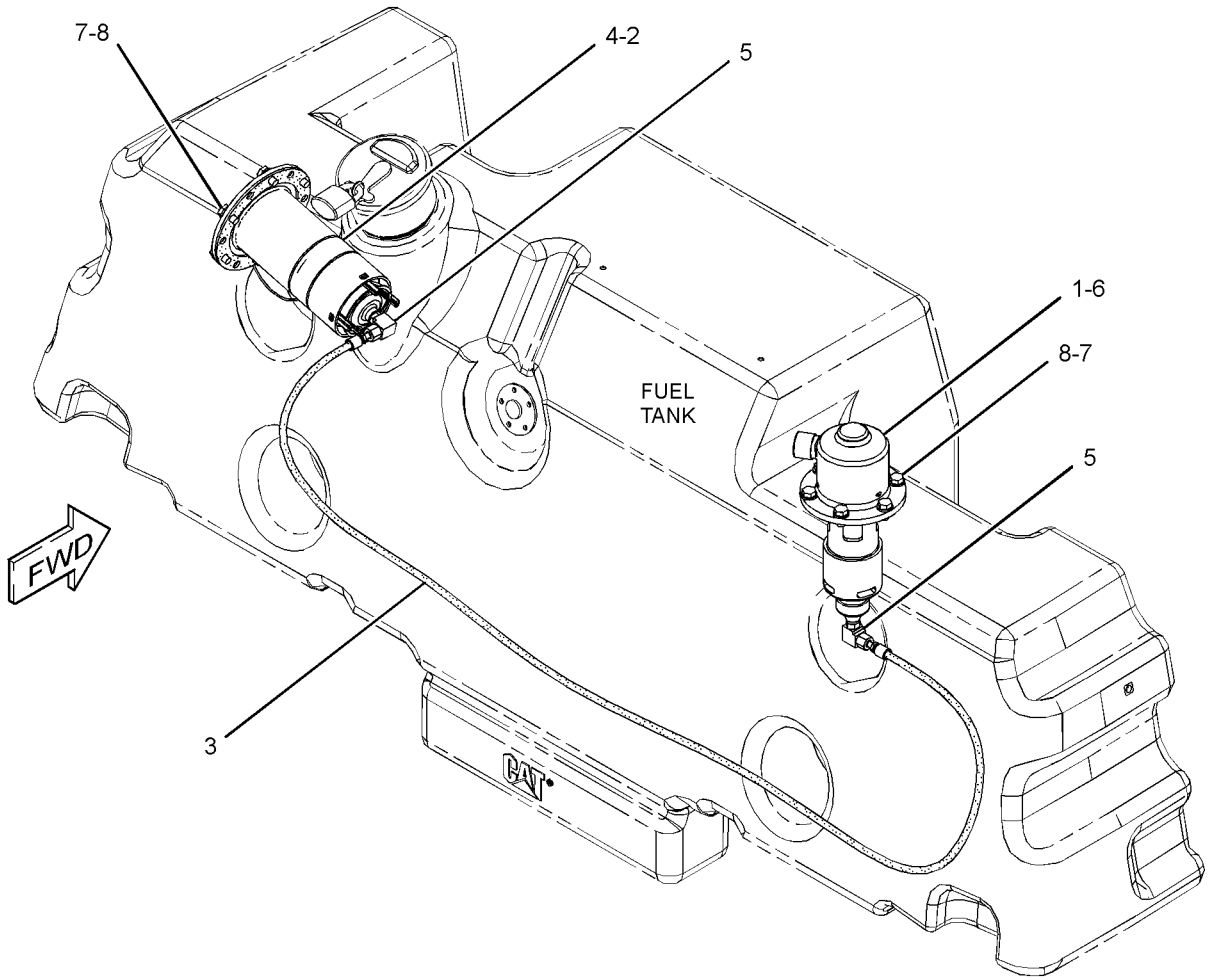

GRAPHIC #1 **<END>** g01304175

164-4858 CAP GP-FUEL FILLER–EXTREME SERVICE, LOCKABLE

S/N: DHA1-UP; FBH1-UP
PART OF 288-2738 CAP GP-FUEL FILLER
AN ATTACHMENT

SMCS-1273 **i03720353**

NOTE	REF NO	GRAPHIC REF	PART NUMBER	QTY	PART NAME 1 2 3 4 5 6 (PRODUCT LEVEL)	SEE PAGE
	1	1	**9X-8600**	1	SEAL-O-RING	
	2	1	**190-9775**	1	COVER AS-FILTER	

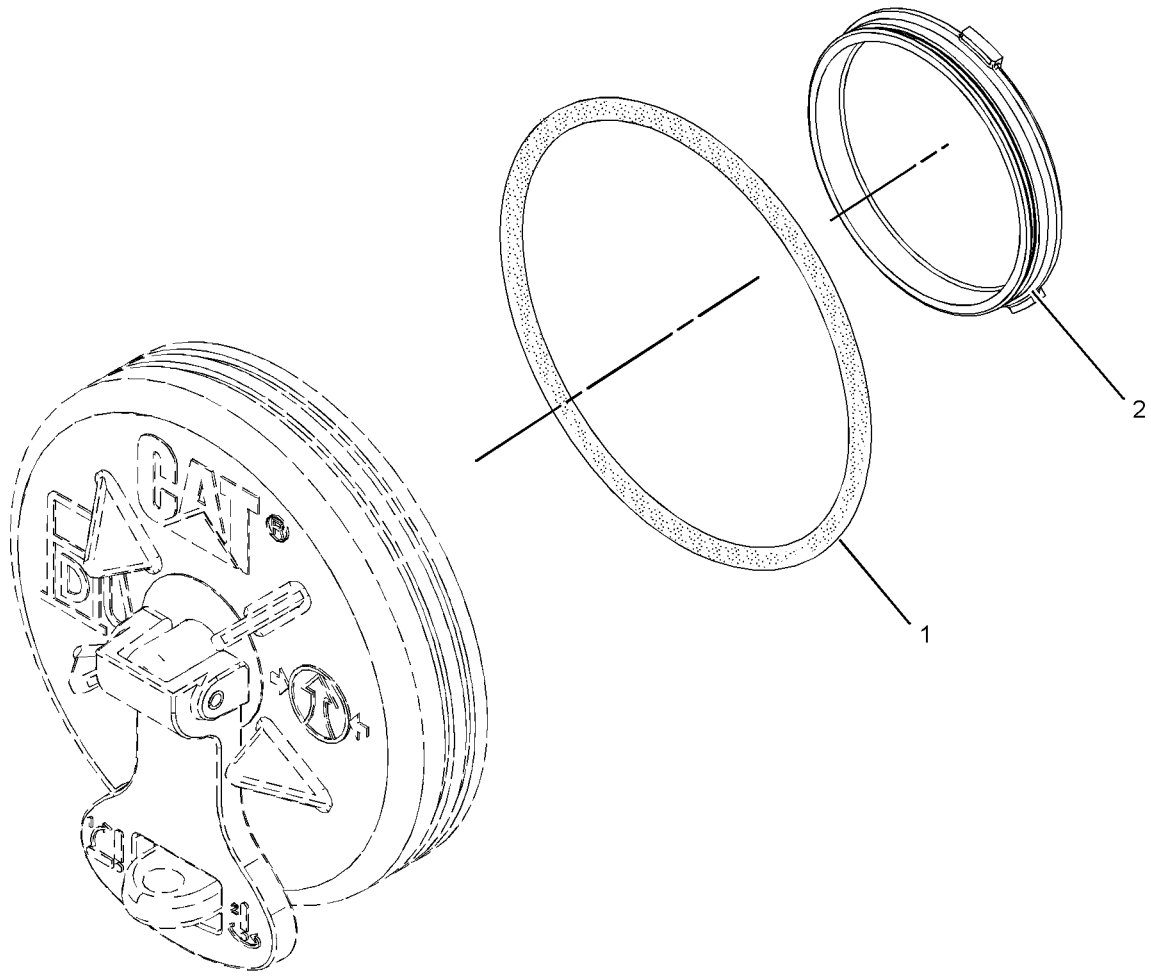

GRAPHIC #1 **<END>** g02006053

288-2738 CAP GP-FUEL FILLER–EXTREME SERVICE, LOCKABLE

S/N: DHA1-UP; FBH1-UP
PART OF 288-5423, 288-5424 TANK GP-FUEL
AN ATTACHMENT

SMCS-1273 **i03702632**

NOTE	REF NO	GRAPHIC REF	PART NUMBER	QTY	PART NAME 1 2 3 4 5 6 (PRODUCT LEVEL)	SEE PAGE
Y	1	1	**164-4858**	1	CAP GP-FUEL FILLER (EXTREME SERVICE, LOCKABLE)	115

Y-SEPARATE ILLUSTRATION

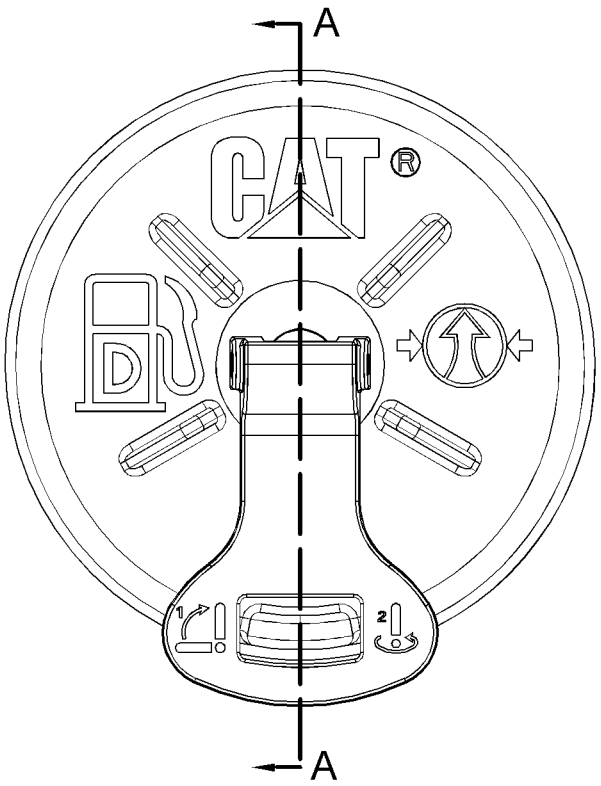

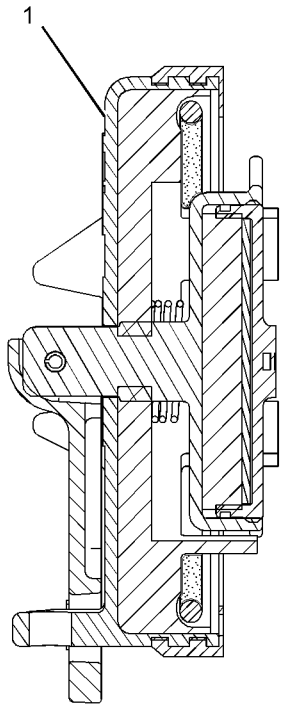

SECTION A-A

GRAPHIC #1 **<END>** g01993198

305-7294 FILTER GP-FUEL

S/N: C6E1-UP
PART OF 242-1356, 319-7261 ENGINE AR
ALSO AN ATTACHMENT

SMCS-1261 **i03649529**

NOTE	REF NO	GRAPHIC REF	PART NUMBER	QTY	PART NAME 1 2 3 4 5 6 (PRODUCT LEVEL)	SEE PAGE
	1	1	**343-5937**	1	FILTER AS-FUEL	
	1A	1	**319-0844**	1	FILTER AS-FUEL (ULTRA HIGH EFFICIENCY)	
Y	1B	1	**258-0883**	1	SWITCH GP-PRESSURE (FUEL FILTER)	305
	2	1	**343-5938**	1	FILTER AS-FUEL	
	2A	1	**306-9199**	1	FILTER AS-FUEL (ULTRA HIGH EFFICIENCY) (SECONDARY)	
F			**278-4138**	2	PROTECTION GP-FUEL SYSTEM	

F-NOT SHOWN
Y-SEPARATE ILLUSTRATION

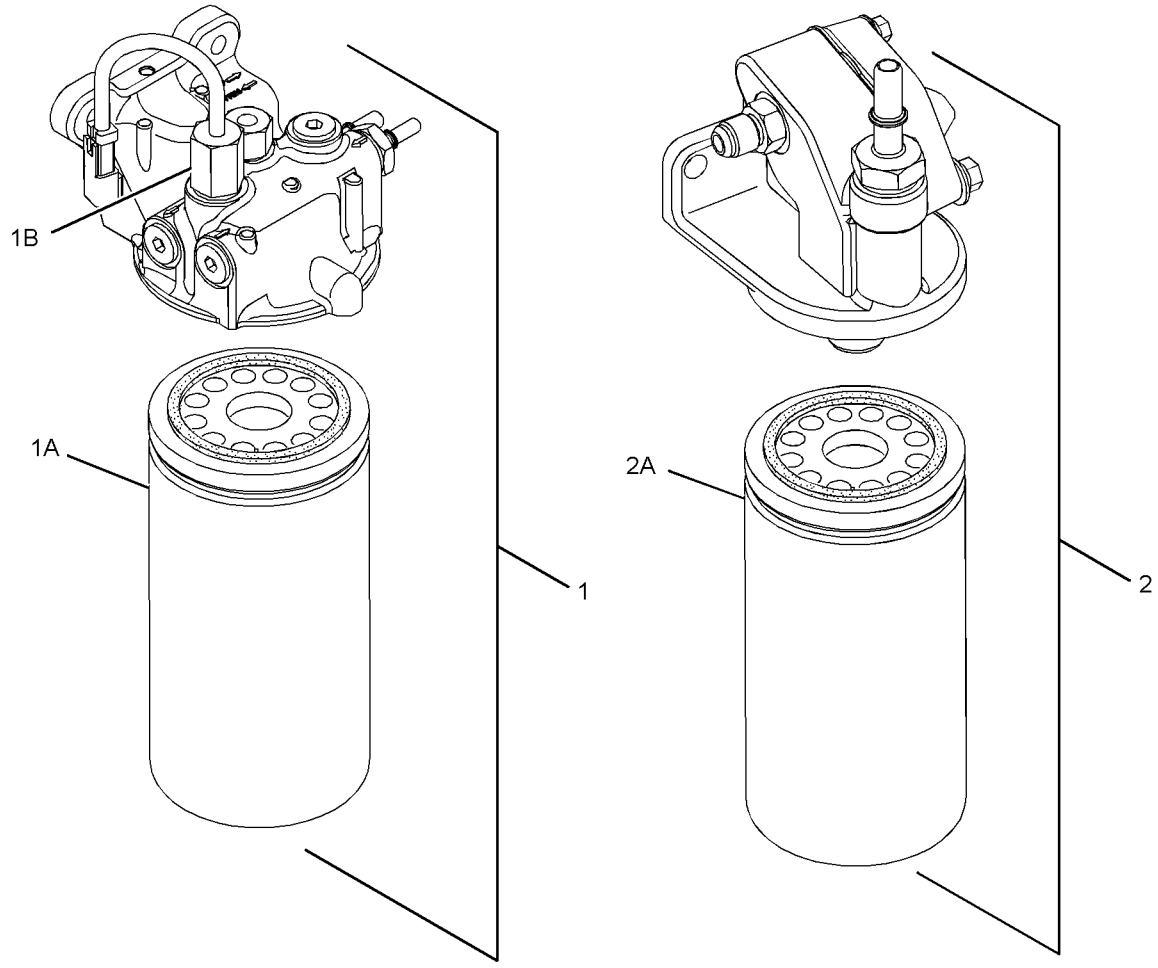

GRAPHIC #1 **<END>** g01958786

174-9570 FILTER GP-WATER SEP & FUEL

S/N: DHA1-UP; FBH1-UP

PART OF 212-3657 PUMP GP-FUEL PRM & WATER SEP

SMCS-1261, 1263 **i03671373**

NOTE	REF NO	GRAPHIC REF	PART NUMBER	QTY	PART NAME 1 2 3 4 5 6 (PRODUCT LEVEL)	SEE PAGE
	1	1	**326-1644**	1	FILTER AS-WATER SEP & FUEL (PRIMARY)	
	1A	1	**220-8678**	1	SEAL-RING (FUEL, WATER SEPARATOR)	
	2	1	**343-5527**	1	BOWL AS (FUEL, WATER SEPARATOR)	
		1	**3J-1907**	1	SEAL-O-RING	
		1	**5F-9144**	1	SEAL-O-RING	
		1	**8F-7219**	1	SEAL-O-RING	
		1	**9S-8004**	1	PLUG	

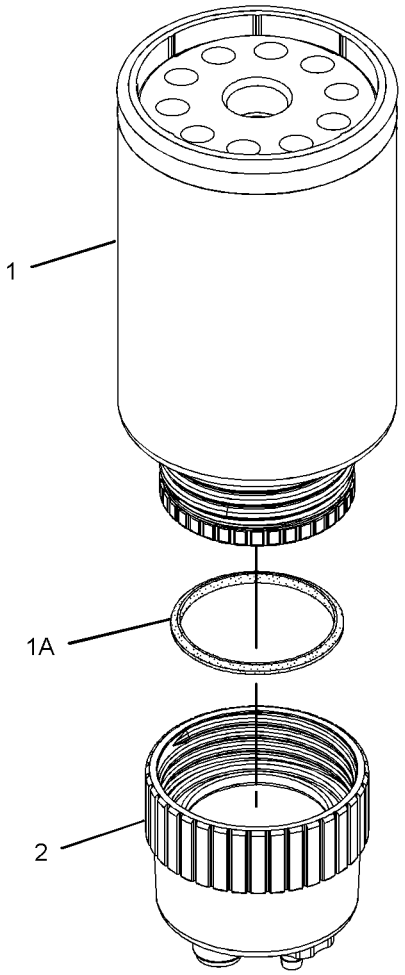

GRAPHIC #1 **<END>** g01179858

276-8280 INJECTOR GP-FUEL

S/N: C6E1-UP

PART OF 278-5319 PUMP GP-FUEL INJECTION

SMCS-1251, 1254, 1290 **i02511468**

NOTE	REF NO	GRAPHIC REF	PART NUMBER	QTY	PART NAME 1 2 3 4 5 6 (PRODUCT LEVEL)	SEE PAGE
	1	1	**274-1639**	1	SEAL	
	2	1	**272-8308**	1	WASHER	

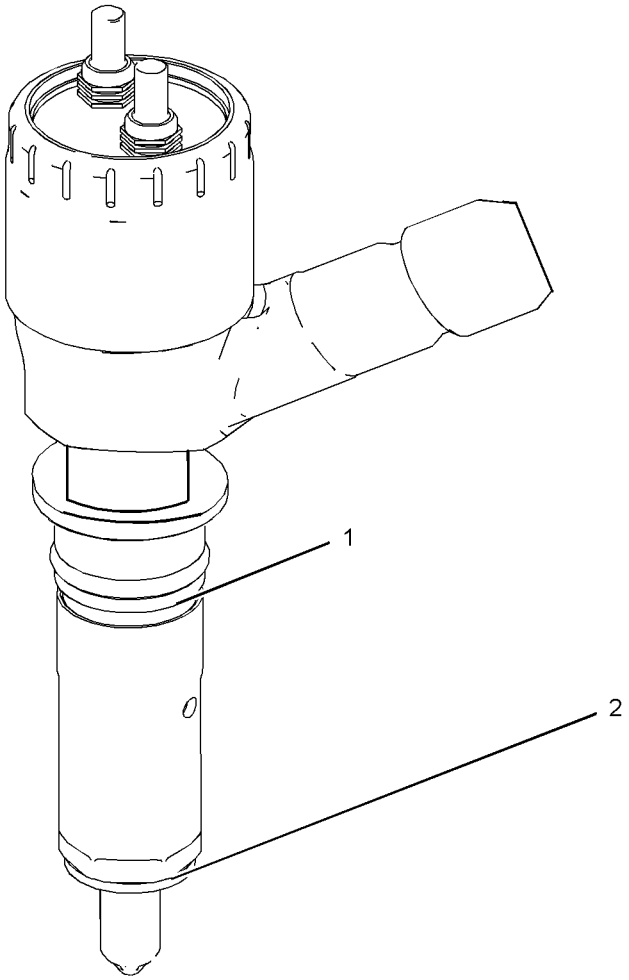

GRAPHIC #1

<END>

g01218944

282-0480 INJECTOR GP-FUEL

S/N: C6E1-UP

PART OF 278-5319, 310-0659 PUMP GP-FUEL INJECTION

SMCS-1251, 1254, 1290 **i02783187**

NOTE	REF NO	GRAPHIC REF	PART NUMBER	QTY	PART NAME 1 2 3 4 5 6 (PRODUCT LEVEL)	SEE PAGE
	1	1	**274-1639**	1	SEAL	
	2	1	**287-7637**	1	WASHER	

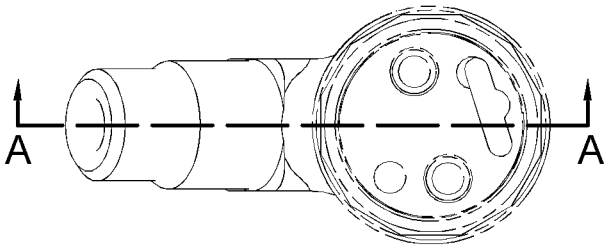

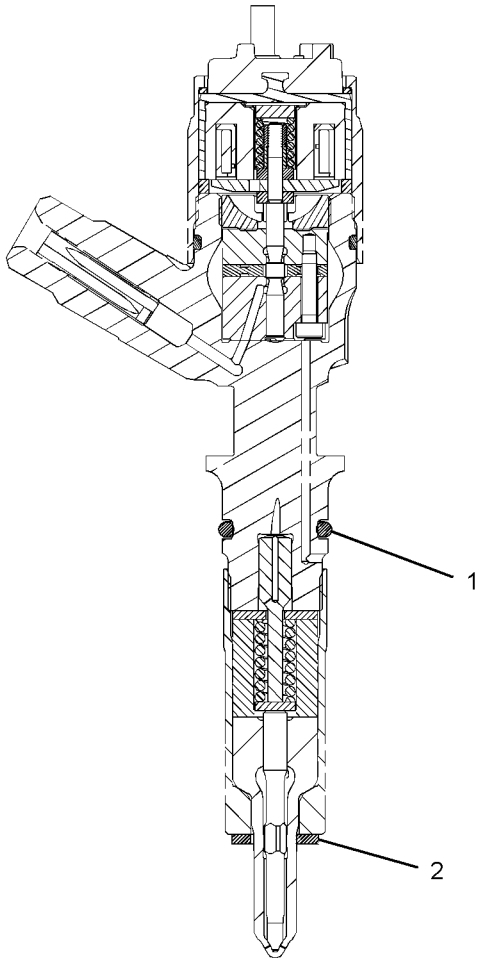

SECTION A-A

GRAPHIC #1 **<END>** g01306918

FUEL SYSTEM

306-9380 INJECTOR GP-FUEL

S/N: C6E3160-6804

PART OF 310-0659 PUMP GP-FUEL INJECTION

SMCS-1251, 1254, 1290 **i02861935**

NOTE	REF NO	GRAPHIC REF	PART NUMBER	QTY	PART NAME 1 2 3 4 5 6 (PRODUCT LEVEL)	SEE PAGE
	1	1	**287-7637**	1	WASHER	
	2	1	**274-1639**	1	SEAL	

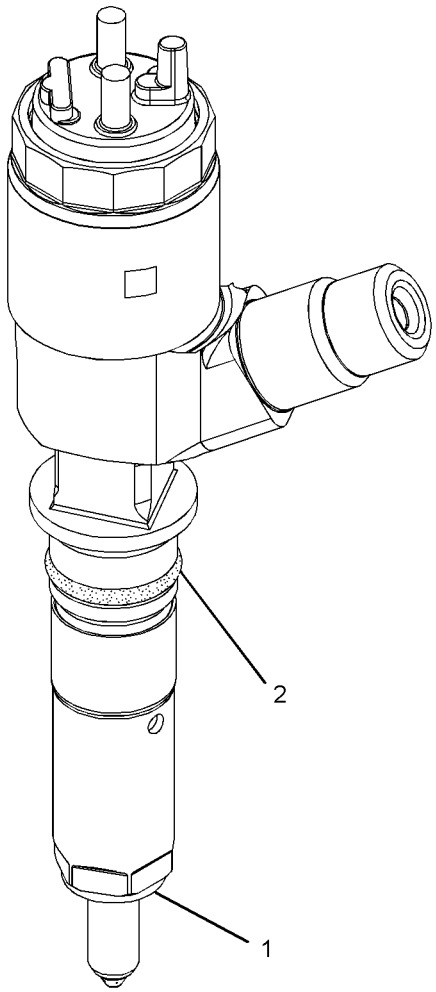

GRAPHIC #1 **<END>** g01321917

321-3600 INJECTOR GP-FUEL

S/N: C6E6805-UP

PART OF 310-0659, 320-3566 PUMP GP-FUEL INJECTION

ALSO AN ATTACHMENT

SMCS-1251, 1254, 1290 **i03133303**

NOTE	REF NO	GRAPHIC REF	PART NUMBER	QTY	PART NAME 1 2 3 4 5 6 (PRODUCT LEVEL)	SEE PAGE
	1	1	**287-7637**	1	WASHER	
	2	1	**274-1639**	1	SEAL	

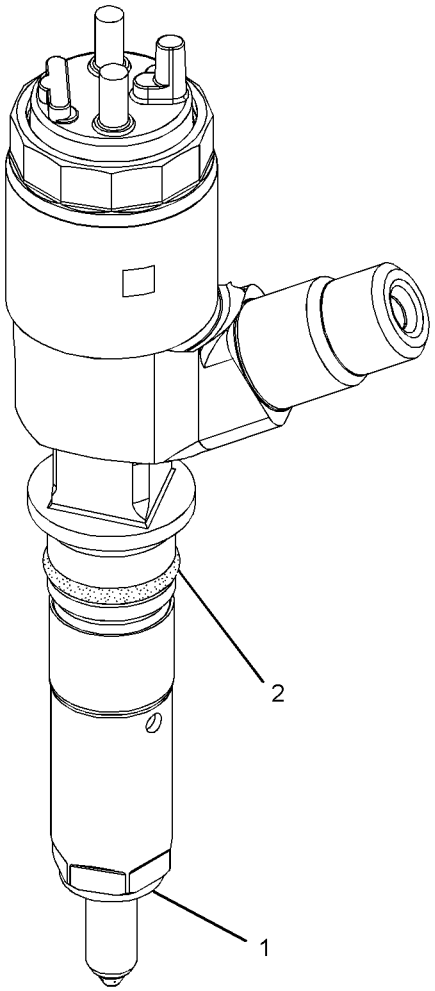

GRAPHIC #1 **<END>** g01321917

206-7248 LINES GP-FUEL

S/N: DHA1-UP; FBH1-UP

PART OF 206-7294 INSTALLATION AR-ENGINE

SMCS-1274 **i02741366**

NOTE	REF NO	GRAPHIC REF	PART NUMBER	QTY	PART NAME 1 2 3 4 5 6 (PRODUCT LEVEL)	SEE PAGE
	1	1	**5P-4961**	1	CLAMP-HOSE	
	2	1	**034-3679**	1	FITTING	
	3	1	**156-2525**	1	VALVE GP-SHUTOFF (FUEL)	
	4	1	**252-1585**	1	HOSE AS	
	5	1	**252-1586**	1	HOSE AS	
	6	1	**267-6417**	2	CONNECTOR	
	7	1	*268-1531*	1	ELBOW AS	
		1	**268-1530**	1	ELBOW	
		1	**2M-9780**	1	SEAL-O-RING	
	8	1	**277-8736**	1	CONNECTOR	
	9	1	**277-8737**	1	VALVE AS-CHECK (FUEL LINE)	
	10	1	**281-5882**	1	VALVE-BALL (FUEL TANK DRAIN)	
	11	1	**198-4777**	1	WASHER-HARD (11X25X10-MM THK)	
	12	1	**9G-7101**	1	SPACER (10.5X20X30-MM THK)	
	13	1	**3D-5279**	1	GROMMET	
	14	1	**3K-0360**	5	SEAL-O-RING	
	15	1	**193-3973**	2	STRAP-CABLE	
	16	1	**5K-8451**	4	CLIP	
	17	1	**6K-8178**	3	CLIP	
	18	1	**7X-7729**	3	WASHER (11X25X3-MM THK)	
	19	1	**8T-2561**	1	WASHER-HARD (10.5X28.5X5-MM THK)	
	20	1	**8T-4121**	4	WASHER-HARD (11X21X2.5-MM THK)	
M	21	1	**8T-4133**	2	NUT (M10X1.5-THD)	
M	22	1	**8T-4137**	5	BOLT (M10X1.5X20-MM)	
	23	1	**9M-8406**	3	CLIP	
	24	1	**9X-6582**	1	NUT (13/16-16-THD)	
	25	1	**200-6345**	1	MOUNT (DUAL SWIVEL)	
E	26	1	**5P-1505**		HOSE (20-CM)	
	27	1	**177-2215**	1	STRAP-DUAL CLAMP	

E-ORDER BY THE CENTIMETER
M-METRIC PART

206-7248 **LINES GP-FUEL** *(contd.)* **i02741366**

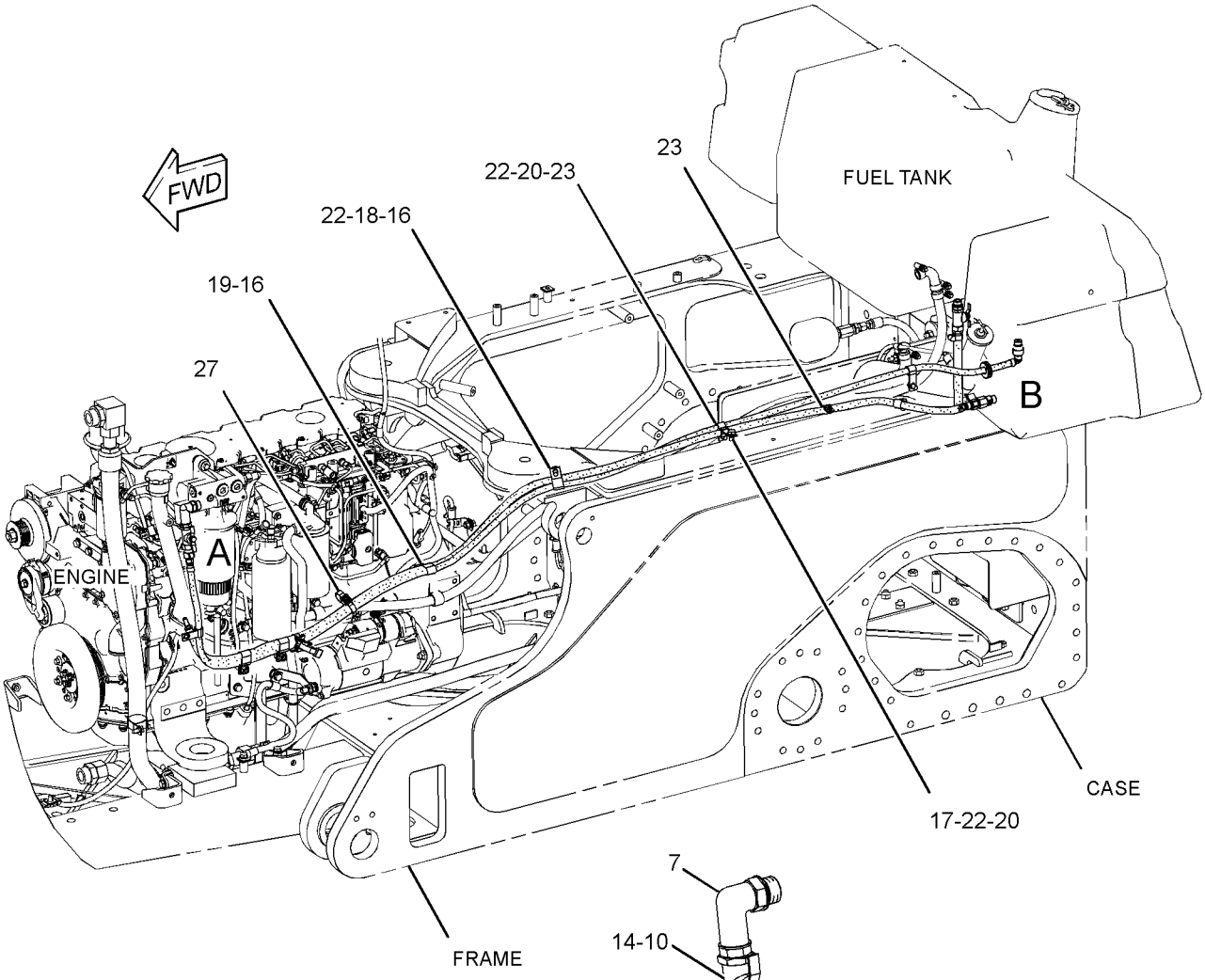

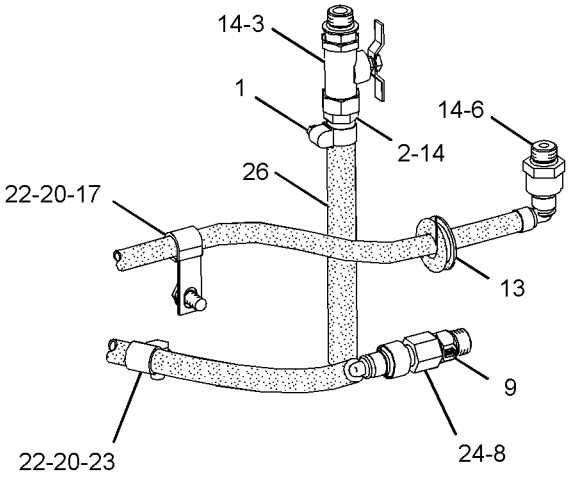

VIEW OF AREA B

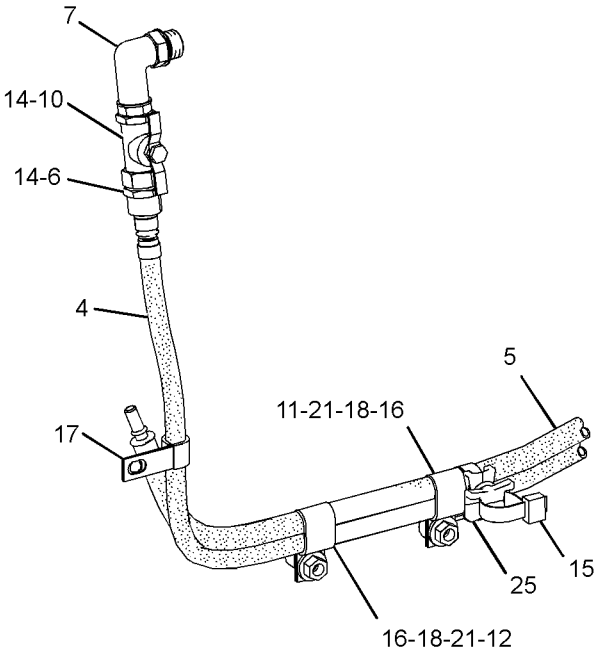

VIEW OF AREA A

GRAPHIC #1 **<END>** g01384488

305-7299 LINES GP-FUEL

S/N: C6E1-6838
PART OF 242-1356, 319-7261 ENGINE AR
ALSO AN ATTACHMENT

SMCS-1274 **i03385382**

NOTE	REF NO	GRAPHIC REF	PART NUMBER	QTY	PART NAME 1 2 3 4 5 6 (PRODUCT LEVEL)	SEE PAGE
M	1	1,3	**6I-0260**	4	BOLT (M8X1.25X25-MM)	
M	2	1,2	**6I-0654**	3	BOLT (M10X1.5X25-MM)	
M	3	3	**100-3751**	1	BOLT (M8X1.25X65-MM)	
	5	1	**111-0859**	2	BOLT (M10X1.5X35-MM)	
M	6	2,3	**124-3815**	3	BOLT (M8X16X1.25-MM)	
	7	1,2	**216-9752**	4	WASHER	
	8	3	**6I-0456**	1	BOLT (M8X1.25X45-MM)	
	9	1,2	**277-6165**	2	CONNECTION-FUEL	
	10	2	**278-0314**	1	SPACER	
	11	3	**285-3555**	1	CLIP	
	12	1,2	**295-4670**	2	BOLT-SPECIAL (BANJO)	
	13	2	**293-9820**	1	BRACKET	
	14	2	**302-5695**	1	BRACKET AS	
	14A	2	**298-4576**	1	CLIP	
	15	3	**305-7302**	1	TUBE	
	16	3	**305-7303**	1	TUBE	
	17	3	**305-7304**	1	TUBE	
	18	1	**305-7305**	1	TUBE	
	19	1	**305-7306**	1	BRACKET AS	
	19A	1	**232-1115**	3	CLIP-PIPE	
	20	1	**305-7307**	1	BRACKET AS	
	20A	1	**232-1115**	2	CLIP-PIPE	
	21	2	**305-7308**	1	TUBE	
	22	2	**305-7309**	1	BRACKET AS	
	22A	2	**232-1115**	4	CLIP-PIPE	
	23	3	**320-4729**	1	BRACKET	
	24	1	**305-7311**	1	BRACKET AS	
	24A	1	**232-1115**	3	CLIP-PIPE	
	25	1	**317-7147**	1	CLIP	
F			**278-4138**	5	PROTECTION GP-FUEL SYSTEM	

F-NOT SHOWN
M-METRIC PART

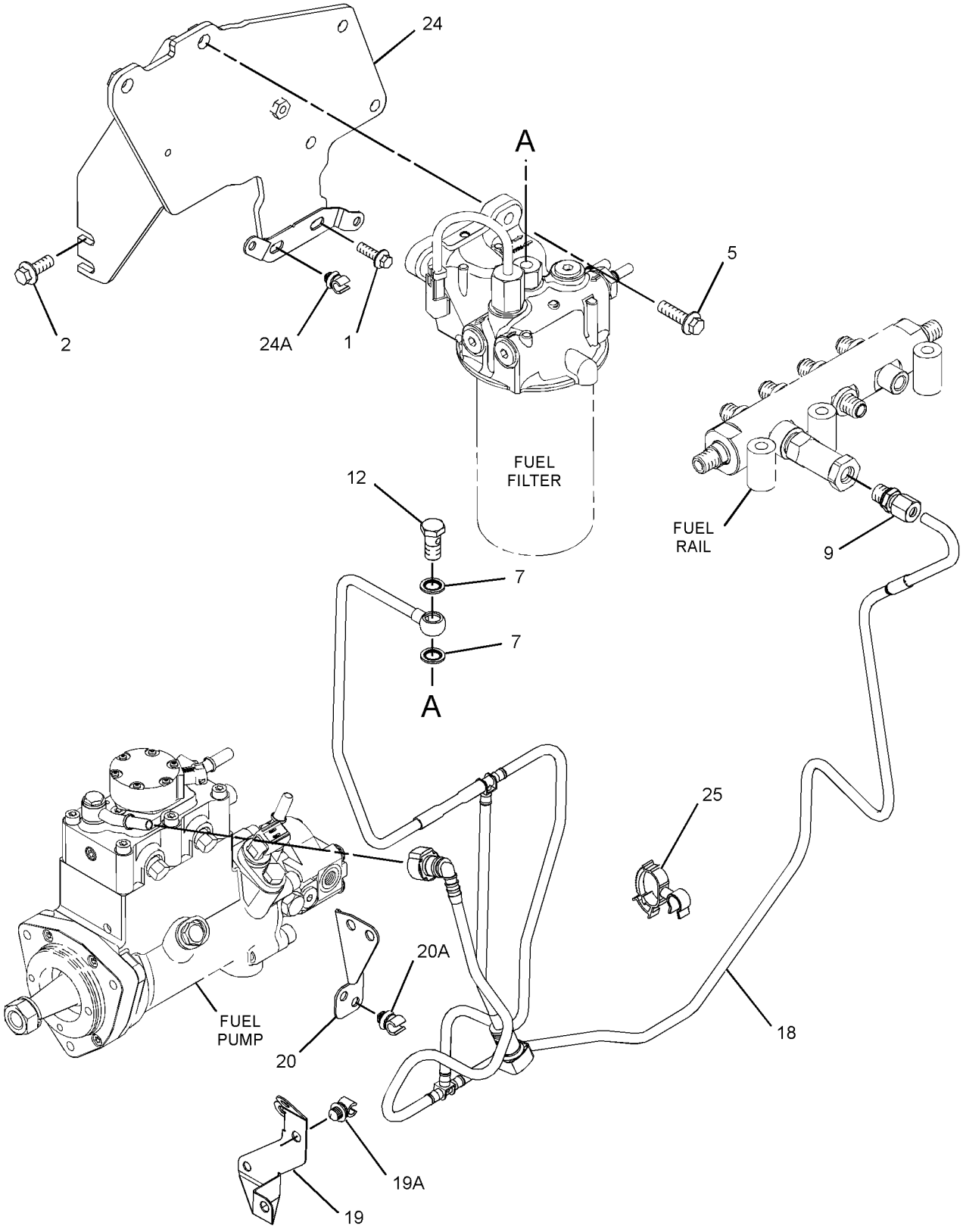

GRAPHIC #1

g01495993

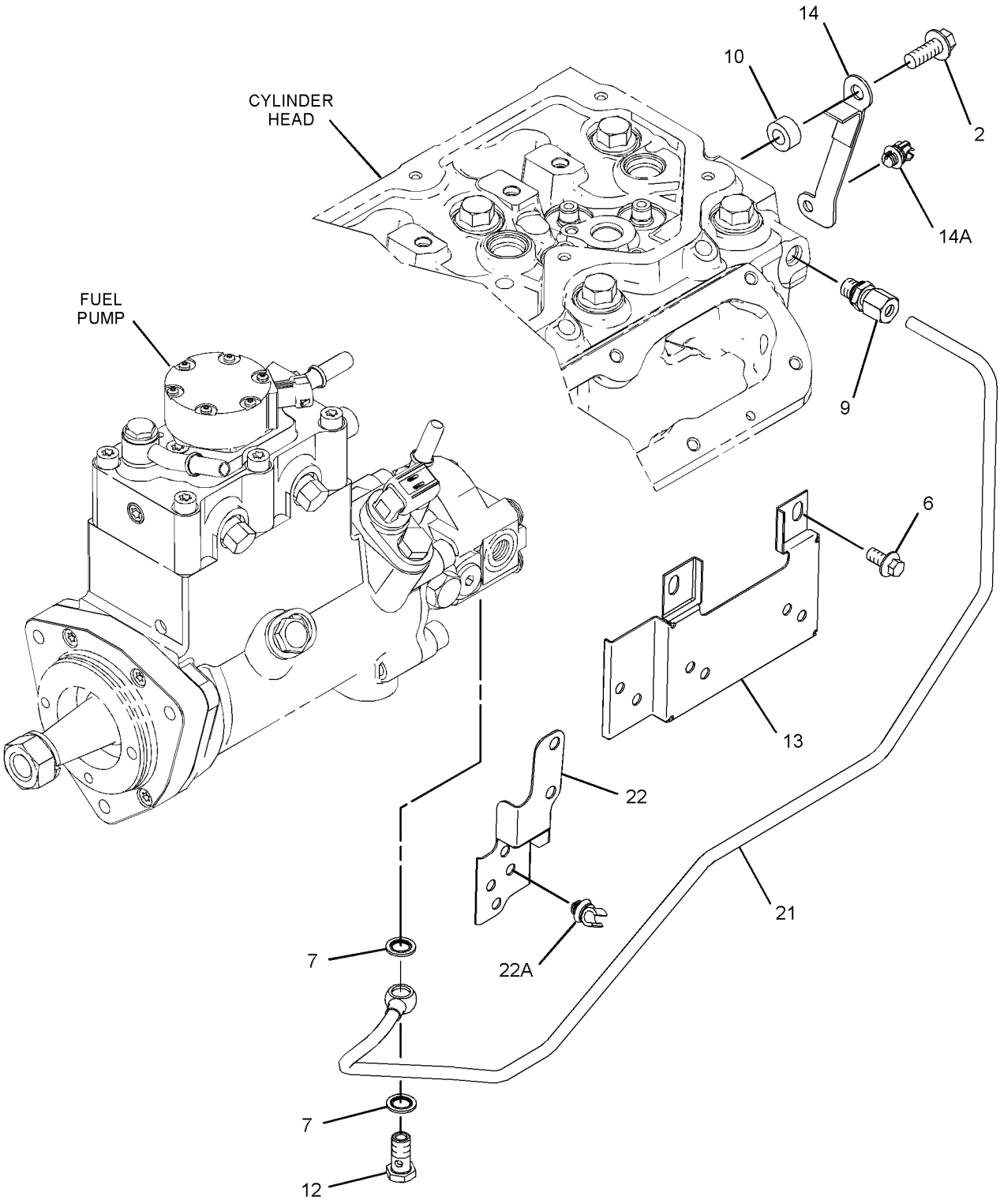

GRAPHIC #2 g01348152

305-7299 **LINES GP-FUEL** *(contd.)* **i03385382**

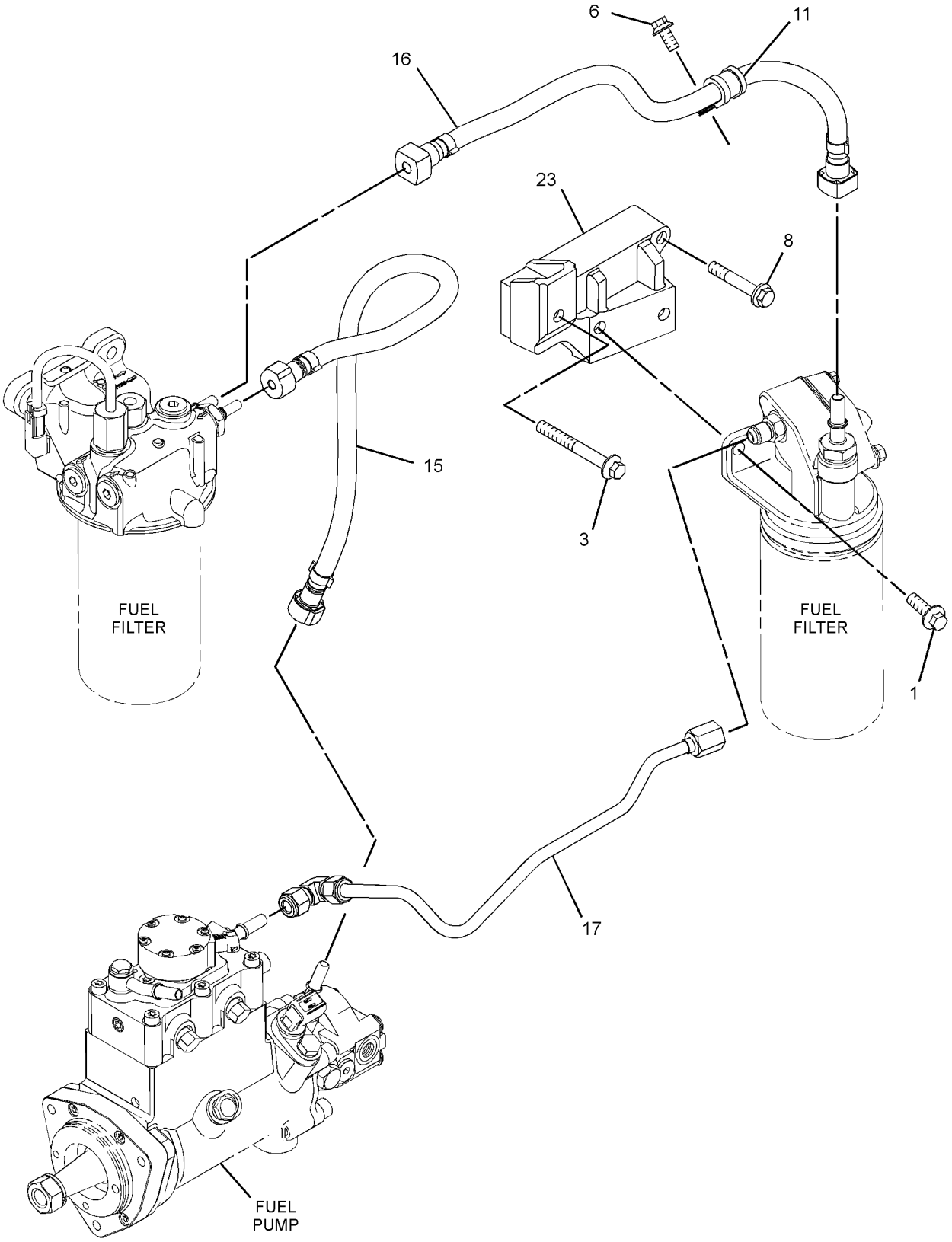

GRAPHIC #3 **<END>** g01496015

FUEL SYSTEM

305-7299 LINES GP-FUEL

S/N: C6E6839-UP
PART OF 242-1356, 319-7261 ENGINE AR
ALSO AN ATTACHMENT

SMCS-1274 **i03553565**

NOTE	REF NO	GRAPHIC REF	PART NUMBER	QTY	PART NAME 1 2 3 4 5 6 (PRODUCT LEVEL)	SEE PAGE
M	1	1,3	**6I-0260**	6	BOLT (M8X1.25X25-MM)	
M	2	2	**6I-0654**	1	BOLT (M10X1.5X25-MM)	
M	3	3	**100-3751**	1	BOLT (M8X1.25X65-MM)	
	5	1	**111-0859**	2	BOLT (M10X1.5X35-MM)	
M	6	2,3	**124-3815**	3	BOLT (M8X16X1.25-MM)	
	8	3	**6I-0456**	1	BOLT (M8X1.25X45-MM)	
	9	1,2	**277-6165**	2	CONNECTION-FUEL	
	10	2	**278-0314**	1	SPACER	
	11	3	**285-3555**	1	CLIP	
	12	1,2	**295-4670**	2	BOLT-SPECIAL (BANJO)	
	13	2	**293-9820**	1	BRACKET	
	13A	2	**232-1115**	6	CLIP-PIPE	
	14	2	**302-5695**	1	BRACKET AS	
	14A	2	**298-4576**	1	CLIP	
C	15	3	**329-0060**	1	TUBE	
C	16	3	**329-0061**	1	TUBE	
	17	3	**305-7304**	1	TUBE	
C	18	1	**329-0062**	1	TUBE	
	19	1	**305-7306**	1	BRACKET AS	
	19A	1	**232-1115**	3	CLIP-PIPE	
	20	1	**305-7307**	1	BRACKET AS	
	20A	1	**232-1115**	2	CLIP-PIPE	
	21	2	**305-7308**	1	TUBE	
	22	2	**305-7309**	1	BRACKET AS	
	22A	2	**232-1115**	4	CLIP-PIPE	
	23	3	**320-4729**	1	BRACKET	
C	24	1	**329-0063**	1	BRACKET	
C	26	1,2	**286-2890**	4	WASHER	
	27	3	**337-9558**	1	SLEEVE	
	28	3	**339-8785**	1	ISOLATOR-RUBBER	
	29	3	**329-0064**	1	BRACKET	
	30	1	**238-8028**	1	TIE-CABLE	
F			**278-4138**	5	PROTECTION GP-FUEL SYSTEM	

C-CHANGE FROM PREVIOUS TYPE
F-NOT SHOWN
M-METRIC PART

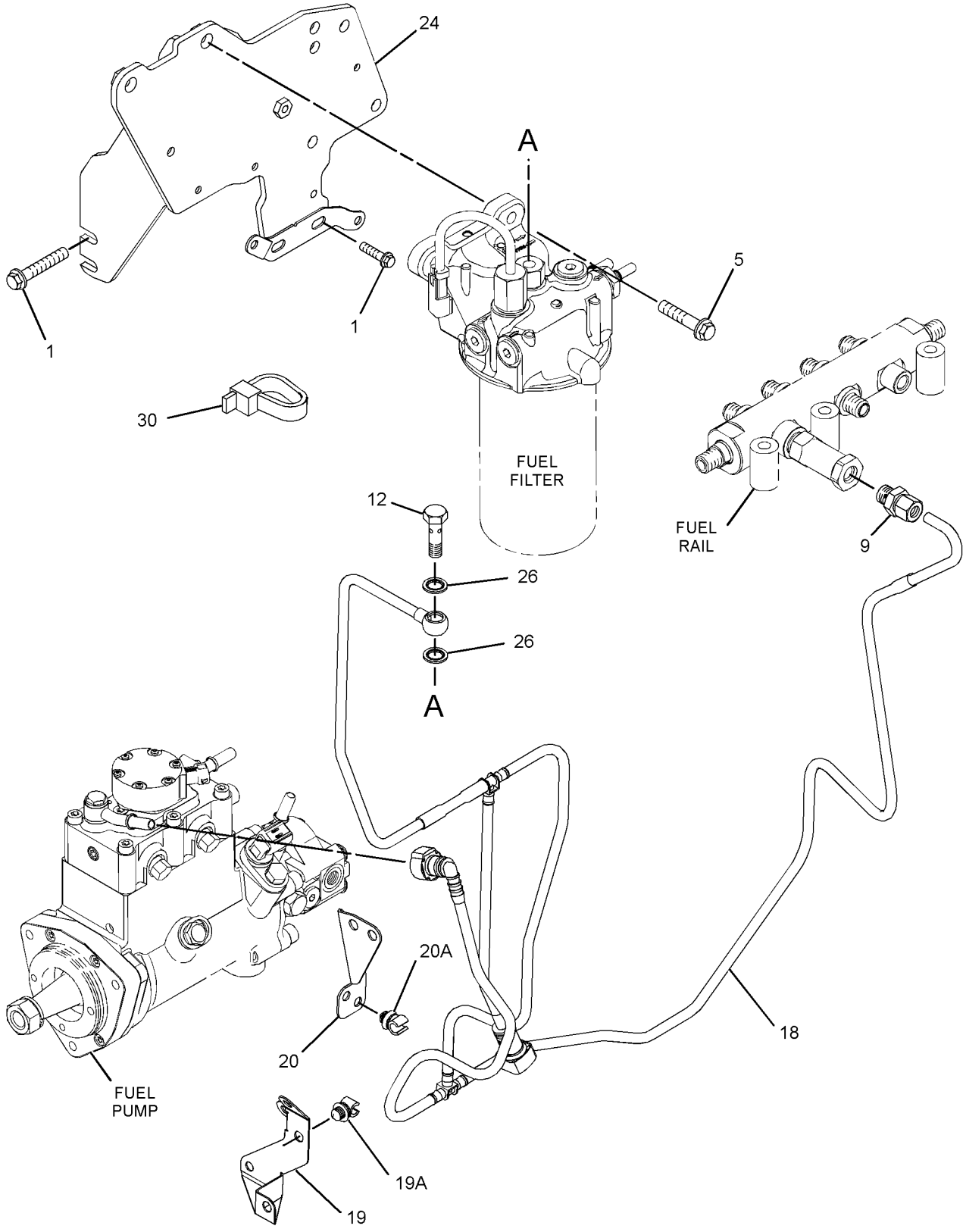

GRAPHIC #1 g01913215

305 - 7299 **LINES GP-FUEL** *(contd.)* **i03553565**

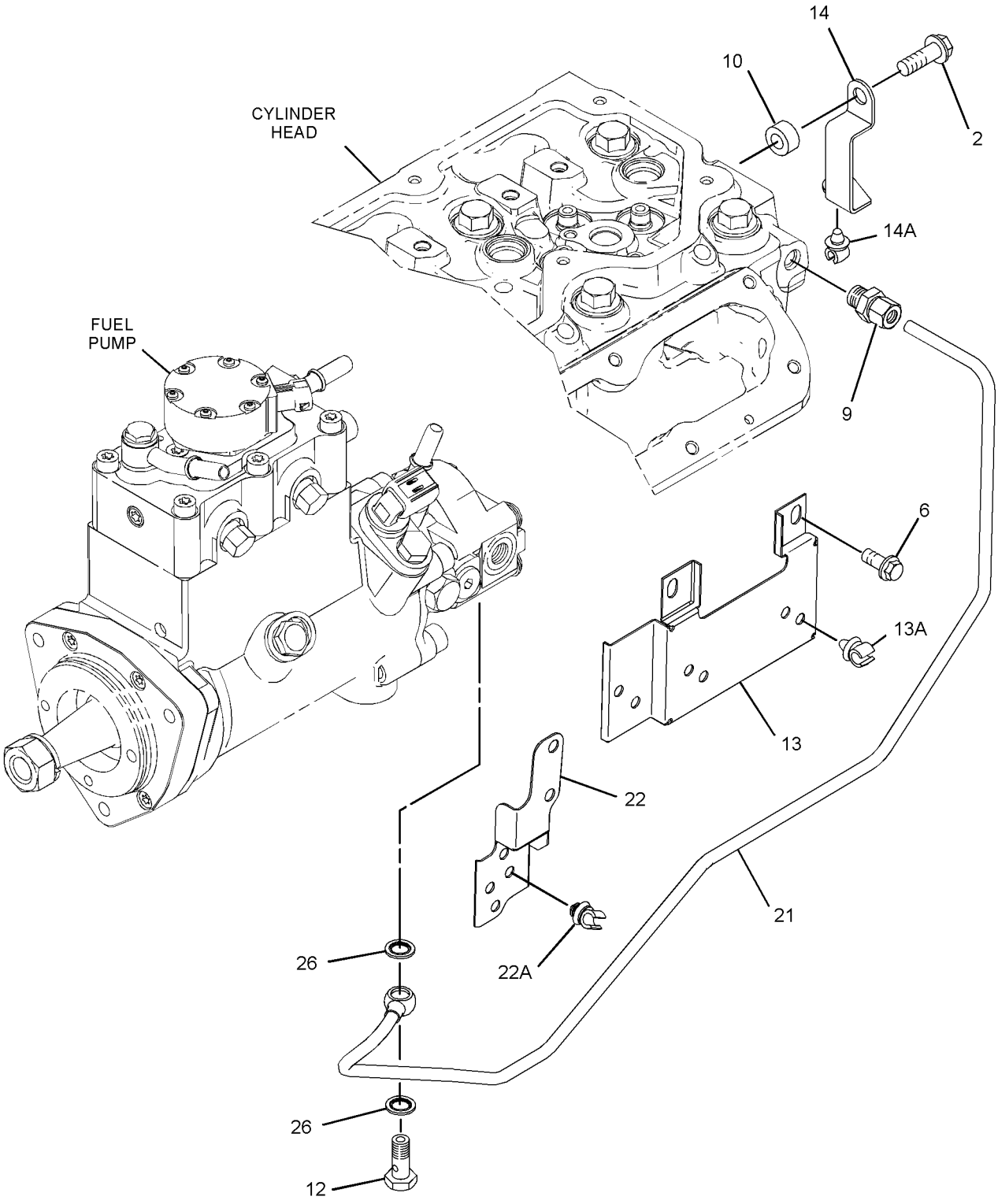

GRAPHIC #2 g01913216

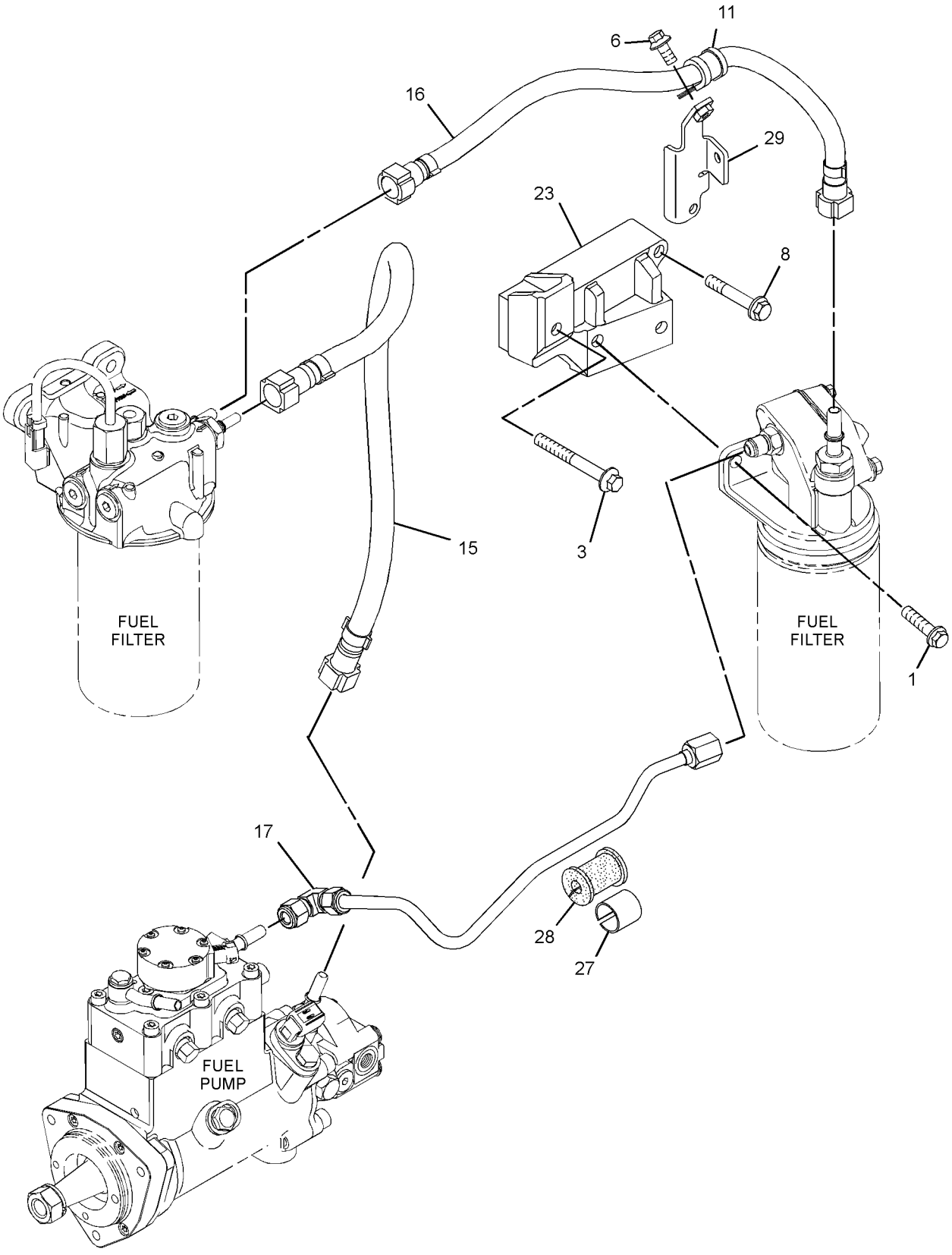

GRAPHIC #3 **<END>** g01913217

291-5919 PUMP & MTG GP-UNIT INJ HYD*R

S/N: C6E496-UP

PART OF 310-0659 PUMP GP-FUEL INJECTION

SMCS-1714 **i03641477**

NOTE	REF NO	GRAPHIC REF	PART NUMBER	QTY	PART NAME 1 2 3 4 5 6 (PRODUCT LEVEL)	SEE PAGE
	1	1	**228-0172**	1	FITTING-FUEL	
	2	1	**228-7100**	3	SEAL-O-RING	
	3	1	**247-6019**	1	SEAL	
	4	1	**248-1066**	1	FITTING-FUEL	
	5	1	**293-0249**	1	PUMP GP-FUEL TRANSFER	
	6	1	**294-3031**	1	BOLT	
	7	1	**294-3032**	1	WASHER	
	8	1	**295-0189**	1	CONNECTOR AS	
	9	1	**295-4801**	1	NUT (M14X1.5-THD)	
	10	1	**296-3542**	1	LOCKWASHER	
	11	1	**117-1385**	1	SEAL-O-RING	
M	12	1	**5A-3604**	5	BOLT-SOCKET HEAD (M8X1.25X25-MM)	
	13	1	**6D-7889**	1	SEAL-O-RING	
	14	1	**8L-2779**	1	SEAL-O-RING	
M	15	1	**8T-4200**	1	BOLT (M8X1.25X16-MM)	
	16	1	**238-0120**	1	SENSOR GP-SPEED (SECONDARY, TIMING)	

M-METRIC PART

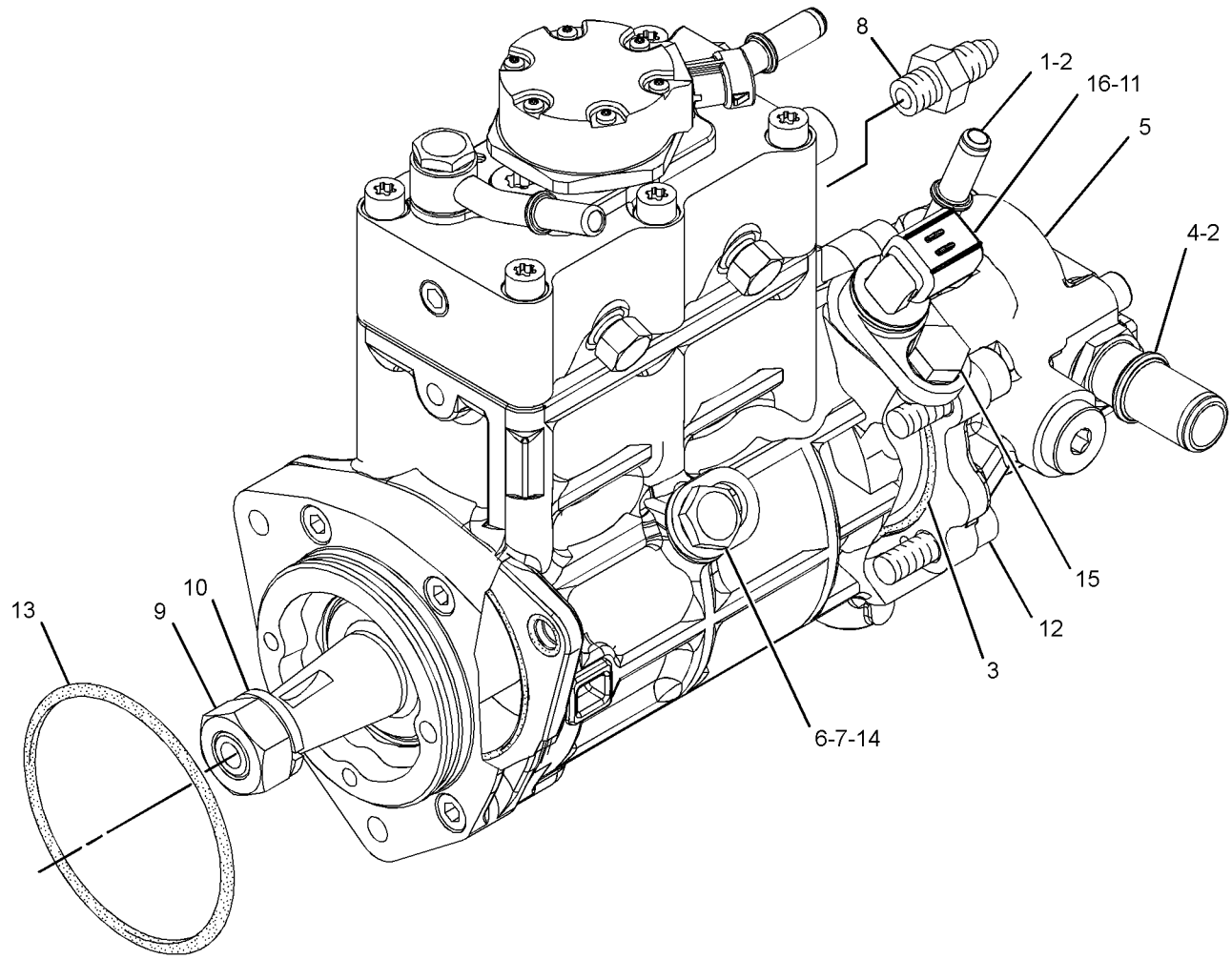

GRAPHIC #1 **<END>** g01954066

276-8398 PUMP GP-FUEL INJECTION

S/N: C6E1-UP

PART OF 278-5319 PUMP GP-FUEL INJECTION

SMCS-1251, 1290 **i03322767**

NOTE	REF NO	GRAPHIC REF	PART NUMBER	QTY	PART NAME 1 2 3 4 5 6 (PRODUCT LEVEL)	SEE PAGE
	1	1	**228-7100**	1	SEAL-O-RING	
	2	1	**238-0120**	1	SENSOR GP-SPEED (SECONDARY, TIMING)	
	3	1	**247-6019**	1	SEAL	
	4	1	**248-1066**	1	FITTING-FUEL	
	5	1	**293-0249**	1	PUMP GP-FUEL TRANSFER	
	6	1	**117-1385**	1	SEAL-O-RING	
M	7	1	**5A-3604**	5	BOLT-SOCKET HEAD (M8X1.25X25-MM)	
	8	1	**6D-7889**	1	SEAL-O-RING	
M	9	1	**8T-4200**	1	BOLT (M8X1.25X16-MM)	

M-METRIC PART

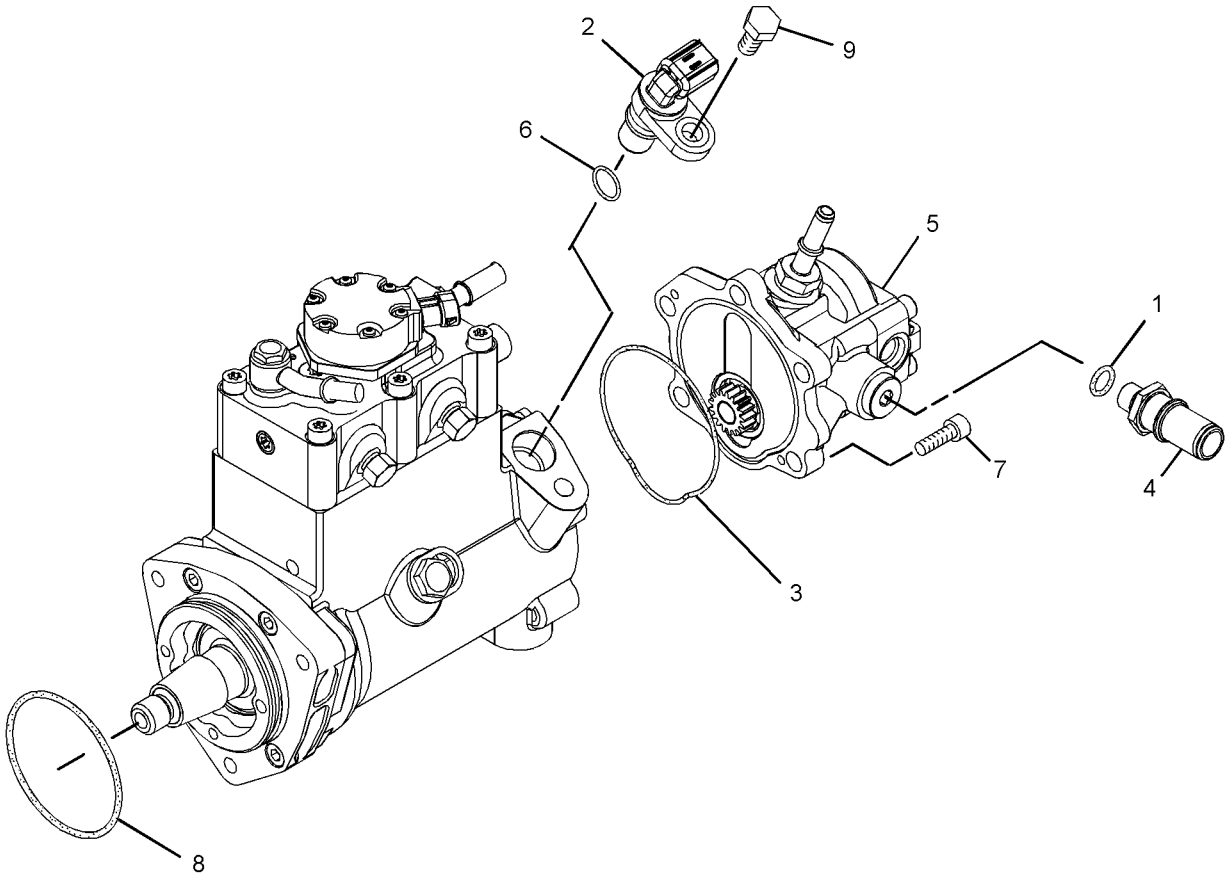

GRAPHIC #1 **<END>** g01427445

277-5191 PUMP GP-FUEL INJECTION

S/N: C6E1-UP

PART OF 278-5319 PUMP GP-FUEL INJECTION

SMCS-1251, 1290 **i02454960**

NOTE	PART NUMBER	QTY	PART NAME 1 2 3 4 5 6 (PRODUCT LEVEL)	SEE PAGE
M	**8T-4200**	1	BOLT (M8X1.25X16-MM)	
M	**5A-3604**	5	BOLT-SOCKET HEAD (M8X1.25X25-MM)	
M	**105-3487**	4	BOLT-SOCKET HEAD (M6X1X20-MM)	
	272-0611	1	FITTING GP-FUEL LINES	
	271-4767	1	FITTING-FUEL	
	272-0610	1	SCREEN	
	111-3422	1	NUT	
	6D-7889	1	SEAL-O-RING	
	8L-2779	3	SEAL-O-RING	
	033-6033	2	SEAL-O-RING	
	117-1385	1	SEAL-O-RING	
	228-7100	3	SEAL-O-RING	
	238-0120	1	SENSOR GP-SPEED	
	111-3423	1	WASHER	

M-METRIC PART

<END>

FUEL SYSTEM

278-5319 PUMP GP-FUEL INJECTION

S/N: C6E1-UP
PART OF 242-1356 ENGINE AR
TYPE 1

SMCS-1251, 1290 **i02605104**

NOTE	REF NO	GRAPHIC REF	PART NUMBER	QTY	PART NAME 1 2 3 4 5 6 (PRODUCT LEVEL)	SEE PAGE
M	1	2	**6I-0217**	4	BOLT (M8X1.25X20-MM)	
M	2	1	**6I-0254**	3	BOLT (M8X1.25X30-MM)	
	3	1	**6I-0456**	1	BOLT (M8X1.25X45-MM)	
	4	1,2	**6I-4793**	6	BOLT (M8X1.25X50-MM)	
	5	2	**7W-2632**	1	WASHER (8.5X16.8X1.6-MM THK)	
M	7	1,3	**124-3815**	1	BOLT (M8X16X1.25-MM)	
	8	2	**155-0576**	8	MOUNT-ISOLATION	
	9	1	**216-9752**	2	WASHER	
	10	2	**217-0099**	8	SPACER (8.2X25X2-MM THK)	
	11	1	**225-8524**	1	BOLT-SPECIAL (BANJO)	
	12	1	**230-8989**	1	GEAR-FUEL PUMP (68-TEETH)	
	13	2	**260-3718**	1	BRACKET	
	14	2	**260-3719**	1	BRACKET	
	15	1	**265-8125**	1	RAIL AS-FUEL	
	16	2	**274-1982**	1	CONTROL GP-POWER TRAIN	
Y	17	1	**277-5191**	1	PUMP GP-FUEL INJECTION	135
	18	1	**278-5168**	6	CLAMP-INJECTOR	
	19	1	**278-5180**	2	CLIP	
	20	1	**278-5189**	1	TUBE AS	
	21	2	**278-5201**	1	CONNECTION	
	22	2	**278-5203**	4	SPACER	
	23	2	**278-5204**	1	BRACKET-MOUNTING	
	24	2	**278-5209**	1	BRACKET	
	25	2	**278-5210**	1	BOLT	
	27	3	**278-5225**	1	KIT-SENSOR (OIL PRESSURE)	
	27A	3	**278-5226**	1	SEAL-O-RING	
	28	3	**278-5228**	1	KIT-SENSOR (ENGINE SPEED)	
	28A	3	**278-5227**	1	SEAL-O-RING	
	29	3	**278-5272**	1	KIT-SENSOR (INTAKE AIR TEMPERATURE)	
	29A	3	**278-5226**	1	SEAL-O-RING	
	30	3	**278-5273**	1	KIT-SENSOR (AIR PRESSURE)	
	30A	3	**199-9252**	1	SEAL-O-RING	
	31	3	**278-5307**	1	KIT-SENSOR (COOLANT TEMPERATURE)	
	31A	3	**199-9267**	1	SEAL-O-RING	
	32	1	**278-5308**	1	KIT-SENSOR	
	32A	1	**278-5309**	1	WASHER	
	33	1	**280-1889**	3	CLAMP	
	34	1	**280-1890**	3	CLAMP	
	35	1	**280-1891**	3	ISOLATOR	
	36	1	**280-1892**	3	BOLT	
	37	1	**282-3233**	1	BRACKET	
	38	1	**282-3234**	1	BRACKET	
	39	1	**282-3237**	1	BOLT	
	40	1	**232-3149**	6	WASHER (8.35X16.85X1.55-MM THK)	
	41	1	**278-5170**	6	BOLT	
	42	2	**278-5202**	2	SEAL-O-RING	
	44	1	**278-5166**	1	LINE AS-FUEL	
	45	1	**284-7417**	1	TUBE-FUEL INJECTION (NUMBER 1)	
	46	1	**284-7418**	1	TUBE-FUEL INJECTION (NUMBER 2)	
	47	1	**284-7419**	1	TUBE-FUEL INJECTION (NUMBER 3)	
	48	1	**284-7420**	1	TUBE-FUEL INJECTION (NUMBER 4)	
	49	1	**284-7421**	1	TUBE-FUEL INJECTION (NUMBER 5)	
	50	1	**284-7422**	1	TUBE-FUEL INJECTION (NUMBER 6)	
Y	51	1	**276-8280**	6	INJECTOR GP-FUEL	119
	52	1	**287-6839**	1	BOLT	

278-5319 **PUMP GP-FUEL INJECTION** *(contd.)* **i02605104**

NOTE	REF NO	GRAPHIC REF	PART NUMBER	QTY	PART NAME 1 2 3 4 5 6 (PRODUCT LEVEL)	SEE PAGE
	53	1	**294-2612**	1	CLIP	
	54	1	**294-2611**	1	CLIP	
F			**278-4138**	4	PROTECTION GP-FUEL SYSTEM	
FM			**6I-0260**	1	BOLT (M8X1.25X25-MM)	
FM			**101-3895**	1	BOLT (M8X1.25X35-MM)	

F-NOT SHOWN
M-METRIC PART
Y-SEPARATE ILLUSTRATION

278-5319 **PUMP GP-FUEL INJECTION** *(contd.)* **i02605104**

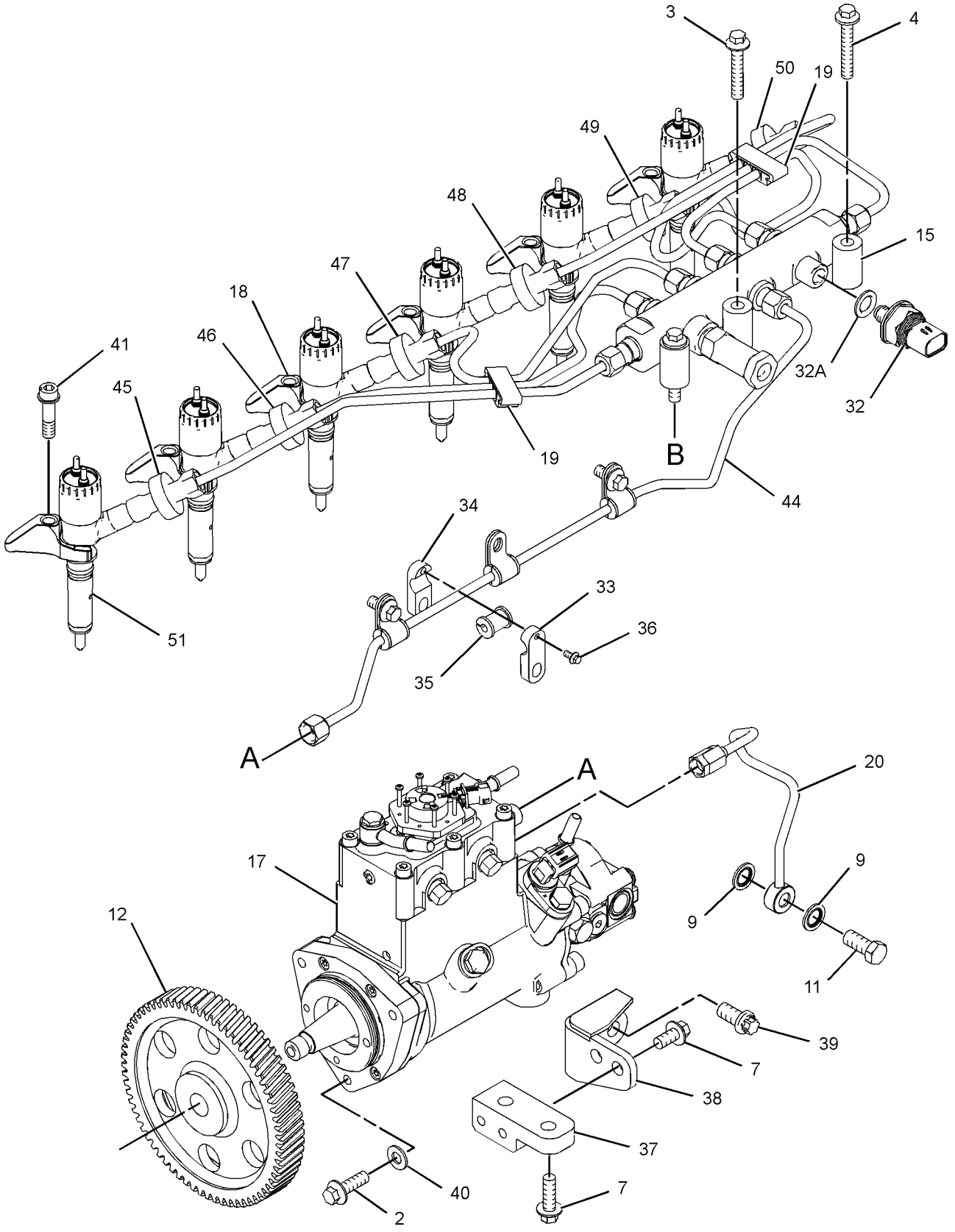

GRAPHIC #1 g01218531

278-5319 **PUMP GP-FUEL INJECTION** *(contd.)* **i02605104**

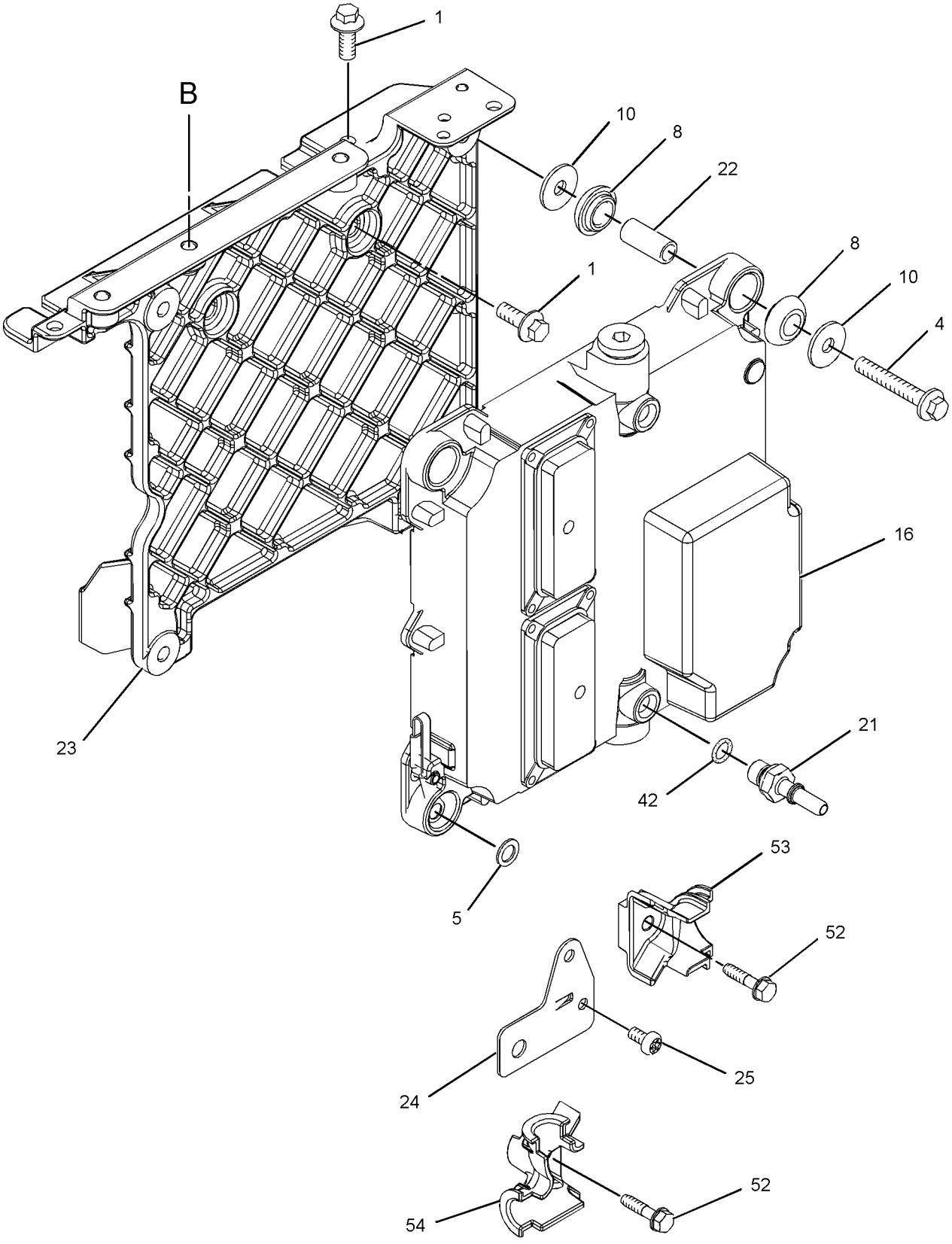

GRAPHIC #2 g01314105

278-5319 **PUMP GP-FUEL INJECTION** *(contd.)* **i02605104**

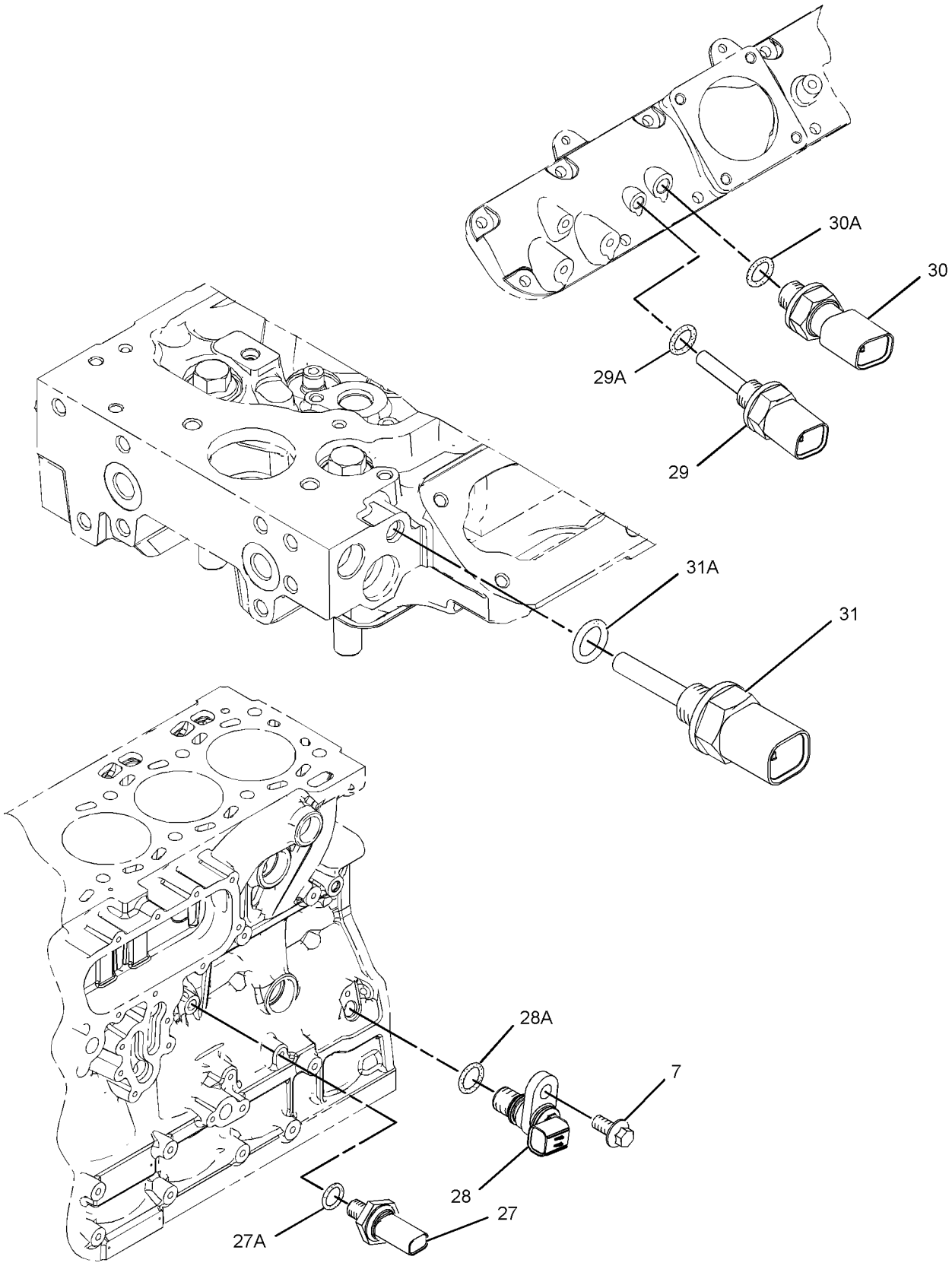

GRAPHIC #3 **<END>** g01218530

FUEL SYSTEM

278-5319 PUMP GP-FUEL INJECTION

S/N: C6E1-UP
PART OF 242-1356 ENGINE AR
TYPE 2

SMCS-1251, 1290 **i02696967**

NOTE	REF NO	GRAPHIC REF	PART NUMBER	QTY	PART NAME 1 2 3 4 5 6 (PRODUCT LEVEL)	SEE PAGE
M	1	1,2	**6I-0217**	4	BOLT (M8X1.25X20-MM)	
M	2	1	**6I-0254**	3	BOLT (M8X1.25X30-MM)	
	3	1,2	**6I-0456**	4	BOLT (M8X1.25X45-MM)	
	4	1	**6I-4793**	3	BOLT (M8X1.25X50-MM)	
	5	2	**7W-2632**	1	WASHER (8.5X16.8X1.6-MM THK)	
R	6	2	**286-3683**	1	CONTROL GP-UNPROGRAMMED	
M	7	1,3	**124-3815**	1	BOLT (M8X16X1.25-MM)	
	8	2	**155-0576**	8	MOUNT-ISOLATION	
	9	1	**216-9752**	2	WASHER	
	10	2	**217-0099**	4	SPACER (8.2X25X2-MM THK)	
	11	1	**225-8524**	1	BOLT-SPECIAL (BANJO)	
	12	1	**230-8989**	1	GEAR-FUEL PUMP (68-TEETH)	
	15	1	**265-8125**	1	RAIL AS-FUEL	
Y	17	1	**276-8398**	1	PUMP GP-FUEL INJECTION	134
	18	1	**278-5168**	6	CLAMP-INJECTOR	
	19	1	**278-5180**	2	CLIP	
	20	1	**292-0848**	1	TUBE	
	21	2	**278-5201**	1	CONNECTION	
	22	2	**278-5203**	4	SPACER	
	23	2	**293-9901**	1	BRACKET	
	24	2	**278-5209**	1	BRACKET	
	25	2	**278-5210**	1	BOLT	
	27	3	**278-5225**	1	KIT-SENSOR (OIL PRESSURE)	
	27A	3	**278-5226**	1	SEAL-O-RING	
	28	3	**278-5228**	1	KIT-SENSOR (ENGINE SPEED)	
	28A	3	**278-5227**	1	SEAL-O-RING	
	29	3	**278-5272**	1	KIT-SENSOR (INTAKE AIR TEMPERATURE)	
	29A	3	**278-5226**	1	SEAL-O-RING	
	30	3	**278-5273**	1	KIT-SENSOR (AIR PRESSURE)	
	30A	3	**199-9252**	1	SEAL-O-RING	
	31	3	**278-5307**	1	KIT-SENSOR (COOLANT TEMPERATURE)	
	31A	3	**199-9267**	1	SEAL-O-RING	
	32	1	**278-5308**	1	KIT-SENSOR	
	32A	1	**278-5309**	1	WASHER	
	33	1	**280-1889**	3	CLAMP	
	34	1	**280-1890**	3	CLAMP	
	35	1	**280-1891**	3	ISOLATOR	
	36	1	**280-1892**	3	BOLT	
	37	1	**282-3233**	1	BRACKET	
	38	1	**282-3234**	1	BRACKET	
	40	1	**232-3149**	6	WASHER (8.35X16.85X1.55-MM THK)	
	41	1	**278-5170**	6	BOLT	
	42	2	**278-5202**	2	SEAL-O-RING	
	44	1	**290-3911**	1	TUBE-FUEL INJECTION (CYL NO. 1)	
	45	1	**290-3912**	1	TUBE-FUEL INJECTION (CYL NO. 2)	
	46	1	**290-3913**	1	TUBE-FUEL INJECTION (CYL NO. 3)	
	47	1	**290-3914**	1	TUBE-FUEL INJECTION (CYL NO. 4)	
	48	1	**290-3915**	1	TUBE-FUEL INJECTION (CYL NO. 5)	
	49	1	**290-3916**	1	TUBE-FUEL INJECTION (CYL NO. 6)	
	50	1	**290-3910**	1	TUBE-FUEL INJECTION	
	51	1	**282-0480**	6	INJECTOR GP-FUEL	
					(EACH INCLUDES)	
	51A	1	**274-1639**	1	SEAL	
	51B	1	**287-7637**	1	WASHER	
	52	1	**287-6839**	1	BOLT	

278-5319 **PUMP GP-FUEL INJECTION** *(contd.)* **i02696967**

NOTE	REF NO	GRAPHIC REF	PART NUMBER	QTY	PART NAME 1 2 3 4 5 6 (PRODUCT LEVEL)	SEE PAGE
	53	2	**268-6677**	1	BRACKET AS	
		2	**260-3718**	1	BRACKET	
	53A	2	**260-3939**	1	SCREW-HEX HEAD	
	54	2	**268-6678**	1	BRACKET AS	
		2	**260-3719**	1	BRACKET	
	54A	2	**260-3939**	1	SCREW-HEX HEAD	
	55	1	**1N-3361**	1	SPACER	
	56	1	**241-4291**	3	SCREW	
FM			**6I-0260**	1	BOLT (M8X1.25X25-MM)	
FM			**101-3895**	1	BOLT (M8X1.25X35-MM)	
F			**278-4138**	4	PROTECTION GP-FUEL SYSTEM	

F-NOT SHOWN
M-METRIC PART
R-REMFG PART MAY BE AVAILABLE
Y-SEPARATE ILLUSTRATION

278-5319 **PUMP GP-FUEL INJECTION** *(contd.)* **i02696967**

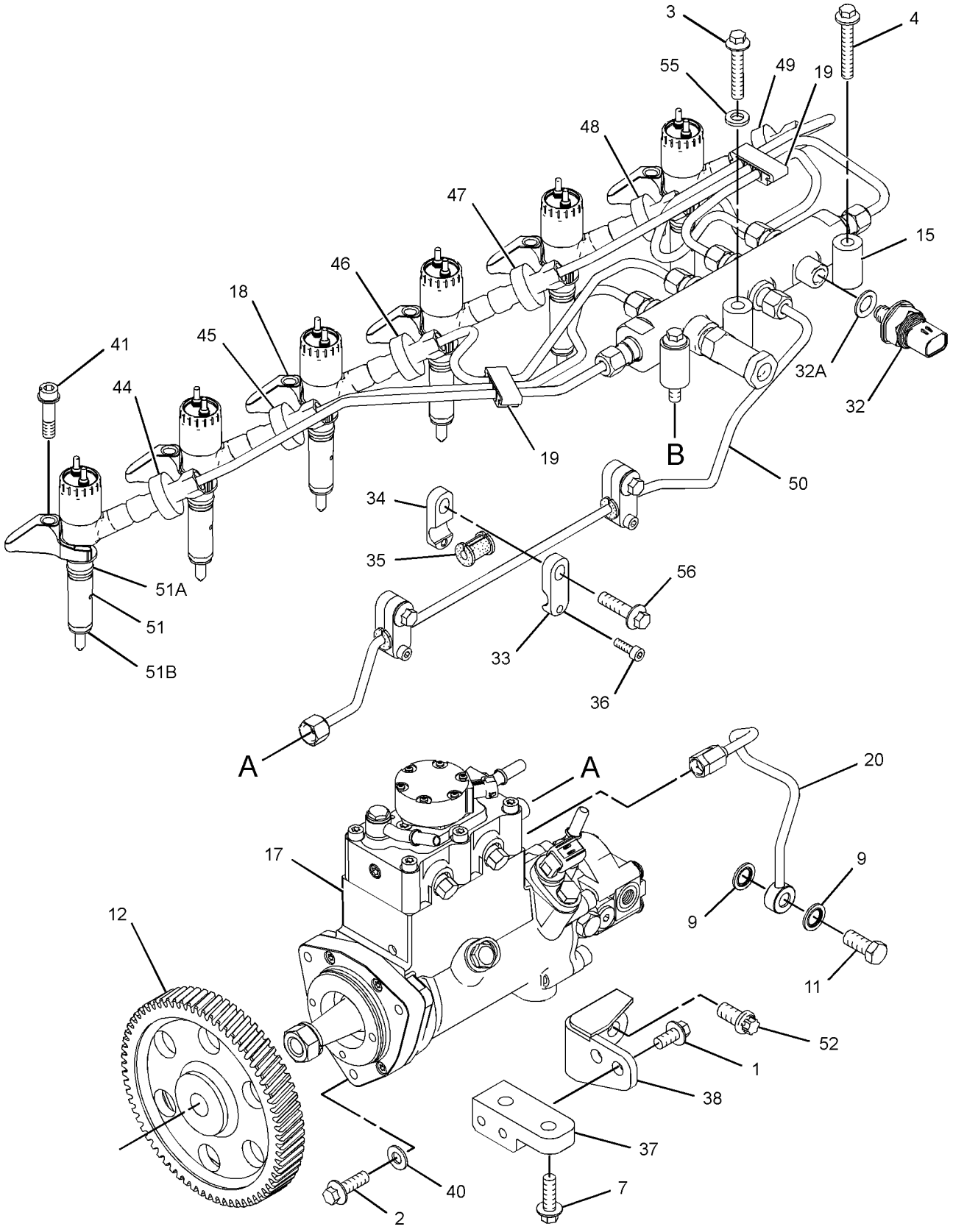

GRAPHIC #1 g01332861

278-5319 **PUMP GP-FUEL INJECTION** *(contd.)* **i02696967**

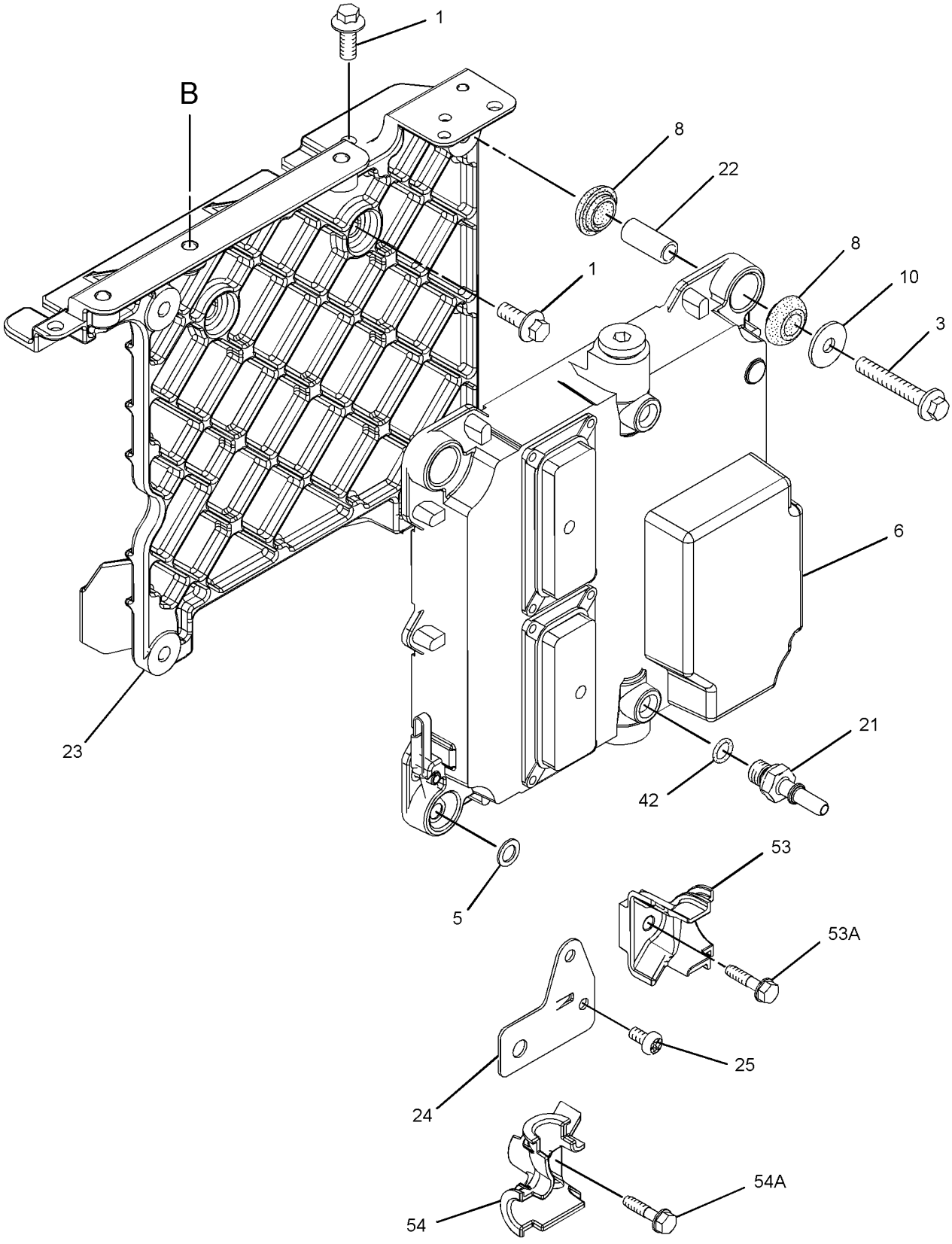

GRAPHIC #2 g01353550

278-5319 **PUMP GP-FUEL INJECTION** *(contd.)* **i02696967**

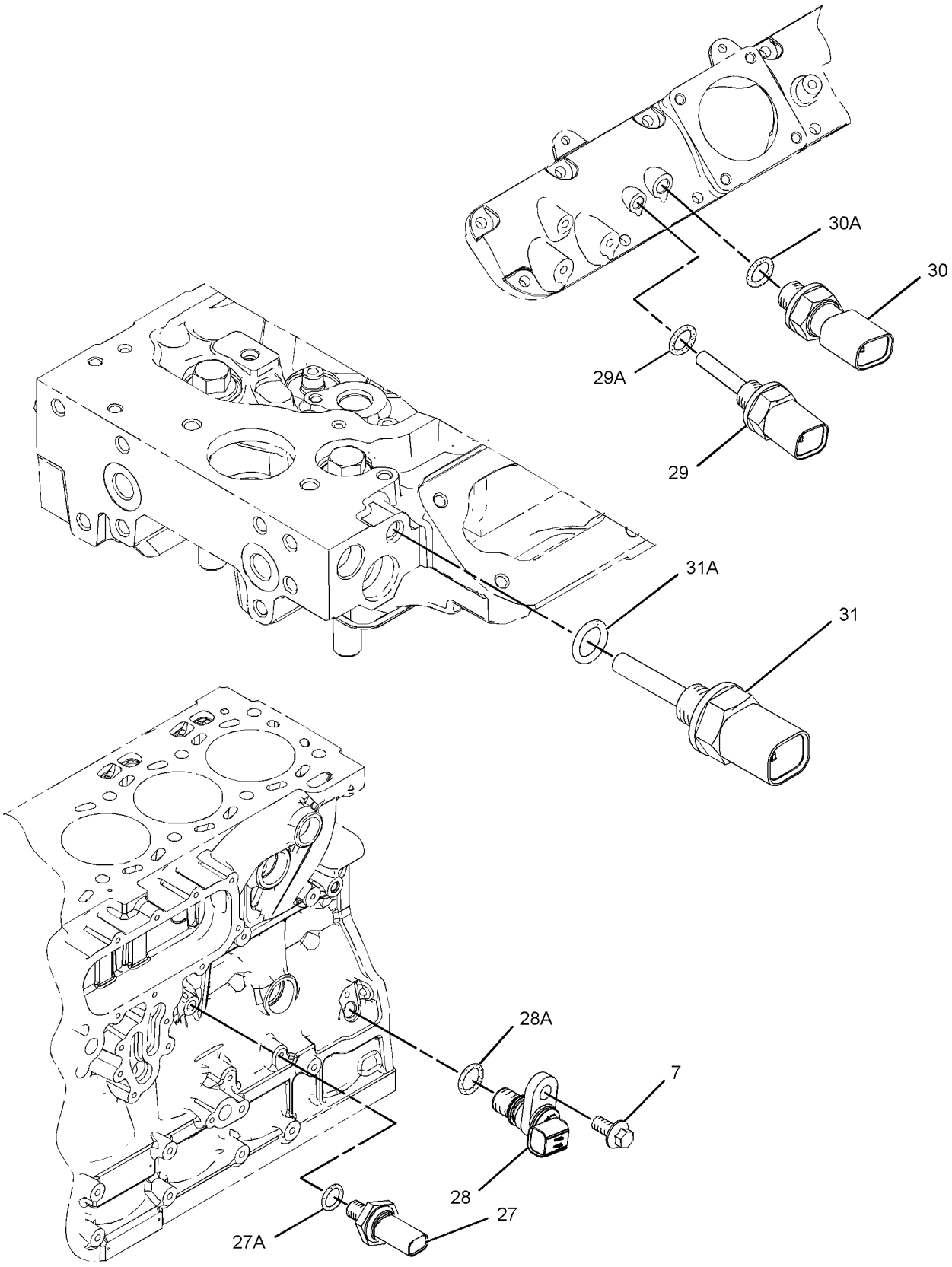

GRAPHIC #3 **<END>** g01218530

FUEL SYSTEM

278-5319 PUMP GP-FUEL INJECTION

S/N: C6E1-495

PART OF 242-1356 ENGINE AR

SMCS-1251, 1290 **i02715378**

NOTE	REF NO	GRAPHIC REF	PART NUMBER	QTY	PART NAME 1 2 3 4 5 6 (PRODUCT LEVEL)	SEE PAGE
M	1	1,2	**6I-0217**	4	BOLT (M8X1.25X20-MM)	
CM	2	1	**6I-0254**	4	BOLT (M8X1.25X30-MM)	
	3	2	**6I-0456**	4	BOLT (M8X1.25X45-MM)	
C	4	1	**6I-4793**	1	BOLT (M8X1.25X50-MM)	
	5	2	**7W-2632**	1	WASHER (8.5X16.8X1.6-MM THK)	
R	6	2	**286-3683**	1	CONTROL GP-UNPROGRAMMED (ENGINE)	
M	7	1,3	**124-3815**	1	BOLT (M8X16X1.25-MM)	
	8	2	**155-0576**	8	MOUNT-ISOLATION	
	9	1	**216-9752**	2	WASHER	
	10	2	**217-0099**	4	SPACER (8.2X25X2-MM THK)	
	11	1	**225-8524**	1	BOLT-SPECIAL (BANJO)	
	12	1	**230-8989**	1	GEAR-FUEL PUMP (68-TEETH)	
	15	1	**265-8125**	1	RAIL AS-FUEL	
Y	17	1	**276-8398**	1	PUMP GP-FUEL INJECTION	134
	18	1	**278-5168**	6	CLAMP-INJECTOR	
	19	1	**278-5180**	2	CLIP	
	20	1	**292-0848**	1	TUBE	
	21	2	**278-5201**	1	CONNECTION	
	22	2	**278-5203**	4	SPACER	
	23	2	**293-9901**	1	BRACKET	
	24	2	**278-5209**	1	BRACKET	
	25	2	**278-5210**	1	BOLT	
	27	3	**278-5225**	1	KIT-SENSOR (ENGINE OIL PRESSURE)	
	27A	3	**278-5226**	1	SEAL-O-RING	
	28	3	**278-5228**	1	KIT-SENSOR (ENGINE SPEED)	
	28A	3	**278-5227**	1	SEAL-O-RING	
	29	3	**278-5272**	1	KIT-SENSOR (INTAKE AIR TEMPERATURE)	
	29A	3	**278-5226**	1	SEAL-O-RING	
	30	3	**278-5273**	1	KIT-SENSOR (AIR PRESSURE)	
	30A	3	**199-9252**	1	SEAL-O-RING	
	31	3	**278-5307**	1	KIT-SENSOR (COOLANT TEMPERATURE)	
	31A	3	**199-9267**	1	SEAL-O-RING	
	32	1	**278-5308**	1	KIT-SENSOR (FUEL RAIL PRESSURE)	
	32A	1	**278-5309**	1	WASHER	
C	33	1	**280-1889**	4	CLAMP	
C	34	1	**280-1890**	4	CLAMP	
C	35	1	**280-1891**	4	ISOLATOR	
	37	1	**282-3233**	1	BRACKET	
	38	1	**282-3234**	1	BRACKET	
	40	1	**232-3149**	6	WASHER (8.35X16.85X1.55-MM THK)	
	41	1	**278-5170**	6	BOLT	
	42	2	**278-5202**	2	SEAL-O-RING	
	44	1	**290-3911**	1	TUBE-FUEL INJECTION (CYL NO. 1)	
	45	1	**290-3912**	1	TUBE-FUEL INJECTION (CYL NO. 2)	
	46	1	**290-3913**	1	TUBE-FUEL INJECTION (CYL NO. 3)	
	47	1	**290-3914**	1	TUBE-FUEL INJECTION (CYL NO. 4)	
	48	1	**290-3915**	1	TUBE-FUEL INJECTION (CYL NO. 5)	
	49	1	**290-3916**	1	TUBE-FUEL INJECTION (CYL NO. 6)	
	50	1	**290-3910**	1	TUBE-FUEL INJECTION	
Y	51	1	**282-0480**	6	INJECTOR GP-FUEL	120
	52	1	**287-6839**	1	BOLT	
	53	2	**268-6677**	1	BRACKET AS	
		2	**260-3718**	1	BRACKET	
	53A	2	**260-3939**	1	SCREW-HEX HEAD	
	54	2	**268-6678**	1	BRACKET AS	
		2	**260-3719**	1	BRACKET	

278-5319 **PUMP GP-FUEL INJECTION** *(contd.)* **i02715378**

NOTE	REF NO	GRAPHIC REF	PART NUMBER	QTY	PART NAME 1 2 3 4 5 6 (PRODUCT LEVEL)	SEE PAGE
	54A	2	**260-3939**	1	SCREW-HEX HEAD	
C	55	1	**300-2940**	1	BRACKET	
C	56	1	**241-4291**	4	SCREW	
C	57	1	**6I-4374**	2	BOLT (M8X1.25X60-MM)	
FM			**6I-0260**	1	BOLT (M8X1.25X25-MM)	
FM			**101-3895**	1	BOLT (M8X1.25X35-MM)	
F			**278-4138**	4	PROTECTION GP-FUEL SYSTEM	

C-CHANGE FROM PREVIOUS TYPE
F-NOT SHOWN
M-METRIC PART
R-REMFG PART MAY BE AVAILABLE
Y-SEPARATE ILLUSTRATION

278-5319 **PUMP GP-FUEL INJECTION** *(contd.)* **i02715378**

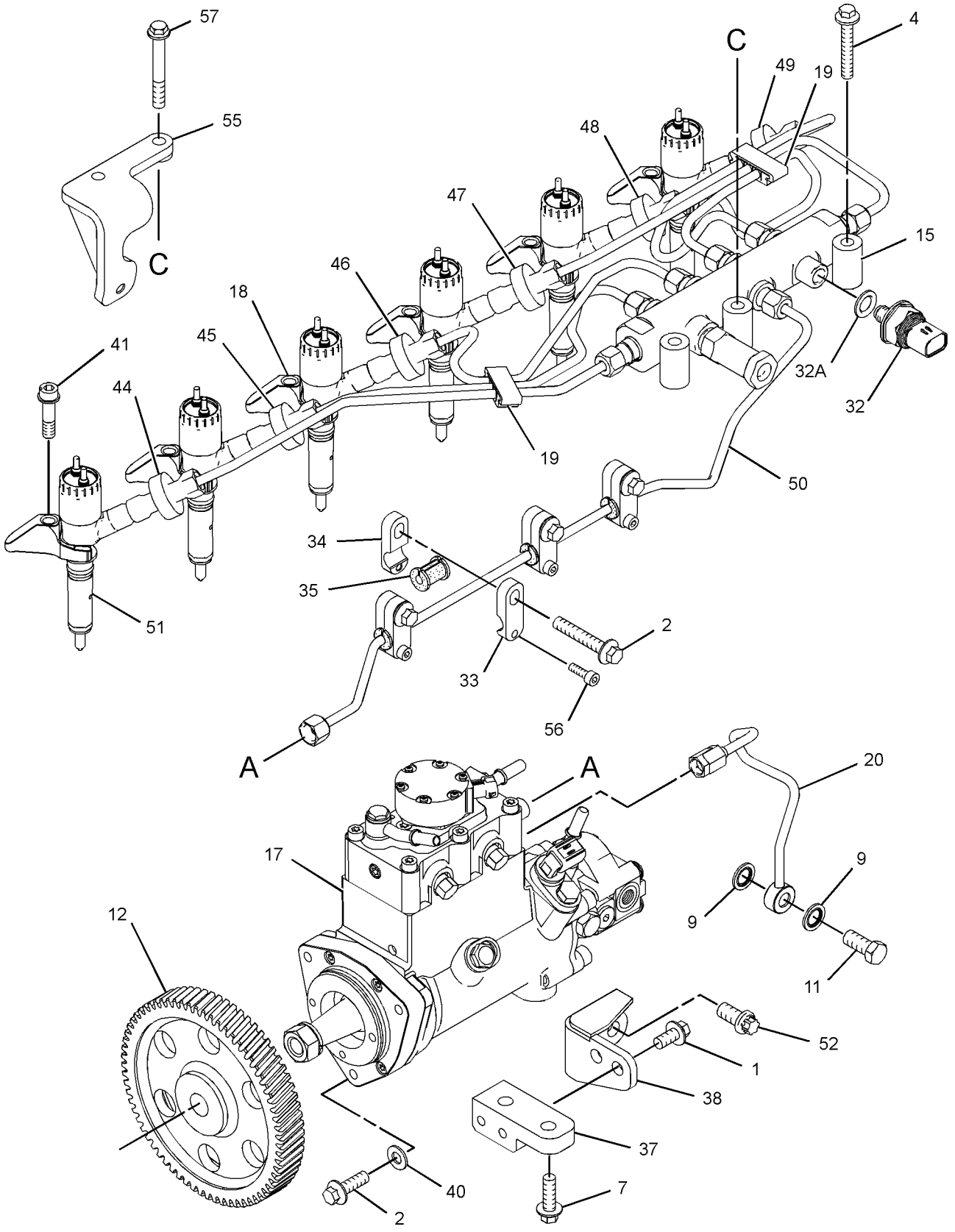

GRAPHIC #1 g01366480

278-5319 **PUMP GP-FUEL INJECTION** *(contd.)* **i02715378**

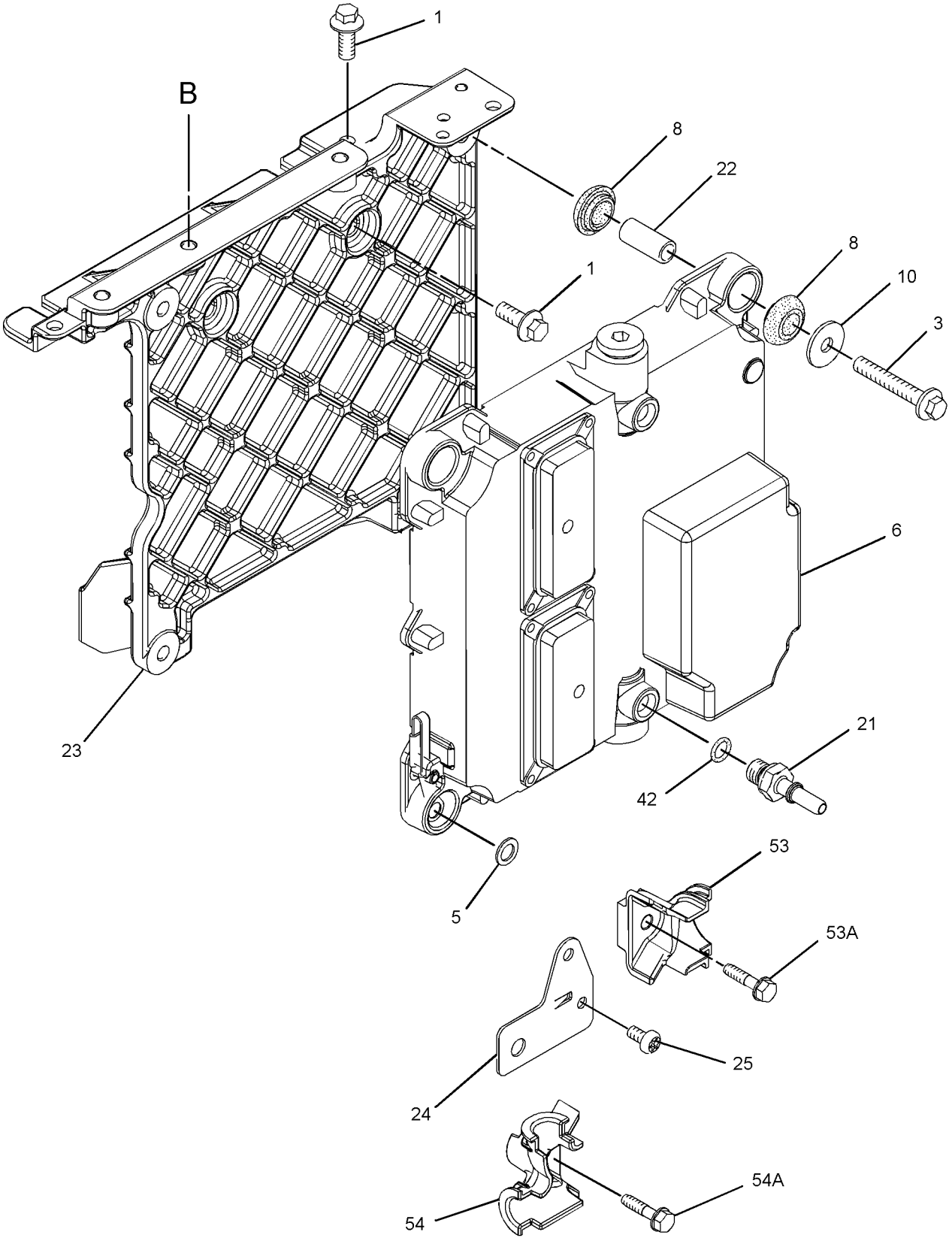

GRAPHIC #2 g01353550

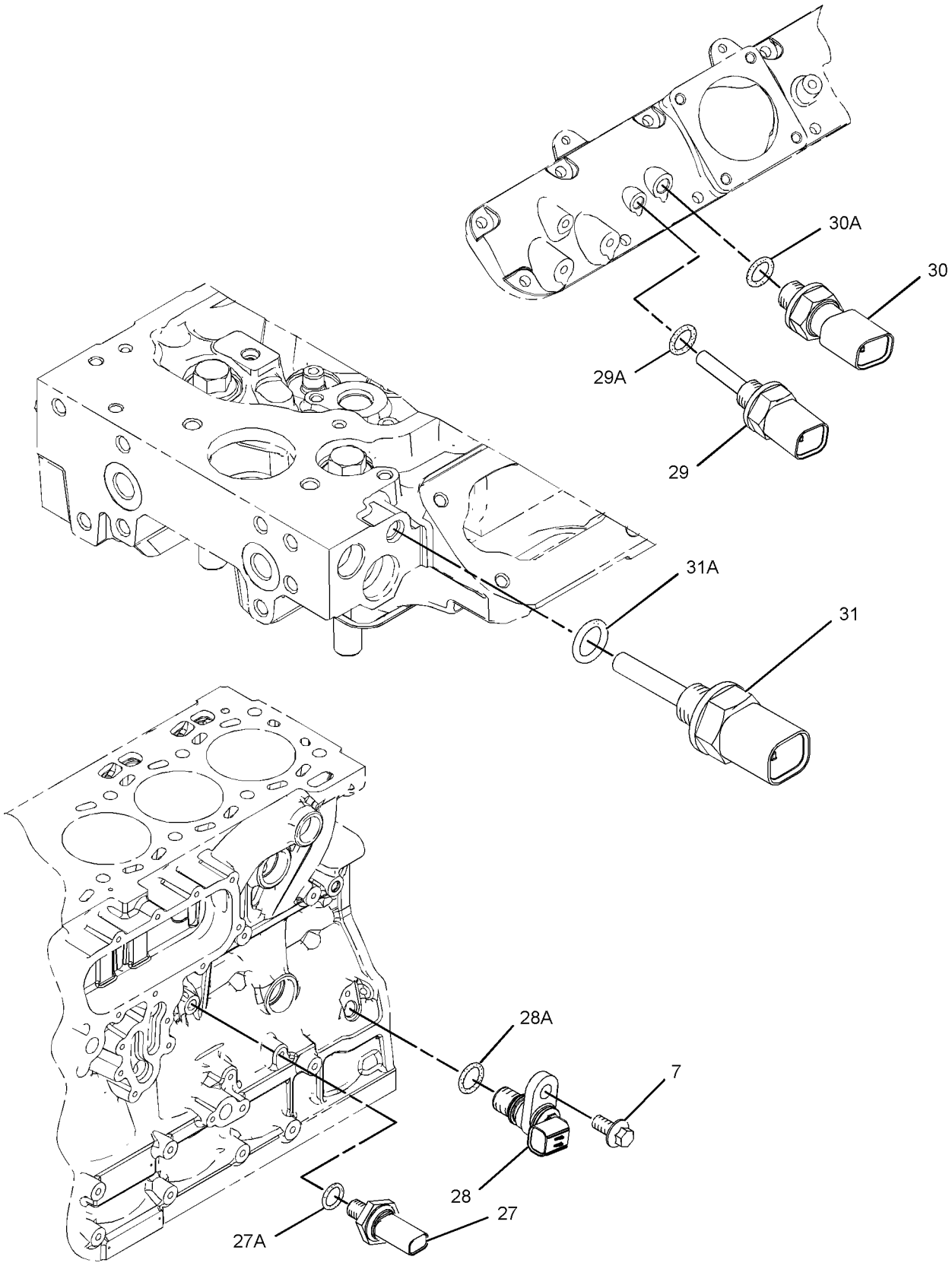

GRAPHIC #3 **<END>** g01218530

279-9692 PUMP GP-FUEL INJECTION

S/N: C6E1-484

PART OF 242-1356 ENGINE AR

SMCS-1251, 1290 **i02386955**

NOTE	REF NO	GRAPHIC REF	PART NUMBER	QTY	PART NAME 1 2 3 4 5 6 (PRODUCT LEVEL)	SEE PAGE
	1	1	**277-4991**	1	CONNECTION	
	2	1	**277-4993**	1	SEAL-O-RING	

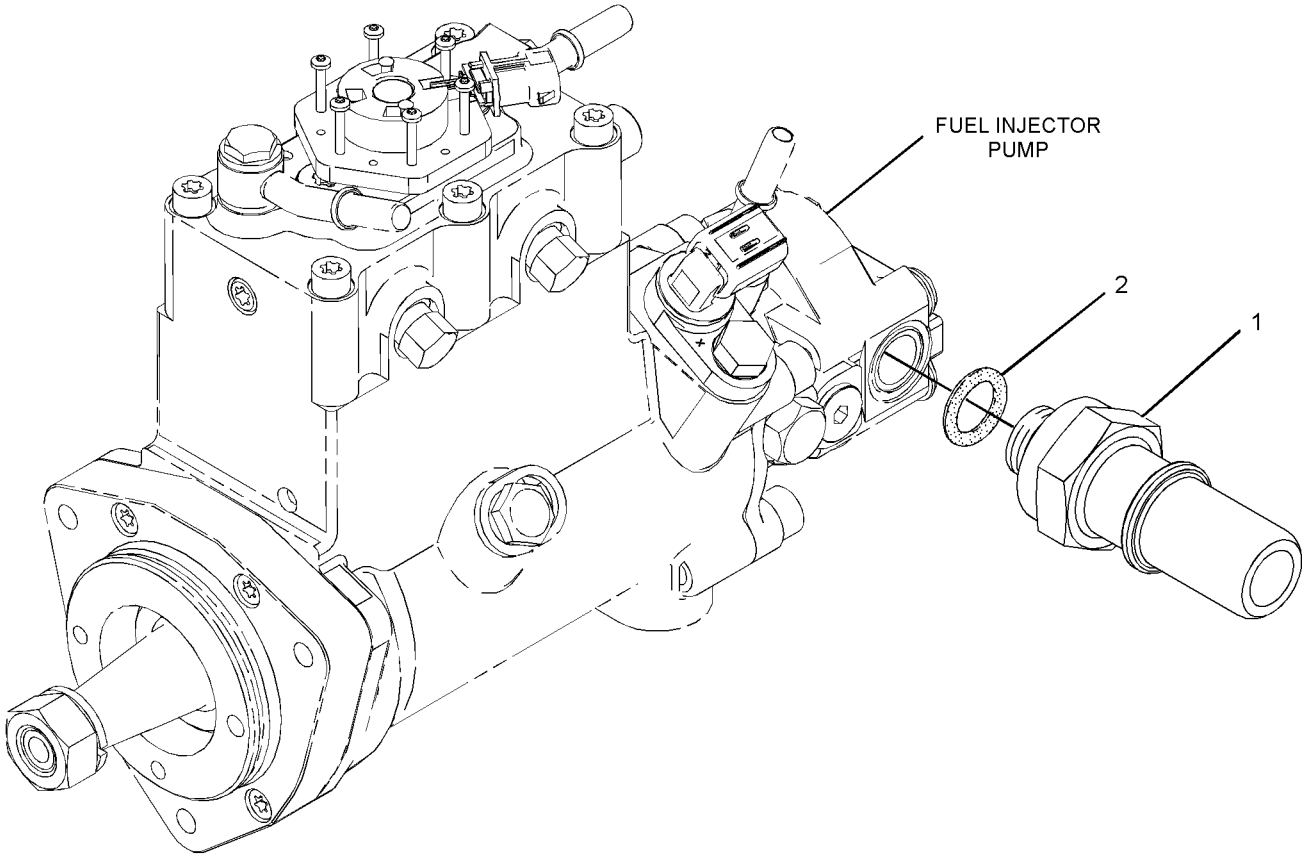

GRAPHIC #1 **<END>** g01195506

FUEL SYSTEM

310-0659 PUMP GP-FUEL INJECTION

S/N: C6E496-3159

PART OF 242-1356 ENGINE AR

SMCS-1251, 1290 **i02765288**

NOTE	REF NO	GRAPHIC REF	PART NUMBER	QTY	PART NAME 1 2 3 4 5 6 (PRODUCT LEVEL)	SEE PAGE
M	1	1,2	**6I-0217**	6	BOLT (M8X1.25X20-MM)	
M	2	1	**6I-0254**	4	BOLT (M8X1.25X30-MM)	
M	3	1	**6I-0260**	5	BOLT (M8X1.25X25-MM)	
	4	2	**6I-0456**	4	BOLT (M8X1.25X45-MM)	
	5	1	**6I-4374**	2	BOLT (M8X1.25X60-MM)	
	6	1	**6I-4793**	1	BOLT (M8X1.25X50-MM)	
	7	2	**7W-2632**	1	WASHER (8.5X16.8X1.6-MM THK)	
M	8	1	**101-3895**	1	BOLT (M8X1.25X35-MM)	
M	9	3	**124-3815**	1	BOLT (M8X16X1.25-MM)	
	10	1	**216-9752**	2	WASHER	
	11	2	**217-0099**	4	SPACER (8.2X25X2-MM THK)	
	12	1	**217-9039**	1	STRAP-CABLE	
	13	1	**225-8524**	1	BOLT-SPECIAL (BANJO)	
	14	1	**230-8989**	1	GEAR-FUEL PUMP (68-TEETH)	
	15	1	**232-3149**	3	WASHER (8.35X16.85X1.55-MM THK)	
	16	1	**241-4291**	4	SCREW	
	17	2	**268-6677**	1	BRACKET AS	
		2	**260-3718**	1	BRACKET	
	17A	2	**260-3939**	1	SCREW-HEX HEAD	
	18	2	**268-6678**	1	BRACKET AS	
		2	**260-3719**	1	BRACKET	
	18A	2	**260-3939**	1	SCREW-HEX HEAD	
	19	1	**310-7918**	1	BRACKET-SUPPORT	
	20	1	**278-5168**	6	CLAMP-INJECTOR	
	21	1	**278-5170**	6	BOLT	
	22	1	**278-5180**	2	CLIP	
	23	2	**278-5203**	4	SPACER	
	24	3	**278-5225**	1	KIT-SENSOR (ENGINE OIL PRESSURE)	
	24A	3	**199-9267**	1	SEAL-O-RING	
	25	3	**278-5272**	1	KIT-SENSOR (INTAKE AIR TEMPERATURE)	
	25A	3	**278-5226**	1	SEAL-O-RING	
	26	3	**278-5273**	1	KIT-SENSOR (AIR PRESSURE)	
	26A	3	**199-9252**	1	SEAL-O-RING	
	27	3	**278-5307**	1	KIT-SENSOR (COOLANT TEMPERATURE)	
	27A	3	**199-9267**	1	SEAL-O-RING	
	28	1	**311-6342**	1	SENSOR-PRESSURE (FUEL)	
	28A	1	**309-8006**	1	WASHER	
	29	1	**280-1889**	4	CLAMP	
	30	1	**280-1890**	4	CLAMP	
	31	1	**280-1891**	4	ISOLATOR	
Y	32	1	**282-0480**	6	INJECTOR GP-FUEL	120
R	33	2	**286-3686**	1	CONTROL GP-ENGINE ELECTRONIC	
	34	1	**287-6838**	1	BRACKET	
	35	1	**287-6839**	2	BOLT	
	36	1	**290-3910**	1	TUBE-FUEL INJECTION	
	37	1	**290-3911**	1	TUBE-FUEL INJECTION (CYL NO. 1)	
	38	1	**290-3912**	1	TUBE-FUEL INJECTION (CYL NO. 2)	
	39	1	**290-3913**	1	TUBE-FUEL INJECTION (CYL NO. 3)	
	40	1	**290-3914**	1	TUBE-FUEL INJECTION (CYL NO. 4)	
	41	1	**290-3915**	1	TUBE-FUEL INJECTION (CYL NO. 5)	
	42	1	**290-3916**	1	TUBE-FUEL INJECTION (CYL NO. 6)	
YR	43	1	**291-5919**	1	PUMP & MTG GP-UNIT INJ HYD	133
	44	1	**292-0848**	1	TUBE	
	45	2	**293-9901**	1	BRACKET	
	46	1	**300-2940**	1	BRACKET	
	47	2	**300-6714**	8	MOUNT	

310-0659 PUMP GP-FUEL INJECTION *(contd.)* i02765288

NOTE	REF NO	GRAPHIC REF	PART NUMBER	QTY	PART NAME 1 2 3 4 5 6 (PRODUCT LEVEL)	SEE PAGE
	48	1	**308-8426**	1	RAIL AS-FUEL	
	49	3	**311-3858**	1	KIT-SENSOR (ENGINE SPEED)	
	49A	3	**274-1639**	1	SEAL	
F			**278-4138**	4	PROTECTION GP-FUEL SYSTEM	

F-NOT SHOWN
M-METRIC PART
R-REMFG PART MAY BE AVAILABLE
Y-SEPARATE ILLUSTRATION

310-0659 **PUMP GP-FUEL INJECTION** *(contd.)* **i02765288**

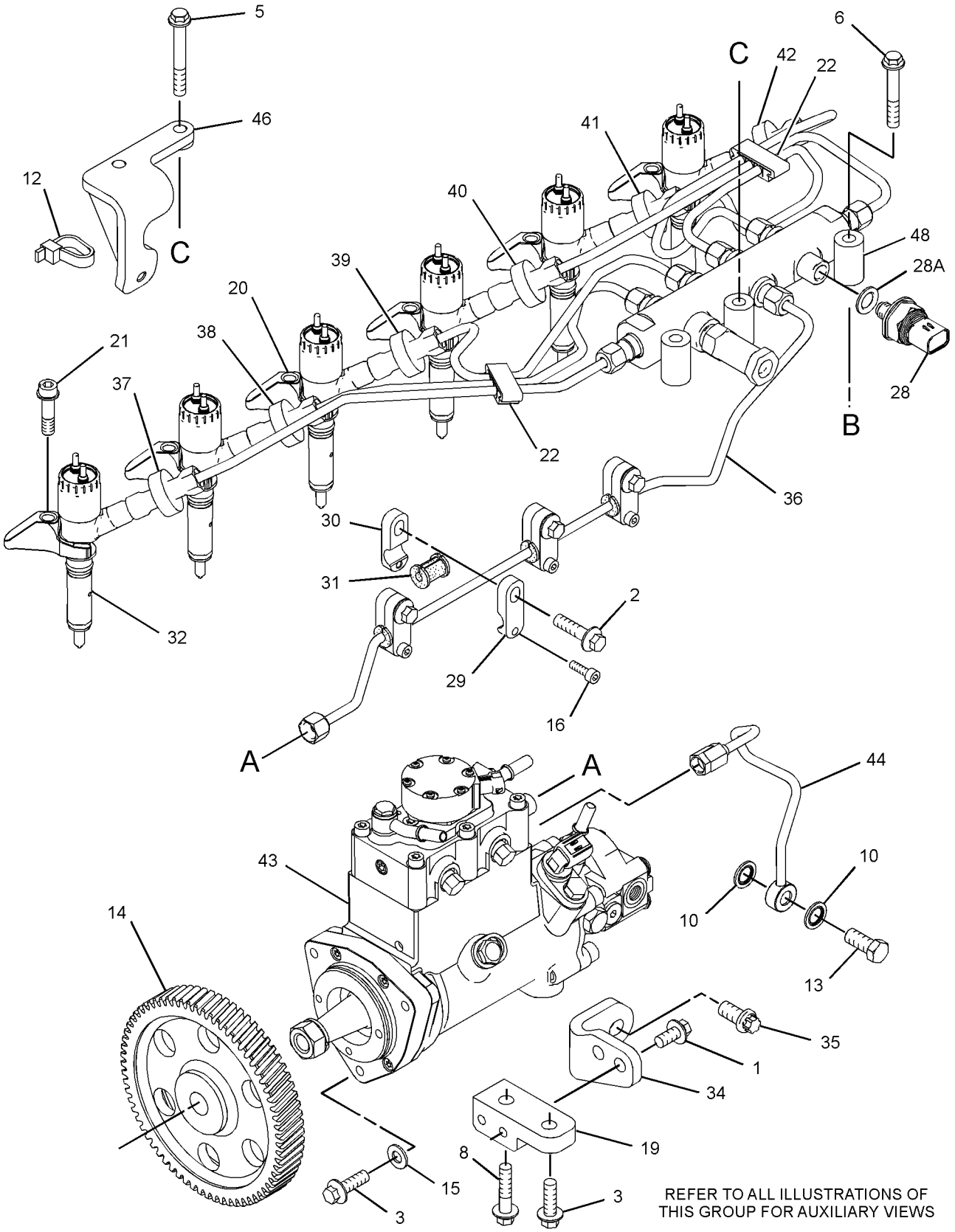

GRAPHIC #1

g01412202

310-0659 **PUMP GP-FUEL INJECTION** *(contd.)* **i02765288**

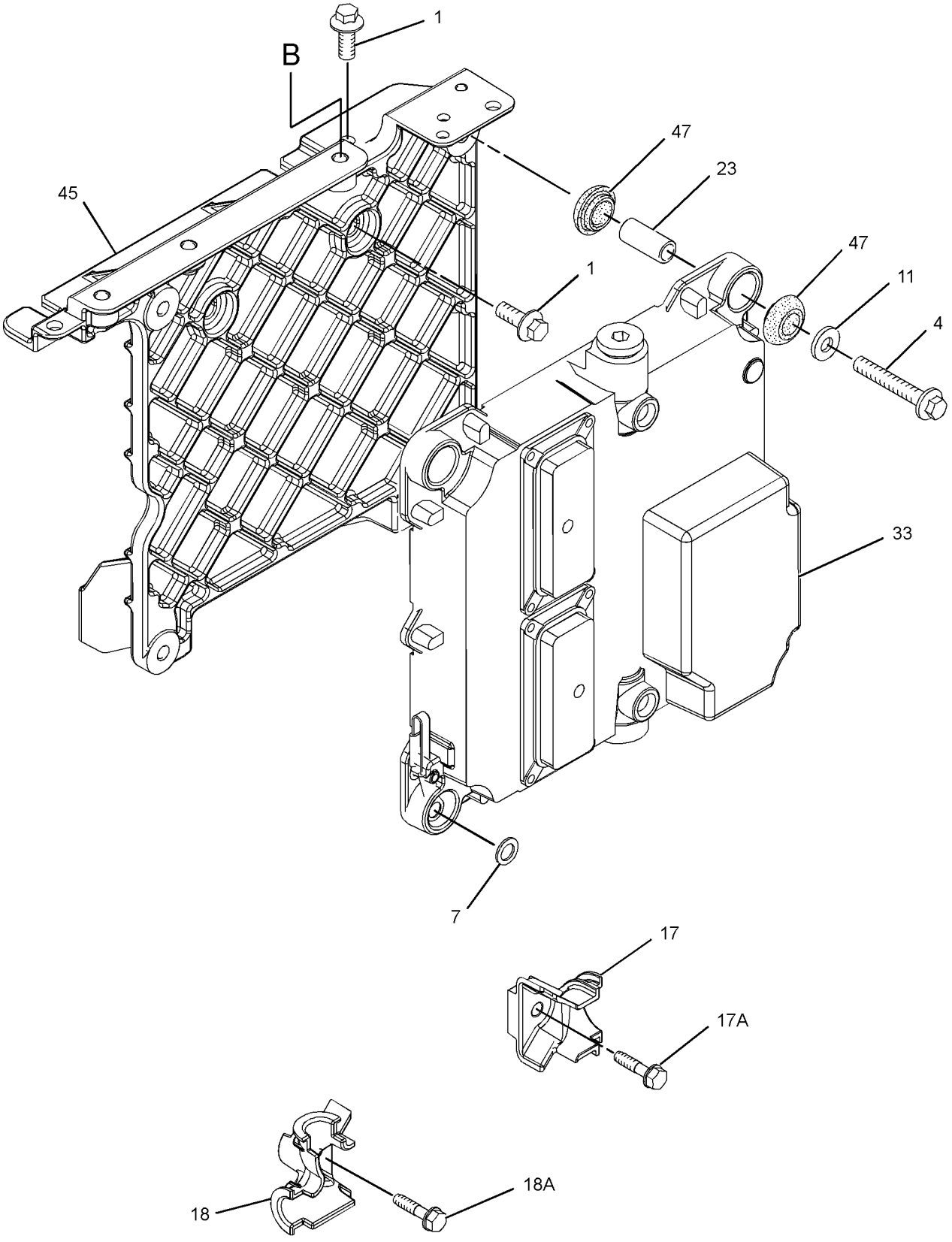

GRAPHIC #2 g01412203

310-0659 **PUMP GP-FUEL INJECTION** *(contd.)* **i02765288**

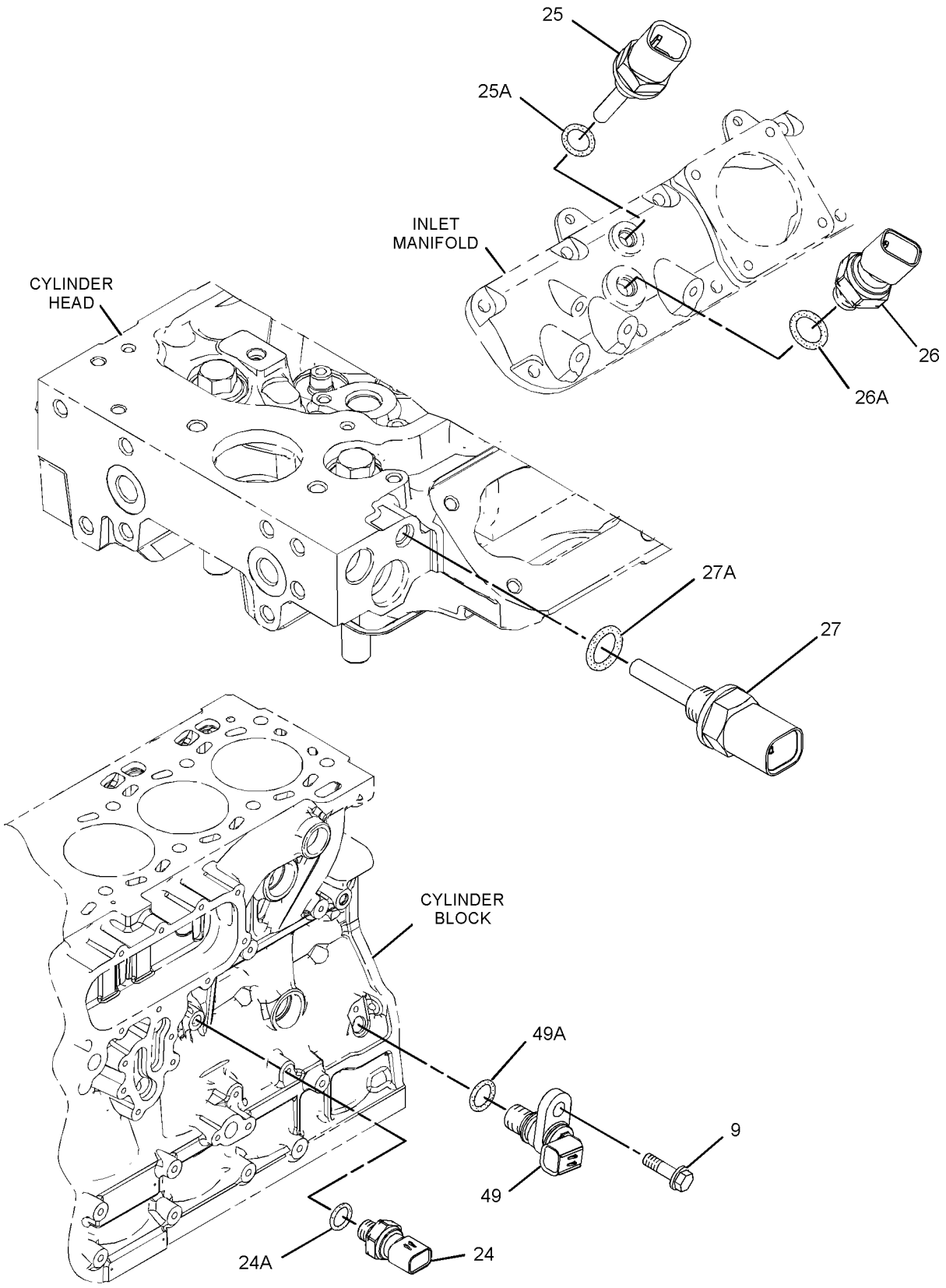

GRAPHIC #3 **<END>** g01412205

FUEL SYSTEM

310-0659 PUMP GP-FUEL INJECTION

S/N: C6E3160-6804

PART OF 242-1356 ENGINE AR

SMCS-1251, 1290 **i02995543**

NOTE	REF NO	GRAPHIC REF	PART NUMBER	QTY	PART NAME 1 2 3 4 5 6 (PRODUCT LEVEL)	SEE PAGE
M	1	1,2	**6I-0217**	6	BOLT (M8X1.25X20-MM)	
M	2	1	**6I-0254**	4	BOLT (M8X1.25X30-MM)	
M	3	1	**6I-0260**	5	BOLT (M8X1.25X25-MM)	
	4	2	**6I-0456**	4	BOLT (M8X1.25X45-MM)	
	5	1	**6I-4374**	2	BOLT (M8X1.25X60-MM)	
	6	1	**6I-4793**	1	BOLT (M8X1.25X50-MM)	
	7	2	**7W-2632**	1	WASHER (8.5X16.8X1.6-MM THK)	
M	8	1	**101-3895**	1	BOLT (M8X1.25X35-MM)	
M	9	3	**124-3815**	1	BOLT (M8X16X1.25-MM)	
	10	1	**320-2391**	2	WASHER	
	11	2	**217-0099**	4	SPACER (8.2X25X2-MM THK)	
	12	1	**217-9039**	1	STRAP-CABLE	
	13	1	**225-8524**	1	BOLT-SPECIAL (BANJO)	
	14	1	**230-8989**	1	GEAR-FUEL PUMP (68-TEETH)	
	15	1	**232-3149**	3	WASHER (8.35X16.85X1.55-MM THK)	
	16	1	**241-4291**	4	SCREW	
	17	2	**268-6677**	1	BRACKET AS	
	17A	2	**260-3939**	1	SCREW-HEX HEAD	
	18	2	**268-6678**	1	BRACKET AS	
	18A	2	**260-3939**	1	SCREW-HEX HEAD	
	19	1	**310-7918**	1	BRACKET-SUPPORT	
	20	1	**278-5168**	6	CLAMP-INJECTOR	
	21	1	**278-5170**	6	BOLT	
	22	1	**278-5180**	2	CLIP	
	23	2	**278-5203**	4	SPACER	
	24	3	**278-5225**	1	KIT-SENSOR (ENGINE OIL PRESSURE)	
	24A	3	**199-9267**	1	SEAL-O-RING	
	25	3	**278-5272**	1	KIT-SENSOR (INTAKE AIR TEMPERATURE)	
	25A	3	**278-5226**	1	SEAL-O-RING	
	26	3	**278-5273**	1	KIT-SENSOR (AIR PRESSURE)	
	26A	3	**199-9252**	1	SEAL-O-RING	
	27	3	**278-5307**	1	KIT-SENSOR (COOLANT TEMPERATURE)	
	27A	3	**199-9267**	1	SEAL-O-RING	
	28	1	**311-6342**	1	SENSOR-PRESSURE (FUEL)	
	28A	1	**309-8006**	1	WASHER	
	29	1	**280-1889**	4	CLAMP	
	30	1	**280-1890**	4	CLAMP	
	31	1	**280-1891**	4	ISOLATOR	
CYR	32	1	**306-9380**	6	INJECTOR GP-FUEL	121
R	33	2	**286-3686**	1	CONTROL GP-ENGINE ELECTRONIC	
	34	1	**287-6838**	1	BRACKET	
	35	1	**287-6839**	2	BOLT	
	36	1	**290-3910**	1	TUBE-FUEL INJECTION	
	37	1	**290-3911**	1	TUBE-FUEL INJECTION (CYL NO. 1)	
	38	1	**290-3912**	1	TUBE-FUEL INJECTION (CYL NO. 2)	
	39	1	**290-3913**	1	TUBE-FUEL INJECTION (CYL NO. 3)	
	40	1	**290-3914**	1	TUBE-FUEL INJECTION (CYL NO. 4)	
	41	1	**290-3915**	1	TUBE-FUEL INJECTION (CYL NO. 5)	
	42	1	**290-3916**	1	TUBE-FUEL INJECTION (CYL NO. 6)	
YR	43	1	**291-5919**	1	PUMP & MTG GP-UNIT INJ HYD	133
	44	1	**321-1270**	1	TUBE-OIL	
	45	2	**293-9901**	1	BRACKET	
	46	1	**300-2940**	1	BRACKET	
	47	2	**300-6714**	8	MOUNT	
C	48	1	**311-6632**	1	RAIL AS-FUEL	
	49	3	**311-3858**	1	KIT-SENSOR (ENGINE SPEED)	

310-0659 **PUMP GP-FUEL INJECTION** *(contd.)* **i02995543**

NOTE	REF NO	GRAPHIC REF	PART NUMBER	QTY	PART NAME 1 2 3 4 5 6 (PRODUCT LEVEL)	SEE PAGE
	49A	3	**274-1639**	1	SEAL	
F			**278-4138**	4	PROTECTION GP-FUEL SYSTEM	

C-CHANGE FROM PREVIOUS TYPE
F-NOT SHOWN
M-METRIC PART
R-REMFG PART MAY BE AVAILABLE
Y-SEPARATE ILLUSTRATION

310-0659 **PUMP GP-FUEL INJECTION** *(contd.)* **i02995543**

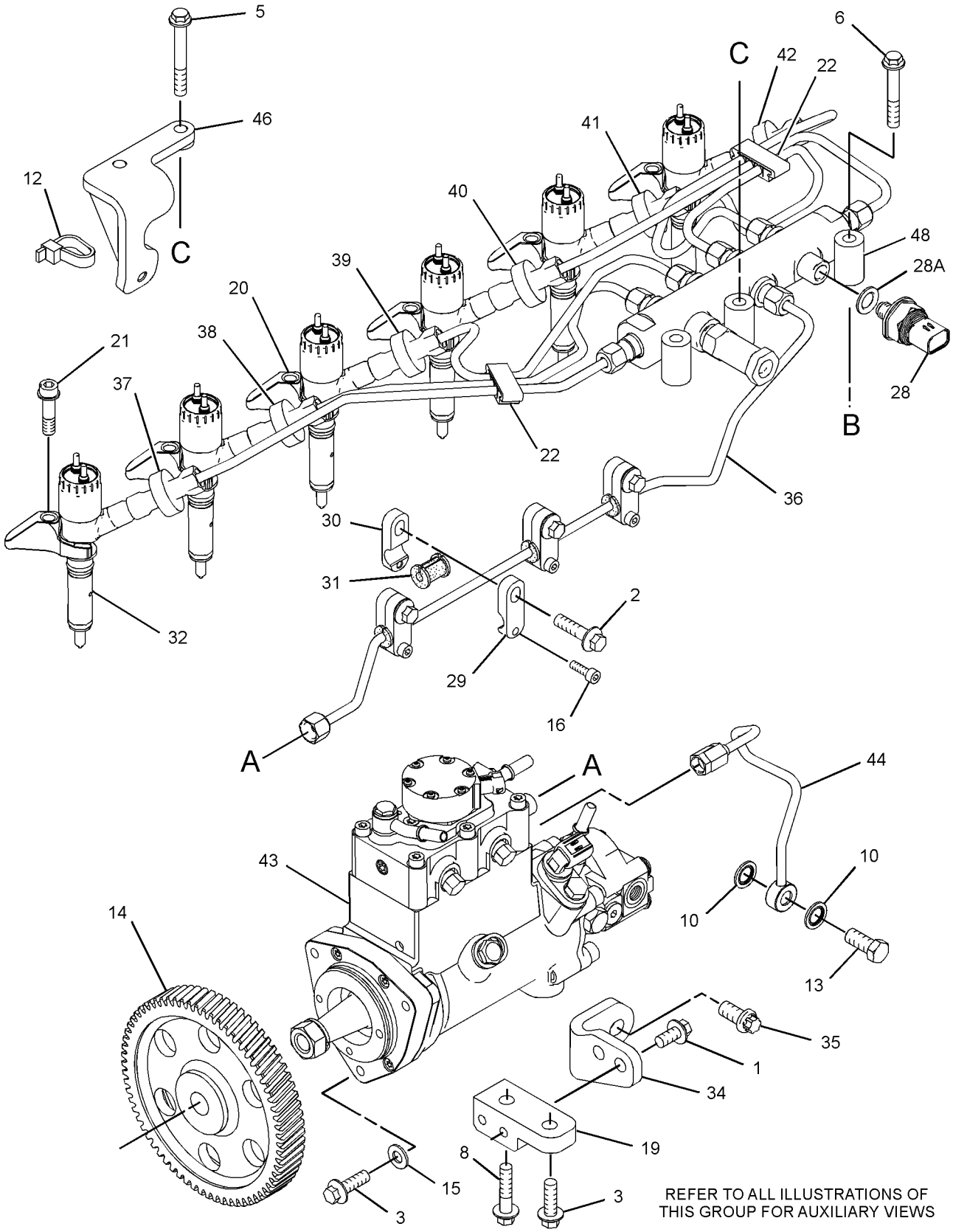

GRAPHIC #1

g01412202

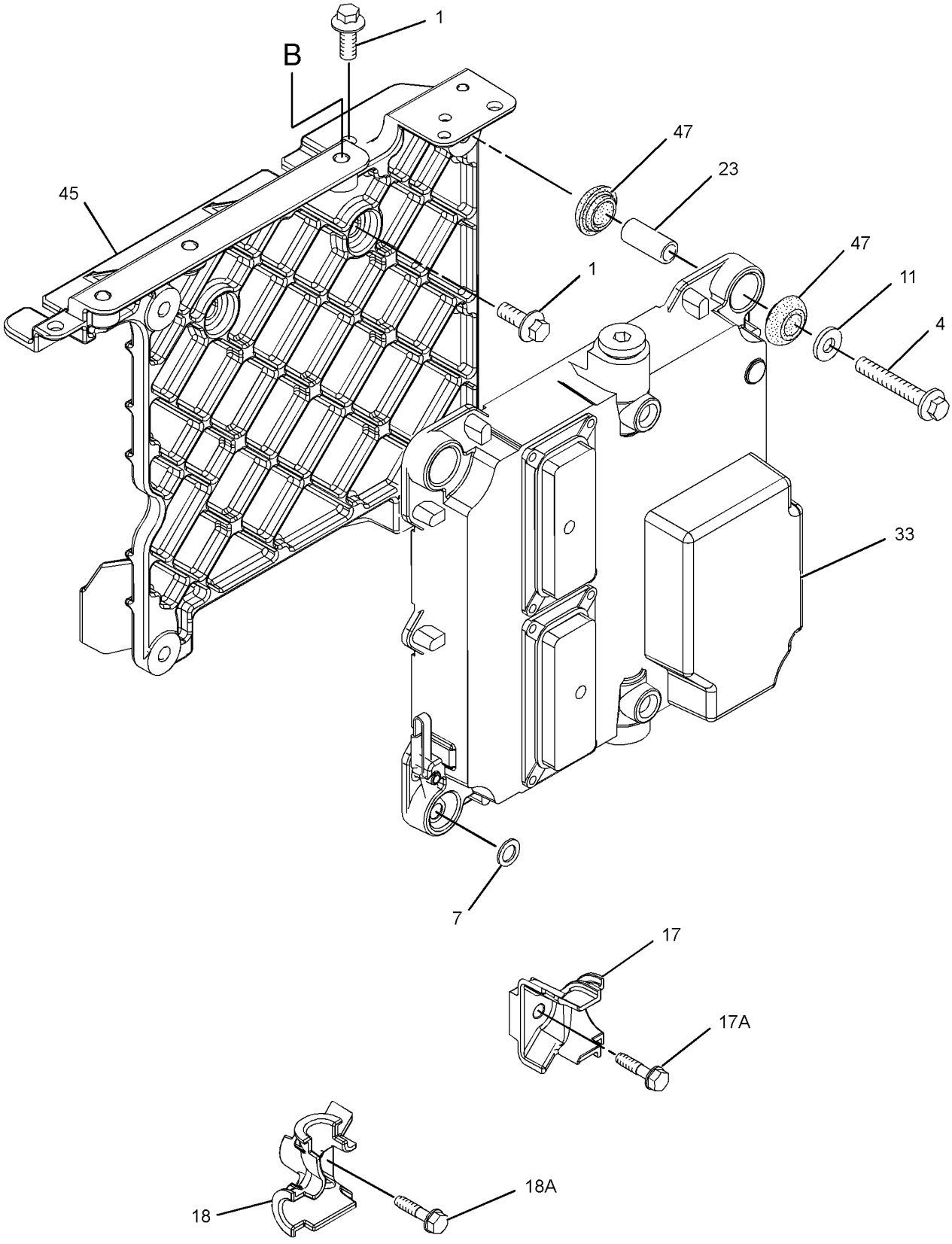

GRAPHIC #2

g01412203

310-0659 **PUMP GP-FUEL INJECTION** *(contd.)* **i02995543**

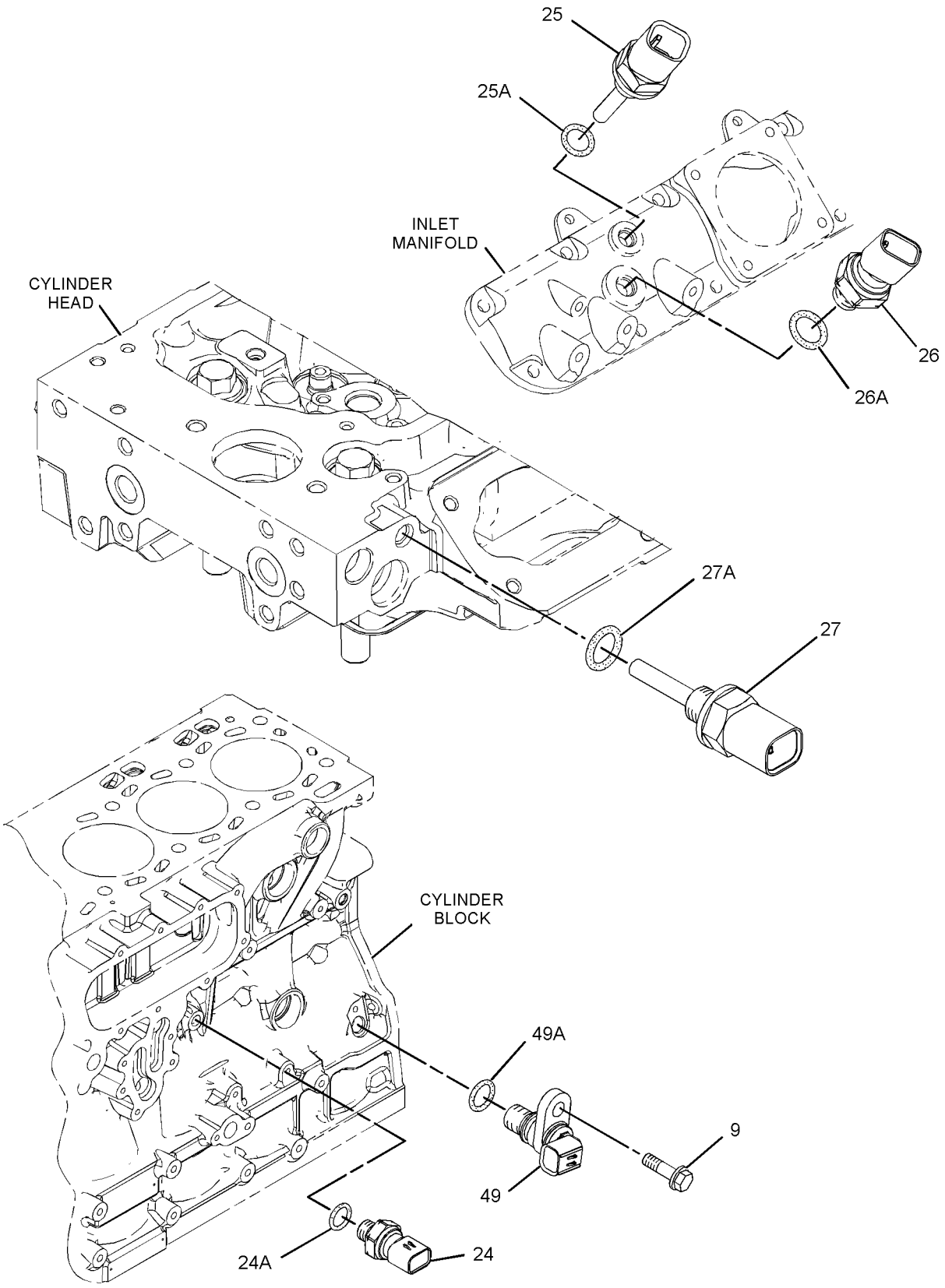

GRAPHIC #3 **<END>** g01412205

FUEL SYSTEM

310-0659 PUMP GP-FUEL INJECTION

S/N: C6E6805-8839

PART OF 242-1356 ENGINE AR

SMCS-1251, 1290 **i03133282**

NOTE	REF NO	GRAPHIC REF	PART NUMBER	QTY	PART NAME 1 2 3 4 5 6 (PRODUCT LEVEL)	SEE PAGE
M	1	1,2	**6I-0217**	6	BOLT (M8X1.25X20-MM)	
M	2	1	**6I-0254**	4	BOLT (M8X1.25X30-MM)	
M	3	1	**6I-0260**	5	BOLT (M8X1.25X25-MM)	
	4	2	**6I-0456**	4	BOLT (M8X1.25X45-MM)	
	5	1	**6I-4374**	2	BOLT (M8X1.25X60-MM)	
	6	1	**6I-4793**	1	BOLT (M8X1.25X50-MM)	
	7	2	**7W-2632**	1	WASHER (8.5X16.8X1.6-MM THK)	
M	8	1	**101-3895**	1	BOLT (M8X1.25X35-MM)	
M	9	3	**124-3815**	1	BOLT (M8X16X1.25-MM)	
	10	1	**160-0162**	2	WASHER	
	11	2	**217-0099**	4	SPACER (8.2X25X2-MM THK)	
	12	1	**217-9039**	1	STRAP-CABLE	
	13	1	**225-8524**	1	BOLT-SPECIAL (BANJO)	
	14	1	**230-8989**	1	GEAR-FUEL PUMP (68-TEETH)	
	15	1	**232-3149**	3	WASHER (8.35X16.85X1.55-MM THK)	
	16	1	**241-4291**	4	SCREW	
	17	2	**268-6677**	1	BRACKET AS	
	17A	2	**260-3939**	1	SCREW-HEX HEAD	
	18	2	**268-6678**	1	BRACKET AS	
	18A	2	**260-3939**	1	SCREW-HEX HEAD	
	19	1	**310-7918**	1	BRACKET-SUPPORT	
	20	1	**278-5168**	6	CLAMP-INJECTOR	
	21	1	**278-5170**	6	BOLT	
	22	1	**278-5180**	2	CLIP	
	23	2	**278-5203**	4	SPACER	
	24	3	**278-5225**	1	KIT-SENSOR (ENGINE OIL PRESSURE)	
	24A	3	**199-9267**	1	SEAL-O-RING	
	25	3	**278-5272**	1	KIT-SENSOR (INTAKE AIR TEMPERATURE)	
	25A	3	**278-5226**	1	SEAL-O-RING	
	26	3	**278-5273**	1	KIT-SENSOR (AIR PRESSURE)	
	26A	3	**199-9252**	1	SEAL-O-RING	
	27	3	**278-5307**	1	KIT-SENSOR (COOLANT TEMPERATURE)	
	27A	3	**199-9267**	1	SEAL-O-RING	
	28	1	**311-6342**	1	SENSOR-PRESSURE (FUEL)	
	28A	1	**309-8006**	1	WASHER	
	29	1	**280-1889**	4	CLAMP	
	30	1	**280-1890**	4	CLAMP	
	31	1	**280-1891**	4	ISOLATOR	
CY	32	1	**321-3600**	6	INJECTOR GP-FUEL	122
R	33	2	**286-3686**	1	CONTROL GP-ENGINE ELECTRONIC	
	34	1	**287-6838**	1	BRACKET	
	35	1	**287-6839**	2	BOLT	
	36	1	**290-3910**	1	TUBE-FUEL INJECTION	
	37	1	**290-3911**	1	TUBE-FUEL INJECTION (CYL NO. 1)	
	38	1	**290-3912**	1	TUBE-FUEL INJECTION (CYL NO. 2)	
	39	1	**290-3913**	1	TUBE-FUEL INJECTION (CYL NO. 3)	
	40	1	**290-3914**	1	TUBE-FUEL INJECTION (CYL NO. 4)	
	41	1	**290-3915**	1	TUBE-FUEL INJECTION (CYL NO. 5)	
	42	1	**290-3916**	1	TUBE-FUEL INJECTION (CYL NO. 6)	
YR	43	1	**291-5919**	1	PUMP & MTG GP-UNIT INJ HYD	133
	44	1	**321-1270**	1	TUBE-OIL	
	45	2	**293-9901**	1	BRACKET	
	46	1	**300-2940**	1	BRACKET	
	47	2	**300-6714**	8	MOUNT	
C	48	1	**311-6632**	1	RAIL AS-FUEL	
	49	3	**311-3858**	1	KIT-SENSOR (ENGINE SPEED)	

310-0659 PUMP GP-FUEL INJECTION *(contd.)* i03133282

NOTE	REF NO	GRAPHIC REF	PART NUMBER	QTY	PART NAME 1 2 3 4 5 6 (PRODUCT LEVEL)	SEE PAGE
	49A	3	**274-1639**	1	SEAL	
F			**278-4138**	4	PROTECTION GP-FUEL SYSTEM	

C-CHANGE FROM PREVIOUS TYPE
F-NOT SHOWN
M-METRIC PART
R-REMFG PART MAY BE AVAILABLE
Y-SEPARATE ILLUSTRATION

310-0659 **PUMP GP-FUEL INJECTION** *(contd.)* **i03133282**

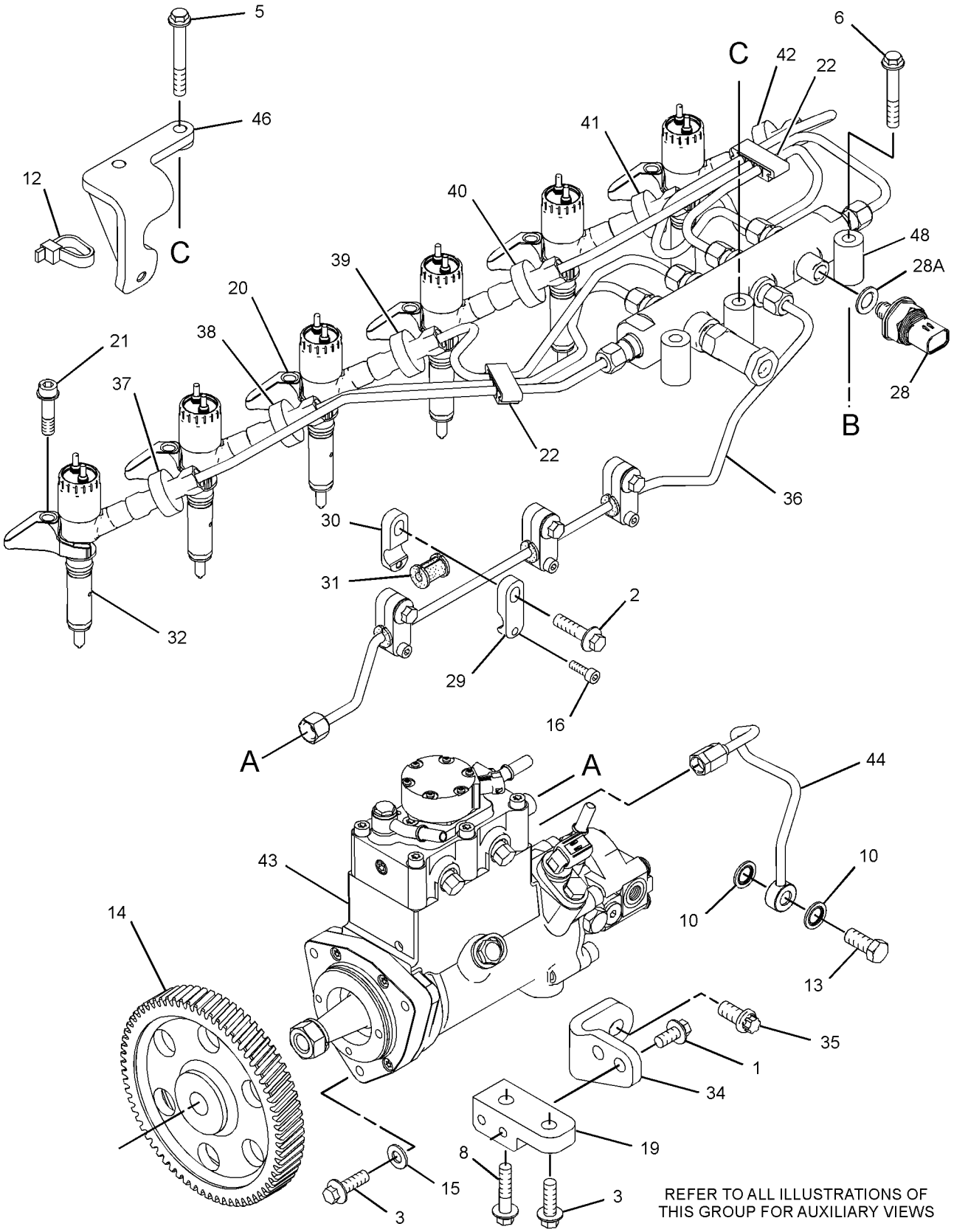

GRAPHIC #1

g01412202

310-0659 **PUMP GP-FUEL INJECTION** *(contd.)* **i03133282**

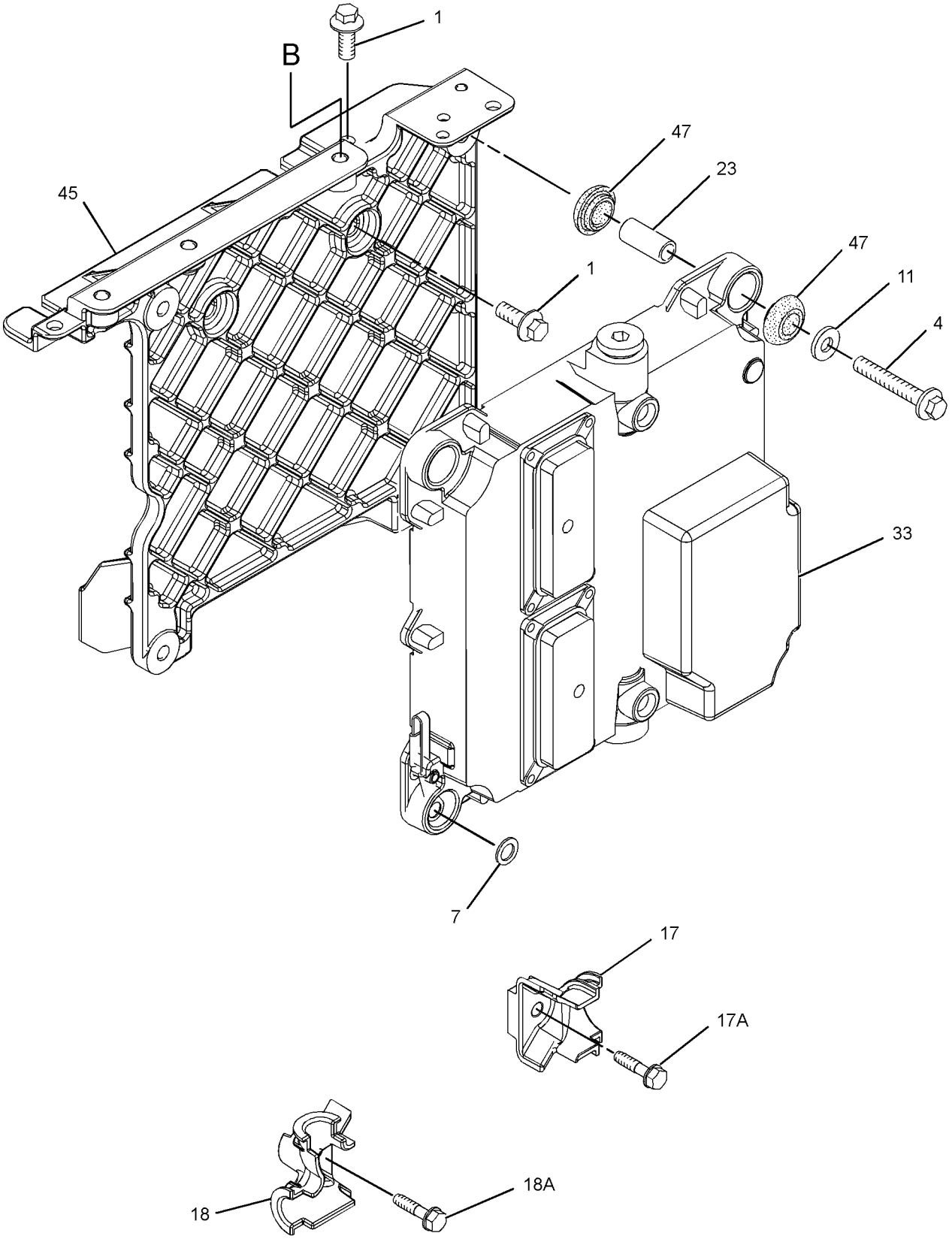

GRAPHIC #2 g01412203

310-0659 **PUMP GP-FUEL INJECTION** *(contd.)* **i03133282**

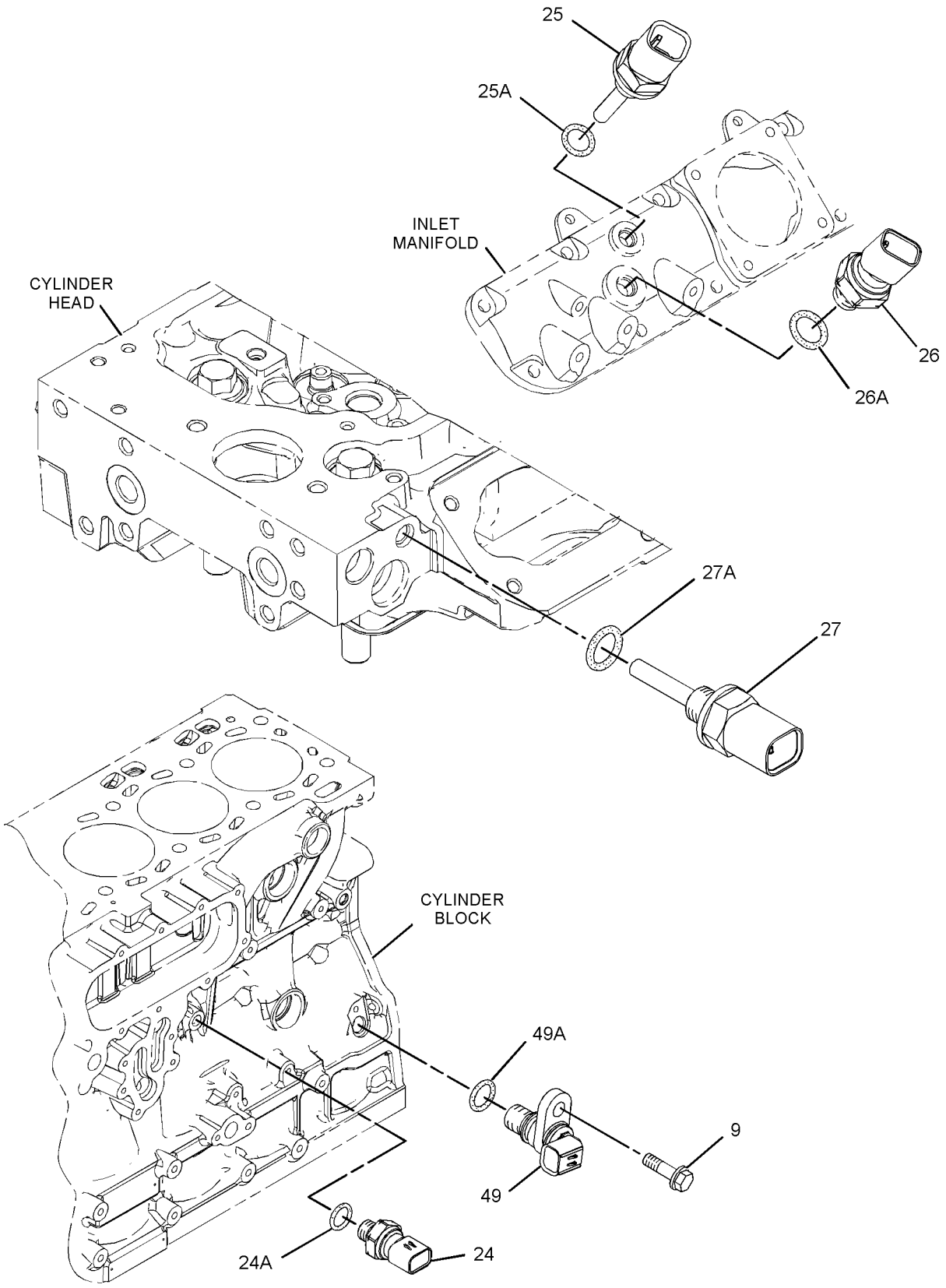

GRAPHIC #3 **<END>** g01412205

310-0659 PUMP GP-FUEL INJECTION

S/N: C6E8840-UP
PART OF 242-1356 ENGINE AR
TYPE 1

SMCS-1251, 1290 **i03133346**

NOTE	REF NO	GRAPHIC REF	PART NUMBER	QTY	PART NAME 1 2 3 4 5 6 (PRODUCT LEVEL)	SEE PAGE
M	1	1,2	**6I-0217**	6	BOLT (M8X1.25X20-MM)	
M	2	1	**6I-0254**	4	BOLT (M8X1.25X30-MM)	
M	3	1	**6I-0260**	5	BOLT (M8X1.25X25-MM)	
	4	2	**6I-0456**	4	BOLT (M8X1.25X45-MM)	
	5	1	**6I-4374**	2	BOLT (M8X1.25X60-MM)	
	6	1	**6I-4793**	1	BOLT (M8X1.25X50-MM)	
	7	2	**7W-2632**	1	WASHER (8.5X16.8X1.6-MM THK)	
M	8	1	**101-3895**	1	BOLT (M8X1.25X35-MM)	
M	9	3	**124-3815**	1	BOLT (M8X16X1.25-MM)	
	10	1	**160-0162**	2	WASHER	
	11	2	**217-0099**	4	SPACER (8.2X25X2-MM THK)	
	12	1	**217-9039**	1	STRAP-CABLE	
	13	1	**225-8524**	1	BOLT-SPECIAL (BANJO)	
	14	1	**230-8989**	1	GEAR-FUEL PUMP (68-TEETH)	
	15	1	**232-3149**	3	WASHER (8.35X16.85X1.55-MM THK)	
	16	1	**241-4291**	4	SCREW	
	17	2	**268-6677**	1	BRACKET AS	
	17A	2	**260-3939**	1	SCREW-HEX HEAD	
	18	2	**268-6678**	1	BRACKET AS	
	18A	2	**260-3939**	1	SCREW-HEX HEAD	
	19	1	**310-7918**	1	BRACKET-SUPPORT	
	20	1	**278-5168**	6	CLAMP-INJECTOR	
	21	1	**278-5170**	6	BOLT	
	22	1	**278-5180**	2	CLIP	
	23	2	**278-5203**	4	SPACER	
	24	3	**278-5225**	1	KIT-SENSOR (ENGINE OIL PRESSURE)	
	24A	3	**199-9267**	1	SEAL-O-RING	
	25	3	**278-5272**	1	KIT-SENSOR (INTAKE AIR TEMPERATURE)	
	25A	3	**278-5226**	1	SEAL-O-RING	
	26	3	**278-5273**	1	KIT-SENSOR (AIR PRESSURE)	
	26A	3	**199-9252**	1	SEAL-O-RING	
	27	3	**278-5307**	1	KIT-SENSOR (COOLANT TEMPERATURE)	
	27A	3	**199-9267**	1	SEAL-O-RING	
	28	1	**311-6342**	1	SENSOR-PRESSURE (FUEL)	
	28A	1	**309-8006**	1	WASHER	
C	29	1	**330-3685**	4	CLAMP	
C	30	1	**330-3687**	4	CLAMP	
C	31	1	**330-5467**	4	ISOLATOR	
Y	32	1	**321-3600**	6	INJECTOR GP-FUEL	122
R	33	2	**286-3686**	1	CONTROL GP-ENGINE ELECTRONIC	
	34	1	**287-6838**	1	BRACKET	
	35	1	**287-6839**	2	BOLT	
	36	1	**290-3910**	1	TUBE-FUEL INJECTION	
	37	1	**290-3911**	1	TUBE-FUEL INJECTION (CYL NO. 1)	
	38	1	**290-3912**	1	TUBE-FUEL INJECTION (CYL NO. 2)	
	39	1	**290-3913**	1	TUBE-FUEL INJECTION (CYL NO. 3)	
	40	1	**290-3914**	1	TUBE-FUEL INJECTION (CYL NO. 4)	
	41	1	**290-3915**	1	TUBE-FUEL INJECTION (CYL NO. 5)	
	42	1	**290-3916**	1	TUBE-FUEL INJECTION (CYL NO. 6)	
YR	43	1	**291-5919**	1	PUMP & MTG GP-UNIT INJ HYD	133
	44	1	**321-1270**	1	TUBE-OIL	
	45	2	**293-9901**	1	BRACKET	
	46	1	**300-2940**	1	BRACKET	
	47	2	**300-6714**	8	MOUNT	
	48	1	**311-6632**	1	RAIL AS-FUEL	

310-0659 **PUMP GP-FUEL INJECTION** *(contd.)* **i03133346**

NOTE	REF NO	GRAPHIC REF	PART NUMBER	QTY	PART NAME 1 2 3 4 5 6 (PRODUCT LEVEL)	SEE PAGE
	49	3	**311-3858**	1	KIT-SENSOR (ENGINE SPEED)	
	49A	3	**274-1639**	1	SEAL	
F			**278-4138**	4	PROTECTION GP-FUEL SYSTEM	

C-CHANGE FROM PREVIOUS TYPE
F-NOT SHOWN
M-METRIC PART
R-REMFG PART MAY BE AVAILABLE
Y-SEPARATE ILLUSTRATION

310-0659 **PUMP GP-FUEL INJECTION** *(contd.)* **i03133346**

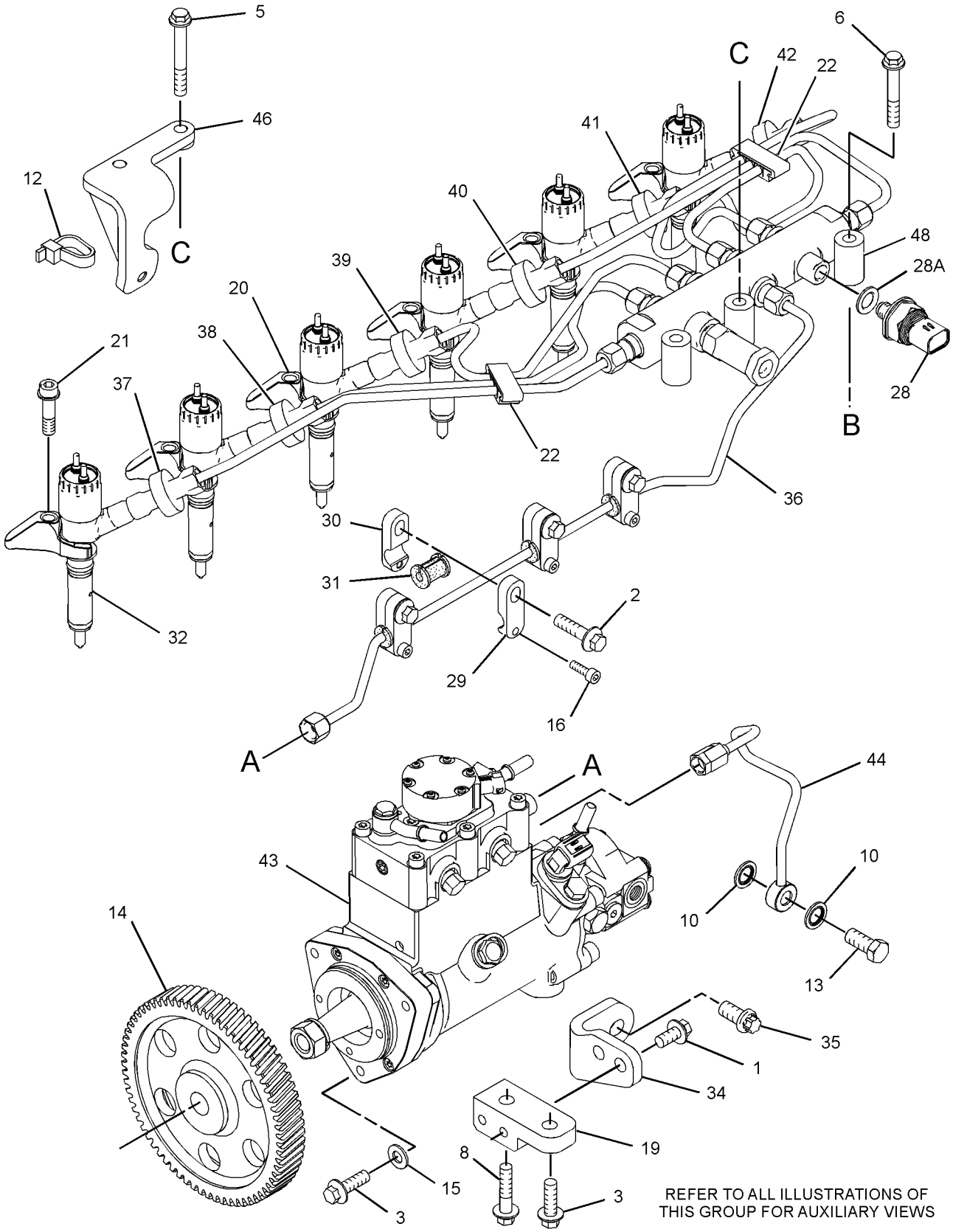

GRAPHIC #1

g01412202

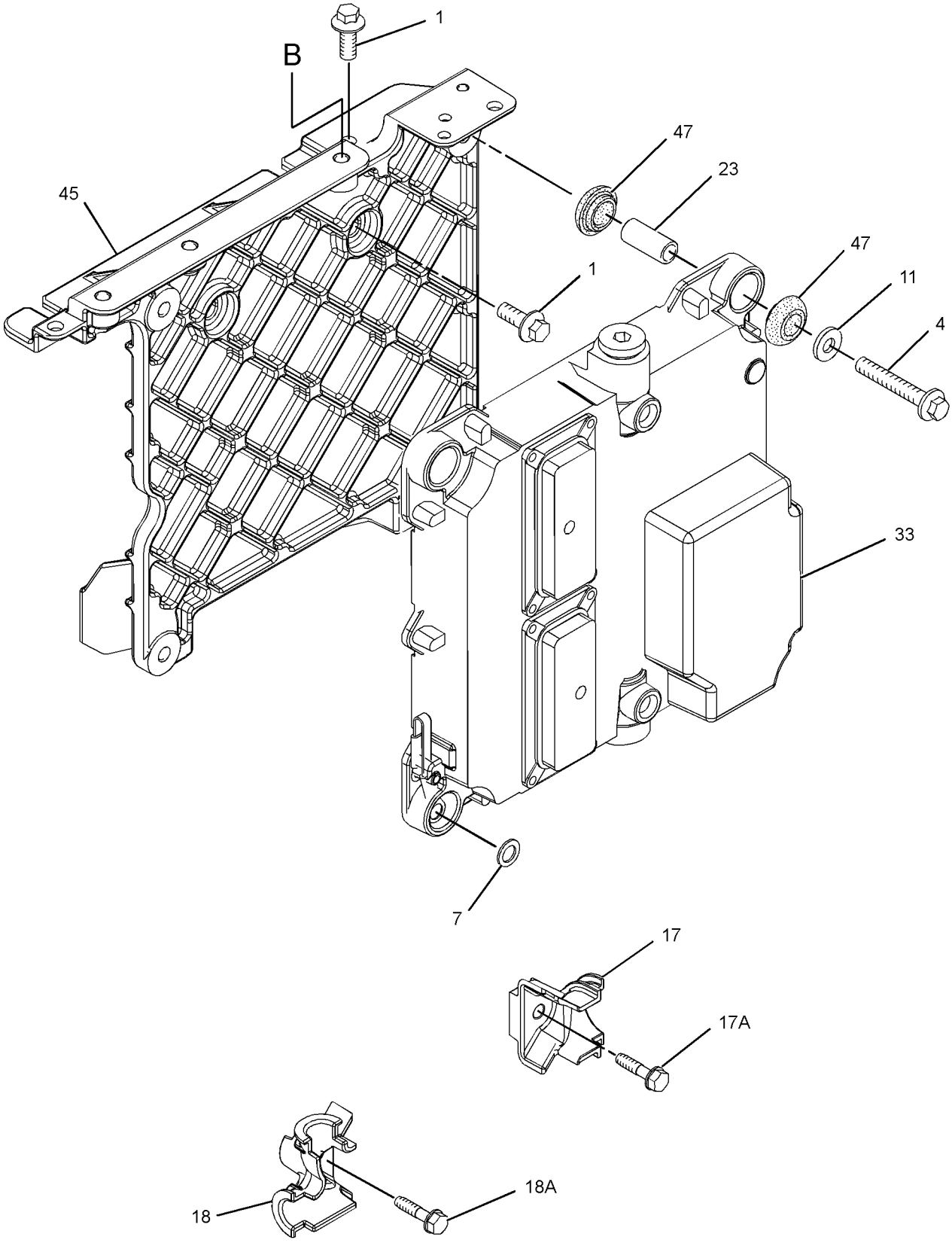

GRAPHIC #2

g01412203

310-0659 **PUMP GP-FUEL INJECTION** *(contd.)* **i03133346**

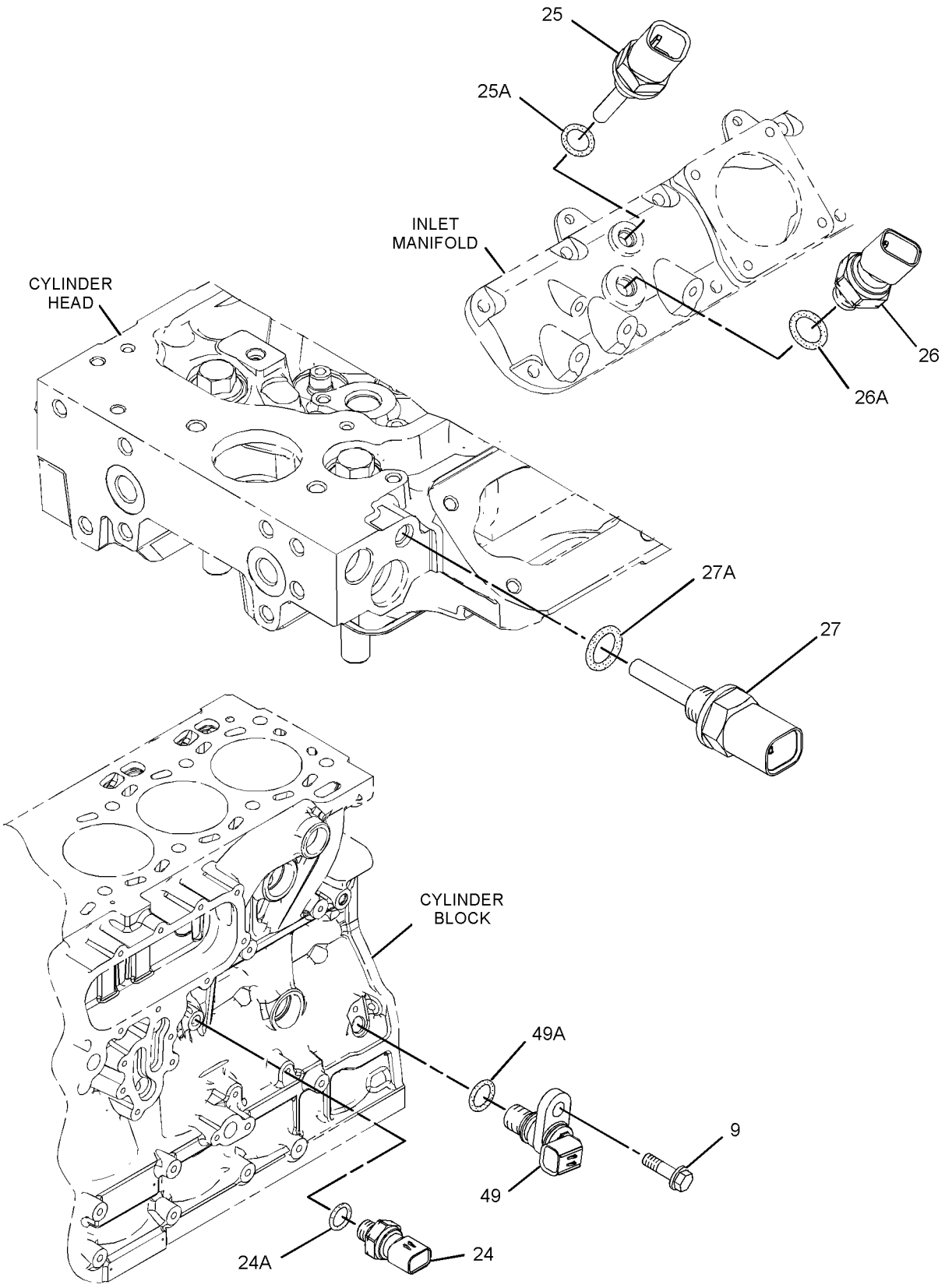

GRAPHIC #3 **<END>** g01412205

FUEL SYSTEM

310-0659 PUMP GP-FUEL INJECTION

S/N: C6E8840-UP
PART OF 242-1356 ENGINE AR
TYPE 2

SMCS-1251, 1290 **i03213968**

NOTE	REF NO	GRAPHIC REF	PART NUMBER	QTY	PART NAME 1 2 3 4 5 6 (PRODUCT LEVEL)	SEE PAGE
M	1	1	**6I-0217**	6	BOLT (M8X1.25X20-MM)	
M	2	2	**6I-0254**	4	BOLT (M8X1.25X30-MM)	
M	3	1	**6I-0260**	5	BOLT (M8X1.25X25-MM)	
	4	1	**6I-0456**	4	BOLT (M8X1.25X45-MM)	
	5	2	**6I-4374**	2	BOLT (M8X1.25X60-MM)	
	6	2	**6I-4793**	1	BOLT (M8X1.25X50-MM)	
	7	1	**7W-2632**	1	WASHER (8.5X16.8X1.6-MM THK)	
M	8	1	**101-3895**	1	BOLT (M8X1.25X35-MM)	
M	9	3	**124-3815**	1	BOLT (M8X16X1.25-MM)	
	10	1	**160-0162**	2	WASHER	
	11	1	**217-0099**	4	SPACER (8.2X25X2-MM THK)	
	12	2	**217-9039**	1	STRAP-CABLE	
	13	1	**225-8524**	1	BOLT-SPECIAL (BANJO)	
	14	1	**230-8989**	1	GEAR-FUEL PUMP (68-TEETH)	
	15	1	**232-3149**	3	WASHER (8.35X16.85X1.55-MM THK)	
	16	2	**241-4291**	4	SCREW	
	17	1	**268-6677**	1	BRACKET AS	
	17A	1	**260-3939**	1	SCREW-HEX HEAD	
	18	1	**268-6678**	1	BRACKET AS	
	18A	1	**260-3939**	1	SCREW-HEX HEAD	
	19	1	**310-7918**	1	BRACKET-SUPPORT	
	20	2	**278-5168**	6	CLAMP-INJECTOR	
	21	2	**278-5170**	6	BOLT	
	22	2	**278-5180**	2	CLIP	
	23	1	**278-5203**	4	SPACER	
	24	3	**278-5225**	1	KIT-SENSOR (ENGINE OIL PRESSURE)	
	24A	3	**199-9267**	1	SEAL-O-RING	
	25	3	**278-5272**	1	KIT-SENSOR (INTAKE AIR TEMPERATURE)	
	25A	3	**278-5226**	1	SEAL-O-RING	
	26	3	**278-5273**	1	KIT-SENSOR (AIR PRESSURE)	
	26A	3	**199-9252**	1	SEAL-O-RING	
	27	3	**278-5307**	1	KIT-SENSOR (COOLANT TEMPERATURE)	
	27A	3	**199-9267**	1	SEAL-O-RING	
	28	2	**311-6342**	1	SENSOR-PRESSURE (FUEL)	
	28A	2	**309-8006**	1	WASHER	
	29	2	**330-3685**	4	CLAMP	
	30	2	**330-3687**	4	CLAMP	
	31	2	**330-5467**	4	ISOLATOR	
YR	32	2	**321-3600**	6	INJECTOR GP-FUEL	122
C	33	1	**331-7540**	1	CONTROL GP-UNPROGRAMMED	
	34	1	**287-6838**	1	BRACKET	
	35	1	**287-6839**	2	BOLT	
	36	2	**336-8180**	1	TUBE-FUEL INJECTION	
	37	2	**336-8174**	1	TUBE-FUEL INJECTION (CYL NO. 1)	
	38	2	**336-8175**	1	TUBE-FUEL INJECTION (CYL NO. 2)	
	39	2	**336-8176**	1	TUBE-FUEL INJECTION (CYL NO. 3)	
	40	2	**336-8177**	1	TUBE-FUEL INJECTION (CYL NO. 4)	
	41	2	**336-8178**	1	TUBE-FUEL INJECTION (CYL NO. 5)	
	42	2	**336-8179**	1	TUBE-FUEL INJECTION (CYL NO. 6)	
CYR	43	1	**317-8021**	1	PUMP GP-FUEL INJECTION	177
	44	1	**321-1270**	1	TUBE-OIL	
	45	1	**293-9901**	1	BRACKET	
	46	2	**300-2940**	1	BRACKET	
	47	1	**300-6714**	8	MOUNT	
	48	2	**311-6632**	1	RAIL AS-FUEL	

310-0659 **PUMP GP-FUEL INJECTION** *(contd.)* **i03213968**

NOTE	REF NO	GRAPHIC REF	PART NUMBER	QTY	PART NAME 1 2 3 4 5 6 (PRODUCT LEVEL)	SEE PAGE
	48A	2	**305-5291**	1	VALVE AS-RELIEF	
	49	3	**311-3858**	1	KIT-SENSOR (ENGINE SPEED)	
		3	**238-0120**	1	SENSOR GP-SPEED	
	49A	3	**274-1639**	1	SEAL	
F			**278-4138**	4	PROTECTION GP-FUEL SYSTEM	

C-CHANGE FROM PREVIOUS TYPE
F-NOT SHOWN
M-METRIC PART
R-REMFG PART MAY BE AVAILABLE
Y-SEPARATE ILLUSTRATION

310-0659 **PUMP GP-FUEL INJECTION** *(contd.)* **i03213968**

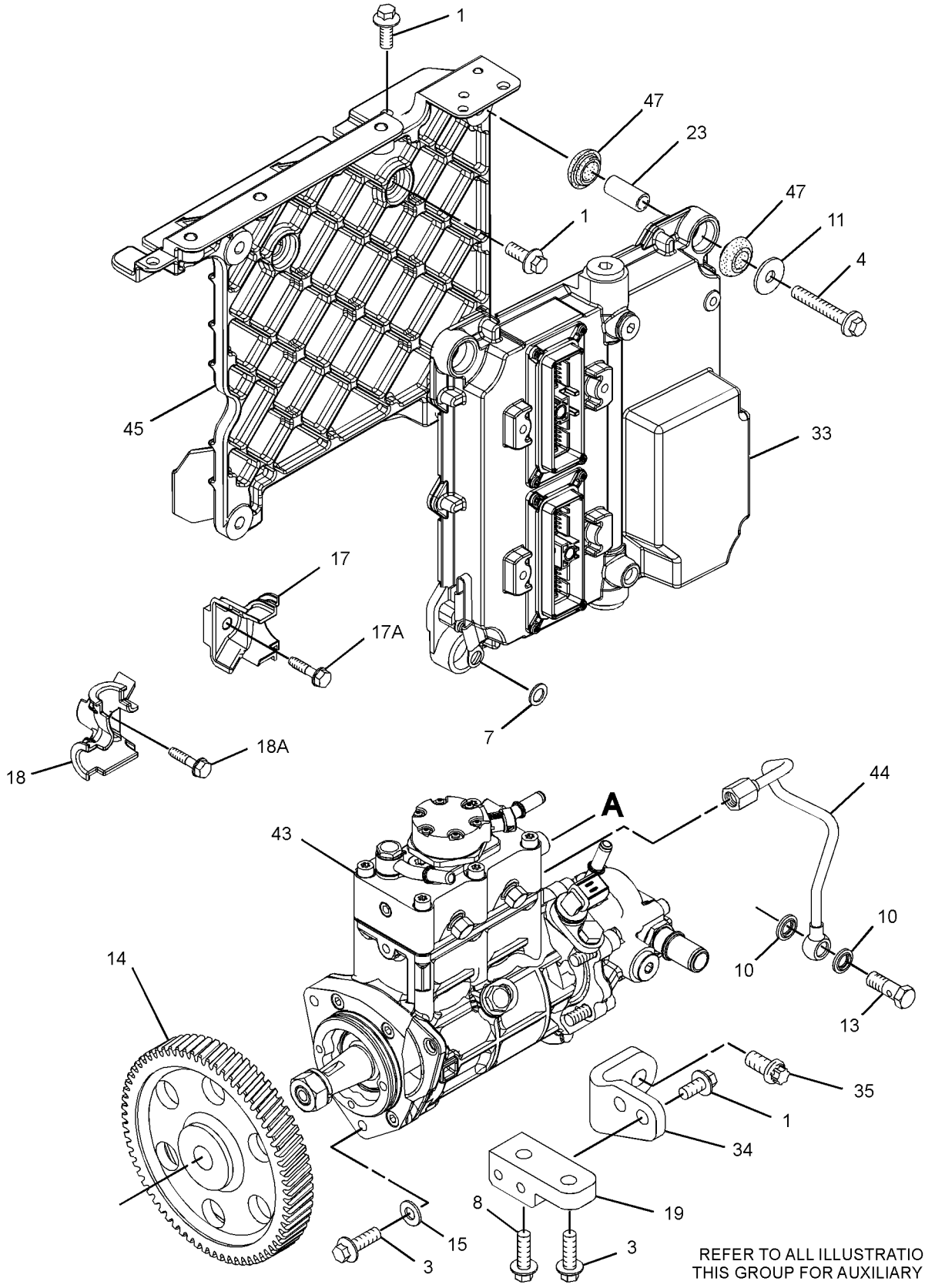

GRAPHIC #1

g01841594

310-0659 **PUMP GP-FUEL INJECTION** *(contd.)* **i03213968**

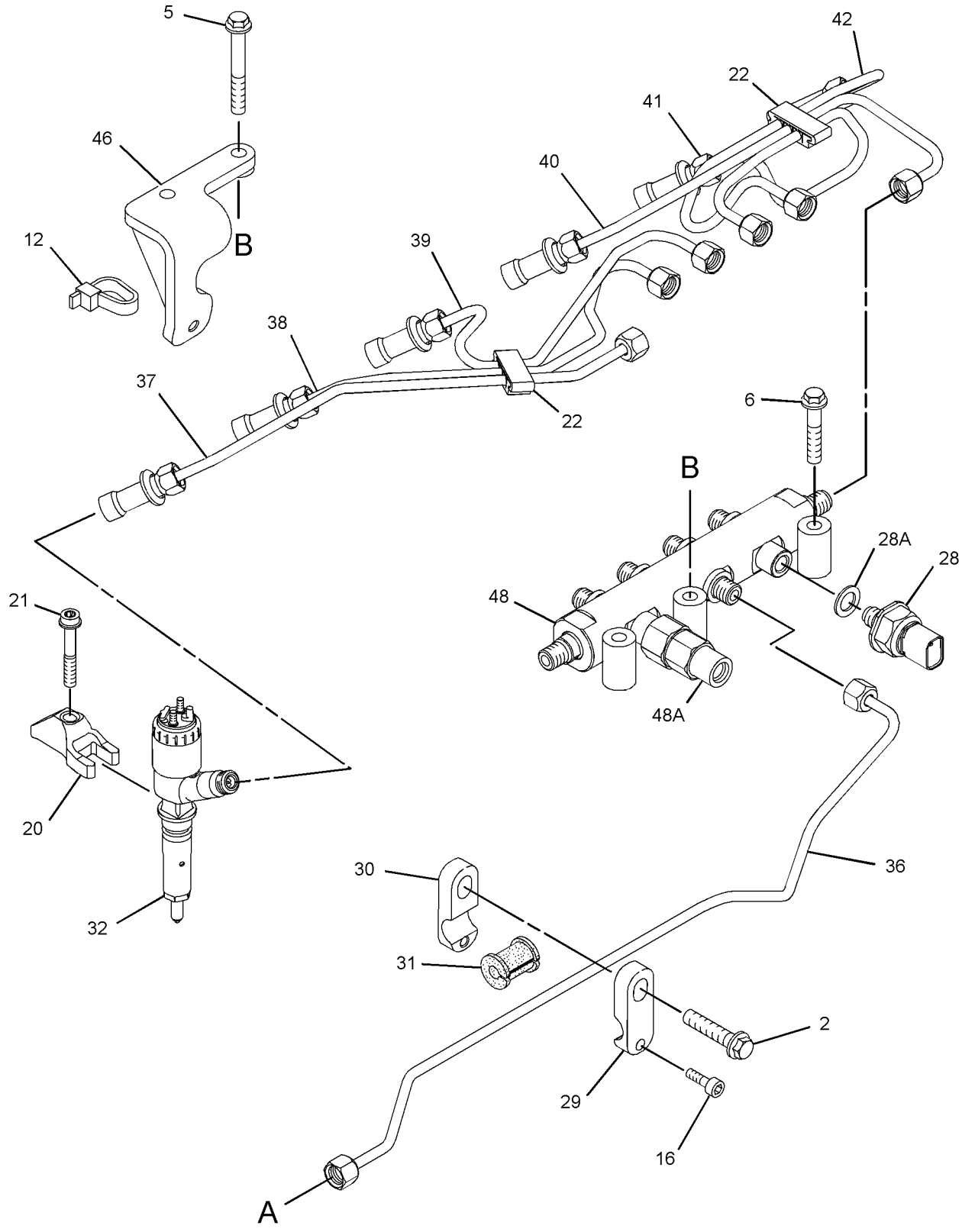

GRAPHIC #2 g01841613

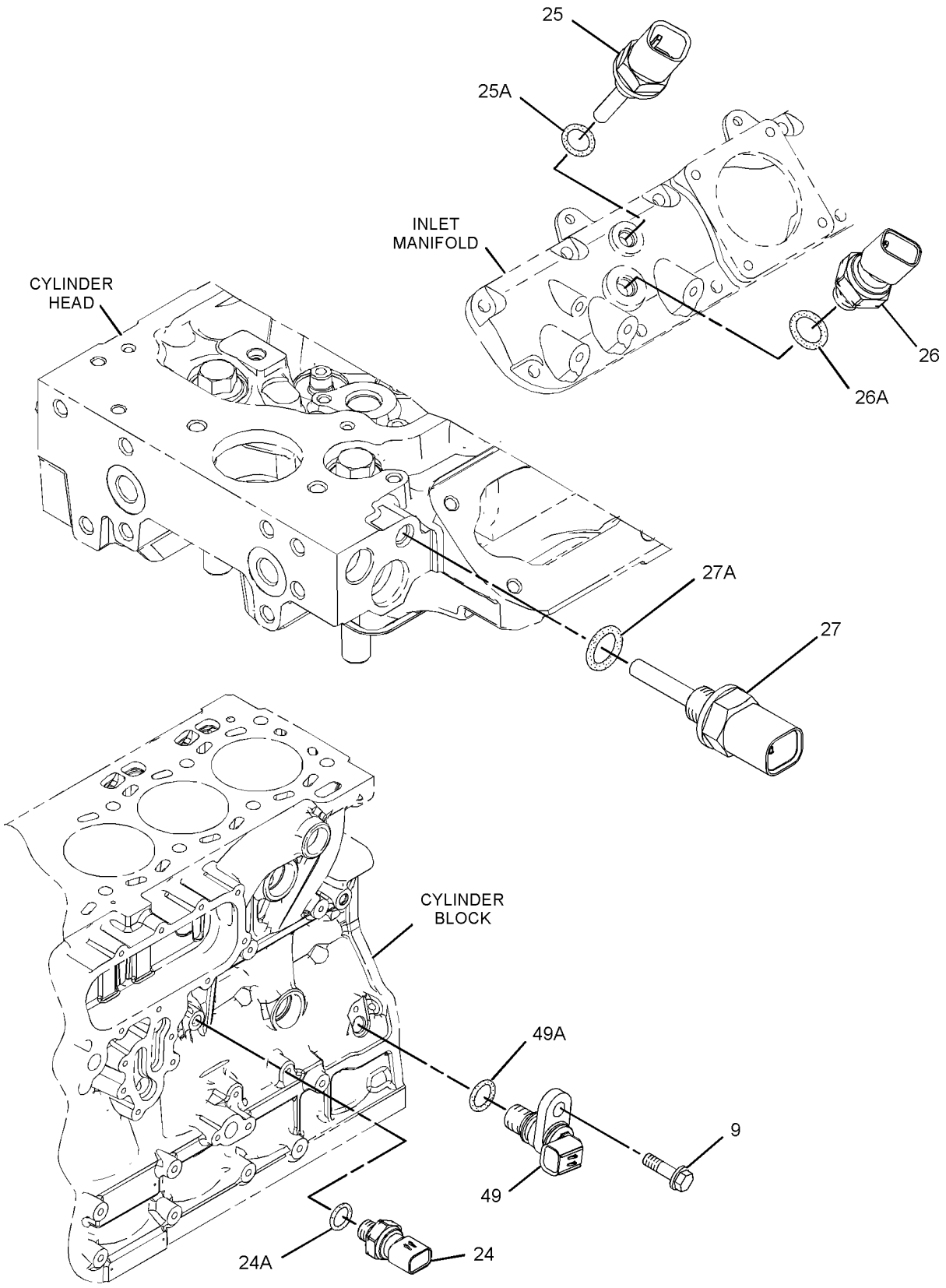

GRAPHIC #3 **<END>** g01412205

317-8021 PUMP GP-FUEL INJECTION*R

S/N: C6E496-UP
PART OF 310-0659, 320-3566 PUMP GP-FUEL INJECTION
ALSO AN ATTACHMENT

SMCS-1251, 1290 **i03490648**

NOTE	REF NO	GRAPHIC REF	PART NUMBER	QTY	PART NAME 1 2 3 4 5 6 (PRODUCT LEVEL)	SEE PAGE
	1	1	**228-0172**	1	FITTING-FUEL	
	2	1	**228-7100**	2	SEAL-O-RING	
	3	1	**238-0120**	1	SENSOR GP-SPEED (SECONDARY, TIMING)	
	4	1	**247-6019**	1	SEAL	
	5	1	**248-1066**	1	FITTING-FUEL	
	6	1	**293-0249**	1	PUMP GP-FUEL TRANSFER	
	7	1	**295-4801**	1	NUT (M14X1.5-THD)	
	8	1	**296-3542**	1	LOCKWASHER	
	9	1	**117-1385**	1	SEAL-O-RING	
M	10	1	**5A-3604**	5	BOLT-SOCKET HEAD (M8X1.25X25-MM)	
	11	1	**334-2932**	1	SEAL-O-RING	
	12	1	**8L-2779**	4	SEAL-O-RING	
M	13	1	**8T-4200**	1	BOLT (M8X1.25X16-MM)	

M-METRIC PART

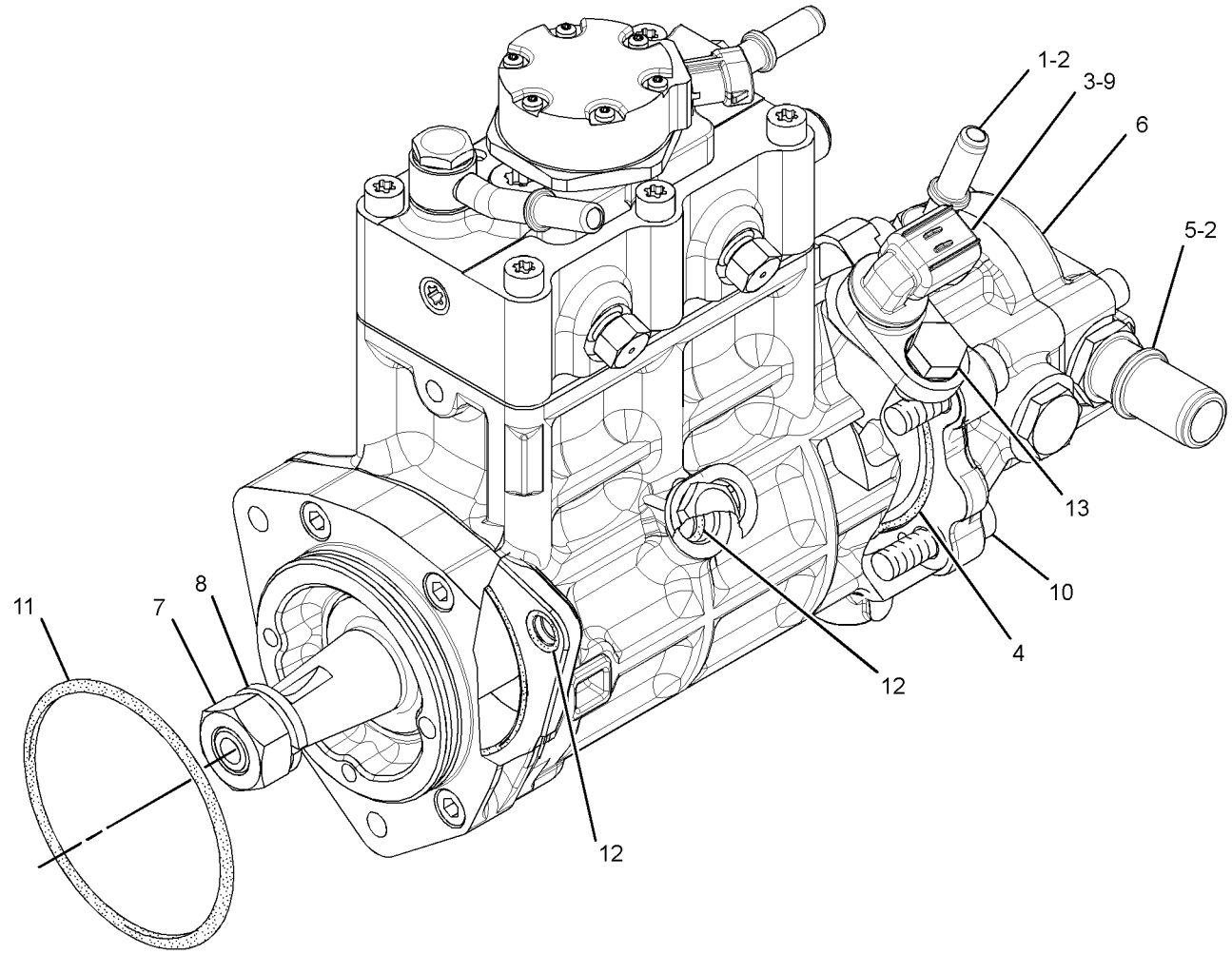

GRAPHIC #1 **<END>** g01701813

FUEL SYSTEM

320-3566 PUMP GP-FUEL INJECTION

S/N: C6E1-UP
PART OF 319-7261 ENGINE AR
AN ATTACHMENT

SMCS-1251, 1290 **i03353785**

NOTE	REF NO	GRAPHIC REF	PART NUMBER	QTY	PART NAME 1 2 3 4 5 6 (PRODUCT LEVEL)	SEE PAGE
M	1	1	**6I-0217**	6	BOLT (M8X1.25X20-MM)	
M	2	2	**6I-0254**	4	BOLT (M8X1.25X30-MM)	
M	3	1	**6I-0260**	4	BOLT (M8X1.25X25-MM)	
	4	1	**6I-0456**	4	BOLT (M8X1.25X45-MM)	
	5	2	**6I-4374**	2	BOLT (M8X1.25X60-MM)	
	6	2	**6I-4793**	1	BOLT (M8X1.25X50-MM)	
	7	1	**7W-2632**	1	WASHER (8.5X16.8X1.6-MM THK)	
M	8	1	**101-3895**	1	BOLT (M8X1.25X35-MM)	
M	9	3	**124-3815**	1	BOLT (M8X16X1.25-MM)	
	10	1	**155-0576**	8	MOUNT-ISOLATION	
	11	1	**160-0162**	2	WASHER	
	12	1	**217-0099**	4	SPACER (8.2X25X2-MM THK)	
	13	2	**217-9039**	1	STRAP-CABLE	
	14	1	**225-8524**	1	BOLT-SPECIAL (BANJO)	
	15	1	**230-8989**	1	GEAR-FUEL PUMP (68-TEETH)	
	16	2	**241-4291**	4	SCREW	
	17	1	**268-6677**	1	BRACKET AS	
	17A	1	**260-3939**	1	SCREW-HEX HEAD	
	18	1	**268-6678**	1	BRACKET AS	
	18A	1	**260-3939**	1	SCREW-HEX HEAD	
	19	2	**278-5168**	6	CLAMP-INJECTOR	
	20	2	**278-5170**	6	BOLT	
	21	2	**278-5180**	2	CLIP	
	22	1	**278-5203**	4	SPACER	
	23	3	**278-5225**	1	KIT-SENSOR (ENGINE OIL PRESSURE)	
	23A	3	**199-9267**	1	SEAL-O-RING	
	24	3	**278-5272**	1	KIT-SENSOR (INTAKE AIR TEMPERATURE)	
	24A	3	**278-5226**	1	SEAL-O-RING	
	25	3	**278-5273**	1	KIT-SENSOR (INTAKE AIR MANIFOLD)	
	25A	3	**199-9252**	1	SEAL-O-RING	
	26	3	**278-5307**	1	KIT-SENSOR (COOLANT TEMPERATURE)	
	26A	3	**199-9267**	1	SEAL-O-RING	
	27	1	**287-6838**	1	BRACKET	
	28	1	**287-6839**	2	BOLT	
CYR	29	1	**317-8021**	1	PUMP GP-FUEL INJECTION	177
	30	1	**293-9901**	1	BRACKET	
	31	1	**310-7918**	1	BRACKET-SUPPORT	
	32	3	**311-3858**	1	KIT-SENSOR (ENGINE SPEED)	
		3	**238-0120**	1	SENSOR GP-SPEED (ENGINE)	
	32A	3	**274-1639**	1	SEAL	
	33	2	**311-6342**	1	SENSOR-PRESSURE (FUEL)	
	33A	2	**309-8006**	1	WASHER	
	34	2	**311-6632**	1	RAIL AS-FUEL	
	35	1	**321-1270**	1	TUBE-OIL	
	36	2	**330-3685**	4	CLAMP	
	37	2	**330-3687**	4	CLAMP	
	38	2	**330-5467**	4	ISOLATOR	
	39	1	**232-3149**	3	WASHER (8.35X16.85X1.55-MM THK)	
	40	2	**336-8180**	1	TUBE-FUEL INJECTION	
	41	2	**336-8174**	1	TUBE-FUEL INJECTION (CYL NO. 1) (CYL NO. 1)	
	42	2	**336-8175**	1	TUBE-FUEL INJECTION (CYL NO. 2) (CYL NO. 2)	
	43	2	**336-8176**	1	TUBE-FUEL INJECTION (CYL NO. 3) (CYL NO. 3)	
	44	2	**336-8177**	1	TUBE-FUEL INJECTION (CYL NO. 4) (CYL NO. 4)	
	45	2	**336-8178**	1	TUBE-FUEL INJECTION (CYL NO. 5) (CYL NO. 5)	
	46	2	**336-8179**	1	TUBE-FUEL INJECTION (CYL NO. 6) (CYL NO. 6)	

320-3566 PUMP GP-FUEL INJECTION *(contd.)* i03353785

NOTE	REF NO	GRAPHIC REF	PART NUMBER	QTY	PART NAME 1 2 3 4 5 6 (PRODUCT LEVEL)	SEE PAGE
	47	2	**300-2940**	1	BRACKET	
	48	1	**331-7540**	1	CONTROL GP-UNPROGRAMMED	
YR	49	2	**321-3600**	6	INJECTOR GP-FUEL	122
F			**278-4138**	4	PROTECTION GP-FUEL SYSTEM (LINE, LOW PRESSURE)	

C-CHANGE FROM PREVIOUS TYPE
F-NOT SHOWN
M-METRIC PART
R-REMFG PART MAY BE AVAILABLE
Y-SEPARATE ILLUSTRATION

320-3566 **PUMP GP-FUEL INJECTION** *(contd.)* **i03353785**

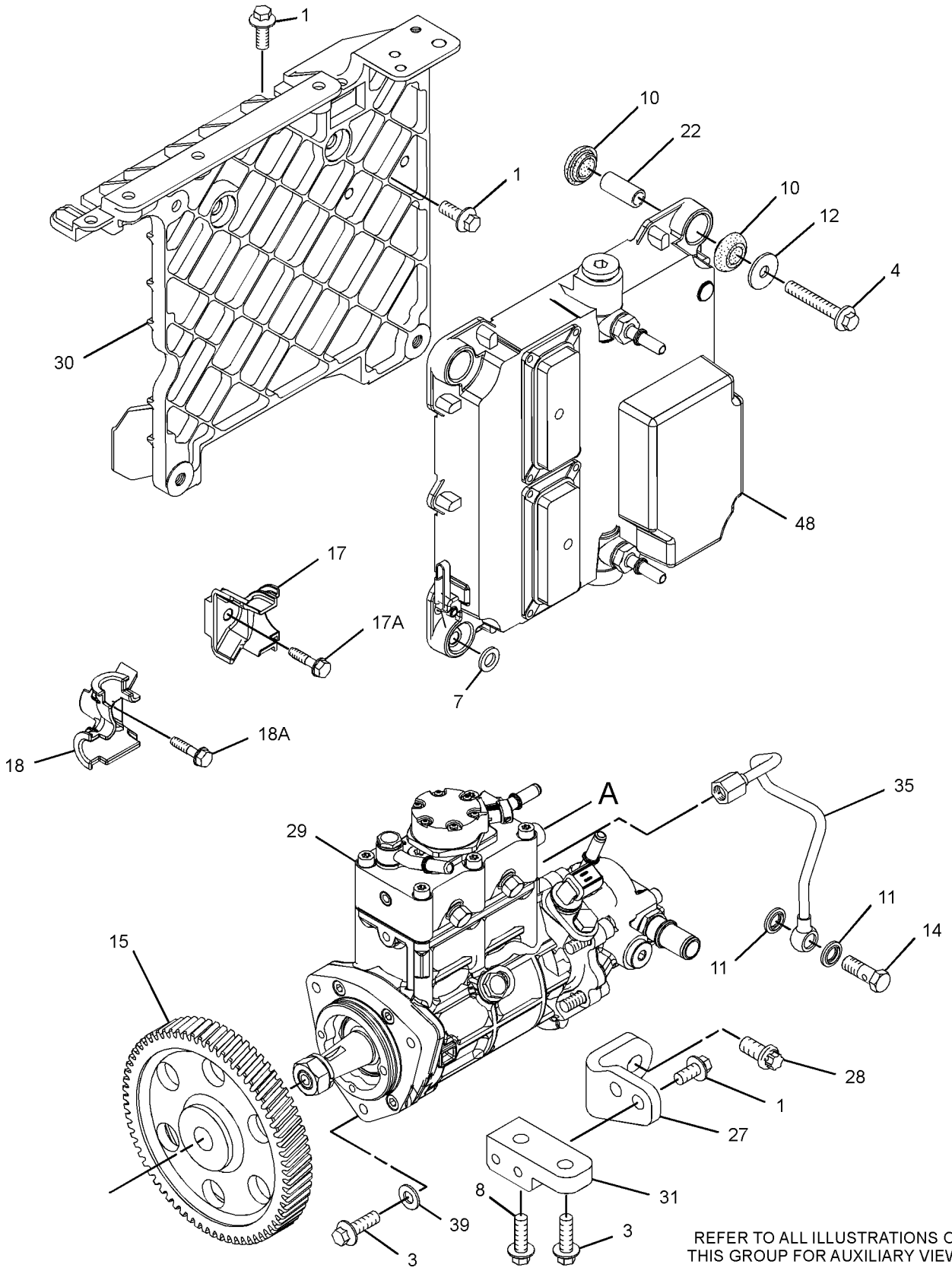

GRAPHIC #1

g01649513

320-3566 **PUMP GP-FUEL INJECTION** *(contd.)* **i03353785**

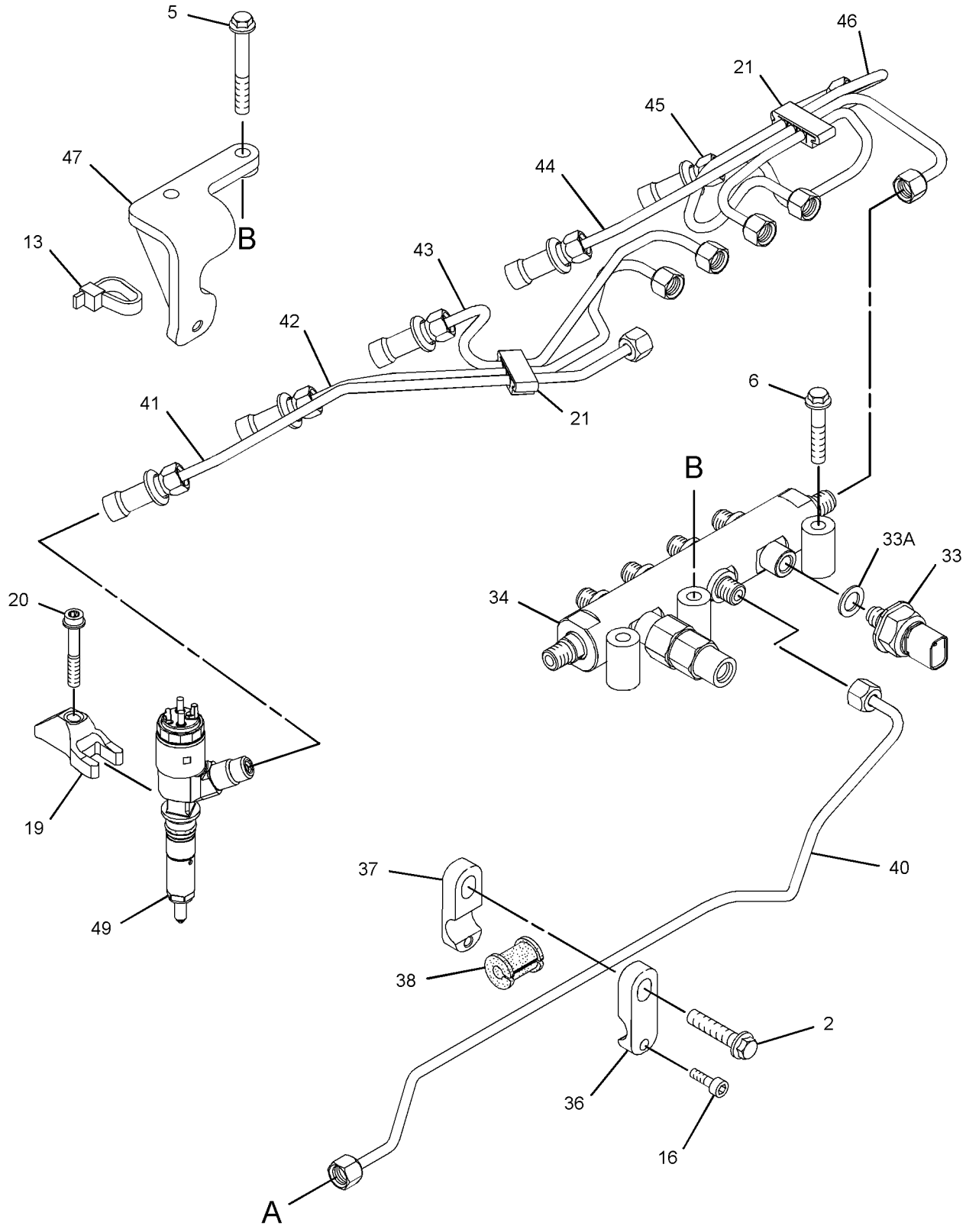

GRAPHIC #2 g01649515

320-3566 **PUMP GP-FUEL INJECTION** *(contd.)* **i03353785**

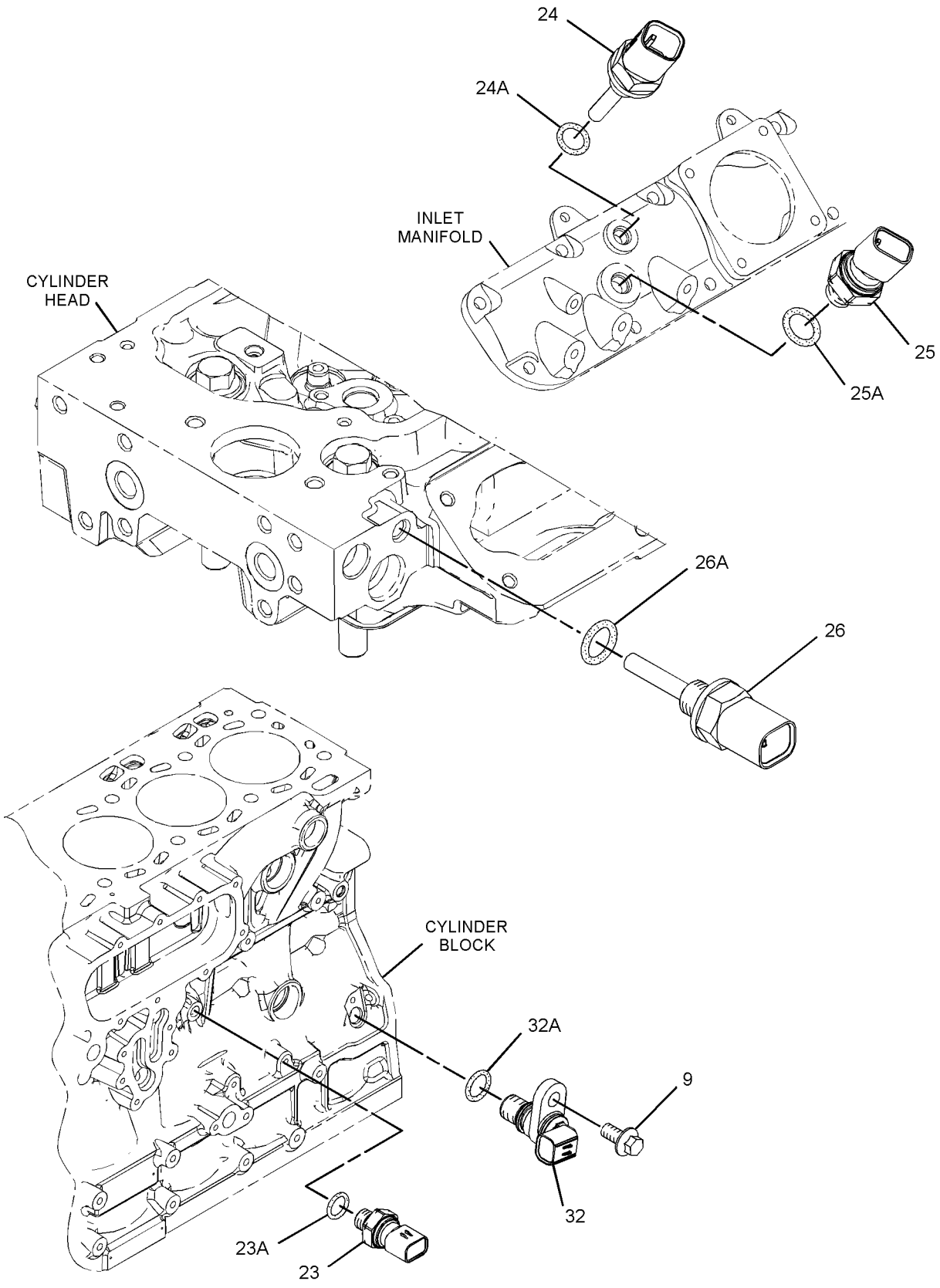

GRAPHIC #3 **<END>** g01649516

212-3657 PUMP GP-FUEL PRM & WATER SEP–ELECTRIC

S/N: DHA1-UP; FBH1-UP

PART OF 277-8731, 301-2710 PUMP GP-FUEL PRM & WATER SEP

SMCS-1258, 1261, 1263 **i01906285**

NOTE	REF NO	GRAPHIC REF	PART NUMBER	QTY	PART NAME 1 2 3 4 5 6 (PRODUCT LEVEL)	SEE PAGE
Y	1	1	*174-9570*	1	FILTER GP-WATER SEP & FUEL	118
	2	1	**217-8339**	1	PUMP AS-FUEL PRIMING (24-VOLT)	

Y-SEPARATE ILLUSTRATION

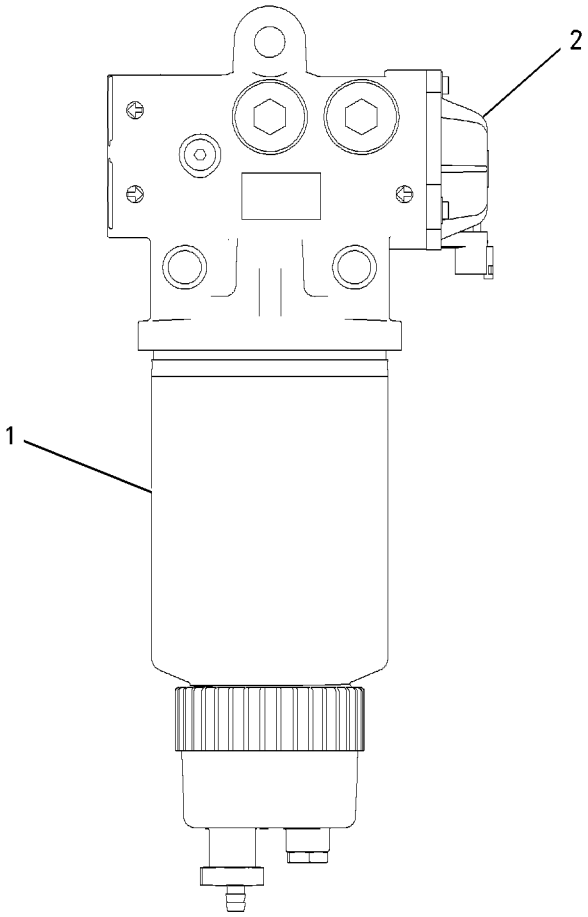

GRAPHIC #1 **<END>** g00875466

277-8731 PUMP GP-FUEL PRM & WATER SEP

S/N: DHA1-645; FBH1-798

ELECTRIC

PART OF 206-7294 INSTALLATION AR-ENGINE

SMCS-1258, 1261, 1263 **i02865460**

NOTE	REF NO	GRAPHIC REF	PART NUMBER	QTY	PART NAME 1 2 3 4 5 6 (PRODUCT LEVEL)	SEE PAGE
	1	1	**7K-1181**	6	STRAP-CABLE	
	2	1	**9L-6331**	1	BRACKET	
Y	3	1	**102-2240**	1	SENSOR GP-TEMPERATURE (FUEL)	295
	4	1	*161-9916*	1	ADAPTER AS	
		1	**6V-7420**	1	ADAPTER	
		1	**2M-9780**	1	SEAL-O-RING	
Y	5	1	**165-5970**	1	SWITCH GP-TOGGLE (FUEL PRIMING PUMP)	307
	6	1	**177-2215**	1	STRAP-DUAL CLAMP	
Y	7	1	**178-2345**	1	SENSOR GP-LIQUID LEVEL (WATER SEPARATOR)	287
	8	1	**209-7659**	1	PLATE-INFORMATION (FUEL PRIMING PUMP ON, OFF)	
Y	9	1	**212-3657**	1	PUMP GP-FUEL PRM & WATER SEP (ELECTRIC)	183
	10	1	**232-1374**	1	BRACKET	
	11	1	**232-1376**	2	SPACER (8.5X12.7X139.1-MM THK)	
	12	1	**254-7864**	1	HOSE AS	
	13	1	**256-3454**	1	CONNECTOR	
	14	1	**319-8516**	1	SWITCH AS-PRESSURE (FUEL)	
	15	1	*268-1563*	1	TEE AS	
		1	**268-1562**	1	TEE	
		1	**2M-9780**	1	SEAL-O-RING	
	16	1	**191-1782**	1	SPACER (8.5X12.7X38.2-MM THK)	
	17	1	**198-4776**	3	WASHER-HARD (8.8X20X8-MM THK)	
	18	1	**315-5494**	1	BOLT (M8X1.25X180-MM)	
	19	1	**3K-0360**	1	SEAL-O-RING	
	20	1	**4K-8864**	2	CLIP	
	21	1	**4P-7581**	1	CLIP	
	22	1	**4P-8134**	1	CLIP	
M	23	1	**5C-7261**	1	NUT (M8X1.25-THD)	
	24	1	**5P-4116**	4	WASHER-HARD (8.8X20.5X2-MM THK)	
	25	1	**6D-3479**	1	CLIP	
	26	1	**6V-4589**	2	SEAL-O-RING	
	27	1	**7X-0579**	3	WASHER-HARD (8.8X25.5X2-MM THK)	
	28	1	**8T-4121**	2	WASHER-HARD (11X21X2.5-MM THK)	
M	29	1	**8T-4133**	1	NUT (M10X1.5-THD)	
M	30	1	**8T-4189**	1	BOLT (M8X1.25X20-MM)	
M	31	1	**8T-4195**	1	BOLT (M10X1.5X30-MM)	
M	32	1	**8T-6869**	1	BOLT (M8X1.25X60-MM)	
M	33	1	**8T-7352**	1	BOLT (M8X1.25X160-MM)	
	34	1	**8T-9655**	8	MOUNT-ISOLATION	
	35	1	**9S-8006**	1	PLUG-O-RING	

M-METRIC PART
Y-SEPARATE ILLUSTRATION

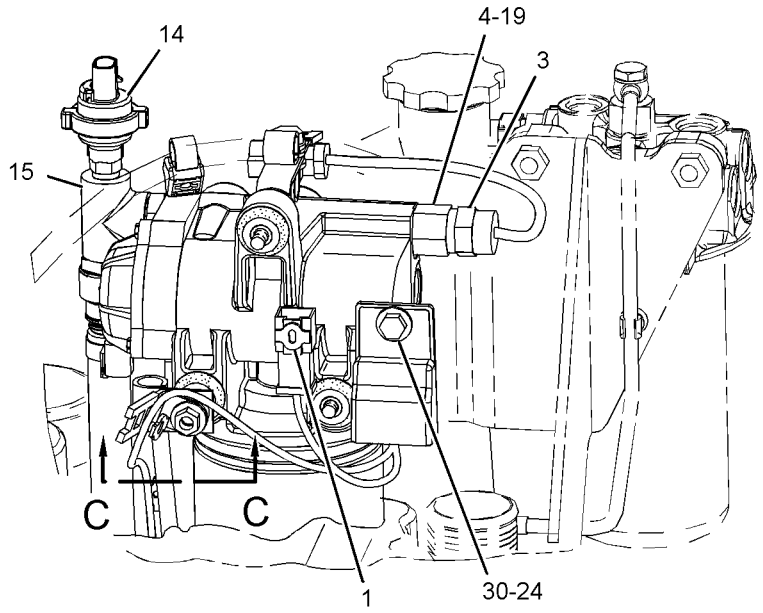

RIGHT SIDE VIEW OF ENGINE

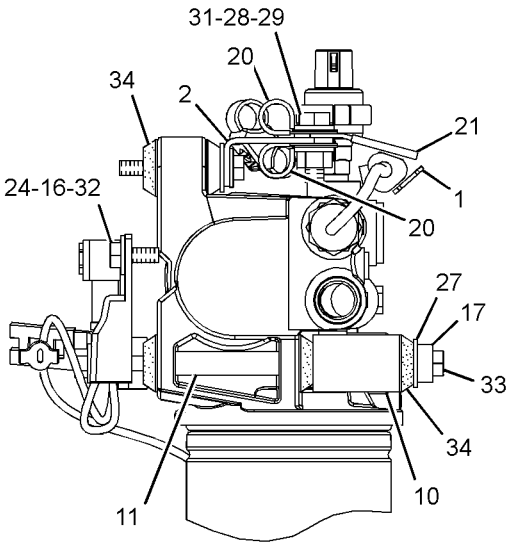

VIEW B-B

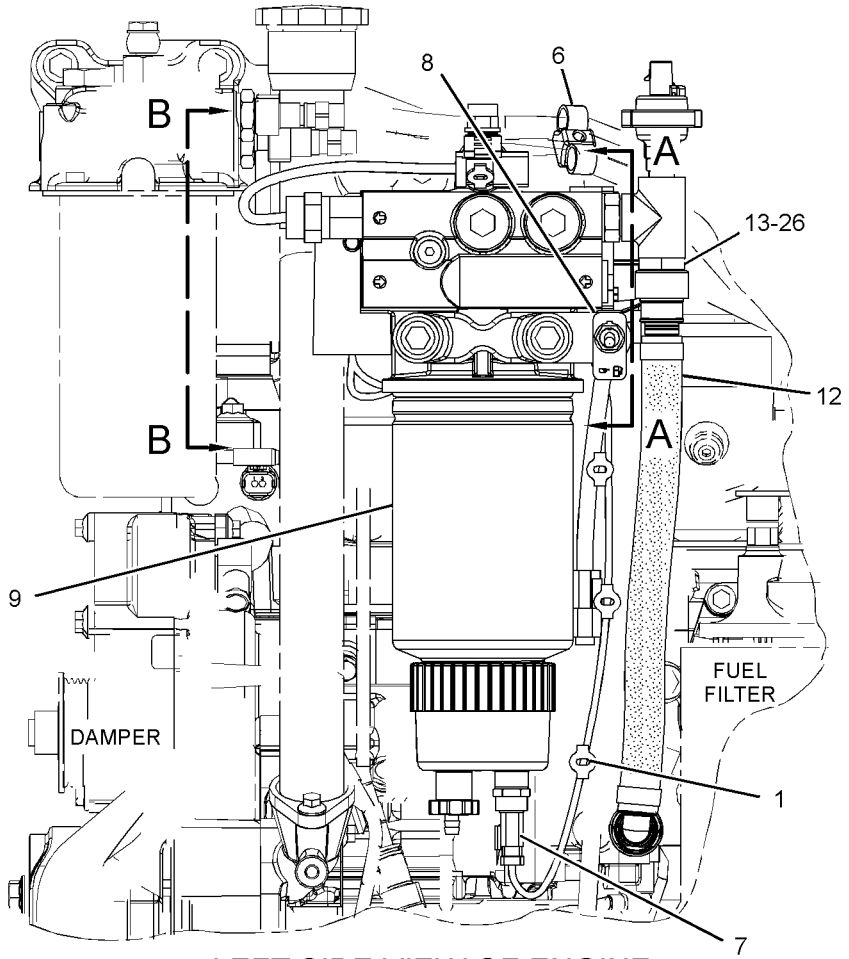

LEFT SIDE VIEW OF ENGINE

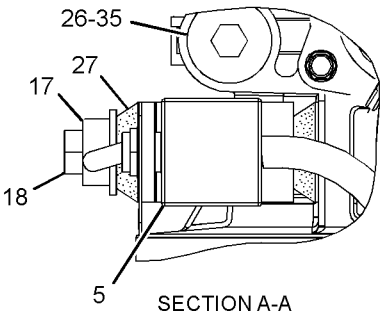

SECTION A-A

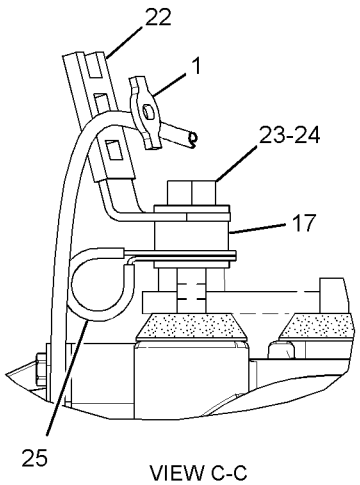

VIEW C-C

GRAPHIC #1 **<END>** g01415361

301-2710 PUMP GP-FUEL PRM & WATER SEP—ELECTRIC

S/N: DHA646-UP; FBH799-UP

PART OF 206-7294 INSTALLATION AR-ENGINE

SMCS-1258, 1261, 1263 **i03666261**

NOTE	REF NO	GRAPHIC REF	PART NUMBER	QTY	PART NAME 1 2 3 4 5 6 (PRODUCT LEVEL)	SEE PAGE
	1	1	**3S-2093**	3	STRAP-CABLE	
	2	1	**7K-1181**	6	STRAP-CABLE	
	3	1	**9L-6331**	1	BRACKET	
Y	4	1	**102-2240**	1	SENSOR GP-TEMPERATURE (FUEL)	295
	5	1	*161-9916*	1	ADAPTER AS	
		1	**2M-9780**	1	SEAL-O-RING	
		1	**6V-7420**	1	ADAPTER	
Y	6	1	**165-5970**	1	SWITCH GP-TOGGLE (FUEL PRIMING PUMP)	307
Y	7	1	**178-2345**	1	SENSOR GP-LIQUID LEVEL (WATER SEPARATOR)	287
	8	1	**206-2423**	1	SADDLE	
	9	1	**209-7659**	1	PLATE-INFORMATION (FUEL PRIMING PUMP ON, OFF)	
Y	10	1	**212-3657**	1	PUMP GP-FUEL PRM & WATER SEP (ELECTRIC)	183
	11	1	**232-1374**	1	BRACKET	
	12	1	**232-1376**	2	SPACER (8.5X12.7X139.1-MM THK)	
	13	1	**254-7864**	1	HOSE AS	
	14	1	**256-3454**	1	CONNECTOR	
	15	1	*268-1563*	1	TEE AS	
		1	**2M-9780**	1	SEAL-O-RING	
		1	**268-1562**	1	TEE	
	16	1	**315-5494**	1	BOLT (M8X1.25X180-MM)	
	17	1	**329-6683**	1	SWITCH-FUEL	
	18	1	*162-6802*	1	ELBOW AS	
		1	**3J-7354**	1	SEAL-O-RING	
		1	**151-5145**	1	ELBOW	
	19	1	**191-1782**	1	SPACER (8.5X12.7X38.2-MM THK)	
	20	1	**198-4776**	3	WASHER-HARD (8.8X20X8-MM THK)	
	21	1	**1P-4278**	1	CLAMP-HOSE	
	22	1	**3K-0360**	1	SEAL-O-RING	
	23	1	**4P-7581**	1	CLIP	
	24	1	**4P-8134**	1	CLIP	
M	25	1	**5C-7261**	1	NUT (M8X1.25-THD)	
	26	1	**5P-4116**	4	WASHER-HARD (8.8X20.5X2-MM THK)	
	27	1	**6D-3479**	3	CLIP	
	28	1	**6V-4589**	2	SEAL-O-RING	
	29	1	**7X-0579**	3	WASHER-HARD (8.8X25.5X2-MM THK)	
	30	1	**8T-4121**	2	WASHER-HARD (11X21X2.5-MM THK)	
M	31	1	**8T-4133**	1	NUT (M10X1.5-THD)	
M	32	1	**8T-4189**	1	BOLT (M8X1.25X20-MM)	
M	33	1	**8T-4195**	1	BOLT (M10X1.5X30-MM)	
M	34	1	**8T-6869**	1	BOLT (M8X1.25X60-MM)	
M	35	1	**8T-7352**	1	BOLT (M8X1.25X160-MM)	
	36	1	**8T-9655**	8	MOUNT-ISOLATION	
	37	1	**9S-8006**	1	PLUG-O-RING	
D	38	1	**5P-5991**		HOSE (0.5-M)	
E	39	1	**7I-7439**		GUARD (20-CM)	

D-ORDER BY THE METER
E-ORDER BY THE CENTIMETER
M-METRIC PART
Y-SEPARATE ILLUSTRATION

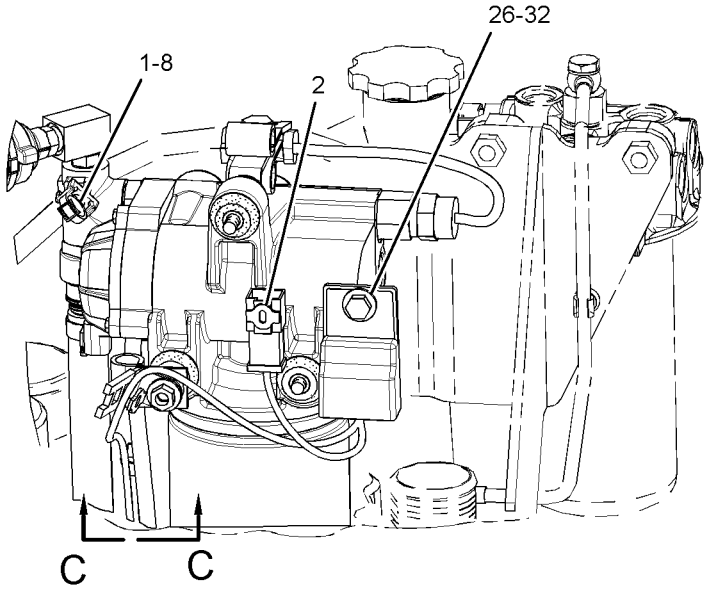

RIGHT SIDE VIEW OF ENGINE

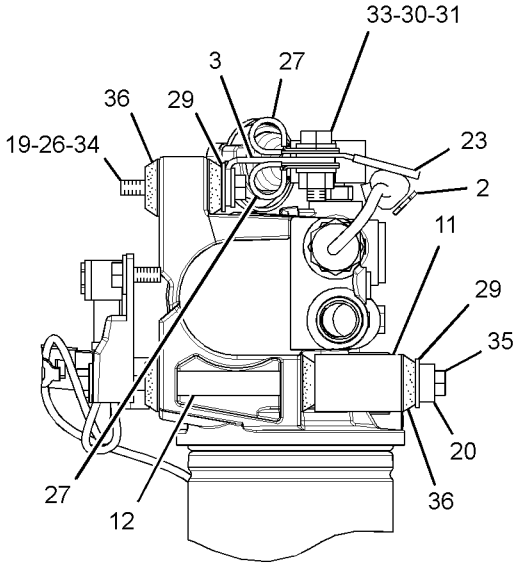

VIEW B-B

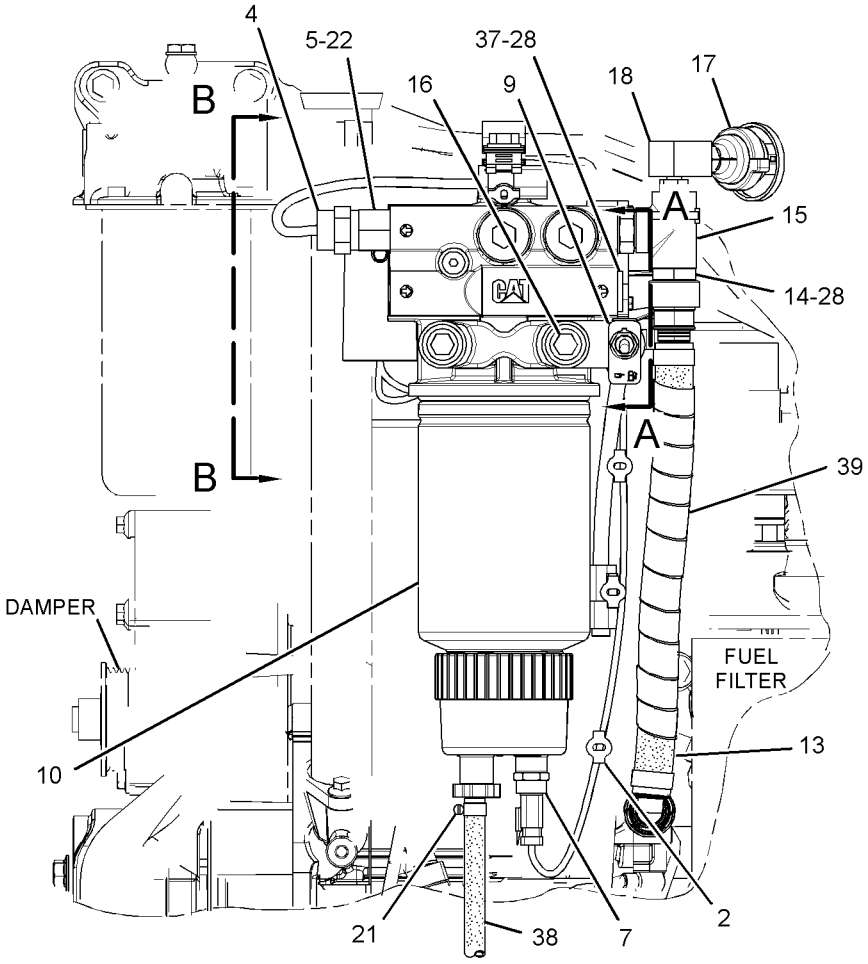

LEFT SIDE VIEW OF ENGINE

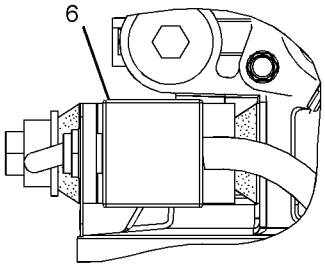

SECTION A-A

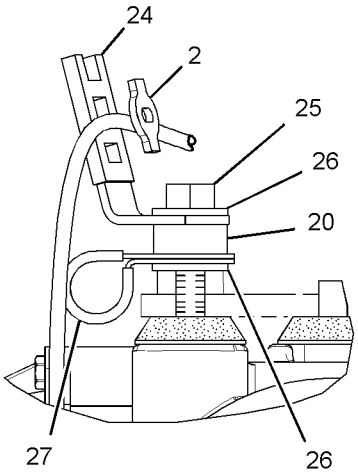

SECTION C-C

GRAPHIC #1 **<END>** g01978954

206-7249 TANK GP-FUEL

S/N: DHA1-UP; FBH1-UP
270-L (71.3-US GAL)
PART OF 349-8355 OPTION AR-FUEL TANK
CANNOT BE USED WITH 249-7117—PAGE 189
AN ATTACHMENT

SMCS-1273 **i02590734**

NOTE	REF NO	GRAPHIC REF	PART NUMBER	QTY	PART NAME 1 2 3 4 5 6 (PRODUCT LEVEL)	SEE PAGE
	1	1	**276-3898**	4	SPACER (13.5X60.5X10-MM THK)	
Y	2	1	*288-5423*	1	TANK GP-FUEL	190
M	3	1	**8T-5041**	4	BOLT (M12X1.75X120-MM)	

M-METRIC PART
Y-SEPARATE ILLUSTRATION

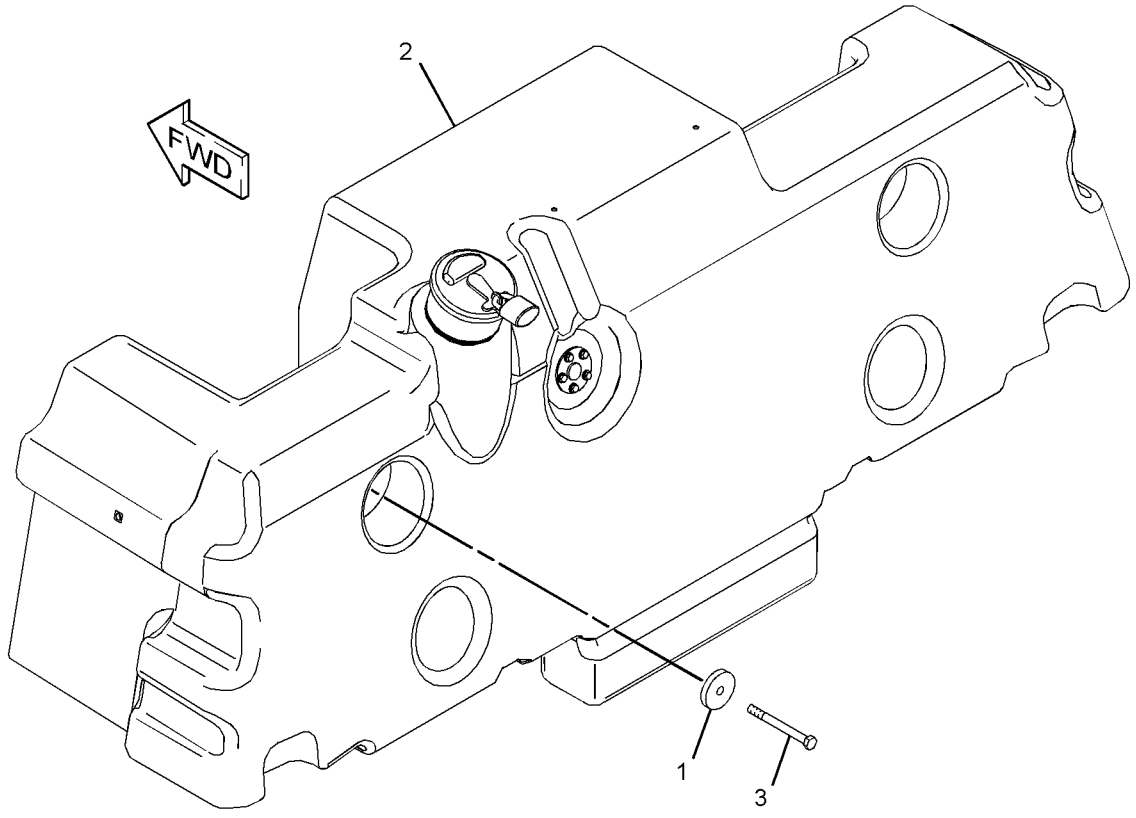

GRAPHIC #1 **<END>** g01297338

249-7117 TANK GP-FUEL–FAST FILL

S/N: DHA1-UP; FBH1-UP
270-L (71.3-US GAL)
CANNOT BE USED WITH 206-7249–PAGE 188
AN ATTACHMENT

SMCS-1273 **i02582537**

NOTE	REF NO	GRAPHIC REF	PART NUMBER	QTY	PART NAME 1 2 3 4 5 6 (PRODUCT LEVEL)	SEE PAGE
	1	1	**276-3898**	4	SPACER (13.5X60.5X10-MM THK)	
Y	2	1	*288-5424*	1	TANK GP-FUEL	191
M	3	1	**8T-5041**	4	BOLT (M12X1.75X120-MM)	

M-METRIC PART
Y-SEPARATE ILLUSTRATION

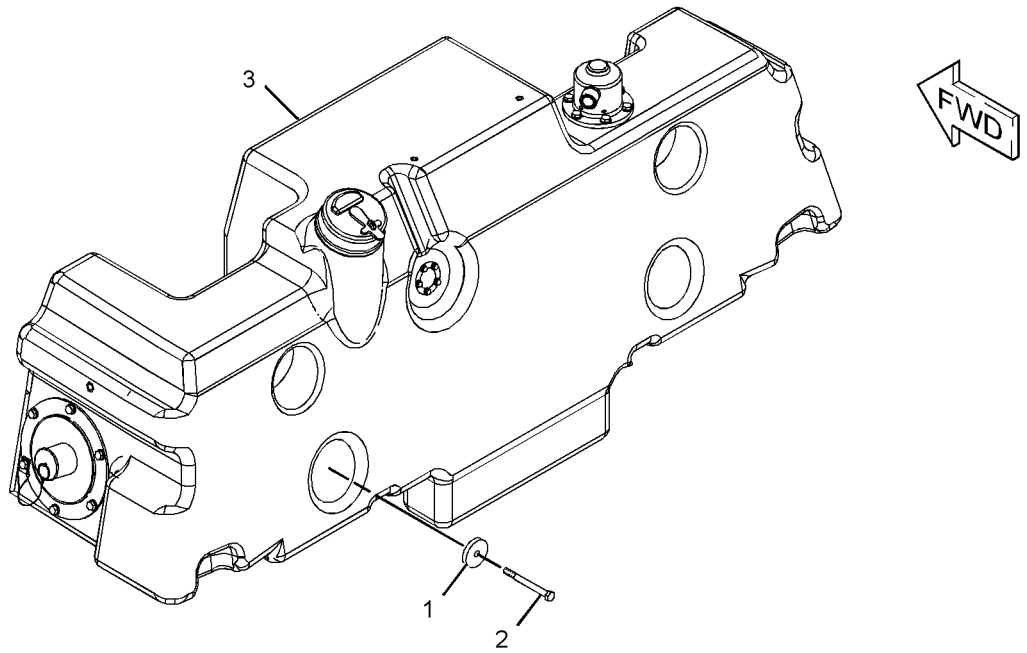

GRAPHIC #1 **<END>** g01297113

288-5423 TANK GP-FUEL

S/N: DHA1-UP; FBH1-UP
270-L (71.3-US GAL)
PART OF 206-7249 TANK GP-FUEL
AN ATTACHMENT

SMCS-1273 **i03601541**

NOTE	REF NO	GRAPHIC REF	PART NUMBER	QTY	PART NAME 1 2 3 4 5 6 (PRODUCT LEVEL)	SEE PAGE
	1	1	**246-2641**	1	PADLOCK GP	
		1	**5P-8500**	1	KEY	
	2	1	**9P-7121**	1	STRAINER-FUEL	
	3	1	**251-4177**	1	SENDER AS-FUEL LEVEL	
		1	**102-8802**	1	KIT-RECEPTACLE (2-PIN)	
					(INCLUDES RECEPTACLE AS & WEDGE)	
		1	**186-3735**	2	PIN-CONNECTOR (16-GA TO 18-GA)	
Y	4	1	**288-2738**	1	CAP GP-FUEL FILLER (EXTREME SERVICE, LOCKABLE)	116
	5	1	**289-5982**	1	TANK AS-FUEL	
		1	**8C-6438**	1	SCREW-PAN HEAD (6-20X12.7-MM)	
		1	**306-8127**	1	ADAPTER	
	6	1	**095-2643**	1	GASKET	
M	7	1	**5C-9553**	1	BOLT (M6X1X16-MM)	
M	8	1	**8T-4171**	4	BOLT (M6X1X12-MM)	
	9	1	**8T-4205**	5	WASHER-HARD (7.2X14.5X2-MM THK)	

M-METRIC PART
Y-SEPARATE ILLUSTRATION

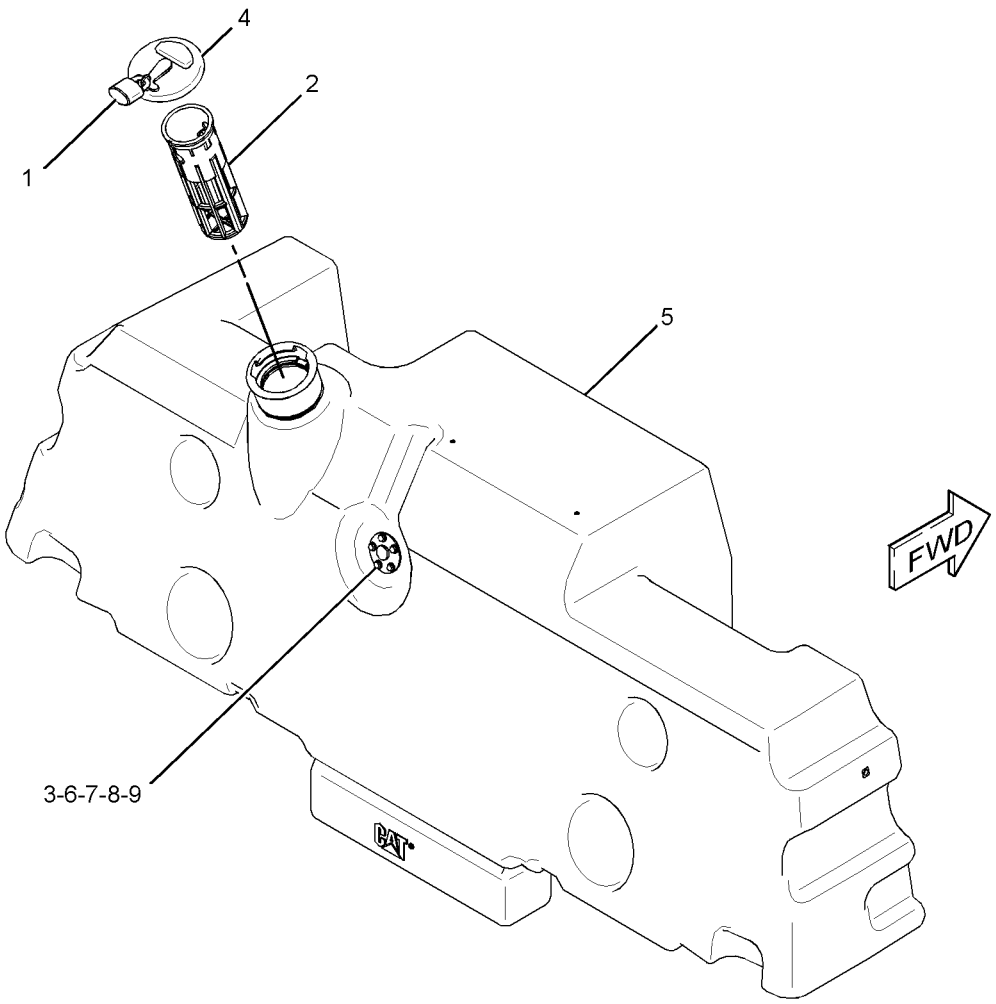

GRAPHIC #1 **<END>** g01447077

288-5424 TANK GP-FUEL–FAST FILL

S/N: DHA1-UP; FBH1-UP
270-L (71.3-US GAL)
PART OF 249-7117 TANK GP-FUEL
AN ATTACHMENT

SMCS-1273 **i03601542**

NOTE	REF NO	GRAPHIC REF	PART NUMBER	QTY	PART NAME 1 2 3 4 5 6 (PRODUCT LEVEL)	SEE PAGE
	1	1	**246-2641**	1	PADLOCK GP	
		1	**5P-8500**	1	KEY	
	2	1	**9P-7121**	1	STRAINER-FUEL	
	3	1	**251-4177**	1	SENDER AS-FUEL LEVEL	
		1	**102-8802**	1	KIT-RECEPTACLE (2-PIN)	
					(INCLUDES RECEPTACLE AS & WEDGE)	
		1	**186-3735**	2	PIN-CONNECTOR (16-GA TO 18-GA)	
Y	4	1	**288-2738**	1	CAP GP-FUEL FILLER (EXTREME SERVICE, LOCKABLE)	116
Y	5	1	*288-5425*	1	ADAPTER GP-FAST FILL FUEL	114
	6	1	**294-4874**	1	TANK AS-FUEL	
		1	**8C-6438**	1	SCREW-PAN HEAD (6-20X12.7-MM)	
		1	**306-8127**	1	ADAPTER	
	7	1	**095-2643**	1	GASKET	
M	8	1	**5C-9553**	1	BOLT (M6X1X16-MM)	
M	9	1	**8T-4171**	4	BOLT (M6X1X12-MM)	
	10	1	**8T-4205**	5	WASHER-HARD (7.2X14.5X2-MM THK)	

M-METRIC PART
Y-SEPARATE ILLUSTRATION

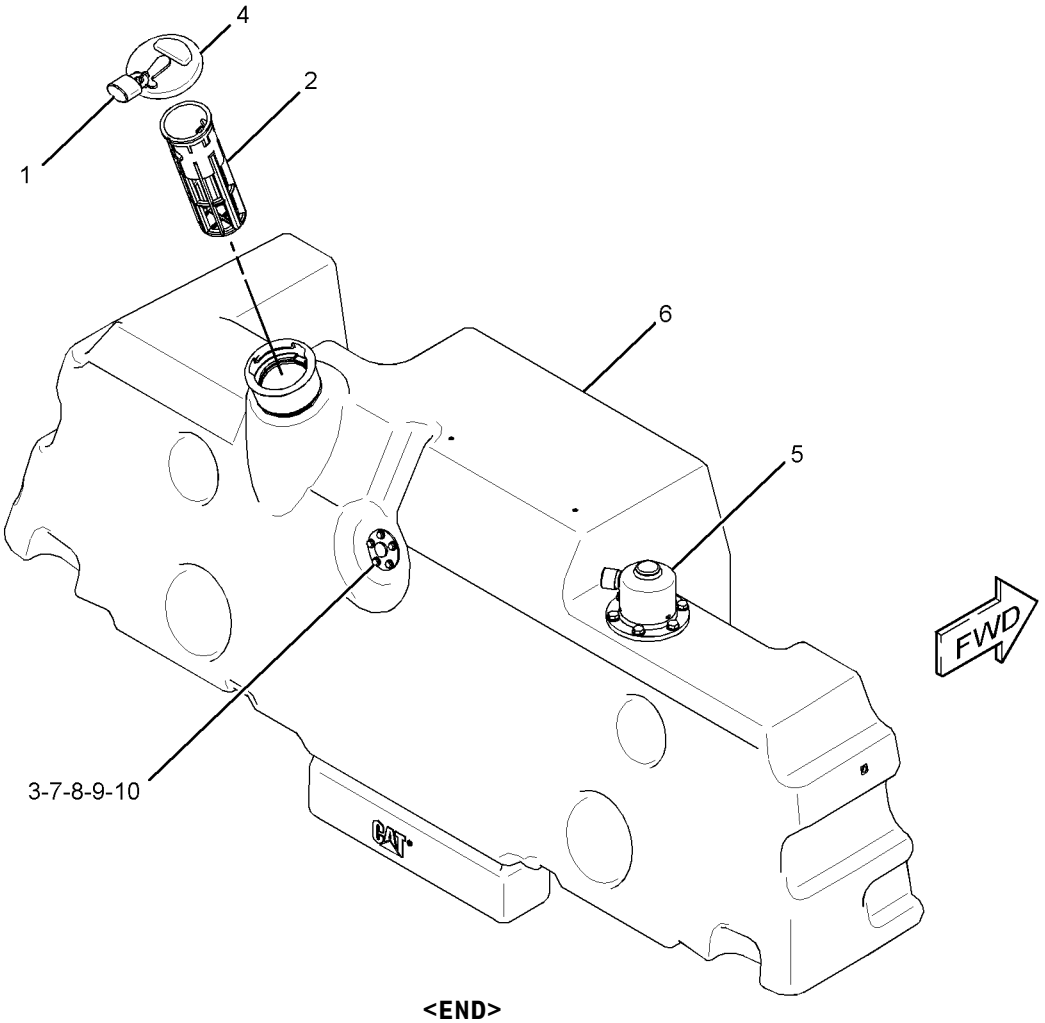

GRAPHIC #1 **<END>** g01447109

3E-6328 ALARM GP–ACTION

S/N: DHA1-UP; FBH1-UP
24-VOLT
PART OF 251-2003 WIRING GP-CAB
AN ATTACHMENT

SMCS-7400, 7402, 7407 **i01995637**

NOTE	REF NO	GRAPHIC REF	PART NUMBER	QTY	PART NAME 1 2 3 4 5 6 (PRODUCT LEVEL)	SEE PAGE
	1	1	**102-8802**	1	KIT-RECEPTACLE (2-PIN)	
					(INCLUDES RECEPTACLE AS & WEDGE)	
	2	1	**3E-3365**	1	WEDGE-RECEPTACLE LOCK (2-PIN)	
	3	1	**186-3735**	2	PIN-CONNECTOR (16-GA TO 18-GA)	

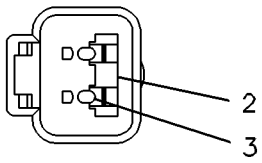

VIEW A–A

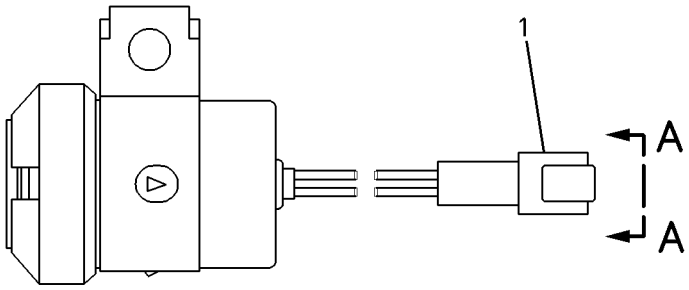

GRAPHIC #1 **<END>** g00083162

226-7683 ALTERNATOR GP-CHARGING

S/N: C6E1-UP
24-VOLT, 95-AMPERE
PART OF 277-6080 ALTERNATOR GP-CHARGING
ALSO AN ATTACHMENT

SMCS-1405 **i02475247**

NOTE	REF NO	GRAPHIC REF	PART NUMBER	QTY	PART NAME 1 2 3 4 5 6 (PRODUCT LEVEL)	SEE PAGE
	1	1	**228-9656**	1	FRAME AS-DRIVE END	
	2	1	**5S-7349**	1	BOLT (1/4-20X0.5-IN)	
	3	1	**185-2639**	1	FAN AS	
	4	1	**1H-3244**	1	LOCKWASHER	
	5	1	**228-9655**	1	FRAME AS-ALTERNATOR	
	6	1	**2K-4821**	1	LOCKNUT (5/8-18-THD)	
	7	1	**5P-8247**	1	WASHER-HARD (17X32X3.5-MM THK)	
	8	1	**228-9657**	1	COVER AS	
	9	1	**8T-4205**	1	WASHER-HARD (7.2X14.5X2-MM THK)	
	10	1	**185-2647**	1	GROMMET	
	11	1	**9L-6770**	1	CAP-DUST	
	12	1	**205-0626**	1	STATOR AS-ALTERNATOR	
	13	1	**185-2638**	2	COLLAR	
	14	1	**185-2654**	1	PLATE	
	15	1	**185-2650**	1	ROTOR AS	
	16	1	**185-2644**	1	COIL AS	
	17	1	**185-2648**	1	REGULATOR AS-VOLTAGE (24-VOLT) (ALTERNATOR)	
	18	1	**6V-8189**	1	NUT (5/16-18-THD)	
	19	1	**8T-4224**	1	WASHER-HARD (8.8X16X2-MM THK)	
	20	1	**3F-9556**	1	LOCKWASHER	
					AVAILABLE REPAIR KIT(S):	
			185-2655	1	KIT-BEARING (ALTERNATOR)	
			185-2658	1	KIT-HARDWARE (ALTERNATOR)	
			199-8436	1	KIT-TERMINAL (ALTERNATOR)	
			199-7891	1	KIT-TERMINAL (ALTERNATOR)	

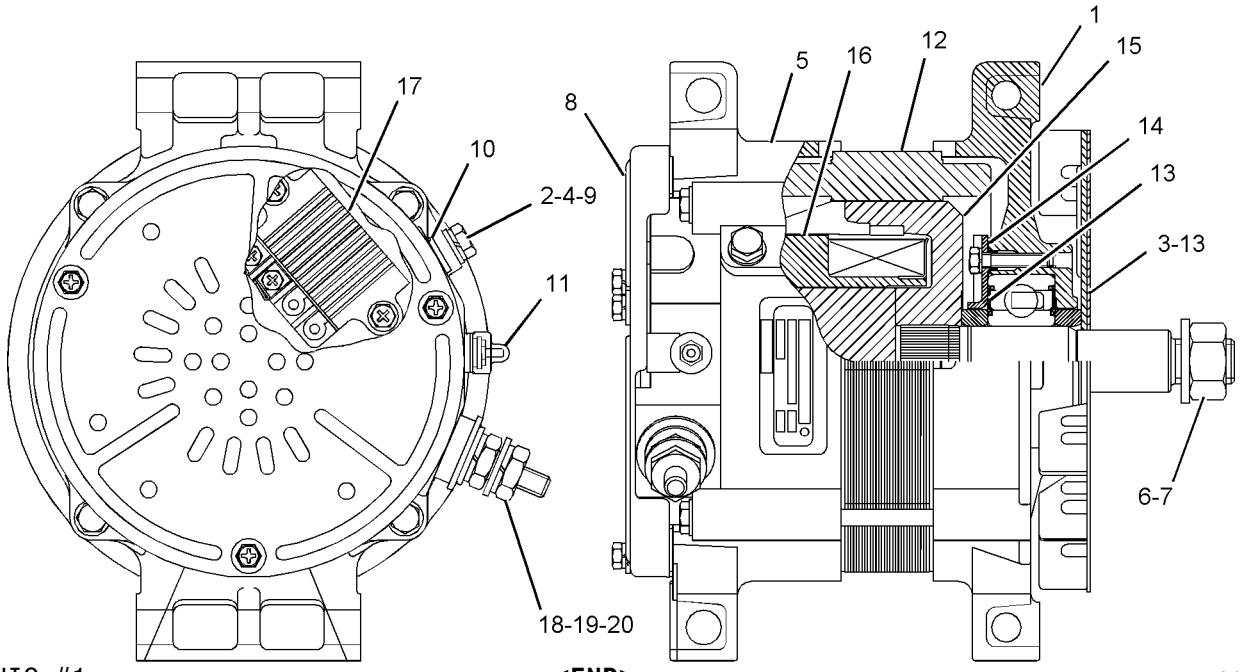

GRAPHIC #1 **<END>** g01088551

ELECTRICAL AND STARTING SYSTEM

277-6080 ALTERNATOR GP-CHARGING

S/N: C6E1-273
24-VOLT, 95-AMPERE
PART OF 242-1356 ENGINE AR

SMCS-1405 **i02475251**

NOTE	REF NO	GRAPHIC REF	PART NUMBER	QTY	PART NAME 1 2 3 4 5 6 (PRODUCT LEVEL)	SEE PAGE
Y	1	1	**226-7683**	1	ALTERNATOR GP-CHARGING (24-VOLT, 95-AMPERE)	193
	2	1	**6I-4200**	1	BOLT (M10X1.5X16-MM)	
	3	1	**277-6079**	1	STRAP-GROUNDING	
M	4	1	**6I-0654**	3	BOLT (M10X1.5X25-MM)	
	5	1	**277-6073**	1	PULLEY-ALTERNATOR	
	6	1	**277-6074**	1	BRACKET	
	7	1	**103-0050**	4	BOLT (M10X1.5X100-MM)	
M	8	1	**6I-0593**	5	BOLT (M10X1.5X30-MM)	
	9	1	**277-6075**	2	BOLT	
	10	1	**7X-0591**	2	WASHER-HARD (17X29X3-MM THK)	
	11	1	**220-1209**	1	BELT TENSIONER	
	12	1	**277-6077**	1	BOLT	
	13	1	**101-3917**	1	WASHER	
	14	1	**277-6078**	1	BRACKET	

M-METRIC PART
Y-SEPARATE ILLUSTRATION

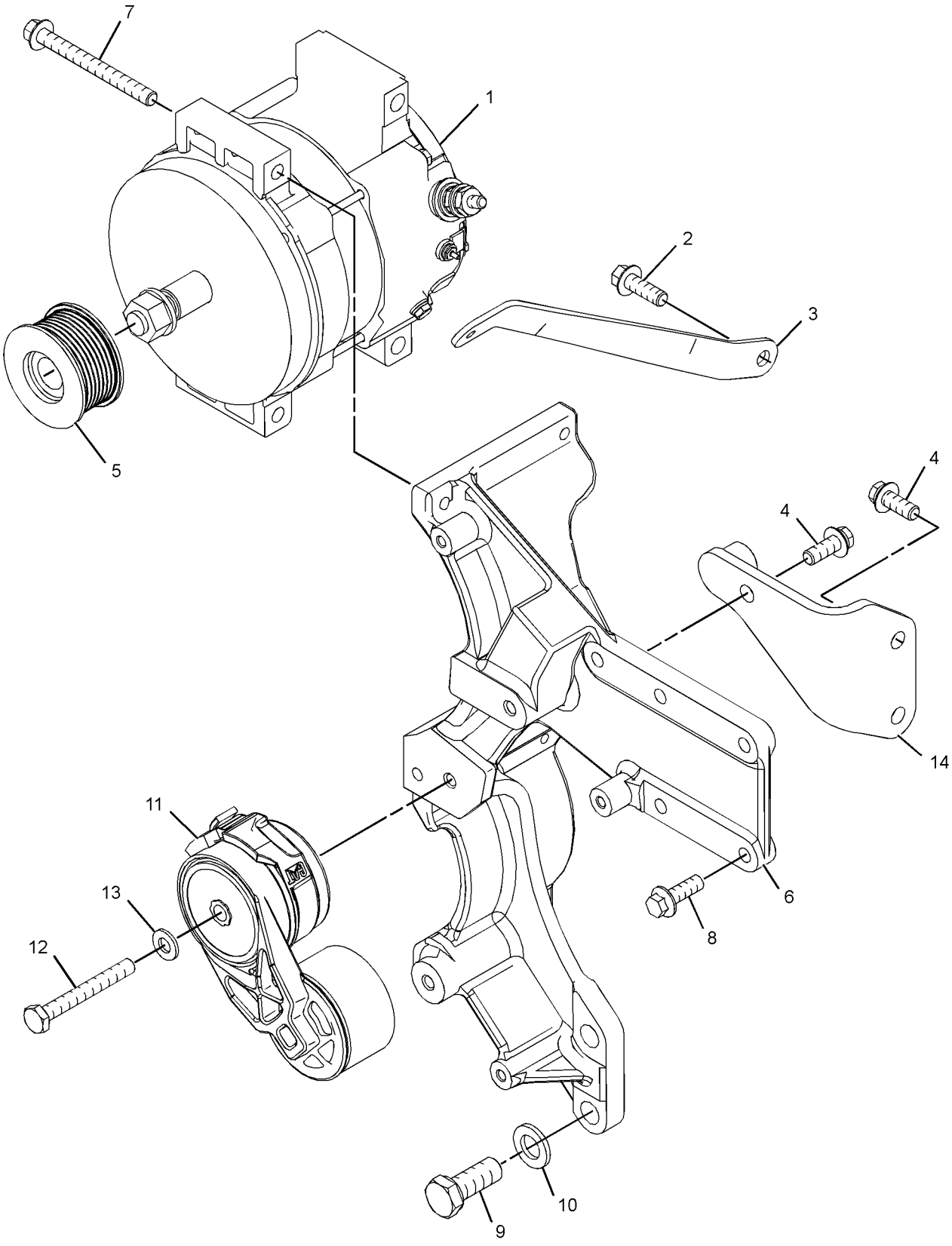

GRAPHIC #1 **<END>** g01213223

ELECTRICAL AND STARTING SYSTEM

277-6080 ALTERNATOR GP-CHARGING

S/N: C6E274-UP
24-VOLT, 95-AMPERE
PART OF 242-1356, 319-7261 ENGINE AR
ALSO AN ATTACHMENT

SMCS-1405 **i03259081**

NOTE	REF NO	GRAPHIC REF	PART NUMBER	QTY	PART NAME 1 2 3 4 5 6 (PRODUCT LEVEL)	SEE PAGE
M	1	1	**6I-0593**	5	BOLT (M10X1.5X30-MM)	
M	2	1	**6I-0654**	3	BOLT (M10X1.5X25-MM)	
	3	1	**6I-4200**	1	BOLT (M10X1.5X16-MM)	
	4	1	**7X-0591**	2	WASHER-HARD (17X29X3-MM THK)	
	5	1	**164-7468**	4	BOLT (M10X1.5X95-MM)	
	6	1	**261-0376**	1	BELT TENSIONER	
Y	7	1	**226-7683**	1	ALTERNATOR GP-CHARGING (24-VOLT, 95-AMPERE)	193
	8	1	**320-2868**	1	BRACKET	
	9	1	**277-6073**	1	PULLEY-ALTERNATOR	
	10	1	**277-6075**	2	BOLT	
	11	1	**277-6078**	1	BRACKET	
	12	1	**295-0585**	1	STRAP	

M-METRIC PART
Y-SEPARATE ILLUSTRATION

277-6080 **ALTERNATOR GP-CHARGING** *(contd.)* **i03259081**

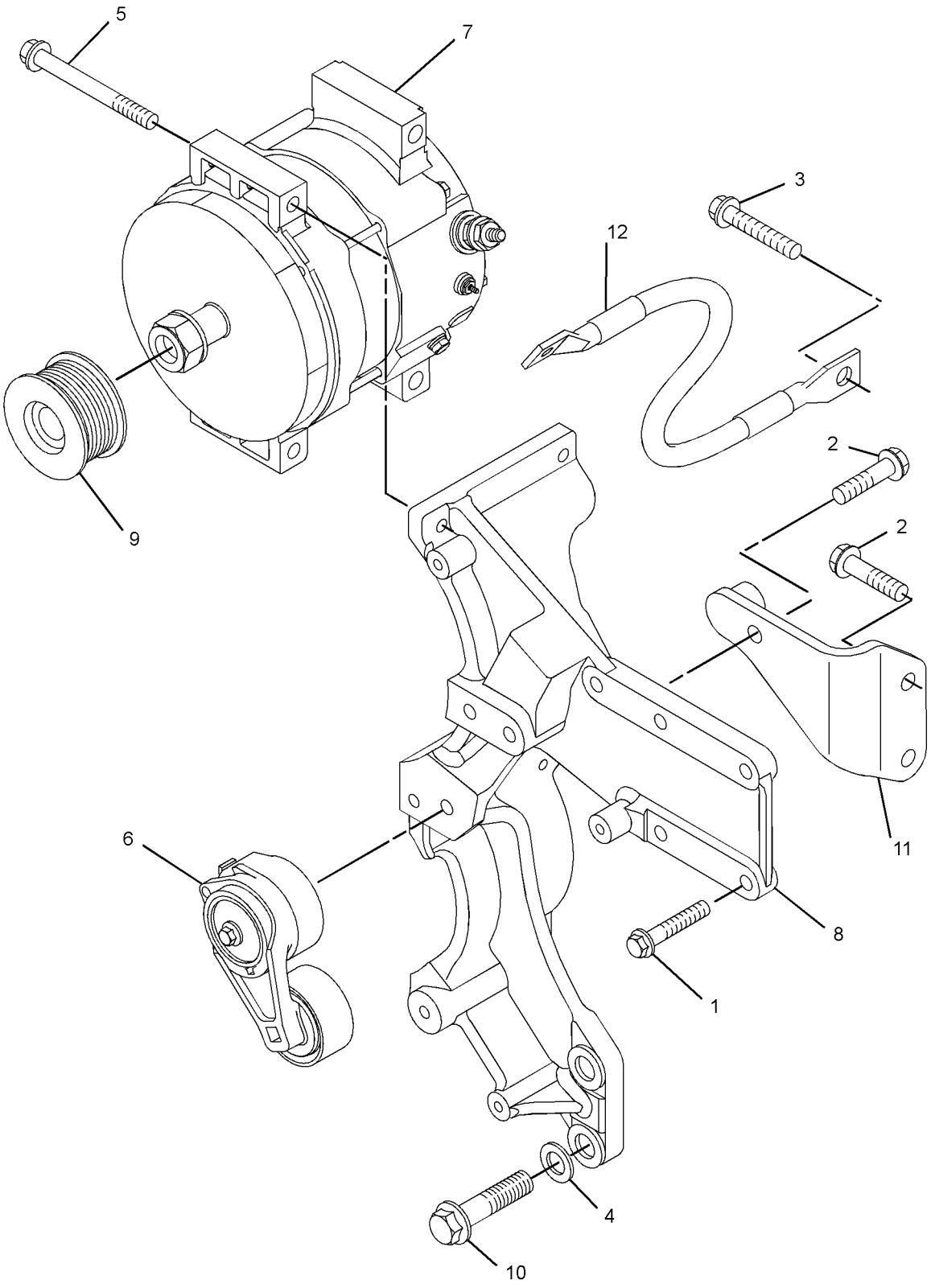

GRAPHIC #1 **<END>** g01453191

9W-0742 BLOCK GP-JUNCTION–BATTERY

S/N: DHA1-UP; FBH1-UP

PART OF 206-7297 WIRING GP-CHASSIS

SMCS-1408, 7426 **i02387778**

NOTE	REF NO	GRAPHIC REF	PART NUMBER	QTY	PART NAME 1 2 3 4 5 6 (PRODUCT LEVEL)	SEE PAGE
	1	1	**8C-6358**	1	BLOCK GP-JUNCTION (BATTERY)	
		1	**1D-5117**	3	NUT-JAM (1/2-13-THD)	
		1	**8T-3519**	3	BOLT-BRONZE (1/2-13X2-IN)	
	2	1	**7F-0560**	6	WASHER (0.516X0.938X0.101-IN THK)	
D	3	1	**6V-2722**		TUBE-HEAT SHRINK (0.1-M)	
	4	1	**8T-3518**	6	NUT-FULL (1/2-13-THD)	

D-ORDER BY THE METER

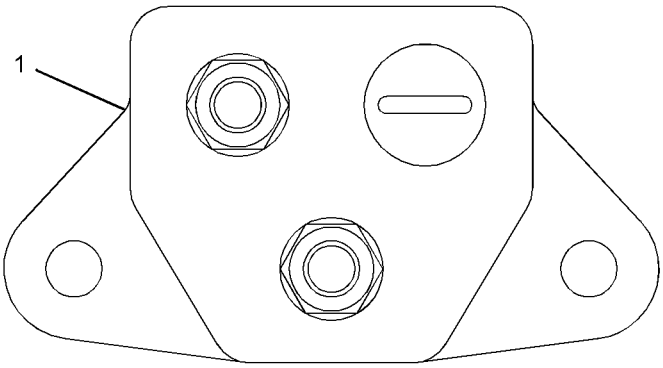

VIEW A-A

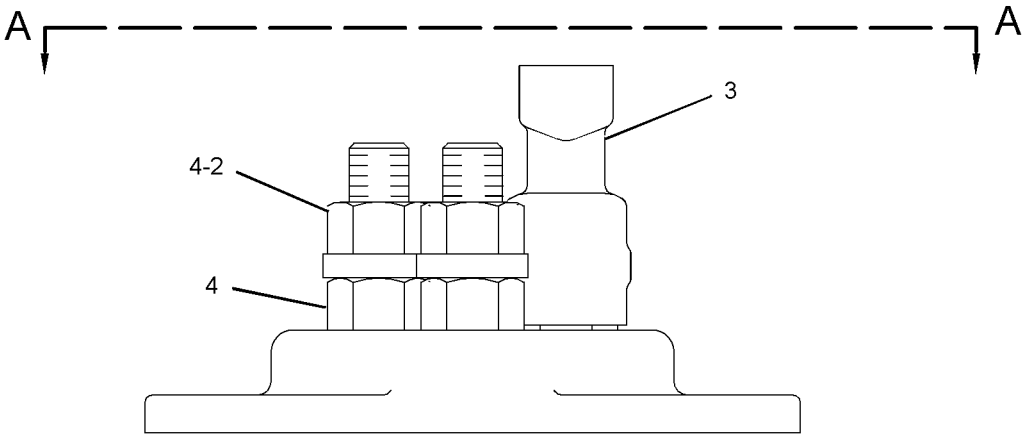

GRAPHIC #1 **<END>** g01195251

292-0294 CABLE AS-COILED–LASER RECEIVER

S/N: DHA1-UP; FBH1-UP
FIELD INSTALLATION

SMCS-1408 **i02977941**

NOTE	REF NO	GRAPHIC REF	PART NUMBER	QTY	PART NAME 1 2 3 4 5 6 (PRODUCT LEVEL)	SEE PAGE
	1	1	**311-4863**	1	CABLE AS-COILED (MAST)	

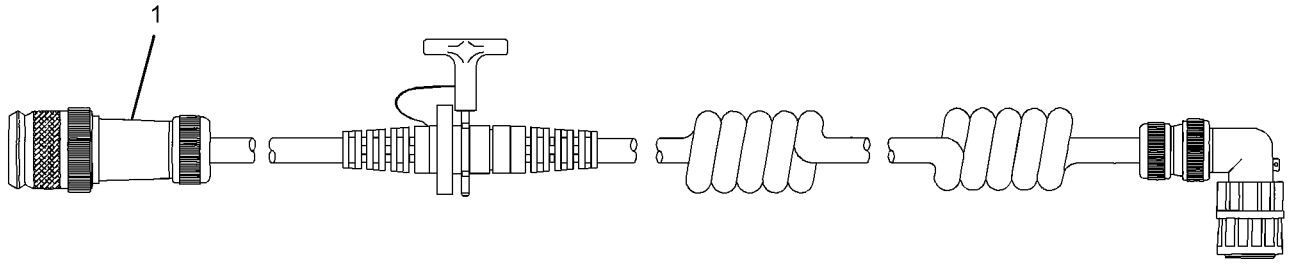

GRAPHIC #1 **<END>** g01458178

239-9954 CONTROL GP-UNPROGRAMMED–PRODUCT LINK 300

S/N: DHA1-UP; FBH1-UP

PART OF 250-6991, 267-9084, 290-1032, 314-5402, 314-5403, 319-0053

INSTALLATION GP-COMMUNICATION

AN ATTACHMENT

SMCS-7610 **i02933833**

NOTE	REF NO	GRAPHIC REF	PART NUMBER	QTY	PART NAME 1 2 3 4 5 6 (PRODUCT LEVEL)	SEE PAGE
	1	1	**285-1133**	1	CONTROL GP-UNPROGRAMMED (PRODUCT LINK 300)	
	1A	1	**7X-6315**	1	STRAP AS-GROUND	
	1B	1	**126-7574**	1	SCREW-PAN HEAD (8-32X9.52-MM)	
	1C	1	**134-4126**	1	WASHER (4.52X8.28X0.76-MM THK)	

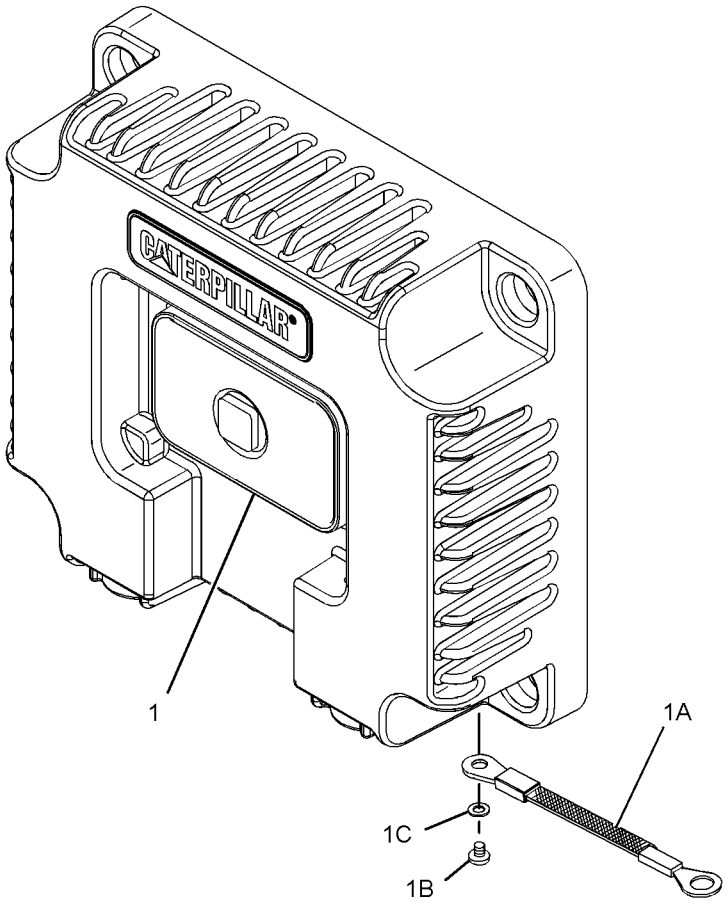

GRAPHIC #1 **<END>** g01447497

309-3676 CONTROL GP-UNPROGRAMMED–WINCH

S/N: DHA1-885; FBH1-1049
PART OF 266-9652 WIRING GP-WINCH
AN ATTACHMENT

SMCS-7610 **i02955375**

NOTE	REF NO	GRAPHIC REF	PART NUMBER	QTY	PART NAME 1 2 3 4 5 6 (PRODUCT LEVEL)	SEE PAGE
	1	1	**296-1839**	1	BRACKET AS	
	2	1	**300-3631**	1	CONTROL GP-UNPROGRAMMED (WINCH)	
M	3	1	**8T-4189**	2	BOLT (M8X1.25X20-MM)	
	4	1	**8T-4205**	2	WASHER-HARD (7.2X14.5X2-MM THK)	
	5	1	**8T-4224**	2	WASHER-HARD (8.8X16X2-MM THK)	
M	6	1	**9X-2480**	2	BOLT (M6X1X45-MM)	
FY			*284-0826*	1	ELECTRONICS GP-MACHINE	203

F-NOT SHOWN
M-METRIC PART
Y-SEPARATE ILLUSTRATION

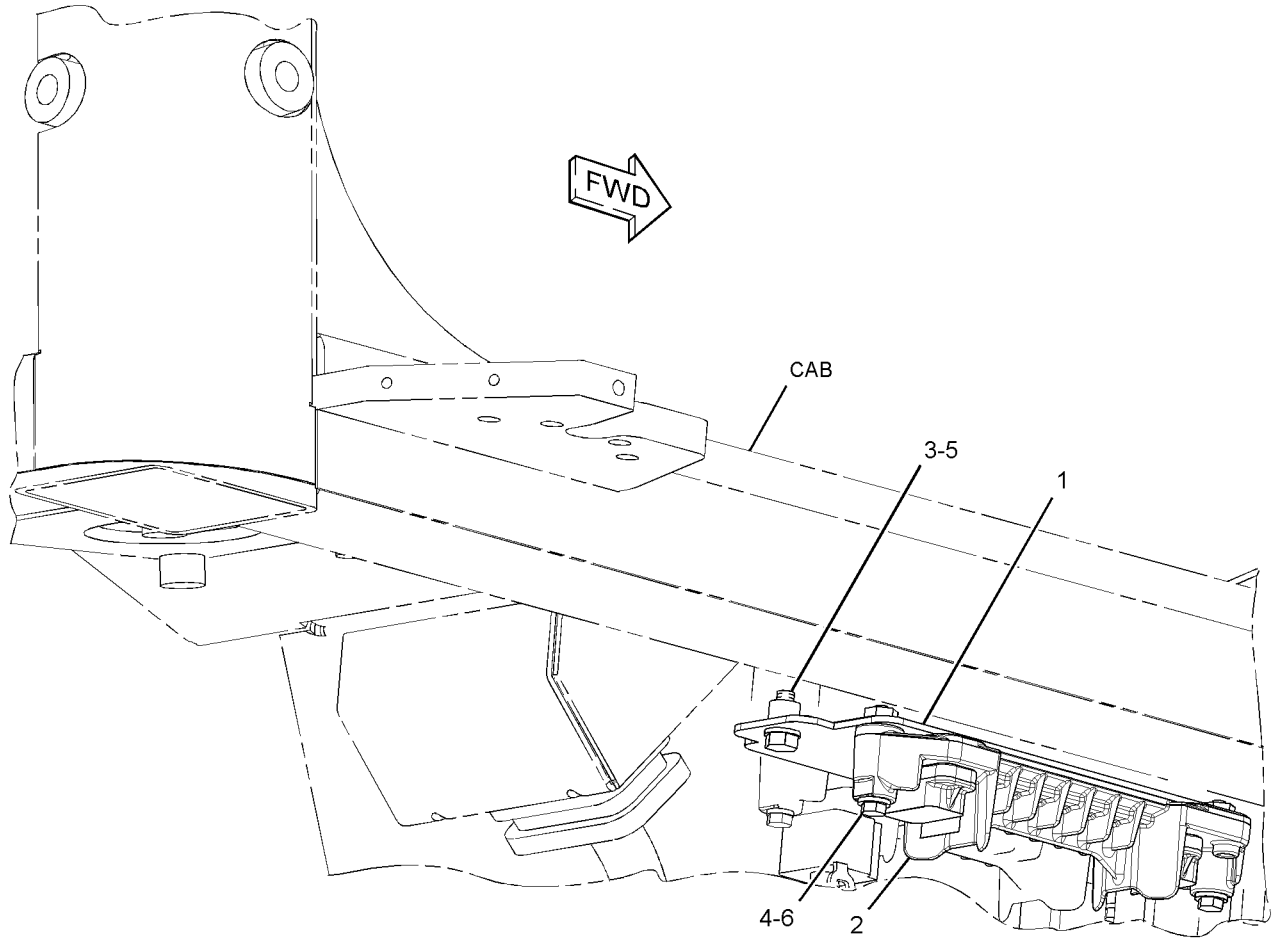

GRAPHIC #1 **<END>** g01386465

206-7300 ELECTRONICS AR-MACHINE

S/N: DHA1-UP; FBH1-UP
PART OF 206-7250, 206-7251 COMMON AR

SMCS-7610, 7620 **i03701100**

NOTE	PART NUMBER	QTY	PART NAME 1 2 3 4 5 6 (PRODUCT LEVEL)	SEE PAGE
Y	*284-0825*	1	ELECTRONICS GP-MACHINE	203
			S/N: DHA1-525; FBH1-691	
Y	*314-5298*	1	ELECTRONICS GP-MACHINE	203
			S/N: DHA526-UP; FBH692-UP	
Y	*284-0826*	1	ELECTRONICS GP-MACHINE (RIPPER)	203
			S/N: DHA1-890; FBH1-1050	
Y	*312-0309*	1	ELECTRONICS GP-MACHINE (RIPPER)	203
			S/N: DHA891-UP; FBH1051-UP	
Y	*206-7297*	1	WIRING GP-CHASSIS	313
Y	*206-7301*	1	WIRING GP-ENGINE	327
Y-SEPARATE ILLUSTRATION				

<END>

262-2043 ELECTRONICS GP-COMMUNICATION–PRODUCT LINK 300

S/N: DHA1-UP; FBH1-UP
PART OF 250-6991, 267-9084, 290-1032, 314-5402, 314-5403, 319-0053
INSTALLATION GP-COMMUNICATION
AN ATTACHMENT

SMCS-7606, 7610, 7620 **i03504284**

NOTE	PART NUMBER	QTY	PART NAME 1 2 3 4 5 6 (PRODUCT LEVEL)	SEE PAGE
	330-3409	1	SOFTWARE GP-COMMUNICATION (PRODUCT LINK 300)	
			-OR-	
	330-3410	1	SERVICE GP-COMMUNICATION (PRODUCT LINK 300)	
			(OPTIONAL SERVICE REPLACEMENT) (INCLUDES CONTROL GP & SOFTWARE)	
	7X-6315	1	STRAP AS-GROUND	
	126-7574	1	SCREW-PAN HEAD (8-32X9.52-MM)	
	134-4126	1	WASHER (4.52X8.28X0.76-MM THK)	

<END>

303-1464 ELECTRONICS GP-IMPLEMENT–ACCUGRADE

S/N: DHA1-UP; FBH1-UP
FOR USE WITH 250-6994–PAGE 213, 293-5184–PAGE 218
AN ATTACHMENT

SMCS-5701, 7610, 7620 **i02793362**

NOTE	PART NUMBER	QTY	PART NAME 1 2 3 4 5 6 (PRODUCT LEVEL)	SEE PAGE
	295-7950	1	CONFIGURATION-PREMIUM (ACCUGRADE)	

<END>

284-0825 ELECTRONICS GP-MACHINE

S/N: DHA1-525; FBH1-691
PART OF 206-7300 ELECTRONICS AR-MACHINE

SMCS-7610, 7620 **i02716721**

NOTE	PART NUMBER	QTY	PART NAME 1 2 3 4 5 6 (PRODUCT LEVEL)	SEE PAGE
	284-0549	1	SOFTWARE GP-MACHINE	

<END>

284-0826 ELECTRONICS GP-MACHINE

S/N: DHA1-890; FBH1-1050
PART OF 309-3676 CONTROL GP-UNPROGRAMMED, 206-7300 ELECTRONICS AR-MACHINE
ALSO AN ATTACHMENT

SMCS-7610, 7620 **i03701101**

NOTE	PART NUMBER	QTY	PART NAME 1 2 3 4 5 6 (PRODUCT LEVEL)	SEE PAGE
	285-2214	1	SOFTWARE GP-MACHINE	

<END>

312-0309 ELECTRONICS GP-MACHINE

S/N: DHA891-UP; FBH1051-UP
PART OF 206-7300 ELECTRONICS AR-MACHINE

SMCS-7610, 7620 **i03622062**

NOTE	PART NUMBER	QTY	PART NAME 1 2 3 4 5 6 (PRODUCT LEVEL)	SEE PAGE
	327-4449	1	SOFTWARE GP-POWER TRAIN	

<END>

314-5298 ELECTRONICS GP-MACHINE

S/N: DHA526-UP; FBH692-UP
PART OF 206-7300 ELECTRONICS AR-MACHINE

SMCS-7610, 7620 **i03666183**

NOTE	PART NUMBER	QTY	PART NAME 1 2 3 4 5 6 (PRODUCT LEVEL)	SEE PAGE
	336-6475	1	SOFTWARE GP-MACHINE	
			—OR—	
	336-6476	1	SERVICE GP-MACHINE	
			(OPTIONAL SERVICE REPLACEMENT)(INCLUDES CONTROL GP & SOFTWARE)	

<END>

294-7829 ELECTRONICS GP-MONITOR

S/N: DHA1-UP; FBH1-UP
ENGLISH, FRENCH, SPANISH
CANNOT BE USED WITH ANY OTHER MESSENGER LANGUAGE
AN ATTACHMENT

SMCS-7490, 7601, 7603, 7610, 7620 **i03018898**

NOTE	PART NUMBER	QTY	PART NAME 1 2 3 4 5 6 (PRODUCT LEVEL)	SEE PAGE
	322-9213	1	SOFTWARE GP-MONITOR	
			-OR-	
	322-9214	1	SERVICE GP-MONITOR	
			(OPTIONAL SERVICE REPLACEMENT)(INCLUDES CONTROL GP & SOFTWARE)	

<END>

294-7830 ELECTRONICS GP-MONITOR

S/N: DHA1-UP; FBH1-UP
ENGLISH, PORTUGUESE, SPANISH
CANNOT BE USED WITH ANY OTHER MESSENGER LANGUAGE
AN ATTACHMENT

SMCS-7490, 7601, 7603, 7610, 7620 **i03018899**

NOTE	PART NUMBER	QTY	PART NAME 1 2 3 4 5 6 (PRODUCT LEVEL)	SEE PAGE
	322-9215	1	SOFTWARE GP-MONITOR	
			-OR-	
	322-9216	1	SERVICE GP-MONITOR	
			(OPTIONAL SERVICE REPLACEMENT)(INCLUDES CONTROL GP & SOFTWARE)	

<END>

294-7831 ELECTRONICS GP-MONITOR

S/N: DHA1-UP; FBH1-UP
ENGLISH, GERMAN, CZECH
CANNOT BE USED WITH ANY OTHER MESSENGER LANGUAGE
AN ATTACHMENT

SMCS-7490, 7601, 7603, 7610, 7620 **i03018901**

NOTE	PART NUMBER	QTY	PART NAME 1 2 3 4 5 6 (PRODUCT LEVEL)	SEE PAGE
	322-9217	1	SOFTWARE GP-MONITOR	
			-OR-	
	322-9218	1	SERVICE GP-MONITOR	
			(OPTIONAL SERVICE REPLACEMENT)(INCLUDES CONTROL GP & SOFTWARE)	

<END>

294-7832 ELECTRONICS GP-MONITOR

S/N: DHA1-UP; FBH1-UP
ENGLISH, GERMAN, FRENCH
CANNOT BE USED WITH ANY OTHER MESSENGER LANGUAGE
AN ATTACHMENT

SMCS-7490, 7601, 7603, 7610, 7620 **i03018906**

NOTE	PART NUMBER	QTY	PART NAME 1 2 3 4 5 6 (PRODUCT LEVEL)	SEE PAGE
	322-9219	1	SOFTWARE GP-MONITOR	
			-OR-	
	322-9220	1	SERVICE GP-MONITOR	
			(OPTIONAL SERVICE REPLACEMENT)(INCLUDES CONTROL GP & SOFTWARE)	

<END>

294-7833 ELECTRONICS GP-MONITOR

S/N: DHA1-UP; FBH1-UP
ENGLISH, ITALIAN, FRENCH
CANNOT BE USED WITH ANY OTHER MESSENGER LANGUAGE
AN ATTACHMENT

SMCS-7490, 7601, 7603, 7610, 7620 **i03586980**

NOTE	PART NUMBER	QTY	PART NAME 1 2 3 4 5 6 (PRODUCT LEVEL)	SEE PAGE
	322-9221	1	SOFTWARE GP-MONITOR	
			-OR-	
	322-9222	1	SERVICE GP-MONITOR	
			(OPTIONAL SERVICE REPLACEMENT)(INCLUDES CONTROL GP & SOFTWARE)	

<END>

294-7834 ELECTRONICS GP-MONITOR

S/N: DHA1-UP; FBH1-UP
ENGLISH, DUTCH, FRENCH
CANNOT BE USED WITH ANY OTHER MESSENGER LANGUAGE
AN ATTACHMENT

SMCS-7490, 7601, 7603, 7610, 7620 **i03587002**

NOTE	PART NUMBER	QTY	PART NAME 1 2 3 4 5 6 (PRODUCT LEVEL)	SEE PAGE
	322-9223	1	SOFTWARE GP-MONITOR	
			-OR-	
	322-9224	1	SERVICE GP-MONITOR	
			(OPTIONAL SERVICE REPLACEMENT)(INCLUDES CONTROL GP & SOFTWARE)	

<END>

ELECTRICAL AND STARTING SYSTEM

294-7835 ELECTRONICS GP-MONITOR

S/N: DHA1-UP; FBH1-UP
ENGLISH, ARABIC, HEBREW
CANNOT BE USED WITH ANY OTHER MESSENGER LANGUAGE
AN ATTACHMENT

SMCS-7490, 7601, 7603, 7610, 7620 **i03018957**

NOTE	PART NUMBER	QTY	PART NAME 1 2 3 4 5 6 (PRODUCT LEVEL)	SEE PAGE
	322-9225	1	SOFTWARE GP-MONITOR	
			-OR-	
	322-9226	1	SERVICE GP-MONITOR	
			(OPTIONAL SERVICE REPLACEMENT)(INCLUDES CONTROL GP & SOFTWARE)	

<END>

294-7836 ELECTRONICS GP-MONITOR

S/N: DHA1-UP; FBH1-UP
ENGLISH, GERMAN, ITALIAN
CANNOT BE USED WITH ANY OTHER MESSENGER LANGUAGE
AN ATTACHMENT

SMCS-7490, 7601, 7603, 7610, 7620 **i03018958**

NOTE	PART NUMBER	QTY	PART NAME 1 2 3 4 5 6 (PRODUCT LEVEL)	SEE PAGE
	322-9227	1	SOFTWARE GP-MONITOR	
			-OR-	
	322-9228	1	SERVICE GP-MONITOR	
			(OPTIONAL SERVICE REPLACEMENT)(INCLUDES CONTROL GP & SOFTWARE)	

<END>

294-7837 ELECTRONICS GP-MONITOR

S/N: DHA1-UP; FBH1-UP
ENGLISH, GERMAN, DUTCH
CANNOT BE USED WITH ANY OTHER MESSENGER LANGUAGE
AN ATTACHMENT

SMCS-7490, 7601, 7603, 7610, 7620 **i03587003**

NOTE	PART NUMBER	QTY	PART NAME 1 2 3 4 5 6 (PRODUCT LEVEL)	SEE PAGE
	322-9229	1	SOFTWARE GP-MONITOR	
			-OR-	
	322-9230	1	SERVICE GP-MONITOR	
			(OPTIONAL SERVICE REPLACEMENT)(INCLUDES CONTROL GP & SOFTWARE)	

<END>

294-7838 ELECTRONICS GP-MONITOR

S/N: DHA1-UP; FBH1-UP
ENGLISH, RUSSIAN, LATVIAN
CANNOT BE USED WITH ANY OTHER MESSENGER LANGUAGE
AN ATTACHMENT

SMCS-7490, 7601, 7603, 7610, 7620 **i03094957**

NOTE	PART NUMBER	QTY	PART NAME 1 2 3 4 5 6 (PRODUCT LEVEL)	SEE PAGE
	322-9231	1	SOFTWARE GP-MONITOR	
			-OR-	
	322-9232	1	SERVICE GP-MONITOR	
			(OPTIONAL SERVICE REPLACEMENT)(INCLUDES CONTROL GP & SOFTWARE)	

<END>

294-7839 ELECTRONICS GP-MONITOR

S/N: DHA1-UP; FBH1-UP
ENGLISH, NORWEGIAN, SWEDISH
CANNOT BE USED WITH ANY OTHER MESSENGER LANGUAGE
AN ATTACHMENT

SMCS-7490, 7601, 7603, 7610, 7620 **i03094958**

NOTE	PART NUMBER	QTY	PART NAME 1 2 3 4 5 6 (PRODUCT LEVEL)	SEE PAGE
	322-9233	1	SOFTWARE GP-MONITOR	
			-OR-	
	322-9234	1	SERVICE GP-MONITOR	
			(OPTIONAL SERVICE REPLACEMENT)(INCLUDES CONTROL GP & SOFTWARE)	

<END>

294-7840 ELECTRONICS GP-MONITOR

S/N: DHA1-UP; FBH1-UP
ENGLISH, POLISH, RUSSIAN
CANNOT BE USED WITH ANY OTHER MESSENGER LANGUAGE
AN ATTACHMENT

SMCS-7490, 7601, 7603, 7610, 7620 **i03094959**

NOTE	PART NUMBER	QTY	PART NAME 1 2 3 4 5 6 (PRODUCT LEVEL)	SEE PAGE
	322-9235	1	SOFTWARE GP-MONITOR	
			-OR-	
	322-9236	1	SERVICE GP-MONITOR	
			(OPTIONAL SERVICE REPLACEMENT)(INCLUDES CONTROL GP & SOFTWARE)	

<END>

ELECTRICAL AND STARTING SYSTEM

294-7841 ELECTRONICS GP-MONITOR

S/N: DHA1-UP; FBH1-UP
ENGLISH, GREEK, TURKISH
CANNOT BE USED WITH ANY OTHER MESSENGER LANGUAGE
AN ATTACHMENT

SMCS-7490, 7601, 7603, 7610, 7620 **i03019189**

NOTE	PART NUMBER	QTY	PART NAME 1 2 3 4 5 6 (PRODUCT LEVEL)	SEE PAGE
	322-9237	1	SOFTWARE GP-MONITOR	
			-OR-	
	322-9238	1	SERVICE GP-MONITOR	
			(OPTIONAL SERVICE REPLACEMENT)(INCLUDES CONTROL GP & SOFTWARE)	

<END>

294-7842 ELECTRONICS GP-MONITOR

S/N: DHA1-UP; FBH1-UP
ENGLISH, FINNISH, SWEDISH
CANNOT BE USED WITH ANY OTHER MESSENGER LANGUAGE
AN ATTACHMENT

SMCS-7490, 7601, 7603, 7610, 7620 **i03019190**

NOTE	PART NUMBER	QTY	PART NAME 1 2 3 4 5 6 (PRODUCT LEVEL)	SEE PAGE
	322-9239	1	SOFTWARE GP-MONITOR	
			-OR-	
	322-9240	1	SERVICE GP-MONITOR	
			(OPTIONAL SERVICE REPLACEMENT)(INCLUDES CONTROL GP & SOFTWARE)	

<END>

294-7843 ELECTRONICS GP-MONITOR

S/N: DHA1-UP; FBH1-UP
ENGLISH, GREEK, SERBIAN
CANNOT BE USED WITH ANY OTHER MESSENGER LANGUAGE
AN ATTACHMENT

SMCS-7490, 7601, 7603, 7610, 7620 **i03019191**

NOTE	PART NUMBER	QTY	PART NAME 1 2 3 4 5 6 (PRODUCT LEVEL)	SEE PAGE
	322-9241	1	SOFTWARE GP-MONITOR	
			-OR-	
	322-9242	1	SERVICE GP-MONITOR	
			(OPTIONAL SERVICE REPLACEMENT)(INCLUDES CONTROL GP & SOFTWARE)	

<END>

294-7844 ELECTRONICS GP-MONITOR

S/N: DHA1-UP; FBH1-UP
ENGLISH, DANISH, DUTCH
CANNOT BE USED WITH ANY OTHER MESSENGER LANGUAGE
AN ATTACHMENT

SMCS-7490, 7601, 7603, 7610, 7620 **i03019192**

NOTE	PART NUMBER	QTY	PART NAME 1 2 3 4 5 6 (PRODUCT LEVEL)	SEE PAGE
	322-9243	1	SOFTWARE GP-MONITOR	
			-OR-	
	322-9244	1	SERVICE GP-MONITOR	
			(OPTIONAL SERVICE REPLACEMENT)(INCLUDES CONTROL GP & SOFTWARE)	

<END>

294-7845 ELECTRONICS GP-MONITOR

S/N: DHA1-UP; FBH1-UP
ENGLISH, INDONESIAN, JAPANESE
CANNOT BE USED WITH ANY OTHER MESSENGER LANGUAGE
AN ATTACHMENT

SMCS-7490, 7601, 7603, 7610, 7620 **i03019193**

NOTE	PART NUMBER	QTY	PART NAME 1 2 3 4 5 6 (PRODUCT LEVEL)	SEE PAGE
	322-9245	1	SOFTWARE GP-MONITOR	
			-OR-	
	322-9246	1	SERVICE GP-MONITOR	
			(OPTIONAL SERVICE REPLACEMENT)(INCLUDES CONTROL GP & SOFTWARE)	

<END>

277-4410 GLOW PLUG GP

S/N: C6E1-311

PART OF 242-1356 ENGINE AR

SMCS-1412 **i02548338**

NOTE	REF NO	GRAPHIC REF	PART NUMBER	QTY	PART NAME 1 2 3 4 5 6 (PRODUCT LEVEL)	SEE PAGE
	1	1	**226-8770**	6	GLOW PLUG (24-VOLT)	
	2	1	**277-4407**	1	BAR AS	
	2A	1	**277-4408**	1	CABLE AS	
M	2B	1	**5C-2890**	1	NUT (M6X1-THD)	
	4	1	**275-2428**	1	INSULATOR	
M	5	1	**5C-2890**	2	NUT (M6X1-THD)	
	6	1	**277-4409**	1	CAP	
	7	1	**067-6269**	6	FERRULE	
	8	1	**100-4838**	1	BOLT (M6X20-MM)	
	9	1	**283-4693**	12	SEAL-O-RING	

M-METRIC PART

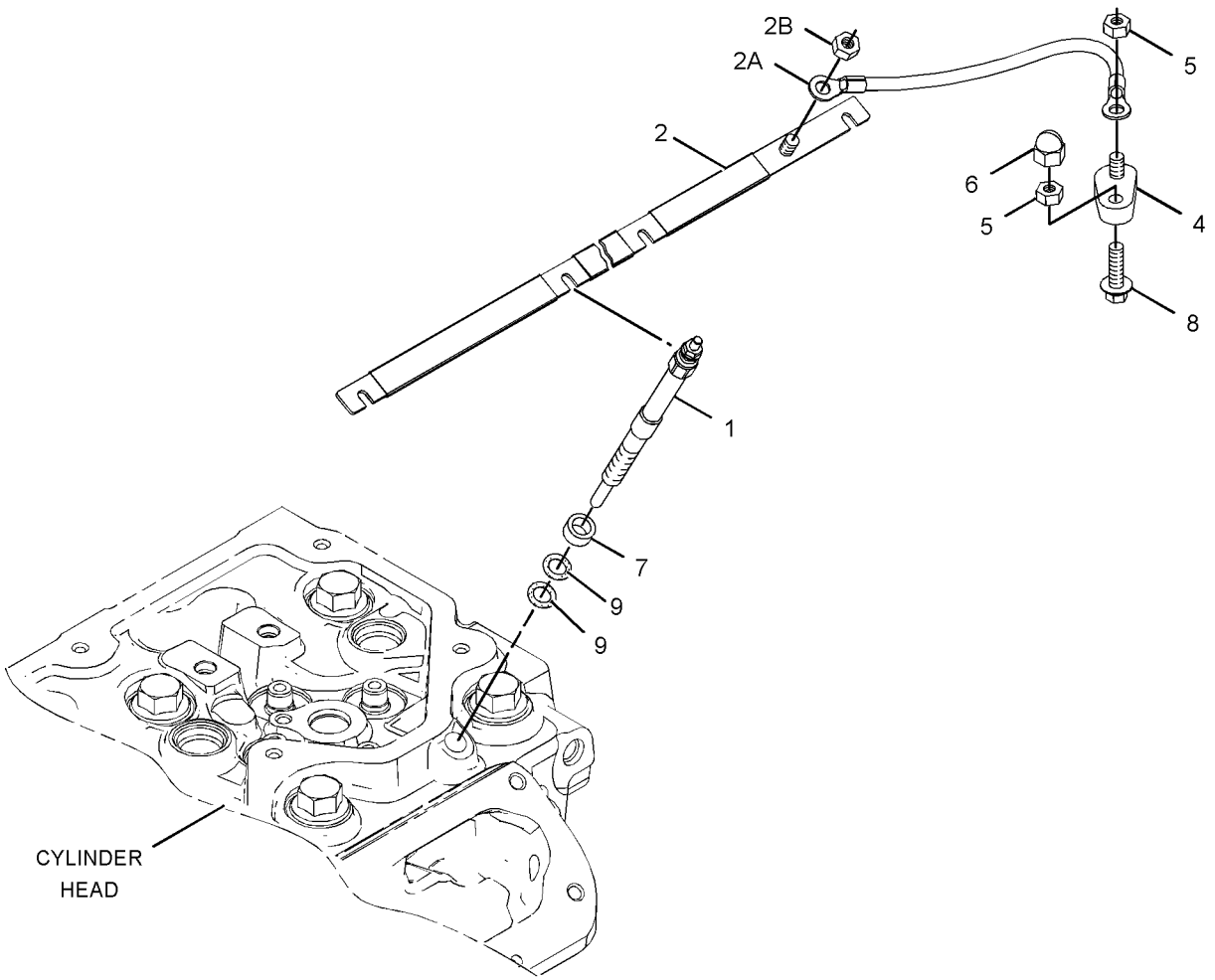

GRAPHIC #1 **<END>** g01279988

277-4410 GLOW PLUG GP

S/N: C6E312-408

PART OF 242-1356 ENGINE AR

SMCS-1412 **i03092224**

NOTE	REF NO	GRAPHIC REF	PART NUMBER	QTY	PART NAME 1 2 3 4 5 6 (PRODUCT LEVEL)	SEE PAGE
C	1	1	**292-9881**	6	GLOW PLUG	
	2	1	**316-9073**	1	CABLE GP (GLOW PLUG)	
	2A	1	**277-4408**	1	CABLE AS	
M	2B	1	**5C-2890**	1	NUT (M6X1-THD)	
	4	1	**275-2428**	1	INSULATOR	
M	5	1	**5C-2890**	2	NUT (M6X1-THD)	
	6	1	**277-4409**	1	CAP	
	8	1	**100-4838**	1	BOLT (M6X20-MM)	

C-CHANGE FROM PREVIOUS TYPE
M-METRIC PART

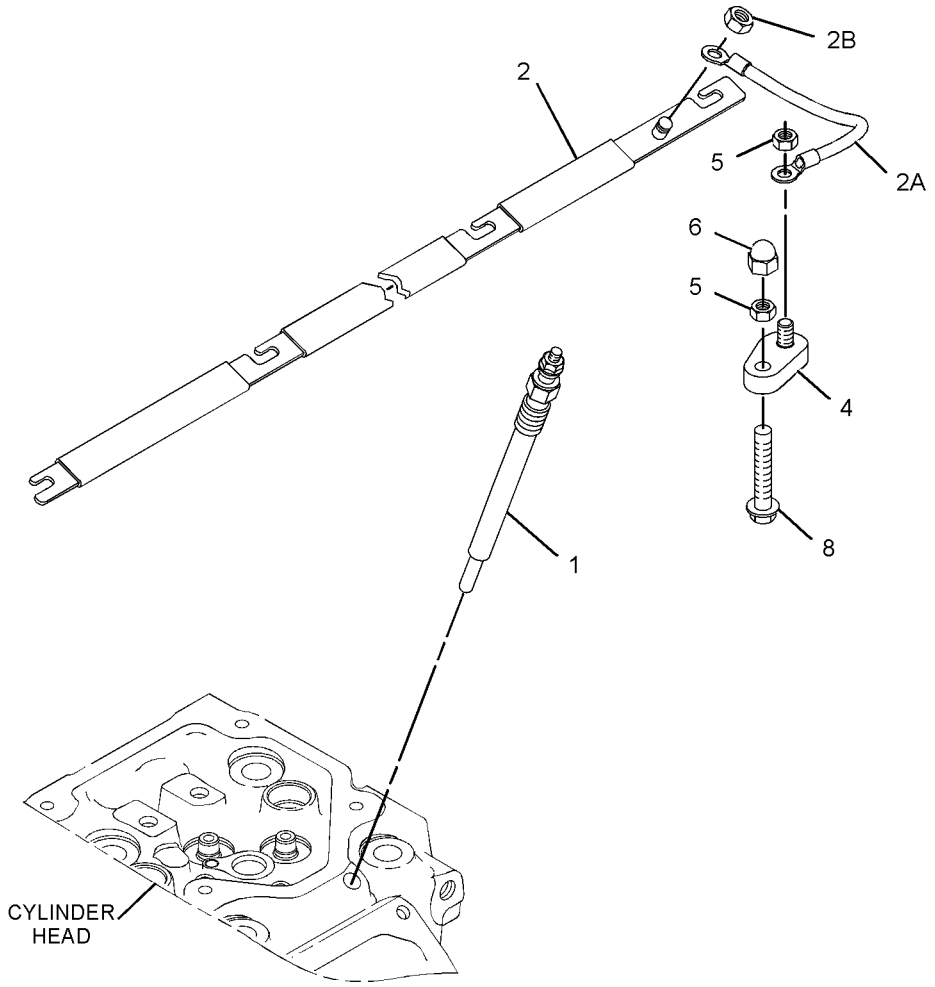

GRAPHIC #1 **<END>** g01636787

299-6957 GLOW PLUG GP

S/N: C6E409-UP
PART OF 242-1356, 319-7261 ENGINE AR
ALSO AN ATTACHMENT

SMCS-1412 **i02686878**

NOTE	REF NO	GRAPHIC REF	PART NUMBER	QTY	PART NAME 1 2 3 4 5 6 (PRODUCT LEVEL)	SEE PAGE
	1	1	**299-6953**	6	GLOW PLUG	

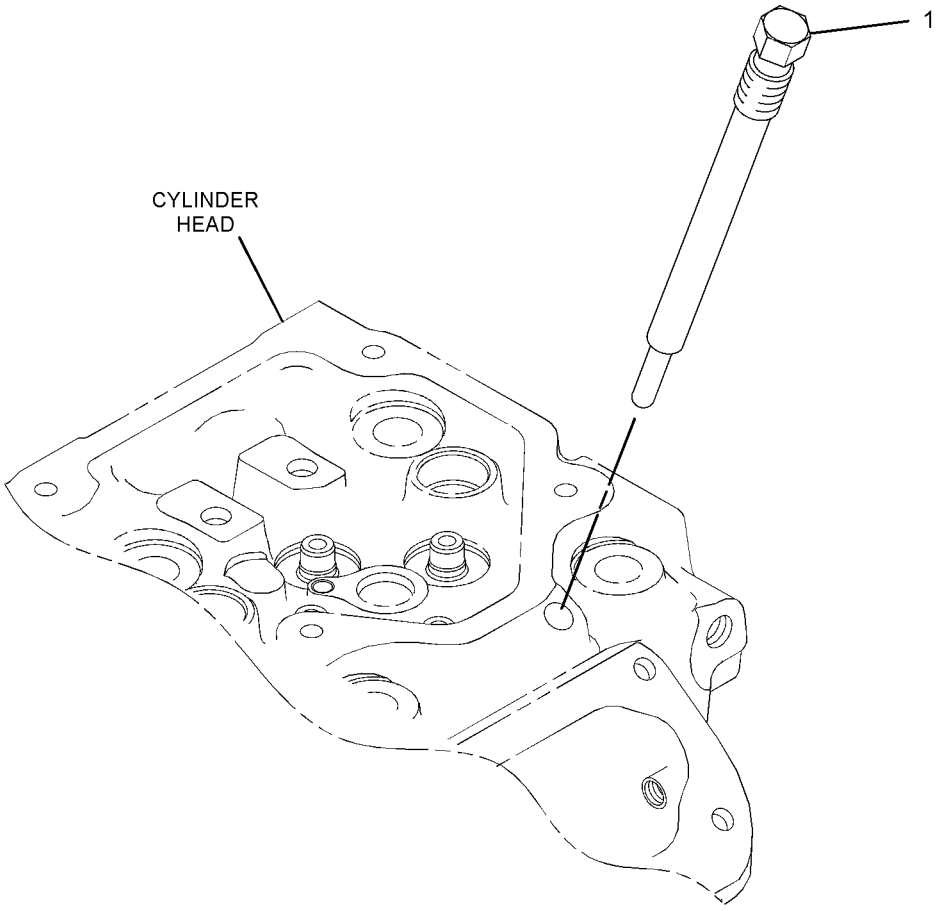

GRAPHIC #1 **<END>** g01313044

ELECTRICAL AND STARTING SYSTEM

250-6994 GRADE CONTROL AR—ENCLOSED ROPS

S/N: DHA1-1098; FBH1-1448

FOR USE WITH 240-1500—PAGE 818, 240-1520—PAGE 820, 289-8448—PAGE 814

AN ATTACHMENT

SMCS-7220 **i02745305**

NOTE	REF NO	GRAPHIC REF	PART NUMBER	QTY	PART NAME 1 2 3 4 5 6 (PRODUCT LEVEL)	SEE PAGE
	1	1	**7K-1181**	13	STRAP-CABLE	
	2	1	**132-8487**	3	NUT-RING	
	3	1	**210-6211**	1	HARNESS AS-WIRING (RECEIVER, RH)	
		1	**190-7614**	1	KIT-RECEPTACLE (12-PIN)	
					(INCLUDES RECEPTACLE AS & WEDGE)	
		1	**228-3323**	1	CLIP-SPRING	
	4	1	**226-9169**	1	MODULE AS-POWER SUPPLY	
	5	1	**227-3037**	1	HARNESS AS-WIRING (BULKHEAD)	
		1	**102-8801**	1	KIT-RECEPTACLE (12-PIN)	
					(INCLUDES RECEPTACLE AS & WEDGE)	
		1	**228-3323**	1	CLIP-SPRING	
	6	1	**250-9152**	1	HARNESS AS-FRONT	
		1	**230-5008**	1	PLUG AS-CONNECTOR (4-PIN)	
		1	**134-2540**	2	RESISTOR AS-CONNECTION (3-PIN)	
		1	**102-8806**	1	KIT-RECEPTACLE (8-PIN)	
					(INCLUDES RECEPTACLE AS & WEDGE)	
		1	**155-2255**	1	KIT-CONNECTING PLUG (12-PIN)	
		1	**155-2256**	1	KIT-CONNECTING PLUG (12-PIN)	
		1	**155-2260**	2	KIT-CONNECTING PLUG (3-PIN)	
					(EACH INCLUDES PLUG AS, WEDGE & INTERFACE SEAL)	
	7	1	**252-5533**	1	BRACKET AS	
	8	1	**258-4819**	3	BOSS	
	9	1	**272-5584**	1	FILM-INSTRUCTION (BULLDOZER CONTROL)	
	10	1	**277-1801**	1	HARNESS AS-WIRING (POWER SUPPLY MODULE)	
		1	**3R-9965**	1	PLUG AS-CONNECTOR (8-PIN)	
		1	**6D-5257**	1	PLUG AS-CONNECTOR (8-PIN)	
		1	**230-4010**	1	RECEPTACLE AS-CONNECTOR (12-PIN)	
	11	1	**295-0931**	1	HARNESS AS-WIRING (ANGLE)	
		1	**230-5009**	1	RECEPTACLE AS-CONNECTOR (4-PIN)	
		1	**228-3323**	1	CLIP-SPRING	
	12	1	**103-6262**	12	SCREW-MACHINE (4-40X0.63-IN)	
M	14	1	**179-7262**	3	SCREW-FLAT HEAD (M8X1.25X40-MM)	
Y	15	1	**302-0576**	1	GRADE CONTROL GP	226
	16	1	**4P-7581**	1	CLIP	
	17	1	**4P-8134**	2	CLIP	
M	18	1	**5C-2890**	4	NUT (M6X1-THD)	
M	19	1	**5C-7261**	3	NUT (M8X1.25-THD)	
	20	1	**7R-3029**	3	CAP-DUST	
	21	1	**8C-9987**	3	WASHER (8.3X28X2.5-MM THK)	
	22	1	**8T-4121**	1	WASHER-HARD (11X21X2.5-MM THK)	
M	23	1	**8T-4195**	1	BOLT (M10X1.5X30-MM)	
	24	1	**8T-4205**	4	WASHER-HARD (7.2X14.5X2-MM THK)	

M-METRIC PART
Y-SEPARATE ILLUSTRATION

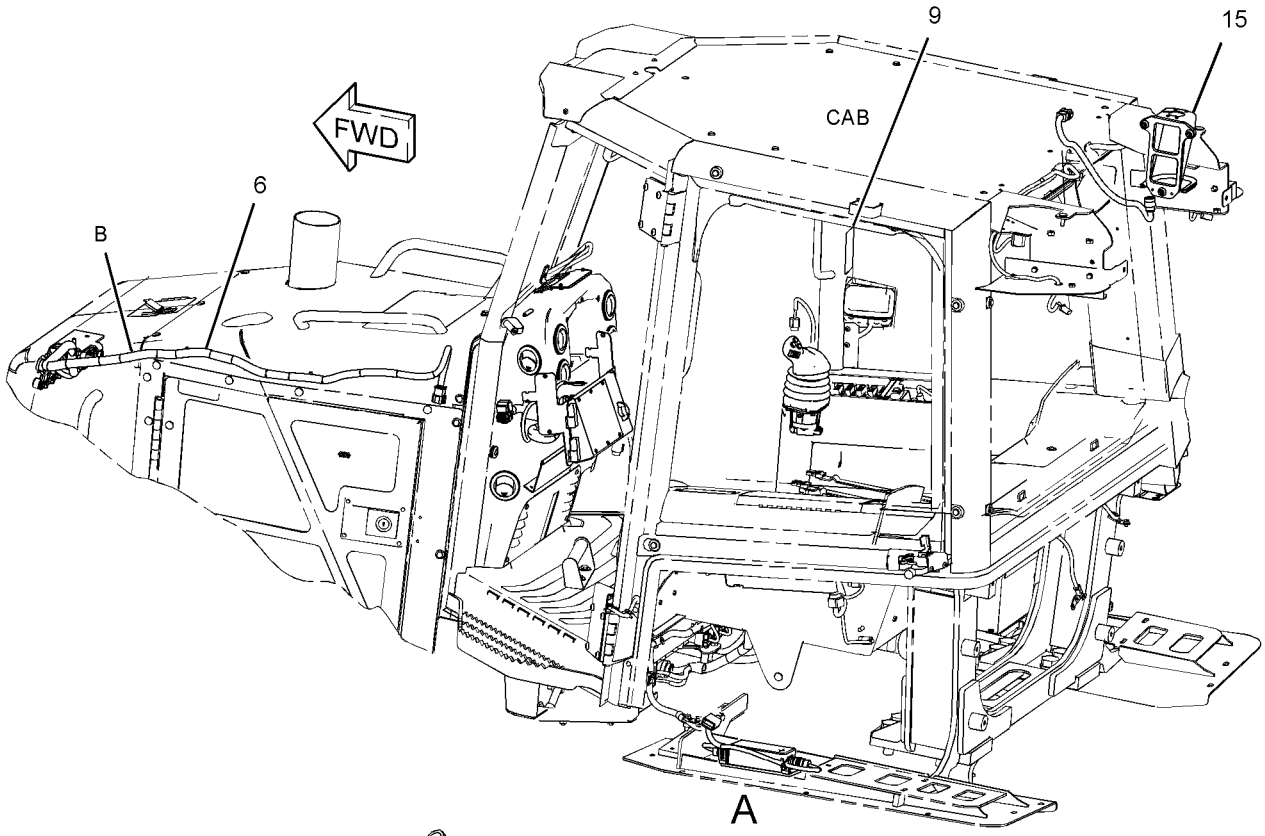

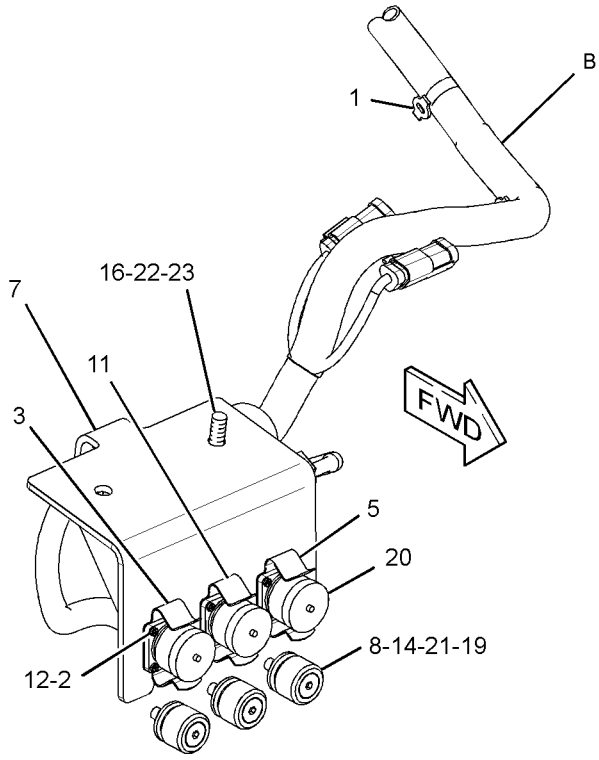

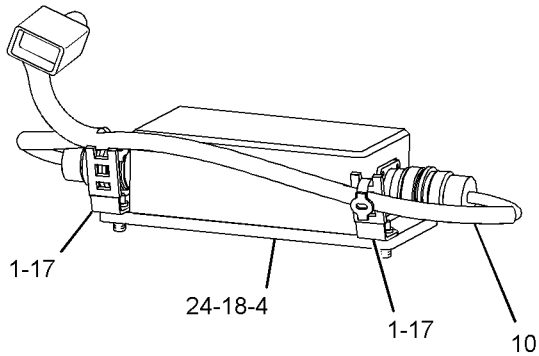

VIEW OF AREA A

GRAPHIC #1 **<END>** g01384943

ELECTRICAL AND STARTING SYSTEM

250-6994 GRADE CONTROL AR—ENCLOSED ROPS

S/N: DHA1099-UP; FBH1449-UP

FOR USE WITH 240-1500—PAGE 818, 240-1520—PAGE 820, 289-8448—PAGE 814

AN ATTACHMENT

SMCS-7220 **i03598922**

NOTE	REF NO	GRAPHIC REF	PART NUMBER	QTY	PART NAME 1 2 3 4 5 6 (PRODUCT LEVEL)	SEE PAGE
C	1	1	**7K-1181**	14	STRAP-CABLE	
	2	1	**132-8487**	3	NUT-RING	
	3	1	**210-6211**	1	HARNESS AS-WIRING (RECEIVER, RH)	
		1	**8T-8737**	2	PLUG-SEAL	
		1	**144-1636**	10	PIN-CONNECTOR (14-GA TO 18-GA)	
		1	**190-7614**	1	KIT-RECEPTACLE (12-PIN)	
					(INCLUDES RECEPTACLE AS & WEDGE)	
		1	**228-3323**	1	CLIP-SPRING	
	4	1	**226-9169**	1	MODULE AS-POWER SUPPLY	
	5	1	**227-3037**	1	HARNESS AS-WIRING (BULKHEAD)	
		1	**8T-8737**	2	PLUG-SEAL	
		1	**144-1636**	10	PIN-CONNECTOR (14-GA TO 18-GA)	
		1	**102-8801**	1	KIT-RECEPTACLE (12-PIN)	
					(INCLUDES RECEPTACLE AS & WEDGE)	
		1	**228-3323**	1	CLIP-SPRING	
C	6	1	**338-1713**	1	HARNESS AS-FRONT	
		1	**126-1766**	25	SOCKET-CONNECTOR (14-GA TO 18-GA)	
		1	**144-1636**	12	PIN-CONNECTOR (14-GA TO 18-GA)	
		1	**8C-6354**	1	CAP-RECEPTACLE	
		1	**8T-8736**	1	RECEPTACLE-CONNECTOR (9-PIN)	
		1	**8T-8737**	14	PLUG-SEAL	
E		1	**119-3662**		TUBE-HEAT SHRINK (10.85-MM DIA) (26-CM)	
E		1	**125-7874**		TUBE-HEAT SHRINK (5.72-MM DIA) (60-CM)	
		1	**230-5008**	1	PLUG AS-CONNECTOR (4-PIN)	
		1	**264-7031**	1	SEAL-CONNECTOR	
		1	**134-2540**	2	RESISTOR AS-CONNECTION (3-PIN)	
		1	**102-8806**	1	KIT-RECEPTACLE (8-PIN)	
					(INCLUDES RECEPTACLE AS & WEDGE)	
		1	**155-2255**	1	KIT-CONNECTING PLUG (12-PIN)	
		1	**155-2256**	1	KIT-CONNECTING PLUG (12-PIN)	
		1	**155-2260**	2	KIT-CONNECTING PLUG (3-PIN)	
					(EACH INCLUDES PLUG AS, WEDGE & INTERFACE SEAL)	
	7	1	**252-5533**	1	BRACKET AS	
	8	1	**258-4819**	3	BOSS	
	9	1	**272-5584**	1	FILM-INSTRUCTION (BULLDOZER CONTROL)	
	10	1	**277-1801**	1	HARNESS AS-WIRING (POWER SUPPLY MODULE)	
		1	**144-1636**	10	PIN-CONNECTOR (14-GA TO 18-GA)	
		1	**8T-8737**	2	PLUG-SEAL	
		1	**3R-9965**	1	PLUG AS-CONNECTOR (8-PIN)	
		1	**6D-5257**	1	PLUG AS-CONNECTOR (8-PIN)	
		1	**230-4010**	1	RECEPTACLE AS-CONNECTOR (12-PIN)	
	11	1	**295-0931**	1	HARNESS AS-WIRING (ANGLE)	
		1	**230-5009**	1	RECEPTACLE AS-CONNECTOR (4-PIN)	
		1	**228-3323**	1	CLIP-SPRING	
	12	1	**103-6262**	12	SCREW-MACHINE (4-40X0.63-IN)	
M	14	1	**179-7262**	3	SCREW-FLAT HEAD (M8X1.25X40-MM)	
Y	15	1	**302-0576**	1	GRADE CONTROL GP	226
	16	1	**4P-7581**	1	CLIP	
	17	1	**4P-8134**	2	CLIP	
M	18	1	**5C-2890**	4	NUT (M6X1-THD)	
M	19	1	**5C-7261**	3	NUT (M8X1.25-THD)	
	20	1	**7R-3029**	3	CAP-DUST	
	21	1	**8C-9987**	3	WASHER (8.3X28X2.5-MM THK)	
	22	1	**8T-4121**	1	WASHER-HARD (11X21X2.5-MM THK)	

250-6994 **GRADE CONTROL AR** *(contd.)* **i03598922**

NOTE	REF NO	GRAPHIC REF	PART NUMBER	QTY	PART NAME 1 2 3 4 5 6 (PRODUCT LEVEL)	SEE PAGE
M	23	1	**8T-4195**	1	BOLT (M10X1.5X30-MM)	
	24	1	**8T-4205**	4	WASHER-HARD (7.2X14.5X2-MM THK)	

C-CHANGE FROM PREVIOUS TYPE
E-ORDER BY THE CENTIMETER
M-METRIC PART
Y-SEPARATE ILLUSTRATION

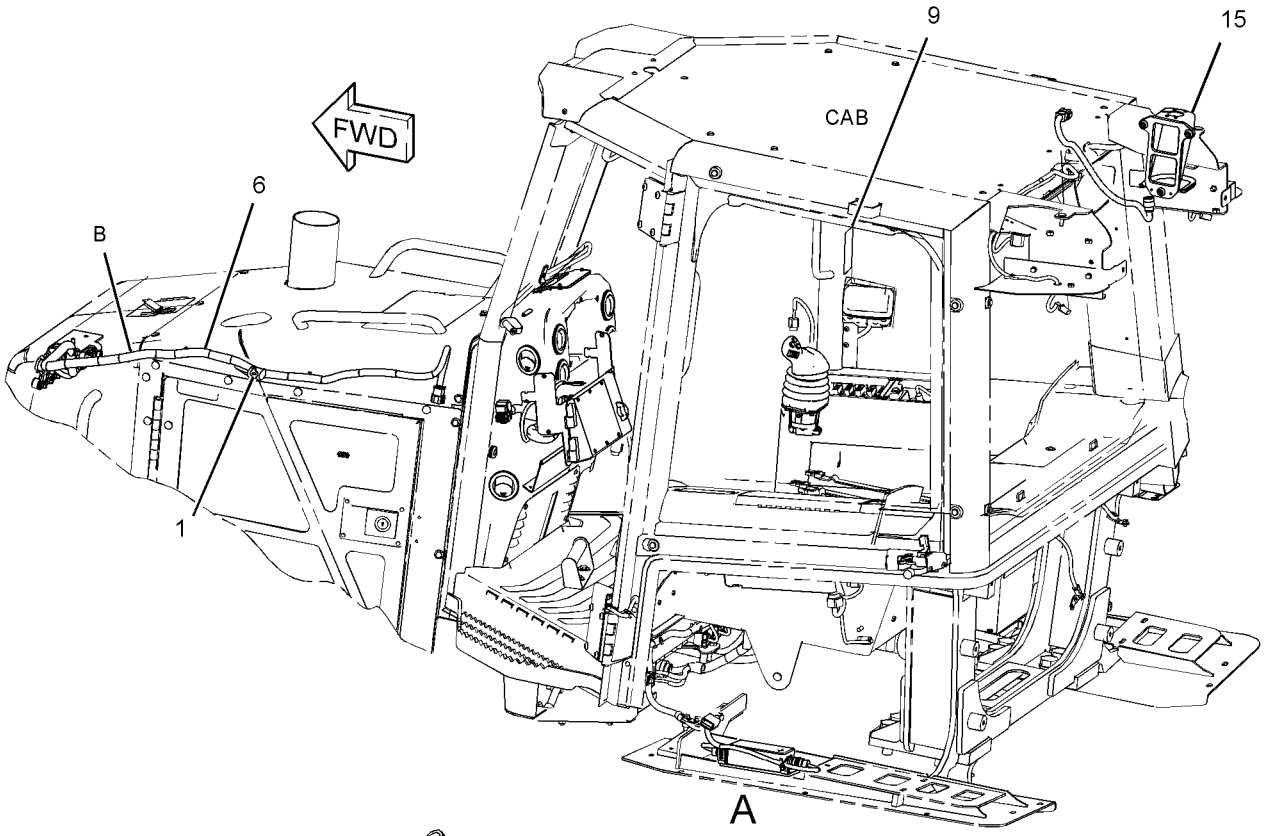

VIEW OF AREA A

GRAPHIC #1 **<END>** g01924215

293-5184 GRADE CONTROL AR—OPEN ROPS

S/N: DHA1-1098; FBH1-1498

FOR USE WITH 320-2348—PAGE 778. CANNOT BE USED WITH 250-1697 SCREEN GP-CAB, SCREEN GP-REAR

AN ATTACHMENT

SMCS-7220 **i02799223**

NOTE	REF NO	GRAPHIC REF	PART NUMBER	QTY	PART NAME 1 2 3 4 5 6 (PRODUCT LEVEL)	SEE PAGE
	1	1	**7K-1181**	13	STRAP-CABLE	
	2	1	**132-8487**	3	NUT-RING	
	3	1	**210-6211**	1	HARNESS AS-WIRING (RECEIVER, RH)	
	4	1	**226-9169**	1	MODULE AS-POWER SUPPLY	
	5	1	**227-3037**	1	HARNESS AS-WIRING (BULKHEAD)	
	6	1	**250-9152**	1	HARNESS AS-FRONT	
	7	1	**252-5533**	1	BRACKET AS	
	8	1	**258-4819**	3	BOSS	
	9	1	**272-5584**	1	FILM-INSTRUCTION (BULLDOZER CONTROL)	
	10	1	**277-1801**	1	HARNESS AS-WIRING (POWER SUPPLY MODULE)	
	11	1	**295-0931**	1	HARNESS AS-WIRING (ANGLE)	
Y	12	1	*302-0577*	1	GRADE CONTROL GP	232
	13	1	**103-6262**	12	SCREW-MACHINE (4-40X0.63-IN)	
M	14	1	**179-7262**	3	SCREW-FLAT HEAD (M8X1.25X40-MM)	
	15	1	**4P-7581**	1	CLIP	
	16	1	**4P-8134**	2	CLIP	
M	17	1	**5C-2890**	4	NUT (M6X1-THD)	
M	18	1	**5C-7261**	3	NUT (M8X1.25-THD)	
	19	1	**7R-3029**	3	CAP-DUST	
	20	1	**8C-9987**	3	WASHER (8.3X28X2.5-MM THK)	
	21	1	**8T-4121**	1	WASHER-HARD (11X21X2.5-MM THK)	
M	22	1	**8T-4195**	1	BOLT (M10X1.5X30-MM)	
	23	1	**8T-4205**	4	WASHER-HARD (7.2X14.5X2-MM THK)	

M-METRIC PART
Y-SEPARATE ILLUSTRATION

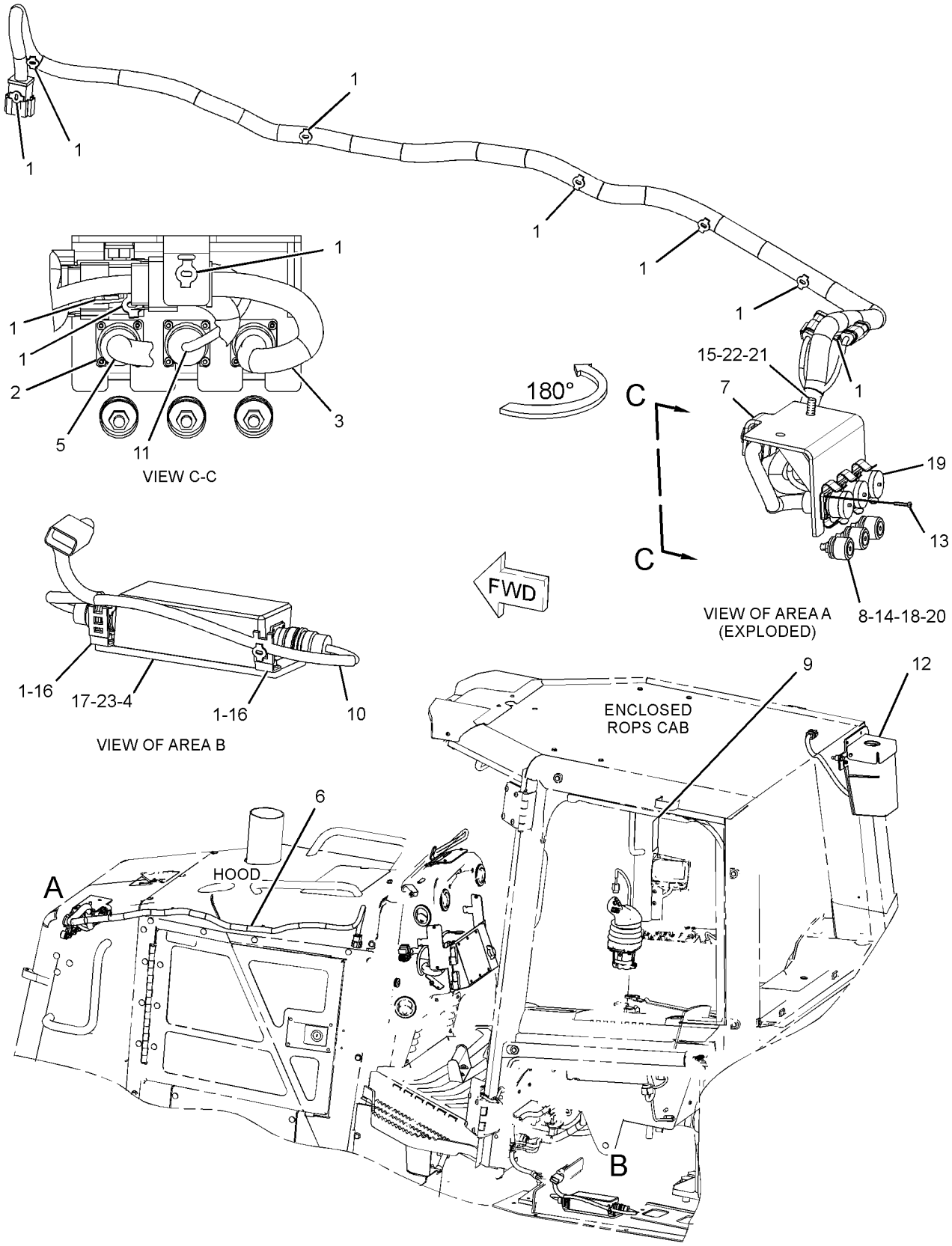

GRAPHIC #1 **<END>** g01437793

ELECTRICAL AND STARTING SYSTEM

293-5184 GRADE CONTROL AR—OPEN ROPS

S/N: DHA1099-UP; FBH1499-UP

FOR USE WITH 320-2348—PAGE 778. CANNOT BE USED WITH 250-1697 SCREEN GP-CAB, SCREEN GP-REAR

AN ATTACHMENT

SMCS-7220 **i03598924**

NOTE	REF NO	GRAPHIC REF	PART NUMBER	QTY	PART NAME 1 2 3 4 5 6 (PRODUCT LEVEL)	SEE PAGE
C	1	1	**7K-1181**	14	STRAP-CABLE	
	2	1	**132-8487**	3	NUT-RING	
	3	1	**210-6211**	1	HARNESS AS-WIRING (RECEIVER, RH)	
		1	**102-8801**	1	KIT-RECEPTACLE (12-PIN)	
		1	**190-7614**	1	KIT-RECEPTACLE (12-PIN)	
					(EACH KIT INCLUDES RECEPTACLE AS & WEDGE)	
		1	**8T-8737**	2	PLUG-SEAL	
		1	**144-1636**	10	PIN-CONNECTOR (14-GA TO 18-GA)	
		1	**228-3323**	1	CLIP-SPRING	
	4	1	**226-9169**	1	MODULE AS-POWER SUPPLY	
	5	1	**227-3037**	1	HARNESS AS-WIRING (BULKHEAD)	
		1	**102-8801**	1	KIT-RECEPTACLE (12-PIN)	
		1	**8T-8737**	2	PLUG-SEAL	
		1	**144-1636**	10	PIN-CONNECTOR (14-GA TO 18-GA)	
		1	**228-3323**	1	CLIP-SPRING	
C	6	1	**338-1713**	1	HARNESS AS-FRONT	
		1	**102-8806**	1	KIT-RECEPTACLE (8-PIN)	
					(INCLUDES RECEPTACLE AS & WEDGE)	
		1	**8C-6354**	1	CAP-RECEPTACLE	
		1	**8T-8736**	1	RECEPTACLE-CONNECTOR (9-PIN)	
		1	**8T-8737**	14	PLUG-SEAL	
E		1	**119-3662**		TUBE-HEAT SHRINK (10.85-MM DIA) (26-CM)	
E		1	**125-7874**		TUBE-HEAT SHRINK (5.72-MM DIA) (60-CM)	
		1	**126-1766**	25	SOCKET-CONNECTOR (14-GA TO 18-GA)	
		1	**134-2540**	2	RESISTOR AS-CONNECTION (3-PIN)	
		1	**144-1636**	12	PIN-CONNECTOR (14-GA TO 18-GA)	
		1	**155-2255**	1	KIT-CONNECTING PLUG (12-PIN)	
		1	**155-2256**	1	KIT-CONNECTING PLUG (12-PIN)	
		1	**155-2260**	2	KIT-CONNECTING PLUG (3-PIN)	
					(EACH KIT INCLUDES PLUG AS, WEDGE, & INTERFACE SEAL)	
		1	**230-5008**	1	PLUG AS-CONNECTOR (4-PIN)	
		1	**264-7031**	1	SEAL-CONNECTOR	
	7	1	**252-5533**	1	BRACKET AS	
	8	1	**258-4819**	3	BOSS	
	9	1	**272-5584**	1	FILM-INSTRUCTION (BULLDOZER CONTROL)	
	10	1	**277-1801**	1	HARNESS AS-WIRING (POWER SUPPLY MODULE)	
		1	**3R-9965**	1	PLUG AS-CONNECTOR (8-PIN)	
		1	**6D-5257**	1	PLUG AS-CONNECTOR (8-PIN)	
		1	**8T-8737**	2	PLUG-SEAL	
		1	**144-1636**	10	PIN-CONNECTOR (14-GA TO 18-GA)	
		1	**230-4010**	1	RECEPTACLE AS-CONNECTOR (12-PIN)	
	11	1	**295-0931**	1	HARNESS AS-WIRING (ANGLE)	
		1	**228-3323**	1	CLIP-SPRING	
		1	**230-5009**	1	RECEPTACLE AS-CONNECTOR (4-PIN)	
Y	12	1	*302-0577*	1	GRADE CONTROL GP	232
	13	1	**103-6262**	12	SCREW-MACHINE (4-40X0.63-IN)	
M	14	1	**179-7262**	3	SCREW-FLAT HEAD (M8X1.25X40-MM)	
	15	1	**4P-7581**	1	CLIP	
	16	1	**4P-8134**	2	CLIP	
M	17	1	**5C-2890**	4	NUT (M6X1-THD)	
M	18	1	**5C-7261**	3	NUT (M8X1.25-THD)	
	19	1	**7R-3029**	3	CAP-DUST	
	20	1	**8C-9987**	3	WASHER (8.3X28X2.5-MM THK)	

293-5184 **GRADE CONTROL AR** *(contd.)* **i03598924**

NOTE	REF NO	GRAPHIC REF	PART NUMBER	QTY	PART NAME 1 2 3 4 5 6 (PRODUCT LEVEL)	SEE PAGE
	21	1	**8T-4121**	1	WASHER-HARD (11X21X2.5-MM THK)	
M	22	1	**8T-4195**	1	BOLT (M10X1.5X30-MM)	
	23	1	**8T-4205**	4	WASHER-HARD (7.2X14.5X2-MM THK)	

C-CHANGE FROM PREVIOUS TYPE
E-ORDER BY THE CENTIMETER
M-METRIC PART
Y-SEPARATE ILLUSTRATION

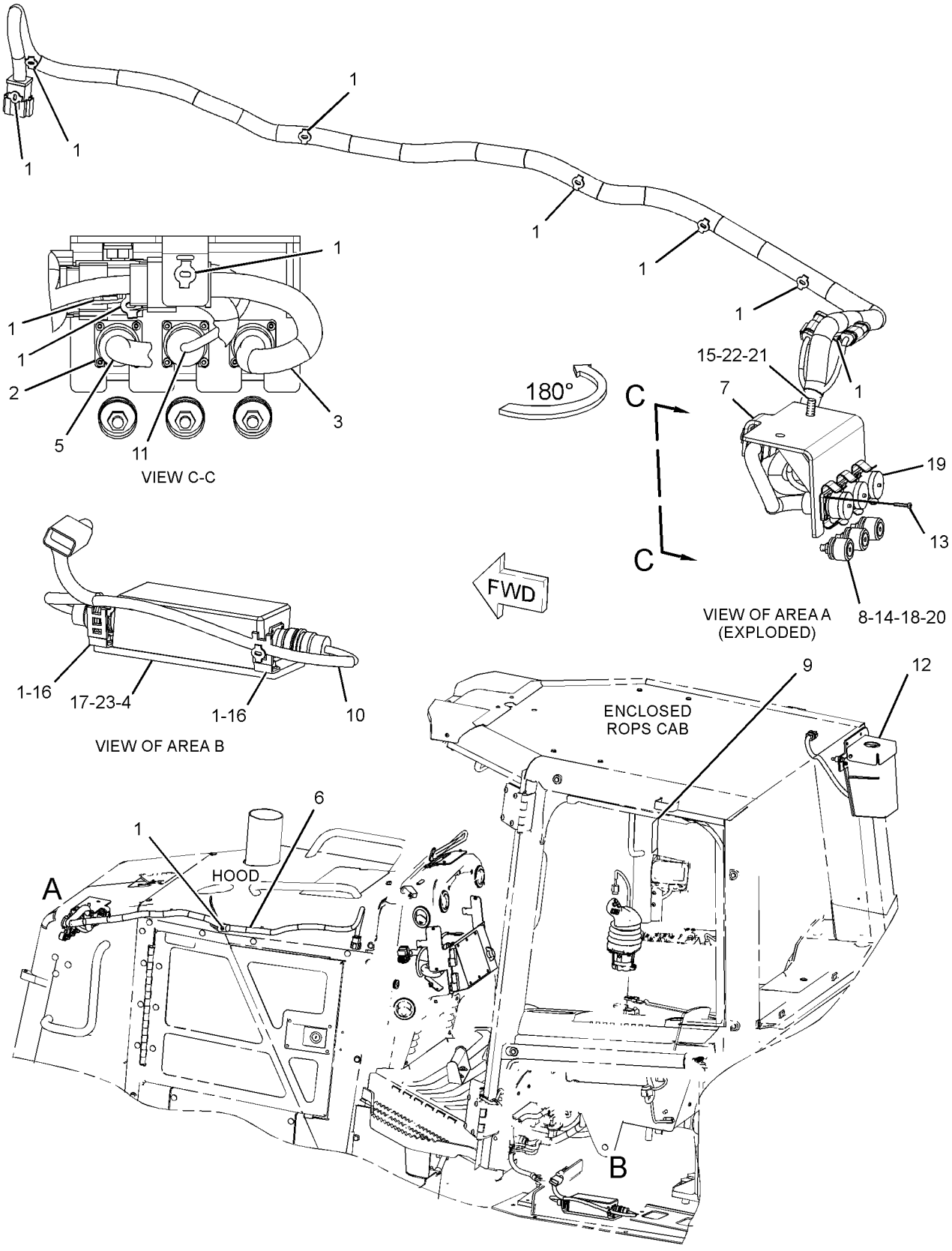

GRAPHIC #1 **<END>** g01924177

292-0293 GRADE CONTROL AR-LASER—ACCUGRADE, SINGLE

S/N: DHA1-UP; FBH1-UP
FIELD INSTALLATION

SMCS-7220 **i03699861**

NOTE	PART NUMBER	QTY	PART NAME 1 2 3 4 5 6 (PRODUCT LEVEL)	SEE PAGE
Y	**292-0309**	1	DISPLAY GP-MONITOR (CD610)	699
Y	**226-2333**	1	MAST GP	269
Y	*292-0302*	1	MOUNTING GP-MAST (LASER RECEIVER)	839
Y	**234-9970**	1	MOUNTING GP-RECEIVER	275
Y	**239-9950**	1	RECEIVER GP-LASER (SINGLE)	284
Y-SEPARATE ILLUSTRATION				

<END>

292-0312 GRADE CONTROL AR-LASER—ACCUGRADE, DUAL

S/N: DHA1-UP; FBH1-UP
FIELD INSTALLATION

SMCS-7220 **i03700001**

NOTE	PART NUMBER	QTY	PART NAME 1 2 3 4 5 6 (PRODUCT LEVEL)	SEE PAGE
Y	**292-0309**	1	DISPLAY GP-MONITOR (CD610)	699
Y	**226-2333**	1	MAST GP	269
Y	*292-0302*	1	MOUNTING GP-MAST (LASER RECEIVER)	839
Y	**234-9970**	1	MOUNTING GP-RECEIVER	275
Y	*292-0285*	2	RECEIVER GP-LASER (DUAL)	284
	235-4587	1	CASE-PLASTIC	
Y-SEPARATE ILLUSTRATION				

<END>

290-5570 GRADE CONTROL AR-SATELLITE—DUAL GPS

S/N: DHA1-UP; FBH1-UP
REPLACED BY 290-5571—PAGE 224
FIELD INSTALLATION

SMCS-7220 **i03580146**

NOTE	PART NUMBER	QTY	PART NAME 1 2 3 4 5 6 (PRODUCT LEVEL)	SEE PAGE
Y	*286-0134*	1	DISPLAY GP-MONITOR (CD700)	699
Y	*292-0290*	2	MAST GP	269
Y	**286-9124**	3	MONITOR AS (LIGHT BAR)	745
Y	*292-0296*	1	MOUNTING GP-GRADE CONTROL	274
Y	*286-0137*	1	RECEIVER GP-SATELLITE (DUAL GPS, MS980)	285
	254-9136	2	CABLE-COILED (RECEIVER)	
Y-SEPARATE ILLUSTRATION				

<END>

290-5571 GRADE CONTROL AR-SATELLITE–ACCUGRADE, DUAL GNSS

S/N: DHA1-UP; FBH1-UP

FIELD INSTALLATION

SMCS-7220 **i03700082**

NOTE	PART NUMBER	QTY	PART NAME 1 2 3 4 5 6 (PRODUCT LEVEL)	SEE PAGE
Y	**286-0134**	1	DISPLAY GP-MONITOR (CD700)	699
Y	*292-0303*	2	MOUNTING GP-MAST (SATELLITE RECEIVER)	839
Y	*292-0296*	1	MOUNTING GP-GRADE CONTROL	274
Y	**292-0291**	1	RECEIVER GP-SATELLITE (DUAL GNSS, MS990)	285
Y	**286-9124**	3	MONITOR AS (LIGHT BAR)	745
	248-1500	2	MAST AS	
	311-4862	2	CABLE-COILED (RECEIVER)	
Y-SEPARATE ILLUSTRATION				

<END>

292-0279 GRADE CONTROL AR-SATELLITE–SINGLE GPS

S/N: DHA1-UP; FBH1-UP

REPLACED BY 292-0280–PAGE 225

FIELD INSTALLATION

SMCS-7220 **i03583840**

NOTE	PART NUMBER	QTY	PART NAME 1 2 3 4 5 6 (PRODUCT LEVEL)	SEE PAGE
Y	*286-0134*	1	DISPLAY GP-MONITOR (CD700)	699
Y	*292-0290*	1	MAST GP	269
Y	**286-9124**	3	MONITOR AS (LIGHT BAR)	745
Y	*292-0296*	1	MOUNTING GP-GRADE CONTROL	274
Y	*286-0136*	1	RECEIVER GP-SATELLITE (SINGLE GPS, MS980)	284
	254-9136	1	CABLE-COILED (RECEIVER)	
	254-9951	1	CABLE-COILED (ANGLE SENSOR)	
	226-9170	1	SENSOR-ANGLE (AS400C)	
Y-SEPARATE ILLUSTRATION				

<END>

292-0280 GRADE CONTROL AR-SATELLITE–

ACCUGRADE, SINGLE GNSS

S/N: DHA1-UP; FBH1-UP

FIELD INSTALLATION

SMCS-7220 **i03700163**

NOTE	PART NUMBER	QTY	PART NAME 1 2 3 4 5 6 (PRODUCT LEVEL)	SEE PAGE
Y	**286-0134**	1	DISPLAY GP-MONITOR (CD700)	699
Y	**286-9124**	3	MONITOR AS (LIGHT BAR)	745
Y	*292-0296*	1	MOUNTING GP-GRADE CONTROL	274
Y	*292-0303*	1	MOUNTING GP-MAST (SATELLITE RECEIVER)	839
Y	*292-0292*	1	RECEIVER GP-SATELLITE (SINGLE GNSS, MS990)	286
	248-1500	1	MAST AS (SATELLITE RECEIVER)	
	276-6146	1	SENSOR AS-ANGLE	
	311-4862	1	CABLE-COILED (RECEIVER)	
	311-4864	1	CABLE-COILED (ANGLE SENSOR)	

Y-SEPARATE ILLUSTRATION

<END>

302-0576 GRADE CONTROL GP—ENCLOSED ROPS

S/N: DHA1-786; FBH1-927
PART OF 250-6994 GRADE CONTROL AR
AN ATTACHMENT

SMCS-7220 **i02745317**

NOTE	REF NO	GRAPHIC REF	PART NUMBER	QTY	PART NAME 1 2 3 4 5 6 (PRODUCT LEVEL)	SEE PAGE
B	1	1	**8C-5607**	6	MOUNT-ISOLATION	
B	2	1	**8C-5608**	3	SPACER (6.5X9.5X25.4-MM THK)	
	3	1	**167-8712**	1	ALARM (CAES)	
	4	1	**167-8713**	1	BAFFLE AS	
B	5	1	**252-6949**	1	BRACKET	
Y	6	1	*255-4260*	1	MOUNTING GP-GRADE CONTROL	270
B	7	1	**264-4510**	1	BRACKET AS	
B	8	1	**291-5422**	1	HARNESS AS-WIRING (CAB)	
		1	**167-8987**	1	PLUG AS-CONNECTOR (8-PIN)	
		1	**102-8806**	1	KIT-RECEPTACLE (8-PIN)	
					(INCLUDES RECEPTACLE AS & WEDGE)	
B	9	1	**293-5185**	1	HARNESS AS-WIRING (GLOBAL POSITIONING SYSTEM)	
		1	**230-4009**	1	PLUG AS-CONNECTOR (12-PIN)	
		1	**239-7356**	1	PLUG AS-CONNECTOR (12-PIN)	
		1	**248-5358**	1	PLUG AS-CONNECTOR (39-PIN)	
B	10	1	**293-5188**	1	HARNESS AS-WIRING (LASER)	
		1	**147-1444**	1	PLUG AS-CONNECTOR (70-PIN)	
		1	**230-4009**	1	PLUG AS-CONNECTOR (12-PIN)	
		1	**239-7356**	1	PLUG AS-CONNECTOR (12-PIN)	
		1	**155-2260**	1	KIT-CONNECTING PLUG (3-PIN)	
					(INCLUDES RECEPTACLE AS & WEDGE)	
	11	1	**314-3024**	1	PLATE	
M	12	1	**112-6646**	4	LOCKNUT (M6X1-THD)	
Y	13	1	**274-4645**	1	CONTROL GP-JOYSTICK (GRADE CONTROL)	669
	14	1	**1M-4543**	1	GROMMET	
BM	15	1	**8C-8451**	3	BOLT (M6X1X40-MM)	
B	16	1	**8T-4205**	6	WASHER-HARD (7.2X14.5X2-MM THK)	
E	17	1	**3E-6600**		SEAL (28-CM)	
E	17A	1	**3E-6600**		SEAL (23-CM)	
E	17B	1	**3E-6600**		SEAL (5-CM)	

B-USE AS REQUIRED
E-ORDER BY THE CENTIMETER
M-METRIC PART
Y-SEPARATE ILLUSTRATION

302-0576 **GRADE CONTROL GP** *(contd.)* **i02745317**

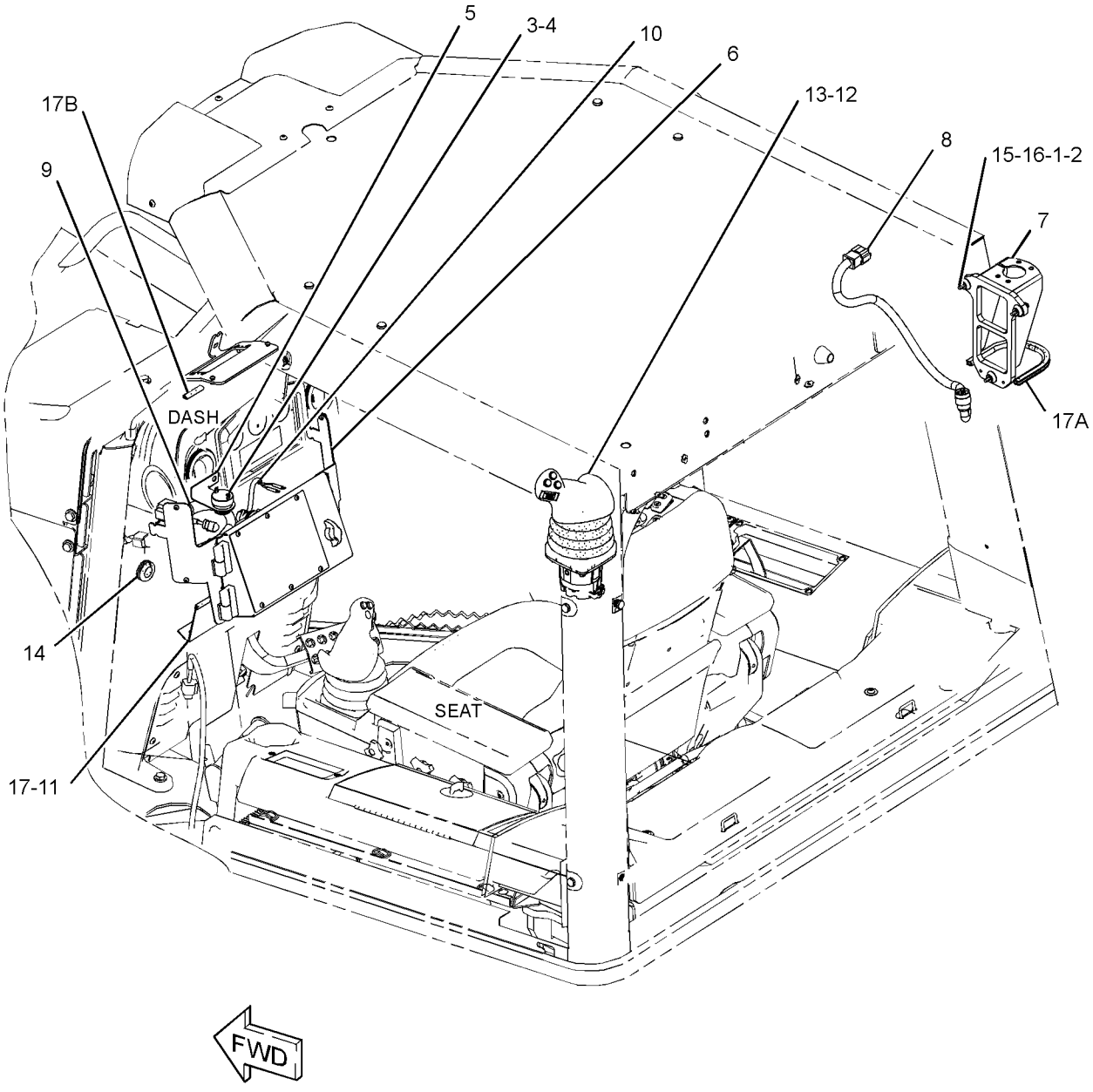

GRAPHIC #1 **<END>** g01387929

ELECTRICAL AND STARTING SYSTEM

302-0576 GRADE CONTROL GP—ENCLOSED ROPS

S/N: DHA787-1021; FBH928-1290
PART OF 250-6994 GRADE CONTROL AR
AN ATTACHMENT

SMCS-7220 **i03539321**

NOTE	REF NO	GRAPHIC REF	PART NUMBER	QTY	PART NAME 1 2 3 4 5 6 (PRODUCT LEVEL)	SEE PAGE
	1	1	**167-8712**	1	ALARM	
	2	1	**167-8713**	1	BAFFLE AS	
B	3	1	**252-6949**	1	BRACKET	
Y	4	1	*255-4260*	1	MOUNTING GP-GRADE CONTROL	270
B	5	1	**293-5185**	1	HARNESS AS-WIRING (GLOBAL POSITIONING SYSTEM)	
		1	**8T-8737**	8	PLUG-SEAL	
		1	**126-1768**	16	SOCKET-CONNECTOR (14-GA)	
					-OR-	
		1	**9X-3402**	16	SOCKET-CONNECTOR (16-GA TO 18-GA)	
		1	**230-4009**	1	PLUG AS-CONNECTOR (12-PIN)	
		1	**239-7356**	1	PLUG AS-CONNECTOR (12-PIN)	
		1	**248-5358**	1	PLUG AS-CONNECTOR (39-PIN)	
B	6	1	**293-5188**	1	HARNESS AS-WIRING (LASER)	
		1	**8T-8737**	63	PLUG-SEAL	
		1	**126-1768**	34	SOCKET-CONNECTOR (14-GA)	
					-OR-	
		1	**5P-2766**	2	TERMINAL-RING (18-GA TO 22-GA, NO. 6 SCREW)	
		1	**147-1444**	1	PLUG AS-CONNECTOR (70-PIN)	
		1	**155-2260**	1	KIT-CONNECTING PLUG (3-PIN)	
		1	**230-4009**	1	PLUG AS-CONNECTOR (12-PIN)	
		1	**239-7356**	1	PLUG AS-CONNECTOR (12-PIN)	
		1	**251-7591**	1	WIRE AS	
	7	1	**314-3024**	1	PLATE	
B	8	1	**319-4525**	1	HARNESS AS-CONTROL	
		1	**102-8806**	1	KIT-RECEPTACLE (8-PIN)	
		1	**9X-3401**	8	PIN-CONNECTOR (16-GA TO 18-GA)	
					-OR-	
		1	**126-1767**	8	PIN-CONNECTOR (14-GA)	
		1	**167-8987**	1	PLUG AS-CONNECTOR (8-PIN)	
M	9	1	**112-6646**	4	LOCKNUT (M6X1-THD)	
Y	10	1	**274-4645**	1	CONTROL GP-JOYSTICK (GRADE CONTROL)	669
	11	1	**1M-4543**	1	GROMMET	
	12	1	**4P-8134**	1	CLIP	
	13	1	**5P-4115**	1	WASHER-HARD (7.2X19X2-MM THK)	
M	14	1	**8T-4138**	1	BOLT (M6X1X20-MM)	
E	15	1	**3E-6600**		SEAL (28-CM)	
E	15A	1	**3E-6600**		SEAL (23-CM)	
E	15B	1	**3E-6600**		SEAL (5-CM)	

B-USE AS REQUIRED
E-ORDER BY THE CENTIMETER
M-METRIC PART
Y-SEPARATE ILLUSTRATION

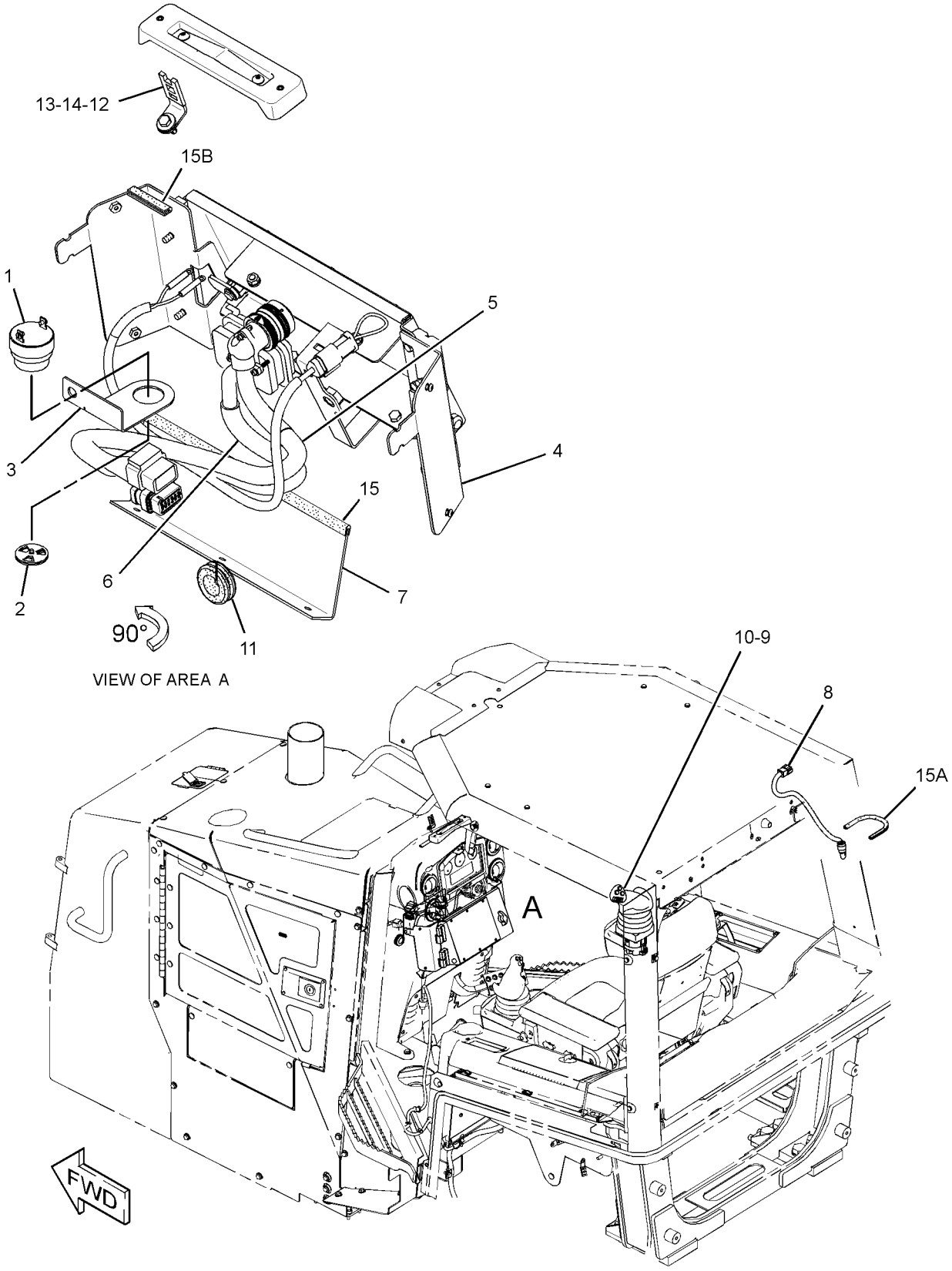

GRAPHIC #1 **<END>** g01875613

302-0576 GRADE CONTROL GP—ENCLOSED ROPS

S/N: DHA1022-UP; FBH1291-UP
PART OF 250-6994 GRADE CONTROL AR
AN ATTACHMENT

SMCS-7220 **i03457420**

NOTE	REF NO	GRAPHIC REF	PART NUMBER	QTY	PART NAME 1 2 3 4 5 6 (PRODUCT LEVEL)	SEE PAGE
	1	1	**167-8712**	1	ALARM	
	2	1	**167-8713**	1	BAFFLE AS	
B	3	1	**252-6949**	1	BRACKET	
Y	4	1	*255-4260*	1	MOUNTING GP-GRADE CONTROL	270
B	5	1	**293-5185**	1	HARNESS AS-WIRING (GLOBAL POSITIONING SYSTEM)	
B	6	1	**293-5188**	1	HARNESS AS-WIRING (LASER)	
	7	1	**314-3024**	1	PLATE	
B	8	1	**319-4525**	1	HARNESS AS-CONTROL	
M	9	1	**112-6646**	4	LOCKNUT (M6X1-THD)	
CY	10	1	**328-0894**	1	CONTROL GP-JOYSTICK (GRADE CONTROL)	676
	11	1	**1M-4543**	1	GROMMET	
	12	1	**4P-8134**	1	CLIP	
	13	1	**5P-4115**	1	WASHER-HARD (7.2X19X2-MM THK)	
M	14	1	**8T-4138**	1	BOLT (M6X1X20-MM)	
E	15	1	**3E-6600**		SEAL (28-CM)	
E	15A	1	**3E-6600**		SEAL (23-CM)	
E	15B	1	**3E-6600**		SEAL (5-CM)	

B-USE AS REQUIRED
C-CHANGE FROM PREVIOUS TYPE
E-ORDER BY THE CENTIMETER
M-METRIC PART
Y-SEPARATE ILLUSTRATION

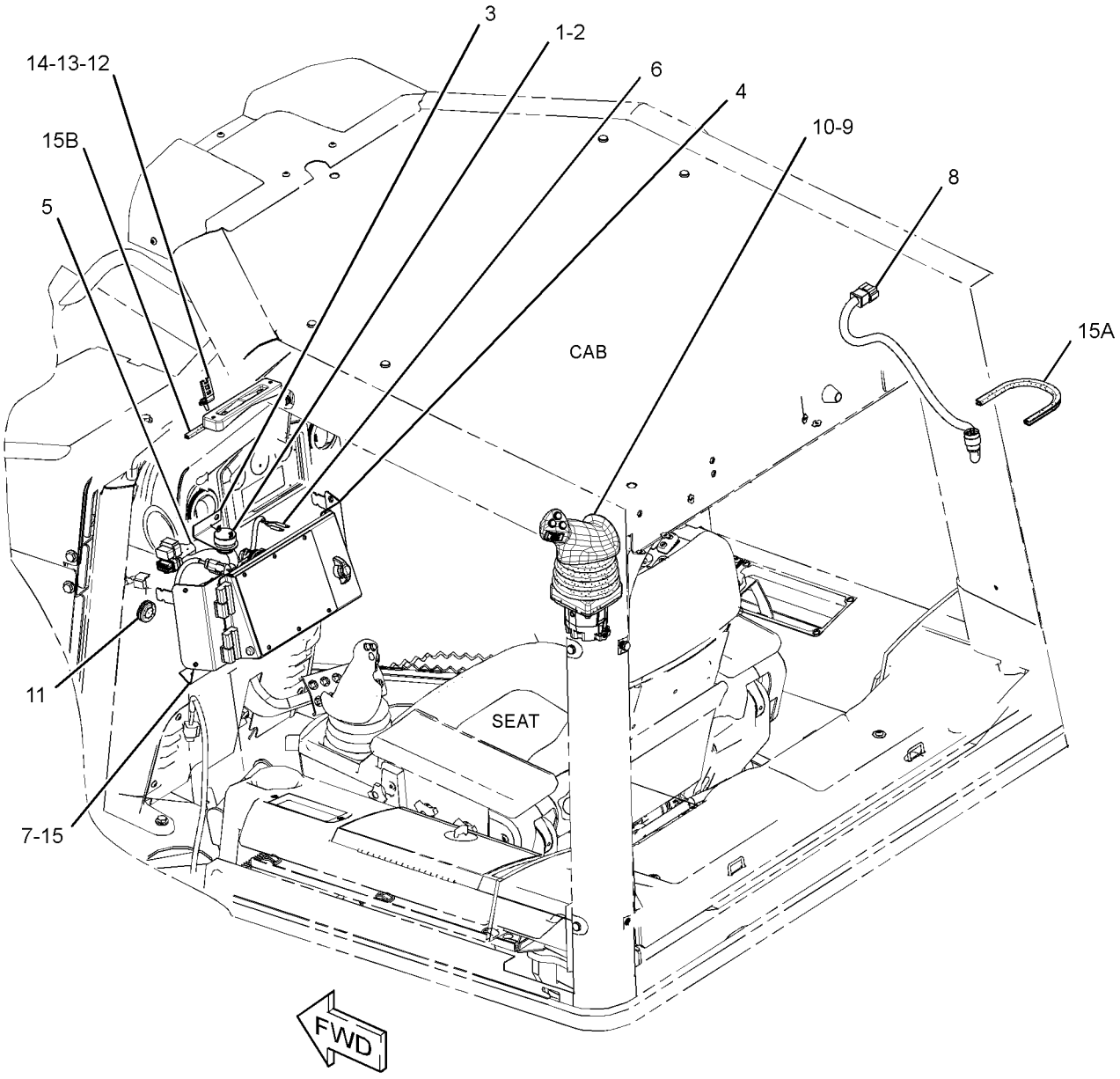

GRAPHIC #1 **<END>** g01787113

302-0577 GRADE CONTROL GP–OPEN ROPS

S/N: DHA1-911; FBH1-1078
PART OF 293-5184 GRADE CONTROL AR
AN ATTACHMENT

SMCS-7220 **i03698305**

NOTE	REF NO	GRAPHIC REF	PART NUMBER	QTY	PART NAME 1 2 3 4 5 6 (PRODUCT LEVEL)	SEE PAGE
B	1	2	**8C-5607**	6	MOUNT-ISOLATION	
B	2	2	**8C-5608**	3	SPACER (6.5X9.5X25.4-MM THK)	
	3	1	**167-8712**	1	ALARM	
	4	1	**167-8713**	1	BAFFLE AS	
B	5	1	**252-6949**	1	BRACKET	
Y	6	1	*255-4260*	1	MOUNTING GP-GRADE CONTROL	270
	7	1	**314-3015**	1	PLATE	
B	8	2	**264-4510**	1	BRACKET AS	
B	9	2	**266-8944**	1	GROMMET	
B	10	1	**291-5422**	1	HARNESS AS-WIRING (CAB)	
B	11	2	**293-1860**	1	BRACKET AS	
B	12	1	**293-1861**	1	COVER AS	
B	13	1	**293-1863**	1	COVER	
B	14	1	**293-5185**	1	HARNESS AS-WIRING (GLOBAL POSITIONING SYSTEM)	
B	15	1	**293-5188**	1	HARNESS AS-WIRING (LASER)	
M	16	1	**112-6646**	4	LOCKNUT (M6X1-THD)	
Y	17	1	**274-4645**	1	CONTROL GP-JOYSTICK (GRADE CONTROL)	669
	18	1	**1M-4543**	1	GROMMET	
B	19	1	**5P-4115**	5	WASHER-HARD (7.2X19X2-MM THK)	
BM	20	2	**7X-2553**	1	BOLT (M16X2X40-MM)	
BM	21	2	**8C-8451**	3	BOLT (M6X1X40-MM)	
B	22	1	**8T-4121**	2	WASHER-HARD (11X21X2.5-MM THK)	
B	23	2	**8T-4122**	1	WASHER-HARD (17X32X3.5-MM THK)	
BM	24	1	**8T-4138**	5	BOLT (M6X1X20-MM)	
BM	25	1	**8T-4186**	2	BOLT (M10X1.5X40-MM)	
B	26	2	**8T-4205**	6	WASHER-HARD (7.2X14.5X2-MM THK)	
M	27	1	**9X-2042**	1	SCREW-TRUSS HEAD (M6X1X12-MM)	
E	28	1	**3E-6600**		SEAL (5-CM)	

B-USE AS REQUIRED
E-ORDER BY THE CENTIMETER
M-METRIC PART
Y-SEPARATE ILLUSTRATION

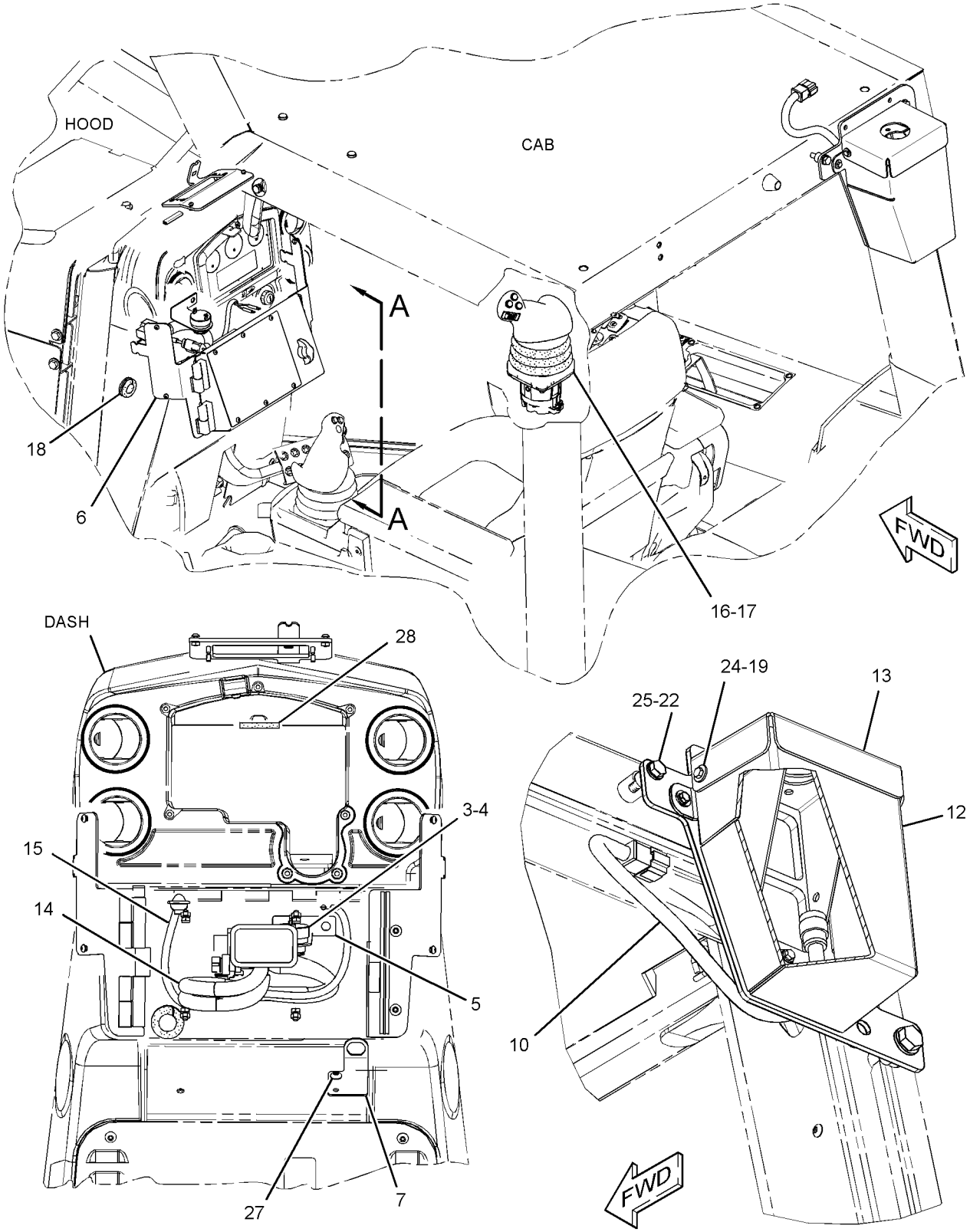

VIEW A-A
(MOUNTING PLATE REMOVED FOR CLARITY)

(OROPS CAB WITHOUT REAR SCREEN OPTION)

GRAPHIC #1

g01433810

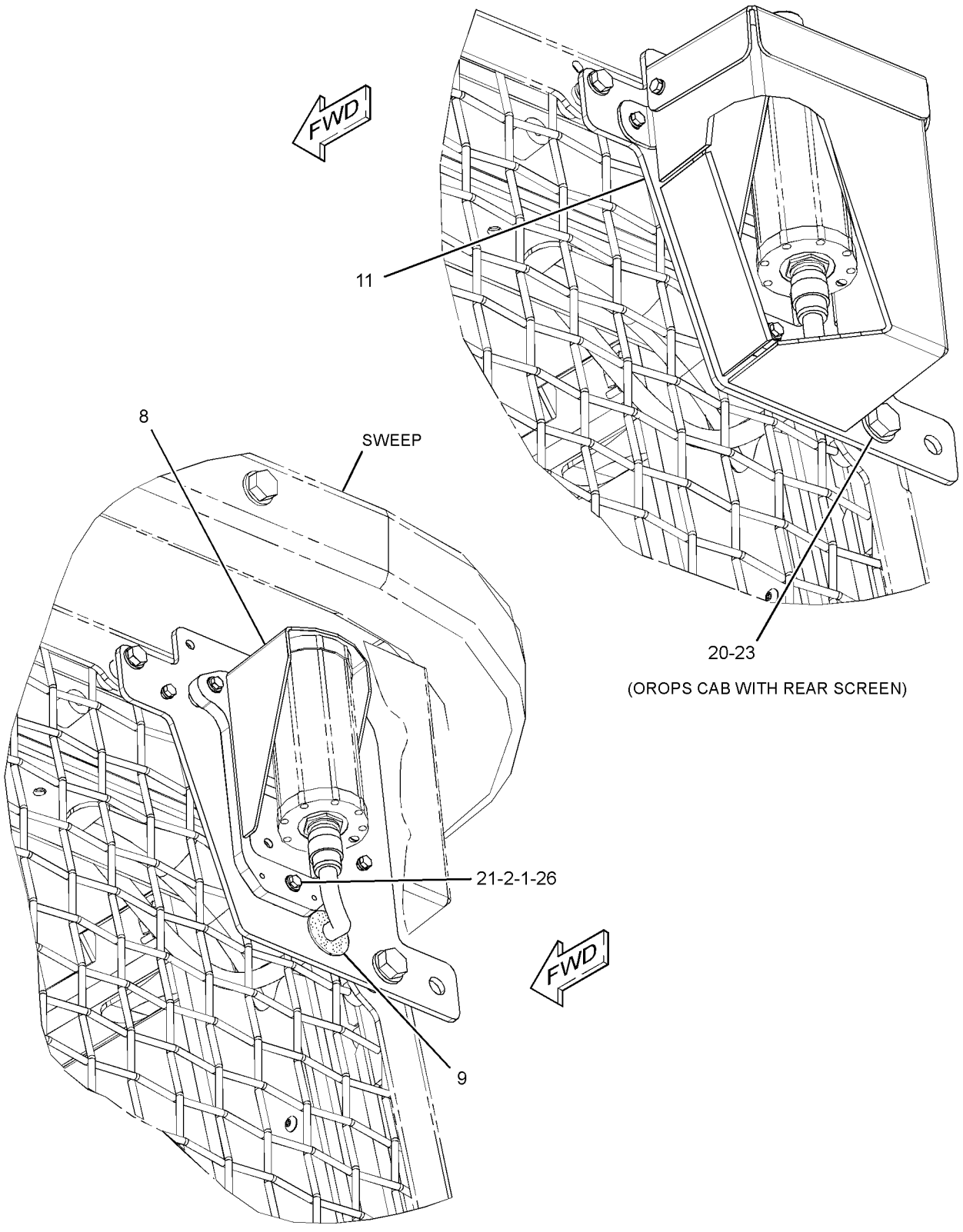

(OROPS CAB WITH REAR SCREEN)

(OROPS CAB WITH REAR SCREEN AND SWEEP OPTION)
(TOP COVER REMOVAL WITH SWEEP OPTION)

GRAPHIC #2 **<END>** g01435692

ELECTRICAL AND STARTING SYSTEM

302-0577 GRADE CONTROL GP—OPEN ROPS

S/N: DHA912-1021; FBH1079-1290
PART OF 293-5184 GRADE CONTROL AR
AN ATTACHMENT

SMCS-7220 **i03698306**

NOTE	REF NO	GRAPHIC REF	PART NUMBER	QTY	PART NAME 1 2 3 4 5 6 (PRODUCT LEVEL)	SEE PAGE
	1	1	**167-8712**	1	ALARM	
	2	1	**167-8713**	1	BAFFLE AS	
B	3	1	**252-6949**	1	BRACKET	
Y	4	1	*255-4260*	1	MOUNTING GP-GRADE CONTROL	270
B	5	2	**266-8944**	1	GROMMET	
B	6	1	**293-5185**	1	HARNESS AS-WIRING (GLOBAL POSITIONING SYSTEM)	
		1	**8T-8737**	8	PLUG-SEAL	
		1	**9X-3402**	16	SOCKET-CONNECTOR (16-GA TO 18-GA)	
		1	**230-4009**	1	PLUG AS-CONNECTOR (12-PIN)	
		1	**239-7356**	1	PLUG AS-CONNECTOR (12-PIN)	
					(EACH PLUG AS INCLUDES)	
		1	**264-7034**	1	SEAL-CONNECTOR	
		1	**248-5358**	1	PLUG AS-CONNECTOR (39-PIN)	
B	7	1	**293-5188**	1	HARNESS AS-WIRING (LASER)	
		1	**8T-8737**	63	PLUG-SEAL	
		1	**9X-3402**	34	SOCKET-CONNECTOR (16-GA TO 18-GA)	
		1	**5P-2766**	2	TERMINAL-RING (18-GA TO 22-GA, NO. 6 SCREW)	
		1	**147-1444**	1	PLUG AS-CONNECTOR (70-PIN)	
		1	**155-2260**	1	KIT-CONNECTING PLUG (3-PIN)	
					(INCLUDES PLUG AS, WEDGE & INTERFACE SEAL)	
		1	**230-4009**	1	PLUG AS-CONNECTOR (12-PIN)	
		1	**239-7356**	1	PLUG AS-CONNECTOR (12-PIN)	
					(EACH PLUG AS INCLUDES)	
		1	**264-7034**	1	SEAL-CONNECTOR	
		1	**251-7591**	1	WIRE AS	
	8	1	**314-3015**	1	PLATE	
BC	9	1	**319-4525**	1	HARNESS AS-CONTROL	
		1	**102-8806**	1	KIT-RECEPTACLE (8-PIN)	
					(INCLUDES RECEPTACLE AS & WEDGE)	
		1	**144-1636**	8	PIN-CONNECTOR (14-GA TO 18-GA)	
		1	**167-8987**	1	PLUG AS-CONNECTOR (8-PIN)	
BC	10	1	**319-6775**	1	BRACKET AS	
BC	11	1	**319-6776**	1	COVER AS	
BC	12	1	**319-6777**	1	COVER	
M	13	1	**112-6646**	4	LOCKNUT (M6X1-THD)	
Y	14	1	**274-4645**	1	CONTROL GP-JOYSTICK (GRADE CONTROL)	669
	15	1	**1M-4543**	1	GROMMET	
	16	1	**4P-8134**	1	CLIP	
	17	1	**5P-4115**	6	WASHER-HARD (7.2X19X2-MM THK)	
BM	18	2	**7X-2553**	1	BOLT (M16X2X40-MM)	
B	19	1	**8T-4121**	2	WASHER-HARD (11X21X2.5-MM THK)	
B	20	2	**8T-4122**	1	WASHER-HARD (17X32X3.5-MM THK)	
M	21	1	**8T-4138**	6	BOLT (M6X1X20-MM)	
BM	22	1	**8T-4186**	2	BOLT (M10X1.5X40-MM)	
M	23	1	**9X-2042**	1	SCREW-TRUSS HEAD (M6X1X12-MM)	
E	24	1	**3E-6600**		SEAL (5-CM)	

B-USE AS REQUIRED
C-CHANGE FROM PREVIOUS TYPE
E-ORDER BY THE CENTIMETER
M-METRIC PART
Y-SEPARATE ILLUSTRATION

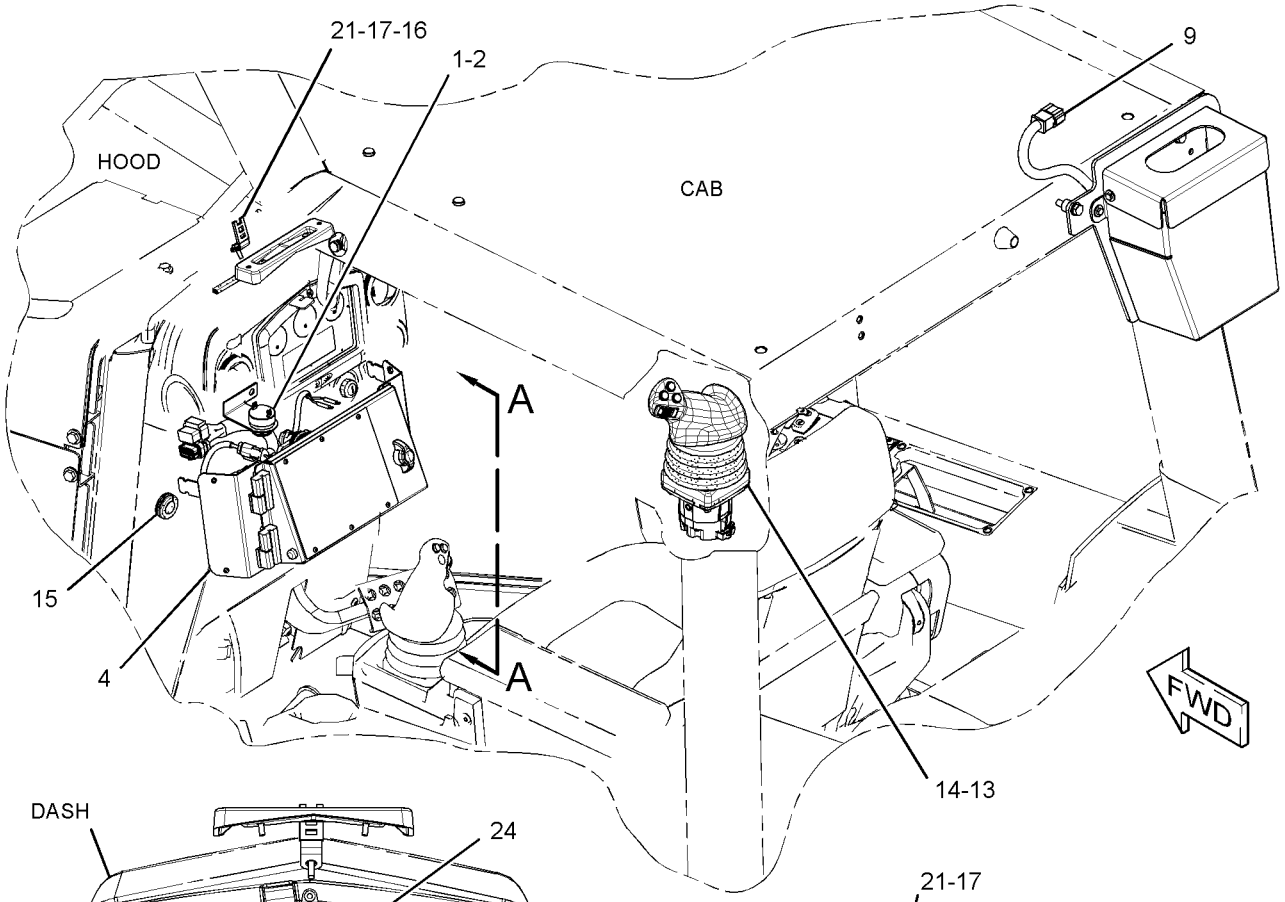

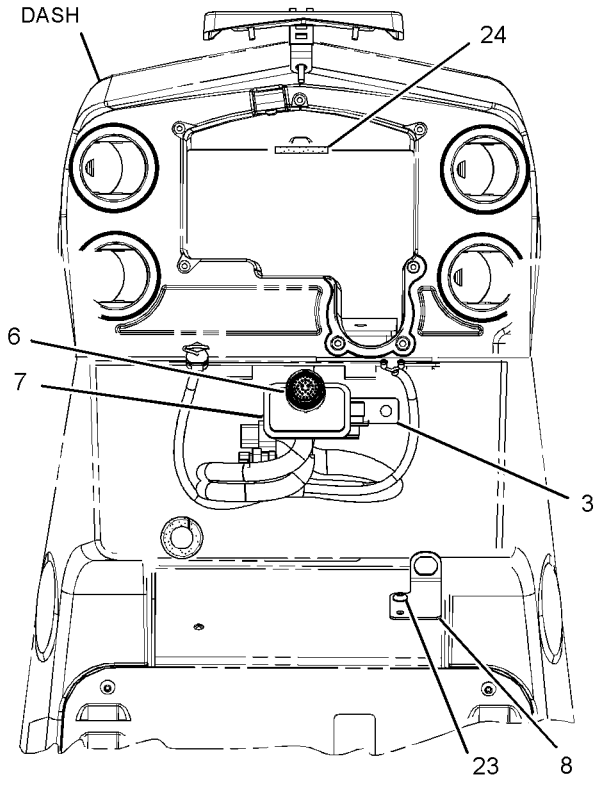

VIEW A-A
(MOUNTING PLATE REMOVED FOR CLARITY)

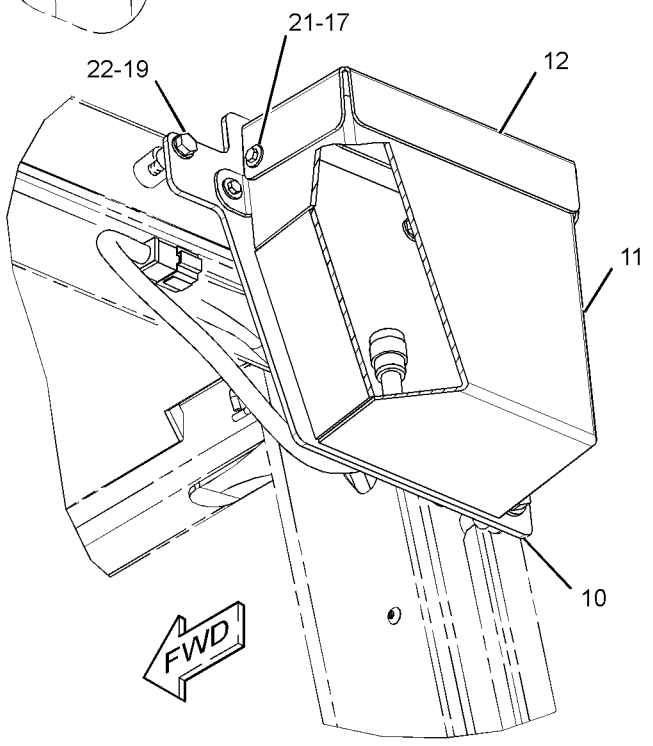

(OROPS CAB WITHOUT REAR SCREEN OPTION)

GRAPHIC #1

g02002273

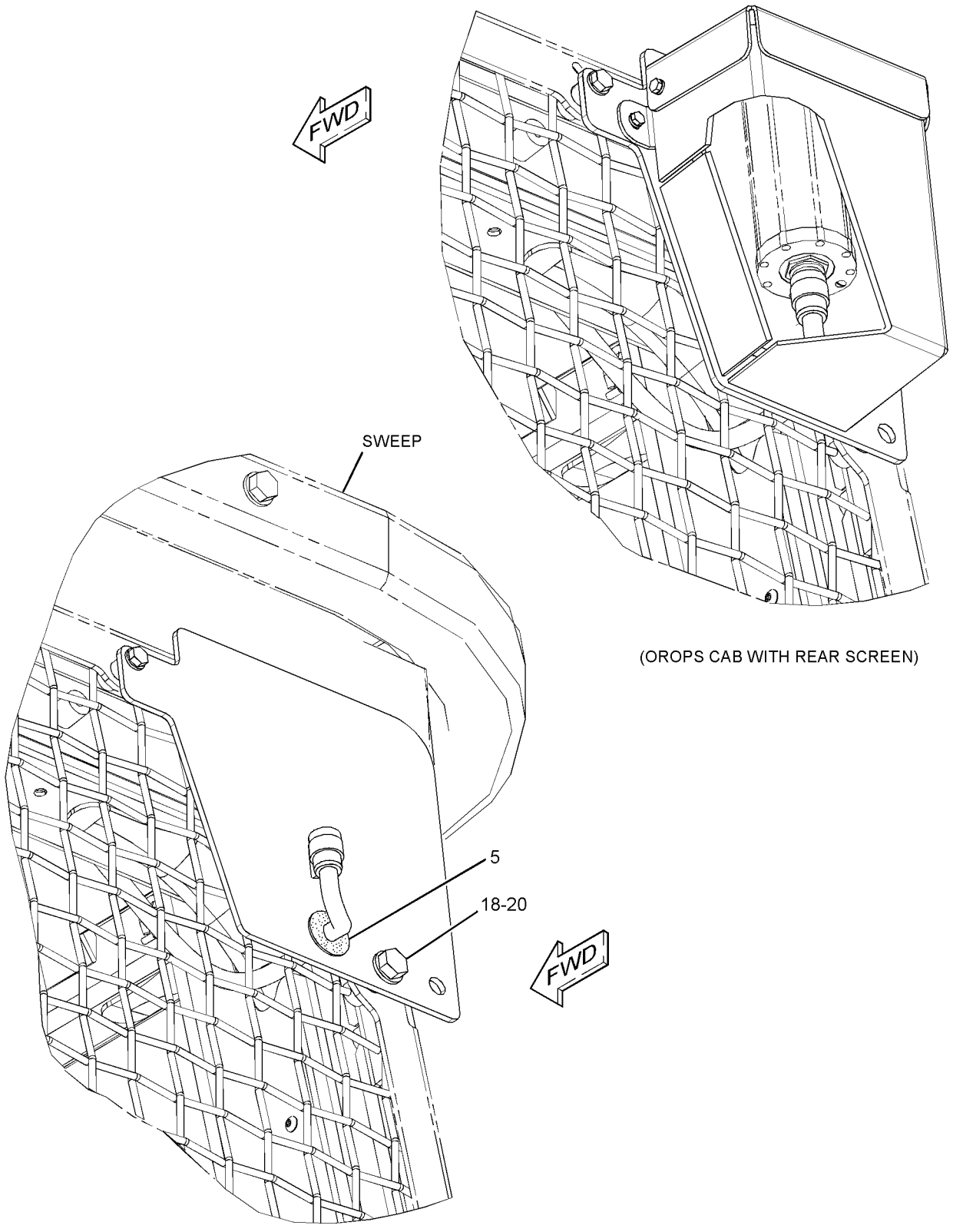

(OROPS CAB WITH REAR SCREEN)

(OROPS CAB WITH REAR SCREEN AND SWEEP OPTION)
(TOP COVER REMOVAL WITH SWEEP OPTION)

GRAPHIC #2 **<END>** g02002275

302-0577 GRADE CONTROL GP–OPEN ROPS

S/N: DHA1022-UP; FBH1291-UP
PART OF 293-5184 GRADE CONTROL AR
AN ATTACHMENT

SMCS-7220 **i03698307**

NOTE	REF NO	GRAPHIC REF	PART NUMBER	QTY	PART NAME 1 2 3 4 5 6 (PRODUCT LEVEL)	SEE PAGE
	1	1	**167-8712**	1	ALARM	
	2	1	**167-8713**	1	BAFFLE AS	
B	3	1	**252-6949**	1	BRACKET	
Y	4	1	*255-4260*	1	MOUNTING GP-GRADE CONTROL	270
B	5	2	**266-8944**	1	GROMMET	
B	6	1	**293-5185**	1	HARNESS AS-WIRING (GLOBAL POSITIONING SYSTEM)	
		1	**8T-8737**	8	PLUG-SEAL	
		1	**9X-3402**	16	SOCKET-CONNECTOR (16-GA TO 18-GA)	
		1	**230-4009**	1	PLUG AS-CONNECTOR (12-PIN)	
		1	**239-7356**	1	PLUG AS-CONNECTOR (12-PIN)	
					(EACH PLUG AS INCLUDES)	
		1	**264-7034**	1	SEAL-CONNECTOR	
		1	**248-5358**	1	PLUG AS-CONNECTOR (39-PIN)	
B	7	1	**293-5188**	1	HARNESS AS-WIRING (LASER)	
		1	**8T-8737**	63	PLUG-SEAL	
		1	**9X-3402**	34	SOCKET-CONNECTOR (16-GA TO 18-GA)	
		1	**5P-2766**	2	TERMINAL-RING (18-GA TO 22-GA, NO. 6 SCREW)	
		1	**147-1444**	1	PLUG AS-CONNECTOR (70-PIN)	
		1	**155-2260**	1	KIT-CONNECTING PLUG (3-PIN)	
					(INCLUDES PLUG AS, WEDGE & INTERFACE SEAL)	
		1	**230-4009**	1	PLUG AS-CONNECTOR (12-PIN)	
		1	**239-7356**	1	PLUG AS-CONNECTOR (12-PIN)	
					(EACH PLUG AS INCLUDES)	
		1	**264-7034**	1	SEAL-CONNECTOR	
	8	1	**314-3015**	1	PLATE	
B	9	1	**319-4525**	1	HARNESS AS-CONTROL	
		1	**102-8806**	1	KIT-RECEPTACLE (8-PIN)	
					(INCLUDES RECEPTACLE AS & WEDGE)	
		1	**144-1636**	8	PIN-CONNECTOR (14-GA TO 18-GA)	
		1	**167-8987**	1	PLUG AS-CONNECTOR (8-PIN)	
B	10	1	**319-6775**	1	BRACKET AS	
B	11	1	**319-6776**	1	COVER AS	
B	12	1	**319-6777**	1	COVER	
M	13	1	**112-6646**	4	LOCKNUT (M6X1-THD)	
CY	14	1	**328-0894**	1	CONTROL GP-JOYSTICK (GRADE CONTROL)	676
	15	1	**1M-4543**	1	GROMMET	
	16	1	**4P-8134**	1	CLIP	
	17	1	**5P-4115**	6	WASHER-HARD (7.2X19X2-MM THK)	
BM	18	2	**7X-2553**	1	BOLT (M16X2X40-MM)	
B	19	1	**8T-4121**	2	WASHER-HARD (11X21X2.5-MM THK)	
B	20	2	**8T-4122**	1	WASHER-HARD (17X32X3.5-MM THK)	
M	21	1	**8T-4138**	6	BOLT (M6X1X20-MM)	
BM	22	1	**8T-4186**	2	BOLT (M10X1.5X40-MM)	
M	23	1	**9X-2042**	1	SCREW-TRUSS HEAD (M6X1X12-MM)	
E	24	1	**3E-6600**		SEAL (5-CM)	

B-USE AS REQUIRED
C-CHANGE FROM PREVIOUS TYPE
E-ORDER BY THE CENTIMETER
M-METRIC PART
Y-SEPARATE ILLUSTRATION

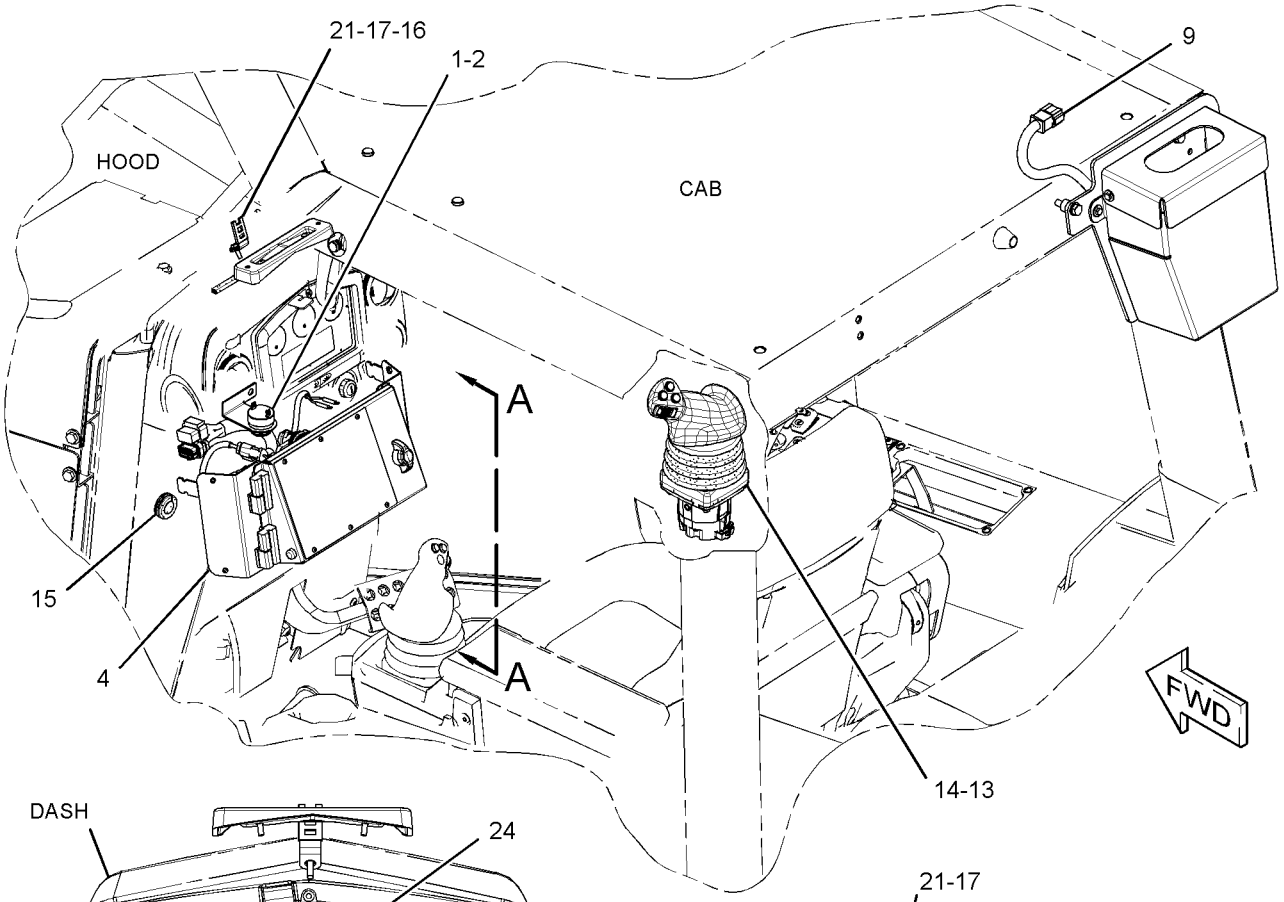

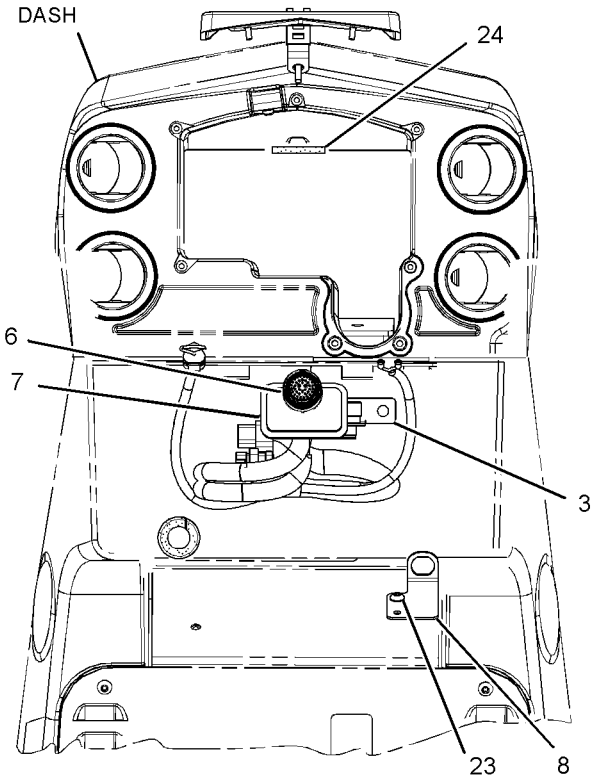

VIEW A-A
(MOUNTING PLATE REMOVED FOR CLARITY)

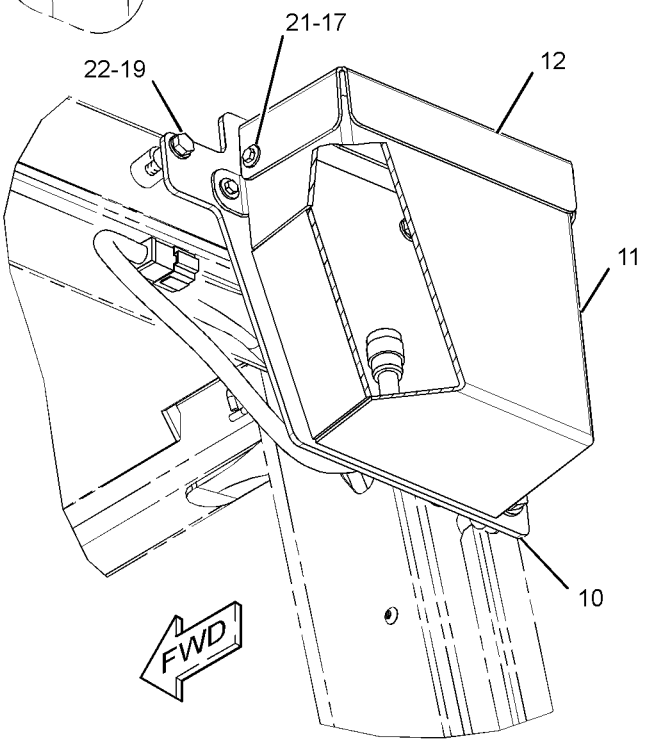

(OROPS CAB WITHOUT REAR SCREEN OPTION)

GRAPHIC #1 g02002273

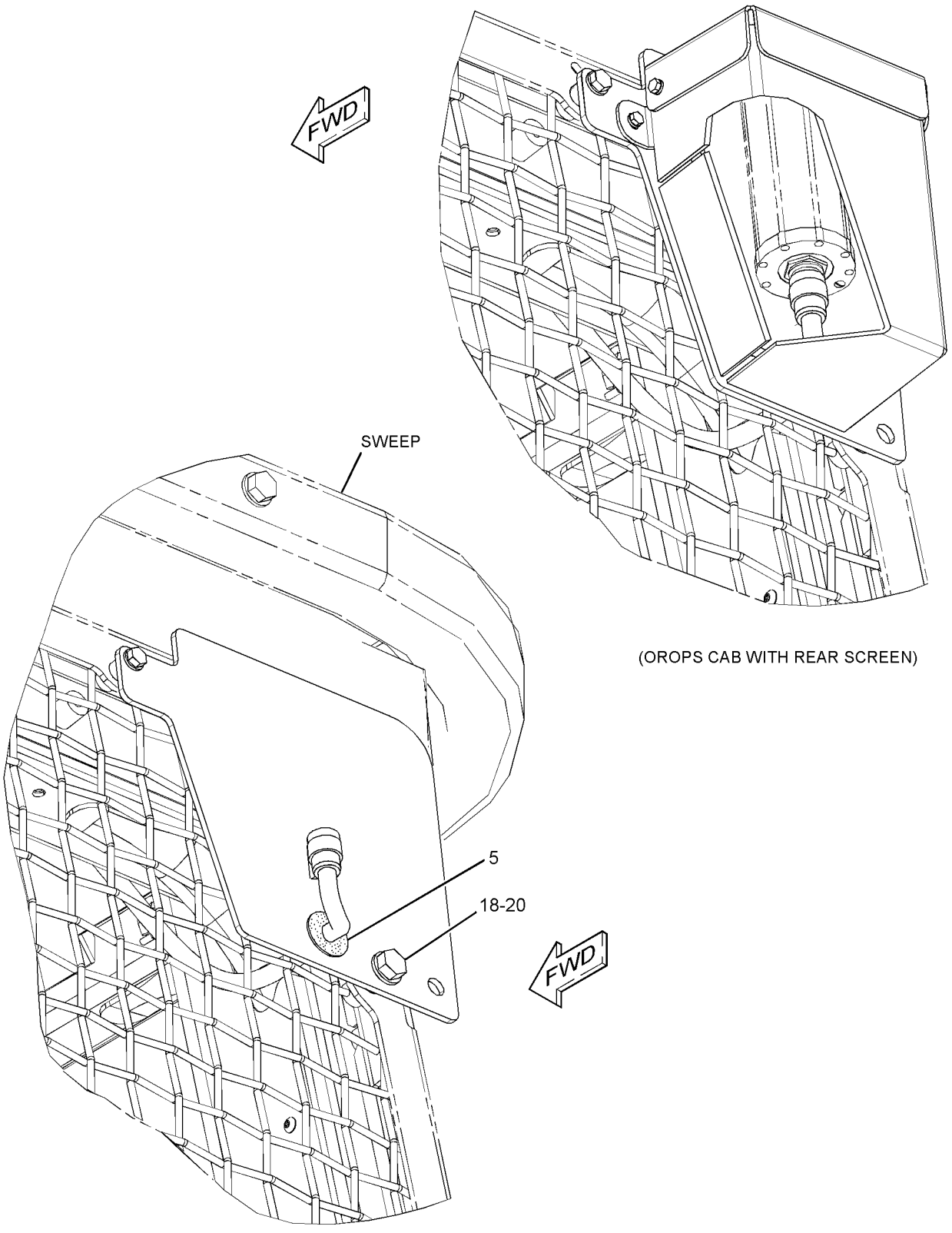

(OROPS CAB WITH REAR SCREEN)

(OROPS CAB WITH REAR SCREEN AND SWEEP OPTION)
(TOP COVER REMOVAL WITH SWEEP OPTION)

GRAPHIC #2 **<END>** g02002275

308-6207 HARNESS AS-CONTROL

S/N: DHA1-UP; FBH1-UP
FIELD INSTALLATION

SMCS-1408 **i03598941**

NOTE	PART NUMBER	QTY	PART NAME 1 2 3 4 5 6 (PRODUCT LEVEL)	SEE PAGE
	160-7689	1	PLUG AS-CONNECTOR (70-PIN)	
	159-9322	1	SEAL-O-RING	
	230-4009	1	PLUG AS-CONNECTOR (12-PIN)	
	264-7034	1	SEAL-CONNECTOR	
	230-4010	2	RECEPTACLE AS-CONNECTOR (12-PIN)	
	230-4014	1	RECEPTACLE AS-CONNECTOR (3-PIN)	
	231-2301	1	RECEPTACLE AS-CONNECTOR (8-PIN)	
	126-1774	1	COVER-CONNECTOR	
	144-1636	23	PIN-CONNECTOR (14-GA TO 18-GA)	
	8T-8737	64	PLUG-SEAL	
	126-1766	30	SOCKET-CONNECTOR (14-GA TO 18-GA)	
	9X-6772	2	STRAP-CABLE	
E	**119-3662**		TUBE-HEAT SHRINK (10.85-MM DIA) (7-CM)	
E	**125-7875**		TUBE-HEAT SHRINK (7.44-MM DIA) (5-CM)	

E-ORDER BY THE CENTIMETER

<END>

256-3468 HEATER GP-JACKET WATER

S/N: DHA1-UP; FBH1-UP
120-VOLT, 1000-WATT
CANNOT BE USED WITH 256-3469—PAGE 243
AN ATTACHMENT

SMCS-1383 **i03663701**

NOTE	REF NO	GRAPHIC REF	PART NUMBER	QTY	PART NAME 1 2 3 4 5 6 (PRODUCT LEVEL)	SEE PAGE
	1	1	**3S-2093**	9	STRAP-CABLE	
	2	1	**260-1555**	1	ELEMENT AS-JACKET WATER HEATER (120-VOLT, 1000-WATT)	
		1	**4D-9986**	1	SEAL-O-RING	
	3	1	**260-1566**	1	CORD AS-HEATER	
	4	1	**302-1266**	1	COVER-PROTECTION	
M	5	1	**8T-4200**	1	BOLT (M8X1.25X16-MM)	
	6	1	**8T-4224**	1	WASHER-HARD (8.8X16X2-MM THK)	

M-METRIC PART

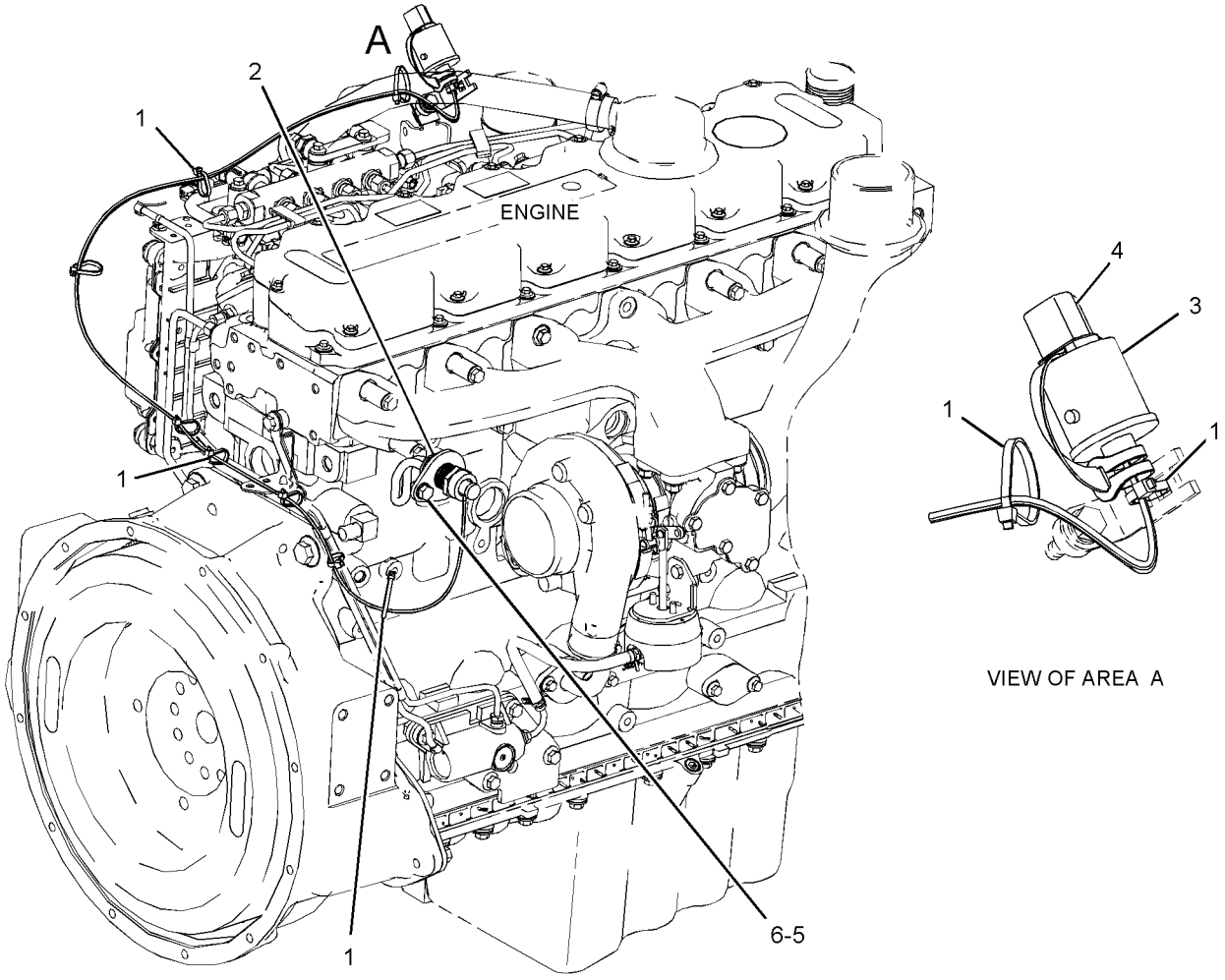

GRAPHIC #1 **<END>** g01949679

256-3469 HEATER GP-JACKET WATER

S/N: DHA1-UP; FBH1-UP
240-VOLT, 1000-WATT
CANNOT BE USED WITH 256-3468—PAGE 242
AN ATTACHMENT

SMCS-1383 **i03663703**

NOTE	REF NO	GRAPHIC REF	PART NUMBER	QTY	PART NAME 1 2 3 4 5 6 (PRODUCT LEVEL)	SEE PAGE
	1	1	**3S-2093**	9	STRAP-CABLE	
	2	1	**260-1556**	1	ELEMENT AS-JACKET WATER HEATER (240-VOLT, 1000-WATT)	
		1	**4D-9986**	1	SEAL-O-RING	
	3	1	**260-1569**	1	CORD AS-HEATER	
	4	1	**302-1266**	1	COVER-PROTECTION	
M	5	1	**8T-4200**	1	BOLT (M8X1.25X16-MM)	
	6	1	**8T-4224**	1	WASHER-HARD (8.8X16X2-MM THK)	

M-METRIC PART

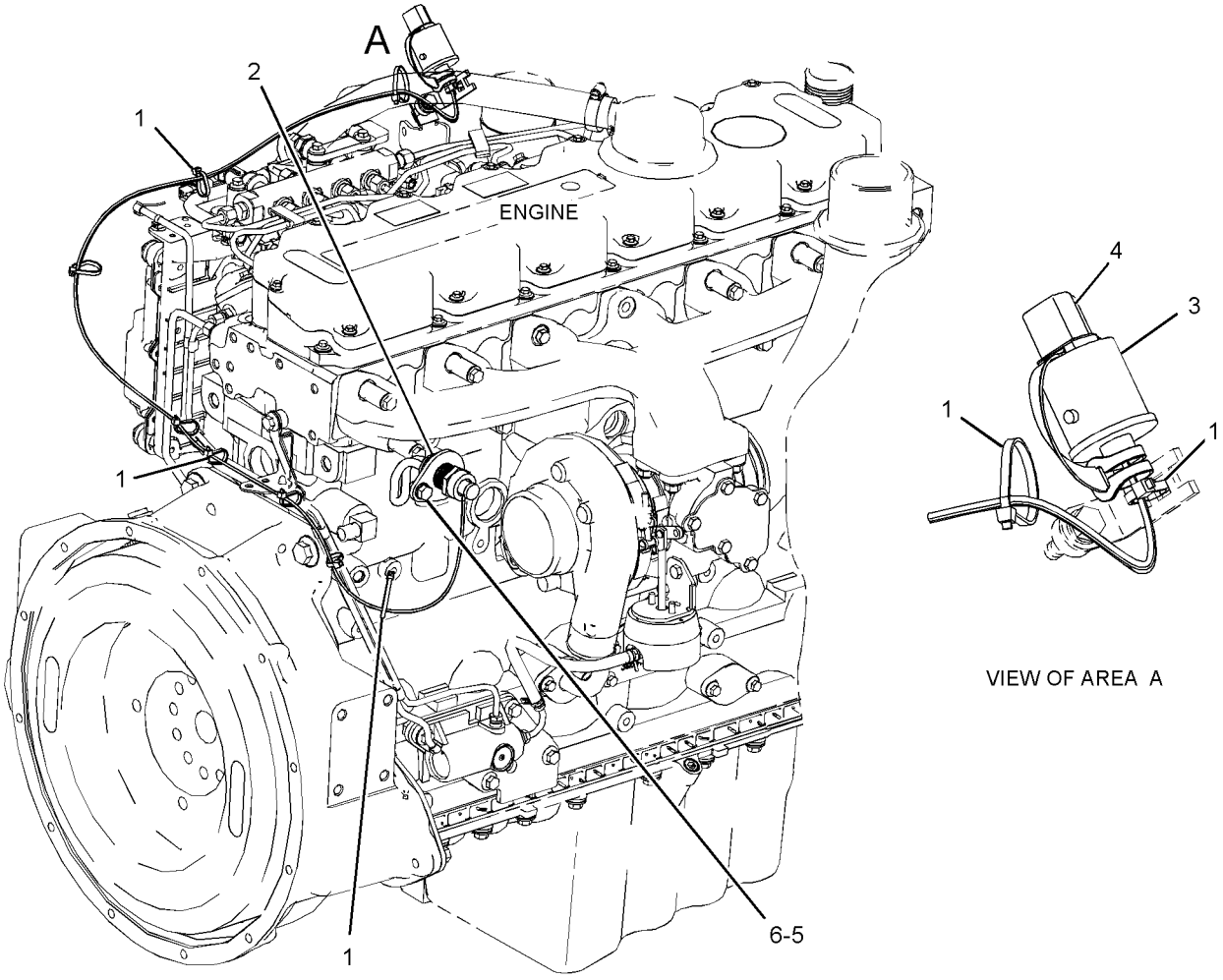

GRAPHIC #1 **<END>** g01949679

250-6991 INSTALLATION GP-COMMUNICATION–

PRODUCT LINK 321SR

S/N: DHA1-618; FBH1-794

EUROPEAN MARKET

FOR USE WITH CAB. CANNOT BE USED WITH SWEEPS AN ATTACHMENT

SMCS-7606 **i03090580**

NOTE	REF NO	GRAPHIC REF	PART NUMBER	QTY	PART NAME 1 2 3 4 5 6 (PRODUCT LEVEL)	SEE PAGE
	1	1	**7K-1181**	4	STRAP-CABLE	
	2	1	**8C-5607**	8	MOUNT-ISOLATION	
	3	1	**8C-5608**	4	SPACER (6.5X9.5X25.4-MM THK)	
	4	1	**262-1184**	1	BRACKET AS	
M		1	**6V-9632**	4	NUT-WELD (M6X1-THD)	
	5	1	**263-7802**	1	ANTENNA AS (MAGNETIC MOUNT, PRODUCT LINK)	
		1	**223-4296**	1	ANTENNA (FLEXIBLE)	
Y	6	1	**263-9088**	1	RADIO GP-COMMUNICATION (PRODUCT LINK 121SR)	284
	7	1	**267-5001**	1	PLATE AS	
	8	1	**267-5002**	1	BRACKET AS	
	9	1	**267-5003**	1	HARNESS AS-CONTROL (PRODUCT LINK)	
		1	**126-1774**	1	COVER-CONNECTOR	
		1	**3S-2093**	2	STRAP-CABLE	
		1	**160-7690**	1	PLUG AS-CONNECTOR (70-PIN)	
		1	**230-4009**	1	PLUG AS-CONNECTOR (12-PIN)	
		1	**230-4011**	1	PLUG AS-CONNECTOR (2-PIN)	
M	10	1	**8C-8451**	4	BOLT (M6X1X40-MM)	
M	11	1	**8T-4138**	4	BOLT (M6X1X20-MM)	
	13	1	**8T-4224**	4	WASHER-HARD (8.8X16X2-MM THK)	
M	14	1	**8T-7547**	4	BOLT (M8X1.25X30-MM)	
	15	1	**9X-6165**	4	WASHER (6.5X22X2.5-MM THK)	
	16	1	**9X-7345**	1	GROMMET	
	17	1	**9X-8256**	4	WASHER (6.6X12X2-MM THK)	
Y	18	1	**239-9954**	1	CONTROL GP-UNPROGRAMMED (PRODUCT LINK 300)	200

M-METRIC PART
Y-SEPARATE ILLUSTRATION

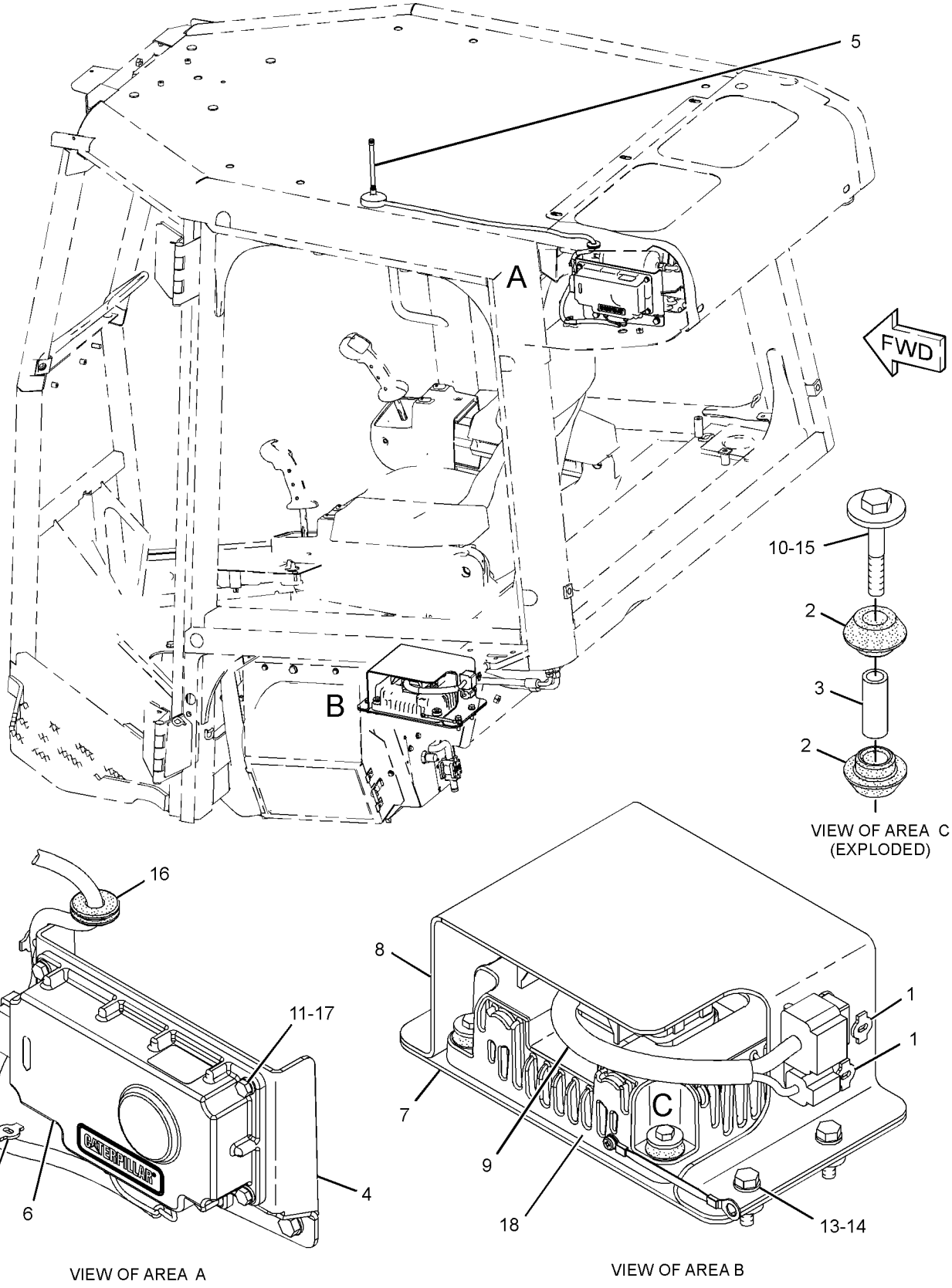

GRAPHIC #1 **<END>** g01296756

250-6991 INSTALLATION GP-COMMUNICATION–

PRODUCT LINK 321SR

S/N: DHA619-UP; FBH795-UP

EUROPEAN MARKET

FOR USE WITH CAB. CANNOT BE USED WITH SWEEPS

AN ATTACHMENT

SMCS-7606 **i02998431**

NOTE	REF NO	GRAPHIC REF	PART NUMBER	QTY	PART NAME 1 2 3 4 5 6 (PRODUCT LEVEL)	SEE PAGE
	1	1	**7K-1181**	4	STRAP-CABLE	
	2	1	**8C-5607**	8	MOUNT-ISOLATION	
	3	1	**8C-5608**	4	SPACER (6.5X9.5X25.4-MM THK)	
	4	1	**262-1184**	1	BRACKET AS	
		1	**7T-1099**	1	LINK	
M		1	**6V-9632**	4	NUT-WELD (M6X1-THD)	
C	5	1	**310-2392**	1	ANTENNA AS (MAGNETIC MOUNT, PRODUCT LINK)	
		1	**301-0589**	1	ANTENNA (FLEXIBLE)	
Y	6	1	**263-9088**	1	RADIO GP-COMMUNICATION (PRODUCT LINK 121SR)	284
	7	1	**267-5001**	1	PLATE AS	
	8	1	**267-5002**	1	BRACKET AS	
	9	1	**267-5003**	1	HARNESS AS-CONTROL	
		1	**126-1774**	1	COVER-CONNECTOR	
		1	**3S-2093**	2	STRAP-CABLE	
		1	**160-7690**	1	PLUG AS-CONNECTOR (70-PIN)	
		1	**230-4009**	1	PLUG AS-CONNECTOR (12-PIN)	
		1	**230-4011**	1	PLUG AS-CONNECTOR (2-PIN)	
M	10	1	**8C-8451**	4	BOLT (M6X1X40-MM)	
M	11	1	**8T-4181**	4	BOLT (M6X1X20-MM)	
	13	1	**8T-4224**	4	WASHER-HARD (8.8X16X2-MM THK)	
M	14	1	**8T-7547**	4	BOLT (M8X1.25X30-MM)	
	15	1	**9X-6165**	4	WASHER (6.5X22X2.5-MM THK)	
	16	1	**9X-7345**	1	GROMMET	
	17	1	**9X-8256**	4	WASHER (6.6X12X2-MM THK)	
Y	18	1	**239-9954**	1	CONTROL GP-UNPROGRAMMED (PRODUCT LINK 300)	200
C	19	1	**307-0047**	1	FILM-INFORMATION (PRODUCT LINK, READ OMM)	
CFY			*262-2043*	1	ELECTRONICS GP-COMMUNICATION (PRODUCT LINK 300)	202

C-CHANGE FROM PREVIOUS TYPE
F-NOT SHOWN
M-METRIC PART
Y-SEPARATE ILLUSTRATION

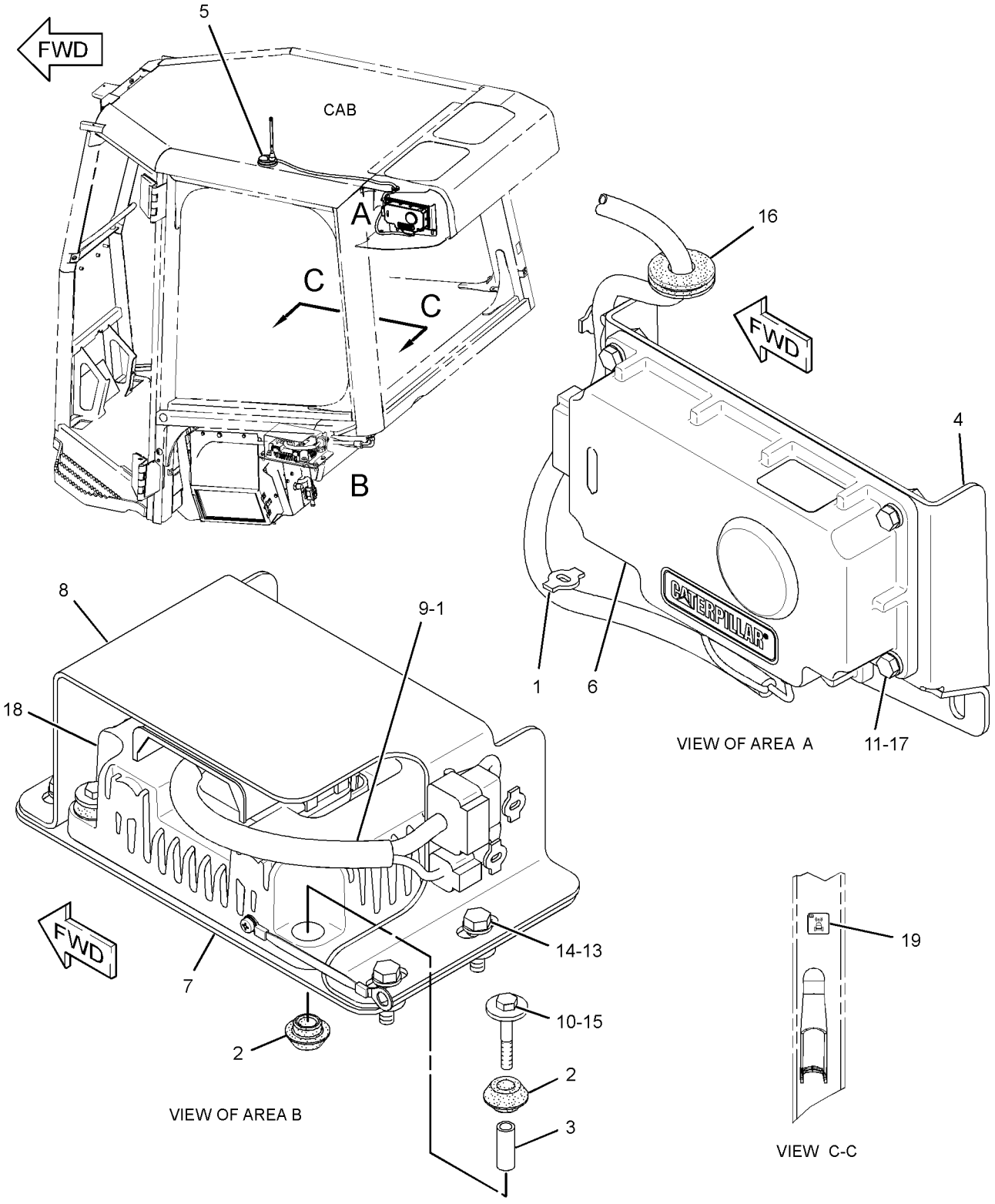

GRAPHIC #1 **<END>** g01521970

267-9084 INSTALLATION GP-COMMUNICATION–

PRODUCT LINK 321SR

S/N: DHA1-618; FBH1-794

FOR USE WITH CANOPY AR. CANNOT BE USED WITH 290-1032–PAGE 252, SWEEPS, SCREEN GP-REAR

AN ATTACHMENT

SMCS-7606 **i03698320**

NOTE	REF NO	GRAPHIC REF	PART NUMBER	QTY	PART NAME 1 2 3 4 5 6 (PRODUCT LEVEL)	SEE PAGE
	1	1	**7K-1181**	3	STRAP-CABLE	
	2	1	**8C-5607**	8	MOUNT-ISOLATION	
	3	1	**8C-5608**	4	SPACER (6.5X9.5X25.4-MM THK)	
Y	4	1	**239-9954**	1	CONTROL GP-UNPROGRAMMED (PRODUCT LINK 300)	200
	6	1	**263-7802**	1	ANTENNA AS (MAGNETIC MOUNT, PRODUCT LINK)	
		1	**223-4296**	1	ANTENNA (FLEXIBLE)	
Y	7	1	**263-9088**	1	RADIO GP-COMMUNICATION (PRODUCT LINK 121SR)	284
	8	1	**267-5001**	1	PLATE AS	
	9	1	**267-5002**	1	BRACKET AS	
	10	1	**267-5003**	1	HARNESS AS-CONTROL (PRODUCT LINK)	
		1	**3S-2093**	2	STRAP-CABLE	
		1	**126-1774**	1	COVER-CONNECTOR	
		1	**160-7690**	1	PLUG AS-CONNECTOR (70-PIN)	
		1	**230-4009**	1	PLUG AS-CONNECTOR (12-PIN)	
		1	**230-4011**	1	PLUG AS-CONNECTOR (2-PIN)	
	12	1	**2V-8259**	1	GROMMET	
M	13	1	**7X-2552**	1	BOLT (M16X2X30-MM)	
M	14	1	**8C-8451**	4	BOLT (M6X1X40-MM)	
	15	1	**8T-4121**	7	WASHER-HARD (11X21X2.5-MM THK)	
M	16	1	**8T-4137**	4	BOLT (M10X1.5X20-MM)	
M	17	1	**8T-4138**	4	BOLT (M6X1X20-MM)	
M	18	1	**8T-6466**	3	BOLT (M10X1.5X60-MM)	
	19	1	**8T-4224**	4	WASHER-HARD (8.8X16X2-MM THK)	
M	20	1	**8T-7547**	4	BOLT (M8X1.25X30-MM)	
	21	1	**9X-6165**	4	WASHER (6.5X22X2.5-MM THK)	
	22	1	**9X-7345**	1	GROMMET	
	23	1	**9X-8256**	4	WASHER (6.6X12X2-MM THK)	
	24	1	**9X-8257**	1	WASHER (17.5X30X3.5-MM THK)	
	25	1	**292-1882**	1	PLATE AS	
	26	1	**290-1034**	1	COVER AS	

M-METRIC PART
Y-SEPARATE ILLUSTRATION

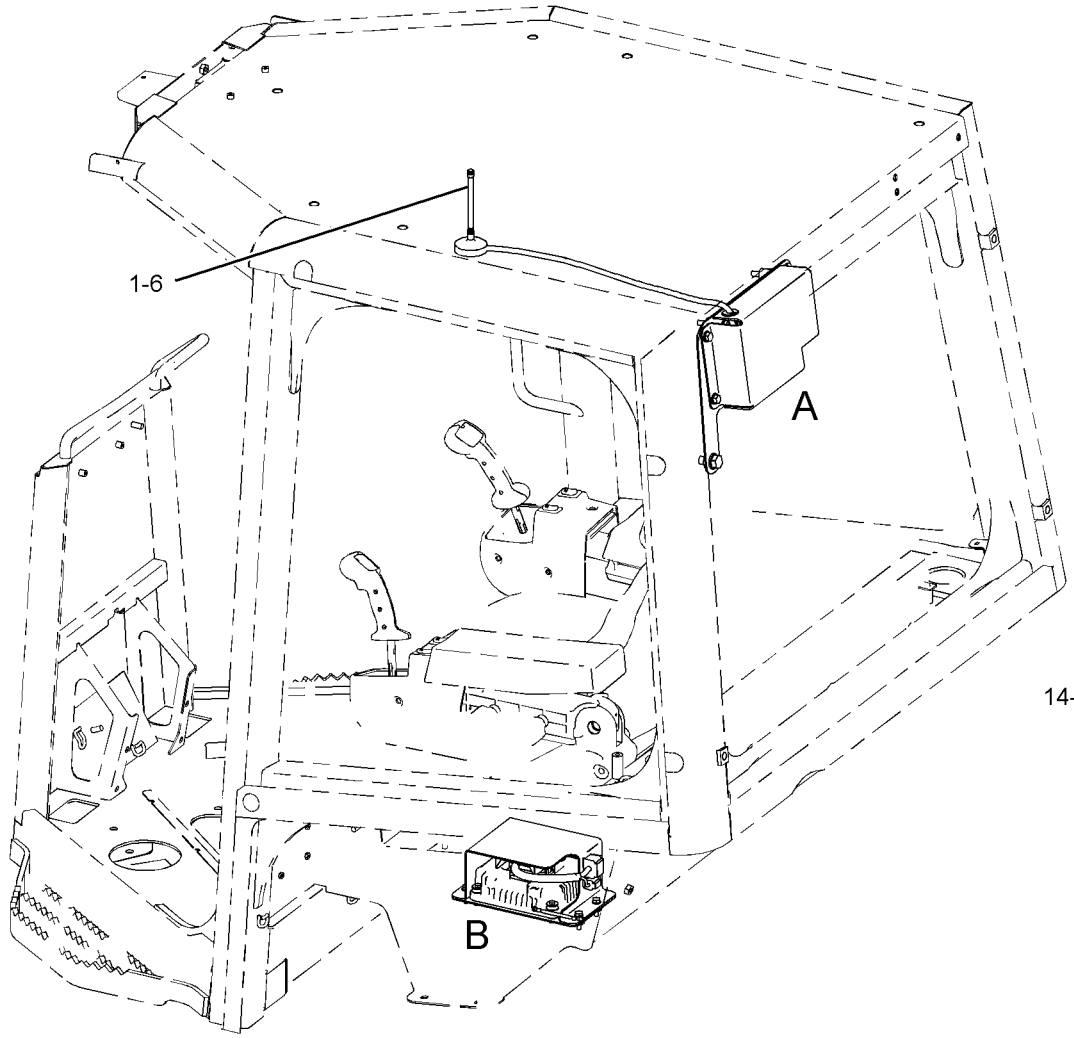

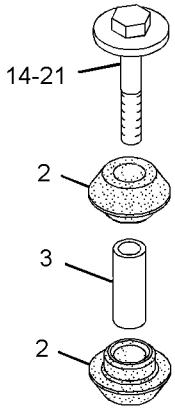

VIEW OF AREA C
(EXPLODED)

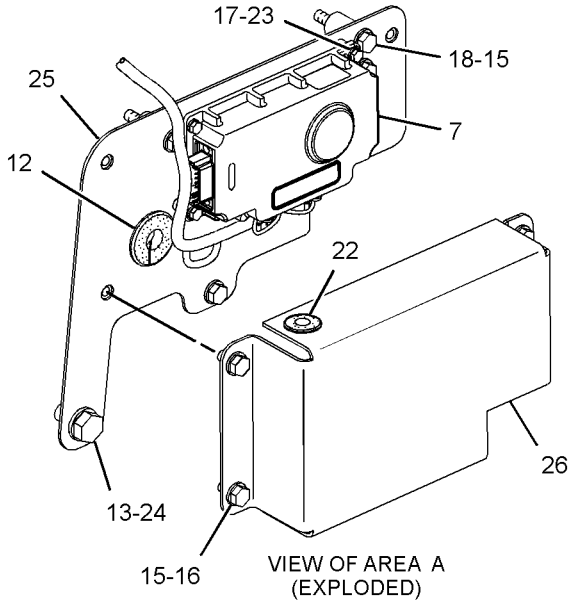

VIEW OF AREA A
(EXPLODED)

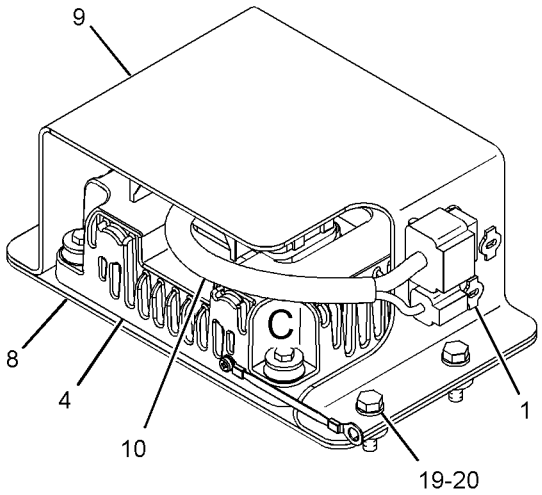

VIEW OF AREA B

GRAPHIC #1 **<END>** g01303630

267-9084 INSTALLATION GP-COMMUNICATION–

PRODUCT LINK 321SR

S/N: DHA619-UP; FBH795-UP

FOR USE WITH CANOPY AR. CANNOT BE USED WITH 290-1032–PAGE 252, SWEEPS, SCREEN GP-REAR

AN ATTACHMENT

SMCS-7606 **i03136697**

NOTE	REF NO	GRAPHIC REF	PART NUMBER	QTY	PART NAME 1 2 3 4 5 6 (PRODUCT LEVEL)	SEE PAGE
	1	1	**7K-1181**	3	STRAP-CABLE	
	2	1	**8C-5607**	8	MOUNT-ISOLATION	
	3	1	**8C-5608**	4	SPACER (6.5X9.5X25.4-MM THK)	
Y	4	1	**239-9954**	1	CONTROL GP-UNPROGRAMMED (PRODUCT LINK 300)	200
C	6	1	**310-2392**	1	ANTENNA AS (MAGNETIC MOUNT, PRODUCT LINK)	
		1	**301-0589**	1	ANTENNA (FLEXIBLE)	
Y	7	1	**263-9088**	1	RADIO GP-COMMUNICATION (PRODUCT LINK 121SR)	284
	8	1	**267-5001**	1	PLATE AS	
	9	1	**267-5002**	1	BRACKET AS	
	10	1	**267-5003**	1	HARNESS AS-CONTROL	
		1	**3S-2093**	2	STRAP-CABLE	
		1	**126-1774**	1	COVER-CONNECTOR	
		1	**160-7690**	1	PLUG AS-CONNECTOR (70-PIN)	
		1	**230-4009**	1	PLUG AS-CONNECTOR (12-PIN)	
		1	**230-4011**	1	PLUG AS-CONNECTOR (2-PIN)	
C	11	1	**307-0047**	1	FILM-INFORMATION (PRODUCT LINK, READ OMM)	
	12	1	**2V-8259**	1	GROMMET	
M	13	1	**7X-2552**	1	BOLT (M16X2X30-MM)	
M	14	1	**8C-8451**	4	BOLT (M6X1X40-MM)	
	15	1	**8T-4121**	7	WASHER-HARD (11X21X2.5-MM THK)	
M	16	1	**8T-4137**	4	BOLT (M10X1.5X20-MM)	
M	17	1	**8T-4181**	4	BOLT (M6X1X20-MM)	
M	18	1	**8T-6466**	3	BOLT (M10X1.5X60-MM)	
	19	1	**8T-4224**	4	WASHER-HARD (8.8X16X2-MM THK)	
M	20	1	**8T-7547**	4	BOLT (M8X1.25X30-MM)	
	21	1	**9X-6165**	4	WASHER (6.5X22X2.5-MM THK)	
	22	1	**9X-7345**	1	GROMMET	
	23	1	**9X-8256**	4	WASHER (6.6X12X2-MM THK)	
	24	1	**9X-8257**	1	WASHER (17.5X30X3.5-MM THK)	
	25	1	**292-1882**	1	PLATE AS	
	26	1	**290-1034**	1	COVER AS	
CFY			*262-2043*	1	ELECTRONICS GP-COMMUNICATION (PRODUCT LINK 300)	202

C-CHANGE FROM PREVIOUS TYPE
F-NOT SHOWN
M-METRIC PART
Y-SEPARATE ILLUSTRATION

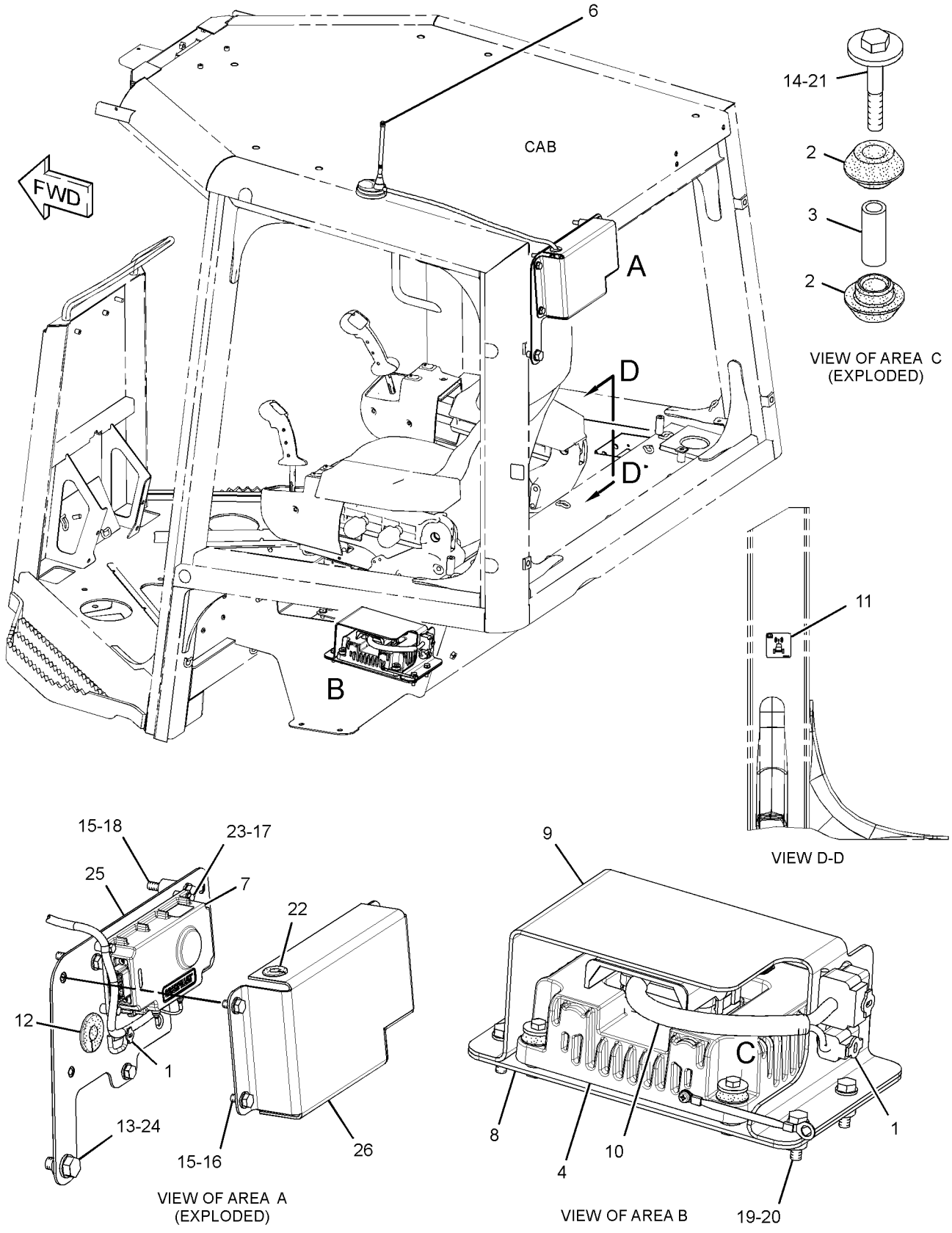

GRAPHIC #1 **<END>** g01519926

290-1032 INSTALLATION GP-COMMUNICATION–

PRODUCT LINK 321SR

S/N: DHA1-618; FBH1-794

FORESTRY

FOR USE WITH 250-1697–PAGE 776, 250-2110–PAGE 651, 289-8424–PAGE 652. CANNOT BE USED WITH 267-9084–PAGE 248, 250-6991–PAGE 244

AN ATTACHMENT

SMCS-7606 **i03698346**

NOTE	REF NO	GRAPHIC REF	PART NUMBER	QTY	PART NAME 1 2 3 4 5 6 (PRODUCT LEVEL)	SEE PAGE
	1	1	**2B-0941**	3	SPACER (10.5X19X19-MM THK)	
	2	1	**7K-1181**	3	STRAP-CABLE	
	3	1	**8C-5607**	8	MOUNT-ISOLATION	
	4	1	**8C-5608**	4	SPACER (6.5X9.5X25.4-MM THK)	
Y	5	1	**239-9954**	1	CONTROL GP-UNPROGRAMMED (PRODUCT LINK 300)	200
	6	1	**263-6394**	1	COVER	
	7	1	**263-7802**	1	ANTENNA AS (MAGNETIC MOUNT, PRODUCT LINK)	
		1	**223-4296**	1	ANTENNA (FLEXIBLE)	
Y	8	1	**263-9088**	1	RADIO GP-COMMUNICATION (PRODUCT LINK 121SR)	284
	9	1	**267-5001**	1	PLATE AS	
	10	1	**267-5002**	1	BRACKET AS	
	11	1	**267-5003**	1	HARNESS AS-CONTROL	
		1	**160-7690**	1	PLUG AS-CONNECTOR (70-PIN)	
		1	**230-4009**	1	PLUG AS-CONNECTOR (12-PIN)	
		1	**230-4011**	1	PLUG AS-CONNECTOR (2-PIN)	
		1	**3S-2093**	2	STRAP-CABLE	
		1	**126-1774**	1	COVER-CONNECTOR	
	12	1	**290-1030**	1	PLATE AS	
	13	1	**2V-8259**	1	GROMMET	
M	14	1	**8C-8451**	4	BOLT (M6X1X40-MM)	
	15	1	**8T-4121**	7	WASHER-HARD (11X21X2.5-MM THK)	
M	16	1	**8T-4137**	4	BOLT (M10X1.5X20-MM)	
M	17	1	**8T-4138**	4	BOLT (M6X1X20-MM)	
M	18	1	**8T-4185**	3	BOLT (M10X1.5X50-MM)	
	19	1	**8T-4224**	4	WASHER-HARD (8.8X16X2-MM THK)	
M	20	1	**8T-7547**	4	BOLT (M8X1.25X30-MM)	
	21	1	**9X-6165**	4	WASHER (6.5X22X2.5-MM THK)	
	22	1	**9X-7345**	1	GROMMET	
	23	1	**9X-8256**	4	WASHER (6.6X12X2-MM THK)	

M-METRIC PART
Y-SEPARATE ILLUSTRATION

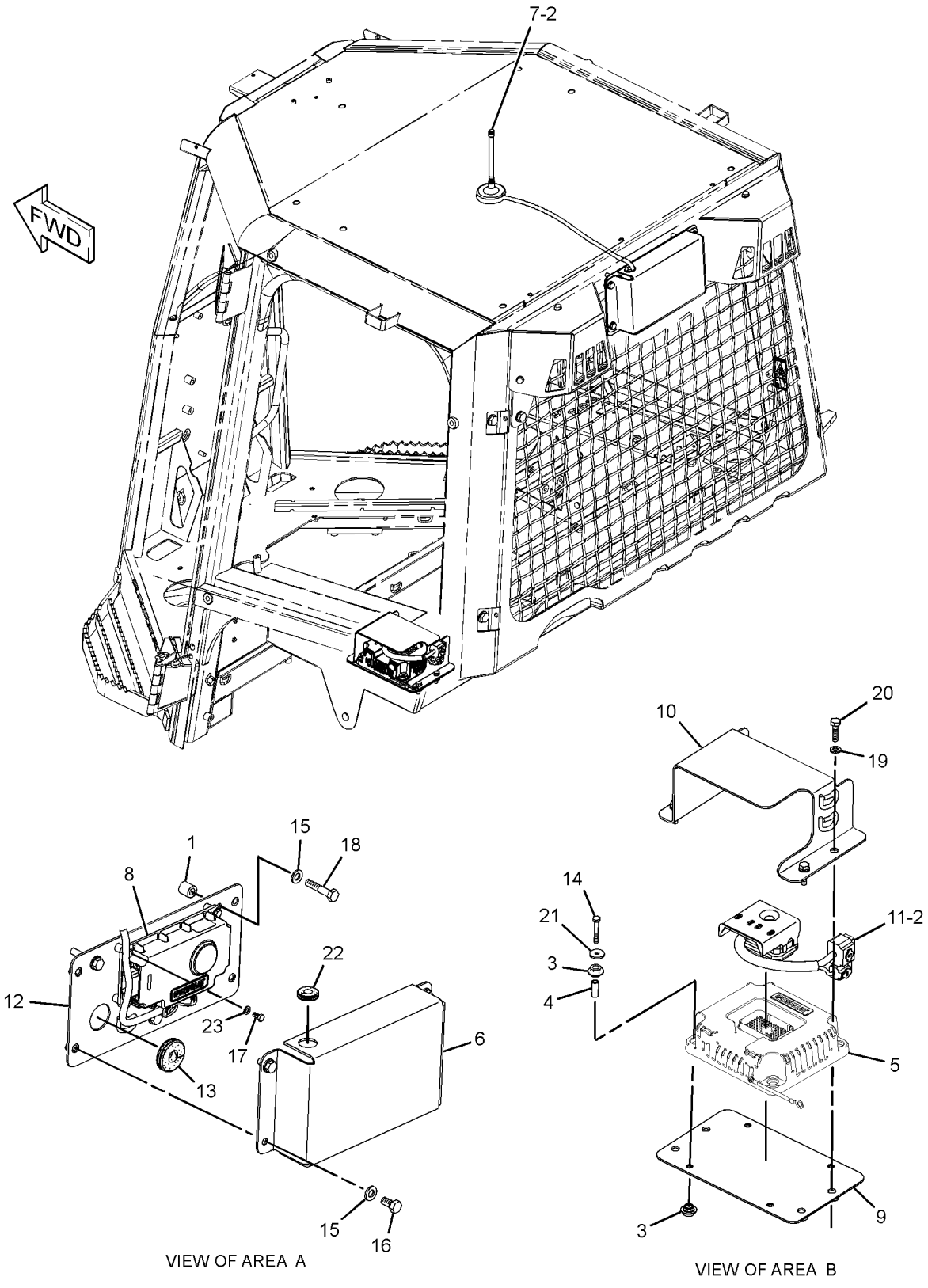

GRAPHIC #1 **<END>** g01304229

ELECTRICAL AND STARTING SYSTEM

290-1032 INSTALLATION GP-COMMUNICATION–

PRODUCT LINK 321SR

S/N: DHA619-UP; FBH795-UP

FORESTRY

FOR USE WITH 250-1697–PAGE 776, 250-2110–PAGE 651, 289-8424–PAGE 652. CANNOT BE USED WITH 267-9084–PAGE 248, 250-6991–PAGE 244

AN ATTACHMENT

SMCS-7606 **i03084880**

NOTE	REF NO	GRAPHIC REF	PART NUMBER	QTY	PART NAME 1 2 3 4 5 6 (PRODUCT LEVEL)	SEE PAGE
	1	1	**2B-0941**	3	SPACER (10.5X19X19-MM THK)	
	2	1	**7K-1181**	3	STRAP-CABLE	
	3	1	**8C-5607**	8	MOUNT-ISOLATION	
	4	1	**8C-5608**	4	SPACER (6.5X9.5X25.4-MM THK)	
Y	5	1	**239-9954**	1	CONTROL GP-UNPROGRAMMED (PRODUCT LINK 300)	200
	6	1	**263-6394**	1	COVER	
C	7	1	**310-2392**	1	ANTENNA AS (MAGNETIC MOUNT, PRODUCT LINK)	
		1	**301-0589**	1	ANTENNA (FLEXIBLE)	
Y	8	1	**263-9088**	1	RADIO GP-COMMUNICATION (PRODUCT LINK 121SR)	284
	9	1	**267-5001**	1	PLATE AS	
	10	1	**267-5002**	1	BRACKET AS	
	11	1	**267-5003**	1	HARNESS AS-CONTROL	
		1	**160-7690**	1	PLUG AS-CONNECTOR (70-PIN)	
		1	**230-4009**	1	PLUG AS-CONNECTOR (12-PIN)	
		1	**230-4011**	1	PLUG AS-CONNECTOR (2-PIN)	
		1	**3S-2093**	2	STRAP-CABLE	
		1	**126-1774**	1	COVER-CONNECTOR	
	12	1	**290-1030**	1	PLATE AS	
	13	1	**2V-8259**	1	GROMMET	
M	14	1	**8C-8451**	4	BOLT (M6X1X40-MM)	
	15	1	**8T-4121**	7	WASHER-HARD (11X21X2.5-MM THK)	
M	16	1	**8T-4137**	4	BOLT (M10X1.5X20-MM)	
M	17	1	**8T-4181**	4	BOLT (M6X1X20-MM)	
M	18	1	**8T-4185**	3	BOLT (M10X1.5X50-MM)	
	19	1	**8T-4224**	4	WASHER-HARD (8.8X16X2-MM THK)	
M	20	1	**8T-7547**	4	BOLT (M8X1.25X30-MM)	
	21	1	**9X-6165**	4	WASHER (6.5X22X2.5-MM THK)	
	22	1	**9X-7345**	1	GROMMET	
	23	1	**9X-8256**	4	WASHER (6.6X12X2-MM THK)	
C	24	1	**307-0047**	1	FILM-INFORMATION (PRODUCT LINK, READ OMM)	
CFY			*262-2043*	1	ELECTRONICS GP-COMMUNICATION (PRODUCT LINK 300)	202

C-CHANGE FROM PREVIOUS TYPE
F-NOT SHOWN
M-METRIC PART
Y-SEPARATE ILLUSTRATION

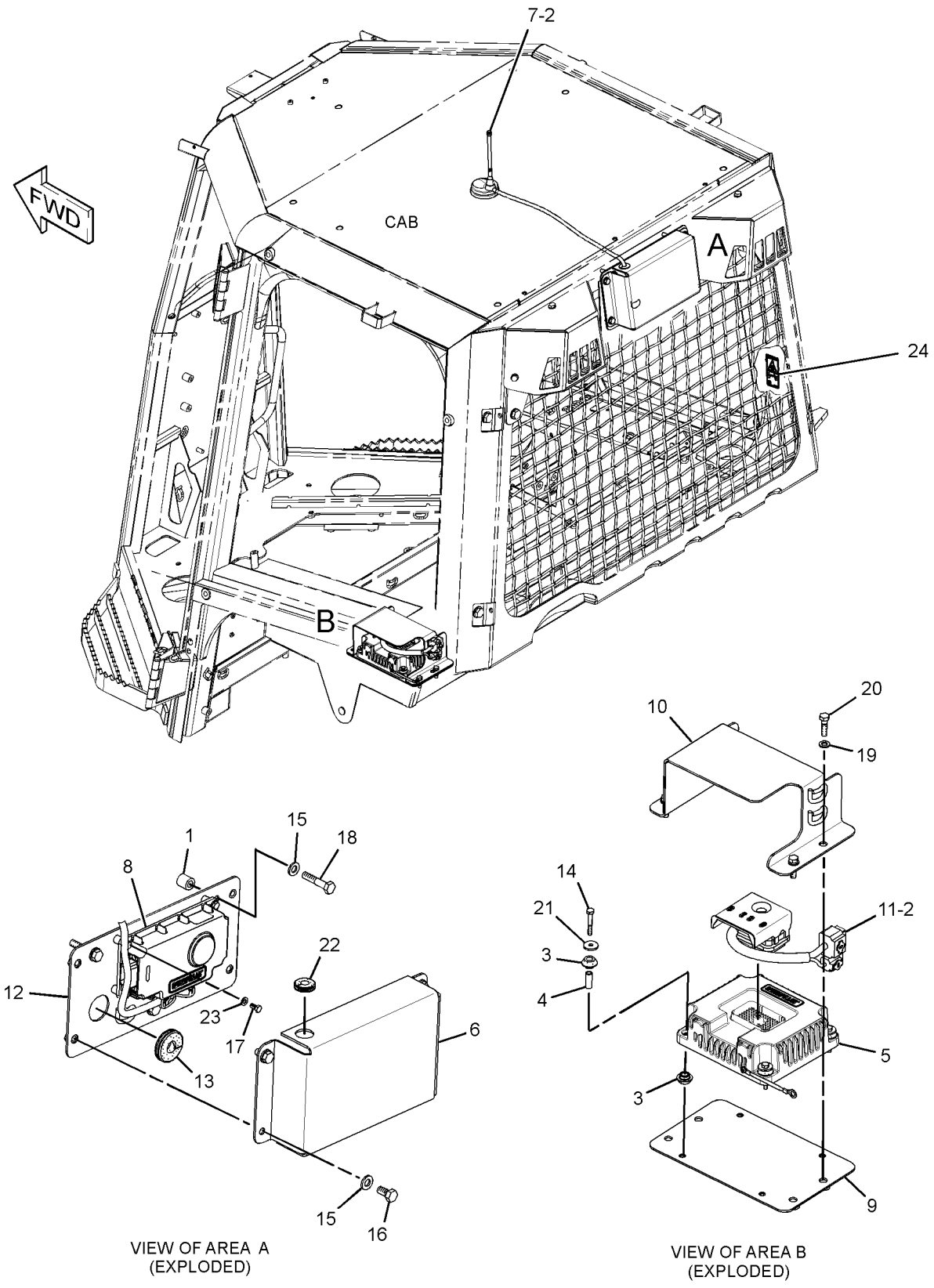

VIEW OF AREA A
(EXPLODED)

VIEW OF AREA B
(EXPLODED)

GRAPHIC #1 **<END>** g01476181

314-5401 INSTALLATION GP-COMMUNICATION–

PRODUCT LINK 321SR
S/N: DHA1-UP; FBH1-UP
EUROPEAN MARKET
FOR USE WITH SWEEP GP-ENCLOSED ROPS, CAB
AN ATTACHMENT

SMCS-7606 **i03036683**

NOTE	REF NO	GRAPHIC REF	PART NUMBER	QTY	PART NAME 1 2 3 4 5 6 (PRODUCT LEVEL)	SEE PAGE
	1	1	*319-0052*	1	MOUNTING GP-ANTENNA	
	1A	1	**7K-1181**	8	STRAP-CABLE	
	1B	1	**8T-4896**	2	WASHER-HARD (10.2X18.5X2.5-MM THK)	
M	1C	1	**8T-4189**	2	BOLT (M8X1.25X20-MM)	
	1D	1	**314-5404**	1	BRACKET	
Y	2	1	*319-0053*	1	INSTALLATION GP-COMMUNICATION (PRODUCT LINK 321SR)	261

M-METRIC PART
Y-SEPARATE ILLUSTRATION

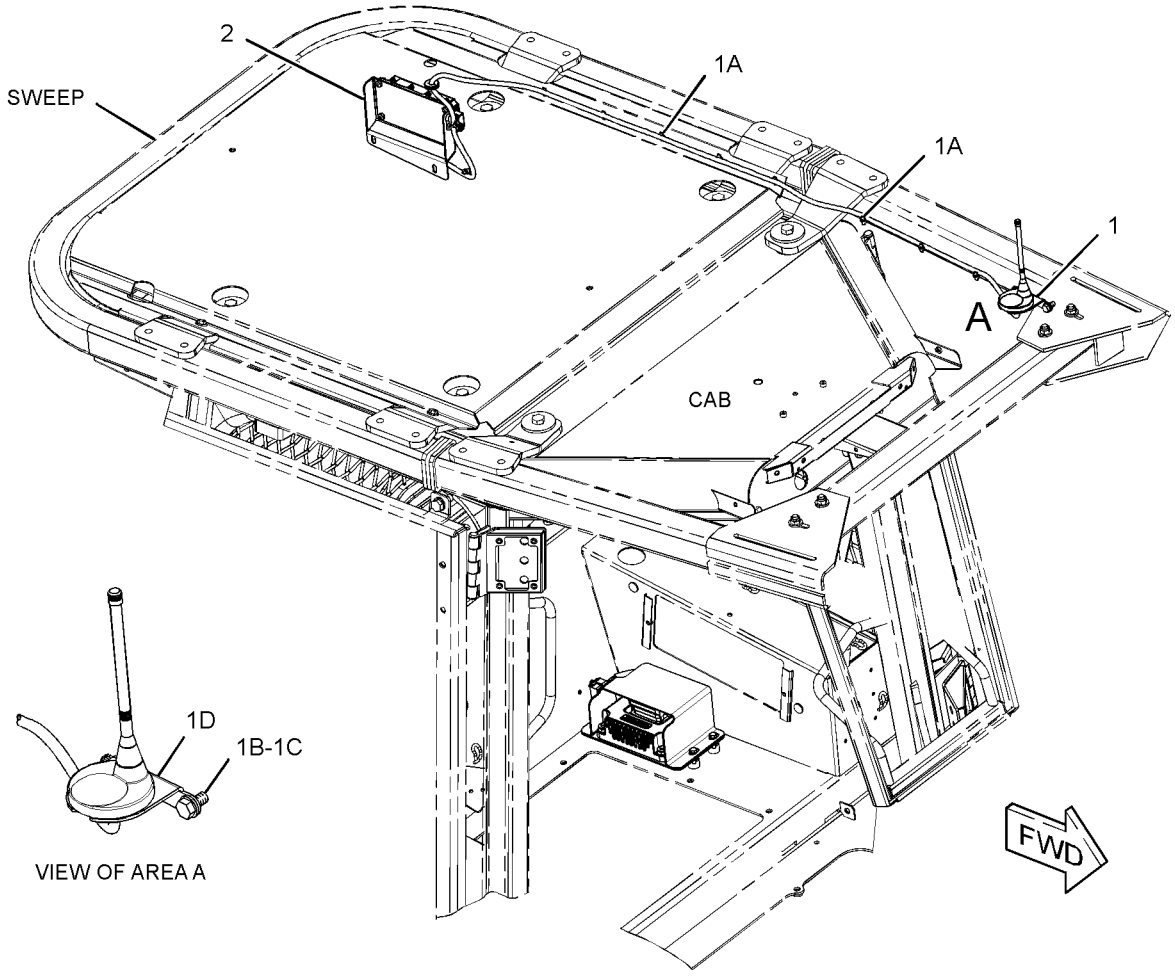

GRAPHIC #1 **<END>** g01442207

314-5402 INSTALLATION GP-COMMUNICATION–

PRODUCT LINK 321SR

S/N: DHA1-UP; FBH1-UP

FOR USE WITH CANOPY, SWEEP GP-OPEN ROPS. CANNOT BE USED WITH REAR SCREEN AN ATTACHMENT

SMCS-7606 **i03081227**

NOTE	REF NO	GRAPHIC REF	PART NUMBER	QTY	PART NAME 1 2 3 4 5 6 (PRODUCT LEVEL)	SEE PAGE
	1	1	**7K-1181**	11	STRAP-CABLE	
	2	1	**8C-5607**	8	MOUNT-ISOLATION	
	3	1	**8C-5608**	4	SPACER (6.5X9.5X25.4-MM THK)	
Y	4	1	*239-9954*	1	CONTROL GP-UNPROGRAMMED (PRODUCT LINK 300)	200
Y	5	1	**263-9088**	1	RADIO GP-COMMUNICATION (PRODUCT LINK 121SR)	284
	6	1	**267-5001**	1	PLATE AS	
	7	1	**267-5002**	1	BRACKET AS	
	8	1	**267-5003**	1	HARNESS AS-CONTROL (PRODUCT LINK)	
	9	1	**284-8532**	1	ANTENNA AS (ROOF)	
		1	**301-0589**	1	ANTENNA (FLEXIBLE)	
	10	1	**290-1034**	1	COVER AS	
	11	1	**292-1882**	1	PLATE AS	
	12	1	**314-5404**	1	BRACKET	
	13	1	**2V-8259**	1	GROMMET	
M	14	1	**7X-2552**	1	BOLT (M16X2X30-MM)	
M	15	1	**8C-8451**	4	BOLT (M6X1X40-MM)	
	16	1	**8T-4121**	7	WASHER-HARD (11X21X2.5-MM THK)	
M	17	1	**8T-4137**	4	BOLT (M10X1.5X20-MM)	
M	18	1	**8T-4181**	4	BOLT (M6X1X20-MM)	
	19	1	**8T-4224**	4	WASHER-HARD (8.8X16X2-MM THK)	
M	20	1	**8T-6466**	3	BOLT (M10X1.5X60-MM)	
M	21	1	**8T-7547**	4	BOLT (M8X1.25X30-MM)	
	22	1	**9X-6165**	4	WASHER (6.5X22X2.5-MM THK)	
	23	1	**9X-7345**	1	GROMMET	
	24	1	**9X-8256**	4	WASHER (6.6X12X2-MM THK)	
	25	1	**9X-8257**	1	WASHER (17.5X30X3.5-MM THK)	
	26	1	**8T-4896**	2	WASHER-HARD (10.2X18.5X2.5-MM THK)	
M	27	1	**8T-4189**	2	BOLT (M8X1.25X20-MM)	
	28	1	**307-0047**	1	FILM-INFORMATION (PRODUCT LINK, READ OMM)	
FY			*262-2043*	1	ELECTRONICS GP-COMMUNICATION (PRODUCT LINK 300)	202

F-NOT SHOWN
M-METRIC PART
Y-SEPARATE ILLUSTRATION

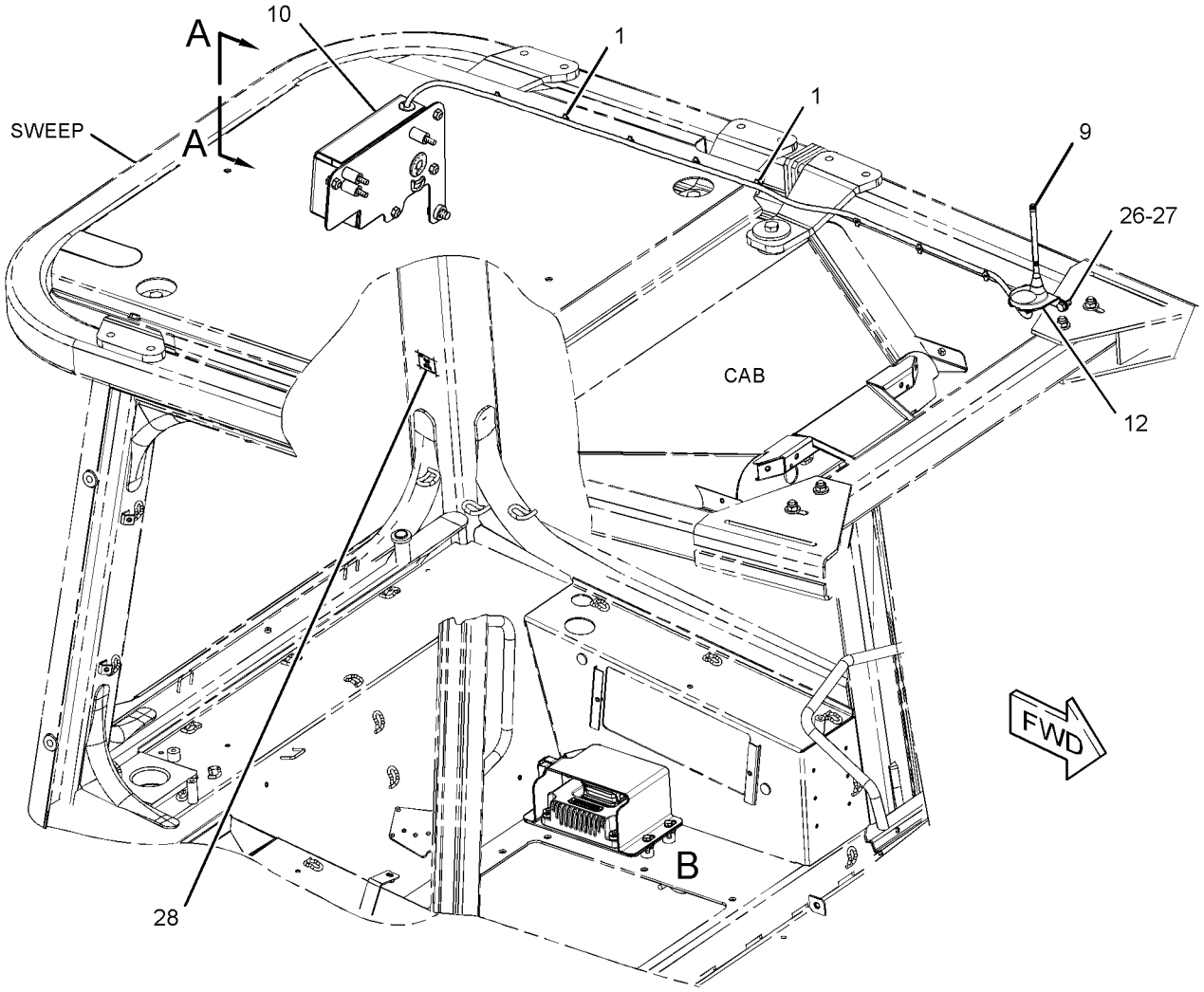

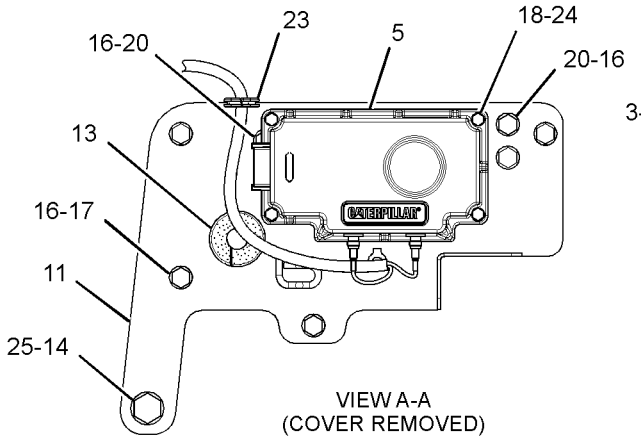

VIEW A-A
(COVER REMOVED)

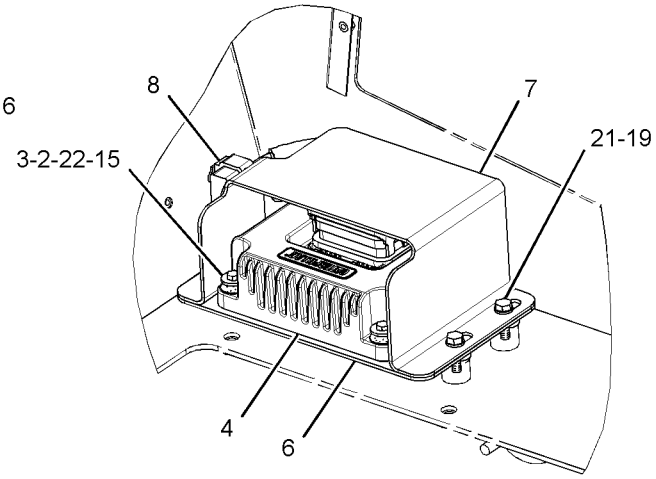

VIEW OF AREA B

GRAPHIC #1 **<END>** g01582713

314-5403 INSTALLATION GP-COMMUNICATION–

PRODUCT LINK 321SR

S/N: DHA1-UP; FBH1-UP

FORESTRY

FOR USE WITH CANOPY, REAR SCREEN, SWEEP GP-OPEN ROPS

AN ATTACHMENT

SMCS-7606 **i03081300**

NOTE	REF NO	GRAPHIC REF	PART NUMBER	QTY	PART NAME 1 2 3 4 5 6 (PRODUCT LEVEL)	SEE PAGE
	1	1	**2B-0941**	3	SPACER (10.5X19X19-MM THK)	
	2	1	**7K-1181**	11	STRAP-CABLE	
	3	1	**8C-5607**	8	MOUNT-ISOLATION	
	4	1	**8C-5608**	4	SPACER (6.5X9.5X25.4-MM THK)	
Y	5	1	*239-9954*	1	CONTROL GP-UNPROGRAMMED (PRODUCT LINK 300)	200
	6	1	**263-6394**	1	COVER	
Y	7	1	**263-9088**	1	RADIO GP-COMMUNICATION (PRODUCT LINK 121SR)	284
	8	1	**267-5001**	1	PLATE AS	
	9	1	**267-5002**	1	BRACKET AS	
	10	1	**267-5003**	1	HARNESS AS-CONTROL	
	11	1	**284-8532**	1	ANTENNA AS (ROOF)	
		1	**301-0589**	1	ANTENNA (FLEXIBLE)	
	12	1	**290-1030**	1	PLATE AS	
	13	1	**314-5404**	1	BRACKET	
	14	1	**2V-8259**	1	GROMMET	
M	15	1	**8C-8451**	4	BOLT (M6X1X40-MM)	
	16	1	**8T-4121**	7	WASHER-HARD (11X21X2.5-MM THK)	
M	17	1	**8T-4137**	4	BOLT (M10X1.5X20-MM)	
M	18	1	**8T-4138**	4	BOLT (M6X1X20-MM)	
M	19	1	**8T-4185**	3	BOLT (M10X1.5X50-MM)	
	20	1	**8T-4224**	4	WASHER-HARD (8.8X16X2-MM THK)	
M	21	1	**8T-7547**	4	BOLT (M8X1.25X30-MM)	
	22	1	**9X-6165**	4	WASHER (6.5X22X2.5-MM THK)	
	23	1	**9X-7345**	1	GROMMET	
	24	1	**9X-8256**	4	WASHER (6.6X12X2-MM THK)	
	25	1	**8T-4896**	2	WASHER-HARD (10.2X18.5X2.5-MM THK)	
M	26	1	**8T-4189**	2	BOLT (M8X1.25X20-MM)	
	27	1	**307-0047**	1	FILM-INFORMATION (PRODUCT LINK, READ OMM)	
FY			*262-2043*	1	ELECTRONICS GP-COMMUNICATION (PRODUCT LINK 300)	202

F-NOT SHOWN
M-METRIC PART
Y-SEPARATE ILLUSTRATION

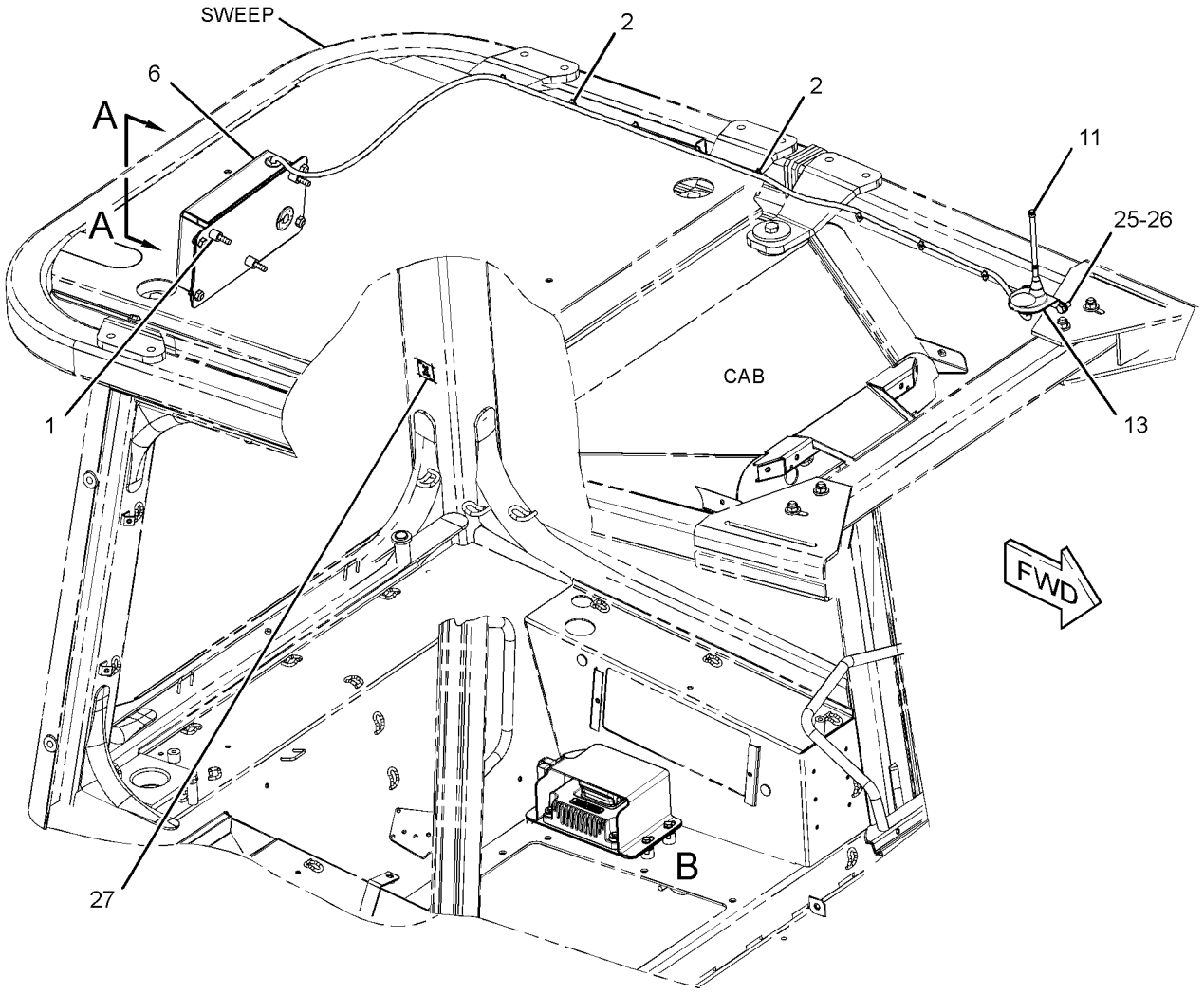

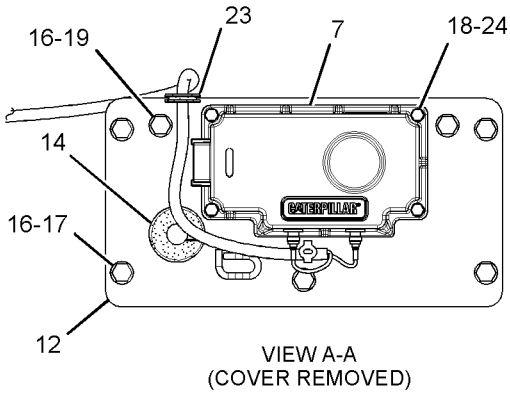

VIEW A-A
(COVER REMOVED)

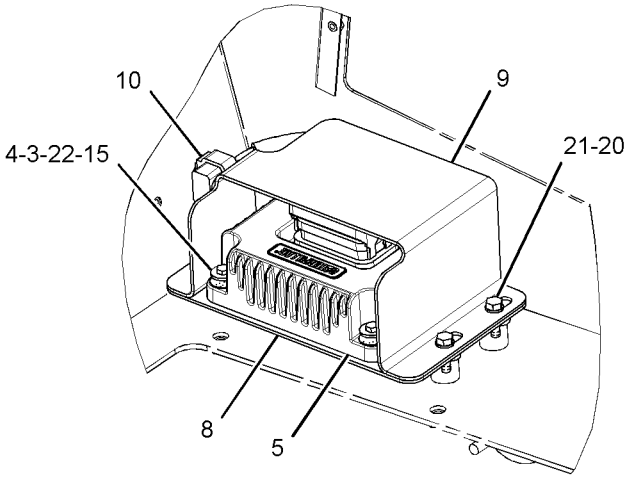

VIEW OF AREA B

GRAPHIC #1 **<END>** g01582673

319-0053 INSTALLATION GP-COMMUNICATION–

PRODUCT LINK 321SR

S/N: DHA1-UP; FBH1-UP

PART OF 314-5401 INSTALLATION GP-COMMUNICATION

AN ATTACHMENT

SMCS-7606 **i03085024**

NOTE	REF NO	GRAPHIC REF	PART NUMBER	QTY	PART NAME 1 2 3 4 5 6 (PRODUCT LEVEL)	SEE PAGE
	1	1	**7K-1181**	4	STRAP-CABLE	
	2	1	**8C-5607**	8	MOUNT-ISOLATION	
	3	1	**8C-5608**	4	SPACER (6.5X9.5X25.4-MM THK)	
Y	4	1	*239-9954*	1	CONTROL GP-UNPROGRAMMED (PRODUCT LINK 300)	200
	5	1	**262-1184**	1	BRACKET AS	
M		1	**6V-9632**	4	NUT-WELD (M6X1-THD)	
		1	**7T-1099**	1	LINK	
Y	6	1	**263-9088**	1	RADIO GP-COMMUNICATION (PRODUCT LINK 121SR)	284
	7	1	**267-5001**	1	PLATE AS	
	8	1	**267-5002**	1	BRACKET AS	
	9	1	**267-5003**	1	HARNESS AS-CONTROL	
	10	1	**284-8532**	1	ANTENNA AS (ROOF)	
		1	**301-0589**	1	ANTENNA (FLEXIBLE)	
M	11	1	**8C-8451**	4	BOLT (M6X1X40-MM)	
M	12	1	**8T-4181**	4	BOLT (M6X1X20-MM)	
	13	1	**8T-4224**	4	WASHER-HARD (8.8X16X2-MM THK)	
M	14	1	**8T-7547**	4	BOLT (M8X1.25X30-MM)	
	15	1	**9X-6165**	4	WASHER (6.5X22X2.5-MM THK)	
	16	1	**9X-7345**	1	GROMMET	
	17	1	**9X-8256**	4	WASHER (6.6X12X2-MM THK)	
	18	1	**307-0047**	1	FILM-INFORMATION (PRODUCT LINK, READ OMM)	
FY			*262-2043*	1	ELECTRONICS GP-COMMUNICATION (PRODUCT LINK 300)	202

F-NOT SHOWN
M-METRIC PART
Y-SEPARATE ILLUSTRATION

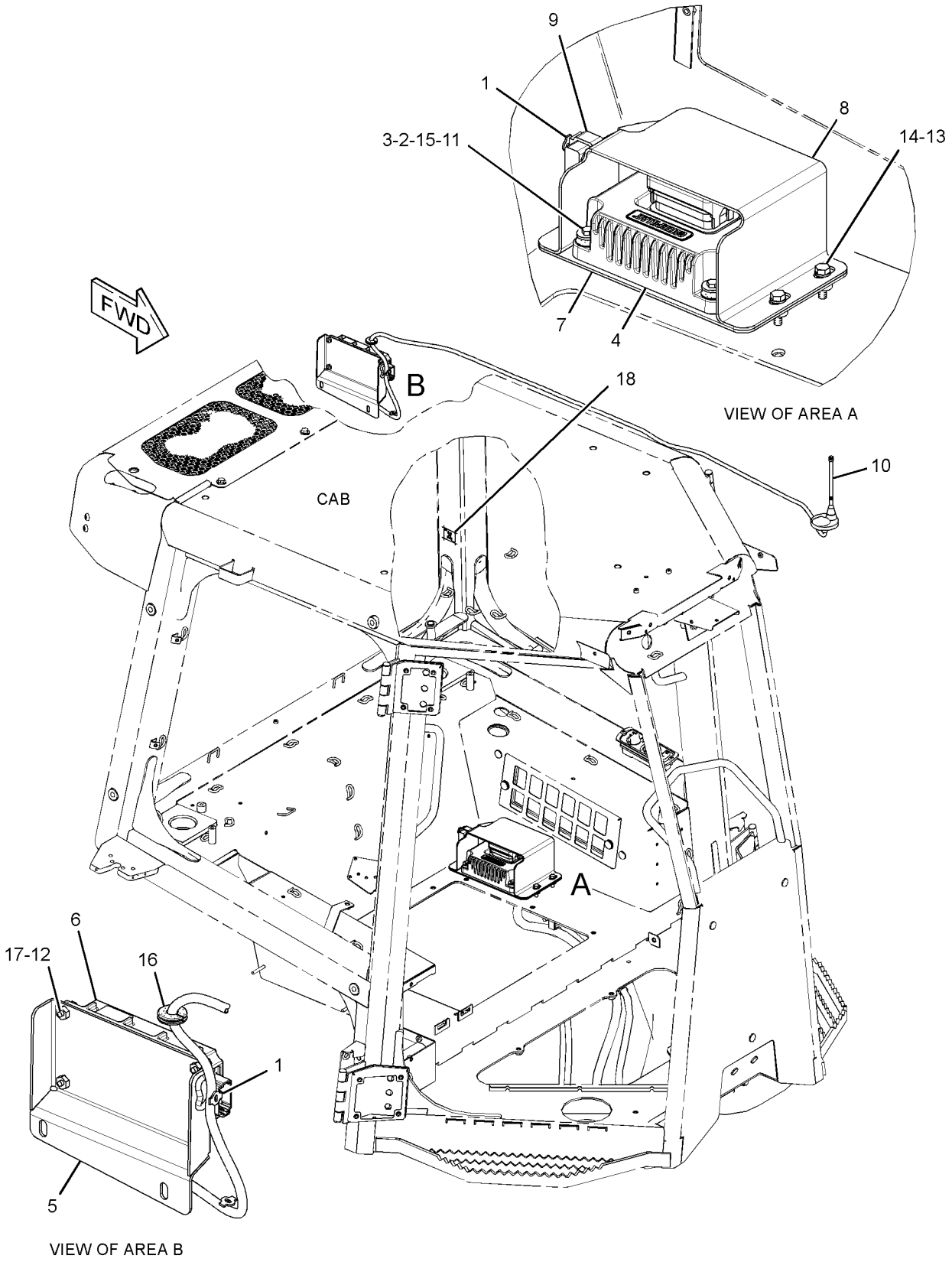

GRAPHIC #1 **<END>** g01582753

250-6992 INSTALLATION GP-SECURITY–
MACHINE SECURITY SYSTEM
S/N: DHA1-UP; FBH1-UP
AN ATTACHMENT

SMCS-7631 **i02645271**

NOTE	REF NO	GRAPHIC REF	PART NUMBER	QTY	PART NAME 1 2 3 4 5 6 (PRODUCT LEVEL)	SEE PAGE
	1	1	**8C-5607**	4	MOUNT-ISOLATION	
	2	1	**8C-5608**	2	SPACER (6.5X9.5X25.4-MM THK)	
	4	1	**205-8257**	1	COIL AS (EXCITER)	
		1	**186-3735**	2	PIN-CONNECTOR (16-GA TO 18-GA)	
D		1	**5P-5677**		WIRE (18-GA, BLACK) (0.4-M)	
	4A	1	**198-5389**	1	FILM-IDENTIFICATION (IGNITION SWITCH)	
	4B	1	**102-8802**	1	KIT-RECEPTACLE (2-PIN)	
					(INCLUDES RECEPTACLE AS & WEDGE)	
	5	1	**218-0404**	1	MODULE GP-INTERFACE (KEY)	
M	7	1	**7X-2533**	2	BOLT (M6X1X35-MM)	
	8	1	**9X-6165**	2	WASHER (6.5X22X2.5-MM THK)	
J	9	1	**206-5162**	4	KEY AS-ELECTRONIC (SECURITY) (YELLOW)	
					–OR–	
J		1	**206-5165**	4	KEY AS-ELECTRONIC (SECURITY) (GRAY)	
	10	1	**219-6314**	2	KEY RING (IDENTIFICATION)	

D-ORDER BY THE METER
J-REQUIRES 5P8500 KEY
M-METRIC PART

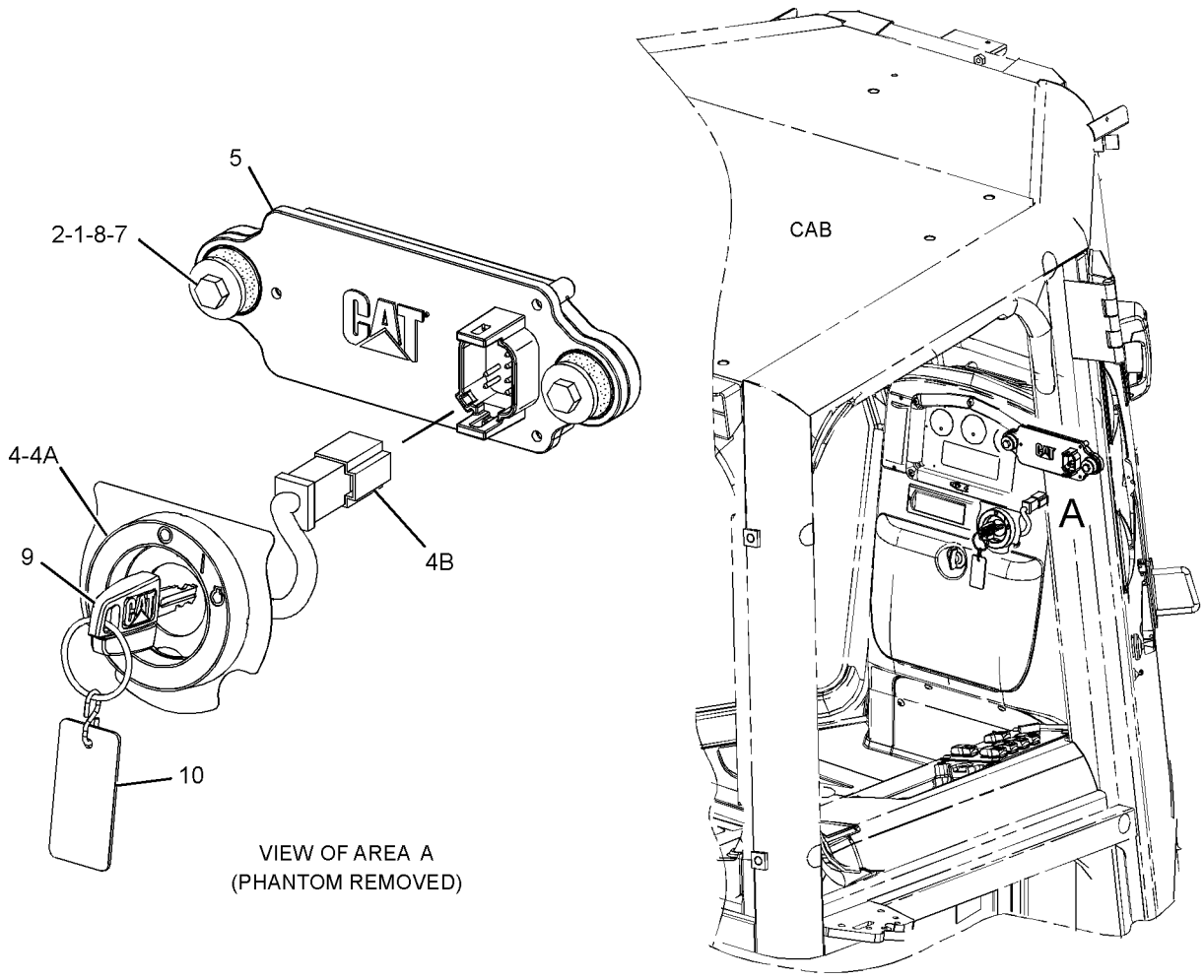

GRAPHIC #1 **<END>** g01309267

219-6488 LAMP GP-FLOOD

S/N: DHA1-UP; FBH1-UP
24-VOLT
PART OF 247-6510 LIGHTING GP-FLOOD
AN ATTACHMENT

SMCS-1434 **i02956268**

NOTE	REF NO	GRAPHIC REF	PART NUMBER	QTY	PART NAME 1 2 3 4 5 6 (PRODUCT LEVEL)	SEE PAGE
	1	1	**9X-3463**	1	LAMP-HALOGEN (24-VOLT, 70-WATT)	
M	2	1	**8T-6912**	1	BOLT (M8X1.25X50-MM)	
M	3	1	**6V-9189**	1	LOCKNUT (M8X1.25-THD)	
	4	1	**8T-4224**	2	WASHER-HARD (8.8X16X2-MM THK)	
	5	1	**9X-4244**	2	SCREW-SPECIAL (M4X1.79X25-MM)	
	7	1	**202-6611**	1	LENS AS	
	8	1	**175-4292**	1	BODY AS	
	9	1	**164-7556**	1	BRACKET (LAMP RETAINING)	
	10	1	**175-4291**	1	BRACKET AS	

M-METRIC PART

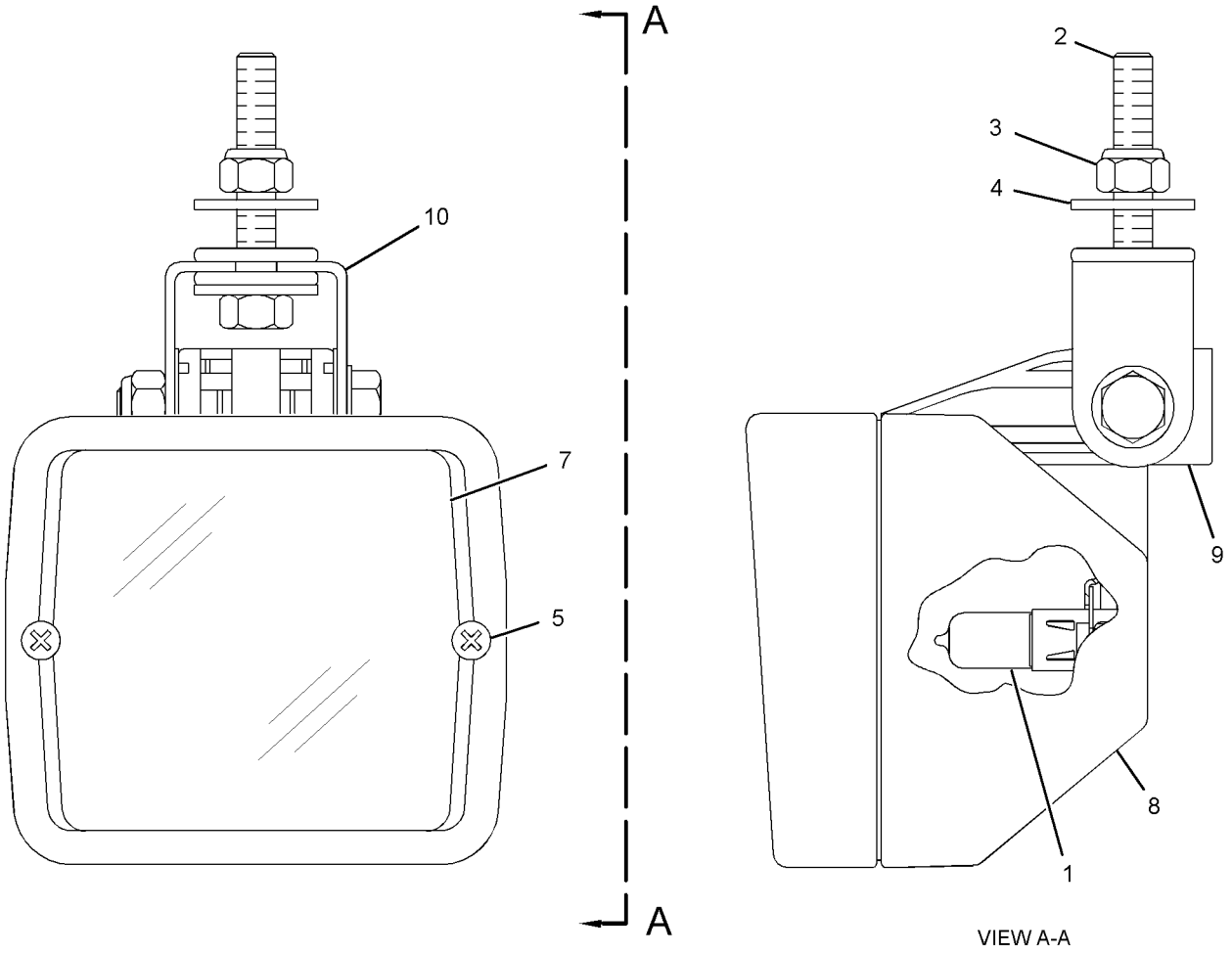

GRAPHIC #1 **<END>** g01523638

254-8155 LAMP GP-FLOOD

S/N: DHA1-UP; FBH1-UP
24-VOLT, 70-WATT
PART OF 247-6510 LIGHTING GP-FLOOD
AN ATTACHMENT

SMCS-1434 **i02394913**

NOTE	REF NO	GRAPHIC REF	PART NUMBER	QTY	PART NAME 1 2 3 4 5 6 (PRODUCT LEVEL)	SEE PAGE
	1	1	**9X-3463**	1	LAMP-HALOGEN (24-VOLT, 70-WATT)	
M	2	1	**8T-4154**	1	BOLT (M8X1.25X35-MM)	
M	3	1	**5C-7261**	1	NUT (M8X1.25-THD)	
	4	1	**8T-4224**	2	WASHER-HARD (8.8X16X2-MM THK)	
	5	1	**9X-4244**	2	SCREW-SPECIAL (M4X1.79X25-MM)	
	6	1	**202-6614**	1	LENS AS	
	7	1	**175-4292**	1	BODY AS	
	8	1	**164-7556**	1	BRACKET (LAMP RETAINING)	
	9	1	**175-4291**	1	BRACKET AS	

M-METRIC PART

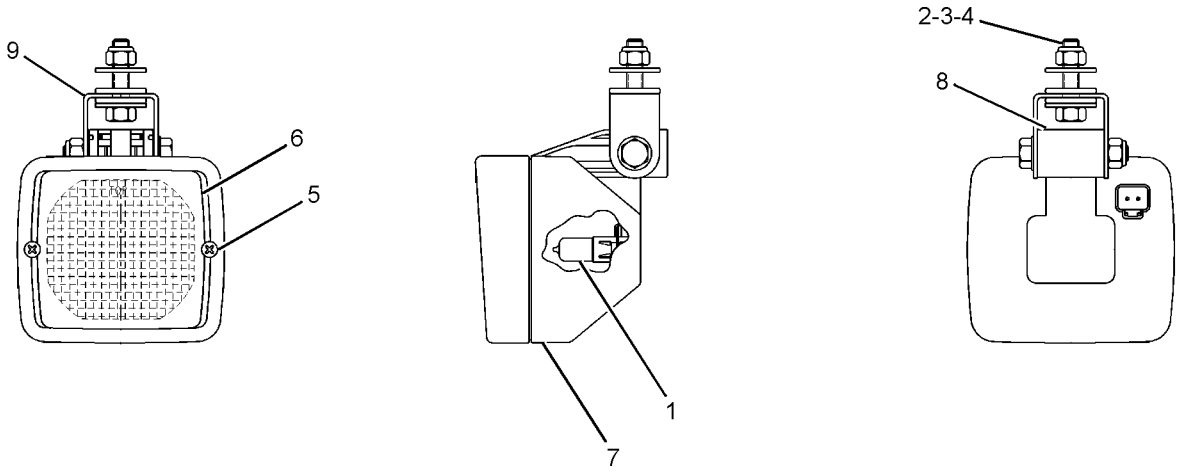

GRAPHIC #1 **<END>** g01205426

271-4507 LAMP GP-WARNING BEACON

S/N: DHA1-UP; FBH1-UP
24-VOLT/70-WATT. ROTATING
PART OF 250-6993 LIGHTING GP-WARNING BEACON
AN ATTACHMENT

SMCS-1431 **i02584254**

NOTE	REF NO	GRAPHIC REF	PART NUMBER	QTY	PART NAME 1 2 3 4 5 6 (PRODUCT LEVEL)	SEE PAGE
	1	1	**272-9800**	1	LENS (AMBER)	
	2	1	**9X-7849**	1	LAMP (24-VOLT, 70-WATT)	
	3	1	**9X-8139**	1	BELT-DRIVE	
	4	1	**102-8802**	1	KIT-RECEPTACLE (2-PIN)	
					(INCLUDES RECEPTACLE AS & WEDGE)	
	5	1	**186-3735**	2	PIN-CONNECTOR (16-GA TO 18-GA)	

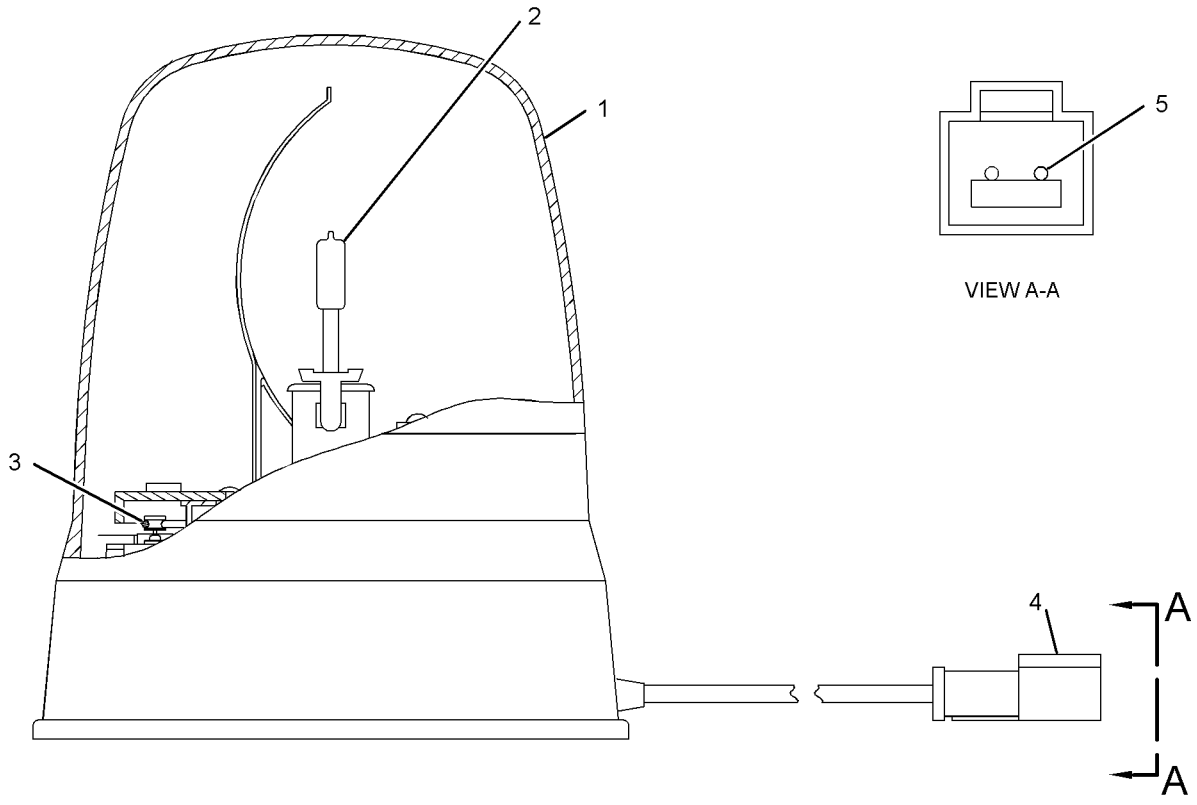

GRAPHIC #1 **<END>** g01303889

247-6510 LIGHTING GP-FLOOD—CAB FRONT, REAR

S/N: DHA1-UP; FBH1-UP

PART OF 240-6233 CAB GP-ENCLOSED ROPS, 267-2550 CAB GP-FORESTRY, 251-3536 CANOPY GP

AN ATTACHMENT

SMCS-1434 **i03017445**

NOTE	REF NO	GRAPHIC REF	PART NUMBER	QTY	PART NAME 1 2 3 4 5 6 (PRODUCT LEVEL)	SEE PAGE
Y	1	1	**219-6488**	2	LAMP GP-FLOOD (24-VOLT) (CAB, FRONT)	264
Y	2	1	**254-8155**	4	LAMP GP-FLOOD (24-VOLT, 65-WATT) (CAB FRONT, REAR)	265

Y-SEPARATE ILLUSTRATION

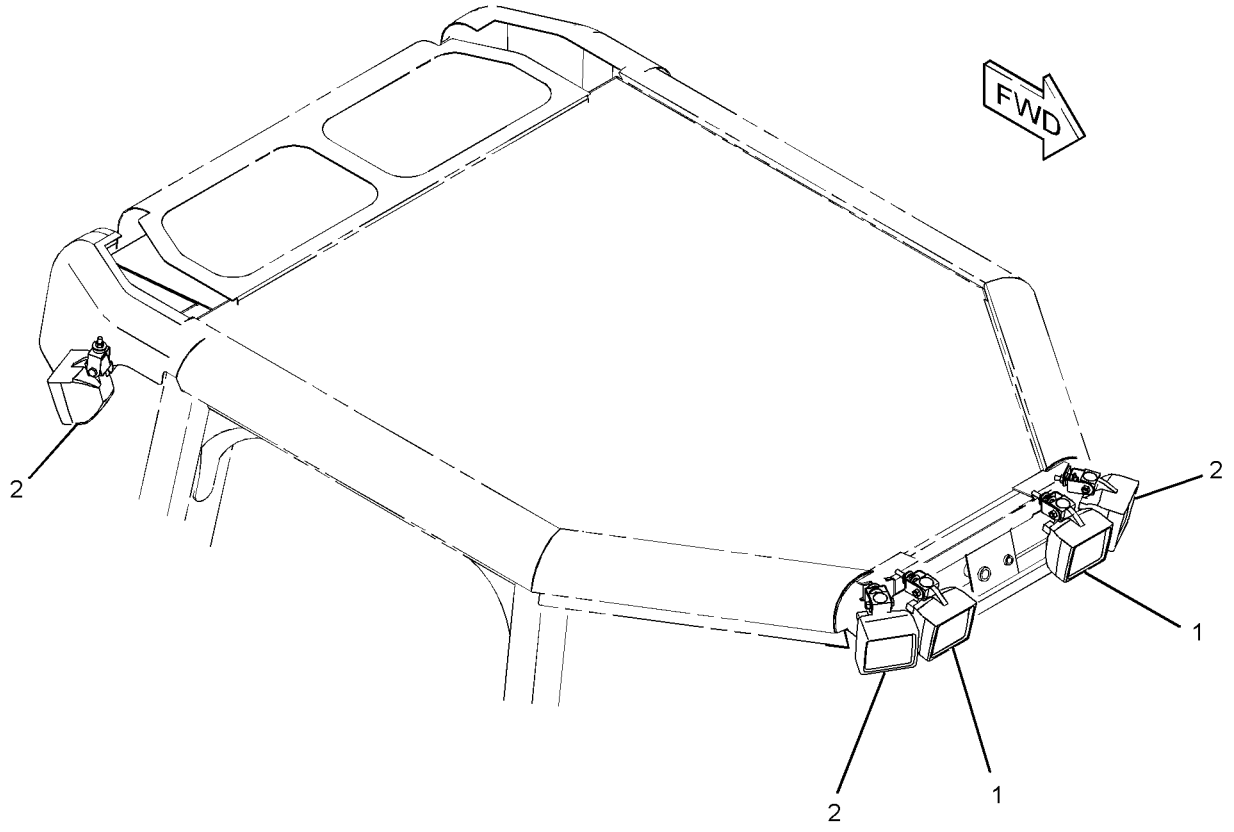

GRAPHIC #1 **<END>** g01200549

250-6993 LIGHTING GP-WARNING BEACON

S/N: DHA1-UP; FBH1-UP

AN ATTACHMENT

SMCS-1431 **i02656777**

NOTE	REF NO	GRAPHIC REF	PART NUMBER	QTY	PART NAME 1 2 3 4 5 6 (PRODUCT LEVEL)	SEE PAGE
Y	1	1	**271-4507**	1	LAMP GP-WARNING BEACON (AMBER, STROBE)	266
	2	1	**237-9736**	1	SWITCH AS-ROCKER (WARNING BEACON)	
	3	1	**9X-7345**	1	GROMMET	

Y-SEPARATE ILLUSTRATION

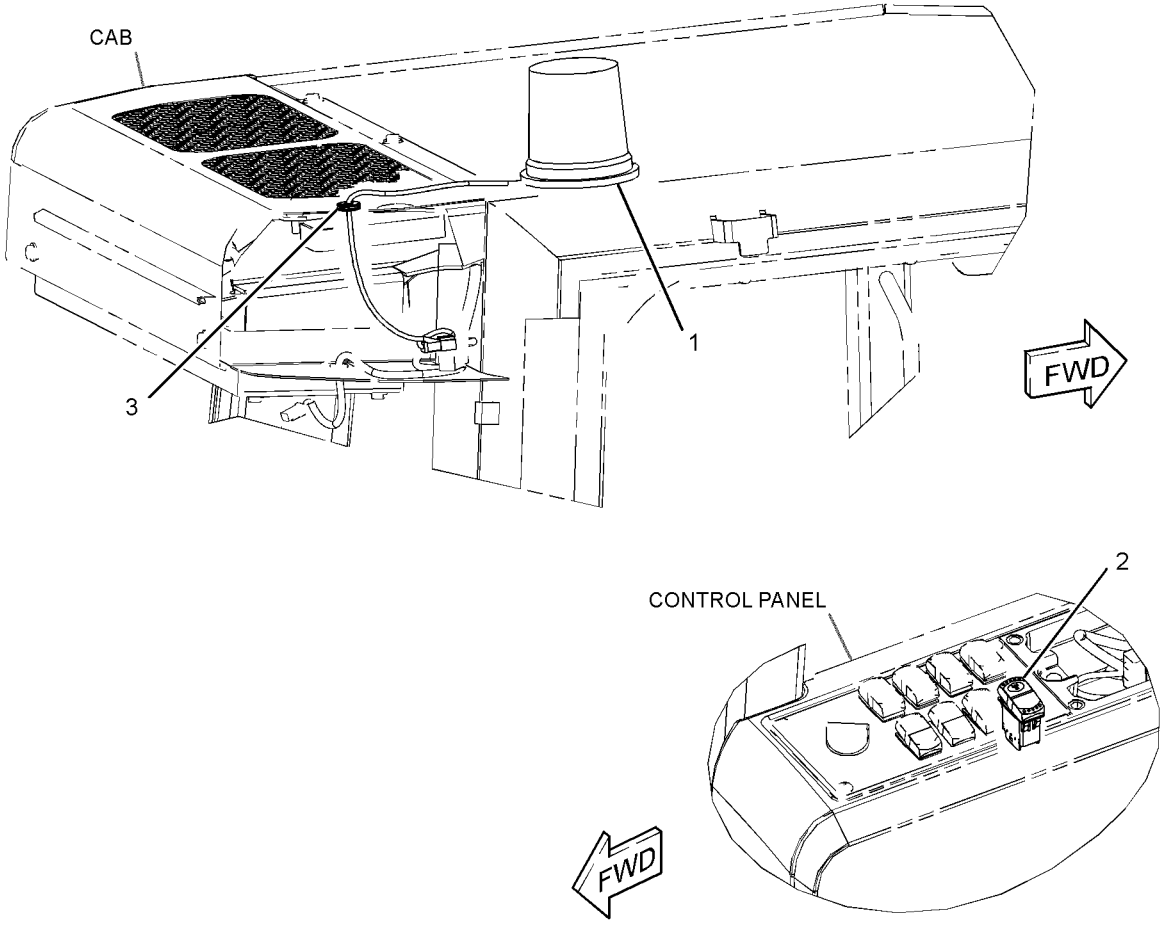

GRAPHIC #1 **<END>** g01302329

226-2333 MAST GP

S/N: DHA1-UP; FBH1-UP

PART OF 292-0293, 292-0312 GRADE CONTROL AR-LASER

SMCS-79NS **i03701167**

NOTE	PART NUMBER	QTY	PART NAME 1 2 3 4 5 6 (PRODUCT LEVEL)	SEE PAGE
	256-5732	1	HARNESS AS-WIRING (MAST)	
	256-4580	1	MOTOR AS	
	256-4579	1	SCREW AS	
	256-5720	1	SWITCH AS (UPPER LIMIT)	
	256-5721	1	SWITCH AS (LOWER LIMIT)	
	256-4581	1	BUSHING	
	256-4582	1	GEAR (141-TEETH)	
	256-5722	1	GEAR (15-TEETH)	
	260-6480	1	RING-SNAP	
	260-6478	1	SEAL-O-RING	
	256-5719	1	SEAL-WIPER	
			AVAILABLE REPAIR KIT(S):	
	245-4747	1	KIT-ADAPTER (MAST)	
			(INCLUDES ADAPTER BLOCK, BOLTS & WASHER)	
	295-8930	1	KIT-CIRCUIT BOARD	
			(INCLUDES BOARD AS, LOCKWASHER, LOCTITE & SCREWS)	

<END>

292-0290 MAST GP—SATELLITE RECEIVER

S/N: DHA1-UP; FBH1-UP

SOLID

PART OF 290-5570, 292-0279 GRADE CONTROL AR-SATELLITE

SMCS-79NS **i02654750**

NOTE	PART NUMBER	QTY	PART NAME 1 2 3 4 5 6 (PRODUCT LEVEL)	SEE PAGE
Y	*292-0303*	1	MOUNTING GP-MAST (SATELLITE RECEIVER)	839
	248-1500	1	MAST AS	

Y-SEPARATE ILLUSTRATION

<END>

255-4260 MOUNTING GP-GRADE CONTROL

S/N: DHA1-912; FBH1-770
PART OF 302-0576, 302-0577 GRADE CONTROL GP
AN ATTACHMENT

SMCS-7220 **i02743021**

NOTE	REF NO	GRAPHIC REF	PART NUMBER	QTY	PART NAME 1 2 3 4 5 6 (PRODUCT LEVEL)	SEE PAGE
M	1	1	**201-0694**	4	SCREW-FLAT HEAD (M5X0.8X22.2-MM)	
	2	1	**255-4261**	2	HINGE AS	
	3	1	**255-4262**	1	BRACKET AS	
	4	1	**255-4263**	1	BRACKET AS	
	5	1	**255-4264**	1	PLATE-MOUNTING	
	6	1	**255-4265**	1	BRACKET AS	
	7	1	**255-4267**	1	COVER	
	8	1	**283-9900**	1	LATCH AS	
	9	1	**283-9901**	1	CAM	
M	10	1	**3E-4313**	10	SCREW-BUTTON HEAD (M4X0.7X8-MM)	
M	11	1	**174-8131**	2	SCREW-TRUSS HEAD (M4X0.7X12-MM)	
M	12	1	**5C-2890**	4	NUT (M6X1-THD)	
M	13	1	**5C-8312**	6	NUT (M4X0.7-THD)	
M	14	1	**6V-4298**	4	BOLT (M5X0.8X16-MM)	
M	15	1	**7I-2272**	4	BOLT (M5X0.8X12-MM)	
M	16	1	**7X-2619**	4	BOLT (M6X1X10-MM)	
M	17	1	**9X-2042**	2	SCREW-TRUSS HEAD (M6X1X12-MM)	
E	18	1	**3E-3892**		SEAL (19-CM)	
E	19	1	**8C-7332**		TRIM-EDGE (29-CM)	

E-ORDER BY THE CENTIMETER
M-METRIC PART

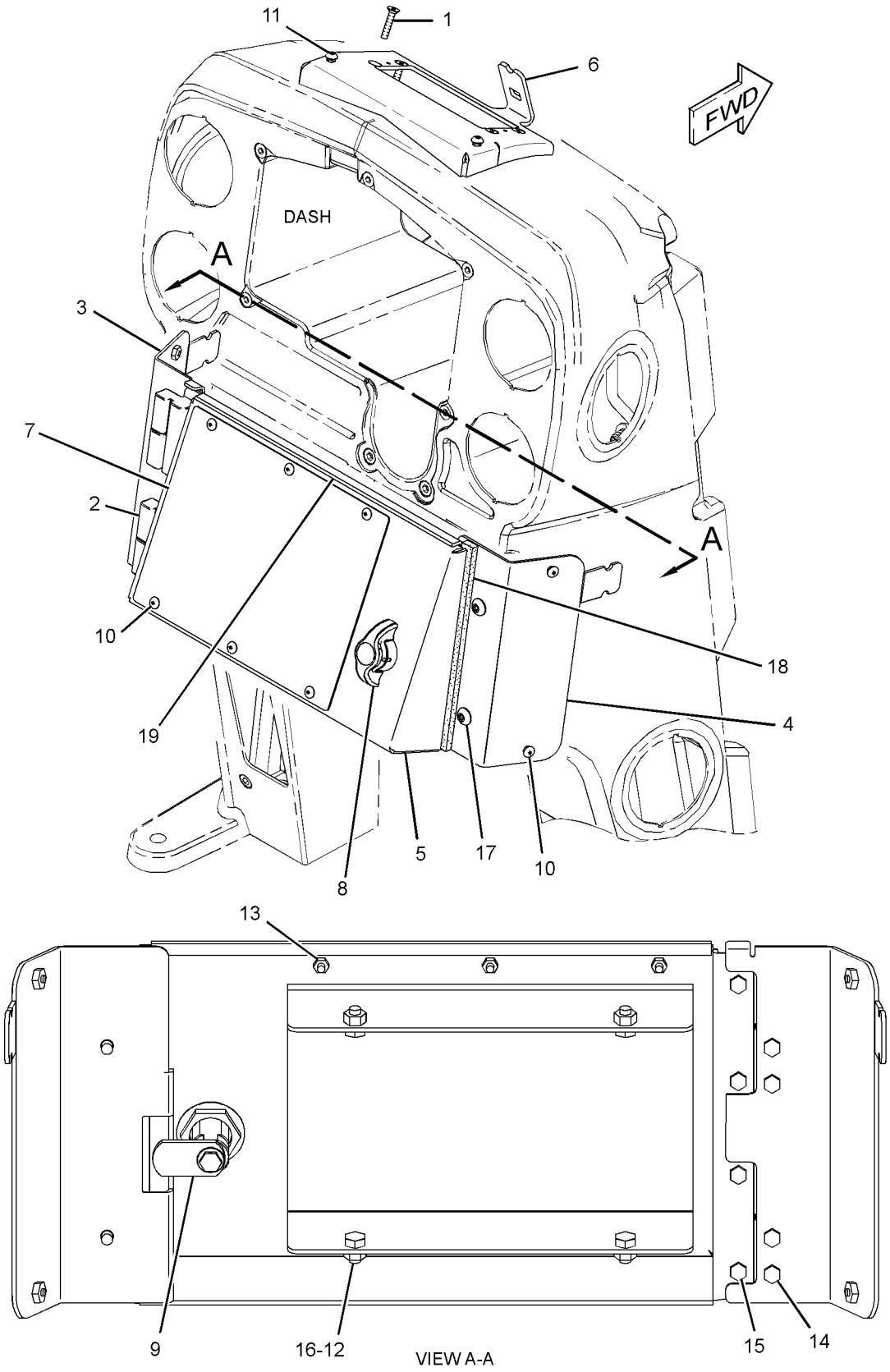

GRAPHIC #1 **<END>** g01385698

ELECTRICAL AND STARTING SYSTEM

255-4260 MOUNTING GP-GRADE CONTROL

S/N: DHA913-UP; FBH771-UP
PART OF 302-0576, 302-0577 GRADE CONTROL GP
AN ATTACHMENT

SMCS-7220 **i02973455**

NOTE	REF NO	GRAPHIC REF	PART NUMBER	QTY	PART NAME 1 2 3 4 5 6 (PRODUCT LEVEL)	SEE PAGE
M	1	1	**201-0694**	4	SCREW-FLAT HEAD (M5X0.8X22.2-MM)	
	2	1	**255-4261**	2	HINGE AS	
C	3	1	**314-3011**	1	BRACKET AS	
C	4	1	**314-3012**	1	BRACKET AS	
C	5	1	**314-3013**	1	MOUNTING AS	
C	6	1	**314-3027**	1	BRACKET AS	
C	7	1	**314-3014**	1	COVER	
	8	1	**283-9900**	1	LATCH AS	
	9	1	**283-9901**	1	CAM	
M	10	1	**3E-4313**	10	SCREW-BUTTON HEAD (M4X0.7X8-MM)	
M	11	1	**174-8131**	2	SCREW-TRUSS HEAD (M4X0.7X12-MM)	
M	12	1	**5C-2890**	4	NUT (M6X1-THD)	
M	13	1	**5C-8312**	6	NUT (M4X0.7-THD)	
M	14	1	**6V-4298**	4	BOLT (M5X0.8X16-MM)	
M	15	1	**7I-2272**	4	BOLT (M5X0.8X12-MM)	
M	16	1	**7X-2619**	4	BOLT (M6X1X10-MM)	
CM	17	1	**9X-2042**	3	SCREW-TRUSS HEAD (M6X1X12-MM)	
E	18	1	**3E-3892**		SEAL (19-CM)	
CE	19	1	**8C-7332**		TRIM-EDGE (30-CM)	
C	20	1	**9M-5617**	1	GROMMET	
C	21	1	**9X-8256**	4	WASHER (6.6X12X2-MM THK)	
C	22	1	**314-3026**	1	PIN	

C-CHANGE FROM PREVIOUS TYPE
E-ORDER BY THE CENTIMETER
M-METRIC PART

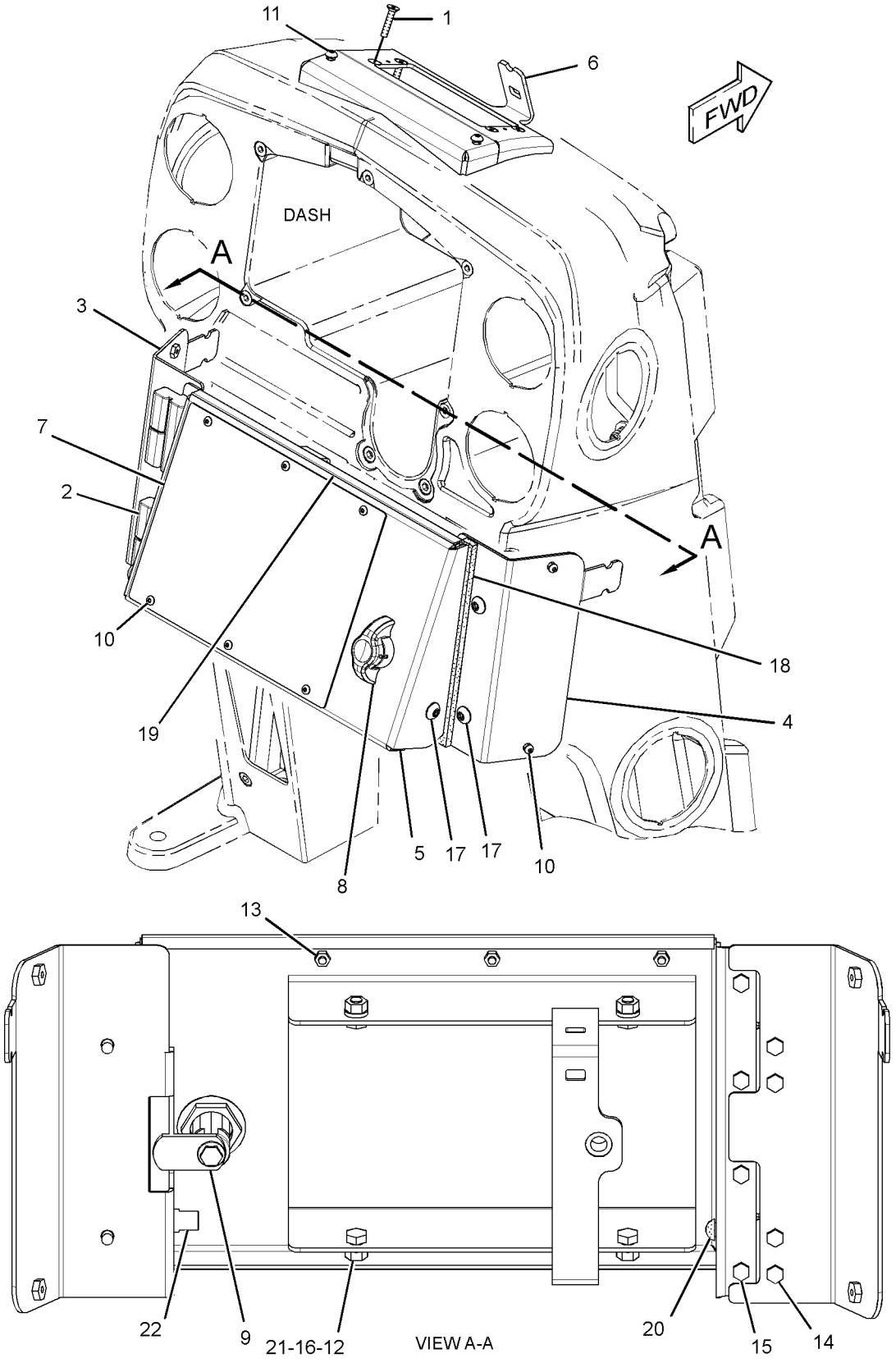

GRAPHIC #1 **<END>** g01526478

292-0296 MOUNTING GP-GRADE CONTROL

S/N: DHA1-UP; FBH1-UP

PART OF 290-5570, 290-5571, 292-0279, 292-0280 GRADE CONTROL AR-SATELLITE

SMCS-7220 **i02648200**

NOTE	PART NUMBER	QTY	PART NAME 1 2 3 4 5 6 (PRODUCT LEVEL)	SEE PAGE
Y	*259-4746*	1	MOUNTING GP-RADIO	754
M	**143-6020**	2	BOLT-SOCKET HEAD (M6X1X75-MM)	
	2V-8259	3	GROMMET	
	2Y-5429	3	GROMMET	
M	**8T-2659**	6	LOCKNUT (M4X0.7-THD)	
M	**5C-2890**	2	NUT (M6X1-THD)	
	230-5008	3	PLUG AS-CONNECTOR (4-PIN)	
	8T-8737	3	PLUG-SEAL	
M	**9X-1046**	8	SCREW (M4X0.7X18-MM)	
	104-2091	6	SCREW-FLAT HEAD (NO 6X0.5-IN)	
	9X-3402	9	SOCKET-CONNECTOR (16-GA TO 18-GA)	
	4B-4863	12	WASHER (4.7X11X1.2-MM THK)	
	9X-8256	2	WASHER (6.6X12X2-MM THK)	

M-METRIC PART
Y-SEPARATE ILLUSTRATION

<END>

234-9970 MOUNTING GP-RECEIVER–MAST

S/N: DHA1-UP; FBH1-UP

PART OF 292-0293, 292-0312 GRADE CONTROL AR-LASER

SMCS-7009, 7010 **i02654748**

NOTE	REF NO	GRAPHIC REF	PART NUMBER	QTY	PART NAME 1 2 3 4 5 6 (PRODUCT LEVEL)	SEE PAGE
	1	1	**253-8967**	1	ROD-THREADED	
	2	1	**253-8969**	1	BRACKET	
	3	1	**237-4132**	4	MOUNT-FLEXIBLE	
	4	1	**237-4133**	2	GASKET	
	5	1	**237-4134**	1	CLAMP	
	6	1	**237-4135**	1	MOUNT-FLEXIBLE	
	7	1	**237-7252**	1	BOLT (3/4-16X1.25-IN)	
	8	1	**3B-4508**	4	LOCKWASHER	
	9	1	**3B-4512**	1	LOCKWASHER	
	10	1	**4M-6425**	2	BOLT (5/16-18X1-IN)	
	11	1	**5W-1437**	2	LOCKWASHER	
	12	1	**8T-9383**	2	BOLT (1/2-13X0.75-IN)	
	13	1	**9B-0453**	2	LOCKWASHER	
	14	1	**253-8981**	4	ROD-THREADED	
	15	1	**6V-8188**	6	NUT (1/2-13-THD)	

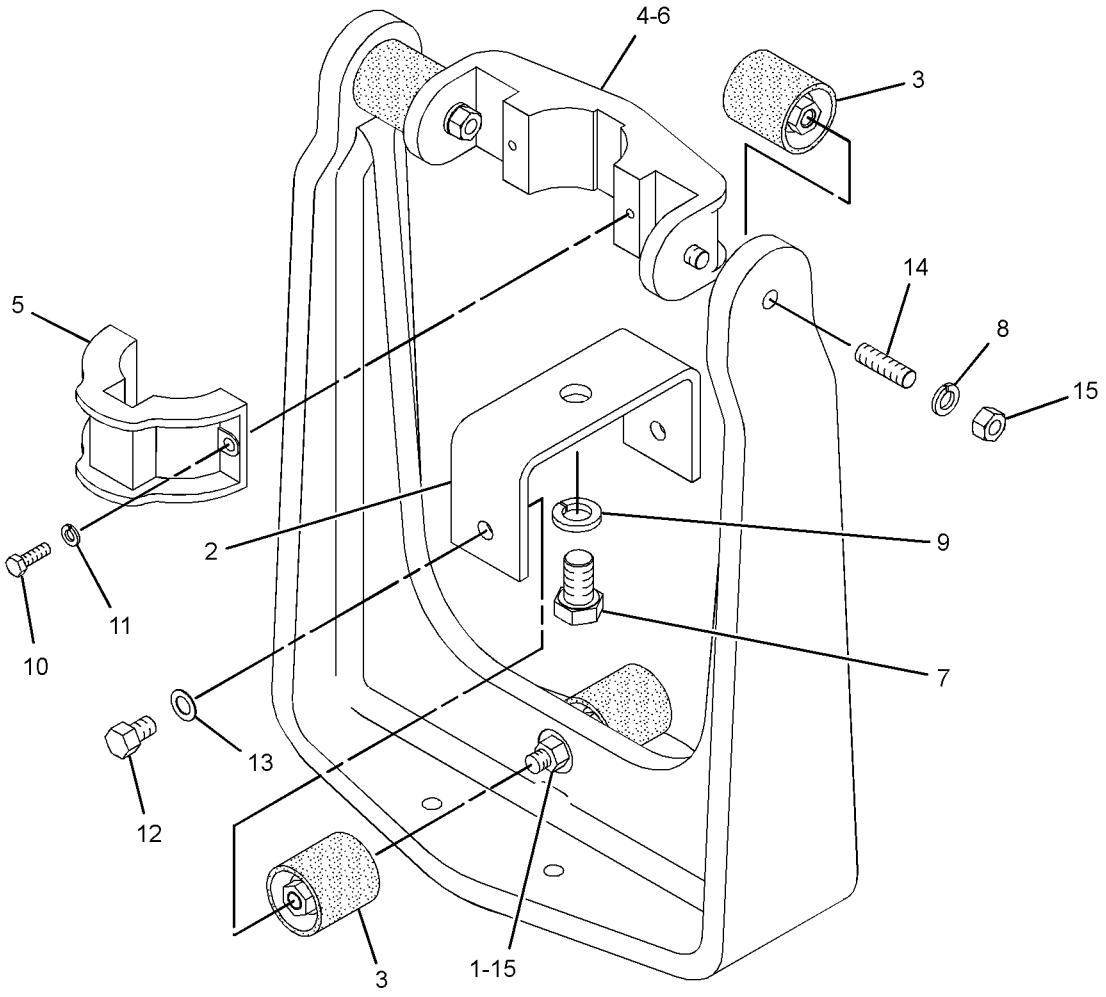

GRAPHIC #1 **<END>** g01333368

ELECTRICAL AND STARTING SYSTEM

242-3053 PANEL GP-FUSE

S/N: DHA1-UP; FBH1-UP
PART OF 206-7302 WIRING GP-PLATFORM
AN ATTACHMENT
TYPE 1

SMCS-1417 **i03698426**

NOTE	REF NO	GRAPHIC REF	PART NUMBER	QTY	PART NAME 1 2 3 4 5 6 (PRODUCT LEVEL)	SEE PAGE
	1	1,2	**7K-1181**	4	STRAP-CABLE	
	2	1	**116-7471**	1	PULLER-MINIFUSE	
	3	1	**149-9818**	1	PLATE	
	4	1	**171-2212**	2	CIRCUIT BREAKER AS (105-AMPERE) (MAIN, ALTERNATE)	
					(EACH INCLUDES)	
		1	**6V-8187**	2	NUT (1/4-28-THD)	
		1	**8T-4205**	2	WASHER-HARD (7.2X14.5X2-MM THK)	
		1	**253-2111**	2	LOCKWASHER	
	5	2	**172-4863**	1	JUNCTION BLOCK	
	6	1	**173-1614**	1	FILM-IDENTIFICATION (ALTERNATOR)	
Y	7	1	**241-8368**	1	SWITCH GP-MAGNETIC (24-VOLT) (MAIN RELAY)	304
	8	1	**242-3054**	1	PANEL AS	
	9	1	**245-8823**	1	FILM-IDENTIFICATION (GENERATOR, ELECTRICAL POWER)	
	10	1	**252-1182**	1	PLATE	
	11	2	**252-4925**	1	STRIP	
	12	2	**252-4926**	1	STRIP	
	13	2	**252-4927**	1	STRIP	
	14	2	**252-4928**	1	WIRE AS	
	15	1	**252-4929**	1	PLATE AS	
	16	1	**304-4376**	1	FILM-FUSE PANEL	
	17	1	**264-5425**	1	CAP AS-PROTECTION	
D		1	**5P-5677**		WIRE (18-GA, BLACK) (0.2-M)	
		1	**2L-8076**	1	TERMINAL-RING (14-GA TO 16-GA, NO. 10 SCREW)	
	18	1	**304-4360**	1	HARNESS GP-PANEL	
	18A	1	**113-8490**	14	FUSE (10-AMPERE)	
	18B	1	**113-8491**	14	FUSE (15-AMPERE)	
	18C	1	**280-2709**	4	CIRCUIT BREAKER AS (15-AMPERE)	
		1	**124-9636**	2	BLOCK-MINIFUSE	
		1	**124-9637**	2	LOCK-MINIFUSE	
		1	**113-5100**	8	TERMINAL-BUS	
		1	**128-4249**	1	LOCKWASHER	
		1	**211-0052**	1	NUT (1-11/16-18-THD)	
		1	**167-3693**	1	PLUG AS-CONNECTOR (31-PIN)	
		1	**9W-1951**	1	RECEPTACLE-CONNECTOR (9-PIN)	
		1	**167-3692**	1	RECEPTACLE AS-CONNECTOR (31-PIN)	
		1	**102-8802**	1	KIT-RECEPTACLE (2-PIN)	
					(INCLUDES RECEPTACLE AS & WEDGE)	
	19	1	**141-4976**	4	SCREW-WASHER HEAD (4-40X0.5-IN)	
M	20	2	**6V-5683**	2	BOLT (M6X1X16-MM)	
	21	1	**6V-7978**	4	SCREW-MACHINE (10-32X0.375-IN)	
M	22	1	**9X-2043**	3	SCREW-TRUSS HEAD (M6X1X14-MM)	
M	23	2	**8T-0267**	1	BOLT-SOCKET HEAD (M6X1X12-MM)	
M	24	2	**8T-4133**	1	NUT (M10X1.5-THD)	
M	25	1	**5C-9553**	2	BOLT (M6X1X16-MM)	
	26	2	**7X-0589**	2	WASHER-HARD (12X28.5X5-MM THK)	
	27	1	**8T-4205**	4	WASHER-HARD (7.2X14.5X2-MM THK)	
M	28	2	**8T-4244**	1	NUT (M12X1.75-THD)	
M	29	1	**8T-4971**	2	BOLT (M6X1X30-MM)	
M	30	2	**160-8749**	1	BOLT (M12X1.75X60-MM)	
M	31	2	**180-4686**	1	BOLT (M10X1.5X60-MM)	
D	32	1	**8T-5372**		SEAL (1.3-M)	

242-3053 **PANEL GP-FUSE** ***(contd.)*** **i03698426**

D-ORDER BY THE METER
M-METRIC PART
Y-SEPARATE ILLUSTRATION

242-3053 **PANEL GP-FUSE** *(contd.)* **i03698426**

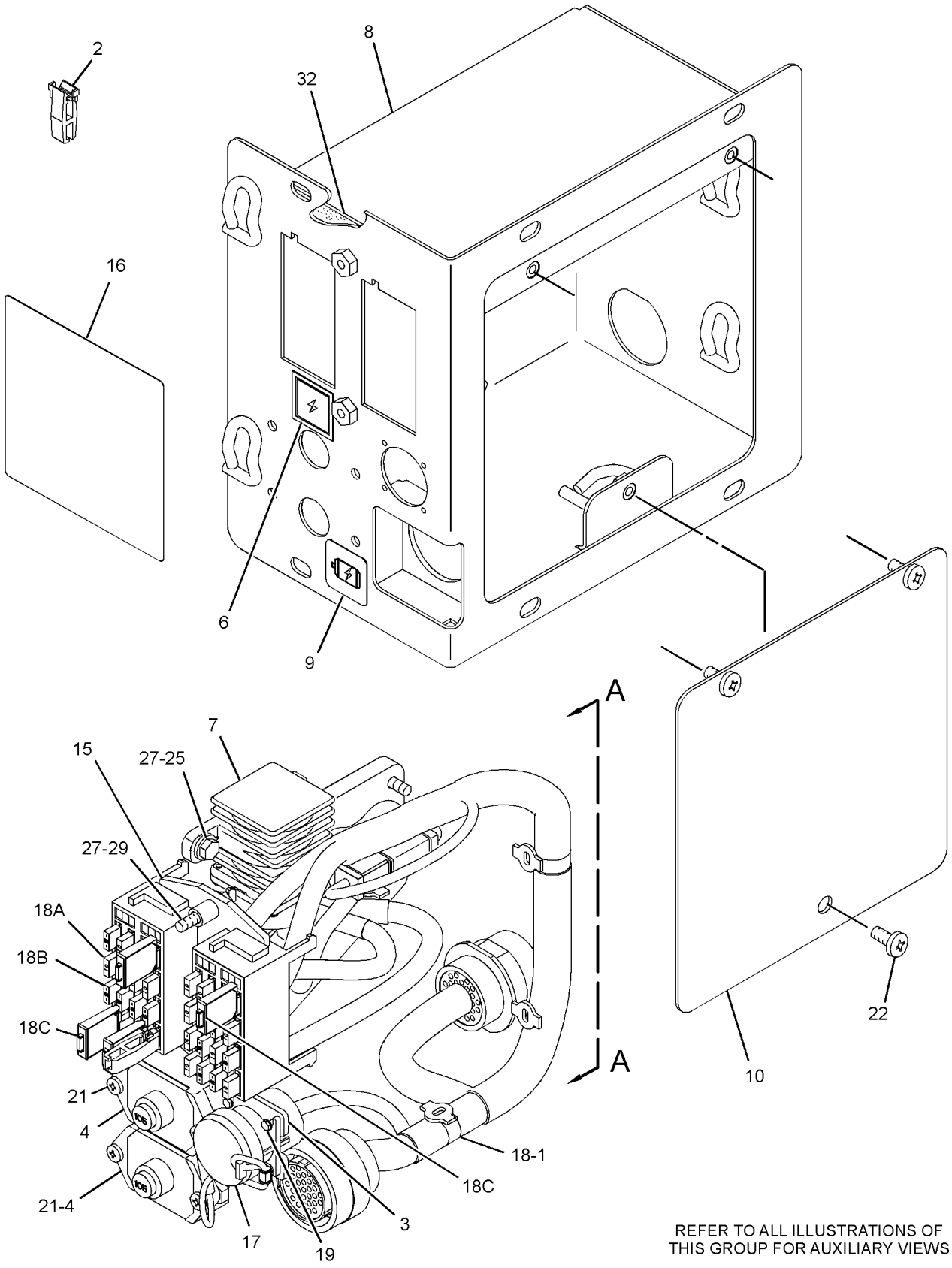

REFER TO ALL ILLUSTRATIONS OF
THIS GROUP FOR AUXILIARY VIEWS

GRAPHIC #1

g01516776

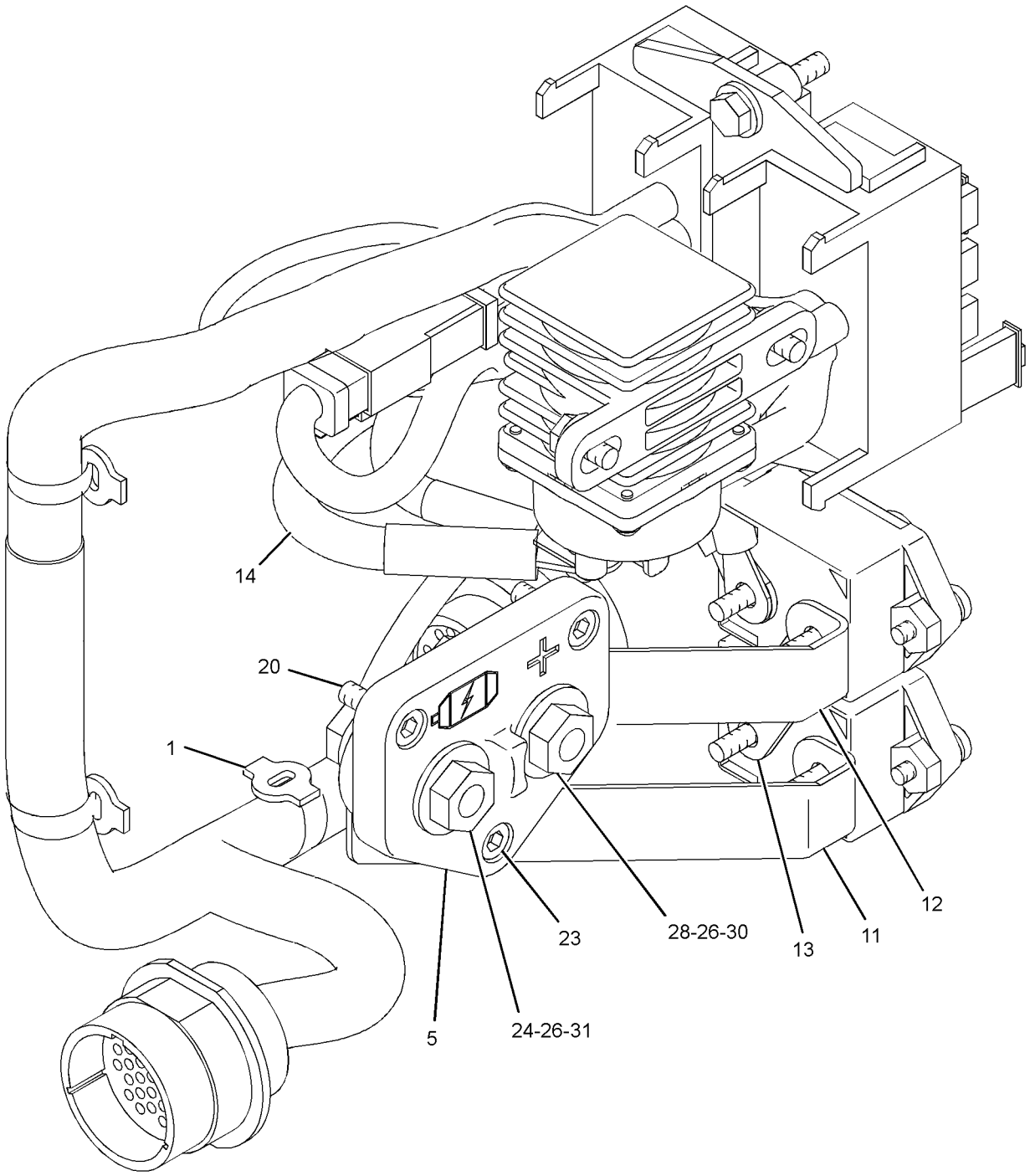

VIEW A-A
(PANEL REMOVED)

GRAPHIC #2 **<END>** g01305449

ELECTRICAL AND STARTING SYSTEM

242-3053 PANEL GP-FUSE

S/N: DHA1-UP; FBH1-UP
PART OF 206-7302 WIRING GP-PLATFORM
AN ATTACHMENT
TYPE 2

SMCS-1417 **i03698427**

NOTE	REF NO	GRAPHIC REF	PART NUMBER	QTY	PART NAME 1 2 3 4 5 6 (PRODUCT LEVEL)	SEE PAGE
	1	1,2	**7K-1181**	4	STRAP-CABLE	
	2	1	**116-7471**	1	PULLER-MINIFUSE	
	3	1	**149-9818**	1	PLATE	
	4	1	**171-2212**	2	CIRCUIT BREAKER AS (105-AMPERE) (MAIN, ALTERNATE)	
					(EACH INCLUDES)	
		1	**6V-8187**	2	NUT (1/4-28-THD)	
		1	**8T-4205**	2	WASHER-HARD (7.2X14.5X2-MM THK)	
		1	**253-2111**	2	LOCKWASHER	
	5	2	**172-4863**	1	JUNCTION BLOCK	
	6	1	**173-1614**	1	FILM-IDENTIFICATION (ALTERNATOR)	
Y	7	1	**241-8368**	1	SWITCH GP-MAGNETIC (24-VOLT) (MAIN RELAY)	304
	8	1	**242-3054**	1	PANEL AS	
	9	1	**245-8823**	1	FILM-IDENTIFICATION (GENERATOR, ELECTRICAL POWER)	
	10	1	**252-1182**	1	PLATE	
	11	2	**252-4925**	1	STRIP	
	12	2	**252-4926**	1	STRIP	
	13	2	**252-4927**	1	STRIP	
	14	2	**252-4928**	1	WIRE AS	
	15	1	**252-4929**	1	PLATE AS	
	16	1	**304-4376**	1	FILM-FUSE PANEL	
	17	1	**264-5425**	1	CAP AS-PROTECTION	
D		1	**5P-5677**		WIRE (18-GA, BLACK) (0.2-M)	
		1	**2L-8076**	1	TERMINAL-RING (14-GA TO 16-GA, NO. 10 SCREW)	
C	18	1	**322-4870**	1	HARNESS GP-PANEL	
	18A	1	**113-8490**	14	FUSE (10-AMPERE)	
	18B	1	**113-8491**	14	FUSE (15-AMPERE)	
	18C	1	**280-2709**	4	CIRCUIT BREAKER AS (15-AMPERE)	
		1	**124-9636**	2	BLOCK-MINIFUSE	
		1	**124-9637**	2	LOCK-MINIFUSE	
		1	**113-5100**	8	TERMINAL-BUS	
		1	**128-4249**	1	LOCKWASHER	
		1	**211-0052**	1	NUT (1-11/16-18-THD)	
		1	**167-3693**	1	PLUG AS-CONNECTOR (31-PIN)	
		1	**9W-1951**	1	RECEPTACLE-CONNECTOR (9-PIN)	
		1	**167-3692**	1	RECEPTACLE AS-CONNECTOR (31-PIN)	
		1	**102-8802**	1	KIT-RECEPTACLE (2-PIN)	
					(INCLUDES RECEPTACLE AS & WEDGE)	
	19	1	**141-4976**	4	SCREW-WASHER HEAD (4-40X0.5-IN)	
M	20	2	**6V-5683**	2	BOLT (M6X1X16-MM)	
	21	1	**6V-7978**	4	SCREW-MACHINE (10-32X0.375-IN)	
M	22	1	**9X-2043**	3	SCREW-TRUSS HEAD (M6X1X14-MM)	
M	23	2	**8T-0267**	1	BOLT-SOCKET HEAD (M6X1X12-MM)	
M	24	2	**8T-4133**	1	NUT (M10X1.5-THD)	
M	25	1	**5C-9553**	2	BOLT (M6X1X16-MM)	
	26	2	**7X-0589**	2	WASHER-HARD (12X28.5X5-MM THK)	
	27	1	**8T-4205**	4	WASHER-HARD (7.2X14.5X2-MM THK)	
M	28	2	**8T-4244**	1	NUT (M12X1.75-THD)	
M	29	1	**8T-4971**	2	BOLT (M6X1X30-MM)	
CM	30	2	**8T-4910**	1	BOLT (M12X1.75X60-MM)	
M	31	2	**180-4686**	1	BOLT (M10X1.5X60-MM)	
D	32	1	**8T-5372**		SEAL (1.3-M)	

242-3053 **PANEL GP-FUSE** ***(contd.)*** **i03698427**

C-CHANGE FROM PREVIOUS TYPE
D-ORDER BY THE METER
M-METRIC PART
Y-SEPARATE ILLUSTRATION

242-3053 **PANEL GP-FUSE** *(contd.)* **i03698427**

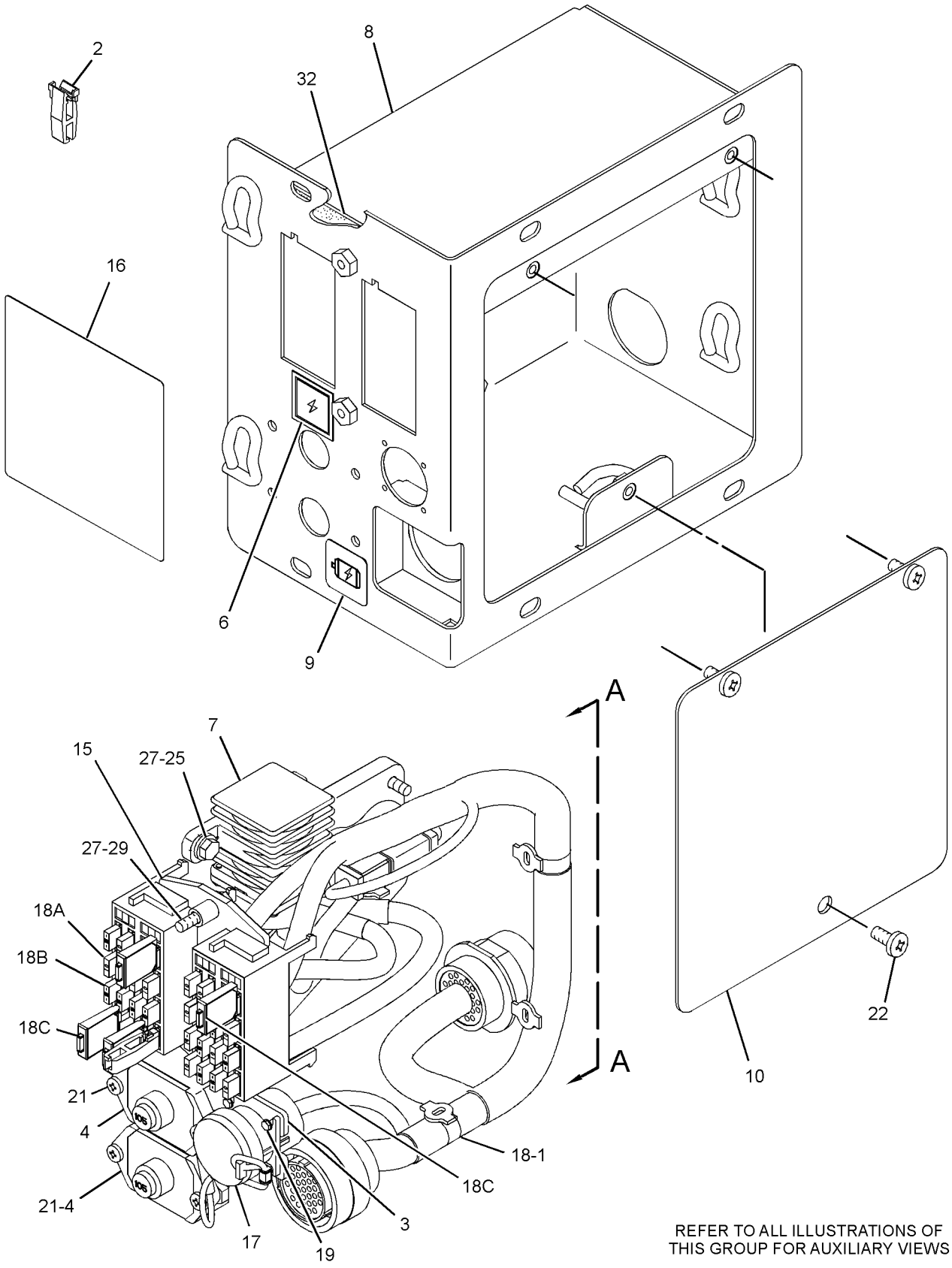

GRAPHIC #1

g01516776

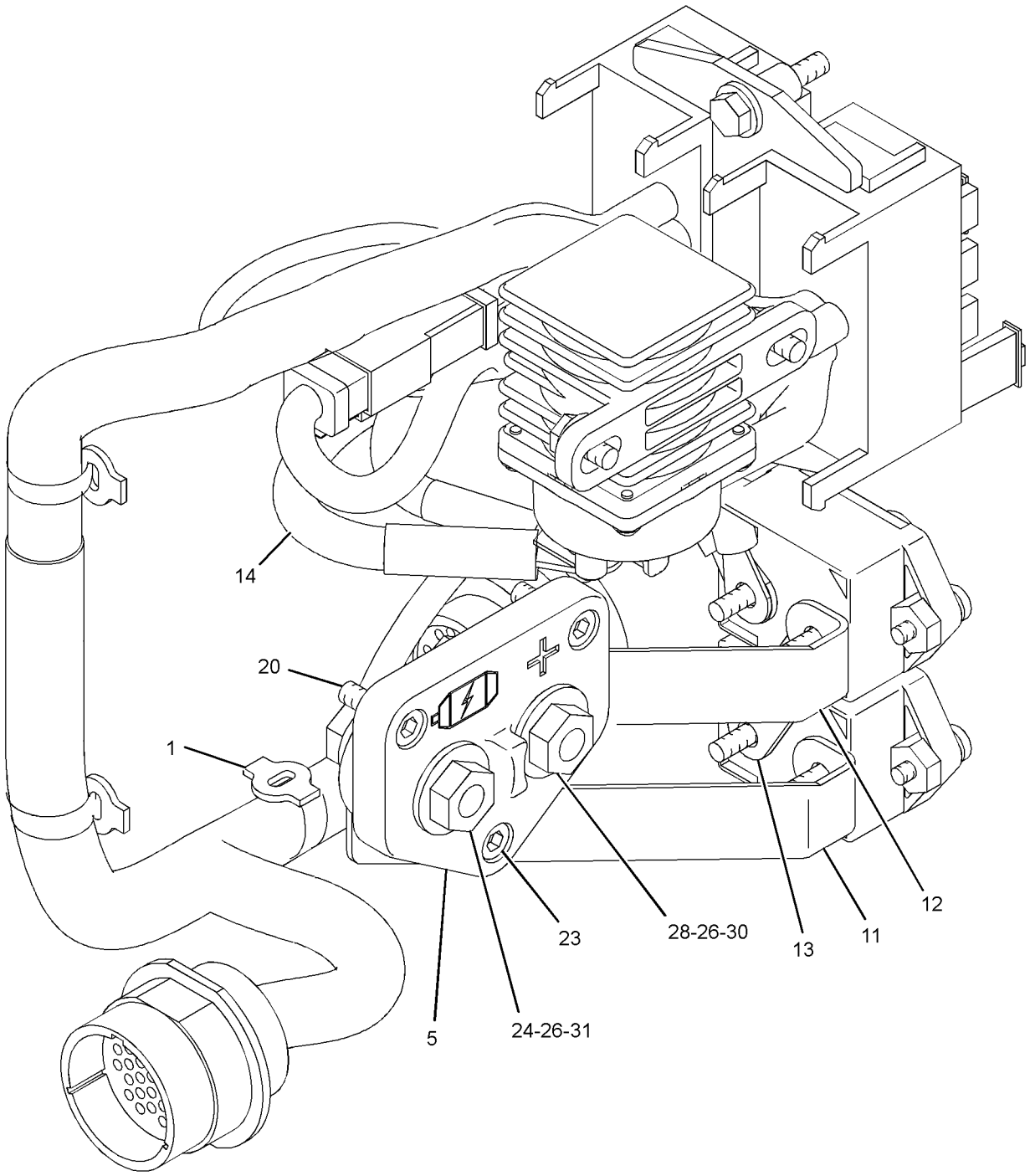

VIEW A-A
(PANEL REMOVED)

GRAPHIC #2 **<END>** g01305449

263-9088 RADIO GP-COMMUNICATION—PRODUCT LINK 121SR

S/N: DHA1-UP; FBH1-UP
PART OF 250-6991, 267-9084, 290-1032, 314-5402, 314-5403, 319-0053
INSTALLATION GP-COMMUNICATION
AN ATTACHMENT

SMCS-733T **i03212280**

NOTE	PART NUMBER	QTY	PART NAME 1 2 3 4 5 6 (PRODUCT LEVEL)	SEE PAGE
			(NO SERVICED PARTS)	

<END>

239-9950 RECEIVER GP-LASER—SINGLE

S/N: DHA1-UP; FBH1-UP
PART OF 292-0293 GRADE CONTROL AR-LASER

SMCS-7009 **i02832573**

NOTE	PART NUMBER	QTY	PART NAME 1 2 3 4 5 6 (PRODUCT LEVEL)	SEE PAGE
	276-0764	1	CABLE-COILED (LASER RECEIVER)	
	257-1729	1	CASE-CARRYING	
	253-8329	1	RECEIVER GP-LASER (LR410)	
	292-1268		SOFTWARE GP-MONITOR	

<END>

292-0285 RECEIVER GP-LASER—DUAL

S/N: DHA1-UP; FBH1-UP
PART OF 292-0312 GRADE CONTROL AR-LASER

SMCS-7009 **i02654612**

NOTE	PART NUMBER	QTY	PART NAME 1 2 3 4 5 6 (PRODUCT LEVEL)	SEE PAGE
	276-0764	1	CABLE-COILED (LASER RECEIVER)	
	253-8329	1	RECEIVER GP-LASER (LR410)	
	292-1268	1	SOFTWARE GP-MONITOR	

<END>

286-0136 RECEIVER GP-SATELLITE—SINGLE GPS, MS980

S/N: DHA1-UP; FBH1-UP
PART OF 292-0279 GRADE CONTROL AR-SATELLITE

SMCS-7010 **i02645203**

NOTE	PART NUMBER	QTY	PART NAME 1 2 3 4 5 6 (PRODUCT LEVEL)	SEE PAGE
	252-9628	1	MOUNTING GP-RECEIVER (TARGET)	
	8R-1803	5	WASHER (10.5X18X1-MM THK)	
M	**8T-9388**	4	BOLT (M10X1.5X25-MM)	
	113-0693	5	LOCKWASHER	
	289-8449	1	HANDLE AS	
	255-0939	1	CASE-PLASTIC (RECEIVER)	
	244-1717	1	RECEIVER AS-SATELLITE (GPS, MS980)	
	292-2441	1	SOFTWARE (RECEIVER)	

M-METRIC PART

<END>

286-0137 RECEIVER GP-SATELLITE—DUAL GPS, MS980

S/N: DHA1-UP; FBH1-UP

PART OF 290-5570 GRADE CONTROL AR-SATELLITE

SMCS-7010 **i02646057**

NOTE	PART NUMBER	QTY	PART NAME 1 2 3 4 5 6 (PRODUCT LEVEL)	SEE PAGE
	252-9628	2	MOUNTING GP-RECEIVER (TARGET)	
			(EACH INCLUDES)	
	8R-1803	5	WASHER (10.5X18X1-MM THK)	
M	**8T-9388**	4	BOLT (M10X1.5X25-MM) (M10X1.5X25-MM)	
	113-0693	5	LOCKWASHER	
	289-8449	1	HANDLE AS	
	255-0939	1	CASE-PLASTIC (RECEIVER)	
	244-1717	2	RECEIVER AS-SATELLITE (GPS, MS980)	
			(EACH INCLUDES)	
	292-2441	1	SOFTWARE (RECEIVER)	

M-METRIC PART

<END>

292-0291 RECEIVER GP-SATELLITE—DUAL GNSS, MS990

S/N: DHA1-UP; FBH1-UP

PART OF 290-5571 GRADE CONTROL AR-SATELLITE

SMCS-7010 **i02904164**

NOTE	PART NUMBER	QTY	PART NAME 1 2 3 4 5 6 (PRODUCT LEVEL)	SEE PAGE
	252-9628	2	MOUNTING GP-RECEIVER (TARGET)	
			(EACH INCLUDES)	
	8R-1803	5	WASHER (10.5X18X1-MM THK)	
M	**8T-9388**	4	BOLT (M10X1.5X25-MM)	
	113-0693	5	LOCKWASHER	
	289-8449	1	HANDLE AS	
R	**291-1913**	2	RECEIVER AS-SATELLITE (GNSS, MS990)	
	255-0939	1	CASE-PLASTIC (RECEIVER)	
	286-3017	2	HANDLE (RECEIVER)	

M-METRIC PART
R-REMFG PART MAY BE AVAILABLE

<END>

292-0292 RECEIVER GP-SATELLITE–SINGLE GNSS, MS990

S/N: DHA1-UP; FBH1-UP

PART OF 292-0280 GRADE CONTROL AR-SATELLITE

SMCS-7010 **i03522362**

NOTE	PART NUMBER	QTY	PART NAME 1 2 3 4 5 6 (PRODUCT LEVEL)	SEE PAGE
	252-9628	1	MOUNTING GP-RECEIVER (TARGET)	
	8R-1803	5	WASHER (10.5X18X1-MM THK)	
M	**8T-9388**	4	BOLT (M10X1.5X25-MM)	
	113-0693	5	LOCKWASHER	
	289-8449	1	HANDLE AS	
R	**291-1913**	1	RECEIVER AS-SATELLITE (GNSS, MS990)	
	255-0939	1	CASE-PLASTIC (RECEIVER)	
	286-3017	1	HANDLE (RECEIVER)	

M-METRIC PART
R-REMFG PART MAY BE AVAILABLE

<END>

300-2118 RECEIVER GP-SATELLITE–

ACCUGRADE, UPGRADE FROM GPS TO GNSS

S/N: DHA1-UP; FBH1-UP

FIELD INSTALLATION

SMCS-7010 **i02859684**

NOTE	PART NUMBER	QTY	PART NAME 1 2 3 4 5 6 (PRODUCT LEVEL)	SEE PAGE
	291-1913	1	RECEIVER AS-SATELLITE (GNSS, MS990)	

<END>

178-2345 SENSOR GP-LIQUID LEVEL

S/N: DHA1-UP; FBH1-UP

PART OF 277-8731, 301-2710 PUMP GP-FUEL PRM & WATER SEP

SMCS-7422 **i02549139**

NOTE	REF NO	GRAPHIC REF	PART NUMBER	QTY	PART NAME 1 2 3 4 5 6 (PRODUCT LEVEL)	SEE PAGE
	1	1	**178-2334**	1	PROBE AS-LIQUID LEVEL (WATER SEPARATOR)	
	1A	1	**3J-1907**	1	SEAL-O-RING	
	2	1	**178-2335**	1	SENSOR AS-LIQUID LEVEL (WATER SEPARATOR)	
		1	**102-8804**	1	KIT-RECEPTACLE (4-PIN)	
					(INCLUDES RECEPTACLE AS & WEDGE)	
		1	**155-2270**	1	KIT-CONNECTING PLUG (2-PIN)	
					(INCLUDES PLUG AS, WEDGE, & INTERFACE SEAL)	
		1	**186-3735**	4	PIN-CONNECTOR (16-GA TO 18-GA)	
		1	**186-3736**	2	SOCKET-CONNECTOR (16-GA TO 18-GA)	

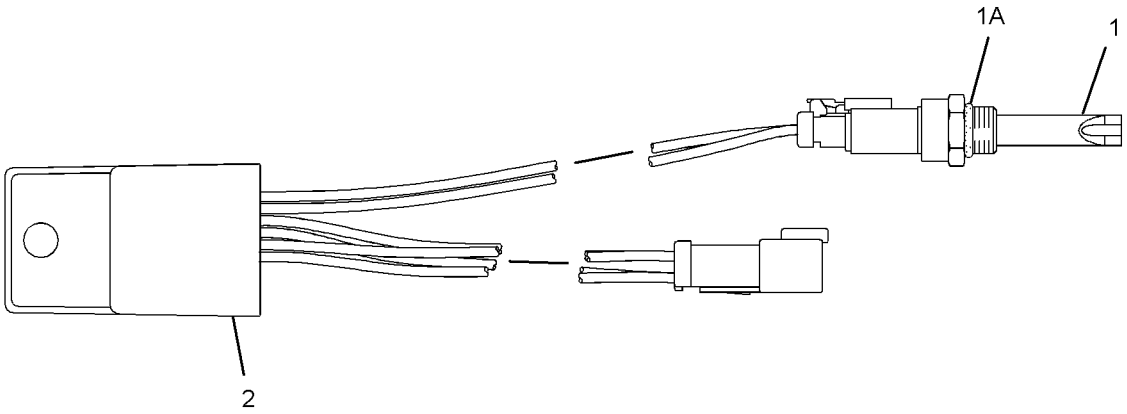

GRAPHIC #1 **<END>** g01285011

224-5530 SENSOR GP-POSITION

S/N: DHA1-UP; FBH1-UP
PART OF 253-2439 PEDAL GP-GOVERNOR & BRAKE
AN ATTACHMENT

SMCS-1905, 1911, 430S **i02394873**

NOTE	REF NO	GRAPHIC REF	PART NUMBER	QTY	PART NAME 1 2 3 4 5 6 (PRODUCT LEVEL)	SEE PAGE
Z	1	1		1	SENSOR AS-POSITION	
	2	1	**102-8803**	1	KIT-RECEPTACLE (3-PIN)	
					(INCLUDES RECEPTACLE AS & WEDGE)	
	3	1	**186-3735**	3	PIN-CONNECTOR (16-GA TO 18-GA)	
E	4	1	**9X-1813**		SLEEVE (13-CM)	

E-ORDER BY THE CENTIMETER
Z-NOT SERVICED SEPARATELY

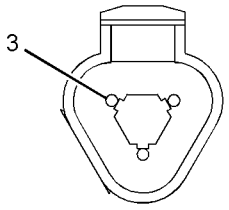

VIEW A-A

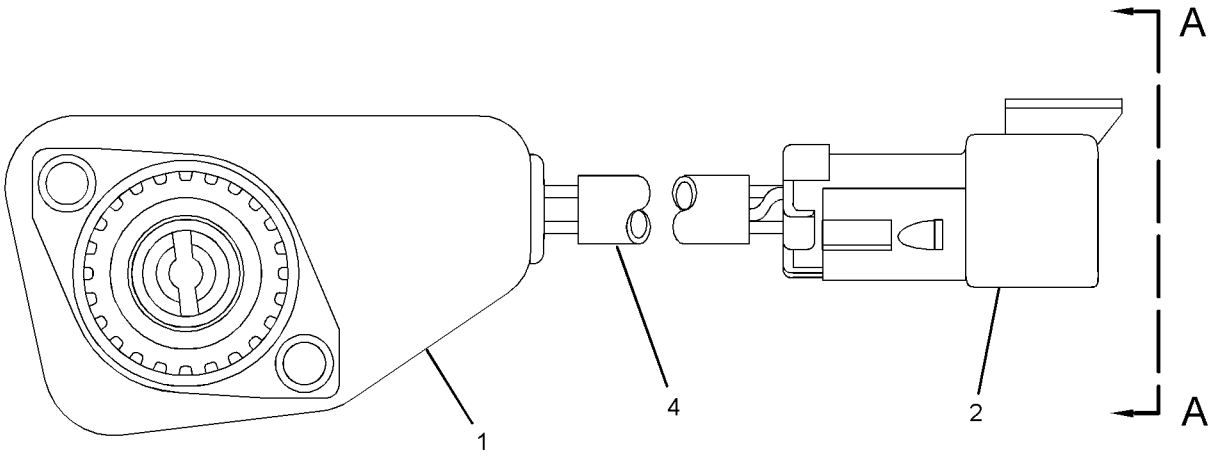

GRAPHIC #1 **<END>** g01202322

266-1467 SENSOR GP-POSITION

S/N: DHA1-UP; FBH1-UP
PART OF 253-2439 PEDAL GP-GOVERNOR & BRAKE
AN ATTACHMENT

SMCS-1905, 1911, 430S **i03600041**

NOTE	REF NO	GRAPHIC REF	PART NUMBER	QTY	PART NAME 1 2 3 4 5 6 (PRODUCT LEVEL)	SEE PAGE
	1	1	**9X-3401**	3	PIN-CONNECTOR (16-GA TO 18-GA)	
					—OR—	
		1	**126-1767**	3	PIN-CONNECTOR (14-GA)	
	2	1	**102-8803**	1	KIT-RECEPTACLE (3-PIN)	
					(INCLUDES RECEPTACLE AS & WEDGE)	
	3	1	**3E-3371**	1	WEDGE-RECEPTACLE LOCK (3-PIN)	

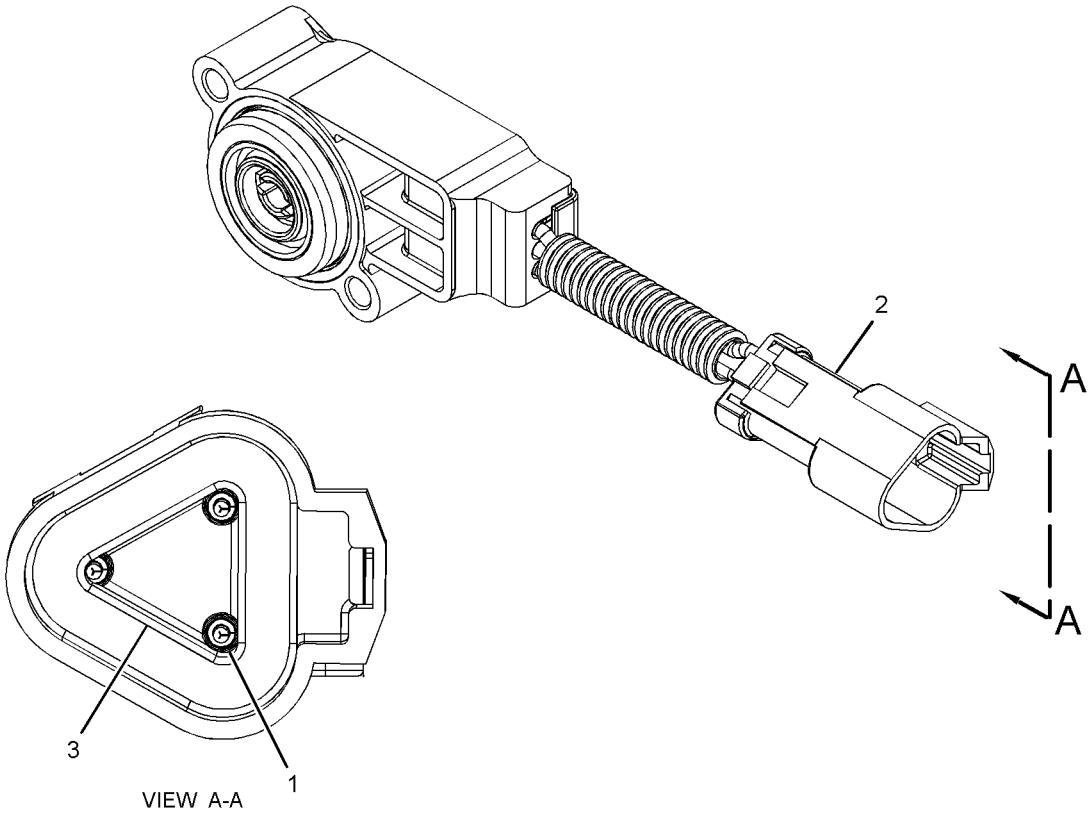

GRAPHIC #1 **<END>** g01514049

284-8207 SENSOR GP-POSITION

S/N: DHA1-UP; FBH1-UP
PART OF 290-4835 CONTROL GP-JOYSTICK
AN ATTACHMENT

SMCS-1905, 1911, 430S **i02745924**

NOTE	REF NO	GRAPHIC REF	PART NUMBER	QTY	PART NAME 1 2 3 4 5 6 (PRODUCT LEVEL)	SEE PAGE
	1	1	**284-8208**	1	SHAFT-ADAPTER	
	2	1	**102-8805**	1	KIT-RECEPTACLE (6-PIN)	
					(INCLUDES RECEPTACLE AS & WEDGE)	
	3	1	**186-3735**	4	PIN-CONNECTOR (16-GA TO 18-GA)	
	4	1	**3E-3383**	1	WEDGE-RECEPTACLE LOCK (6-PIN)	
	5	1	**8T-8737**	2	PLUG-SEAL	

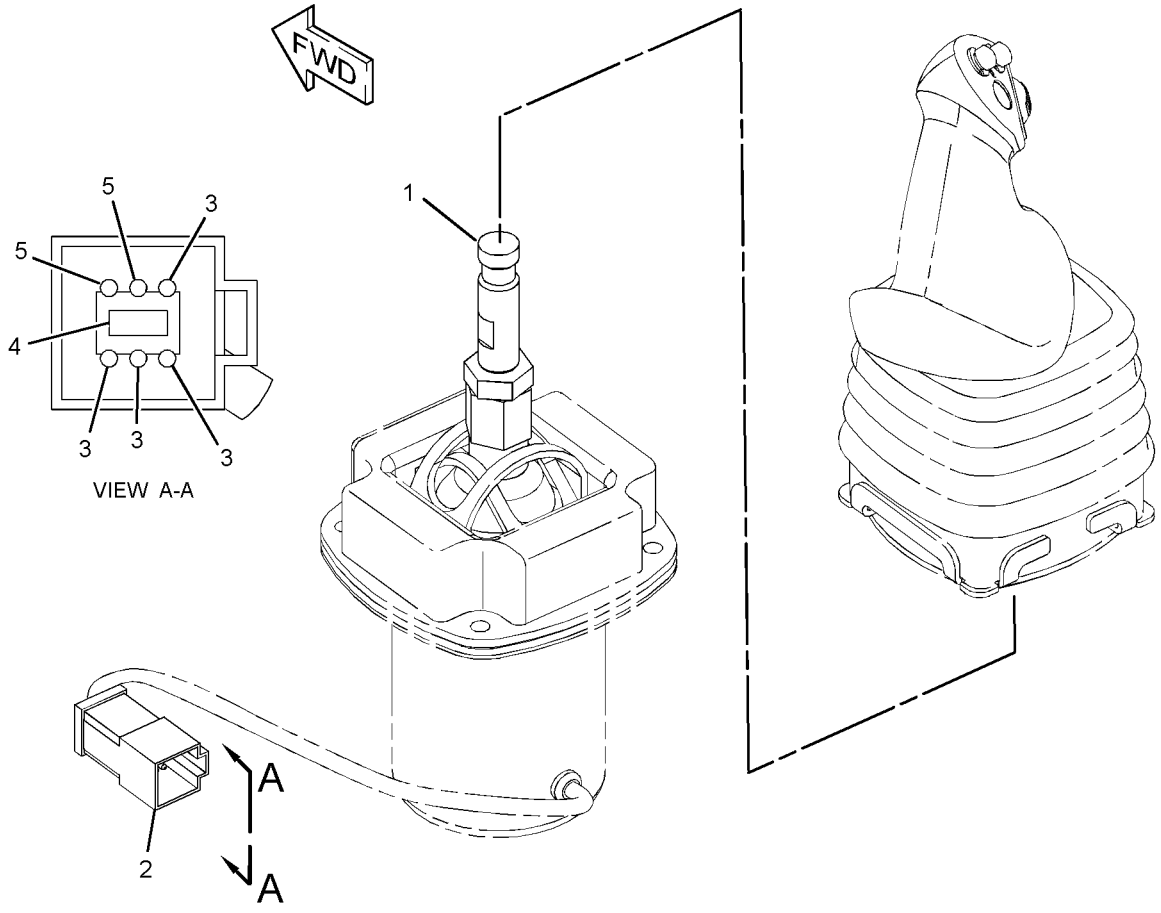

GRAPHIC #1 **<END>** g01315294

214-6863 SENSOR GP-PRESSURE

S/N: DHA1-UP; FBH1-UP
PART OF 266-9652 WIRING GP-WINCH
AN ATTACHMENT

SMCS-1718, 1916, 1917, 1923, 1924, 1925 **i02397707**

NOTE	REF NO	GRAPHIC REF	PART NUMBER	QTY	PART NAME 1 2 3 4 5 6 (PRODUCT LEVEL)	SEE PAGE
	1	1	**155-2260**	1	KIT-CONNECTING PLUG (3-PIN)	
					(INCLUDES PLUG AS, WEDGE, & INTERFACE SEAL)	
	2	1	**180-9340**	3	SOCKET-CONNECTOR	

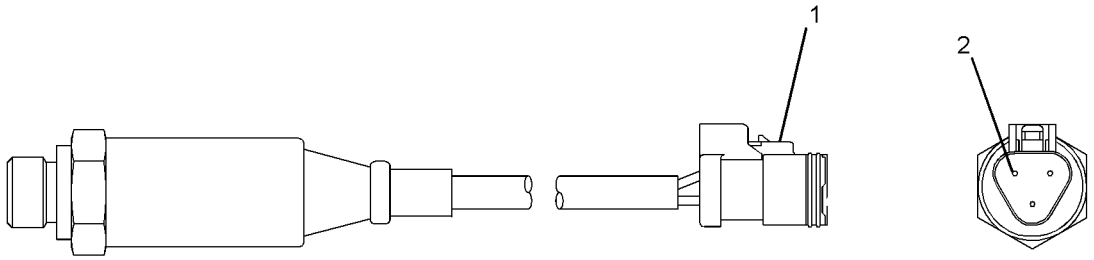

GRAPHIC #1 **<END>** g01197687

ELECTRICAL AND STARTING SYSTEM

183-4584 SENSOR GP-SPEED

S/N: DHA1-630; FBH1-792

PART OF 206-7297 WIRING GP-CHASSIS

SMCS-1907 **i01884915**

NOTE	REF NO	GRAPHIC REF	PART NUMBER	QTY	PART NAME 1 2 3 4 5 6 (PRODUCT LEVEL)	SEE PAGE
	1	1	**6J-2245**	1	SEAL-O-RING	

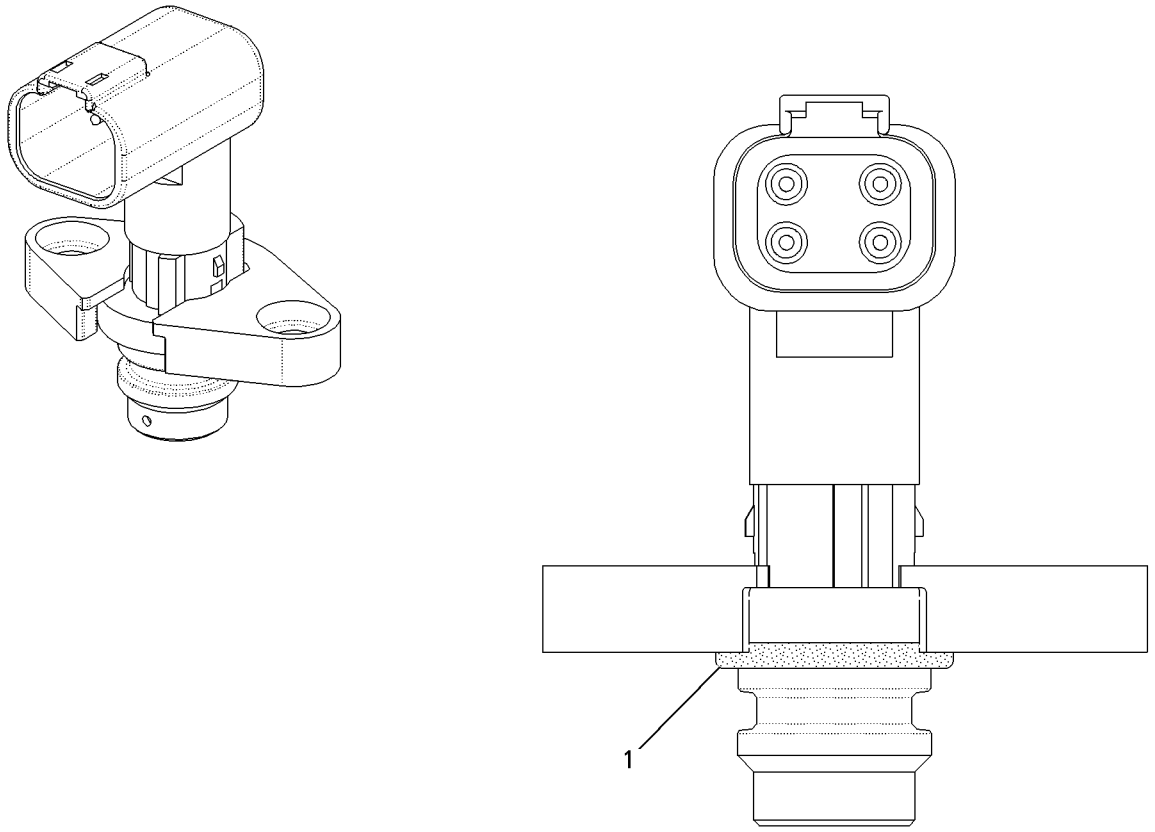

GRAPHIC #1 **<END>** g00835873

262-4806 SENSOR GP-SPEED

S/N: DHA1-UP; FBH1-UP

PART OF 206-7301 WIRING GP-ENGINE

SMCS-1907 **i02837104**

NOTE	REF NO	GRAPHIC REF	PART NUMBER	QTY	PART NAME 1 2 3 4 5 6 (PRODUCT LEVEL)	SEE PAGE
	1	1	**171-5349**	1	STRAP-MARKER	
	2	1	**230-4012**	1	RECEPTACLE AS-CONNECTOR (2-PIN)	
	3	1	**9X-3401**	2	PIN-CONNECTOR (16-GA TO 18-GA)	
E	4	1	**9X-1386**		SLEEVE (14-CM)	

E-ORDER BY THE CENTIMETER

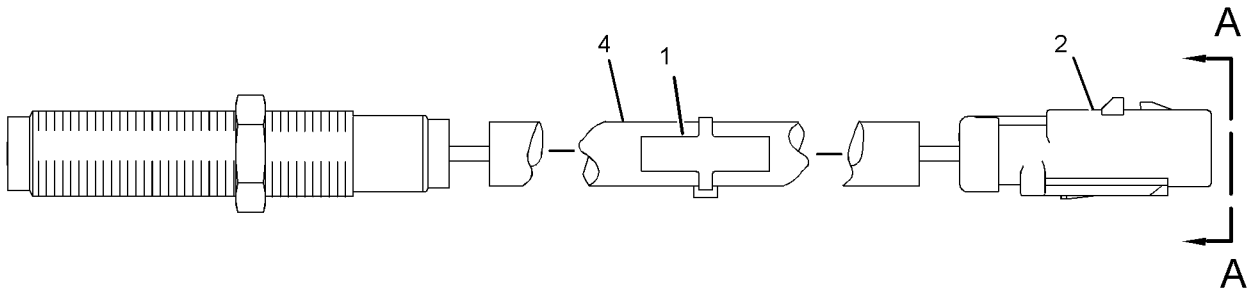

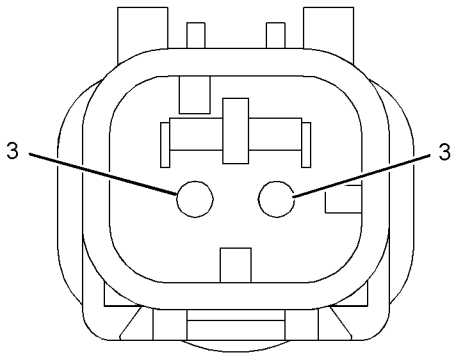

VIEW A-A

GRAPHIC #1 **<END>** g01395142

319-6491 SENSOR GP-SPEED

S/N: DHA631-UP; FBH793-UP

PART OF 206-7297 WIRING GP-CHASSIS

SMCS-1907 **i02920060**

NOTE	REF NO	GRAPHIC REF	PART NUMBER	QTY	PART NAME 1 2 3 4 5 6 (PRODUCT LEVEL)	SEE PAGE
	1	1	**6J-2245**	1	SEAL-O-RING	

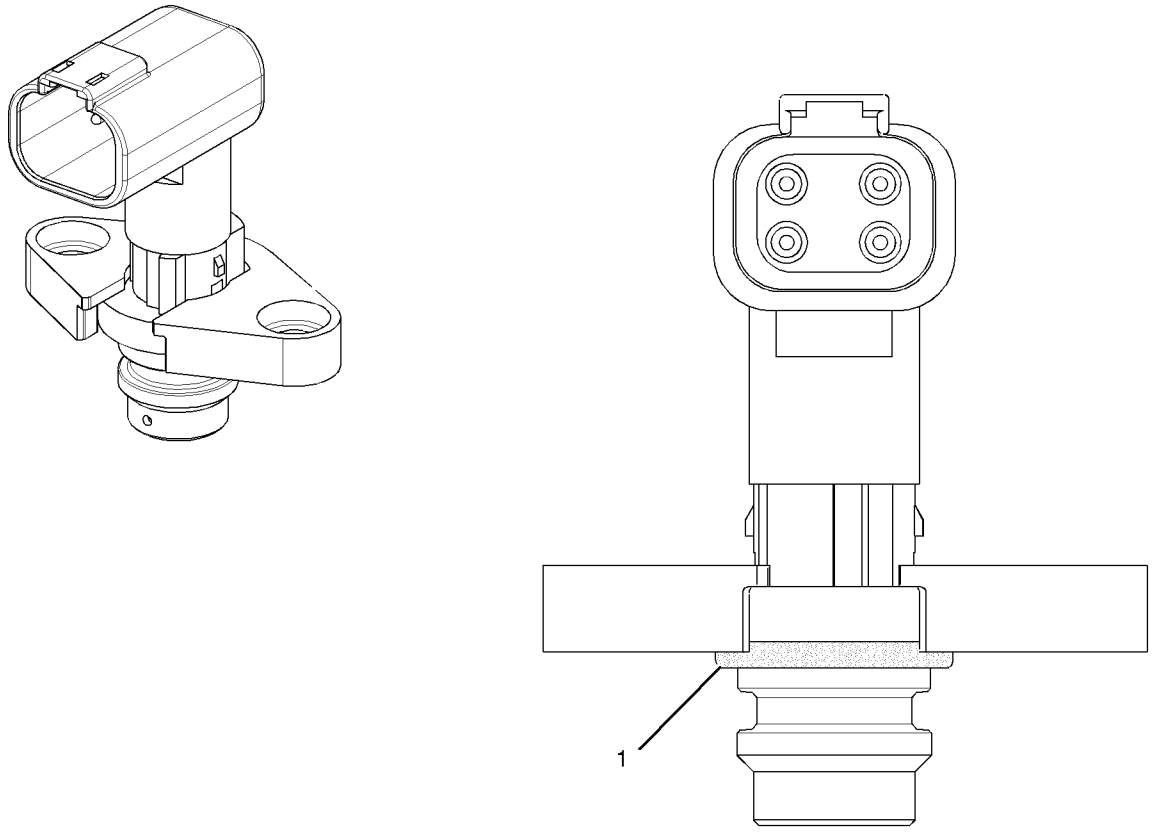

GRAPHIC #1 **<END>** g01031645

102-2240 SENSOR GP-TEMPERATURE

S/N: DHA1-UP; FBH1-UP

PART OF 277-8731, 301-2710 PUMP GP-FUEL PRM & WATER SEP

SMCS-1906, 1919, 1921, 1922, 1928, 1929 **i02969021**

NOTE	REF NO	GRAPHIC REF	PART NUMBER	QTY	PART NAME 1 2 3 4 5 6 (PRODUCT LEVEL)	SEE PAGE
E	1	1	**9X-1813**		SLEEVE (31-CM)	
	3	1	**102-8803**	1	KIT-RECEPTACLE (3-PIN)	
					(INCLUDES RECEPTACLE AS & WEDGE)	
	4	1	**186-3735**	3	PIN-CONNECTOR (16-GA TO 18-GA)	

E-ORDER BY THE CENTIMETER

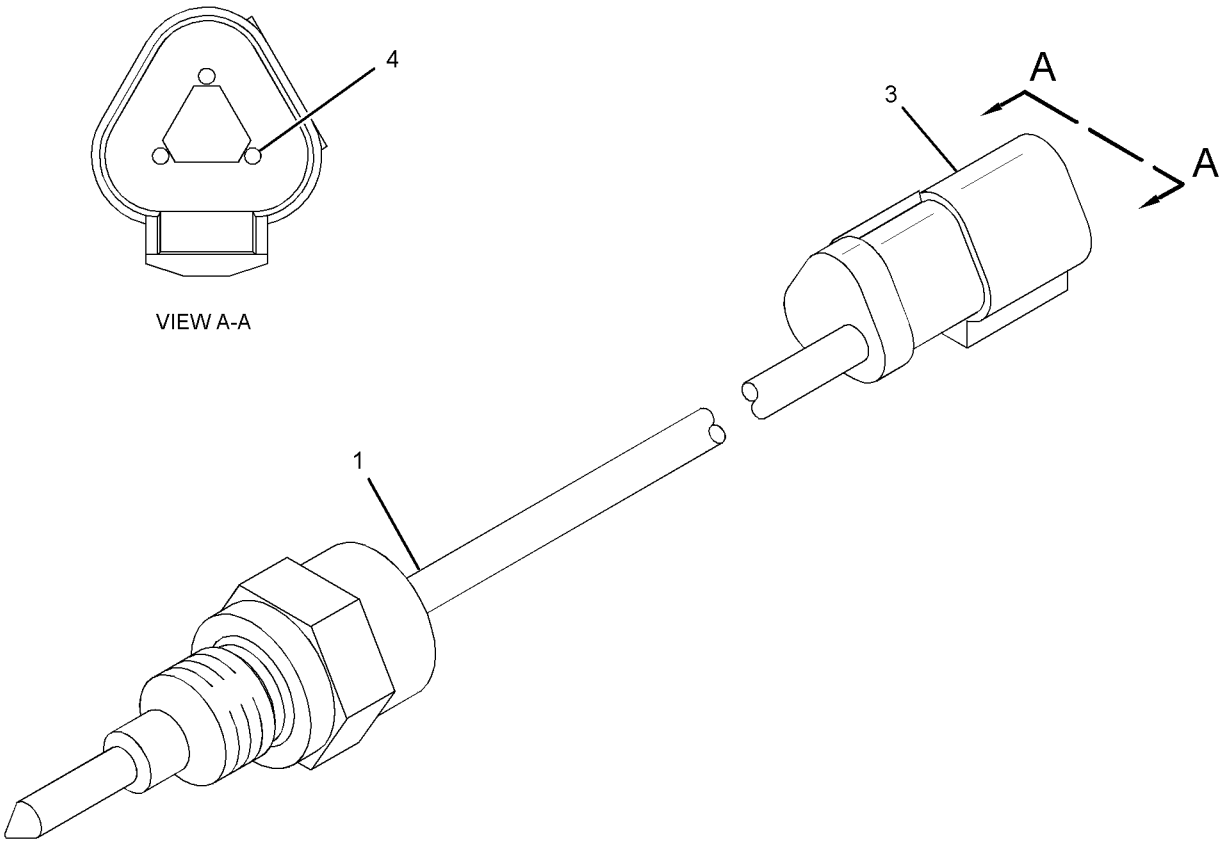

GRAPHIC #1 **<END>** g01511113

ELECTRICAL AND STARTING SYSTEM

252-1590 STARTING AID GP-ETHER

S/N: DHA1-UP; FBH1-UP

PART OF 277-8748 STARTING AID GP-ETHER

SMCS-1456 **i02702042**

NOTE	REF NO	GRAPHIC REF	PART NUMBER	QTY	PART NAME 1 2 3 4 5 6 (PRODUCT LEVEL)	SEE PAGE
Y	1	1	**239-1134**	1	VALVE GP-ETHER STARTING (24-VOLT)	308
	2	1	**276-6596**	1	CLAMP	
	3	1	**303-2179**	1	MOUNTING PLATE	
M	4	1	**5C-7261**	2	NUT (M8X1.25-THD)	
M	5	1	**8T-4200**	2	BOLT (M8X1.25X16-MM)	
	6	1	**8T-4224**	4	WASHER-HARD (8.8X16X2-MM THK)	

M-METRIC PART
Y-SEPARATE ILLUSTRATION

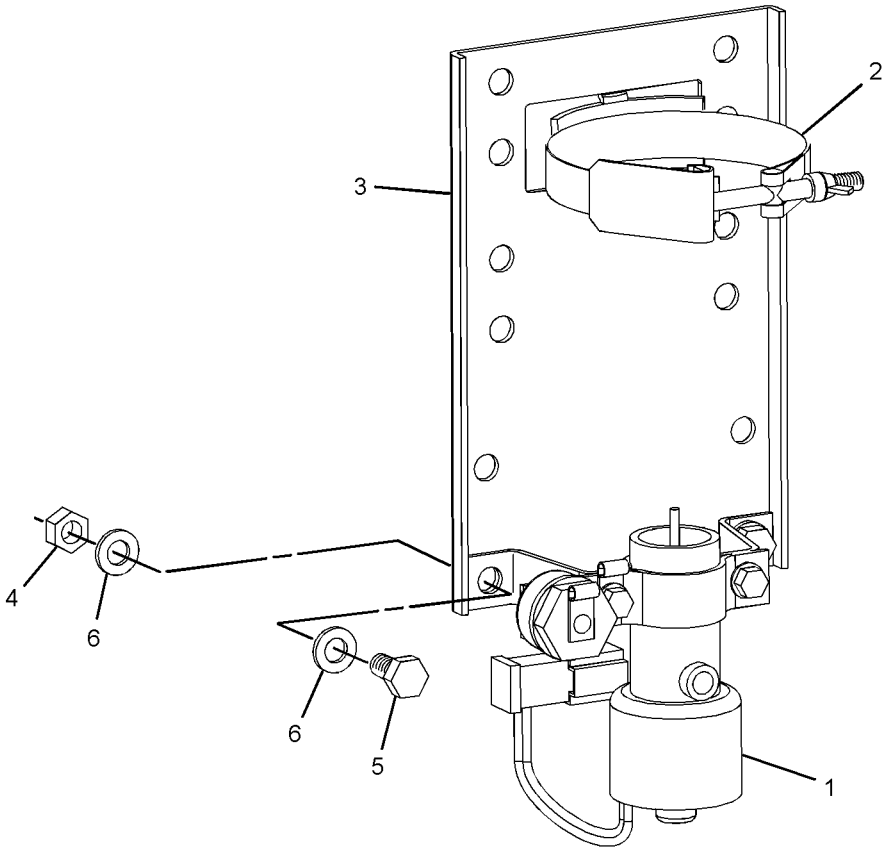

GRAPHIC #1 **<END>** g01346248

277-8748 STARTING AID GP-ETHER

S/N: DHA1-UP; FBH1-UP

PART OF 206-7294 INSTALLATION AR-ENGINE

SMCS-1456 **i02957119**

NOTE	REF NO	GRAPHIC REF	PART NUMBER	QTY	PART NAME 1 2 3 4 5 6 (PRODUCT LEVEL)	SEE PAGE
	1	1	**3S-2093**	2	STRAP-CABLE	
	2	1	**127-7443**	1	ATOMIZER AS (ETHER)	
Y	3	1	**252-1590**	1	STARTING AID GP-ETHER	296
	4	1	**276-5438**	1	FITTING AS	
		1	**236-4545**	1	NUT-SLEEVE (5/16-24-THD)	
	5	1	**290-5645**	1	TUBE	
M	6	1	**8T-4200**	3	BOLT (M8X1.25X16-MM)	
	7	1	**8T-4224**	3	WASHER-HARD (8.8X16X2-MM THK)	
A			**7N-0296**	1	CYLINDER AS-ETHER	
					(MUST BE PROCURED LOCALLY FROM YOUR CATERPILLAR DEALER)	
A			**187-4851**	1	CYLINDER AS-ETHER (EAME)	
					(MUST BE PROCURED LOCALLY FROM YOUR CATERPILLAR DEALER)	

A-NOT PART OF THIS GROUP
M-METRIC PART
Y-SEPARATE ILLUSTRATION

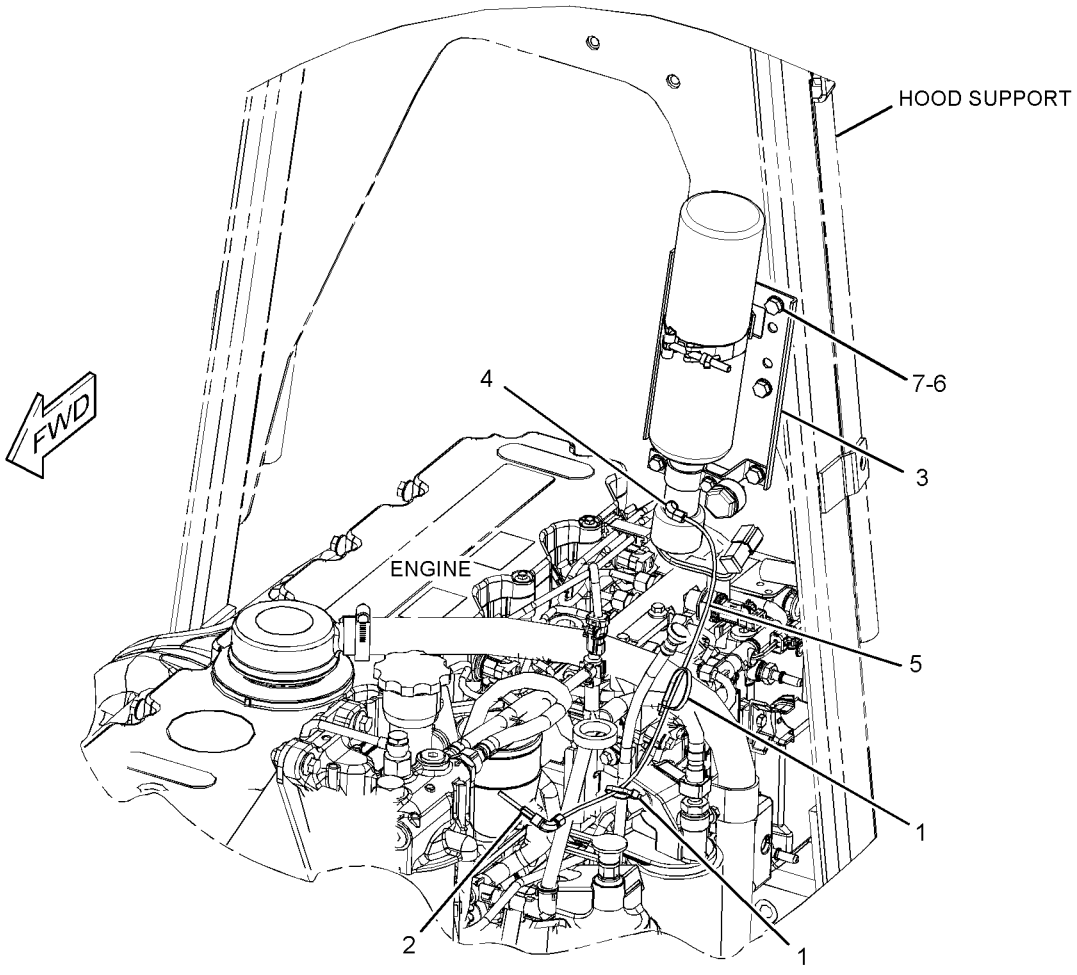

GRAPHIC #1 **<END>** g01404393

ELECTRICAL AND STARTING SYSTEM

277-1835 STARTING MOTOR GP-ELECTRIC

S/N: C6E1-408
24-VOLT, 8 KW
PART OF 242-1356 ENGINE AR

SMCS-1453 **i02579998**

NOTE	REF NO	GRAPHIC REF	PART NUMBER	QTY	PART NAME 1 2 3 4 5 6 (PRODUCT LEVEL)	SEE PAGE
	1	1	**277-1833**	1	STARTING MOTOR GP-ELECTRIC	
	2	1	**290-5728**	1	GASKET	
	3	1	**183-1343**	3	STUD	
M	4	1	**6I-0233**	3	NUT (M12X1.75-THD)	

M-METRIC PART

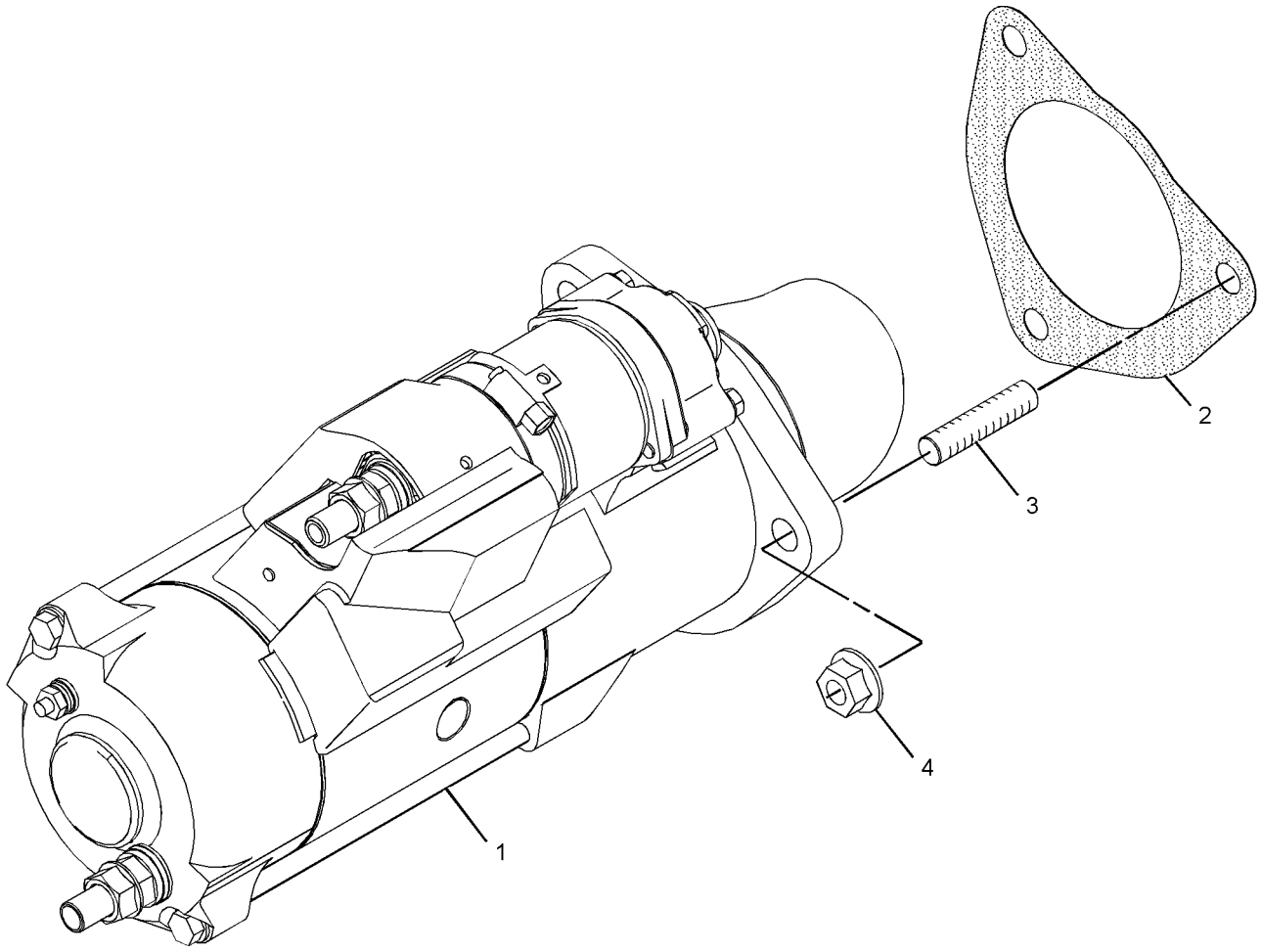

GRAPHIC #1 **<END>** g01193516

ELECTRICAL AND STARTING SYSTEM

301-2744 STARTING MOTOR GP-ELECTRIC

S/N: C6E1-UP

PART OF 242-1356 ENGINE AR

SMCS-1453 **i02752768**

NOTE	REF NO	GRAPHIC REF	PART NUMBER	QTY	PART NAME 1 2 3 4 5 6 (PRODUCT LEVEL)	SEE PAGE
M	1	1	**6I-0233**	3	NUT (M12X1.75-THD)	
	2	1	**183-1343**	3	STUD	
	3	1	**290-5728**	1	GASKET	
Y	4	1	*307-4441*	1	STARTING MOTOR GP-ELECTRIC	302

M-METRIC PART
Y-SEPARATE ILLUSTRATION

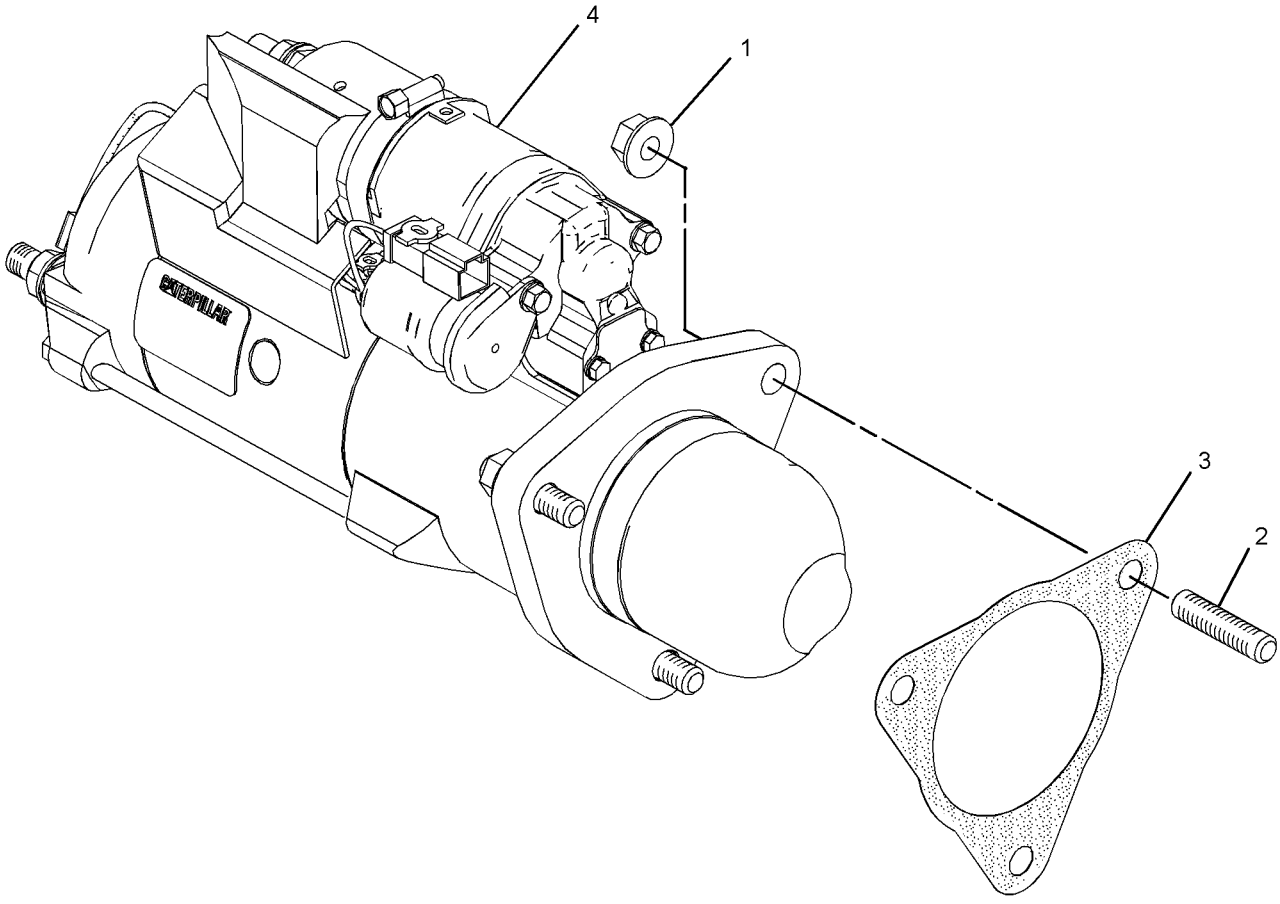

GRAPHIC #1 **<END>** g01378299

ELECTRICAL AND STARTING SYSTEM

301-2768 STARTING MOTOR GP-ELECTRIC

S/N: DHA1094-UP; FBH1431-UP

PART OF 206-7294 INSTALLATION AR-ENGINE

SMCS-1453 **i03493768**

NOTE	REF NO	GRAPHIC REF	PART NUMBER	QTY	PART NAME 1 2 3 4 5 6 (PRODUCT LEVEL)	SEE PAGE
M	1	1	**6I-0233**	3	NUT (M12X1.75-THD)	
	2	1	**183-1343**	3	STUD	
	3	1	**290-5728**	1	GASKET	
	4	1	**330-3123**	1	STARTING MOTOR GP-ELECTRIC	
		1	**102-8802**	1	KIT-RECEPTACLE (2-PIN)	
					(INCLUDES RECEPTACLE AS & WEDGE)	

M-METRIC PART

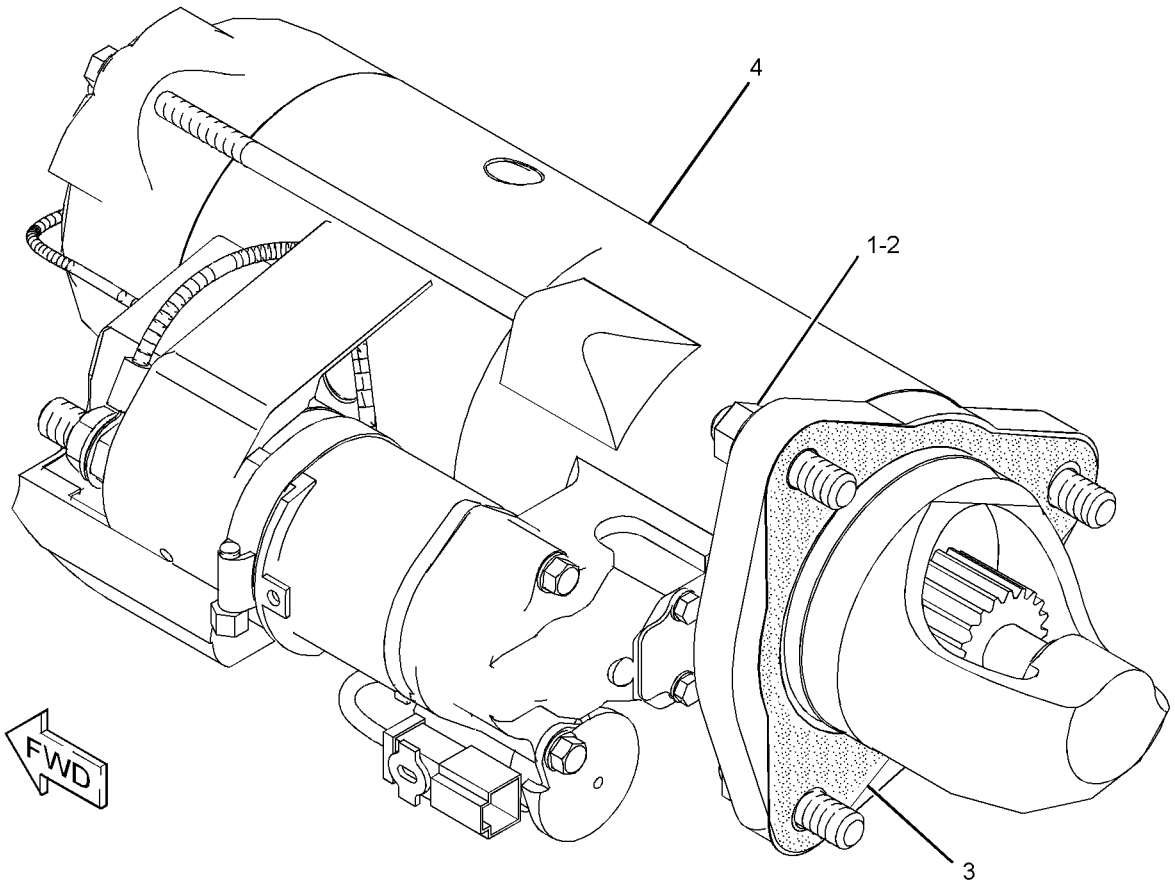

GRAPHIC #1 **<END>** g01832174

301-8296 STARTING MOTOR GP-ELECTRIC

S/N: C6E409-UP
PART OF 242-1356, 319-7261 ENGINE AR
ALSO AN ATTACHMENT

SMCS-1453 **i02672735**

NOTE	REF NO	GRAPHIC REF	PART NUMBER	QTY	PART NAME 1 2 3 4 5 6 (PRODUCT LEVEL)	SEE PAGE
M	1	1	**6I-0233**	3	NUT (M12X1.75-THD)	
	2	1	**183-1343**	3	STUD	
	3	1	**277-1833**	1	STARTING MOTOR GP-ELECTRIC	

M-METRIC PART

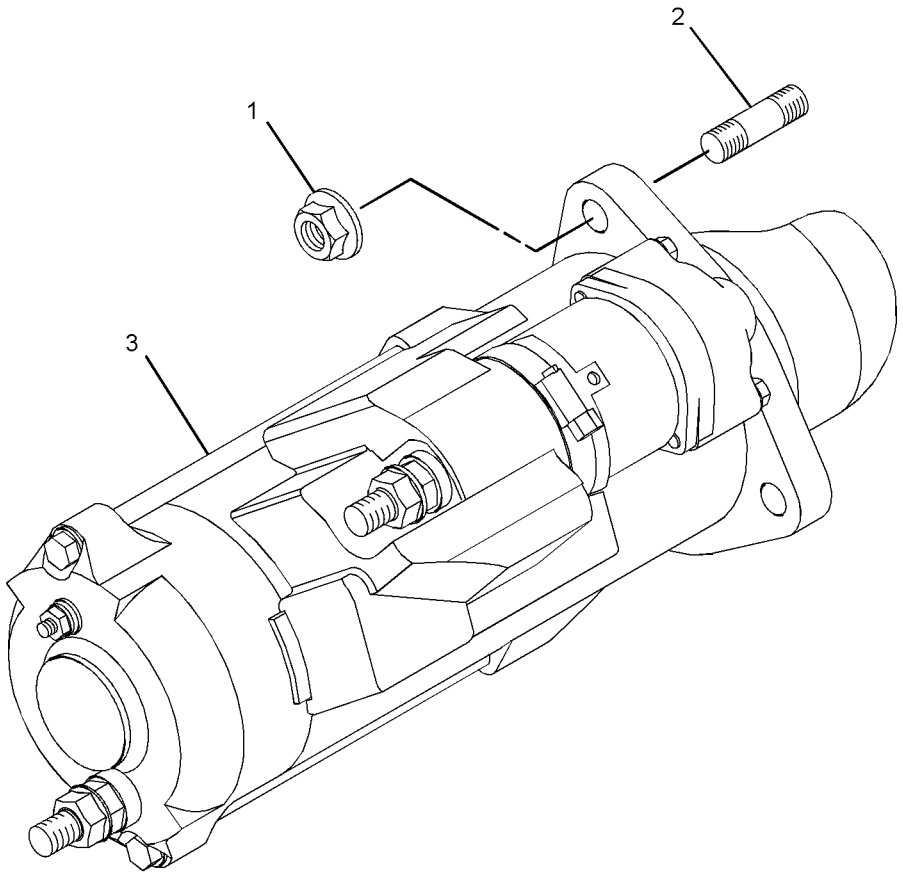

GRAPHIC #1 **<END>** g01334516

307-4441 STARTING MOTOR GP-ELECTRIC

S/N: C6E1-UP

PART OF 301-2744 STARTING MOTOR GP-ELECTRIC

SMCS-1453 **i03587120**

NOTE	REF NO	GRAPHIC REF	PART NUMBER	QTY	PART NAME 1 2 3 4 5 6 (PRODUCT LEVEL)	SEE PAGE
	1	1	**102-8802**	1	KIT-RECEPTACLE (2-PIN)	
					(INCLUDES RECEPTACLE AS & WEDGE)	
	2	1	**3S-2093**	1	STRAP-CABLE	
	3	1	**7K-1181**	1	STRAP-CABLE	
	4	1	**9X-3401**	2	PIN-CONNECTOR (16-GA TO 18-GA)	
					—OR—	
		1	**126-1767**	2	PIN-CONNECTOR (14-GA)	
	5	1	**277-1833**	1	STARTING MOTOR GP-ELECTRIC	
	6	1	**309-8470**	1	FILM-INFORMATION (STARTING MOTOR)	

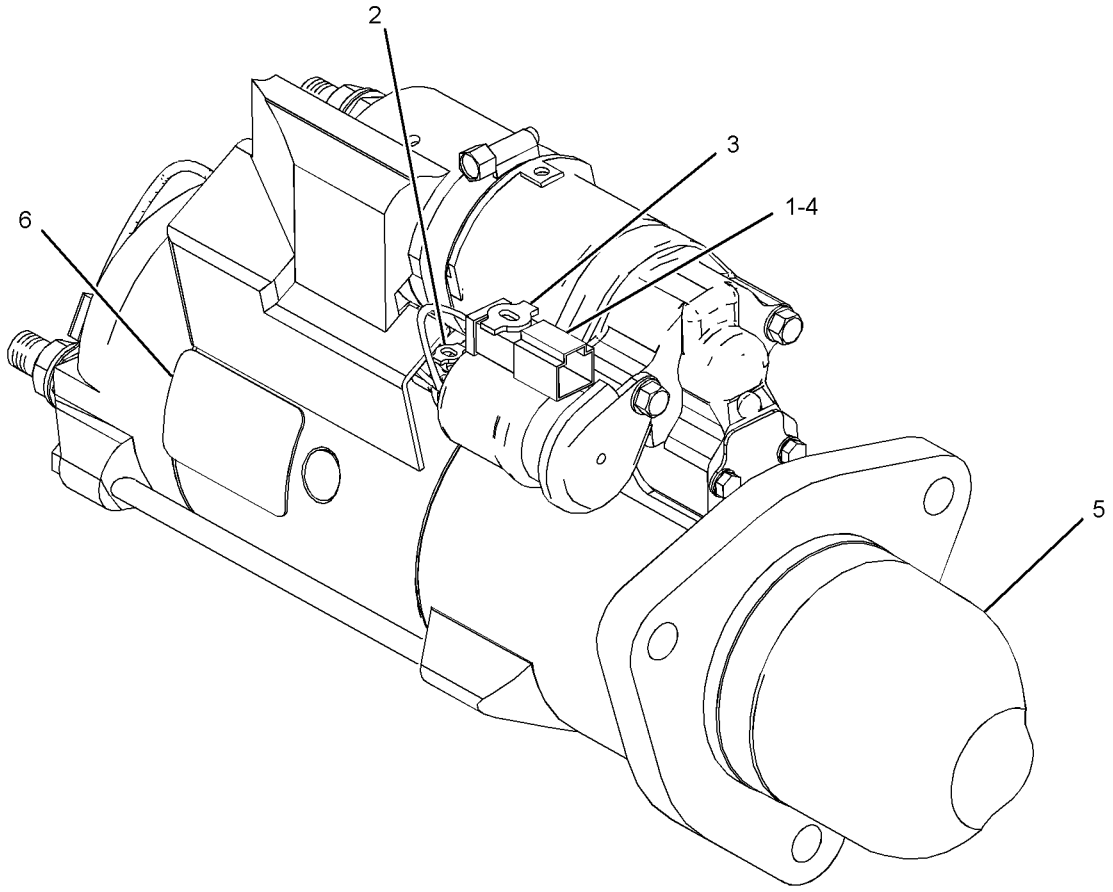

GRAPHIC #1 **<END>** g01379337

7N-0718 SWITCH GP-DISCONNECT–BATTERY

S/N: DHA1-UP; FBH1-UP

PART OF 206-7297 WIRING GP-CHASSIS

SMCS-1411 **i02960143**

NOTE	REF NO	GRAPHIC REF	PART NUMBER	QTY	PART NAME 1 2 3 4 5 6 (PRODUCT LEVEL)	SEE PAGE
	1	1	**2H-3922**	2	LOCKWASHER	
	2	1	**8H-5303**	1	NUT (3/4-16-THD)	
	3	1	**9F-5644**	2	LOCKWASHER	
	4	1	**6F-7045**	2	NUT-FULL (3/8-24-THD)	
	5	1	**8H-5306**	1	KEY (BATTERY DISCONNECT)	

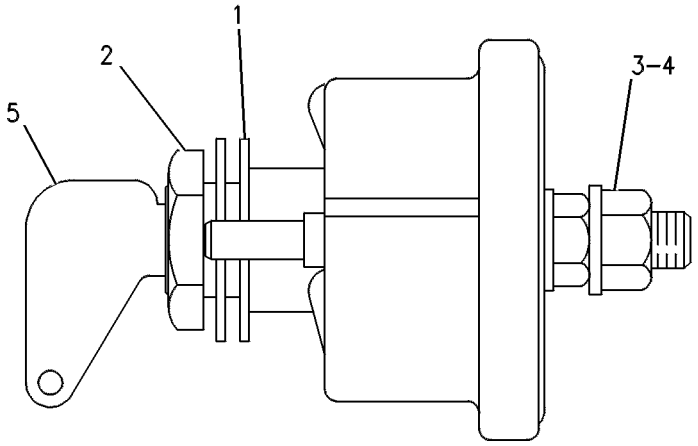

GRAPHIC #1 **<END>** g00246536

241-8368 SWITCH GP-MAGNETIC—MAIN RELAY

S/N: DHA1-UP; FBH1-UP
24-VOLT
PART OF 242-3053 PANEL GP-FUSE
AN ATTACHMENT

SMCS-7499 **i02290580**

NOTE	REF NO	GRAPHIC REF	PART NUMBER	QTY	PART NAME 1 2 3 4 5 6 (PRODUCT LEVEL)	SEE PAGE
	1	1	**155-2270**	1	KIT-CONNECTING PLUG (2-PIN)	
					(INCLUDES PLUG AS, WEDGE & INTERFACE SEAL)	
	2	1	**4F-2294**	2	NUT-JAM (5/16-24-THD)	
	3	1	**186-3736**	2	SOCKET-CONNECTOR (16-GA TO 18-GA)	

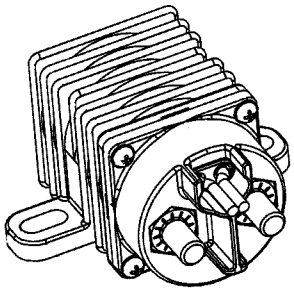

ISOMETRIC VIEW

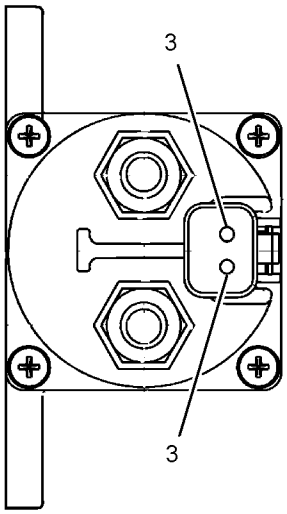

VIEW A-A

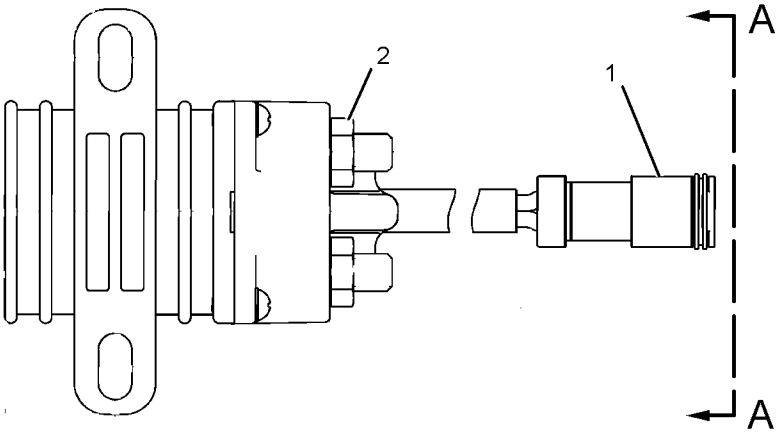

GRAPHIC #1 **<END>** g01077362

258-0883 SWITCH GP-PRESSURE

S/N: C6E1-UP

PART OF 305-7294 FILTER GP-FUEL

ALSO AN ATTACHMENT

SMCS-7400, 7421 **i02289625**

NOTE	REF NO	GRAPHIC REF	PART NUMBER	QTY	PART NAME 1 2 3 4 5 6 (PRODUCT LEVEL)	SEE PAGE
	1	1	**102-8802**	1	KIT-RECEPTACLE (2-PIN)	
					(INCLUDES RECEPTACLE AS AND WEDGE)	
	2	1	**3E-3365**	1	WEDGE-RECEPTACLE LOCK (2-PIN)	
	3	1	**186-3735**	2	PIN-CONNECTOR (16-GA TO 18-GA)	
E	4	1	**9X-1813**		SLEEVE (14-CM)	
	5	1	**6V-4589**	1	SEAL-O-RING	
	6	1	**7L-9061**	1	SEAL-O-RING	

E-ORDER BY THE CENTIMETER

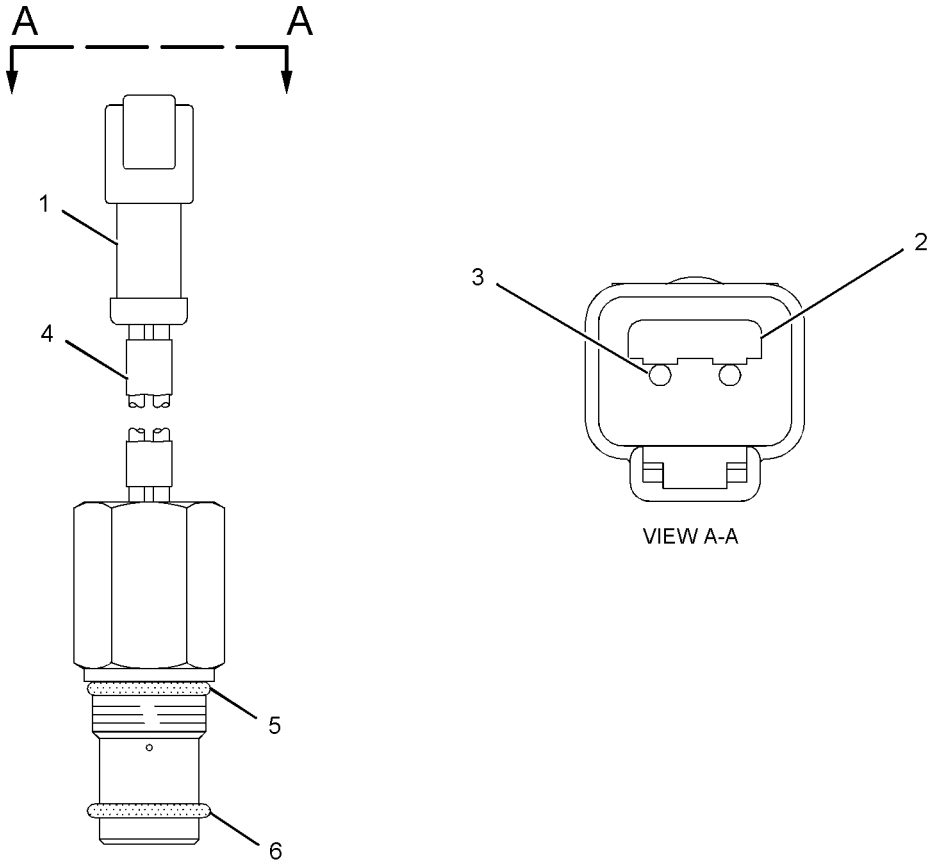

GRAPHIC #1 **<END>** g01072091

106-0107 SWITCH GP-ROTARY–THROTTLE POSITION

S/N: DHA1-UP; FBH1-UP
PART OF 247-6508, 252-7820 INSTRUMENT GP
AN ATTACHMENT

SMCS-7332 **i02934092**

NOTE	REF NO	GRAPHIC REF	PART NUMBER	QTY	PART NAME 1 2 3 4 5 6 (PRODUCT LEVEL)	SEE PAGE
	1	1	**102-8805**	1	KIT-RECEPTACLE (6-PIN)	
					(INCLUDES RECEPTACLE AS & WEDGE)	
	2	1	**8T-8737**	1	PLUG-SEAL	
	3	1	**9X-3401**	5	PIN-CONNECTOR (16-GA TO 18-GA)	
M	4	1	**7Y-5458**	1	NUT (M12X1-THD)	
	5	1	**7Y-5464**	1	WASHER (12.2X15.4X0.5-MM THK)	
	6	1	**106-0210**	1	SEAL	

M-METRIC PART

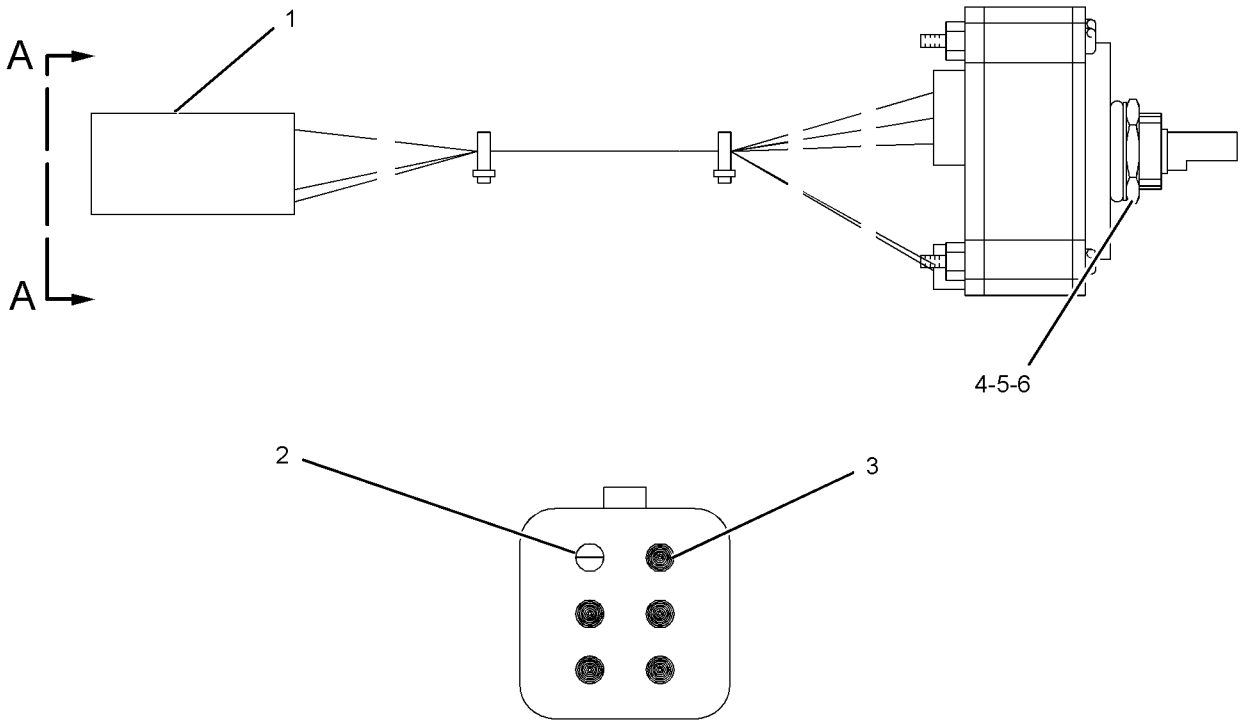

VIEW A-A

GRAPHIC #1 **<END>** g01203205

165-5970 SWITCH GP-TOGGLE–FUEL PRIMING PUMP

S/N: DHA1-UP; FBH1-UP

PART OF 277-8731, 301-2710 PUMP GP-FUEL PRM & WATER SEP

SMCS-7332 **i01481120**

NOTE	REF NO	GRAPHIC REF	PART NUMBER	QTY	PART NAME 1 2 3 4 5 6 (PRODUCT LEVEL)	SEE PAGE
	1	1	**6T-3631**	2	NUT-HEX (15/32-32-THD)	
	2	1	**6T-3632**	1	LOCKWASHER	
	3	1	**6T-3633**	1	RING-LOCKING	
	4	1	**102-8803**	1	KIT-RECEPTACLE (3-PIN)	
					(INCLUDES RECEPTACLE AS AND WEDGE)	
	5	1	**3E-3371**	1	WEDGE-RECEPTACLE LOCK (3-PIN)	
	6	1	**186-3735**	3	PIN-CONNECTOR (16-GA TO 18-GA)	

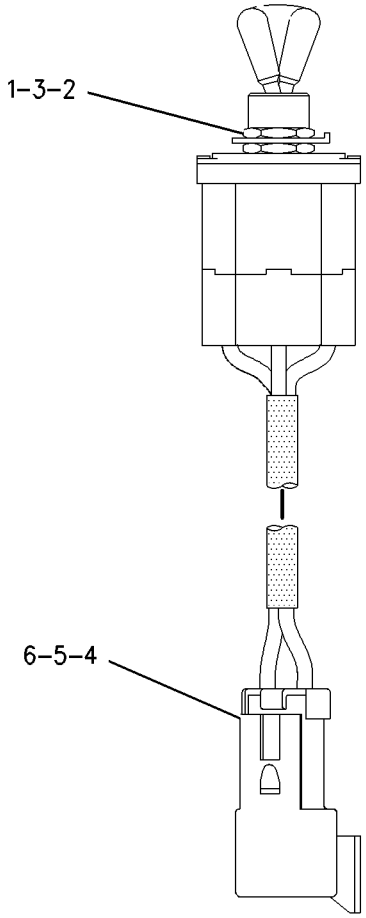

GRAPHIC #1 **<END>** g00749466

239-1134 VALVE GP-ETHER STARTING

S/N: DHA1-UP; FBH1-UP
24-VOLT
PART OF 252-1590 STARTING AID GP-ETHER

SMCS-1456 **i02743309**

NOTE	REF NO	GRAPHIC REF	PART NUMBER	QTY	PART NAME 1 2 3 4 5 6 (PRODUCT LEVEL)	SEE PAGE
	1	1	**7N-9801**	1	GASKET	
	2	1	**102-8802**	1	KIT-RECEPTACLE (2-PIN)	
					(INCLUDES RECEPTACLE AS & WEDGE)	
	3	1	**186-3735**	2	PIN-CONNECTOR (16-GA TO 18-GA)	

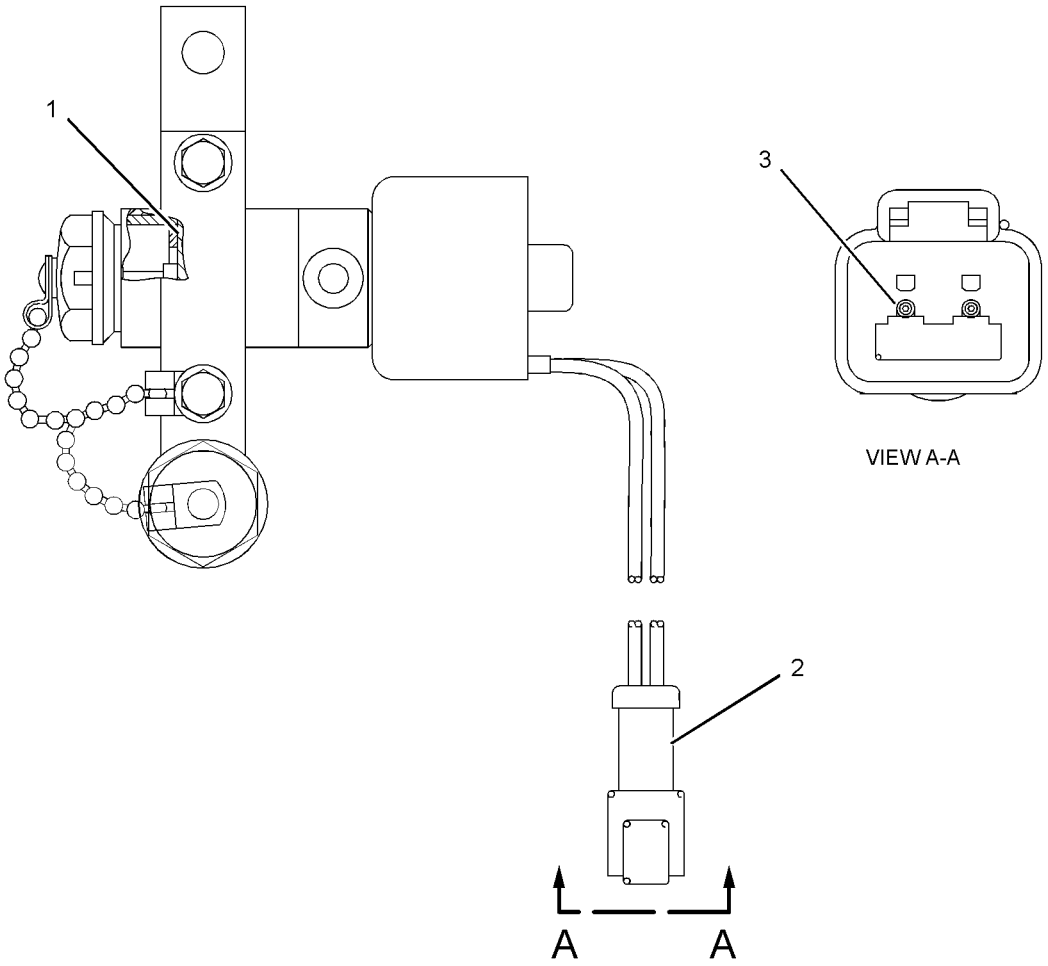

GRAPHIC #1 **<END>** g01375620

251-2003 WIRING GP-CAB

S/N: DHA1-UP; FBH1-UP
PART OF 240-6233 CAB GP-ENCLOSED ROPS, 267-2550 CAB GP-FORESTRY, 251-3536 CANOPY GP
AN ATTACHMENT
TYPE 1

SMCS-1408, 7301 **i02810881**

NOTE	REF NO	GRAPHIC REF	PART NUMBER	QTY	PART NAME 1 2 3 4 5 6 (PRODUCT LEVEL)	SEE PAGE
	1	1	**3E-5239**	2	RELAY AS (24-VOLT) (FLOODLIGHTS)	
Y	2	1	**3E-6328**	1	ALARM GP (24-VOLT) (ACTION)	192
	3	1	**7K-1181**	87	STRAP-CABLE	
	4	1	**7T-8894**	1	GROMMET	
	5	1	**7T-8895**	1	GROMMET	
	6	1	**178-7539**	1	RECEPTACLE AS (POWER SUPPLY)	
	7	1	**209-0381**	1	CONVERTER-POWER (24-VOLT TO 12-VOLT)	
	8	1	**304-4361**	1	HARNESS AS-CAB	
	9	1	**296-9401**	1	HARNESS AS-CONTROL	
		1	**231-2300**	1	RECEPTACLE AS-CONNECTOR (8-PIN)	
		1	**134-2540**	2	RESISTOR AS-CONNECTION (3-PIN)	
		1	**230-4010**	2	RECEPTACLE AS-CONNECTOR (12-PIN)	
		1	**230-5009**	3	RECEPTACLE AS-CONNECTOR (4-PIN)	
		1	**239-7357**	1	RECEPTACLE AS-CONNECTOR (12-PIN)	
		1	**102-8802**	1	KIT-RECEPTACLE (2-PIN)	
		1	**102-8806**	1	KIT-RECEPTACLE (8-PIN)	
					(EACH INCLUDES RECEPTACLE AS & WEDGE)	
		1	**155-2272**	1	PLUG AS-CONNECTOR (4-PIN)	
		1	**230-4009**	3	PLUG AS-CONNECTOR (12-PIN)	
		1	**230-5008**	3	PLUG AS-CONNECTOR (4-PIN)	
		1	**239-7356**	1	PLUG AS-CONNECTOR (12-PIN)	
		1	**155-2260**	3	KIT-CONNECTING PLUG (3-PIN)	
		1	**155-2265**	1	KIT-CONNECTING PLUG (8-PIN)	
		1	**155-2270**	2	KIT-CONNECTING PLUG (2-PIN)	
					(EACH INCLUDES PLUG AS, WEDGE, & INTERFACE SEAL)	
	10	1	**132-5789**	4	CLIP	
	11	1	**170-9360**	1	GROMMET	
	12	1	**2V-8259**	1	GROMMET	
	13	1	**4P-7581**	2	CLIP	
	14	1	**4P-8134**	3	CLIP	
	15	1	**5P-8439**	2	GROMMET	
M	16	1	**8T-0289**	6	BOLT (M5X0.8X20-MM)	
	17	1	**8T-4121**	3	WASHER-HARD (11X21X2.5-MM THK)	
M	18	1	**8T-4137**	2	BOLT (M10X1.5X20-MM)	
M	19	1	**8T-4138**	10	BOLT (M6X1X20-MM)	
M	20	1	**8T-4191**	1	BOLT (M10X1.5X16-MM)	
	21	1	**5P-4115**	6	WASHER-HARD (7.2X19X2-MM THK)	
	23	1	**9M-8406**	1	CLIP	
	24	1	**9X-8256**	12	WASHER (6.6X12X2-MM THK)	
M	25	1	**5C-9553**	2	BOLT (M6X1X16-MM)	

M-METRIC PART
Y-SEPARATE ILLUSTRATION

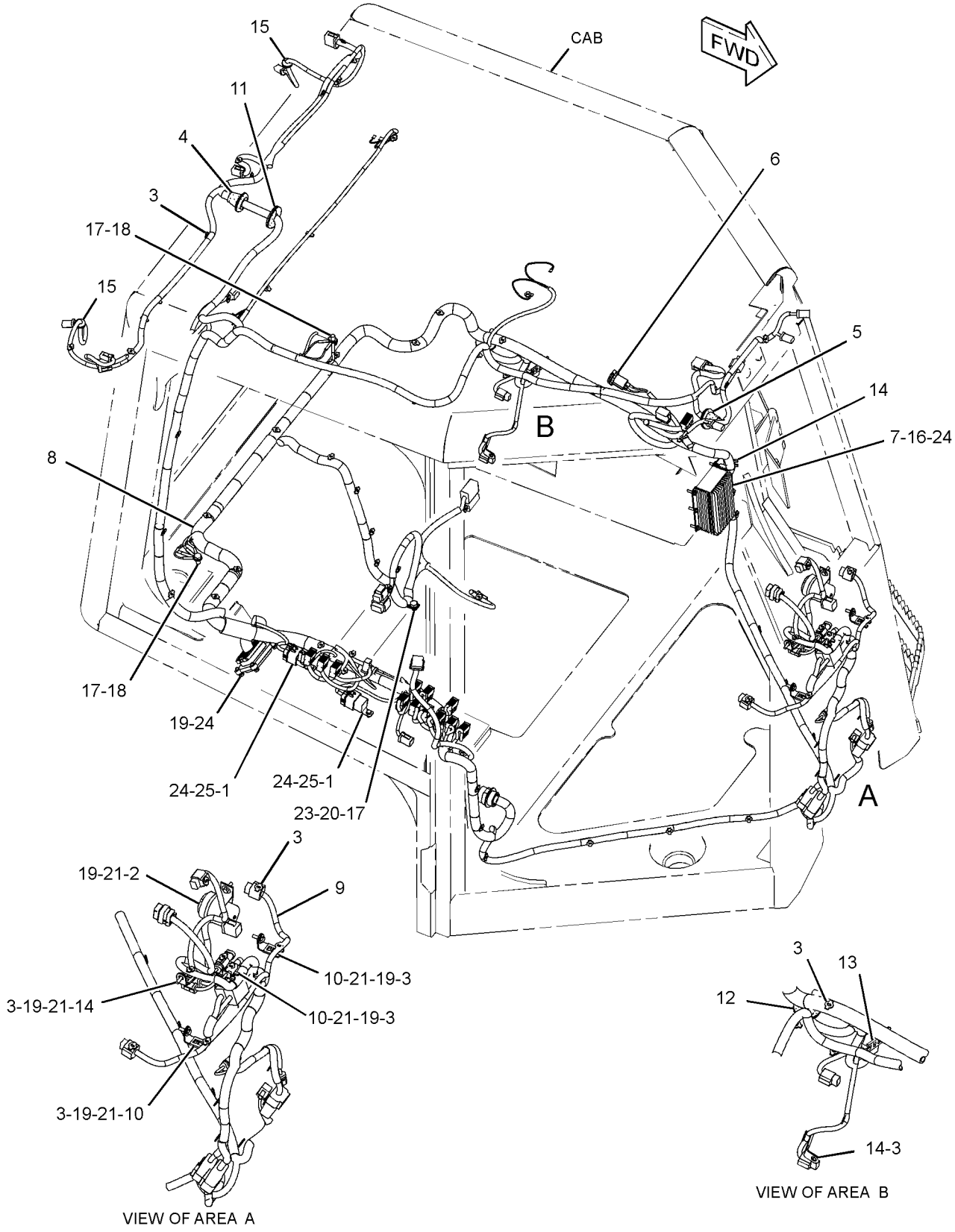

GRAPHIC #1 **<END>** g01411070

251-2003 WIRING GP-CAB

S/N: DHA1-UP; FBH1-UP
PART OF 240-6233 CAB GP-ENCLOSED ROPS, 267-2550 CAB GP-FORESTRY, 251-3536 CANOPY GP
AN ATTACHMENT
TYPE 2

SMCS-1408, 7301 **i02988866**

NOTE	REF NO	GRAPHIC REF	PART NUMBER	QTY	PART NAME 1 2 3 4 5 6 (PRODUCT LEVEL)	SEE PAGE
	1	1	**3E-5239**	2	RELAY AS (24-VOLT) (FLOODLIGHTS)	
Y	2	1	**3E-6328**	1	ALARM GP (24-VOLT) (ACTION)	192
C	3	1	**7K-1181**	90	STRAP-CABLE	
	4	1	**7T-8894**	1	GROMMET	
	5	1	**7T-8895**	1	GROMMET	
	6	1	**178-7539**	1	RECEPTACLE AS (POWER SUPPLY)	
	7	1	**209-0381**	1	CONVERTER-POWER (24-VOLT TO 12-VOLT)	
C	8	1	**322-4868**	1	HARNESS AS-CAB	
C	9	1	**322-4869**	1	HARNESS AS-CONTROL	
	10	1	**132-5789**	4	CLIP	
	11	1	**170-9360**	1	GROMMET	
	12	1	**2V-8259**	1	GROMMET	
	13	1	**4P-7581**	2	CLIP	
	14	1	**4P-8134**	3	CLIP	
	15	1	**5P-8439**	2	GROMMET	
M	16	1	**8T-0289**	6	BOLT (M5X0.8X20-MM)	
C	17	1	**8T-4121**	5	WASHER-HARD (11X21X2.5-MM THK)	
CM	18	1	**8T-4137**	4	BOLT (M10X1.5X20-MM)	
M	19	1	**8T-4138**	10	BOLT (M6X1X20-MM)	
M	20	1	**8T-4191**	1	BOLT (M10X1.5X16-MM)	
	21	1	**5P-4115**	6	WASHER-HARD (7.2X19X2-MM THK)	
	23	1	**9M-8406**	1	CLIP	
	24	1	**9X-8256**	12	WASHER (6.6X12X2-MM THK)	
M	25	1	**5C-9553**	2	BOLT (M6X1X16-MM)	
C	26	1	**169-2876**	1	FILM-IDENTIFICATION (POWER RECEPTACLE, 12-VOLT)	

C-CHANGE FROM PREVIOUS TYPE
M-METRIC PART
Y-SEPARATE ILLUSTRATION

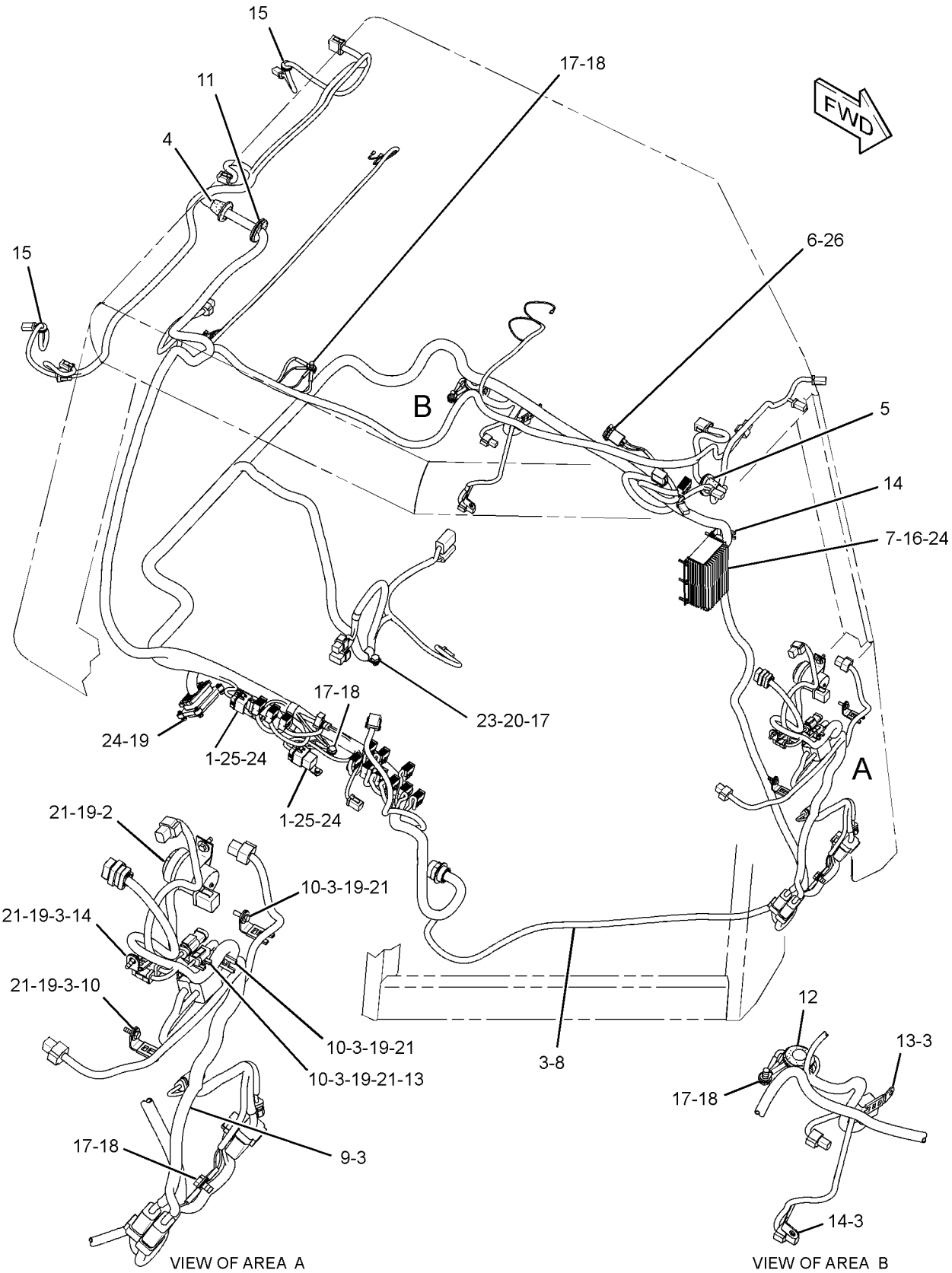

GRAPHIC #1 **<END>** g01519929

ELECTRICAL AND STARTING SYSTEM

206-7297 WIRING GP-CHASSIS

S/N: DHA1-630; FBH1-792

PART OF 206-7300 ELECTRONICS AR-MACHINE

SMCS-1408 **i02716060**

NOTE	REF NO	GRAPHIC REF	PART NUMBER	QTY	PART NAME 1 2 3 4 5 6 (PRODUCT LEVEL)	SEE PAGE
	1	1	**3E-5169**	1	GUARD-SWITCH	
	2	1,2,3, 4	**7K-1181**	58	STRAP-CABLE	
Y	3	1	**7N-0718**	1	SWITCH GP-DISCONNECT (BATTERY)	303
	4	4	**9B-1885**	1	SPACER (0.438X0.75X0.938-IN THK)	
	5	2	**9G-7101**	1	SPACER (10.5X20X30-MM THK)	
	6	1	**9M-9812**	1	WIRE AS	
	7	1	**158-6634**	1	SWITCH GP-TOGGLE (GROUND LEVEL SHUTDOWN)	
		1	**6T-3632**	1	LOCKWASHER	
		1	**6T-3633**	1	RING-LOCKING	
		1	**6T-3631**	2	NUT-HEX (15/32-32-THD)	
		1	**9G-3695**	1	PLUG-SEAL	
		1	**102-8804**	1	KIT-RECEPTACLE (4-PIN)	
					(INCLUDES RECEPTACLE AS & WEDGE)	
		1	**186-3735**	3	PIN-CONNECTOR (16-GA TO 18-GA)	
	8	2	**174-7876**	1	HORN AS (24-VOLT, LOW TONE)	
	9	3	**177-2215**	5	STRAP-DUAL CLAMP	
Y	10	3	**183-4584**	1	SENSOR GP-SPEED (TRACK, LH)	292
Y	10A	3	**183-4584**	1	SENSOR GP-SPEED (TRACK, RH)	292
	11	2	**202-7214**	1	BRACKET AS	
	12	2	**203-3847**	1	BRACKET AS	
					(EACH BRACKET AS INCLUDES)	
M		2	**170-7491**	1	STUD-WELD (M10X1.5X35-MM OAL)	
	13	2	**203-3970**	1	STRIP AS	
M		2	**8T-3490**	1	NUT-WELD (M10X1.5-THD)	
	14	2	**220-0229**	1	ALARM AS (BACKUP)	
		2	**102-8802**	1	KIT-RECEPTACLE (2-PIN)	
					(INCLUDES RECEPTACLE AS & WEDGE)	
		2	**186-3735**	2	PIN-CONNECTOR (16-GA TO 18-GA)	
E		2	**9X-1813**		SLEEVE (31-CM)	
	15	2	**251-3069**	1	CABLE AS	
		2	**1S-7251**	2	TERMINAL-CABLE (00-GA, 1/2-IN SCREW)	
		2	**8N-0869**	2	COVER-TERMINAL (RED)	
		2	**1S-4915**	2	LINER (CONDUIT)	
E		2	**5P-0695**		CONDUIT (140-CM)	
E		2	**8T-2225**		TUBE-HEAT SHRINK (25.4-MM DIA) (16-CM)	
E		2	**5P-0761**		CABLE (00-GA, RED) (165-CM)	
	16	1	**251-3070**	1	CABLE AS	
		1	**8T-8827**	1	BOOT (RED)	
		1	**1S-7251**	1	TERMINAL-CABLE (00-GA, 1/2-IN SCREW)	
		1	**3S-6049**	1	TERMINAL AS-BATTERY (POSITIVE)	
		1	**1M-6119**	1	BOLT (5/16-18X1.375-IN)	
		1	**1M-6120**	1	NUT (5/16-18-THD)	
		1	**8N-1725**	1	COVER-TERMINAL (RED)	
E		1	**5P-0761**		CABLE (00-GA, RED) (85-CM)	
	17	1	**251-3072**	1	CABLE AS	
		1	**037-5197**	1	BOOT	
		1	**1S-7252**	1	TERMINAL-CABLE (00-GA, 3/8-IN SCREW)	
		1	**3S-6050**	1	TERMINAL AS-BATTERY (NEGATIVE)	
		1	**1M-6119**	1	BOLT (5/16-18X1.375-IN)	
		1	**1M-6120**	1	NUT (5/16-18-THD)	
		1	**7N-5274**	1	COVER-TERMINAL (BLACK)	
E		1	**5P-0747**		CABLE (00-GA, BLACK) (35-CM)	
	18	1	**251-3073**	1	CABLE AS	
		1	**8S-3020**	1	TERMINAL-CABLE (00-GA, 3/8-IN SCREW)	
		1	**1S-7251**	1	TERMINAL-CABLE (00-GA, 1/2-IN SCREW)	

206-7297 WIRING GP-CHASSIS *(contd.)* i02716060

NOTE	REF NO	GRAPHIC REF	PART NUMBER	QTY	PART NAME 1 2 3 4 5 6 (PRODUCT LEVEL)	SEE PAGE
E		1	**5P-0747**		CABLE (00-GA, BLACK) (33-CM)	
	19	4	**252-2153**	1	BRACKET AS	
	20	1	**252-2155**	1	HOLD-DOWN AS	
	21	1	**252-6113**	1	BRACKET AS	
	22	1	**252-6921**	1	ANGLE	
	23	1	**252-6922**	1	COVER	
	24	3	**261-0420**	1	SENSOR GP-PRESSURE (HYDROSTATIC DRIVE)	
	25	1	**268-7591**	1	HARNESS AS-PLATFORM	
		1	**102-8806**	1	KIT-RECEPTACLE (8-PIN)	
					(INCLUDES RECEPTACLE AS & WEDGE)	
		1	**231-2295**	1	PLUG AS-CONNECTOR (8-PIN)	
		1	**155-2265**	1	KIT-CONNECTING PLUG (8-PIN)	
					(INCLUDES PLUG AS, WEDGE, & INTERFACE SEAL)	
	26	1	**276-8728**	1	HARNESS AS-SENSOR	
		1	**230-5011**	1	RECEPTACLE AS-CONNECTOR (6-PIN)	
		1	**102-8802**	1	KIT-RECEPTACLE (2-PIN)	
					(INCLUDES RECEPTACLE AS & WEDGE)	
		1	**155-2270**	5	KIT-CONNECTING PLUG (2-PIN)	
					(EACH INCLUDES PLUG AS, WEDGE, & INTERFACE SEAL)	
	27	1	**277-5995**	1	ROD	
	28	2	**288-8600**	1	HARNESS AS-POWER	
		2	**8T-8827**	3	BOOT (RED)	
		2	**180-7110**	1	TERMINAL-RING (2-GA, 3/8-IN SCREW)	
	29	1	**295-2361**	1	HARNESS AS-TRANSMISSION	
		1	**9X-1343**	1	RECEPTACLE AS-CONNECTOR (40-PIN)	
		1	**102-8802**	2	KIT-RECEPTACLE (2-PIN)	
					(EACH INCLUDES RECEPTACLE AS & WEDGE)	
		1	**155-2272**	2	PLUG AS-CONNECTOR (4-PIN)	
		1	**230-4011**	1	PLUG AS-CONNECTOR (2-PIN)	
		1	**230-5010**	1	PLUG AS-CONNECTOR (6-PIN)	
		1	**237-0227**	1	PLUG AS-CONNECTOR (3-PIN)	
		1	**155-2270**	11	KIT-CONNECTING PLUG (2-PIN)	
					(EACH INCLUDES PLUG AS, WEDGE, & INTERFACE SEAL)	
	30	1	**295-2380**	1	HARNESS AS-SENSOR	
		1	**230-4014**	1	RECEPTACLE AS-CONNECTOR (3-PIN)	
		1	**230-5011**	1	RECEPTACLE AS-CONNECTOR (6-PIN)	
		1	**230-4013**	1	PLUG AS-CONNECTOR (3-PIN)	
		1	**155-2270**	1	KIT-CONNECTING PLUG (2-PIN)	
					(INCLUDES PLUG AS, WEDGE, & INTERFACE SEAL)	
	31	2	**296-1838**	1	BRACKET AS	
	32	1	**124-0378**	1	CABLE AS	
		1	**8C-5917**	1	TERMINAL AS-BATTERY (POSITIVE)	
		1	**8T-9757**	1	TERMINAL AS-BATTERY (NEGATIVE)	
		1	**1M-6119**	2	BOLT (5/16-18X1.375-IN)	
		1	**1M-6120**	2	NUT (5/16-18-THD)	
		1	**9G-0003**	1	COVER-TERMINAL (BLACK)	
		1	**9G-0004**	1	COVER-TERMINAL (RED)	
E		1	**5P-0761**		CABLE (00-GA, RED) (12-CM)	
	33	4	**198-4777**	2	WASHER-HARD (11X25X10-MM THK)	
	34	2	**198-4778**	1	WASHER-HARD (13.5X30X12-MM THK)	
	35	1	**204-2281**	2	STRAP-TIE	
	36	1	**204-8000**	2	MOUNT (TIE WRAP)	
	37	1,2,4	**1S-0994**	9	CLIP	
	38	2	**1S-1015**	1	CLIP	
	39	2	**2B-0941**	1	SPACER (10.5X19X19-MM THK)	
	40	2	**2D-2751**	1	GROMMET	
	41	1	**2V-8259**	1	GROMMET	
	42	3	**3J-1907**	1	SEAL-O-RING	

206-7297 **WIRING GP-CHASSIS** *(contd.)* **i02716060**

NOTE	REF NO	GRAPHIC REF	PART NUMBER	QTY	PART NAME 1 2 3 4 5 6 (PRODUCT LEVEL)	SEE PAGE
	43	2	**3S-8665**	1	CLIP	
	44	4	**4D-9517**	1	CLIP	
	45	1,4	**4K-8864**	4	CLIP	
	46	2	**4P-7428**	1	CLIP	
	47	1,2,3	**4P-7581**	9	CLIP	
	48	2,4	**4P-8134**	7	CLIP	
	49	4	**4S-1962**	1	CLIP	
M	50	1	**5C-7261**	1	NUT (M8X1.25-THD)	
	51	4	**6D-4636**	1	CLIP	
	52	1	**6K-8178**	2	CLIP	
M	53	2	**6V-9672**	3	SCREW-MACHINE (M4X0.7X16-MM)	
	54	2,3,4	**7X-7729**	7	WASHER (11X25X3-MM THK)	
M	55	3	**8T-0267**	4	BOLT-SOCKET HEAD (M6X1X12-MM)	
M	56	1	**8T-0389**	1	LOCKNUT (M10X1.5-THD)	
	57	1,2,3, 4	**8T-4121**	30	WASHER-HARD (11X21X2.5-MM THK)	
M	58	1,2	**8T-4133**	3	NUT (M10X1.5-THD)	
M	59	1,2,4	**8T-4136**	4	BOLT (M10X1.5X25-MM)	
M	60	1,2,3, 4	**8T-4137**	19	BOLT (M10X1.5X20-MM)	
M	61	2,4	**8T-4139**	4	BOLT (M12X1.75X30-MM)	
M	62	2	**8T-4185**	1	BOLT (M10X1.5X50-MM)	
M	63	2,4	**8T-4186**	2	BOLT (M10X1.5X40-MM)	
M	64	1,2,4	**8T-4195**	7	BOLT (M10X1.5X30-MM)	
M	65	1	**8T-4199**	3	BOLT (M8X1.25X12-MM)	
	66	1,2,4	**8T-4223**	5	WASHER-HARD (13.5X25.5X3-MM THK)	
	67	1	**8T-4224**	3	WASHER-HARD (8.8X16X2-MM THK)	
	68	1	**8T-4226**	1	WASHER-PLATED (10.5X45X3-MM THK)	
M	69	1	**8T-4244**	1	NUT (M12X1.75-THD)	
M	70	4	**8T-5005**	1	BOLT (M10X1.5X70-MM)	
	71	1,2	**8T-7934**	2	WASHER-HARD (11X21X5-MM THK)	
	72	2	**9M-8406**	1	CLIP	
Y	73	1	**9W-0742**	1	BLOCK GP-JUNCTION (BATTERY)	198
	74	1	**9X-3404**	2	BATTERY (12-VOLT, MAINTENANCE FREE, WET)	
	75	2	**3S-2093**	2	STRAP-CABLE	
	76	2	**206-2423**	1	SADDLE	

E-ORDER BY THE CENTIMETER
M-METRIC PART
Y-SEPARATE ILLUSTRATION

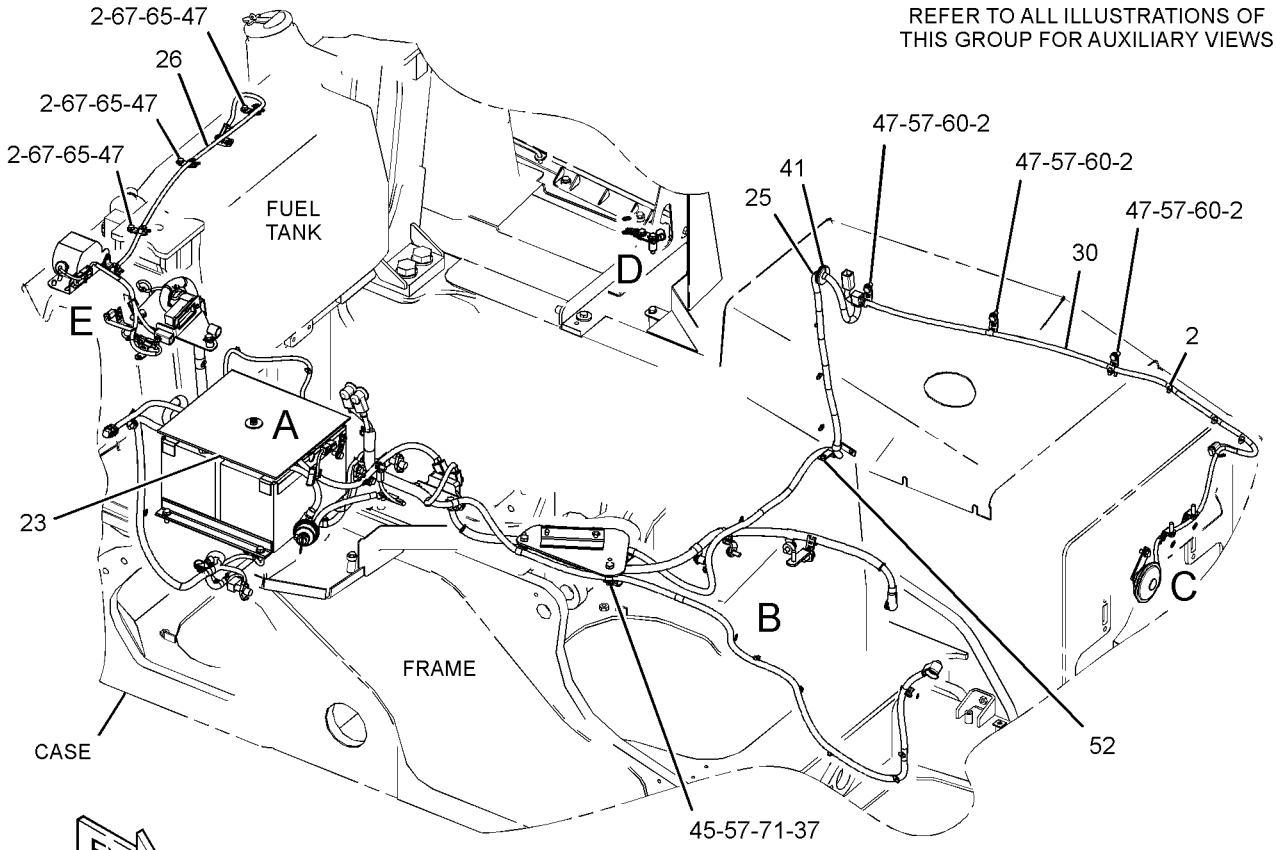

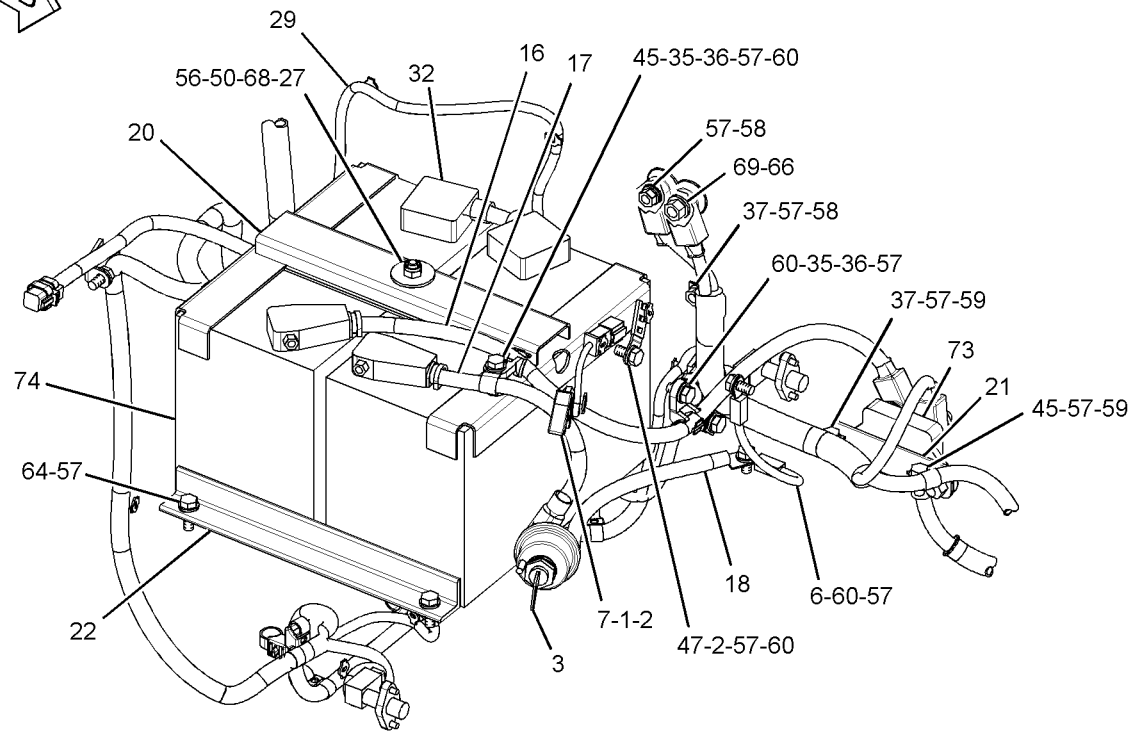

VIEW OF AREA A
(COVER ASSEMBLY REMOVED)

GRAPHIC #1 g01413783

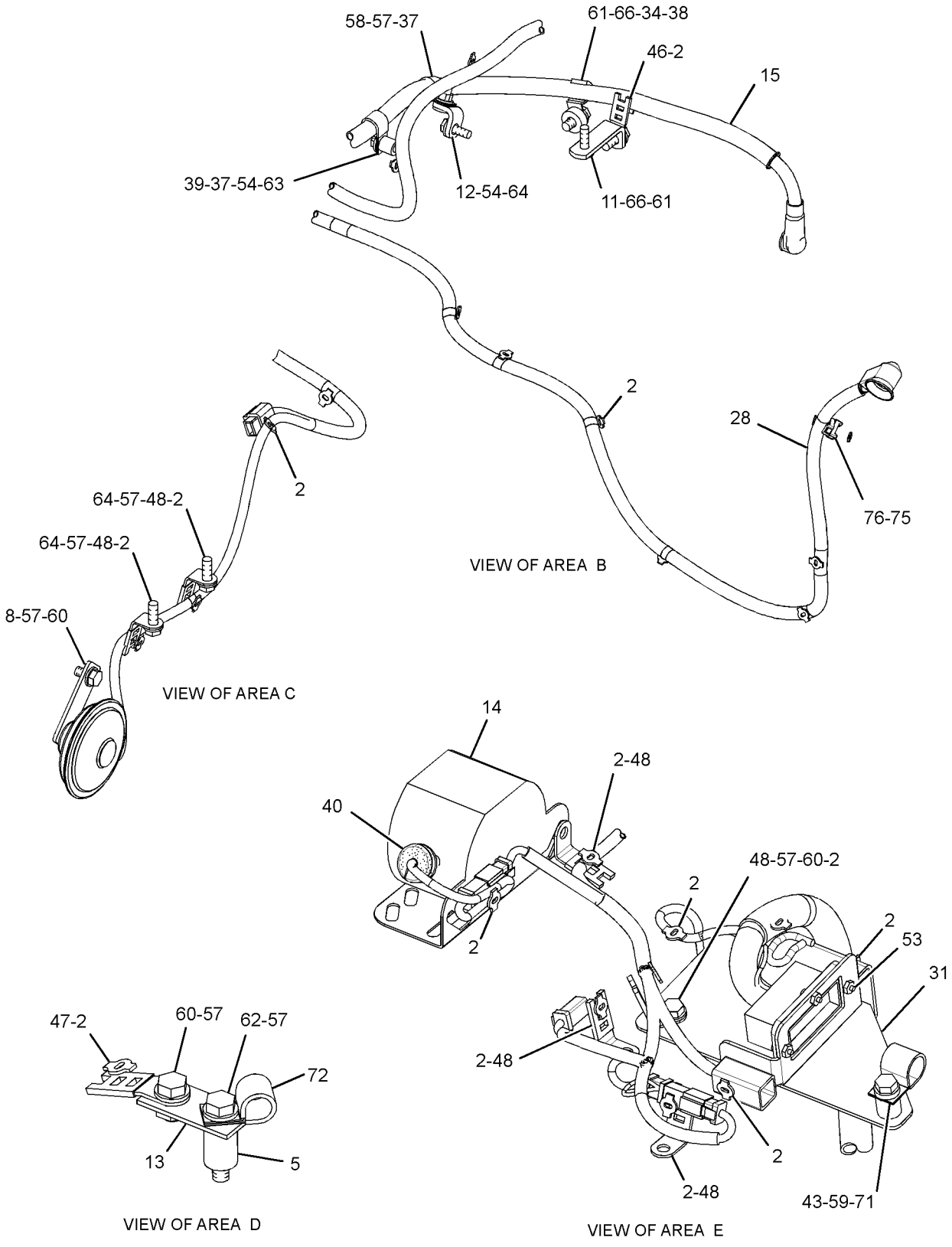

GRAPHIC #2

g01413795

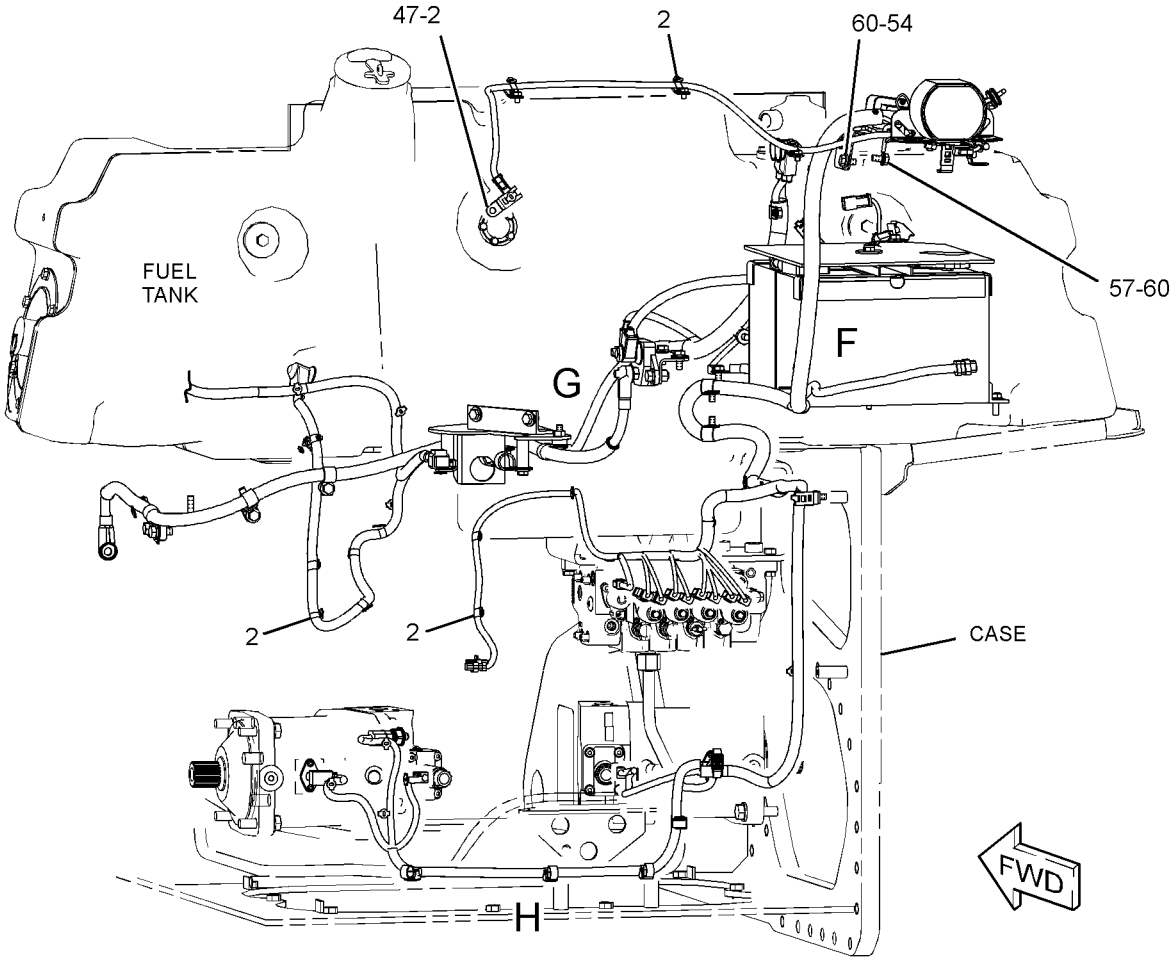

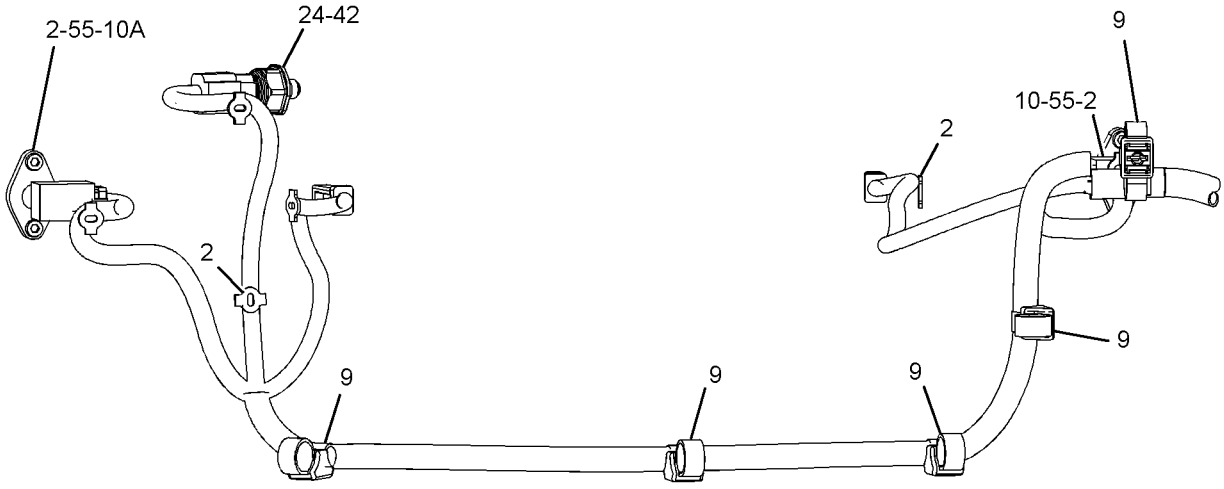

VIEW OF AREA H

REFER TO ALL ILLUSTRATIONS OF
THIS GROUP FOR AUXILIARY VIEWS

GRAPHIC #3

g01413784

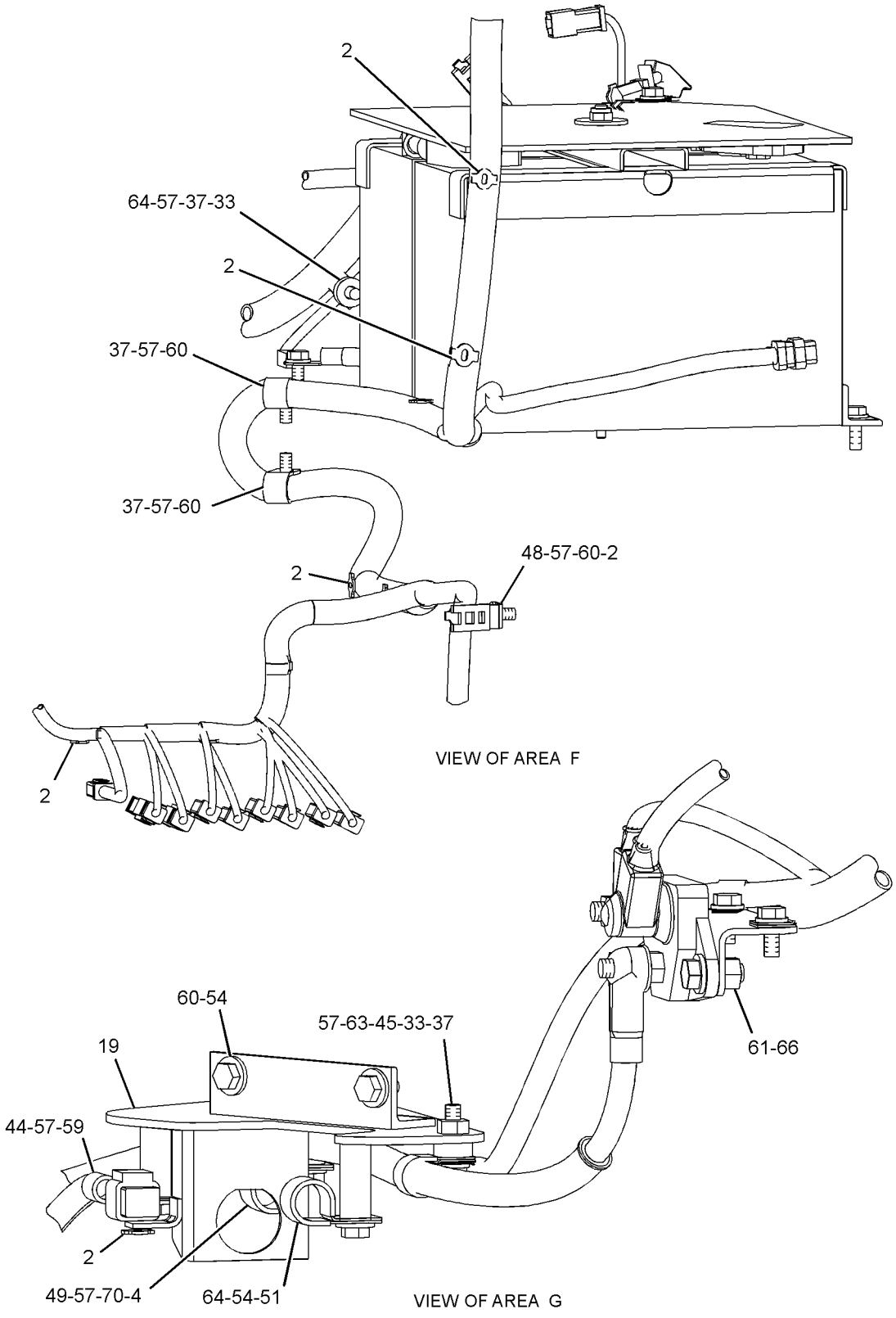

GRAPHIC #4 **<END>** g01413786

ELECTRICAL AND STARTING SYSTEM

206-7297 WIRING GP-CHASSIS

S/N: DHA631-UP; FBH793-UP

PART OF 206-7300 ELECTRONICS AR-MACHINE

SMCS-1408 **i03143781**

NOTE	REF NO	GRAPHIC REF	PART NUMBER	QTY	PART NAME 1 2 3 4 5 6 (PRODUCT LEVEL)	SEE PAGE
	1	1	**3E-5169**	1	GUARD-SWITCH	
	2	1,2,3, 4	**7K-1181**	59	STRAP-CABLE	
Y	3	1	**7N-0718**	1	SWITCH GP-DISCONNECT (BATTERY) (BATTERY)	303
	4	4	**9B-1885**	1	SPACER (0.438X0.75X0.938-IN THK)	
	5	2	**9G-7101**	1	SPACER (10.5X20X30-MM THK)	
	6	1	**9M-9812**	1	WIRE AS	
	7	1	**158-6634**	1	SWITCH GP-TOGGLE (GROUND LEVEL SHUTDOWN)	
		1	**6T-3632**	1	LOCKWASHER	
		1	**6T-3633**	1	RING-LOCKING	
		1	**6T-3631**	2	NUT-HEX (15/32-32-THD)	
		1	**9G-3695**	1	PLUG-SEAL	
		1	**102-8804**	1	KIT-RECEPTACLE (4-PIN)	
					(INCLUDES RECEPTACLE AS & WEDGE)	
		1	**186-3735**	3	PIN-CONNECTOR (16-GA TO 18-GA)	
	8	2	**174-7876**	1	HORN AS (24-VOLT, LOW TONE)	
	9	3	**177-2215**	5	STRAP-DUAL CLAMP	
CY	10	3	**319-6491**	1	SENSOR GP-SPEED (TRACK, LH)	294
CY	10A	3	**319-6491**	1	SENSOR GP-SPEED (TRACK, RH)	294
	11	2	**202-7214**	1	BRACKET AS	
M		2	**170-7491**	1	STUD-WELD (M10X1.5X35-MM OAL)	
	12	2	**203-3847**	1	BRACKET AS	
M		2	**170-7491**	1	STUD-WELD (M10X1.5X35-MM OAL)	
	13	1,2	**203-3970**	2	STRIP AS	
					(EACH INCLUDES)	
M		1,2	**8T-3490**	1	NUT-WELD (M10X1.5-THD)	
	14	2	**220-0229**	1	ALARM AS (BACKUP)	
		2	**102-8802**	1	KIT-RECEPTACLE (2-PIN)	
					(INCLUDES RECEPTACLE AS & WEDGE)	
		2	**186-3735**	2	PIN-CONNECTOR (16-GA TO 18-GA)	
E		2	**9X-1813**		SLEEVE (31-CM)	
	15	2	**251-3069**	1	CABLE AS	
		2	**1S-7251**	2	TERMINAL-CABLE (00-GA, 1/2-IN SCREW)	
		2	**8N-0869**	2	COVER-TERMINAL (RED)	
		2	**1S-4915**	2	LINER (CONDUIT)	
E		2	**5P-0695**		CONDUIT (140-CM)	
E		2	**8T-2225**		TUBE-HEAT SHRINK (25.4-MM DIA) (16-CM)	
E		2	**5P-0761**		CABLE (00-GA, RED) (165-CM)	
	16	1	**251-3070**	1	CABLE AS	
		1	**8T-8827**	1	BOOT (RED)	
		1	**1S-7251**	1	TERMINAL-CABLE (00-GA, 1/2-IN SCREW)	
		1	**3S-6049**	1	TERMINAL AS-BATTERY (POSITIVE)	
		1	**1M-6119**	1	BOLT (5/16-18X1.375-IN)	
		1	**1M-6120**	1	NUT (5/16-18-THD)	
		1	**8N-1725**	1	COVER-TERMINAL (RED)	
E		1	**5P-0761**		CABLE (00-GA, RED) (85-CM)	
	17	1	**251-3072**	1	CABLE AS	
		1	**037-5197**	1	BOOT	
		1	**1S-7252**	1	TERMINAL-CABLE (00-GA, 3/8-IN SCREW)	
		1	**3S-6050**	1	TERMINAL AS-BATTERY (NEGATIVE)	
		1	**1M-6119**	1	BOLT (5/16-18X1.375-IN)	
		1	**1M-6120**	1	NUT (5/16-18-THD)	
		1	**7N-5274**	1	COVER-TERMINAL (BLACK)	
E		1	**5P-0747**		CABLE (00-GA, BLACK) (35-CM)	
	18	1	**251-3073**	1	CABLE AS	
		1	**8S-3020**	1	TERMINAL-CABLE (00-GA, 3/8-IN SCREW)	

206-7297 **WIRING GP-CHASSIS** ***(contd.)*** **i03143781**

NOTE	REF NO	GRAPHIC REF	PART NUMBER	QTY	PART NAME 1 2 3 4 5 6 (PRODUCT LEVEL)	SEE PAGE
		1	**1S-7251**	1	TERMINAL-CABLE (00-GA, 1/2-IN SCREW)	
E		1	**5P-0747**		CABLE (00-GA, BLACK) (33-CM)	
	19	4	**252-2153**	1	BRACKET AS	
	20	1	**252-2155**	1	HOLD-DOWN AS	
	21	1	**252-6113**	1	BRACKET AS	
	22	1	**252-6921**	1	ANGLE	
	23	1	**252-6922**	1	COVER	
	24	3	**261-0420**	1	SENSOR GP-PRESSURE (HYDROSTATIC DRIVE)	
	25	1	**268-7591**	1	HARNESS AS-PLATFORM	
		1	**102-8806**	1	KIT-RECEPTACLE (8-PIN)	
					(INCLUDES RECEPTACLE AS & WEDGE)	
		1	**231-2295**	1	PLUG AS-CONNECTOR (8-PIN)	
		1	**155-2265**	1	KIT-CONNECTING PLUG (8-PIN)	
					(INCLUDES PLUG AS, WEDGE, & INTERFACE SEAL)	
	26	1	**276-8728**	1	HARNESS AS-SENSOR	
		1	**230-5011**	1	RECEPTACLE AS-CONNECTOR (6-PIN)	
		1	**102-8802**	1	KIT-RECEPTACLE (2-PIN)	
					(INCLUDES RECEPTACLE AS & WEDGE)	
		1	**155-2270**	5	KIT-CONNECTING PLUG (2-PIN)	
					(EACH INCLUDES PLUG AS, WEDGE, & INTERFACE SEAL)	
	27	1	**277-5995**	1	ROD	
	28	2	**288-8600**	1	HARNESS AS-POWER	
		2	**8T-8827**	3	BOOT (RED)	
		2	**180-7110**	1	TERMINAL-RING (2-GA, 3/8-IN SCREW)	
	29	1	**295-2361**	1	HARNESS AS-TRANSMISSION	
		1	**9X-1343**	1	RECEPTACLE AS-CONNECTOR (40-PIN)	
		1	**102-8802**	2	KIT-RECEPTACLE (2-PIN)	
					(EACH INCLUDES RECEPTACLE AS & WEDGE)	
		1	**155-2272**	2	PLUG AS-CONNECTOR (4-PIN)	
		1	**230-4011**	1	PLUG AS-CONNECTOR (2-PIN)	
		1	**230-5010**	1	PLUG AS-CONNECTOR (6-PIN)	
		1	**237-0227**	1	PLUG AS-CONNECTOR (3-PIN)	
		1	**155-2270**	11	KIT-CONNECTING PLUG (2-PIN)	
					(EACH INCLUDES PLUG AS, WEDGE, & INTERFACE SEAL)	
	30	1	**295-2380**	1	HARNESS AS-SENSOR	
		1	**230-4014**	1	RECEPTACLE AS-CONNECTOR (3-PIN)	
		1	**230-5011**	1	RECEPTACLE AS-CONNECTOR (6-PIN)	
		1	**230-4013**	1	PLUG AS-CONNECTOR (3-PIN)	
		1	**155-2270**	1	KIT-CONNECTING PLUG (2-PIN)	
					(INCLUDES PLUG AS, WEDGE, & INTERFACE SEAL)	
	31	2	**296-1838**	1	BRACKET AS	
	32	1	**124-0378**	1	CABLE AS	
		1	**8C-5917**	1	TERMINAL AS-BATTERY (POSITIVE)	
		1	**8T-9757**	1	TERMINAL AS-BATTERY (NEGATIVE)	
		1	**1M-6119**	2	BOLT (5/16-18X1.375-IN)	
		1	**1M-6120**	2	NUT (5/16-18-THD)	
		1	**9G-0003**	1	COVER-TERMINAL (BLACK)	
		1	**9G-0004**	1	COVER-TERMINAL (RED)	
E		1	**5P-0761**		CABLE (00-GA, RED) (12-CM)	
	33	4	**198-4777**	2	WASHER-HARD (11X25X10-MM THK)	
	34	2	**198-4778**	1	WASHER-HARD (13.5X30X12-MM THK)	
	35	1	**204-2281**	2	STRAP-TIE	
	36	1	**204-8000**	2	MOUNT (TIE WRAP)	
	37	1,2,4	**1S-0994**	9	CLIP	
	38	2	**1S-1015**	1	CLIP	
	39	2	**2B-0941**	1	SPACER (10.5X19X19-MM THK)	
	40	2	**2D-2751**	1	GROMMET	
	41	1	**2V-8259**	1	GROMMET	

206-7297 **WIRING GP-CHASSIS** *(contd.)* **i03143781**

NOTE	REF NO	GRAPHIC REF	PART NUMBER	QTY	PART NAME 1 2 3 4 5 6 (PRODUCT LEVEL)	SEE PAGE
	42	3	**3J-1907**	1	SEAL-O-RING	
	43	2	**3S-8665**	1	CLIP	
	44	4	**4D-9517**	1	CLIP	
	45	1,4	**4K-8864**	4	CLIP	
	46	1,2	**4P-7428**	2	CLIP	
	47	1,2,3	**4P-7581**	9	CLIP	
	48	2,4	**4P-8134**	7	CLIP	
	49	4	**4S-1962**	1	CLIP	
M	50	1	**5C-7261**	1	NUT (M8X1.25-THD)	
	51	4	**6D-4636**	1	CLIP	
	52	1	**6K-8178**	2	CLIP	
M	53	2	**6V-9672**	3	SCREW-MACHINE (M4X0.7X16-MM)	
	54	2,3,4	**7X-7729**	7	WASHER (11X25X3-MM THK)	
M	55	3	**8T-0267**	4	BOLT-SOCKET HEAD (M6X1X12-MM)	
M	56	1	**8T-0389**	1	LOCKNUT (M10X1.5-THD)	
	57	1,2,3, 4	**8T-4121**	31	WASHER-HARD (11X21X2.5-MM THK)	
M	58	1,2	**8T-4133**	3	NUT (M10X1.5-THD)	
M	59	1,2,4	**8T-4136**	4	BOLT (M10X1.5X25-MM)	
M	60	1,2,3, 4	**8T-4137**	20	BOLT (M10X1.5X20-MM)	
M	61	2,4	**8T-4139**	4	BOLT (M12X1.75X30-MM)	
M	62	2	**8T-4185**	1	BOLT (M10X1.5X50-MM)	
M	63	2,4	**8T-4186**	2	BOLT (M10X1.5X40-MM)	
M	64	1,2,4	**8T-4195**	7	BOLT (M10X1.5X30-MM)	
M	65	1	**8T-4199**	3	BOLT (M8X1.25X12-MM)	
	66	1,2,4	**8T-4223**	5	WASHER-HARD (13.5X25.5X3-MM THK)	
	67	1	**8T-4224**	3	WASHER-HARD (8.8X16X2-MM THK)	
	68	1	**8T-4226**	1	WASHER-PLATED (10.5X45X3-MM THK)	
M	69	1	**8T-4244**	1	NUT (M12X1.75-THD)	
M	70	4	**8T-5005**	1	BOLT (M10X1.5X70-MM)	
	71	1,2	**8T-7934**	2	WASHER-HARD (11X21X5-MM THK)	
	72	2	**9M-8406**	1	CLIP	
Y	73	1	**9W-0742**	1	BLOCK GP-JUNCTION (BATTERY)	198
	74	1	**9X-3404**	2	BATTERY (12-VOLT, MAINTENANCE FREE, WET)	
	75	2	**3S-2093**	2	STRAP-CABLE	
	76	2	**206-2423**	1	SADDLE	

C-CHANGE FROM PREVIOUS TYPE
E-ORDER BY THE CENTIMETER
M-METRIC PART
Y-SEPARATE ILLUSTRATION

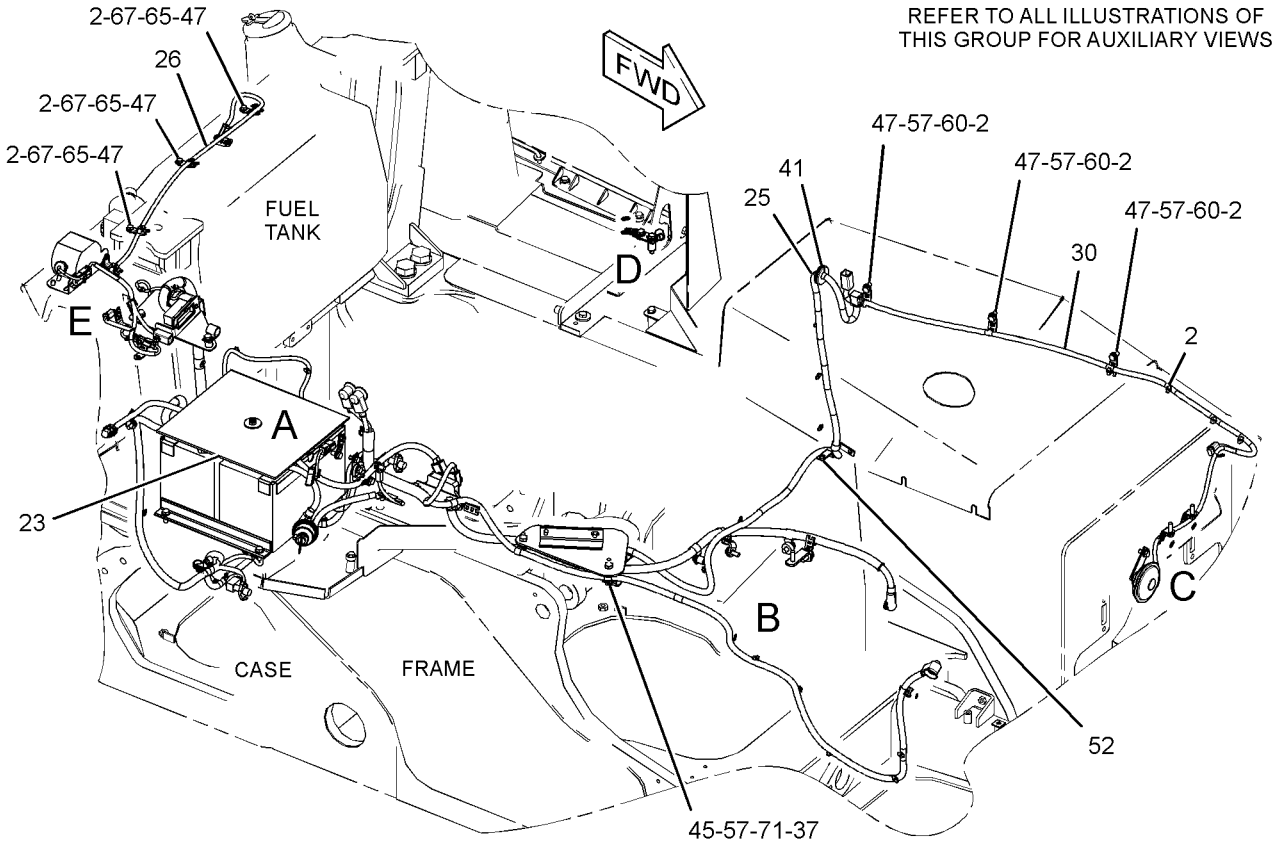

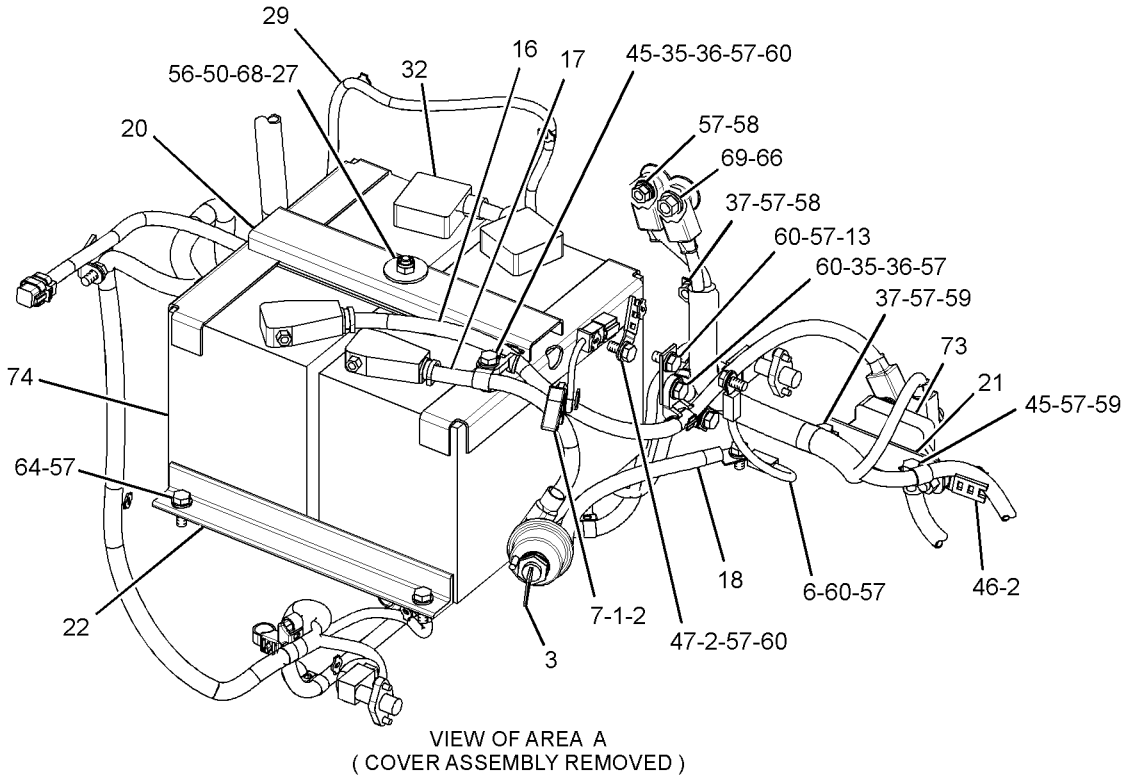

VIEW OF AREA A
(COVER ASSEMBLY REMOVED)

GRAPHIC #1 g01518587

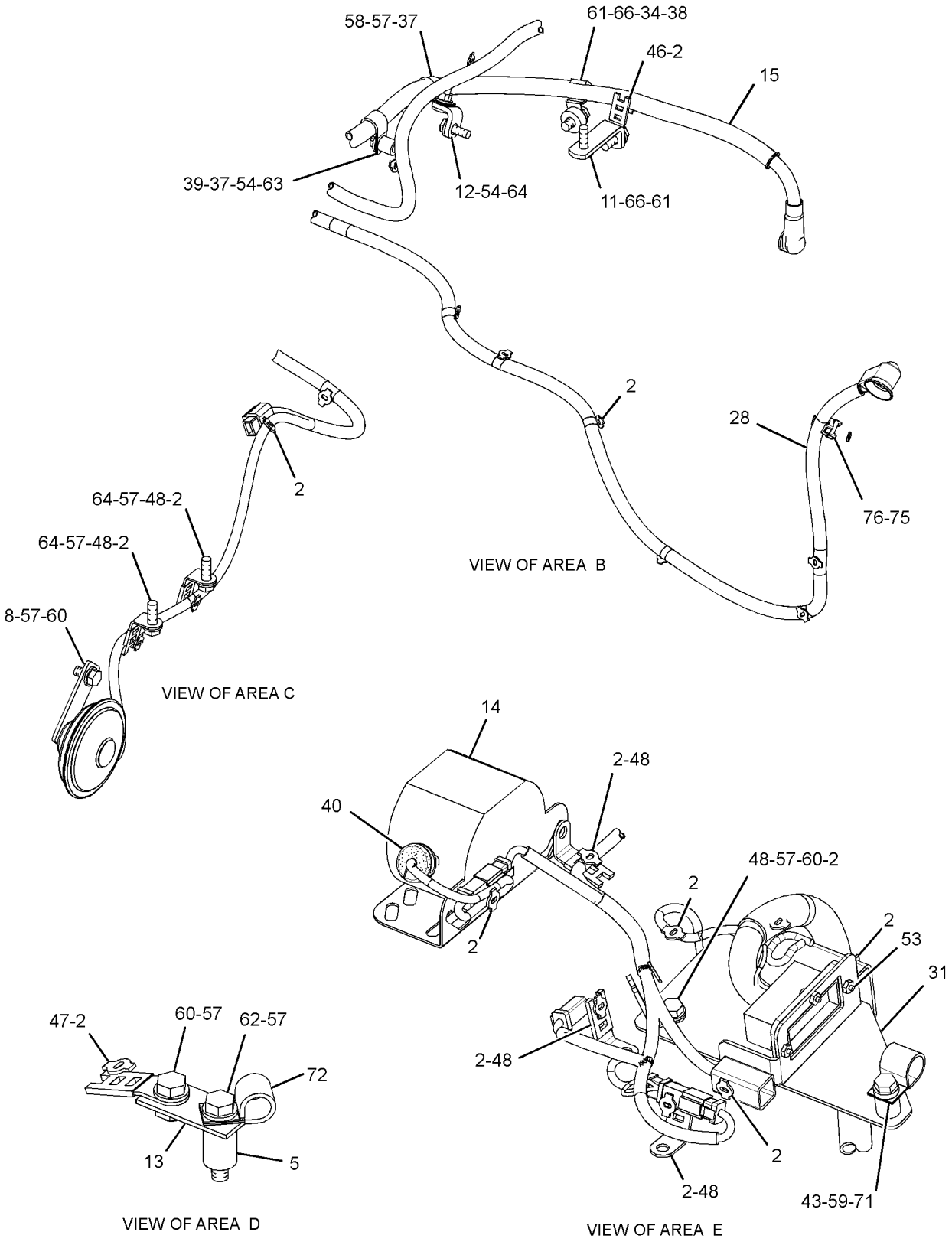

GRAPHIC #2

g01413795

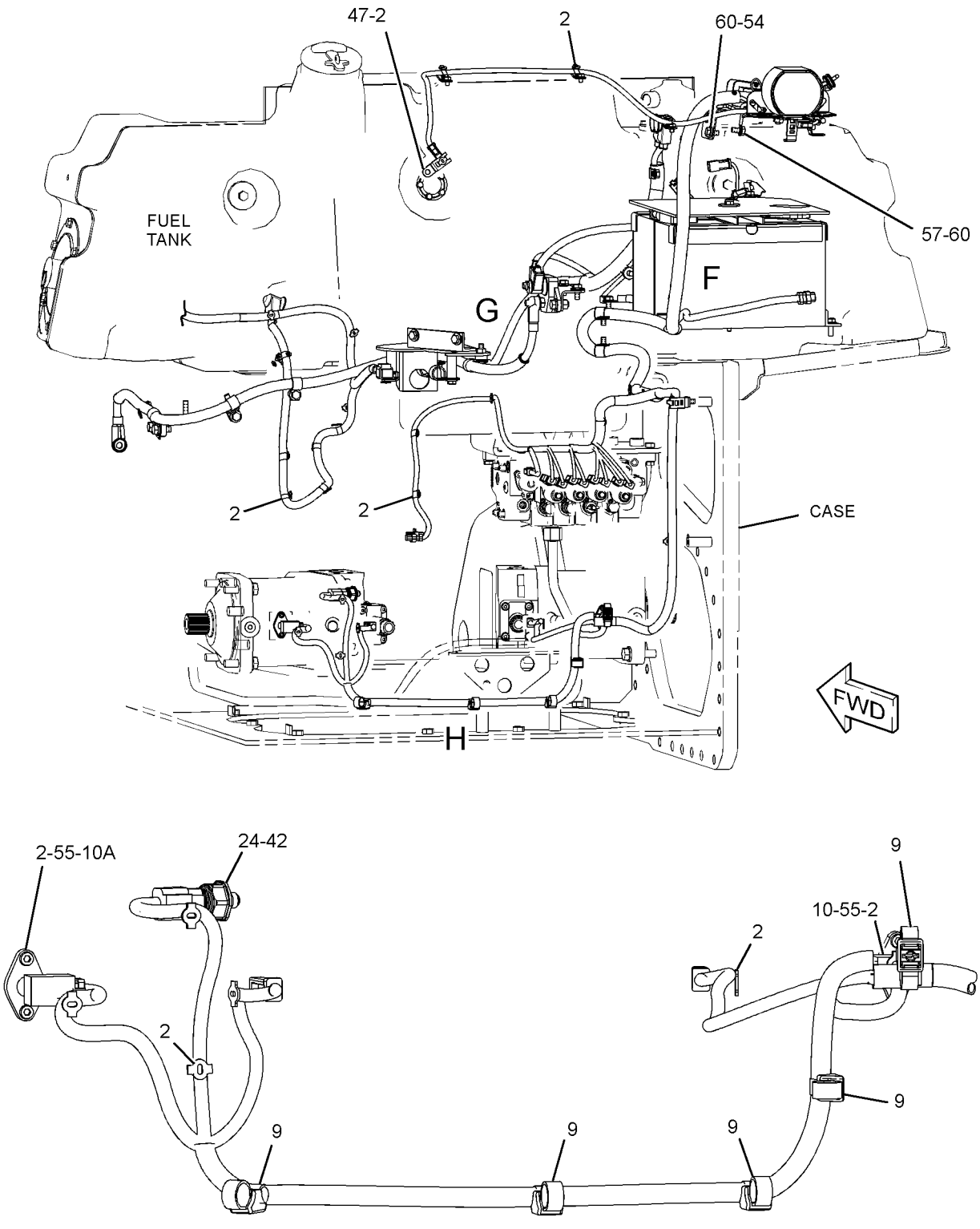

VIEW OF AREA H

REFER TO ALL ILLUSTRATIONS OF
THIS GROUP FOR AUXILIARY VIEWS

GRAPHIC #3

g01413784

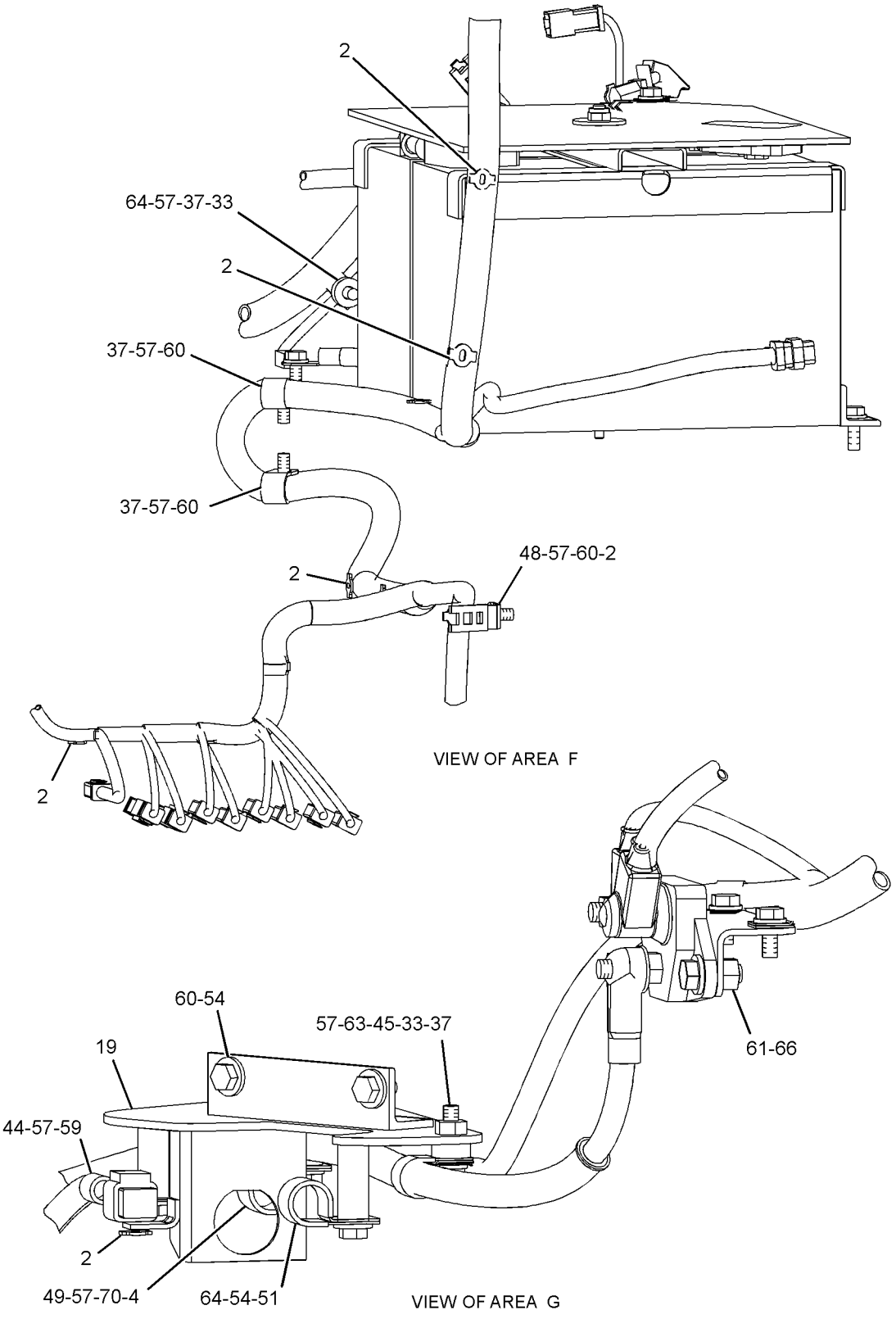

GRAPHIC #4 **<END>** g01413786

206-7301 WIRING GP-ENGINE

S/N: DHA1-UP; FBH1-UP

PART OF 206-7300 ELECTRONICS AR-MACHINE

SMCS-1000, 1408 **i02716474**

NOTE	REF NO	GRAPHIC REF	PART NUMBER	QTY	PART NAME 1 2 3 4 5 6 (PRODUCT LEVEL)	SEE PAGE
	1	2	**2B-0941**	1	SPACER (10.5X19X19-MM THK)	
	2	2	**3S-2093**	1	STRAP-CABLE	
	3	2	**7K-1181**	50	STRAP-CABLE	
	4	2	**8B-8679**	1	SPACER (0.406X0.75X0.44-IN THK)	
	5	2	**133-6934**	1	SPACER (11X20X25-MM THK)	
	6	2	**141-3983**	1	SPACER (11X19X48-MM THK)	
M	7	2	**176-9237**	1	STUD (M10X1.5X18-MM, M10X1.5X37-MM)	
	8	2	**177-2215**	1	STRAP-DUAL CLAMP	
	9	2	**183-4274**	1	BRACKET	
M	10	2	**197-7481**	1	STUD (M10X1.5X18-MM, M10X1.5X57-MM)	
	11	2	**203-3847**	1	BRACKET AS	
M		2	**170-7491**	1	STUD-WELD (M10X1.5X35-MM OAL)	
	12	2	**220-5946**	1	CLIP	
	13	2	**252-6111**	1	BRACKET AS	
Y	14	2	**262-4806**	1	SENSOR GP-SPEED (ENGINE)	293
	15	2	**287-3890**	1	PLATE AS	
	16	1	**293-5223**	1	HARNESS AS-ENGINE	
		1	**102-8802**	5	KIT-RECEPTACLE (2-PIN)	
					(EACH INCLUDES RECEPTACLE AS & WEDGE)	
		1	**155-2260**	1	KIT-CONNECTING PLUG (3-PIN)	
		1	**155-2270**	8	KIT-CONNECTING PLUG (2-PIN)	
		1	**174-0503**	1	KIT-CONNECTING PLUG (3-PIN)	
					(EACH INCLUDES PLUG AS, WEDGE, & INTERFACE SEAL)	
		1	**230-4011**	3	PLUG AS-CONNECTOR (2-PIN)	
		1	**230-4013**	2	PLUG AS-CONNECTOR (3-PIN)	
		1	**230-5010**	1	PLUG AS-CONNECTOR (6-PIN)	
		1	**245-1042**	1	PLUG AS-CONNECTOR (64-PIN)	
		1	**134-2540**	1	RESISTOR AS-CONNECTION (3-PIN)	
		1	**167-3692**	1	RECEPTACLE AS-CONNECTOR (31-PIN)	
		1	**230-4010**	1	RECEPTACLE AS-CONNECTOR (12-PIN)	
		1	**231-2300**	1	RECEPTACLE AS-CONNECTOR (8-PIN)	
	17	2	**294-8548**	1	CABLE AS	
		2	**1S-7251**	1	TERMINAL-CABLE (00-GA, 1/2-IN BOLT)	
E		2	**5P-0747**		CABLE (00-GA, BLACK) (58-CM)	
		2	**9X-9825**	1	TERMINAL-CABLE (00-GA, 1/2-IN BOLT)	
	18	1	**296-7906**	1	HARNESS AS-SOLENOID	
		1	**102-8802**	2	KIT-RECEPTACLE (2-PIN)	
					(EACH INCLUDES RECEPTACLE AS & WEDGE)	
		1	**155-2270**	8	KIT-CONNECTING PLUG (2-PIN)	
					(EACH INCLUDES PLUG AS, WEDGE, & INTERFACE SEAL)	
		1	**230-4009**	1	PLUG AS-CONNECTOR (12-PIN)	
	19	2	**306-6687**	1	STRAP AS	
	20	2	**039-8557**	1	WASHER (13X26X6-MM THK)	
M	21	2	**101-3129**	1	STUD (M10X1.5-THD)	
	22	2	**1V-1984**	1	CLIP	
	23	2	**272-1777**	1	WASHER-HARD (11X18.5X15-MM THK)	
	24	2	**4K-8864**	2	CLIP	
	25	2	**4P-7581**	12	CLIP	
	26	2	**4P-8134**	11	CLIP	
	27	2	**4S-1962**	1	CLIP	
M	28	2	**5C-7261**	2	NUT (M8X1.25-THD)	
	29	2	**5P-4116**	2	WASHER-HARD (8.8X20.5X2-MM THK)	
	30	2	**5P-9297**	3	CLIP	
	31	2	**6D-3479**	1	CLIP	

206-7301 **WIRING GP-ENGINE** *(contd.)* **i02716474**

NOTE	REF NO	GRAPHIC REF	PART NUMBER	QTY	PART NAME 1 2 3 4 5 6 (PRODUCT LEVEL)	SEE PAGE
	32	2	**6H-4005**	1	GROMMET	
	33	2	**8T-4121**	21	WASHER-HARD (11X21X2.5-MM THK)	
M	34	2	**8T-4133**	1	NUT (M10X1.5-THD)	
M	35	2	**8T-4136**	1	BOLT (M10X1.5X25-MM)	
M	36	2	**8T-4137**	11	BOLT (M10X1.5X20-MM)	
M	37	2	**8T-4139**	2	BOLT (M12X1.75X30-MM)	
M	38	2	**8T-4185**	1	BOLT (M10X1.5X50-MM)	
M	39	2	**8T-4189**	2	BOLT (M8X1.25X20-MM)	
M	40	2	**8T-4191**	2	BOLT (M10X1.5X16-MM)	
M	41	2	**8T-4195**	1	BOLT (M10X1.5X30-MM)	
M	42	2	**8T-4196**	1	BOLT (M10X1.5X35-MM)	
M	43	2	**8T-4200**	1	BOLT (M8X1.25X16-MM)	
	44	2	**8T-4223**	2	WASHER-HARD (13.5X25.5X3-MM THK)	
	45	2	**8T-4224**	5	WASHER-HARD (8.8X16X2-MM THK)	
M	46	2	**8T-6869**	1	BOLT (M8X1.25X60-MM)	
M	47	2	**8T-6870**	1	BOLT (M8X1.25X70-MM)	
	48	2	**8T-7934**	1	WASHER-HARD (11X21X5-MM THK)	

E-ORDER BY THE CENTIMETER
M-METRIC PART
Y-SEPARATE ILLUSTRATION

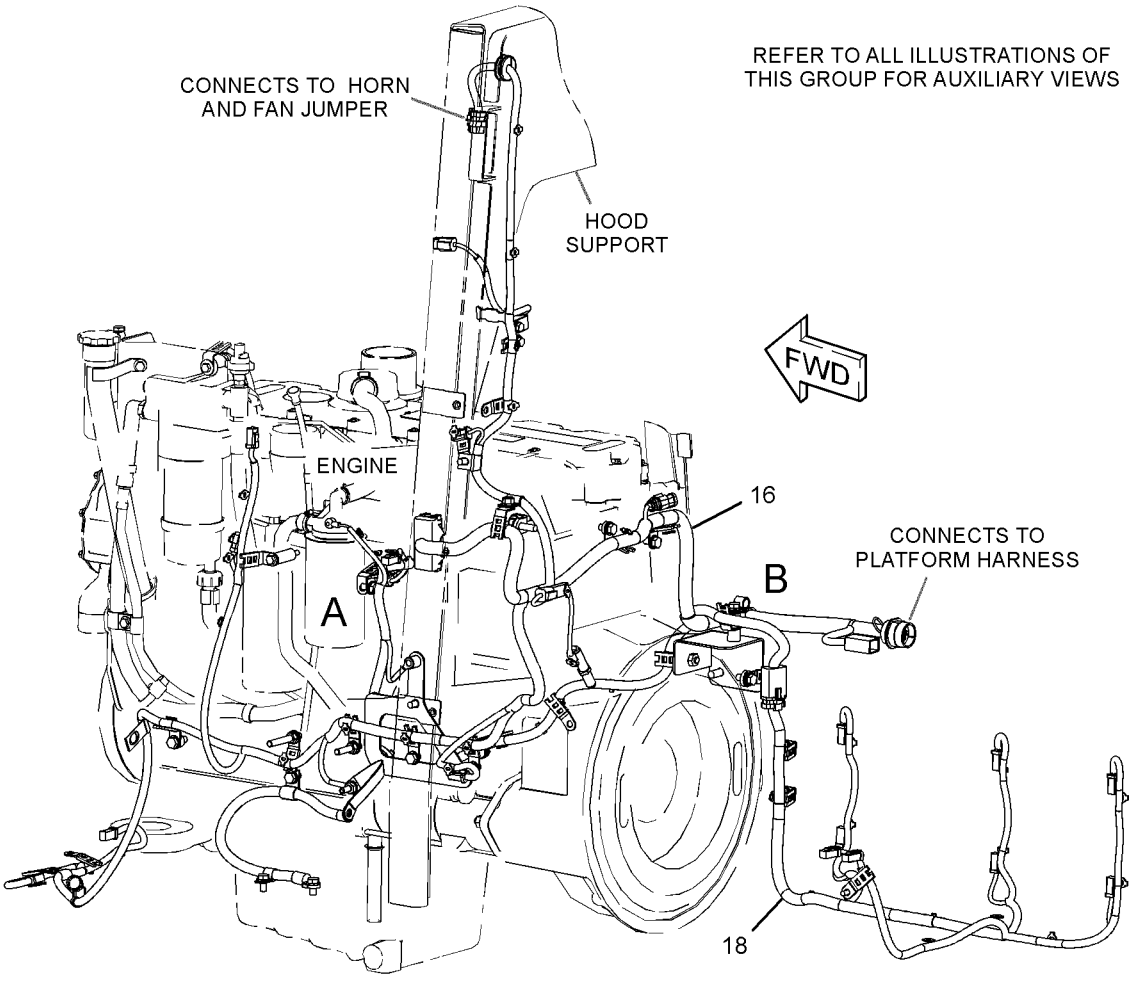

GRAPHIC #1 g01416657

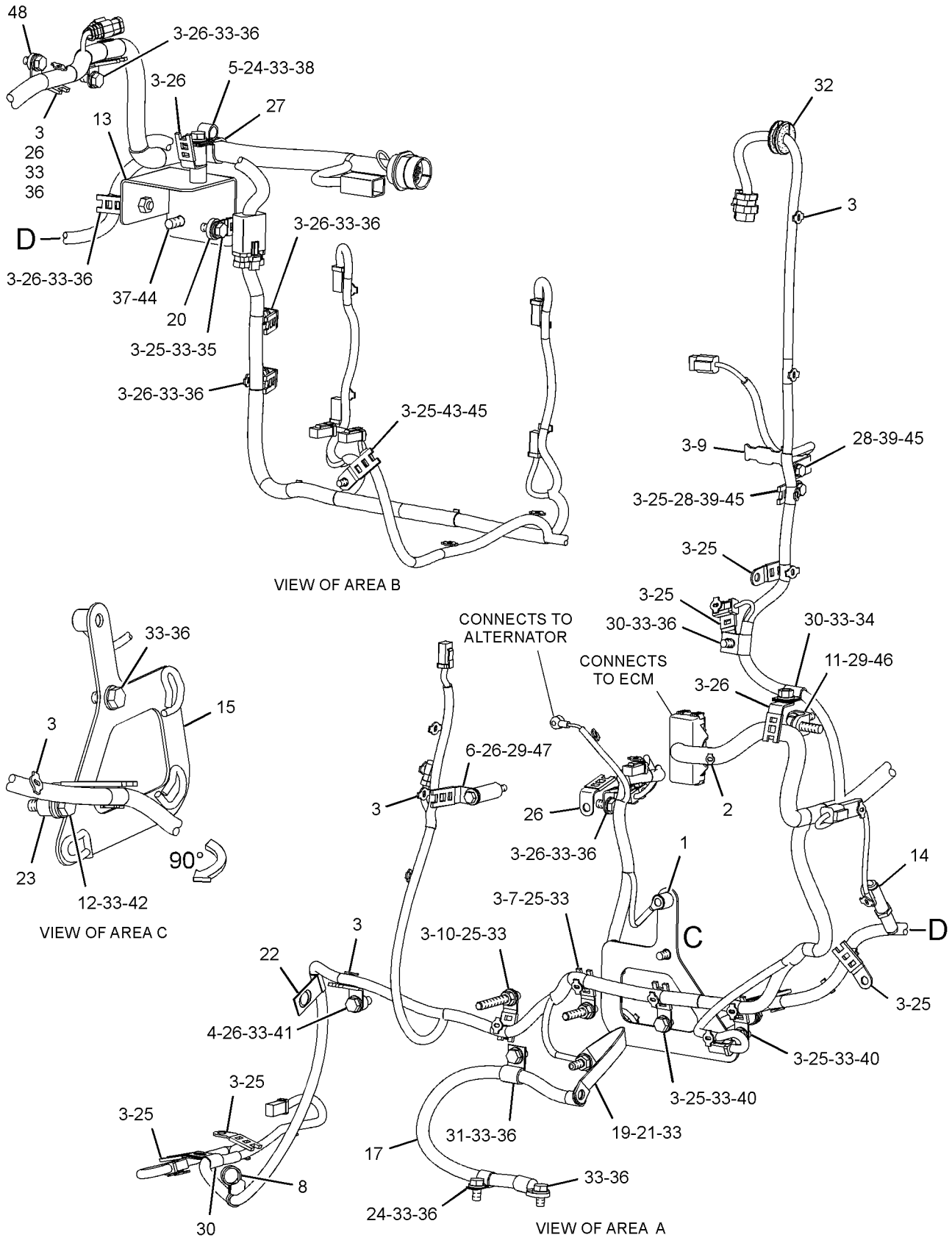

GRAPHIC #2

<END>

g01416667

ELECTRICAL AND STARTING SYSTEM

305-8977 WIRING GP-ENGINE

S/N: C6E1-UP
PART OF 242-1356, 319-7261 ENGINE AR
ALSO AN ATTACHMENT

SMCS-1000, 1408 **i02770482**

NOTE	REF NO	GRAPHIC REF	PART NUMBER	QTY	PART NAME 1 2 3 4 5 6 (PRODUCT LEVEL)	SEE PAGE
	1	1	**217-9039**	2	STRAP-CABLE	
	2	1	**278-5210**	1	BOLT	
	3	1	**293-1880**	1	BRACKET	
	4	1	**304-5166**	1	HARNESS AS-ENGINE	
	5	1	**304-5167**	1	HARNESS AS-ENGINE	
	6	1	**305-8978**	1	BRACKET	
	7	1	**305-8979**	1	BRACKET	
	8	1	**305-8980**	1	BRACKET	
	9	1	**311-2732**	4	TIE-CABLE	
	10	1	**311-2752**	1	RIVET	

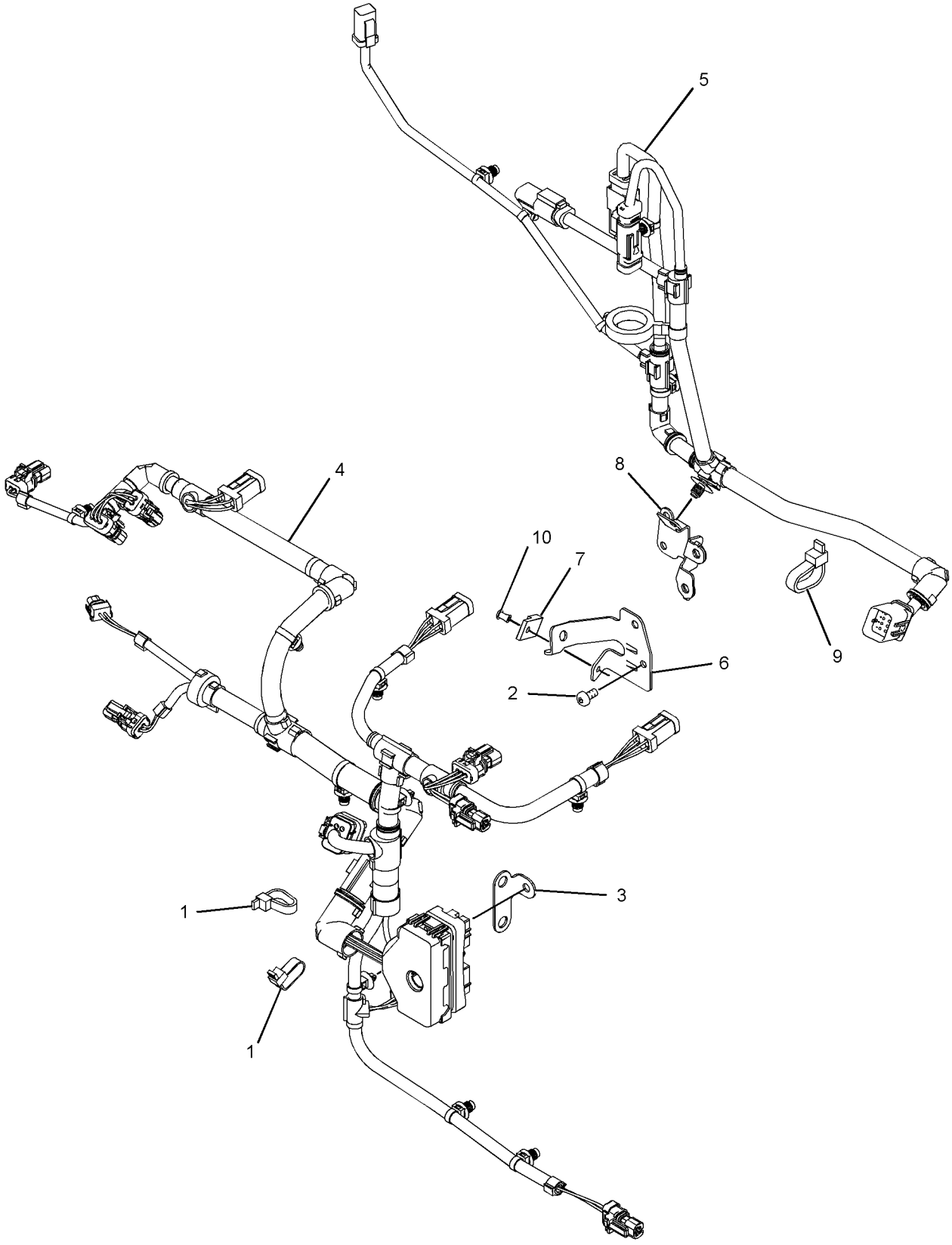

GRAPHIC #1 **<END>** g01456665

206-7302 WIRING GP-PLATFORM

S/N: DHA1-UP; FBH1-UP
PART OF 240-6233 CAB GP-ENCLOSED ROPS, 267-2550 CAB GP-FORESTRY, 251-3536 CANOPY GP
AN ATTACHMENT
TYPE 1

SMCS-1408 **i03701081**

NOTE	REF NO	GRAPHIC REF	PART NUMBER	QTY	PART NAME 1 2 3 4 5 6 (PRODUCT LEVEL)	SEE PAGE
	1	1	**3E-5239**	1	RELAY AS (24-VOLT) (A/C CLUTCH SOLENOID)	
	1A	1	**3E-5239**	1	RELAY AS (24-VOLT) (REVERSING FAN)	
	1B	1	**3E-5239**	1	RELAY AS (24-VOLT) (HORN)	
	2	1	**6I-1418**	4	SPACER (8.2X12.7X28.7-MM THK)	
	3	1	**7K-1181**	15	STRAP-CABLE	
	4	1	**177-4937**	1	SPACER (11.7X19.8X20.3-MM THK)	
Y	5	1	*242-3053*	1	PANEL GP-FUSE	276
R	6	1	**262-1408**	1	CONTROL GP-UNPROGRAMMED (MACHINE)	
R	7	1	**300-3631**	1	CONTROL GP-UNPROGRAMMED (IMPLEMENT)	
	8	1	**267-6457**	1	BRACKET AS	
	9	1	**296-2649**	1	BRACKET AS	
	10	1	**304-4359**	1	HARNESS AS-PLATFORM	
	11	1	**5P-8439**	2	GROMMET	
M	12	1	**127-2170**	6	SCREW-TRUSS HEAD (M8X1.25X20-MM)	
	13	1	**165-9104**	2	SPACER (6.5X9.5X10-MM THK)	
	14	1	**3S-8665**	1	CLIP	
	15	1	**4D-0012**	2	GROMMET	
	16	1	**4P-7581**	2	CLIP	
M	17	1	**5C-7261**	6	NUT (M8X1.25-THD)	
	18	1	**5P-4116**	2	WASHER-HARD (8.8X20.5X2-MM THK)	
	19	1	**6D-3479**	1	CLIP	
M	20	1	**7X-2534**	2	BOLT (M6X1X50-MM)	
	21	1	**8T-4121**	5	WASHER-HARD (11X21X2.5-MM THK)	
M	22	1	**8T-4137**	2	BOLT (M10X1.5X20-MM)	
M	23	1	**8T-4171**	3	BOLT (M6X1X12-MM)	
M	24	1	**8T-4186**	1	BOLT (M10X1.5X40-MM)	
M	25	1	**8T-4195**	2	BOLT (M10X1.5X30-MM)	
	26	1	**8T-9655**	8	MOUNT-ISOLATION	
	27	1	**9N-0869**	2	WASHER-HARD (8.8X25.5X2-MM THK)	
	28	1	**9X-8256**	5	WASHER (6.6X12X2-MM THK)	
	29	1	**143-2397**	2	CAP	

M-METRIC PART
R-REMFG PART MAY BE AVAILABLE
Y-SEPARATE ILLUSTRATION

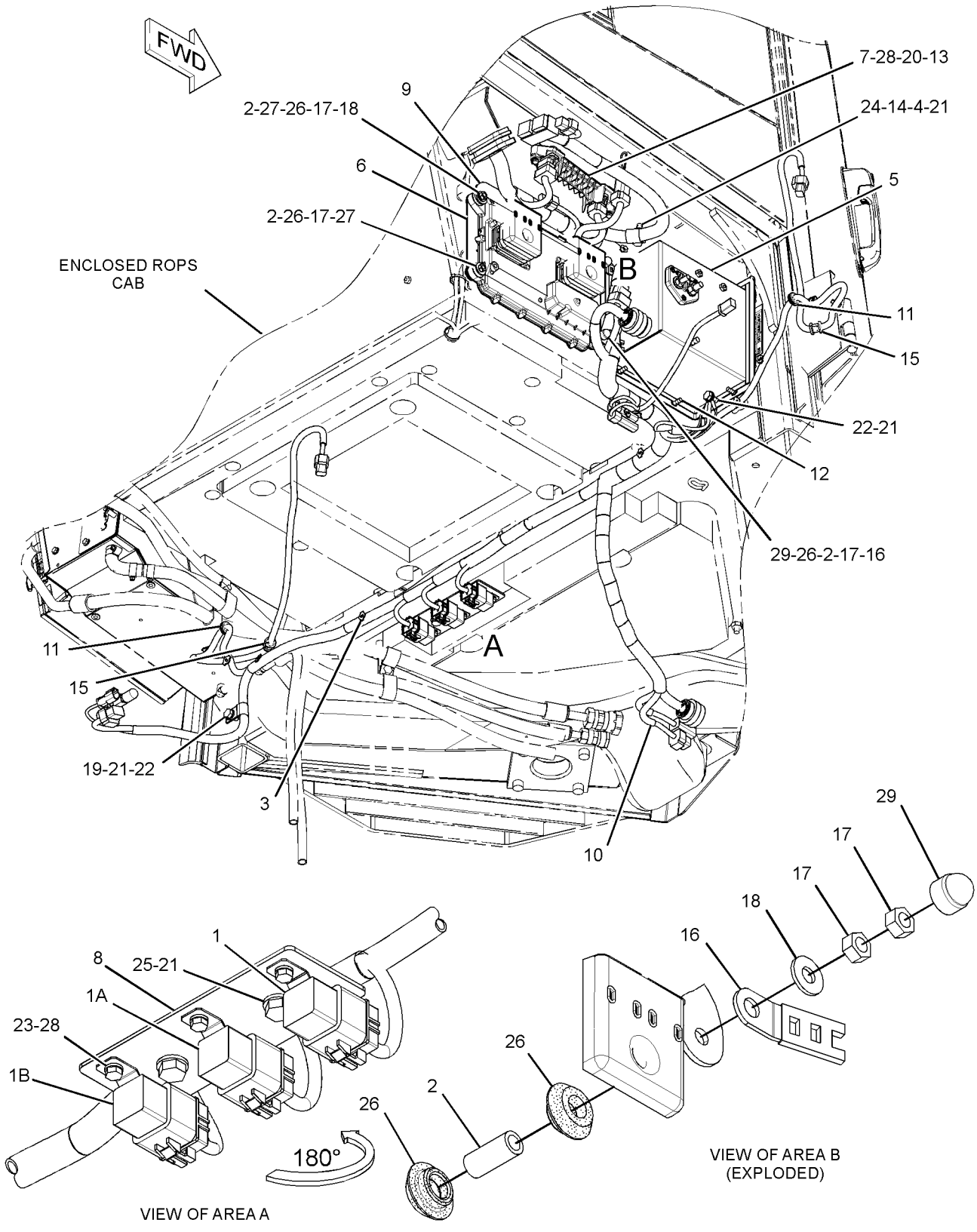

GRAPHIC #1 **<END>** g01433372

ELECTRICAL AND STARTING SYSTEM

206-7302 WIRING GP-PLATFORM

S/N: DHA1-UP; FBH1-UP
PART OF 240-6233 CAB GP-ENCLOSED ROPS, 267-2550 CAB GP-FORESTRY, 251-3536 CANOPY GP
AN ATTACHMENT
TYPE 2

SMCS-1408 **i03701080**

NOTE	REF NO	GRAPHIC REF	PART NUMBER	QTY	PART NAME 1 2 3 4 5 6 (PRODUCT LEVEL)	SEE PAGE
	1	1	**3E-5239**	1	RELAY AS (24-VOLT) (HORN)	
	1A	1	**3E-5239**	1	RELAY AS (24-VOLT) (REVERSING FAN)	
	1B	1	**3E-5239**	1	RELAY AS (24-VOLT) (A/C CLUTCH SOLENOID)	
C	2	1	**6C-8996**	2	CAP	
C	3	1	**6I-1418**	8	SPACER (8.2X12.7X28.7-MM THK)	
	4	1	**7K-1181**	15	STRAP-CABLE	
	5	1	**177-4937**	1	SPACER (11.7X19.8X20.3-MM THK)	
Y	6	1	*242-3053*	1	PANEL GP-FUSE	276
	7	1	**267-6457**	1	BRACKET AS	
C	8	1	**311-0263**	1	CONTROL GP-UNPROGRAMMED (IMPLEMENT)	
	9	1	**296-2649**	1	BRACKET AS	
R	10	1	**304-5687**	1	CONTROL GP-UNPROGRAMMED (MACHINE)	
C	11	1	**308-6206**	1	BRACKET AS	
C	12	1	**322-4867**	1	HARNESS AS-PLATFORM	
M	13	1	**127-2170**	6	SCREW-TRUSS HEAD (M8X1.25X20-MM)	
C	14	1	**155-0576**	8	MOUNT-ISOLATION	
	15	1	**3S-8665**	1	CLIP	
	16	1	**4D-0012**	2	GROMMET	
	17	1	**4P-7581**	2	CLIP	
M	18	1	**5C-7261**	6	NUT (M8X1.25-THD)	
C	19	1	**5P-4116**	3	WASHER-HARD (8.8X20.5X2-MM THK)	
	20	1	**5P-8439**	2	GROMMET	
	21	1	**6D-3479**	1	CLIP	
C	22	1	**7X-0579**	14	WASHER-HARD (8.8X25.5X2-MM THK)	
C	23	1	**8T-4121**	6	WASHER-HARD (11X21X2.5-MM THK)	
CM	24	1	**8T-4137**	3	BOLT (M10X1.5X20-MM)	
M	25	1	**8T-4186**	1	BOLT (M10X1.5X40-MM)	
M	26	1	**8T-4195**	2	BOLT (M10X1.5X30-MM)	
CM	27	1	**8T-4200**	3	BOLT (M8X1.25X16-MM)	
	28	1	**8T-4224**	2	WASHER-HARD (8.8X16X2-MM THK)	
CM	29	1	**7X-0818**	4	BOLT (M8X1.25X45-MM)	
	30	1	**8T-9655**	8	MOUNT-ISOLATION	
E	31	1	**7X-7702**		CONDUIT-FLEXIBLE (17-CM)	

C-CHANGE FROM PREVIOUS TYPE
E-ORDER BY THE CENTIMETER
M-METRIC PART
R-REMFG PART MAY BE AVAILABLE
Y-SEPARATE ILLUSTRATION

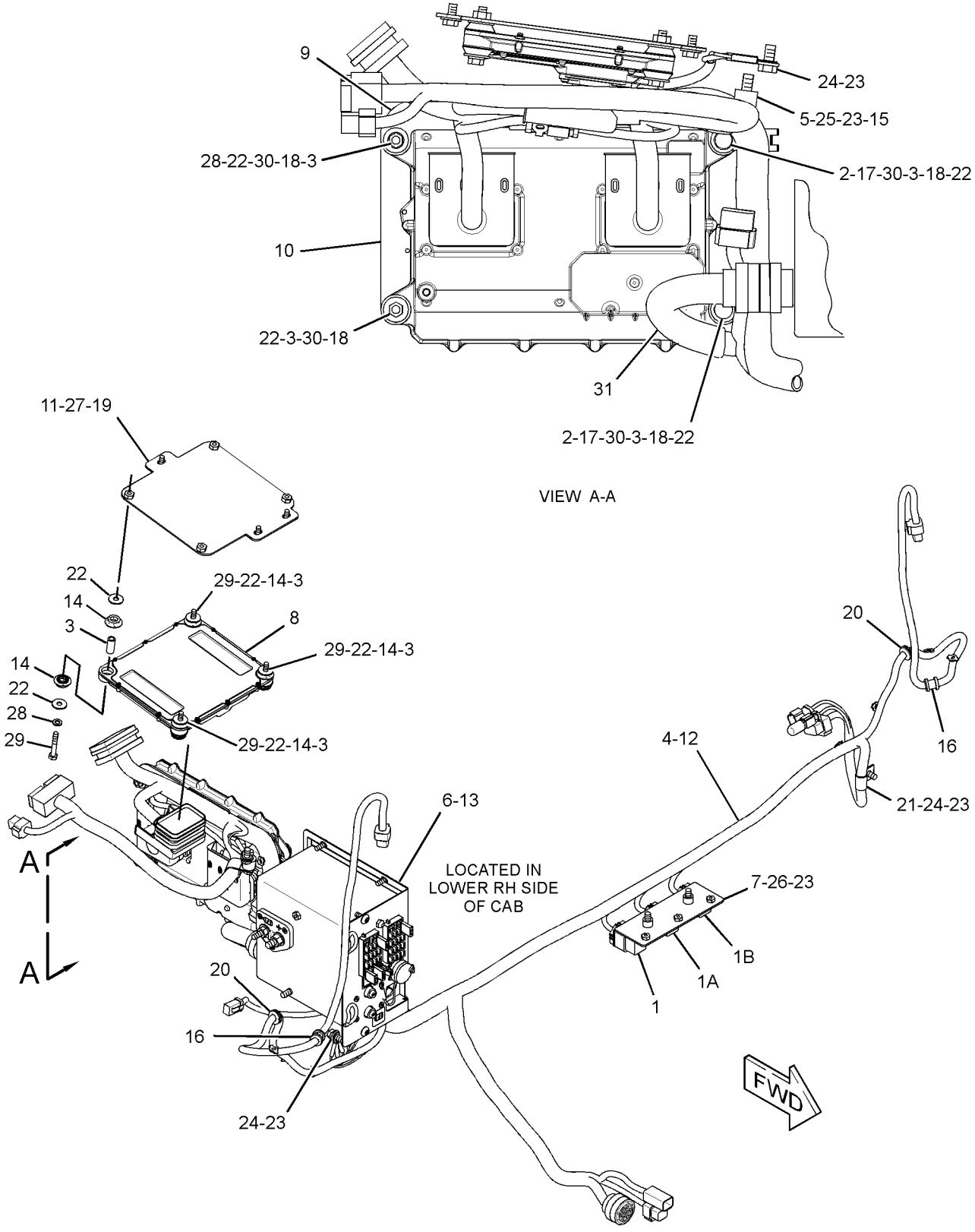

GRAPHIC #1 **<END>** g01519320

272-2771 WIRING GP-SEAT

S/N: DHA1-UP; FBH1-UP
PART OF 250-2120, 250-2121, 250-2123, 320-1194 SEAT GP-SUSPENSION
AN ATTACHMENT
TYPE 1

SMCS-1408 **i02809703**

NOTE	REF NO	GRAPHIC REF	PART NUMBER	QTY	PART NAME 1 2 3 4 5 6 (PRODUCT LEVEL)	SEE PAGE
B	1	1	**7K-1181**	9	STRAP-CABLE	
Y	2	1	**290-4835**	1	CONTROL GP-JOYSTICK (STEERING, TRANSMISSION)	673
	3	1	**293-5183**	1	HARNESS AS-SENSOR	
		1	**230-4010**	1	RECEPTACLE AS-CONNECTOR (12-PIN)	
		1	**230-5011**	1	RECEPTACLE AS-CONNECTOR (6-PIN)	
		1	**230-4009**	2	PLUG AS-CONNECTOR (12-PIN)	
		1	**230-5010**	1	PLUG AS-CONNECTOR (6-PIN)	
		1	**155-2260**	1	KIT-CONNECTING PLUG (3-PIN)	
		1	**155-2274**	1	KIT-CONNECTING PLUG (6-PIN)	
					(EACH INCLUDES PLUG AS, WEDGE, & INTERFACE SEAL)	
M	4	1	**3T-0849**	4	BOLT-SOCKET HEAD (M6X1X25-MM)	
	5	1	**4P-7581**	4	CLIP	

B-USE AS REQUIRED
M-METRIC PART
Y-SEPARATE ILLUSTRATION

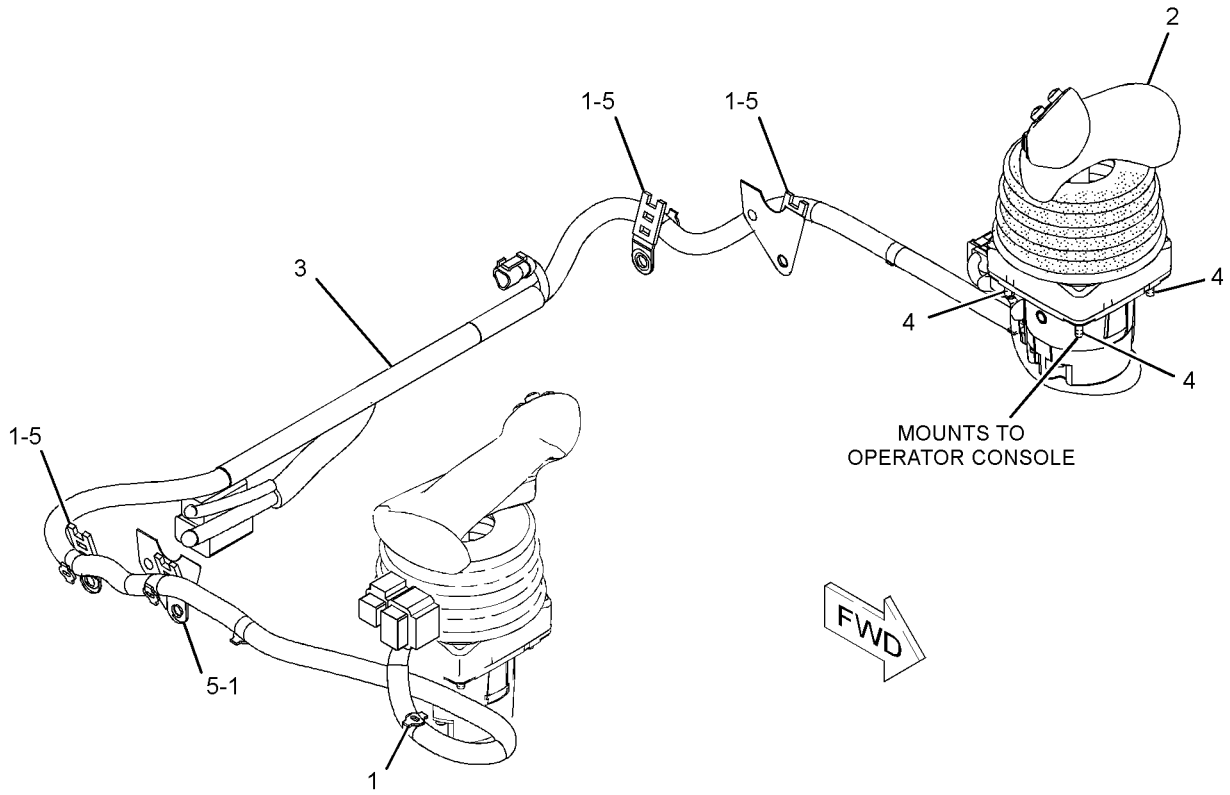

GRAPHIC #1 **<END>** g01419972

272-2771 WIRING GP-SEAT

S/N: DHA1-UP; FBH1-UP
PART OF 250-2120, 250-2121, 250-2123, 320-1194 SEAT GP-SUSPENSION
AN ATTACHMENT
TYPE 2

SMCS-1408 **i02997750**

NOTE	REF NO	GRAPHIC REF	PART NUMBER	QTY	PART NAME 1 2 3 4 5 6 (PRODUCT LEVEL)	SEE PAGE
BC	1	1	**7K-1181**	11	STRAP-CABLE	
Y	2	1	**290-4835**	1	CONTROL GP-JOYSTICK (STEERING, TRANSMISSION)	673
C	3	1	**322-4871**	1	HARNESS AS-SENSOR	
M	4	1	**3T-0849**	4	BOLT-SOCKET HEAD (M6X1X25-MM)	
C	5	1	**4P-7581**	6	CLIP	
CM	6	1	**5C-7261**	2	NUT (M8X1.25-THD)	
CM	7	1	**8T-4189**	2	BOLT (M8X1.25X20-MM)	
C	8	1	**8T-4224**	4	WASHER-HARD (8.8X16X2-MM THK)	

B-USE AS REQUIRED
C-CHANGE FROM PREVIOUS TYPE
M-METRIC PART
Y-SEPARATE ILLUSTRATION

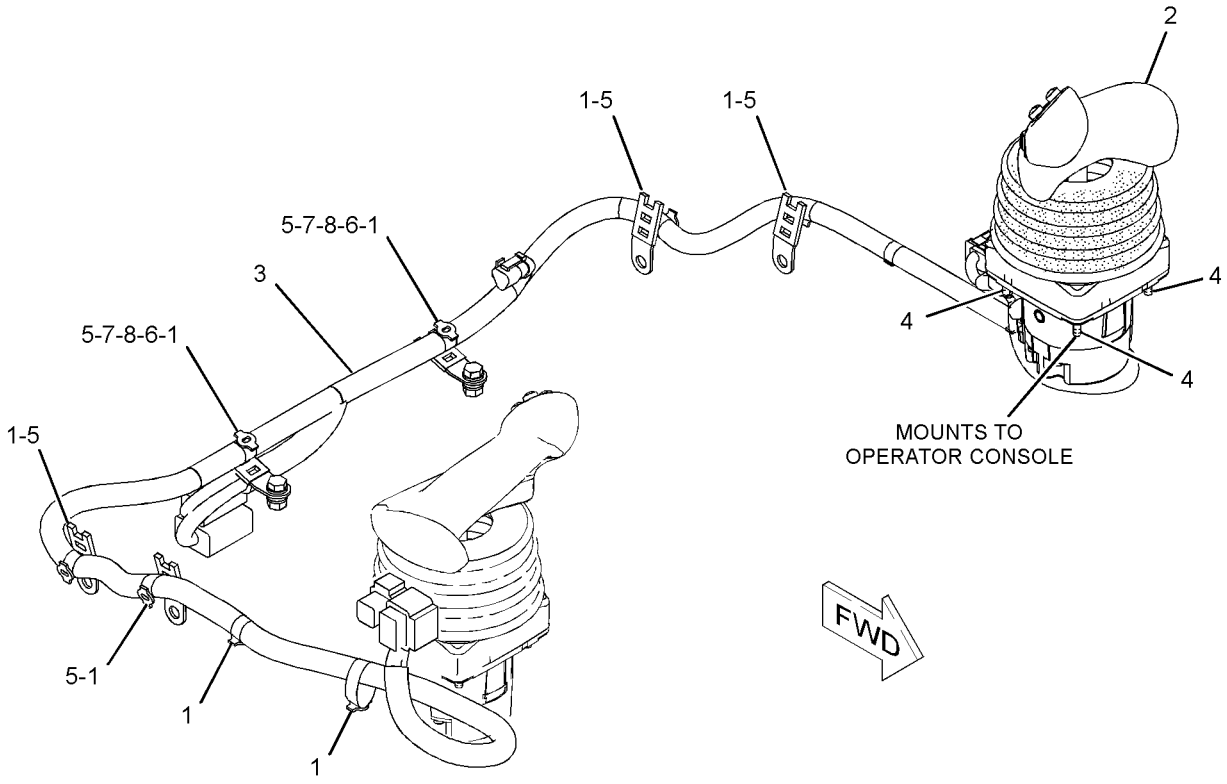

GRAPHIC #1 **<END>** g01520231

266-9652 WIRING GP-WINCH

S/N: DHA1-885; FBH1-1049
PART OF 248-6545 CONVERSION AR-WINCH
AN ATTACHMENT

SMCS-1408, 5163 **i02751890**

NOTE	REF NO	GRAPHIC REF	PART NUMBER	QTY	PART NAME 1 2 3 4 5 6 (PRODUCT LEVEL)	SEE PAGE
	1	1	**3S-2093**	1	STRAP-CABLE	
	2	1	**7K-1181**	11	STRAP-CABLE	
	3	1	**177-2215**	3	STRAP-DUAL CLAMP	
	4	1	**200-6345**	1	MOUNT (DUAL SWIVEL)	
Y	5	1	**214-6863**	1	SENSOR GP-PRESSURE (WINCH OIL)	291
	6	1	**289-4773**	1	HARNESS AS-SOLENOID	
		1	**102-8803**	1	KIT-RECEPTACLE (3-PIN)	
					(INCLUDES RECEPTACLE AS & WEDGE)	
		1	**230-4009**	1	PLUG AS-CONNECTOR (12-PIN)	
		1	**230-5010**	1	PLUG AS-CONNECTOR (6-PIN)	
		1	**230-5011**	1	RECEPTACLE AS-CONNECTOR (6-PIN)	
		1	**239-7357**	1	RECEPTACLE AS-CONNECTOR (12-PIN)	
Y	7	1	*309-3676*	1	CONTROL GP-UNPROGRAMMED (WINCH)	201
	8	1	*180-9933*	1	ADAPTER GP (90-DEG)	
		1	**135-9941**	1	ADAPTER	
		1	**3J-7354**	1	SEAL-O-RING	
	9	1	**3J-1907**	1	SEAL-O-RING	
	10	1	**4P-7581**	1	CLIP	
	11	1	**8T-4121**	1	WASHER-HARD (11X21X2.5-MM THK)	
M	12	1	**8T-4137**	1	BOLT (M10X1.5X20-MM)	

M-METRIC PART
Y-SEPARATE ILLUSTRATION

266-9652 **WIRING GP-WINCH** *(contd.)* **i02751890**

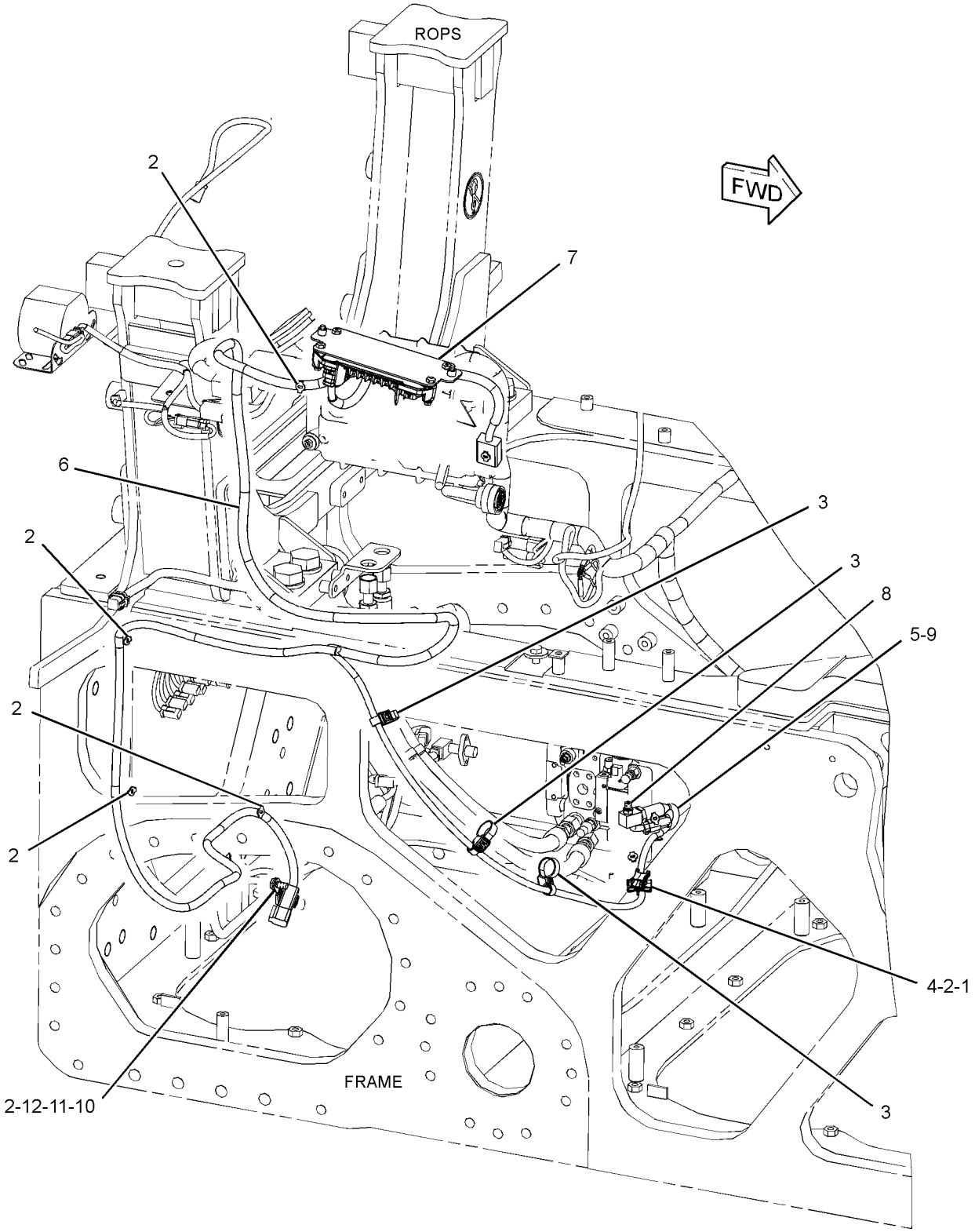

GRAPHIC #1 **<END>** g01386078

ELECTRICAL AND STARTING SYSTEM

266-9652 WIRING GP-WINCH

S/N: DHA886-UP; FBH1050-UP
PART OF 248-6545 CONVERSION AR-WINCH
AN ATTACHMENT

SMCS-1408, 5163 **i03120902**

NOTE	REF NO	GRAPHIC REF	PART NUMBER	QTY	PART NAME 1 2 3 4 5 6 (PRODUCT LEVEL)	SEE PAGE
	1	1	**3S-2093**	1	STRAP-CABLE	
	2	1	**7K-1181**	11	STRAP-CABLE	
	3	1	**177-2215**	3	STRAP-DUAL CLAMP	
	4	1	**200-6345**	1	MOUNT (DUAL SWIVEL)	
Y	5	1	**214-6863**	1	SENSOR GP-PRESSURE (WINCH OIL)	291
C	6	1	**324-9504**	1	HARNESS AS-SOLENOID	
	7	1	*180-9933*	1	ADAPTER GP (90-DEG)	
		1	**135-9941**	1	ADAPTER	
		1	**3J-7354**	1	SEAL-O-RING	
	8	1	**3J-1907**	1	SEAL-O-RING	
	9	1	**4P-7581**	1	CLIP	
	10	1	**8T-4121**	1	WASHER-HARD (11X21X2.5-MM THK)	
M	11	1	**8T-4137**	1	BOLT (M10X1.5X20-MM)	

C-CHANGE FROM PREVIOUS TYPE
M-METRIC PART
Y-SEPARATE ILLUSTRATION

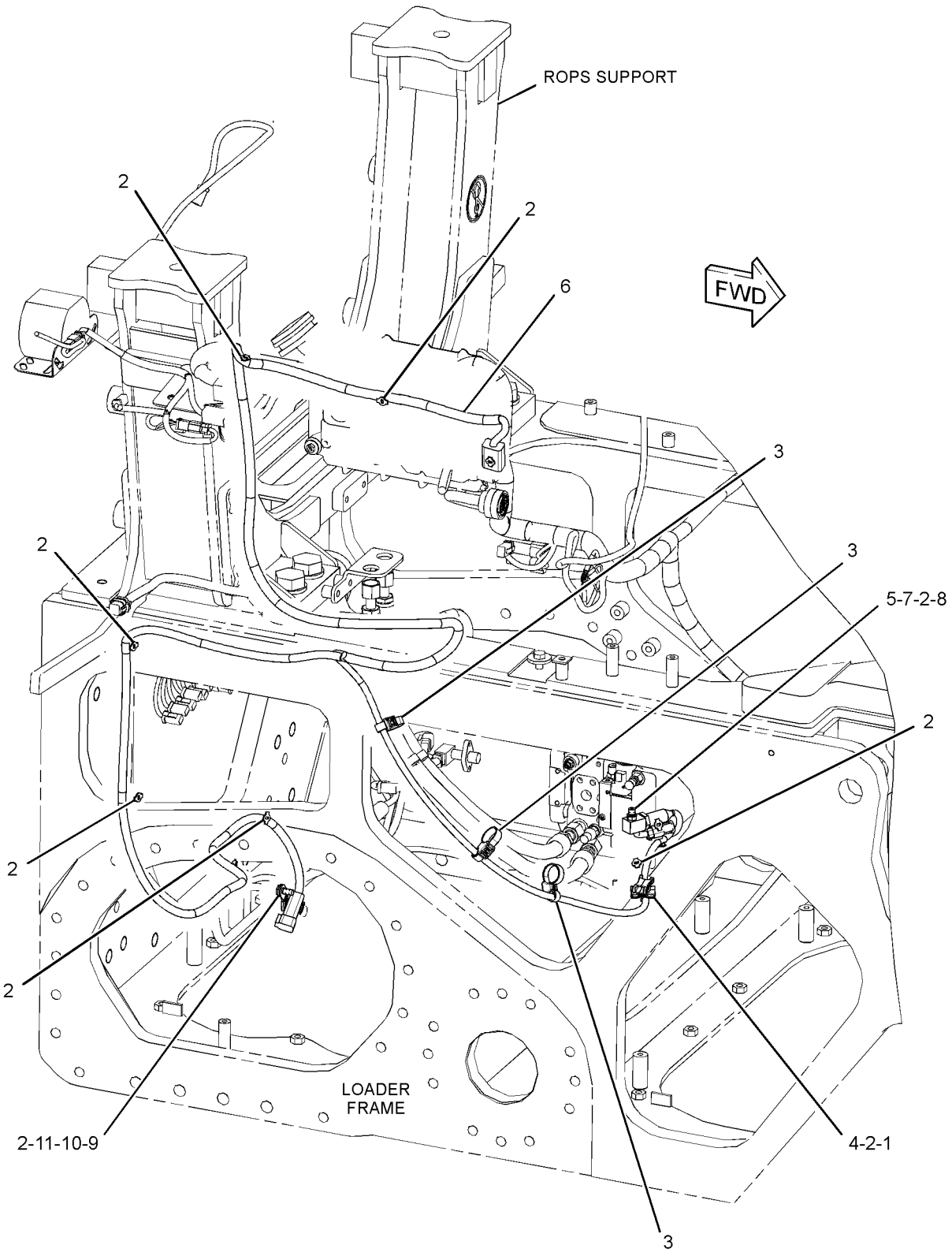

GRAPHIC #1 **<END>** g01621536

278-4439 ACTUATOR GP-PUMP—HYDROSTATIC DRIVE

S/N: DHA1-UP; FBH1-UP

PART OF 261-3629, 261-3630 PUMP GP-PISTON

SMCS-5078 **i02938823**

NOTE	REF NO	GRAPHIC REF	PART NUMBER	QTY	PART NAME 1 2 3 4 5 6 (PRODUCT LEVEL)	SEE PAGE
M	1	1	**8T-1158**	8	BOLT-SOCKET HEAD (M8X1.25X20-MM)	
	2	1	**278-4452**	1	KIT-CARTRIDGE (PUMP CONTROL VALVE)	
	3	1	**6V-8398**	1	SEAL-O-RING	
M	4	1	**161-7614**	1	NUT (M16X1.5-THD)	
	5	1	**119-7844**	2	SEAL-O-RING	
	6	1	**153-2163**	2	RING	
	7	1	**153-2160**	1	COVER	
	8	1	**153-2159**	1	COVER	
	9	1	**153-2162**	2	RING	

M-METRIC PART

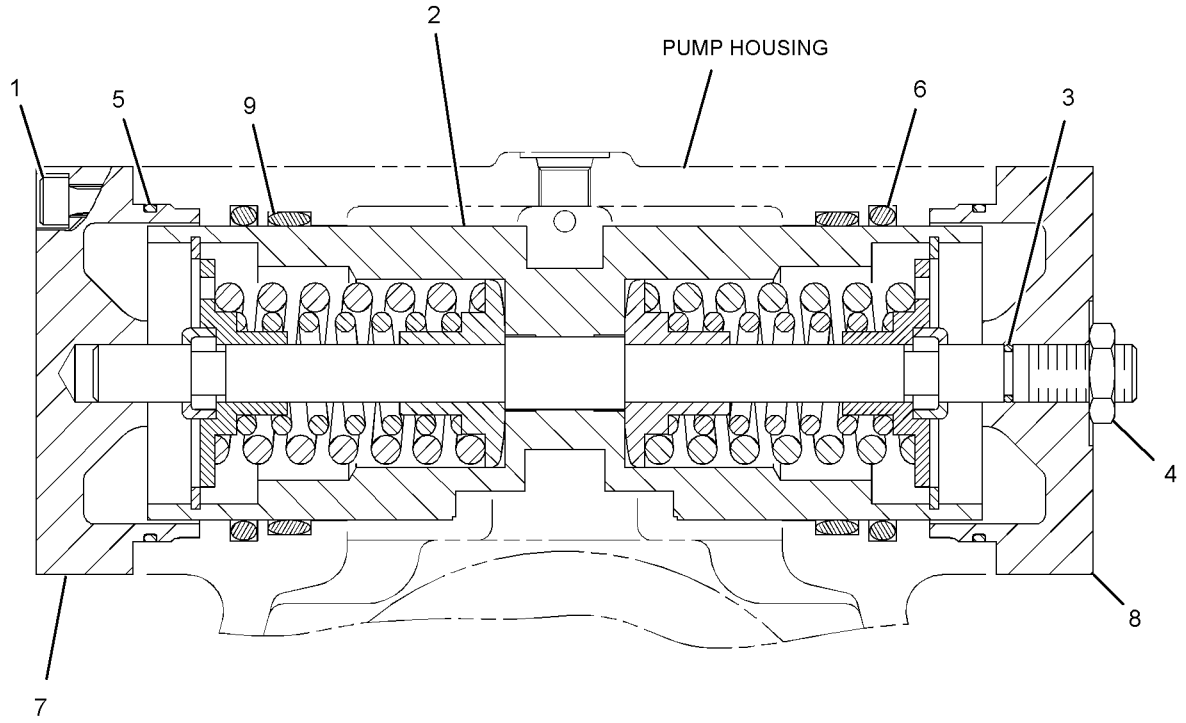

GRAPHIC #1 **<END>** g01303914

206-7255 COUPLING GP-PUMP

S/N: DHA1-UP; FBH1-UP

PART OF 206-7260, 206-7261 POWER TRAIN AR

SMCS-5062 **i02906445**

NOTE	REF NO	GRAPHIC REF	PART NUMBER	QTY	PART NAME 1 2 3 4 5 6 (PRODUCT LEVEL)	SEE PAGE
	1	1	**252-0235**	1	COUPLING GP-FLEXIBLE	
M	2	1	**190-2787**	4	BOLT-SOCKET HEAD (M16X2X60-MM)	

M-METRIC PART

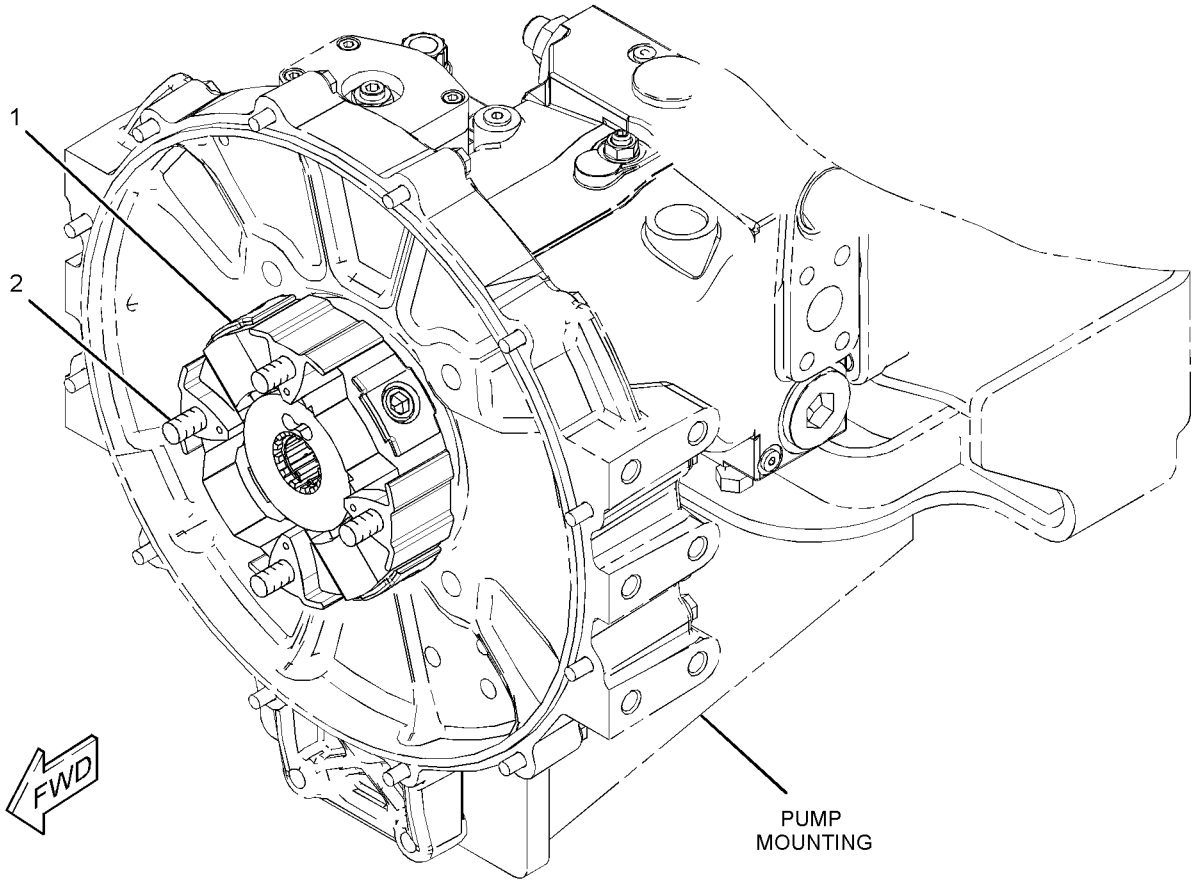

GRAPHIC #1 **<END>** g01456506

264-2995 FILTER GP-OIL—POWER TRAIN, WINCH—POWER TRAIN

S/N: DHA1-281; FBH1-419

PART OF 206-7264 LINES GP-CHARGE PRESSURE, 246-5950 LINES GP-WINCH

AN ATTACHMENT

SMCS-3004, 3067, 5068, 5177 **i03699621**

NOTE	REF NO	GRAPHIC REF	PART NUMBER	QTY	PART NAME 1 2 3 4 5 6 (PRODUCT LEVEL)	SEE PAGE
	1	1	**8C-3451**	1	CAP-DUST	
	2	1	**227-6744**	1	SWITCH GP-DIFF PRESSURE (FILTER BYPASS)	
		1	**102-8802**	1	KIT-RECEPTACLE (2-PIN)	
					(INCLUDES RECEPTACLE AS & WEDGE)	
		1	**186-3735**	2	PIN-CONNECTOR (16-GA TO 18-GA)	
E		1	**9X-1813**		SLEEVE (14-CM)	
	3	1	**183-7264**	1	VALVE AS-FLUID SAMPLING	
	4	1	**1G-8878**	1	FILTER-OIL (ADVANCED EFFICIENCY)	
					—OR—	
A		1	**102-2828**	1	FILTER-OIL (ULTRA HIGH EFFICIENCY)	
					—OR—	
A		1	**156-0214**	1	FILTER-OIL (FIRE RESISTANT FLUID)	
	5	1	**3J-1907**	2	SEAL-O-RING	
	6	1	**5F-9144**	1	SEAL-O-RING	

A-NOT PART OF THIS GROUP
E-ORDER BY THE CENTIMETER

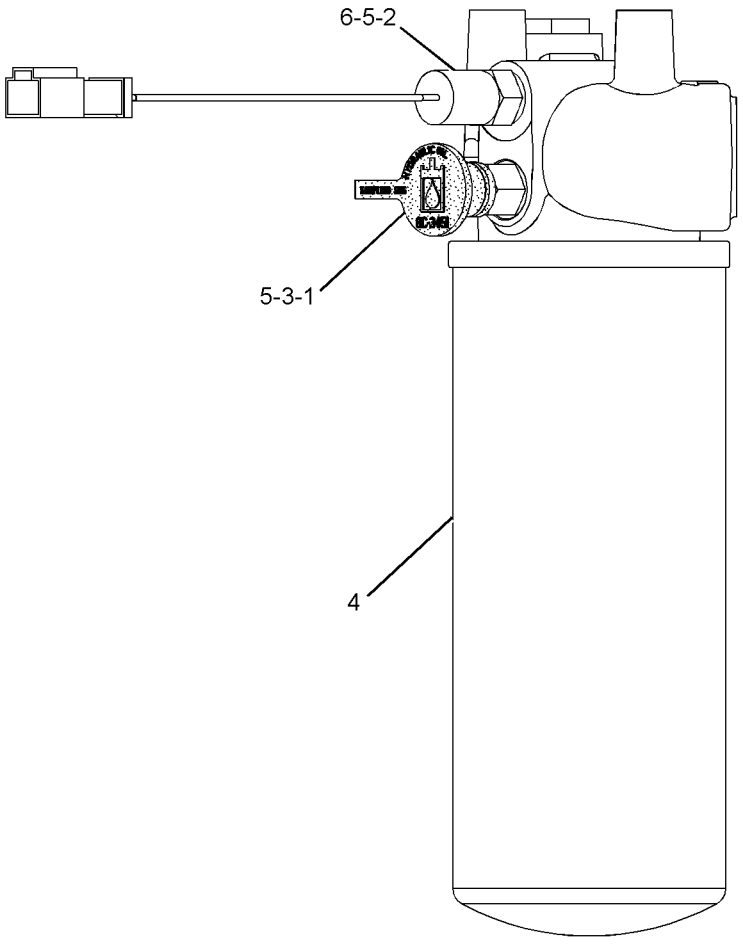

GRAPHIC #1 **<END>** g01203312

302-7298 FILTER GP-OIL—POWER TRAIN, WINCH—POWER TRAIN

S/N: DHA282-UP; FBH420-UP

PART OF 206-7264 LINES GP-CHARGE PRESSURE, 246-5950 LINES GP-WINCH

AN ATTACHMENT

SMCS-3004, 3067, 5068, 5177 **i03626796**

NOTE	REF NO	GRAPHIC REF	PART NUMBER	QTY	PART NAME 1 2 3 4 5 6 (PRODUCT LEVEL)	SEE PAGE
	1	1	**1G-8878**	1	FILTER-OIL (ADVANCED EFFICIENCY)	
					—OR—	
A		1	**102-2828**	1	FILTER-OIL (ULTRA HIGH EFFICIENCY)	
					—OR—	
A		1	**156-0214**	1	FILTER-OIL (FIRE RESISTANT FLUID)	
	2	1	**6V-0852**	1	CAP-DUST	
	3	1	**6V-3965**	1	FITTING (QUICK DISCONNECT)	
	4	1	**227-6744**	1	SWITCH GP-DIFF PRESSURE (FILTER BYPASS)	
	4A	1	**5F-9144**	1	SEAL-O-RING	
	4B	1	**3J-1907**	1	SEAL-O-RING	
		1	**102-8802**	1	KIT-RECEPTACLE (2-PIN)	
					(INCLUDES RECEPTACLE AS & WEDGE)	
		1	**186-3735**	2	PIN-CONNECTOR (16-GA TO 18-GA)	
E		1	**9X-1813**		SLEEVE (14-CM)	
	5	1	**3J-1907**	1	SEAL-O-RING	

A-NOT PART OF THIS GROUP
E-ORDER BY THE CENTIMETER

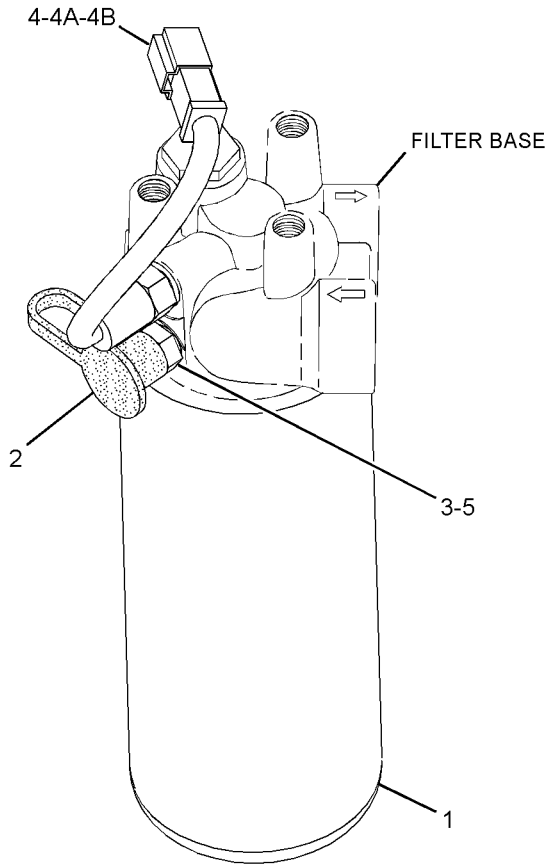

GRAPHIC #1 **<END>** g01415335

POWER TRAIN

239-1244 FINAL DRIVE & BRAKE GP

S/N: FBH1-UP
PART OF 206-7260 POWER TRAIN AR
ALSO AN ATTACHMENT

SMCS-4050, 4056, 4251 **i03568971**

NOTE	REF NO	GRAPHIC REF	PART NUMBER	QTY	PART NAME 1 2 3 4 5 6 (PRODUCT LEVEL)	SEE PAGE
	1	2	**1B-3978**	12	CUP-BEARING (TAPERED ROLLER)	
	2	2	**1B-3980**	12	CONE-BEARING (TAPERED ROLLER)	
	3	1	**3S-9182**	2	PLUG-MAGNETIC (FINAL DRIVE, OIL DRAIN)	
	4	2	**3W-5159**	6	PLATE-PARKING BRAKE	
	5	2	**3W-5436**	2	BUTTON-THRUST	
	6	2	**3W-5447**	2	COVER	
	7	2	**3W-5451**	2	PISTON	
	8	2	**3W-5928**	2	SEAL AS	
					(EACH INCLUDES)	
		2	**5F-0149**	1	SEAL-O-RING	
		2	**5J-7852**	1	SEAL	
	9	2	**5F-0585**	4	CONE-BEARING (TAPERED ROLLER)	
	10	2	**5F-0589**	4	CUP-BEARING (TAPERED ROLLER)	
	11	2	**6V-0327**	4	CUP-BEARING (TAPERED ROLLER)	
	12	2	**6V-0328**	4	CONE-BEARING (TAPERED ROLLER)	
	13	1	**6V-0439**	2	PLUG-MAGNETIC (FINAL DRIVE, OIL DRAIN)	
	13A	1	**6V-0439**	2	PLUG-MAGNETIC (FINAL DRIVE, OIL CHECK)	
	13B	1	**6V-0439**	2	PLUG-MAGNETIC (FINAL DRIVE, OIL FILL)	
	15	2	**6Y-0859**	2	SEAL GP-DUO-CONE	
					(EACH INCLUDES)	
		2	**1M-9011**	2	RING-TORIC	
	16	2	**7P-9571**	6	PLUG	
	17	2	**8G-1258**	2	PLATE-PRESSURE	
	18	2	**8G-1259**	2	RING-LOCK	
	19	2	**8G-4392**	4	SPRING-DISC	
	20	2	**8G-4565**	6	GEAR-PLANETARY (30-TEETH)	
	21	2	**8G-4568**	2	GEAR-RING (74-TEETH)	
	22	2	**8G-4569**	2	RING	
	23	2	*8T-6379*	2	SEAL AS	
					(EACH INCLUDES)	
		2	**7J-8956**	1	SEAL-O-RING	
		2	**8T-6378**	1	SEAL-RING	
	24	2	**170-8714**	8	DISC-FRICTION	
	25	2	**239-1246**	2	SPINDLE	
	26	2	**239-1248**	2	SHAFT-SUN GEAR	
	27	1	**239-1250**	1	CASE-FINAL DRIVE (RH)	
	28	1	**239-1251**	1	CASE-FINAL DRIVE (LH)	
	29	2	**239-1253**	2	HUB-RING GEAR	
	30	2	**239-1254**	2	PLATE-RETAINER	
	31	2	**239-1255**	2	GEAR-FINAL DRIVE (81-TEETH)	
	32	2	**239-1256**	2	GEAR-INPUT (13-TEETH)	
	33	2	**239-4478**	2	HOUSING	
	34	2	**239-4481**	2	RETAINER	
	35	2	**242-8863**	2	HUB	
	36	2	*327-7124*	2	CARRIER AS	
					(EACH INCLUDES)	
M		2	**6V-3532**	6	BOLT (M20X2.5X60-MM)	
		2	**8T-3282**	6	WASHER-HARD (22X35X3.5-MM THK)	
		2	**327-4287**	1	PLATE	
	37	2	**243-1455**	6	SHAFT	
	38	2	**246-8432**	2	RING	
	39	2	**247-2574**	2	SHAFT	
	40	2	**2H-6489**	2	RACE-BEARING OUTER	
	41	2	**2H-6490**	2	BEARING-INNER	
	42	2	**2K-2939**	2	SEAL-O-RING	

239-1244 **FINAL DRIVE & BRAKE GP** *(contd.)* **i03568971**

NOTE	REF NO	GRAPHIC REF	PART NUMBER	QTY	PART NAME 1 2 3 4 5 6 (PRODUCT LEVEL)	SEE PAGE
	43	1	**2S-4078**	6	SEAL-O-RING	
	44	2	**5P-8245**	18	WASHER-HARD (13.5X25.5X3-MM THK)	
	45	2	**5P-9147**	2	SEAL-O-RING	
	46	2	**5S-3676**	4	SEAL-O-RING	
	47	1	**6V-2452**	6	DOWEL	
M	48	2	**6V-3823**	18	BOLT (M12X1.75X60-MM)	
M	49	2	**6V-6317**	12	BOLT (M10X1.5X20-MM)	
	50	2	**7D-7519**	2	SEAL-O-RING	
M	51	2	**7X-2563**	36	BOLT (M20X2.5X60-MM)	
	52	2	**8T-4123**	44	WASHER (22X35X3.5-MM THK)	
M	53	2	**8T-4137**	12	BOLT (M10X1.5X20-MM)	
M	54	2	**8T-4140**	58	BOLT (M16X2X60-MM)	
M	55	2	**8T-4187**	8	BOLT (M20X2.5X80-MM)	
M	56	2	**8T-4193**	48	BOLT (M16X2X50-MM)	
	57	2	**8T-7971**	16	WASHER-HARD (13.5X25.5X5-MM THK)	
M	58	2	**8T-4176**	16	BOLT (M12X1.75X90-MM)	
	59	2	**9X-8257**	106	WASHER (17.5X30X3.5-MM THK)	
B	60	2	**6V-6640**		SEALANT	

QUANTITIES SHOWN ARE THOSE REQUIRED FOR BOTH LH AND RH SIDES
B-USE AS REQUIRED
M-METRIC PART

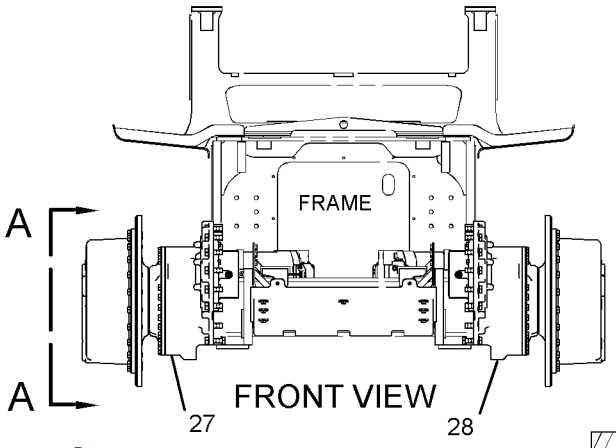

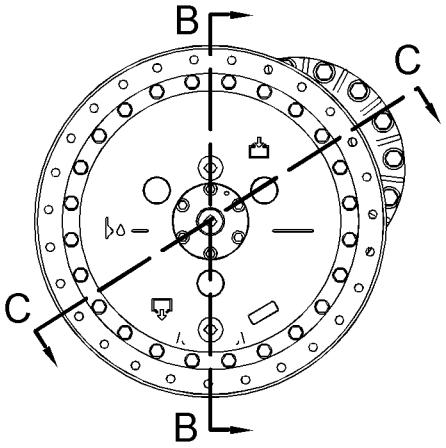

VIEW A-A

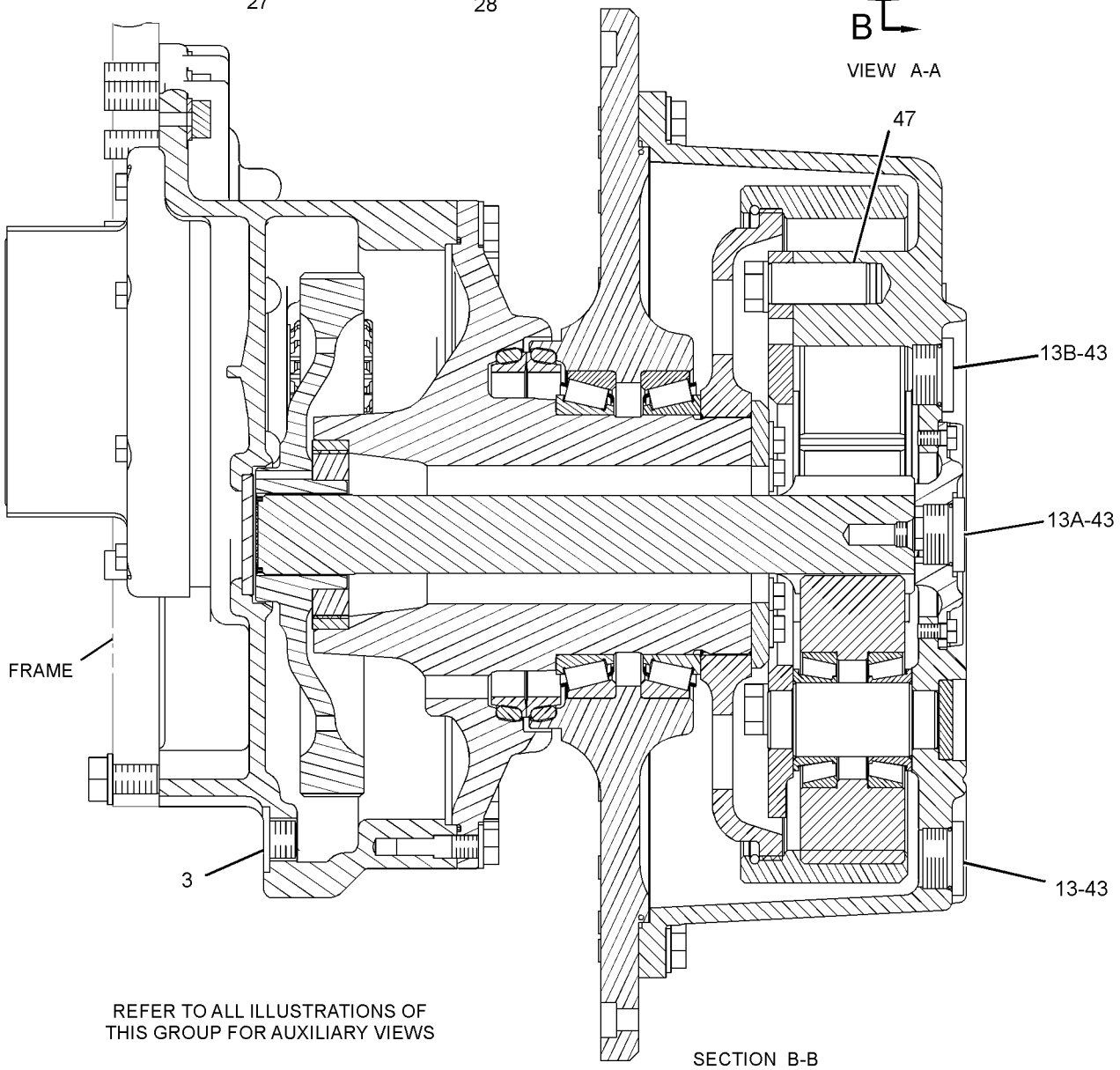

REFER TO ALL ILLUSTRATIONS OF
THIS GROUP FOR AUXILIARY VIEWS

SECTION B-B

GRAPHIC #1

g01417273

239-1244 **FINAL DRIVE & BRAKE GP** *(contd.)* **i03568971**

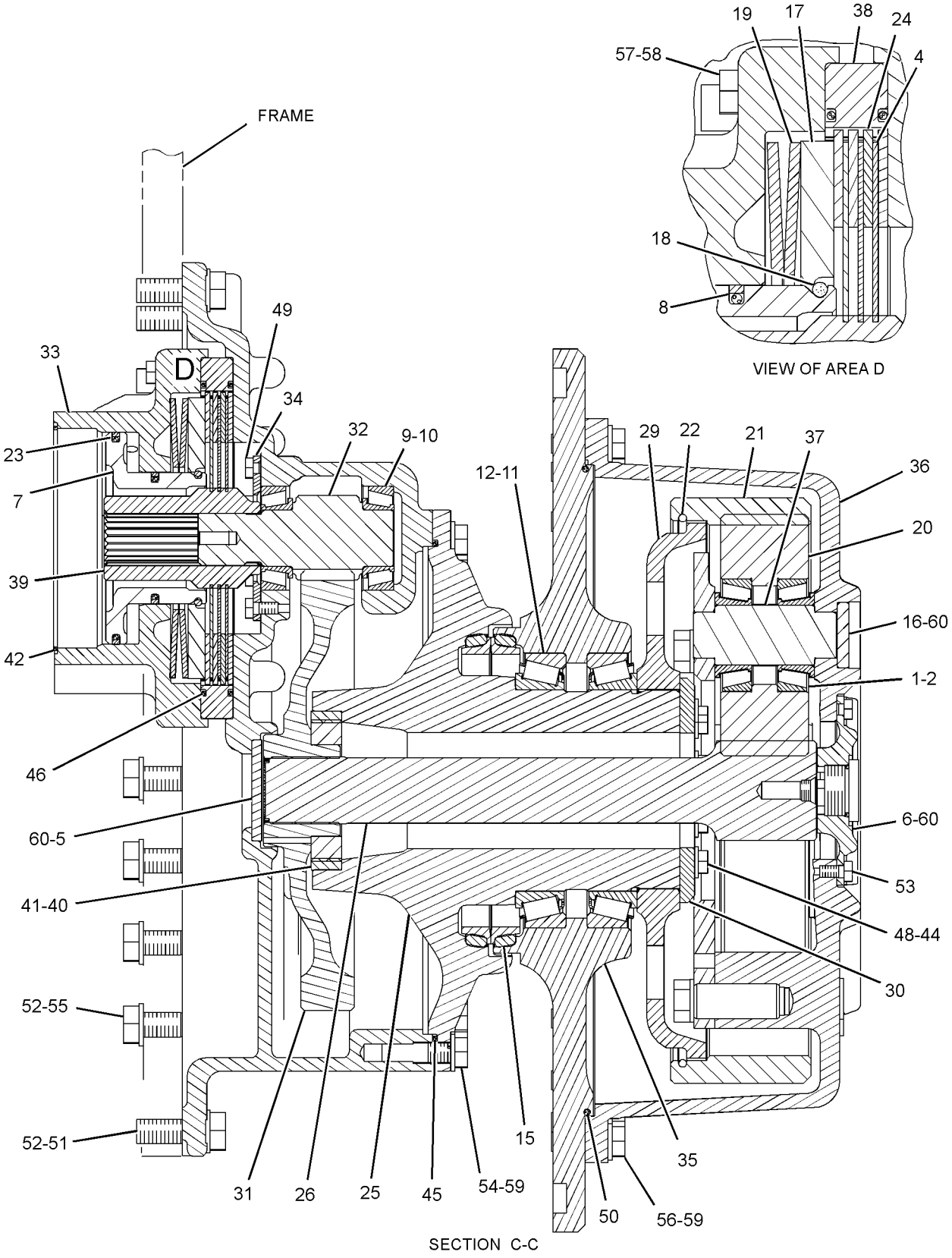

GRAPHIC #2 **<END>** g01414188

POWER TRAIN

239-1245 FINAL DRIVE & BRAKE GP

S/N: DHA1-UP

PART OF 206-7261 POWER TRAIN AR

ALSO AN ATTACHMENT

SMCS-4050, 4056, 4251 **i03568981**

NOTE	REF NO	GRAPHIC REF	PART NUMBER	QTY	PART NAME 1 2 3 4 5 6 (PRODUCT LEVEL)	SEE PAGE
	1	2	**1B-3978**	12	CUP-BEARING (TAPERED ROLLER)	
	2	2	**1B-3980**	12	CONE-BEARING (TAPERED ROLLER)	
	3	1	**3S-9182**	2	PLUG-MAGNETIC (FINAL DRIVE, OIL DRAIN)	
	4	2	**3W-5159**	6	PLATE-PARKING BRAKE	
	5	2	**3W-5436**	2	BUTTON-THRUST	
	6	2	**3W-5447**	2	COVER	
	7	2	**3W-5451**	2	PISTON	
	8	2	*3W-5928*	2	SEAL AS	
					(EACH INCLUDES)	
		2	**5F-0149**	1	SEAL-O-RING	
		2	**5J-7852**	1	SEAL	
	9	2	**5F-0585**	4	CONE-BEARING (TAPERED ROLLER)	
	10	2	**5F-0589**	4	CUP-BEARING (TAPERED ROLLER)	
	11	2	**6V-0327**	4	CUP-BEARING (TAPERED ROLLER)	
	12	2	**6V-0328**	4	CONE-BEARING (TAPERED ROLLER)	
	13	1	**6V-0439**	2	PLUG-MAGNETIC (FINAL DRIVE, OIL DRAIN)	
	13A	1	**6V-0439**	2	PLUG-MAGNETIC (FINAL DRIVE, OIL FILL)	
	13B	1	**6V-0439**	2	PLUG-MAGNETIC (FINAL DRIVE, OIL CHECK)	
	15	2	**6Y-0859**	2	SEAL GP-DUO-CONE	
					(EACH INCLUDES)	
		2	**1M-9011**	2	RING-TORIC	
	16	2	**7P-9571**	6	PLUG	
	17	2	**8G-1258**	2	PLATE-PRESSURE	
	18	2	**8G-1259**	2	RING-LOCK	
	19	2	**8G-4392**	4	SPRING-DISC	
	20	2	**8G-4565**	6	GEAR-PLANETARY (30-TEETH)	
	21	2	**8G-4568**	2	GEAR-RING (74-TEETH)	
	22	2	**8G-4569**	2	RING	
	23	2	*8T-6379*	2	SEAL AS	
					(EACH INCLUDES)	
		2	**7J-8956**	1	SEAL-O-RING	
		2	**8T-6378**	1	SEAL-RING	
	24	2	**170-8714**	8	DISC-FRICTION	
	25	2	**239-1247**	2	SPINDLE	
	26	2	**239-1249**	2	SHAFT-SUN GEAR	
	27	1	**239-1250**	1	CASE-FINAL DRIVE (RH)	
	28	1	**239-1251**	1	CASE-FINAL DRIVE (LH)	
	29	2	**239-1253**	2	HUB-RING GEAR	
	30	2	**239-1254**	2	PLATE-RETAINER	
	31	2	**239-1255**	2	GEAR-FINAL DRIVE (81-TEETH)	
	32	2	**239-1256**	2	GEAR-INPUT (13-TEETH)	
	33	2	**239-4478**	2	HOUSING	
	34	2	**239-4481**	2	RETAINER	
	35	2	**242-8863**	2	HUB	
	36	2	*327-7124*	2	CARRIER AS	
					(EACH INCLUDES)	
M		1	**6V-3532**	6	BOLT (M20X2.5X60-MM)	
		1	**8T-3282**	6	WASHER-HARD (22X35X3.5-MM THK)	
		1	**327-4287**	1	PLATE	
	37	2	**243-1455**	6	SHAFT	
	38	2	**246-8432**	2	RING	
	39	2	**247-2574**	2	SHAFT	
	40	2	**2H-6489**	2	RACE-BEARING OUTER	
	41	2	**2H-6490**	2	BEARING-INNER	
	42	2	**2K-2939**	2	SEAL-O-RING	

239-1245 **FINAL DRIVE & BRAKE GP** *(contd.)* **i03568981**

NOTE	REF NO	GRAPHIC REF	PART NUMBER	QTY	PART NAME 1 2 3 4 5 6 (PRODUCT LEVEL)	SEE PAGE
	43	1	**2S-4078**	6	SEAL-O-RING	
	44	2	**5P-8245**	18	WASHER-HARD (13.5X25.5X3-MM THK)	
	45	2	**5P-9147**	2	SEAL-O-RING	
	46	2	**5S-3676**	4	SEAL-O-RING	
	47	1	**6V-2452**	6	DOWEL	
M	48	2	**6V-3823**	18	BOLT (M12X1.75X60-MM)	
M	49	2	**6V-6317**	12	BOLT (M10X1.5X20-MM)	
	50	2	**7D-7519**	2	SEAL-O-RING	
M	51	2	**7X-2563**	36	BOLT (M20X2.5X60-MM)	
	52	2	**8T-4123**	44	WASHER (22X35X3.5-MM THK)	
M	53	2	**8T-4137**	12	BOLT (M10X1.5X20-MM)	
M	54	2	**8T-4140**	58	BOLT (M16X2X60-MM)	
M	55	2	**8T-4187**	8	BOLT (M20X2.5X80-MM)	
M	56	2	**8T-4193**	48	BOLT (M16X2X50-MM)	
	57	2	**8T-7971**	16	WASHER-HARD (13.5X25.5X5-MM THK)	
M	58	2	**8T-4176**	16	BOLT (M12X1.75X90-MM)	
	59	2	**9X-8257**	106	WASHER (17.5X30X3.5-MM THK)	
B	60	2	**6V-6640**	1	SEALANT	

QUANTITIES SHOWN ARE THOSE REQUIRED FOR BOTH LH AND RH SIDES
B-USE AS REQUIRED
M-METRIC PART

REFER TO ALL ILLUSTRATIONS OF
THIS GROUP FOR AUXILIARY VIEWS

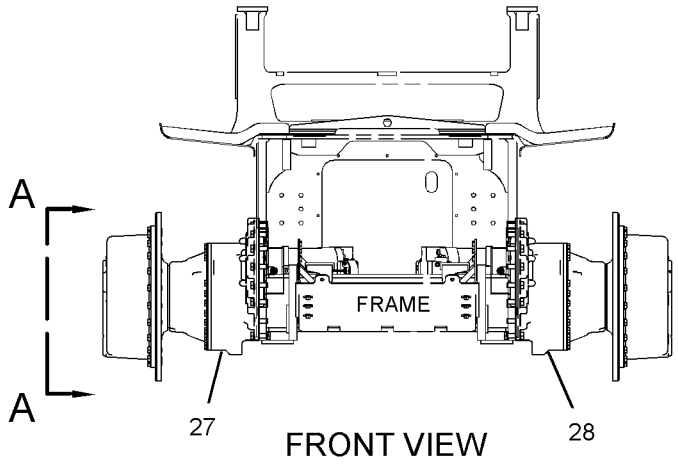

FRONT VIEW

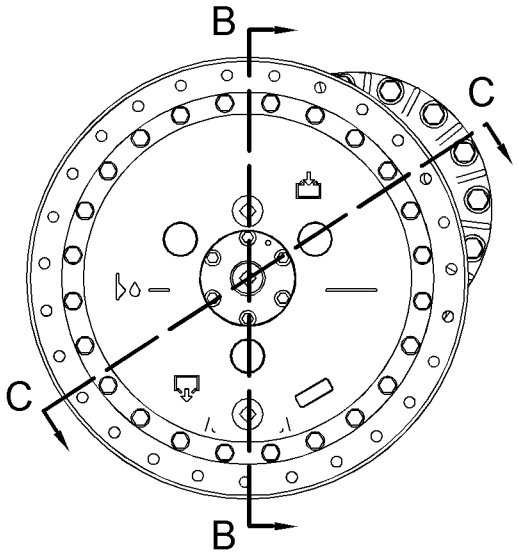

VIEW A-A

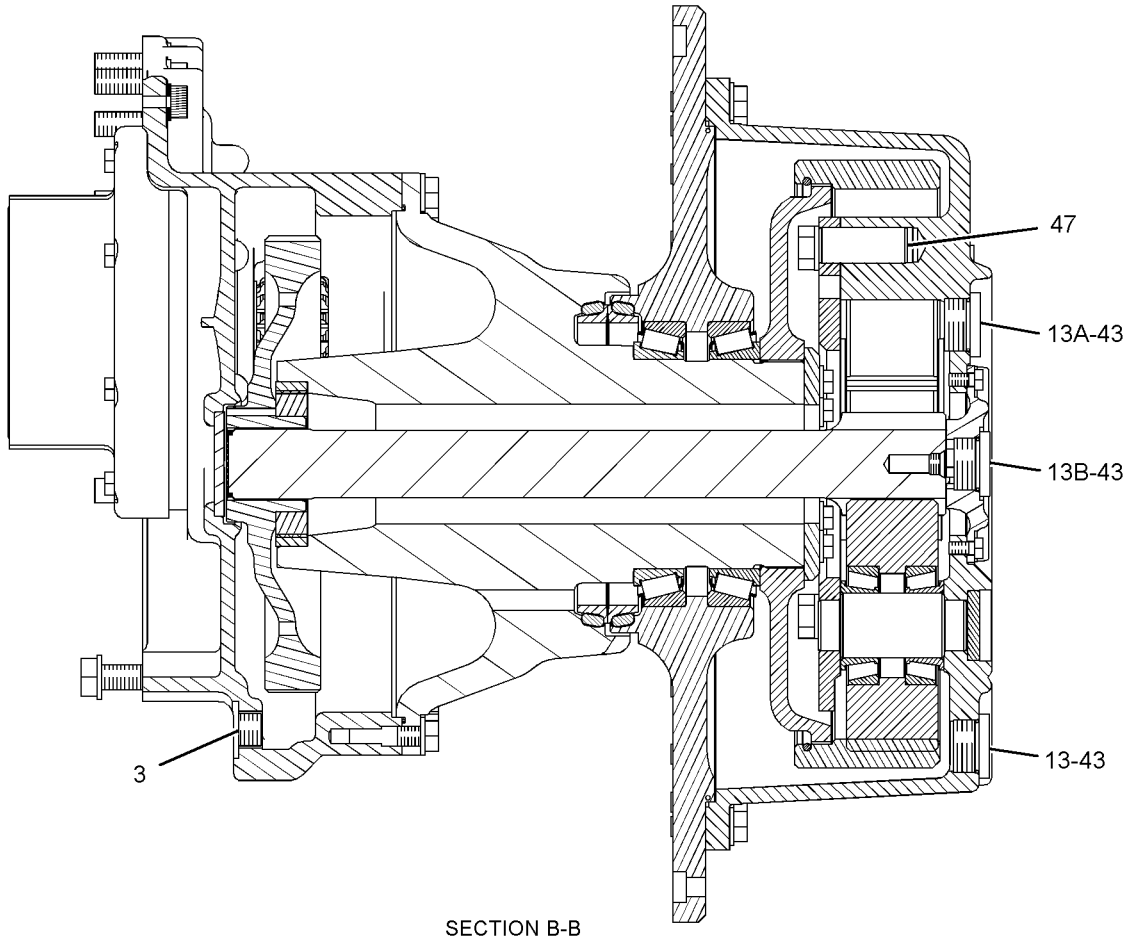

SECTION B-B

GRAPHIC #1

g01526255

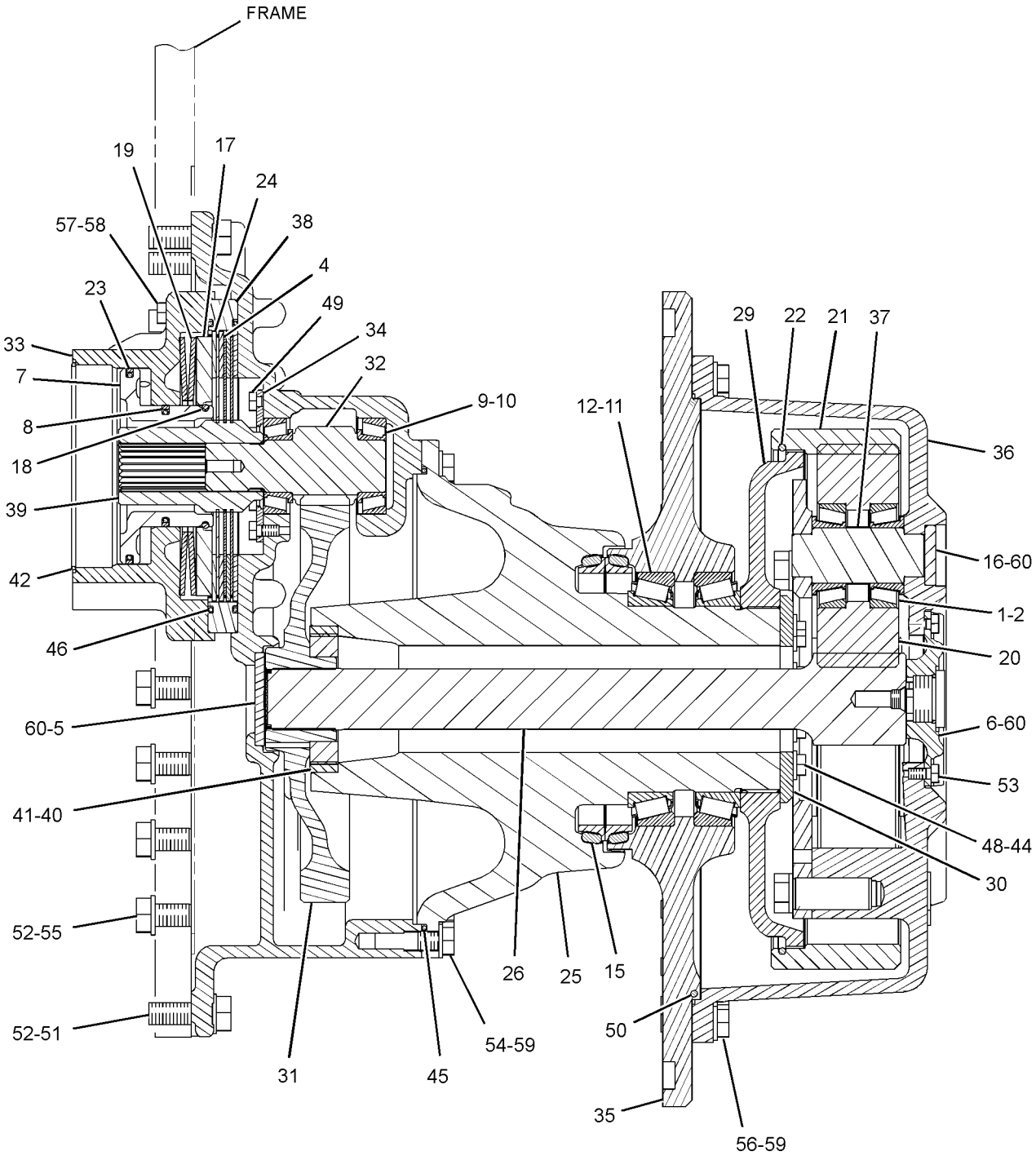

SECTION C-C

GRAPHIC #2 **<END>** g01509716

278-8935 HEAD GP-MOTOR—HYDROSTATIC DRIVE, LH

S/N: DHA1-UP; FBH1-UP

PART OF 243-6639 MOTOR GP-PISTON

SMCS-3202, 5058 **i02652585**

NOTE	REF NO	GRAPHIC REF	PART NUMBER	QTY	PART NAME 1 2 3 4 5 6 (PRODUCT LEVEL)	SEE PAGE
Y	1	1	**278-8936**	1	VALVE GP-MOTOR CONTROL (HYDROSTATIC DRIVE)	393
Y	2	1	**278-8937**	1	VALVE GP-FLUSHING (HYDROSTATIC DRIVE)	392
	3	1	**9S-8004**	1	PLUG	
	4	1	**124-9882**	1	TRUNNION	
	5	1	**124-9881**	1	PISTON	
	6	1	**135-7454**	1	PISTON	
M	7	1	**125-2205**	1	BOLT-SHALLOW HEAD (M14X1.5X25-MM)	
	8	1	**124-9884**	1	PIN-THREADED	
	9	1	**3E-6760**	6	SEAL-O-RING	
M	10	1	**6V-8201**	8	BOLT-SOCKET HEAD (M16X2X45-MM)	
	11	1	**120-4394**	1	PLUG-BREAK OFF	
	12	1	**123-0698**	2	PLUG	
	13	1	**123-5787**	2	SEAT	
	14	1	**3J-1907**	1	SEAL-O-RING	
Y	15	1	**301-7890**	2	VALVE GP-CHECK	597
M	16	1	**8T-7811**	4	BOLT-SOCKET HEAD (M12X1.75X50-MM)	
	17	1	**061-7540**	1	SEAL-O-RING	
	18	1	**135-7455**	3	SEAL	
	19	1	**7X-2906**	2	PIN	

M-METRIC PART
Y-SEPARATE ILLUSTRATION

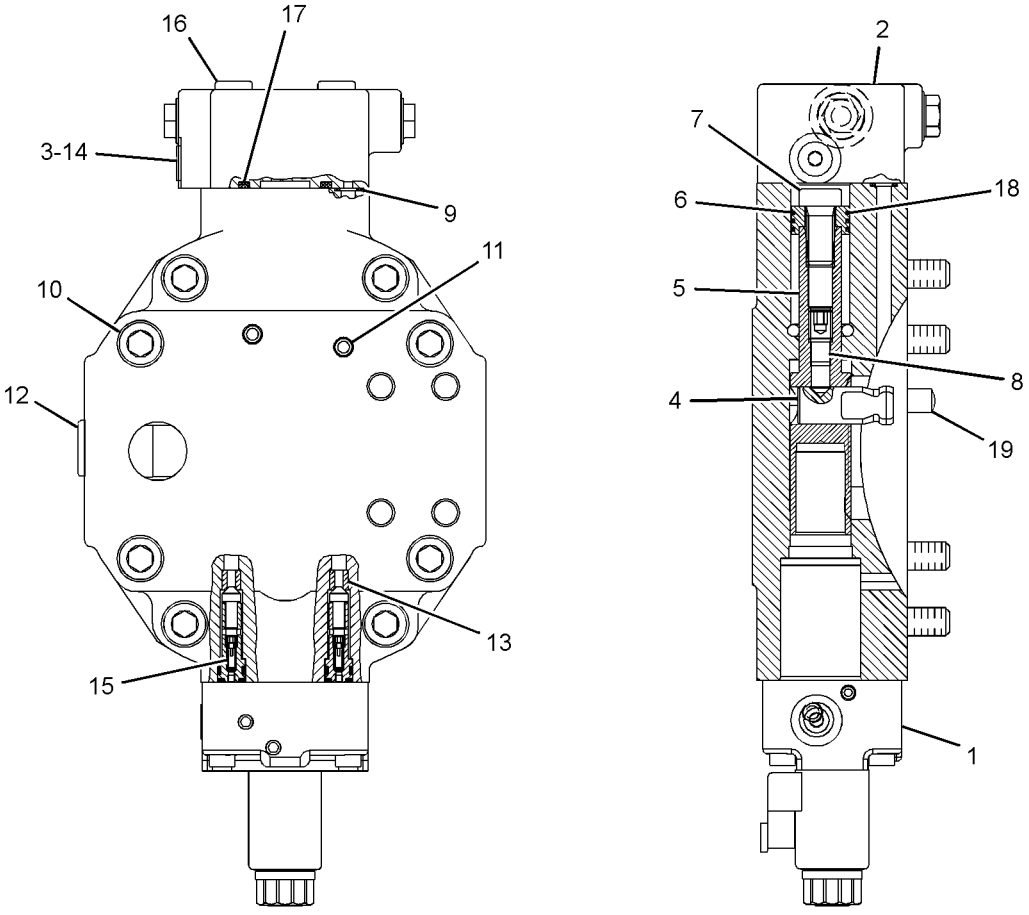

GRAPHIC #1 **<END>** g01331245

279-0543 HEAD GP-MOTOR—HYDROSTATIC DRIVE, RH

S/N: DHA1-UP; FBH1-UP

PART OF 243-6640 MOTOR GP-PISTON

SMCS-3202, 5058 **i02652587**

NOTE	REF NO	GRAPHIC REF	PART NUMBER	QTY	PART NAME 1 2 3 4 5 6 (PRODUCT LEVEL)	SEE PAGE
Y	1	1	**278-8936**	1	VALVE GP-MOTOR CONTROL (HYDROSTATIC DRIVE)	393
Y	2	1	**278-8937**	1	VALVE GP-FLUSHING (HYDROSTATIC DRIVE)	392
	3	1	**9S-8004**	1	PLUG	
	4	1	**124-9882**	1	TRUNNION	
	5	1	**124-9881**	1	PISTON	
	6	1	**135-7454**	1	PISTON	
M	7	1	**125-2205**	1	BOLT-SHALLOW HEAD (M14X1.5X25-MM)	
	8	1	**124-9884**	1	PIN-THREADED	
	9	1	**3E-6760**	6	SEAL-O-RING	
M	10	1	**6V-8201**	8	BOLT-SOCKET HEAD (M16X2X45-MM)	
	11	1	**120-4394**	1	PLUG-BREAK OFF	
	12	1	**123-0698**	2	PLUG	
	13	1	**123-5787**	2	SEAT	
	14	1	**3J-1907**	1	SEAL-O-RING	
Y	15	1	**301-7890**	2	VALVE GP-CHECK	597
M	16	1	**8T-7811**	4	BOLT-SOCKET HEAD (M12X1.75X50-MM)	
	17	1	**061-7540**	1	SEAL-O-RING	
	18	1	**135-7455**	3	SEAL	
	19	1	**7X-2906**	2	PIN	

M-METRIC PART
Y-SEPARATE ILLUSTRATION

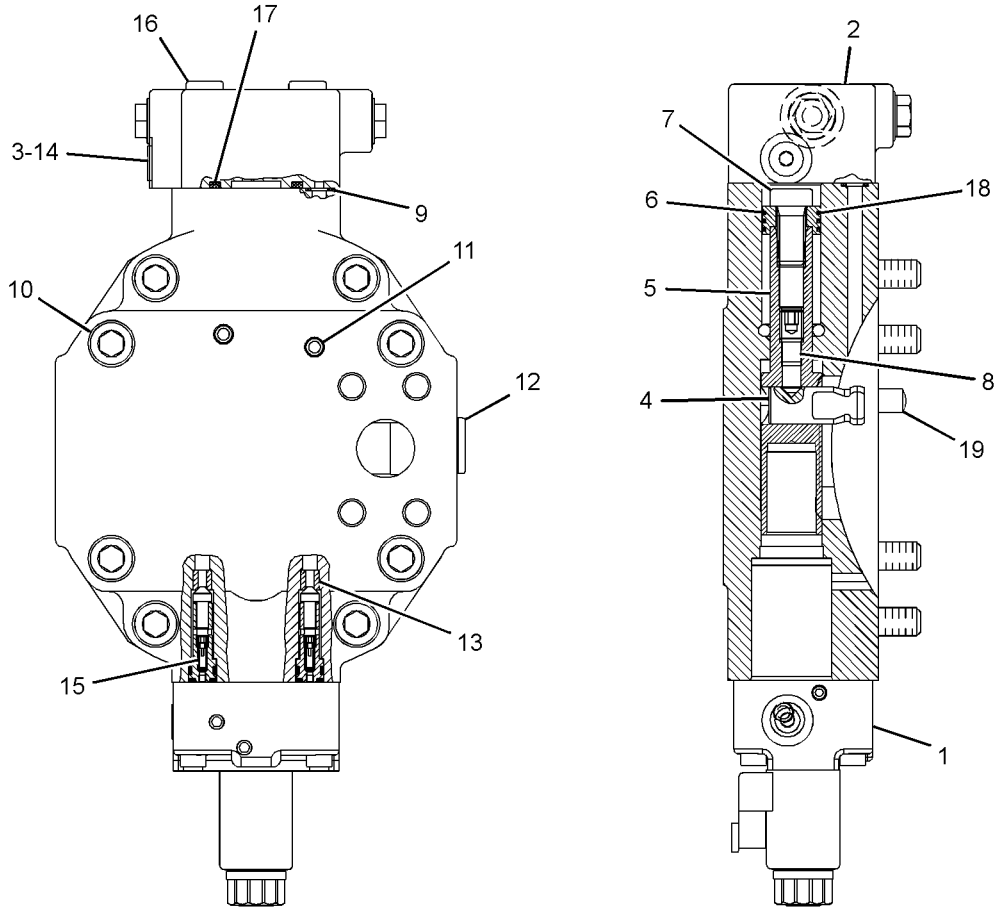

GRAPHIC #1 **<END>** g01331258

278-4440 HEAD GP-PUMP—HYDROSTATIC DRIVE, LH

S/N: DHA1-UP; FBH1-UP

PART OF 261-3629 PUMP GP-PISTON

SMCS-3202, 5070 **i02590978**

NOTE	REF NO	GRAPHIC REF	PART NUMBER	QTY	PART NAME 1 2 3 4 5 6 (PRODUCT LEVEL)	SEE PAGE
J	1	1	**1G-7407**	2	VALVE GP-RELIEF (PUMP HEAD)	
					(EACH INCLUDES)	
		1	**123-7556**	1	CAP	
Y	2	1	**6E-4402**	1	VALVE GP-RELIEF (CHARGE PRESSURE)	396
M	3	1	**3E-8008**	4	BOLT-SOCKET HEAD (M16X2X90-MM)	
	4	1	**2P-1692**	1	SEAL-O-RING	
	5	1	**9S-8002**	2	PLUG-O-RING	
	6	1	**6V-8398**	1	SEAL-O-RING	
	7	1	**126-1597**	1	BEARING	
	8	1	**126-1598**	1	BUSHING	
	9	1	**120-4394**	1	PLUG-BREAK OFF	
	10	1	**144-9101**	1	PLUG-BREAK OFF	
	11	1	**3J-7354**	2	SEAL-O-RING	
					AVAILABLE REPAIR KIT(S):	
J			**145-0905**	1	KIT-SEAL (PUMP HEAD RELIEF VALVE)	

J-KIT MARKED J SERVICES PART(S) MARKED J
M-METRIC PART
Y-SEPARATE ILLUSTRATION

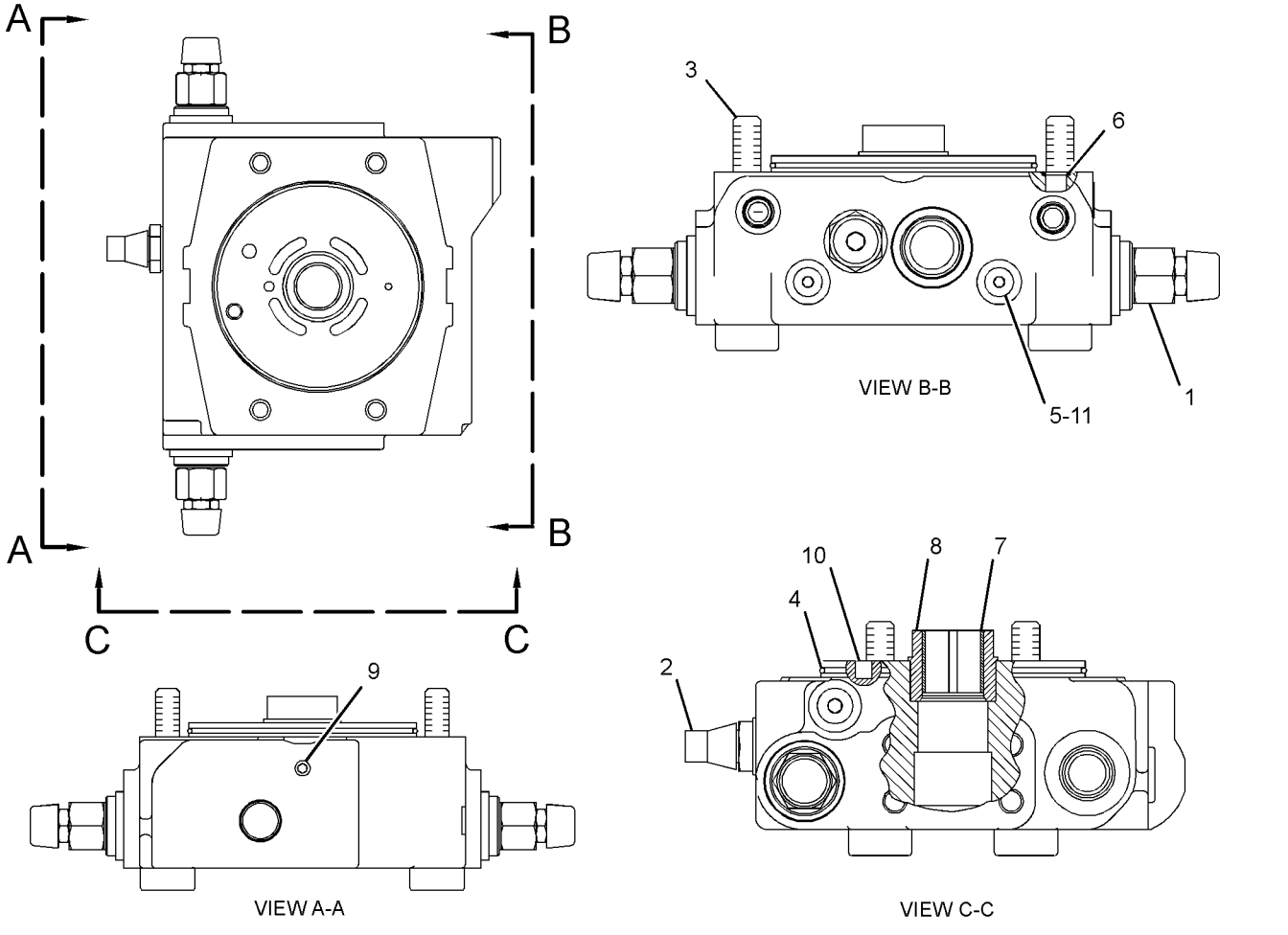

GRAPHIC #1 **<END>** g01304317

278-4441 HEAD GP-PUMP–HYDROSTATIC DRIVE, RH

S/N: DHA1-UP; FBH1-UP

PART OF 261-3630 PUMP GP-PISTON

SMCS-3202, 5070 **i02607098**

NOTE	REF NO	GRAPHIC REF	PART NUMBER	QTY	PART NAME 1 2 3 4 5 6 (PRODUCT LEVEL)	SEE PAGE
J	1	1	**1G-7407**	2	VALVE GP-RELIEF (PUMP HEAD)	
					(EACH INCLUDES)	
		1	**123-7556**	1	CAP	
Y	2	1	**6E-4402**	1	VALVE GP-RELIEF (CHARGE PRESSURE)	396
M	3	1	**3E-8008**	4	BOLT-SOCKET HEAD (M16X2X90-MM)	
	4	1	**2P-1692**	1	SEAL-O-RING	
	5	1	**9S-8002**	2	PLUG-O-RING	
	6	1	**6V-8398**	1	SEAL-O-RING	
	7	1	**126-1597**	1	BEARING	
	8	1	**126-1598**	1	BUSHING	
	9	1	**120-4394**	1	PLUG-BREAK OFF	
	10	1	**144-9101**	1	PLUG-BREAK OFF	
	11	1	**3J-7354**	2	SEAL-O-RING	
	12	1	**126-1477**	1	BUSHING-COUPLING	
					AVAILABLE REPAIR KIT(S):	
J			**145-0905**	1	KIT-SEAL (PUMP HEAD RELIEF VALVE)	

J-KIT MARKED J SERVICES PART(S) MARKED J
M-METRIC PART
Y-SEPARATE ILLUSTRATION

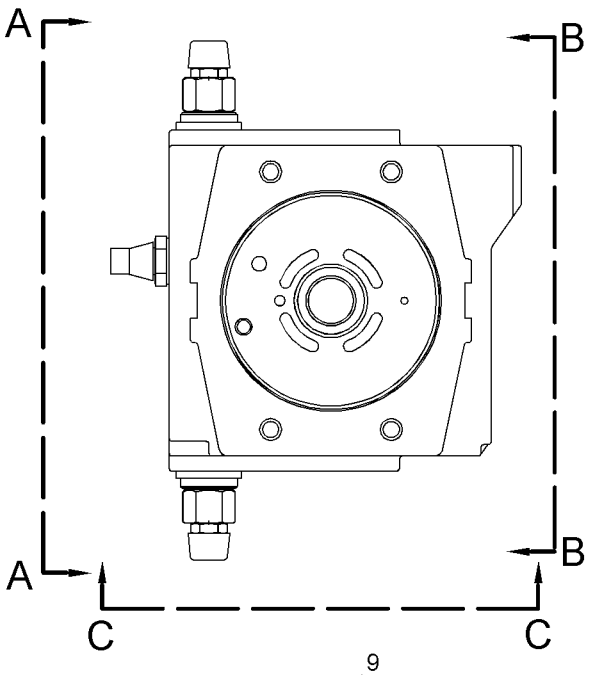

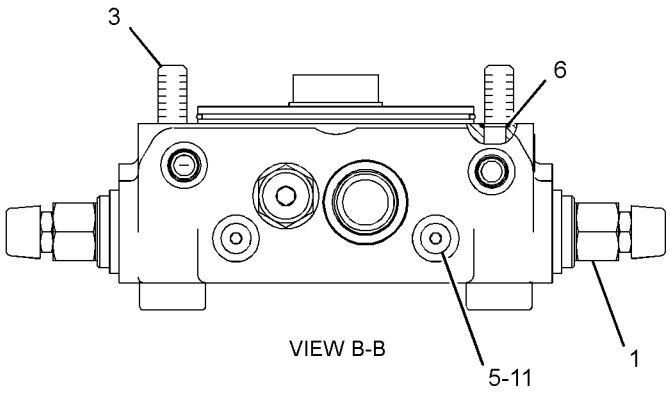

VIEW B-B

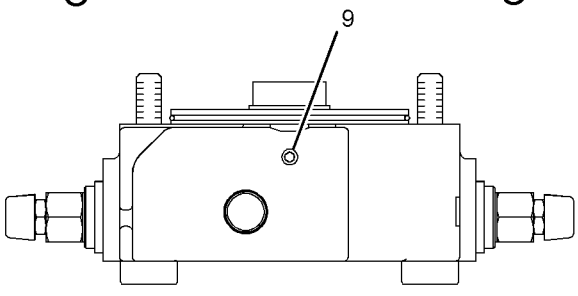

VIEW A-A

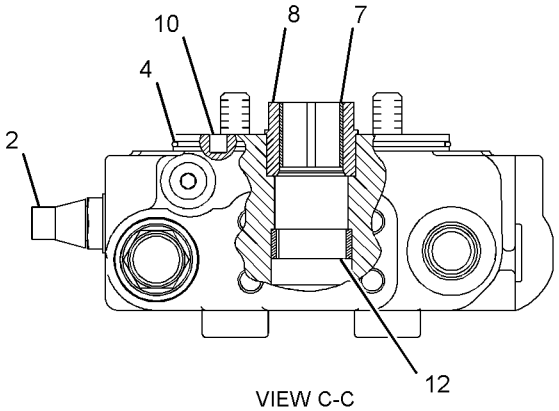

VIEW C-C

GRAPHIC #1 **<END>** g01304376

206-7264 LINES GP-CHARGE PRESSURE

S/N: DHA1-281; FBH1-419
PART OF 288-8129 PUMP & LINES AR
CANNOT BE USED WITH 248-6545 WINCH
AN ATTACHMENT

SMCS-3016 **i02816163**

NOTE	REF NO	GRAPHIC REF	PART NUMBER	QTY	PART NAME 1 2 3 4 5 6 (PRODUCT LEVEL)	SEE PAGE
	1	1	**8T-4984**	2	CLAMP-HOSE	
	2	1	**177-2215**	3	STRAP-DUAL CLAMP	
	3	1	**203-3847**	1	BRACKET AS	
M		1	**170-7491**	1	STUD-WELD (M10X1.5X35-MM OAL)	
	4	1	**204-2281**	1	STRAP-TIE	
I	5	1	**243-3663**	1	HOSE AS	
I	6	1	**243-3664**	1	HOSE AS	
I	7	1	**243-3665**	1	HOSE AS	
I	8	1	**243-3666**	1	HOSE AS	
	9	1	**250-5745**	1	HOSE	
	10	1	*254-7185*	1	STEM AS	
		1	**254-7184**	1	STEM	
		1	**2S-4078**	1	SEAL-O-RING	
Y	11	1	**264-2995**	2	FILTER GP-OIL (HYDRAULIC) (POWER TRAIN)	344
	12	1	**266-1619**	1	BRACKET AS	
	13	1	**269-4970**	2	ADAPTER	
	14	1	**277-7013**	2	ELBOW	
	15	1	**277-7014**	1	ELBOW	
M	16	1	**101-3129**	1	STUD (M10X1.5-THD)	
	17	1	*148-8327*	4	CONNECTOR AS	
					(EACH INCLUDES)	
		1	**3D-2824**	1	SEAL-O-RING	
		1	**6V-8637**	1	CONNECTOR	
		1	**6V-9746**	1	SEAL-O-RING	
	18	1	**198-4777**	1	WASHER-HARD (11X25X10-MM THK)	
	19	1	**3P-9847**	2	CLIP	
	20	1	**7X-7729**	3	WASHER (11X25X3-MM THK)	
	21	1	**8T-4121**	2	WASHER-HARD (11X21X2.5-MM THK)	
M	22	1	**8T-4133**	2	NUT (M10X1.5-THD)	
M	23	1	**8T-4137**	1	BOLT (M10X1.5X20-MM)	
M	24	1	**8T-4192**	3	BOLT (M12X1.75X25-MM)	
M	25	1	**8T-4195**	6	BOLT (M10X1.5X30-MM)	
	26	1	**8T-4223**	3	WASHER-HARD (13.5X25.5X3-MM THK)	
	27	1	**8T-7934**	6	WASHER-HARD (11X21X5-MM THK)	

I-REFER TO HYDRAULIC INFORMATION SYSTEM
M-METRIC PART
Y-SEPARATE ILLUSTRATION

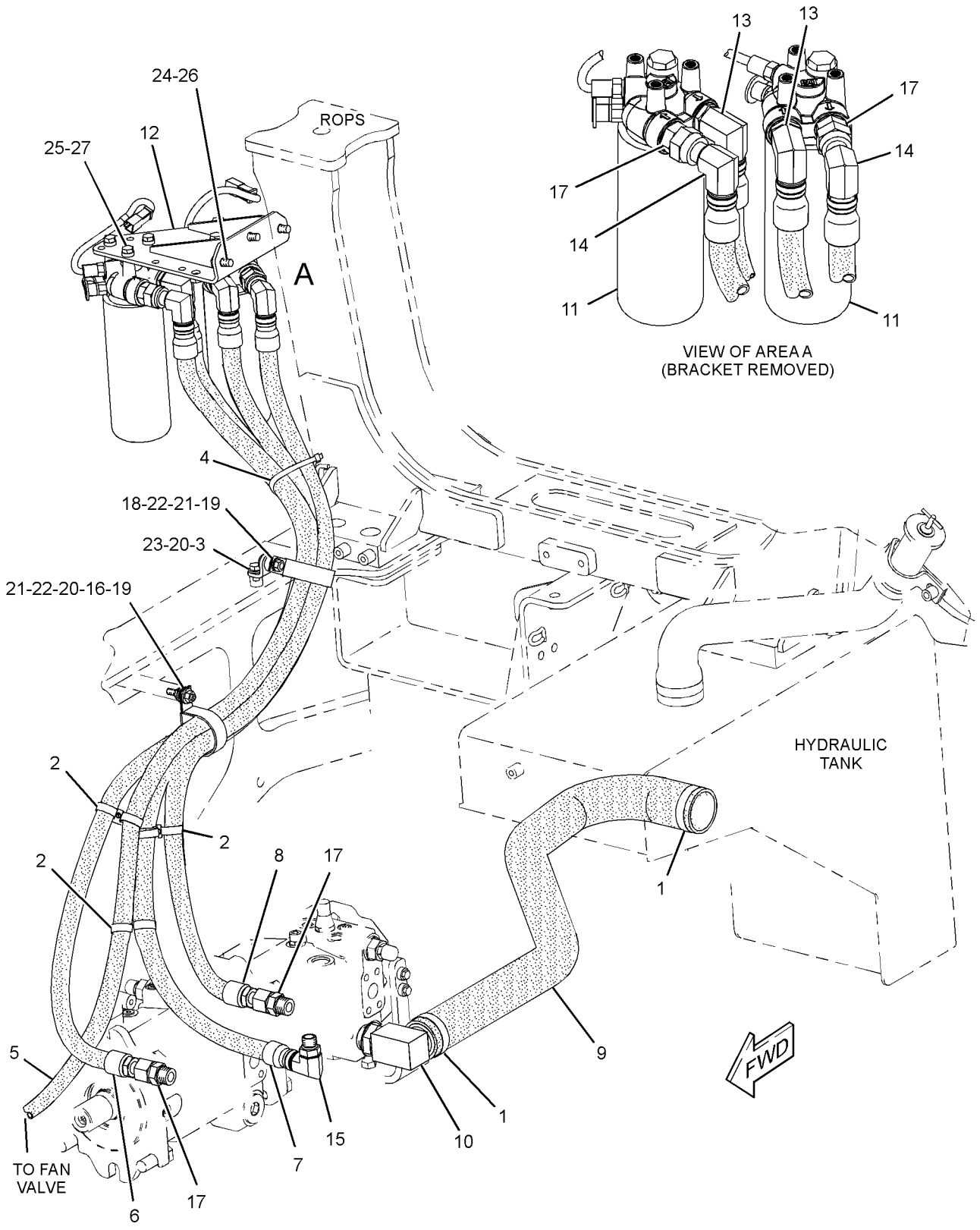

GRAPHIC #1 **<END>** g01382788

206-7264 LINES GP-CHARGE PRESSURE

S/N: DHA282-UP; FBH420-UP
PART OF 288-8129 PUMP & LINES AR
CANNOT BE USED WITH 248-6545 WINCH
AN ATTACHMENT

SMCS-3016 **i03449182**

NOTE	REF NO	GRAPHIC REF	PART NUMBER	QTY	PART NAME 1 2 3 4 5 6 (PRODUCT LEVEL)	SEE PAGE
C	1	1	**5I-4376**	1	FITTING	
C	2	1	**8C-3451**	1	CAP-DUST	
	3	1	**8T-4984**	2	CLAMP-HOSE	
	4	1	**177-2215**	3	STRAP-DUAL CLAMP	
	5	1	**203-3847**	1	BRACKET AS	
M		1	**170-7491**	1	STUD-WELD (M10X1.5X35-MM OAL)	
	6	1	**204-2281**	1	STRAP-TIE	
I	7	1	**243-3663**	1	HOSE AS	
I	8	1	**243-3664**	1	HOSE AS	
I	9	1	**243-3665**	1	HOSE AS	
I	10	1	**243-3666**	1	HOSE AS	
	11	1	**250-5745**	1	HOSE	
	12	1	*254-7185*	1	STEM AS (90-DEG)	
		1	**254-7184**	1	STEM	
		1	**2S-4078**	1	SEAL-O-RING	
	13	1	**266-1619**	1	BRACKET AS	
	14	1	**269-4970**	2	ADAPTER	
	15	1	**277-7013**	2	ELBOW	
	16	1	**277-7014**	1	ELBOW	
CY	17	1	**302-7298**	2	FILTER GP-OIL (POWER TRAIN)	345
M	18	1	**101-3129**	1	STUD (M10X1.5-THD)	
C	19	1	*148-8305*	1	ADAPTER AS	
		1	**3J-1907**	1	SEAL-O-RING	
		1	**5P-9617**	1	ADAPTER	
	20	1	*148-8327*	4	CONNECTOR AS	
					(EACH INCLUDES)	
		1	**3D-2824**	1	SEAL-O-RING	
		1	**6V-8637**	1	CONNECTOR	
		1	**6V-9746**	1	SEAL-O-RING	
C	21	1	*148-8336*	1	CONNECTOR AS	
		1	**3J-1907**	1	SEAL-O-RING	
		1	**6V-8397**	1	SEAL-O-RING	
		1	**6V-8636**	1	CONNECTOR	
C	22	1	*164-5590*	1	VALVE AS-FLUID SAMPLING	
		1	**3J-7354**	1	SEAL-O-RING	
		1	**8C-3446**	1	VALVE-FLUID SAMPLING	
	23	1	**198-4777**	1	WASHER-HARD (11X25X10-MM THK)	
	24	1	**3P-9847**	2	CLIP	
C	25	1	**7X-7729**	4	WASHER (11X25X3-MM THK)	
C	26	1	**8T-4121**	1	WASHER-HARD (11X21X2.5-MM THK)	
M	27	1	**8T-4133**	2	NUT (M10X1.5-THD)	
M	28	1	**8T-4137**	1	BOLT (M10X1.5X20-MM)	
M	29	1	**8T-4192**	3	BOLT (M12X1.75X25-MM)	
M	30	1	**8T-4195**	6	BOLT (M10X1.5X30-MM)	
	31	1	**8T-4223**	3	WASHER-HARD (13.5X25.5X3-MM THK)	
	32	1	**8T-7934**	6	WASHER-HARD (11X21X5-MM THK)	
	33	1	**3J-1907**	1	SEAL-O-RING	

C-CHANGE FROM PREVIOUS TYPE
I-REFER TO HYDRAULIC INFORMATION SYSTEM
M-METRIC PART
Y-SEPARATE ILLUSTRATION

206-7264 **LINES GP-CHARGE PRESSURE** *(contd.)* **i03449182**

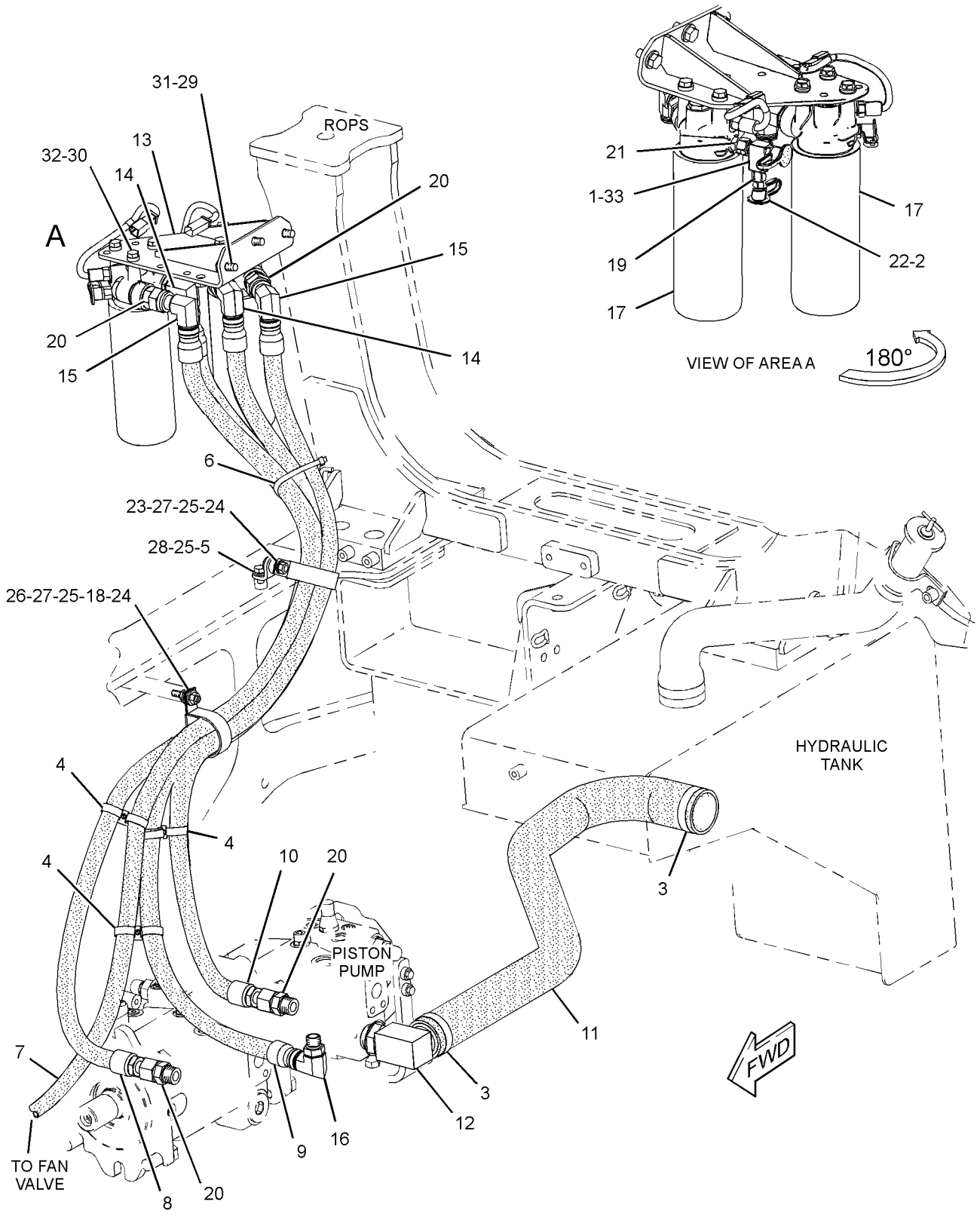

GRAPHIC #1 **<END>** g01861553

POWER TRAIN

206-7263 LINES GP-DRAIN

S/N: DHA1-UP; FBH1-UP

PART OF 206-7260, 206-7261 POWER TRAIN AR

SMCS-3016 **i03699616**

NOTE	REF NO	GRAPHIC REF	PART NUMBER	QTY	PART NAME 1 2 3 4 5 6 (PRODUCT LEVEL)	SEE PAGE
I	1	1	**168-8402**	1	HOSE AS	
	2	1	**177-2215**	6	STRAP-DUAL CLAMP	
	3	1	**243-3647**	1	HOSE	
	4	1	**243-3652**	1	TUBE AS	
	5	1	**243-3654**	1	TUBE AS	
	6	1	**250-5485**	1	BRACKET AS	
Y	7	1	**253-1803**	1	VALVE GP-TRANSMISSION CONTROL (POWER TRAIN RETURN MANIFOLD)	400
	8	1	**263-8727**	1	BRACKET AS	
I	9	1	**288-8609**	1	HOSE AS	
I	10	1	**288-8610**	1	HOSE AS	
	11	1	**100-4336**	1	CLIP	
	12	1	*148-8327*	2	CONNECTOR AS	
					(EACH INCLUDES)	
		1	**6V-8637**	1	CONNECTOR	
		1	**3D-2824**	1	SEAL-O-RING	
		1	**6V-9746**	1	SEAL-O-RING	
	13	1	*148-8342*	2	CONNECTOR AS	
					(EACH INCLUDES)	
		1	**6V-8632**	1	CONNECTOR	
		1	**3K-0360**	1	SEAL-O-RING	
		1	**7J-9108**	1	SEAL-O-RING	
	14	1	*148-8362*	2	ELBOW AS	
					(EACH INCLUDES)	
		1	**8T-6684**	1	ELBOW	
		1	**3D-2824**	1	SEAL-O-RING	
		1	**5K-9090**	1	SEAL-O-RING	
I	15	1	**203-6971**	1	HOSE AS	
	16	1	**6V-1889**	1	CLIP	
	17	1	**8T-4121**	5	WASHER-HARD (11X21X2.5-MM THK)	
M	18	1	**8T-4133**	1	NUT (M10X1.5-THD)	
M	19	1	**8T-4137**	1	BOLT (M10X1.5X20-MM)	
M	20	1	**8T-4194**	4	BOLT (M12X1.75X50-MM)	
M	21	1	**8T-4198**	3	BOLT (M10X1.5X100-MM)	
	22	1	**8T-4223**	4	WASHER-HARD (13.5X25.5X3-MM THK)	
	23	1	**8T-6703**	2	CLAMP-HOSE	

I-REFER TO HYDRAULIC INFORMATION SYSTEM
M-METRIC PART
Y-SEPARATE ILLUSTRATION

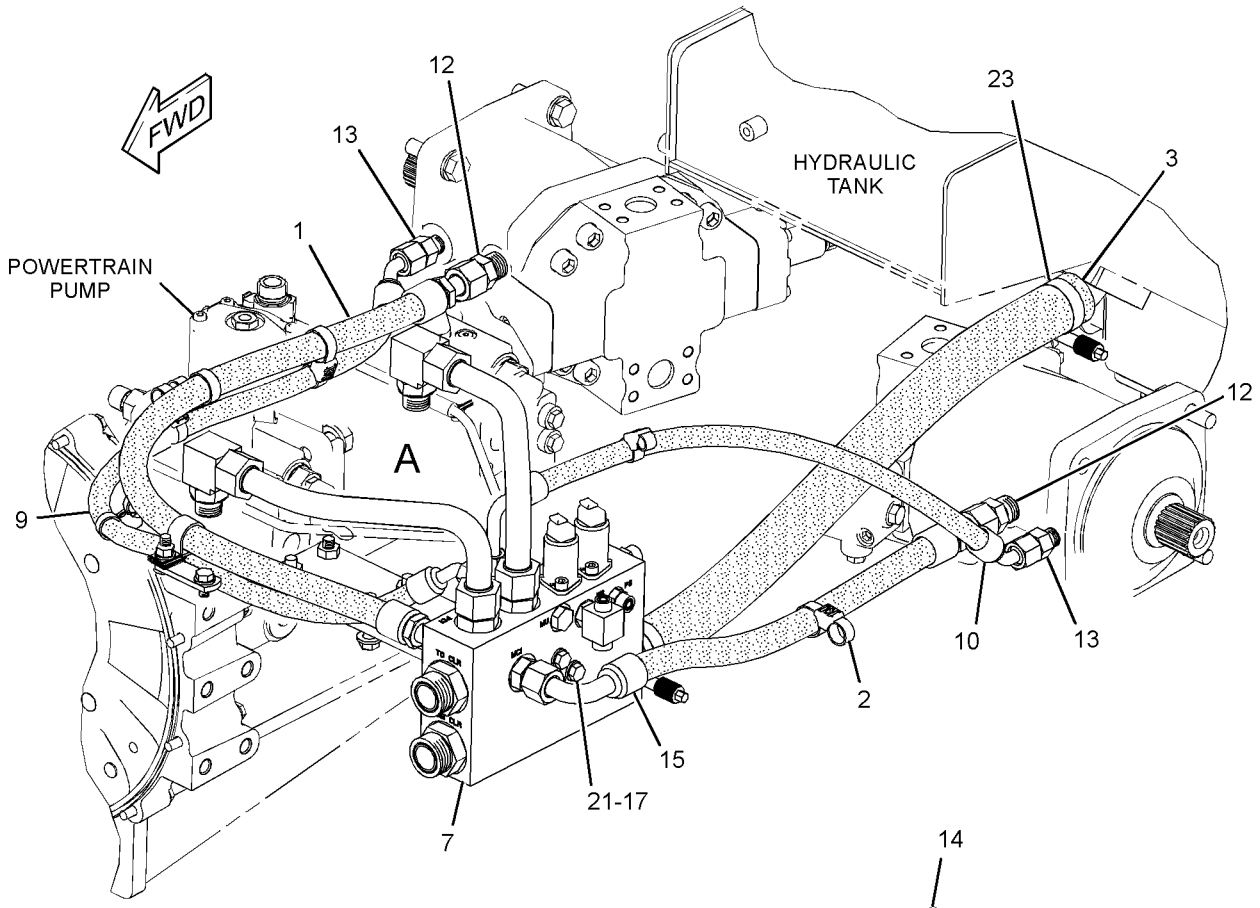

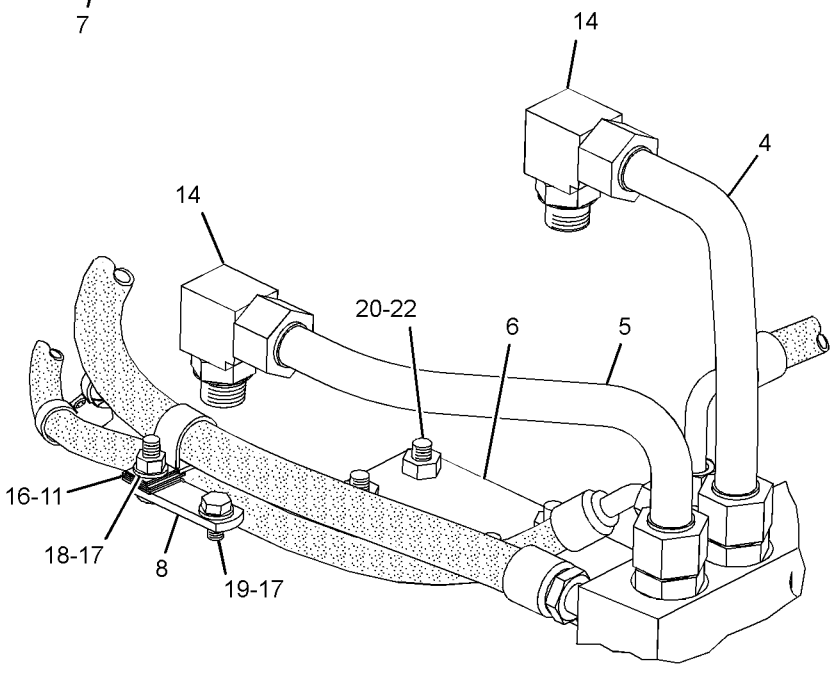

VIEW OF AREA A

GRAPHIC #1 **<END>** g01296550

206-7257 LINES GP-HYDROSTATIC

S/N: DHA1-UP; FBH1-UP

PART OF 206-7260, 206-7261 POWER TRAIN AR

SMCS-3154 **i02355378**

NOTE	REF NO	GRAPHIC REF	PART NUMBER	QTY	PART NAME 1 2 3 4 5 6 (PRODUCT LEVEL)	SEE PAGE
	1	1	*148-8443*	1	TEE AS	
		1	**7X-2459**	1	TEE-O-RING	
		1	**3J-1907**	1	SEAL-O-RING	
		1	**6V-8397**	1	SEAL-O-RING	
I	2	1	**243-3154**	1	HOSE AS	
I	3	1	**243-3155**	1	HOSE AS	
I	4	1	**277-3629**	1	HOSE AS	
I	5	1	**277-3630**	1	HOSE AS	
I	6	1	**277-4267**	1	HOSE AS	
	7	1	*164-9869*	1	CONNECTOR AS	
		1	**9X-2297**	1	CONNECTOR	
		1	**3J-1907**	1	SEAL-O-RING	
		1	**6V-8397**	1	SEAL-O-RING	
	8	1	**1P-3703**	4	SEAL-RECTANGULAR	
	9	1	**1P-3704**	4	SEAL-RECTANGULAR	
	10	1	**1P-5767**	8	FLANGE-HALF	
	11	1	**6V-0400**	8	FLANGE-HALF	
M	12	1	**8T-4184**	16	BOLT (M12X1.75X45-MM)	
M	13	1	**8T-4194**	16	BOLT (M12X1.75X50-MM)	
	14	1	**8T-4223**	32	WASHER-HARD (13.5X25.5X3-MM THK)	

I-REFER TO HYDRAULIC INFORMATION SYSTEM
M-METRIC PART

206-7257 **LINES GP-HYDROSTATIC** *(contd.)* **i02355378**

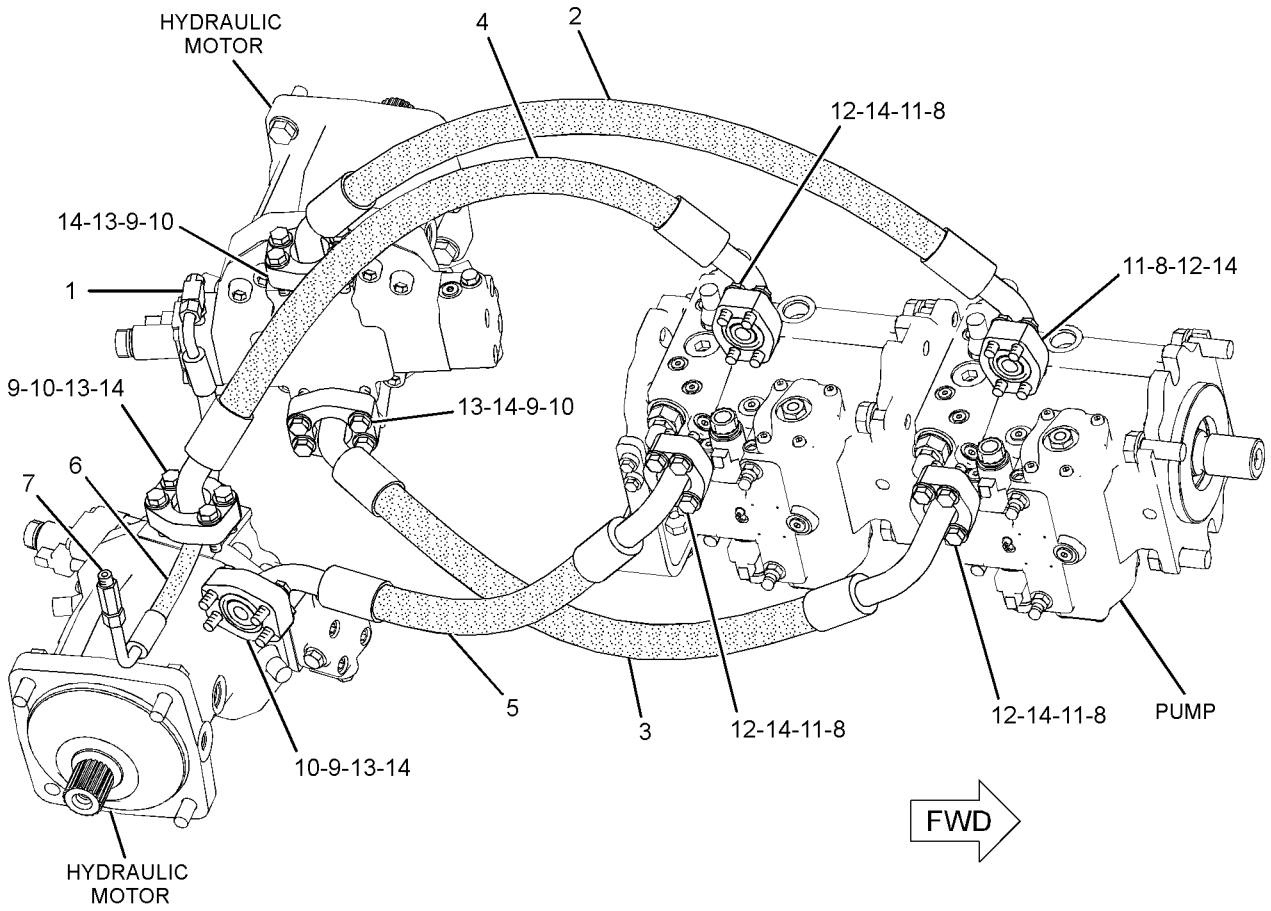

GRAPHIC #1 **<END>** g01199597

206-7243 LINES GP-POWER TRAIN COOLER

S/N: DHA1-UP; FBH1-UP

PART OF 206-7260, 206-7261 POWER TRAIN AR

SMCS-1375, 3016 **i02741424**

NOTE	REF NO	GRAPHIC REF	PART NUMBER	QTY	PART NAME 1 2 3 4 5 6 (PRODUCT LEVEL)	SEE PAGE
	2	1	**287-2982**	1	PLATE AS	
	3	1	**287-8533**	1	TUBE AS	
	4	1	**287-8534**	1	TUBE AS	
	5	1	**287-8535**	1	PLATE AS	
I	6	1	**288-2567**	1	HOSE AS	
I	7	1	**288-2568**	1	HOSE AS	
	8	1	*148-8356*	1	ELBOW AS	
		1	**6V-9009**	1	ELBOW	
		1	**2S-4078**	1	SEAL-O-RING	
		1	**6V-8400**	1	SEAL-O-RING	
	9	1	*153-6238*	1	ELBOW AS	
		1	**6V-9006**	1	ELBOW	
		1	**2S-4078**	1	SEAL-O-RING	
		1	**6V-8400**	1	SEAL-O-RING	
	10	1	**198-4780**	2	WASHER-HARD (17.5X32X8-MM THK)	
	11	1	**6V-8400**	2	SEAL-O-RING	
M	12	1	**7X-2553**	2	BOLT (M16X2X40-MM)	
	13	1	**7X-7729**	2	WASHER (11X25X3-MM THK)	
	14	1	**8S-0023**	3	CLIP (SLOT)	
	15	1	**8S-0024**	3	CLIP (TAB)	
M	16	1	**8T-4133**	1	NUT (M10X1.5-THD)	
M	17	1	**8T-4192**	1	BOLT (M12X1.75X25-MM)	
	18	1	**8T-4223**	3	WASHER-HARD (13.5X25.5X3-MM THK)	
M	19	1	**8T-4244**	2	NUT (M12X1.75-THD)	

I-REFER TO HYDRAULIC INFORMATION SYSTEM
M-METRIC PART

206-7243 **LINES GP-POWER TRAIN COOLER** *(contd.)* **i02741424**

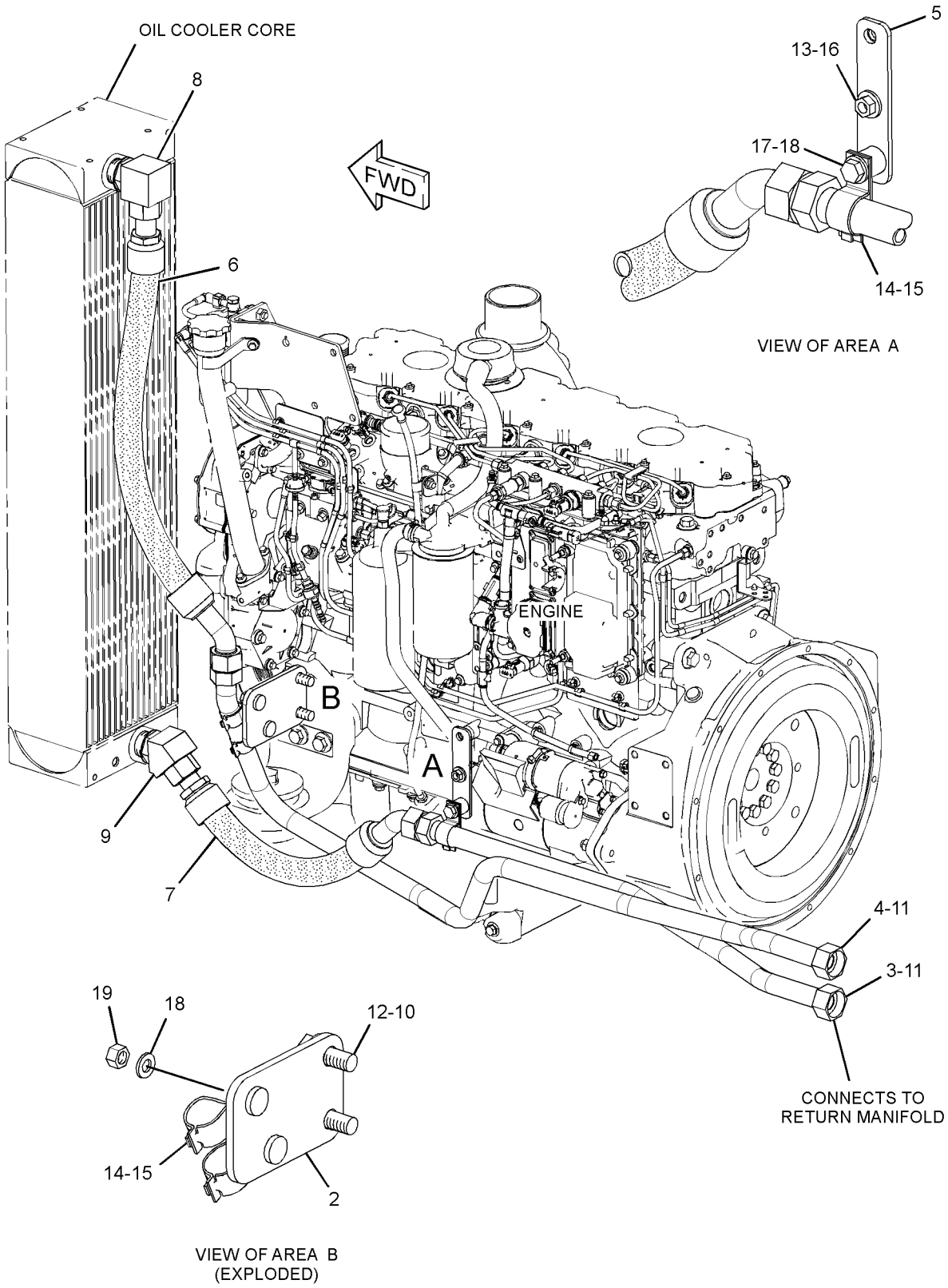

GRAPHIC #1 **<END>** g01384934

POWER TRAIN

252-5074 LINES GP-PUMP

S/N: DHA1-UP; FBH1-UP

PART OF 206-7260, 206-7261 POWER TRAIN AR

SMCS-3016 **i02836004**

NOTE	REF NO	GRAPHIC REF	PART NUMBER	QTY	PART NAME 1 2 3 4 5 6 (PRODUCT LEVEL)	SEE PAGE
M	1	1	**8T-4136**	2	BOLT (M10X1.5X25-MM)	
	2	1	**243-3655**	1	TUBE AS	
	3	1	**243-3656**	1	TUBE AS	
I	4	1	**243-3658**	1	HOSE AS	
	5	1	**247-2588**	1	TUBE AS	
I	6	1	**247-2647**	1	HOSE AS	
	7	1	*148-8336*	2	CONNECTOR AS	
					(EACH INCLUDES)	
		1	**6V-8636**	1	CONNECTOR	
		1	**3J-1907**	1	SEAL-O-RING	
		1	**6V-8397**	1	SEAL-O-RING	
	8	1	*148-8340*	3	CONNECTOR AS	
					(EACH INCLUDES)	
		1	**6V-8639**	1	CONNECTOR	
		1	**3K-0360**	1	SEAL-O-RING	
		1	**6V-8398**	1	SEAL-O-RING	
	9	1	*150-4037*	1	TEE AS	
		1	**6V-9844**	1	TEE-SWIVEL	
		1	**6V-8398**	2	SEAL-O-RING	
	10	1	**5P-9297**	2	CLIP	
	11	1	**7C-4354**	2	CLIP	
	12	1	**8T-4121**	4	WASHER-HARD (11X21X2.5-MM THK)	
M	13	1	**8T-4133**	2	NUT (M10X1.5-THD)	

I-REFER TO HYDRAULIC INFORMATION SYSTEM
M-METRIC PART

252-5074 **LINES GP-PUMP** *(contd.)* **i02836004**

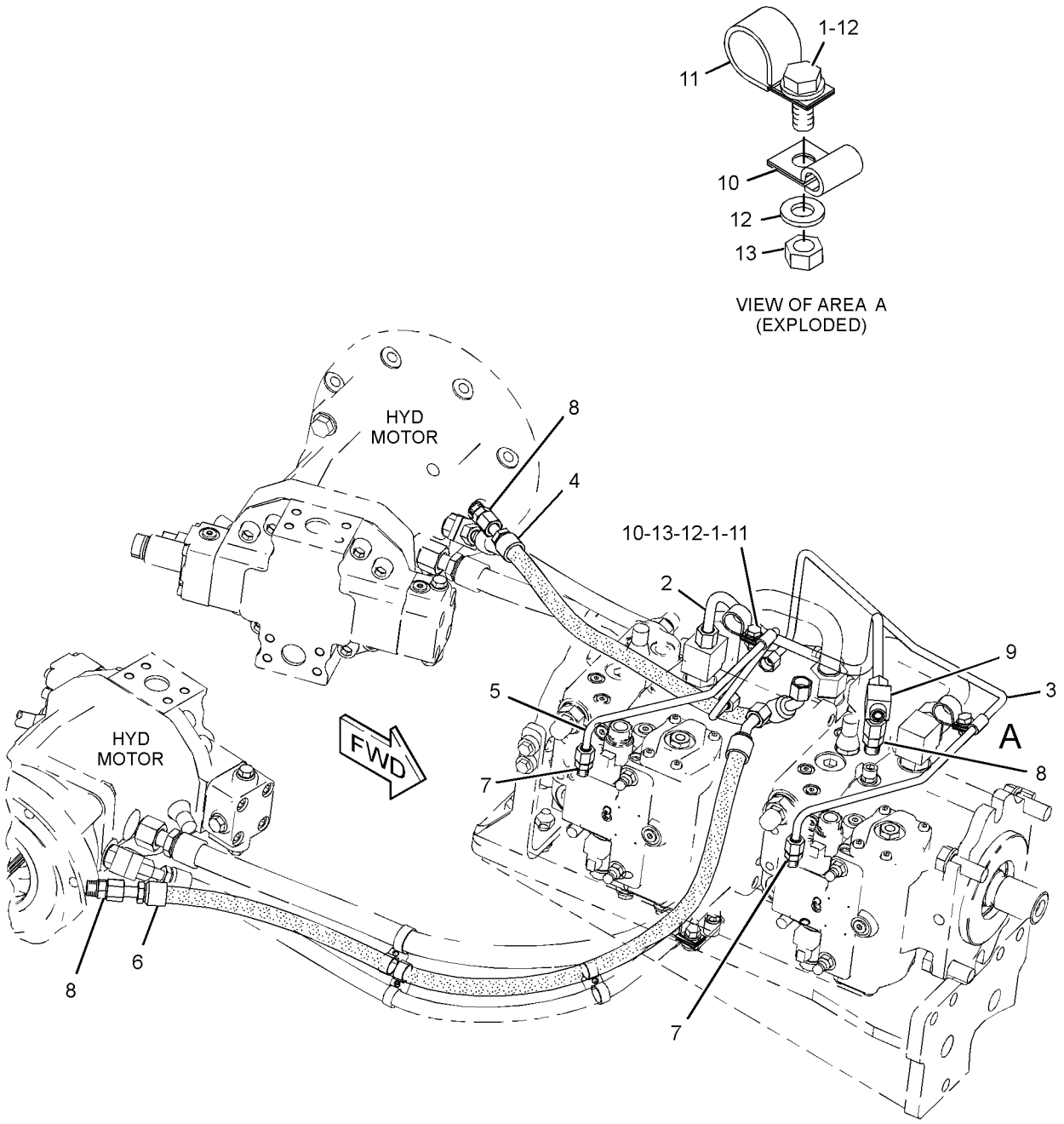

GRAPHIC #1 **<END>** g01414113

236-2123 MOTOR & MOUNTING GP—HYDROSTATIC DRIVE

S/N: DHA1-UP; FBH1-UP

PART OF 206-7260, 206-7261 POWER TRAIN AR

SMCS-5084 **i02648769**

NOTE	REF NO	GRAPHIC REF	PART NUMBER	QTY	PART NAME 1 2 3 4 5 6 (PRODUCT LEVEL)	SEE PAGE
Y	1	1	**243-6639**	1	MOTOR GP-PISTON (HYDROSTATIC DRIVE, LH)	371
Y	2	1	**243-6640**	1	MOTOR GP-PISTON (HYDROSTATIC DRIVE, RH)	372
	3	1	**2K-2939**	2	SEAL-O-RING	
M	4	1	**8T-4140**	8	BOLT (M16X2X60-MM)	
	5	1	**9X-8257**	8	WASHER (17.5X30X3.5-MM THK)	

M-METRIC PART
Y-SEPARATE ILLUSTRATION

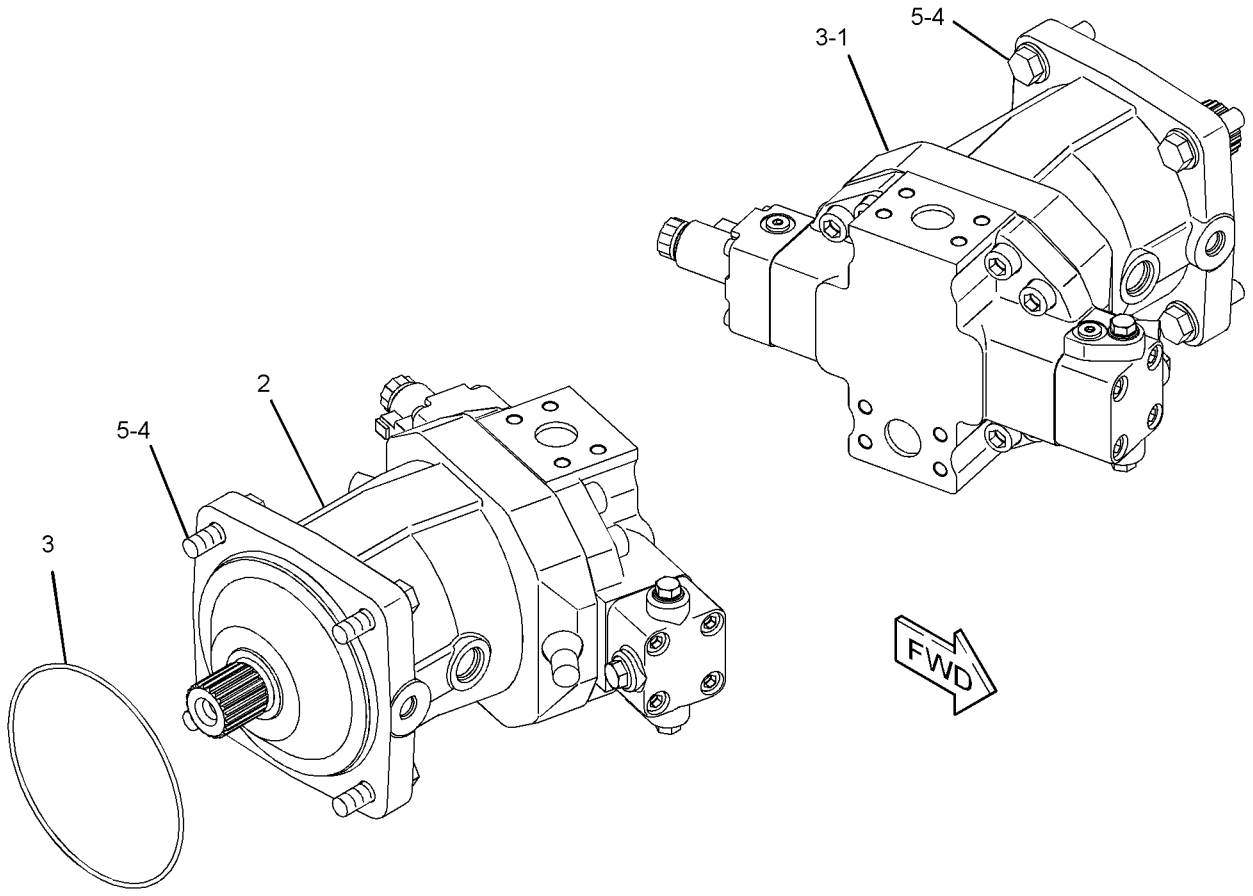

GRAPHIC #1 **<END>** g01185896

243-6639 MOTOR GP-PISTON—HYDROSTATIC DRIVE, LH

S/N: DHA1-UP; FBH1-UP

PART OF 236-2123 MOTOR & MOUNTING GP

SMCS-4351 **i02650486**

NOTE	REF NO	GRAPHIC REF	PART NUMBER	QTY	PART NAME 1 2 3 4 5 6 (PRODUCT LEVEL)	SEE PAGE
	1	1	**3J-0634**	1	SEAL-O-RING	
M	2	1	**6E-3283**	2	LOCKNUT	
M	3	1	**9X-8483**	1	SETSCREW-SOCKET (M12X1.75X80-MM)	
M	4	1	**125-1379**	1	SETSCREW-SOCKET (M12X1.75-THD)	
	5	1	**9S-8008**	1	PLUG-O-RING	
	6	1	**3K-0360**	1	SEAL-O-RING	
	7	1	**9S-8005**	2	PLUG-O-RING	
	8	1	**2M-9780**	2	SEAL-O-RING	
	9	1	**2W-1145**	1	RING-RETAINING	
	10	1	**124-9914**	1	SHIM (3-MM THK)	
	11	1	**124-9913**	1	SEAL-SHAFT	
Y	12	1	**278-8935**	1	HEAD GP-MOTOR (HYDROSTATIC DRIVE, LH)	354
Y	13	1	**278-8934**	1	ROTATING GP-MOTOR (HYDROSTATIC DRIVE)	385

M-METRIC PART
Y-SEPARATE ILLUSTRATION

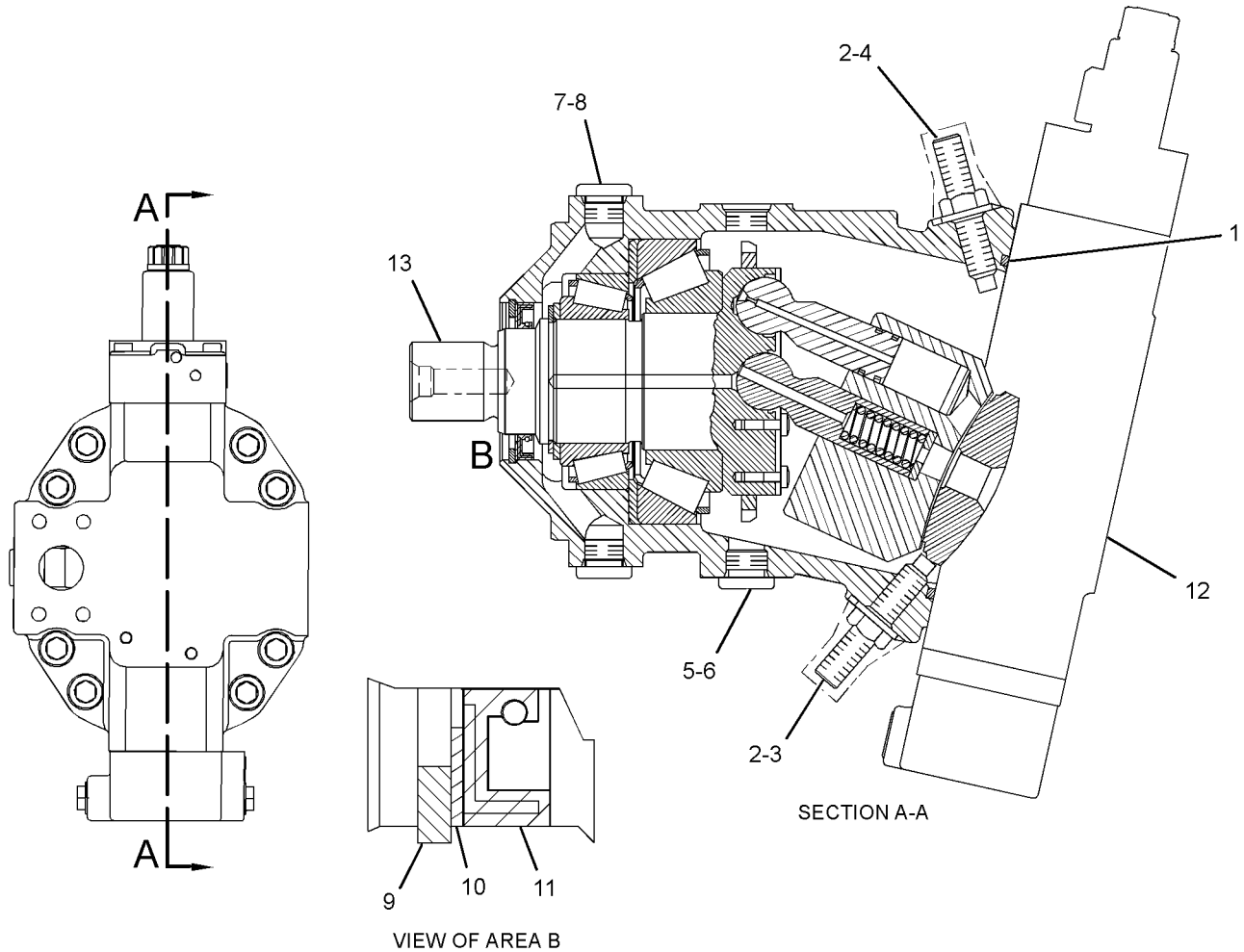

GRAPHIC #1 **<END>** g01328354

243-6640 MOTOR GP-PISTON—HYDROSTATIC DRIVE, RH

S/N: DHA1-UP; FBH1-UP

PART OF 236-2123 MOTOR & MOUNTING GP

SMCS-4351 **i02650479**

NOTE	REF NO	GRAPHIC REF	PART NUMBER	QTY	PART NAME 1 2 3 4 5 6 (PRODUCT LEVEL)	SEE PAGE
	1	1	**3J-0634**	1	SEAL-O-RING	
M	2	1	**6E-3283**	2	LOCKNUT	
M	3	1	**9X-8483**	1	SETSCREW-SOCKET (M12X1.75X80-MM)	
M	4	1	**125-1379**	1	SETSCREW-SOCKET (M12X1.75-THD)	
	5	1	**9S-8008**	1	PLUG-O-RING	
	6	1	**3K-0360**	1	SEAL-O-RING	
	7	1	**9S-8005**	2	PLUG-O-RING	
	8	1	**2M-9780**	2	SEAL-O-RING	
	9	1	**2W-1145**	1	RING-RETAINING	
	10	1	**124-9914**	1	SHIM (3-MM THK)	
	11	1	**124-9913**	1	SEAL-SHAFT	
Y	12	1	**279-0543**	1	HEAD GP-MOTOR (HYDROSTATIC DRIVE, RH)	355
Y	13	1	**278-8934**	1	ROTATING GP-MOTOR (HYDROSTATIC DRIVE)	385

M-METRIC PART
Y-SEPARATE ILLUSTRATION

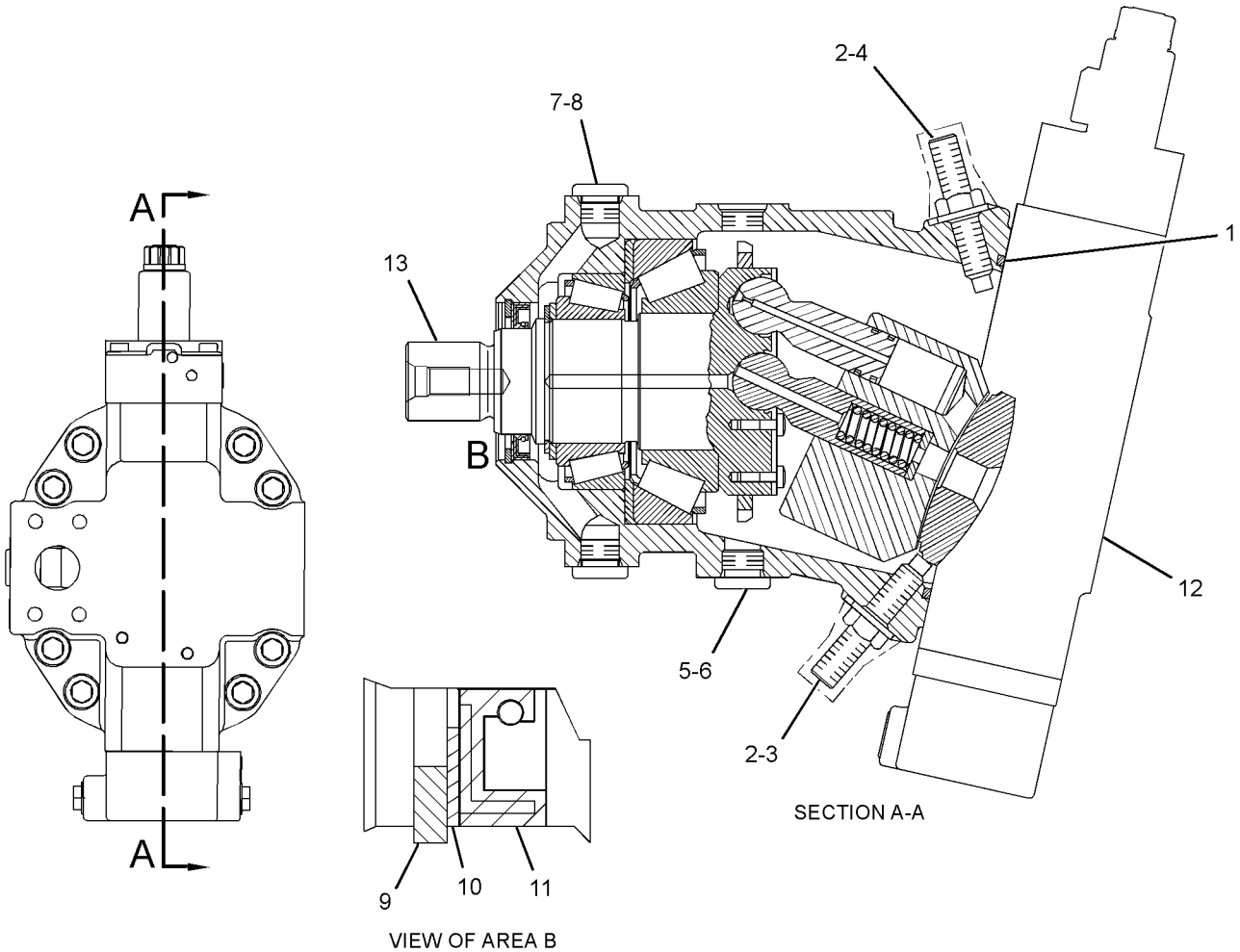

GRAPHIC #1 **<END>** g01328413

206-7267 MOUNTING GP-PUMP

S/N: DHA1-UP; FBH1-UP

PART OF 206-7260, 206-7261 POWER TRAIN AR

SMCS-5070 **i03021811**

NOTE	REF NO	GRAPHIC REF	PART NUMBER	QTY	PART NAME 1 2 3 4 5 6 (PRODUCT LEVEL)	SEE PAGE
	1	1	**1P-2943**	1	PLUG-BREATHER	
	2	1	**249-3973**	1	HOUSING	
	3	1	**249-3974**	1	BRACKET AS	
	4	1	**8T-4121**	12	WASHER-HARD (11X21X2.5-MM THK)	
M	5	1	**8T-4193**	6	BOLT (M16X2X50-MM)	
M	6	1	**8T-4198**	4	BOLT (M10X1.5X100-MM)	
M	7	1	**8T-6466**	8	BOLT (M10X1.5X60-MM)	
	8	1	**9X-8257**	6	WASHER (17.5X30X3.5-MM THK)	

M-METRIC PART

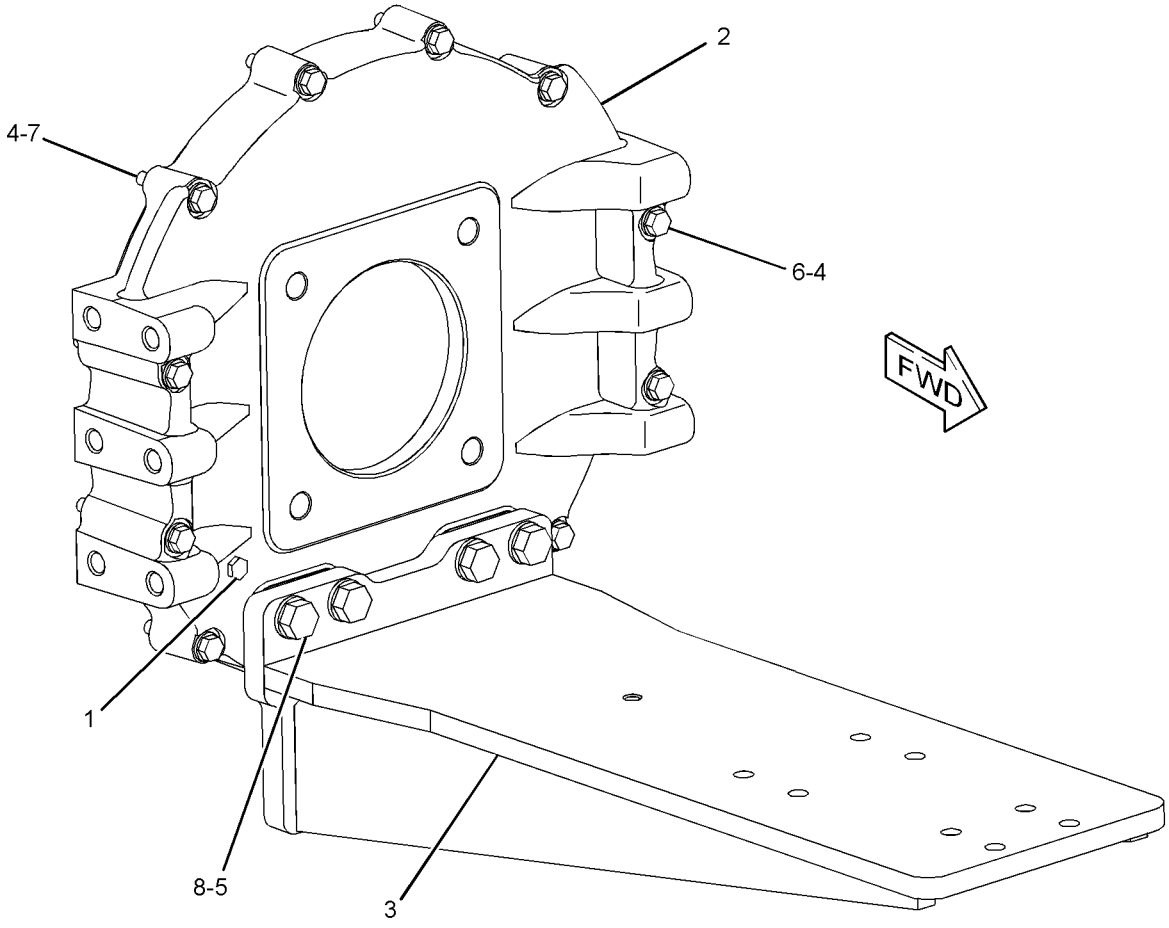

GRAPHIC #1 **<END>** g01200101

POWER TRAIN

206-7260 POWER TRAIN AR–XL

S/N: FBH1-UP

PART OF 206-7250 COMMON AR

SMCS-3000, 4000 **i03601702**

NOTE	PART NUMBER	QTY	PART NAME 1 2 3 4 5 6 (PRODUCT LEVEL)	SEE PAGE
Y	*206-7255*	1	COUPLING GP-PUMP	343
Y	*239-1244*	1	FINAL DRIVE & BRAKE GP	346
Y	*206-7281*	1	LINES GP-DIAGNOSTIC	855
Y	*206-7263*	1	LINES GP-DRAIN	362
Y	*206-7257*	1	LINES GP-HYDROSTATIC	364
Y	*206-7243*	1	LINES GP-POWER TRAIN COOLER	366
Y	*252-5074*	1	LINES GP-PUMP	368
Y	*236-2123*	1	MOTOR & MOUNTING GP	370
Y	*206-7267*	1	MOUNTING GP-PUMP	373
Y	*206-7244*	1	PLATE & FILM GP	858
Y	*236-2122*	1	PUMP & MTG GP-POWER TRAIN	375
Y	*252-9136*	2	SEGMENT GP-SPROCKET	390

Y-SEPARATE ILLUSTRATION

<END>

206-7261 POWER TRAIN AR–LGP

S/N: DHA1-UP

PART OF 206-7251 COMMON AR

SMCS-3000, 4000 **i03699840**

NOTE	PART NUMBER	QTY	PART NAME 1 2 3 4 5 6 (PRODUCT LEVEL)	SEE PAGE
Y	*206-7255*	1	COUPLING GP-PUMP	343
Y	*239-1245*	1	FINAL DRIVE & BRAKE GP	350
Y	*206-7281*	1	LINES GP-DIAGNOSTIC	855
Y	*206-7263*	1	LINES GP-DRAIN	362
Y	*206-7257*	1	LINES GP-HYDROSTATIC	364
Y	*206-7243*	1	LINES GP-POWER TRAIN COOLER	366
Y	*252-5074*	1	LINES GP-PUMP	368
Y	*236-2123*	1	MOTOR & MOUNTING GP	370
Y	*206-7267*	1	MOUNTING GP-PUMP	373
Y	*206-7271*	1	PLATE & FILM GP	859
Y	*236-2122*	1	PUMP & MTG GP-POWER TRAIN	375
Y	*252-9136*	2	SEGMENT GP-SPROCKET	390

Y-SEPARATE ILLUSTRATION

<END>

236-2122 PUMP & MTG GP-POWER TRAIN

S/N: DHA1-UP; FBH1-UP

PART OF 206-7260, 206-7261 POWER TRAIN AR

SMCS-3203 **i03017549**

NOTE	REF NO	GRAPHIC REF	PART NUMBER	QTY	PART NAME 1 2 3 4 5 6 (PRODUCT LEVEL)	SEE PAGE
Y	1	1	**243-6637**	1	PUMP GP-PISTON (HYDROSTATIC DRIVE)	378
	2	1	**250-6055**	1	BRACKET AS	
	3	1	**198-4777**	4	WASHER-HARD (11X25X10-MM THK)	
	4	1	**8T-4123**	4	WASHER (22X35X3.5-MM THK)	
M	5	1	**8T-4194**	4	BOLT (M12X1.75X50-MM)	
M	6	1	**8T-4196**	4	BOLT (M10X1.5X35-MM)	
	7	1	**8T-4223**	4	WASHER-HARD (13.5X25.5X3-MM THK)	
M	8	1	**8T-6430**	4	BOLT (M20X2.5X50-MM)	

M-METRIC PART
Y-SEPARATE ILLUSTRATION

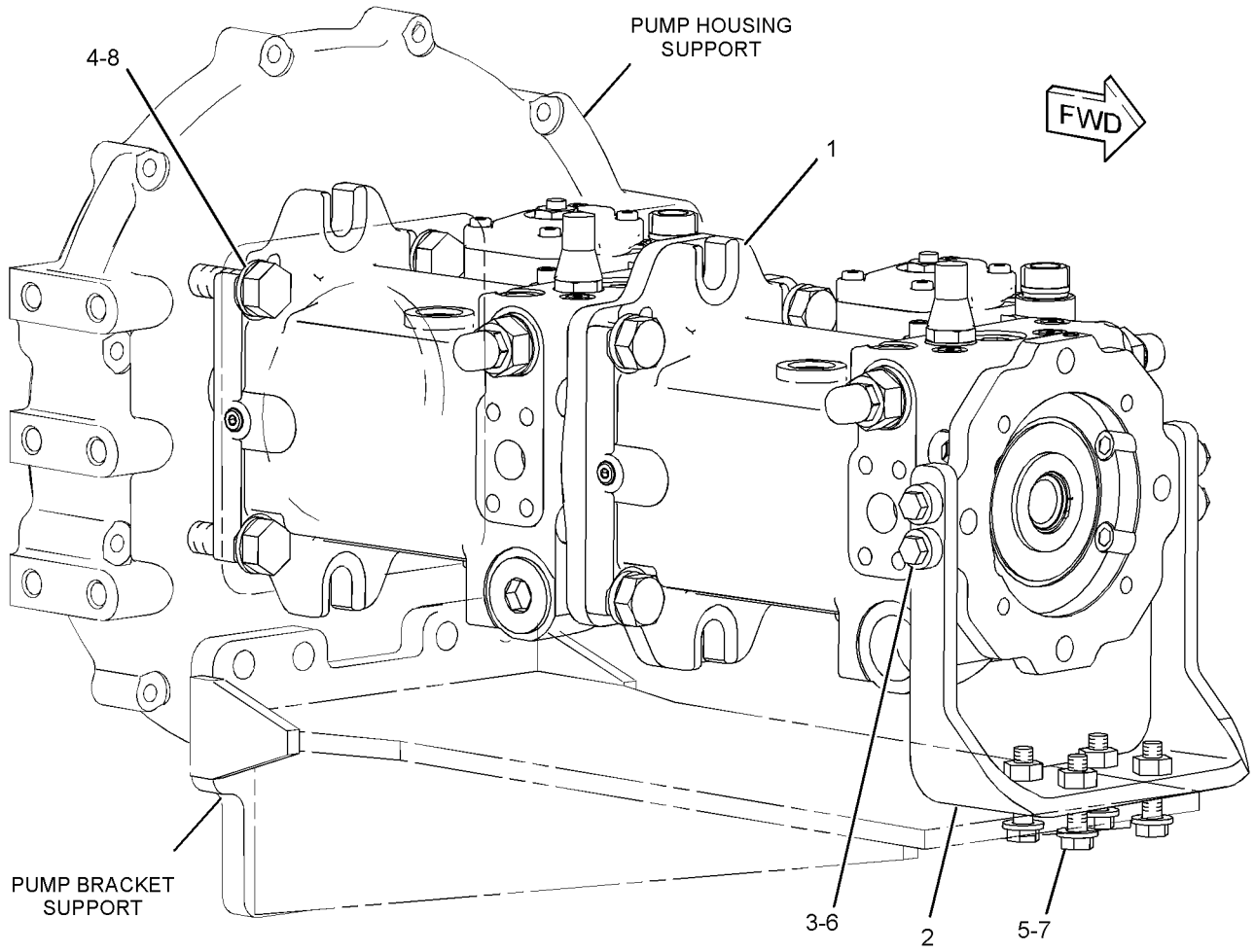

GRAPHIC #1 **<END>** g01299392

278-4448 PUMP GP-CHARGE—HYDROSTATIC DRIVE, LH

S/N: DHA1-UP; FBH1-UP

PART OF 261-3629 PUMP GP-PISTON

SMCS-3204 **i02592887**

NOTE	REF NO	GRAPHIC REF	PART NUMBER	QTY	PART NAME 1 2 3 4 5 6 (PRODUCT LEVEL)	SEE PAGE
	1	1	**8H-7521**	2	SEAL-O-RING	
	2	1	**278-8284**	2	COUPLING	
M	3	1	**8T-3957**	4	BOLT-SOCKET HEAD (M12X1.75X30-MM)	
	4	1	**7D-9014**	1	SEAL-O-RING	
	5	1	**145-5311**	1	SPACER	
	6	1	**8T-5049**	1	SEAL-O-RING	

M-METRIC PART

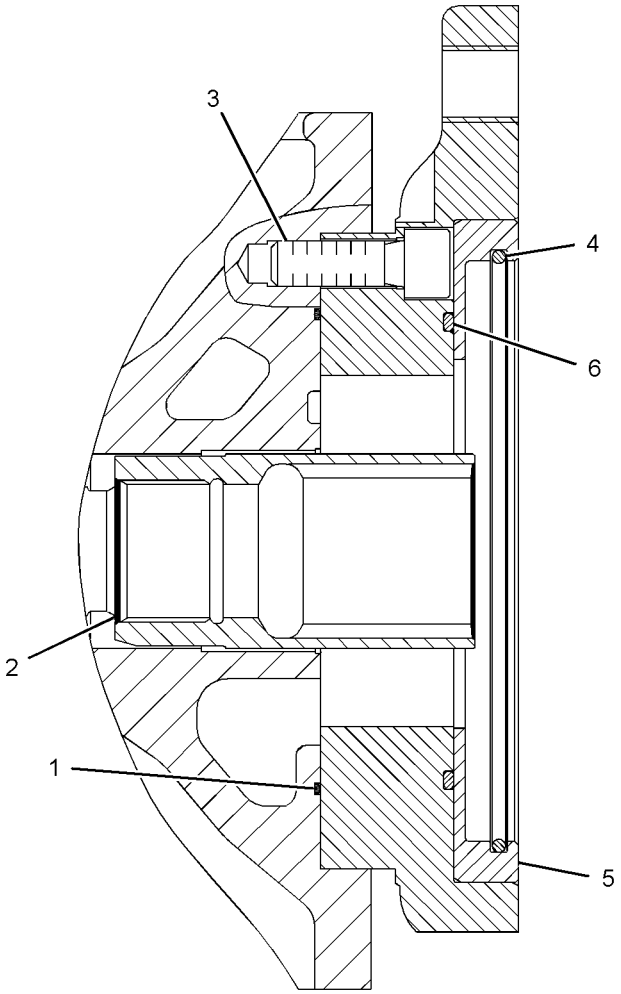

GRAPHIC #1 **<END>** g01304352

278-4449 PUMP GP-CHARGE—HYDROSTATIC DRIVE, RH

S/N: DHA1-UP; FBH1-UP

PART OF 261-3630 PUMP GP-PISTON

SMCS-3204 **i02592930**

NOTE	REF NO	GRAPHIC REF	PART NUMBER	QTY	PART NAME 1 2 3 4 5 6 (PRODUCT LEVEL)	SEE PAGE
	1	1	**8H-7521**	2	SEAL-O-RING	
	2	1	**270-5239**	1	PLATE-WEAR	
	3	1	**8T-5049**	1	SEAL-O-RING	
	4	1	**278-8283**	1	COUPLING	
	5	1	**117-7296**	1	KEY-SHAFT	
M	6	1	**8T-3957**	4	BOLT-SOCKET HEAD (M12X1.75X30-MM)	
	7	1	**126-1477**	1	BUSHING-COUPLING	
	8	1	**246-5804**	2	PLUG	
	9	1	**7J-6285**	1	SEAL-O-RING	
	10	1	**278-8282**	1	SPACER-SPECIAL	

M-METRIC PART

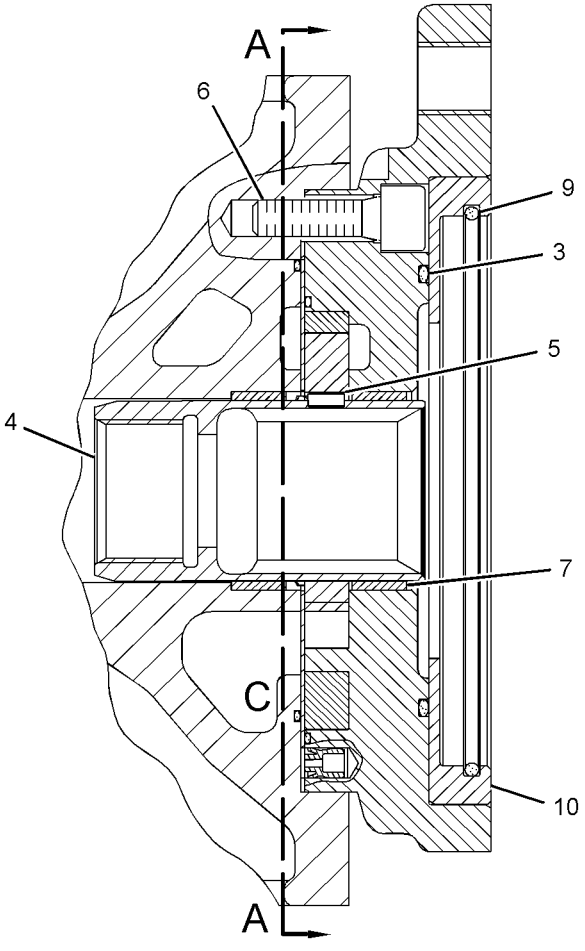

SECTION B-B

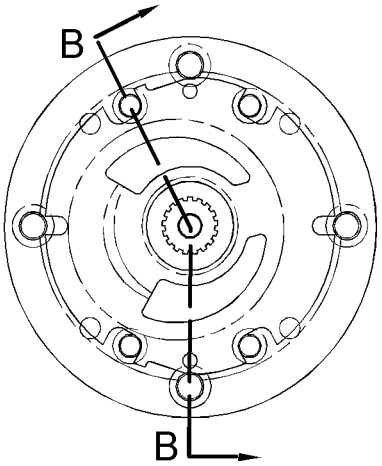

SECTION A-A

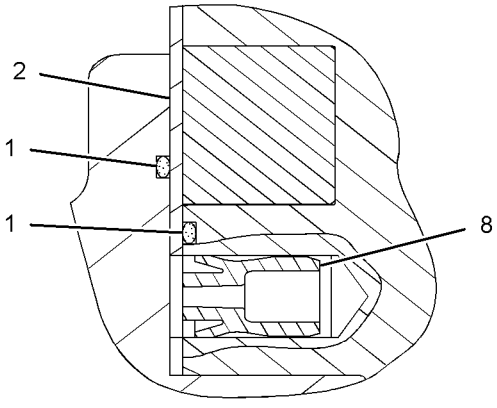

VIEW OF AREA C

GRAPHIC #1 **<END>** g01304419

243-6637 PUMP GP-PISTON—HYDROSTATIC DRIVE

S/N: DHA1-UP; FBH1-UP

PART OF 236-2122 PUMP & MTG GP-POWER TRAIN

SMCS-3203 **i02864061**

NOTE	REF NO	GRAPHIC REF	PART NUMBER	QTY	PART NAME 1 2 3 4 5 6 (PRODUCT LEVEL)	SEE PAGE
Y	1	1	**261-3629**	1	PUMP GP-PISTON (HYDROSTATIC DRIVE, LH)	379
Y	2	1	**261-3630**	1	PUMP GP-PISTON (HYDROSTATIC DRIVE, RH)	381
M	3	1	**7Y-5221**	4	BOLT-SOCKET HEAD (M20X2.5X45-MM)	
	4	1	**8T-4123**	4	WASHER (22X35X3.5-MM THK)	
	5	1	**2K-8257**	1	SEAL-O-RING	

M-METRIC PART
Y-SEPARATE ILLUSTRATION

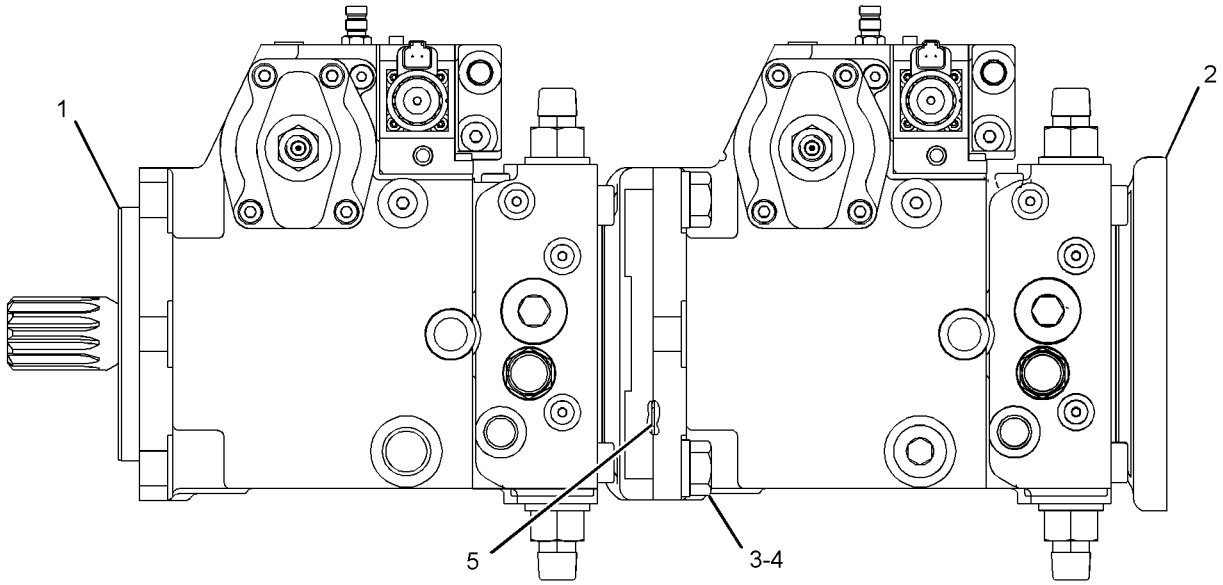

GRAPHIC #1 **<END>** g01428806

261-3629 PUMP GP-PISTON—HYDROSTATIC DRIVE, LH

S/N: DHA1-UP; FBH1-UP

PART OF 243-6637 PUMP GP-PISTON

SMCS-3203 **i02964850**

NOTE	REF NO	GRAPHIC REF	PART NUMBER	QTY	PART NAME 1 2 3 4 5 6 (PRODUCT LEVEL)	SEE PAGE
	1	1	**9T-3928**	4	PLUG AS	
					(EACH INCLUDES)	
		1	**187-8001**	1	SEAL	
	2	1	**9S-8004**	5	PLUG	
	3	1	**126-1638**	2	PIN-JOINT	
Y	4	1	**278-4442**	1	VALVE GP-PUMP CONTROL (PRESSURE, FLOW COMPENSATOR) (HYDROSTATIC DRIVE)	394
	5	1	**167-6805**	2	PIN	
Y	6	1	**278-4437**	1	ROTATING GP-PUMP (HYDROSTATIC DRIVE, LH)	386
	7	1	**112-4628**	2	SCREW	
	8	1	**123-7574**	1	SCREW-LOCK	
	9	1	**126-1661**	1	PLUG	
	10	1	**123-7582**	1	PIN-THREADED	
Y	11	1	**278-4448**	1	PUMP GP-CHARGE (HYDROSTATIC DRIVE, LH)	376
	12	1	**6V-8978**	1	SEAL-O-RING	
	13	1	**123-7575**	1	SCREW-LOCK	
	14	1	**112-4629**	1	SCREW	
Y	15	1	**278-4440**	1	HEAD GP-PUMP (HYDROSTATIC DRIVE, LH)	356
M	16	1	**1G-3176**	1	SCREW-LOCK (M8-THD)	
	17	1	**6E-4350**	1	PIN	
Y	18	1	**278-4439**	1	ACTUATOR GP-PUMP (HYDROSTATIC DRIVE)	342
M	19	1	**6E-4385**	1	LOCKNUT (M12X1.5-THD)	

M-METRIC PART
Y-SEPARATE ILLUSTRATION

261-3629 PUMP GP-PISTON *(contd.)* i02964850

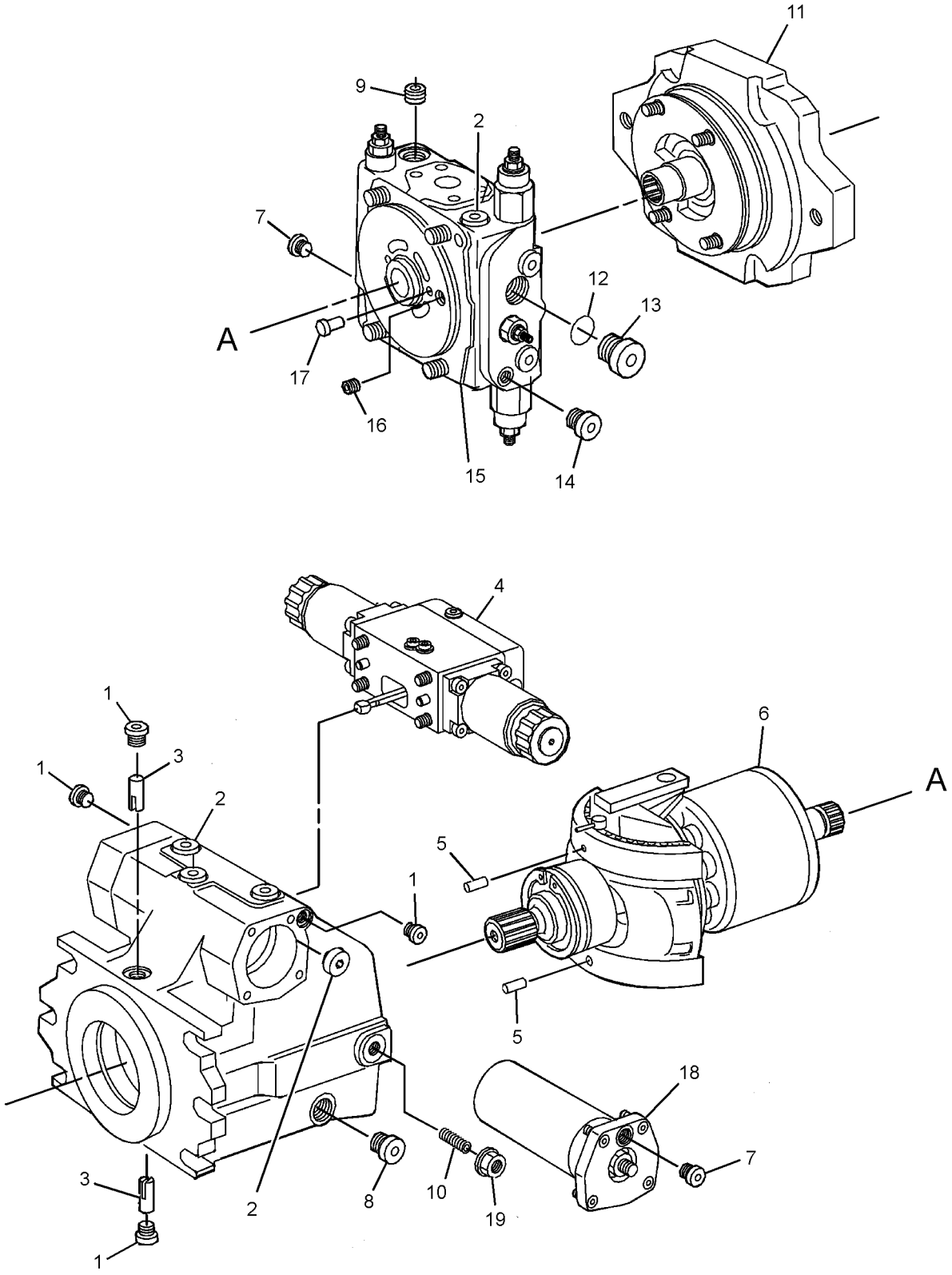

GRAPHIC #1 **<END>** g01302905

261-3630 PUMP GP-PISTON—HYDROSTATIC DRIVE, RH

S/N: DHA1-UP; FBH1-UP

PART OF 243-6637 PUMP GP-PISTON

SMCS-3203 **i02964981**

NOTE	REF NO	GRAPHIC REF	PART NUMBER	QTY	PART NAME 1 2 3 4 5 6 (PRODUCT LEVEL)	SEE PAGE
	1	1	**9T-3928**	4	PLUG AS	
					(EACH INCLUDES)	
		1	**187-8001**	1	SEAL	
	2	1	**9S-8004**	5	PLUG	
	3	1	**126-1638**	2	PIN-JOINT	
Y	4	1	**278-4442**	1	VALVE GP-PUMP CONTROL (PRESSURE, FLOW COMPENSATOR) (HYDROSTATIC DRIVE)	394
	5	1	**167-6805**	2	PIN	
Y	6	1	*278-4438*	1	ROTATING GP-PUMP (HYDROSTATIC DRIVE, RH)	388
	7	1	**112-4628**	2	SCREW	
	8	1	**123-7574**	1	SCREW-LOCK	
	9	1	**126-1661**	1	PLUG	
	10	1	**123-7582**	1	PIN-THREADED	
Y	11	1	**278-4449**	1	PUMP GP-CHARGE (HYDROSTATIC DRIVE, RH)	377
	12	1	**6V-8978**	1	SEAL-O-RING	
	13	1	**123-7575**	1	SCREW-LOCK	
	14	1	**112-4629**	1	SCREW	
Y	15	1	**278-4441**	1	HEAD GP-PUMP (HYDROSTATIC DRIVE, RH)	357
M	16	1	**1G-3176**	1	SCREW-LOCK (M8-THD)	
	17	1	**6E-4350**	1	PIN	
Y	18	1	**278-4439**	1	ACTUATOR GP-PUMP (HYDROSTATIC DRIVE)	342
M	19	1	**6E-4385**	1	LOCKNUT (M12X1.5-THD)	

M-METRIC PART
Y-SEPARATE ILLUSTRATION

261-3630 PUMP GP-PISTON *(contd.)* i02964981

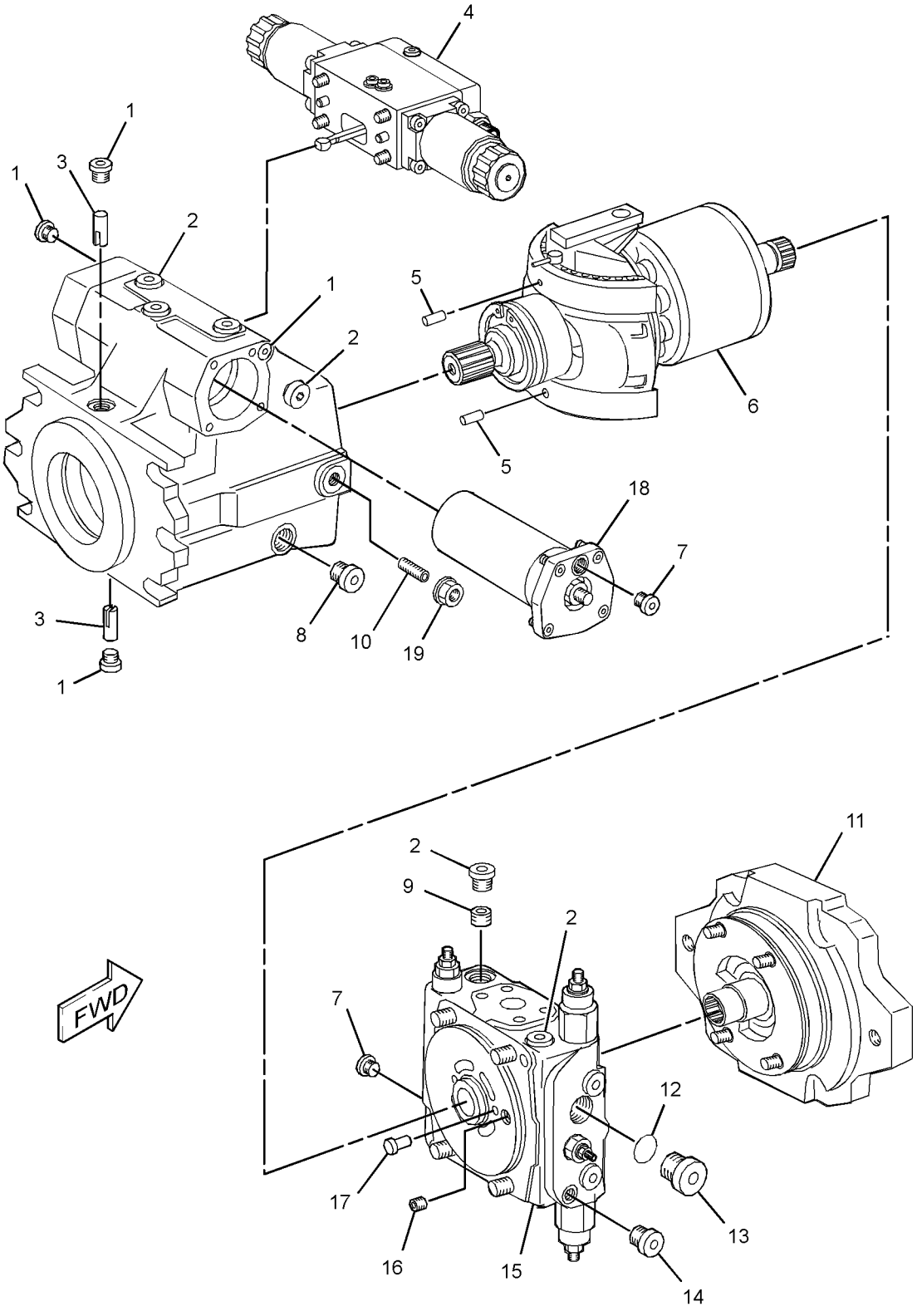

GRAPHIC #1 **<END>** g01303277

191-0885 ROTATING GP-MOTOR—HYDROSTATIC DRIVE

S/N: DHA1-UP; FBH1-UP

PART OF 278-8934 ROTATING GP-MOTOR

SMCS-5058 **i02645618**

NOTE	REF NO	GRAPHIC REF	PART NUMBER	QTY	PART NAME 1 2 3 4 5 6 (PRODUCT LEVEL)	SEE PAGE
	1	1	**191-1393**	1	BARREL-CYLINDER	
	2	1	**191-1394**	1	PLATE-CONTROL	
	3	1	**191-1395**	1	PIN	
	4	1	**191-1396**	7	PISTON AS	
					(EACH INCLUDES)	
		1	**191-1398**	2	RING-PISTON	
B	5	1	**124-9855**	1	SHIM (4.5-MM THK)	
B	6	1	**124-9856**	1	SHIM (4.6-MM THK)	
B	7	1	**124-9857**	1	SHIM (4.7-MM THK)	
B	8	1	**124-9858**	1	SHIM (4.8-MM THK)	
B	9	1	**124-9859**	1	SHIM (4.9-MM THK)	
B	10	1	**124-9860**	1	SHIM (5-MM THK)	
	11	1	**124-9861**	1	SPRING	
	12	1	**191-1397**	1	PLATE-RETAINING	
	13	1	**252-0706**	7	SCREW-PAN HEAD (M8X1.25X20-MM)	

B-USE AS REQUIRED

191-0885 **ROTATING GP-MOTOR** *(contd.)* **i02645618**

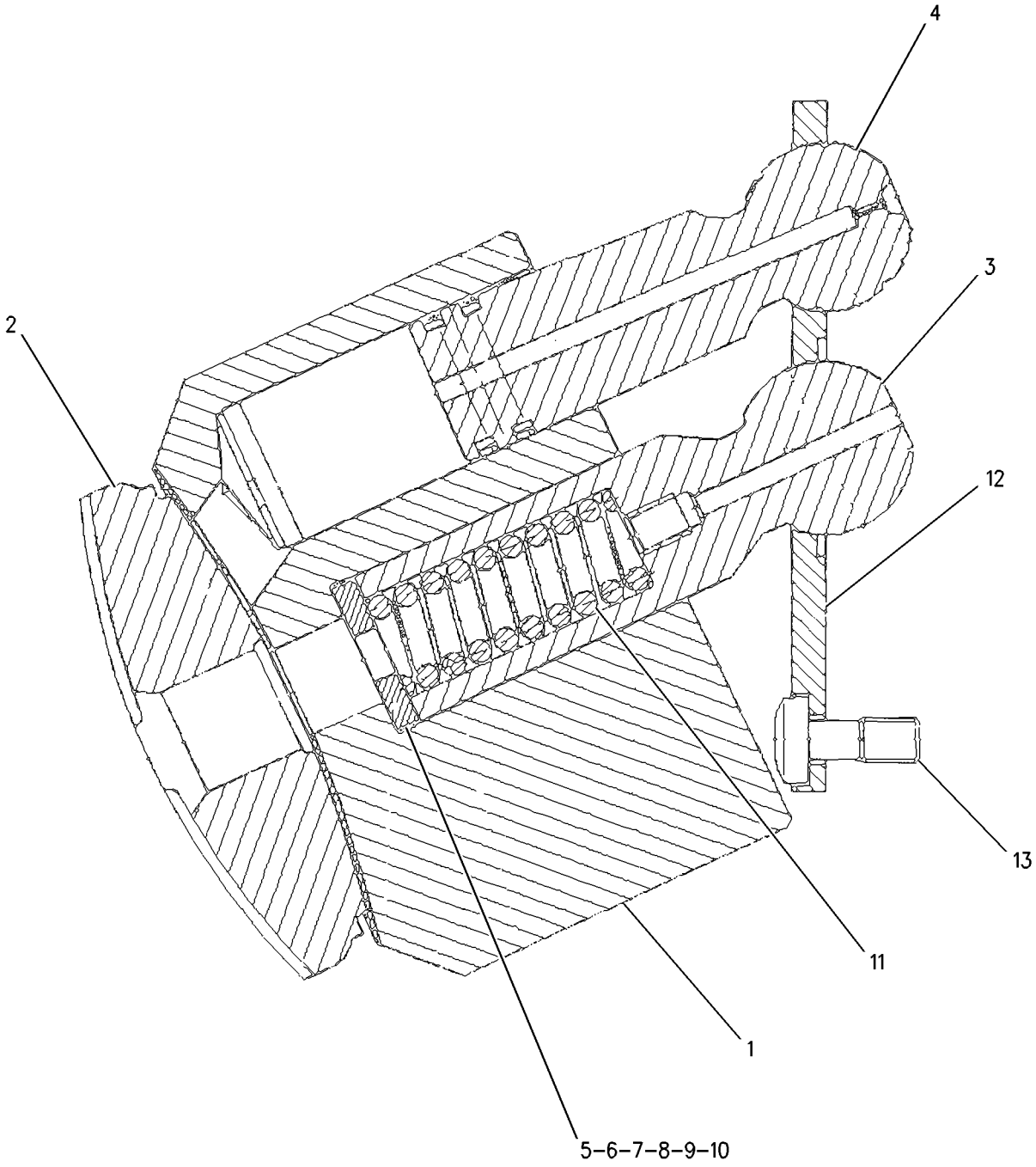

GRAPHIC #1 **<END>** g00713987

278-8934 ROTATING GP-MOTOR—HYDROSTATIC DRIVE

S/N: DHA1-UP; FBH1-UP

PART OF 243-6639, 243-6640 MOTOR GP-PISTON

SMCS-5058 **i02801489**

NOTE	REF NO	GRAPHIC REF	PART NUMBER	QTY	PART NAME 1 2 3 4 5 6 (PRODUCT LEVEL)	SEE PAGE
J	1	1	**191-1956**	1	KIT-BEARING	
					(INCLUDES BEARINGS, SPACER, SHIM, & RETAINING RING)	
Y	2	1	**191-0885**	1	ROTATING GP-MOTOR (HYDROSTATIC DRIVE)	383
J	3	1	**095-0929**	1	RING-RETAINING	
	4	1	**278-4977**	1	SHAFT-DRIVE	
	5	1	**252-0706**	7	SCREW-PAN HEAD (M8X1.25X20-MM)	
B	6	1	**124-9855**	1	SHIM (4.5-MM THK)	
B	7	1	**124-9856**	1	SHIM (4.6-MM THK)	
B	8	1	**124-9857**	1	SHIM (4.7-MM THK)	
B	9	1	**124-9858**	1	SHIM (4.8-MM THK)	
B	10	1	**124-9859**	1	SHIM (4.9-MM THK)	
B	11	1	**124-9860**	1	SHIM (5-MM THK)	
					PARTS SHOWN IN GRAPHIC(S) WITHOUT A REFERENCE NUMBER ARE NOT SERVICED SEPARATELY	

B-USE AS REQUIRED
J-KIT MARKED J INCLUDES PART(S) MARKED J
Y-SEPARATE ILLUSTRATION

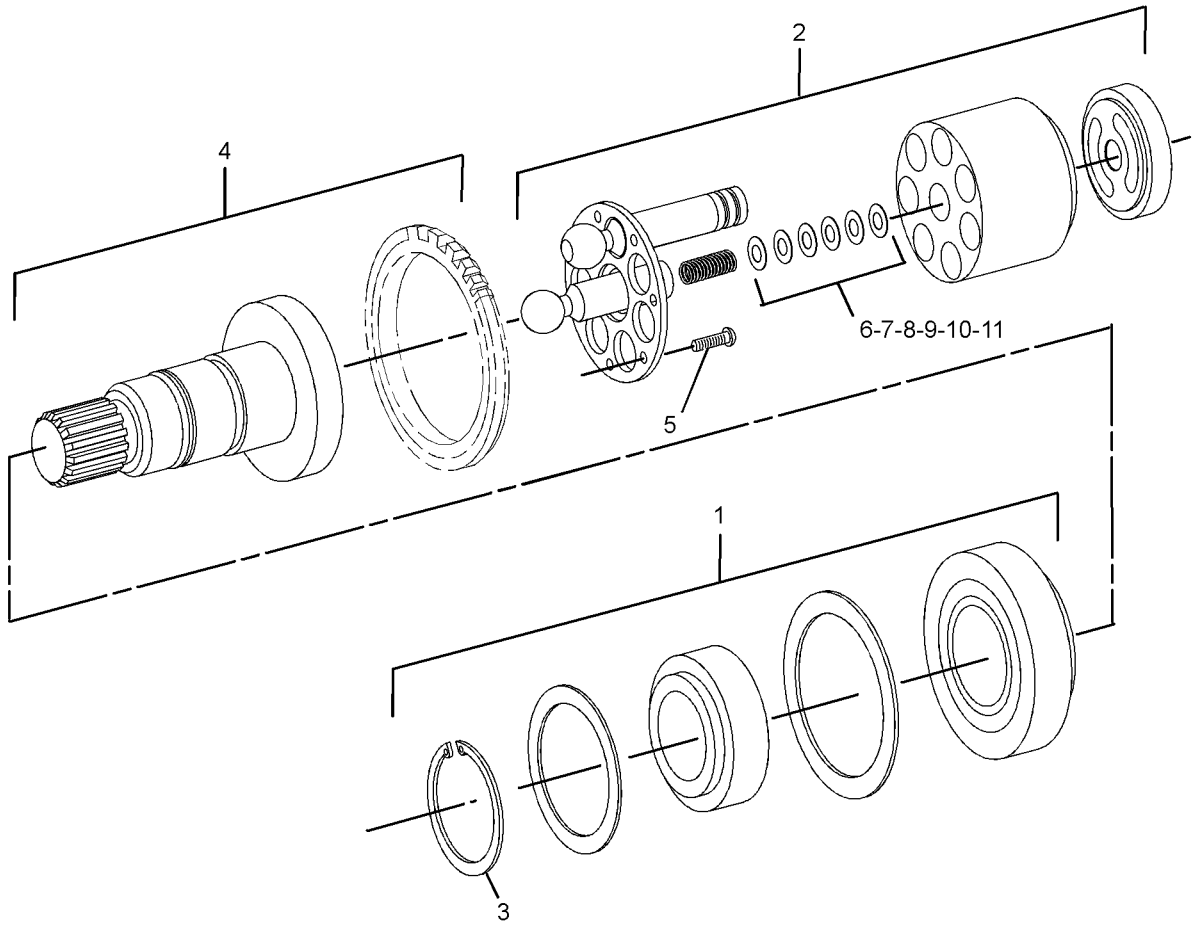

GRAPHIC #1 **<END>** g01412482

278-4437 ROTATING GP-PUMP—HYDROSTATIC DRIVE, LH

S/N: DHA1-UP; FBH1-UP

PART OF 261-3629 PUMP GP-PISTON

SMCS-5070 **i02830603**

NOTE	REF NO	GRAPHIC REF	PART NUMBER	QTY	PART NAME 1 2 3 4 5 6 (PRODUCT LEVEL)	SEE PAGE
	1	1	**159-9854**	2	RING-RETAINING	
	2	1	**126-1420**	1	SEAL-SHAFT	
	3	1	**142-9439**	1	BEARING AS	
	4	1	**6V-5201**	1	RING-RETAINING	
	5	1	**278-4464**	1	PLATE	
J	6	1	**114-4270**	1	RING-RETAINING	
J	7	1	**135-8054**	2	SHIM	
J	8	1	**262-7293**	1	KIT-PUMP ROTATING GROUP	
J	9	1	**126-1401**	1	SPRING SET	
BJ	10	1	**126-1405**	1	SHIM (1.2-MM THK)	
BJ	11	1	**126-1406**	1	SHIM (1-MM THK)	
BJ	12	1	**126-1407**	1	SHIM (0.8-MM THK)	
BJ	13	1	**126-1408**	1	SHIM (0.6-MM THK)	
	14	1	**126-1403**	1	PLATE-ADJUSTMENT	
	15	1	**278-4976**	1	SHAFT-DRIVE	
	16	1	**6E-0719**	2	ROD	
	17	1	**126-1413**	1	LINER-BEARING	
	18	1	**126-1419**	1	BEARING-CRADLE	
	19	1	**126-1402**	1	SWASHPLATE	

PARTS SHOWN IN GRAPHIC(S) WITHOUT A REFERENCE NUMBER ARE NOT SERVICED SEPARATELY

B-USE AS REQUIRED
J-KIT MARKED J INCLUDES PART(S) MARKED J

278-4437 **ROTATING GP-PUMP** *(contd.)* **i02830603**

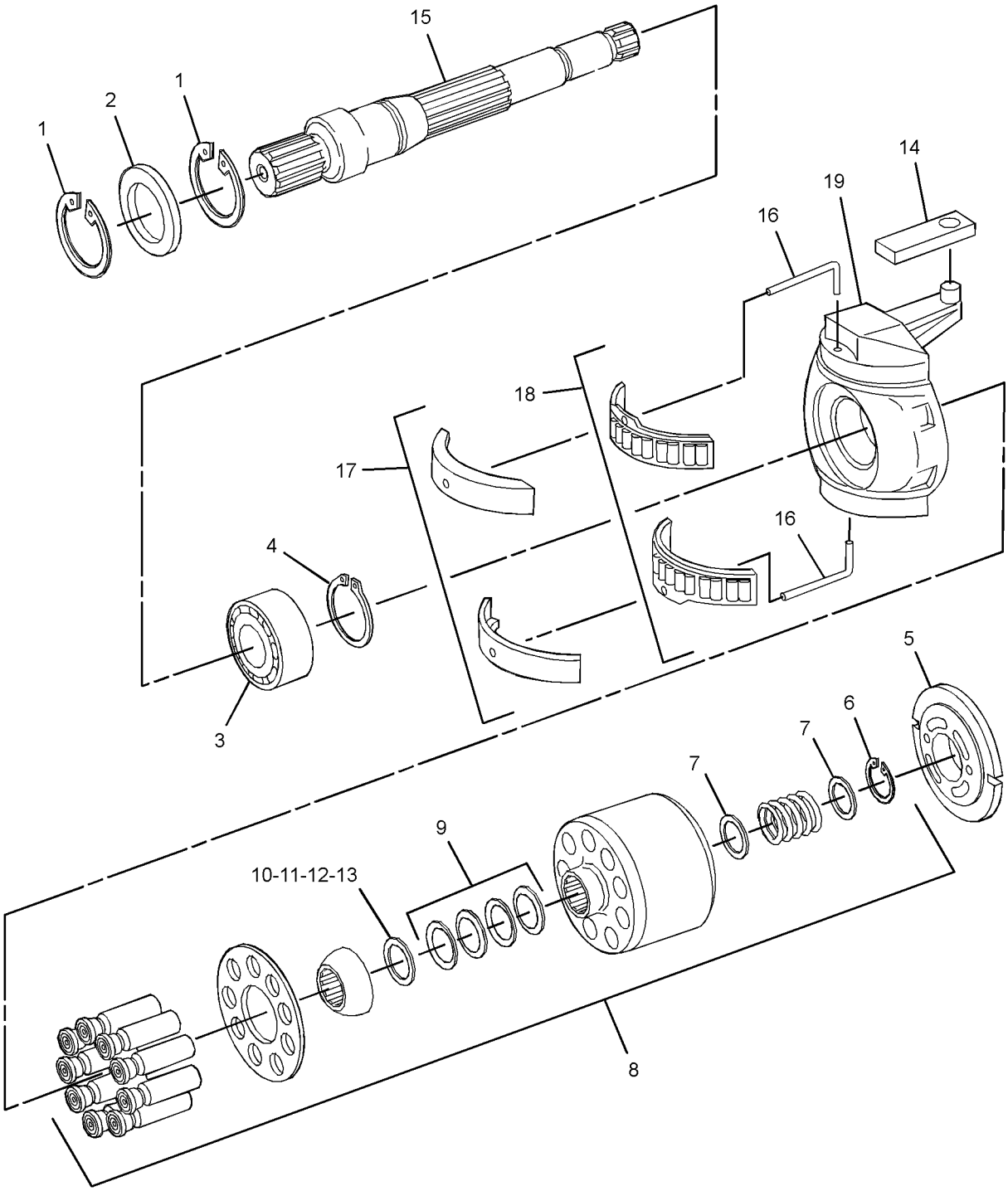

GRAPHIC #1 **<END>** g01411838

278-4438 ROTATING GP-PUMP—HYDROSTATIC DRIVE, RH

S/N: DHA1-UP; FBH1-UP

PART OF 261-3630 PUMP GP-PISTON

SMCS-5070 **i02830632**

NOTE	REF NO	GRAPHIC REF	PART NUMBER	QTY	PART NAME 1 2 3 4 5 6 (PRODUCT LEVEL)	SEE PAGE
	1	1	**159-9854**	2	RING-RETAINING	
	2	1	**126-1420**	1	SEAL-SHAFT	
	3	1	**142-9439**	1	BEARING AS	
	4	1	**6V-5201**	1	RING-RETAINING	
	5	1	**278-4464**	1	PLATE	
J	6	1	**114-4270**	1	RING-RETAINING	
J	7	1	**135-8054**	2	SHIM	
J	8	1	**262-7293**	1	KIT-PUMP ROTATING GROUP	
J	9	1	**126-1401**	1	SPRING SET	
BJ	10	1	**126-1405**	1	SHIM (1.2-MM THK)	
BJ	11	1	**126-1406**	1	SHIM (1-MM THK)	
BJ	12	1	**126-1407**	1	SHIM (0.8-MM THK)	
BJ	13	1	**126-1408**	1	SHIM (0.6-MM THK)	
	14	1	**126-1403**	1	PLATE-ADJUSTMENT	
	15	1	**145-5927**	1	SHAFT	
	16	1	**6E-0719**	2	ROD	
	17	1	**126-1413**	1	LINER-BEARING	
	18	1	**126-1419**	1	BEARING-CRADLE	
	19	1	**126-1402**	1	SWASHPLATE	

PARTS SHOWN IN GRAPHIC(S) WITHOUT A REFERENCE NUMBER ARE NOT SERVICED SEPARATELY

B-USE AS REQUIRED
J-KIT MARKED J INCLUDES PART(S) MARKED J

278-4438 **ROTATING GP-PUMP** *(contd.)* **i02830632**

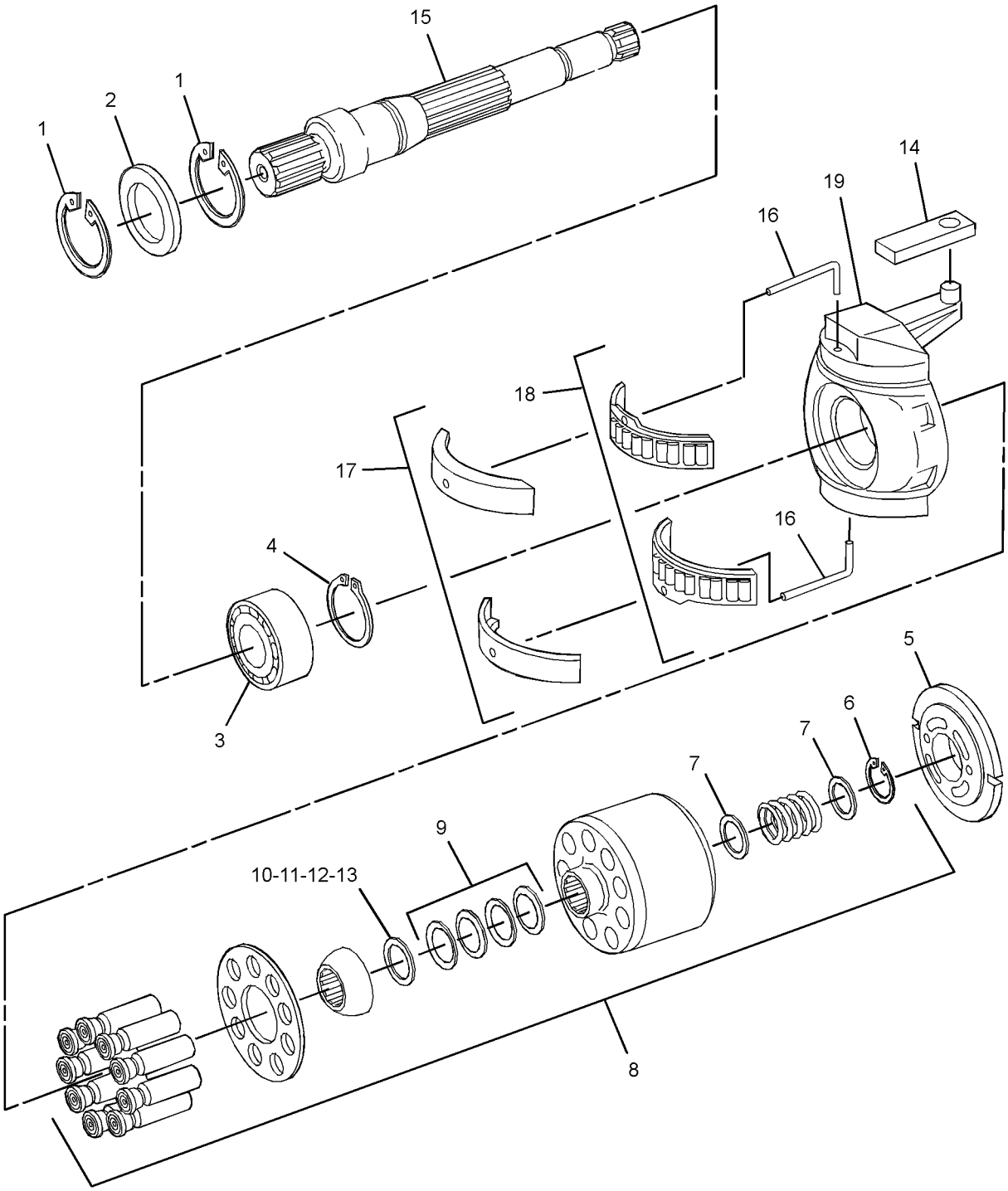

GRAPHIC #1 **<END>** g01411838

252-9136 SEGMENT GP-SPROCKET

S/N: DHA1-UP; FBH1-UP

PART OF 206-7260, 206-7261 POWER TRAIN AR

SMCS-4155 **i02388102**

NOTE	REF NO	GRAPHIC REF	PART NUMBER	QTY	PART NAME 1 2 3 4 5 6 (PRODUCT LEVEL)	SEE PAGE
	1	1	**3S-8182**	27	BOLT (5/8-18X1.84-IN)	
	2	1	**255-8095**	1	SPROCKET-TRACK	
	3	1	**7H-3607**	27	NUT (5/8-18-THD)	

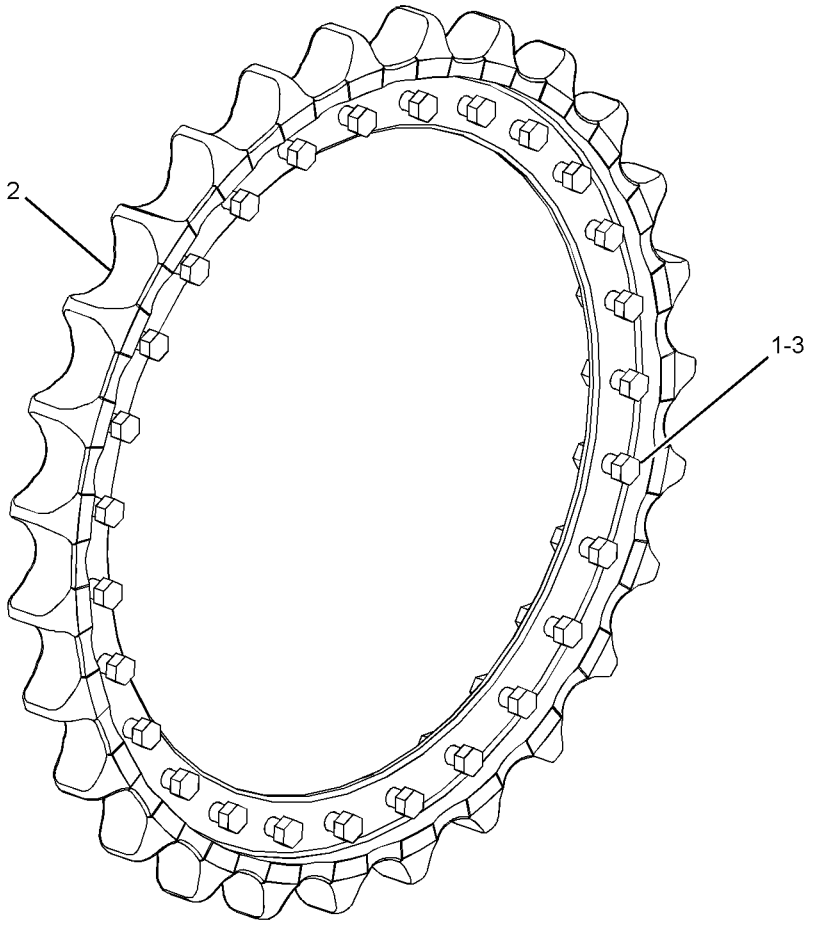

GRAPHIC #1 **<END>** g01198903

266-2579 VALVE & MTG GP-SOLENOID–OUTLET

S/N: DHA1-UP; FBH1-UP

PART OF 244-7115, 309-1571 VALVE GP-BANK 3, 246-8498, 309-1572 VALVE GP-BANK 4

AN ATTACHMENT

SMCS-5479 **i03620320**

NOTE	REF NO	GRAPHIC REF	PART NUMBER	QTY	PART NAME 1 2 3 4 5 6 (PRODUCT LEVEL)	SEE PAGE
J	1	1	**221-4486**	1	VALVE GP-SOLENOID (HYDRAULIC LOCKOUT)	
		1	**212-0061**	1	FLANGE	
	2	1	**227-1192**	2	KIT-VALVE (SHUTTLE) (OUTLET MANIFOLD)	
M	3	1	**8T-1158**	1	BOLT-SOCKET HEAD (M8X1.25X20-MM)	
					AVAILABLE REPAIR KIT(S):	
J			**200-2371**	1	KIT-SEAL (SOLENOID VALVE)	
					(INCLUDES SEAL-O-RINGS)	

J-(KIT MARKED J SERVICES PART(S) MARKED J)
M-METRIC PART

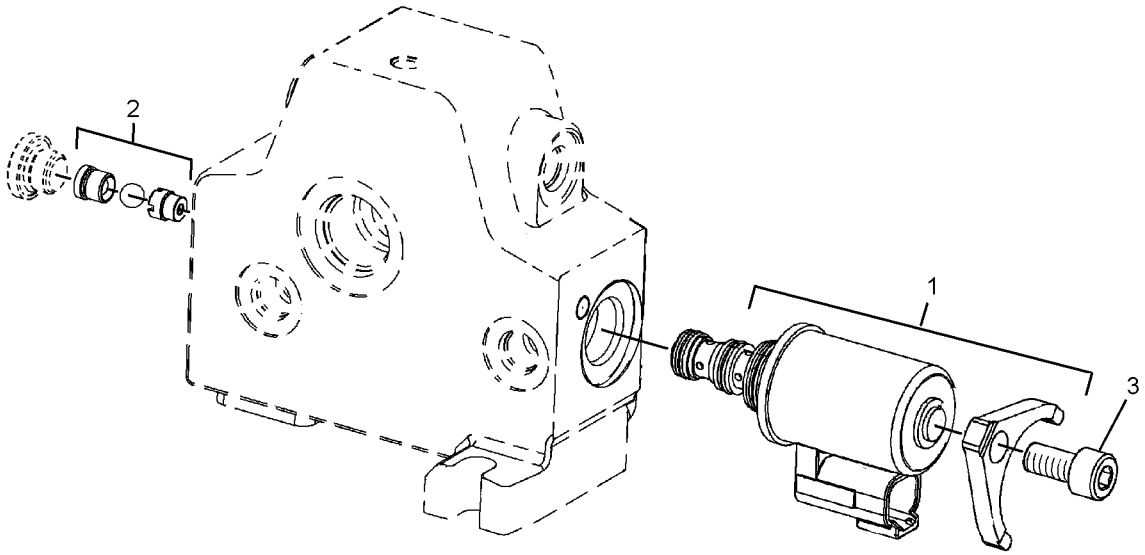

GRAPHIC #1 **<END>** g01303128

278-8937 VALVE GP-FLUSHING—HYDROSTATIC DRIVE

S/N: DHA1-UP; FBH1-UP

PART OF 278-8935, 279-0543 HEAD GP-MOTOR

SMCS-5066 **i02645627**

NOTE	REF NO	GRAPHIC REF	PART NUMBER	QTY	PART NAME 1 2 3 4 5 6 (PRODUCT LEVEL)	SEE PAGE
	1	1	**125-4572**	1	RING-RETAINING	
	2	1	**109-4441**	1	PLUG	
	3	1	**124-9901**	1	SPRING	
	4	1	**124-9904**	1	SHIM (1-MM THK)	
	5	1	**124-9905**	1	SHIM (0.3-MM THK)	
	6	1	**124-9906**	1	SHIM (0.5-MM THK)	
	7	1	**6V-8351**	1	SEAL-O-RING	
	8	1	**124-9896**	1	VALVE-PISTON	
	9	1	**279-0354**	1	ORIFICE	
M	10	1	**8T-7811**	4	BOLT-SOCKET HEAD (M12X1.75X50-MM)	
	11	1	**124-9894**	1	HOUSING	
	12	1	**124-9895**	1	PISTON	
	13	1	**124-9899**	2	SPACER	
	14	1	**107-3117**	2	SEAL-O-RING	
	15	1	**124-9900**	2	SPRING	
	16	1	**124-9891**	2	PLUG	
	17	1	**9S-8004**	1	PLUG	
	18	1	**3J-1907**	1	SEAL-O-RING	
	19	1	**061-7540**	1	SEAL-O-RING	

M-METRIC PART

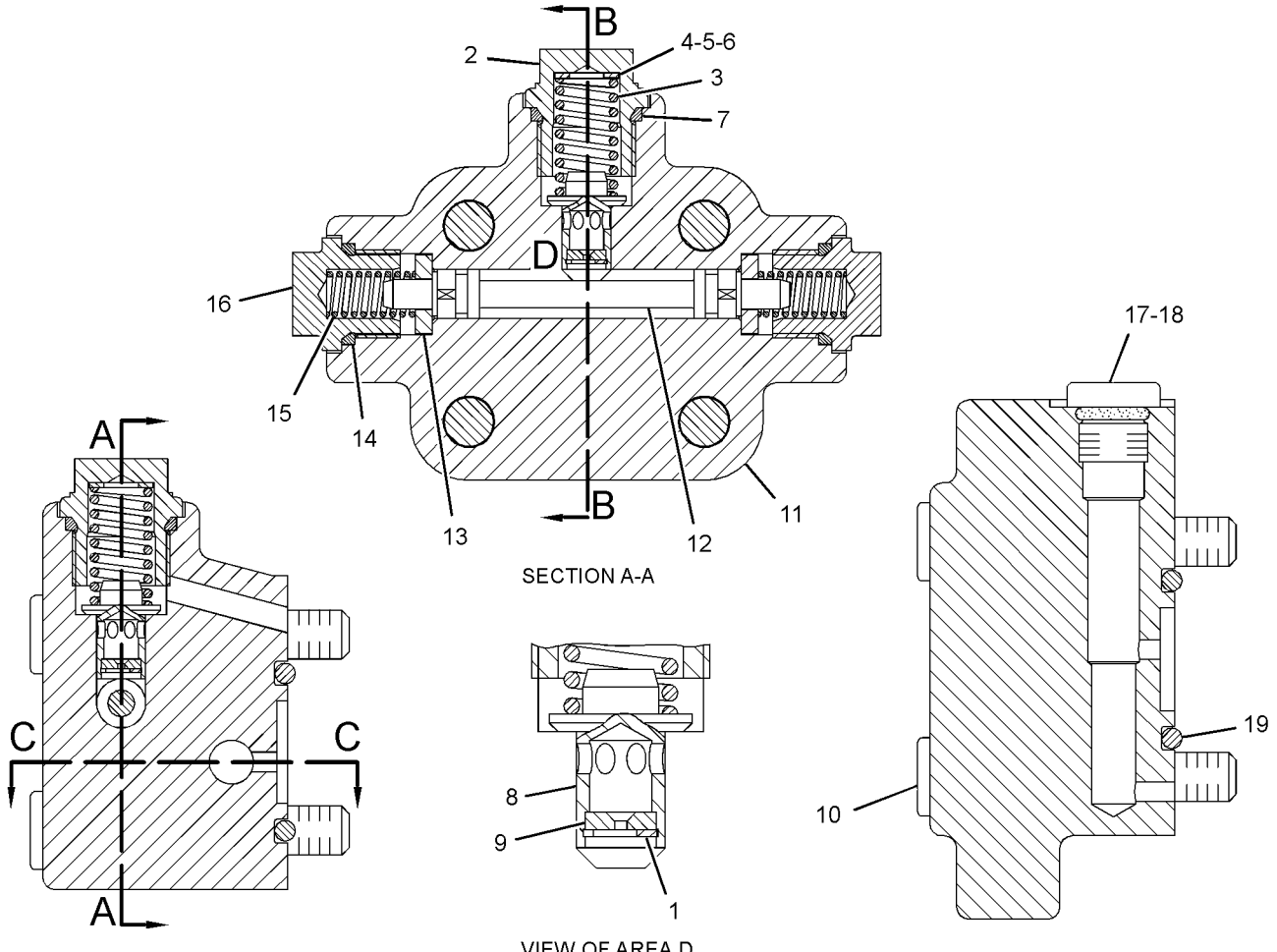

GRAPHIC #1

<END>

g01328254

278-8936 VALVE GP-MOTOR CONTROL—HYDROSTATIC DRIVE

S/N: DHA1-UP; FBH1-UP

PART OF 278-8935, 279-0543 HEAD GP-MOTOR

SMCS-5455 **i02645622**

NOTE	REF NO	GRAPHIC REF	PART NUMBER	QTY	PART NAME 1 2 3 4 5 6 (PRODUCT LEVEL)	SEE PAGE
M	1	1	**8T-0338**	4	BOLT-SOCKET HEAD (M8X1.25X45-MM)	
	2	1	**9S-8004**	1	PLUG	
	3	1	**3J-1907**	1	SEAL-O-RING	
M	4	1	**145-8746**	1	SCREW	
M	5	1	**9T-3853**	1	LOCKNUT (M6X1-THD)	
	6	1	**095-0933**	1	RING-RETAINING	
	7	1	**6V-1250**	1	SEAL-O-RING	
	8	1	**242-0814**	1	PIN	
	9	1	**124-9888**	1	SPRING	
	10	1	**242-9251**	1	SPRING-COLLAR	
	11	1	**124-9948**	1	RETAINER	
	12	1	**124-9887**	1	BUSHING	
	13	1	**124-9945**	1	BUSHING	
	14	1	**120-4394**	1	PLUG-BREAK OFF	
	15	1	**123-9769**	1	PLUG	
	16	1	**257-4210**	1	HOUSING	
	17	1	**269-4669**	1	SOLENOID AS (PILOT VALVE)	
		1	**217-3875**	1	SEAL-O-RING	

M-METRIC PART

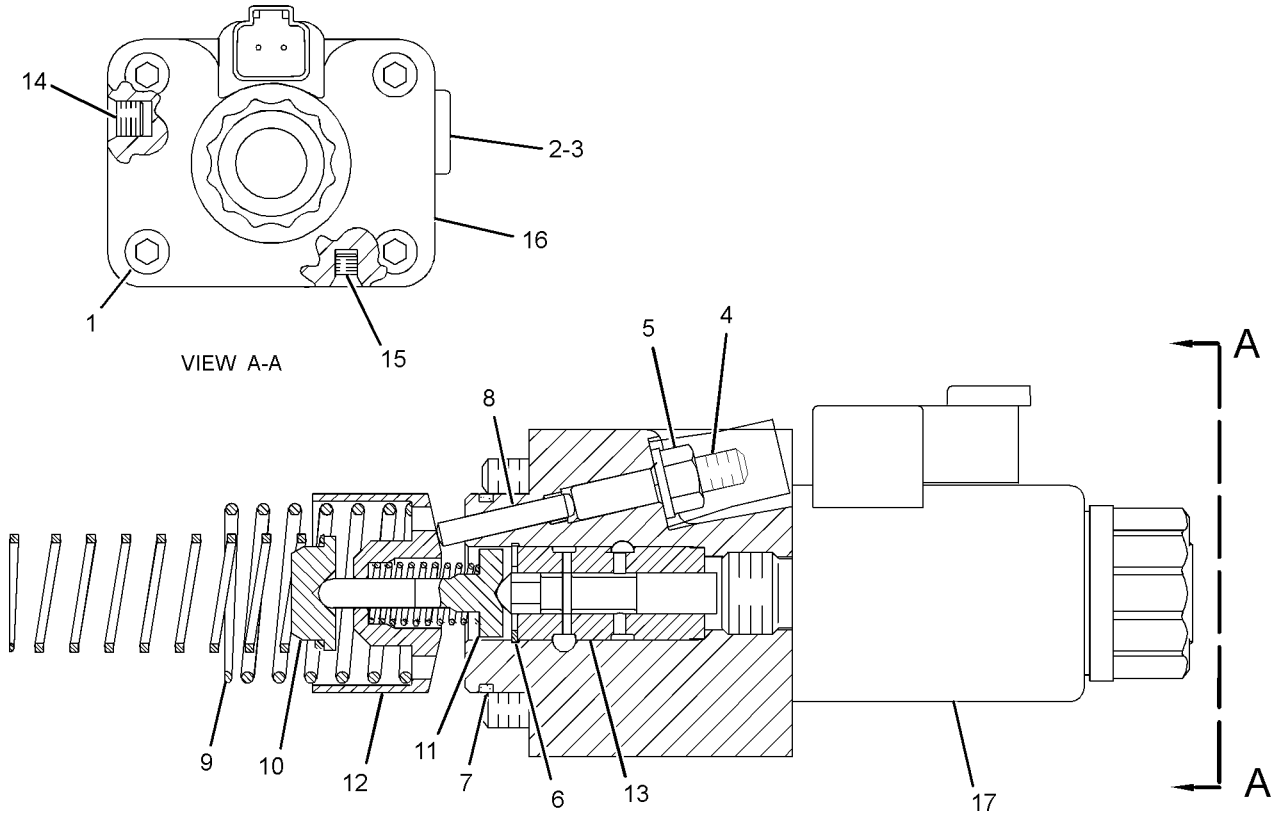

GRAPHIC #1 **<END>** g01328435

278-4442 VALVE GP-PUMP CONTROL–
PRESSURE, FLOW COMPENSATOR
S/N: DHA1-UP; FBH1-UP
PART OF 261-3629, 261-3630 PUMP GP-PISTON

SMCS-5455 **i03587216**

NOTE	REF NO	GRAPHIC REF	PART NUMBER	QTY	PART NAME 1 2 3 4 5 6 (PRODUCT LEVEL)	SEE PAGE
M	1	1	**6V-5683**	2	BOLT (M6X1X16-MM)	
	2	1	**269-4669**	2	SOLENOID AS (HYDROSTATIC PUMP)	
					(EACH INCLUDES)	
		1	**217-3875**	1	SEAL-O-RING	
	3	1	**196-4250**	2	SPACER	
	4	1	**6V-8400**	1	SEAL-O-RING	
	5	1	**9S-8004**	1	PLUG	
	6	1	**236-5157**	1	SCREEN-FILTER (PUMP CONTROL VALVE)	
	7	1	**262-7701**	1	GASKET	
M	8	1	**143-6020**	4	BOLT-SOCKET HEAD (M6X1X75-MM)	
	9	1	**095-1750**	2	SEAL-O-RING	
M	10	1	**196-9444**	8	BOLT-SOCKET HEAD (M5X0.8X10-MM)	
	11	1	**6V-8398**	2	SEAL-O-RING	
	12	1	**6V-5586**	1	SEAL-O-RING	
	13	1	**196-4254**	2	SPRING	
	14	1	**202-6535**	1	PIN	
	15	1	**085-7539**	2	SEAL-O-RING	
	16	1	**6M-5062**	3	SEAL-O-RING	
	17	1	**3J-1907**	1	SEAL-O-RING	
	18	1	**8F-9538**	1	SEAL-O-RING	
	19	1	**215-8011**	1	BOLT-SPECIAL	
	20	1	**144-9101**	1	PLUG-BREAK OFF	
	21	1	**215-8010**	1	SHIM (3-MM THK)	
	22	1	**324-2713**	1	SPACER-SPECIAL	

M-METRIC PART

278-4442 VALVE GP-PUMP CONTROL *(contd.)* **i03587216**

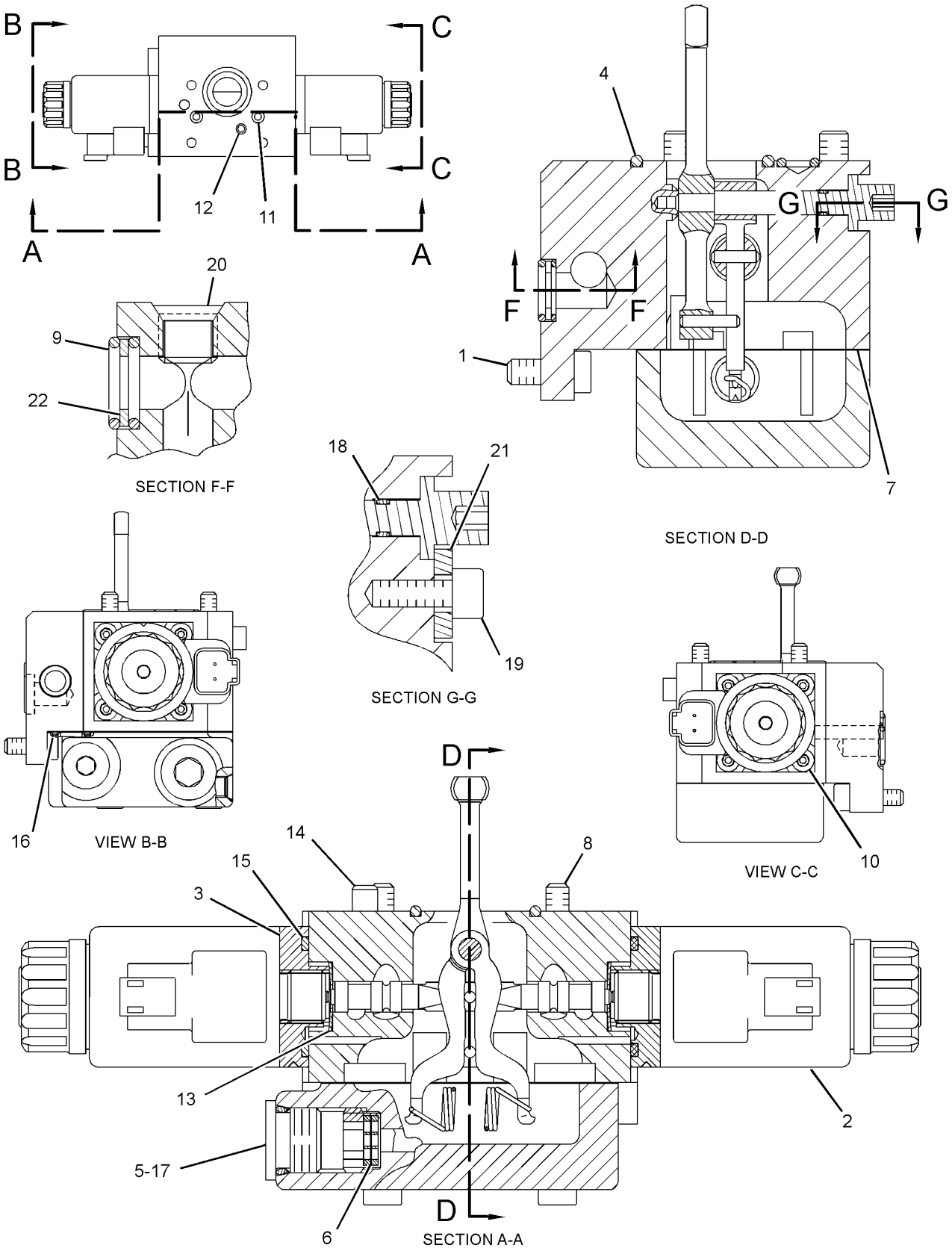

GRAPHIC #1 **<END>** g01520315

6E-4402 VALVE GP-RELIEF–CHARGE PRESSURE

S/N: DHA1-UP; FBH1-UP

PART OF 278-4440, 278-4441 HEAD GP-PUMP

SMCS-3133, 3182 **i02591004**

NOTE	REF NO	GRAPHIC REF	PART NUMBER	QTY	PART NAME 1 2 3 4 5 6 (PRODUCT LEVEL)	SEE PAGE
	1	1	**202-2342**	1	SPRING	
	2	1	**6E-4404**	1	VALVE-POPPET	
	3	1	**183-8410**	1	SCREW	
	4	1	**6E-4403**	1	PLUG	
M	5	1	**6E-4240**	1	NUT-SEALING (M10X1-THD)	
	6	1	**6V-8352**	1	SEAL-O-RING	
	7	1	**167-7715**	1	RETAINER-SPRING	

M-METRIC PART

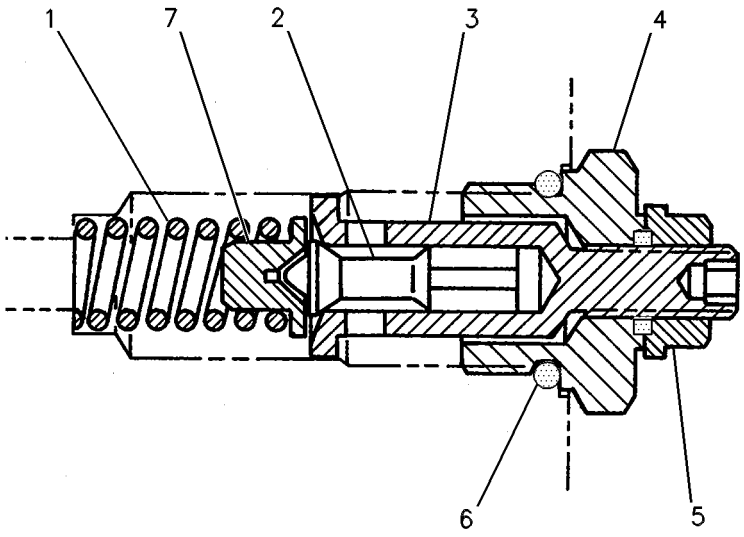

GRAPHIC #1 **<END>** g00252131

152-1811 VALVE GP-RELIEF—PRESSURE OVERRIDE

S/N: DHA1-UP; FBH1-UP
PART OF 277-6553 HEAD GP-PUMP
AN ATTACHMENT

SMCS-3133, 3182 **i02656342**

NOTE	REF NO	GRAPHIC REF	PART NUMBER	QTY	PART NAME 1 2 3 4 5 6 (PRODUCT LEVEL)	SEE PAGE
J	1	1	**7Y-5219**	1	SEAL-O-RING	
J	2	1	**6V-5586**	1	SEAL-O-RING	
JM	3	1	**6E-1607**	1	LOCKNUT-SEALING	
					AVAILABLE REPAIR KIT(S):	
J			**122-9363**	1	KIT-SEAL (RELIEF VALVE)	

J-KIT MARKED J INCLUDES PART(S) MARKED J
M-METRIC PART

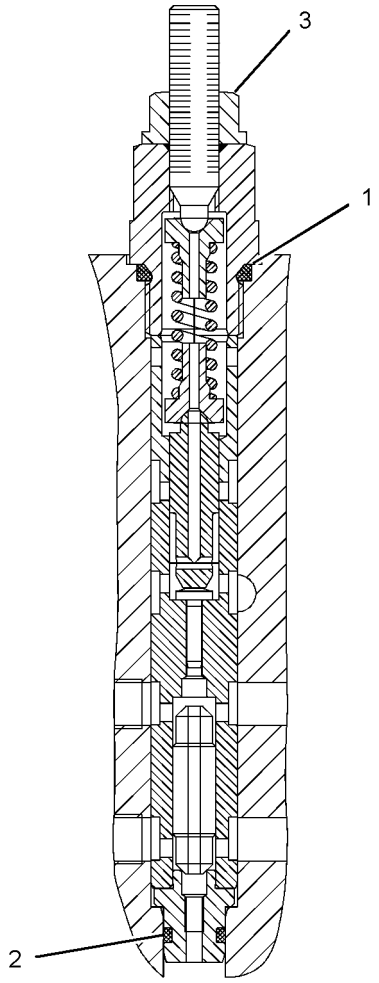

GRAPHIC #1

<END>

g01011120

177-7122 VALVE GP-RELIEF–CHARGE PRESSURE

S/N: DHA1-UP; FBH1-UP
PART OF 277-6553 HEAD GP-PUMP
AN ATTACHMENT

SMCS-3133, 3182 **i02404683**

NOTE	REF NO	GRAPHIC REF	PART NUMBER	QTY	PART NAME 1 2 3 4 5 6 (PRODUCT LEVEL)	SEE PAGE
	1	1	**6E-4404**	1	VALVE-POPPET	
	2	1	**167-7715**	1	RETAINER-SPRING	
	3	1	**112-4645**	1	SPRING	
	4	1	**6V-8352**	1	SEAL-O-RING	
	5	1	**112-4647**	1	SHIM (0.3-MM THK)	
	6	1	**177-7747**	1	RING	
					AVAILABLE REPAIR KIT(S):	
			215-7697	1	KIT-SHIM (RELIEF VALVE)	
					(INCLUDES 4 SHIMS)	

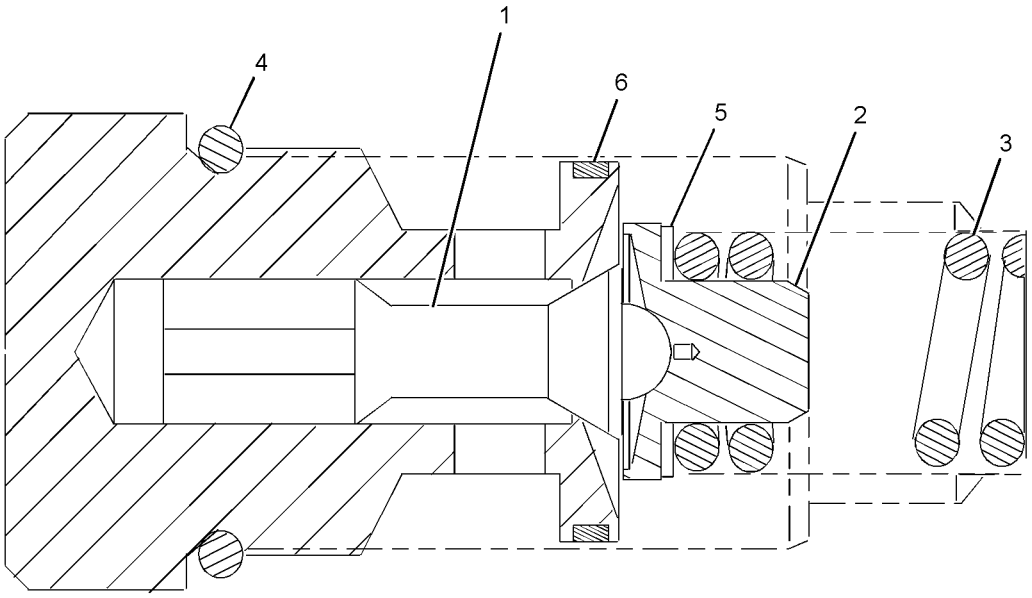

GRAPHIC #1 **<END>** g01203400

277-6679 VALVE GP-RELIEF–CROSSOVER

S/N: DHA1-UP; FBH1-UP
PART OF 277-6553 HEAD GP-PUMP
AN ATTACHMENT

SMCS-3133, 3182 **i02404673**

NOTE	REF NO	GRAPHIC REF	PART NUMBER	QTY	PART NAME 1 2 3 4 5 6 (PRODUCT LEVEL)	SEE PAGE
	1	1	**6V-5326**	1	SEAL-O-RING	
	2	1	**167-7713**	1	RING-BACKUP	

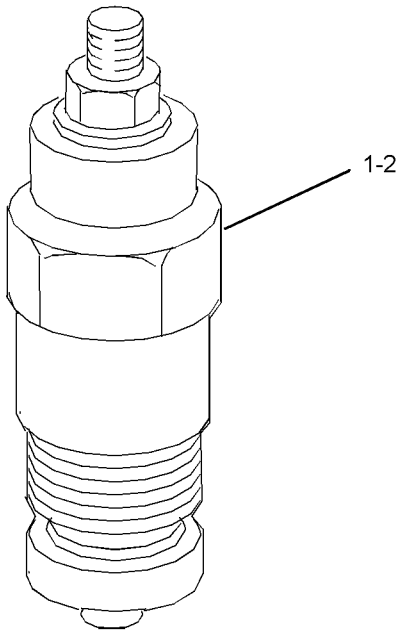

GRAPHIC #1 **<END>** g01203296

253-1803 VALVE GP-TRANSMISSION CONTROL–

POWER TRAIN RETURN MANIFOLD

S/N: DHA1-UP; FBH1-UP

PART OF 206-7263 LINES GP-DRAIN

SMCS-3073, 3167 **i02748406**

NOTE	REF NO	GRAPHIC REF	PART NUMBER	QTY	PART NAME 1 2 3 4 5 6 (PRODUCT LEVEL)	SEE PAGE
	1	1	**9T-1013**	1	VALVE AS-CHECK	
		1	**3K-0360**	1	SEAL-O-RING	
		1	**6V-8398**	1	SEAL-O-RING	
	2	1	**301-7692**	1	ADAPTER-HOSE	
Y	3	1	**267-6709**	1	MANIFOLD & VALVE GP (HYDROSTATIC TRANSMISSION)	510
	4	1	*148-8327*	2	CONNECTOR AS	
					(EACH INCLUDES)	
		1	**6V-8637**	1	CONNECTOR	
		1	**3D-2824**	1	SEAL-O-RING	
		1	**6V-9746**	1	SEAL-O-RING	
	5	1	*148-8334*	2	CONNECTOR AS	
					(EACH INCLUDES)	
		1	**8T-3611**	1	CONNECTOR	
		1	**2S-4078**	1	SEAL-O-RING	
		1	**6V-8400**	1	SEAL-O-RING	
	6	1	*148-8335*	2	CONNECTOR AS	
					(EACH INCLUDES)	
		1	**6V-8635**	1	CONNECTOR	
		1	**5K-9090**	1	SEAL-O-RING	
		1	**7M-8485**	1	SEAL-O-RING	
	7	1	*148-8336*	2	CONNECTOR AS	
					(EACH INCLUDES)	
		1	**6V-8636**	1	CONNECTOR	
		1	**3J-1907**	1	SEAL-O-RING	
		1	**6V-8397**	1	SEAL-O-RING	
	8	1	*148-8340*	1	CONNECTOR AS	
		1	**6V-8639**	1	CONNECTOR	
		1	**3K-0360**	1	SEAL-O-RING	
		1	**6V-8398**	1	SEAL-O-RING	
	9	1	*148-8411*	1	PLUG AS	
		1	**9S-4185**	1	PLUG-O-RING	
		1	**3K-0360**	1	SEAL-O-RING	
	10	1	*148-8426*	1	TEE AS	
		1	**8T-6696**	1	TEE-O-RING	
		1	**3K-0360**	1	SEAL-O-RING	
		1	**6V-8397**	1	SEAL-O-RING	
		1	**6V-8398**	1	SEAL-O-RING	
	11	1	*148-8428*	1	TEE AS	
		1	**6V-8782**	1	TEE	
		1	**3K-0360**	1	SEAL-O-RING	
		1	**6V-8398**	2	SEAL-O-RING	

Y-SEPARATE ILLUSTRATION

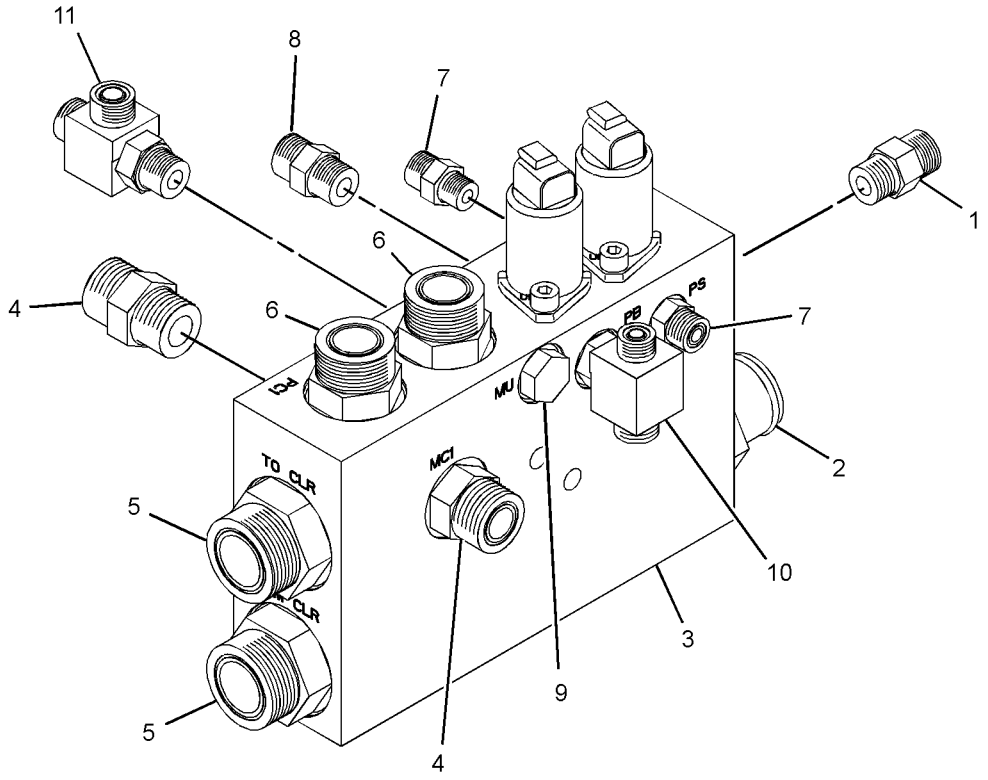

VIEW OF AREA A
(EXPLODED)

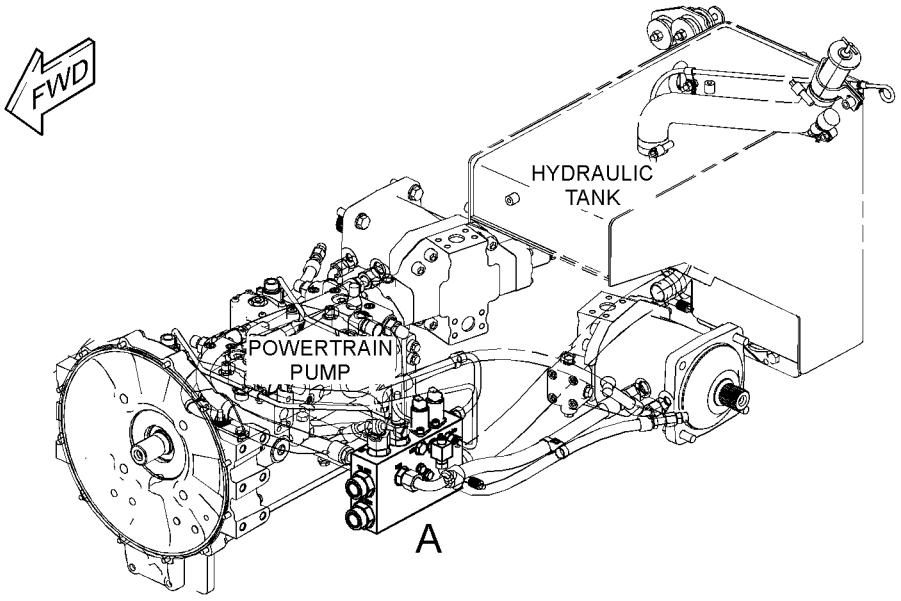

GRAPHIC #1 **<END>** g01296605

FRAME AND BODY

249-3600 CASE & FRAME GP

S/N: DHA1-UP; FBH1-UP

PART OF 206-7270 CHASSIS AR

SMCS-7051 **i02582868**

NOTE	REF NO	GRAPHIC REF	PART NUMBER	QTY	PART NAME 1 2 3 4 5 6 (PRODUCT LEVEL)	SEE PAGE
	1	1	**249-3601**	1	FRAME AS-LIFT	
	1A	1	**7P-7858**	2	BEARING-SLEEVE	
	2	1	**142-2709**	20	PLUG	
	3	1	**147-0526**	2	PLUG	

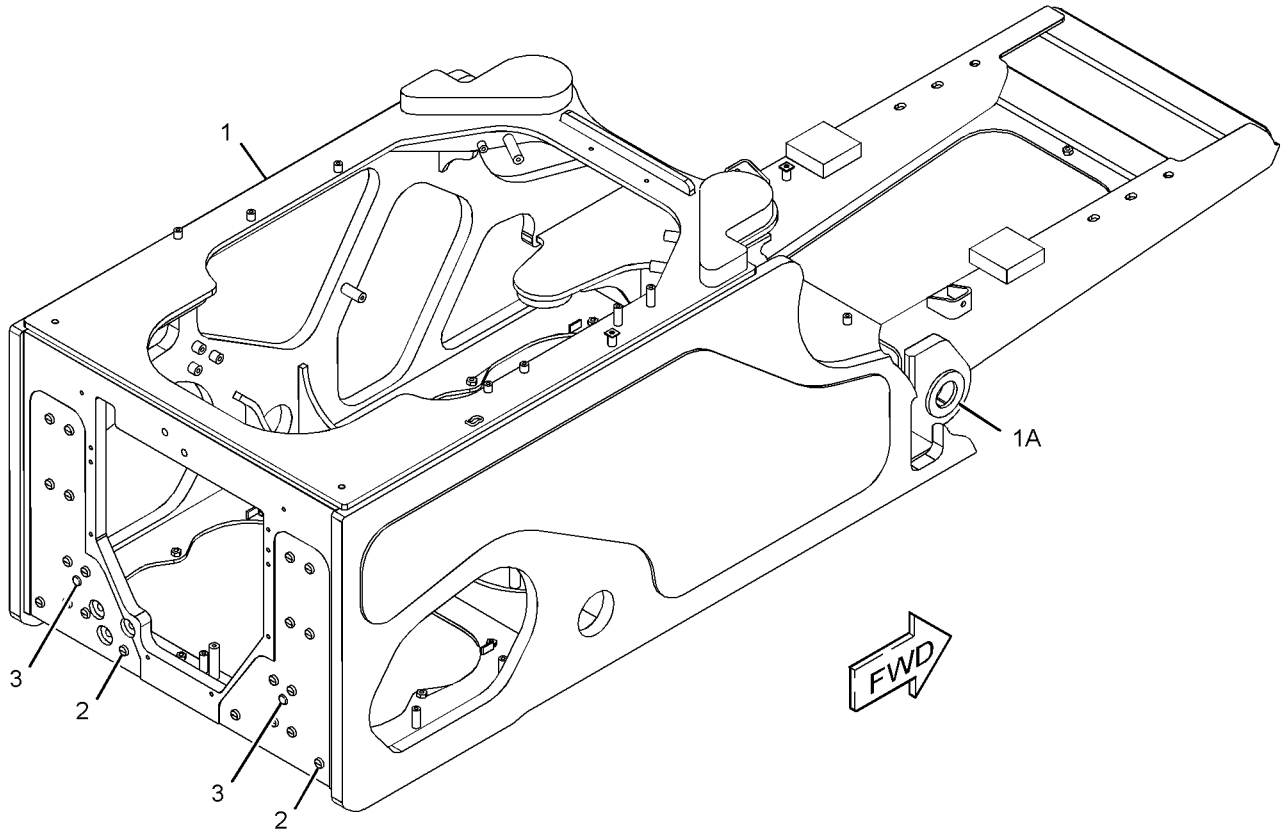

GRAPHIC #1 **<END>** g01301669

340-5429 COUNTERWEIGHT GP

S/N: DHA1-UP; FBH1-UP
534.4-KG (1178.1-LB)
CANNOT BE USED WITH WINCH, DRAWBAR, RIPPER
AN ATTACHMENT

SMCS-7056 **i03602741**

NOTE	REF NO	GRAPHIC REF	PART NUMBER	QTY	PART NAME 1 2 3 4 5 6 (PRODUCT LEVEL)	SEE PAGE
	1	1	**248-6566**	1	PIN	
	2	1	**340-5430**	1	SUPPORT AS	
	3	1	**340-5432**	1	PLATE	
M	4	1	**168-7790**	4	BOLT (M20X2.5X130-MM)	
	5	1	**198-4769**	4	WASHER (22X40X10-MM THK)	
	6	1	**3B-5319**	1	PIN-COTTER	
	7	1	**6K-8987**	2	DOWEL	
	8	1	**7X-7729**	4	WASHER (11X25X3-MM THK)	
M	9	1	**8C-8585**	4	SCREW-BUTTON HEAD (M10X1.5X20-MM)	
	10	1	**8T-4167**	10	WASHER-HARD (26X44X4-MM THK)	
M	11	1	**8T-5878**	10	BOLT (M24X3X80-MM)	

M-METRIC PART

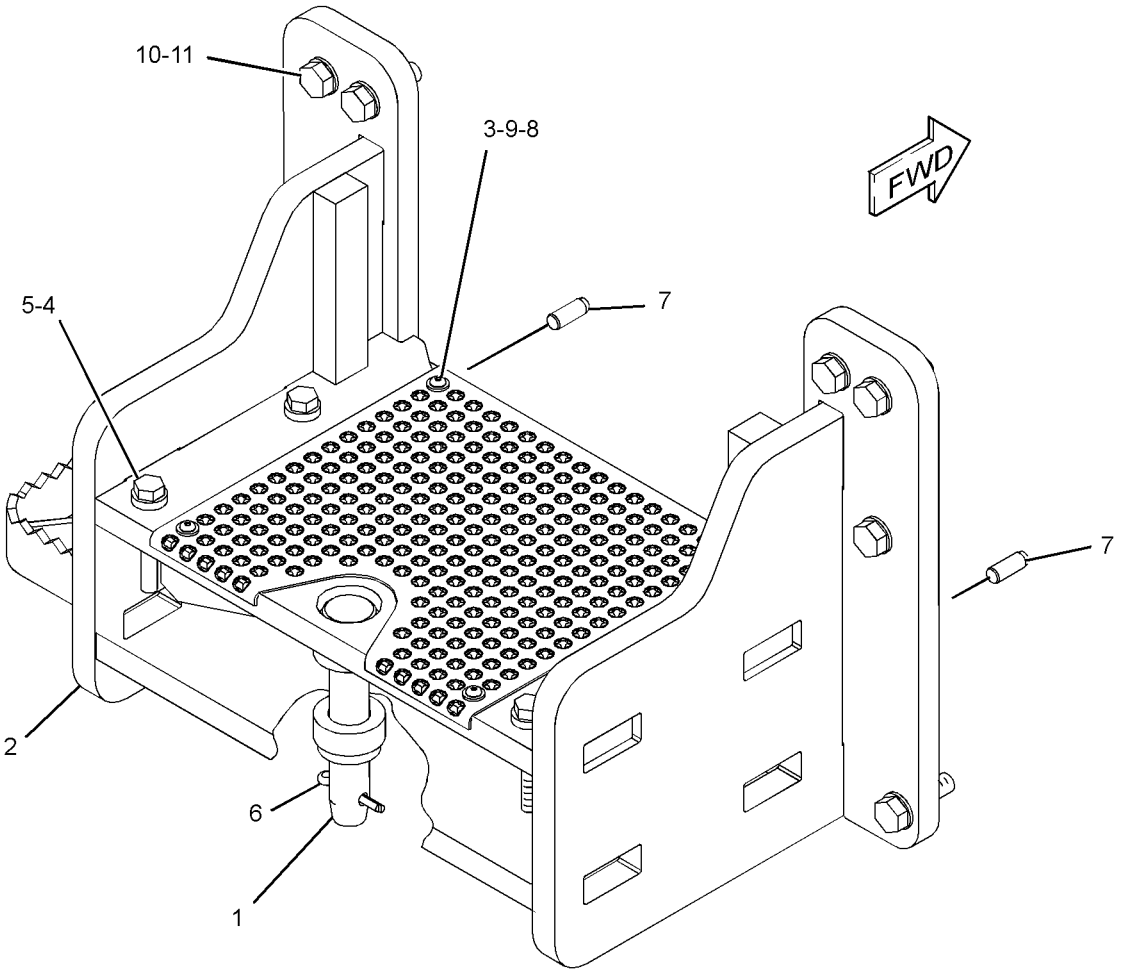

GRAPHIC #1 **<END>** g02003333

288-9567 COVER GP-ACCESS

S/N: DHA1-UP; FBH1-UP
FUEL TANK FILL
PART OF 249-3190 GUARD GP-FUEL TANK
AN ATTACHMENT

SMCS-726A **i02595904**

NOTE	REF NO	GRAPHIC REF	PART NUMBER	QTY	PART NAME 1 2 3 4 5 6 (PRODUCT LEVEL)	SEE PAGE
J	1	1	**226-0294**	1	LOCK AS	
	2	1	**286-3462**	1	CAM-LATCH	
J	3	1	**288-9570**	1	PLATE AS	
	4	1	**289-6138**	1	COVER AS-ACCESS	
	5	1	**7X-7729**	3	WASHER (11X25X3-MM THK)	
M	6	1	**8T-4136**	3	BOLT (M10X1.5X25-MM)	

J-REQUIRES 5P-8500 KEY
M-METRIC PART

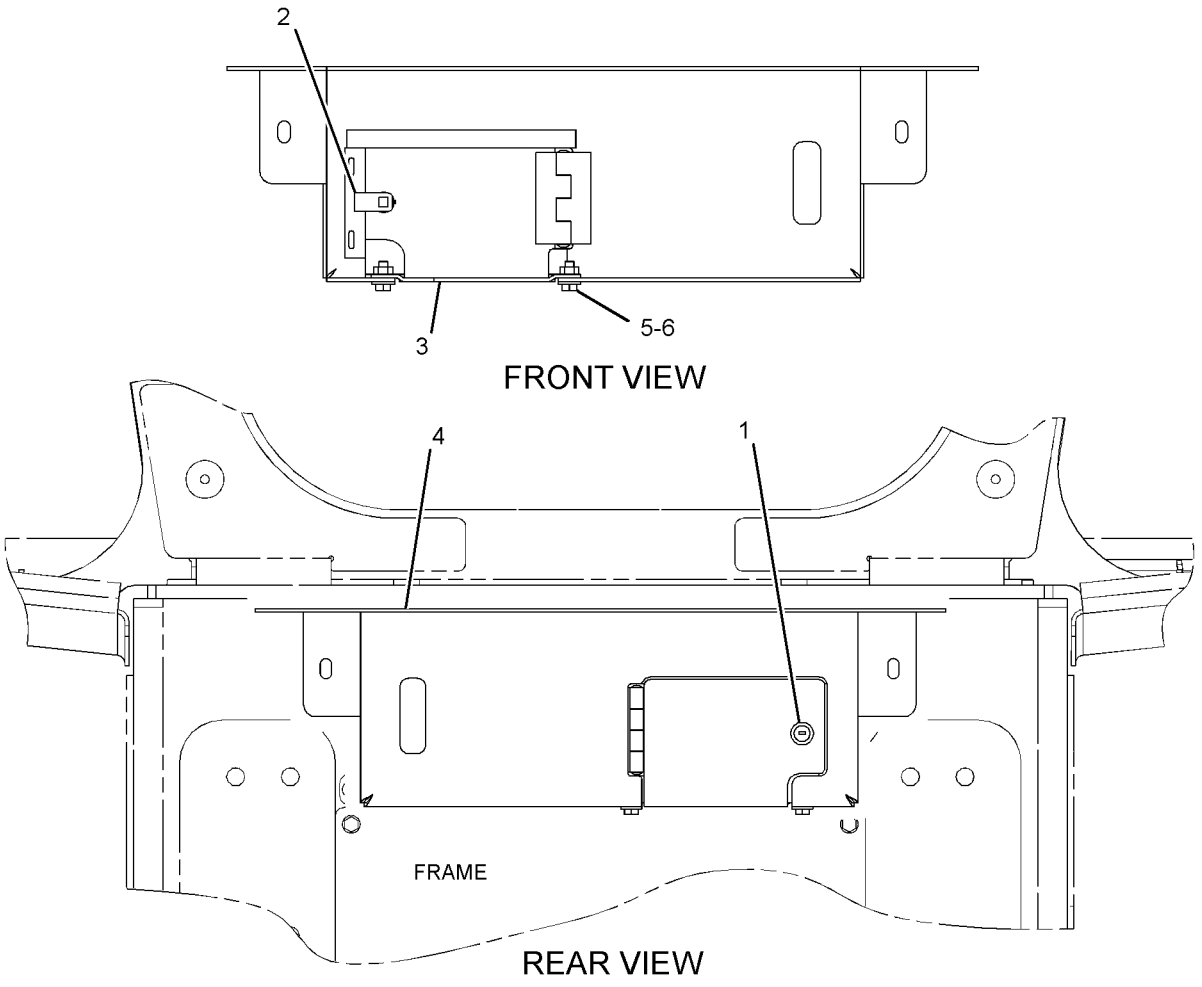

GRAPHIC #1

<END>

g01303980

288-9568 COVER GP-ACCESS—HEAVY-DUTY

S/N: DHA1-UP; FBH1-UP
FUEL TANK FILL
PART OF 249-3191 GUARD GP-FUEL TANK
AN ATTACHMENT

SMCS-726A **i02595901**

NOTE	REF NO	GRAPHIC REF	PART NUMBER	QTY	PART NAME 1 2 3 4 5 6 (PRODUCT LEVEL)	SEE PAGE
J	1	1	**226-0294**	1	LOCK AS	
	2	1	**255-8878**	1	CAM-LATCH	
	3	1	**288-9573**	1	PLATE AS	
	4	1	**289-6141**	1	COVER AS-ACCESS	
	5	1	**7X-7729**	3	WASHER (11X25X3-MM THK)	
M	6	1	**8T-4195**	3	BOLT (M10X1.5X30-MM)	

J-REQUIRES 5P8500 KEY
M-METRIC PART

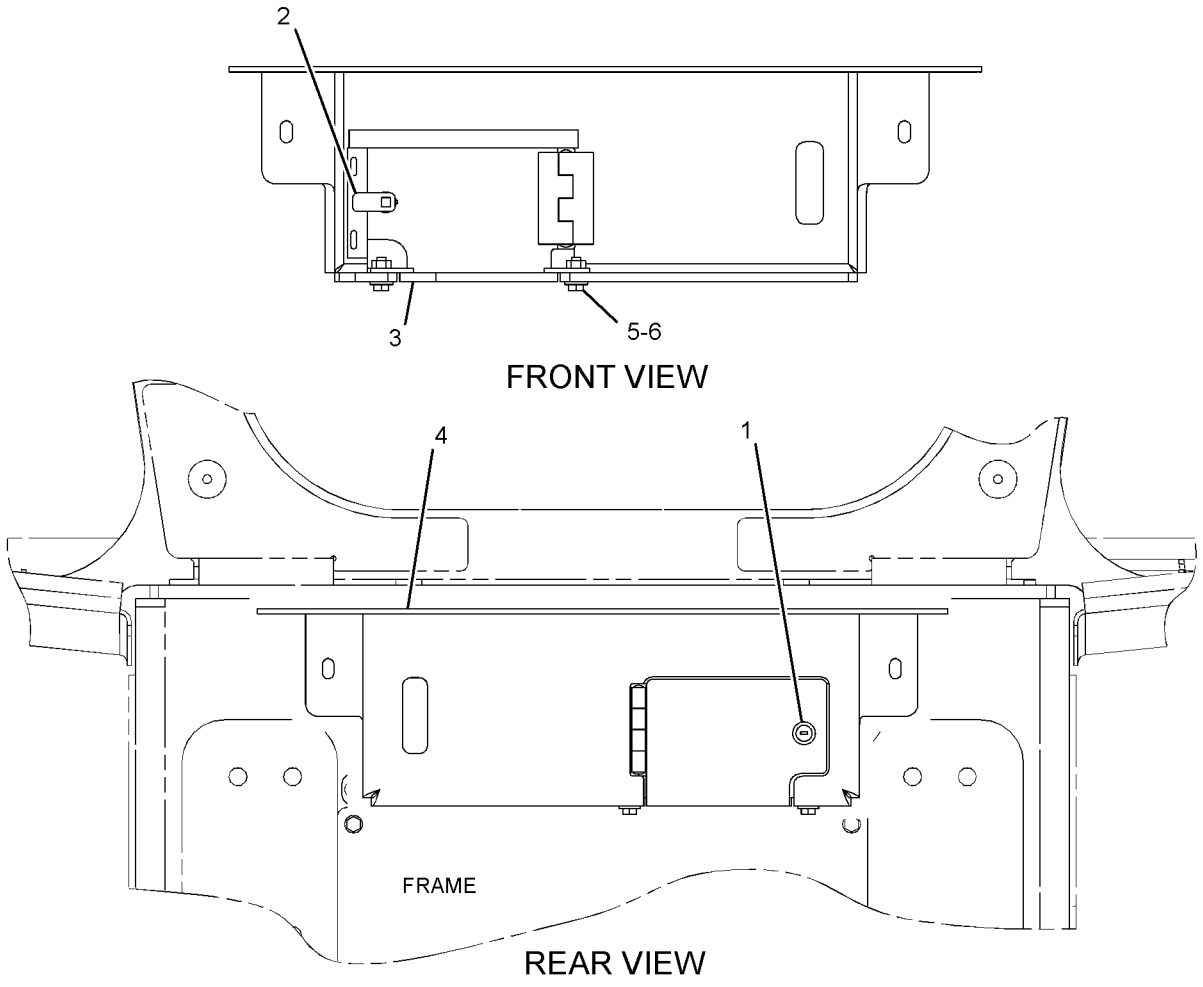

GRAPHIC #1 **<END>** g01303941

289-6140 COVER GP-ACCESS–RH

S/N: DHA1-UP; FBH1-UP

PART OF 206-7245 ENCLOSURE GP-PLATFORM

SMCS-726A **i03661235**

NOTE	REF NO	GRAPHIC REF	PART NUMBER	QTY	PART NAME 1 2 3 4 5 6 (PRODUCT LEVEL)	SEE PAGE
J	1	1	**226-0294**	1	LOCK AS	
M	2	1	**099-6418**	4	NUT (M6X1-THD)	
	3	1	**155-9320**	1	CAM-LATCH	
B	4	1	**216-0143**	1	SHIM (1-MM THK)	
	5	1	**267-9928**	1	BRACKET	
J	6	1	**274-1923**	1	LOCK AS	
	7	1	**278-2220**	1	ROD AS	
	8	1	**288-9562**	1	COVER AS-ACCESS (RH)	
	9	1	**288-9574**	1	PLATE AS	
	10	1	**288-9575**	1	HINGE-SPRING	
	11	1	**293-3127**	1	DOOR AS-ACCESS (RH)	
	12	1	**293-3217**	1	BRACKET (RH)	
	13	1	**3B-4605**	1	PIN-COTTER	
M	14	1	**5C-7261**	4	NUT (M8X1.25-THD)	
	15	1	**7X-7729**	6	WASHER (11X25X3-MM THK)	
M	16	1	**8T-4133**	3	NUT (M10X1.5-THD)	
M	17	1	**8T-4136**	2	BOLT (M10X1.5X25-MM)	
	18	1	**8T-4224**	4	WASHER-HARD (8.8X16X2-MM THK)	

B-USE AS REQUIRED
J-REQUIRES 5P5800 KEY
M-METRIC PART

289-6140 **COVER GP-ACCESS** *(contd.)* **i03661235**

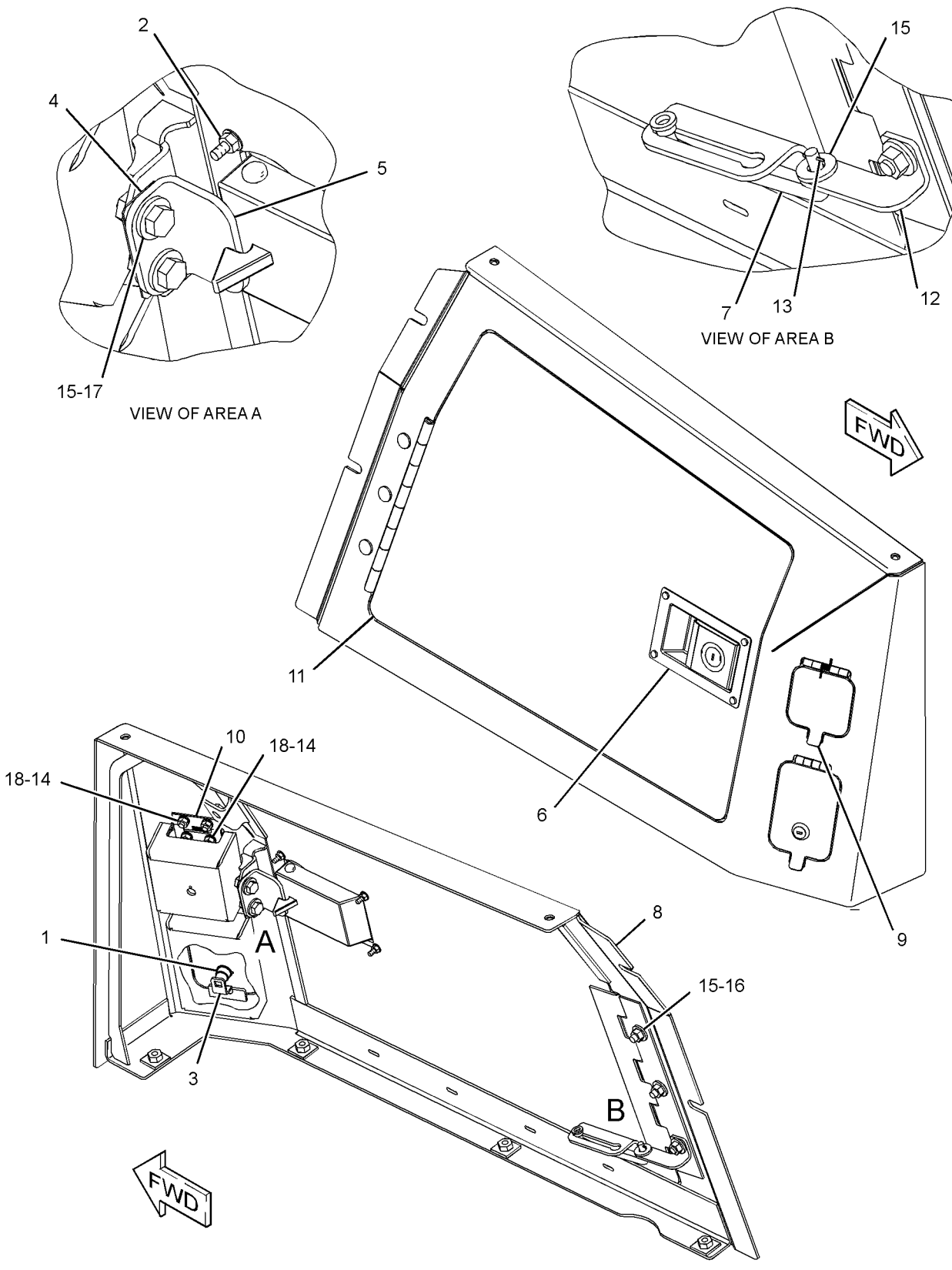

GRAPHIC #1 **<END>** g01963793

289-6145 COVER GP-ACCESS–LH

S/N: DHA1-UP; FBH1-UP

PART OF 206-7245 ENCLOSURE GP-PLATFORM

SMCS-726A **i02582867**

NOTE	REF NO	GRAPHIC REF	PART NUMBER	QTY	PART NAME 1 2 3 4 5 6 (PRODUCT LEVEL)	SEE PAGE
M	1	1	**099-6418**	4	NUT (M6X1-THD)	
B	2	1	**216-0143**	1	SHIM (1-MM THK)	
	3	1	**267-9928**	1	BRACKET	
J	4	1	**274-1923**	1	LOCK AS	
	5	1	**278-2220**	1	ROD AS	
	6	1	**288-9563**	1	COVER AS-ACCESS (LH)	
	7	1	**293-3126**	1	DOOR AS-ACCESS (LH)	
	8	1	**293-3216**	1	PLATE	
	9	1	**3B-4605**	1	PIN-COTTER	
	10	1	**7X-7729**	6	WASHER (11X25X3-MM THK)	
M	11	1	**8T-4133**	3	NUT (M10X1.5-THD)	
M	12	1	**8T-4136**	2	BOLT (M10X1.5X25-MM)	

B-USE AS REQUIRED
J-REQUIRES 5P8500 KEY
M-METRIC PART

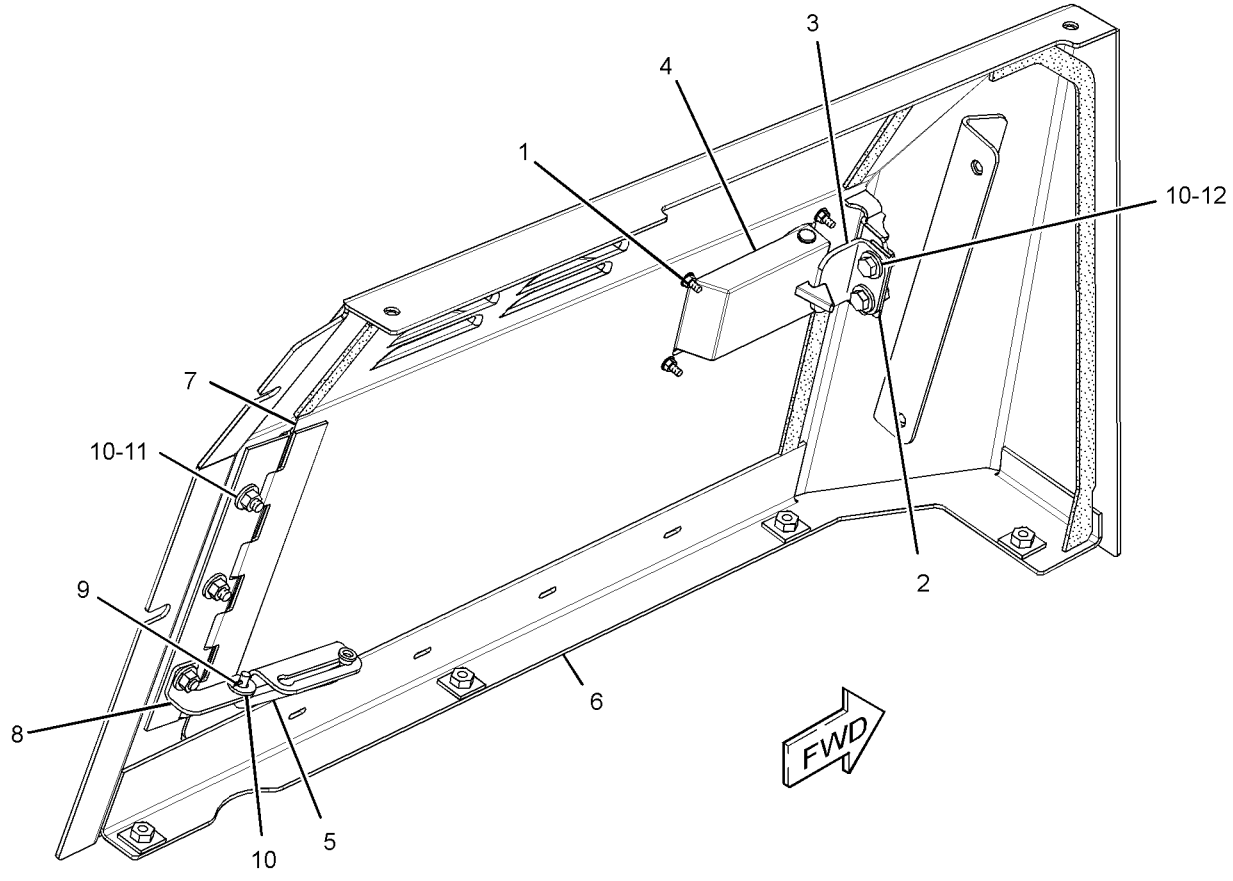

GRAPHIC #1 **<END>** g01304950

267-9242 DOOR GP-ACCESS–LH

S/N: DHA1-UP; FBH1-UP
PART OF 267-9249, 268-4324 PANEL GP-SIDE
AN ATTACHMENT

SMCS-7273 **i02603417**

NOTE	REF NO	GRAPHIC REF	PART NUMBER	QTY	PART NAME 1 2 3 4 5 6 (PRODUCT LEVEL)	SEE PAGE
	1	1	**267-9244**	1	DOOR AS (LH)	
J	2	1	**274-1923**	1	LOCK AS	
M	3	1	**5C-2890**	4	NUT (M6X1-THD)	
	4	1	**9X-8256**	4	WASHER (6.6X12X2-MM THK)	

J-REQUIRES 5P8500 KEY
M-METRIC PART

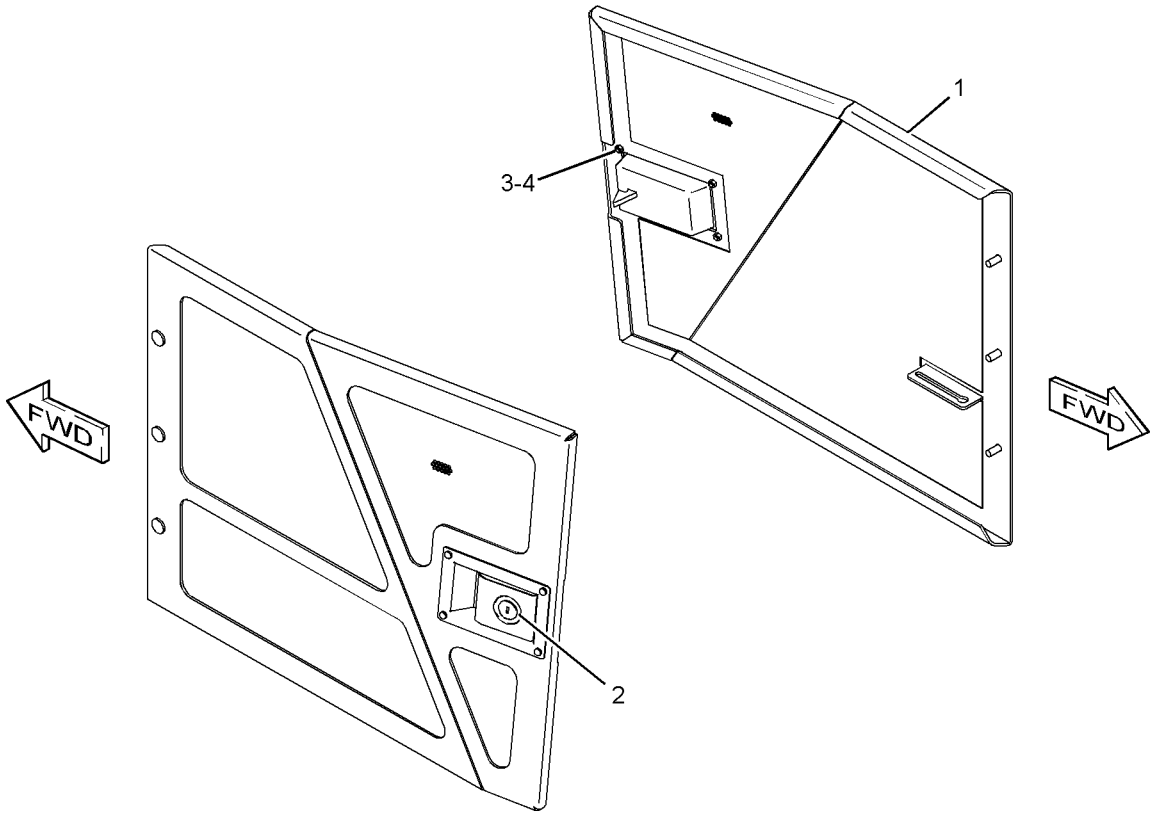

GRAPHIC #1 **<END>** g01293814

246-8384 DRAWBAR GP

S/N: DHA1-UP; FBH1-UP
CANNOT BE USED WITH RIPPER AR, WINCH AR-TOWING
AN ATTACHMENT

SMCS-7105, 7119 **i02606924**

NOTE	REF NO	GRAPHIC REF	PART NUMBER	QTY	PART NAME 1 2 3 4 5 6 (PRODUCT LEVEL)	SEE PAGE
	1	1	**248-6551**	1	DRAWBAR AS	
	2	1	**248-6566**	1	PIN	
	3	1	**3B-5319**	1	PIN-COTTER	
	4	1	**126-8928**	8	WASHER-HARD (26X40X8-MM THK)	
M	5	1	**7X-2577**	8	BOLT (M24X3X90-MM)	

M-METRIC PART

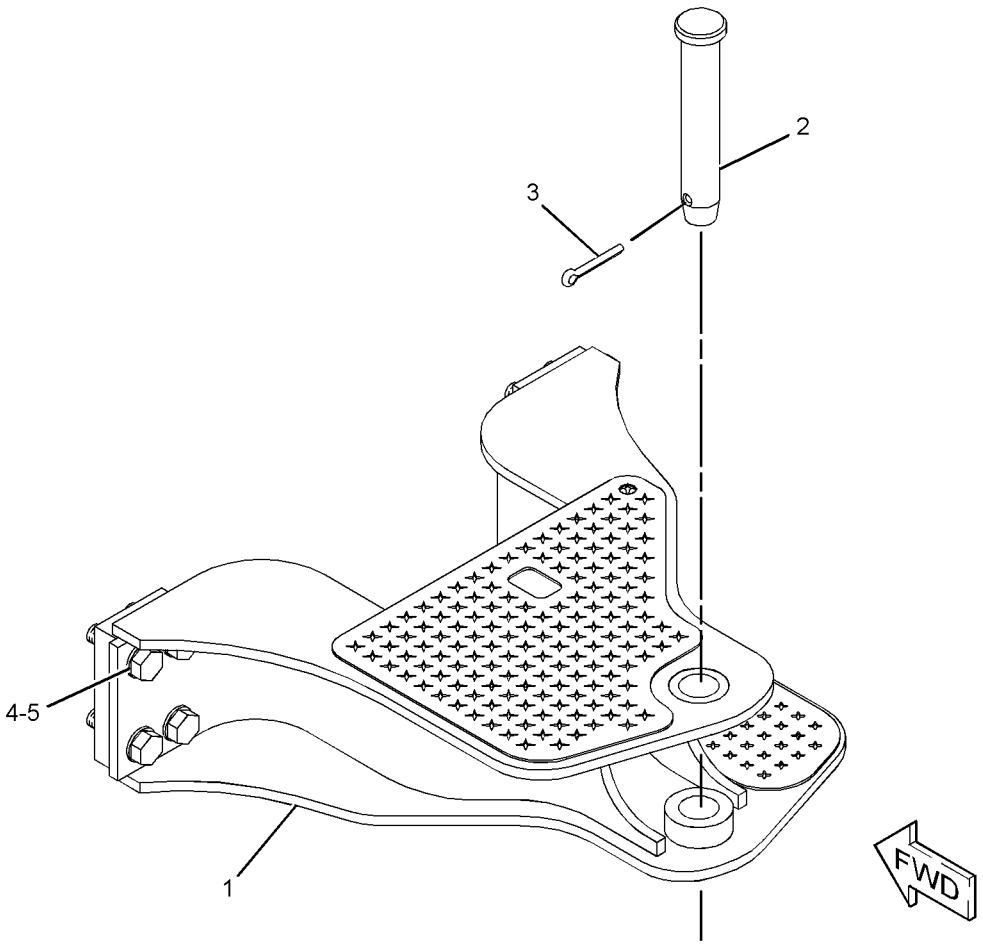

GRAPHIC #1 **<END>** g01200219

206-7245 ENCLOSURE GP-PLATFORM

S/N: DHA1-UP; FBH1-UP
PART OF 206-7270 CHASSIS AR

SMCS-7253, 7301 **i02748447**

NOTE	REF NO	GRAPHIC REF	PART NUMBER	QTY	PART NAME 1 2 3 4 5 6 (PRODUCT LEVEL)	SEE PAGE
	1	1	**267-9934**	1	BRACKET AS (RH)	
	2	1	**267-9935**	1	BRACKET AS (LH)	
	3	1	**288-9564**	1	COVER AS-ACCESS (RH)	
	4	1	**288-9565**	1	COVER AS-ACCESS (LH)	
Y	5	1	*289-6140*	1	COVER GP-ACCESS (RH)	406
Y	6	1	*289-6145*	1	COVER GP-ACCESS (LH)	408
	7	1	**198-4777**	3	WASHER-HARD (11X25X10-MM THK)	
	8	1	**7X-7729**	4	WASHER (11X25X3-MM THK)	
M	9	1	**8T-4195**	17	BOLT (M10X1.5X30-MM)	
	10	1	**8T-2561**	10	WASHER-HARD (10.5X28.5X5-MM THK)	
E	11	1	**280-7618**		SEAL (60-CM EACH)	

E-ORDER BY THE CENTIMETER
M-METRIC PART
Y-SEPARATE ILLUSTRATION

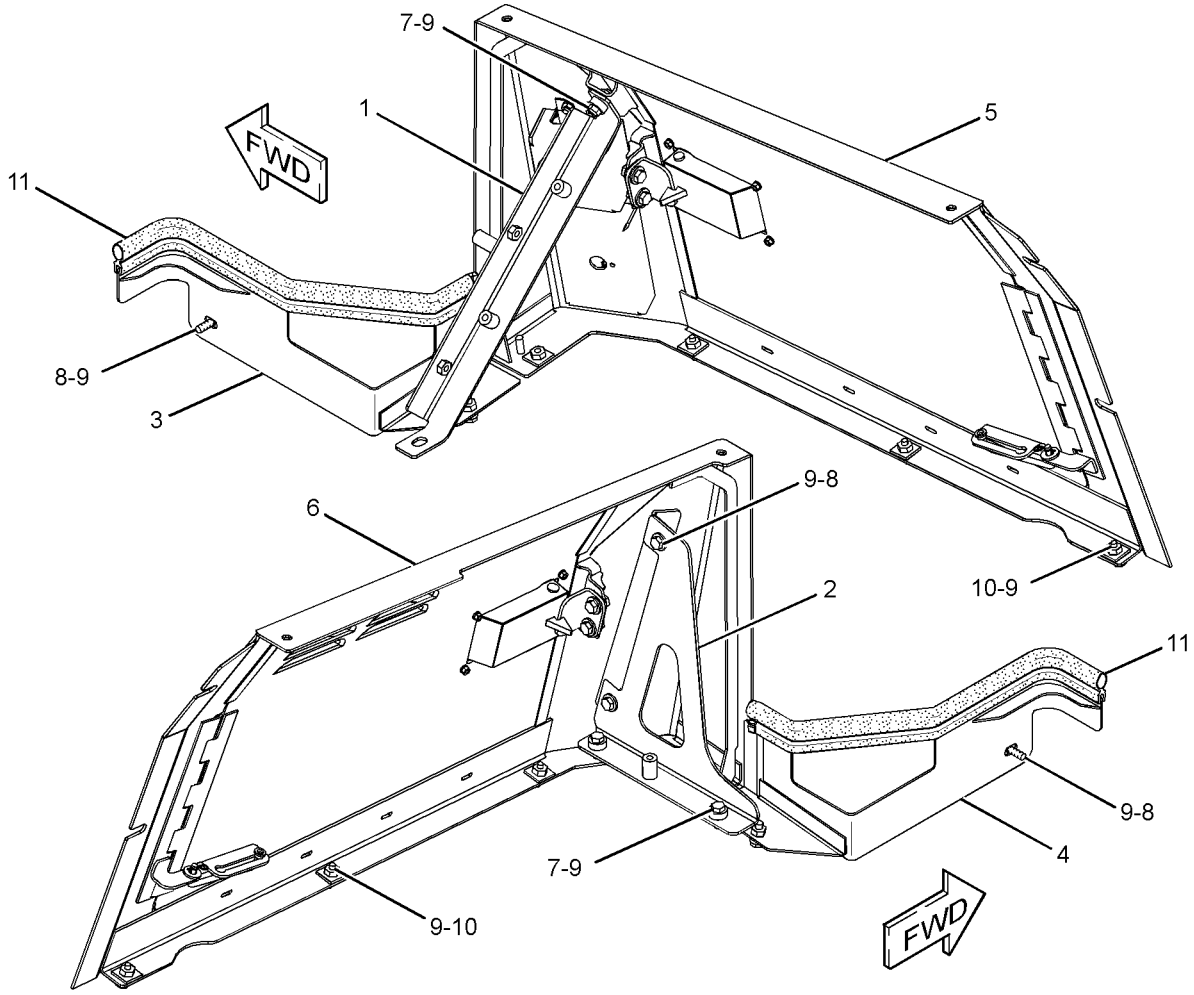

GRAPHIC #1 **<END>** g01298596

269-8084 GRILL GP-RADIATOR

S/N: DHA1-UP; FBH1-UP
PART OF 349-8352 OPTION AR-GUARD
CANNOT BE USED WITH 269-8091—PAGE 413
AN ATTACHMENT

SMCS-7170 **i02659964**

NOTE	REF NO	GRAPHIC REF	PART NUMBER	QTY	PART NAME 1 2 3 4 5 6 (PRODUCT LEVEL)	SEE PAGE
Y	1	1	**286-3438**	1	GRILL GP-RADIATOR (BOTTOM)	415
Y	2	1	**286-3456**	1	GRILL GP-RADIATOR (TOP)	417
M	3	1	**096-4884**	4	LOCKNUT (M12X1.75-THD)	
	4	1	**5P-1076**	12	WASHER-HARD (13.5X30X4-MM THK)	
M	5	1	**8T-4176**	4	BOLT (M12X1.75X90-MM)	

M-METRIC PART
Y-SEPARATE ILLUSTRATION

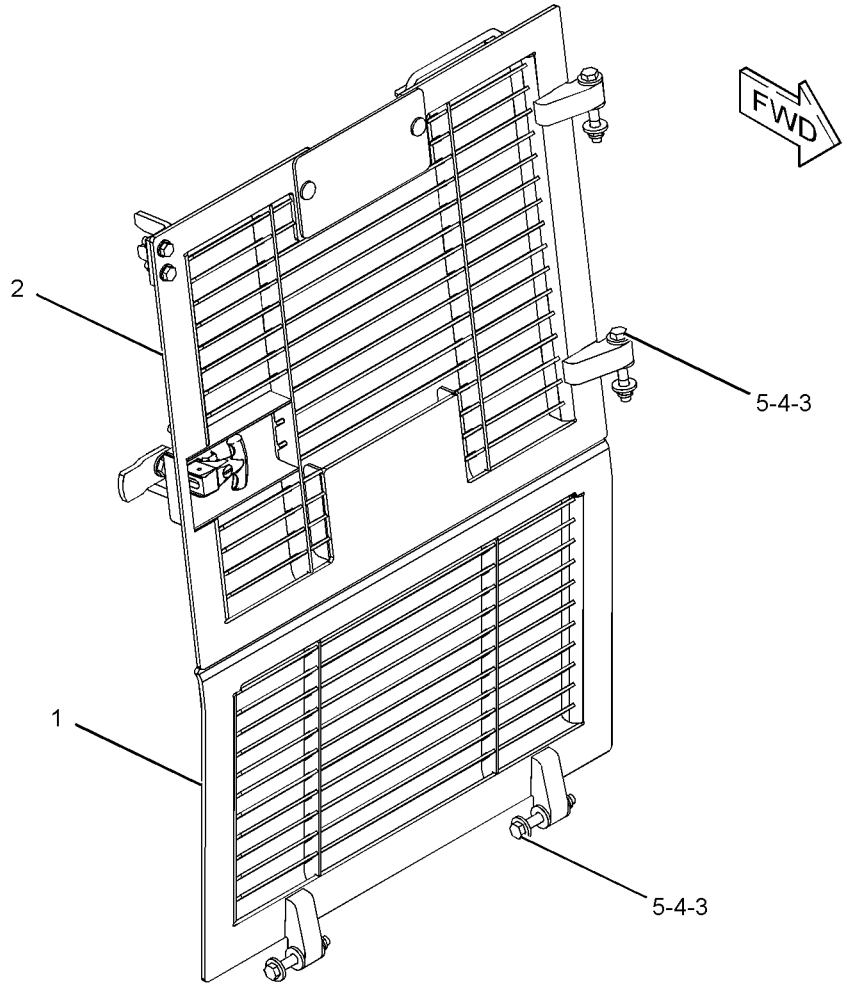

GRAPHIC #1 **<END>** g01303833

269-8091 GRILL GP-RADIATOR—HEAVY-DUTY

S/N: DHA1-1095; FBH1-1443
PART OF 349-8354 OPTION AR-GUARD
CANNOT BE USED WITH 269-8084—PAGE 412
AN ATTACHMENT

SMCS-7170 **i02655417**

NOTE	REF NO	GRAPHIC REF	PART NUMBER	QTY	PART NAME 1 2 3 4 5 6 (PRODUCT LEVEL)	SEE PAGE
Y	1	1	**286-3440**	1	GRILL GP-RADIATOR (BOTTOM)	416
Y	2	1	**286-3458**	1	GRILL GP-RADIATOR (TOP)	418
M	3	1	**096-4884**	4	LOCKNUT (M12X1.75-THD)	
	4	1	**5P-1076**	12	WASHER-HARD (13.5X30X4-MM THK)	
M	5	1	**8T-4176**	4	BOLT (M12X1.75X90-MM)	

M-METRIC PART
Y-SEPARATE ILLUSTRATION

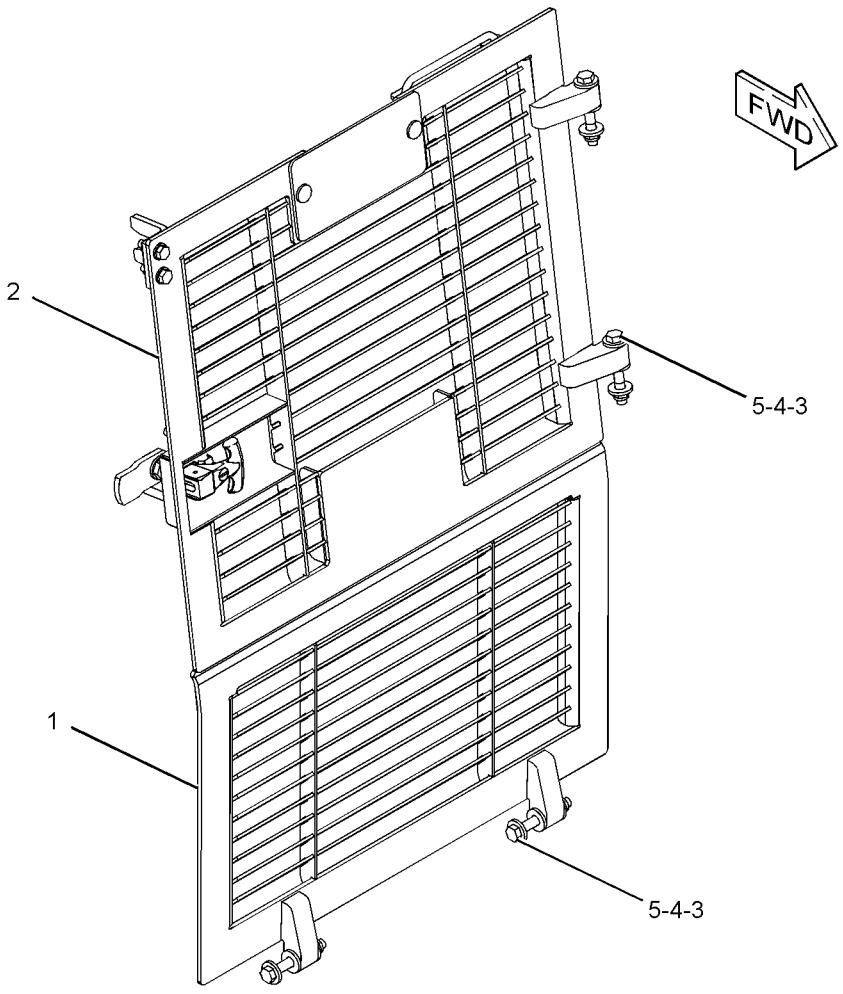

GRAPHIC #1 **<END>** g01303833

269-8091 GRILL GP-RADIATOR—HEAVY-DUTY

S/N: DHA1096-UP; FBH1444-UP
PART OF 349-8354 OPTION AR-GUARD
CANNOT BE USED WITH 269-8084—PAGE 412
AN ATTACHMENT

SMCS-7170 **i03659103**

NOTE	REF NO	GRAPHIC REF	PART NUMBER	QTY	PART NAME 1 2 3 4 5 6 (PRODUCT LEVEL)	SEE PAGE
Y	1	1	**286-3458**	1	GRILL GP-RADIATOR (TOP)	418
CY	2	1	*340-1802*	1	GRILL GP-RADIATOR (BOTTOM)	419
M	3	1	**096-4884**	4	LOCKNUT (M12X1.75-THD)	
	4	1	**5P-1076**	12	WASHER-HARD (13.5X30X4-MM THK)	
M	5	1	**8T-4176**	4	BOLT (M12X1.75X90-MM)	
CD	6	1	**8T-5372**		SEAL (O.2-M)	

C-CHANGE FROM PREVIOUS TYPE
D-ORDER BY THE METER
M-METRIC PART
Y-SEPARATE ILLUSTRATION

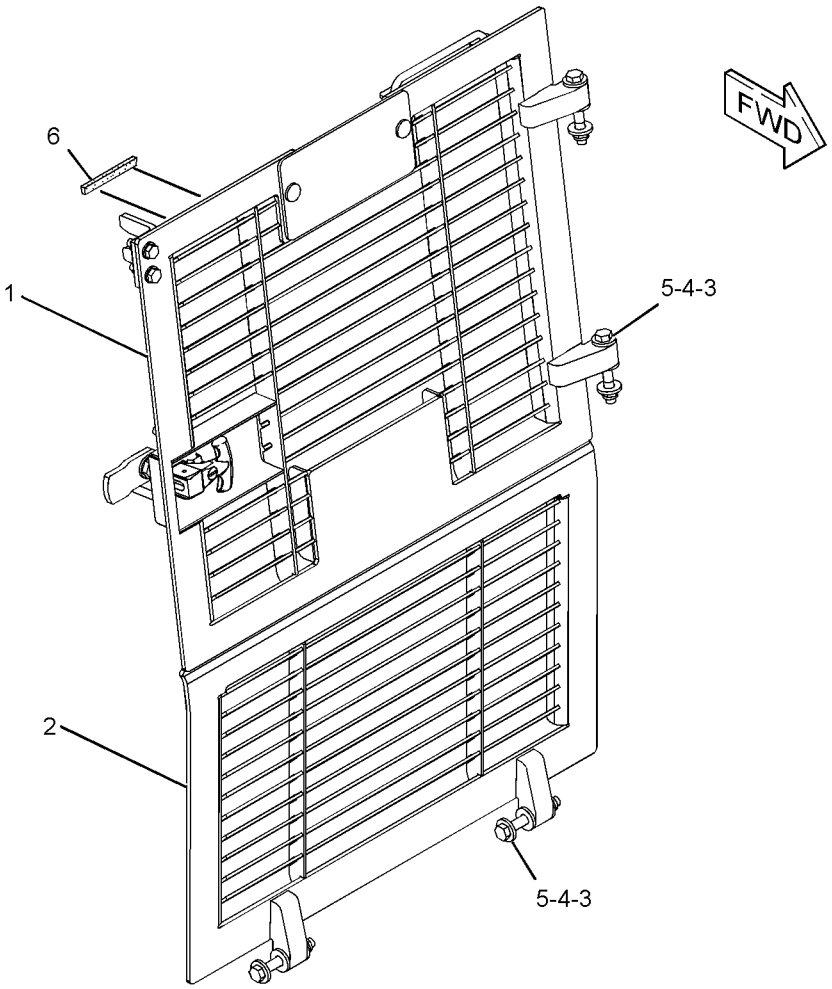

GRAPHIC #1 **<END>** g02009393

286-3438 GRILL GP-RADIATOR–BOTTOM

S/N: DHA1-UP; FBH1-UP
PART OF 269-8084 GRILL GP-RADIATOR
AN ATTACHMENT

SMCS-7170 **i02627843**

NOTE	REF NO	GRAPHIC REF	PART NUMBER	QTY	PART NAME 1 2 3 4 5 6 (PRODUCT LEVEL)	SEE PAGE
	1	1	**221-2718**	3	BUMPER	
	2	1	**286-3439**	1	GRILL AS-RADIATOR	
	3	1	**288-5422**	1	LATCH	

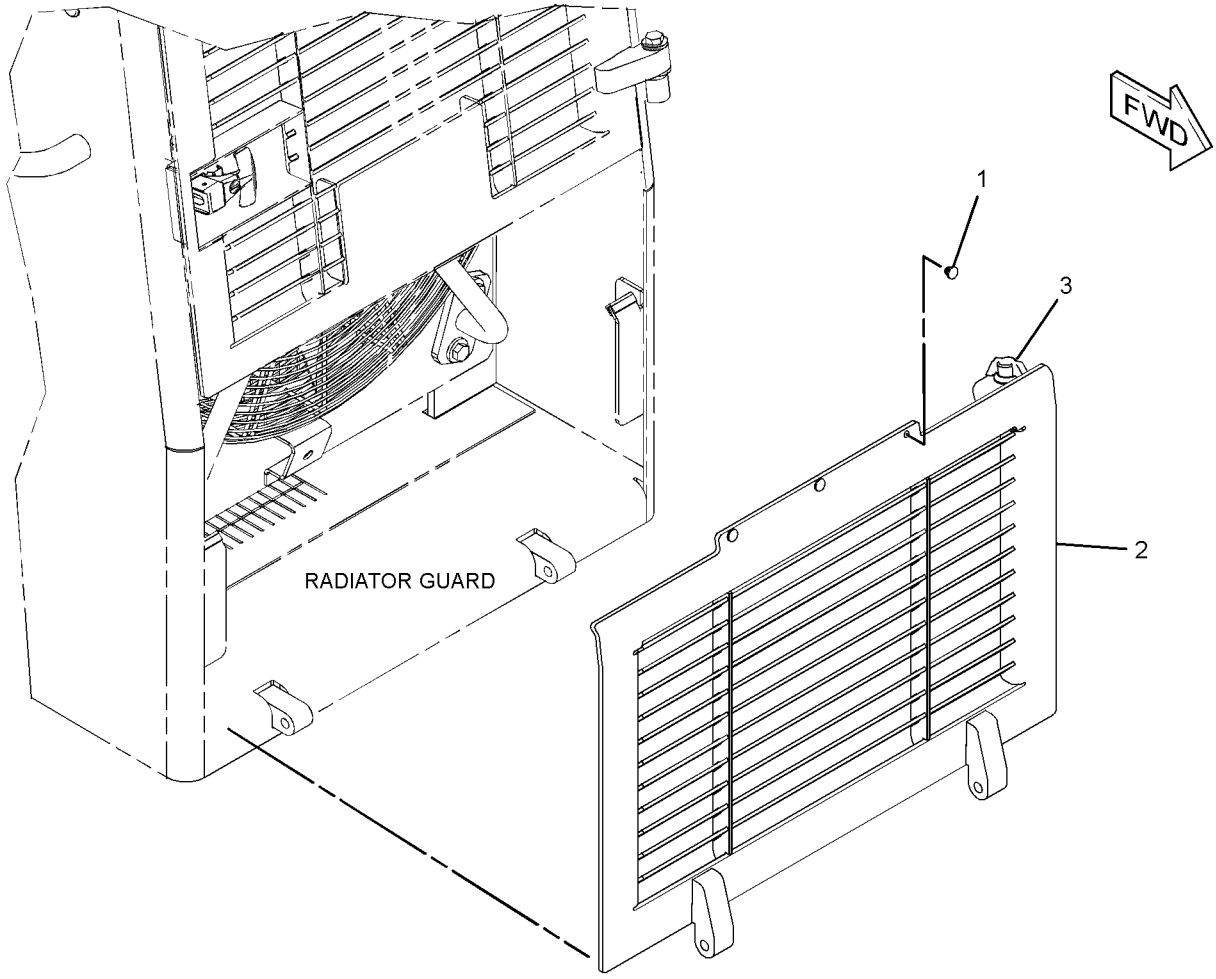

GRAPHIC #1 **<END>** g01315589

286-3440 GRILL GP-RADIATOR–BOTTOM

S/N: DHA1-1095; FBH1-1443
HEAVY-DUTY
PART OF 269-8091 GRILL GP-RADIATOR
AN ATTACHMENT

SMCS-7170 **i02586489**

NOTE	REF NO	GRAPHIC REF	PART NUMBER	QTY	PART NAME 1 2 3 4 5 6 (PRODUCT LEVEL)	SEE PAGE
	1	1	**221-2718**	3	BUMPER	
	2	1	**286-3441**	1	GRILL AS-RADIATOR (BOTTOM) (HEAVY-DUTY)	
	3	1	**288-5422**	1	LATCH	

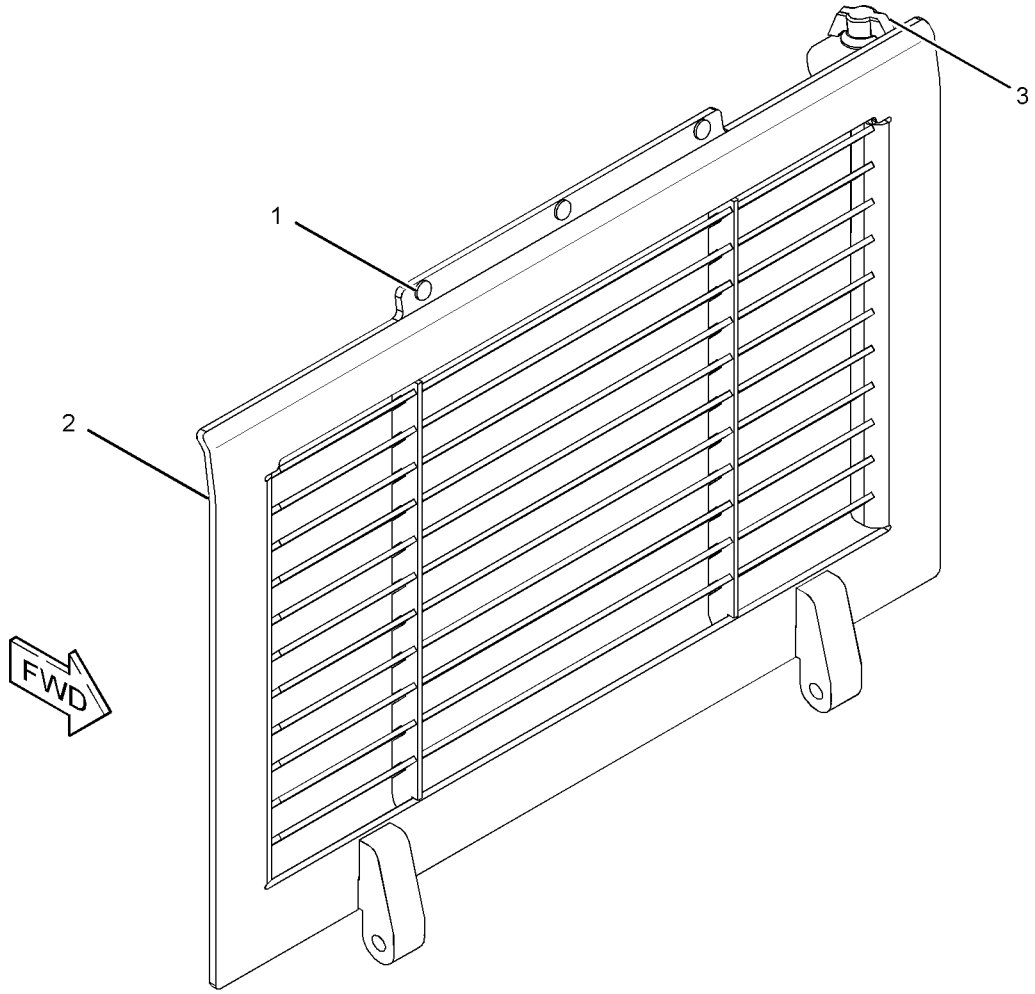

GRAPHIC #1 **<END>** g01303848

FRAME AND BODY

286-3456 GRILL GP-RADIATOR—TOP

S/N: DHA1-UP; FBH1-UP
PART OF 269-8084 GRILL GP-RADIATOR
AN ATTACHMENT

SMCS-7170 **i03136748**

NOTE	REF NO	GRAPHIC REF	PART NUMBER	QTY	PART NAME 1 2 3 4 5 6 (PRODUCT LEVEL)	SEE PAGE
	1	1	**269-8119**	1	COVER AS-ACCESS	
	2	1	**271-9166**	1	BRACKET AS	
	3	1	**277-3421**	1	ROD	
	4	1	**286-3457**	1	GRILL AS-RADIATOR (TOP)	
	5	1	**296-6494**	1	CAM-LATCH	
	6	1	**296-6499**	1	LATCH AS	
		1	**9X-8257**	2	WASHER (17.5X30X3.5-MM THK)	
M		1	**098-5747**	2	NUT (M16X2-THD)	
M		1	**161-7615**	1	NUT (M22X1.5-THD)	
	7	1	**8T-4121**	4	WASHER-HARD (11X21X2.5-MM THK)	
M	8	1	**8T-4133**	2	NUT (M10X1.5-THD)	
M	9	1	**8T-4196**	2	BOLT (M10X1.5X35-MM)	

M-METRIC PART

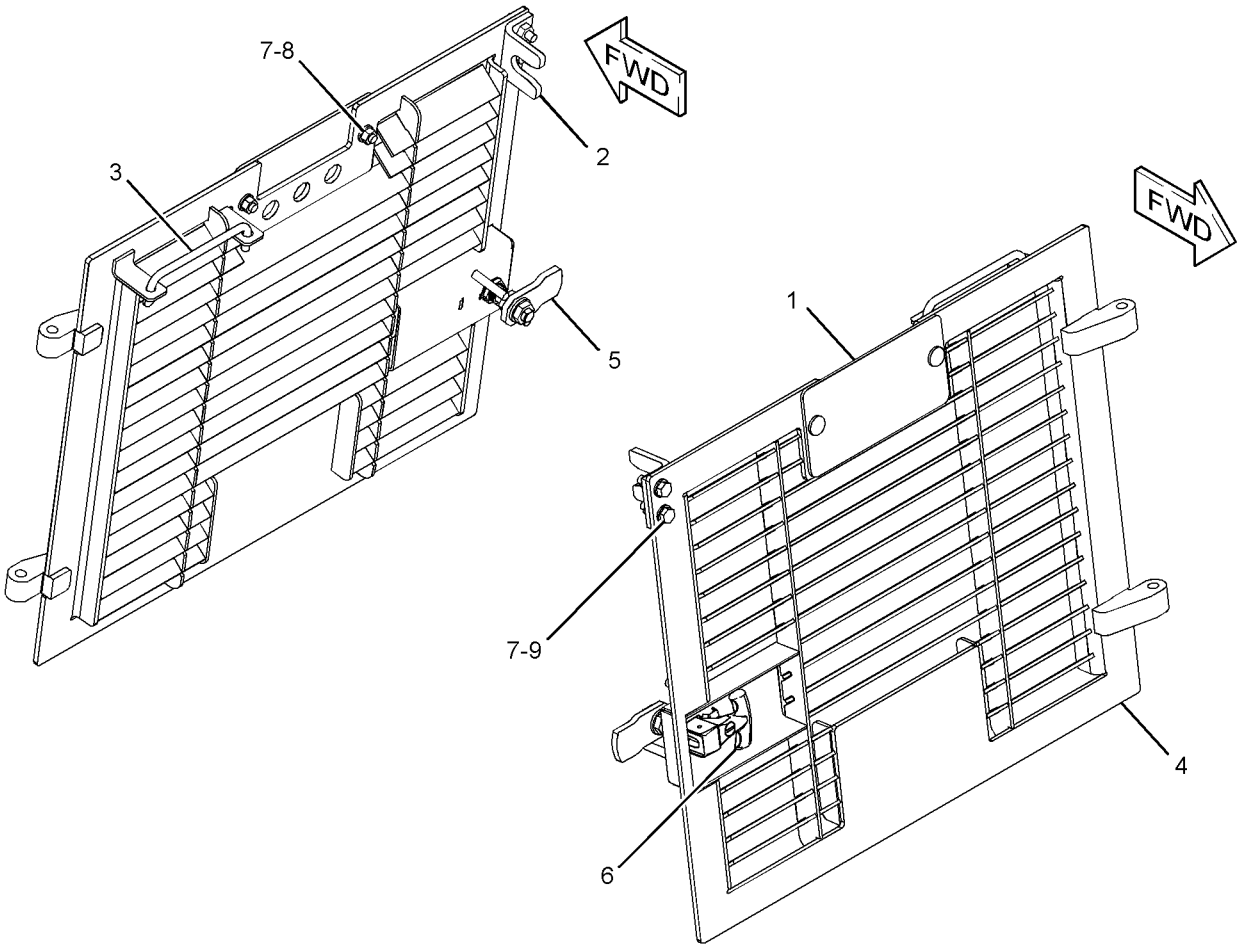

GRAPHIC #1 **<END>** g01303856

286-3458 GRILL GP-RADIATOR–TOP

S/N: DHA1-UP; FBH1-UP
HEAVY-DUTY
PART OF 269-8091 GRILL GP-RADIATOR
AN ATTACHMENT

SMCS-7170 **i02586506**

NOTE	REF NO	GRAPHIC REF	PART NUMBER	QTY	PART NAME 1 2 3 4 5 6 (PRODUCT LEVEL)	SEE PAGE
	1	1	**269-8119**	1	COVER AS-ACCESS	
	2	1	**271-9166**	1	BRACKET AS	
	3	1	**277-3421**	1	ROD	
	4	1	**286-3459**	1	GRILL AS-RADIATOR (TOP) (HEAVY-DUTY)	
	5	1	**296-6494**	1	CAM-LATCH	
	6	1	**296-6499**	1	LATCH AS	
	7	1	**7X-7729**	4	WASHER (11X25X3-MM THK)	
M	8	1	**8T-4133**	2	NUT (M10X1.5-THD)	
M	9	1	**8T-4196**	2	BOLT (M10X1.5X35-MM)	

M-METRIC PART

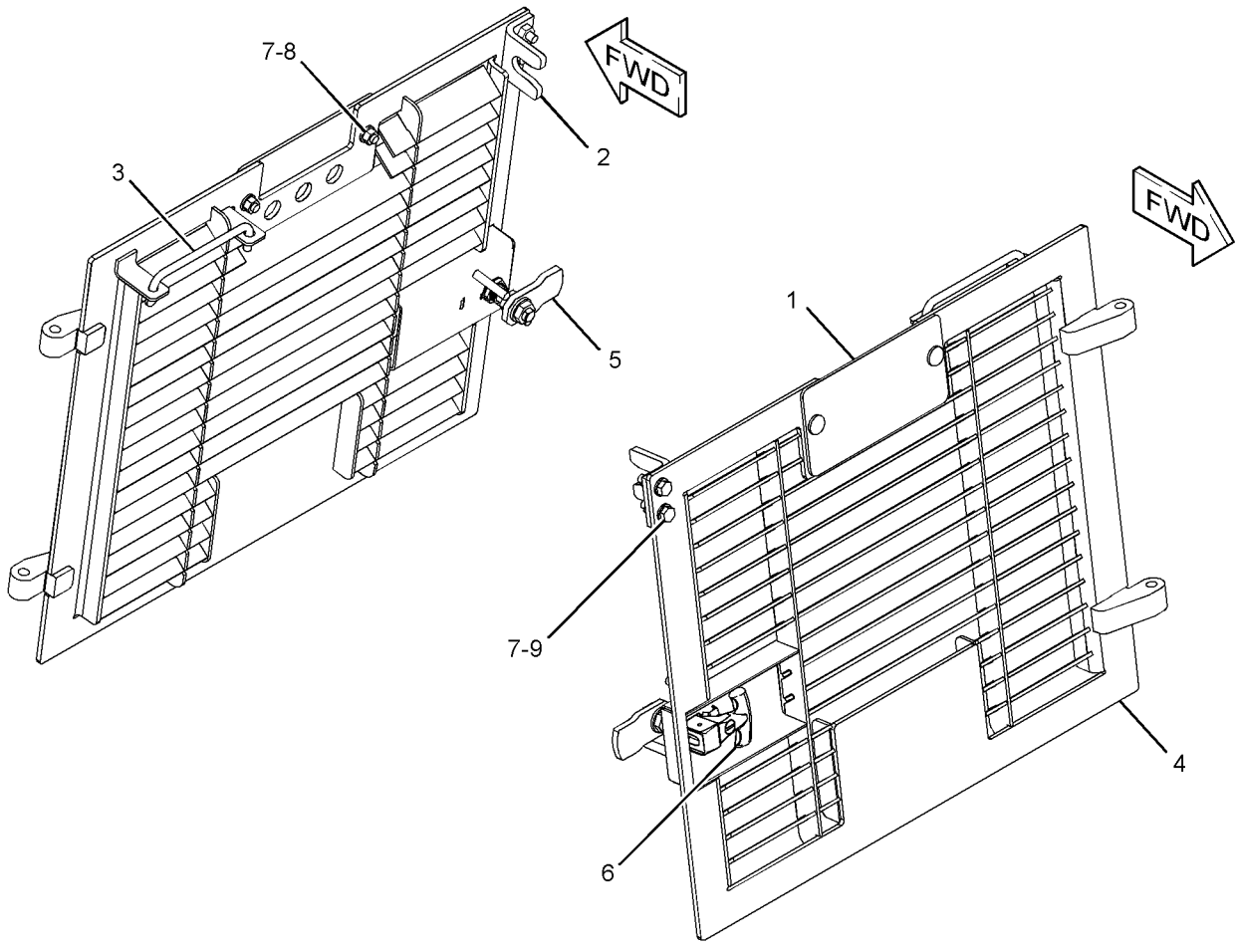

GRAPHIC #1 **<END>** g01303856

340-1802 GRILL GP-RADIATOR

S/N: DHA1096-UP; FBH1444-UP
PART OF 269-8091 GRILL GP-RADIATOR
AN ATTACHMENT

SMCS-7170 **i03659121**

NOTE	REF NO	GRAPHIC REF	PART NUMBER	QTY	PART NAME 1 2 3 4 5 6 (PRODUCT LEVEL)	SEE PAGE
	1	1	**221-2718**	3	BUMPER	
	2	1	**326-2662**	1	LATCH	
	3	1	**340-1803**	1	GRILL AS-BOTTOM	
M	4	1	**5C-2890**	2	NUT (M6X1-THD)	
M	5	1	**8T-4138**	2	BOLT (M6X1X20-MM)	
	6	1	**9X-8256**	4	WASHER (6.6X12X2-MM THK)	

M-METRIC PART

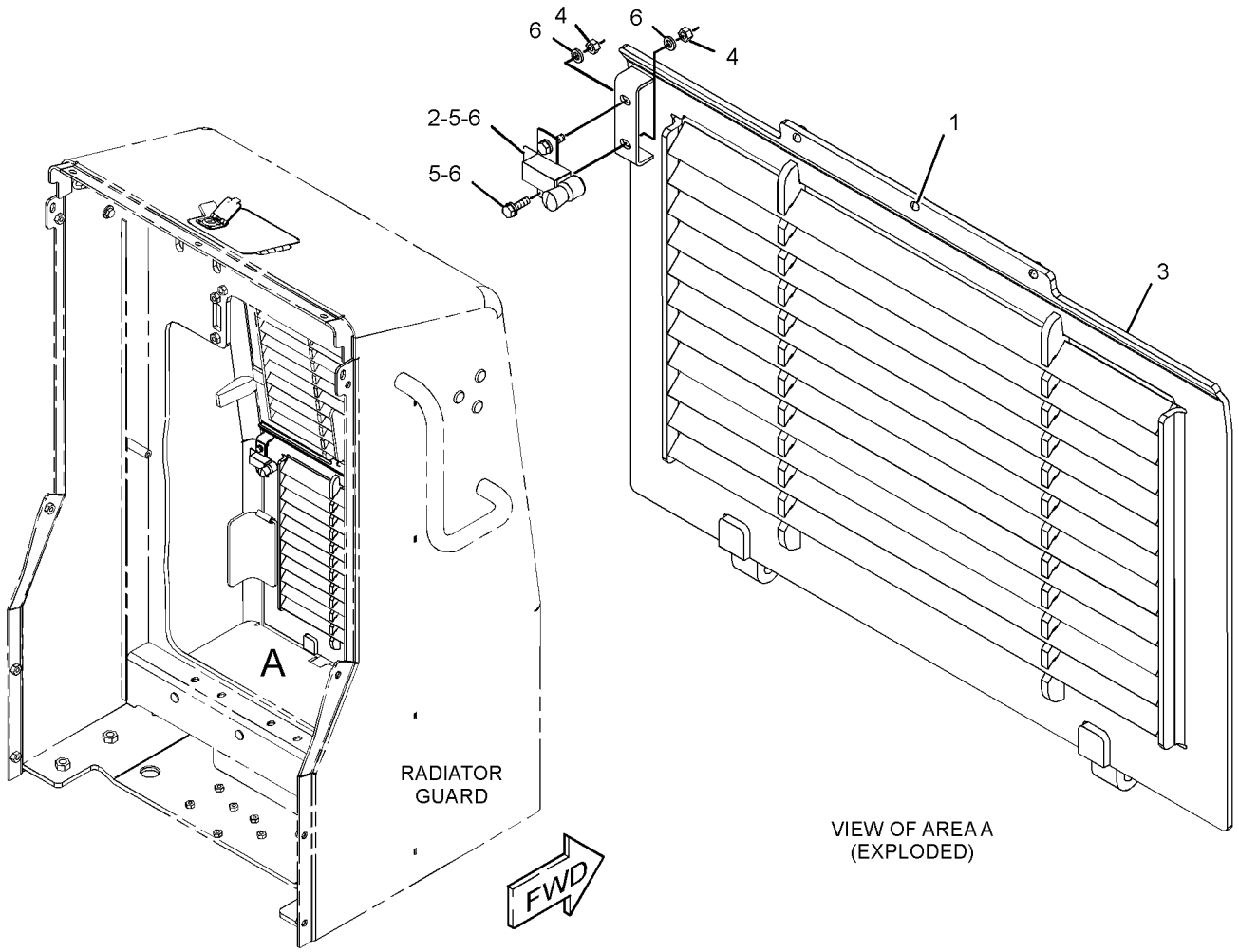

GRAPHIC #1 **<END>** g02009414

FRAME AND BODY

249-3604 GUARD GP-BOTTOM

S/N: DHA1-UP; FBH1-UP
PART OF 349-8352, 349-8354 OPTION AR-GUARD
CANNOT BE USED WITH 249-3608—PAGE 421
AN ATTACHMENT

SMCS-7153 **i02582520**

NOTE	REF NO	GRAPHIC REF	PART NUMBER	QTY	PART NAME 1 2 3 4 5 6 (PRODUCT LEVEL)	SEE PAGE
	1	1	**249-8802**	2	PLATE AS	
	2	1	**249-8807**	2	PLATE AS	
	3	1	**249-8811**	1	PLATE AS	
M		1	**8T-3490**	6	NUT-WELD (M10X1.5-THD)	
	4	1	**288-6968**	2	PLATE	
	5	1	**250-9566**	20	SPACER (13.94X21.34X8-MM THK)	
	6	1	**267-1240**	1	PLATE AS	
	7	1	**267-1242**	1	PLATE AS	
					(EACH PLATE AS INCLUDES)	
M		1	**8T-3597**	4	NUT-WELD (M12X1.75-THD)	
	8	1	**7X-0618**	38	WASHER-HARD (13.5X40X5-MM THK)	
	9	1	**8T-4121**	6	WASHER-HARD (11X21X2.5-MM THK)	
M	10	1	**8T-4195**	6	BOLT (M10X1.5X30-MM)	
M	11	1	**8T-4183**	38	BOLT (M12X1.75X40-MM)	

M-METRIC PART

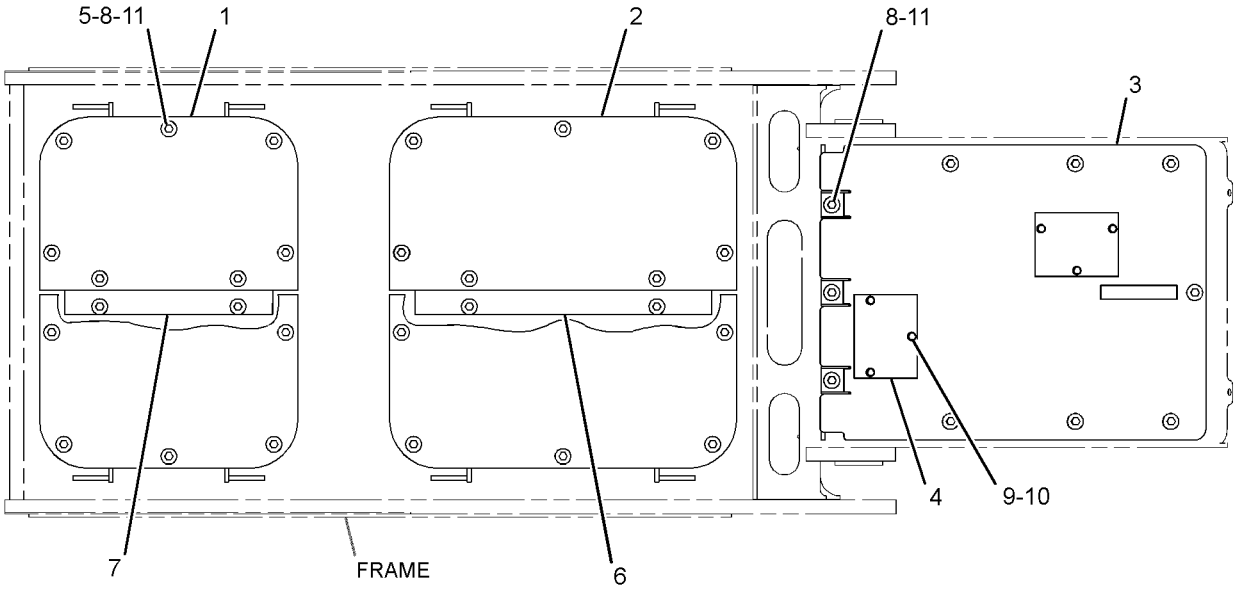

BOTTOM VIEW FWD

GRAPHIC #1 **<END>** g01301688

249-3608 GUARD GP-BOTTOM—HEAVY-DUTY

S/N: DHA1-UP; FBH1-UP
CANNOT BE USED WITH 249-3604—PAGE 420
AN ATTACHMENT

SMCS-7153 **i02582523**

NOTE	REF NO	GRAPHIC REF	PART NUMBER	QTY	PART NAME 1 2 3 4 5 6 (PRODUCT LEVEL)	SEE PAGE
	1	1	**288-6968**	2	PLATE	
	2	1	**249-8826**	2	PLATE AS	
	3	1	**249-8830**	2	PLATE AS	
	4	1	**249-8834**	1	PLATE AS	
	5	1	**250-9566**	20	SPACER (13.94X21.34X8-MM THK)	
	6	1	**267-1240**	1	PLATE AS	
	7	1	**267-1242**	1	PLATE AS	
					(EACH PLATE AS INCLUDES)	
M		1	**8T-3597**	4	NUT-WELD (M12X1.75-THD)	
	8	1	**7X-0618**	38	WASHER-HARD (13.5X40X5-MM THK)	
	9	1	**8T-4121**	6	WASHER-HARD (11X21X2.5-MM THK)	
M	10	1	**8T-4183**	38	BOLT (M12X1.75X40-MM)	
M	11	1	**8T-4195**	6	BOLT (M10X1.5X30-MM)	

M-METRIC PART

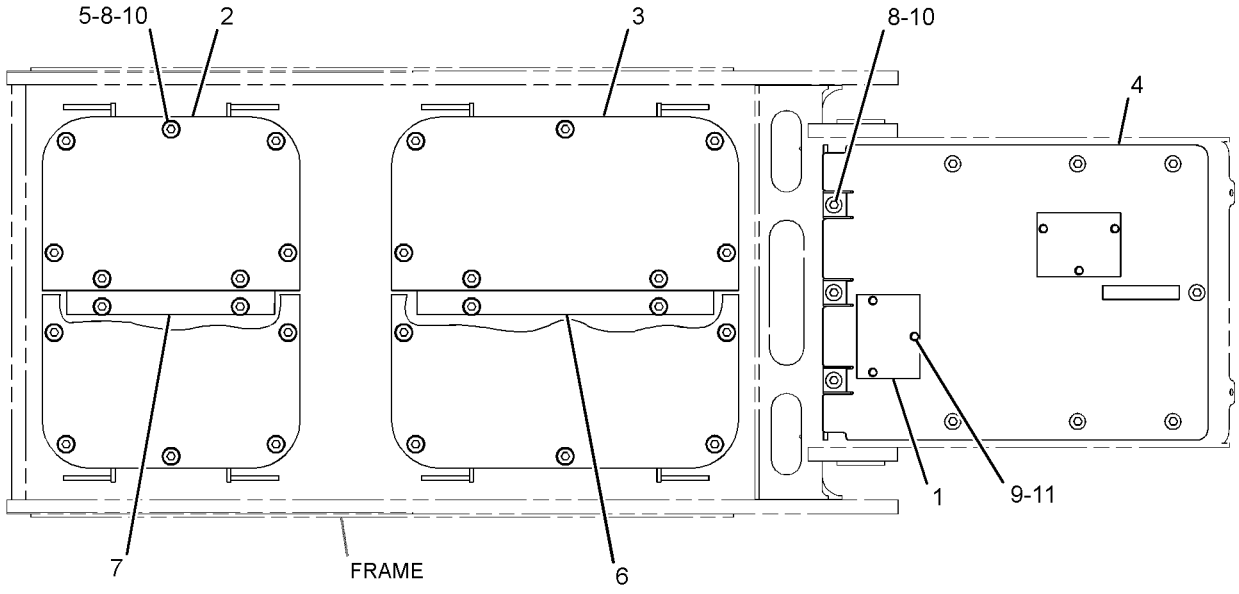

GRAPHIC #1 **<END>** g01301706

255-4276 GUARD GP-BRUSH—OPEN ROPS

S/N: DHA1-UP; FBH1-UP
DOOR & FRONT
FOR USE WITH CANOPY AR, SCREEN GP-SIDE
AN ATTACHMENT

SMCS-7158 **i02585778**

NOTE	REF NO	GRAPHIC REF	PART NUMBER	QTY	PART NAME 1 2 3 4 5 6 (PRODUCT LEVEL)	SEE PAGE
B	1	1	**8T-0318**	6	SHIM (0.8-MM THK)	
	2	1	**114-9284**	10	BUMPER	
	3	1	**123-0380**	2	SHIELD-STRIKER	
	4	1	**187-0413**	2	STRIKER	
Y	5	1	**262-2923**	1	SCREEN GP (FRONT)	446
	6	1	**262-2925**	1	GUARD AS (RH)	
M		1	**8T-3597**	4	NUT-WELD (M12X1.75-THD)	
M		1	**8T-3612**	3	NUT-WELD (M8X1.25-THD)	
	7	1	**262-2930**	4	HINGE	
					(EACH INCLUDES)	
M		1	**8T-3612**	1	NUT-WELD (M8X1.25-THD)	
	8	1	**263-7360**	1	GUARD AS (LH)	
M		1	**8T-3597**	4	NUT-WELD (M12X1.75-THD)	
M		1	**8T-3612**	3	NUT-WELD (M8X1.25-THD)	
	9	1	**276-0062**	1	PLATE AS (LH)	
	10	1	**276-0063**	1	PLATE AS (RH)	
					(EACH PLATE AS INCLUDES)	
M		1	**8T-3612**	1	NUT-WELD (M8X1.25-THD)	
	11	1	**147-1076**	2	CYLINDER AS-GAS	
M	12	1	**5C-7261**	10	NUT (M8X1.25-THD)	
	13	1	**5P-1076**	18	WASHER-HARD (13.5X30X4-MM THK)	
	14	1	**5P-4116**	10	WASHER-HARD (8.8X20.5X2-MM THK)	
	15	1	**6V-5839**	4	WASHER (11X21X2.5-MM THK)	
M	16	1	**8T-4139**	16	BOLT (M12X1.75X30-MM)	
M	17	1	**8T-4189**	8	BOLT (M8X1.25X20-MM)	
M	18	1	**8T-4195**	4	BOLT (M10X1.5X30-MM)	
	19	1	**8T-4224**	6	WASHER-HARD (8.8X16X2-MM THK)	
M	20	1	**8T-4244**	2	NUT (M12X1.75-THD)	
	21	1	**3E-4352**	4	WASHER-HARD (8.8X20.5X2.5-MM THK)	

B-USE AS REQUIRED
M-METRIC PART
Y-SEPARATE ILLUSTRATION

255-4276 **GUARD GP-BRUSH** *(contd.)* **i02585778**

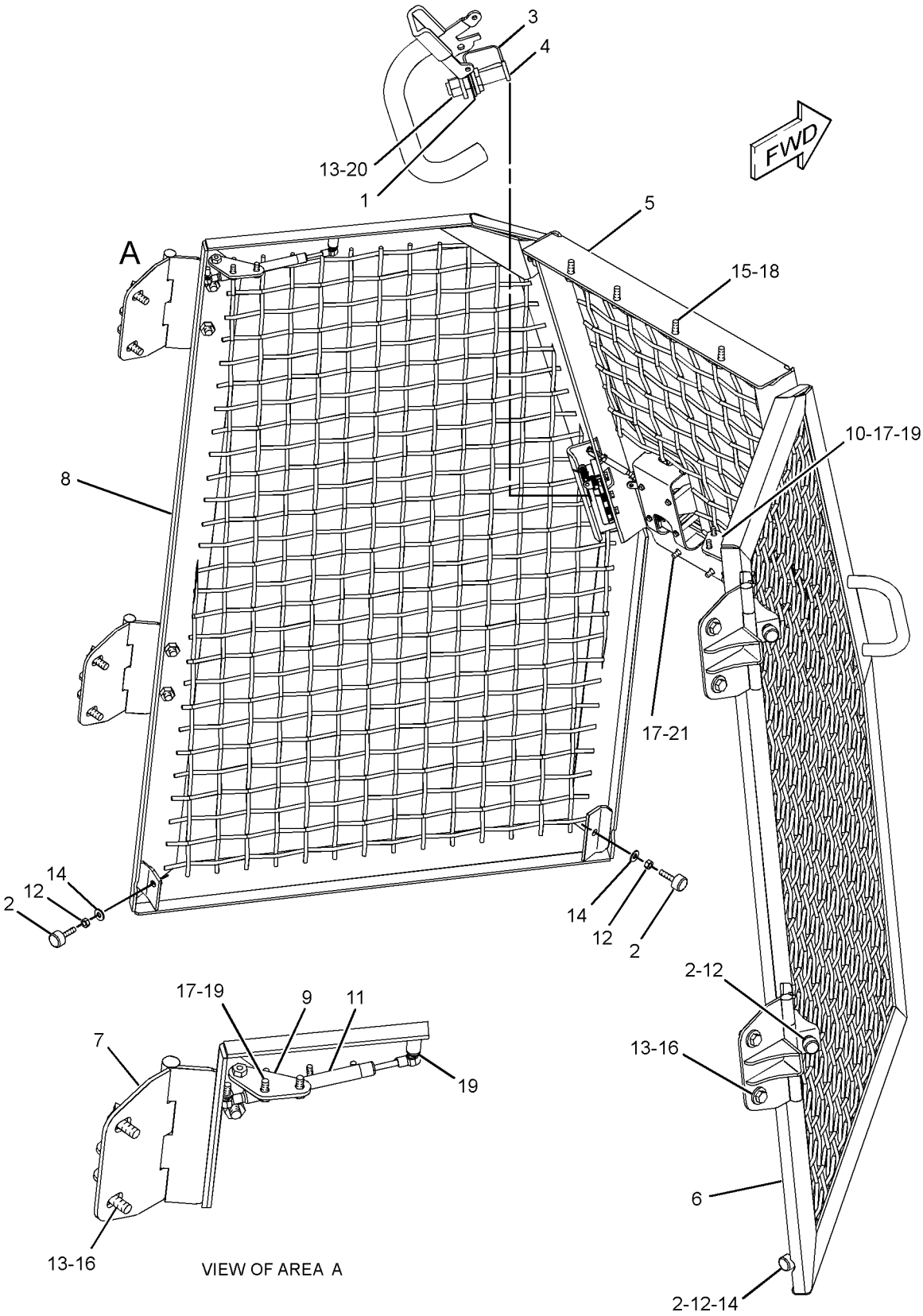

GRAPHIC #1 **<END>** g01204454

249-3190 GUARD GP-FUEL TANK

S/N: DHA1-UP; FBH1-UP
PART OF 349-8352, 349-8354 OPTION AR-GUARD
CANNOT BE USED WITH 249-3191—PAGE 426, 277-3556—PAGE 428
AN ATTACHMENT

SMCS-1273, 7150 **i03094580**

NOTE	REF NO	GRAPHIC REF	PART NUMBER	QTY	PART NAME 1 2 3 4 5 6 (PRODUCT LEVEL)	SEE PAGE
	1	1	**278-5921**	2	PLUG	
	2	1	**288-9566**	1	PLATE AS	
		1	**7T-1099**	1	LINK	
M		1	**8T-3490**	1	NUT-WELD (M10X1.5-THD)	
Y	3	1	*288-9567*	1	COVER GP-ACCESS	404
	4	1	**289-6134**	1	GUARD AS (FUEL TANK)	
	5	1	**289-6136**	1	BAFFLE	
	6	1	**289-6137**	1	PLATE	
	7	1	**198-4777**	6	WASHER-HARD (11X25X10-MM THK)	
	8	1	**198-4778**	2	WASHER-HARD (13.5X30X12-MM THK)	
	9	1	**7X-7729**	3	WASHER (11X25X3-MM THK)	
M	10	1	**8T-0389**	4	LOCKNUT (M10X1.5-THD)	
M	11	1	**8T-4136**	5	BOLT (M10X1.5X25-MM)	
M	12	1	**8T-4138**	3	BOLT (M6X1X20-MM)	
M	13	1	**8T-4186**	2	BOLT (M10X1.5X40-MM)	
M	14	1	**8T-4195**	4	BOLT (M10X1.5X30-MM)	
	15	1	**8T-4205**	3	WASHER-HARD (7.2X14.5X2-MM THK)	
M	16	1	**8T-4956**	2	BOLT (M12X1.75X35-MM)	
	17	1	**8T-2561**	6	WASHER-HARD (10.5X28.5X5-MM THK)	

M-METRIC PART
Y-SEPARATE ILLUSTRATION

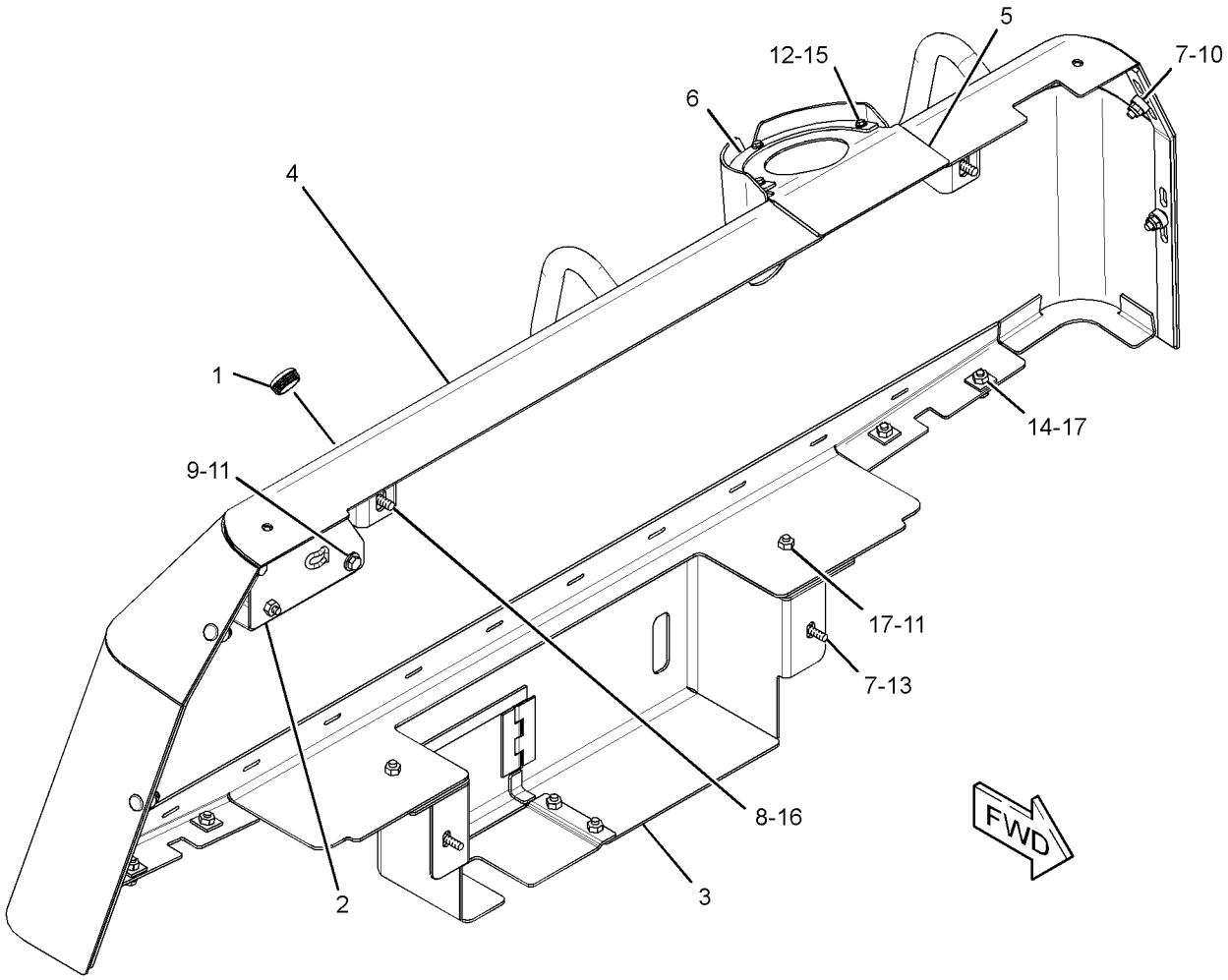

GRAPHIC #1 **<END>** g01578756

249-3191 GUARD GP-FUEL TANK—HEAVY-DUTY

S/N: DHA1-UP; FBH1-UP

CANNOT BE USED WITH 249-3190—PAGE 424, 277-3556—PAGE 428

AN ATTACHMENT

SMCS-1273, 7150 **i02997623**

NOTE	REF NO	GRAPHIC REF	PART NUMBER	QTY	PART NAME 1 2 3 4 5 6 (PRODUCT LEVEL)	SEE PAGE
	1	1	**278-5921**	2	PLUG	
	2	1	**288-9566**	1	PLATE AS	
		1	**7T-1099**	1	LINK	
M		1	**8T-3490**	1	NUT-WELD (M10X1.5-THD)	
Y	3	1	*288-9568*	1	COVER GP-ACCESS	405
	4	1	**289-6135**	1	GUARD AS (FUEL TANK)	
	5	1	**289-6136**	1	BAFFLE	
	6	1	**289-6137**	1	PLATE	
	7	1	**198-4777**	6	WASHER-HARD (11X25X10-MM THK)	
	8	1	**198-4778**	2	WASHER-HARD (13.5X30X12-MM THK)	
	9	1	**7X-7729**	3	WASHER (11X25X3-MM THK)	
M	10	1	**8T-0389**	4	LOCKNUT (M10X1.5-THD)	
M	11	1	**8T-4136**	5	BOLT (M10X1.5X25-MM)	
M	12	1	**8T-4138**	3	BOLT (M6X1X20-MM)	
M	13	1	**8T-4186**	2	BOLT (M10X1.5X40-MM)	
M	14	1	**8T-4195**	4	BOLT (M10X1.5X30-MM)	
	15	1	**8T-4205**	3	WASHER-HARD (7.2X14.5X2-MM THK)	
M	16	1	**8T-4956**	2	BOLT (M12X1.75X35-MM)	
	17	1	**8T-2561**	6	WASHER-HARD (10.5X28.5X5-MM THK)	

M-METRIC PART
Y-SEPARATE ILLUSTRATION

249-3191 **GUARD GP-FUEL TANK** *(contd.)* **i02997623**

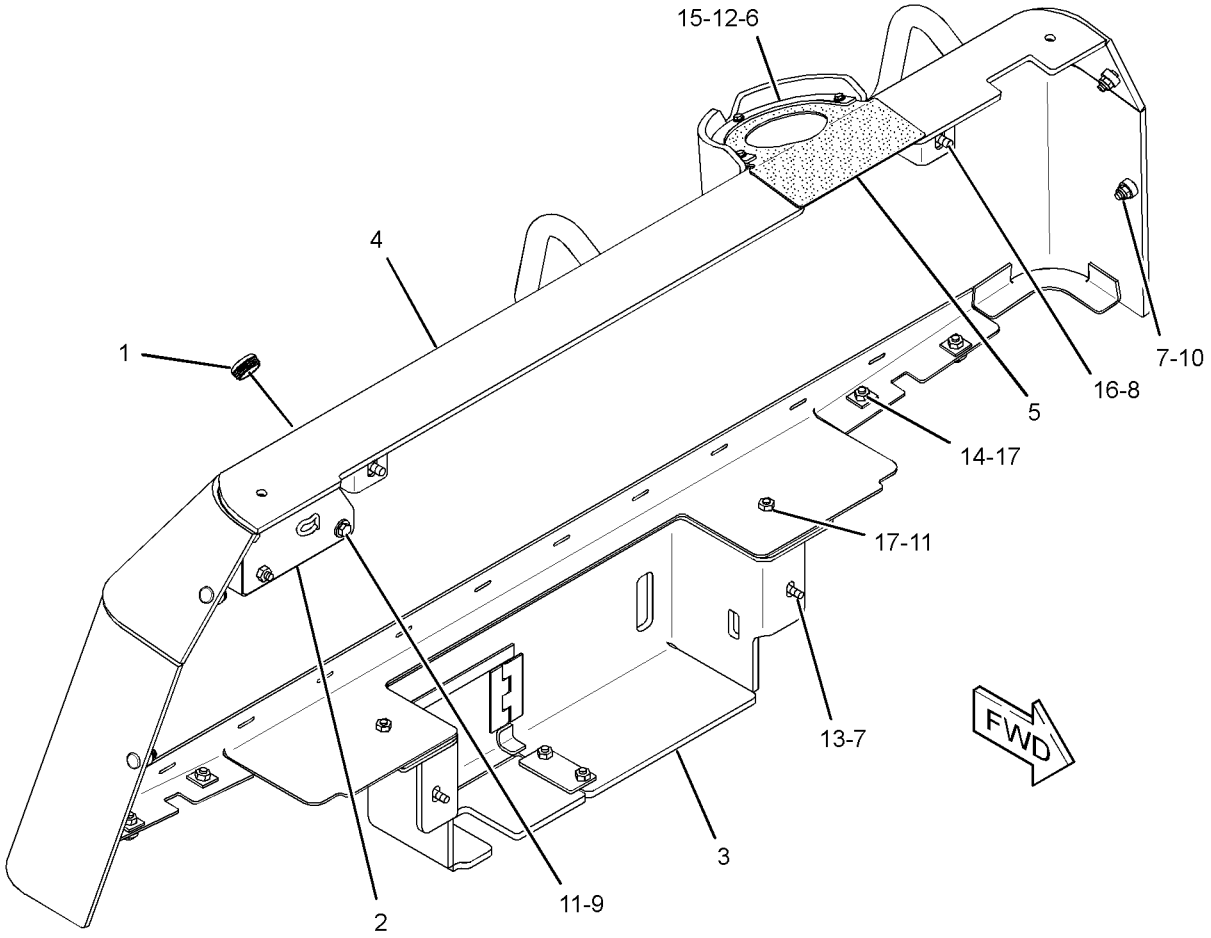

GRAPHIC #1 **<END>** g01521856

277-3556 GUARD GP-FUEL TANK—WINCH

S/N: DHA1-UP; FBH1-UP

CANNOT BE USED WITH 249-3190—PAGE 424, 249-3191—PAGE 426

AN ATTACHMENT

SMCS-1273, 7150 **i02833916**

NOTE	REF NO	GRAPHIC REF	PART NUMBER	QTY	PART NAME 1 2 3 4 5 6 (PRODUCT LEVEL)	SEE PAGE
	1	1	**278-5921**	2	PLUG	
	2	1	**288-9566**	1	PLATE AS	
		1	**7T-1099**	1	LINK	
M		1	**8T-3490**	1	NUT-WELD (M10X1.5-THD)	
Y	3	1	**288-9569**	1	COVER GP-WINCH	833
	4	1	**289-6135**	1	GUARD AS (FUEL TANK)	
	5	1	**289-6136**	1	BAFFLE	
	6	1	**289-6137**	1	PLATE	
	7	1	**198-4777**	6	WASHER-HARD (11X25X10-MM THK)	
	8	1	**198-4778**	2	WASHER-HARD (13.5X30X12-MM THK)	
	9	1	**7X-7729**	3	WASHER (11X25X3-MM THK)	
M	10	1	**8T-0389**	4	LOCKNUT (M10X1.5-THD)	
M	11	1	**8T-4136**	5	BOLT (M10X1.5X25-MM)	
M	12	1	**8T-4138**	3	BOLT (M6X1X20-MM)	
M	13	1	**8T-4186**	2	BOLT (M10X1.5X40-MM)	
M	14	1	**8T-4195**	4	BOLT (M10X1.5X30-MM)	
	15	1	**8T-4205**	3	WASHER-HARD (7.2X14.5X2-MM THK)	
M	16	1	**8T-4956**	2	BOLT (M12X1.75X35-MM)	
	17	1	**8T-2561**	6	WASHER-HARD (10.5X28.5X5-MM THK)	

M-METRIC PART
Y-SEPARATE ILLUSTRATION

277-3556 **GUARD GP-FUEL TANK** *(contd.)* **i02833916**

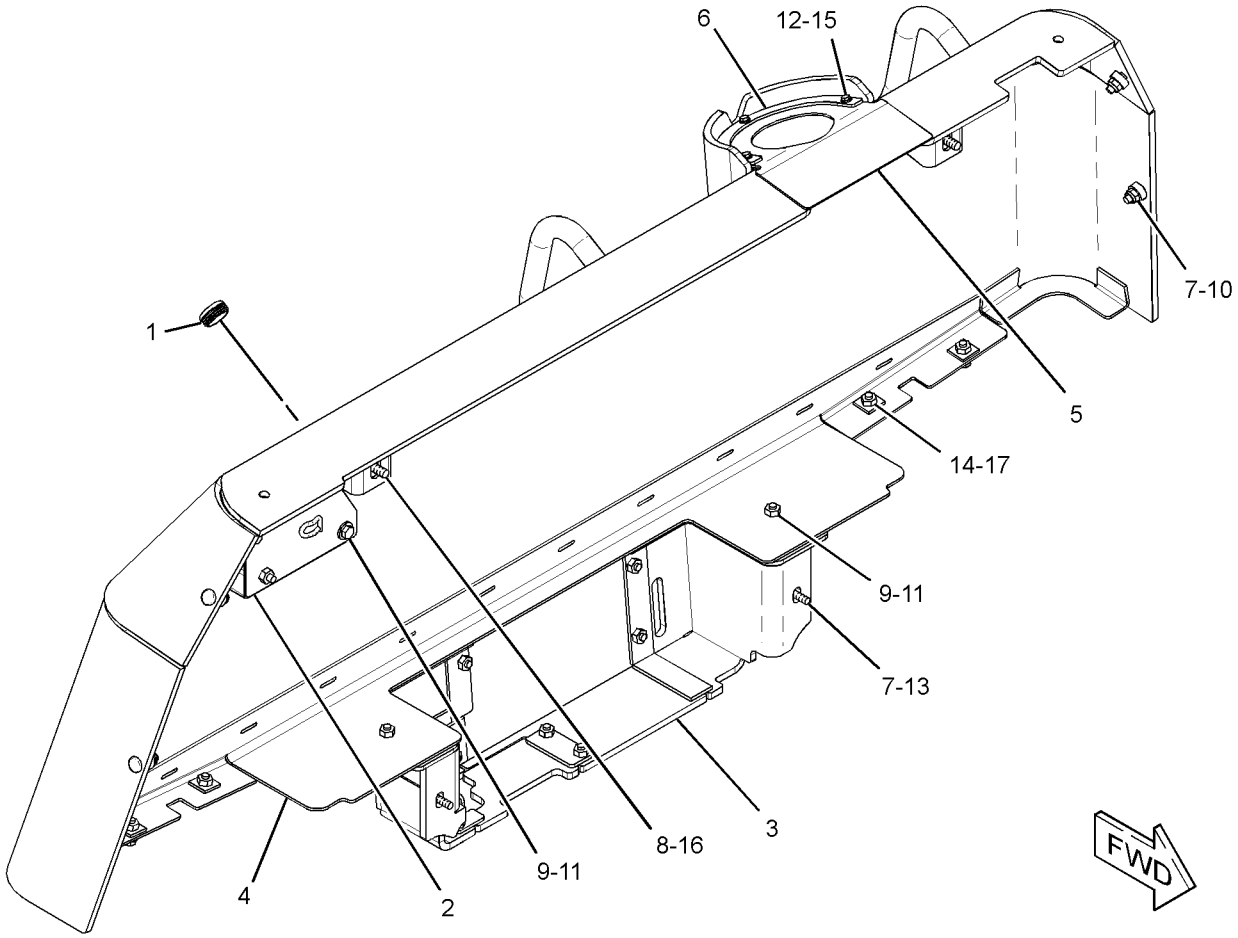

GRAPHIC #1 **<END>** g01304576

FRAME AND BODY

291-4110 GUARD GP-LIGHTING

S/N: DHA1-UP; FBH1-UP
FOR USE WITH CAB AR
AN ATTACHMENT

SMCS-715L **i02788050**

NOTE	REF NO	GRAPHIC REF	PART NUMBER	QTY	PART NAME 1 2 3 4 5 6 (PRODUCT LEVEL)	SEE PAGE
	1	1	**293-3746**	2	GRID	
	2	1	**293-3747**	2	BRACKET AS	
	3	1	**293-3748**	2	BRACKET	
	4	1	**7M-3361**	2	GROMMET	
	5	1	**7X-7729**	6	WASHER (11X25X3-MM THK)	
	6	1	**8T-4121**	4	WASHER-HARD (11X21X2.5-MM THK)	
M	7	1	**8T-4136**	10	BOLT (M10X1.5X25-MM)	
M	8	1	**8T-4189**	8	BOLT (M8X1.25X20-MM)	
	9	1	**8T-4224**	10	WASHER-HARD (8.8X16X2-MM THK)	
M	10	1	**131-3540**	2	LOCKNUT (M8X1.25-THD)	

M-METRIC PART

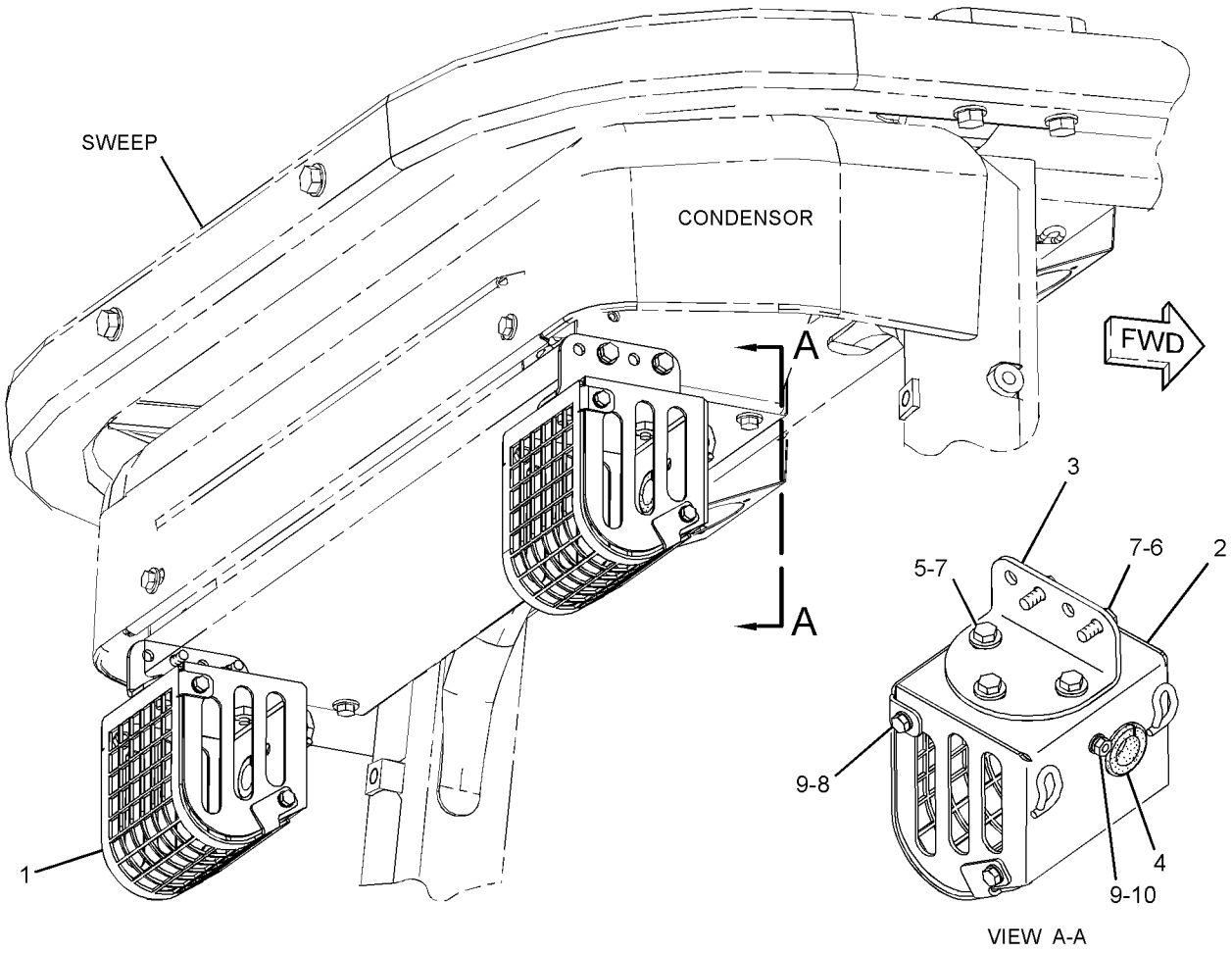

GRAPHIC #1 **<END>** g01416079

289-8302 GUARD GP-LINES—LIFT CYLINDER

S/N: DHA1-UP; FBH1-UP
FOR USE WITH BULLDOZER AR
AN ATTACHMENT

SMCS-7167 **i02588356**

NOTE	REF NO	GRAPHIC REF	PART NUMBER	QTY	PART NAME 1 2 3 4 5 6 (PRODUCT LEVEL)	SEE PAGE
	1	1	**290-2457**	2	GUARD AS	
					(EACH INCLUDES)	
M		1	**8T-3490**	8	NUT-WELD (M10X1.5-THD)	
	2	1	**290-2482**	4	COLLAR	
M	3	1	**8T-4136**	16	BOLT (M10X1.5X25-MM)	
	4	1	**8T-7934**	16	WASHER-HARD (11X21X5-MM THK)	

QUANTITIES SHOWN ARE THOSE REQUIRED FOR BOTH LH AND RH SIDES
M-METRIC PART

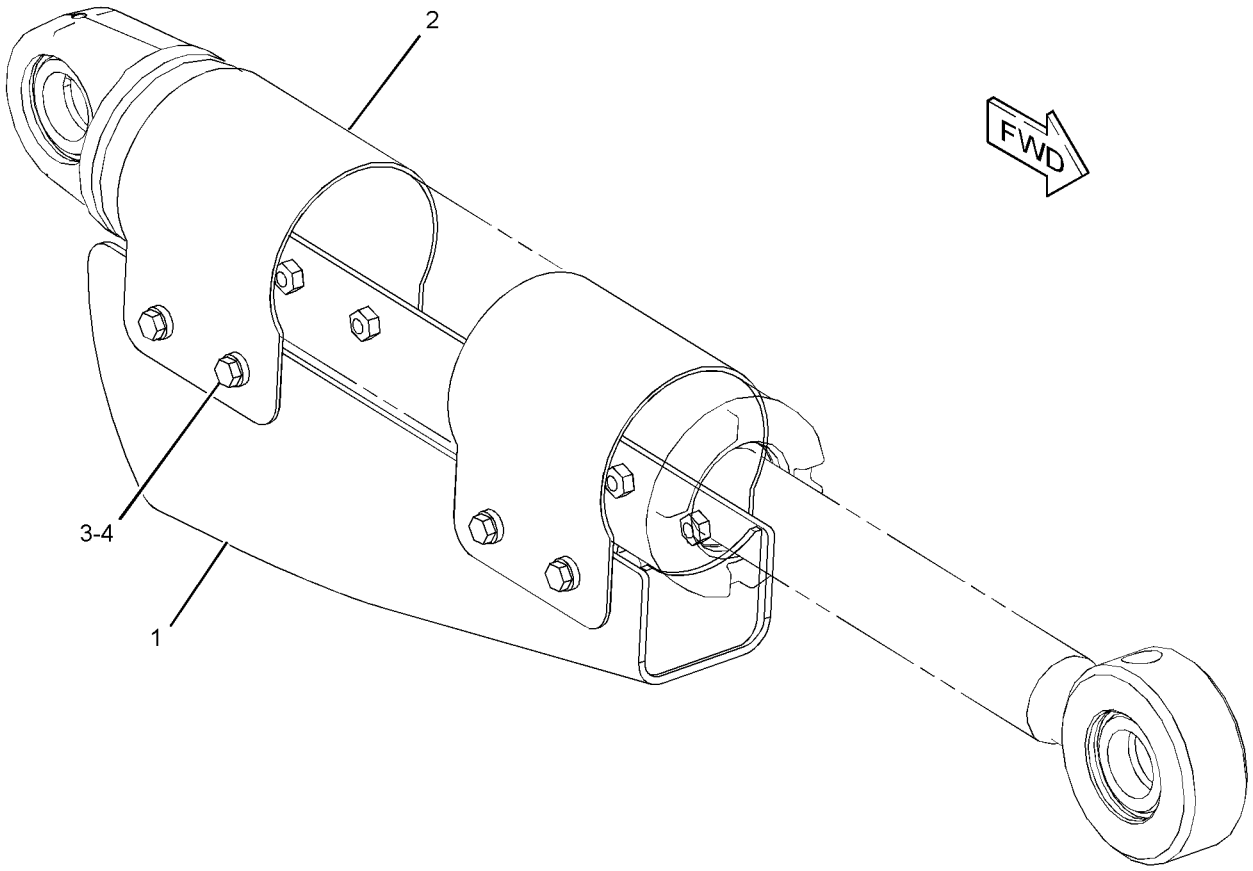

GRAPHIC #1 **<END>** g01303745

FRAME AND BODY

267-8340 GUARD GP-RADIATOR

S/N: DHA1-UP; FBH1-UP
PART OF 274-7674 COOLING AR

SMCS-7155 **i03159560**

NOTE	REF NO	GRAPHIC REF	PART NUMBER	QTY	PART NAME 1 2 3 4 5 6 (PRODUCT LEVEL)	SEE PAGE
J	1	1	**226-0294**	1	LOCK AS	
	2	1	**147-0526**	6	PLUG	
	3	1	**155-9321**	1	CAP AS	
	4	1	**269-5420**	1	BAFFLE	
	5	1	**269-5422**	2	STRIP	
	6	1	**286-3433**	1	GUARD AS	
	7	1	**286-3462**	1	CAM-LATCH	
	9	1	**294-0786**	1	HANDLE AS (RH)	
	10	1	**294-0787**	1	HANDLE AS (LH)	
M	12	1	**3E-4320**	4	SCREW (M3X0.5X10-MM)	
M	13	1	**5C-7261**	4	NUT (M8X1.25-THD)	
	15	1	**7X-0613**	8	WASHER-HARD (8.8X25.5X5-MM THK)	
	16	1	**7X-7729**	4	WASHER (11X25X3-MM THK)	
M	17	1	**8T-4186**	4	BOLT (M10X1.5X40-MM)	
M	19	1	**8T-7547**	4	BOLT (M8X1.25X30-MM)	
E	20	1	**3E-8268**		TRIM (3.5-CM EACH)	

E-ORDER BY THE CENTIMETER
J-REQUIRES 5P8500 KEY
M-METRIC PART

267-8340 **GUARD GP-RADIATOR** *(contd.)* **i03159560**

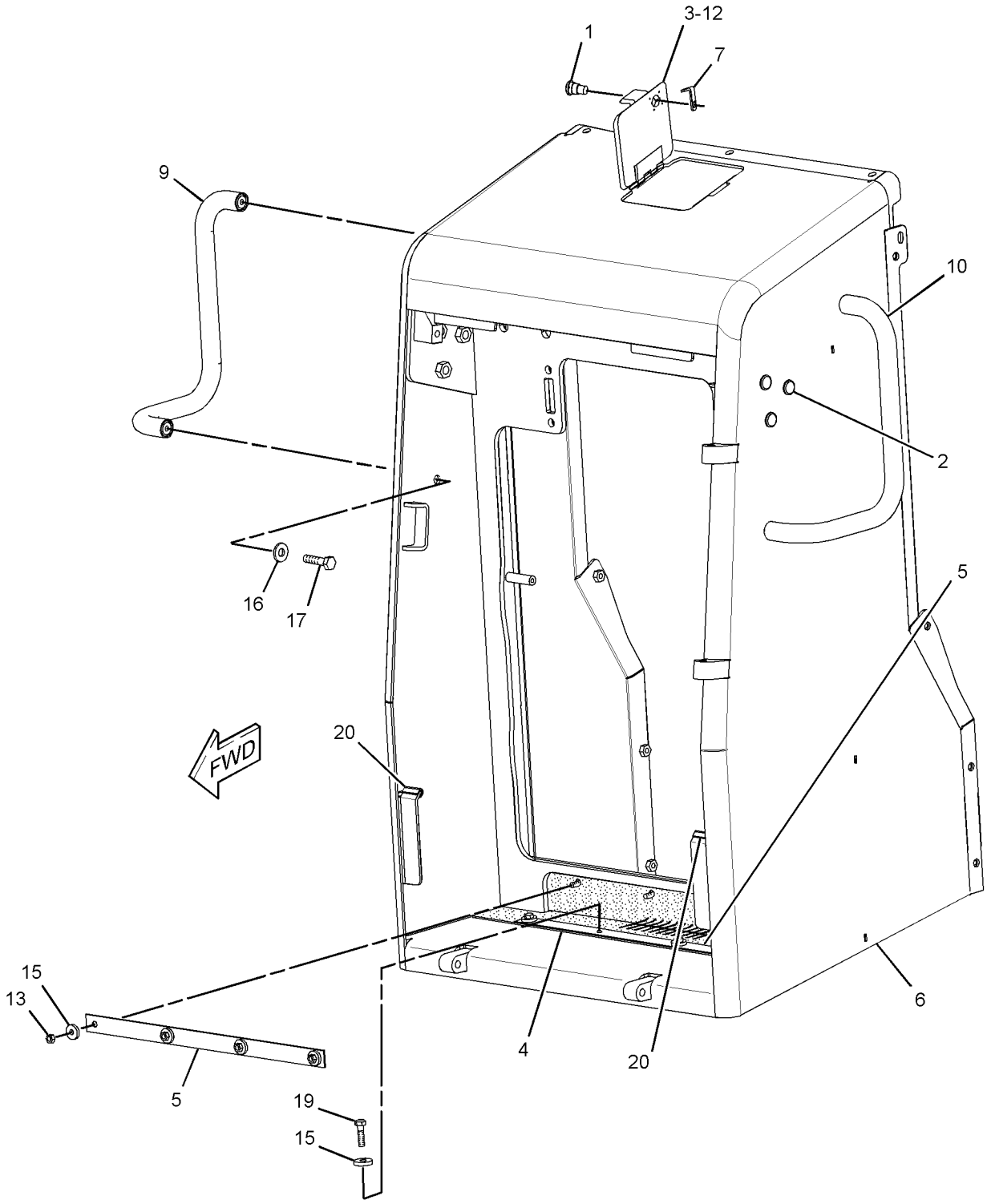

GRAPHIC #1 **<END>** g01649937

FRAME AND BODY

249-3606 GUARD GP-REAR

S/N: DHA1-UP; FBH1-UP
PART OF 206-7270 CHASSIS AR

SMCS-7187 **i02370411**

NOTE	REF NO	GRAPHIC REF	PART NUMBER	QTY	PART NAME 1 2 3 4 5 6 (PRODUCT LEVEL)	SEE PAGE
	1	1	**249-8795**	1	PLATE	
	2	1	**277-2990**	1	PLATE	
	3	1	**277-7712**	1	PLATE AS-GUARD	
	4	1	**8T-4121**	11	WASHER-HARD (11X21X2.5-MM THK)	
M	5	1	**8T-4137**	9	BOLT (M10X1.5X20-MM)	
M	6	1	**8T-4195**	2	BOLT (M10X1.5X30-MM)	

M-METRIC PART

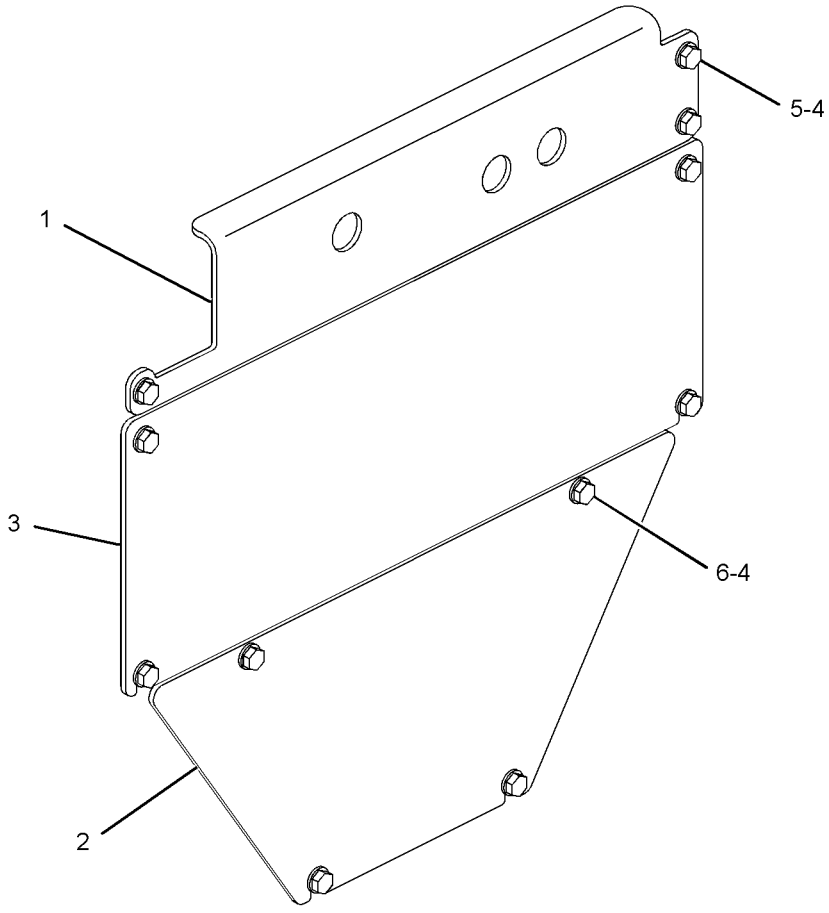

GRAPHIC #1 **<END>** g01186693

267-8342 HOOD & GUARD GP–EEC

S/N: DHA1-UP; FBH1-UP
SOUND SUPPRESSION
PART OF 250-8231 SUPPRESSION AR-SOUND
AN ATTACHMENT

SMCS-7251 **i02655479**

NOTE	REF NO	GRAPHIC REF	PART NUMBER	QTY	PART NAME 1 2 3 4 5 6 (PRODUCT LEVEL)	SEE PAGE
	1	1	**268-4316**	1	COVER (LH)	
	2	1	**268-4317**	1	COVER AS (LH)	
	3	1	**268-4318**	1	COVER AS (RH)	
	4	1	**268-4319**	1	COVER (RH)	
Y	5	1	*268-4321*	1	PANEL GP-SIDE (RH)	443
Y	6	1	*268-4324*	1	PANEL GP-SIDE (LH)	444
	7	1	**269-0424**	2	BRACKET AS	
Y	8	1	**276-4259**	1	HOOD GP (ENGINE)	439
Y	9	1	*276-4263*	1	SUPPORT GP-HOOD	448
	10	1	**282-9404**	1	BRACKET AS	
	11	1	**283-1529**	1	BRACKET AS	
	12	1	**198-4777**	12	WASHER-HARD (11X25X10-MM THK)	
	13	1	**7X-7729**	48	WASHER (11X25X3-MM THK)	
M	14	1	**8T-4133**	13	NUT (M10X1.5-THD)	
M	15	1	**8T-4136**	26	BOLT (M10X1.5X25-MM)	
M	16	1	**8T-4186**	11	BOLT (M10X1.5X40-MM)	
M	17	1	**8T-4195**	4	BOLT (M10X1.5X30-MM)	
M	18	1	**8T-5005**	6	BOLT (M10X1.5X70-MM)	

M-METRIC PART
Y-SEPARATE ILLUSTRATION

267-8342 **HOOD & GUARD GP** *(contd.)* **i02655479**

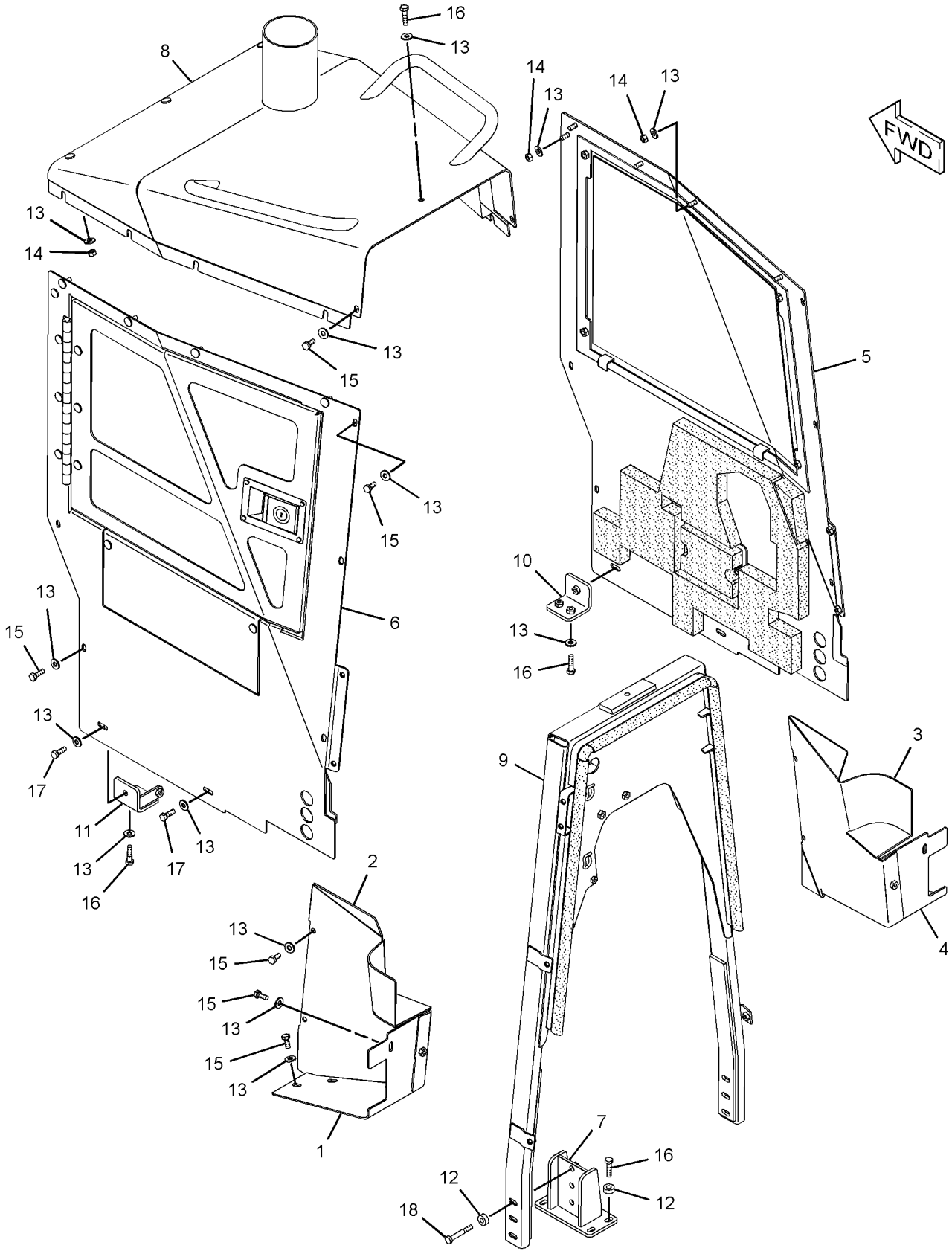

GRAPHIC #1

<END>

g01303847

267-9243 HOOD & GUARD GP–NACD

S/N: DHA1-UP; FBH1-UP
SOUND SUPPRESSION
PART OF 206-7285 SUPPRESSION AR-SOUND
AN ATTACHMENT

SMCS-7251 **i02580041**

NOTE	REF NO	GRAPHIC REF	PART NUMBER	QTY	PART NAME 1 2 3 4 5 6 (PRODUCT LEVEL)	SEE PAGE
	1	1	**267-9240**	1	HOOD AS	
Y	2	1	*267-9247*	1	SUPPORT GP-HOOD	447
Y	3	1	*267-9249*	1	PANEL GP-SIDE (LH)	440
Y	4	1	*267-9251*	1	PANEL GP-SIDE (RH)	442
	5	1	**268-4316**	1	COVER (LH)	
	6	1	**268-4317**	1	COVER AS (LH)	
	7	1	**268-4318**	1	COVER AS (RH)	
	8	1	**268-4319**	1	COVER (RH)	
	9	1	**269-0424**	2	BRACKET AS	
	10	1	**282-9404**	1	BRACKET AS	
	11	1	**283-1529**	1	BRACKET AS	
	12	1	**198-4777**	12	WASHER-HARD (11X25X10-MM THK)	
	13	1	**7X-7729**	48	WASHER (11X25X3-MM THK)	
M	14	1	**8T-4133**	13	NUT (M10X1.5-THD)	
M	15	1	**8T-4136**	26	BOLT (M10X1.5X25-MM)	
M	16	1	**8T-4186**	11	BOLT (M10X1.5X40-MM)	
M	17	1	**8T-4195**	4	BOLT (M10X1.5X30-MM)	
M	18	1	**8T-5005**	6	BOLT (M10X1.5X70-MM)	

M-METRIC PART
Y-SEPARATE ILLUSTRATION

267-9243 **HOOD & GUARD GP** *(contd.)* **i02580041**

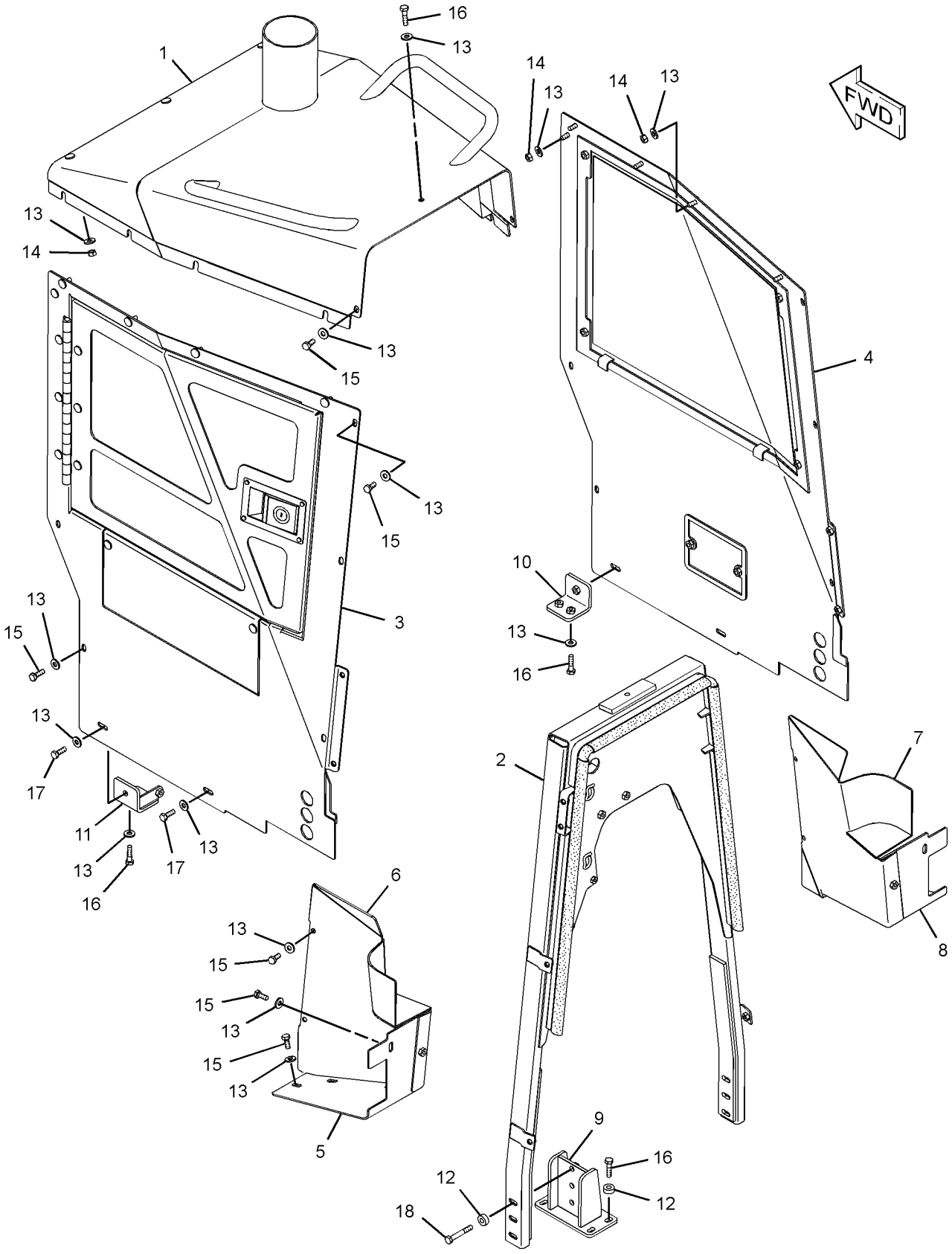

GRAPHIC #1 **<END>** g01303759

276-4259 HOOD GP–EEC

S/N: DHA1-UP; FBH1-UP
SOUND SUPPRESSION
PART OF 267-8342 HOOD & GUARD GP
AN ATTACHMENT

SMCS-7251 **i02585581**

NOTE	REF NO	GRAPHIC REF	PART NUMBER	QTY	PART NAME 1 2 3 4 5 6 (PRODUCT LEVEL)	SEE PAGE
	1	1	**267-9240**	1	HOOD AS	
	2	1	**277-6377**	1	LINER	
	3	1	**277-6379**	1	LINER	
	4	1	**277-6381**	1	LINER	
	5	1	**277-6382**	1	LINER	
	6	1	**277-6383**	1	LINER	
	7	1	**277-6388**	1	LINER	
	8	1	**277-7015**	1	LINER	

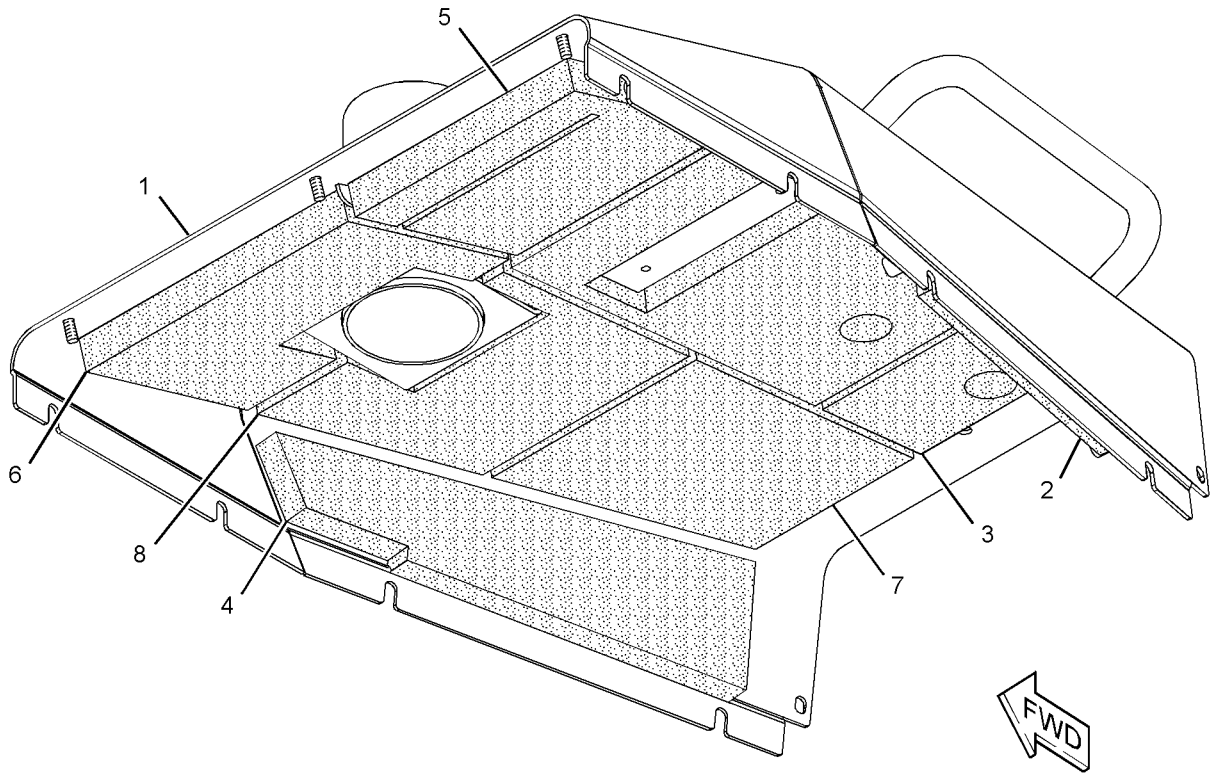

GRAPHIC #1 **<END>** g01304460

267-9249 PANEL GP-SIDE–LH–NACD

S/N: DHA1-UP; FBH1-UP
SOUND SUPPRESSION
PART OF 267-9243 HOOD & GUARD GP
AN ATTACHMENT

SMCS-7267 **i02580082**

NOTE	REF NO	GRAPHIC REF	PART NUMBER	QTY	PART NAME 1 2 3 4 5 6 (PRODUCT LEVEL)	SEE PAGE
	1	1	**3B-8489**	1	FITTING-GREASE	
	2	1	**6V-9197**	1	LOCK PIN	
	3	1	**221-2718**	3	BUMPER	
Y	4	1	**267-9242**	1	DOOR GP-ACCESS (LH)	409
	5	1	**267-9245**	1	COVER AS (LH)	
	6	1	**267-9250**	1	PANEL AS (LH)	
	7	1	**267-9252**	1	LATCH AS	
	8	1	**272-0502**	1	SUPPORT AS	
	9	1	**276-3990**	1	HINGE AS	
	10	1	**278-2220**	1	ROD AS	
M	11	1	**5C-7261**	2	NUT (M8X1.25-THD)	
	12	1	**5P-4116**	2	WASHER-HARD (8.8X20.5X2-MM THK)	
	13	1	**7X-7729**	9	WASHER (11X25X3-MM THK)	
	14	1	**8L-6557**	1	CONNECTOR	
M	15	1	**8T-4133**	6	NUT (M10X1.5-THD)	
M	16	1	**8T-4191**	2	BOLT (M10X1.5X16-MM)	
J	17	1	**202-5293**		SEAL (2.7-DM)	
J	17A	1	**202-5293**		SEAL (2.6-DM)	

J-ORDER BY THE DECIMETER
M-METRIC PART
Y-SEPARATE ILLUSTRATION

267-9249 **PANEL GP-SIDE** *(contd.)* **i02580082**

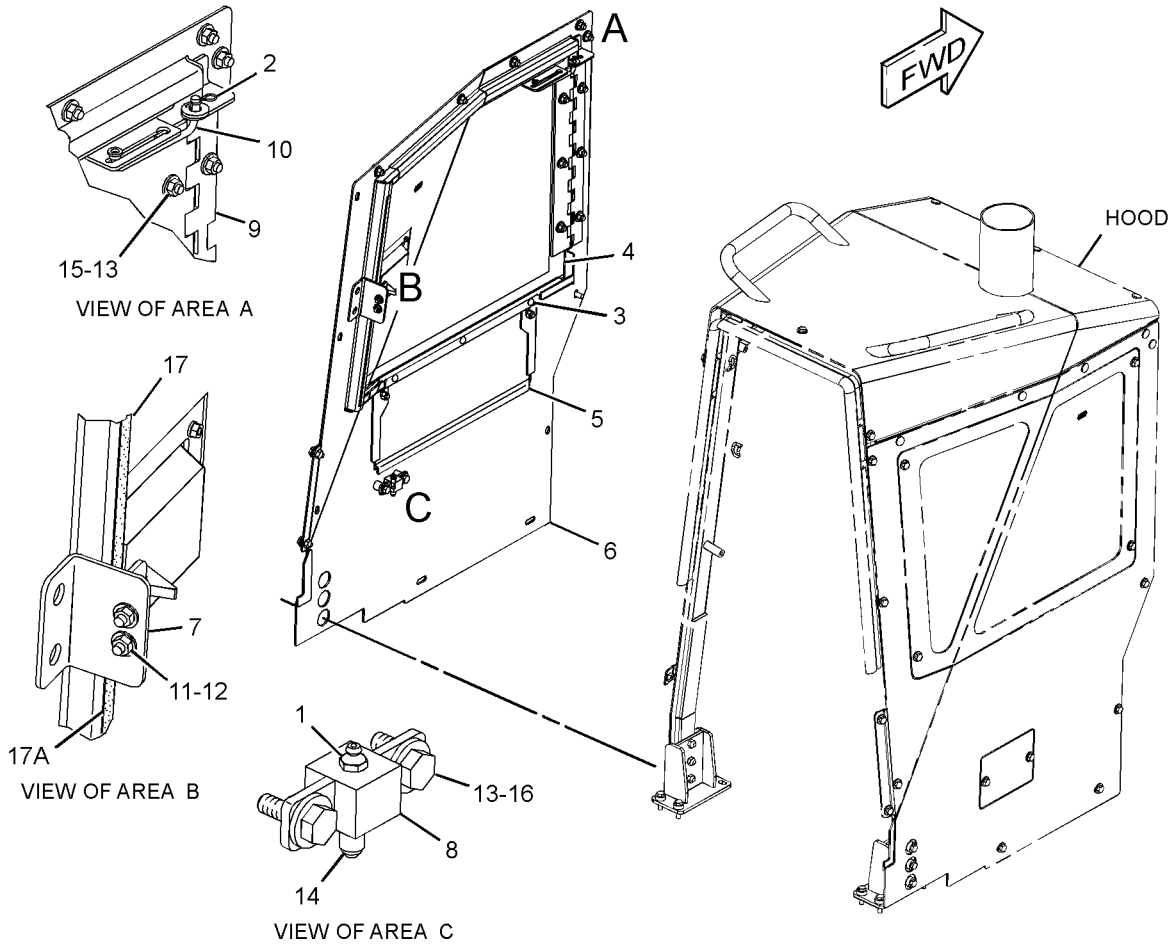

GRAPHIC #1 **<END>** g01317369

267-9251 PANEL GP-SIDE–RH–NACD

S/N: DHA1-UP; FBH1-UP
SOUND SUPPRESSION
PART OF 267-9243 HOOD & GUARD GP
AN ATTACHMENT

SMCS-7267 **i02603598**

NOTE	REF NO	GRAPHIC REF	PART NUMBER	QTY	PART NAME 1 2 3 4 5 6 (PRODUCT LEVEL)	SEE PAGE
	1	1	**267-9241**	1	DOOR AS (RH)	
	2	1	**267-9246**	1	PANEL AS (RH)	
	3	1	**7X-7729**	6	WASHER (11X25X3-MM THK)	
M	4	1	**8T-4137**	6	BOLT (M10X1.5X20-MM)	
	5	1	**288-5419**	1	COVER	

M-METRIC PART

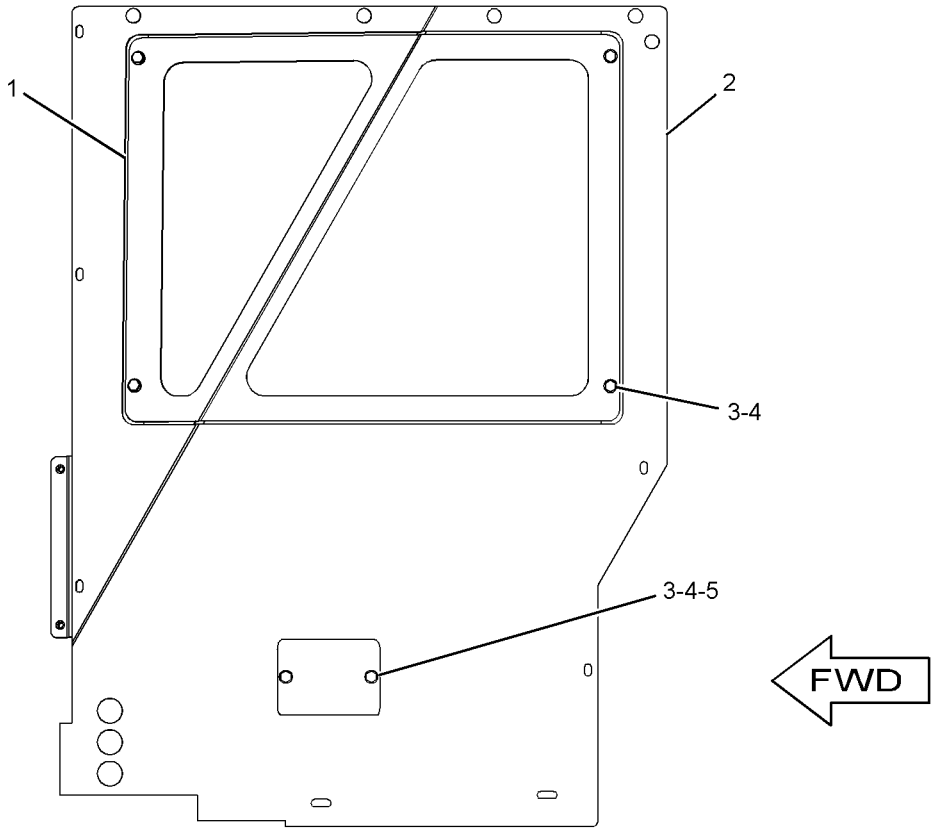

GRAPHIC #1 **<END>** g01293887

268-4321 PANEL GP-SIDE–RH–EEC

S/N: DHA1-UP; FBH1-UP
SOUND SUPPRESSION
PART OF 267-8342 HOOD & GUARD GP
AN ATTACHMENT

SMCS-7267 **i02585577**

NOTE	REF NO	GRAPHIC REF	PART NUMBER	QTY	PART NAME 1 2 3 4 5 6 (PRODUCT LEVEL)	SEE PAGE
	1	1	**267-9241**	1	DOOR AS (RH)	
	2	1	**267-9246**	1	PANEL AS (RH)	
	3	1	**277-6384**	1	LINER	
	4	1	**288-5418**	1	COVER AS	
	5	1	**7X-7729**	6	WASHER (11X25X3-MM THK)	
M	6	1	**8T-4137**	6	BOLT (M10X1.5X20-MM)	

M-METRIC PART

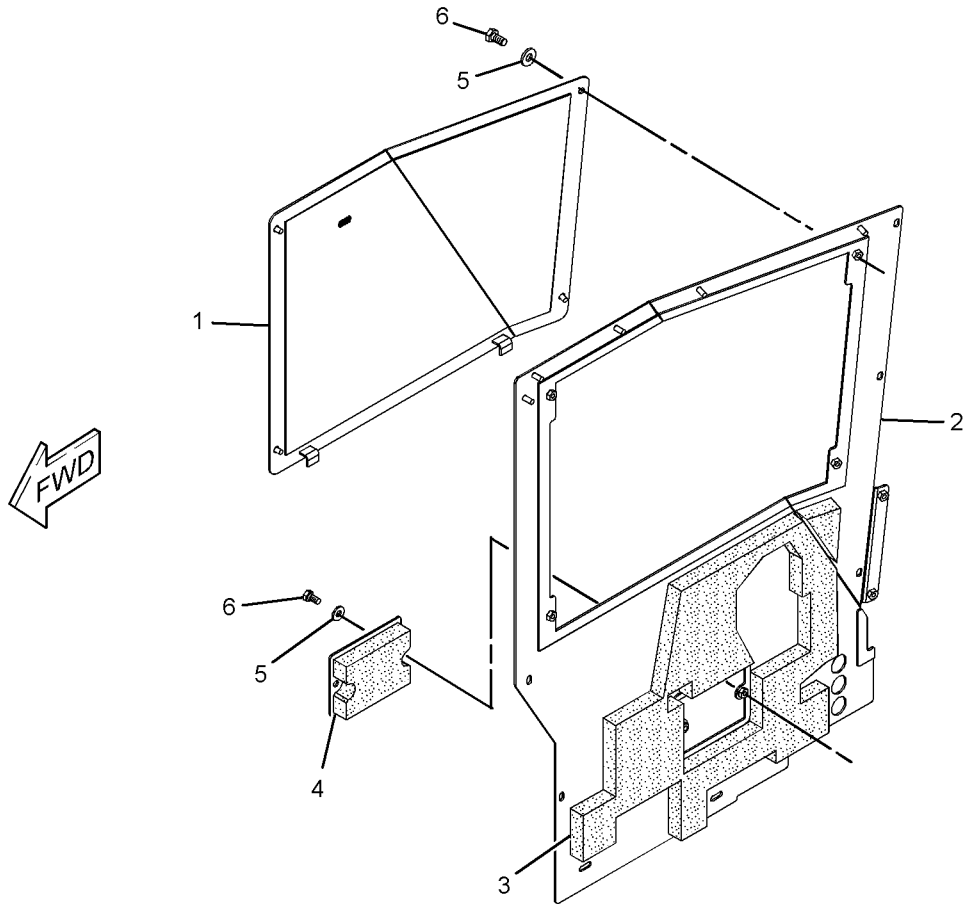

GRAPHIC #1 **<END>** g01303423

268-4324 PANEL GP-SIDE—LH—EEC

S/N: DHA1-UP; FBH1-UP
SOUND SUPPRESSION
PART OF 267-8342 HOOD & GUARD GP
AN ATTACHMENT

SMCS-7267 **i02655474**

NOTE	REF NO	GRAPHIC REF	PART NUMBER	QTY	PART NAME 1 2 3 4 5 6 (PRODUCT LEVEL)	SEE PAGE
	1	1	**3B-8489**	1	FITTING-GREASE	
	2	1	**6V-9197**	1	LOCK PIN	
	3	1	**221-2718**	3	BUMPER	
Y	4	1	*267-9242*	1	DOOR GP-ACCESS (LH)	409
	5	1	**267-9245**	1	COVER AS (LH)	
	6	1	**267-9250**	1	PANEL AS (LH)	
	7	1	**267-9252**	1	LATCH AS	
	8	1	**272-0502**	1	SUPPORT AS	
	9	1	**276-3990**	1	HINGE AS	
	10	1	**277-6372**	1	LINER	
	11	1	**277-6373**	1	LINER	
	12	1	**278-2220**	1	ROD AS	
M	13	1	**5C-7261**	2	NUT (M8X1.25-THD)	
	14	1	**5P-4116**	2	WASHER-HARD (8.8X20.5X2-MM THK)	
	15	1	**7X-7729**	9	WASHER (11X25X3-MM THK)	
	16	1	**8L-6557**	1	CONNECTOR	
M	17	1	**8T-4133**	6	NUT (M10X1.5-THD)	
M	18	1	**8T-4191**	2	BOLT (M10X1.5X16-MM)	
H	19	1	**202-5293**		SEAL (3-DM EACH)	

H-SOLD BY THE DECIMETER
M-METRIC PART
Y-SEPARATE ILLUSTRATION

268-4324 **PANEL GP-SIDE** *(contd.)* **i02655474**

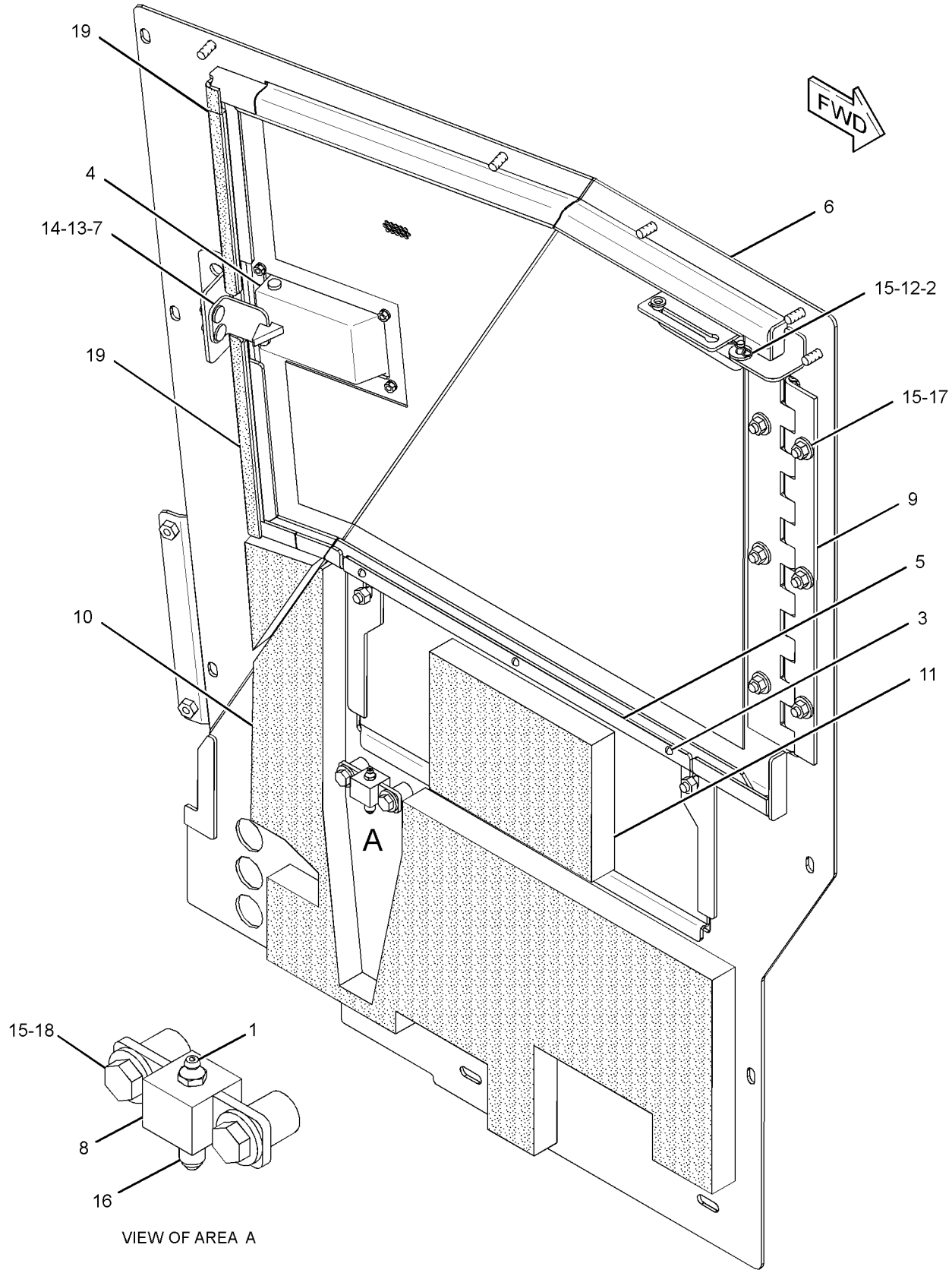

GRAPHIC #1 **<END>** g01303437

FRAME AND BODY

262-2923 SCREEN GP–FRONT

S/N: DHA1-UP; FBH1-UP
PART OF 255-4276 GUARD GP-BRUSH
AN ATTACHMENT

SMCS-7165 **i02585795**

NOTE	REF NO	GRAPHIC REF	PART NUMBER	QTY	PART NAME 1 2 3 4 5 6 (PRODUCT LEVEL)	SEE PAGE
M	1	1	**109-1390**	8	BOLT (M6X1X25-MM)	
	2	1	**172-2384**	1	LATCH AS-ROTARY (LH)	
	3	1	**172-2385**	1	LATCH AS-ROTARY (RH)	
	4	1	**267-8655**	1	GUARD AS-FRONT	
J	5	1	**297-3275**	1	HANDLE AS (RH)	
J	6	1	**297-3274**	1	HANDLE AS (LH)	
					(EACH HANDLE AS INCLUDES)	
		1	**8Y-4501**	1	SPRING-HANDLE	
	7	1	**297-3272**	1	ROD AS (LH)	
		1	**6V-8185**	1	NUT (1/4-20-THD)	
		1	**108-5471**	1	CLEVIS	
	8	1	**6V-7636**	4	PIN AS-SPRING	
M	9	1	**8T-4180**	8	SCREW-MACHINE (M5X0.8X20-MM)	
	10	1	**9X-8256**	8	WASHER (6.6X12X2-MM THK)	
	11	1	**297-3273**	1	ROD AS (RH)	
		1	**6V-8185**	1	NUT (1/4-20-THD)	
		1	**108-5471**	1	CLEVIS	

J-REQUIRES 5P-8500 KEY
M-METRIC PART

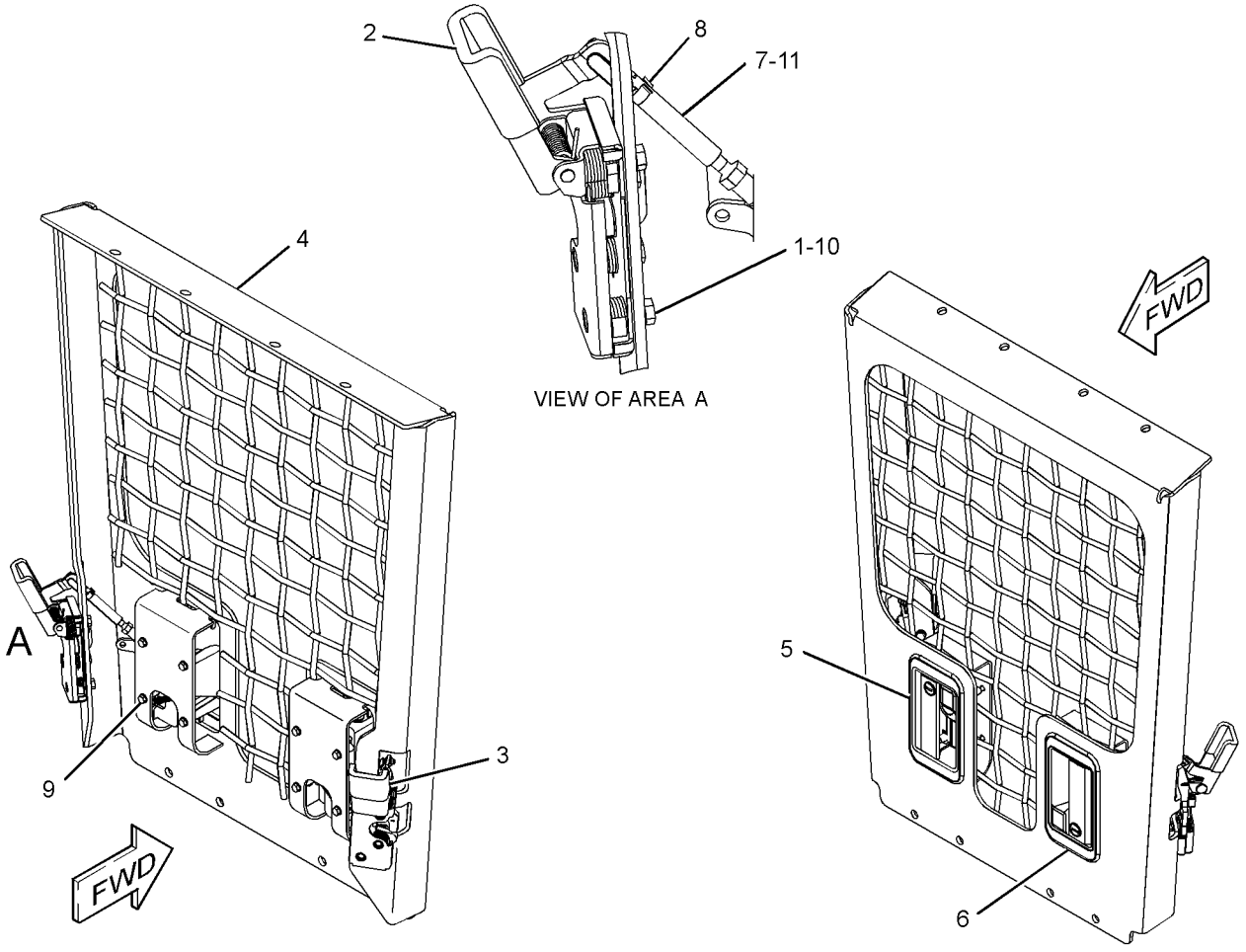

GRAPHIC #1 **<END>** g01294727

267-9247 SUPPORT GP-HOOD–NACD

S/N: DHA1-UP; FBH1-UP
SOUND SUPPRESSION
PART OF 267-9243 HOOD & GUARD GP
AN ATTACHMENT

SMCS-7251 **i02580073**

NOTE	REF NO	GRAPHIC REF	PART NUMBER	QTY	PART NAME 1 2 3 4 5 6 (PRODUCT LEVEL)	SEE PAGE
	1	1	**267-9253**	1	SUPPORT AS-HOOD	
	2	1	**278-6948**	1	SEAL	

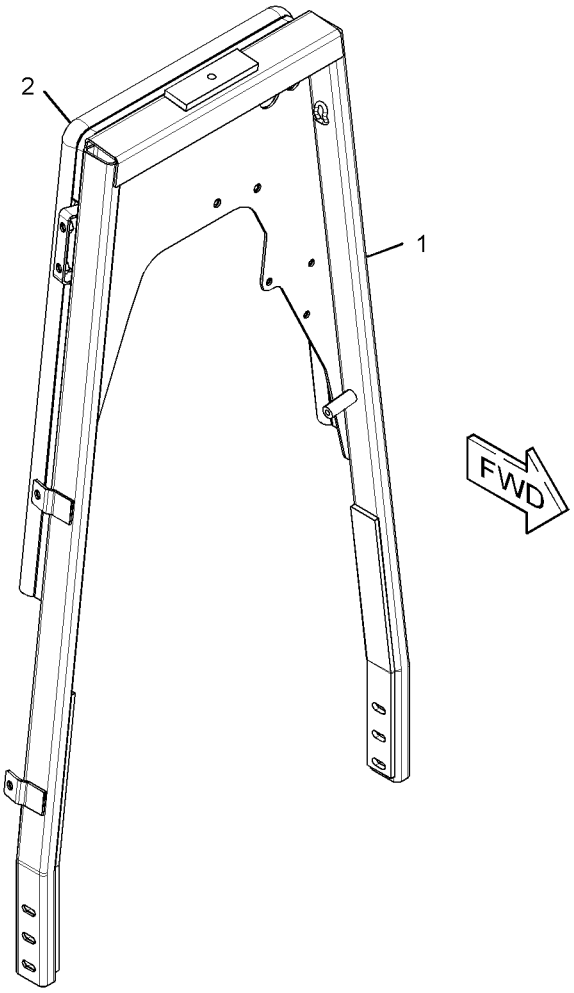

GRAPHIC #1 **<END>** g01303521

276-4263 SUPPORT GP-HOOD–EEC

S/N: DHA1-UP; FBH1-UP
SOUND SUPPRESSION
PART OF 267-8342 HOOD & GUARD GP
AN ATTACHMENT

SMCS-7251 **i02585601**

NOTE	REF NO	GRAPHIC REF	PART NUMBER	QTY	PART NAME 1 2 3 4 5 6 (PRODUCT LEVEL)	SEE PAGE
	1	1	**267-9253**	1	SUPPORT AS-HOOD	
	2	1	**277-6380**	1	LINER	
	3	1	**278-6948**	1	SEAL	

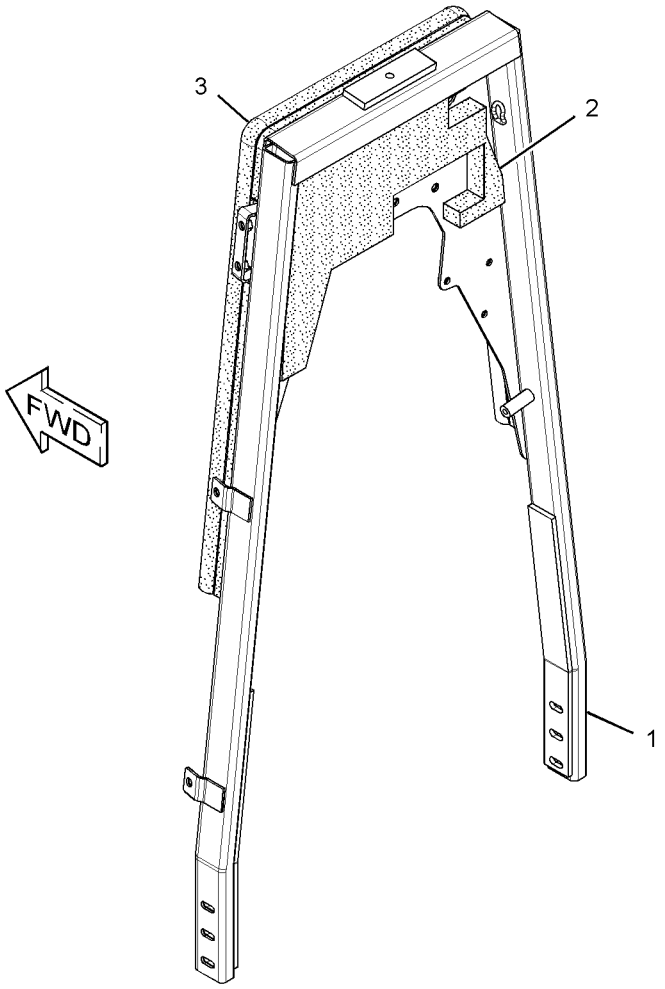

GRAPHIC #1 **<END>** g01304435

206-7285 SUPPRESSION AR-SOUND—NACD

S/N: DHA1-UP; FBH1-UP
CANNOT BE USED WITH 250-8231—PAGE 449
AN ATTACHMENT

SMCS-7076 **i02580031**

NOTE	PART NUMBER	QTY	PART NAME 1 2 3 4 5 6 (PRODUCT LEVEL)	SEE PAGE
Y	*267-9243*	1	HOOD & GUARD GP	437
Y-SEPARATE ILLUSTRATION				

<END>

250-8231 SUPPRESSION AR-SOUND—EEC

S/N: DHA1-UP; FBH1-UP
CANNOT BE USED WITH 206-7285—PAGE 449
AN ATTACHMENT

SMCS-7076 **i02585537**

NOTE	PART NUMBER	QTY	PART NAME 1 2 3 4 5 6 (PRODUCT LEVEL)	SEE PAGE
Y	*267-8342*	1	HOOD & GUARD GP	435
Y-SEPARATE ILLUSTRATION				

<END>

FRAME AND BODY

250-1700 SWEEP GP—FRONT

S/N: DHA1-UP; FBH1-UP
PART OF 251-3495, 287-6000 SWEEP GP
AN ATTACHMENT

SMCS-7162 **i02817357**

NOTE	REF NO	GRAPHIC REF	PART NUMBER	QTY	PART NAME 1 2 3 4 5 6 (PRODUCT LEVEL)	SEE PAGE
	1	1	**5V-0500**	4	WASHER (16.5X75X6-MM THK)	
	2	1	**217-5807**	4	MOUNT	
	3	1	**250-1703**	1	TUBE	
	4	1	**250-1714**	2	SUPPORT AS	
	5	1	**253-0578**	2	PLATE	
	6	1	**277-6037**	1	TUBE AS	
	7	1	**277-6038**	1	TUBE AS	
M	8	1	**129-3180**	4	LOCKNUT (M12X1.75-THD)	
	9	1	**5P-1076**	8	WASHER-HARD (13.5X30X4-MM THK)	
	10	1	**7X-0515**	6	WASHER-HARD (17X35X5-MM THK)	
M	11	1	**7X-2555**	2	BOLT (M16X2X80-MM)	
M	12	1	**7X-2556**	6	BOLT (M16X2X100-MM)	
	13	1	**090-8865**	4	SPACER (17X40X3-MM THK)	
M	14	1	**8T-4193**	6	BOLT (M16X2X50-MM)	
M	15	1	**8T-5041**	4	BOLT (M12X1.75X120-MM)	

M-METRIC PART

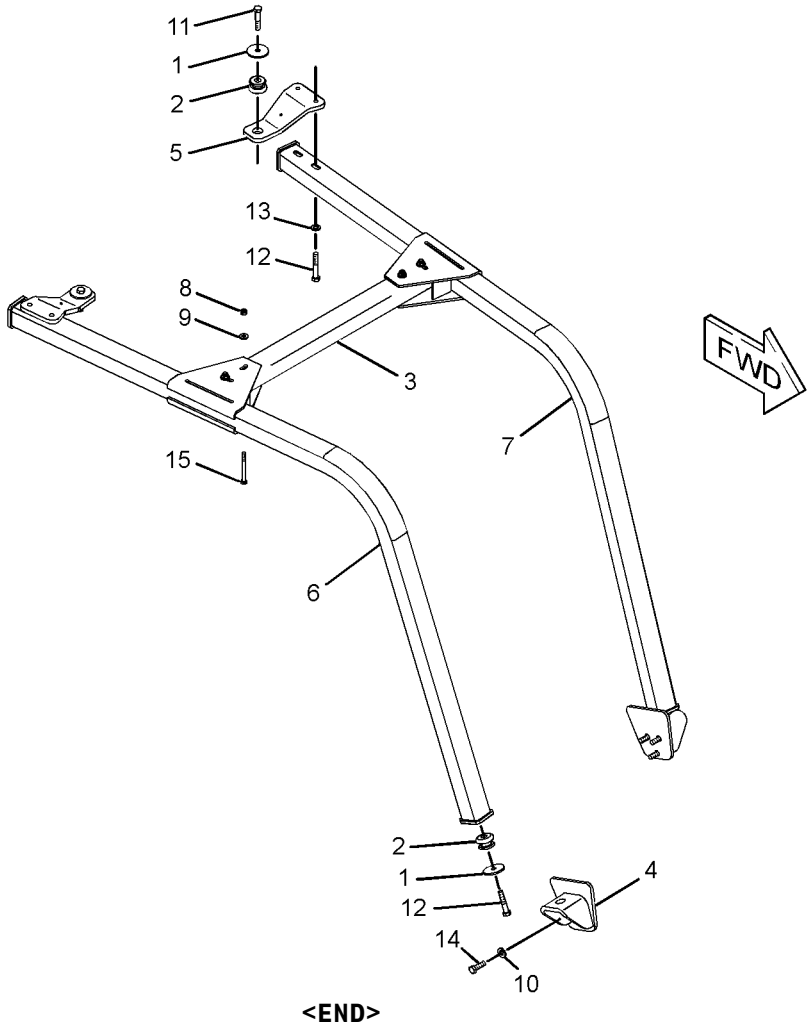

GRAPHIC #1 **<END>** g01320103

250-1705 SWEEP GP–REAR–ENCLOSED ROPS

S/N: DHA1-UP; FBH1-UP
PART OF 251-3495 SWEEP GP
AN ATTACHMENT

SMCS-7162 **i03710360**

NOTE	REF NO	GRAPHIC REF	PART NUMBER	QTY	PART NAME 1 2 3 4 5 6 (PRODUCT LEVEL)	SEE PAGE
	1	1	**250-1701**	1	TUBE AS	
	2	1	**253-0578**	4	PLATE	
	3	1	**090-8865**	10	SPACER (17X40X3-MM THK)	
M	4	1	**7X-2556**	10	BOLT (M16X2X100-MM)	
	5	1	**5V-0500**	4	WASHER (16.5X75X6-MM THK)	
	6	1	**217-5807**	4	MOUNT	
M	7	1	**7X-2555**	4	BOLT (M16X2X80-MM)	
	8	1	**276-8580**	1	PLATE AS	
	9	1	**7X-7729**	4	WASHER (11X25X3-MM THK)	
M	10	1	**8T-4137**	4	BOLT (M10X1.5X20-MM)	

M-METRIC PART

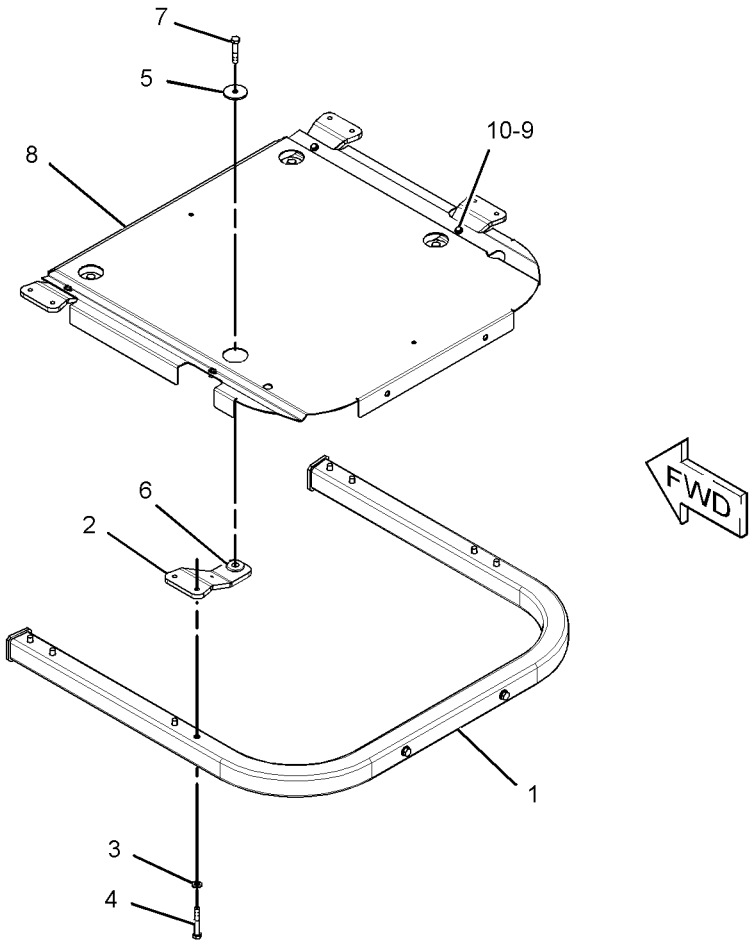

GRAPHIC #1 **<END>** g01997553

251-3495 SWEEP GP—ENCLOSED ROPS

S/N: DHA1-UP; FBH1-UP

AN ATTACHMENT

SMCS-7162 **i02418946**

NOTE	PART NUMBER	QTY	PART NAME 1 2 3 4 5 6 (PRODUCT LEVEL)	SEE PAGE
Y	*250-1700*	1	SWEEP GP (FRONT)	450
Y	*250-1705*	1	SWEEP GP (REAR)	451

Y-SEPARATE ILLUSTRATION

<END>

287-6000 SWEEP GP—OPEN ROPS

S/N: DHA1-UP; FBH1-UP
FOR USE WITH CANOPY AR. CANNOT BE USED WITH CAB AR
AN ATTACHMENT

SMCS-7162 **i02587134**

NOTE	REF NO	GRAPHIC REF	PART NUMBER	QTY	PART NAME 1 2 3 4 5 6 (PRODUCT LEVEL)	SEE PAGE
Y	1	1	*250-1700*	1	SWEEP GP (FRONT)	450
Y	2	1	*294-4474*	1	SWEEP GP (OPEN ROPS, REAR)	454

Y-SEPARATE ILLUSTRATION

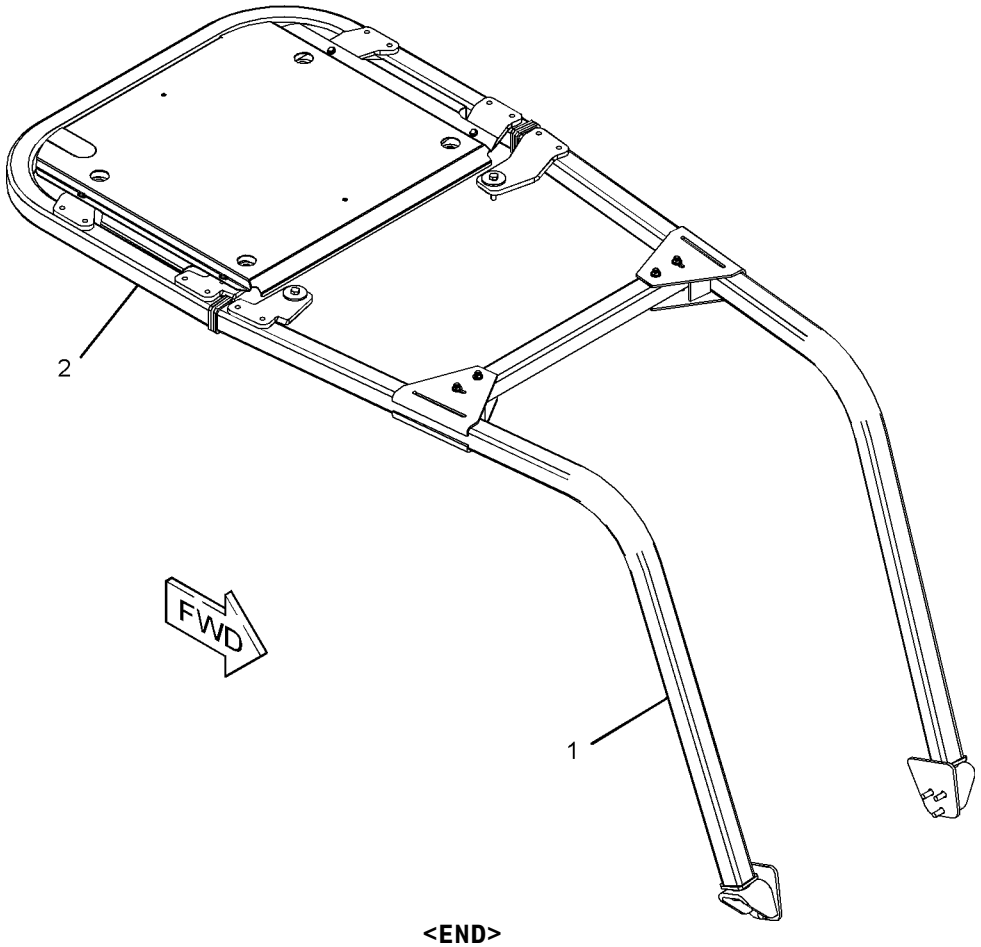

GRAPHIC #1 **<END>** g01299195

FRAME AND BODY

294-4474 SWEEP GP—OPEN ROPS, REAR

S/N: DHA1-UP; FBH1-UP
PART OF 287-6000 SWEEP GP
AN ATTACHMENT

SMCS-7162 **i02843045**

NOTE	REF NO	GRAPHIC REF	PART NUMBER	QTY	PART NAME 1 2 3 4 5 6 (PRODUCT LEVEL)	SEE PAGE
	1	1	**5V-0500**	4	WASHER (16.5X75X6-MM THK)	
	2	1	**253-0578**	2	PLATE	
	3	1	**293-1864**	1	PLATE AS	
	4	1	**293-1939**	1	TUBE AS	
	5	1	**293-1940**	1	PLATE	
	6	1	**293-1943**	1	PLATE	
	7	1	**217-5807**	4	MOUNT	
M	8	1	**7X-2555**	4	BOLT (M16X2X80-MM)	
M	9	1	**7X-2556**	10	BOLT (M16X2X100-MM)	
	10	1	**7X-7729**	4	WASHER (11X25X3-MM THK)	
	11	1	**090-8865**	10	SPACER (17X40X3-MM THK)	
M	12	1	**8T-4137**	4	BOLT (M10X1.5X20-MM)	

M-METRIC PART

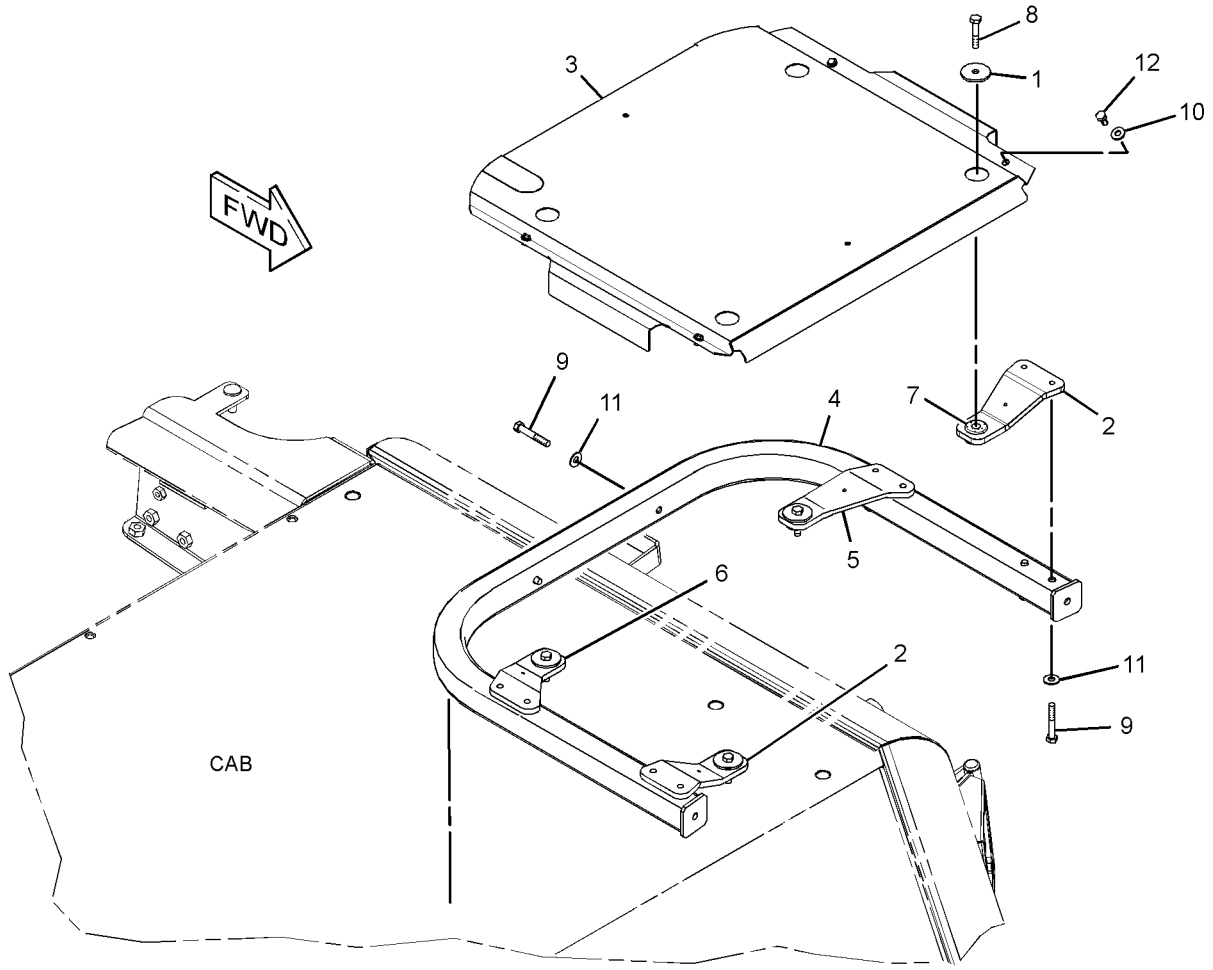

GRAPHIC #1 **<END>** g01420494

239-8212 BAR GP-EQUALIZER

S/N: FBH1-UP

PART OF 271-6035 UNDERCARRIAGE AR

SMCS-7206 **i03662663**

NOTE	REF NO	GRAPHIC REF	PART NUMBER	QTY	PART NAME 1 2 3 4 5 6 (PRODUCT LEVEL)	SEE PAGE
	1	1	**8E-1339**	2	SPACER (52X85X7-MM THK)	
	2	1	**109-0382**	1	COVER	
	3	1	**109-0383**	1	COVER	
	4	1	**248-3946**	1	PIN (CENTER)	
	5	1	**271-6058**	2	PIN (END)	
I	6	1	**271-6160**	1	HOSE AS	
Y	7	1	**346-2870**	1	BAR GP-EQUALIZER	458
	8	1	**126-8928**	4	WASHER-HARD (26X40X8-MM THK)	
	9	1	*169-7393*	1	CONNECTOR AS	
		1	**3J-7352**	1	CONNECTOR	
		1	**3J-7354**	1	SEAL-O-RING	
	10	1	**6D-3479**	2	CLIP (SLOT)	
	11	1	**8T-4121**	2	WASHER-HARD (11X21X2.5-MM THK)	
M	12	1	**8T-4137**	2	BOLT (M10X1.5X20-MM)	
M	13	1	**8T-4649**	4	BOLT (M24X3X140-MM)	
M	14	1	**8T-7338**	4	BOLT (M16X2X45-MM)	
	15	1	**9X-8257**	4	WASHER (17.5X30X3.5-MM THK)	

I-REFER TO HYDRAULIC INFORMATION SYSTEM
M-METRIC PART
Y-SEPARATE ILLUSTRATION

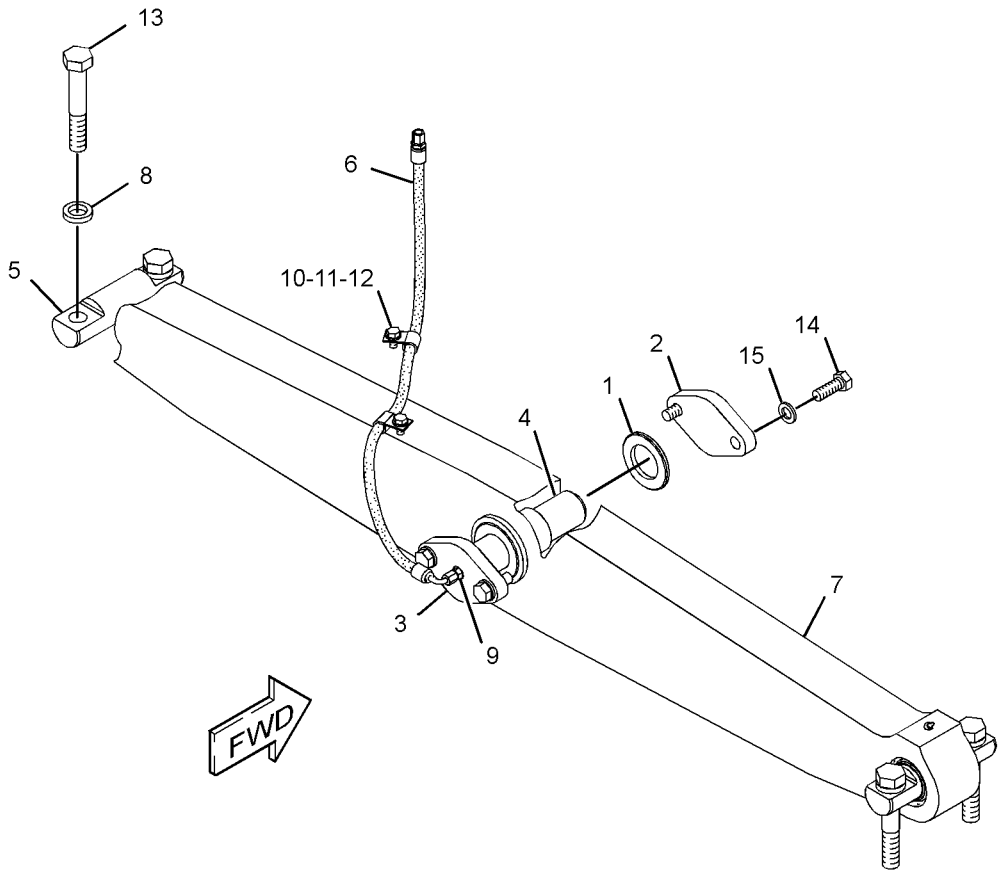

GRAPHIC #1 **<END>** g01966533

248-3912 BAR GP-EQUALIZER—LGP

S/N: DHA1-UP

PART OF 206-7291 UNDERCARRIAGE AR

SMCS-7206 **i03658873**

NOTE	REF NO	GRAPHIC REF	PART NUMBER	QTY	PART NAME 1 2 3 4 5 6 (PRODUCT LEVEL)	SEE PAGE
	1	1	**8E-1339**	2	SPACER (52X85X7-MM THK)	
	2	1	**109-0382**	1	COVER	
	3	1	**109-0383**	1	COVER	
	4	1	**248-3946**	1	PIN (CENTER)	
	5	1	**271-6058**	2	PIN (END)	
I	6	1	**271-6160**	1	HOSE AS	
Y	7	1	**346-2871**	1	BAR GP-EQUALIZER	459
	8	1	**126-8928**	4	WASHER-HARD (26X40X8-MM THK)	
	9	1	*169-7393*	1	CONNECTOR AS	
		1	**3J-7352**	1	CONNECTOR	
		1	**3J-7354**	1	SEAL-O-RING	
	10	1	**6D-3479**	2	CLIP (SLOT)	
	11	1	**8T-4121**	2	WASHER-HARD (11X21X2.5-MM THK)	
M	12	1	**8T-4137**	2	BOLT (M10X1.5X20-MM)	
M	13	1	**8T-4649**	4	BOLT (M24X3X140-MM)	
M	14	1	**8T-7338**	4	BOLT (M16X2X45-MM)	
	15	1	**9X-8257**	4	WASHER (17.5X30X3.5-MM THK)	

I-REFER TO HYDRAULIC INFORMATION SYSTEM
M-METRIC PART
Y-SEPARATE ILLUSTRATION

248-3912 **BAR GP-EQUALIZER** *(contd.)* **i03658873**

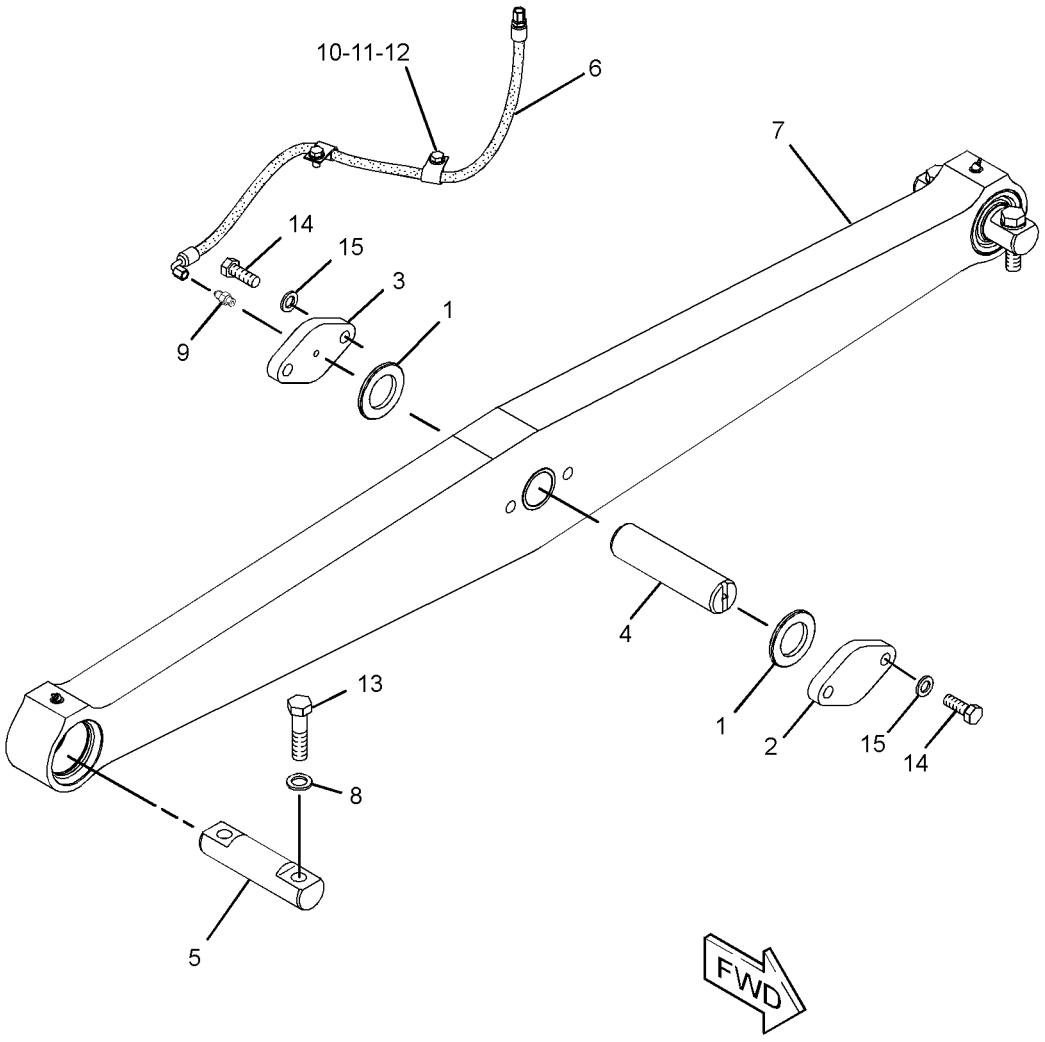

GRAPHIC #1 **<END>** g01965913

346-2870 BAR GP-EQUALIZER

S/N: FBH1-UP

PART OF 239-8212 BAR GP-EQUALIZER

SMCS-7206 **i03662761**

NOTE	REF NO	GRAPHIC REF	PART NUMBER	QTY	PART NAME 1 2 3 4 5 6 (PRODUCT LEVEL)	SEE PAGE
	1	1	**3B-8485**	2	FITTING-GREASE	
	2	1	**7K-9203**	2	SEAL-LIP TYPE	
	3	1	**8G-3732**	4	SEAL	
	4	1	**9M-1328**	2	BEARING	
	5	1	**239-8262**	1	BAR AS	
	5A	1	**7P-7858**	1	BEARING-SLEEVE	
	6	1	**1K-6985**	4	RING-RETAINING	

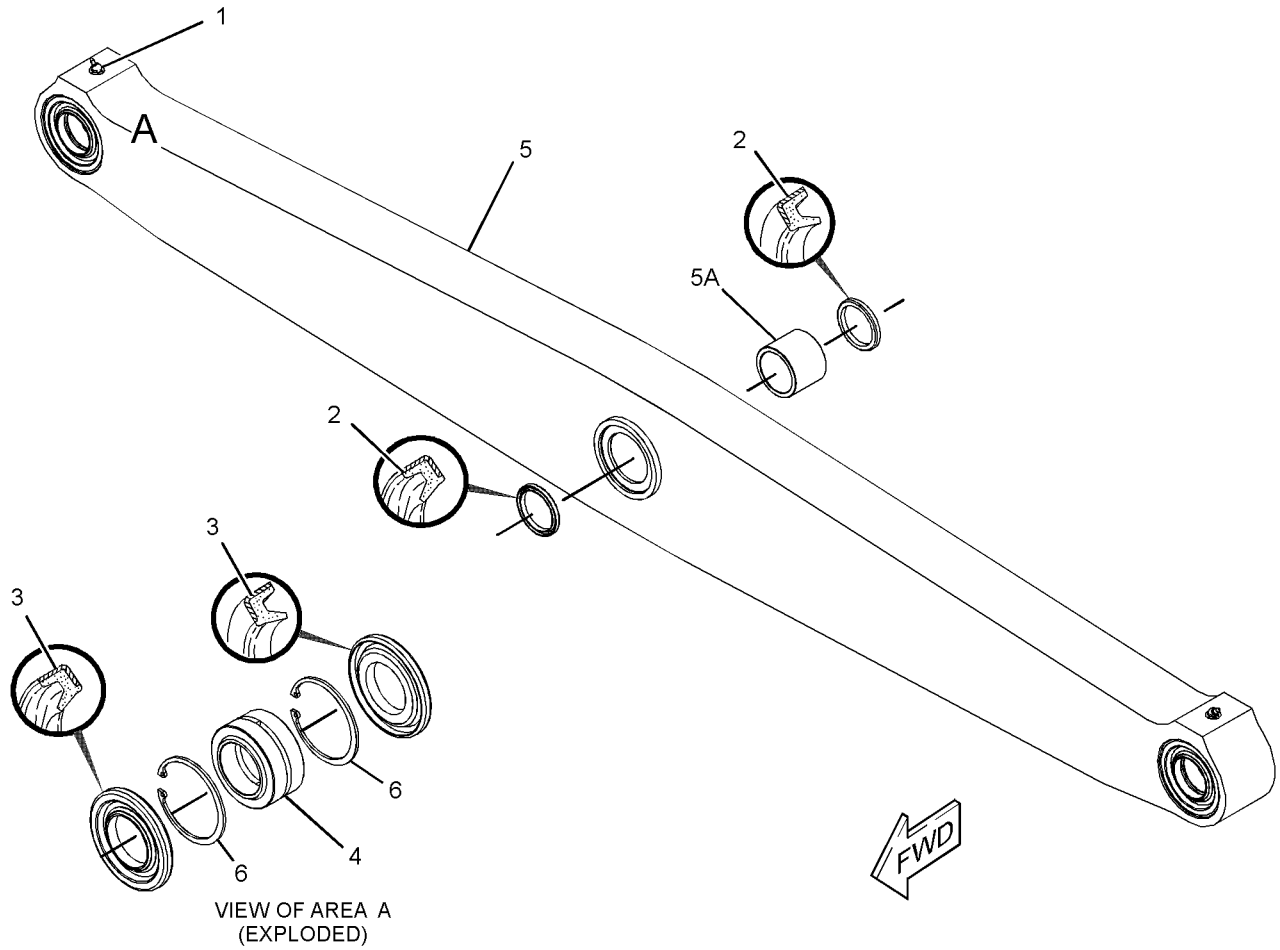

VIEW OF AREA A
(EXPLODED)

GRAPHIC #1 **<END>** g01979093

346-2871 BAR GP-EQUALIZER

S/N: DHA1-UP

PART OF 248-3912 BAR GP-EQUALIZER

SMCS-7206 **i03668620**

NOTE	REF NO	GRAPHIC REF	PART NUMBER	QTY	PART NAME 1 2 3 4 5 6 (PRODUCT LEVEL)	SEE PAGE
	1	1	**3B-8485**	2	FITTING-GREASE	
	2	1	**7K-9203**	2	SEAL-LIP TYPE	
	3	1	**8G-3732**	4	SEAL	
	4	1	**9M-1328**	2	BEARING	
	5	1	**248-3932**	1	BAR AS (LOW GROUND PRESSURE)	
	5A	1	**7P-7858**	1	BEARING-SLEEVE	
	6	1	**1K-6985**	4	RING-RETAINING	

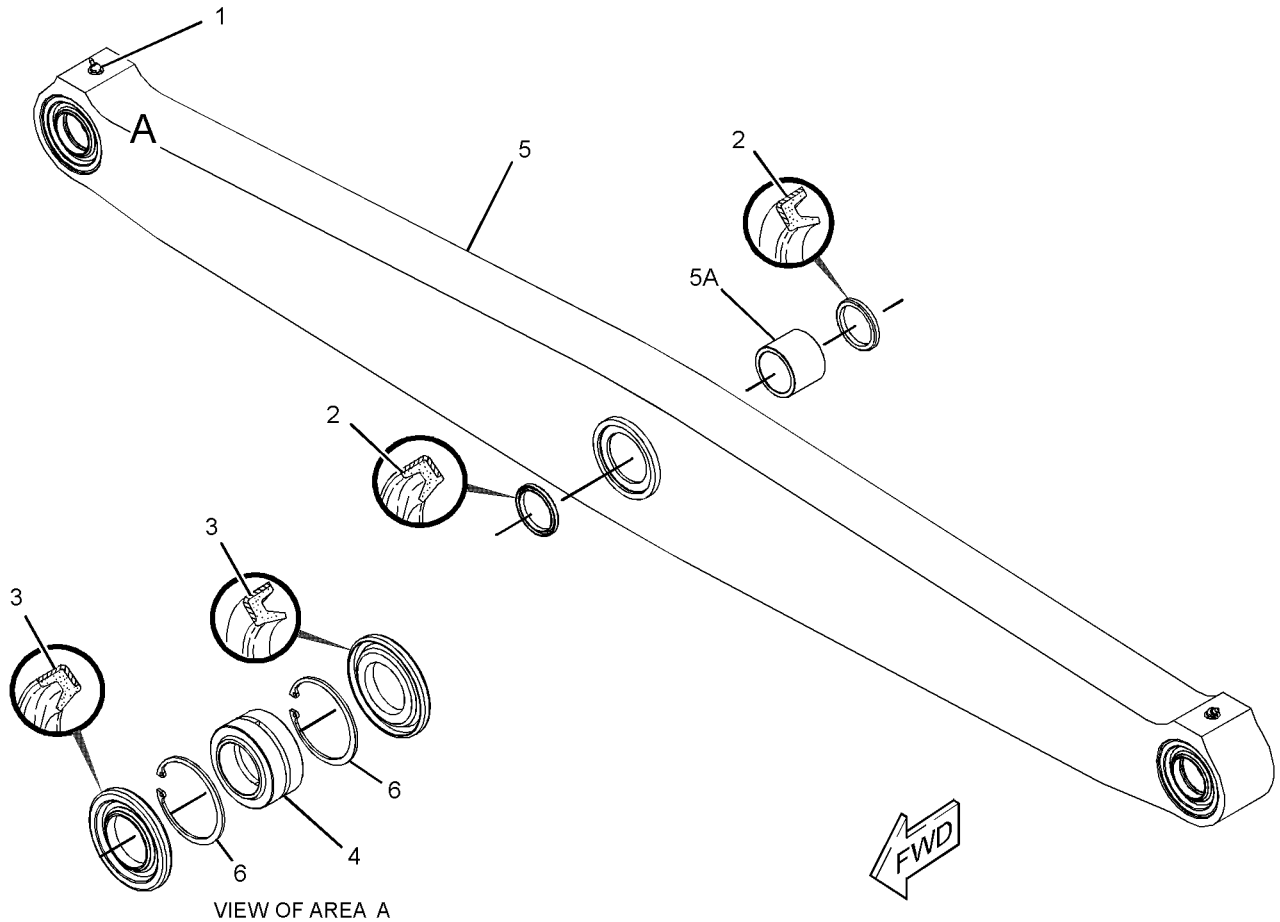

VIEW OF AREA A
(EXPLODED)

GRAPHIC #1 **<END>** g01966775

UNDERCARRIAGE

248-3919 FRAME GP-TRACK ROLLER–LH

S/N: DHA1-UP; FBH1-UP

PART OF 206-7291, 271-6035 UNDERCARRIAGE AR

SMCS-4151 **i02796145**

NOTE	REF NO	GRAPHIC REF	PART NUMBER	QTY	PART NAME 1 2 3 4 5 6 (PRODUCT LEVEL)	SEE PAGE
	1	1	**9S-4185**	1	PLUG-O-RING (RECOIL SPRING, OIL FILL)	
Y	2	1	*294-3497*	7	ROLLER GP-TRACK	491
	3	1	**3K-0360**	1	SEAL-O-RING	
	4	1	**248-3931**	1	FRAME AS-LGP (LH)	
	4A	1	**7J-9682**	1	BEARING-SLEEVE	
Y	5	1	*248-3927*	1	IDLER GP-FRONT	469
Y	8	1	*239-8215*	1	TRACK ADJUSTER & RECOIL GP	497
	9	1	**221-3198**	1	BEARING-SLEEVE	
	10	1	**221-3187**	1	BEARING-SLEEVE	
	12	1	**3B-8489**	1	FITTING-GREASE	

Y-SEPARATE ILLUSTRATION

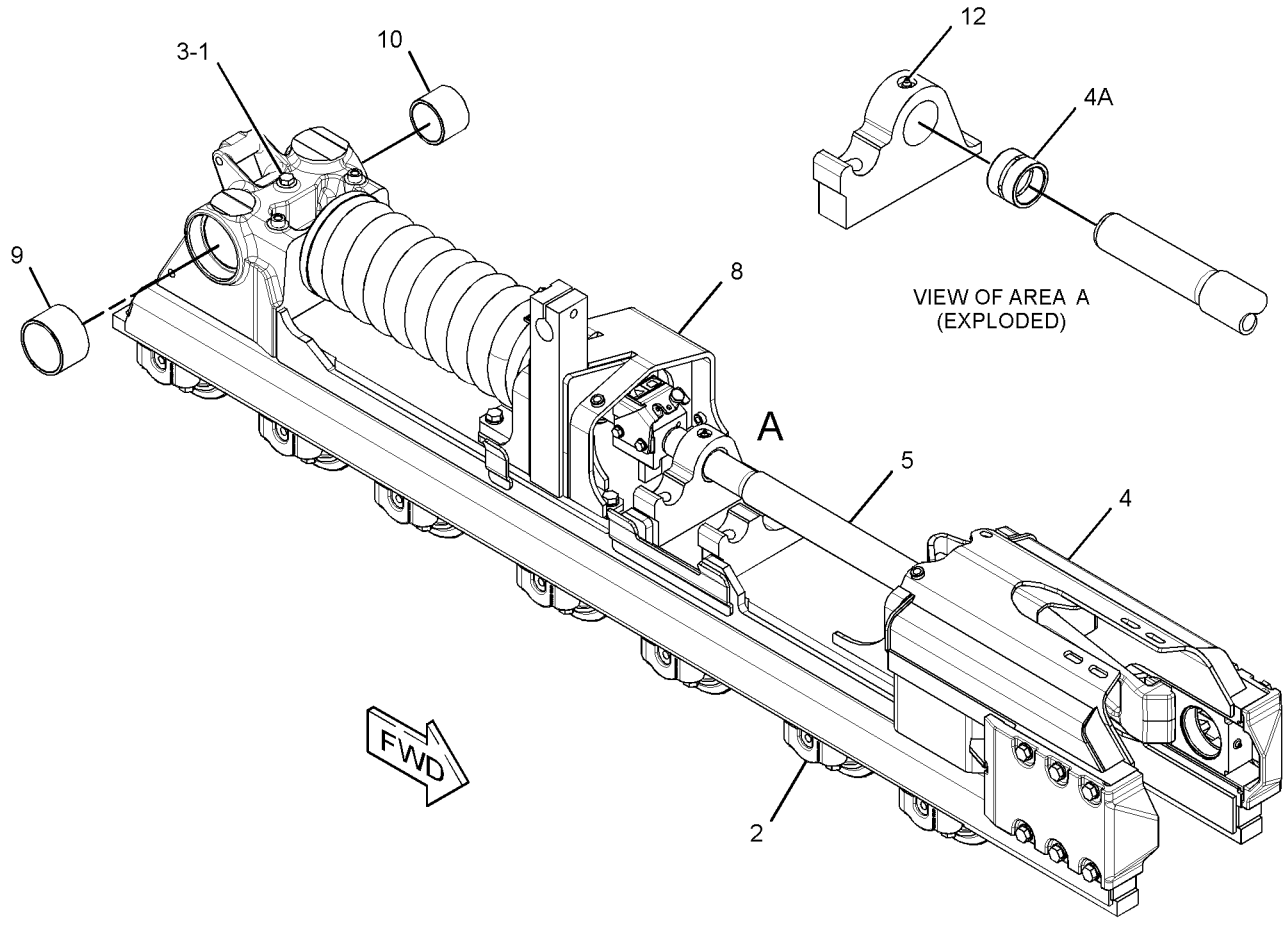

GRAPHIC #1 **<END>** g01415530

UNDERCARRIAGE

248-3920 FRAME GP-TRACK ROLLER–RH

S/N: DHA1-UP; FBH1-UP

PART OF 206-7291, 271-6035 UNDERCARRIAGE AR

SMCS-4151 **i02797962**

NOTE	REF NO	GRAPHIC REF	PART NUMBER	QTY	PART NAME 1 2 3 4 5 6 (PRODUCT LEVEL)	SEE PAGE
	1	1	**9S-4185**	1	PLUG-O-RING (RECOIL SPRING, OIL FILL)	
	3	1	**3K-0360**	1	SEAL-O-RING	
	4	1	**248-3930**	1	FRAME AS-LGP (RH)	
	4A	1	**7J-9682**	1	BEARING-SLEEVE	
Y	5	1	**248-3927**	1	IDLER GP-FRONT	469
Y	7	1	**294-3497**	7	ROLLER GP-TRACK	491
Y	8	1	*239-8215*	1	TRACK ADJUSTER & RECOIL GP	497
	9	1	**221-3198**	1	BEARING-SLEEVE	
	10	1	**221-3187**	1	BEARING-SLEEVE	
	12	1	**3B-8489**	1	FITTING-GREASE	

Y-SEPARATE ILLUSTRATION

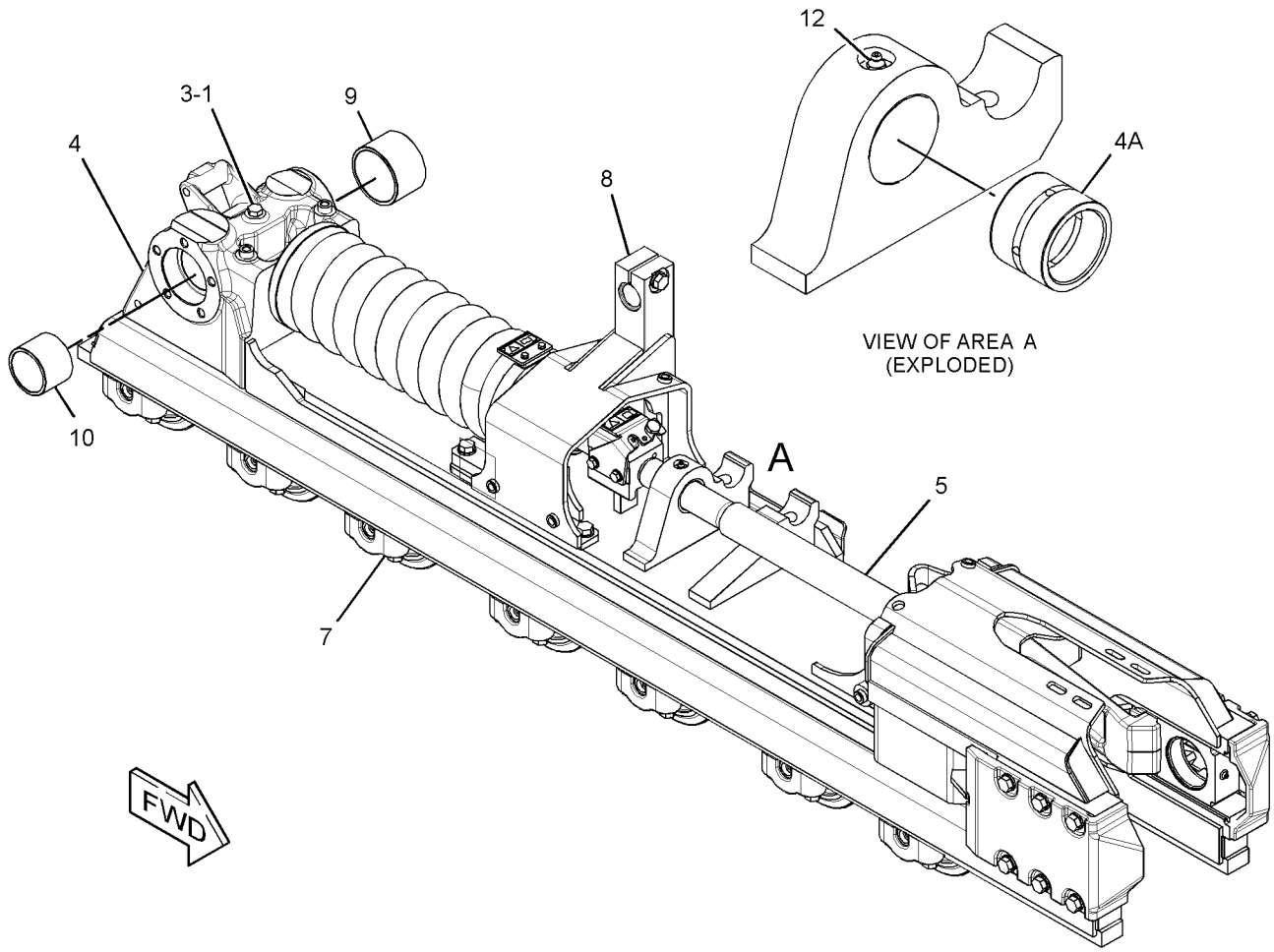

GRAPHIC #1 **<END>** g01401600

UNDERCARRIAGE

248-3918 GUARD GP-RECOIL MECHANISM

S/N: DHA1-UP; FBH1-UP

PART OF 206-7291, 271-6035 UNDERCARRIAGE AR

SMCS-7171, 7173 **i02835589**

NOTE	REF NO	GRAPHIC REF	PART NUMBER	QTY	PART NAME 1 2 3 4 5 6 (PRODUCT LEVEL)	SEE PAGE
	1	1	**271-6005**	2	DOOR AS-ACCESS	
	2	1	**294-7257**	1	BRACKET AS (RH)	
	3	1	**294-7258**	1	BRACKET AS (LH)	
	4	1	**294-7259**	1	BRACKET AS (OUTER, RH)	
	5	1	**294-7260**	1	BRACKET AS (OUTER, LH)	
	6	1	**294-7261**	1	SHEET AS (INNER, RH)	
	7	1	**294-7262**	1	SHEET AS (INNER, LH)	
	8	1	**4Y-3046**	16	WASHER (13.5X38X3-MM THK)	
	9	1	**5P-1076**	2	WASHER-HARD (13.5X30X4-MM THK)	
	10	1	**7Y-8990**	18	SPACER (24X38X1.5-MM THK)	
M	11	1	**8T-4183**	18	BOLT (M12X1.75X40-MM)	

M-METRIC PART

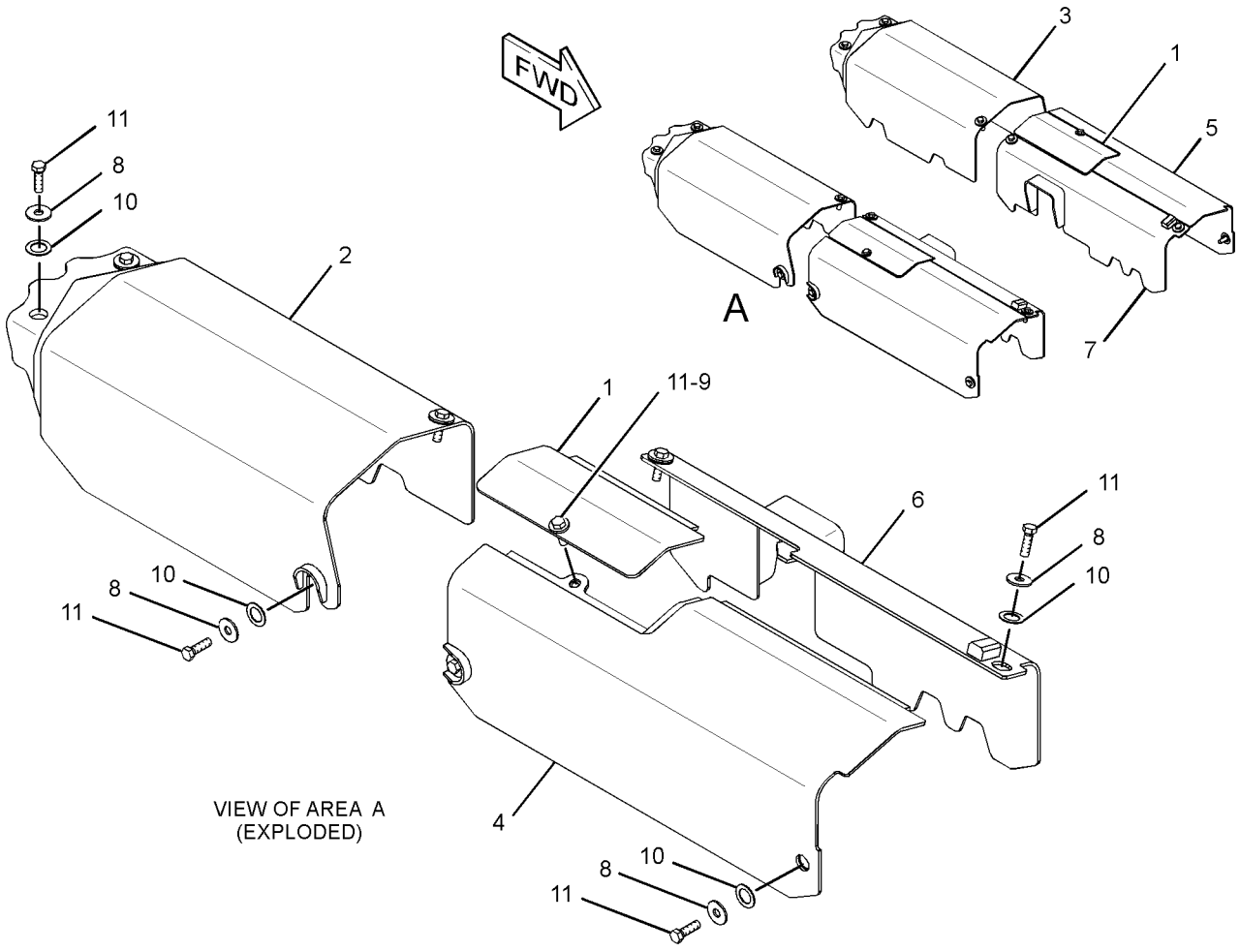

GRAPHIC #1 **<END>** g01302470

239-8217 GUARD GP-SPROCKET

S/N: DHA1-UP; FBH1-UP

PART OF 206-7291, 271-6035 UNDERCARRIAGE AR

SMCS-4164 **i02585268**

NOTE	REF NO	GRAPHIC REF	PART NUMBER	QTY	PART NAME 1 2 3 4 5 6 (PRODUCT LEVEL)	SEE PAGE
	1	1	**204-6365**	20	SPACER	
	2	1	**215-1574**	4	GUARD AS (FRONT)	
	3	1	**251-8531**	1	SHEET AS (INNER, RH)	
M		1	**8T-3597**	2	NUT-WELD (M12X1.75-THD)	
	4	1	**251-8532**	1	SHEET AS (OUTER, RH)	
M		1	**8T-3597**	1	NUT-WELD (M12X1.75-THD)	
	5	1	**261-2082**	2	GUARD AS-REAR (INNER, LH; OUTER, RH)	
	6	1	**261-2083**	2	GUARD AS-REAR (INNER, RH; OUTER, LH)	
					(EACH GUARD AS INCLUDES)	
M		1	**8T-3597**	1	NUT-WELD (M12X1.75-THD)	
	7	1	**198-4778**	6	WASHER-HARD (13.5X30X12-MM THK)	
M	8	1	**8T-4140**	20	BOLT (M16X2X60-MM)	
M	9	1	**8T-4174**	4	BOLT (M16X2X120-MM)	
M	10	1	**8T-4183**	4	BOLT (M12X1.75X40-MM)	
M	11	1	**8T-4194**	4	BOLT (M12X1.75X50-MM)	
	12	1	**8T-4223**	4	WASHER-HARD (13.5X25.5X3-MM THK)	
M	13	1	**8T-5092**	2	BOLT (M12X1.75X150-MM)	
	14	1	**9X-8257**	4	WASHER (17.5X30X3.5-MM THK)	
	15	1	**271-6080**	1	SHEET AS (OUTER, LH)	
M		1	**8T-3597**	1	NUT-WELD (M12X1.75-THD)	
	16	1	**271-6081**	1	SHEET AS (INNER, LH)	
M		1	**8T-3597**	2	NUT-WELD (M12X1.75-THD)	

M-METRIC PART

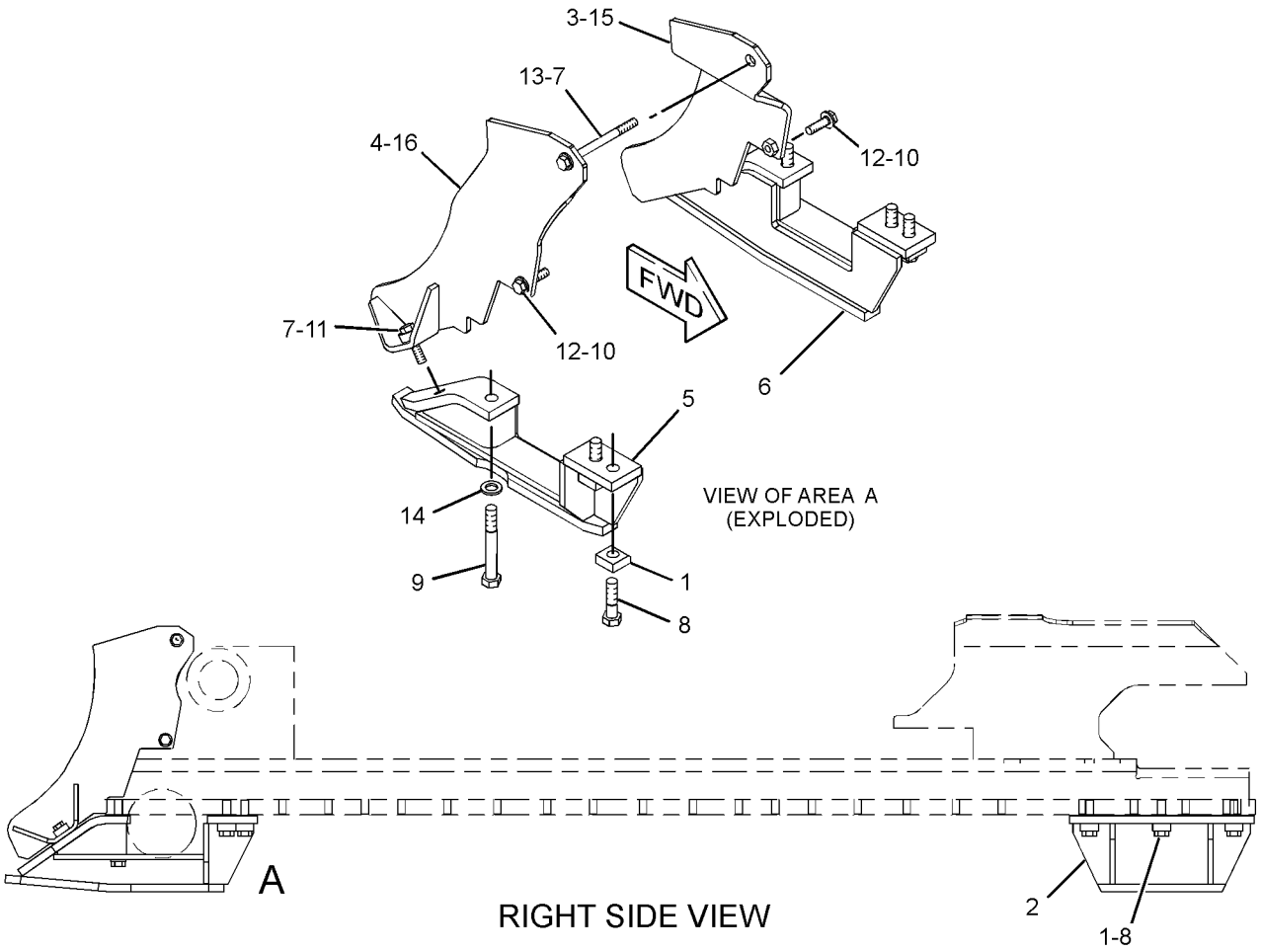

GRAPHIC #1 **<END>** g01294553

234-4744 GUARD GP-TRACK GUIDE–CENTER

S/N: DHA1-UP; FBH1-UP
AN ATTACHMENT

SMCS-4177 **i02581555**

NOTE	REF NO	GRAPHIC REF	PART NUMBER	QTY	PART NAME 1 2 3 4 5 6 (PRODUCT LEVEL)	SEE PAGE
Y	1	1	*251-8579*	2	GUARD GP-TRACK GUIDE	467

Y-SEPARATE ILLUSTRATION

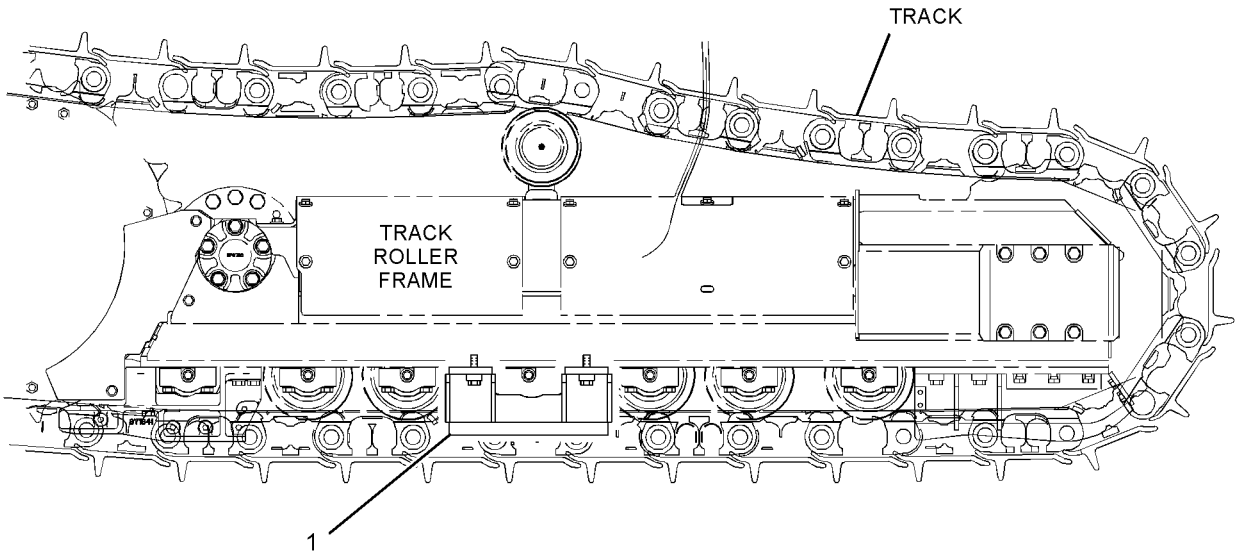

RIGHT SIDE VIEW

GRAPHIC #1 **<END>** g01299274

234-4746 GUARD GP-TRACK GUIDE—MODERATE SERVICE

S/N: DHA1-UP; FBH1-UP
AN ATTACHMENT

SMCS-4177 **i02581559**

NOTE	REF NO	GRAPHIC REF	PART NUMBER	QTY	PART NAME 1 2 3 4 5 6 (PRODUCT LEVEL)	SEE PAGE
Y	1	1	*251-8579*	4	GUARD GP-TRACK GUIDE	467

Y-SEPARATE ILLUSTRATION

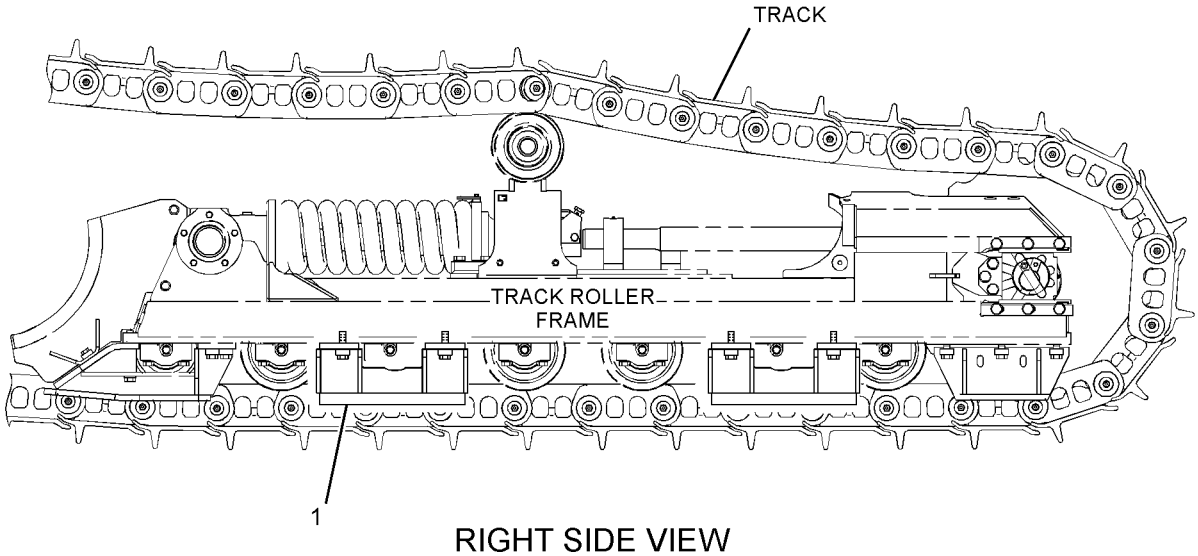

RIGHT SIDE VIEW

GRAPHIC #1 **<END>** g01299357

251-8579 GUARD GP-TRACK GUIDE—SYSTEMONE

S/N: DHA1-UP; FBH1-UP

PART OF 234-4744, 234-4746 GUARD GP-TRACK GUIDE

AN ATTACHMENT

SMCS-4177 **i02319793**

NOTE	REF NO	GRAPHIC REF	PART NUMBER	QTY	PART NAME 1 2 3 4 5 6 (PRODUCT LEVEL)	SEE PAGE
	1	1	**204-6365**	4	SPACER	
	2	1	**251-8580**	1	GUIDE AS	
M	3	1	**8T-4140**	4	BOLT (M16X2X60-MM)	

M-METRIC PART

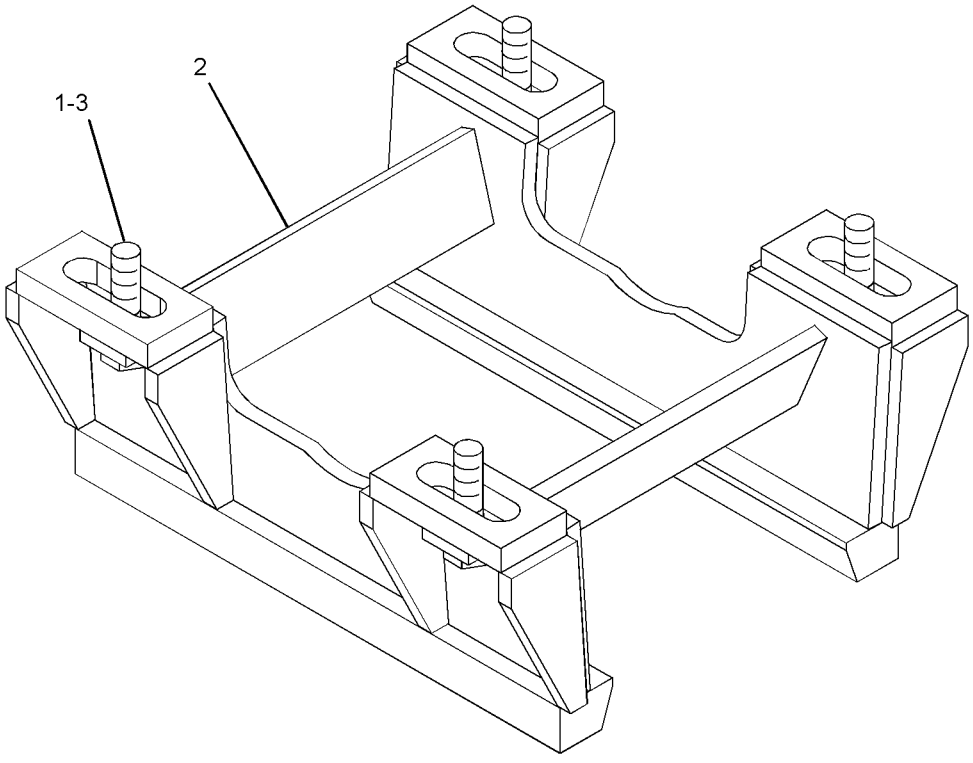

GRAPHIC #1 **<END>** g01205858

UNDERCARRIAGE

234-4745 GUARD GP-TRACK ROLLER

S/N: DHA1-UP; FBH1-UP

AN ATTACHMENT

SMCS-7152 **i02581557**

NOTE	REF NO	GRAPHIC REF	PART NUMBER	QTY	PART NAME 1 2 3 4 5 6 (PRODUCT LEVEL)	SEE PAGE
	1	1	**204-6365**	20	SPACER	
	2	1	**261-2070**	4	GUARD AS	
	3	1	**271-6033**	6	TUBE	
M	4	1	**8T-4140**	20	BOLT (M16X2X60-MM)	
M	5	1	**8T-4778**	6	LOCKNUT (M16X2-THD)	
M	6	1	**8T-6382**	6	BOLT (M16X2X260-MM)	
	7	1	**9X-8257**	12	WASHER (17.5X30X3.5-MM THK)	

QUANTITIES SHOWN ARE THOSE REQUIRED FOR BOTH LH AND RH SIDES
M-METRIC PART

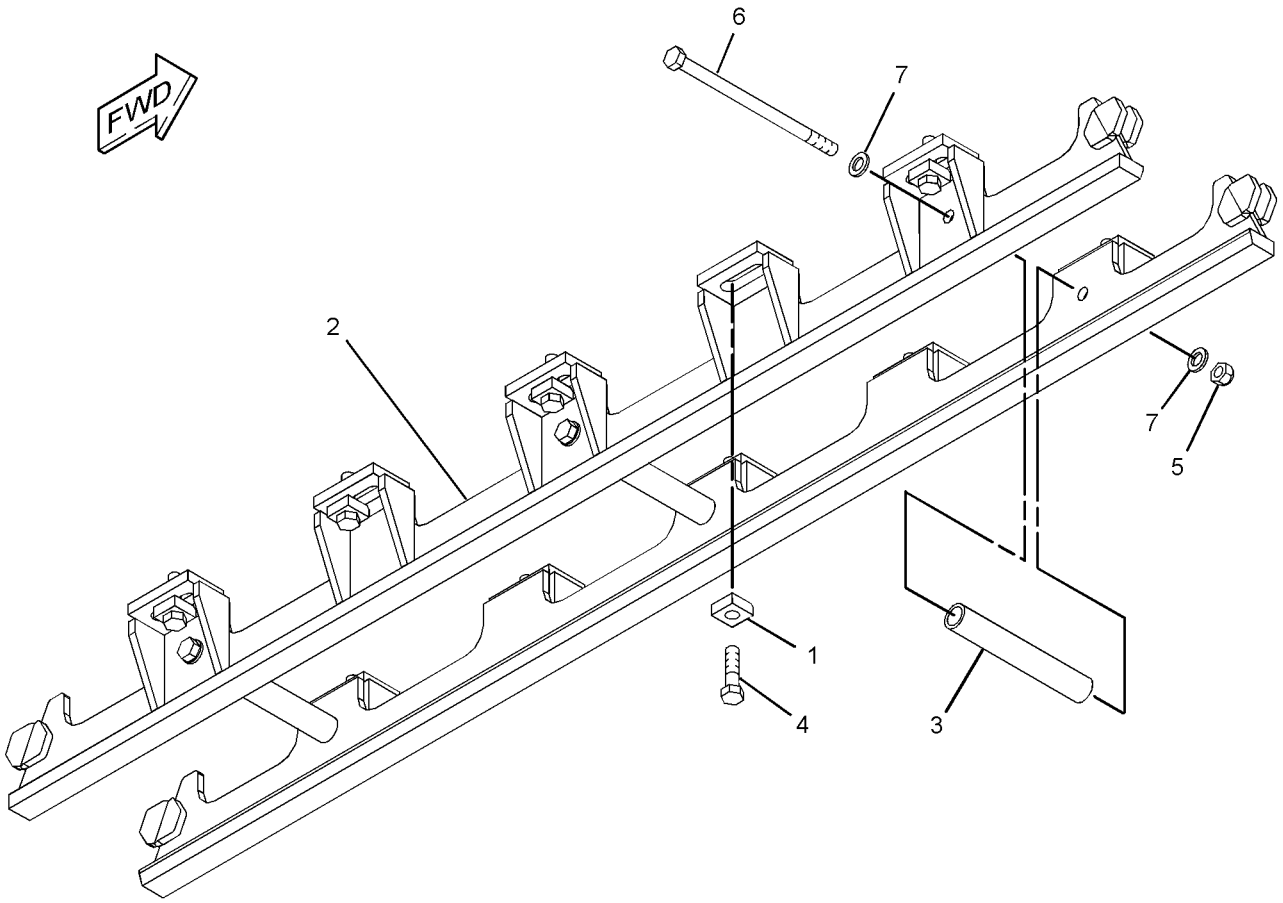

GRAPHIC #1 **<END>** g01299290

248-3927 IDLER GP-FRONT

S/N: DHA1-UP; FBH1-UP

PART OF 248-3919, 248-3920 FRAME GP-TRACK ROLLER

SMCS-4159 **i02586742**

NOTE	REF NO	GRAPHIC REF	PART NUMBER	QTY	PART NAME 1 2 3 4 5 6 (PRODUCT LEVEL)	SEE PAGE
	1	1	**248-3924**	1	YOKE AS	
	2	1	**248-3958**	2	PLATE-WEAR	
	3	1	**248-3959**	2	COVER	
	4	1	**251-8515**	2	PLATE-WEAR	
	5	1	**251-8518**	1	GUARD	
	6	1	**271-6041**	1	KEY	
	7	1	**271-6042**	2	BLOCK	
	8	1	**2H-4145**	4	SEAL-O-RING	
M	9	1	**7X-2553**	12	BOLT (M16X2X40-MM)	
M	10	1	**8T-1159**	1	BOLT-SOCKET HEAD (M10X1.5X25-MM)	
M	11	1	**8T-4140**	6	BOLT (M16X2X60-MM)	
M	12	1	**8T-4192**	4	BOLT (M12X1.75X25-MM)	
	13	1	**8T-4223**	4	WASHER-HARD (13.5X25.5X3-MM THK)	
	14	1	**9X-8257**	18	WASHER (17.5X30X3.5-MM THK)	
	15	1	**3B-8489**	2	FITTING-GREASE	

M-METRIC PART

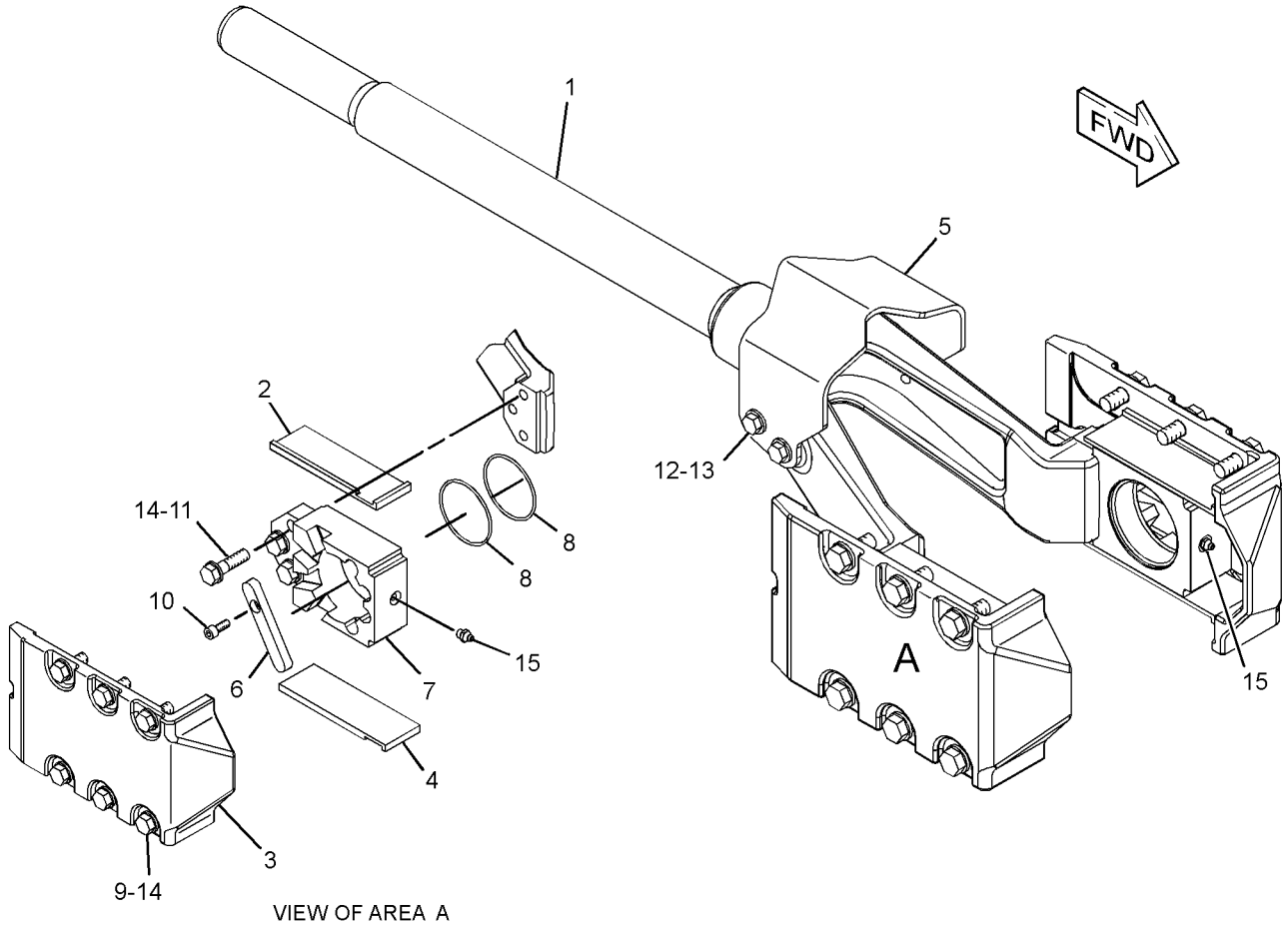

VIEW OF AREA A
(EXPLODED)

GRAPHIC #1 **<END>** g01301368

UNDERCARRIAGE

239-8211 IDLER GP-TRACK

S/N: DHA1-UP; FBH1-UP

PART OF 206-7291, 271-6035 UNDERCARRIAGE AR

SMCS-4159 **i02595425**

NOTE	REF NO	GRAPHIC REF	PART NUMBER	QTY	PART NAME 1 2 3 4 5 6 (PRODUCT LEVEL)	SEE PAGE
	1	1	**9W-2146**	1	PLUG	
	2	1	**148-3533**	2	SEAL GP-DUO-CONE	
Z	2A	1		2	SEAL-RING	
	2B	1	**160-6631**	2	RING-TORIC	
	3	1	**243-5322**	1	IDLER AS	
	4	1	**248-5327**	1	SHAFT	
	5	1	**251-8512**	2	DOWEL	
	6	1	**271-5950**	2	BEARING	
	7	1	**7F-8267**	2	SEAL-O-RING	

Z-NOT SERVICED SEPARATELY

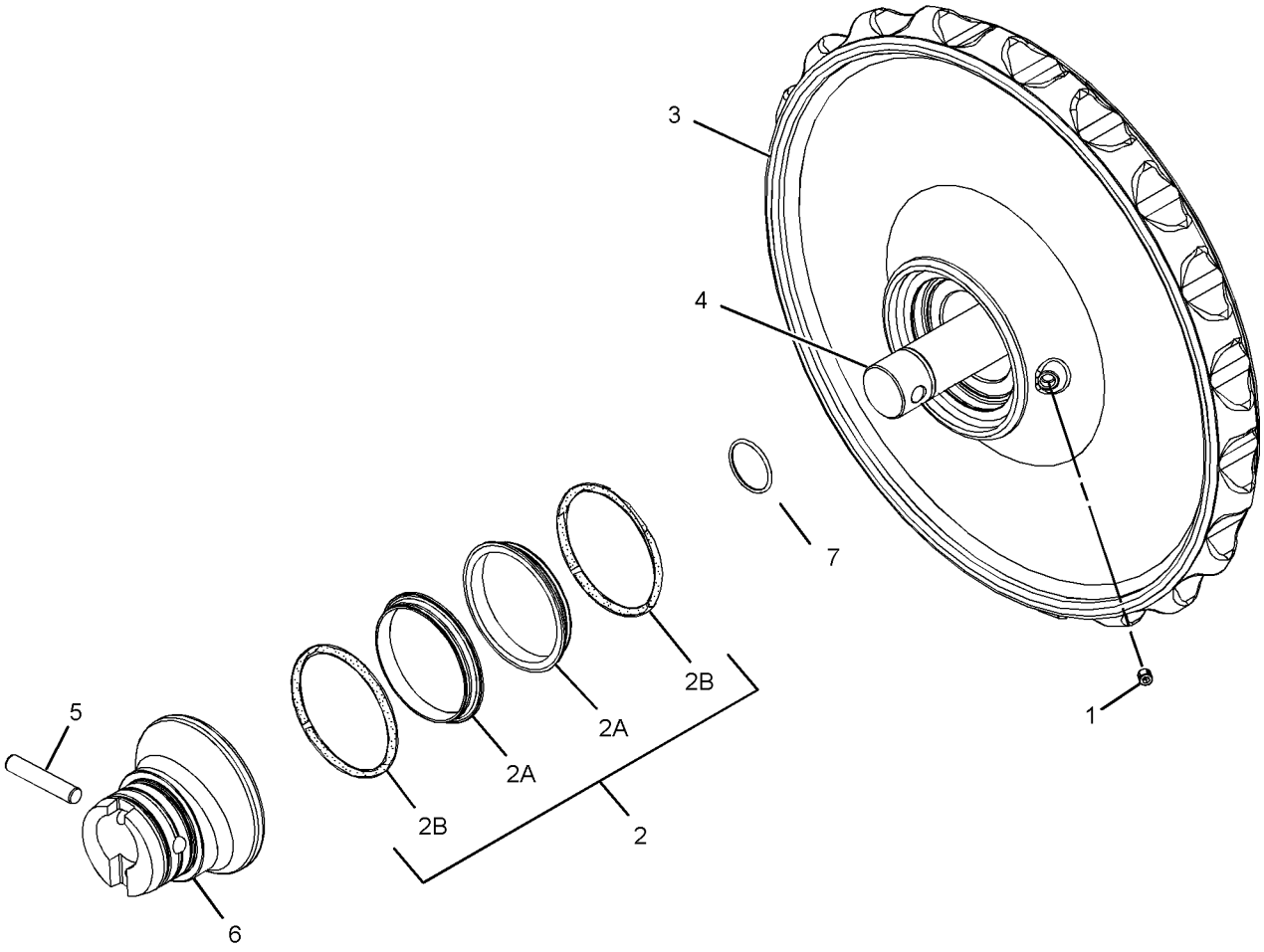

GRAPHIC #1 **<END>** g01299050

235-2525 LINK AS-TRACK–SYSTEMONE

S/N: DHA1-UP
44-JOINTS. SEALED, LUBRICATED
PART OF 256-4928, 256-4930 TRACK GP
FOR USE WITH SYSTEMONE ROLLERS, GUARDS, GUIDESTRIPS, SHOES

SMCS-4169, 4171 **i02398718**

NOTE	REF NO	GRAPHIC REF	PART NUMBER	QTY	PART NAME 1 2 3 4 5 6 (PRODUCT LEVEL)	SEE PAGE
	1	1	**235-2514**	42	LINK-TRACK	
Y	2	1	**235-2522**	22	LINK AS-TRACK BOX	477

Y-SEPARATE ILLUSTRATION

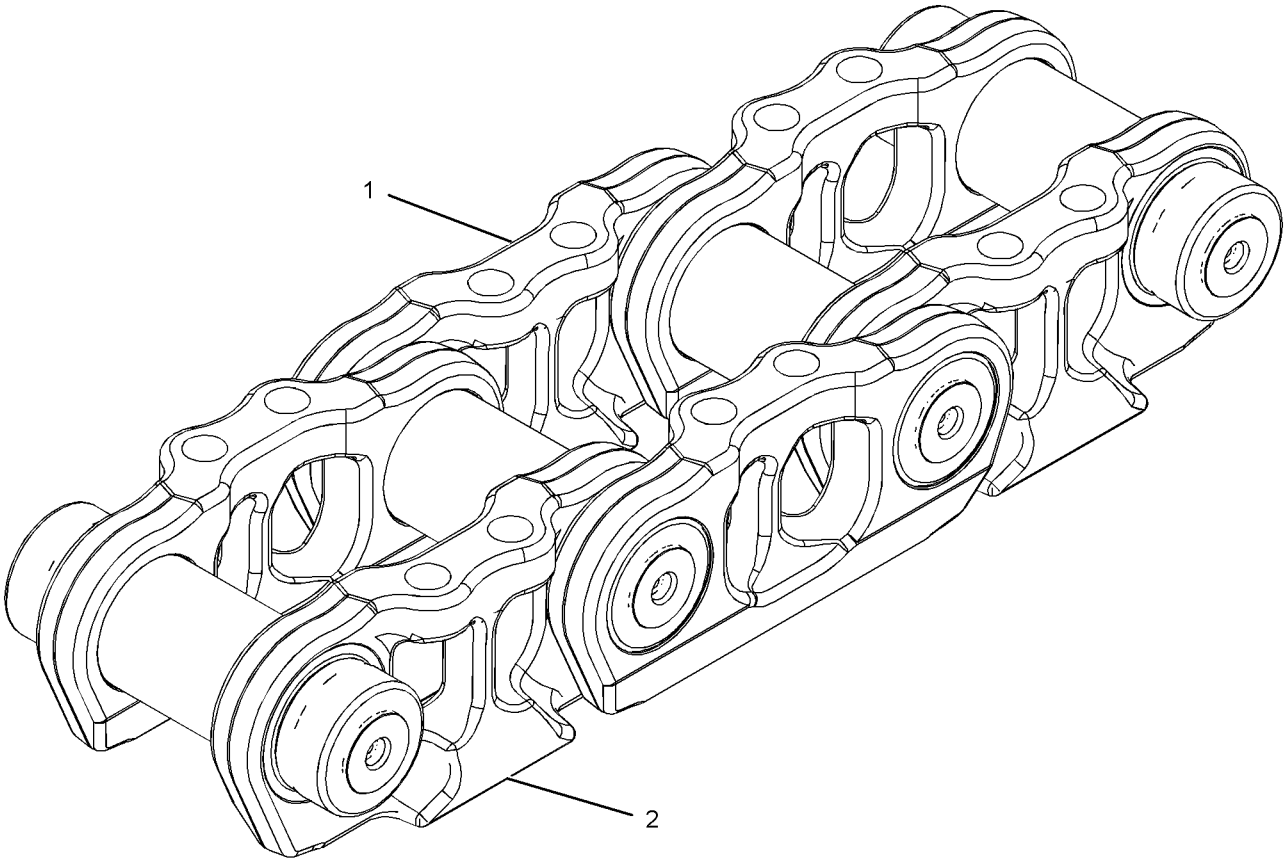

GRAPHIC #1 **<END>** g01193467

235-2526 LINK AS-TRACK–SYSTEMONE, OFFSET

S/N: FBH1-UP
41-JOINTS. SEALED, LUBRICATED
PART OF 256-4931, 256-4932, 256-4933, 258-0932 TRACK GP
FOR USE WITH SYSTEMONE ROLLERS, GUARDS, GUIDESTRIPS, SHOES

SMCS-4169, 4171 **i03708980**

NOTE	REF NO	GRAPHIC REF	PART NUMBER	QTY	PART NAME 1 2 3 4 5 6 (PRODUCT LEVEL)	SEE PAGE
	1	1	**235-2514**	38	LINK-TRACK	
Y	2	1	**235-2522**	19	LINK AS-TRACK BOX	477
Y	3	1	**235-2523**	1	LINK AS-TRACK BOX (LINK BOX, OFFSET)	478

Y-SEPARATE ILLUSTRATION

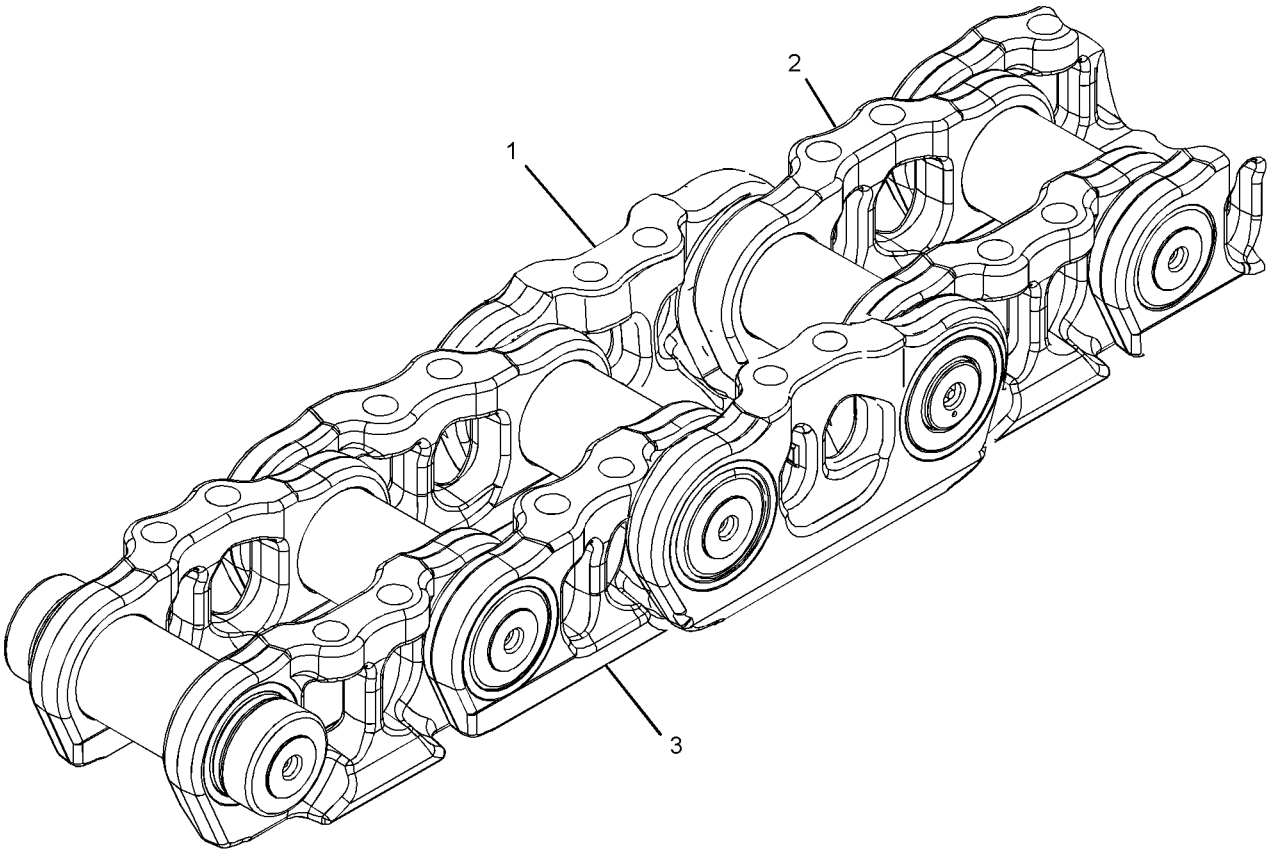

GRAPHIC #1 **<END>** g01793333

235-2538 LINK AS-TRACK–SYSTEMONE

S/N: FBH1-532
40-JOINTS. SEALED, LUBRICATED
PART OF 235-2540, 250-3430, 277-2245, 289-3086 TRACK GP
FOR USE WITH SYSTEMONE ROLLERS, GUARDS, GUIDESTRIPS, SHOES
AN ATTACHMENT

SMCS-4169, 4171 **i02395618**

NOTE	REF NO	GRAPHIC REF	PART NUMBER	QTY	PART NAME 1 2 3 4 5 6 (PRODUCT LEVEL)	SEE PAGE
	1	1	**235-2529**	38	LINK-TRACK	
Y	2	1	**235-2536**	20	LINK AS-TRACK BOX	479

Y-SEPARATE ILLUSTRATION

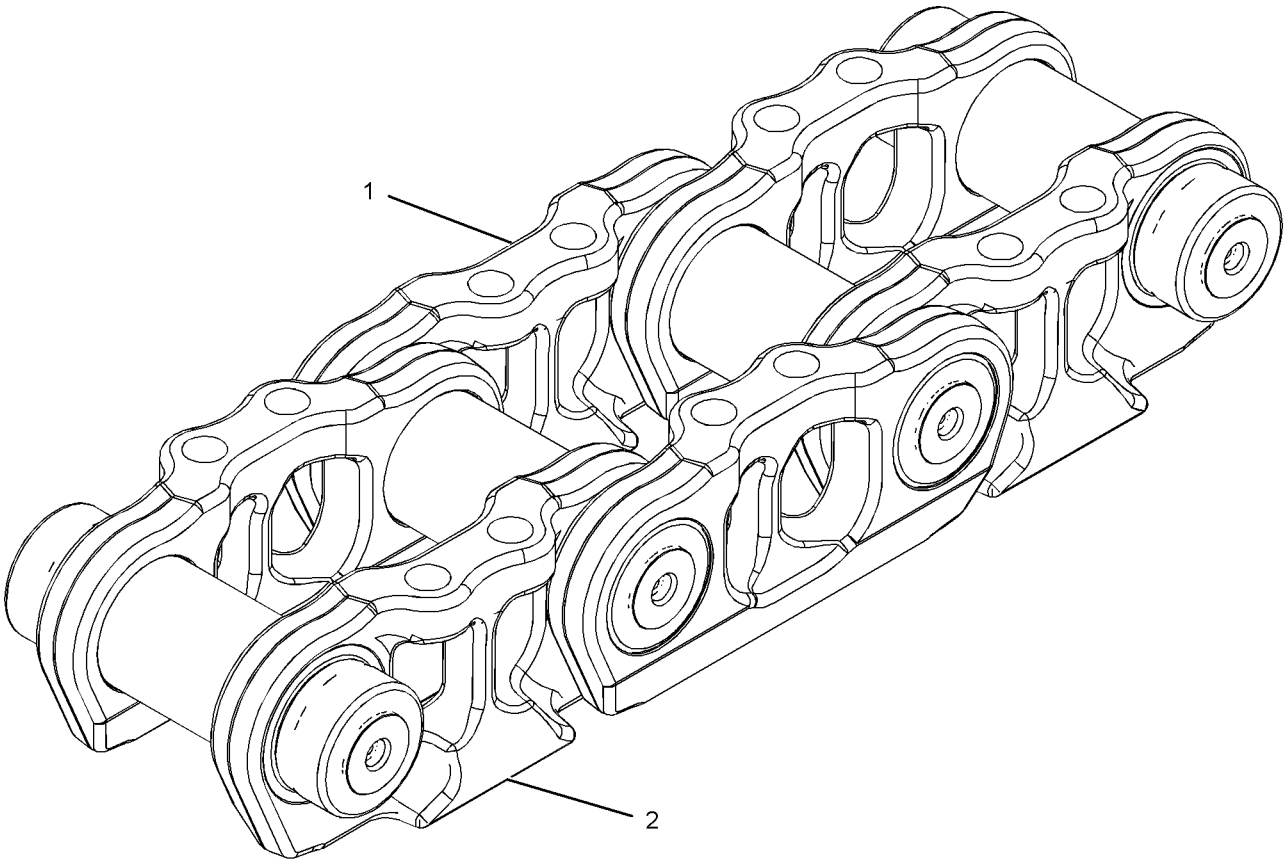

GRAPHIC #1 **<END>** g01193467

235-2539 LINK AS-TRACK—SYSTEMONE

S/N: FBH1-UP
38-JOINTS. SEALED, LUBRICATED
PART OF 256-4924, 256-4926 TRACK GP
FOR USE WITH SYSTEMONE ROLLERS, GUARDS, GUIDESTRIPS, SHOES

SMCS-4169, 4171 **i02394301**

NOTE	REF NO	GRAPHIC REF	PART NUMBER	QTY	PART NAME 1 2 3 4 5 6 (PRODUCT LEVEL)	SEE PAGE
	1	1	**235-2529**	36	LINK-TRACK	
Y	2	1	**235-2536**	19	LINK AS-TRACK BOX	479

Y-SEPARATE ILLUSTRATION

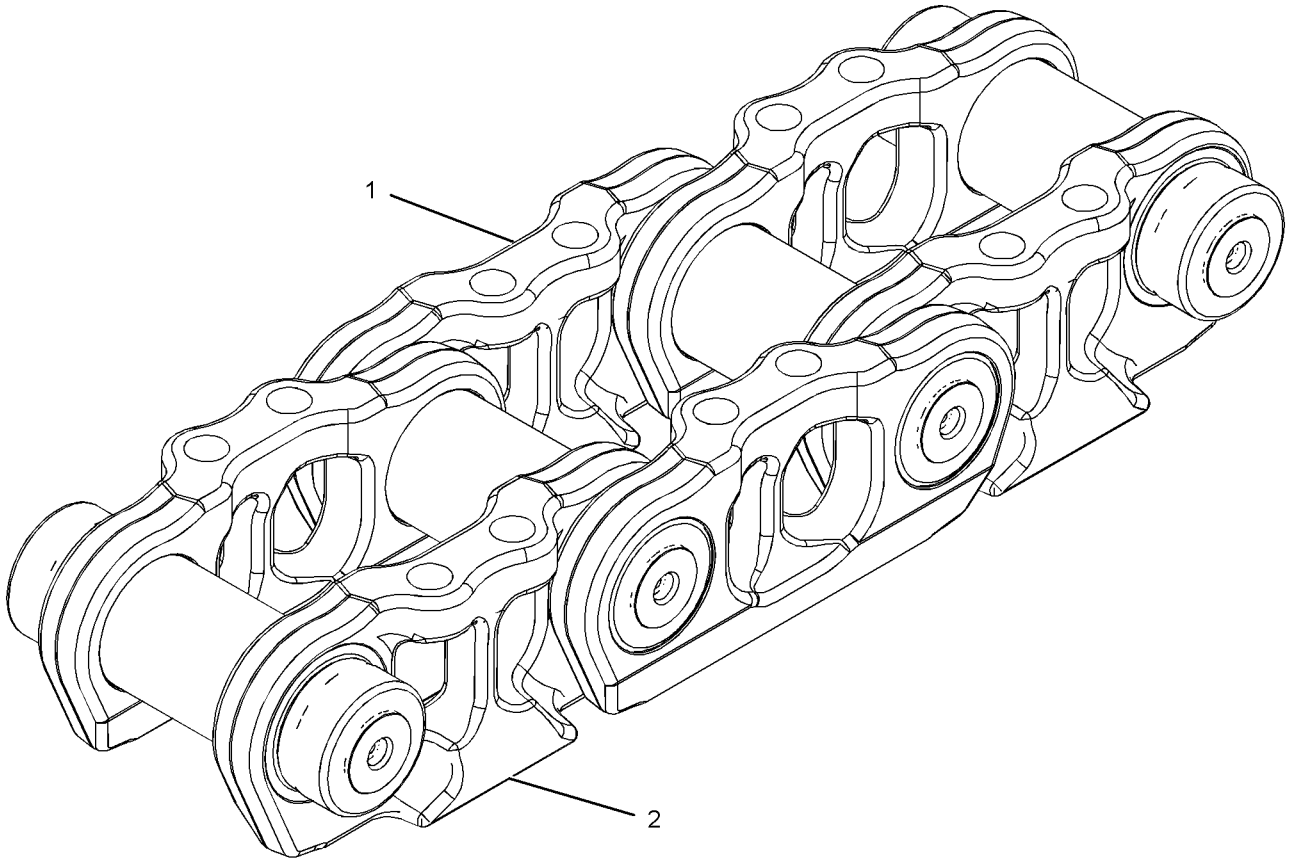

GRAPHIC #1 **<END>** g01193467

302-5928 LINK AS-TRACK–SYSTEMONE

S/N: DHA1-385
40-JOINTS. SEALED, LUBRICATED
PART OF 235-2541, 246-5735, 277-2247, 277-2248, 277-2249 TRACK GP
FOR USE WITH SYSTEMONE ROLLERS, GUARDS, GUIDESTRIPS, SHOES
AN ATTACHMENT

SMCS-4169, 4171 **i02912412**

NOTE	REF NO	GRAPHIC REF	PART NUMBER	QTY	PART NAME 1 2 3 4 5 6 (PRODUCT LEVEL)	SEE PAGE
	1	1	**235-2529**	38	LINK-TRACK	
Y	2	1	**302-5927**	20	LINK AS-TRACK BOX	484

Y-SEPARATE ILLUSTRATION

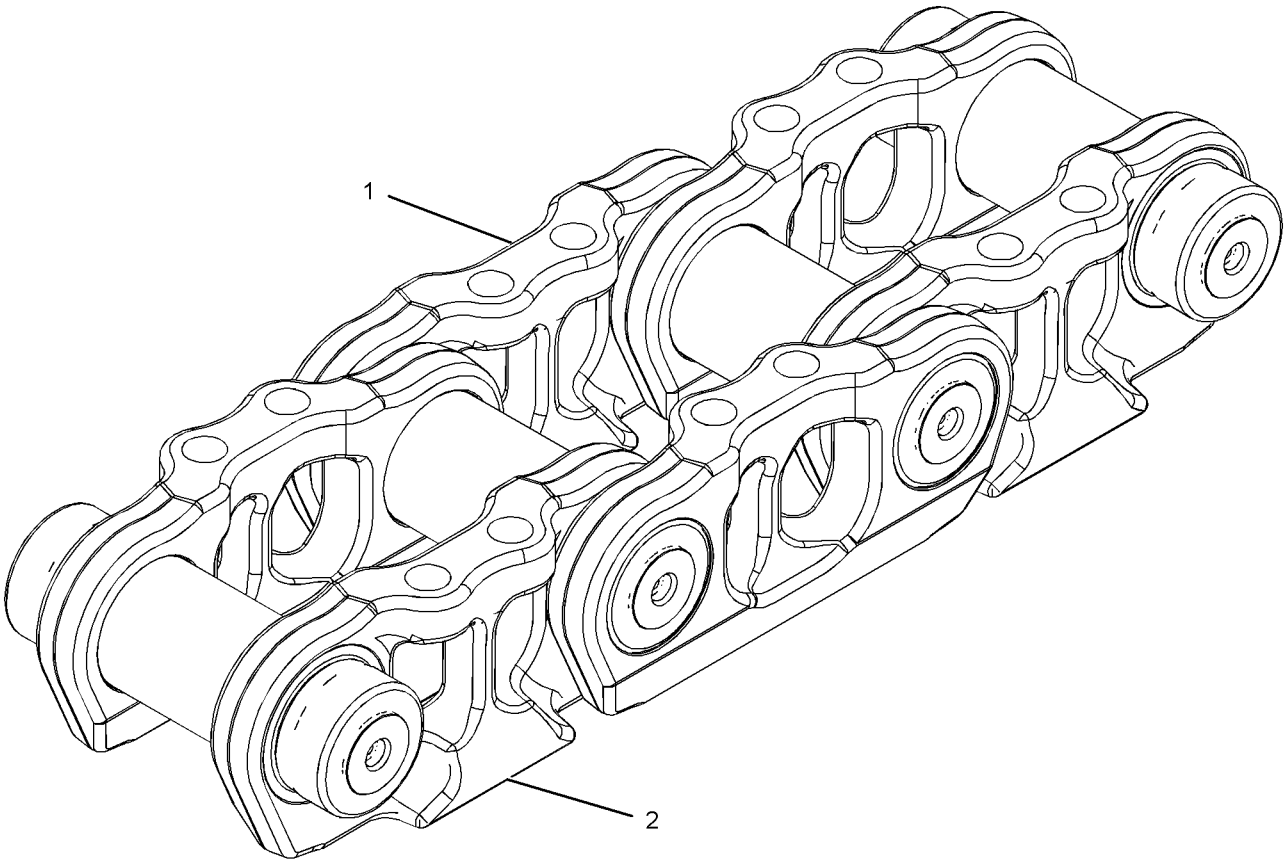

GRAPHIC #1 **<END>** g01193467

311-6644 LINK AS-TRACK—SYSTEMONE

S/N: DHA1-UP; FBH1-UP
40-JOINTS. SEALED, LUBRICATED
PART OF 235-2540, 235-2541, 246-5735, 250-3430, 256-4923, 256-4925, 277-2245, 277-2246, 277-2247, 277-2248, 277-2249, 289-3086 TRACK GP
FOR USE WITH SYSTEMONE ROLLERS, GUARDS, GUIDESTRIPS
AN ATTACHMENT

SMCS-4169, 4171 **i02848568**

NOTE	REF NO	GRAPHIC REF	PART NUMBER	QTY	PART NAME 1 2 3 4 5 6 (PRODUCT LEVEL)	SEE PAGE
Y	1	1	**311-6643**	20	LINK AS-TRACK BOX	485
	2	1	**235-2529**	38	LINK-TRACK	

Y-SEPARATE ILLUSTRATION

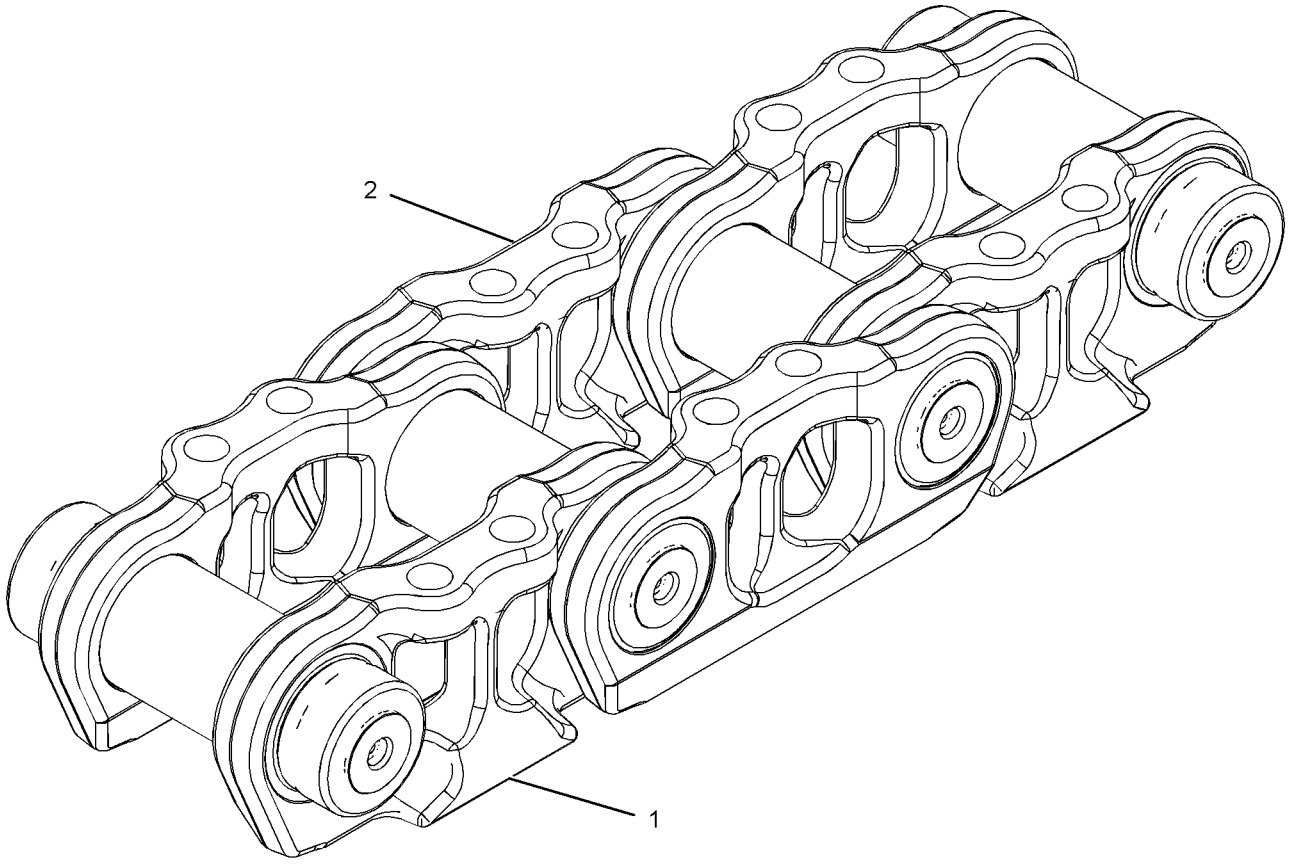

GRAPHIC #1 **<END>** g01357181

235-2522 LINK AS-TRACK BOX—LINK BOX

S/N: DHA1-UP; FBH1-UP

SEALED, LUBRICATED, FOR FIELD REPLACEMENT OF LINK BOX THAT IS MORE THAN 40% WORN, ORDER 264-9765 LINK AS, FOR FIELD REPLACEMENT OF LINK BOX THAT IS LESS THAN 40% WORN, ORDER 312-2269 LINK AS

PART OF 235-2525, 235-2526 LINK AS-TRACK, 235-2523 LINK AS-TRACK BOX

SMCS-4169 **i02838566**

NOTE	REF NO	GRAPHIC REF	PART NUMBER	QTY	PART NAME 1 2 3 4 5 6 (PRODUCT LEVEL)	SEE PAGE
	1	1	**235-2514**	2	LINK-TRACK	
	2	1	*303-4446*	2	CARTRIDGE AS-TRACK LINK	
					(EACH INCLUDES)	
		1	**6Y-0473**	2	PLUG-CLEAR	
		1	**9G-1642**	2	STOPPER-RUBBER	

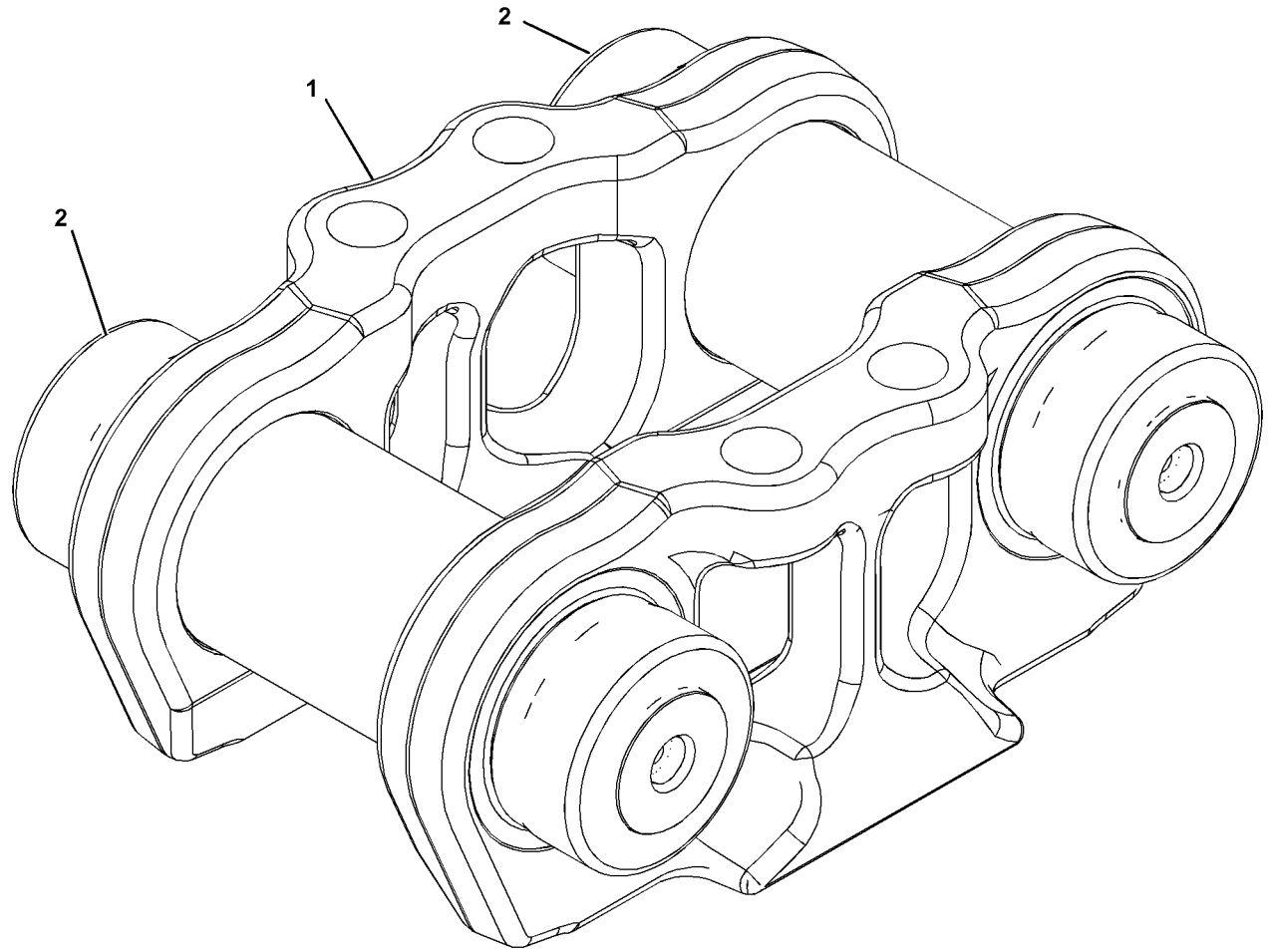

GRAPHIC #1 **<END>** g01378067

235-2523 LINK AS-TRACK BOX—LINK BOX, OFFSET

S/N: FBH1-UP

SEALED, LUBRICATED, FOR FIELD REPLACEMENT OF LINK BOX THAT IS MORE THAN 40% WORN, ORDER 264-9770 LINK AS, FOR FIELD REPLACEMENT OF LINK BOX THAT IS LESS THAN 40% WORN, ORDER 312-2271 LINK AS

PART OF 235-2526 LINK AS-TRACK

SMCS-4169 **i02840085**

NOTE	REF NO	GRAPHIC REF	PART NUMBER	QTY	PART NAME 1 2 3 4 5 6 (PRODUCT LEVEL)	SEE PAGE
Y	1	1	**235-2522**	1	LINK AS-TRACK BOX	477
	2	1	*303-4446*	1	CARTRIDGE AS-TRACK LINK	
		1	**6Y-0473**	2	PLUG-CLEAR	
		1	**9G-1642**	2	STOPPER-RUBBER	
					PARTS SHOWN IN GRAPHIC WITHOUT A REFERENCE NUMBER ARE NOT SERVICED SEPARATELY	

Y-SEPARATE ILLUSTRATION

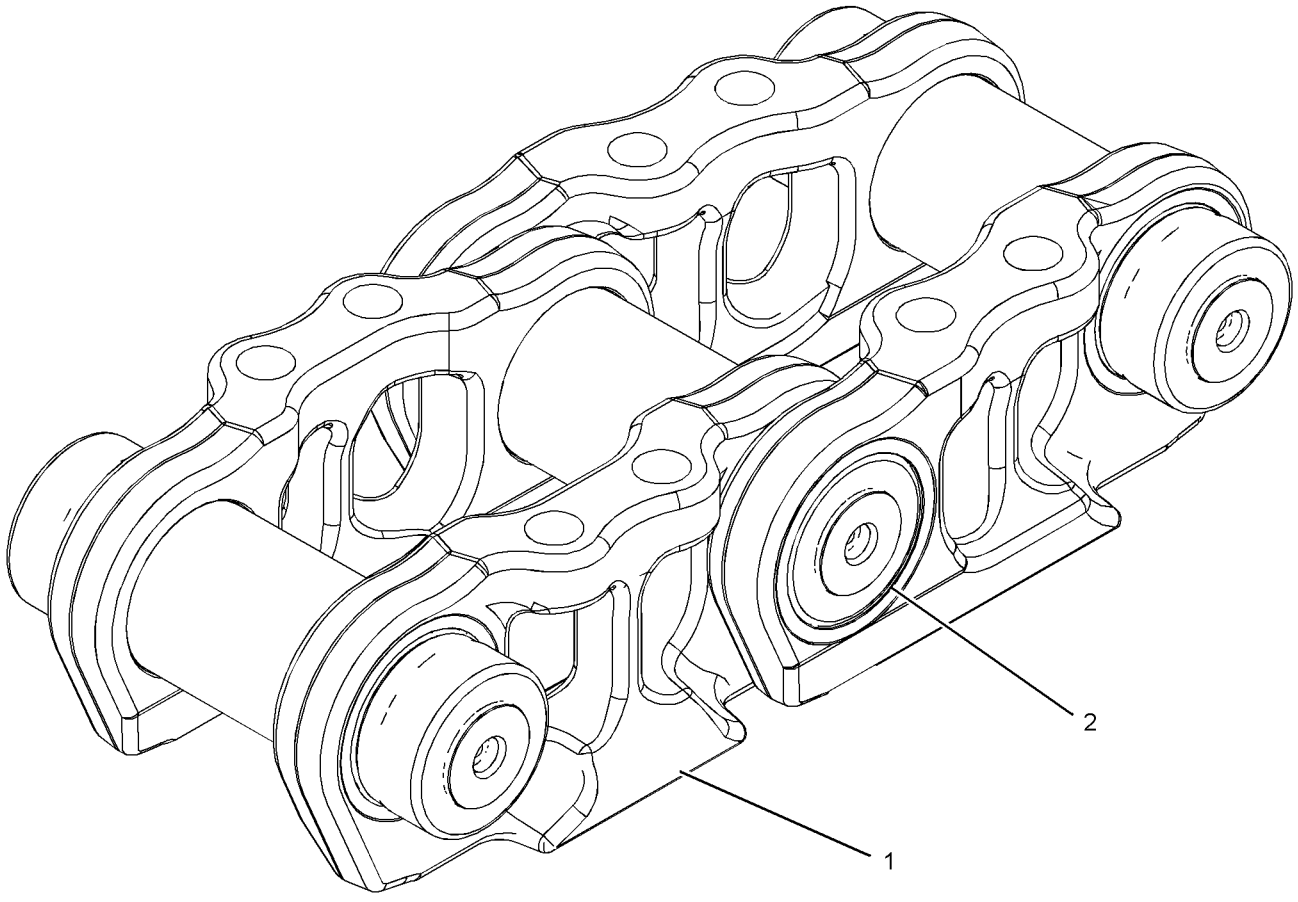

GRAPHIC #1 **<END>** g01416652

235-2536 LINK AS-TRACK BOX—LINK BOX

S/N: FBH1-UP

FOR FIELD REPLACEMENT OF LINK BOX THAT IS MORE THAN 40% WORN, ORDER 264-9766 LINK AS, FOR FIELD REPLACEMENT OF LINK BOX THAT IS LESS THAN 40% WORN, ORDER 311-6643 LINK AS

PART OF 235-2538, 235-2539 LINK AS-TRACK

AN ATTACHMENT

SMCS-4169 **i02751909**

NOTE	REF NO	GRAPHIC REF	PART NUMBER	QTY	PART NAME 1 2 3 4 5 6 (PRODUCT LEVEL)	SEE PAGE
	1	1	**235-2529**	2	LINK-TRACK	
	2	1	*303-4446*	2	CARTRIDGE AS-TRACK LINK	
					(EACH INCLUDES)	
		1	**6Y-0473**	2	PLUG-CLEAR	
		1	**9G-1642**	2	STOPPER-RUBBER	
					PARTS SHOWN IN GRAPHIC(S) WITHOUT A REFERENCE NUMBER ARE NOT SERVICED SEPARATELY	

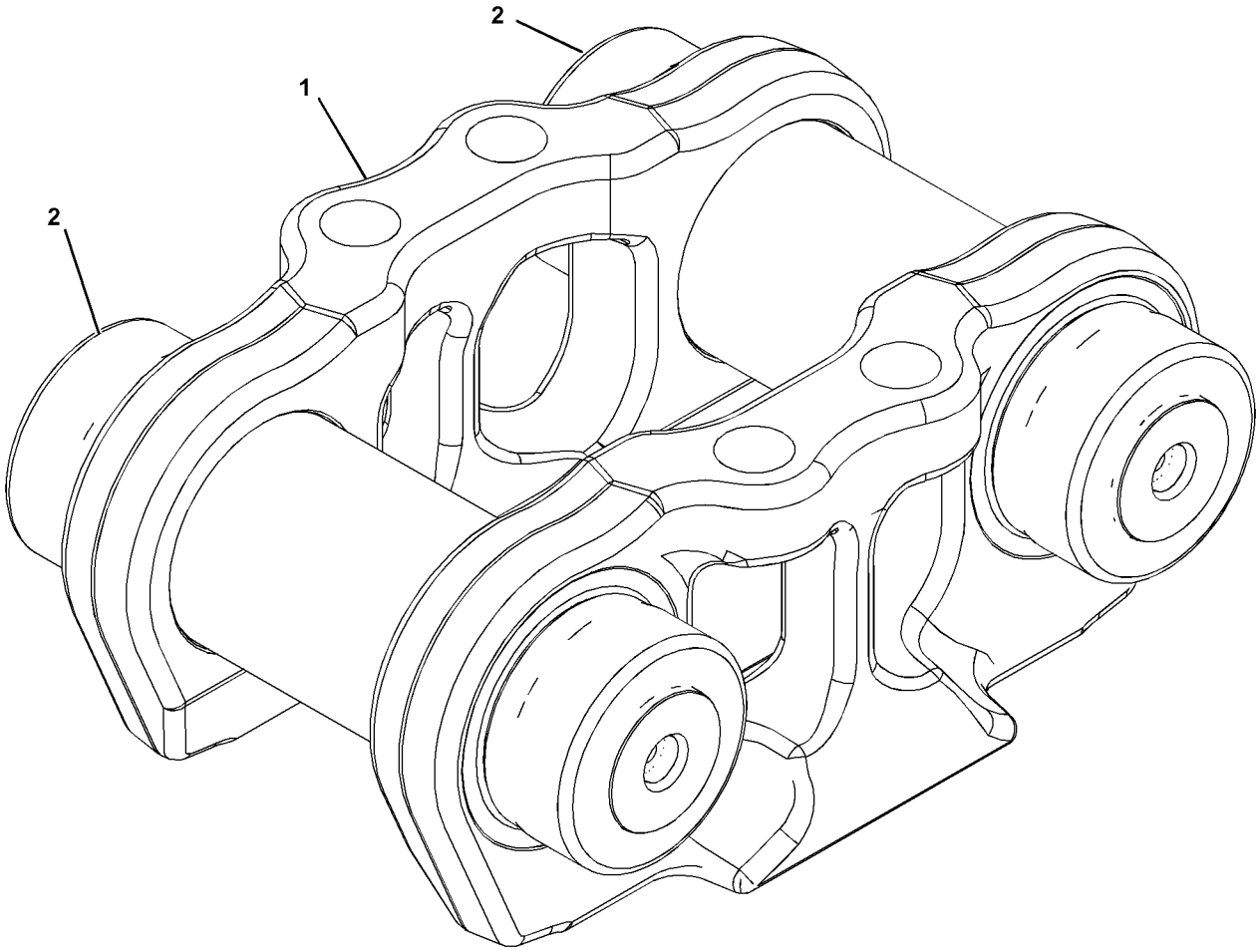

GRAPHIC #1 **<END>** g01378067

264-9765 LINK AS-TRACK BOX–LINK BOX

S/N: DHA1-UP; FBH1-UP
70% WORN. SEALED, LUBRICATED,
FIELD REPLACEMENT FOR 235-2522 LINK AS THAT IS MORE THAN 40% WORN,
FIELD REPLACEMENT FOR 312-2269 LINK AS THAT IS MORE THAN 40% WORN
FIELD INSTALLATION

SMCS-4169 **i02844346**

NOTE	REF NO	GRAPHIC REF	PART NUMBER	QTY	PART NAME 1 2 3 4 5 6 (PRODUCT LEVEL)	SEE PAGE
	1	1	*291-9805*	2	CARTRIDGE AS-TRACK LINK	
					(EACH INCLUDES)	
		1	**6Y-0473**	2	PLUG-CLEAR	
		1	**9G-1642**	2	STOPPER-RUBBER	
					PARTS SHOWN IN GRAPHIC(S) WITHOUT A REFERENCE NUMBER ARE NOT SERVICED SEPARATELY	

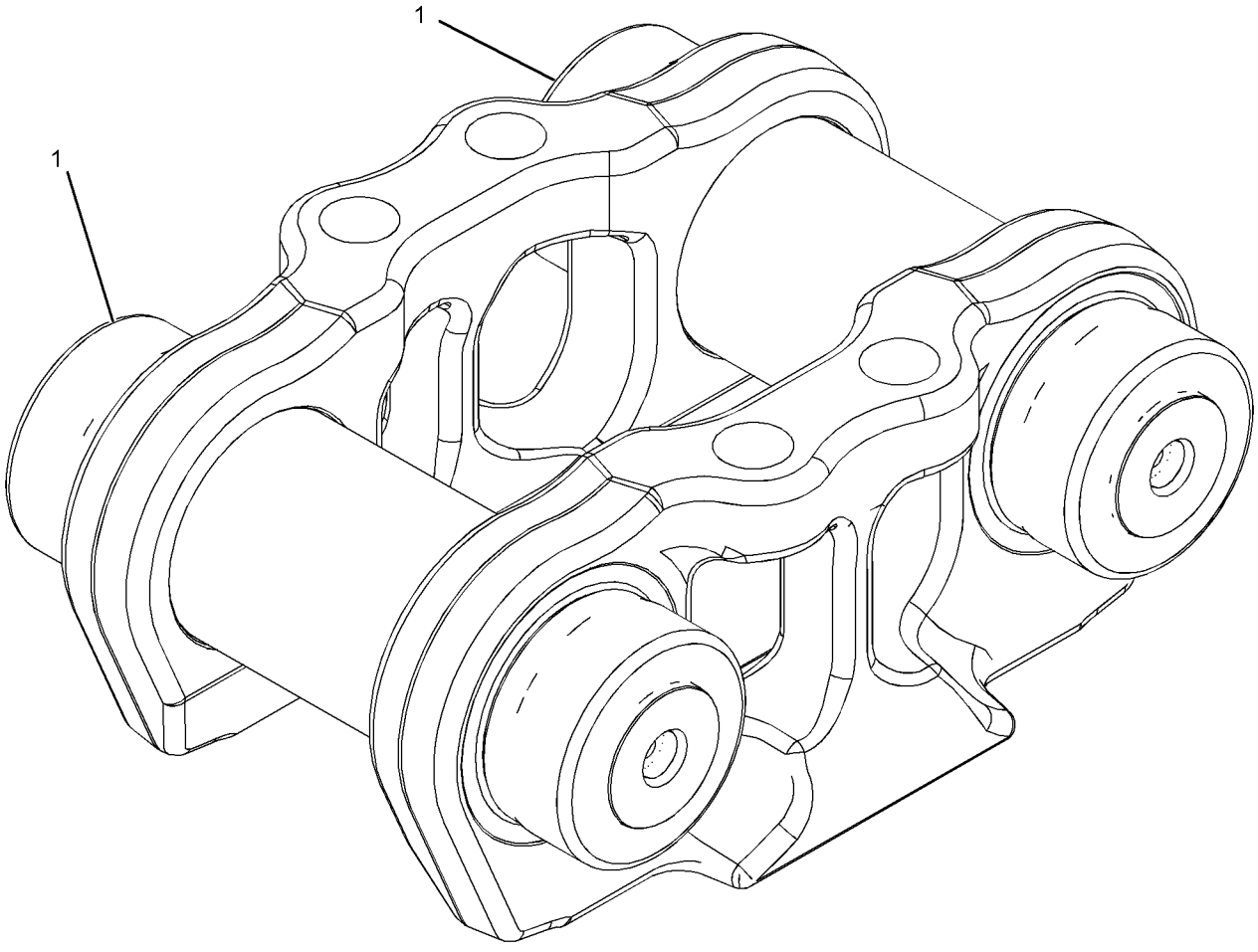

GRAPHIC #1 **<END>** g01416784

264-9766 LINK AS-TRACK BOX—LINK BOX

S/N: DHA1-UP; FBH1-UP
70% WORN. SEALED, LUBRICATED,
FIELD REPLACEMENT FOR 235-2536 LINK AS THAT IS MORE THAN 40% WORN
FIELD REPLACEMENT FOR 311-6643—PAGE 485
FIELD INSTALLATION

SMCS-4169 **i03709702**

NOTE	REF NO	GRAPHIC REF	PART NUMBER	QTY	PART NAME 1 2 3 4 5 6 (PRODUCT LEVEL)	SEE PAGE
	1	1	*291-9805*	1	CARTRIDGE AS-TRACK LINK	
		1	**6Y-0473**	2	PLUG-CLEAR	
		1	**9G-1642**	2	STOPPER-RUBBER	
					PARTS SHOWN IN GRAPHIC(S) WITHOUT A REFERENCE NUMBER ARE NOT SERVICED SEPARATELY	

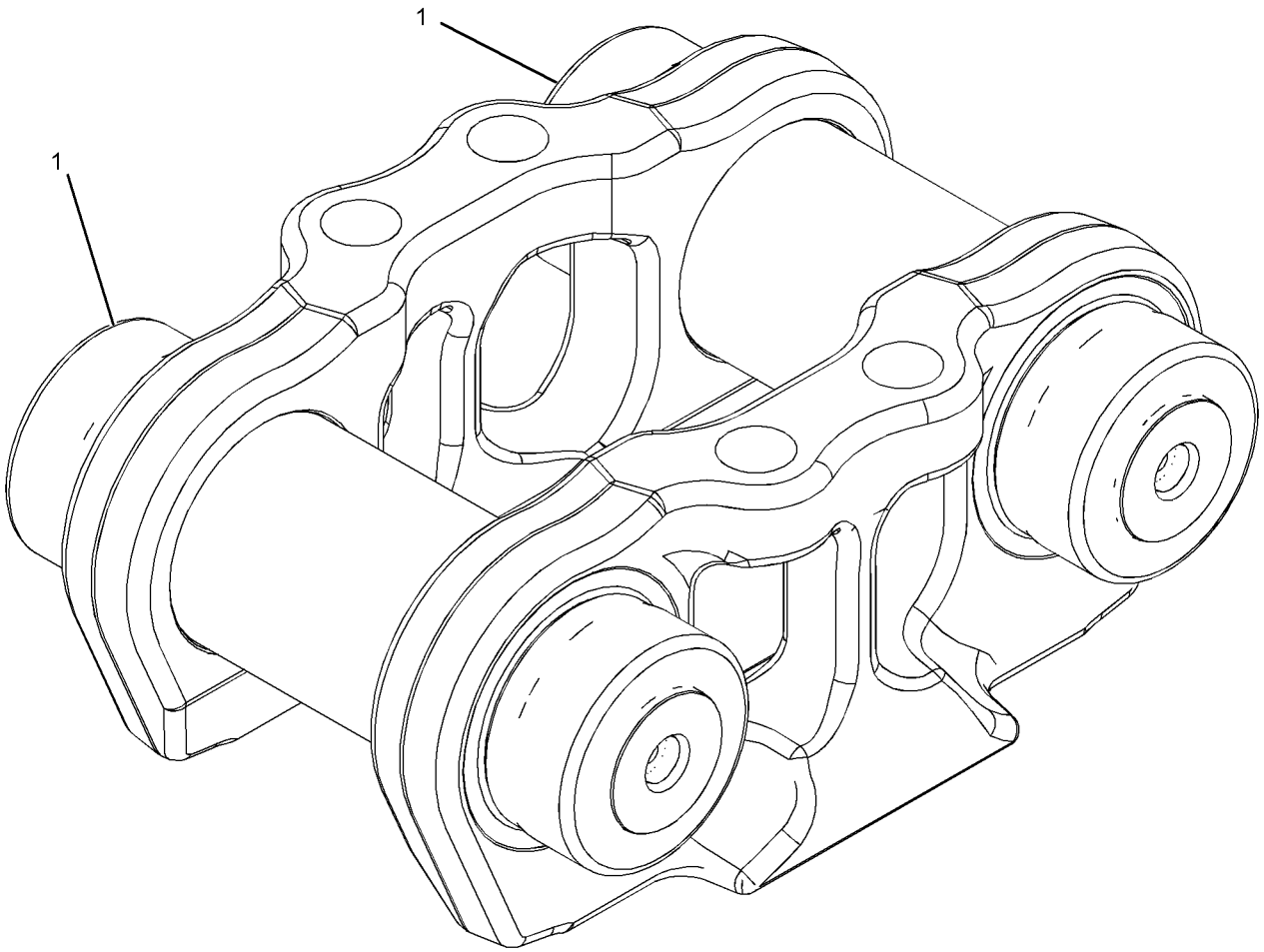

GRAPHIC #1 **<END>** g01416784

264-9770 LINK AS-TRACK BOX—LINK BOX, OFFSET

S/N: DHA1-UP; FBH1-UP
70% WORN. SEALED, LUBRICATED,
FIELD REPLACEMENT FOR 235-2523 LINK AS THAT IS MORE THAN 40% WORN,
FIELD REPLACEMENT FOR 312-2271 LINK AS THAT IS MORE THAN 40% WORN
FIELD INSTALLATION

SMCS-4169 **i02843495**

NOTE	REF NO	GRAPHIC REF	PART NUMBER	QTY	PART NAME 1 2 3 4 5 6 (PRODUCT LEVEL)	SEE PAGE
	1	1	*291-9805*	1	CARTRIDGE AS-TRACK LINK	
		1	**6Y-0473**	2	PLUG-CLEAR	
		1	**9G-1642**	2	STOPPER-RUBBER	
					PARTS SHOWN IN GRAPHIC(S) WITHOUT A REFERENCE NUMBER ARE NOT SERVICED SEPARATELY	

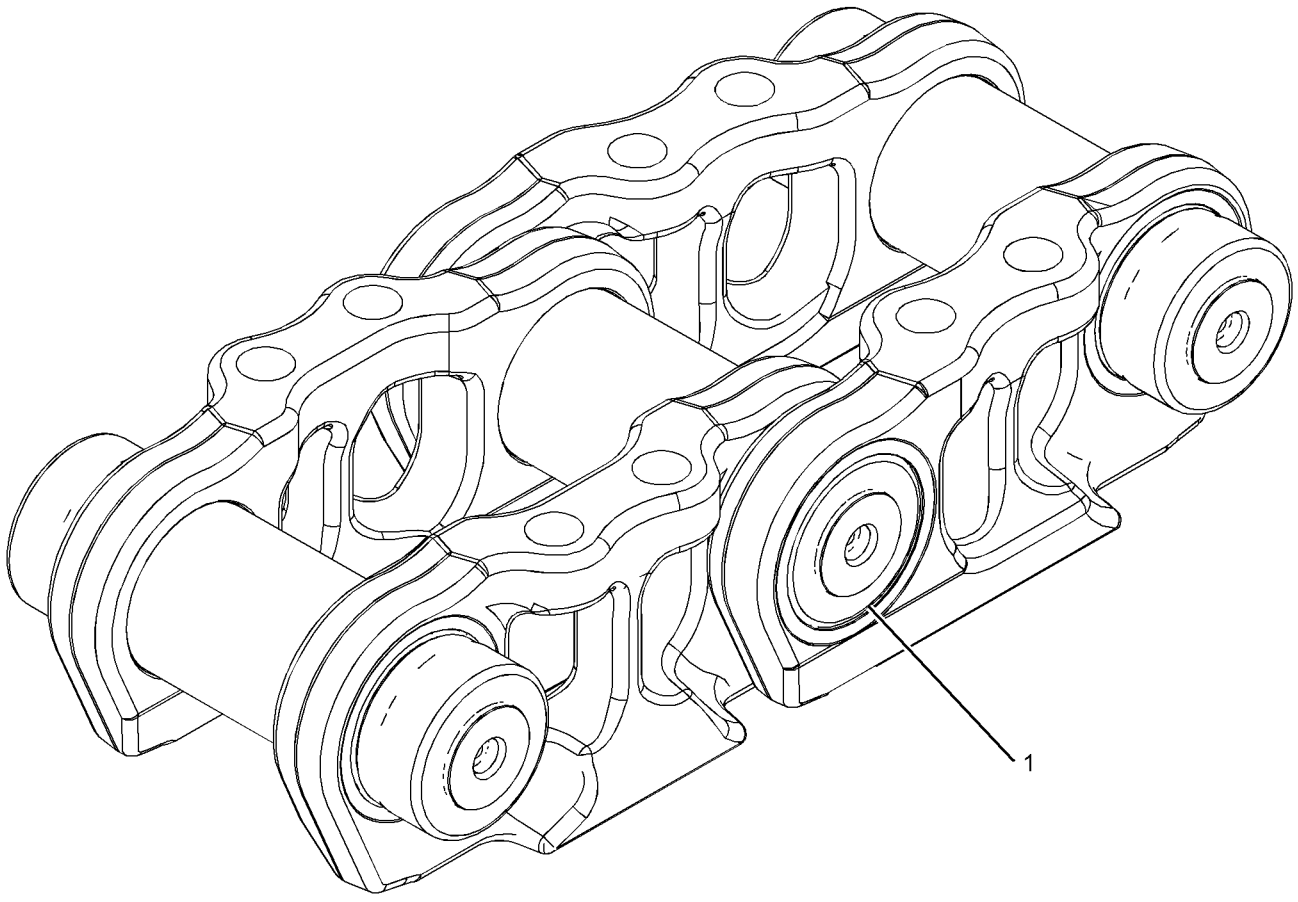

GRAPHIC #1 **<END>** g01416892

UNDERCARRIAGE

264-9771 LINK AS-TRACK BOX—LINK BOX

S/N: DHA1-UP; FBH1-UP
70% WORN. SEALED, LUBRICATED
FIELD INSTALLATION

SMCS-4169 **i02399750**

NOTE	REF NO	GRAPHIC REF	PART NUMBER	QTY	PART NAME 1 2 3 4 5 6 (PRODUCT LEVEL)	SEE PAGE
					INDIVIDUAL PARTS ARE NOT SERVICED SEPARATELY	

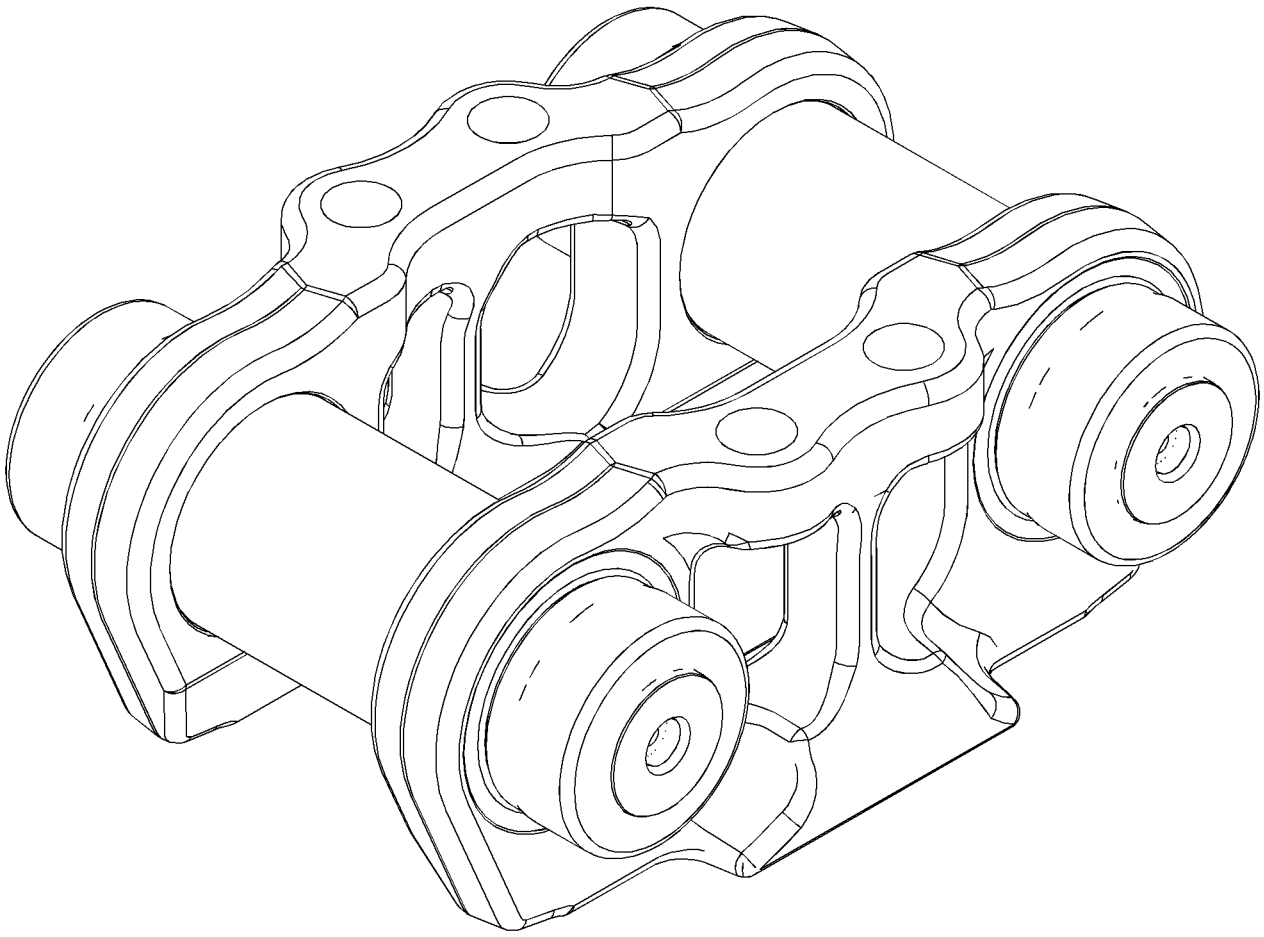

GRAPHIC #1 **<END>** g01193491

302-5927 LINK AS-TRACK BOX—LINK BOX

S/N: DHA1-385
SEALED, LUBRICATED
PART OF 302-5928 LINK AS-TRACK
AN ATTACHMENT

SMCS-4169 **i02912413**

NOTE	REF NO	GRAPHIC REF	PART NUMBER	QTY	PART NAME 1 2 3 4 5 6 (PRODUCT LEVEL)	SEE PAGE
	1	1	**235-2529**	2	LINK-TRACK	
	2	1	*298-3696*	2	CARTRIDGE AS	
					(EACH INCLUDES)	
		1	**6Y-0473**	2	PLUG-CLEAR	
		1	**9G-1642**	2	STOPPER-RUBBER	

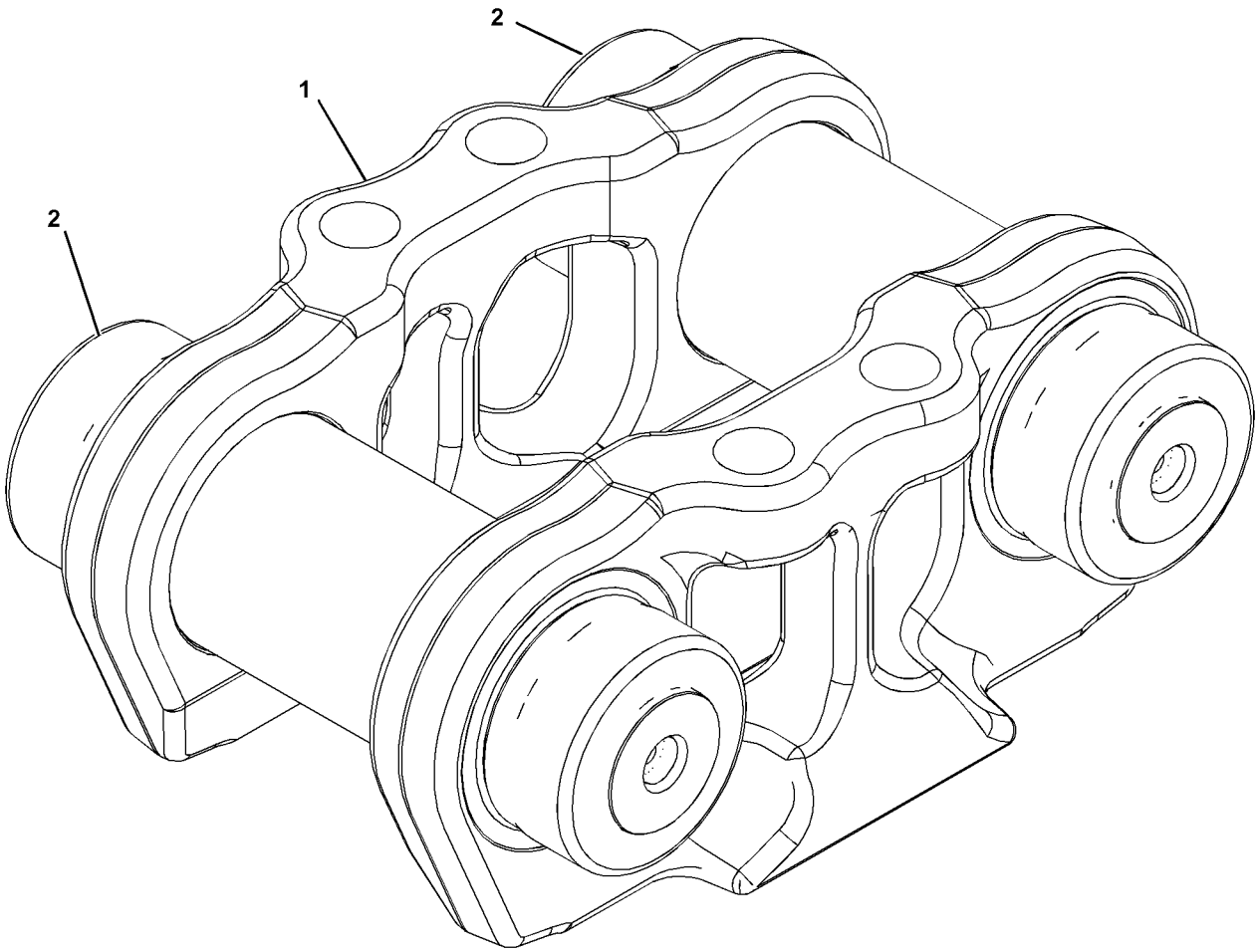

GRAPHIC #1 **<END>** g01378067

311-6643 LINK AS-TRACK BOX—LINK BOX

S/N: DHA1-UP; FBH1-UP
SEALED, LUBRICATED
PART OF 311-6644 LINK AS-TRACK
FIELD REPLACEMENT ORDER 264-9766—PAGE 481. FIELD REPLACEMENT FOR 235-2536—PAGE 479 LINK AS THAT IS LESS THAN 40% WORN AN ATTACHMENT AND FIELD INSTALLATION

SMCS-4169 **i02848572**

NOTE	REF NO	GRAPHIC REF	PART NUMBER	QTY	PART NAME 1 2 3 4 5 6 (PRODUCT LEVEL)	SEE PAGE
	1	1	**235-2529**	2	LINK-TRACK	
	2	1	*291-9805*	2	CARTRIDGE AS-TRACK LINK	
					(EACH INCLUDES)	
		1	**6Y-0473**	2	PLUG-CLEAR	
		1	**9G-1642**	2	STOPPER-RUBBER	

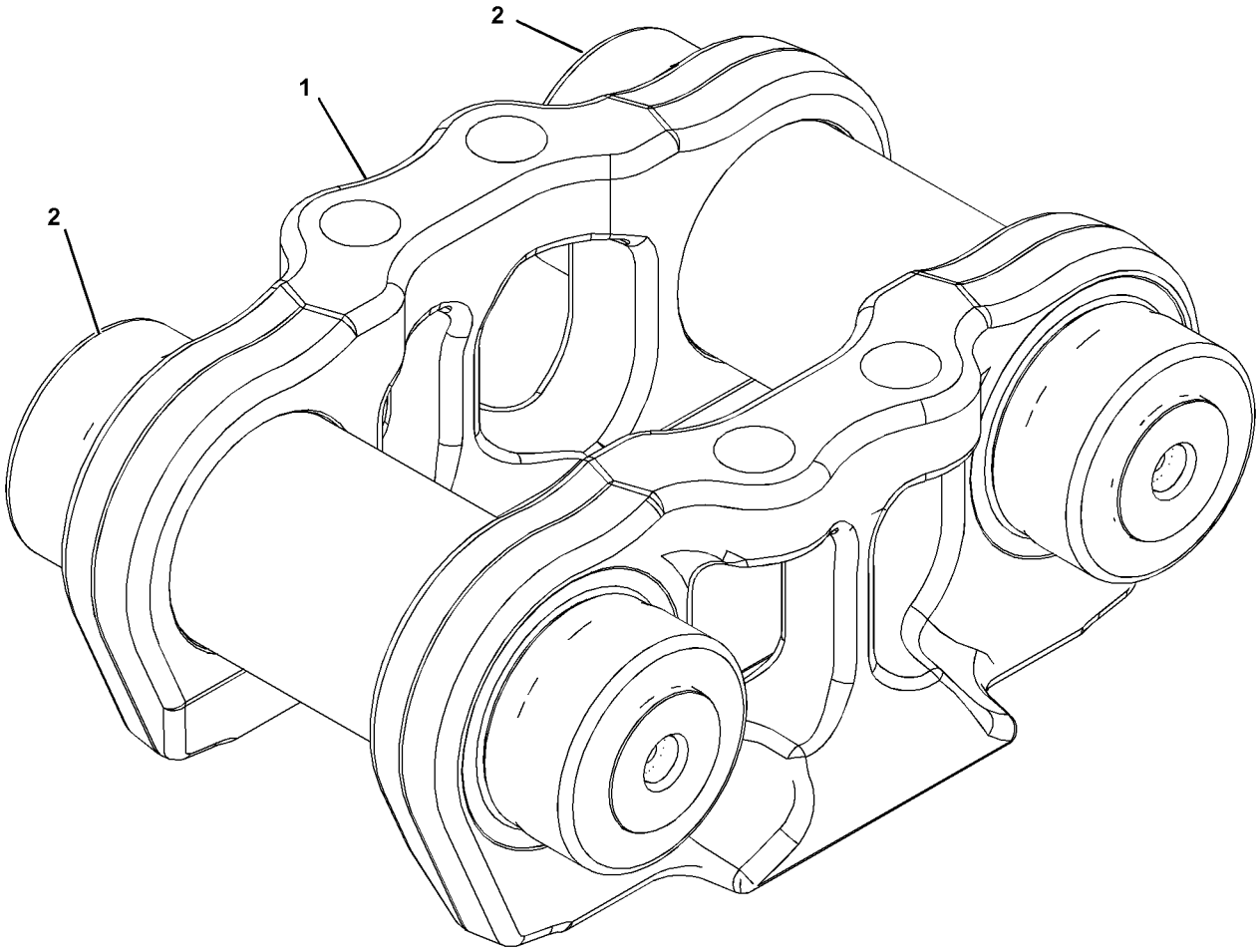

GRAPHIC #1 **<END>** g01378067

312-2269 LINK AS-TRACK BOX—LINK BOX

S/N: DHA1-UP; FBH1-UP
SEALED, LUBRICATED,
FOR FIELD REPLACEMENT OF LINK BOX THAT IS GREATER THAN 40% WORN
PART OF 312-2271 LINK AS-TRACK BOX

SMCS-4169 **i03081003**

NOTE	REF NO	GRAPHIC REF	PART NUMBER	QTY	PART NAME 1 2 3 4 5 6 (PRODUCT LEVEL)	SEE PAGE
	1	1	**235-2514**	2	LINK-TRACK	
	2	1	*291-9805*	2	CARTRIDGE AS-TRACK LINK	
					(EACH INCLUDES)	
		1	**6Y-0473**	2	PLUG-CLEAR	
		1	**9G-1642**	2	STOPPER-RUBBER	

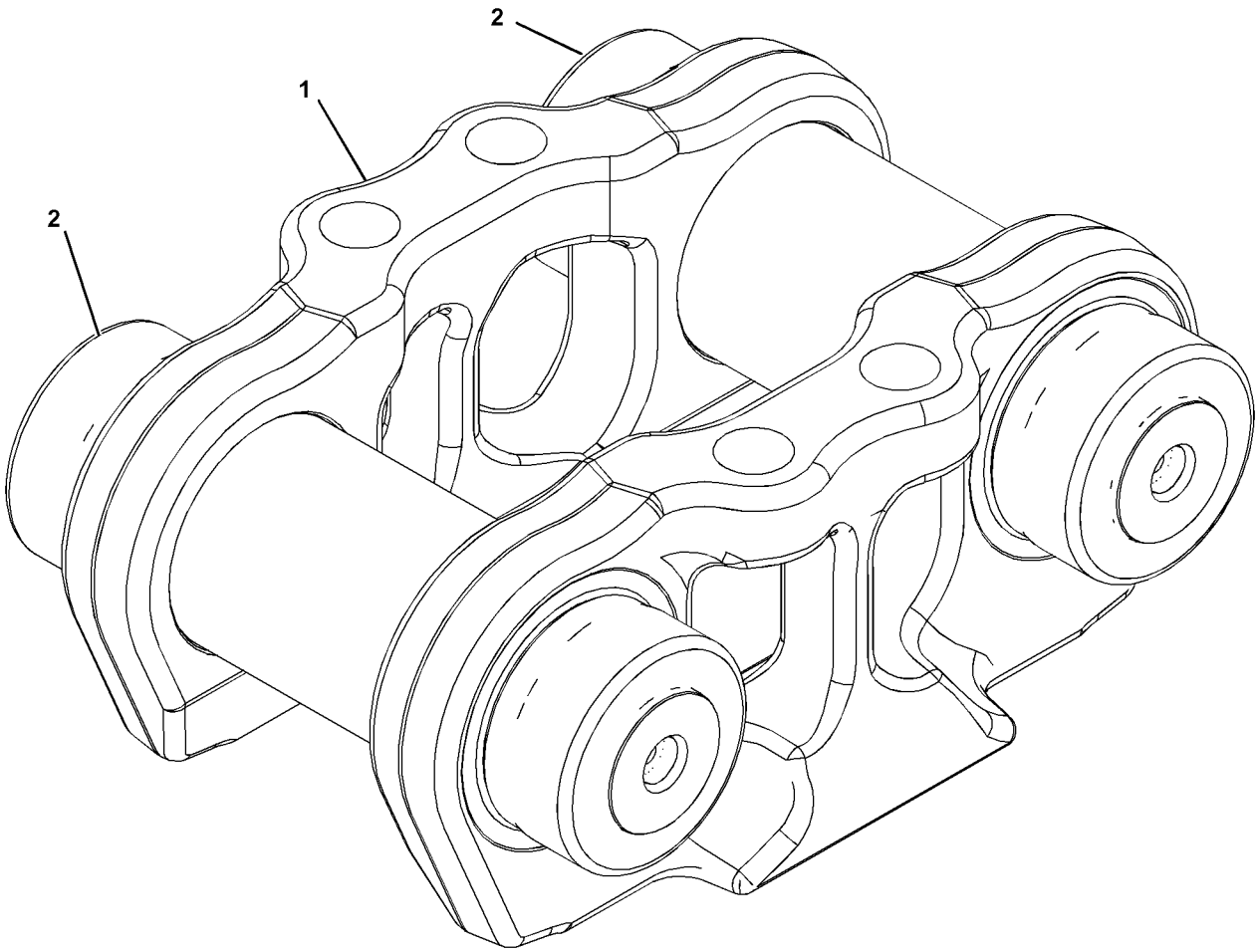

GRAPHIC #1 **<END>** g01378067

312-2271 LINK AS-TRACK BOX–SYSTEMONE

S/N: DHA1-UP; FBH1-UP
44 JOINTS. SEALED, LUBRICATED
FOR USE WITH SYSTEMONE ROLLER, GUARDS, GUIDESTRIPS
FIELD INSTALLATION

SMCS-4169 **i03709866**

NOTE	REF NO	GRAPHIC REF	PART NUMBER	QTY	PART NAME 1 2 3 4 5 6 (PRODUCT LEVEL)	SEE PAGE
Y	1	1	**312-2269**	1	LINK AS-TRACK BOX	486
	2	1	*291-9805*	1	CARTRIDGE AS-TRACK LINK	
		1	**6Y-0473**	2	PLUG-CLEAR	
		1	**9G-1642**	2	STOPPER-RUBBER	

Y-SEPARATE ILLUSTRATION

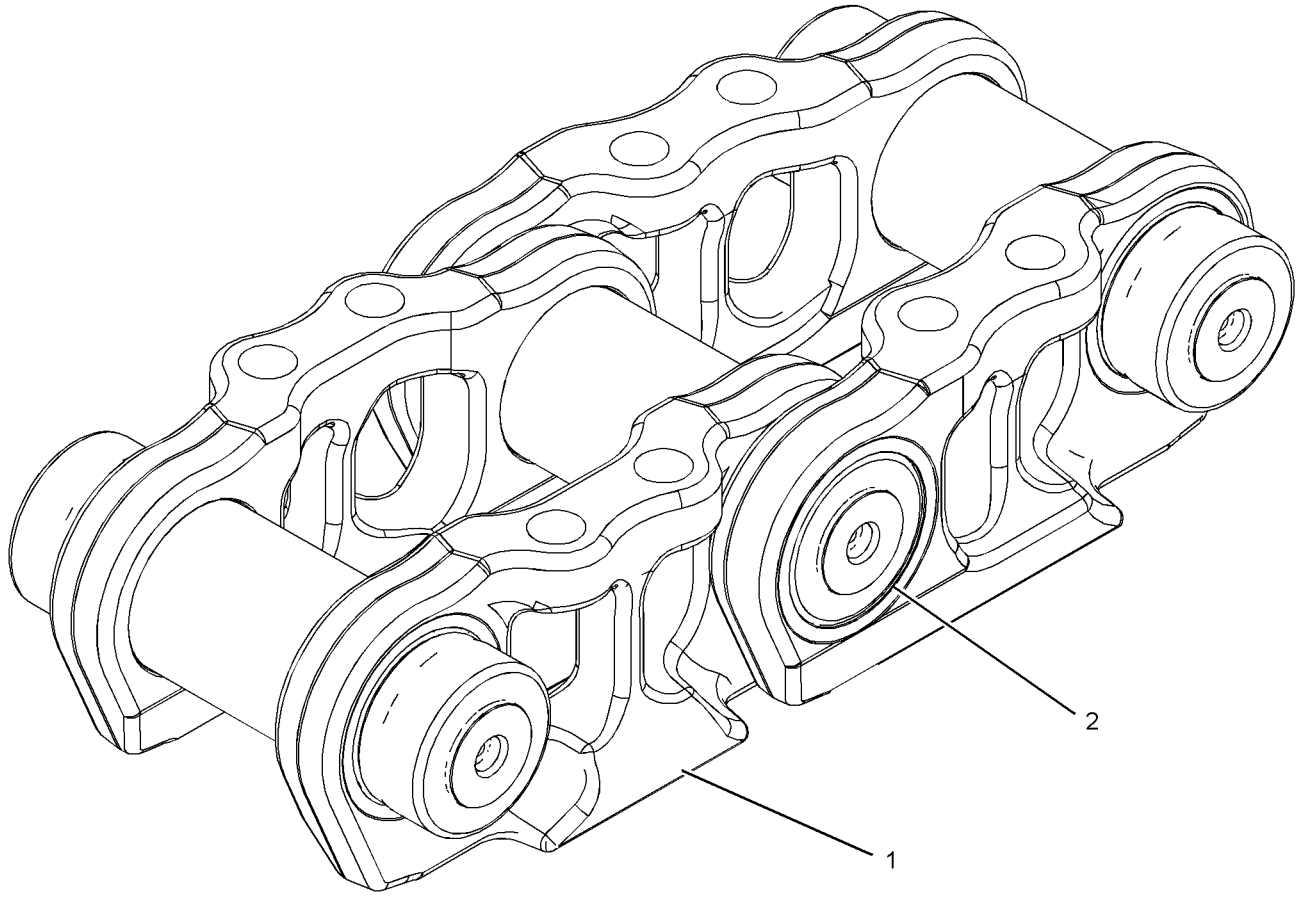

GRAPHIC #1 **<END>** g01416652

UNDERCARRIAGE

239-8214 PIVOT BAR GP–XL

S/N: FBH1-UP

PART OF 271-6035 UNDERCARRIAGE AR

SMCS-4153 **i02588619**

NOTE	REF NO	GRAPHIC REF	PART NUMBER	QTY	PART NAME 1 2 3 4 5 6 (PRODUCT LEVEL)	SEE PAGE
	1	1	**8P-8629**	2	PLATE	
	2	1	**9P-6790**	2	RETAINER	
	3	1	**239-8258**	2	SHAFT AS	
					(EACH INCLUDES)	
		1	**8G-4177**	1	RING	
	4	1	**266-5291**	2	SEAL-FOOTBALL	
	5	1	**1H-8128**	2	SEAL-O-RING	
M	6	1	**7X-2553**	10	BOLT (M16X2X40-MM)	
M	7	1	**7X-2563**	24	BOLT (M20X2.5X60-MM)	
	8	1	**8T-4123**	24	WASHER (22X35X3.5-MM THK)	
M	9	1	**8T-4193**	6	BOLT (M16X2X50-MM)	
	10	1	**9X-8257**	10	WASHER (17.5X30X3.5-MM THK)	

QUANTITIES SHOWN ARE THOSE REQUIRED FOR BOTH LH AND RH SIDES
M-METRIC PART

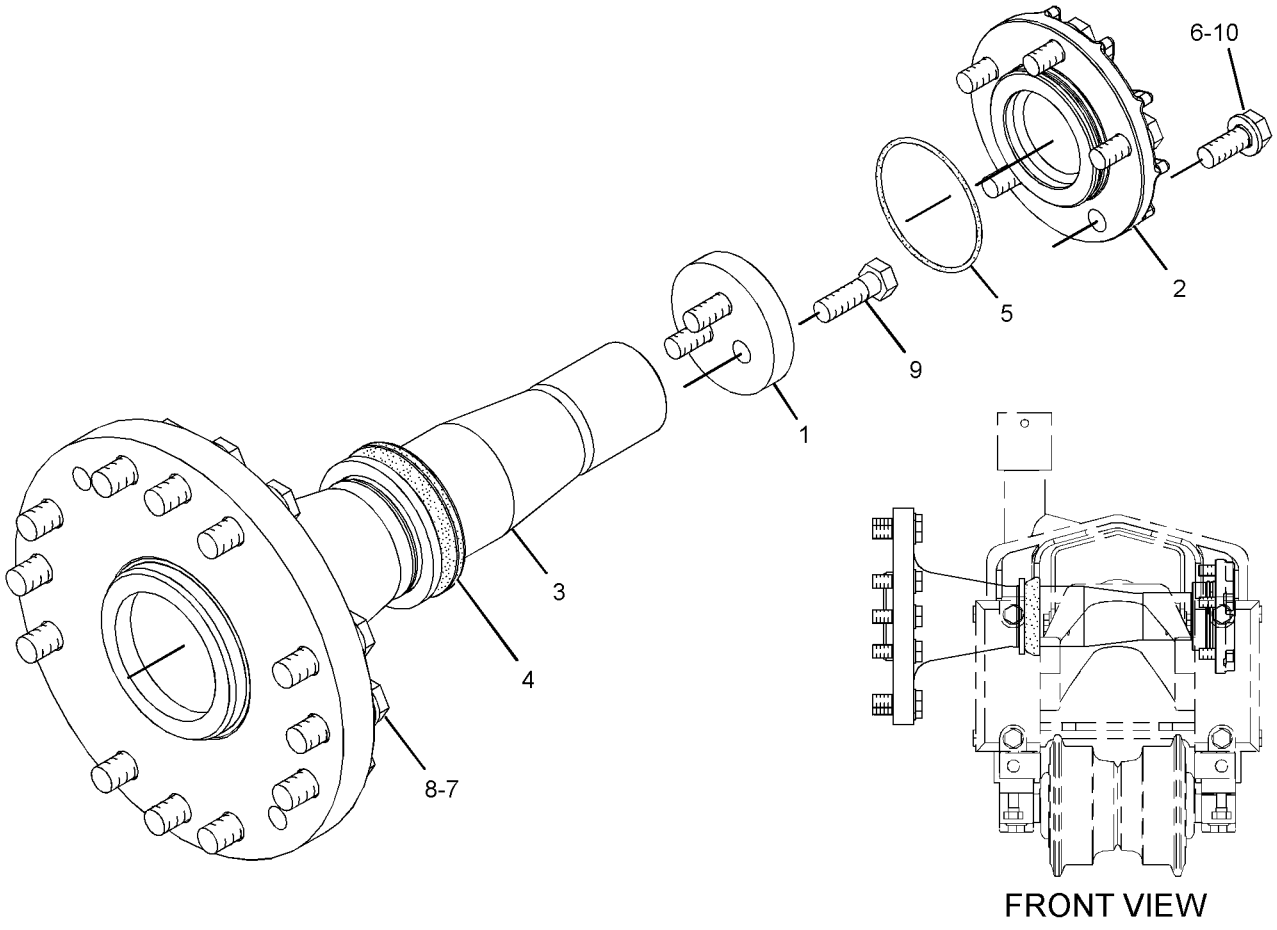

GRAPHIC #1 **<END>** g01196618

248-3914 PIVOT BAR GP–LGP

S/N: DHA1-UP

PART OF 206-7291 UNDERCARRIAGE AR

SMCS-4153 **i02586705**

NOTE	REF NO	GRAPHIC REF	PART NUMBER	QTY	PART NAME 1 2 3 4 5 6 (PRODUCT LEVEL)	SEE PAGE
	1	1	**8P-8629**	2	PLATE	
	2	1	**9P-6790**	2	RETAINER	
	3	1	**248-3938**	2	SHAFT AS	
					(EACH INCLUDES)	
		1	**8G-4177**	1	RING	
	4	1	**266-5291**	2	SEAL-FOOTBALL	
	5	1	**1H-8128**	2	SEAL-O-RING	
M	6	1	**7X-2553**	10	BOLT (M16X2X40-MM)	
M	7	1	**7X-2563**	24	BOLT (M20X2.5X60-MM)	
	8	1	**8T-4123**	24	WASHER (22X35X3.5-MM THK)	
M	9	1	**8T-4193**	6	BOLT (M16X2X50-MM)	
	10	1	**9X-8257**	10	WASHER (17.5X30X3.5-MM THK)	

QUANTITIES SHOWN ARE THOSE REQUIRED FOR BOTH LH AND RH SIDES
M-METRIC PART

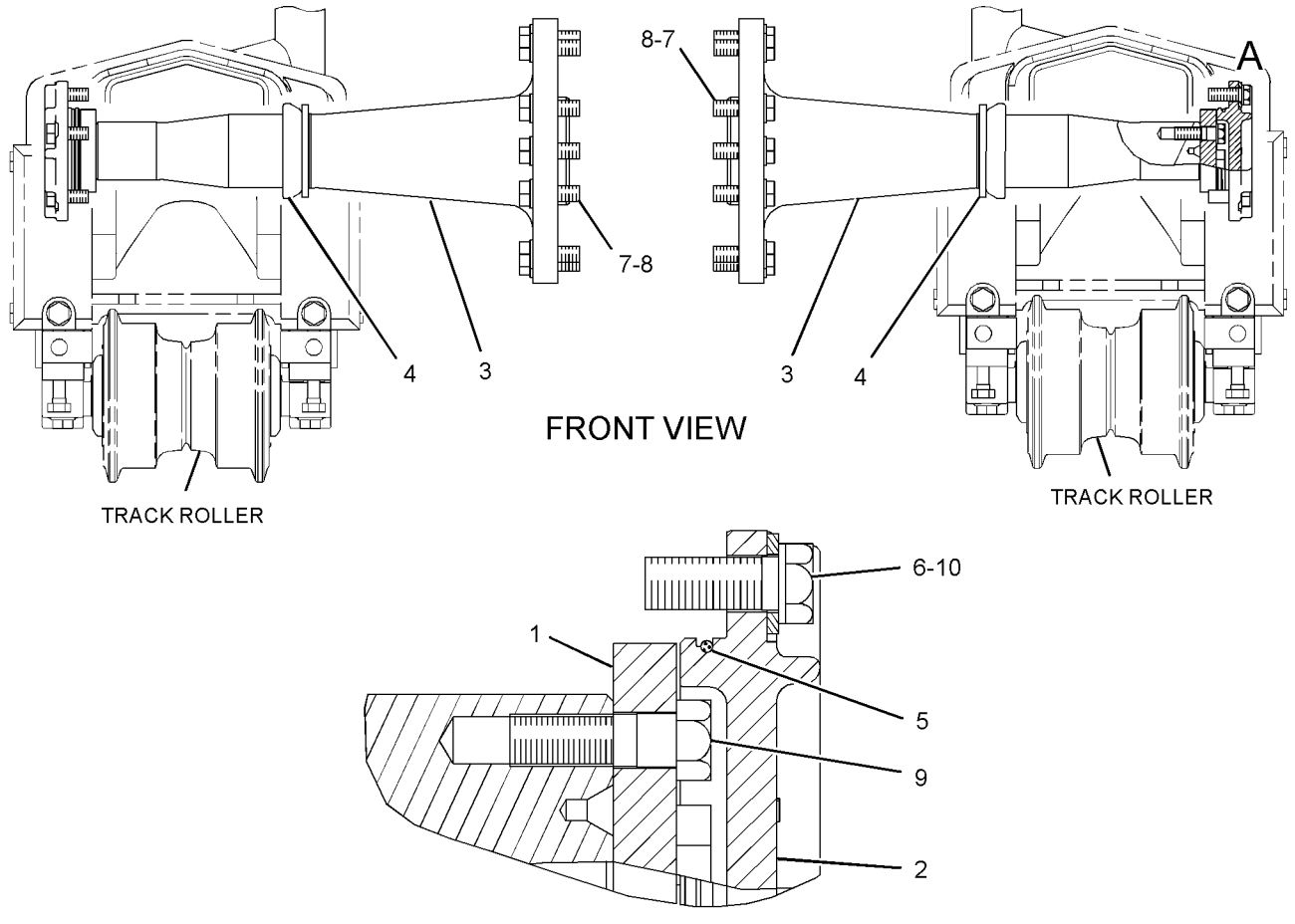

GRAPHIC #1 **<END>** g01297055

240-8933 ROLLER GP-TRACK–SYSTEMONE

S/N: DHA1-UP; FBH1-UP
PART OF 294-3497 ROLLER GP-TRACK
ALSO FIELD INSTALLATION

SMCS-4180 **i02794826**

NOTE	REF NO	GRAPHIC REF	PART NUMBER	QTY	PART NAME 1 2 3 4 5 6 (PRODUCT LEVEL)	SEE PAGE
					(INDIVIDUAL PARTS ARE NOT SERVICED SEPARATELY)	

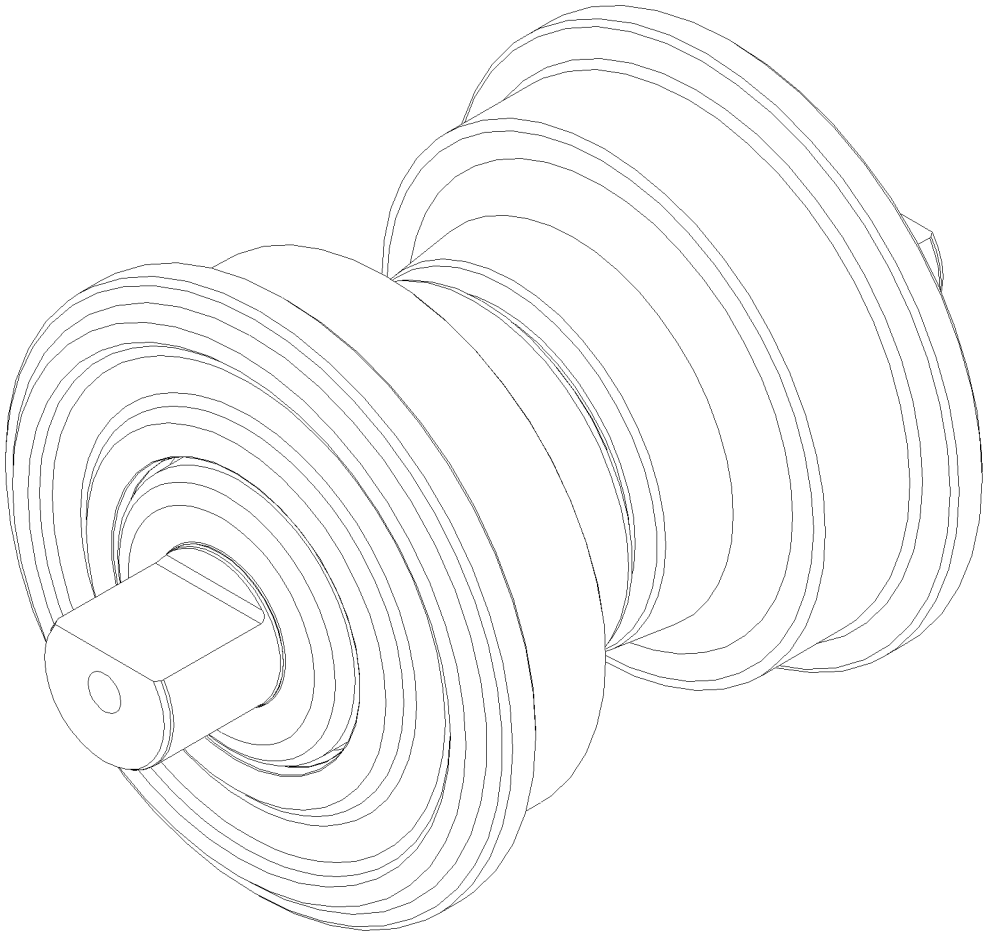

GRAPHIC #1 **<END>** g01395989

294-3497 ROLLER GP-TRACK

S/N: DHA1-UP; FBH1-UP

PART OF 248-3919, 248-3920 FRAME GP-TRACK ROLLER

SMCS-4180 **i02796667**

NOTE	PART NUMBER	QTY	PART NAME 1 2 3 4 5 6 (PRODUCT LEVEL)	SEE PAGE
Y	**240-8933**	1	ROLLER GP-TRACK	490
M	**137-3301**	4	BOLT (M16X2X80-MM)	
	218-4993	2	CAP (TRACK ROLLER)	
	9X-8268	4	WASHER (17.5X30X3.5-MM THK)	

M-METRIC PART
Y-SEPARATE ILLUSTRATION

<END>

UNDERCARRIAGE

227-5971 ROLLER GP-TRACK CARRIER–
HEAVY-DUTY, SYSTEMONE
S/N: DHA1-UP; FBH1-UP
PART OF 206-7291, 271-6035 UNDERCARRIAGE AR

SMCS-4154 **i02794786**

NOTE	REF NO	GRAPHIC REF	PART NUMBER	QTY	PART NAME 1 2 3 4 5 6 (PRODUCT LEVEL)	SEE PAGE
					(INDIVIDUAL PARTS ARE NOT SERVICED SEPARATELY)	

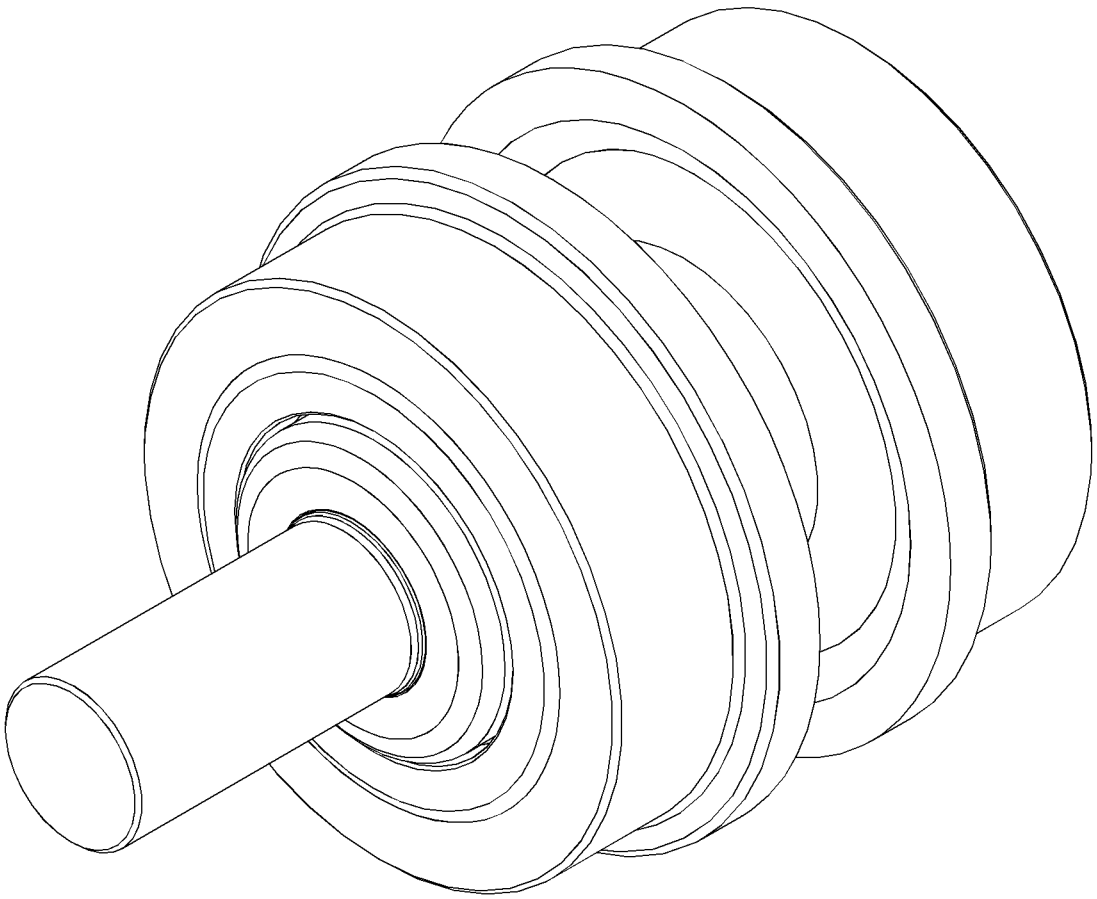

GRAPHIC #1 **<END>** g01395978

271-6071 SCRAPER GP-IDLER

S/N: DHA1-399; FBH1-556
PART OF 206-7291, 271-6035 UNDERCARRIAGE AR
ALSO AN ATTACHMENT

SMCS-4152 **i03703780**

NOTE	REF NO	GRAPHIC REF	PART NUMBER	QTY	PART NAME 1 2 3 4 5 6 (PRODUCT LEVEL)	SEE PAGE
	1	1	**271-6085**	2	GUARD AS (RH)	
	2	1	**271-6086**	2	GUARD AS (LH)	
					(EACH GUARD AS INCLUDES)	
M		1	**8T-3597**	3	NUT-WELD (M12X1.75-THD)	
	3	1	**198-4778**	16	WASHER-HARD (13.5X30X12-MM THK)	
M	4	1	**8T-4194**	16	BOLT (M12X1.75X50-MM)	

M-METRIC PART

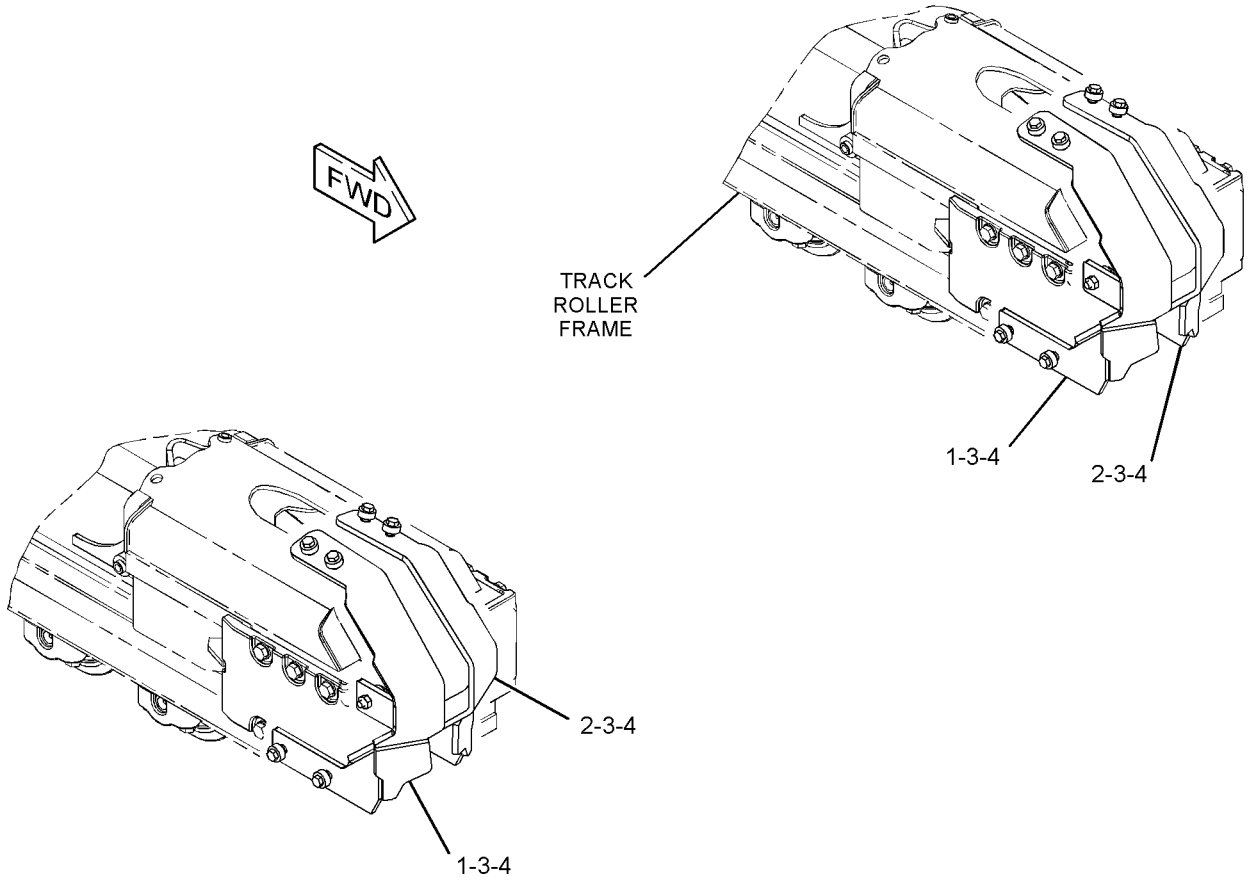

GRAPHIC #1 **<END>** g01302211

UNDERCARRIAGE

271-6071 SCRAPER GP-IDLER

S/N: DHA400-UP; FBH557-UP
PART OF 206-7291, 271-6035 UNDERCARRIAGE AR
ALSO AN ATTACHMENT

SMCS-4152 **i02837928**

NOTE	REF NO	GRAPHIC REF	PART NUMBER	QTY	PART NAME 1 2 3 4 5 6 (PRODUCT LEVEL)	SEE PAGE
	1	1	**271-6085**	2	GUARD AS (RH)	
	2	1	**271-6086**	2	GUARD AS (LH)	
					(EACH GUARD AS INCLUDES)	
M		1	**8T-3597**	3	NUT-WELD (M12X1.75-THD)	
C	3	1	**198-4778**	12	WASHER-HARD (13.5X30X12-MM THK)	
CM	4	1	**8T-4194**	12	BOLT (M12X1.75X50-MM)	

C-CHANGE FROM PREVIOUS TYPE
M-METRIC PART

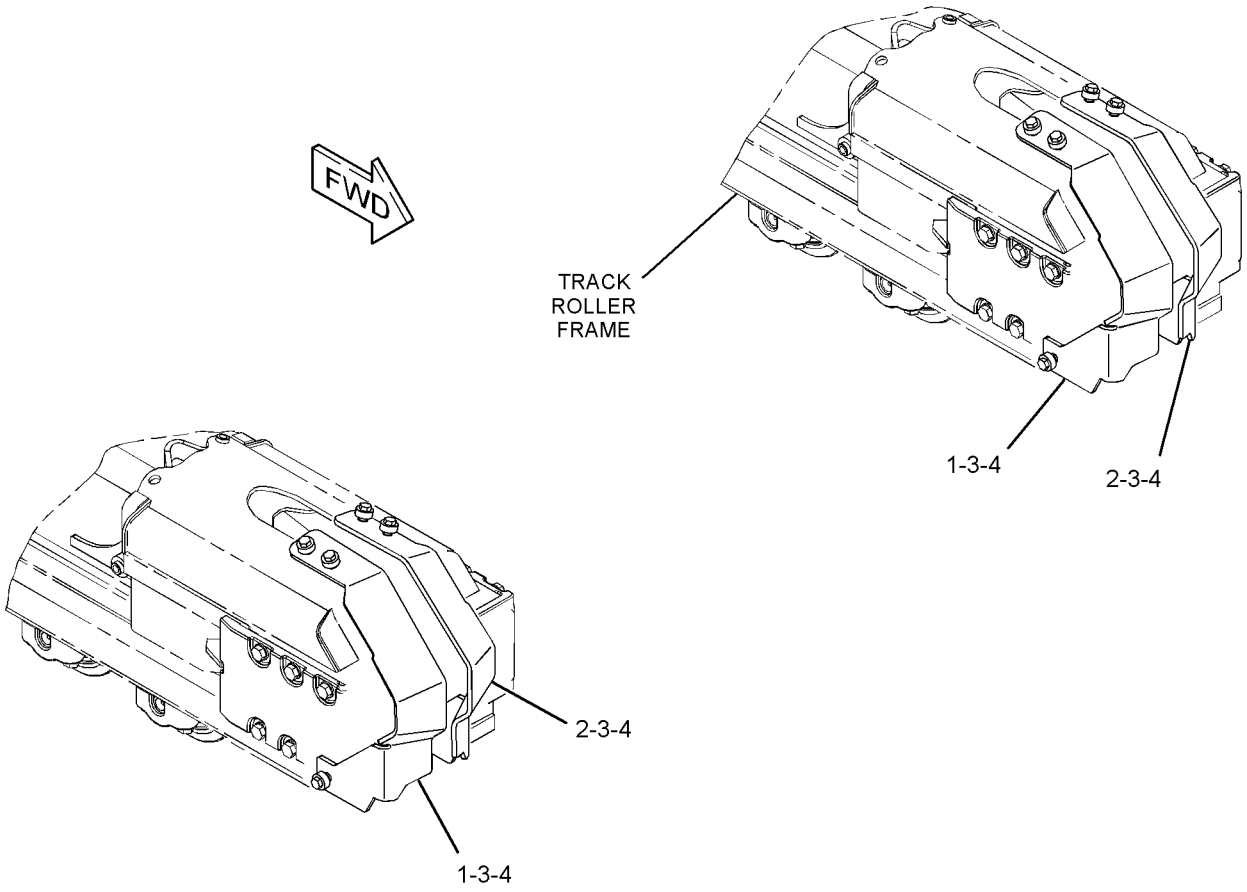

GRAPHIC #1 **<END>** g01415799

239-8243 SPRING GP-RECOIL

S/N: DHA1-UP; FBH1-UP

PART OF 239-8247 SPRING GP-RECOIL

SMCS-4158 **i02589464**

NOTE	REF NO	GRAPHIC REF	PART NUMBER	QTY	PART NAME 1 2 3 4 5 6 (PRODUCT LEVEL)	SEE PAGE
	1	1	**2S-5926**	1	VALVE-RELIEF (RECOIL SPRING OIL)	
	2	1	**7I-7734**	1	RING-BACKUP	
	3	1	**093-1435**	1	SEAL-LIP TYPE	
	4	1	**190-8609**	1	VALVE-FILL (RECOIL SPRING OIL)	
	5	1	**239-8245**	1	PISTON	
	6	1	**251-5785**	1	CYLINDER	
	7	1	**251-5786**	1	ROD	
	8	1	**251-5787**	1	PLATE-GUIDING	
	9	1	**271-6076**	1	PLATE	
	10	1	**271-6077**	1	BRACKET	
	11	1	**093-1515**	2	RING	
	12	1	**095-1612**	2	SEAL-O-RING	
	13	1	**095-1703**	1	SEAL-O-RING	
	14	1	**096-4275**	2	RING	
	15	1	**2J-6274**	1	SEAL-O-RING	
	16	1	**8T-4121**	2	WASHER-HARD (11X21X2.5-MM THK)	
M	17	1	**8T-4195**	2	BOLT (M10X1.5X30-MM)	

M-METRIC PART

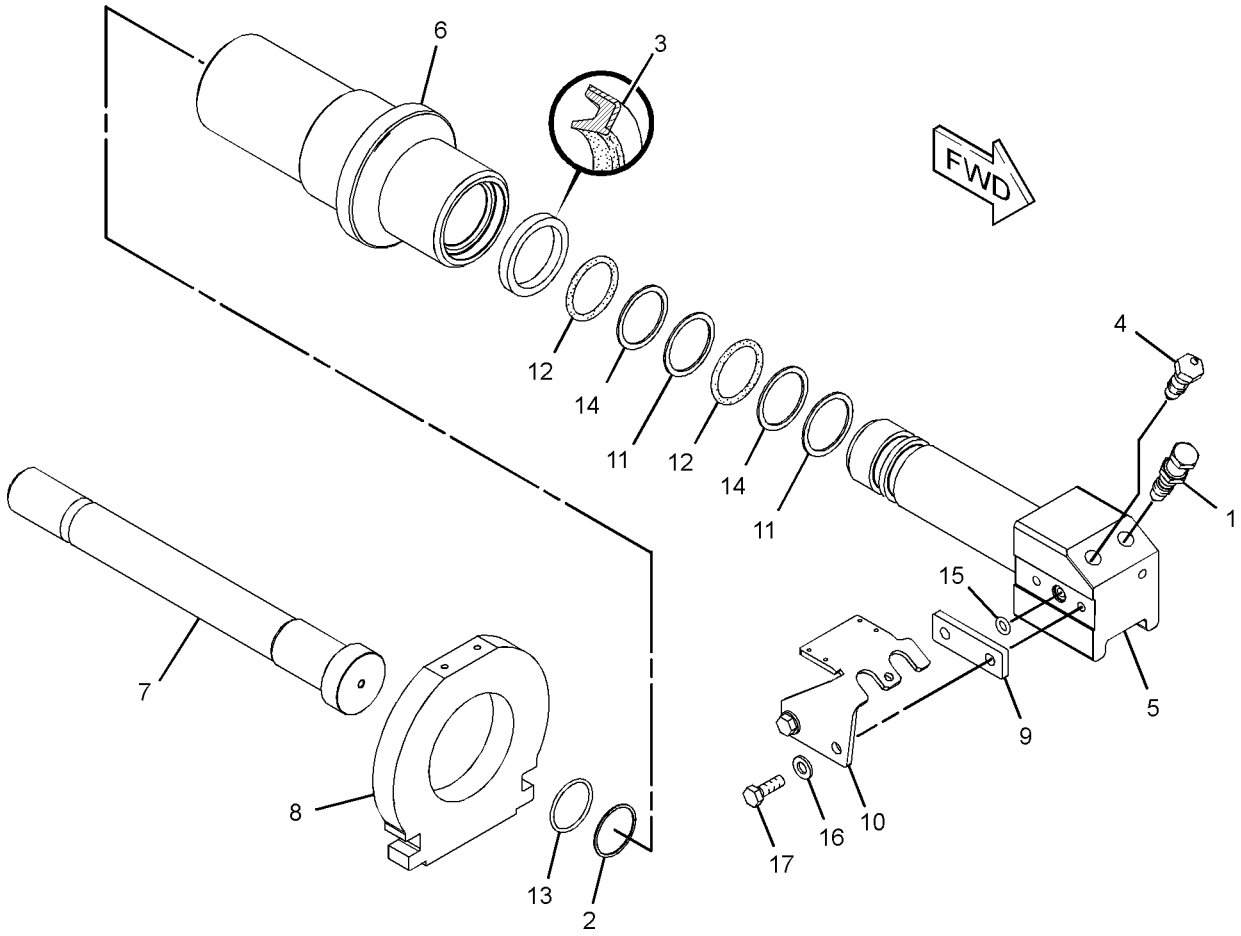

GRAPHIC #1 **<END>** g01299462

239-8247 SPRING GP-RECOIL

S/N: DHA1-UP; FBH1-UP

PART OF 239-8215 TRACK ADJUSTER & RECOIL GP

SMCS-4158 **i02586733**

NOTE	REF NO	GRAPHIC REF	PART NUMBER	QTY	PART NAME 1 2 3 4 5 6 (PRODUCT LEVEL)	SEE PAGE
	1	1	**7I-7719**	1	STRIP	
M	2	1	**7I-7732**	1	NUT-SPECIAL (M42X4.5-THD)	
	3	1	**239-8240**	1	SPRING	
	4	1	**239-8242**	1	SUPPORT	
Y	5	1	*239-8243*	1	SPRING GP-RECOIL	495
	6	1	**251-8522**	1	TUBE	
	7	1	**253-1346**	1	PLATE-WARNING (HIGH PRESSURE CYLINDER)	
	8	1	**271-6069**	1	PLATE	
	9	1	**271-6070**	1	PLATE	
	10	1	**277-8378**	1	PLATE-WARNING (CRUSH HAZARD, READ OMM)	
	11	1	**4S-8264**	8	RIVET-POP	
M	12	1	**7X-2536**	2	BOLT (M8X1.25X14-MM)	
M	13	1	**8T-4971**	2	BOLT (M6X1X30-MM)	
	14	1	**9X-8256**	2	WASHER (6.6X12X2-MM THK)	

M-METRIC PART
Y-SEPARATE ILLUSTRATION

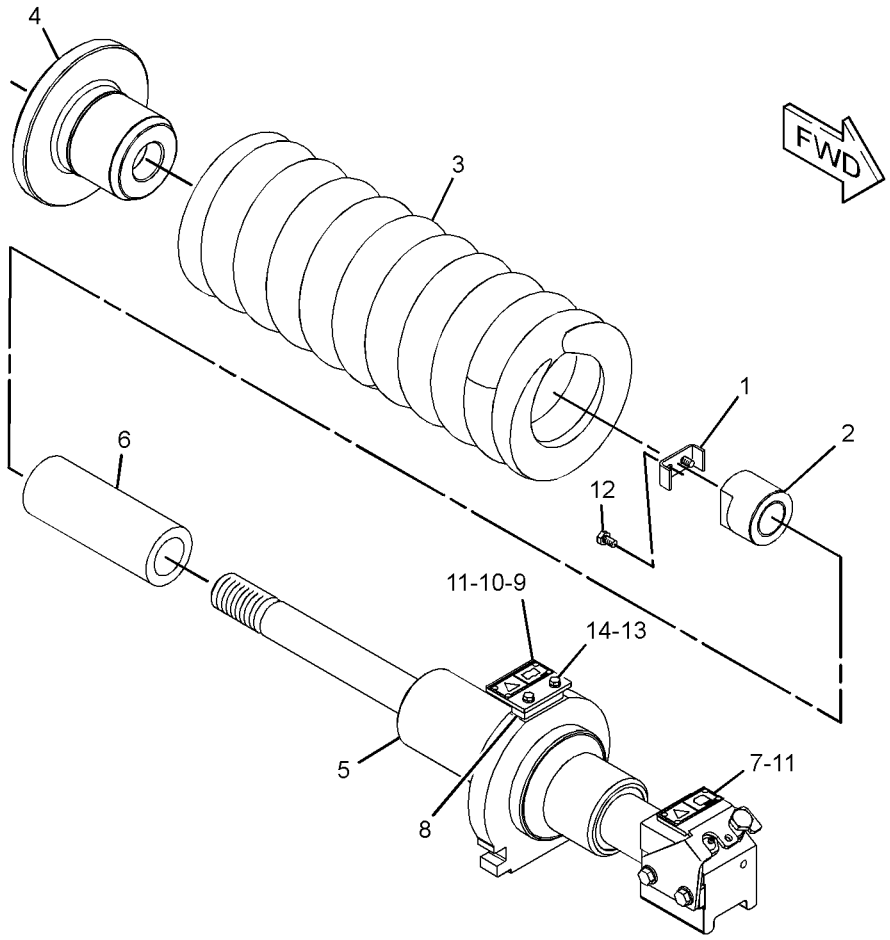

GRAPHIC #1 **<END>** g01299473

239-8215 TRACK ADJUSTER & RECOIL GP

S/N: DHA1-UP; FBH1-UP

PART OF 248-3919, 248-3920 FRAME GP-TRACK ROLLER

SMCS-4157, 4158 **i02957168**

NOTE	REF NO	GRAPHIC REF	PART NUMBER	QTY	PART NAME 1 2 3 4 5 6 (PRODUCT LEVEL)	SEE PAGE
Y	1	1	*239-8247*	1	SPRING GP-RECOIL	496
	2	1	**294-1967**	1	BRACKET AS	
	3	1	**248-3923**	2	BLOCK	
	4	1	**251-5447**	1	PLATE	
M	5	1	**118-7313**	6	BOLT (M16X2X70-MM)	
M	6	1	**160-8509**	2	BOLT (M16X2X50-MM)	
	7	1	**9X-8257**	8	WASHER (17.5X30X3.5-MM THK)	

M-METRIC PART
Y-SEPARATE ILLUSTRATION

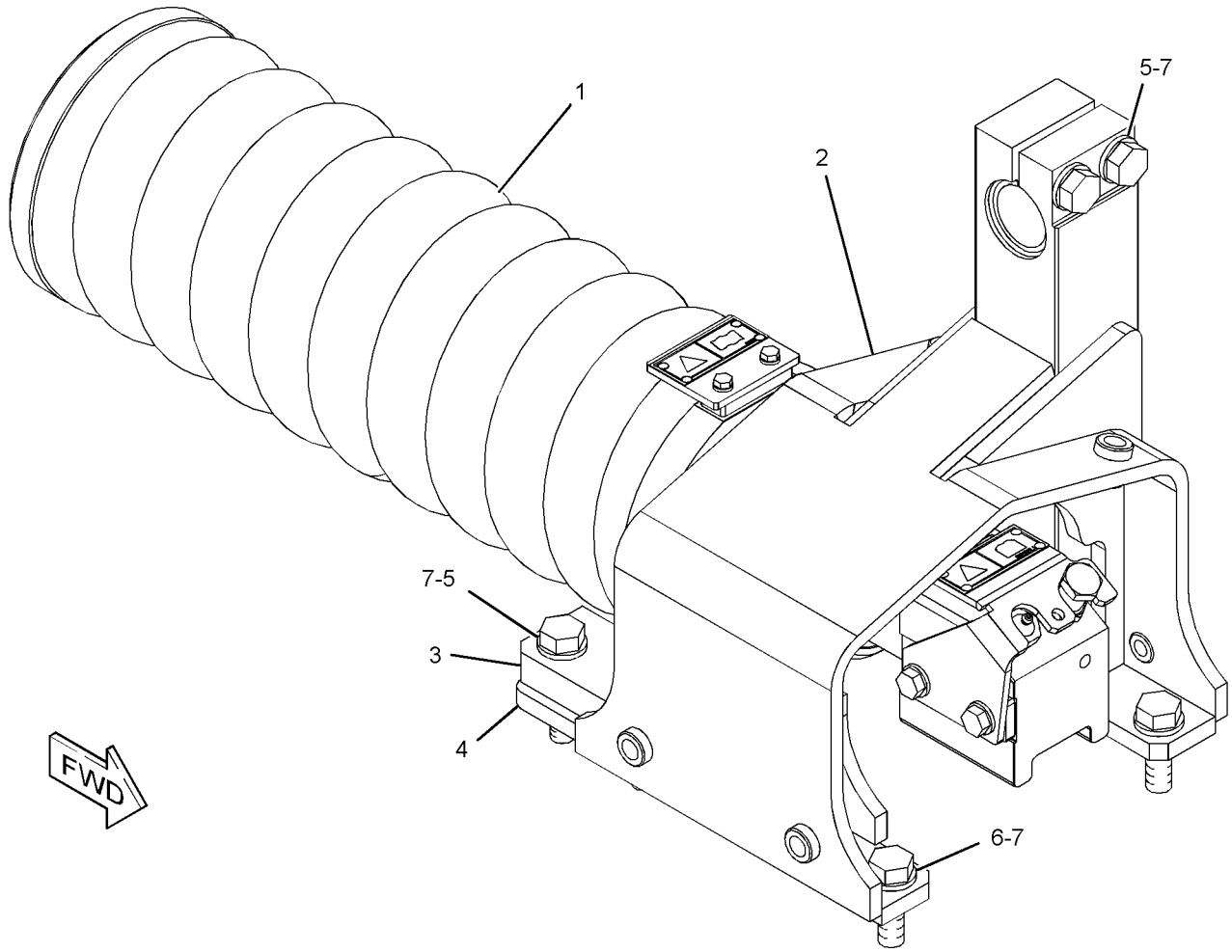

GRAPHIC #1 **<END>** g01507878

235-2540 TRACK GP–2-REQUIRED, SYSTEMONE

S/N: FBH1-UP
560-MM (22-IN) GROUSER SHOE. SEALED, LUBRICATED, MODERATE SERVICE
FOR USE WITH SYSTEMONE ROLLERS, GUARDS, & GUIDESTRIPS
AN ATTACHMENT

SMCS-4170 **i02939427**

NOTE	PART NUMBER	QTY	PART NAME 1 2 3 4 5 6 (PRODUCT LEVEL)	SEE PAGE
Y	**235-2538**	1	LINK AS-TRACK (SYSTEMONE)	473
			S/N: FBH1-532	
Y	**311-6644**	1	LINK AS-TRACK (SYSTEMONE)	476
			S/N: FBH533-UP	
M	**238-0472**	160	BOLT-TRACK (M18X1.5X59-MM, SYSTEMONE)	
	235-2529	2	LINK-TRACK	
M	**238-0473**	160	NUT-TRACK (M18X1.5-THD, SYSTEMONE)	
	235-2533	40	SHOE-TRACK	

M-METRIC PART
Y-SEPARATE ILLUSTRATION

<END>

235-2541 TRACK GP–2-REQUIRED, SYSTEMONE

S/N: DHA1-UP
760-MM (29.9-IN) GROUSER SHOE. SEALED, LUBRICATED, MODERATE SERVICE
FOR USE WITH SYSTEMONE ROLLERS, GUARDS, & GUIDESTRIPS
AN ATTACHMENT

SMCS-4170 **i02939498**

NOTE	PART NUMBER	QTY	PART NAME 1 2 3 4 5 6 (PRODUCT LEVEL)	SEE PAGE
Y	**302-5928**	1	LINK AS-TRACK (SYSTEMONE)	475
			S/N: DHA1-385	
Y	**311-6644**	1	LINK AS-TRACK (SYSTEMONE)	476
			S/N: DHA386-UP	
M	**238-0472**	160	BOLT-TRACK (M18X1.5X59-MM, SYSTEMONE)	
	235-2529	2	LINK-TRACK	
M	**238-0473**	160	NUT-TRACK (M18X1.5-THD, SYSTEMONE)	
	235-2534	40	SHOE-TRACK	

M-METRIC PART
Y-SEPARATE ILLUSTRATION

<END>

246-5735 TRACK GP–2-REQUIRED, SYSTEMONE

S/N: DHA1-UP

760-MM (29.9-IN) GROUSER SHOE. SEALED, LUBRICATED, EXTREME SERVICE
FOR USE WITH SYSTEMONE ROLLERS, GUARDS, & GUIDESTRIPS
AN ATTACHMENT

SMCS-4170 **i03703784**

NOTE	PART NUMBER	QTY	PART NAME 1 2 3 4 5 6 (PRODUCT LEVEL)	SEE PAGE
Y	**302-5928**	1	LINK AS-TRACK (SYSTEMONE)	475
			S/N: DHA1-385	
Y	**311-6644**	1	LINK AS-TRACK (SYSTEMONE)	476
			S/N: DHA386-UP	
M	**238-0472**	160	BOLT-TRACK (M18X1.5X59-MM, SYSTEMONE)	
	235-2529	2	LINK-TRACK	
M	**238-0473**	160	NUT-TRACK (M18X1.5-THD, SYSTEMONE)	
	246-5726	40	SHOE-TRACK	

M-METRIC PART
Y-SEPARATE ILLUSTRATION

<END>

250-3430 TRACK GP–2-REQUIRED, SYSTEMONE

S/N: FBH1-UP

560-MM (28-IN) GROUSER SHOE. SEALED,LUBRICATED, EXTREME SERVICE
FOR USE WITH SYSTEMONE ROLLERS, GUARDS, GUIDESTRIPS
AN ATTACHMENT

SMCS-4170 **i03703785**

NOTE	PART NUMBER	QTY	PART NAME 1 2 3 4 5 6 (PRODUCT LEVEL)	SEE PAGE
Y	**235-2538**	1	LINK AS-TRACK (SYSTEMONE)	473
			S/N: FBH1-532	
Y	**311-6644**	1	LINK AS-TRACK (SYSTEMONE)	476
			S/N: FBH533-UP	
M	**238-0472**	160	BOLT-TRACK (M18X1.5X59-MM, SYSTEMONE)	
	235-2529	2	LINK-TRACK	
M	**238-0473**	160	NUT-TRACK (M18X1.5-THD, SYSTEMONE)	
	246-5727	40	SHOE-TRACK	

M-METRIC PART
Y-SEPARATE ILLUSTRATION

<END>

256-4923 TRACK GP–2-REQUIRED, SYSTEMONE

S/N: DHA1-UP

760-MM (30-IN) GROUSER SHOE. SEALED, LUBRICATED, MODERATE SERVICE, CLAMP MASTER

FOR USE WITH SYSTEMONE ROLLERS, GUARDS, GUIDESTRIPS

FIELD INSTALLATION

SMCS-4170 **i03144594**

NOTE	PART NUMBER	QTY	PART NAME 1 2 3 4 5 6 (PRODUCT LEVEL)	SEE PAGE
Y	**311-6644**	1	LINK AS-TRACK (SYSTEMONE)	476
M	**238-0472**	156	BOLT-TRACK (M18X1.5X59-MM, SYSTEMONE)	
	254-0227	4	BOLT-TRACK MASTER (M18X1.5X93-MM, SYSTEMONE)	
	235-2621	2	LINK-TRACK MASTER	
M	**238-0473**	156	NUT-TRACK (M18X1.5-THD, SYSTEMONE)	
	235-2534	39	SHOE-TRACK	
	255-4182	1	SHOE-TRACK MASTER	

M-METRIC PART
Y-SEPARATE ILLUSTRATION

<END>

256-4924 TRACK GP–2-REQUIRED, SYSTEMONE

S/N: FBH1-UP

560-MM (22-IN) GROUSER SHOE. SEALED, LUBRICATED, MODERATE SERVICE, CLAMP MASTER

FOR USE WITH SYSTEMONE ROLLERS, GUARDS, GUIDESTRIPS

FIELD INSTALLATION

SMCS-4170 **i02398539**

NOTE	PART NUMBER	QTY	PART NAME 1 2 3 4 5 6 (PRODUCT LEVEL)	SEE PAGE
Y	**235-2539**	1	LINK GP-TRACK (SYSTEMONE)	474
M	**238-0472**	148	BOLT-TRACK (M18X1.5X59-MM, SYSTEMONE)	
	254-0227	4	BOLT-TRACK MASTER (M18X1.5X93-MM, SYSTEMONE)	
	235-2621	2	LINK-TRACK MASTER	
M	**238-0473**	148	NUT-TRACK (M18X1.5-THD, SYSTEMONE)	
	235-2533	37	SHOE-TRACK	
	255-4183	1	SHOE-TRACK MASTER	

M-METRIC PART
Y-SEPARATE ILLUSTRATION

<END>

256-4925 TRACK GP–2-REQUIRED, SYSTEMONE

S/N: DHA1-UP

760-MM (30-IN) GROUSER SHOE. SEALED, LUBRICATED, EXTREME SERVICE, CLAMP MASTER

FOR USE WITH SYSTEMONE ROLLERS, GUARDS, GUIDESTRIPS

FIELD INSTALLATION

SMCS-4170 **i03144686**

NOTE	PART NUMBER	QTY	PART NAME 1 2 3 4 5 6 (PRODUCT LEVEL)	SEE PAGE
Y	**311-6644**	1	LINK AS-TRACK (SYSTEMONE)	476
M	**238-0472**	156	BOLT-TRACK (M18X1.5X59-MM, SYSTEMONE)	
	254-0227	4	BOLT-TRACK MASTER (M18X1.5X93-MM, SYSTEMONE)	
	235-2621	2	LINK-TRACK MASTER	
M	**238-0473**	156	NUT-TRACK (M18X1.5-THD, SYSTEMONE)	
	246-5726	39	SHOE-TRACK	
	255-4184	1	SHOE-TRACK MASTER	

M-METRIC PART
Y-SEPARATE ILLUSTRATION

<END>

256-4926 TRACK GP–2-REQUIRED, SYSTEMONE

S/N: FBH1-UP

560-MM (22-IN) GROUSER SHOE. SEALED, LUBRICATED, EXTREME SERVICE, CLAMP MASTER

FOR USE WITH SYSTEMONE ROLLERS, GUARDS, GUIDESTRIPS

FIELD INSTALLATION

SMCS-4170 **i02398659**

NOTE	PART NUMBER	QTY	PART NAME 1 2 3 4 5 6 (PRODUCT LEVEL)	SEE PAGE
Y	**235-2539**	1	LINK GP-TRACK (SYSTEMONE)	474
M	**238-0472**	148	BOLT-TRACK (M18X1.5X59-MM, SYSTEMONE)	
	254-0227	4	BOLT-TRACK MASTER (M18X1.5X93-MM, SYSTEMONE)	
	235-2621	2	LINK-TRACK MASTER	
M	**238-0473**	148	NUT-TRACK (M18X1.5-THD, SYSTEMONE)	
	246-5727	37	SHOE-TRACK	
	255-4185	1	SHOE-TRACK MASTER	

M-METRIC PART
Y-SEPARATE ILLUSTRATION

<END>

256-4928 TRACK GP—2-REQUIRED, SYSTEMONE

S/N: DHA1-UP

760-MM (30-IN) GROUSER SHOE. SEALED, LUBRICATED, MODERATE SERVICE, CLAMP MASTER

FOR USE WITH SYSTEMONE ROLLERS, GUARDS, GUIDESTRIPS

FIELD INSTALLATION

SMCS-4170 **i02593471**

NOTE	PART NUMBER	QTY	PART NAME 1 2 3 4 5 6 (PRODUCT LEVEL)	SEE PAGE
Y	**235-2525**	1	LINK GP-TRACK (SYSTEMONE)	471
M	**218-3274**	172	BOLT-TRACK (M16X1.5X56-MM)	
	254-0227	4	BOLT-TRACK MASTER (M18X1.5X93-MM, SYSTEMONE)	
	235-2620	2	LINK-TRACK MASTER	
M	**5I-6125**	172	NUT-TRACK (M16X1.5-THD)	
	260-6765	43	SHOE-TRACK	
	255-1530	1	SHOE-TRACK MASTER	

M-METRIC PART
Y-SEPARATE ILLUSTRATION

<END>

256-4930 TRACK GP—2-REQUIRED, SYSTEMONE

S/N: DHA1-UP

610-MM (24-IN) GROUSER SHOE. SEALED, LUBRICATED, MODERATE SERVICE, CLAMP MASTER

FOR USE WITH SYSTEMONE ROLLERS, GUARDS, GUIDESTRIPS

FIELD INSTALLATION

SMCS-4170 **i02593475**

NOTE	PART NUMBER	QTY	PART NAME 1 2 3 4 5 6 (PRODUCT LEVEL)	SEE PAGE
Y	**235-2525**	1	LINK GP-TRACK (SYSTEMONE)	471
M	**218-3274**	172	BOLT-TRACK (M16X1.5X56-MM)	
	254-0227	4	BOLT-TRACK MASTER (M18X1.5X93-MM, SYSTEMONE)	
	235-2620	2	LINK-TRACK MASTER	
M	**5I-6125**	172	NUT-TRACK (M16X1.5-THD)	
	260-6766	43	SHOE-TRACK	
	255-1532	1	SHOE-TRACK MASTER	

M-METRIC PART
Y-SEPARATE ILLUSTRATION

<END>

256-4931 TRACK GP–2-REQUIRED, SYSTEMONE

S/N: FBH1-UP

560-MM (22-IN) GROUSER SHOE. SEALED, LUBRICATED, MODERATE SERVICE, CLAMP MASTER

FOR USE WITH SYSTEMONE ROLLERS GUARDS, GUIDESTRIPS

FIELD INSTALLATION

SMCS-4170 **i02595315**

NOTE	PART NUMBER	QTY	PART NAME 1 2 3 4 5 6 (PRODUCT LEVEL)	SEE PAGE
Y	**235-2526**	1	LINK GP-TRACK (SYSTEMONE)	472
M	**218-3274**	160	BOLT-TRACK (M16X1.5X56-MM)	
	254-0227	4	BOLT-TRACK MASTER (M18X1.5X93-MM, SYSTEMONE)	
	235-2620	2	LINK-TRACK MASTER	
M	**5I-6125**	160	NUT-TRACK (M16X1.5-THD)	
	260-6767	40	SHOE-TRACK	
	255-1533	1	SHOE-TRACK MASTER	

M-METRIC PART
Y-SEPARATE ILLUSTRATION

<END>

256-4932 TRACK GP–2-REQUIRED, SYSTEMONE

S/N: FBH1-UP

560-MM (22-IN) GROUSER SHOE. SEALED, LUBRICATED, EXTREME SERVICE, CLAMP MASTER

FOR USE WITH SYSTEMONE ROLLERS, GUARDS, GUIDESTRIPS

FIELD INSTALLATION

SMCS-4170 **i02593959**

NOTE	PART NUMBER	QTY	PART NAME 1 2 3 4 5 6 (PRODUCT LEVEL)	SEE PAGE
Y	**235-2526**	1	LINK GP-TRACK (SYSTEMONE)	472
M	**218-3274**	160	BOLT-TRACK (M16X1.5X56-MM)	
	254-0227	4	BOLT-TRACK MASTER (M18X1.5X93-MM, SYSTEMONE)	
	235-2620	2	LINK-TRACK MASTER	
M	**5I-6125**	160	NUT-TRACK (M16X1.5-THD)	
	260-6771	40	SHOE-TRACK	
	255-1534	1	SHOE-TRACK MASTER	

M-METRIC PART
Y-SEPARATE ILLUSTRATION

<END>

256-4933 TRACK GP—2-REQUIRED, SYSTEMONE

S/N: FBH1-UP
510-MM (20.1-IN) GROUSER SHOE. SEALED, LUBRICATED, EXTREME SERVICE, CLAMP MASTER
FOR USE WITH SYSTEMONE ROLLERS, GUARDS, GUIDESTRIPS
FIELD INSTALLATION

SMCS-4170 **i02593956**

NOTE	PART NUMBER	QTY	PART NAME 1 2 3 4 5 6 (PRODUCT LEVEL)	SEE PAGE
Y	**235-2526**	1	LINK GP-TRACK (SYSTEMONE)	472
M	**218-3274**	160	BOLT-TRACK (M16X1.5X56-MM)	
	254-0227	4	BOLT-TRACK MASTER (M18X1.5X93-MM, SYSTEMONE)	
	235-2620	2	LINK-TRACK MASTER	
M	**5I-6125**	160	NUT-TRACK (M16X1.5-THD)	
	260-6772	40	SHOE-TRACK	
	256-4944	1	SHOE-TRACK MASTER	

M-METRIC PART
Y-SEPARATE ILLUSTRATION

<END>

258-0932 TRACK GP—2-REQUIRED, SYSTEMONE

S/N: FBH1-UP
510-MM (20-IN) GROUSER SHOE.
SEALED, LUBRICATED, MODERATE SERVICE, CLAMP MASTER
FOR USE WITH SYSTEMONE ROLLERS, GUARDS, GUIDESTRIPS
FIELD INSTALLATION

SMCS-4170 **i02593953**

NOTE	PART NUMBER	QTY	PART NAME 1 2 3 4 5 6 (PRODUCT LEVEL)	SEE PAGE
Y	**235-2526**	1	LINK GP-TRACK (SYSTEMONE)	472
M	**218-3274**	160	BOLT-TRACK (M16X1.5X56-MM)	
	254-0227	4	BOLT-TRACK MASTER (M18X1.5X93-MM, SYSTEMONE)	
	235-2620	2	LINK-TRACK MASTER	
M	**5I-6125**	160	NUT-TRACK (M16X1.5-THD)	
	260-6768	40	SHOE-TRACK	
	257-2336	1	SHOE-TRACK MASTER	

M-METRIC PART
Y-SEPARATE ILLUSTRATION

<END>

277-2245 TRACK GP–2-REQUIRED, SYSTEMONE

S/N: FBH1-UP

510-MM (20-IN) GROUSER SHOE. SEALED, LUBRICATED, MODERATE SERVICE

AN ATTACHMENT

SMCS-4170 **i03711742**

NOTE	PART NUMBER	QTY	PART NAME 1 2 3 4 5 6 (PRODUCT LEVEL)	SEE PAGE
Y	**235-2538**	1	LINK AS-TRACK (SYSTEMONE)	473
			S/N: FBH1-532	
Y	**311-6644**	1	LINK AS-TRACK (SYSTEMONE)	476
			S/N: FBH533-UP	
M	**238-0472**	160	BOLT-TRACK (M18X1.5X59-MM, SYSTEMONE)	
	235-2529	2	LINK-TRACK	
M	**238-0473**	160	NUT-TRACK (M18X1.5-THD, SYSTEMONE)	
	235-2554	40	SHOE-TRACK	

M-METRIC PART
Y-SEPARATE ILLUSTRATION

<END>

277-2246 TRACK GP–2-REQUIRED, SYSTEMONE

S/N: FBH1-UP

510-MM (20-IN) GROUSER SHOE. SEALED, LUBRICATED, EXTREME SERVICE

FOR USE WITH SYSTEMONE ROLLERS, GUARDS, GUIDESTRIPS

AN ATTACHMENT

SMCS-4170 **i02835541**

NOTE	PART NUMBER	QTY	PART NAME 1 2 3 4 5 6 (PRODUCT LEVEL)	SEE PAGE
Y	**311-6644**	1	LINK GP-TRACK (SYSTEMONE)	476
M	**238-0472**	160	BOLT-TRACK (M18X1.5X59-MM, SYSTEMONE)	
	235-2529	2	LINK-TRACK	
M	**238-0473**	160	NUT-TRACK (M18X1.5-THD, SYSTEMONE)	
	277-2238	40	SHOE-TRACK	

M-METRIC PART
Y-SEPARATE ILLUSTRATION

<END>

277-2247 TRACK GP–2-REQUIRED, SYSTEMONE

S/N: DHA1-UP

610-MM (24-IN) GROUSER SHOE. SEALED, LUBRICATED, MODERATE SERVICE

FOR USE WITH SYSTEMONE ROLLERS, GUARDS, GUIDESTRIPS

AN ATTACHMENT

SMCS-4170 **i02994310**

NOTE	PART NUMBER	QTY	PART NAME 1 2 3 4 5 6 (PRODUCT LEVEL)	SEE PAGE
Y	**302-5928**	1	LINK AS-TRACK (SYSTEMONE)	475
			S/N: DHA1-385	
Y	**311-6644**	1	LINK GP-TRACK (SYSTEMONE)	476
			S/N: DHA386-UP	
M	**238-0472**	160	BOLT-TRACK (M18X1.5X59-MM, SYSTEMONE)	
	235-2529	2	LINK-TRACK	
M	**238-0473**	160	NUT-TRACK (M18X1.5-THD, SYSTEMONE)	
	277-2239	40	SHOE-TRACK	

M-METRIC PART
Y-SEPARATE ILLUSTRATION

<END>

277-2248 TRACK GP–2-REQUIRED, SYSTEMONE

S/N: DHA1-UP

610-MM (24-IN) GROUSER SHOE. SEALED, LUBRICATED, EXTREME SERVICE

FOR USE WITH SYSTEMONE ROLLERS, GUARDS, GUIDESTRIPS

AN ATTACHMENT

SMCS-4170 **i03712060**

NOTE	PART NUMBER	QTY	PART NAME 1 2 3 4 5 6 (PRODUCT LEVEL)	SEE PAGE
Y	**302-5928**	1	LINK AS-TRACK (SYSTEMONE)	475
			S/N: DHA1-385	
Y	**311-6644**	1	LINK AS-TRACK (SYSTEMONE)	476
			S/N: DHA386-UP	
M	**238-0472**	160	BOLT-TRACK (M18X1.5X59-MM, SYSTEMONE)	
	235-2529	2	LINK-TRACK	
M	**238-0473**	160	NUT-TRACK (M18X1.5-THD, SYSTEMONE)	
	277-2240	40	SHOE-TRACK	

M-METRIC PART
Y-SEPARATE ILLUSTRATION

<END>

277-2249 TRACK GP–2-REQUIRED, SYSTEMONE

S/N: DHA1-UP

770-MM (30.3-IN) SELF CLEANING GROUSER SHOE. SEALED, LUBRICATED
FOR USE WITH SYSTEMONE ROLLERS, GUARDS, GUIDESTRIPS
AN ATTACHMENT

SMCS-4170 **i03714621**

NOTE	PART NUMBER	QTY	PART NAME 1 2 3 4 5 6 (PRODUCT LEVEL)	SEE PAGE
Y	**302-5928**	1	LINK AS-TRACK (SYSTEMONE)	475
			S/N: DHA1-385	
Y	**311-6644**	1	LINK AS-TRACK (SYSTEMONE)	476
			S/N: DHA386-UP	
M	**238-0472**	80	BOLT-TRACK (M18X1.5X59-MM, SYSTEMONE)	
	254-0227	80	BOLT-TRACK MASTER (M18X1.5X93-MM, SYSTEMONE)	
	235-2529	2	LINK-TRACK	
M	**238-0473**	160	NUT-TRACK (M18X1.5-THD, SYSTEMONE)	
	241-7870	40	SHOE-TRACK	

M-METRIC PART
Y-SEPARATE ILLUSTRATION

<END>

289-3086 TRACK GP–2-REQUIRED, SYSTEMONE

S/N: FBH1-UP

510-MM (20-IN) GROUSER SHOE. SEALED, LUBRICATED, MODERATE SERVICE,
CENTER HOLE
FOR USE WITH SYSTEMONE ROLLER, GUARDS, GUIDESTRIPS
AN ATTACHMENT

SMCS-4170 **i03706560**

NOTE	PART NUMBER	QTY	PART NAME 1 2 3 4 5 6 (PRODUCT LEVEL)	SEE PAGE
Y	**235-2538**	1	LINK AS-TRACK (SYSTEMONE)	473
			S/N: FBH1-532	
Y	**311-6644**	1	LINK AS-TRACK (SYSTEMONE)	476
			S/N: FBH533-UP	
M	**238-0472**	160	BOLT-TRACK (M18X1.5X59-MM, SYSTEMONE)	
	235-2529	2	LINK-TRACK	
M	**238-0473**	160	NUT-TRACK (M18X1.5-THD, SYSTEMONE)	
	289-3085	40	SHOE-TRACK	

M-METRIC PART
Y-SEPARATE ILLUSTRATION

<END>

UNDERCARRIAGE

206-7291 UNDERCARRIAGE AR–LGP

S/N: DHA1-UP

PART OF 206-7251 COMMON AR

SMCS-4150 **i03601707**

NOTE	REF NO	GRAPHIC REF	PART NUMBER	QTY	PART NAME 1 2 3 4 5 6 (PRODUCT LEVEL)	SEE PAGE
Y	1	1	**227-5971**	2	ROLLER GP-TRACK CARRIER (HEAVY-DUTY, SYSTEMONE)	492
Y	2	1	**239-8211**	2	IDLER GP-TRACK	470
Y	3	1	*239-8217*	1	GUARD GP-SPROCKET	463
Y	4	1	*248-3912*	1	BAR GP-EQUALIZER	456
Y	5	1	*248-3914*	1	PIVOT BAR GP	489
Y	6	1	*248-3918*	1	GUARD GP-RECOIL MECHANISM	462
Y	7	1	*248-3919*	1	FRAME GP-TRACK ROLLER (LH)	460
Y	8	1	*248-3920*	1	FRAME GP-TRACK ROLLER (RH)	461
Y	9	1	*271-6071*	1	SCRAPER GP-IDLER	493

Y-SEPARATE ILLUSTRATION

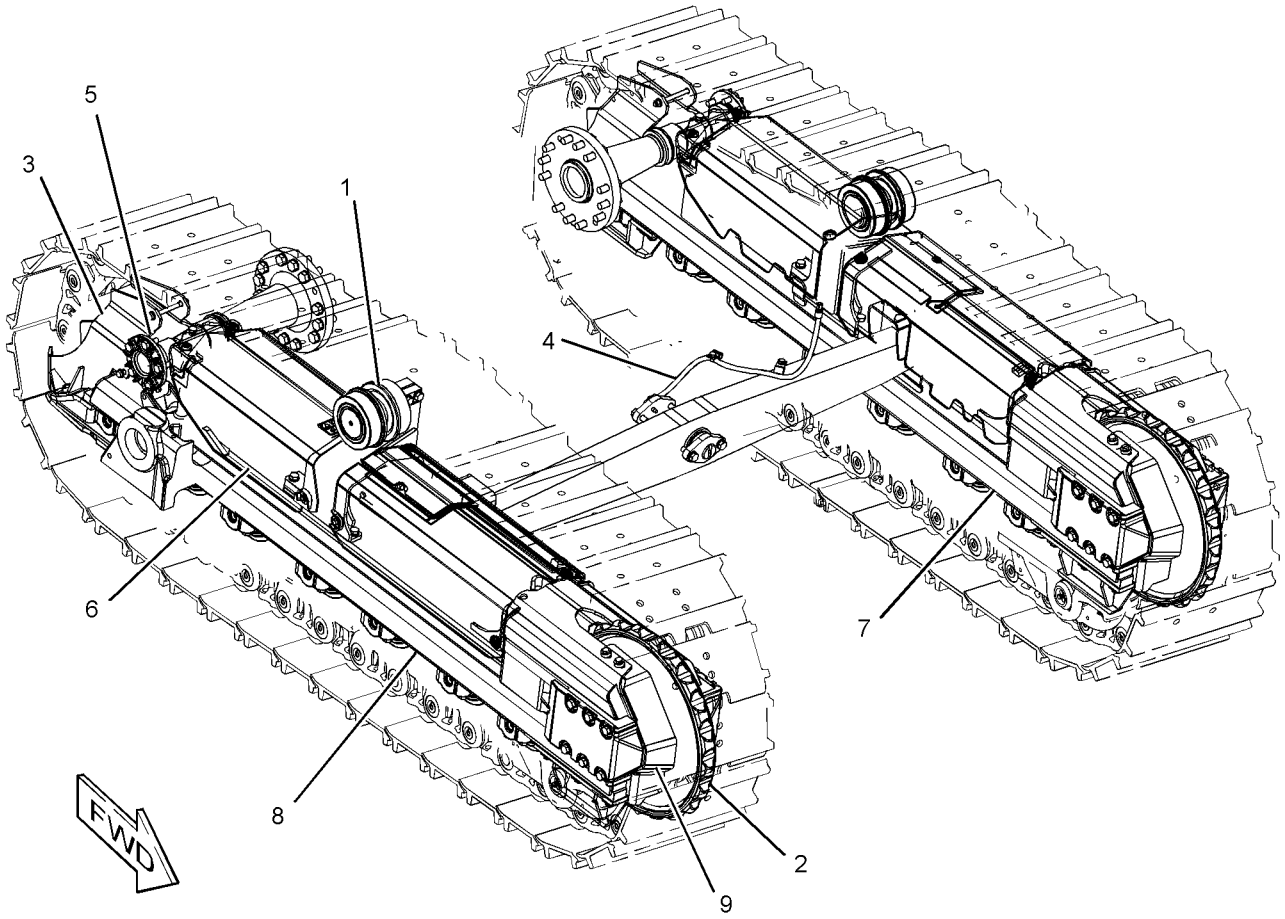

GRAPHIC #1 **<END>** g01946682

UNDERCARRIAGE

271-6035 UNDERCARRIAGE AR–XL

S/N: FBH1-UP

PART OF 206-7250 COMMON AR

SMCS-4150 **i03706620**

NOTE	REF NO	GRAPHIC REF	PART NUMBER	QTY	PART NAME 1 2 3 4 5 6 (PRODUCT LEVEL)	SEE PAGE
Y	1	1	**227-5971**	2	ROLLER GP-TRACK CARRIER (HEAVY-DUTY, SYSTEMONE)	492
Y	2	1	**239-8211**	2	IDLER GP-TRACK	470
Y	3	1	*239-8212*	1	BAR GP-EQUALIZER	455
Y	4	1	*239-8214*	1	PIVOT BAR GP	488
Y	5	1	*239-8217*	1	GUARD GP-SPROCKET	463
Y	6	1	*248-3918*	1	GUARD GP-RECOIL MECHANISM	462
Y	7	1	*248-3919*	1	FRAME GP-TRACK ROLLER (LH)	460
Y	8	1	*248-3920*	1	FRAME GP-TRACK ROLLER (RH)	461
Y	9	1	*271-6071*	1	SCRAPER GP-IDLER	493

Y-SEPARATE ILLUSTRATION

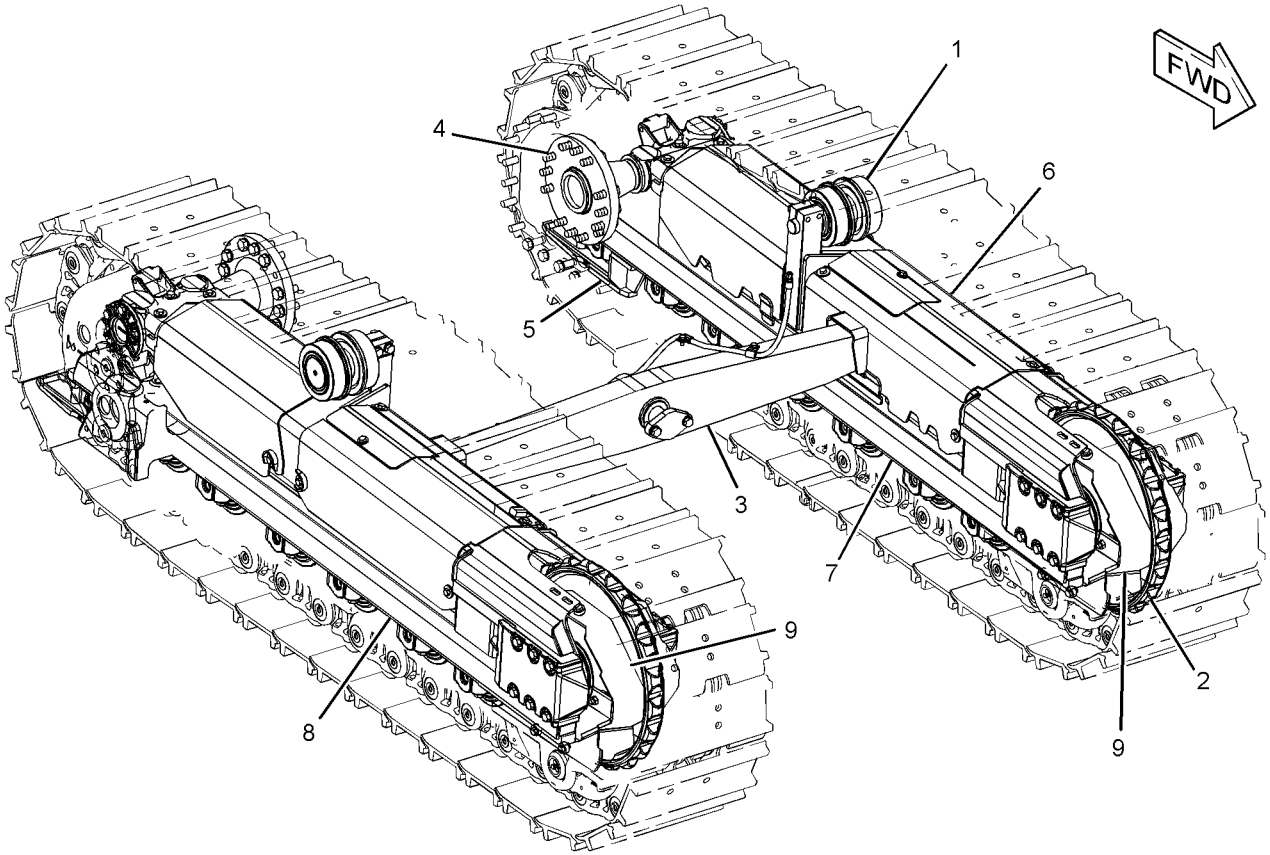

GRAPHIC #1 **<END>** g02003674

267-6709 MANIFOLD & VALVE GP–RETURN MANIFOLD

S/N: DHA1-UP; FBH1-UP

PART OF 253-1803 VALVE GP-TRANSMISSION CONTROL

SMCS-3073, 3206, 5479 **i03706623**

NOTE	REF NO	GRAPHIC REF	PART NUMBER	QTY	PART NAME 1 2 3 4 5 6 (PRODUCT LEVEL)	SEE PAGE
	1	1	**105-4593**	2	POPPET	
	2	1	**212-6603**	2	PLUG AS	
					(EACH INCLUDES)	
		1	**6V-8978**	1	SEAL-O-RING	
	3	1	**212-6604**	2	SPRING	
	4	1	**245-1181**	2	FLANGE	
Y	5	1	**252-2237**	1	VALVE GP-SOLENOID (PARKING BRAKE)	625
Y	5A	1	**252-2237**	1	VALVE GP-SOLENOID (HYDROSTATIC PRESSURE CUTOFF)	625
	6	1	**267-6708**	1	MANIFOLD	
M	7	1	**8T-1158**	2	BOLT-SOCKET HEAD (M8X1.25X20-MM)	

M-METRIC PART
Y-SEPARATE ILLUSTRATION

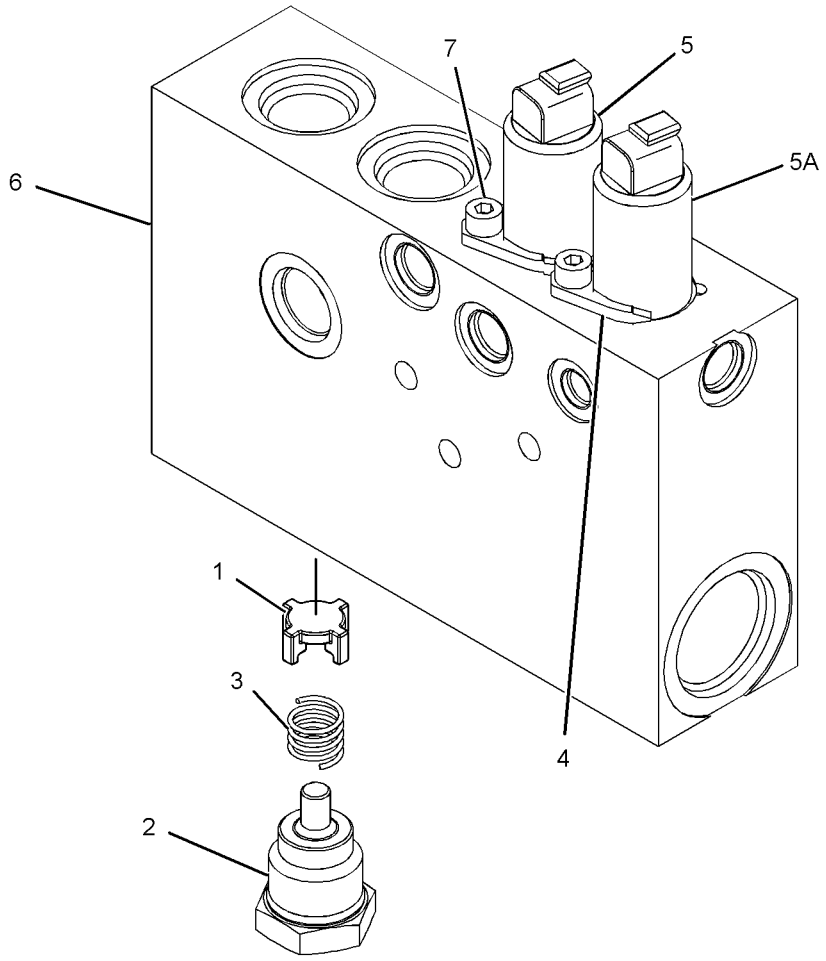

GRAPHIC #1 **<END>** g01293554

226-0420 ACCUMULATOR GP-PILOT OIL–CHARGED

S/N: DHA1-UP; FBH1-UP
PART OF 248-1664 LINES GP-PILOT
FIELD REPLACEMENT ORDER 230-3489–PAGE 512

SMCS-5077 **i02369953**

NOTE	REF NO	GRAPHIC REF	PART NUMBER	QTY	PART NAME 1 2 3 4 5 6 (PRODUCT LEVEL)	SEE PAGE
					(NO SERVICED PARTS)	

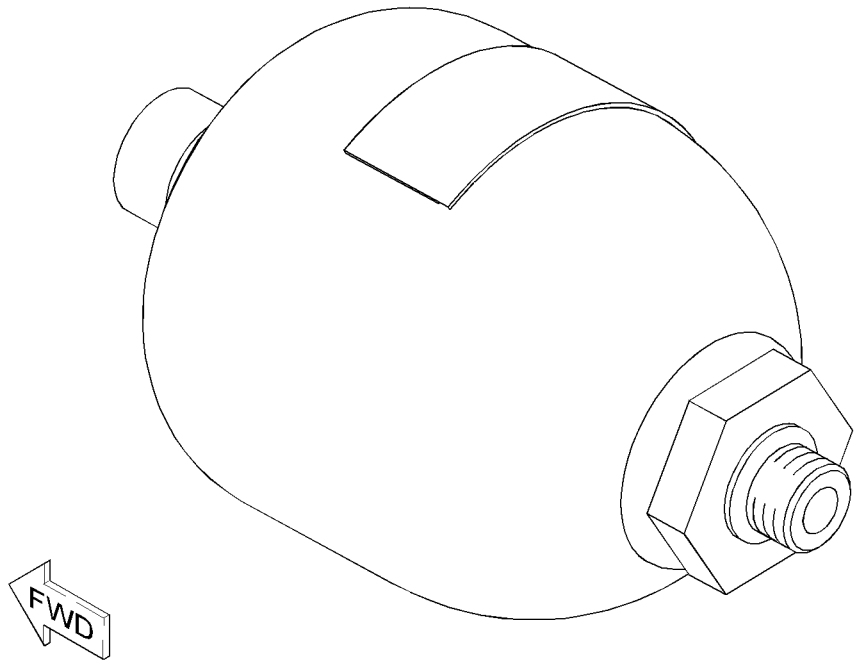

GRAPHIC #1 **<END>** g01197342

230-3489 ACCUMULATOR GP-PILOT OIL—UNCHARGED

S/N: DHA1-UP; FBH1-UP

FIELD REPLACEMENT FOR 226-0420—PAGE 511

SMCS-5077 **i03020894**

NOTE	REF NO	GRAPHIC REF	PART NUMBER	QTY	PART NAME 1 2 3 4 5 6 (PRODUCT LEVEL)	SEE PAGE
					(NO SERVICED PARTS)	

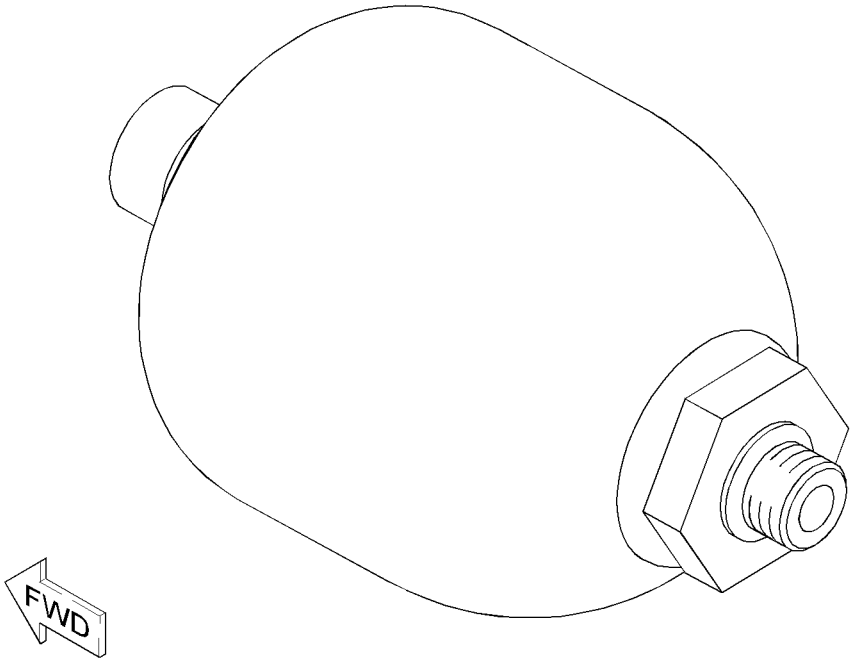

GRAPHIC #1 **<END>** g01527032

302-8157 ACTUATOR GP-HYDRAULIC

S/N: DHA1-UP; FBH1-UP

PART OF 320-3629, 320-3630, 320-3631, 320-3632 VALVE GP-CONTROL

AN ATTACHMENT

SMCS-5078 **i03622878**

NOTE	REF NO	GRAPHIC REF	PART NUMBER	QTY	PART NAME 1 2 3 4 5 6 (PRODUCT LEVEL)	SEE PAGE
Y	1	1	**302-8149**	1	VALVE GP-SOLENOID (IMPLEMENT)	626
Y	1A	1	**302-8149**	1	VALVE GP-SOLENOID (IMPLEMENT)	626
	2	1	**5F-9144**	3	SEAL-O-RING	
	3	1	**5D-6543**	1	SEAL-O-RING	
	4	1	**211-5255**	4	BOLT-SOCKET HEAD (M5X0.8X55-MM)	
M	5	1	**8T-5433**	3	BOLT-SOCKET HEAD (M3X0.5X1.5-MM)	

M-METRIC PART
Y-SEPARATE ILLUSTRATION

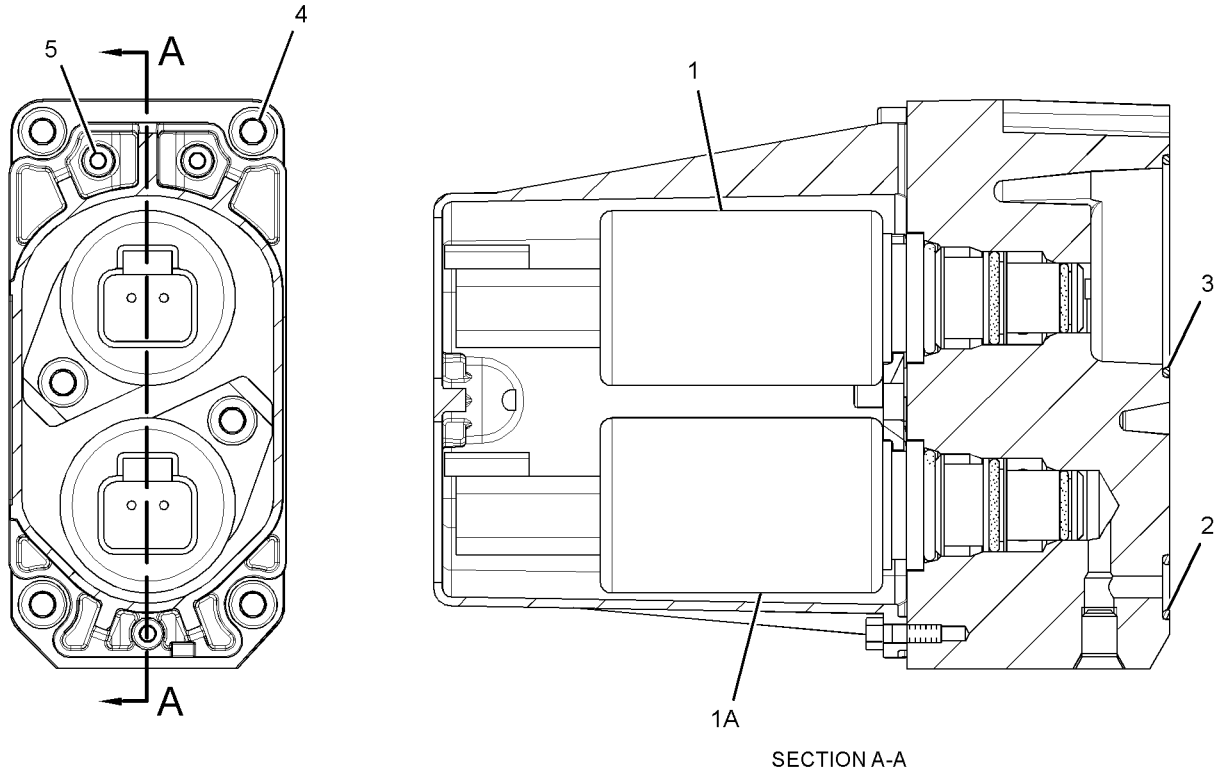

SECTION A-A

GRAPHIC #1 **<END>** g01561635

HYDRAULIC SYSTEM

177-6949 ACTUATOR GP-PUMP–WINCH

S/N: DHA1-UP; FBH1-UP
PART OF 249-8600 PUMP GP-PISTON
AN ATTACHMENT

SMCS-5070, 5078 **i02398354**

NOTE	REF NO	GRAPHIC REF	PART NUMBER	QTY	PART NAME 1 2 3 4 5 6 (PRODUCT LEVEL)	SEE PAGE
	1	1	**145-3811**	1	COVER	
	2	1	**117-7273**	2	SEAL-O-RING	
	3	1	**145-3812**	2	RING	
	4	1	**145-3813**	2	RING-SEAL	
	5	1	**177-7783**	1	PISTON	
	6	1	**145-3810**	1	COVER	
M	7	1	**160-8499**	1	NUT (M12X1.5-THD)	
	8	1	**5W-1437**	8	LOCKWASHER	
M	9	1	**8T-1158**	8	BOLT-SOCKET HEAD (M8X1.25X20-MM)	

M-METRIC PART

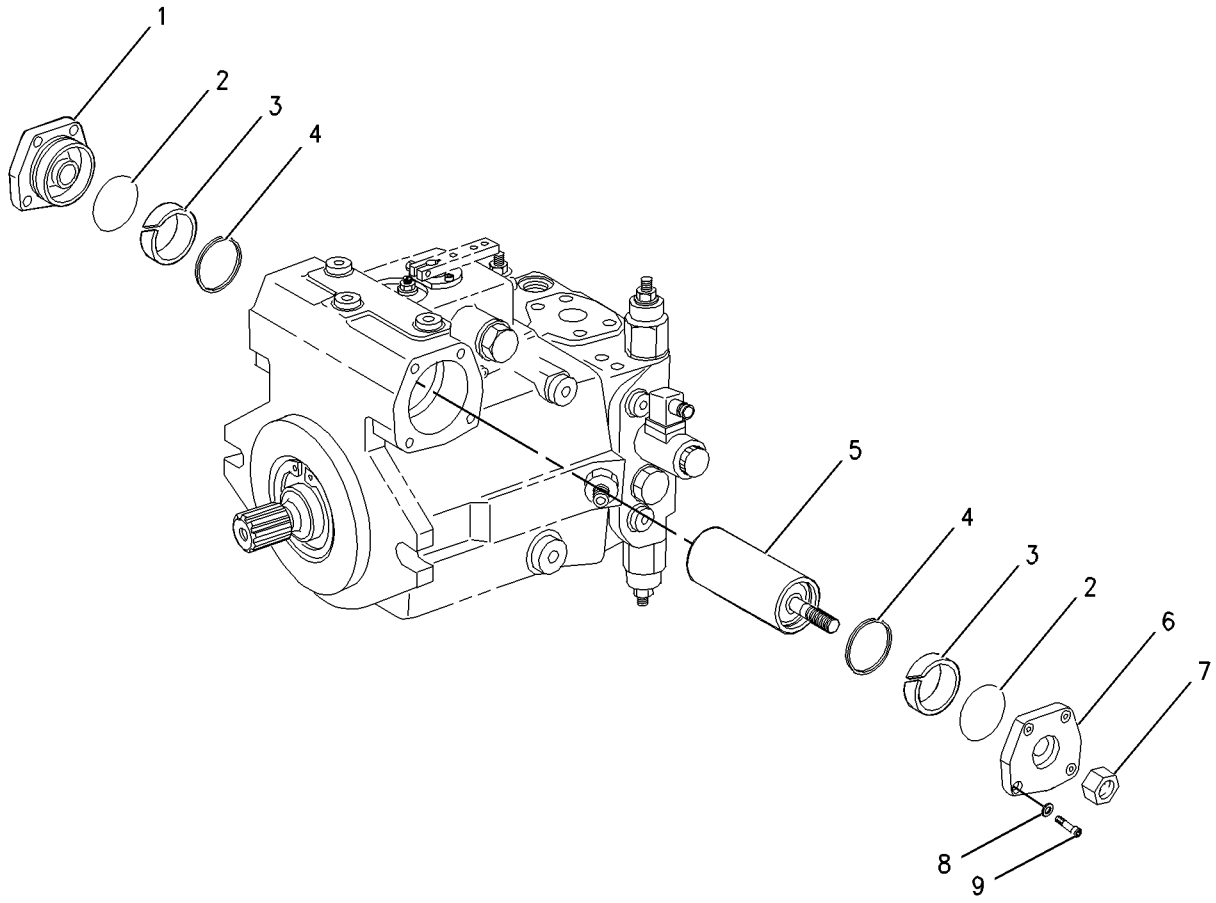

GRAPHIC #1 **<END>** g00806986

250-2114 CONTROL GP-WINCH & RIPPER

S/N: DHA1-348; FBH1-488
AN ATTACHMENT

SMCS-5170, 5357 **i03706640**

NOTE	REF NO	GRAPHIC REF	PART NUMBER	QTY	PART NAME 1 2 3 4 5 6 (PRODUCT LEVEL)	SEE PAGE
	1	1	**117-2311**	1	SOCKET-AUXILIARY POWER (12-VOLT)	
	2	1	**169-2876**	1	FILM-IDENTIFICATION (POWER RECEPTACLE, 12-VOLT)	
Y	3	1	**252-4559**	1	CONTROL GP-HANDLE (WINCH & RIPPER OPERATION)	664
	4	1	**284-3660**	1	SWITCH AS-ROCKER (RIPPER CYL EXTEND, RETRACT)	
	5	1	**266-9001**	1	BRACKET	
	6	1	**266-9007**	1	FILM-INSTRUCTION (WINCH & RIPPER OPERATION)	
	7	1	**266-8524**	1	SWITCH AS-ROCKER (24-VOLT) (WINCH BRAKE)	
	8	1	**266-8525**	1	SWITCH AS-ROCKER (24-VOLT) (WINCH FREESPOOL)	
M	9	1	**9X-2045**	8	SCREW-TRUSS HEAD (M6X1X20-MM)	

M-METRIC PART
Y-SEPARATE ILLUSTRATION

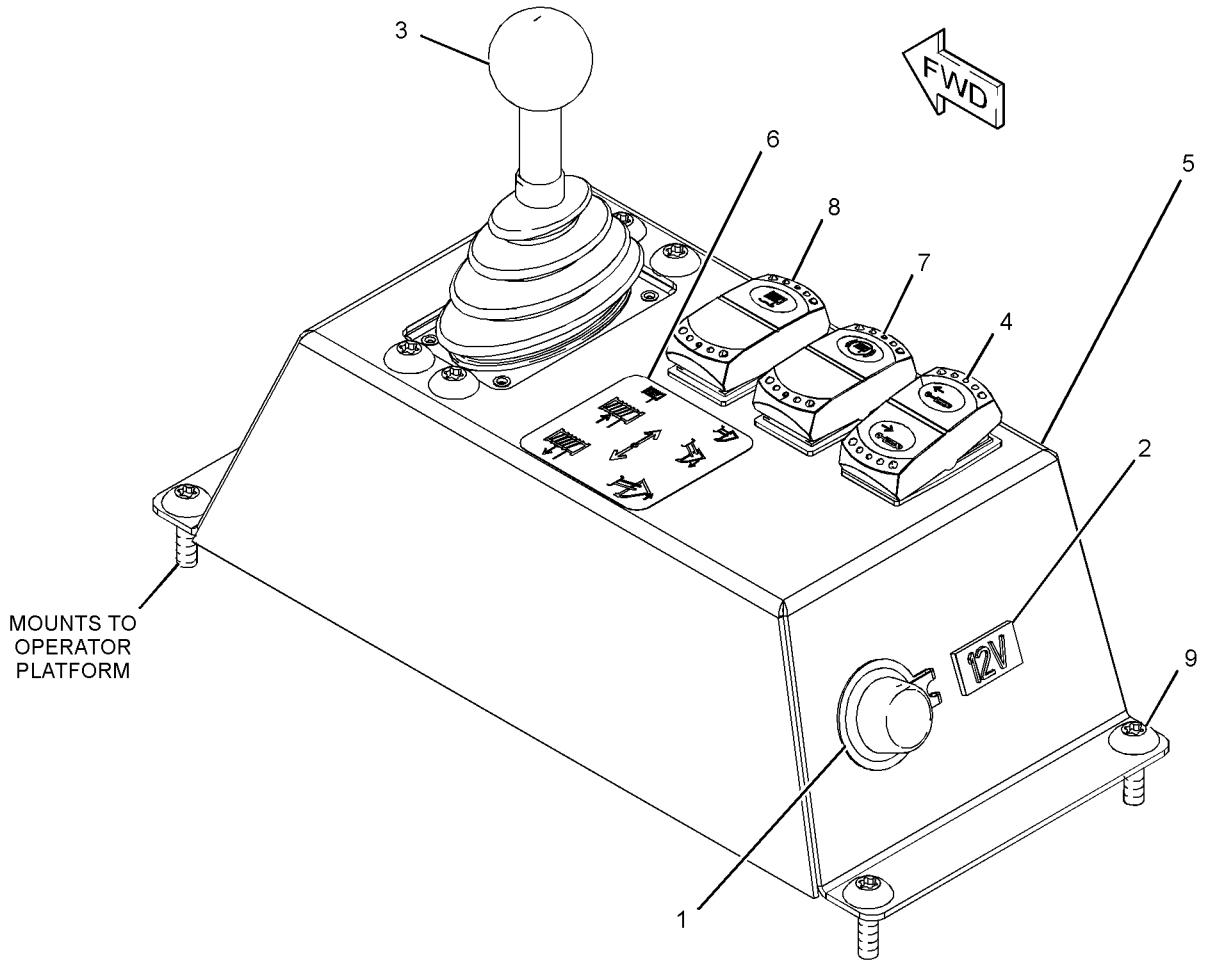

GRAPHIC #1 **<END>** g02003394

HYDRAULIC SYSTEM

250-2114 CONTROL GP-WINCH & RIPPER

S/N: DHA349-UP; FBH489-UP

AN ATTACHMENT

SMCS-5170, 5357 **i03706641**

NOTE	REF NO	GRAPHIC REF	PART NUMBER	QTY	PART NAME 1 2 3 4 5 6 (PRODUCT LEVEL)	SEE PAGE
	1	1	**117-2311**	1	SOCKET-AUXILIARY POWER (12-VOLT)	
	2	1	**169-2876**	1	FILM-IDENTIFICATION (POWER RECEPTACLE, 12-VOLT)	
CY	3	1	**307-4673**	1	CONTROL GP-HANDLE (WINCH & RIPPER OPERATION)	668
	4	1	**284-3660**	1	SWITCH AS-ROCKER (RIPPER CYL EXTEND, RETRACT)	
	5	1	**298-4325**	1	BRACKET	
	6	1	**266-9007**	1	FILM-INSTRUCTION (WINCH & RIPPER OPERATION)	
	7	1	**266-8524**	1	SWITCH AS-ROCKER (24-VOLT) (WINCH BRAKE)	
	8	1	**266-8525**	1	SWITCH AS-ROCKER (24-VOLT) (WINCH FREESPOOL)	
M	9	1	**9X-2045**	8	SCREW-TRUSS HEAD (M6X1X20-MM)	

C-CHANGE FROM PREVIOUS TYPE
M-METRIC PART
Y-SEPARATE ILLUSTRATION

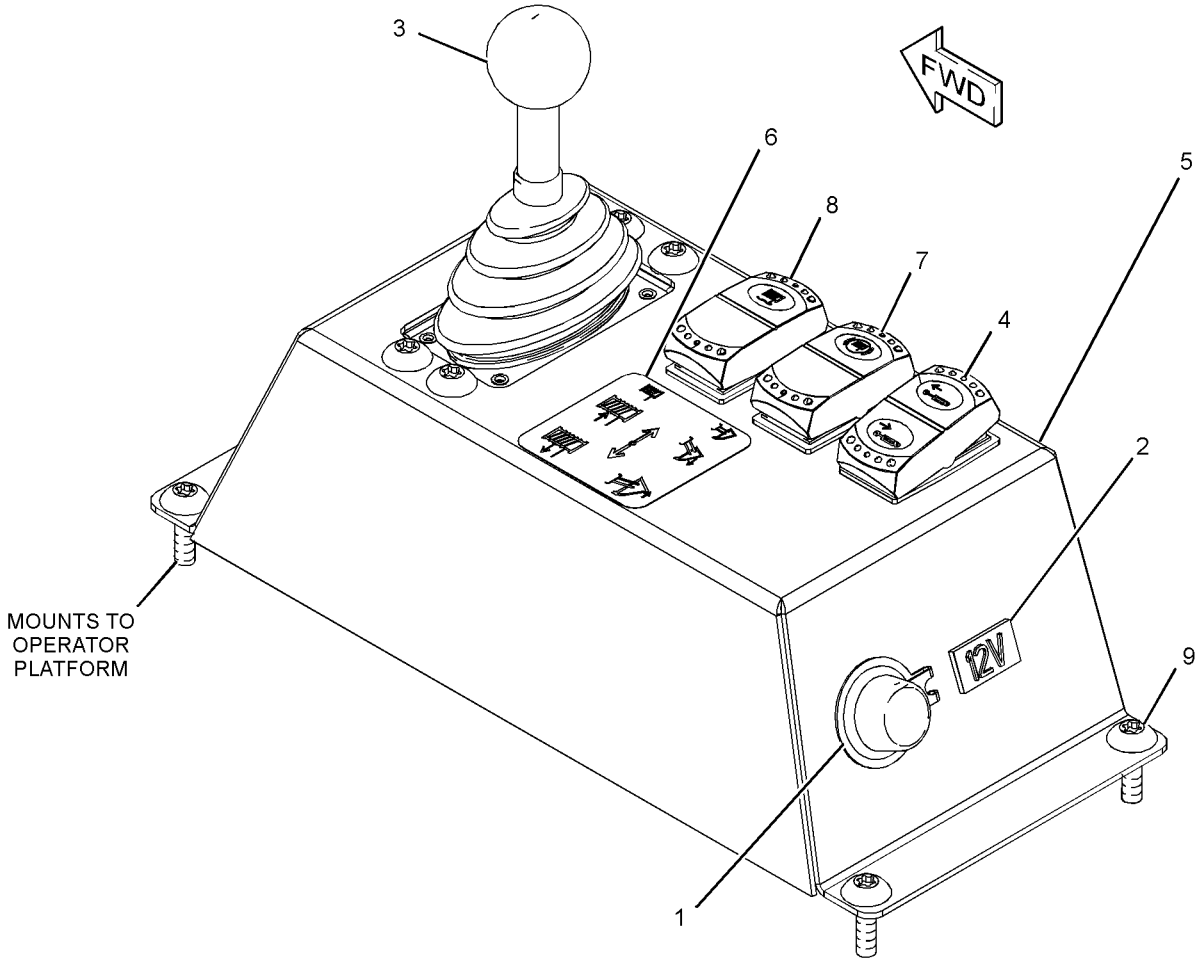

GRAPHIC #1 **<END>** g02003394

269-2728 CYLINDER GP-ANGLING—FINE GRADING

S/N: DHA1-UP; FBH1-UP
90-MM (3.5-IN) BORE X 455-MM (17.91-IN) STROKE
PART OF 278-2470 C-FRAME GP-POWER ANGLING
ALSO AN ATTACHMENT

SMCS-5101 **i03359320**

NOTE	REF NO	GRAPHIC REF	PART NUMBER	QTY	PART NAME 1 2 3 4 5 6 (PRODUCT LEVEL)	SEE PAGE
	1	1	**266-9384**	1	PISTON	
	2	1	**269-3205**	1	CYLINDER AS	
	2A	1	**4D-4431**	1	BEARING-ALIGNING	
	2B	1	**2H-5549**	2	RING-RETAINING	
	3	1	**269-3228**	1	ROD AS	
	3A	1	**4D-4431**	1	BEARING-ALIGNING	
	3B	1	**2H-5549**	2	RING-RETAINING	
	4	1	**269-3945**	1	HEAD	
	5	1	**099-6976**	1	RING	
	6	1	**143-8916**	1	RING-WEAR	
	7	1	**144-5287**	1	SEAL-PISTON	
	8	1	**167-2242**	1	SEAL AS-BUFFER	
	9	1	**167-2297**	1	SEAL-U-CUP	
	10	1	**233-0617**	1	SEAL-WIPER	
	11	1	**2H-3931**	1	SEAL-O-RING	
	12	1	**2H-6338**	1	SEAL-O-RING	
	13	1	**4J-9224**	1	RING-BACKUP	
	14	1	**6J-5730**	1	LOCKNUT (1-1/8-12-THD)	

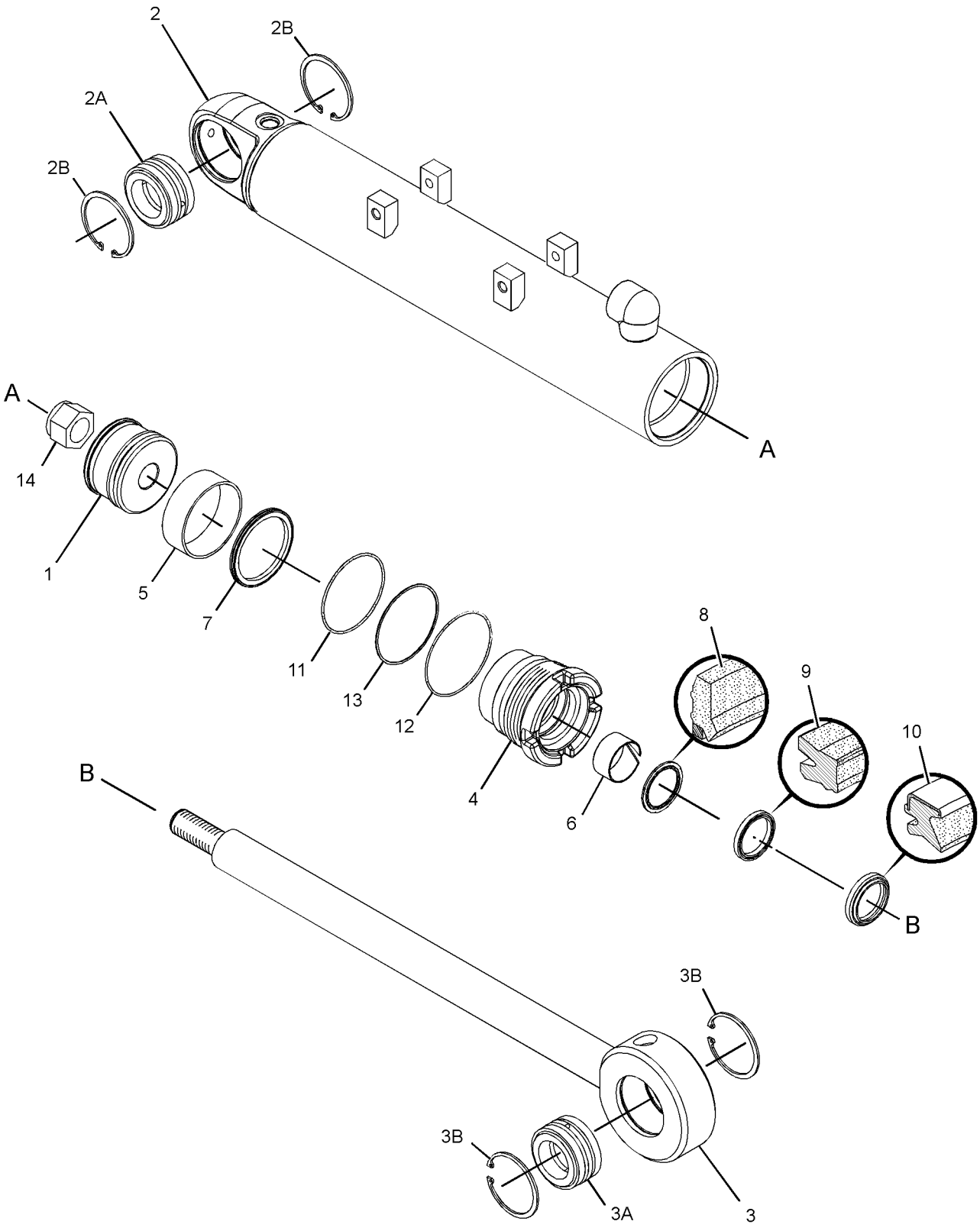

GRAPHIC #1 **<END>** g01733513

269-2730 CYLINDER GP-BULLDOZER LIFT–FINE GRADING

S/N: DHA1-UP; FBH1-UP
110-MM (4.3-IN) BORE X 390-MM (15.4-IN) STROKE
PART OF 278-2470 C-FRAME GP-POWER ANGLING
ALSO AN ATTACHMENT

SMCS-5102 **i02834181**

NOTE	REF NO	GRAPHIC REF	PART NUMBER	QTY	PART NAME 1 2 3 4 5 6 (PRODUCT LEVEL)	SEE PAGE
	1	1	**233-0618**	1	SEAL-WIPER	
	2	1	**266-9390**	1	PISTON	
	3	1	**269-3231**	1	CYLINDER AS	
	3A	1	**4D-4431**	1	BEARING-ALIGNING	
	3B	1	**2H-5549**	2	RING-RETAINING	
	4	1	**269-3236**	1	ROD AS	
	4A	1	**4D-4431**	1	BEARING-ALIGNING	
	4B	1	**2H-5549**	2	RING-RETAINING	
	5	1	**269-3237**	1	HEAD	
	6	1	**119-5434**	1	RING	
	7	1	**140-0176**	1	RING-WEAR	
	8	1	**167-2185**	1	SEAL AS-BUFFER	
	9	1	**167-2301**	1	SEAL-U-CUP	
	10	1	**2J-3950**	1	LOCKNUT (1-1/2-12-THD)	
	11	1	**310-2184**	1	SEAL-O-RING	
	12	1	**310-2186**	1	SEAL-O-RING	
	13	1	**5J-7865**	1	RING-BACKUP	
	14	1	**9X-7301**	1	SEAL AS	

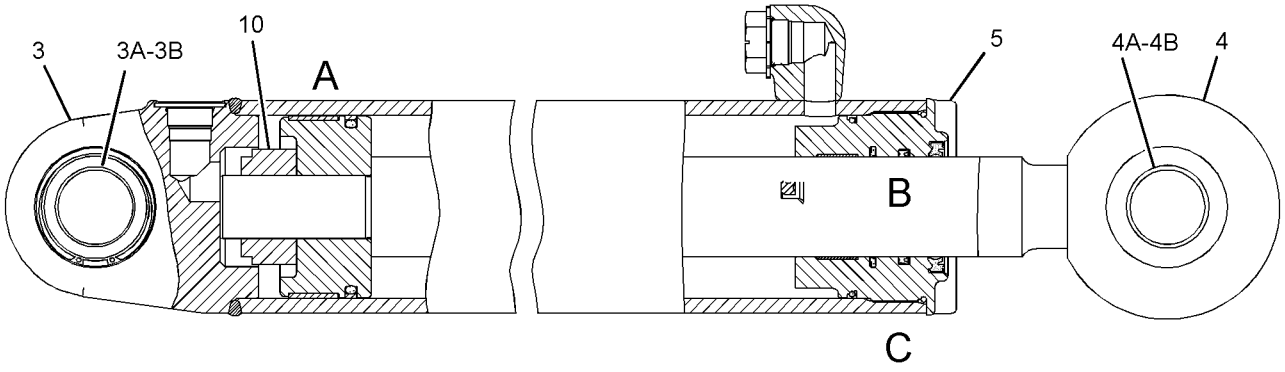

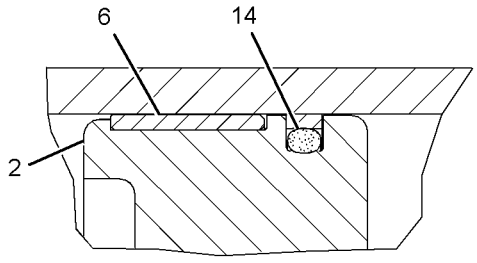

VIEW OF AREA A

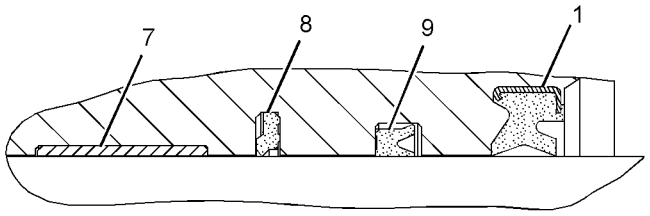

VIEW OF AREA B

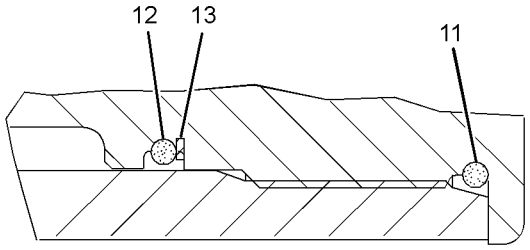

VIEW OF AREA C

GRAPHIC #1 **<END>** g01416719

269-2729 CYLINDER GP-BULLDOZER TILT–FINE GRADING

S/N: DHA1-UP; FBH1-UP
120-MM (4.7-IN) BORE X 99-MM (3.9-IN) STROKE
PART OF 278-2470 C-FRAME GP-POWER ANGLING
ALSO AN ATTACHMENT

SMCS-5104 **i02834174**

NOTE	REF NO	GRAPHIC REF	PART NUMBER	QTY	PART NAME 1 2 3 4 5 6 (PRODUCT LEVEL)	SEE PAGE
	1	1	**1U-4049**	1	WASHER (51X73X12.7-MM THK)	
	2	1	**266-9983**	1	HEAD	
	3	1	**269-3238**	1	CYLINDER AS	
	3A	1	**160-0305**	1	BEARING	
	3B	1	**8T-7567**	1	RING	
	4	1	**269-3242**	1	ROD AS	
	4A	1	**7J-1309**	1	BEARING	
	4B	1	**1S-3311**	1	RING-RETAINING	
	5	1	**269-3244**	1	PISTON	
	6	1	**119-5445**	1	RING	
	7	1	**146-0742**	1	RING-WEAR	
	8	1	**167-2204**	1	SEAL AS-BUFFER	
	9	1	**167-2314**	1	SEAL-U-CUP	
	10	1	**227-1148**	1	SEAL-WIPER	
	11	1	**2J-3961**	1	RING-BACKUP	
	12	1	**310-2187**	1	SEAL-O-RING	
	13	1	**3E-6703**	1	SEAL-O-RING	
	14	1	**3J-9545**	1	LOCKNUT (2-12-THD)	
	15	1	**9X-3592**	1	SEAL AS	

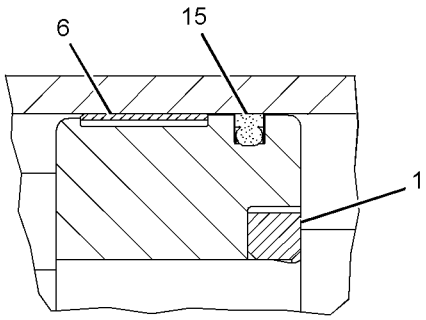

VIEW OF AREA A

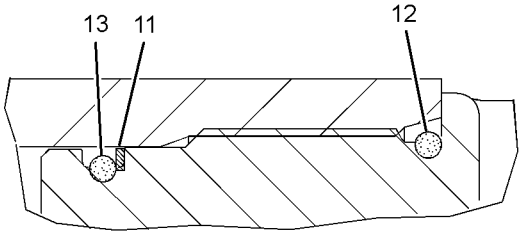

VIEW OF AREA B

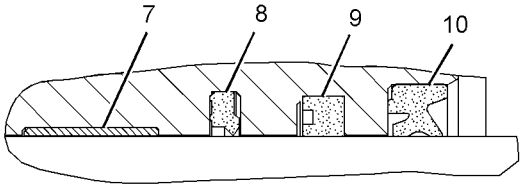

VIEW OF AREA C

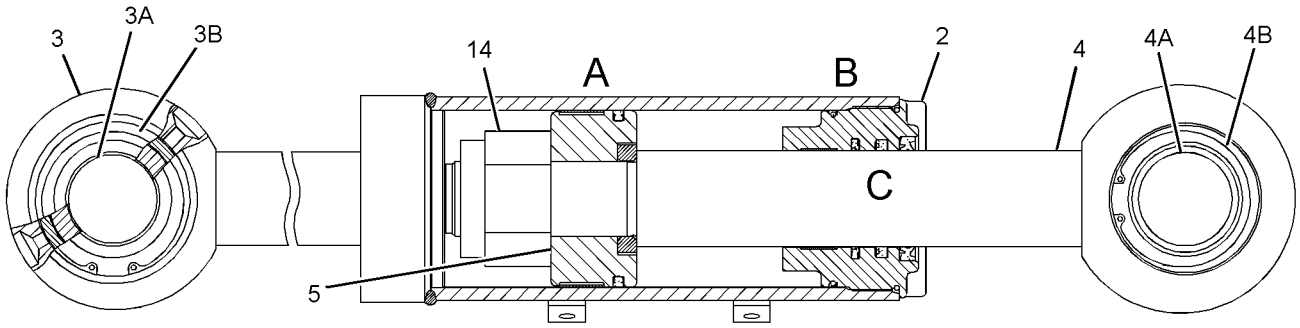

GRAPHIC #1 **<END>** g01416755

227-0842 CYLINDER GP-RIPPER–LIFT

S/N: 4041-UP
127-MM (5-IN) BORE X 362-MM (14.25-IN) STROKE
PART OF 240-1470 RIPPER AR
AN ATTACHMENT

SMCS-5352, 5356 **i02831302**

NOTE	REF NO	GRAPHIC REF	PART NUMBER	QTY	PART NAME 1 2 3 4 5 6 (PRODUCT LEVEL)	SEE PAGE
	1	1	**230-4873**	1	CYLINDER AS	
	1A	1	**4K-3128**	2	BEARING-SLEEVE	
	2	1	**2J-0564**	1	LOCKNUT (2-12-THD)	
	3	1	**3G-1753**	1	PISTON	
	4	1	**4J-3420**	1	RING-WEAR	
	5	1	**9X-7264**	1	SEAL AS	
	6	1	**3G-1757**	1	WASHER (50.95X82X12-MM THK)	
	7	1	**2K-4096**	1	RING-BACKUP	
	8	1	**310-2189**	1	SEAL-O-RING	
	9	1	**230-4872**	1	HEAD	
	10	1	**9T-2714**	1	ROD AS	
	10A	1	**2K-4507**	1	BEARING-SLEEVE	
	11	1	**8T-5668**	1	RING-WEAR	
	12	1	**167-2201**	1	SEAL AS-BUFFER	
	13	1	**167-2312**	1	SEAL-U-CUP	
	14	1	**225-3281**	1	SEAL-WIPER	
	15	1	**6V-8237**	4	WASHER (26X44X4-MM THK)	
M	16	1	**173-9779**	4	BOLT (M24X3X80-MM)	
	17	1	**1P-4576**	4	FLANGE-HALF	
M	18	1	**8T-4186**	8	BOLT (M10X1.5X40-MM)	
	19	1	**8T-4121**	8	WASHER-HARD (11X21X2.5-MM THK)	

M-METRIC PART

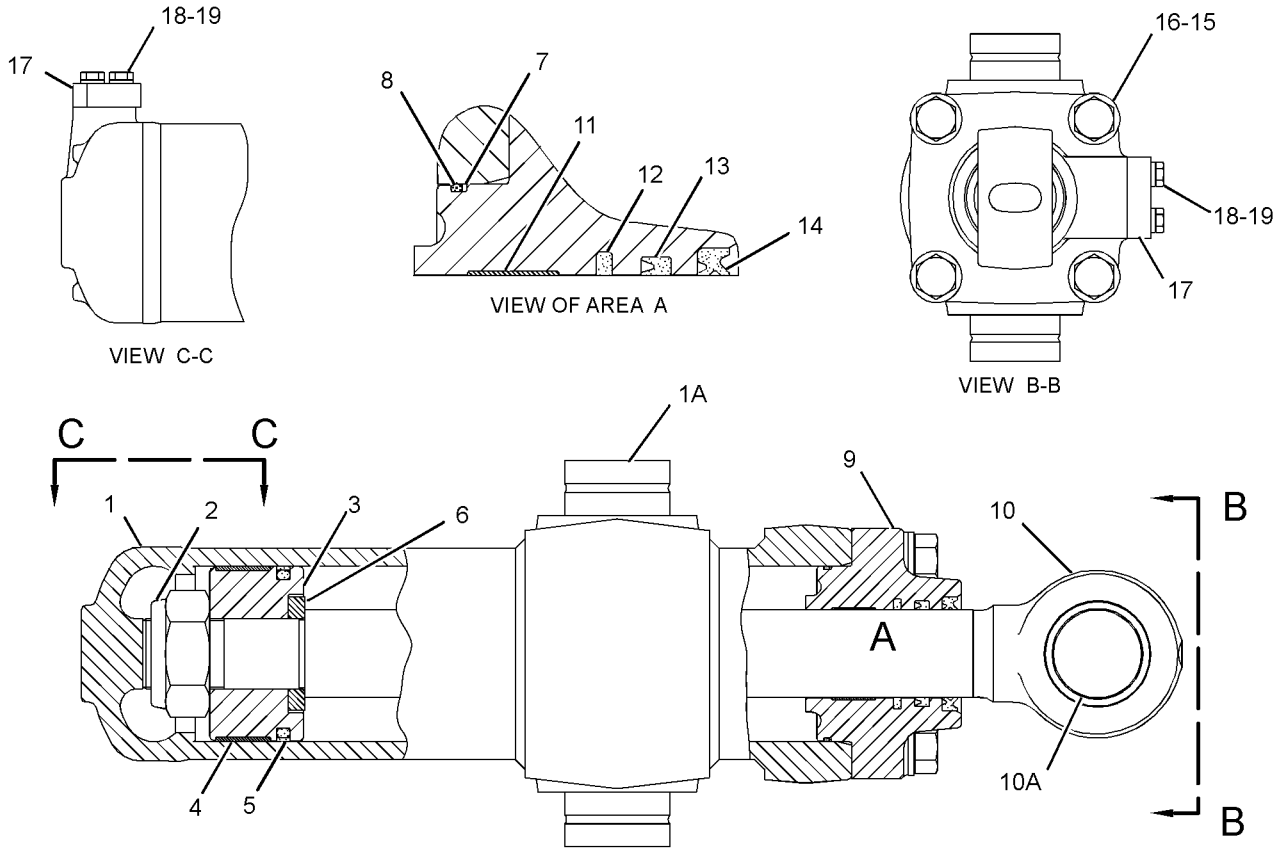

GRAPHIC #1 **<END>** g01224913

325-5723 CYLINDER GP-RIPPER–LIFT

S/N: 4041-UP
127-MM (5-IN) BORE X 362-MM (14.25-IN) STROKE
PART OF 240-1470 RIPPER AR
AN ATTACHMENT

SMCS-5352, 5356 **i03518486**

NOTE	REF NO	GRAPHIC REF	PART NUMBER	QTY	PART NAME 1 2 3 4 5 6 (PRODUCT LEVEL)	SEE PAGE
	1	1	**2K-4507**	1	BEARING-SLEEVE	
	3	1	**4J-3420**	1	RING-WEAR	
	4	1	**4K-3128**	2	BEARING-SLEEVE	
	5	1	**328-2293**	1	CYLINDER AS-HYDRAULIC	
	6	1	**328-2294**	1	ROD AS	
	7	1	**328-2295**	1	HEAD	
	8	1	**328-2296**	1	PISTON	
	9	1	**334-6074**	1	SPACER	
	10	1	**167-2201**	1	SEAL AS-BUFFER	
	11	1	**167-2312**	1	SEAL-U-CUP	
	12	1	**1P-4576**	4	FLANGE-HALF	
	13	1	**225-3281**	1	SEAL-WIPER	
	14	1	**2F-5325**	2	SETSCREW (3/8-16-THD)	
	15	1	**2K-4096**	1	RING-BACKUP	
	16	1	**2L-0041**	13	BOLT (1/2-13X2.25-IN)	
	17	1	**310-2189**	1	SEAL-O-RING	
	18	1	**4J-5267**	2	SEAL-O-RING	
	19	1	**5H-4018**	2	COVER	
	20	1	**8T-4121**	8	WASHER-HARD (11X21X2.5-MM THK)	
M	21	1	**8T-4196**	8	BOLT (M10X1.5X35-MM)	
	22	1	**8T-5668**	1	RING-WEAR	
	23	1	**9X-7264**	1	SEAL AS	

M-METRIC PART

325-5723 CYLINDER GP-RIPPER *(contd.)* **i03518486**

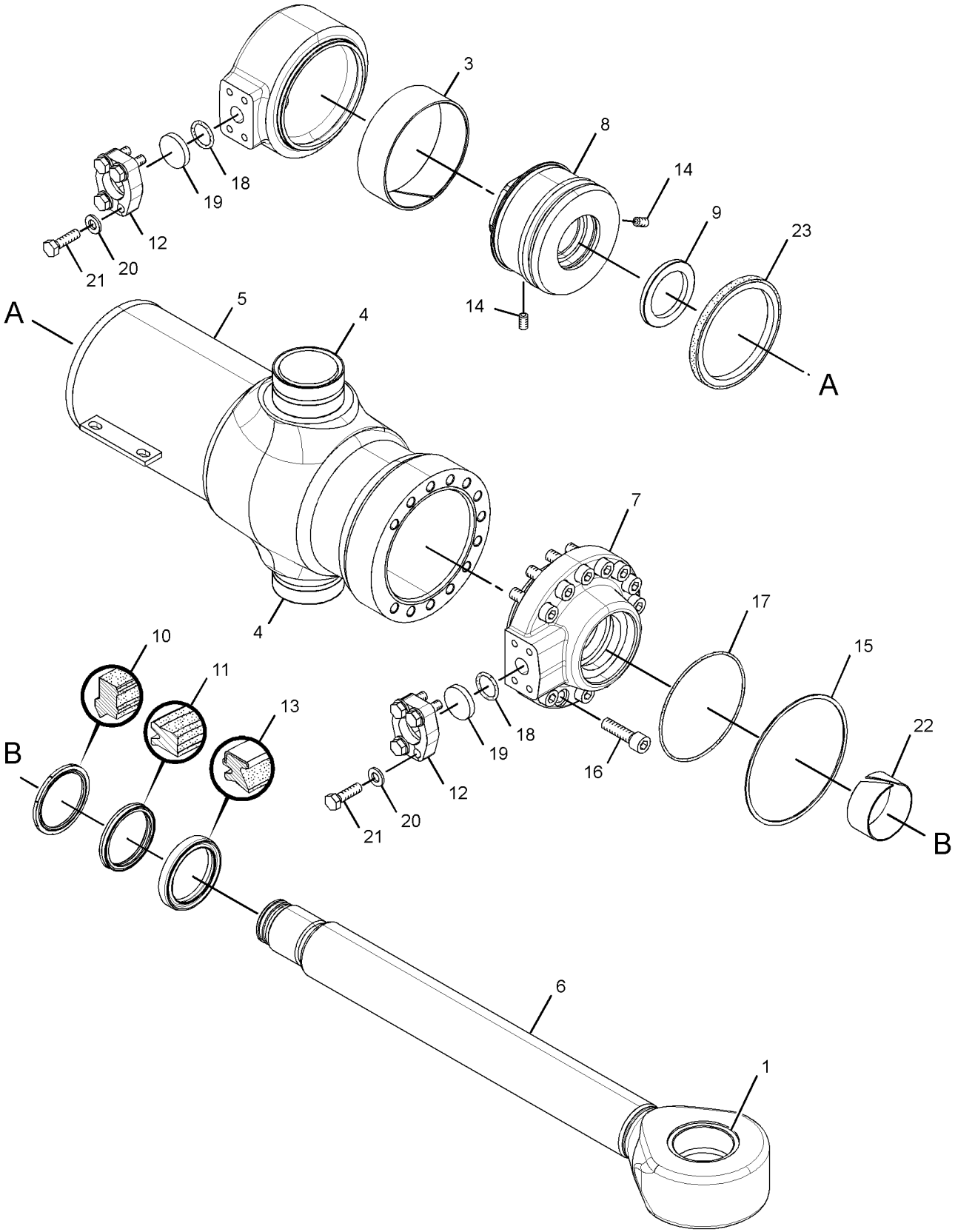

GRAPHIC #1 **<END>** g01852097

HYDRAULIC SYSTEM

277-6553 HEAD GP-PUMP–WINCH

S/N: DHA1-UP; FBH1-UP
PART OF 249-8600 PUMP GP-PISTON
AN ATTACHMENT

SMCS-5070 **i02404648**

NOTE	REF NO	GRAPHIC REF	PART NUMBER	QTY	PART NAME 1 2 3 4 5 6 (PRODUCT LEVEL)	SEE PAGE
	1	1	**117-7280**	1	BUSHING (INTERNAL)	
	2	1	**117-7282**	1	SEAL-O-RING	
	3	1	**117-7279**	1	BUSHING (EXTERNAL)	
	4	1	**6V-8397**	1	SEAL-O-RING	
	5	1	**5W-1250**	2	PIN	
	6	1	**087-4772**	3	PLUG-O-RING	
Y	7	1	**152-1811**	1	VALVE GP-RELIEF (PRESSURE OVERRIDE)	397
M	8	1	**8C-4365**	4	BOLT (M14X2X80-MM)	
	9	1	**192-3282**	1	BUSHING-BEARING	
	10	1	**120-4394**	3	PLUG-BREAK OFF	
	11	1	**9S-4182**	2	PLUG-O-RING	
	12	1	**6V-8978**	1	SEAL-O-RING	
	13	1	**123-7575**	1	SCREW-LOCK	
Y	14	1	**177-7122**	1	VALVE GP-RELIEF (CHARGE PRESSURE)	398
	15	1	**9S-8002**	2	PLUG-O-RING	
	16	1	**123-7583**	1	ORIFICE	
	17	1	**177-6854**	1	PLUG-PIN	
Y	18	1	**277-6679**	2	VALVE GP-RELIEF (CROSSOVER)	399
	19	1	**3J-7354**	2	SEAL-O-RING	

M-METRIC PART
Y-SEPARATE ILLUSTRATION

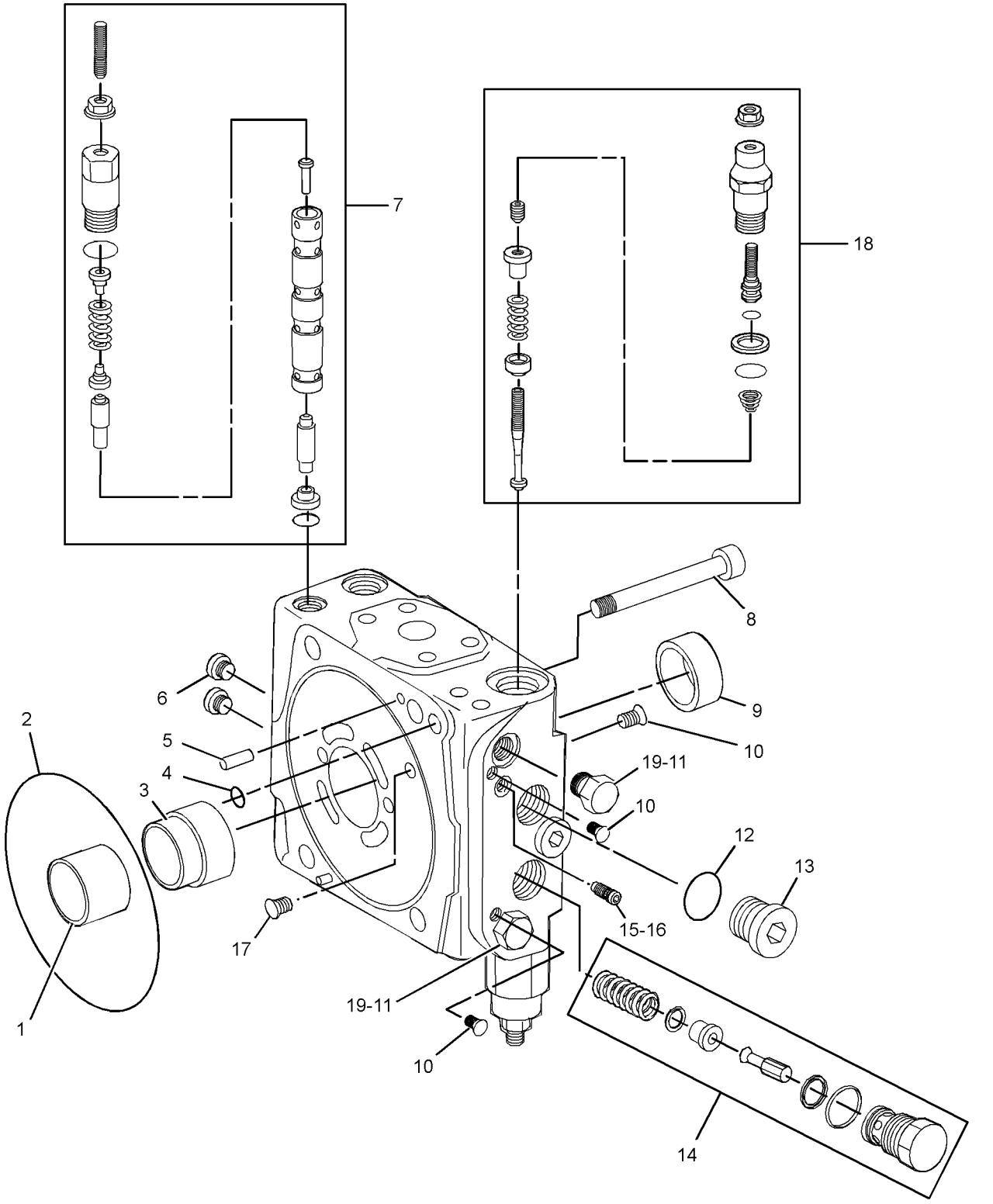

GRAPHIC #1 **<END>** g01203255

HYDRAULIC SYSTEM

206-7280 HYDRAULIC AR-3 VALVE

S/N: DHA1-UP; FBH1-UP

PART OF 206-7250, 206-7251 COMMON AR

SMCS-5051 **i02583286**

NOTE	PART NUMBER	QTY	PART NAME 1 2 3 4 5 6 (PRODUCT LEVEL)	SEE PAGE
Y	*206-7238*	1	LINES GP-ANGLE & TILT	530
Y	*206-7265*	1	LINES GP-LIFT CYLINDER	541
Y	*248-1664*	1	LINES GP-PILOT	545
Y	*251-3544*	1	TANK & MTG GP-HYDRAULIC	588
Y	*206-7277*	1	MOUNTING GP-VALVE	570

Y-SEPARATE ILLUSTRATION

<END>

HYDRAULIC SYSTEM

250-3852 HYDRAULIC AR-4 VALVE

S/N: DHA1-828; FBH1-976
PART OF 349-8353 OPTION AR-RIPPER
FOR USE WITH 240-1470—PAGE 842. CANNOT BE USED WITH 244-7115—PAGE 592
AN ATTACHMENT

SMCS-5051 **i02390732**

NOTE	REF NO	GRAPHIC REF	PART NUMBER	QTY	PART NAME 1 2 3 4 5 6 (PRODUCT LEVEL)	SEE PAGE
Y	1	1	*246-6469*	1	LINES GP-RIPPER	553
Y	2	1	**246-8498**	1	VALVE GP-BANK 4	594

Y-SEPARATE ILLUSTRATION

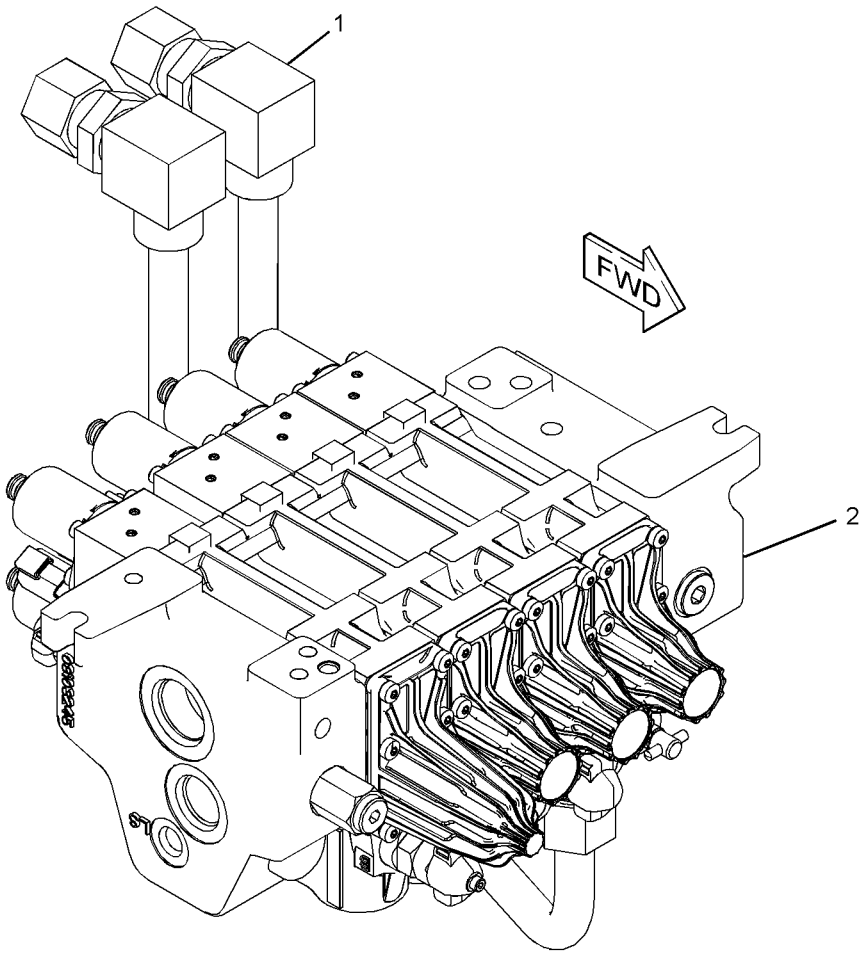

GRAPHIC #1 **<END>** g01203633

250-3852 HYDRAULIC AR-4 VALVE

S/N: DHA829-UP; FBH977-UP
PART OF 349-8353 OPTION AR-RIPPER
FOR USE WITH 240-1470—PAGE 842. CANNOT BE USED WITH 244-7115—PAGE 592
AN ATTACHMENT

SMCS-5051 **i03032901**

NOTE	REF NO	GRAPHIC REF	PART NUMBER	QTY	PART NAME 1 2 3 4 5 6 (PRODUCT LEVEL)	SEE PAGE
Y	1	1	*246-6469*	1	LINES GP-RIPPER	553
CY	2	1	**309-1572**	1	VALVE GP-BANK 4	595

C-CHANGE FROM PREVIOUS TYPE
Y-SEPARATE ILLUSTRATION

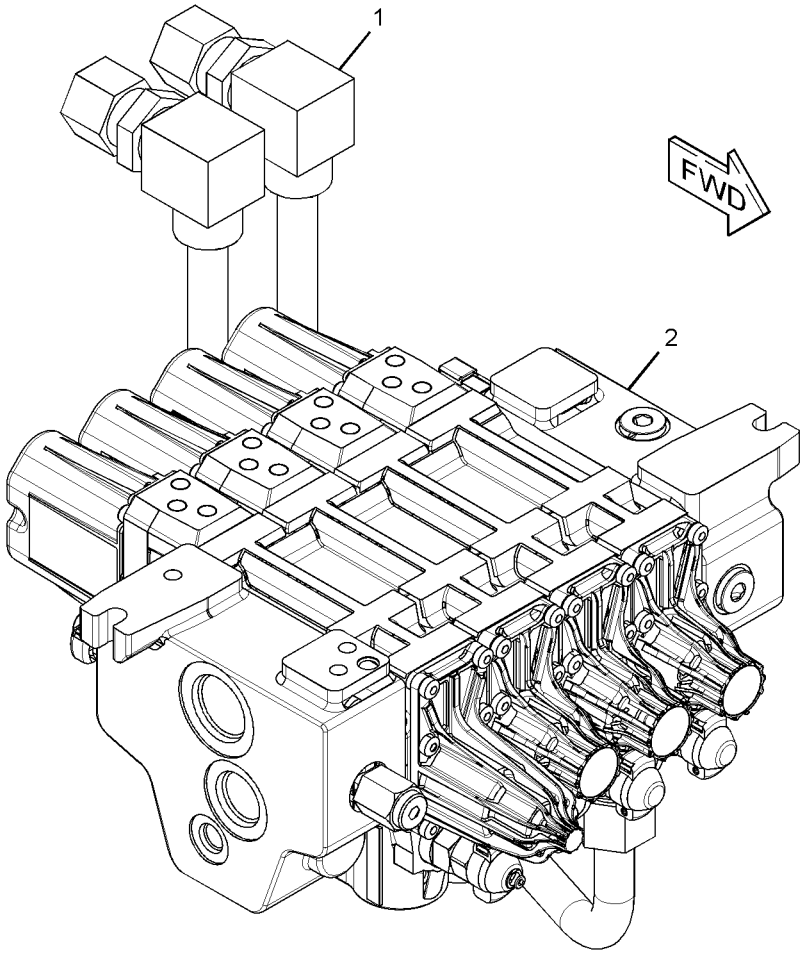

GRAPHIC #1 **<END>** g01590678

HYDRAULIC SYSTEM

206-7238 LINES GP-ANGLE & TILT

S/N: DHA1-UP; FBH1-UP

PART OF 206-7280 HYDRAULIC AR-3 VALVE

SMCS-5057, 5101, 5104 **i03706649**

NOTE	REF NO	GRAPHIC REF	PART NUMBER	QTY	PART NAME 1 2 3 4 5 6 (PRODUCT LEVEL)	SEE PAGE
	1	1	**9M-9162**	10	CLAMP	
	2	1	*260-9174*	2	CONNECTOR AS	
					(EACH INCLUDES)	
		1	**109-5815**	1	CONNECTOR	
		1	**3D-2824**	1	SEAL-O-RING	
		1	**7J-9108**	1	SEAL-O-RING	
	3	1	**261-5506**	1	BRACKET AS (RH)	
	4	1	**261-5507**	1	BRACKET AS (LH)	
	5	1	**132-7551**	1	SPACER (11X19X6-MM THK)	
	6	1	*148-8327*	2	CONNECTOR AS	
					(EACH INCLUDES)	
		1	**6V-8637**	1	CONNECTOR	
		1	**3D-2824**	1	SEAL-O-RING	
		1	**6V-9746**	1	SEAL-O-RING	
	7	1	**261-5114**	1	TUBE AS	
	8	1	**261-5115**	1	TUBE AS	
	9	1	**261-5116**	1	TUBE AS	
	10	1	**261-5117**	1	TUBE AS	
	11	1	**261-5118**	1	TUBE AS	
	12	1	**261-5119**	1	TUBE AS	
	13	1	**261-5120**	1	TUBE AS	
	14	1	**261-5121**	1	TUBE AS	
	15	1	**261-5122**	1	TUBE AS	
	16	1	**261-5123**	1	TUBE AS	
	17	1	**261-5124**	1	TUBE AS	
	18	1	**6V-8398**	6	SEAL-O-RING	
	19	1	**6V-9169**	6	NUT-BULKHEAD (13/16-16-THD)	
	20	1	**6V-9746**	2	SEAL-O-RING	
	21	1	**7J-9108**	5	SEAL-O-RING	
	22	1	**7X-7729**	9	WASHER (11X25X3-MM THK)	
	23	1	**8T-4121**	6	WASHER-HARD (11X21X2.5-MM THK)	
M	24	1	**8T-4137**	4	BOLT (M10X1.5X20-MM)	
M	25	1	**8T-4195**	6	BOLT (M10X1.5X30-MM)	
	26	1	**9M-9130**	2	CLAMP	

M-METRIC PART

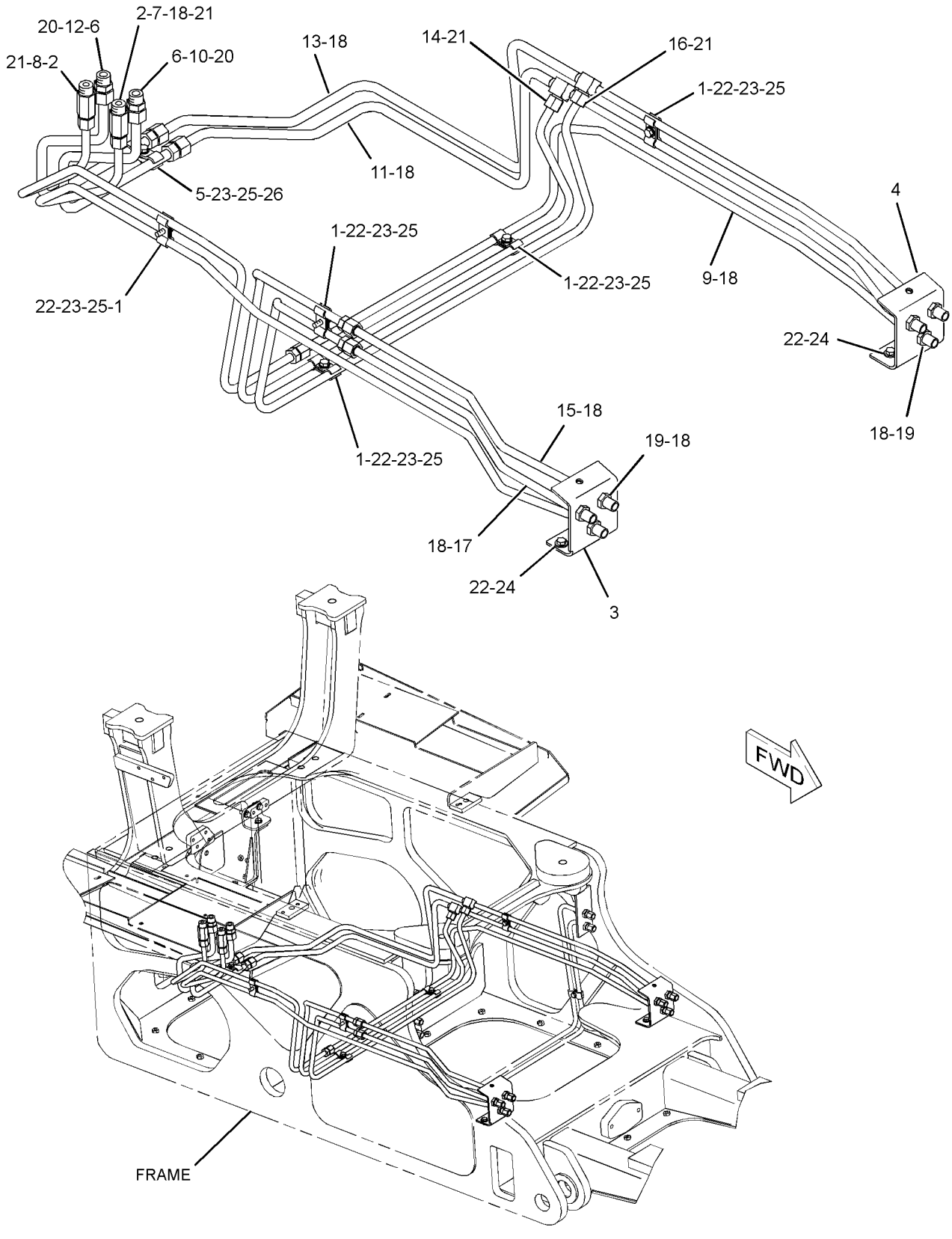

GRAPHIC #1 **<END>** g01186187

HYDRAULIC SYSTEM

252-0452 LINES GP-ANGLE & TILT—FINE GRADING

S/N: DHA1-466; FBH1-644

PART OF 278-2470 C-FRAME GP-POWER ANGLING

ALSO AN ATTACHMENT

SMCS-5057, 5101, 5104 **i03378781**

NOTE	REF NO	GRAPHIC REF	PART NUMBER	QTY	PART NAME 1 2 3 4 5 6 (PRODUCT LEVEL)	SEE PAGE
	1	1	**3B-8486**	2	FITTING-GREASE	
	2	1	**3B-8489**	10	FITTING-GREASE	
	3	1	**197-2477**	4	PIN	
I	4	2	**252-0465**	2	HOSE AS	
I	5	2	**252-0467**	2	HOSE AS	
I	6	2	**252-0468**	1	HOSE AS	
I	7	2	**252-0469**	1	HOSE AS	
	8	1	**287-6800**	1	BRACKET AS (RH)	
	9	1	**287-6801**	1	BRACKET AS (LH)	
	10	1	**287-6802**	1	GUARD AS	
	11	1	**288-1041**	1	BRACKET AS (LH)	
	12	1	**288-1042**	1	BRACKET AS (RH)	
I	15	2	**289-9876**	2	HOSE AS	
	16	1	**294-5374**	4	PLATE	
	17	1	**306-8866**	4	BAFFLE AS	
					(EACH INCLUDES)	
		1	**7G-5186**	4	SPACER (13X19X4.5-MM THK)	
	18	1	**294-7278**	4	PLATE	
	19	1	**294-9532**	2	GUARD AS	
	20	1	**294-9533**	1	GUARD AS (LH)	
	21	1	**294-9535**	1	GUARD AS (RH)	
	22	1	**297-7888**	2	COVER	
	23	1	**096-7033**	4	PIN-COTTER	
	24	2	*148-8320*	4	CONNECTOR AS	
					(EACH INCLUDES)	
		2	**8C-6865**	1	CONNECTOR	
		2	**4J-5477**	1	SEAL-O-RING	
	25	2	*148-8340*	3	CONNECTOR AS	
					(EACH INCLUDES)	
		2	**6V-8639**	1	CONNECTOR	
		2	**3K-0360**	1	SEAL-O-RING	
		2	**6V-8398**	1	SEAL-O-RING	
	26	2	*148-8364*	3	ELBOW AS	
					(EACH INCLUDES)	
		2	**6V-8625**	1	ELBOW	
		2	**3K-0360**	1	SEAL-O-RING	
		2	**6V-8398**	1	SEAL-O-RING	
	27	1,2	*148-8389*	4	ELBOW AS	
					(EACH INCLUDES)	
		1,2	**7X-0492**	1	ELBOW	
		1,2	**4J-5477**	1	SEAL-O-RING	
I	28	2	**288-0888**	2	HOSE AS	
	29	1	**2P-6470**	1	CLIP (SLOT)	
	30	1	**2P-6471**	1	CLIP (TAB)	
	31	1	**5P-1076**	10	WASHER-HARD (13.5X30X4-MM THK)	
	32	1,2	**5P-7464**	4	CLIP (SLOT)	
	33	1,2	**5P-7465**	4	CLIP (TAB)	
	34	2	**5P-7466**	2	CLIP (SLOT)	
	35	2	**5P-7467**	2	CLIP (TAB)	
	36	2	**5P-8112**	2	GROMMET	
	37	1,2	**6V-1249**	4	GROMMET	
	38	2	**7G-3832**	2	GROMMET	
	39	2	**7G-3833**	2	CLIP (TAB)	
	40	2	**7G-3834**	2	CLIP (SLOT)	
	41	1,2	**7X-7729**	16	WASHER (11X25X3-MM THK)	

252-0452 LINES GP-ANGLE & TILT *(contd.)* i03378781

NOTE	REF NO	GRAPHIC REF	PART NUMBER	QTY	PART NAME 1 2 3 4 5 6 (PRODUCT LEVEL)	SEE PAGE
	42	1	**7Y-1858**	4	WASHER (21X37X3-MM THK)	
	43	1	**8T-4121**	20	WASHER-HARD (11X21X2.5-MM THK)	
M	44	1	**8T-4133**	14	NUT (M10X1.5-THD)	
M	45	1	**8T-4136**	12	BOLT (M10X1.5X25-MM)	
M	46	1	**8T-4137**	8	BOLT (M10X1.5X20-MM)	
M	47	1	**8T-4139**	13	BOLT (M12X1.75X30-MM)	
M	48	2	**8T-4183**	2	BOLT (M12X1.75X40-MM)	
M	49	2	**8T-4186**	2	BOLT (M10X1.5X40-MM)	
M	50	2	**8T-4195**	2	BOLT (M10X1.5X30-MM)	
	51	1,2	**8T-4223**	7	WASHER-HARD (13.5X25.5X3-MM THK)	
M	52	2	**8T-4244**	2	NUT (M12X1.75-THD)	
	53	1	**8T-4994**	2	WASHER-HARD (20X36.5X3.5-MM THK)	
M	54	1	**8T-6466**	2	BOLT (M10X1.5X60-MM)	
J	55	1	**202-5293**		SEAL (3.2-DM EACH)	
J	55A	1	**202-5293**		SEAL (4-DM EACH)	

I-REFER TO HYDRAULIC INFORMATION SYSTEM
J-SOLD BY THE DECIMETER
M-METRIC PART

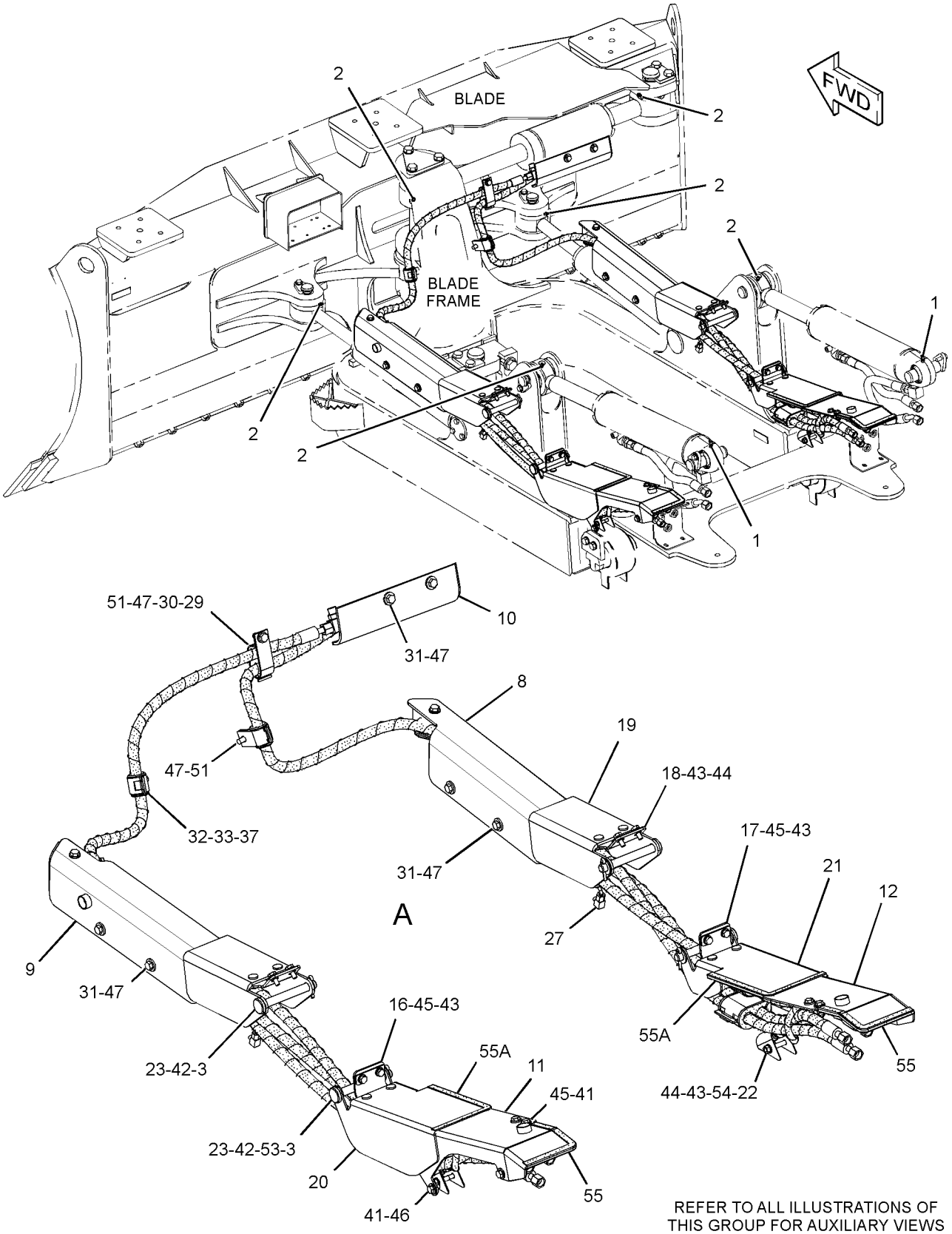

REFER TO ALL ILLUSTRATIONS OF THIS GROUP FOR AUXILIARY VIEWS

GRAPHIC #1

g01748019

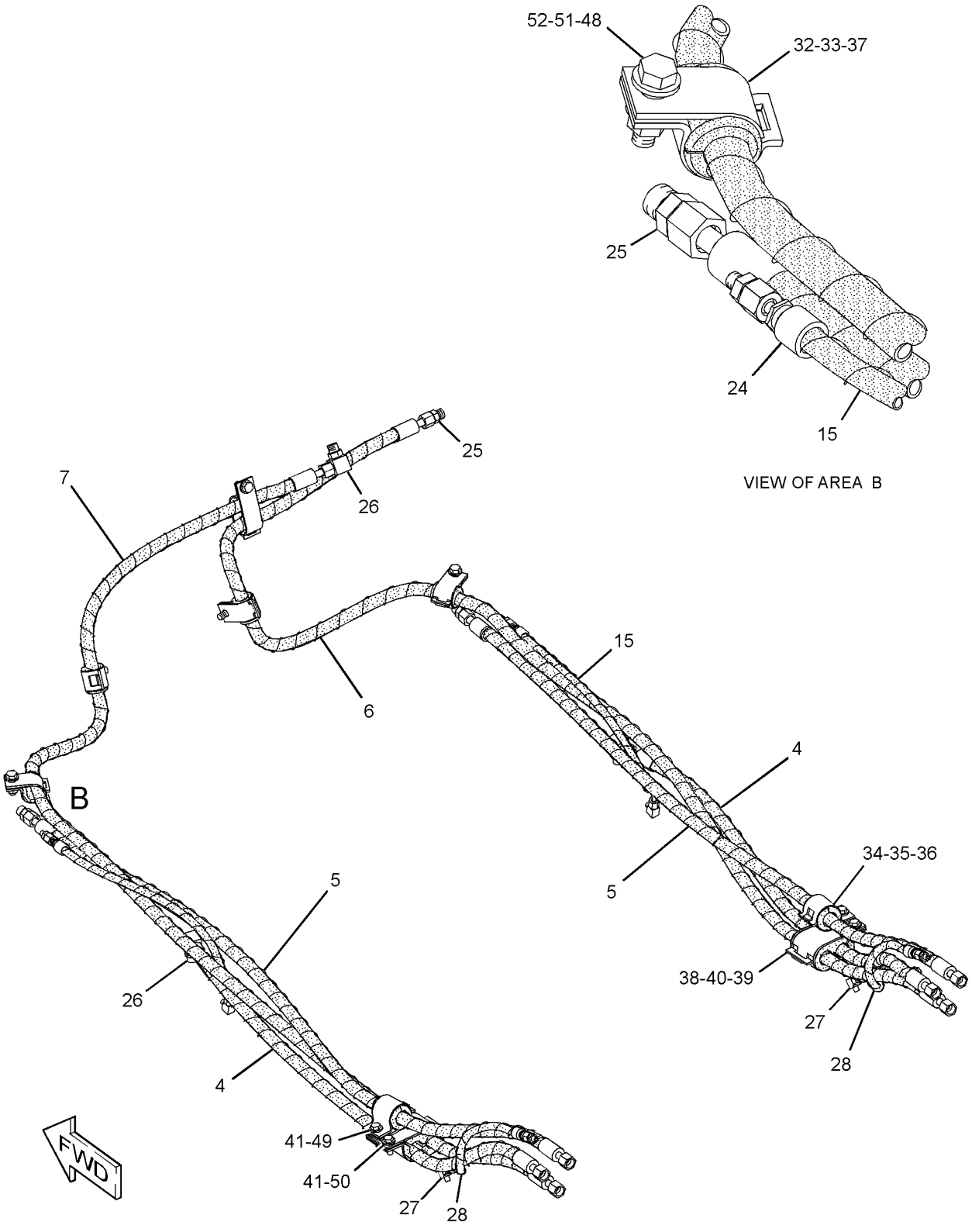

GRAPHIC #2 **<END>** g01748020

HYDRAULIC SYSTEM

252-0452 LINES GP-ANGLE & TILT—FINE GRADING

S/N: DHA467-UP; FBH645-UP

PART OF 278-2470 C-FRAME GP-POWER ANGLING AN ATTACHMENT

SMCS-5057, 5101, 5104 **i03660947**

NOTE	REF NO	GRAPHIC REF	PART NUMBER	QTY	PART NAME 1 2 3 4 5 6 (PRODUCT LEVEL)	SEE PAGE
	1	1	**3B-8486**	2	FITTING-GREASE	
	2	1	**3B-8489**	10	FITTING-GREASE	
	3	1	**197-2477**	4	PIN	
I	4	2	**252-0465**	2	HOSE AS	
I	5	2	**252-0467**	2	HOSE AS	
I	6	2	**252-0468**	1	HOSE AS	
I	7	2	**252-0469**	1	HOSE AS	
	8	1	**287-6800**	1	BRACKET AS (RH)	
	9	1	**287-6801**	1	BRACKET AS (LH)	
	10	1	**287-6802**	1	GUARD AS	
	11	1	**288-1041**	1	BRACKET AS (LH)	
	12	1	**288-1042**	1	BRACKET AS (RH)	
C	15	2	**307-1435**	2	HOSE AS	
	16	1	**294-5374**	4	PLATE	
	17	1	**306-8866**	4	BAFFLE AS	
					(EACH INCLUDES)	
		1	**7G-5186**	4	SPACER (13X19X4.5-MM THK)	
	18	1	**294-7278**	4	PLATE	
	19	1	**294-9532**	2	GUARD AS	
	20	1	**294-9533**	1	GUARD AS (LH)	
	21	1	**294-9535**	1	GUARD AS (RH)	
	22	1	**344-5377**	2	GUARD AS	
	23	1	**096-7033**	4	PIN-COTTER	
	25	2	*148-8340*	3	CONNECTOR AS	
					(EACH INCLUDES)	
		2	**6V-8639**	1	CONNECTOR	
		2	**3K-0360**	1	SEAL-O-RING	
		2	**6V-8398**	1	SEAL-O-RING	
	26	2	*148-8364*	3	ELBOW AS	
					(EACH INCLUDES)	
		2	**6V-8625**	1	ELBOW	
		2	**3K-0360**	1	SEAL-O-RING	
		2	**6V-8398**	1	SEAL-O-RING	
	27	1,2	*148-8389*	4	ELBOW AS	
					(EACH INCLUDES)	
		1,2	**7X-0492**	1	ELBOW	
		1,2	**4J-5477**	1	SEAL-O-RING	
C	28	2	**307-1869**	2	HOSE AS	
	29	1	**2P-6470**	1	CLIP (SLOT)	
	30	1	**2P-6471**	1	CLIP (TAB)	
	31	1	**5P-1076**	10	WASHER-HARD (13.5X30X4-MM THK)	
	32	1,2	**5P-7464**	4	CLIP (SLOT)	
	33	1,2	**5P-7465**	4	CLIP (TAB)	
	34	2	**5P-7466**	2	CLIP (SLOT)	
	35	2	**5P-7467**	2	CLIP (TAB)	
	36	2	**5P-8112**	2	GROMMET	
	37	1,2	**6V-1249**	4	GROMMET	
	38	2	**7G-3832**	2	GROMMET	
	39	2	**7G-3833**	2	CLIP (TAB)	
	40	2	**7G-3834**	2	CLIP (SLOT)	
C	41	1,2	**7X-7729**	8	WASHER (11X25X3-MM THK)	
	42	1	**7Y-1858**	4	WASHER (21X37X3-MM THK)	
	43	1	**8T-4121**	20	WASHER-HARD (11X21X2.5-MM THK)	
CM	44	1	**8T-4133**	10	NUT (M10X1.5-THD)	
CM	45	1	**8T-4136**	8	BOLT (M10X1.5X25-MM)	

252-0452 **LINES GP-ANGLE & TILT** *(contd.)* **i03660947**

NOTE	REF NO	GRAPHIC REF	PART NUMBER	QTY	PART NAME 1 2 3 4 5 6 (PRODUCT LEVEL)	SEE PAGE
M	46	1	**8T-4137**	8	BOLT (M10X1.5X20-MM)	
M	47	1	**8T-4139**	13	BOLT (M12X1.75X30-MM)	
M	48	2	**8T-4183**	2	BOLT (M12X1.75X40-MM)	
M	49	2	**8T-4186**	2	BOLT (M10X1.5X40-MM)	
M	50	2	**8T-4195**	2	BOLT (M10X1.5X30-MM)	
	51	1,2	**8T-4223**	7	WASHER-HARD (13.5X25.5X3-MM THK)	
M	52	2	**8T-4244**	2	NUT (M12X1.75-THD)	
	53	1	**8T-4994**	2	WASHER-HARD (20X36.5X3.5-MM THK)	
M	54	1	**8T-6466**	2	BOLT (M10X1.5X60-MM)	
J	55	1	**202-5293**		SEAL (3.2-DM EACH)	
J	55A	1	**202-5293**		SEAL (4-DM EACH)	

C-CHANGE FROM PREVIOUS TYPE
I-REFER TO HYDRAULIC INFORMATION SYSTEM
J-SOLD BY THE DECIMETER
M-METRIC PART

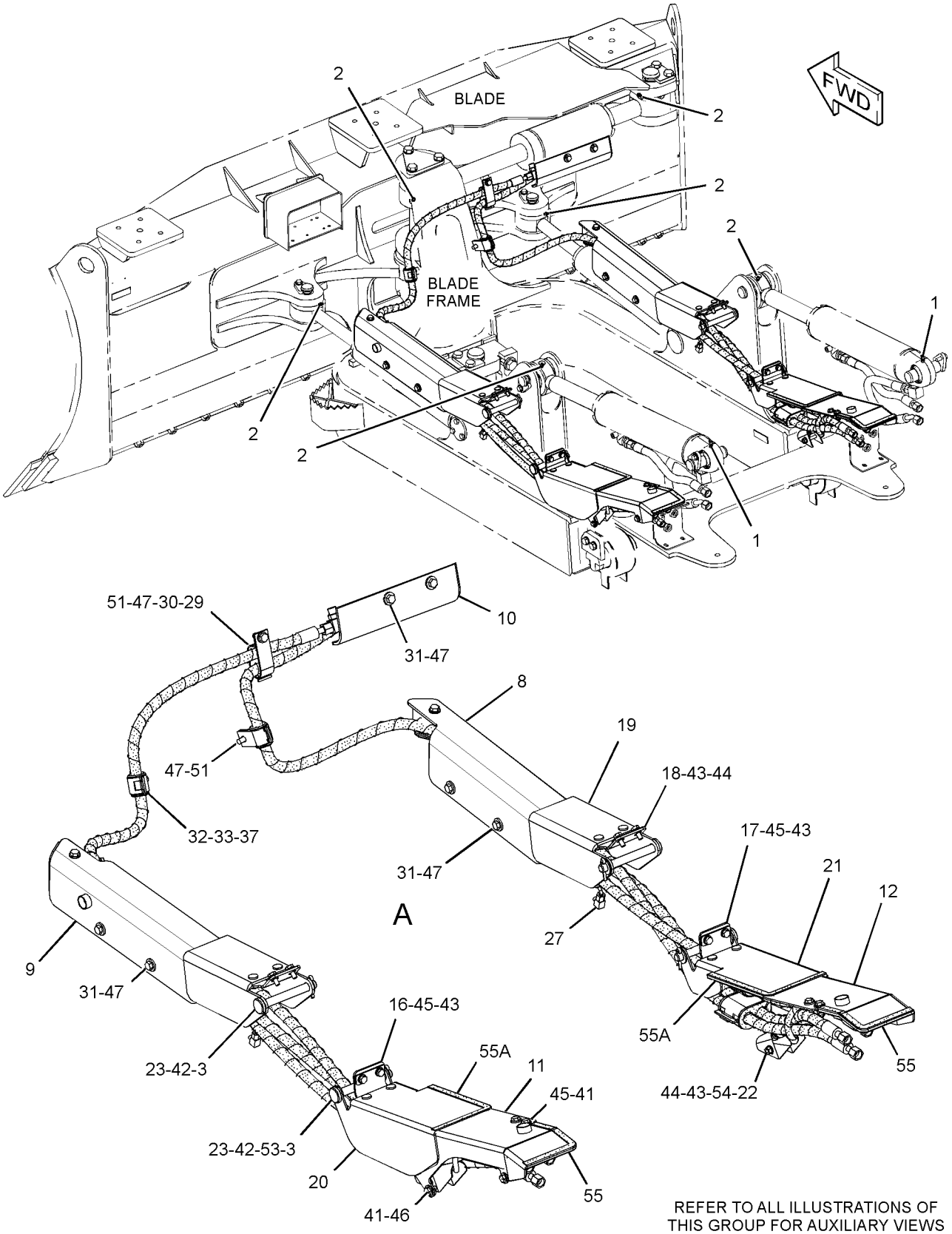

REFER TO ALL ILLUSTRATIONS OF THIS GROUP FOR AUXILIARY VIEWS

GRAPHIC #1

g02004634

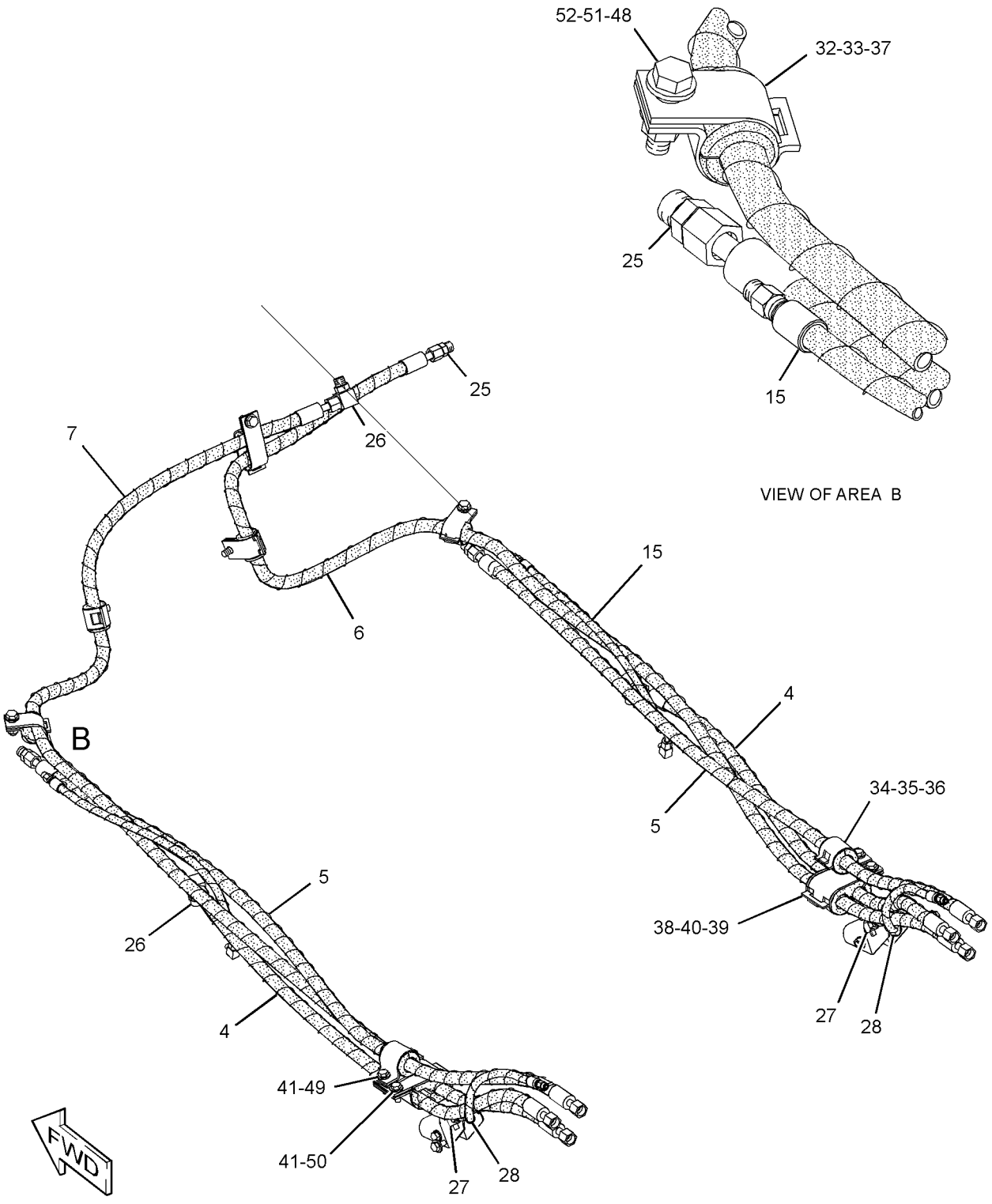

GRAPHIC #2

<END>

g02004633

250-6999 LINES GP-BULLDOZER—FINE GRADING

S/N: DHA1-UP; FBH1-UP

PART OF 278-2470 C-FRAME GP-POWER ANGLING

ALSO AN ATTACHMENT

SMCS-5057 **i02587013**

NOTE	REF NO	GRAPHIC REF	PART NUMBER	QTY	PART NAME 1 2 3 4 5 6 (PRODUCT LEVEL)	SEE PAGE
	1	1	*148-8315*	2	CONNECTOR AS	
					(EACH INCLUDES)	
		1	**6V-8642**	1	CONNECTOR	
		1	**2M-9780**	1	SEAL-O-RING	
		1	**7J-9108**	1	SEAL-O-RING	
	2	1	*148-8382*	2	ELBOW AS	
					(EACH INCLUDES)	
		1	**8T-0404**	1	ELBOW	
		1	**3D-2824**	1	SEAL-O-RING	
		1	**7J-9108**	1	SEAL-O-RING	
I	3	1	**268-2526**	2	HOSE AS	
I	4	1	**268-2527**	2	HOSE AS	

I-REFER TO HYDRAULIC INFORMATION SYSTEM

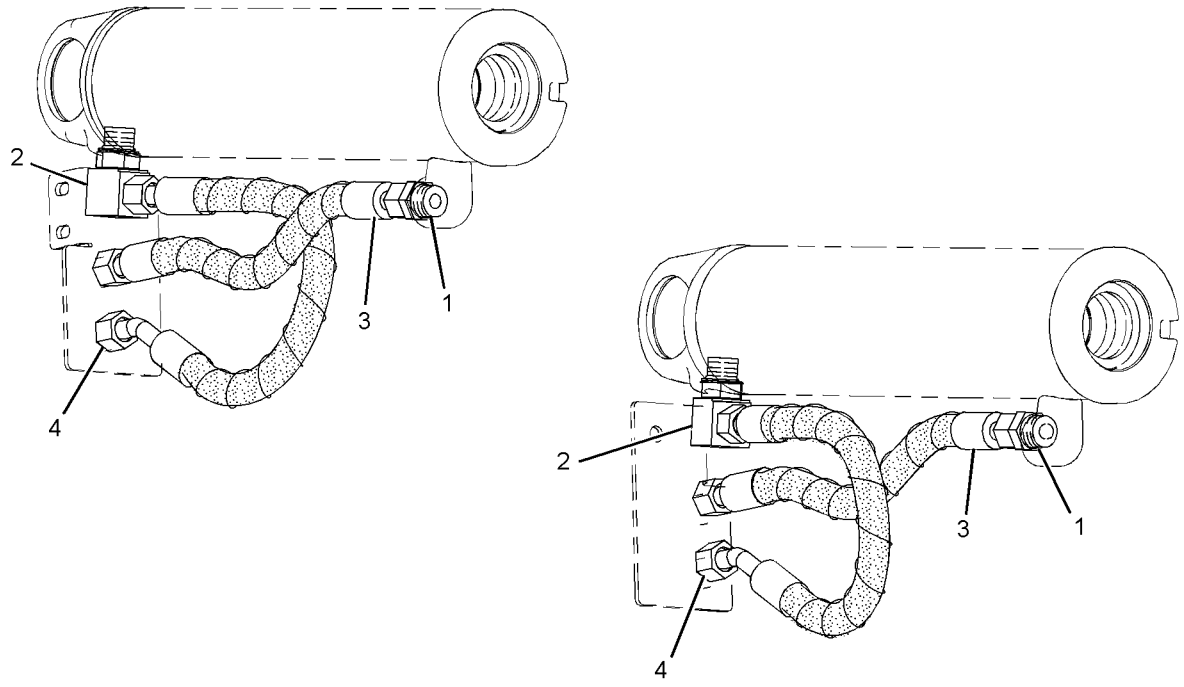

GRAPHIC #1 **<END>** g01197979

206-7265 LINES GP-LIFT CYLINDER

S/N: DHA1-1011; FBH1-1268

PART OF 206-7280 HYDRAULIC AR-3 VALVE

SMCS-5057, 5102 **i02596155**

NOTE	REF NO	GRAPHIC REF	PART NUMBER	QTY	PART NAME 1 2 3 4 5 6 (PRODUCT LEVEL)	SEE PAGE
	1	1	**261-6048**	1	BRACKET AS (RH)	
	2	1	**261-6049**	1	BRACKET AS (LH)	
	3	1	**132-7551**	2	SPACER (11X19X6-MM THK)	
	4	1	*148-8317*	1	CONNECTOR AS	
		1	**6V-8714**	1	CONNECTOR	
		1	**3D-2824**	1	SEAL-O-RING	
		1	**5K-9090**	1	SEAL-O-RING	
	5	1	*148-8362*	1	ELBOW AS	
		1	**8T-6684**	1	ELBOW	
		1	**3D-2824**	1	SEAL-O-RING	
		1	**5K-9090**	1	SEAL-O-RING	
	6	1	**198-4777**	1	WASHER-HARD (11X25X10-MM THK)	
	7	1	**261-6044**	1	TUBE AS	
	8	1	**261-6045**	1	TUBE AS	
	9	1	**261-6046**	1	TUBE AS	
	10	1	**261-6047**	1	TUBE AS	
	11	1	**5K-2697**	2	CLIP	
	12	1	**6V-9170**	4	NUT-BULKHEAD (1-14-THD)	
	13	1	**6V-9746**	2	SEAL-O-RING	
	15	1	**7J-9108**	4	SEAL-O-RING	
	16	1	**7X-7729**	4	WASHER (11X25X3-MM THK)	
	17	1	**8T-4121**	3	WASHER-HARD (11X21X2.5-MM THK)	
M	18	1	**8T-4137**	4	BOLT (M10X1.5X20-MM)	
M	19	1	**8T-4195**	2	BOLT (M10X1.5X30-MM)	
M	20	1	**8T-4196**	1	BOLT (M10X1.5X35-MM)	
	21	1	**9M-9130**	4	CLAMP	

M-METRIC PART

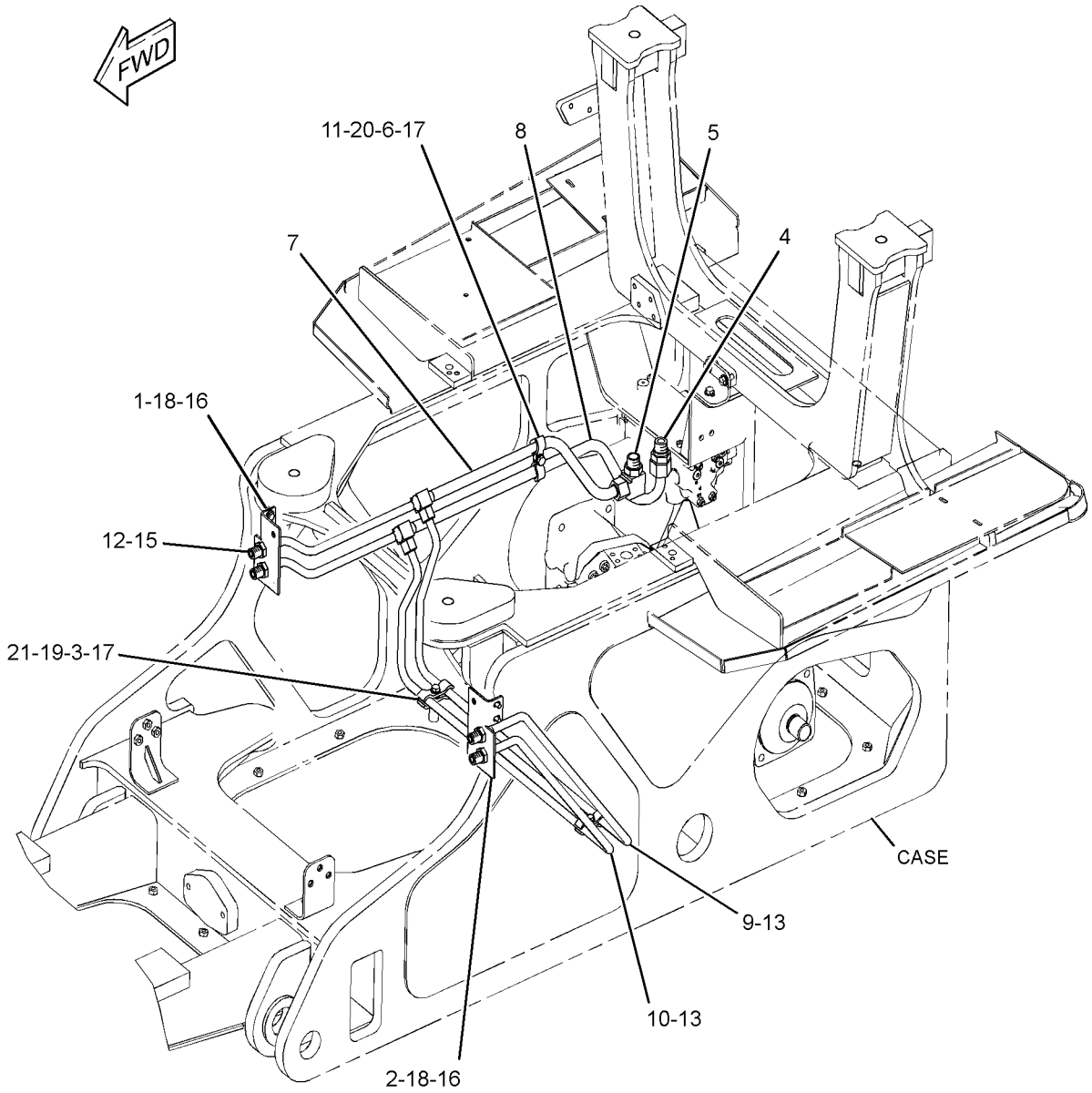

GRAPHIC #1 **<END>** g01296913

HYDRAULIC SYSTEM

206-7265 LINES GP-LIFT CYLINDER

S/N: DHA1012-UP; FBH1269-UP

PART OF 206-7280 HYDRAULIC AR-3 VALVE

SMCS-5057, 5102 **i03385505**

NOTE	REF NO	GRAPHIC REF	PART NUMBER	QTY	PART NAME 1 2 3 4 5 6 (PRODUCT LEVEL)	SEE PAGE
CI	1	1	**216-1640**	1	HOSE AS	
	2	1	**261-6044**	1	TUBE AS	
	3	1	**261-6046**	1	TUBE AS	
	4	1	**261-6047**	1	TUBE AS	
	5	1	**261-6048**	1	BRACKET AS (RH)	
	6	1	**261-6049**	1	BRACKET AS (LH)	
C	7	1	**333-3663**	1	TUBE AS	
	8	1	**132-7551**	2	SPACER (11X19X6-MM THK)	
C	9	1	*148-8327*	1	CONNECTOR AS	
		1	**6V-8637**	1	CONNECTOR	
		1	**3D-2824**	1	SEAL-O-RING	
		1	**6V-9746**	1	SEAL-O-RING	
	10	1	*148-8362*	1	ELBOW AS	
		1	**8T-6684**	1	ELBOW	
		1	**3D-2824**	1	SEAL-O-RING	
		1	**5K-9090**	1	SEAL-O-RING	
	11	1	**6V-9170**	4	NUT-BULKHEAD (1-14-THD)	
C	12	1	**6V-9746**	3	SEAL-O-RING	
	14	1	**7J-9108**	4	SEAL-O-RING	
C	15	1	**7X-7729**	5	WASHER (11X25X3-MM THK)	
C	16	1	**8T-1889**	2	CLIP (SLOT)	
C	17	1	**8T-1890**	2	CLIP (TAB)	
C	18	1	**8T-4121**	4	WASHER-HARD (11X21X2.5-MM THK)	
CM	19	1	**8T-4136**	2	BOLT (M10X1.5X25-MM)	
M	20	1	**8T-4137**	4	BOLT (M10X1.5X20-MM)	
M	21	1	**8T-4195**	2	BOLT (M10X1.5X30-MM)	
	22	1	**9M-9130**	4	CLAMP	

C-CHANGE FROM PREVIOUS TYPE
I-REFER TO HYDRAULIC INFORMATION SYSTEM
M-METRIC PART

206-7265 **LINES GP-LIFT CYLINDER** *(contd.)* **i03385505**

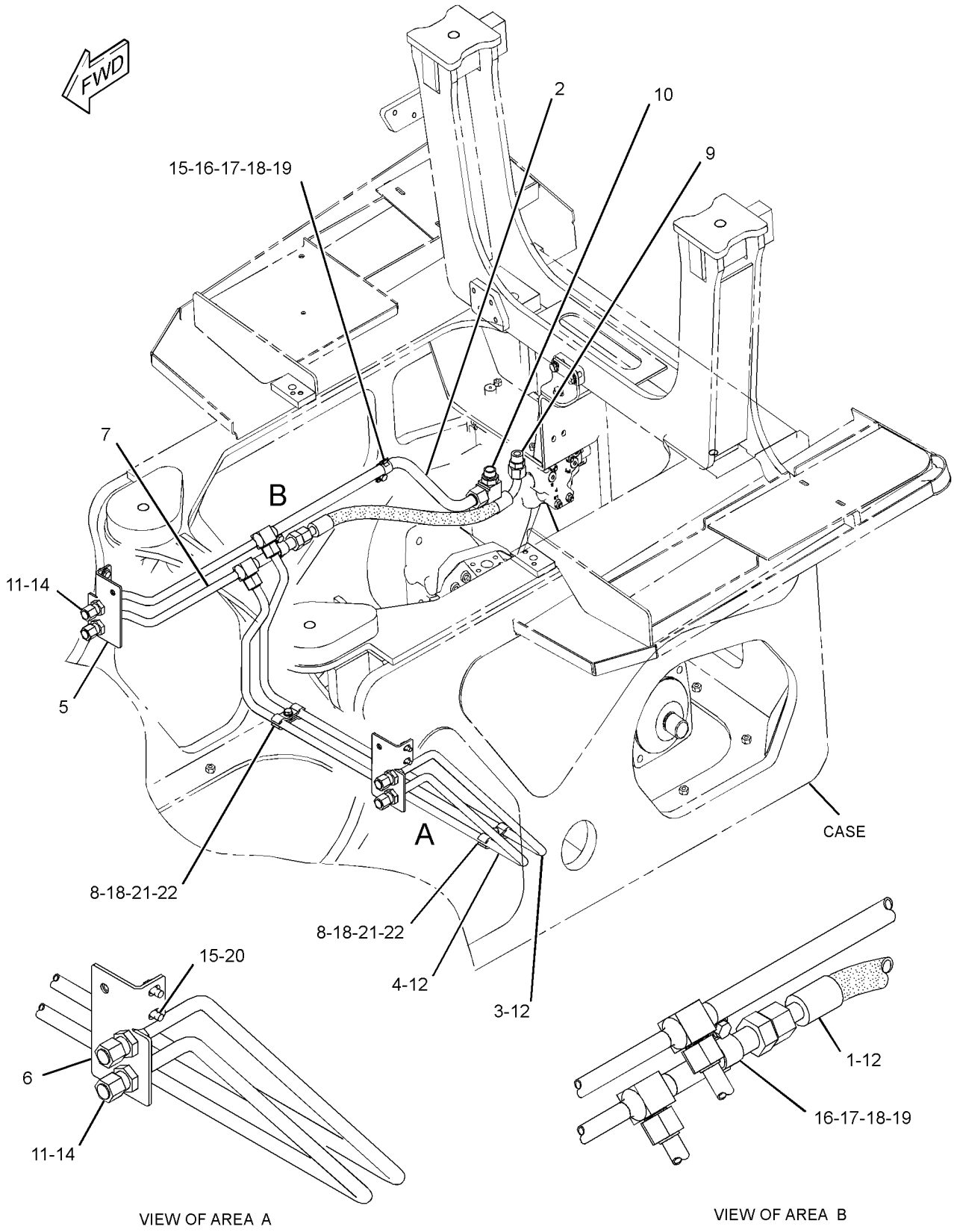

GRAPHIC #1 **<END>** g01788138

HYDRAULIC SYSTEM

248-1664 LINES GP-PILOT

S/N: DHA1-UP; FBH1-UP

PART OF 206-7280 HYDRAULIC AR-3 VALVE

SMCS-5057 **i02837782**

NOTE	REF NO	GRAPHIC REF	PART NUMBER	QTY	PART NAME 1 2 3 4 5 6 (PRODUCT LEVEL)	SEE PAGE
	1	1	**133-6934**	1	SPACER (11X20X25-MM THK)	
I	2	1	**276-4282**	1	HOSE AS	
	3	1	*148-8336*	2	CONNECTOR AS	
					(EACH INCLUDES)	
		1	**6V-8636**	1	CONNECTOR	
		1	**3J-1907**	1	SEAL-O-RING	
		1	**6V-8397**	1	SEAL-O-RING	
	4	1	*148-8378*	1	ELBOW AS	
		1	**6V-8724**	1	ELBOW	
		1	**3J-1907**	1	SEAL-O-RING	
		1	**6V-8397**	1	SEAL-O-RING	
	5	1	*148-8435*	1	TEE AS	
		1	**6V-8781**	1	TEE-FACE SEAL	
		1	**3J-1907**	1	SEAL-O-RING	
		1	**6V-8397**	2	SEAL-O-RING	
	6	1	*184-2420*	1	ADAPTER AS	
		1	**3E-7401**	1	ADAPTER	
		1	**6V-8397**	1	SEAL-O-RING	
	7	1	**1S-0994**	1	CLIP	
Y	8	1	*226-0420*	1	ACCUMULATOR GP-PILOT OIL (CHARGED)	511
I	9	1	**226-5554**	1	HOSE AS	
I	10	1	**234-2825**	1	HOSE AS	
	11	1	**3K-0360**	1	SEAL-O-RING	
	12	1	**6V-9168**	1	NUT (11/16-16-THD)	
	13	1	**8T-4121**	1	WASHER-HARD (11X21X2.5-MM THK)	
M	14	1	**8T-4186**	1	BOLT (M10X1.5X40-MM)	
	15	1	**258-7255**	1	FILM-WARNING (ACCUM, HIGH PRESS, READ OMM)	

I-REFER TO HYDRAULIC INFORMATION SYSTEM
M-METRIC PART
Y-SEPARATE ILLUSTRATION

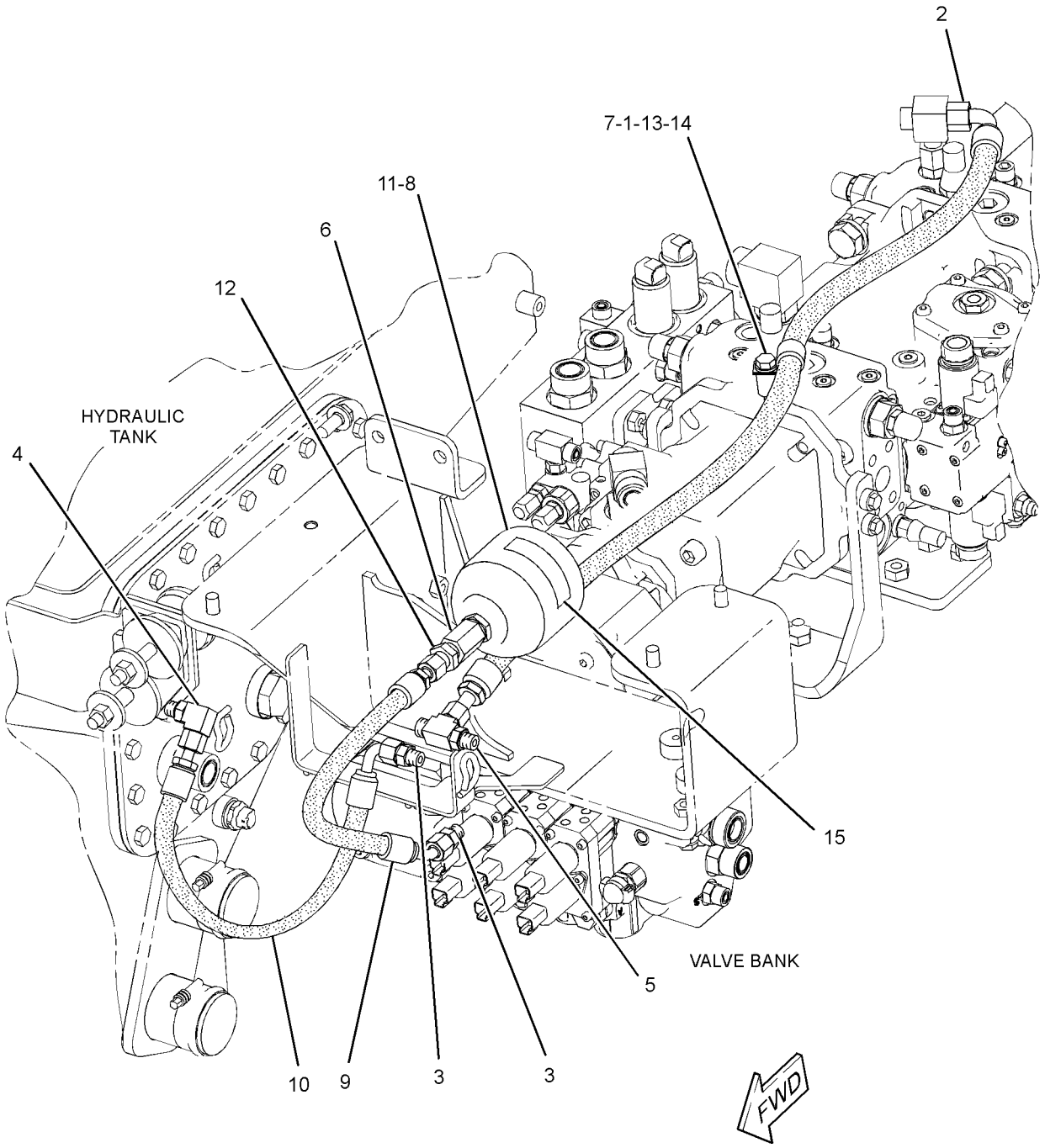

GRAPHIC #1 **<END>** g01186572

HYDRAULIC SYSTEM

250-7798 LINES GP-PUMP

S/N: DHA1-975; FBH1-1164
PART OF 248-6545 CONVERSION AR-WINCH
FOR USE WITH WINCH
AN ATTACHMENT

SMCS-5057 **i02957068**

NOTE	REF NO	GRAPHIC REF	PART NUMBER	QTY	PART NAME 1 2 3 4 5 6 (PRODUCT LEVEL)	SEE PAGE
	1	1	**3S-2093**	3	STRAP-CABLE	
	2	1	**6V-0852**	4	CAP-DUST	
	3	1	**8T-4984**	2	CLAMP-HOSE	
I	4	1	**246-6316**	1	HOSE AS	
I	5	1	**198-7413**	1	HOSE AS (VALVE GP FAN)	
	6	1	**130-2531**	1	BRACKET AS	
		1	**4W-3277**	1	BRACKET	
M		1	**8T-3490**	1	NUT-WELD (M10X1.5-THD)	
	7	1	*164-5611*	1	TEE AS	
		1	**8T-3312**	1	TEE	
		1	**6V-9746**	1	SEAL-O-RING	
		1	**7M-8485**	1	SEAL-O-RING	
	8	1	**177-2215**	1	STRAP-DUAL CLAMP	
	9	1	**203-3847**	2	BRACKET AS	
					(EACH INCLUDES)	
M		1	**170-7491**	1	STUD-WELD (M10X1.5X35-MM OAL)	
	10	1	**204-5380**	1	HOSE AS (IMPLEMENT PUMP SIGNAL PRESSURE)	
	10A	1	**204-5380**	1	HOSE AS (FAN PUMP PRESSURE)	
	10B	1	**204-5380**	1	HOSE AS (IMPLEMENT PUMP PRESSURE)	
	11	1	**214-4643**	2	TAG-IDENTIFICATION (NUMBER ZERO)	
	12	1	**214-4644**	2	TAG-IDENTIFICATION (NUMBER THREE)	
	13	1	**214-4646**	2	TAG-IDENTIFICATION (NUMBER SIX)	
	14	1	**214-4653**	2	TAG-IDENTIFICATION (NUMBER TWO)	
I	15	1	**216-1640**	1	HOSE AS	
	16	1	**292-8012**	1	VALVE GP-CHECK	
		1	**7M-8485**	1	SEAL-O-RING	
		1	**5K-9090**	1	SEAL-O-RING	
I	17	1	**246-7756**	1	HOSE AS	
Y	18	1	**246-9876**	1	PUMP GP-PISTON & GEAR (IMPLEMENT, HYDRAULIC FAN)	582
	19	1	**251-6638**	1	HOSE	
	20	1	**252-0524**	1	TUBE AS	
	21	1	**264-6186**	1	HOSE AS (IMPLEMENT PUMP FILL)	
M	22	1	**101-3129**	1	STUD (M10X1.5-THD)	
	23	1	*148-8319*	1	CONNECTOR AS	
		1	**6V-8715**	1	CONNECTOR	
		1	**2M-9780**	1	SEAL-O-RING	
		1	**6V-8397**	1	SEAL-O-RING	
	24	1	*148-8327*	1	CONNECTOR AS	
		1	**6V-8637**	1	CONNECTOR	
		1	**3D-2824**	1	SEAL-O-RING	
		1	**6V-9746**	1	SEAL-O-RING	
	25	1	*148-8335*	1	CONNECTOR AS	
		1	**6V-8635**	1	CONNECTOR	
		1	**5K-9090**	1	SEAL-O-RING	
		1	**7M-8485**	1	SEAL-O-RING	
	26	1	*148-8336*	2	CONNECTOR AS	
					(EACH INCLUDES)	
		1	**6V-8636**	1	CONNECTOR	
		1	**3J-1907**	1	SEAL-O-RING	
		1	**6V-8397**	1	SEAL-O-RING	
	27	1	*155-3503*	1	TEE AS	
		1	**6V-8776**	1	TEE-FACE SEAL	
		1	**2M-9780**	1	SEAL-O-RING	

250-7798 **LINES GP-PUMP** *(contd.)* **i02957068**

NOTE	REF NO	GRAPHIC REF	PART NUMBER	QTY	PART NAME 1 2 3 4 5 6 (PRODUCT LEVEL)	SEE PAGE
		1	**7J-9108**	2	SEAL-O-RING	
	28	1	*148-8434*	1	TEE AS	
		1	**6V-9843**	1	TEE-SWIVEL	
		1	**6V-8397**	2	SEAL-O-RING	
	29	1	*156-4282*	1	REDUCER AS	
		1	**6V-8938**	1	REDUCER-O-RING	
		1	**6V-8397**	1	SEAL-O-RING	
	30	1	*164-5567*	4	COUPLER AS-QUICK DISCONNECT	
					(EACH INCLUDES)	
		1	**6V-3965**	1	FITTING (QUICK DISCONNECT)	
		1	**3J-1907**	1	SEAL-O-RING	
	31	1	**1P-3709**	1	SEAL-RECTANGULAR	
	32	1	*260-9187*	4	CONNECTOR AS	
					(EACH INCLUDES)	
		1	**8T-9358**	1	CONNECTOR	
		1	**6V-8397**	1	SEAL-O-RING	
	33	1	**5D-0718**	4	CLIP	
	34	1	**6V-1889**	2	CLIP	
	35	1	**6V-8555**	1	NUT-FACE SEAL (1-14-THD)	
	36	1	**6V-9168**	4	NUT (11/16-16-THD)	
	37	1	**7X-3391**	4	WASHER-HARD (13.5X32X6-MM THK)	
	38	1	**7X-7729**	5	WASHER (11X25X3-MM THK)	
	39	1	**8T-4121**	7	WASHER-HARD (11X21X2.5-MM THK)	
M	40	1	**8T-4133**	3	NUT (M10X1.5-THD)	
M	41	1	**8T-4136**	1	BOLT (M10X1.5X25-MM)	
M	42	1	**8T-4137**	5	BOLT (M10X1.5X20-MM)	
M	43	1	**8T-4184**	4	BOLT (M12X1.75X45-MM)	
M	44	1	**8T-4194**	4	BOLT (M12X1.75X50-MM)	
	45	1	**7X-3392**	4	WASHER-HARD (13.5X22.5X3-MM THK)	
D	46	1	**6V-5819**		CONDUIT-FLEXIBLE (0.4-M)	
	47	1	*148-8326*	1	CONNECTOR AS	
		1	**3J-7354**	1	SEAL-O-RING	
		1	**6V-8397**	1	SEAL-O-RING	
		1	**6V-9872**	1	CONNECTOR	

D-ORDER BY THE METER
I-REFER TO HYDRAULIC INFORMATION SYSTEM
M-METRIC PART
Y-SEPARATE ILLUSTRATION

250-7798 **LINES GP-PUMP** *(contd.)* **i02957068**

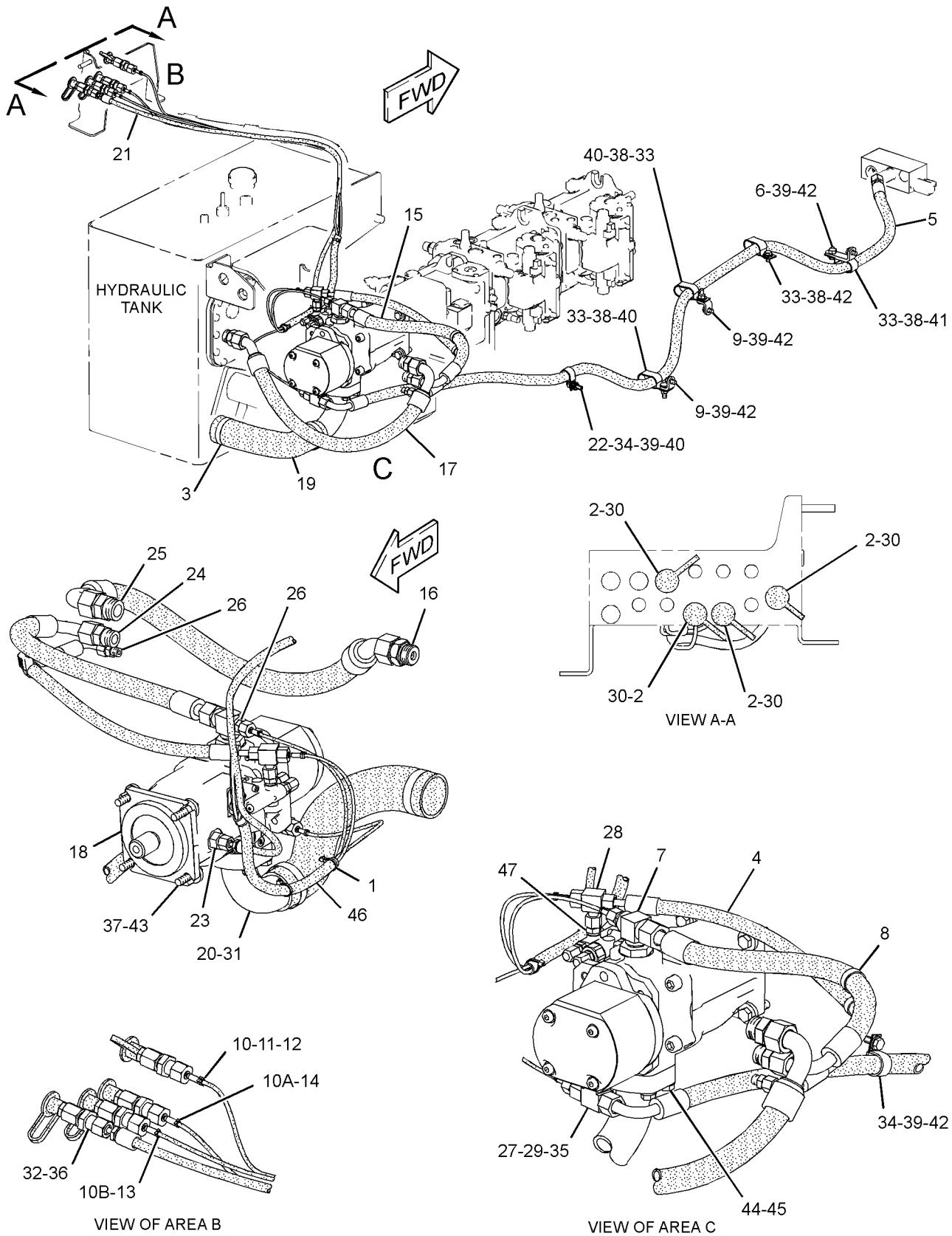

GRAPHIC #1 **<END>** g01520574

HYDRAULIC SYSTEM

250-7798 LINES GP-PUMP

S/N: DHA976-UP; FBH1165-UP
PART OF 248-6545 CONVERSION AR-WINCH
FOR USE WITH WINCH
AN ATTACHMENT

SMCS-5057 **i03266691**

NOTE	REF NO	GRAPHIC REF	PART NUMBER	QTY	PART NAME 1 2 3 4 5 6 (PRODUCT LEVEL)	SEE PAGE
	1	1	**3S-2093**	3	STRAP-CABLE	
	2	1	**6V-0852**	4	CAP-DUST	
	3	1	**8T-4984**	2	CLAMP-HOSE	
I	4	1	**246-6316**	1	HOSE AS	
I	5	1	**198-7413**	1	HOSE AS	
	6	1	**130-2531**	1	BRACKET AS	
		1	**4W-3277**	1	BRACKET	
M		1	**8T-3490**	1	NUT-WELD (M10X1.5-THD)	
	7	1	*164-5611*	1	TEE AS	
		1	**8T-3312**	1	TEE	
		1	**6V-9746**	1	SEAL-O-RING	
		1	**7M-8485**	1	SEAL-O-RING	
	8	1	**177-2215**	1	STRAP-DUAL CLAMP	
	9	1	**203-3847**	2	BRACKET AS	
					(EACH INCLUDES)	
M		1	**170-7491**	1	STUD-WELD (M10X1.5X35-MM OAL)	
	10	1	**204-5380**	3	HOSE AS	
	11	1	**214-4643**	2	TAG-IDENTIFICATION (NUMBER ZERO)	
	12	1	**214-4644**	2	TAG-IDENTIFICATION (NUMBER THREE)	
	13	1	**214-4646**	2	TAG-IDENTIFICATION (NUMBER SIX)	
	14	1	**214-4653**	2	TAG-IDENTIFICATION (NUMBER TWO)	
I	15	1	**216-1640**	1	HOSE AS	
	16	1	**292-8012**	1	VALVE GP-CHECK	
		1	**7M-8485**	1	SEAL-O-RING	
		1	**5K-9090**	1	SEAL-O-RING	
I	17	1	**246-7756**	1	HOSE AS	
Y	18	1	**246-9876**	1	PUMP GP-PISTON & GEAR (IMPLEMENT, HYDRAULIC FAN)	582
	19	1	**251-6638**	1	HOSE	
	20	1	**252-0524**	1	TUBE AS	
	21	1	**264-6186**	1	HOSE AS	
M	22	1	**101-3129**	1	STUD (M10X1.5-THD)	
	23	1	*148-8319*	1	CONNECTOR AS	
		1	**6V-8715**	1	CONNECTOR	
		1	**2M-9780**	1	SEAL-O-RING	
		1	**6V-8397**	1	SEAL-O-RING	
	24	1	*148-8327*	1	CONNECTOR AS	
		1	**6V-8637**	1	CONNECTOR	
		1	**3D-2824**	1	SEAL-O-RING	
		1	**6V-9746**	1	SEAL-O-RING	
	25	1	*148-8335*	1	CONNECTOR AS	
		1	**6V-8635**	1	CONNECTOR	
		1	**5K-9090**	1	SEAL-O-RING	
		1	**7M-8485**	1	SEAL-O-RING	
	26	1	*148-8336*	2	CONNECTOR AS	
					(EACH INCLUDES)	
		1	**6V-8636**	1	CONNECTOR	
		1	**3J-1907**	1	SEAL-O-RING	
		1	**6V-8397**	1	SEAL-O-RING	
	27	1	*155-3503*	1	TEE AS	
		1	**6V-8776**	1	TEE-FACE SEAL	
		1	**2M-9780**	1	SEAL-O-RING	
		1	**7J-9108**	2	SEAL-O-RING	
C	28	1	*148-8439*	1	TEE AS	

250-7798 **LINES GP-PUMP** *(contd.)* **i03266691**

NOTE	REF NO	GRAPHIC REF	PART NUMBER	QTY	PART NAME 1 2 3 4 5 6 (PRODUCT LEVEL)	SEE PAGE
		1	**6V-8774**	1	TEE	
		1	**3J-1907**	1	SEAL-O-RING	
		1	**6V-8397**	2	SEAL-O-RING	
	29	1	*156-4282*	1	REDUCER AS	
		1	**6V-8938**	1	REDUCER-O-RING	
		1	**6V-8397**	1	SEAL-O-RING	
	30	1	*164-5567*	4	COUPLER AS-QUICK DISCONNECT	
					(EACH INCLUDES)	
		1	**6V-3965**	1	FITTING (QUICK DISCONNECT)	
		1	**3J-1907**	1	SEAL-O-RING	
	31	1	**1P-3709**	1	SEAL-RECTANGULAR	
	32	1	*260-9187*	4	CONNECTOR AS	
					(EACH INCLUDES)	
		1	**8T-9358**	1	CONNECTOR	
		1	**6V-8397**	1	SEAL-O-RING	
	33	1	**5D-0718**	4	CLIP	
	34	1	**6V-1889**	2	CLIP	
	35	1	**6V-8555**	1	NUT-FACE SEAL (1-14-THD)	
	36	1	**6V-9168**	4	NUT (11/16-16-THD)	
	37	1	**7X-3391**	4	WASHER-HARD (13.5X32X6-MM THK)	
	38	1	**7X-7729**	5	WASHER (11X25X3-MM THK)	
	39	1	**8T-4121**	7	WASHER-HARD (11X21X2.5-MM THK)	
M	40	1	**8T-4133**	3	NUT (M10X1.5-THD)	
M	41	1	**8T-4136**	1	BOLT (M10X1.5X25-MM)	
M	42	1	**8T-4137**	5	BOLT (M10X1.5X20-MM)	
M	43	1	**8T-4184**	4	BOLT (M12X1.75X45-MM)	
M	44	1	**8T-4194**	4	BOLT (M12X1.75X50-MM)	
	45	1	**7X-3392**	4	WASHER-HARD (13.5X22.5X3-MM THK)	
D	46	1	**6V-5819**		CONDUIT-FLEXIBLE (0.4-M)	
C	47	1	*150-4047*	1	ADAPTER AS	
		1	**8T-2353**	1	ADAPTER	
		1	**3J-7354**	1	SEAL-O-RING	

C-CHANGE FROM PREVIOUS TYPE
D-ORDER BY THE METER
I-REFER TO HYDRAULIC INFORMATION SYSTEM
M-METRIC PART
Y-SEPARATE ILLUSTRATION

250-7798 **LINES GP-PUMP** *(contd.)* **i03266691**

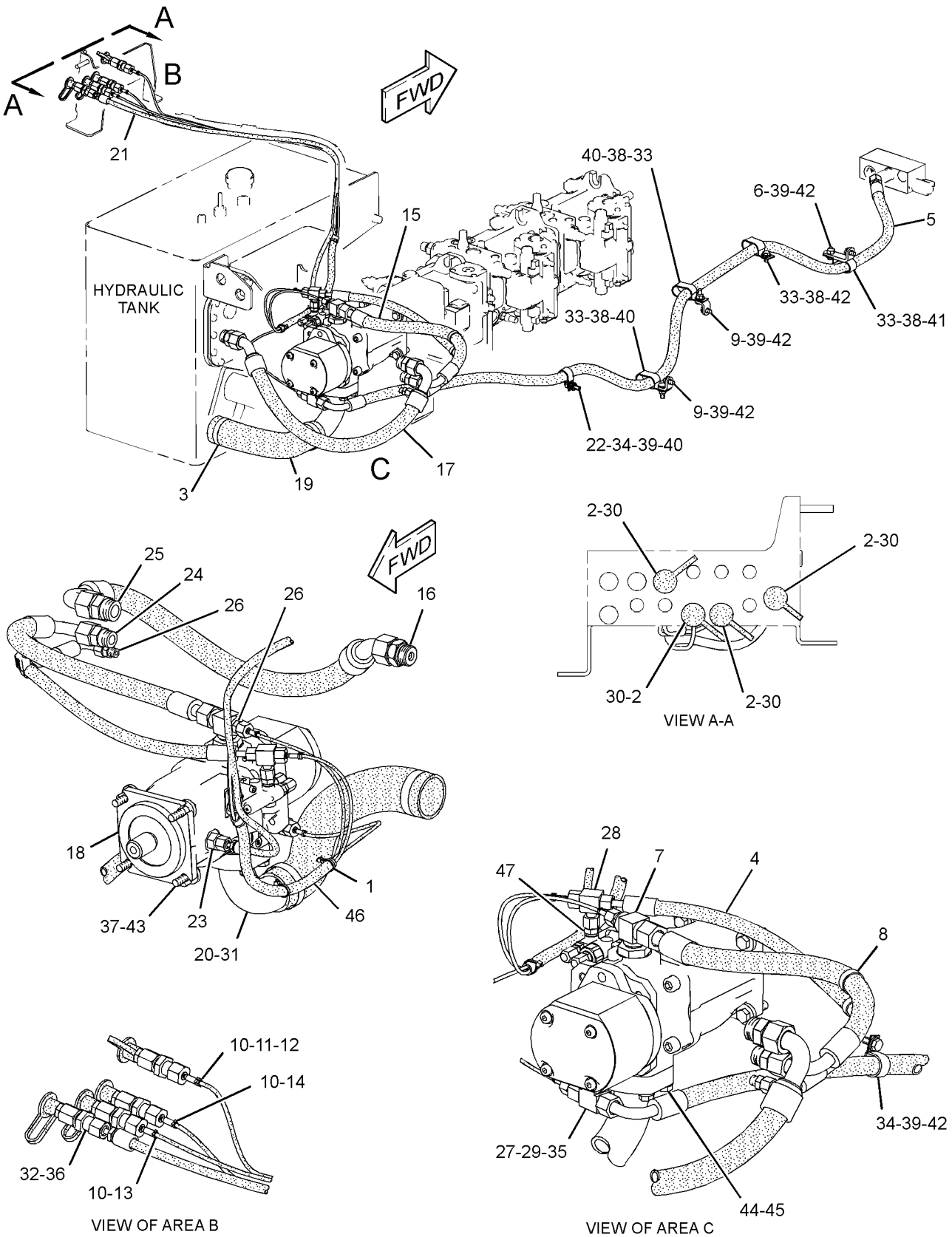

GRAPHIC #1 **<END>** g01665255

HYDRAULIC SYSTEM

246-6469 LINES GP-RIPPER

S/N: DHA1-UP; FBH1-UP
PART OF 250-3852 HYDRAULIC AR-4 VALVE
AN ATTACHMENT

SMCS-5057, 5352, 5356 **i02392159**

NOTE	REF NO	GRAPHIC REF	PART NUMBER	QTY	PART NAME 1 2 3 4 5 6 (PRODUCT LEVEL)	SEE PAGE
	1	1	*148-8327*	2	CONNECTOR AS	
					(EACH INCLUDES)	
		1	**6V-8637**	1	CONNECTOR	
		1	**3D-2824**	1	SEAL-O-RING	
		1	**6V-9746**	1	SEAL-O-RING	
	2	1	**246-6470**	1	TUBE AS	
	3	1	**246-6471**	1	TUBE AS	
	4	1	**2P-1293**	2	LOCKNUT (1-3/16-12-THD)	
	5	1	**6V-9746**	2	SEAL-O-RING	

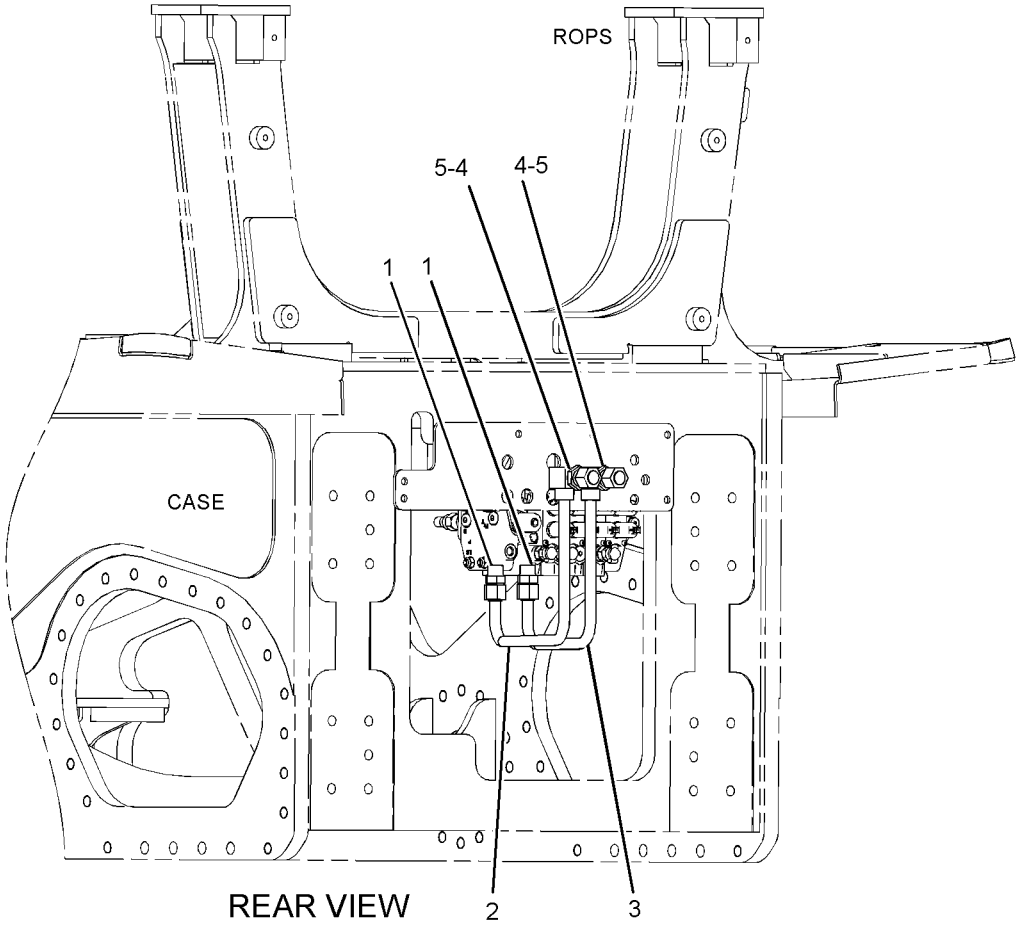

GRAPHIC #1 **<END>** g01200288

HYDRAULIC SYSTEM

253-1698 LINES GP-RIPPER

S/N: 4041-UP
PART OF 240-1470 RIPPER AR
AN ATTACHMENT

SMCS-5057, 5352, 5356 **i02581607**

NOTE	REF NO	GRAPHIC REF	PART NUMBER	QTY	PART NAME 1 2 3 4 5 6 (PRODUCT LEVEL)	SEE PAGE
	1	1	**1L-5081**	1	SPACER (0.41X0.75X0.56-IN THK)	
	2	1	**246-2641**	1	PADLOCK GP	
		1	**5P-8500**	1	KEY	
	3	1	**9M-2904**	2	CLAMP-HOSE	
	4	1	**112-4368**	4	SHIELD	
	5	1	**130-1977**	4	SHIELD	
	6	1	**130-9192**	2	GROMMET	
I	7	1	**253-7673**	1	HOSE AS	
I	8	1	**253-7674**	1	HOSE AS	
	9	1	*148-8418*	2	REDUCER AS	
					(EACH INCLUDES)	
		1	**6V-8942**	1	REDUCER-O-RING	
		1	**6V-8398**	1	SEAL-O-RING	
	10	1	**4J-5267**	2	SEAL-O-RING	
	13	1	**5P-7466**	1	CLIP (SLOT)	
	14	1	**5P-7467**	1	CLIP (TAB)	
	15	1	**5P-8112**	1	GROMMET	
	16	1	**6V-8556**	2	NUT (1-3/16-12-THD)	
M	17	1	**8T-6466**	1	BOLT (M10X1.5X60-MM)	
M	18	1	**8T-4186**	7	BOLT (M10X1.5X40-MM)	
	19	1	**8T-4121**	8	WASHER-HARD (11X21X2.5-MM THK)	

I-REFER TO HYDRAULIC INFORMATION SYSTEM
M-METRIC PART

253-1698 **LINES GP-RIPPER** *(contd.)* **i02581607**

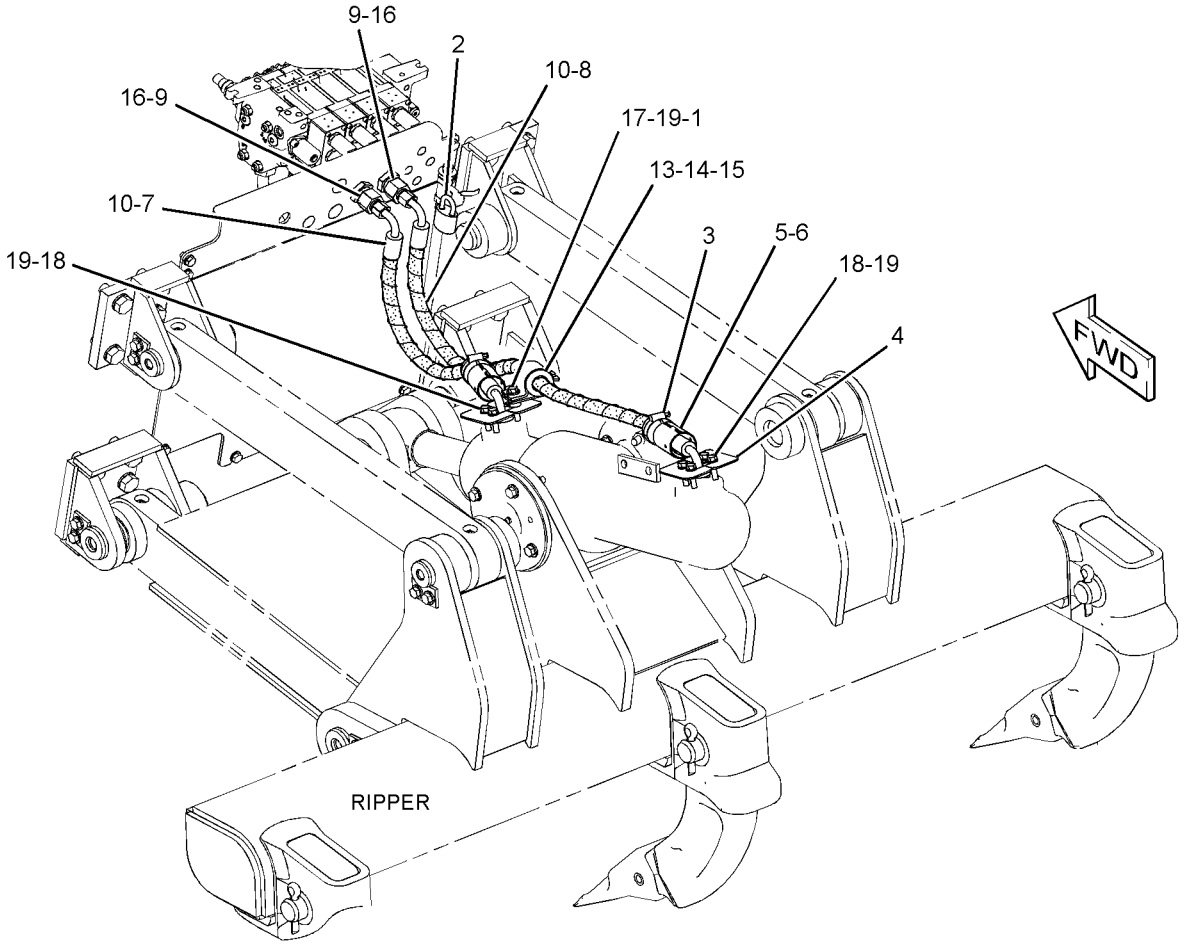

GRAPHIC #1 **<END>** g01303413

HYDRAULIC SYSTEM

246-5950 LINES GP-WINCH

S/N: DHA1-281; FBH1-419
PART OF 248-6545 CONVERSION AR-WINCH
AN ATTACHMENT

SMCS-5179 **i02747585**

NOTE	REF NO	GRAPHIC REF	PART NUMBER	QTY	PART NAME 1 2 3 4 5 6 (PRODUCT LEVEL)	SEE PAGE
	1	2	**3S-2093**	1	STRAP-CABLE	
	2	1	**5P-4247**	2	ELBOW-HOSE	
	3	2	**6V-0852**	1	CAP-DUST	
	4	2	**8C-9022**	1	STEM AS	
	5	1	**8T-4984**	2	CLAMP-HOSE	
	6	2	**9X-3962**	1	FITTING	
	7	1	**097-4552**	2	TUBE	
	8	1	**177-2215**	5	STRAP-DUAL CLAMP	
	9	2	**187-3547**	2	COUPLER AS-QUICK DISCONNECT	
	10	2	**187-9008**	2	CAP-DUST	
	11	2	**203-3847**	1	BRACKET AS	
	12	1	**210-0691**	1	HOSE AS	
	13	2	**214-4643**	4	TAG-IDENTIFICATION (NUMBER ZERO)	
	14	2	**214-4646**	4	TAG-IDENTIFICATION (NUMBER SIX)	
	15	2	**214-4647**	4	TAG-IDENTIFICATION (NUMBER EIGHT)	
I	16	1	**243-3665**	1	HOSE AS	
I	17	1	**243-3666**	1	HOSE AS	
	18	1	**243-3667**	1	HOSE	
I	19	2	**246-5955**	1	HOSE AS	
I	20	2	**246-5956**	1	HOSE AS	
I	21	1	**246-6167**	1	HOSE AS	
	22	2	*250-1445*	1	ADAPTER AS	
		2	**250-1444**	1	ADAPTER	
		2	**2S-4078**	1	SEAL-O-RING	
	23	1	**250-5576**	1	HOSE	
	24	2	**250-5747**	1	PLATE	
	25	1	**251-9852**	1	HOSE	
	26	1,2	**254-1254**	2	HOSE AS	
Y	27	2	**264-2995**	3	FILTER GP-OIL (HYDRAULIC) (POWER TRAIN, WINCH)	344
	28	2	**266-0394**	1	TUBE AS	
	29	2	**266-0395**	1	TUBE AS	
	30	2	**266-1505**	1	TUBE AS	
	31	2	**266-1506**	1	TUBE AS	
	32	1	**266-1619**	1	BRACKET AS	
I	33	1	**266-9600**	1	HOSE AS	
I	34	2	**266-9601**	1	HOSE AS	
	35	1	**267-8142**	1	BLOCK AS	
	36	1	**267-8143**	1	BRACKET AS	
	37	1	**267-8144**	1	BRACKET	
I	38	1	**268-9890**	1	HOSE AS	
I	39	1	**268-9891**	1	HOSE AS	
	40	2	**269-4970**	1	ADAPTER	
I	41	2	**269-8260**	1	HOSE AS	
I	42	1	**272-0511**	1	HOSE AS	
	43	1	**272-0512**	1	BRACKET AS	
	44	1	**272-0513**	1	TUBE AS	
I	45	2	**272-0830**	1	HOSE AS	
	46	2	**277-7013**	1	ELBOW	
	47	2	**277-7014**	1	ELBOW	
M	48	2	**101-3129**	1	STUD (M10X1.5-THD)	
	49	1	**8T-7934**	9	WASHER-HARD (11X21X5-MM THK)	
	50	2	*148-8326*	2	CONNECTOR AS	
					(EACH INCLUDES)	
		2	**6V-9872**	1	CONNECTOR	

246-5950 **LINES GP-WINCH** *(contd.)* **i02747585**

NOTE	REF NO	GRAPHIC REF	PART NUMBER	QTY	PART NAME 1 2 3 4 5 6 (PRODUCT LEVEL)	SEE PAGE
		2	**3J-7354**	1	SEAL-O-RING	
		2	**6V-8397**	1	SEAL-O-RING	
	51	2	*148-8327*	7	CONNECTOR AS	
					(EACH INCLUDES)	
		2	**6V-8637**	1	CONNECTOR	
		2	**3D-2824**	1	SEAL-O-RING	
		2	**6V-9746**	1	SEAL-O-RING	
	52	2	**176-5166**	4	SPACER (13X23.6X8.5-MM THK)	
	53	2	*148-8339*	1	CONNECTOR AS	
		2	**6V-8716**	1	CONNECTOR	
		2	**6V-9746**	1	SEAL-O-RING	
		2	**7M-8485**	1	SEAL-O-RING	
	54	1	*148-8342*	1	CONNECTOR AS	
		1	**6V-8632**	1	CONNECTOR	
		1	**3K-0360**	1	SEAL-O-RING	
		1	**7J-9108**	1	SEAL-O-RING	
	55	1	*148-8376*	1	ELBOW AS	
		1	**6V-8983**	1	ELBOW	
		1	**6V-9746**	2	SEAL-O-RING	
	56	1	*148-8378*	1	ELBOW AS	
		1	**6V-8724**	1	ELBOW	
		1	**3J-1907**	1	SEAL-O-RING	
		1	**6V-8397**	1	SEAL-O-RING	
	57	1	*148-8435*	1	TEE AS	
		1	**6V-8781**	1	TEE-FACE SEAL	
		1	**3J-1907**	1	SEAL-O-RING	
		1	**6V-8397**	2	SEAL-O-RING	
	58	1	*148-8455*	1	UNION AS	
		1	**6V-8997**	1	UNION	
		1	**6V-9746**	2	SEAL-O-RING	
	59	1	*149-5452*	1	UNION AS	
		1	**6V-8994**	1	UNION	
		1	**6V-8397**	2	SEAL-O-RING	
	60	2	*150-4033*	1	TEE AS	
		2	**6V-9846**	1	TEE-SWIVEL	
		2	**6V-9746**	2	SEAL-O-RING	
	61	2	*150-4048*	1	ELBOW AS	
		2	**6V-8722**	1	ELBOW	
		2	**3K-0360**	1	SEAL-O-RING	
		2	**7J-9108**	1	SEAL-O-RING	
	62	2	*153-6237*	1	ELBOW AS	
		2	**6V-9004**	1	ELBOW	
		2	**3D-2824**	1	SEAL-O-RING	
		2	**6V-9746**	1	SEAL-O-RING	
	63	2	*164-5567*	1	COUPLER AS-QUICK DISCONNECT	
		2	**6V-3965**	1	FITTING (QUICK DISCONNECT)	
		2	**3J-1907**	1	SEAL-O-RING	
	64	2	**204-2281**	1	STRAP-TIE	
	65	2	**198-4777**	1	WASHER-HARD (11X25X10-MM THK)	
	66	1,2	**1P-3702**	2	SEAL-RECTANGULAR	
Y	67	2	**249-8600**	1	PUMP GP-PISTON (WINCH)	580
	68	2	*260-9187*	3	CONNECTOR AS	
					(EACH INCLUDES)	
		2	**8T-9358**	1	CONNECTOR	
		2	**6V-8397**	1	SEAL-O-RING	
	69	1	**2P-1293**	3	LOCKNUT (1-3/16-12-THD)	
	70	1,2	**2S-4078**	3	SEAL-O-RING	
	71	2	**3P-9847**	2	CLIP	
	72	2	**5F-3106**	1	SEAL-O-RING	

246-5950 **LINES GP-WINCH** ***(contd.)*** **i02747585**

NOTE	REF NO	GRAPHIC REF	PART NUMBER	QTY	PART NAME 1 2 3 4 5 6 (PRODUCT LEVEL)	SEE PAGE
	73	2	**5K-5338**	1	CLIP	
	74	1,2	**6V-9168**	4	NUT (11/16-16-THD)	
	75	2	**6V-9170**	2	NUT-BULKHEAD (1-14-THD)	
	76	1,2	**6V-9746**	4	SEAL-O-RING	
	77	1	**6V-9829**	1	CAP AS	
	78	1	**6V-9832**	3	CAP AS	
	79	2,2	**7J-9108**	2	SEAL-O-RING	
	80	2	**7M-8485**	1	SEAL-O-RING	
M	81	1	**7X-2552**	1	BOLT (M16X2X30-MM)	
	82	1,2	**7X-7729**	4	WASHER (11X25X3-MM THK)	
	83	1	**8T-1889**	2	CLIP (SLOT)	
	84	1	**8T-1890**	2	CLIP (TAB)	
	85	1,2	**8T-4121**	17	WASHER-HARD (11X21X2.5-MM THK)	
M	86	2	**8T-4133**	2	NUT (M10X1.5-THD)	
M	87	1,2	**8T-4136**	2	BOLT (M10X1.5X25-MM)	
M	88	1,2	**8T-4137**	5	BOLT (M10X1.5X20-MM)	
M	89	1,2	**8T-4182**	8	BOLT (M10X1.5X45-MM)	
M	90	1	**8T-4189**	5	BOLT (M8X1.25X20-MM)	
M	91	1	**8T-4192**	3	BOLT (M12X1.75X25-MM)	
M	92	2	**8T-4194**	4	BOLT (M12X1.75X50-MM)	
M	93	1	**8T-4198**	2	BOLT (M10X1.5X100-MM)	
	94	1	**8T-4223**	3	WASHER-HARD (13.5X25.5X3-MM THK)	
	95	1	**8T-4224**	5	WASHER-HARD (8.8X16X2-MM THK)	
	96	1	**8T-4983**	4	CLAMP-HOSE	
	97	1,2	**8T-9403**	4	FLANGE-HALF	
	98	1	**9X-8257**	1	WASHER (17.5X30X3.5-MM THK)	
M	99	1	**8T-4195**	9	BOLT (M10X1.5X30-MM)	

I-REFER TO HYDRAULIC INFORMATION SYSTEM
M-METRIC PART
Y-SEPARATE ILLUSTRATION

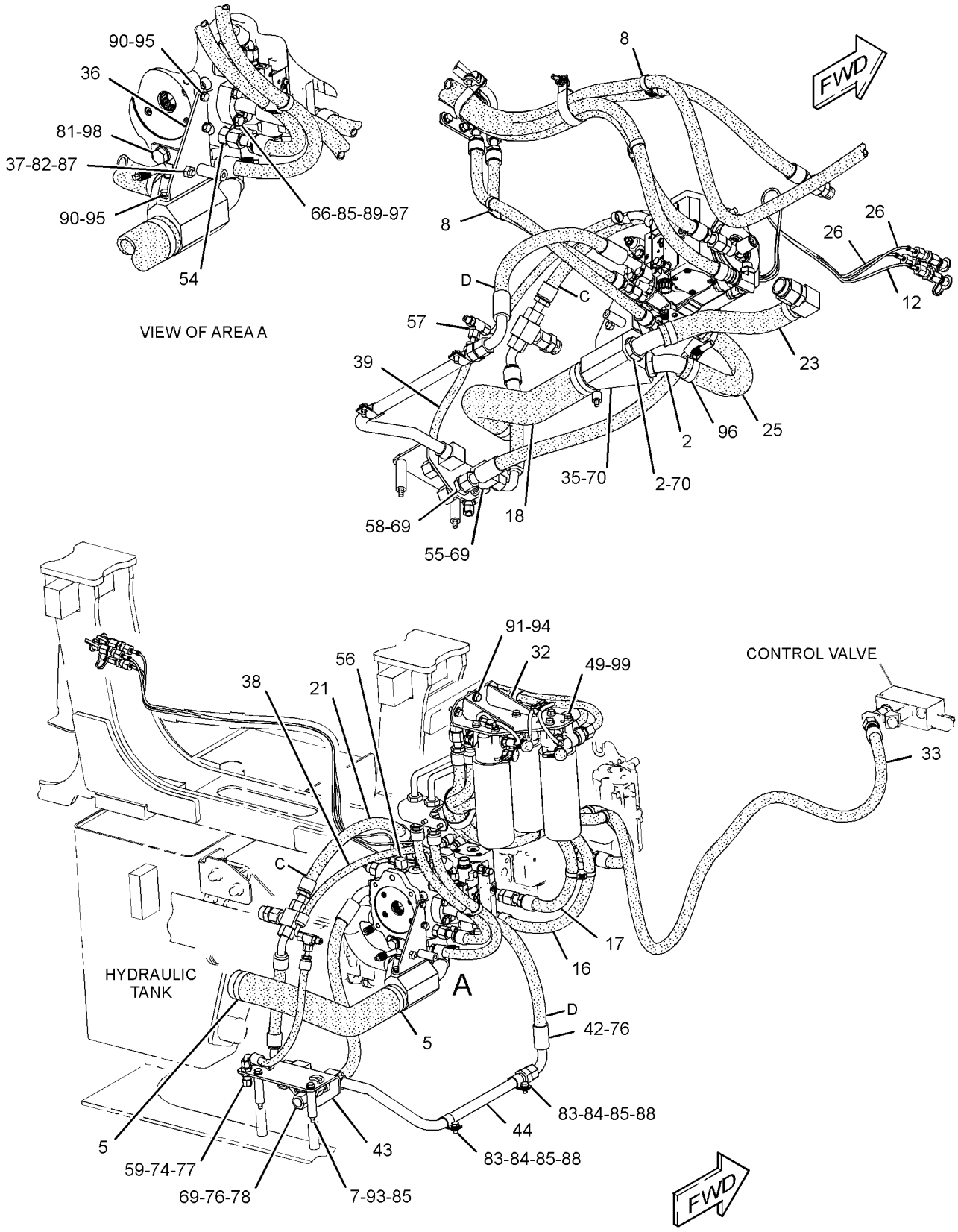

GRAPHIC #1 g01301278

246-5950 **LINES GP-WINCH** *(contd.)* **i02747585**

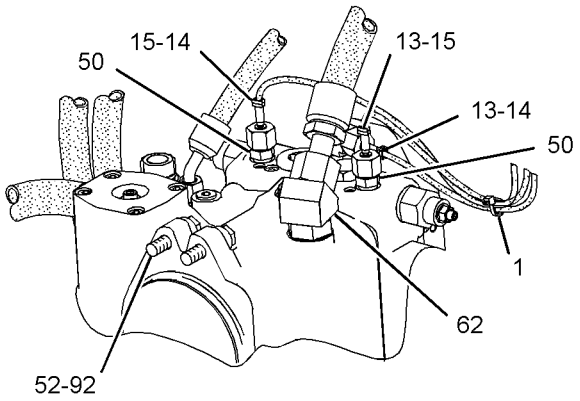

VIEW OF AREA B

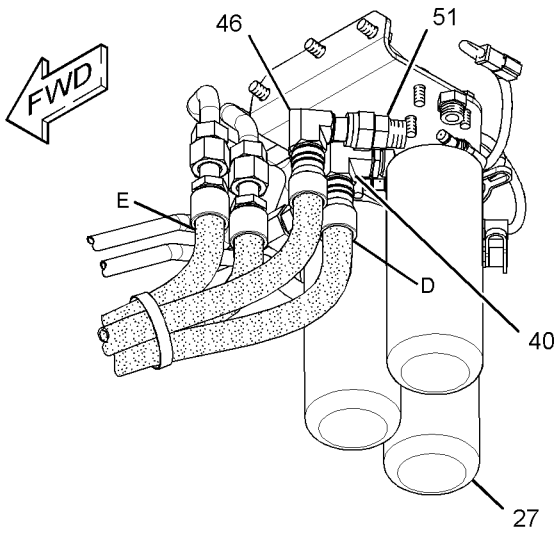

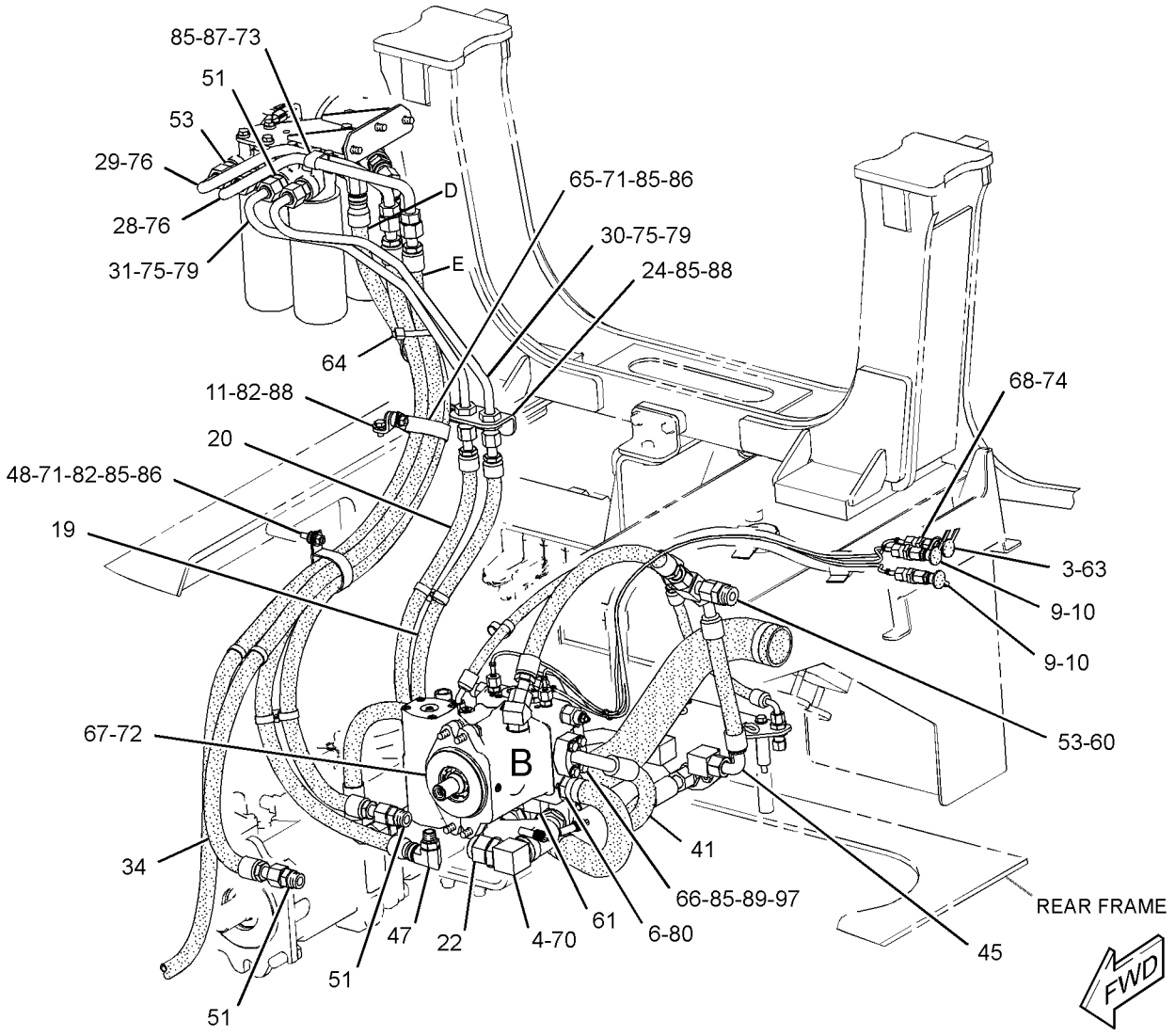

GRAPHIC #2 **<END>** g01301282

HYDRAULIC SYSTEM

246-5950 LINES GP-WINCH

S/N: DHA282-UP; FBH420-UP
PART OF 248-6545 CONVERSION AR-WINCH
AN ATTACHMENT

SMCS-5179 **i03449460**

NOTE	REF NO	GRAPHIC REF	PART NUMBER	QTY	PART NAME 1 2 3 4 5 6 (PRODUCT LEVEL)	SEE PAGE
	1	2	**3S-2093**	1	STRAP-CABLE	
	2	1	**5P-4247**	2	ELBOW-HOSE	
	3	2	**6V-0852**	1	CAP-DUST	
	4	2	**8C-9022**	1	STEM AS	
	5	1	**8T-4984**	2	CLAMP-HOSE	
	6	2	**9X-3962**	1	FITTING	
	7	1	**097-4552**	2	TUBE	
	8	1	**177-2215**	4	STRAP-DUAL CLAMP	
	9	2	**187-3547**	2	COUPLER AS-QUICK DISCONNECT	
	10	2	**187-9008**	2	CAP-DUST	
	11	2	**203-3847**	1	BRACKET AS	
	12	1	**210-0691**	1	HOSE AS	
	13	2	**214-4643**	4	TAG-IDENTIFICATION (NUMBER ZERO)	
	14	2	**214-4646**	4	TAG-IDENTIFICATION (NUMBER SIX)	
	15	2	**214-4647**	4	TAG-IDENTIFICATION (NUMBER EIGHT)	
I	16	1	**243-3665**	1	HOSE AS	
I	17	1	**243-3666**	1	HOSE AS	
	18	1	**243-3667**	1	HOSE	
I	19	2	**246-5955**	1	HOSE AS	
I	20	2	**246-5956**	1	HOSE AS	
I	21	1	**246-6167**	1	HOSE AS	
	22	2	*250-1445*	1	ADAPTER AS	
		2	**250-1444**	1	ADAPTER	
		2	**2S-4078**	1	SEAL-O-RING	
	23	1	**250-5576**	1	HOSE	
	24	2	**250-5747**	1	PLATE	
	25	1	**251-9852**	1	HOSE	
	26	1	**254-1254**	2	HOSE AS	
CY	27	2	**302-7298**	3	FILTER GP-OIL (POWER TRAIN, WINCH)	345
	28	2	**266-0394**	1	TUBE AS	
	29	2	**266-0395**	1	TUBE AS	
	30	2	**266-1505**	1	TUBE AS	
	31	2	**266-1506**	1	TUBE AS	
	32	1	**266-1619**	1	BRACKET AS	
I	33	1	**266-9600**	1	HOSE AS	
I	34	2	**266-9601**	1	HOSE AS	
	35	1	**267-8142**	1	BLOCK AS	
	36	1	**267-8143**	1	BRACKET AS	
	37	1	**267-8144**	1	BRACKET	
I	38	1	**268-9890**	1	HOSE AS	
I	39	1	**268-9891**	1	HOSE AS	
	40	2	**269-4970**	1	ADAPTER	
I	41	2	**269-8260**	1	HOSE AS	
I	42	1	**272-0511**	1	HOSE AS	
	43	1	**272-0512**	1	BRACKET AS	
	44	1	**272-0513**	1	TUBE AS	
I	45	2	**272-0830**	1	HOSE AS	
	46	2	**277-7013**	1	ELBOW	
	47	2	**277-7014**	1	ELBOW	
M	48	2	**101-3129**	1	STUD (M10X1.5-THD)	
	49	1	**8T-7934**	9	WASHER-HARD (11X21X5-MM THK)	
	50	2	*148-8326*	2	CONNECTOR AS	
					(EACH INCLUDES)	
		2	**6V-9872**	1	CONNECTOR	
		2	**3J-7354**	1	SEAL-O-RING	

246-5950 **LINES GP-WINCH** *(contd.)* **i03449460**

NOTE	REF NO	GRAPHIC REF	PART NUMBER	QTY	PART NAME 1 2 3 4 5 6 (PRODUCT LEVEL)	SEE PAGE
		2	**6V-8397**	1	SEAL-O-RING	
	51	2	*148-8327*	7	CONNECTOR AS	
					(EACH INCLUDES)	
		2	**6V-8637**	1	CONNECTOR	
		2	**3D-2824**	1	SEAL-O-RING	
		2	**6V-9746**	1	SEAL-O-RING	
	52	2	**176-5166**	4	SPACER (13X23.6X8.5-MM THK) (13X23.6X8.5-MM THK)	
	53	2	*148-8339*	1	CONNECTOR AS	
		2	**6V-8716**	1	CONNECTOR	
		2	**6V-9746**	1	SEAL-O-RING	
		2	**7M-8485**	1	SEAL-O-RING	
	54	1	*148-8342*	1	CONNECTOR AS	
		1	**6V-8632**	1	CONNECTOR	
		1	**3K-0360**	1	SEAL-O-RING	
		1	**7J-9108**	1	SEAL-O-RING	
	55	1	*148-8376*	1	ELBOW AS	
		1	**6V-8983**	1	ELBOW	
		1	**6V-9746**	2	SEAL-O-RING	
C	56	1	*148-8378*	2	ELBOW AS	
					(EACH INCLUDES)	
		1	**6V-8724**	1	ELBOW	
		1	**3J-1907**	1	SEAL-O-RING	
		1	**6V-8397**	1	SEAL-O-RING	
	57	1	*148-8435*	1	TEE AS	
		1	**6V-8781**	1	TEE-FACE SEAL	
		1	**3J-1907**	1	SEAL-O-RING	
		1	**6V-8397**	2	SEAL-O-RING	
	58	1	*148-8455*	1	UNION AS	
		1	**6V-8997**	1	UNION	
		1	**6V-9746**	2	SEAL-O-RING	
	59	1	*149-5452*	1	UNION AS	
		1	**6V-8994**	1	UNION	
		1	**6V-8397**	2	SEAL-O-RING	
	60	2	*150-4033*	1	TEE AS	
		2	**6V-9846**	1	TEE-SWIVEL	
		2	**6V-9746**	2	SEAL-O-RING	
	61	2	*150-4048*	1	ELBOW AS	
		2	**6V-8722**	1	ELBOW	
		2	**3K-0360**	1	SEAL-O-RING	
		2	**7J-9108**	1	SEAL-O-RING	
	62	2	*153-6237*	1	ELBOW AS	
		2	**6V-9004**	1	ELBOW	
		2	**3D-2824**	1	SEAL-O-RING	
		2	**6V-9746**	1	SEAL-O-RING	
	63	2	*164-5567*	1	COUPLER AS-QUICK DISCONNECT	
		2	**6V-3965**	1	FITTING (QUICK DISCONNECT)	
		2	**3J-1907**	1	SEAL-O-RING	
	64	2	**204-2281**	1	STRAP-TIE	
	65	2	**198-4777**	1	WASHER-HARD (11X25X10-MM THK)	
	66	1,2	**1P-3702**	2	SEAL-RECTANGULAR	
Y	67	2	**249-8600**	1	PUMP GP-PISTON (WINCH)	580
	68	2	*260-9187*	3	CONNECTOR AS	
					(EACH INCLUDES)	
		2	**8T-9358**	1	CONNECTOR	
		2	**6V-8397**	1	SEAL-O-RING	
	69	1	**2P-1293**	3	LOCKNUT (1-3/16-12-THD)	
	70	1,2	**2S-4078**	3	SEAL-O-RING	
	71	2	**3P-9847**	2	CLIP	
	72	2	**7J-6285**	1	SEAL-O-RING	

246-5950 **LINES GP-WINCH** *(contd.)* **i03449460**

NOTE	REF NO	GRAPHIC REF	PART NUMBER	QTY	PART NAME 1 2 3 4 5 6 (PRODUCT LEVEL)	SEE PAGE
	73	2	**5K-5338**	1	CLIP	
	74	1,2	**6V-9168**	4	NUT (11/16-16-THD)	
	75	2	**6V-9170**	2	NUT-BULKHEAD (1-14-THD)	
	76	1,2	**6V-9746**	4	SEAL-O-RING	
	77	1	**6V-9829**	1	CAP AS	
	78	1	**6V-9832**	3	CAP AS	
	79	2,2	**7J-9108**	2	SEAL-O-RING	
	80	2	**7M-8485**	1	SEAL-O-RING	
M	81	1	**7X-2552**	1	BOLT (M16X2X30-MM)	
C	82	1,2	**7X-7729**	5	WASHER (11X25X3-MM THK)	
	83	1	**8T-1889**	2	CLIP (SLOT)	
	84	1	**8T-1890**	2	CLIP (TAB)	
C	85	1,2	**8T-4121**	16	WASHER-HARD (11X21X2.5-MM THK)	
M	86	2	**8T-4133**	2	NUT (M10X1.5-THD)	
M	87	1,2	**8T-4136**	2	BOLT (M10X1.5X25-MM)	
M	88	1,2	**8T-4137**	5	BOLT (M10X1.5X20-MM)	
M	89	1,2	**8T-4182**	8	BOLT (M10X1.5X45-MM)	
M	90	1	**8T-4189**	5	BOLT (M8X1.25X20-MM)	
M	91	1	**8T-4192**	3	BOLT (M12X1.75X25-MM)	
M	92	2	**8T-4194**	4	BOLT (M12X1.75X50-MM)	
M	93	1	**8T-4198**	2	BOLT (M10X1.5X100-MM)	
	94	1	**8T-4223**	3	WASHER-HARD (13.5X25.5X3-MM THK)	
	95	1	**8T-4224**	5	WASHER-HARD (8.8X16X2-MM THK)	
	96	1	**8T-4983**	4	CLAMP-HOSE	
	97	1,2	**8T-9403**	4	FLANGE-HALF	
	98	1	**9X-8257**	1	WASHER (17.5X30X3.5-MM THK)	
M	99	1	**8T-4195**	9	BOLT (M10X1.5X30-MM)	
C	100	1	*164-5590*	1	VALVE AS-FLUID SAMPLING	
		1	**3J-7354**	1	SEAL-O-RING	
		1	**8C-3446**	1	VALVE-FLUID SAMPLING	
C	101	1	*148-8305*	1	ADAPTER AS	
		1	**3J-1907**	1	SEAL-O-RING	
		1	**5P-9617**	1	ADAPTER	
C	102	1	**8C-3451**	1	CAP-DUST	
C	103	1	**5I-4376**	1	FITTING	
	104	1	**3J-1907**	1	SEAL-O-RING	

C-CHANGE FROM PREVIOUS TYPE
I-REFER TO HYDRAULIC INFORMATION SYSTEM
M-METRIC PART
Y-SEPARATE ILLUSTRATION

246-5950 **LINES GP-WINCH** *(contd.)* **i03449460**

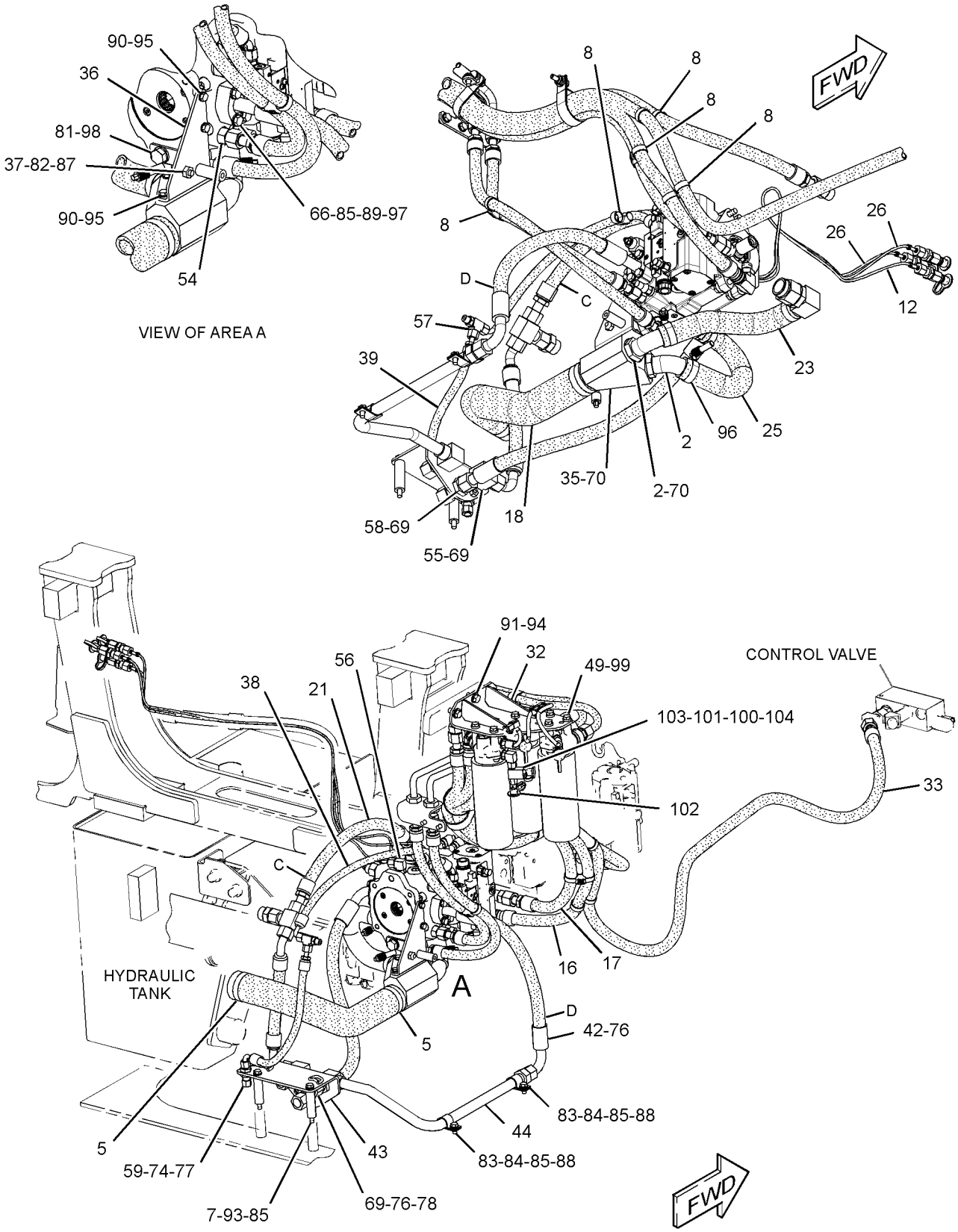

GRAPHIC #1 g01812153

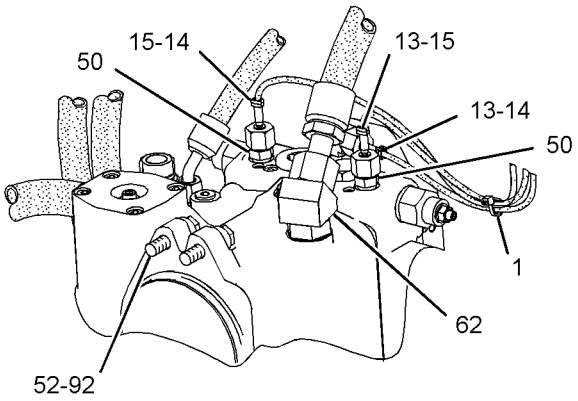

VIEW OF AREA B

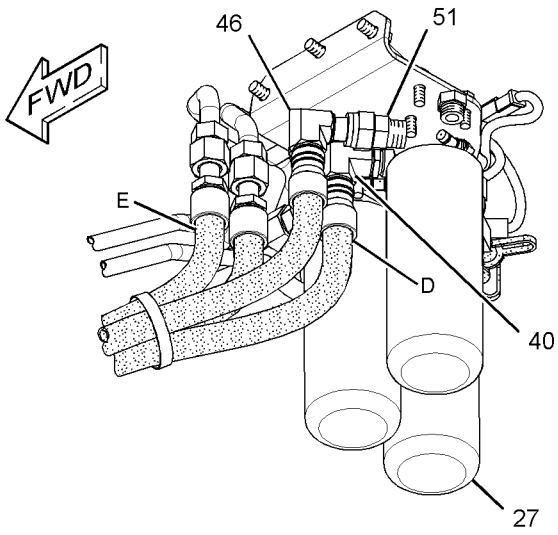

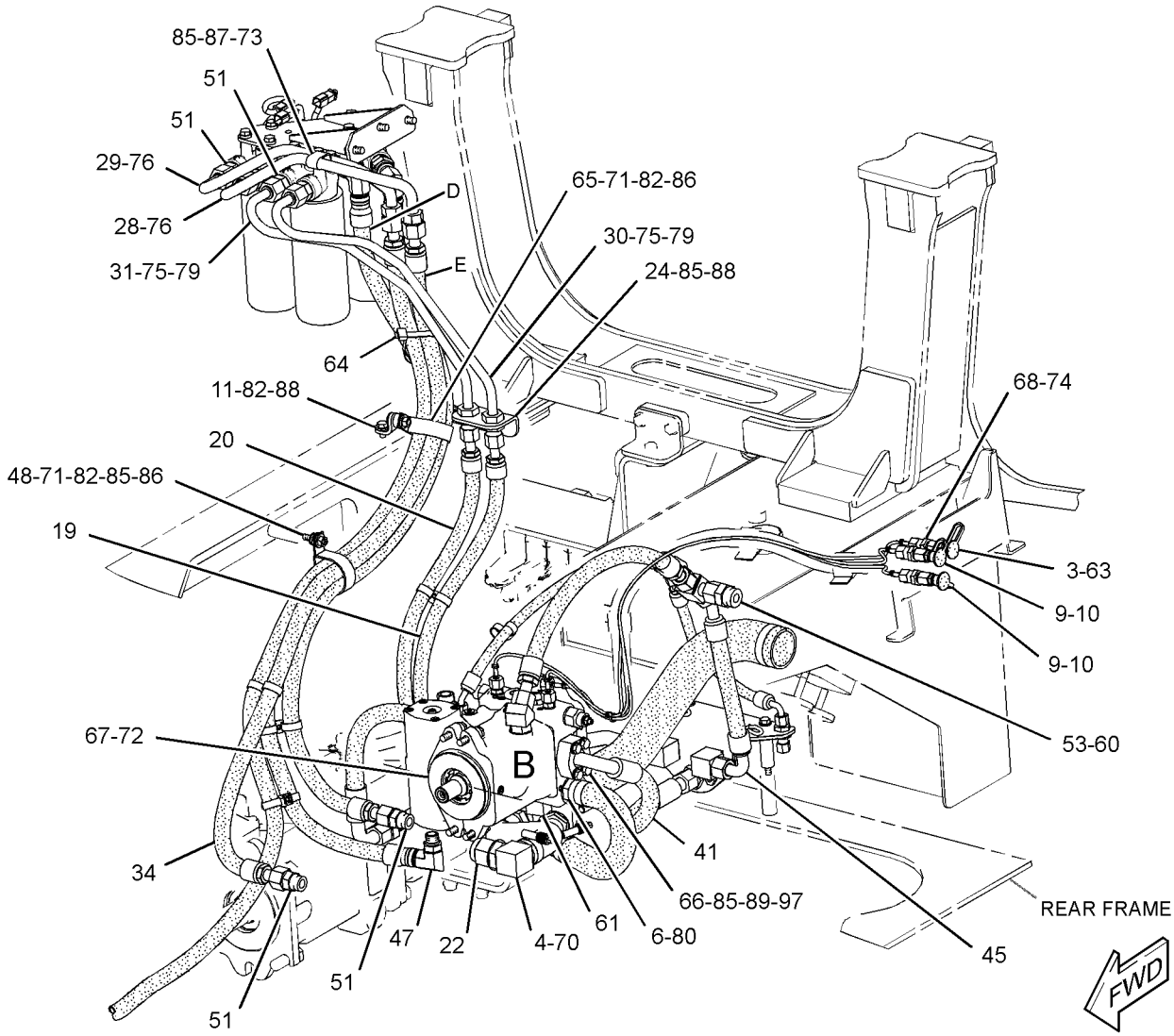

GRAPHIC #2 **<END>** g01427025

266-2273 MANIFOLD GP-CONTROL & SOLENOID–

IMPLEMENT CONTROL
S/N: DHA1-UP; FBH1-UP
24-VOLT DC
PART OF 266-2581, 266-2583, 266-2584 VALVE GP-CONTROL
AN ATTACHMENT

SMCS-5264, 5479 **i02704067**

NOTE	REF NO	GRAPHIC REF	PART NUMBER	QTY	PART NAME 1 2 3 4 5 6 (PRODUCT LEVEL)	SEE PAGE
Z	1	1		2	PLUG	
Z	2	1		1	PLUG	
Z	3	1		1	SPOOL	
Z	4	1		1	MANIFOLD	
Y	5	1	**189-8898**	2	VALVE GP-SOLENOID (PILOT PROPORTIONING)	623
Z	6	1		1	SPRING	

Y-SEPARATE ILLUSTRATION
Z-NOT SERVICED SEPARATELY

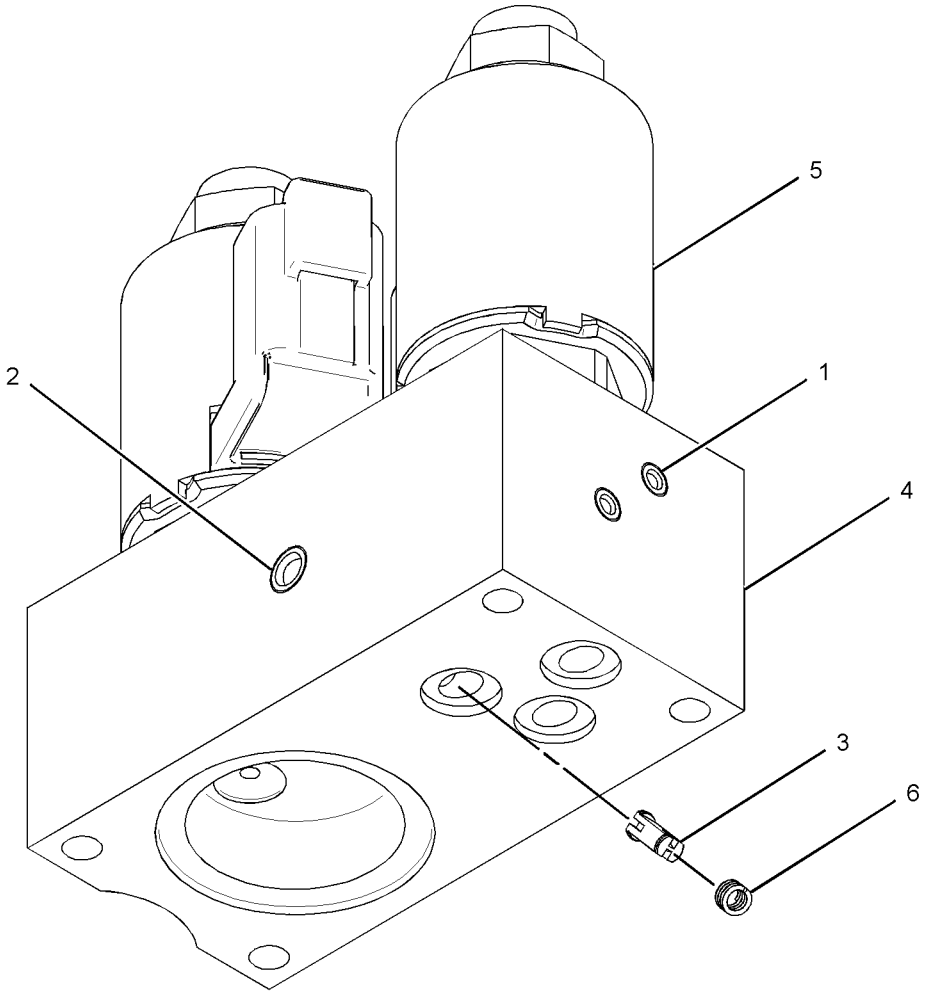

GRAPHIC #1 **<END>** g01308326

252-7008 MANIFOLD GP-CONTROL–DEMAND FAN

S/N: DHA1-UP; FBH1-UP
PART OF 250-7881 VALVE GP-CONTROL
AN ATTACHMENT

SMCS-5264 **i02395106**

NOTE	REF NO	GRAPHIC REF	PART NUMBER	QTY	PART NAME 1 2 3 4 5 6 (PRODUCT LEVEL)	SEE PAGE
Y	1	1	**211-2092**	1	VALVE GP-SOLENOID (24-VOLT) (DEMAND FAN)	624
	2	1	**177-3868**	1	VALVE GP-CHECK	

Y-SEPARATE ILLUSTRATION

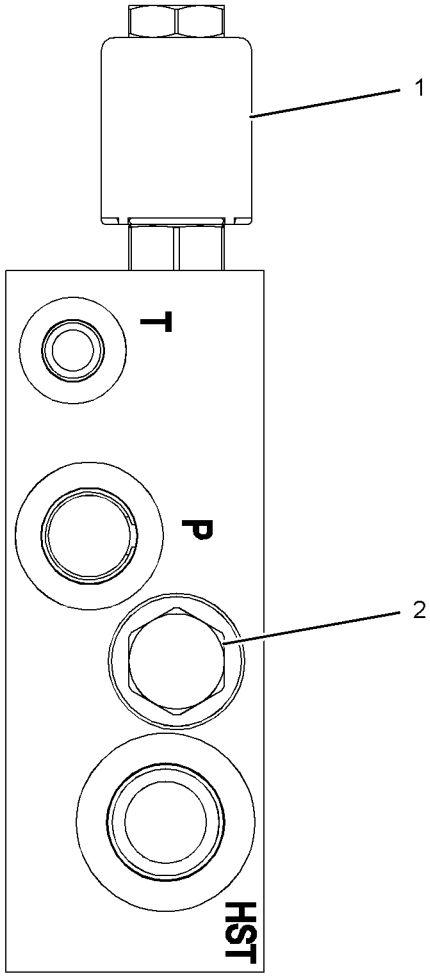

GRAPHIC #1 **<END>** g01200978

HYDRAULIC SYSTEM

285-7460 MANIFOLD GP-CONTROL–REVERSING FAN

S/N: DHA1-UP; FBH1-UP
PART OF 250-7882 VALVE GP-CONTROL
AN ATTACHMENT

SMCS-5264 **i03706654**

NOTE	REF NO	GRAPHIC REF	PART NUMBER	QTY	PART NAME 1 2 3 4 5 6 (PRODUCT LEVEL)	SEE PAGE
Y	1	1	**211-2092**	1	VALVE GP-SOLENOID (24-VOLT) (DEMAND FAN)	624
	2	1	**241-5895**	1	VALVE GP-SOLENOID (24-VOLT) (REVERSING FAN)	
		1	**250-6148**	1	COIL AS (24-VOLT)	
J	3	1	**252-7010**	1	VALVE GP-DIVERTER (REVERSING FAN)	
L	4	1	**177-3868**	1	VALVE GP-CHECK (REVERSING FAN)	
P		1	**3K-0360**	1	SEAL-O-RING	
N	5	1	**208-0886**	1	VALVE GP-RELIEF (REVERSING FAN)	
					AVAILABLE REPAIR KIT(S):	
J		1	**254-4493**	1	KIT-SEAL (DIVERTER VALVE)	
					(INCLUDES SEAL RINGS & BACKUP RINGS)	
LP		1	**120-9051**	1	KIT-SEAL	
					(INCLUDES O-RINGS & RING RETAINER)	
N		1	**264-5726**	1	KIT-SEAL	
					(INCLUDES O-RINGS & BACK-UP SEALS)	

J-KIT MARKED J SERVICES PART(S) MARKED J
L-KIT MARKED L SERVICES PART(S) MARKED L
N-KIT MARKED N SERVICES PART(S) MARKED N
P-KIT MARKED P INCLUDES PART(S) MARKED P
Y-SEPARATE ILLUSTRATION

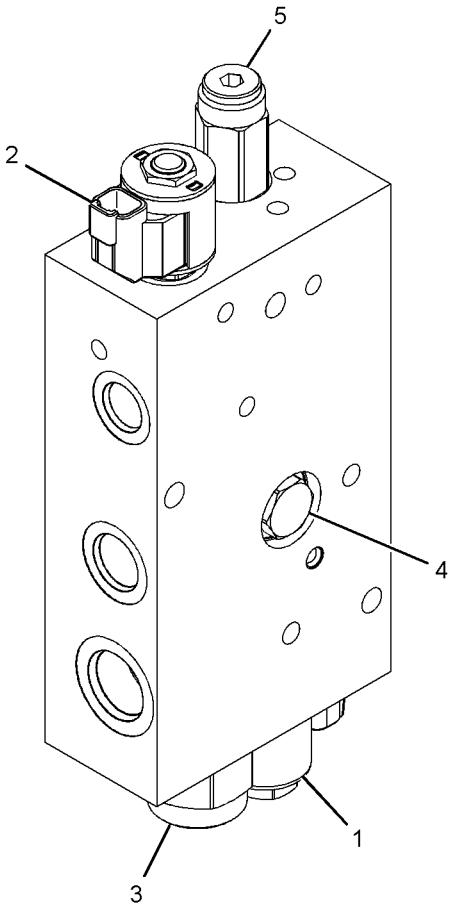

GRAPHIC #1 **<END>** g01301346

266-2580 MANIFOLD GP-VALVE–INLET

S/N: DHA1-UP; FBH1-UP

PART OF 244-7115, 309-1571 VALVE GP-BANK 3, 246-8498, 309-1572 VALVE GP-BANK 4

AN ATTACHMENT

SMCS-5264 **i03667675**

NOTE	REF NO	GRAPHIC REF	PART NUMBER	QTY	PART NAME 1 2 3 4 5 6 (PRODUCT LEVEL)	SEE PAGE
	1	1	**227-1184**	1	VALVE GP-RELIEF (INLET MANIFOLD)	
	2	1	**227-1185**	1	VALVE GP-FLOW CONTROL (AUXILIARY, INLET)	
	2A	1	**227-1198**	1	KIT-SEAL (FLOW CONTROL VALVE)	
					(INCLUDES SEAL RINGS & BACKUP RING)	
	3	1	**227-1197**	1	FILTER-OIL (FLOW REGULATOR) (INLET MANIFOLD)	
	4	1	**227-1199**	1	KIT-SEAL	
					(INCLUDES SEAL RINGS & THRUST RING)	
	5	1	**257-0468**	1	CAP-PROTECTION	

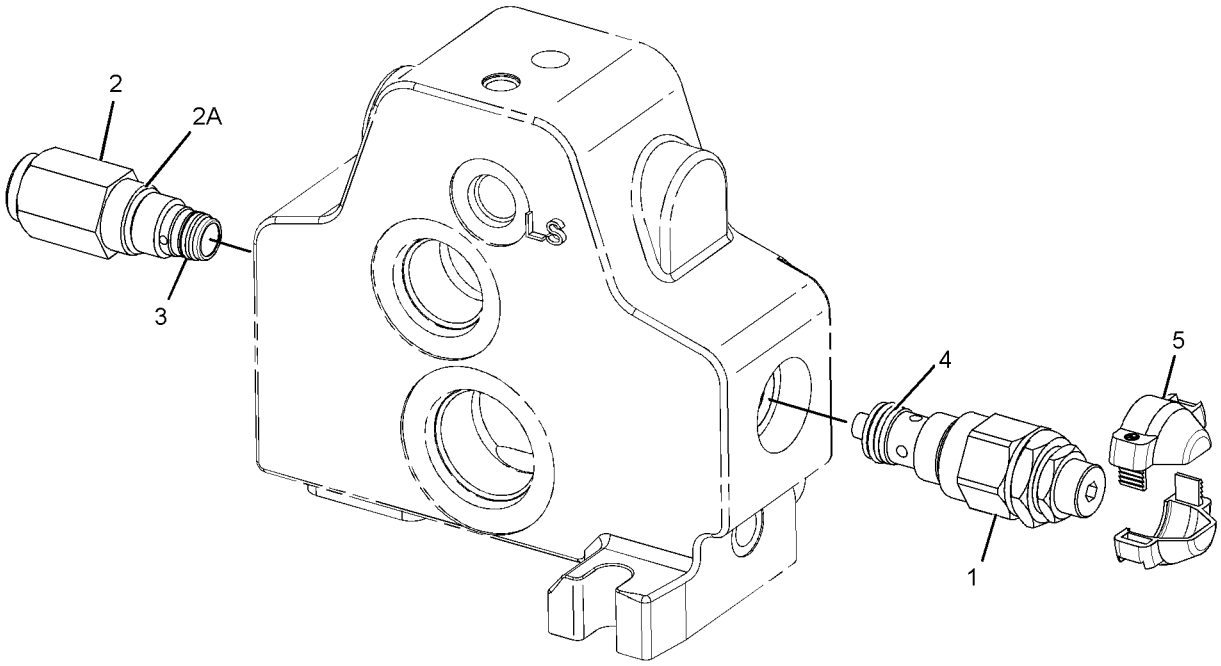

GRAPHIC #1 **<END>** g01975535

HYDRAULIC SYSTEM

206-7277 MOUNTING GP-VALVE

S/N: DHA1-UP; FBH1-UP

PART OF 206-7280 HYDRAULIC AR-3 VALVE

SMCS-5051 **i02595282**

NOTE	REF NO	GRAPHIC REF	PART NUMBER	QTY	PART NAME 1 2 3 4 5 6 (PRODUCT LEVEL)	SEE PAGE
	1	1	**246-5882**	1	BRACKET AS	
	2	1	**248-0971**	1	PLATE	
	3	1	**261-6916**	2	SPACER (13.8X35X20-MM THK)	
	4	1	**5P-1076**	6	WASHER-HARD (13.5X30X4-MM THK)	
	5	1	**8T-4121**	3	WASHER-HARD (11X21X2.5-MM THK)	
M	6	1	**8T-4136**	1	BOLT (M10X1.5X25-MM)	
M	7	1	**8T-4139**	2	BOLT (M12X1.75X30-MM)	
M	8	1	**8T-4183**	1	BOLT (M12X1.75X40-MM)	
M	9	1	**8T-4185**	2	BOLT (M10X1.5X50-MM)	
M	10	1	**8T-4910**	2	BOLT (M12X1.75X60-MM)	
M	11	1	**8T-4956**	1	BOLT (M12X1.75X35-MM)	

M-METRIC PART

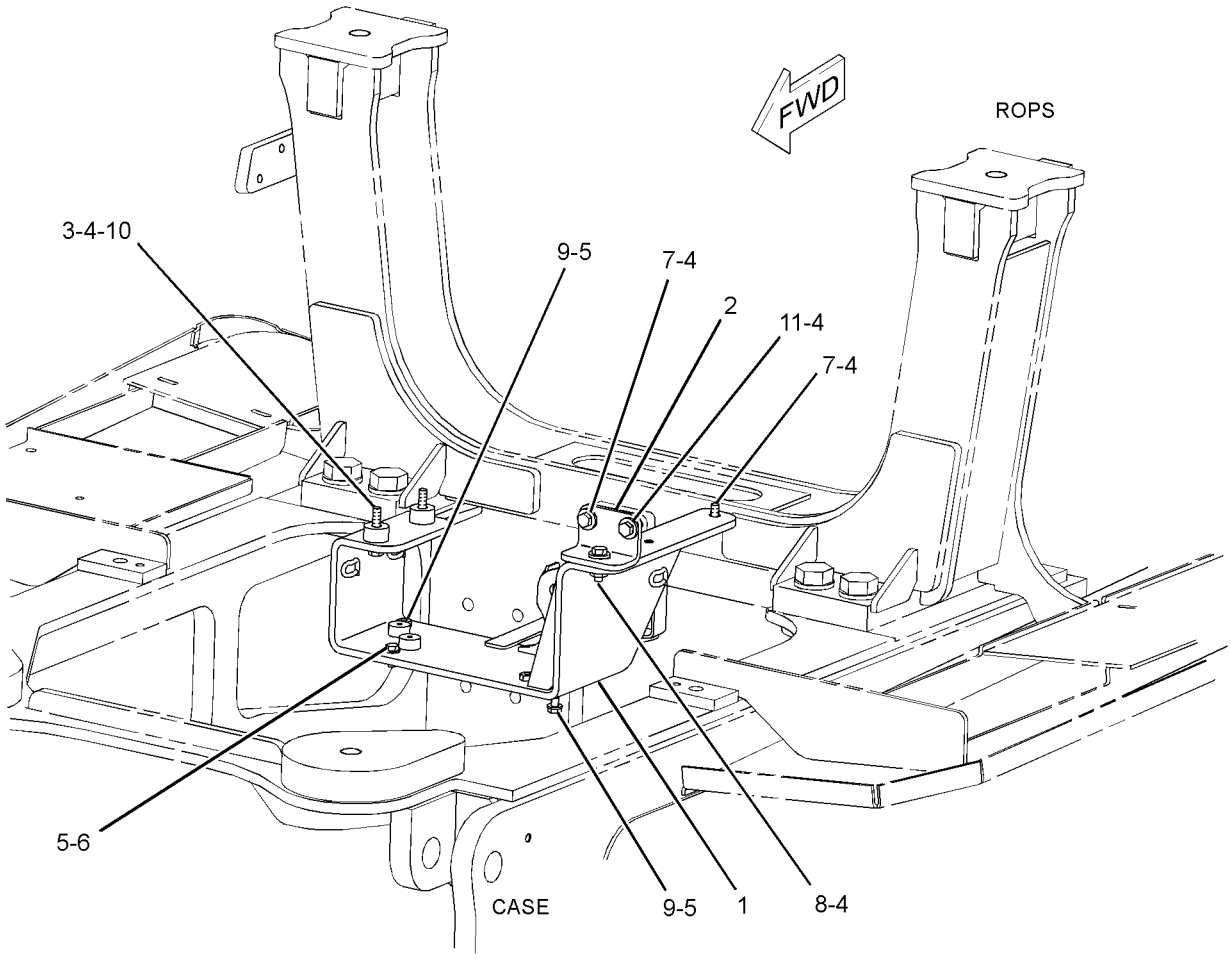

GRAPHIC #1 **<END>** g01294072

240-1506 PIN GP-CYLINDER—FINE GRADING

S/N: DHA1-UP; FBH1-UP
PART OF 278-2470 C-FRAME GP-POWER ANGLING
ALSO AN ATTACHMENT

SMCS-6068 **i02396614**

NOTE	REF NO	GRAPHIC REF	PART NUMBER	QTY	PART NAME 1 2 3 4 5 6 (PRODUCT LEVEL)	SEE PAGE
	1	1	**3G-8932**	2	PIN	
	2	1	**4T-0231**	2	RETAINER	
	3	1	**269-4215**	4	SPACER (45X50X13-MM THK)	
	4	1	**8T-4223**	2	WASHER-HARD (13.5X25.5X3-MM THK)	
M	5	1	**8T-4956**	2	BOLT (M12X1.75X35-MM)	

M-METRIC PART

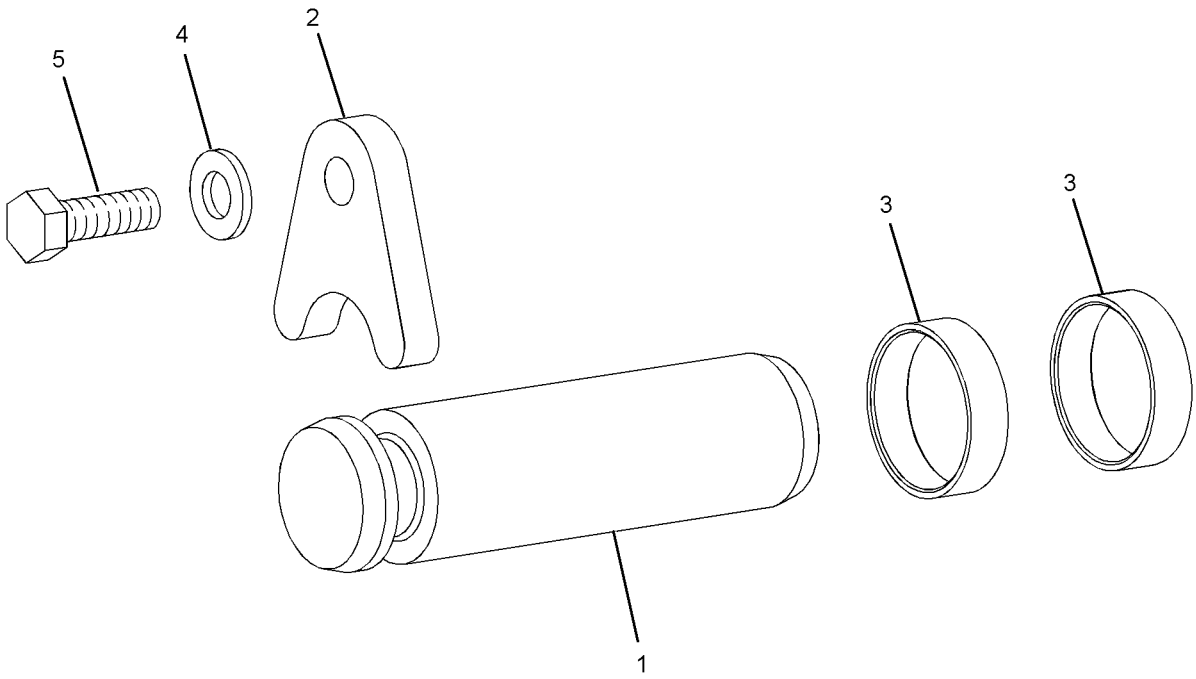

GRAPHIC #1 **<END>** g01204503

HYDRAULIC SYSTEM

288-8129 PUMP & LINES AR—HYDROSTATIC DRIVE

S/N: DHA1-UP; FBH1-UP
WITHOUT WINCH
PART OF 349-8353 OPTION AR-RIPPER
CANNOT BE USED WITH 248-6545—PAGE 832
AN ATTACHMENT

SMCS-5057, 5084 **i02649645**

NOTE	PART NUMBER	QTY	PART NAME 1 2 3 4 5 6 (PRODUCT LEVEL)	SEE PAGE
Y	*206-7264*	1	LINES GP-CHARGE PRESSURE	358
Y	*206-7275*	1	PUMP & LINES GP	573

Y-SEPARATE ILLUSTRATION

<END>

HYDRAULIC SYSTEM

206-7275 PUMP & LINES GP–IMPLEMENT, HYDRAULIC FAN

S/N: DHA1-975; FBH1-1164
PART OF 288-8129 PUMP & LINES AR
CANNOT BE USED WITH 250-7798 LINES GP-PUMP, WINCH
AN ATTACHMENT

SMCS-5057, 5084 **i02955798**

NOTE	REF NO	GRAPHIC REF	PART NUMBER	QTY	PART NAME 1 2 3 4 5 6 (PRODUCT LEVEL)	SEE PAGE
	1	1	**3S-2093**	1	STRAP-CABLE	
	2	1	**6V-0852**	4	CAP-DUST	
	3	1	**8T-4984**	2	CLAMP-HOSE	
	4	1	**130-2531**	1	BRACKET AS	
		1	**4W-3277**	1	BRACKET	
M		1	**8T-3490**	1	NUT-WELD (M10X1.5-THD)	
	5	1	**147-0526**	3	PLUG	
	6	1	*164-5611*	1	TEE AS	
		1	**8T-3312**	1	TEE	
		1	**6V-9746**	1	SEAL-O-RING	
		1	**7M-8485**	1	SEAL-O-RING	
	7	1	**177-2215**	1	STRAP-DUAL CLAMP	
	8	1	**203-3847**	2	BRACKET AS	
					(EACH INCLUDES)	
M		1	**170-7491**	1	STUD-WELD (M10X1.5X35-MM OAL)	
	9	1	**210-0691**	1	HOSE AS (IMPLEMENT PUMP SIGNAL PRESSURE)	
	9A	1	**210-0691**	1	HOSE AS (IMPLEMENT PUMP PRESSURE)	
	10	1	**214-4643**	2	TAG-IDENTIFICATION (NUMBER ZERO)	
	11	1	**214-4644**	2	TAG-IDENTIFICATION (NUMBER THREE)	
	12	1	**214-4646**	2	TAG-IDENTIFICATION (NUMBER SIX)	
	13	1	**214-4653**	2	TAG-IDENTIFICATION (NUMBER TWO)	
I	14	1	**246-4178**	1	HOSE AS	
	15	1	**246-4180**	1	HOSE	
I	16	1	**246-7756**	1	HOSE AS	
Y	17	1	**246-9876**	1	PUMP GP-PISTON & GEAR (IMPLEMENT, HYDRAULIC FAN)	582
	18	1	**254-1255**	1	HOSE AS (FAN PUMP PRESSURE)	
	19	1	**264-6186**	1	HOSE AS (IMPLEMENT PUMP FILL)	
	20	1	**282-1825**	1	TUBE AS	
I	21	1	**287-3577**	1	HOSE AS	
	22	1	**292-8012**	1	VALVE GP-CHECK	
		1	**5K-9090**	1	SEAL-O-RING	
		1	**7M-8485**	1	SEAL-O-RING	
I	23	1	**296-7459**	1	HOSE AS	
M	24	1	**101-3129**	1	STUD (M10X1.5-THD)	
	25	1	*148-8319*	1	CONNECTOR AS	
		1	**6V-8715**	1	CONNECTOR	
		1	**2M-9780**	1	SEAL-O-RING	
		1	**6V-8397**	1	SEAL-O-RING	
	26	1	*148-8326*	1	CONNECTOR AS	
		1	**6V-9872**	1	CONNECTOR	
		1	**3J-7354**	1	SEAL-O-RING	
		1	**6V-8397**	1	SEAL-O-RING	
	27	1	*148-8327*	1	CONNECTOR AS	
		1	**6V-8637**	1	CONNECTOR	
		1	**3D-2824**	1	SEAL-O-RING	
		1	**6V-9746**	1	SEAL-O-RING	
	28	1	*148-8335*	1	CONNECTOR AS	
		1	**6V-8635**	1	CONNECTOR	
		1	**5K-9090**	1	SEAL-O-RING	
		1	**7M-8485**	1	SEAL-O-RING	
	29	1	*148-8336*	2	CONNECTOR AS	
					(EACH INCLUDES)	
		1	**6V-8636**	1	CONNECTOR	

206-7275 **PUMP & LINES GP** *(contd.)* **i02955798**

NOTE	REF NO	GRAPHIC REF	PART NUMBER	QTY	PART NAME 1 2 3 4 5 6 (PRODUCT LEVEL)	SEE PAGE
		1	**3J-1907**	1	SEAL-O-RING	
		1	**6V-8397**	1	SEAL-O-RING	
	30	1	*148-8434*	1	TEE AS	
		1	**6V-9843**	1	TEE-SWIVEL	
		1	**6V-8397**	2	SEAL-O-RING	
	31	1	*153-6256*	1	ELBOW AS	
		1	**8C-7563**	1	ELBOW	
		1	**7J-9108**	1	SEAL-O-RING	
	32	1	*155-3503*	1	TEE AS	
		1	**6V-8776**	1	TEE-FACE SEAL	
		1	**2M-9780**	1	SEAL-O-RING	
		1	**7J-9108**	2	SEAL-O-RING	
	33	1	*156-4282*	1	REDUCER AS	
		1	**6V-8938**	1	REDUCER-O-RING	
		1	**6V-8397**	1	SEAL-O-RING	
	34	1	*164-5567*	4	COUPLER AS-QUICK DISCONNECT	
					(EACH INCLUDES)	
		1	**6V-3965**	1	FITTING (QUICK DISCONNECT)	
		1	**3J-1907**	1	SEAL-O-RING	
	35	1	**1P-3709**	1	SEAL-RECTANGULAR	
	36	1	*260-9187*	4	CONNECTOR AS	
					(EACH INCLUDES)	
		1	**8T-9358**	1	CONNECTOR	
		1	**6V-8397**	1	SEAL-O-RING	
	37	1	**5D-0718**	4	CLIP	
	38	1	**6V-1889**	1	CLIP	
	39	1	**6V-8555**	1	NUT-FACE SEAL (1-14-THD)	
	40	1	**6V-9168**	4	NUT (11/16-16-THD)	
	41	1	**7X-3391**	4	WASHER-HARD (13.5X32X6-MM THK)	
	42	1	**7X-3392**	4	WASHER-HARD (13.5X22.5X3-MM THK)	
	43	1	**7X-7729**	5	WASHER (11X25X3-MM THK)	
	44	1	**8T-4121**	6	WASHER-HARD (11X21X2.5-MM THK)	
M	45	1	**8T-4133**	3	NUT (M10X1.5-THD)	
M	46	1	**8T-4136**	1	BOLT (M10X1.5X25-MM)	
M	47	1	**8T-4137**	4	BOLT (M10X1.5X20-MM)	
M	48	1	**8T-4183**	4	BOLT (M12X1.75X40-MM)	
M	49	1	**8T-4184**	4	BOLT (M12X1.75X45-MM)	

I-REFER TO HYDRAULIC INFORMATION SYSTEM
M-METRIC PART
Y-SEPARATE ILLUSTRATION

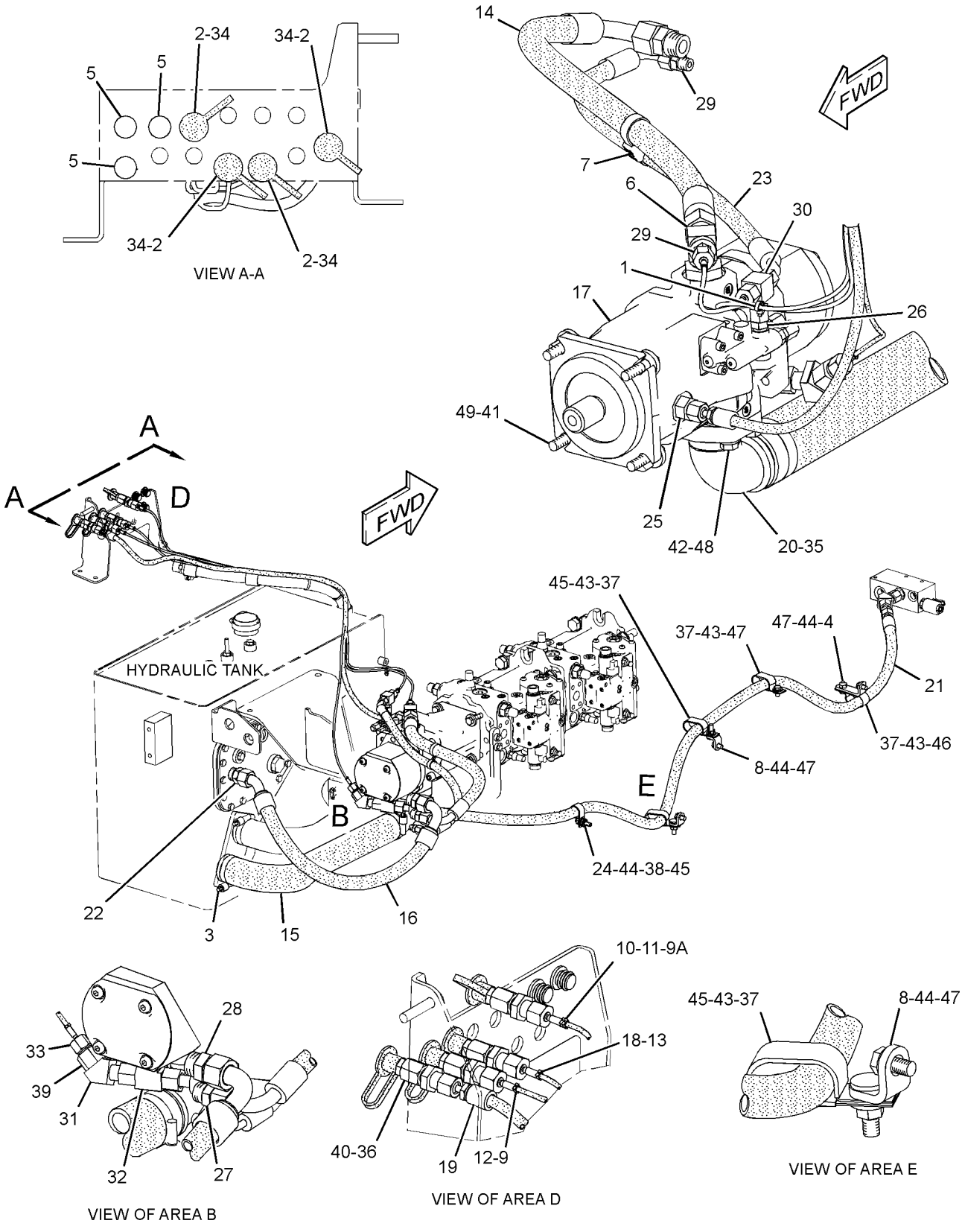

GRAPHIC #1 **<END>** g01520573

HYDRAULIC SYSTEM

206-7275 PUMP & LINES GP–IMPLEMENT, HYDRAULIC FAN

S/N: DHA976-UP; FBH1165-UP
PART OF 288-8129 PUMP & LINES AR
CANNOT BE USED WITH 250-7798 LINES GP-PUMP, WINCH
AN ATTACHMENT

SMCS-5057, 5084 **i03706666**

NOTE	REF NO	GRAPHIC REF	PART NUMBER	QTY	PART NAME 1 2 3 4 5 6 (PRODUCT LEVEL)	SEE PAGE
	1	1	**3S-2093**	1	STRAP-CABLE	
	2	1	**6V-0852**	4	CAP-DUST	
	3	1	**8T-4984**	2	CLAMP-HOSE	
	4	1	**130-2531**	1	BRACKET AS	
		1	**4W-3277**	1	BRACKET	
M		1	**8T-3490**	1	NUT-WELD (M10X1.5-THD)	
	5	1	**147-0526**	3	PLUG	
	6	1	*164-5611*	1	TEE AS	
		1	**8T-3312**	1	TEE	
		1	**6V-9746**	1	SEAL-O-RING	
		1	**7M-8485**	1	SEAL-O-RING	
	7	1	**177-2215**	1	STRAP-DUAL CLAMP	
	8	1	**203-3847**	2	BRACKET AS	
					(EACH INCLUDES)	
M		1	**170-7491**	1	STUD-WELD (M10X1.5X35-MM OAL)	
	9	1	**210-0691**	2	HOSE AS	
	10	1	**214-4643**	2	TAG-IDENTIFICATION (NUMBER ZERO)	
	11	1	**214-4644**	2	TAG-IDENTIFICATION (NUMBER THREE)	
	12	1	**214-4646**	2	TAG-IDENTIFICATION (NUMBER SIX)	
	13	1	**214-4653**	2	TAG-IDENTIFICATION (NUMBER TWO)	
I	14	1	**246-4178**	1	HOSE AS	
	15	1	**246-4180**	1	HOSE	
I	16	1	**246-7756**	1	HOSE AS	
Y	17	1	**246-9876**	1	PUMP GP-PISTON & GEAR (IMPLEMENT, HYDRAULIC FAN)	582
	18	1	**254-1255**	1	HOSE AS	
	19	1	**264-6186**	1	HOSE AS	
	20	1	**282-1825**	1	TUBE AS	
I	21	1	**287-3577**	1	HOSE AS	
	22	1	**292-8012**	1	VALVE GP-CHECK	
		1	**5K-9090**	1	SEAL-O-RING	
		1	**7M-8485**	1	SEAL-O-RING	
I	23	1	**296-7459**	1	HOSE AS	
M	24	1	**101-3129**	1	STUD (M10X1.5-THD)	
	25	1	*148-8319*	1	CONNECTOR AS	
		1	**6V-8715**	1	CONNECTOR	
		1	**2M-9780**	1	SEAL-O-RING	
		1	**6V-8397**	1	SEAL-O-RING	
C	26	1	*150-4047*	1	ADAPTER AS	
		1	**8T-2353**	1	ADAPTER	
		1	**3J-7354**	1	SEAL-O-RING	
	27	1	*148-8327*	1	CONNECTOR AS	
		1	**6V-8637**	1	CONNECTOR	
		1	**3D-2824**	1	SEAL-O-RING	
		1	**6V-9746**	1	SEAL-O-RING	
	28	1	*148-8335*	1	CONNECTOR AS	
		1	**6V-8635**	1	CONNECTOR	
		1	**5K-9090**	1	SEAL-O-RING	
		1	**7M-8485**	1	SEAL-O-RING	
	29	1	*148-8336*	2	CONNECTOR AS	
					(EACH INCLUDES)	
		1	**6V-8636**	1	CONNECTOR	
		1	**3J-1907**	1	SEAL-O-RING	
		1	**6V-8397**	1	SEAL-O-RING	

206-7275 **PUMP & LINES GP** *(contd.)* **i03706666**

NOTE	REF NO	GRAPHIC REF	PART NUMBER	QTY	PART NAME 1 2 3 4 5 6 (PRODUCT LEVEL)	SEE PAGE
C	30	1	*148-8439*	1	TEE AS	
		1	**6V-8774**	1	TEE	
		1	**3J-1907**	1	SEAL-O-RING	
		1	**6V-8397**	2	SEAL-O-RING	
	31	1	*153-6256*	1	ELBOW AS	
		1	**8C-7563**	1	ELBOW	
		1	**7J-9108**	1	SEAL-O-RING	
	32	1	*155-3503*	1	TEE AS	
		1	**6V-8776**	1	TEE-FACE SEAL	
		1	**2M-9780**	1	SEAL-O-RING	
		1	**7J-9108**	2	SEAL-O-RING	
	33	1	*156-4282*	1	REDUCER AS	
		1	**6V-8938**	1	REDUCER-O-RING	
		1	**6V-8397**	1	SEAL-O-RING	
	34	1	*164-5567*	4	COUPLER AS-QUICK DISCONNECT	
					(EACH INCLUDES)	
		1	**6V-3965**	1	FITTING (QUICK DISCONNECT)	
		1	**3J-1907**	1	SEAL-O-RING	
	35	1	**1P-3709**	1	SEAL-RECTANGULAR	
	36	1	*260-9187*	4	CONNECTOR AS	
					(EACH INCLUDES)	
		1	**8T-9358**	1	CONNECTOR	
		1	**6V-8397**	1	SEAL-O-RING	
	37	1	**5D-0718**	4	CLIP	
	38	1	**6V-1889**	1	CLIP	
	39	1	**6V-8555**	1	NUT-FACE SEAL (1-14-THD)	
	40	1	**6V-9168**	4	NUT (11/16-16-THD)	
	41	1	**7X-3391**	4	WASHER-HARD (13.5X32X6-MM THK)	
	42	1	**7X-3392**	4	WASHER-HARD (13.5X22.5X3-MM THK)	
	43	1	**7X-7729**	5	WASHER (11X25X3-MM THK)	
	44	1	**8T-4121**	6	WASHER-HARD (11X21X2.5-MM THK)	
M	45	1	**8T-4133**	3	NUT (M10X1.5-THD)	
M	46	1	**8T-4136**	1	BOLT (M10X1.5X25-MM)	
M	47	1	**8T-4137**	4	BOLT (M10X1.5X20-MM)	
M	48	1	**8T-4183**	4	BOLT (M12X1.75X40-MM)	
M	49	1	**8T-4184**	4	BOLT (M12X1.75X45-MM)	

C-CHANGE FROM PREVIOUS TYPE
I-REFER TO HYDRAULIC INFORMATION SYSTEM
M-METRIC PART
Y-SEPARATE ILLUSTRATION

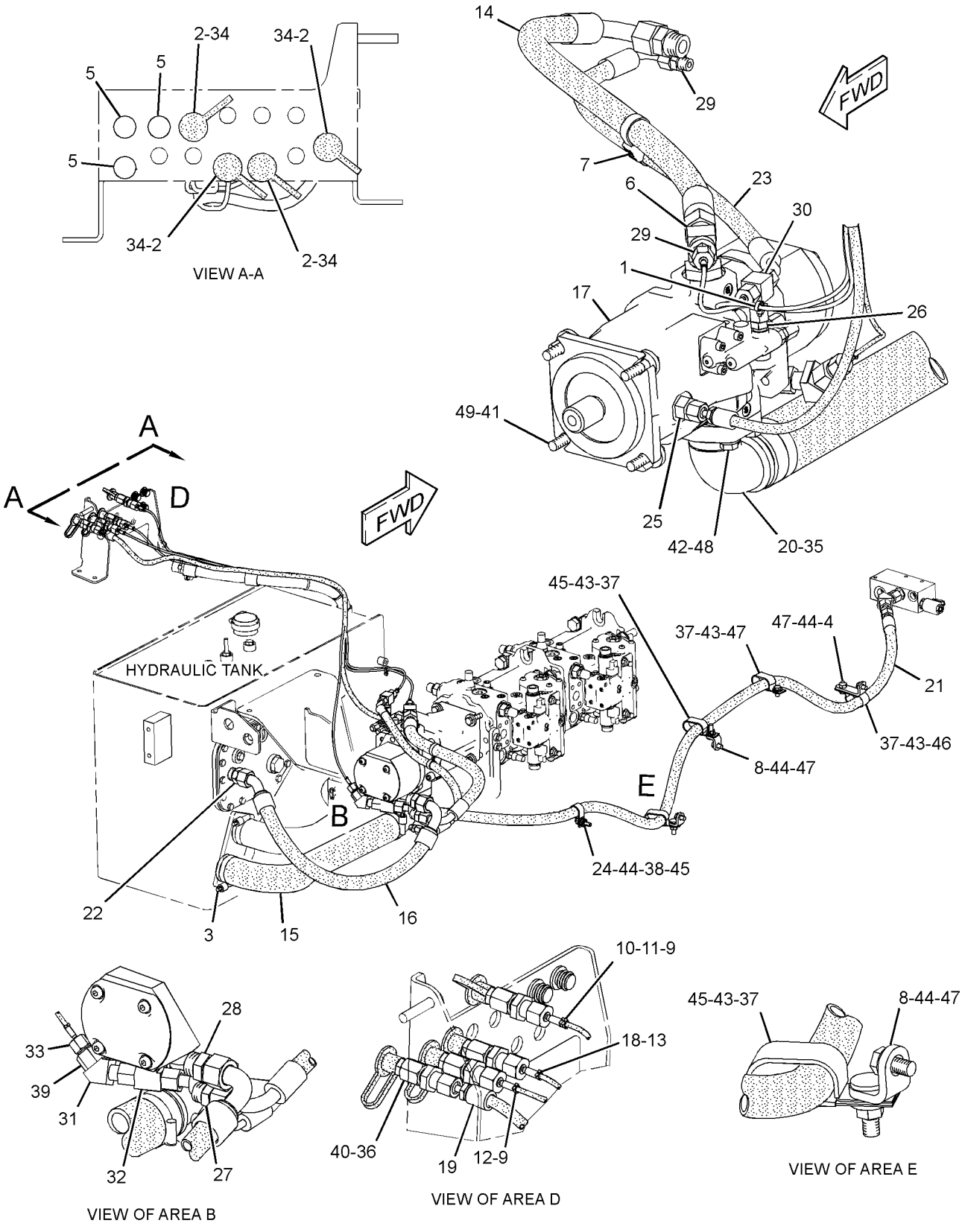

GRAPHIC #1 **<END>** g01665213

277-6557 PUMP GP-CHARGE–WINCH

S/N: DHA1-UP; FBH1-UP
PART OF 249-8600 PUMP GP-PISTON
AN ATTACHMENT

SMCS-3204 **i02404705**

NOTE	REF NO	GRAPHIC REF	PART NUMBER	QTY	PART NAME 1 2 3 4 5 6 (PRODUCT LEVEL)	SEE PAGE
	1	1	**179-0464**	2	SEAL-O-RING	
	2	1	**277-6624**	1	PLATE-WEAR	
	3	1	**1T-1068**	1	SEAL-O-RING	
	4	1	**278-4956**	1	SHAFT-DRIVE	
	5	1	**278-4957**	1	KEY	
M	6	1	**122-3151**	4	BOLT (M8X1.25X35-MM)	
	7	1	**192-3282**	1	BUSHING-BEARING	
	8	1	**246-5804**	2	PLUG	
	9	1	**7J-6285**	1	SEAL-O-RING	

M-METRIC PART

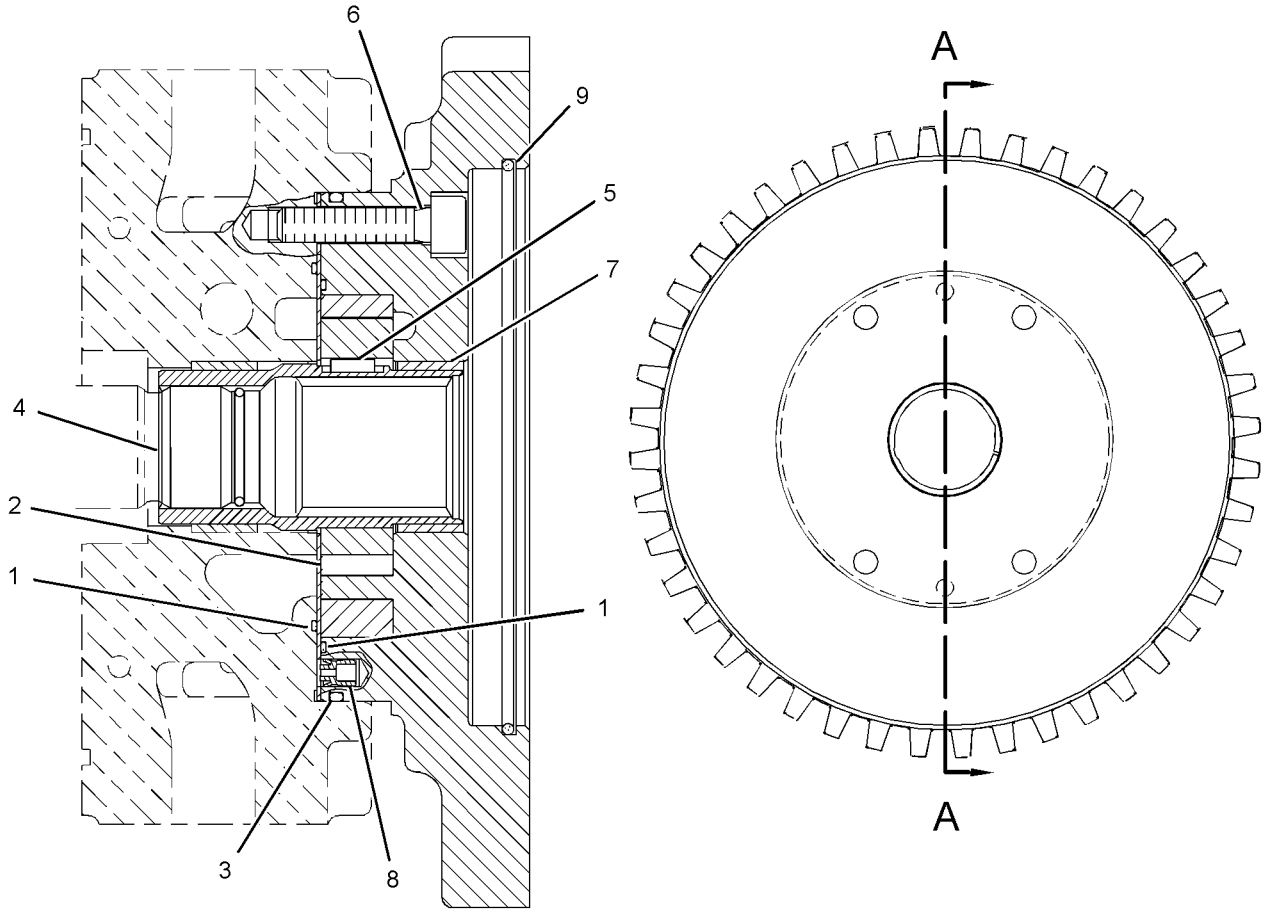

SECTION A-A

GRAPHIC #1 **<END>** g01203759

HYDRAULIC SYSTEM

249-8600 PUMP GP-PISTON—WINCH

S/N: DHA1-UP; FBH1-UP
PART OF 246-5950 LINES GP-WINCH
AN ATTACHMENT

SMCS-5070 **i02666916**

NOTE	REF NO	GRAPHIC REF	PART NUMBER	QTY	PART NAME 1 2 3 4 5 6 (PRODUCT LEVEL)	SEE PAGE
	1	1	**9T-3928**	1	PLUG AS	
		1	**187-8001**	1	SEAL	
	2	1	**187-8001**	1	SEAL	
	3	1	**122-9718**	1	PIN	
	4	1	**1G-3180**	1	SCREW-ECCENTRIC	
M	5	1	**6E-4240**	1	NUT-SEALING (M10X1-THD)	
	6	1	**9S-8002**	1	PLUG-O-RING	
	7	1	**3J-7354**	1	SEAL-O-RING	
Y	8	1	**277-6630**	1	VALVE GP-PUMP CONTROL (PRESSURE, FLOW COMPENSATOR) (WINCH)	617
	9	1	**167-6805**	2	PIN	
Y	10	1	*277-6551*	1	ROTATING GP-PUMP (WINCH)	585
	11	1	**6E-4350**	1	PIN	
	12	1	**9T-3726**	1	PLUG	
	13	1	**112-4629**	1	SCREW	
	14	1	**202-7704**	1	PLUG	
Y	15	1	**277-6553**	1	HEAD GP-PUMP (WINCH)	525
	16	1	**9S-8008**	1	PLUG-O-RING	
	17	1	**6V-8978**	1	SEAL-O-RING	
	18	1	**123-7575**	1	SCREW-LOCK	
	19	1	**206-4881**	2	PLUG-ORIFICE	
	20	1	**123-7583**	1	ORIFICE	
	21	1	**087-4772**	1	PLUG-O-RING	
M	22	1	**1G-3176**	1	SCREW-LOCK (M8-THD)	
	23	1	**9S-8004**	3	PLUG	
	24	1	**3J-1907**	3	SEAL-O-RING	
Y	25	1	**177-6949**	1	ACTUATOR GP-PUMP (HYDRAULIC)	514
Y	26	1	**277-6557**	1	PUMP GP-CHARGE (WINCH)	579
	27	1	**3D-2824**	1	SEAL-O-RING	
	28	1	**6V-3965**	1	FITTING (QUICK DISCONNECT)	
	29	1	*148-8336*	1	CONNECTOR AS	
		1	**6V-8636**	1	CONNECTOR	
		1	**3J-1907**	1	SEAL-O-RING	
		1	**6V-8397**	1	SEAL-O-RING	

M-METRIC PART
Y-SEPARATE ILLUSTRATION

249-8600 **PUMP GP-PISTON** *(contd.)* **i02666916**

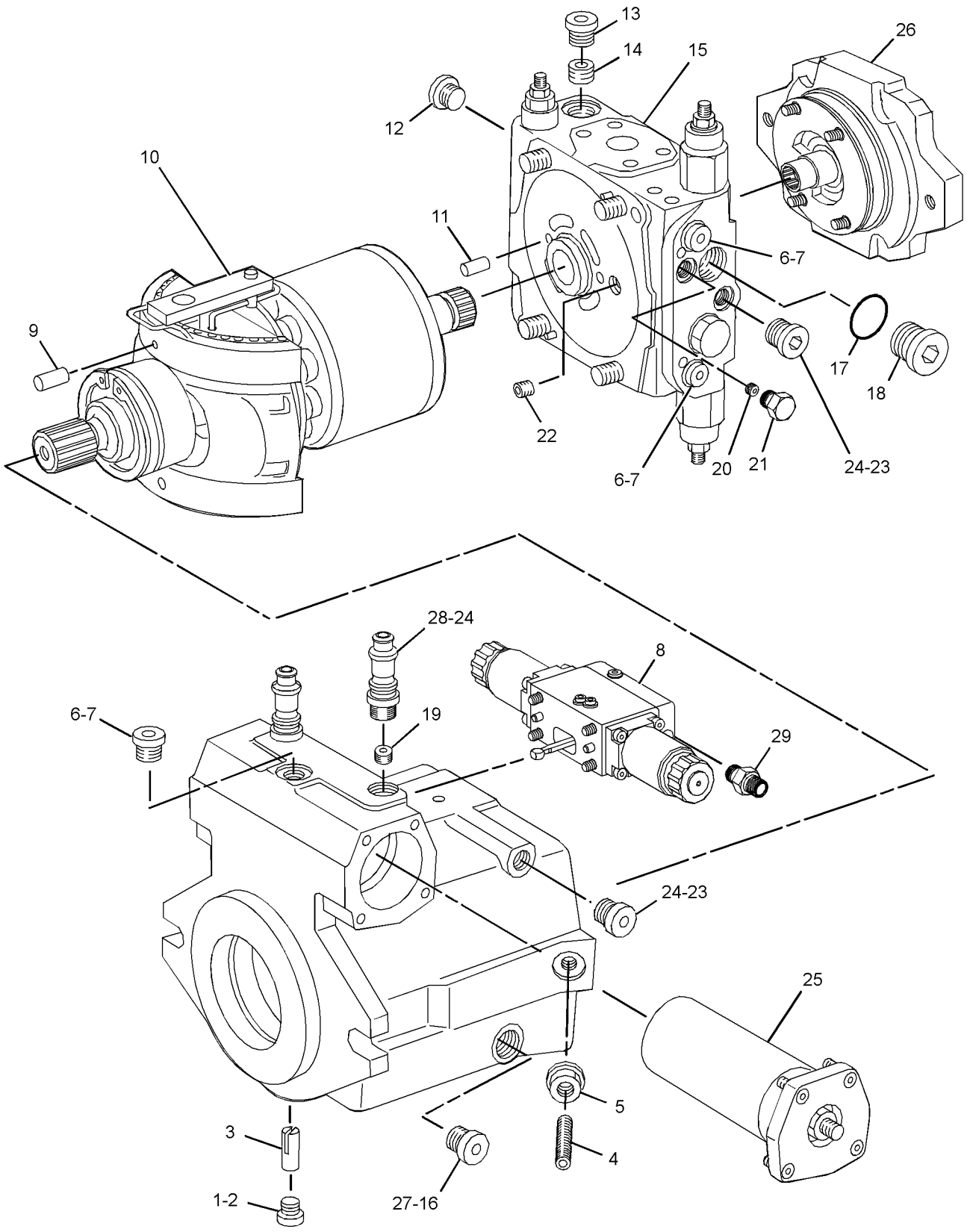

GRAPHIC #1 **<END>** g01203758

246-9876 PUMP GP-PISTON & GEAR–

IMPLEMENT, HYDRAULIC FAN

S/N: DHA1-UP; FBH1-UP

PART OF 250-7798 LINES GP-PUMP, 206-7275 PUMP & LINES GP

AN ATTACHMENT

SMCS-5084 **i02579890**

NOTE	REF NO	GRAPHIC REF	PART NUMBER	QTY	PART NAME 1 2 3 4 5 6 (PRODUCT LEVEL)	SEE PAGE
Y	1	1	**260-6781**	1	PUMP GP-PISTON & GEAR (FRONT) (IMPLEMENT)	583
J	2	1	**260-6782**	1	PUMP GP-GEAR (REAR) (HYDRAULIC FAN)	
M	3	1	**8T-3957**	2	BOLT-SOCKET HEAD (M12X1.75X30-MM)	
	4	1	**5P-8245**	2	WASHER-HARD (13.5X25.5X3-MM THK)	
					AVAILABLE REPAIR KIT(S):	
J			**285-7633**	1	KIT-SEAL (GEAR PUMP)	
					(INCLUDES PRESSURE BALANCE SEALS, SEALS-O-RING, & BACK-UP STRIPS)	

J-KIT MARKED J SERVICES PART(S) MARKED J
M-METRIC PART
Y-SEPARATE ILLUSTRATION

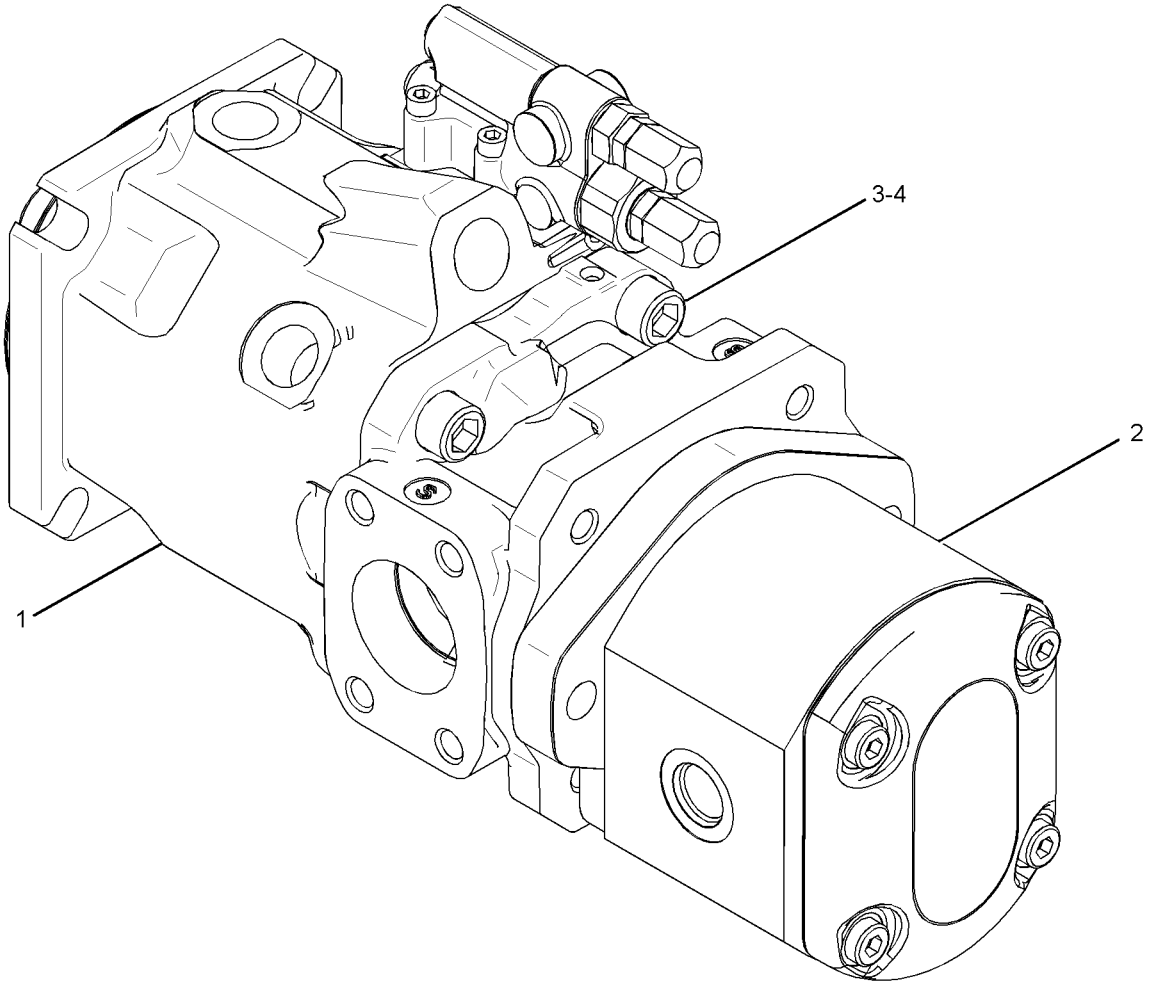

GRAPHIC #1 **<END>** g01300829

260-6781 PUMP GP-PISTON & GEAR—FRONT—IMPLEMENT

S/N: DHA1-UP; FBH1-UP
PART OF 246-9876 PUMP GP-PISTON & GEAR
AN ATTACHMENT

SMCS-5084 **i02579962**

NOTE	REF NO	GRAPHIC REF	PART NUMBER	QTY	PART NAME 1 2 3 4 5 6 (PRODUCT LEVEL)	SEE PAGE
	1	1	**180-6213**	1	RING-RETAINING	
	2	1	**168-7319**	1	SEAL-SHAFT	
M	3	1	**6R-7943**	2	SCREW (M5X0.8X15-MM)	
	4	1	**168-2197**	1	SPRING	
	5	1	**168-2198**	1	LINK-CONTROL	
	6	1	**174-9994**	1	PISTON-CONTROL	
	7	1	**8T-7525**	1	SEAL-O-RING	
	8	1	**198-5351**	1	PLUG	
	9	1	**9W-2109**	1	CONE	
	10	1	**9W-2110**	1	CUP-TAPERED ROLLER	
M	11	1	**8T-2503**	4	BOLT-SOCKET HEAD (M14X2X35-MM)	
	12	1	**204-2799**	1	DOWEL	
	13	1	**192-7470**	1	SEAL-O-RING	
	14	1	**168-2203**	1	SHIM-SHAFT	
Y	15	1	**279-2486**	1	ROTATING GP-PUMP	587
	16	1	**279-2488**	1	SWASHPLATE-PUMP	
	17	1	**279-2619**	1	COUPLER	
	18	1	**3P-1210**	1	CONE-BEARING	
	19	1	**227-5904**	1	SEAL-O-RING	
	20	1	**190-6507**	1	STOP	
	21	1	**235-2404**	1	SHAFT	
	22	1	**120-4394**	2	PLUG-BREAK OFF	
	23	1	**168-3504**	2	SEAL	
	24	1	**9S-8006**	1	PLUG-O-RING	
	25	1	**2M-9780**	1	SEAL-O-RING	
Y	26	1	**285-5240**	1	VALVE GP-PUMP CONTROL (PRESSURE, FLOW COMPENSATOR)	619
	27	1	**282-0918**	1	BEARING-CRADLE	
	28	1	**282-0919**	1	BEARING-CRADLE	
	29	1	**8J-0412**	1	CUP-BEARING	
	30	1	**9X-7680**	3	SEAL-O-RING	
M	31	1	**8T-8442**	4	BOLT-SOCKET HEAD (M6X1X30-MM)	
	32	1	**9S-8002**	1	PLUG-O-RING	
	33	1	**3J-7354**	1	SEAL-O-RING	

M-METRIC PART
Y-SEPARATE ILLUSTRATION

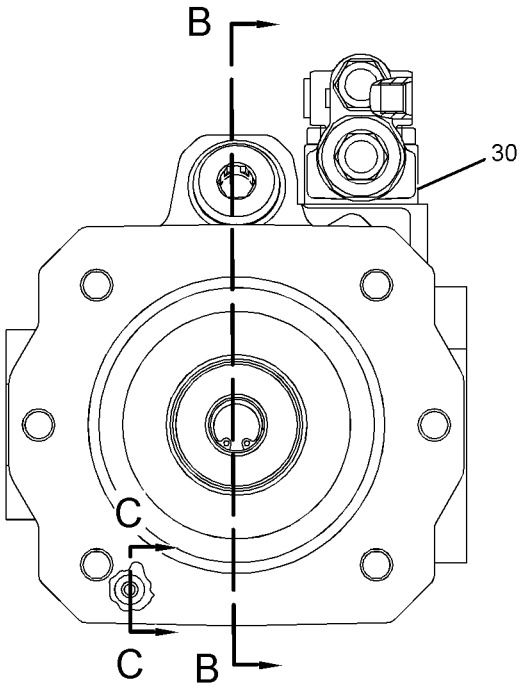

VIEW A-A

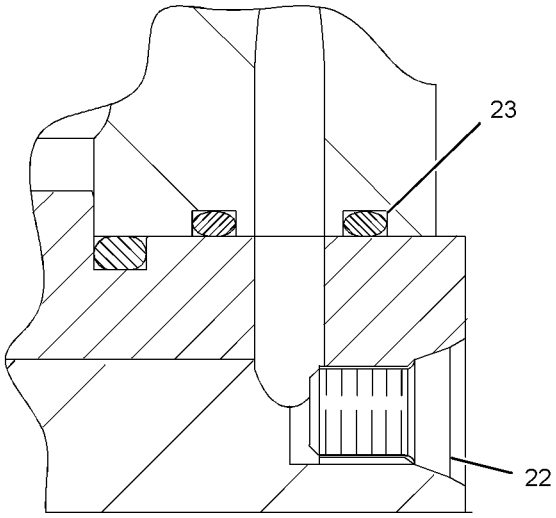

SECTION C-C

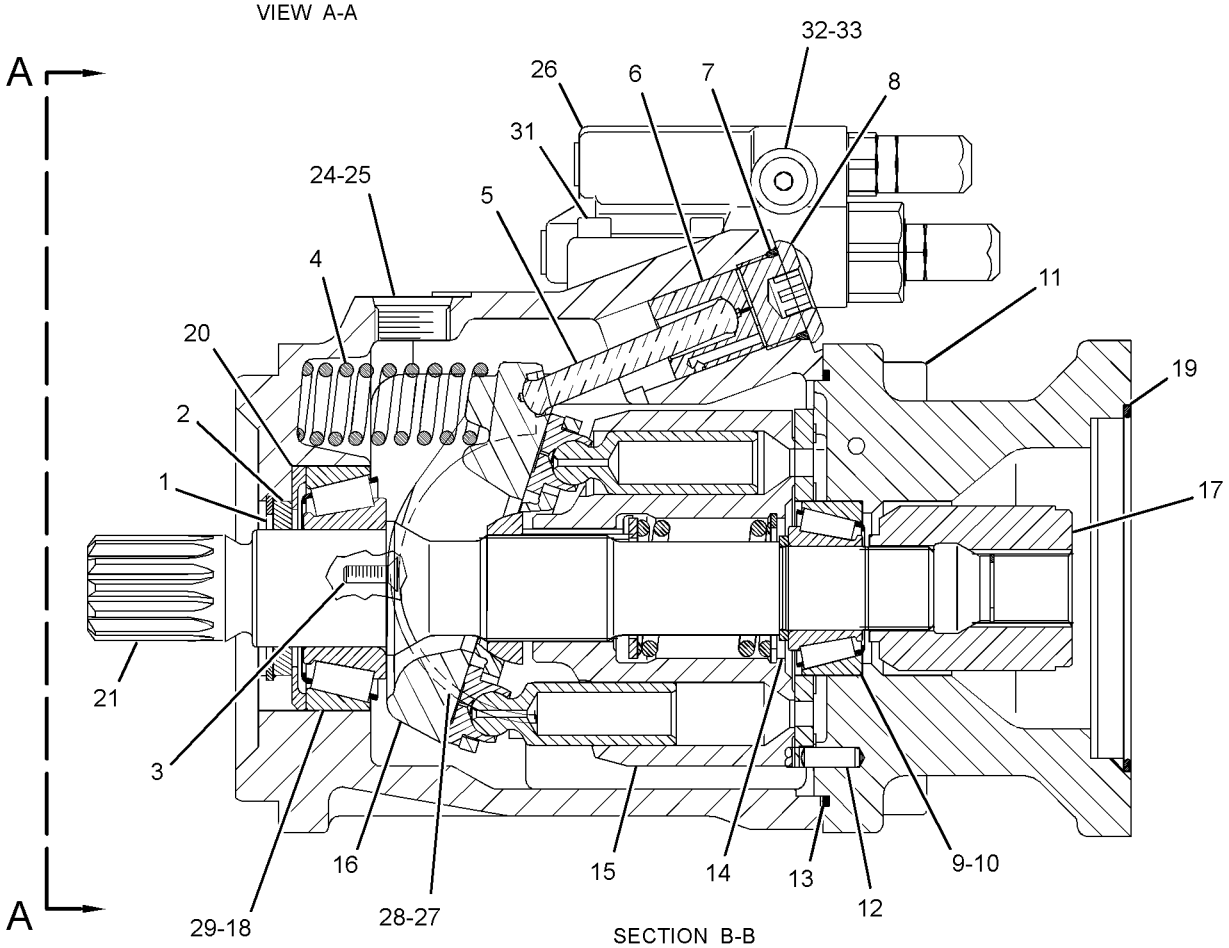

SECTION B-B

GRAPHIC #1 **<END>** g01296288

HYDRAULIC SYSTEM

277-6551 ROTATING GP-PUMP–WINCH

S/N: DHA1-UP; FBH1-UP
PART OF 249-8600 PUMP GP-PISTON
AN ATTACHMENT

SMCS-5070 **i02837304**

NOTE	REF NO	GRAPHIC REF	PART NUMBER	QTY	PART NAME 1 2 3 4 5 6 (PRODUCT LEVEL)	SEE PAGE
	1	1	**212-4483**	1	RING-RETAINING	
	2	1	**194-1983**	1	SEAL-SHAFT	
	3	1	**126-9587**	1	RING-RETAINING	
	4	1	**178-1149**	1	SHAFT	
	5	1	**117-7251**	1	BEARING	
	6	1	**108-3565**	1	CLIP	
	7	1	**125-9134**	1	BEARING	
	8	1	**122-9068**	1	WIRE	
	9	1	**117-7252**	1	CAGE	
	10	1	**112-4657**	1	PIN	
	11	1	**117-7241**	1	PLATE	
	12	1	**117-7240**	1	CRADLE	
	13	1	**1G-3410**	1	WIRE	
J	14	1	**126-8842**	1	RING-SNAP	
J	15	1	**122-9070**	2	SHIM (3-MM THK)	
J	16	1	**122-9071**	1	SPRING	
J	17	1	**117-7239**	1	SPRING SET	
J	18	1	**117-7245**	1	SHIM (1.2-MM THK)	
J	19	1	**117-7246**	1	SHIM (1-MM THK)	
J	20	1	**117-7247**	1	SHIM (0.8-MM THK)	
J	21	1	**117-7248**	1	SHIM (0.6-MM THK)	
J	22	1	**117-7250**	1	RETAINER	
J	23	1	**117-7249**	1	PLATE-RETAINER	
J	24	1	**117-7238**	9	PISTON	
J	25	1	**177-6915**	1	CYLINDER	
	26	1	**6E-0725**	2	ROLLER	
	27	1	**251-1803**	1	PLATE-CONTROL	
					AVAILABLE REPAIR KIT(S):	
J			**251-1752**	1	KIT-PUMP ROTATING GROUP	

J-KIT MARKED J INCLUDES PART(S) MARKED J

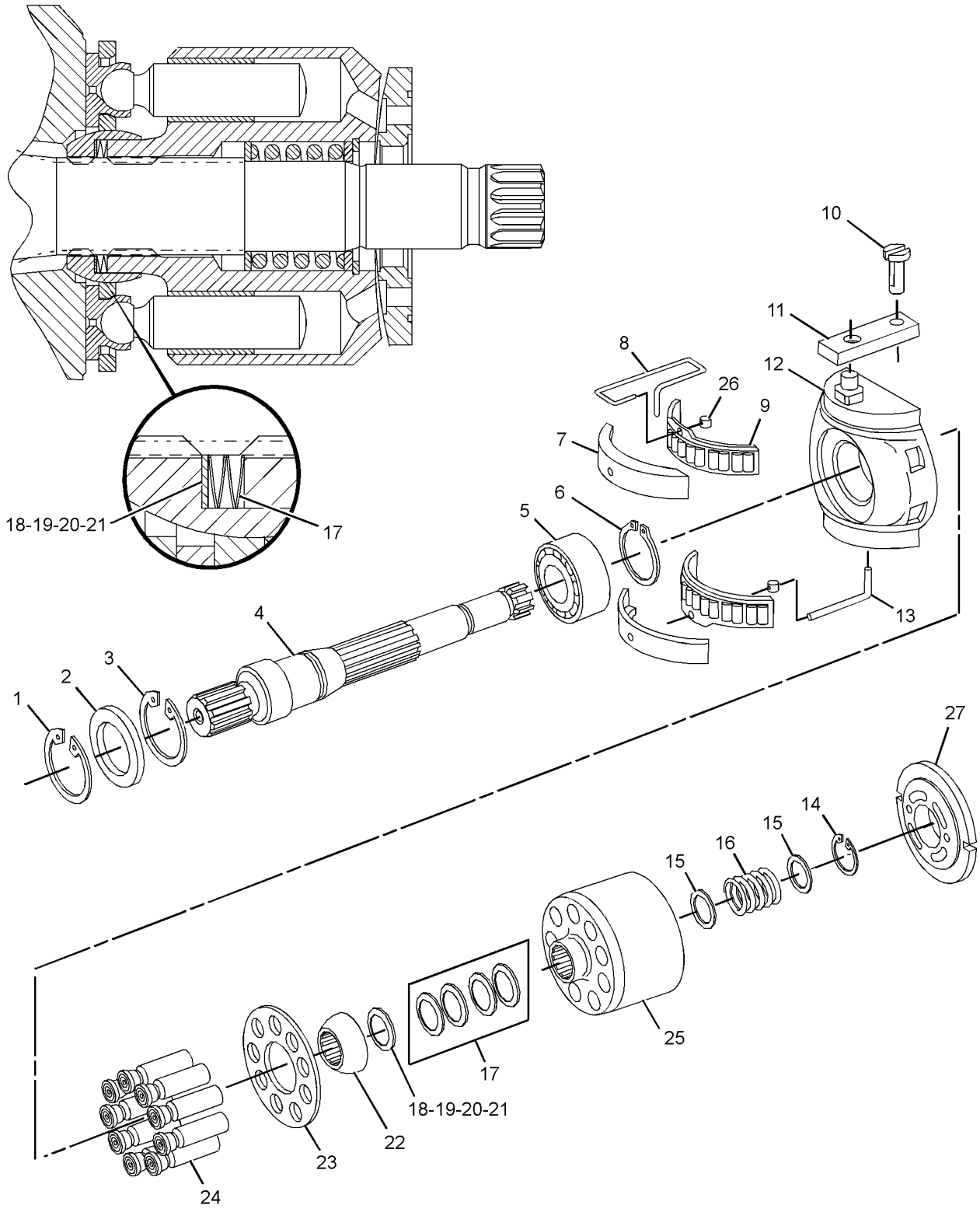

GRAPHIC #1 **<END>** g01329158

279-2486 ROTATING GP-PUMP–IMPLEMENT, HYDRAULIC FAN

S/N: DHA1-UP; FBH1-UP
PART OF 260-6781 PUMP GP-PISTON & GEAR
AN ATTACHMENT

SMCS-5070 **i02582630**

NOTE	REF NO	GRAPHIC REF	PART NUMBER	QTY	PART NAME 1 2 3 4 5 6 (PRODUCT LEVEL)	SEE PAGE
	1	1	**168-3384**	9	PISTON AS-PUMP	
	2	1	**197-2851**	1	BARREL	
	3	1	**279-2491**	1	PLATE-PORT	
	4	1	**168-3385**	1	PLATE-RETRACTION	
	5	1	**168-3378**	1	BEARING-SPHERICAL	
	6	1	**168-3381**	1	SPRING	
	7	1	**168-3379**	3	PIN	
	8	1	**6V-7723**	1	RING-RETAINING	
	9	1	**168-3382**	1	WASHER (42-MM ODX2.7-MM THK)	

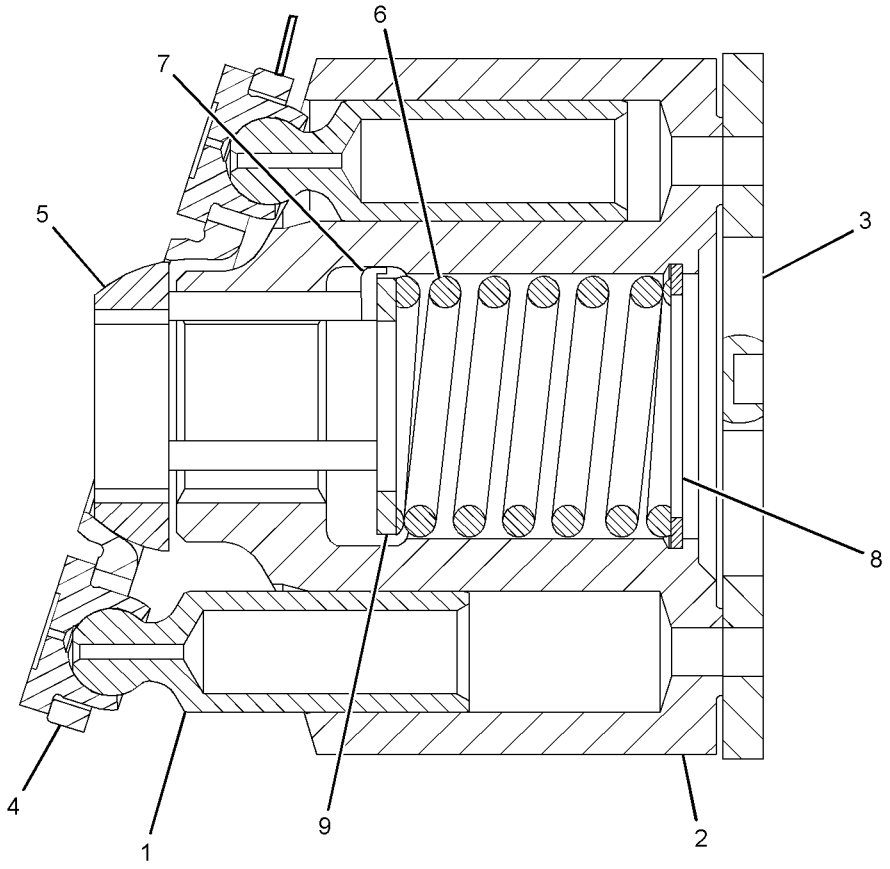

GRAPHIC #1 **<END>** g01295110

HYDRAULIC SYSTEM

251-3544 TANK & MTG GP-HYDRAULIC

S/N: DHA1-UP; FBH1-UP

PART OF 206-7280 HYDRAULIC AR-3 VALVE

SMCS-5056 **i02837055**

NOTE	REF NO	GRAPHIC REF	PART NUMBER	QTY	PART NAME 1 2 3 4 5 6 (PRODUCT LEVEL)	SEE PAGE
	1	1	**2W-6225**	1	CAP AS-OIL FILLER (HYDRAULIC TANK FILL)	
	2	1	**8T-6703**	2	CLAMP-HOSE	
	3	1	**095-1386**	2	CLAMP-HOSE	
	4	1	*164-5562*	1	CONNECTOR AS	
		1	**5P-1046**	1	CONNECTOR	
		1	**3J-1907**	1	SEAL-O-RING	
	5	1	**183-3873**	1	BREATHER (HYDRAULIC TANK)	
	6	1	**203-2789**	1	BRACKET AS	
	7	1	**203-3847**	2	BRACKET AS	
					(EACH INCLUDES)	
M		1	**170-7491**	1	STUD-WELD (M10X1.5X35-MM OAL)	
	8	1	**251-3567**	1	HOSE	
	9	1	**252-5542**	1	HOSE	
Y	10	1	*265-3751*	1	TANK & MTG GP-HYDRAULIC	590
	11	1	**266-2705**	1	TUBE	
	12	1	**198-4778**	3	WASHER-HARD (13.5X30X12-MM THK)	
	13	1	**091-9035**	1	SPACER (11X25X20-MM THK)	
	14	1	**3B-6488**	1	COUPLING-PIPE	
	15	1	**5P-4566**	1	ELBOW	
	16	1	**7X-0618**	3	WASHER-HARD (13.5X40X5-MM THK)	
	17	1	**7X-7729**	1	WASHER (11X25X3-MM THK)	
	18	1	**8M-2773**	1	CLIP	
	19	1	**8T-4121**	6	WASHER-HARD (11X21X2.5-MM THK)	
M	20	1	**8T-4133**	3	NUT (M10X1.5-THD)	
M	21	1	**8T-4137**	4	BOLT (M10X1.5X20-MM)	
M	22	1	**8T-4183**	3	BOLT (M12X1.75X40-MM)	
M	23	1	**8T-4194**	3	BOLT (M12X1.75X50-MM)	
	24	1	**9D-6196**	1	CLIP (SLOT)	
	25	1	**9D-6197**	1	CLIP (TAB)	
	26	1	**9M-8406**	4	CLIP	

M-METRIC PART
Y-SEPARATE ILLUSTRATION

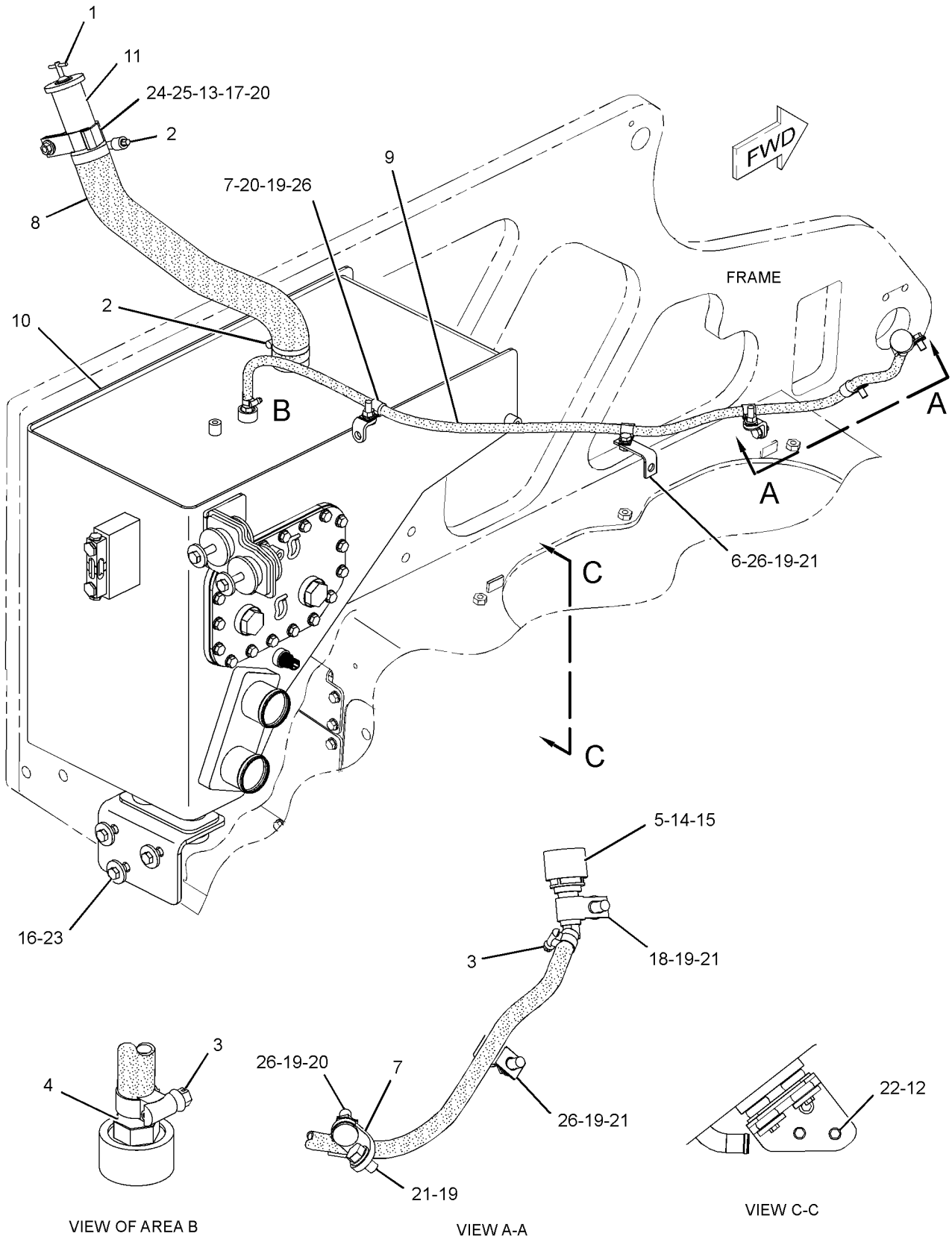

GRAPHIC #1 **<END>** g01188304

HYDRAULIC SYSTEM

265-3751 TANK & MTG GP-HYDRAULIC

S/N: DHA1-UP; FBH1-UP

PART OF 251-3544 TANK & MTG GP-HYDRAULIC

SMCS-5056 **i02438929**

NOTE	REF NO	GRAPHIC REF	PART NUMBER	QTY	PART NAME 1 2 3 4 5 6 (PRODUCT LEVEL)	SEE PAGE
	1	1	**112-4159**	2	MOUNTING AS	
Y	2	1	*246-7379*	1	TANK GP-HYDRAULIC	591
	3	1	**265-3759**	2	WASHER-HARD (12.2X65X10-MM THK)	
	4	1	**265-3760**	2	WASHER-HARD (12.2X55X10-MM THK)	
	5	1	**265-3758**	4	WASHER-HARD (12.2X65X6-MM THK)	
	6	1	**266-1457**	1	BRACKET AS	
	7	1	**266-1458**	1	BRACKET AS	
	8	1	**7X-0618**	2	WASHER-HARD (13.5X40X5-MM THK)	
M	9	1	**8T-4244**	2	NUT (M12X1.75-THD)	
M	10	1	**8T-5041**	2	BOLT (M12X1.75X120-MM)	
M	11	1	**8T-6868**	4	BOLT (M12X1.75X80-MM)	
	12	1	**9R-3141**	4	MOUNT AS	

M-METRIC PART
Y-SEPARATE ILLUSTRATION

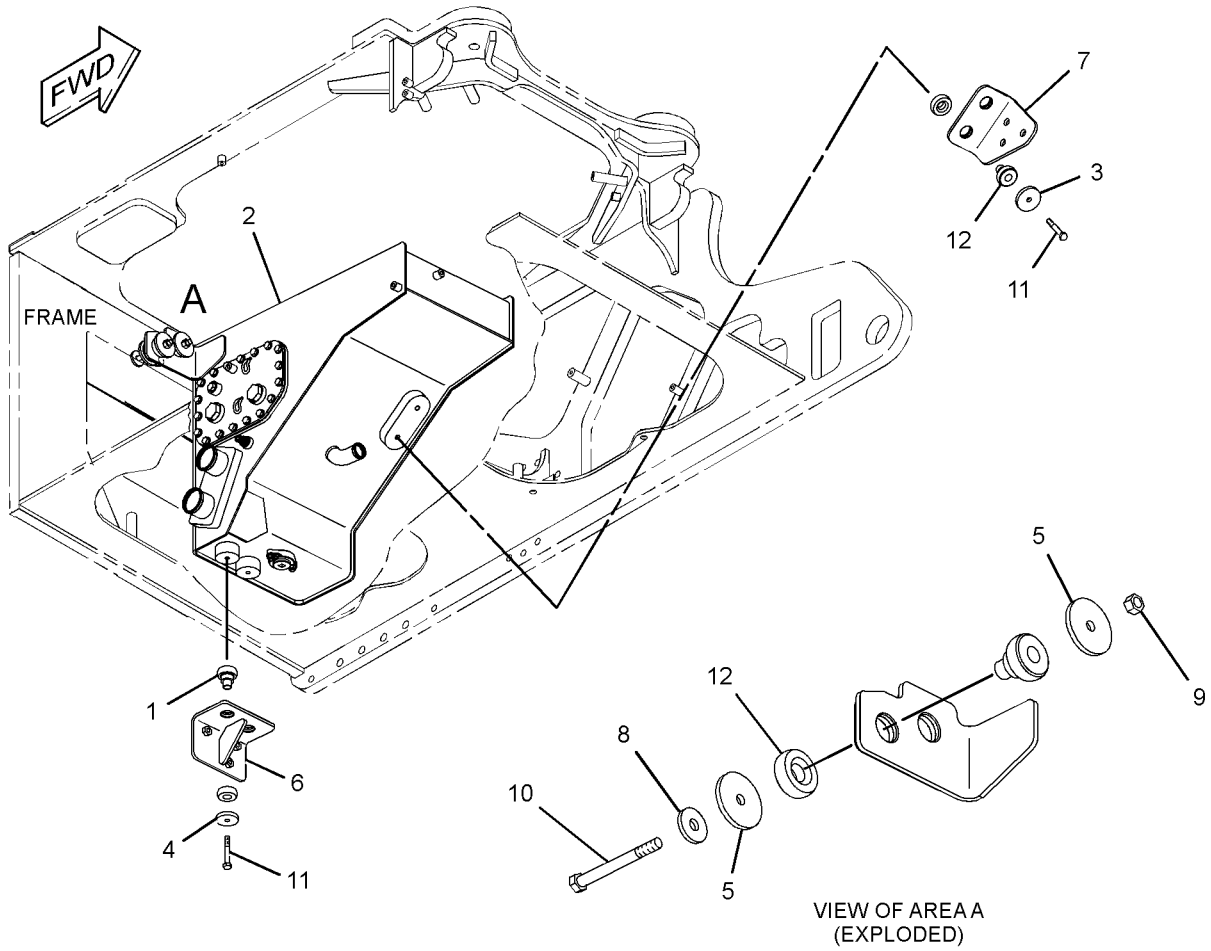

VIEW OF AREA A
(EXPLODED)

GRAPHIC #1 **<END>** g01187935

246-7379 TANK GP-HYDRAULIC

S/N: DHA1-UP; FBH1-UP

PART OF 265-3751 TANK & MTG GP-HYDRAULIC

SMCS-5056 **i03706672**

NOTE	REF NO	GRAPHIC REF	PART NUMBER	QTY	PART NAME 1 2 3 4 5 6 (PRODUCT LEVEL)	SEE PAGE
	1	1	**1U-2827**	1	GUIDE-VALVE	
	2	1	**7B-3039**	1	SPRING	
	3	1	**8J-8782**	1	BODY-DRAIN VALVE	
	4	1	**8J-8783**	1	VALVE	
	5	1	**8T-3298**	1	SEAL-RECTANGULAR	
	6	1	**9J-7031**	1	PLUG-DRAIN (HYDRAULIC TANK)	
	7	1	**322-9703**	2	SCREEN-SUCTION (HYDRAULIC TANK)	
	8	1	**246-7381**	1	TANK AS-HYDRAULIC	
	9	1	**249-5059**	1	COVER AS-HYDRAULIC TANK	
	10	1	**252-4587**	1	GAUGE-SIGHT (HYDRAULIC TANK OIL)	
	11	1	**256-6453**	1	SENSOR AS-TEMPERATURE (HYDRAULIC TANK OIL)	
	12	1	**269-1844**	1	GASKET	
	13	1	**3K-0360**	1	SEAL-O-RING	
	14	1	**5M-2057**	1	SEAL-O-RING	
M	15	1	**6V-7744**	2	LOCKNUT (M10X1.5-THD)	
	16	1	**8T-4121**	20	WASHER-HARD (11X21X2.5-MM THK)	
M	17	1	**8T-4137**	18	BOLT (M10X1.5X20-MM)	

M-METRIC PART

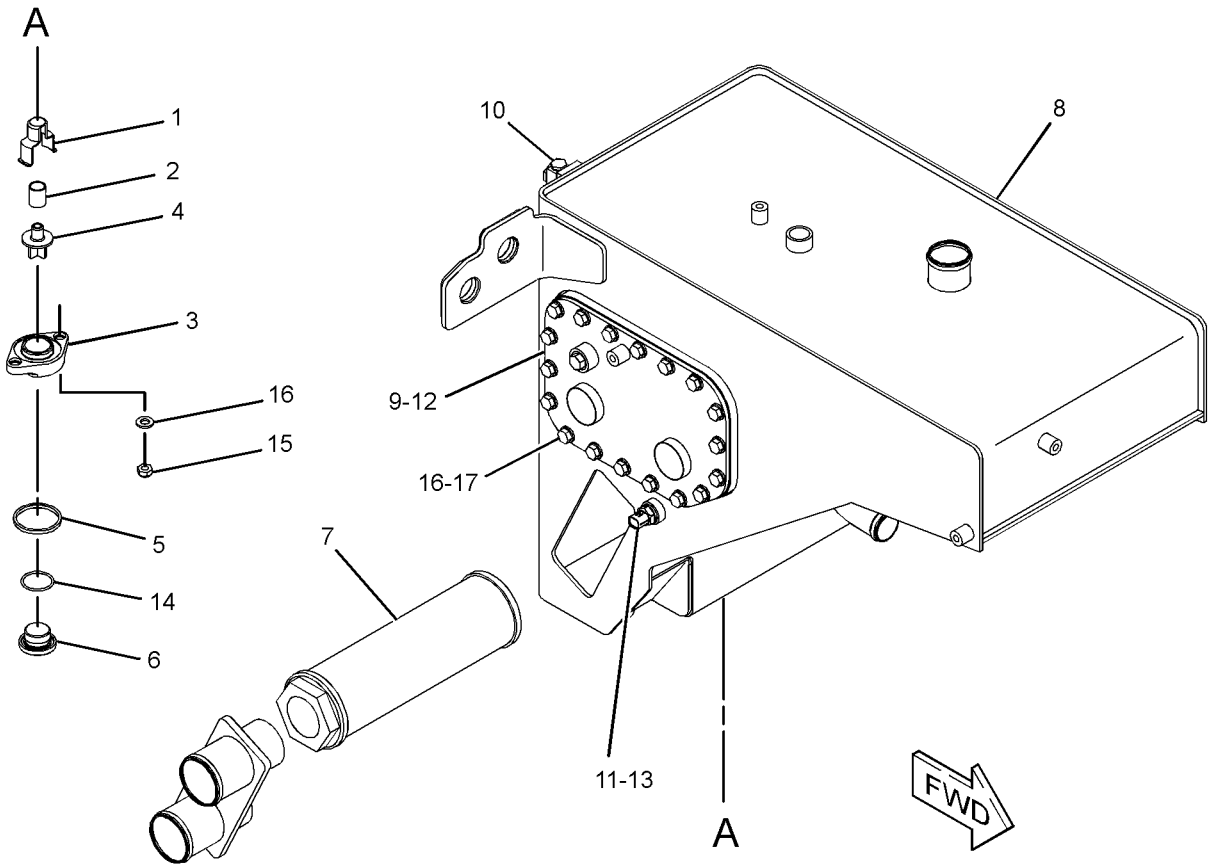

GRAPHIC #1 **<END>** g01226114

HYDRAULIC SYSTEM

244-7115 VALVE GP-BANK 3—BULLDOZER CONTROL

S/N: DHA1-UP; FBH1-UP
CANNOT BE USED WITH 250-3852—PAGE 528
AN ATTACHMENT

SMCS-5051 **i03706674**

NOTE	REF NO	GRAPHIC REF	PART NUMBER	QTY	PART NAME 1 2 3 4 5 6 (PRODUCT LEVEL)	SEE PAGE
Y	1	1	**266-2580**	1	MANIFOLD GP-VALVE (INLET)	569
Y	2	1	**266-2581**	1	VALVE GP-CONTROL (BULLDOZER LIFT)	609
Y	3	1	**266-2582**	1	VALVE GP-CONTROL (BULLDOZER TILT)	610
Y	4	1	**266-2583**	1	VALVE GP-CONTROL (BLADE ANGLE)	611
Y	5	1	**266-2579**	1	VALVE & MTG GP-SOLENOID (OUTLET)	391
	6	1	**257-0450**	1	KIT-FASTENER (BANK VALVE)	
					(INCLUDES LOCKNUTS & TIE RODS)	
	7	1	**4J-5309**	16	SEAL-O-RING	
	8	1	**6V-5326**	4	SEAL-O-RING	
	9	1	**6V-8978**	4	SEAL-O-RING	

Y-SEPARATE ILLUSTRATION

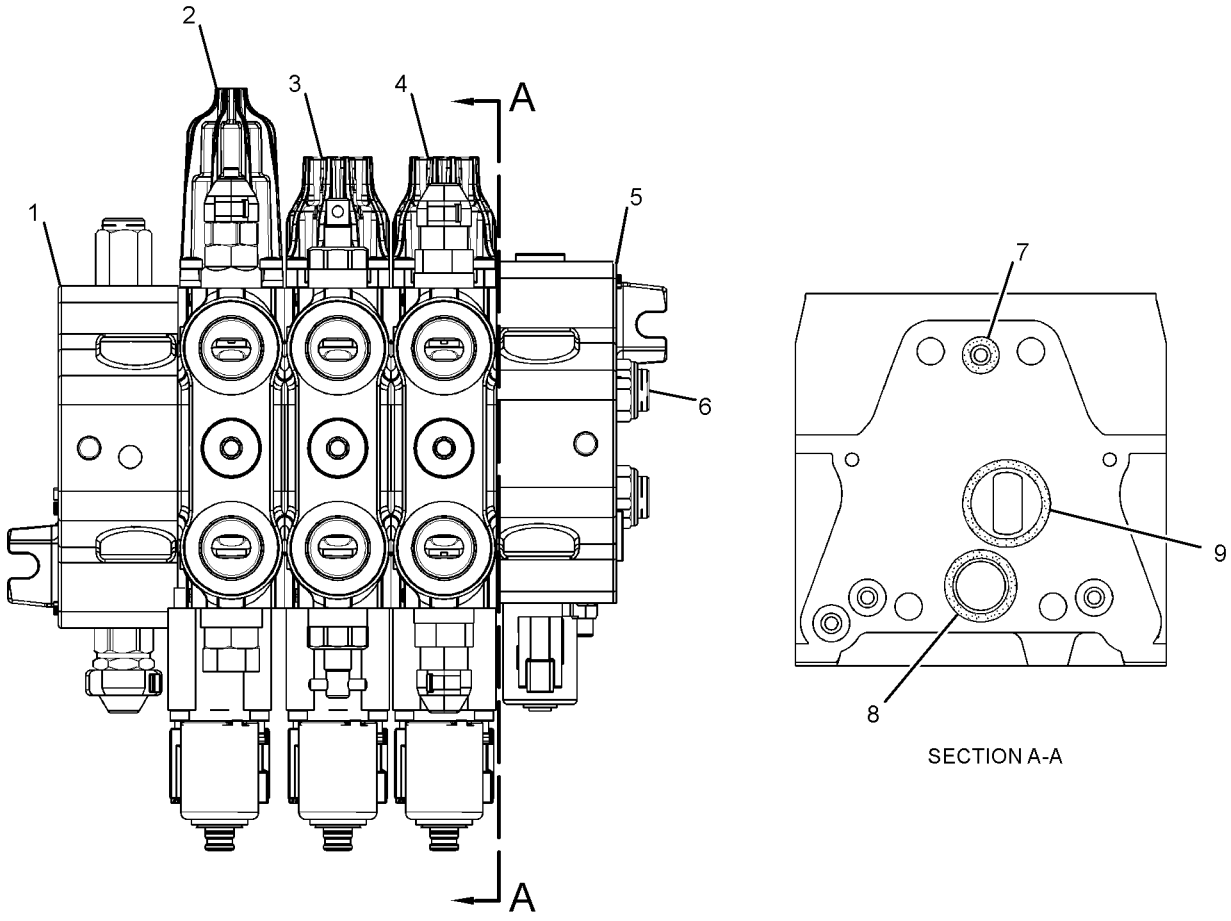

SECTION A-A

GRAPHIC #1 **<END>** g01204477

309-1571 VALVE GP-BANK 3—BULLDOZER CONTROL

S/N: DHA1-UP; FBH1-UP
CANNOT BE USED WITH 250-3852—PAGE 528
AN ATTACHMENT

SMCS-5051 **i03706673**

NOTE	REF NO	GRAPHIC REF	PART NUMBER	QTY	PART NAME 1 2 3 4 5 6 (PRODUCT LEVEL)	SEE PAGE
Y	1	1	**266-2580**	1	MANIFOLD GP-VALVE (INLET)	569
Y	2	1	**320-3629**	1	VALVE GP-CONTROL (BULLDOZER LIFT)	613
Y	3	1	**320-3630**	1	VALVE GP-CONTROL (BULLDOZER TILT)	614
Y	4	1	**320-3631**	1	VALVE GP-CONTROL (BLADE ANGLE)	615
Y	5	1	**266-2579**	1	VALVE & MTG GP-SOLENOID (OUTLET)	391
	6	1	**257-0450**	1	KIT-FASTENER (BANK VALVE)	
					(INCLUDES LOCKNUTS & TIE RODS)	
	7	1	**4J-5309**	16	SEAL-O-RING	
	8	1	**6V-5326**	4	SEAL-O-RING	
	9	1	**6V-8978**	4	SEAL-O-RING	

Y-SEPARATE ILLUSTRATION

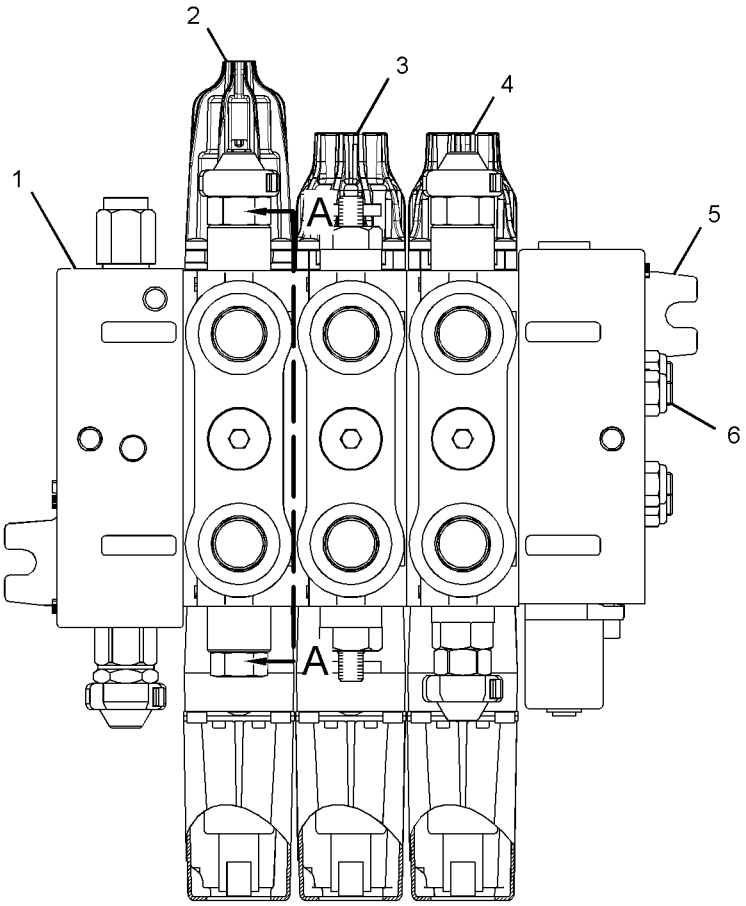

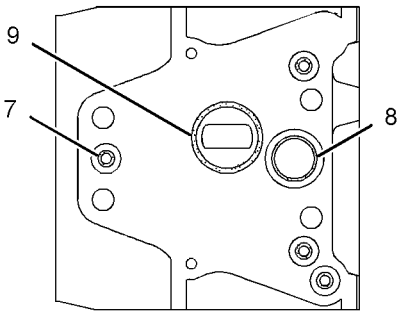

SECTION A-A

GRAPHIC #1 **<END>** g01590756

246-8498 VALVE GP-BANK 4—BULLDOZER, RIPPER

S/N: DHA1-828; FBH1-976
PART OF 250-3852 HYDRAULIC AR-4 VALVE
AN ATTACHMENT

SMCS-5051 **i03706680**

NOTE	REF NO	GRAPHIC REF	PART NUMBER	QTY	PART NAME 1 2 3 4 5 6 (PRODUCT LEVEL)	SEE PAGE
Y	1	1	**266-2580**	1	MANIFOLD GP-VALVE (INLET)	569
Y	2	1	**266-2581**	1	VALVE GP-CONTROL (BULLDOZER LIFT)	609
Y	3	1	**266-2582**	1	VALVE GP-CONTROL (BULLDOZER TILT)	610
Y	4	1	**266-2583**	1	VALVE GP-CONTROL (BLADE ANGLE)	611
Y	5	1	**266-2584**	1	VALVE GP-CONTROL (RIPPER)	612
Y	6	1	**266-2579**	1	VALVE & MTG GP-SOLENOID (OUTLET)	391
	7	1	**227-1201**	1	KIT-FASTENER (BANK VALVE)	
					(INCLUDES LOCKNUTS & TIE RODS)	
	8	1	**4J-5309**	20	SEAL-O-RING	
	9	1	**6V-5326**	5	SEAL-O-RING	
	10	1	**6V-8978**	5	SEAL-O-RING	

Y-SEPARATE ILLUSTRATION

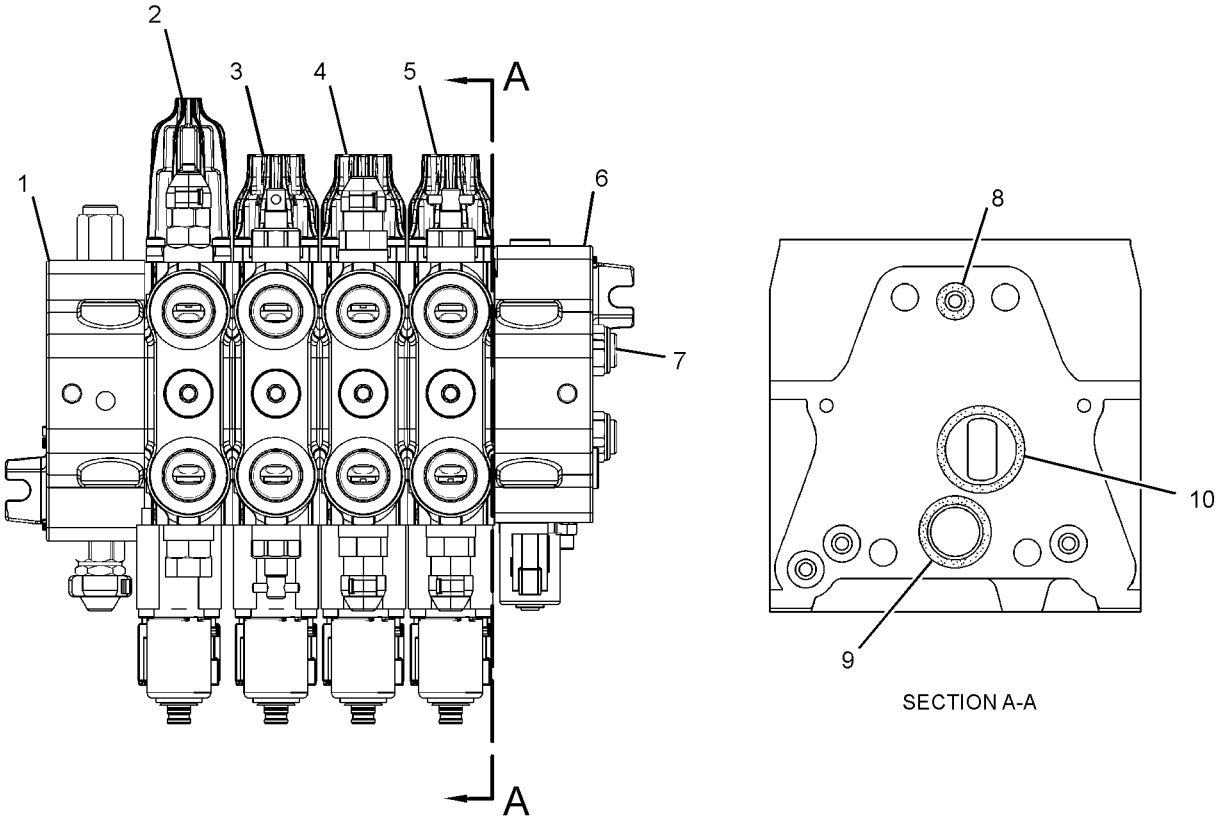

GRAPHIC #1 **<END>** g01204450

309-1572 VALVE GP-BANK 4—BULLDOZER, RIPPER

S/N: DHA829-UP; FBH977-UP
PART OF 250-3852 HYDRAULIC AR-4 VALVE
AN ATTACHMENT

SMCS-5051 **i03706682**

NOTE	REF NO	GRAPHIC REF	PART NUMBER	QTY	PART NAME 1 2 3 4 5 6 (PRODUCT LEVEL)	SEE PAGE
Y	1	1	**266-2580**	1	MANIFOLD GP-VALVE (INLET)	569
Y	2	1	**320-3629**	1	VALVE GP-CONTROL (BULLDOZER LIFT)	613
Y	3	1	**320-3630**	1	VALVE GP-CONTROL (BULLDOZER TILT)	614
Y	4	1	**320-3631**	1	VALVE GP-CONTROL (BLADE ANGLE)	615
Y	5	1	**320-3632**	1	VALVE GP-CONTROL (RIPPER)	616
Y	6	1	**266-2579**	1	VALVE & MTG GP-SOLENOID (OUTLET)	391
	7	1	**227-1201**	1	KIT-FASTENER	
					(INCLUDES LOCKNUTS & TIE RODS)	
	8	1	**4J-5309**	20	SEAL-O-RING	
	9	1	**6V-5326**	5	SEAL-O-RING	
	10	1	**6V-8978**	5	SEAL-O-RING	

Y-SEPARATE ILLUSTRATION

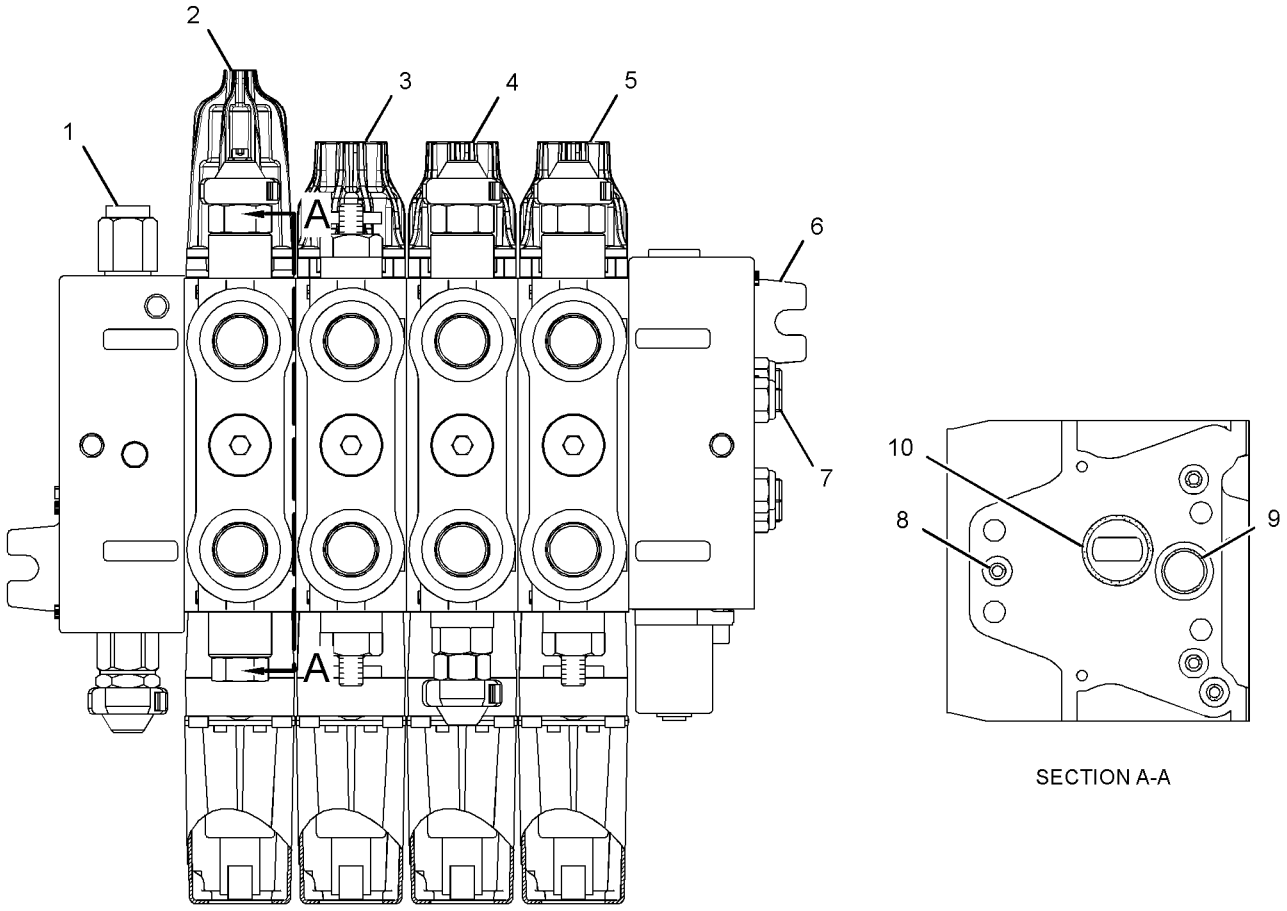

SECTION A-A

GRAPHIC #1 **<END>** g01590753

257-7736 VALVE GP-CHECK–DEAD ENGINE LOWER

S/N: DHA1-UP; FBH1-UP
PART OF 266-2584, 320-3632 VALVE GP-CONTROL
AN ATTACHMENT

SMCS-5067 **i02582278**

NOTE	REF NO	GRAPHIC REF	PART NUMBER	QTY	PART NAME 1 2 3 4 5 6 (PRODUCT LEVEL)	SEE PAGE
	1	1	**8F-9206**	1	SEAL-O-RING	
	2	1	**8J-2413**	1	SEAL-O-RING	
	3	1	**251-9585**	1	SEAL-O-RING	

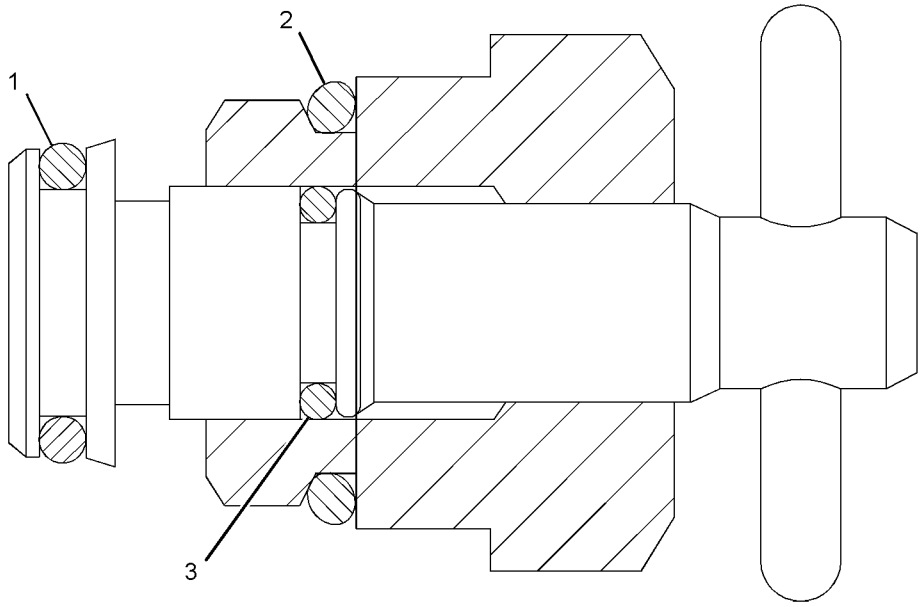

GRAPHIC #1 **<END>** g01303068

HYDRAULIC SYSTEM

301-7890 VALVE GP-CHECK

S/N: DHA1-UP; FBH1-UP

PART OF 278-8935, 279-0543 HEAD GP-MOTOR

SMCS-5067 **i02652586**

NOTE	REF NO	GRAPHIC REF	PART NUMBER	QTY	PART NAME 1 2 3 4 5 6 (PRODUCT LEVEL)	SEE PAGE
	1	1	**033-6039**	1	SEAL-O-RING	
	2	1	**242-0262**	1	RING-BACKUP	
	3	1	**269-4676**	1	SEAL-O-RING	

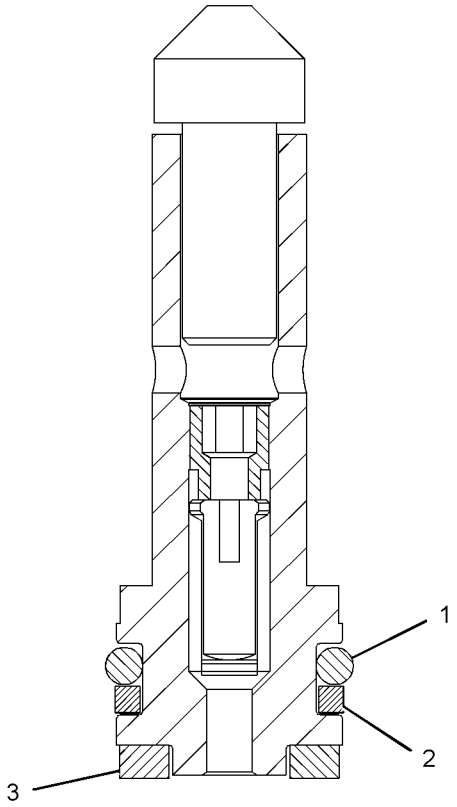

GRAPHIC #1 **<END>** g01332617

HYDRAULIC SYSTEM

250-7881 VALVE GP-CONTROL—DEMAND FAN

S/N: DHA1-815; FBH1-964

CANNOT BE USED WITH 250-7882—PAGE 604

AN ATTACHMENT

SMCS-5051 **i02584898**

NOTE	REF NO	GRAPHIC REF	PART NUMBER	QTY	PART NAME 1 2 3 4 5 6 (PRODUCT LEVEL)	SEE PAGE
	1	1	*171-6723*	1	ELBOW AS	
		1	**8T-8899**	1	ELBOW	
		1	**6V-9746**	1	SEAL-O-RING	
	2	1	*148-8315*	1	CONNECTOR AS	
		1	**6V-8642**	1	CONNECTOR	
		1	**2M-9780**	1	SEAL-O-RING	
		1	**7J-9108**	1	SEAL-O-RING	
	3	1	*148-8326*	1	CONNECTOR AS	
		1	**6V-9872**	1	CONNECTOR	
		1	**3J-7354**	1	SEAL-O-RING	
		1	**6V-8397**	1	SEAL-O-RING	
	4	1	*148-8328*	1	CONNECTOR AS	
		1	**6V-8633**	1	CONNECTOR	
		1	**3D-2824**	1	SEAL-O-RING	
		1	**6V-8398**	1	SEAL-O-RING	
	5	1	*148-8336*	1	CONNECTOR AS	
		1	**6V-8636**	1	CONNECTOR	
		1	**3J-1907**	1	SEAL-O-RING	
		1	**6V-8397**	1	SEAL-O-RING	
	6	1	**148-8367**	1	ELBOW AS	
		1	**6V-9850**	1	ELBOW	
		1	**6V-8397**	1	SEAL-O-RING	
	7	1	*148-8378*	1	ELBOW AS	
		1	**6V-8724**	1	ELBOW	
		1	**3J-1907**	1	SEAL-O-RING	
		1	**6V-8397**	1	SEAL-O-RING	
	8	1	*153-6256*	1	ELBOW AS	
		1	**8C-7563**	1	ELBOW	
		1	**7J-9108**	1	SEAL-O-RING	
	9	1	*153-6241*	1	ELBOW AS	
		1	**8C-8989**	1	ELBOW	
		1	**6V-8398**	1	SEAL-O-RING	
	10	1	*164-5557*	1	CONNECTOR AS	
		1	**5I-4370**	1	CONNECTOR	
		1	**2M-9780**	1	SEAL-O-RING	
		1	**6V-8398**	1	SEAL-O-RING	
	11	1	*164-9869*	1	CONNECTOR AS	
		1	**9X-2297**	1	CONNECTOR	
		1	**3J-1907**	1	SEAL-O-RING	
		1	**6V-8397**	1	SEAL-O-RING	
	12	1	**1P-4574**	4	FLANGE-HALF	
Y	13	1	**252-7008**	1	MANIFOLD GP-CONTROL (DEMAND FAN)	567
I	14	1	**263-8736**	1	HOSE AS	
I	15	1	**263-8737**	1	HOSE AS	
I	16	1	**263-8738**	1	HOSE AS	
I	17	1	**269-8459**	1	HOSE AS	
	18	1	**4D-7735**	1	CLIP	
	19	1	**4J-5140**	2	SEAL-O-RING	
	20	1	**5P-6994**	1	CLIP	
	21	1	**8T-4121**	1	WASHER-HARD (11X21X2.5-MM THK)	
M	22	1	**8T-4195**	1	BOLT (M10X1.5X30-MM)	
M	23	1	**8T-4177**	3	BOLT (M8X1.25X90-MM)	
	24	1	**8T-4224**	11	WASHER-HARD (8.8X16X2-MM THK)	
M	25	1	**8T-7547**	8	BOLT (M8X1.25X30-MM)	
	26	1	*148-8327*	1	CONNECTOR AS	

250-7881 VALVE GP-CONTROL *(contd.)* i02584898

NOTE	REF NO	GRAPHIC REF	PART NUMBER	QTY	PART NAME 1 2 3 4 5 6 (PRODUCT LEVEL)	SEE PAGE
		1	**6V-8637**	1	CONNECTOR	
		1	**3D-2824**	1	SEAL-O-RING	
		1	**6V-9746**	1	SEAL-O-RING	

I-REFER TO HYDRAULIC INFORMATION SYSTEM
M-METRIC PART
Y-SEPARATE ILLUSTRATION

250-7881 VALVE GP-CONTROL *(contd.)* i02584898

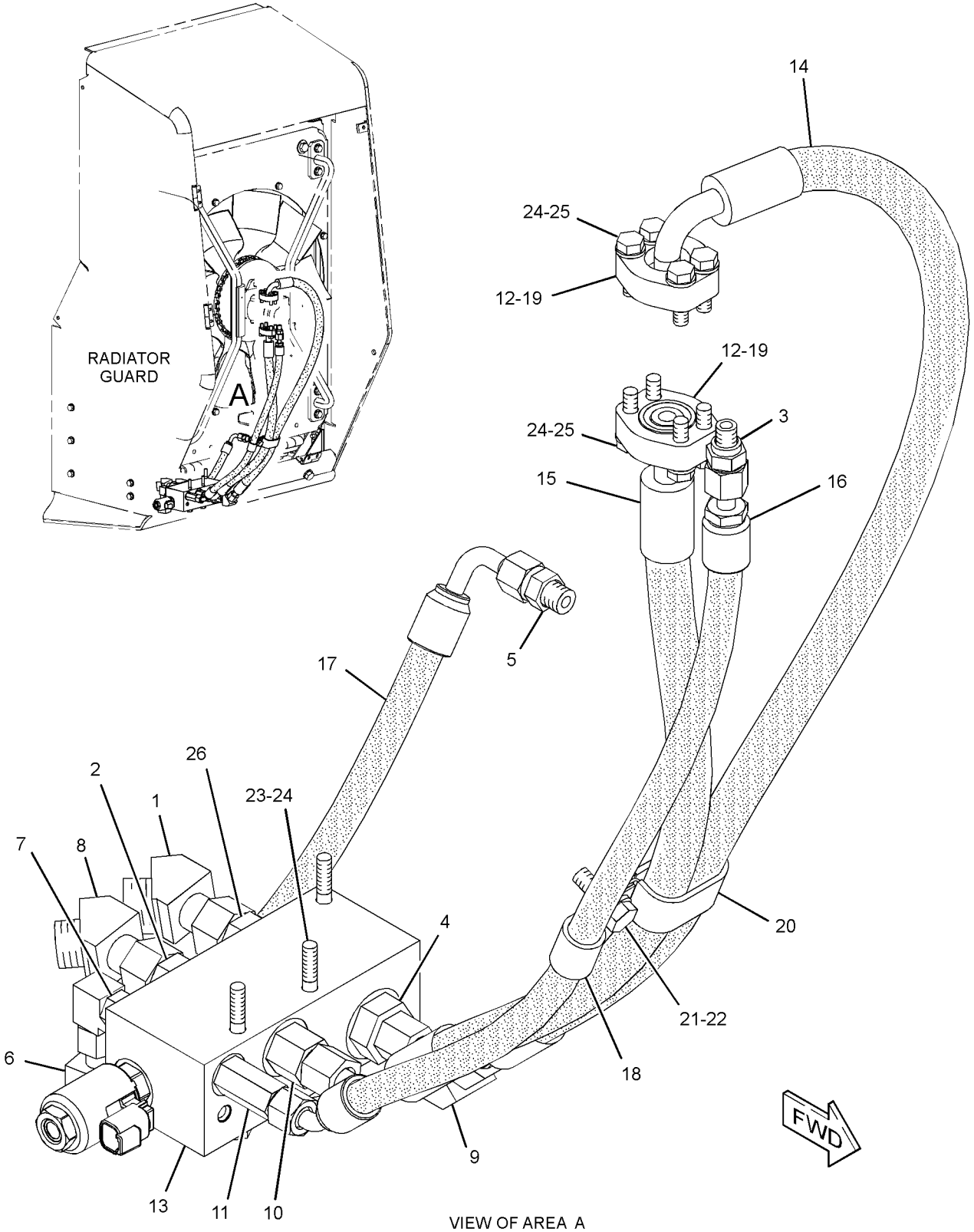

VIEW OF AREA A

GRAPHIC #1 **<END>** g01302183

HYDRAULIC SYSTEM

250-7881 VALVE GP-CONTROL—DEMAND FAN

S/N: DHA816-UP; FBH965-UP
CANNOT BE USED WITH 250-7882—PAGE 604
AN ATTACHMENT

SMCS-5051 **i03002137**

NOTE	REF NO	GRAPHIC REF	PART NUMBER	QTY	PART NAME 1 2 3 4 5 6 (PRODUCT LEVEL)	SEE PAGE
	1	1	*171-6723*	1	ELBOW AS	
		1	**8T-8899**	1	ELBOW	
		1	**6V-9746**	1	SEAL-O-RING	
	2	1	*148-8315*	1	CONNECTOR AS	
		1	**6V-8642**	1	CONNECTOR	
		1	**2M-9780**	1	SEAL-O-RING	
		1	**7J-9108**	1	SEAL-O-RING	
	3	1	*148-8326*	1	CONNECTOR AS	
		1	**6V-9872**	1	CONNECTOR	
		1	**3J-7354**	1	SEAL-O-RING	
		1	**6V-8397**	1	SEAL-O-RING	
	4	1	*148-8328*	1	CONNECTOR AS	
		1	**6V-8633**	1	CONNECTOR	
		1	**3D-2824**	1	SEAL-O-RING	
		1	**6V-8398**	1	SEAL-O-RING	
	5	1	*148-8336*	1	CONNECTOR AS	
		1	**6V-8636**	1	CONNECTOR	
		1	**3J-1907**	1	SEAL-O-RING	
		1	**6V-8397**	1	SEAL-O-RING	
	6	1	*148-8367*	1	ELBOW AS	
		1	**6V-9850**	1	ELBOW	
		1	**6V-8397**	1	SEAL-O-RING	
	7	1	*148-8378*	1	ELBOW AS	
		1	**6V-8724**	1	ELBOW	
		1	**3J-1907**	1	SEAL-O-RING	
		1	**6V-8397**	1	SEAL-O-RING	
	8	1	*153-6256*	1	ELBOW AS	
		1	**8C-7563**	1	ELBOW	
		1	**7J-9108**	1	SEAL-O-RING	
	9	1	*153-6241*	1	ELBOW AS	
		1	**8C-8989**	1	ELBOW	
		1	**6V-8398**	1	SEAL-O-RING	
	10	1	*164-5557*	1	CONNECTOR AS	
		1	**5I-4370**	1	CONNECTOR	
		1	**2M-9780**	1	SEAL-O-RING	
		1	**6V-8398**	1	SEAL-O-RING	
	11	1	*164-9869*	1	CONNECTOR AS	
		1	**9X-2297**	1	CONNECTOR	
		1	**3J-1907**	1	SEAL-O-RING	
		1	**6V-8397**	1	SEAL-O-RING	
	12	1	**1P-4574**	4	FLANGE-HALF	
Y	13	1	**252-7008**	1	MANIFOLD GP-CONTROL (DEMAND FAN)	567
I	14	1	**263-8736**	1	HOSE AS	
I	15	1	**263-8737**	1	HOSE AS	
I	16	1	**263-8738**	1	HOSE AS	
I	17	1	**269-8459**	1	HOSE AS	
	18	1	**4D-7735**	1	CLIP	
	19	1	**4J-5140**	2	SEAL-O-RING	
	21	1	**8T-4121**	1	WASHER-HARD (11X21X2.5-MM THK)	
M	22	1	**8T-4195**	1	BOLT (M10X1.5X30-MM)	
M	23	1	**8T-4177**	3	BOLT (M8X1.25X90-MM)	
	24	1	**8T-4224**	11	WASHER-HARD (8.8X16X2-MM THK)	
M	25	1	**8T-7547**	8	BOLT (M8X1.25X30-MM)	
	26	1	*148-8327*	1	CONNECTOR AS	
		1	**6V-8637**	1	CONNECTOR	

250-7881 VALVE GP-CONTROL *(contd.)* i03002137

NOTE	REF NO	GRAPHIC REF	PART NUMBER	QTY	PART NAME 1 2 3 4 5 6 (PRODUCT LEVEL)	SEE PAGE
		1	**3D-2824**	1	SEAL-O-RING	
		1	**6V-9746**	1	SEAL-O-RING	
C	27	1	**6D-4636**	1	CLIP	
C	28	1	**7X-7729**	1	WASHER (11X25X3-MM THK)	
CM	29	1	**8T-4137**	1	BOLT (M10X1.5X20-MM)	
C	30	1	**8T-7529**	1	CLIP	
C	31	1	**256-1028**	1	BRACKET AS	

C-CHANGE FROM PREVIOUS TYPE
I-REFER TO HYDRAULIC INFORMATION SYSTEM
M-METRIC PART
Y-SEPARATE ILLUSTRATION

250-7881 VALVE GP-CONTROL *(contd.)* i03002137

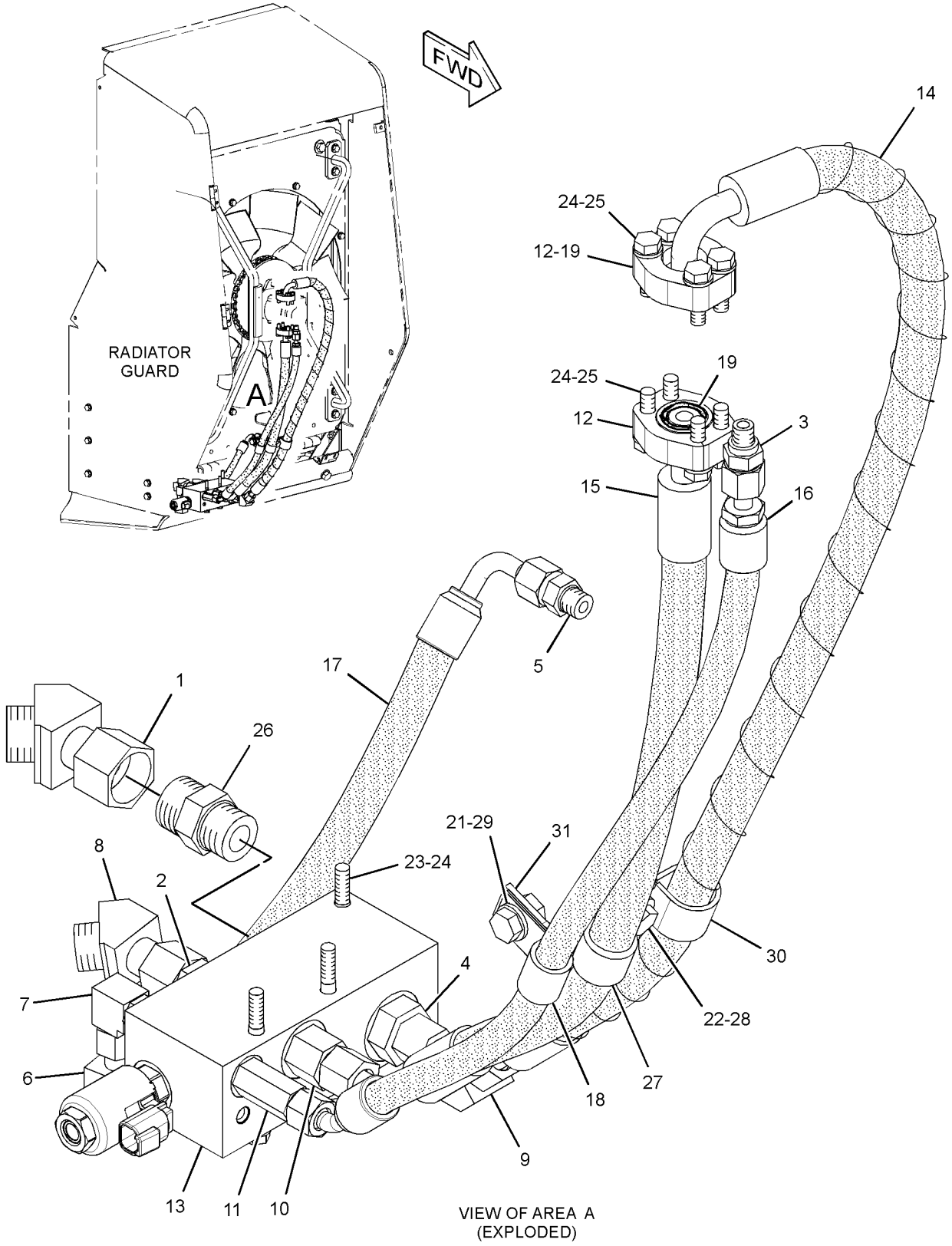

GRAPHIC #1 **<END>** g01595654

HYDRAULIC SYSTEM

250-7882 VALVE GP-CONTROL—REVERSING FAN

S/N: DHA1-815; FBH1-964

CANNOT BE USED WITH 250-7881—PAGE 598

AN ATTACHMENT

SMCS-5051 **i03706700**

NOTE	REF NO	GRAPHIC REF	PART NUMBER	QTY	PART NAME 1 2 3 4 5 6 (PRODUCT LEVEL)	SEE PAGE
	1	1	**236-4623**	1	SWITCH AS-ROCKER (24-VOLT) (REVERSING FAN)	
	2	1	*171-6723*	1	ELBOW AS	
		1	**8T-8899**	1	ELBOW	
		1	**6V-9746**	1	SEAL-O-RING	
I	3	1	**269-8459**	1	HOSE AS	
	4	1	*148-8315*	1	CONNECTOR AS	
		1	**6V-8642**	1	CONNECTOR	
		1	**2M-9780**	1	SEAL-O-RING	
		1	**7J-9108**	1	SEAL-O-RING	
	5	1	*148-8326*	1	CONNECTOR AS	
		1	**6V-9872**	1	CONNECTOR	
		1	**3J-7354**	1	SEAL-O-RING	
		1	**6V-8397**	1	SEAL-O-RING	
	6	1	*148-8336*	1	CONNECTOR AS	
		1	**6V-8636**	1	CONNECTOR	
		1	**3J-1907**	1	SEAL-O-RING	
		1	**6V-8397**	1	SEAL-O-RING	
	7	1	*148-8345*	1	CONNECTOR AS	
		1	**6V-8638**	1	CONNECTOR	
		1	**2M-9780**	1	SEAL-O-RING	
		1	**6V-8398**	1	SEAL-O-RING	
	8	1	*148-8378*	1	ELBOW AS	
		1	**6V-8724**	1	ELBOW	
		1	**3J-1907**	1	SEAL-O-RING	
		1	**6V-8397**	1	SEAL-O-RING	
	9	1	*153-6256*	1	ELBOW AS	
		1	**8C-7563**	1	ELBOW	
		1	**7J-9108**	1	SEAL-O-RING	
	10	1	*150-4044*	1	CONNECTOR AS	
		1	**8T-1779**	1	CONNECTOR	
		1	**3J-1907**	1	SEAL-O-RING	
		1	**6V-8397**	1	SEAL-O-RING	
	11	1	*155-6258*	1	ELBOW AS	
		1	**127-1647**	1	ELBOW	
		1	**3D-2824**	1	SEAL-O-RING	
		1	**6V-8398**	1	SEAL-O-RING	
	12	1	**1P-4574**	4	FLANGE-HALF	
Y	13	1	**285-7460**	1	MANIFOLD GP-CONTROL (REVERSING FAN)	568
I	14	1	**263-8736**	1	HOSE AS	
I	15	1	**263-8737**	1	HOSE AS	
I	16	1	**263-8738**	1	HOSE AS	
	17	1	**4D-7735**	1	CLIP	
	18	1	**4J-5140**	2	SEAL-O-RING	
	19	1	**5P-6994**	1	CLIP	
	20	1	**8T-4121**	1	WASHER-HARD (11X21X2.5-MM THK)	
M	21	1	**8T-4195**	1	BOLT (M10X1.5X30-MM)	
M	22	1	**8T-4177**	3	BOLT (M8X1.25X90-MM)	
	23	1	**8T-4224**	11	WASHER-HARD (8.8X16X2-MM THK)	
M	24	1	**8T-7547**	8	BOLT (M8X1.25X30-MM)	
	25	1	*148-8327*	1	CONNECTOR AS	
		1	**6V-8637**	1	CONNECTOR	
		1	**3D-2824**	1	SEAL-O-RING	
		1	**6V-9746**	1	SEAL-O-RING	

250-7882 **VALVE GP-CONTROL** *(contd.)* **i03706700**

I-REFER TO HYDRAULIC INFORMATION SYSTEM
M-METRIC PART
Y-SEPARATE ILLUSTRATION

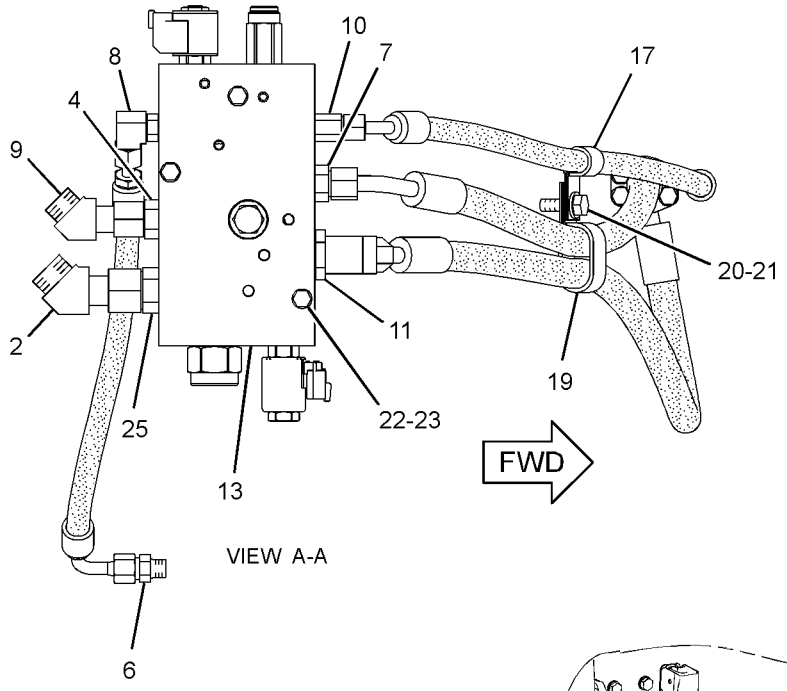

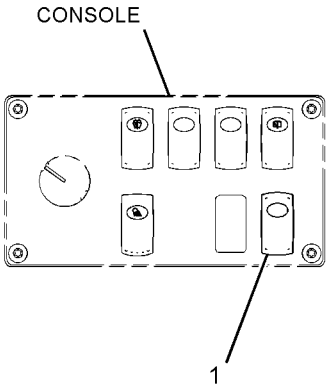

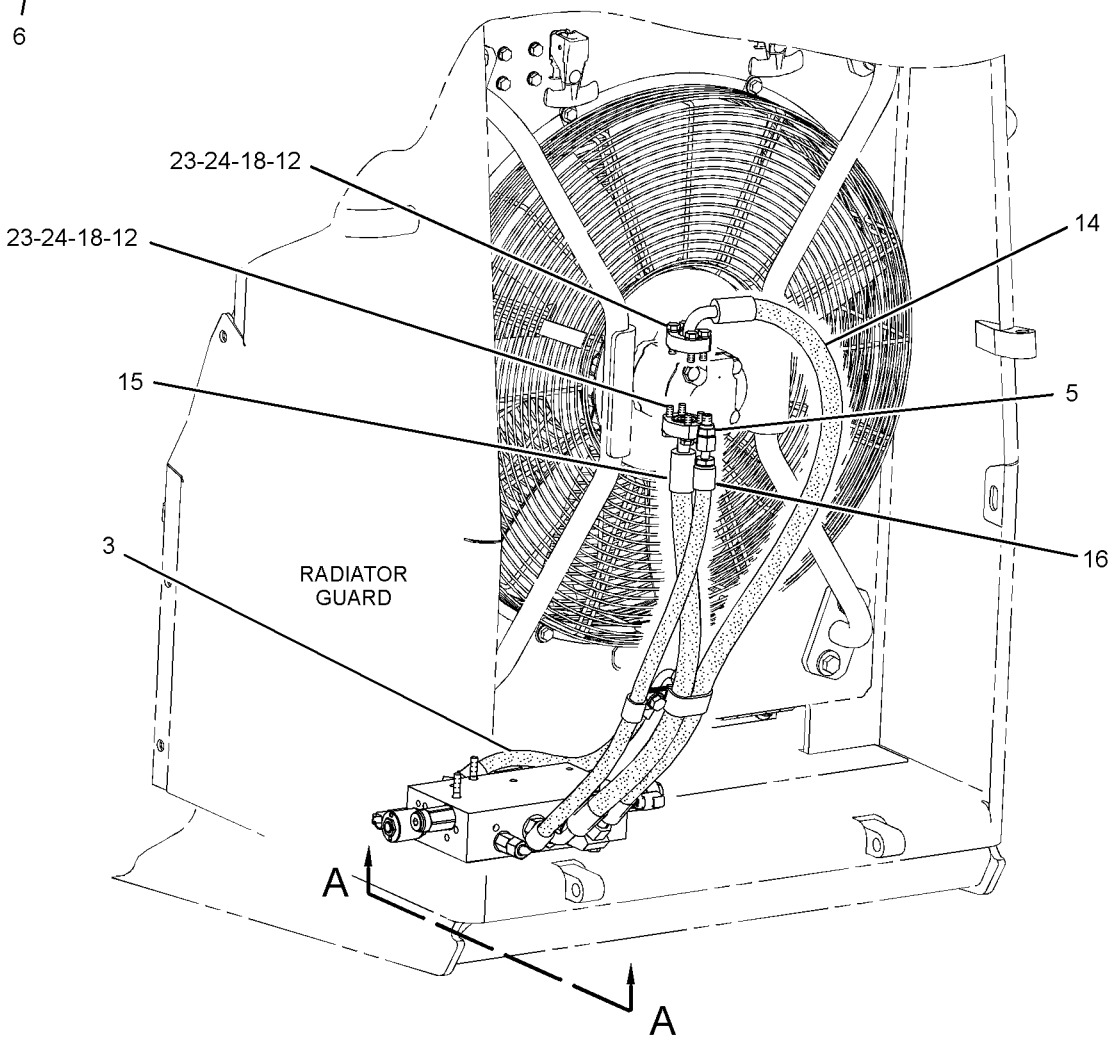

GRAPHIC #1 **<END>** g01302212

HYDRAULIC SYSTEM

250-7882 VALVE GP-CONTROL—REVERSING FAN

S/N: DHA816-UP; FBH965-UP
CANNOT BE USED WITH 250-7881—PAGE 598
AN ATTACHMENT

SMCS-5051 **i03706701**

NOTE	REF NO	GRAPHIC REF	PART NUMBER	QTY	PART NAME 1 2 3 4 5 6 (PRODUCT LEVEL)	SEE PAGE
	1	1	**236-4623**	1	SWITCH AS-ROCKER (24-VOLT) (REVERSING FAN)	
	2	1	*171-6723*	1	ELBOW AS	
		1	**8T-8899**	1	ELBOW	
		1	**6V-9746**	1	SEAL-O-RING	
I	3	1	**269-8459**	1	HOSE AS	
	4	1	*148-8315*	1	CONNECTOR AS	
		1	**6V-8642**	1	CONNECTOR	
		1	**2M-9780**	1	SEAL-O-RING	
		1	**7J-9108**	1	SEAL-O-RING	
	5	1	*148-8326*	1	CONNECTOR AS	
		1	**6V-9872**	1	CONNECTOR	
		1	**3J-7354**	1	SEAL-O-RING	
		1	**6V-8397**	1	SEAL-O-RING	
	6	1	*148-8336*	1	CONNECTOR AS	
		1	**6V-8636**	1	CONNECTOR	
		1	**3J-1907**	1	SEAL-O-RING	
		1	**6V-8397**	1	SEAL-O-RING	
	7	1	*148-8345*	1	CONNECTOR AS	
		1	**6V-8638**	1	CONNECTOR	
		1	**2M-9780**	1	SEAL-O-RING	
		1	**6V-8398**	1	SEAL-O-RING	
	8	1	*148-8378*	1	ELBOW AS	
		1	**6V-8724**	1	ELBOW	
		1	**3J-1907**	1	SEAL-O-RING	
		1	**6V-8397**	1	SEAL-O-RING	
	9	1	*153-6256*	1	ELBOW AS	
		1	**8C-7563**	1	ELBOW	
		1	**7J-9108**	1	SEAL-O-RING	
	10	1	*150-4044*	1	CONNECTOR AS	
		1	**8T-1779**	1	CONNECTOR	
		1	**3J-1907**	1	SEAL-O-RING	
		1	**6V-8397**	1	SEAL-O-RING	
	11	1	*155-6258*	1	ELBOW AS	
		1	**127-1647**	1	ELBOW	
		1	**3D-2824**	1	SEAL-O-RING	
		1	**6V-8398**	1	SEAL-O-RING	
	12	1	**1P-4574**	4	FLANGE-HALF	
Y	13	1	**285-7460**	1	MANIFOLD GP-CONTROL (REVERSING FAN)	568
I	14	1	**263-8736**	1	HOSE AS	
I	15	1	**263-8737**	1	HOSE AS	
I	16	1	**263-8738**	1	HOSE AS	
	17	1	**4D-7735**	1	CLIP	
	18	1	**4J-5140**	2	SEAL-O-RING	
	20	1	**8T-4121**	1	WASHER-HARD (11X21X2.5-MM THK)	
M	21	1	**8T-4195**	1	BOLT (M10X1.5X30-MM)	
M	22	1	**8T-4177**	3	BOLT (M8X1.25X90-MM)	
	23	1	**8T-4224**	11	WASHER-HARD (8.8X16X2-MM THK)	
M	24	1	**8T-7547**	8	BOLT (M8X1.25X30-MM)	
	25	1	*148-8327*	1	CONNECTOR AS	
		1	**6V-8637**	1	CONNECTOR	
		1	**3D-2824**	1	SEAL-O-RING	
		1	**6V-9746**	1	SEAL-O-RING	
C	26	1	**6D-4636**	1	CLIP	
C	27	1	**7X-7729**	1	WASHER (11X25X3-MM THK)	
CM	28	1	**8T-4137**	1	BOLT (M10X1.5X20-MM)	

250-7882 **VALVE GP-CONTROL** *(contd.)* **i03706701**

NOTE	REF NO	GRAPHIC REF	PART NUMBER	QTY	PART NAME 1 2 3 4 5 6 (PRODUCT LEVEL)	SEE PAGE
C	29	1	**8T-7529**	1	CLIP	
C	30	1	**256-1028**	1	BRACKET AS	

C-CHANGE FROM PREVIOUS TYPE
I-REFER TO HYDRAULIC INFORMATION SYSTEM
M-METRIC PART
Y-SEPARATE ILLUSTRATION

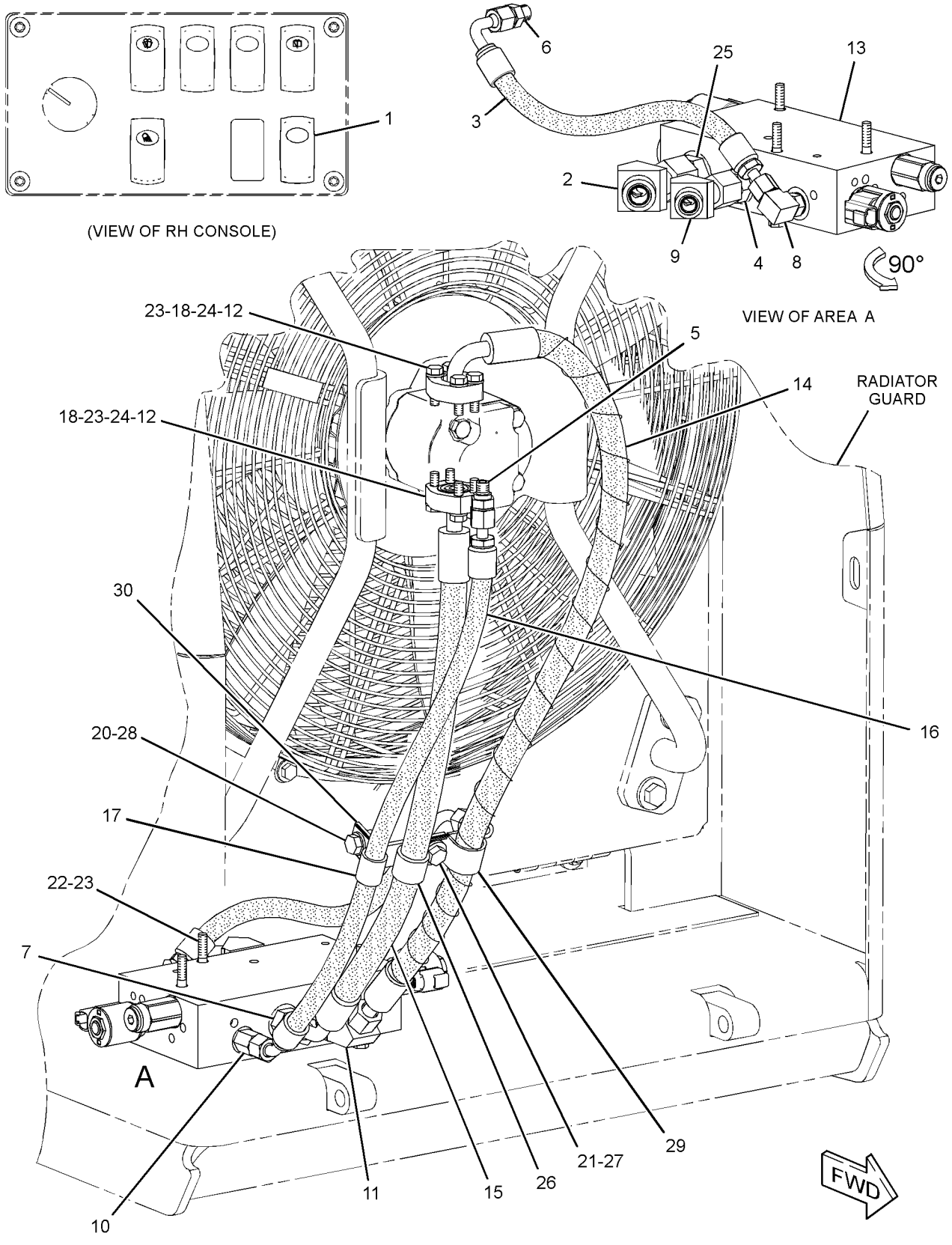

GRAPHIC #1 **<END>** g01595633

266-2581 VALVE GP-CONTROL–BULLDOZER LIFT

S/N: DHA1-UP; FBH1-UP

PART OF 244-7115 VALVE GP-BANK 3, 246-8498 VALVE GP-BANK 4

AN ATTACHMENT

SMCS-5051 **i03709562**

NOTE	REF NO	GRAPHIC REF	PART NUMBER	QTY	PART NAME 1 2 3 4 5 6 (PRODUCT LEVEL)	SEE PAGE
	1	1	**257-7735**	1	KIT-COVER	
					(INCLUDES BOLTS, SEAL RING, COVER, PLUG, SPRING, & RETAINERS)	
Y	2	1	**257-7732**	1	VALVE GP-RELIEF (IMPLEMENT PILOT OIL)	621
Y	3	1	**257-7726**	1	VALVE GP-RELIEF (DEAD ENGINE LOWER, IMP PILOT)	620
	4	1	**227-1186**	2	VALVE AS-CHECK	
	5	1	**257-7722**	1	KIT-COMPENSATOR (CONTROL VALVE)	
					(INCLUDES SEAL RING, COMPENSATOR, SEAL, & PLUG)	
Y	6	1	**266-2273**	1	MANIFOLD & SOLENOID GP-CONTROL (IMPLEMENT CONTROL)	566
	7	1	**5F-9144**	3	SEAL-O-RING	
	8	1	**5D-6543**	1	SEAL-O-RING	
	9	1	**211-5255**	4	BOLT-SOCKET HEAD (M5X0.8X55-MM)	
	10	1	**257-0466**	1	CAP-PROTECTION	

Y-SEPARATE ILLUSTRATION

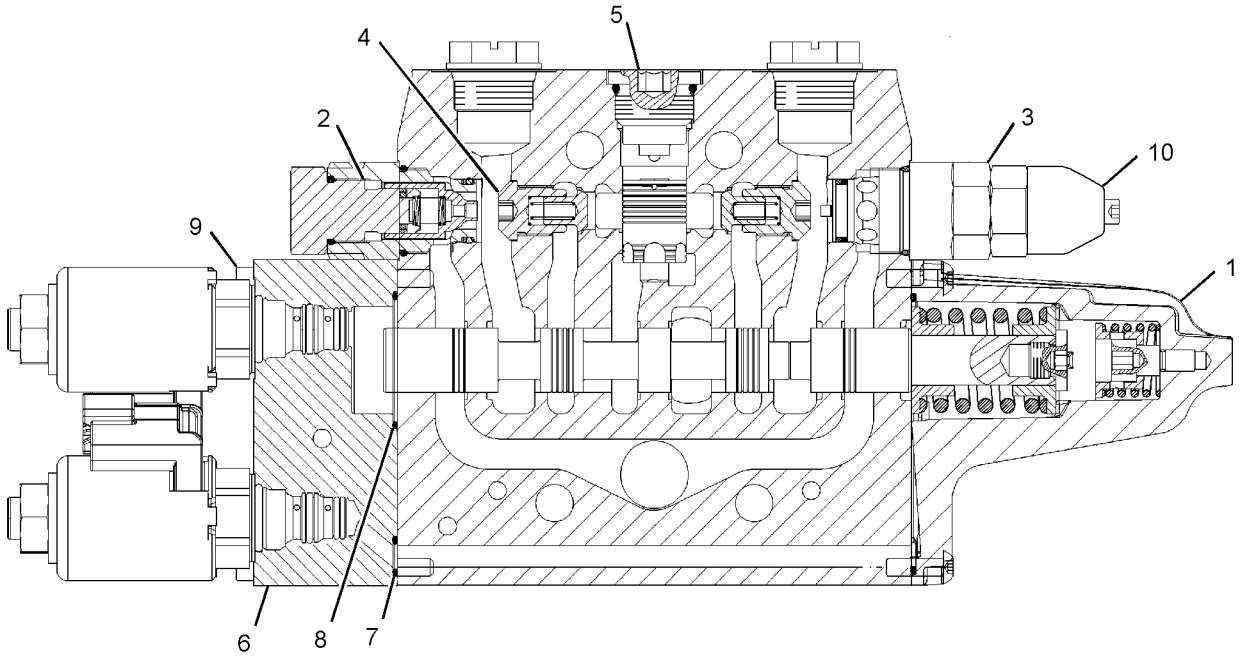

GRAPHIC #1 **<END>** g01303474

266-2582 VALVE GP-CONTROL–BULLDOZER TILT

S/N: DHA1-UP; FBH1-UP

PART OF 244-7115 VALVE GP-BANK 3, 246-8498 VALVE GP-BANK 4

AN ATTACHMENT

SMCS-5051 **i02611169**

NOTE	REF NO	GRAPHIC REF	PART NUMBER	QTY	PART NAME 1 2 3 4 5 6 (PRODUCT LEVEL)	SEE PAGE
	1	1	**257-7734**	1	KIT-COVER (CONTROL VALVE)	
					(INCLUDES BOLTS, SEAL RING, COVER, PLUG, SPRING & RETAINERS)	
Y	2	1	**257-7736**	2	VALVE GP-CHECK (DEAD ENGINE LOWER)	596
	3	1	**227-1186**	2	VALVE AS-CHECK	
	4	1	**257-7722**	1	KIT-COMPENSATOR (CONTROL VALVE)	
					(INCLUDES SEAL RING, COMPENSATOR, SEAL, & PLUG)	
Y	5	1	**266-2273**	1	MANIFOLD & SOLENOID GP-CONTROL (IMPLEMENT CONTROL)	566
	6	1	**5F-9144**	3	SEAL-O-RING	
	7	1	**5D-6543**	1	SEAL-O-RING	
	8	1	**211-5255**	4	BOLT-SOCKET HEAD (M5X0.8X55-MM)	

Y-SEPARATE ILLUSTRATION

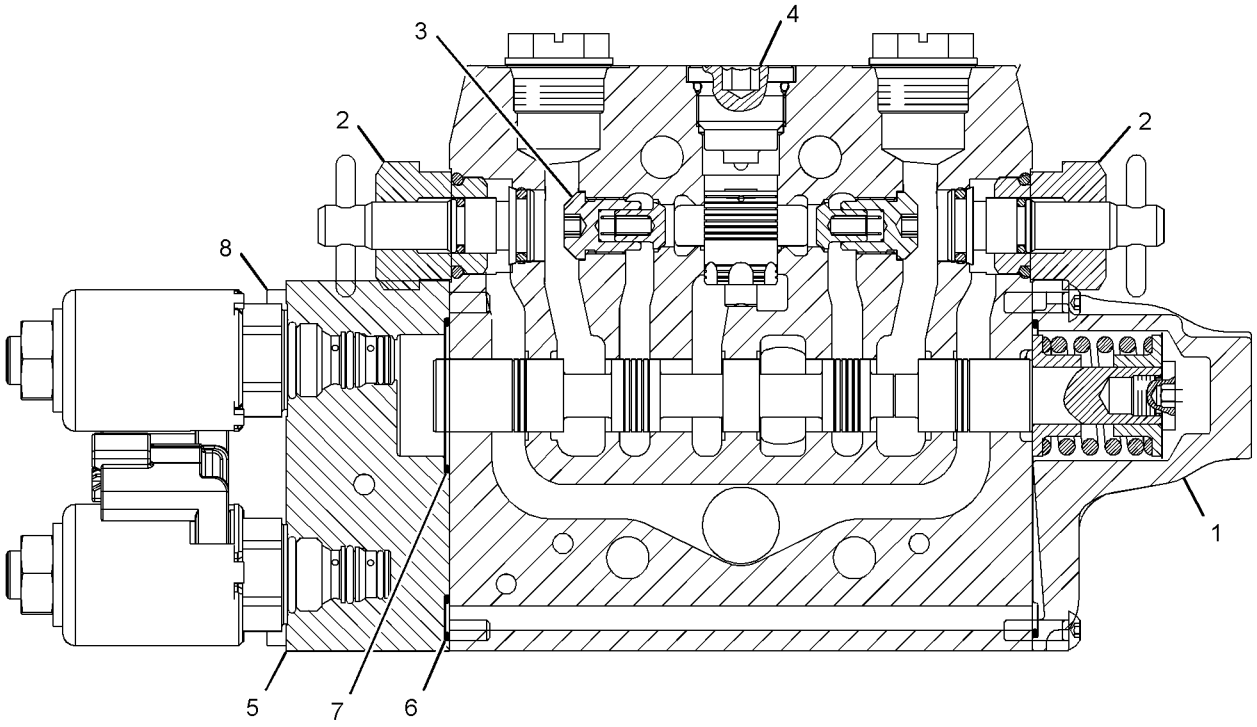

GRAPHIC #1 **<END>** g01303508

266-2583 VALVE GP-CONTROL–BLADE ANGLE

S/N: DHA1-UP; FBH1-UP

PART OF 244-7115 VALVE GP-BANK 3, 246-8498 VALVE GP-BANK 4

AN ATTACHMENT

SMCS-5051 **i02611168**

NOTE	REF NO	GRAPHIC REF	PART NUMBER	QTY	PART NAME 1 2 3 4 5 6 (PRODUCT LEVEL)	SEE PAGE
	1	1	**257-7734**	1	KIT-COVER (CONTROL VALVE)	
					(INCLUDES BOLTS, SEAL RING, COVER, PLUG, SPRING, & RETAINERS)	
Y	2	1	**266-3593**	2	VALVE GP-RELIEF (IMPLEMENT PILOT PRESSURE)	622
	3	1	**227-1186**	2	VALVE AS-CHECK	
	4	1	**257-7722**	1	KIT-COMPENSATOR (CONTROL VALVE)	
					(INCLUDES SEAL RING, COMPENSATOR, SEAL, & PLUG)	
Y	5	1	**266-2273**	1	MANIFOLD & SOLENOID GP-CONTROL (IMPLEMENT CONTROL)	566
	6	1	**5F-9144**	3	SEAL-O-RING	
	7	1	**5D-6543**	1	SEAL-O-RING	
	8	1	**211-5255**	4	BOLT-SOCKET HEAD (M5X0.8X55-MM)	
	9	1	**257-0468**	2	CAP-PROTECTION	

Y-SEPARATE ILLUSTRATION

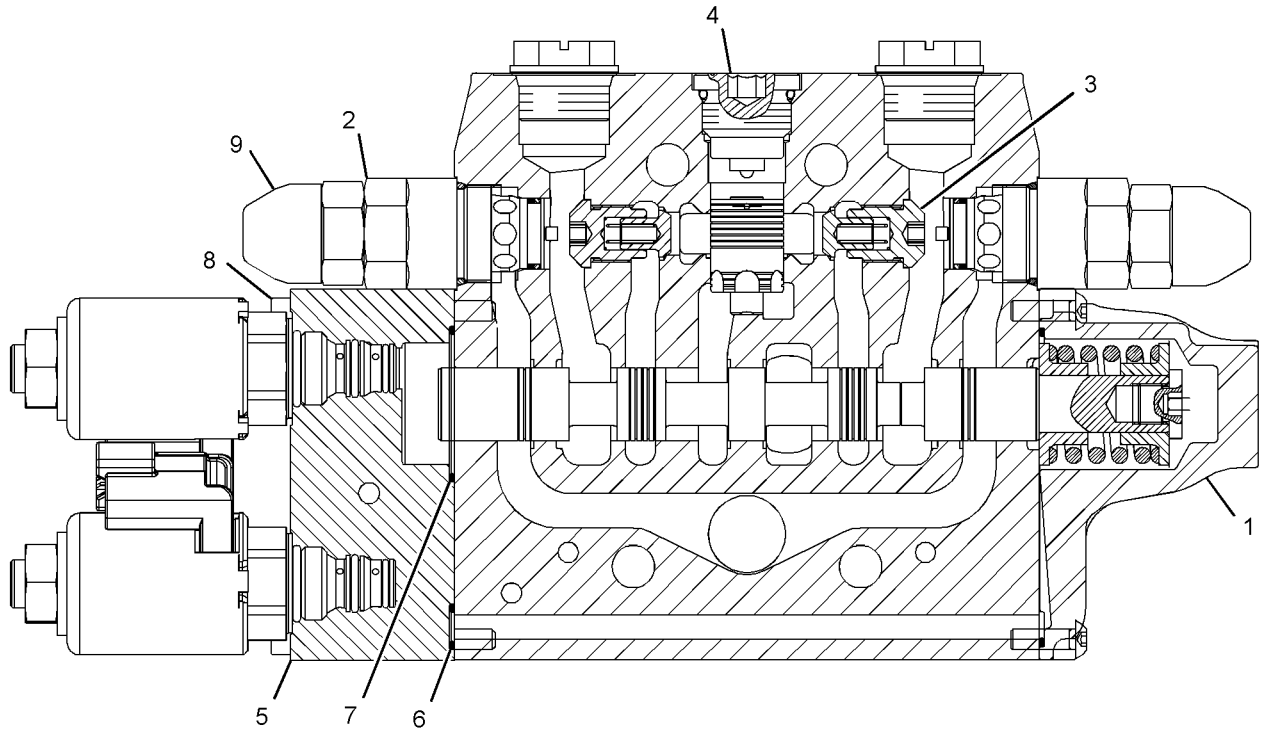

GRAPHIC #1 **<END>** g01303332

HYDRAULIC SYSTEM

266-2584 VALVE GP-CONTROL–RIPPER

S/N: DHA1-828; FBH1-976
PART OF 246-8498 VALVE GP-BANK 4
AN ATTACHMENT

SMCS-5051 **i03709563**

NOTE	REF NO	GRAPHIC REF	PART NUMBER	QTY	PART NAME 1 2 3 4 5 6 (PRODUCT LEVEL)	SEE PAGE
	1	1	**257-7734**	1	KIT-COVER (CONTROL VALVE)	
					(INCLUDES BOLTS, SEAL RING, COVER, PLUG, SPRING, & RETAINERS)	
Y	2	1	**266-3593**	1	VALVE GP-RELIEF (IMPLEMENT PILOT PRESSURE)	622
Y	3	1	**257-7736**	1	VALVE GP-CHECK (DEAD ENGINE LOWER)	596
	4	1	**227-1186**	2	VALVE AS-CHECK	
	5	1	**257-7722**	1	KIT-COMPENSATOR (CONTROL VALVE)	
					(INCLUDES SEAL RING, COMPENSATOR, SEAL, & PLUG)	
Y	6	1	**266-2273**	1	MANIFOLD & SOLENOID GP-CONTROL (IMPLEMENT CONTROL)	566
	7	1	**5F-9144**	3	SEAL-O-RING	
	8	1	**5D-6543**	1	SEAL-O-RING	
	9	1	**211-5255**	4	BOLT-SOCKET HEAD (M5X0.8X55-MM)	
	10	1	**257-0468**	1	CAP-PROTECTION	

Y-SEPARATE ILLUSTRATION

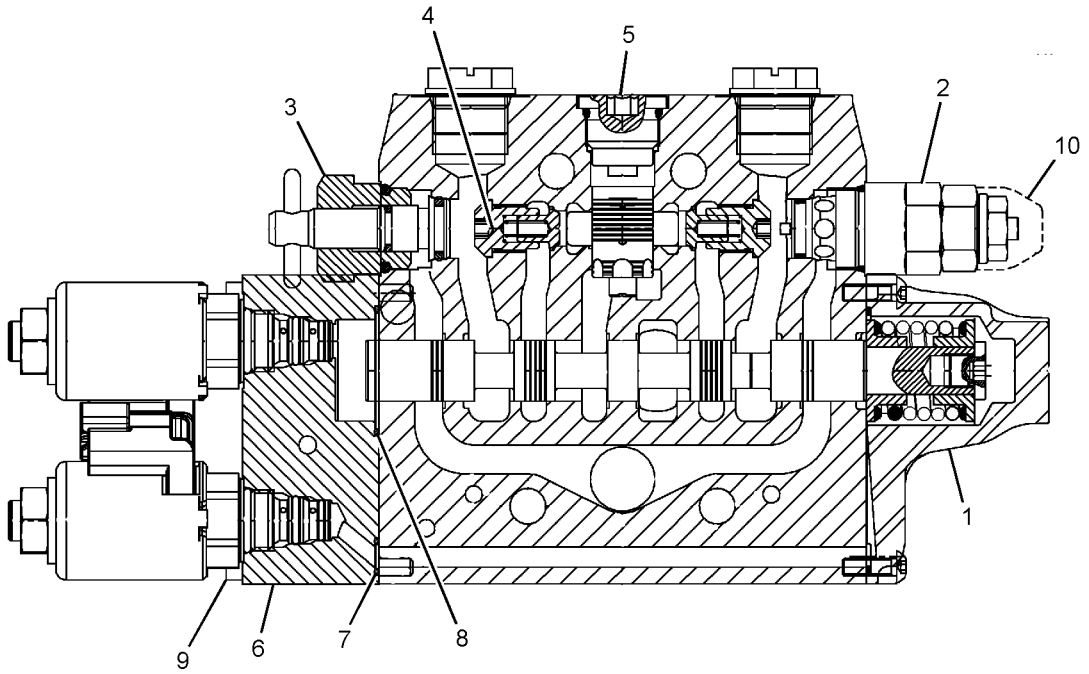

GRAPHIC #1 **<END>** g01303269

320-3629 VALVE GP-CONTROL–BULLDOZER LIFT

S/N: DHA1-UP; FBH1-UP

PART OF 309-1571 VALVE GP-BANK 3, 309-1572 VALVE GP-BANK 4

AN ATTACHMENT

SMCS-5051 **i03706743**

NOTE	REF NO	GRAPHIC REF	PART NUMBER	QTY	PART NAME 1 2 3 4 5 6 (PRODUCT LEVEL)	SEE PAGE
	1	1	**257-7735**	1	KIT-COVER (CONTROL VALVE)	
					(INCLUDES BOLTS-SOCKET HEAD, SEAL-O-RING, COVER, PLUG, SPRINGS & RETAINERS)	
	2	1	**257-7722**	1	KIT-COMPENSATOR (CONTROL VALVE)	
					(INCLUDES SEAL-O-RING)	
	3	1	**227-1186**	2	VALVE AS-CHECK	
Y	4	1	**302-8157**	1	ACTUATOR GP-HYDRAULIC	513
Y	5	1	**257-7732**	1	VALVE GP-RELIEF (IMPLEMENT PILOT OIL)	621
Y	6	1	**257-7726**	1	VALVE GP-RELIEF (DEAD ENGINE LOWER, IMP PILOT)	620
	7	1	**257-0466**	1	CAP-PROTECTION	

Y-SEPARATE ILLUSTRATION

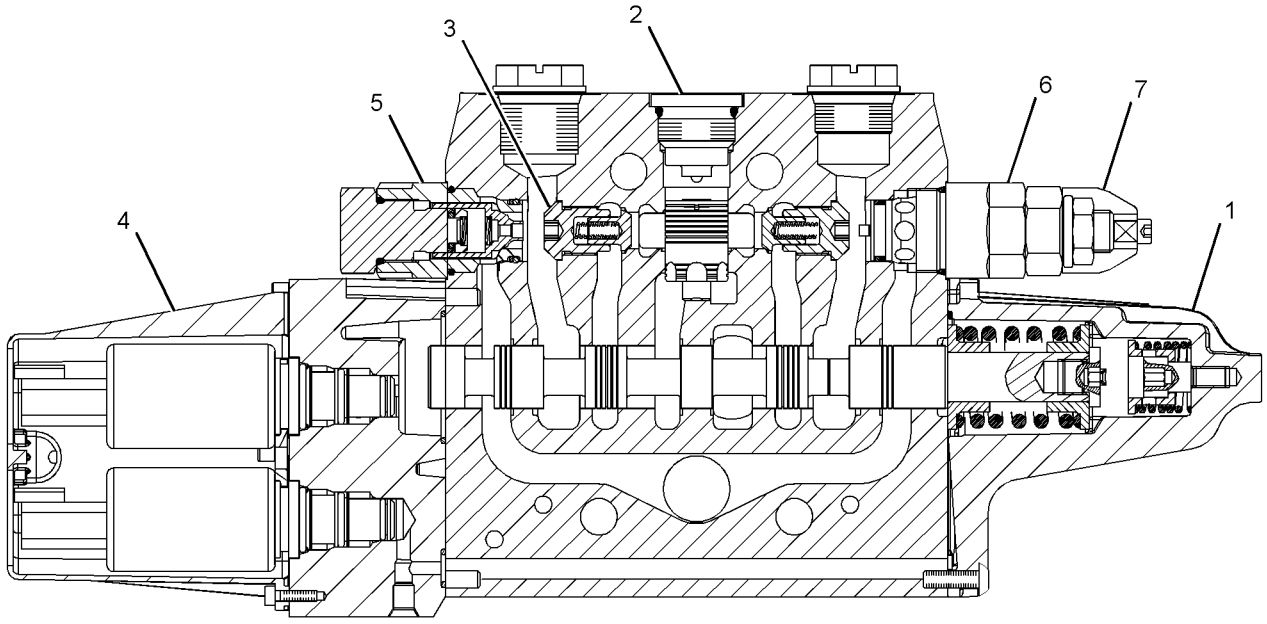

GRAPHIC #1 **<END>** g01625518

320-3630 VALVE GP-CONTROL–BULLDOZER TILT

S/N: DHA1-UP; FBH1-UP
PART OF 309-1571 VALVE GP-BANK 3, 309-1572 VALVE GP-BANK 4
AN ATTACHMENT

SMCS-5051 **i03600881**

NOTE	REF NO	GRAPHIC REF	PART NUMBER	QTY	PART NAME 1 2 3 4 5 6 (PRODUCT LEVEL)	SEE PAGE
	1	1	**257-7734**	1	KIT-COVER (CONTROL VALVE)	
					(INCLUDES BOLTS-SOCKET HEAD, SEAL-O-RING, COVER, PLUG, SPRING & RETAINERS)	
	2	1	**257-7722**	1	KIT-COMPENSATOR (CONTROL VALVE)	
					(INCLUDES SEAL-O-RING)	
	3	1	**227-1186**	2	VALVE AS-CHECK	
Y	4	1	**302-8157**	1	ACTUATOR GP-HYDRAULIC	513
	5	1	**227-1191**	2	PLUG AS	
					(EACH INCLUDES)	
		1	**8J-2413**	1	SEAL-O-RING	
		1	**095-1751**	1	SEAL-O-RING	
		1	**169-1616**	1	RING-BACKUP	

Y-SEPARATE ILLUSTRATION

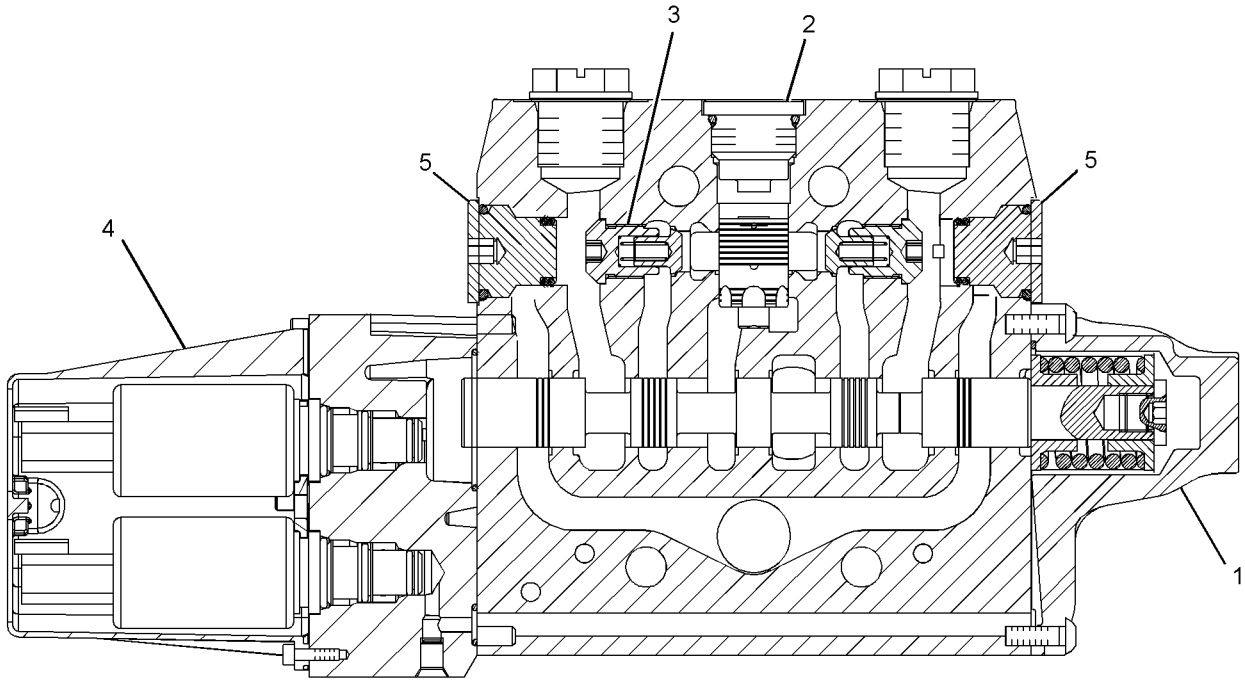

GRAPHIC #1 **<END>** g01946579

320-3631 VALVE GP-CONTROL–BLADE ANGLE

S/N: DHA1-UP; FBH1-UP
PART OF 309-1571 VALVE GP-BANK 3, 309-1572 VALVE GP-BANK 4
AN ATTACHMENT

SMCS-5051 **i03706760**

NOTE	REF NO	GRAPHIC REF	PART NUMBER	QTY	PART NAME 1 2 3 4 5 6 (PRODUCT LEVEL)	SEE PAGE
	1	1	**257-7734**	1	KIT-COVER (CONTROL VALVE)	
					(INCLUDES BOLTS-SOCKET HEAD, SEAL-O-RING, COVER, PLUG, SPRING & RETAINERS)	
	2	1	**257-7722**	1	KIT-COMPENSATOR (CONTROL VALVE)	
					(INCLUDES SEAL-O-RING)	
	3	1	**227-1186**	2	VALVE AS-CHECK	
Y	4	1	**302-8157**	1	ACTUATOR GP-HYDRAULIC	513
Y	5	1	**266-3593**	2	VALVE GP-RELIEF (IMPLEMENT PILOT PRESSURE)	622
	6	1	**257-0468**	2	CAP-PROTECTION	

Y-SEPARATE ILLUSTRATION

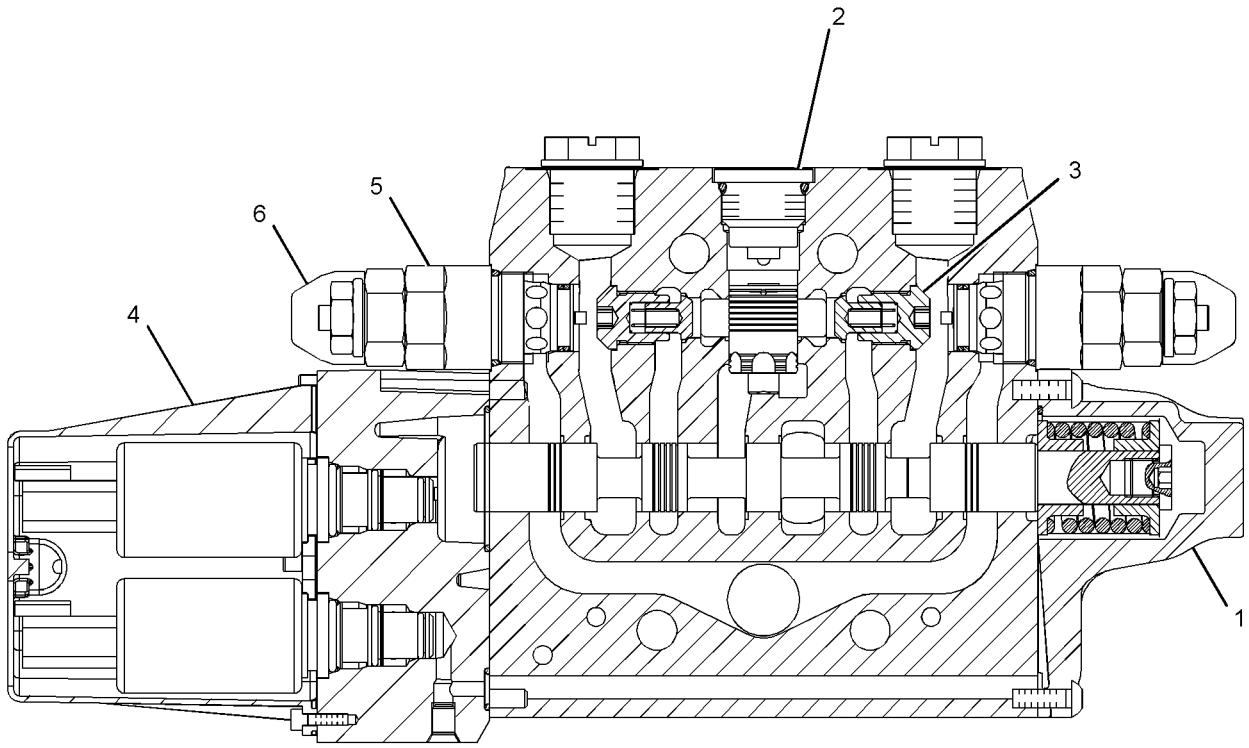

GRAPHIC #1 **<END>** g01620773

320-3632 VALVE GP-CONTROL–RIPPER

S/N: DHA829-UP; FBH977-UP
PART OF 309-1572 VALVE GP-BANK 4
AN ATTACHMENT

SMCS-5051 **i03706761**

NOTE	REF NO	GRAPHIC REF	PART NUMBER	QTY	PART NAME 1 2 3 4 5 6 (PRODUCT LEVEL)	SEE PAGE
	1	1	**257-7734**	1	KIT-COVER (CONTROL VALVE)	
					(INCLUDES BOLTS-SOCKET HEAD, SEAL-O-RING, COVER, PLUG, SPRING & RETAINERS)	
	2	1	**257-7722**	1	KIT-COMPENSATOR (CONTROL VALVE)	
					(INCLUDES SEAL-O-RINGS)	
	3	1	**227-1186**	2	VALVE AS-CHECK (RIPPER)	
Y	4	1	**302-8157**	1	ACTUATOR GP-HYDRAULIC	513
Y	5	1	**257-7736**	1	VALVE GP-CHECK (DEAD ENGINE LOWER)	596
Y	6	1	**266-3593**	1	VALVE GP-RELIEF (IMPLEMENT PILOT PRESSURE)	622
	7	1	**257-0468**	1	CAP-PROTECTION	

Y-SEPARATE ILLUSTRATION

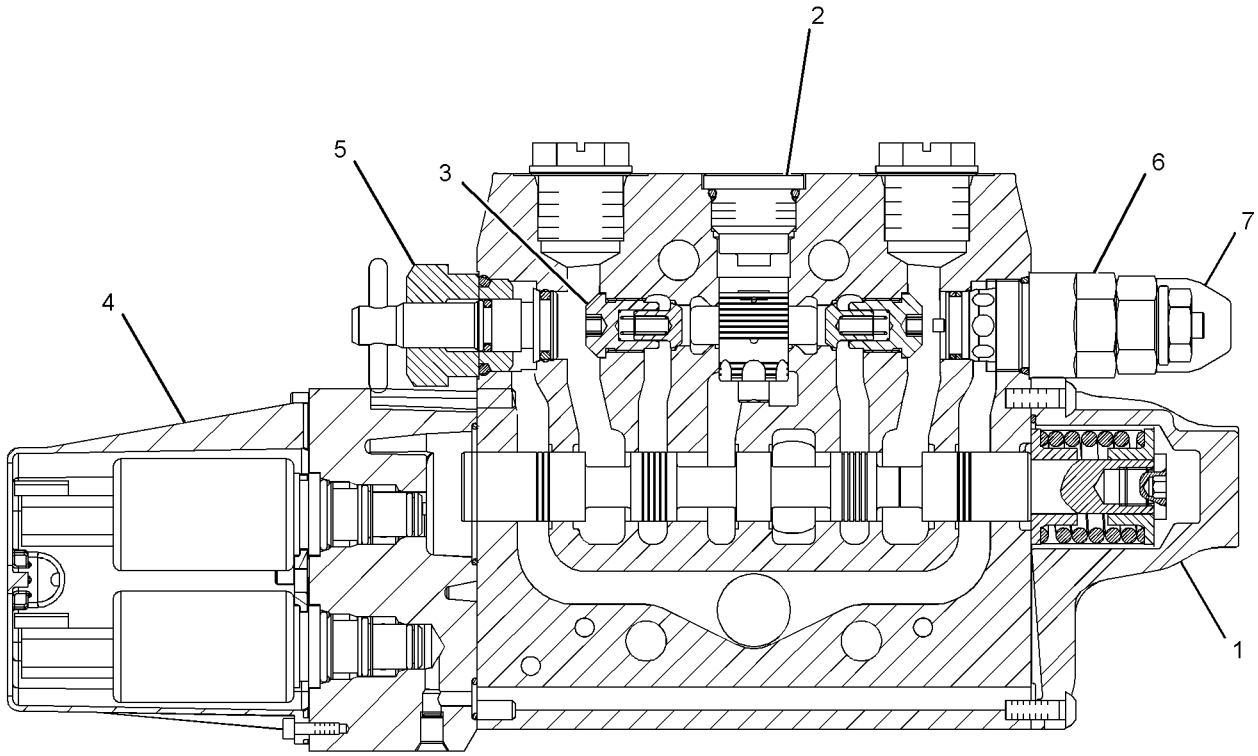

GRAPHIC #1 **<END>** g01620786

HYDRAULIC SYSTEM

277-6630 VALVE GP-PUMP CONTROL—WINCH

S/N: DHA1-UP; FBH1-UP
PART OF 249-8600 PUMP GP-PISTON
AN ATTACHMENT

SMCS-5455 **i02404709**

NOTE	REF NO	GRAPHIC REF	PART NUMBER	QTY	PART NAME 1 2 3 4 5 6 (PRODUCT LEVEL)	SEE PAGE
	1	1	**269-4669**	2	SOLENOID AS	
					(EACH INCLUDES)	
		1	**217-3875**	1	SEAL-O-RING	
M	2	1	**196-9444**	8	BOLT-SOCKET HEAD (M5X0.8X10-MM)	
	3	1	**196-4250**	2	SPACER	
	4	1	**196-4254**	2	SPRING	
	5	1	**7E-4846**	2	SEAL-O-RING	
	6	1	**215-8013**	1	PISTON	
	7	1	**277-6631**	1	SPRING	
B	8	1	**216-4551**	1	SHIM (0.8-MM THK)	
B	9	1	**216-4552**	1	SHIM (1-MM THK)	
B	10	1	**216-4553**	1	SHIM (1.2-MM THK)	
B	11	1	**216-4554**	1	SHIM (1.4-MM THK)	
B	12	1	**216-4555**	1	SHIM (1.6-MM THK)	
B	13	1	**233-9808**	1	SHIM (0.6-MM THK)	
	14	1	**209-3565**	1	SEAL	
	15	1	**5E-7046**	1	BEARING AS-NEEDLE	
	16	1	**215-8008**	1	LEVER	
	17	1	**215-8012**	1	PIN	
	18	1	**6H-9691**	1	SEAL-O-RING	
	19	1	**215-8011**	1	BOLT-SPECIAL	
	20	1	**215-8010**	1	SHIM (3-MM THK)	
	21	1	**215-8015**	2	PIN	
M	22	1	**196-9445**	1	BOLT-SOCKET HEAD (M6X1X45-MM)	
M	23	1	**8T-2922**	4	BOLT-SOCKET HEAD (M6X1X65-MM)	
	24	1	**196-4251**	1	COVER	
	25	1	**6J-3134**	1	SEAL-O-RING	
	26	1	**196-4253**	1	GASKET	
	27	1	**215-8014**	2	KIT-LEVER	

B-USE AS REQUIRED
M-METRIC PART

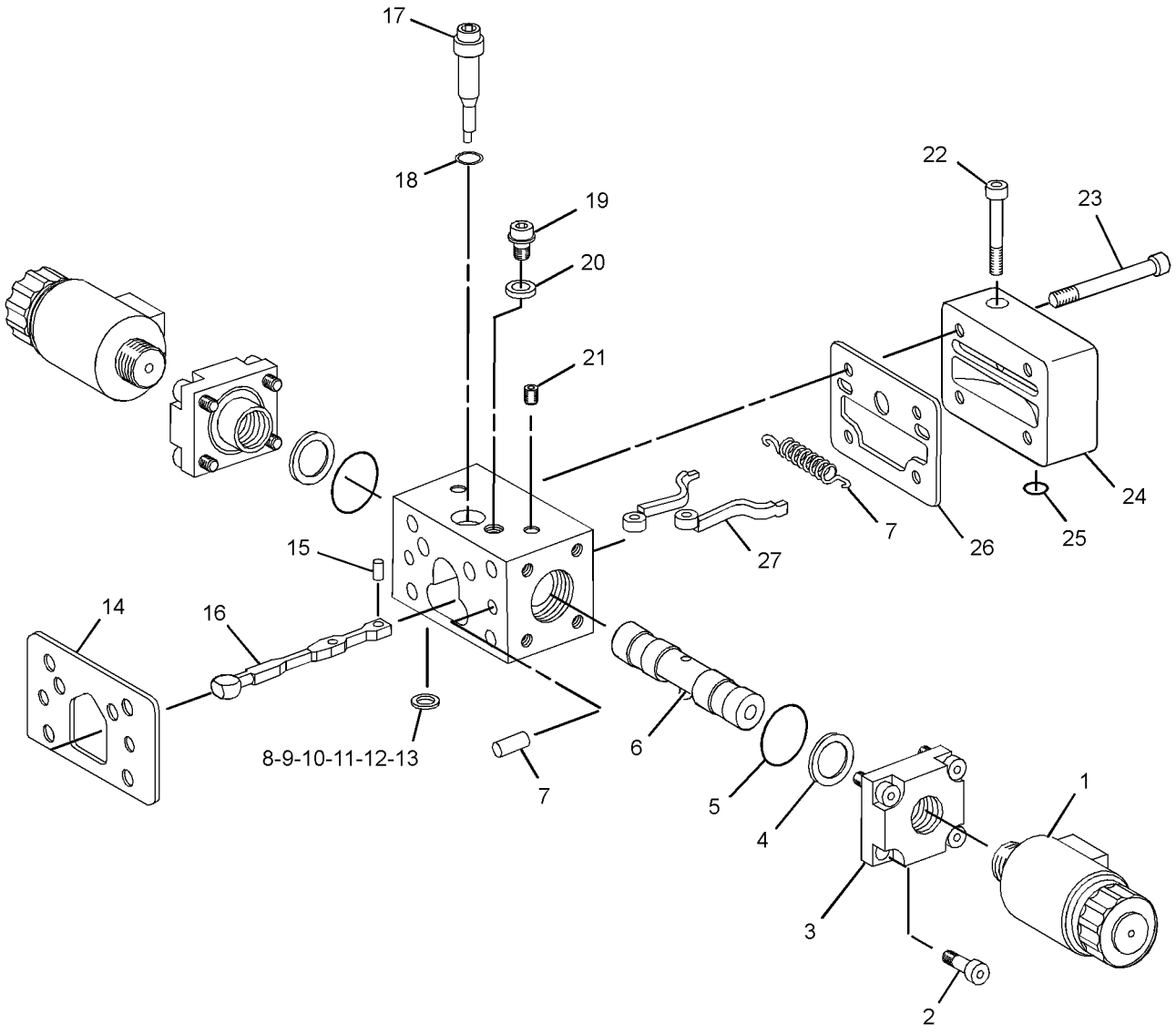

GRAPHIC #1 **<END>** g01203614

285-5240 VALVE GP-PUMP CONTROL–
PRESSURE, FLOW COMPENSATOR–IMPLEMENT, HYDRAULIC FAN
S/N: DHA1-UP; FBH1-UP
PART OF 260-6781 PUMP GP-PISTON & GEAR
AN ATTACHMENT

SMCS-5455 **i02580009**

NOTE	REF NO	GRAPHIC REF	PART NUMBER	QTY	PART NAME 1 2 3 4 5 6 (PRODUCT LEVEL)	SEE PAGE
M	1	1	**8T-8442**	4	BOLT-SOCKET HEAD (M6X1X30-MM)	
	2	1	**280-7870**	1	GASKET	
J	3	1	**6E-6528**	2	SEAL	
	4	1	**9S-8002**	1	PLUG-O-RING	
	5	1	**3J-7354**	5	SEAL-O-RING	
J	6	1	**033-6043**	1	SEAL-O-RING	
J	7	1	**6V-6339**	1	SEAL-O-RING	
					AVAILABLE REPAIR KIT(S):	
J			**293-8350**	1	KIT-SEAL (FLOW COMPENSATOR)	
					(INCLUDES SEAL-O-RINGS & BACK-UP RINGS)	

J-KIT MARKED J SERVICES PARTS MARKED J
M-METRIC PART

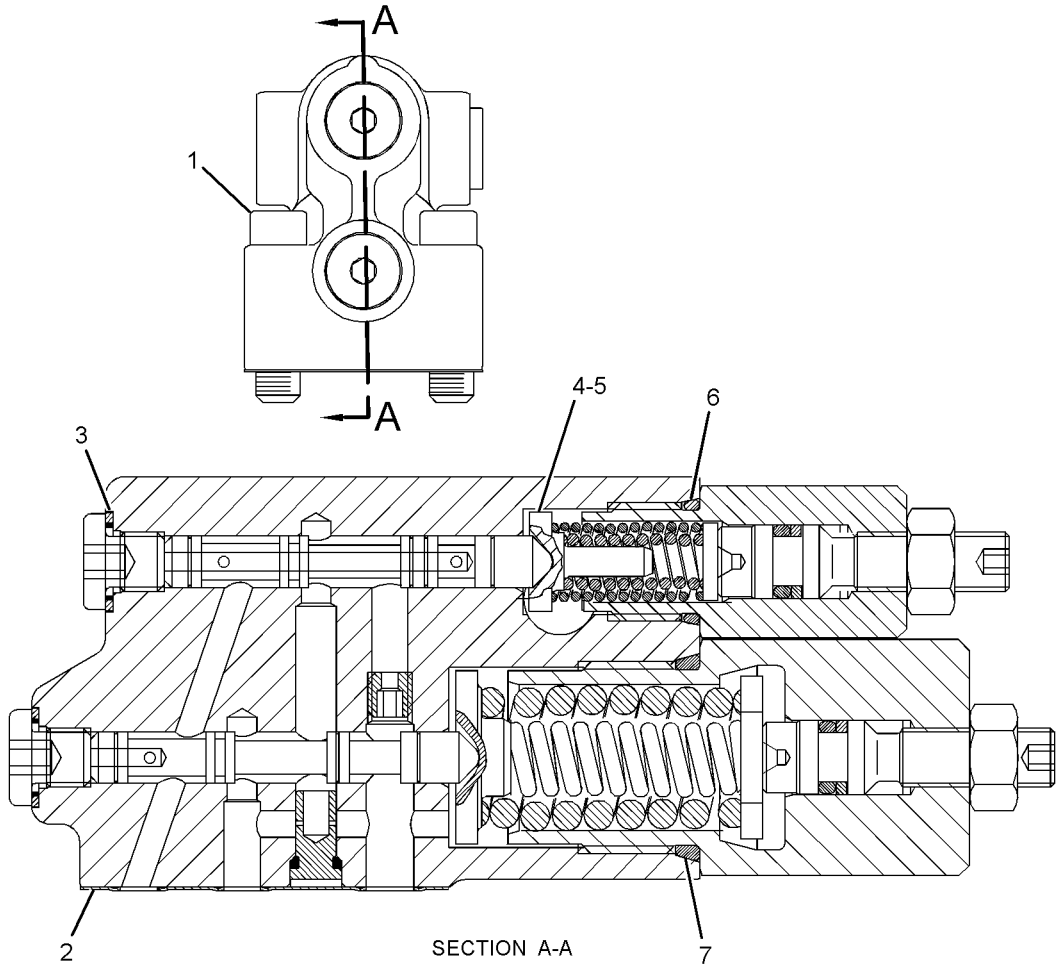

GRAPHIC #1 **<END>** g01297140

257-7726 VALVE GP-RELIEF—DEAD ENGINE LOWER, IMP PILOT

S/N: DHA1-UP; FBH1-UP
PART OF 266-2581, 320-3629 VALVE GP-CONTROL
AN ATTACHMENT

SMCS-5069, 5117 **i02581859**

NOTE	REF NO	GRAPHIC REF	PART NUMBER	QTY	PART NAME 1 2 3 4 5 6 (PRODUCT LEVEL)	SEE PAGE
	1	1	**169-1616**	1	RING-BACKUP	
	2	1	**095-1751**	1	SEAL-O-RING	
	3	1	**8J-2413**	1	SEAL-O-RING	

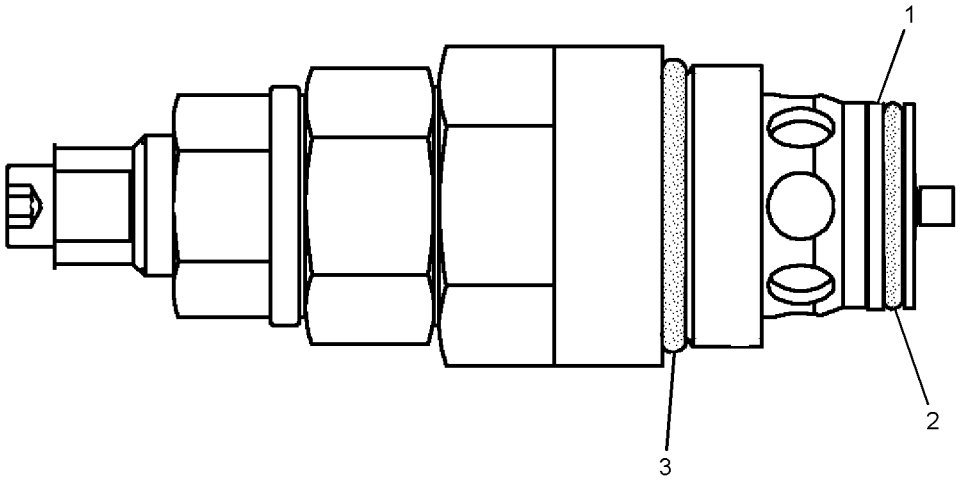

GRAPHIC #1 **<END>** g01296819

257-7732 VALVE GP-RELIEF–IMPLEMENT PILOT OIL

S/N: DHA1-UP; FBH1-UP

PART OF 266-2581, 320-3629 VALVE GP-CONTROL

AN ATTACHMENT

SMCS-5069, 5117 **i02581855**

NOTE	REF NO	GRAPHIC REF	PART NUMBER	QTY	PART NAME 1 2 3 4 5 6 (PRODUCT LEVEL)	SEE PAGE
	1	1	**169-1616**	1	RING-BACKUP	
	2	1	**095-1751**	1	SEAL-O-RING	
	3	1	**8J-2413**	1	SEAL-O-RING	

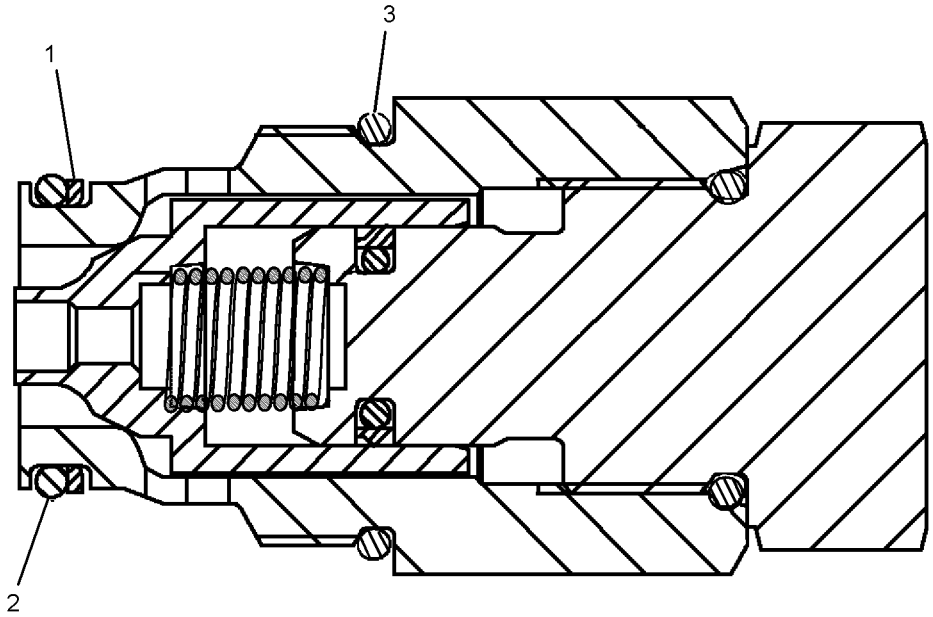

GRAPHIC #1 **<END>** g01296837

266-3593 VALVE GP-RELIEF–IMPLEMENT PILOT PRESSURE

S/N: DHA1-UP; FBH1-UP

PART OF 266-2583, 266-2584, 320-3631, 320-3632 VALVE GP-CONTROL AN ATTACHMENT

SMCS-5069, 5117 **i02582344**

NOTE	REF NO	GRAPHIC REF	PART NUMBER	QTY	PART NAME 1 2 3 4 5 6 (PRODUCT LEVEL)	SEE PAGE
	1	1	**169-1616**	1	RING-BACKUP	
	2	1	**095-1751**	1	SEAL-O-RING	
	3	1	**8J-2413**	1	SEAL-O-RING	

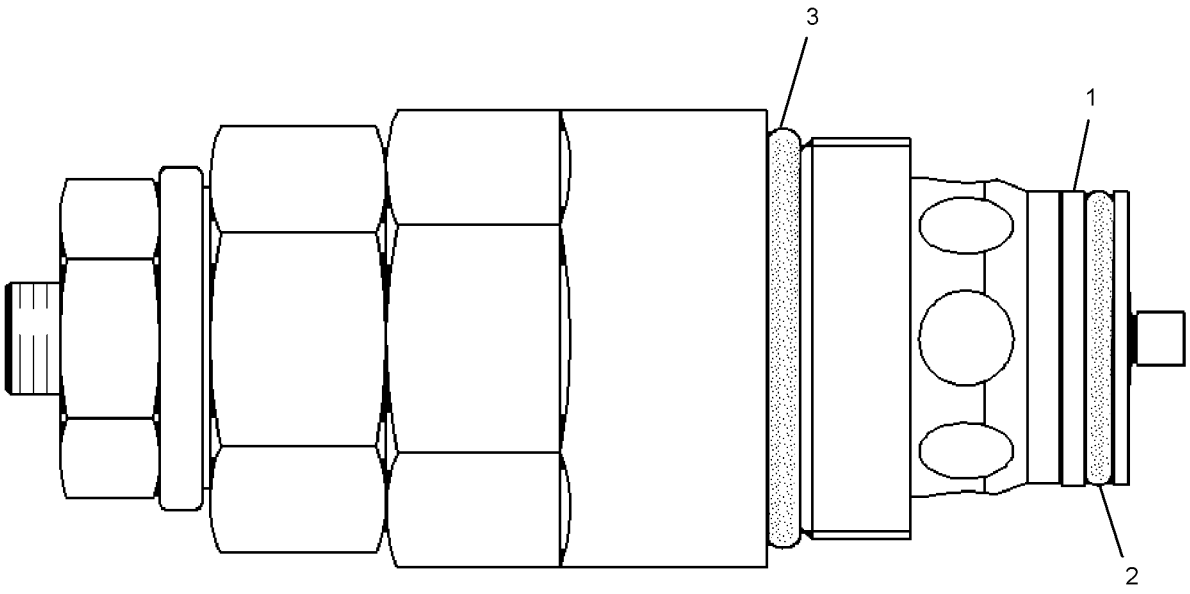

GRAPHIC #1 **<END>** g01303317

HYDRAULIC SYSTEM

189-8898 VALVE GP-SOLENOID

S/N: DHA1-UP; FBH1-UP
24-VOLT
PART OF 266-2273 MANIFOLD & SOLENOID GP-CONTROL
AN ATTACHMENT

SMCS-5479 **i02730865**

NOTE	REF NO	GRAPHIC REF	PART NUMBER	QTY	PART NAME 1 2 3 4 5 6 (PRODUCT LEVEL)	SEE PAGE
	1	1	**226-9622**	1	COIL AS-SOLENOID (24-VOLT)	
	2	1	**164-2108**	1	WASHER (13.03X25.4X2.38-MM THK)	
	3	1	**218-2373**	1	NUT (1/2-28-THD)	
					PARTS SHOWN IN GRAPHIC(S) WITHOUT A REFERENCE NUMBER ARE NOT SERVICED SEPARATELY	

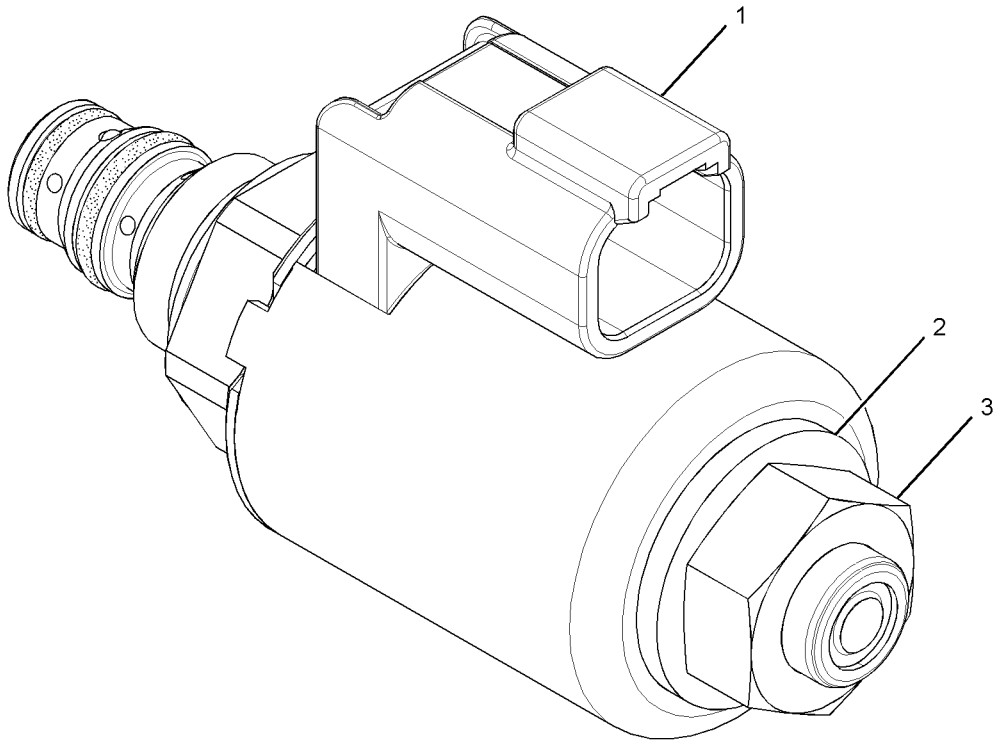

GRAPHIC #1 **<END>** g01388058

211-2092 VALVE GP-SOLENOID

S/N: DHA1-UP; FBH1-UP
24-VOLT
PART OF 252-7008, 285-7460 MANIFOLD GP-CONTROL
AN ATTACHMENT

SMCS-5479 **i02395107**

NOTE	REF NO	GRAPHIC REF	PART NUMBER	QTY	PART NAME 1 2 3 4 5 6 (PRODUCT LEVEL)	SEE PAGE
	1	1	**123-3132**	1	RING-BACKUP	
	2	1	**8L-2779**	1	SEAL-O-RING	
	3	1	**230-0913**	1	COIL AS	
	4	1	**033-6028**	1	SEAL-O-RING	

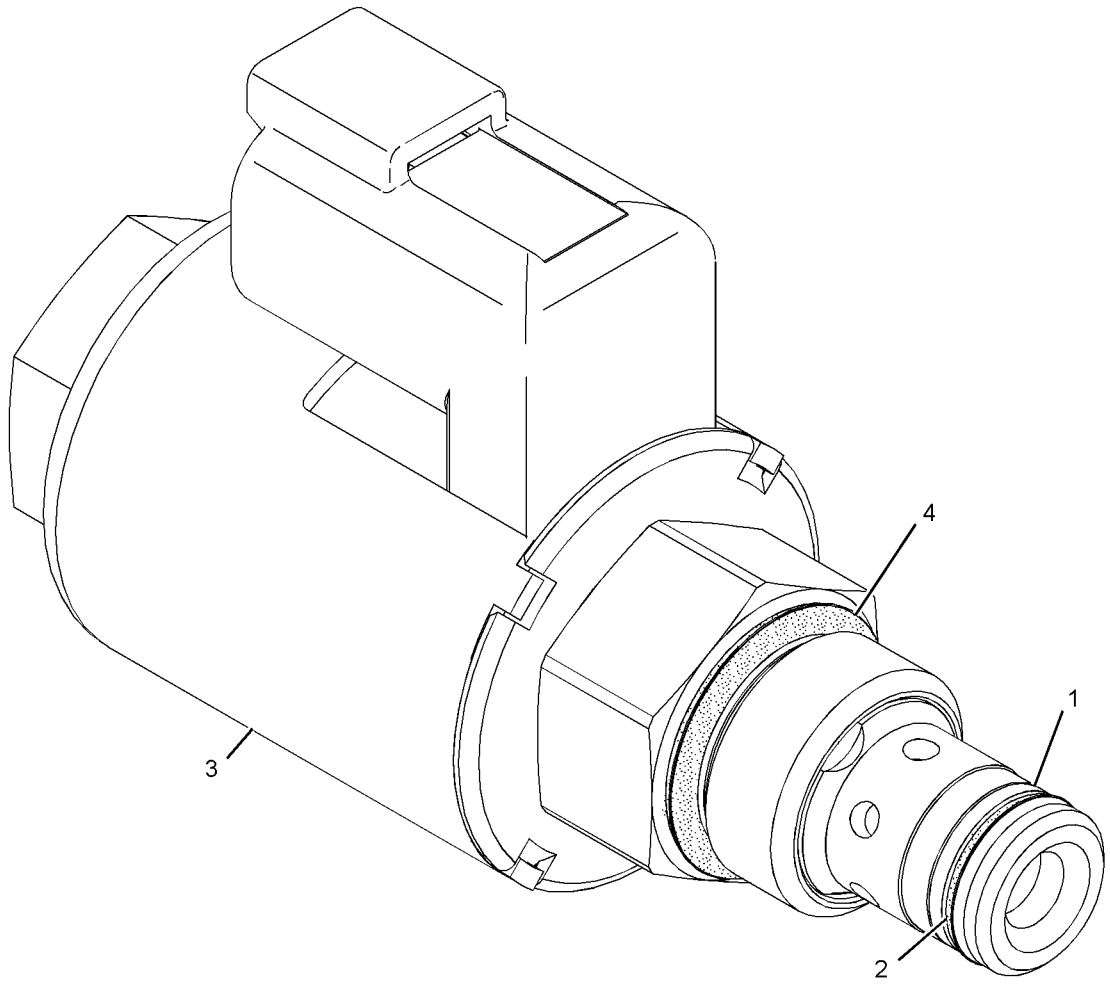

GRAPHIC #1 **<END>** g01181806

HYDRAULIC SYSTEM

252-2237 VALVE GP-SOLENOID

S/N: DHA1-UP; FBH1-UP
24-VOLT
PART OF 267-6709 MANIFOLD & VALVE GP

SMCS-4282, 4804, 5479 **i03021085**

NOTE	REF NO	GRAPHIC REF	PART NUMBER	QTY	PART NAME 1 2 3 4 5 6 (PRODUCT LEVEL)	SEE PAGE
	1	1	**245-1181**	1	FLANGE	
					AVAILABLE REPAIR KIT(S):	
			245-1912	1	KIT-SEAL (SOLENOID VALVE)	
					(INCLUDES SEALS)	

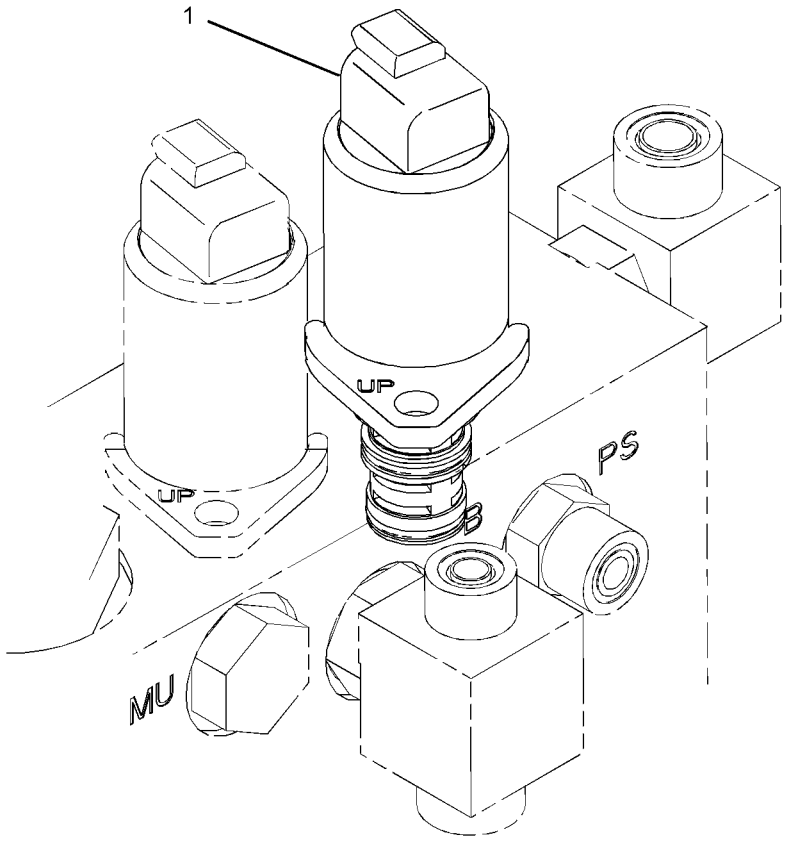

GRAPHIC #1 **<END>** g01199604

302-8149 VALVE GP-SOLENOID—WITH HARDWARE

S/N: DHA1-UP; FBH1-UP
24-VOLT
PART OF 302-8157 ACTUATOR GP-HYDRAULIC
AN ATTACHMENT

SMCS-5479 **i02995325**

NOTE	REF NO	GRAPHIC REF	PART NUMBER	QTY	PART NAME 1 2 3 4 5 6 (PRODUCT LEVEL)	SEE PAGE
	1	1	**324-3294**	1	VALVE GP-SOLENOID (24 VDC) (WITHOUT HARDWARE)	

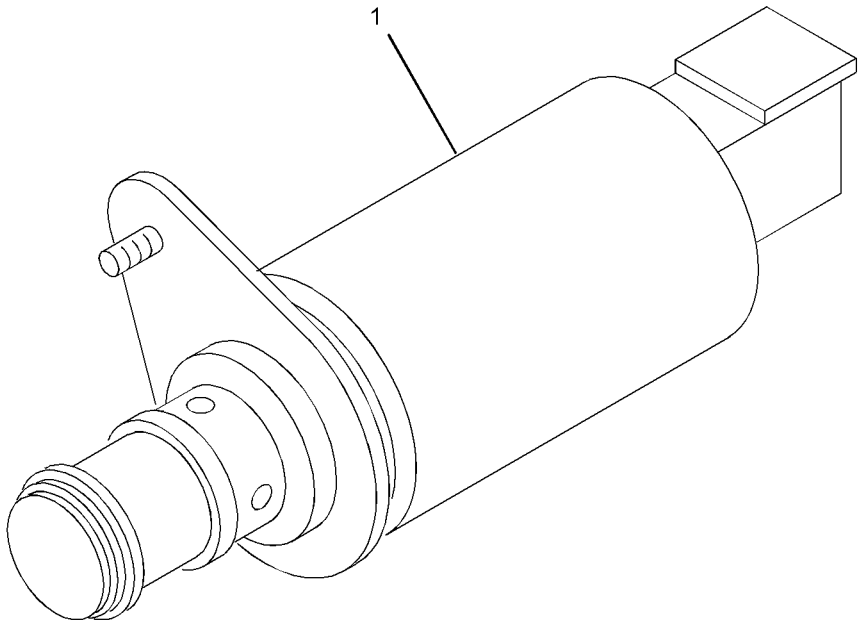

GRAPHIC #1 **<END>** g01519941

240-1530 C-FRAME GP-POWER ANGLING—FINE GRADING

S/N: DHA1-UP; FBH1-UP
PART OF 278-2470 C-FRAME GP-POWER ANGLING
ALSO AN ATTACHMENT

SMCS-6063 **i02875346**

NOTE	REF NO	GRAPHIC REF	PART NUMBER	QTY	PART NAME 1 2 3 4 5 6 (PRODUCT LEVEL)	SEE PAGE
	1	1	**8G-5747**	8	SPACER (45X50X15-MM THK)	
	2	1	**8T-1482**	4	WASHER-HARD (26X50X8-MM THK)	
	3	1	**089-8249**	2	SPACER (64X72X13-MM THK)	
	4	1	**104-4816**	2	SHIM (35-MM THK)	
	5	1	**104-4817**	1	PIN	
	6	1	**104-7391**	1	CAP	
	7	1	**104-7434**	1	RETAINER	
	8	1	**104-7498**	2	RETAINER	
	9	1	**105-2058**	1	BRACKET AS	
	10	1	**124-5234**	4	RETAINER	
	11	1	**124-5235**	6	SHIM (0.8-MM THK)	
	12	1	**124-5741**	4	PIN	
	13	1	**147-4359**	1	PIN	
	14	1	**160-5692**	1	SPACER (60.5X76.5X186-MM THK)	
	15	1	**161-2114**	1	PIN	
	16	1	**240-1531**	1	FRAME AS-BULLDOZER	
	16A	1	**147-4357**	1	BEARING-SLEEVE	
	16B	1	**240-1553**	2	BEARING-SLEEVE	
	17	1	**240-1555**	2	PIN	
	18	1	**240-1556**	2	PLATE	
B	19	1	**276-4485**	8	SPACER	
	20	1	**7K-9210**	4	SEAL-LIP TYPE	
M	21	1	**298-2764**	4	BOLT (M24X3X190-MM)	
M	22	1	**7X-2562**	5	BOLT (M20X2.5X45-MM)	
	23	1	**8T-4123**	3	WASHER (22X35X3.5-MM THK)	
M	24	1	**8T-4139**	12	BOLT (M12X1.75X30-MM)	
M	25	1	**8T-4193**	4	BOLT (M16X2X50-MM)	
	26	1	**9X-8257**	4	WASHER (17.5X30X3.5-MM THK)	

B-USE AS REQUIRED
M-METRIC PART

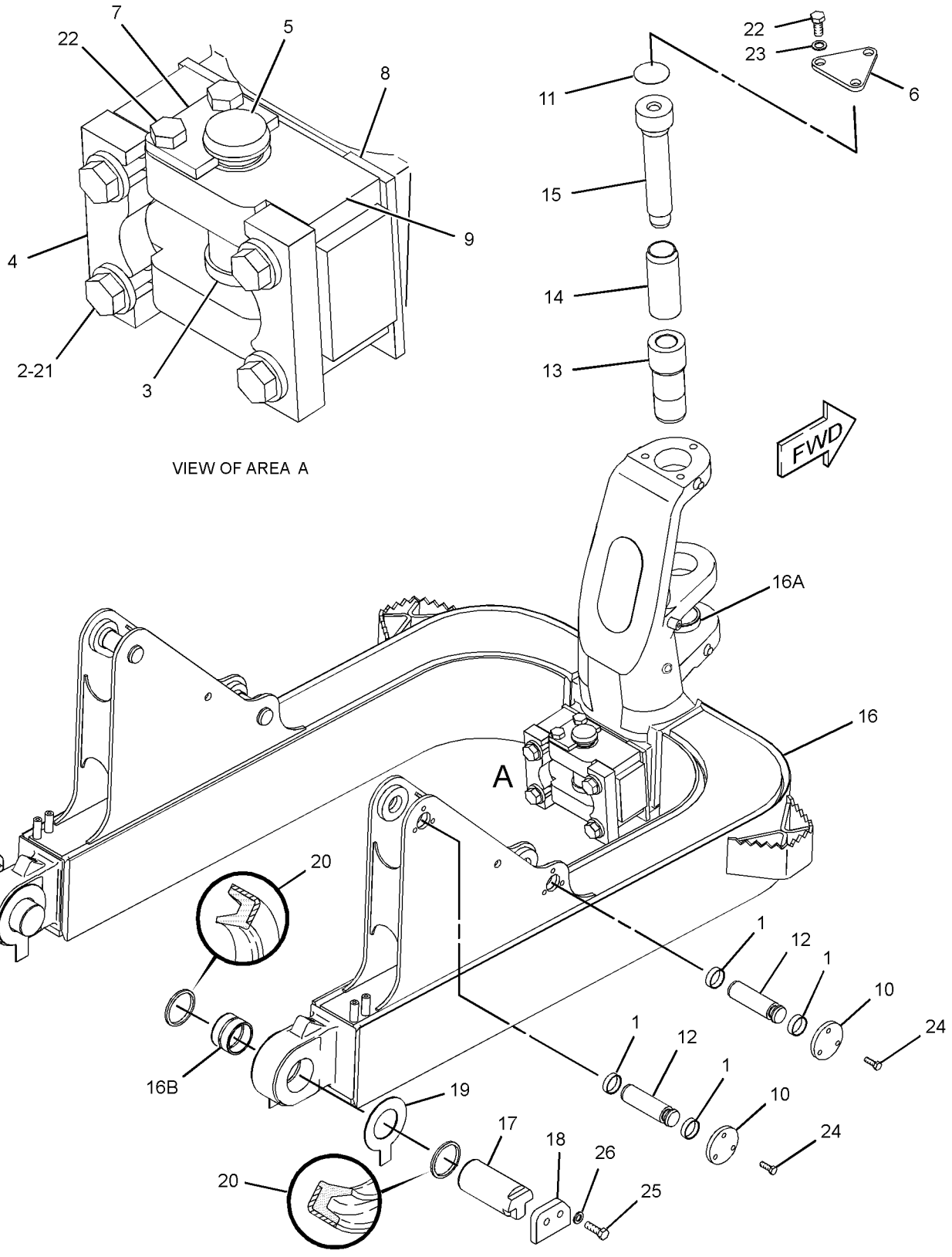

GRAPHIC #1 **<END>** g01431121

278-2470 C-FRAME GP-POWER ANGLING–FINE GRADING

S/N: DHA1-UP; FBH1-UP
PART OF 206-7270 CHASSIS AR
ALSO AN ATTACHMENT

SMCS-6063 **i02662187**

NOTE	REF NO	GRAPHIC REF	PART NUMBER	QTY	PART NAME 1 2 3 4 5 6 (PRODUCT LEVEL)	SEE PAGE
Y	1	1	**104-7425**	1	LINK GP-PITCH	630
Y	2	1	*240-1506*	1	PIN GP-CYLINDER	571
Y	3	1	*240-1530*	1	C-FRAME GP-POWER ANGLING	627
Y	4	1	*250-6999*	1	LINES GP-BULLDOZER	540
Y	5	1	*252-0452*	1	LINES GP-ANGLE & TILT	532
Y	6	1	**269-2728**	2	CYLINDER GP-ANGLING	517
Y	7	1	**269-2729**	1	CYLINDER GP-BULLDOZER TILT	520
Y	8	1	**269-2730**	2	CYLINDER GP-BULLDOZER LIFT	519

Y-SEPARATE ILLUSTRATION

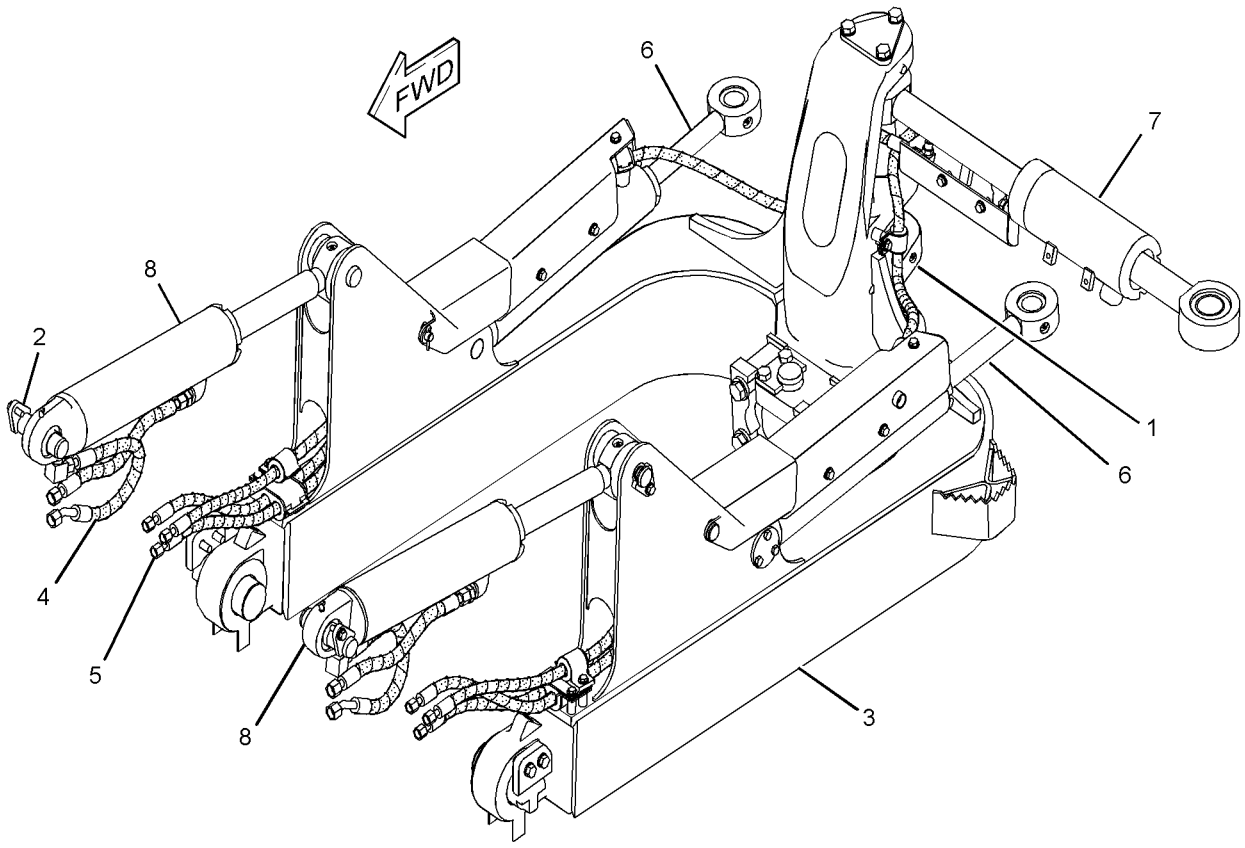

GRAPHIC #1 **<END>** g01197899

104-7425 LINK GP-PITCH—FINE GRADING

S/N: DHA1-UP; FBH1-UP
PART OF 278-2470 C-FRAME GP-POWER ANGLING
ALSO AN ATTACHMENT

SMCS-6079, 6081 **i01279163**

NOTE	REF NO	GRAPHIC REF	PART NUMBER	QTY	PART NAME 1 2 3 4 5 6 (PRODUCT LEVEL)	SEE PAGE
	1	1	**3B-8489**	2	FITTING-GREASE	
	2	1	**7J-1309**	2	BEARING	
	3	1	**1S-3311**	2	RING-RETAINING	
	4	1	**152-3895**	1	LINK	

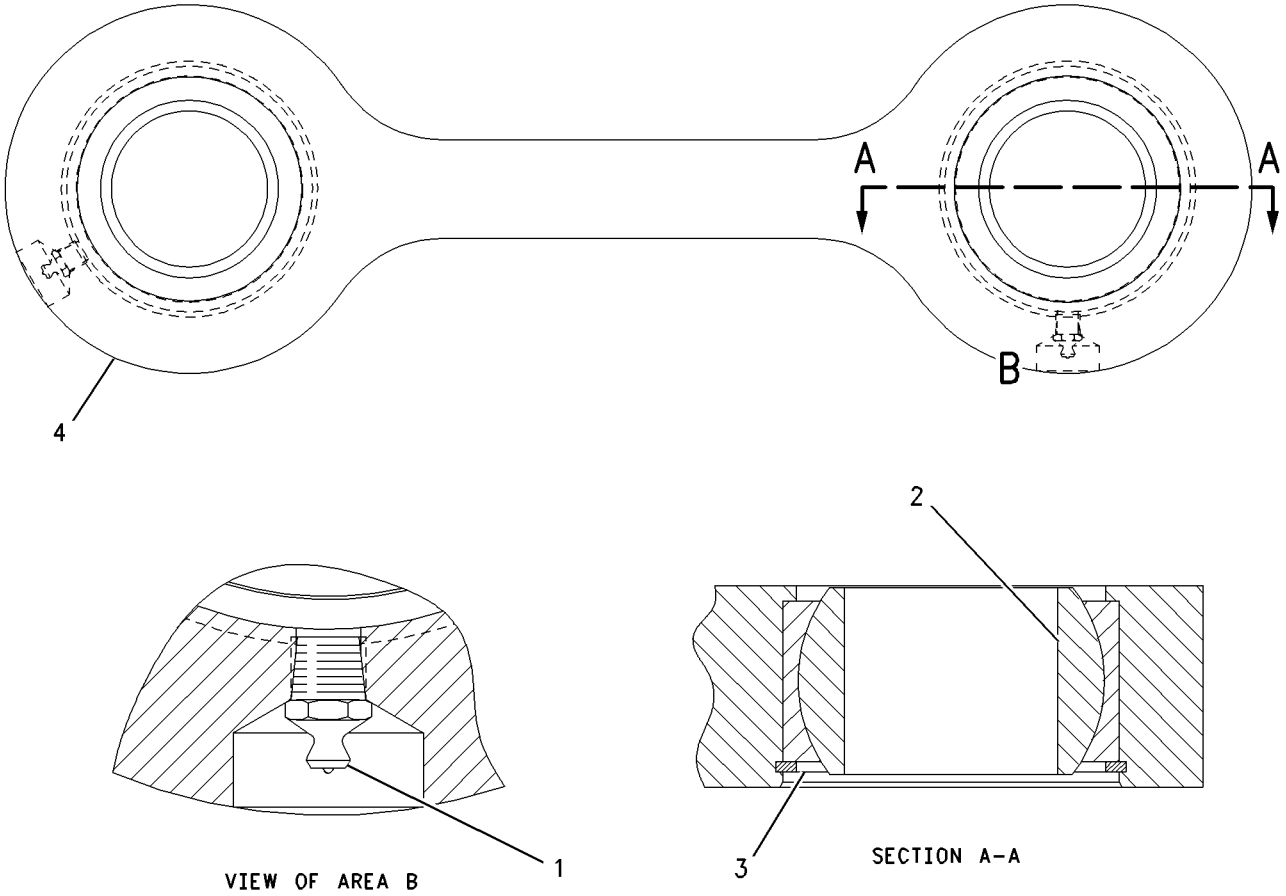

GRAPHIC #1 **<END>** g00678473

OPERATOR STATION

247-6511 ACCESSORY GP-CAB

S/N: DHA1-UP; FBH1-UP

PART OF 240-6233 CAB GP-ENCLOSED ROPS, 267-2550 CAB GP-FORESTRY

AN ATTACHMENT

SMCS-1408, 1421, 7301 **i02841376**

NOTE	REF NO	GRAPHIC REF	PART NUMBER	QTY	PART NAME 1 2 3 4 5 6 (PRODUCT LEVEL)	SEE PAGE
	1	1	**6C-9003**	2	STOP	
	2	1	**7G-4824**	2	STRAP	
	3	1	**8E-7791**	2	STRAP	
	4	1	**180-3153**	1	LATCH AS-DOOR (ROTARY) (RH)	
	5	1	**180-3154**	1	LATCH AS-DOOR (ROTARY) (LH)	
	6	1	**244-7094**	15	PLUG	
	7	1	**247-6658**	1	COVER AS (REAR, LH)	
	8	1	**247-6660**	1	COVER AS (REAR, RH)	
	9	1	**259-1060**	1	COVER AS (LIGHT)	
	10	1	**276-6855**	1	PLATE AS	
	11	1	**276-6856**	1	PLATE AS	
	12	1	**281-7631**	2	STRIKER	
	13	1	**286-5809**	1	COVER (RH)	
	14	1	**286-5810**	1	COVER (LH)	
	15	1	**288-0882**	2	PLATE	
	16	1	**289-8247**	1	SEAL	
	17	1	**296-3854**	1	PLATE AS	
	18	1	**296-7897**	1	PLATE AS	
	19	1	**101-2867**	5	WASHER-HARD (7.2X25X2-MM THK)	
M	20	1	**5C-7261**	2	NUT (M8X1.25-THD)	
	21	1	**7X-7729**	11	WASHER (11X25X3-MM THK)	
M	22	1	**8T-4190**	4	BOLT (M16X2X25-MM)	
M	23	1	**8T-4195**	11	BOLT (M10X1.5X30-MM)	
	24	1	**8T-4224**	4	WASHER-HARD (8.8X16X2-MM THK)	
M	25	1	**8T-4908**	4	BOLT (M8X1.25X25-MM)	
M	26	1	**8T-4971**	8	BOLT (M6X1X30-MM)	
M	27	1	**9X-2041**	16	SCREW-TRUSS HEAD (M10X1.5X20-MM)	
M	28	1	**9X-2042**	11	SCREW-TRUSS HEAD (M6X1X12-MM)	
M	29	1	**9X-2045**	2	SCREW-TRUSS HEAD (M6X1X20-MM)	
	30	1	**9X-8256**	8	WASHER (6.6X12X2-MM THK)	
	31	1	**9X-8257**	4	WASHER (17.5X30X3.5-MM THK)	

M-METRIC PART

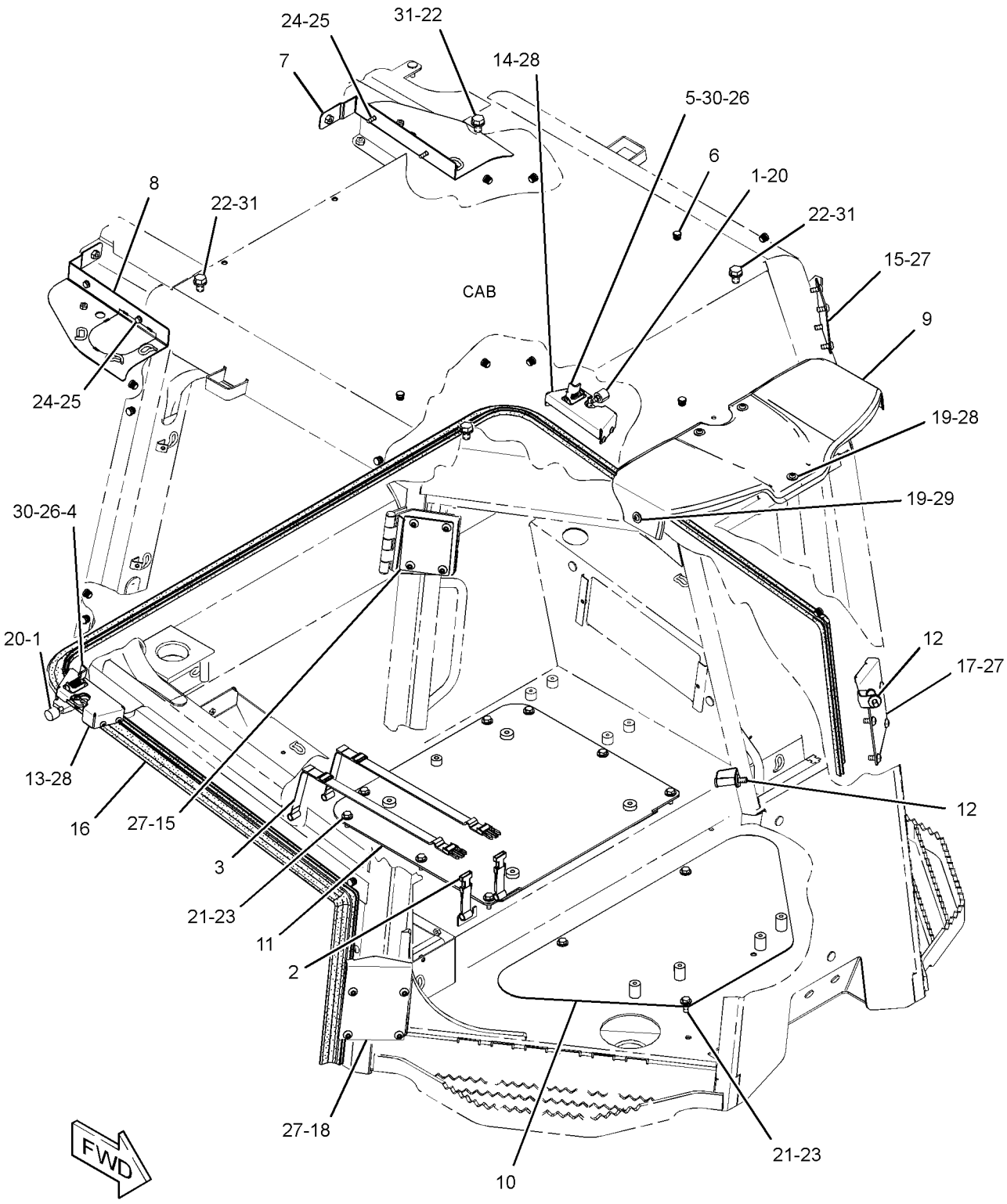

GRAPHIC #1 **<END>** g01441101

294-7779 ADJUSTER GP-SEAT

S/N: DHA1-UP; FBH1-UP

PART OF 295-4434, 295-4435, 295-4436, 301-3165 SEAT GP

AN ATTACHMENT

SMCS-7321 **i02677926**

NOTE	REF NO	GRAPHIC REF	PART NUMBER	QTY	PART NAME 1 2 3 4 5 6 (PRODUCT LEVEL)	SEE PAGE
	1	1	**4B-4276**	2	WASHER (7X16X1.6-MM THK)	
	2	1	**4V-8256**	2	SPRING	
	3	1	**132-0338**	4	WASHER-PLASTIC (13X31.7X0.8-MM THK)	
	4	1	**249-2844**	2	WASHER (12.7X31.7X1-MM THK)	
	5	1	**262-0779**	1	LATCH	
	6	1	**262-0780**	1	LATCH	
	7	1	**262-0781**	1	ROD	
	8	1	**262-0785**	1	LEVER	
	9	1	**262-0786**	2	BOLT-SHOULDER (3/8-16X0.49-IN)	
	10	1	**262-0787**	1	ROD	
	11	1	**293-2915**	1	LEVER	
	12	1	**293-9380**	1	ROD	
	13	1	**293-9381**	1	PLATE AS	
	14	1	**5V-1496**	2	RETAINER	
	15	1	**7Y-0468**	2	PIN-SPRING	

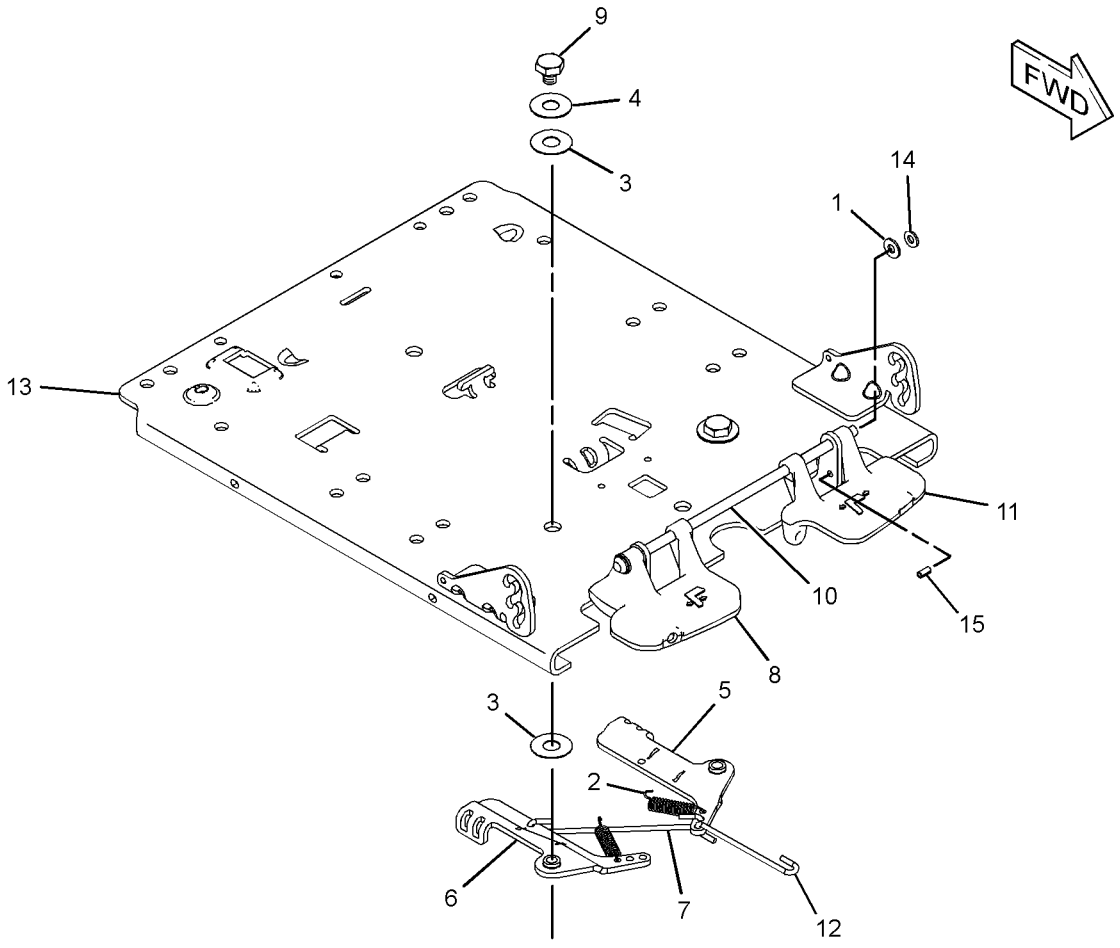

GRAPHIC #1 **<END>** g01346021

OPERATOR STATION

214-0783 AIR COMPRESSOR GP-SEAT–HEAVY-DUTY

S/N: DHA1-UP; FBH1-UP

OPTIONAL FIELD REPLACEMENT FOR 237-3970 STANDARD DUTY COMPRESSOR

SMCS-731S, 7324 **i03114240**

NOTE	REF NO	GRAPHIC REF	PART NUMBER	QTY	PART NAME 1 2 3 4 5 6 (PRODUCT LEVEL)	SEE PAGE
	1	1	**5P-4423**	1	ELBOW	
	2	1	**5P-4432**	1	ELBOW-AIR BRAKE	
	3	1	**175-5058**	1	MOUNT	
	4	1	**186-5107**	3	SCREW-DRIVE (8-16X1.25-IN)	
	5	1	**214-0784**	1	COMPRESSOR AS	

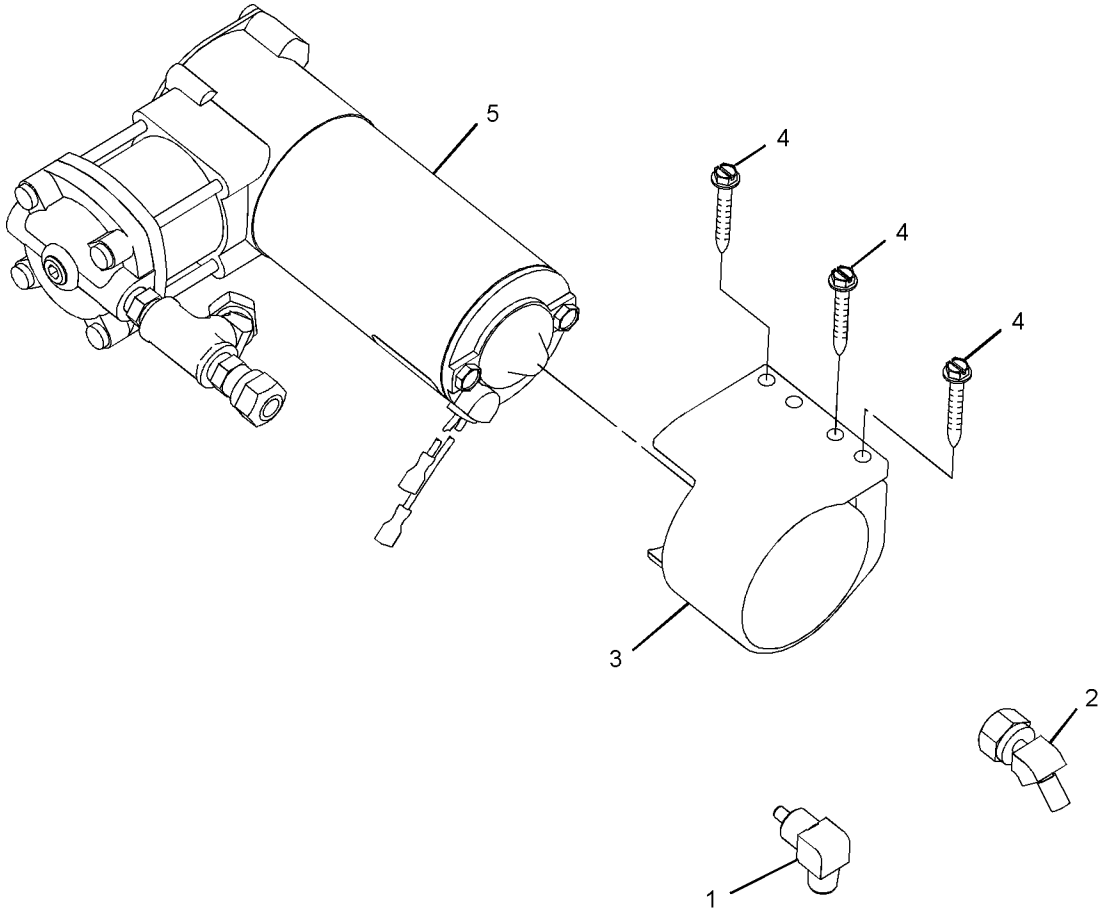

GRAPHIC #1 **<END>** g01040572

OPERATOR STATION

237-3970 AIR COMPRESSOR GP-SEAT

S/N: DHA1-UP; FBH1-UP
FOR OPTIONAL FIELD REPLACEMENT ORDER 214-0783 COMPRESSOR, 211-5358 CONDUIT (100-CM) & 5P-6010 TUBE (1-M), PROVIDES HEAVY DUTY SEAT COMPRESSOR
PART OF 291-7971 SUSPENSION GP-SEAT
AN ATTACHMENT

SMCS-731S, 7324 **i03114229**

NOTE	REF NO	GRAPHIC REF	PART NUMBER	QTY	PART NAME 1 2 3 4 5 6 (PRODUCT LEVEL)	SEE PAGE
					(NO SERVICED PARTS)	

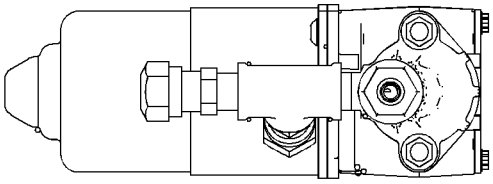

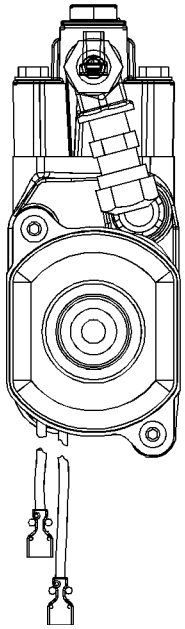

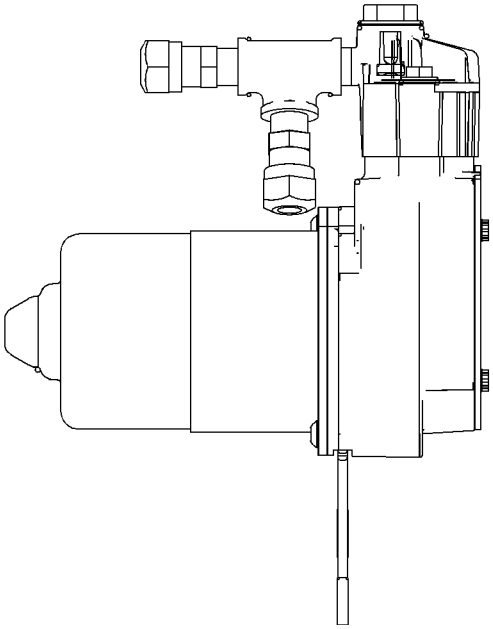

GRAPHIC #1 **<END>** g01040576

OPERATOR STATION

247-6507 AIR CONDITIONER GP

S/N: DHA1-UP; FBH1-UP
PART OF 240-6233 CAB GP-ENCLOSED ROPS, 267-2550 CAB GP-FORESTRY
AN ATTACHMENT

SMCS-7320 **i03706789**

NOTE	REF NO	GRAPHIC REF	PART NUMBER	QTY	PART NAME 1 2 3 4 5 6 (PRODUCT LEVEL)	SEE PAGE
	1	2	**288-3657**	2	THUMBSCREW (M6X1X10-MM)	
	2	2	**1K-4649**	1	SPACER (0.516X1X1-IN THK)	
	3	1	**5P-3929**	1	COUPLING AS-REFRIGERANT	
		1	**8F-9206**	1	SEAL-O-RING	
		1	**107-4397**	1	VALVE AS	
	4	1	**5P-3948**	1	COUPLING AS-REFRIGERANT	
		1	**7F-8607**	1	SEAL-O-RING	
		1	**107-4399**	1	VALVE AS	
	5	2	**9M-0164**	2	CLAMP-HOSE	
	7	1,2	**177-2215**	4	STRAP-DUAL CLAMP	
	8	1	**247-6648**	1	GRID	
	9	1	**252-8878**	1	DUCT AS-AIR	
	10	1	**253-3690**	1	COVER AS	
	11	1	**254-3202**	1	GASKET	
	12	1	**254-3203**	2	GASKET	
	13	2	**255-5153**	1	COVER-FILTER	
	14	2	**265-7981**	1	SWITCH AS-ROCKER (AIR CONDITIONER CONTROL)	
	15	2	**266-7765**	1	FILTER GP-CAB AIR (STANDARD EFFICIENCY)	
	16	2	**267-5243**	1	PANEL AS	
		2	**271-7312**	1	KNOB (TEMPERATURE CONTROL)	
		2	**285-7415**	1	KNOB (BLOWER FAN SPEED)	
Y	17	2	**268-0179**	1	AIR CONDITIONER GP	640
I	18	1	**269-1751**	1	HOSE AS	
I	19	1	**269-1752**	1	HOSE AS	
I	20	1	**269-1753**	1	HOSE AS	
	21	2	**271-6458**	1	BRACKET AS	
M		2	**6V-9632**	1	NUT-WELD (M6X1-THD)	
I	22	1	**271-6479**	1	HOSE AS	
	23	2	**271-7392**	1	TUBE AS-ORIFICE	
	24	1	**271-7421**	1	RECEIVER-REFRIGERANT DRYER	
	25	2	**275-6710**	2	RETAINER	
Y	26	1	**287-0554**	1	CONDENSER GP-REFRIGERANT	655
	27	1	**109-1633**	1	CLIP (SLOT)	
	28	1	**109-1634**	1	CLIP (TAB)	
	29	2	**223-3490**	1	CLIP	
	30	1	**4S-1962**	1	CLIP	
	31	1	**6C-9047**	3	WASHER (25.0X0.8X1.50-MM THK)	
	32	1	**7X-7729**	20	WASHER (11X25X3-MM THK)	
	33	2	**8D-9671**	1	CLIP	
	34	2	**8J-1256**	1	CLIP	
	35	2	**8M-2773**	2	CLIP	
	36	1,2	**8T-4121**	6	WASHER-HARD (11X21X2.5-MM THK)	
M	37	1,2	**8T-4133**	5	NUT (M10X1.5-THD)	
M	38	1	**8T-4137**	9	BOLT (M10X1.5X20-MM)	
M	39	1	**8T-4186**	4	BOLT (M10X1.5X40-MM)	
M	40	1	**8T-4195**	6	BOLT (M10X1.5X30-MM)	
	41	2	**8T-4205**	1	WASHER-HARD (7.2X14.5X2-MM THK)	
M	42	2	**8T-4970**	1	BOLT (M6X1X14-MM)	
M	43	1	**9X-2040**	2	SCREW-TRUSS HEAD (M10X1.5X25-MM)	
M	44	2	**9X-2045**	2	SCREW-TRUSS HEAD (M6X1X20-MM)	
	45	1	**9X-7380**	2	SEAL-O-RING	
	46	1,2	**9X-7381**	4	SEAL-O-RING	
	47	1	**9X-7382**	2	SEAL-O-RING	
	48	1	**9X-7383**	1	SEAL-O-RING	
	49	1	**9X-7384**	1	SEAL-O-RING	

247-6507 **AIR CONDITIONER GP** *(contd.)* **i03706789**

NOTE	REF NO	GRAPHIC REF	PART NUMBER	QTY	PART NAME 1 2 3 4 5 6 (PRODUCT LEVEL)	SEE PAGE
	50	1	**9X-8250**	4	CLIP	
E	51	1	**8C-5064**		CONDUIT-FLEXIBLE (276-CM)	
E	51A	1	**8C-5064**		CONDUIT-FLEXIBLE (145-CM)	
P	52	2	**242-4885**		HOSE (1.3-DM)	
E	53	1	**247-6845**		SEAL (14-CM EACH)	
	54	2	**301-5627**	2	TUBE AS	
	55	2	**300-3665**	2	GROMMET	

E-ORDER BY THE CENTIMETER
I-REFER TO HYDRAULIC INFORMATION SYSTEM
M-METRIC PART
P-ORDER BY THE DECIMETER
Y-SEPARATE ILLUSTRATION

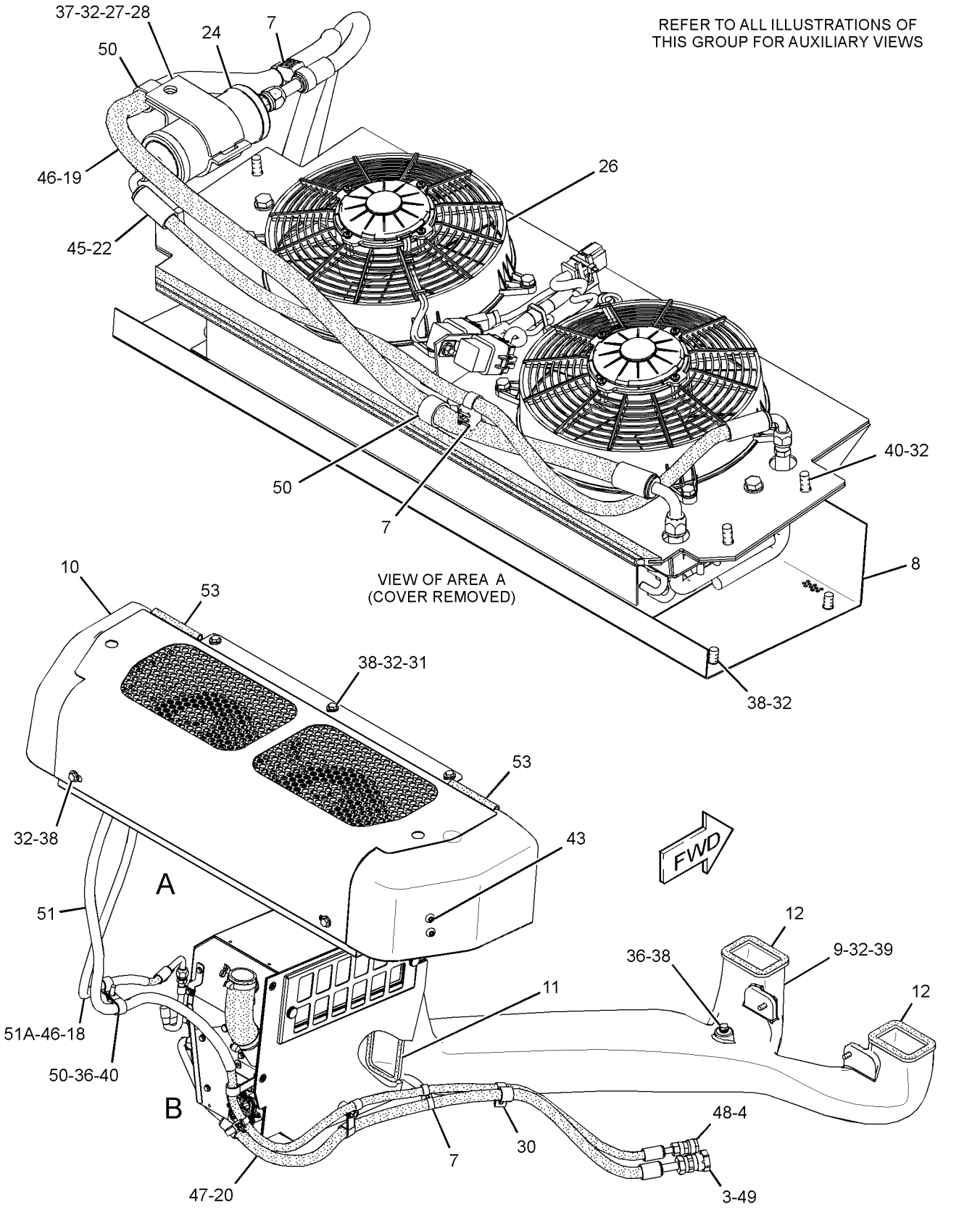

GRAPHIC #1

g01523172

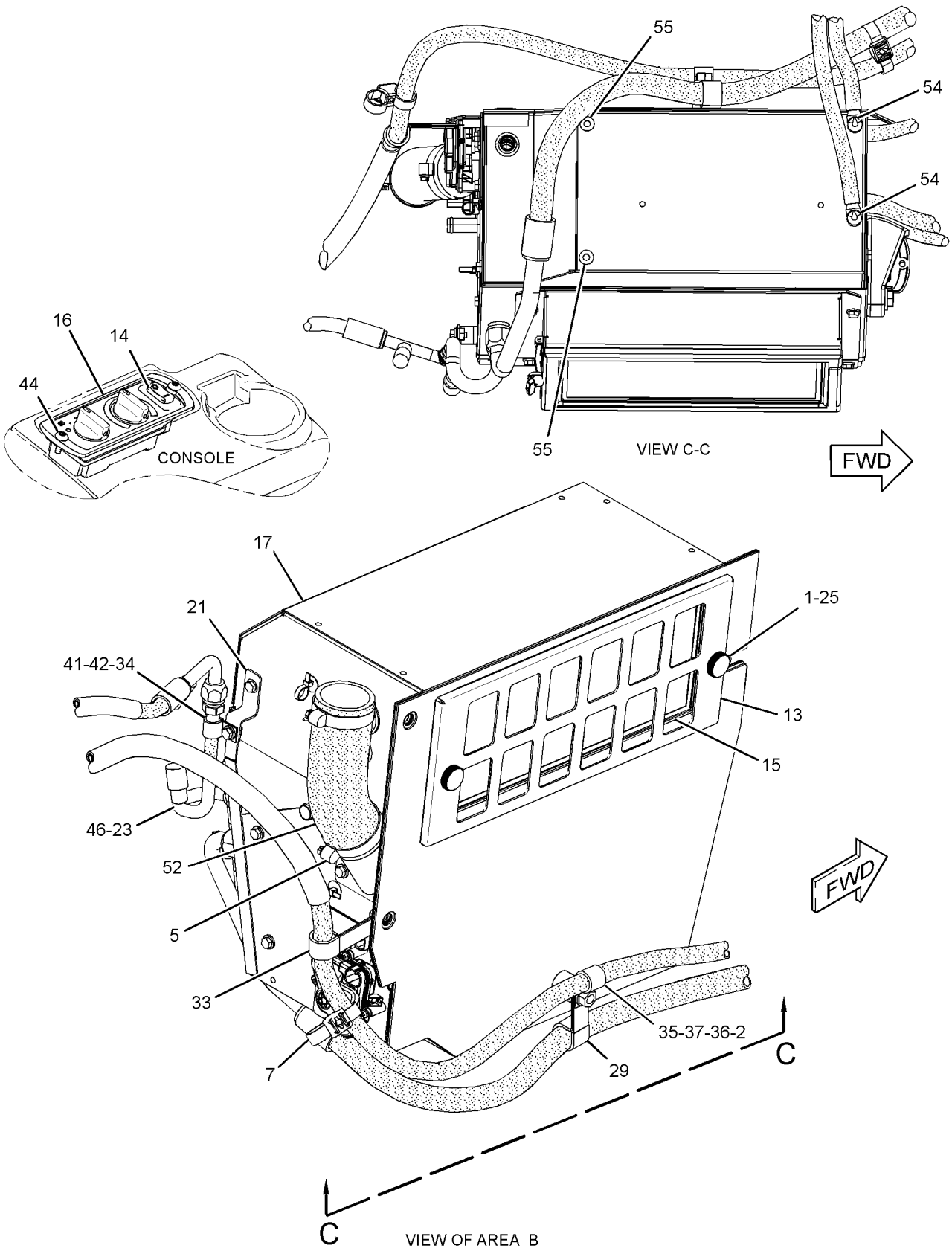

GRAPHIC #2

<END>

g01523160

OPERATOR STATION

268-0179 AIR CONDITIONER GP

S/N: DHA1-UP; FBH1-UP
PART OF 247-6507 AIR CONDITIONER GP
AN ATTACHMENT

SMCS-7320 **i03706796**

NOTE	REF NO	GRAPHIC REF	PART NUMBER	QTY	PART NAME 1 2 3 4 5 6 (PRODUCT LEVEL)	SEE PAGE
	1	1	**3E-5464**	1	THERMOSTAT (HVAC) (REFRIGERANT)	
	2	1	**131-3093**	1	BUSHING	
	3	1	**133-8714**	1	GROMMET	
	4	1	**134-3518**	2	TIE-PUSH MOUNT	
	5	1	**209-8217**	1	FILTER ELEMENT-CAB AIR (STANDARD EFFICIENCY)	
	6	1	**248-6772**	2	SCREW-MACHINE (8-16X7.75-IN)	
	7	1	**255-6210**	1	COIL AS-EVAPORATOR	
	8	1	**256-0761**	1	CASE AS-AIR CONDITIONER	
	9	1	**256-0762**	1	PLATE AS	
	10	1	**256-0770**	1	PLATE AS	
	11	1	**256-6454**	2	SENSOR GP-TEMPERATURE (AIR TEMPERATURE CONTROL)	
	13	1	**262-2814**	1	PLATE AS	
	16	1	**275-6707**	2	GROMMET	
	17	1	**277-7113**	1	PLATE AS	
	21	1	**275-6706**	1	MOTOR-BLOWER (24-VOLT, A/C, HEATER)	
	22	1	**277-9966**	1	PLATE AS	
Y	23	1	**277-9969**	1	HEATER GP-CAB	730
	24	1	**318-0815**	1	PLATE AS	
	25	1	**279-0850**	1	ACTUATOR (ELECTRONIC)	
	26	1	**096-6166**	2	WASHER-HARD (4.5X9X1-MM THK)	
	27	1	**3B-4501**	2	LOCKWASHER	
M	28	1	**5C-9553**	21	BOLT (M6X1X16-MM)	
	29	1	**111-4015**	1	GROMMET	
	30	1	**8C-8514**	2	SCREW-MACHINE (8-32X0.375-IN)	
	32	1	**8T-4205**	21	WASHER-HARD (7.2X14.5X2-MM THK)	
D	33	1	**6V-2496**		SEAL (0.2-M EACH)	
D	33A	1	**6V-2496**		SEAL (0.3-M EACH)	
D	33B	1	**6V-2496**		SEAL (0.1-M EACH)	
M	34	1	**283-8651**	7	BOLT (M4X0.7X10-MM)	
	35	1	**282-3653**	1	BRACKET	
	39	1	**266-7145**	1	DUCT AS	
	40	1	**256-0768**	1	PLATE AS	
M		1	**6V-9632**	6	NUT-WELD (M6X1-THD)	
M		1	**9X-2032**	2	NUT-WELD (M4X0.7-THD)	
	41	1	**151-5650**	2	PLUG	
	42	1	*282-3476*	1	RESISTOR AS	
		1	**282-3481**	1	PLATE AS	
		1	**280-9453**	3	SCREW-SELF-TAPPING (6X0.375-IN)	
	43	1	**278-3354**	1	FILM-INSTRUCTION (HVAC WATER, DRAINING, FILLING)	
	44	1	**255-6211**	1	HARNESS AS-MOTOR (BLOWER)	
		1	**155-2272**	1	PLUG AS-CONNECTOR (4-PIN)	
		1	**155-2270**	1	KIT-CONNECTING PLUG (2-PIN)	
					(INCLUDES PLUG AS, WEDGE, & INTERFACE SEAL)	
		1	**230-4010**	1	RECEPTACLE AS-CONNECTOR (12-PIN)	
	45	1	**8C-3756**	1	FILM-IDENTIFICATION (GROUP NO., SEQUENCE NO.) (CONDENSER)	
	46	1	**3S-2093**	3	STRAP-CABLE	
	47	1	**8T-4121**	1	WASHER-HARD (11X21X2.5-MM THK)	
M	48	1	**8T-4137**	1	BOLT (M10X1.5X20-MM)	
	49	1	**4P-7581**	1	CLIP	
J	50	1	**153-6932**	1	GASKET	

PARTS SHOWN IN GRAPHIC(S) WITHOUT A REFERENCE NUMBER ARE NOT SERVICED SEPARATELY

268-0179 AIR CONDITIONER GP *(contd.)* i03706796

NOTE	REF NO	GRAPHIC REF	PART NUMBER	QTY	PART NAME 1 2 3 4 5 6 (PRODUCT LEVEL)	SEE PAGE
					AVAILABLE REPAIR KIT(S):	
J			**285-8553**	1	KIT-GASKET (AIR CONDITIONER)	
					(INCLUDES GASKETS)	

D-ORDER BY THE METER
J-KIT MARKED J SERVICES PARTS MARKED J
M-METRIC PART
Y-SEPARATE ILLUSTRATION

268-0179 AIR CONDITIONER GP *(contd.)* i03706796

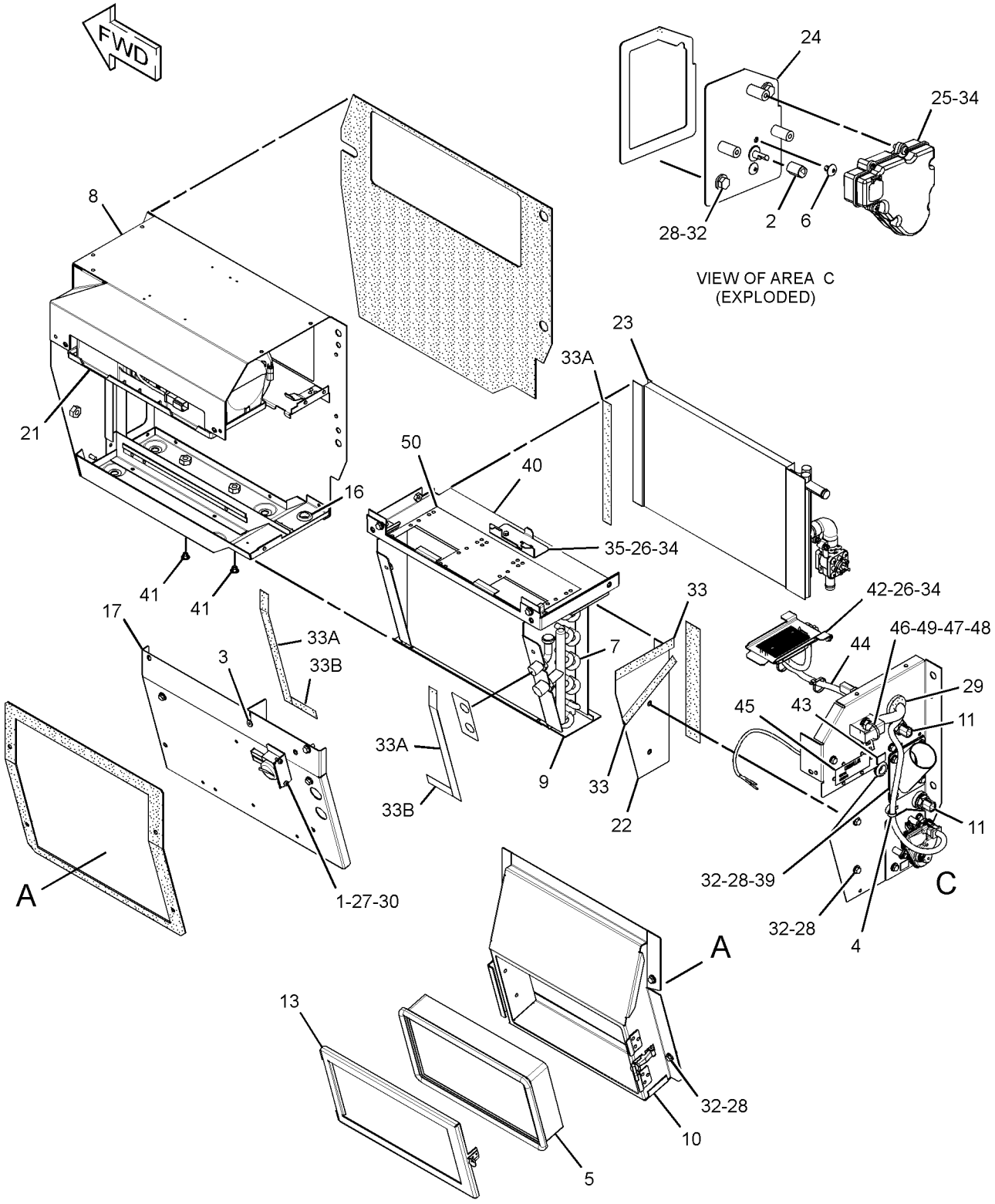

GRAPHIC #1 **<END>** g01417481

OPERATOR STATION

291-7980 ARM GP-SEAT SUSPENSION–CENTER

S/N: DHA1-UP; FBH1-UP
PART OF 291-7971 SUSPENSION GP-SEAT
AN ATTACHMENT

SMCS-7324 **i03706801**

NOTE	REF NO	GRAPHIC REF	PART NUMBER	QTY	PART NAME 1 2 3 4 5 6 (PRODUCT LEVEL)	SEE PAGE
	1	1	**291-7981**	1	ARM AS (INNER, RH)	
	2	1	**291-7984**	1	ARM AS (INNER, LH)	
	3	1	**291-7986**	1	PLATE AS	
	4	1	**291-7989**	2	PLATE	
	5	1	**291-7990**	2	BEARING	
	6	1	**291-7992**	1	SHAFT	
	7	1	**291-8030**	1	SPACER (19.3X25.4X225-MM THK)	
	8	1	**291-9310**	2	BELT-TETHER	
	9	1	**313-2794**	1	CLIP	
	10	1	**2B-2695**	4	BOLT (5/16-18X0.875-IN)	
	11	1	**6V-8189**	4	NUT (5/16-18-THD)	
	12	1	**6V-8801**	4	NUT (3/8-16-THD)	
	13	1	**7X-0289**	4	BOLT (3/8-16X1.875-IN)	
	14	1	**8T-4896**	8	WASHER-HARD (10.2X18.5X2.5-MM THK)	
	15	1	**9S-5282**	4	WASHER-HARD (8.8X14.5X2-MM THK)	

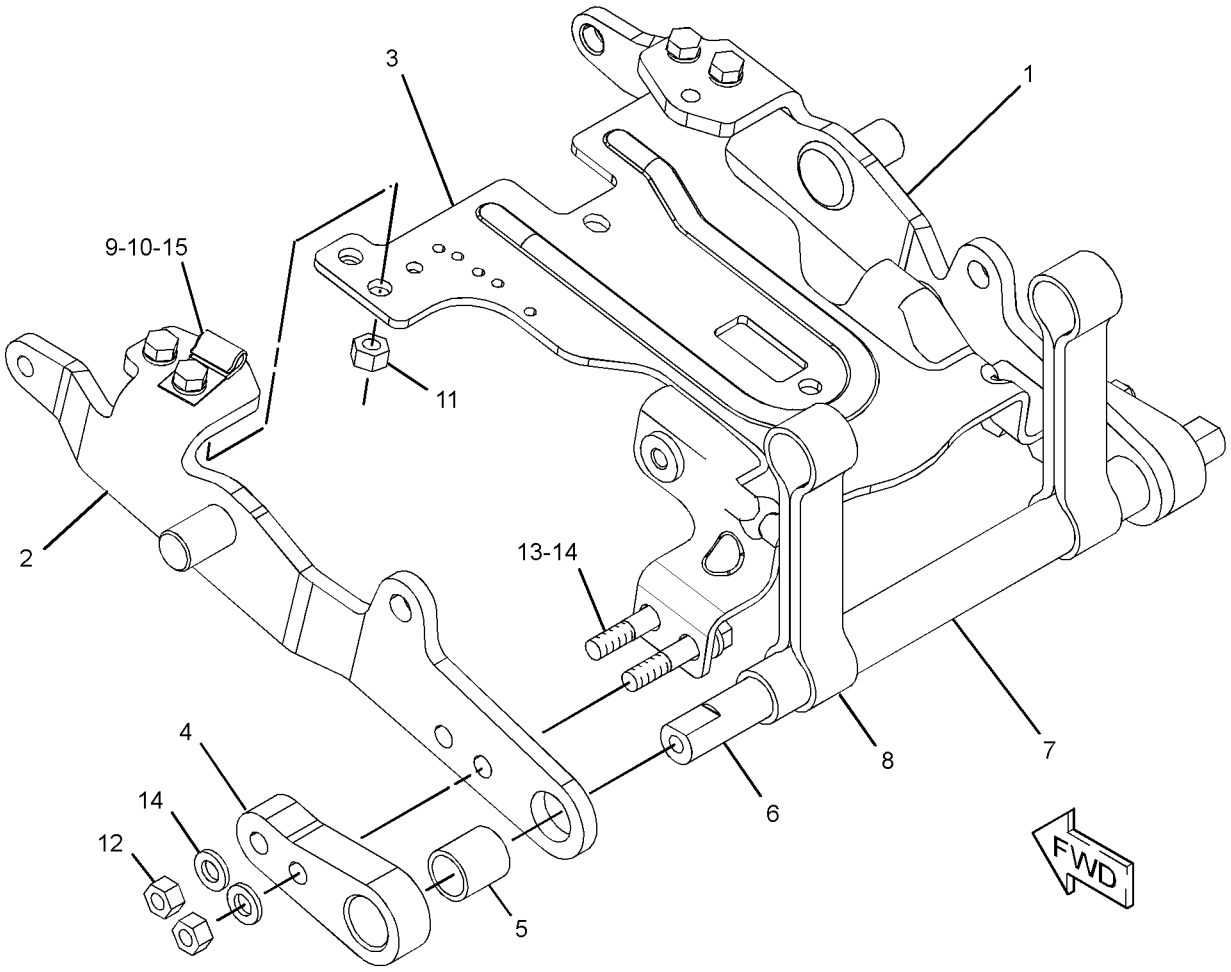

GRAPHIC #1 **<END>** g01995534

OPERATOR STATION

291-8004 ARM GP-SEAT SUSPENSION—OUTER, RH

S/N: DHA1-UP; FBH1-UP
PART OF 291-7971 SUSPENSION GP-SEAT
AN ATTACHMENT

SMCS-7324 **i03095640**

NOTE	REF NO	GRAPHIC REF	PART NUMBER	QTY	PART NAME 1 2 3 4 5 6 (PRODUCT LEVEL)	SEE PAGE
	1	1	**291-7990**	1	BEARING	
	2	1	**291-8005**	1	ARM AS (OUTER, RH)	
	3	1	**291-8008**	1	SPACER	
M	4	1	**5C-7261**	2	NUT (M8X1.25-THD)	
M	5	1	**8T-4197**	2	BOLT (M8X1.25X40-MM)	
	6	1	**8T-4224**	4	WASHER-HARD (8.8X16X2-MM THK)	

M-METRIC PART

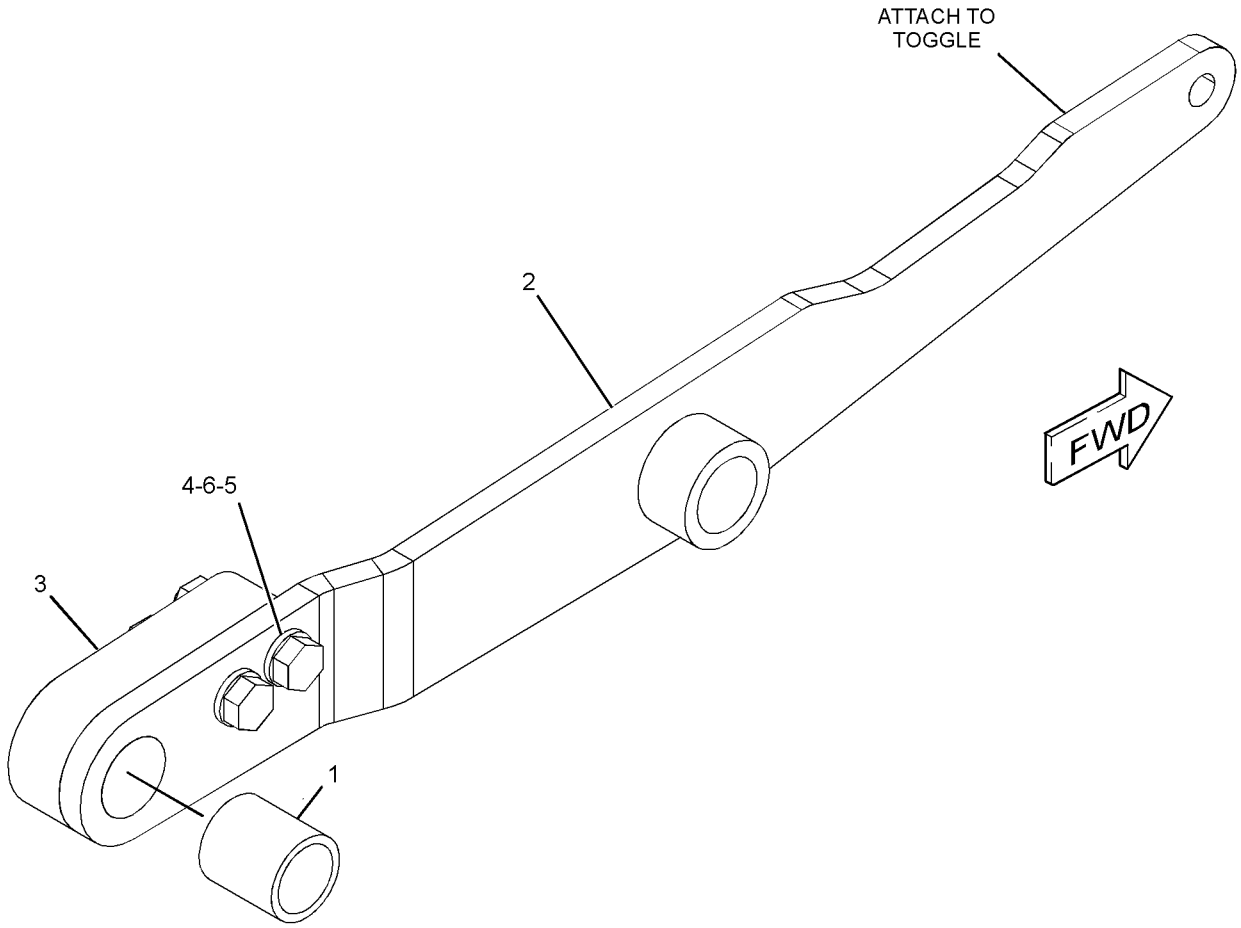

GRAPHIC #1 **<END>** g01578696

OPERATOR STATION

291-8011 ARM GP-SEAT SUSPENSION–OUTER, LH

S/N: DHA1-UP; FBH1-UP
PART OF 291-7971 SUSPENSION GP-SEAT
AN ATTACHMENT

SMCS-7324 **i03095680**

NOTE	REF NO	GRAPHIC REF	PART NUMBER	QTY	PART NAME 1 2 3 4 5 6 (PRODUCT LEVEL)	SEE PAGE
	1	1	**291-7990**	1	BEARING	
	2	1	**291-8008**	1	SPACER	
	3	1	**291-8012**	1	ARM (OUTER, LH)	
M	4	1	**5C-7261**	2	NUT (M8X1.25-THD)	
M	5	1	**8T-4197**	2	BOLT (M8X1.25X40-MM)	
	6	1	**8T-4224**	4	WASHER-HARD (8.8X16X2-MM THK)	

M-METRIC PART

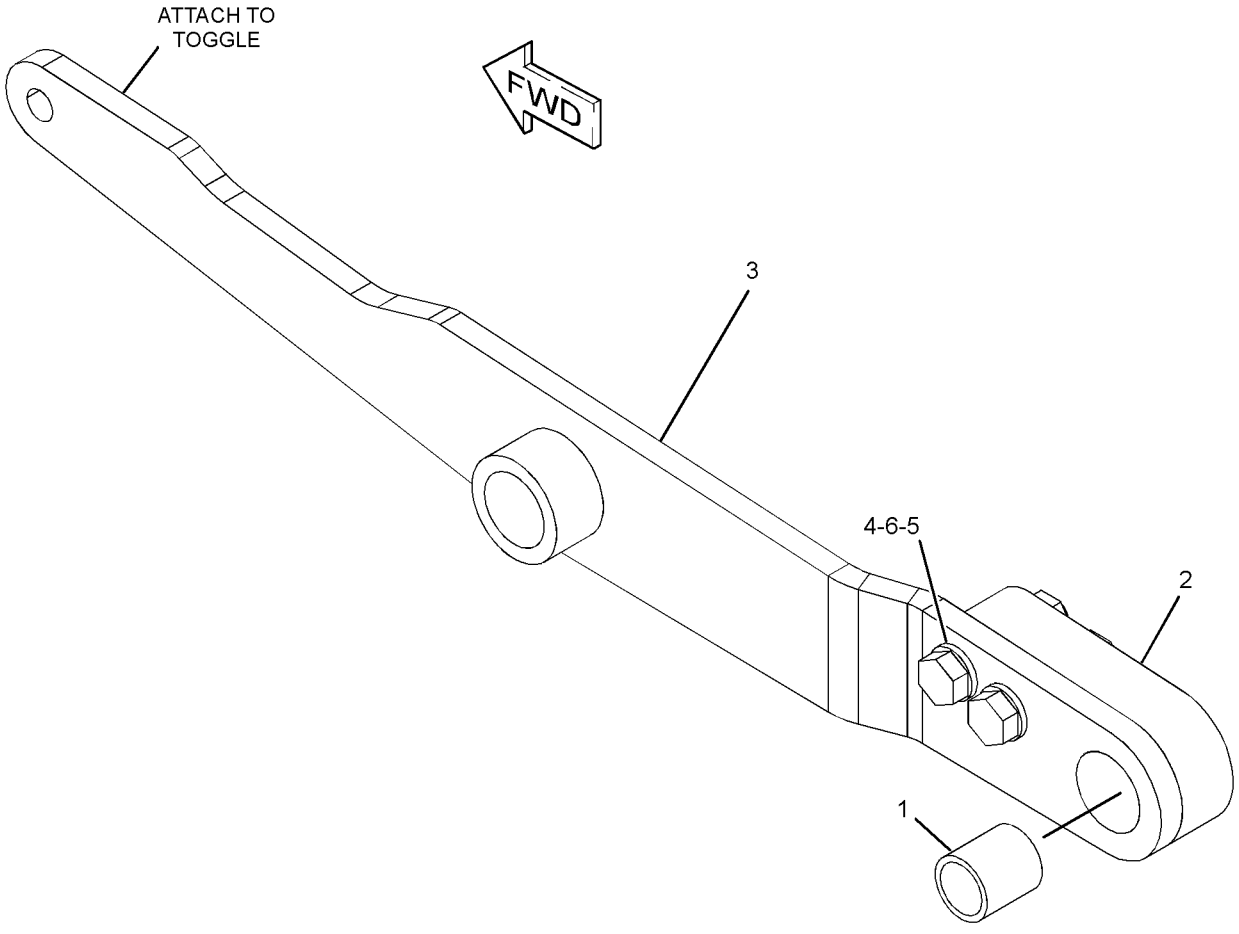

GRAPHIC #1 **<END>** g01578695

OPERATOR STATION

280-9679 ARMREST GP–LH

S/N: DHA1-UP; FBH1-UP
NONTILTABLE
PART OF 250-2120, 250-2121, 250-2123, 320-1194 SEAT GP-SUSPENSION
AN ATTACHMENT

SMCS-7307, 7312 **i02583032**

NOTE	REF NO	GRAPHIC REF	PART NUMBER	QTY	PART NAME 1 2 3 4 5 6 (PRODUCT LEVEL)	SEE PAGE
	1	1	**253-8798**	2	KNOB	
	2	1	**268-9378**	1	BRACKET	
	3	1	**282-2035**	1	CUSHION AS (LH)	
	4	1	**282-2036**	1	CUSHION AS	
	5	1	**282-6690**	1	COVER	
	6	1	**282-6692**	1	COVER (LH)	
	7	1	**282-6702**	1	BRACKET AS (LH)	
	8	1	**282-6708**	1	BRACKET AS	
	9	1	**282-6710**	1	BRACKET AS	
Y	10	1	**284-7059**	1	SUPPORT GP-STEERING CONTROL (LH)	798
	11	1	**284-7649**	1	BRACKET	
M	12	1	**127-2170**	9	SCREW-TRUSS HEAD (M8X1.25X20-MM)	
	13	1	**7X-0578**	2	WASHER-HARD (10.2X32X2.5-MM THK)	
M	14	1	**7X-2546**	1	BOLT (M10X1.5X180-MM)	
	15	1	**8T-4121**	4	WASHER-HARD (11X21X2.5-MM THK)	
M	16	1	**8T-4178**	2	BOLT (M10X1.5X90-MM)	
M	17	1	**8T-6685**	1	BOLT (M10X1.5X110-MM)	
M	18	1	**9X-2041**	1	SCREW-TRUSS HEAD (M10X1.5X20-MM)	
M	19	1	**9X-2042**	4	SCREW-TRUSS HEAD (M6X1X12-MM)	
M	20	1	**9X-2043**	2	SCREW-TRUSS HEAD (M6X1X14-MM)	
M	21	1	**9X-2044**	4	SCREW-TRUSS HEAD (M6X1X16-MM)	
M	22	1	**9X-2045**	2	SCREW-TRUSS HEAD (M6X1X20-MM)	

M-METRIC PART
Y-SEPARATE ILLUSTRATION

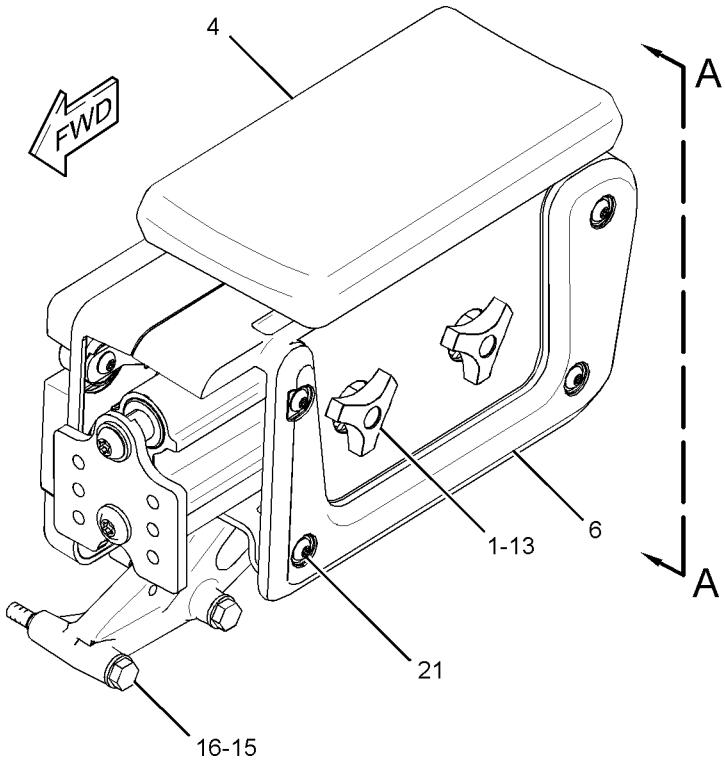

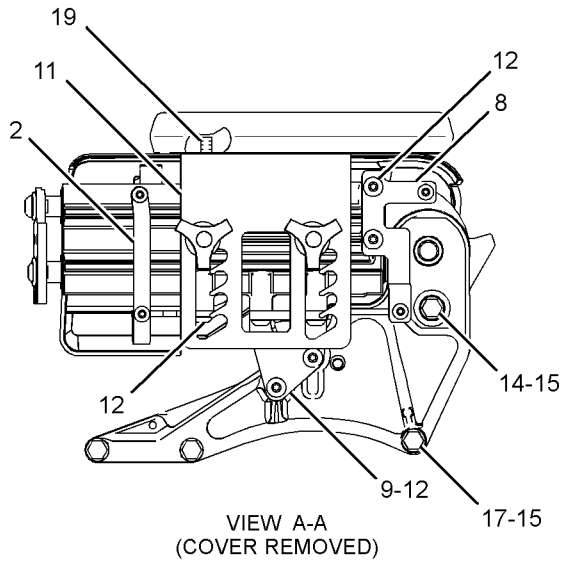

VIEW A-A
(COVER REMOVED)

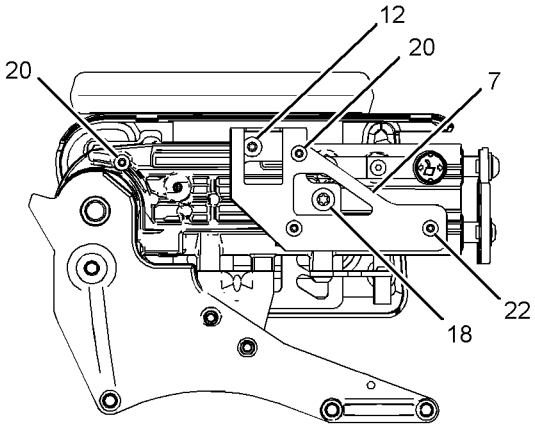

VIEW B-B
(COVER REMOVED)

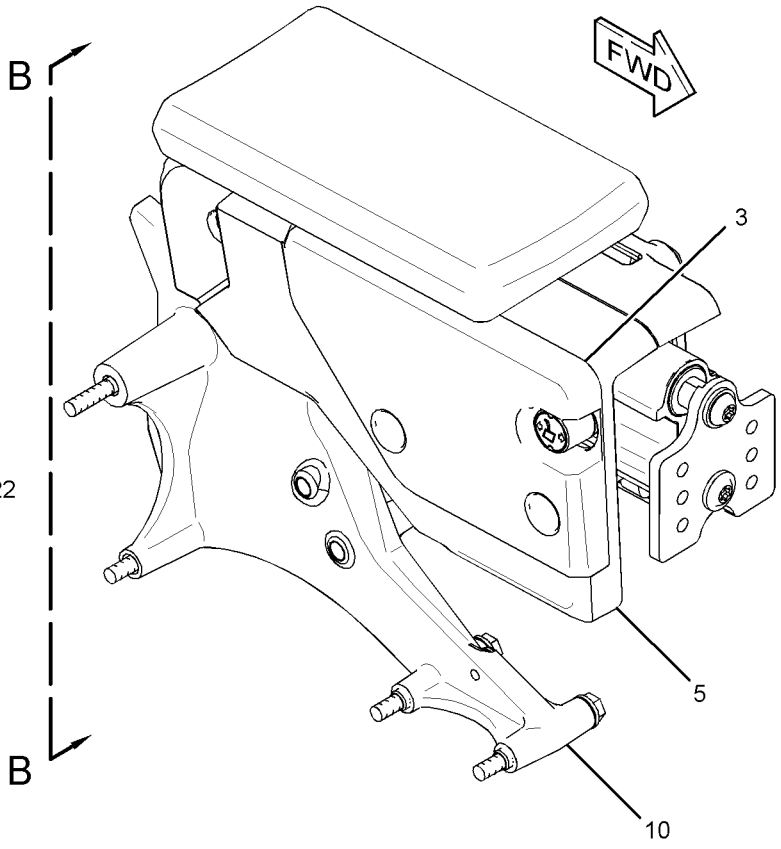

GRAPHIC #1 **<END>** g01304612

OPERATOR STATION

284-7054 ARMREST GP–RH

S/N: DHA1-UP; FBH1-UP
NO TILT
PART OF 250-2120, 250-2121, 250-2123, 320-1194 SEAT GP-SUSPENSION
AN ATTACHMENT

SMCS-7307, 7312 **i02957122**

NOTE	REF NO	GRAPHIC REF	PART NUMBER	QTY	PART NAME 1 2 3 4 5 6 (PRODUCT LEVEL)	SEE PAGE
	1	1	**253-8798**	2	KNOB	
	2	1	**268-9382**	1	BRACKET	
	3	1	**282-2034**	1	CUSHION AS (RH)	
	4	1	**282-2036**	1	CUSHION AS	
	5	1	**282-6689**	1	COVER	
	6	1	**282-6691**	1	COVER (RH)	
	7	1	**282-6701**	1	BRACKET AS (RH)	
	8	1	**282-6707**	1	BRACKET AS	
	9	1	**282-6709**	1	BRACKET AS	
Y	10	1	**284-7055**	1	SUPPORT GP-HYDRAULIC CONTROL (RH)	796
	11	1	**284-7648**	1	BRACKET	
M	12	1	**127-2170**	9	SCREW-TRUSS HEAD (M8X1.25X20-MM)	
	13	1	**7X-0578**	2	WASHER-HARD (10.2X32X2.5-MM THK)	
M	14	1	**7X-2546**	1	BOLT (M10X1.5X180-MM)	
	15	1	**8T-4121**	4	WASHER-HARD (11X21X2.5-MM THK)	
M	16	1	**8T-4178**	2	BOLT (M10X1.5X90-MM)	
M	17	1	**8T-6685**	1	BOLT (M10X1.5X110-MM)	
M	18	1	**9X-2041**	1	SCREW-TRUSS HEAD (M10X1.5X20-MM)	
M	19	1	**9X-2042**	4	SCREW-TRUSS HEAD (M6X1X12-MM)	
M	20	1	**9X-2043**	2	SCREW-TRUSS HEAD (M6X1X14-MM)	
M	21	1	**9X-2044**	4	SCREW-TRUSS HEAD (M6X1X16-MM)	
M	22	1	**9X-2045**	2	SCREW-TRUSS HEAD (M6X1X20-MM)	
	23	1	**314-3472**	1	SPACER (10.67X17.46X12-MM THK)	

M-METRIC PART
Y-SEPARATE ILLUSTRATION

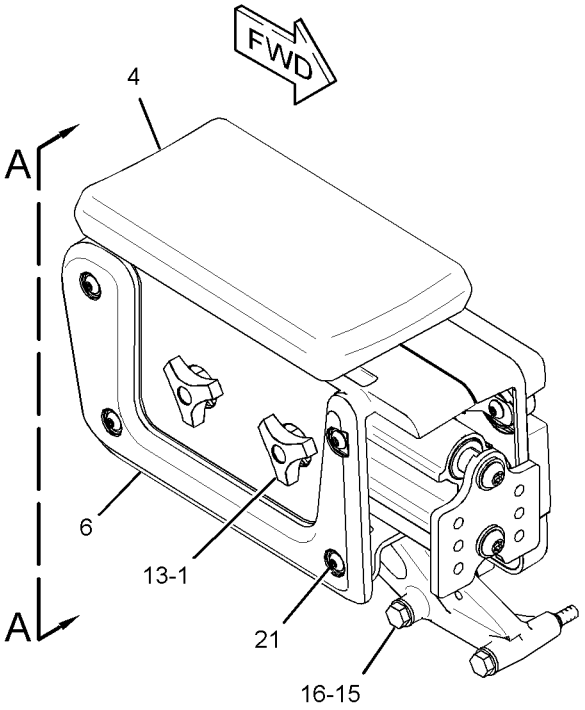

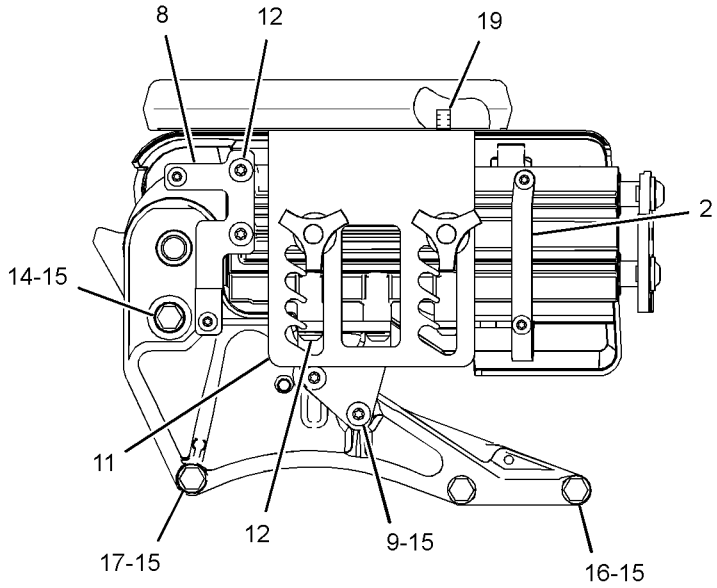

VIEW A-A
(COVER REMOVED)

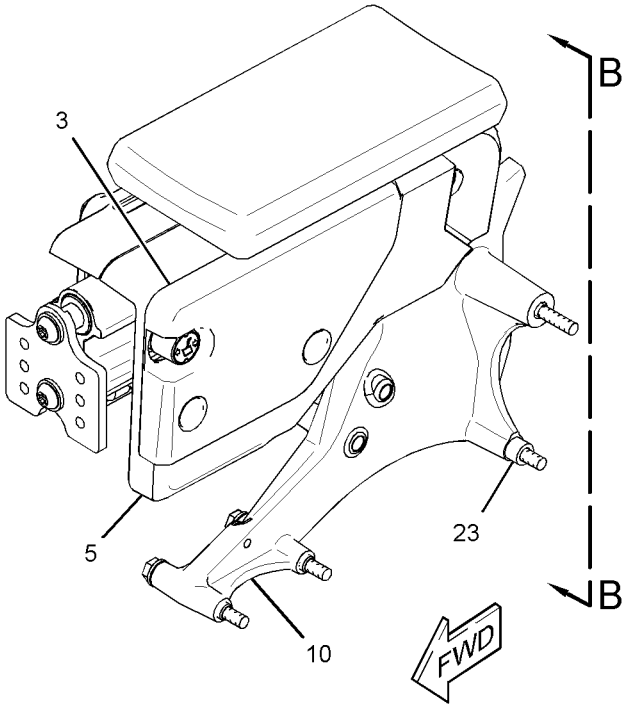

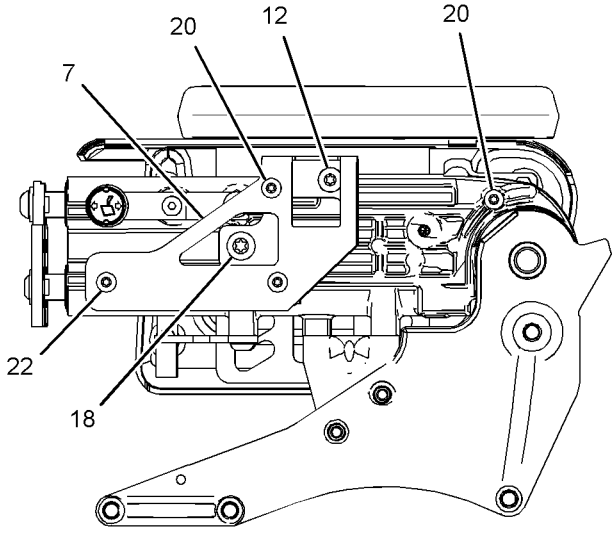

VIEW B-B
(COVER REMOVED)

GRAPHIC #1 **<END>** g01414585

OPERATOR STATION

206-7310 CAB AR-ENCLOSED ROPS

S/N: DHA1-UP; FBH1-UP
PART OF 349-8349 OPTION AR-CAB
CANNOT BE USED WITH 250-2110—PAGE 651
AN ATTACHMENT

SMCS-7301 **i02392141**

NOTE	PART NUMBER	QTY	PART NAME 1 2 3 4 5 6 (PRODUCT LEVEL)	SEE PAGE
Y	*248-7070*	1	LINES GP-AIR CONDITIONER	739
Y	*240-6233*	1	CAB GP-ENCLOSED ROPS	650
Y	*243-2156*	1	COMPRESSOR GP-REFRIGERANT	654
Y	*248-7071*	1	LINES GP-HEATER	742
Y	*248-7069*	1	MOUNTING GP-CAB	753
Y	*251-5975*	1	WASHER GP-WINDOW	804

Y-SEPARATE ILLUSTRATION

<END>

240-6233 CAB GP-ENCLOSED ROPS

S/N: DHA1-UP; FBH1-UP
PART OF 206-7310 CAB AR-ENCLOSED ROPS
AN ATTACHMENT

SMCS-7301 **i02660380**

NOTE	PART NUMBER	QTY	PART NAME 1 2 3 4 5 6 (PRODUCT LEVEL)	SEE PAGE
Y	*247-6511*	1	ACCESSORY GP-CAB	631
Y	*247-6507*	1	AIR CONDITIONER GP	636
Y	*247-6506*	1	CONTROL & MTG GP-PEDAL (GOVERNOR, BRAKE)	663
Y	*247-6509*	1	COVER GP-CAB	681
Y	**247-6501**	1	DOOR GP-CAB (RH)	700
Y	**247-6502**	1	DOOR GP-CAB (LH)	706
Y	*276-8082*	1	HEATER GP-CAB	729
Y	**247-6505**	1	INSTALLATION GP-RADIO	732
Y	*247-6508*	1	INSTRUMENT GP	734
Y	*269-3790*	1	INSULATION GP-WEATHER	738
Y	*247-6510*	1	LIGHTING GP-FLOOD (FRONT, REAR)	267
Y	*247-6503*	1	WINDOW GP-CAB	806
Y	*247-6504*	1	WIPER GP-WINDOW	812
Y	*251-2003*	1	WIRING GP-CAB	309
Y	*206-7302*	1	WIRING GP-PLATFORM	332
	247-6500	1	CAB AS	

Y-SEPARATE ILLUSTRATION

<END>

OPERATOR STATION

267-2550 CAB GP-FORESTRY

S/N: DHA1-UP; FBH1-UP
PART OF 267-4943 FORESTRY AR
AN ATTACHMENT

SMCS-7301 **i03569256**

NOTE	PART NUMBER	QTY	PART NAME 1 2 3 4 5 6 (PRODUCT LEVEL)	SEE PAGE
Y	*247-6511*	1	ACCESSORY GP-CAB	631
Y	*247-6507*	1	AIR CONDITIONER GP	636
Y	*247-6506*	1	CONTROL & MTG GP-PEDAL (GOVERNOR, BRAKE)	663
Y	*247-6509*	1	COVER GP-CAB	681
Y	*267-2549*	1	DOOR GP-CAB (RH)	712
Y	*267-2551*	1	DOOR GP-CAB (LH)	718
Y	*276-8082*	1	HEATER GP-CAB	729
Y	**247-6505**	1	INSTALLATION GP-RADIO	732
Y	*247-6508*	1	INSTRUMENT GP	734
Y	*269-3790*	1	INSULATION GP-WEATHER	738
Y	*247-6510*	1	LIGHTING GP-FLOOD (FRONT, REAR)	267
Y	*255-4275*	1	WINDOW GP-CAB	808
			S/N: DHA1-1083; FBH1-1405	
Y	*338-8073*	1	WINDOW GP-CAB	811
			S/N: DHA1084-UP; FBH1406-UP	
Y	*247-6504*	1	WIPER GP-WINDOW	812
Y	*251-2003*	1	WIRING GP-CAB	309
Y	*206-7302*	1	WIRING GP-PLATFORM	332
	247-6500	1	CAB AS	

Y-SEPARATE ILLUSTRATION

<END>

250-2110 CANOPY AR

S/N: DHA1-UP; FBH1-UP
CANNOT BE USED WITH 206-7310—PAGE 650
AN ATTACHMENT

SMCS-7302 **i02582922**

NOTE	PART NUMBER	QTY	PART NAME 1 2 3 4 5 6 (PRODUCT LEVEL)	SEE PAGE
Y	*251-3536*	1	CANOPY GP	652
Y	*251-4060*	1	COVER GP-CONSOLE	698
Y	*248-7069*	1	MOUNTING GP-CAB	753
	3J-5389	2	PLUG	
	173-1498	1	PULLEY AS-IDLER (8-GROOVE)	
	166-6358	1	COVER-DUST	
M	**151-2900**	1	BOLT (M10X1.5X54.25-MM)	

M-METRIC PART
Y-SEPARATE ILLUSTRATION

<END>

OPERATOR STATION

289-8424 CANOPY AR–HEATED

S/N: DHA1-UP; FBH1-UP
CANNOT BE USED WITH CAB
AN ATTACHMENT

SMCS-7302 **i02588364**

NOTE	PART NUMBER	QTY	PART NAME 1 2 3 4 5 6 (PRODUCT LEVEL)	SEE PAGE
Y	*251-3536*	1	CANOPY GP	652
Y	*250-9160*	1	HEATER GP-CAB (OPEN ROPS)	724
Y	*248-7071*	1	LINES GP-HEATER	742
Y	*248-7069*	1	MOUNTING GP-CAB	753
	173-1498	1	PULLEY AS-IDLER (8-GROOVE)	
M	**151-2900**	1	BOLT (M10X1.5X54.25-MM)	
	166-6358	1	COVER-DUST	

M-METRIC PART
Y-SEPARATE ILLUSTRATION

<END>

251-3536 CANOPY GP

S/N: DHA1-UP; FBH1-UP
PART OF 250-2110, 289-8424 CANOPY AR
AN ATTACHMENT

SMCS-7302 **i02635215**

NOTE	PART NUMBER	QTY	PART NAME 1 2 3 4 5 6 (PRODUCT LEVEL)	SEE PAGE
Y	*247-6506*	1	CONTROL & MTG GP-PEDAL (GOVERNOR, BRAKE)	663
Y	**252-7821**	1	COVER GP-CAB	689
Y	*252-7820*	1	INSTRUMENT GP (OPEN ROPS)	736
Y	*256-7482*	1	TRIM GP-CANOPY	803
Y	*247-6510*	1	LIGHTING GP-FLOOD (FRONT, REAR)	267
Y	*251-2003*	1	WIRING GP-CAB	309
Y	*206-7302*	1	WIRING GP-PLATFORM	332
	252-7819	1	ROLLOVER AS	

Y-SEPARATE ILLUSTRATION

<END>

OPERATOR STATION

183-5106 COMPRESSOR GP-REFRIGERANT

S/N: DHA1-UP; FBH1-UP
PART OF 243-2156 COMPRESSOR GP-REFRIGERANT
AN ATTACHMENT

SMCS-1802 **i02876948**

NOTE	REF NO	GRAPHIC REF	PART NUMBER	QTY	PART NAME 1 2 3 4 5 6 (PRODUCT LEVEL)	SEE PAGE
	1	1	**126-1767**	2	PIN-CONNECTOR (14-GA)	
	2	1	**102-8802**	1	KIT-RECEPTACLE (2-PIN)	
					(INCLUDES RECEPTACLE AS & WEDGE)	
	3	1	**314-4018**	1	VALVE AS-PRESSURE RELIEF	
		1	**9X-7378**	1	SEAL-O-RING	
	4	1	**7T-4532**	1	PLUG AS	
	5	1	**9X-7385**	2	SEAL-O-RING	

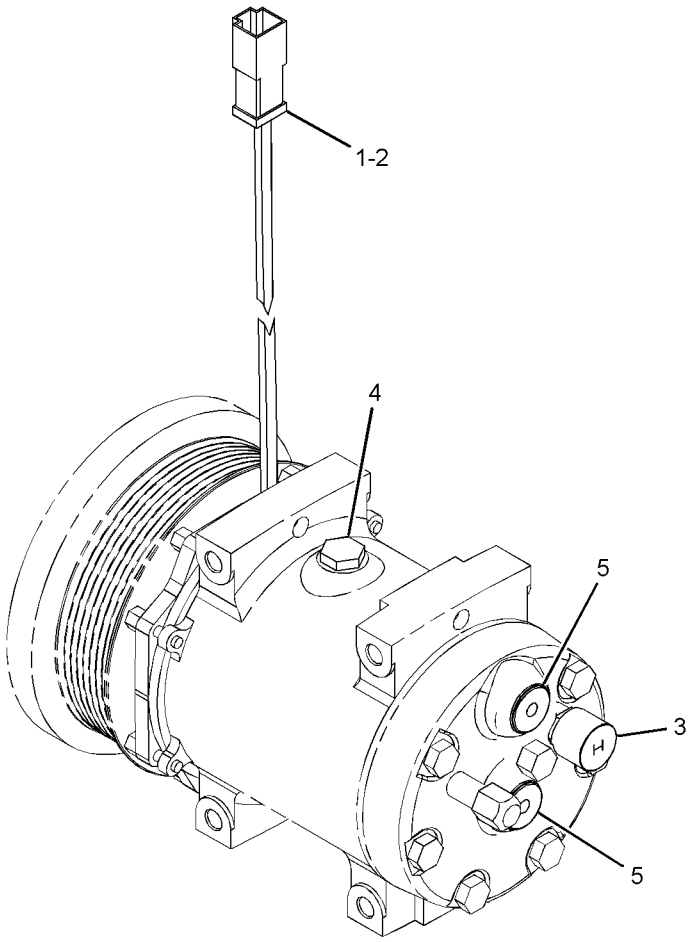

GRAPHIC #1 **<END>** g01419732

OPERATOR STATION

243-2156 COMPRESSOR GP-REFRIGERANT

S/N: DHA1-UP; FBH1-UP
PART OF 206-7310 CAB AR-ENCLOSED ROPS, 267-4943 FORESTRY AR
AN ATTACHMENT

SMCS-1802 **i02857382**

NOTE	REF NO	GRAPHIC REF	PART NUMBER	QTY	PART NAME 1 2 3 4 5 6 (PRODUCT LEVEL)	SEE PAGE
	1	1	**3S-2093**	2	STRAP-CABLE	
Y	2	1	**183-5106**	1	COMPRESSOR GP-REFRIGERANT	653
M	3	1	**255-1281**	2	BOLT-FLANGE HEAD (M8X1.25X100-MM)	
M	4	1	**315-5492**	2	STUD (M8X1.25X130-MM)	
	5	1	**4P-7581**	1	CLIP	
	6	1	**4P-8134**	1	CLIP	
	7	1	**8T-4224**	2	WASHER-HARD (8.8X16X2-MM THK)	
H	8	1	**310-8320**		CONDUIT (1-DM)	

H-ORDER BY THE DECIMETER
M-METRIC PART
Y-SEPARATE ILLUSTRATION

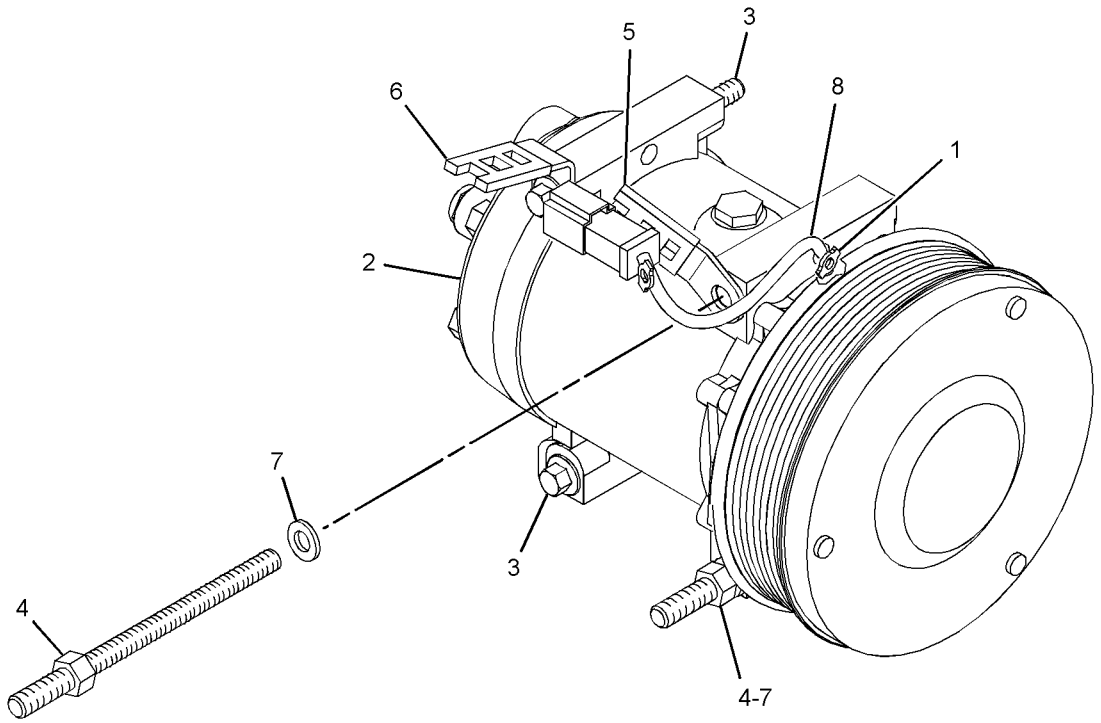

GRAPHIC #1 **<END>** g01423503

OPERATOR STATION

287-0554 CONDENSER GP-REFRIGERANT

S/N: DHA1-UP; FBH1-UP
PART OF 247-6507 AIR CONDITIONER GP
AN ATTACHMENT

SMCS-1805 **i03622800**

NOTE	REF NO	GRAPHIC REF	PART NUMBER	QTY	PART NAME 1 2 3 4 5 6 (PRODUCT LEVEL)	SEE PAGE
	1	1	**3E-5239**	2	RELAY AS (24-VOLT) (CONDENSER BLOWER MOTOR)	
	2	1	**3S-2093**	2	STRAP-CABLE	
	3	1	**8C-3756**	1	FILM-IDENTIFICATION (GROUP NO., SEQUENCE NO.) (REFRIGERANT CONDENSER)	
	4	1	**304-3715**	2	FAN AS-CONDENSER (24-VOLT, 5-BLADE)	
	5	1	**175-2539**	1	CASE AS	
	6	1	**199-7698**	1	COIL AS (CONDENSER)	
	7	1	**287-0553**	1	HARNESS AS-HEATER & AIR COND	
		1	**9X-1054**	2	PLUG AS-CONNECTOR (4-PIN)	
		1	**155-2270**	2	KIT-CONNECTING PLUG (2-PIN)	
					(EACH INCLUDES PLUG AS, WEDGE, & INTERFACE SEAL)	
		1	**102-8805**	1	KIT-RECEPTACLE (6-PIN)	
					(INCLUDES RECEPTACLE AS & WEDGE)	
	8	1	**4P-8134**	1	CLIP	
M	9	1	**5C-2890**	1	NUT (M6X1-THD)	
	10	1	**8T-4121**	8	WASHER-HARD (11X21X2.5-MM THK)	
M	11	1	**8T-4137**	8	BOLT (M10X1.5X20-MM)	
M	12	1	**8T-4138**	1	BOLT (M6X1X20-MM)	
	13	1	**8T-4205**	2	WASHER-HARD (7.2X14.5X2-MM THK)	
	14	1	**8T-4224**	8	WASHER-HARD (8.8X16X2-MM THK)	
M	15	1	**8T-4908**	8	BOLT (M8X1.25X25-MM)	
E	16	1	**126-8472**		SEAL (79-CM)	
D	17	1	**5P-5673**		SEAL (0.8-M EACH)	
D	17A	1,1	**5P-5673**		SEAL (0.2-M EACH)	

D-ORDER BY THE METER
E-ORDER BY THE CENTIMETER
M-METRIC PART

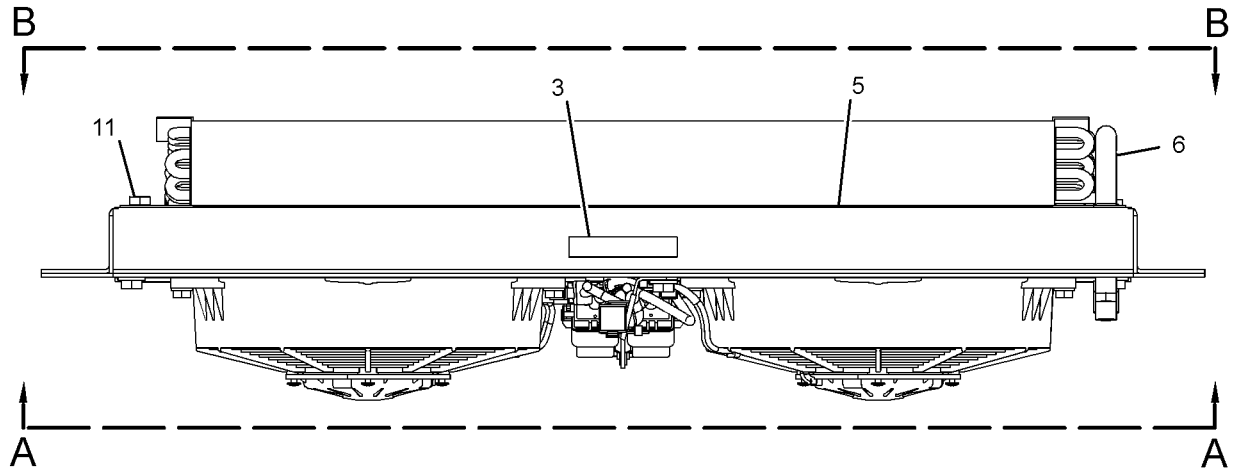

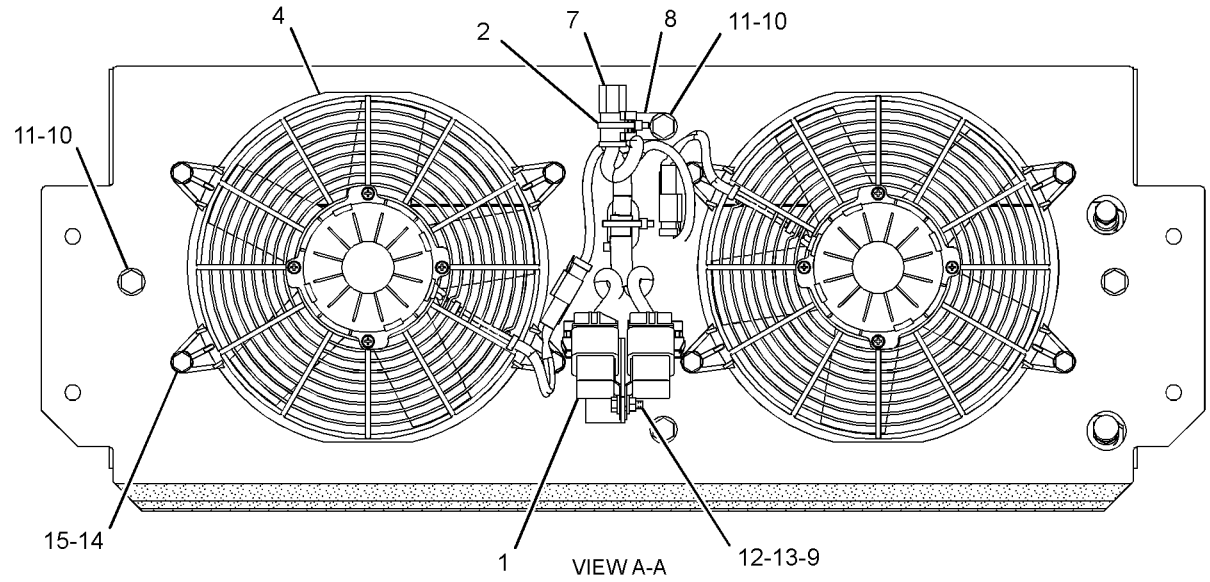

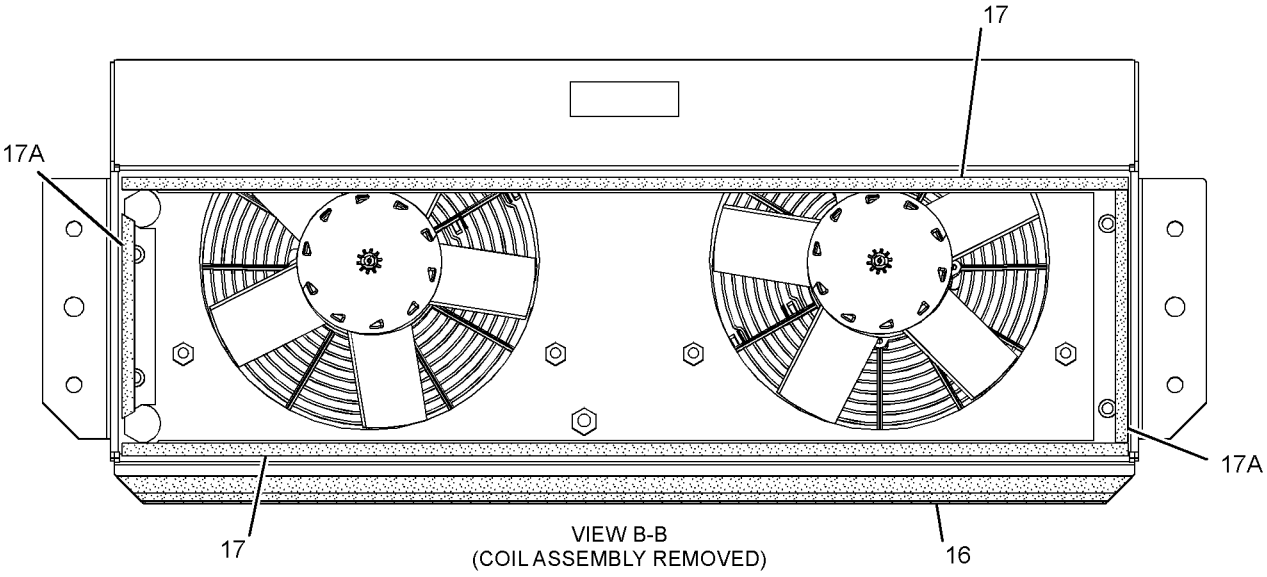

GRAPHIC #1 **<END>** g01338300

OPERATOR STATION

284-3752 CONSOLE GP–LH

S/N: DHA1-912; FBH1-770
ENCLOSED ROPS
PART OF 247-6509 COVER GP-CAB
AN ATTACHMENT

SMCS-5258 **i02581262**

NOTE	REF NO	GRAPHIC REF	PART NUMBER	QTY	PART NAME 1 2 3 4 5 6 (PRODUCT LEVEL)	SEE PAGE
	1	1	**188-8846**	1	LATCH AS (COMPRESSION)	
	2	1	**251-8636**	1	DOOR	
	3	1	**258-6387**	1	HINGE AS	
	4	1	**284-7043**	1	CONSOLE (LH)	
	5	1	**297-1464**	11	INSERT-THREADED (M4X0.7-THD)	
M	6	1	**297-1466**	3	INSERT-THREADED (M6X1-6H-THD)	
M	7	1	**138-8454**	11	SCREW-TRUSS HEAD (M4X0.7X10-MM)	

M-METRIC PART

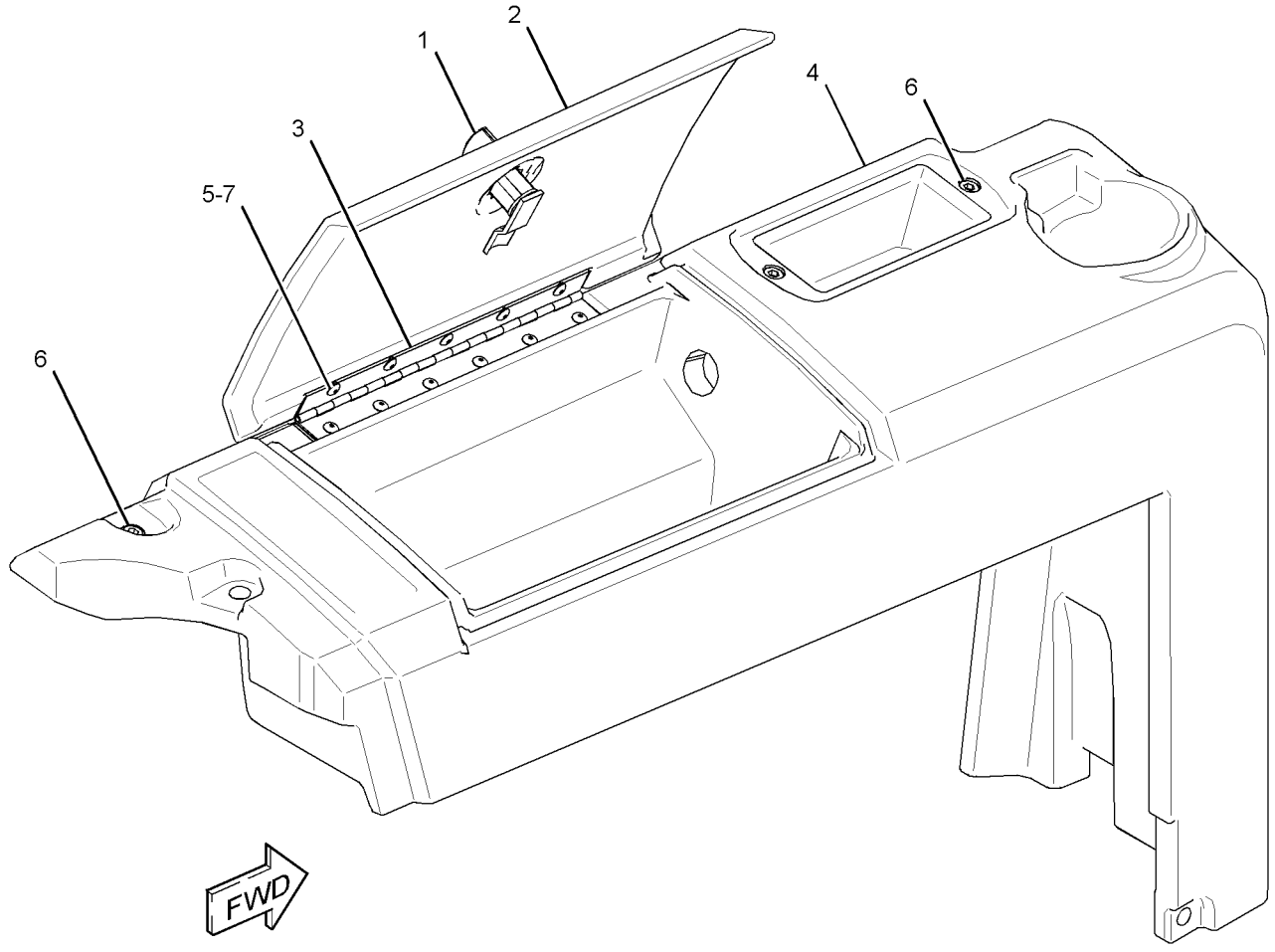

GRAPHIC #1 **<END>** g01304209

OPERATOR STATION

288-7343 CONSOLE GP–LH

S/N: DHA1-912; FBH1-770
OPEN ROPS
PART OF 252-7821 COVER GP-CAB
AN ATTACHMENT

SMCS-5258 **i02655464**

NOTE	REF NO	GRAPHIC REF	PART NUMBER	QTY	PART NAME 1 2 3 4 5 6 (PRODUCT LEVEL)	SEE PAGE
	1	1	**188-8846**	1	LATCH AS	
	2	1	**251-8636**	1	DOOR	
	3	1	**258-6387**	1	HINGE AS	
	4	1	**297-1464**	11	INSERT-THREADED (M4X0.7-THD)	
M	5	1	**297-1466**	3	INSERT-THREADED (M6X1-6H-THD)	
M	6	1	**138-8454**	11	SCREW-TRUSS HEAD (M4X0.7X10-MM)	

M-METRIC PART

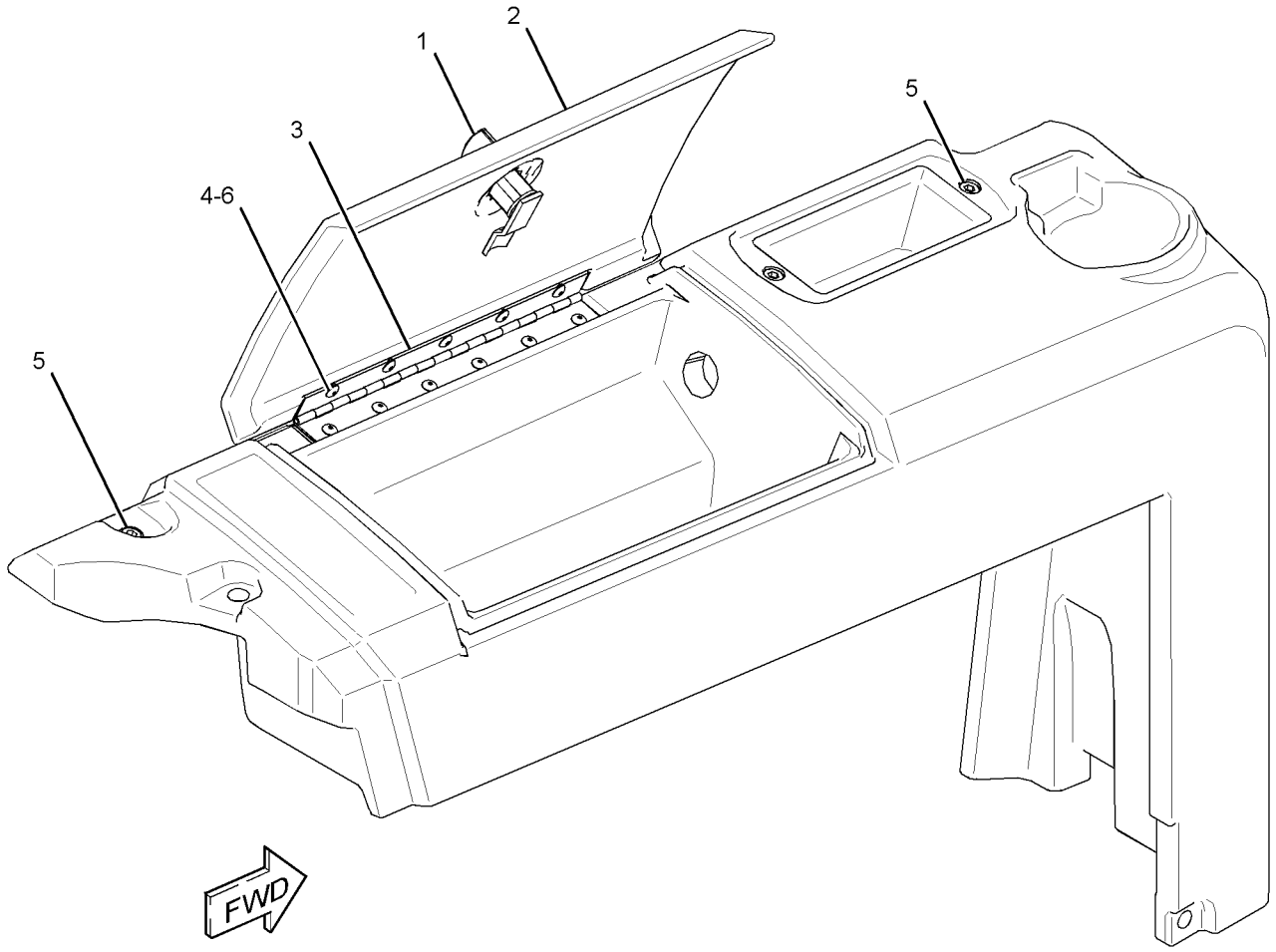

GRAPHIC #1 **<END>** g01333766

OPERATOR STATION

314-3003 CONSOLE GP-CONTROL–LH

S/N: DHA913-UP; FBH771-UP
ENCLOSED ROPS
PART OF 247-6509 COVER GP-CAB
AN ATTACHMENT

SMCS-5258 **i02969782**

NOTE	REF NO	GRAPHIC REF	PART NUMBER	QTY	PART NAME 1 2 3 4 5 6 (PRODUCT LEVEL)	SEE PAGE
	1	1	**188-8846**	1	LATCH AS	
	2	1	**258-6387**	1	HINGE AS	
	3	1	**297-1464**	11	INSERT-THREADED (M4X0.7-THD)	
M	4	1	**297-1466**	3	INSERT-THREADED (M6X1-THD)	
	6	1	**314-3007**	1	DOOR	
M	7	1	**138-8454**	11	SCREW-TRUSS HEAD (M4X0.7X10-MM)	

M-METRIC PART

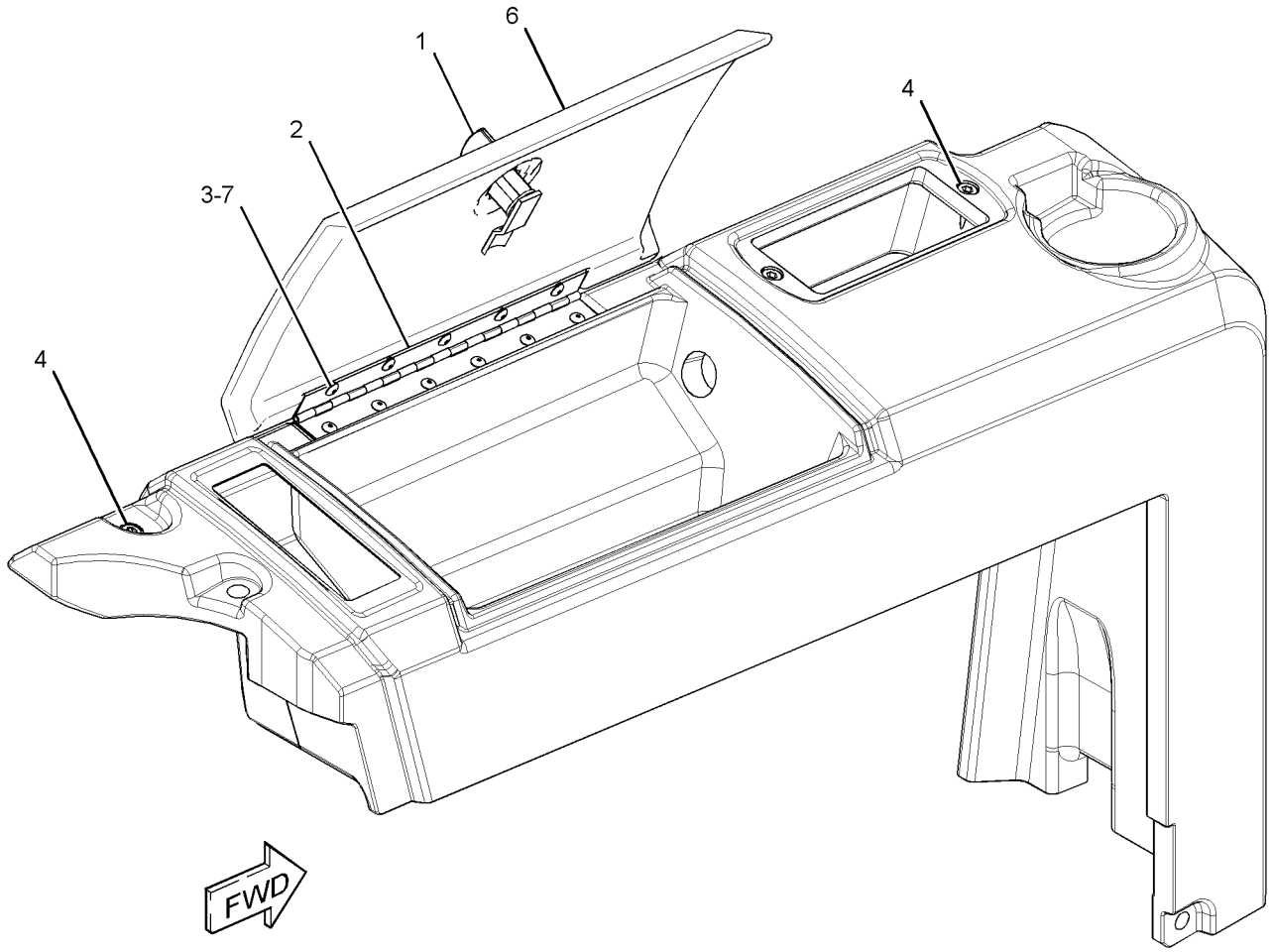

GRAPHIC #1 **<END>** g01447659

OPERATOR STATION

314-3004 CONSOLE GP–LH

S/N: DHA913-UP; FBH771-UP
OPEN ROPS
PART OF 252-7821 COVER GP-CAB
AN ATTACHMENT

SMCS-5258 **i02973319**

NOTE	REF NO	GRAPHIC REF	PART NUMBER	QTY	PART NAME 1 2 3 4 5 6 (PRODUCT LEVEL)	SEE PAGE
	1	1	**188-8846**	1	LATCH AS	
	2	1	**258-6387**	1	HINGE AS	
	3	1	**297-1464**	11	INSERT-THREADED (M4X0.7-THD)	
M	4	1	**297-1466**	3	INSERT-THREADED (M6X1-THD)	
	6	1	**314-3007**	1	DOOR	
M	7	1	**138-8454**	11	SCREW-TRUSS HEAD (M4X0.7X10-MM)	

M-METRIC PART

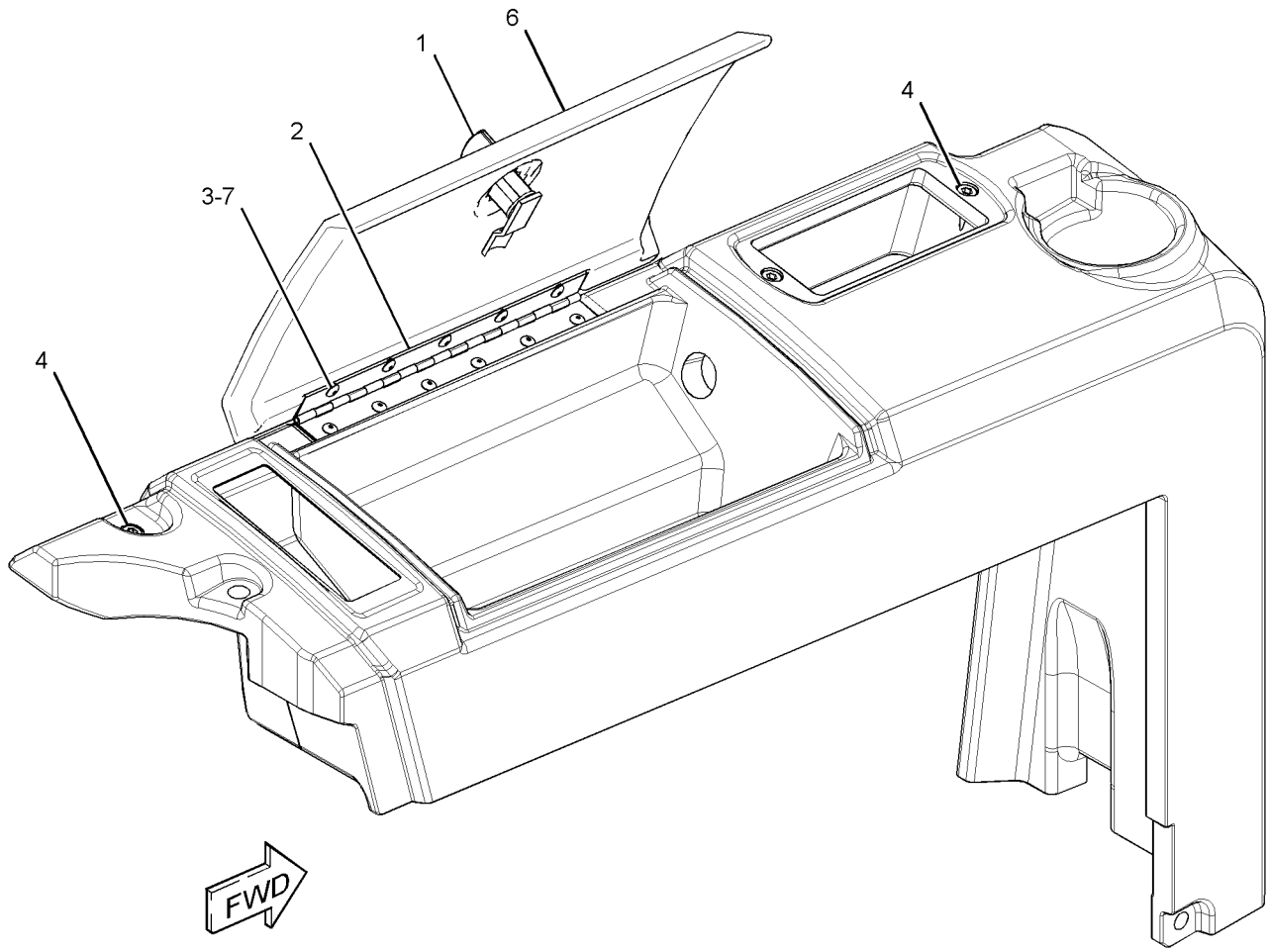

GRAPHIC #1 **<END>** g01447659

OPERATOR STATION

268-9351 CONSOLE GP-OPERATOR–RH

S/N: DHA1-UP; FBH1-UP

PART OF 250-2120, 250-2121, 250-2123, 320-1194 SEAT GP-SUSPENSION

AN ATTACHMENT

SMCS-5258, 7451 **i02583040**

NOTE	REF NO	GRAPHIC REF	PART NUMBER	QTY	PART NAME 1 2 3 4 5 6 (PRODUCT LEVEL)	SEE PAGE
	1	1	**280-9440**	1	CUSHION AS	
	2	1	**280-9680**	1	BRACKET AS	
	3	1	**280-9896**	1	COVER AS	
M	4	1	**6V-3940**	4	BOLT (M8X1.25X25-MM)	
	5	1	**7X-0578**	1	WASHER-HARD (10.2X32X2.5-MM THK)	
	6	1	**9M-1974**	4	WASHER-HARD (8.8X16X2-MM THK)	
M	7	1	**9X-2043**	10	SCREW-TRUSS HEAD (M6X1X14-MM)	
J	8	1	**5C-8465**		SEAL (0.7-DM EACH)	
	9	1	**280-9441**	1	BRACKET	
	10	1	**280-9442**	1	BRACKET AS	
	11	1	**280-9444**	1	KNOB	
	12	1	**280-9897**	1	COVER	

J-ORDER BY THE DECIMETER
M-METRIC PART

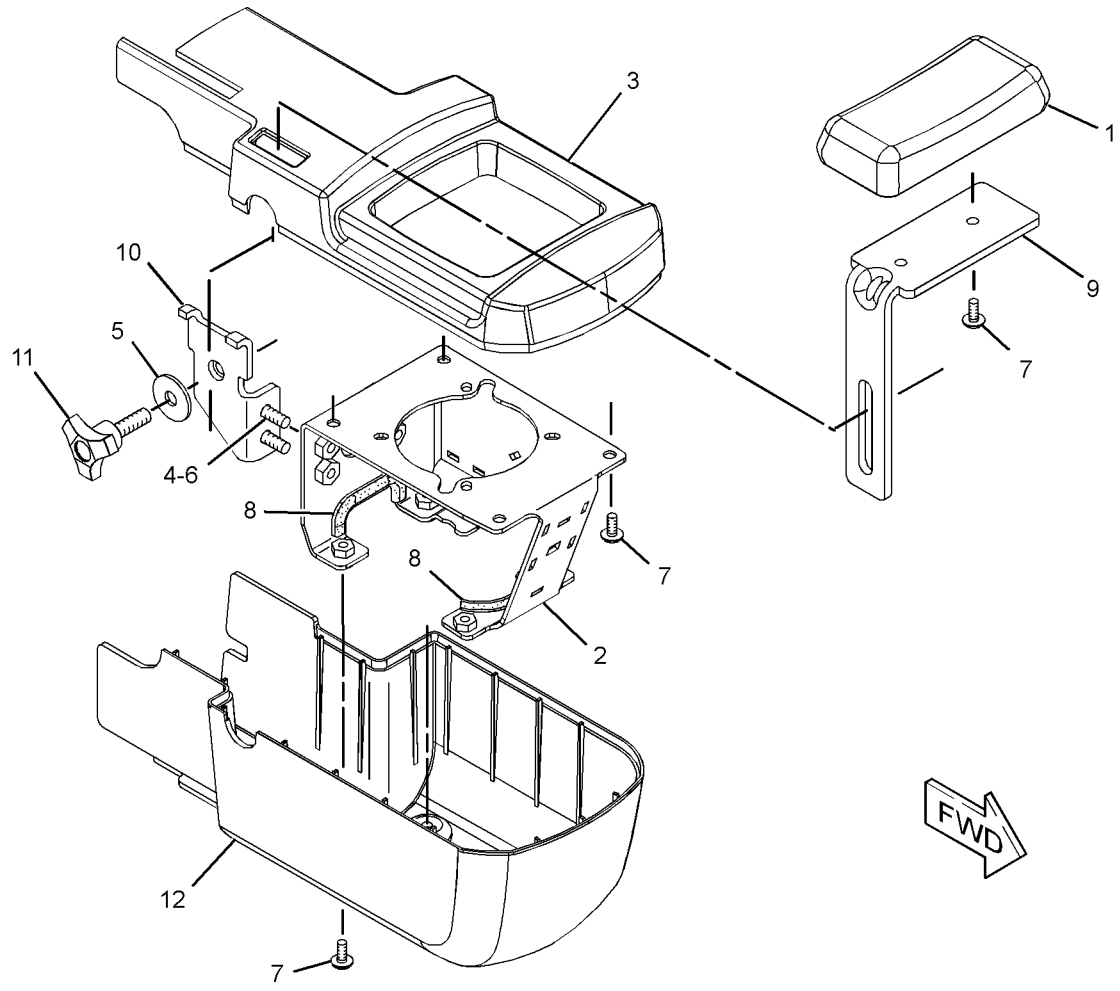

GRAPHIC #1 **<END>** g01314510

OPERATOR STATION

268-9352 CONSOLE GP-OPERATOR—LH

S/N: DHA1-UP; FBH1-UP

PART OF 250-2120, 250-2121, 250-2123, 320-1194 SEAT GP-SUSPENSION

AN ATTACHMENT

SMCS-5258, 7451 **i02583080**

NOTE	REF NO	GRAPHIC REF	PART NUMBER	QTY	PART NAME 1 2 3 4 5 6 (PRODUCT LEVEL)	SEE PAGE
	1	1	**280-9440**	1	CUSHION AS	
	2	1	**280-9441**	1	BRACKET	
	3	1	**280-9443**	1	BRACKET AS	
	4	1	**280-9444**	1	KNOB (ARMREST ADJUSTMENT)	
	5	1	**280-9898**	1	BRACKET AS	
	6	1	**280-9899**	1	COVER AS	
	7	1	**280-9900**	1	COVER	
M	8	1	**6V-3940**	4	BOLT (M8X1.25X25-MM)	
	9	1	**7X-0578**	1	WASHER-HARD (10.2X32X2.5-MM THK)	
	10	1	**9M-1974**	4	WASHER-HARD (8.8X16X2-MM THK)	
M	11	1	**9X-2043**	10	SCREW-TRUSS HEAD (M6X1X14-MM)	
J	12	1	**5C-8465**		SEAL (0.7-DM EACH)	

J-ORDER BY THE DECIMETER
M-METRIC PART

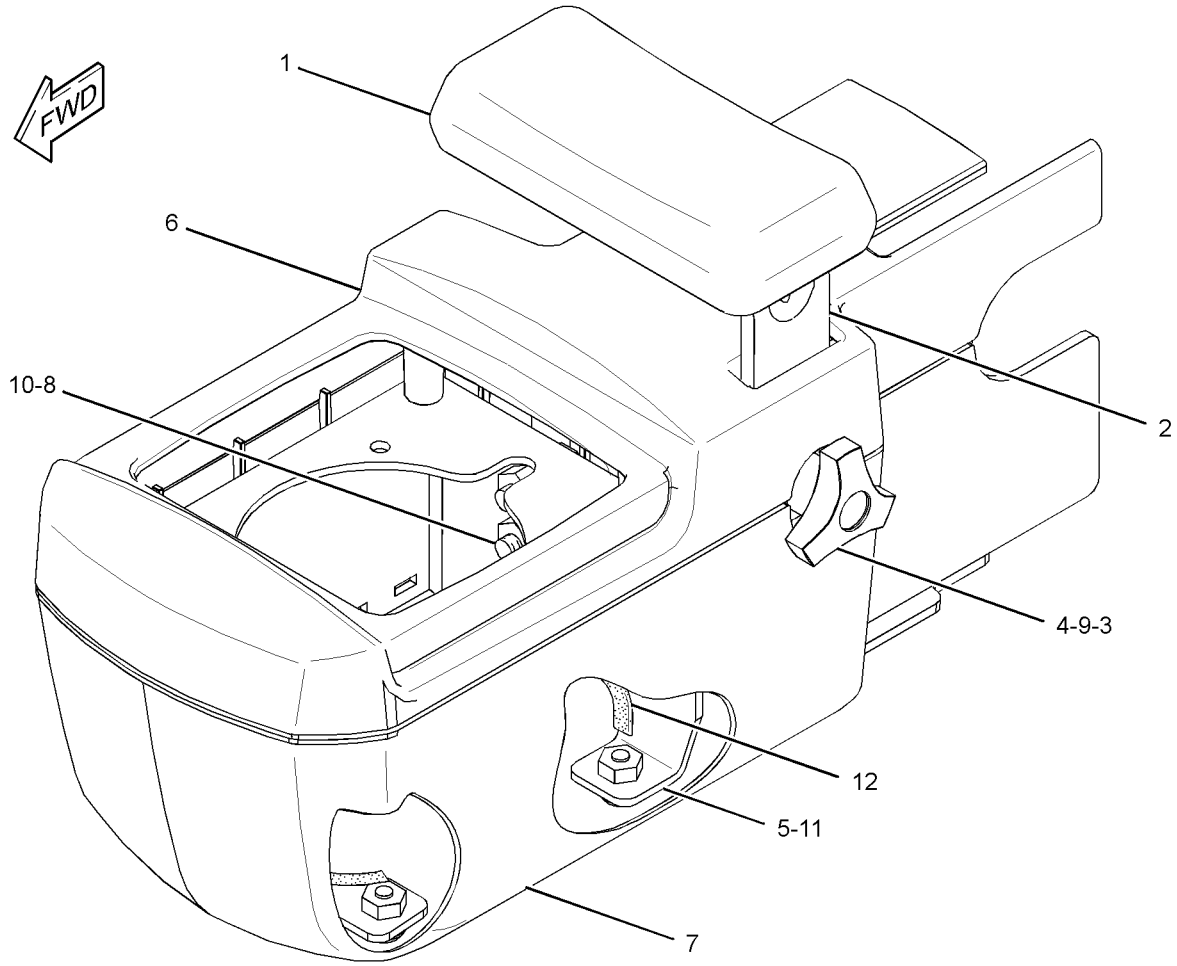

GRAPHIC #1 **<END>** g01303742

247-6506 CONTROL & MTG GP-PEDAL–GOVERNOR, BRAKE

S/N: DHA1-UP; FBH1-UP
PART OF 240-6233 CAB GP-ENCLOSED ROPS, 267-2550 CAB GP-FORESTRY, 251-3536 CANOPY GP
AN ATTACHMENT

SMCS-5462 **i02394843**

NOTE	REF NO	GRAPHIC REF	PART NUMBER	QTY	PART NAME 1 2 3 4 5 6 (PRODUCT LEVEL)	SEE PAGE
Y	1	1	*253-2439*	1	PEDAL GP-GOVERNOR & BRAKE	764
	2	1	**7X-7729**	3	WASHER (11X25X3-MM THK)	
M	3	1	**8T-4133**	3	NUT (M10X1.5-THD)	

M-METRIC PART
Y-SEPARATE ILLUSTRATION

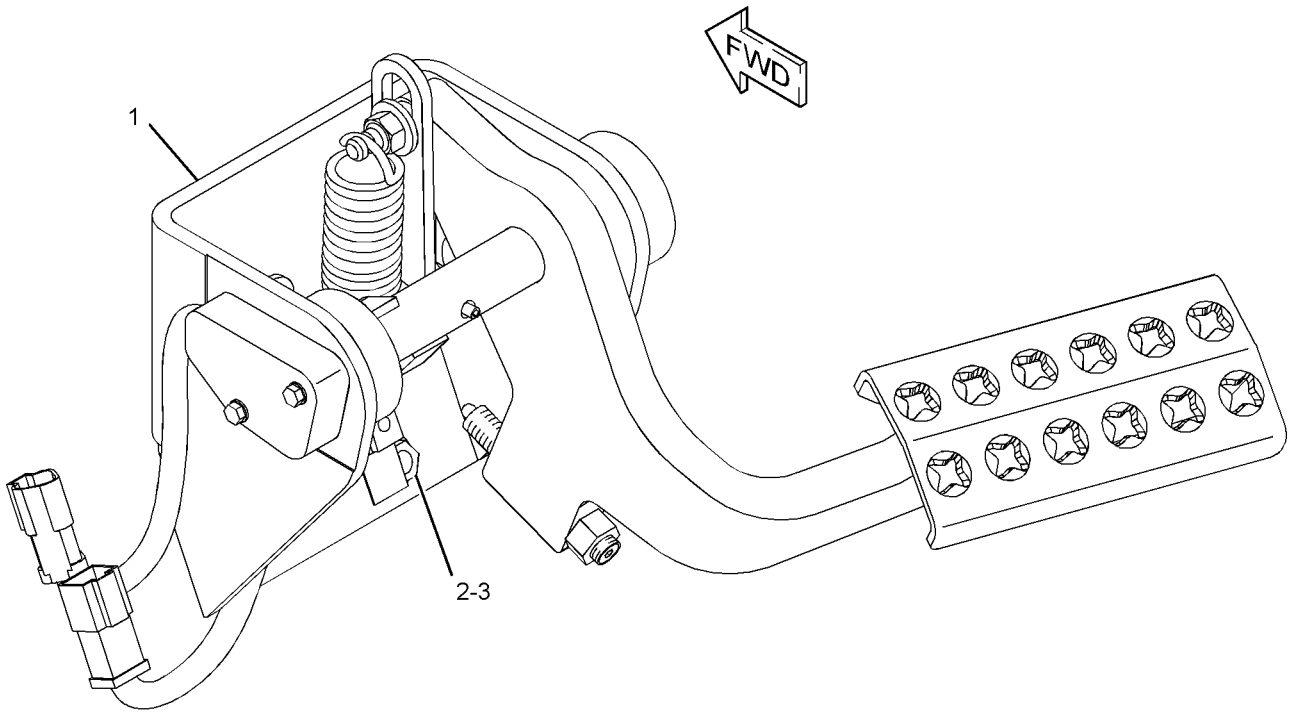

GRAPHIC #1 **<END>** g01202348

252-4559 CONTROL GP-HANDLE—WINCH—RIPPER, WINCH—RIPPER

S/N: DHA1-348; FBH1-488

PART OF 250-2112 CONTROL GP-RIPPER, 250-2113 CONTROL GP-WINCH, 250-2114 CONTROL GP-WINCH & RIPPER

AN ATTACHMENT

SMCS-5063, 5705 **i03588300**

NOTE	REF NO	GRAPHIC REF	PART NUMBER	QTY	PART NAME 1 2 3 4 5 6 (PRODUCT LEVEL)	SEE PAGE
	1	1	**151-9274**	1	KIT-RECEPTACLE (4-PIN)	
					(INCLUDES RECEPTACLE AS & WEDGE)	
	2	1	**278-8974**	1	KNOB	
	3	1	**278-8965**	1	BOOT	
	4	1	**278-8967**	1	RETAINER-BOOT	
M	5	1	**278-8970**	4	SCREW (M3X0.5X6-MM)	

M-METRIC PART

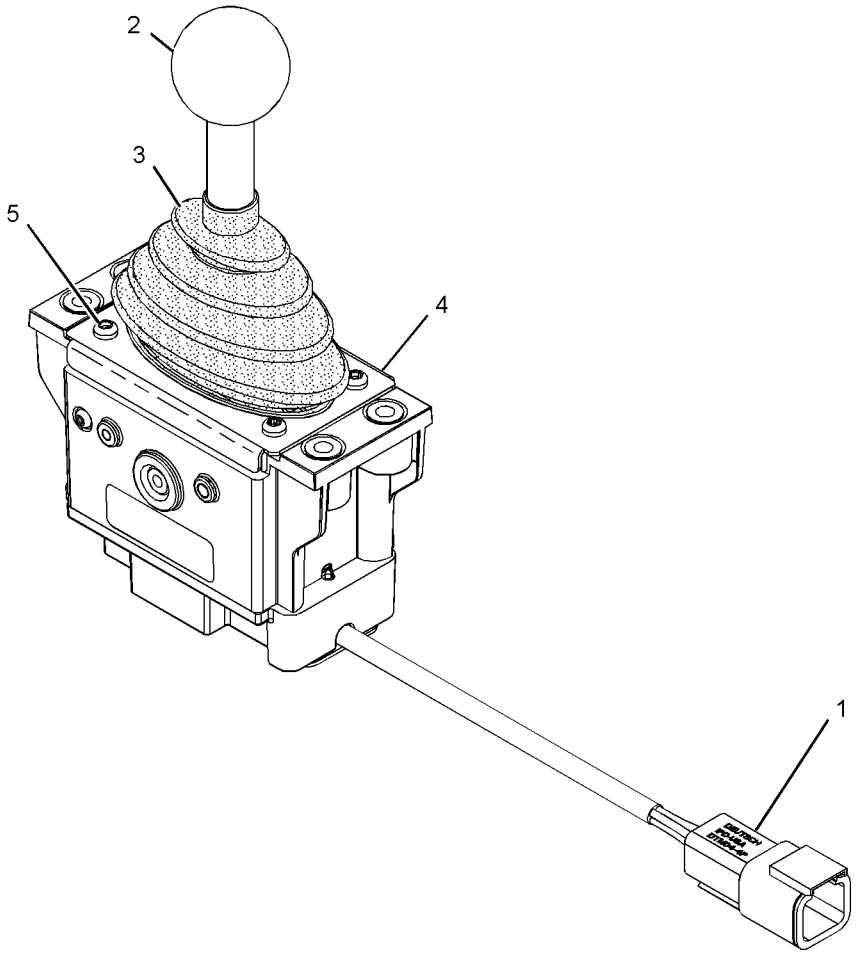

GRAPHIC #1 **<END>** g01195083

266-7631 CONTROL GP-HANDLE–BULLDOZER CONTROL

S/N: DHA1-UP; FBH1-UP

PART OF 274-4646, 328-0895 CONTROL GP-JOYSTICK

AN ATTACHMENT

SMCS-5063, 5705 **i02744621**

NOTE	REF NO	GRAPHIC REF	PART NUMBER	QTY	PART NAME 1 2 3 4 5 6 (PRODUCT LEVEL)	SEE PAGE
M	1	1	**299-2214**	2	SETSCREW (M6X1X12-MM)	
	2	1	**260-6728**	1	RECEPTACLE AS-CONNECTOR (12-PIN)	
	3	1	**186-3735**	7	PIN-CONNECTOR (16-GA TO 18-GA)	
	4	1	**8T-8737**	5	PLUG-SEAL	

M-METRIC PART

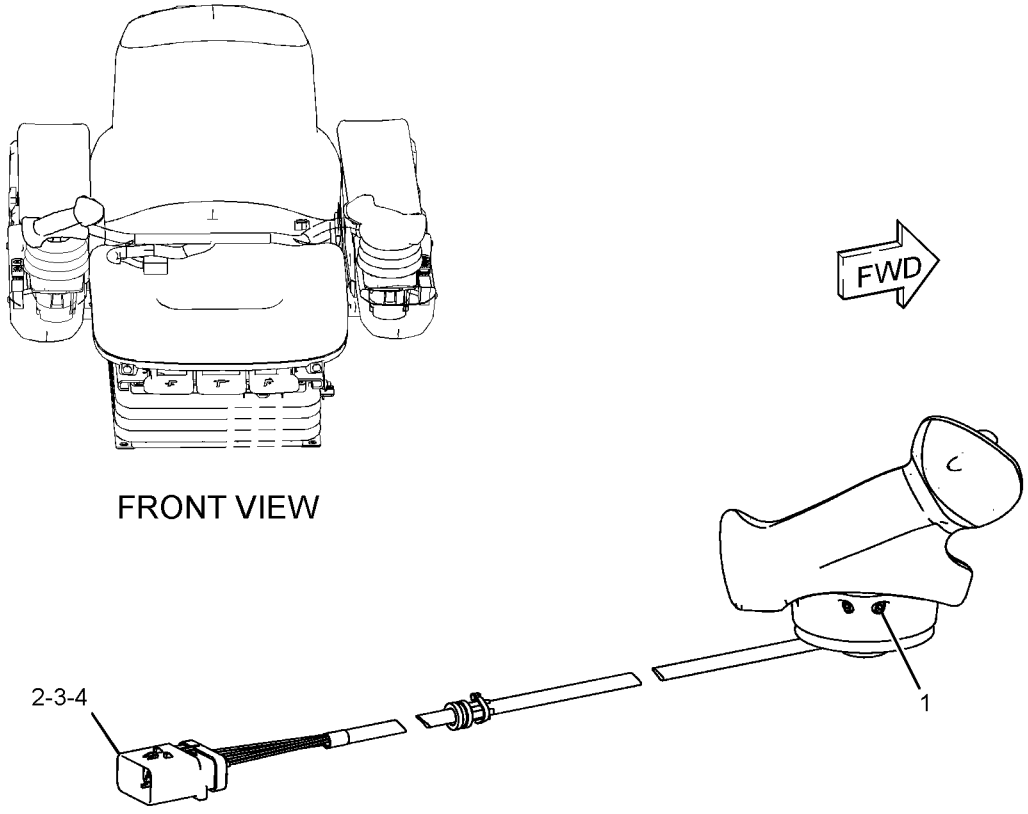

GRAPHIC #1 **<END>** g01303324

266-7632 CONTROL GP-HANDLE–GRADE CONTROL

S/N: DHA1-UP; FBH1-UP

PART OF 274-4645, 328-0894 CONTROL GP-JOYSTICK

AN ATTACHMENT

SMCS-5063, 5705 **i02743167**

NOTE	REF NO	GRAPHIC REF	PART NUMBER	QTY	PART NAME 1 2 3 4 5 6 (PRODUCT LEVEL)	SEE PAGE
M	1	1	**299-2214**	2	SETSCREW (M6X1X12-MM)	
	2	1	**260-6728**	1	RECEPTACLE AS-CONNECTOR (12-PIN)	
	3	1	**186-3735**	11	PIN-CONNECTOR (16-GA TO 18-GA)	
	4	1	**8T-8737**	1	PLUG-SEAL	

M-METRIC PART

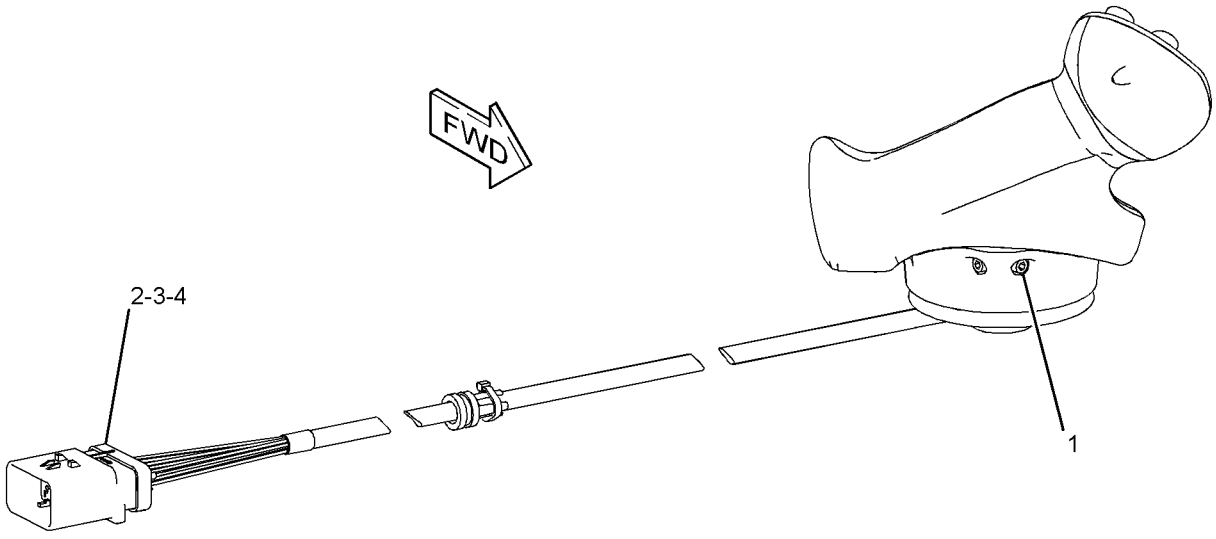

GRAPHIC #1 **<END>** g01303350

266-7634 CONTROL GP-HANDLE–STEERING, TRANSMISSION

S/N: DHA1-UP; FBH1-UP
PART OF 290-4835 CONTROL GP-JOYSTICK
AN ATTACHMENT

SMCS-5063, 5705 **i02745942**

NOTE	REF NO	GRAPHIC REF	PART NUMBER	QTY	PART NAME 1 2 3 4 5 6 (PRODUCT LEVEL)	SEE PAGE
	1	1	**260-6728**	1	RECEPTACLE AS-CONNECTOR (12-PIN)	
	2	1	**186-3735**	9	PIN-CONNECTOR (16-GA TO 18-GA)	
	3	1	**8T-8737**	3	PLUG-SEAL	
M	4	1	**299-2214**	2	SETSCREW (M6X1X12-MM)	

M-METRIC PART

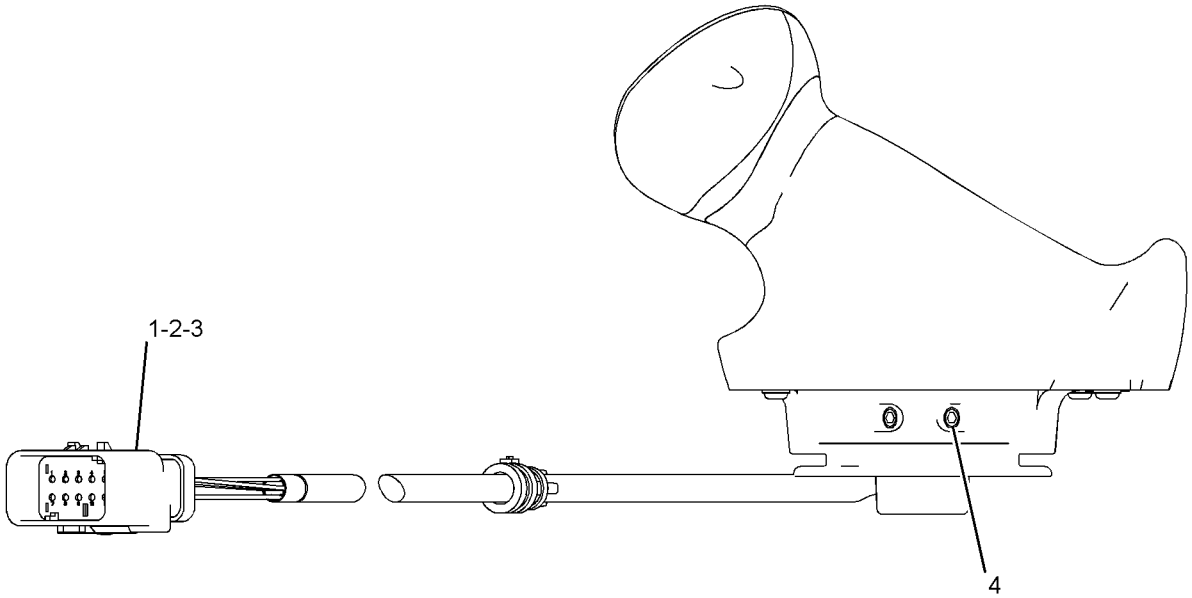

FRONT VIEW

GRAPHIC #1 **<END>** g01303367

OPERATOR STATION

307-4673 CONTROL GP-HANDLE–WINCH–RIPPER, WINCH–RIPPER

S/N: DHA349-UP; FBH489-UP

PART OF 250-2112 CONTROL GP-RIPPER, 250-2113 CONTROL GP-WINCH, 250-2114 CONTROL GP-WINCH & RIPPER

AN ATTACHMENT

SMCS-5063, 5705 **i02814073**

NOTE	REF NO	GRAPHIC REF	PART NUMBER	QTY	PART NAME 1 2 3 4 5 6 (PRODUCT LEVEL)	SEE PAGE
	1	1	**151-9274**	1	KIT-RECEPTACLE (4-PIN)	
					(INCLUDES RECEPTACLE AS & WEDGE)	
	2	1	**278-8974**	1	KNOB	
	3	1	**278-8965**	1	BOOT	
	4	1	**278-8967**	1	RETAINER-BOOT	
M	5	1	**278-8970**	4	SCREW (M3X10X6-MM)	

M-METRIC PART

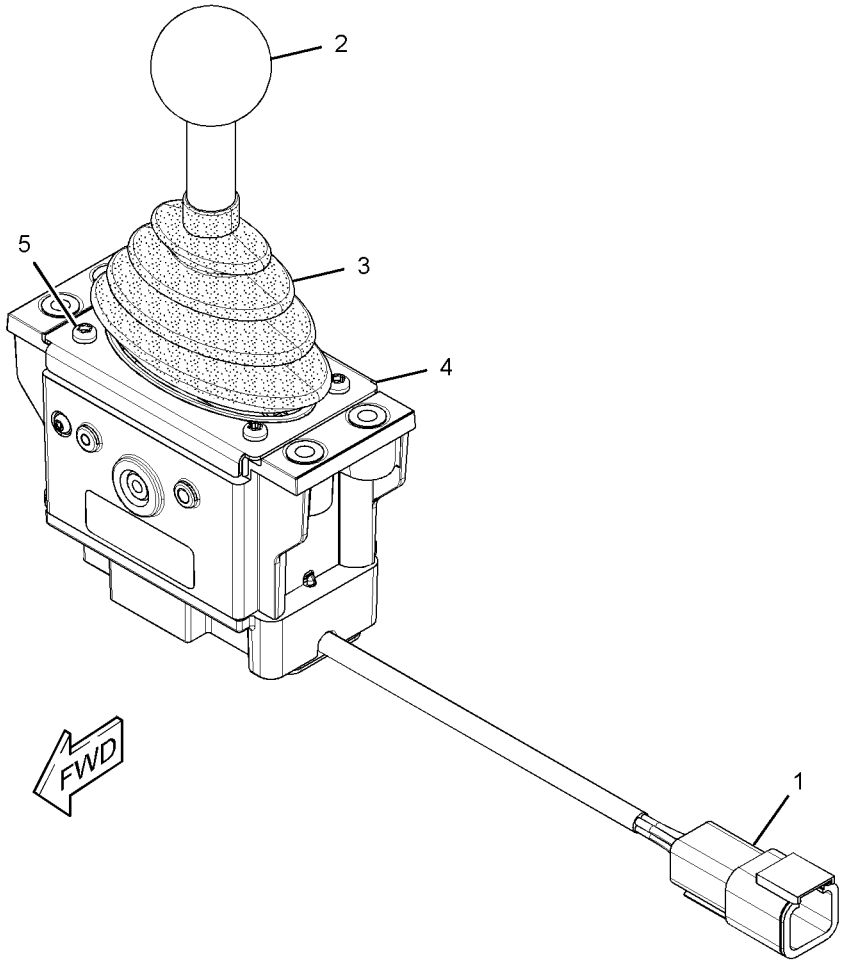

GRAPHIC #1 **<END>** g01416075

274-4645 CONTROL GP-JOYSTICK—GRADE CONTROL

S/N: DHA1-1021; FBH1-1290
PART OF 302-0576, 302-0577 GRADE CONTROL GP
FIELD REPLACEMENT ORDER 328-0894—PAGE 676
AN ATTACHMENT

SMCS-5705 **i03139007**

NOTE	REF NO	GRAPHIC REF	PART NUMBER	QTY	PART NAME 1 2 3 4 5 6 (PRODUCT LEVEL)	SEE PAGE
	1	1	**253-9544**	1	SENSOR AS-POSITION (IMPLEMENT CONTROL)	
	1A	1	**230-5011**	1	RECEPTACLE AS-CONNECTOR (6-PIN)	
	1B	1	**186-3735**	6	PIN-CONNECTOR (16-GA TO 18-GA)	
Y	2	1	**266-7632**	1	CONTROL GP-HANDLE (RH)	666
	3	1	**285-0151**	1	BOOT	
	5	1	**186-3735**	11	PIN-CONNECTOR (16-GA TO 18-GA)	
	6	1	**260-6728**	1	RECEPTACLE AS-CONNECTOR (12-PIN)	
	7	1	**8T-8737**	1	PLUG-SEAL	
M	8	1	**299-2214**	2	SETSCREW (M6X1X12-MM)	
	9	1	**8L-8413**	3	STRAP-CABLE	

M-METRIC PART
Y-SEPARATE ILLUSTRATION

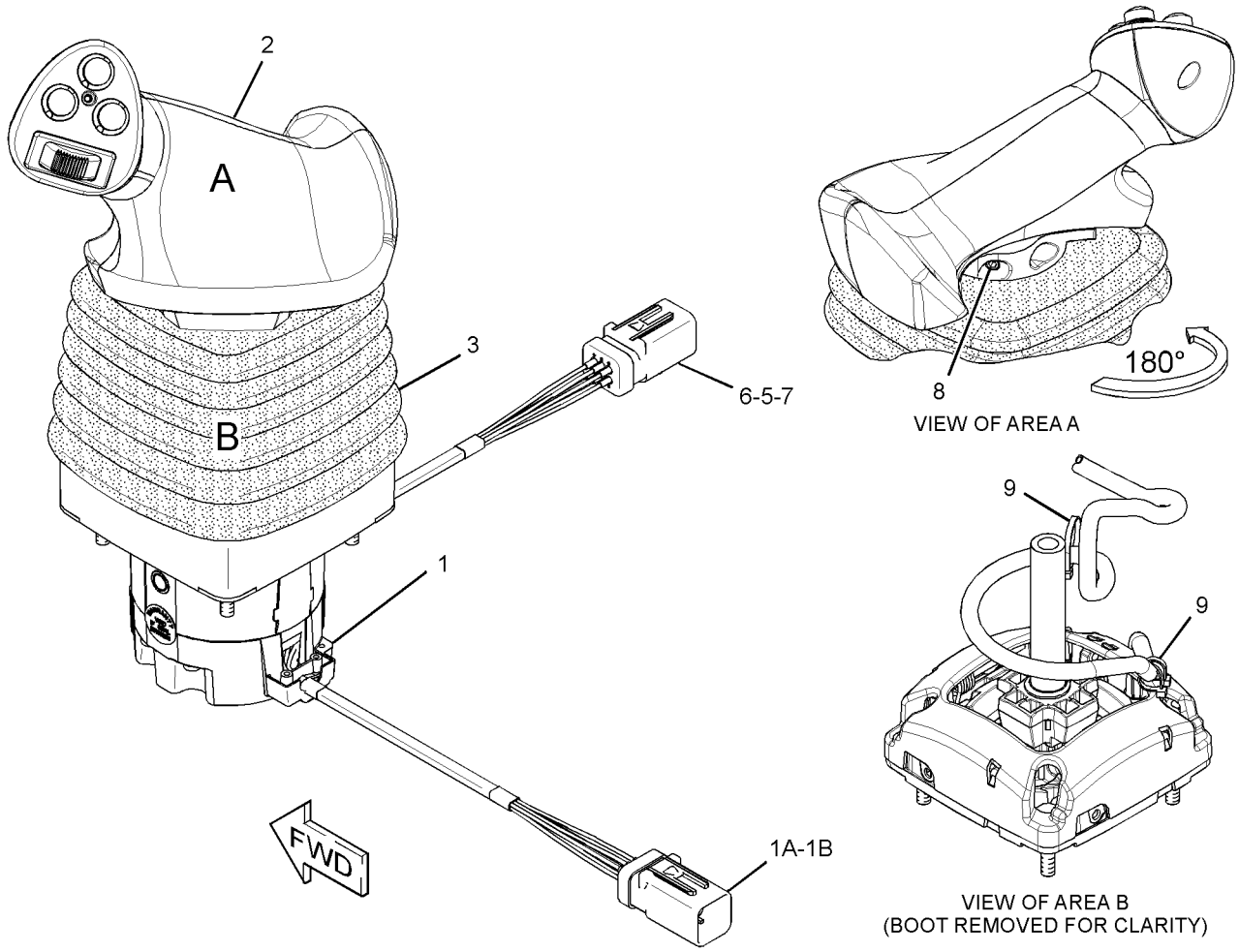

GRAPHIC #1 **<END>** g01423785

OPERATOR STATION

274-4646 CONTROL GP-JOYSTICK–BULLDOZER

S/N: DHA1-1012; FBH1-1262

PART OF 288-9868, 302-0582 CONTROL GP-JOYSTICK

AN ATTACHMENT

SMCS-5705 **i02841573**

NOTE	REF NO	GRAPHIC REF	PART NUMBER	QTY	PART NAME 1 2 3 4 5 6 (PRODUCT LEVEL)	SEE PAGE
	1	1	**253-9544**	1	SENSOR AS-POSITION (BULLDOZER CONTROL)	
	1A	1	**186-3735**	6	PIN-CONNECTOR (16-GA TO 18-GA)	
	1B	1	**230-5011**	1	RECEPTACLE AS-CONNECTOR (6-PIN)	
Y	2	1	**266-7631**	1	CONTROL GP-HANDLE (BULLDOZER CONTROL)	665
	3	1	**285-0151**	1	BOOT	
	5	1	**186-3735**	7	PIN-CONNECTOR (16-GA TO 18-GA)	
	6	1	**260-6728**	1	RECEPTACLE AS-CONNECTOR (12-PIN)	
	7	1	**8T-8737**	5	PLUG-SEAL	
M	8	1	**299-2214**	2	SETSCREW (M6X1X12-MM)	
	9	1	**8L-8413**	3	STRAP-CABLE	

M-METRIC PART
Y-SEPARATE ILLUSTRATION

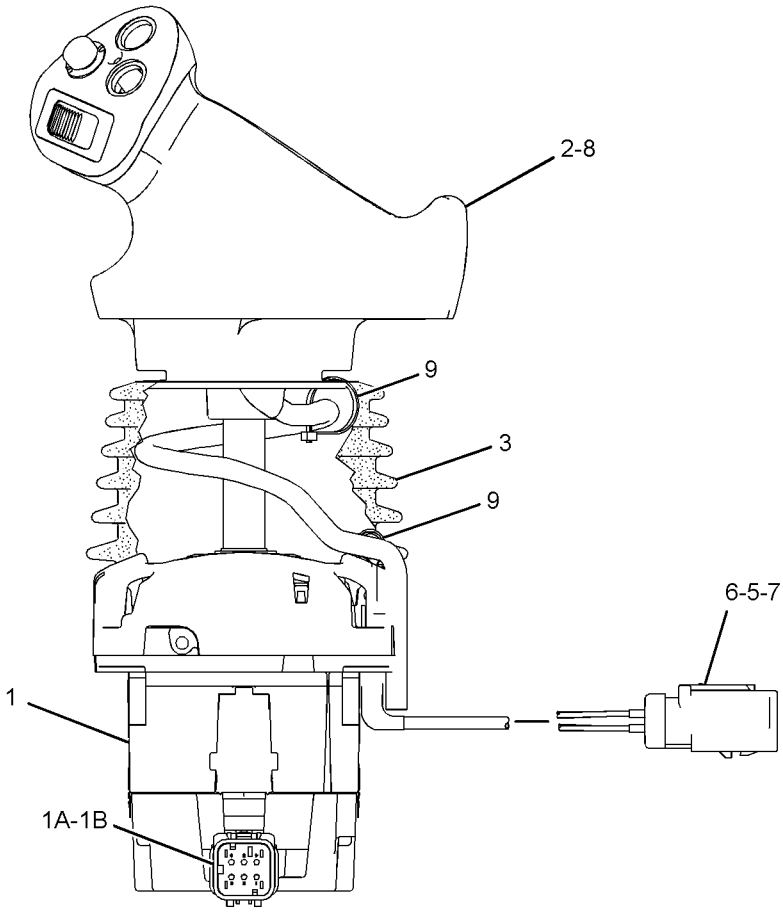

REAR VIEW

GRAPHIC #1 **<END>** g01422964

OPERATOR STATION

288-9868 CONTROL GP-JOYSTICK—ENCLOSED ROPS

S/N: DHA1-1012; FBH1-1262
CANNOT BE USED WITH 250-6994—PAGE 213
AN ATTACHMENT

SMCS-5705 **i02841626**

NOTE	REF NO	GRAPHIC REF	PART NUMBER	QTY	PART NAME 1 2 3 4 5 6 (PRODUCT LEVEL)	SEE PAGE
	1	1	**110-0885**	1	BUMPER	
	2	1	**188-8846**	1	LATCH AS	
Y	3	1	**274-4646**	1	CONTROL GP-JOYSTICK (BULLDOZER)	670
	4	1	**281-3963**	1	TREAD-RUBBER	
	5	1	**281-3964**	1	TREAD-RUBBER	
	6	1	**281-3965**	1	TREAD-RUBBER	
	7	1	**314-3022**	1	BOX AS-STORAGE	
	8	1	**314-3023**	1	PLATE AS	
M	9	1	**112-6646**	4	LOCKNUT (M6X1-THD)	
M	10	1	**9X-2042**	2	SCREW-TRUSS HEAD (M6X1X12-MM)	

M-METRIC PART
Y-SEPARATE ILLUSTRATION

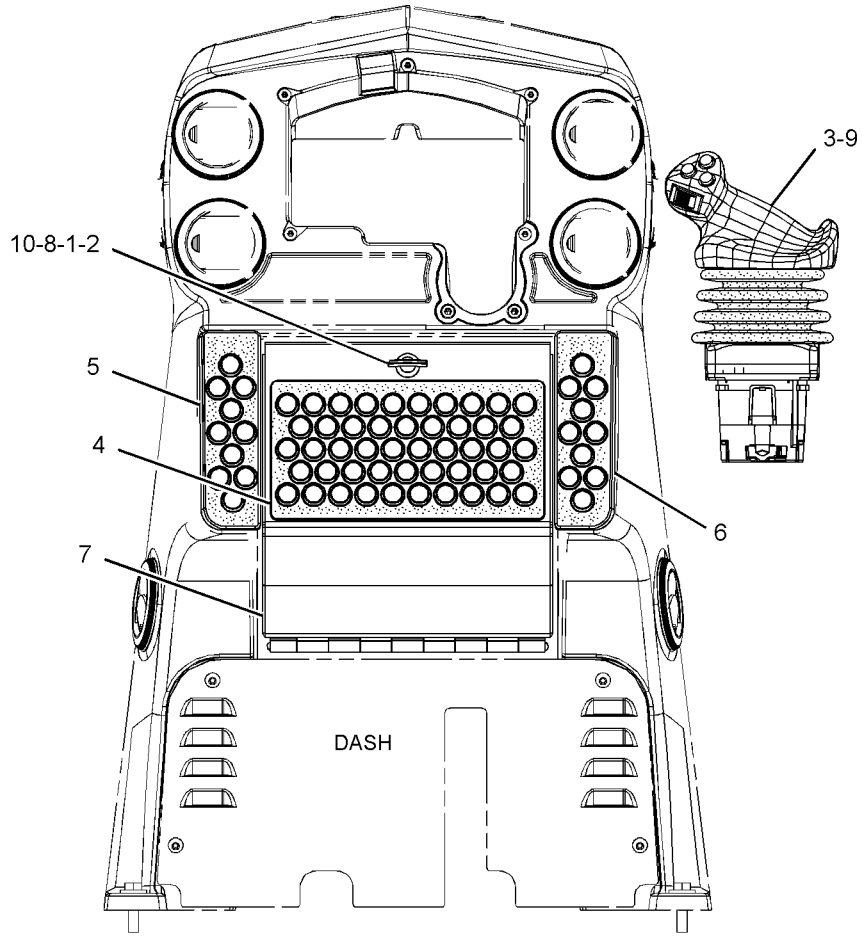

REAR VIEW

GRAPHIC #1 **<END>** g01382004

OPERATOR STATION

288-9868 CONTROL GP-JOYSTICK—ENCLOSED ROPS

S/N: DHA1013-UP; FBH1263-UP
CANNOT BE USED WITH 250-6994—PAGE 213
AN ATTACHMENT

SMCS-5705 **i03383742**

NOTE	REF NO	GRAPHIC REF	PART NUMBER	QTY	PART NAME 1 2 3 4 5 6 (PRODUCT LEVEL)	SEE PAGE
	1	1	**110-0885**	1	BUMPER	
	2	1	**188-8846**	1	LATCH AS	
CY	3	1	**328-0895**	1	CONTROL GP-JOYSTICK (BULLDOZER)	677
	4	1	**281-3963**	1	TREAD-RUBBER	
	5	1	**281-3964**	1	TREAD-RUBBER	
	6	1	**281-3965**	1	TREAD-RUBBER	
	7	1	**314-3022**	1	BOX AS-STORAGE	
	8	1	**314-3023**	1	PLATE AS	
M	9	1	**112-6646**	4	LOCKNUT (M6X1-THD)	
M	10	1	**9X-2042**	2	SCREW-TRUSS HEAD (M6X1X12-MM)	

C-CHANGE FROM PREVIOUS TYPE
M-METRIC PART
Y-SEPARATE ILLUSTRATION

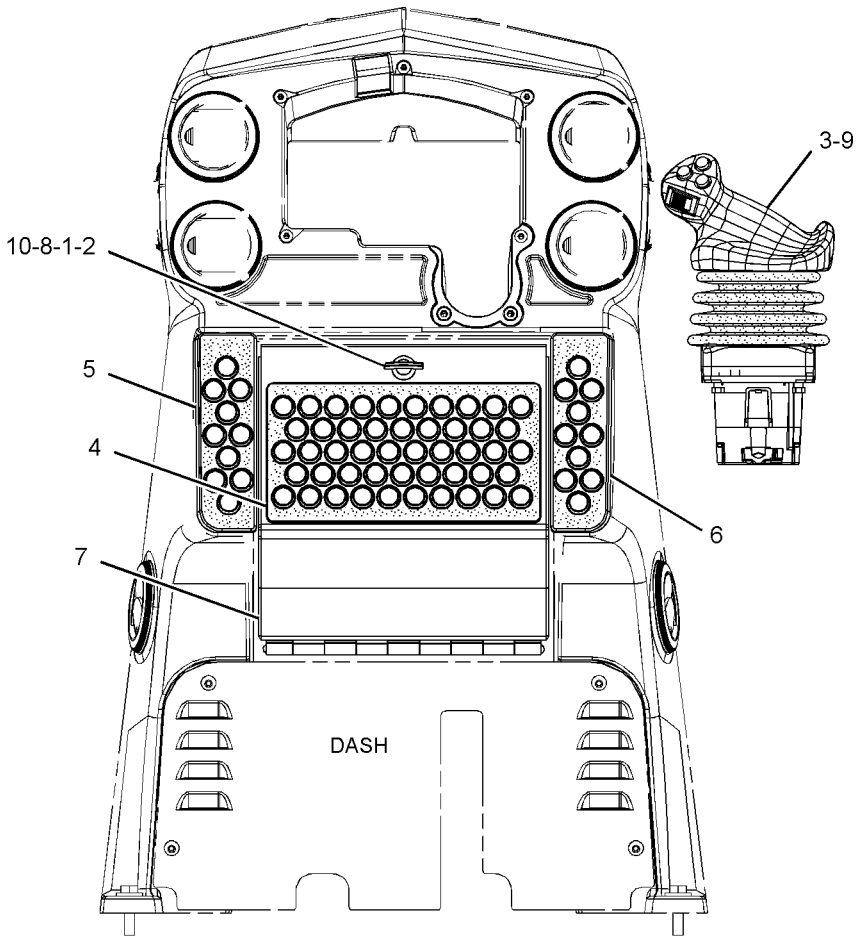

REAR VIEW

GRAPHIC #1 **<END>** g01382004

OPERATOR STATION

290-4835 CONTROL GP-JOYSTICK–STEERING, TRANSMISSION

S/N: DHA1-UP; FBH1-UP
PART OF 272-2771 WIRING GP-SEAT
AN ATTACHMENT

SMCS-5705 **i03706811**

NOTE	REF NO	GRAPHIC REF	PART NUMBER	QTY	PART NAME 1 2 3 4 5 6 (PRODUCT LEVEL)	SEE PAGE
Y	1	1	**266-7634**	1	CONTROL GP-HANDLE (STEERING, TRANSMISSION)	667
Y	2	1	**284-8207**	1	SENSOR GP-POSITION (STEERING, TRANSMISSION)	290
	3	1	**285-0151**	1	BOOT	
	4	1	**286-2968**	1	BRACKET AS	
M		1	**6V-9632**	4	NUT-WELD (M6X1-THD)	
M	5	1	**299-2214**	2	SETSCREW (M6X1X12-MM)	
	6	1	**260-6728**	1	RECEPTACLE AS-CONNECTOR (12-PIN)	
	7	1	**102-8805**	1	KIT-RECEPTACLE (6-PIN)	
					(INCLUDES RECEPTACLE AS & WEDGE)	
	8	1	**186-3735**	15	PIN-CONNECTOR (16-GA TO 18-GA)	
	9	1	**8T-8737**	3	PLUG-SEAL	
	10	1	**284-8208**	1	SHAFT-ADAPTER	
	11	1	**8L-8413**	1	STRAP-CABLE	

M-METRIC PART
Y-SEPARATE ILLUSTRATION

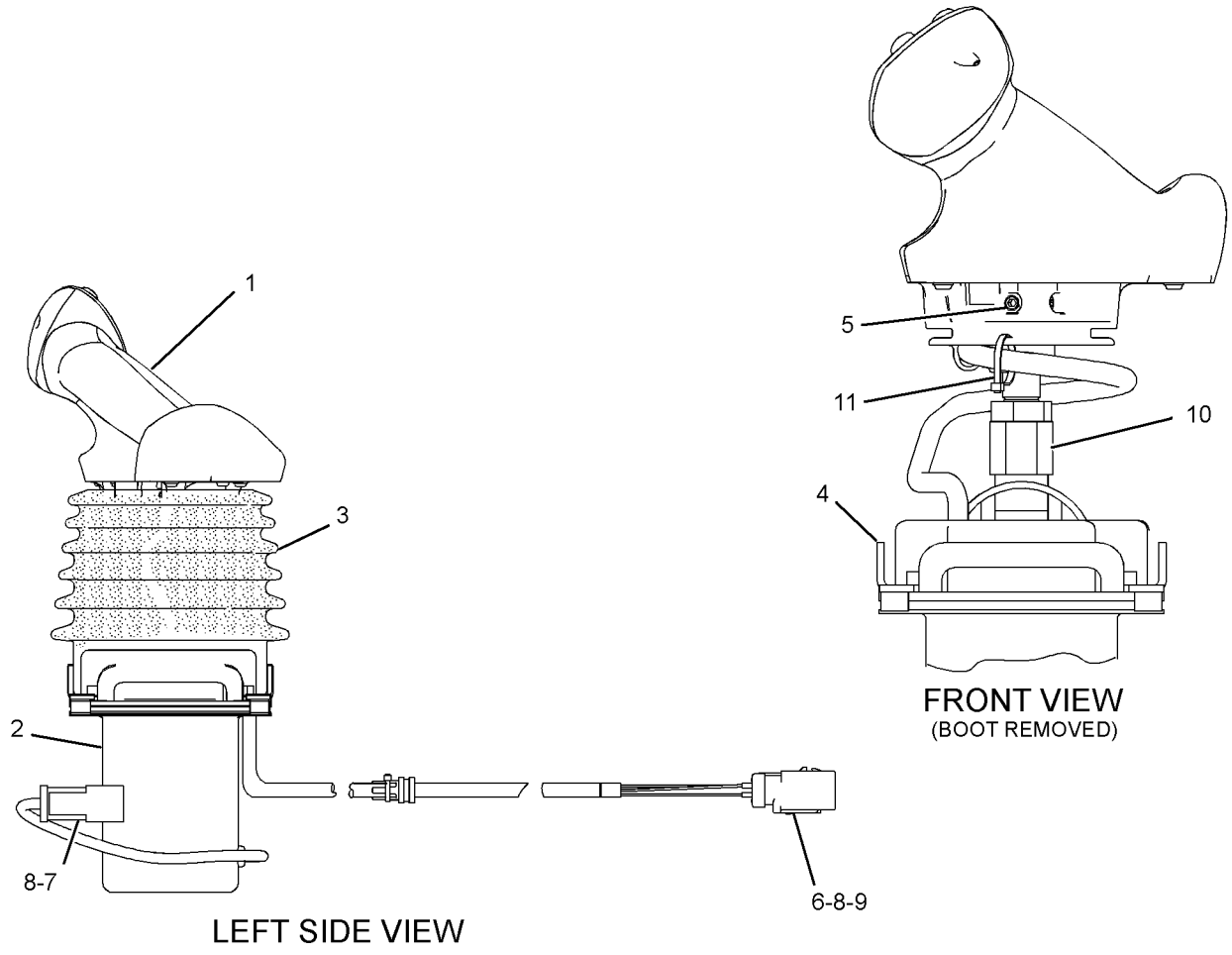

GRAPHIC #1 **<END>** g01412928

OPERATOR STATION

302-0582 CONTROL GP-JOYSTICK—OPEN ROPS

S/N: DHA1-1012; FBH1-1262

FOR USE WITH CANOPY. CANNOT BE USED WITH 293-5184—PAGE 218 AN ATTACHMENT

SMCS-5705 **i02843869**

NOTE	REF NO	GRAPHIC REF	PART NUMBER	QTY	PART NAME 1 2 3 4 5 6 (PRODUCT LEVEL)	SEE PAGE
Y	1	1	**274-4646**	1	CONTROL GP-JOYSTICK (BULLDOZER)	670
	2	1	**281-3964**	1	TREAD-RUBBER	
	3	1	**281-3965**	1	TREAD-RUBBER	
	4	1	**314-3020**	1	PLATE	
M	5	1	**112-6646**	4	LOCKNUT (M6X1-THD)	
E	6	1	**8C-7332**		TRIM-EDGE (26.2-CM)	

E-ORDER BY THE CENTIMETER
M-METRIC PART
Y-SEPARATE ILLUSTRATION

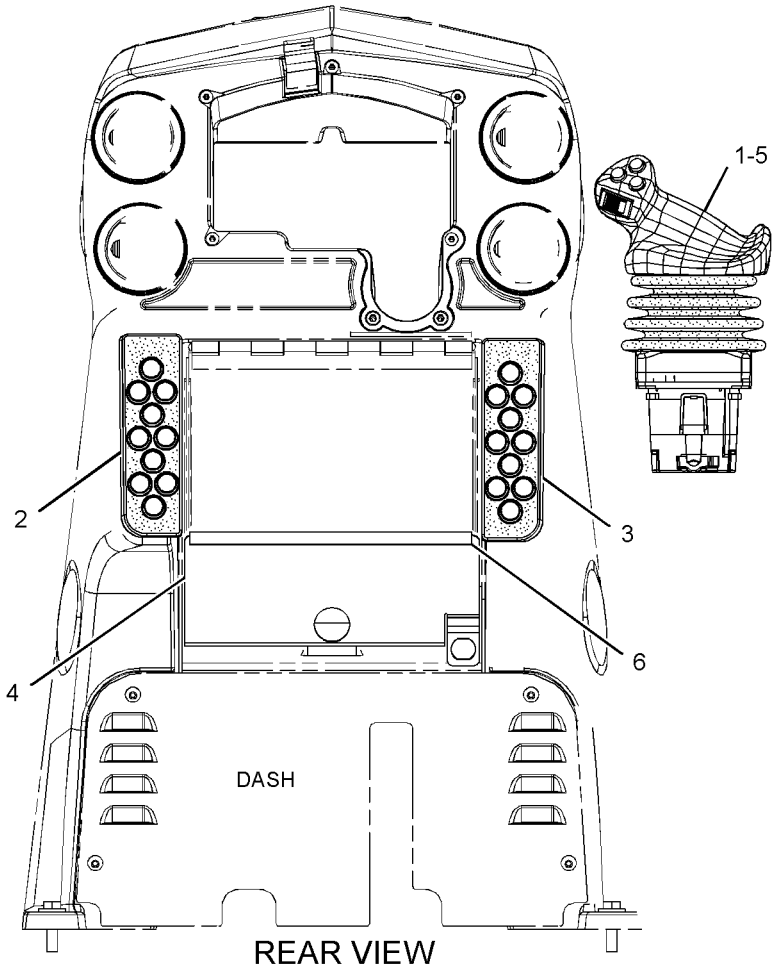

REAR VIEW

GRAPHIC #1 **<END>** g01386508

302-0582 CONTROL GP-JOYSTICK—OPEN ROPS

S/N: DHA1013-UP; FBH1263-UP

FOR USE WITH CANOPY. CANNOT BE USED WITH 293-5184—PAGE 218 AN ATTACHMENT

SMCS-5705 **i03383748**

NOTE	REF NO	GRAPHIC REF	PART NUMBER	QTY	PART NAME 1 2 3 4 5 6 (PRODUCT LEVEL)	SEE PAGE
CY	1	1	**328-0895**	1	CONTROL GP-JOYSTICK (BULLDOZER)	677
	2	1	**281-3964**	1	TREAD-RUBBER	
	3	1	**281-3965**	1	TREAD-RUBBER	
	4	1	**314-3020**	1	PLATE	
M	5	1	**112-6646**	4	LOCKNUT (M6X1-THD)	
E	6	1	**8C-7332**		TRIM-EDGE (26.2-CM)	

C-CHANGE FROM PREVIOUS TYPE
E-ORDER BY THE CENTIMETER
M-METRIC PART
Y-SEPARATE ILLUSTRATION

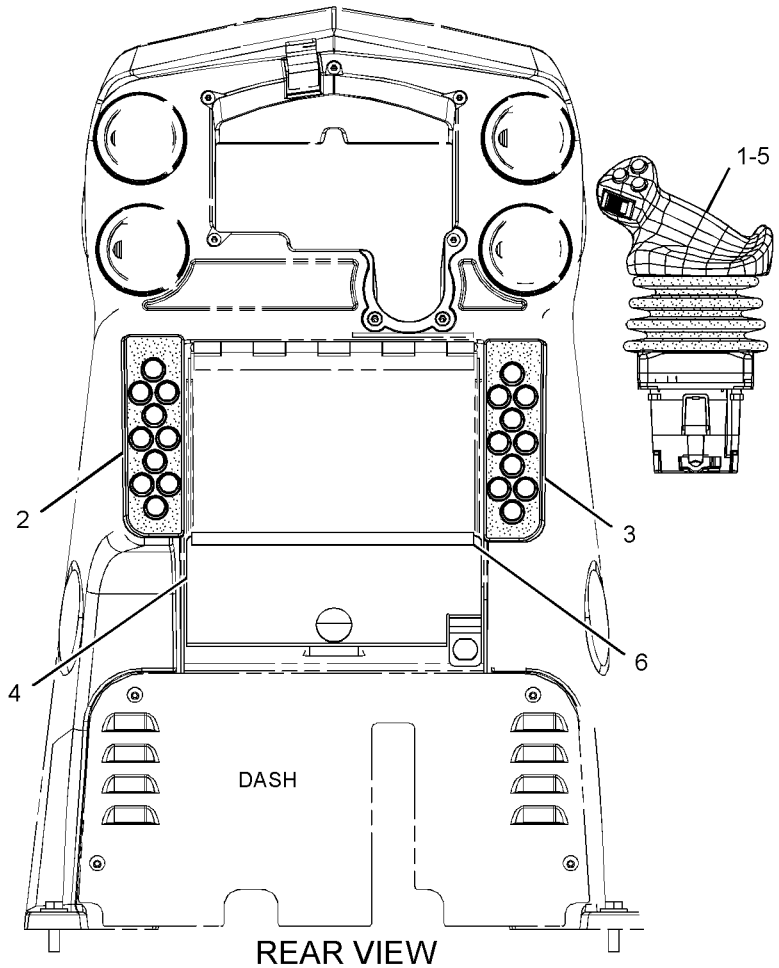

REAR VIEW

GRAPHIC #1

<END>

g01386508

OPERATOR STATION

328-0894 CONTROL GP-JOYSTICK—GRADE CONTROL

S/N: DHA1-UP; FBH1-UP
PART OF 302-0576, 302-0577 GRADE CONTROL GP
FIELD REPLACEMENT FOR 274-4645—PAGE 669
AN ATTACHMENT

SMCS-5705 **i03139020**

NOTE	REF NO	GRAPHIC REF	PART NUMBER	QTY	PART NAME 1 2 3 4 5 6 (PRODUCT LEVEL)	SEE PAGE
	1	1	**328-0893**	1	SENSOR AS-POSITION (IMPLEMENT CONTROL)	
	1A	1	**230-5011**	1	RECEPTACLE AS-CONNECTOR (6-PIN)	
	1B	1	**186-3735**	6	PIN-CONNECTOR (16-GA TO 18-GA)	
Y	2	1	**266-7632**	1	CONTROL GP-HANDLE (RH)	666
	3	1	**285-0151**	1	BOOT	
	5	1	**186-3735**	11	PIN-CONNECTOR (16-GA TO 18-GA)	
	6	1	**260-6728**	1	RECEPTACLE AS-CONNECTOR (12-PIN)	
	7	1	**8T-8737**	1	PLUG-SEAL	
M	8	1	**299-2214**	2	SETSCREW (M6X1X12-MM)	
	9	1	**8L-8413**	3	STRAP-CABLE	
	10	1	**144-0331**	1	CAP-PUSH BUTTON (YELLOW)	
	11	1	**220-8355**	2	CAP-PUSH BUTTON (BLACK)	

M-METRIC PART
Y-SEPARATE ILLUSTRATION

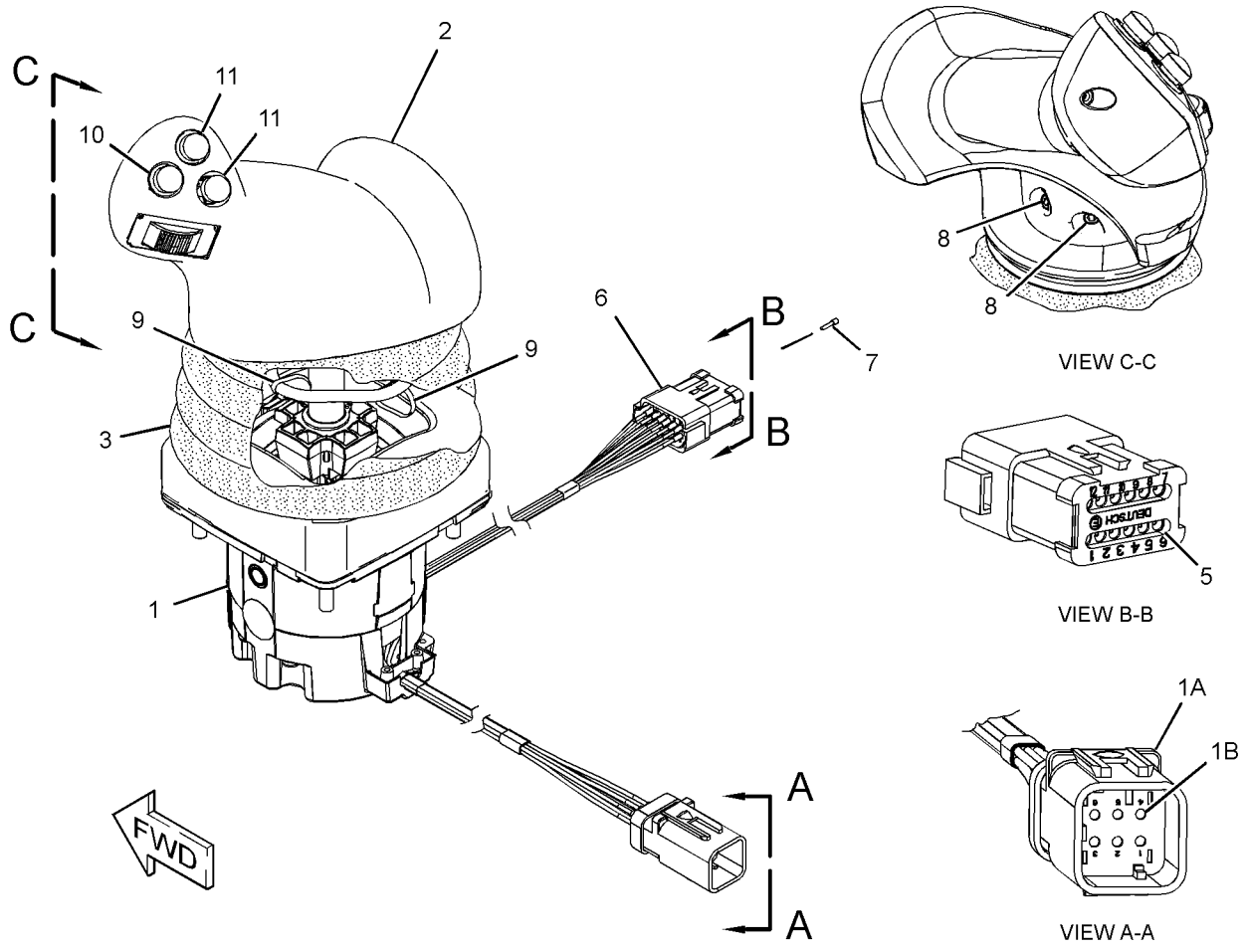

GRAPHIC #1 **<END>** g01521475

OPERATOR STATION

328-0895 CONTROL GP-JOYSTICK–BULLDOZER

S/N: DHA1013-UP; FBH1263-UP

PART OF 288-9868, 302-0582 CONTROL GP-JOYSTICK

AN ATTACHMENT

SMCS-5705 **i03383753**

NOTE	REF NO	GRAPHIC REF	PART NUMBER	QTY	PART NAME 1 2 3 4 5 6 (PRODUCT LEVEL)	SEE PAGE
	1	1	**328-0893**	1	SENSOR AS-POSITION (IMPLEMENT JOYSTICK)	
		1	**186-3735**	6	PIN-CONNECTOR (16-GA TO 18-GA)	
		1	**230-5011**	1	RECEPTACLE AS-CONNECTOR (6-PIN)	
Y	2	1	**266-7631**	1	CONTROL GP-HANDLE (BULLDOZER CONTROL)	665
	3	1	**285-0151**	1	BOOT	
	4	1	**230-5011**	1	RECEPTACLE AS-CONNECTOR (6-PIN)	
	5	1	**186-3735**	13	PIN-CONNECTOR (16-GA TO 18-GA)	
	6	1	**260-6728**	1	RECEPTACLE AS-CONNECTOR (12-PIN)	
	7	1	**8T-8737**	5	PLUG-SEAL	
M	8	1	**299-2214**	2	SETSCREW (M6X1X12-MM)	
	9	1	**8L-8413**	3	STRAP-CABLE	
	10	1	**144-0331**	1	CAP-PUSH BUTTON (YELLOW)	

M-METRIC PART
Y-SEPARATE ILLUSTRATION

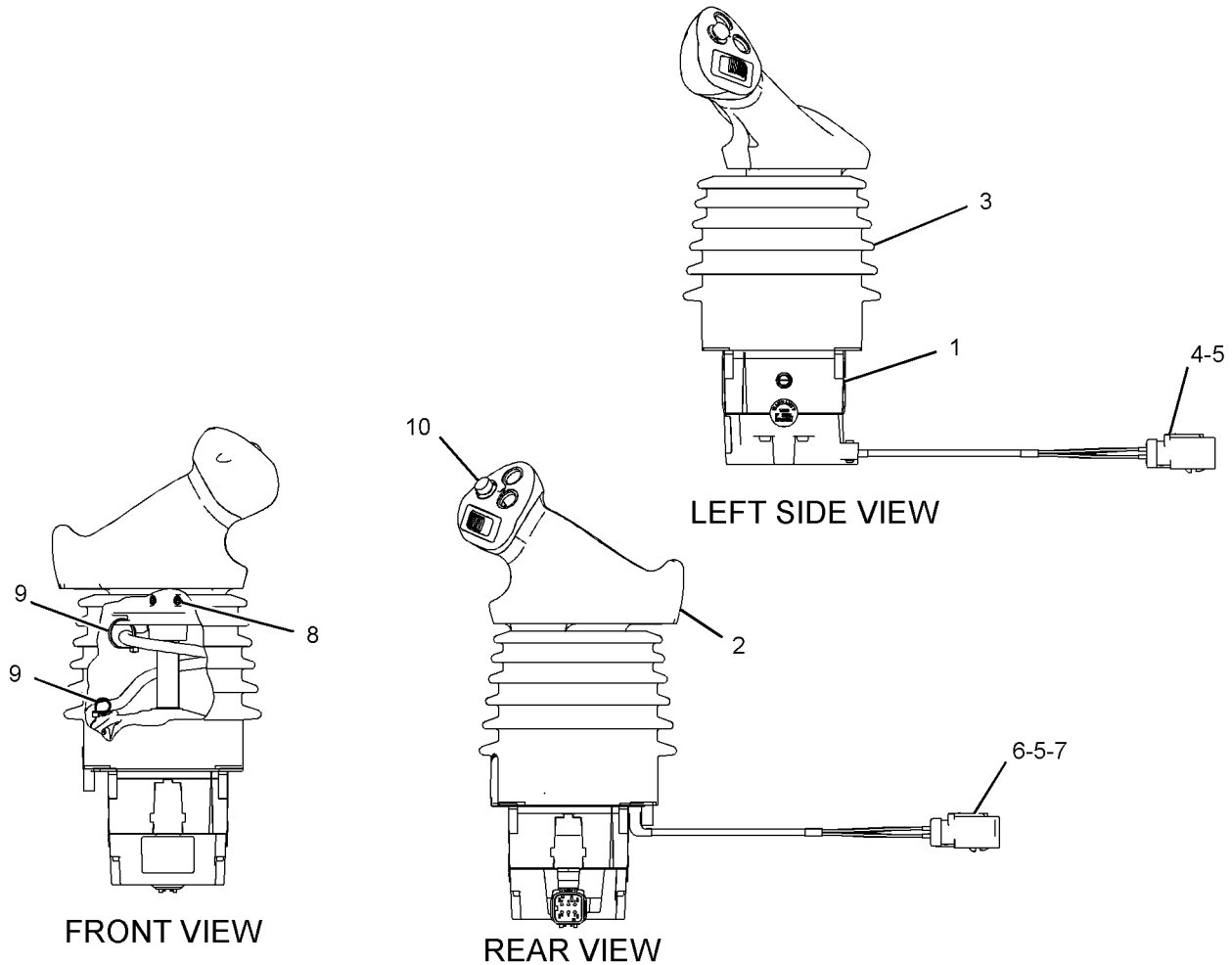

GRAPHIC #1

<END>

g01622537

OPERATOR STATION

250-2112 CONTROL GP-RIPPER

S/N: DHA1-348; FBH1-488
PART OF 349-8353 OPTION AR-RIPPER
FOR USE WITH 240-1470—PAGE 842, 250-3852—PAGE 528. CANNOT BE USED WITH 250-2114—PAGE 515, 250-2113—PAGE 830, 250-2111—PAGE 697 AN ATTACHMENT

SMCS-5357 **i02582958**

NOTE	REF NO	GRAPHIC REF	PART NUMBER	QTY	PART NAME 1 2 3 4 5 6 (PRODUCT LEVEL)	SEE PAGE
	1	1	**117-2311**	1	SOCKET-AUXILIARY POWER (12-VOLT)	
	2	1	**169-2876**	1	FILM-IDENTIFICATION (POWER RECEPTACLE, 12-VOLT)	
	3	1	**228-6089**	3	PLUG (ROCKER SWITCH)	
Y	4	1	**252-4559**	1	CONTROL GP-HANDLE (RIPPER)	664
	5	1	**266-9001**	1	BRACKET	
	6	1	**266-9005**	1	FILM-INSTRUCTION (RIPPER CONTROL)	
M	7	1	**9X-2045**	8	SCREW-TRUSS HEAD (M6X1X20-MM)	

M-METRIC PART
Y-SEPARATE ILLUSTRATION

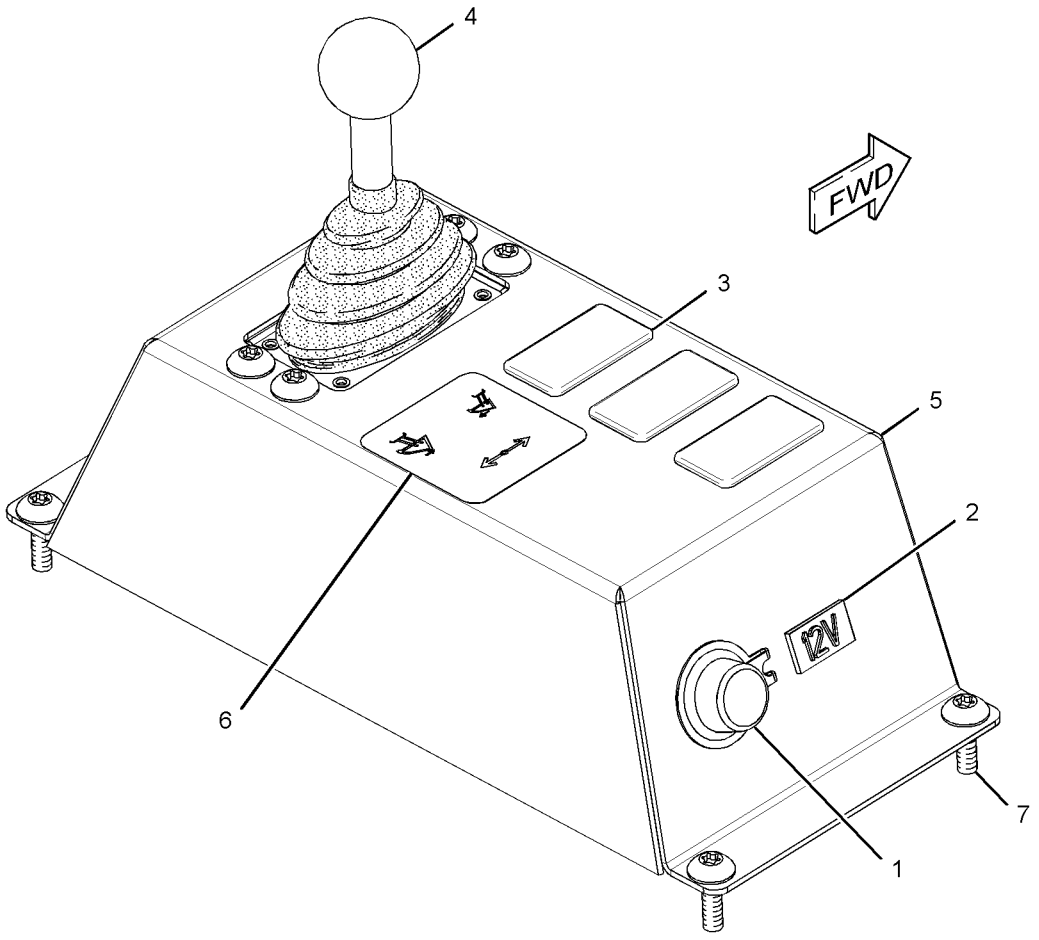

GRAPHIC #1 **<END>** g01301996

OPERATOR STATION

250-2112 CONTROL GP-RIPPER

S/N: DHA349-UP; FBH489-UP
PART OF 349-8353 OPTION AR-RIPPER
FOR USE WITH 240-1470—PAGE 842, 250-3852—PAGE 528. CANNOT BE USED WITH 250-2114—PAGE 515, 250-2113—PAGE 830, 250-2111—PAGE 697 AN ATTACHMENT

SMCS-5357 **i03706816**

NOTE	REF NO	GRAPHIC REF	PART NUMBER	QTY	PART NAME 1 2 3 4 5 6 (PRODUCT LEVEL)	SEE PAGE
	1	1	**117-2311**	1	SOCKET-AUXILIARY POWER (12-VOLT)	
	2	1	**169-2876**	1	FILM-IDENTIFICATION (POWER RECEPTACLE, 12-VOLT)	
	3	1	**228-6089**	3	PLUG (ROCKER SWITCH)	
CY	4	1	**307-4673**	1	CONTROL GP-HANDLE (RIPPER)	668
	5	1	**298-4325**	1	BRACKET	
	6	1	**266-9005**	1	FILM-INSTRUCTION (RIPPER CONTROL)	
M	7	1	**9X-2045**	8	SCREW-TRUSS HEAD (M6X1X20-MM)	

C-CHANGE FROM PREVIOUS TYPE
M-METRIC PART
Y-SEPARATE ILLUSTRATION

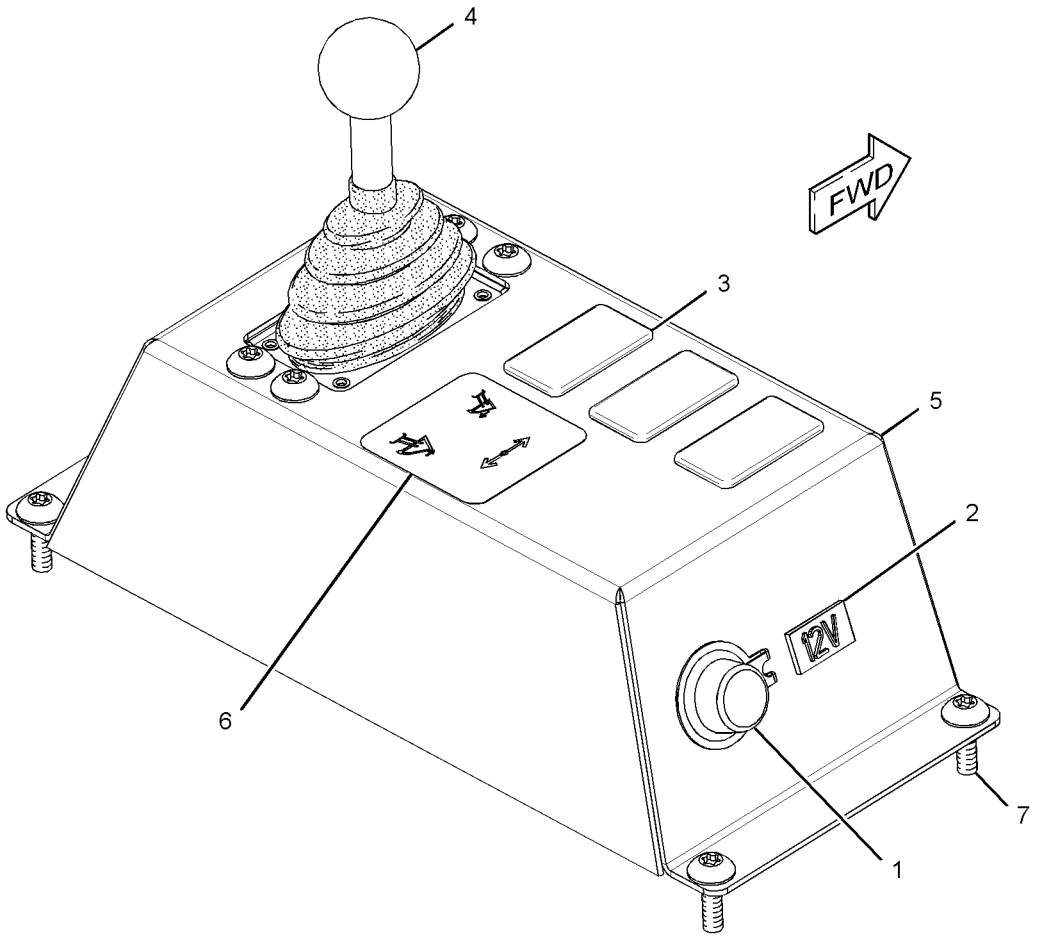

GRAPHIC #1 **<END>** g01301996

OPERATOR STATION

239-5025 CONTROL GP-UNPRGMED MONITOR

S/N: DHA1-UP; FBH1-UP
PART OF 247-6508, 252-7820 INSTRUMENT GP
AN ATTACHMENT

SMCS-7610 **i02580878**

NOTE	REF NO	GRAPHIC REF	PART NUMBER	QTY	PART NAME 1 2 3 4 5 6 (PRODUCT LEVEL)	SEE PAGE
Z	1	1		2	BRACKET	
	2	1	*239-5024*	1	CONTROL GP-MONITOR (MESSENGER)	
	2A	1	**124-0312**	1	SCREW-PAN HEAD (8-16X0.32-IN)	
	3	1	**242-2461**	1	BEZEL	
Z	4	1		4	SCREW-MACHINE (6-20X0.37-IN)	

Z-NOT SERVICED SEPARATELY

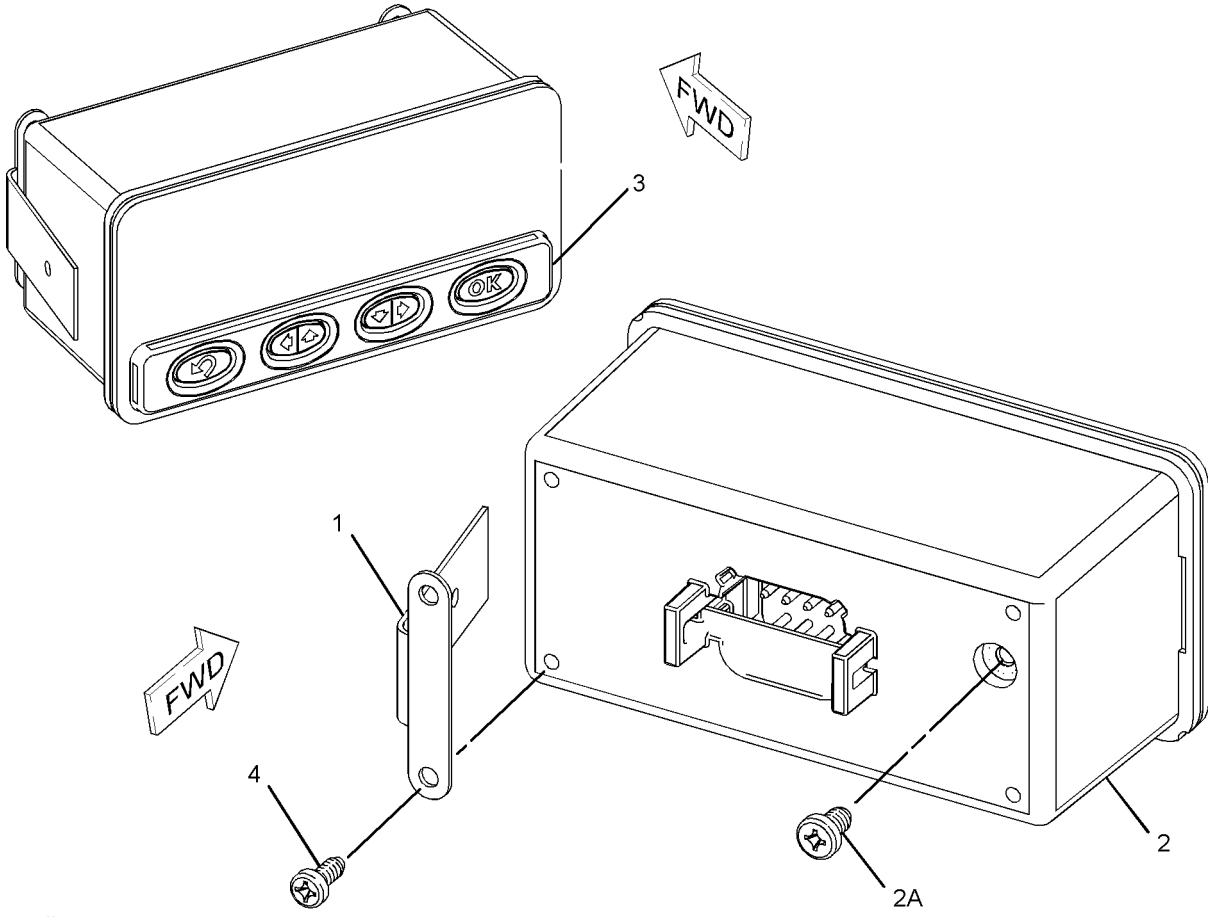

GRAPHIC #1 **<END>** g01103089

OPERATOR STATION

247-6509 COVER GP-CAB

S/N: DHA1-329; FBH1-471

PART OF 240-6233 CAB GP-ENCLOSED ROPS, 267-2550 CAB GP-FORESTRY

AN ATTACHMENT

SMCS-7301 **i02747663**

NOTE	REF NO	GRAPHIC REF	PART NUMBER	QTY	PART NAME 1 2 3 4 5 6 (PRODUCT LEVEL)	SEE PAGE
	1	1	**107-6032**	1	LAMP GP-DOME (24-VOLT)	
		1	**259-1286**	1	LAMP (24-VOLT, 10-WATT)	
	2	1	**154-7951**	12	SPACER	
	3	1	**164-8474**	8	LOUVER AS-VENT	
	4	1	**223-0455**	2	LOUVER AS	
M	5	1	**225-3322**	1	SCREW-TRUSS HEAD (M6X1X10-MM)	
	6	1	**251-8633**	1	PLATE	
	7	1	**252-7208**	1	INSULATION (LH)	
	8	1	**252-7209**	1	INSULATION (RH)	
	9	1	**255-4233**	1	HEADLINER	
	10	1	**255-8384**	1	COVER-RADIO	
	11	1	**255-8386**	1	COVER	
	12	1	**275-6710**	2	RETAINER	
	13	1	**281-3966**	1	PLATE	
	14	1	**281-3967**	1	PLATE	
	15	1	**281-3968**	1	BOX AS	
	16	1	**284-3751**	1	CONSOLE AS (RH)	
M		1	**297-1466**	11	INSERT-THREADED (M6X1-THD)	
Y	17	1	**284-3752**	1	CONSOLE GP (LH)	657
	18	1	**284-3753**	1	MAT-REAR	
	19	1	**284-7042**	1	FLOOR MAT-REAR	
	20	1	**288-0883**	1	COVER	
	21	1	**288-0887**	1	BRACKET	
M	22	1	**288-3663**	2	THUMBSCREW (M6X1X25-MM)	
	23	1	**289-2020**	1	DASH AS	
M		1	**297-1465**	9	INSERT-THREADED (M5X0.8-THD)	
M		1	**297-1466**	13	INSERT-THREADED (M6X1-THD)	
	24	1	**289-3378**	1	HOUSING AS	
M		1	**297-1466**	3	INSERT-THREADED (M6X1-THD)	
	25	1	**289-3380**	1	PLATE AS	
	26	1	**289-3381**	1	BRACKET	
	27	1	**104-2091**	4	SCREW-FLAT HEAD (NO 6X0.5-IN)	
M	28	1	**127-2170**	14	SCREW-TRUSS HEAD (M8X1.25X20-MM)	
M	29	1	**128-2136**	6	SCREW-TRUSS HEAD (M6X1X16-MM)	
	30	1	**3E-4353**	8	WASHER-HARD (11X25X3-MM THK)	
	31	1	**7X-7729**	8	WASHER (11X25X3-MM THK)	
Y	32	1	*8E-8706*	1	MIRROR GP-REAR VIEW	744
M	33	1	**8T-4133**	2	NUT (M10X1.5-THD)	
M	34	1	**8T-4186**	6	BOLT (M10X1.5X40-MM)	
M	35	1	**9X-2040**	8	SCREW-TRUSS HEAD (M10X1.5X25-MM)	
M	36	1	**9X-2043**	15	SCREW-TRUSS HEAD (M6X1X14-MM)	
M	37	1	**9X-2045**	11	SCREW-TRUSS HEAD (M6X1X20-MM)	
D	38	1	**5P-5639**		SEAL (0.1-M)	
D	39	1	**8T-5372**		SEAL (0.3-M)	
M	40	1	**111-4627**	1	SCREW-MACHINE (M6X1X30-MM)	
	41	1	**201-2638**	1	MIRROR AS	

D-ORDER BY THE METER
M-METRIC PART
Y-SEPARATE ILLUSTRATION

247-6509 **COVER GP-CAB** *(contd.)* **i02747663**

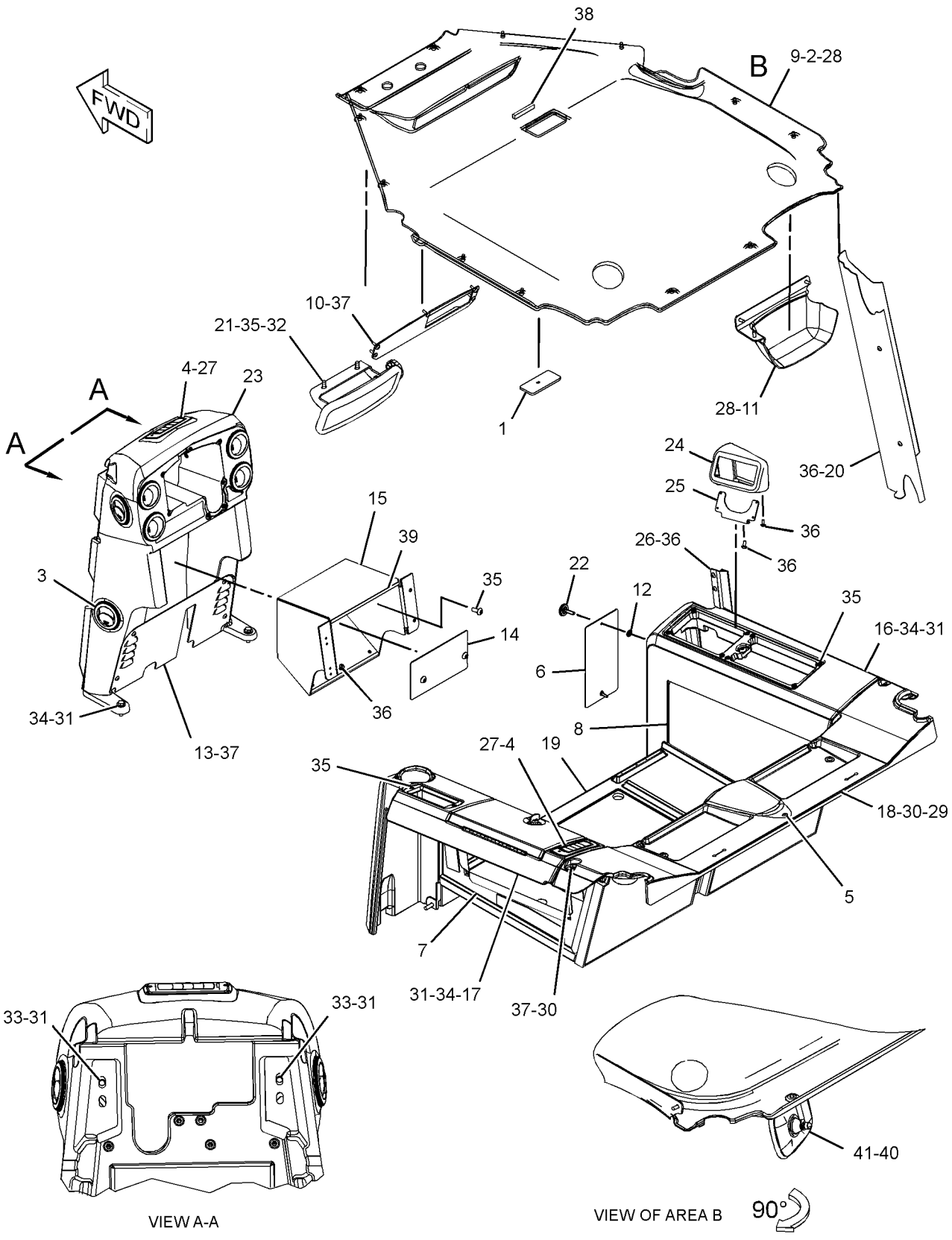

GRAPHIC #1 **<END>** g01390264

OPERATOR STATION

247-6509 COVER GP-CAB

S/N: DHA330-912; FBH472-770
PART OF 240-6233 CAB GP-ENCLOSED ROPS, 267-2550 CAB GP-FORESTRY
AN ATTACHMENT

SMCS-7301 **i02810077**

NOTE	REF NO	GRAPHIC REF	PART NUMBER	QTY	PART NAME 1 2 3 4 5 6 (PRODUCT LEVEL)	SEE PAGE
	1	2	**107-6032**	1	LAMP GP-DOME (24-VOLT)	
		2	**259-1286**	1	LAMP (24-VOLT, 10-WATT)	
	2	1	**154-7951**	12	SPACER	
	3	2	**164-8474**	8	LOUVER AS-VENT	
	4	1	**223-0455**	2	LOUVER AS	
M	5	1	**225-3322**	1	SCREW-TRUSS HEAD (M6X1X10-MM)	
	6	1	**251-8633**	1	PLATE	
	7	1	**252-7208**	1	INSULATION (LH)	
	8	1	**252-7209**	1	INSULATION (RH)	
	9	1	**255-4233**	1	HEADLINER	
	10	2	**255-8384**	1	COVER-RADIO	
	11	2	**255-8386**	1	COVER	
	12	1	**275-6710**	2	RETAINER	
	13	2	**281-3966**	1	PLATE	
	14	2	**281-3967**	1	PLATE	
	15	2	**281-3968**	1	BOX AS	
	16	1	**284-3751**	1	CONSOLE AS (RH)	
M		1	**297-1466**	11	INSERT-THREADED (M6X1-THD)	
Y	17	1	**284-3752**	1	CONSOLE GP (LH)	657
	18	1	**284-3753**	1	MAT-REAR	
	19	1	**284-7042**	1	FLOOR MAT-REAR	
	20	2	**288-0883**	1	COVER	
C	21	2	**281-4007**	1	BRACKET AS	
M	22	1	**288-3663**	2	THUMBSCREW (M6X1X25-MM)	
	23	2	**289-2020**	1	DASH AS	
M		2	**297-1465**	9	INSERT-THREADED (M5X0.8-THD)	
M		2	**297-1466**	13	INSERT-THREADED (M6X1-THD)	
	24	1	**289-3378**	1	HOUSING AS	
M		1	**297-1466**	3	INSERT-THREADED (M6X1-THD)	
	25	1	**289-3380**	1	PLATE AS	
	26	1	**289-3381**	1	BRACKET	
	27	1	**104-2091**	4	SCREW-FLAT HEAD (NO 6X0.5-IN)	
M	28	1,2	**127-2170**	14	SCREW-TRUSS HEAD (M8X1.25X20-MM)	
M	29	1	**128-2136**	6	SCREW-TRUSS HEAD (M6X1X16-MM)	
	30	1	**3E-4353**	8	WASHER-HARD (11X25X3-MM THK)	
	31	1,2	**7X-7729**	8	WASHER (11X25X3-MM THK)	
C	32	2	**283-9909**	1	MIRROR AS	
M	33	1	**8T-4133**	2	NUT (M10X1.5-THD)	
M	34	1,2	**8T-4186**	6	BOLT (M10X1.5X40-MM)	
M	35	1,2	**9X-2040**	8	SCREW-TRUSS HEAD (M10X1.5X25-MM)	
M	36	1,2	**9X-2043**	15	SCREW-TRUSS HEAD (M6X1X14-MM)	
M	37	1,2	**9X-2045**	11	SCREW-TRUSS HEAD (M6X1X20-MM)	
D	38	1	**5P-5639**		SEAL (0.1-M)	
D	39	2	**8T-5372**		SEAL (0.3-M)	
M	40	2	**111-4627**	1	SCREW-MACHINE (M6X1X30-MM)	
	41	2	**201-2638**	1	MIRROR AS	
C	42	1	**5P-4115**	1	WASHER-HARD (7.2X19X2-MM THK)	
C	43	2	**8T-4121**	1	WASHER-HARD (11X21X2.5-MM THK)	
CM	44	1	**8T-4138**	1	BOLT (M6X1X20-MM)	
C	45	2	**164-0850**	1	LEVER	

C-CHANGE FROM PREVIOUS TYPE
D-ORDER BY THE METER
M-METRIC PART
Y-SEPARATE ILLUSTRATION

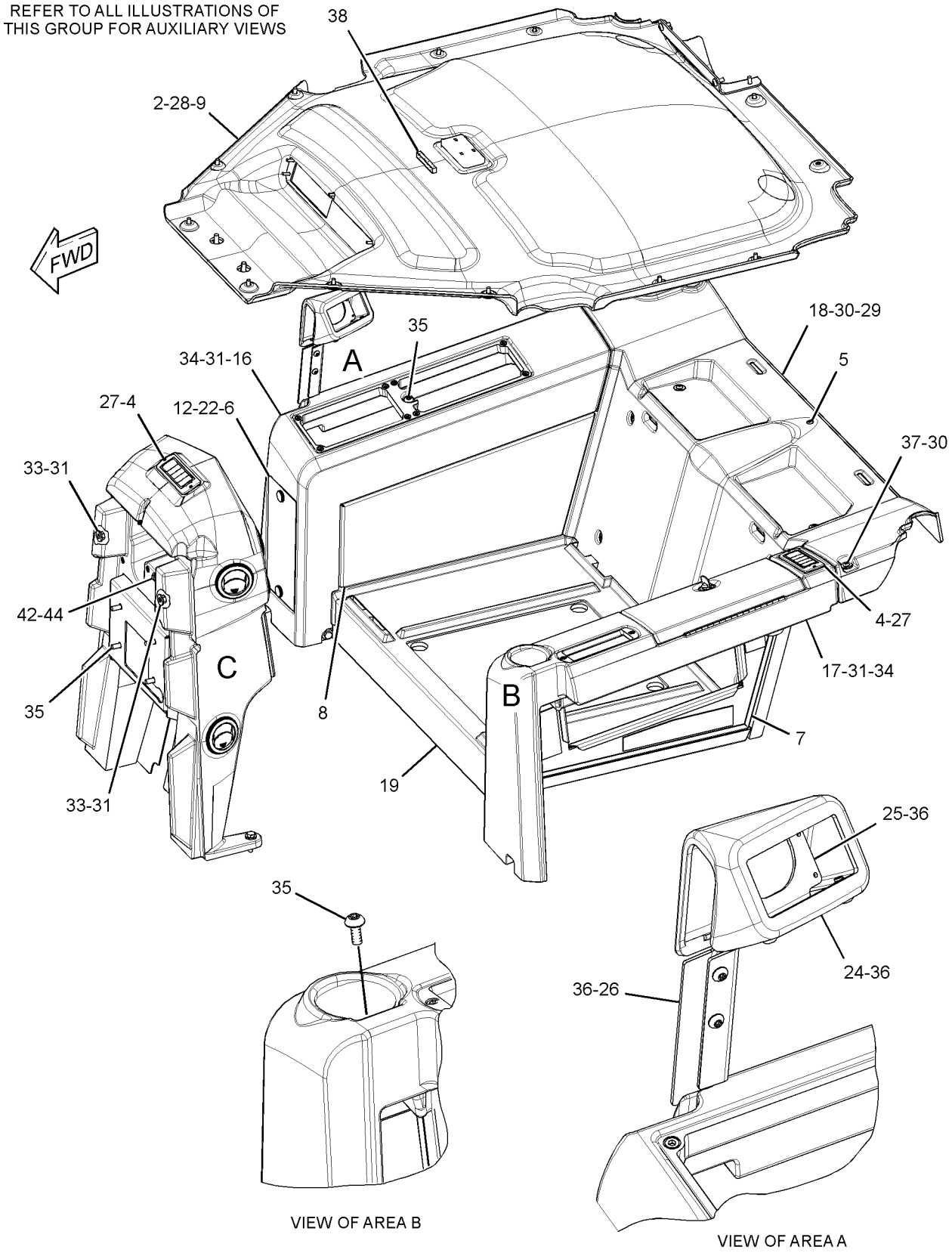

GRAPHIC #1

g01428799

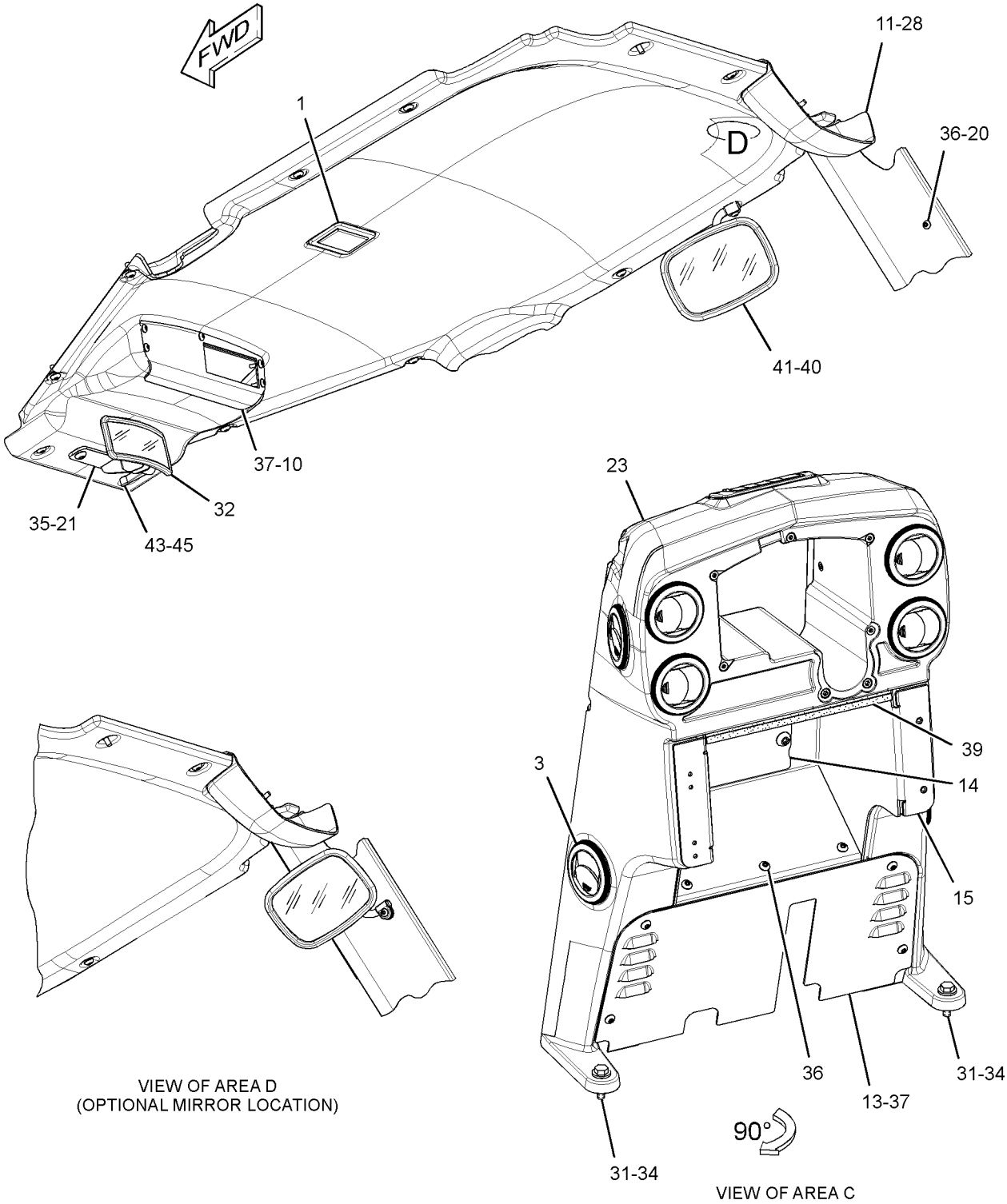

GRAPHIC #2 **<END>** g01475533

OPERATOR STATION

247-6509 COVER GP-CAB

S/N: DHA913-UP; FBH771-UP
PART OF 240-6233 CAB GP-ENCLOSED ROPS, 267-2550 CAB GP-FORESTRY
AN ATTACHMENT

SMCS-7301 **i03638760**

NOTE	REF NO	GRAPHIC REF	PART NUMBER	QTY	PART NAME 1 2 3 4 5 6 (PRODUCT LEVEL)	SEE PAGE
	1	2	**107-6032**	1	LAMP GP-DOME (24-VOLT)	
		2	**259-1286**	1	LAMP (24-VOLT, 10-WATT)	
	2	1	**154-7951**	12	SPACER	
	3	2	**164-0850**	1	LEVER	
	4	2	**164-8474**	8	LOUVER AS-VENT	
	5	2	**201-2638**	1	MIRROR AS	
	6	1	**8Y-6388**	2	LOUVER AS-VENT	
	8	1	**255-4233**	1	HEADLINER	
	9	2	**255-8384**	1	COVER-RADIO	
	10	2	**255-8386**	1	COVER	
	11	1	**275-6710**	2	RETAINER	
	12	2	**281-4007**	1	BRACKET AS	
	13	2	**283-9909**	1	MIRROR AS	
	14	1	**284-3753**	1	MAT-REAR	
	15	1	**284-7042**	1	FLOOR MAT-REAR	
	16	1	**289-3380**	1	PLATE AS	
	17	1	**289-3381**	1	BRACKET	
C	18	2	**314-3000**	1	DASH AS	
M		2	**297-1465**	9	INSERT-THREADED (M5X0.8-THD)	
M		2	**297-1466**	13	INSERT-THREADED (M6X1-THD)	
C	19	1	**314-3002**	1	CONSOLE AS (RH)	
CY	20	1	**314-3003**	1	CONSOLE GP (LH)	659
C	21	1	**314-3008**	1	HOUSING AS	
M		1	**297-1466**	3	INSERT-THREADED (M6X1-THD)	
C	22	1	**314-3009**	1	PLATE	
C	23	2	**314-3016**	1	PLATE	
C	24	2	**314-3017**	1	PLATE	
C	25	2	**314-3018**	1	BOX AS	
C	26	1	**314-3025**	2	THUMBSCREW (M6X1X16-MM)	
C	27	1	**314-3028**	1	INSULATION	
C	28	1	**314-3029**	1	INSULATION	
	29	1	**104-2091**	4	SCREW-FLAT HEAD (NO 6X0.5-IN)	
M	30	2	**111-4627**	1	SCREW-MACHINE (M6X1X30-MM)	
M	31	1,2	**127-2170**	14	SCREW-TRUSS HEAD (M8X1.25X20-MM)	
M	32	1	**128-2136**	6	SCREW-TRUSS HEAD (M6X1X16-MM)	
	34	1	**5P-4115**	1	WASHER-HARD (7.2X19X2-MM THK)	
	35	1,2	**7X-7729**	14	WASHER (11X25X3-MM THK)	
	36	2	**8T-4121**	1	WASHER-HARD (11X21X2.5-MM THK)	
M	37	1	**8T-4133**	2	NUT (M10X1.5-THD)	
M	38	1	**8T-4138**	1	BOLT (M6X1X20-MM)	
M	39	1,2	**8T-4186**	6	BOLT (M10X1.5X40-MM)	
M	40	1,2	**9X-2040**	8	SCREW-TRUSS HEAD (M10X1.5X25-MM)	
CM	41	1,2	**9X-2043**	12	SCREW-TRUSS HEAD (M6X1X14-MM)	
M	42	1,2	**9X-2045**	11	SCREW-TRUSS HEAD (M6X1X20-MM)	
D	43	1	**5P-5639**		SEAL (0.1-M)	
D	44	2	**8T-5372**		SEAL (0.3-M)	
	45	1	**320-1163**	2	PLUG	
	46	1	**320-1162**	1	PLUG	
	47	1	**9X-6165**	2	WASHER (6.5X22X2.5-MM THK)	
	48	1	**8T-4205**	1	WASHER-HARD (7.2X14.5X2-MM THK)	

C-CHANGE FROM PREVIOUS TYPE
D-ORDER BY THE METER
M-METRIC PART
Y-SEPARATE ILLUSTRATION

247-6509 **COVER GP-CAB** *(contd.)* **i03638760**

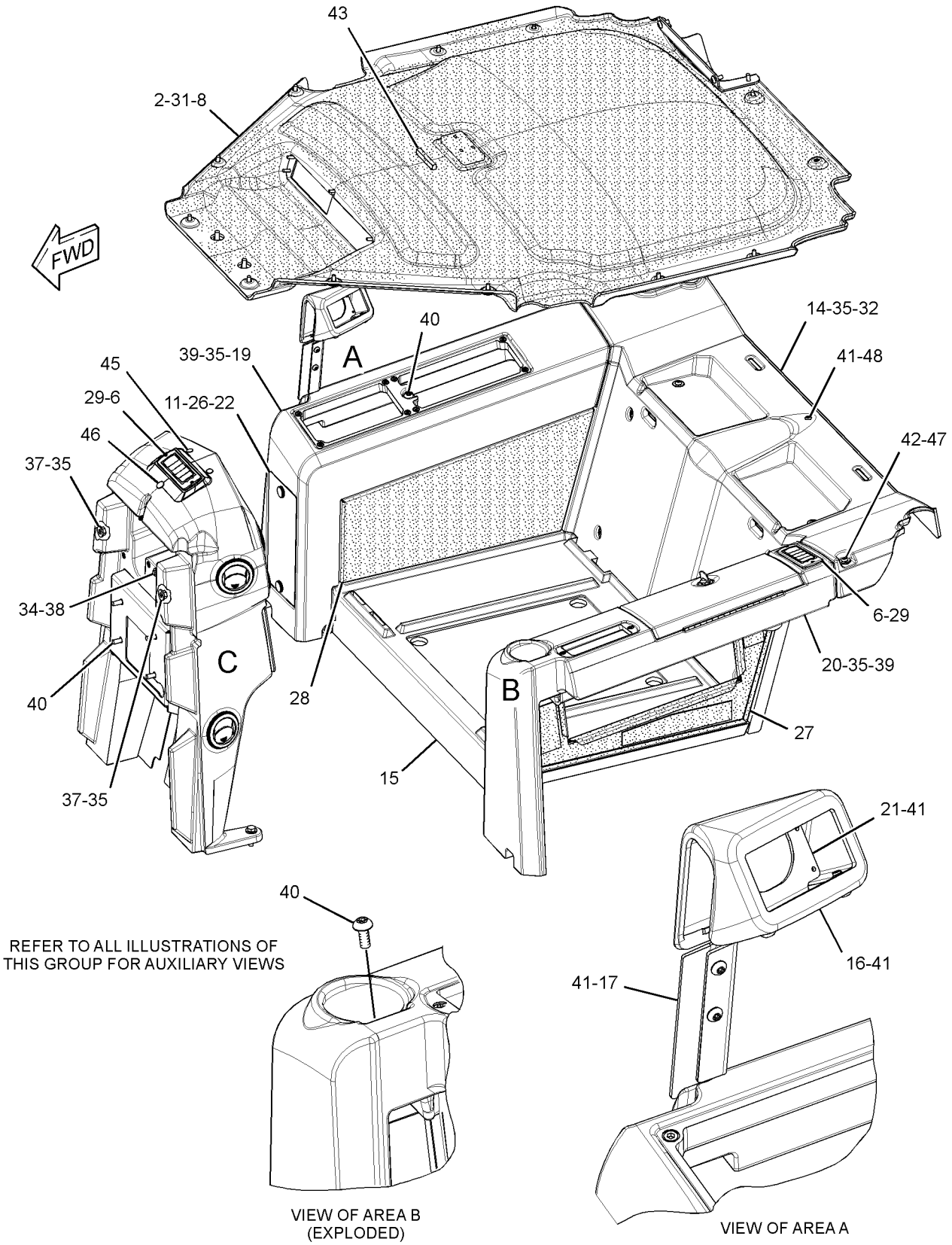

GRAPHIC #1 g01791725

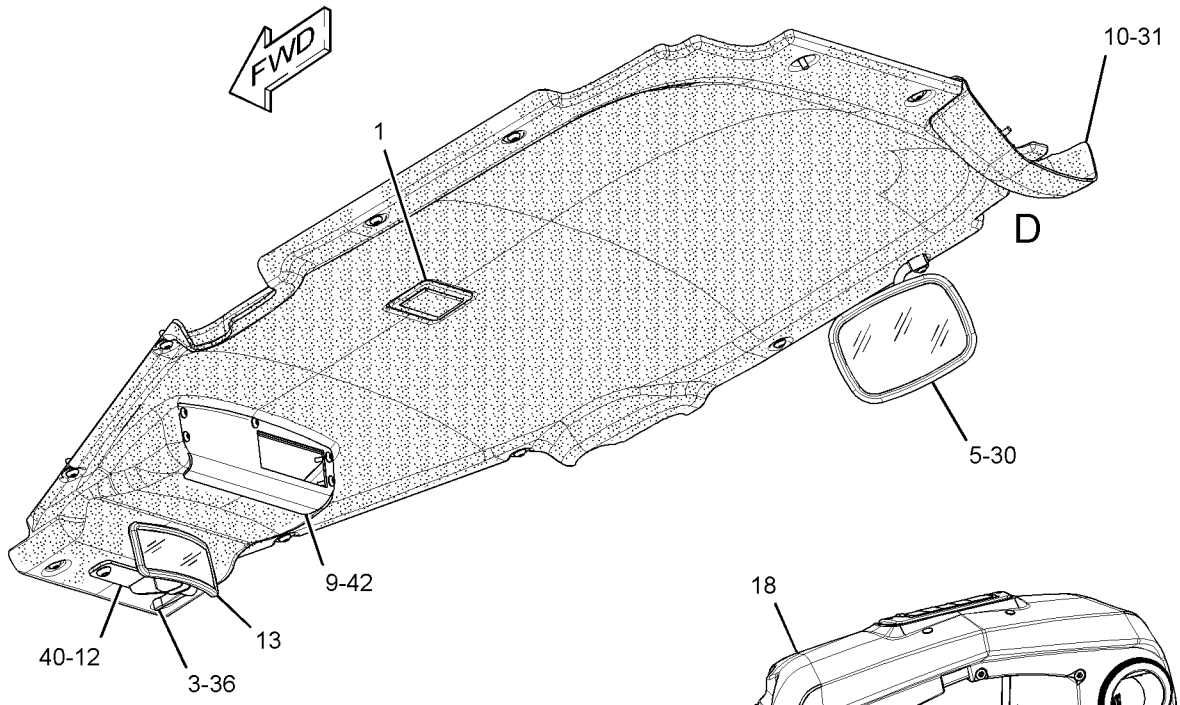

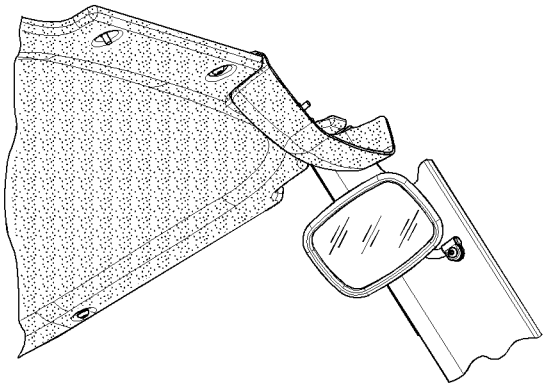

VIEW OF AREA D
(OPTIONAL MIRROR LOCATION)

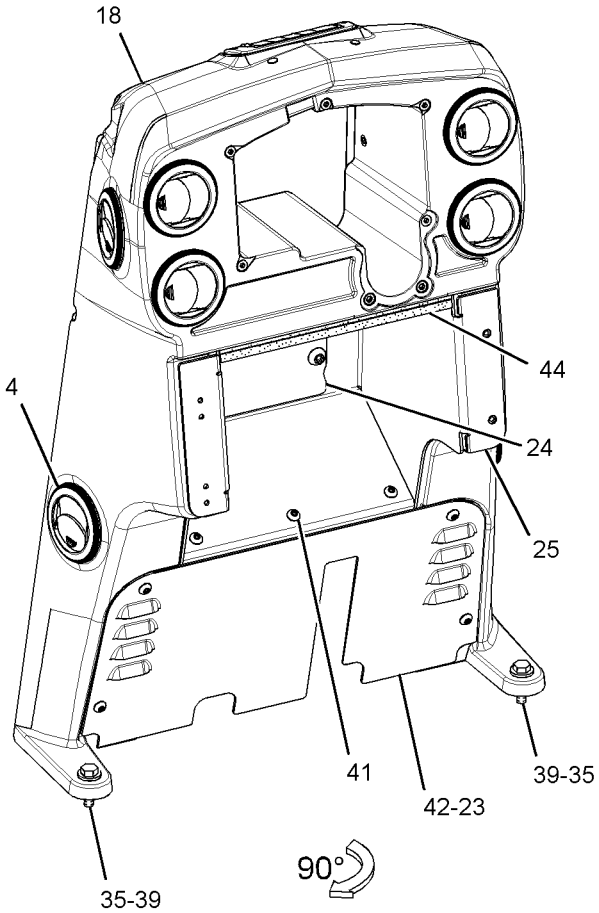

VIEW OF AREA C

GRAPHIC #2 **<END>** g01791726

OPERATOR STATION

252-7821 COVER GP-CAB—OPEN ROPS

S/N: DHA1-300; FBH1-439
PART OF 251-3536 CANOPY GP
AN ATTACHMENT

SMCS-7301 **i02747629**

NOTE	REF NO	GRAPHIC REF	PART NUMBER	QTY	PART NAME 1 2 3 4 5 6 (PRODUCT LEVEL)	SEE PAGE
J	1	1	**5P-9000**	1	LOCK AS-CYLINDER	
	2	1	**164-8474**	4	LOUVER AS-VENT	
M	3	1	**225-3322**	1	SCREW-TRUSS HEAD (M6X1X10-MM)	
	4	1	**251-8633**	1	PLATE	
	5	1	**255-4232**	1	HEADLINER AS	
	6	1	**255-4266**	1	PLATE	
	7	1	**288-0887**	1	BRACKET	
	8	1	**275-6710**	2	RETAINER	
	12	1	**281-3966**	1	PLATE	
	13	1	**281-3967**	1	PLATE	
	14	1	**281-3970**	1	GUARD GP-VANDALISM	
	16	1	**281-3976**	1	PLATE	
	17	1	**283-9902**	1	HANDLE AS	
	18	1	**284-3751**	1	CONSOLE AS (RH)	
M		1	**297-1466**	11	INSERT-THREADED (M6X1-THD)	
	19	1	**284-3753**	1	MAT-REAR	
	20	1	**284-7042**	1	FLOOR MAT-REAR	
	21	1	**288-0884**	1	COVER-POST	
M	22	1	**288-3663**	2	THUMBSCREW (M6X1X25-MM)	
Y	23	1	**288-7343**	1	CONSOLE GP (LH)	658
	24	1	**289-2021**	1	DASH AS	
M		1	**297-1465**	11	INSERT-THREADED (M5X0.8-THD)	
M		1	**297-1466**	13	INSERT-THREADED (M6X1-THD)	
	25	1	**289-3378**	1	HOUSING AS	
M		1	**297-1466**	3	INSERT-THREADED (M6X1-THD)	
	26	1	**289-3380**	1	PLATE AS	
	27	1	**289-3381**	1	BRACKET	
M	28	1	**128-2136**	6	SCREW-TRUSS HEAD (M6X1X16-MM)	
	29	1	**226-0331**	1	CAM-LOCK	
M	30	1	**271-9408**	6	SCREW-TRUSS HEAD (M5X0.8X10-MM)	
	31	1	**3E-4353**	8	WASHER-HARD (11X25X3-MM THK)	
	32	1	**7X-7729**	8	WASHER (11X25X3-MM THK)	
Y	33	1	*8E-8706*	1	MIRROR GP-REAR VIEW	744
M	34	1	**8T-4133**	2	NUT (M10X1.5-THD)	
M	35	1	**8T-4186**	6	BOLT (M10X1.5X40-MM)	
	36	1	**8T-4223**	1	WASHER-HARD (13.5X25.5X3-MM THK)	
M	37	1	**9X-2040**	8	SCREW-TRUSS HEAD (M10X1.5X25-MM)	
M	38	1	**9X-2043**	14	SCREW-TRUSS HEAD (M6X1X14-MM)	
M	39	1	**9X-2045**	6	SCREW-TRUSS HEAD (M6X1X20-MM)	
E	40	1	**8C-7332**		TRIM-EDGE (29-CM)	
M	41	1	**111-4627**	1	SCREW-MACHINE (M6X1X30-MM)	
	42	1	**201-2638**	1	MIRROR AS	

E-ORDER BY THE CENTIMETER
J-REQUIRES CORPORATE KEY
M-METRIC PART
Y-SEPARATE ILLUSTRATION

252-7821 **COVER GP-CAB** *(contd.)* **i02747629**

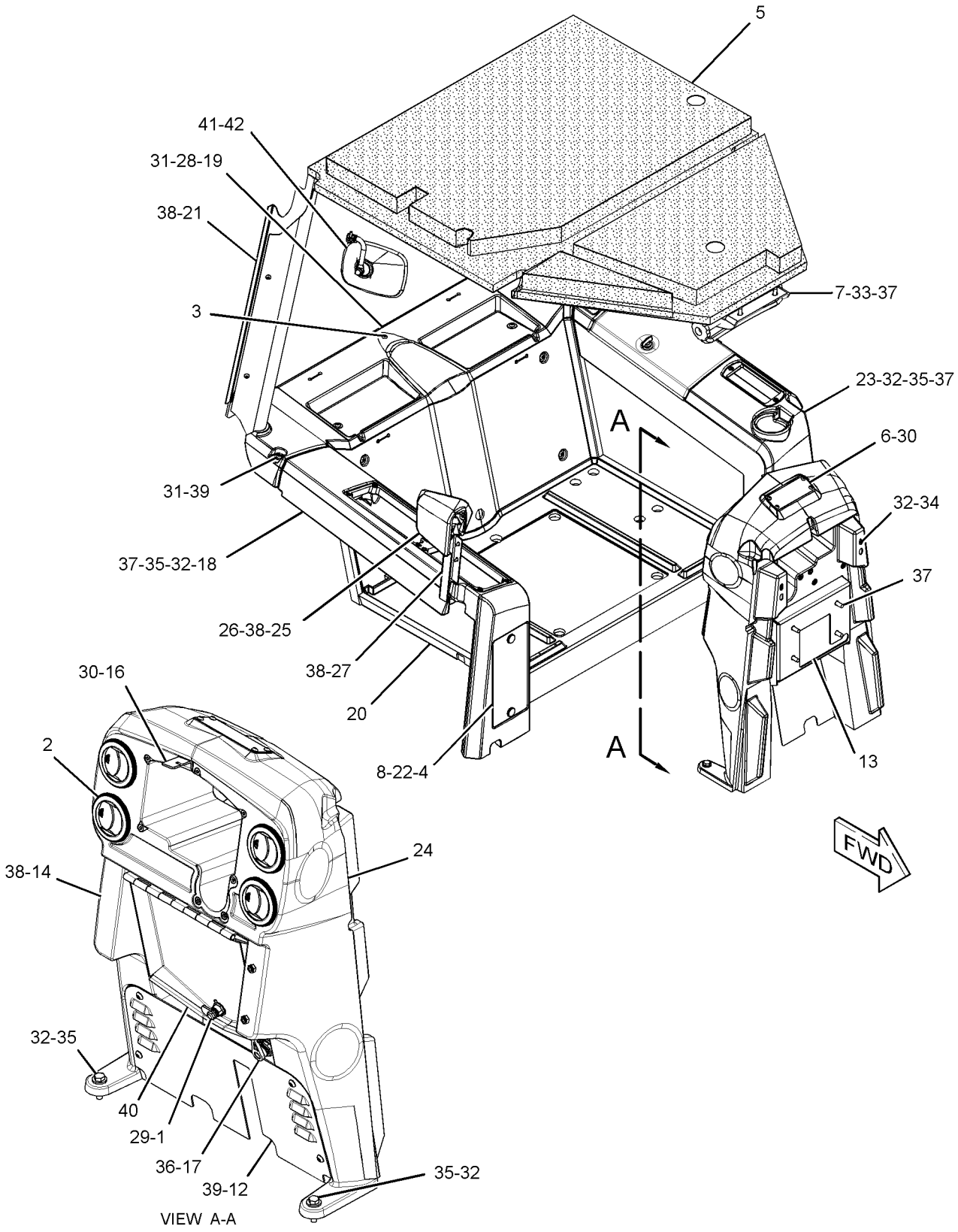

GRAPHIC #1 **<END>** g01410516

OPERATOR STATION

252-7821 COVER GP-CAB—OPEN ROPS

S/N: DHA301-912; FBH440-770
PART OF 251-3536 CANOPY GP
AN ATTACHMENT

SMCS-7301 **i02747633**

NOTE	REF NO	GRAPHIC REF	PART NUMBER	QTY	PART NAME 1 2 3 4 5 6 (PRODUCT LEVEL)	SEE PAGE
J	1	1	**5P-9000**	1	LOCK AS-CYLINDER	
	2	1	**164-8474**	4	LOUVER AS-VENT	
M	3	1	**225-3322**	1	SCREW-TRUSS HEAD (M6X1X10-MM)	
	4	1	**251-8633**	1	PLATE	
C	5	1	**281-4004**	1	HEADLINER	
	6	1	**255-4266**	1	PLATE	
C	7	1	**281-4007**	1	BRACKET AS	
	8	1	**275-6710**	2	RETAINER	
	12	1	**281-3966**	1	PLATE	
	13	1	**281-3967**	1	PLATE	
	14	1	**281-3970**	1	GUARD GP-VANDALISM	
	16	1	**281-3976**	1	PLATE	
	17	1	**283-9902**	1	HANDLE AS	
	18	1	**284-3751**	1	CONSOLE AS (RH)	
M		1	**297-1466**	11	INSERT-THREADED (M6X1-THD)	
	19	1	**284-3753**	1	MAT-REAR	
	20	1	**284-7042**	1	FLOOR MAT-REAR	
	21	1	**288-0884**	1	COVER-POST	
M	22	1	**288-3663**	2	THUMBSCREW (M6X1X25-MM)	
Y	23	1	**288-7343**	1	CONSOLE GP (LH)	658
	24	1	**289-2021**	1	DASH AS	
M		1	**297-1465**	11	INSERT-THREADED (M5X0.8-THD)	
M		1	**297-1466**	13	INSERT-THREADED (M6X1-THD)	
	25	1	**289-3378**	1	HOUSING AS	
M		1	**297-1466**	3	INSERT-THREADED (M6X1-THD)	
	26	1	**289-3380**	1	PLATE AS	
	27	1	**289-3381**	1	BRACKET	
M	28	1	**128-2136**	6	SCREW-TRUSS HEAD (M6X1X16-MM)	
	29	1	**226-0331**	1	CAM-LOCK	
M	30	1	**271-9408**	6	SCREW-TRUSS HEAD (M5X0.8X10-MM)	
	31	1	**3E-4353**	8	WASHER-HARD (11X25X3-MM THK)	
	32	1	**7X-7729**	8	WASHER (11X25X3-MM THK)	
C	33	1	**283-9909**	1	MIRROR AS	
M	34	1	**8T-4133**	2	NUT (M10X1.5-THD)	
M	35	1	**8T-4186**	6	BOLT (M10X1.5X40-MM)	
	36	1	**8T-4223**	1	WASHER-HARD (13.5X25.5X3-MM THK)	
M	37	1	**9X-2040**	8	SCREW-TRUSS HEAD (M10X1.5X25-MM)	
M	38	1	**9X-2043**	14	SCREW-TRUSS HEAD (M6X1X14-MM)	
M	39	1	**9X-2045**	6	SCREW-TRUSS HEAD (M6X1X20-MM)	
E	40	1	**8C-7332**		TRIM-EDGE (29-CM)	
M	41	1	**111-4627**	1	SCREW-MACHINE (M6X1X30-MM)	
	42	1	**201-2638**	1	MIRROR AS	
C	43	1	**164-0850**	1	LEVER	
CM	44	1	**8T-4138**	1	BOLT (M6X1X20-MM)	
C	45	1	**8T-4121**	1	WASHER-HARD (11X21X2.5-MM THK)	
C	46	1	**5P-4115**	1	WASHER-HARD (7.2X19X2-MM THK)	

C-CHANGE FROM PREVIOUS TYPE
E-ORDER BY THE CENTIMETER
J-REQUIRES CORPORATE KEY
M-METRIC PART
Y-SEPARATE ILLUSTRATION

252-7821 **COVER GP-CAB** *(contd.)* **i02747633**

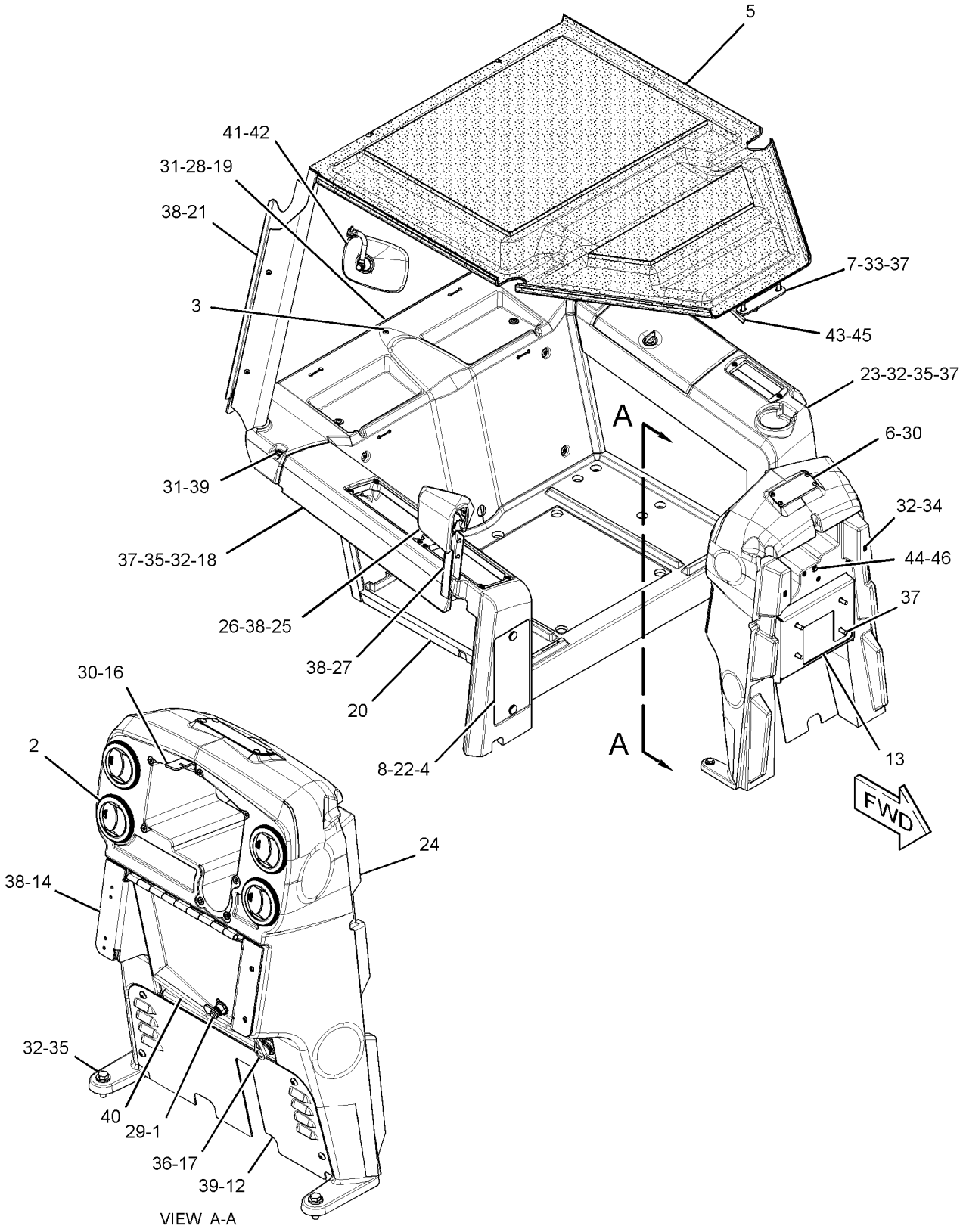

VIEW A-A

GRAPHIC #1 **<END>** g01411078

OPERATOR STATION

252-7821 COVER GP-CAB—OPEN ROPS

S/N: DHA913-1021; FBH771-1290
PART OF 251-3536 CANOPY GP
AN ATTACHMENT

SMCS-7301 **i02973262**

NOTE	REF NO	GRAPHIC REF	PART NUMBER	QTY	PART NAME 1 2 3 4 5 6 (PRODUCT LEVEL)	SEE PAGE
J	1	1	**5P-9000**	1	LOCK AS-CYLINDER	
	2	1	**164-0850**	1	LEVER	
	3	1	**164-8474**	4	LOUVER AS-VENT	
	4	1	**201-2638**	1	MIRROR AS	
M	5	1	**225-3322**	1	SCREW-TRUSS HEAD (M6X1X10-MM)	
	6	1	**275-6710**	2	RETAINER	
	7	1	**281-4004**	1	HEADLINER	
	8	1	**281-4007**	1	BRACKET AS	
	9	1	**283-9902**	1	HANDLE AS	
	10	1	**283-9909**	1	MIRROR AS	
	11	1	**284-3753**	1	MAT-REAR	
	12	1	**284-7042**	1	FLOOR MAT-REAR	
	13	1	**289-3380**	1	PLATE AS	
	14	1	**289-3381**	1	BRACKET	
C	15	1	**298-4321**	1	PLATE	
C	16	1	**314-3001**	1	DASH AS	
M		1	**297-1465**	11	INSERT-THREADED (M5X0.8-THD)	
M		1	**297-1466**	13	INSERT-THREADED (M6X1-THD)	
C	17	1	**314-3002**	1	CONSOLE AS (RH)	
CY	18	1	**314-3004**	1	CONSOLE GP (LH)	660
C	19	1	**314-3008**	1	HOUSING AS	
M		1	**297-1466**	3	INSERT-THREADED (M6X1-THD)	
C	20	1	**314-3009**	1	PLATE	
C	21	1	**314-3016**	1	PLATE	
C	22	1	**314-3017**	1	PLATE	
C	23	1	**314-3019**	1	GUARD GP-VANDALISM	
C	24	1	**314-3021**	1	PLATE	
C	25	1	**314-3025**	2	THUMBSCREW	
	26	1	**320-1158**	1	BRACKET	
M	27	1	**111-4627**	1	SCREW-MACHINE (M6X1X30-MM)	
M	28	1	**128-2136**	6	SCREW-TRUSS HEAD (M6X1X16-MM)	
C	29	1	**198-9706**	2	SCREW-TRUSS HEAD (M5X0.8X16-MM)	
	30	1	**226-0331**	1	CAM-LOCK	
CM	31	1	**271-9408**	4	SCREW-TRUSS HEAD (M5X0.8X10-MM)	
	32	1	**5P-4115**	1	WASHER-HARD (7.2X19X2-MM THK)	
C	33	1	**7X-7729**	14	WASHER (11X25X3-MM THK)	
	34	1	**8T-4121**	1	WASHER-HARD (11X21X2.5-MM THK)	
M	35	1	**8T-4133**	2	NUT (M10X1.5-THD)	
M	36	1	**8T-4138**	1	BOLT (M6X1X20-MM)	
M	37	1	**8T-4186**	6	BOLT (M10X1.5X40-MM)	
	38	1	**8T-4205**	1	WASHER-HARD (7.2X14.5X2-MM THK)	
	39	1	**8T-4223**	1	WASHER-HARD (13.5X25.5X3-MM THK)	
M	40	1	**9X-2040**	8	SCREW-TRUSS HEAD (M10X1.5X25-MM)	
CM	41	1	**9X-2043**	10	SCREW-TRUSS HEAD (M6X1X14-MM)	
M	42	1	**9X-2045**	6	SCREW-TRUSS HEAD (M6X1X20-MM)	
	43	1	**9X-6165**	2	WASHER (6.5X22X2.5-MM THK)	
E	44	1	**8C-7332**		TRIM-EDGE (29-CM)	

C-CHANGE FROM PREVIOUS TYPE
E-ORDER BY THE CENTIMETER
J-REQUIRES CORPORATE KEY
M-METRIC PART
Y-SEPARATE ILLUSTRATION

252-7821 **COVER GP-CAB** *(contd.)* **i02973262**

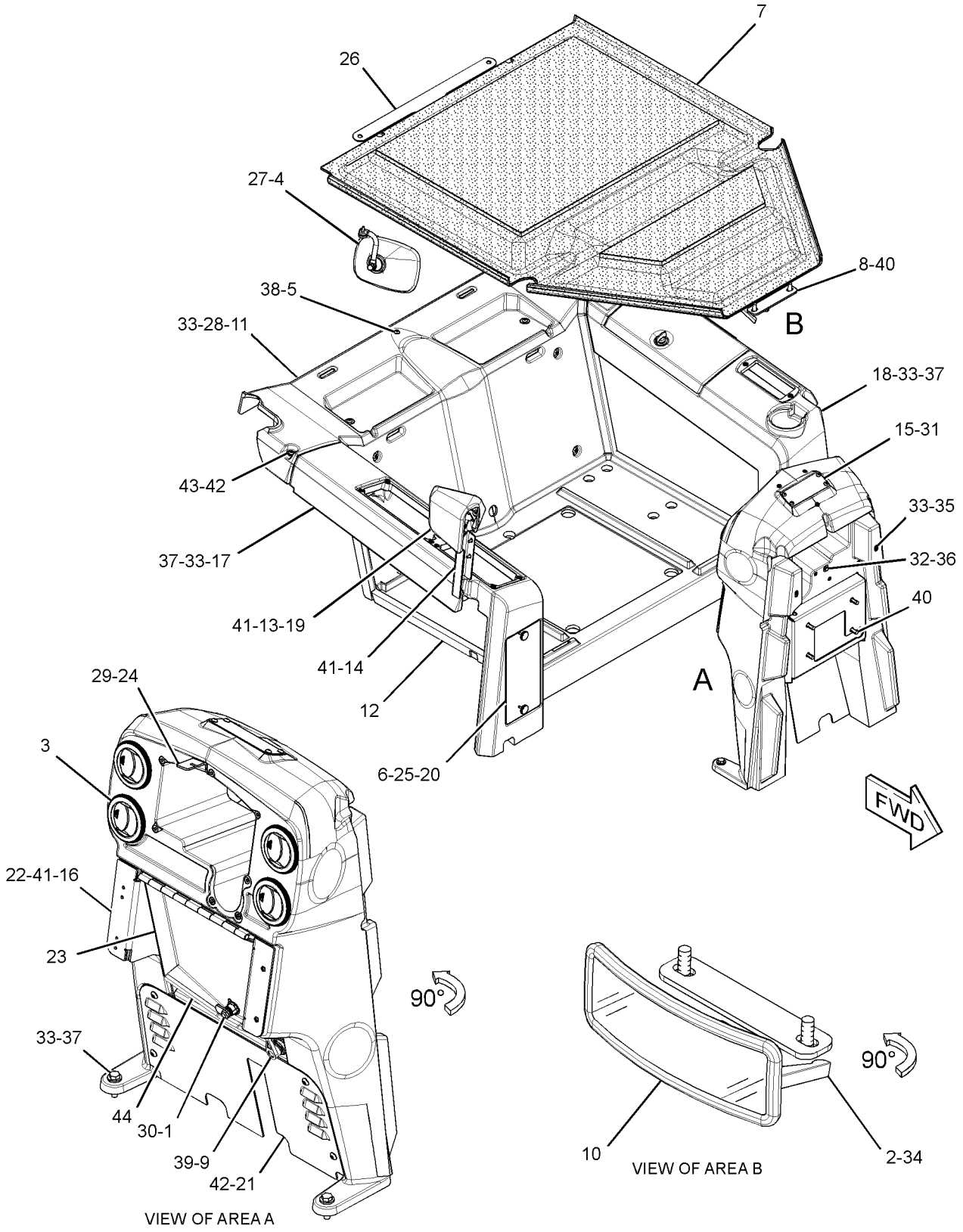

GRAPHIC #1 **<END>** g01524806

OPERATOR STATION

252-7821 COVER GP-CAB—OPEN ROPS

S/N: DHA1022-UP; FBH1291-UP
PART OF 251-3536 CANOPY GP
AN ATTACHMENT

SMCS-7301 **i03426462**

NOTE	REF NO	GRAPHIC REF	PART NUMBER	QTY	PART NAME 1 2 3 4 5 6 (PRODUCT LEVEL)	SEE PAGE
J	1	1	**5P-9000**	1	LOCK AS-CYLINDER (CAB FRONT, REAR, SIDE, COMPT)	
	2	1	**164-0850**	1	LEVER	
	3	1	**164-8474**	4	LOUVER AS-VENT	
	4	1	**201-2638**	1	MIRROR AS	
	6	1	**275-6710**	2	RETAINER	
	7	1	**281-4004**	1	HEADLINER	
	8	1	**281-4007**	1	BRACKET AS	
	9	1	**283-9902**	1	HANDLE AS	
	10	1	**283-9909**	1	MIRROR AS	
	11	1	**284-3753**	1	MAT-REAR	
	12	1	**284-7042**	1	FLOOR MAT-REAR	
	13	1	**289-3380**	1	PLATE AS	
	14	1	**289-3381**	1	BRACKET	
	16	1	**314-3001**	1	DASH AS	
M		1	**297-1465**	9	INSERT-THREADED (M5X0.8-THD)	
M		1	**297-1466**	14	INSERT-THREADED (M6X1-THD)	
	17	1	**314-3002**	1	CONSOLE AS (RH)	
M		1	**297-1466**	11	INSERT-THREADED (M6X1-THD)	
Y	18	1	**314-3004**	1	CONSOLE GP (LH)	660
	19	1	**314-3008**	1	HOUSING AS	
M		1	**297-1466**	3	INSERT-THREADED (M6X1-THD)	
	20	1	**314-3009**	1	PLATE	
	21	1	**314-3016**	1	PLATE	
	22	1	**314-3017**	1	PLATE	
	23	1	**314-3019**	1	GUARD GP-VANDALISM	
	24	1	**314-3021**	1	PLATE	
	25	1	**314-3025**	2	THUMBSCREW	
	26	1	**320-1158**	1	BRACKET	
M	27	1	**111-4627**	1	SCREW-MACHINE (M6X1X30-MM)	
M	28	1	**128-2136**	6	SCREW-TRUSS HEAD (M6X1X16-MM)	
	29	1	**198-9706**	2	SCREW-TRUSS HEAD (M5X0.8X16-MM)	
	30	1	**226-0331**	1	CAM-LOCK	
	32	1	**5P-4115**	1	WASHER-HARD (7.2X19X2-MM THK)	
	33	1	**7X-7729**	14	WASHER (11X25X3-MM THK)	
	34	1	**8T-4121**	1	WASHER-HARD (11X21X2.5-MM THK)	
M	35	1	**8T-4133**	2	NUT (M10X1.5-THD)	
M	36	1	**8T-4138**	1	BOLT (M6X1X20-MM)	
M	37	1	**8T-4186**	6	BOLT (M10X1.5X40-MM)	
	38	1	**8T-4205**	1	WASHER-HARD (7.2X14.5X2-MM THK)	
	39	1	**8T-4223**	1	WASHER-HARD (13.5X25.5X3-MM THK)	
M	40	1	**9X-2040**	8	SCREW-TRUSS HEAD (M10X1.5X25-MM)	
CM	41	1	**9X-2043**	11	SCREW-TRUSS HEAD (M6X1X14-MM)	
M	42	1	**9X-2045**	6	SCREW-TRUSS HEAD (M6X1X20-MM)	
	43	1	**9X-6165**	2	WASHER (6.5X22X2.5-MM THK)	
E	44	1	**8C-7332**		TRIM-EDGE (29-CM)	
C	45	1	**320-1162**	1	PLUG	
C	46	1	**320-1163**	2	PLUG	

C-CHANGE FROM PREVIOUS TYPE
E-ORDER BY THE CENTIMETER
J-REQUIRES CORPORATE KEY
M-METRIC PART
Y-SEPARATE ILLUSTRATION

252-7821 **COVER GP-CAB** *(contd.)* **i03426462**

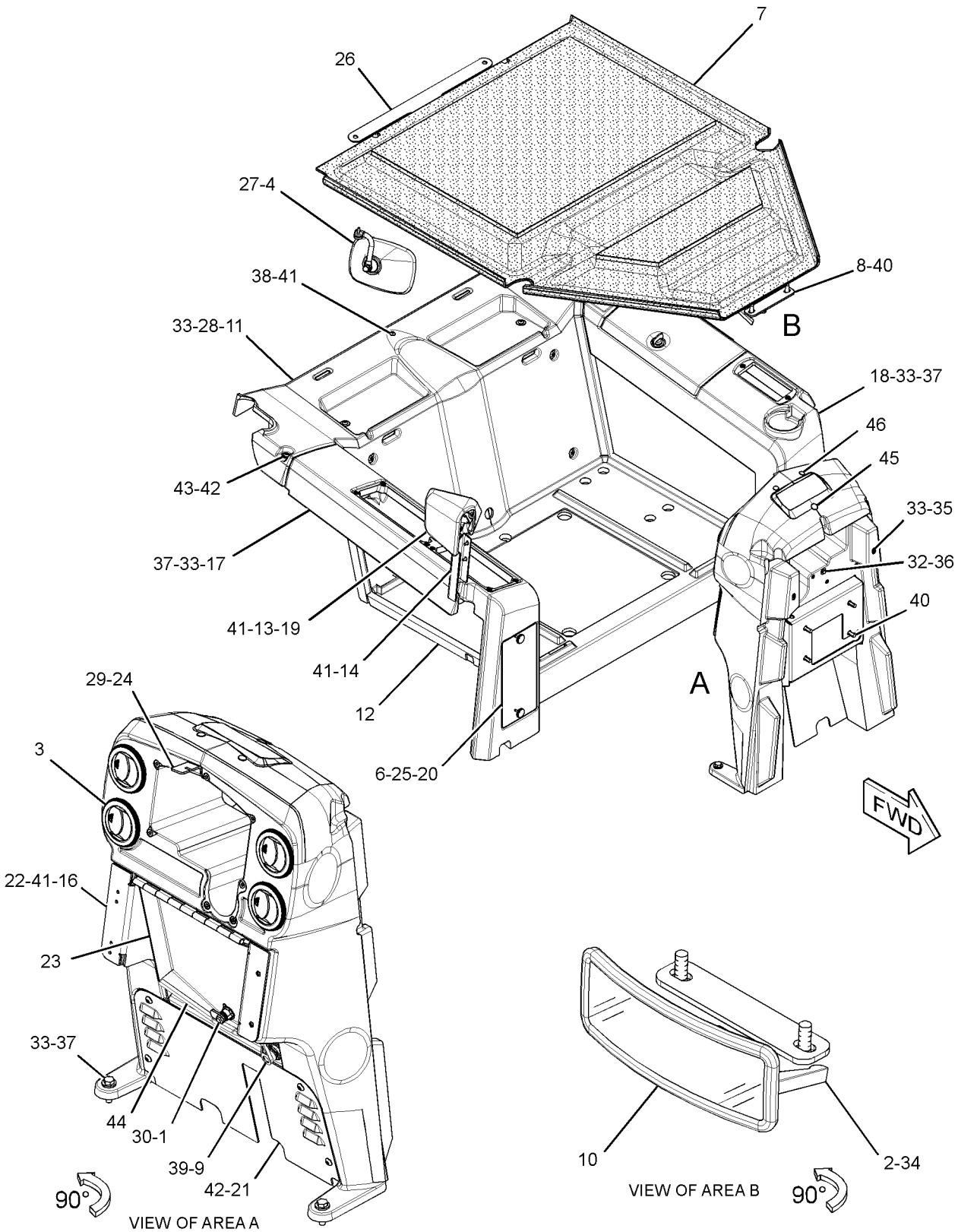

GRAPHIC #1 **<END>** g01790840

250-2111 COVER GP-CONSOLE

S/N: DHA1-UP; FBH1-UP

CANNOT BE USED WITH 250-2112—PAGE 678, 250-2114—PAGE 515, 250-2113—PAGE 830

AN ATTACHMENT

SMCS-5258 **i02867402**

NOTE	REF NO	GRAPHIC REF	PART NUMBER	QTY	PART NAME 1 2 3 4 5 6 (PRODUCT LEVEL)	SEE PAGE
	1	1	**117-2311**	1	SOCKET-AUXILIARY POWER (12-VOLT)	
	2	1	**169-2876**	1	FILM-IDENTIFICATION (POWER RECEPTACLE, 12-VOLT)	
	3	1	**298-4323**	1	PLATE	
M	4	1	**9X-2045**	4	SCREW-TRUSS HEAD (M6X1X20-MM)	

M-METRIC PART

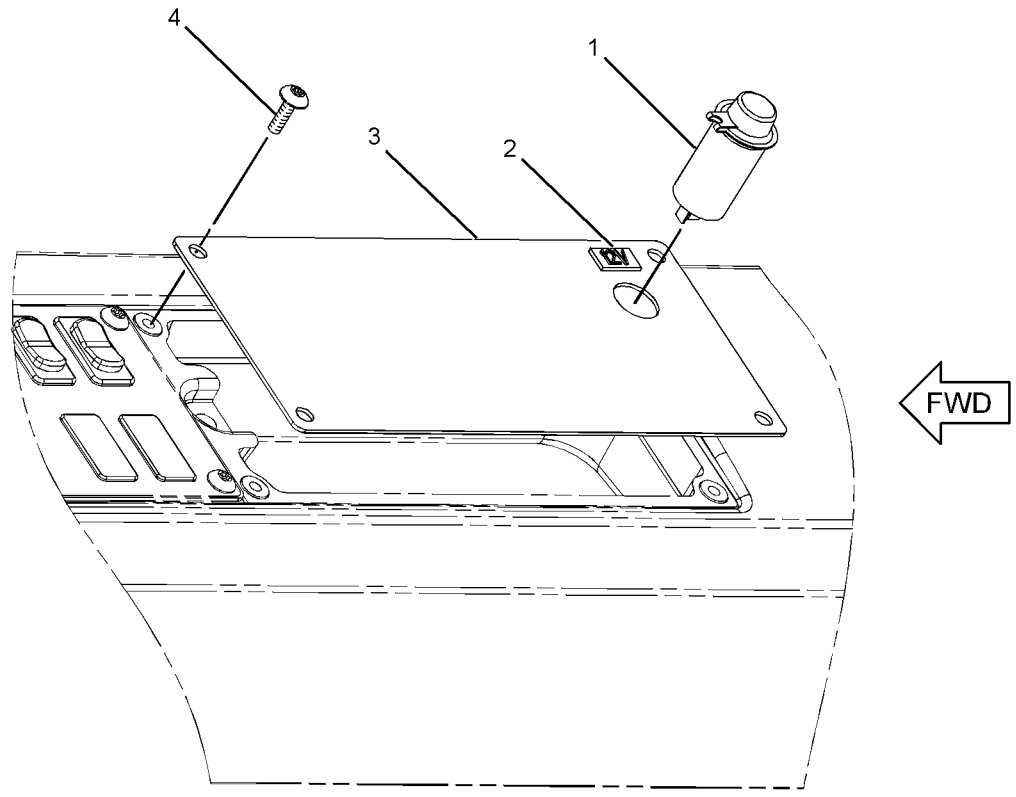

GRAPHIC #1 **<END>** g01201819

OPERATOR STATION

251-4060 COVER GP-CONSOLE–CANOPY

S/N: DHA1-UP; FBH1-UP
PART OF 250-2110 CANOPY AR
AN ATTACHMENT

SMCS-5258 **i03426445**

NOTE	REF NO	GRAPHIC REF	PART NUMBER	QTY	PART NAME 1 2 3 4 5 6 (PRODUCT LEVEL)	SEE PAGE
	1	1	**7K-1181**	2	STRAP-CABLE	
	2	1	**8T-8737**	4	PLUG-SEAL	
	3	1	**230-4012**	2	RECEPTACLE AS-CONNECTOR (2-PIN)	
	4	1	**275-6710**	2	RETAINER	
	5	1	**284-2213**	1	COVER-FILTER	
	6	1	**288-3657**	2	THUMBSCREW (M6X1X10-MM)	
	7	1	**298-4324**	1	PLATE	
M	8	1	**9X-2045**	2	SCREW-TRUSS HEAD (M6X1X20-MM)	

M-METRIC PART

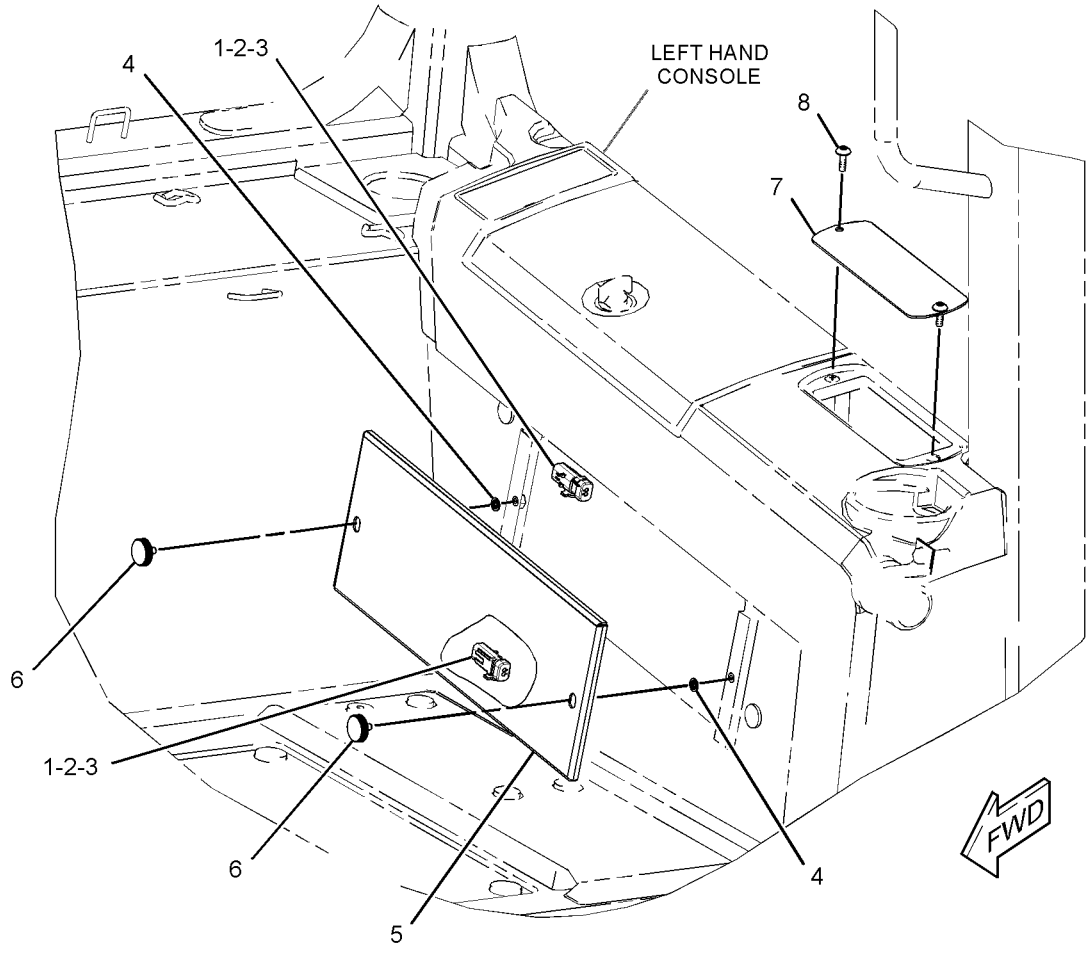

GRAPHIC #1 **<END>** g01790835

OPERATOR STATION

286-0134 DISPLAY GP-MONITOR—CD700

S/N: DHA1-UP; FBH1-UP

PART OF 290-5570, 290-5571, 292-0279, 292-0280 GRADE CONTROL AR-SATELLITE

SMCS-7490 **i02895294**

NOTE	PART NUMBER	QTY	PART NAME 1 2 3 4 5 6 (PRODUCT LEVEL)	SEE PAGE
R	**244-1716**	1	DISPLAY GP-MONITOR (CD700)	
	283-4426	1	CARD AS-MEMORY (FLASH)	
	194-8031	1	ADAPTER (COMPACT)	
M	**8T-4171**	4	BOLT (M6X1X12-MM)	
	292-0311	1	CASE-CARRYING	
M	**8T-0285**	6	SCREW-MACHINE (M4X0.7X12-MM)	
	9X-8256	4	WASHER (6.6X12X2-MM THK)	
	096-6166	6	WASHER-HARD (4.5X9X1-MM THK)	

M-METRIC PART
R-REMFG PART MAY BE AVAILABLE

<END>

292-0309 DISPLAY GP-MONITOR—CD610

S/N: DHA1-UP; FBH1-UP

PART OF 292-0293, 292-0312 GRADE CONTROL AR-LASER

SMCS-7490 **i02648791**

NOTE	PART NUMBER	QTY	PART NAME 1 2 3 4 5 6 (PRODUCT LEVEL)	SEE PAGE
M	**7X-2619**	6	BOLT (M6X1X10-MM)	
	292-0311	1	CASE-CARRYING	
	283-9530	1	DISPLAY GP-MONITOR (CD610)	
	290-6112	1	SOFTWARE GP-MONITOR	
	8T-4205	6	WASHER-HARD (7.2X14.5X2-MM THK)	

M-METRIC PART

<END>

OPERATOR STATION

247-6501 DOOR GP-CAB–RH

S/N: DHA1-918; FBH1-1088
PART OF 240-6233 CAB GP-ENCLOSED ROPS
AN ATTACHMENT
TYPE 1

SMCS-7308 **i03706819**

NOTE	REF NO	GRAPHIC REF	PART NUMBER	QTY	PART NAME 1 2 3 4 5 6 (PRODUCT LEVEL)	SEE PAGE
	1	1	**5E-5740**	2	NUT (M8X1.25-THD)	
	2	1	**6C-9003**	1	STOP	
J	3	1	**252-1862**	1	HANDLE AS	
	4	1	**252-1863**	1	GASKET	
	5	1	**262-2971**	1	PLATE AS	
M		1	**6V-9632**	1	NUT-WELD (M6X1-THD)	
	6	1	**266-9299**	1	FRAME AS-DOOR (RH)	
M		1	**6V-9632**	6	NUT-WELD (M6X1-THD)	
M		1	**8T-3597**	6	NUT-WELD (M12X1.75-THD)	
	7	1	**266-9303**	1	COVER	
	8	1	**266-9307**	1	STRIKER AS (RH)	
	9	1	**269-2890**	1	CLEVIS	
	10	1	**281-4002**	1	PLUG	
	11	1	**281-4136**	1	COVER-LATCH	
	12	1	**281-4140**	1	WINDOW (DOOR, RH)	
	13	1	**285-3692**	11	SPACER	
	14	1	**285-5734**	1	SEAL-RH	
	15	1	**287-0548**	1	STICKER-DOOR SEAL	
	16	1	**125-8175**	1	BLADE AS-WIPER (450-MM) (DOOR, RH)	
M	17	1	**131-3540**	2	LOCKNUT (M8X1.25-THD)	
	18	1	**1H-3244**	2	LOCKWASHER	
	19	1	**262-1997**	1	ARM GP-WINDOW WIPER (RH)	
		1	**136-3194**	1	NOZZLE AS-WASHER	
Y	20	1	**262-4070**	1	MOTOR GP-WINDOW WIPER (DOOR, RH)	748
	21	1	**269-2887**	1	LATCH AS-DOOR	
	22	1	**269-2892**	2	PIN	
	23	1	**269-2893**	2	CLIP	
	24	1	**272-1622**	1	ROD AS	
		1	**108-5471**	1	CLEVIS	
	25	1	**272-1623**	1	BELLCRANK AS	
M	26	1	**5C-7261**	1	NUT (M8X1.25-THD)	
	27	1	**5P-1076**	6	WASHER-HARD (13.5X30X4-MM THK)	
	28	1	**6V-7636**	1	PIN AS-SPRING	
M	29	1	**8C-6802**	4	SCREW-FLAT HEAD (6X1X26.3-MM)	
M	30	1	**8T-0639**	2	BOLT (M6X1X12-MM)	
M	31	1	**8T-4183**	6	BOLT (M12X1.75X40-MM)	
	32	1	**8T-4224**	2	WASHER-HARD (8.8X16X2-MM THK)	
M	33	1	**8T-4971**	3	BOLT (M6X1X30-MM)	
	34	1	**8T-5400**	1	CONNECTOR AS	
M	35	1	**9X-2042**	3	SCREW-TRUSS HEAD (M6X1X12-MM)	
M	36	1	**9X-2043**	5	SCREW-TRUSS HEAD (M6X1X14-MM)	
	37	1	**9X-8267**	3	WASHER (6.6X12X2-MM THK)	
E	38	1	**144-0195**		HOSE (26-CM)	

E-ORDER BY THE CENTIMETER
J-REQUIRES 5P8500 KEY
M-METRIC PART
Y-SEPARATE ILLUSTRATION

247-6501 DOOR GP-CAB *(contd.)* **i03706819**

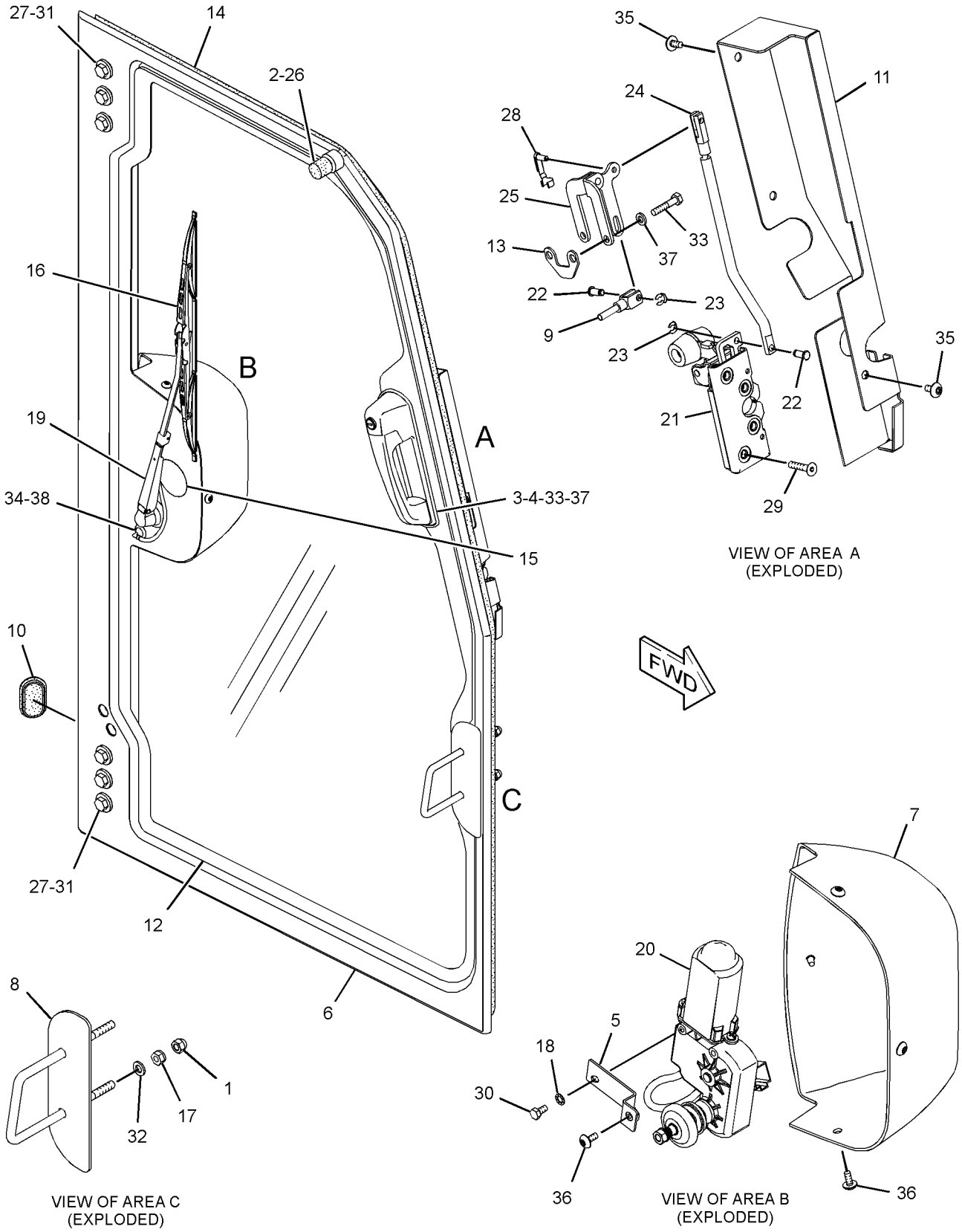

GRAPHIC #1 **<END>** g01302757

OPERATOR STATION

247-6501 DOOR GP-CAB–RH

S/N: DHA1-918; FBH1-1088
PART OF 240-6233 CAB GP-ENCLOSED ROPS
AN ATTACHMENT
TYPE 2

SMCS-7308 **i03706820**

NOTE	REF NO	GRAPHIC REF	PART NUMBER	QTY	PART NAME 1 2 3 4 5 6 (PRODUCT LEVEL)	SEE PAGE
	1	1	**5E-5740**	2	NUT (M8X1.25-THD)	
	2	1	**6C-9003**	1	STOP	
J	3	1	**252-1862**	1	HANDLE AS	
	4	1	**252-1863**	1	GASKET	
	5	1	**262-2971**	1	PLATE AS	
	6	1	**266-9299**	1	FRAME AS-DOOR (RH)	
	7	1	**266-9303**	1	COVER	
	8	1	**266-9307**	1	STRIKER AS (RH)	
	9	1	**269-2890**	1	CLEVIS	
	10	1	**281-4002**	1	PLUG	
	11	1	**281-4136**	1	COVER-LATCH	
	12	1	**281-4140**	1	WINDOW (DOOR, RH)	
	13	1	**285-3692**	1	SPACER	
	14	1	**285-5734**	1	SEAL-RH	
	15	1	**287-0548**	1	STICKER-DOOR SEAL	
	16	1	**125-8175**	1	BLADE AS-WIPER (450-MM) (DOOR, RH)	
M	17	1	**131-3540**	2	LOCKNUT (M8X1.25-THD)	
	18	1	**1H-3244**	2	LOCKWASHER	
	19	1	**262-1997**	1	ARM GP-WINDOW WIPER (RH)	
		1	**305-9192**	1	NOZZLE AS-WASHER	
CY	20	1	**304-4244**	1	MOTOR GP-WINDOW WIPER (DOOR, RH)	751
	21	1	**269-2887**	1	LATCH AS-DOOR	
	22	1	**269-2892**	2	PIN	
C	23	1	**8T-6902**	2	CLIP	
	24	1	**272-1622**	1	ROD AS	
		1	**108-5471**	1	CLEVIS	
	25	1	**272-1623**	1	BELLCRANK AS	
M	26	1	**5C-7261**	1	NUT (M8X1.25-THD)	
	27	1	**5P-1076**	6	WASHER-HARD (13.5X30X4-MM THK)	
	28	1	**6V-7636**	1	PIN AS-SPRING	
M	29	1	**8C-6802**	4	SCREW-FLAT HEAD (6X1X26.3-MM)	
M	30	1	**8T-0639**	2	BOLT (M6X1X12-MM)	
M	31	1	**8T-4183**	6	BOLT (M12X1.75X40-MM)	
	32	1	**8T-4224**	2	WASHER-HARD (8.8X16X2-MM THK)	
M	33	1	**8T-4971**	3	BOLT (M6X1X30-MM)	
	34	1	**8T-5400**	1	CONNECTOR AS	
M	35	1	**9X-2042**	3	SCREW-TRUSS HEAD (M6X1X12-MM)	
M	36	1	**9X-2043**	5	SCREW-TRUSS HEAD (M6X1X14-MM)	
	37	1	**9X-8267**	3	WASHER (6.6X12X2-MM THK)	
E	38	1	**144-0195**		HOSE (26-CM)	

C-CHANGE FROM PREVIOUS TYPE
E-ORDER BY THE CENTIMETER
J-REQUIRES CORPORATE KEY
M-METRIC PART
Y-SEPARATE ILLUSTRATION

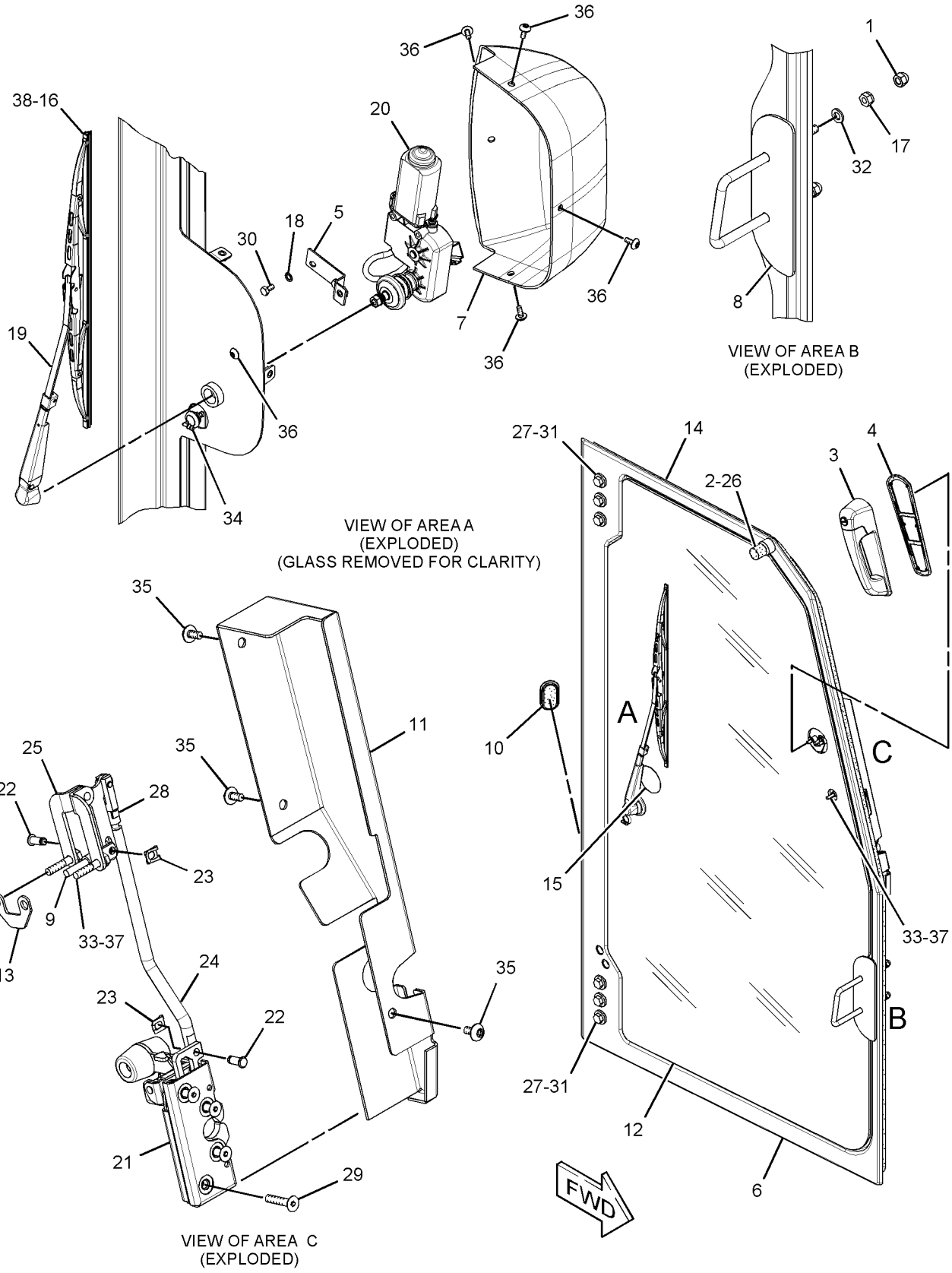

GRAPHIC #1 **<END>** g01438798

OPERATOR STATION

247-6501 DOOR GP-CAB—RH

S/N: DHA919-UP; FBH1089-UP
PART OF 240-6233 CAB GP-ENCLOSED ROPS
AN ATTACHMENT

SMCS-7308 **i03706821**

NOTE	REF NO	GRAPHIC REF	PART NUMBER	QTY	PART NAME 1 2 3 4 5 6 (PRODUCT LEVEL)	SEE PAGE
	1	1	**5E-5740**	2	NUT (M8X1.25-THD)	
	2	1	**6C-9003**	1	STOP	
J	3	1	**252-1862**	1	HANDLE AS	
	4	1	**252-1863**	1	GASKET	
	5	1	**262-2971**	1	PLATE AS	
	6	1	**266-9299**	1	FRAME AS-DOOR (RH)	
	7	1	**266-9303**	1	COVER	
	8	1	**266-9307**	1	STRIKER AS (RH)	
	9	1	**269-2890**	1	CLEVIS	
	10	1	**281-4002**	1	PLUG	
	11	1	**281-4136**	1	COVER-LATCH	
	12	1	**281-4140**	1	WINDOW (DOOR, RH)	
	13	1	**285-3692**	1	SPACER	
	14	1	**285-5734**	1	SEAL-RH	
	15	1	**287-0548**	1	STICKER-DOOR SEAL	
	16	1	**125-8175**	1	BLADE AS-WIPER (450-MM) (DOOR, RH)	
M	17	1	**131-3540**	2	LOCKNUT (M8X1.25-THD)	
	18	1	**1H-3244**	2	LOCKWASHER	
	19	1	**262-1997**	1	ARM GP-WINDOW WIPER (RH)	
		1	**305-9192**	1	NOZZLE AS-WASHER	
Y	20	1	**304-4244**	1	MOTOR GP-WINDOW WIPER (DOOR, RH)	751
	21	1	**269-2887**	1	LATCH AS-DOOR	
	22	1	**269-2892**	2	PIN	
	23	1	**8T-6902**	2	CLIP	
	24	1	**272-1622**	1	ROD AS	
		1	**108-5471**	1	CLEVIS	
	25	1	**272-1623**	1	BELLCRANK AS	
M	26	1	**5C-7261**	1	NUT (M8X1.25-THD)	
	27	1	**5P-1076**	6	WASHER-HARD (13.5X30X4-MM THK)	
	28	1	**6V-7636**	1	PIN AS-SPRING	
M	29	1	**8C-6802**	4	SCREW-FLAT HEAD (6X1X26.3-MM)	
M	30	1	**8T-0639**	2	BOLT (M6X1X12-MM)	
M	31	1	**8T-4183**	6	BOLT (M12X1.75X40-MM)	
	32	1	**8T-4224**	2	WASHER-HARD (8.8X16X2-MM THK)	
CM	33	1	**3E-8020**	3	SCREW-TRUSS HEAD (M6X1X25-MM)	
	34	1	**8T-5400**	1	CONNECTOR AS	
M	35	1	**9X-2042**	3	SCREW-TRUSS HEAD (M6X1X12-MM)	
M	36	1	**9X-2043**	5	SCREW-TRUSS HEAD (M6X1X14-MM)	
E	38	1	**144-0195**		HOSE (26-CM)	

C-CHANGE FROM PREVIOUS TYPE
E-ORDER BY THE CENTIMETER
J-REQUIRES CORPORATE KEY
M-METRIC PART
Y-SEPARATE ILLUSTRATION

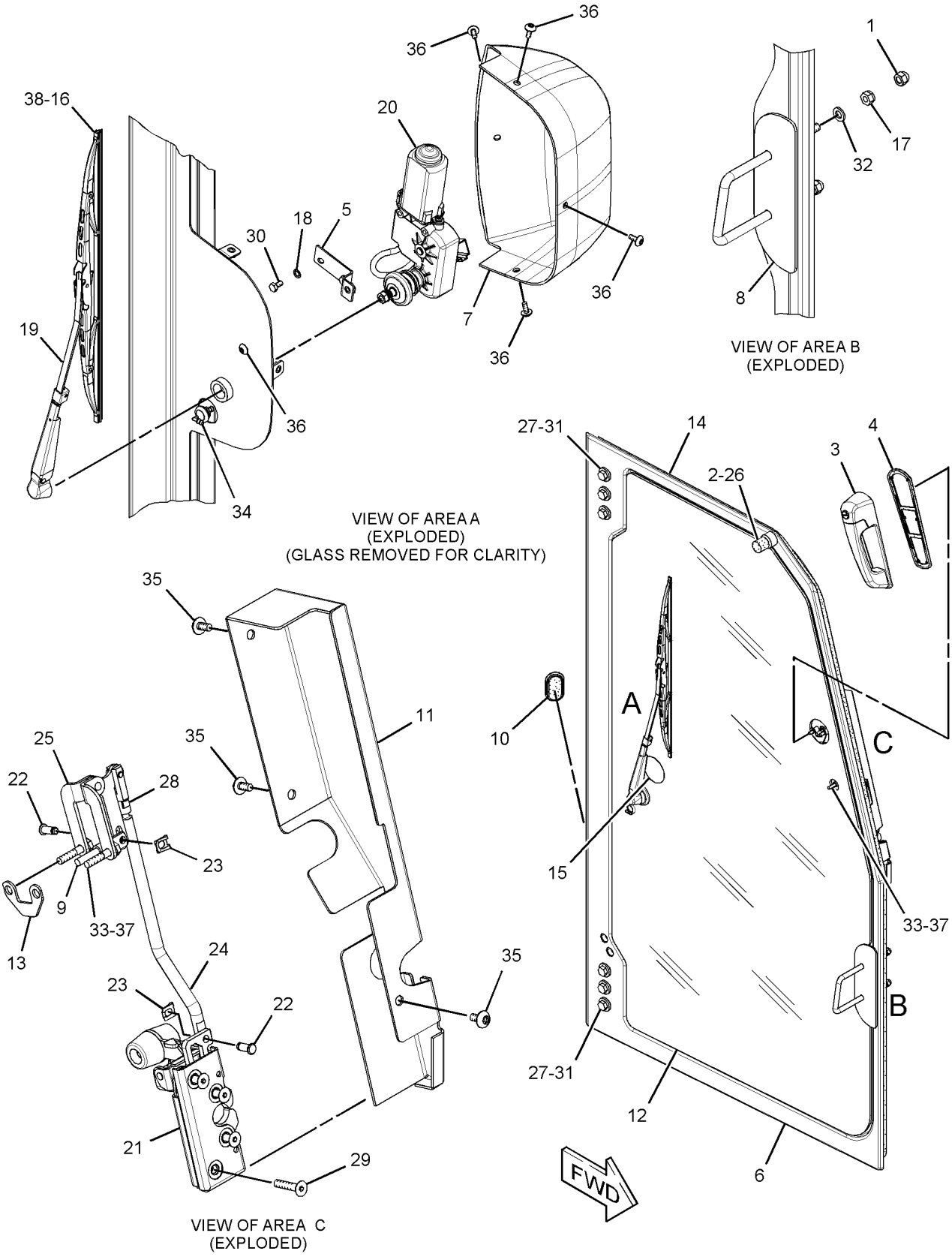

GRAPHIC #1 **<END>** g01438798

OPERATOR STATION

247-6502 DOOR GP-CAB–LH

S/N: DHA1-298; FBH1-439
PART OF 240-6233 CAB GP-ENCLOSED ROPS
AN ATTACHMENT

SMCS-7308 **i03706840**

NOTE	REF NO	GRAPHIC REF	PART NUMBER	QTY	PART NAME 1 2 3 4 5 6 (PRODUCT LEVEL)	SEE PAGE
	1	1	**5E-5740**	1	NUT (M8X1.25-THD)	
	2	1	**6C-9003**	1	STOP	
	3	1	**247-6613**	1	FRAME AS-DOOR (LH)	
J	4	1	**252-1862**	1	HANDLE AS	
	5	1	**252-1863**	1	GASKET	
	6	1	**262-2971**	1	PLATE AS	
	7	1	**266-9303**	1	COVER	
	8	1	**266-9306**	1	STRIKER AS	
	9	1	**269-2890**	1	CLEVIS	
	10	1	**281-4002**	1	PLUG	
	11	1	**281-4137**	1	COVER-LATCH	
	12	1	**281-4141**	1	WINDOW (DOOR, LH)	
	13	1	**285-3692**	1	SPACER	
	14	1	**285-5735**	1	SEAL-LH	
	15	1	**287-0548**	1	STICKER-DOOR SEAL	
	16	1	**125-8175**	1	BLADE AS-WIPER (450-MM) (DOOR, LH)	
M	17	1	**131-3540**	2	LOCKNUT (M8X1.25-THD)	
	18	1	**1H-3244**	2	LOCKWASHER	
	19	1	**262-1998**	1	ARM GP-WINDOW WIPER (LH)	
		1	**136-3194**	1	NOZZLE AS-WASHER	
Y	20	1	**262-4069**	1	MOTOR GP-WINDOW WIPER	747
	21	1	**269-2886**	1	LATCH AS-DOOR (ROTARY)	
	22	1	**269-2888**	1	LINK GP-ADJUSTABLE	
		1	**108-5471**	1	CLEVIS	
	23	1	**269-2892**	2	PIN	
	24	1	**269-2893**	2	CLIP	
	25	1	**272-1623**	1	BELLCRANK AS	
M	26	1	**5C-7261**	1	NUT (M8X1.25-THD)	
	27	1	**5P-1076**	6	WASHER-HARD (13.5X30X4-MM THK)	
	28	1	**6V-7636**	1	PIN AS-SPRING	
M	29	1	**8C-6802**	4	SCREW-FLAT HEAD (6X1X26.3-MM)	
M	30	1	**8T-0639**	2	BOLT (M6X1X12-MM)	
M	31	1	**8T-4183**	6	BOLT (M12X1.75X40-MM)	
	32	1	**8T-4224**	2	WASHER-HARD (8.8X16X2-MM THK)	
M	33	1	**8T-4971**	3	BOLT (M6X1X30-MM)	
	34	1	**8T-5400**	1	CONNECTOR AS	
M	35	1	**9X-2042**	3	SCREW-TRUSS HEAD (M6X1X12-MM)	
M	36	1	**9X-2043**	5	SCREW-TRUSS HEAD (M6X1X14-MM)	
	37	1	**9X-8267**	3	WASHER (6.6X12X2-MM THK)	
E	38	1	**144-0195**		HOSE (26-CM)	

E-ORDER BY THE CENTIMETER
J-REQUIRES 5P8500 KEY
M-METRIC PART
Y-SEPARATE ILLUSTRATION

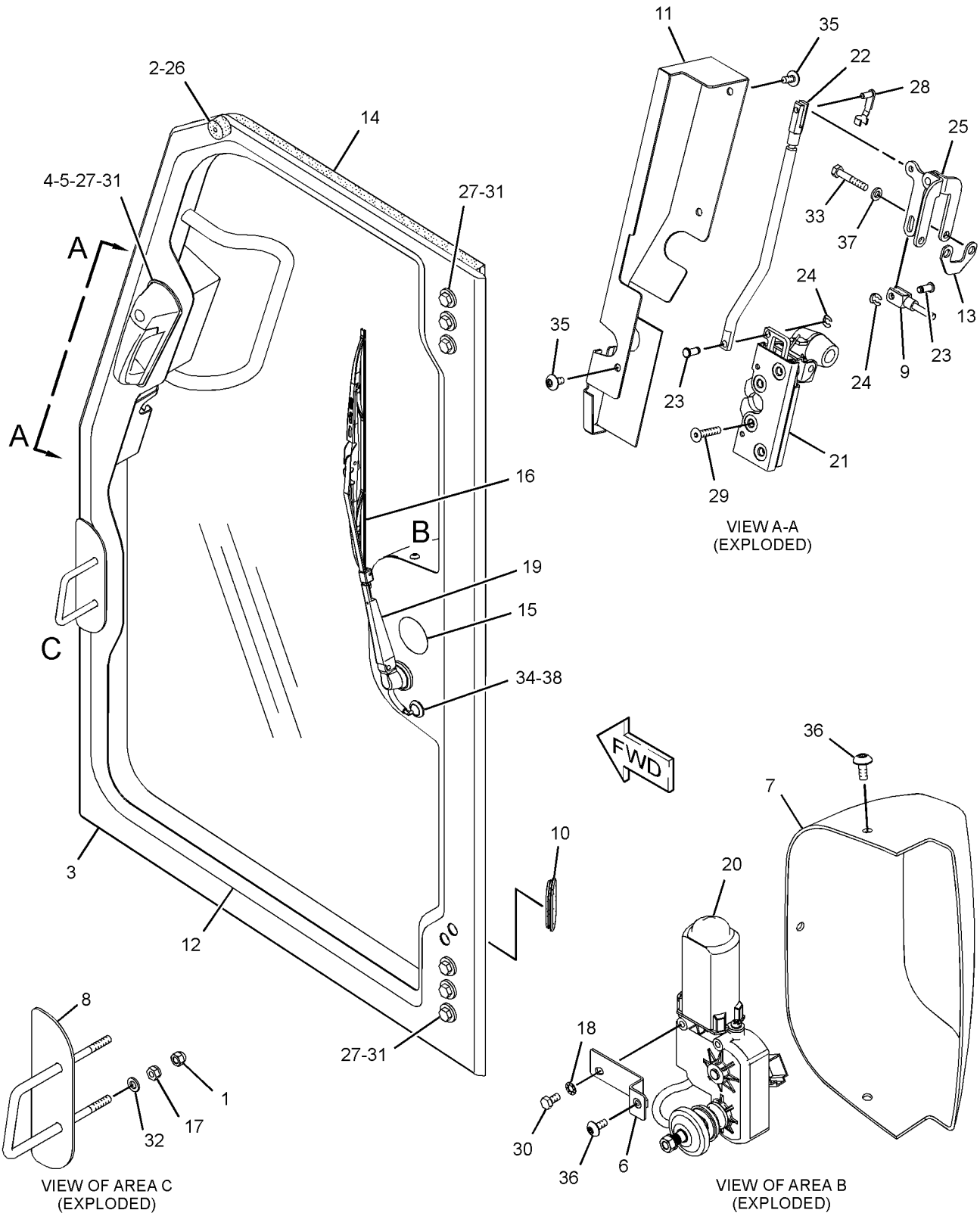

GRAPHIC #1

<END>

g01301604

OPERATOR STATION

247-6502 DOOR GP-CAB—LH

S/N: DHA299-918; FBH440-1088
PART OF 240-6233 CAB GP-ENCLOSED ROPS
AN ATTACHMENT

SMCS-7308 **i03706841**

NOTE	REF NO	GRAPHIC REF	PART NUMBER	QTY	PART NAME 1 2 3 4 5 6 (PRODUCT LEVEL)	SEE PAGE
	1	1	**5E-5740**	2	NUT (M8X1.25-THD)	
	2	1	**6C-9003**	1	STOP	
	3	1	**247-6613**	1	FRAME AS-DOOR (LH)	
J	4	1	**252-1862**	1	HANDLE AS	
	5	1	**252-1863**	1	GASKET	
	6	1	**262-2971**	1	PLATE AS	
	7	1	**266-9303**	1	COVER	
	8	1	**266-9306**	1	STRIKER AS	
	9	1	**269-2890**	1	CLEVIS	
	10	1	**281-4002**	1	PLUG	
	11	1	**281-4137**	1	COVER-LATCH	
	12	1	**281-4141**	1	WINDOW	
	13	1	**285-3692**	1	SPACER	
	14	1	**285-5735**	1	SEAL-LH	
	15	1	**287-0548**	1	STICKER-DOOR SEAL	
	16	1	**125-8175**	1	BLADE AS-WIPER (450-MM) (DOOR, LH)	
M	17	1	**131-3540**	2	LOCKNUT (M8X1.25-THD)	
	18	1	**1H-3244**	2	LOCKWASHER	
	19	1	**262-1998**	1	ARM GP-WINDOW WIPER (LH)	
		1	**136-3194**	1	NOZZLE AS-WASHER	
CY	20	1	**304-4243**	1	MOTOR GP-WINDOW WIPER (DOOR, LH)	750
	21	1	**269-2886**	1	LATCH AS-DOOR (ROTARY)	
	22	1	**269-2888**	1	LINK GP-ADJUSTABLE	
		1	**108-5471**	1	CLEVIS	
	23	1	**269-2892**	2	PIN	
C	24	1	**8T-6902**	2	CLIP	
	25	1	**272-1623**	1	BELLCRANK AS	
M	26	1	**5C-7261**	1	NUT (M8X1.25-THD)	
	27	1	**5P-1076**	6	WASHER-HARD (13.5X30X4-MM THK)	
	28	1	**6V-7636**	1	PIN AS-SPRING	
M	29	1	**8C-6802**	4	SCREW-FLAT HEAD (6X1X26.3-MM)	
M	30	1	**8T-0639**	2	BOLT (M6X1X12-MM)	
M	31	1	**8T-4183**	6	BOLT (M12X1.75X40-MM)	
	32	1	**8T-4224**	2	WASHER-HARD (8.8X16X2-MM THK)	
M	33	1	**8T-4971**	3	BOLT (M6X1X30-MM)	
	34	1	**8T-5400**	1	CONNECTOR AS	
M	35	1	**9X-2042**	3	SCREW-TRUSS HEAD (M6X1X12-MM)	
M	36	1	**9X-2043**	5	SCREW-TRUSS HEAD (M6X1X14-MM)	
	37	1	**9X-8267**	3	WASHER (6.6X12X2-MM THK)	
E	38	1	**144-0195**		HOSE (26-CM)	

C-CHANGE FROM PREVIOUS TYPE
E-ORDER BY THE CENTIMETER
J-REQUIRES CORPORATE KEY
M-METRIC PART
Y-SEPARATE ILLUSTRATION

247-6502 DOOR GP-CAB *(contd.)* **i03706841**

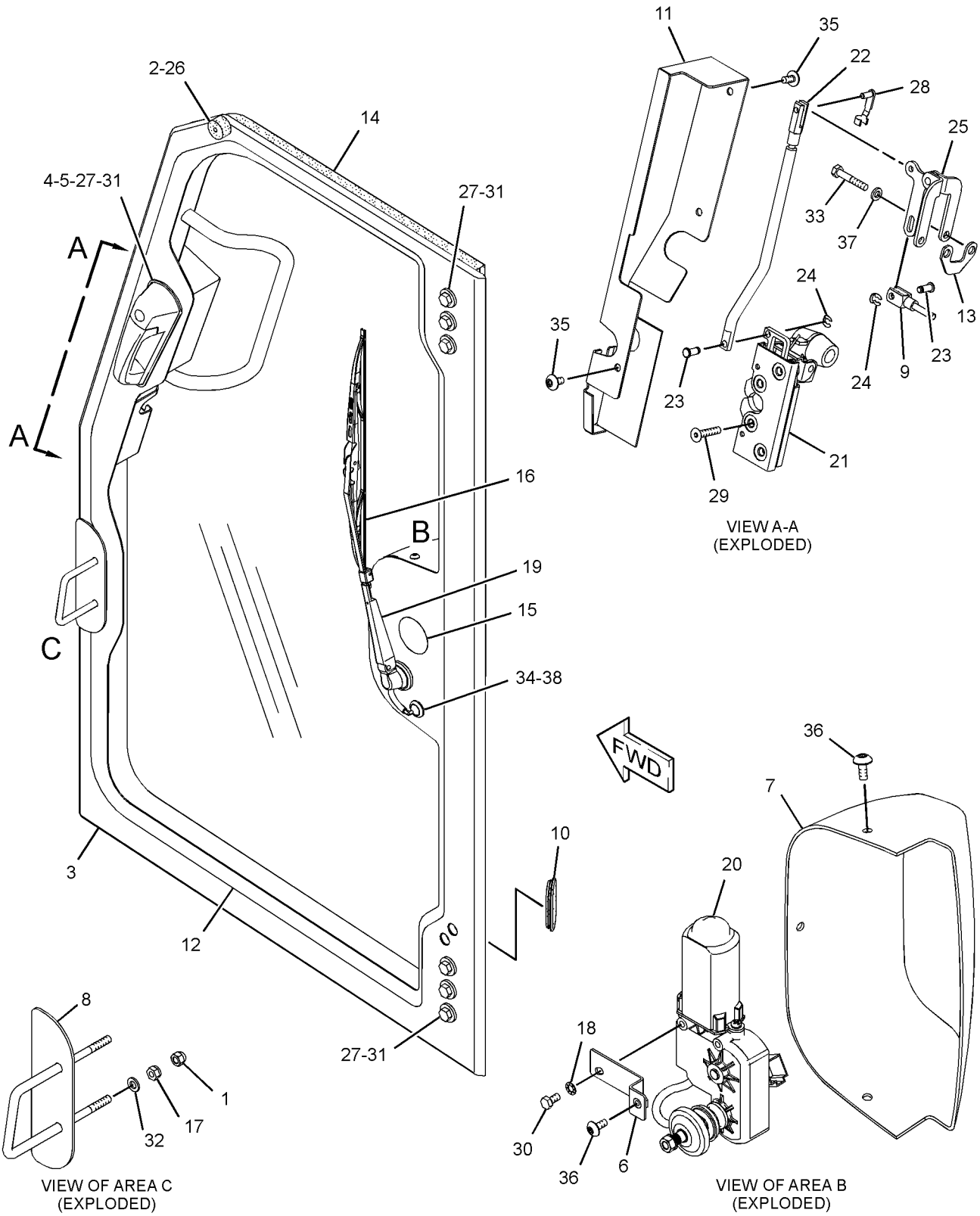

GRAPHIC #1 **<END>** g01301604

OPERATOR STATION

247-6502 DOOR GP-CAB—LH

S/N: DHA919-UP; FBH1089-UP
PART OF 240-6233 CAB GP-ENCLOSED ROPS
AN ATTACHMENT

SMCS-7308 **i03706844**

NOTE	REF NO	GRAPHIC REF	PART NUMBER	QTY	PART NAME 1 2 3 4 5 6 (PRODUCT LEVEL)	SEE PAGE
	1	1	**5E-5740**	2	NUT (M8X1.25-THD)	
	2	1	**6C-9003**	1	STOP	
	3	1	**247-6613**	1	FRAME AS-DOOR (LH)	
J	4	1	**252-1862**	1	HANDLE AS	
	5	1	**252-1863**	1	GASKET	
	6	1	**262-2971**	1	PLATE AS	
	7	1	**266-9303**	1	COVER	
	8	1	**266-9306**	1	STRIKER AS	
	9	1	**269-2890**	1	CLEVIS	
	10	1	**281-4002**	1	PLUG	
	11	1	**281-4137**	1	COVER-LATCH	
	12	1	**281-4141**	1	WINDOW	
	13	1	**285-3692**	1	SPACER	
	14	1	**285-5735**	1	SEAL-LH	
	15	1	**287-0548**	1	STICKER-DOOR SEAL	
	16	1	**125-8175**	1	BLADE AS-WIPER (450-MM) (DOOR, LH)	
M	17	1	**131-3540**	2	LOCKNUT (M8X1.25-THD)	
	18	1	**1H-3244**	2	LOCKWASHER	
	19	1	**262-1998**	1	ARM GP-WINDOW WIPER (LH)	
		1	**136-3194**	1	NOZZLE AS-WASHER	
Y	20	1	**304-4243**	1	MOTOR GP-WINDOW WIPER (DOOR, LH)	750
	21	1	**269-2886**	1	LATCH AS-DOOR (ROTARY)	
	22	1	**269-2888**	1	LINK GP-ADJUSTABLE	
		1	**108-5471**	1	CLEVIS	
	23	1	**269-2892**	2	PIN	
	24	1	**8T-6902**	2	CLIP	
	25	1	**272-1623**	1	BELLCRANK AS	
M	26	1	**5C-7261**	1	NUT (M8X1.25-THD)	
	27	1	**5P-1076**	6	WASHER-HARD (13.5X30X4-MM THK)	
	28	1	**6V-7636**	1	PIN AS-SPRING	
M	29	1	**8C-6802**	4	SCREW-FLAT HEAD (6X1X26.3-MM)	
M	30	1	**8T-0639**	2	BOLT (M6X1X12-MM)	
M	31	1	**8T-4183**	6	BOLT (M12X1.75X40-MM)	
	32	1	**8T-4224**	2	WASHER-HARD (8.8X16X2-MM THK)	
CM	33	1	**3E-8020**	3	SCREW-TRUSS HEAD (M6X1X25-MM)	
	34	1	**8T-5400**	1	CONNECTOR AS	
M	35	1	**9X-2042**	3	SCREW-TRUSS HEAD (M6X1X12-MM)	
M	36	1	**9X-2043**	5	SCREW-TRUSS HEAD (M6X1X14-MM)	
E	38	1	**144-0195**		HOSE (26-CM)	

C-CHANGE FROM PREVIOUS TYPE
E-ORDER BY THE CENTIMETER
J-REQUIRES CORPORATE KEY
M-METRIC PART
Y-SEPARATE ILLUSTRATION

247-6502 DOOR GP-CAB *(contd.)* **i03706844**

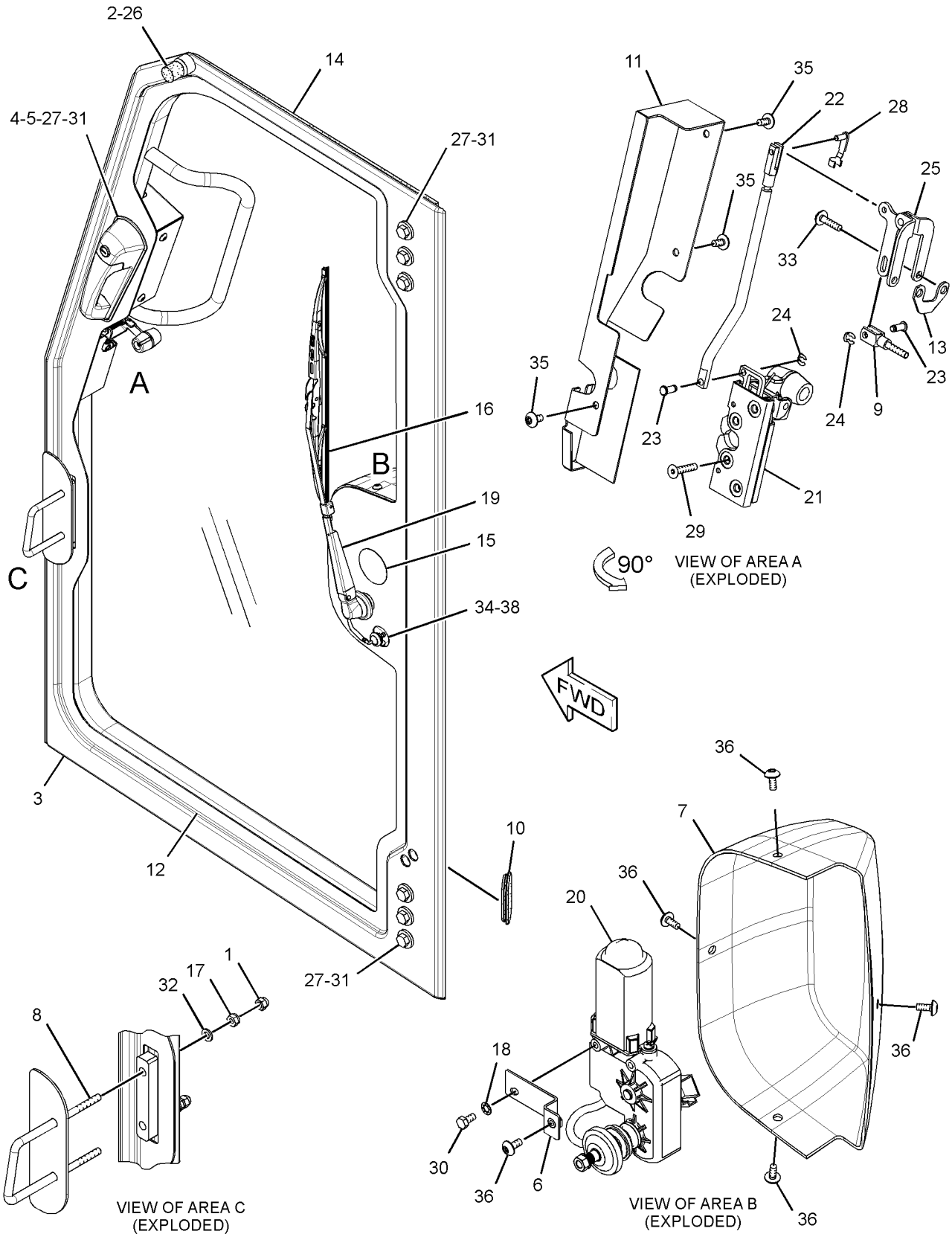

GRAPHIC #1 **<END>** g01622243

OPERATOR STATION

267-2549 DOOR GP-CAB—RH—FORESTRY

S/N: DHA1-298; FBH1-439
POLYCARBONATE
PART OF 267-2550 CAB GP-FORESTRY
AN ATTACHMENT

SMCS-7308 **i03706853**

NOTE	REF NO	GRAPHIC REF	PART NUMBER	QTY	PART NAME 1 2 3 4 5 6 (PRODUCT LEVEL)	SEE PAGE
	1	1	**5E-5740**	2	NUT (M8X1.25-THD)	
	2	1	**6C-9003**	1	STOP	
	3	1	**223-9818**	1	FILM-INSTRUCTION (WINDOW CLEANING, READ OMM)	
J	4	1	**252-1862**	1	HANDLE AS	
	5	1	**252-1863**	1	GASKET	
	6	1	**262-2971**	1	PLATE AS	
	7	1	**266-9299**	1	FRAME AS-DOOR (RH)	
	8	1	**266-9303**	1	COVER	
	9	1	**266-9307**	1	STRIKER AS (RH)	
	10	1	**269-2890**	1	CLEVIS	
	11	1	**281-4002**	1	PLUG	
	12	1	**281-4136**	1	COVER-LATCH (RH)	
	13	1	**281-4150**	1	WINDOW (RH)	
	14	1	**285-3692**	1	SPACER	
	15	1	**285-5734**	1	SEAL-RH (DOOR)	
	16	1	**287-0548**	1	STICKER-DOOR SEAL	
	17	1	**290-6180**	3	SPACER (7X11X5-MM THK)	
	18	1	**125-8175**	1	BLADE AS-WIPER (450-MM) (DOOR, RH)	
M	19	1	**131-3540**	2	LOCKNUT (M8X1.25-THD)	
	20	1	**1H-3244**	2	LOCKWASHER	
	21	1	**262-1997**	1	ARM GP-WINDOW WIPER (DOOR, RH)	
	21A	1	**136-3194**	1	NOZZLE AS-WASHER	
Y	22	1	**262-4070**	1	MOTOR GP-WINDOW WIPER (DOOR, RH)	748
	23	1	**269-2887**	1	LATCH AS-DOOR (ROTARY)	
	24	1	**269-2892**	2	PIN	
	25	1	**269-2893**	2	CLIP	
	26	1	**272-1622**	1	ROD AS	
	26A	1	**108-5471**	1	CLEVIS	
	27	1	**272-1623**	1	BELLCRANK AS	
	28	1	**4I-4872**	2	SPACER (8.6X18X5-MM THK)	
M	29	1	**5C-7261**	1	NUT (M8X1.25-THD)	
	30	1	**5P-1076**	6	WASHER-HARD (13.5X30X4-MM THK)	
	31	1	**6V-7636**	1	PIN AS-SPRING	
M	32	1	**7X-2533**	3	BOLT (M6X1X35-MM)	
M	33	1	**8C-6802**	4	SCREW-FLAT HEAD (6X1X26.3-MM)	
M	34	1	**8T-0639**	2	BOLT (M6X1X12-MM)	
M	35	1	**8T-4183**	6	BOLT (M12X1.75X40-MM)	
	36	1	**8T-4224**	2	WASHER-HARD (8.8X16X2-MM THK)	
M	37	1	**9X-2042**	3	SCREW-TRUSS HEAD (M6X1X12-MM)	
M	38	1	**9X-2043**	5	SCREW-TRUSS HEAD (M6X1X14-MM)	
	39	1	**9X-8267**	3	WASHER (6.6X12X2-MM THK)	
E	40	1	**144-0195**		HOSE (26-CM)	

E-ORDER BY THE CENTIMETER
J-REQUIRES 5P8500 KEY
M-METRIC PART
Y-SEPARATE ILLUSTRATION

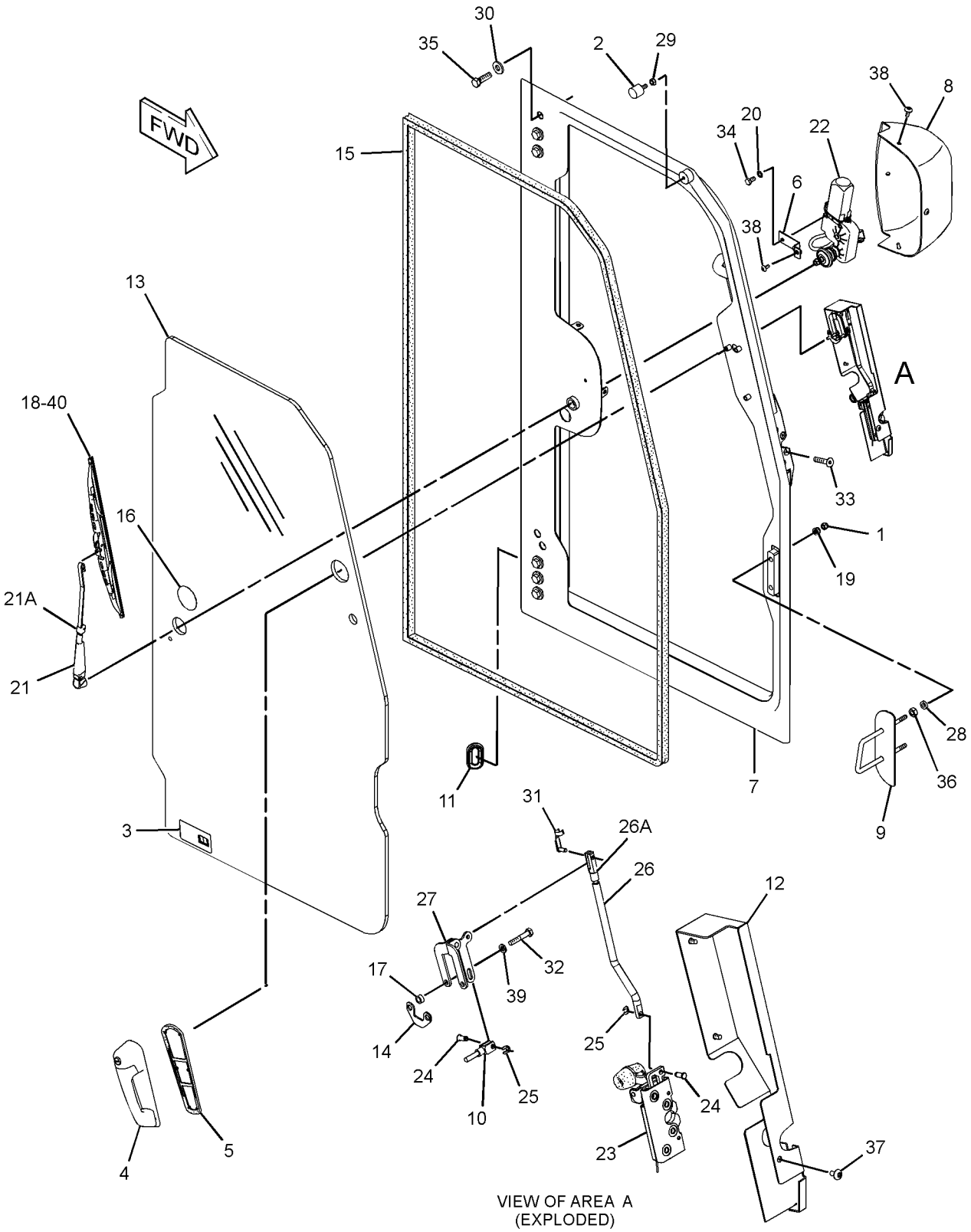

GRAPHIC #1 **<END>** g01319099

OPERATOR STATION

267-2549 DOOR GP-CAB—RH—FORESTRY

S/N: DHA299-918; FBH440-1088
POLYCARBONATE
PART OF 267-2550 CAB GP-FORESTRY
AN ATTACHMENT

SMCS-7308 **i03706854**

NOTE	REF NO	GRAPHIC REF	PART NUMBER	QTY	PART NAME 1 2 3 4 5 6 (PRODUCT LEVEL)	SEE PAGE
	1	1	**6C-8996**	2	CAP	
	2	1	**6C-9003**	1	STOP	
	3	1	**223-9818**	1	FILM-INSTRUCTION (WINDOW CLEANING, READ OMM)	
J	4	1	**252-1862**	1	HANDLE AS	
	5	1	**252-1863**	1	GASKET	
	6	1	**262-2971**	1	PLATE AS	
	7	1	**266-9299**	1	FRAME AS-DOOR (RH)	
	8	1	**266-9303**	1	COVER	
	9	1	**266-9307**	1	STRIKER AS (RH)	
	10	1	**269-2890**	1	CLEVIS	
	11	1	**281-4002**	1	PLUG	
	12	1	**281-4136**	1	COVER-LATCH (RH)	
	13	1	**281-4150**	1	WINDOW (RH)	
	14	1	**285-3692**	1	SPACER	
	15	1	**285-5734**	1	SEAL-RH (DOOR)	
	16	1	**287-0548**	1	STICKER-DOOR SEAL	
	17	1	**290-6180**	3	SPACER (7X11X5-MM THK)	
	18	1	**125-8175**	1	BLADE AS-WIPER (450-MM) (DOOR, RH)	
M	19	1	**131-3540**	2	LOCKNUT (M8X1.25-THD)	
	20	1	**1H-3244**	2	LOCKWASHER	
	21	1	**262-1997**	1	ARM GP-WINDOW WIPER (DOOR, RH)	
	21A	1	**136-3194**	1	NOZZLE AS-WASHER	
CY	22	1	**304-4244**	1	MOTOR GP-WINDOW WIPER (DOOR, RH)	751
	23	1	**269-2887**	1	LATCH AS-DOOR (ROTARY)	
	24	1	**269-2892**	2	PIN	
C	25	1	**8T-6902**	2	CLIP	
	26	1	**272-1622**	1	ROD AS	
	26A	1	**108-5471**	1	CLEVIS	
	27	1	**272-1623**	1	BELLCRANK AS	
	28	1	**4I-4872**	2	SPACER (8.6X18X5-MM THK)	
M	29	1	**5C-7261**	1	NUT (M8X1.25-THD)	
	30	1	**5P-1076**	6	WASHER-HARD (13.5X30X4-MM THK)	
	31	1	**6V-7636**	1	PIN AS-SPRING	
M	32	1	**7X-2533**	3	BOLT (M6X1X35-MM)	
M	33	1	**8C-6802**	4	SCREW-FLAT HEAD (6X1X26.3-MM)	
M	34	1	**8T-0639**	2	BOLT (M6X1X12-MM)	
M	35	1	**8T-4183**	6	BOLT (M12X1.75X40-MM)	
	36	1	**8T-4224**	2	WASHER-HARD (8.8X16X2-MM THK)	
M	37	1	**9X-2042**	3	SCREW-TRUSS HEAD (M6X1X12-MM)	
M	38	1	**9X-2043**	5	SCREW-TRUSS HEAD (M6X1X14-MM)	
	39	1	**9X-8267**	3	WASHER (6.6X12X2-MM THK)	
E	40	1	**144-0195**		HOSE (26-CM)	
	41	1	**8T-5400**	1	CONNECTOR AS	

C-CHANGE FROM PREVIOUS TYPE
E-ORDER BY THE CENTIMETER
J-REQUIRES 5P8500 KEY
M-METRIC PART
Y-SEPARATE ILLUSTRATION

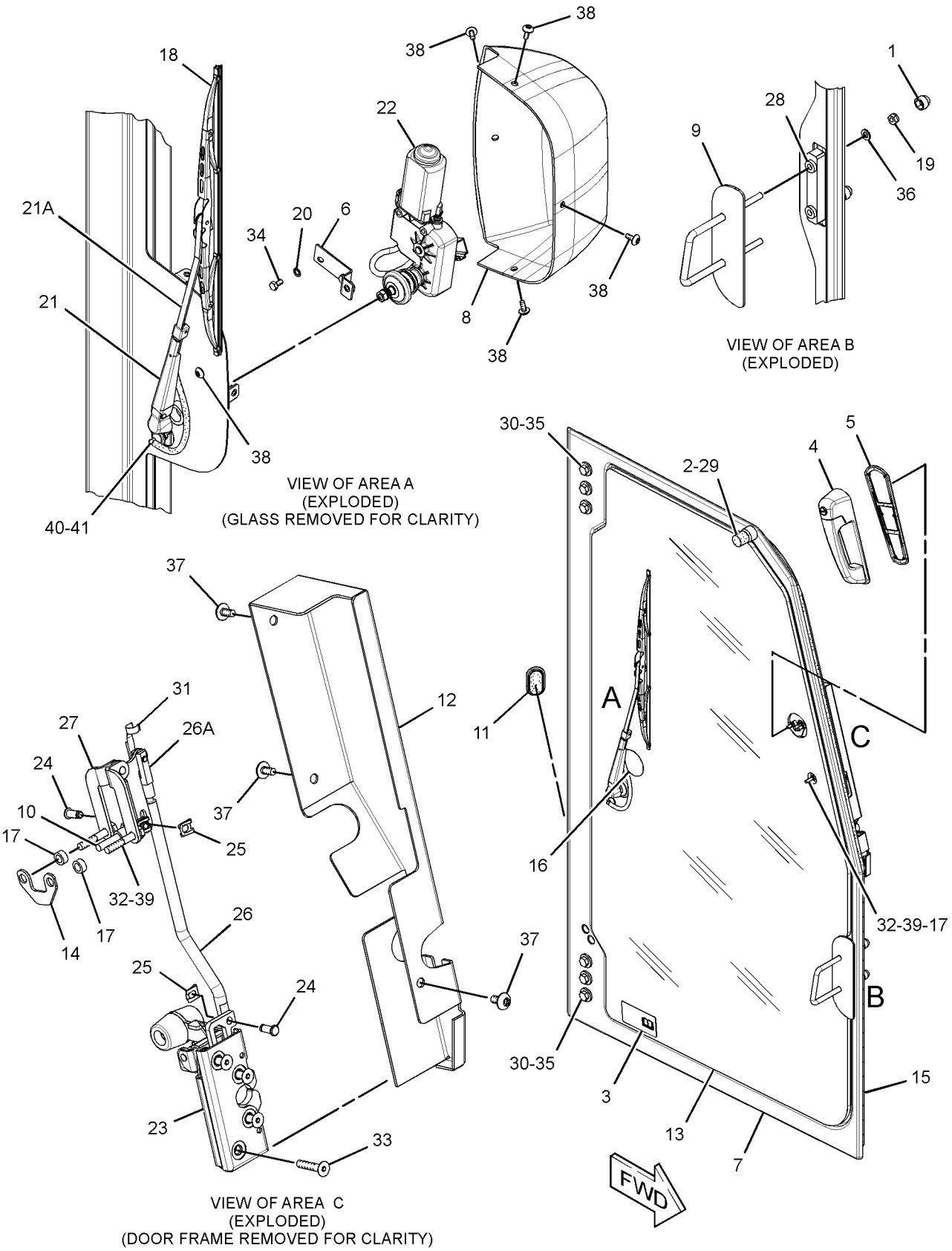

GRAPHIC #1 **<END>** g01440614

OPERATOR STATION

267-2549 DOOR GP-CAB—RH—FORESTRY

S/N: DHA919-UP; FBH1089-UP
POLYCARBONATE
PART OF 267-2550 CAB GP-FORESTRY
AN ATTACHMENT

SMCS-7308 **i03706855**

NOTE	REF NO	GRAPHIC REF	PART NUMBER	QTY	PART NAME 1 2 3 4 5 6 (PRODUCT LEVEL)	SEE PAGE
	1	1	**6C-8996**	2	CAP	
	2	1	**6C-9003**	1	STOP	
	3	1	**223-9818**	1	FILM-INSTRUCTION (WINDOW CLEANING, READ OMM)	
J	4	1	**252-1862**	1	HANDLE AS	
	5	1	**252-1863**	1	GASKET	
	6	1	**262-2971**	1	PLATE AS	
	7	1	**266-9299**	1	FRAME AS-DOOR (RH)	
	8	1	**266-9303**	1	COVER	
	9	1	**266-9307**	1	STRIKER AS (RH)	
	10	1	**269-2890**	1	CLEVIS	
	11	1	**281-4002**	1	PLUG	
	12	1	**281-4136**	1	COVER-LATCH (RH)	
	13	1	**281-4150**	1	WINDOW (RH)	
	14	1	**285-3692**	1	SPACER	
	15	1	**285-5734**	1	SEAL-RH (DOOR)	
	16	1	**287-0548**	1	STICKER-DOOR SEAL	
	17	1	**290-6180**	3	SPACER (7X11X5-MM THK)	
	18	1	**125-8175**	1	BLADE AS-WIPER (450-MM) (DOOR, RH)	
M	19	1	**131-3540**	2	LOCKNUT (M8X1.25-THD)	
	20	1	**1H-3244**	2	LOCKWASHER	
	21	1	**262-1997**	1	ARM GP-WINDOW WIPER (DOOR, RH)	
	21A	1	**136-3194**	1	NOZZLE AS-WASHER	
Y	22	1	**304-4244**	1	MOTOR GP-WINDOW WIPER (DOOR, RH)	751
	23	1	**269-2887**	1	LATCH AS-DOOR (ROTARY)	
	24	1	**269-2892**	2	PIN	
	25	1	**8T-6902**	2	CLIP	
	26	1	**272-1622**	1	ROD AS	
	26A	1	**108-5471**	1	CLEVIS	
	27	1	**272-1623**	1	BELLCRANK AS	
	28	1	**4I-4872**	2	SPACER (8.6X18X5-MM THK)	
M	29	1	**5C-7261**	1	NUT (M8X1.25-THD)	
	30	1	**5P-1076**	6	WASHER-HARD (13.5X30X4-MM THK)	
	31	1	**6V-7636**	1	PIN AS-SPRING	
CM	32	1	**3E-8020**	3	SCREW-TRUSS HEAD (M6X1X25-MM)	
M	33	1	**8C-6802**	4	SCREW-FLAT HEAD (6X1X26.3-MM)	
M	34	1	**8T-0639**	2	BOLT (M6X1X12-MM)	
M	35	1	**8T-4183**	6	BOLT (M12X1.75X40-MM)	
	36	1	**8T-4224**	2	WASHER-HARD (8.8X16X2-MM THK)	
M	37	1	**9X-2042**	3	SCREW-TRUSS HEAD (M6X1X12-MM)	
M	38	1	**9X-2043**	5	SCREW-TRUSS HEAD (M6X1X14-MM)	
E	40	1	**144-0195**		HOSE (26-CM)	
	41	1	**8T-5400**	1	CONNECTOR AS	

C-CHANGE FROM PREVIOUS TYPE
E-ORDER BY THE CENTIMETER
J-REQUIRES 5P8500 KEY
M-METRIC PART
Y-SEPARATE ILLUSTRATION

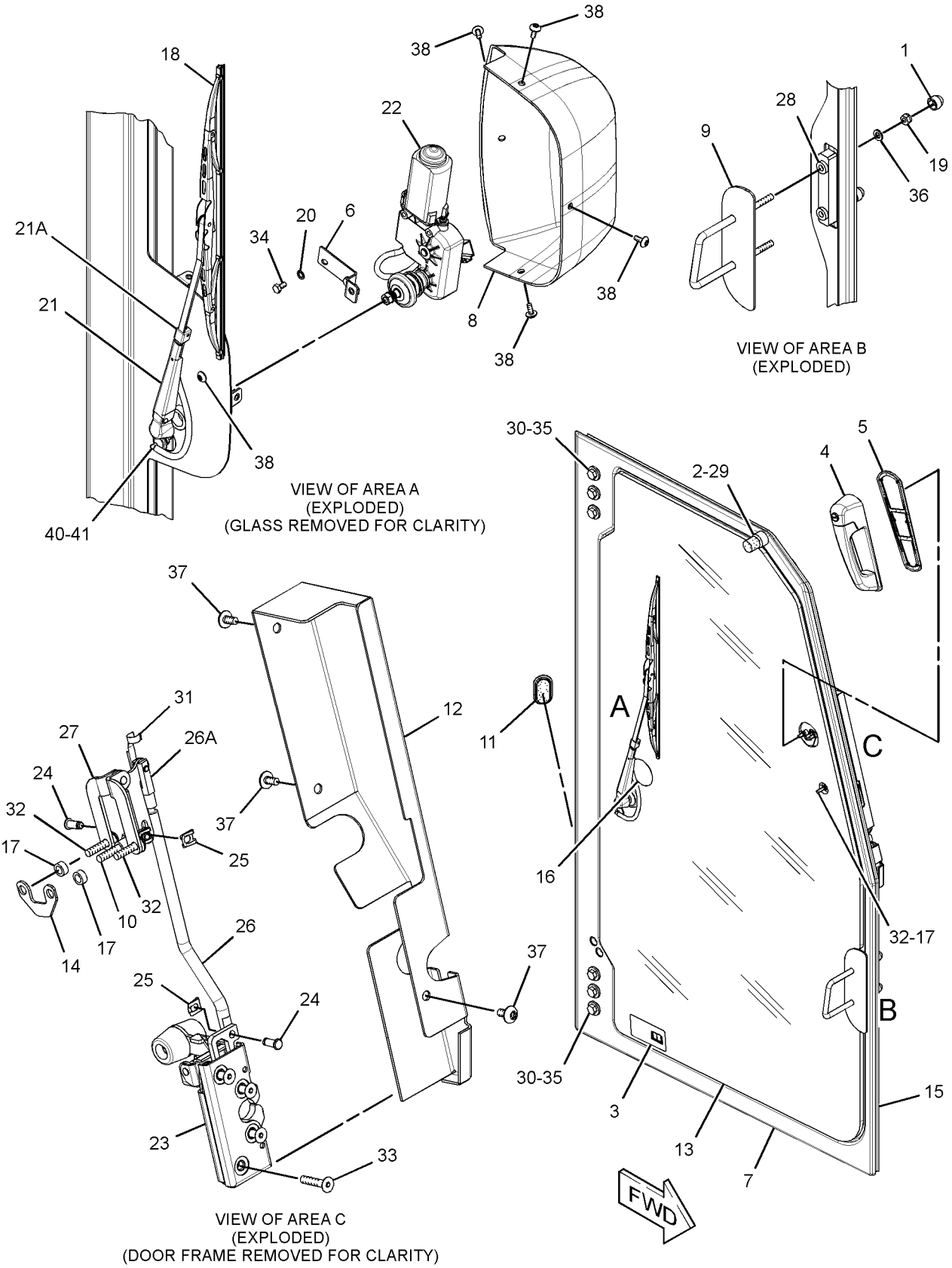

GRAPHIC #1 **<END>** g01622810

OPERATOR STATION

267-2551 DOOR GP-CAB—LH—FORESTRY

S/N: DHA1-298; FBH1-439
POLYCARBONATE
PART OF 267-2550 CAB GP-FORESTRY
AN ATTACHMENT

SMCS-7308 **i03706860**

NOTE	REF NO	GRAPHIC REF	PART NUMBER	QTY	PART NAME 1 2 3 4 5 6 (PRODUCT LEVEL)	SEE PAGE
	1	1	**6C-9003**	1	STOP	
	2	1	**223-9818**	1	FILM-INSTRUCTION (WINDOW CLEANING, READ OMM)	
	3	1	**247-6613**	1	FRAME AS-DOOR (LH)	
J	4	1	**252-1862**	1	HANDLE AS	
	5	1	**252-1863**	1	GASKET	
	6	1	**281-4151**	1	WINDOW (LH)	
	7	1	**262-2971**	1	PLATE AS	
	9	1	**266-9303**	1	COVER	
	10	1	**266-9306**	1	STRIKER AS	
	11	1	**281-4137**	1	COVER-LATCH	
	12	1	**290-6180**	3	SPACER (7X11X5-MM THK)	
	13	1	**125-8175**	1	BLADE AS-WIPER (450-MM) (DOOR, LH)	
M	14	1	**131-3540**	2	LOCKNUT (M8X1.25-THD)	
	15	1	**1H-3244**	2	LOCKWASHER	
	16	1	**262-1998**	1	ARM GP-WINDOW WIPER (DOOR, LH)	
	16A	1	**136-3194**	1	NOZZLE AS-WASHER	
Y	17	1	**262-4069**	1	MOTOR GP-WINDOW WIPER (DOOR, LH)	747
	18	1	**269-2890**	1	CLEVIS	
	19	1	**269-2886**	1	LATCH AS-DOOR (ROTARY)	
	20	1	**269-2888**	1	LINK GP-ADJUSTABLE	
	21	1	**269-2892**	2	PIN	
	22	1	**269-2893**	2	CLIP	
	23	1	**272-1623**	1	BELLCRANK AS	
	24	1	**4I-4872**	2	SPACER (8.6X18X5-MM THK)	
	25	1	**6V-7636**	1	PIN AS-SPRING	
M	27	1	**7X-2533**	3	BOLT (M6X1X35-MM)	
M	28	1	**8C-6802**	4	SCREW-FLAT HEAD (6X1X26.3-MM)	
M	29	1	**8T-0639**	2	BOLT (M6X1X12-MM)	
	31	1	**8T-4224**	2	WASHER-HARD (8.8X16X2-MM THK)	
M	32	1	**9X-2042**	3	SCREW-TRUSS HEAD (M6X1X12-MM)	
M	33	1	**9X-2043**	5	SCREW-TRUSS HEAD (M6X1X14-MM)	
	34	1	**9X-8267**	3	WASHER (6.6X12X2-MM THK)	
E	35	1	**144-0195**		HOSE (26-CM)	
	36	1	**285-5735**	1	SEAL-LH (DOOR)	
M	37	1	**8T-4183**	6	BOLT (M12X1.75X40-MM)	
	38	1	**5P-1076**	6	WASHER-HARD (13.5X30X4-MM THK)	
	39	1	**287-0548**	1	STICKER-DOOR SEAL	
	40	1	**281-4002**	1	PLUG	
M	41	1	**5C-7261**	1	NUT (M8X1.25-THD)	
	42	1	**285-3692**	1	SPACER	
	43	1	**5E-5740**	2	NUT (M8X1.25-THD)	

E-ORDER BY THE CENTIMETER
J-REQUIRES 5P8500 KEY
M-METRIC PART
Y-SEPARATE ILLUSTRATION

267-2551 **DOOR GP-CAB** *(contd.)* **i03706860**

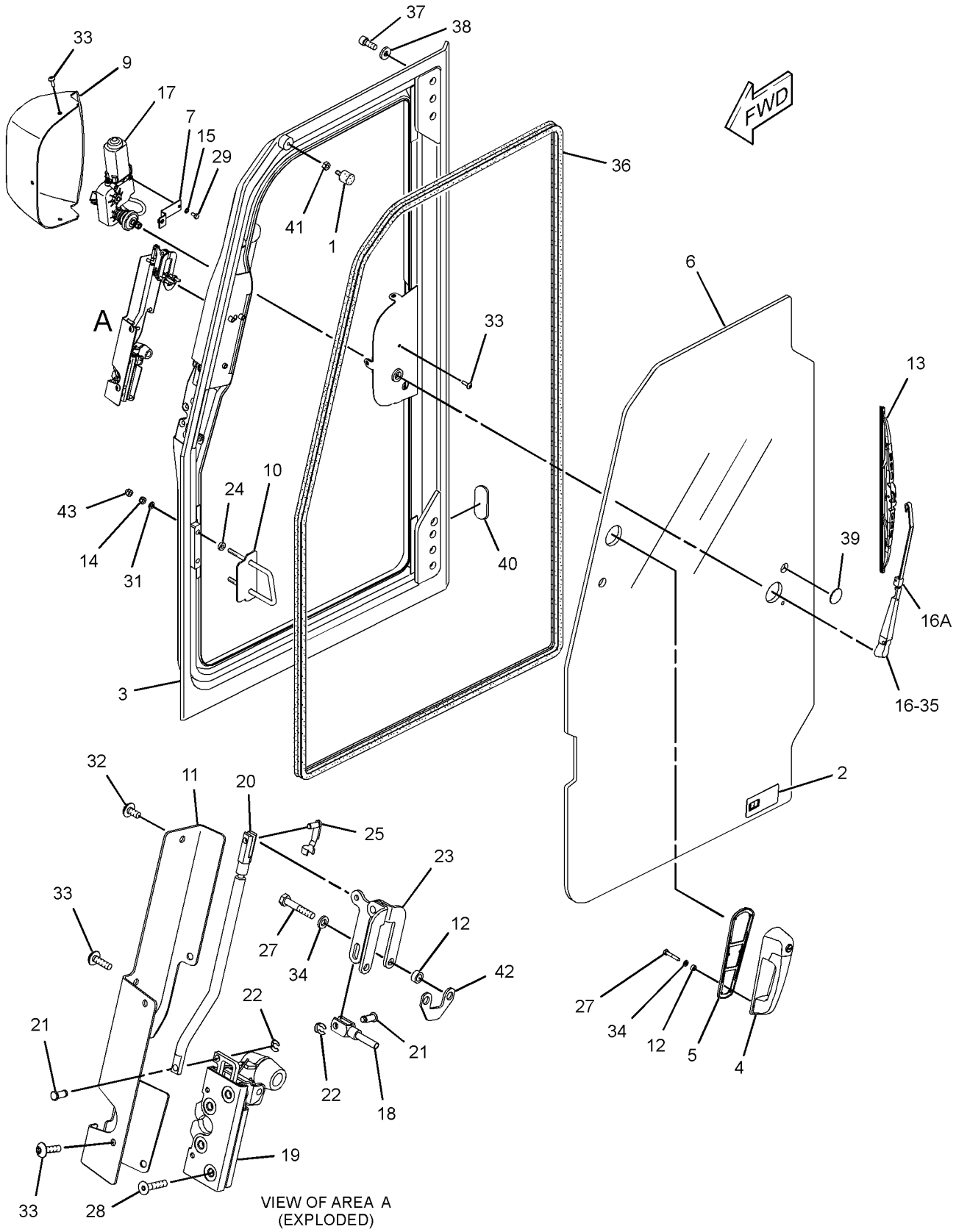

GRAPHIC #1 **<END>** g01320210

OPERATOR STATION

267-2551 DOOR GP-CAB—LH—FORESTRY

S/N: DHA299-918; FBH440-1088
POLYCARBONATE
PART OF 267-2550 CAB GP-FORESTRY
AN ATTACHMENT

SMCS-7308 **i03706862**

NOTE	REF NO	GRAPHIC REF	PART NUMBER	QTY	PART NAME 1 2 3 4 5 6 (PRODUCT LEVEL)	SEE PAGE
	1	1	**6C-9003**	1	STOP	
	2	1	**223-9818**	1	FILM-INSTRUCTION (WINDOW CLEANING, READ OMM)	
	3	1	**247-6613**	1	FRAME AS-DOOR (LH)	
J	4	1	**252-1862**	1	HANDLE AS	
	5	1	**252-1863**	1	GASKET	
	6	1	**281-4151**	1	WINDOW (LH)	
	7	1	**262-2971**	1	PLATE AS	
	9	1	**266-9303**	1	COVER	
	10	1	**266-9306**	1	STRIKER AS	
	11	1	**281-4137**	1	COVER-LATCH	
	12	1	**290-6180**	3	SPACER (7X11X5-MM THK)	
	13	1	**125-8175**	1	BLADE AS-WIPER (450-MM) (DOOR, LH)	
M	14	1	**131-3540**	2	LOCKNUT (M8X1.25-THD)	
	15	1	**1H-3244**	2	LOCKWASHER	
	16	1	**262-1998**	1	ARM GP-WINDOW WIPER (DOOR, LH)	
	16A	1	**136-3194**	1	NOZZLE AS-WASHER	
CY	17	1	**304-4243**	1	MOTOR GP-WINDOW WIPER (DOOR, LH)	750
	18	1	**269-2890**	1	CLEVIS	
	19	1	**269-2886**	1	LATCH AS-DOOR (ROTARY)	
	20	1	**269-2888**	1	LINK GP-ADJUSTABLE	
	21	1	**269-2892**	2	PIN	
C	22	1	**8T-6902**	2	CLIP	
	23	1	**272-1623**	1	BELLCRANK AS	
	24	1	**4I-4872**	2	SPACER (8.6X18X5-MM THK)	
	25	1	**6V-7636**	1	PIN AS-SPRING	
M	27	1	**7X-2533**	3	BOLT (M6X1X35-MM)	
M	28	1	**8C-6802**	4	SCREW-FLAT HEAD (6X1X26.3-MM)	
M	29	1	**8T-0639**	2	BOLT (M6X1X12-MM)	
	31	1	**8T-4224**	2	WASHER-HARD (8.8X16X2-MM THK)	
M	32	1	**9X-2042**	3	SCREW-TRUSS HEAD (M6X1X12-MM)	
M	33	1	**9X-2043**	5	SCREW-TRUSS HEAD (M6X1X14-MM)	
	34	1	**9X-8267**	3	WASHER (6.6X12X2-MM THK)	
E	35	1	**144-0195**		HOSE (26-CM)	
	36	1	**285-5735**	1	SEAL-LH (DOOR)	
M	37	1	**8T-4183**	6	BOLT (M12X1.75X40-MM)	
	38	1	**5P-1076**	6	WASHER-HARD (13.5X30X4-MM THK)	
	39	1	**287-0548**	1	STICKER-DOOR SEAL	
	40	1	**281-4002**	1	PLUG	
M	41	1	**5C-7261**	1	NUT (M8X1.25-THD)	
	42	1	**285-3692**	1	SPACER	
	43	1	**6C-8996**	2	CAP	
	44	1	**8T-5400**	1	CONNECTOR AS	

C-CHANGE FROM PREVIOUS TYPE
E-ORDER BY THE CENTIMETER
J-REQUIRES 5P8500 KEY
M-METRIC PART
Y-SEPARATE ILLUSTRATION

267-2551 **DOOR GP-CAB** *(contd.)* **i03706862**

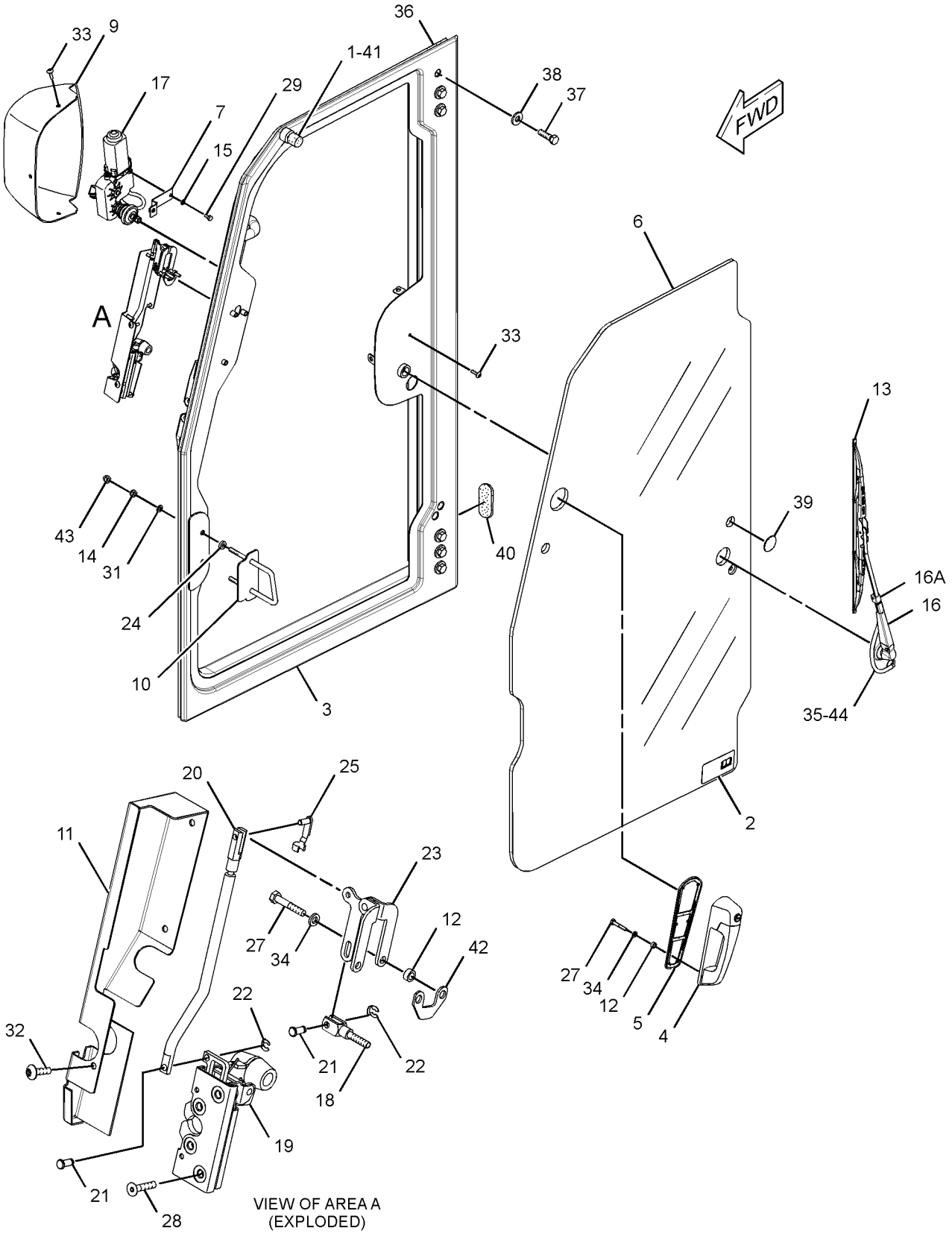

GRAPHIC #1 **<END>** g01623230

OPERATOR STATION

267-2551 DOOR GP-CAB—LH—FORESTRY

S/N: DHA919-UP; FBH1089-UP
POLYCARBONATE
PART OF 267-2550 CAB GP-FORESTRY
AN ATTACHMENT

SMCS-7308 **i03706863**

NOTE	REF NO	GRAPHIC REF	PART NUMBER	QTY	PART NAME 1 2 3 4 5 6 (PRODUCT LEVEL)	SEE PAGE
	1	1	**6C-9003**	1	STOP	
	2	1	**223-9818**	1	FILM-INSTRUCTION (WINDOW CLEANING, READ OMM)	
	3	1	**247-6613**	1	FRAME AS-DOOR (LH)	
J	4	1	**252-1862**	1	HANDLE AS	
	5	1	**252-1863**	1	GASKET	
	6	1	**281-4151**	1	WINDOW (LH)	
	7	1	**262-2971**	1	PLATE AS	
	9	1	**266-9303**	1	COVER	
	10	1	**266-9306**	1	STRIKER AS	
	11	1	**281-4137**	1	COVER-LATCH	
	12	1	**290-6180**	3	SPACER (7X11X5-MM THK)	
	13	1	**125-8175**	1	BLADE AS-WIPER (450-MM) (DOOR, LH)	
M	14	1	**131-3540**	2	LOCKNUT (M8X1.25-THD)	
	15	1	**1H-3244**	2	LOCKWASHER	
	16	1	**262-1998**	1	ARM GP-WINDOW WIPER (DOOR, LH)	
	16A	1	**136-3194**	1	NOZZLE AS-WASHER	
Y	17	1	**304-4243**	1	MOTOR GP-WINDOW WIPER (DOOR, LH)	750
	18	1	**269-2890**	1	CLEVIS	
	19	1	**269-2886**	1	LATCH AS-DOOR (ROTARY)	
	20	1	**269-2888**	1	LINK GP-ADJUSTABLE	
	21	1	**269-2892**	2	PIN	
	22	1	**8T-6902**	2	CLIP	
	23	1	**272-1623**	1	BELLCRANK AS	
	24	1	**4I-4872**	2	SPACER (8.6X18X5-MM THK)	
	25	1	**6V-7636**	1	PIN AS-SPRING	
CM	27	1	**3E-8020**	3	SCREW-TRUSS HEAD (M6X1X25-MM)	
M	28	1	**8C-6802**	4	SCREW-FLAT HEAD (6X1X26.3-MM)	
M	29	1	**8T-0639**	2	BOLT (M6X1X12-MM)	
	31	1	**8T-4224**	2	WASHER-HARD (8.8X16X2-MM THK)	
M	32	1	**9X-2042**	3	SCREW-TRUSS HEAD (M6X1X12-MM)	
M	33	1	**9X-2043**	5	SCREW-TRUSS HEAD (M6X1X14-MM)	
E	35	1	**144-0195**		HOSE (26-CM)	
	36	1	**285-5735**	1	SEAL-LH (DOOR)	
M	37	1	**8T-4183**	6	BOLT (M12X1.75X40-MM)	
	38	1	**5P-1076**	6	WASHER-HARD (13.5X30X4-MM THK)	
	39	1	**287-0548**	1	STICKER-DOOR SEAL	
	40	1	**281-4002**	1	PLUG	
M	41	1	**5C-7261**	1	NUT (M8X1.25-THD)	
	42	1	**285-3692**	1	SPACER	
	43	1	**6C-8996**	2	CAP	
	44	1	**8T-5400**	1	CONNECTOR AS	

C-CHANGE FROM PREVIOUS TYPE
E-ORDER BY THE CENTIMETER
J-REQUIRES 5P8500 KEY
M-METRIC PART
Y-SEPARATE ILLUSTRATION

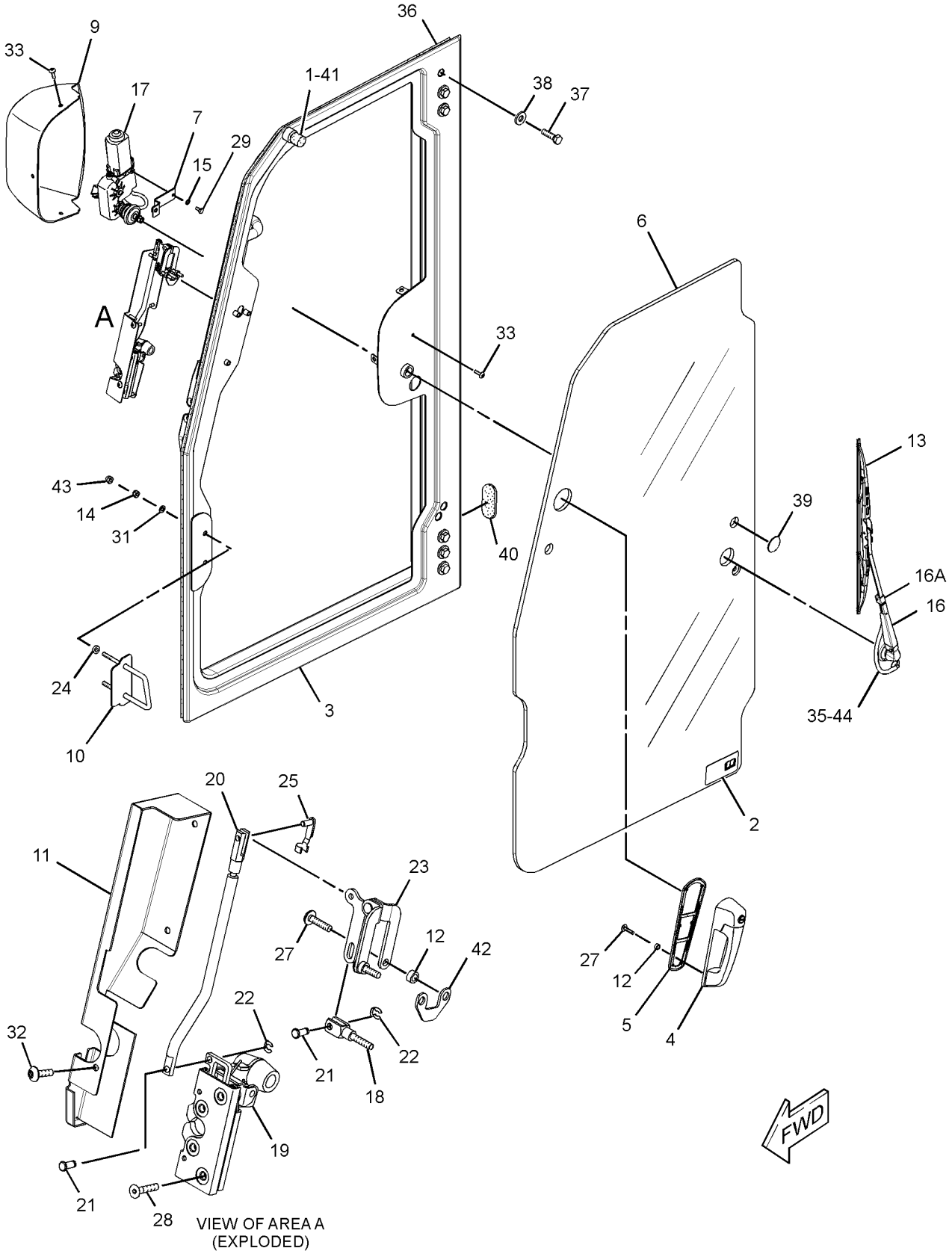

GRAPHIC #1 **<END>** g01727676

OPERATOR STATION

250-9160 HEATER GP-CAB—OPEN ROPS

S/N: DHA1-UP; FBH1-UP
PART OF 289-8424 CANOPY AR
AN ATTACHMENT

SMCS-7304 **i03638781**

NOTE	REF NO	GRAPHIC REF	PART NUMBER	QTY	PART NAME 1 2 3 4 5 6 (PRODUCT LEVEL)	SEE PAGE
	1	1	**1K-4649**	1	SPACER (0.516X1X1-IN THK)	
	2	1	**5U-5745**	1	CONNECTOR-HOSE	
	3	1	**6W-0058**	1	ELBOW-HOSE	
	4	1	**8T-0154**	4	CLAMP-HOSE	
	5	1	**121-2761**	1	GRILL-AIR FILTER (CAB)	
	6	1	**228-6089**	1	PLUG (ROCKER SWITCH)	
Y	7	1	*251-7146*	1	HEATER GP-CAB (OPEN ROPS)	726
	8	1	**252-8878**	1	DUCT AS-AIR	
		1	**297-1468**	1	INSERT-THREADED	
	9	1	**254-3202**	1	GASKET	
	10	1	**254-3203**	2	GASKET	
	11	1	**267-5243**	1	PANEL AS	
		1	**271-7312**	1	KNOB (TEMPERATURE CONTROL)	
		1	**285-7415**	1	KNOB (BLOWER FAN SPEED)	
	12	1	**275-6710**	4	RETAINER	
	13	1	**277-6001**	1	BRACKET	
	14	1	**287-8437**	1	PLATE AS	
M		1	**6V-9632**	4	NUT-WELD (M6X1-THD)	
M	15	1	**288-3663**	4	THUMBSCREW (M6X1X25-MM)	
	17	1	**6D-1641**	2	CLIP	
	18	1	**7X-7729**	5	WASHER (11X25X3-MM THK)	
	19	1	**8T-4121**	7	WASHER-HARD (11X21X2.5-MM THK)	
M	20	1	**8T-4133**	5	NUT (M10X1.5-THD)	
M	21	1	**8T-4137**	1	BOLT (M10X1.5X20-MM)	
M	22	1	**8T-4186**	4	BOLT (M10X1.5X40-MM)	
M	23	1	**8T-4195**	2	BOLT (M10X1.5X30-MM)	
M	24	1	**9X-2042**	2	SCREW-TRUSS HEAD (M6X1X12-MM)	
M	25	1	**9X-2045**	2	SCREW-TRUSS HEAD (M6X1X20-MM)	
E	26	1	**136-1953**		HOSE (93-CM)	
E	26A	1	**136-1953**		HOSE (141-CM)	
D	27	1	**5P-5639**		SEAL (0.2-M EACH)	
D	27A	1	**5P-5639**		SEAL (0.5-M EACH)	
	28	1	**7K-1181**	2	STRAP-CABLE	
	29	1	**230-4012**	2	RECEPTACLE AS-CONNECTOR (2-PIN)	

D-ORDER BY THE METER
E-ORDER BY THE CENTIMETER
M-METRIC PART
Y-SEPARATE ILLUSTRATION

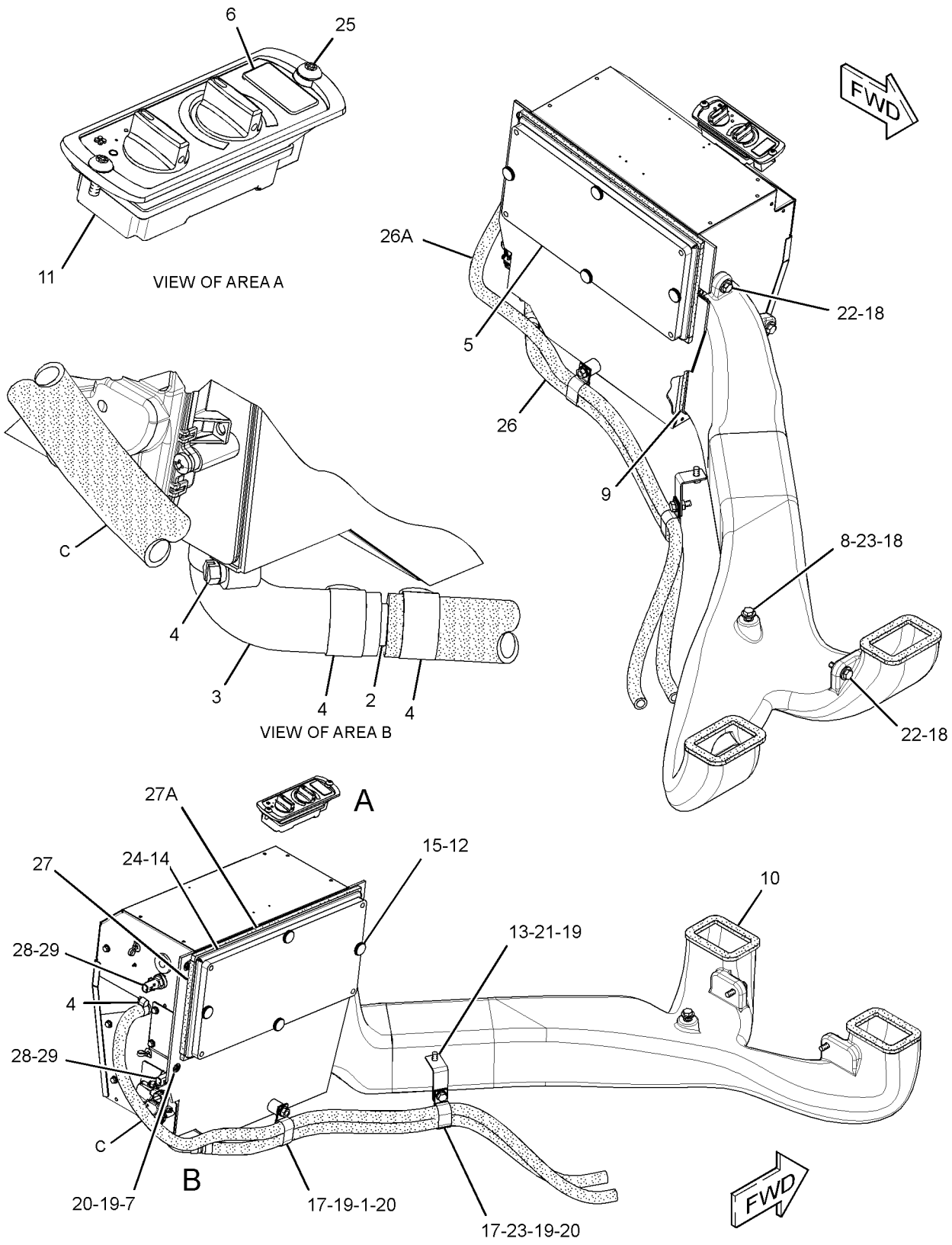

GRAPHIC #1 **<END>** g02004133

OPERATOR STATION

251-7146 HEATER GP-CAB

S/N: DHA1-UP; FBH1-UP
24-VOLT
PART OF 250-9160 HEATER GP-CAB
AN ATTACHMENT

SMCS-7304 **i02954437**

NOTE	REF NO	GRAPHIC REF	PART NUMBER	QTY	PART NAME 1 2 3 4 5 6 (PRODUCT LEVEL)	SEE PAGE
	1	1	**300-4098**	4	CAP	
	2	1	**111-4015**	1	GROMMET	
	3	1	**131-3093**	1	BUSHING	
	4	1	**134-3518**	2	TIE-PUSH MOUNT	
	5	1	**151-5650**	2	PLUG	
	6	1	**248-6772**	2	SCREW-MACHINE (8-16X7.75-IN)	
	7	1	**255-6211**	1	HARNESS AS-MOTOR (BLOWER)	
		1	**230-4010**	1	RECEPTACLE AS-CONNECTOR (12-PIN)	
		1	**155-2272**	1	PLUG AS-CONNECTOR (4-PIN)	
		1	**155-2270**	1	KIT-CONNECTING PLUG (2-PIN)	
					(INCLUDES PLUG AS, WEDGE, & INTERFACE SEAL)	
	8	1	**256-0761**	1	CASE AS-AIR CONDITIONER	
	9	1	**256-0768**	1	PLATE AS	
J	10	1	**262-2815**	1	GASKET	
	11	1	**275-6706**	1	MOTOR-BLOWER (24-VOLT, A/C, HEATER)	
	12	1	**275-6707**	2	GROMMET	
	13	1	**277-7112**	1	PLATE	
	14	1	**277-7114**	2	PLUG	
J	15	1	**277-9958**	1	GASKET	
J	16	1	**277-9959**	1	GASKET	
J	17	1	**277-9960**	1	GASKET	
J	18	1	**277-9962**	1	GASKET	
J	19	1	**277-9964**	1	GASKET	
	20	1	**318-0815**	1	PLATE AS	
	21	1	**278-3354**	1	FILM-INSTRUCTION (HVAC WATER, DRAINING, FILLING)	
	22	1	**279-0850**	1	ACTUATOR (ELECTRONIC)	
	23	1	*282-3476*	1	RESISTOR AS	
		1	**281-2033**	1	RESISTOR AS	
		1	**280-9453**	3	SCREW-SELF-TAPPING (NO 6X0.375-IN)	
		1	**282-3481**	1	PLATE AS	
	24	1	**282-3653**	1	BRACKET	
M	25	1	**283-8651**	7	BOLT (M4X0.7X10-MM)	
	26	1	**285-7974**	1	PLATE AS	
Y	27	1	*289-2123*	1	HEATER GP-CAB	731
	28	1	**289-2134**	1	PLATE AS	
	29	1	**289-4795**	1	PLATE AS	
	30	1	**096-6166**	4	WASHER-HARD (4.5X9X1-MM THK)	
J	31	1	**285-8548**	1	GASKET	
M	32	1	**5C-9553**	16	BOLT (M6X1X16-MM)	
	33	1	**8T-4205**	16	WASHER-HARD (7.2X14.5X2-MM THK)	
D	34	1	**6V-2496**		SEAL (0.1-M)	
D	34A	1	**6V-2496**		SEAL (0.2-M EACH)	
D	34B	1	**6V-2496**		SEAL (0.3-M EACH)	
	35	1	**3S-2093**	3	STRAP-CABLE	
	36	1	**4P-7581**	1	CLIP	
	37	1	**8T-4121**	1	WASHER-HARD (11X21X2.5-MM THK)	
M	38	1	**8T-4137**	1	BOLT (M10X1.5X20-MM)	
	39	1	**153-6932**	1	GASKET	
					AVAILABLE REPAIR KIT(S):	
J			**285-8554**	1	KIT-SEAL (HEATER)	
					(INCLUDES GASKETS)	

D-ORDER BY THE METER
J-KIT MARKED J SERVICES PART(S) MARKED J
M-METRIC PART
Y-SEPARATE ILLUSTRATION

251-7146 HEATER GP-CAB *(contd.)* i02954437

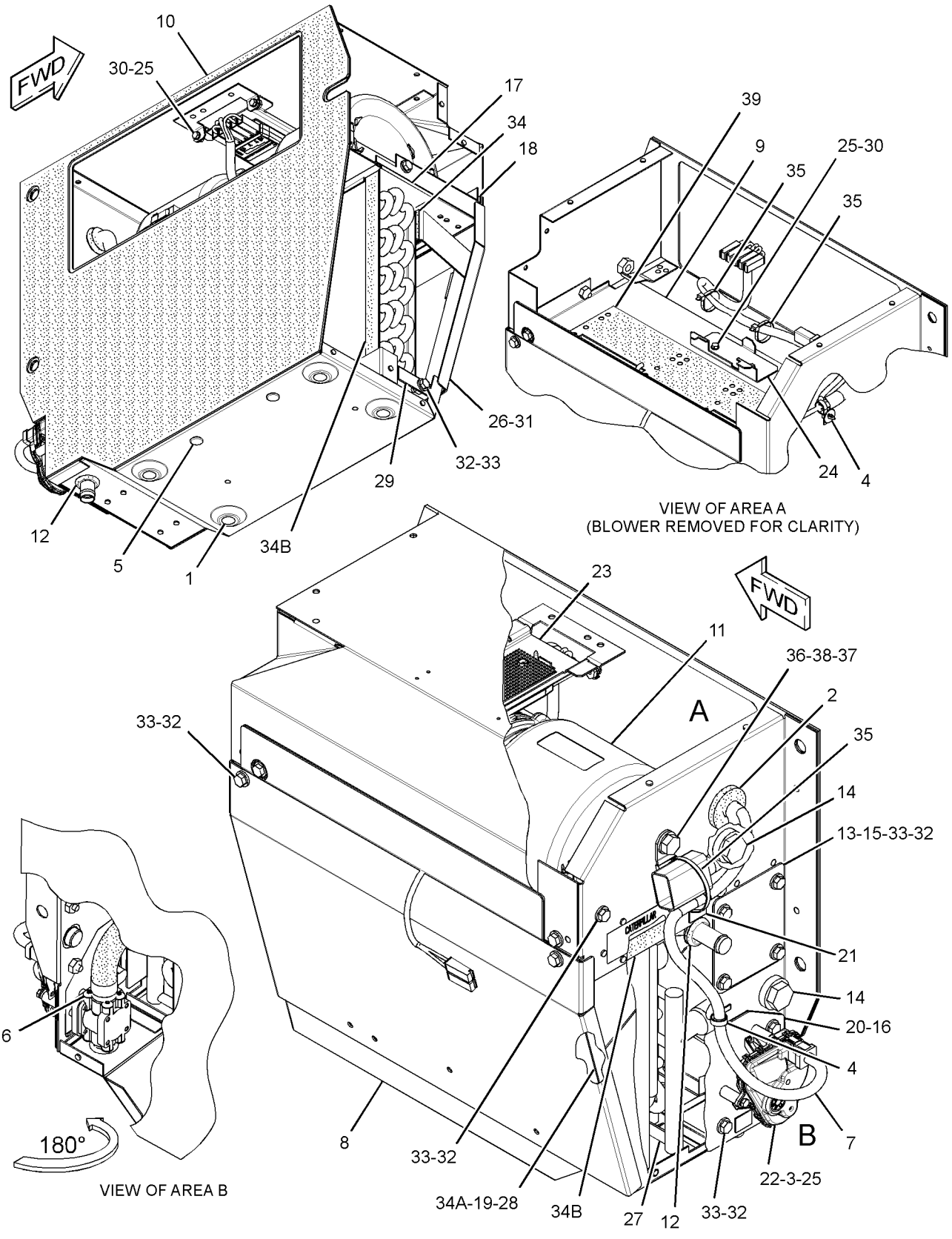

GRAPHIC #1 **<END>** g01482289

OPERATOR STATION

276-8082 HEATER GP-CAB

S/N: DHA1-UP; FBH1-UP
PART OF 240-6233 CAB GP-ENCLOSED ROPS, 267-2550 CAB GP-FORESTRY
AN ATTACHMENT

SMCS-7304 **i02811229**

NOTE	REF NO	GRAPHIC REF	PART NUMBER	QTY	PART NAME 1 2 3 4 5 6 (PRODUCT LEVEL)	SEE PAGE
	1	1	**5U-5745**	1	CONNECTOR-HOSE	
	2	1	**6W-0058**	1	ELBOW-HOSE	
	3	1	**8T-0154**	4	CLAMP-HOSE	
	4	1	**277-6001**	1	BRACKET	
	5	1	**6D-1641**	2	CLIP	
	6	1	**8T-4121**	3	WASHER-HARD (11X21X2.5-MM THK)	
M	7	1	**8T-4133**	1	NUT (M10X1.5-THD)	
M	8	1	**8T-4137**	1	BOLT (M10X1.5X20-MM)	
M	9	1	**8T-4195**	1	BOLT (M10X1.5X30-MM)	
E	10	1	**136-1953**		HOSE (142-CM)	
E	10A	1	**136-1953**		HOSE (93-CM)	

E-ORDER BY THE CENTIMETER
M-METRIC PART

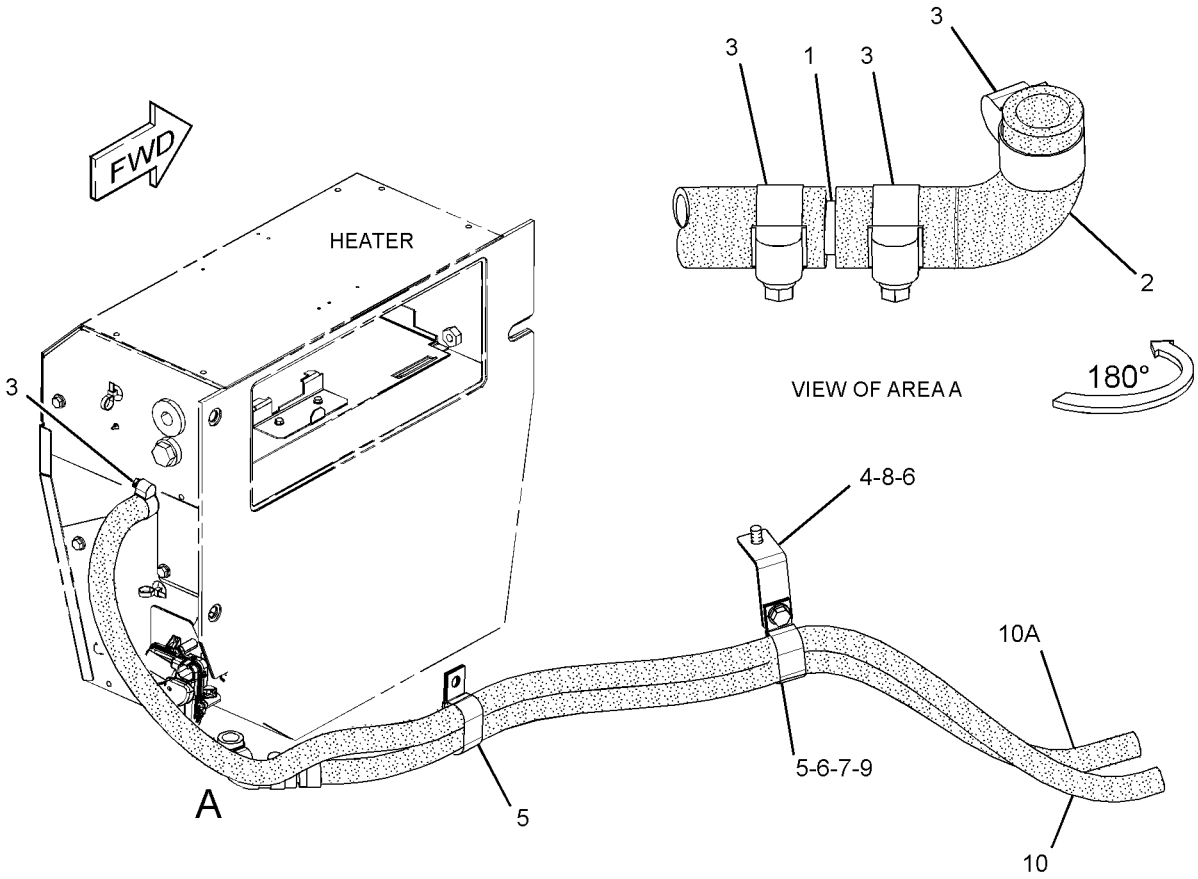

GRAPHIC #1 **<END>** g01414701

OPERATOR STATION

277-9969 HEATER GP-CAB

S/N: DHA1-UP; FBH1-UP
PART OF 268-0179 AIR CONDITIONER GP
AN ATTACHMENT

SMCS-7304 **i02841576**

NOTE	REF NO	GRAPHIC REF	PART NUMBER	QTY	PART NAME 1 2 3 4 5 6 (PRODUCT LEVEL)	SEE PAGE
	1	1	**8T-0154**	2	CLAMP-HOSE	
	2	1	**277-9968**	1	VALVE GP-CAB HEATER	
	3	1	**287-6657**	1	COIL AS-HEATER	
	4	1	**291-3803**	1	HOSE	

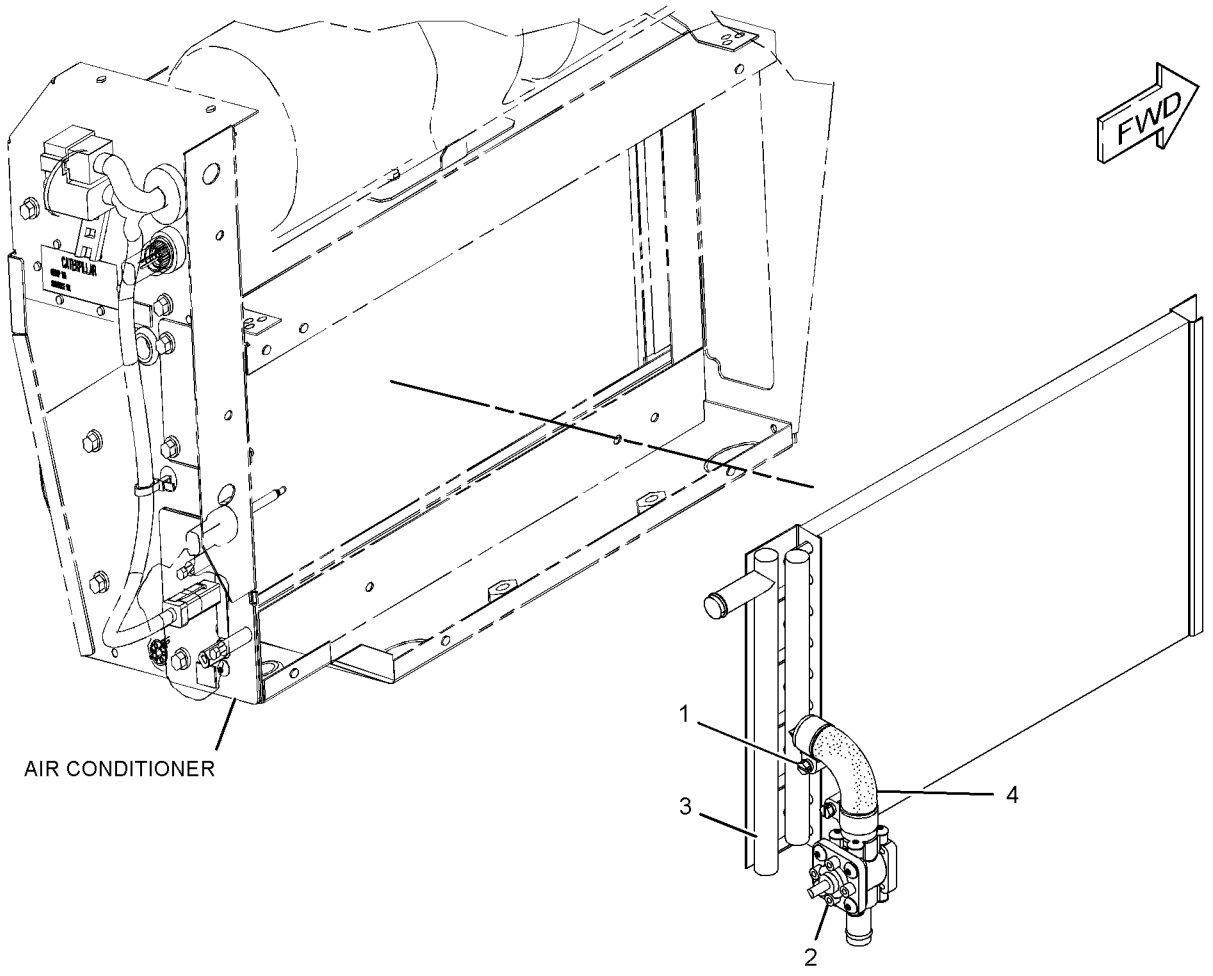

GRAPHIC #1 **<END>** g01417376

OPERATOR STATION

289-2123 HEATER GP-CAB–OPEN ROPS

S/N: DHA1-UP; FBH1-UP
PART OF 251-7146 HEATER GP-CAB
AN ATTACHMENT

SMCS-7304 **i02651344**

NOTE	REF NO	GRAPHIC REF	PART NUMBER	QTY	PART NAME 1 2 3 4 5 6 (PRODUCT LEVEL)	SEE PAGE
	1	1	**8T-0154**	2	CLAMP-HOSE	
	2	1	**277-9968**	1	VALVE GP-CAB HEATER	
	3	1	**289-2122**	1	COIL AS-HEATER	
	4	1	**291-3803**	1	HOSE	

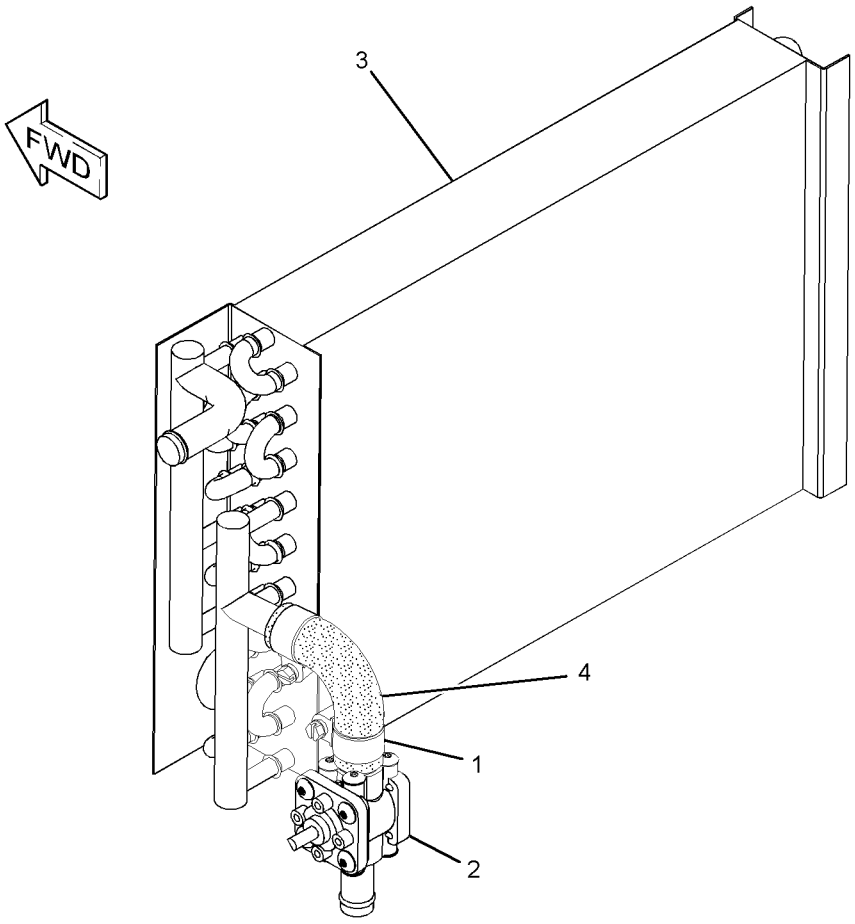

GRAPHIC #1 **<END>** g01304601

OPERATOR STATION

247-6505 INSTALLATION GP-RADIO

S/N: DHA1-UP; FBH1-UP
PART OF 240-6233 CAB GP-ENCLOSED ROPS, 267-2550 CAB GP-FORESTRY
AN ATTACHMENT

SMCS-7338 **i03028666**

NOTE	REF NO	GRAPHIC REF	PART NUMBER	QTY	PART NAME 1 2 3 4 5 6 (PRODUCT LEVEL)	SEE PAGE
	1	1	**6C-3431**	1	ANTENNA	
	2	1	**6T-7695**	2	SPEAKER AS-RADIO	
	3	1	**9U-8263**	1	COVER	
	4	1	**226-0150**	1	WASHER-RUBBER	
	5	1	**226-0151**	1	SPACER	
	6	1	**6C-9081**	2	LOCKWASHER	
M	7	1	**138-8454**	8	SCREW-TRUSS HEAD (M4X0.7X10-MM)	
M	8	1	**5C-2874**	1	NUT (M5X0.8-THD)	
	9	1	**8K-1433**	1	GROMMET	
M	10	1	**160-8754**	1	BOLT (M5X0.8X40-MM)	
	11	1	**140-4722**	1	NUT (M5X0.8-THD)	

M-METRIC PART

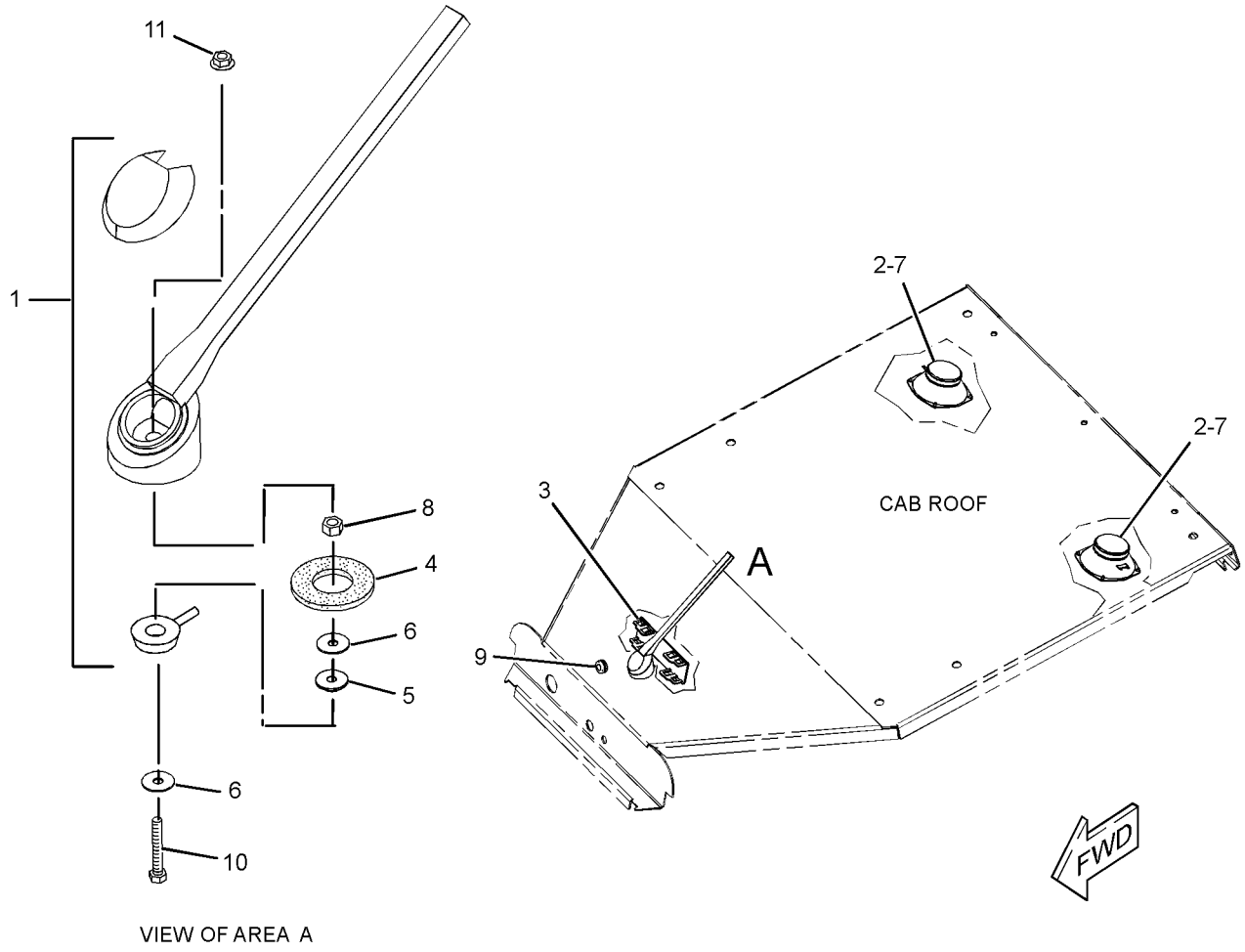

GRAPHIC #1 **<END>** g01319703

OPERATOR STATION

294-2007 INSTALLATION GP-RADIO—XM SATELLITE

S/N: DHA1-UP; FBH1-UP
NACD MARKET
CANNOT BE USED WITH CANOPY AR
AN ATTACHMENT

SMCS-7338 **i03638013**

NOTE	PART NUMBER	QTY	PART NAME 1 2 3 4 5 6 (PRODUCT LEVEL)	SEE PAGE
Y	**284-8954**	1	RADIO GP (AM/FM/WB/XM/CD PLAYER)	771
	284-9055	1	ANTENNA AS	
	200-5728	1	HARNESS AS-RADIO	
	8T-8737	1	PLUG-SEAL	
	186-3735	7	PIN-CONNECTOR (16-GA TO 18-GA)	
	160-3518	1	KIT-RECEPTACLE (8-PIN)	
			(INCLUDES RECEPTACLE AS & WEDGE)	
	172-8037	1	CONNECTOR (RADIO)	
	172-8039	11	TERMINAL (RADIO)	
M	**8T-4137**	2	BOLT (M10X1.5X20-MM)	
	137-8165	1	BUMPER	
	295-4533	1	PLATE	
	8T-8557	2	RIVET-POP	
	8T-4121	2	WASHER-HARD (11X21X2.5-MM THK)	

M-METRIC PART
Y-SEPARATE ILLUSTRATION

<END>

294-2008 INSTALLATION GP-RADIO—SIRIUS SATELLITE

S/N: DHA1-UP; FBH1-UP
NACD MARKET
CANNOT BE USED WITH CANOPY AR
AN ATTACHMENT

SMCS-7338 **i03638032**

NOTE	PART NUMBER	QTY	PART NAME 1 2 3 4 5 6 (PRODUCT LEVEL)	SEE PAGE
Y	**284-8955**	1	RADIO GP (AM/FM/WB/SIRIUS/CD PLAYER)	772
	284-9055	1	ANTENNA AS	
	200-5728	1	HARNESS AS-RADIO	
	8T-8737	1	PLUG-SEAL	
	160-3518	1	KIT-RECEPTACLE (8-PIN)	
			(INCLUDES RECEPTACLE AS & WEDGE)	
	172-8037	1	CONNECTOR (RADIO)	
	172-8039	1	TERMINAL (RADIO)	
	186-3735	7	PIN-CONNECTOR (16-GA TO 18-GA)	
M	**8T-4137**	2	BOLT (M10X1.5X20-MM)	
	137-8165	1	BUMPER	
	295-4533	1	PLATE	
	8T-8557	2	RIVET-POP	
	8T-4121	2	WASHER-HARD (11X21X2.5-MM THK)	

M-METRIC PART
Y-SEPARATE ILLUSTRATION

<END>

OPERATOR STATION

247-6508 INSTRUMENT GP

S/N: DHA1-UP; FBH1-UP
PART OF 240-6233 CAB GP-ENCLOSED ROPS, 267-2550 CAB GP-FORESTRY
AN ATTACHMENT

SMCS-7450, 7451 **i03706865**

NOTE	REF NO	GRAPHIC REF	PART NUMBER	QTY	PART NAME 1 2 3 4 5 6 (PRODUCT LEVEL)	SEE PAGE
Y	1	1	**106-0107**	1	SWITCH GP-ROTARY (THROTTLE)	306
	2	1	**110-6109**	1	KNOB-CONTROL (THROTTLE SWITCH)	
	3	1	**110-7887**	1	SWITCH AS-START (KEY)	
		1	**7T-6799**	1	NUT-MOUNTING (1-32-THD)	
		1	**102-8804**	1	KIT-RECEPTACLE (4-PIN)	
					(INCLUDES RECEPTACLE AS & WEDGE)	
		1	**186-3735**	4	PIN-CONNECTOR (16-GA TO 18-GA)	
	4	1	**218-0651**	1	FILM-INSTRUCTION (KEY START SWITCH)	
	5	1	**228-6089**	3	PLUG (ROCKER SWITCH)	
	6	1	**251-1191**	1	SWITCH AS-ROCKER (WIPER, WASHER FRONT)	
	7	1	**251-1192**	1	SWITCH AS-ROCKER (WIPER, WASHER, LH DOOR)	
	8	1	**251-1193**	1	SWITCH AS-ROCKER (WIPER, WASHER, RH DOOR)	
	9	1	**251-1194**	1	SWITCH AS-ROCKER (WIPER, WASHER REAR)	
	10	1	**314-6036**	1	PLATE	
	11	1	**277-8369**	1	FILM-IDENTIFICATION (THROTTLE CONTROL SWITCH)	
	12	1	**251-5848**	1	SWITCH AS-ROCKER (REAR WORK LIGHTS)	
	13	1	**254-4091**	1	MONITOR GP-OPERATOR	
	14	1	**314-3010**	1	PLATE	
M	15	1	**263-5928**	5	SCREW-TRUSS HEAD (M5X0.8X25-MM)	
Y	17	1	**239-5025**	1	CONTROL GP-UNPRGMED MONITOR (MESSENGER)	680
M	18	1	**9X-2045**	6	SCREW-TRUSS HEAD (M6X1X20-MM)	
	19	1	**251-1197**	1	SWITCH AS-ROCKER (HYDRAULIC LOCKOUT)	
	20	1	**222-7890**	1	SWITCH AS-ROCKER (PARKING BRAKE ON, OFF)	

M-METRIC PART
Y-SEPARATE ILLUSTRATION

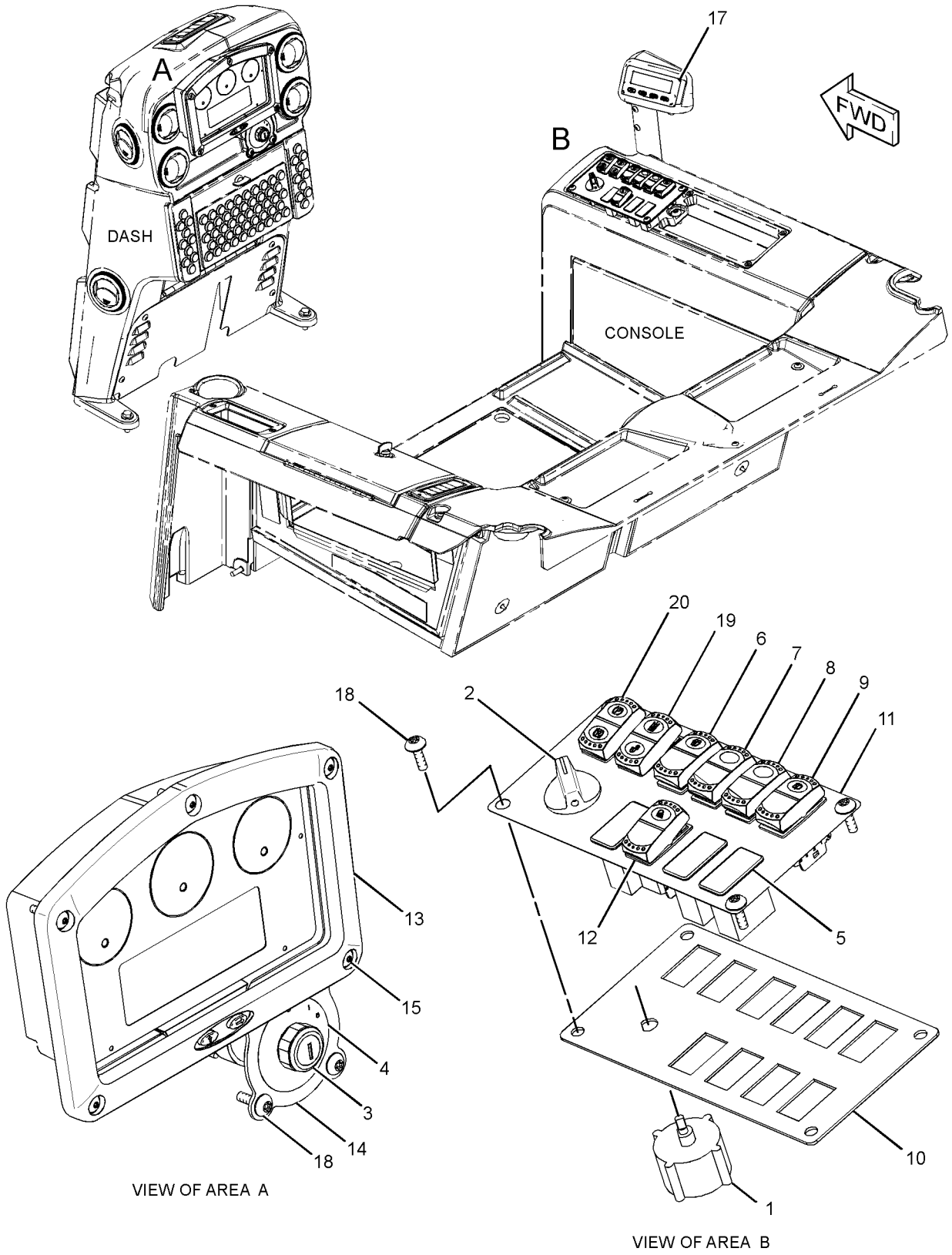

VIEW OF AREA A

VIEW OF AREA B

GRAPHIC #1 **<END>** g01301915

OPERATOR STATION

252-7820 INSTRUMENT GP—OPEN ROPS

S/N: DHA1-UP; FBH1-UP
PART OF 251-3536 CANOPY GP
AN ATTACHMENT

SMCS-7450, 7451 **i02867381**

NOTE	REF NO	GRAPHIC REF	PART NUMBER	QTY	PART NAME 1 2 3 4 5 6 (PRODUCT LEVEL)	SEE PAGE
Y	1	1	**106-0107**	1	SWITCH GP-ROTARY (THROTTLE POSITION)	306
	2	1	**110-6109**	1	KNOB-CONTROL (THROTTLE SWITCH)	
	3	1	**110-7887**	1	SWITCH AS-START (KEY)	
		1	**7T-6799**	1	NUT-MOUNTING (1-32-THD)	
		1	**102-8804**	1	KIT-RECEPTACLE (4-PIN)	
					(INCLUDES RECEPTACLE AS & WEDGE)	
		1	**186-3735**	4	PIN-CONNECTOR (16-GA TO 18-GA)	
	4	1	**218-0651**	1	FILM-INSTRUCTION (KEY START SWITCH)	
	5	1	**222-7890**	1	SWITCH AS-ROCKER (PARKING BRAKE ON, OFF)	
	6	1	**228-6089**	3	PLUG (ROCKER SWITCH)	
	7	1	**251-1197**	1	SWITCH AS-ROCKER (IMPLEMENT LOCKOUT)	
	8	1	**251-5848**	1	SWITCH AS-ROCKER (WORK LIGHTS)	
	9	1	**254-4091**	1	MONITOR GP-OPERATOR	
	10	1	**314-6036**	1	PLATE	
	11	1	**314-3010**	1	PLATE	
	12	1	**291-6288**	1	FILM-IDENTIFICATION (THROTTLE CONTROL SWITCH)	
Y	13	1	**239-5025**	1	CONTROL GP-UNPRGMED MONITOR (MESSENGER)	680
M	14	1	**263-5928**	5	SCREW-TRUSS HEAD (M5X0.8X25-MM)	
M	15	1	**9X-2045**	6	SCREW-TRUSS HEAD (M6X1X20-MM)	

M-METRIC PART
Y-SEPARATE ILLUSTRATION

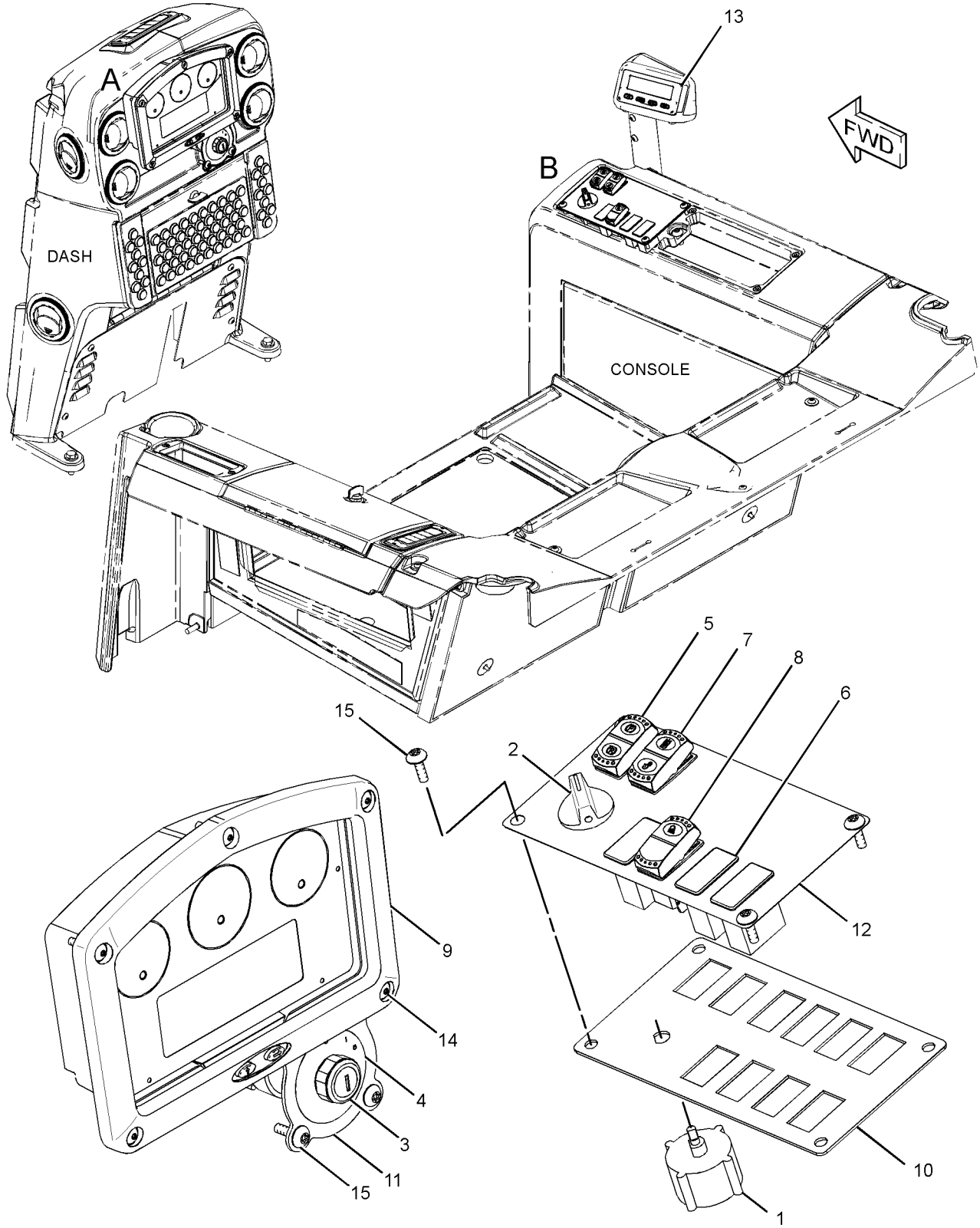

VIEW OF AREA A
(PHANTOM REMOVED)

VIEW OF AREA B
(PHANTOM REMOVED)

GRAPHIC #1 **<END>** g01303278

OPERATOR STATION

269-3790 INSULATION GP-WEATHER

S/N: DHA1-UP; FBH1-UP
PART OF 240-6233 CAB GP-ENCLOSED ROPS, 267-2550 CAB GP-FORESTRY
AN ATTACHMENT

SMCS-7329 **i02395584**

NOTE	REF NO	GRAPHIC REF	PART NUMBER	QTY	PART NAME 1 2 3 4 5 6 (PRODUCT LEVEL)	SEE PAGE
	1	1	**6P-2216**	31	CAP	
	2	1	**270-4835**	1	FOAM	
	3	1	**270-4836**	1	FOAM	
	4	1	**270-4837**	1	FOAM	
	5	1	**270-4838**	1	FOAM	
	6	1	**270-4839**	1	FOAM	

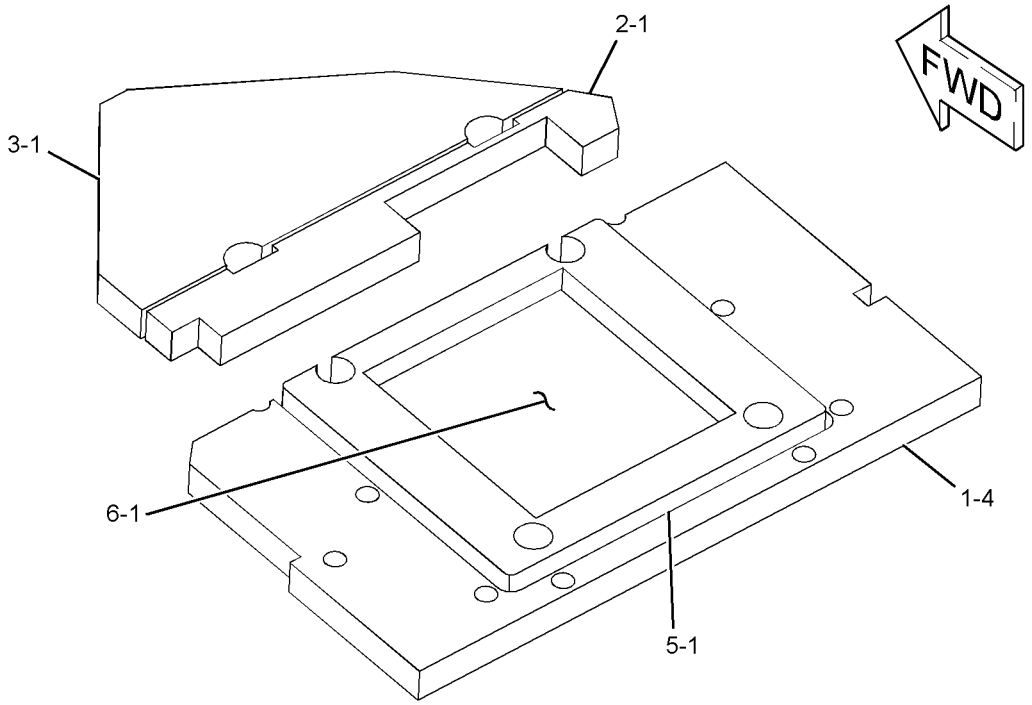

GRAPHIC #1 **<END>** g01203824

OPERATOR STATION

248-7070 LINES GP-AIR CONDITIONER

S/N: DHA1-UP; FBH1-UP

PART OF 206-7310 CAB AR-ENCLOSED ROPS, 267-4943 FORESTRY AR

AN ATTACHMENT

SMCS-1808 **i03022425**

NOTE	REF NO	GRAPHIC REF	PART NUMBER	QTY	PART NAME 1 2 3 4 5 6 (PRODUCT LEVEL)	SEE PAGE
	1	1	**2B-0941**	1	SPACER (10.5X19X19-MM THK)	
	2	1	**2K-0703**	1	BAR	
	3	1	**5P-4106**	1	NUT (1-7/16-16-THD)	
	4	1	**7K-3304**	1	NUT-JAM (1-20-THD)	
	5	1	**110-6171**	1	CLAMP	
	6	1	**110-6172**	1	CLAMP	
	7	1	**110-6393**	1	PLATE-INSTRUCTION (AIR CONDITIONER)	
	8	1	**114-5333**	1	SWITCH AS-PRESSURE (COMPRESSOR, HIGH SIDE)	
		1	**102-8802**	1	KIT-RECEPTACLE (2-PIN)	
					(INCLUDES RECEPTACLE AS & WEDGE)	
		1	**8T-8729**	2	PIN-CONNECTOR (16-GA TO 18-GA)	
E		1	**9X-1386**		SLEEVE (25-CM)	
	9	1	**149-6371**	1	SWITCH AS-PRESSURE (COMPRESSOR, LOW SIDE)	
		1	**102-8802**	1	KIT-RECEPTACLE (2-PIN)	
					(INCLUDES RECEPTACLE AS & WEDGE)	
		1	**8T-8729**	2	PIN-CONNECTOR (16-GA TO 18-GA)	
	10	1	**177-2215**	1	STRAP-DUAL CLAMP	
	11	1	**186-6189**	1	ACCUMULATOR-REFRIGERANT	
	12	1	**187-8661**	1	FITTING AS-AIR CONDITIONER	
	12A	1	**3E-4051**	1	CAP-SEAL	
	12B	1	**3E-4057**	1	VALVE AS	
	12C	1	**172-4880**	1	CAP-SEAL	
	12D	1	**180-7180**	1	CORE-VALVE	
	13	1	**218-4935**	1	SUPPRESSOR-ARC	
	14	1	**253-3696**	1	TUBE AS	
I	15	1	**269-1748**	1	HOSE AS	
I	16	1	**269-1749**	1	HOSE AS	
I	17	1	**269-1799**	1	HOSE AS	
	18	1	**269-8341**	1	BRACKET AS	
	19	1	**198-4777**	1	WASHER-HARD (11X25X10-MM THK)	
	20	1	**1B-3057**	2	CLIP (LOOP)	
	21	1	**1P-6356**	1	PLATE	
	22	1	**3E-4073**	1	FITTING AS-COMPRESSOR	
		1	**3E-4052**	1	CAP-SEAL (HIGH SIDE CHARGE PORT)	
		1	**3E-4058**	1	VALVE AS	
	23	1	**4S-1962**	1	CLIP	
	24	1	**5P-3928**	1	COUPLING AS-REFRIGERANT (SELF SEALING)	
		1	**107-4395**	1	VALVE AS	
		1	**107-4396**	1	GASKET	
	25	1	**5P-4295**	1	CLIP	
	26	1	**7K-3176**	1	COUPLING AS-REFRIGERANT (SELF SEALING)	
		1	**107-4393**	1	VALVE AS	
		1	**107-4394**	1	GASKET	
	27	1	**8T-4121**	4	WASHER-HARD (11X21X2.5-MM THK)	
M	28	1	**8T-4133**	1	NUT (M10X1.5-THD)	
M	29	1	**8T-4136**	1	BOLT (M10X1.5X25-MM)	
M	30	1	**8T-4139**	2	BOLT (M12X1.75X30-MM)	
M	31	1	**8T-4182**	1	BOLT (M10X1.5X45-MM)	
M	32	1	**8T-4185**	1	BOLT (M10X1.5X50-MM)	
	33	1	**8T-4223**	2	WASHER-HARD (13.5X25.5X3-MM THK)	
M	34	1	**8T-6466**	1	BOLT (M10X1.5X60-MM)	
	35	1	**8T-7934**	1	WASHER-HARD (11X21X5-MM THK)	
	36	1	**9X-7378**	2	SEAL-O-RING	
	37	1	**9X-7381**	2	SEAL-O-RING	
	38	1	**9X-7382**	1	SEAL-O-RING	

248-7070 **LINES GP-AIR CONDITIONER** *(contd.)* **i03022425**

NOTE	REF NO	GRAPHIC REF	PART NUMBER	QTY	PART NAME 1 2 3 4 5 6 (PRODUCT LEVEL)	SEE PAGE
	39	1	**9X-7383**	3	SEAL-O-RING	
	40	1	**9X-7384**	1	SEAL-O-RING	

E-ORDER BY THE CENTIMETER
I-REFER TO HYDRAULIC INFORMATION SYSTEM
M-METRIC PART

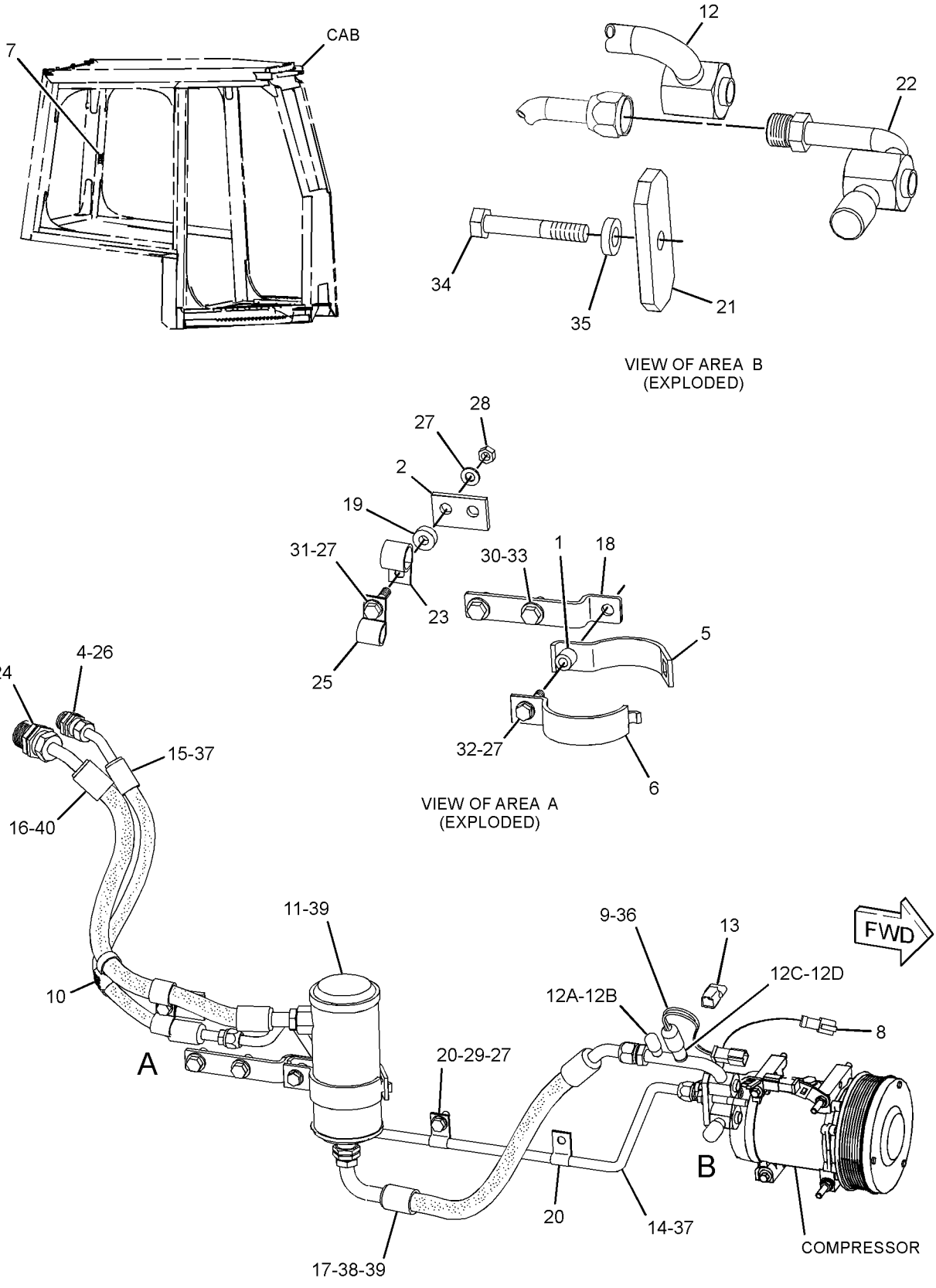

GRAPHIC #1 **<END>** g01386485

OPERATOR STATION

248-7071 LINES GP-HEATER

S/N: DHA1-213; FBH1-338
PART OF 206-7310 CAB AR-ENCLOSED ROPS, 289-8424 CANOPY AR, 267-4943 FORESTRY AR
AN ATTACHMENT

SMCS-7304 **i02651349**

NOTE	REF NO	GRAPHIC REF	PART NUMBER	QTY	PART NAME 1 2 3 4 5 6 (PRODUCT LEVEL)	SEE PAGE
	1	1	**110-6109**	2	KNOB-CONTROL (CAB HEATER)	
	2	1	**177-2215**	1	STRAP-DUAL CLAMP	
	3	1	**277-5672**	1	PLATE AS	
	4	1	**277-9968**	2	VALVE GP-CAB HEATER	
	5	1	**4S-1962**	2	CLIP	
	6	1	**5P-4116**	1	WASHER-HARD (8.8X20.5X2-MM THK)	
	7	1	**6V-1228**	2	CLIP	
	8	1	**8T-4121**	3	WASHER-HARD (11X21X2.5-MM THK)	
M	9	1	**8T-4133**	1	NUT (M10X1.5-THD)	
M	10	1	**8T-4137**	2	BOLT (M10X1.5X20-MM)	
M	11	1	**8T-4908**	1	BOLT (M8X1.25X25-MM)	
	12	1	**9X-2488**	10	CLAMP-HOSE	
E	13	1	**136-1953**		HOSE (44-CM)	
E	13A	1	**136-1953**		HOSE (144-CM)	
E	13B	1	**136-1953**		HOSE (6-CM EACH)	

E-ORDER BY THE CENTIMETER
M-METRIC PART

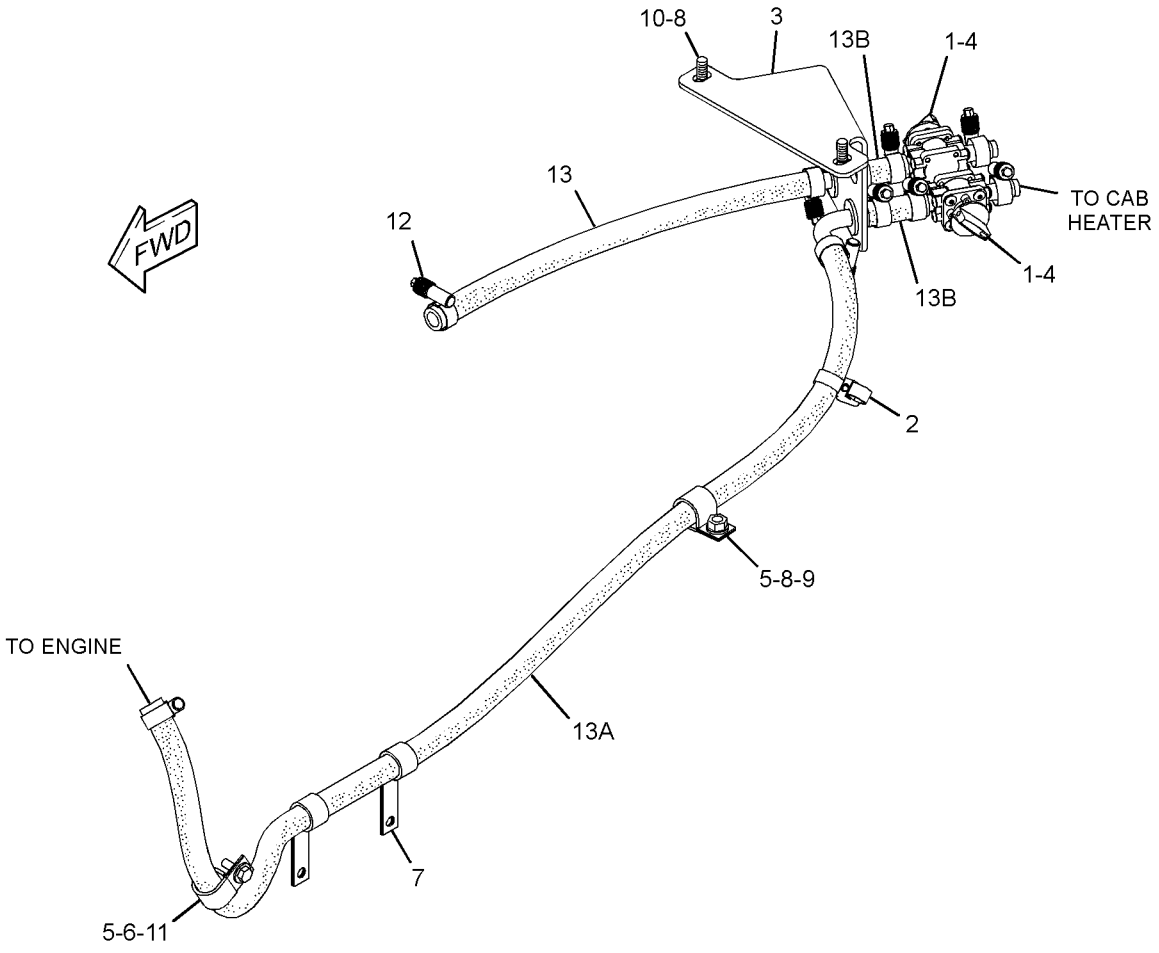

GRAPHIC #1 **<END>** g01301588

OPERATOR STATION

248-7071 LINES GP-HEATER

S/N: DHA214-UP; FBH339-UP
PART OF 206-7310 CAB AR-ENCLOSED ROPS, 289-8424 CANOPY AR, 267-4943 FORESTRY AR
AN ATTACHMENT

SMCS-7304 **i02816637**

NOTE	REF NO	GRAPHIC REF	PART NUMBER	QTY	PART NAME 1 2 3 4 5 6 (PRODUCT LEVEL)	SEE PAGE
C	1	1	**6D-3534**	4	CONNECTOR-HOSE	
C	2	1	**112-4036**	2	VALVE AS-SHUTOFF	
	3	1	**177-2215**	2	STRAP-DUAL CLAMP	
	4	1	**277-5672**	1	PLATE AS	
	5	1	**4S-1962**	2	CLIP	
	6	1	**5P-4116**	1	WASHER-HARD (8.8X20.5X2-MM THK)	
	7	1	**6V-1228**	2	CLIP	
	8	1	**8T-2561**	1	WASHER-HARD (10.5X28.5X5-MM THK)	
	9	1	**8T-4121**	3	WASHER-HARD (11X21X2.5-MM THK)	
M	10	1	**8T-4133**	1	NUT (M10X1.5-THD)	
M	11	1	**8T-4137**	2	BOLT (M10X1.5X20-MM)	
M	12	1	**8T-4908**	1	BOLT (M8X1.25X25-MM)	
	13	1	**9X-2488**	10	CLAMP-HOSE	
E	14	1	**136-1953**		HOSE (144-CM)	
E	14A	1	**136-1953**		HOSE (6.5-CM EACH)	
E	14B	1	**136-1953**		HOSE (43-CM)	

C-CHANGE FROM PREVIOUS TYPE
E-ORDER BY THE CENTIMETER
M-METRIC PART

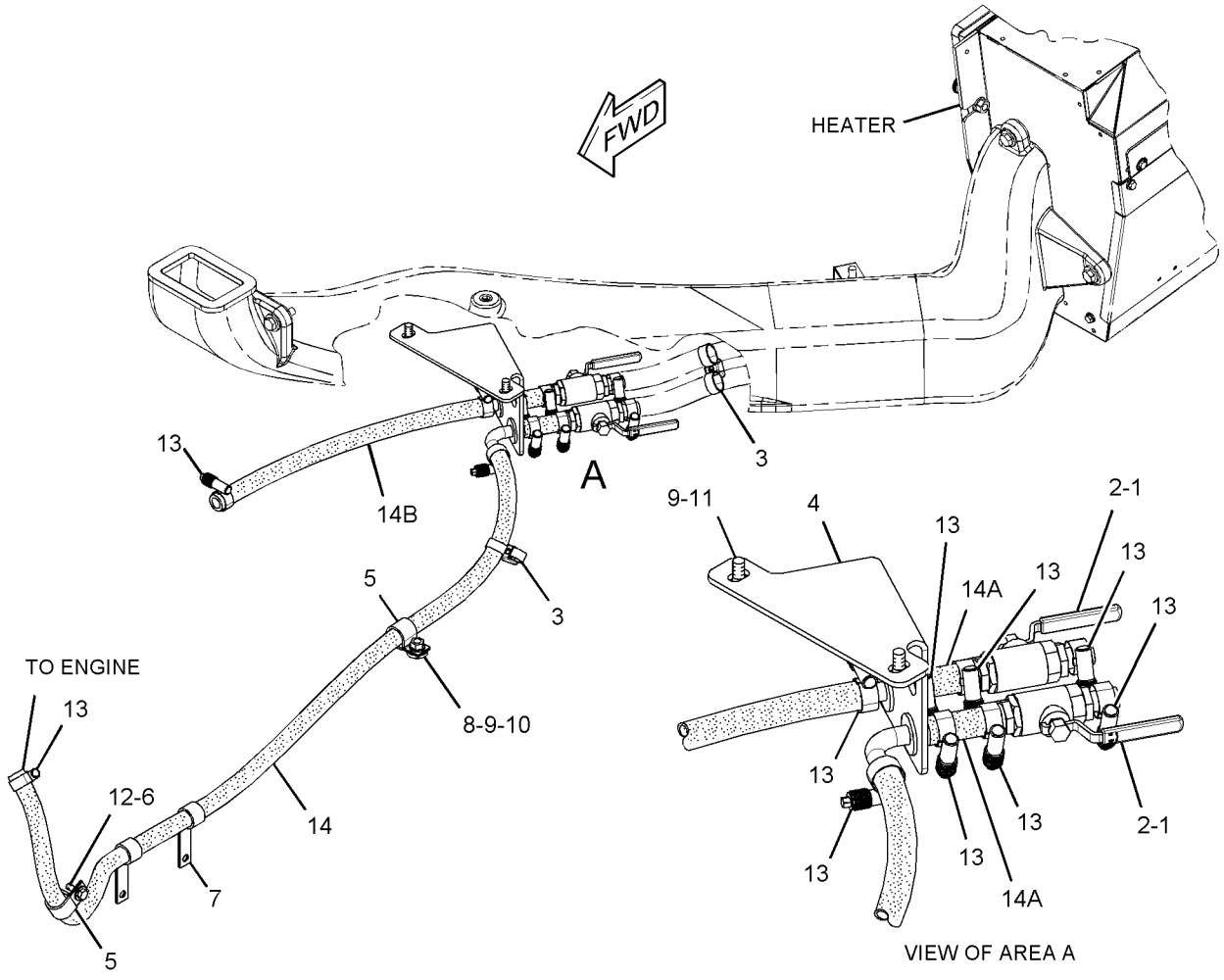

GRAPHIC #1 **<END>** g01420813

OPERATOR STATION

8E-8706 MIRROR GP-REAR VIEW

S/N: DHA1-329; FBH1-471
PART OF 247-6509, 252-7821 COVER GP-CAB
AN ATTACHMENT

SMCS-7319 **i01864811**

NOTE	REF NO	GRAPHIC REF	PART NUMBER	QTY	PART NAME 1 2 3 4 5 6 (PRODUCT LEVEL)	SEE PAGE
	1	1	**9P-9388**	1	KNOB (MIRROR)	
	2	1	**5P-6874**	1	MIRROR (REAR VIEW)	
	3	1	**5K-9179**	1	BOLT-ROUND HEAD (3/8-16X11-IN)	

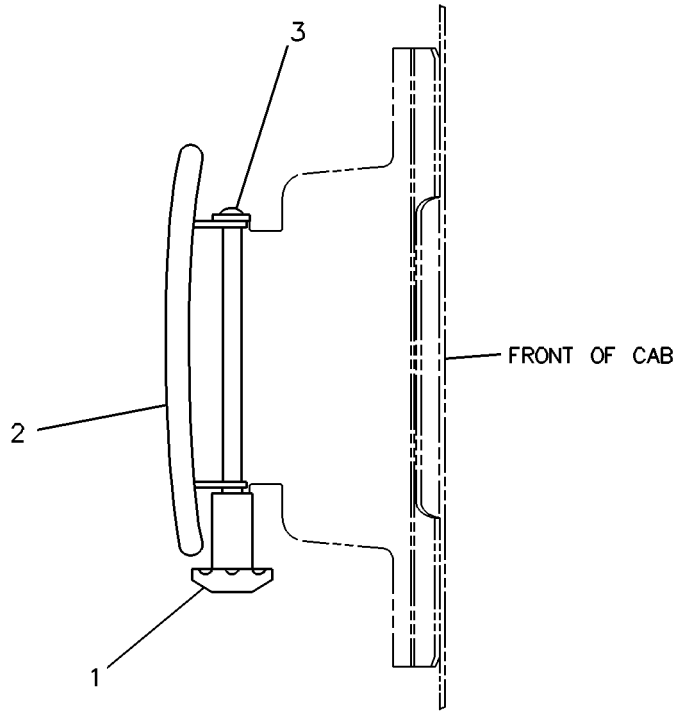

GRAPHIC #1 **<END>** g00223660

OPERATOR STATION

286-9124 MONITOR AS–LIGHT BAR

S/N: DHA1-UP; FBH1-UP

PART OF 290-5570, 290-5571, 292-0279, 292-0280 GRADE CONTROL AR-SATELLITE

SMCS-7431 **i02618099**

NOTE	REF NO	GRAPHIC REF	PART NUMBER	QTY	PART NAME 1 2 3 4 5 6 (PRODUCT LEVEL)	SEE PAGE
	1	1	**230-5009**	1	RECEPTACLE AS-CONNECTOR (4-PIN)	
	2	1	**9X-3402**	3	SOCKET-CONNECTOR (16-GA TO 18-GA)	
	3	1	**8T-8737**	1	PLUG-SEAL	

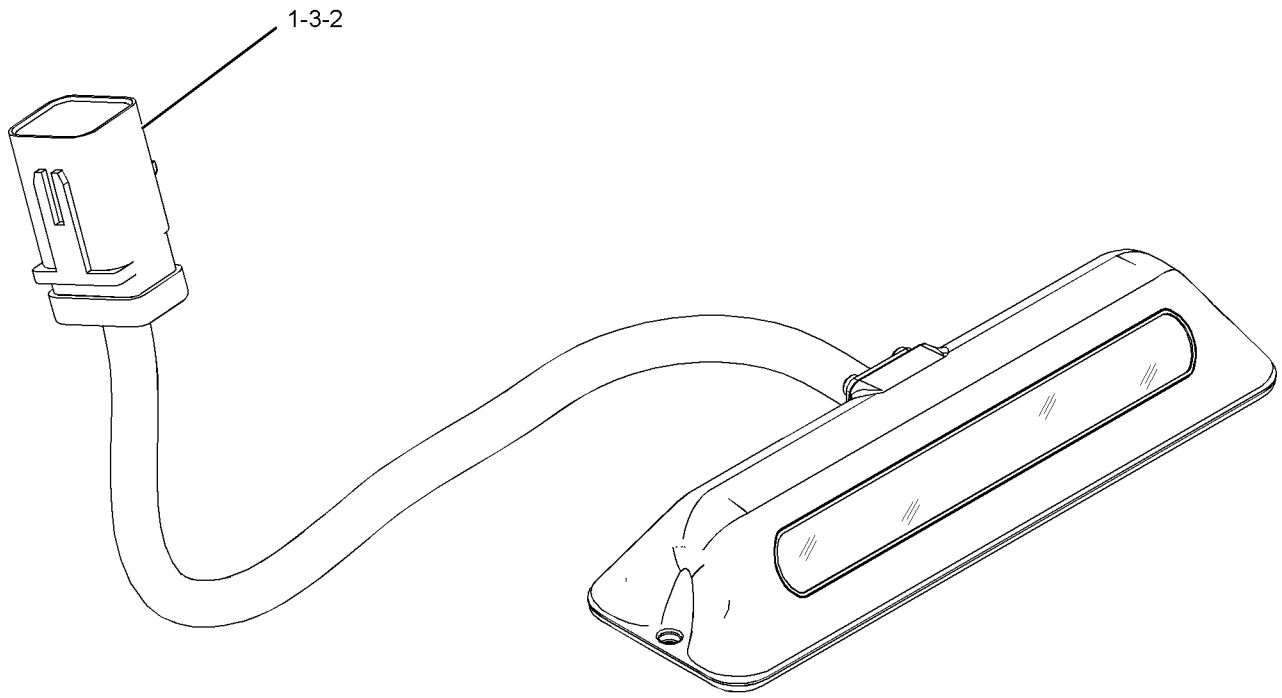

GRAPHIC #1 **<END>** g01313338

247-6606 MOTOR GP-WINDOW WIPER–FRONT

S/N: DHA1-UP; FBH1-UP
24-VOLT
PART OF 247-6504 WIPER GP-WINDOW
FIELD REPLACEMENT FOR 330-5021–PAGE 752
AN ATTACHMENT

SMCS-7305 **i02395021**

NOTE	REF NO	GRAPHIC REF	PART NUMBER	QTY	PART NAME 1 2 3 4 5 6 (PRODUCT LEVEL)	SEE PAGE
	1	1	**186-3735**	4	PIN-CONNECTOR (16-GA TO 18-GA)	
	2	1	**230-5009**	1	RECEPTACLE AS-CONNECTOR (4-PIN)	
	3	1	**263-3823**	1	CAP-WIPER	
	4	1	**3F-9556**	1	LOCKWASHER	
M	5	1	**5C-7261**	1	NUT (M8X1.25-THD)	

M-METRIC PART

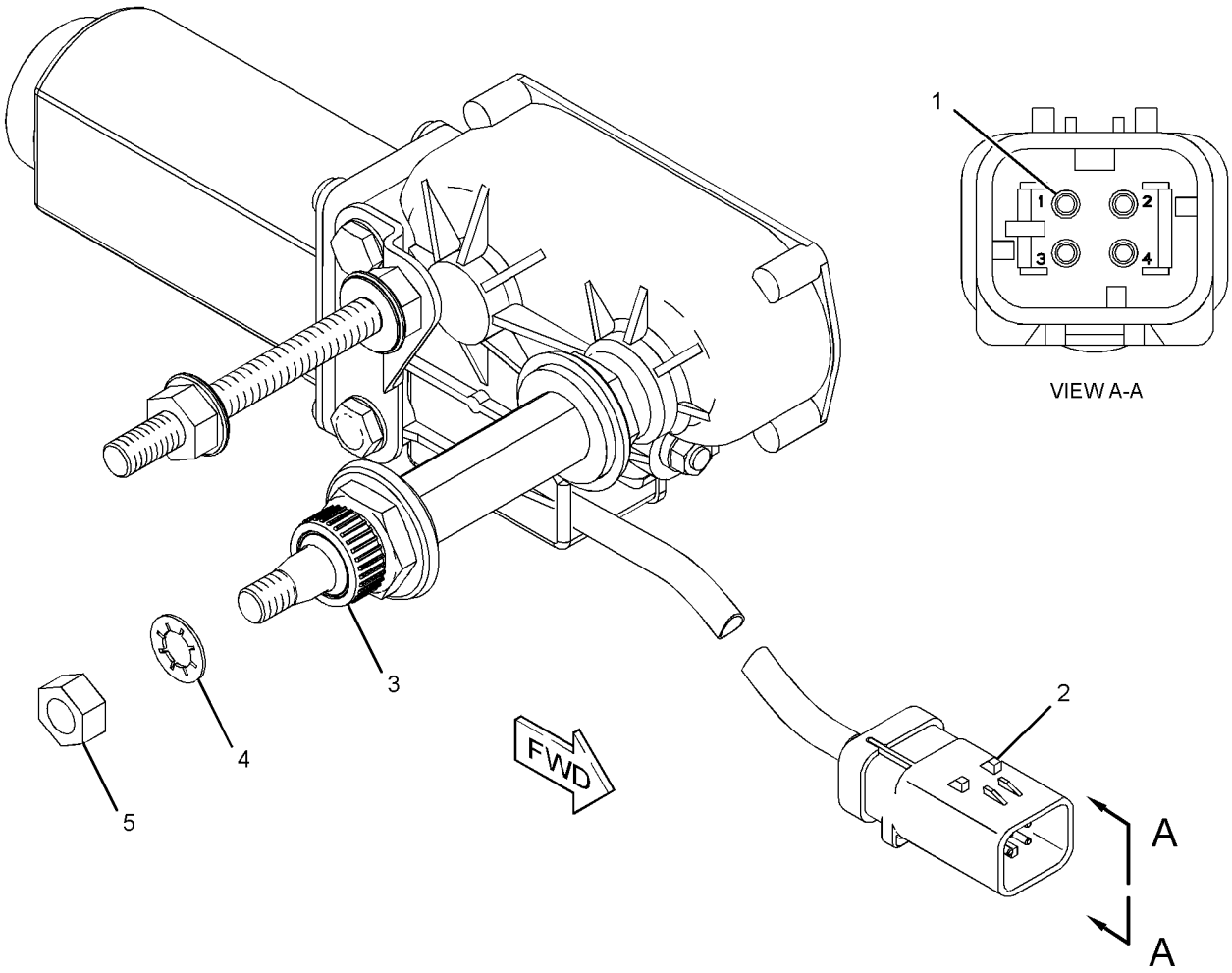

GRAPHIC #1 **<END>** g01200837

262-4069 MOTOR GP-WINDOW WIPER–DOOR, LH

S/N: DHA1-298; FBH1-439
PART OF 247-6502, 267-2551 DOOR GP-CAB
AN ATTACHMENT

SMCS-7305 **i02393351**

NOTE	REF NO	GRAPHIC REF	PART NUMBER	QTY	PART NAME 1 2 3 4 5 6 (PRODUCT LEVEL)	SEE PAGE
	1	1	**186-3735**	4	PIN-CONNECTOR (16-GA TO 18-GA)	
	2	1	**230-5009**	1	RECEPTACLE AS-CONNECTOR (4-PIN)	
	3	1	**263-3823**	1	CAP-WIPER	
	4	1	**3F-9556**	1	LOCKWASHER	
M	5	1	**5C-7261**	1	NUT (M8X1.25-THD)	

M-METRIC PART

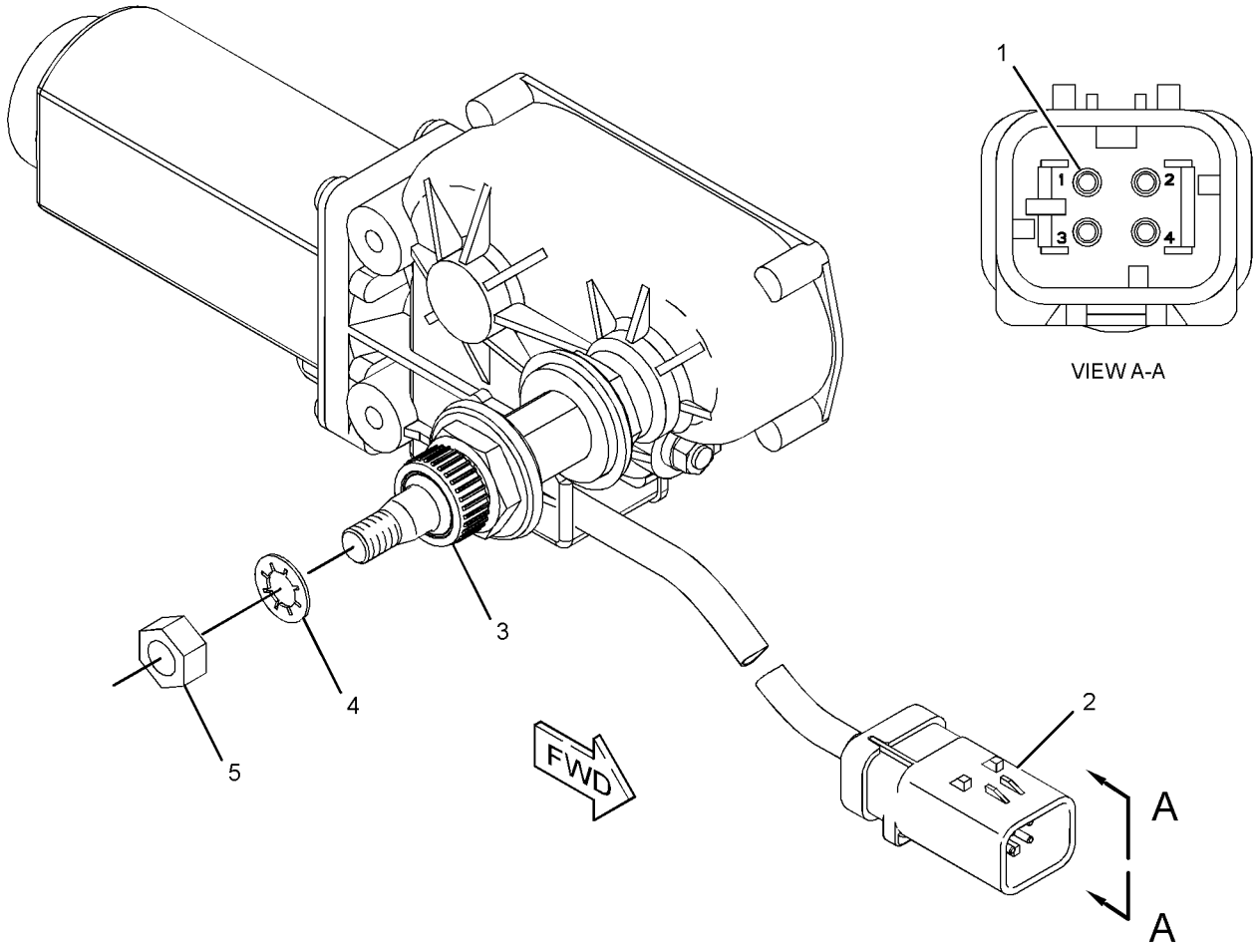

GRAPHIC #1 **<END>** g01201062

OPERATOR STATION

262-4070 MOTOR GP-WINDOW WIPER–DOOR, RH

S/N: DHA1-UP; FBH1-UP
PART OF 247-6501, 267-2549 DOOR GP-CAB
AN ATTACHMENT

SMCS-7305 **i02393202**

NOTE	REF NO	GRAPHIC REF	PART NUMBER	QTY	PART NAME 1 2 3 4 5 6 (PRODUCT LEVEL)	SEE PAGE
	1	1	**186-3735**	4	PIN-CONNECTOR (16-GA TO 18-GA)	
	2	1	**230-5009**	1	RECEPTACLE AS-CONNECTOR (4-PIN)	
	3	1	**263-3823**	1	CAP-WIPER	
	4	1	**3F-9556**	1	LOCKWASHER	
M	5	1	**5C-7261**	1	NUT (M8X1.25-THD)	

M-METRIC PART

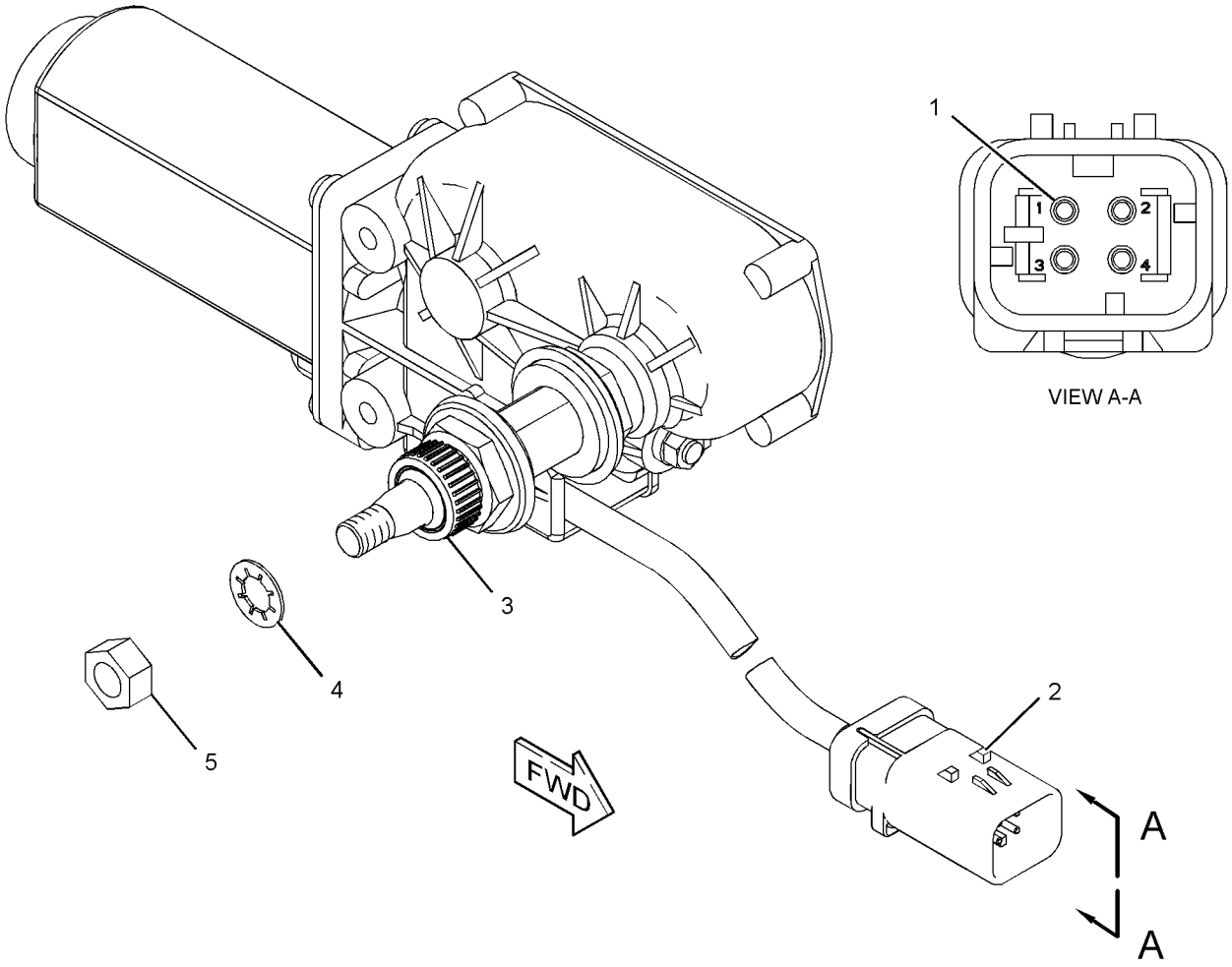

GRAPHIC #1 **<END>** g01203444

270-0076 MOTOR GP-WINDOW WIPER–REAR

S/N: DHA1-UP; FBH1-UP
24-VOLT
PART OF 247-6504 WIPER GP-WINDOW
AN ATTACHMENT

SMCS-7305 **i02395036**

NOTE	REF NO	GRAPHIC REF	PART NUMBER	QTY	PART NAME 1 2 3 4 5 6 (PRODUCT LEVEL)	SEE PAGE
	1	1	**186-3735**	4	PIN-CONNECTOR (16-GA TO 18-GA)	
	2	1	**230-5009**	1	RECEPTACLE AS-CONNECTOR (4-PIN)	
	3	1	**263-3823**	1	CAP-WIPER	
	4	1	**3F-9556**	1	LOCKWASHER	
M	5	1	**5C-7261**	1	NUT (M8X1.25-THD)	

M-METRIC PART

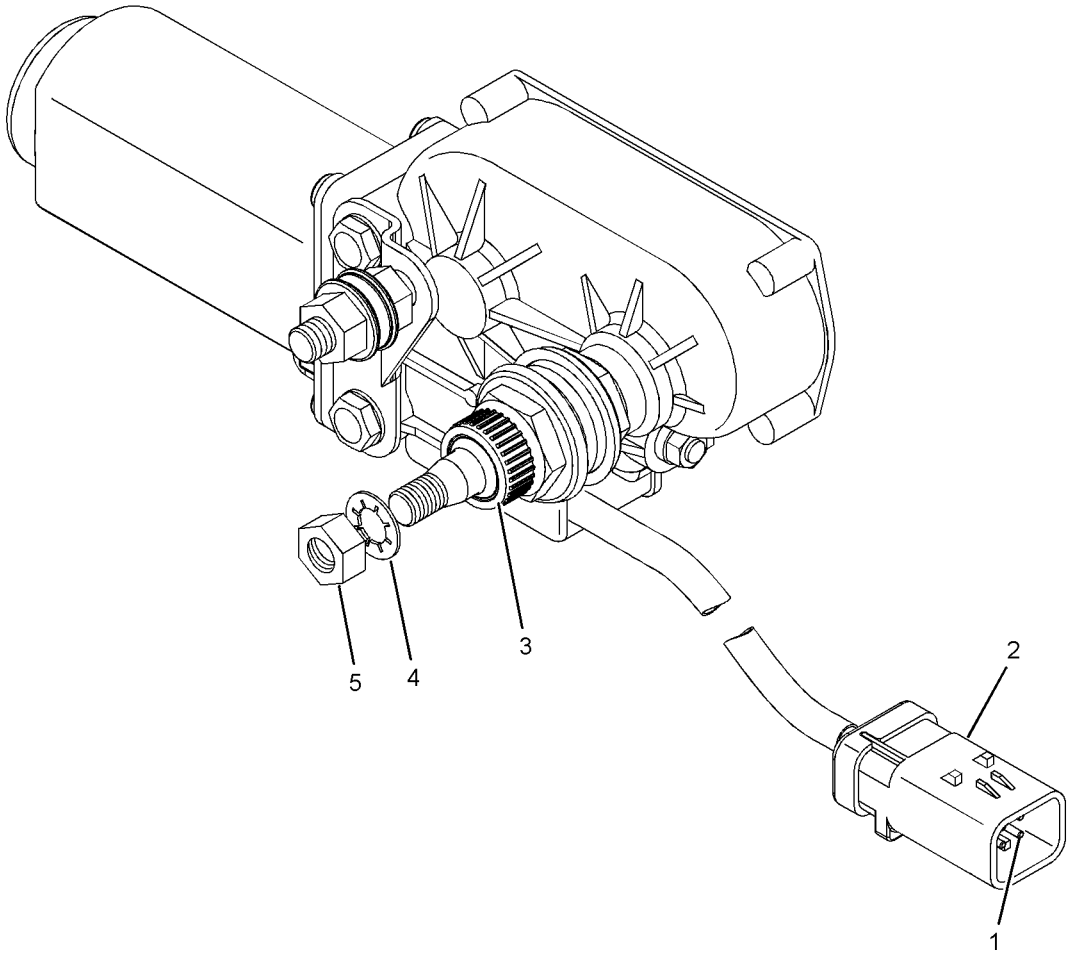

GRAPHIC #1 **<END>** g01204207

OPERATOR STATION

304-4243 MOTOR GP-WINDOW WIPER—DOOR, LH

S/N: DHA299-UP; FBH440-UP
24-VOLT
PART OF 247-6502, 267-2551 DOOR GP-CAB
AN ATTACHMENT

SMCS-7305 **i02793193**

NOTE	REF NO	GRAPHIC REF	PART NUMBER	QTY	PART NAME 1 2 3 4 5 6 (PRODUCT LEVEL)	SEE PAGE
	1	1	**206-5823**	1	CAP	
	2	1	*304-4406*	1	MOTOR GP-WINDOW WIPER	
		1	**186-3735**	4	PIN-CONNECTOR (16-GA TO 18-GA)	
		1	**230-5009**	1	RECEPTACLE AS-CONNECTOR (4-PIN)	
	3	1	**3F-9556**	1	LOCKWASHER	
M	4	1	**5C-7261**	1	NUT (M8X1.25-THD)	

M-METRIC PART

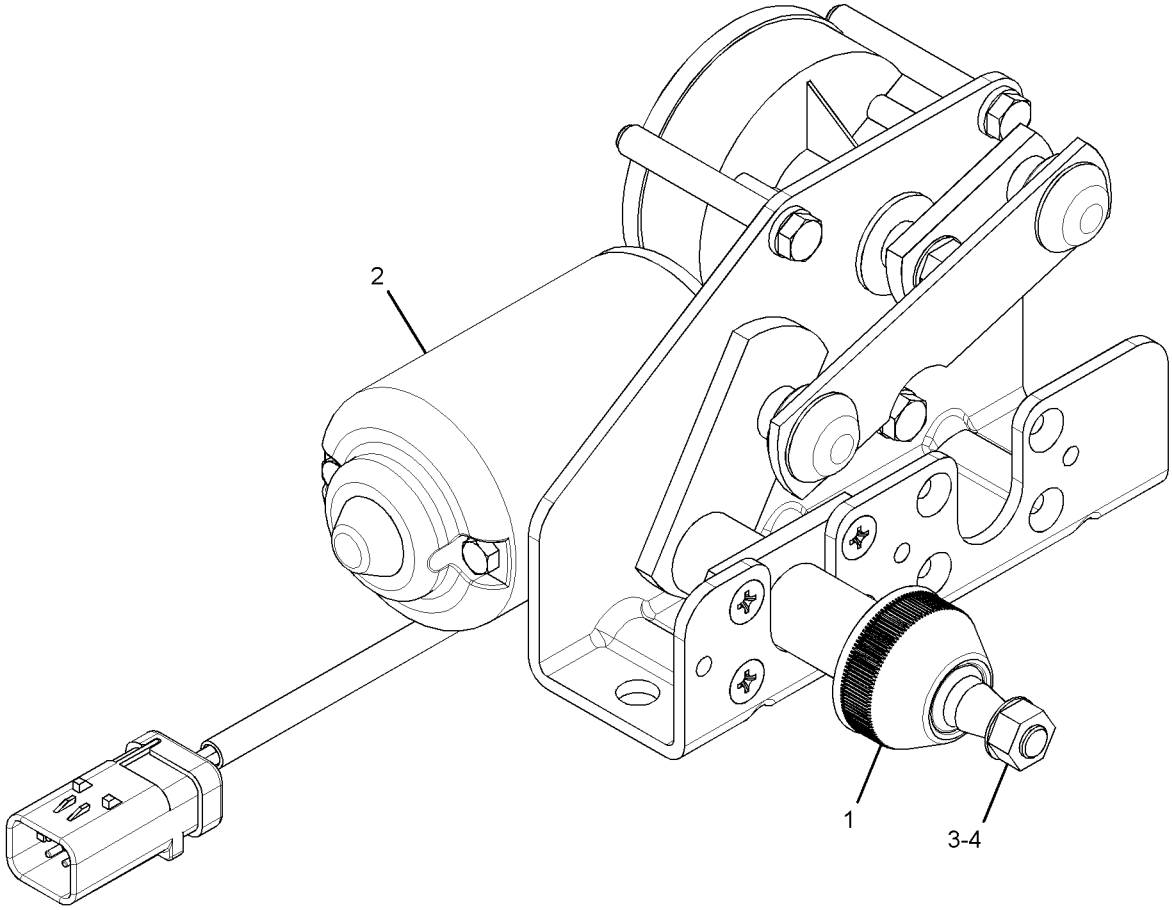

GRAPHIC #1 **<END>** g01403665

304-4244 MOTOR GP-WINDOW WIPER–DOOR, RH

S/N: DHA1-UP; FBH1-UP
24-VOLT
PART OF 247-6501, 267-2549 DOOR GP-CAB
AN ATTACHMENT

SMCS-7305 **i02814258**

NOTE	REF NO	GRAPHIC REF	PART NUMBER	QTY	PART NAME 1 2 3 4 5 6 (PRODUCT LEVEL)	SEE PAGE
	1	1	**206-5823**	1	CAP	
	2	1	*304-4406*	1	MOTOR GP-WINDOW WIPER	
		1	**186-3735**	1	PIN-CONNECTOR (16-GA TO 18-GA)	
		1	**230-5009**	1	RECEPTACLE AS-CONNECTOR (4-PIN)	
	3	1	**3F-9556**	1	LOCKWASHER	
M	4	1	**5C-7261**	1	NUT (M8X1.25-THD)	

M-METRIC PART

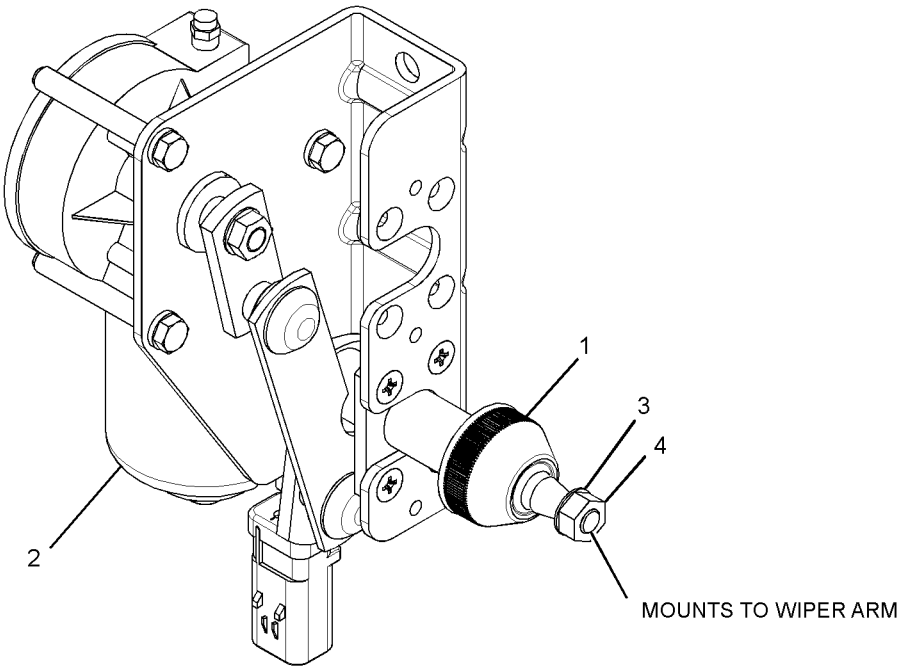

GRAPHIC #1 **<END>** g01407452

330-5021 MOTOR GP-WINDOW WIPER–FRONT

S/N: DHA1-UP; FBH1-UP
24-VOLT
PART OF 247-6504 WIPER GP-WINDOW
FIELD REPLACEMENT ORDER 247-6606–PAGE 746

SMCS-7305 **i03675725**

NOTE	REF NO	GRAPHIC REF	PART NUMBER	QTY	PART NAME 1 2 3 4 5 6 (PRODUCT LEVEL)	SEE PAGE
	1	1	**186-3735**	4	PIN-CONNECTOR (16-GA TO 18-GA)	
	2	1	**230-5009**	1	RECEPTACLE AS-CONNECTOR (4-PIN)	
	3	1	**263-3823**	1	CAP-WIPER	
	4	1	**3F-9556**	1	LOCKWASHER	
M	5	1	**5C-7261**	1	NUT (M8X1.25-THD)	

M-METRIC PART

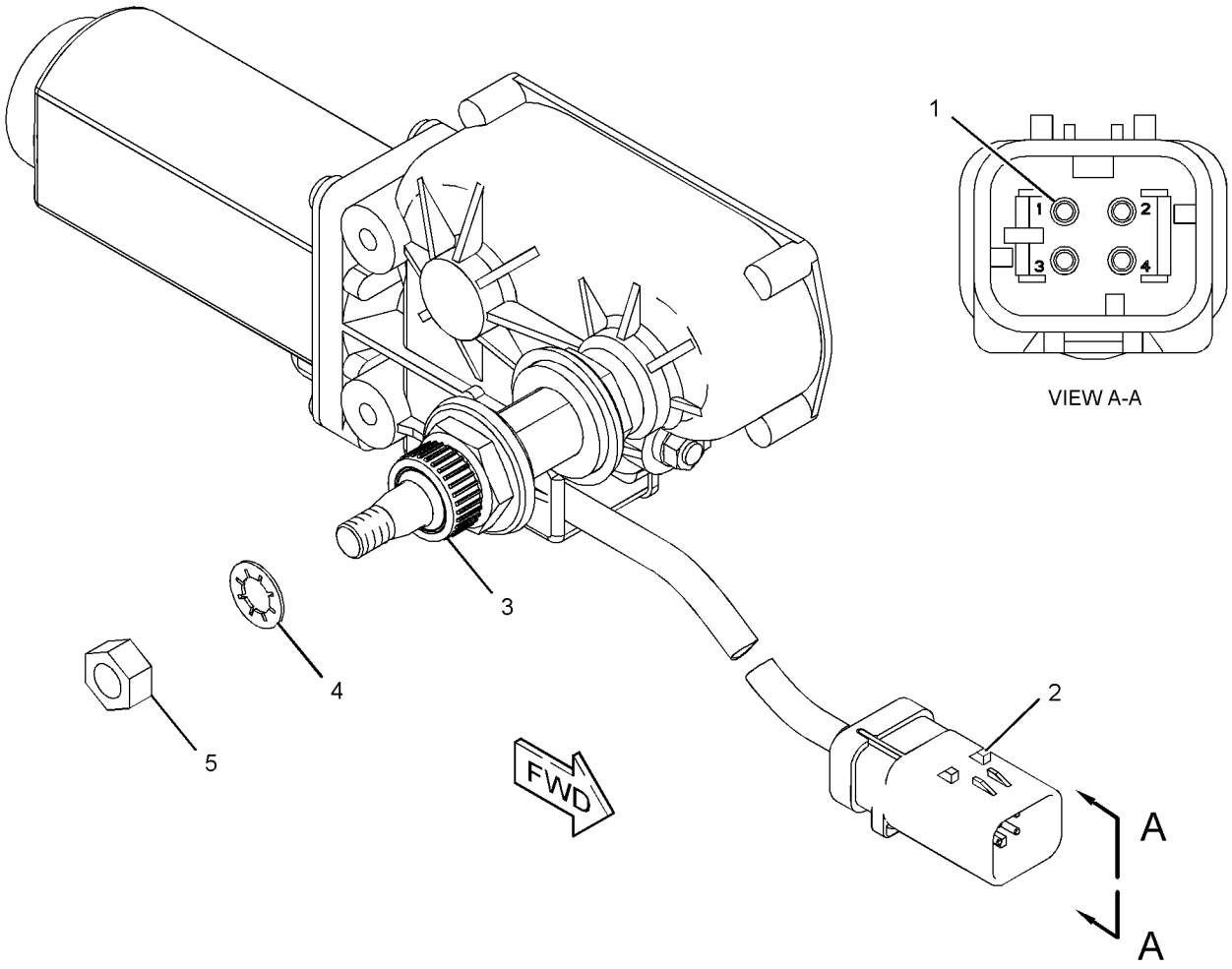

GRAPHIC #1 **<END>** g01203444

OPERATOR STATION

248-7069 MOUNTING GP-CAB

S/N: DHA1-UP; FBH1-UP
PART OF 206-7310 CAB AR-ENCLOSED ROPS, 250-2110, 289-8424 CANOPY AR, 267-4943 FORESTRY AR
AN ATTACHMENT

SMCS-7266, 7301 **i02834656**

NOTE	REF NO	GRAPHIC REF	PART NUMBER	QTY	PART NAME 1 2 3 4 5 6 (PRODUCT LEVEL)	SEE PAGE
	1	1	**117-8131**	8	MOUNT AS	
	2	1	**126-1595**	4	WASHER (32X134X12-MM THK)	
	3	1	**144-2179**	4	SLEEVE	
	4	1	**219-0305**	1	FILM-WARNING (NO WELD, NO DRILL, READ OMM)	
	5	1	**270-7881**	1	FILM-INSTRUCTION (BULLDOZER CONTROL)	
	6	1	**270-7882**	1	FILM-INSTRUCTION (BULLDOZER, STER, CRUISE CNTL)	
	7	1	**271-2773**	1	SUPPORT AS-FOOT (LH)	
	8	1	**271-2774**	1	SUPPORT AS-FOOT (RH)	
	9	1	**284-3754**	1	FLOOR MAT-FRONT	
	10	1	**287-2372**	1	FILM-WARNING (ROPS, FOPS, READ OMM)	
	11	1	**288-0884**	1	COVER-POST	
M	12	1	**8C-3236**	4	BOLT (M30X3.5X160-MM)	
M	13	1	**8T-4137**	4	BOLT (M10X1.5X20-MM)	
	14	1	**8T-4222**	4	WASHER-PLATED (11X32X2.5-MM THK)	
M	15	1	**9X-2043**	4	SCREW-TRUSS HEAD (M6X1X14-MM)	
	16	1	**9X-8399**	4	WASHER (33X56X6-MM THK)	

M-METRIC PART

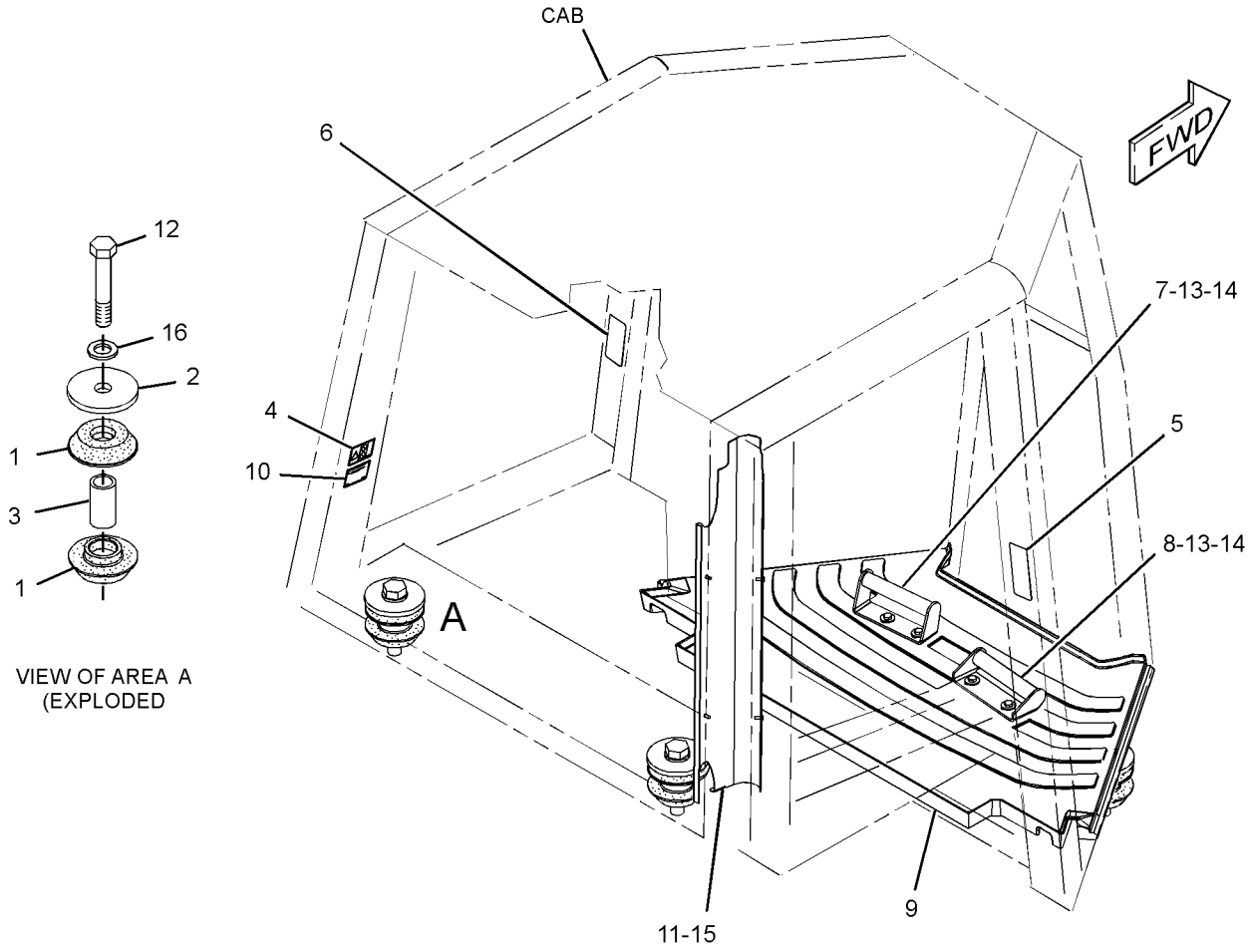

GRAPHIC #1 **<END>** g01415435

OPERATOR STATION

259-4746 MOUNTING GP-RADIO–GRADE CONTROL

S/N: DHA1-UP; FBH1-UP
GLOBAL POSITIONING SYSTEM
PART OF 292-0296 MOUNTING GP-GRADE CONTROL

SMCS-7338 **i02346006**

NOTE	REF NO	GRAPHIC REF	PART NUMBER	QTY	PART NAME 1 2 3 4 5 6 (PRODUCT LEVEL)	SEE PAGE
	1	1	**8C-5607**	6	MOUNT-ISOLATION	
	2	1	**8C-5608**	3	SPACER (6.5X9.5X25.4-MM THK)	
	3	1	**140-7480**	1	BRACKET-MOUNTING	
	4	1	**167-8610**	1	BRACKET AS	
	5	1	**5S-7349**	2	BOLT (1/4-20X0.5-IN)	
	6	1	**8T-4205**	2	WASHER-HARD (7.2X14.5X2-MM THK)	
M	7	1	**9X-2480**	3	BOLT (M6X1X45-MM)	
	8	1	**9X-6165**	3	WASHER (6.5X22X2.5-MM THK)	
BJM	9	1	**7X-2533**	3	BOLT (M6X1X35-MM)	

B-USE AS REQUIRED
J-TO BE USED ON HYDRAULIC EXCAVATOR
M-METRIC PART

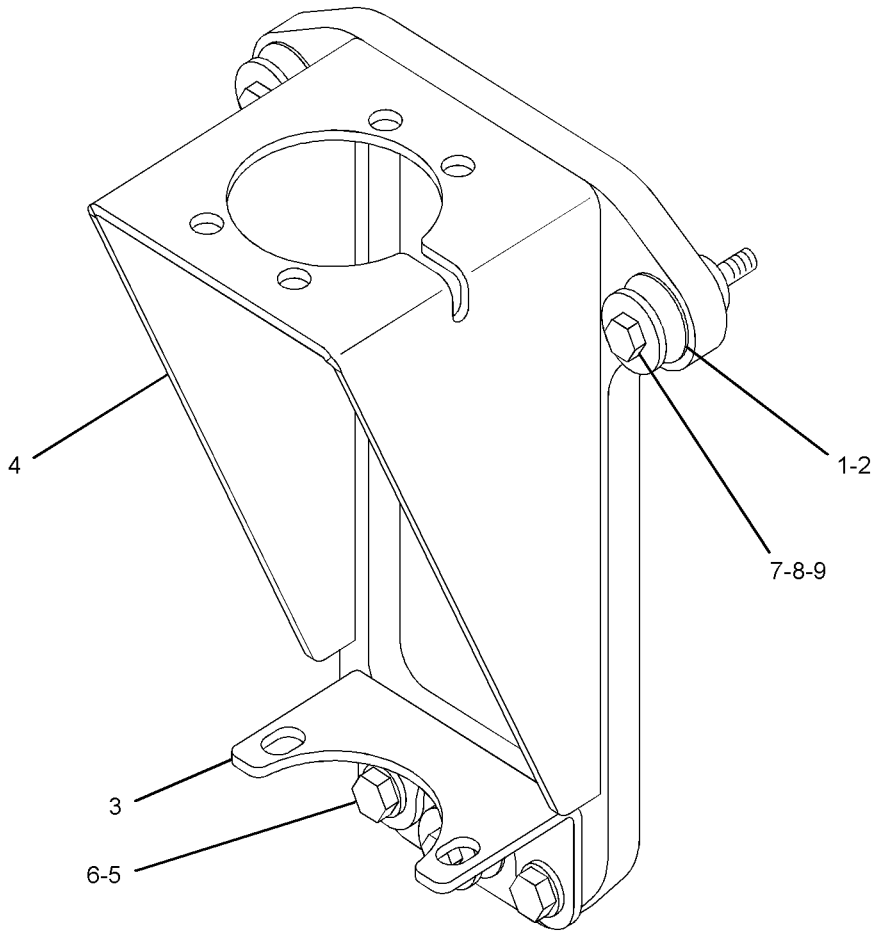

GRAPHIC #1 **<END>** g01259563

278-8515 PAN GP-BACKREST–CLOTH

S/N: DHA1-UP; FBH1-UP
PART OF 295-4434 SEAT GP
AN ATTACHMENT

SMCS-7312 **i03706870**

NOTE	REF NO	GRAPHIC REF	PART NUMBER	QTY	PART NAME 1 2 3 4 5 6 (PRODUCT LEVEL)	SEE PAGE
	1	1	**164-4883**	1	KNOB-LUMBAR	
Y	2	1	*292-6402*	1	PAN GP-BACKREST (LUMBAR)	758
	3	1	**218-2529**	3	PLUG	
	4	1	**278-7528**	1	CUSHION AS-BACK (CLOTH)	
	5	1	**5P-0537**	2	WASHER-HARD (7.2X14.5X2-MM THK)	
	6	1	**6V-8969**	2	SCREW-BUTTON HEAD (1/4-20X0.5-IN)	
	7	1	**8T-7566**	1	PIN-SPRING	

Y-SEPARATE ILLUSTRATION

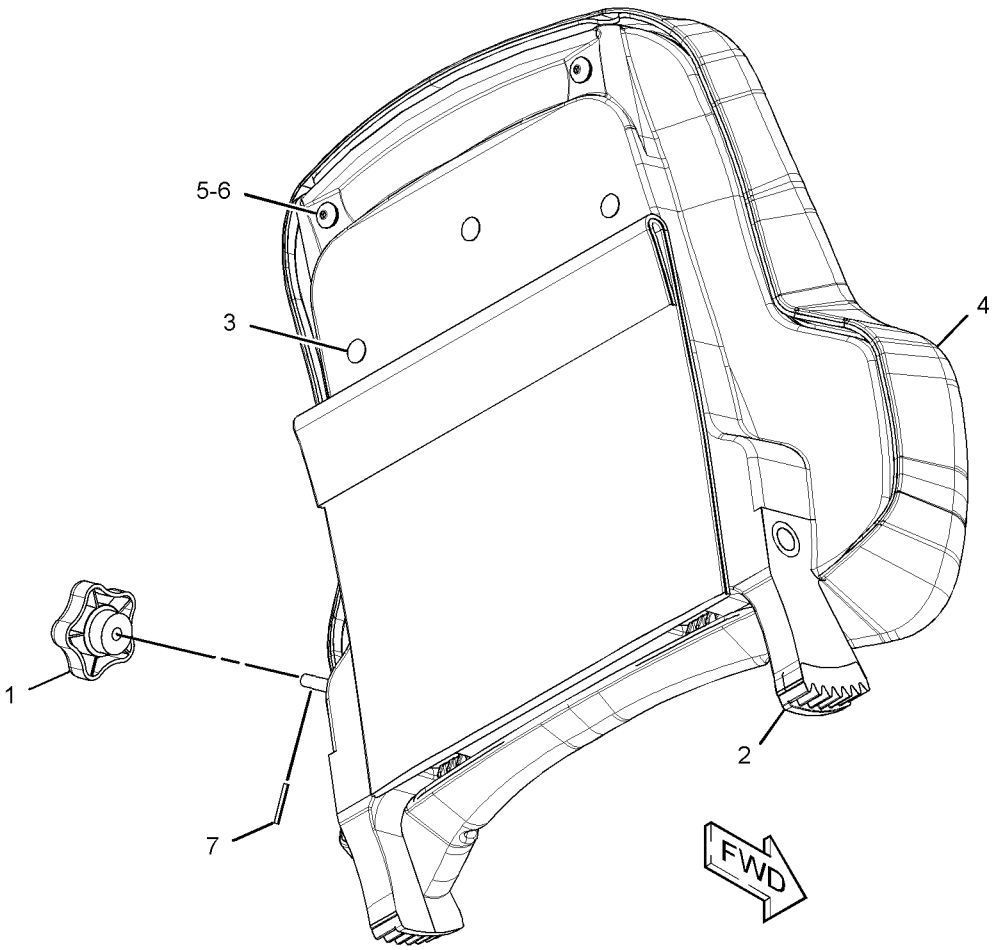

GRAPHIC #1 **<END>** g01304380

OPERATOR STATION

278-8516 PAN GP-BACKREST—CLOTH, HEATED

S/N: DHA1-UP; FBH1-UP
24-VOLT
PART OF 295-4435 SEAT GP
AN ATTACHMENT

SMCS-7312 **i03097409**

NOTE	REF NO	GRAPHIC REF	PART NUMBER	QTY	PART NAME 1 2 3 4 5 6 (PRODUCT LEVEL)	SEE PAGE
	1	1	**164-4883**	1	KNOB-LUMBAR	
	2	1	**218-2529**	3	PLUG	
	3	1	**276-3063**	1	CUSHION AS-BACK (CLOTH, HEATED)	
Y	4	1	*292-6402*	1	PAN GP-BACKREST (LUMBAR)	758
	5	1	**5P-0537**	2	WASHER-HARD (7.2X14.5X2-MM THK)	
	6	1	**6V-8969**	2	SCREW-BUTTON HEAD (1/4-20X0.5-IN)	
	7	1	**8T-7566**	1	PIN-SPRING	

Y-SEPARATE ILLUSTRATION

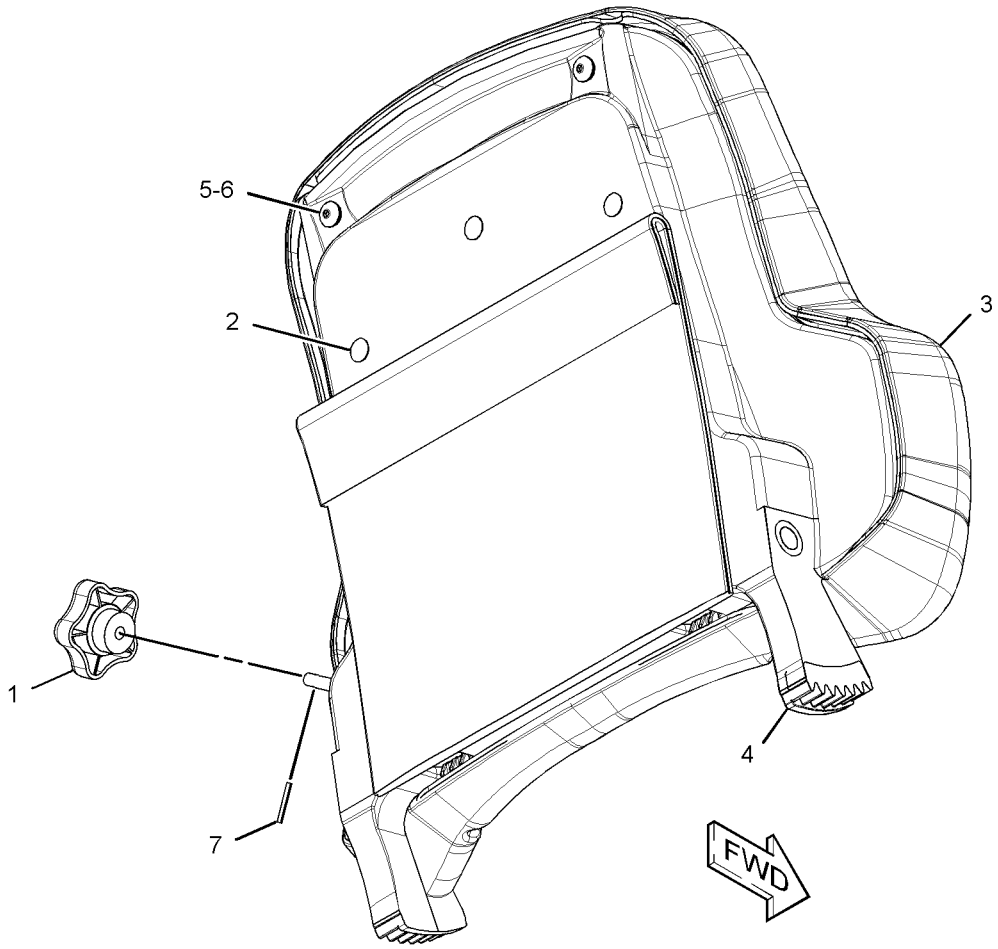

GRAPHIC #1 **<END>** g01304391

OPERATOR STATION

278-8517 PAN GP-BACKREST–VINYL

S/N: DHA1-UP; FBH1-UP
PART OF 295-4436 SEAT GP
AN ATTACHMENT

SMCS-7312 **i03139120**

NOTE	REF NO	GRAPHIC REF	PART NUMBER	QTY	PART NAME 1 2 3 4 5 6 (PRODUCT LEVEL)	SEE PAGE
	1	1	**164-4883**	1	KNOB-LUMBAR	
	2	1	**218-2529**	3	PLUG	
	3	1	**278-6935**	1	CUSHION AS-BACKREST (VINYL)	
Y	4	1	*292-6402*	1	PAN GP-BACKREST (LUMBAR)	758
	5	1	**5P-0537**	2	WASHER-HARD (7.2X14.5X2-MM THK)	
	6	1	**6V-8969**	2	SCREW-BUTTON HEAD (1/4-20X0.5-IN)	
	7	1	**8T-7566**	1	PIN-SPRING	

Y-SEPARATE ILLUSTRATION

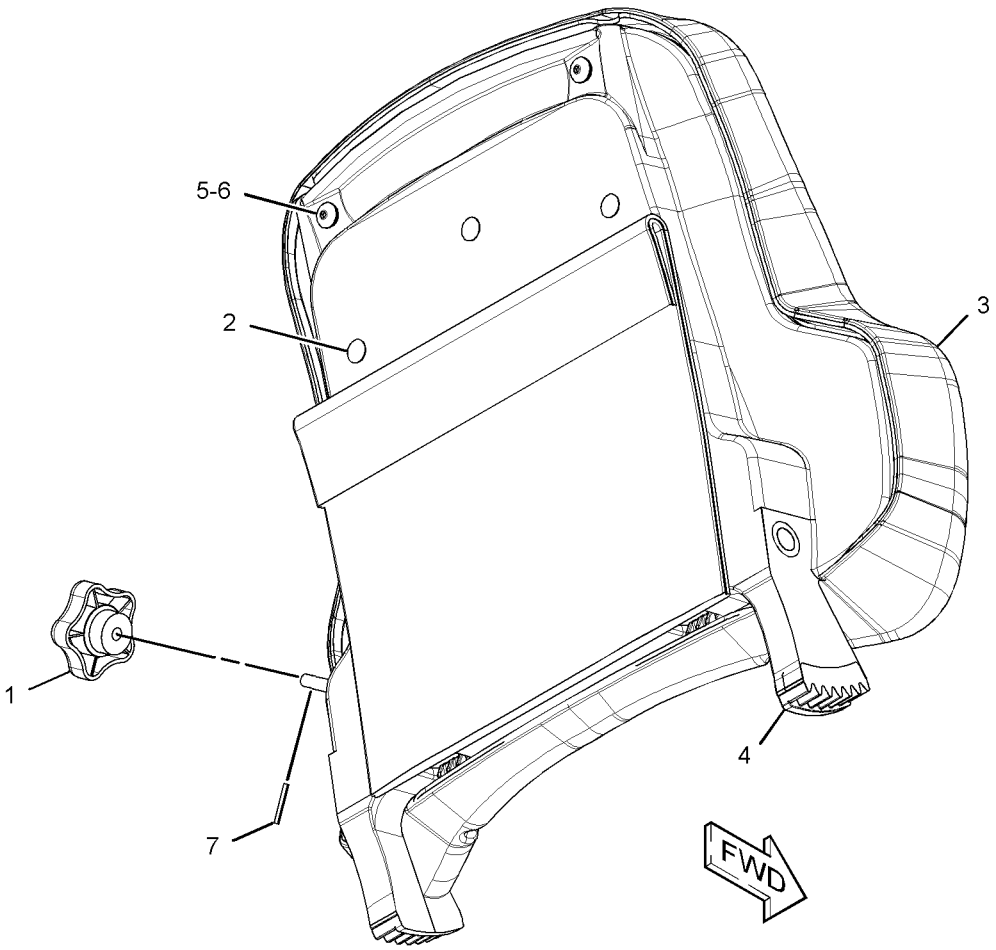

GRAPHIC #1 **<END>** g01304398

OPERATOR STATION

292-6402 PAN GP-BACKREST–LUMBAR

S/N: DHA1-UP; FBH1-UP

PART OF 278-8515, 278-8516, 278-8517, 301-3161 PAN GP-BACKREST

AN ATTACHMENT

SMCS-7312 **i03095784**

NOTE	REF NO	GRAPHIC REF	PART NUMBER	QTY	PART NAME 1 2 3 4 5 6 (PRODUCT LEVEL)	SEE PAGE
	1	1	**5P-7957**	1	LANYARD	
	2	1	**136-1543**	1	PLATE AS-LUMBAR	
	3	1	**173-2052**	1	RETAINER	
	4	1	**178-7907**	1	HOLDER	
	5	1	**261-5694**	1	PAN AS-BACKREST	
	6	1	**322-3161**	1	SPRING	
	7	1	**4K-9429**	8	RIVET-POP	

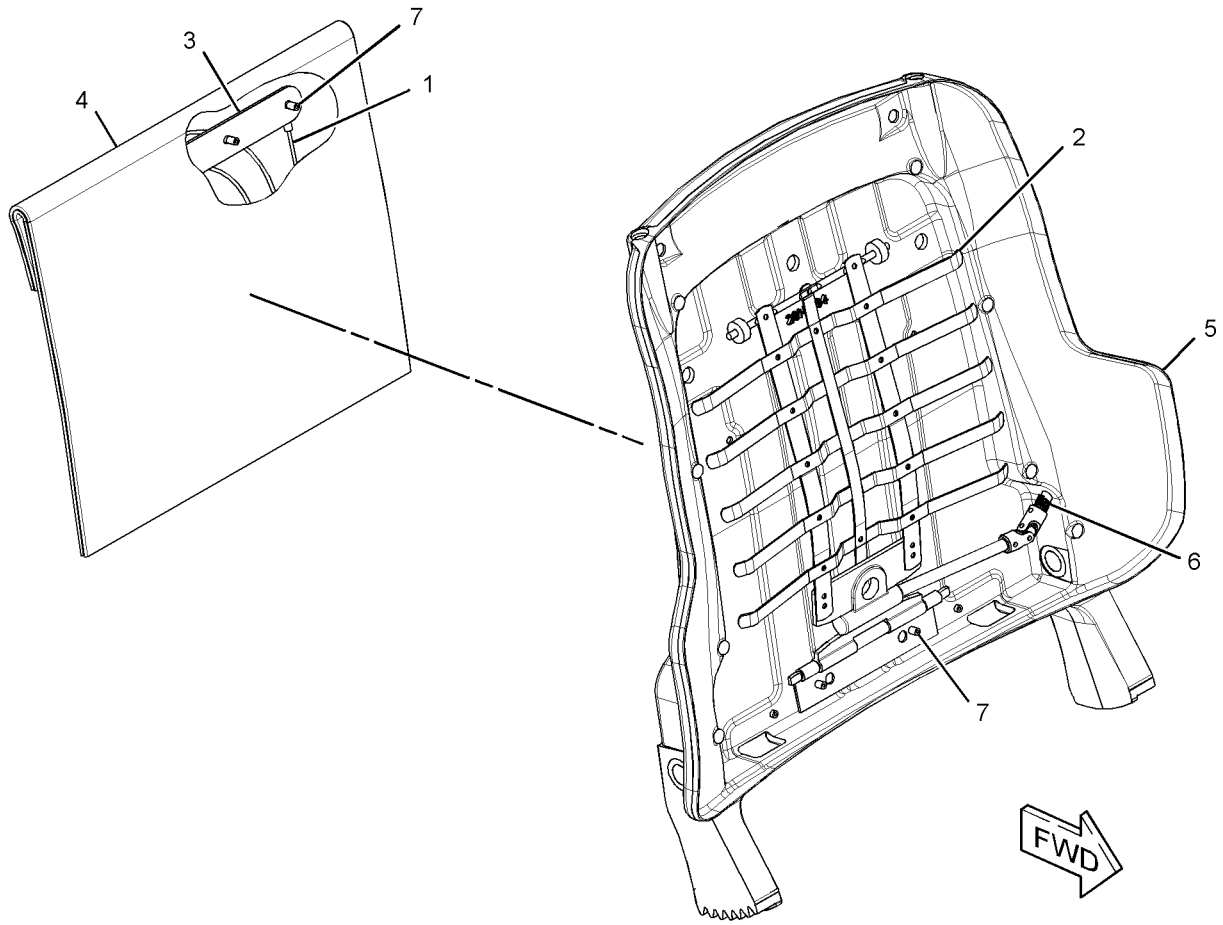

GRAPHIC #1 **<END>** g01577333

301-3161 PAN GP-BACKREST–VINYL, HEATED

S/N: DHA1-UP; FBH1-UP
24-VOLT
PART OF 301-3165 SEAT GP
AN ATTACHMENT

SMCS-7312 **i03096751**

NOTE	REF NO	GRAPHIC REF	PART NUMBER	QTY	PART NAME 1 2 3 4 5 6 (PRODUCT LEVEL)	SEE PAGE
	1	1	**164-4883**	1	KNOB-LUMBAR	
	2	1	**218-2529**	3	PLUG	
Y	3	1	*292-6402*	1	PAN GP-BACKREST (LUMBAR)	758
	4	1	**301-3163**	1	CUSHION AS-BACK	
	5	1	**5P-0537**	2	WASHER-HARD (7.2X14.5X2-MM THK)	
	6	1	**6V-8969**	2	SCREW-BUTTON HEAD (1/4-20X0.5-IN)	
	7	1	**8T-7566**	1	PIN-SPRING	

Y-SEPARATE ILLUSTRATION

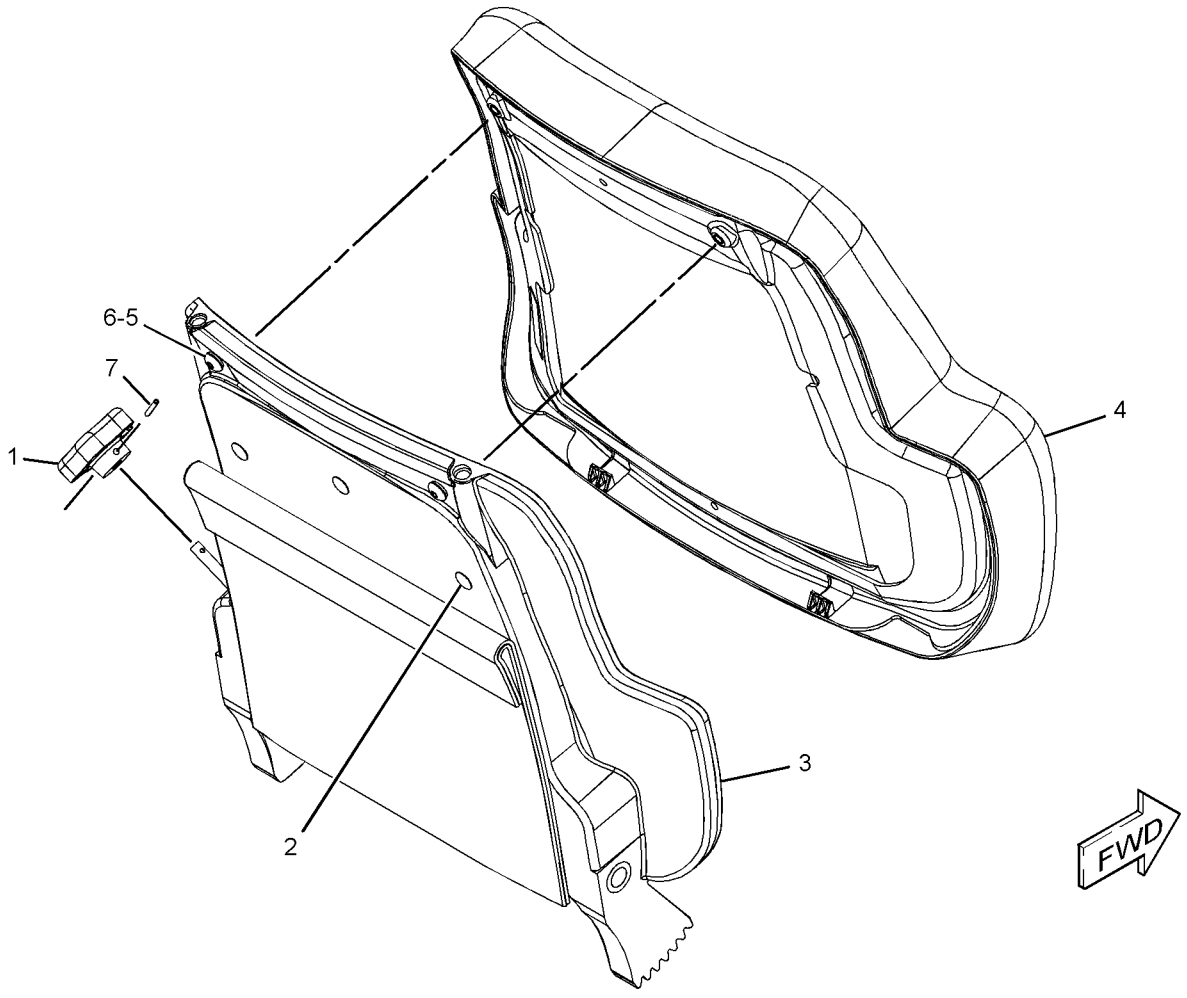

GRAPHIC #1 **<END>** g01583474

OPERATOR STATION

295-4475 PAN GP-SEAT–CLOTH

S/N: DHA1-UP; FBH1-UP
PART OF 295-4434 SEAT GP
AN ATTACHMENT

SMCS-7312 **i03098210**

NOTE	REF NO	GRAPHIC REF	PART NUMBER	QTY	PART NAME 1 2 3 4 5 6 (PRODUCT LEVEL)	SEE PAGE
	1	1	**216-0814**	1	SWITCH AS-LIMIT (SEAT ADJUSTMENT)	
	2	1	**294-7139**	1	PAN GP-SEAT	
M	2A	1	**127-2170**	6	SCREW-TRUSS HEAD (M8X1.25X20-MM)	
M	2B	1	**5C-7261**	6	NUT (M8X1.25-THD)	
	2C	1	**8T-4224**	6	WASHER-HARD (8.8X16X2-MM THK)	
M	3	1	**7Y-7388**	6	SCREW-BUTTON HEAD (M5X0.8X12-MM)	
	4	1	**267-5159**	1	SPRING	
	5	1	**267-5160**	1	PLATE	
	6	1	**277-8103**	1	PLUG	
	7	1	**277-8589**	1	CUSHION AS-SEAT (CLOTH)	

M-METRIC PART

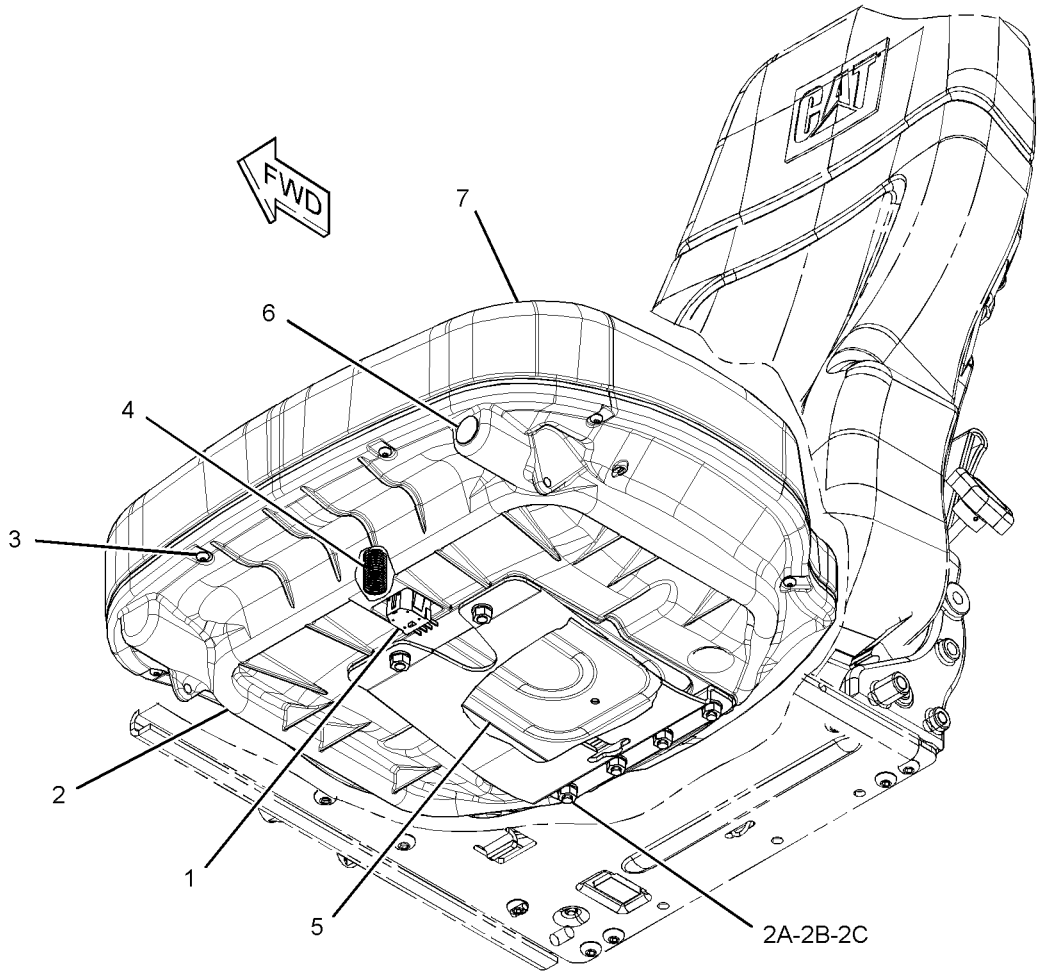

GRAPHIC #1 **<END>** g01581335

295-4476 PAN GP-SEAT–CLOTH, HEATED

S/N: DHA1-UP; FBH1-UP
24-VOLT
PART OF 295-4435 SEAT GP
AN ATTACHMENT

SMCS-7312 **i03706871**

NOTE	REF NO	GRAPHIC REF	PART NUMBER	QTY	PART NAME 1 2 3 4 5 6 (PRODUCT LEVEL)	SEE PAGE
	1	1	**216-0814**	1	SWITCH AS-LIMIT (PLUNGER) (SEAT ADJUSTMENT)	
	2	1	**267-5157**	1	CUSHION AS-SEAT (CLOTH, HEATED)	
		1	**267-5156**	1	CARRIER AS	
	3	1	**267-5159**	1	SPRING	
	4	1	**267-5160**	1	PLATE	
	5	1	**277-8102**	1	SWITCH (HEAT)	
	6	1	**294-7139**	1	PAN GP-SEAT	
M	6A	1	**127-2170**	6	SCREW-TRUSS HEAD (M8X1.25X20-MM)	
M	6B	1	**5C-7261**	6	NUT (M8X1.25-THD)	
	6C	1	**8T-4224**	6	WASHER-HARD (8.8X16X2-MM THK)	
M	7	1	**7Y-7388**	6	SCREW-BUTTON HEAD (M5X0.8X12-MM)	

M-METRIC PART

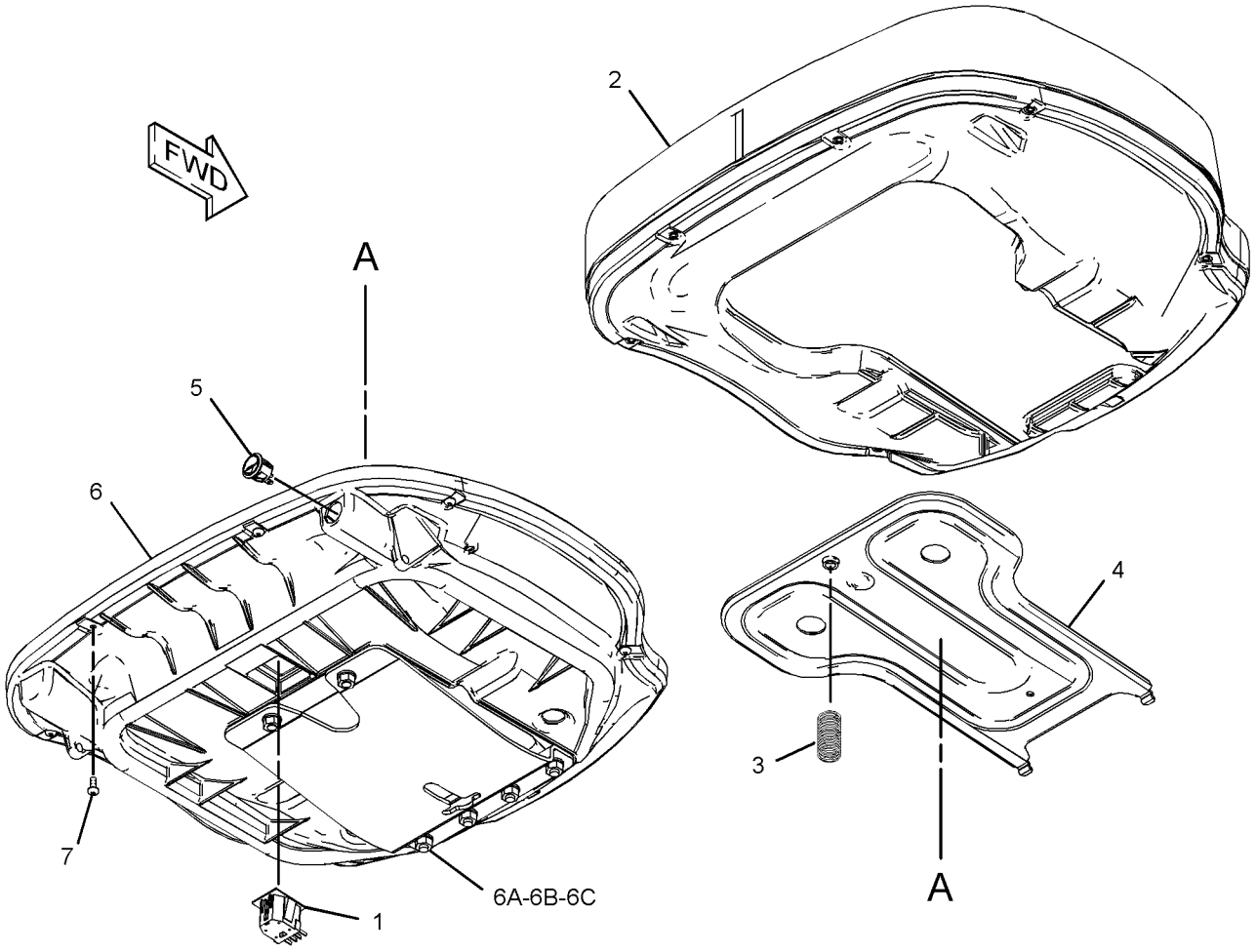

GRAPHIC #1 **<END>** g01581173

OPERATOR STATION

295-4477 PAN GP-SEAT—VINYL

S/N: DHA1-UP; FBH1-UP
PART OF 295-4436 SEAT GP
AN ATTACHMENT

SMCS-7312 **i03117728**

NOTE	REF NO	GRAPHIC REF	PART NUMBER	QTY	PART NAME 1 2 3 4 5 6 (PRODUCT LEVEL)	SEE PAGE
	1	1	**216-0814**	1	SWITCH AS-LIMIT (SEAT ADJUSTMENT)	
	2	1	**267-5159**	1	SPRING	
	3	1	**267-5160**	1	PLATE	
	4	1	**277-8103**	1	PLUG	
	5	1	**278-6936**	1	CUSHION AS-SEAT (VINYL)	
	6	1	**294-7139**	1	PAN GP-SEAT	
M		1	**5C-7261**	6	NUT (M8X1.25-THD)	
		1	**8T-4224**	6	WASHER-HARD (8.8X16X2-MM THK)	
M		1	**127-2170**	6	SCREW-TRUSS HEAD (M8X1.25X20-MM)	
M	7	1	**7Y-7388**	6	SCREW-BUTTON HEAD (M5X0.8X12-MM)	

M-METRIC PART

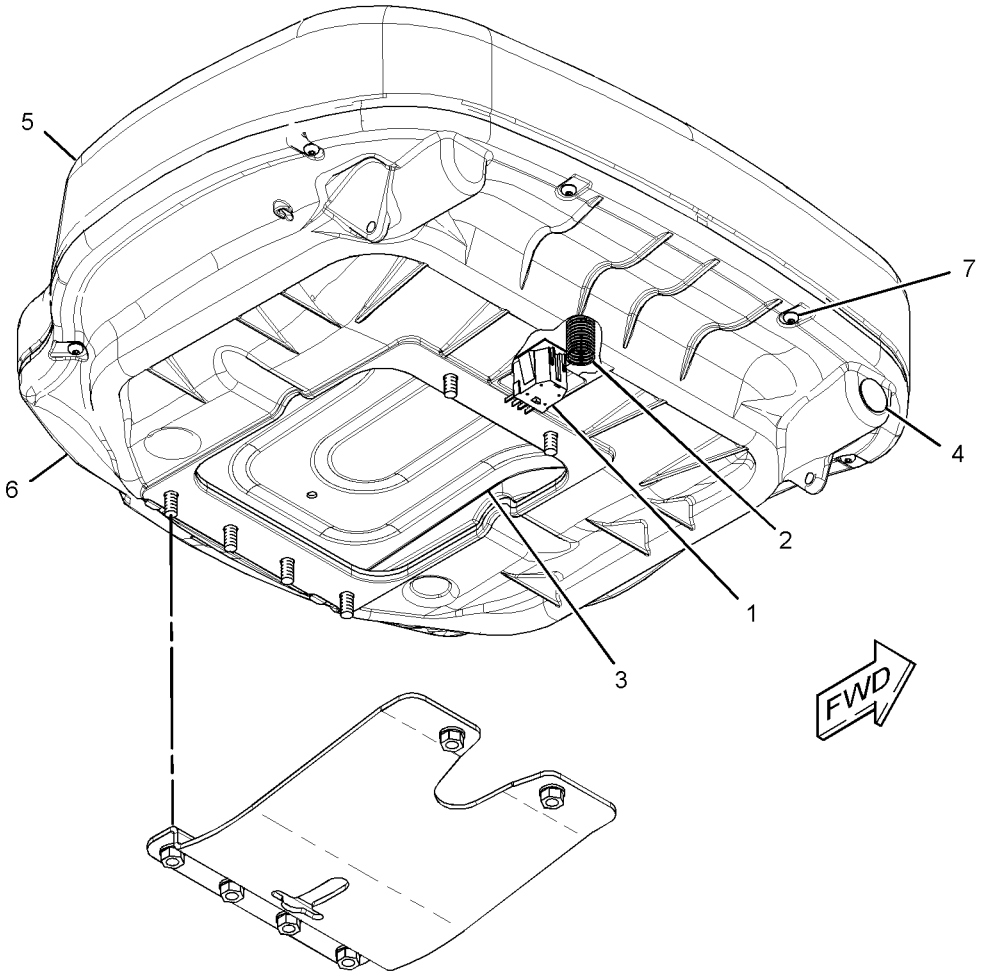

GRAPHIC #1 **<END>** g01304269

301-3162 PAN GP-SEAT—VINYL, HEATED

S/N: DHA1-UP; FBH1-UP
24-VOLT
PART OF 301-3165 SEAT GP
AN ATTACHMENT

SMCS-7312 **i03706873**

NOTE	REF NO	GRAPHIC REF	PART NUMBER	QTY	PART NAME 1 2 3 4 5 6 (PRODUCT LEVEL)	SEE PAGE
	1	1	**216-0814**	1	SWITCH AS-LIMIT (PLUNGER) (SEAT ADJUSTMENT)	
	2	1	**267-5159**	1	SPRING	
	3	1	**267-5160**	1	PLATE	
	4	1	**294-7139**	1	PAN GP-SEAT	
M		1	**5C-7261**	6	NUT (M8X1.25-THD)	
		1	**8T-4224**	6	WASHER-HARD (8.8X16X2-MM THK)	
M		1	**127-2170**	6	SCREW-TRUSS HEAD (M8X1.25X20-MM)	
	5	1	**301-3164**	1	CUSHION AS-SEAT	
	6	1	**320-5176**	1	SWITCH (12-VOLT, 24-VOLT) (HEAT)	
M	7	1	**7Y-7388**	6	SCREW-BUTTON HEAD (M5X0.8X12-MM)	

M-METRIC PART

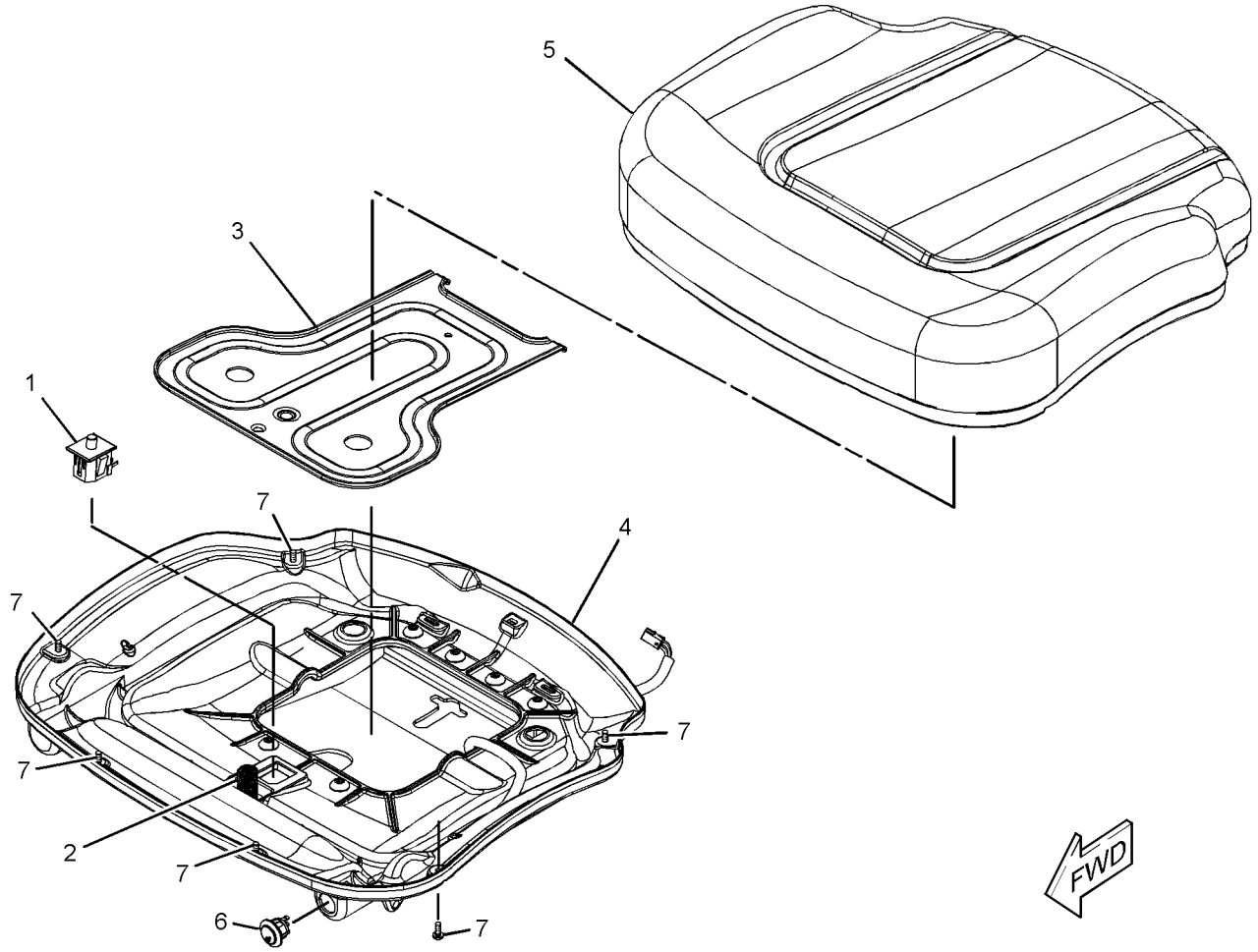

GRAPHIC #1 **<END>** g01583476

OPERATOR STATION

253-2439 PEDAL GP-GOVERNOR & BRAKE

S/N: DHA1-UP; FBH1-UP
PART OF 247-6506 CONTROL & MTG GP-PEDAL
AN ATTACHMENT
TYPE 1

SMCS-4122 **i02989031**

NOTE	REF NO	GRAPHIC REF	PART NUMBER	QTY	PART NAME 1 2 3 4 5 6 (PRODUCT LEVEL)	SEE PAGE
	1	1	**5P-9209**	2	BEARING AS-NEEDLE	
	2	1	**111-3780**	1	SPRING	
	3	1	**111-3781**	2	BOLT-ANCHOR (M10X1.5X23-MM)	
	4	1	**145-3405**	2	SPACER (10.3X16.7X8-MM THK)	
	5	1	**191-3587**	1	SWITCH AS-LIMIT (GOVERNOR, BRAKE PEDAL)	
		1	**102-8804**	1	KIT-RECEPTACLE (4-PIN)	
					(INCLUDES RECEPTACLE AS & WEDGE)	
		1	**186-3735**	3	PIN-CONNECTOR (16-GA TO 18-GA)	
		1	**9G-3695**	1	PLUG-SEAL	
	6	1	**252-8930**	1	SUPPORT AS-PEDAL	
	7	1	**252-8933**	1	SHAFT	
	8	1	**267-5639**	1	LINK	
	9	1	**287-2169**	1	PAD (FRICTION)	
	10	1	**296-9891**	1	PEDAL AS	
	11	1	**096-6166**	4	WASHER-HARD (4.5X9X1-MM THK)	
	12	1	**138-1645**	1	PIN-SPRING	
Y	13	1	**224-5530**	1	SENSOR GP-POSITION (GOVERNOR, BRAKE PEDAL)	288
M	14	1	**3C-6969**	2	NUT (M3X0.5-THD)	
	15	1	**3W-3321**	1	PLUNGER AS	
	16	1	**5D-0998**	6	SPRING-DISC	
	17	1	**6S-3859**	2	WASHER (0.562X1.75X0.063-IN THK)	
	18	1	**6V-0894**	1	SEAL-O-RING	
M	19	1	**6V-2314**	2	BOLT (M5X0.8X35-MM)	
M	20	1	**6V-7687**	1	LOCKNUT (M12X1.75-THD)	
	21	1	**6V-8188**	1	NUT (1/2-13-THD)	
M	22	1	**6V-9325**	2	SCREW-MACHINE (M3X0.5X30-MM)	
	23	1	**7X-7729**	3	WASHER (11X25X3-MM THK)	
	24	1	**8T-0328**	2	WASHER-HARD (5.5X10X1-MM THK)	
M	25	1	**8T-4133**	1	NUT (M10X1.5-THD)	
	26	1	**8T-7971**	1	WASHER-HARD (13.5X25.5X5-MM THK)	

M-METRIC PART
Y-SEPARATE ILLUSTRATION

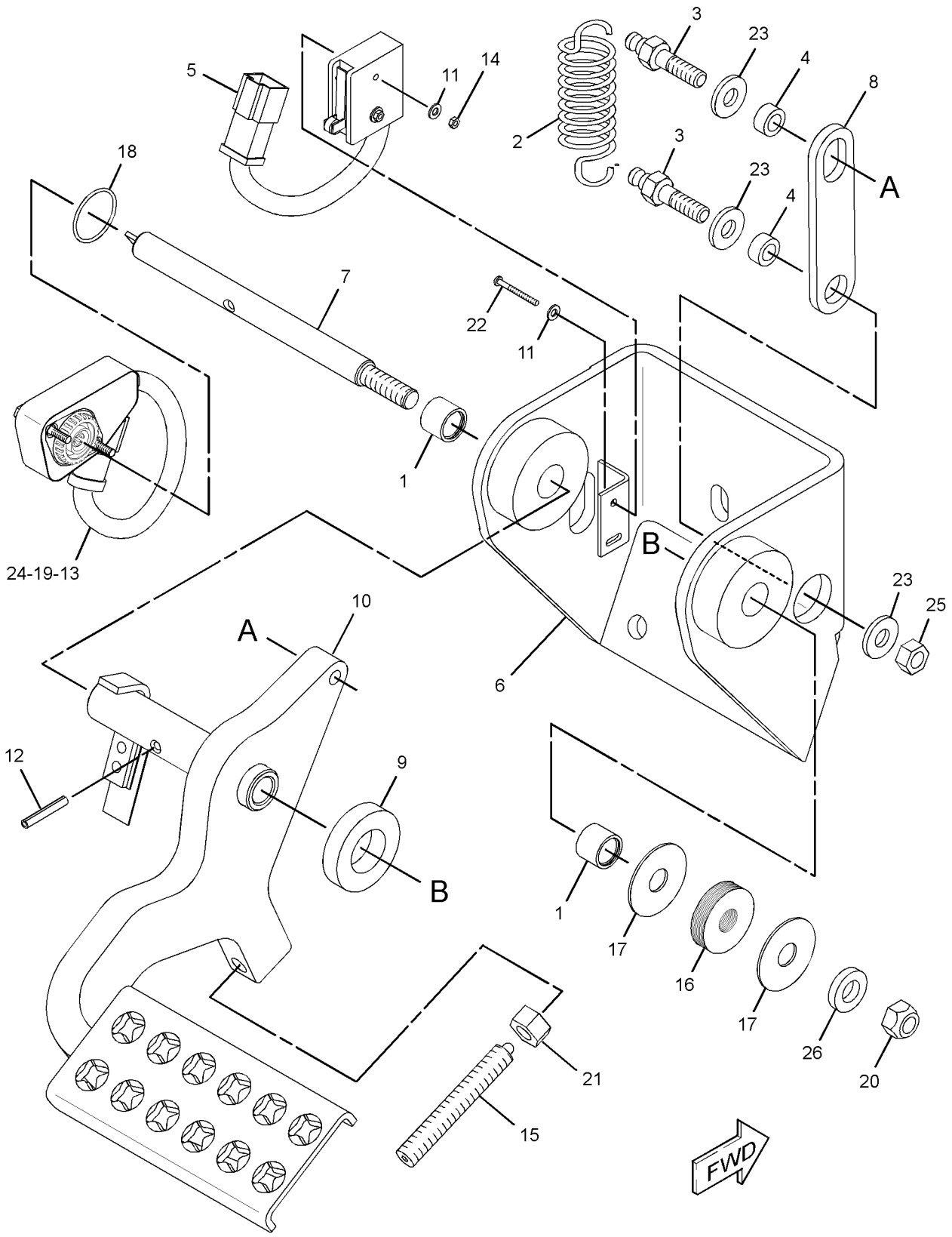

GRAPHIC #1 **<END>** g01516921

OPERATOR STATION

253-2439 PEDAL GP-GOVERNOR & BRAKE

S/N: DHA1-UP; FBH1-UP
PART OF 247-6506 CONTROL & MTG GP-PEDAL
AN ATTACHMENT
TYPE 2

SMCS-4122 **i03022429**

NOTE	REF NO	GRAPHIC REF	PART NUMBER	QTY	PART NAME 1 2 3 4 5 6 (PRODUCT LEVEL)	SEE PAGE
	1	1	**5P-9209**	2	BEARING AS-NEEDLE	
	2	1	**111-3780**	1	SPRING	
	3	1	**111-3781**	2	BOLT-ANCHOR (M10X1.5X23-MM)	
	4	1	**145-3405**	2	SPACER (10.3X16.7X8-MM THK)	
	5	1	**191-3587**	1	SWITCH AS-LIMIT (GOVERNOR, BRAKE PEDAL)	
		1	**102-8804**	1	KIT-RECEPTACLE (4-PIN)	
					(INCLUDES RECEPTACLE AS & WEDGE)	
		1	**186-3735**	3	PIN-CONNECTOR (16-GA TO 18-GA)	
		1	**9G-3695**	1	PLUG-SEAL	
	6	1	**252-8930**	1	SUPPORT AS-PEDAL	
	7	1	**252-8933**	1	SHAFT	
	8	1	**267-5639**	1	LINK	
	9	1	**287-2169**	1	PAD (FRICTION)	
	10	1	**296-9891**	1	PEDAL AS	
	11	1	**096-6166**	4	WASHER-HARD (4.5X9X1-MM THK)	
	12	1	**138-1645**	1	PIN-SPRING	
CY	13	1	**266-1467**	1	SENSOR GP-POSITION (ROTARY) (GOVERNOR, BRAKE PEDAL)	289
M	14	1	**3C-6969**	2	NUT (M3X0.5-THD)	
	15	1	**3W-3321**	1	PLUNGER AS	
	16	1	**5D-0998**	6	SPRING-DISC	
	17	1	**6S-3859**	2	WASHER (0.562X1.75X0.063-IN THK)	
	18	1	**6V-0894**	1	SEAL-O-RING	
M	19	1	**6V-2314**	2	BOLT (M5X0.8X35-MM)	
M	20	1	**6V-7687**	1	LOCKNUT (M12X1.75-THD)	
	21	1	**6V-8188**	1	NUT (1/2-13-THD)	
M	22	1	**6V-9325**	2	SCREW-MACHINE (M3X0.5X30-MM)	
	23	1	**7X-7729**	3	WASHER (11X25X3-MM THK)	
	24	1	**8T-0328**	2	WASHER-HARD (5.5X10X1-MM THK)	
M	25	1	**8T-4133**	1	NUT (M10X1.5-THD)	
	26	1	**8T-7971**	1	WASHER-HARD (13.5X25.5X5-MM THK)	

C-CHANGE FROM PREVIOUS TYPE
M-METRIC PART
Y-SEPARATE ILLUSTRATION

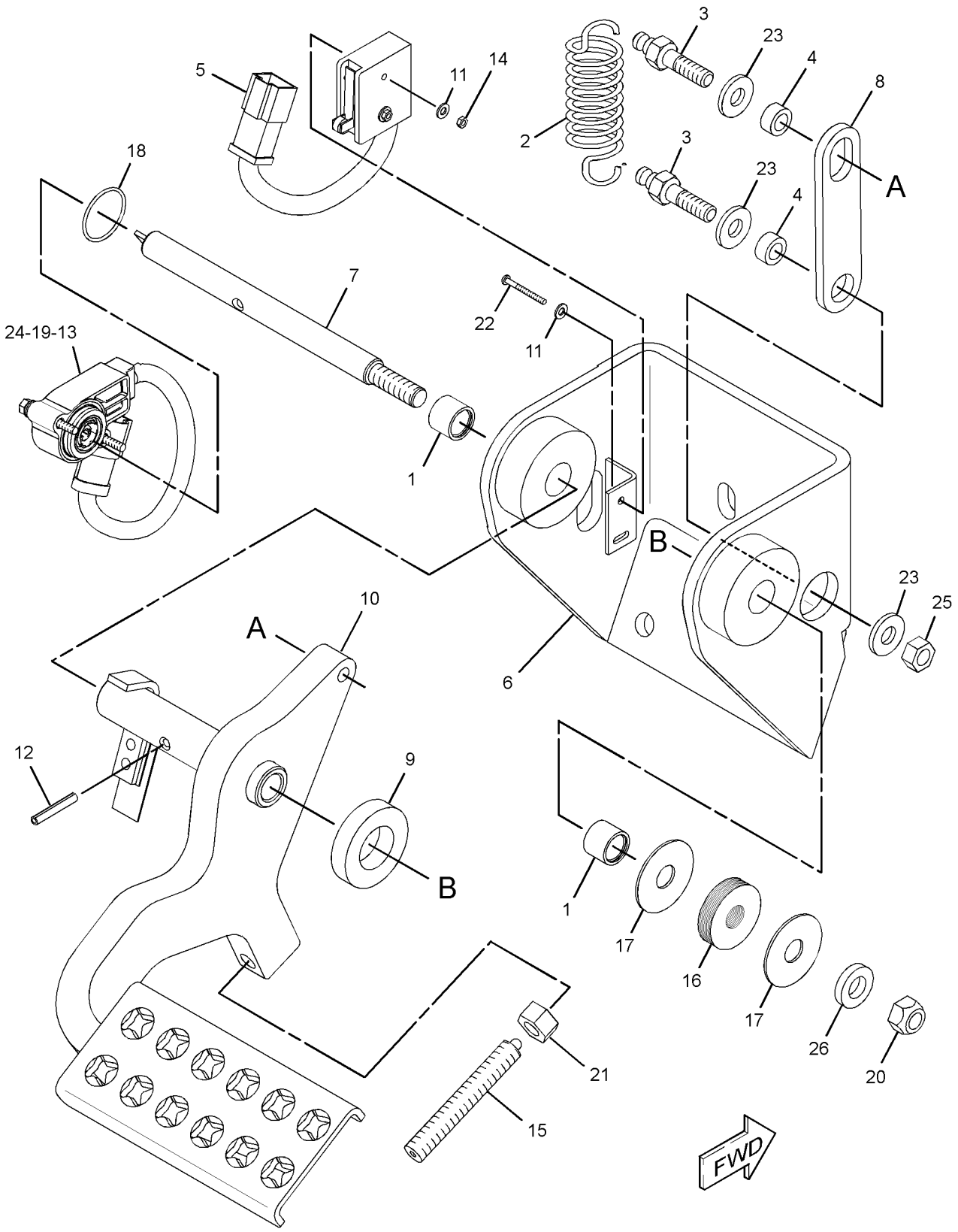

GRAPHIC #1 **<END>** g01519813

OPERATOR STATION

249-3602 PLATFORM GP-OPERATOR

S/N: DHA1-UP; FBH1-UP

PART OF 206-7270 CHASSIS AR

SMCS-7253 **i02370394**

NOTE	REF NO	GRAPHIC REF	PART NUMBER	QTY	PART NAME 1 2 3 4 5 6 (PRODUCT LEVEL)	SEE PAGE
	1	1	**249-3603**	1	PLATFORM AS (ROPS)	
		1	**8T-7038**	2	FILM-WARNING (DO NOT LIFT)	
	2	1	**7X-0618**	2	WASHER-HARD (13.5X40X5-MM THK)	
M	3	1	**7Y-1810**	8	BOLT (M30X3.5X75-MM)	
M	4	1	**8T-4194**	2	BOLT (M12X1.75X50-MM)	
	5	1	**9X-8258**	8	WASHER (33X56X6-MM THK)	

M-METRIC PART

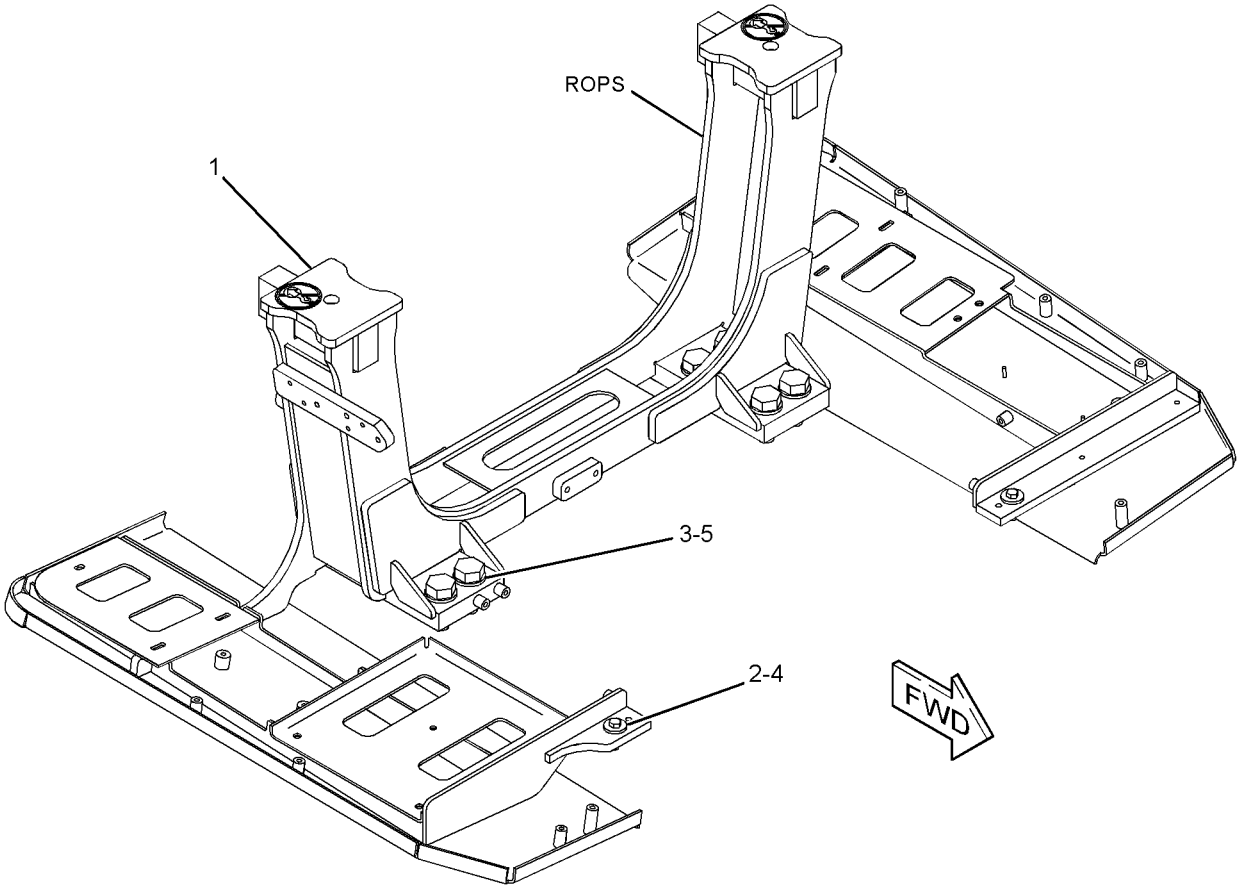

GRAPHIC #1 **<END>** g01202017

OPERATOR STATION

241-4936 RADIO GP–AM/FM/WB CD PLAYER

S/N: DHA1-UP; FBH1-UP
PART OF 294-2006 RADIO GP
AN ATTACHMENT

SMCS-7338 **i02552433**

NOTE	REF NO	GRAPHIC REF	PART NUMBER	QTY	PART NAME 1 2 3 4 5 6 (PRODUCT LEVEL)	SEE PAGE
	1	1	**142-9681**	1	KNOB-SELECT (RADIO)	
	2	1	**192-7054**	1	SLEEVE	

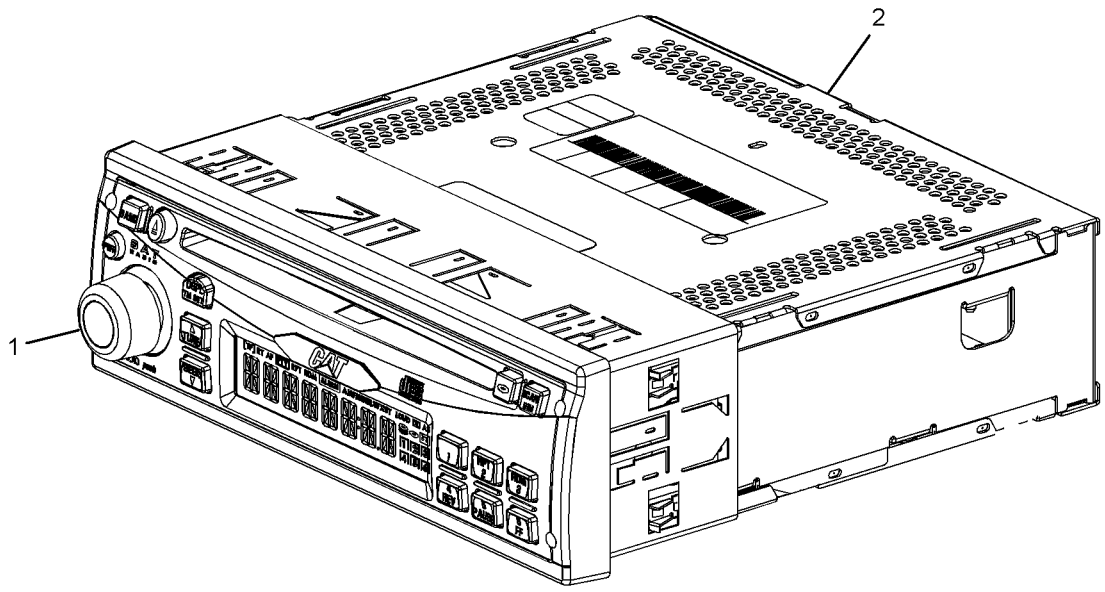

GRAPHIC #1 **<END>** g01286176

OPERATOR STATION

284-8953 RADIO GP–AM/FM/WB CD PLAYER

S/N: DHA1-UP; FBH1-UP
PART OF 294-2006 RADIO GP
AN ATTACHMENT

SMCS-7338 **i02662864**

NOTE	REF NO	GRAPHIC REF	PART NUMBER	QTY	PART NAME 1 2 3 4 5 6 (PRODUCT LEVEL)	SEE PAGE
	1	1	**142-9681**	1	KNOB-SELECT (RADIO)	
	2	1	**192-7054**	1	SLEEVE	

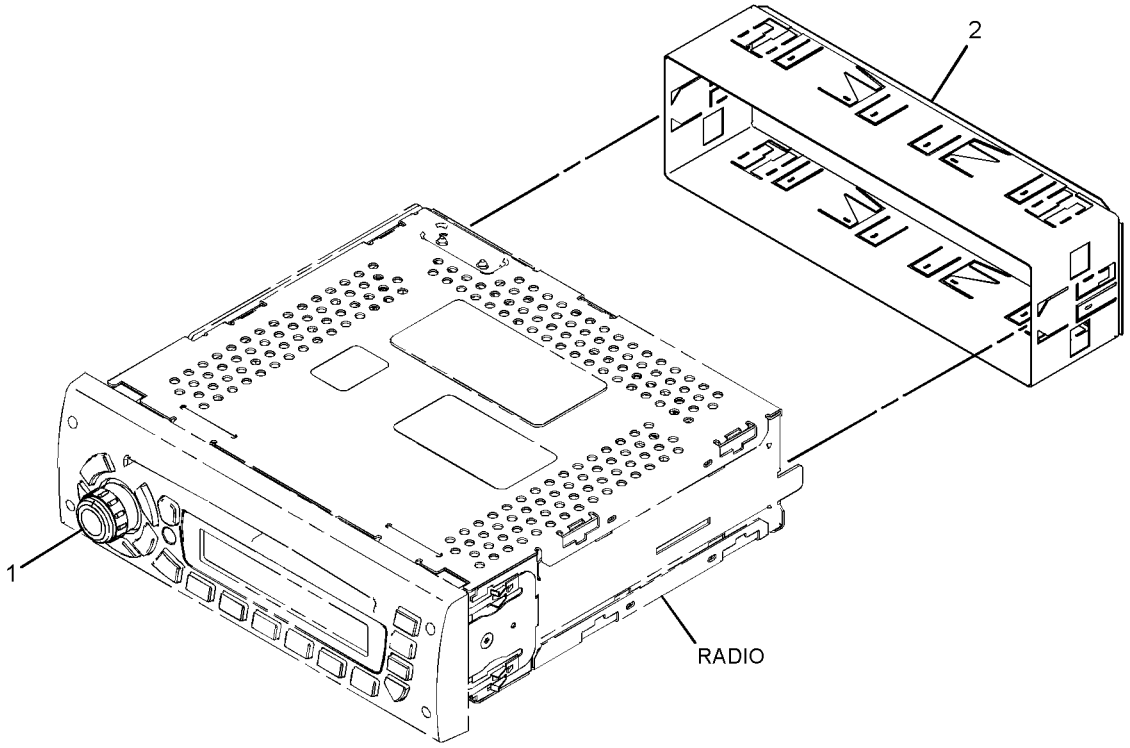

GRAPHIC #1 **<END>** g01340230

OPERATOR STATION

284-8954 RADIO GP–AM/FM/WB CD PLAYER

S/N: DHA1-UP; FBH1-UP
XM SATELLITE
PART OF 294-2007 INSTALLATION GP-RADIO
AN ATTACHMENT

SMCS-7338 **i02567360**

NOTE	REF NO	GRAPHIC REF	PART NUMBER	QTY	PART NAME 1 2 3 4 5 6 (PRODUCT LEVEL)	SEE PAGE
	1	1	**142-9681**	1	KNOB-SELECT (RADIO)	
	2	1	**192-7054**	1	SLEEVE	

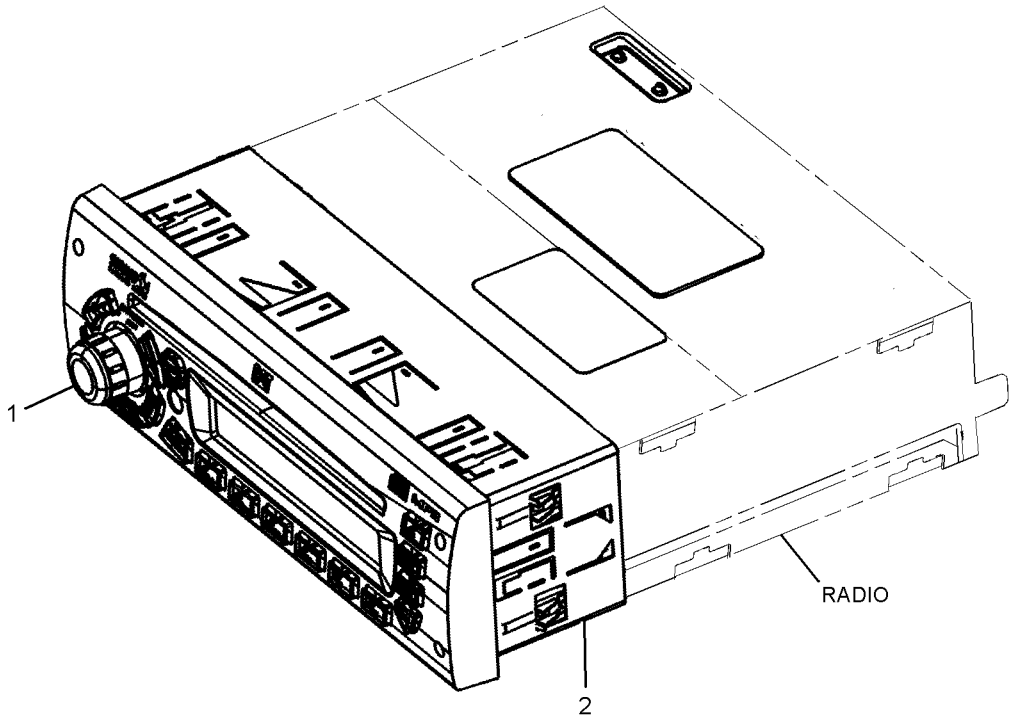

GRAPHIC #1 **<END>** g01289710

OPERATOR STATION

284-8955 RADIO GP–AM/FM/WB CD PLAYER

S/N: DHA1-UP; FBH1-UP
SIRIUS SATELLITE
PART OF 294-2008 INSTALLATION GP-RADIO
AN ATTACHMENT

SMCS-7338 **i02567379**

NOTE	REF NO	GRAPHIC REF	PART NUMBER	QTY	PART NAME 1 2 3 4 5 6 (PRODUCT LEVEL)	SEE PAGE
	1	1	**142-9681**	1	KNOB-SELECT (RADIO)	
	2	1	**192-7054**	1	SLEEVE	

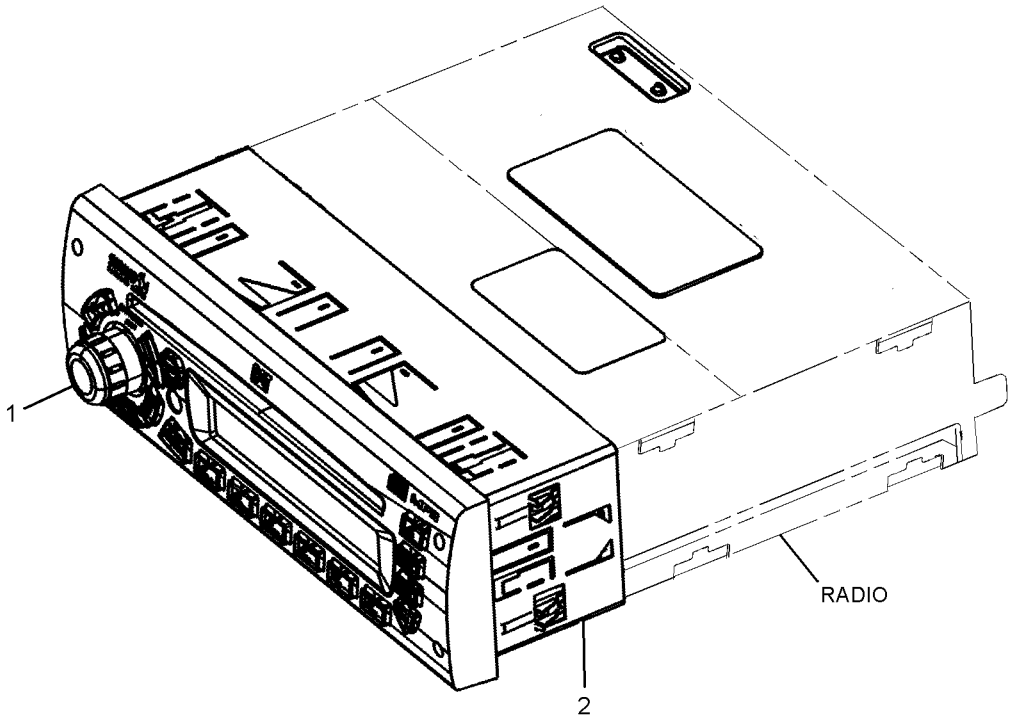

GRAPHIC #1 **<END>** g01289705

294-2006 RADIO GP–AM/FM/WB/CD PLAYER

S/N: DHA1-UP; FBH1-UP
CANNOT BE USED WITH CANOPY AR
AN ATTACHMENT
TYPE 1

SMCS-7338 **i02560643**

NOTE	REF NO	GRAPHIC REF	PART NUMBER	QTY	PART NAME 1 2 3 4 5 6 (PRODUCT LEVEL)	SEE PAGE
	1	1	**137-8165**	1	BUMPER	
	2	1	**200-5728**	1	HARNESS AS-RADIO	
		1	**172-8039**	1	TERMINAL (RADIO)	
		1	**172-8037**	1	CONNECTOR (RADIO)	
		1	**160-3518**	1	KIT-RECEPTACLE (8-PIN)	
					(INCLUDES RECEPTACLE AS & WEDGE)	
Y	3	1	**241-4936**	1	RADIO GP (AM/FM/WB CD PLAYER)	769

Y-SEPARATE ILLUSTRATION

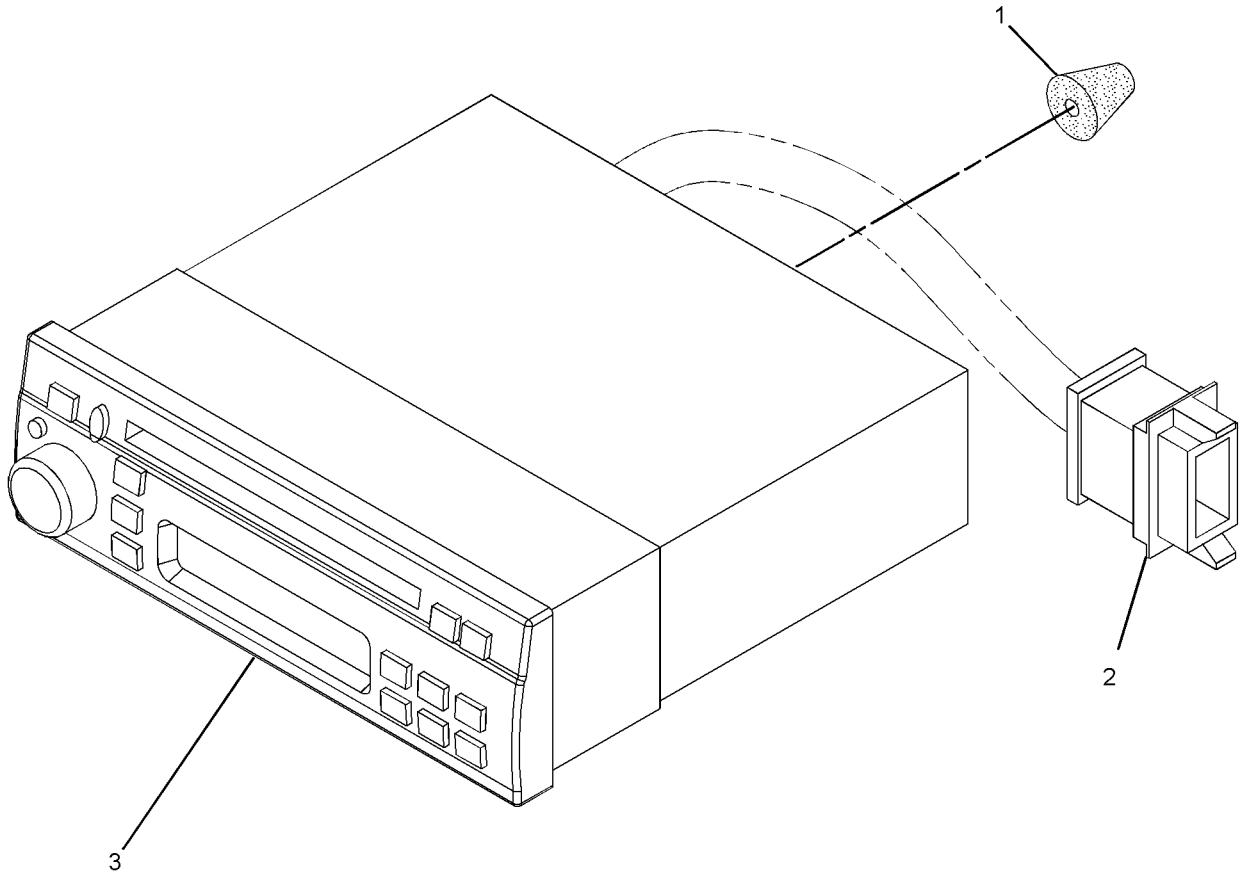

GRAPHIC #1 **<END>** g01290559

OPERATOR STATION

294-2006 RADIO GP–AM/FM/WB/CD PLAYER

S/N: DHA1-UP; FBH1-UP
CANNOT BE USED WITH CANOPY AR
AN ATTACHMENT
TYPE 2

SMCS-7338 **i02662819**

NOTE	REF NO	GRAPHIC REF	PART NUMBER	QTY	PART NAME 1 2 3 4 5 6 (PRODUCT LEVEL)	SEE PAGE
	1	1	**137-8165**	1	BUMPER	
	2	1	**200-5728**	1	HARNESS AS-RADIO	
		1	**172-8039**	1	TERMINAL (RADIO)	
		1	**172-8037**	1	CONNECTOR (RADIO)	
		1	**160-3518**	1	KIT-RECEPTACLE (8-PIN)	
					(INCLUDES RECEPTACLE AS & WEDGE)	
Y	3	1	**284-8953**	1	RADIO GP (AM/FM/WB CD PLAYER)	770

Y-SEPARATE ILLUSTRATION

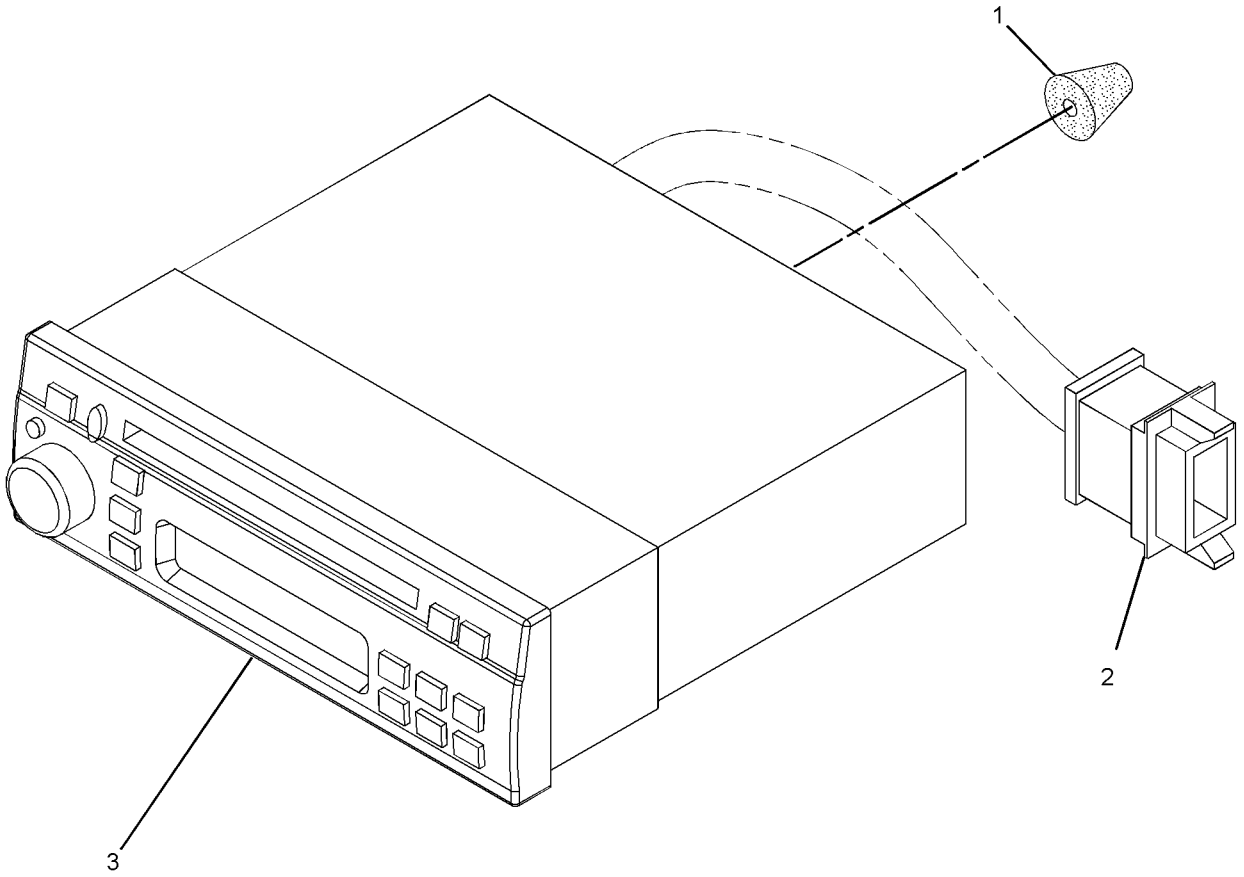

GRAPHIC #1 **<END>** g01290559

262-0766 RECLINER GP-SEAT

S/N: DHA1-UP; FBH1-UP

PART OF 295-4434, 295-4435, 295-4436, 301-3165 SEAT GP

AN ATTACHMENT

SMCS-7312 **i02583147**

NOTE	REF NO	GRAPHIC REF	PART NUMBER	QTY	PART NAME 1 2 3 4 5 6 (PRODUCT LEVEL)	SEE PAGE
	1	1	**262-0767**	1	BRACKET AS (LH)	
	2	1	**262-0769**	1	BRACKET AS (RH)	
					(EACH BRACKET AS INCLUDES)	
		1	**262-0771**	1	BEARING AS	
	3	1	**262-0772**	1	SHAFT AS	
		1	**282-0557**	1	SPRING	
		1	**2K-9111**	2	PIN-SPRING	
		1	**8T-0277**	1	PIN-SPRING	
		1	**3E-4333**	1	KEY-WOODRUFF	
		1	**256-4959**	1	SLIDER AS	
		1	**262-0789**	1	CABLE AS	

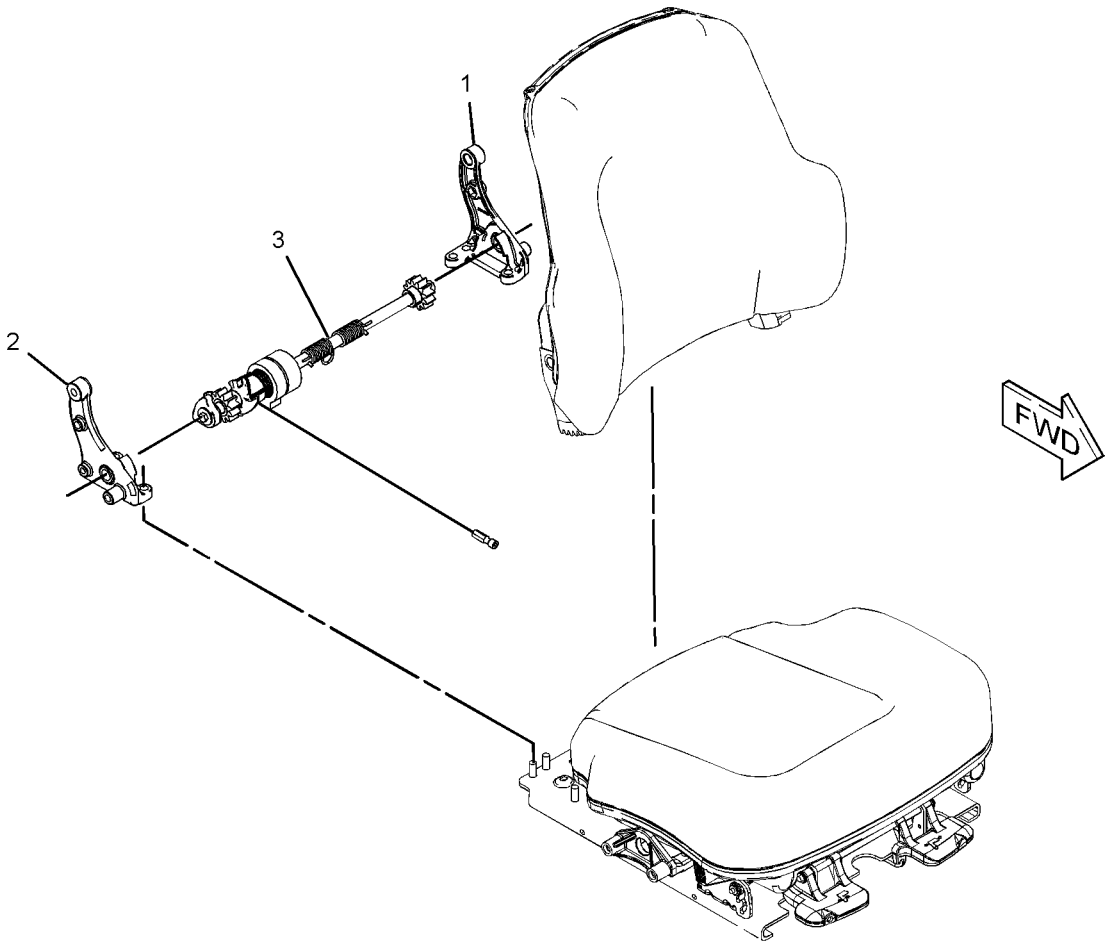

GRAPHIC #1 **<END>** g01303028

OPERATOR STATION

250-1697 SCREEN GP-CAB—OPEN ROPS, REAR

S/N: DHA1-UP; FBH1-UP

FOR USE WITH CANOPY AR, WINCH AR. CANNOT BE USED WITH WIRING GP-GRADE CANOPY, 320-2348—PAGE 778

AN ATTACHMENT

SMCS-7165, 7301 **i02952321**

NOTE	REF NO	GRAPHIC REF	PART NUMBER	QTY	PART NAME 1 2 3 4 5 6 (PRODUCT LEVEL)	SEE PAGE
	1	1	**252-6801**	1	SCREEN AS (CAB)	
	2	1	**293-1856**	2	COVER	
	3	1	**293-1857**	1	BRACKET AS (RH)	
	4	1	**293-1859**	1	BRACKET AS (LH)	
M	5	1	**7X-2552**	6	BOLT (M16X2X30-MM)	
M	6	1	**8T-4189**	2	BOLT (M8X1.25X20-MM)	
	7	1	**8T-4121**	12	WASHER-HARD (11X21X2.5-MM THK)	
	8	1	**8T-4122**	4	WASHER-HARD (17X32X3.5-MM THK)	
M	9	1	**8T-4136**	4	BOLT (M10X1.5X25-MM)	
M	10	1	**8T-4137**	8	BOLT (M10X1.5X20-MM)	
	11	1	**9X-8257**	2	WASHER (17.5X30X3.5-MM THK)	
	12	1	**8T-4224**	2	WASHER-HARD (8.8X16X2-MM THK)	

M-METRIC PART

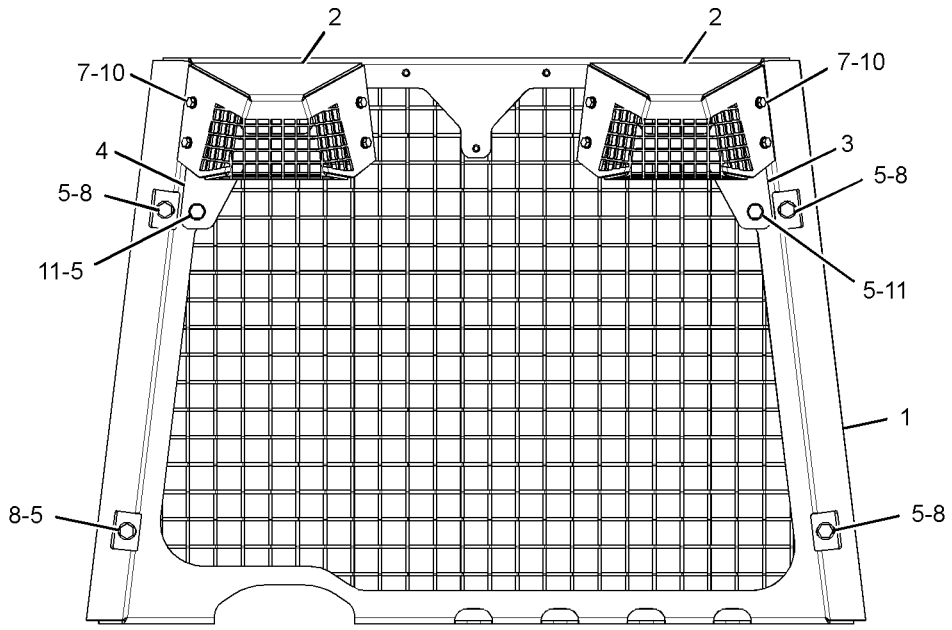

REAR VIEW

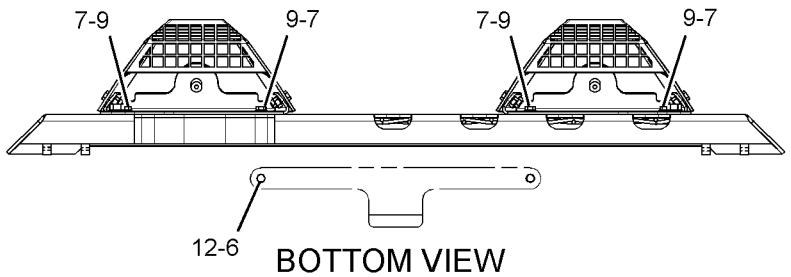

BOTTOM VIEW

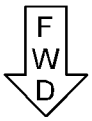

GRAPHIC #1

<END>

g01505874

OPERATOR STATION

250-1698 SCREEN GP-CAB—REAR, ENCLOSED ROPS

S/N: DHA1-UP; FBH1-UP

FOR USE WITH WINCH ARRANGEMENT TOWING. CANNOT BE USED WITH 250-2110—PAGE 651 AN ATTACHMENT

SMCS-7165, 7301 **i02582642**

NOTE	REF NO	GRAPHIC REF	PART NUMBER	QTY	PART NAME 1 2 3 4 5 6 (PRODUCT LEVEL)	SEE PAGE
	1	1	**3B-4618**	3	PIN-COTTER	
	2	1	**252-5459**	1	ROD AS	
	3	1	**252-6802**	1	SCREEN AS-CAB	
	4	1	**252-6803**	2	HINGE	
	5	1	**6S-9277**	2	PIN	
M	6	1	**7X-2552**	4	BOLT (M16X2X30-MM)	
	7	1	**8T-4122**	4	WASHER-HARD (17X32X3.5-MM THK)	

M-METRIC PART

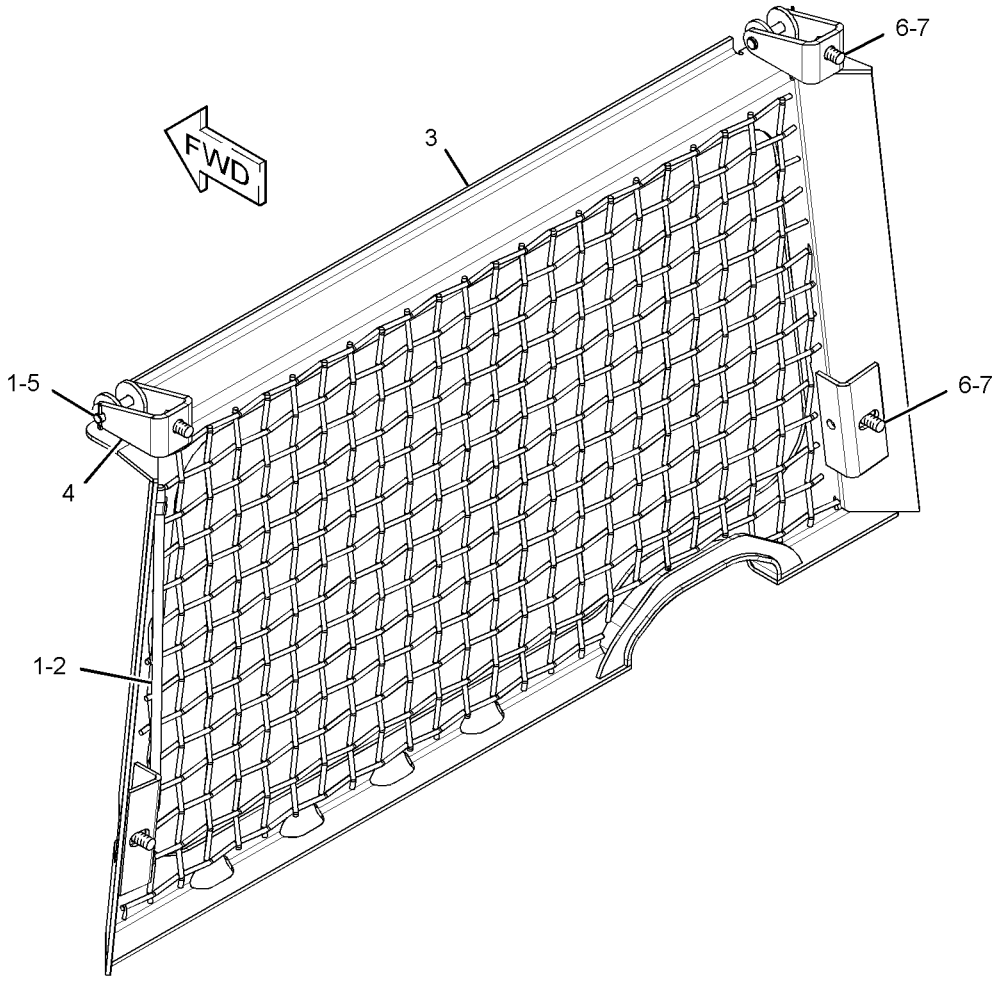

GRAPHIC #1 **<END>** g01301975

OPERATOR STATION

320-2348 SCREEN GP-CAB—REAR, OPEN ROPS

S/N: DHA1-UP; FBH1-UP

FOR USE WITH CANOPY AR, WIRING GP-GRADE CANOPY. CANNOT BE USED WITH 250-1697—PAGE 776 AN ATTACHMENT

SMCS-7165, 7301 **i02878666**

NOTE	REF NO	GRAPHIC REF	PART NUMBER	QTY	PART NAME 1 2 3 4 5 6 (PRODUCT LEVEL)	SEE PAGE
	1	1	**252-6801**	1	SCREEN AS (CAB)	
M	2	1	**7X-2552**	4	BOLT (M16X2X30-MM)	
	3	1	**8T-4121**	9	WASHER-HARD (11X21X2.5-MM THK)	
	4	1	**8T-4122**	4	WASHER-HARD (17X32X3.5-MM THK)	
M	5	1	**8T-4137**	9	BOLT (M10X1.5X20-MM)	

M-METRIC PART

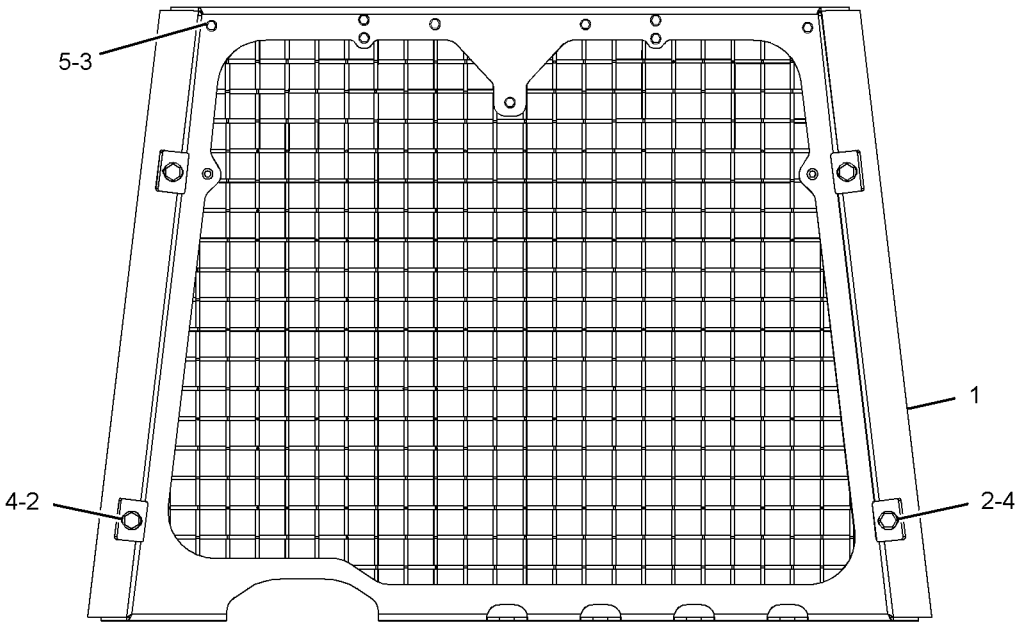

REAR VIEW

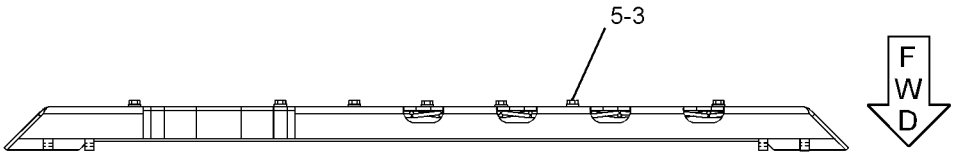

BOTTOM VIEW

GRAPHIC #1 **<END>** g01435066

OPERATOR STATION

250-1699 SCREEN GP-PROTECTION–SIDES

S/N: DHA1-UP; FBH1-UP

AN ATTACHMENT

SMCS-7165 **i02399158**

NOTE	REF NO	GRAPHIC REF	PART NUMBER	QTY	PART NAME 1 2 3 4 5 6 (PRODUCT LEVEL)	SEE PAGE
	1	1	**252-0552**	1	SCREEN AS (RH)	
M		1	**8T-3597**	4	NUT-WELD (M12X1.75-THD)	
	2	1	**252-0553**	1	SCREEN AS (LH)	
M		1	**8T-3597**	4	NUT-WELD (M12X1.75-THD)	
M	3	1	**7X-2553**	6	BOLT (M16X2X40-MM)	
M	4	1	**7X-2554**	2	BOLT (M16X2X70-MM)	
	5	1	**9X-8257**	8	WASHER (17.5X30X3.5-MM THK)	

M-METRIC PART

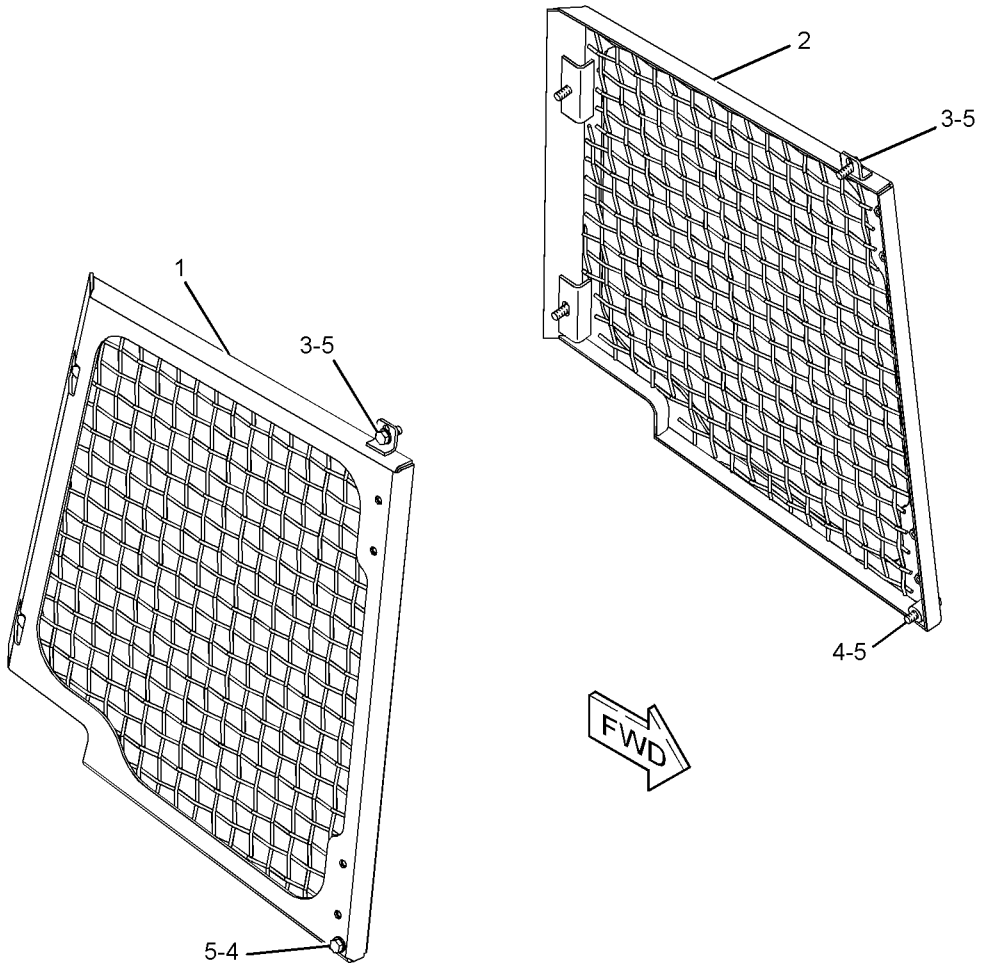

GRAPHIC #1 **<END>** g01202762

OPERATOR STATION

272-2272 SEAT BELT GP–RETRACTABLE

S/N: DHA1-UP; FBH1-UP

PART OF 253-8297, 272-8109, 272-8110, 301-3166 SEAT GP-SUSPENSION

AN ATTACHMENT

SMCS-7327 **i02583118**

NOTE	REF NO	GRAPHIC REF	PART NUMBER	QTY	PART NAME 1 2 3 4 5 6 (PRODUCT LEVEL)	SEE PAGE
	1	1	**275-7803**	1	SPACER (11.7X19.8X25.4-MM THK)	
	2	1	**0T-0489**	2	BOLT (7/16-20X2-IN)	
	3	1	**8T-5360**	2	WASHER (12X22.5X2.5-MM THK)	

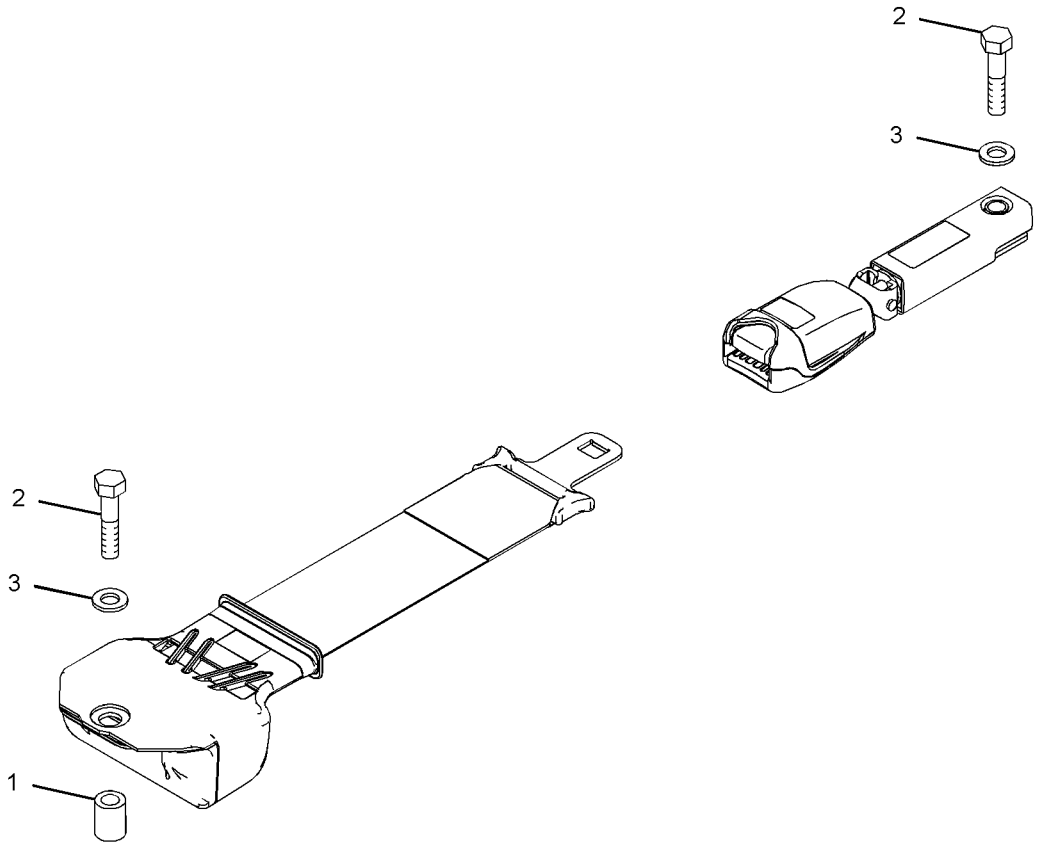

GRAPHIC #1 **<END>** g01303780

OPERATOR STATION

295-4434 SEAT GP–CLOTH

S/N: DHA1-UP; FBH1-UP
MANUAL TILT
PART OF 272-8109 SEAT GP-SUSPENSION
AN ATTACHMENT

SMCS-7312 **i03139145**

NOTE	REF NO	GRAPHIC REF	PART NUMBER	QTY	PART NAME 1 2 3 4 5 6 (PRODUCT LEVEL)	SEE PAGE
	1	1	**143-1288**	6	LOCKNUT-FLANGE (3/8-16-THD)	
	2	1	**171-1230**	6	SCREW-BUTTON HEAD (3/8-16X1-IN)	
Y	3	1	*262-0766*	1	RECLINER GP-SEAT	775
	4	1	**267-5147**	2	BRACKET	
	5	1	**267-9319**	1	STOP	
	6	1	**276-3642**	1	SHAFT	
	7	1	**276-3644**	1	NUT-SPECIAL	
Y	8	1	*278-8515*	1	PAN GP-BACKREST (CLOTH)	755
	9	1	**293-9379**	1	ROD	
	10	1	**293-9665**	2	SPRING	
Y	11	1	*294-7779*	1	ADJUSTER GP-SEAT	633
Y	12	1	*295-4475*	1	PAN GP-SEAT (CLOTH)	760
	13	1	**295-6472**	4	WASHER (7X19X2-MM THK)	
	14	1	**031-0214**	1	BOLT-LOCKING (1/4-20X0.5-IN)	
	15	1	**101-2867**	1	WASHER-HARD (7.2X25X2-MM THK)	
	16	1	**200-8790**	2	WASHER-HARD (7.2X17.5X2-MM THK)	
M	17	1	**2Y-5829**	1	NUT (M10X1.5-THD)	
	18	1	**5V-1496**	2	RETAINER	
	19	1	**6F-7418**	1	BOLT-SOCKET HEAD (5/16-18X1.25-IN)	
M	20	1	**8C-8585**	8	SCREW-BUTTON HEAD (M10X1.5X20-MM)	
	21	1	**8T-4121**	2	WASHER-HARD (11X21X2.5-MM THK)	
M	22	1	**8T-4196**	2	BOLT (M10X1.5X35-MM)	

M-METRIC PART
Y-SEPARATE ILLUSTRATION

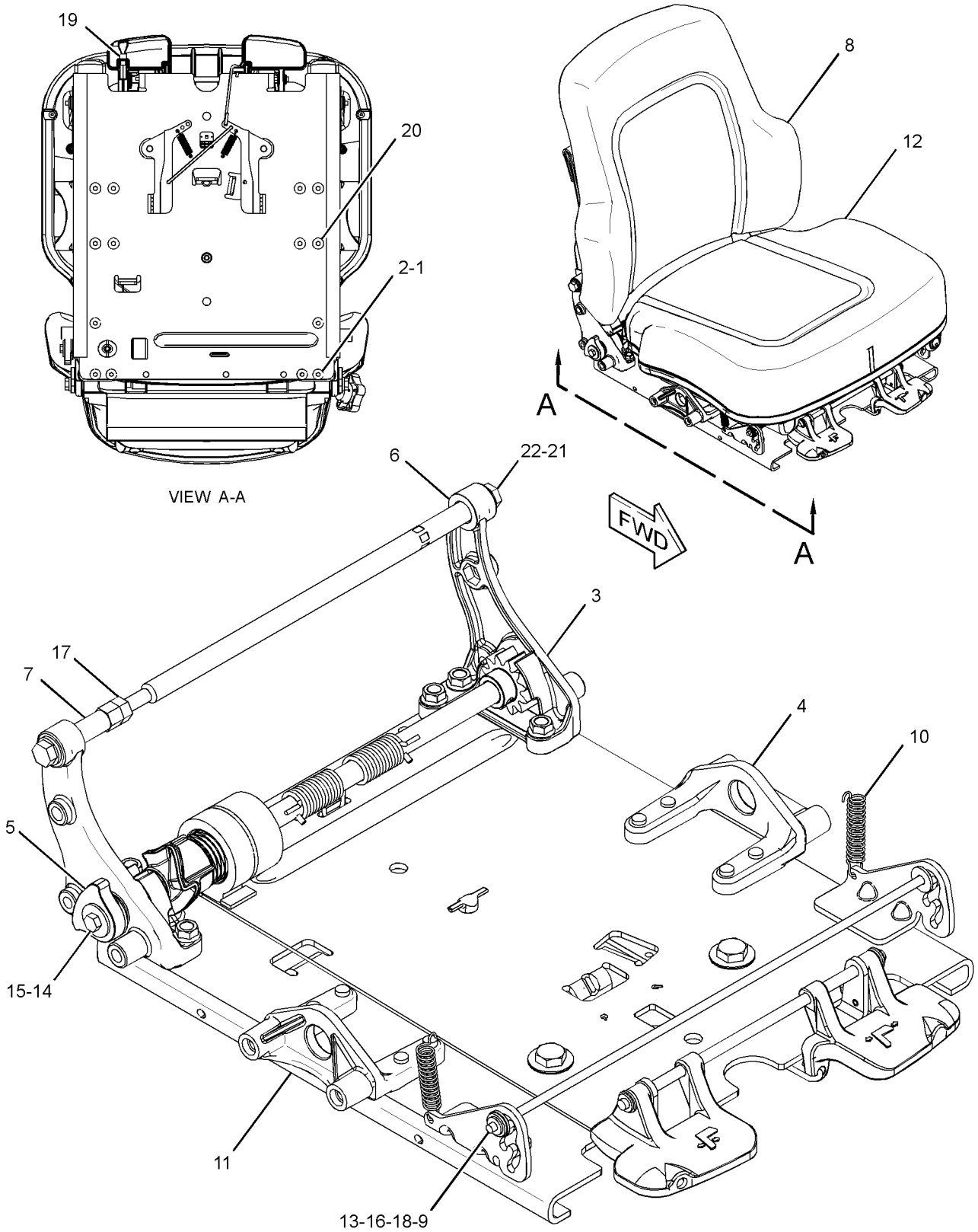

BACK REST AND SEAT PAN REMOVED

GRAPHIC #1 **<END>** g01304000

OPERATOR STATION

295-4435 SEAT GP—CLOTH, HEATED

S/N: DHA1-UP; FBH1-UP
24-VOLT. MANUAL TILT
PART OF 272-8110 SEAT GP-SUSPENSION
AN ATTACHMENT

SMCS-7312 **i03097480**

NOTE	REF NO	GRAPHIC REF	PART NUMBER	QTY	PART NAME 1 2 3 4 5 6 (PRODUCT LEVEL)	SEE PAGE
	1	1	**143-1288**	6	LOCKNUT-FLANGE (3/8-16-THD)	
	2	1	**171-1230**	6	SCREW-BUTTON HEAD (3/8-16X1-IN)	
Y	3	1	*262-0766*	1	RECLINER GP-SEAT	775
	4	1	**267-5147**	2	BRACKET	
	5	1	**267-9319**	1	STOP	
	6	1	**276-3642**	1	SHAFT	
	7	1	**276-3644**	1	NUT-SPECIAL	
Y	8	1	*278-8516*	1	PAN GP-BACKREST (CLOTH, HEATED)	756
	9	1	**293-9379**	1	ROD	
	10	1	**293-9665**	2	SPRING	
Y	11	1	*294-7779*	1	ADJUSTER GP-SEAT	633
Y	12	1	*295-4476*	1	PAN GP-SEAT (CLOTH, HEATED)	761
	13	1	**295-6472**	4	WASHER (7X19X2-MM THK)	
	14	1	**031-0214**	1	BOLT-LOCKING (1/4-20X0.5-IN)	
	15	1	**101-2867**	1	WASHER-HARD (7.2X25X2-MM THK)	
	16	1	**200-8790**	2	WASHER-HARD (7.2X17.5X2-MM THK)	
M	17	1	**2Y-5829**	1	NUT (M10X1.5-THD)	
	18	1	**5V-1496**	2	RETAINER	
	19	1	**6F-7418**	1	BOLT-SOCKET HEAD (5/16-18X1.25-IN)	
M	20	1	**8C-8585**	8	SCREW-BUTTON HEAD (M10X1.5X20-MM)	
	21	1	**8T-4121**	2	WASHER-HARD (11X21X2.5-MM THK)	
M	22	1	**8T-4196**	2	BOLT (M10X1.5X35-MM)	

M-METRIC PART
Y-SEPARATE ILLUSTRATION

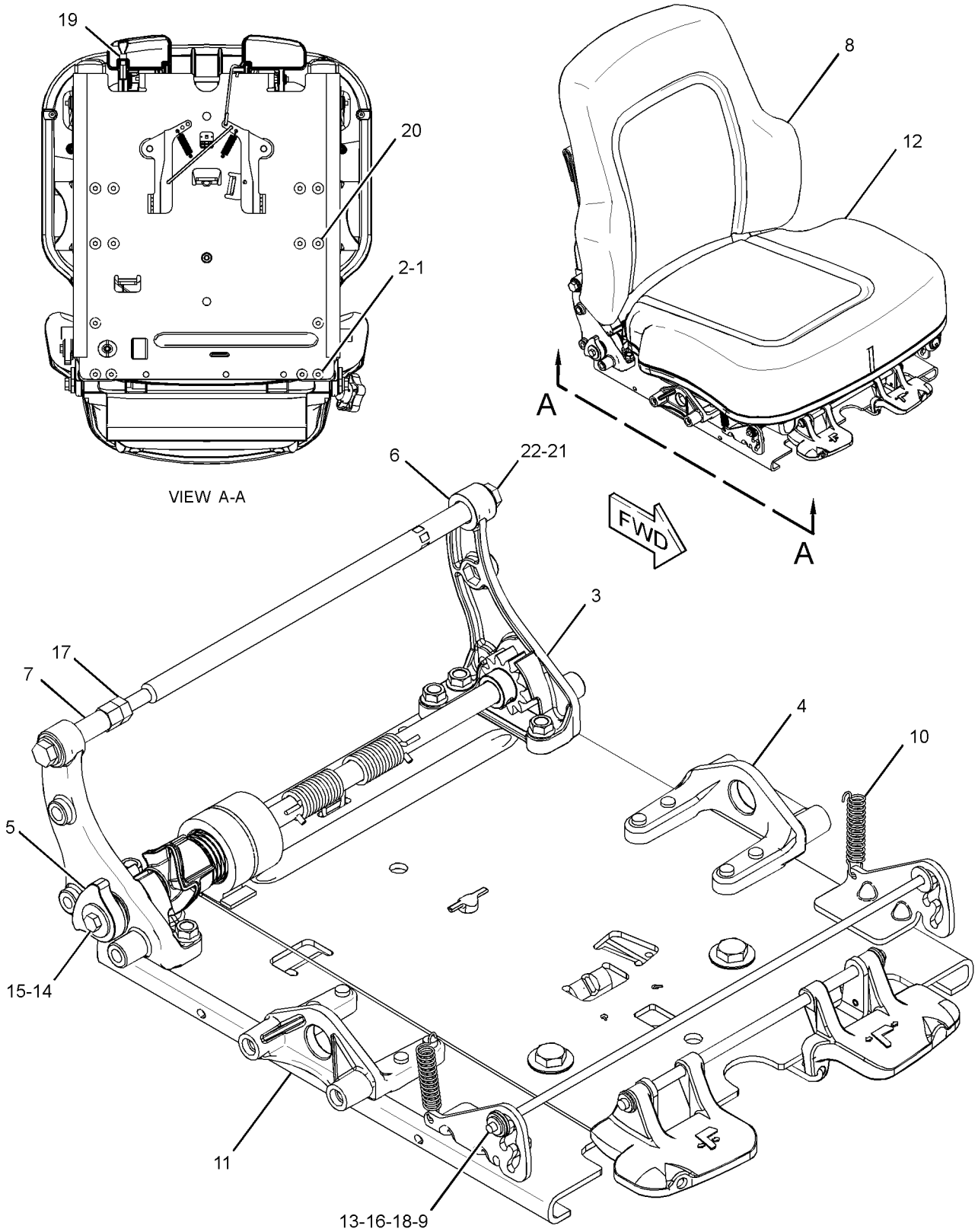

BACK REST AND SEAT PAN REMOVED

GRAPHIC #1 **<END>** g01304000

OPERATOR STATION

295-4436 SEAT GP–VINYL

S/N: DHA1-UP; FBH1-UP
MANUAL TILT
PART OF 253-8297 SEAT GP-SUSPENSION
AN ATTACHMENT

SMCS-7312 **i03139160**

NOTE	REF NO	GRAPHIC REF	PART NUMBER	QTY	PART NAME 1 2 3 4 5 6 (PRODUCT LEVEL)	SEE PAGE
	1	1	**143-1288**	6	LOCKNUT-FLANGE (3/8-16-THD)	
	2	1	**171-1230**	6	SCREW-BUTTON HEAD (3/8-16X1-IN)	
Y	3	1	*262-0766*	1	RECLINER GP-SEAT	775
	4	1	**267-5147**	2	BRACKET	
	5	1	**267-9319**	1	STOP	
	6	1	**276-3642**	1	SHAFT	
	7	1	**276-3644**	1	NUT-SPECIAL	
Y	8	1	*278-8517*	1	PAN GP-BACKREST (VINYL)	757
	9	1	**293-9379**	1	ROD	
	10	1	**293-9665**	2	SPRING	
Y	11	1	*294-7779*	1	ADJUSTER GP-SEAT	633
Y	12	1	*295-4477*	1	PAN GP-SEAT (VINYL)	762
	13	1	**295-6472**	4	WASHER (7X19X2-MM THK)	
	14	1	**031-0214**	1	BOLT-LOCKING (1/4-20X0.5-IN)	
	15	1	**101-2867**	1	WASHER-HARD (7.2X25X2-MM THK)	
	16	1	**200-8790**	2	WASHER-HARD (7.2X17.5X2-MM THK)	
M	17	1	**2Y-5829**	1	NUT (M10X1.5-THD)	
	18	1	**5V-1496**	2	RETAINER	
	19	1	**6F-7418**	1	BOLT-SOCKET HEAD (5/16-18X1.25-IN)	
M	20	1	**8C-8585**	8	SCREW-BUTTON HEAD (M10X1.5X20-MM)	
	21	1	**8T-4121**	2	WASHER-HARD (11X21X2.5-MM THK)	
M	22	1	**8T-4196**	2	BOLT (M10X1.5X35-MM)	

M-METRIC PART
Y-SEPARATE ILLUSTRATION

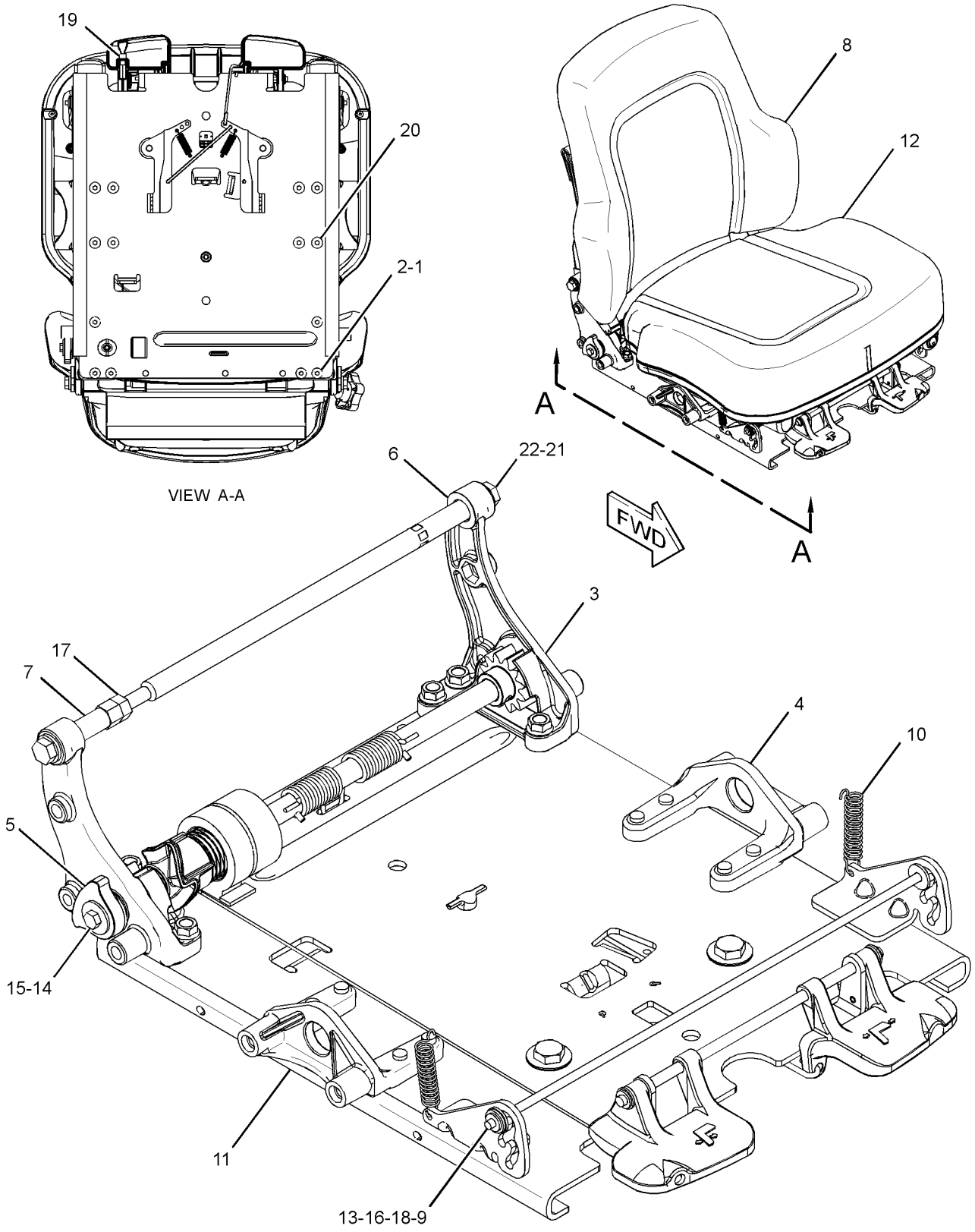

BACK REST AND SEAT PAN REMOVED

GRAPHIC #1 **<END>** g01304000

301-3165 SEAT GP—VINYL, HEATED

S/N: DHA1-UP; FBH1-UP
24-VOLT
PART OF 301-3166 SEAT GP-SUSPENSION
AN ATTACHMENT

SMCS-7312 **i03139169**

NOTE	REF NO	GRAPHIC REF	PART NUMBER	QTY	PART NAME 1 2 3 4 5 6 (PRODUCT LEVEL)	SEE PAGE
	1	1	**143-1288**	6	LOCKNUT-FLANGE (3/8-16-THD)	
	2	1	**171-1230**	6	SCREW-BUTTON HEAD (3/8-16X1-IN)	
Y	3	1	*262-0766*	1	RECLINER GP-SEAT	775
	4	1	**267-5147**	2	BRACKET	
	5	1	**267-9319**	1	STOP	
	6	1	**276-3642**	1	SHAFT	
	7	1	**276-3644**	1	NUT-SPECIAL	
	8	1	**293-9379**	1	ROD	
	9	1	**293-9665**	2	SPRING	
Y	10	1	*294-7779*	1	ADJUSTER GP-SEAT	633
	11	1	**295-6472**	4	WASHER (7X19X2-MM THK)	
Y	12	1	*301-3161*	1	PAN GP-BACKREST (VINYL, HEATED)	759
Y	13	1	*301-3162*	1	PAN GP-SEAT (VINYL, HEATED)	763
	14	1	**031-0214**	1	BOLT-LOCKING (1/4-20X0.5-IN)	
	15	1	**101-2867**	1	WASHER-HARD (7.2X25X2-MM THK)	
	16	1	**200-8790**	2	WASHER-HARD (7.2X17.5X2-MM THK)	
M	17	1	**2Y-5829**	1	NUT (M10X1.5-THD)	
	18	1	**5V-1496**	2	RETAINER	
	19	1	**6F-7418**	1	BOLT-SOCKET HEAD (5/16-18X1.25-IN)	
M	20	1	**8C-8585**	8	SCREW-BUTTON HEAD (M10X1.5X20-MM)	
	21	1	**8T-4121**	2	WASHER-HARD (11X21X2.5-MM THK)	
M	22	1	**8T-4196**	2	BOLT (M10X1.5X35-MM)	

M-METRIC PART
Y-SEPARATE ILLUSTRATION

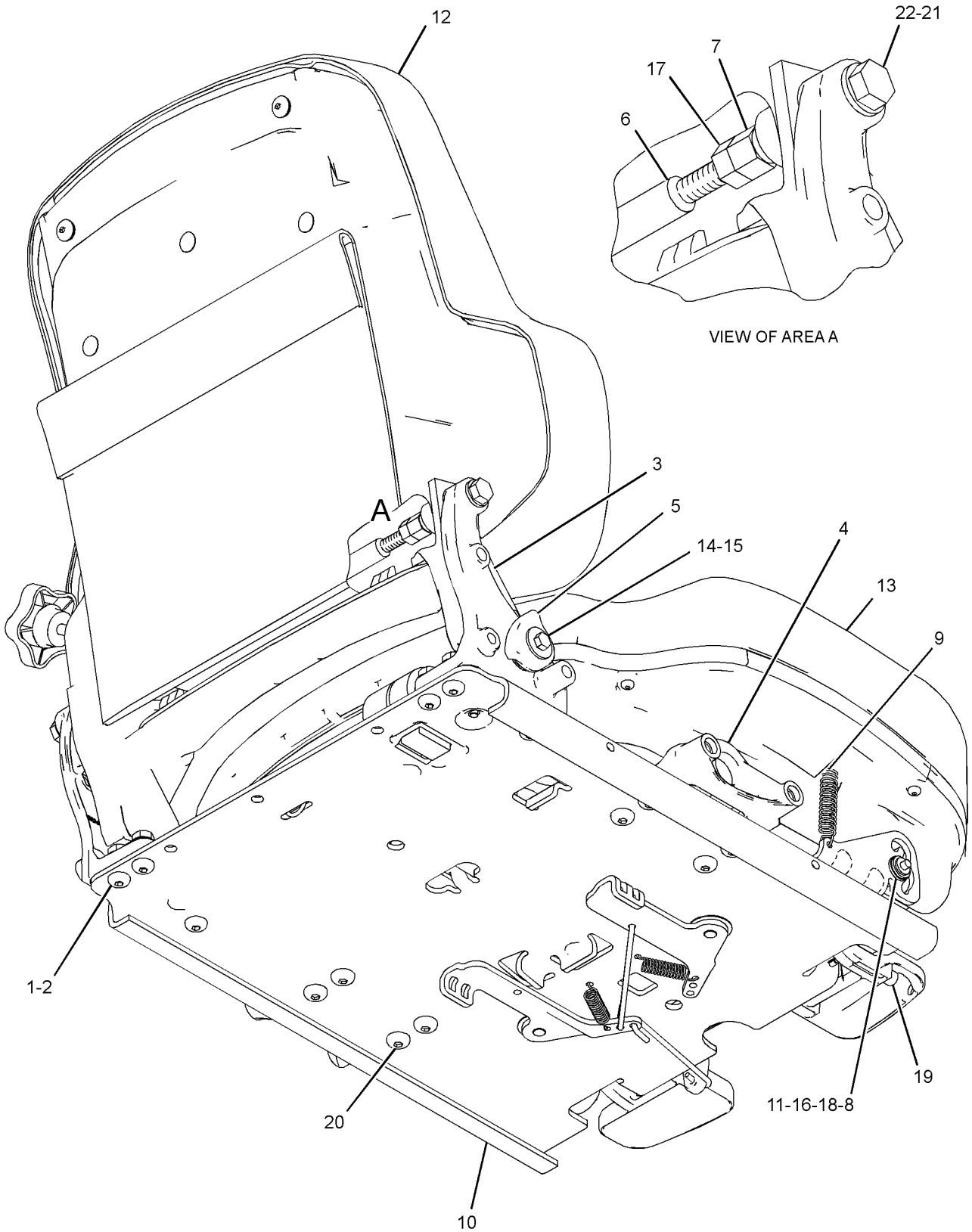

GRAPHIC #1 **<END>** g01585940

250-2120 SEAT GP-SUSPENSION—CLOTH, AIR

S/N: DHA1-UP; FBH1-UP
PART OF 349-8349 OPTION AR-CAB
AN ATTACHMENT

SMCS-7321, 7324, 7336 **i03139178**

NOTE	PART NUMBER	QTY	PART NAME 1 2 3 4 5 6 (PRODUCT LEVEL)	SEE PAGE
Y	*284-7054*	1	ARMREST GP (RH)	648
Y	*280-9679*	1	ARMREST GP (LH)	646
Y	*268-9352*	1	CONSOLE GP-OPERATOR (LH)	662
Y	*268-9351*	1	CONSOLE GP-OPERATOR (RH)	661
Y	*272-8109*	1	SEAT GP-SUSPENSION (CLOTH, AIR)	792
Y	*272-2771*	1	WIRING GP-SEAT	336
M	**8T-4186**	4	BOLT (M10X1.5X40-MM)	
	7X-7729	4	WASHER (11X25X3-MM THK)	

M-METRIC PART
Y-SEPARATE ILLUSTRATION

<END>

250-2121 SEAT GP-SUSPENSION—VINYL, AIR

S/N: DHA1-UP; FBH1-UP
AN ATTACHMENT

SMCS-7321, 7324, 7336 **i03139360**

NOTE	PART NUMBER	QTY	PART NAME 1 2 3 4 5 6 (PRODUCT LEVEL)	SEE PAGE
Y	*284-7054*	1	ARMREST GP (RH)	648
Y	*280-9679*	1	ARMREST GP (LH)	646
Y	*268-9352*	1	CONSOLE GP-OPERATOR (LH)	662
Y	*268-9351*	1	CONSOLE GP-OPERATOR (RH)	661
Y	*253-8297*	1	SEAT GP-SUSPENSION (VINYL) (AIR)	791
Y	*272-2771*	1	WIRING GP-SEAT	336
M	**8T-4186**	4	BOLT (M10X1.5X40-MM)	
	7X-7729	4	WASHER (11X25X3-MM THK)	

M-METRIC PART
Y-SEPARATE ILLUSTRATION

<END>

OPERATOR STATION

250-2123 SEAT GP-SUSPENSION—CLOTH, HEATED, AIR

S/N: DHA1-UP; FBH1-UP

CANNOT BE USED WITH 250-2110—PAGE 651, 250-2120—PAGE 789, 250-2121—PAGE 789 AN ATTACHMENT

SMCS-7321, 7324, 7336 **i03706880**

NOTE	PART NUMBER	QTY	PART NAME 1 2 3 4 5 6 (PRODUCT LEVEL)	SEE PAGE
Y	*268-9352*	1	CONSOLE GP-OPERATOR (LH)	662
Y	*268-9351*	1	CONSOLE GP-OPERATOR (RH)	661
Y	*272-8110*	1	SEAT GP-SUSPENSION (CLOTH, HEATED, AIR)	793
Y	*284-7054*	1	ARMREST GP (RH)	648
Y	*280-9679*	1	ARMREST GP (LH)	646
Y	*272-2771*	1	WIRING GP-SEAT	336
M	**8T-4186**	4	BOLT (M10X1.5X40-MM)	
	7X-7729	4	WASHER (11X25X3-MM THK)	

M-METRIC PART
Y-SEPARATE ILLUSTRATION

<END>

OPERATOR STATION

253-8297 SEAT GP-SUSPENSION—VINYL, AIR

S/N: DHA1-UP; FBH1-UP

PART OF 250-2121 SEAT GP-SUSPENSION

AN ATTACHMENT

SMCS-7321, 7324, 7336 **i03139213**

NOTE	REF NO	GRAPHIC REF	PART NUMBER	QTY	PART NAME 1 2 3 4 5 6 (PRODUCT LEVEL)	SEE PAGE
	1	1	**173-3083**	1	EXTENSION GP-BACKREST (VINYL)	
J	2	1	**173-5787**	4	SETSCREW (1/4-20-THD)	
J	3	1	**203-7703**	2	WASHER-HARD (10.2X22.22X2.38-MM THK)	
Y	4	1	**272-2272**	1	SEAT BELT GP (RETRACTABLE)	780
Y	5	1	**291-7971**	1	SUSPENSION GP-SEAT (AIR)	800
Y	6	1	*295-4436*	1	SEAT GP (VINYL)	785
J	7	1	**4F-4879**	1	BOLT (3/8-16X0.5-IN)	
					AVAILABLE REPAIR KIT(S):	
J			**173-7035**	1	KIT-SLIDER BLOCK (SUSPENSION SEAT)	
					(INCLUDES BOLT, WASHERS, SLIDER BLOCKS & SETSCREWS)	

J-KIT MARKED J SERVICES PART(S) MARKED J
Y-SEPARATE ILLUSTRATION

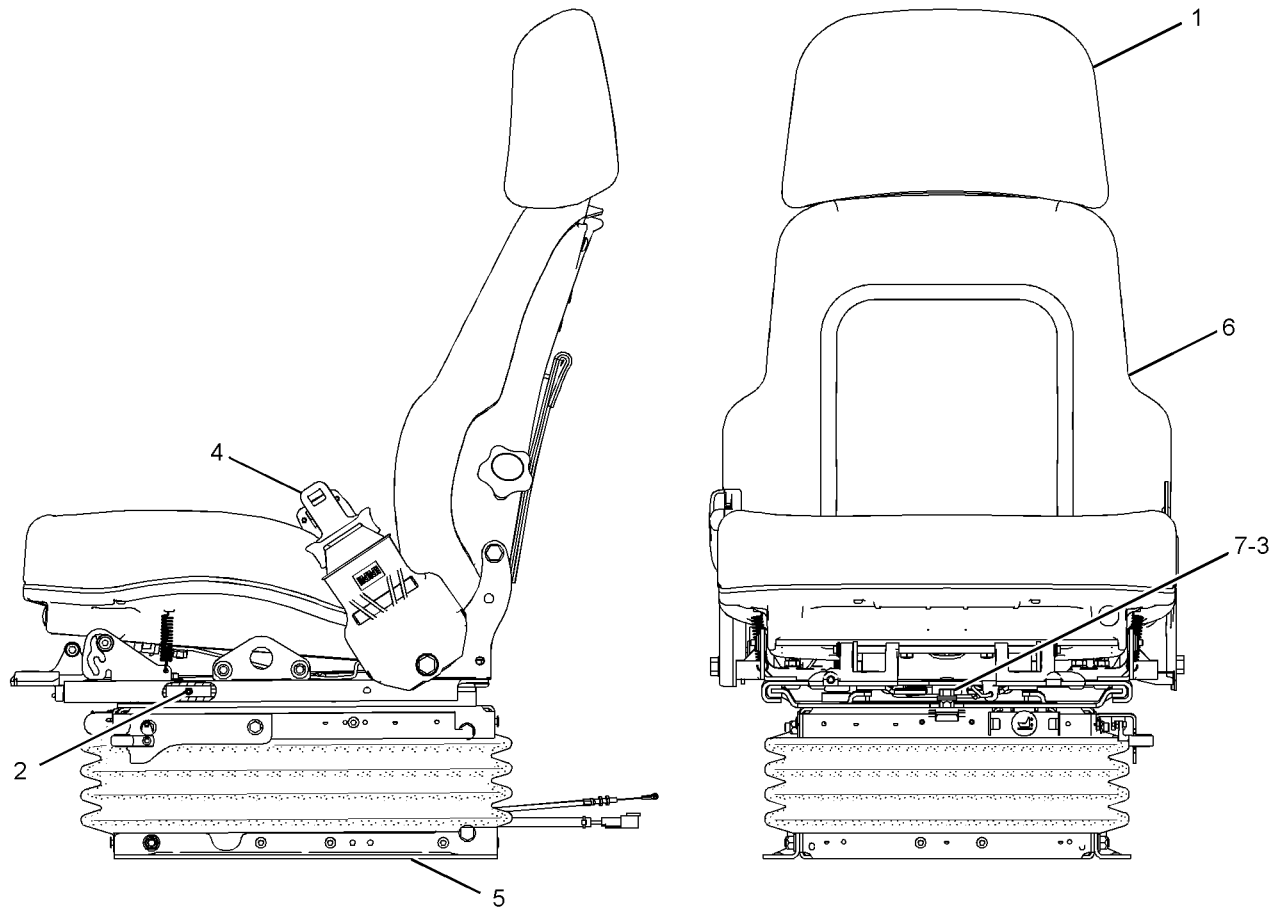

GRAPHIC #1 **<END>** g01340591

272-8109 SEAT GP-SUSPENSION—CLOTH, AIR

S/N: DHA1-UP; FBH1-UP
PART OF 250-2120 SEAT GP-SUSPENSION
AN ATTACHMENT

SMCS-7321, 7324, 7336 **i03139222**

NOTE	REF NO	GRAPHIC REF	PART NUMBER	QTY	PART NAME 1 2 3 4 5 6 (PRODUCT LEVEL)	SEE PAGE
J	1	1	**173-5787**	4	SETSCREW (1/4-20-THD)	
J	2	1	**203-7703**	2	WASHER-HARD (10.2X22.22X2.38-MM THK)	
	3	1	**229-1494**	1	EXTENSION GP-BACKREST (CLOTH)	
Y	4	1	**272-2272**	1	SEAT BELT GP (RETRACTABLE)	780
Y	5	1	**291-7971**	1	SUSPENSION GP-SEAT (AIR)	800
Y	6	1	**295-4434**	1	SEAT GP (CLOTH)	781
J	7	1	**4F-4879**	1	BOLT (3/8-16X0.5-IN)	
					AVAILABLE REPAIR KIT(S):	
J			**173-7035**	1	KIT-SLIDER BLOCK (SUSPENSION SEAT)	
					(INCLUDES BOLT, WASHERS, SLIDER BLOCKS, & SETSCREWS)	

J-KIT MARKED J SERVICES PARTS MARKED J
Y-SEPARATE ILLUSTRATION

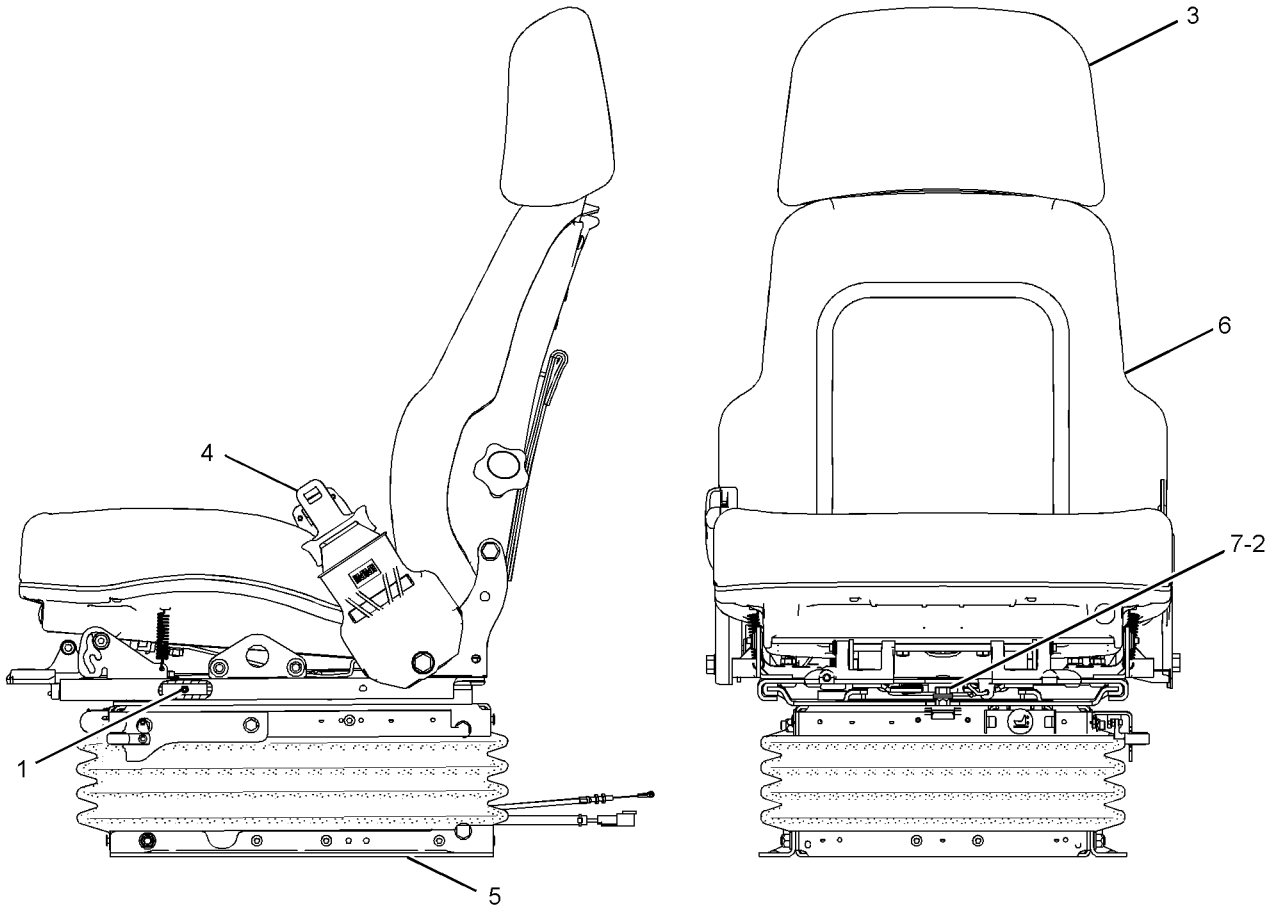

GRAPHIC #1 **<END>** g01313093

OPERATOR STATION

272-8110 SEAT GP-SUSPENSION—CLOTH, HEATED, AIR

S/N: DHA1-UP; FBH1-UP
24-VOLT
PART OF 250-2123 SEAT GP-SUSPENSION
AN ATTACHMENT

SMCS-7321, 7324, 7336 **i03706881**

NOTE	REF NO	GRAPHIC REF	PART NUMBER	QTY	PART NAME 1 2 3 4 5 6 (PRODUCT LEVEL)	SEE PAGE
J	1	1	**173-5787**	4	SETSCREW (1/4-20-THD)	
J	2	1	**203-7703**	2	WASHER-HARD (10.2X22.22X2.38-MM THK)	
	3	1	**229-1494**	1	EXTENSION GP-BACKREST (CLOTH)	
Y	4	1	**272-2272**	1	SEAT BELT GP (RETRACTABLE)	780
Y	5	1	**291-7971**	1	SUSPENSION GP-SEAT (AIR)	800
Y	6	1	*295-4435*	1	SEAT GP (CLOTH, HEATED)	783
J	7	1	**4F-4879**	1	BOLT (3/8-16X0.5-IN)	
					AVAILABLE REPAIR KIT(S):	
J			**173-7035**	1	KIT-SLIDER BLOCK (SUSPENSION SEAT)	
					(INCLUDES BOLT, WASHERS, SLIDER BLOCKS, & SETSCREWS)	

J-KIT MARKED J SERVICES PART(S) MARKED J
Y-SEPARATE ILLUSTRATION

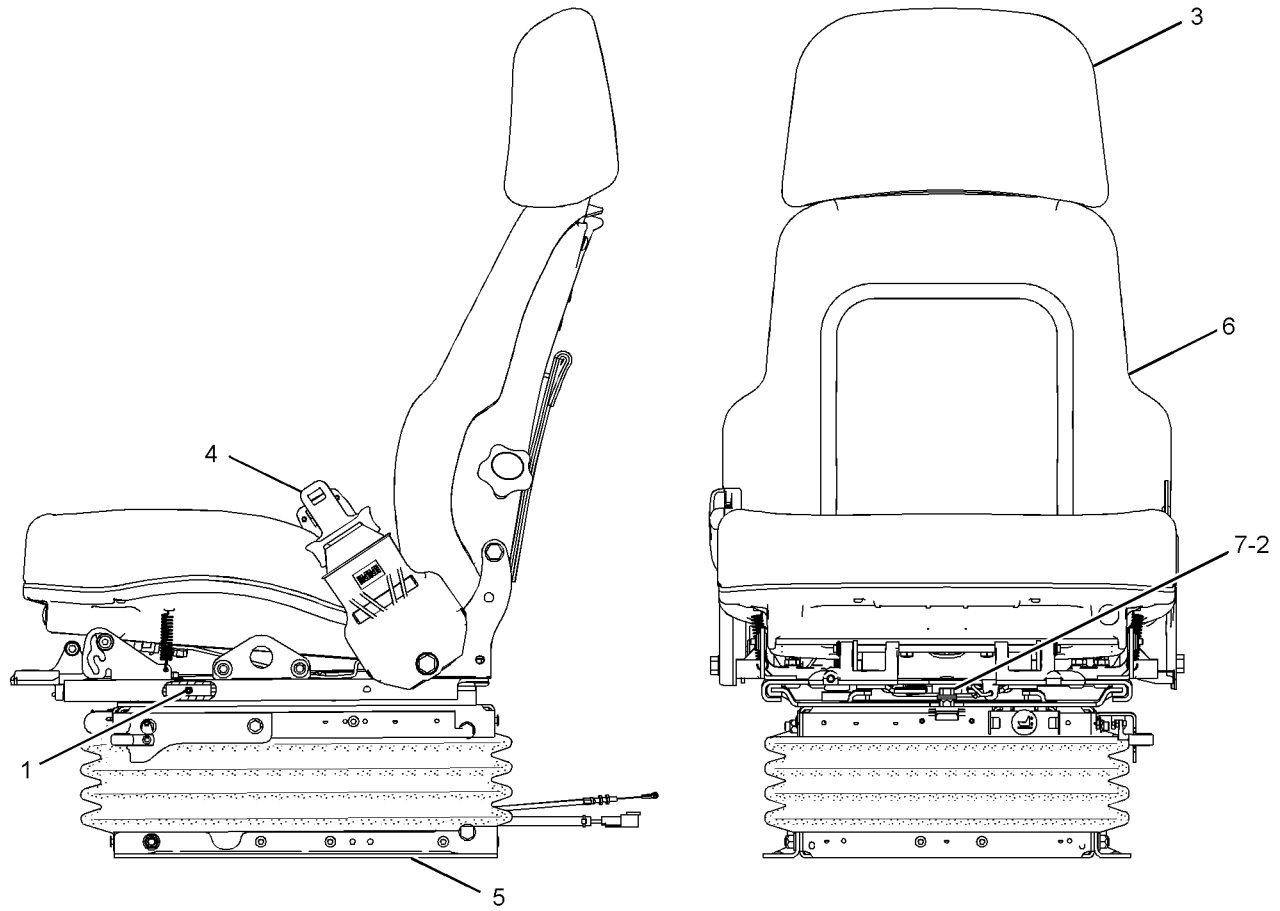

GRAPHIC #1 **<END>** g01313093

OPERATOR STATION

301-3166 SEAT GP-SUSPENSION—VINYL, HEATED—AIR

S/N: DHA1-UP; FBH1-UP
24-VOLT
PART OF 320-1194 SEAT GP-SUSPENSION
AN ATTACHMENT

SMCS-7321, 7324, 7336 **i03139227**

NOTE	REF NO	GRAPHIC REF	PART NUMBER	QTY	PART NAME 1 2 3 4 5 6 (PRODUCT LEVEL)	SEE PAGE
	2	1	**173-3083**	1	EXTENSION GP-BACKREST (VINYL)	
		1	**117-4491**	1	ROD	
J	3	1	**173-5787**	4	SETSCREW (1/4-20-THD)	
J	4	1	**203-7703**	2	WASHER-HARD (10.2X22.22X2.38-MM THK)	
Y	5	1	**272-2272**	1	SEAT BELT GP (RETRACTABLE)	780
Y	6	1	**291-7971**	1	SUSPENSION GP-SEAT (AIR)	800
Y	7	1	*301-3165*	1	SEAT GP (VINYL, HEATED)	787
J	8	1	**4F-4879**	1	BOLT (3/8-16X0.5-IN)	
					AVAILABLE REPAIR KIT(S):	
J				1	KIT-SLIDER BLOCK (SUSPENSION SEAT)	
					(INCLUDES BOLT, BLOCK-SLIDERS, SETSCREWS, & WASHERS)	

J-KIT MARKED J SERVICES PART(S) MARKED J
Y-SEPARATE ILLUSTRATION

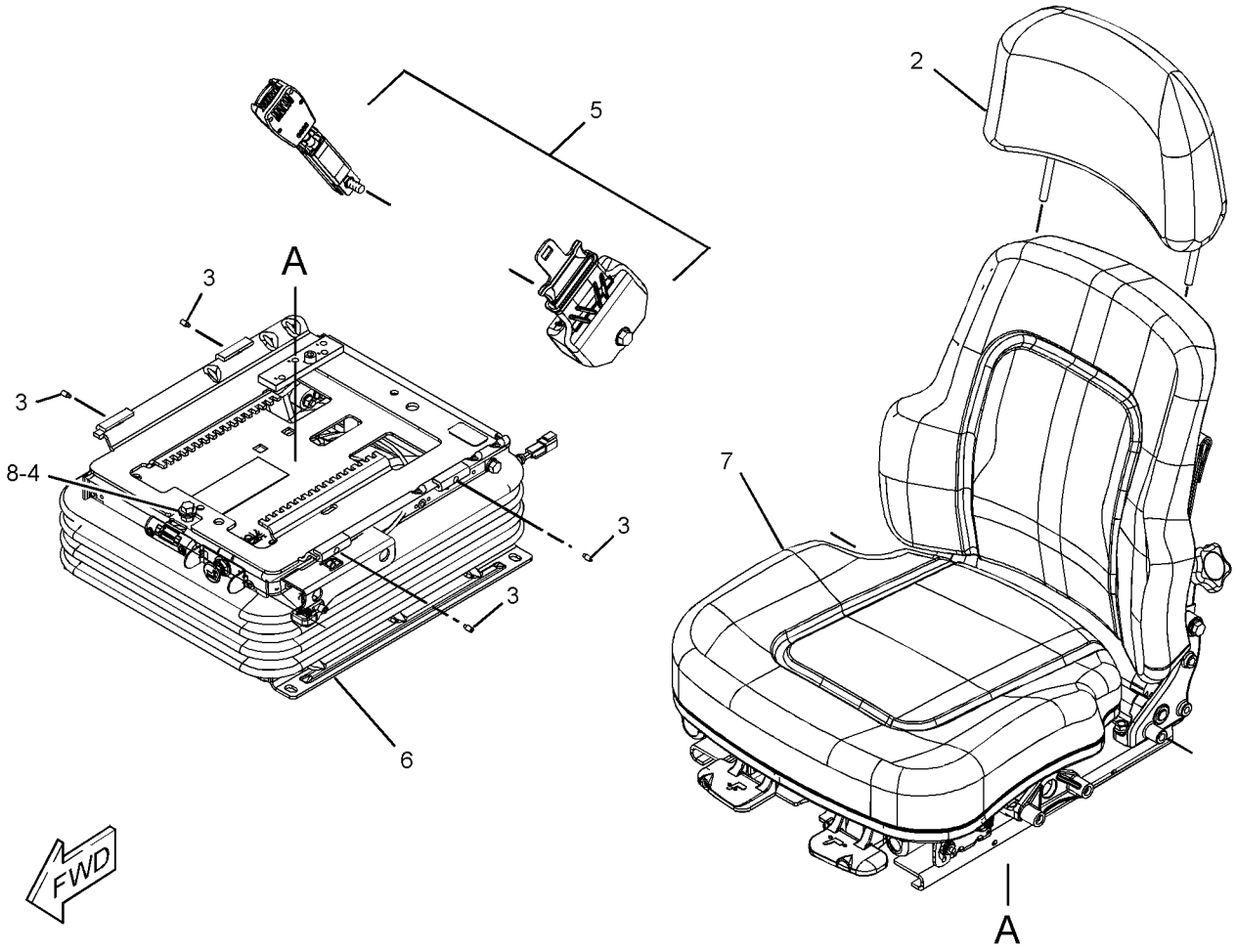

GRAPHIC #1 **<END>** g01587653

OPERATOR STATION

320-1194 SEAT GP-SUSPENSION—VINYL, HEATED—AIR

S/N: DHA1-UP; FBH1-UP

CANNOT BE USED WITH 250-2120—PAGE 789, 250-2121—PAGE 789, 250-2123—PAGE 790 AN ATTACHMENT

SMCS-7321, 7324, 7336 **i03139240**

NOTE	PART NUMBER	QTY	PART NAME 1 2 3 4 5 6 (PRODUCT LEVEL)	SEE PAGE
Y	*280-9679*	1	ARMREST GP (LH)	646
Y	*284-7054*	1	ARMREST GP (RH)	648
Y	*268-9351*	1	CONSOLE GP-OPERATOR (RH)	661
Y	*268-9352*	1	CONSOLE GP-OPERATOR (LH)	662
Y	**301-3166**	1	SEAT GP-SUSPENSION (VINYL, HEATED) (AIR)	794
Y	*272-2771*	1	WIRING GP-SEAT	336
M	**8T-4186**	4	BOLT (M10X1.5X40-MM)	
	7X-7729	4	WASHER (11X25X3-MM THK)	

M-METRIC PART
Y-SEPARATE ILLUSTRATION

<END>

OPERATOR STATION

284-7055 SUPPORT GP-HYDRAULIC CONTROL–RH

S/N: DHA1-UP; FBH1-UP
PART OF 284-7054 ARMREST GP
AN ATTACHMENT

SMCS-5258 **i02583019**

NOTE	REF NO	GRAPHIC REF	PART NUMBER	QTY	PART NAME 1 2 3 4 5 6 (PRODUCT LEVEL)	SEE PAGE
	1	1	**1W-7117**	2	DOWEL-HOLLOW	
	2	1	**161-2398**	2	SEAL-LIP TYPE	
	3	1	**244-2095**	1	ROD	
	4	1	**244-2109**	1	ROD-ADJUSTMENT	
	5	1	**244-2115**	1	PIN	
	6	1	**266-3214**	1	PIN	
	7	1	**267-9552**	2	SPACER (19X76X.8-MM THK)	
	8	1	**267-9553**	1	SPACER (7X12.5X6.5-MM THK)	
	9	1	**267-9554**	2	BEARING	
	10	1	**267-9555**	2	BEARING	
	11	1	**267-9556**	2	BEARING	
	12	1	**267-9834**	1	PLATE	
	13	1	**280-3512**	1	HOUSING	
	14	1	**280-3514**	1	SUPPORT-ARM	
	15	1	**282-2032**	2	PLUG-ORIFICE	
	16	1	**282-2033**	1	BUTTON-PUSH	
	17	1	**282-6695**	1	BRACKET	
	18	1	**289-2073**	1	FILM-INFORMATION (ARMREST ADJUSTMENT)	
	19	1	**3E-4353**	2	WASHER-HARD (11X25X3-MM THK)	
	20	1	**7D-7453**	1	SETSCREW (1/4-20-THD)	
	21	1	**7D-9708**	1	BOLT-SHOULDER (5/16-18X0.88-IN)	
M	22	1	**9X-2040**	2	SCREW-TRUSS HEAD (M10X1.5X25-MM)	
M	23	1	**9X-2043**	1	SCREW-TRUSS HEAD (M6X1X14-MM)	

M-METRIC PART

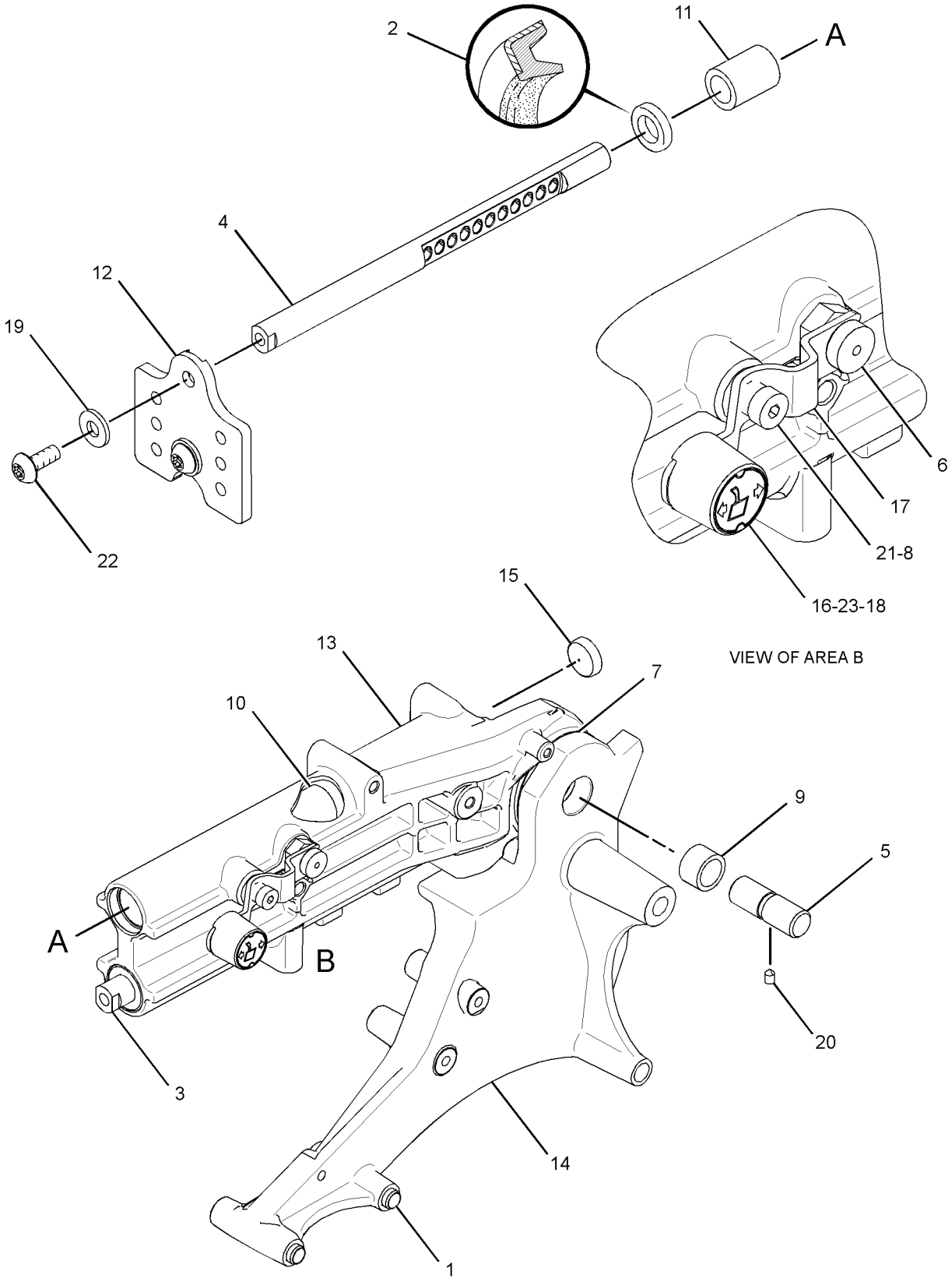

GRAPHIC #1 **<END>** g01305265

OPERATOR STATION

284-7059 SUPPORT GP-STEERING CONTROL—LH

S/N: DHA1-UP; FBH1-UP
PART OF 280-9679 ARMREST GP
AN ATTACHMENT

SMCS-5258 **i02583035**

NOTE	REF NO	GRAPHIC REF	PART NUMBER	QTY	PART NAME 1 2 3 4 5 6 (PRODUCT LEVEL)	SEE PAGE
	1	1	**1W-7117**	2	DOWEL-HOLLOW	
	2	1	**161-2398**	2	SEAL-LIP TYPE	
	3	1	**244-2095**	1	ROD	
	4	1	**244-2109**	1	ROD-ADJUSTMENT	
	5	1	**244-2115**	1	PIN	
	6	1	**266-3214**	1	PIN	
	7	1	**267-9552**	2	SPACER (19X76X.8-MM THK)	
	8	1	**267-9553**	1	SPACER (7X12.5X6.5-MM THK)	
	9	1	**267-9554**	2	BEARING	
	10	1	**267-9555**	2	BEARING	
	11	1	**267-9556**	2	BEARING	
	12	1	**267-9834**	1	PLATE	
	13	1	**280-3513**	1	HOUSING	
	14	1	**280-3515**	1	SUPPORT-ARM (LH)	
	15	1	**282-2032**	2	PLUG-ORIFICE	
	16	1	**282-2033**	1	BUTTON-PUSH	
	17	1	**282-6695**	1	BRACKET	
	18	1	**289-2073**	1	FILM-INFORMATION (ARMREST ADJUSTMENT)	
	19	1	**3E-4353**	2	WASHER-HARD (11X25X3-MM THK)	
	20	1	**7D-7453**	1	SETSCREW (1/4-20-THD)	
	21	1	**7D-9708**	1	BOLT-SHOULDER (5/16-18X0.88-IN)	
M	22	1	**9X-2040**	2	SCREW-TRUSS HEAD (M10X1.5X25-MM)	
M	23	1	**9X-2043**	1	SCREW-TRUSS HEAD (M6X1X14-MM)	

M-METRIC PART

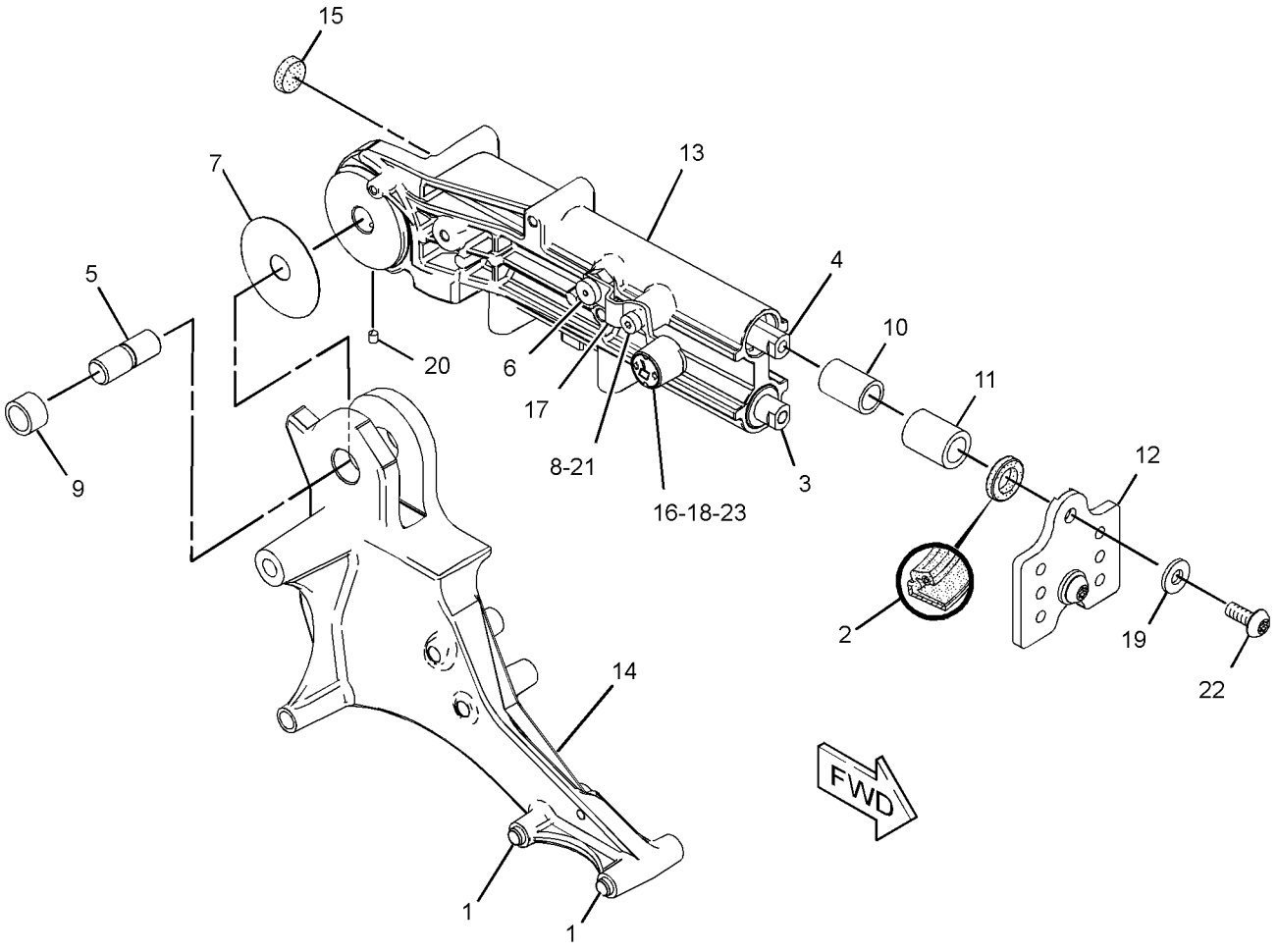

GRAPHIC #1 **<END>** g01303992

OPERATOR STATION

291-7971 SUSPENSION GP-SEAT—AIR

S/N: DHA1-UP; FBH1-UP
24-VOLT
PART OF 253-8297, 272-8109, 272-8110, 301-3166 SEAT GP-SUSPENSION
AN ATTACHMENT

SMCS-7324 **i03708966**

NOTE	REF NO	GRAPHIC REF	PART NUMBER	QTY	PART NAME 1 2 3 4 5 6 (PRODUCT LEVEL)	SEE PAGE
	1	1	**3P-9900**	1	WASHER (10.5X30X3-MM THK)	
	2	1	**4V-8577**	8	BEARING	
	3	1	**7L-0688**	2	BOLT-SOCKET HEAD (10-24X1.2-IN)	
	4	1	**8L-8413**	9	STRAP-CABLE	
	5	1	**031-0249**	2	LOCKNUT (10-24-THD)	
	6	1	**101-0003**	22	FASTENER	
	7	1	**145-0326**	1	FILM-INSTRUCTION (SEAT ADJUSTMENT)	
	8	1	**164-1234**	1	PLATE	
	9	1	**169-7380**	1	BOLT-SOCKET HEAD (3/8-16X0.375-IN)	
	10	1	**186-5107**	2	SCREW-DRIVE (8-16X1.25-IN)	
	11	1	**192-7795**	1	BOOT	
	12	1	**192-7799**	1	KIT-AIR VALVE	
					(INCLUDES FITTING, LOCKWASHER, NUT, VALVE & KNOB AS)	
	13	1	**192-7805**	1	HARNESS AS-VALVE (SEAT AIR COMPRESSOR)	
		1	**5P-4571**	2	TERMINAL-BLADE (14-GA TO 16-GA)	
		1	**8T-8729**	2	PIN-CONNECTOR (16-GA TO 18-GA)	
E		1	**211-5358**		CONDUIT-FLEXIBLE (64-CM)	
		1	**102-8802**	1	KIT-RECEPTACLE (2-PIN)	
					(INCLUDES RECEPTACLE AS & WEDGE)	
	14	1	**192-7810**	1	SPRING AS-AIR	
		1	**163-1135**	1	SPRING	
		1	**5P-4423**	1	ELBOW	
	15	1	**192-7820**	1	BUMPER	
	16	1	**192-7848**	1	KIT-SHOCK ABSORBER (SUSPENSION SEAT) (RH)	
					(INCLUDES SHOCK ABSORBER, LOCKNUT, LOCKWASHER, BEARINGS, WASHERS, & BOLTS)	
	17	1	**212-7779**	1	KIT-SHOCK ABSORBER (SUSPENSION SEAT) (LH)	
					(INCLUDES SHOCK ABSORBER, STRAP, SPRING, CLAMP, ADJUSTERS, BOLTS, BEARINGS, WASHERS,	
					BRACKETS, PULLEY KIT, CABLE AS, KNOB, LOCKNUTS, BALL, & LOCKWASHER)	
	18	1	**213-5167**	1	ROD	
	19	1	**213-5168**	1	ARM-INDICATOR	
	20	1	**213-5169**	1	HOUSING	
	21	1	**218-7252**	1	RETAINER	
	22	1	**237-3943**	1	BRACKET	
Y	23	1	**237-3970**	1	AIR COMPRESSOR GP-SEAT	635
	24	1	**251-2360**	1	TOGGLE AS (LOWER)	
	25	1	**251-2362**	1	TOGGLE AS (UPPER)	
	26	1	**291-7972**	1	HOUSING AS	
Y	27	1	*291-7980*	1	ARM GP-SEAT SUSPENSION (CENTER)	643
	28	1	**291-7993**	4	WASHER (20X40X2-MM THK)	
Y	29	1	*291-8004*	1	ARM GP-SEAT SUSPENSION (OUTER, RH)	644
	30	1	**291-8010**	2	BEARING	
Y	31	1	*291-8011*	1	ARM GP-SEAT SUSPENSION (OUTER, LH)	645
	32	1	**291-8014**	1	HOUSING AS	
	33	1	**291-8019**	2	SHAFT	
	34	1	**291-8026**	1	SHAFT	
	35	1	**291-8027**	4	BLOCK	
	36	1	**291-8028**	4	BLOCK	
	37	1	**291-8031**	1	SPACER (19.3X25.4X212.4-MM THK)	
	38	1	**291-8032**	1	BUMPER	
	39	1	**308-3554**	1	SPACER (9.9X28.4X3.2-MM THK)	

291-7971 **SUSPENSION GP-SEAT** *(contd.)* **i03708966**

NOTE	REF NO	GRAPHIC REF	PART NUMBER	QTY	PART NAME 1 2 3 4 5 6 (PRODUCT LEVEL)	SEE PAGE
	40	1	**308-3555**	1	SPACER (7.1X25.4X1.4-MM THK)	
	41	1	**308-8642**	1	FILM-IDENTIFICATION (SERIAL NUMBER)	
	42	1	**314-5274**	1	SHAFT	
	43	1	**314-5275**	1	SHAFT	
	44	1	**108-4311**	1	SCREW-MACHINE (3/8-16X0.75-IN)	
	45	1	**2K-4973**	8	LOCKNUT (3/8-16-THD)	
	46	1	**3E-9865**	2	LOCKNUT (1/4-20-THD)	
	47	1	**4D-7794**	1	CLIP	
	48	1	**4L-6454**	4	BOLT (3/8-16X1-IN)	
M	49	1	**5C-2890**	2	NUT (M6X1-THD)	
	50	1	**8T-4224**	16	WASHER-HARD (8.8X16X2-MM THK)	
	51	1	**8T-4896**	12	WASHER-HARD (10.2X18.5X2.5-MM THK)	
M	52	1	**8T-7547**	16	BOLT (M8X1.25X30-MM)	
	53	1	**8T-9371**	1	BOLT (3/8-16X0.5-IN)	
E	54	1	**211-5358**		CONDUIT-FLEXIBLE (36.5-CM)	
E	54A	1	**211-5358**		CONDUIT-FLEXIBLE (26.7-CM)	
D	55	1	**5P-6010**		TUBE (0.4-M)	
D	55A	1	**5P-6010**		TUBE (0.3-M)	

PARTS SHOWN IN GRAPHIC(S) WITHOUT A REFERENCE NUMBER ARE NOT SERVICED SEPARATELY

D-ORDER BY THE METER
E-ORDER BY THE CENTIMETER
M-METRIC PART
Y-SEPARATE ILLUSTRATION

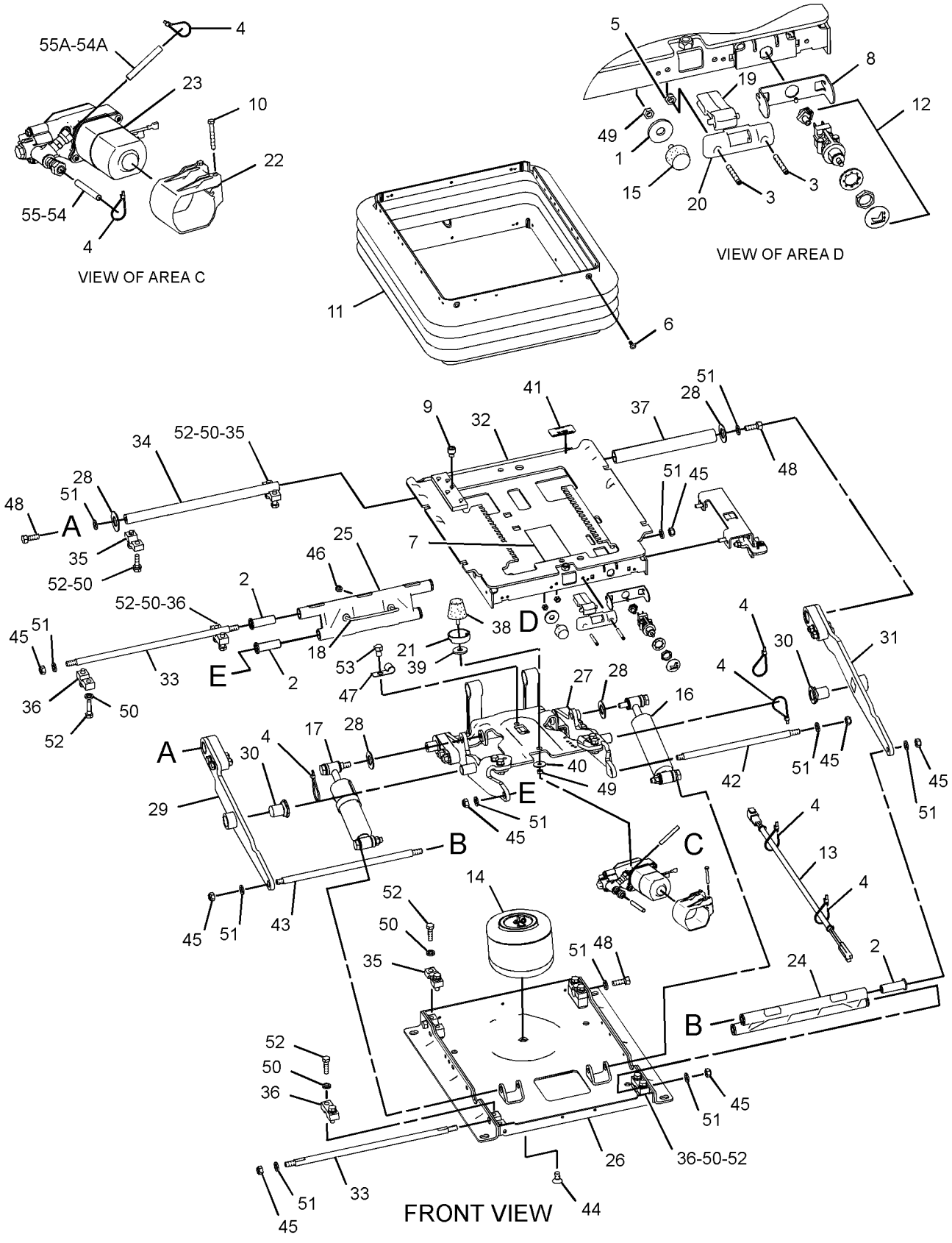

GRAPHIC #1 **<END>** g01996874

OPERATOR STATION

256-7482 TRIM GP-CANOPY

S/N: DHA1-UP; FBH1-UP
PART OF 251-3536 CANOPY GP
AN ATTACHMENT

SMCS-7302 **i02861874**

NOTE	REF NO	GRAPHIC REF	PART NUMBER	QTY	PART NAME 1 2 3 4 5 6 (PRODUCT LEVEL)	SEE PAGE
	1	1	**7G-4824**	2	STRAP	
	2	1	**8E-7791**	2	STRAP	
	3	1	**244-7094**	15	PLUG	
	4	1	**247-6631**	1	PLATE AS	
	5	1	**247-6632**	1	PLATE AS	
	6	1	**259-1060**	1	COVER AS (LIGHT)	
	7	1	**289-8247**	1	SEAL	
	8	1	**101-2867**	5	WASHER-HARD (7.2X25X2-MM THK)	
	9	1	**7X-7729**	11	WASHER (11X25X3-MM THK)	
M	10	1	**8T-4190**	4	BOLT (M16X2X25-MM)	
M	11	1	**8T-4195**	11	BOLT (M10X1.5X30-MM)	
M	12	1	**9X-2042**	3	SCREW-TRUSS HEAD (M6X1X12-MM)	
M	13	1	**9X-2045**	2	SCREW-TRUSS HEAD (M6X1X20-MM)	
	14	1	**9X-8257**	4	WASHER (17.5X30X3.5-MM THK)	

M-METRIC PART

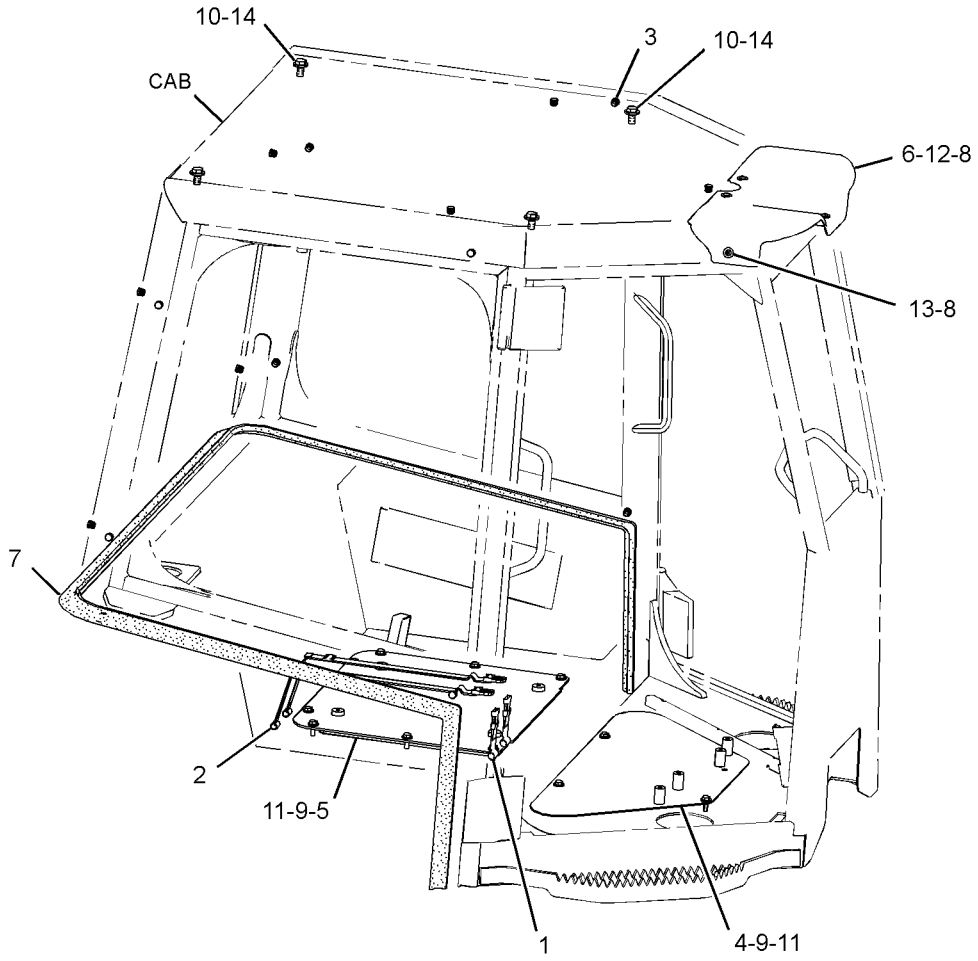

GRAPHIC #1 **<END>** g01425909

OPERATOR STATION

251-5975 WASHER GP-WINDOW

S/N: DHA1-UP; FBH1-UP
PART OF 206-7310 CAB AR-ENCLOSED ROPS, 267-4943 FORESTRY AR
AN ATTACHMENT

SMCS-7306 **i02986810**

NOTE	REF NO	GRAPHIC REF	PART NUMBER	QTY	PART NAME 1 2 3 4 5 6 (PRODUCT LEVEL)	SEE PAGE
	1	1	**3S-2093**	12	STRAP-CABLE	
	2	1	**5D-1026**	3	CLAMP-BAND	
BE	3	1	**7X-7927**		TAPE-IDENTIFICATION (LETTER A)	
BE	4	1	**7X-7928**		TAPE-IDENTIFICATION (LETTER B)	
BE	5	1	**7X-7929**		TAPE-IDENTIFICATION (LETTER C)	
BE	6	1	**7X-7930**		TAPE-IDENTIFICATION (LETTER D)	
	7	1	**153-0136**	1	SPOUT AS	
		1	**261-1885**	1	CAP-VENTED (WASHER BOTTLE)	
	8	1	**166-7772**	2	SCREW-WING (M8X1.25X20-MM)	
	9	1	**204-2581**	4	VALVE AS-CHECK	
	10	1	**267-4500**	1	TANK GP-WINDOW WASHER	
		1	**267-4501**	1	TANK-WASHER	
		1	**223-3383**	4	PUMP AS-WASHER (24-VOLT)	
	13	1	**277-3570**	1	HARNESS AS-WIRING (WINDOW WASHER)	
		1	**9X-0194**	4	TERMINAL AS	
		1	**230-5011**	1	RECEPTACLE AS-CONNECTOR (6-PIN)	
	14	1	**4P-8134**	2	CLIP	
M	15	1	**5C-2890**	2	NUT (M6X1-THD)	
M	16	1	**8C-8451**	2	BOLT (M6X1X40-MM)	
	17	1	**9X-8250**	1	CLIP	
	18	1	**8T-4121**	4	WASHER-HARD (11X21X2.5-MM THK)	
M	20	1	**8T-4189**	1	BOLT (M8X1.25X20-MM)	
	21	1	**8T-4224**	6	WASHER-HARD (8.8X16X2-MM THK)	
E	23	1	**153-2817**		HOSE (51-CM)	
E	23A	1	**153-2817**		HOSE (12-CM)	
E	24	1	**144-0195**		HOSE (77-CM)	
E	24A	1	**144-0195**		HOSE (69-CM)	
E	24B	1	**144-0195**		HOSE (56-CM)	
E	24C	1	**144-0195**		HOSE (52-CM)	
D	25	1	**6V-2496**		SEAL (0.2-M EACH)	
D	25A	1	**6V-2496**		SEAL (0.3-M)	
	26	1	**287-5999**	1	BRACKET AS	
	27	1	**287-5998**	1	BRACKET AS	
	28	1	**287-5997**	1	BRACKET	
M	29	1	**101-3129**	2	STUD (M10X1.5-THD)	
M	30	1	**8T-4133**	2	NUT (M10X1.5-THD)	
	31	1	**8T-4205**	2	WASHER-HARD (7.2X14.5X2-MM THK)	
	32	1	**296-5094**	2	BRACKET	
M	33	1	**8T-4200**	1	BOLT (M8X1.25X16-MM)	

B-USE AS REQUIRED
D-ORDER BY THE METER
E-ORDER BY THE CENTIMETER
M-METRIC PART

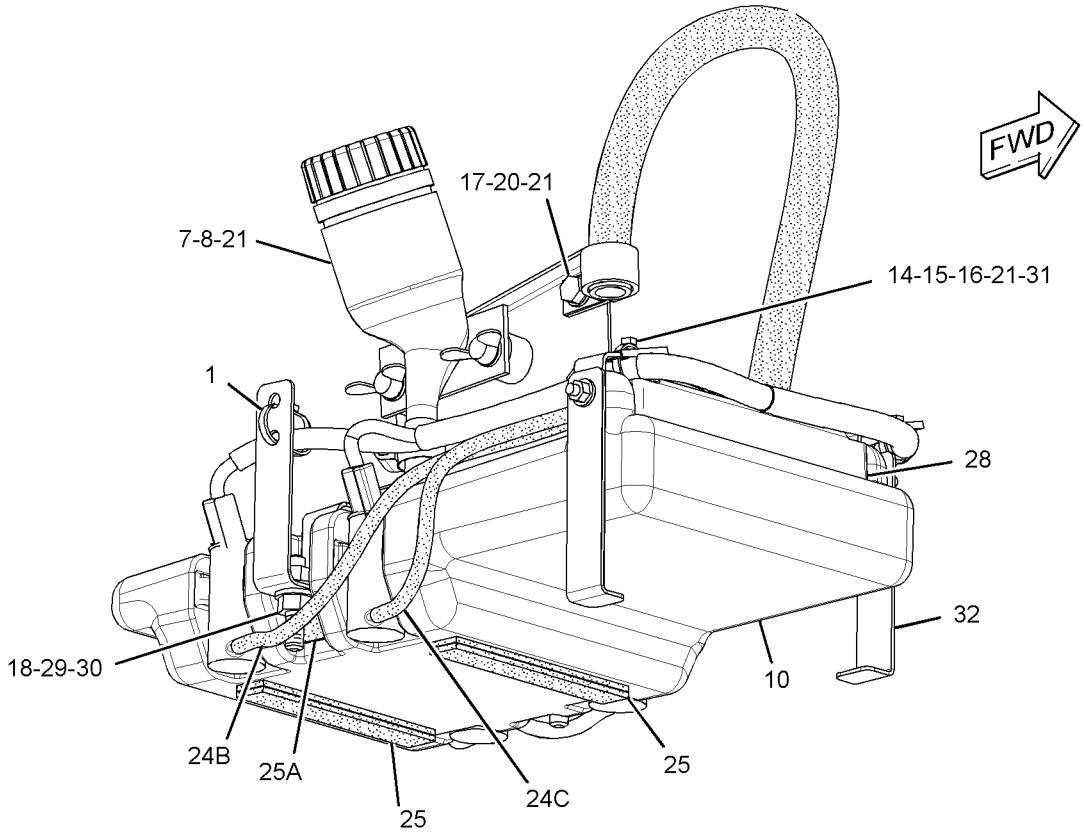

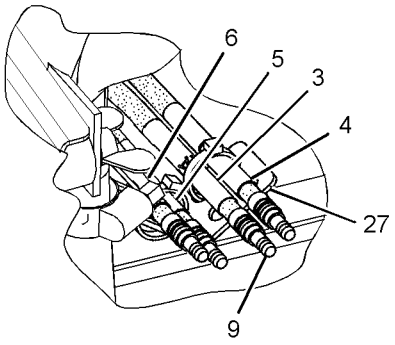

VIEW OF AREA A

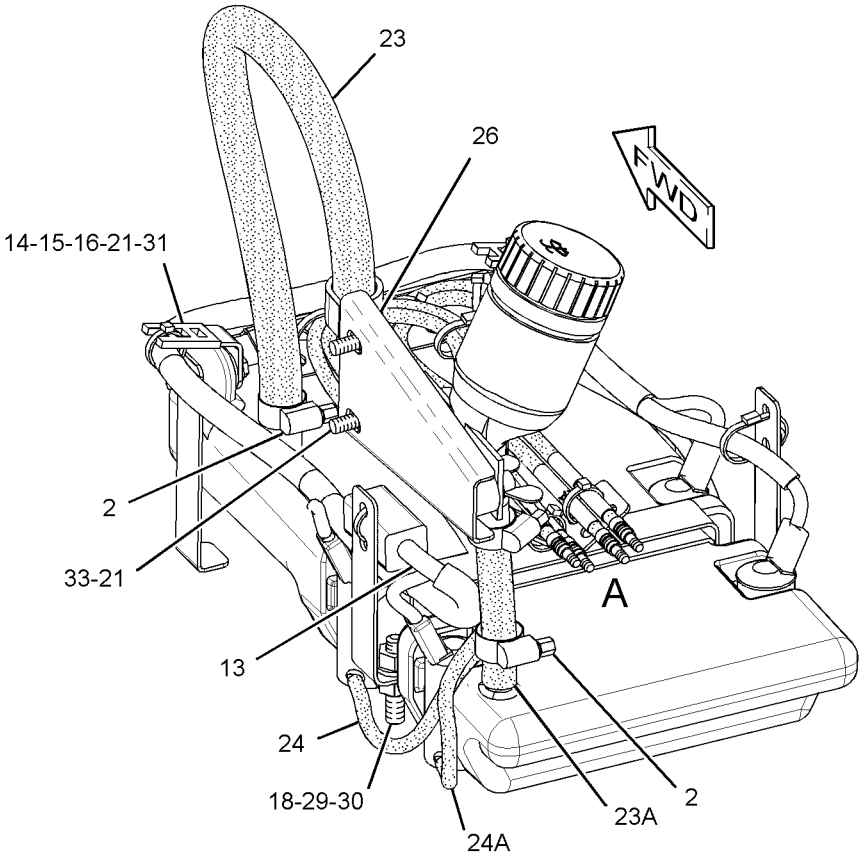

GRAPHIC #1 **<END>** g01519252

OPERATOR STATION

247-6503 WINDOW GP-CAB

S/N: DHA1-UP; FBH1-UP
PART OF 240-6233 CAB GP-ENCLOSED ROPS
AN ATTACHMENT
TYPE 1

SMCS-7310 **i03711140**

NOTE	REF NO	GRAPHIC REF	PART NUMBER	QTY	PART NAME 1 2 3 4 5 6 (PRODUCT LEVEL)	SEE PAGE
	1	1	**247-6582**	1	GLASS-FRONT	
	2	1	**247-6583**	1	GLASS-REAR	
Y	3	1	*259-4403*	1	WINDOW GP-CAB (RH)	809
Y	4	1	*259-4405*	1	WINDOW GP-CAB (LH)	810

Y-SEPARATE ILLUSTRATION

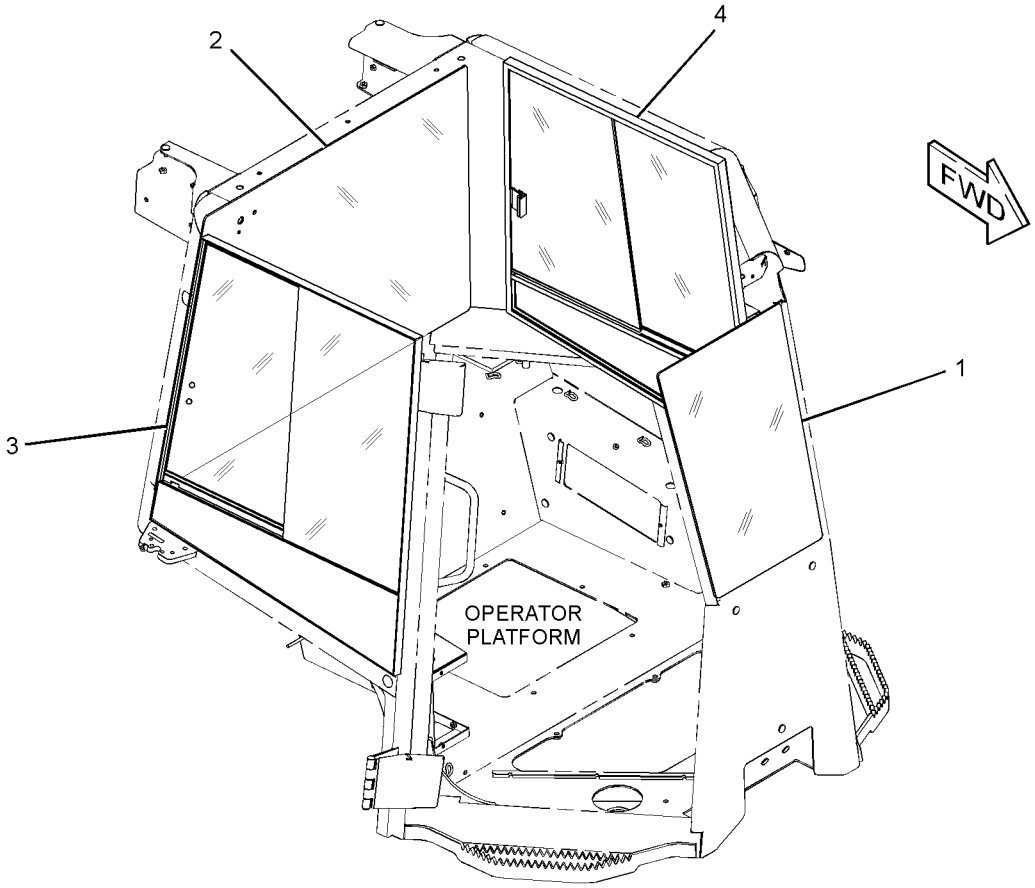

GRAPHIC #1 **<END>** g02002490

OPERATOR STATION

247-6503 WINDOW GP-CAB

S/N: DHA1-UP; FBH1-UP
PART OF 240-6233 CAB GP-ENCLOSED ROPS
AN ATTACHMENT
TYPE 2

SMCS-7310 **i03521682**

NOTE	REF NO	GRAPHIC REF	PART NUMBER	QTY	PART NAME 1 2 3 4 5 6 (PRODUCT LEVEL)	SEE PAGE
	1	1	**247-6582**	1	GLASS-FRONT	
	2	1	**247-6583**	1	GLASS-REAR	
	3	1	**333-2732**	1	WINDOW AS (RH)	
	4	1	**333-2733**	1	WINDOW AS (LH)	

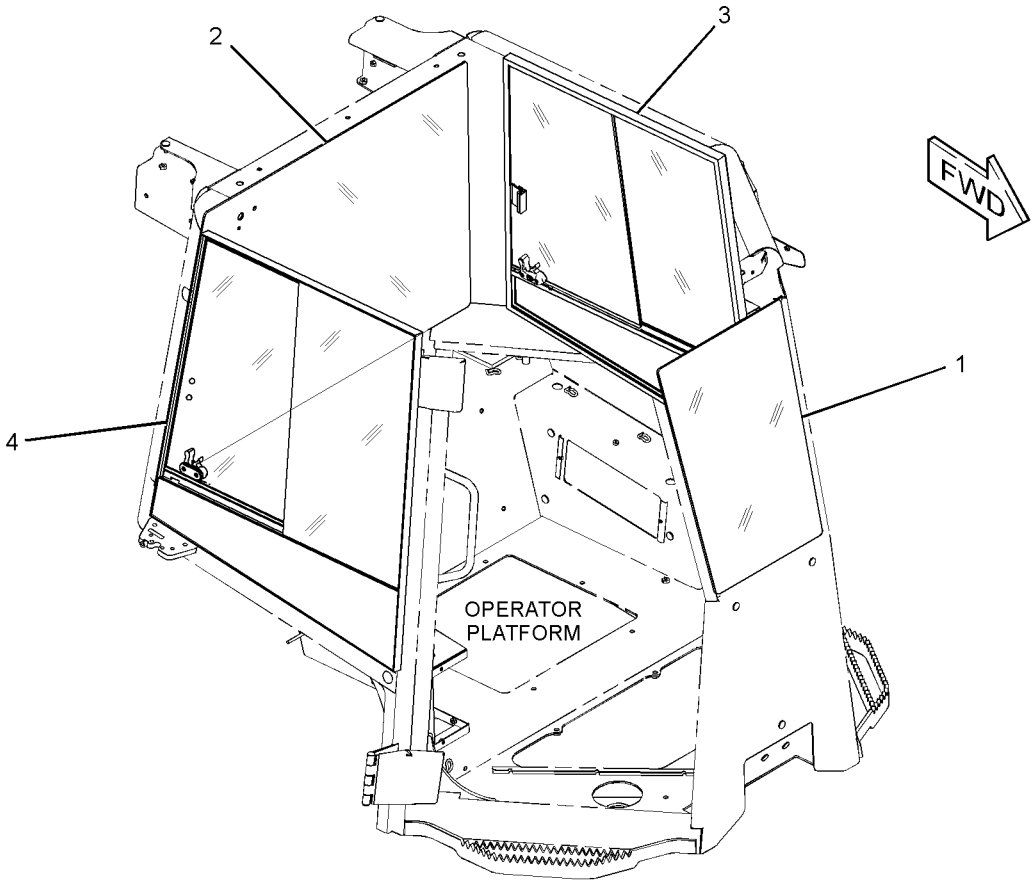

GRAPHIC #1 **<END>** g02004489

OPERATOR STATION

255-4275 WINDOW GP-CAB—FORESTRY

S/N: DHA1-1083; FBH1-1405
PART OF 267-2550 CAB GP-FORESTRY
AN ATTACHMENT

SMCS-7310 **i03706900**

NOTE	REF NO	GRAPHIC REF	PART NUMBER	QTY	PART NAME 1 2 3 4 5 6 (PRODUCT LEVEL)	SEE PAGE
	1	1	**247-6583**	1	GLASS-REAR	
	2	1	**255-4279**	1	WINDOW-FRONT (POLYCARBONATE)	
Y	3	1	**259-4403**	1	WINDOW GP-CAB (RH)	809
Y	4	1	**259-4405**	1	WINDOW GP-CAB (LH)	810

Y-SEPARATE ILLUSTRATION

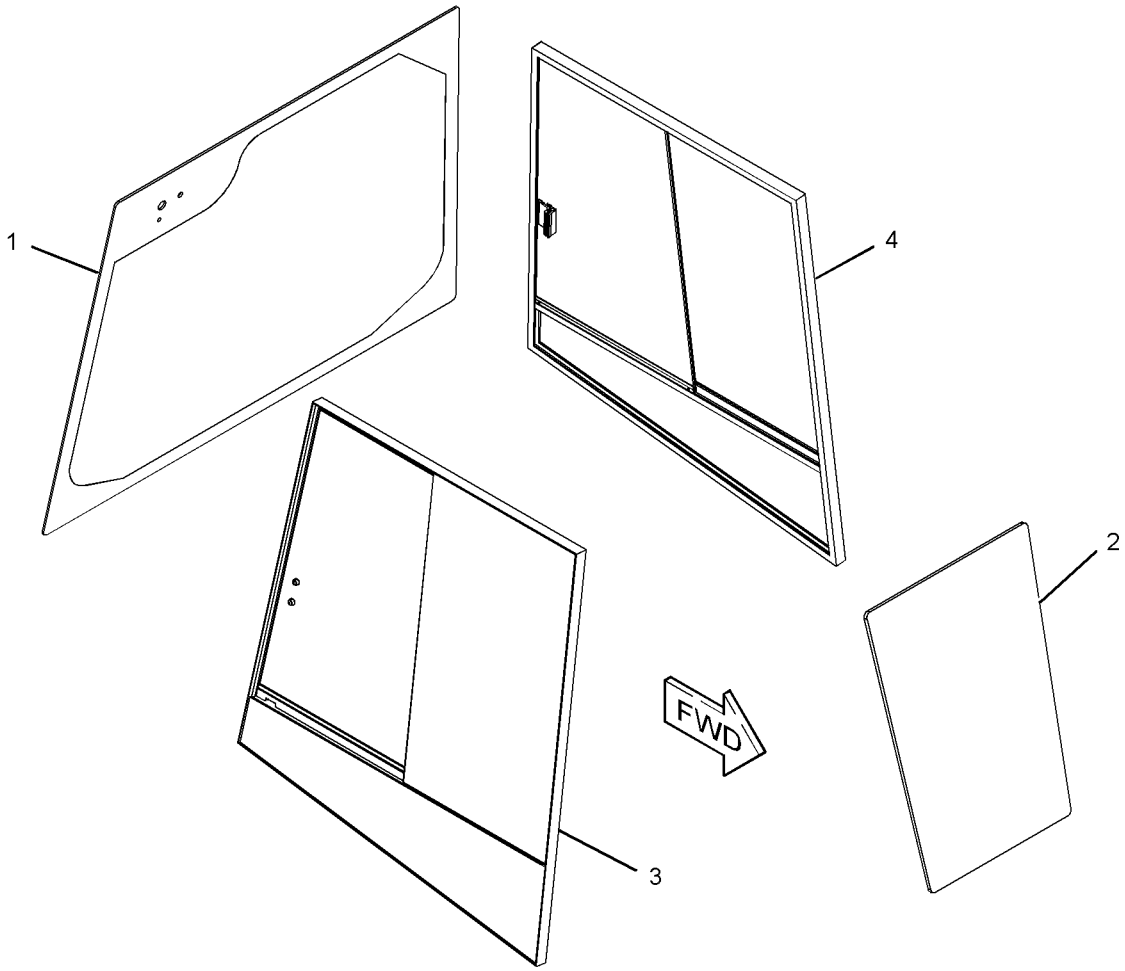

GRAPHIC #1 **<END>** g01204973

OPERATOR STATION

259-4403 WINDOW GP-CAB–RH

S/N: DHA1-UP; FBH1-UP
PART OF 247-6503, 255-4275 WINDOW GP-CAB
AN ATTACHMENT

SMCS-7310 **i03023163**

NOTE	REF NO	GRAPHIC REF	PART NUMBER	QTY	PART NAME 1 2 3 4 5 6 (PRODUCT LEVEL)	SEE PAGE
	1	1	**6C-4016**	1	CAP	
	2	1	**212-4219**	1	KNOB	
	3	1	**302-2136**	1	CATCH AS	
E	4	1	**137-2170**		SEAL (77-CM)	
E	4A	1	**137-2170**		SEAL (78-CM)	
E	5	1	**191-3040**		SEAL (8-CM)	
	6	1	**301-5701**	1	GLASS	
	7	1	**264-8899**	1	GLASS	
	8	1	**264-8900**	1	GLASS	
	9	1	**295-4039**	2	BLOCK-SLIDER	
E	10	1	**264-8901**		SEAL (47-CM)	
E	11	1	**286-4407**		WEATHERSTRIP (75-CM EACH)	
	12	1	**145-9087**	1	CUSHION	
M	13	1	**5C-2874**	2	NUT (M5X0.8-THD)	
	14	1	**8R-0275**	2	CAP	
	15	1	**9R-4024**	2	BUSHING-TERMINAL	

E-ORDER BY THE CENTIMETER
M-METRIC PART

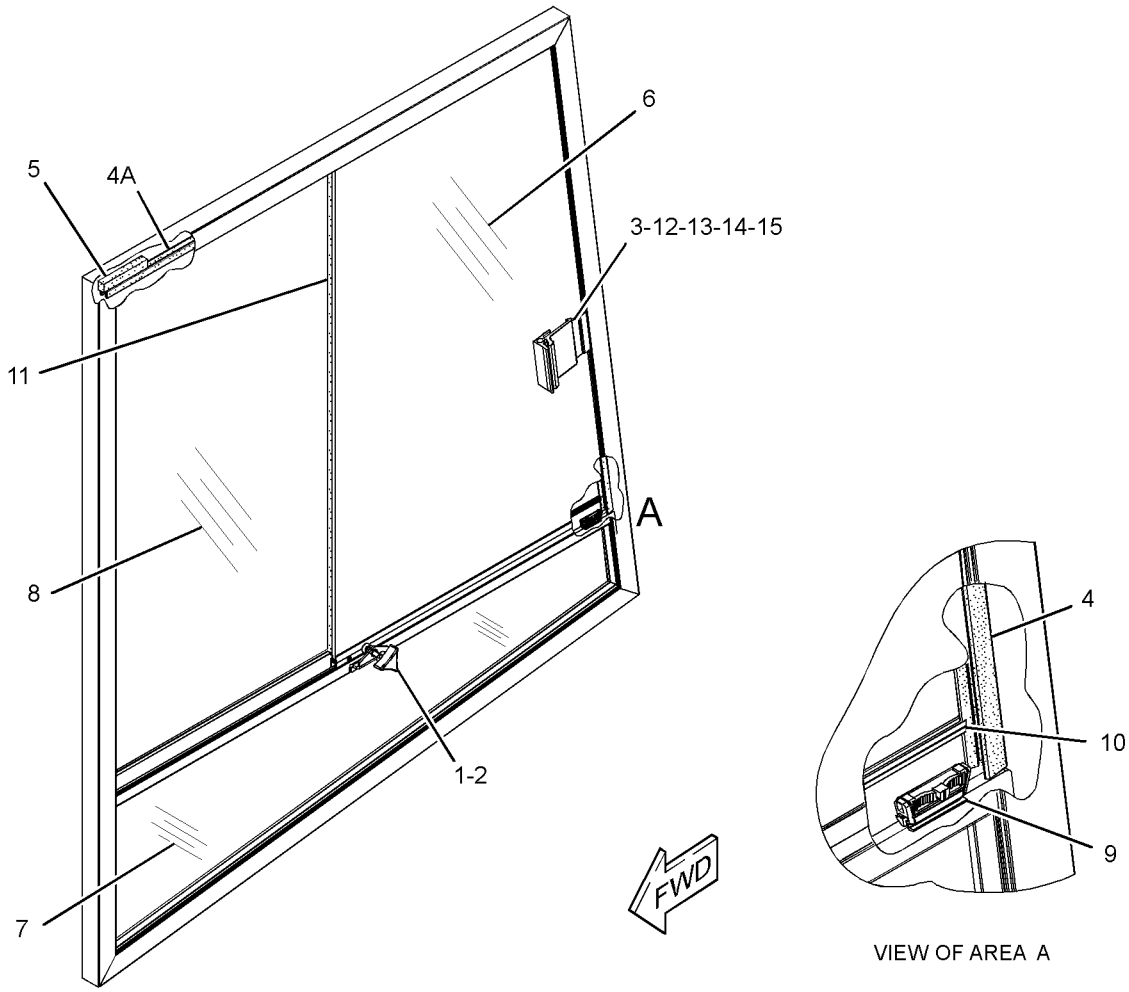

GRAPHIC #1 **<END>** g01520280

OPERATOR STATION

259-4405 WINDOW GP-CAB—LH

S/N: DHA1-UP; FBH1-UP
PART OF 247-6503, 255-4275 WINDOW GP-CAB
AN ATTACHMENT

SMCS-7310 **i03023164**

NOTE	REF NO	GRAPHIC REF	PART NUMBER	QTY	PART NAME 1 2 3 4 5 6 (PRODUCT LEVEL)	SEE PAGE
	1	1	**6C-4016**	1	CAP	
	2	1	**212-4219**	1	KNOB	
	3	1	**302-2136**	1	CATCH AS	
E	4	1	**137-2170**		SEAL (77-CM)	
E	4A	1	**137-2170**		SEAL (78-CM)	
E	5	1	**191-3040**		SEAL (8-CM)	
	6	1	**301-5700**	1	GLASS	
	7	1	**295-4037**	1	GLASS	
	8	1	**264-8900**	1	GLASS	
	9	1	**295-4039**	2	BLOCK-SLIDER	
E	10	1	**264-8901**		SEAL (47-CM)	
E	11	1	**286-4407**		WEATHERSTRIP (75-CM EACH)	
	12	1	**145-9087**	1	CUSHION	
M	13	1	**5C-2874**	2	NUT (M5X0.8-THD)	
	14	1	**8R-0275**	2	CAP	
	15	1	**9R-4024**	2	BUSHING-TERMINAL	

E-ORDER BY THE CENTIMETER
M-METRIC PART

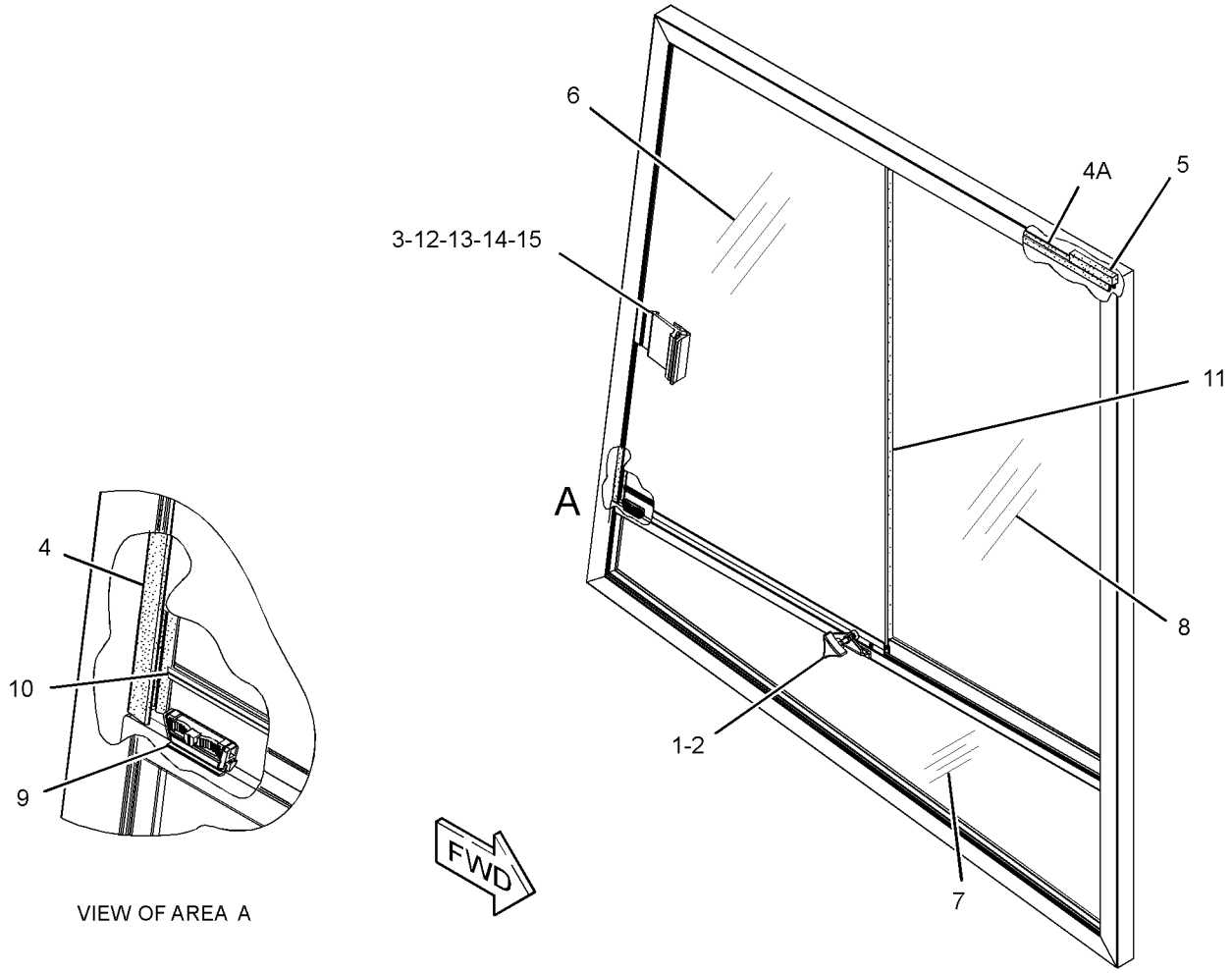

GRAPHIC #1 **<END>** g01519939

OPERATOR STATION

338-8073 WINDOW GP-CAB—FORESTRY

S/N: DHA1084-UP; FBH1406-UP
PART OF 267-2550 CAB GP-FORESTRY
AN ATTACHMENT

SMCS-7310 **i03569283**

NOTE	REF NO	GRAPHIC REF	PART NUMBER	QTY	PART NAME 1 2 3 4 5 6 (PRODUCT LEVEL)	SEE PAGE
	1	1	**247-6583**	1	GLASS-REAR	
	2	1	**255-4279**	1	WINDOW-FRONT (POLYCARBONATE)	
	3	1	**333-2732**	1	WINDOW AS (RH)	
	4	1	**333-2733**	1	WINDOW AS (LH)	

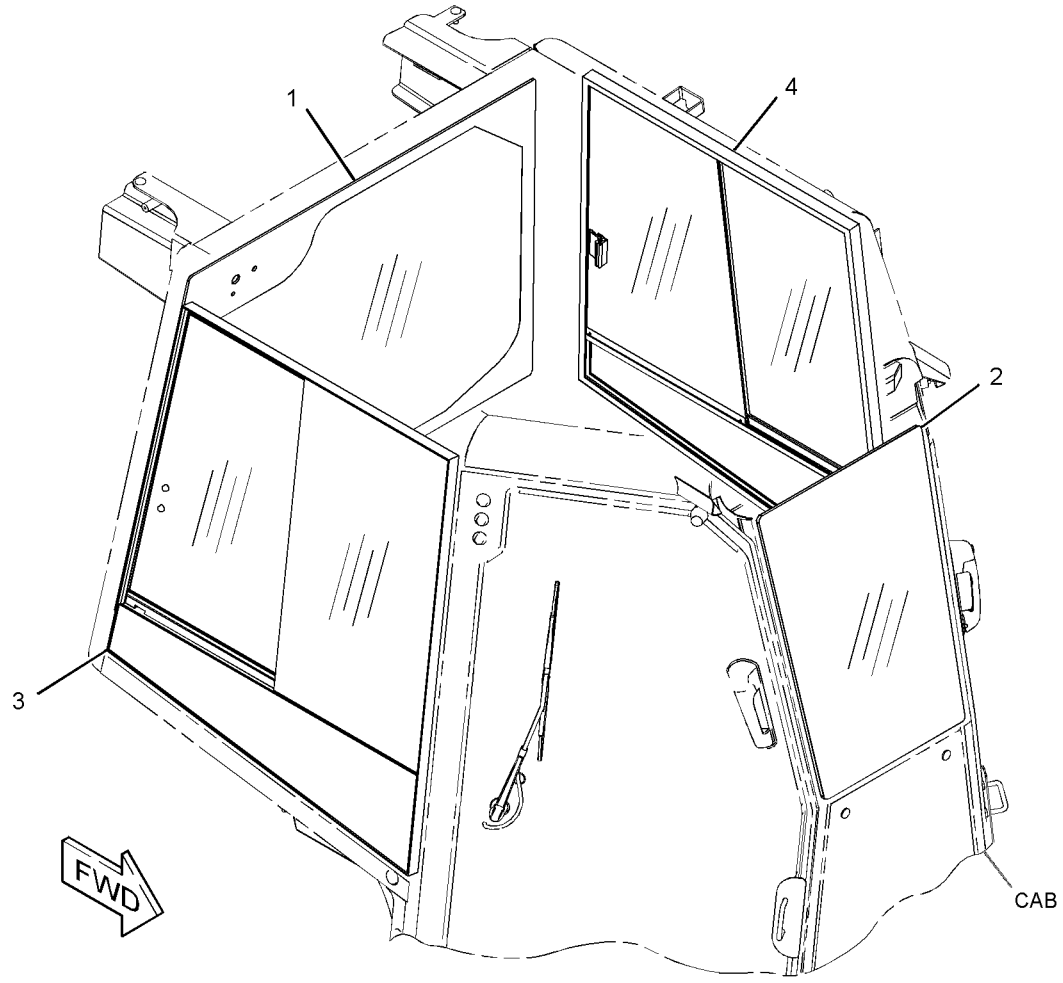

GRAPHIC #1 **<END>** g01380929

OPERATOR STATION

247-6504 WIPER GP-WINDOW

S/N: DHA1-UP; FBH1-UP
PART OF 240-6233 CAB GP-ENCLOSED ROPS, 267-2550 CAB GP-FORESTRY
AN ATTACHMENT

SMCS-7305 **i02810744**

NOTE	REF NO	GRAPHIC REF	PART NUMBER	QTY	PART NAME 1 2 3 4 5 6 (PRODUCT LEVEL)	SEE PAGE
	1	1	**3S-2093**	22	STRAP-CABLE	
	2	1	**5C-8811**	1	BLADE AS-WIPER (500-MM) (FRONT)	
B	3	1	**7X-7927**		TAPE-IDENTIFICATION (LETTER A)	
B	4	1	**7X-7928**		TAPE-IDENTIFICATION (LETTER B)	
B	5	1	**7X-7929**		TAPE-IDENTIFICATION (LETTER C)	
B	6	1	**7X-7930**		TAPE-IDENTIFICATION (LETTER D)	
	7	1	**146-6433**	1	BLADE AS-WIPER (500-MM) (REAR)	
Y	8	1	**247-6606**	1	MOTOR GP-WINDOW WIPER (FRONT)	746
	9	1	**263-2135**	1	ARM GP-WINDOW WIPER (FRONT)	
		1	**240-8666**	2	CLIP	
		1	**136-3191**	1	NOZZLE AS-WASHER	
E		1	**194-5171**		HOSE (60-CM)	
	10	1	**266-3701**	1	ARM GP-WINDOW WIPER (REAR)	
		1	**305-9192**	1	NOZZLE AS-WASHER	
E		1	**194-5171**		HOSE (50-CM)	
Y	11	1	**270-0076**	1	MOTOR GP-WINDOW WIPER (REAR)	749
	12	1	**4D-0012**	2	GROMMET	
	13	1	**8T-5400**	2	CONNECTOR AS	
	14	1	**9D-8508**	4	GROMMET	
	15	1	**9X-8250**	3	CLIP	
J	16	1	**251-4515**		CONDUIT (2-DM EACH)	
E	17	1	**144-0195**		HOSE (271-CM)	
E	17A	1	**144-0195**		HOSE (367-CM)	
E	17B	1	**144-0195**		HOSE (409-CM)	
E	17C	1	**144-0195**		HOSE (248-CM)	

B-USE AS REQUIRED
E-ORDER BY THE CENTIMETER
J-ORDER BY THE DECIMETER
Y-SEPARATE ILLUSTRATION

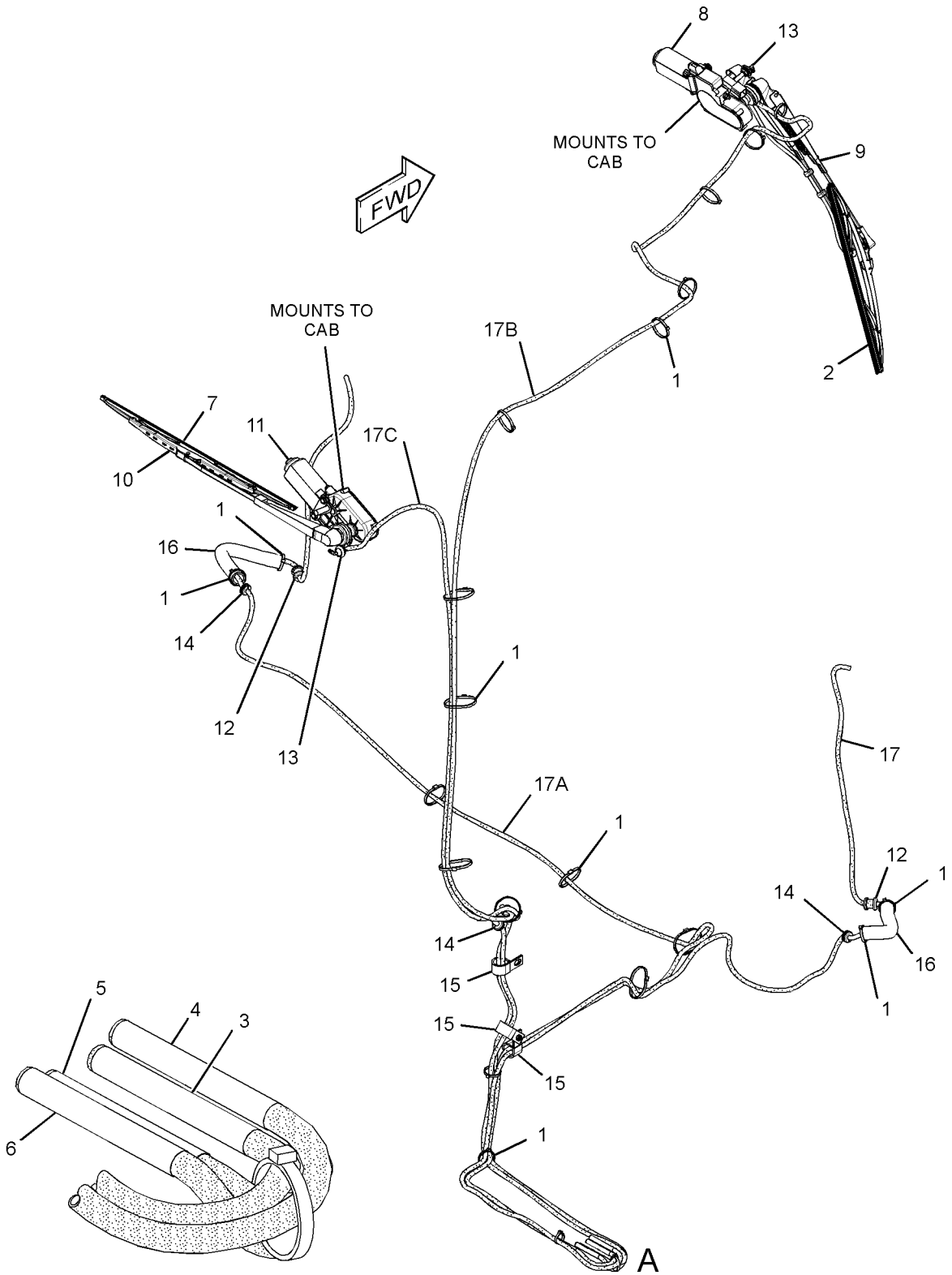

VIEW OF AREA A

GRAPHIC #1 **<END>** g01426594

WORK TOOLS

289-8448 BLADE & EDGE GP-ANGLING

S/N: S1D1-UP
FOLDABLE
CANNOT BE USED WITH 240-1500—PAGE 818, 240-1520—PAGE 820
AN ATTACHMENT

SMCS-6060 **i03713023**

NOTE	REF NO	GRAPHIC REF	PART NUMBER	QTY	PART NAME 1 2 3 4 5 6 (PRODUCT LEVEL)	SEE PAGE
	1	1	**3B-8489**	2	FITTING-GREASE	
	2	1	**3G-8932**	2	PIN	
	3	1	**4T-0231**	2	RETAINER	
	4	1	**8G-5747**	4	SPACER (45X50X15-MM THK)	
	5	1	**089-8249**	4	SPACER (64X72X13-MM THK)	
	6	1	**104-4817**	2	PIN	
	7	1	**104-7434**	2	RETAINER	
	8	1	**197-6439**	1	BEARING	
Y	10	1	*294-3337*	1	BLADE GP-ANGLING	822
Y	11	1	*294-4514*	1	EDGE GP-BIT & CUTTING	836
	12	1	**296-7452**	1	RETAINER	
M	13	1	**9X-8271**	8	BOLT-12 POINT HEAD (M10X1.5X45-MM)	
M	14	1	**7X-2562**	4	BOLT (M20X2.5X45-MM)	
	15	1	**8T-4223**	2	WASHER-HARD (13.5X25.5X3-MM THK)	
M	16	1	**8T-4956**	2	BOLT (M12X1.75X35-MM)	
B	17	1	**139-6381**	6	SHIM (0.5-MM THK)	
F		1	**8T-7371**	1	PLATE-SERIAL NUMBER (BLADE)	
					(ON RH TOP CORNER OF VPAT FOLDABLE BLADE)	
F		1	**4B-4158**	2	SCREW-DRIVE (4X0.25-IN)	

B-USE AS REQUIRED
F-NOT SHOWN
M-METRIC PART
Y-SEPARATE ILLUSTRATION

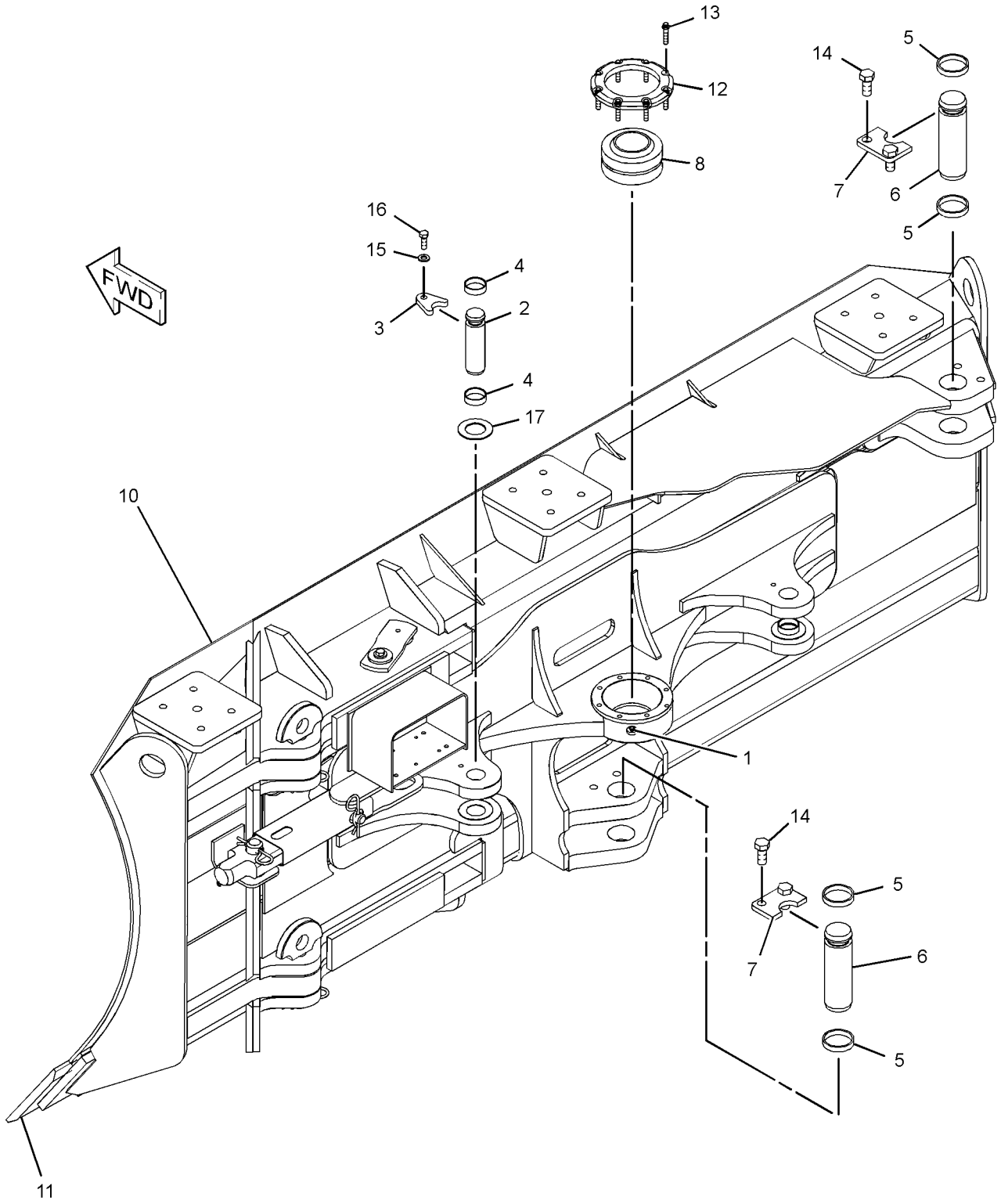

GRAPHIC #1 **<END>** g01999835

WORK TOOLS

297-1700 BLADE & EDGE GP-ANGLING

S/N: 1MW1-UP
FOLDABLE
FOR USE WITH INSTALLATION, ACCUGRADE READY CAB OR CANOPY
AN ATTACHMENT

SMCS-6060 **i03706926**

NOTE	REF NO	GRAPHIC REF	PART NUMBER	QTY	PART NAME 1 2 3 4 5 6 (PRODUCT LEVEL)	SEE PAGE
	1	1	**3B-8489**	2	FITTING-GREASE	
	2	1	**3G-8932**	2	PIN	
	3	1	**4T-0231**	2	RETAINER	
	4	1	**8G-5747**	4	SPACER (45X50X15-MM THK)	
	5	1	**089-8249**	4	SPACER (64X72X13-MM THK)	
	6	1	**104-4817**	2	PIN	
	7	1	**104-7434**	2	RETAINER	
B	8	1	**139-6381**	6	SHIM (0.5-MM THK)	
	9	1	**197-6439**	1	BEARING	
	11	1	**296-7452**	1	RETAINER	
Y	12	1	**297-1701**	1	BLADE GP-ANGLING	823
Y	13	1	*297-1704*	1	EDGE GP-BIT & CUTTING	837
M	14	1	**7X-2562**	4	BOLT (M20X2.5X45-MM)	
	15	1	**8T-4223**	2	WASHER-HARD (13.5X25.5X3-MM THK)	
M	16	1	**8T-4956**	2	BOLT (M12X1.75X35-MM)	
M	17	1	**9X-8271**	8	BOLT-12 POINT HEAD (M10X1.5X45-MM)	
F			**8T-7371**	1	PLATE-SERIAL NUMBER (BLADE)	
					(ON RH TOP CORNER OF VPAT FOLDABLE BLADE)	
F			**4B-4158**	2	SCREW-DRIVE (4X0.25-IN)	

B-USE AS REQUIRED
F-NOT SHOWN
M-METRIC PART
Y-SEPARATE ILLUSTRATION

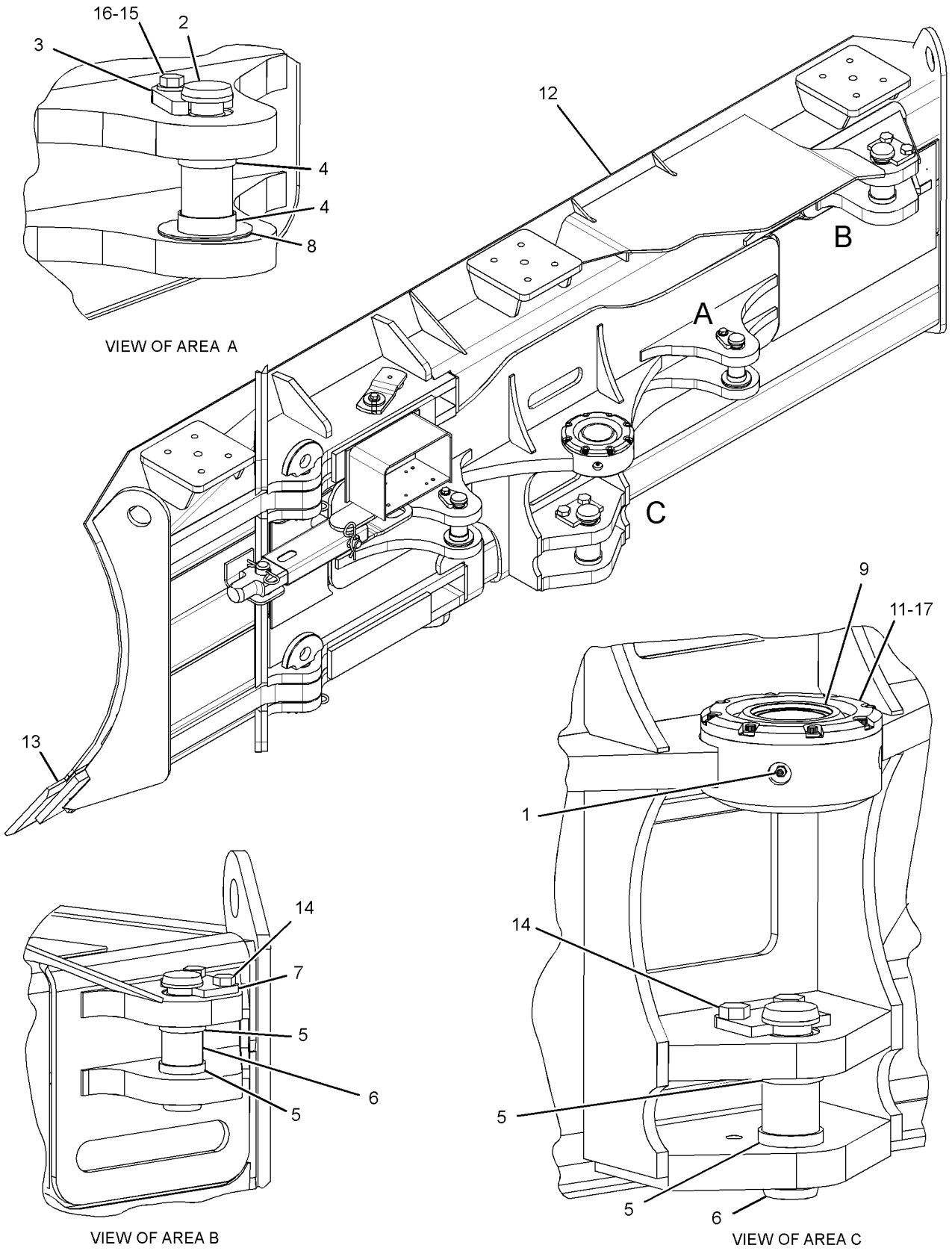

GRAPHIC #1 **<END>** g01999895

WORK TOOLS

240-1500 BLADE GP-ANGLING

S/N: S1B1-UP

AN ATTACHMENT

SMCS-6052, 6060 **i03707000**

NOTE	REF NO	GRAPHIC REF	PART NUMBER	QTY	PART NAME 1 2 3 4 5 6 (PRODUCT LEVEL)	SEE PAGE
	1	1	**3B-8489**	2	FITTING-GREASE	
	2	1	**3G-8932**	2	PIN	
	3	1	**4T-0231**	2	RETAINER	
Y	4	1	*8E-9376*	1	EDGE GP-BIT & CUTTING	835
	5	1	**8G-5747**	4	SPACER (45X50X15-MM THK)	
	6	1	**089-8249**	4	SPACER (64X72X13-MM THK)	
	7	1	**104-4817**	2	PIN	
	8	1	**104-7434**	2	RETAINER	
	9	1	**197-6439**	1	BEARING	
	11	1	**240-1501**	1	BLADE AS-ANGLING	
	11A	1	**307-3631**	1	PLATE AS	
	11B	1	**307-3633**	2	PLATE AS	
	12	1	**296-7452**	1	RETAINER	
M	13	1	**9X-8271**	8	BOLT-12 POINT HEAD (M10X1.5X45-MM)	
M	14	1	**7X-2562**	4	BOLT (M20X2.5X45-MM)	
	15	1	**8T-4223**	2	WASHER-HARD (13.5X25.5X3-MM THK)	
M	16	1	**8T-4956**	2	BOLT (M12X1.75X35-MM)	
B	17	1	**139-6381**	6	SHIM (0.5-MM THK)	
F			**8T-7371**	1	PLATE-SERIAL NUMBER (BLADE)	
					(ON RH TOP CORNER OF BLADE)	
F			**4B-4158**	2	SCREW-DRIVE (4X0.25-IN)	

B-USE AS REQUIRED
F-NOT SHOWN
M-METRIC PART
Y-SEPARATE ILLUSTRATION

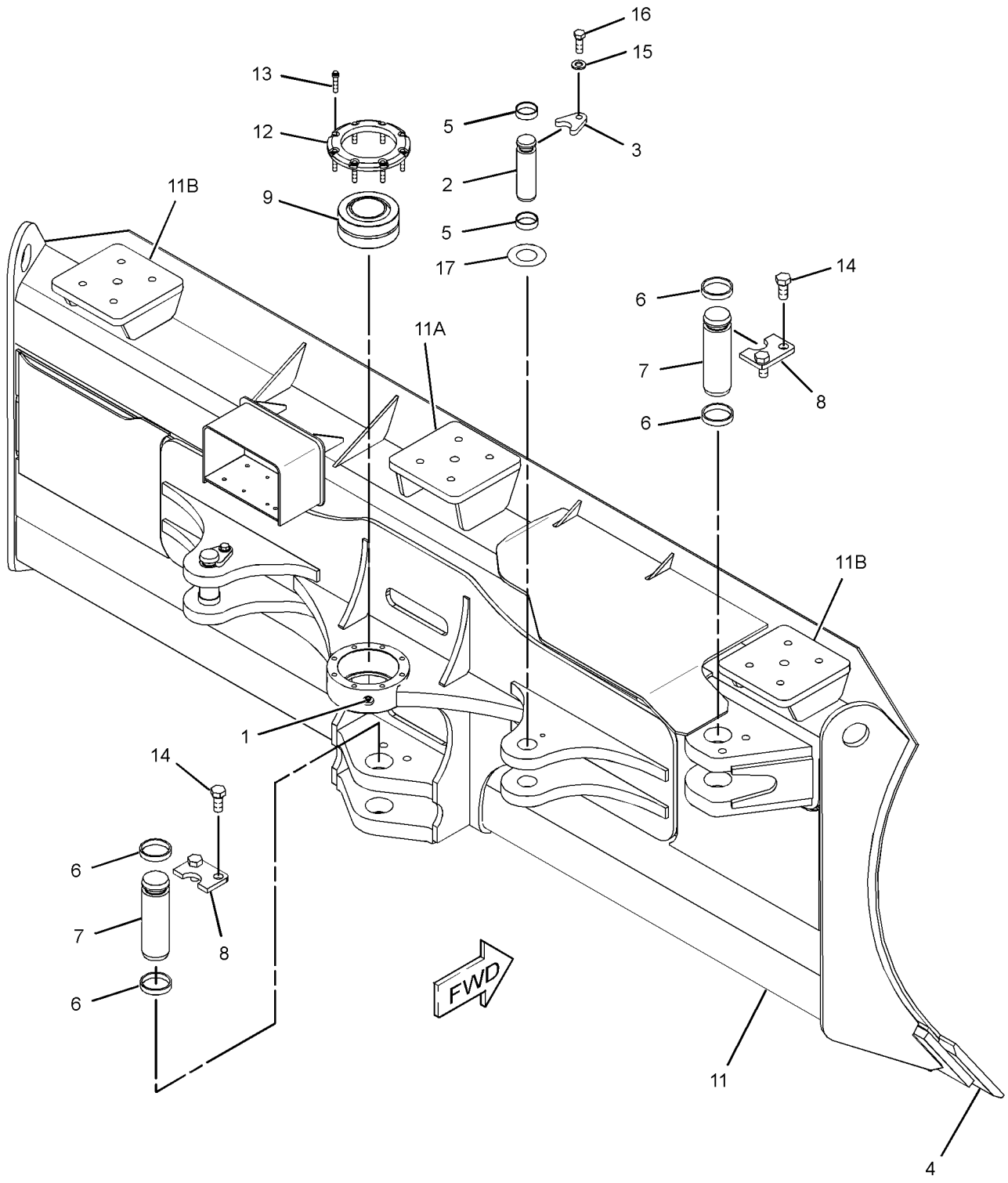

GRAPHIC #1 **<END>** g02000039

WORK TOOLS

240-1520 BLADE GP-ANGLING

S/N: S1C1-UP
FINE GRADING
FOR USE WITH 250-6994—PAGE 213, 293-5184—PAGE 218. CANNOT BE USED WITH 240-1500—PAGE 818, 289-8448—PAGE 814, 306-3004—PAGE 824, 306-3006—PAGE 826 AN ATTACHMENT

SMCS-6052, 6060 **i03707001**

NOTE	REF NO	GRAPHIC REF	PART NUMBER	QTY	PART NAME 1 2 3 4 5 6 (PRODUCT LEVEL)	SEE PAGE
	1	1	**3B-8489**	2	FITTING-GREASE	
	2	1	**3G-8932**	2	PIN	
	3	1	**4T-0231**	2	RETAINER	
Y	4	1	*4T-5261*	1	EDGE GP-BIT & CUTTING	834
	5	1	**8G-5747**	4	SPACER (45X50X15-MM THK)	
	6	1	**089-8249**	4	SPACER (64X72X13-MM THK)	
	7	1	**104-4817**	2	PIN	
	8	1	**104-7434**	2	RETAINER	
	9	1	**197-6439**	1	BEARING	
	10	1	**240-1521**	1	BLADE AS-ANGLING	
	10A	1	**307-3633**	2	PLATE AS	
	10B	1	**307-3635**	1	PLATE AS	
M	11	1	**7X-2562**	4	BOLT (M20X2.5X45-MM)	
	12	1	**8T-4223**	2	WASHER-HARD (13.5X25.5X3-MM THK)	
M	13	1	**8T-4956**	2	BOLT (M12X1.75X35-MM)	
	15	1	**296-7452**	1	RETAINER	
M	16	1	**9X-8271**	8	BOLT-12 POINT HEAD (M10X1.5X45-MM)	
B	17	1	**139-6381**	6	SHIM (0.5-MM THK)	
F			**8T-7371**	1	PLATE-SERIAL NUMBER (BLADE)	
					(ON RH TOP CORNER OF BLADE)	
F			**4B-4158**	2	SCREW-DRIVE (4X0.25-IN)	

B-USE AS REQUIRED
F-NOT SHOWN
M-METRIC PART
Y-SEPARATE ILLUSTRATION

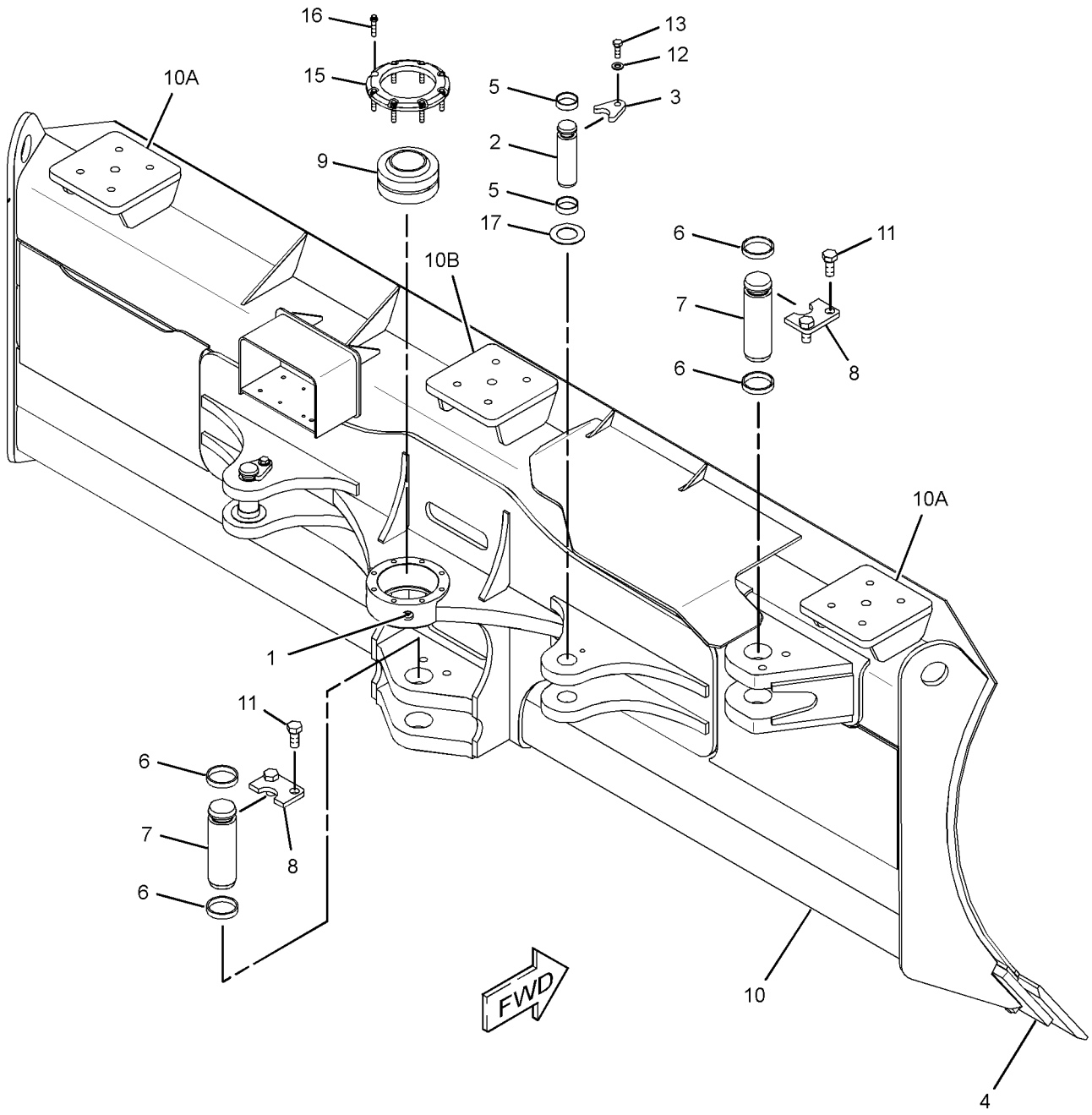

GRAPHIC #1 **<END>** g02000115

WORK TOOLS

294-3337 BLADE GP-ANGLING

S/N: S1D1-UP
FOLDABLE
PART OF 289-8448 BLADE & EDGE GP-ANGLING
AN ATTACHMENT

SMCS-6052, 6060 **i03601589**

NOTE	REF NO	GRAPHIC REF	PART NUMBER	QTY	PART NAME 1 2 3 4 5 6 (PRODUCT LEVEL)	SEE PAGE
	1	1	**8D-3791**	4	PIN	
	2	1	**8V-7659**	2	PIN AS	
	3	1	**257-0205**	2	PIN-DOWEL	
	4	1	**294-4475**	1	BLADE AS (RH)	
	5	1	**294-4476**	1	BLADE AS (LH)	
	6	1	**294-4521**	1	SUPPORT-ARM	
	7	1	**5P-1076**	2	WASHER-HARD (13.5X30X4-MM THK)	
	8	1	**7G-8839**	2	SPACER (13.5X57X6-MM THK)	
M	9	1	**8T-4183**	2	BOLT (M12X1.75X40-MM)	

M-METRIC PART

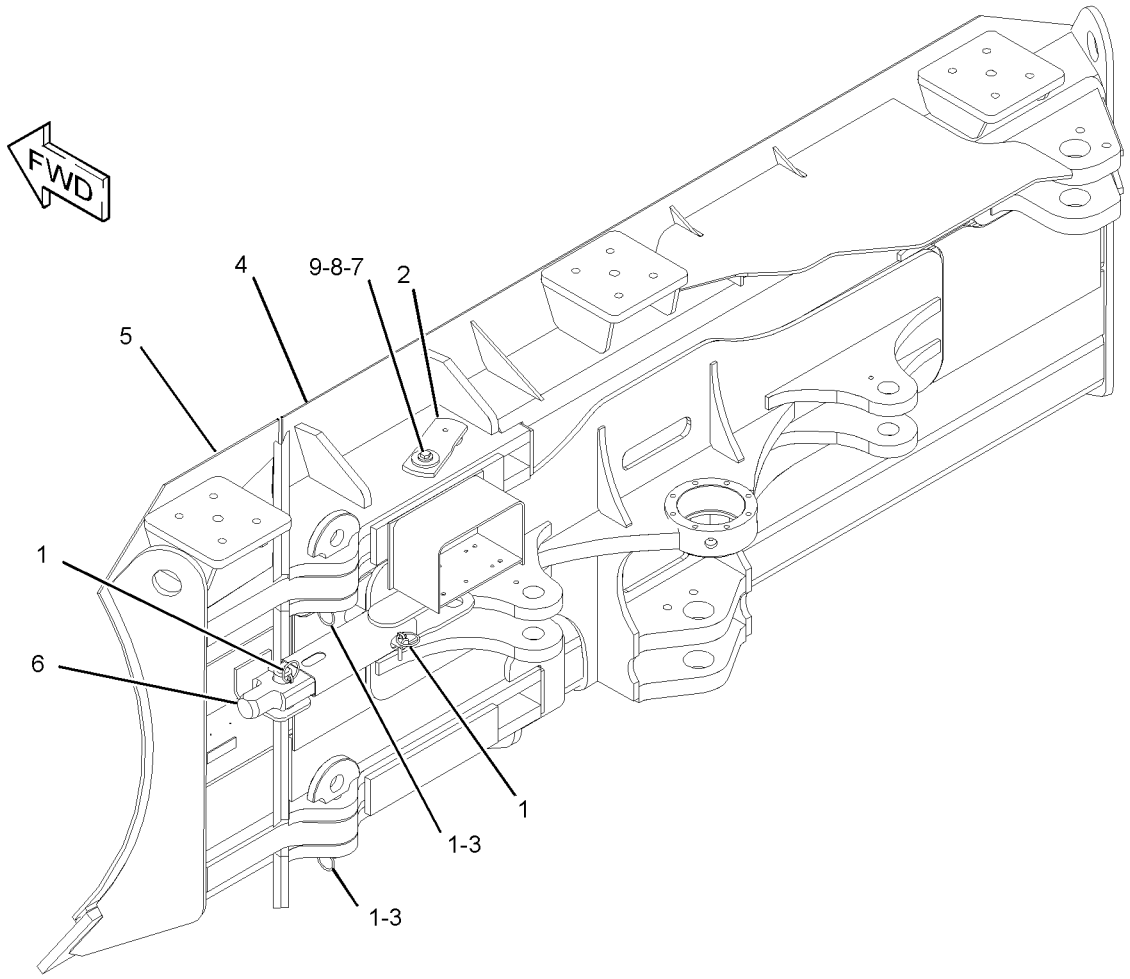

GRAPHIC #1 **<END>** g01947594

297-1701 BLADE GP-ANGLING

S/N: 1MW1-UP
FOLDABLE
PART OF 297-1700 BLADE & EDGE GP-ANGLING
AN ATTACHMENT

SMCS-6052, 6060 **i03601588**

NOTE	REF NO	GRAPHIC REF	PART NUMBER	QTY	PART NAME 1 2 3 4 5 6 (PRODUCT LEVEL)	SEE PAGE
	1	1	**8V-7659**	2	PIN AS	
	2	1	**8D-3791**	4	PIN	
	3	1	**257-0205**	2	PIN-DOWEL	
	4	1	**294-4521**	1	SUPPORT-ARM	
	5	1	*297-1702*	1	BLADE AS (RH)	
	5A	1	**240-1502**	1	BRACKET AS	
	5B	1	**240-1503**	1	BRACKET AS	
	5C	1	**240-1557**	1	BRACKET AS	
	5D	1	**257-0252**	1	PIN	
	5E	1	**307-3633**	1	PLATE AS	
	5F	1	**307-3635**	1	PLATE AS	
	6	1	*297-1703*	1	BLADE AS (LH)	
	6A	1	**257-0225**	1	PIN	
	7	1	**5P-1076**	2	WASHER-HARD (13.5X30X4-MM THK)	
	8	1	**7G-8839**	2	SPACER (13.5X57X6-MM THK)	
M	9	1	**8T-4183**	2	BOLT (M12X1.75X40-MM)	

M-METRIC PART

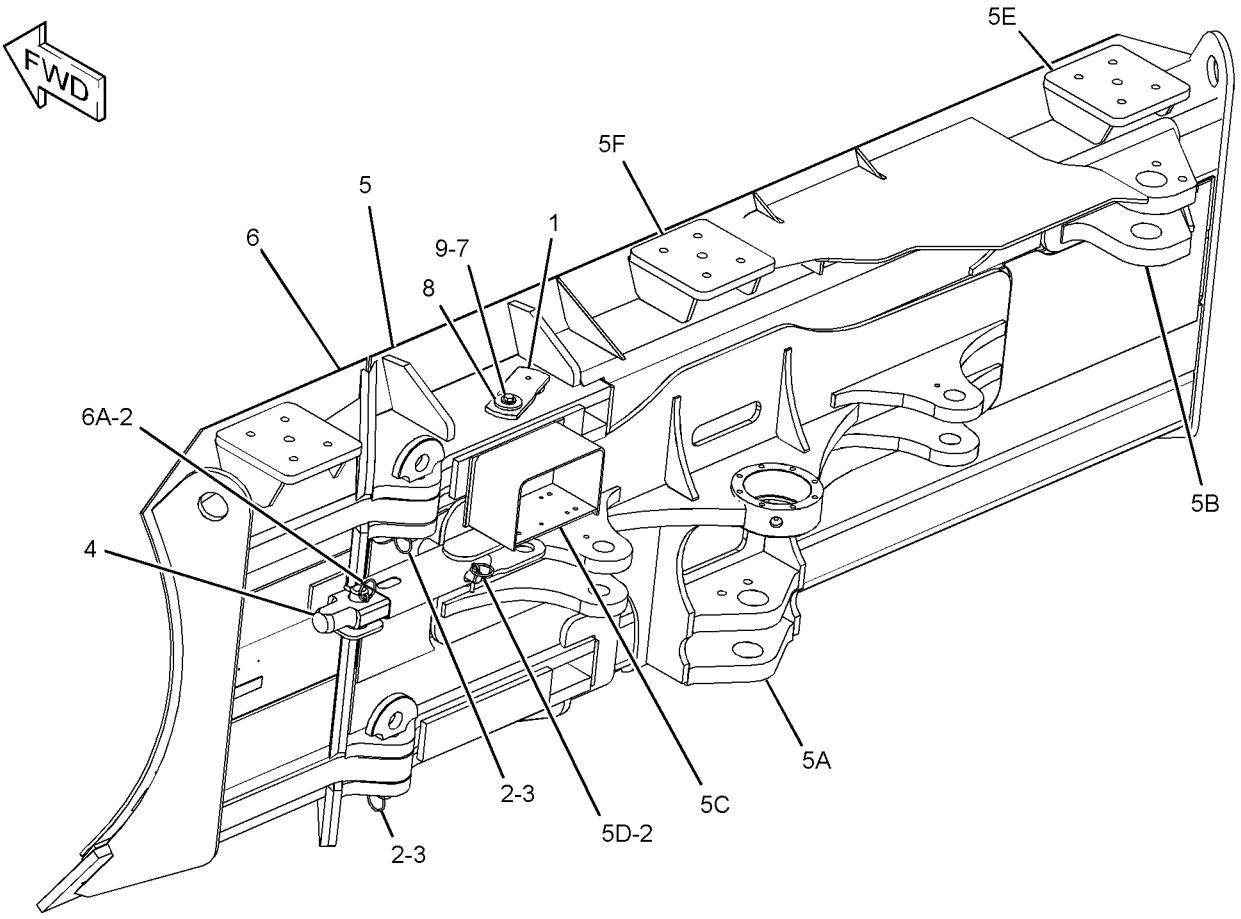

GRAPHIC #1 **<END>** g01946693

WORK TOOLS

306-3004 BLADE GP-ANGLING

S/N: 9EZ1-UP

CANNOT BE USED WITH 240-1500—PAGE 818, 250-6994—PAGE 213

AN ATTACHMENT

SMCS-6052, 6060 **i03707020**

NOTE	REF NO	GRAPHIC REF	PART NUMBER	QTY	PART NAME 1 2 3 4 5 6 (PRODUCT LEVEL)	SEE PAGE
	1	1	**3B-8489**	2	FITTING-GREASE	
	2	1	**3G-8932**	2	PIN	
	3	1	**4T-0231**	2	RETAINER	
Y	4	1	*8E-9376*	1	EDGE GP-BIT & CUTTING	835
	5	1	**8G-5747**	4	SPACER (45X50X15-MM THK)	
	6	1	**089-8249**	4	SPACER (64X72X13-MM THK)	
	7	1	**104-4817**	2	PIN	
	8	1	**104-7434**	2	RETAINER	
	9	1	**197-6439**	1	BEARING	
	11	1	**296-7452**	1	RETAINER	
	12	1	**306-3005**	1	BLADE AS-ANGLING	
	12A	1	**8P-9770**	1	PLATE	
	12B	1	**240-1502**	1	BRACKET AS	
	12C	1	**240-1503**	1	BRACKET AS	
M	13	1	**7X-2562**	4	BOLT (M20X2.5X45-MM)	
	14	1	**8T-4223**	2	WASHER-HARD (13.5X25.5X3-MM THK)	
M	15	1	**8T-4956**	2	BOLT (M12X1.75X35-MM)	
M	16	1	**9X-8271**	8	BOLT-12 POINT HEAD (M10X1.5X45-MM)	
B	17	1	**139-6381**	6	SHIM (0.5-MM THK)	
F			**8T-7371**	1	PLATE-SERIAL NUMBER (BLADE)	
					(ON RH TOP CORNER OF BLADE)	
F			**4B-4158**	2	SCREW-DRIVE (4X0.25-IN)	

B-USE AS REQUIRED
F-NOT SHOWN
M-METRIC PART
Y-SEPARATE ILLUSTRATION

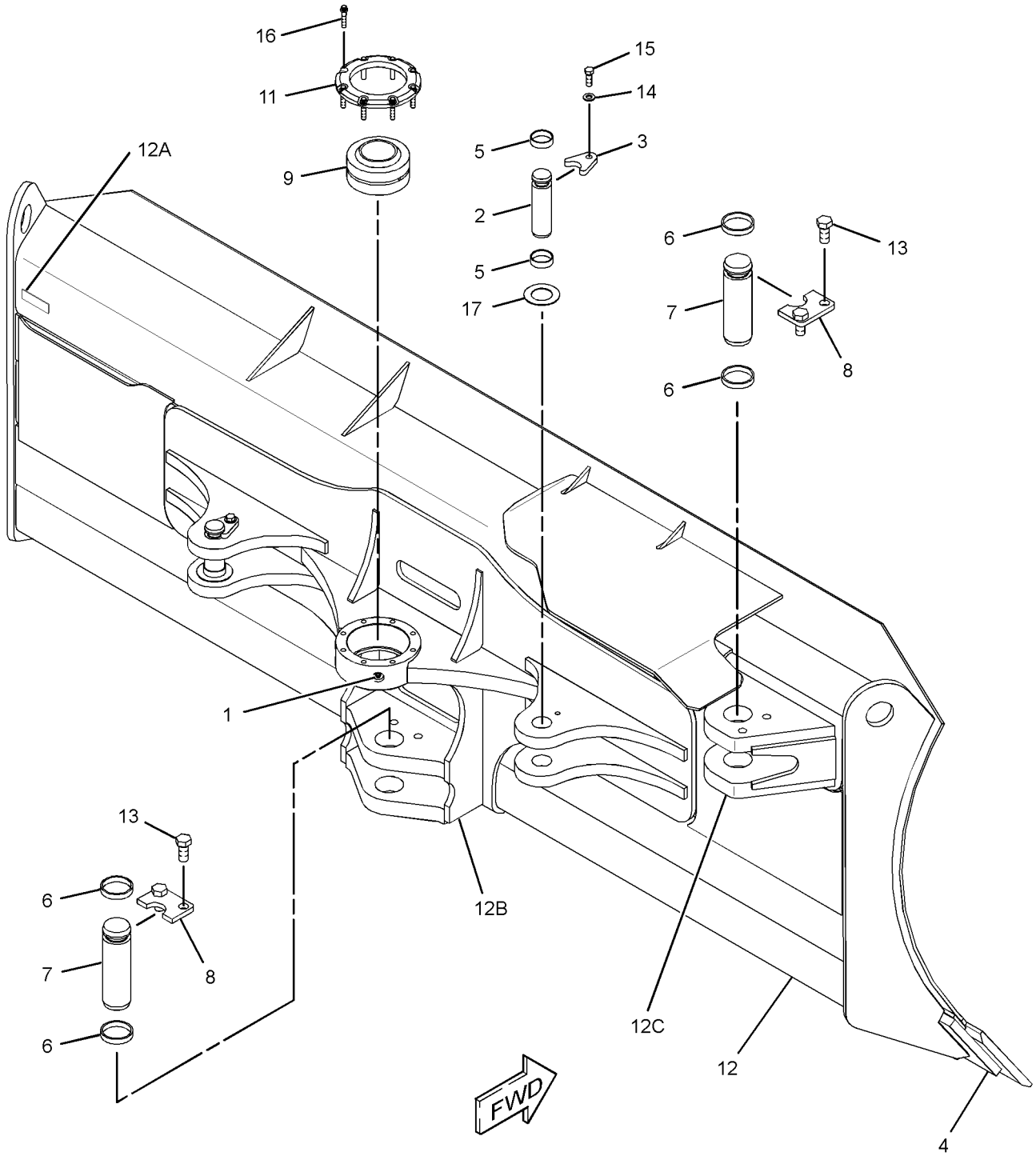

GRAPHIC #1 **<END>** g02000233

WORK TOOLS

306-3006 BLADE GP-ANGLING

S/N: 4101-UP

CANNOT BE USED WITH 240-1500—PAGE 818, 240-1520—PAGE 820, 289-8448—PAGE 814, 306-3004—PAGE 824

AN ATTACHMENT

SMCS-6052, 6060 **i03707060**

NOTE	REF NO	GRAPHIC REF	PART NUMBER	QTY	PART NAME 1 2 3 4 5 6 (PRODUCT LEVEL)	SEE PAGE
	1	1	**3B-8489**	2	FITTING-GREASE	
	2	1	**3G-8932**	2	PIN	
	3	1	**4T-0231**	2	RETAINER	
Y	4	1	*4T-5261*	1	EDGE GP-BIT & CUTTING	834
	5	1	**8G-5747**	4	SPACER (45X50X15-MM THK)	
	6	1	**089-8249**	4	SPACER (64X72X13-MM THK)	
	7	1	**104-4817**	2	PIN	
	8	1	**104-7434**	2	RETAINER	
	9	1	**197-6439**	1	BEARING	
	11	1	**296-7452**	1	RETAINER	
	12	1	*306-3007*	1	BLADE AS-ANGLING	
	12A	1	**8P-9770**	1	PLATE	
	12B	1	**240-1502**	1	BRACKET AS	
	12C	1	**240-1503**	1	BRACKET AS	
M	13	1	**9X-8271**	8	BOLT-12 POINT HEAD (M10X1.5X45-MM)	
M	14	1	**7X-2562**	4	BOLT (M20X2.5X45-MM)	
	15	1	**8T-4223**	2	WASHER-HARD (13.5X25.5X3-MM THK)	
M	16	1	**8T-4956**	2	BOLT (M12X1.75X35-MM)	
B	17	1	**139-6381**	6	SHIM (0.5-MM THK)	
F			**8T-7371**	1	PLATE-SERIAL NUMBER (BLADE)	
					(ON THE RH TOP CORNER OF THE BLADE)	
F			**4B-4158**	2	SCREW-DRIVE (4X0.25-IN)	

B-USE AS REQUIRED
F-NOT SHOWN
M-METRIC PART
Y-SEPARATE ILLUSTRATION

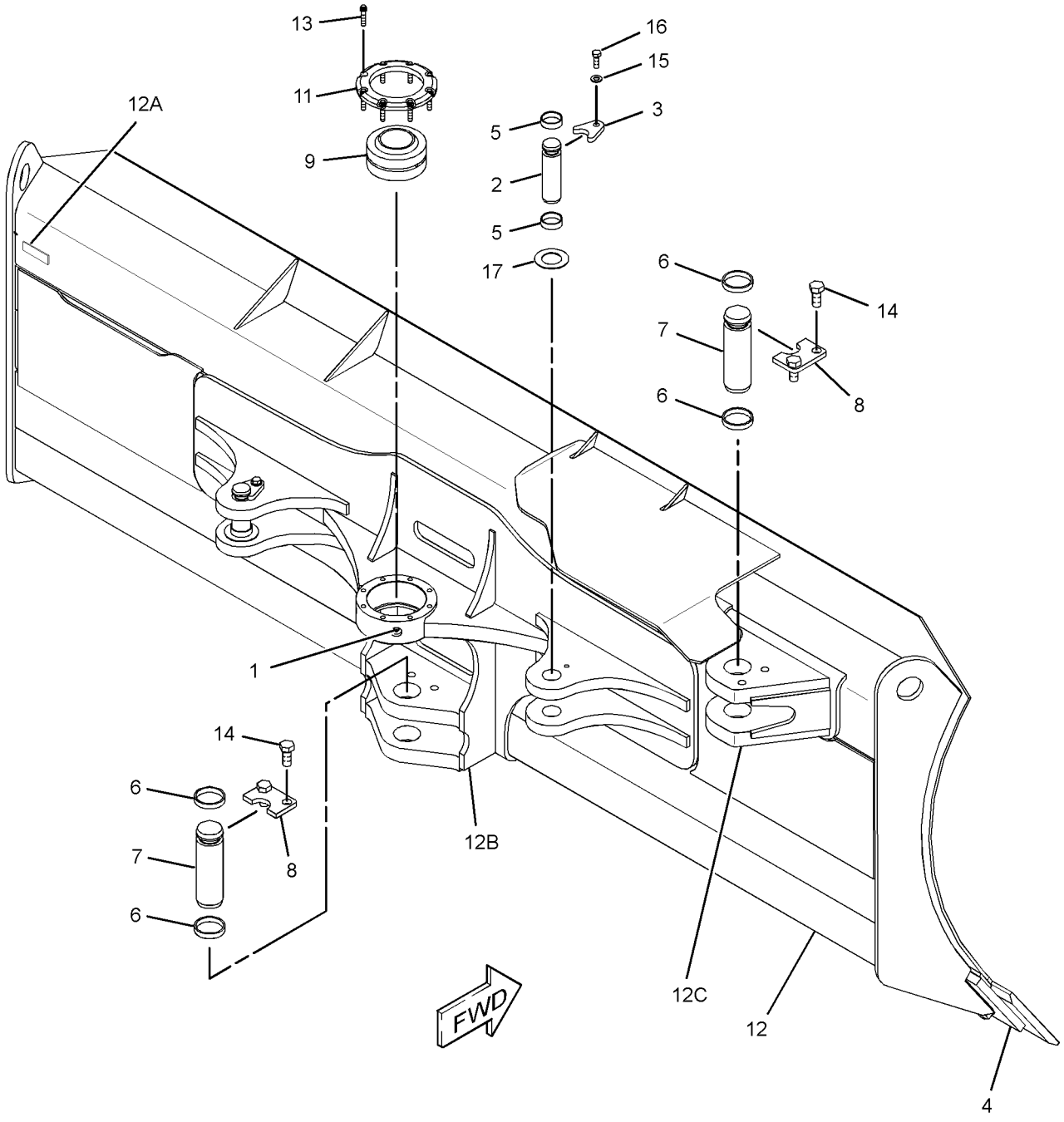

GRAPHIC #1 **<END>** g02000375

WORK TOOLS

325-0000 BLADE GP-ANGLING

S/N: S1T1-UP
FOR USE WITH INSTALLATION, ACCUGRADE READY CAB OR CANOPY
AN ATTACHMENT

SMCS-6052, 6060 **i03707100**

NOTE	REF NO	GRAPHIC REF	PART NUMBER	QTY	PART NAME 1 2 3 4 5 6 (PRODUCT LEVEL)	SEE PAGE
	1	1	**3B-8489**	2	FITTING-GREASE	
	2	1	**3G-8932**	2	PIN	
	3	1	**4T-0231**	2	RETAINER	
	4	1	**8G-5747**	4	SPACER (45X50X15-MM THK)	
	5	1	**089-8249**	4	SPACER (64X72X13-MM THK)	
	6	1	**104-4817**	2	PIN	
	7	1	**104-7434**	2	RETAINER	
B	8	1	**139-6381**	6	SHIM (0.5-MM THK)	
	9	1	**197-6439**	1	BEARING	
	11	1	**296-7452**	1	RETAINER	
	12	1	**325-0001**	1	BLADE AS-ANGLING	
	12A	1	**307-3633**	2	PLATE AS	
	12B	1	**307-3635**	1	PLATE AS	
	12C	1	**240-1557**	1	BRACKET AS	
Y	13	1	*325-0002*	1	EDGE GP-BIT & CUTTING	838
M	14	1	**7X-2562**	4	BOLT (M20X2.5X45-MM)	
	15	1	**8T-4223**	2	WASHER-HARD (13.5X25.5X3-MM THK)	
M	16	1	**8T-4956**	2	BOLT (M12X1.75X35-MM)	
M	17	1	**9X-8271**	8	BOLT-12 POINT HEAD (M10X1.5X45-MM)	
F			**8T-7371**	1	PLATE-SERIAL NUMBER (BLADE)	
					(ON RH TOP CORNER OF BLADE)	
F			**4B-4158**	2	SCREW-DRIVE (4X0.25-IN)	

B-USE AS REQUIRED
F-NOT SHOWN
M-METRIC PART
Y-SEPARATE ILLUSTRATION

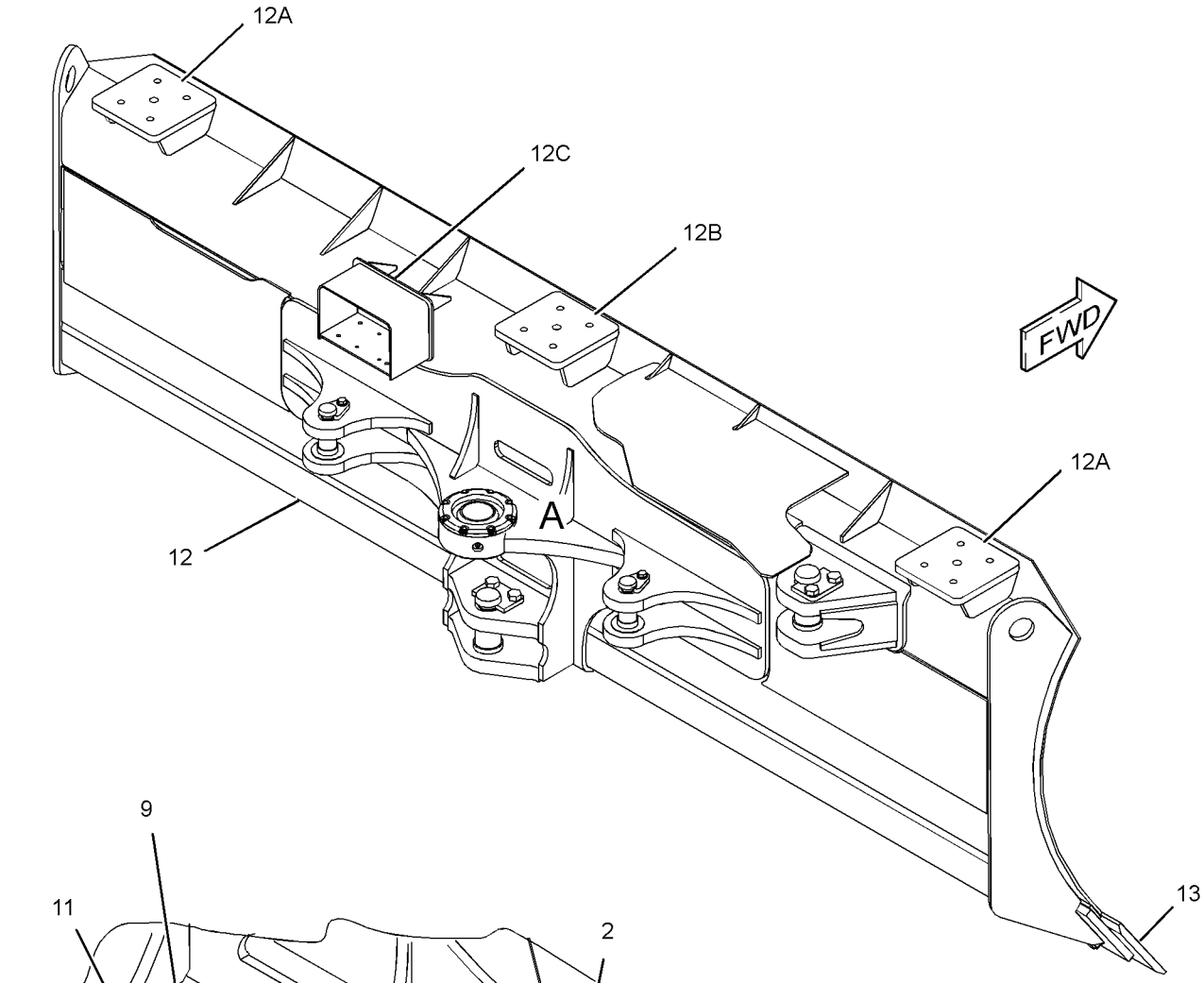

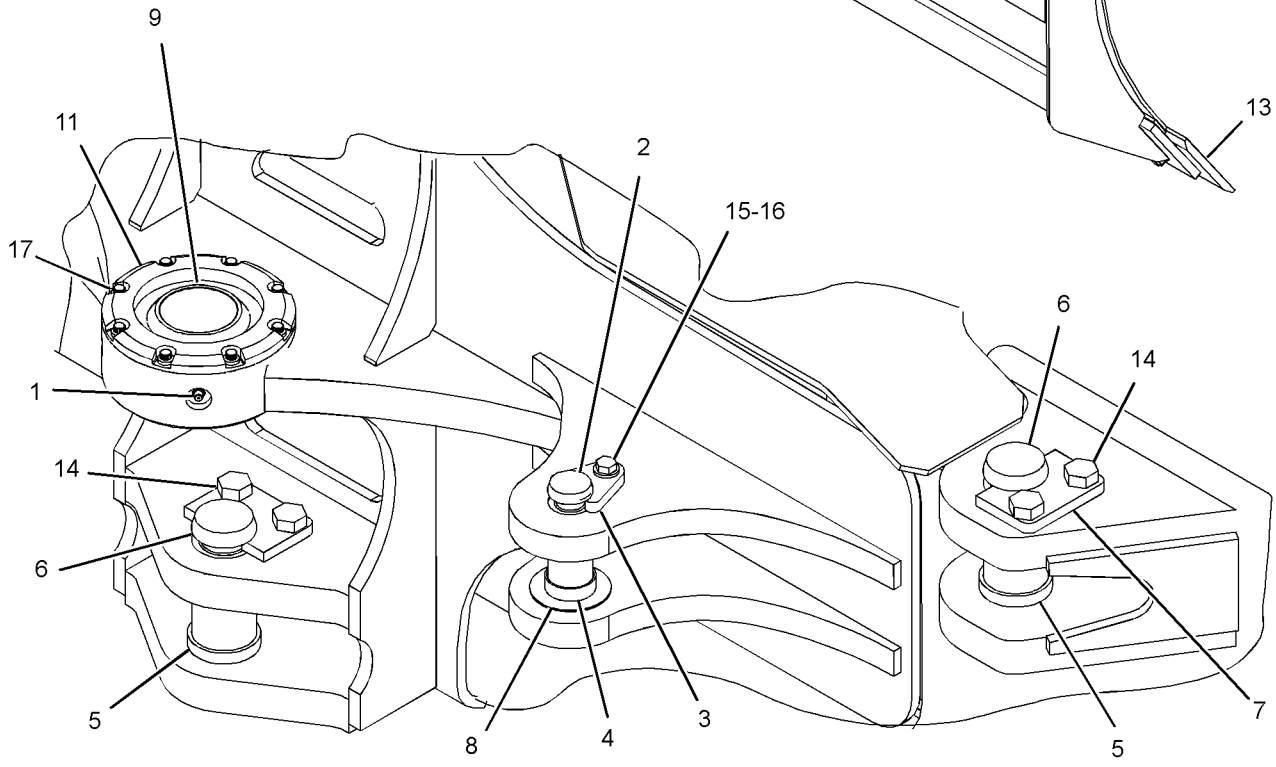

VIEW OF AREA A

GRAPHIC #1 **<END>** g02000393

WORK TOOLS

250-2113 CONTROL GP-WINCH

S/N: DHA1-348; FBH1-488

FOR USE WITH WINCH AR-TOWING. CANNOT BE USED WITH 250-2112—PAGE 678, 250-2114—PAGE 515, 250-2111—PAGE 697 AN ATTACHMENT

SMCS-5161, 5170 **i03708960**

NOTE	REF NO	GRAPHIC REF	PART NUMBER	QTY	PART NAME 1 2 3 4 5 6 (PRODUCT LEVEL)	SEE PAGE
	1	1	**117-2311**	1	SOCKET-AUXILIARY POWER (12-VOLT)	
	2	1	**169-2876**	1	FILM-IDENTIFICATION (POWER RECEPTACLE, 12-VOLT)	
	3	1	**228-6089**	1	PLUG (ROCKER SWITCH)	
Y	4	1	**252-4559**	1	CONTROL GP-HANDLE (WINCH)	664
	5	1	**266-9001**	1	BRACKET	
	6	1	**266-9006**	1	FILM-INSTRUCTION (WINCH CONTROL)	
	7	1	**266-8524**	1	SWITCH AS-ROCKER (24-VOLT) (WINCH BRAKE)	
	8	1	**266-8525**	1	SWITCH AS-ROCKER (24-VOLT) (WINCH FREESPOOL)	
M	9	1	**9X-2045**	8	SCREW-TRUSS HEAD (M6X1X20-MM)	

M-METRIC PART
Y-SEPARATE ILLUSTRATION

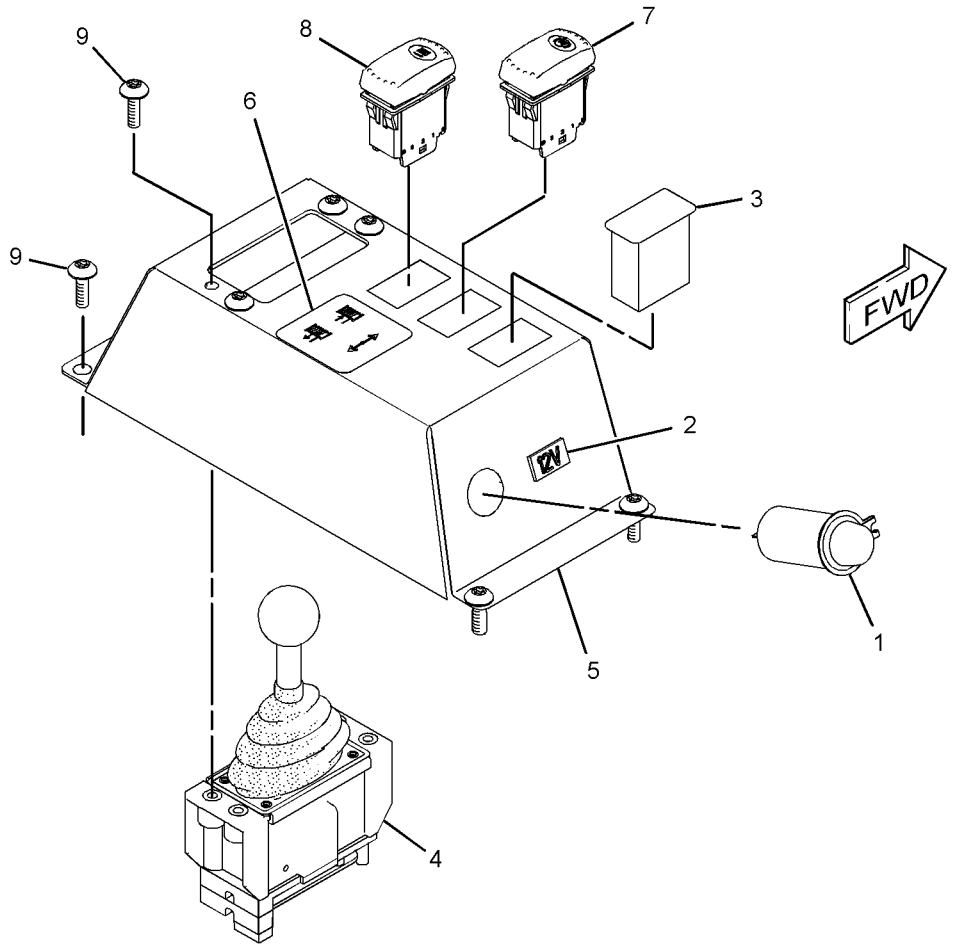

GRAPHIC #1 **<END>** g01996881

250-2113 CONTROL GP-WINCH

S/N: DHA349-UP; FBH489-UP

FOR USE WITH WINCH AR-TOWING. CANNOT BE USED WITH 250-2112—PAGE 678, 250-2114—PAGE 515, 250-2111—PAGE 697 AN ATTACHMENT

SMCS-5161, 5170 **i03708961**

NOTE	REF NO	GRAPHIC REF	PART NUMBER	QTY	PART NAME 1 2 3 4 5 6 (PRODUCT LEVEL)	SEE PAGE
	1	1	**117-2311**	1	SOCKET-AUXILIARY POWER (12-VOLT)	
	2	1	**169-2876**	1	FILM-IDENTIFICATION (POWER RECEPTACLE, 12-VOLT)	
	3	1	**228-6089**	1	PLUG (ROCKER SWITCH)	
CY	4	1	**307-4673**	1	CONTROL GP-HANDLE (WINCH)	668
	5	1	**298-4325**	1	BRACKET	
	6	1	**266-9006**	1	FILM-INSTRUCTION (WINCH CONTROL)	
	7	1	**266-8524**	1	SWITCH AS-ROCKER (24-VOLT) (WINCH BRAKE)	
	8	1	**266-8525**	1	SWITCH AS-ROCKER (24-VOLT) (WINCH FREESPOOL)	
M	9	1	**9X-2045**	8	SCREW-TRUSS HEAD (M6X1X20-MM)	

C-CHANGE FROM PREVIOUS TYPE
M-METRIC PART
Y-SEPARATE ILLUSTRATION

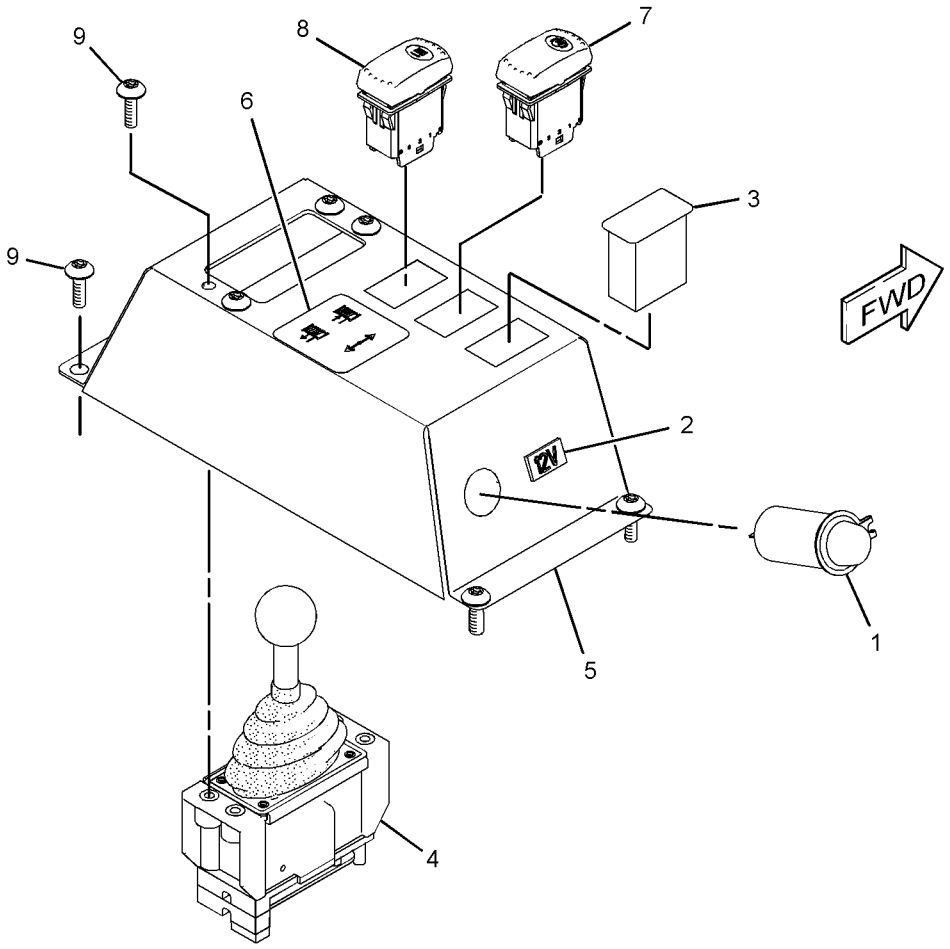

GRAPHIC #1 **<END>** g01996881

WORK TOOLS

248-6545 CONVERSION AR-WINCH

S/N: DHA1-UP; FBH1-UP

FOR USE WITH 277-3556—PAGE 428, 250-2113—PAGE 830, 250-2114—PAGE 515

AN ATTACHMENT

SMCS-5163 **i02397705**

NOTE	REF NO	GRAPHIC REF	PART NUMBER	QTY	PART NAME 1 2 3 4 5 6 (PRODUCT LEVEL)	SEE PAGE
Y	1	1	*246-5950*	1	LINES GP-WINCH	556
Y	2	1	*250-7798*	1	LINES GP-PUMP (WINCH)	547
Y	3	1	*266-9652*	1	WIRING GP-WINCH	338

Y-SEPARATE ILLUSTRATION

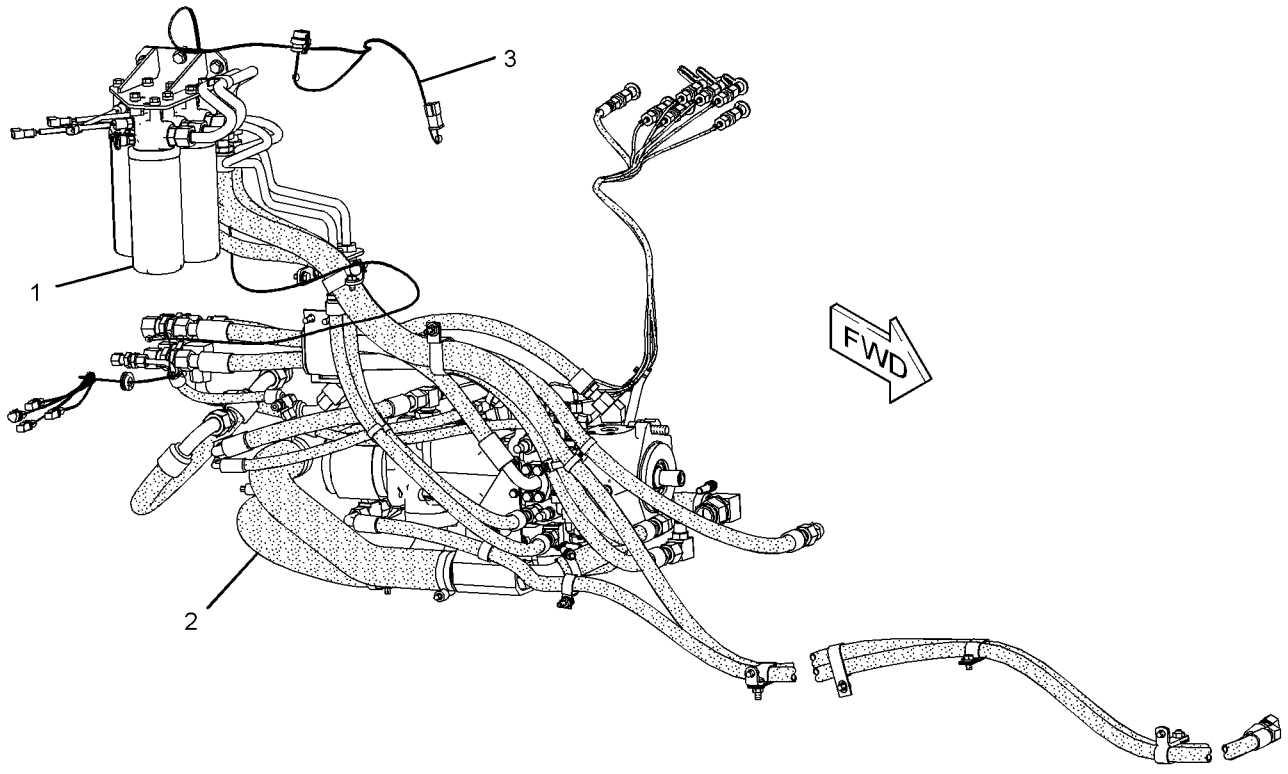

GRAPHIC #1 **<END>** g01202294

WORK TOOLS

288-9569 COVER GP-WINCH

S/N: DHA1-UP; FBH1-UP
PART OF 277-3556 GUARD GP-FUEL TANK
AN ATTACHMENT

SMCS-5163 **i02590363**

NOTE	REF NO	GRAPHIC REF	PART NUMBER	QTY	PART NAME 1 2 3 4 5 6 (PRODUCT LEVEL)	SEE PAGE
	1	1	**288-9576**	1	PLATE AS	
	2	1	**288-9577**	1	PLATE AS	
	3	1	**288-9578**	1	PLATE	
	4	1	**288-9579**	1	PLATE AS	
	5	1	**289-6142**	1	COVER AS	
	6	1	**7X-7729**	8	WASHER (11X25X3-MM THK)	
M	7	1	**8T-4195**	8	BOLT (M10X1.5X30-MM)	

M-METRIC PART

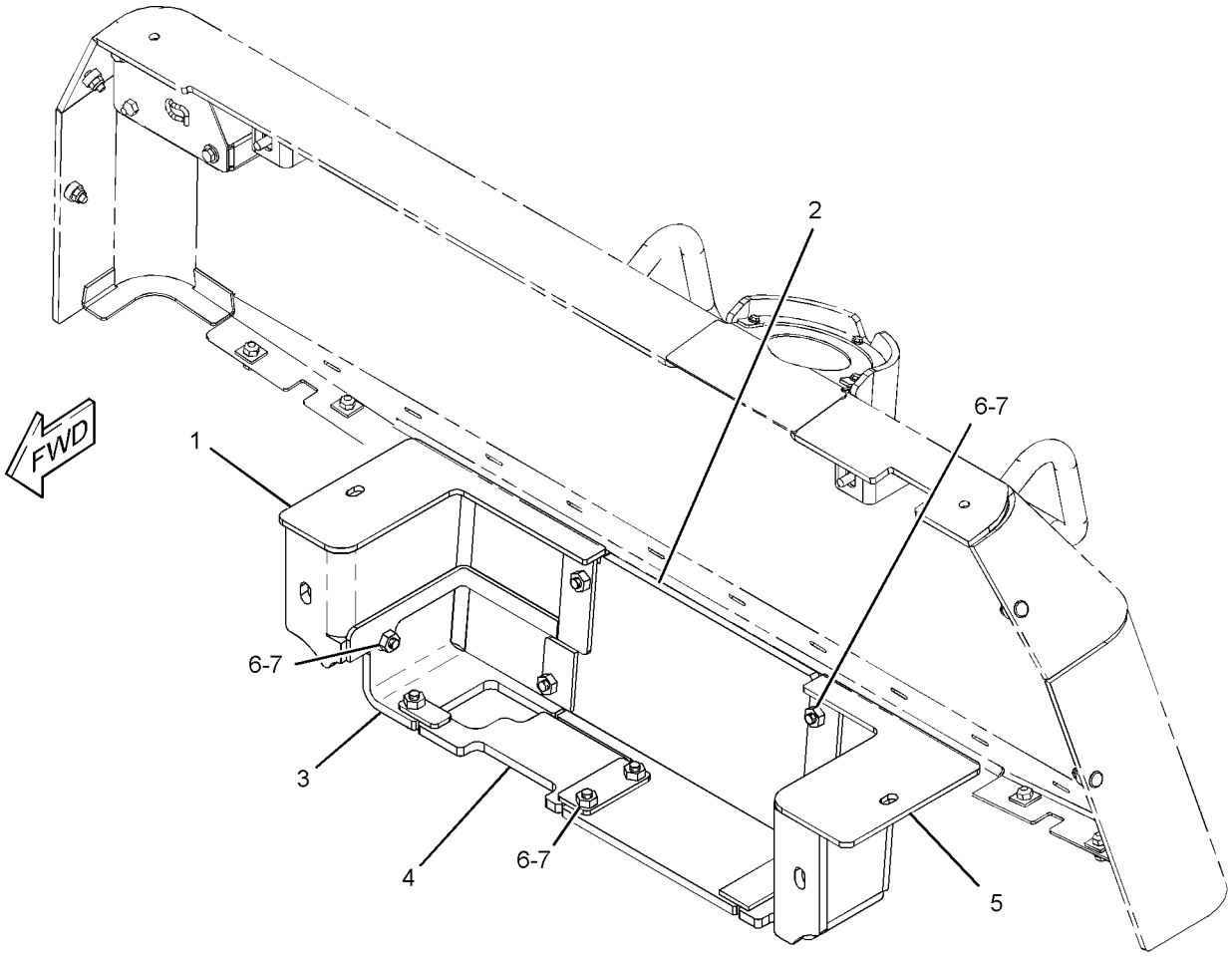

GRAPHIC #1 **<END>** g01304337

WORK TOOLS

4T-5261 EDGE GP-BIT & CUTTING

S/N: 4101-UP; S1C1-UP
PART OF 240-1520, 306-3006 BLADE GP-ANGLING
AN ATTACHMENT

SMCS-6801, 6804 **i01830880**

NOTE	REF NO	GRAPHIC REF	PART NUMBER	QTY	PART NAME 1 2 3 4 5 6 (PRODUCT LEVEL)	SEE PAGE
	1	1	**8E-9379**	1	BIT-END	
		1	**8E-9378**	1	BIT-END	
	2	1	**4T-8940**	2	EDGE-CUTTING	
	3	1	**5J-4773**	24	BOLT-PLOW (3/4-10X2.5-IN)	
	4	1	**5P-8248**	24	WASHER-HARD (20X36.5X3.5-MM THK)	
	5	1	**2J-3506**	24	NUT-FULL (3/4-10-THD)	

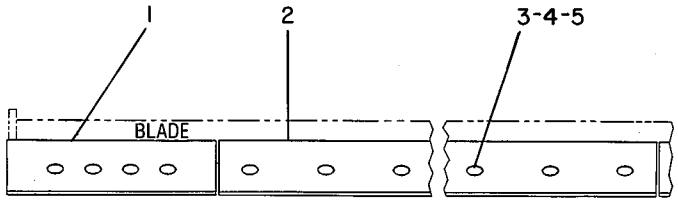

GRAPHIC #1 **<END>** g00169616

WORK TOOLS

8E-9376 EDGE GP-BIT & CUTTING

S/N: S1B1-UP; 9EZ1-UP
PART OF 240-1500, 306-3004 BLADE GP-ANGLING
AN ATTACHMENT

SMCS-6801, 6804 **i01643586**

NOTE	PART NUMBER	QTY	PART NAME 1 2 3 4 5 6 (PRODUCT LEVEL)	SEE PAGE
	8E-9378	1	BIT-END	
	8E-9379	1	BIT-END	
	5J-4773	22	BOLT-PLOW (3/4-10X2.5-IN)	
	8E-9377	2	EDGE-CUTTING	
	2J-3506	22	NUT-FULL (3/4-10-THD)	
	5P-8248	22	WASHER-HARD (20X36.5X3.5-MM THK)	

<END>

294-4514 EDGE GP-BIT & CUTTING

S/N: S1D1-UP
PART OF 289-8448 BLADE & EDGE GP-ANGLING
AN ATTACHMENT

SMCS-6801, 6804 **i02745552**

NOTE	REF NO	GRAPHIC REF	PART NUMBER	QTY	PART NAME 1 2 3 4 5 6 (PRODUCT LEVEL)	SEE PAGE
	1	1	**5J-4773**	22	BOLT-PLOW (3/4-10X2.5-IN)	
	2	1	**8E-9377**	1	EDGE-CUTTING	
	3	1	**8E-9379**	1	BIT-END	
	4	1	**300-0168**	1	BIT-END (LH)	
	5	1	**294-4519**	1	EDGE-CUTTING	
	6	1	**2J-3506**	22	NUT-FULL (3/4-10-THD)	
	7	1	**5P-8248**	22	WASHER-HARD (20X36.5X3.5-MM THK)	

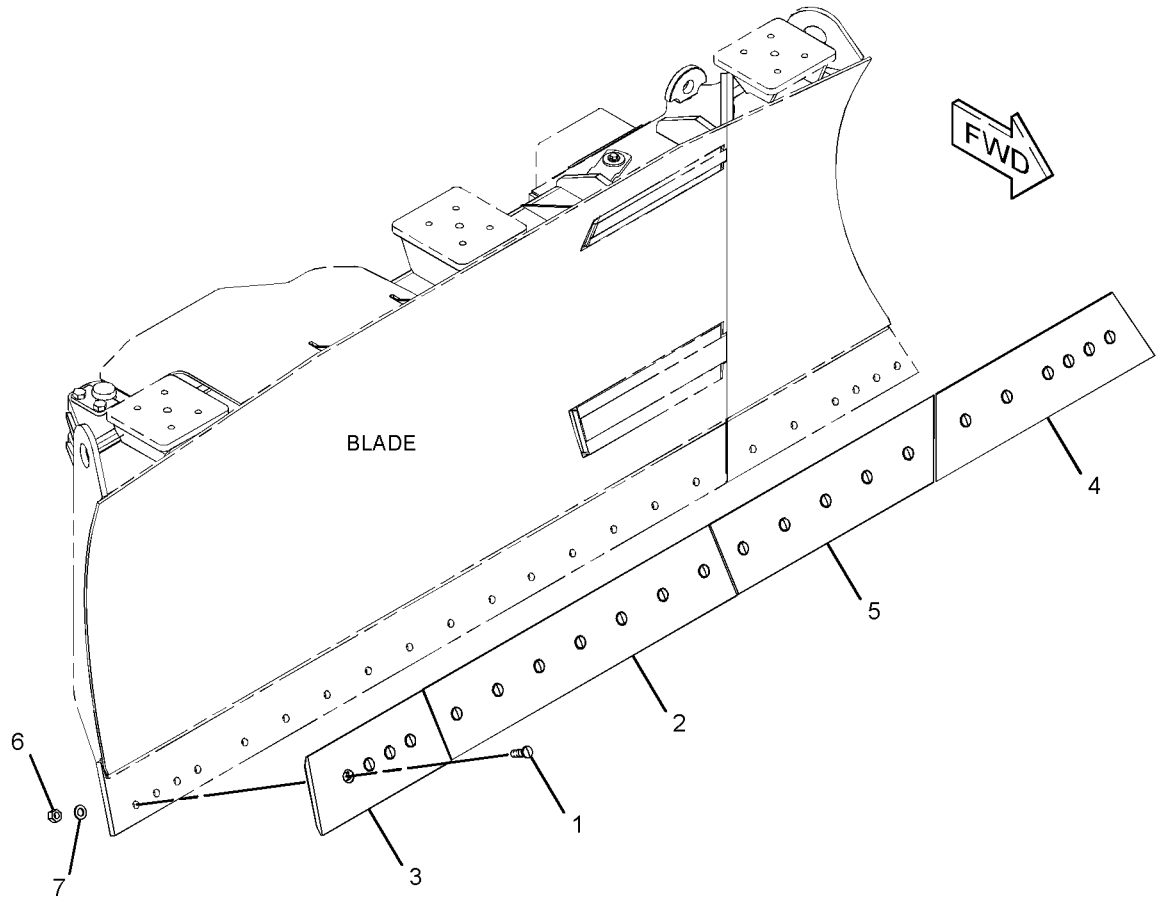

GRAPHIC #1 **<END>** g01304261

WORK TOOLS

297-1704 EDGE GP-BIT & CUTTING

S/N: 1MW1-UP

PART OF 297-1700 BLADE & EDGE GP-ANGLING

AN ATTACHMENT

SMCS-6801, 6804 **i02794000**

NOTE	REF NO	GRAPHIC REF	PART NUMBER	QTY	PART NAME 1 2 3 4 5 6 (PRODUCT LEVEL)	SEE PAGE
	1	1	**4T-8940**	1	EDGE-CUTTING (RH)	
	2	1	**8E-9379**	1	BIT-END	
	3	1	**297-1699**	1	BIT-END (LH)	
	4	1	**297-1705**	1	EDGE-CUTTING (LH)	
	5	1	**2J-3506**	24	NUT-FULL (3/4-10-THD)	
	6	1	**5J-4773**	24	BOLT-PLOW (3/4-10X2.5-IN)	
	7	1	**5P-8248**	24	WASHER-HARD (20X36.5X3.5-MM THK)	

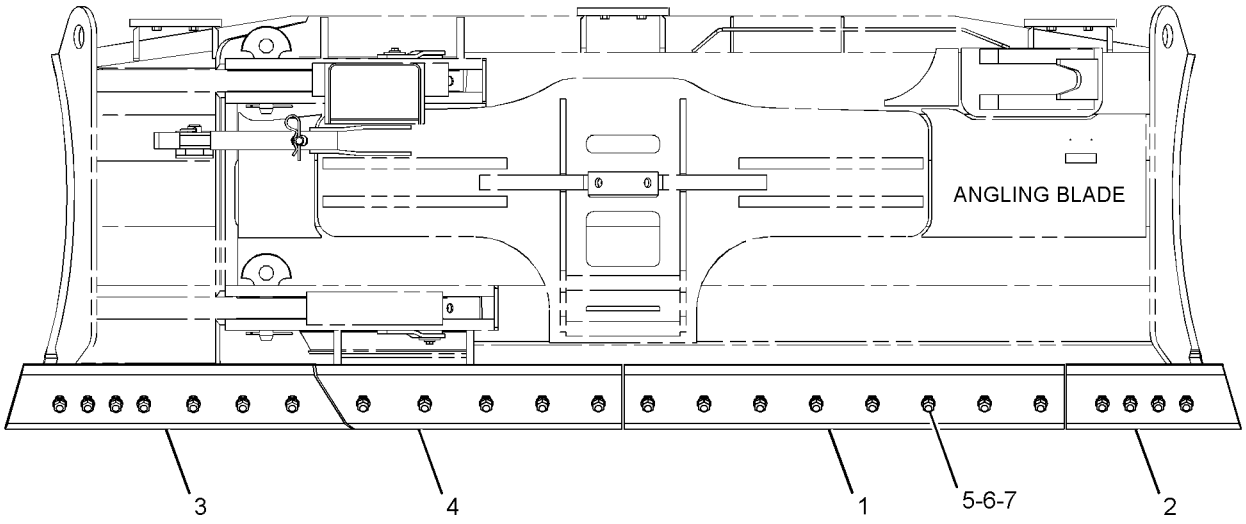

REAR VIEW

GRAPHIC #1 **<END>** g01404129

WORK TOOLS

325-0002 EDGE GP-BIT & CUTTING

S/N: S1T1-UP
PART OF 325-0000 BLADE GP-ANGLING
AN ATTACHMENT

SMCS-6801, 6804 **i03707120**

NOTE	REF NO	GRAPHIC REF	PART NUMBER	QTY	PART NAME 1 2 3 4 5 6 (PRODUCT LEVEL)	SEE PAGE
	1	1	**8E-9378**	1	BIT-END (RH)	
	2	1	**8E-9379**	1	BIT-END (LH)	
	3	1	**2J-3506**	26	NUT-FULL (3/4-10-THD)	
	4	1	**5J-4773**	26	BOLT-PLOW (3/4-10X2.5-IN)	
	5	1	**5P-8248**	26	WASHER-HARD (20X36.5X3.5-MM THK)	
	6	1	**8E-7245**	2	EDGE-CUTTING	

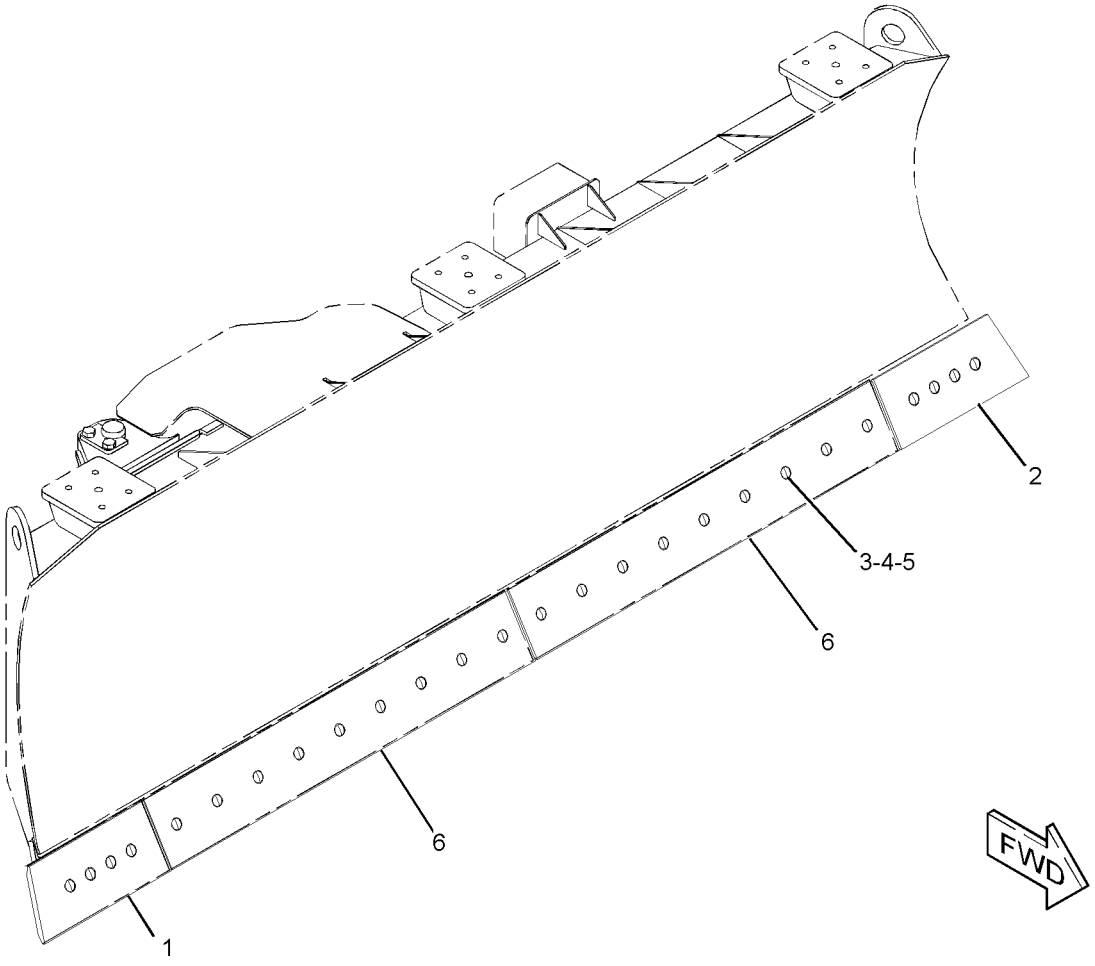

GRAPHIC #1 **<END>** g01967033

292-0302 MOUNTING GP-MAST—LASER RECEIVER

S/N: DHA1-UP; FBH1-UP
ELECTRIC
PART OF 292-0293, 292-0312 GRADE CONTROL AR-LASER

SMCS-79NS **i02648770**

NOTE	PART NUMBER	QTY	PART NAME 1 2 3 4 5 6 (PRODUCT LEVEL)	SEE PAGE
M	**8T-4648**	4	BOLT (M12X1.75X70-MM)	
	237-7552	3	FILM-WARNING (LASER TRANSMITTER)	
	252-8744	1	FILM-WARNING (BLADE, DO NOT CLIMB, READ OMM)	
M	**8T-4244**	4	NUT (M12X1.75-THD)	
	8T-4223	8	WASHER-HARD (13.5X25.5X3-MM THK)	

M-METRIC PART

<END>

292-0303 MOUNTING GP-MAST—SATELLITE RECEIVER

S/N: DHA1-UP; FBH1-UP
SOLID
PART OF 290-5571, 292-0280 GRADE CONTROL AR-SATELLITE, 292-0290 MAST GP

SMCS-79NS **i02618522**

NOTE	PART NUMBER	QTY	PART NAME 1 2 3 4 5 6 (PRODUCT LEVEL)	SEE PAGE
M	**8T-4648**	4	BOLT (M12X1.75X70-MM)	
	252-8744	1	FILM-WARNING (BLADE, DO NOT CLIMB, READ OMM)	
			ON THE REAR OF THE MAST AT EYE LEVEL	
M	**8T-4244**	4	NUT (M12X1.75-THD)	
	8T-4223	8	WASHER-HARD (13.5X25.5X3-MM THK)	

M-METRIC PART

<END>

WORK TOOLS

240-1476 MOUNTING GP-RIPPER

S/N: 4041-UP
PART OF 240-1470 RIPPER AR
AN ATTACHMENT

SMCS-6165, 6310, 6324 **i02884221**

NOTE	REF NO	GRAPHIC REF	PART NUMBER	QTY	PART NAME 1 2 3 4 5 6 (PRODUCT LEVEL)	SEE PAGE
B	1	1	**9N-4449**	12	SPACER (68X121X1.5-MM THK)	
B	2	1	**9N-4450**	4	SPACER (68X120X5-MM THK)	
B	3	1	**193-3074**	4	SPACER (52X120X5-MM THK)	
B	4	1	**193-3075**	10	SPACER (52X121X1.5-MM THK)	
	5	1	**240-1486**	1	BRACKET AS (RH)	
	6	1	**240-1487**	1	BRACKET AS (LH)	
	7	1	**240-1490**	2	PIN	
	8	1	**240-1491**	2	PIN	
	9	1	**240-1494**	1	BRACKET AS (LH)	
	10	1	**240-1495**	1	BRACKET AS (RH)	
	11	1	**6K-8987**	2	DOWEL	
M	12	1	**6V-7744**	2	LOCKNUT (M10X1.5-THD)	
M	13	1	**7X-2575**	8	BOLT (M24X3X60-MM)	
	14	1	**8T-1482**	8	WASHER-HARD (26X50X8-MM THK)	
	15	1	**8T-4167**	8	WASHER-HARD (26X44X4-MM THK)	
M	16	1	**8T-4198**	2	BOLT (M10X1.5X100-MM)	
M	17	1	**8T-4244**	2	NUT (M12X1.75-THD)	
M	18	1	**8T-5041**	2	BOLT (M12X1.75X120-MM)	
M	19	1	**8T-5878**	8	BOLT (M24X3X80-MM)	

B-USE AS REQUIRED
M-METRIC PART

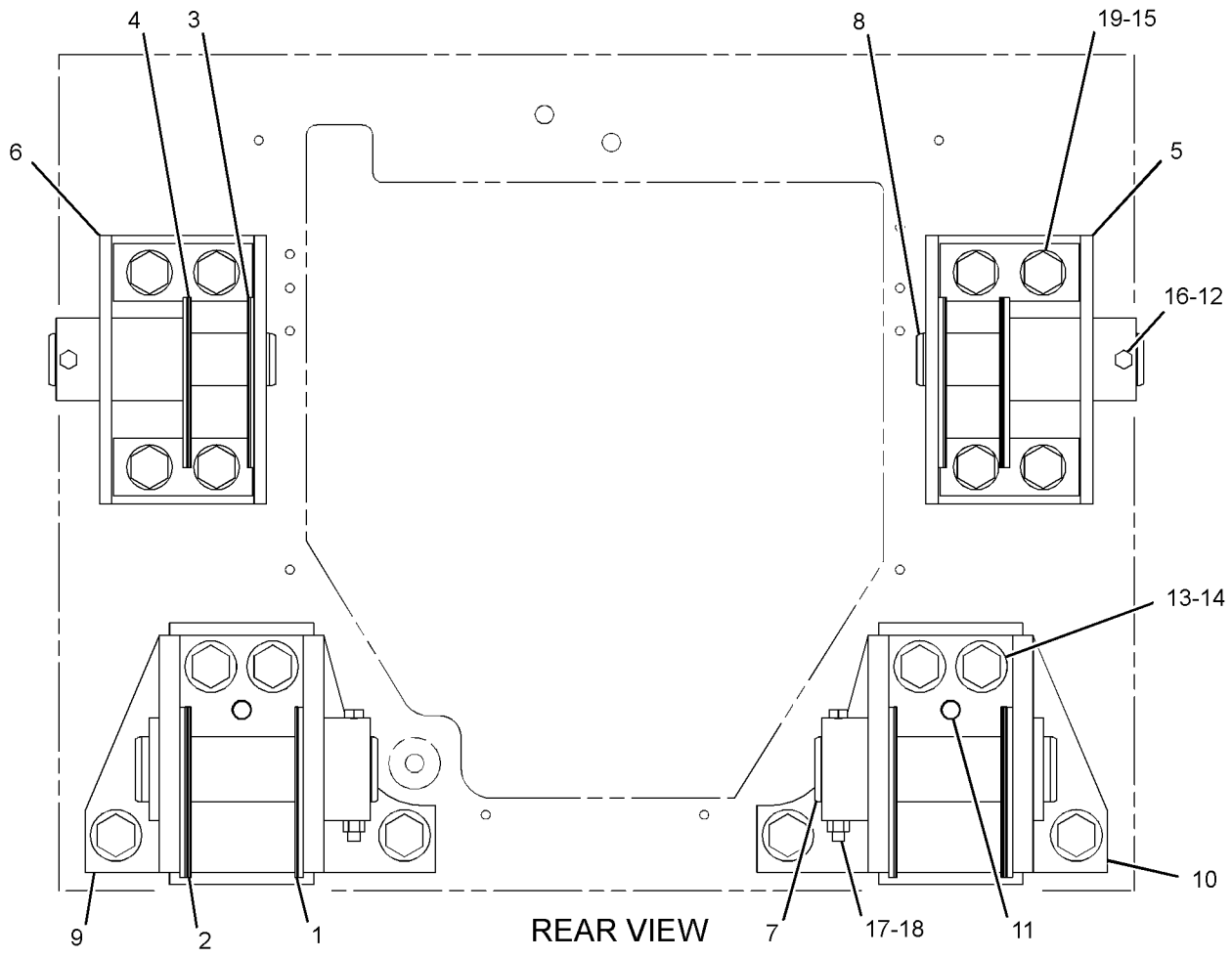

GRAPHIC #1

<END>

g01299494

WORK TOOLS

240-1470 RIPPER AR

S/N: 4041-UP

FOR USE WITH 250-3852—PAGE 528, 250-2112—PAGE 678, 250-2114—PAGE 515, 276-4480—PAGE 850, 276-4483—PAGE 851. CANNOT BE USED WITH 246-8384—PAGE 410, WINCH AR-TOWING

AN ATTACHMENT

TYPE 1

SMCS-6310 **i02581586**

NOTE	REF NO	GRAPHIC REF	PART NUMBER	QTY	PART NAME 1 2 3 4 5 6 (PRODUCT LEVEL)	SEE PAGE
Y	1	1	**227-0842**	1	CYLINDER GP-RIPPER	521
Y	2	1	*240-1471*	1	RIPPER GP	846
Y	3	1	*240-1476*	1	MOUNTING GP-RIPPER	840
Y	4	1	*253-1698*	1	LINES GP-RIPPER	554
	5	1	**8M-3494**	1	PLATE-SERIAL NUMBER (RIPPER)	
	6	1	**4B-4158**	2	SCREW-DRIVE (NO 4X0.25-IN)	
F			**7X-3229**	4	FILM-INSTRUCTION (LIFT EYE, TIE-DOWN LOCATION)	
					ON SIDE OF TRACK ROLLER FRAME, BETWEEN FRONT IDLER & ROLLER & ON SIDE OF RIPPER FRAME BY REAR LIFT CYL PIN	
					(2 EACH SIDE)	
F			**7X-7644**	5	FILM-INFORMATION (TIE-DOWN)	
					1-BY FRONT TOWING EYE	
					BETWEEN FRONT & REAR IDLERS & ON SIDE OF RIPPER FRAME BY REAR LIFT CYL PIN (2 EACH SIDE)	

F-NOT SHOWN
Y-SEPARATE ILLUSTRATION

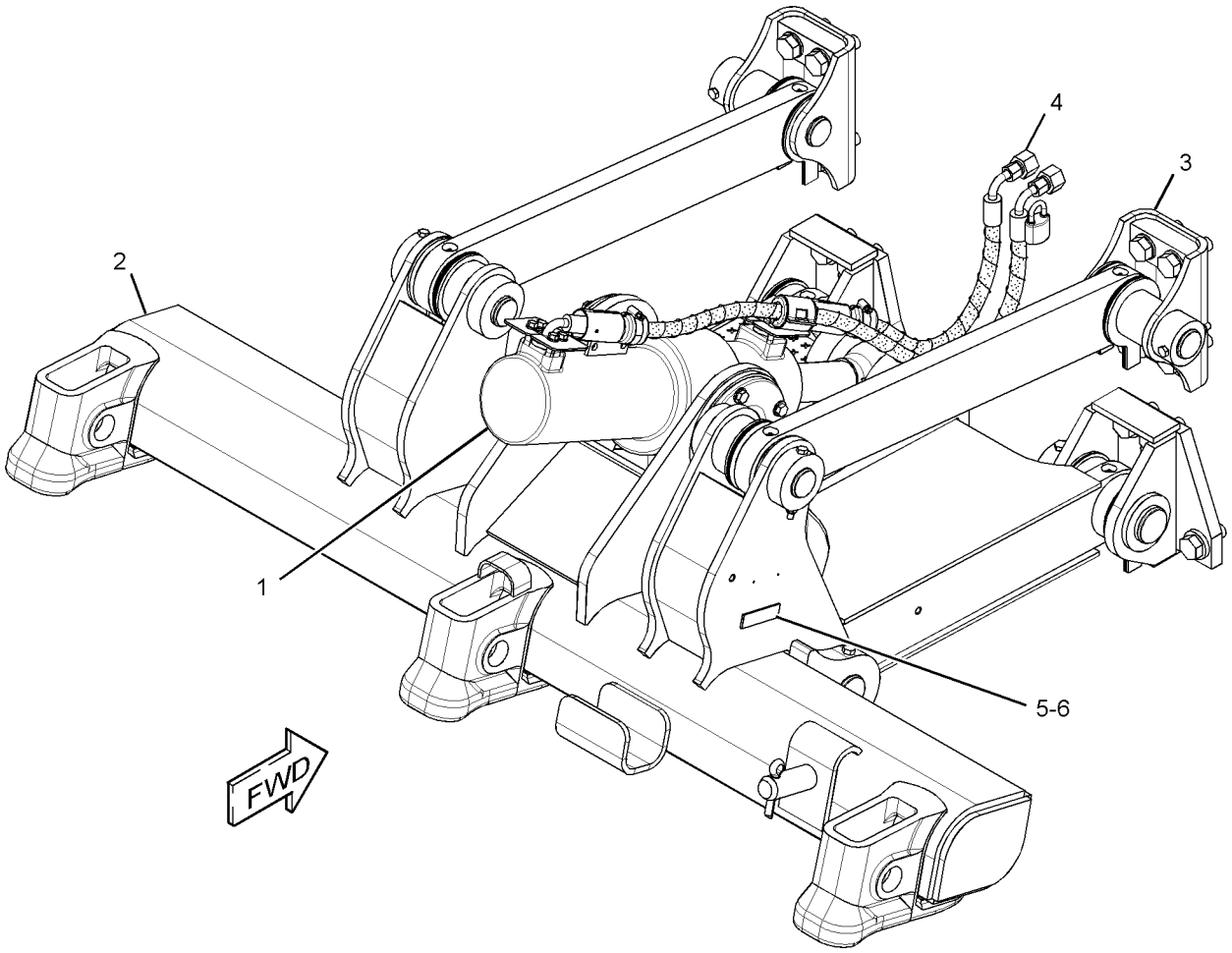

GRAPHIC #1 **<END>** g01301344

WORK TOOLS

240-1470 RIPPER AR

S/N: 4041-UP

FOR USE WITH 250-3852—PAGE 528, 250-2112—PAGE 678, 250-2114—PAGE 515, 276-4480—PAGE 850, 276-4483—PAGE 851. CANNOT BE USED WITH 246-8384—PAGE 410, WINCH AR-TOWING

AN ATTACHMENT

TYPE 2

SMCS-6310 **i03708580**

NOTE	REF NO	GRAPHIC REF	PART NUMBER	QTY	PART NAME 1 2 3 4 5 6 (PRODUCT LEVEL)	SEE PAGE
Y	1	1	**227-0842**	1	CYLINDER GP-RIPPER	521
Y	2	1	*240-1471*	1	RIPPER GP	846
Y	3	1	*240-1476*	1	MOUNTING GP-RIPPER	840
Y	4	1	*253-1698*	1	LINES GP-RIPPER	554
	5	1	**8M-3494**	1	PLATE-SERIAL NUMBER (RIPPER)	
	6	1	**4B-4158**	2	SCREW-DRIVE (4X0.25-IN)	
F			**7X-7644**	2	FILM-INFORMATION (TIE-DOWN) (ON REAR OF UNDERCARRIAGE, EACH SIDE)	

F-NOT SHOWN
Y-SEPARATE ILLUSTRATION

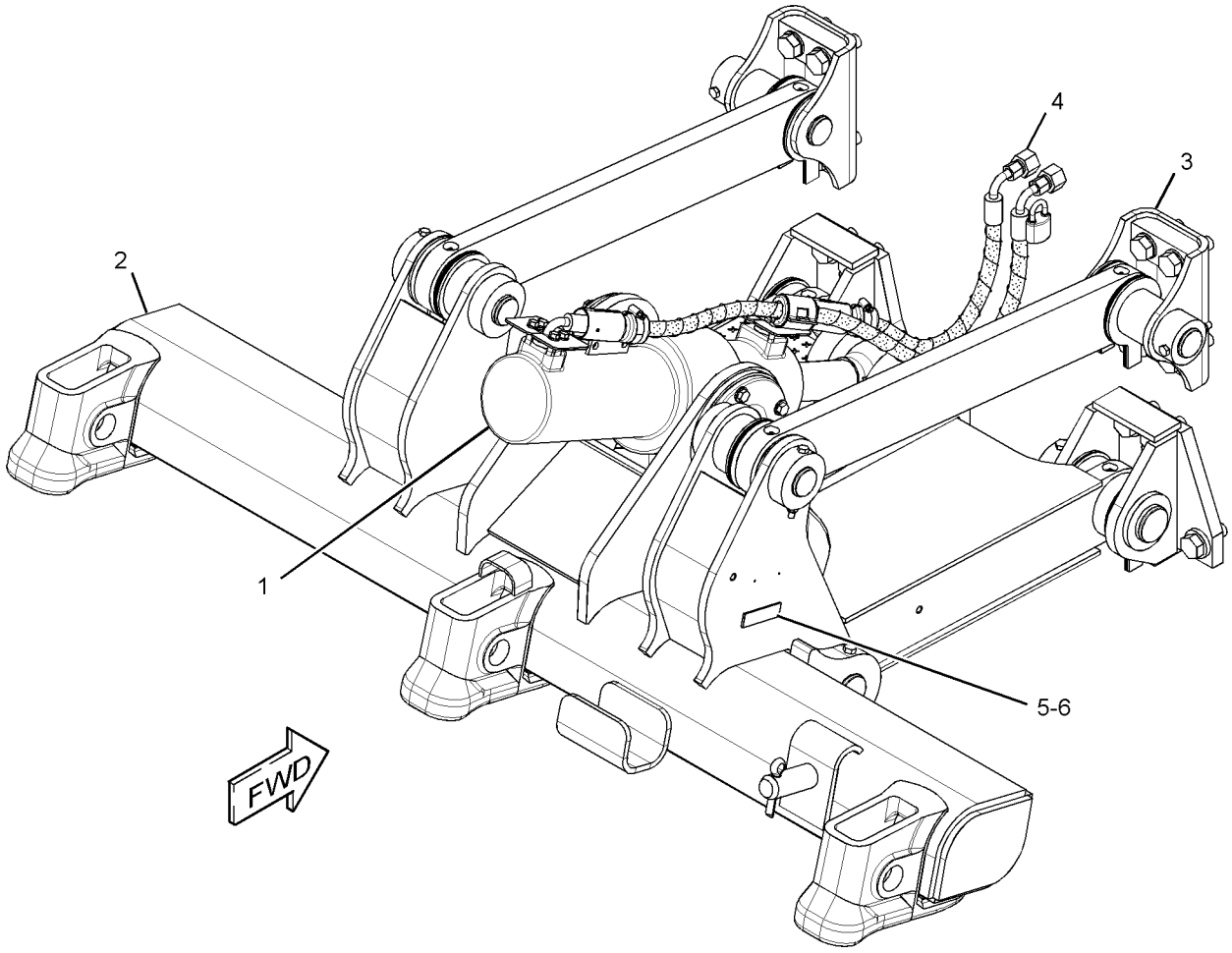

GRAPHIC #1 **<END>** g01301344

240-1470 RIPPER AR

S/N: 4041-UP

FOR USE WITH 250-3852—PAGE 528, 250-2112—PAGE 678, 250-2114—PAGE 515, 276-4480—PAGE 850, 276-4483—PAGE 851. CANNOT BE USED WITH 246-8384—PAGE 410, WINCH AR-TOWING

AN ATTACHMENT

TYPE 3

SMCS-6310 **i03708581**

NOTE	REF NO	GRAPHIC REF	PART NUMBER	QTY	PART NAME 1 2 3 4 5 6 (PRODUCT LEVEL)	SEE PAGE
CY	1	1	**325-5723**	1	CYLINDER GP-RIPPER	523
Y	2	1	*240-1471*	1	RIPPER GP	846
Y	3	1	*240-1476*	1	MOUNTING GP-RIPPER	840
Y	4	1	*253-1698*	1	LINES GP-RIPPER	554
	5	1	**8M-3494**	1	PLATE-SERIAL NUMBER (RIPPER)	
	6	1	**4B-4158**	2	SCREW-DRIVE (4X0.25-IN)	
F			**7X-7644**	2	FILM-INFORMATION (TIE-DOWN) (ON REAR OF UNDERCARRIAGE, EACH SIDE)	

C-CHANGE FROM PREVIOUS TYPE
F-NOT SHOWN
Y-SEPARATE ILLUSTRATION

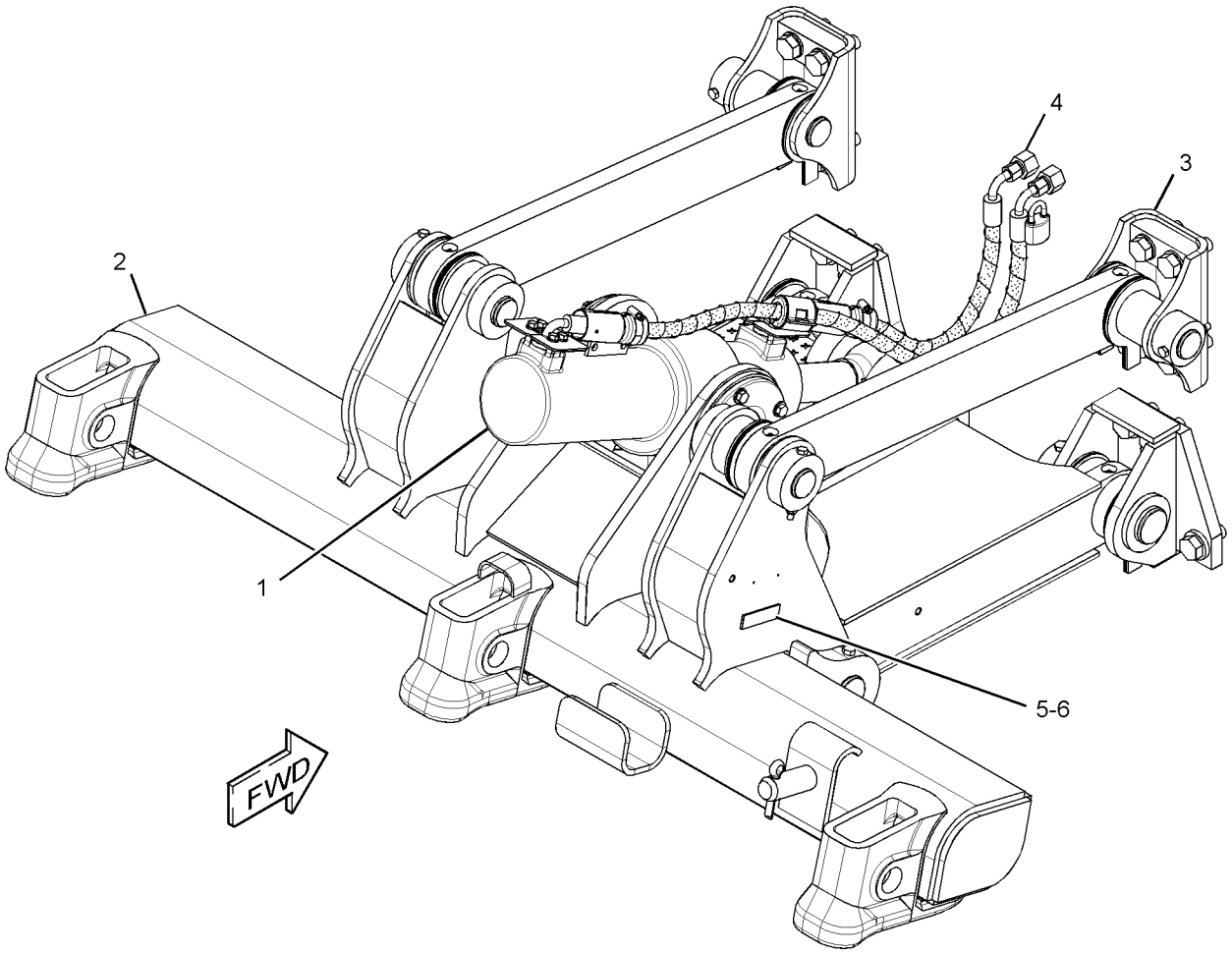

GRAPHIC #1 **<END>** g01301344

WORK TOOLS

240-1471 RIPPER GP

S/N: 4041-UP
PART OF 240-1470 RIPPER AR
AN ATTACHMENT

SMCS-6310, 6325 **i02973814**

NOTE	REF NO	GRAPHIC REF	PART NUMBER	QTY	PART NAME 1 2 3 4 5 6 (PRODUCT LEVEL)	SEE PAGE
	1	1	**2K-0703**	1	BAR	
	2	1	**3B-8489**	11	FITTING-GREASE	
	3	1	**3K-8510**	1	PIN	
	4	1	**4K-3004**	2	BEARING-TRUNNION SUPPLEMENTARY	
B	5	1	**9N-4449**	6	SPACER (68X121X1.5-MM THK)	
B	6	1	**9N-4450**	2	SPACER (68X120X5-MM THK)	
B	7	1	**193-3074**	4	SPACER (52X120X5-MM THK)	
	8	1	**240-1472**	1	LINK AS	
		1	**240-1473**	1	LINK AS-LOWER	
		1	**9W-0099**	4	BEARING-SLEEVE	
	9	1	**240-1477**	1	CARRIAGE AS	
	10	1	**240-1478**	2	LINK AS	
					(EACH INCLUDES)	
		1	**7J-9682**	2	BEARING-SLEEVE	
	11	1	**240-1490**	2	PIN	
	12	1	**240-1491**	2	PIN	
	13	1	**3B-5325**	1	PIN-COTTER	
M	14	1	**6V-7744**	2	LOCKNUT (M10X1.5-THD)	
M	15	1	**7X-2543**	2	BOLT (M10X1.5X120-MM)	
M	16	1	**8T-4139**	2	BOLT (M12X1.75X30-MM)	
	17	1	**8T-4223**	18	WASHER-HARD (13.5X25.5X3-MM THK)	
M	18	1	**8T-4244**	10	NUT (M12X1.75-THD)	
M	19	1	**8T-4648**	8	BOLT (M12X1.75X70-MM)	
M	20	1	**8T-7930**	2	BOLT (M12X1.75X160-MM)	
B	21	1	**193-3075**	10	SPACER (52X121X1.5-MM THK)	
M	22	1	**7X-2548**	6	BOLT (M12X1.75X16-MM)	

B-USE AS REQUIRED
M-METRIC PART

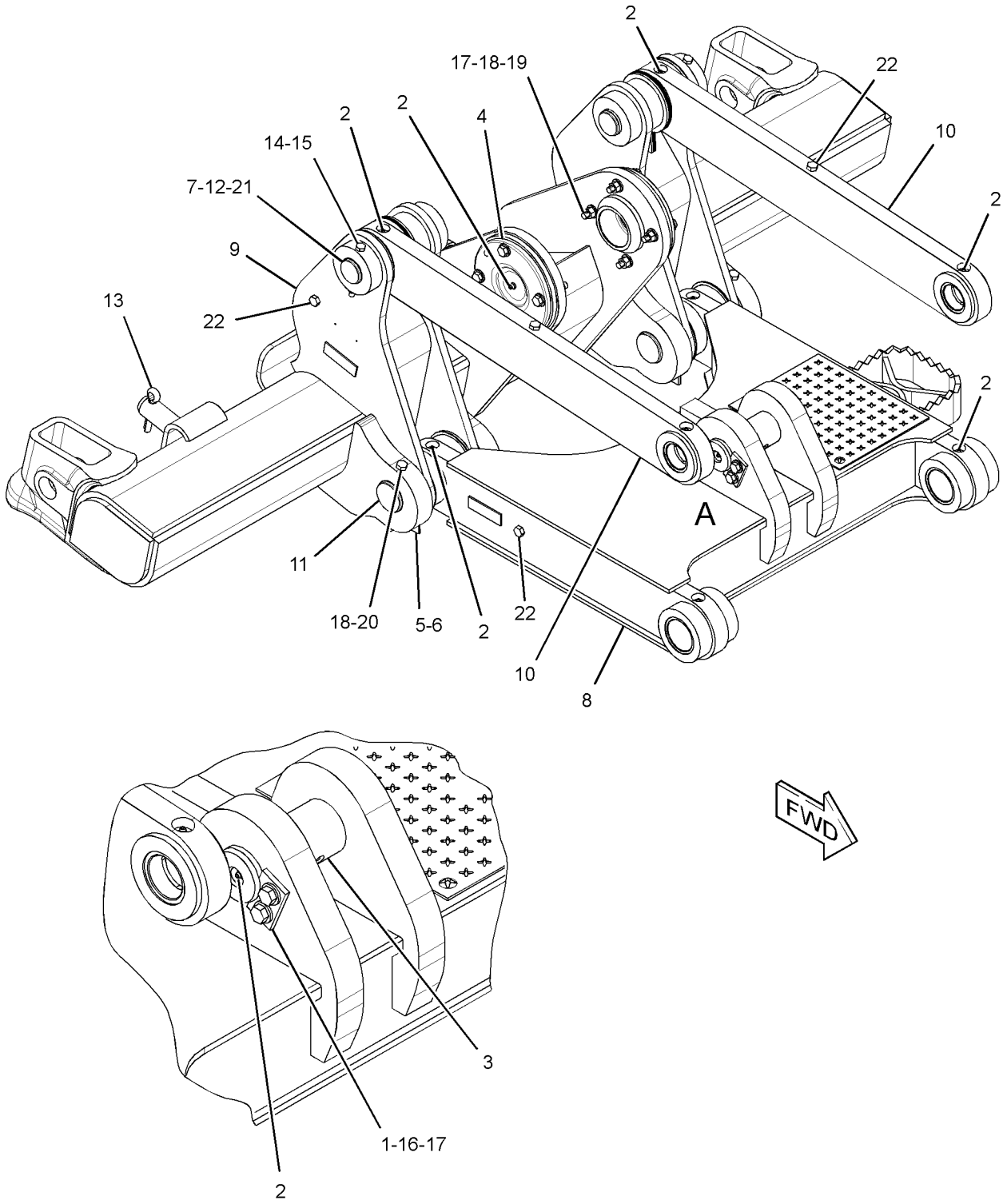

VIEW OF AREA A

GRAPHIC #1 **<END>** g01511214

WORK TOOLS

3G-0109 TOOTH GP-RIPPER—CURVED

S/N: DHA1-UP; FBH1-UP
PART OF 276-4480 TOOTH GP-RIPPER
AN ATTACHMENT

SMCS-6808, 6810 **i01139798**

NOTE	REF NO	GRAPHIC REF	PART NUMBER	QTY	PART NAME 1 2 3 4 5 6 (PRODUCT LEVEL)	SEE PAGE
	1	1	**3B-5325**	2	PIN-COTTER	
	2	1	**2K-6413**	1	PIN	
	3	1	**9J-8913**	1	SHANK-RIPPER	
	4	1	**136-8308**	1	PIN	
	5	1	**6Y-0309**	1	TIP-RIPPER	
	6	1	**114-0359**	1	RETAINER AS	

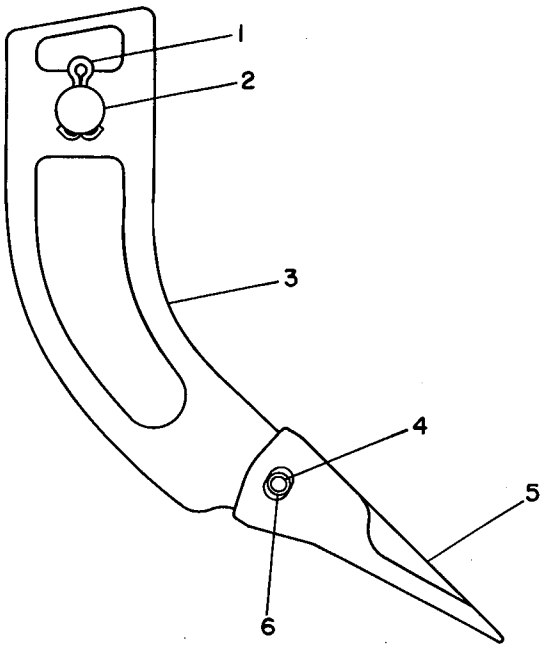

GRAPHIC #1 **<END>** g00173601

WORK TOOLS

8J-1434 TOOTH GP-RIPPER—STRAIGHT

S/N: DHA1-UP; FBH1-UP
PART OF 276-4483 TOOTH GP-RIPPER
AN ATTACHMENT

SMCS-6808, 6810 **i01142861**

NOTE	REF NO	GRAPHIC REF	PART NUMBER	QTY	PART NAME 1 2 3 4 5 6 (PRODUCT LEVEL)	SEE PAGE
	1	1	**3B-5325**	2	PIN-COTTER	
	2	1	**2K-6413**	1	PIN	
	3	1	**9J-6586**	1	SHANK	
	4	1	**136-8308**	1	PIN	
	5	1	**6Y-0309**	1	TIP-RIPPER	
	6	1	**114-0359**	1	RETAINER AS	

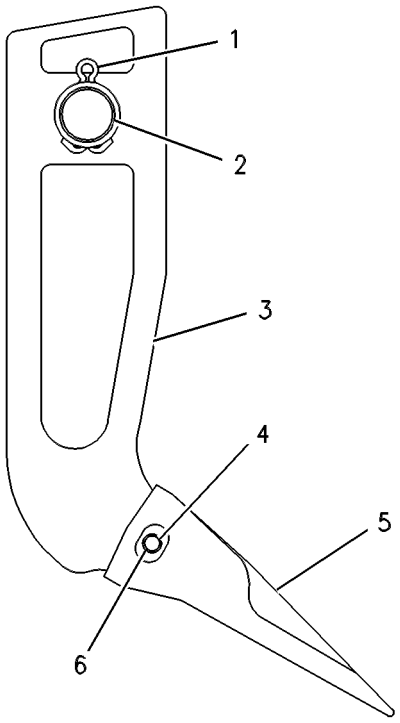

GRAPHIC #1 **<END>** g00287831

WORK TOOLS

276-4480 TOOTH GP-RIPPER

S/N: DHA1-UP; FBH1-UP

FOR USE WITH 240-1470—PAGE 842. CANNOT BE USED WITH 276-4483—PAGE 851 AN ATTACHMENT

SMCS-6808, 6810 **i02397613**

NOTE	REF NO	GRAPHIC REF	PART NUMBER	QTY	PART NAME 1 2 3 4 5 6 (PRODUCT LEVEL)	SEE PAGE
Y	1	1	*3G-0109*	3	TOOTH GP-RIPPER	848

Y-SEPARATE ILLUSTRATION

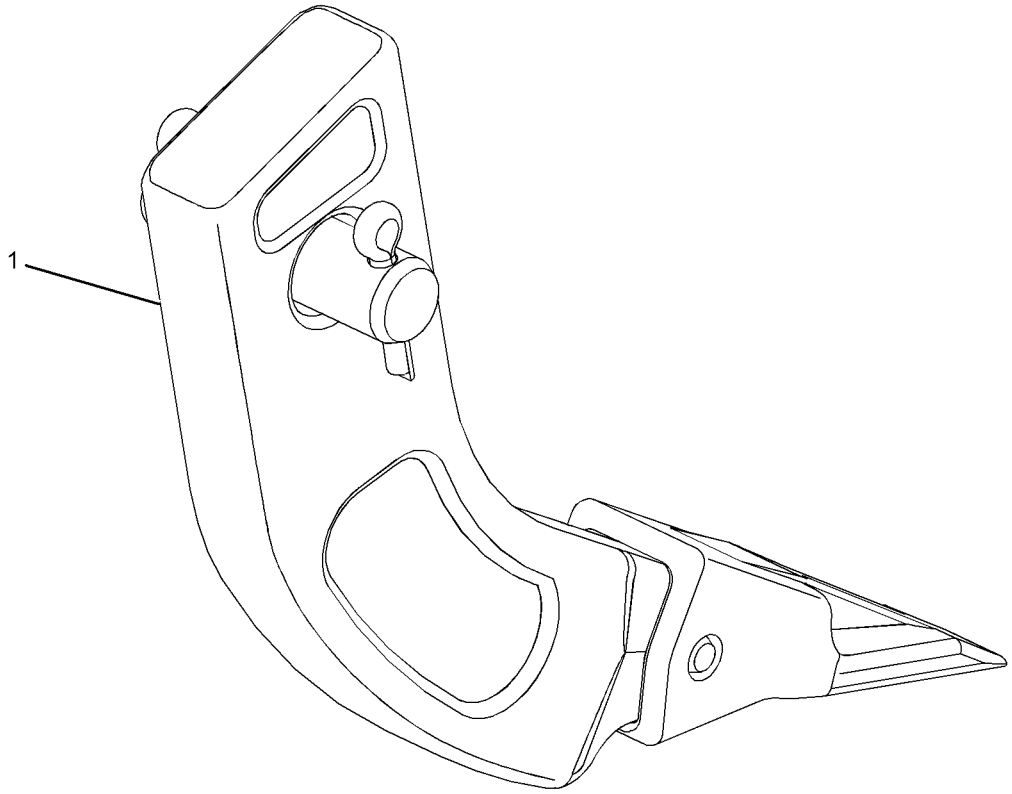

GRAPHIC #1 **<END>** g01199264

WORK TOOLS

276-4483 TOOTH GP-RIPPER

S/N: DHA1-UP; FBH1-UP

FOR USE WITH 240-1470—PAGE 842. CANNOT BE USED WITH 276-4480—PAGE 850 AN ATTACHMENT

SMCS-6808, 6810 **i02397636**

NOTE	REF NO	GRAPHIC REF	PART NUMBER	QTY	PART NAME 1 2 3 4 5 6 (PRODUCT LEVEL)	SEE PAGE
Y	1	1	*8J-1434*	3	TOOTH GP-RIPPER	849

Y-SEPARATE ILLUSTRATION

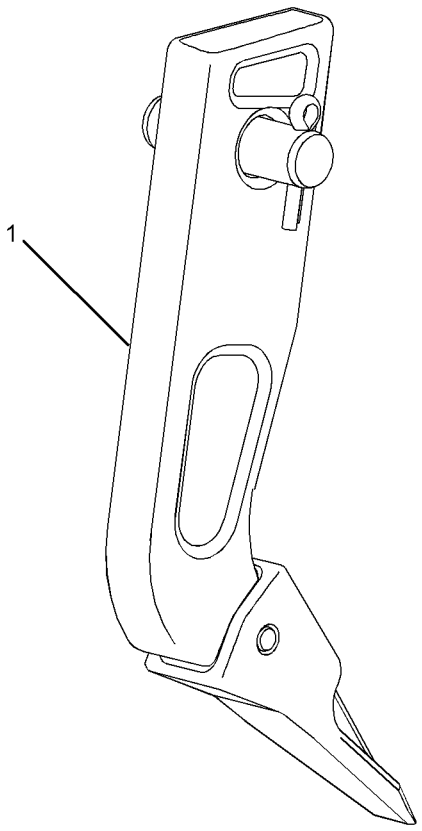

GRAPHIC #1 **<END>** g01199294

SERVICE EQUIPMENT AND SUPPLIES

277-8361 FILM GP

S/N: FBH1-UP

PART OF 206-7244 PLATE & FILM GP

SMCS-7000 **i02743243**

NOTE	REF NO	GRAPHIC REF	PART NUMBER	QTY	PART NAME 1 2 3 4 5 6 (PRODUCT LEVEL)	SEE PAGE
	1	1	**277-8374**	1	FILM-STRIPE (CAT D6K LGP, LH)	
	2	1	**277-8373**	1	FILM-STRIPE (CAT D6K LGP, RH)	
	3	1	**277-8362**	1	FILM-IDENTIFICATION (CAT) (REAR)	
	4	1	**277-8365**	1	FILM-IDENTIFICATION (CATERPILLAR) (FRONT)	
	5	1	**253-0861**	2	FILM-INFORMATION (CAT POWER, ACERT TECHNOLOGY)	
	6	1	**277-8363**	1	FILM-STRIPE (CAT D6K XL, LH)	
	7	1	**277-8364**	1	FILM-STRIPE (CAT D6K XL, RH)	

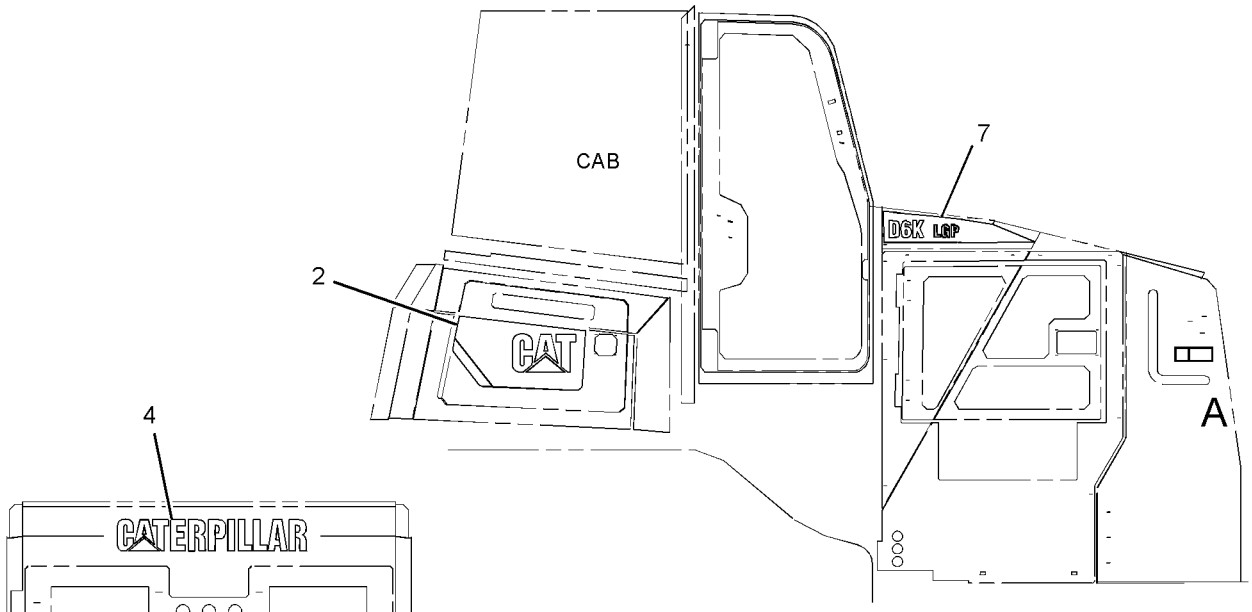

RIGHT SIDE VIEW

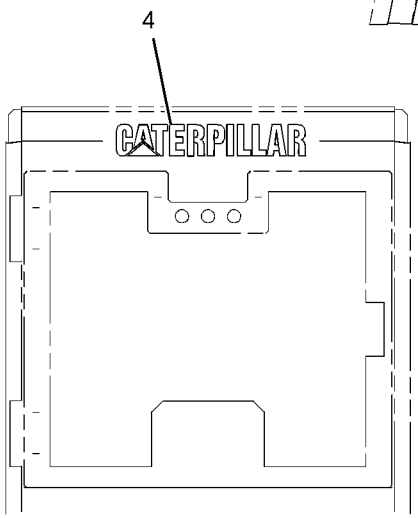

FRONT VIEW

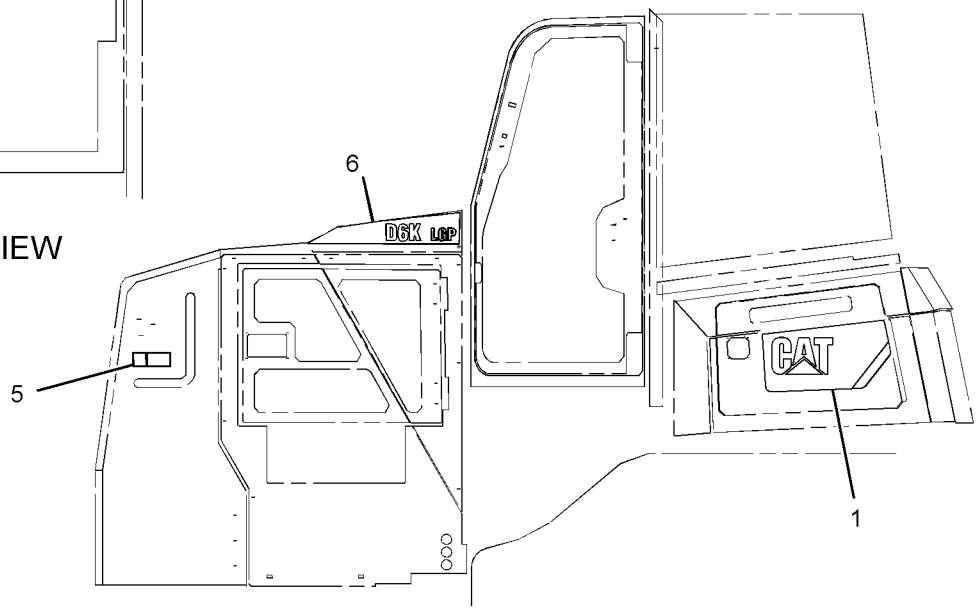

LEFT SIDE VIEW

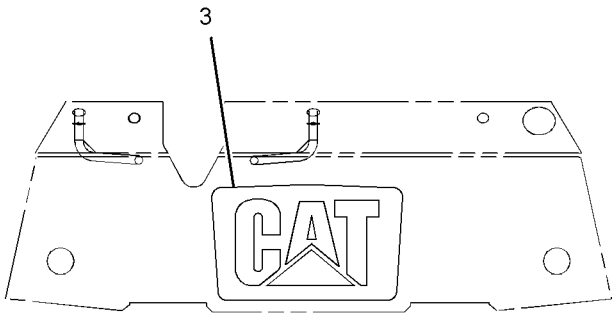

REAR VIEW

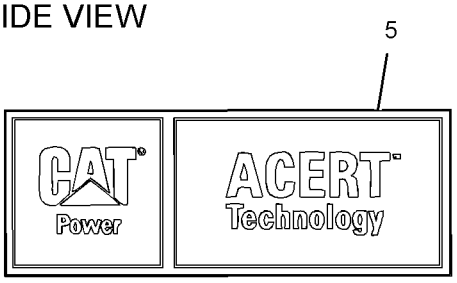

VIEW OF AREA A

GRAPHIC #1 **<END>** g01386061

SERVICE EQUIPMENT AND SUPPLIES

277-8371 FILM GP

S/N: DHA1-UP

PART OF 206-7271 PLATE & FILM GP

SMCS-7000 **i02743262**

NOTE	REF NO	GRAPHIC REF	PART NUMBER	QTY	PART NAME 1 2 3 4 5 6 (PRODUCT LEVEL)	SEE PAGE
	1	1	**277-8374**	1	FILM-STRIPE (CAT D6K LGP, LH)	
	2	1	**277-8373**	1	FILM-STRIPE (CAT D6K LGP, RH)	
	3	1	**277-8362**	1	FILM-IDENTIFICATION (CAT) (REAR)	
	4	1	**277-8365**	1	FILM-IDENTIFICATION (CATERPILLAR) (FRONT)	
	5	1	**253-0861**	2	FILM-INFORMATION (CAT POWER, ACERT TECHNOLOGY)	
	6	1	**300-1293**	1	FILM-IDENTIFICATION (D6K LGP, LH)	
	7	1	**300-1294**	1	FILM-IDENTIFICATION (D6K LGP, RH)	

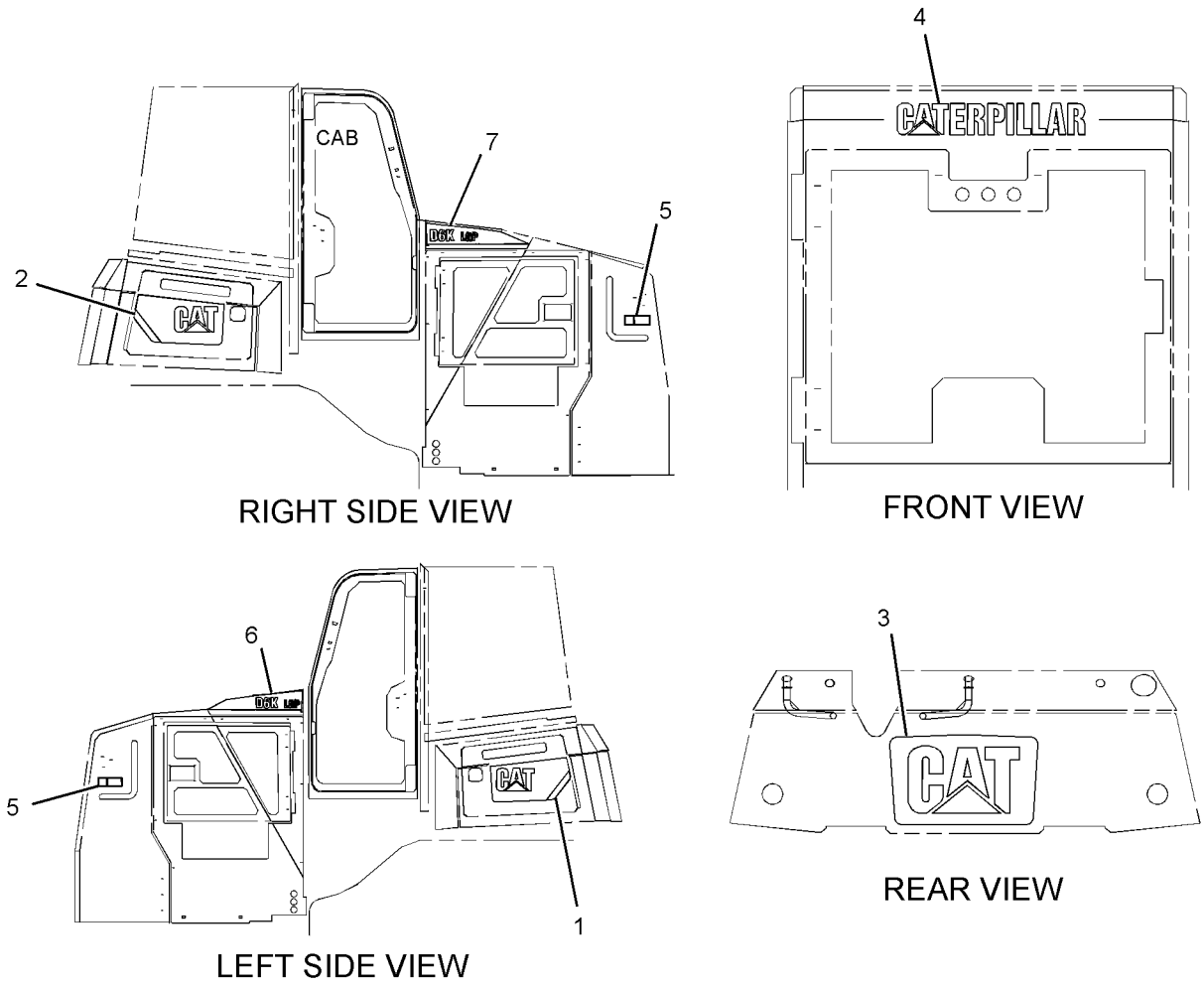

GRAPHIC #1 **<END>** g01386055

SERVICE EQUIPMENT AND SUPPLIES

206-7281 LINES GP-DIAGNOSTIC

S/N: DHA1-UP; FBH1-UP

PART OF 206-7260, 206-7261 POWER TRAIN AR

SMCS-7554 **i02746941**

NOTE	REF NO	GRAPHIC REF	PART NUMBER	QTY	PART NAME 1 2 3 4 5 6 (PRODUCT LEVEL)	SEE PAGE
	1	1	**3S-2093**	5	STRAP-CABLE	
	2	1	**6V-0852**	4	CAP-DUST	
	3	1	**187-3547**	4	COUPLER AS-QUICK DISCONNECT	
	4	1	**187-9008**	4	CAP-DUST	
	5	1	**203-3847**	1	BRACKET AS	
M		1	**170-7491**	1	STUD-WELD (M10X1.5X35-MM OAL)	
	6	1	**214-4643**	2	TAG-IDENTIFICATION (NUMBER ZERO)	
	7	1	**214-4644**	2	TAG-IDENTIFICATION (NUMBER THREE)	
	8	1	**214-4645**	4	TAG-IDENTIFICATION (NUMBER FIVE)	
	9	1	**214-4646**	2	TAG-IDENTIFICATION (NUMBER SIX)	
	10	1	**214-4647**	2	TAG-IDENTIFICATION (NUMBER EIGHT)	
	11	1	**214-4648**	2	TAG-IDENTIFICATION (NUMBER NINE)	
	12	1	**215-7487**	1	HOSE AS (PUMP CASE PRESSURE)	
	13	1	**254-1254**	1	HOSE AS (REAR PUMP PRESSURE, MB PORT)	
	13A	1	**254-1254**	1	HOSE AS (REAR PUMP PRESSURE, G PORT)	
	14	1	**254-1255**	1	HOSE AS (PARKING BRAKE PRESSURE PORT)	
	15	1	**265-5673**	1	BRACKET AS	
	16	1	*148-8318*	1	CONNECTOR AS	
		1	**6V-8634**	1	CONNECTOR	
		1	**3K-0360**	1	SEAL-O-RING	
		1	**6V-8397**	1	SEAL-O-RING	
	17	1	*148-8326*	2	CONNECTOR AS	
					(EACH INCLUDES)	
		1	**6V-9872**	1	CONNECTOR	
		1	**3J-7354**	1	SEAL-O-RING	
		1	**6V-8397**	1	SEAL-O-RING	
	18	1	**148-8367**	1	ELBOW AS	
		1	**6V-9850**	1	ELBOW	
		1	**6V-8397**	1	SEAL-O-RING	
	19	1	*148-8378*	1	ELBOW AS	
		1	**6V-8724**	1	ELBOW	
		1	**3J-1907**	1	SEAL-O-RING	
		1	**6V-8397**	1	SEAL-O-RING	
	20	1	*150-4047*	2	ADAPTER AS	
					(EACH INCLUDES)	
		1	**3J-7354**	1	SEAL-O-RING	
		1	**8T-2353**	1	ADAPTER	
	21	1	*164-5567*	4	COUPLER AS-QUICK DISCONNECT	
					(EACH INCLUDES)	
		1	**6V-3965**	1	FITTING (QUICK DISCONNECT)	
		1	**3J-1907**	1	SEAL-O-RING	
	22	1	**198-4777**	1	WASHER-HARD (11X25X10-MM THK)	
	23	1	**204-5380**	1	HOSE AS (FRONT PUMP PRESSURE, MB PORT)	
	23A	1	**204-5380**	1	HOSE AS (FRONT PUMP PRESSURE, G PORT)	
	24	1	*260-9187*	6	CONNECTOR AS	
					(EACH INCLUDES)	
		1	**8T-9358**	1	CONNECTOR	
		1	**6V-8397**	1	SEAL-O-RING	
	25	1	**4D-7388**	3	CLIP	
	26	1	**6K-8179**	1	CLIP	
	27	1	**6V-9168**	6	NUT (11/16-16-THD)	
	28	1	**8T-4121**	6	WASHER-HARD (11X21X2.5-MM THK)	
M	29	1	**8T-4133**	1	NUT (M10X1.5-THD)	
M	30	1	**8T-4137**	5	BOLT (M10X1.5X20-MM)	
M	31	1	**8T-4195**	1	BOLT (M10X1.5X30-MM)	
E	32	1	**9X-8705**		CONDUIT-FLEXIBLE (75-CM)	

SERVICE EQUIPMENT AND SUPPLIES

206-7281 **LINES GP-DIAGNOSTIC** *(contd.)* **i02746941**

NOTE	REF NO	GRAPHIC REF	PART NUMBER	QTY	PART NAME 1 2 3 4 5 6 (PRODUCT LEVEL)	SEE PAGE
	33	1	**254-1387**	1	FILM-IDENTIFICATION (DIAGNOSTICS PANEL)	

E-ORDER BY THE CENTIMETER
M-METRIC PART

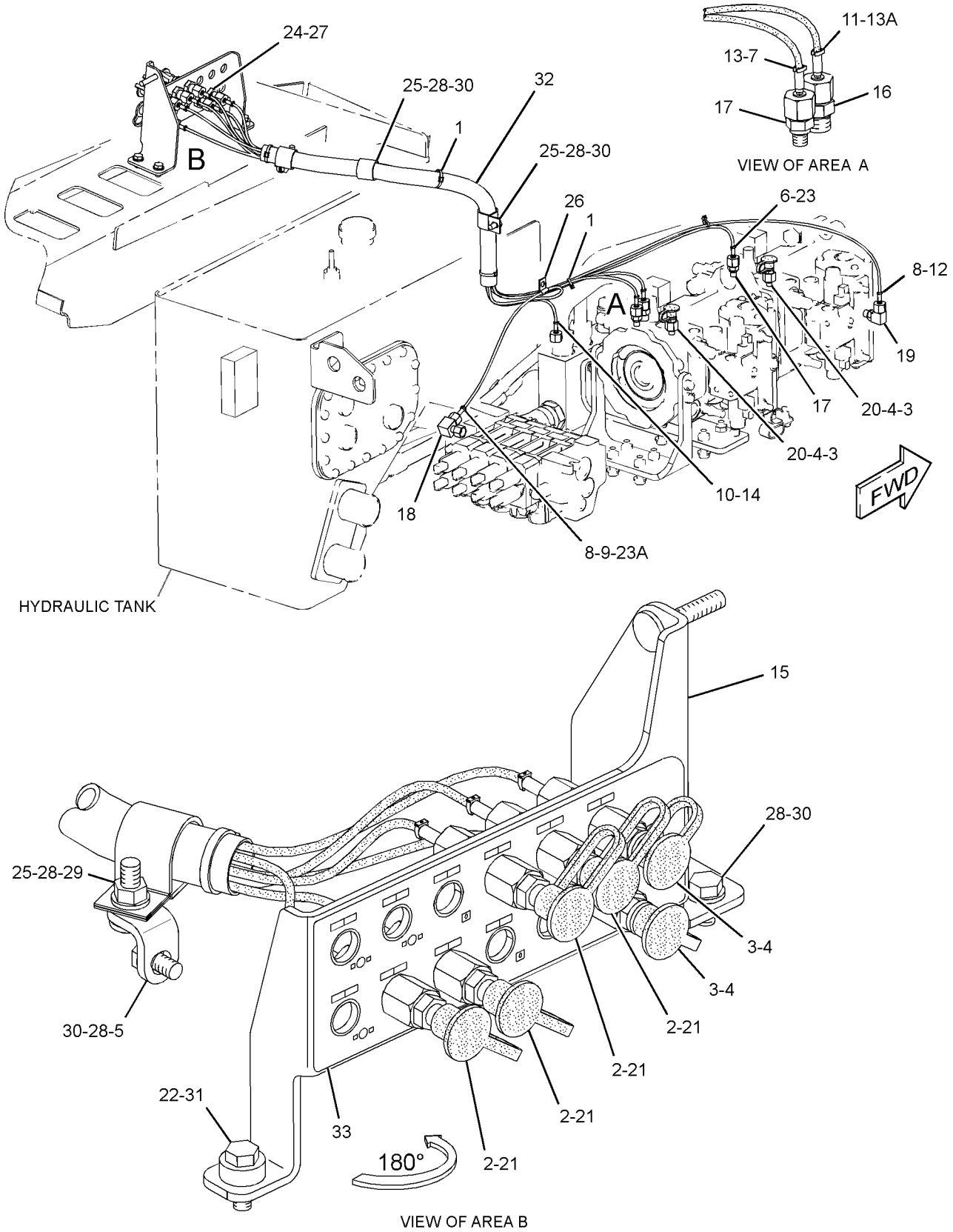

GRAPHIC #1 **<END>** g01383675

SERVICE EQUIPMENT AND SUPPLIES

206-7244 PLATE & FILM GP

S/N: FBH1-UP

PART OF 206-7260 POWER TRAIN AR

SMCS-7557, 7563 **i03598920**

NOTE	PART NUMBER	QTY	PART NAME 1 2 3 4 5 6 (PRODUCT LEVEL)	SEE PAGE
Y	*277-8361*	1	FILM GP	852
	131-0359	1	PLATE-IDENTIFICATION (ENGINE STOP, RUN)	
			(NEAR TO THE ENGINE SHUTDOWN SWITCH)	
	239-6986	1	PLATE-IDENTIFICATION (MACHINE)	
			(ON LH REAR OF CASE)	
	174-4590	1	PLATE-INFORMATION (SERVICE INFORMATION NUMBERS)	
			(ON THE INSIDE OF THE CAB ON THE REAR LEFT C POST)	
	190-5386	2	FILM-STRIPE (ROUND RED REFLECTIVE)	
			(ON THE RH & LH SIDE OF THE FUEL TANK COVER)	
	286-8141	1	FILM-IDENTIFICATION (COMPACT INSTRUMENT CLUSTER)	
			(INSIDE THE LEFT CONSOLE STORAGE DOOR, INSIDE THE CAB)	
	8C-5897	1	FILM-IDENTIFICATION (SIGHT GAUGE) (HYDRAULIC OIL LEVEL)	
			(ON THE REAR COVER, LH SIDE OF MACHINE NEAR THE OPENING SIGHT GAUGE)	
	277-7087	1	FILM-INFORMATION (LUBRICATION, MAINTENANCE)	
			(ON THE INSIDE COVER OF THE HYDRAULIC VALVE ACCESS)	
	7X-7644	4	FILM-INFORMATION (TIE-DOWN)	
			(ONE BY FRONT TOWING EYE)	
			(ONE AT REAR HITCH CLEVIS (DRAWBAR OR WINCH ONLY)	
			(ON SIDE OF TRACK FRAME CENTERED BETWEEN FRONT & REAR IDLERS EACH SIDE)	
	134-7258	2	FILM-INFORMATION (EXTENDED LIFE COOLANT,READ OMM)	
			(ONE ON UNDERSIDE OF RADIATOR FILL DOOR)	
			(ONE OUTSIDE THE TRAP OF THE FRONT GUARD BOTTOM)	
	307-6202	1	FILM-INSTRUCTION (AIR FILTER SERVICE, READ OMM)	
			(LEFT SIDE ON AIR CLEANER END COVER ASSEMBLY)	
	211-0686	1	FILM-INSTRUCTION (BATTERY DISCONNECT)	
			(ON BATTERY DISCONNECT SWITCH)	
	7X-3229	4	FILM-INSTRUCTION (LIFT EYE, TIE-DOWN LOCATION)	
			(WITHOUT RIPPER)	
			(ON SIDE OF TRACK FRAME BETWEEN FRONT IDLER & ROLLER & BETWEEN REAR IDLER & ROLLER EACH SIDE)	
			(WITH RIPPER)	
			(ON SIDE OF TRACK ROLLER FRAME BETWEEN FRONT IDLER & ROLLER & ON THE RIPPER BEAM AS EACH SIDE)	
	9X-6340	1	FILM-INSTRUCTION (ENGINE OIL)	
			(ON OR NEAR ENGINE OIL FILL TUBE)	
	158-7864	1	FILM-IDENTIFICATION (HYDRAULIC OIL)	
			(LH REAR SIDE, INSIDE HYDRAULIC ACCESS DOOR ON THE FILLER SPOUT)	
	268-8670	1	FILM-INSTRUCTION (ALTERNATOR BELT MOUNTING)	
			(ON THE MUFFLER BRACKET ABOVE THE ALTERNATOR)	

Y-SEPARATE ILLUSTRATION

<END>

206-7271 PLATE & FILM GP

S/N: DHA1-UP

PART OF 206-7261 POWER TRAIN AR

SMCS-7557, 7563 **i03598921**

NOTE	PART NUMBER	QTY	PART NAME 1 2 3 4 5 6 (PRODUCT LEVEL)	SEE PAGE
Y	*277-8371*	1	FILM GP	854
	131-0359	1	PLATE-IDENTIFICATION (ENGINE STOP, RUN)	
			(NEXT TO ENGINE SHUTDOWN SWITCH)	
	239-6986	1	PLATE-IDENTIFICATION (MACHINE)	
			(ON LH REAR OF CASE)	
	174-4590	1	PLATE-INFORMATION (SERVICE INFORMATION NUMBERS)	
			(INSIDE CAB ON REAR LEFT C POST)	
	190-5386	2	FILM-STRIPE (ROUND RED REFLECTIVE)	
			(1-ON LH SIDE OF FUEL TANK)	
			(1-ON RH SIDE OF FUEL TANK)	
	286-8141	1	FILM-IDENTIFICATION (COMPACT INSTRUMENT CLUSTER)	
			(INSIDE THE LEFT CONSOLE STORAGE DOOR, IN THE CAB)	
	8C-5897	1	FILM-IDENTIFICATION (SIGHT GAUGE)	
			(ON THE REAR COVER, LEFT SIDE OF THE MACHINE NEAR THE OPENING SIDE GAGE)	
	7X-7644	4	FILM-INFORMATION (TIE-DOWN)	
			WITHOUT RIPPER	
			(1-BY FRONT TOWING EYE)	
			(1-AT REAR HITCH CLEVIS, DRAWBAR OR WINCH ONLY)	
			(1-ON LH SIDE OF TRACK FRAME. CENTERED BETWEEN FRONT & REAR IDLERS)	
			(1-ON RH SIDE OF TRACK FRAME. CENTERED BETWEEN FRONT & REAR IDLERS)	
	134-7258	1	FILM-INFORMATION (EXTENDED LIFE COOLANT,READ OMM)	
			(UNDERSIDE OF DOOR TO RADIATOR FILL)	
	277-7087	1	FILM-INFORMATION (LUBRICATION, MAINTENANCE)	
			(RH SIDE OF THE MACHINE, ON THE INSIDE COVER OF THE HYD VALVE ACCESS)	
	307-6202	1	FILM-INSTRUCTION (AIR FILTER SERVICE, READ OMM)	
			(ON AIR CLEANER END COVER ASSEMBLY)	
	211-0686	1	FILM-INSTRUCTION (BATTERY DISCONNECT)	
			(ON BATTERY DISCONNECT SWITCH)	
	268-8670	1	FILM-INSTRUCTION (ALTERNATOR BELT MOUNTING)	
			(ON MUFFLER BRACKET, ABOVE ALTERNATOR)	
	7X-3229	4	FILM-INSTRUCTION (LIFT EYE, TIE-DOWN LOCATION)	
			WITHOUT RIPPER	
			(1-ON LH SIDE OF TRACK ROLLER FRAME BETWEEN FRONT IDLER & FRONT ROLLER)	
			(1-ON RH SIDE OF TRACK ROLLER FRAME BETWEEN FRONT IDLER & FRONT ROLLER)	
			(1-ON LH SIDE OF TRACK ROLLER FRAME BETWEEN REAR IDLER & REAR ROLLER)	

206-7271 **PLATE & FILM GP** *(contd.)* **i03598921**

NOTE	PART NUMBER	QTY	PART NAME 1 2 3 4 5 6 (PRODUCT LEVEL)	SEE PAGE
			(1-ON RH SIDE OF TRACK ROLLER FRAME BETWEEN REAR IDLER & REAR ROLLER)	
	9X-6340	1	FILM-INSTRUCTION (ENGINE OIL)	
			(ON ENGINE OIL FILL TUBE)	
	158-7864	1	FILM-IDENTIFICATION (HYDRAULIC OIL)	
			(INSIDE HYDRAULIC OIL ACCESS DOOR BY FILLER SPOUT)	
Y-SEPARATE ILLUSTRATION				

<END>

206-7288 PLATE & FILM GP—U.S.

S/N: DHA1-UP; FBH1-UP
CANNOT BE USED WITH 206-7289—PAGE 861
AN ATTACHMENT

SMCS-7557, 7563 **i02955977**

NOTE	PART NUMBER	QTY	PART NAME 1 2 3 4 5 6 (PRODUCT LEVEL)	SEE PAGE
	227-7390	1	FILM-WARNING (SEAT BELT)	
			(ON LH SIDE POST INSIDE CAB BELOW THE GRAB IRON)	
	228-2615	1	FILM-WARNING (UNIVERSAL, U.S.)	
			(ON LH SIDE POST INSIDE CAB BELOW THE GRAB IRON)	
	225-0313	1	FILM-WARNING (JUMP START, READ OMM, U.S.)	
			(INSIDE RH BATTERY SERVICE DOOR)	
	288-0661	2	FILM-WARNING (HOT FLUID UND PRESS, READ OMM)	
			(1-UNDERSIDE OF DOOR TO RADIATOR FILL	
			1-OUTSIDE THE TRAP OF THE FRONT GUARD BOTTOM)	
	242-5055	2	FILM-WARNING (NO STEP)	
			(ON RH & LH BLADE ANGLE CYLINDER)	
	260-7652	1	FILM-WARNING (PRODUCT LINK 300, U.S.)	
			(ON ROPS C POST COVER)	
	299-7883	1	FILM-WARNING (DO NOT USE ETHER, READ OMM)	
			(NEXT TO THE FILM AIR CLEANER)	

<END>

206-7289 PLATE & FILM GP—INTERNATIONAL

S/N: DHA1-UP; FBH1-UP
CANNOT BE USED WITH 206-7288—PAGE 860
AN ATTACHMENT

SMCS-7557, 7563 **i02956004**

NOTE	PART NUMBER	QTY	PART NAME 1 2 3 4 5 6 (PRODUCT LEVEL)	SEE PAGE
	227-7391	1	FILM-WARNING (SEAT BELT, INTERNATIONAL)	
			ON LH SIDE POST INSIDE CAB BELOW THE GRAB IRON	
	228-2616	1	FILM-WARNING (UNIVERSAL, READ OMM, INTL)	
			ON LH SIDE POST INSIDE CAB BELOW THE GRAB IRON	
	225-0312	1	FILM-WARNING (JUMP START, READ OMM)	
			INSIDE RH BATTERY SERVICE DOOR	
	288-0662	2	FILM-WARNING (HOT FLUID UND PRESS, READ OMM)	
			1-ON UNDERSIDE OF DOOR TO RADIATOR FILL	
			1-OUTSIDE THE TRAP OF THE FRONT GUARD BOTTOM	
	242-5054	2	FILM-WARNING (NO STEP)	
			ON RH & LH BLADE CYLINDER	
	260-7653	1	FILM-WARNING (PRODUCT LINK, READ OMM)	
			ON ROPS C POST COVER	
	293-9659	2	FILM-WARNING (UNIVERSAL, READ OMM) (UNIVERSAL)	
			AT THE FRONT OF THE ENGINE EITHER SIDE OF THE TOP COVER	
			1-ON THE LH SIDE OF THE BASE SECTION	
			1-ON THE RH SIDE OF THE LID SECTION	
	293-6467	2	FILM-WARNING (DO NOT USE ETHER, READ OMM)	
			FORWARD OF THE INDUCTED ELBOW	
	293-6468	1	FILM-WARNING (HIGH PRESSURE, READ OMM)	
			ON THE FUEL MANIFOLD	

<END>

249-3097 PLATE & FILM GP—BIODEGRADABLE HYDRAULIC OIL

S/N: DHA1-UP; FBH1-UP
SAE 10W
AN ATTACHMENT

SMCS-7557, 7563 **i02582499**

NOTE	PART NUMBER	QTY	PART NAME 1 2 3 4 5 6 (PRODUCT LEVEL)	SEE PAGE
	141-6968	1	FILM-IDENTIFICATION (BIODEGRADABLE HYDRAULIC OIL)	
			NEAR THE HYDRAULIC CONTROL OIL FILLER TUBE	

<END>

MEMORANDA

PART NUMBER INDEX

Part	Page
0	
0T-0489	780
1	
1B-3057	739
1B-3978	346
	350
1B-3980	346
	350
1B-8736	9
	25
	43
	45
1D-5117	198
1F-7567	84
1G-3176	379
	381
	580
1G-3180	580
1G-3410	585
1G-7407	356
	357
1G-8878	344
	345
1H-3244	193
	700
	702
	704
	706
	708
	710
	712
	714
	716
	718
	720
	722
1H-8128	114
	488
	489
1J-9671	114
1K-4649	636
	724
1K-6985	458
	459
1L-5081	554
1M-4543	226
	228
	230
	232
	235
	238
1M-6119	313
	314
	320
	321
1M-6120	313
	314
	320
	321
1M-9011	346
	350
1N-3361	142
1P-2943	373
1P-3702	84
	557
	562
1P-3703	364
1P-3704	364
1P-3709	548
	551
	574
	577
1P-4278	186
1P-4574	598
	601
	604
	606
1P-4576	521
	523
1P-5767	364
1P-6356	739
1S-0994	314
	321
	545
1S-1015	314
	321
1S-3311	520
	630
1S-4915	313
	320
1S-7251	313
	320
	321
	327
1S-7252	313
	320
1T-1068	579
1U-2827	591
1U-4049	520
1V-1984	327
1W-7117	796
	798
2	
2B-0858	28
	30
	32
	83
	87
2B-0941	252
	254
	259
	314
	321
	327
	739
2B-2695	643
2D-2751	314
	321
2F-5325	523
2H-3922	303
2H-3931	517
2H-4145	469
2H-5549	517
	519
2H-6338	517
2H-6489	346
	350
2H-6490	346
	350
2J-0564	521
2J-3506	834
	835
	836
	837
	838
2J-3950	519
2J-3961	520
2J-6274	495
2J-6540	96
2K-0703	739
	846
2K-2939	346
	350
	370
2K-4096	521
	523
2K-4507	521
	523
2K-4821	193
2K-4973	801
2K-6413	848
	849
2K-8257	378
2K-9111	775
2L-0041	523
2L-8076	276
	280
2M-9780	84
	123
	184
	186
	371
	372
	540
	547
	550
	573
	574
	576
	577
	583
	598
	601
	604
	606
2P-1293	67
	68
	69
	553
	557
	562
2P-1692	356
	357
2P-6470	532
	536
2P-6471	532
	536
2S-3440	12
2S-4078	347
	351
	358
	360
	366
	400
	556
	557
	561
	562
2S-5926	495
2V-8259	248
	250
	252
	254
	257
	259
	274
	309
	311
	314
	321
2W-1145	371
	372
2W-6225	588
2Y-5429	274
2Y-5829	781
	783
	785
	787
3	
3B-4501	640
3B-4508	80
	275
3B-4512	275
3B-4605	406
	408
3B-4618	777
3B-5319	403
	410
3B-5325	846
	848
	849
3B-6488	588
3B-8485	458
	459
3B-8486	532
	536
3B-8489	440
	444
	460
	461
	469
	532
	536
	630
	814
	816
	818
	820
	824

► **PRIMARY REFERENCE**

PART NUMBER INDEX

Part	Page
	826
	828
	846
3C-6969	764
	766
3D-2824	67
	68
	69
	358
	360
	362
	400
	530
	540
	541
	543
	547
	550
	553
	557
	562
	573
	576
	580
	598
	599
	601
	602
	604
	606
3D-5279	123
3E-3365	192
	305
3E-3371	289
	307
3E-3383	290
3E-3892	270
	272
3E-4051	739
3E-4052	739
3E-4057	739
3E-4058	739
3E-4073	739
3E-4313	270
	272
3E-4320	432
3E-4333	775
3E-4352	422
3E-4353	681
	683
	689
	691
	796
	798
3E-5169	313
	320
3E-5239	309
	311
	332
	334
	655
3E-5464	640
3E-6328	▶192
	309
	311
3E-6600	226
	228
	230
	232
	235
	238
3E-6703	520
3E-6760	354
	355
3E-7401	545
3E-7430	67
	68
	69
3E-8008	356
	357
3E-8020	704
	710
	716
	722
3E-8268	432
3E-9865	801
3F-9556	193
	746
	747
	748
	749
	750
	751
	752
3G-0109	▶848
	850
3G-1753	521
3G-1757	521
3G-8932	571
	814
	816
	818
	820
	824
	826
	828
3J-0634	371
	372
3J-1907	84
	118
	287
	314
	322
	338
	340
	344
	345
	354
	355
	360
	364
	368
	392
	393
	394
	400
	545
	547
	548
	550
	551
	557
	562
	563
	574
	576
	577
	580
	588
	598
	601
	604
	606
	855
3J-5389	651
3J-7352	455
	456
3J-7354	186
	338
	340
	356
	357
	360
	455
	456
	525
	548
	551
	557
	561
	563
	573
	576
	580
	583
	598
	601
	604
	606
	619
	855
3J-9545	520
3K-0360	123
	184
	186
	362
	368
	371
	372
	400
	460
	461
	532
	536
	545
	557
	562
	568
	591
	855
3K-8510	846
3P-1210	583
3P-9847	358
	360
	557
3P-9900	800
3R-9965	213
	215
	220
3S-2093	84
	186
	242
	243
	244
	246
	248
	250
	252
	254
	297
	302
	315
	322
	327
	338
	340
	547
	550
	556
	561
	573
	576
	640
	654
	655
	726
	804
	812
	855
3S-6049	313
	320
3S-6050	313
	320
3S-8182	390
3S-8665	315
	322
	332
	334
3S-9182	346
	350
3T-0849	336
	337
3W-3321	764
	766
3W-5159	346
	350
3W-5436	346
	350
3W-5447	346
	350
3W-5451	346
	350
3W-5928	346
	350
4B-4158	814

4

▶ **PRIMARY REFERENCE**

PART NUMBER INDEX

Part	Page	Part	Page	Part	Page	Part	Page
	816	4K-9429	758	4V-8577	800		722
	818	4L-6454	801	4W-3277	547		746
	820	4M-6425	275		550		747
	824	4P-7428	315		573		748
	826		322		576		749
	828	4P-7581	184	4Y-3046	462		750
	842		186				751
	844		213				752
	845		215	**5**			760
4B-4276	633		218				761
4B-4863	274		220	5A-3604	133		762
4B-8774	102		309		134		763
	105		311		135	5C-8312	270
	108		315		177		272
	111		322	5C-2874	732	5C-8465	661
4D-0012	332		327		809		662
	334		332		810	5C-8811	812
	812		334	5C-2890	210	5C-9553	190
4D-4431	517		336		211		191
	519		337		213		276
4D-7388	84		338		215		280
	855		340		218		309
4D-7735	598		640		220		311
	601		654		270		640
	604		726		272		726
	606	4P-8134	184		274	5D-0718	548
4D-7794	801		186		409		551
4D-9517	315		213		419		574
	322		215		655		577
4D-9986	242		218		801	5D-0998	764
	243		220		804		766
4F-2294	304		228	5C-7261	80	5D-1026	12
4F-4879	791		230		184		84
	792		235		186		804
	793		238		213	5D-6543	513
	794		309		215		609
4I-4872	712		311		218		610
	714		315		220		611
	716		322		265		612
	718		327		296	5E-5740	700
	720		654		315		702
	722		655		322		704
4J-3420	521		804		327		706
	523	4S-1962	315		332		708
4J-5140	598		322		334		710
	601		327		337		712
	604		636		406		718
	606		739		422	5E-7046	617
4J-5267	523		742		432	5F-0149	346
	554		743		440		350
4J-5309	592	4S-8264	496		444	5F-0585	346
	593	4T-0231	571		631		350
	594		814		644	5F-0589	346
	595		816		645		350
4J-5477	114		818		700	5F-3106	557
	532		820		702	5F-9144	118
	536		824		704		344
4J-9224	517		826		706		345
4K-3004	846		828		708		513
4K-3128	521	4T-5261	820		710		609
	523		826		712		610
4K-8864	184		▶834		714		611
	315	4T-8940	834		716		612
	322		837		718	5G-7817	84
	327	4V-8256	633		720	5H-4018	523

▶ **PRIMARY REFERENCE**

PART NUMBER INDEX

Part	Page
5I-4370	598
	601
5I-4376	360
	563
5I-6125	502
	503
	504
5J-4773	834
	835
	836
	837
	838
5J-7852	346
	350
5J-7865	519
5K-2697	541
5K-5338	558
	563
5K-8451	123
5K-9090	362
	400
	541
	543
	547
	550
	573
	576
5K-9179	744
5M-2057	591
5M-6213	78
5P-0537	755
	756
	757
	759
5P-0695	313
	320
5P-0747	313
	314
	320
	321
	327
5P-0761	313
	314
	320
	321
5P-1046	588
5P-1076	76
	80
	412
	413
	414
	422
	450
	462
	532
	536
	570
	700
	702
	704
	706
	708
	710
	712
	714
	716
	718
	720
	722
	822
	823
5P-1505	123
5P-2230	96
5P-2766	228
	235
	238
5P-3928	739
5P-3929	636
5P-3948	636
5P-4106	739
5P-4115	228
	230
	232
	235
	238
	309
	311
	683
	686
	691
	693
	695
5P-4116	80
	96
	184
	186
	327
	332
	334
	422
	440
	444
	742
	743
5P-4247	556
	561
5P-4295	739
5P-4423	634
	800
5P-4432	634
5P-4566	588
5P-4571	800
5P-4961	84
	123
5P-5639	681
	683
	686
	724
5P-5673	655
5P-5677	263
	276
	280
5P-5962	76
5P-5991	186
5P-6010	801
5P-6874	744
5P-6994	598
	604
5P-7464	532
	536
5P-7465	532
	536
5P-7466	532
	536
	554
5P-7467	532
	536
	554
5P-7854	69
5P-7957	758
5P-8112	532
	536
	554
5P-8245	38
	347
	351
	582
5P-8247	193
5P-8248	834
	835
	836
	837
	838
5P-8439	309
	311
	332
	334
5P-8500	1
	190
	191
	554
5P-9000	689
	691
	693
	695
5P-9147	347
	351
5P-9209	764
	766
5P-9297	327
	368
5P-9617	360
	563
5S-3676	347
	351
5S-7349	193
	754
5U-5745	724
	729
5V-0500	450
	451
	454
5V-1496	633
	781
	783
	785
	787
5W-1250	525
5W-1437	275
	514
6B-6684	80
6C-3431	732
6C-4016	809
	810
6C-8996	334
	714
	716
	720
	722
6C-9003	631
	700
	702
	704
	706
	708
	710
	712
	714
	716
	718
	720
	722
6C-9047	636
6C-9081	732
6D-1641	724
	729
6D-3479	184
	186
	327
	332
	334
	455
	456
6D-3534	743
6D-4636	315
	322
	602
	606
6D-5257	213
	215
	220
6D-7889	133
	134
	135
6E-0719	386
	388
6E-0725	585
6E-1607	397
6E-3283	371
	372
6E-4240	396
	580
6E-4350	379
	381
	580
6E-4385	379
	381
6E-4402	356
	357
	▶396
6E-4403	396
6E-4404	396
	398
6E-6528	619
6F-7045	303
6F-7418	781

6

▶ **PRIMARY REFERENCE**

PART NUMBER INDEX

Part	Page	Part	Page	Part	Page	Part	Page
	783	6I-0289	51		147	6V-1249	532
	785		53		152		536
	787	6I-0291	15		157	6V-1250	393
6H-4005	328		18		162	6V-1889	69
6H-9691	617		21		167		362
6I-0217	12		23		172		548
	15		51		178		551
	18		53	6I-4681	51		574
	21		55		53		577
	43	6I-0456	125		55	6V-1971	1
	45		129	6I-4709	73	6V-2314	764
	51		136	6I-4793	136		766
	53		141		141	6V-2452	347
	55		146		146		351
	64		152		152	6V-2496	640
	65		157		157		726
	73		162		162		804
	88		167		167	6V-2722	198
	90		172		172	6V-3532	346
	102		178		178		350
	105	6I-0563	105	6J-2245	292	6V-3823	347
	108		108		294		351
	111		111	6J-3134	617	6V-3940	661
	136	6I-0572	51	6J-5730	517		662
	141		53	6K-8178	123	6V-3965	345
	146		55		315		548
	152	6I-0593	102		322		551
	157		105	6K-8179	855		557
	162		194	6K-8987	403		562
	167		196		840		574
	172	6I-0594	73	6M-5062	394		577
	178	6I-0645	43	6P-2216	738		580
6I-0233	298		45	6R-7943	583		855
	299		98	6S-3859	764	6V-4298	270
	300		99		766		272
	301	6I-0650	43	6S-9277	777	6V-4589	184
6I-0254	64		45	6T-3631	307		186
	65	6I-0654	48		313		305
	88		51		320	6V-5201	386
	90		53	6T-3632	307		388
	136		55		313	6V-5326	399
	141		102		320		592
	146		105	6T-3633	307		593
	152		108		313		594
	157		111		320		595
	162		125	6T-7695	732	6V-5586	394
	167		129	6V-0327	346		397
	172		194		350	6V-5683	276
	178		196	6V-0328	346		280
6I-0260	51	6I-0817	102		350		394
	53		105	6V-0400	364	6V-5819	548
	55		108	6V-0439	346		551
	64		111		350	6V-5839	422
	73	6I-1090	71	6V-0852	345	6V-6317	347
	125	6I-1201	64		547		351
	129	6I-1418	332		550	6V-6339	619
	137		334		556	6V-6640	347
	142	6I-1497	51		561		351
	147		53		573	6V-7420	184
	152		55		576		186
	157	6I-4200	194		855	6V-7636	446
	162		196	6V-0894	764		700
	167	6I-4374	12		766		702
	172		64	6V-1228	742		704
	178		65		743		706

► **PRIMARY REFERENCE**

PART NUMBER INDEX

Part	Page	Part	Page	Part	Page	Part	Page
	708		601		598		574
	710		604		601		577
	712		606		604		855
	714	6V-8400	366		606	6V-9169	530
	716		394	6V-8714	541	6V-9170	541
	718		400	6V-8715	547		543
	720	6V-8523	84		550		558
	722	6V-8555	548		573		563
6V-7687	764		551		576	6V-9189	264
	766		574	6V-8716	557	6V-9197	440
6V-7723	587		577		562		444
6V-7744	591	6V-8556	554	6V-8722	557	6V-9208	84
	840	6V-8625	532		562	6V-9325	764
	846		536	6V-8724	545		766
6V-7978	276	6V-8632	362		557	6V-9632	244
	280		557		562		246
6V-8185	446		562		598		261
6V-8187	276	6V-8633	598		601		636
	280		601		604		640
6V-8188	275	6V-8634	855		606		673
	764	6V-8635	400		855		700
	766		547	6V-8774	551		724
6V-8189	193		550		577	6V-9672	315
	643		573	6V-8776	547		322
6V-8201	354		576		550	6V-9746	67
	355	6V-8636	360		574		68
6V-8237	521		368		577		69
6V-8351	78		400	6V-8781	545		358
	392		545		557		360
6V-8352	396		547		562		362
	398		550	6V-8782	400		400
6V-8397	84		573	6V-8801	643		530
	360		576	6V-8938	548		541
	364		580		551		543
	368		598		574		547
	400		601		577		550
	525		604	6V-8942	554		553
	545		606	6V-8969	755		557
	547	6V-8637	67		756		558
	548		68		757		562
	550		69		759		563
	551		358	6V-8978	379		573
	557		360		381		576
	562		362		510		598
	573		400		525		599
	574		530		580		601
	576		543		592		602
	577		547		593		604
	580		550		594		606
	598		553		595	6V-9829	558
	601		557	6V-8983	557		563
	604		562		562	6V-9832	558
	606		573	6V-8994	557		563
	855		576		562	6V-9843	548
6V-8398	342		599	6V-8997	557		574
	356		601		562	6V-9844	368
	357		604	6V-9004	557	6V-9846	557
	368		606		562		562
	394	6V-8638	604	6V-9006	366	6V-9850	598
	400		606	6V-9009	366		601
	530	6V-8639	368	6V-9168	545		855
	532		400		548	6V-9872	548
	536		532		551		556
	554		536		558		561
	598	6V-8642	540		563		573

► **PRIMARY REFERENCE**

PART NUMBER INDEX

Part	Page
	598
	601
	604
	606
	855
6W-0058	724
	729
6Y-0309	848
	849
6Y-0473	477
	478
	479
	480
	481
	482
	484
	485
	486
	487
6Y-0859	346
	350
7	
7B-3039	591
7C-1281	21
	23
7C-4354	368
7C-4616	43
	45
7D-7453	796
	798
7D-7519	347
	351
7D-9014	376
7D-9708	796
	798
7E-4846	617
7F-0560	198
7F-8267	470
7F-8607	636
7G-3832	532
	536
7G-3833	532
	536
7G-3834	532
	536
7G-4824	631
	803
7G-5186	532
	536
7G-8839	78
	822
	823
7H-3607	390
7I-2272	270
	272
7I-7439	186
7I-7719	496
7I-7732	496
7I-7734	495
7J-1309	520
	630
7J-6285	377
7J-8956	346
	350
7J-9108	362
	530
	540
	541
	543
	548
	550
	557
	558
	562
	563
	574
	577
	598
	601
	604
	606
7J-9682	460
	461
	846
7K-1181	184
	186
	213
	215
	218
	220
	244
	246
	248
	250
	252
	254
	256
	257
	259
	261
	276
	280
	302
	309
	311
	313
	320
	327
	332
	334
	336
	337
	338
	340
	698
	724
7K-3176	739
7K-3304	739
7K-9203	458
	459
7K-9210	627
7L-0688	800
7L-9061	305
7M-3361	430
7M-8485	400
	547
	550
	557
	558
	562
	563
	573
	576
7N-0296	297
7N-0718	▶303
	313
	320
7N-5274	313
	320
7N-9801	308
7P-7858	402
	458
	459
7P-9571	346
	350
7R-3029	213
	215
	218
	220
7T-1099	246
	261
	424
	426
	428
7T-4532	653
7T-6799	734
	736
7T-8894	309
	311
7T-8895	309
	311
7W-2632	136
	141
	146
	152
	157
	162
	167
	172
	178
7W-4669	87
7X-0289	643
7X-0492	532
	536
7X-0515	78
	450
7X-0578	646
	648
	661
	662
7X-0579	184
	186
	334
7X-0589	276
	280
7X-0591	194
	196
7X-0607	78
7X-0613	432
7X-0618	420
7X-0818	334
7X-2459	364
7X-2533	263
	712
	714
	718
	720
	754
7X-2534	332
7X-2536	496
7X-2537	84
7X-2543	846
7X-2546	646
	648
7X-2548	846
7X-2552	248
	250
	257
	558
	563
	776
	777
	778
7X-2553	78
	232
	235
	238
	366
	469
	488
	489
	779
7X-2554	50
	779
7X-2555	50
	78
	450
	451
	454
7X-2556	450
	451
	454
7X-2562	627
	814
	816
	818
	820
	824
	826
	828
7X-2563	347
	351
	488
	489
7X-2575	840
7X-2577	410
7X-2619	270
	272
	699
7X-2906	354
	355

▶ **PRIMARY REFERENCE**

PART NUMBER INDEX

Part	Page
7X-3229	842
	858
	859
7X-3391	548
	551
	574
	577
7X-3392	548
	551
	574
	577
7X-3393	76
7X-6315	200
	202
7X-7644	842
	844
	845
	858
	859
7X-7702	334
7X-7729	69
	76
	78
	96
	123
	315
	322
	358
	360
	366
	403
	404
	405
	406
	408
	411
	418
	424
	426
	428
	430
	432
	435
	437
	440
	442
	443
	444
	451
	454
	530
	532
	536
	541
	543
	548
	551
	558
	563
	574
	577
	588
	602
	606
	631
	636
	663
	681
	683
	686
	689
	691
	693
	695
	724
	764
	766
	789
	790
	795
	803
	833
7X-7927	804
	812
7X-7928	804
	812
7X-7929	804
	812
7X-7930	804
	812
7X-7958	84
7Y-0468	633
7Y-1810	768
7Y-1858	533
	536
7Y-5219	397
7Y-5221	378
7Y-5458	306
7Y-5464	306
7Y-7388	760
	761
	762
	763
7Y-8990	462
8B-8679	327
8C-3236	753
8C-3445	72
8C-3446	360
	563
8C-3451	344
	360
	563
8C-3681	84
8C-3756	640
	655
8C-4365	525
8C-5064	637
8C-5607	226
	232
	244
	246
	248
	250
	252
	254
	257
	259
	261
	263
	754
8C-5608	226
	232
	244
	246
	248
	250
	252
	254
	257
	259
	261
	263
	754
8C-5897	858
	859
8C-5917	314
	321
8C-6354	215
	220
8C-6358	198
8C-6438	190
	191
8C-6802	700
	702
	704
	706
	708
	710
	712
	714
	716
	718
	720
	722
8C-6865	532
8C-6868	84
8C-7332	270
	272
	674
	675
	689
	691
	693
	695
8C-7563	574
	577
	598
	601
	604
	606
8C-8451	226
	232
	244
	246
	248
	250
	252
	254
	257
	259
	261
	263
	754
8C-8514	640
8C-8585	403
	754
	783
	785
	787
8C-8989	598
	601
8C-9022	556
	561
8C-9987	213
	215
	218
	220
8D-3791	822
	823
8D-9671	636
8E-1339	455
	456
8E-7245	838
8E-7791	631
	803
8E-8706	681
	689
	▶744
8E-9376	818
	824
	▶835
8E-9377	835
	836
8E-9378	834
	835
	838
8E-9379	834
	835
	836
	837
	838
8F-7219	118
8F-9206	596
	636
8F-9538	394
8G-1258	346
	350
8G-1259	346
	350
8G-3732	458
	459
8G-4177	488
	489
8G-4392	346
	350
8G-4565	346
	350
8G-4568	346
	350
8G-4569	346
	350
8G-5747	627
	814
	816
	818
	820
	824

8

▶ PRIMARY REFERENCE

PART NUMBER INDEX

Part	Page	Part	Page	Part	Page	Part	Page
	826		311		431		495
	828	8T-0318	422		547		521
8H-5303	303	8T-0328	764		550		523
8H-5306	303		766		573		530
8H-7521	376	8T-0338	393		576		533
	377	8T-0389	315	8T-3518	198		536
8I-1362	84		322	8T-3519	198		541
8J-0412	583		424	8T-3597	420		543
8J-1256	636		426		421		545
8J-1434	▶849		428		422		548
	851	8T-0404	540		463		551
8J-2413	596	8T-0639	700		493		554
	614		702		494		558
	620		704		700		563
	621		706		779		570
	622		708	8T-3611	400		574
8J-8782	591		710	8T-3612	422		577
8J-8783	591		712	8T-3957	376		588
8K-1433	732		714		377		591
8L-2779	133		716		582		598
	135		718	8T-4121	47		601
	177		720		68		604
	624		722		80		606
8L-6557	440	8T-1158	342		84		636
	444		391		94		640
8L-8413	669		510		96		646
	670		514		100		648
	673	8T-1159	469		114		655
	676	8T-1482	627		123		683
	677		840		184		686
	800	8T-1779	604		186		691
8M-2773	588		606		213		693
	636	8T-1889	543		215		695
8M-3494	842		558		218		724
	844		563		221		726
	845	8T-1890	543		232		729
8N-0869	313		558		235		733
	320		563		238		739
8N-1725	313	8T-2225	313		248		742
	320		320		250		743
8P-8629	488	8T-2353	551		252		776
	489		576		254		778
8P-9770	824		855		257		781
	826	8T-2503	583		259		783
8R-0275	809	8T-2561	123		309		785
	810		411		311		787
8R-1803	284		424		315		804
	285		426		322		855
	286		428		328	8T-4122	232
8S-0023	366		743		332		235
8S-0024	366	8T-2659	274		334		238
8S-3020	313	8T-2922	617		338		776
	320	8T-3282	346		340		777
8T-0154	84		350		358		778
	724	8T-3298	591		360	8T-4123	50
	729	8T-3312	547		362		347
	730		550		368		351
	731		573		373		375
8T-0267	276		576		417		378
	280	8T-3490	313		420		488
	315		320		421		489
	322		420		430		627
8T-0277	775		424		434	8T-4133	69
8T-0285	699		426		455		123
8T-0289	309		428		456		184

▶ **PRIMARY REFERENCE**

PART NUMBER INDEX

Part	Page	Part	Page	Part	Page	Part	Page
	186		543		743		250
	276		548		753		254
	280		551		776		257
	315		558		778		261
	322		563		855	8T-4182	558
	328		570	8T-4138	228		563
	358		574		230		739
	360		577		232	8T-4183	420
	362		739		235		421
	366		776		238		462
	368	8T-4137	84		244		463
	406		94		248		533
	408		96		252		537
	417		114		259		570
	418		123		309		574
	435		248		311		577
	437		250		419		588
	440		252		424		700
	444		254		426		702
	533		257		428		704
	536		259		655		706
	548		309		683		708
	551		311		686		710
	558		315		691		712
	563		322		693		714
	574		328		695		716
	577		332	8T-4139	315		718
	588		334		322		720
	636		338		328		722
	663		340		422		822
	681		347		533		823
	683		351		537	8T-4184	364
	686		358		570		548
	689		360		627		551
	691		362		739		574
	693		434		846		577
	695		442	8T-4140	347	8T-4185	252
	724		443		351		254
	729		451		370		259
	739		454		463		315
	742		455		467		322
	743		456		468		328
	764		530		469		570
	766		533	8T-4154	265		739
	804		537	8T-4167	403	8T-4186	47
	855		541		840		84
8T-4136	68		543	8T-4171	190		232
	78		548		191		235
	80		551		332		238
	315		558		699		315
	322		563	8T-4172	84		322
	328		574	8T-4174	463		332
	368		577	8T-4176	347		334
	404		588		351		424
	406		591		412		426
	408		602		413		428
	424		606		414		432
	426		636	8T-4177	598		435
	428		640		601		437
	430		655		604		521
	431		724		606		533
	435		726	8T-4178	646		537
	437		729		648		545
	533		733	8T-4180	446		554
	536		742	8T-4181	246		636

PART NUMBER INDEX

Part	Page	Part	Page	Part	Page	Part	Page
	681		186		135	8T-4224	80
	683		213		177		94
	686		216		242		193
	689		218		243		201
	691		221		296		242
	693		315		297		243
	695		322		328		244
	724		328		334		246
	789		332		804		248
	790		334	8T-4205	190		250
	795		358		191		252
8T-4187	347		360		193		254
	351		405		201		257
8T-4189	80		411		213		259
	94		420		216		261
	96		421		218		264
	184		422		221		265
	186		424		226		296
	201		426		232		297
	256		428		276		315
	257		434		280		322
	259		435		424		328
	328		437		426		334
	337		495		428		337
	422		530		636		406
	430		533		640		422
	558		537		655		430
	563		541		686		558
	776		543		693		563
	804		558		695		598
8T-4190	631		563		699		601
	803		598		726		604
8T-4191	309		601		754		606
	311		604		804		631
	328		606	8T-4222	753		644
	440		631	8T-4223	315		645
	444		636		322		654
8T-4192	358		724		328		655
	360		729		358		700
	366		803		360		702
	469		833		362		704
	558		855		364		706
	563	8T-4196	80		366		708
8T-4193	347		100		375		710
	351		328		463		712
	373		375		469		714
	450		417		533		716
	488		418		537		718
	489		523		558		720
	627		541		563		722
8T-4194	362		781		571		760
	364		783		689		761
	375		785		691		762
	463		787		693		763
	493	8T-4197	644		695		776
	494		645		739		801
	548	8T-4198	362		814		804
	551		373		816	8T-4226	315
	558		558		818		322
	563		563		820	8T-4244	276
	588		840		824		280
	768	8T-4199	315		826		315
8T-4195	69		322		828		322
	76	8T-4200	133		839		366
	184		134		846		422

► **PRIMARY REFERENCE**

PART NUMBER INDEX

Part	Page
	533
	537
	590
	839
	840
	846
8T-4648	76
	839
	846
8T-4649	455
	456
8T-4778	468
8T-4896	256
	257
	259
	643
	801
8T-4908	80
	631
	655
	742
	743
8T-4910	78
	280
	570
8T-4956	80
	424
	426
	428
	570
	571
	814
	816
	818
	820
	824
	826
	828
8T-4970	636
8T-4971	276
	280
	496
	631
	700
	702
	706
	708
8T-4983	558
	563
8T-4984	358
	360
	547
	550
	556
	561
	573
	576
8T-4994	533
	537
8T-5005	315
	322
	435
	437
8T-5041	188
	189
	450
	590
	840
8T-5049	376
	377
8T-5092	463
8T-5360	780
8T-5372	276
	280
	414
	681
	683
	686
8T-5373	67
	68
	69
8T-5400	700
	702
	704
	706
	708
	710
	714
	716
	720
	722
	812
8T-5433	513
8T-5666	80
8T-5668	521
	523
8T-5878	403
	840
8T-6378	346
	350
8T-6379	346
	350
8T-6381	50
8T-6382	468
8T-6430	375
8T-6466	84
	248
	250
	257
	373
	533
	537
	554
	739
8T-6684	362
	541
	543
8T-6685	646
	648
8T-6696	400
8T-6703	84
	362
	588
8T-6868	590
8T-6869	184
	186
	328
8T-6870	328
8T-6902	702
	704
	708
	710
	714
	716
	720
	722
8T-6912	264
8T-6936	78
8T-7038	768
8T-7338	82
	455
	456
8T-7352	184
	186
8T-7371	814
	816
	818
	820
	824
	826
	828
8T-7525	583
8T-7529	602
	607
8T-7547	244
	246
	248
	250
	252
	254
	257
	259
	261
	432
	598
	601
	604
	606
	801
8T-7566	755
	756
	757
	759
8T-7567	520
8T-7811	354
	355
	392
8T-7930	846
8T-7934	315
	322
	328
	358
	360
	431
	556
	561
	739
8T-7971	347
	351
	764
	766
8T-8442	583
	619
8T-8557	733
8T-8729	739
	800
8T-8736	215
	220
8T-8737	215
	220
	228
	235
	238
	241
	274
	290
	306
	665
	666
	667
	669
	670
	673
	676
	677
	698
	733
	745
8T-8827	313
	314
	320
	321
8T-8899	598
	601
	604
	606
8T-9358	548
	551
	557
	562
	574
	577
	855
8T-9371	801
8T-9383	275
8T-9388	284
	285
	286
8T-9403	558
	563
8T-9655	184
	186
	332
	334
8T-9757	314
	321
8V-7659	822
	823
8W-3214	67
	68
	69
8Y-4501	446
8Y-6388	686
	9
9B-0453	275
9B-1885	313
	320

PART NUMBER INDEX

Part	Page	Part	Page	Part	Page	Part	Page
9D-6196	588	9S-4185	400		686		516
9D-6197	588		460		689		631
9D-8508	812		461		691		636
9F-2247	98	9S-5282	643		693		646
9F-5644	303	9S-8002	356		695		648
9G-0003	314		357		796		678
	321		525		798		679
9G-0004	314		580	9X-2041	631		681
	321		583		646		683
9G-1642	477		619		648		686
	478	9S-8004	118	9X-2042	232		689
	479		354		235		691
	480		355		238		693
	481		379		270		695
	482		381		272		697
	484		392		631		698
	485		393		646		724
	486		394		648		734
	487		580		671		736
9G-3695	313	9S-8005	371		672		803
	320		372		700		830
	764	9S-8006	184		702		831
	766		186		704	9X-2297	364
9G-7101	123		583		706		598
	313	9S-8008	371		708		601
	320		372		710	9X-2480	201
9J-6586	849		580		712		754
9J-7031	591	9T-1013	400		714	9X-2488	742
9J-8913	848	9T-2714	521		716		743
9L-6331	184	9T-3726	580		718	9X-3401	228
	186	9T-3853	393		720		289
9L-6770	193	9T-3928	379		722		293
9M-0164	636		381		724		302
9M-1328	458		580		803		306
	459	9U-8263	732	9X-2043	276	9X-3402	228
9M-1974	661	9W-0099	846		280		235
	662	9W-0742	▶198		646		238
9M-2904	554		315		648		274
9M-5617	272		322		661		745
9M-8406	123	9W-1951	276		662	9X-3404	315
	309		280		681		322
	311	9W-2109	583		683	9X-3463	264
	315	9W-2110	583		686		265
	322	9W-2146	470		689	9X-3592	520
	588	9W-6582	50		691	9X-3962	556
9M-9130	530	9W-6584	50		693		561
	541	9W-9930	50		695	9X-4244	264
	543	9X-0194	804		700		265
9M-9162	530	9X-1046	274		702	9X-6165	244
9M-9812	313	9X-1054	655		704		246
	320	9X-1343	314		706		248
9N-0869	332		321		708		250
9N-4449	840	9X-1386	293		710		252
	846		739		712		254
9N-4450	840	9X-1813	288		714		257
	846		295		716		259
9P-6790	488		305		718		261
	489		313		720		263
9P-7121	190		320		722		686
	191		344		753		693
9P-9388	744		345		796		695
9R-3141	590	9X-2032	640		798		754
9R-4024	809	9X-2040	636	9X-2044	646	9X-6269	78
	810		681		648	9X-6340	858
9S-4182	525		683	9X-2045	515		860

▶ **PRIMARY REFERENCE**

PART NUMBER INDEX

Part	Page
9X-6582	123
9X-6772	241
9X-7264	521
	523
9X-7301	519
9X-7345	244
	246
	248
	250
	252
	254
	257
	259
	261
	268
9X-7378	653
	739
9X-7380	636
9X-7381	636
	739
9X-7382	636
	739
9X-7383	636
	740
9X-7384	636
	740
9X-7385	653
9X-7680	583
9X-7849	266
9X-8139	266
9X-8250	637
	804
	812
9X-8256	244
	246
	248
	250
	252
	254
	257
	259
	261
	272
	274
	309
	311
	332
	409
	419
	446
	496
	631
	699
9X-8257	50
	78
	80
	248
	250
	257
	347
	351
	370
	373
	417
	455
	456
	463
	468
	469
	488
	489
	497
	558
	563
	627
	631
	776
	779
	803
9X-8258	768
9X-8267	700
	702
	706
	708
	712
	714
	718
	720
9X-8268	491
9X-8271	814
	816
	818
	820
	824
	826
	828
9X-8399	753
9X-8483	371
	372
9X-8600	115
9X-8705	855
9X-9825	327
9Y-8315	100
9Y-9381	102
	105
	108
	111

0

Part	Page
031-0214	781
	783
	785
	787
031-0249	800
032-8047	102
	105
	108
	111
032-9020	21
	23
033-6028	624
033-6033	135
033-6039	597
033-6043	619
033-8248	84
034-3679	123
035-8014	102
	105
	108
	111
037-5197	313
	320
039-8557	327
061-7540	354
	355
	392
067-6007	102
	105
	108
	111
067-6043	28
067-6179	43
	45
067-6269	210
085-7539	394
087-4772	525
	580
089-8249	627
	814
	816
	818
	820
	824
	826
	828
090-8865	450
	451
	454
091-7124	84
091-9035	588
093-1435	495
093-1515	495
095-0929	385
095-0933	393
095-1386	588
095-1612	495
095-1703	495
095-1750	394
095-1751	614
	620
	621
	622
095-2643	190
	191
096-4275	495
096-4884	412
	413
	414
096-6166	640
	699
	726
	764
	766
096-7033	532
	536
097-4552	556
	561
098-5747	80
	417
099-3649	80
099-6418	406
	408
099-6976	517

1

Part	Page
100-3751	43
	45
	73
	125
	129
100-4336	362
100-4830	10
	11
	43
	45
	64
	108
	111
100-4838	210
	211
100-4841	28
100-7603	114
101-0003	800
101-2867	631
	781
	783
	785
	787
	803
101-3129	327
	358
	360
	547
	550
	556
	561
	573
	576
	804
101-3895	43
	45
	137
	142
	147
	152
	157
	162
	167
	172
	178
101-3917	73
	194
101-7547	73
102-2240	184
	186
	►295
102-2828	344
	345
102-8801	213
	215
	220
102-8802	190
	191
	192
	263
	266
	276
	280

► **PRIMARY REFERENCE**

PART NUMBER INDEX

Part	Page	Part	Page	Part	Page	Part	Page
	300	104-7425	629		129		516
	302		▶630	111-3422	135		678
	305	104-7434	627	111-3423	135		679
	308		814	111-3780	764		697
	309		816		766		830
	313		818	111-3781	764		831
	314		820		766	117-4491	794
	320		824	111-4015	640	117-7238	585
	321		826		726	117-7239	585
	327		828	111-4627	681	117-7240	585
	344	104-7498	627		683	117-7241	585
	345	105-2058	627		686	117-7245	585
	653	105-3487	135		689	117-7246	585
	739	105-4593	510		691	117-7247	585
	800	106-0107	▶306		693	117-7248	585
102-8803	288		734		695	117-7249	585
	289		736	111-8222	10	117-7250	585
	295	106-0210	306		11	117-7251	585
	307	107-2348	102	112-4036	743	117-7252	585
	338		105	112-4159	590	117-7273	514
102-8804	287		108	112-4368	554	117-7279	525
	313		111	112-4628	379	117-7280	525
	320	107-3117	392		381	117-7282	525
	734	107-4393	739	112-4629	379	117-7296	377
	736	107-4394	739		381	117-8131	753
	764	107-4395	739		580	118-4977	78
	766	107-4396	739	112-4645	398	118-7313	497
102-8805	290	107-4397	636	112-4647	398	119-3662	215
	306	107-4399	636	112-4657	585		220
	655	107-6032	681	112-6646	226		241
	673		683		228	119-5434	519
102-8806	213		686		230	119-5445	520
	215	108-3565	585		232	119-7844	342
	220	108-4311	801		235	120-4394	354
	226	108-5471	446		238		355
	228		700		671		356
	235		702		672		357
	238		704		674		393
	309		706		675		525
	314		708	113-0693	284		583
	321		710		285	120-9051	568
102-9690	55		712		286	121-2761	724
102-9941	39		714	113-1504	64	122-3151	579
	41		716		65	122-9068	585
103-0050	194	109-0382	455	113-5100	276	122-9070	585
103-1066	15		456		280	122-9071	585
	18	109-0383	455	113-8129	88	122-9363	397
103-6262	213		456		90	122-9718	580
	215	109-1390	446	113-8490	276	123-0380	422
	218	109-1633	636		280	123-0698	354
	220	109-1634	636	113-8491	276		355
104-2091	274	109-4441	392		280	123-2899	92
	681	109-5351	96	114-0359	848	123-3132	624
	683	109-5815	530		849	123-5787	354
	686	110-0885	671	114-4270	386		355
104-4816	627		672		388	123-7556	356
104-4817	627	110-6109	734	114-5333	739		357
	814		736	114-9284	422	123-7574	379
	816		742	116-7471	276		381
	818	110-6171	739		280	123-7575	379
	820	110-6172	739	117-1385	133		381
	824	110-6393	739		134		525
	826	110-7887	734		135		580
	828		736		177	123-7582	379
104-7391	627	111-0859	125	117-2311	515		381

▶ **PRIMARY REFERENCE**

PART NUMBER INDEX

Part	Page
123-7583	525
	580
123-9769	393
124-0312	680
124-0378	314
	321
124-0506	12
	15
	18
124-3536	57
124-3815	15
	18
	21
	23
	43
	45
	65
	125
	129
	136
	141
	146
	152
	157
	162
	167
	172
	178
124-5234	627
124-5235	627
124-5741	627
124-9636	276
	280
124-9637	276
	280
124-9855	383
	385
124-9856	383
	385
124-9857	383
	385
124-9858	383
	385
124-9859	383
	385
124-9860	383
	385
124-9861	383
124-9881	354
	355
124-9882	354
	355
124-9884	354
	355
124-9887	393
124-9888	393
124-9891	392
124-9894	392
124-9895	392
124-9896	392
124-9899	392
124-9900	392
124-9901	392
124-9904	392
124-9905	392
124-9906	392
124-9913	371
	372
124-9914	371
	372
124-9945	393
124-9948	393
125-1379	371
	372
125-2205	354
	355
125-4572	392
125-7874	215
	220
125-7875	241
125-8175	700
	702
	704
	706
	708
	710
	712
	714
	716
	718
	720
	722
125-9134	585
126-1401	386
	388
126-1402	386
	388
126-1403	386
	388
126-1405	386
	388
126-1406	386
	388
126-1407	386
	388
126-1408	386
	388
126-1413	386
	388
126-1419	386
	388
126-1420	386
	388
126-1477	357
	377
126-1595	753
126-1597	356
	357
126-1598	356
	357
126-1638	379
	381
126-1661	379
	381
126-1766	215
	220
	241
126-1767	228
	289
	302
	653
126-1768	228
126-1774	241
	244
	246
	248
	250
	252
	254
126-7574	200
	202
126-8472	655
126-8842	585
126-8928	410
	455
	456
126-9587	585
127-1647	604
	606
127-2170	332
	334
	646
	648
	681
	683
	686
	760
	761
	762
	763
127-7443	297
127-8281	21
	23
128-2136	681
	683
	686
	689
	691
	693
	695
128-4249	276
	280
129-3180	450
130-1977	554
130-2531	547
	550
	573
	576
130-9192	554
130-9888	64
	65
131-0359	858
	859
131-3093	640
	726
131-3540	430
	700
	702
	704
	706
	708
	710
	712
	714
	716
	718
	720
	722
132-0338	633
132-5789	309
	311
132-7551	530
	541
	543
132-8487	213
	215
	218
	220
133-1011	43
	45
133-6934	327
	545
133-8714	640
134-2540	213
	215
	220
	309
	327
134-3518	640
	726
134-3856	83
134-4126	200
	202
134-7258	858
	859
135-7454	354
	355
135-7455	354
	355
135-8054	386
	388
135-9941	338
	340
136-1543	758
136-1953	84
	724
	729
	742
	743
136-3191	812
136-3194	700
	706
	708
	710
	712
	714
	716
	718
	720
	722
136-8308	848
	849
137-2170	809
	810
137-3301	491
137-8165	733
	773
	774
138-1645	764
	766

PART NUMBER INDEX

Part	Page	Part	Page	Part	Page	Part	Page
138-8454	657	145-0326	800		553	148-8426	400
	658	145-0905	356		557	148-8428	400
	659		357		562	148-8434	548
	660	145-3405	764		573		574
	732		766		576	148-8435	545
139-1398	96	145-3810	514		598		557
139-6381	814	145-3811	514		601		562
	816	145-3812	514		604	148-8439	550
	818	145-3813	514		606		577
	820	145-5311	376	148-8328	598	148-8443	364
	824	145-5927	388		601	148-8455	557
	826	145-8746	393	148-8334	400		562
	828	145-9087	809	148-8335	400	149-5452	557
140-0176	519		810		547		562
140-4722	732	146-0742	520		550	149-6371	739
140-7480	754	146-6433	812		573	149-9818	276
141-3983	327	147-0526	402		576		280
141-4976	276		432	148-8336	360	150-4033	557
	280		573		368		562
141-6968	861		576		400	150-4037	368
141-8589	105	147-1076	422		545	150-4044	604
	108	147-1444	226		547		606
	111		228		550	150-4047	551
142-2709	402		235		573		576
142-9439	386		238		576		855
	388	147-4357	627		580	150-4048	557
142-9681	769	147-4359	627		598		562
	770	147-5553	105		601	151-2900	651
	771		108		604		652
	772		111		606	151-5145	186
143-1288	781	148-3533	470	148-8339	557	151-5650	640
	783	148-8305	360		562		726
	785		563	148-8340	368	151-9274	664
	787	148-8315	540		400		668
143-2397	332		598		532	152-1811	▶397
143-6020	274		601		536		525
	394		604	148-8342	362	152-3895	630
143-8916	517		606		557	153-0136	804
144-0195	700	148-8317	541		562	153-2159	342
	702	148-8318	855	148-8345	604	153-2160	342
	704	148-8319	547		606	153-2162	342
	706		550	148-8356	366	153-2163	342
	708		573	148-8362	362	153-2817	804
	710		576		541	153-6237	557
	712	148-8320	532		543		562
	714	148-8326	548	148-8364	532	153-6238	366
	716		556		536	153-6241	598
	718		561	148-8367	598		601
	720		573		601	153-6256	574
	722		598		855		577
	804		601	148-8376	557		598
	812		604		562		601
144-0331	676		606	148-8378	545		604
	677		855		557		606
144-1636	215	148-8327	67		562	153-6932	640
	220		68		598		726
	235		69		601	154-7951	681
	238		358		604		683
	241		360		606		686
144-2179	753		362		855	154-9024	84
144-5287	517		400	148-8382	540	155-0576	136
144-8344	84		530	148-8389	532		141
144-9101	356		543		536		146
	357		547	148-8411	400		178
	394		550	148-8418	554		334

▶ **PRIMARY REFERENCE**

PART NUMBER INDEX

Part	Page	Part	Page	Part	Page	Part	Page
155-2255	213		18		689	169-1616	614
	215	160-3518	733		691		620
	220		773		693		621
155-2256	213		774		695		622
	215	160-5692	627	164-9869	364	169-2876	311
	220	160-6631	470		598		515
155-2260	213	160-7689	241		601		516
	215	160-7690	244	165-5970	184		678
	220		246		186		679
	226		248		▶307		697
	228		250	165-9104	332		830
	235		252	166-6358	651		831
	238		254		652	169-7380	800
	291	160-8499	514	166-7772	804	169-7393	455
	309	160-8509	497	167-2185	519		456
	327	160-8749	276	167-2201	521	170-7491	313
	336	160-8754	732		523		320
155-2265	309	161-2114	627	167-2204	520		327
	314	161-2398	796	167-2242	517		358
	321		798	167-2297	517		360
155-2270	287	161-7614	342	167-2301	519		547
	304	161-7615	80	167-2312	521		550
	309		417		523		573
	314	161-9916	184	167-2314	520		576
	321		186	167-3692	276		588
	327	162-1565	21		280		855
	640		23		327	170-8714	346
	655	162-6802	186	167-3693	276		350
	726	163-1135	800		280	170-9360	309
155-2272	309	164-0850	683	167-6805	379		311
	314		686		381	171-1230	781
	321		691		580		783
	640		693	167-7713	399		785
	726		695	167-7715	396		787
155-2274	336	164-1234	800		398	171-2212	276
155-3503	547	164-2108	623	167-8610	754		280
	550	164-4858	▶115	167-8712	226	171-5349	293
	574		116		228	171-6723	598
	577	164-4883	755		230		601
155-6258	604		756		232		604
	606		757		235		606
155-9320	406		759		238	172-2384	446
155-9321	432	164-5557	598	167-8713	226	172-2385	446
156-0214	344		601		228	172-4863	276
	345	164-5562	588		230		280
156-2525	123	164-5567	548		232	172-4880	739
156-4282	548		551		235	172-8037	733
	551		557		238		773
	574		562	167-8987	226		774
	577		574		228	172-8039	733
157-0670	84		577		235		773
158-6634	313		855		238		774
	320	164-5590	360	168-2197	583	173-1498	651
158-7864	858		563	168-2198	583		652
	860	164-5597	84	168-2203	583	173-1614	276
159-9322	241	164-5611	547	168-3378	587		280
159-9854	386		550	168-3379	587	173-2052	758
	388		573	168-3381	587	173-3083	791
160-0162	162		576	168-3382	587		794
	167	164-7468	196	168-3384	587	173-5787	791
	172	164-7556	264	168-3385	587		792
	178		265	168-3504	583		793
160-0305	520	164-8474	681	168-7319	583		794
160-0526	12		683	168-7790	403	173-7035	791
	15		686	168-8402	362		792

▶ **PRIMARY REFERENCE**

PART NUMBER INDEX

Part	Page	Part	Page	Part	Page	Part	Page
	793	178-7907	758		670	191-1956	385
173-9779	521	179-0464	579		673	191-3040	809
174-0503	327	179-7262	213		676		810
174-4590	858		215		677	191-3587	764
	859		218		733		766
174-6118	114		220		734	192-3282	525
174-7876	313	180-3153	631		736		579
	320	180-3154	631		746	192-7054	769
174-8131	270	180-4686	276		747		770
	272		280		748		771
174-9570	▶118	180-6213	583		749		772
	183	180-7110	314		750	192-7470	583
174-9994	583		321		751	192-7795	800
175-2539	655	180-7180	739		752	192-7799	800
175-4291	264	180-9340	291		764	192-7805	800
	265	180-9933	338		766	192-7810	800
175-4292	264		340	186-3736	287	192-7820	800
	265	183-1343	298		304	192-7848	800
175-5058	634		299	186-5107	634	193-3074	840
176-3141	34		300		800		846
	36		301	186-6189	739	193-3075	840
176-5166	557	183-3873	588	187-0413	422		846
	562	183-4274	327	187-0555	51	193-3973	123
176-9237	327	183-4584	▶292		53	194-1983	585
177-2215	69		313		55	194-5171	812
	123	183-5106	▶653	187-3547	556	194-8031	699
	184		654		561	195-5830	84
	313	183-7264	344		855	196-4250	394
	320	183-8410	396	187-4851	297		617
	327	184-2420	545	187-7331	78	196-4251	617
	338	184-6581	84	187-8001	379	196-4253	617
	340	185-0884	28		381	196-4254	394
	358	185-1043	78		580		617
	360	185-2638	193	187-8661	739	196-9444	394
	362	185-2639	193	187-9008	556		617
	547	185-2644	193		561	196-9445	617
	550	185-2647	193		855	197-2477	532
	556	185-2648	193	188-5095	114		536
	561	185-2650	193	188-8846	657	197-2851	587
	573	185-2654	193		658	197-6439	814
	576	185-2655	193		659		816
	636	185-2658	193		660		818
	739	185-3159	12		671		820
	742		15		672		824
	743		18	189-8898	566		826
177-3868	567	186-3735	190		▶623		828
	568		191	190-2787	343	197-7481	327
177-4937	332		192	190-5386	858	198-4769	403
	334		263		859	198-4776	84
177-6854	525		266	190-6507	583		184
177-6915	585		287	190-7614	213		186
177-6949	▶514		288		215	198-4777	76
	580		290		220		80
177-7122	▶398		295	190-8609	495		100
	525		305	190-9775	115		123
177-7747	398		307	191-0885	▶383		314
177-7783	514		308		385		321
178-1149	585		313	191-1393	383		358
178-2334	287		320	191-1394	383		360
178-2335	287		344	191-1395	383		375
178-2345	184		345	191-1396	383		411
	186		665	191-1397	383		424
	▶287		666	191-1398	383		426
178-7539	309		667	191-1782	184		428
	311		669		186		435

▶ **PRIMARY REFERENCE**

PART NUMBER INDEX

Part	Page
	437
	541
	557
	562
	739
	855
198-4778	314
	321
	424
	426
	428
	463
	493
	494
	588
198-4780	82
	366
198-5351	583
198-5389	263
198-7413	547
	550
198-9706	693
	695
199-7698	655
199-7891	193
199-8436	193
199-9252	136
	141
	146
	152
	157
	162
	167
	172
	178
199-9267	72
	136
	141
	146
	152
	157
	162
	167
	172
	178
199-9751	30
	32
2	
200-2371	391
200-5728	733
	773
	774
200-6345	67
	68
	84
	96
	123
	338
	340
200-8790	781
	783
	785
	787
201-0694	270
	272
201-2638	681
	683
	686
	689
	691
	693
	695
202-2342	396
202-5293	440
	444
	533
	537
202-6535	394
202-6611	264
202-6614	265
202-7214	313
	320
202-7704	580
203-2789	588
203-3847	313
	320
	327
	358
	360
	547
	550
	556
	561
	573
	576
	588
	855
203-3970	313
	320
203-6971	362
203-7703	791
	792
	793
	794
204-2281	84
	96
	314
	321
	358
	360
	557
	562
204-2581	804
204-2799	583
204-5380	547
	550
	855
204-6365	463
	467
	468
204-8000	314
	321
205-0626	193
205-8257	263
206-2423	186
	315
	322
206-4881	580
206-5162	263
206-5165	263
206-5823	750
	751
206-7238	527
	▶530
206-7243	▶366
	374
206-7244	374
	▶858
206-7245	1
	▶411
206-7248	8
	▶123
206-7249	2
	▶188
206-7250	▶1
206-7251	▶1
206-7255	▶343
	374
206-7257	▶364
	374
206-7260	1
	▶374
206-7261	1
	▶374
206-7263	▶362
	374
206-7264	▶358
	▶360
	572
206-7265	527
	▶541
	▶543
206-7267	▶373
	374
206-7270	▶1
206-7271	374
	▶859
206-7275	572
	▶573
	▶576
206-7277	527
	▶570
206-7280	1
	▶527
206-7281	374
	▶855
206-7285	▶449
206-7288	▶860
206-7289	▶861
206-7291	1
	▶508
206-7294	1
	▶8
206-7297	202
	▶313
	▶320
206-7300	1
	▶202
206-7301	202
	▶327
206-7302	▶332
	▶334
	650
	651
	652
206-7310	2
	▶650
208-0886	568
208-7448	96
209-0381	309
	311
209-3565	617
209-4573	96
209-4580	96
209-5502	10
209-5503	10
209-7659	184
	186
209-8217	640
209-9219	26
210-0691	556
	561
	573
	576
210-6211	213
	215
	218
	220
210-6842	102
	105
	108
	111
211-0052	276
	280
211-0686	858
	859
211-2092	567
	568
	▶624
211-5255	513
	609
	610
	611
	612
211-5358	800
	801
212-0061	391
212-3657	▶183
	184
	186
212-4219	809
	810
212-4483	585
212-6603	510
212-6604	510
212-7779	800
213-5167	800
213-5168	800
213-5169	800
214-0783	▶634
214-0784	634
214-4643	547
	550
	556
	561
	573
	576

▶ **PRIMARY REFERENCE**

PART NUMBER INDEX

Part	Page	Part	Page	Part	Page	Part	Page
	855		162		716	227-1148	520
214-4644	547		167		718	227-1184	569
	550		172		720	227-1185	569
	573		178		722	227-1186	609
	576	217-3875	393	224-5530	▶288		610
	855		394		764		611
214-4645	855		617	224-8472	78		612
214-4646	547	217-5807	450	225-0312	861		613
	550		451	225-0313	860		614
	556		454	225-3281	521		615
	561	217-8339	183		523		616
	573	217-9039	152	225-3322	681	227-1191	614
	576		157		683	227-1192	391
	855		162		689	227-1197	569
214-4647	556		167		691	227-1198	569
	561		172		693	227-1199	569
	855		178	225-5439	57	227-1201	594
214-4648	855		330	225-7738	88		595
214-4653	547	218-0404	263		90	227-3037	213
	550	218-0651	734	225-7944	73		215
	573		736	225-8019	88		218
	576	218-2373	623		90		220
214-6863	▶291	218-2529	755	225-8524	136	227-5904	583
	338		756		141	227-5971	▶492
	340		757		146		508
215-1574	463		759		152		509
215-4012	96	218-3274	502		157	227-6744	344
215-7487	855		503		162		345
215-7697	398		504		167	227-7390	860
215-8008	617	218-4935	739		172	227-7391	861
215-8010	394	218-4993	491		178	228-0172	133
	617	218-7252	800	225-8839	25		177
215-8011	394	219-0305	753	225-8858	28	228-2615	860
	617	219-6314	263	226-0150	732	228-2616	861
215-8012	617	219-6488	▶264	226-0151	732	228-3323	213
215-8013	617		267	226-0294	404		215
215-8014	617	220-0229	313		405		220
215-8015	617		320		406	228-6089	678
216-0143	406	220-1209	194		432		679
	408	220-5946	327	226-0331	689		724
216-0814	760	220-8355	676		691		734
	761	220-8678	118		693		736
	762	221-2718	415		695		830
	763		416	226-0420	▶511		831
216-1640	543		419		545	228-7100	133
	547		440	226-2333	223		134
	550		444		▶269		135
216-4551	617	221-3187	460	226-5554	545		177
216-4552	617		461	226-7683	▶193	228-8960	15
216-4553	617	221-3198	460		194		18
216-4554	617		461		196	228-9655	193
216-4555	617	221-4486	391	226-8766	43	228-9656	193
216-8634	43	221-8310	78		45	228-9657	193
	45	221-8571	96	226-8767	43	229-1494	792
216-9633	72	222-7890	734		45		793
216-9752	125		736	226-8770	210	230-0913	624
	136	223-0455	681	226-9169	213	230-3489	▶512
	141		683		215	230-4009	226
	146	223-3383	804		218		228
	152	223-3490	636		220		235
217-0099	136	223-4296	244	226-9170	224		238
	141		248	226-9622	623		241
	146		252	227-0842	▶521		244
	152	223-9818	712		842		246
	157		714		844		248

▶ **PRIMARY REFERENCE**

PART NUMBER INDEX

Part	Page	Part	Page	Part	Page	Part	Page
	250		677		502		135
	252		804	235-2526	▶472		173
	254	230-8989	136		503		177
	309		141		504		178
	327		146	235-2529	473	238-0472	498
	336		152		474		499
	338		157		475		500
230-4010	213		162		476		501
	215		167		479		505
	220		172		484		506
	241		178		485		507
	309	231-1455	73		498	238-0473	498
	327	231-2295	314		499		499
	336		321		505		500
	640	231-2300	309		506		501
	726		327		507		505
230-4011	244	231-2301	241	235-2533	498		506
	246	232-1115	125		500		507
	248		129	235-2534	498	238-8028	129
	250	232-1322	28		500	238-8288	99
	252		30	235-2536	473	238-8292	102
	254		32		474		105
	314	232-1374	184		▶479		108
	321		186	235-2538	▶473		111
	327	232-1376	184		498	239-1134	296
230-4012	293		186		499		▶308
	698	232-3149	136		505	239-1244	▶346
	724		141		507		374
230-4013	314		146	235-2539	▶474	239-1245	▶350
	321		152		500		374
	327		157		501	239-1246	346
230-4014	241		162	235-2540	▶498	239-1247	350
	314		167	235-2541	▶498	239-1248	346
	321		172	235-2554	505	239-1249	350
230-4872	521		178	235-2620	502	239-1250	346
230-4873	521	232-3666	43		503		350
230-5008	213		45		504	239-1251	346
	215	232-3751	73	235-2621	500		350
	220	232-3861	72		501	239-1253	346
	274	232-7596	28	235-4587	223		350
	309	232-7597	28	236-2122	374	239-1254	346
230-5009	213	232-7599	28		▶375		350
	215	233-0617	517	236-2123	▶370	239-1255	346
	220	233-0618	519		374		350
	309	233-9808	617	236-4545	297	239-1256	346
	745	234-2825	545	236-4623	604		350
	746	234-3030	98		606	239-4478	346
	747	234-3587	12	236-5157	394		350
	748	234-4744	▶465	236-5511	51	239-4481	346
	749	234-4745	▶468		53		350
	750	234-4746	▶466		55	239-5024	680
	751	234-9970	223	237-0227	314	239-5025	▶680
	752		▶275		321		734
230-5010	314	235-2404	583	237-3943	800		736
	321	235-2514	471	237-3970	▶635	239-6986	858
	327		472		800		859
	336		477	237-4132	275	239-7356	226
	338		486	237-4133	275		228
230-5011	314	235-2522	471	237-4134	275		235
	321		472	237-4135	275		238
	336		▶477	237-7252	275		309
	338		478	237-7552	839	239-7357	309
	669	235-2523	472	237-9736	268		338
	670		▶478	238-0120	133	239-8211	▶470
	676	235-2525	▶471		134		508

▶ **PRIMARY REFERENCE**

PART NUMBER INDEX

Part	Page
	509
239-8212	▶455
	509
239-8214	▶488
	509
239-8215	460
	461
	▶497
239-8217	▶463
	508
	509
239-8240	496
239-8242	496
239-8243	▶495
	496
239-8245	495
239-8247	▶496
	497
239-8258	488
239-8262	458
239-9950	223
	▶284
239-9954	▶200
	244
	246
	248
	250
	252
	254
	257
	259
	261
240-1470	▶842
	▶844
	▶845
240-1471	842
	844
	845
	▶846
240-1472	846
240-1473	846
240-1476	▶840
	842
	844
	845
240-1477	846
240-1478	846
240-1486	840
240-1487	840
240-1490	840
	846
240-1491	840
	846
240-1494	840
240-1495	840
240-1500	▶818
240-1501	818
240-1502	823
	824
	826
240-1503	823
	824
	826
240-1506	▶571
	629
240-1520	▶820
240-1521	820
240-1530	▶627
	629
240-1531	627
240-1553	627
240-1555	627
240-1556	627
240-1557	823
	828
240-6233	▶650
240-8552	▶93
	94
240-8555	96
240-8666	812
240-8933	▶490
	491
241-4291	142
	147
	152
	157
	162
	167
	172
	178
241-4936	▶769
	773
241-5895	568
241-7870	507
241-8368	276
	280
	▶304
242-0262	597
242-0814	393
242-1356	1
	▶4
242-2461	680
242-3053	▶276
	▶280
	332
	334
242-3054	276
	280
242-4885	637
242-5054	861
242-5055	860
242-8863	346
	350
242-9251	393
243-1455	346
	350
243-2147	50
243-2156	2
	650
	▶654
243-2157	8
	▶101
243-2158	101
243-3154	364
243-3155	364
243-3647	362
243-3652	362
243-3654	362
243-3655	368
243-3656	368
243-3658	368
243-3663	358
	360
243-3664	358
	360
243-3665	358
	360
	556
	561
243-3666	358
	360
	556
	561
243-3667	556
	561
243-5322	470
243-6637	375
	▶378
243-6639	370
	▶371
243-6640	370
	▶372
244-1432	93
	95
244-1716	699
244-1717	284
	285
244-1792	78
244-1817	80
244-2095	796
	798
244-2109	796
	798
244-2115	796
	798
244-7094	631
	803
244-7115	▶592
245-1042	327
245-1181	510
	625
245-1912	625
245-4747	269
245-8823	276
	280
246-2641	1
	190
	191
	554
246-4178	573
	576
246-4180	573
	576
246-5726	499
	501
246-5727	499
	501
246-5735	▶499
246-5804	377
	579
246-5882	570
246-5950	▶556
	▶561
	832
246-5955	556
	561
246-5956	556
	561
246-6167	556
	561
246-6316	547
	550
246-6469	528
	529
	▶553
246-6470	553
246-6471	553
246-7379	590
	▶591
246-7381	591
246-7756	547
	550
	573
	576
246-8384	▶410
246-8432	346
	350
246-8498	528
	▶594
246-9876	547
	550
	573
	576
	▶582
247-1925	96
247-2574	346
	350
247-2588	368
247-2647	368
247-6019	133
	134
	177
247-6500	650
	651
247-6501	650
	▶700
	▶702
	▶704
247-6502	650
	▶706
	▶708
	▶710
247-6503	650
	▶806
	▶807
247-6504	650
	651
	▶812
247-6505	650
	651
	▶732
247-6506	650
	651
	652
	▶663
247-6507	▶636
	650
	651
247-6508	650
	651

▶ **PRIMARY REFERENCE**

PART NUMBER INDEX

Part	Page	Part	Page	Part	Page	Part	Page
	▶734	248-3946	455	249-8826	421		421
247-6509	650		456	249-8830	421	251-1191	734
	651	248-3958	469	249-8834	421	251-1192	734
	▶681	248-3959	469	250-1444	556	251-1193	734
	▶683	248-5327	470		561	251-1194	734
	▶686	248-5358	226	250-1445	556	251-1197	734
247-6510	▶267		228		561		736
	650		235	250-1697	▶776	251-1752	585
	651		238	250-1698	▶777	251-1803	585
	652	248-6545	▶832	250-1699	▶779	251-2003	▶309
247-6511	▶631	248-6551	410	250-1700	▶450		▶311
	650	248-6566	403		452		650
	651		410		453		651
247-6582	806	248-6772	640	250-1701	451		652
	807		726	250-1703	450	251-2360	800
247-6583	806	248-7069	2	250-1705	▶451	251-2362	800
	807		650		452	251-3069	313
	808		651	250-1714	450		320
	811		652	250-2110	▶651	251-3070	313
247-6606	▶746		▶753	250-2111	▶697		320
	812	248-7070	2	250-2112	3	251-3072	313
247-6613	706		650		▶678		320
	708		▶739		▶679	251-3073	313
	710	248-7071	2	250-2113	▶830		320
	718		650		▶831	251-3495	▶452
	720		652	250-2114	▶515	251-3536	651
	722		▶742		▶516		▶652
247-6631	803		▶743	250-2120	2	251-3544	527
247-6632	803	249-2844	633		▶789		▶588
247-6648	636	249-3097	▶861	250-2121	▶789	251-3567	588
247-6658	631	249-3190	2	250-2123	▶790	251-4060	651
247-6660	631		3	250-3430	▶499		▶698
247-6845	637		▶424	250-3852	3	251-4129	8
247-9730	96	249-3191	▶426		▶528		▶84
248-0971	570	249-3600	1		▶529	251-4177	190
248-1066	133		▶402	250-5485	362		191
	134	249-3601	402	250-5576	556	251-4336	43
	177	249-3602	1		561		45
248-1500	224		▶768	250-5745	358	251-4515	812
	225	249-3603	768		360	251-5447	497
	269	249-3604	2	250-5747	556	251-5785	495
248-1664	527		3		561	251-5786	495
	▶545		▶420	250-6055	375	251-5787	495
248-3912	▶456	249-3606	1	250-6148	568	251-5848	734
	508		▶434	250-6991	▶244		736
248-3914	▶489	249-3608	▶421		▶246	251-5975	2
	508	249-3720	8	250-6992	▶263		650
248-3918	▶462		▶94	250-6993	▶268		▶804
	508	249-3721	8	250-6994	▶213	251-6638	547
	509		▶96		▶215		550
248-3919	▶460	249-3722	8	250-6999	▶540	251-7146	724
	508		▶50		629		▶726
	509	249-3723	8	250-7798	▶547	251-7591	228
248-3920	▶461		▶100		▶550		235
	508	249-3973	373		832	251-8512	470
	509	249-3974	373	250-7881	▶598	251-8515	469
248-3923	497	249-5059	591		▶601	251-8518	469
248-3924	469	249-7117	▶189	250-7882	▶604	251-8522	496
248-3927	460	249-8600	557		▶606	251-8531	463
	461		562	250-8231	▶449	251-8532	463
	▶469		▶580	250-9152	213	251-8579	465
248-3930	461	249-8795	434		218		466
248-3931	460	249-8802	420	250-9160	652		▶467
248-3932	459	249-8807	420		▶724	251-8580	467
248-3938	489	249-8811	420	250-9566	420	251-8633	681

▶ **PRIMARY REFERENCE**

PART NUMBER INDEX

Part	Page	Part	Page	Part	Page	Part	Page
	683		▶664		724	254-7864	184
	689		678	252-8930	764		186
	691		830		766	254-8155	▶265
251-8636	657	252-4587	591	252-8933	764		267
	658	252-4925	276		766	254-9136	223
251-9585	596		280	252-9136	374		224
251-9852	556	252-4926	276		▶390	254-9951	224
	561		280	252-9628	284	255-0939	284
252-0235	343	252-4927	276		285		285
252-0452	▶532		280		286		286
	▶536	252-4928	276	253-0578	450	255-1281	654
	629		280		451	255-1530	502
252-0465	532	252-4929	276		454	255-1532	502
	536		280	253-0861	852	255-1533	503
252-0467	532	252-5001	93		854	255-1534	503
	536		95	253-1346	496	255-4182	500
252-0468	532	252-5002	93	253-1698	▶554	255-4183	500
	536		95		842	255-4184	501
252-0469	532	252-5003	93		844	255-4185	501
	536		95		845	255-4232	689
252-0524	547	252-5004	93	253-1803	362	255-4233	681
	550		95		▶400		683
252-0552	779	252-5074	▶368	253-2111	276		686
252-0553	779		374		280	255-4260	226
252-0706	383	252-5459	777	253-2439	663		228
	385	252-5533	213		▶764		230
252-0787	51		215		▶766		232
252-1182	276		218	253-3690	636		235
	280		220	253-3696	739		238
252-1577	96	252-5542	588	253-7673	554		▶270
252-1585	123	252-6111	327	253-7674	554		▶272
252-1586	123	252-6113	314	253-8297	789	255-4261	270
252-1590	▶296		321		▶791		272
	297	252-6801	776	253-8329	284	255-4262	270
252-1862	700		778	253-8798	646	255-4263	270
	702	252-6802	777		648	255-4264	270
	704	252-6803	777	253-8967	275	255-4265	270
	706	252-6921	314	253-8969	275	255-4266	689
	708		321	253-8981	275		691
	710	252-6922	314	253-9544	669	255-4267	270
	712		321		670	255-4275	651
	714	252-6949	226	254-0227	500		▶808
	716		228		501	255-4276	▶422
	718		230		502	255-4279	808
	720		232		503		811
	722		235		504	255-5153	636
252-1863	700		238		507	255-6210	640
	702	252-7008	▶567	254-1254	556	255-6211	640
	704		598		561		726
	706		601		855	255-8095	390
	708	252-7010	568	254-1255	573	255-8384	681
	710	252-7208	681		576		683
	712		683		855		686
	714	252-7209	681	254-1387	856	255-8386	681
	716		683	254-3202	636		683
	718	252-7819	652		724		686
	720	252-7820	652	254-3203	636	255-8878	405
	722		▶736		724	256-0761	640
252-2153	314	252-7821	652	254-4091	734		726
	321		▶689		736	256-0762	640
252-2155	314		▶691	254-4493	568	256-0768	640
	321		▶693	254-7184	358		726
252-2237	510		▶695		360	256-0770	640
	▶625	252-8744	839	254-7185	358	256-1028	602
252-4559	515	252-8878	636		360		607

▶ **PRIMARY REFERENCE**

PART NUMBER INDEX

Part	Page
256-3454	184
	186
256-3464	8
	▶47
256-3468	▶242
256-3469	▶243
256-4579	269
256-4580	269
256-4581	269
256-4582	269
256-4923	▶500
256-4924	▶500
256-4925	▶501
256-4926	▶501
256-4928	▶502
256-4930	▶502
256-4931	▶503
256-4932	▶503
256-4933	▶504
256-4944	504
256-4959	775
256-5719	269
256-5720	269
256-5721	269
256-5722	269
256-5732	269
256-6453	591
256-6454	640
256-7482	652
	▶803
257-0205	822
	823
257-0225	823
257-0252	823
257-0450	592
	593
257-0466	609
	613
257-0468	569
	611
	612
	615
	616
257-1729	284
257-2336	504
257-4210	393
257-7722	609
	610
	611
	612
	613
	614
	615
	616
257-7726	609
	613
	▶620
257-7732	609
	613
	▶621
257-7734	610
	611
	612
	614
	615
	616
257-7735	609
	613
257-7736	▶596
	610
	612
	616
258-0883	117
	▶305
258-0932	▶504
258-4819	213
	215
	218
	220
258-6387	657
	658
	659
	660
258-7255	545
259-1060	631
	803
259-1286	681
	683
	686
259-4403	806
	808
	▶809
259-4405	806
	808
	▶810
259-4746	274
	▶754
260-0634	96
260-1555	242
260-1556	243
260-1566	242
260-1569	243
260-3638	78
260-3718	136
	142
	146
	152
260-3719	136
	142
	146
	147
	152
	157
	162
	167
	172
	178
260-3939	142
	146
	152
260-6478	269
260-6480	269
260-6728	665
	666
	667
	669
	670
	673
	676
	677
260-6765	502
260-6766	502
260-6767	503
260-6768	504
260-6771	503
260-6772	504
260-6781	582
	▶583
260-6782	582
260-7652	860
260-7653	861
260-9174	530
260-9187	548
	551
	557
	562
	574
	577
	855
261-0376	196
261-0420	314
	321
261-1885	804
261-2070	468
261-2082	463
261-2083	463
261-2167	96
261-3629	378
	▶379
261-3630	378
	▶381
261-5114	530
261-5115	530
261-5116	530
261-5117	530
261-5118	530
261-5119	530
261-5120	530
261-5121	530
261-5122	530
261-5123	530
261-5124	530
261-5506	530
261-5507	530
261-5694	758
261-6044	541
	543
261-6045	541
261-6046	541
	543
261-6047	541
	543
261-6048	541
	543
261-6049	541
	543
261-6916	570
261-7504	80
262-0766	▶775
	781
	783
	785
	787
262-0767	775
262-0769	775
262-0771	775
262-0772	775
262-0779	633
262-0780	633
262-0781	633
262-0785	633
262-0786	633
262-0787	633
262-0789	775
262-1184	244
	246
	261
262-1408	332
262-1997	700
	702
	704
	712
	714
	716
262-1998	706
	708
	710
	718
	720
	722
262-2043	▶202
	246
	250
	254
	257
	259
	261
262-2814	640
262-2815	726
262-2923	422
	▶446
262-2925	422
262-2930	422
262-2971	700
	702
	704
	706
	708
	710
	712
	714
	716
	718
	720
	722
262-4069	706
	718
	▶747
262-4070	700
	712
	▶748
262-4806	▶293
	327
262-7293	386
	388
262-7701	394
263-1233	78
263-2135	812
263-3823	746
	747

▶ **PRIMARY REFERENCE**

PART NUMBER INDEX

Part	Page	Part	Page	Part	Page	Part	Page
	748	265-3759	590		669	266-9983	520
	749	265-3760	590		676	267-1240	420
	752	265-5673	855	266-7634	▶667		421
263-5928	734	265-7981	636		673	267-1242	420
	736	265-8125	136	266-7765	636		421
263-6394	252		141	266-8524	515	267-2549	651
	254		146		516		▶712
	259	266-0394	556		830		▶714
263-7360	422		561		831		▶716
263-7802	244	266-0395	556	266-8525	515	267-2550	2
	248		561		516		▶651
	252	266-1457	590		830	267-2551	651
263-8727	362	266-1458	590		831		▶718
263-8736	598	266-1467	▶289	266-8944	232		▶720
	601		766		235		▶722
	604	266-1505	556		238	267-4500	804
	606		561	266-9001	515	267-4501	804
263-8737	598	266-1506	556		678	267-4943	▶2
	601		561		830	267-5001	244
	604	266-1619	358	266-9005	678		246
	606		360		679		248
263-8738	598		556	266-9006	830		250
	601		561		831		252
	604	266-2273	▶566	266-9007	515		254
	606		609		516		257
263-9088	244		610	266-9247	▶95		259
	246		611	266-9299	700		261
	248		612		702	267-5002	244
	250	266-2579	▶391		704		246
	252		592		712		248
	254		593		714		250
	257		594		716		252
	259		595	266-9303	700		254
	261	266-2580	▶569		702		257
	▶284		592		704		259
264-2995	▶344		593		706		261
	358		594		708	267-5003	244
	556		595		710		246
264-3504	80	266-2581	592		712		248
264-4510	226		594		714		250
	232		▶609		716		252
264-5425	276	266-2582	592		718		254
	280		594		720		257
264-5726	568		▶610		722		259
264-6186	547	266-2583	592	266-9306	706		261
	550		594		708	267-5147	781
	573		▶611		710		783
	576	266-2584	594		718		785
264-7031	215		▶612		720		787
	220	266-2705	588		722	267-5156	761
264-7034	235	266-3214	796	266-9307	700	267-5157	761
	238		798		702	267-5159	760
	241	266-3593	611		704		761
264-8899	809		612		712		762
264-8900	809		615		714		763
	810		616		716	267-5160	760
264-8901	809		▶622	266-9384	517		761
	810	266-3701	812	266-9390	519		762
264-9765	▶480	266-5291	488	266-9600	556		763
264-9766	▶481		489		561	267-5243	636
264-9770	▶482	266-7145	640	266-9601	556		724
264-9771	▶483	266-7631	▶665		561	267-5639	764
265-3751	588		670	266-9652	▶338		766
	▶590		677		▶340	267-6404	96
265-3758	590	266-7632	▶666		832	267-6405	96

▶ **PRIMARY REFERENCE**

PART NUMBER INDEX

Part	Page
267-6409	96
267-6417	123
267-6457	332
	334
267-6708	510
267-6709	400
	▶510
267-8142	556
	561
267-8143	556
	561
267-8144	556
	561
267-8340	76
	▶432
267-8342	▶435
	449
267-8655	446
267-9084	▶248
	▶250
267-9240	437
	439
267-9241	442
	443
267-9242	▶409
	440
	444
267-9243	▶437
	449
267-9244	409
267-9245	440
	444
267-9246	442
	443
267-9247	437
	▶447
267-9249	437
	▶440
267-9250	440
	444
267-9251	437
	▶442
267-9252	440
	444
267-9253	447
	448
267-9319	781
	783
	785
	787
267-9552	796
	798
267-9553	796
	798
267-9554	796
	798
267-9555	796
	798
267-9556	796
	798
267-9834	796
	798
267-9928	406
	408
267-9934	411
267-9935	411
268-0179	636
	▶640
268-1530	123
268-1531	123
268-1562	184
	186
268-1563	184
	186
268-2526	540
268-2527	540
268-4316	435
	437
268-4317	435
	437
268-4318	435
	437
268-4319	435
	437
268-4321	435
	▶443
268-4324	435
	▶444
268-6677	142
	146
	152
	157
	162
	167
	172
	178
268-6678	142
	146
	152
	157
	162
	167
	172
	178
268-7591	314
	321
268-8670	858
	859
268-9351	▶661
	789
	790
	795
268-9352	▶662
	789
	790
	795
268-9378	646
268-9382	648
268-9890	556
	561
268-9891	556
	561
269-0424	435
	437
269-1748	739
269-1749	739
269-1751	636
269-1752	636
269-1753	636
269-1799	739
269-1844	591
269-2728	▶517
	629
269-2729	▶520
	629
269-2730	▶519
	629
269-2886	706
	708
	710
	718
	720
	722
269-2887	700
	702
	704
	712
	714
	716
269-2888	706
	708
	710
	718
	720
	722
269-2890	700
	702
	704
	706
	708
	710
	712
	714
	716
	718
	720
	722
269-2892	700
	702
	704
	706
	708
	710
	712
	714
	716
	718
	720
	722
269-2893	700
	706
	712
	718
	720
	722
	700
	702
	704
	706
	708
	710
	712
	714
	716
	▶738
269-3945	517
269-4215	571
269-4669	393
	394
	617
269-4676	597
269-4970	358
	360
	556
	561
269-5420	432
269-5422	432
269-5950	76
	▶78
269-7034	80
269-7035	80
269-8084	2
	▶412
269-8091	3
	▶413
	▶414
269-8119	417
	418
269-8121	76
	▶80
269-8260	556
	561
269-8325	66
269-8341	739
269-8459	598
	601
	604
	606
270-0076	▶749
	812
270-4835	738
270-4836	738
270-4837	738
270-4838	738
270-4839	738
270-5239	377
270-7881	753
270-7882	753
271-2773	753
271-2774	753
271-4507	▶266
	268
271-4767	135
271-5950	470
271-6005	462
271-6033	468
271-6035	1
	▶509
271-6041	469
271-6042	469
271-6058	455
	456
271-6069	496
271-6070	496
271-6071	▶493
	▶494
	508
	509
271-6076	495
271-6077	495
271-6080	463

▶ **PRIMARY REFERENCE**

PART NUMBER INDEX

Part	Page	Part	Page	Part	Page	Part	Page
271-6081	463	272-8110	790		55		▶729
271-6085	493		▶793	275-9889	51	276-8115	▶30
	494	272-8308	119		53		34
271-6086	493	272-9800	266		55	276-8116	30
	494	273-5711	63	275-9891	51		32
271-6160	455	274-1639	119		53	276-8117	30
	456		120		55		32
271-6458	636		121	275-9897	51	276-8123	30
271-6479	636		122		53		32
271-7312	636		141		55	276-8132	30
	724		153	276-0062	422		32
271-7392	636		158	276-0063	422	276-8133	30
271-7421	636		163	276-0142	51		32
271-9166	417		168		53	276-8134	34
	418		173		55		36
271-9408	689		178	276-0764	284	276-8280	▶119
	691	274-1923	406	276-3063	756		136
	693		408	276-3276	114	276-8398	▶134
272-0502	440		409	276-3642	781		141
	444	274-1929	4		783		146
272-0511	556		7		785	276-8580	451
	561		▶58		787	276-8728	314
272-0512	556	274-1930	58	276-3644	781		321
	561	274-1931	58		783	276-9200	59
272-0513	556	274-1932	58		785	276-9201	59
	561	274-1933	58		787	276-9206	59
272-0610	135	274-1934	58	276-3898	188	276-9207	59
272-0611	135	274-1935	58		189	276-9230	59
272-0830	556	274-1982	136	276-3990	440	277-0116	39
	561	274-4645	226		444	277-0117	39
272-1622	700		228	276-4259	435	277-0118	39
	702		232		▶439		41
	704		235	276-4263	435	277-0119	39
	712		▶669		▶448	277-0120	39
	714	274-4646	▶670	276-4282	545	277-0121	39
	716		671	276-4480	▶850		41
272-1623	700		674	276-4483	▶851	277-0122	39
	702	274-5983	▶67	276-4485	627	277-0588	38
	704		▶68	276-5071	78	277-1801	213
	706		▶69	276-5438	297		215
	708	274-7674	1	276-5600	28		218
	710		▶76	276-5601	28		220
	712	274-7681	80	276-5602	28	277-1833	298
	714	275-2428	210	276-5603	28		301
	716		211	276-5604	28		302
	718	275-6706	640	276-5605	28	277-1835	4
	720		726	276-6146	225		▶298
	722	275-6707	640	276-6596	296	277-1974	64
272-1777	327		726	276-6855	631		65
272-2272	▶780	275-6710	636	276-6856	631	277-1975	64
	791		681	276-7387	25		65
	792		683	276-7388	25	277-2238	505
	793		686	276-7389	25	277-2239	506
	794		689	276-7390	25	277-2240	506
272-2771	▶336		691	276-7391	25	277-2245	▶505
	▶337		693	276-7393	25	277-2246	▶505
	789		695	276-7394	25	277-2247	▶506
	790		698	276-7475	57	277-2248	▶506
	795		724	276-7476	57	277-2249	▶507
272-5584	213	275-7803	780	276-7478	57	277-2500	73
	215	275-9884	51	276-7479	57	277-2502	73
	218		53	276-7481	57	277-2503	73
	220		55	276-7483	57	277-2504	4
272-8109	789	275-9888	51	276-8082	650		7
	▶792		53		651		▶73

▶ **PRIMARY REFERENCE**

PART NUMBER INDEX

Part	Page
277-2525	73
277-2526	73
277-2537	73
277-2538	73
277-2912	4
	7
	▶66
277-2923	88
	90
277-2925	88
	90
277-2939	4
	7
	▶88
	▶90
277-2974	92
277-2976	4
	7
	▶92
277-2990	434
277-3012	43
	45
277-3013	43
	45
277-3014	4
	7
	▶43
	▶45
277-3373	76
277-3421	417
	418
277-3556	▶428
277-3570	804
277-3629	364
277-3630	364
277-4223	10
	11
277-4224	7
	▶10
	▶11
277-4262	4
	7
	▶71
277-4267	364
277-4302	99
277-4407	210
277-4408	210
	211
277-4409	210
	211
277-4410	4
	▶210
	▶211
277-4490	49
277-4541	4
	7
	▶49
277-4694	4
	7
	▶72
277-4991	151
277-4993	151
277-5030	12
	15
277-5031	12
	15
	18
	21
	23
277-5063	12
	15
277-5064	12
	15
	18
	21
	23
277-5065	12
	15
	18
	21
	23
277-5066	12
	15
277-5067	12
	15
	18
	21
	23
277-5094	12
	15
	18
	21
277-5096	12
	15
	18
	21
277-5191	▶135
	136
277-5307	59
277-5672	742
	743
277-5995	314
	321
277-6001	724
	729
277-6037	450
277-6038	450
277-6073	194
	196
277-6074	194
277-6075	194
	196
277-6077	194
277-6078	194
	196
277-6079	194
277-6080	4
	7
	▶194
	▶196
277-6165	125
	129
277-6372	444
277-6373	444
277-6377	439
277-6379	439
277-6380	448
277-6381	439
277-6382	439
277-6383	439
277-6384	443
277-6388	439
277-6551	580
	▶585
277-6553	▶525
	580
277-6557	▶579
	580
277-6624	579
277-6630	580
	▶617
277-6631	617
277-6679	▶399
	525
277-6990	5
	7
277-7013	358
	360
	556
	561
277-7014	358
	360
	556
	561
277-7015	439
277-7087	858
	859
277-7112	726
277-7113	640
277-7114	726
277-7712	434
277-8102	761
277-8103	760
	762
277-8361	▶852
	858
277-8362	852
	854
277-8363	852
277-8364	852
277-8365	852
	854
277-8369	734
277-8371	▶854
	859
277-8373	852
	854
277-8374	852
	854
277-8378	496
277-8589	760
277-8707	84
277-8713	8
277-8716	96
277-8718	94
277-8719	96
277-8731	8
	▶184
277-8736	123
277-8737	123
277-8748	8
	▶297
277-9501	102
277-9602	105
	108
	111
277-9603	105
	108
	111
277-9605	102
277-9938	102
	105
	108
	111
277-9939	102
	105
	108
	111
277-9940	102
	105
	108
	111
277-9958	726
277-9959	726
277-9960	726
277-9962	726
277-9964	726
277-9966	640
277-9968	730
	731
	742
277-9969	640
	▶730
278-0016	102
	105
	108
	111
278-0017	102
	105
	108
278-0310	102
	105
	108
	111
278-0314	102
	125
	129
278-0315	102
278-0316	102
	105
278-0361	102
	105
278-2220	406
	408
	440
	444
278-2470	1
	▶629
278-3242	88
278-3354	640
	726
278-4138	117
	125
	129
	137
	142
	147
	153
	158

▶ **PRIMARY REFERENCE**

PART NUMBER INDEX

Part	Page	Part	Page	Part	Page	Part	Page
	163		162		157		372
	168		167		162	279-0850	640
	173		172		167		726
	179		178		172	279-2486	583
278-4437	379	278-5189	136		178		▶587
	▶386	278-5201	136	278-5307	136	279-2488	583
278-4438	381		141		141	279-2491	587
	▶388		146		146	279-2619	583
278-4439	▶342	278-5202	136		152	279-8711	4
	379		141		157		7
	381		146		162		▶26
278-4440	▶356	278-5203	136		167	279-8762	4
	379		141		172		7
278-4441	▶357		146		178		▶25
	381		152	278-5308	136	279-8780	4
278-4442	379		157		141		7
	381		162		146		▶57
	▶394		167	278-5309	136	279-8821	4
278-4448	▶376		172		141		7
	379		178		146		▶34
278-4449	▶377	278-5204	136	278-5319	4		▶36
	381	278-5209	136		▶136	279-8825	4
278-4452	342		141		▶141		7
278-4464	386		146		▶146		▶61
	388	278-5210	136	278-5921	424	279-8837	4
278-4693	12		141		426		7
	15		146		428		▶9
	18		330	278-5927	12	279-8846	4
278-4694	12	278-5225	136		15		7
	15		141		18		▶39
	18		146	278-6935	757		▶41
278-4956	579		152	278-6936	762	279-9254	38
278-4957	579		157	278-6948	447	279-9255	4
278-4976	386		162		448		7
278-4977	385		167	278-7528	755		▶38
278-5111	59		172	278-8282	377	279-9361	102
278-5112	59		178	278-8283	377		105
278-5113	59	278-5226	136	278-8284	376		108
278-5125	9		141	278-8515	▶755		111
278-5126	9		146		781	279-9651	48
278-5128	99		152	278-8516	▶756	279-9652	48
278-5166	136		157		783	279-9653	4
278-5168	136		162	278-8517	▶757		7
	141		167		785		▶48
	146		172	278-8934	371	279-9692	4
	152		178		372		▶151
	157	278-5227	136		▶385	279-9720	4
	162		141	278-8935	▶354		▶87
	167		146		371	280-1291	98
	172	278-5228	136	278-8936	354	280-1292	4
	178		141		355		7
278-5170	136		146		▶393		▶98
	141	278-5272	136	278-8937	354		▶99
	146		141		355	280-1379	4
	152		146		▶392		▶51
	157		152	278-8965	664	280-1383	51
	162		157		668		53
	167		162	278-8967	664	280-1384	51
	172		167		668		53
	178		172	278-8970	664		55
278-5180	136		178		668	280-1385	51
	141	278-5273	136	278-8974	664		53
	146		141		668		55
	152		146	279-0354	392	280-1387	51
	157		152	279-0543	▶355	280-1428	4

▶ **PRIMARY REFERENCE**

PART NUMBER INDEX

Part	Page
	7
	▶64
	▶65
280-1429	64
280-1430	64
	65
280-1889	136
	141
	146
	152
	157
	162
280-1890	136
	141
	146
	152
	157
	162
280-1891	136
	141
	146
	152
	157
	162
280-1892	136
	141
280-1911	▶59
	61
280-1912	59
280-1913	59
280-1914	59
280-2017	12
280-2020	12
280-2023	12
280-2024	4
	▶12
280-2050	4
	▶63
280-2392	102
280-2407	102
	105
	108
	111
280-2420	102
	105
	108
	111
280-2423	102
	105
	108
280-2424	102
	105
	108
	111
280-2441	102
	105
280-2442	102
280-2443	102
	105
	108
	111
280-2458	4
	▶102
	▶105
280-2709	276
	280
280-3512	796
280-3513	798
280-3514	796
280-3515	798
280-7618	411
280-7870	619
280-9440	661
	662
280-9441	661
	662
280-9442	661
280-9443	662
280-9444	661
	662
280-9453	640
	726
280-9679	▶646
	789
	790
	795
280-9680	661
280-9896	661
280-9897	661
280-9898	662
280-9899	662
280-9900	662
281-2033	726
281-3963	671
	672
281-3964	671
	672
	674
	675
281-3965	671
	672
	674
	675
281-3966	681
	683
	689
	691
281-3967	681
	683
	689
	691
281-3968	681
	683
281-3970	689
	691
281-3976	689
	691
281-4002	700
	702
	704
	706
	708
	710
	712
	714
	716
281-4004	691
	693
	695
281-4007	683
	686
	691
	693
	695
	704
	712
	714
	716
281-4136	700
	702
	704
	712
	714
	716
281-4137	706
	708
	710
	718
	720
	722
281-4140	700
	702
	704
281-4141	706
	708
	710
281-4150	712
	714
	716
281-4151	718
	720
	722
281-5882	123
281-7631	631
281-8744	92
282-0480	▶120
	141
	146
	152
282-0557	775
282-0918	583
282-0919	583
282-1825	573
	576
282-2032	796
	798
282-2033	796
	798
282-2034	648
282-2035	646
282-2036	646
	648
282-3233	136
	141
	146
282-3234	136
	141
	146
282-3237	136
282-3476	640
	726
282-3481	640
	726
282-3653	640
	726
282-6689	648
282-6690	646
282-6691	648
282-6692	646
282-6695	796
	798
282-6701	648
282-6702	646
282-6707	648
282-6708	646
282-6709	648
282-6710	646
282-9404	435
	437
282-9861	43
283-1529	435
	437
283-4426	699
283-4662	39
	41
283-4693	210
283-8301	49
283-8302	49
283-8651	640
	726
283-9530	699
283-9900	270
	272
283-9901	270
	272
283-9902	689
	691
	693
283-9909	683
	686
	691
	693
	695
284-0071	39
	41
284-0549	203
284-0825	202
	▶203
284-0826	201
	202
	▶203
284-1291	76
284-2213	698
284-3660	515
	516
284-3751	681
	683
	689
	691
284-3752	▶657
	681
	683
284-3753	681
	683
	686
	689
	691
	693
	695
284-3754	753

▶ **PRIMARY REFERENCE**

PART NUMBER INDEX

Part	Page	Part	Page	Part	Page	Part	Page
284-7042	681	285-5240	583	286-6933	80		167
	683		▶619	286-7847	51		172
	686	285-5734	700		53		178
	689		702		55	287-7430	88
	691		704	286-7851	102	287-7637	120
	693		712		105		121
	695		714		108		122
284-7043	657		716		111		141
284-7054	▶648	285-5735	706	286-8141	858	287-8437	724
	789		708		859	287-8533	366
	790		710	286-9124	223	287-8534	366
	795		718		224	287-8535	366
284-7055	648		720		225	287-8597	39
	▶796		722		▶745		41
284-7059	646	285-7415	636	286-9488	78	288-0453	76
	▶798		724	286-9489	78	288-0661	860
284-7417	136	285-7460	▶568	286-9549	84	288-0662	861
284-7418	136		604	286-9550	84	288-0882	631
284-7419	136		606	287-0427	84	288-0883	681
284-7420	136	285-7633	582	287-0548	700		683
284-7421	136	285-7974	726		702	288-0884	689
284-7422	136	285-8548	726		704		691
284-7648	648	285-8553	641		706		753
284-7649	646	285-8554	726		708	288-0887	681
284-8207	▶290	286-0134	223		710		689
	673		224		712	288-0888	532
284-8208	290		225		714	288-0925	8
	673		▶699		716		▶82
284-8532	257	286-0136	224		718	288-1041	532
	259		▶284		720		536
	261	286-0137	223		722	288-1042	532
284-8953	▶770		▶285	287-0553	655		536
	774	286-2890	129	287-0554	636	288-2357	102
284-8954	733	286-2968	673		▶655		105
	▶771	286-3017	285	287-2169	764	288-2567	366
284-8955	733		286		766	288-2568	366
	▶772	286-3433	432	287-2372	753	288-2738	▶116
284-9055	733	286-3438	412	287-2982	366		190
285-0151	669		▶415	287-3577	573		191
	670	286-3439	415		576	288-3657	636
	673	286-3440	413	287-3890	327		698
	676		▶416	287-5702	80	288-3663	681
	677	286-3441	416	287-5997	804		683
285-1133	200	286-3456	412	287-5998	804		689
285-1975	12		▶417	287-5999	804		691
	15	286-3457	417	287-6000	▶453		724
	18	286-3458	413	287-6657	730	288-4011	7
	21		414	287-6800	532		▶83
	23		▶418		536	288-4513	84
285-2214	203	286-3459	418	287-6801	532	288-5418	443
285-3429	84	286-3462	404		536	288-5419	442
285-3555	125		432	287-6802	532	288-5422	415
	129	286-3683	141		536		416
285-3692	700		146	287-6838	152	288-5423	188
	702	286-3686	152		157		▶190
	704		157		162	288-5424	189
	706		162		167		▶191
	708		167		172	288-5425	▶114
	710	286-4407	809		178		191
	712		810	287-6839	136	288-6968	420
	714	286-5809	631		141		421
	716	286-5810	631		146	288-6974	41
	718	286-6911	78		152	288-6975	41
	720	286-6912	78		157	288-6982	64
	722	286-6913	78		162	288-7343	▶658

PART NUMBER INDEX

Part	Page
	689
	691
288-8129	3
	▶572
288-8600	314
	321
288-8609	362
288-8610	362
288-9562	406
288-9563	408
288-9564	411
288-9565	411
288-9566	424
	426
	428
288-9567	▶404
	424
288-9568	▶405
	426
288-9569	428
	▶833
288-9570	404
288-9573	405
288-9574	406
288-9575	406
288-9576	833
288-9577	833
288-9578	833
288-9579	833
288-9868	▶671
	▶672
289-2020	681
	683
289-2021	689
	691
289-2073	796
	798
289-2122	731
289-2123	726
	▶731
289-2134	726
289-2544	114
289-3085	507
289-3086	▶507
289-3378	681
	683
	689
	691
289-3380	681
	683
	686
	689
	691
	693
	695
289-3381	681
	683
	686
	689
	691
	693
	695
289-4773	338
289-4795	726
289-5982	190
289-6134	424
289-6135	426
	428
289-6136	424
	426
	428
289-6137	424
	426
	428
289-6138	404
289-6140	▶406
	411
289-6141	405
289-6142	833
289-6145	▶408
	411
289-8247	631
	803
289-8302	▶431
289-8424	▶652
289-8448	▶814
289-8449	284
	285
	286
289-8725	51
	53
	55
289-9876	532
290-1030	252
	254
	259
290-1032	▶252
	▶254
290-1034	248
	250
	257
290-2457	431
290-2482	431
290-3910	141
	146
	152
	157
	162
	167
290-3911	141
	146
	152
	157
	162
	167
290-3912	141
	146
	152
	157
	162
	167
290-3913	141
	146
	152
	157
	162
	167
290-3914	141
	146
	152
290-3915	141
	146
	152
	157
	162
	167
290-3916	141
	146
	152
	157
	162
	167
290-4835	336
	337
	▶673
290-5570	▶223
290-5571	▶224
290-5623	47
290-5624	47
290-5626	96
290-5638	100
290-5645	297
290-5728	39
	298
	299
	300
290-6112	699
290-6180	712
	714
	716
	718
	720
	722
291-1913	285
	286
291-3803	730
	731
291-4110	▶430
291-5422	226
	232
291-5919	▶133
	152
	157
	162
	167
291-6288	736
291-7971	791
	792
	793
	794
	▶800
291-7972	800
291-7980	▶643
	800
291-7981	643
291-7984	643
291-7986	643
291-7989	643
291-7990	643
	644
	645
291-7992	643
291-7993	800
291-8004	▶644
	800
291-8005	644
291-8008	644
	645
291-8010	800
291-8011	▶645
	800
291-8012	645
291-8014	800
291-8019	800
291-8026	800
291-8027	800
291-8028	800
291-8030	643
291-8031	800
291-8032	800
291-9310	643
291-9805	480
	481
	482
	485
	486
	487
292-0279	▶224
292-0280	▶225
292-0285	223
	▶284
292-0290	223
	224
	▶269
292-0291	224
	▶285
292-0292	225
	▶286
292-0293	▶223
292-0294	▶199
292-0296	223
	224
	225
	▶274
292-0302	223
	▶839
292-0303	224
	225
	269
	▶839
292-0309	223
	▶699
292-0311	699
292-0312	▶223
292-0848	141
	146
	152
292-0886	26
292-1268	284
292-1882	248
	250
	257
292-2441	284
	285
292-3462	99
292-4829	102

▶ **PRIMARY REFERENCE**

PART NUMBER INDEX

Part	Page
292-6402	755
	756
	757
	▶758
	759
292-8012	547
	550
	573
	576
292-9881	211
293-0249	133
	134
	177
293-1856	776
293-1857	776
293-1859	776
293-1860	232
293-1861	232
293-1863	232
293-1864	454
293-1874	43
293-1880	330
293-1939	454
293-1940	454
293-1943	454
293-2915	633
293-3126	408
293-3127	406
293-3216	408
293-3217	406
293-3746	430
293-3747	430
293-3748	430
293-5183	336
293-5184	▶218
	▶220
293-5185	226
	228
	230
	232
	235
	238
293-5188	226
	228
	230
	232
	235
	238
293-5223	327
293-6467	861
293-6468	861
293-8350	619
293-9379	781
	783
	785
	787
293-9380	633
293-9381	633
293-9659	861
293-9665	781
	783
	785
	787
293-9820	125
	129
293-9901	141
	146
	152
	157
	162
	167
	172
	178
294-0786	432
294-0787	432
294-1967	497
294-2006	▶773
	▶774
294-2007	▶733
294-2008	▶733
294-2611	137
294-2612	137
294-3031	133
294-3032	133
294-3067	101
294-3279	114
294-3337	814
	▶822
294-3497	460
	461
	▶491
294-4474	453
	▶454
294-4475	822
294-4476	822
294-4514	814
	▶836
294-4519	836
294-4521	822
	823
294-4874	191
294-5374	532
	536
294-7139	760
	761
	762
	763
294-7257	462
294-7258	462
294-7259	462
294-7260	462
294-7261	462
294-7262	462
294-7278	532
	536
294-7779	▶633
	781
	783
	785
	787
294-7829	▶204
294-7830	▶204
294-7831	▶204
294-7832	▶205
294-7833	▶205
294-7834	▶205
294-7835	▶206
294-7836	▶206
294-7837	▶206
294-7838	▶207
294-7839	▶207
294-7840	▶207
294-7841	▶208
294-7842	▶208
294-7843	▶208
294-7844	▶209
294-7845	▶209
294-8548	327
294-8576	51
	53
	55
294-8578	51
294-9532	532
	536
294-9533	532
	536
294-9535	532
	536
295-0189	133
295-0585	196
295-0912	98
	99
295-0913	98
295-0914	98
295-0931	213
	215
	218
	220
295-1000	12
	15
	18
295-1041	12
	15
295-1042	12
	15
	18
	21
295-1711	43
	45
295-1778	80
295-2361	314
	321
295-2380	314
	321
295-2526	80
295-4037	810
295-4039	809
	810
295-4434	▶781
	792
295-4435	▶783
	793
295-4436	▶785
	791
295-4475	▶760
	781
295-4476	▶761
	783
295-4477	▶762
	785
295-4533	733
295-4670	125
	129
295-4801	133
	177
295-5297	78
295-5423	105
	108
	111
295-6472	781
	783
	785
	787
295-6661	30
	32
295-7950	202
295-8610	73
295-8613	73
295-8615	73
295-8930	269
296-1838	314
	321
296-1839	201
296-2649	332
	334
296-2735	94
296-3542	133
	177
296-3854	631
296-5094	804
296-6494	417
	418
296-6499	80
	417
	418
296-7452	814
	816
	818
	820
	824
	826
	828
296-7459	573
	576
296-7897	631
296-7906	327
296-9401	309
296-9891	764
	766
297-1464	657
	658
	659
	660
297-1465	681
	683
	686
	689
	691
	693
	695
297-1466	657
	658
	659
	660
	681
	683
	686
	689
	691
	693

▶ **PRIMARY REFERENCE**

PART NUMBER INDEX

Part	Page
	695
297-1468	724
297-1699	837
297-1700	▶816
297-1701	816
	▶823
297-1702	823
297-1703	823
297-1704	816
	▶837
297-1705	837
297-3272	446
297-3273	446
297-3274	446
297-3275	446
297-7888	532
298-2764	627
298-3696	484
298-4321	693
298-4323	697
298-4324	698
298-4325	516
	679
	831
298-4547	21
298-4550	18
	21
	23
298-4576	125
	129
299-2214	665
	666
	667
	669
	670
	673
	676
	677
299-5511	30
	32
299-6953	212
299-6957	4
	7
	▶212
299-7883	860

3

Part	Page
300-0168	836
300-1293	854
300-1294	854
300-1504	67
	68
300-2118	▶286
300-2940	147
	152
	157
	162
	167
	172
	179
300-3631	201
	332
300-3665	637
300-3907	18
300-3965	12
	15
300-4098	726
300-6520	105
	108
	111
300-6714	152
	157
	162
	167
	172
301-0589	246
	250
	254
	257
	259
	261
301-2710	8
	▶186
301-2719	67
	68
301-2725	100
301-2744	4
	▶299
301-2768	8
	▶300
301-3161	▶759
	787
301-3162	▶763
	787
301-3163	759
301-3164	763
301-3165	▶787
	794
301-3166	▶794
	795
301-5627	637
301-5700	810
301-5701	809
301-7692	400
301-7890	354
	355
	▶597
301-8296	4
	7
	▶301
302-0576	213
	215
	▶226
	▶228
	▶230
302-0577	218
	220
	▶232
	▶235
	▶238
302-0582	▶674
	▶675
302-1266	242
	243
302-2136	809
	810
302-5535	51
	53
	55
302-5695	125
	129
302-5927	475
	▶484
302-5928	▶475
	498
	499
	506
	507
302-7298	▶345
	360
	561
302-8149	513
	▶626
302-8157	▶513
	613
	614
	615
	616
303-1464	▶202
303-2116	108
	111
303-2179	296
303-4446	477
	478
	479
304-3715	655
304-4243	708
	710
	720
	722
	▶750
304-4244	702
	704
	714
	716
	▶751
304-4359	332
304-4360	276
304-4361	309
304-4376	276
	280
304-4406	750
	751
304-5166	330
304-5167	330
304-5687	334
305-5291	173
305-5970	4
	7
	▶108
	▶111
305-7294	4
	7
	▶117
305-7298	53
305-7299	4
	7
	▶125
	▶129
305-7300	4
	7
	▶53
	▶55
305-7302	125
305-7303	125
305-7304	125
	129
305-7305	125
305-7306	125
	129
305-7307	125
	129
305-7308	125
	129
305-7309	125
	129
305-7311	125
305-7396	65
305-7397	65
305-7398	65
305-8963	4
	7
	▶15
	▶18
	▶21
	▶23
305-8964	15
	18
305-8977	4
	7
	▶330
305-8978	330
305-8979	330
305-8980	330
305-9192	702
	704
	812
306-2337	65
306-3004	▶824
306-3005	824
306-3006	▶826
306-3007	826
306-6687	327
306-6845	26
	▶28
306-8127	190
	191
306-8866	532
	536
306-9199	117
306-9380	▶121
	157
307-0047	246
	250
	254
	257
	259
	261
307-1435	536
307-1869	536
307-3170	80
307-3631	818
307-3633	818
	820
	823
	828
307-3635	820
	823

▶ PRIMARY REFERENCE

PART NUMBER INDEX

Part	Page
	828
307-4441	299
	▶302
307-4673	516
	▶668
	679
	831
307-6202	858
	859
307-9843	88
308-3554	800
308-3555	801
308-6206	334
308-6207	▶241
308-8426	153
308-8642	801
308-9651	69
308-9653	69
309-1571	▶593
309-1572	529
	▶595
309-3676	▶201
	338
309-6663	▶32
	36
309-6664	18
	21
	23
309-6678	30
	32
309-8006	152
	157
	162
	167
	172
	178
309-8470	302
310-0659	4
	▶152
	▶157
	▶162
	▶167
	▶172
310-2184	519
310-2186	519
310-2187	520
310-2189	521
	523
310-2392	246
	250
	254
310-7918	152
	157
	162
	167
	172
	178
310-8320	654
311-0263	334
311-2732	330
311-2752	330
311-3858	153
	157
	162
	168
	173
	178
311-4862	224
	225
311-4863	199
311-4864	225
311-6342	152
	157
	162
	167
	172
311-6632	157
	162
	167
	172
311-6643	476
	▶485
311-6644	▶476
	498
	499
	500
	501
	505
	506
	507
312-0309	202
	▶203
312-2269	▶486
	487
312-2271	▶487
312-3084	18
312-4545	71
313-2794	643
314-3000	686
314-3001	693
	695
314-3002	686
	693
	695
314-3003	▶659
	686
314-3004	▶660
	693
	695
314-3007	659
	660
314-3008	686
	693
	695
314-3009	686
	693
	695
314-3010	734
	736
314-3011	272
314-3012	272
314-3013	272
314-3014	272
314-3015	232
	235
	238
314-3016	686
	693
	695
314-3017	686
	693
	695
314-3018	686
314-3019	693
	695
314-3020	674
	675
314-3021	693
	695
314-3022	671
	672
314-3023	671
	672
314-3024	226
	228
	230
314-3025	686
	693
	695
314-3026	272
314-3027	272
314-3028	686
314-3029	686
314-3472	648
314-4018	653
314-5274	801
314-5275	801
314-5298	202
	▶203
314-5401	▶256
314-5402	▶257
314-5403	▶259
314-5404	256
	257
	259
314-6036	734
	736
315-5492	654
315-5494	184
	186
315-9810	105
	108
	111
316-9073	211
317-2684	99
317-2717	21
	23
317-3064	21
	23
317-3065	21
	23
317-3580	18
317-3775	65
317-7147	125
317-8021	172
	▶177
	178
317-8530	▶6
317-9299	65
318-0815	640
	726
319-0052	256
319-0053	256
	695
319-0844	117
319-4525	228
	230
	235
	238
319-6491	▶294
	320
319-6775	235
	238
319-6776	235
	238
319-6777	235
	238
319-7261	6
	▶7
319-8516	184
320-1158	693
	695
320-1162	686
	695
320-1163	686
	695
320-1194	▶795
320-2345	111
320-2348	▶778
320-2391	157
320-2868	196
320-3566	7
	▶178
320-3576	7
320-3629	593
	595
	▶613
320-3630	593
	595
	▶614
320-3631	593
	595
	▶615
320-3632	595
	▶616
320-3669	38
320-4729	125
	129
320-5176	763
320-9921	21
	23
321-1270	157
	162
	167
	172
	178
321-3600	▶122
	162
	167
	172
	179
322-3161	758
322-4867	334
322-4868	311
322-4869	311
322-4870	280
322-4871	337
322-9213	204

▶ **PRIMARY REFERENCE**

PART NUMBER INDEX

Part	Page	Part	Page	Part	Page	Part	Page
322-9214	204		675	339-8785	129		
322-9215	204		▶677	339-9637	30		
322-9216	204	328-2293	523		32		
322-9217	204	328-2294	523	340-1802	414		
322-9218	204	328-2295	523		▶419		
322-9219	205	328-2296	523	340-1803	419		
322-9220	205	328-8709	108	340-4325	80		
322-9221	205		111	340-4329	80		
322-9222	205	329-0060	129	340-5429	▶403		
322-9223	205	329-0061	129	340-5430	403		
322-9224	205	329-0062	129	340-5432	403		
322-9225	206	329-0063	129	343-5527	118		
322-9226	206	329-0064	55	343-5937	117		
322-9227	206		129	343-5938	117		
322-9228	206	329-6683	186	344-5377	536		
322-9229	206	329-7854	11	345-2204	78		
322-9230	206	329-7856	11	346-2870	455		
322-9231	207	330-3123	300		▶458		
322-9232	207	330-3409	202	346-2871	456		
322-9233	207	330-3410	202		▶459		
322-9234	207	330-3685	167	347-1132	9		
322-9235	207		172	349-8349	▶2		
322-9236	207		178	349-8352	▶2		
322-9237	208	330-3687	167	349-8353	▶3		
322-9238	208		172	349-8354	▶3		
322-9239	208		178	349-8355	▶2		
322-9240	208	330-5021	▶752				
322-9241	208	330-5467	167				
322-9242	208		172				
322-9243	209		178				
322-9244	209	330-9599	108				
322-9245	209		111				
322-9246	209	331-4400	55				
322-9662	90	331-7540	172				
322-9703	591		179				
324-0444	45	333-2732	807				
324-2713	394		811				
324-3294	626	333-2733	807				
324-9504	340		811				
325-0000	▶828	333-3663	543				
325-0001	828	334-2932	177				
325-0002	828	334-6074	523				
	▶838	336-0693	41				
325-5723	▶523	336-6475	203				
	845	336-6476	203				
326-1015	53	336-8174	172				
	55		178				
326-1644	118	336-8175	172				
326-2662	419		178				
326-5054	53	336-8176	172				
	55		178				
326-5063	45	336-8177	172				
326-7288	21		178				
326-7289	21	336-8178	172				
327-4287	346		178				
	350	336-8179	172				
327-4449	203		178				
327-7124	346	336-8180	172				
	350		178				
328-0893	676	337-9558	129				
	677	338-1713	215				
328-0894	230		220				
	238	338-8073	651				
	▶676		▶811				
328-0895	672	339-3397	61				

▶ **PRIMARY REFERENCE**



© 2009 CATERPILLAR
ALL RIGHTS
RESERVED

CAT, CATERPILLAR, THEIR RESPECTIVE LOGOS, “CATERPILLAR YELLOW” AND THE POWER EDGE TRADE DRESS, AS WELL AS CORPORATE AND PRODUCT IDENTITY USED HEREIN, ARE TRADEMARKS OF CATERPILLAR AND MAY NOT BE USED WITHOUT PERMISSION.

PRINTED IN
U.S.A.