SEBP5042-15
March 2013

RUTHZIL TRATOR COMERCIAL DE PEÇAS LTDA 11 97083-6812 ROLANDO CITRANGULO

Parts Manual

D6N TRACK-TYPE TRACTOR

LJR1-Up (Machine)
C6E1-Up (Engine)
T6K1-Up (Transmission)
D1Y1-Up (Bulldozer)
LPC1-Up (Bulldozer)
RPP1-Up (Ripper)
BZA1-Up (Torque Converter)
B7J1-Up (Angle Blade)
B7K1-Up (Angle Blade)
ECC1-Up (Angle Blade)

Powered By C6.6 Engine
This Parts Manual is also Available in .PDF Format on Compact Disc (CD-ROM)-Caterpillar Form No. SERP5042

Product and Dealer Information

Note: For
product identification plate locations, see the section “Product Identification Information” in the Operation and Maintenance Manual.

Delivery Date: _____

Product Information

Model: _____

Product Identification Number: _____

Engine Serial Number: _____

Transmission
Serial Number: _____

Generator Serial Number: _____

Attachment Serial Numbers: _____

Attachment Information: _____

Customer Equipment Number: _____

Dealer Equipment
Number: _____

Dealer Information

Name: _____ Branch: _____

Address: _____

_____

_____

	Dealer Contact	Phone Number	Hours
Sales:	_____	_____	_____
Parts:	_____	_____	_____
Service:	_____	_____	_____

MEMORANDA

TABLE OF CONTENTS

NAME	PAGE
GENERAL INFORMATION	**A5**
REPAIR ALTERNATIVES	**A8**
SUPPLEMENTAL COOLANT ADDITIVES	A9
MAINTENANCE PARTS	**A37**
INDEX	**A41**
MACHINE ARRANGEMENT	**1**
CHASSIS AR	1
FORESTRY AR	2
GENERAL AR	2
OPTION AR-BULLDOZER	3
OPTION AR-COLD WEATHER	3
OPTION AR-GUARD	3
OPTION AR-HYDRAULIC	4
OPTION AR-SERVICE	4
OPTION AR-SWEEP	4
OPTION AR-WORK TOOL	5
WASTE HANDLING AR	5
ENGINE ARRANGEMENT	**6**
ENGINE AR-PRIMARY	6
INSTALLATION AR-ENGINE	7
BASIC ENGINE	**8**
CAMSHAFT GP	8
COVER GP-ENGINE	9
COVER GP-VALVE MECHANISM	10
CRANKSHAFT GP	12
CYLINDER BLOCK AS	15
CYLINDER BLOCK GP	16
CYLINDER HEAD AS	19
CYLINDER HEAD GP	21
DRIVE GP-FAN	22
FLYWHEEL GP	25
HOUSING GP-FLYWHEEL	26
HOUSING GP-FRONT	30
IDLER GP-BELT	34
KIT-CRANKSHAFT	35
LIFTING GP-ENGINE	36
MOUNTING GP-ENGINE	38
PAN GP-OIL	39
PISTON & ROD GP	41
PLUG GP-CYLINDER BLOCK	43
PULLEY GP-CRANKSHAFT	44
ROCKER ARM GP	46
LUBRICATION SYSTEM	**50**
FILLER GP-ENGINE OIL	50
FILTER GP-ENGINE OIL	53
OIL CHANGE GP-HIGH SPEED	54
PUMP GP-ENGINE OIL	55
VALVE GP-FLUID SAMPLING	56
COOLING SYSTEM	**57**
COOLER GP-ENGINE OIL	57
COOLING AR-SUPPLEMENTAL	59
FAN GP-BLOWER	60
FAN GP-REVERSIBLE	61
FITTING GP-WATER LINES	62
LINES GP-RADIATOR	64
PUMP GP-WATER	68
RADIATOR GP	70
REGULATOR GP-TEMPERATURE	72
AIR INLET AND EXHAUST SYSTEM	**73**
AIR CLEANER GP	73
LINES GP-AIR	76
MANIFOLD GP-INLET	78
MUFFLER GP	79
PIPE GP-EXHAUST	80
PRECLEANER GP	81
TURBOCHARGER GP	84
FUEL SYSTEM	**87**
FILTER GP-FUEL	87
FILTER GP-WATER SEP & FUEL	88
INJECTOR GP-FUEL	89
LINES GP-FUEL	90
PUMP GP-FUEL INJECTION	102
PUMP GP-FUEL PRM & WATER SEP	125
RAIL GP-FUEL	130
TANK GP-FUEL	131
ELECTRICAL AND STARTING SYSTEM	137
ALARM GP	137
ALTERNATOR GP-CHARGING	138
BATTERY & WIRING GP	141
BLOCK GP-JUNCTION	158
CONTROL GP-UNPROGRAMMED	159
ELECTRONICS AR-MACHINE	162
ELECTRONICS GP-COMMUNICATION	162
ELECTRONICS GP-MACHINE	162
ELECTRONICS GP-MONITOR	163
GLOW PLUG GP	164
GRADE CONTROL AR	165
GRADE CONTROL GP	166
GUARD GP-ALTERNATOR	170
HEATER GP-JACKET WATER	171
INSTALLATION GP-COMMUNICATION	173
LAMP GP-FLOOD	183
LAMP GP-WARNING BEACON	186
LIGHTING GP-FLOOD	187
LIGHTING GP-WARNING BEACON	192
MOUNTING GP-GRADE CONTROL	193

TABLE OF CONTENTS

NAME	PAGE
PANEL GP-CIRCUIT BREAKER	195
RADIO GP-COMMUNICATION	198
SENSOR GP-LIQUID LEVEL	199
SENSOR GP-POSITION	200
SENSOR GP-SPEED	203
SENSOR GP-TEMPERATURE	207
STARTING AID GP-ETHER	211
STARTING MOTOR GP-ELECTRIC	215
SWITCH GP-BYPASS	216
SWITCH GP-DISCONNECT	217
SWITCH GP-MAGNETIC	218
SWITCH GP-PRESSURE	219
SWITCH GP-PUSH BUTTON	220
SWITCH GP-TOGGLE	221
VALVE GP-ETHER STARTING	223
WIRING GP-CAB	224
WIRING GP-ENGINE	226
WIRING GP-GRADE CONTROL	234
WIRING GP-LIGHTING	243
WIRING GP-PLATFORM	245
POWER TRAIN	**260**
ACCUMULATOR GP	260
AXLE GP	261
BASE GP-OIL FILTER	262
BRAKE & DIFFERENTIAL DRIVE GP	263
BRAKE & PLANETARY GP	267
CASE AS-TRANSMISSION	269
CONTROL GP-TRANSMISSION HYD	270
DIFFERENTIAL & BEVEL GEAR GP	272
DRIVE GP-FINAL	276
FASTENER GP-VALVE	280
FILTER & LINES GP-POWER TRAIN	281
FILTER GP-OIL	283
LINES GP-POWER TRAIN OIL	284
MANIFOLD GP-TRANSMISSION	290
MOUNTING GP-TORQUE CONVERTER	291
MOUNTING GP-TRANSMISSION	292
PLANETARY GP-TRANSMISSION	293
POWER TRAIN AR	298
PUMP GP-GEAR	299
SEGMENT GP-SPROCKET	302
SHAFT GP-DRIVE	303
TORQUE CONVERTER GP	304
TRANSMISSION AR	310
UNIVERSAL JOINT GP	311
VALVE & MTG GP-SOLENOID	312
VALVE GP-MODULATING	313
VALVE GP-RELIEF	315
FRAME AND BODY	**317**
BAR GP-RADIATOR GUARD	317
CASE & FRAME GP	318
COVER GP-ACCESS	320
COVER GP-BATTERY	322
DOOR GP-ACCESS	323
DOOR GP-HOOD	325
DRAWBAR GP	330
ENCLOSURE GP-FENDER	331
ENCLOSURE GP-PLATFORM	334
FENDER GP	336
FRAME AS	340
GRID GP-SAND BLAST ERODING	342
GRILL GP-RADIATOR	343
GUARD AR-BOTTOM	345
GUARD AR-FINAL DRIVE	345
GUARD GP-BOTTOM	346
GUARD GP-CAB	351
GUARD GP-FRONT	354
GUARD GP-FUEL TANK	355
GUARD GP-LINES	361
GUARD GP-RADIATOR	363
GUARD GP-REAR	365
HOOD GP	368
SEAL GP-WASTE HANDLING	374
STEP GP	375
SWEEP GP	376
UNDERCARRIAGE	**380**
BAR GP-EQUALIZER	380
CAP GP-TRACK IDLER	385
FRAME GP-TRACK ROLLER	391
FRAME GP-UNDERCARRIAGE	395
GUARD GP-TRACK GUIDE	396
GUARD GP-TRACK ROLLER	401
IDLER GP-TRACK	406
LINK AS-TRACK	409
LINK AS-TRACK BOX	412
MOUNTING GP-CARRIER ROLLER	419
PIVOT BAR GP	420
ROLLER GP-TRACK CARRIER	421
ROLLER GP-TRACK-DOUBLE FLANGE	422
ROLLER GP-TRACK-SINGLE FLANGE	424
SCRAPER GP-IDLER	428
TRACK ADJUSTER & RECOIL GP	430
TRACK GP	431
UNDERCARRIAGE AR	438
UNDERCARRIAGE GP	441
STEERING AND BRAKING SYSTEM	**443**
ACTUATOR GP-PUMP	443
BARREL GP-MOTOR	444
BRAKE GP-STEERING	445
CONTROL GP-PARKING BRAKE	446
CONTROL GP-STEERING & XMSN	447
FILTER GP-OIL	450

TABLE OF CONTENTS

NAME	PAGE
HEAD GP-PUMP	451
LINES GP-STEERING	453
MANIFOLD & VALVE GP	457
MOTOR GP-PISTON	461
PUMP GP-CHARGE	462
PUMP GP-PISTON	463
ROTATING GP-MOTOR	465
ROTATING GP-PUMP	467
VALVE GP-BRAKE CONTROL	469
VALVE GP-FLUSHING	473
VALVE GP-PUMP CONTROL	474
VALVE GP-RELIEF	476
VALVE GP-SOLENOID	479
HYDRAULIC SYSTEM	**482**
ACCUMULATOR GP-HYDRAULIC	482
ACCUMULATOR GP-PILOT OIL	484
ACTUATOR GP-HYDRAULIC	486
COOLER GP-HYDRAULIC OIL	487
COVER GP-HYDRAULIC TANK CAP	489
CYLINDER GP-ANGLING	490
CYLINDER GP-BULLDOZER LIFT	494
CYLINDER GP-RIPPER	497
CYLINDER GP-TILT	499
FILTER GP-OIL	503
HYDRAULIC AR-3 VALVE	504
HYDRAULIC AR-4 VALVE	504
LINES GP-ANGLE & TILT	506
LINES GP-LIFT CYLINDER	514
LINES GP-PILOT	520
LINES GP-PUMP	528
LINES GP-RIPPER	536
LINES GP-TILT CYLINDER	539
MANIFOLD GP-VALVE	543
MOUNTING GP-CYLINDER	544
PIN GP-CYLINDER	545
PLATE GP-MOUNTING	546
PUMP GP-PISTON	548
ROTATING GP-PUMP	552
TANK & FILTER GP-HYDRAULIC	553
VALVE GP-BANK 3	559
VALVE GP-BANK 4	560
VALVE GP-BYPASS	561
VALVE GP-CHECK	562
VALVE GP-CONTROL	563
VALVE GP-MAKEUP	569
VALVE GP-PUMP CONTROL	570
VALVE GP-RELIEF	573
IMPLEMENTS	**576**
BULLDOZER AR	576
BULLDOZER AR-PWR ANGLE & TILT	577
BULLDOZER AR-SEMI-UNIVERSAL	578
C-FRAME GP-POWER ANGLING	579
LINES GP-GREASE	583
LINK GP-PITCH	584
PUSH ARM GP	585
TRUNNION GP-BULLDOZER	587
OPERATOR STATION	**588**
ADJUSTER GP-SEAT	588
AIR CONDITIONER GP	589
BLOWER GP-CAB	592
CAB AR	594
CAB AS	595
CAB GP	596
CANOPY AR	599
COMPRESSOR GP-REFRIGERANT	600
CONDENSER GP-REFRIGERANT	602
CONTROL GP-HANDLE	604
CONTROL GP-JOYSTICK	614
CONTROL GP-PEDAL	622
COVER GP-CONSOLE	624
DASH GP	631
DOOR GP-CAB	632
HEATER GP-CAB	636
INSTALLATION GP-RADIO	642
INSULATION GP-WEATHER	644
KIT-SEAT CUSHION	645
LATCH GP	646
LINER GP-CAB	648
LINES GP-AIR CONDITIONER	649
MIRROR GP-REAR VIEW	655
MOTOR GP-WINDOW WIPER	656
MOUNTING GP-CAB	660
MOUNTING GP-LINES	661
MOUNTING GP-PLATFORM	662
MOUNTING GP-ROPS	664
PAN GP-BACKREST	665
PANEL GP-INSTRUMENT	668
PEDAL GP-GOVERNOR & BRAKE	670
PLATFORM GP-OPERATOR	671
PRESSURIZER GP-CAB	674
RADIO GP	676
RECLINER GP-SEAT	684
RETAINER GP-DOOR	685
ROPS GP	687
ROPS GP-ENCLOSED	689
SCREEN GP-PROTECTION	690
SEAT BELT GP	692
SEAT GP	693
SEAT GP-SUSPENSION	703
SUSPENSION GP-SEAT	707
TANK GP-WINDOW WASHER	709
WINDOW GP-CAB	713
WIPER GP-WINDOW	716
WORK TOOLS	**718**
BLADE & EDGE GP-SEMI-UNIVERSAL	718

TABLE OF CONTENTS

NAME	PAGE
BLADE AS-ANGLING	720
BLADE GP-ANGLING	721
EDGE GP-BIT & CUTTING	732
GUARD GP-WINCH	735
MOUNTING GP-RIPPER	736
RIPPER AR	738
RIPPER GP	739
TOOTH GP-RIPPER	741
WINCH AR	743
WINCH GP	744
SERVICE EQUIPMENT AND SUPPLIES	745
FILM GP	745
LINES GP-DIAGNOSTIC	747
PLATE & FILM GP	753
PART NUMBER INDEX	B1

1. MACHINE IDENTIFICATION

Cat machines are identified by Product Identification Numbers (PIN). Some components included in a machine may be identified by Serial Numbers (S/N). Typical components that will be serialized include engines, transmissions, bulldozers, and rippers. The machine and engine are further identified by arrangement numbers and in some cases modification numbers. These numbers are shown on the product identification plate(s) and on the master plate in the operator's compartment.

Cat dealers need all of these numbers to determine accurate parts identification.

Effective First Quarter 2001 the Cat Product Identification Number (PIN) changed from 8 to 17 characters. In an effort to provide uniform equipment identification, Caterpillar and other construction equipment manufacturers are moving to comply with the latest version of the product identification numbering standard. Non-road machine PINs are defined by ISO 10261. The new PIN format will apply to all Cat machines and generator sets. The PIN plates and frame marking will display the 17 character PIN. The new format will look like the following:

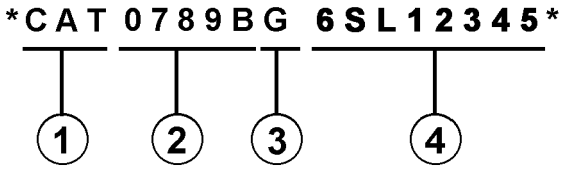

Where:

1. Caterpillar's World Manufacturing Code (characters 1-3)

2. Machine Descriptor (characters 4-8)

3. Check Character (character 9)

4. Machine Indicator Section (MIS) or Product Sequence Number (characters 10-17). These were previously referred to as the Serial Number.

Machines and generator sets produced before First Quarter 2001 will maintain their 8 character PIN format.

Components such as engines, transmissions, axles, etc. and work tools will continue to use an 8 character Serial Number (S/N).

2. ORDERING PARTS

⚠ WARNING

When replacement parts are required for this product Caterpillar recommends using Caterpillar replacement parts or parts with equivalent specifications including, but not limited to, physical dimensions, type, strength and material.

Failure to heed this warning can lead to premature failures, product damage, personal injury or death.

Quality Cat replacement parts are available from Cat dealers throughout the world. Their parts inventories are up to date and include all parts normally required to protect your investment in Cat machines. Dealers may offer repair kits or remanufactured parts to allow selection of the most effective repair alternative for a particular situation. When ordering parts, your order should specify the quantity, part number, part name, and the serial number/product identification number of the machine for which the parts are needed.

3. PARTS MANUAL ORGANIZATION

Product information in this manual is presented as "information elements" that represent all of the components for the specific model. Engine Arrangement and Seat Group are examples of information elements. The information elements are organized alphabetically by part name and secondarily by part number within each major section of the manual.

4. TABLE OF CONTENTS

A table of contents (TOC) is found at the beginning of the manual. The TOC lists each section of the manual with a complete list of all information elements organized as they appear in the manual. Page numbers are provided for quick reference to detailed parts identification illustrations and serviceable consist lists.

5. MAINTENANCE PARTS INDEX

The Maintenance Parts Index, located near the beginning of the manual, references most frequently used maintenance part numbers, providing description, quantity, usage and page number. This information is organized alphabetically by part description.

6. INDEX

The index located near the front of the manual is an alphabetical listing of all information elements included in the manual. Page numbers are provided for quick reference to detailed parts identification illustrations and serviceable consist lists.

7. PART NUMBER INDEX

A numerical index listing all part numbers and the corresponding page number(s) appears at the back of the manual.

8. CAPTIONS

Captions located at the beginning of each information element identify the part number and part name along with additional descriptive information. PIN and S/N information found in each caption should be used to select correct information for a specific machine. Field replacement options, identification of optional attachment components, and where used ("part of") information is also provided.

The first line of a caption is shown in larger type font to indicate the beginning of an information element. Captions for additional pages that may be required to illustrate an information element will be shown in standard type font and will include the term *(contd.)* .

9. NON-SERVICED PARTS

In some instances it is necessary to display non-serviced parts that are a link to a lower level serviceable consist lists. These non-serviced part numbers are shown in *italic* type indicating that they are not available.

10. PARTS LIST REFERENCE NUMBERS

Numbers shown in the Ref No column correspond to numbers used in the associated graphic(s). An alphabetic suffix may be added to a reference number to identify lower level consist items. Numbers shown in the Graphic Ref column refer to the graphic number identifier displayed in the lower left corner of each illustration. The Graphic Ref number may be used in combination with the item Ref No to determine the correct part number. There may be intentional omission of a Ref No in a consist list as information is updated to reflect the latest serviceable part numbers.

11. INDENTED PART NAMES

When a part name is indented in a parts list, it is part of (included in) the group or assembly under which it is indented.

12. ILLUSTRATION REFERENCE LETTERS

When necessary, illustrations contain reference letters (A, B, C etc.) that are intended to track lines and harnesses from one point to another. They are also used to show where to reconnect illustrations that have been separated.

13. ABBREVIATIONS AND SYMBOLS

O.D. – Outside Diameter
I.D. – Inside Diameter
A – Not Part Of This Group
B – Use As Required
C – Change From Previous Type
D – Order By The Meter
E – Order By The Centimeter
F – Not Shown
G – Order By The Inch
I – Refer To Hydraulic Information System
M – Metric Part
R – Remfg Part May Be Available
Y – Separate Illustration
Z – Not Serviced Separately

14. DESCRIPTION OF TYPE CHANGES

Type - A type is defined as any configuration change that requires an additional Information Element for an Arrangement, Group, or Assembly. If serial number breaks for types are not available, a type # (Type 1, Type 2, etc.) will be displayed in the caption. These "type" changes are identified with a "C" note (change from previous type) in the Parts List. Only the "types" that apply to this Parts Manual will be included. Additional types may exist causing "C" notes to appear on an Information Element when no other types are shown.

15.<END>

This symbol indicates the end of an information element.

NOTE:

Continuing improvement and advancement of product design may cause changes to your machine which may not be included in this publication. Whenever a question arises regarding your Cat product or this publication, please consult your Cat dealer for the latest available information.

FRAME AND BODY

8E-3299 PLATFORM GP-CAB

PIN 38K1-99999

8MC5-7253 100090751

NOTE	REF NO	GRAPHIC REF	PART NUMBER	QTY	PART NAME (1 2 3 4 5 6 PRODUCT LEVEL)	SEE PAGE
	1	1	3T-3963	1	PLATE AS	
	2	1	5H-3962	25	BOLT (3/8-16X.750IN)	
	3	1	6P-1075	41	WASHER-HARD (9MM THK)	
	4	1	9P-1444	2	SUPPORT AS-FOOT	
	5	1	5P-2229	19	BOLT (1/2-13X1IN)	
		1	9x-[illegible]	19	WASHER-HARD (4MM THK)	
	6	1	9E-8134	1	COVER AS-LH	
		1	9P-2979	6	NUT-WELD (3/8-16 THD)	
		1	1P-8188	1	CLIP	
	7	1	7S-2411	4	COVER	
	8	1	5J-0468	19	SCREW-HEAD (3/8-16X.87SIN)	
	9	1	[illegible]074	1	COVER	
		1	9E-8[illegible]	1	GASKET	
	10	1	9E-3248	1	[illegible]	
		1	9E-3250	1	GASKET	
	11	1	3T-3830	1	HANDHOLD	
	12	1	9E-8678	1	COVER AS	
		1	9P-2979	6	NUT-WELD (3/8-16 THD)	
		1	9E-8078	1	GASKET	
	13	1	7T-0131	1	FLOORPLATE AS	
		1	1F-0748	4	NUT-WELD (1/2-13 THD)	
	14	1	7V-8067	1	PLUG-BUTTON	
	15	1	7T-0136	1	PLATE AS	
		1	9P-2978	5	NUT-WELD (3/8-16 THD)	
	16	1	7T-8066	1	COVER	
		1	7T-0779	1	GASKET	
	17	1	3T-3951	1	PLATE AS	
	18	1	9T-9364	4	BOLT (1/4-20X.62SIN)	
M		1	9T-4236	4	WASHER-HARD (2MM THK)	
	19	1	6I-8464	1	FLOOR MAT	
	20	1	9E-8846	1	MODULE AS-OPERATOR	
	21	1	3T-3834	1	HANDHOLD	
	22	1	9P-8571	2	PLUG	
	23	2	9T-9364	4	BOLT (1/4-20X.62SIN)	
M		2	9T-4236	4	WASHER-HARD (2MM THK)	
	24	2	5H-3962	17	BOLT (3/8-16X.750IN)	
	25	2	6P-1078	21	WASHER-HARD (9MM THK)	
	26	2	7T-0136	1	SEAL	
	27	2	7X-0378	2	BOLT (3/4-10X5IN)	
		2	7X-0682	2	WASHER-HARD (6MM THK)	
	28	2	3T-3482	2	PLATE	
	29	2	3T-8290	1	PLATE AS	
		2	7S-4828	6	SPACER	
	30	2	3T-8281	1	SEAL	
	31	2	7S-8017	1	GASKET	
	32	2	7S-8016	1	COVER AS	
		2	2R-2376	2	WASHER	
		2	6P-8626	2	SCREW-KNURLED	
	33	2	9W-3429	1	COVER	
	34	2	8E-9697	1	COVER	
	35	2	9D-3091	8	SCREW-SOCKET HEAD	
	36	2	9W-3142	8	MOUNTING	
	37	2	9W-9527	2	PLATE	
	38	2	7X-0390	2	BOLT (7/8-9X6IN)	
		2	7X-0672	2	WASHER-HARD	
	39	2	4L-8454	4	BOLT (3/8-16X1.0IN)	
	40	2	3T-4788	1	COVER	

12 FRAME AND BODY 1 of 4 SELP4570-01

FRAME AND BODY

8E-3299 PLATFORM GP-CAB (contd.)

100090751

NOTE	REF NO	GRAPHIC REF	PART NUMBER	QTY	PART NAME (1 2 3 4 5 6 PRODUCT LEVEL)	SEE PAGE
	41	2	8E-2515	1	COVER	
	42	2	7T-0134	1	PLATE	
	43	2	7T-0128	1	GASKET	
	44	2	7S-8724	1	GASKET	
	45	2	7S-8723	1	COVER	
	46	2	6V-1960	2	PLUG-BUTTON	

M-METRIC PART

SELP4570-01 2 of 4 FRAME AND BODY 13

FRAME AND BODY

8E-3299 PLATFORM GP-CAB (contd.)

100090751

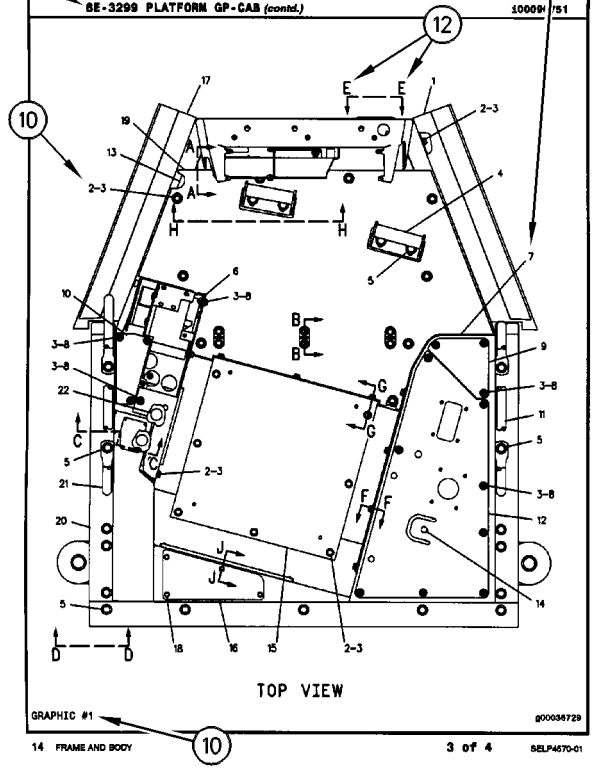

14 FRAME AND BODY 3 of 4 SELP4570-01

FRAME AND BODY

8E-3299 PLATFORM GP-CAB (contd.)

100090751

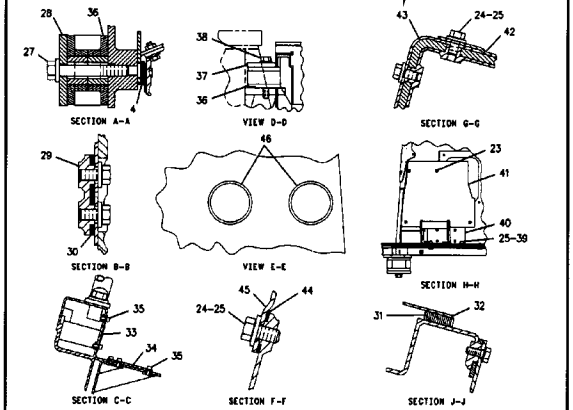

SELP4570-01 4 of 4 FRAME AND BODY 15

REMANUFACTURED COMPONENTS

As an option when making repairs consider Cat Remanufactured Components. Components that are available through the Cat Remanufactured Program are identified three ways in the parts book:

- with the letter R in the note field of the parts list
- with an R* at the beginning of the first line of the caption
- with an *R at the end of the first line of the caption

Typical components included in the Remanufacturing Program include:

ALTERNATORS
CONNECTING RODS
CRANKSHAFTS - UNDERSIZE
CRANKSHAFTS - UPGRADE TO NEW
CYLINDER HEADS
ELECTRONIC CONTROL MODULES (ECM)
ELECTRONIC SENSORS
FUEL INJECTORS
FUEL NOZZLES
FUEL PUMPS
GOVERNORS
OIL PUMPS
PISTONS
SHORT BLOCKS
STARTERS
TURBOCHARGERS - COMPLETE
TURBOCHARGER CARTRIDGES
WATER PUMPS

Cat Remanufactured engines for many engine arrangements are also available.

SUPPLEMENTAL COOLANT ADDITIVES

CUSTOMER BENEFITS:

Protects against cavitation, foam, erosion, corrosion, and scale buildup in cooling systems.

- Provides measured coolant conditioner.

DESCRIPTION:

Additives deplete from the coolant with normal operation. For this reason, Supplemental Coolant Additives (SCA) must be added to all heavy duty coolants at regular intervals. In addition, when not using a fully formulated, pre-charged antifreeze, like Cat DEAC, an initial charge of SCA must be added to the cooling system. The amount of SCA added to the system is dependent on the capacity of the system.

The SCA for initial fill is provided as a liquid. SCA's for maintenance intervals are available in liquid form and as a spin-on element. (No Spin-on available for 3600 Family of Engines)

NOTE:

The amount of SCA added at initial fill is not the same as the amount added at maintenance intervals.

The coolant additive elements can be used with any ethylene or propylene glycol type antifreeze which meets ASTM D4985 or ASTM D5345 Specifications.

NOTE:

For use with standard heavy duty coolant only, not for use with Extended Life Coolant.

PARTS NEEDED:

Cooling System Capacity		Liquid SCA at Initial Fill	Liquid SCA at Maintenance*	Spin-on SCA Maintenance Element*
Liters	Gallons			
22-30	(6-8)	3P-2044 (1)	6V-3542 (1)	111-2370 (1)
30-38	(8-10)	3P-2044 (1) 6V-3542 (1)	111-2372 (1)	111-2369 (1)
38-49	(10-13)	3P-2044 (1) 8T-1589 (1)	111-2372 (1)	111-2369 (1)
49-64	(13-17)	3P-2044 (2)	8T-1589 (1)	9N-3368 (1)
64-83	(17-22)	3P-2044 (2) 8T-1589 (1)	111-2372 (1) 6V-3542 (1)	111-2371 (1)
83-114	(22-30)	3P-2044 (3) 8T-1589 (1)	3P-2044 (1)	9N-3718 (1)
114-163	(30-43)	3P-2044 (5)	3P-2044 (1) 6V-3542 (1)	111-2371 (2)
163-242	(43-64)	3P-2044 (8)	3P-2044 (2)	9N-3718 (2)

** Normal maintenance period is 250 hrs. See your Operation and Maintenance Manual for complete coolant maintenance instructions.*

( ) Indicates quantity required.

SUPPLEMENTAL COOLANT ADDITIVES

ABOVE –
Acima
ABSORBER –
Amortecedor
ACCESSORY –
Acessório
ACTUATOR –
Acionador
ADAPTER –
Adaptador
ADHESIVE –
Adesivo
ADJUSTER –
Adjustador
AFTERCOOLER –
Pós-resfriador
AIR –
Ar
AIR CLEANER –
Purificador de ar
AIR SYSTEM –
Sistema de ar
ALARM –
Alarme
ALTERNATOR –
Alternador
AMMETER –
Amperímetro
ANCHOR –
Âncora, fixador
ANGLE –
Ângulo, canto
ANVIL A. –
Bigorna conj.
ARBOR –
Mandril, eixo
ARM –
Braço
ARMATURE –
Armadura, Induzida
ARM REST –
Apoio para braço
ARRESTER –
Detentor
ASSEM. = ASSEMBLY –
Conjunto
ATTACHMENT –
Acessório
AVAILABLE –
Disponível
AXLE –
Eixo
AXLE SHAFT –
Semi-eixo, ponta
BACK-UP ALARM –
Alarme de marcha à ré
BACK-UP LIGHT –
Luz da marcha à ré
BACK-UP SWITCH –

Interruptor de marcha à ré
BACKBOARD –
Prancha traseira
BACK CUSHION –
Encosto
BACKHOE –
Retroescavadeira
BAFFLE –
Defletor
BAG –
Saco, sacola
BAIL –
Alça
BALANCER –
Balanceador
BALL –
Esfera
BALLCHECK ASSEMBLY –
Conjunto de (válvula) de esfera de retenção
BALL JOINT –
Junta esférica
BALLSTUD –
Munhão esférica
BAND –
Banda, cinta, tira
BAND & LINING –
Banda e revestimento
BAR –
Barra
BARREL –
Cilindro
BARRIER –
Barreira
BASE –
Base
BASIN –
Bacia, coletor
BATTERY –
Bateria
BEAM –
Barra, viga, trave
BEARING –
Mancal, rolamento
BEARING BALL –
Rolamento de esferas
BEARING-SLEEVE –
Mancal tipo luva
BEARING-NEEDLE –
Rolamento de agulha
BEARING-ROLLER –
Rolamento tipo roletes
BELL –
Campânula
BELLCRANK –
Alavanca angular
BELLOWS –
Fole
BELOW –
Abaixo

SUPPLEMENTAL COOLANT ADDITIVES

BELT –
Correia, cinto
BELT TIGHTENER –
Ajustador de correia
BEVEL GEAR –
Coroa
BIT-CUTTER –
Broca, fresa
BLACK –
Preto
BLADE –
Lâmina
BLEEDER –
Sangrador
BLOCK –
Bloco, calço
BLOWER –
Ventilador
BLUE –
Azul
BOARD –
Prancha, tábua
BODY –
Corpo
BOLT –
Parafuso
BONNET –
Tampa
BOOM –
Lança
BOOSTER –
Reforçador
BOOT –
Protetor contra poeira
BORE –
Furo
BOSS –
Ressalto
BOTH –
Ambos (as)
BOTTOM –
Fundo
BOWL –
Caçamba
BOX –
Caixa
BRACE –
Tirante
BRACKET –
Suporte
BRAKE –
Freio
BREAKER –
Interruptor
BREATHER –
Respiro
BRIDGE –
Braço
BROWN –

Marrom
BRUSH –
Escova
BUCKET –
Caçamba
BULB –
Bulbo
BULLDOZER –
Bulldozer
BUMPER –
Pára-choque
BUSHING –
Bucha
BUTTON –
Botão
BUZZER WARNING –
Alarme sonoro
C = CHANGE –
Alteração
CAB –
Cabina
CABINET –
Gabinete
CABLE –
Cabo
CAGE –
Alojamento
CALIPER –
Calibrador
CAM –
Excêntrico, ressalto
CAMSHAFT –
Eixo-comando-de-válvulas
CANOPY –
Coberta, toldo
CAP –
Tampa
CAPACITOR –
Capacitor, condensador
CARBURETOR –
Caburador
CARCASS –
Carcaça
CARRIER –
Suporte
CARTON –
Caixa de papelão
CARTRIDGE –
Cartucho
CASE –
Caixa, alojamento
CASING –
Invólucro, revestimento
CASTER –
Rolete, roldana
CAST IRON –
Ferro fundido
CATWALK –
Passadiço

SUPPLEMENTAL COOLANT ADDITIVES

CENTER –
Centro
CHAIN –
Corrente
CHAMBER –
Câmara
CHANGEOVER –
Modificação
CHANNEL –
Canal
CHASSIS –
Chassi, armação
CHECK-VALVE –
Válvula de retenção
CIRCUIT –
Circuito
CIRCUIT BREAKER –
Interruptor de circuito
CLAMP –
Braçadeira
CLASP –
Fecho, grampo
CLEANER –
Purificador
CLEVIS –
Forquilha, garfo
CLIP –
Clipe, presilha, grampo
CLOSURE –
Fecho
CLUTCH –
Embreagem
COARSE –
Grosso, áspero
COATING –
Capa, revestimento
COCK –
Torneira
COIL –
Bobina, serpentina
COLLAR –
Colar
COLLECTOR –
Coletor
COLLET –
Mandril
COLUMN –
Coluna
COMPACTOR –
Compactador
COMPARTMENT –
Compartimento
COMPLETE –
Completo
COMPOUND –
Composto
COMPRESSOR –
Compressor
CONCAVE –

Côncavo
CONDITIONER –
Condicionador
CONDUIT –
Conduite, eletroduto
CONE –
Cone
CONNECTING –
Ligação
CONNECTED ROD –
Biela
CONNECTION –
Conexão
CONNECTOR –
Conetor
CONSISTS OF –
Consiste de
CONSOLE –
Consolo
CONTACT –
Contato, platinado
CONTACTOR –
Contactador
CONTINUED FROM –
Continuação de
CONTROL –
Controle
CONVERSION –
Conversão
CONVERTER –
Conversor
COOLER –
Arrefecedor
COOLING –
Arrefecimento
CORK –
Cortiça
CORE –
Núcleo
CORNER –
Canto
COTTER PIN –
Contrapino
COUNTER –
Contador, tacômetro
COUNTERWEIGHT –
Contrapeso
COUPLER –
Acoplador, engate
COUPLING –
Acoplamento, conexão
COVER –
Tampa
COWL –
Capota
COWLING –
Capota
CRADLE –

Armação, suporte
CRANK –
Manivela
CRANKCASE –
Cárter
CRANKSHAFT –
Virabrequim
CROSS UNION –
Junta transversal
CROSSBAR –
Barra transversal
CUP –
Capa, anel externa
CURTAIN –
Cortina
CUSHION –
Almofada, amortecedor
CUTTER –
Fresa, cortador
CUTTING EDGE –
Borda cortante
CYLINDER –
Cilindro
CYLINDER BLOCK –
Bloco do motor
CYLINDER HEAD –
Cabeçote
DAMPER –
Amortecedor
DARK GREEN –
Verde escuro
DASH –
Painel
DASH PANEL –
Painel de Instrumento
DECELERATOR –
Desacelerador
DEFLECTOR –
Defletor
DETENT –
Retém, pino de trava
DIAGRAM-WIRING –
Diagrama dos circuitos elétricos
DIAL –
Medidor de dial
DIAPHRAGM –
Diafragma
DIESEL ENGINE COMPLETE –
Motor diesel completo
DIFFERENTIAL –
Diferencial
DIFFUSER –
Difusor
DIMMER –
Redutor de luminosidade
DIODE –
Diodo
DIRECTOR –
Diretor

DISC –
Disco
DISCONNECT –
Desligar
DISPOSABLE –
Disponível, substituível
DISSIPATOR –
Dissipador de calor
DISTRIBUTOR –
Distribuidor
DM = DECIMETER –
dm = decímetro
DOME LIGHT –
Lâmpada do teto
DOOR –
Porta
DOWEL –
Pino-guia, cavilha
DOWNSHIFT –
Mudança para marcha mais baixa
DOZER –
Bulldozer (lâmina)
DRAIN –
Dreno
DRAWBAR –
Barra de tração
DRILL –
Broca
DRILLED –
Broqueado, perturado
DRIVE –
Comando, acionamento, propulsão
DRIVER –
Acionador, mecanismo propulsor
DRIVESHAFT –
Eixo acionador, eixo de transmissão
DRUM –
Tambor
DUCT –
Conduto, canal
EACH –
Cada
EDGE –
Borda, canto
EFFECTIVE WITH –
Efetivo a partir de
EJECTOR –
Ejetor
ELBOW –
Cotovelo
ELEMENT –
Elemento
ENCLOSURE –
Cobertura
END –
Extremidade
END BIT –
Canto de lâmina
END VIEW –

Vista traseira
ENGINE –
Motor
ENGINE ARRANGEMENT –
Arranjo do motor
EXCEPT –
Exceto
EXHAUST –
Escape
EXHAUST PIPE –
Cano de escape
EXPANDER –
Expansor
EXPANSION PLUG –
Bujão de expansão
EXTENSION –
Extensão
EXTINGUISHER –
Extintor
EXTRACTOR –
Extrator
EYE –
Olhal
EYEBOLT –
Parafuso de olhal
FABRIC –
Tecido, tela textura
FACING –
Revestimento, forro
FAN –
Ventilador
FASTENED –
Fixo, preso
FASTENER –
Fixador, prendedor
FENDER –
Pára-lamas
FERRULE –
Virola
FIELD COIL –
Bobina indutora, ou de campo
FIELD REPLACEMENT –
Reposicão ou substituicão no campo
FILLER –
Bocal de enchimento
FILM –
Película
FILTER –
Filtro
FINAL DRIVE –
Comando final
FINGER –
Dedo
FIREWALL –
Parede contra fogo
FITTING –
Graxeira, conexão
FIXTURE –

Dispositivo, Aparelho
FLANGE –
Flange
FLASHER –
Luz intermitente
FLOAT –
Flutuar, livre
FLOOD-LAMP –
Farol
FLOOR –
Piso
FLOORMAT –
Tapete
FLOORPLATE –
Chapa do piso
FLYWEIGHT –
Peso volante
FLYWHEEL –
Volante
FOLLOWER –
Seguidor
FOOT –
Pé
FORK –
Garfo
FOR USE WITH –
Para usar com
FOUNDATION –
Assentamento, alicerce
FRAME –
Armacão, chassi
FRONT –
Frente, dianteiro
FT = FOOT –
Pé
FUEL INJECTION –
Injecão de combustível
FUEL PUMP –
Bomba de combustível
FUEL RATIO –
Limitador de combustível
FUEL SYSTEM –
Sistema do combustível
FUEL TANK –
Tanque do combustível
FUMES DISPOSAL –
Eliminação de vapores do cárter
FUSE –
Fusível
G = GROUP –
Grupo
GAGE –
Indicador, manômetro
GAP –
Folga, lacuna, intervalo
GASKET –
Junta
GASKET KIT –

Jogo de junta
GATE –
Entrada, trava
GAUGE –
Indicador, manômetro
GEAR –
Engrenagem, marcha
GEAR BOX –
Caixa de engrenagem
GEAR PUMP –
Bomba de engrenagem
GENERATOR –
Gerador
GLAND –
Junta, gaxeta, vedacão sobreposta
GLASS –
Vidro
GLOW PLUG –
Vela incandescente
GOVERNOR –
Governador
GRAB IRON –
Balaústre corrimão
GRATE –
Grade, grelha
GRAY –
Cinza
GRID –
Grade, grelha
GRILL –
Grade, grelha
GRIP –
Pega, garra, cabo
GROMMET –
Ilhós
GROUND BRUSH –
Escova-terra
GROUND (ELECTRIC) –
Terra (eletricidade)
GROUSER –
Garra (de sapata)
GUARD –
Protetor
GUIDE –
Guia
GUSSET –
Cantoneira
HACKSAW –
Serra para metais
HALF –
Metade, meio (a)
HALF LINK –
Semi-elo
HAMMER –
Martelo
HAND CONTROL –
Controle manual
HANDLE –
Cabo, alça

HANDRAIL –
Corrimão, balaústre
HANGER –
Suporte, dispositivo de suspensão
HARDWARE –
Ferragem
HARDWARE KIT –
Jogo de ferragem
HARNESS –
Chicote
HEAD = HD –
Cabeça
HEADER –
Coletor
HEADLAMP –
Farol dianteiro
HEADLIGHT –
Farol dianteiro
HEAT SINK –
Difusor de calor
HEATER –
Aquecedor
HIGH-IDLE –
Marcha acelerada em vazio
HINGE –
Dobradiça, articulacão
HITCH –
Engate
HOIST –
Guincho, talha
HOLD –
Suporte, fixador
HOLD DOWN –
Fixar, reter, manter abaixado
HOLDER –
Fixador, suporte
HOLE –
Furo, buraco
HOOD –
Capô
HOOD & DASH –
Capô e painel
HOOK –
Gancho
HORN –
Buzina
HOSE –
Mangueira
HOUSING –
Alojamento
HUB –
Cubo
HYDRAULIC –
Hidráulico
ID = INSIDE DIAMETER –
Diâmetro interno
IDLER –
Roda-guia
IDLER & SHAFT –

Roda-guia e eixo
IDLER GEAR –
Engrenagem intermediária
IDLER PULLEY –
Polia intermediária
IMPELLER –
Impulsor, rotor
IN = INCH –
Polegada
INCLUDES –
Inclui
INDICATE –
Indicam
INDICATOR –
Indicador
INLAY –
Incrustação
INLET –
Admissão, entrada
INPUT –
Entrada
INSERT –
Inserção
INSTALLATION –
Instalação
INSTALLED ON MODEL –
Instalação no modelo
INSTRUCTION –
Instrução
INSTRUMENT –
Instrumento
INSULATED BRUSH –
Escova isolada
INSULATION –
Isolação, isolamento
INSULATOR –
Isolante, isolador
INTAKE –
Admissão
INTERLOCK –
Trava interna
INTERMEDIATE –
Intermediário
INTERNAL –
Interno
INVERTER –
Inversor
IRON –
Ferro
JACK –
Macaco
JAW –
Mandíbula, garra
JET –
Jato, vaporizador
JOINT –
Junta, articulação
JUNCTION –
Junção

KEY –
Chaveta
KINGBOLT –
Pino de engate
KNIFE –
Faca, lâmina
KNOB –
Maçaneta, botão
LADDER –
Escada
LAMP –
Lâmpada
LARGE –
Grande
LATCH –
Trinco, lingüeta
LEAD –
Condutor, cabo
LEG –
Perna
LENS –
Lente
LEVEL –
Nível
LEVER –
Alavanca
L.H. = LEFT HAND –
Lado esquerdo
LID –
Placa, tampa
LIFT –
Levantar
LIFT CYLINDER –
Cilindro de levantamento
LIFTER –
Tucho
LIFTING EYE –
Olhal de levantamento
LIGHT GREEN –
Verde claro
LIGHTING –
Sistema de iluminação
LINE –
Tubulação
LINER –
Camisa
LINES & PUMP –
Tubulação e bomba
LINES & VALVE –
Tubulação e válvula
LINING –
Revestimento, lona
LINK –
Elo
LINKAGE –
Articulação
LIP –
Lábio, borda
LISTED –

Relacionamento
LITERATURE –
Literatura
LOCATED –
Localizado
LOCATOR –
Localizador
LOCK –
Trava
LOCKNUT –
Contraporca
LOCKWASHER –
Arruela de pressão
LOCKWIRE –
Arame de trava
LONG –
Longo
LOOM –
Tubo isolador
LOW IDLE –
Marcha lenta
LOUVER –
Persiana
LOWER –
Abaixar, inferior
LUBRICANT –
Lubrificante
LUG –
Ressalto, orelha
MACHINE SCREW –
Parafuso de fenda
MAGNET –
Imã magneto
MAIN –
Principal
MAINTENANCE –
Manutenção
MANIFOLD –
Coletor
MARKED –
Marcado (a)
MARKER –
Marcador
MASTER PIN –
Pino mestre
MAT –
Capacho, esteira
METER –
Medidor, contador
MINOR –
Menor
MIRROR –
Espelho
MISCELLANEOUS –
Miscelânea
MODIFICATION –
Modificação
MOLDBOARD –
Armação da lâmina

MOTOR –
Motor
MOULDING –
Moldura
MOUNT –
Montar
MOUNTED –
Montado (a)
MOUNTING –
Montagem
MUFFLER –
Silenciador
NAMEPLATE –
Plaqueta de identificação
N.C. (THREAD) –
Rosca grossa
NEEDLE –
Agulha
N.F. (THREAD) –
Rosca fina
NIB –
Ponta, bico
NIPPLE –
Conexão
NONE –
Nenhum (a)
NORMALIZING –
Normalização
NOT PART OF –
Não faz parte de
NOZZLE –
Bocal, bico injetor
N/S = NOT SERVICED –
Não vendável
NUMBER (No) –
Número (No)
NUT –
Porca
NUT-WING –
Porca borboleta
NUT-CASTLE –
Porca acastelada
NUT-WELD –
Porca-soldada
NUT-CAP –
Porca cega
NUT-HEX –
Porca sextavada
NUT-LOCK –
Contraporca
NUT-IMPERIAL –
Porca imperial
NUT-JAM –
Porca de trava, contraporca
NUT-LOW CROWN –
Porca de meia coroa
NUT-RETAINING –
Porca de retenção
NUT-SELF LOCK –

Porca de autotravamento
NUT-SLOTTED –
Porca fendada
NUT-SPANNER –
Porca para chaves
O.D. = OUTSIDE DIAMETER –
Diâmetro externo
O-RING –
Anel "O"
OIL –
Óleo
OILPAN –
Cárter
OIL PUMP –
Bomba de óleo
OIL SYSTEM –
Sistema de lubrificação
OILER –
Almotolia, lubrificador
ORANGE –
Laranja
TO ORDER –
Para pedir
ORIFICE –
Orifício
OUTER –
Externo
OUTER RACE –
Anel externo
OUTPUT –
Saída
OVERALL –
Geral, total
OVERHAUL –
Revisão
OVER SIZE –
Sobremedida
PACKING –
Embalagem, gaxeta
PAD –
Coxim, calço
PADLOCK –
Cadeado
PAINT –
Pintura
PAN –
Cárter
PANEL –
Painel
PARKING BRAKE –
Freio de estacionamento
PARTITION –
Separacão
PARTS G –
Grupo de peças
PARTS OF –
Peça de
PARTS OF ALL ENGINE ARRANGEMENTS –

Peças de todos os arranjos do motor exceto
PAWL –
Garra
PEDAL –
Pedal
PEDESTAL –
Pedestal
PERFORMANCE –
Desempenho
PILOT –
Piloto
PIN –
Pino
PIN & BUSHING –
Pino e bucha
PIN-COTTER –
Contrapino
PINCH BAR –
Pé de cabra
PINION –
Pinhão
PIPE –
Tubo
PISTON –
Pistão
PIVOT –
Articulação, pivô
PLANETARY –
Planetário
PLATE –
Placa
PLATFORM –
Plataforma
PLUG –
Bujão
PLUNGER –
Pistão, êmbolo
POINT –
Ponta, ponto
POINTER –
Ponteiro
POLE & COIL –
Polo e bobina
POLE –
Polo, lança, vara
POPPET –
Gatilho
POST –
Poste, coluna
POTENTIOMETER –
Potenciômetro
POWER TAKE OFF –
Tomada de força
POWER TRAIN –
Trem de força
PRE-SCREENER –
Tela protetora
PRECHAMBER –

Câmara de pré-combustão
PRECLEANER –
Pré-purificador
PRECOMBUSTION –
Pré-combustão
PRESS –
Prensa
PRESS = PRESSURE –
Pressão
PREVIOUS –
Prévio, anterior
PRIMARY –
Primário, principal
PROBE –
Prova
PROJECTOR –
Projeter
PROTECTION –
Proteção
PROTECTOR –
Proteter
PULLER –
Extrator, sacador
PULLEY –
Polia
PUMP –
Bomba
PURPLE –
Roxo
PUSHROD –
Haste de empuxo
QTY = QUANTITY –
Quantidade
RACE –
Pista
RACE & ROLLER –
Pista e rolete
RACK –
Cremalheira
RADIATOR –
Radiador
RAIL –
Trilho, guia
RANGE TRANSM –
Transmissão manual
RATCHET –
Catraca
REAR –
Traseiro (a)
REBORED –
Escareado, alargado
REBUILD KIT –
Jogo de recondicionamento
RECEPTACLE –
Recipiente
RECTIFIER –
Retificador
RED –
Vermelho

REDUCER –
Redutor
REFER –
Referir
REGULATOR –
Regulador
RELATED REPAIR ITEMS –
Itens de reparos relacionados
RELAY –
Relé
RELIEF VALVE –
Válvula de alívio
REPAIR G –
Grupo de reparo
REPAIR KIT –
Jogo de reparo
REPAIR ITEMS –
Itens de reparo
REPLACEMENT –
Reposição, substituição
REQUIRED –
Necessário
RESERVOIR A –
Reservatôrio
RESIN –
Resina
RESISTOR –
Resistência
RETAINER –
Fixador
RETARDER –
Retardador
REVERSIBLE –
Reversível
R.H. = RIGHT HAND –
Lado direito
RIM –
Aro
RIM & TIRE –
Aro e pneu
RING –
Anel
RIVET –
Rebite
ROCKET –
Balancim
ROD –
Haste
ROD END –
Extremidade da haste
ROLLER –
Rolete
ROPE-STARTING –
Partida à corda
ROTATOR –
Girador
ROTOCHAMBER –
Càmara pneumática
ROTOCOIL –

Girador de válvula
ROTOR –
Rotor
RUST INHIBITOR –
Antioxidante
SADDLE –
Sela, assento
SAFETY –
Segurança
SAFETY TREAD –
Tiras antiderrapante
SCRAPER –
Tampa
SCREEN –
Tela
SCREW –
Parafuso
SCREW-HEX HD –
Parafuso de cabeça hexagonal
SCREW-KIT –
Jogos de parafuso
SCREW-MACHINE –
Parafuso de fenda
SCREW-ROUND HD –
Parafuso de cabeça redonda
SCREW-FLANGED –
Parafuso com flange
SCREW-LOCKING –
Parafuso de trava
SCREW-THUMB –
Parafuso de orelhas
SCREWDRIVER –
Chave de fenda
SEAL –
Retentor
SEALED UNIT –
Unidade vedada
SEALER –
Vedador isolante
SEAT –
Assento
SECONDARY –
Secundário
SECTION –
Seção
SEGMENT –
Segmento
SENDER –
Emissor
SENSOR –
Sensor
SEPARATE –
Separar, separado
SEPARATOR –
Separador
SERIAL NUMBER PLATE –
Placa de número de série
SERVICE –
Serviço, manutenção

SERVICE KIT –
Jogo de manutenção
SERVICE METER –
Horômetro
SETSCREW –
Parafuso de fixação
SHACKLE –
Grilheto, anel, manilha
SHAFT –
Eixo
SHANK –
Porta-ponta do escarificador
SHEAVE –
Polia, roldana
SHEET –
Folha, lâmina
SHELL –
Invólucro, cápsula, casquilho
SHIELD –
Blindagem, protetor
SHIFT –
Mudança
SHIM –
Calço
SHIPPING –
Embarque
SHOCK ABSORBER –
Amortecedor de choques
SHOCKMOUNT –
Montagem a prova de choques
SHOE –
Sapata
SHORT –
Curto
SHOWN –
Ilustrado, mostrado
SHROUD –
Tampa de proteção
SHUNT –
Derivação
SHUT OFF –
Desligar, parada
SHUTTLE –
Pistão de vaivém
SIDE –
Lateral
SIDE VIEW –
Vista lateral
SILICONE –
Silicone
SINK –
Absorvente de calor
SKIVING –
Desbaste
SLACK ADJUSTER –
Adjustador de folga
SLEEVE –
Luva, manga, camisa
SLIDER –

Cursor, deslizador
SLIDE RAIL –
Trilho deslizante
SLING –
Cabos, amarras, linga
SLINGER –
Defletor
SLUG –
Pistão de reação, pistãozinho
SMALL –
Pequeno
SNAP RING –
Anel de retenção, anel de pressão
SNUBBER –
Amortecedor
SOCKET –
Soquete, tomada
SOLENOID –
Solenóide
SPACER –
Espaçador
SPARE –
Sobressalente
SPARK PLUG –
Vela de ignição
SPECIAL –
Especial
SPEEDOMETER –
Velocimetro
SPIDER –
Cruzeta
SPINDLE –
Ponta de eixo
SPLINE –
Estria
SPOOL –
Carretel
SPOUT –
Calha, tubo
SPRING –
Mola
SPROCKET –
Roda motriz, roda dentada
STABILIZER –
Estabilizador
STACK –
Chaminé, cano de escapamento
STAND –
Suporte, cavalete
STANDPIPE –
Suporte vertical de sucção
STAPLE –
Grampo
STARTER –
Arranque motor de partida
STATOR –
Estator
STEERING –
Direção

STEM –
Haste
STEP –
Degrau
STICK –
Vareta
STOP –
Parar
STORAGE –
Armazenagem
STRAINER –
Tela filtrante
STRAP –
Tira, cinta, suporte de fixação
STREET ELL –
Conexão cotovelo
STRIP –
Tira, fita, listra
STROKE –
Curso do pistão
STUD –
Prisioneiro
SUMP –
Tanque, reservatório
SUPPLY VALVE –
Válvula de suprimento
SUPPORT –
Suporte
SUSPENSION –
Suspensão
SWITCH –
Interruptor
SWIVEL –
Articulação giratória
TAB –
Tira, aba, lingüeta
TABLE –
Mesa
TACHOGRAPH –
Tacógrafo
TACHOMETER –
Tacômetro
TAG –
Etiqueta
TAIL LAMP –
Farol traseiro
TAN –
Castanho
TANG –
Lingüeta
TANK –
Tanque
TAP –
Macho
TAPE –
Fita
TAPPET –
Tucho
TEE –

Conexão em "T"
TEMP. = TEMPERATURE –
Temperatura
TERMINAL –
Terminal
TEST UNIT –
Unidade de teste
TESTER –
Aparelho de teste
THERMISTOR –
Termistor
THERMOCOUPLE –
Termopar
THERMOMETER –
Termômetro
THERMOSTAT –
Termostato
THERMOSWITCH –
Interruptor térmico
THICK –
Grosso (a) espesso (a)
TIE –
Ligação, tirante
THREAD (OF NUT) –
Rosca (de porca)
THROTTLE –
Acelerador de
THROWER –
Defletor
THRU = THROUGH –
Através de
TIGHTENER –
Tensor
TILT CYLINDER –
Cilindro de inclinação
TIMING –
Sincronização, Distribuição
TIP –
Ponta
TIRE –
Pneu
TIRE & RIM –
Pneu e aro
TONGUE –
Língua, lingueta
TOOL –
Ferramenta
TOOLCABINET –
Armário para ferramenta
TOOTH/TEETH –
Dente/dentes
TOP –
Topo, parte superior
TORQUE –
Torque
TORQ. CONV. –
Conversor de torque
TORQ. DIVIDER –

Divisor de torque
TOWER –
Torre
TRACK –
Esteira
TRACK PIN –
Pino de esteira
TRACTOR –
Trator
TRAILING UNIT –
Unidade rebocada
TRANSFER –
Decalcomania
TRANSFORMER –
Transformador
TRANSISTOR –
Transistor
TRANSMISSION –
Transmissão
TRANSMISSION OVERHAUL –
Revisão da transmissão
TREAD –
Piso, banda de rodagem
TREADLE –
Pedal
TROLLY –
Carrinho
TRUCK –
Caminhão
TRUNNION –
Munhão
TUBE –
Tubo, cano
TUBING –
Tubulagem canalização
TURBINE –
Turbina
TURBOCHARGER –
Turboalimentador
U-BOLT –
Parafuso em "U"
U-JOINT –
Junta universal
UNDERSIZE –
Submedida
UNION –
União
UPPER –
Superior
USE AS REQUIRED –
Usar conforme necessitar
VALUE –
Valor
VALVE –
Válvula
VALVE GRINDING –
Retificação das válvulas
VEE BELT –
Correia "V"

VEE BELT SET –
Jogo de correia em "V"
VENT –
Respiro
VIEW –
Vista
VISE –
Morsa, torno
VISOR –
Pára-sol
WALKWAY –
Passadiço, corredor
WARNING G. –
Grupo de alarma
WASHER –
Arruela
WATER PUMP –
Bomba d'água
WEARPLATE –
Placa de desgaste
WEDGE –
Cunha
WEIGHT –
Peso
WELD –
Solda
WELDNUT –
Porca soldada
WHEEL –
Roda
WHITE –
Branco
WICK –
Mecha, pavio
WINCH –
Guincho
WINDOW –
Janela
WINDSHIELD –
Pára-brisa
WIPER –
Limpador
WIRE –
Fio
WIRING –
Sistema elétrico
WIRING DIAGRAM –
Diagrama do sistema elétrico
WITH –
Com
WRAPPER –
Invólucro, envoltório
WRENCH –
Chave
YELLOW –
Amarelo
YOKE –
Garfo

MAINTENANCE PARTS

DESCRIPTION	PART NUMBER	QTY	WHERE USED	PAGE
AIR INLET AND EXHAUST SYSTEM				
FILTER ELEMENT AS-AIR (PRIMARY)	252-5001	1	AIR CLEANER GP	73
		1	AIR CLEANER GP	74
FILTER ELEMENT AS-AIR (SECONDARY)	252-5002	1	AIR CLEANER GP	73
		1	AIR CLEANER GP	74
HOSE-RADIATOR	4N-7431	1	LINES GP-AIR	76
BASIC ENGINE				
GASKET-COVER (VALVE MECHANISM)	317-3064	1	COVER GP-VALVE MECHANISM	10
PLUG-DRAIN (ENGINE OIL PAN)	294-8576	1	PAN GP-OIL	39
COOLING SYSTEM				
BELT-SERPENTINE	253-4531	1	FAN GP-BLOWER	60
		1	FAN GP-REVERSIBLE	61
CAP AS-RADIATOR	287-5256	1	RADIATOR GP	70
		1	RADIATOR GP	71
GASKET-WATER REGULATOR (TEMPERATURE)	281-8744	1	REGULATOR GP-TEMPERATURE	72
HOSE (LOWER RADIATOR)	273-2019	1	LINES GP-RADIATOR	64
		1	LINES GP-RADIATOR	66
HOSE (UPPER RADIATOR)	309-8999	1	LINES GP-RADIATOR	64
		1	LINES GP-RADIATOR	66
REGULATOR AS-WATER TEMPERATURE (INCLUDES CONNECTOR)	367-1819	1	REGULATOR GP-TEMPERATURE	72
ELECTRICAL AND STARTING SYSTEM				
BATTERY (12-VOLT, MAINTENANCE FREE, WET)	9X-3404	2	BATTERY & WIRING GP	143
		2	BATTERY & WIRING GP	150
BATTERY (12-VOLT, MAINTENANCE FREE, WET) (MAINTENANCE FREE, WET)	153-5710	2	BATTERY & WIRING GP	156
BELT-DRIVE	9X-8139	1	LAMP GP-WARNING BEACON	186
CAP	220-4081	1	WIRING GP-PLATFORM	245
		1	WIRING GP-PLATFORM	253
CIRCUIT BREAKER AS (105-AMPERE) (MAIN, ALTERNATOR)	171-2212	2	PANEL GP-CIRCUIT BREAKER	195
CIRCUIT BREAKER AS (15-AMPERE, MANUAL RESET) (BLOWER, CONDENSER, ENGINE ECM)	280-2709	4	PANEL GP-CIRCUIT BREAKER	195
FILTER (ETHER START)	358-4889	1	VALVE GP-ETHER STARTING	223
FUSE (10-AMPERE)	113-8490	12	PANEL GP-CIRCUIT BREAKER	195
FUSE (15-AMPERE)	113-8491	20	PANEL GP-CIRCUIT BREAKER	195
GLOW PLUG	299-6953	6	GLOW PLUG GP	164
KEY (BATTERY DISCONNECT)	8H-5306	1	SWITCH GP-DISCONNECT	217
LAMP (24-VOLT, 10-WATT)	259-1286	1	WIRING GP-CAB	224

MAINTENANCE PARTS

DESCRIPTION	PART NUMBER	QTY	WHERE USED	PAGE
LAMP (24-VOLT, 70-WATT)	9X-7849	1	LAMP GP-WARNING BEACON	186
LAMP-HALOGEN (24-VOLT, 70-WATT)	351-9918	1	LAMP GP-FLOOD	183
		1	LAMP GP-FLOOD	184
		1	LAMP GP-FLOOD	185
FRAME AND BODY				
CAP AS	155-9321	1	GUARD GP-RADIATOR	363
PLUG-DRAIN (CASE, FRAME)	106-8187	1	CASE & FRAME GP	318
SCREEN (HOOD TOP)	274-3488	1	HOOD GP	372
		1	HOOD GP	373
SCREEN AS (FRONT, LOWER)	342-8503	1	GUARD GP-CAB	351
SCREEN AS (FRONT, UPPER)	349-4279	1	GUARD GP-CAB	351
FUEL SYSTEM				
CAP GP-FUEL FILLER	349-7059	1	TANK GP-FUEL	131
		1	TANK GP-FUEL	133
		1	TANK GP-FUEL	135
FILTER AS-FUEL (ULTRA HIGH EFFICIENCY)	319-0844	1	FILTER GP-FUEL	87
FILTER AS-FUEL (ULTRA HIGH EFFICIENCY) (SECONDARY)	306-9199	1	FILTER GP-FUEL	87
FILTER AS-WATER SEP & FUEL (PRIMARY)	326-1644	1	FILTER GP-WATER SEP & FUEL	88
STRAINER-FUEL (TANK)	9P-7121	1	TANK GP-FUEL	131
		1	TANK GP-FUEL	133
		1	TANK GP-FUEL	135
HYDRAULIC SYSTEM				
CAP-FILLER (HYDRAULIC TANK FILL)	7H-1447	1	COVER GP-HYDRAULIC TANK CAP	489
FILTER ELEMENT AS-OIL (ADVANCED EFFICIENCY)	1R-0777	1	TANK & FILTER GP-HYDRAULIC	553
		1	TANK & FILTER GP-HYDRAULIC	556
FILTER ELEMENT AS-OIL (FIRE RESISTANT FLUID)	104-6931	1	TANK & FILTER GP-HYDRAULIC	553
		1	TANK & FILTER GP-HYDRAULIC	556
FILTER ELEMENT AS-OIL (ULTRA HIGH EFFICIENCY)	139-1537	1	TANK & FILTER GP-HYDRAULIC	556
FILTER-OIL (ADVANCED EFFICIENCY) (HYDRAULIC)	9T-8578	1	FILTER GP-OIL	503
FILTER-OIL (FLOW REGULATOR) (INLET MANIFOLD)	227-1197	1	MANIFOLD GP-VALVE	543
FILTER-OIL (ULTRA HIGH EFFICIENCY) (HYDRAULIC)	144-0832	1	FILTER GP-OIL	503
PLUG-DRAIN (HYDRAULIC TANK)	9J-7031	1	TANK & FILTER GP-HYDRAULIC	553
		1	TANK & FILTER GP-HYDRAULIC	556
SCREEN AS (HYDRAULIC TANK OIL)	3G-3267	1	TANK & FILTER GP-HYDRAULIC	553
		1	TANK & FILTER GP-HYDRAULIC	556
STRAINER (HYDRAULIC TANK FILL)	9J-3047	1	TANK & FILTER GP-HYDRAULIC	553

DESCRIPTION	PART NUMBER	QTY	WHERE USED	PAGE
		1	TANK & FILTER GP-HYDRAULIC	556
LUBRICATION SYSTEM				
CAP AS (HIGH SPEED OIL CHANGE)	8W-3214	1	OIL CHANGE GP-HIGH SPEED	54
CAP-OIL FILLER (ENGINE)	130-9888	1	FILLER GP-ENGINE OIL	50
		1	FILLER GP-ENGINE OIL	51
FILTER-ENGINE OIL	269-8325	1	FILTER GP-ENGINE OIL	53
OPERATOR STATION				
BLADE AS-WIPER (450-MM) (DOOR, LH)	125-8175	1	DOOR GP-CAB	634
BLADE AS-WIPER (450-MM) (DOOR, RH)	125-8175	1	DOOR GP-CAB	632
BLADE AS-WIPER (450-MM) (FRONT)	125-8175	1	WIPER GP-WINDOW	716
BLADE AS-WIPER (500-MM) (REAR)	5C-8811	1	WIPER GP-WINDOW	716
CAP-VENTED (WINDOW WASHER TANK)	209-4482	1	TANK GP-WINDOW WASHER	709
		1	TANK GP-WINDOW WASHER	711
DRYER AS-REFRIGERANT	257-3227	1	LINES GP-AIR CONDITIONER	651
FILTER ELEMENT-CAB AIR (RECIRCULATION)	329-3243	2	PRESSURIZER GP-CAB	674
FILTER ELEMENT-CAB AIR (STANDARD EFFICIENCY) (FRESH AIR)	7G-8116	2	PRESSURIZER GP-CAB	674
LAMP (24-VOLT)	138-2434	1	CONTROL GP-HANDLE	605
SEAT BELT GP (RETRACTABLE, 3-IN)	222-0345	1	SEAT GP	695
		1	SEAT GP	699
	272-2272	1	SEAT GP-SUSPENSION	704
POWER TRAIN				
BREATHER (POWER TRAIN OIL FILLER)	183-3873	1	LINES GP-POWER TRAIN OIL	284
CAP AS-OIL FILLER (POWER TRAIN)	2W-6225	1	LINES GP-POWER TRAIN OIL	284
FILTER ELEMENT AS-OIL (ADVANCED EFFICIENCY)	328-3655	1	FILTER GP-OIL	283
FILTER-MAGNETIC (POWER TRAIN OIL)	8S-9129	1	LINES GP-POWER TRAIN OIL	284
GASKET-COVER	8P-0058	1	PLANETARY GP-TRANSMISSION	294
PLUG-DRAIN (TORQUE CONVERTER OIL)	4B-7739	1	MOUNTING GP-TORQUE CONVERTER	291
PLUG-MAGNETIC (FINAL DRIVE, OIL FILL, CHECK)	6V-0439	1	DRIVE GP-FINAL	276
		1	DRIVE GP-FINAL	278
SCREEN AS (TORQUE CONVERTER SCAVENGE)	3T-6471	1	TORQUE CONVERTER GP	308
SCREEN-SUCTION (TORQUE CONVERTER SCAVENGE)	8S-9130	1	LINES GP-POWER TRAIN OIL	284
SERVICE EQUIPMENT AND SUPPLIES				
CAP-DUST	187-9008	2	LINES GP-DIAGNOSTIC	747
		2	LINES GP-DIAGNOSTIC	750

MAINTENANCE PARTS

DESCRIPTION	PART NUMBER	QTY	WHERE USED	PAGE
STEERING AND BRAKING SYSTEM				
FILTER-OIL (ADVANCED EFFICIENCY) (HYDRAULIC)	1G-8878	1	FILTER GP-OIL	450
PLUG-O-RING	9S-4182	2	HEAD GP-PUMP	451

INDEX

NAME PAGE

A

ACCUMULATOR GP-HYDRAULIC–CHARGED . . . 482
ACCUMULATOR GP-HYDRAULIC–UNCHARGED 483
ACCUMULATOR GP-PILOT OIL–CHARGED 484
ACCUMULATOR GP-PILOT OIL–UNCHARGED 485
ACCUMULATOR GP–UNCHARGED 260
ACCUMULATOR-REFRIGERANT 651
ACTUATOR GP-HYDRAULIC 486
ACTUATOR GP-PUMP–STEERING 443
ADAPTER GP-OIL PAN DRAIN 39
ADJUSTER GP-SEAT 588
AIR CLEANER GP 73
74
75
AIR CONDITIONER GP 589
ALARM GP 137
ALARM GP (24-VOLT) 245
ALTERNATOR GP-CHARGING 138
139
ARM GP-WINDOW WIPER (DOOR, LH) 634
ARM GP-WINDOW WIPER (DOOR, RH) 632
ARM GP-WINDOW WIPER (FRONT) 716
AXLE GP 261

B

BAR GP-EQUALIZER 380
382
383
384
BAR GP-RADIATOR GUARD 317
BARREL GP-MOTOR–STEERING 444
BASE GP-OIL FILTER–POWER TRAIN 262
BASE GP-VALVE COVER & INJ HARN 10
BATTERY (12-VOLT, MAINTENANCE FREE, WET) 143
150
BATTERY (12-VOLT, MAINTENANCE FREE, WET) (MAINTENANCE FREE, WET) 156
BATTERY & WIRING GP 141
148
BATTERY & WIRING GP–HEAVY DUTY 156
BEARING 721
723
726
728
730
BELT-DRIVE 186
BELT-SERPENTINE 60
61
BLADE & EDGE GP-SEMI-UNIVERSAL 718
BLADE AS-ANGLING–LASER APPLICATION 720
BLADE AS-WIPER (450-MM) (DOOR, LH) 634
BLADE AS-WIPER (450-MM) (DOOR, RH) 632
BLADE AS-WIPER (450-MM) (FRONT) 716
BLADE AS-WIPER (500-MM) (REAR) 716

NAME PAGE

BLADE GP-ANGLING 721
723
726
728
BLADE GP-ANGLING–LANDFILL 730
BLADE GP-ANGLING–LASER APPLICATION . . . 725
BLOCK AS-JUNCTION (BATTERY) 158
BLOCK GP-JUNCTION–BATTERY 158
BLOWER GP-CAB 592
BRAKE & DIFFERENTIAL DRIVE GP 263
BRAKE & PLANETARY GP 267
BRAKE GP-STEERING 445
BREATHER (POWER TRAIN OIL FILLER) 284
BULLDOZER AR 576
BULLDOZER AR-PWR ANGLE & TILT 577
BULLDOZER AR-SEMI-UNIVERSAL 578

C

C-FRAME GP-POWER ANGLING 579
581
582
CAB AR 594
CAB AS 595
CAB GP 596
597
CAB GP–FORESTRY 599
CAMSHAFT GP 8
CANOPY AR 599
CAP 245
253
CAP AS 363
CAP AS (HIGH SPEED OIL CHANGE) 54
CAP AS-OIL FILLER (POWER TRAIN) 284
CAP AS-RADIATOR 70
71
CAP GP-FUEL FILLER 131
133
135
CAP GP-TRACK IDLER–FRONT, LH 386
CAP GP-TRACK IDLER–FRONT, RH 385
CAP GP-TRACK IDLER–REAR, LH 388
CAP GP-TRACK IDLER–REAR, RH 387
CAP GP-TRACK IDLER–SYSTEMONE 389
390
CAP-DUST 747
750
CAP-FILLER (HYDRAULIC TANK FILL) 489
CAP-OIL FILLER (ENGINE) 50
51
CAP-VENTED (WINDOW WASHER TANK) 709
711
CASE & FRAME GP 318
CASE AS-TRANSMISSION 269
CHASSIS AR 1
CHASSIS AR–FORESTRY 1
CHASSIS AR–WASTE HANDLING 2
CIRCUIT BREAKER AS (105-AMPERE) (MAIN, ALTERNATOR) 195

INDEX

NAME PAGE

CIRCUIT BREAKER AS (15-AMPERE, MANUAL RESET) (BLOWER, CONDENSER, ENGINE ECM) . . . 195
COMPRESSOR GP-REFRIGERANT . . . 600 601
CONDENSER GP-REFRIGERANT . . . 602
CONNECTING ROD GP (F) . . . 42
CONNECTING ROD GP (J) . . . 42
CONNECTING ROD GP (L) . . . 42
CONTROL GP-HANDLE (BULLDOZER) . . . 621
CONTROL GP-HANDLE–BULLDOZER . . . 608
CONTROL GP-HANDLE–BULLDOZER–GRADE CONTROL . . . 607
CONTROL GP-HANDLE–RIPPER . . . 606
CONTROL GP-HANDLE–STEERING, TRANSMISSION . . . 610 612
CONTROL GP-HANDLE–WINCH . . . 604 605
CONTROL GP-JOYSTICK–BULLDOZER . . . 619 620 621
CONTROL GP-JOYSTICK–GRADE CONTROL . . . 618
CONTROL GP-JOYSTICK–RIPPER . . . 614
CONTROL GP-JOYSTICK–STEERING, TRANSMISSION . . . 615 616
CONTROL GP-PARKING BRAKE . . . 446
CONTROL GP-PEDAL . . . 622
CONTROL GP-STEERING & XMSN . . . 447 448
CONTROL GP-TRANSMISSION HYD . . . 270
CONTROL GP-UNPROGRAMMED . . . 103 108 113 118 160
CONTROL GP-UNPROGRAMMED (IMPLEMENT) . . . 141 148
CONTROL GP-UNPROGRAMMED (POWER TRAIN) . . . 245 253
CONTROL GP-UNPROGRAMMED (PRODUCT LINK 300) . . . 159
CONTROL GP-UNPROGRAMMED (PRODUCT LINK 300) . . . 173 175 181
CONTROL GP-UNPROGRAMMED (PRODUCT LINK 522) . . . 177 179
CONTROL GP-UNPROGRAMMED–IMPLEMENT . . . 160
CONTROL GP-UNPROGRAMMED–PRODUCT LINK 300 . . . 159
CONTROL GP-UNPROGRAMMED–PRODUCT LINK 522 . . . 161
COOLER GP-ENGINE OIL . . . 57
COOLER GP-HYDRAULIC OIL . . . 487 488
COOLING AR-SUPPLEMENTAL . . . 59
CORE AS-AFTERCOOLER . . . 71 488
CORE AS-HEATER . . . 636
CORE AS-OIL COOLER (HYDRAULIC OIL) . . . 487
CORE AS-OIL COOLER (POWER TRAIN OIL) . . . 488
CORE AS-RADIATOR . . . 70 71
COVER GP-ACCESS–HEAVY-DUTY, LH . . . 321
COVER GP-ACCESS–HEAVY-DUTY, RH . . . 320
COVER GP-BATTERY–HEAVY-DUTY . . . 322
COVER GP-CONSOLE . . . 626 628
COVER GP-CONSOLE–RIPPER . . . 624
COVER GP-CONSOLE–WINCH . . . 625
COVER GP-ENGINE . . . 9
COVER GP-HYDRAULIC TANK CAP . . . 489
COVER GP-VALVE MECHANISM . . . 10
CRANKSHAFT GP . . . 12 13 14
CYLINDER BLOCK AS . . . 15
CYLINDER BLOCK GP . . . 16 17
CYLINDER GP-ANGLING . . . 492
CYLINDER GP-ANGLING–BULLDOZER . . . 490
CYLINDER GP-BULLDOZER LIFT . . . 494 495
CYLINDER GP-RIPPER–LIFT . . . 497
CYLINDER GP-TILT . . . 500
CYLINDER GP-TILT–BULLDOZER . . . 499 502
CYLINDER HEAD AS . . . 19
CYLINDER HEAD GP . . . 21

D

DASH GP–OPEN ROPS . . . 631
DIFFERENTIAL & BEVEL GEAR GP . . . 272
DOOR GP-ACCESS–LH . . . 324
DOOR GP-ACCESS–RH . . . 323
DOOR GP-CAB (LH) . . . 597
DOOR GP-CAB (RH) . . . 597
DOOR GP-CAB–LH . . . 634
DOOR GP-CAB–RH . . . 632
DOOR GP-HOOD . . . 325
DOOR GP-HOOD–LH . . . 327 329
DOOR GP-HOOD–RH . . . 326 328
DRAWBAR GP . . . 330
DRIVE GP-FAN . . . 22 23
DRIVE GP-FAN–WITHOUT AIR CONDITIONING . . . 24
DRIVE GP-FINAL . . . 276
DRIVE GP-FINAL–WASTE HANDLING . . . 278

INDEX

NAME PAGE

DRYER AS-REFRIGERANT 651

E

EDGE GP-BIT & CUTTING. 732 733 734
ELECTRONICS AR-MACHINE 162
ELECTRONICS GP-COMMUNICATION–PRODUCT LINK 300 162
ELECTRONICS GP-MACHINE 162
ELECTRONICS GP-MACHINE–LASER, OPEN ROPS 162
ELECTRONICS GP-MONITOR 163
ELECTRONICS GP-MONITOR (SOFTWARE ONLY) 162
ELECTRONICS GP-MONITOR–PRODUCT LINK. 163
ENCLOSURE GP-FENDER 331
ENCLOSURE GP-PLATFORM–HEAVY-DUTY–FORESTRY–WASTE HANDLING 334
ENGINE AR-PRIMARY 6
EXTENSION GP-BACKREST (CLOTH) 695
EXTENSION GP-BACKREST (VINYL) 699 700

F

FAN GP-BLOWER 60
FAN GP-REVERSIBLE 61
FASTENER GP-VALVE 280
FENDER AS (LH) 338
FENDER GP 336 338
FENDER GP–HEAVY-DUTY–FORESTRY–WASTE HANDLING 337
FILLER GP-ENGINE OIL 50 51
FILM GP. 745
FILM GP–TANK GUARD 746
FILM-IDENTIFICATION (ALTERNATOR AIR) 245 253
FILM-IDENTIFICATION (CAT, LH). 745
FILM-IDENTIFICATION (CAT, RH) 745
FILM-IDENTIFICATION (D6N XL, D6N LGP) 626
FILM-IDENTIFICATION (DIAGNOSTICS PANEL) 748 750
FILM-IDENTIFICATION (FUSE PANEL) 195
FILM-IDENTIFICATION (GENERATOR, ELECTRICAL POWER) 245 253
FILM-IDENTIFICATION (GROUP NO., SEQUENCE NO.) (GROUP NUMBER). 592
FILM-IDENTIFICATION (GROUP NO., SEQUENCE NO.) (REFRIGERANT CONDENSER). 602
FILM-IDENTIFICATION (IGNITION SWITCH) 245
FILM-IDENTIFICATION (JOYSTICK CONTROL). 612

NAME PAGE

FILM-IDENTIFICATION (JOYSTICK) (BLADE CONTROL). 168
FILM-IDENTIFICATION (JOYSTICK) (GRADE CONTROL). 166 193
FILM-IDENTIFICATION (LUBE POINT). 597 671
FILM-IDENTIFICATION (POWER RECEPTACLE, 12-VOLT) 245 253 626
FILM-IDENTIFICATION (WINCH CONTROL) 605
FILM-IDENTIFICATION (WINCH FILTER) 605
FILM-INFORMATION (PRODUCT LINK, READ OMM). 173 175 177 179 181
FILM-INFORMATION (TRANSMISSION OIL LEVEL) 284
FILM-INSTRUCTION (BATTERY DISCONNECT) 141 148
FILM-INSTRUCTION (BULLDOZER CONTROL). 626 662
FILM-INSTRUCTION (READ OMM, STEERING) 447
FILM-INSTRUCTION (RIPPER CONTROL). 614
FILM-INSTRUCTION (SEAT ADJUSTMENT) 707
FILM-INSTRUCTION (WINDOW CLEANING, READ OMM). 599
FILM-ROPS (ROPS, READ OMM) 626
FILM-WARNING (DO NOT LIFT). 664
FILM-WARNING (HIGH PRESSURE CYLINDER) 482 483
FILM-WARNING (HIGH PRESSURE, READ OMM). 260 754
FILM-WARNING (NO STEP). 581
FILM-WARNING (NO WELD, NO DRILL, READ OMM). 662
FILM-WARNING (PRODUCT LINK 300, INTL). . . 754
FILM-WARNING (PRODUCT LINK 300, U.S.) . . . 173 175 181
FILM-WARNING (ROPS, FOPS, READ OMM) . . 662
FILM-WARNING (SEAT BELT, U.S.) 626
FILM-WARNING (UNIVERSAL, READ OMM). . . . 626
FILTER (ETHER START). 223
FILTER & LINES GP-POWER TRAIN 281
FILTER AS-FUEL (ULTRA HIGH EFFICIENCY) . . 87
FILTER AS-FUEL (ULTRA HIGH EFFICIENCY) (SECONDARY) 87
FILTER AS-WATER SEP & FUEL (PRIMARY) . . . 88
FILTER ELEMENT AS-AIR (PRIMARY) 73 74
FILTER ELEMENT AS-AIR (SECONDARY) 73 74

INDEX

NAME PAGE

FILTER ELEMENT AS-OIL (ADVANCED EFFICIENCY). 283 553 556
FILTER ELEMENT AS-OIL (FIRE RESISTANT FLUID). 553 556
FILTER ELEMENT AS-OIL (ULTRA HIGH EFFICIENCY). 556
FILTER ELEMENT-CAB AIR (RECIRCULATION). 674
FILTER ELEMENT-CAB AIR (STANDARD EFFICIENCY) (FRESH AIR) 674
FILTER GP-ENGINE OIL. 53
FILTER GP-FUEL. 87
FILTER GP-OIL–CASE DRAIN–IMPLEMENT 503
FILTER GP-OIL–POWER TRAIN 283
FILTER GP-OIL–STEERING CHARGE. 450
FILTER GP-WATER SEP & FUEL 88
FILTER-ENGINE OIL. 53
FILTER-MAGNETIC (POWER TRAIN OIL) 284
FILTER-OIL (ADVANCED EFFICIENCY) (HYDRAULIC) 450 503
FILTER-OIL (FLOW REGULATOR) (INLET MANIFOLD) 543
FILTER-OIL (ULTRA HIGH EFFICIENCY) (HYDRAULIC) 503
FINAL DRIVE GP 276 278
FITTING AS. 214
FITTING GP-HYDRAULIC (QUICK DISCONNECT) 747 750
FITTING GP-WATER LINES. 62
FLOOR MAT 626
FLOOR MAT (REAR) 628
FLYWHEEL GP 25
FORESTRY AR 2
FRAME AS–SYSTEMONE, FRONT. 340 341
FRAME GP-TRACK ROLLER. 393
FRAME GP-TRACK ROLLER–SYSTEMONE 391
FRAME GP-UNDERCARRIAGE–HEAVY-DUTY. 395
FUSE (10-AMPERE) 195
FUSE (15-AMPERE) 195

G

GASKET-COVER 294
GASKET-COVER (VALVE MECHANISM) 10
GASKET-WATER REGULATOR (TEMPERATURE). 72
GAUGE (OIL LEVEL) (POWER TRAIN) 284
GAUGE AS-OIL (ENGINE) 39
GAUGE-SIGHT (HYDRAULIC TANK OIL). 553 556
GENERAL AR–XL 2
GLOW PLUG. 164
GLOW PLUG GP. 164
GRADE CONTROL AR–ACCUGRADE. 165
GRADE CONTROL GP 166 168
GRID GP-SAND BLAST ERODING 342
GRILL GP-RADIATOR–HEAVY-DUTY. 344
GRILL GP-RADIATOR–HEAVY-DUTY–FORESTRY–WASTE HANDLING. 343
GUARD AR-BOTTOM 345
GUARD AR-FINAL DRIVE. 345
GUARD GP-ALTERNATOR 170
GUARD GP-BOTTOM. 346 350
GUARD GP-BOTTOM–FRONT 349
GUARD GP-BOTTOM–HEAVY-DUTY 348
GUARD GP-BOTTOM–HEAVY-DUTY–FORESTRY–WASTE HANDLING. 347
GUARD GP-CAB–FORESTRY 351
GUARD GP-FRONT. 354
GUARD GP-FUEL TANK 355 357 358 359 360
GUARD GP-FUEL TANK–HEAVY-DUTY–FORESTRY–WASTE HANDLING. 356
GUARD GP-LINES. 362
GUARD GP-LINES–LIFT CYLINDER–FORESTRY–WASTE HANDLING. 361
GUARD GP-RADIATOR 363
GUARD GP-REAR. 365
GUARD GP-REAR–HEAVY-DUTY 366 367
GUARD GP-TRACK GUIDE–EXTRA LONG 396
GUARD GP-TRACK GUIDE–HEAVY-DUTY 397
GUARD GP-TRACK GUIDE–SYSTEMONE. 398 399 400
GUARD GP-TRACK ROLLER–HEAVY-DUTY. . . . 401 402 403
GUARD GP-TRACK ROLLER–SYSTEMONE 404 405
GUARD GP-WINCH. 735
GUARD GP-WINDOW. 351

H

HARNESS AS-CAB 224 234 238 599
HARNESS AS-CAB (EXTENSION) 243
HARNESS AS-CAB (ROPS) 243
HARNESS AS-CONTROL 173 175 177 179 181 193

INDEX

NAME	PAGE
HARNESS AS-CONTROL (MACHINE)	234, 238
HARNESS AS-ENGINE	226, 228, 231
HARNESS AS-FRONT	142, 149
HARNESS AS-HEATER & AIR COND	602
HARNESS AS-MONITOR	168
HARNESS AS-MONITOR (GPS)	166, 193
HARNESS AS-MONITOR (LASER)	166, 193
HARNESS AS-MOTOR	82, 640
HARNESS AS-MOTOR (TEMPERATURE CONTROL)	592
HARNESS AS-PANEL	195, 246, 254
HARNESS AS-PLATFORM	245, 253
HARNESS AS-POWER	228, 231, 247, 255
HARNESS AS-PUMP	126, 128
HARNESS AS-RADIO	643, 680, 681
HARNESS AS-RADIO (AM, FM)	676
HARNESS AS-SENSOR (FUEL LEVEL)	142, 149
HARNESS AS-SWITCH (GROUND LEVEL SHUTDOWN)	143, 150
HARNESS AS-SWITCH (MAST, LH)	234, 238
HARNESS AS-SWITCH (MAST, RH)	234, 239
HARNESS AS-TRANSMISSION	245, 255, 270
HARNESS AS-VALVE (BRAKE)	142, 149
HARNESS AS-VALVE (RIPPER)	141, 148
HARNESS AS-VALVE (SEAT AIR COMPRESSOR)	707
HARNESS AS-WINDOW WIPER	709, 711
HARNESS AS-WIRING	616
HARNESS AS-WIRING (ANGLE)	234, 238
HARNESS AS-WIRING (INJECTOR)	10
HARNESS AS-WIRING (JOYSTICK) (WINCH)	744
HARNESS AS-WIRING (LASER ANTENNA)	234, 238
HARNESS AS-WIRING (MACHINE SECURITY SYSTEM)	247, 255
HARNESS AS-WIRING (OIL FILTER BYPASS)	281
HARNESS AS-WIRING (POWER SUPPLY MODULE)	234, 238
HEAD GP-PUMP–STEERING	451
HEATER GP-CAB	636
HEATER GP-CAB–OPEN ROPS	638, 640
HEATER GP-JACKET WATER	171, 172
HOOD GP	368, 370
HOOD GP–PERFORATED	372, 373
HOSE (LOWER RADIATOR)	64, 66
HOSE (UPPER RADIATOR)	64, 66
HOSE-RADIATOR	76
HOUSING GP-FILTER	283
HOUSING GP-FLYWHEEL	26, 28
HOUSING GP-FRONT	30, 32
HYDRAULIC AR-3 VALVE	504
HYDRAULIC AR-4 VALVE	504, 505

I

IDLER GP-BELT	34
IDLER GP-TRACK	406
IDLER GP-TRACK–SYSTEMONE	407
IDLER GP-TRACK–WASTE HANDLING	408
INDICATOR AS-AIR FILTER CHANGE	75
INJECTOR GP-FUEL	89
INSTALLATION AR-ENGINE	7
INSTALLATION GP-COMMUNICATION–PRODUCT LINK	181
INSTALLATION GP-COMMUNICATION–PRODUCT LINK 321SR	173, 175
INSTALLATION GP-COMMUNICATION–PRODUCT LINK CELLULAR	177, 179
INSTALLATION GP-RADIO	642
INSTALLATION GP-RADIO–SIRIUS SATELLITE	643
INSTALLATION GP-RADIO–XM SATELLITE	643
INSULATION GP-WEATHER	644

K

KEY (BATTERY DISCONNECT)	217
KIT-CRANKSHAFT	35

INDEX

NAME	PAGE
KIT-SEAT CUSHION–CLOTH, HEATED	645
KIT-SENSOR (COOLANT TEMPERATURE)	103, 108, 113, 118
KIT-SENSOR (ENGINE OIL PRESSURE)	103, 108, 113, 118
KIT-SENSOR (INTAKE AIR MANIFOLD)	103, 108, 113, 118
KIT-SENSOR (INTAKE AIR TEMPERATURE)	103, 108, 113, 118

L

NAME	PAGE
LAMP (24-VOLT, 10-WATT)	224
LAMP (24-VOLT, 70-WATT)	186
LAMP (24-VOLT)	605
LAMP GP-DOME (24-VOLT)	224
LAMP GP-FLOOD	183, 185
LAMP GP-FLOOD–CAB ROOF, FRONT	184
LAMP GP-WARNING BEACON	186
LAMP-HALOGEN (24-VOLT, 70-WATT)	183, 184, 185
LATCH GP	646, 647
LIFTING GP-ENGINE	36, 37
LIGHTING GP-FLOOD	191
LIGHTING GP-FLOOD–ENCLOSED ROPS	189, 190
LIGHTING GP-FLOOD–OPEN ROPS	187, 188
LIGHTING GP-WARNING BEACON–ENCLOSED ROPS	192
LINER GP-CAB	648
LINES GP-AIR	76
LINES GP-AIR CONDITIONER	649, 651
LINES GP-ANGLE & TILT	506, 508, 511
LINES GP-DIAGNOSTIC–REMOTE PRESSURE TAPS	747, 750
LINES GP-FUEL	90, 92, 94, 98
LINES GP-GREASE	583
LINES GP-LIFT CYLINDER	514, 516, 518
LINES GP-PILOT	520, 522, 524, 526
LINES GP-POWER TRAIN OIL	284
LINES GP-PUMP	528, 532
LINES GP-RADIATOR	64, 66
LINES GP-RIPPER	536, 537
LINES GP-STEERING	453
LINES GP-TILT CYLINDER	539, 541
LINK AS-TRACK	409
LINK AS-TRACK BOX–LINK BOX	413, 415, 417, 418
LINK AS-TRACK BOX–LINK BOX, OFFSET	414, 416
LINK AS-TRACK BOX–SYSTEMONE	412
LINK AS-TRACK–SYSTEMONE	411
LINK GP-PITCH	584
LITERATURE GP	1

M

NAME	PAGE
MANIFOLD & VALVE GP–BRAKE	457
MANIFOLD & VALVE GP–PARKING, SECONDARY BRAKE	459, 460
MANIFOLD GP-INLET–AIR	78
MANIFOLD GP-TRANSMISSION	290
MANIFOLD GP-VALVE–INLET	543
MIRROR GP-REAR VIEW	655
MODULE GP-DISPLAY	245, 253
MOTOR GP-PISTON–STEERING	461
MOTOR GP-WINDOW WIPER	658, 716
MOTOR GP-WINDOW WIPER–DOOR, LH	657
MOTOR GP-WINDOW WIPER–DOOR, RH	656
MOTOR GP-WINDOW WIPER–REAR	659
MOUNTING GP-CAB	660
MOUNTING GP-CARRIER ROLLER	419
MOUNTING GP-CYLINDER–BULLDOZER	544
MOUNTING GP-ENGINE	38
MOUNTING GP-GRADE CONTROL	193
MOUNTING GP-LINES	661
MOUNTING GP-PLATFORM	662
MOUNTING GP-RIPPER	736
MOUNTING GP-ROPS	664
MOUNTING GP-TORQUE CONVERTER	291
MOUNTING GP-TRANSMISSION	292
MUFFLER GP	79

INDEX

NAME PAGE

N

NUT (M10X1.5-THD) 541

O

OIL CHANGE GP-HIGH SPEED–ENGINE OIL . . . 54
OPTION AR-BULLDOZER 3
OPTION AR-COLD WEATHER. 3
OPTION AR-GUARD–HEAVY-DUTY 3
OPTION AR-HYDRAULIC. 4
OPTION AR-SERVICE 4
OPTION AR-SWEEP 4
OPTION AR-WORK TOOL 5

P

PADLOCK GP. 1
90
PAN GP-BACKREST–CLOTH 666
PAN GP-BACKREST–LUMBAR 665
PAN GP-BACKREST–VINYL 667
PAN GP-OIL 39
PAN GP-SEAT 700
PANEL GP-CIRCUIT BREAKER 195
PANEL GP-INSTRUMENT–ENCLOSED ROPS . . 668
PEDAL GP-GOVERNOR & BRAKE 670
PIN GP-CYLINDER 545
PIPE GP-EXHAUST. 80
PISTON & ROD GP 41
42
PIVOT BAR GP 420
PLANETARY GP-TRANSMISSION. 293
PLATE & FILM GP 753
PLATE & FILM GP–INTERNATIONAL 754
PLATE GP-MOUNTING 546
PLATE-IDENTIFICATION (ENGINE STOP, RUN) 141
148
PLATE-SERIAL NUMBER (BLADE). 721
723
726
728
730
PLATE-SERIAL NUMBER (BULLDOZER) 577
578
PLATE-SERIAL NUMBER (RIPPER). 738
PLATE-SERIAL NUMBER (TORQUE CONVERTER) 308
PLATE-SERIAL NUMBER (TRANSMISSION) 293
PLATE-WARNING (RECOIL SPRING) 341
393
PLATFORM GP-OPERATOR. 671
673
PLUG GP-CYLINDER BLOCK 43
PLUG-DRAIN (CASE, FRAME). 318
PLUG-DRAIN (ENGINE OIL PAN). 39
PLUG-DRAIN (HYDRAULIC TANK). 553
556
PLUG-DRAIN (TORQUE CONVERTER OIL) 291
PLUG-MAGNETIC (FINAL DRIVE, OIL FILL, CHECK) 276
278
PLUG-O-RING. 451
POWER TRAIN AR. 298
PRECLEANER GP. 81
82
PRESSURIZER GP-CAB 674
PROTECTION GP-FUEL SYSTEM 87
94
98
104
109
114
119
PULLEY GP-CRANKSHAFT 44
45
PUMP GP-CHARGE–STEERING 462
PUMP GP-ENGINE OIL 55
PUMP GP-FUEL INJECTION 102
103
108
113
118
123
124
PUMP GP-FUEL PRM & WATER SEP–ELECTRIC 125
126
128
PUMP GP-FUEL TRANSFER 102
124
PUMP GP-GEAR–POWER TRAIN OIL 299
301
PUMP GP-PISTON–IMPLEMENT. 548
550
PUMP GP-PISTON–STEERING 463
PUMP GP-WATER. 68
PUSH ARM GP 585

R

RADIATOR GP 70
71
RADIATOR GP–DEBRIS RESISTANT 71
RADIO GP-COMMUNICATION–PRODUCT LINK 121SR 198
RADIO GP–AM/FM/WB. 676
683
RADIO GP–AM/FM/WB/CD PLAYER 677
680
681
682
RADIO GP–AM/FM/WB/SIRIUS/CD PLAYER 679
RADIO GP–AM/FM/WB/XM/CD PLAYER. 678
RAIL GP-FUEL–6-CYLINDER ENGINE. 130
RECLINER GP-SEAT 684
REGULATOR AS-VOLTAGE (24-VOLT) (ALTERNATOR) 138

INDEX

NAME PAGE

REGULATOR AS-WATER TEMPERATURE (INCLUDES CONNECTOR) . . . 72
REGULATOR GP-TEMPERATURE–WATER . . . 72
REGULATOR-OIL TEMPERATURE (THERMOSTAT, POWER TRAIN) . . . 284
RELAY AS (24-VOLT) . . . 195
RELAY AS (24-VOLT) (CONDENSER BLOWER MOTOR) . . . 602
RELAY AS (24-VOLT) (PRECLEANER) . . . 82
RETAINER GP-DOOR . . . 634
RETAINER GP-DOOR–LH . . . 685
RETAINER GP-DOOR–RH . . . 686
RIPPER AR . . . 738
RIPPER GP . . . 739
ROCKER ARM GP . . . 46 48
ROLLER GP-TRACK CARRIER–SYSTEMONE . . . 421
ROLLER GP-TRACK-DOUBLE FLANGE–HEAVY-DUTY . . . 422 423
ROLLER GP-TRACK-SINGLE FLANGE . . . 426
ROLLER GP-TRACK-SINGLE FLANGE–HEAVY-DUTY . . . 427
ROLLER GP-TRACK-SINGLE FLANGE–SYSTEMONE . . . 424 425
ROPS GP . . . 687
ROPS GP-ENCLOSED . . . 689
ROTATING GP-MOTOR–STEERING . . . 465
ROTATING GP-PUMP–IMPLEMENT . . . 552
ROTATING GP-PUMP–STEERING . . . 467

S

SCRAPER GP-IDLER–SYSTEMONE . . . 428
SCREEN (HOOD TOP) . . . 372 373
SCREEN AS (FRONT, LOWER) . . . 351
SCREEN AS (FRONT, UPPER) . . . 351
SCREEN AS (HYDRAULIC TANK OIL) . . . 553 556
SCREEN AS (TORQUE CONVERTER SCAVENGE) . . . 308
SCREEN GP-PROTECTION–REAR . . . 690 691
SCREEN-SUCTION (TORQUE CONVERTER SCAVENGE) . . . 284
SEAL GP-DUO-CONE . . . 276 278 422 426
SEAL GP-WASTE HANDLING . . . 374
SEAL-CRANKSHAFT (REAR) . . . 26 28
SEAT BELT GP (RETRACTABLE, 3-IN) . . . 695 699 704
SEAT BELT GP–RETRACTABLE . . . 692
SEAT GP-SUSPENSION–CLOTH, AIR . . . 703 705
SEAT GP-SUSPENSION–VINYL . . . 704 705
SEAT GP-SUSPENSION–VINYL, AIR . . . 706
SEAT GP–CLOTH . . . 693 695
SEAT GP–VINYL . . . 697 699 700
SEGMENT GP-SPROCKET . . . 302
SENDER AS-FUEL LEVEL . . . 131 133 135
SENSOR AS . . . 201
SENSOR AS-LIQUID LEVEL (WATER SEPARATOR) . . . 199
SENSOR AS-POSITION (JOYSTICK) . . . 621
SENSOR AS-POSITION (JOYSTICK) (BULLDOZER CONTROL HANDLE) . . . 618 620
SENSOR GP-LIQUID LEVEL . . . 199
SENSOR GP-LIQUID LEVEL (WATER SEPARATOR) . . . 126
SENSOR GP-POSITION . . . 200 201 202
SENSOR GP-POSITION (FORWARD, NEUTRAL, REVERSE) . . . 612
SENSOR GP-POSITION (ROTARY) (GOVERNOR, BRAKE PEDAL) . . . 622
SENSOR GP-POSITION (STEERING) . . . 615 616
SENSOR GP-SPEED . . . 204 205
SENSOR GP-SPEED (ENGINE OUTPUT) . . . 228 231
SENSOR GP-SPEED (ENGINE) . . . 124
SENSOR GP-SPEED (MAGNETIC, HIGH OUTPUT) (TORQUE CONVERTER) . . . 228 231
SENSOR GP-SPEED (SECONDARY, TIMING) . . . 102 123
SENSOR GP-SPEED (STEERING MOTOR) . . . 141 148
SENSOR GP-SPEED (TRANSMISSION OUTPUT) . . . 272
SENSOR GP-SPEED–MAGNETIC, HIGH OUTPUT . . . 203 206
SENSOR GP-TEMPERATURE . . . 207 208 209 210
SENSOR GP-TEMPERATURE (EVAPORATOR) . . . 589
SENSOR GP-TEMPERATURE (FUEL) . . . 126
SENSOR GP-TEMPERATURE (HYDRAULIC OIL) . . . 553 556

INDEX

NAME PAGE

SENSOR GP-TEMPERATURE (TORQUE CONVERTER OUTLET) 228 231
SENSOR GP-TEMPERATURE (TRANSMISSION) 141 148
SENSOR-PRESSURE (FUEL RAIL) 103 108 113 118
SENSOR-TEMPERATURE 210
SENSOR-TEMPERATURE (AIR TEMPERATURE CONTROL) 592
SENSOR-TEMPERATURE (RECIRCULATION) . . 589
SHAFT GP-DRIVE 303
SOFTWARE GP-COMMUNICATION 162
SOFTWARE GP-COMMUNICATION (PRODUCT LINK 121SR) 198
SOFTWARE GP-COMMUNICATION (PRODUCT LINK 522) 163
SOFTWARE GP-ELECTRONIC 161
SOFTWARE GP-MACHINE 162
SOFTWARE GP-MACHINE (IMPLEMENT 2) 162
SOFTWARE GP-MONITOR 163
SOFTWARE GP-MONITOR (VIMS MAIN, PROGRAM) 163
SOLENOID AS (PUMP CONTROL VALVE) 474
SOLENOID AS (WASTEGATE) 84
STARTING AID GP-ETHER 211 212 214
STARTING MOTOR GP-ELECTRIC 215
STEP GP 375
STRAINER (HYDRAULIC TANK FILL) 553 556
STRAINER-FUEL (TANK) 131 133 135
SUSPENSION GP-SEAT–AIR 707
SWEEP GP 376 378
SWITCH (WINCH CONTROL) 604
SWITCH AS-PRESSURE (AIR COMPRESSOR HIGH SIDE) 649
SWITCH AS-PRESSURE (AIR COMPRESSOR LOW SIDE) 649
SWITCH AS-PUSH BUTTON (DOWNSHIFT) 612
SWITCH AS-PUSH BUTTON (IMPLEMENT) 607 608
SWITCH AS-PUSH BUTTON (UPSHIFT) 612
SWITCH AS-ROCKER (AIR CONDITIONER CONTROL) 668
SWITCH AS-ROCKER (AUTO KICKDOWN) 245
SWITCH AS-ROCKER (AUTOMATIC KICKDOWN) 253
SWITCH AS-ROCKER (AUTOSHIFT) 245 253
SWITCH AS-ROCKER (FRONT, REAR FLOODLIGHTS) 245 253
SWITCH AS-ROCKER (HYDRAULIC LOCKOUT) 245 255
SWITCH AS-ROCKER (PARKING BRAKE ON, OFF) 610
SWITCH AS-ROCKER (THROTTLE) 245 253
SWITCH AS-ROCKER (WARNING BEACON) . . . 192
SWITCH AS-ROCKER (WIPER, WASHER, FRONT) 224
SWITCH AS-ROCKER (WIPER, WASHER, LH DOOR) 224
SWITCH AS-ROCKER (WIPER, WASHER, REAR) 224
SWITCH AS-ROCKER (WIPER, WASHER, RH DOOR) 224
SWITCH AS-ROLLER (BRAKE PEDAL) 622
SWITCH AS-START (KEY) 245 253
SWITCH GP-BYPASS–POWER TRAIN OIL 216
SWITCH GP-DISCONNECT–BATTERY 217
SWITCH GP-LIMIT (FORWARD, REVERSE) 612
SWITCH GP-MAGNETIC (24-VOLT) (MAIN POWER RELAY) 195
SWITCH GP-MAGNETIC–MAIN POWER RELAY 218
SWITCH GP-PRESSURE (FILTER BYPASS) 450
SWITCH GP-PRESSURE–FUEL FILTER 219
SWITCH GP-PUSH BUTTON (HORN) 626
SWITCH GP-PUSH BUTTON–HORN 220
SWITCH GP-TOGGLE (GROUND LEVEL SHUTDOWN) 141 148
SWITCH GP-TOGGLE–FUEL PRIMING PUMP 222
SWITCH GP-TOGGLE–GROUND LEVEL SHUTDOWN 221

T

TANK & FILTER GP-HYDRAULIC 553 556
TANK GP-FUEL 131 133
TANK GP-FUEL–FAST FILL 135
TANK GP-WINDOW WASHER 709 711
TOOTH GP-RIPPER–CURVED 742 743
TOOTH GP-RIPPER–STRAIGHT 741
TORQUE CONVERTER GP 304 306 308
TRACK ADJUSTER & RECOIL GP 430
TRACK GP–2 REQUIRED 435 436
TRACK GP–2-REQUIRED 431 437

INDEX

NAME PAGE

TRACK GP–2-REQUIRED, SYSTEMONE 431
432
433
434
TRANSMISSION AR 310
TRUNNION GP-BULLDOZER 587
TURBOCHARGER GP 84

U

UNDERCARRIAGE AR 438
439
UNDERCARRIAGE AR–HEAVY-DUTY 440
UNDERCARRIAGE GP–SYSTEMONE 441
442
UNIVERSAL JOINT GP 311

V

VALVE & MTG GP-SOLENOID–OUTLET 312
VALVE AS-RELIEF (FUEL RAIL) 103
108
113
118
130
VALVE GP-BANK 3–BULLDOZER 559
VALVE GP-BANK 4–BULLDOZER, RIPPER 560
VALVE GP-BRAKE CONTROL 469
471
VALVE GP-BYPASS–HYDRAULIC OIL COOLER 561
VALVE GP-CAB HEATER 636
638
VALVE GP-CHECK 528
532
562
VALVE GP-CONTROL–BLADE ANGLE 565
566
VALVE GP-CONTROL–BULLDOZER LIFT 563
VALVE GP-CONTROL–BULLDOZER TILT 564
VALVE GP-CONTROL–RIPPER 567
568
VALVE GP-DRAIN (ENGINE OIL PAN) 39
VALVE GP-ETHER STARTING 223
VALVE GP-FLOW CONTROL (AUXILIARY, INLET) 543
VALVE GP-FLUID SAMPLING (ENGINE COOLANT) 64
VALVE GP-FLUID SAMPLING–ENGINE OIL 56
VALVE GP-FLUSHING–STEERING 473
VALVE GP-MAKEUP–BULLDOZER LOWER 569
VALVE GP-MODULATING (TRANSMISSION CLUTCH) 270
VALVE GP-MODULATING–TRANSMISSION CLUTCH 313
314
VALVE GP-PUMP CONTROL–PRESSURE, FLOW COMPENSATOR 570
572
VALVE GP-PUMP CONTROL–STEERING 474
VALVE GP-RELIEF 575
VALVE GP-RELIEF (CHARGE PRESSURE) 451
VALVE GP-RELIEF (INLET MANIFOLD) 543
VALVE GP-RELIEF (TORQUE CONVERTER OUTLET) 284
VALVE GP-RELIEF–BLADE ANGLE–RIPPER LOWER 574
VALVE GP-RELIEF–BULLDOZER LIFT 573
VALVE GP-RELIEF–COLD START 478
VALVE GP-RELIEF–CROSSOVER, STEERING 477
VALVE GP-RELIEF–PRESSURE OVERRIDE 476
VALVE GP-RELIEF–TORQUE CONVERTER OUTLET 315
VALVE GP-RELIEF–TRANSMISSION CONTROL 316
VALVE GP-SHUTOFF (RADIATOR DRAIN) 66
VALVE GP-SOLENOID 479
480
481
VALVE GP-SOLENOID (BRAKE) 457
VALVE GP-SOLENOID (HYDRAULIC LOCKOUT) 312
VALVE GP-SOLENOID (IMPLEMENT) 486
VALVE GP-SOLENOID (PARKING, SECONDARY BRAKE) 459
VALVE-RELIEF 284

W

WASTE HANDLING AR 5
WATER SEP & FUEL PRM PUMP GP 125
126
128
WINCH AR 743
WINCH GP 744
WINDOW GP-CAB 713
WINDOW GP-CAB–LH 714
WINDOW GP-CAB–RH 715
WIPER GP-WINDOW 716
WIRING GP-CAB 224
WIRING GP-ENGINE 226
228
231
WIRING GP-GRADE CONTROL 234
238
WIRING GP-GRADE CONTROL–CAB 242
WIRING GP-LIGHTING 243
WIRING GP-PLATFORM 245
253

MACHINE ARRANGEMENT

315-2948 CHASSIS AR

S/N: LJR1-UP

PART OF 310-9903 GENERAL AR

SMCS-7000 **i05182679**

NOTE	PART NUMBER	QTY	PART NAME 1 2 3 4 5 6 (PRODUCT LEVEL)	SEE PAGE
Y	*271-6172*	1	CASE & FRAME GP	318
Y	*107-4068*	1	DRAWBAR GP	330
Y	*319-6464*	1	ENCLOSURE GP-FENDER	331
Y	*315-2942*	1	FENDER GP	336
			S/N: LJR1-850	
Y	*329-1213*	1	FENDER GP	338
			S/N: LJR851-UP	
Y	*270-4339*	1	GUARD GP-BOTTOM	346
Y	*315-2941*	1	GUARD GP-RADIATOR	363
Y	*270-4317*	1	HOOD GP	368
Y	*271-6175*	1	MOUNTING GP-ROPS	664
Y	*288-0449*	1	TANK GP-FUEL	131
	6V-1971	1	LITERATURE GP	
	246-2641	1	PADLOCK GP	
	5P-8500	1	KEY	
	5P-7958	1	SLEEVE-CABLE SPLICE	

Y - SEPARATE ILLUSTRATION

<END>

322-6353 CHASSIS AR–FORESTRY

S/N: LJR1-UP

PART OF 431-7088 FORESTRY AR

AN ATTACHMENT

SMCS-7000 **i03653343**

NOTE	PART NUMBER	QTY	PART NAME 1 2 3 4 5 6 (PRODUCT LEVEL)	SEE PAGE
Y	*273-8739*	1	BAR GP-RADIATOR GUARD	317
Y	*322-6357*	1	ENCLOSURE GP-PLATFORM	334
Y	*322-6354*	1	FENDER GP	337
Y	*287-5400*	1	GRILL GP-RADIATOR	343
Y	*273-3726*	1	GUARD GP-BOTTOM	347
Y	*333-2679*	1	GUARD GP-FUEL TANK	356
Y	*273-3783*	1	GUARD GP-LINES	361

Y - SEPARATE ILLUSTRATION

<END>

MACHINE ARRANGEMENT

333-3450 CHASSIS AR–WASTE HANDLING

S/N: LJR1-UP

PART OF 338-1768, 419-3405 WASTE HANDLING AR

AN ATTACHMENT

SMCS-7000 **i03637456**

NOTE	PART NUMBER	QTY	PART NAME 1 2 3 4 5 6 (PRODUCT LEVEL)	SEE PAGE
Y	*273-8739*	1	BAR GP-RADIATOR GUARD	317
Y	*322-6357*	1	ENCLOSURE GP-PLATFORM	334
Y	*322-6354*	1	FENDER GP	337
Y	*287-5400*	1	GRILL GP-RADIATOR	343
Y	*273-3726*	1	GUARD GP-BOTTOM	347
Y	*333-2679*	1	GUARD GP-FUEL TANK	356
Y	*273-3783*	1	GUARD GP-LINES	361
Y	*257-8158*	1	SEAL GP-WASTE HANDLING	374

Y - SEPARATE ILLUSTRATION

<END>

431-7088 FORESTRY AR

S/N: LJR1-UP

FOR USE WITH GUARD GP-FRONT LINE, 175-7225–PAGE: 691, GUARD GP-FUEL TANK

CANNOT BE USED WITH 320-5953–PAGE: 173, 167-1466–PAGE: 690, 175-7225–PAGE: 691, WASTE HANDLING AR, CANOPY AR

AN ATTACHMENT

SMCS-7000 **i05266827**

NOTE	PART NUMBER	QTY	PART NAME 1 2 3 4 5 6 (PRODUCT LEVEL)	SEE PAGE
Y	*322-6360*	1	CAB GP	599
Y	*322-6353*	1	CHASSIS AR	1
Y	*294-4613*	1	FILM GP	746
Y	*349-1141*	1	GUARD GP-CAB	351
Y	*362-6150*	1	INSTALLATION GP-COMMUNICATION (PRODUCT LINK)	181
Y	*350-7630*	1	LIGHTING GP-FLOOD	191
	198-7424	1	CAP AS-RAIN (EXHAUST)	
	293-9804	1	PIPE-EXTENSION	

Y - SEPARATE ILLUSTRATION

<END>

310-9903 GENERAL AR–XL

S/N: LJR1-UP

SMCS-7000 **i03627250**

NOTE	PART NUMBER	QTY	PART NAME 1 2 3 4 5 6 (PRODUCT LEVEL)	SEE PAGE
Y	*338-8038*	1	BULLDOZER AR	576
Y	*310-9971*	1	CAB AR	594
Y	*315-2948*	1	CHASSIS AR	1
Y	*310-9946*	1	ELECTRONICS AR-MACHINE	162
Y	**319-7201**	1	ENGINE AR-PRIMARY	6
Y	*310-9950*	1	HYDRAULIC AR-3 VALVE	504
Y	*318-0768*	1	INSTALLATION AR-ENGINE	7
Y	*321-3122*	1	POWER TRAIN AR	298
Y	*322-4635*	1	UNDERCARRIAGE AR	438

Y - SEPARATE ILLUSTRATION

<END>

MACHINE ARRANGEMENT

342-2615 OPTION AR-BULLDOZER

S/N: LJR1-UP
FOR USE WITH RIPPER, SEMI-UNIVERSAL, PERFORATED, SOUND SUPPRESSION HOOD GP
CANNOT BE USED WITH CANOPY, WINCH, GRADE CONTROL AR, COVER GP-CONSOLE (WINCH), CONTROL GP-IMPLEMENT
AN ATTACHMENT

SMCS-7000 **i03627241**

NOTE	PART NUMBER	QTY	PART NAME 1 2 3 4 5 6 (PRODUCT LEVEL)	SEE PAGE
Y	*273-0030*	1	BULLDOZER AR-SEMI-UNIVERSAL	578
Y	*321-8161*	1	HYDRAULIC AR-4 VALVE	505
Y	*298-4382*	1	COVER GP-CONSOLE	624

Y - SEPARATE ILLUSTRATION

<END>

338-2597 OPTION AR-COLD WEATHER

S/N: LJR1-UP
120-VOLT
AN ATTACHMENT

SMCS-7000 **i03627018**

NOTE	PART NUMBER	QTY	PART NAME 1 2 3 4 5 6 (PRODUCT LEVEL)	SEE PAGE
Y	*321-1276*	1	BATTERY & WIRING GP	156
Y	*256-3468*	1	HEATER GP-JACKET WATER	171

Y - SEPARATE ILLUSTRATION

<END>

338-2598 OPTION AR-COLD WEATHER

S/N: LJR1-UP
240-VOLT
AN ATTACHMENT

SMCS-7000 **i03627222**

NOTE	PART NUMBER	QTY	PART NAME 1 2 3 4 5 6 (PRODUCT LEVEL)	SEE PAGE
Y	*321-1276*	1	BATTERY & WIRING GP	156
Y	*256-3469*	1	HEATER GP-JACKET WATER	172

Y - SEPARATE ILLUSTRATION

<END>

338-2600 OPTION AR-GUARD—HEAVY-DUTY

S/N: LJR1-UP
CANNOT BE USED WITH FORESTRY AR, WASTE HANDLING AR
AN ATTACHMENT

SMCS-7000 **i03627227**

NOTE	PART NUMBER	QTY	PART NAME 1 2 3 4 5 6 (PRODUCT LEVEL)	SEE PAGE
Y	*287-5400*	1	GRILL GP-RADIATOR	343
Y	*273-3726*	1	GUARD GP-BOTTOM	347
Y	*288-6278*	1	GUARD GP-FUEL TANK	355

Y - SEPARATE ILLUSTRATION

<END>

MACHINE ARRANGEMENT

338-2570 OPTION AR-HYDRAULIC

S/N: LJR1-UP
FOR USE WITH RIPPER
CANNOT BE USED WITH COVER GP-CONSOLE (WINCH), COVER GP-CONSOLE (RIPPER, WINCH), CONTROL GP-IMPLEMENT, WINCH AR-TOWING, CANOPY AR
AN ATTACHMENT

SMCS-7000 **i03626951**

NOTE	PART NUMBER	QTY	PART NAME 1 2 3 4 5 6 (PRODUCT LEVEL)	SEE PAGE
Y	*317-4192*	1	HYDRAULIC AR-4 VALVE	504
Y	*298-4382*	1	COVER GP-CONSOLE	624

Y - SEPARATE ILLUSTRATION

<END>

338-2594 OPTION AR-SERVICE

S/N: LJR1-UP
CANNOT BE USED WITH FORESTRY AR
AN ATTACHMENT

SMCS-7000 **i03627011**

NOTE	PART NUMBER	QTY	PART NAME 1 2 3 4 5 6 (PRODUCT LEVEL)	SEE PAGE
Y	*276-2344*	1	OIL CHANGE GP-HIGH SPEED	54
Y	*288-6277*	1	TANK GP-FUEL	135

Y - SEPARATE ILLUSTRATION

<END>

338-2602 OPTION AR-SWEEP

S/N: LJR1-UP
FOR USE WITH CAB AR
CANNOT BE USED WITH CANOPY AR, FORESTRY AR
AN ATTACHMENT

SMCS-7000 **i03627231**

NOTE	PART NUMBER	QTY	PART NAME 1 2 3 4 5 6 (PRODUCT LEVEL)	SEE PAGE
Y	*167-1466*	1	SCREEN GP-PROTECTION	690
Y	*274-1300*	1	SWEEP GP	376

Y - SEPARATE ILLUSTRATION

<END>

338-2604 OPTION AR-SWEEP

S/N: LJR1-UP
FOR USE WITH CANOPY AR
CANNOT BE USED WITH CAB AR
AN ATTACHMENT

SMCS-7000 **i03627237**

NOTE	PART NUMBER	QTY	PART NAME 1 2 3 4 5 6 (PRODUCT LEVEL)	SEE PAGE
Y	*175-7225*	1	SCREEN GP-PROTECTION	691
Y	*287-3322*	1	SWEEP GP	378

Y - SEPARATE ILLUSTRATION

<END>

MACHINE ARRANGEMENT

338-2590 OPTION AR-WORK TOOL

S/N: LJR1-UP

FOR USE WITH WINCH AR-TOWING, INSTALLATION AR-WINCH

CANNOT BE USED WITH COVER GP-CONSOLE (RIPPER), COVER GP-CONSOLE (RIPPER, WINCH), CONTROL GP (RIPPER, WINCH), RIPPER, HYDRAULIC AR-4 VALVE, CANOPY AR

AN ATTACHMENT

SMCS-6700, 7000 **i03626958**

NOTE	PART NUMBER	QTY	PART NAME 1 2 3 4 5 6 (PRODUCT LEVEL)	SEE PAGE
Y	**273-3763**	1	WINCH AR	743
Y	*298-4383*	1	COVER GP-CONSOLE	625
Y - SEPARATE ILLUSTRATION				

<END>

338-1768 WASTE HANDLING AR

S/N: LJR1-UP

FOR USE WITH WHEN SOUND SUPPRESSION IS NOT ORDERED, 274-5589—PAGE: 372, TRASH RESISTANT RADIATOR, STRIKER BAR, FRONT LINES GUARD IF VPAT BULLDOZER IS ORDERED, GUARD GP-REAR (HEAVY-DUTY)

CANNOT BE USED WITH FORESTRY AR, , CANOPY288-6278—PAGE: 355, HEAVY-DUTY CRANKCASE GUARD

AN ATTACHMENT

SMCS-7000 **i03637435**

NOTE	PART NUMBER	QTY	PART NAME 1 2 3 4 5 6 (PRODUCT LEVEL)	SEE PAGE
Y	*333-3450*	1	CHASSIS AR	2
Y	*331-5318*	1	GUARD AR-FINAL DRIVE	345
Y	*294-4613*	1	FILM GP	746
Y - SEPARATE ILLUSTRATION				

<END>

419-3405 WASTE HANDLING AR

S/N: LJR1-UP

FOR USE WITH 274-5589—PAGE: 372, 274-5590—PAGE: 373, 314-6007—PAGE: 59, 294-3233—PAGE: 366, GUARD GP-FRONT LINE, GUARD GP-FUEL TANK

CANNOT BE USED WITH 320-1082—PAGE: 599, 288-6278—PAGE: 355, HEAVY-DUTY GUARD CRANKCASE

AN ATTACHMENT

SMCS-7000 **i05266828**

NOTE	PART NUMBER	QTY	PART NAME 1 2 3 4 5 6 (PRODUCT LEVEL)	SEE PAGE
Y	*333-3450*	1	CHASSIS AR	2
Y	*294-4613*	1	FILM GP	746
Y	*331-5318*	1	GUARD AR-FINAL DRIVE	345
Y - SEPARATE ILLUSTRATION				

<END>

ENGINE ARRANGEMENT

319-7201 ENGINE AR-PRIMARY

S/N: C6E1-UP
129 BRAKE KW (173 BHP) AT 2200 RPM
PART OF 310-9903 GENERAL AR

SMCS-1000 **i05291589**

NOTE	PART NUMBER	QTY	PART NAME 1 2 3 4 5 6 (PRODUCT LEVEL)	SEE PAGE
Y	*277-6080*	1	ALTERNATOR GP-CHARGING	139
Y	*292-5867*	1	CAMSHAFT GP	8
Y	*277-2504*	1	COOLER GP-ENGINE OIL	57
Y	*277-4224*	1	COVER GP-ENGINE (PTO)	9
			—OR—	
Y	*286-0039*	1	PLUG GP-CYLINDER BLOCK	43
Y	*305-8963*	1	COVER GP-VALVE MECHANISM	10
Y	*292-5859*	1	CRANKSHAFT GP	12
Y	*292-5856*	1	CYLINDER BLOCK GP	16
Y	*292-5860*	1	CYLINDER HEAD GP	21
Y	*280-1428*	1	FILLER GP-ENGINE OIL	50
			—OR—	
Y	*366-0613*	1	FILLER GP-ENGINE OIL	51
Y	*277-2912*	1	FILTER GP-ENGINE OIL	53
Y	*305-7294*	1	FILTER GP-FUEL (PRIMARY AND SECONDARY)	87
Y	*288-4011*	1	FITTING GP-WATER LINES	62
Y	*291-3792*	1	FLYWHEEL GP	25
Y	*299-6957*	1	GLOW PLUG GP	164
Y	*277-0124*	1	HOUSING GP-FLYWHEEL	26
Y	*277-3014*	1	HOUSING GP-FRONT	30
			—OR—	
Y	*286-0035*	1	HOUSING GP-FRONT	32
Y	*279-9653*	1	LIFTING GP-ENGINE	36
Y	*305-7299*	1	LINES GP-FUEL	94
Y	*280-1292*	1	MANIFOLD GP-INLET	78
Y	*305-7300*	1	PAN GP-OIL	39
Y	*292-5857*	1	PISTON & ROD GP	41
Y	*274-1929*	1	PULLEY GP-CRANKSHAFT	44
Y	*277-4262*	1	PUMP GP-ENGINE OIL	55
Y	*322-0598*	1	PUMP GP-FUEL INJECTION	103
Y	*277-2939*	1	PUMP GP-WATER	68
Y	*277-2976*	1	REGULATOR GP-TEMPERATURE (CONNECTOR INCLUDED)	72
Y	*292-5865*	1	ROCKER ARM GP	48
Y	*305-5970*	1	TURBOCHARGER GP	84
Y	*277-4694*	1	VALVE GP-FLUID SAMPLING (ENGINE OIL)	56
Y	*305-8977*	1	WIRING GP-ENGINE	226
	277-6990	1	CYLINDER BLOCK GP (SHORT)	
			S/N: C6E1-32991	
	380-3572	1	CYLINDER BLOCK GP-SHORT	
			S/N: C6E32992-UP	
	322-0599	1	ELECTRONICS GP-ENGINE RATINGS	

Y - SEPARATE ILLUSTRATION

<END>

ENGINE ARRANGEMENT

318-0768 INSTALLATION AR-ENGINE

S/N: LJR1-UP

PART OF 310-9903 GENERAL AR

SMCS-1000 **i04780871**

NOTE	PART NUMBER	QTY	PART NAME 1 2 3 4 5 6 (PRODUCT LEVEL)	SEE PAGE
Y	*267-6421*	1	AIR CLEANER GP	75
Y	*243-2156*	1	COMPRESSOR GP-REFRIGERANT	601
Y	*273-2024*	1	COOLER GP-HYDRAULIC OIL	487
Y	*261-2153*	1	DRIVE GP-FAN	22
Y	*267-6429*	1	FAN GP-BLOWER	60
Y	*267-6437*	1	GUARD GP-ALTERNATOR	170
Y	*290-5650*	1	LIFTING GP-ENGINE	37
			S/N: LJR1-572	
	256-3464	1	LIFTING GP-ENGINE	
			S/N: LJR573-UP	
Y	*322-0617*	1	LINES GP-AIR	76
Y	*267-6420*	1	LINES GP-FUEL	90
Y	*318-0755*	1	LINES GP-RADIATOR	64
Y	*261-2145*	1	MOUNTING GP-ENGINE	38
Y	*322-0600*	1	MUFFLER GP	79
Y	*243-2157*	1	PIPE GP-EXHAUST	80
Y	*301-2710*	1	PUMP GP-FUEL PRM & WATER SEP	126
			S/N: LJR1-314	
Y	*362-1096*	1	PUMP GP-FUEL PRM & WATER SEP	128
			S/N: LJR315-UP	
Y	*277-8701*	1	STARTING AID GP-ETHER	212
Y	*301-2768*	1	STARTING MOTOR GP-ELECTRIC	215

Y - SEPARATE ILLUSTRATION

<END>

292-5867 CAMSHAFT GP

S/N: C6E1-UP

PART OF 319-7201 ENGINE AR-PRIMARY

SMCS-1210 **i04877456**

NOTE	REF NO	GRAPHIC REF	PART NUMBER	QTY	PART NAME 1 2 3 4 5 6 (PRODUCT LEVEL)	SEE PAGE
	1	1	**278-5125**	12	TAPPET	
	2	1	**319-8426**	12	PUSHROD	
	3	1	**347-1133**	1	CAMSHAFT	
	3A	1	**1B-8736**	1	KEY-WOODRUFF	

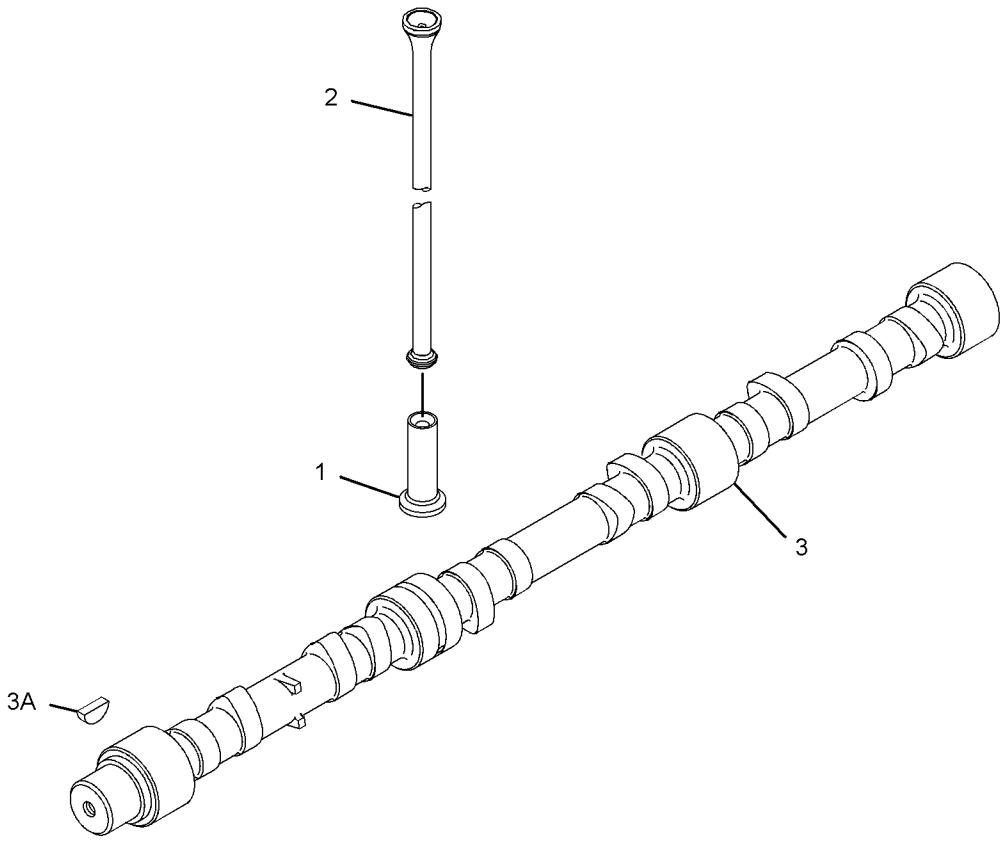

GRAPHIC #1 **<END>** g03013816

277-4224 COVER GP-ENGINE

S/N: C6E1-UP

PART OF 319-7201 ENGINE AR-PRIMARY

SMCS-1000 **i03255878**

NOTE	REF NO	GRAPHIC REF	PART NUMBER	QTY	PART NAME 1 2 3 4 5 6 (PRODUCT LEVEL)	SEE PAGE
C	1	1	**329-7854**	1	PLATE AS	
	1A	1	**329-7856**	1	SEAL-O-RING	
	2	1	**111-8222**	5	BOLT (M8X16-MM)	
M	3	1	**100-4830**	1	BOLT (M10X1.5X20-MM)	
	4	1	**277-4223**	1	PLUG	

C - CHANGE FROM PREVIOUS TYPE
M - METRIC PART

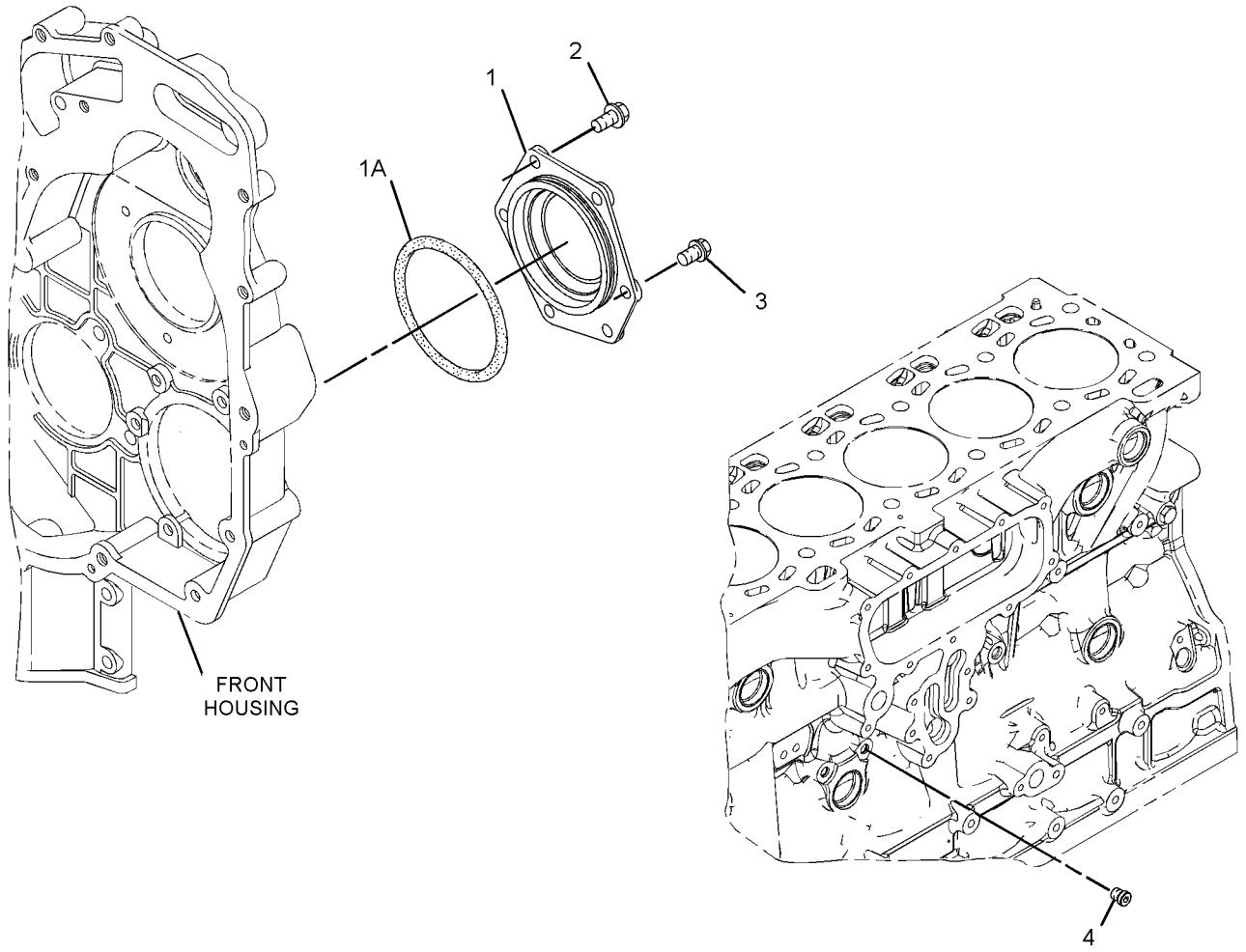

GRAPHIC #1 **<END>** g01682857

305-8963 COVER GP-VALVE MECHANISM

S/N: C6E1-UP

PART OF 319-7201 ENGINE AR-PRIMARY

SMCS-1107 **i04952711**

NOTE	REF NO	GRAPHIC REF	PART NUMBER	QTY	PART NAME 1 2 3 4 5 6 (PRODUCT LEVEL)	SEE PAGE
	1	1	**6I-0291**	1	NUT (M8X1.25-THD)	
	3	1	**032-9020**	1	CLIP	
M	4	1	**124-3815**	1	BOLT (M8X1.25X16-MM)	
	5	1	**127-8281**	1	CLIP	
	6	1	**277-5031**	9	BOLT-SPECIAL (SHOULDER)	
	7	1	**277-5067**	6	SLEEVE	
	9	1	**7C-1281**	1	BRACKET	
	10	1	**317-3065**	1	COVER GP-VALVE MECHANISM	
	10A	1	**317-3064**	1	GASKET-COVER (VALVE MECHANISM)	
	11	1	**317-2717**	1	BASE GP-VALVE COVER & INJ HARN	
	11A	1	**309-6664**	1	GASKET-COVER	
	11B	1	**277-5064**	3	SEAL-O-RING	
	11C	1	**277-5065**	3	CLIP	
	11E	1	**285-1975**	3	HARNESS AS-WIRING (INJECTOR)	
					(EACH INCLUDES)	
		1	**3E-3377**	1	WEDGE-RECEPTACLE LOCK (4-PIN)	
		1	**113-4630**	1	RECEPTACLE AS-CONNECTOR (4-PIN)	
		1	**9X-3401**	4	PIN-CONNECTOR (16-GA TO 18-GA)	
					—OR—	
		1	**126-1767**	4	PIN-CONNECTOR (14-GA TO 16-GA)	
		1	**316-9351**	1	MOUNTING-CABLE TIE	
	12	1	**320-9921**	1	HOSE	
	13	1	**298-4550**	6	BOLT-SPECIAL (SHOULDER)	
	14	1	**162-1565**	1	SPRING (CRANKCASE BREATHER HOSE)	
	15	1	**217-9039**	1	STRAP-CABLE	

M - METRIC PART

305-8963 **COVER GP-VALVE MECHANISM (*contd.*)** **i04952711**

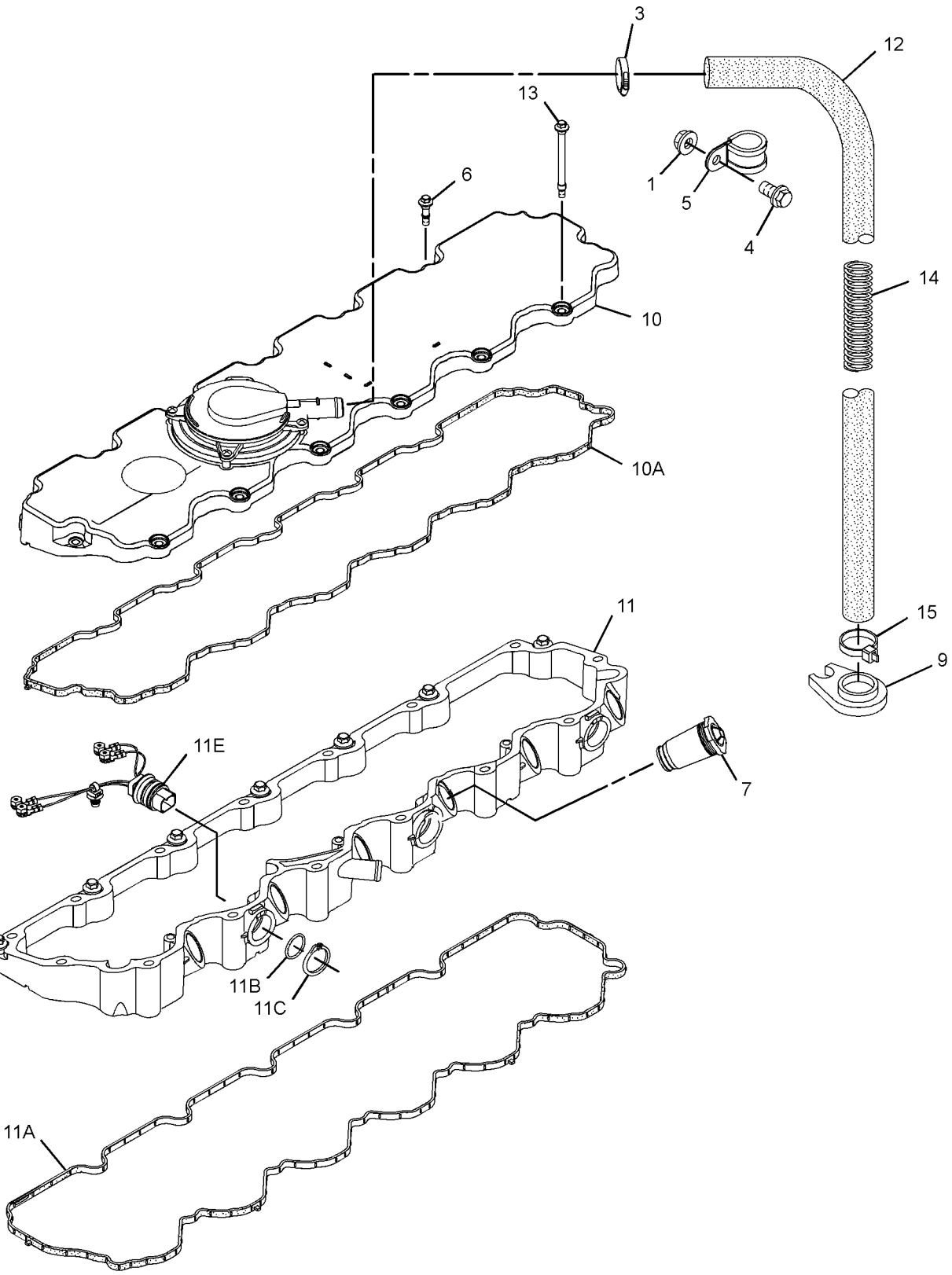

GRAPHIC #1 **<END>** g03176290

292-5859 CRANKSHAFT GP

S/N: C6E1-UP

PART OF 319-7201 ENGINE AR-PRIMARY

SMCS-1202 **i03635030**

NOTE	REF NO	GRAPHIC REF	PART NUMBER	QTY	PART NAME 1 2 3 4 5 6 (PRODUCT LEVEL)	SEE PAGE
	1	1	**276-7387**	1	CRANKSHAFT AS	
	1A	1	**1B-8736**	1	KEY-WOODRUFF	
	1B	1	**225-8839**	1	DOWEL	
	1C	1	**276-7388**	1	KIT-BEARING	
	1D	1	**276-7389**	1	KIT-BEARING	
	1E	1	**276-7390**	2	WASHER-THRUST	
	1F	1	**276-7391**	1	GEAR (34-TEETH)	
	2	1	**276-7393**	1	RING-TIMING	
	3	1	**276-7394**	3	BOLT	

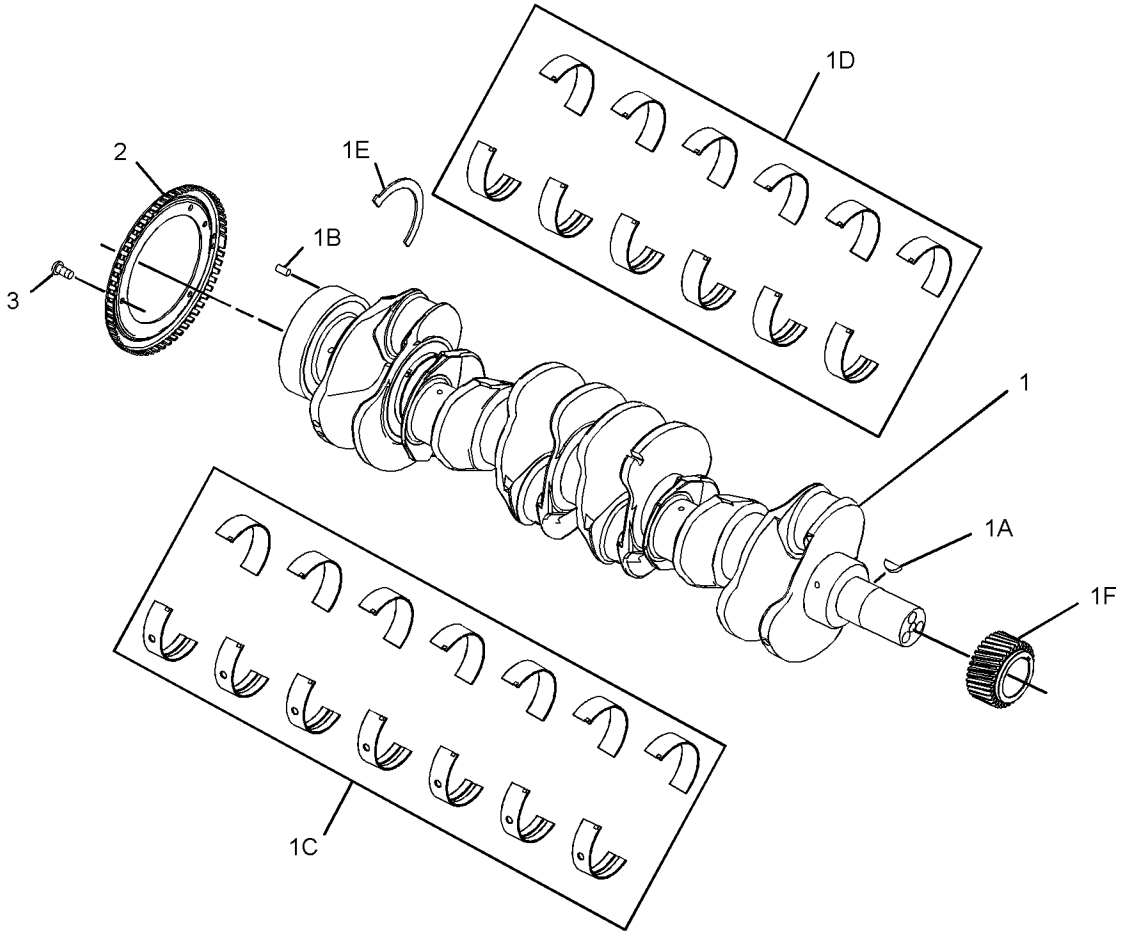

GRAPHIC #1 **<END>** g01358997

292-5859 CRANKSHAFT GP

S/N: C6E1-32991

PART OF 319-7201 ENGINE AR-PRIMARY

SMCS-1202 **i04502914**

NOTE	REF NO	GRAPHIC REF	PART NUMBER	QTY	PART NAME 1 2 3 4 5 6 (PRODUCT LEVEL)	SEE PAGE
	1	1	**276-7387**	1	CRANKSHAFT AS	
	1A	1	**1B-8736**	1	KEY-WOODRUFF	
	1B	1	**339-8780**	1	DOWEL	
	1C	1	**360-1978**	1	KIT-BEARING (CRANKSHAFT)	
	1D	1	**276-7389**	1	KIT-BEARING	
	1E	1	**363-0559**	2	WASHER-THRUST	
	1F	1	**276-7391**	1	GEAR (34-TEETH)	
C	2	1	**348-9328**	1	DISC-TIMING	
	3	1	**276-7394**	3	BOLT	

C - CHANGE FROM PREVIOUS TYPE

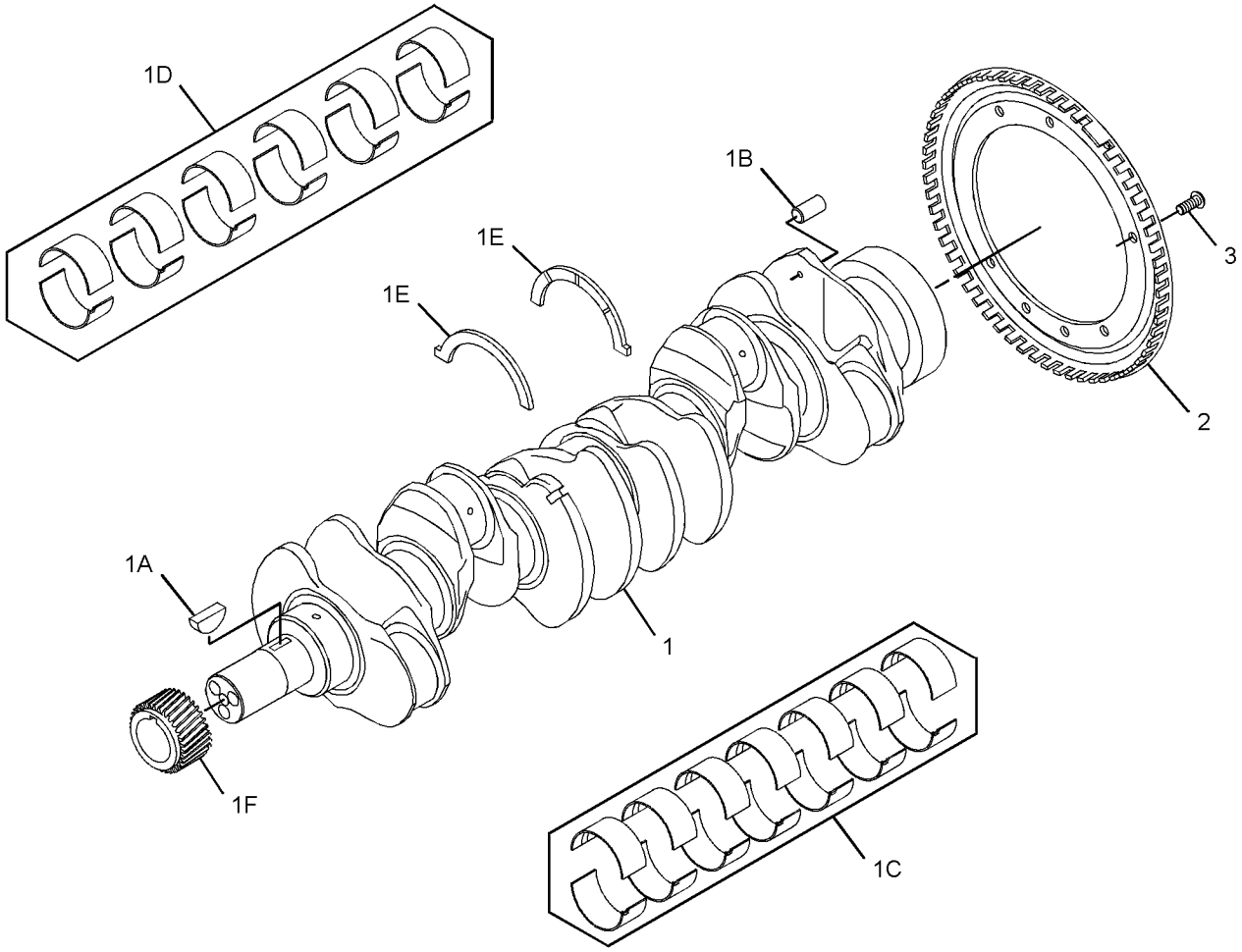

GRAPHIC #1 **<END>** g02698716

292-5859 CRANKSHAFT GP

S/N: C6E32992-UP

PART OF 319-7201 ENGINE AR-PRIMARY

SMCS-1202 **i04558578**

NOTE	REF NO	GRAPHIC REF	PART NUMBER	QTY	PART NAME 1 2 3 4 5 6 (PRODUCT LEVEL)	SEE PAGE
	1	1	**276-7394**	3	BOLT	
	2	1	**348-9328**	1	DISC-TIMING	
CY	3	1	**374-9163**	1	KIT-CRANKSHAFT	35

C - CHANGE FROM PREVIOUS TYPE
Y - SEPARATE ILLUSTRATION

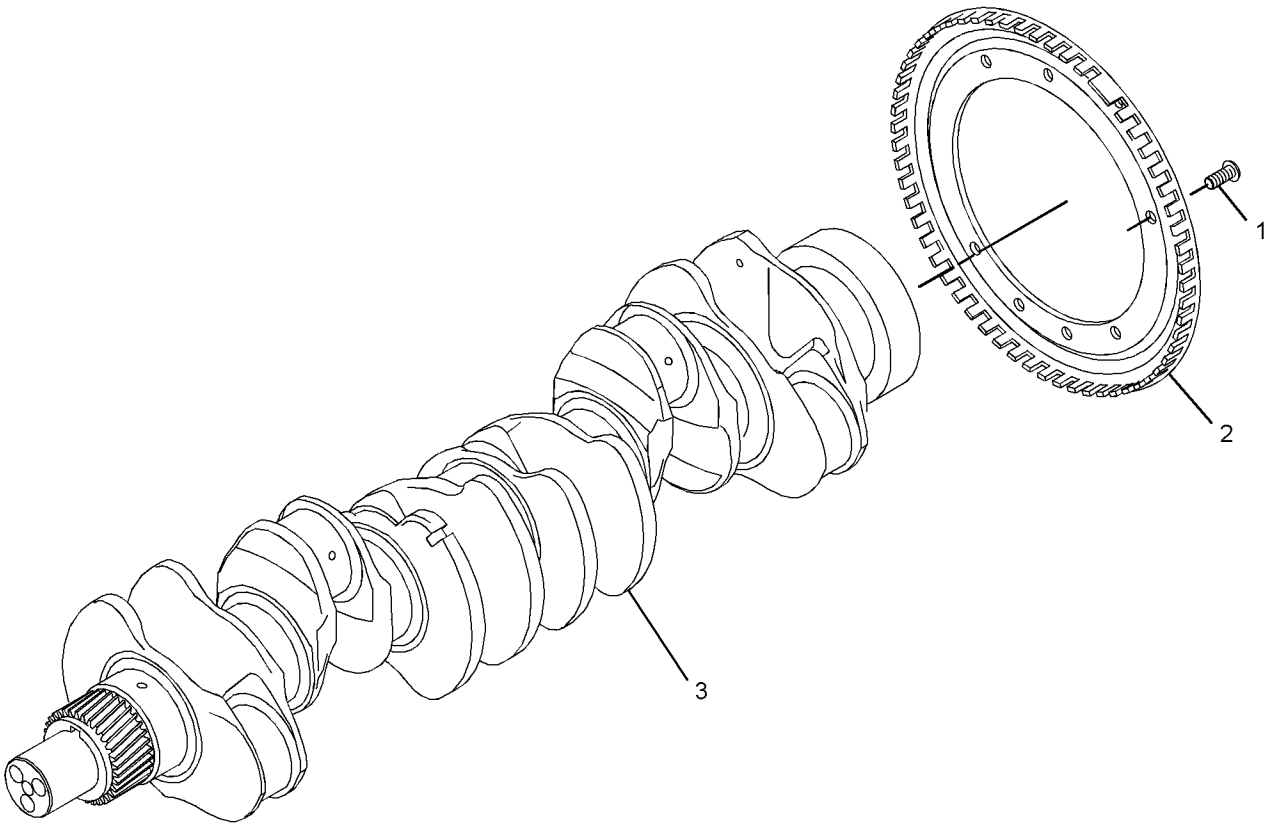

GRAPHIC #1 **<END>** g02714337

420-5231 CYLINDER BLOCK AS

S/N: C6E1-UP

PART OF 306-6845 CYLINDER BLOCK GP

SMCS-1201 **i05169761**

NOTE	REF NO	GRAPHIC REF	PART NUMBER	QTY	PART NAME 1 2 3 4 5 6 (PRODUCT LEVEL)	SEE PAGE
	1	1	**067-6043**	3	PLUG-SIDE	
	2	1	**067-6823**	1	PLUG	
	3	1	**185-0884**	2	DOWEL	
	4	1	**225-8858**	1	PLUG	
	5	1	**232-7596**	1	PLUG	
	6	1	**232-7597**	2	PLUG	
	7	1	**232-7599**	2	PLUG	
	8	1	**276-5602**	6	PLUG-CORE	
	9	1	**276-5604**	1	DOWEL	

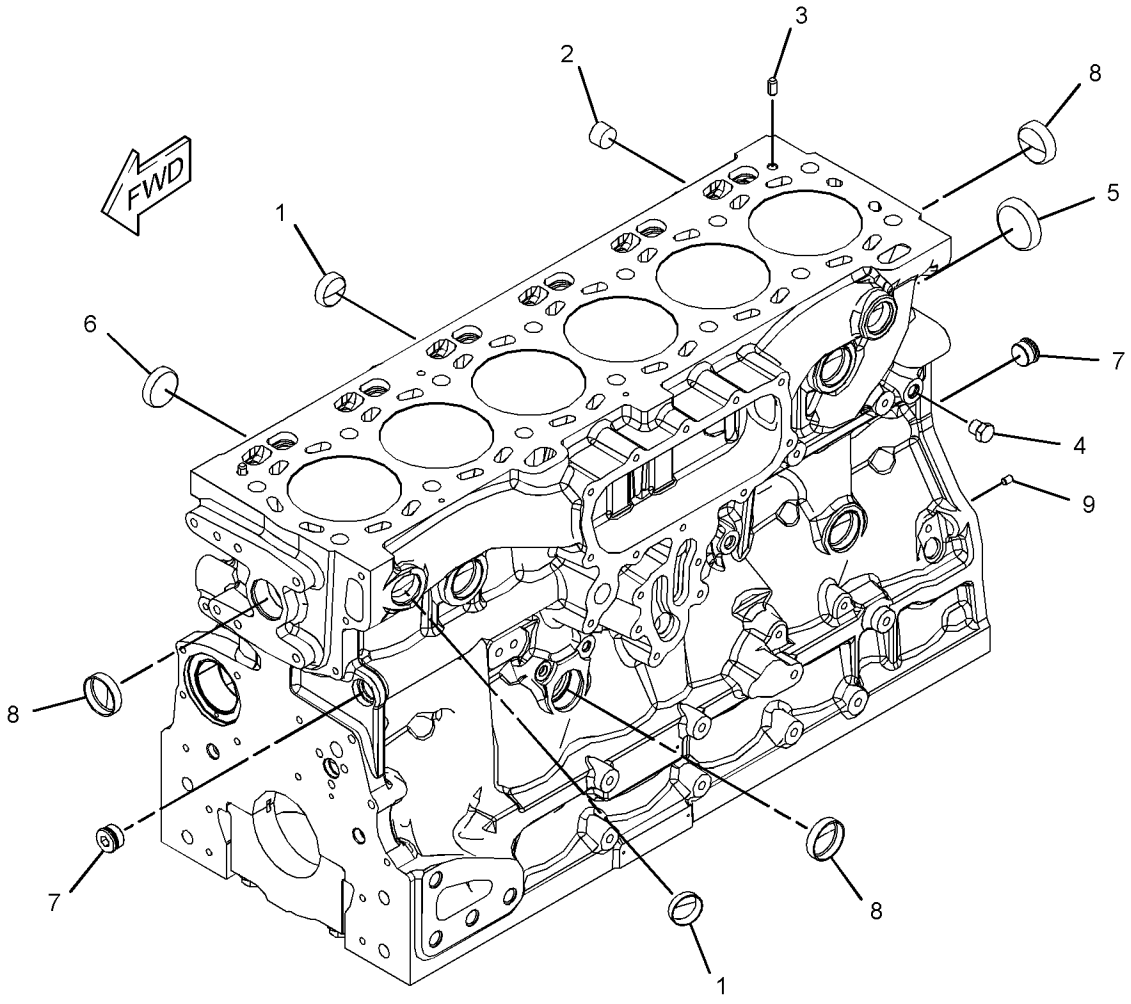

GRAPHIC #1 **<END>** g03321029

292-5856 CYLINDER BLOCK GP

S/N: C6E1-UP

PART OF 319-7201 ENGINE AR-PRIMARY

SMCS-1201 **i02750504**

NOTE	REF NO	GRAPHIC REF	PART NUMBER	QTY	PART NAME 1 2 3 4 5 6 (PRODUCT LEVEL)	SEE PAGE
M	1	1	**209-9219**	8	BOLT (M8X1.25X16-MM)	
	2	1	**292-0886**	1	HOUSING-REAR (INCLUDES SEAL)	
Y	3	1	**306-6845**	1	CYLINDER BLOCK GP	17

M - METRIC PART
Y - SEPARATE ILLUSTRATION

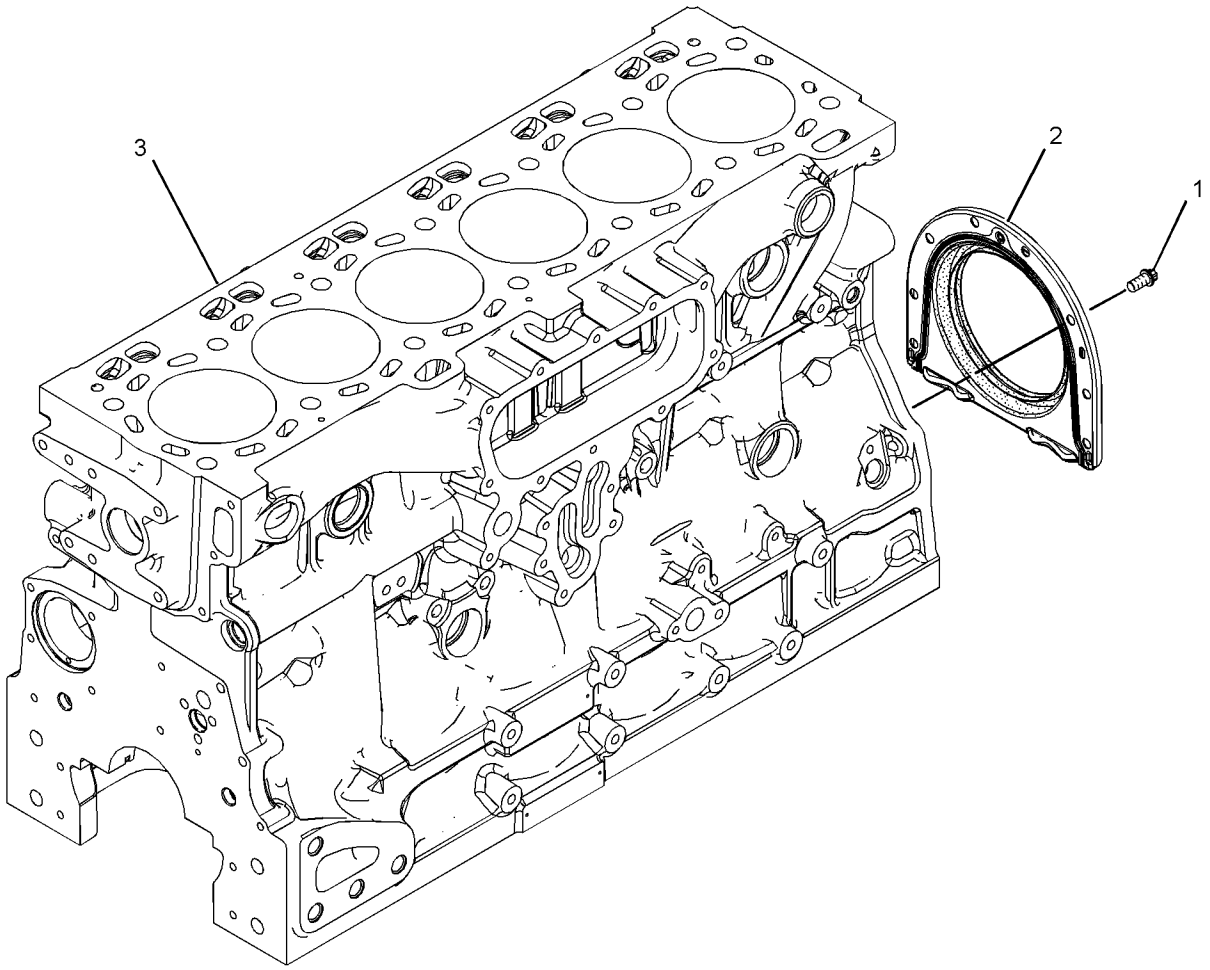

GRAPHIC #1 **<END>** g01355960

306-6845 CYLINDER BLOCK GP

S/N: C6E1-UP

PART OF 292-5856 CYLINDER BLOCK GP

SMCS-1201 **i05169714**

NOTE	REF NO	GRAPHIC REF	PART NUMBER	QTY	PART NAME 1 2 3 4 5 6 (PRODUCT LEVEL)	SEE PAGE
	1	1	**2B-0858**	1	PLUG-PIPE	
	2	1	**067-6043**	5	PLUG-SIDE	
M	3	1	**100-4841**	6	BOLT (M6X1X10-MM)	
	4	1	**185-0884**	2	DOWEL	
	5	1	**225-8858**	1	PLUG	
	6	1	**232-1322**	1	PLUG	
	7	1	**232-7596**	1	PLUG	
	8	1	**232-7597**	2	PLUG	
	9	1	**232-7599**	2	PLUG	
	10	1	**276-5600**	14	BOLT-SPECIAL (BEARING CAP)	
	11	1	**276-5601**	1	BUSHING-CAMSHAFT	
	12	1	**276-5602**	6	PLUG-CORE	
	13	1	**276-5603**	1	SEAL-O-RING	
	14	1	**276-5604**	1	DOWEL	
	15	1	**276-5605**	6	JET AS-PISTON COOLING	
Y	16	1	*420-5231*	1	CYLINDER BLOCK AS	15

M - METRIC PART
Y - SEPARATE ILLUSTRATION

306-6845 **CYLINDER BLOCK GP (*contd.*)** **i05169714**

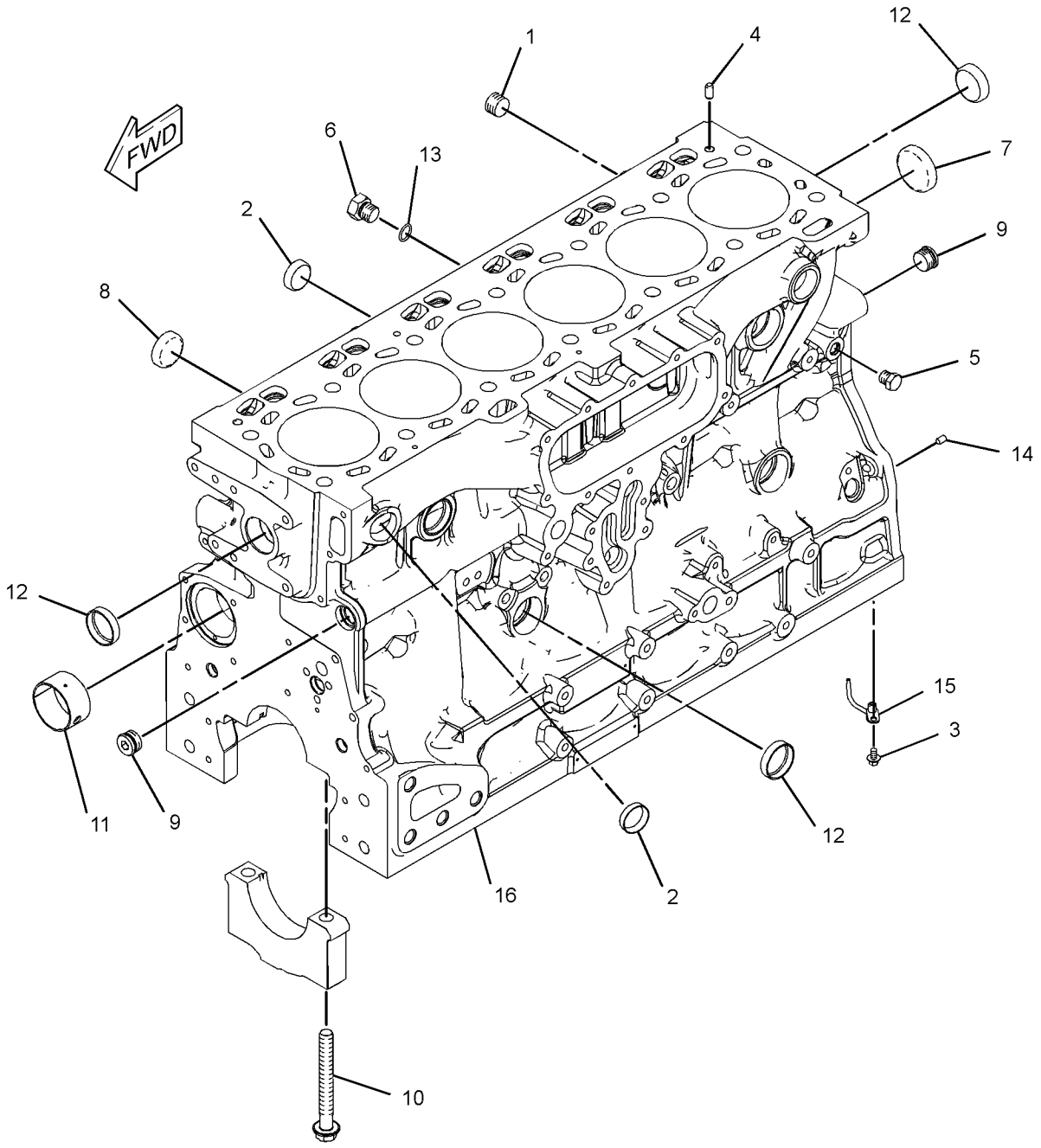

GRAPHIC #1 **<END>** g03320806

309-6663 CYLINDER HEAD AS

S/N: C6E1-UP

PART OF 292-5860 CYLINDER HEAD GP

SMCS-1100, 1101

i05075309

NOTE	REF NO	GRAPHIC REF	PART NUMBER	QTY	PART NAME 1 2 3 4 5 6 (PRODUCT LEVEL)	SEE PAGE
	1	1	**2B-0858**	2	PLUG-PIPE	
	2	1	**199-9751**	1	SEAL-O-RING	
	3	1	**232-1322**	1	PLUG	
	4	1	**276-8116**	6	PLUG-CORE	
	5	1	**276-8117**	13	PLUG-CORE	
	6	1	**276-8123**	48	RETAINER	
	7	1	**339-9637**	12	VALVE-EXHAUST	
J	8	1	**276-8132**	24	SPRING-VALVE	
	9	1	**276-8133**	24	CAP-VALVE	
	10	1	**295-6661**	1	PLUG	
	11	1	**299-5511**	24	SEAL-VALVE STEM	
	12	1	**309-6678**	12	VALVE-INLET	
	13	1	**377-0399**	12	INSERT-VALVE SEAT	
	14	1	**377-0400**	12	INSERT-VALVE SEAT	
B	15	1	**380-2073**	24	GUIDE-VALVE	

B - USE AS REQUIRED
J - SERVICED IN PAIRS

309-6663 **CYLINDER HEAD AS (*contd.*)** **i05075309**

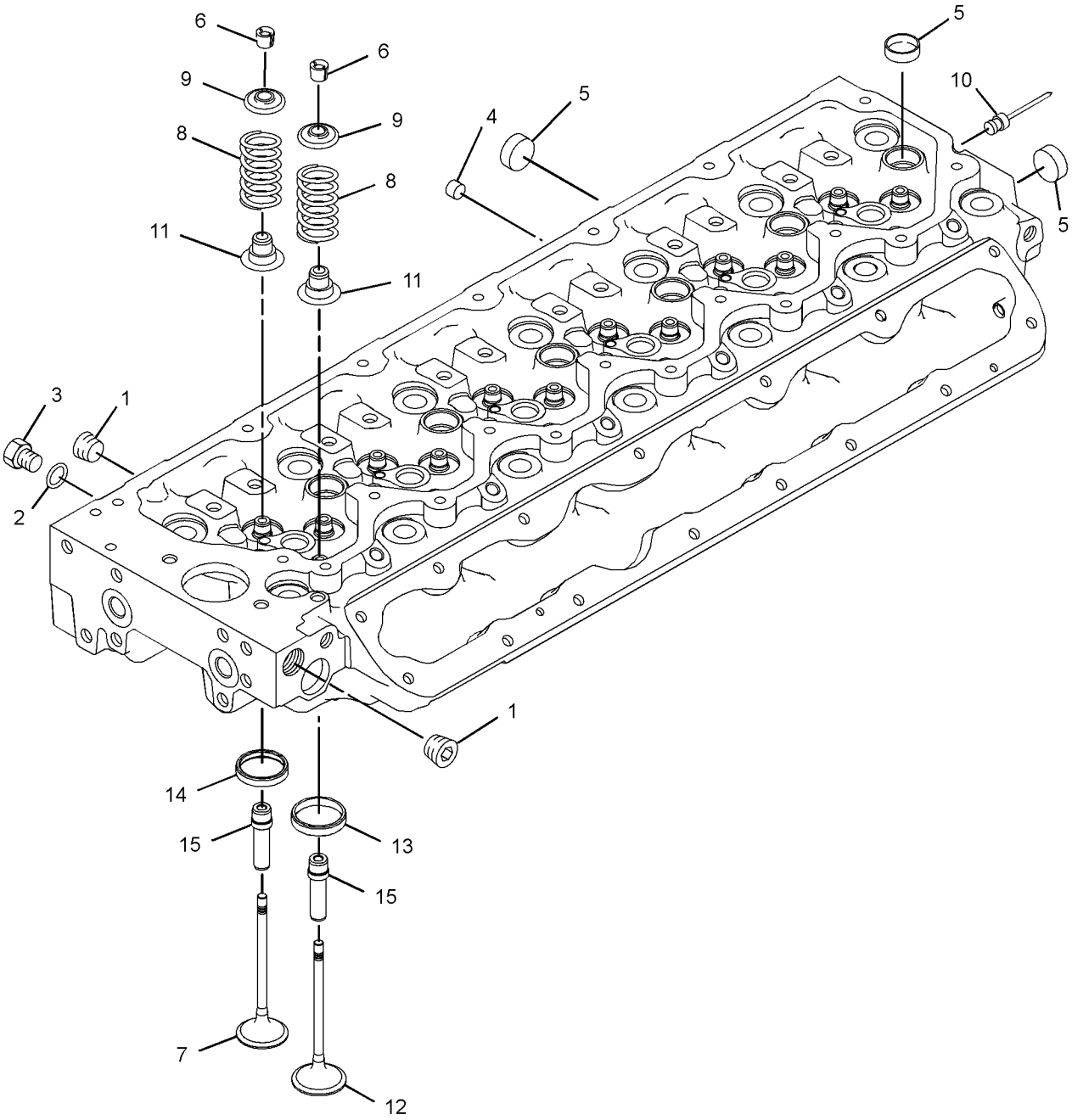

GRAPHIC #1 **<END>** g03250145

292-5860 CYLINDER HEAD GP

S/N: C6E1-UP

PART OF 319-7201 ENGINE AR-PRIMARY

SMCS-1100 **i02897025**

NOTE	REF NO	GRAPHIC REF	PART NUMBER	QTY	PART NAME 1 2 3 4 5 6 (PRODUCT LEVEL)	SEE PAGE
	1	1	**176-3141**	1	GASKET-HEAD	
CY	2	1	**309-6663**	1	CYLINDER HEAD AS	19
	3	1	**276-8134**	14	BOLT-SPECIAL (CYLINDER HEAD)	

C - CHANGE FROM PREVIOUS TYPE
Y - SEPARATE ILLUSTRATION

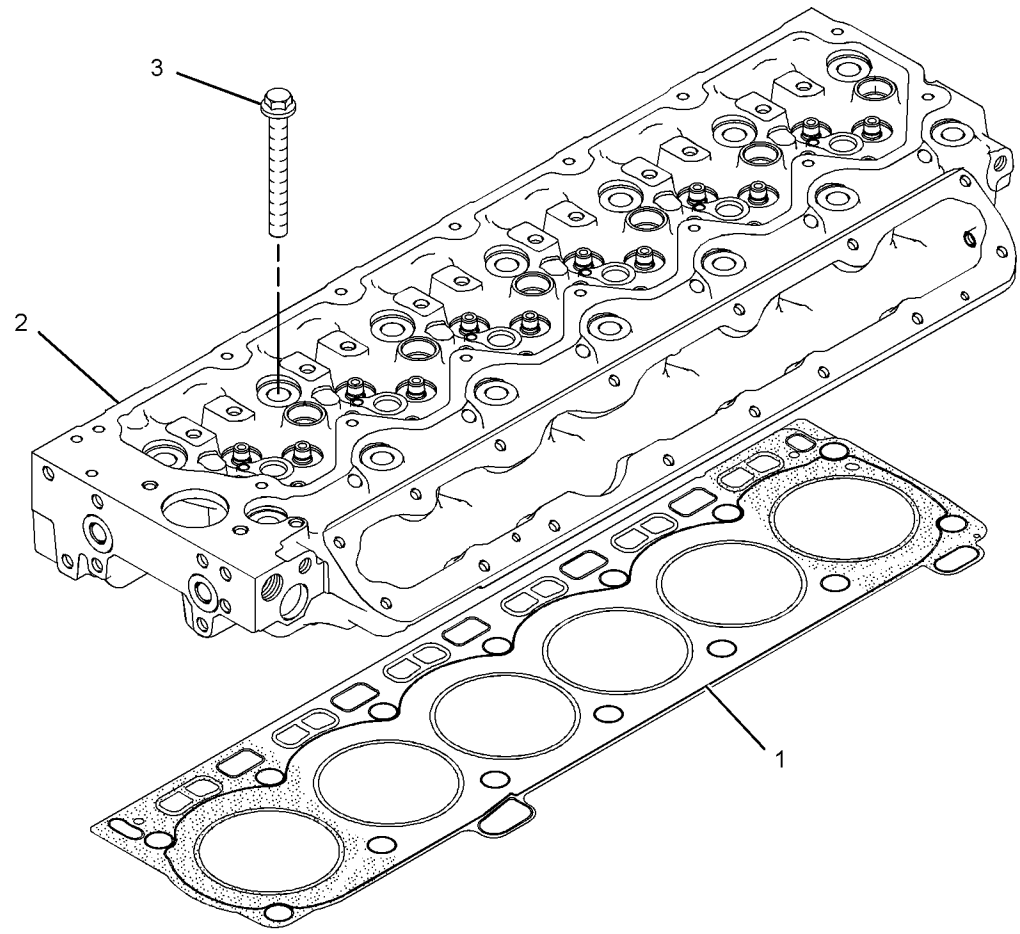

GRAPHIC #1 **<END>** g01265477

261-2153 DRIVE GP-FAN

S/N: LJR1-UP

PART OF 318-0768 INSTALLATION AR-ENGINE

SMCS-1359 **i02788445**

NOTE	REF NO	GRAPHIC REF	PART NUMBER	QTY	PART NAME 1 2 3 4 5 6 (PRODUCT LEVEL)	SEE PAGE
Y	1	1	**192-1563**	2	IDLER GP-BELT (ALTERNATOR, REFRIGERANT COMPR)	34
Y	2	1	**267-6431**	1	DRIVE GP-FAN	23
	3	1	**301-2734**	1	PLATE AS	
	4	1	**8T-4121**	7	WASHER-HARD (11X21X2.5-MM THK)	
M	5	1	**8T-4182**	2	BOLT (M10X1.5X45-MM)	
M	6	1	**8T-4186**	5	BOLT (M10X1.5X40-MM)	

M - METRIC PART
Y - SEPARATE ILLUSTRATION

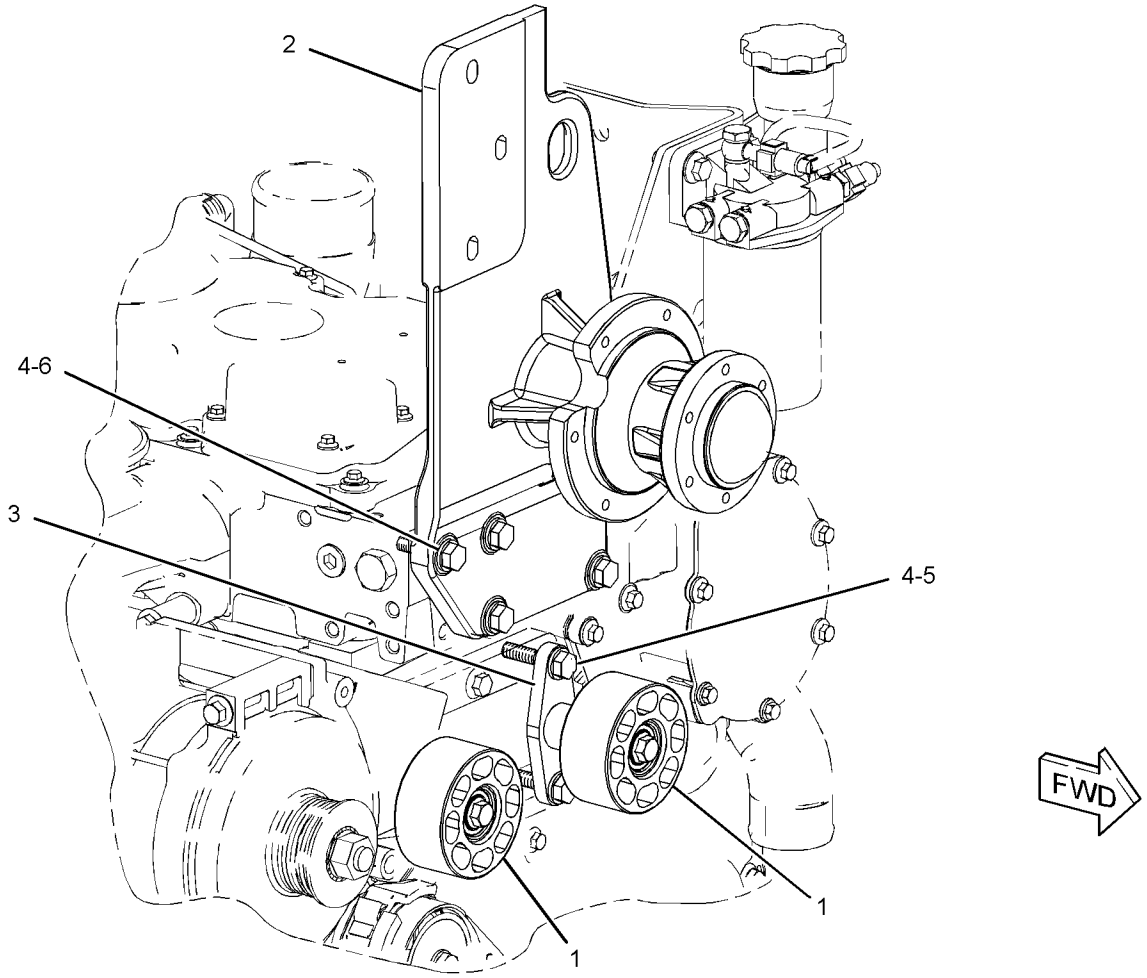

GRAPHIC #1 **<END>** g01405840

267-6431 DRIVE GP-FAN

S/N: LJR1-UP

PART OF 261-2153 DRIVE GP-FAN

SMCS-1359 **i04020397**

NOTE	REF NO	GRAPHIC REF	PART NUMBER	QTY	PART NAME 1 2 3 4 5 6 (PRODUCT LEVEL)	SEE PAGE
	1	1	**4W-1203**	2	CUP-BEARING	
	2	1	**4W-1204**	2	CONE-BEARING	
	3	1	**4W-2042**	1	SPACER (35.3X45.5X38.331-MM THK)	
	4	1	**5S-9062**	1	SPACER (35.032X50.8X15.88-MM THK)	
	5	1	**348-5027**	1	HUB	
	6	1	**7C-8370**	1	CAP-DUST	
	7	1	**7C-8634**	1	PLATE	
	8	1	**355-4757**	1	PLATE AS	
M	9	1	**6V-8004**	1	BOLT (M12X1.75X120-MM)	
	10	1	**6V-9748**	1	SEAL-LIP TYPE	

M - METRIC PART

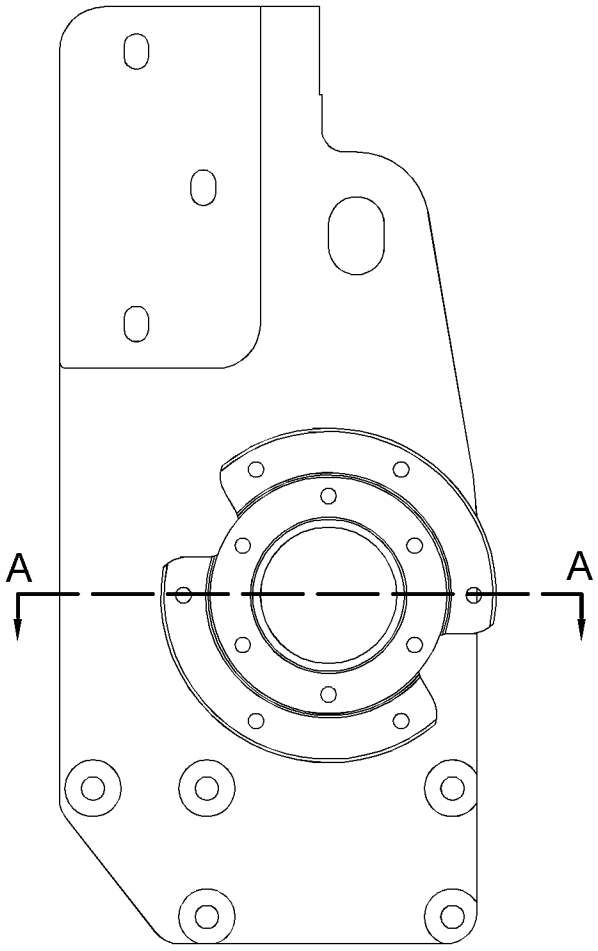

RIGHT SIDE VIEW

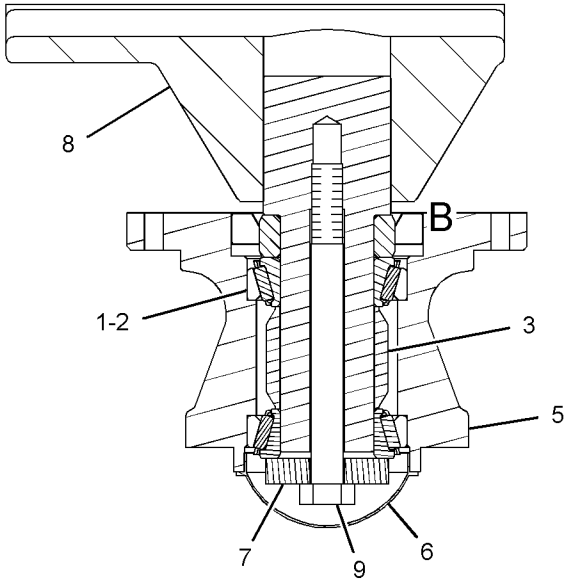

SECTION A-A

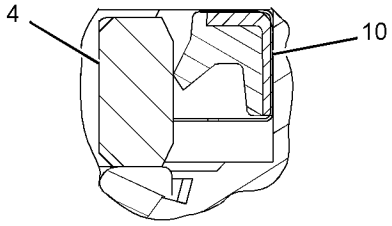

VIEW OF AREA B

GRAPHIC #1 **<END>** g01288631

267-6440 DRIVE GP-FAN—WITHOUT AIR CONDITIONING

S/N: LJR1-UP
PART OF 320-1082 CANOPY AR
AN ATTACHMENT

SMCS-1359 **i02795325**

NOTE	REF NO	GRAPHIC REF	PART NUMBER	QTY	PART NAME 1 2 3 4 5 6 (PRODUCT LEVEL)	SEE PAGE
M	1	1	**129-3179**	1	STUD-TAPERLOCK (M8X1.25X130-MM)	
	2	1	**173-1498**	1	PULLEY AS-IDLER (8-GROOVE)	
M	2A	1	**151-2900**	1	BOLT (M10X1.5X54.25-MM)	
	2B	1	**166-6358**	1	COVER-DUST	
	3	1	**7L-6463**	1	SPACER	
	4	1	**8T-4224**	1	WASHER-HARD (8.8X16X2-MM THK)	

M - METRIC PART

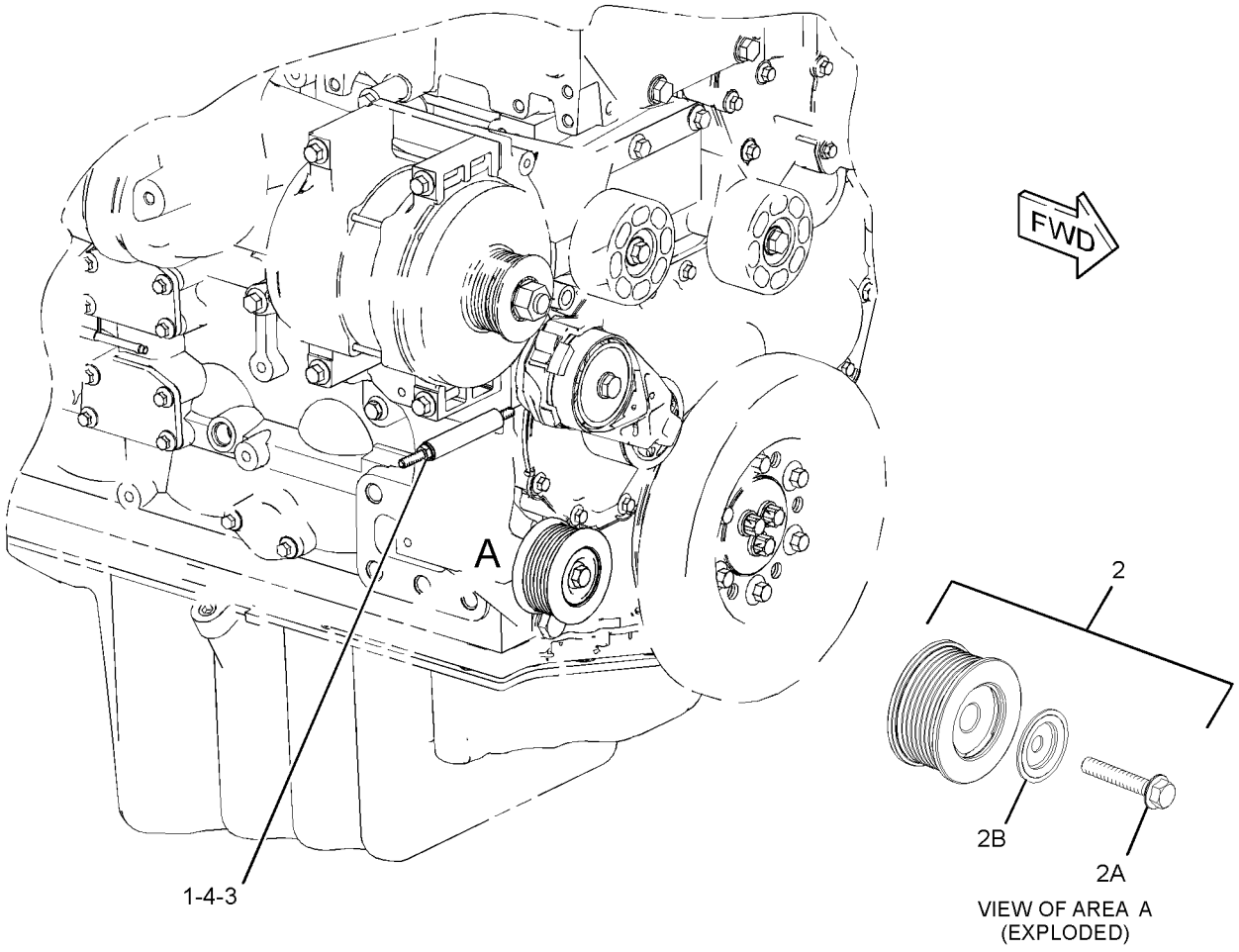

VIEW OF AREA A
(EXPLODED)

GRAPHIC #1 **<END>** g01302293

291-3792 FLYWHEEL GP

S/N: C6E1-UP

PART OF 319-7201 ENGINE AR-PRIMARY

SMCS-1156 **i02960564**

NOTE	REF NO	GRAPHIC REF	PART NUMBER	QTY	PART NAME 1 2 3 4 5 6 (PRODUCT LEVEL)	SEE PAGE
	1	1	**5P-8245**	12	WASHER-HARD (13.5X25.5X3-MM THK)	
	2	1	**279-9254**	12	BOLT	
	3	1	**291-3791**	1	FLYWHEEL AS	
	3A	1	**277-0588**	1	GEAR-STARTING MOTOR RING	

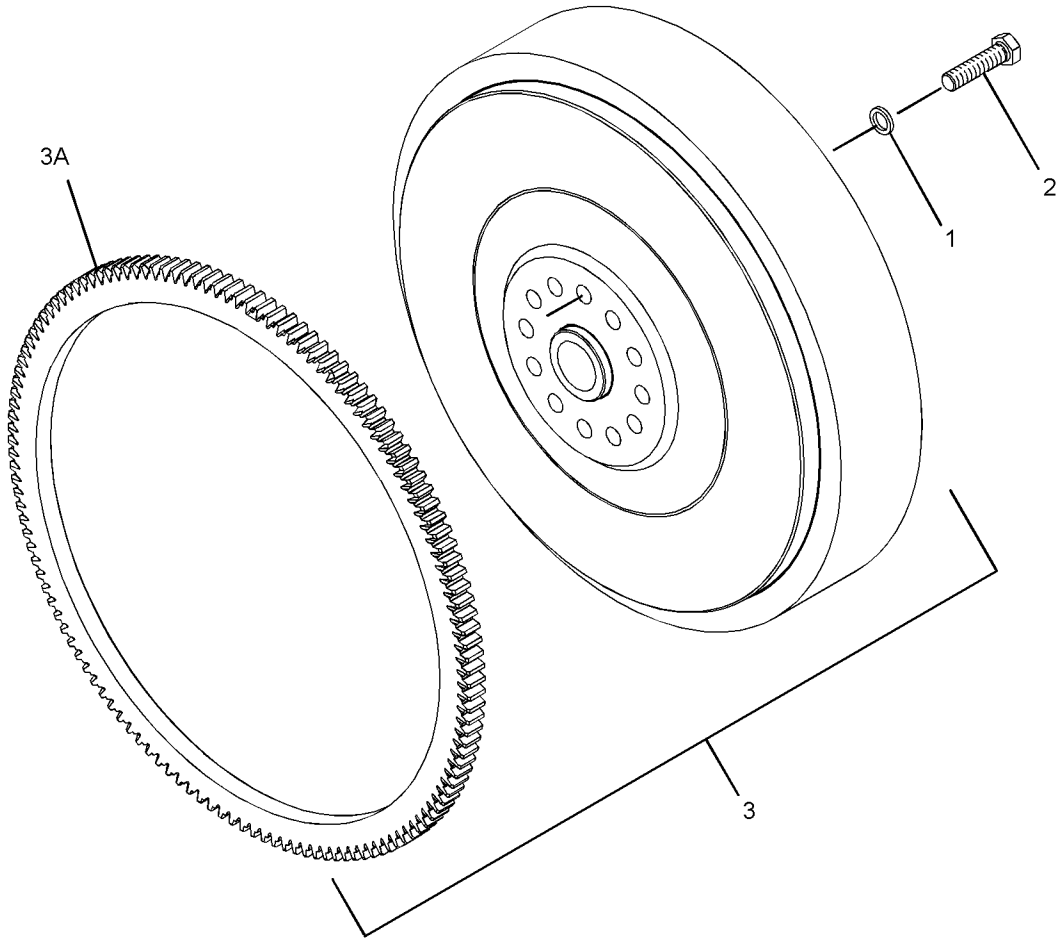

GRAPHIC #1 **<END>** g01488453

277-0124 HOUSING GP-FLYWHEEL

S/N: C6E1-UP

PART OF 319-7201 ENGINE AR-PRIMARY

TYPE 1

SMCS-1157 **i02961062**

NOTE	REF NO	GRAPHIC REF	PART NUMBER	QTY	PART NAME 1 2 3 4 5 6 (PRODUCT LEVEL)	SEE PAGE
M	1	1	**102-9941**	3	BOLT (M12X1.75X25-MM)	
	2	1	**277-0116**	1	SEAL-CRANKSHAFT (REAR)	
	3	1	**277-0118**	1	SEAL	
	4	1	**277-0121**	2	PLUG	
	5	1	**277-0122**	1	COVER	
	6	1	**283-4662**	2	BOLT-FLANGE HEAD	
	7	1	**284-0071**	1	HOUSING-FLYWHEEL	
	8	1	**287-8597**	2	DOWEL	
	9	1	**288-6974**	4	BOLT	
	10	1	**288-6975**	2	BOLT	
	11	1	**290-5728**	1	GASKET	
	12	1	**302-6112**	1	GASKET	

M - METRIC PART

277-0124 **HOUSING GP-FLYWHEEL (*contd.*)** **i02961062**

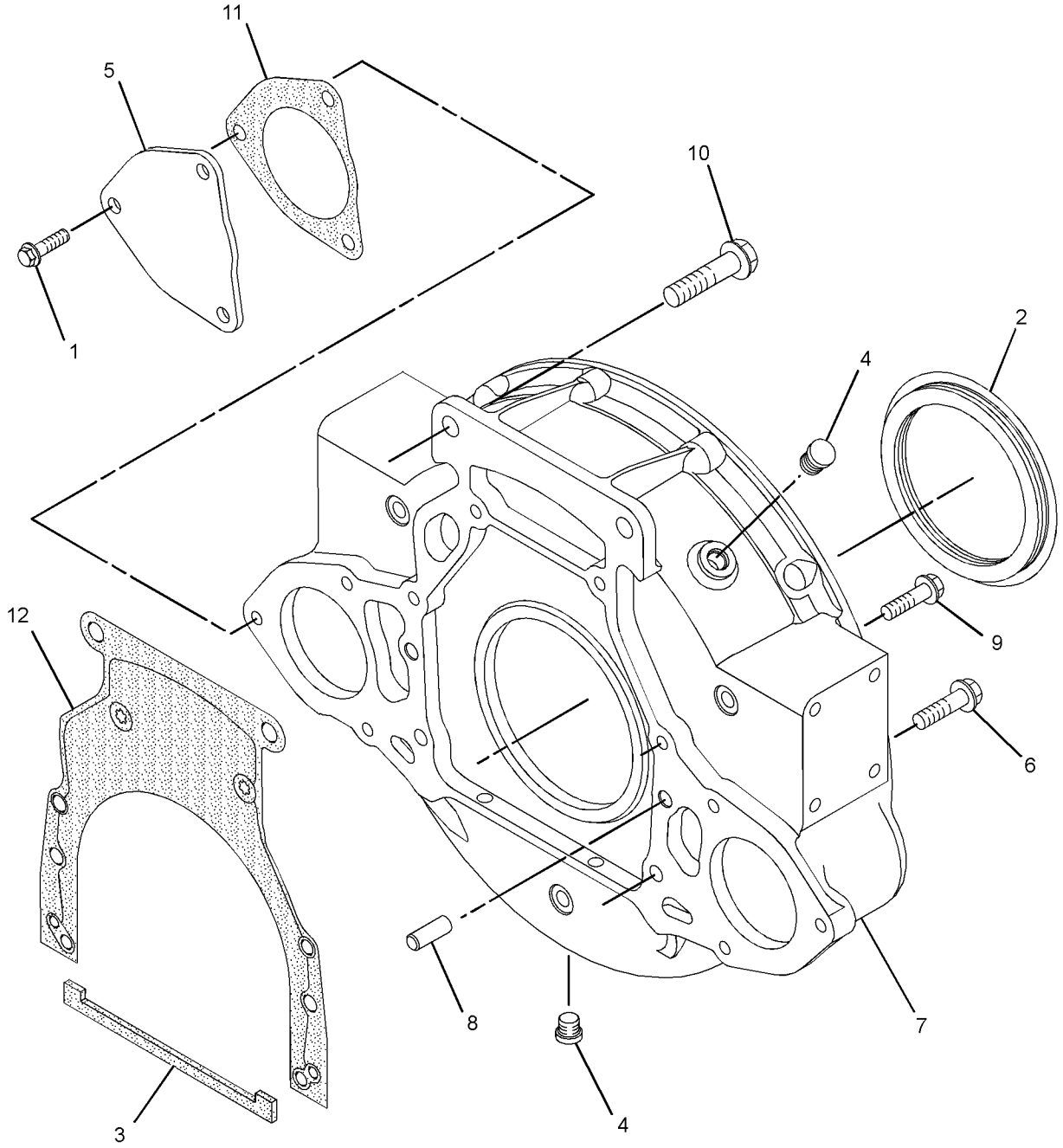

GRAPHIC #1 **<END>** g01450729

277-0124 HOUSING GP-FLYWHEEL

S/N: C6E1-UP

PART OF 319-7201 ENGINE AR-PRIMARY

TYPE 2

SMCS-1157 **i04482635**

NOTE	REF NO	GRAPHIC REF	PART NUMBER	QTY	PART NAME 1 2 3 4 5 6 (PRODUCT LEVEL)	SEE PAGE
	1	1	**302-6112**	1	GASKET	
	2	1	**277-0116**	1	SEAL-CRANKSHAFT (REAR)	
	3	1	**277-0118**	1	SEAL	
	4	1	**277-0121**	2	PLUG	
	5	1	**288-6975**	2	BOLT	
	6	1	**283-4662**	2	BOLT-FLANGE HEAD	
	7	1	**366-6614**	1	HOUSING-FLYWHEEL	
	8	1	**287-8597**	2	DOWEL	
	9	1	**288-6974**	4	BOLT	

277-0124 **HOUSING GP-FLYWHEEL (*contd.*)** **i04482635**

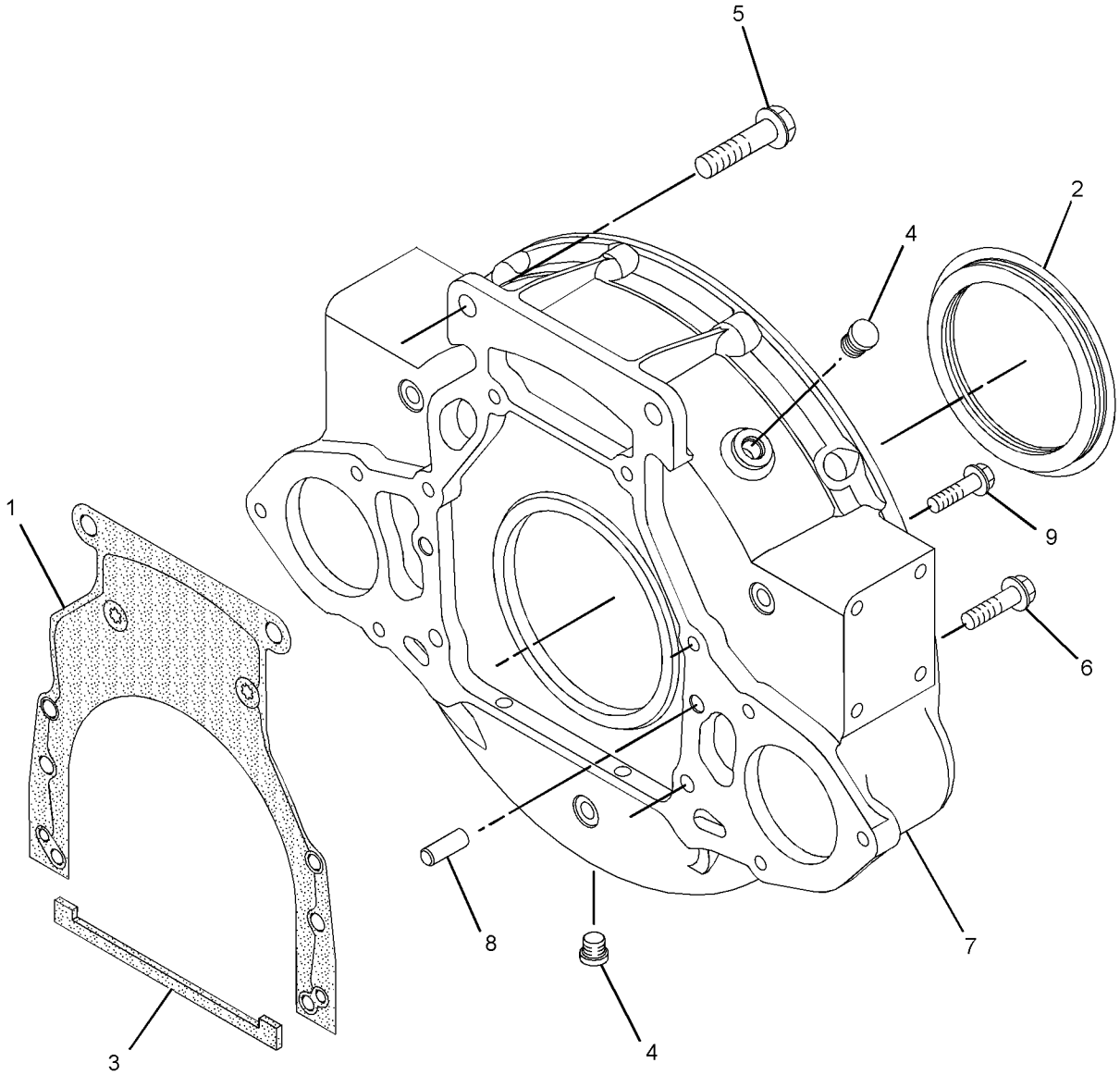

GRAPHIC #1 **<END>** g02662597

277-3014 HOUSING GP-FRONT

S/N: C6E1-UP

PART OF 319-7201 ENGINE AR-PRIMARY

SMCS-1151, 1162, 1206 **i04895241**

NOTE	REF NO	GRAPHIC REF	PART NUMBER	QTY	PART NAME 1 2 3 4 5 6 (PRODUCT LEVEL)	SEE PAGE
	1	1	**326-5063**	1	HOUSING-FRONT	
	2	1	**277-3012**	1	GASKET-COVER	
	3	1	**277-3013**	1	SEAL	
M	4	1	**6I-0217**	6	BOLT (M8X1.25X20-MM)	
M	5	1	**6I-0645**	4	BOLT (M8X1.25X25-MM)	
M	6	1	**101-3895**	2	BOLT (M8X1.25X35-MM)	
	7	1	**251-4336**	1	GEAR AS-IDLER (73-TEETH)	
M	8	1	**6I-0650**	3	BOLT (M10X1.5X65-MM)	
	9	1	**216-8634**	1	GEAR-CAMSHAFT (68-TEETH)	
	10	1	**067-6135**	1	KEY-WOODRUFF	
	11	1	**133-1011**	1	WASHER	
	12	1	**067-6179**	1	DOWEL	
	13	1	**232-3666**	1	WASHER-THRUST	
M	14	1	**124-3815**	9	BOLT (M8X1.25X16-MM)	
M	15	1	**100-3751**	5	BOLT (M8X1.25X65-MM)	
M	16	1	**100-4830**	1	BOLT (M10X1.5X20-MM)	
	17	1	**7C-4616**	1	BOLT (M12X1.75X45-MM)	
	18	1	**324-0444**	1	HUB-IDLER GEAR	
	19	1	**295-1711**	1	PLATE-RETAINING	
	20	1	**226-8767**	1	COVER AS-FRONT	
	20A	1	**226-8766**	1	GASKET-COVER	

M - METRIC PART

277-3014 **HOUSING GP-FRONT (*contd.*)** **i04895241**

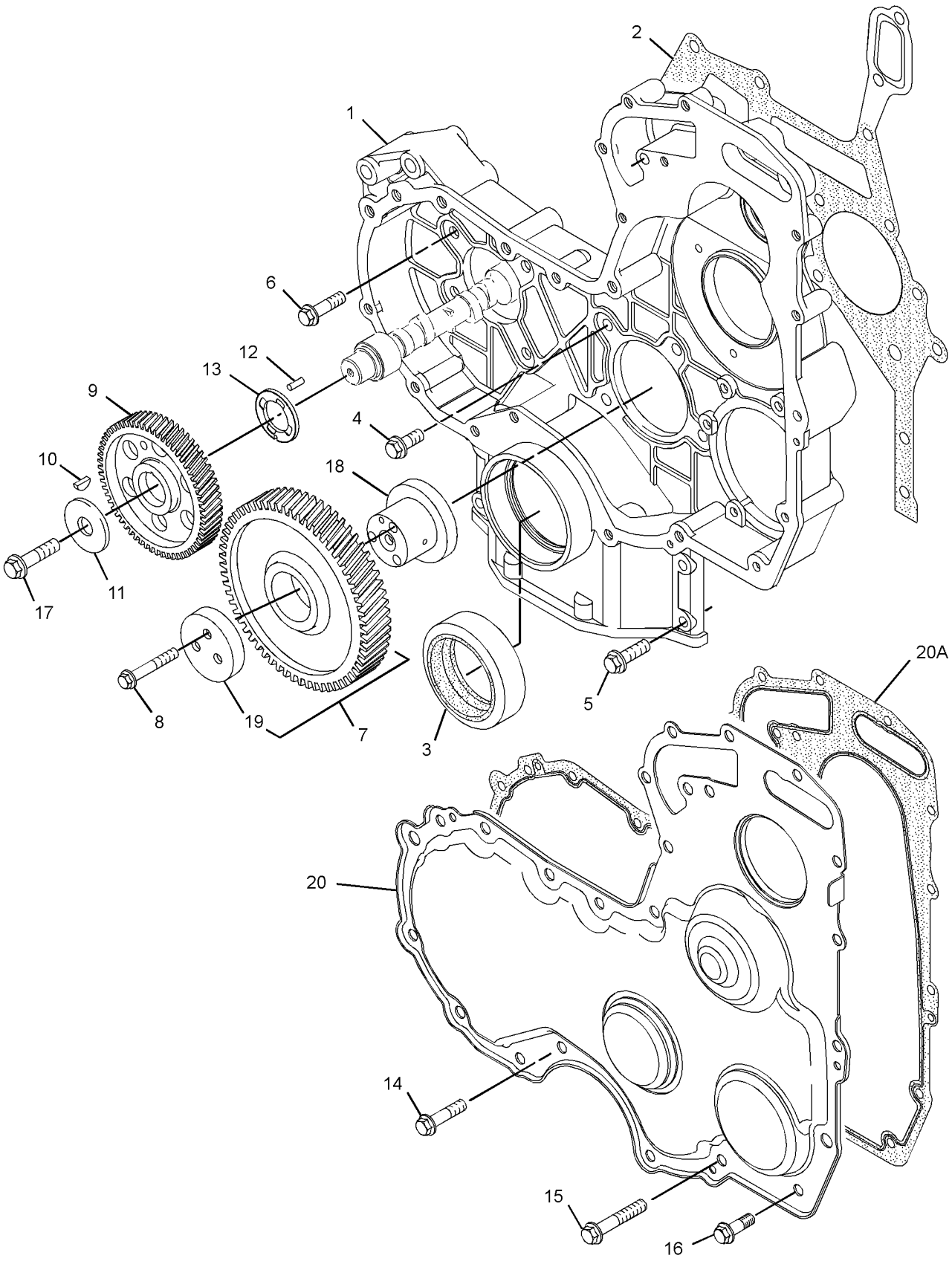

GRAPHIC #1 **<END>** g01379940

286-0035 HOUSING GP-FRONT

S/N: C6E1-UP

PART OF 319-7201 ENGINE AR-PRIMARY

SMCS-1151, 1162, 1206 **i03686605**

NOTE	REF NO	GRAPHIC REF	PART NUMBER	QTY	PART NAME 1 2 3 4 5 6 (PRODUCT LEVEL)	SEE PAGE
M	1	1	**6I-0217**	6	BOLT (M8X1.25X20-MM)	
M	2	1	**6I-0645**	4	BOLT (M8X1.25X25-MM)	
M	3	1	**6I-0650**	3	BOLT (M10X1.5X65-MM)	
	4	1	**7C-4616**	1	BOLT (M12X1.75X45-MM)	
	5	1	**067-6179**	1	DOWEL	
M	6	1	**100-3751**	1	BOLT (M8X1.25X65-MM)	
M	7	1	**101-3895**	2	BOLT (M8X1.25X35-MM)	
M	8	1	**124-3815**	10	BOLT (M8X1.25X16-MM)	
	9	1	**133-1011**	1	WASHER	
	10	1	**216-8634**	1	GEAR-CAMSHAFT (68-TEETH)	
	12	1	**232-3657**	1	COVER AS-FRONT	
	12A	1	**225-8287**	1	GASKET	
	13	1	**232-3666**	1	WASHER-THRUST	
CJ	14	1	**346-0407**	1	GEAR-IDLER (73-TEETH)	
CJ	15	1	**346-0408**	1	PLATE	
	16	1	**277-3012**	1	GASKET-COVER	
	17	1	**277-3013**	1	SEAL	
J	18	1	**324-0444**	1	HUB-IDLER GEAR	
	19	1	**294-0286**	1	KIT-COVER	

C - CHANGE FROM PREVIOUS TYPE
J - CAN ONLY BE USED IN CONJUNCTION WITH 346-0408 & 324-0444
M - METRIC PART

286-0035 **HOUSING GP-FRONT (*contd.*)** **i03686605**

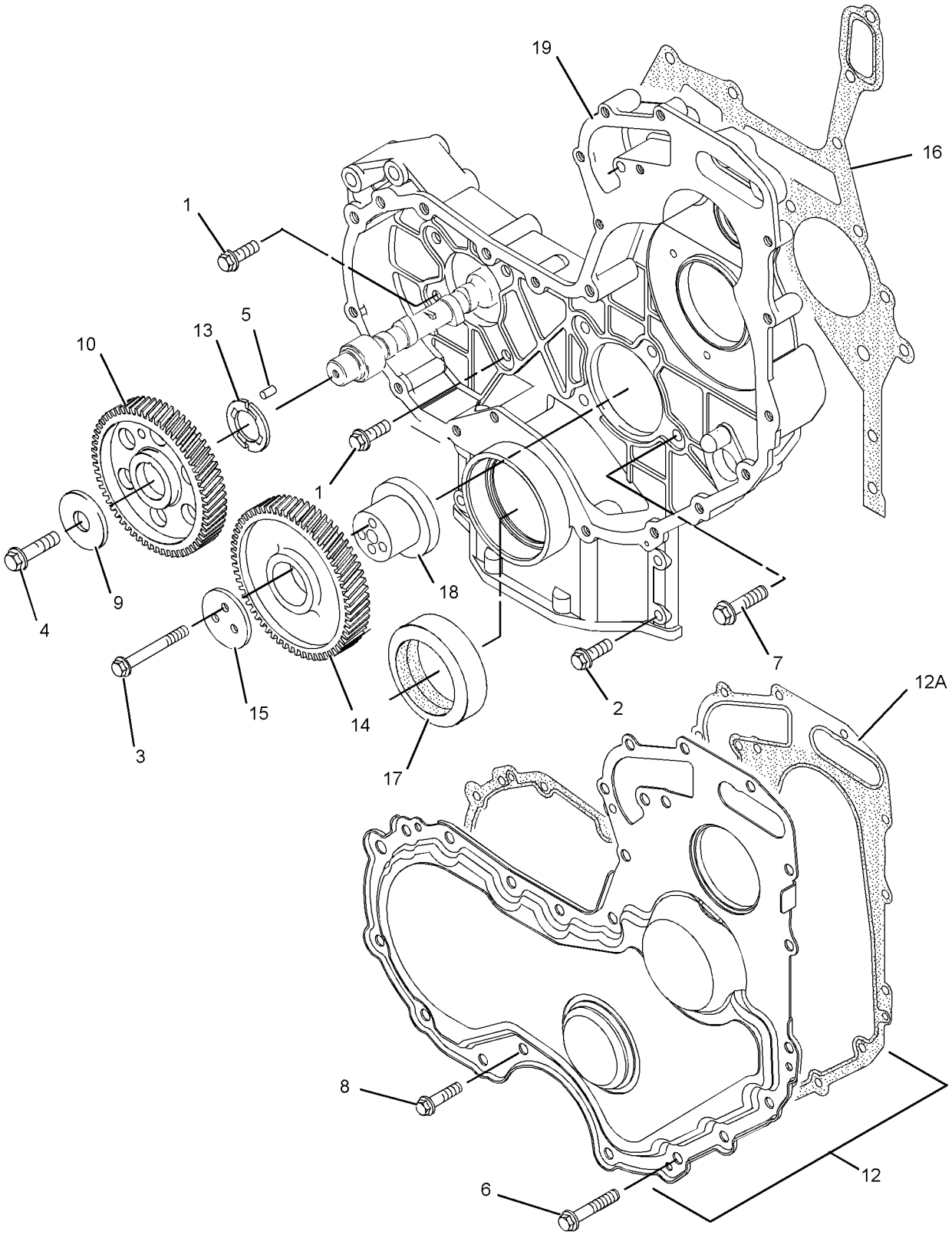

GRAPHIC #1 **<END>** g01233975

192-1563 IDLER GP-BELT

S/N: LJR1-UP

PART OF 261-2153 DRIVE GP-FAN

SMCS-1357, 1358, 1397 **i02046131**

NOTE	REF NO	GRAPHIC REF	PART NUMBER	QTY	PART NAME 1 2 3 4 5 6 (PRODUCT LEVEL)	SEE PAGE
	1	1	**151-2898**	1	SPACER (10.4X38.1X20-MM THK)	
	2	1	**144-5611**	1	PULLEY AS-IDLER	
	3	1	**145-2901**	1	COVER-DUST	
M	4	1	**151-2900**	1	BOLT (M10X1.5X54.25-MM)	
	5	1	**6V-9027**	1	SEAL-O-RING	

M - METRIC PART

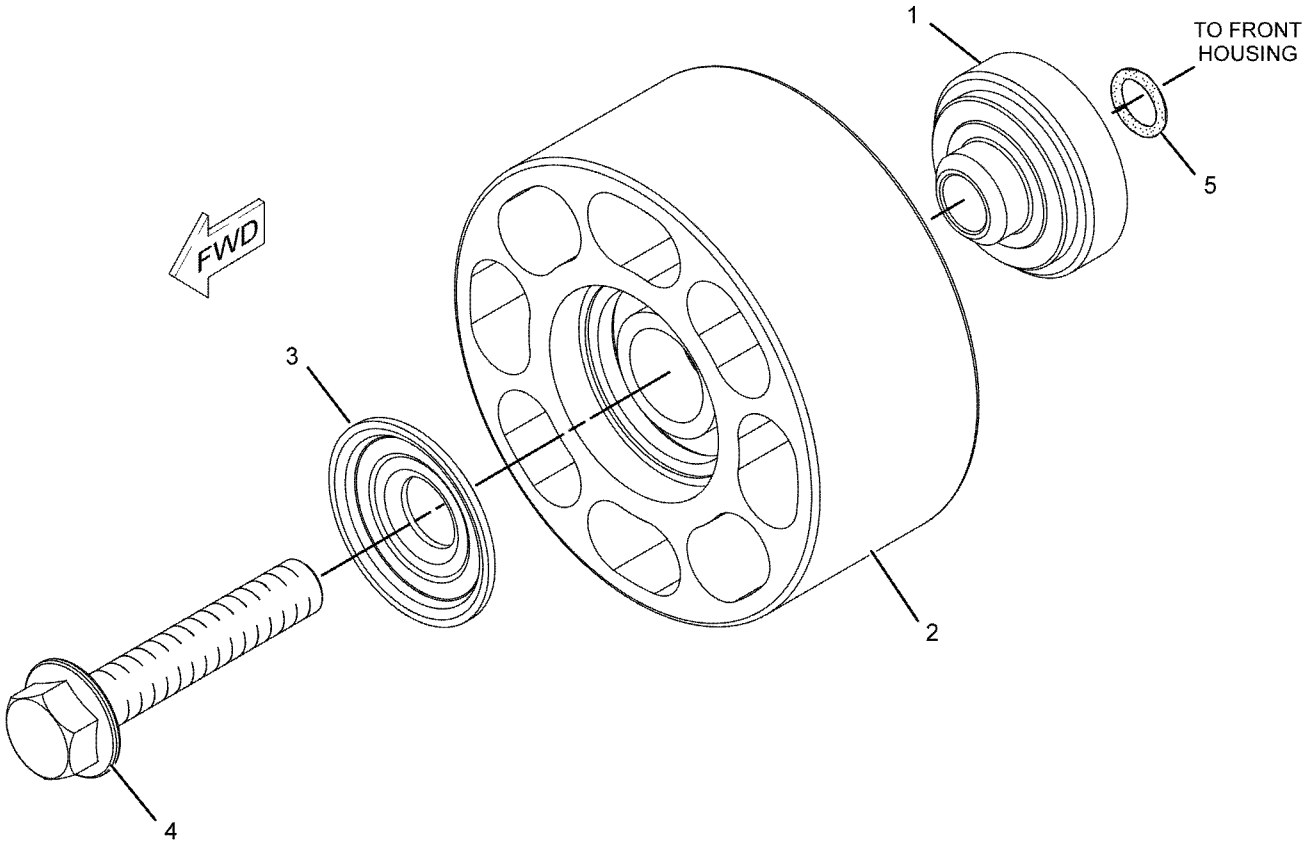

GRAPHIC #1 **<END>** g01051933

374-9163 KIT-CRANKSHAFT

S/N: C6E32992-UP

PART OF 292-5859 CRANKSHAFT GP

SMCS-1202, 1203, 1230

i05075754

NOTE	REF NO	GRAPHIC REF	PART NUMBER	QTY	PART NAME 1 2 3 4 5 6 (PRODUCT LEVEL)	SEE PAGE
	1	1	**1B-8736**	1	KEY-WOODRUFF	
	2	1	**276-7391**	1	GEAR (34-TEETH)	
	3	1	**339-8780**	1	DOWEL	
	4	1	**342-6507**	1	SHIM (0.1-MM THK)	
	5	1	**342-6508**	1	SHIM (0.1-MM THK)	
	6	1	**347-0063**	1	CRANKSHAFT	
	7	1	**363-0559**	2	WASHER-THRUST	
	8	1	**360-1978**	1	KIT-BEARING (MAIN)	
	9	1	**360-1564**	1	KIT-BEARING (END)	

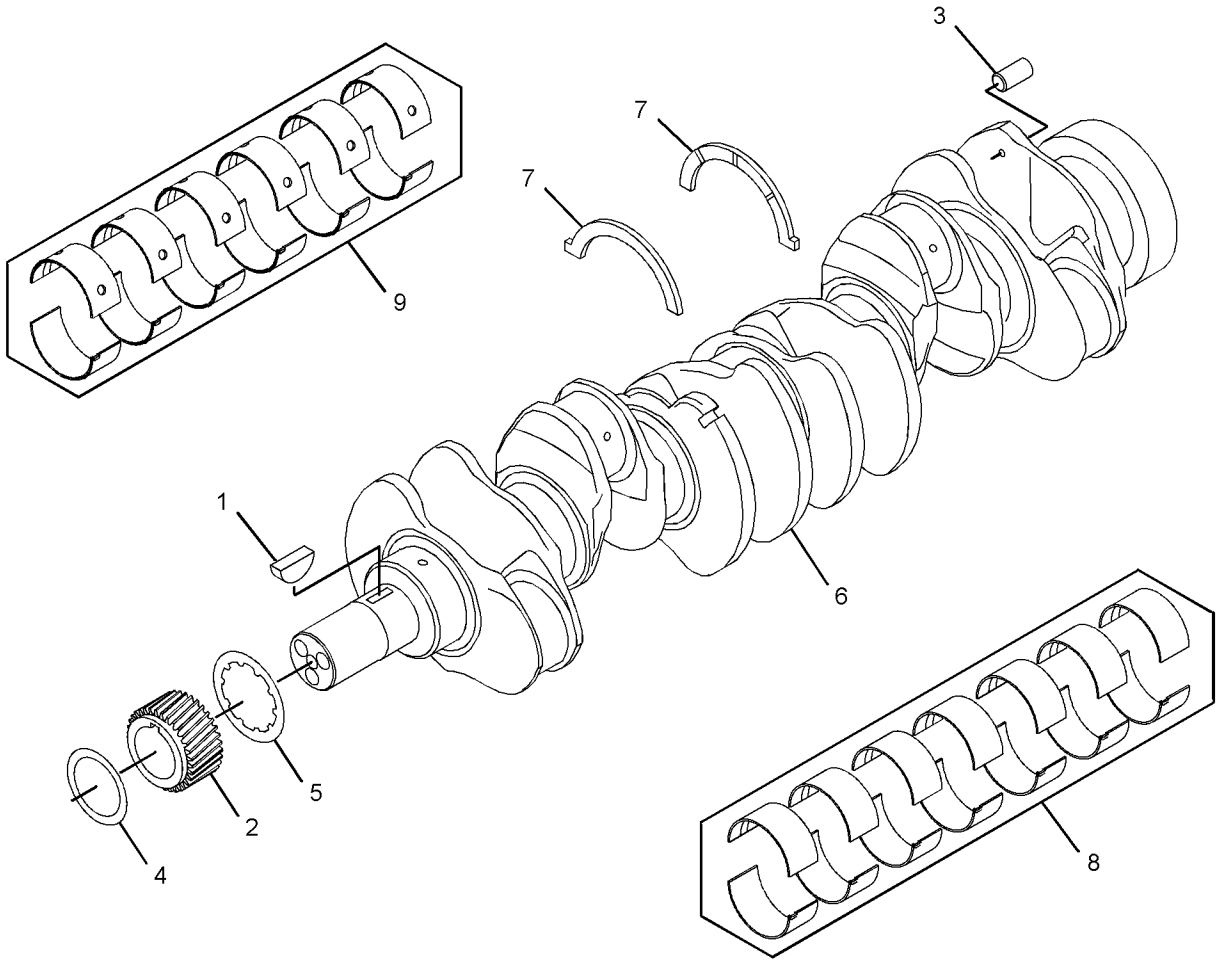

GRAPHIC #1

<END>

g03241859

279-9653 LIFTING GP-ENGINE

S/N: C6E1-UP

PART OF 319-7201 ENGINE AR-PRIMARY

SMCS-1122 **i02854733**

NOTE	REF NO	GRAPHIC REF	PART NUMBER	QTY	PART NAME 1 2 3 4 5 6 (PRODUCT LEVEL)	SEE PAGE
	1	1	**279-9651**	1	PLATE-LIFTING	
M	2	1	**6I-0654**	4	BOLT (M10X1.5X25-MM)	
	3	1	**279-9652**	1	PLATE-LIFTING	

M - METRIC PART

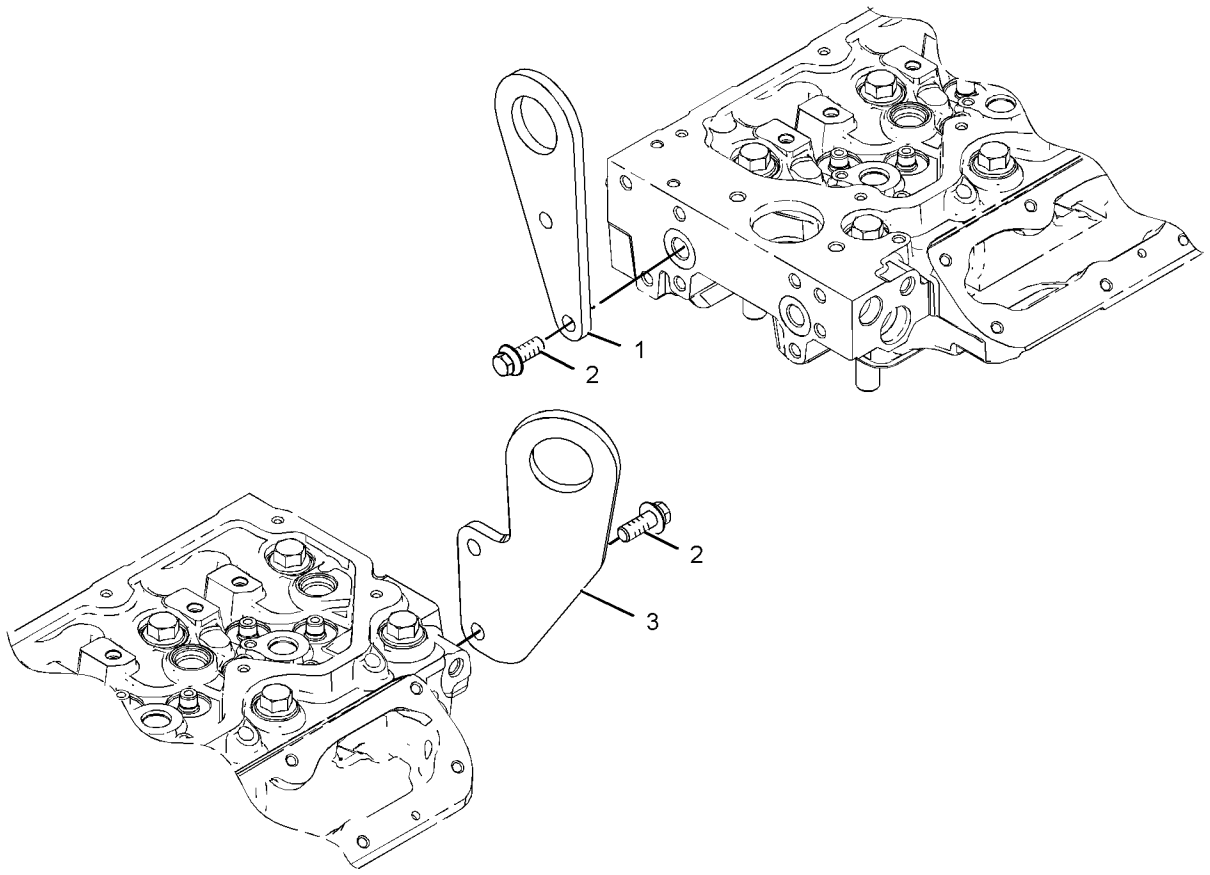

GRAPHIC #1 **<END>** g01195531

290-5650 LIFTING GP-ENGINE

S/N: LJR1-UP

PART OF 318-0768 INSTALLATION AR-ENGINE

SMCS-1122 **i02789079**

NOTE	REF NO	GRAPHIC REF	PART NUMBER	QTY	PART NAME 1 2 3 4 5 6 (PRODUCT LEVEL)	SEE PAGE
	1	1	**290-5623**	1	PLATE	
	2	1	**290-5624**	1	SPACER	
	3	1	**290-5654**	1	SPACER	
	4	1	**290-5655**	1	PLATE	
	5	1	**8T-4121**	7	WASHER-HARD (11X21X2.5-MM THK)	
M	6	1	**8T-4186**	7	BOLT (M10X1.5X40-MM)	

M - METRIC PART

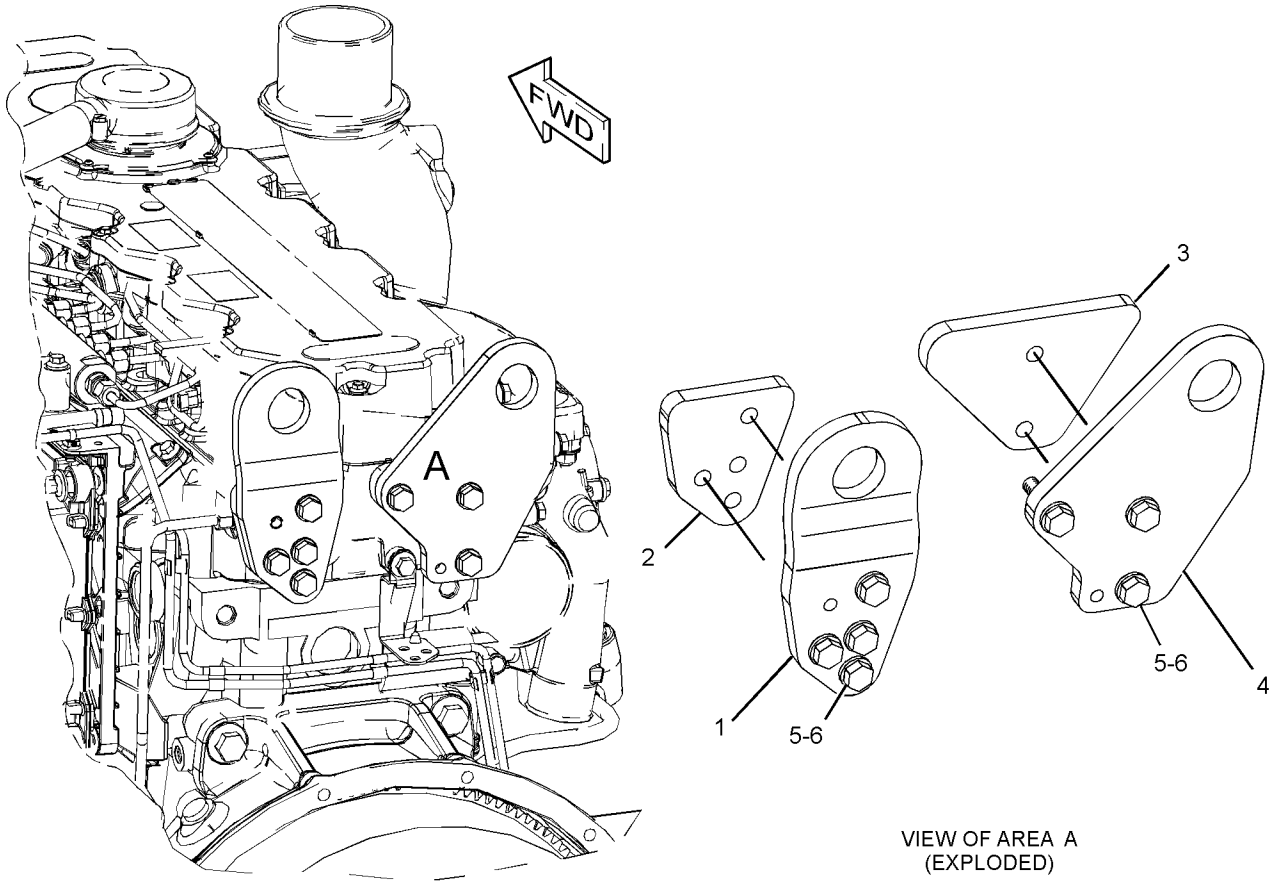

VIEW OF AREA A
(EXPLODED)

GRAPHIC #1 **<END>** g01394698

261-2145 MOUNTING GP-ENGINE

S/N: LJR1-UP

PART OF 318-0768 INSTALLATION AR-ENGINE

SMCS-1152, 1153, 1154 **i02788362**

NOTE	REF NO	GRAPHIC REF	PART NUMBER	QTY	PART NAME 1 2 3 4 5 6 (PRODUCT LEVEL)	SEE PAGE
	1	1	**9W-6582**	4	SLEEVE	
	2	1	**9W-9930**	4	MOUNT AS	
	3	1	**267-6422**	2	SUPPORT-ENGINE	
	4	1	**267-6433**	2	SUPPORT-ENGINE	
	5	1	**8T-4123**	4	WASHER (22X35X3.5-MM THK)	
M	6	1	**8T-4140**	6	BOLT (M16X2X60-MM)	
M	7	1	**8T-4193**	2	BOLT (M16X2X50-MM)	
	8	1	**8T-4223**	8	WASHER-HARD (13.5X25.5X3-MM THK)	
M	9	1	**8T-4910**	4	BOLT (M12X1.75X60-MM)	
M	10	1	**8T-6381**	4	BOLT (M20X2.5X120-MM)	
M	11	1	**8T-6868**	4	BOLT (M12X1.75X80-MM)	
	12	1	**9W-6584**	4	WASHER (20.5X114X10-MM THK)	
	13	1	**9X-8257**	8	WASHER (17.5X30X3.5-MM THK)	

M - METRIC PART

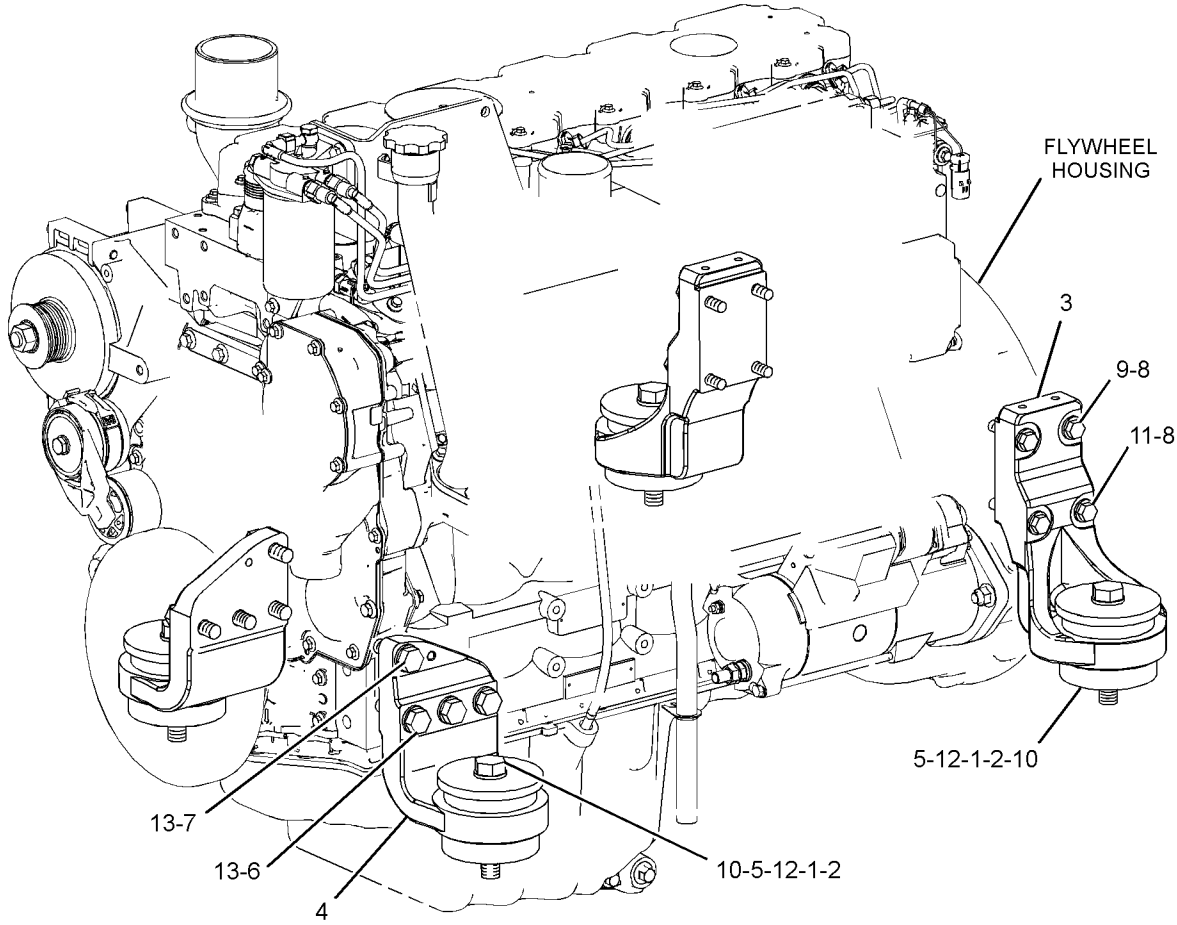

GRAPHIC #1 **<END>** g01288052

305-7300 PAN GP-OIL

S/N: C6E1-UP

PART OF 319-7201 ENGINE AR-PRIMARY

SMCS-1302 **i05202511**

NOTE	REF NO	GRAPHIC REF	PART NUMBER	QTY	PART NAME 1 2 3 4 5 6 (PRODUCT LEVEL)	SEE PAGE
M	1	1	**6I-0217**	1	BOLT (M8X1.25X20-MM)	
M	2	1	**6I-0260**	2	BOLT (M8X1.25X25-MM)	
	3	1	**102-9690**	1	PLUG	
	4	1	**6I-0291**	1	NUT (M8X1.25-THD)	
	5	1	**6I-0572**	1	BOLT (M8X1.25X20-MM)	
M	6	1	**6I-0654**	2	BOLT (M10X1.5X25-MM)	
	7	1	**6I-4681**	1	GASKET	
	8	1	**275-9884**	1	GASKET	
J	9	1	**275-9888**	28	BOLT-SPECIAL	
J	10	1	**275-9889**	2	BOLT-SPECIAL	
	11	1	**275-9897**	1	BRACKET	
	12	1	**276-0142**	6	BOLT-SPECIAL (TORX)	
	13	1	**331-4400**	1	GASKET	
	14	1	**280-1384**	1	TUBE AS-OIL SUCTION	
	14A	1	**236-5511**	1	CLIP-PIPE	
	15	1	**280-1385**	1	TUBE AS-OIL GAUGE	
	15A	1	**6I-1497**	1	SEAL	
	15B	1	**187-0555**	1	CLIP	
	16	1	**286-7847**	1	ADAPTER GP-OIL PAN DRAIN	
	17	1	**289-8725**	1	PAN-OIL	
	18	1	**326-1015**	1	VALVE GP-DRAIN (ENGINE OIL PAN)	
	18A	1	**326-5054**	1	SEAL-O-RING	
	18B	1	**294-8576**	1	PLUG-DRAIN (ENGINE OIL PAN)	
	19	1	**302-5535**	1	GAUGE AS-OIL (ENGINE)	
	19A	1	**275-9891**	2	SEAL-O-RING	

J - SERVICED AS COMPLETE SET ONLY
M - METRIC PART

305-7300 **PAN GP-OIL (*contd.*)** **i05202511**

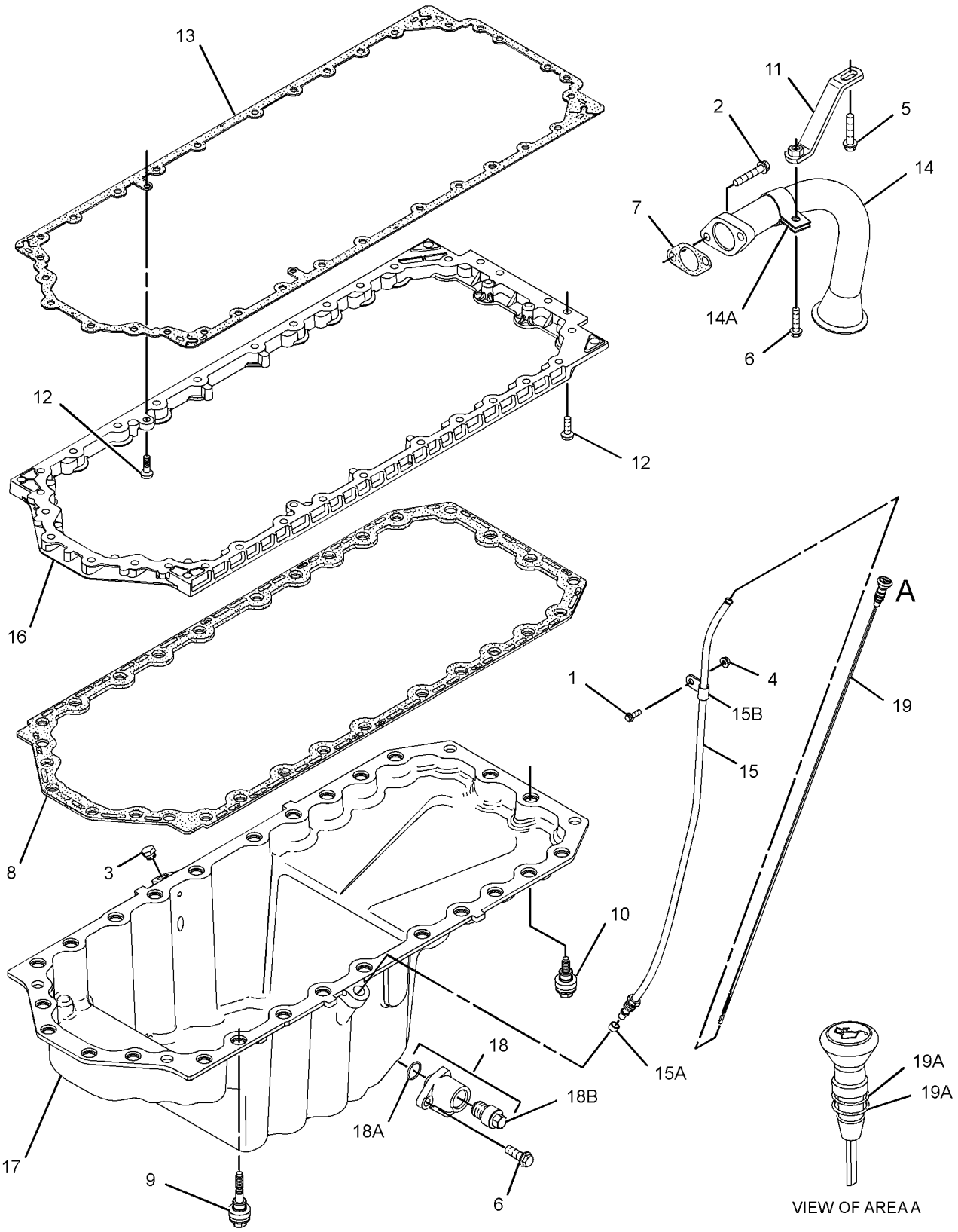

GRAPHIC #1 **<END>** g03332778

292-5857 PISTON & ROD GP

S/N: C6E1-23830

PART OF 319-7201 ENGINE AR-PRIMARY

SMCS-1225 **i05293489**

NOTE	REF NO	GRAPHIC REF	PART NUMBER	QTY	PART NAME 1 2 3 4 5 6 (PRODUCT LEVEL)	SEE PAGE
	1	1	**276-7475**	6	PISTON AS	
					(EACH INCLUDES)	
	1A	1	**124-3536**	2	RING-RETAINING	
AB		1	**380-2062**	1	KIT-PISTON (0.5-MM OS)	
	2	1	**276-7476**	6	KIT-PISTON RING	
					(EACH INCLUDES)	
AB		1	**380-2065**	1	KIT-PISTON RING (0.5-MM OS)	
J	3	1	**276-7479**	6	ROD AS (F)	
					–OR–	
J		1	**276-7481**	6	ROD AS (L)	
					–OR–	
J		1	**276-7483**	6	ROD AS (J)	
					(EACH ROD AS INCLUDES)	
	3A	1	**225-5439**	2	BOLT-SPECIAL (CONNECTING ROD)	
	3B	1	**276-7478**	1	BUSHING	

A - NOT PART OF THIS GROUP
B - USE AS REQUIRED
J - ENSURE THAT CORRECT ROD LENGTH IS FITTED

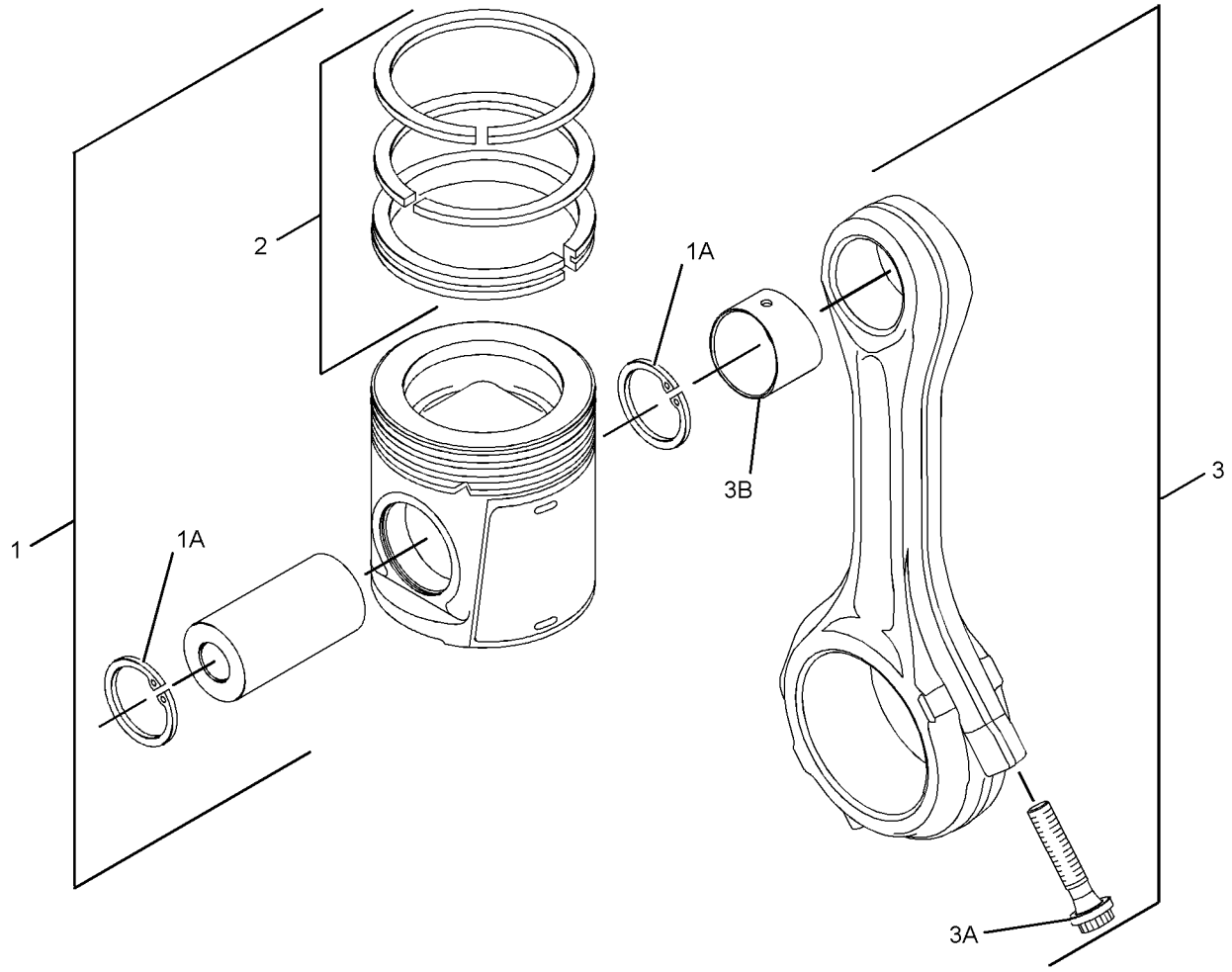

GRAPHIC #1 **<END>** g01265224

292-5857 PISTON & ROD GP

S/N: C6E23831-UP

PART OF 319-7201 ENGINE AR-PRIMARY

SMCS-1225 **i05293490**

NOTE	REF NO	GRAPHIC REF	PART NUMBER	QTY	PART NAME 1 2 3 4 5 6 (PRODUCT LEVEL)	SEE PAGE
	1	1	**276-7475**	6	PISTON AS	
					(EACH INCLUDES)	
	1A	1	**124-3536**	2	RING-RETAINING	
AB		1	**380-2062**	1	KIT-PISTON (0.5-MM OS)	
	2	1	**276-7476**	6	KIT-PISTON RING	
					(EACH INCLUDES)	
AB		1	**380-2065**	1	KIT-PISTON RING (0.5-MM OS)	
J	3	1	**331-0290**	6	CONNECTING ROD GP (F)	
					—OR—	
J		1	**331-0292**	6	CONNECTING ROD GP (L)	
					—OR—	
J		1	**331-0291**	6	CONNECTING ROD GP (J)	
					(EACH ROD AS INCLUDES)	
	3A	1	**323-9312**	2	BOLT (M10X1X50-MM)	
	3B	1	**276-7478**	1	BUSHING	

A - NOT PART OF THIS GROUP
B - USE AS REQUIRED
J - ENSURE THAT CORRECT ROD LENGTH IS FITTED

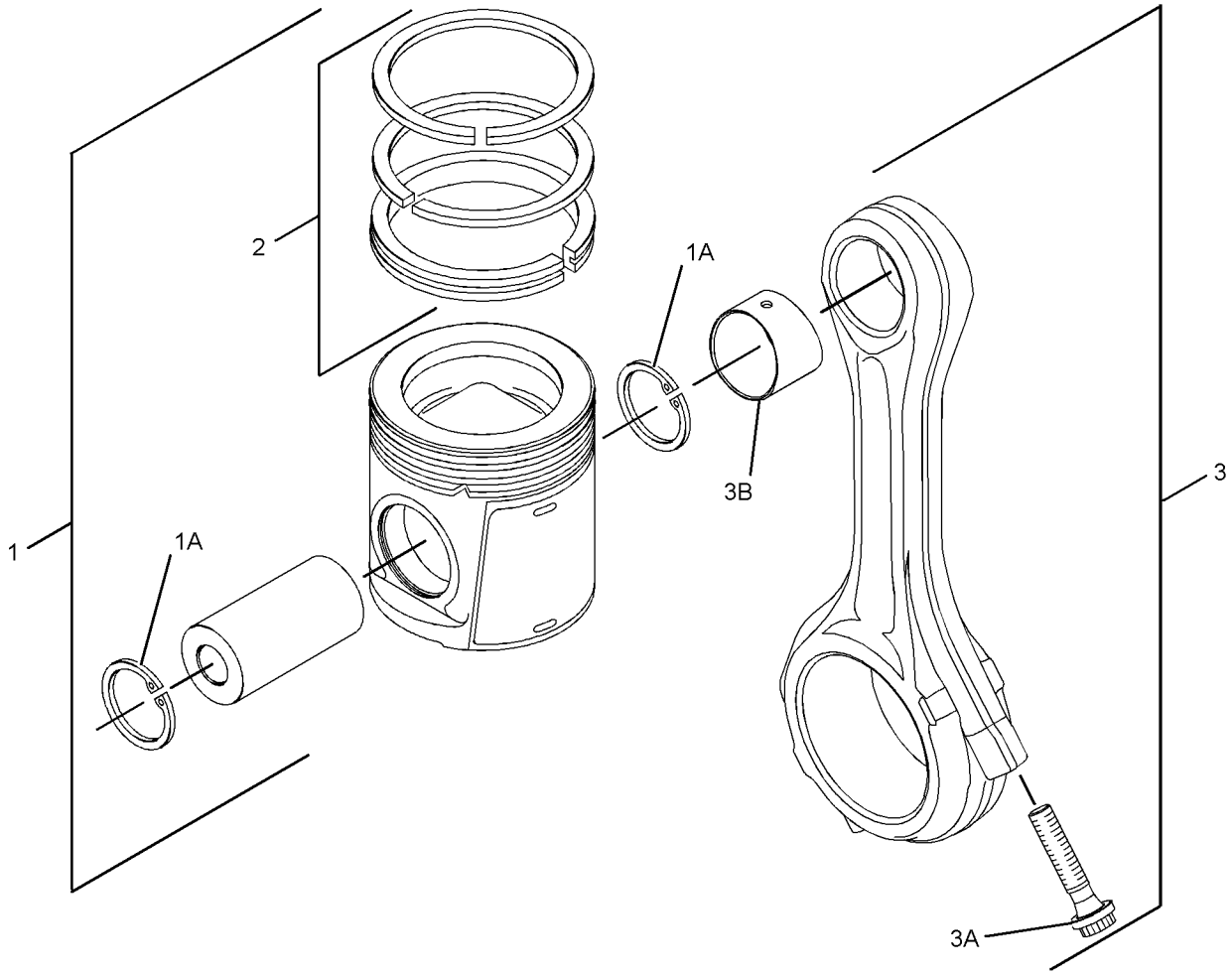

GRAPHIC #1 **<END>** g01265224

286-0039 PLUG GP-CYLINDER BLOCK

S/N: C6E1-UP

PART OF 319-7201 ENGINE AR-PRIMARY

SMCS-1201 **i02752505**

NOTE	REF NO	GRAPHIC REF	PART NUMBER	QTY	PART NAME 1 2 3 4 5 6 (PRODUCT LEVEL)	SEE PAGE
	1	1	**277-4223**	1	PLUG	

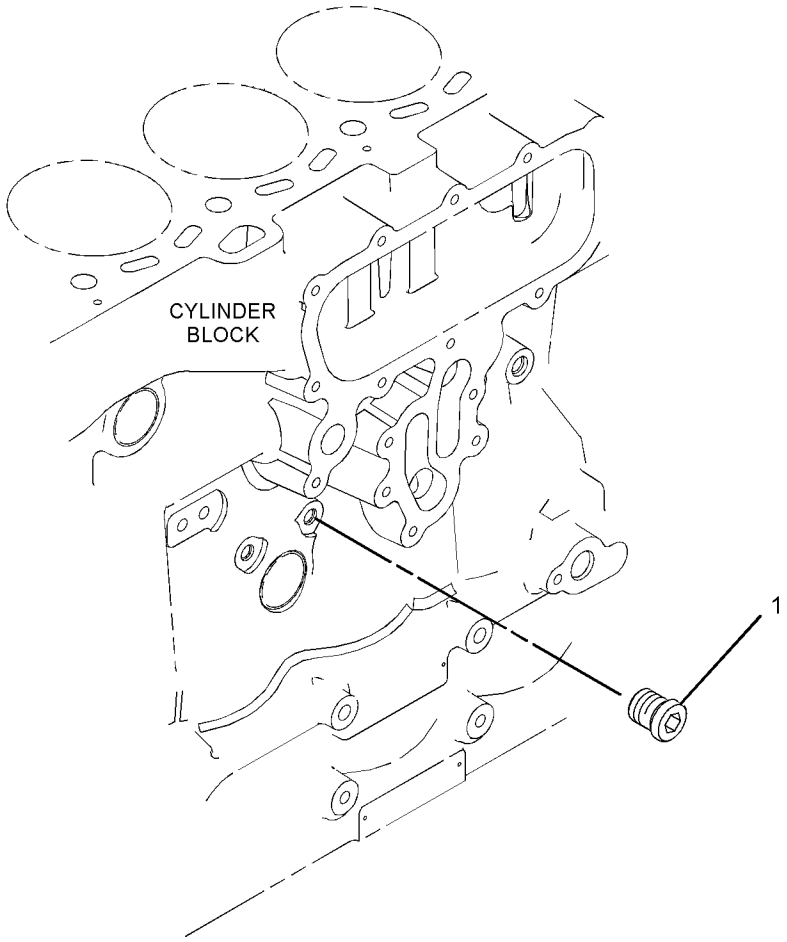

GRAPHIC #1 **<END>** g01235249

274-1929 PULLEY GP-CRANKSHAFT

S/N: C6E1-32991

PART OF 319-7201 ENGINE AR-PRIMARY

SMCS-1205 **i03756077**

NOTE	REF NO	GRAPHIC REF	PART NUMBER	QTY	PART NAME 1 2 3 4 5 6 (PRODUCT LEVEL)	SEE PAGE
	1	1	**274-1930**	1	DAMPER	
	2	1	**274-1931**	1	PULLEY	
	3	1	**351-9778**	1	HUB	
	4	1	**274-1933**	1	BLOCK	
	5	1	**274-1934**	3	BOLT-SPECIAL (TORX)	
	6	1	**274-1935**	6	BOLT	

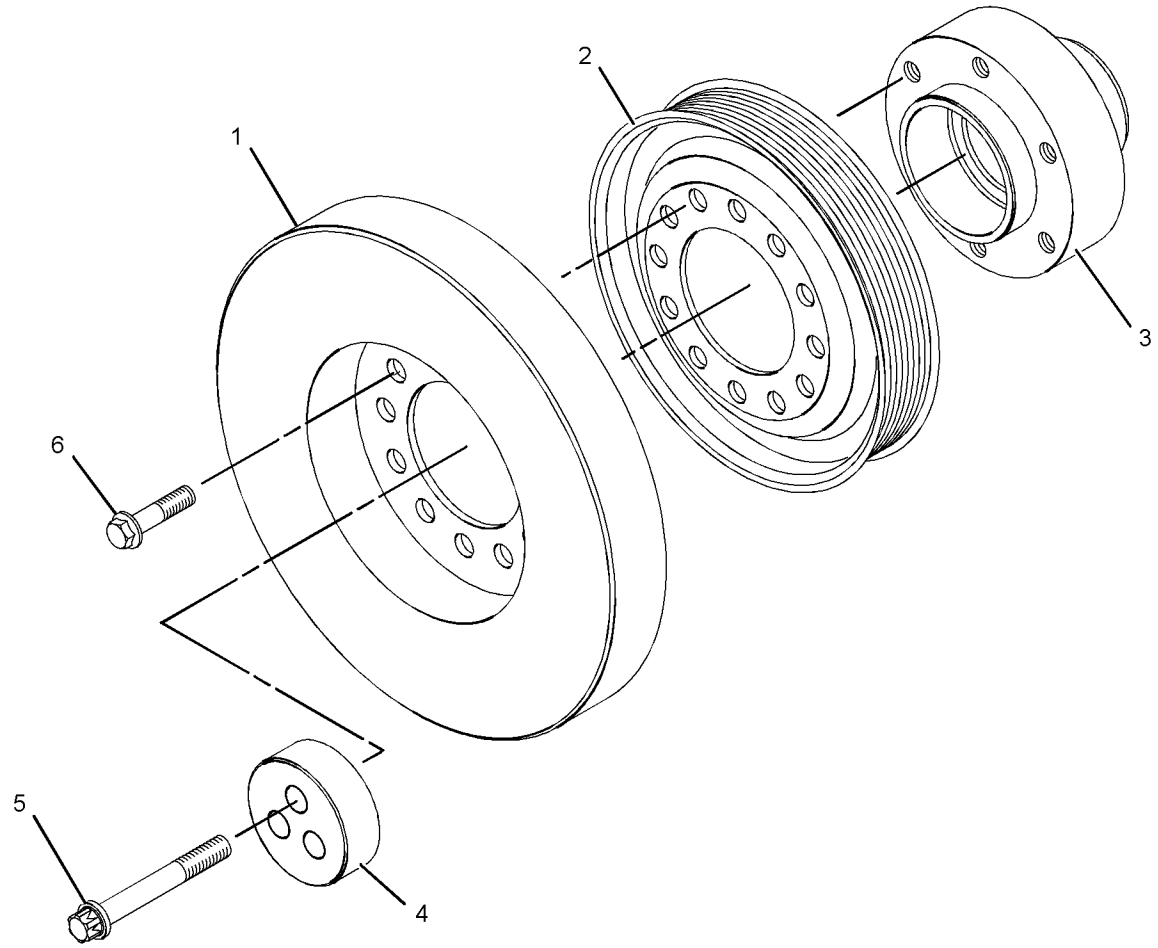

GRAPHIC #1 **<END>** g01157851

274-1929 PULLEY GP-CRANKSHAFT

S/N: C6E32992-UP

PART OF 319-7201 ENGINE AR-PRIMARY

SMCS-1205 **i04588009**

NOTE	REF NO	GRAPHIC REF	PART NUMBER	QTY	PART NAME 1 2 3 4 5 6 (PRODUCT LEVEL)	SEE PAGE
	1	1	**274-1930**	1	DAMPER	
	2	1	**274-1931**	1	PULLEY (8-GROOVE)	
	3	1	**274-1935**	6	BOLT	
C	4	1	**342-6502**	1	ADAPTER	
C	5	1	**342-6510**	3	BOLT-TORX (M14X1.5X70-MM)	

C - CHANGE FROM PREVIOUS TYPE

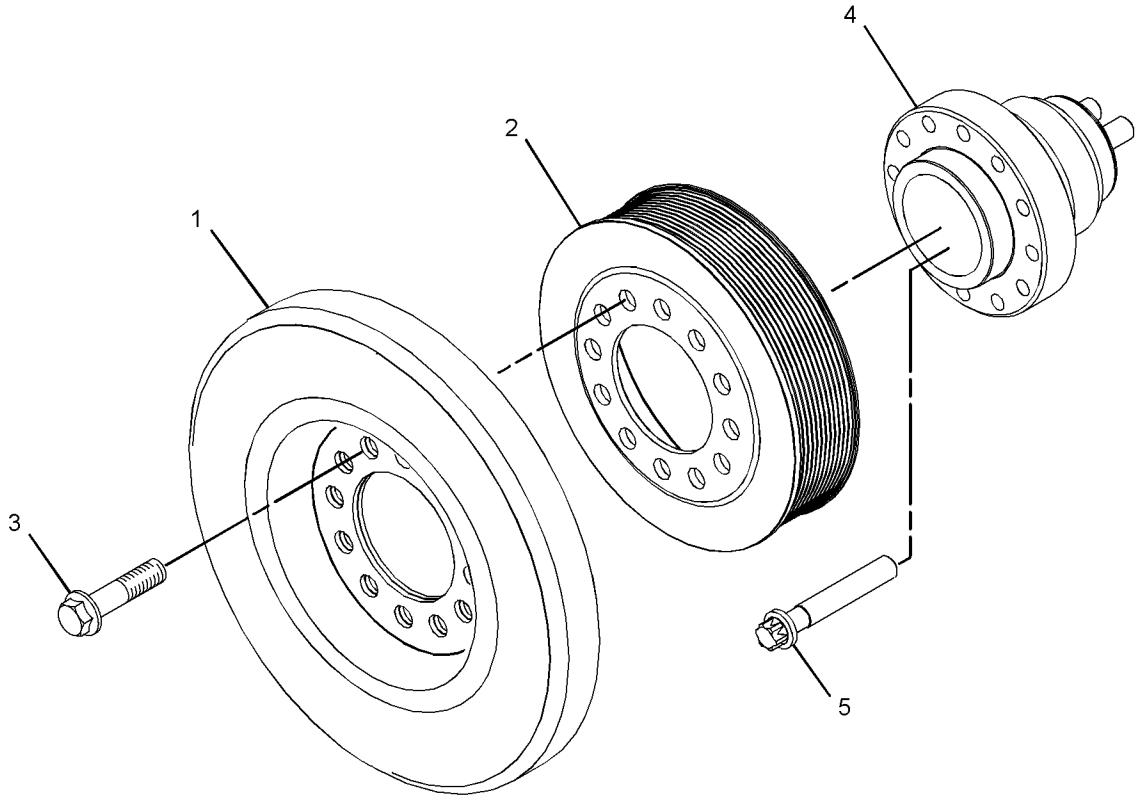

GRAPHIC #1 **<END>** g02756896

280-1911 ROCKER ARM GP

S/N: C6E1-UP

PART OF 292-5865 ROCKER ARM GP

SMCS-1123 **i02752423**

NOTE	REF NO	GRAPHIC REF	PART NUMBER	QTY	PART NAME 1 2 3 4 5 6 (PRODUCT LEVEL)	SEE PAGE
	1	1	**276-9201**	1	CLIP	
	2	1	**276-9206**	5	SPRING-SHAFT	
	3	1	**276-9207**	1	SPRING-SHAFT	
	4	1	**277-5307**	1	SHAFT AS-ROCKER ARM	
	4A	1	**276-9200**	1	PLUG-SHAFT END	
	5	1	**278-5111**	6	ROCKER ARM AS	
					(EACH INCLUDES)	
	5A	1	**276-9230**	1	NUT	
	5B	1	**278-5113**	1	ADJUSTING SCREW (TORX)	
	6	1	**278-5112**	6	ROCKER ARM AS	
					(EACH INCLUDES)	
	6A	1	**276-9230**	1	NUT	
	6B	1	**278-5113**	1	ADJUSTING SCREW (TORX)	
	7	1	**280-1912**	6	BRACKET	
	8	1	**280-1913**	6	RETAINER	
	9	1	**280-1914**	12	BOLT (M8X1.25X55-MM)	

280-1911 **ROCKER ARM GP (*contd.*)** **i02752423**

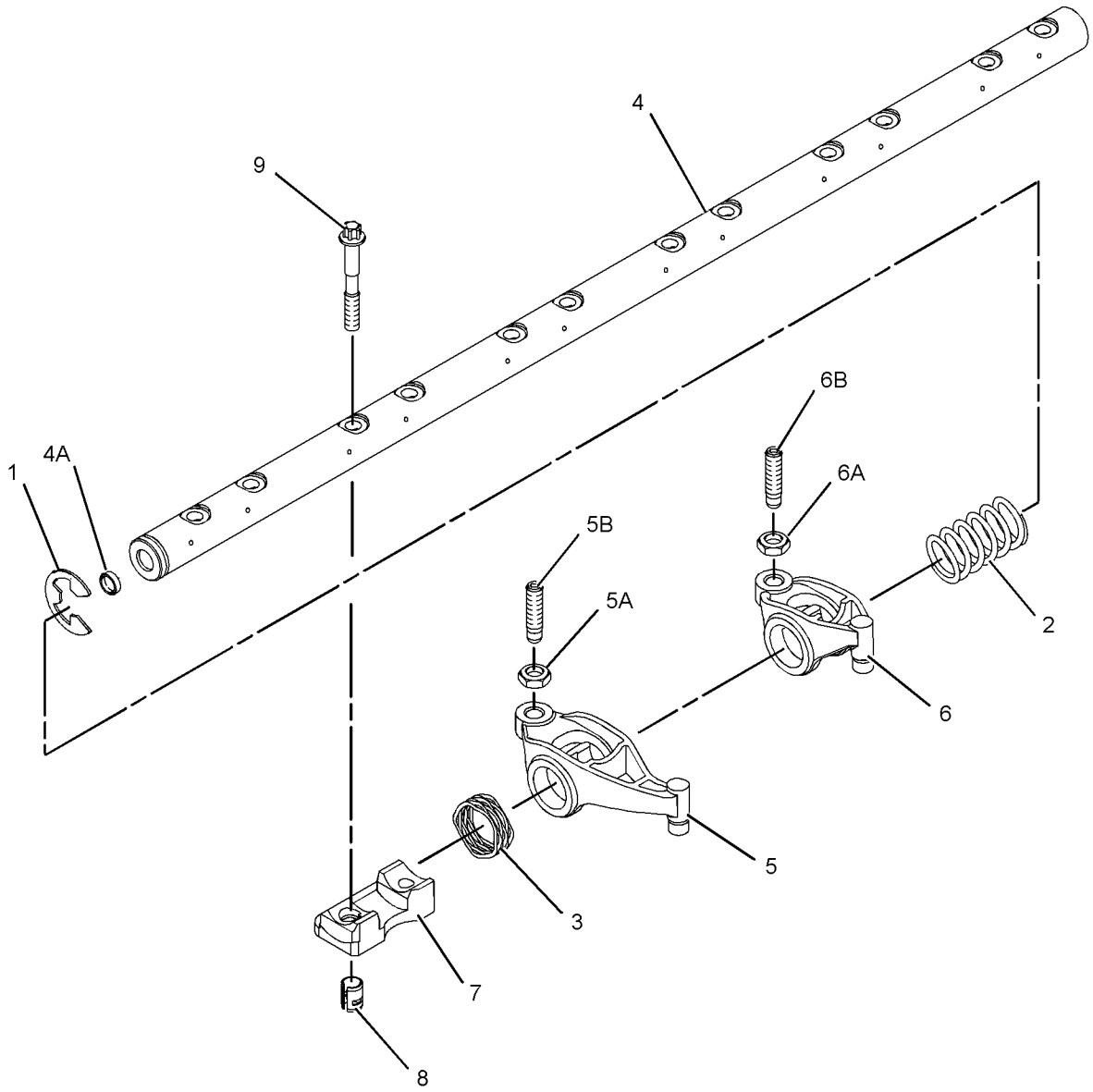

GRAPHIC #1 **<END>** g01235750

292-5865 ROCKER ARM GP

S/N: C6E1-UP

PART OF 319-7201 ENGINE AR-PRIMARY

SMCS-1123 **i04522845**

NOTE	REF NO	GRAPHIC REF	PART NUMBER	QTY	PART NAME 1 2 3 4 5 6 (PRODUCT LEVEL)	SEE PAGE
	1	1	**346-4709**	12	BRIDGE GP-VALVE	
Y	2	1	**280-1911**	1	ROCKER ARM GP	46

Y - SEPARATE ILLUSTRATION

292-5865 **ROCKER ARM GP (*contd.*)** **i04522845**

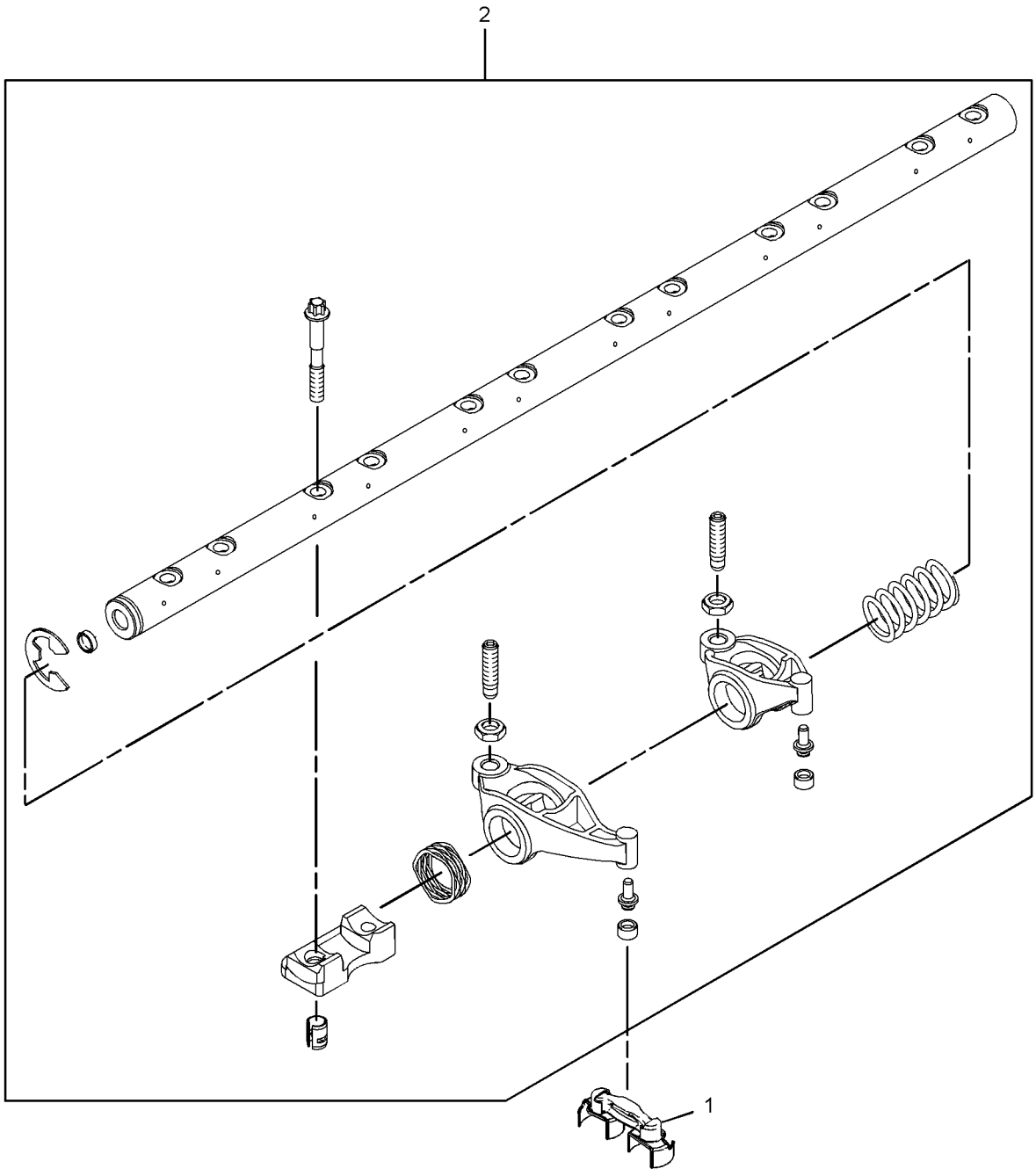

GRAPHIC #1 **<END>** g01923253

280-1428 FILLER GP-ENGINE OIL

S/N: C6E1-UP

PART OF 319-7201 ENGINE AR-PRIMARY

SMCS-1316 **i03633749**

NOTE	REF NO	GRAPHIC REF	PART NUMBER	QTY	PART NAME 1 2 3 4 5 6 (PRODUCT LEVEL)	SEE PAGE
	1	1	**305-7396**	1	FILLER AS-OIL	
	2	1	**130-9888**	1	CAP-OIL FILLER (ENGINE)	
	2A	1	**113-1504**	1	SEAL-O-RING	
M	3	1	**124-3815**	1	BOLT (M8X1.25X16-MM)	
	4	1	**280-1430**	1	GASKET	
M	5	1	**6I-0254**	1	BOLT (M8X1.25X30-MM)	
	6	1	**317-3775**	1	FILLER GP-ENGINE OIL	
	6A	1	**306-2337**	1	SEAL-O-RING	
	7	1	**6I-4374**	1	BOLT (M8X1.25X60-MM)	
	8	1	**277-1974**	1	PLATE AS	
	8A	1	**277-1975**	1	SEAL-O-RING	
M	9	1	**6I-0217**	2	BOLT (M8X1.25X20-MM)	
	10	1	**317-9299**	2	BOLT	
	11	1	**305-7398**	1	WASHER	
	12	1	**305-7397**	1	BRACKET	

M - METRIC PART

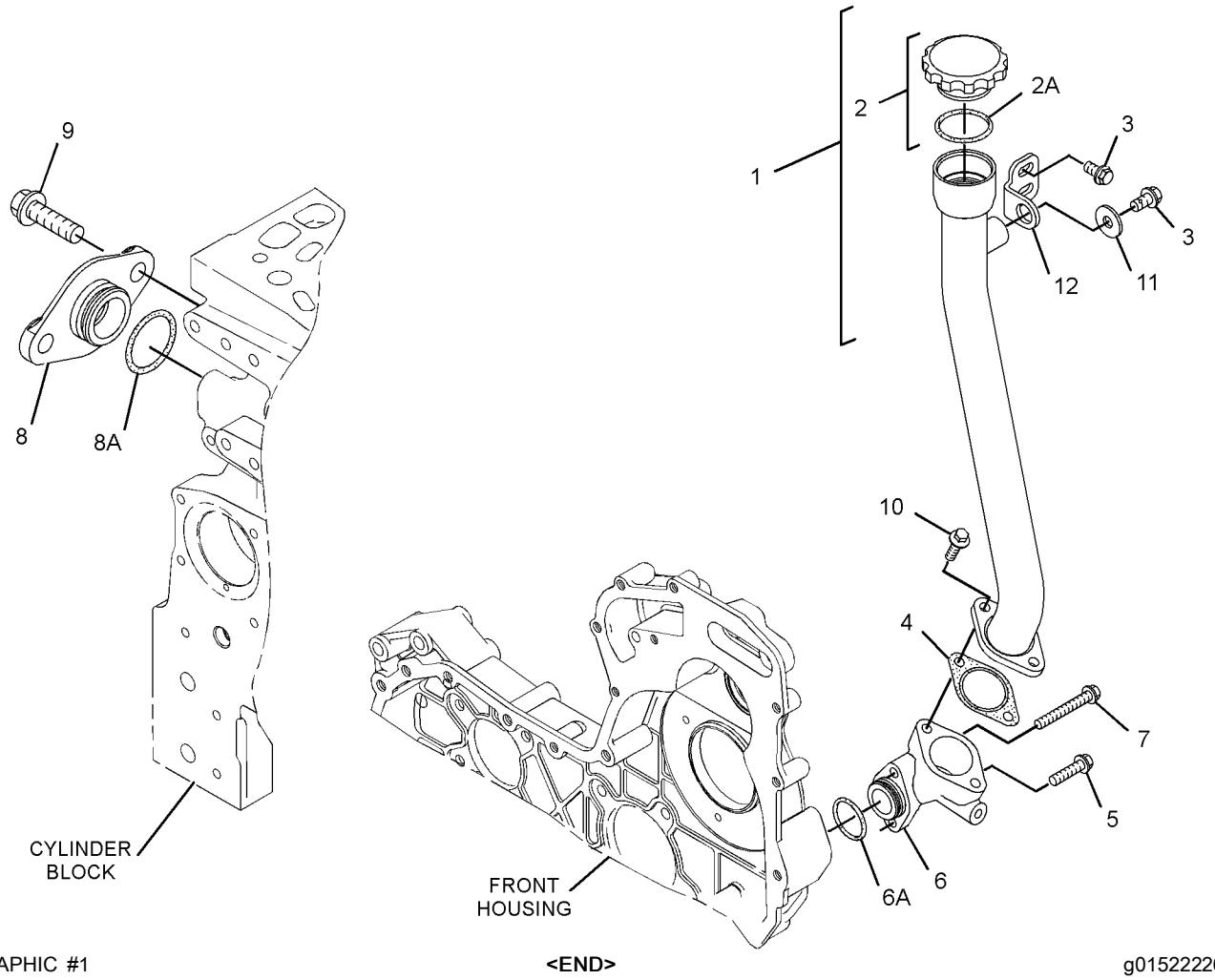

GRAPHIC #1 **<END>** g01522226

366-0613 FILLER GP-ENGINE OIL

S/N: C6E1-UP

PART OF 319-7201 ENGINE AR-PRIMARY

SMCS-1316 **i05291596**

NOTE	REF NO	GRAPHIC REF	PART NUMBER	QTY	PART NAME 1 2 3 4 5 6 (PRODUCT LEVEL)	SEE PAGE
M	1	1	**6I-0217**	2	BOLT (M8X1.25X20-MM)	
M	2	1	**6I-0254**	3	BOLT (M8X1.25X30-MM)	
	3	1	**6I-4374**	1	BOLT (M8X1.25X60-MM)	
M	4	1	**124-3815**	3	BOLT (M8X1.25X16-MM)	
	5	1	**225-6524**	1	PLUG-CUP	
	6	1	**277-1974**	1	PLATE AS	
	6A	1	**277-1975**	1	SEAL-O-RING	
	7	1	**280-1430**	1	GASKET	
	8	1	**305-7396**	1	FILLER AS-OIL	
	8A	1	**130-9888**	1	CAP-OIL FILLER (ENGINE)	
	8B	1	**113-1504**	1	SEAL-O-RING	
	9	1	**305-7397**	1	BRACKET	
	10	1	**305-7398**	1	WASHER	
	11	1	**317-3775**	1	FILLER GP-ENGINE OIL	
	11A	1	**306-2337**	1	SEAL-O-RING	

M - METRIC PART

366-0613 **FILLER GP-ENGINE OIL (*contd.*)** **i05291596**

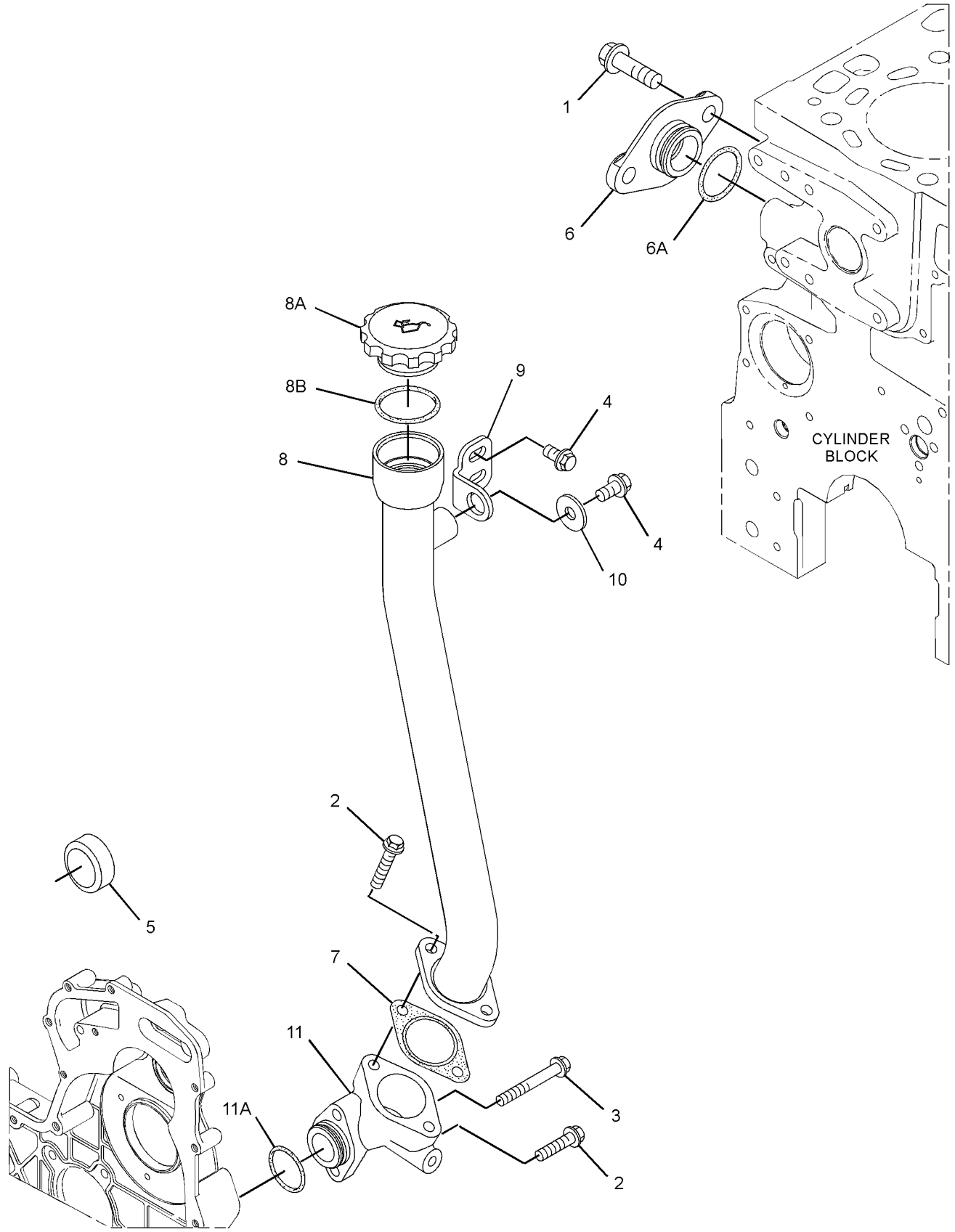

GRAPHIC #1 **<END>** g02756759

277-2912 FILTER GP-ENGINE OIL

S/N: C6E1-UP

PART OF 319-7201 ENGINE AR-PRIMARY

SMCS-1306, 1308

i03327305

NOTE	REF NO	GRAPHIC REF	PART NUMBER	QTY	PART NAME 1 2 3 4 5 6 (PRODUCT LEVEL)	SEE PAGE
	1	1	**269-8325**	1	FILTER-ENGINE OIL	

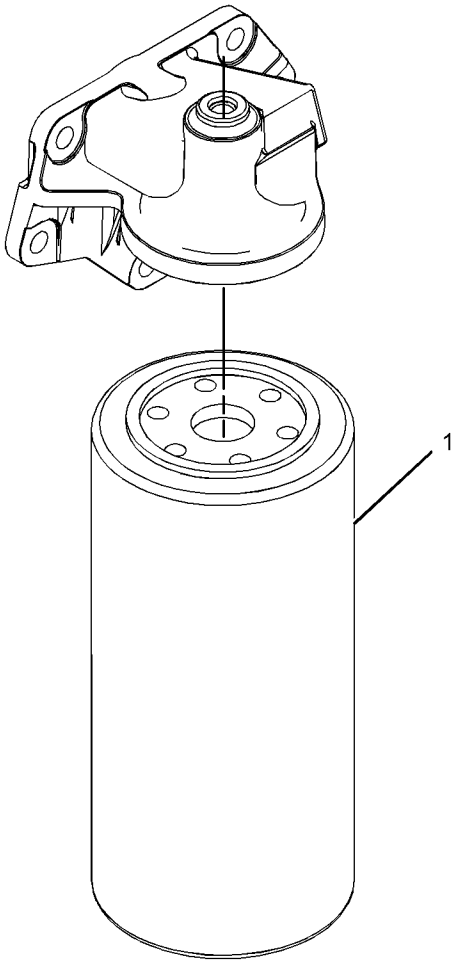

GRAPHIC #1

<END>

g01198493

276-2344 OIL CHANGE GP-HIGH SPEED–ENGINE OIL

S/N: LJR1-UP
PART OF 338-2594 OPTION AR-SERVICE
AN ATTACHMENT

SMCS-1325 **i04791052**

NOTE	REF NO	GRAPHIC REF	PART NUMBER	QTY	PART NAME 1 2 3 4 5 6 (PRODUCT LEVEL)	SEE PAGE
	1	1	**8T-5373**	1	COUPLER-MALE	
	2	1	**8W-3214**	1	CAP AS (HIGH SPEED OIL CHANGE)	
	3	1	**193-3973**	4	STRAP-CABLE	
	4	1	**200-6345**	2	MOUNT (DUAL SWIVEL)	
I	5	1	**348-7732**	1	HOSE AS	
	6	1	**301-2719**	1	BRACKET AS	
		1	**8T-4121**	1	WASHER-HARD (11X21X2.5-MM THK)	
M		1	**8T-4136**	1	BOLT (M10X1.5X25-MM)	
	7	1	*148-8347*	1	ELBOW AS	
		1	**3D-2824**	1	SEAL-O-RING	
		1	**6V-9007**	1	ELBOW	
		1	**6V-9746**	1	SEAL-O-RING	
	8	1	**2P-1293**	1	LOCKNUT (1-3/16-12-THD)	
	9	1	**3E-7430**	1	PLUG-PIPE	
	10	1	**6V-9746**	1	SEAL-O-RING	

I - REFER TO HYDRAULIC INFORMATION SYSTEM
M - METRIC PART

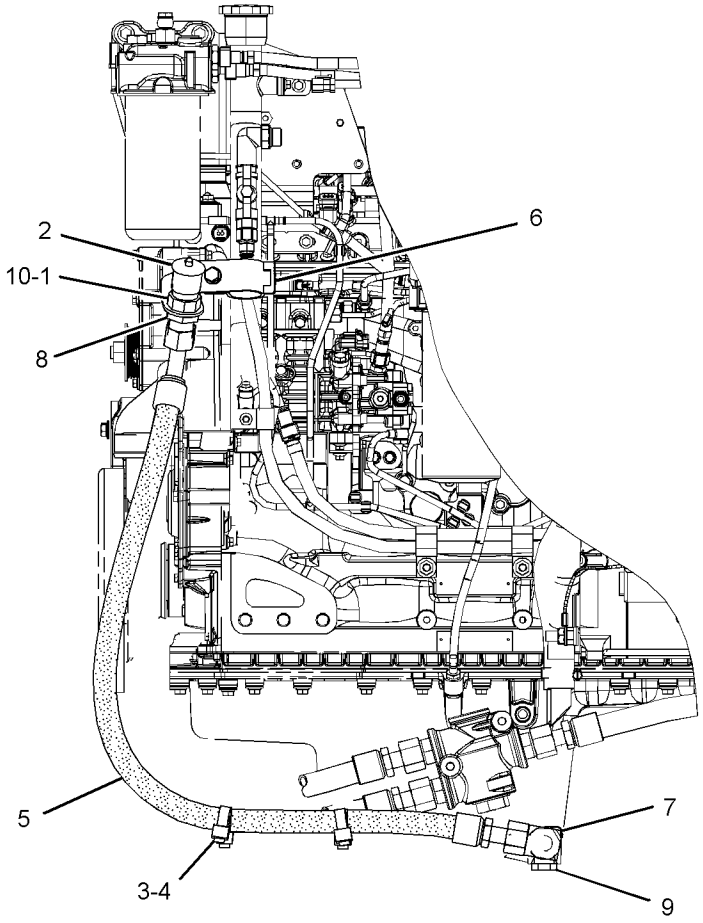

LEFT SIDE VIEW OF ENGINE

GRAPHIC #1 **<END>** g03028598

277-4262 PUMP GP-ENGINE OIL

S/N: C6E1-UP

PART OF 319-7201 ENGINE AR-PRIMARY

SMCS-1304, 1315 **i04670051**

NOTE	REF NO	GRAPHIC REF	PART NUMBER	QTY	PART NAME 1 2 3 4 5 6 (PRODUCT LEVEL)	SEE PAGE
	1	1	**373-8014**	1	PUMP-OIL (ENGINE)	
	2	1	**6I-1090**	4	BOLT (M8X1.25X40-MM)	

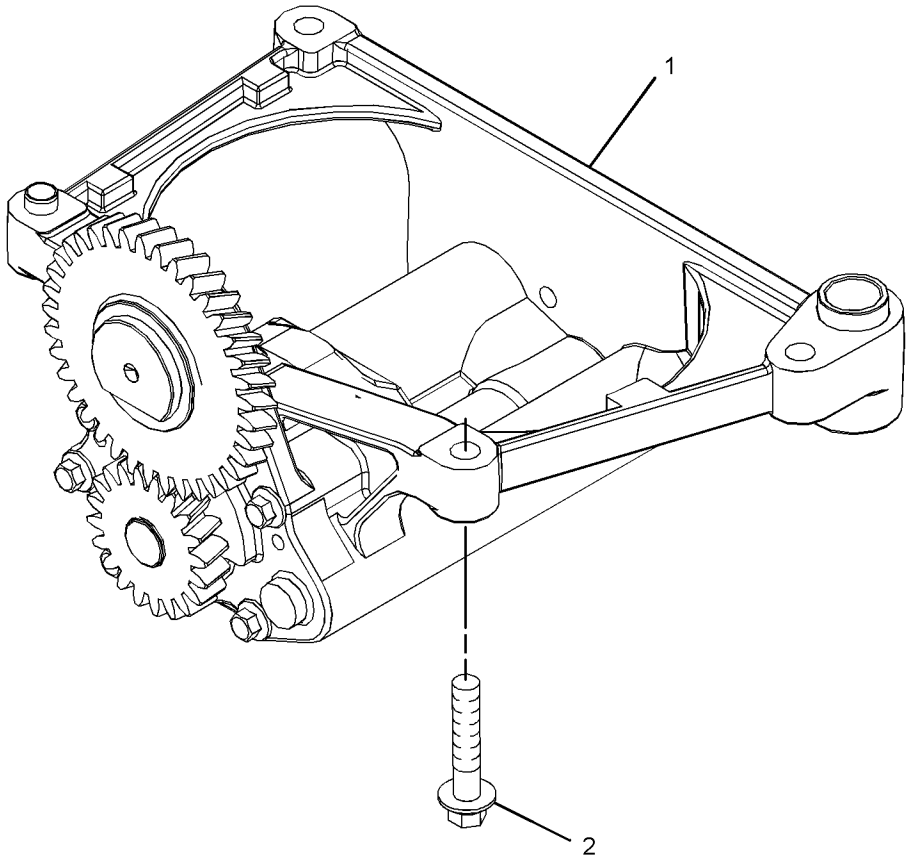

GRAPHIC #1 **<END>** g02815299

277-4694 VALVE GP-FLUID SAMPLING—ENGINE OIL

S/N: C6E1-UP

PART OF 319-7201 ENGINE AR-PRIMARY

SMCS-7542 **i02790076**

NOTE	REF NO	GRAPHIC REF	PART NUMBER	QTY	PART NAME 1 2 3 4 5 6 (PRODUCT LEVEL)	SEE PAGE
	1	1	**216-9633**	1	VALVE AS-FLUID SAMPLING (ENGINE OIL)	
	2	1	**8C-3445**	1	CAP-DUST	
	3	1	**232-3861**	1	PLUG (BLANKING)	
	4	1	**199-9267**	1	SEAL-O-RING	

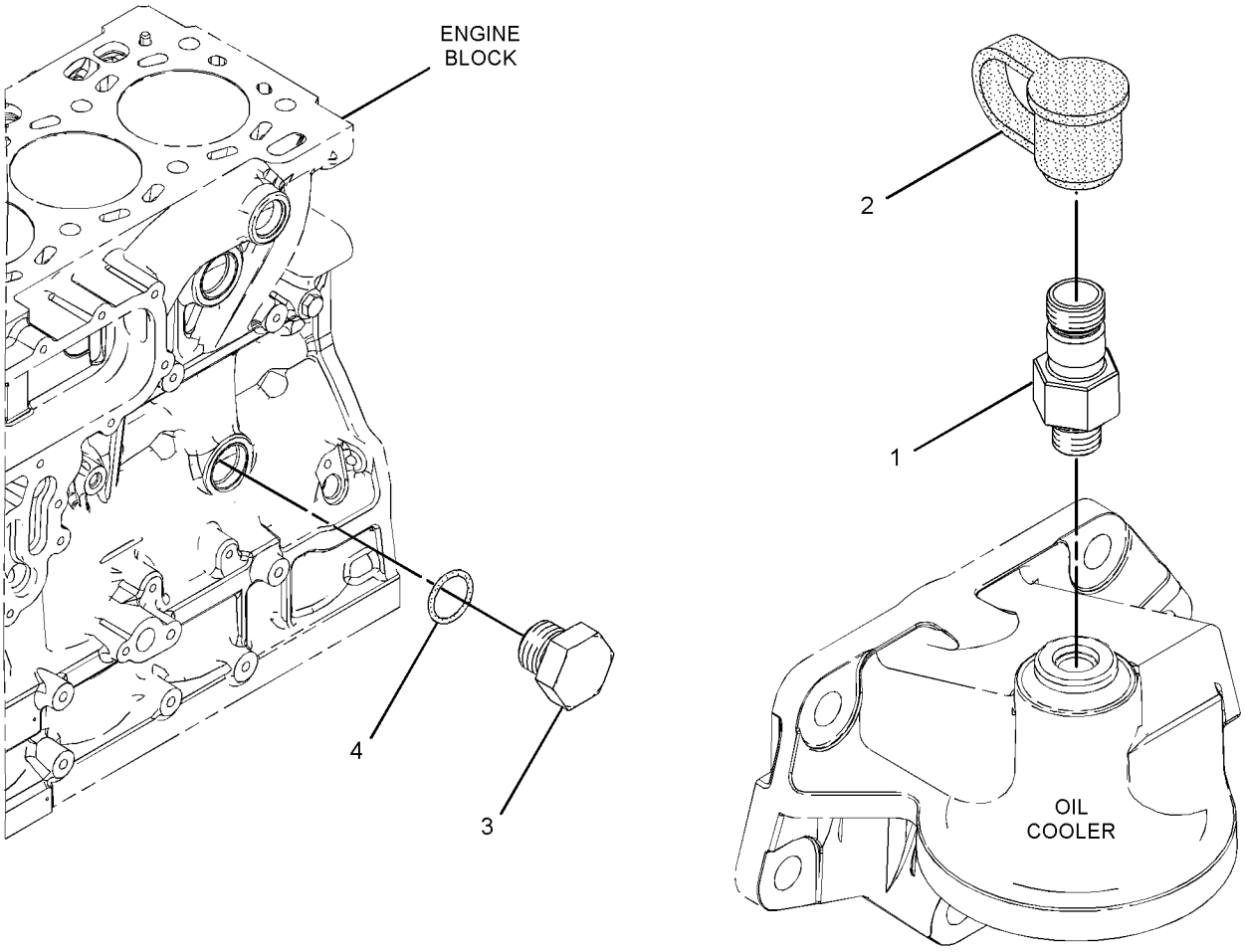

GRAPHIC #1 **<END>** g01198300

277-2504 COOLER GP-ENGINE OIL

S/N: C6E1-UP

PART OF 319-7201 ENGINE AR-PRIMARY

SMCS-1378 **i02854726**

NOTE	REF NO	GRAPHIC REF	PART NUMBER	QTY	PART NAME 1 2 3 4 5 6 (PRODUCT LEVEL)	SEE PAGE
M	1	1	**6I-0217**	8	BOLT (M8X1.25X20-MM)	
M	2	1,2	**6I-0260**	10	BOLT (M8X1.25X25-MM)	
	3	2	**6I-4709**	3	BOLT (M8X1.25X100-MM)	
M	4	2	**100-3751**	5	BOLT (M8X1.25X65-MM)	
	5	2	**295-8610**	1	COOLER AS-ENGINE OIL (ENGINE)	
M	5A	2	**6I-0260**	3	BOLT (M8X1.25X25-MM)	
	5B	2	**6I-0594**	4	NUT (M10X1.5-THD)	
	5C	2	**101-3917**	4	WASHER	
	5D	2	**101-7547**	4	WASHER	
	5E	2	**231-1455**	2	STUD	
	5F	2	**277-2500**	1	GASKET	
	5G	2	**277-2502**	2	STUD	
	5H	2	**277-2503**	3	PLUG	
	5J	2	**295-8613**	1	COOLER-OIL (ENGINE)	
	5K	2	**295-8615**	2	GASKET	
	6	1	**225-7944**	2	GASKET	
	7	1	**277-2538**	1	GASKET	
	8	2	**277-2526**	1	GASKET-FILTER	
	9	2	**277-2525**	1	HEAD AS-OIL FILTER	
	10	1	**232-3751**	2	PLATE (BLANKING)	
	11	1	**277-2537**	1	PLATE	

M - METRIC PART

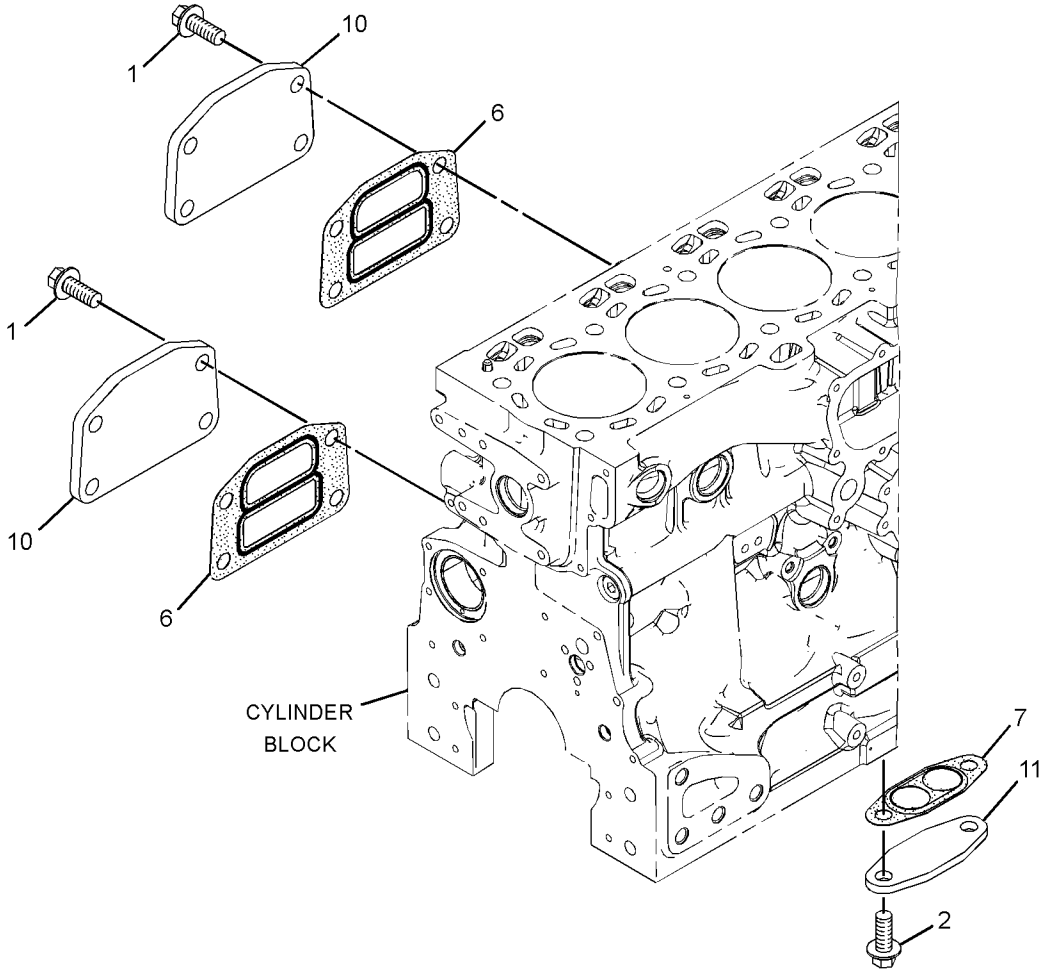

GRAPHIC #1 g01324633

277-2504 **COOLER GP-ENGINE OIL (*contd.*)** **i02854726**

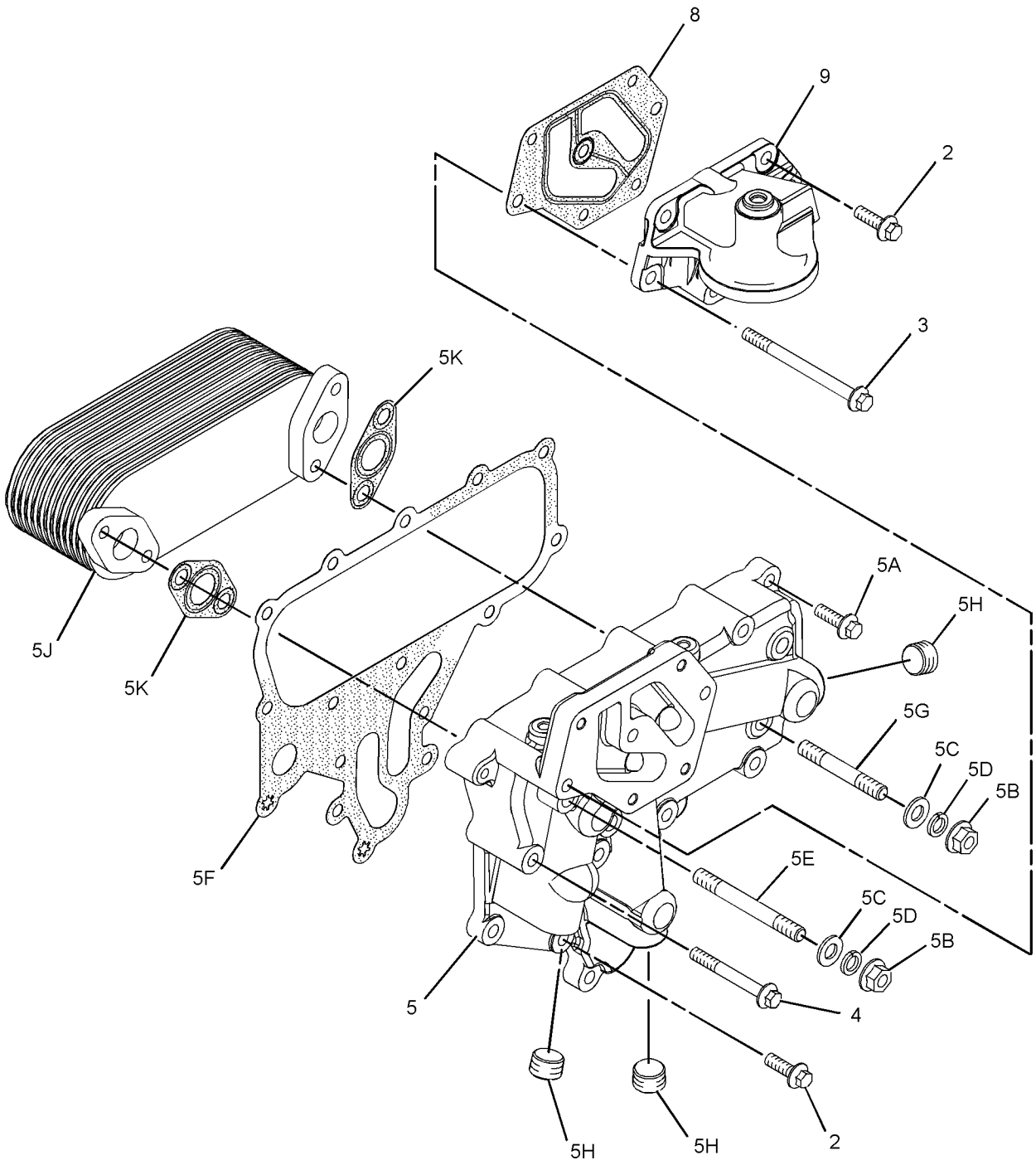

GRAPHIC #2 **<END>** g01324634

314-6007 COOLING AR-SUPPLEMENTAL

S/N: LJR1-UP
FOR USE WITH WASTE HANDLING
AN ATTACHMENT

SMCS-1353 **i03632396**

NOTE	PART NUMBER	QTY	PART NAME 1 2 3 4 5 6 (PRODUCT LEVEL)	SEE PAGE
Y	*308-1318*	1	RADIATOR GP	71

Y - SEPARATE ILLUSTRATION

<END>

267-6429 FAN GP-BLOWER

S/N: LJR1-UP

CANNOT BE USED WITH 267-6428—PAGE: 61

PART OF 318-0768 INSTALLATION AR-ENGINE

SMCS-1356, 1360 **i03630408**

NOTE	REF NO	GRAPHIC REF	PART NUMBER	QTY	PART NAME 1 2 3 4 5 6 (PRODUCT LEVEL)	SEE PAGE
	1	1	**200-0928**	1	ADAPTER-FAN	
	2	1	**253-4531**	1	BELT-SERPENTINE	
	3	1	**297-8682**	1	PULLEY-FAN	
	4	1	**226-2261**	1	SPIDER AS-FAN (BLOWER) (6-BLADE)	
	5	1	**319-1605**	1	GUARD AS-FAN (LH)	
	6	1	**319-1606**	1	GUARD AS-FAN (RH)	
M	7	1	**7X-0818**	6	BOLT (M8X1.25X45-MM)	
	8	1	**8T-4121**	16	WASHER-HARD (11X21X2.5-MM THK)	
M	9	1	**8T-4195**	16	BOLT (M10X1.5X30-MM)	
M	10	1	**8T-4908**	6	BOLT (M8X1.25X25-MM)	

M - METRIC PART

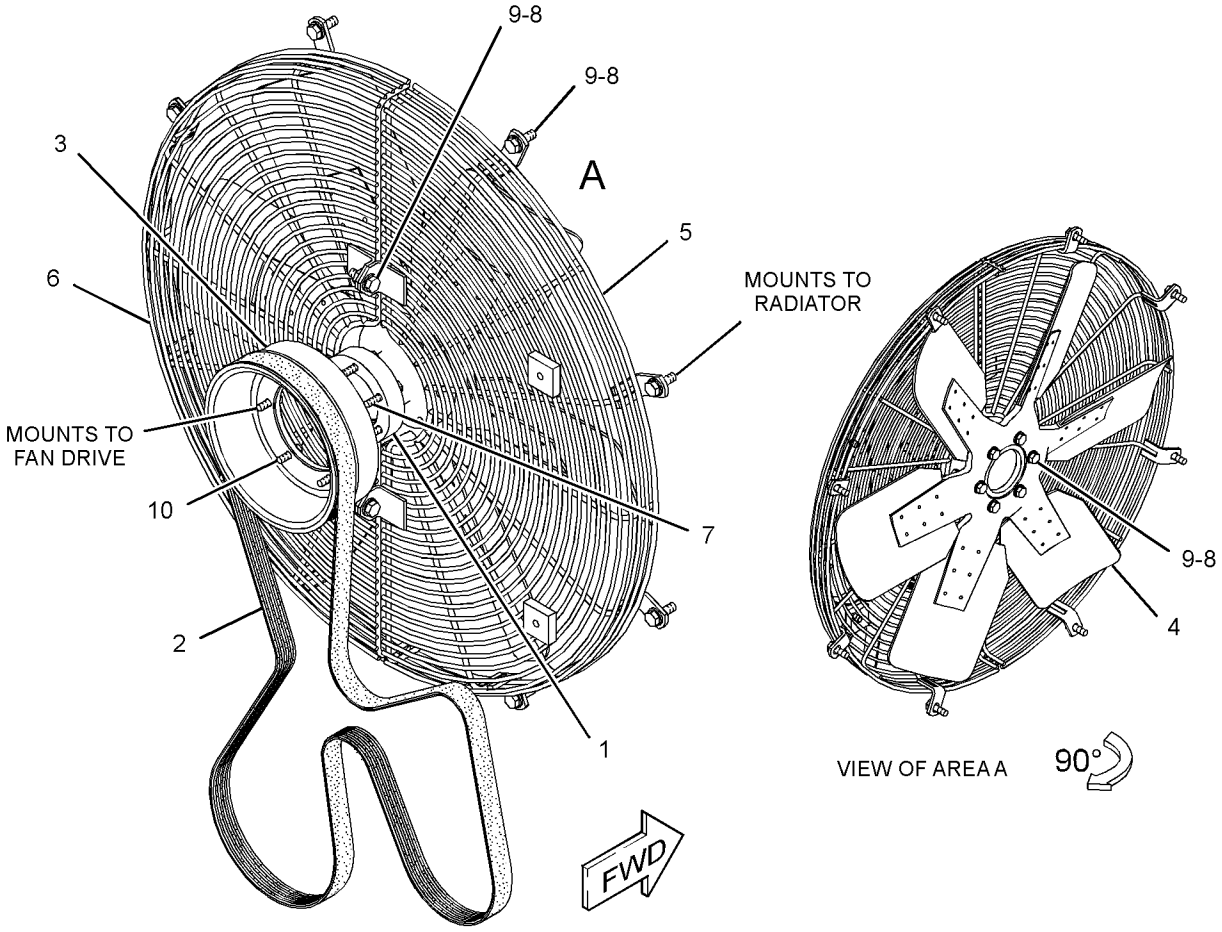

GRAPHIC #1 **<END>** g01398895

267-6428 FAN GP-REVERSIBLE

S/N: LJR1-UP
CANNOT BE USED WITH GRID GP-SANDBLAST
AN ATTACHMENT

SMCS-1356, 1360

i02796948

NOTE	REF NO	GRAPHIC REF	PART NUMBER	QTY	PART NAME 1 2 3 4 5 6 (PRODUCT LEVEL)	SEE PAGE
	1	1	**6P-5560**	1	GROMMET	
	2	1	**188-8954**	1	SPIDER AS-FAN (6-BLADE)	
	3	1	**200-0928**	1	ADAPTER-FAN	
	4	1	**240-8540**	1	GUARD AS-FAN (LH)	
M		1	**8T-3490**	2	NUT-WELD (M10X1.5-THD)	
	5	1	**249-3096**	1	GUARD AS-FAN (RH)	
	6	1	**253-4531**	1	BELT-SERPENTINE	
	7	1	**297-8682**	1	PULLEY-FAN	
M	8	1	**099-3649**	6	BOLT (M8X1.25X40-MM)	
	9	1	**8T-4121**	18	WASHER-HARD (11X21X2.5-MM THK)	
M	10	1	**8T-4186**	6	BOLT (M10X1.5X40-MM)	
M	11	1	**8T-4195**	12	BOLT (M10X1.5X30-MM)	
M	12	1	**8T-4908**	6	BOLT (M8X1.25X25-MM)	

M - METRIC PART

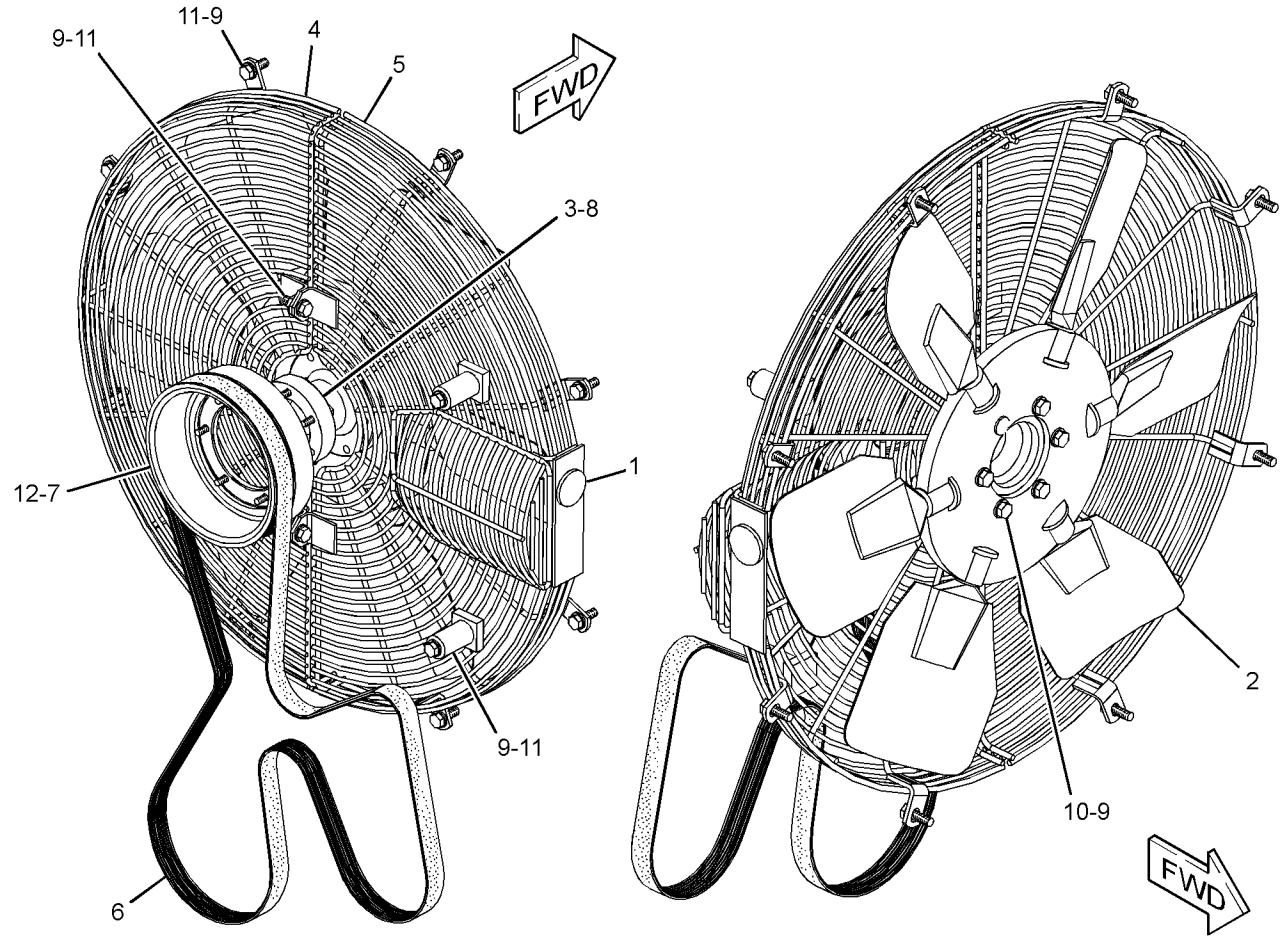

GRAPHIC #1

<END>

g01400045

288-4011 FITTING GP-WATER LINES

S/N: C6E1-UP

PART OF 319-7201 ENGINE AR-PRIMARY

SMCS-1380 **i02960551**

NOTE	REF NO	GRAPHIC REF	PART NUMBER	QTY	PART NAME 1 2 3 4 5 6 (PRODUCT LEVEL)	SEE PAGE
	1	1	**2B-0858**	2	PLUG-PIPE	
	2	1	**134-3856**	2	ELBOW	

288-4011 **FITTING GP-WATER LINES (*contd.*)** **i02960551**

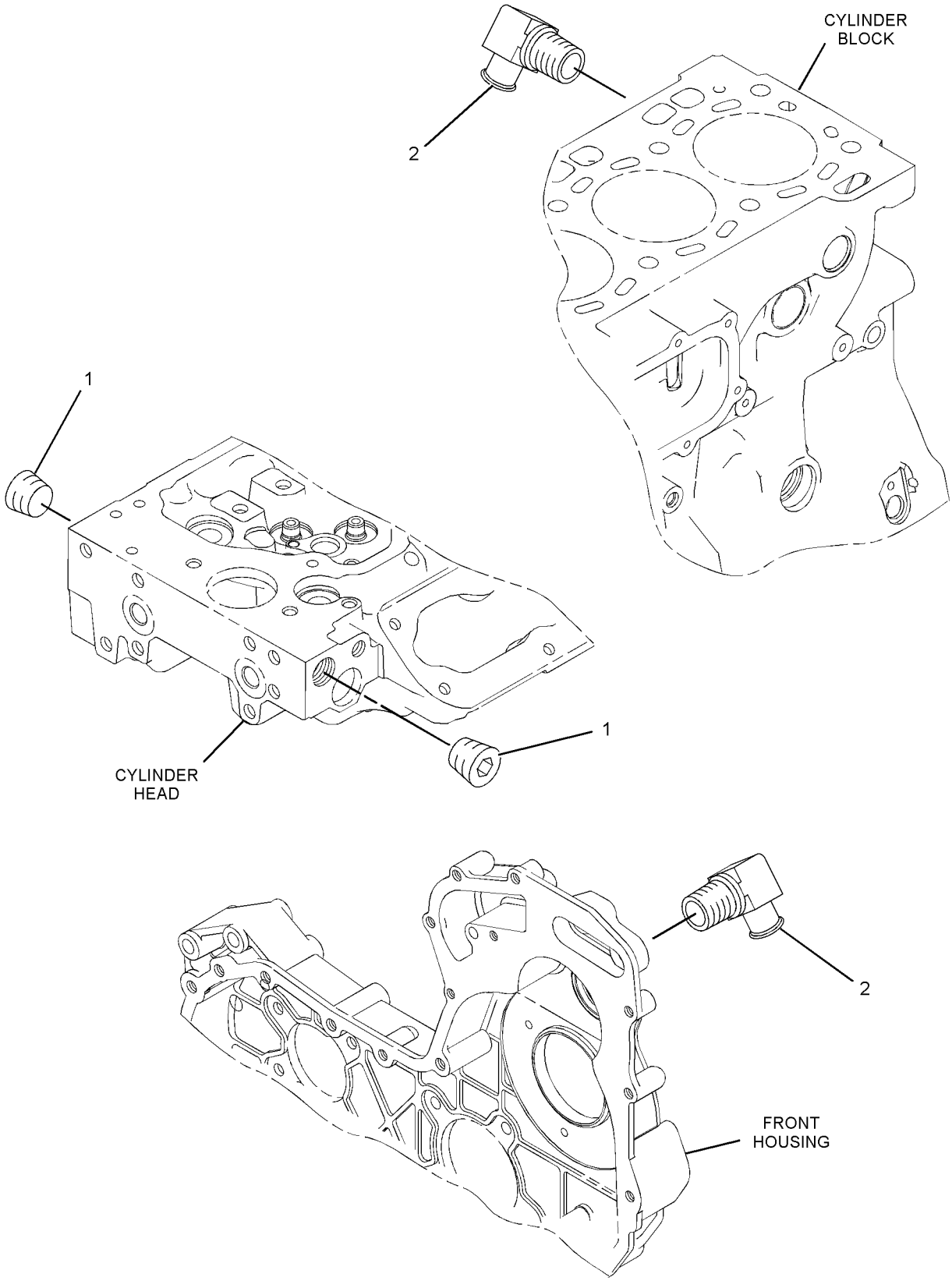

GRAPHIC #1 **<END>** g01488286

318-0755 LINES GP-RADIATOR

S/N: LJR1-294

PART OF 318-0768 INSTALLATION AR-ENGINE

SMCS-1353, 1380 **i03644424**

NOTE	REF NO	GRAPHIC REF	PART NUMBER	QTY	PART NAME 1 2 3 4 5 6 (PRODUCT LEVEL)	SEE PAGE
	1	1	**5D-1026**	1	CLAMP-BAND	
	2	1	**6V-9208**	1	ELBOW	
	3	1	**7K-1181**	6	STRAP-CABLE	
	4	1	**7X-7958**	2	CLAMP-HOSE	
	5	1	**8T-4984**	4	CLAMP-HOSE	
	6	1	**006-6586**	1	CONNECTOR-HOSE	
	7	1	**136-0207**	2	STRAP-CABLE (BLACK)	
	8	1	*150-3030*	1	ELBOW AS	
		1	**7X-1448**	1	ELBOW	
		1	**3J-1907**	1	SEAL-O-RING	
	9	1	**157-0670**	1	CAP-DUST	
	10	1	**177-2215**	4	STRAP-DUAL CLAMP	
	11	1	**193-3973**	2	STRAP-CABLE	
	12	1	**200-6345**	2	MOUNT (DUAL SWIVEL)	
	13	1	**233-2123**	4	BRACKET AS	
	14	1	**233-6818**	1	SHROUD AS	
	15	1	**273-2019**	1	HOSE (LOWER RADIATOR)	
	16	1	**285-3429**	1	VALVE AS-DRAIN (ENGINE BLOCK, RADIATOR COOLANT)	
		1	**2L-6726**	1	RING-RETAINING	
	17	1	**285-6414**	2	BAFFLE AS	
					(EACH INCLUDES)	
		1	**7G-5186**	12	SPACER (13X19X4.5-MM THK)	
	18	1	**286-6942**	2	STRIP	
Y	19	1	*308-1317*	1	COOLER GP-HYDRAULIC OIL	488
	20	1	**309-8995**	1	SHUNT	
	21	1	**309-8999**	1	HOSE (UPPER RADIATOR)	
	22	1	**311-8023**	1	BAFFLE	
	23	1	**311-8024**	1	SHROUD AS	
		1	**5D-9629**	2	ROD	
M		1	**8T-3490**	17	NUT-WELD (M10X1.5-THD)	
	24	1	**154-9024**	1	VALVE GP-FLUID SAMPLING (ENGINE COOLANT)	
	25	1	**198-4776**	2	WASHER-HARD (8.8X20X8-MM THK)	
	26	1	**1P-3702**	1	SEAL-RECTANGULAR	
	27	1	**2M-9780**	1	SEAL-O-RING	
	28	1	**3B-7255**	1	BUSHING-REDUCING	
	29	1	**5P-4961**	2	CLAMP-HOSE	
	30	1	**6V-2370**	4	RIVET-POP	
	31	1	**7X-0579**	4	WASHER-HARD (8.8X25.5X2-MM THK)	
M	32	1	**7X-2537**	2	BOLT (M8X1.25X35-MM)	
	33	1	**7X-7729**	8	WASHER (11X25X3-MM THK)	
	34	1	**8C-7534**	2	CLIP	
	35	1	**8T-4121**	24	WASHER-HARD (11X21X2.5-MM THK)	
M	36	1	**8T-4136**	24	BOLT (M10X1.5X25-MM)	
M	37	1	**8T-4185**	2	BOLT (M10X1.5X50-MM)	
M	38	1	**8T-4195**	8	BOLT (M10X1.5X30-MM)	
M	39	1	**8T-6466**	2	BOLT (M10X1.5X60-MM)	
E	40	1	**5P-0767**		HOSE (79-CM)	
E	41	1	**8C-3681**		HOSE (132-CM)	
E	42	1	**6V-8523**		HOSE (162-CM)	
E	43	1	**233-6832**		SEAL (89-CM EACH)	
E	44	1	**221-8310**		SEAL (83-CM)	
E	44A	1	**221-8310**		SEAL (80-CM EACH)	
E	44B	1	**221-8310**		SEAL (37-CM EACH)	
E	44C	1	**221-8310**		SEAL (35-CM EACH)	

E - ORDER BY THE CENTIMETER
M - METRIC PART
Y - SEPARATE ILLUSTRATION

318-0755 **LINES GP-RADIATOR (*contd.*)** **i03644424**

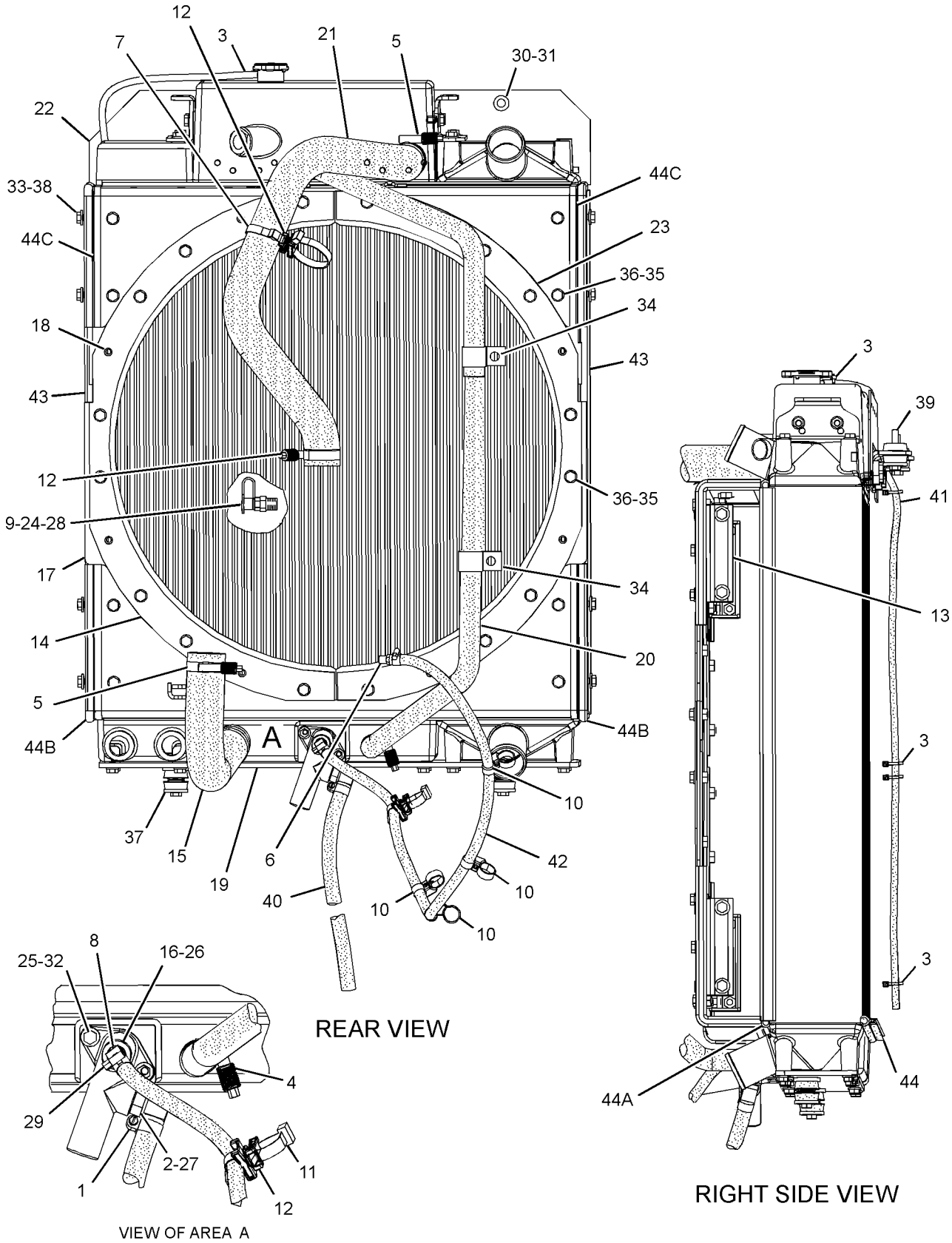

GRAPHIC #1 **<END>** g01955855

318-0755 LINES GP-RADIATOR

S/N: LJR295-UP

PART OF 318-0768 INSTALLATION AR-ENGINE

SMCS-1353, 1380 **i04326460**

NOTE	REF NO	GRAPHIC REF	PART NUMBER	QTY	PART NAME 1 2 3 4 5 6 (PRODUCT LEVEL)	SEE PAGE
	1	1	**5D-1026**	1	CLAMP-BAND	
	2	1	**7K-1181**	6	STRAP-CABLE	
	3	1	**7X-7958**	2	CLAMP-HOSE	
	4	1	**8T-4984**	4	CLAMP-HOSE	
	5	1	**136-0207**	2	STRAP-CABLE (BLACK)	
	6	1	*165-2273*	1	VALVE GP-SHUTOFF (RADIATOR DRAIN)	
		1	**3K-0360**	1	SEAL-O-RING	
		1	**6V-7238**	1	VALVE-SHUTOFF	
C	7	1	**200-6345**	1	MOUNT (DUAL SWIVEL)	
	8	1	**233-2123**	4	BRACKET AS	
	9	1	**233-6818**	1	SHROUD AS	
	10	1	**273-2019**	1	HOSE (LOWER RADIATOR)	
	11	1	**285-6414**	2	BAFFLE AS	
					(EACH INCLUDES)	
		1	**7G-5186**	12	SPACER (13X19X4.5-MM THK)	
	12	1	**286-6942**	2	STRIP	
Y	13	1	*308-1317*	1	COOLER GP-HYDRAULIC OIL	488
	14	1	**309-8995**	1	SHUNT	
	15	1	**309-8999**	1	HOSE (UPPER RADIATOR)	
	16	1	**311-8023**	1	BAFFLE	
	17	1	**311-8024**	1	SHROUD AS	
		1	**5D-9629**	2	ROD	
M		1	**8T-3490**	17	NUT-WELD (M10X1.5-THD)	
	18	1	**6V-2370**	4	RIVET-POP	
	19	1	**7X-0579**	4	WASHER-HARD (8.8X25.5X2-MM THK)	
	20	1	**7X-7729**	8	WASHER (11X25X3-MM THK)	
	21	1	**8C-7534**	2	CLIP	
	22	1	**8T-4121**	24	WASHER-HARD (11X21X2.5-MM THK)	
M	23	1	**8T-4136**	24	BOLT (M10X1.5X25-MM)	
M	24	1	**8T-4185**	2	BOLT (M10X1.5X50-MM)	
M	25	1	**8T-4195**	8	BOLT (M10X1.5X30-MM)	
M	26	1	**8T-6466**	2	BOLT (M10X1.5X60-MM)	
E	27	1	**5P-0767**		HOSE (79-CM)	
E	28	1	**8C-3681**		HOSE (132-CM)	
E	29	1	**233-6832**		SEAL (89-CM EACH)	
E	30	1	**221-8310**		SEAL (83-CM)	
E	30A	1	**221-8310**		SEAL (80-CM EACH)	
E	30B	1	**221-8310**		SEAL (37-CM EACH)	
E	30C	1	**221-8310**		SEAL (35-CM EACH)	

C - CHANGE FROM PREVIOUS TYPE
E - ORDER BY THE CENTIMETER
M - METRIC PART
Y - SEPARATE ILLUSTRATION

318-0755 **LINES GP-RADIATOR (*contd.*)** **i04326460**

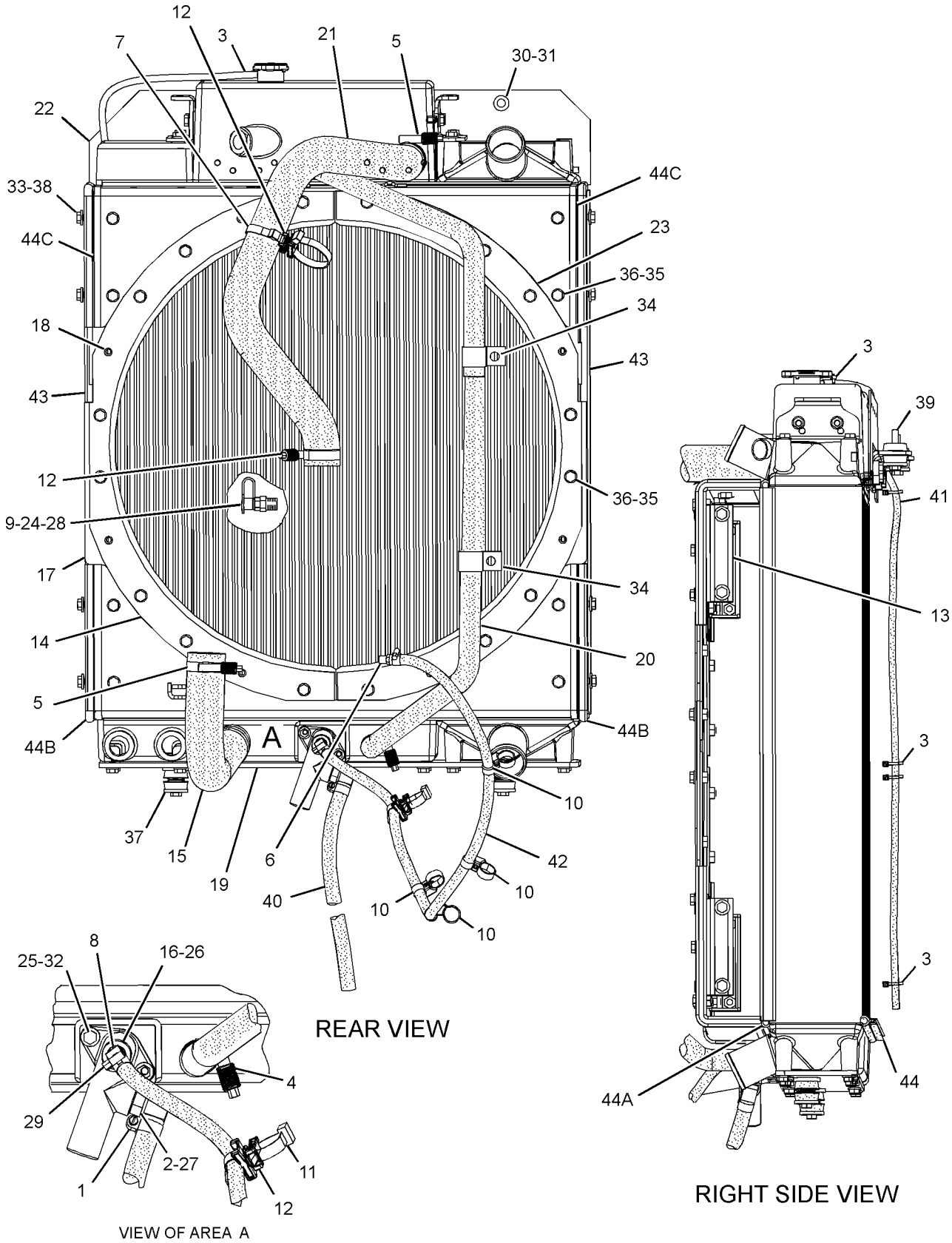

GRAPHIC #1 **<END>** g01955855

277-2939 PUMP GP-WATER

S/N: C6E1-UP

PART OF 319-7201 ENGINE AR-PRIMARY

SMCS-1361 **i03998230**

NOTE	REF NO	GRAPHIC REF	PART NUMBER	QTY	PART NAME 1 2 3 4 5 6 (PRODUCT LEVEL)	SEE PAGE
C	1	1	**354-4754**	1	KIT-WATER PUMP	
	1A	1	**225-8019**	1	GASKET	
M	2	1	**6I-0254**	2	BOLT (M8X1.25X30-MM)	
	3	1	**113-8129**	2	BOLT (M8X1.25X75-MM)	
	4	1	**277-2925**	1	CONNECTION AS	
	4A	1	**225-7738**	1	SEAL-O-RING	
	4B	1	**277-2923**	1	GASKET	
M	5	1	**6I-0217**	2	BOLT (M8X1.25X20-MM)	
	6	1	**6I-0839**	5	BOLT (M8X1.25X70-MM)	

C - CHANGE FROM PREVIOUS TYPE
M - METRIC PART

277-2939 **PUMP GP-WATER (*contd.*)** **i03998230**

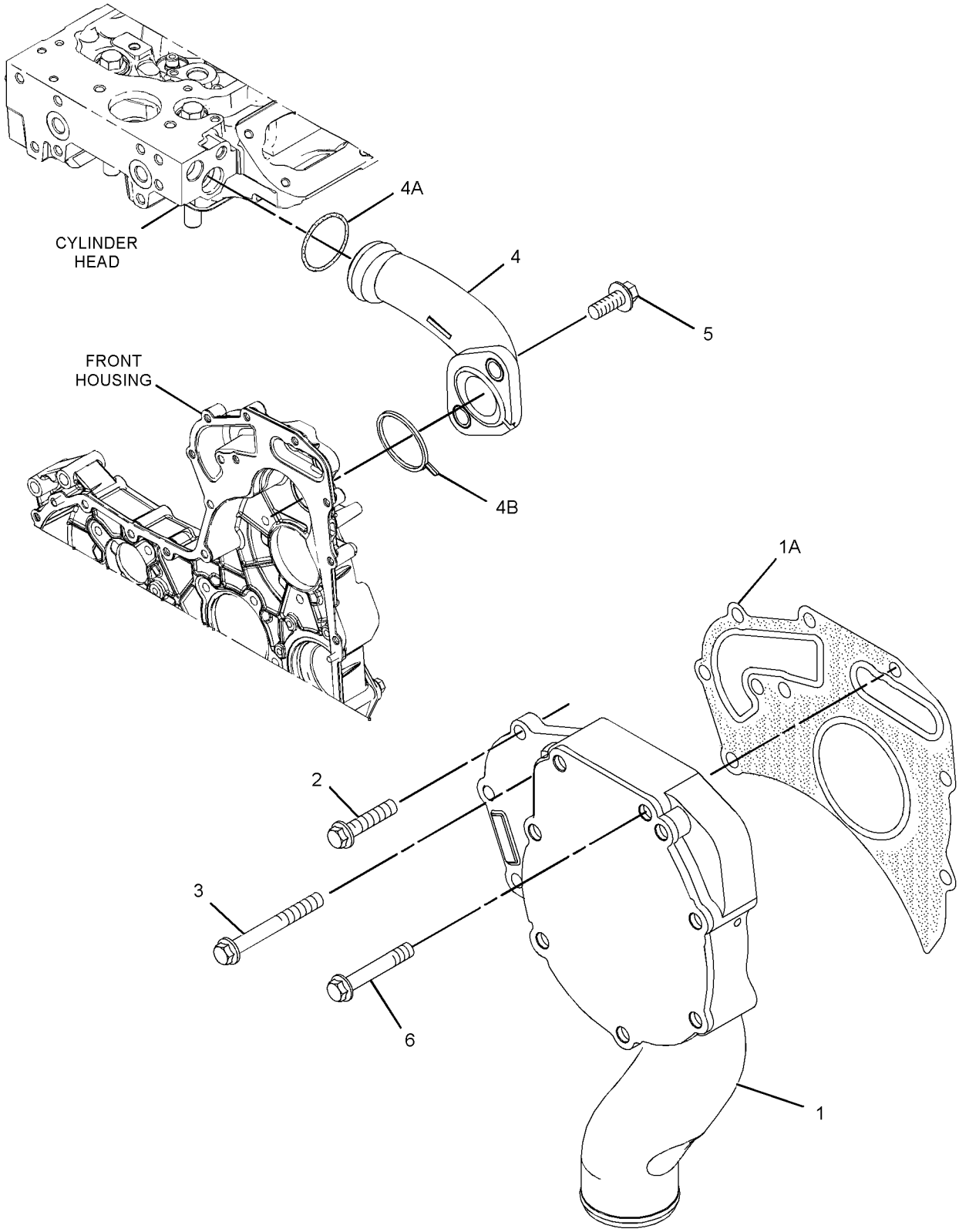

GRAPHIC #1 **<END>** g02177184

308-1225 RADIATOR GP

S/N: LJR1-UP

PART OF 308-1317 COOLER GP-HYDRAULIC OIL

SMCS-1353 **i02987680**

NOTE	REF NO	GRAPHIC REF	PART NUMBER	QTY	PART NAME 1 2 3 4 5 6 (PRODUCT LEVEL)	SEE PAGE
	1	1	**287-5256**	1	CAP AS-RADIATOR	
	2	1	**288-0535**	1	BODY AS	
	3	1	**308-1226**	1	CORE AS-RADIATOR	
	4	1	**7M-8485**	1	SEAL-O-RING	

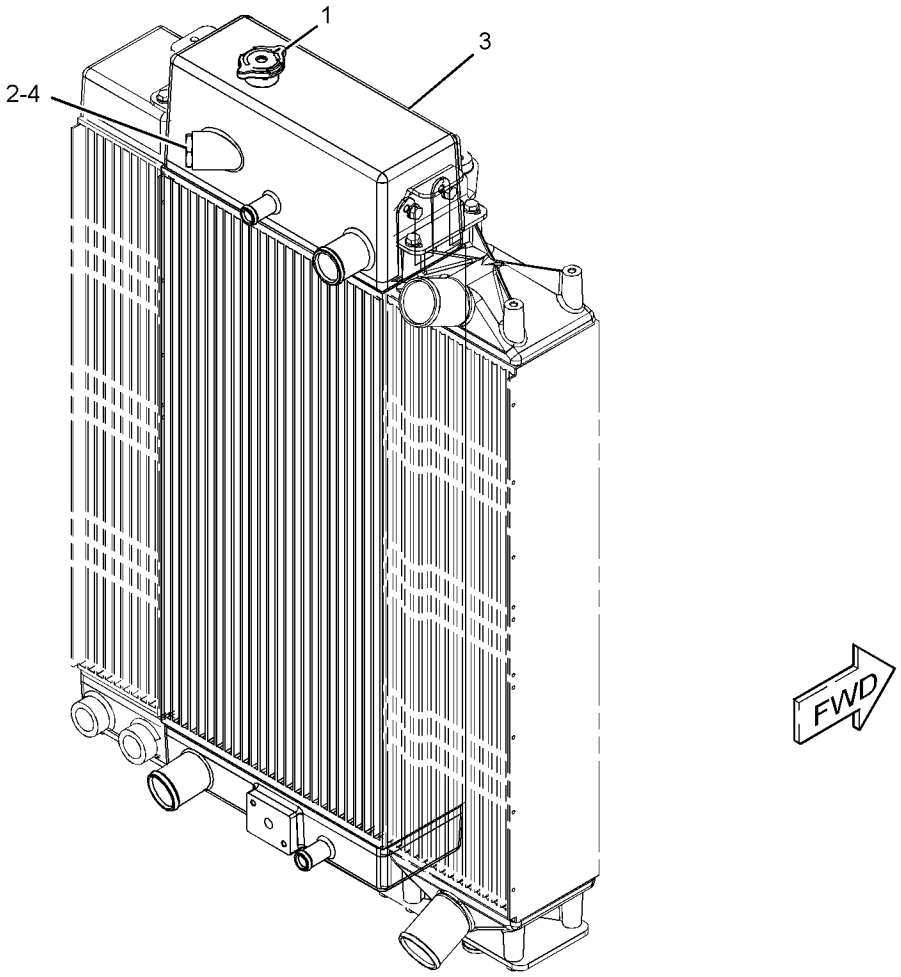

GRAPHIC #1 **<END>** g01458117

308-1318 RADIATOR GP—DEBRIS RESISTANT

S/N: LJR1-UP

PART OF 314-6007 COOLING AR-SUPPLEMENTAL

AN ATTACHMENT

SMCS-1353 **i03632397**

NOTE	REF NO	GRAPHIC REF	PART NUMBER	QTY	PART NAME 1 2 3 4 5 6 (PRODUCT LEVEL)	SEE PAGE
	1	1	**233-2116**	1	BRACKET	
	2	1	**233-2118**	2	BRACKET	
	3	1	**233-6825**	4	MOUNT AS	
	4	1	**285-6410**	1	BRACKET	
	5	1	**308-1224**	1	CORE AS-AFTERCOOLER	
	6	1	**308-1227**	1	PLATE AS	
	7	1	*308-1228*	1	RADIATOR GP	
		1	**7M-8485**	1	SEAL-O-RING	
		1	**287-5256**	1	CAP AS-RADIATOR	
		1	**288-0535**	1	BODY AS	
		1	**308-1229**	1	CORE AS-RADIATOR	
	8	1	**198-4777**	8	WASHER-HARD (11X25X10-MM THK)	
	9	1	**8T-4121**	20	WASHER-HARD (11X21X2.5-MM THK)	
M	10	1	**8T-4137**	20	BOLT (M10X1.5X20-MM)	
M	11	1	**8T-4196**	8	BOLT (M10X1.5X35-MM)	

M - METRIC PART

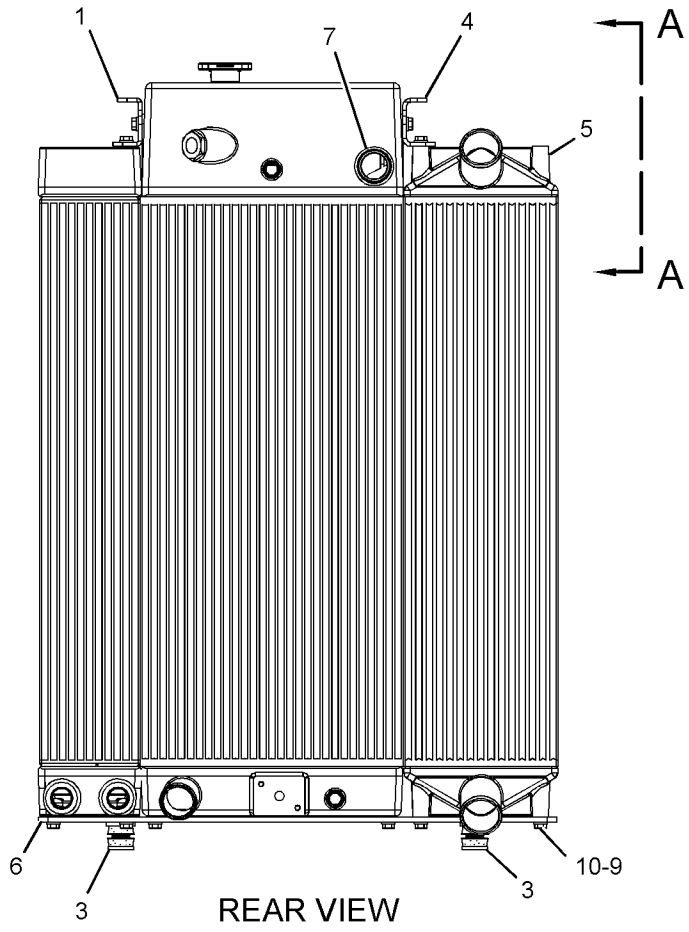

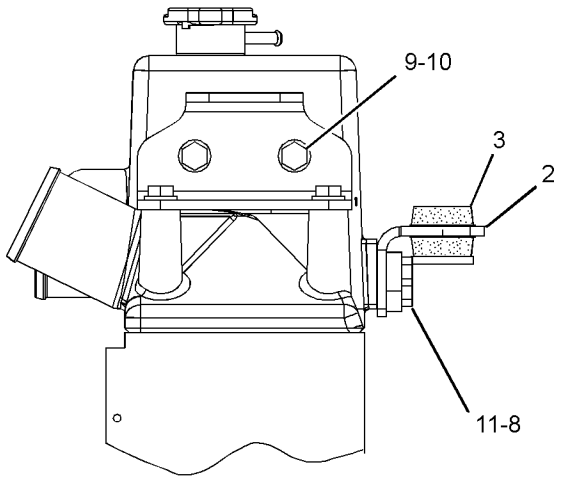

VIEW A-A

GRAPHIC #1 **<END>** g01949347

277-2976 REGULATOR GP-TEMPERATURE—WATER

S/N: C6E1-UP

PART OF 319-7201 ENGINE AR-PRIMARY

SMCS-1355 **i04242852**

NOTE	REF NO	GRAPHIC REF	PART NUMBER	QTY	PART NAME 1 2 3 4 5 6 (PRODUCT LEVEL)	SEE PAGE
	1	1	**367-1819**	1	REGULATOR AS-WATER TEMPERATURE (INCLUDES CONNECTOR)	
	2	1	**281-8744**	1	GASKET-WATER REGULATOR (TEMPERATURE)	
	3	1	**123-2899**	2	BOLT (M10X1.5X40-MM)	

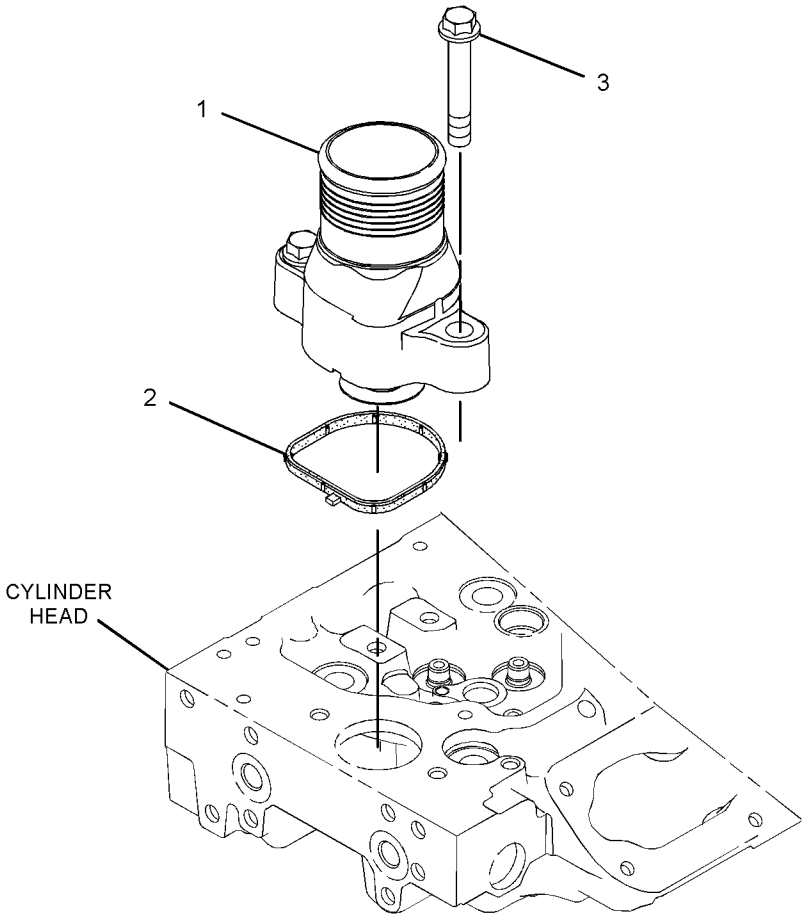

GRAPHIC #1 **<END>** g02432962

240-8552 AIR CLEANER GP

S/N: LJR1-UP

FIELD REPLACEMENT ORDER 266-9247—PAGE: 74

PART OF 267-6421 AIR CLEANER GP

SMCS-1051, 1054

i02793490

NOTE	REF NO	GRAPHIC REF	PART NUMBER	QTY	PART NAME 1 2 3 4 5 6 (PRODUCT LEVEL)	SEE PAGE
M	1	1	**244-1432**	1	BOLT-TEE (M10X1X80.8-MM)	
	2	1	**252-5001**	1	FILTER ELEMENT AS-AIR (PRIMARY)	
	3	1	**252-5002**	1	FILTER ELEMENT AS-AIR (SECONDARY)	
	4	1	**252-5003**	1	FRAME (AIR CLEANER ELEMENT)	
	5	1	**252-5004**	1	COVER	

M - METRIC PART

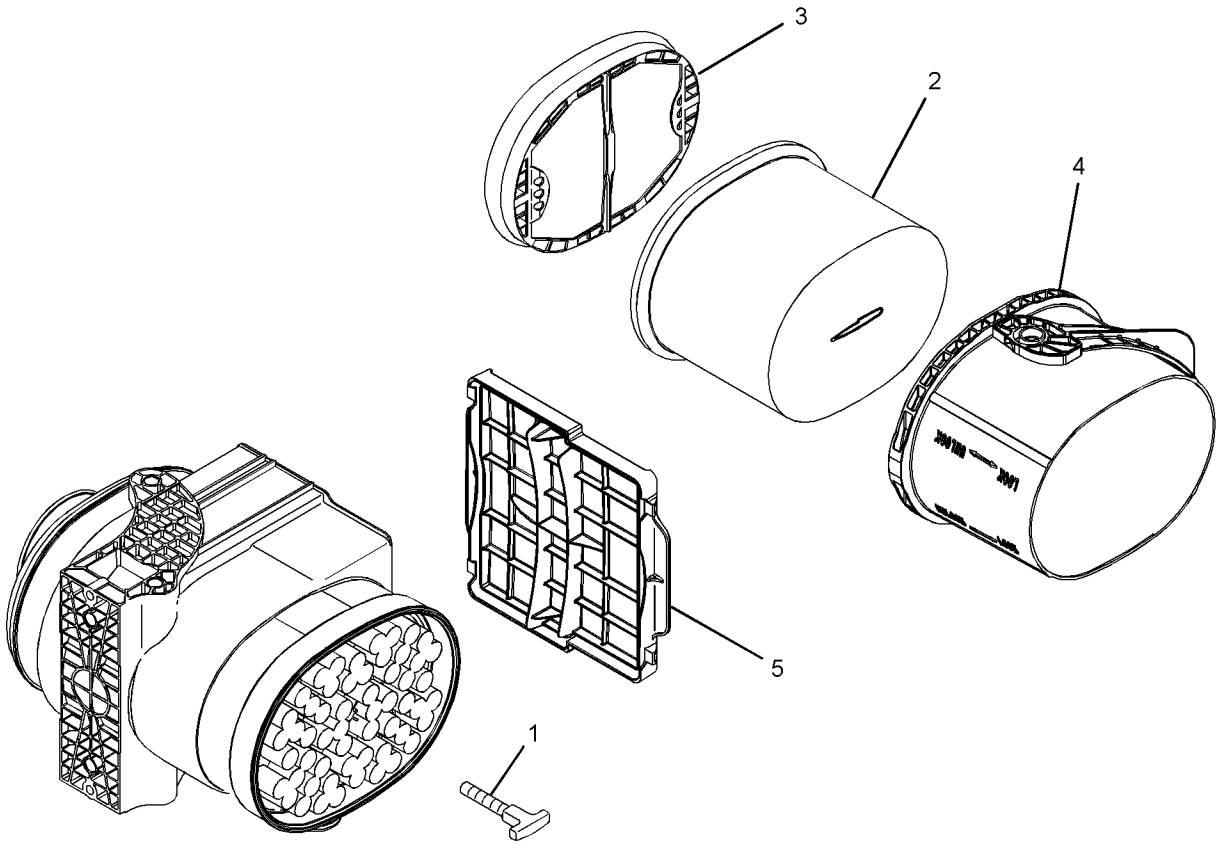

GRAPHIC #1

<END>

g01191292

266-9247 AIR CLEANER GP

S/N: LJR1-UP

METAL THREADED INSERTS IN ALL MOUNTING HOLES

FIELD REPLACEMENT FOR 240-8552—PAGE: 73

SMCS-1051, 1054

i02822712

NOTE	REF NO	GRAPHIC REF	PART NUMBER	QTY	PART NAME 1 2 3 4 5 6 (PRODUCT LEVEL)	SEE PAGE
M	1	1	**244-1432**	1	BOLT-TEE (M10X1X80.8-MM)	
	2	1	**252-5001**	1	FILTER ELEMENT AS-AIR (PRIMARY)	
	3	1	**252-5002**	1	FILTER ELEMENT AS-AIR (SECONDARY)	
	4	1	**252-5003**	1	FRAME (AIR CLEANER ELEMENT)	
	5	1	**252-5004**	1	COVER	

M - METRIC PART

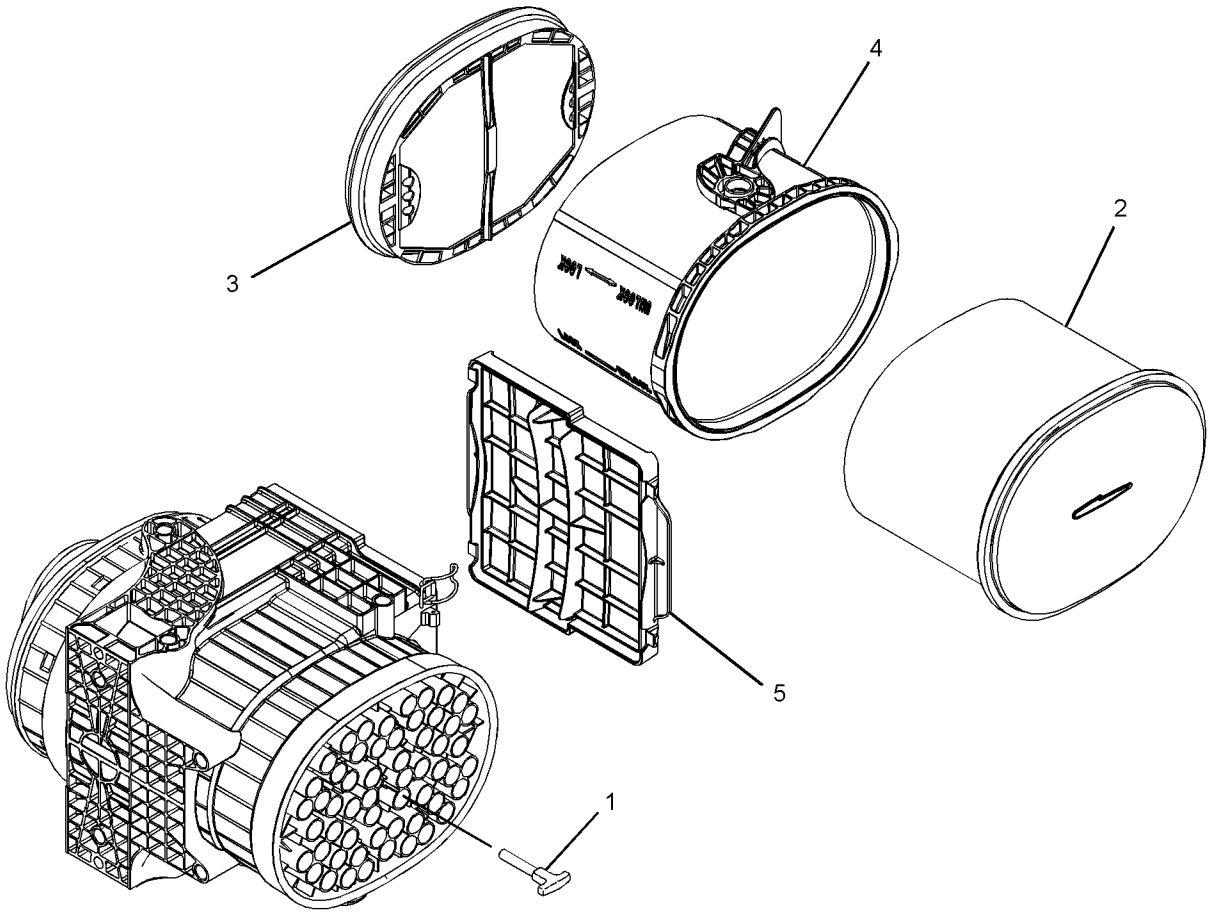

GRAPHIC #1

<END>

g01201753

267-6421 AIR CLEANER GP

S/N: LJR1-UP

PART OF 318-0768 INSTALLATION AR-ENGINE

SMCS-1051, 1054 **i02780908**

NOTE	REF NO	GRAPHIC REF	PART NUMBER	QTY	PART NAME 1 2 3 4 5 6 (PRODUCT LEVEL)	SEE PAGE
Y	1	1	*240-8552*	1	AIR CLEANER GP	73
	2	1	**296-2735**	1	INDICATOR AS-AIR FILTER CHANGE	
M	3	1	**8T-4189**	3	BOLT (M8X1.25X20-MM)	
	4	1	**8T-4224**	3	WASHER-HARD (8.8X16X2-MM THK)	

M - METRIC PART
Y - SEPARATE ILLUSTRATION

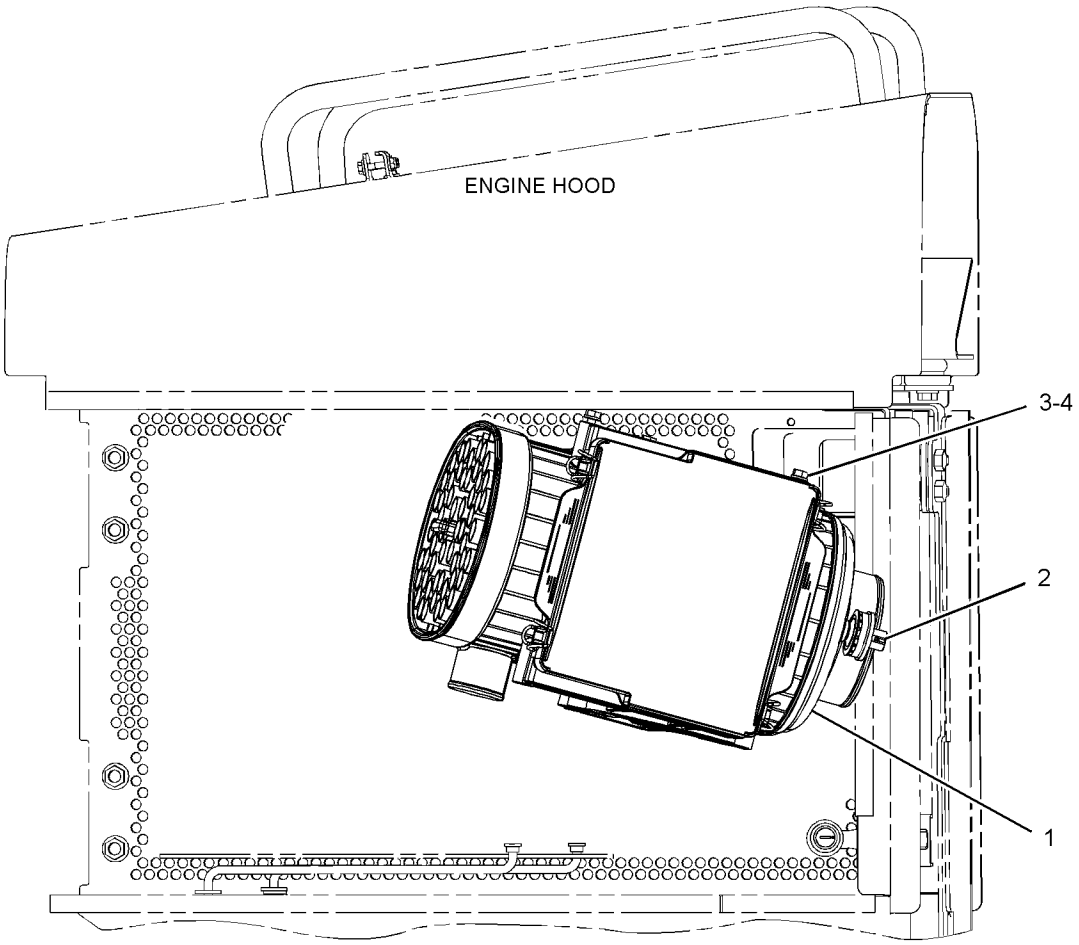

LEFT SIDE VIEW

GRAPHIC #1 **<END>** g01289072

AIR INLET AND EXHAUST SYSTEM

322-0617 LINES GP-AIR

S/N: LJR1-UP

PART OF 318-0768 INSTALLATION AR-ENGINE

SMCS-1071 **i05218586**

NOTE	REF NO	GRAPHIC REF	PART NUMBER	QTY	PART NAME 1 2 3 4 5 6 (PRODUCT LEVEL)	SEE PAGE
	1	1	**2J-6540**	1	CLAMP-HOSE	
	2	1	**2S-3440**	3	CLAMP-HOSE	
	3	1	**4N-7431**	1	HOSE-RADIATOR	
	4	1	**5P-2230**	1	CLAMP-HOSE	
	5	1	**8Y-8503**	1	SPACER (0.8X1X40-MM THK)	
	6	1	**139-1398**	1	CLIP	
	7	1	**203-7607**	1	HOSE	
	8	1	**216-0067**	1	HOSE	
	9	1	**247-9730**	1	VALVE AS-CHECK (AIR CLEANER)	
	10	1	**252-1577**	1	HOSE	
	11	1	**260-0634**	1	TUBE	
	12	1	**267-6404**	1	HOSE	
	13	1	**277-8716**	1	BRACKET AS	
	14	1	**290-5626**	1	HOSE	
	15	1	**377-6092**	1	ELBOW-AIR INLET	
	16	1	**290-5635**	1	HOSE-AIR	
	17	1	**290-5644**	1	TUBE AS	
	18	1	**301-2745**	1	TUBE	
	19	1	**309-0572**	1	ELBOW	
	20	1	**198-4777**	1	WASHER-HARD (11X25X10-MM THK)	
	21	1	**208-7448**	3	CLAMP	
	22	1	**209-4573**	1	CLAMP-V BAND	
	23	1	**209-4581**	1	CLAMP	
	24	1	**215-4012**	1	CLAMP	
	25	1	**216-4983**	5	CLAMP	
	26	1	**247-1925**	1	CLAMP	
	27	1	**5P-4116**	1	WASHER-HARD (8.8X20.5X2-MM THK)	
	28	1	**6V-1581**	1	CLIP (SLOT)	
	29	1	**6V-1582**	1	CLIP (TAB)	
	30	1	**7X-7729**	1	WASHER (11X25X3-MM THK)	
	31	1	**8T-4121**	5	WASHER-HARD (11X21X2.5-MM THK)	
M	32	1	**8T-4137**	1	BOLT (M10X1.5X20-MM)	
M	33	1	**8T-4186**	1	BOLT (M10X1.5X40-MM)	
M	34	1	**8T-4189**	1	BOLT (M8X1.25X20-MM)	
M	35	1	**8T-6466**	1	BOLT (M10X1.5X60-MM)	
M	36	1	**8T-4195**	3	BOLT (M10X1.5X30-MM)	

M - METRIC PART

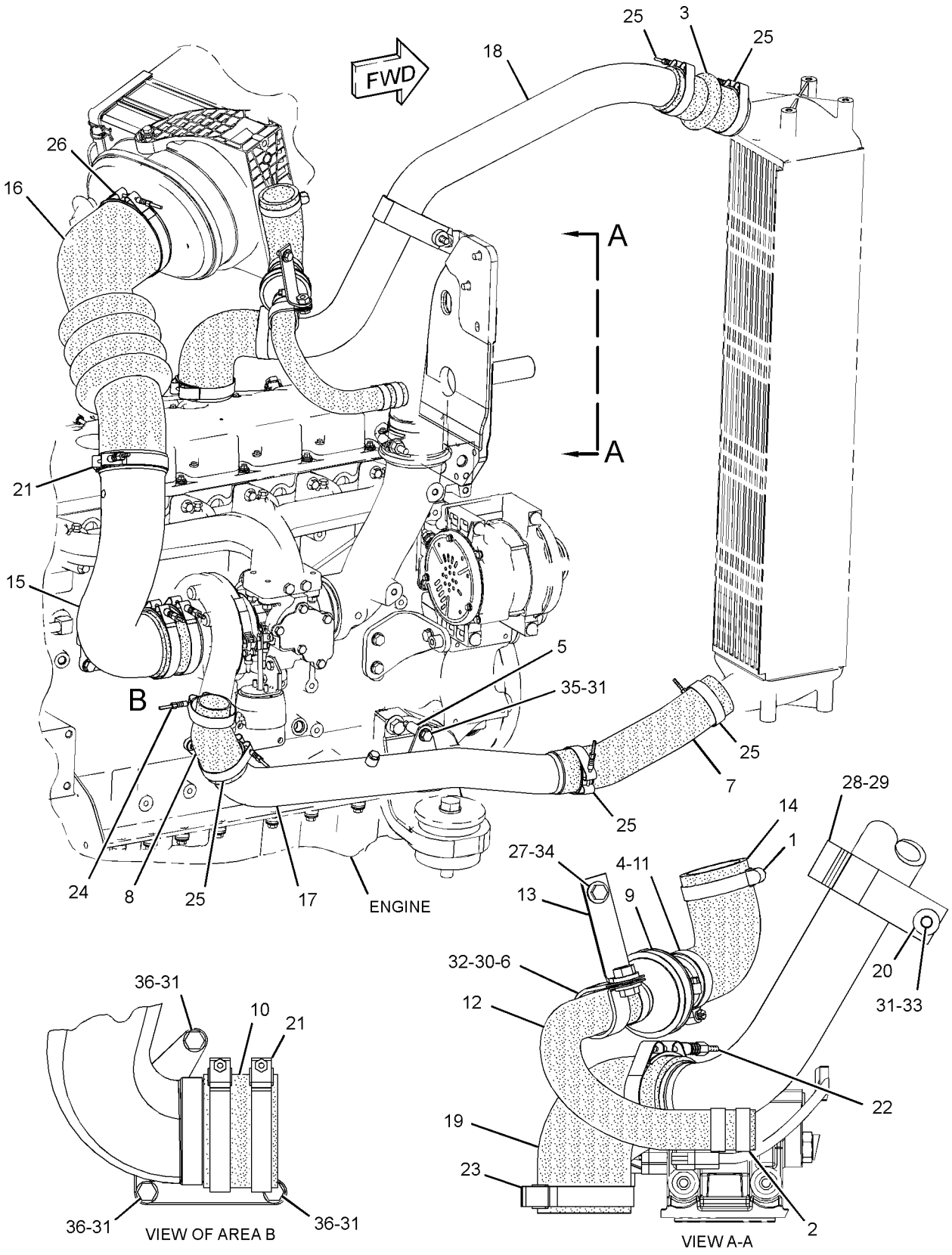

GRAPHIC #1 **<END>** g02891341

280-1292 MANIFOLD GP-INLET–AIR

S/N: C6E1-UP

PART OF 319-7201 ENGINE AR-PRIMARY

SMCS-1058, 1090 **i03419092**

NOTE	REF NO	GRAPHIC REF	PART NUMBER	QTY	PART NAME 1 2 3 4 5 6 (PRODUCT LEVEL)	SEE PAGE
	1	1	**295-0912**	1	COVER AS	
	1A	1	**278-5128**	1	GASKET-MANIFOLD	
	1B	1	**277-4302**	2	DOWEL	
M	2	1	**6I-0645**	19	BOLT (M8X1.25X25-MM)	
C	3	1	**317-2684**	1	ELBOW GP-AIR INLET	
	3A	1	**238-8288**	1	GASKET-INLET	
	3B	1	**292-3462**	1	PLUG-PIPE	

C - CHANGE FROM PREVIOUS TYPE
M - METRIC PART

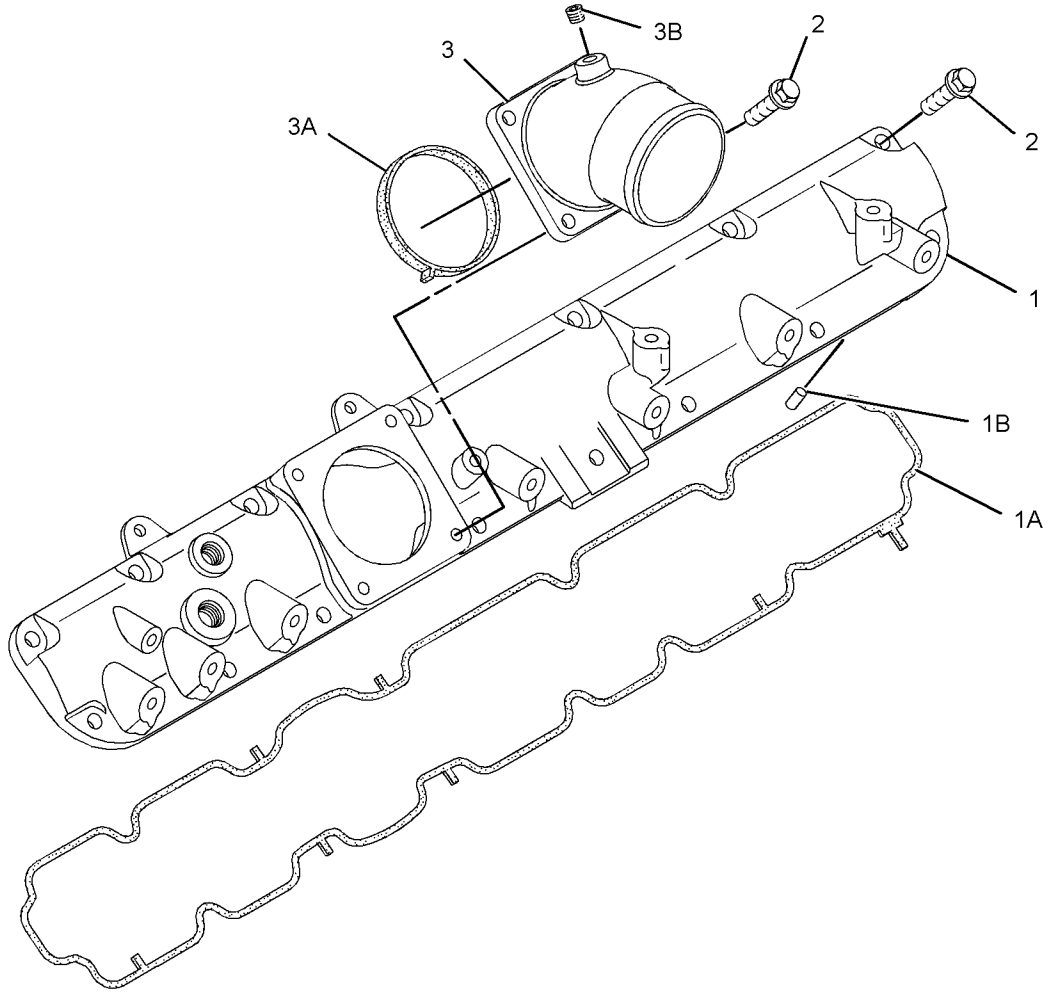

GRAPHIC #1 **<END>** g01636745

322-0600 MUFFLER GP

S/N: LJR1-UP

PART OF 318-0768 INSTALLATION AR-ENGINE

SMCS-1062 **i03630421**

NOTE	REF NO	GRAPHIC REF	PART NUMBER	QTY	PART NAME 1 2 3 4 5 6 (PRODUCT LEVEL)	SEE PAGE
	1	1	**290-5638**	1	MUFFLER AS	
		1	**9Y-8315**	1	CLAMP-PIPE	
	2	1	**198-4777**	3	WASHER-HARD (11X25X10-MM THK)	
M	3	1	**8T-4186**	1	BOLT (M10X1.5X40-MM)	

M - METRIC PART

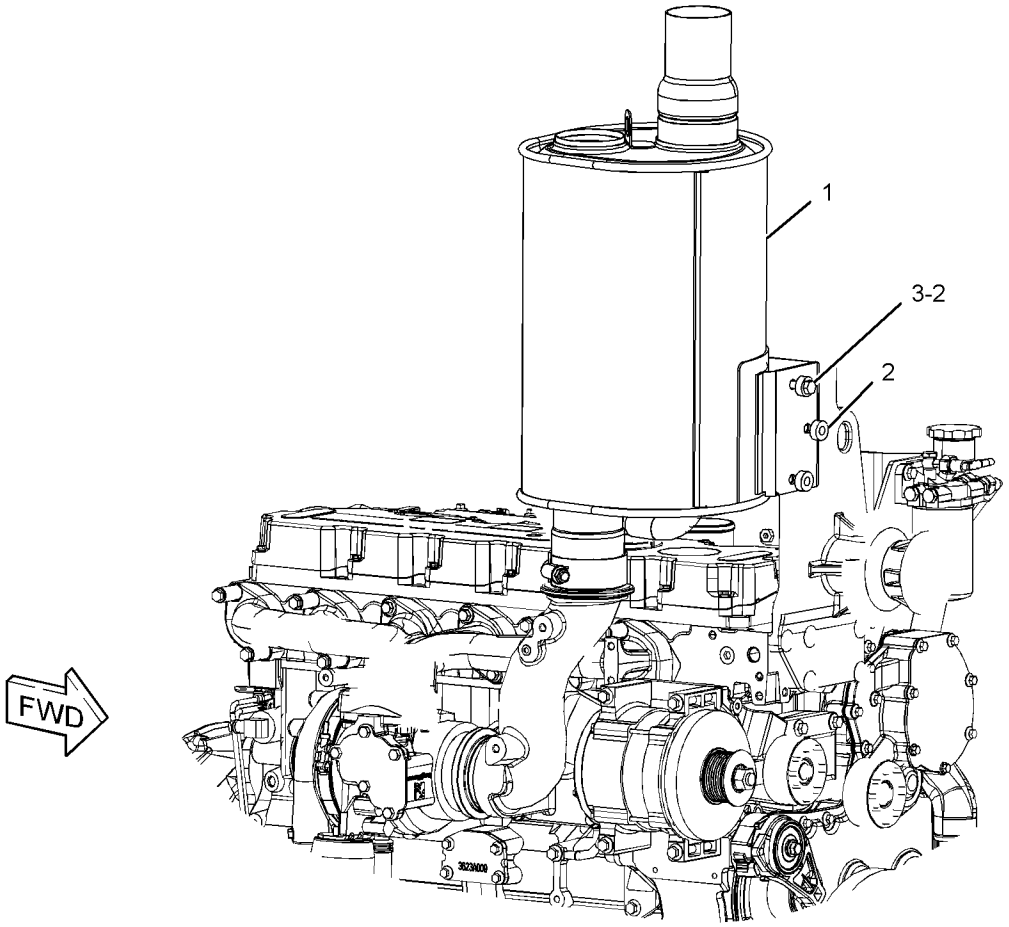

GRAPHIC #1 **<END>** g01902233

AIR INLET AND EXHAUST SYSTEM

243-2157 PIPE GP-EXHAUST

S/N: LJR1-UP

PART OF 318-0768 INSTALLATION AR-ENGINE

SMCS-1061 **i05218971**

NOTE	REF NO	GRAPHIC REF	PART NUMBER	QTY	PART NAME 1 2 3 4 5 6 (PRODUCT LEVEL)	SEE PAGE
	1	1	**243-2158**	1	PIPE-EXHAUST	
	2	1	**388-9525**	1	CLAMP-BENT BOLT	

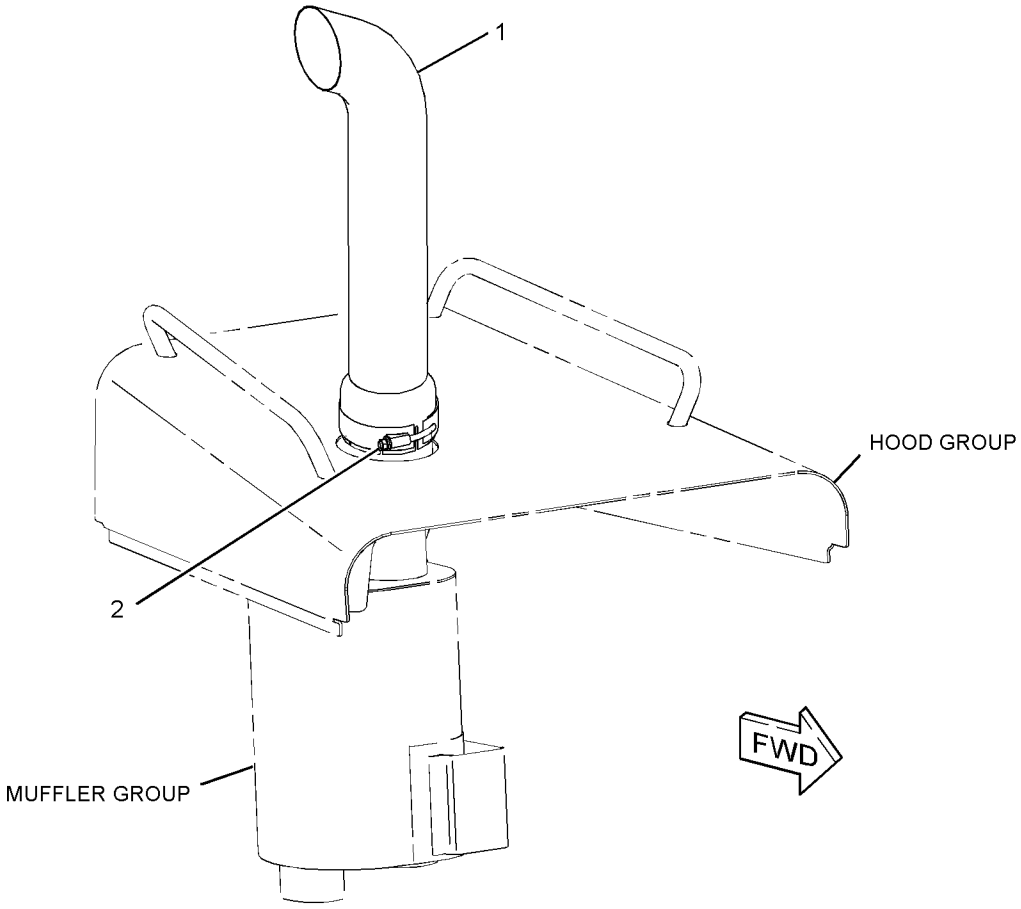

GRAPHIC #1 **<END>** g03350669

267-6435 PRECLEANER GP

S/N: LJR1-UP

FOR USE WITH 274-5589—PAGE: 372, 274-5590—PAGE: 373

AN ATTACHMENT

SMCS-1055 **i02796038**

NOTE	REF NO	GRAPHIC REF	PART NUMBER	QTY	PART NAME 1 2 3 4 5 6 (PRODUCT LEVEL)	SEE PAGE
	1	1	**256-3467**	1	CLAMP	
	2	1	**258-8527**	1	PRECLEANER GP	
	2A	1	**176-8234**	1	CLAMP	
		1	**174-5415**	1	CLAMP	
	3	1	**290-5628**	1	PLATE AS	
	4	1	**307-8645**	1	DUCT AS	
		1	**249-5512**	1	SEAL	
		1	**267-6411**	1	DUCT	

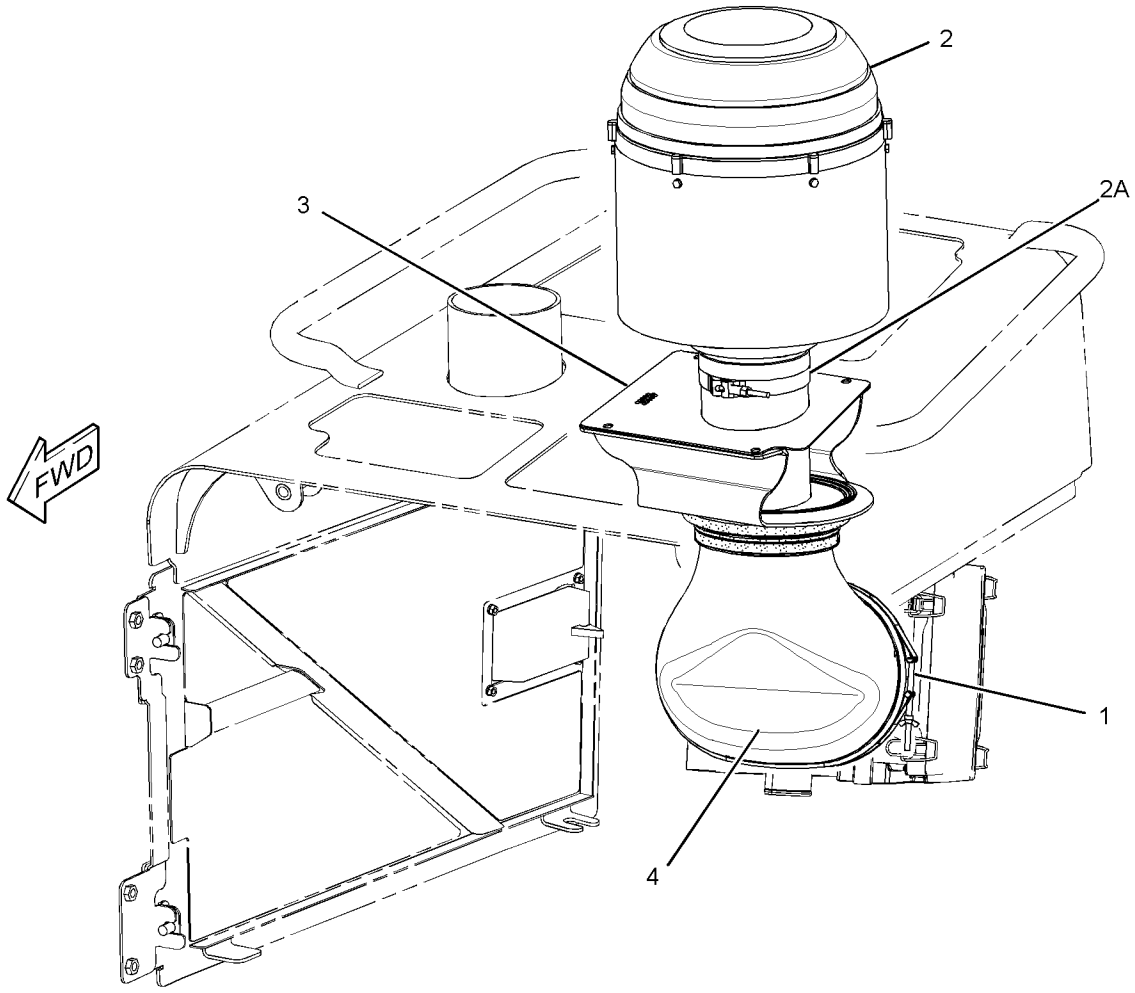

GRAPHIC #1 **<END>** g01379277

290-4288 PRECLEANER GP

S/N: LJR1-UP
FOR USE WITH CAB AR, WASTE HANDLING AR
CANNOT BE USED WITH CANOPY AR
AN ATTACHMENT

SMCS-1055 **i03626358**

NOTE	REF NO	GRAPHIC REF	PART NUMBER	QTY	PART NAME 1 2 3 4 5 6 (PRODUCT LEVEL)	SEE PAGE
	1	1	**3E-5239**	1	RELAY AS (24-VOLT) (PRECLEANER)	
	2	1	**7K-1181**	6	STRAP-CABLE	
	3	1	**220-0122**	1	LATCH AS	
	4	1	**232-3583**	1	PRECLEANER GP	
		1	**197-1932**	1	MOTOR AS-BLOWER (24-VOLT, CAB AIR)	
		1	**9W-0852**	2	PIN-CONNECTOR (14-GA TO 16-GA)	
		1	**102-8802**	1	KIT-RECEPTACLE (2-PIN)	
					(INCLUDES RECEPTACLE AS & WEDGE)	
	5	1	**235-0320**	1	CAP AS-AIR CLEANER (PRECLEANER)	
		1	**3E-7404**	1	CLAMP-HOSE	
	6	1	**290-4289**	1	COVER AS-ACCESS	
	7	1	**290-4290**	1	HARNESS AS-MOTOR	
		1	**8T-8737**	1	PLUG-SEAL	
		1	**9X-1056**	4	TERMINAL-RECEPTACLE (14-GA TO 16-GA)	
E		1	**125-7875**		TUBE-HEAT SHRINK (7.44-MM DIA) (5-CM)	
		1	**126-1766**	2	SOCKET-CONNECTOR (14-GA TO 18-GA)	
		1	**144-1636**	3	PIN-CONNECTOR (14-GA TO 18-GA)	
		1	**9X-1054**	1	PLUG AS-CONNECTOR (4-PIN)	
		1	**155-2270**	1	KIT-CONNECTING PLUG (2-PIN)	
					(INCLUDES PLUG AS, WEDGE, & INTERFACE SEAL)	
		1	**230-4014**	1	RECEPTACLE AS-CONNECTOR (3-PIN)	
	8	1	**290-4291**	1	SEAL	
	9	1	**4P-7581**	3	CLIP	
	10	1	**8T-4121**	1	WASHER-HARD (11X21X2.5-MM THK)	
M	11	1	**8T-4138**	8	BOLT (M6X1X20-MM)	
M	12	1	**8T-4191**	1	BOLT (M10X1.5X16-MM)	
	13	1	**9X-6165**	8	WASHER (6.5X22X2.5-MM THK)	
	14	1	**6V-6604**		SEAL (0.25-M EACH)	

E - ORDER BY THE CENTIMETER
M - METRIC PART

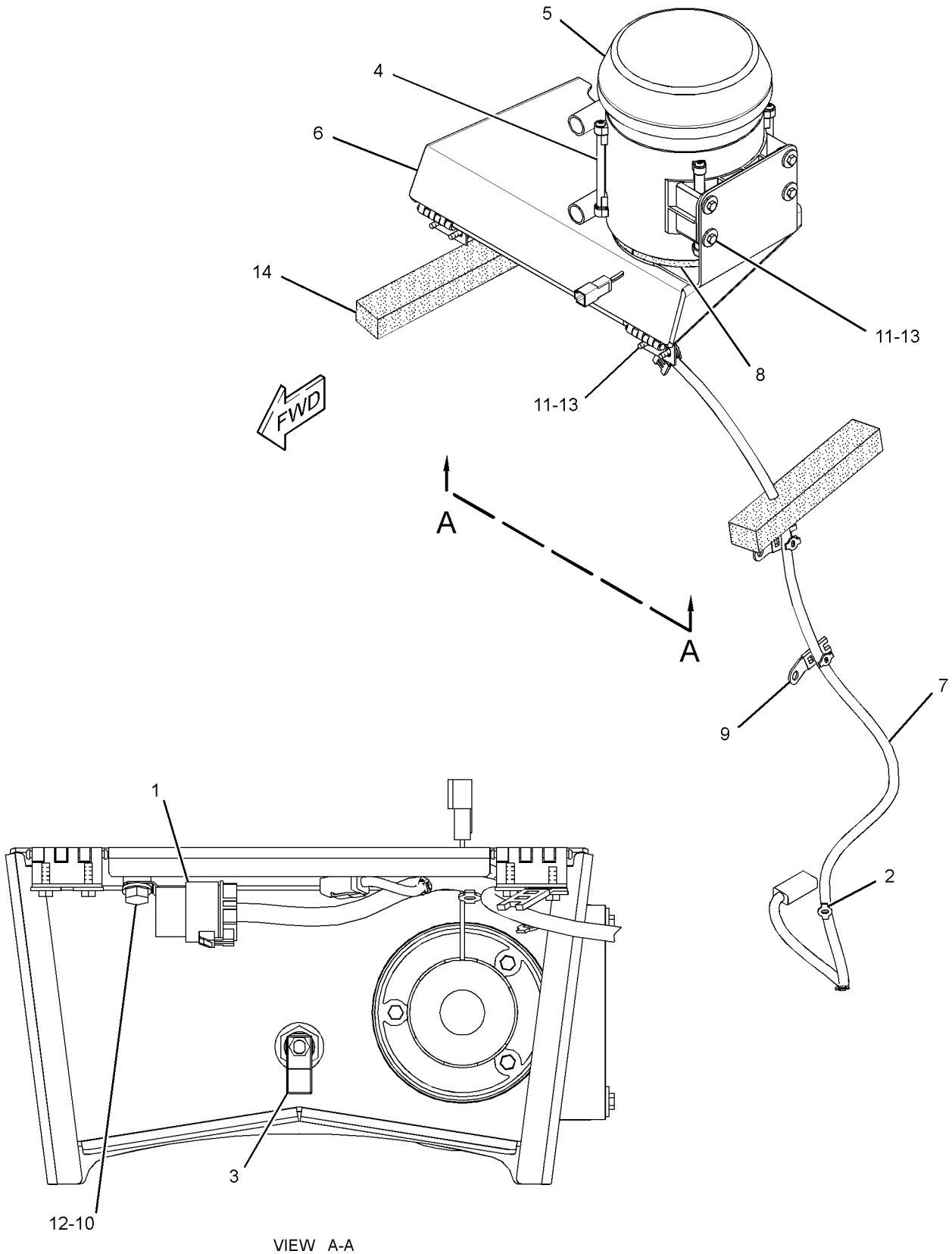

VIEW A-A

GRAPHIC #1 **<END>** g01290099

AIR INLET AND EXHAUST SYSTEM

305-5970 TURBOCHARGER GP

S/N: C6E1-UP

PART OF 319-7201 ENGINE AR-PRIMARY

SMCS-1052, 1053 **i04824532**

NOTE	REF NO	GRAPHIC REF	PART NUMBER	QTY	PART NAME 1 2 3 4 5 6 (PRODUCT LEVEL)	SEE PAGE
M	1	1	**6I-0217**	5	BOLT (M8X1.25X20-MM)	
M	3	2	**6I-0654**	2	BOLT (M10X1.5X25-MM)	
	4	2	**6I-0817**	1	ADAPTER	
	5	2	**9Y-9381**	1	WASHER-HARD	
	6	1	**067-6007**	1	PLUG	
	7	1	**210-6842**	3	BOLT-FLANGE HEAD	
	8	1	**238-8292**	12	BOLT-FLANGE HEAD	
M	9	2	**100-4830**	2	BOLT (M10X1.5X20-MM)	
	10	1	**278-0016**	1	GASKET	
	11	1	**278-0017**	1	GASKET	
	12	2	**278-0310**	1	SOLENOID AS (WASTEGATE)	
	14	1	**279-9361**	2	GASKET-EXHAUST	
	15	1	**368-8557**	1	TUBE AS-TURBOCHARGER	
M	15A	1	**277-9938**	1	BOLT-SPECIAL (BANJO)	
	15B	1	**365-5823**	2	WASHER	
	15C	1	**277-9940**	1	SEAL-O-RING	
	16	1	**280-2420**	1	TUBE AS-TURBOCHARGER	
C	17	1	**320-2345**	1	ELBOW	
	18	1	**280-2424**	1	ADAPTER	
	19	2	**330-9599**	1	BRACKET	
	20	2	**280-2443**	1	TUBE AS	
	20A	2	**035-8014**	1	NUT (7/16-IN)	
	20B	2	**032-8047**	2	FERRULE	
	20C	2	**4B-8774**	1	NUT-FLARED	
	21	1	**286-7851**	12	SPACER	
	22	1	**328-8709**	1	MANIFOLD-EXHAUST	
	23	2	**295-5423**	1	TUBE AS	
	23A	2	**4B-8774**	1	NUT-FLARED	
	23B	2	**032-8047**	1	FERRULE	
	23C	2	**300-6520**	1	HOSE AS	
	23D	2	**107-2348**	2	CLIP	
	24	2	**303-2116**	6	CLIP	
R	25	1	**315-9810**	1	TURBOCHARGER GP	
	25A	1	**277-9603**	1	CLAMP	
	25B	1	**277-9602**	1	CLAMP	
	26	1	**141-8589**	1	GASKET	
	27	1	**367-3340**	4	STUD	
	28	1	**6I-0563**	4	NUT (M10X1.5-THD)	

C - CHANGE FROM PREVIOUS TYPE
M - METRIC PART
R - REMFG PART MAY BE AVAILABLE

305-5970 **TURBOCHARGER GP (*contd.*)** **i04824532**

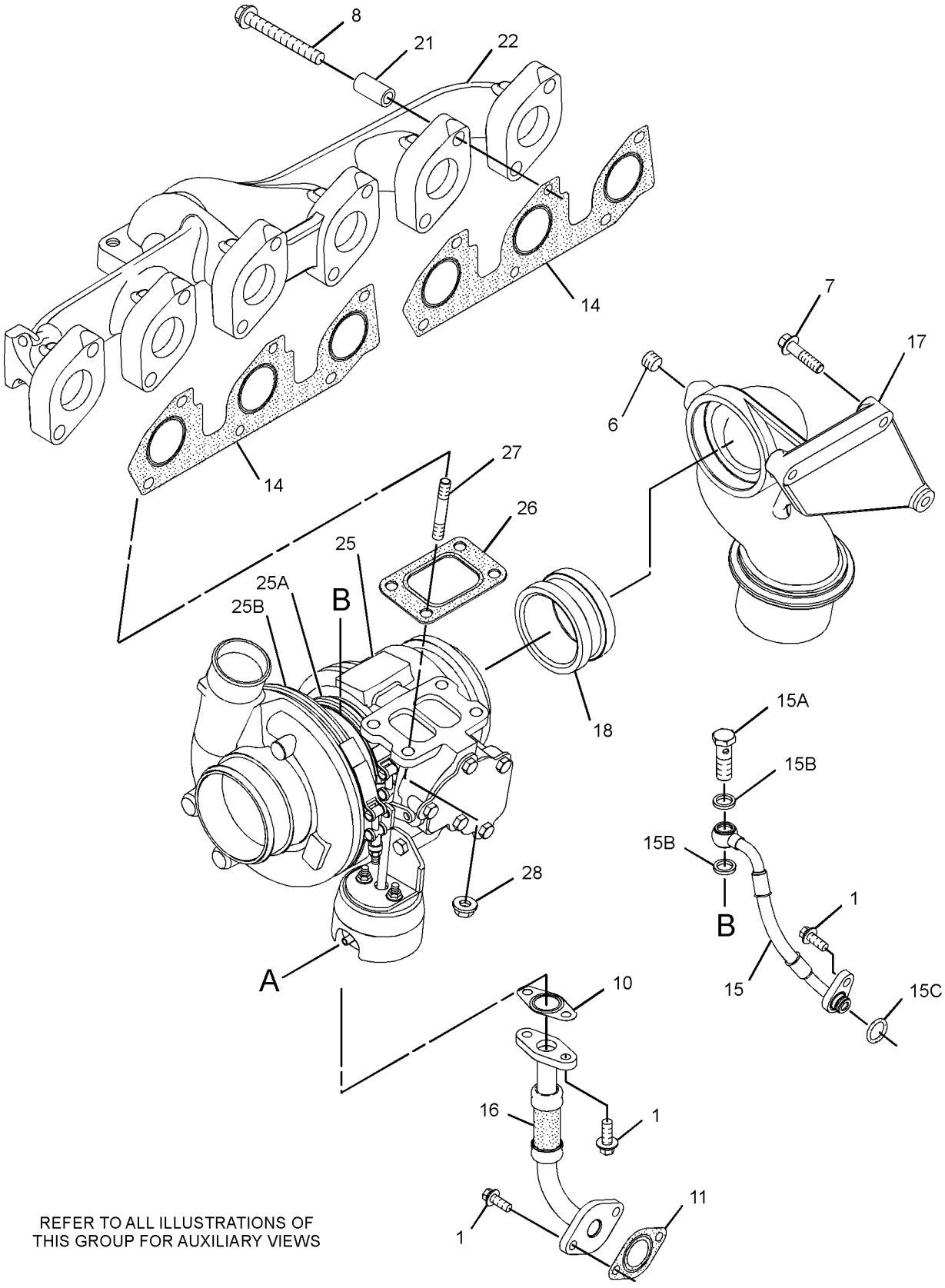

REFER TO ALL ILLUSTRATIONS OF
THIS GROUP FOR AUXILIARY VIEWS

GRAPHIC #1 g01804293

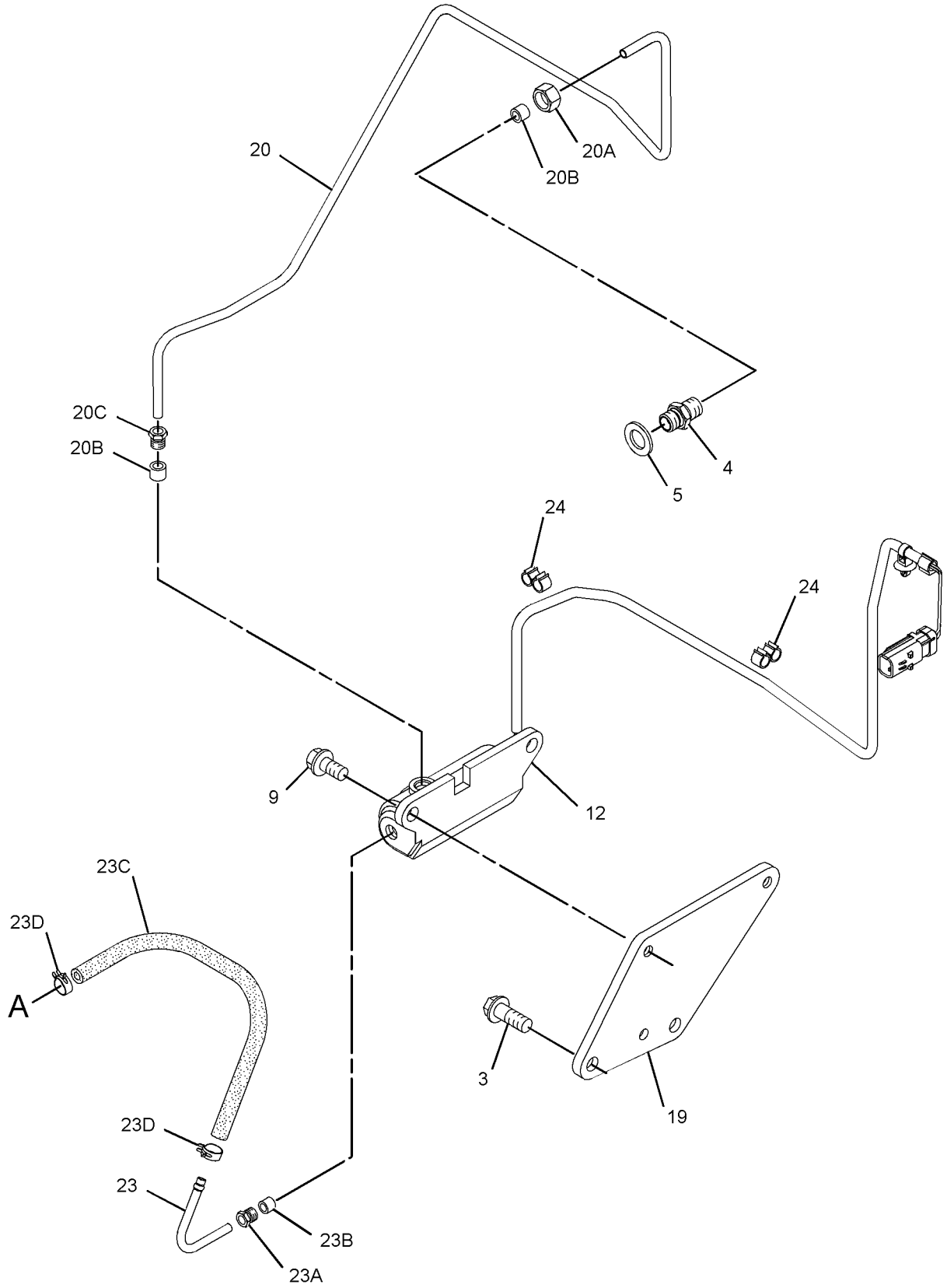

GRAPHIC #2 **<END>** g01804294

305-7294 FILTER GP-FUEL

S/N: C6E1-UP

PART OF 319-7201 ENGINE AR-PRIMARY

SMCS-1261 **i03903221**

NOTE	REF NO	GRAPHIC REF	PART NUMBER	QTY	PART NAME 1 2 3 4 5 6 (PRODUCT LEVEL)	SEE PAGE
	1	1	**343-5937**	1	FILTER GP-FUEL	
	1A	1	**319-0844**	1	FILTER AS-FUEL (ULTRA HIGH EFFICIENCY)	
Y	1B	1	**258-0883**	1	SWITCH GP-PRESSURE (FUEL FILTER)	219
	2	1	**343-5938**	1	FILTER AS-FUEL	
	2A	1	**306-9199**	1	FILTER AS-FUEL (ULTRA HIGH EFFICIENCY) (SECONDARY)	
F			**278-4138**	2	PROTECTION GP-FUEL SYSTEM	

F - NOT SHOWN
Y - SEPARATE ILLUSTRATION

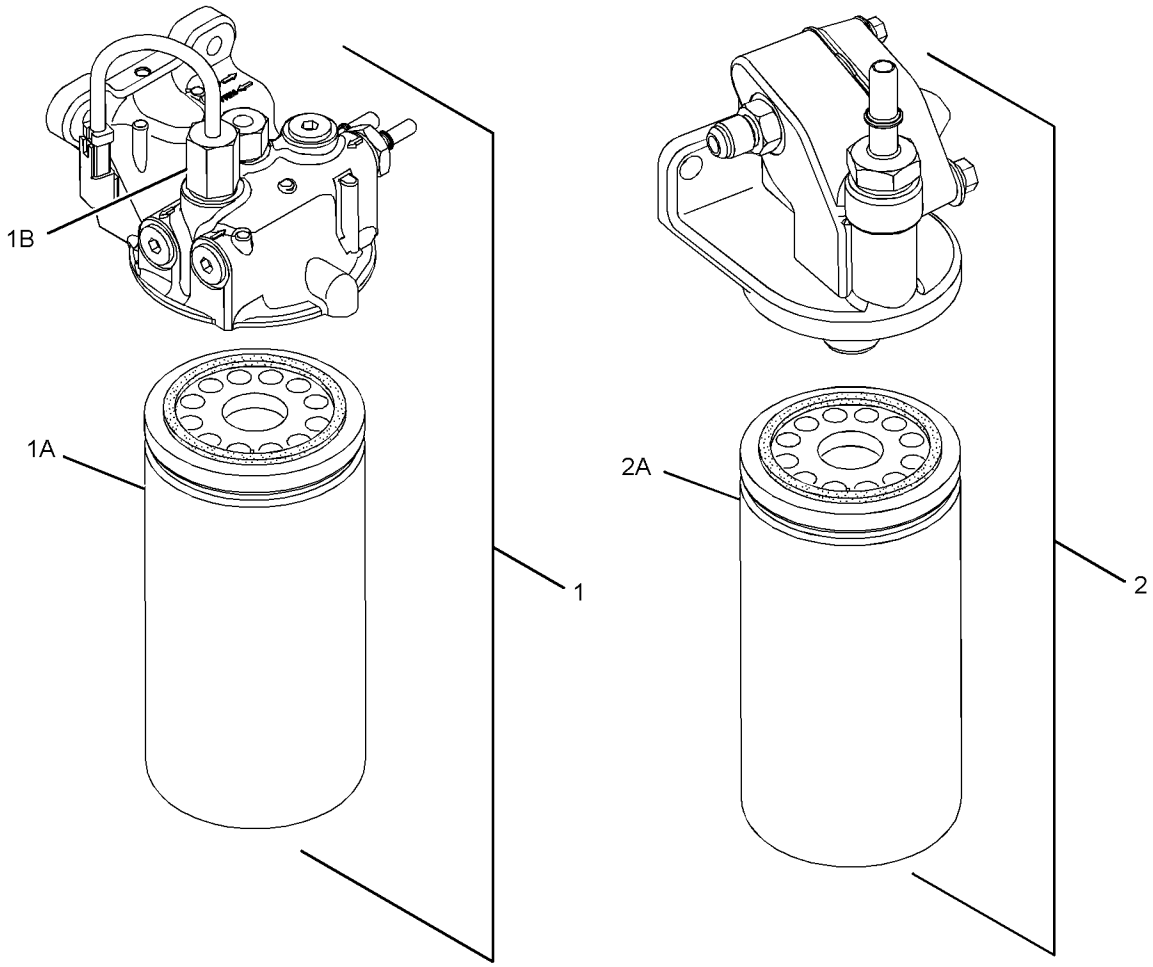

GRAPHIC #1 **<END>** g01958786

174-9570 FILTER GP-WATER SEP & FUEL

S/N: LJR1-UP

PART OF 212-3657 PUMP GP-FUEL PRM & WATER SEP

SMCS-1261, 1263

i04393498

NOTE	REF NO	GRAPHIC REF	PART NUMBER	QTY	PART NAME 1 2 3 4 5 6 (PRODUCT LEVEL)	SEE PAGE
	1	1	**326-1644**	1	FILTER AS-WATER SEP & FUEL (PRIMARY)	
	1A	1	**220-8678**	1	SEAL-RING (FUEL, WATER SEPARATOR)	
	2	1	**343-5527**	1	BOWL AS (FUEL, WATER SEPARATOR)	
		1	**3J-1907**	1	SEAL-O-RING	
		1	**5F-9144**	1	SEAL-O-RING	
		1	**8F-7219**	1	SEAL-O-RING	
		1	**9S-8004**	1	PLUG-O-RING (DRAIN)	

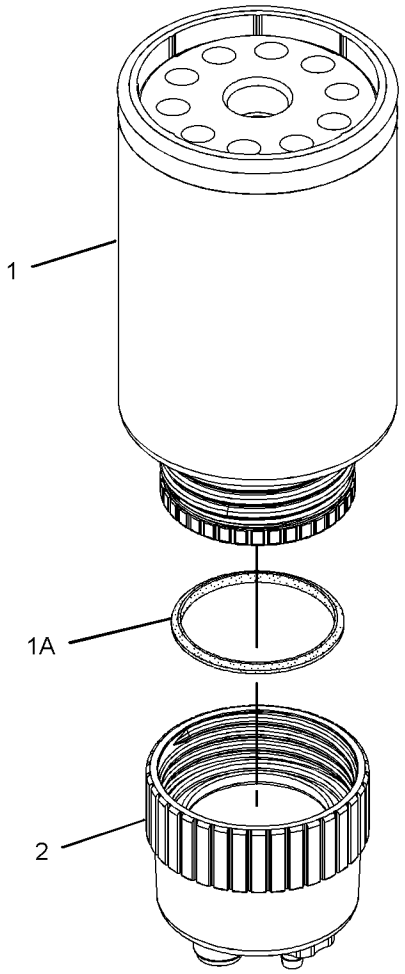

GRAPHIC #1

<END>

g01179858

320-0690 INJECTOR GP-FUEL

S/N: C6E1-UP

PART OF 322-0598 PUMP GP-FUEL INJECTION

SMCS-1251, 1254, 1290

i03088183

NOTE	REF NO	GRAPHIC REF	PART NUMBER	QTY	PART NAME 1 2 3 4 5 6 (PRODUCT LEVEL)	SEE PAGE
	1	1	**287-7637**	1	WASHER	
	2	1	**274-1639**	1	SEAL	

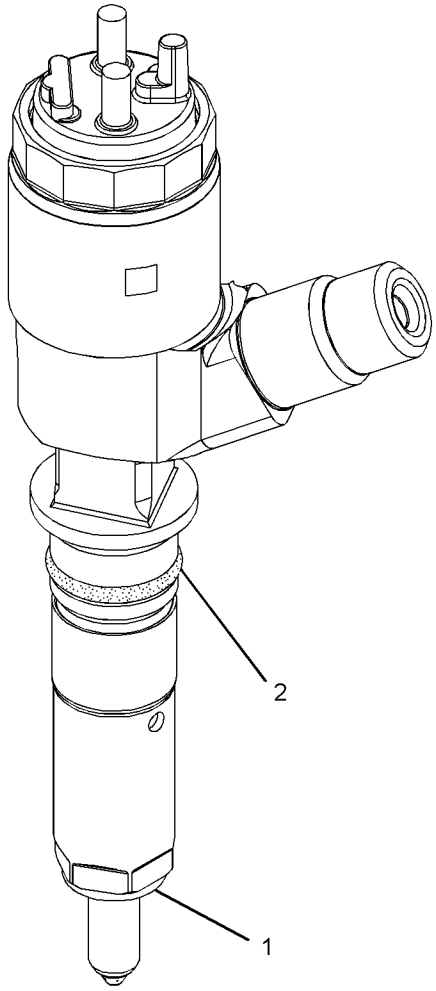

GRAPHIC #1

<END>

g01321917

267-6420 LINES GP-FUEL

S/N: LJR1-634

PART OF 318-0768 INSTALLATION AR-ENGINE

SMCS-1274 **i03961870**

NOTE	REF NO	GRAPHIC REF	PART NUMBER	QTY	PART NAME 1 2 3 4 5 6 (PRODUCT LEVEL)	SEE PAGE
	1	1	**5P-4961**	1	CLAMP-HOSE	
	2	1	**246-2641**	1	PADLOCK GP	
		1	**5P-8500**	1	KEY	
	3	1	**6V-1230**	1	ELBOW	
	4	1	**8T-6724**	1	VALVE-BALL	
	5	1	*194-2903*	1	ELBOW AS	
		1	**8T-0119**	1	ELBOW	
		1	**3K-0360**	1	SEAL-O-RING	
	6	1	**203-3847**	1	BRACKET AS	
M		1	**170-7491**	1	STUD-WELD (M10X1.5X35-MM)	
	7	1	**256-1028**	1	BRACKET AS	
	8	1	**267-6417**	3	CONNECTOR	
	9	1	**267-6424**	1	HOSE AS	
	10	1	**267-6425**	1	HOSE AS	
	11	1	*268-1531*	1	ELBOW AS	
		1	**268-1530**	1	ELBOW	
		1	**2M-9780**	1	SEAL-O-RING	
	12	1	**281-5882**	2	VALVE-BALL	
	13	1	**290-5620**	1	HOSE	
	14	1	*155-7321*	1	ADAPTER AS	
		1	**6V-1722**	1	ADAPTER-O-RING	
		1	**3D-2824**	1	SEAL-O-RING	
	15	1	**2B-0941**	2	SPACER (10.5X19X19-MM THK)	
	17	1	**3K-0360**	6	SEAL-O-RING	
	18	1	**4K-8302**	1	CLIP	
	19	1	**5K-8451**	8	CLIP	
	20	1	**5P-4295**	1	CLIP	
	21	1	**7X-7729**	8	WASHER (11X25X3-MM THK)	
M	22	1	**8T-4133**	4	NUT (M10X1.5-THD)	
M	23	1	**8T-4137**	4	BOLT (M10X1.5X20-MM)	
	24	1	**4S-4456**	2	CLIP	
	25	1	**193-3973**	2	STRAP-CABLE	
	26	1	**200-6345**	1	MOUNT (DUAL SWIVEL)	
	27	1	**206-2423**	1	SADDLE	
	28	1	**8T-4223**	1	WASHER-HARD (13.5X25.5X3-MM THK)	
M	29	1	**7X-2548**	1	BOLT (M12X1.75X16-MM)	
	30	1	**7K-1181**	2	STRAP-CABLE	

M - METRIC PART

267-6420 **LINES GP-FUEL (*contd.*)** **i03961870**

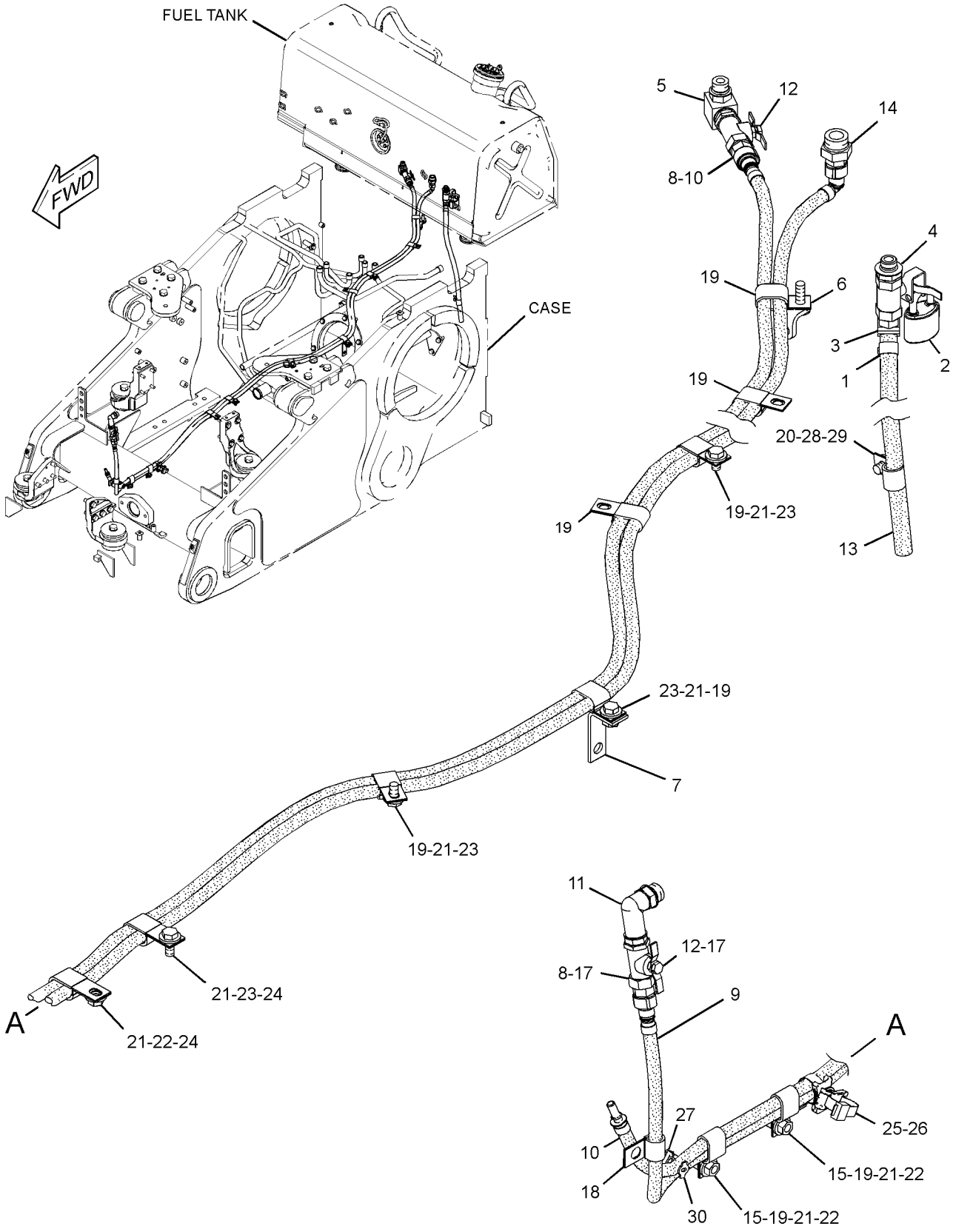

GRAPHIC #1 **<END>** g02270017

267-6420 LINES GP-FUEL

S/N: LJR635-UP

PART OF 318-0768 INSTALLATION AR-ENGINE

SMCS-1274 **i04825078**

NOTE	REF NO	GRAPHIC REF	PART NUMBER	QTY	PART NAME 1 2 3 4 5 6 (PRODUCT LEVEL)	SEE PAGE
	1	1	**5P-4961**	1	CLAMP-HOSE	
	3	1	**6V-1230**	1	ELBOW	
	4	1	**156-2525**	1	VALVE-SHUTOFF (FUEL SHUTOFF)	
	6	1	**203-3847**	1	BRACKET AS	
M		1	**170-7491**	1	STUD-WELD (M10X1.5X35-MM)	
	7	1	**256-1028**	1	BRACKET AS	
	8	1	**267-6417**	3	CONNECTOR	
	9	1	**267-6424**	1	HOSE AS	
	10	1	**385-9003**	1	HOSE AS	
	11	1	*268-1531*	1	ELBOW AS	
		1	**268-1530**	1	ELBOW	
		1	**2M-9780**	1	SEAL-O-RING	
	12	1	**281-5882**	1	VALVE-BALL (FUEL TANK DRAIN)	
	13	1	**290-5620**	1	HOSE	
	15	1	**2B-0941**	2	SPACER (10.5X19X19-MM THK)	
	17	1	**3K-0360**	6	SEAL-O-RING	
	18	1	**4K-8302**	1	CLIP	
	19	1	**5K-8451**	8	CLIP	
	20	1	**5P-4295**	1	CLIP	
	21	1	**7X-7729**	8	WASHER (11X25X3-MM THK)	
M	22	1	**8T-4133**	4	NUT (M10X1.5-THD)	
M	23	1	**8T-4137**	4	BOLT (M10X1.5X20-MM)	
	24	1	**4S-4456**	2	CLIP	
	25	1	**193-3973**	2	STRAP-CABLE	
	26	1	**200-6345**	1	MOUNT (DUAL SWIVEL)	
	27	1	**206-2423**	1	SADDLE	
	28	1	**8T-4223**	1	WASHER-HARD (13.5X25.5X3-MM THK)	
M	29	1	**7X-2548**	1	BOLT (M12X1.75X16-MM)	
	30	1	**7K-1181**	2	STRAP-CABLE	

M - METRIC PART

267-6420 **LINES GP-FUEL (*contd.*)** **i04825078**

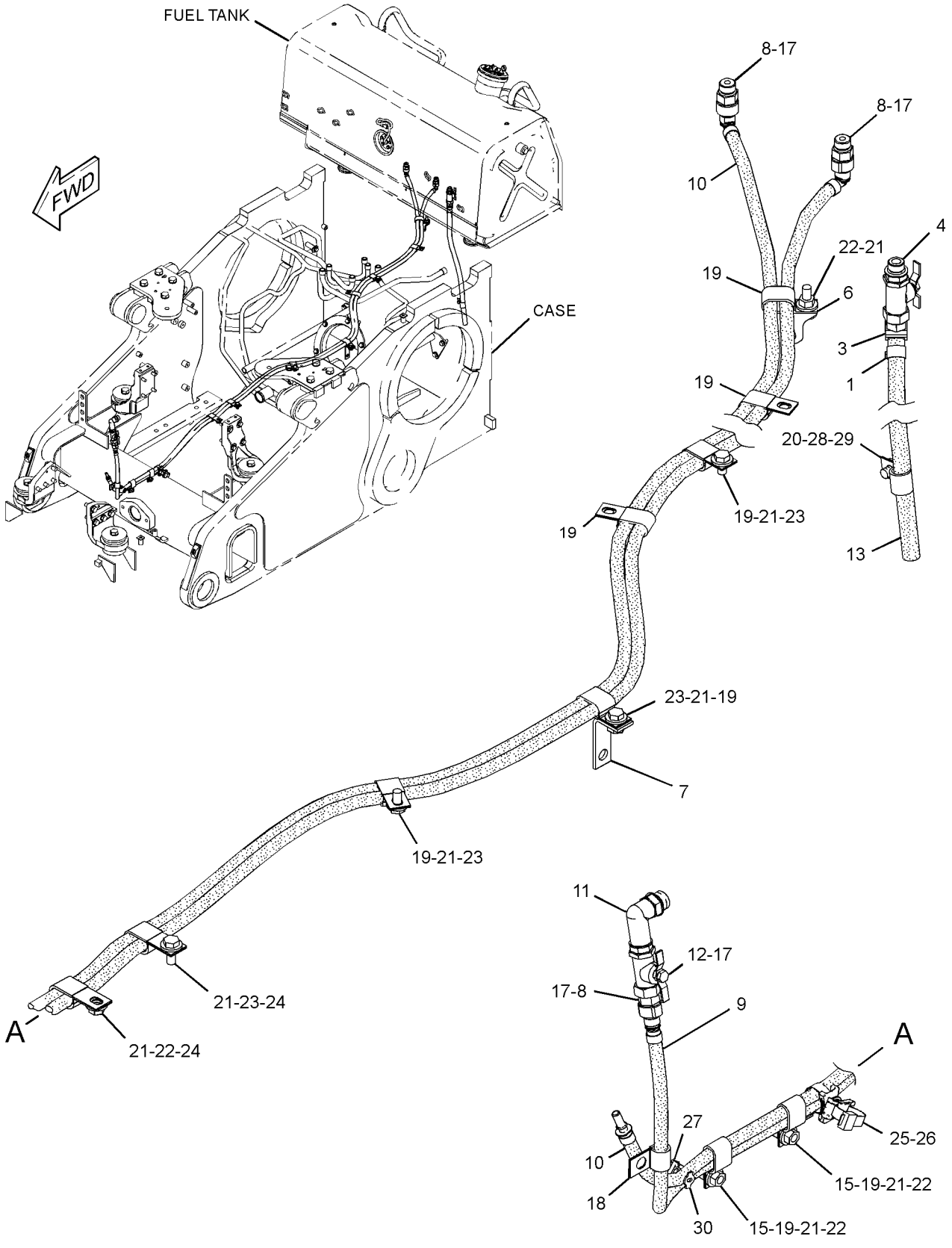

GRAPHIC #1 **<END>** g03014376

305-7299 LINES GP-FUEL

S/N: C6E1-UP

PART OF 319-7201 ENGINE AR-PRIMARY

TYPE 1

SMCS-1274 **i04837372**

NOTE	REF NO	GRAPHIC REF	PART NUMBER	QTY	PART NAME 1 2 3 4 5 6 (PRODUCT LEVEL)	SEE PAGE
M	1	1,3	**6I-0260**	4	BOLT (M8X1.25X25-MM)	
M	2	1,2	**6I-0654**	3	BOLT (M10X1.5X25-MM)	
M	3	3	**100-3751**	1	BOLT (M8X1.25X65-MM)	
	5	1	**111-0859**	2	BOLT (M10X1.5X35-MM)	
M	6	2,3	**124-3815**	3	BOLT (M8X1.25X16-MM)	
	8	3	**6I-0456**	1	BOLT (M8X1.25X45-MM)	
	9	1,2	**277-6165**	2	CONNECTION-FUEL	
	10	2	**278-0314**	1	SPACER	
	11	3	**285-3555**	1	CLIP	
	12	1,2	**295-4670**	2	BOLT-SPECIAL (BANJO)	
	13	2	**293-9820**	1	BRACKET AS	
	13A	2	**232-1115**	6	CLIP-PIPE	
	14	2	**302-5695**	1	BRACKET AS	
	14A	2	**298-4576**	1	CLIP	
C	15	3	**329-0060**	1	TUBE	
C	16	3	**329-0061**	1	TUBE	
	17	3	**305-7304**	1	TUBE	
C	18	1	**329-0062**	1	TUBE	
	19	1	**305-7306**	1	BRACKET AS	
	19A	1	**232-1115**	3	CLIP-PIPE	
	20	1	**305-7307**	1	BRACKET AS	
	20A	1	**232-1115**	2	CLIP-PIPE	
	21	2	**305-7308**	1	TUBE	
	22	2	**305-7309**	1	BRACKET AS	
	22A	2	**232-1115**	4	CLIP-PIPE	
	23	3	**320-4729**	1	BRACKET	
C	24	1	**329-0063**	1	BRACKET	
C	26	1,2	**286-2890**	4	WASHER	
	27	3	**337-9558**	1	SLEEVE	
	28	3	**339-8785**	1	ISOLATOR-RUBBER	
	29	3	**329-0064**	1	BRACKET	
	30	1	**238-8028**	1	TIE-CABLE	
	31	1	**317-7147**	1	CLIP	
F			**278-4138**	5	PROTECTION GP-FUEL SYSTEM	

C - CHANGE FROM PREVIOUS TYPE
F - NOT SHOWN
M - METRIC PART

305-7299 **LINES GP-FUEL (*contd.*)** **i04837372**

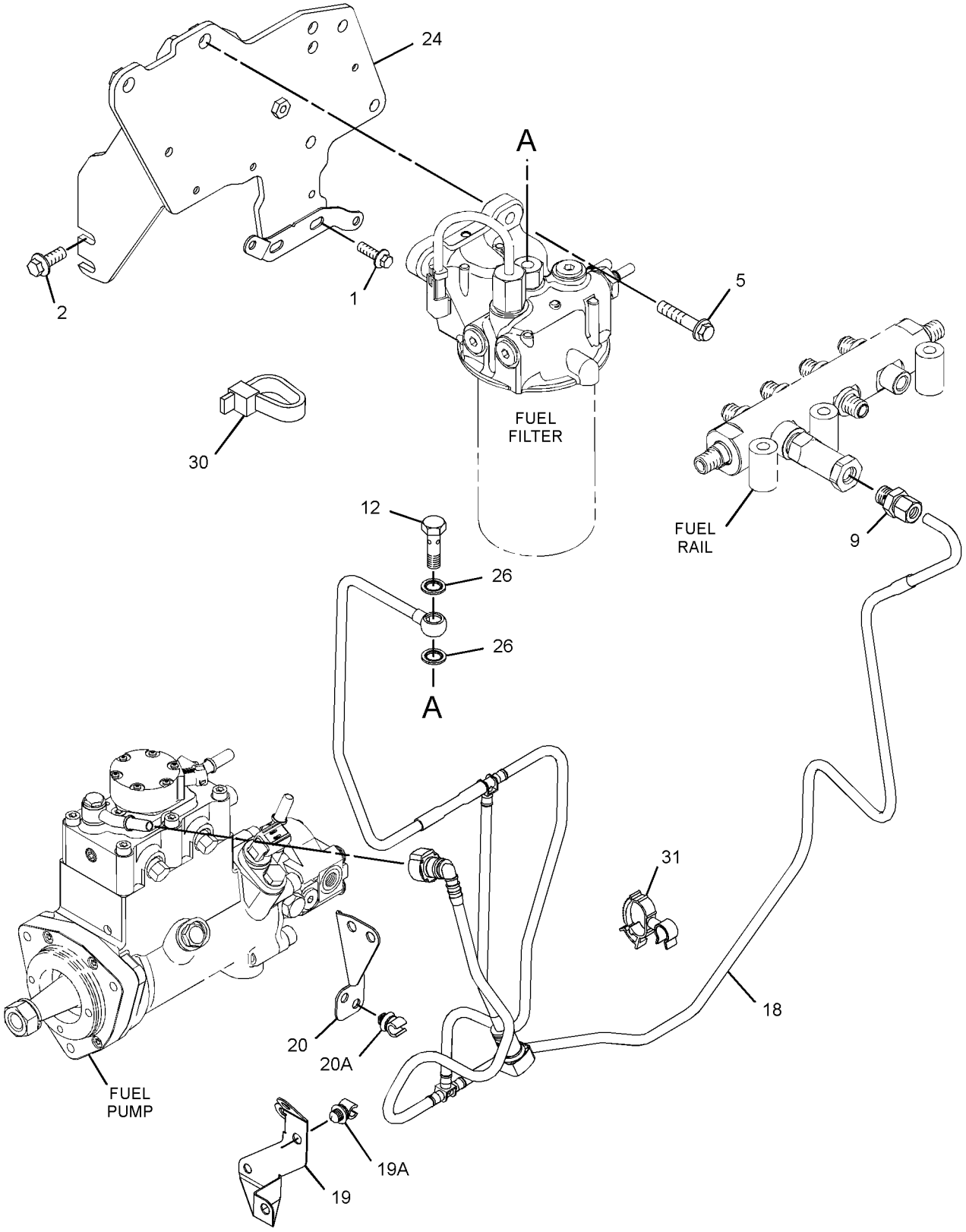

GRAPHIC #1 g02972397

305-7299 **LINES GP-FUEL (*contd.*)** **i04837372**

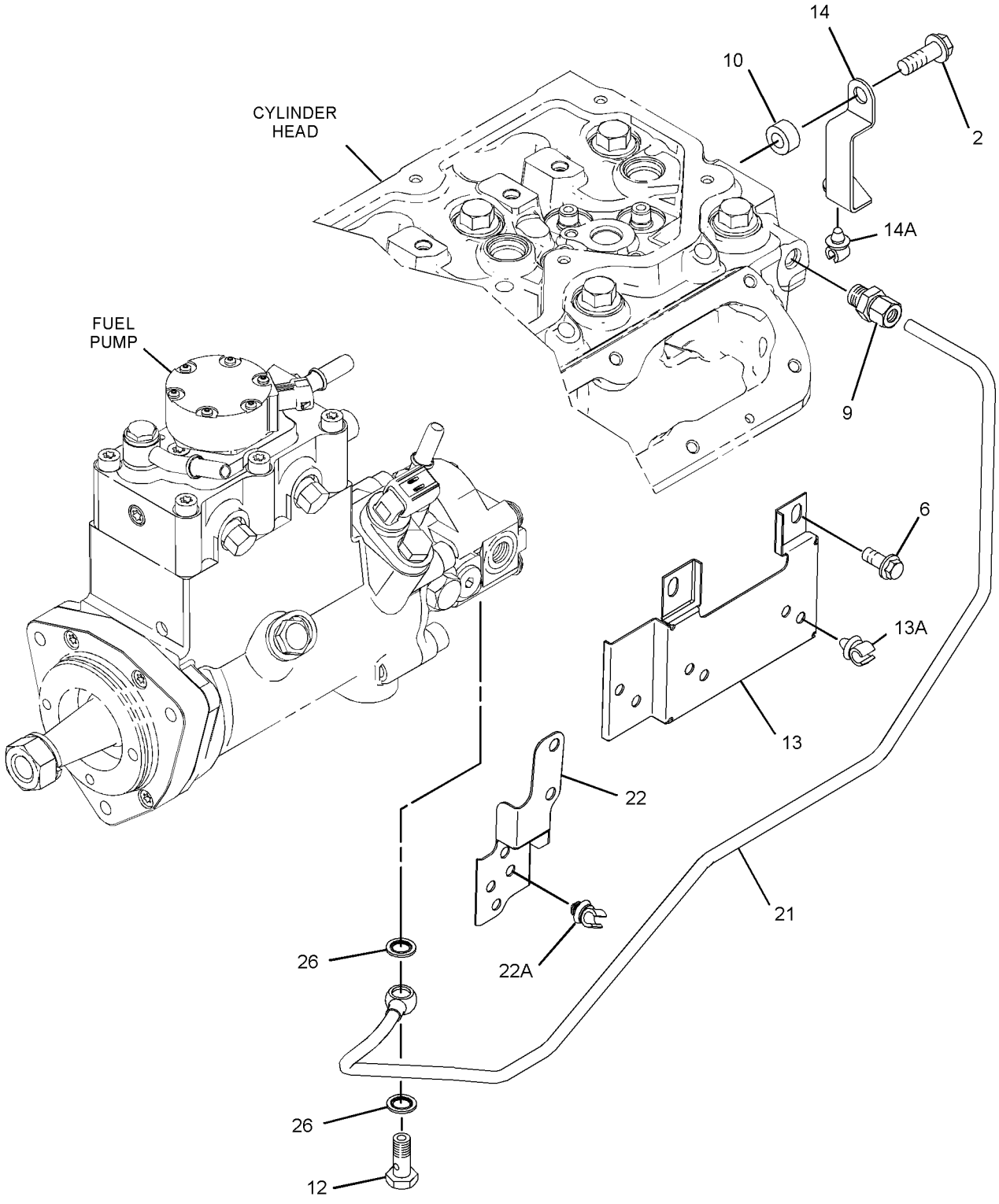

GRAPHIC #2 g01913216

305-7299 **LINES GP-FUEL (*contd.*)** **i04837372**

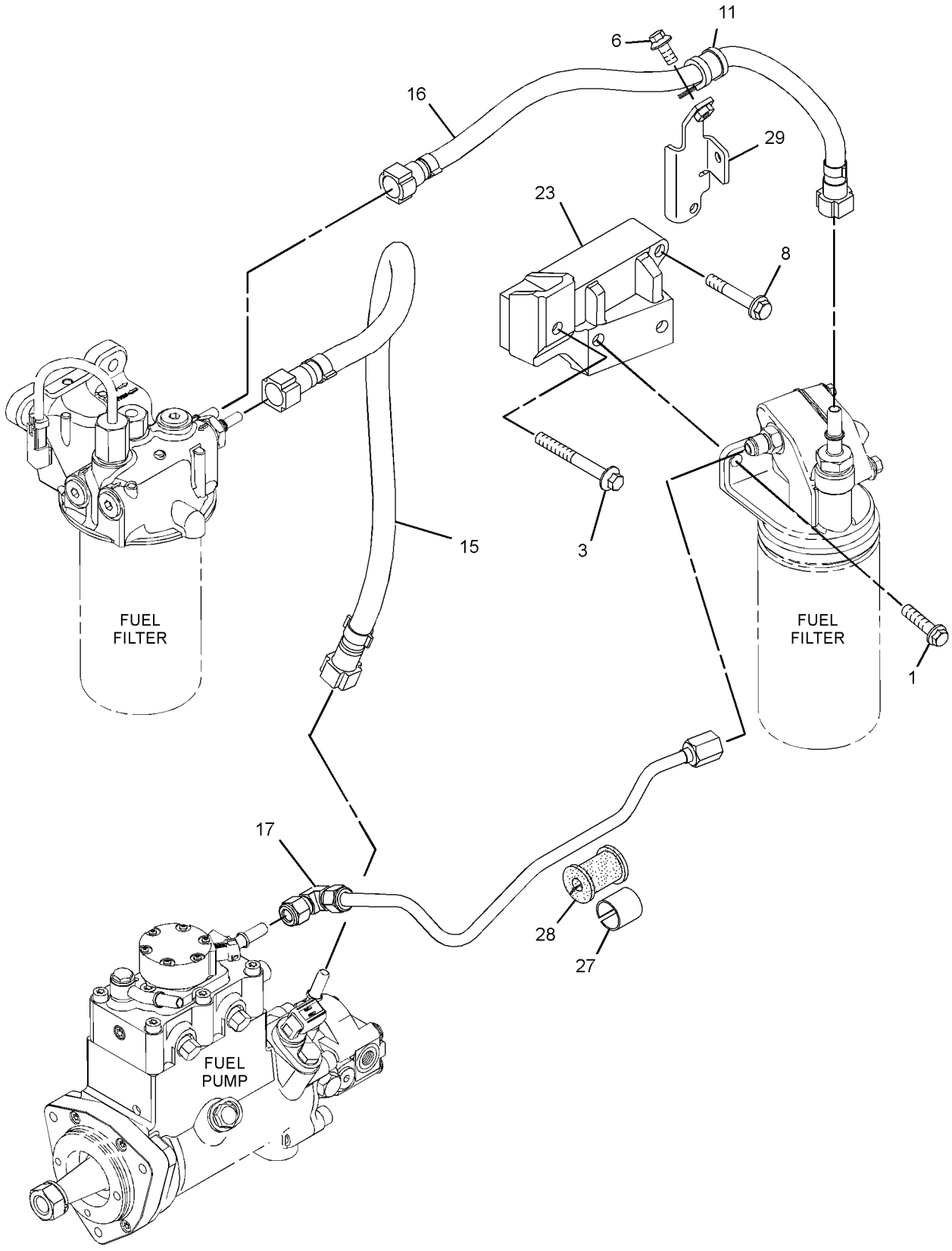

GRAPHIC #3 **<END>** g01913217

305-7299 LINES GP-FUEL

S/N: C6E1-UP

PART OF 319-7201 ENGINE AR-PRIMARY

TYPE 2

SMCS-1274 **i04903797**

NOTE	REF NO	GRAPHIC REF	PART NUMBER	QTY	PART NAME 1 2 3 4 5 6 (PRODUCT LEVEL)	SEE PAGE
M	1	1,3	**6I-0260**	4	BOLT (M8X1.25X25-MM)	
CM	2	1	**6I-0654**	2	BOLT (M10X1.5X25-MM)	
M	3	3	**100-3751**	1	BOLT (M8X1.25X65-MM)	
C	4	2	**6I-4200**	1	BOLT (M10X1.5X16-MM)	
	5	1	**111-0859**	2	BOLT (M10X1.5X35-MM)	
M	6	2,3	**124-3815**	3	BOLT (M8X1.25X16-MM)	
	8	3	**6I-0456**	1	BOLT (M8X1.25X45-MM)	
	9	1,2	**277-6165**	2	CONNECTION-FUEL	
	11	3	**285-3555**	1	CLIP	
	12	1,2	**295-4670**	2	BOLT-SPECIAL (BANJO)	
	13	2	**293-9820**	1	BRACKET AS	
	13A	2	**232-1115**	6	CLIP-PIPE	
C	14	2	**366-7426**	1	BRACKET	
	15	3	**329-0060**	1	TUBE	
	16	3	**329-0061**	1	TUBE	
C	17	3	**356-8335**	1	LINE AS-FUEL INJECTION	
	17A	3	**337-9558**	1	SLEEVE	
	17B	3	**339-8785**	1	ISOLATOR-RUBBER	
C	18	1	**329-0062**	1	TUBE	
	19	1	**305-7306**	1	BRACKET AS	
	19A	1	**232-1115**	3	CLIP-PIPE	
	20	1	**305-7307**	1	BRACKET AS	
	20A	1	**232-1115**	2	CLIP-PIPE	
	21	2	**305-7308**	1	TUBE	
	22	2	**305-7309**	1	BRACKET AS	
	22A	2	**232-1115**	4	CLIP-PIPE	
	23	3	**320-4729**	1	BRACKET	
	24	1	**329-0063**	1	BRACKET	
	26	1,2	**286-2890**	4	WASHER	
	29	3	**329-0064**	1	BRACKET	
	30	1	**238-8028**	1	TIE-CABLE	
	31	1	**317-7147**	1	CLIP	
F			**278-4138**	5	PROTECTION GP-FUEL SYSTEM	

C - CHANGE FROM PREVIOUS TYPE
F - NOT SHOWN
M - METRIC PART

305-7299 **LINES GP-FUEL (*contd.*)** **i04903797**

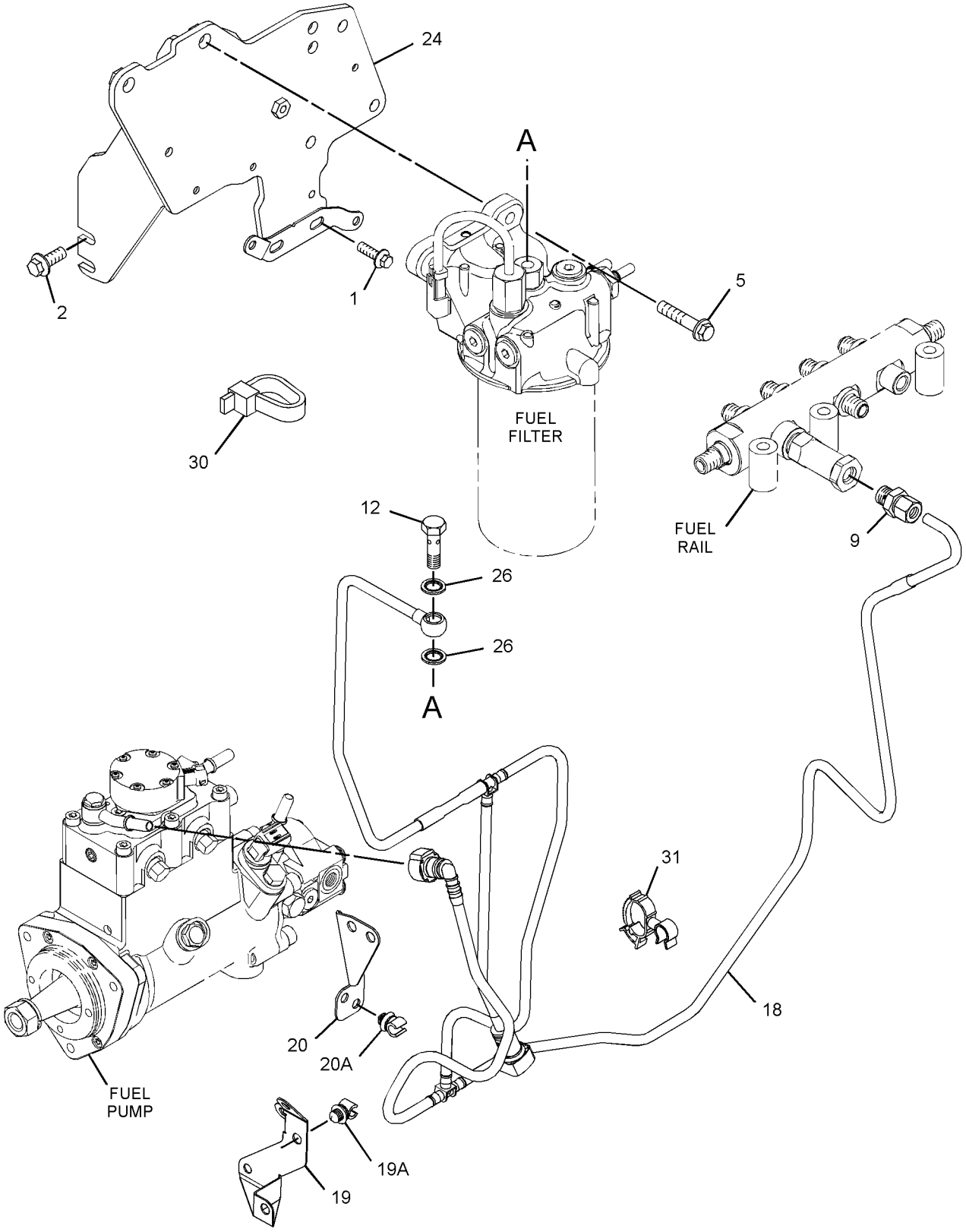

GRAPHIC #1 g02972397

305-7299 **LINES GP-FUEL (*contd.*)** **i04903797**

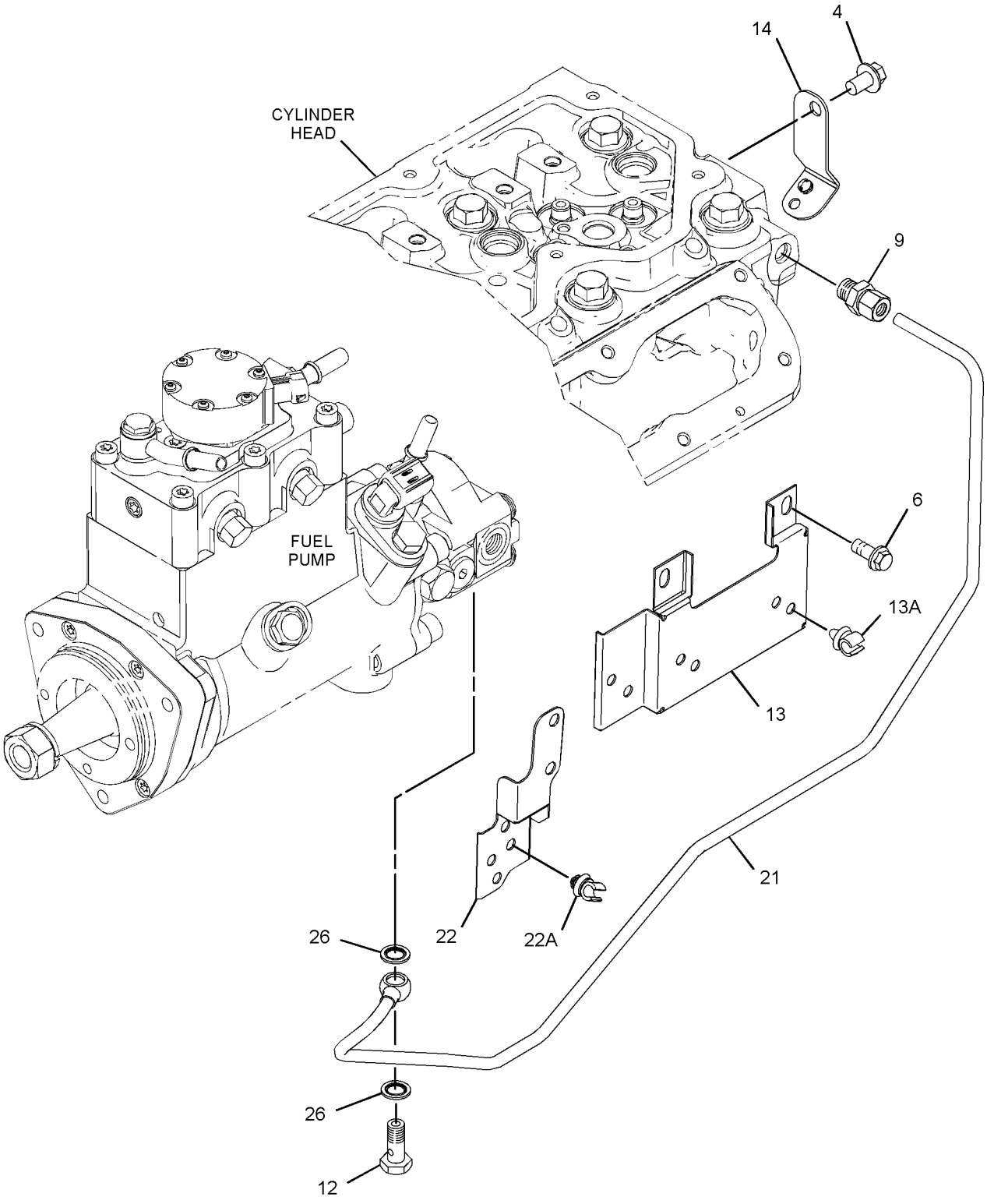

GRAPHIC #2 g02974296

305-7299 **LINES GP-FUEL (*contd.*)** **i04903797**

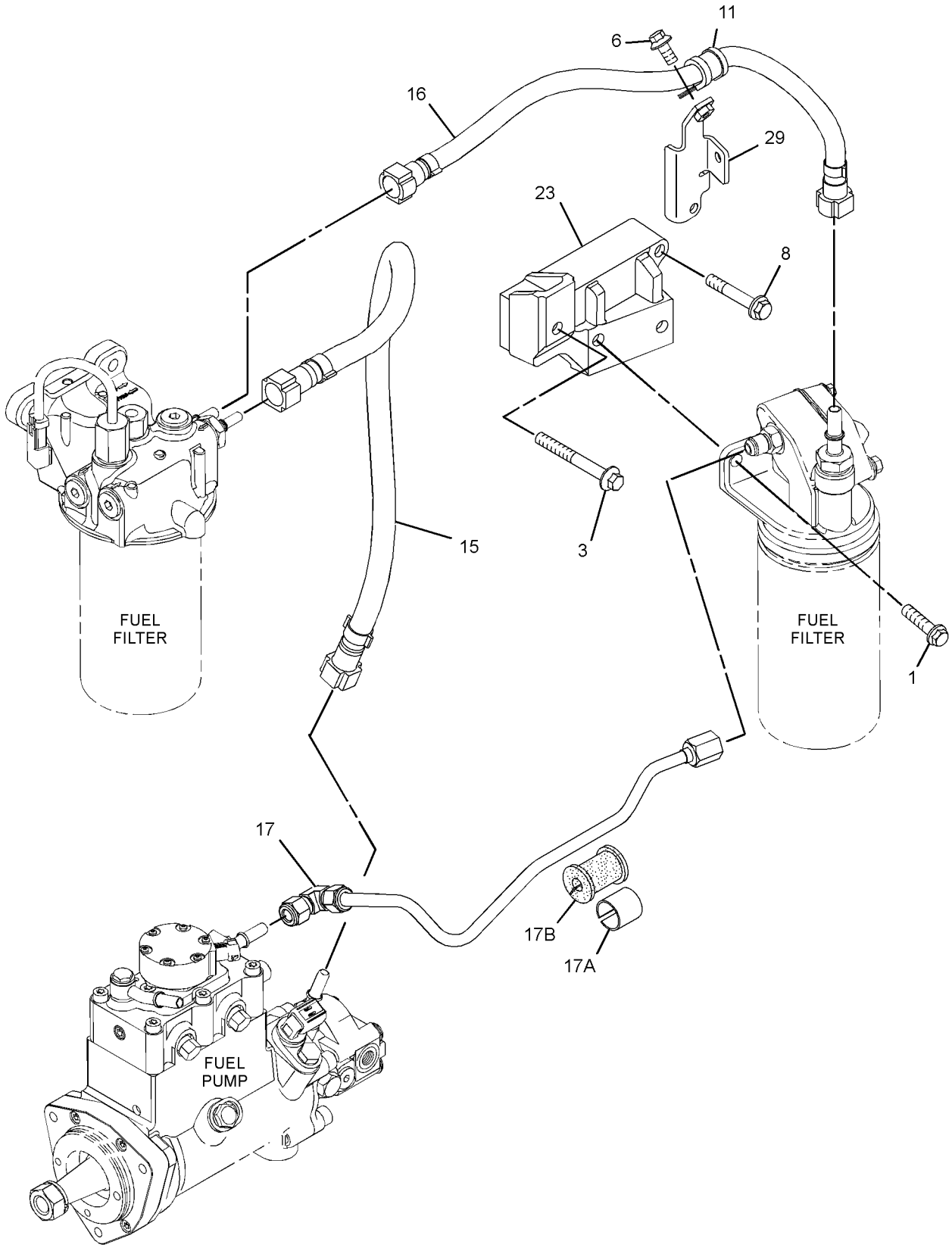

GRAPHIC #3 **<END>** g03067355

317-8021 PUMP GP-FUEL INJECTION*R

S/N: C6E1-39023

PART OF 322-0598 PUMP GP-FUEL INJECTION

SMCS-1251, 1290 **i04216674**

NOTE	REF NO	GRAPHIC REF	PART NUMBER	QTY	PART NAME 1 2 3 4 5 6 (PRODUCT LEVEL)	SEE PAGE
	1	1	**228-0172**	1	FITTING-FUEL	
	2	1	**228-7100**	2	SEAL-O-RING	
	3	1	**238-0120**	1	SENSOR GP-SPEED (SECONDARY, TIMING)	
	4	1	**247-6019**	1	SEAL	
	5	1	**248-1066**	1	FITTING-FUEL	
	6	1	**293-0249**	1	PUMP GP-FUEL TRANSFER	
	7	1	**295-4801**	1	NUT (M14X1.5-THD)	
	8	1	**296-3542**	1	LOCKWASHER	
	9	1	**117-1385**	1	SEAL-O-RING	
M	10	1	**5A-3604**	5	BOLT-SOCKET HEAD (M8X1.25X25-MM)	
	11	1	**334-2932**	1	SEAL-O-RING	
	12	1	**8L-2779**	4	SEAL-O-RING	
M	13	1	**8T-4200**	1	BOLT (M8X1.25X16-MM)	
	14	1	**257-2381**	2	PIN	
	15	1	**257-2382**	2	PLUG	
	16	1	**258-8149**	2	SPRING	
	17	1	**294-3031**	1	BOLT-SPECIAL	
	18	1	**294-3032**	1	WASHER-SPECIAL	

M - METRIC PART

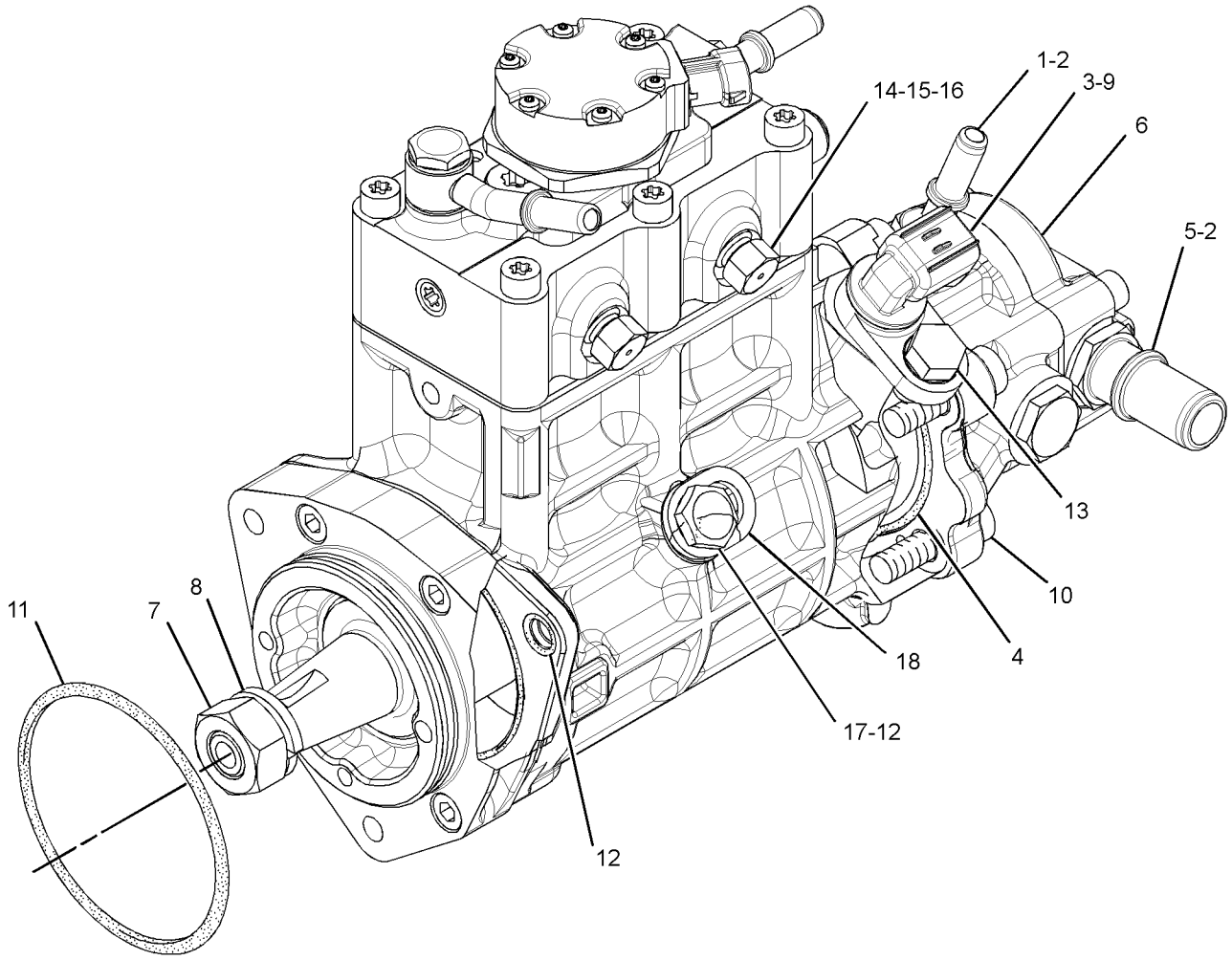

GRAPHIC #1 **<END>** g02398316

322-0598 PUMP GP-FUEL INJECTION

S/N: C6E1-22184

PART OF 319-7201 ENGINE AR-PRIMARY

TYPE 1

SMCS-1251, 1290 **i03888817**

NOTE	REF NO	GRAPHIC REF	PART NUMBER	QTY	PART NAME 1 2 3 4 5 6 (PRODUCT LEVEL)	SEE PAGE
M	1	1	**6I-0217**	6	BOLT (M8X1.25X20-MM)	
M	2	2	**6I-0254**	4	BOLT (M8X1.25X30-MM)	
M	3	1	**6I-0260**	4	BOLT (M8X1.25X25-MM)	
	4	1	**6I-0456**	4	BOLT (M8X1.25X45-MM)	
	5	2	**6I-4374**	2	BOLT (M8X1.25X60-MM)	
	6	2	**6I-4793**	1	BOLT (M8X1.25X50-MM)	
	7	1	**7W-2632**	1	WASHER (8.5X16.8X1.6-MM THK)	
M	8	1	**101-3895**	1	BOLT (M8X1.25X35-MM)	
M	9	3	**124-3815**	1	BOLT (M8X1.25X16-MM)	
	10	1	**155-0576**	8	MOUNT-ISOLATION	
	11	1	**160-0162**	2	WASHER	
	12	1	**217-0099**	4	SPACER (8.2X25X2-MM THK)	
	13	2	**217-9039**	1	STRAP-CABLE	
	14	1	**225-8524**	1	BOLT-SPECIAL (BANJO)	
	15	1	**230-8989**	1	GEAR-FUEL PUMP (68-TEETH)	
	16	2	**241-4291**	4	SCREW	
	17	1	**268-6677**	1	BRACKET AS	
	17A	1	**260-3939**	1	SCREW-HEX HEAD	
	18	1	**268-6678**	1	BRACKET AS	
	18A	1	**260-3939**	1	SCREW-HEX HEAD	
	19	2	**278-5168**	6	CLAMP-INJECTOR	
	20	2	**278-5170**	6	BOLT	
	21	2	**278-5180**	2	CLIP	
	22	1	**278-5203**	4	SPACER	
	23	3	**278-5225**	1	KIT-SENSOR (ENGINE OIL PRESSURE)	
	23A	3	**199-9267**	1	SEAL-O-RING	
	24	3	**278-5272**	1	KIT-SENSOR (INTAKE AIR TEMPERATURE)	
	24A	3	**278-5226**	1	SEAL-O-RING	
	25	3	**278-5273**	1	KIT-SENSOR (INTAKE AIR MANIFOLD)	
	25A	3	**199-9252**	1	SEAL-O-RING	
	26	3	**278-5307**	1	KIT-SENSOR (COOLANT TEMPERATURE)	
	26A	3	**199-9267**	1	SEAL-O-RING	
R	27	1	**331-7540**	1	CONTROL GP-UNPROGRAMMED	
	28	1	**287-6838**	1	BRACKET	
	29	1	**287-6839**	2	BOLT	
	30	1	**232-3149**	3	WASHER (8.35X16.85X1.55-MM THK)	
	31	2	**336-8180**	1	LINE-FUEL INJECTION	
	32	2	**336-8174**	1	LINE-FUEL INJECTION (CYL NO. 1)	
	33	2	**336-8175**	1	LINE-FUEL INJECTION (CYL NO. 2)	
	34	2	**336-8176**	1	LINE-FUEL INJECTION (CYL NO. 3)	
	35	2	**336-8177**	1	LINE-FUEL INJECTION (CYL NO. 4)	
	36	2	**336-8178**	1	LINE-FUEL INJECTION (CYL NO. 5)	
	37	2	**336-8179**	1	LINE-FUEL INJECTION (CYL NO. 6)	
YR	38	1	**317-8021**	1	PUMP GP-FUEL INJECTION	102
	39	1	**293-9901**	1	BRACKET	
	40	2	**300-2940**	1	BRACKET	
	41	1	**310-7918**	1	BRACKET-SUPPORT	
	42	3	**311-3858**	1	KIT-SENSOR (ENGINE SPEED)	
	42A	3	**274-1639**	1	SEAL	
	43	2	**311-6342**	1	SENSOR-PRESSURE (FUEL RAIL)	
	43A	2	**309-8006**	1	WASHER	
	44	2	**318-2396**	1	RAIL AS-FUEL	
	44A	2	**305-5291**	1	VALVE AS-RELIEF (FUEL RAIL)	
		2	**228-7102**	1	SEAL-O-RING	
YR	45	2	**320-0690**	6	INJECTOR GP-FUEL	89
	46	1	**321-1270**	1	TUBE-OIL	

322-0598 **PUMP GP-FUEL INJECTION (*contd.*)** **i03888817**

NOTE	REF NO	GRAPHIC REF	PART NUMBER	QTY	PART NAME 1 2 3 4 5 6 (PRODUCT LEVEL)	SEE PAGE
	47	2	**330-3685**	4	CLAMP	
	48	2	**330-3687**	4	CLAMP	
	49	2	**330-5467**	4	ISOLATOR	
F			**278-4138**	4	PROTECTION GP-FUEL SYSTEM	

F - NOT SHOWN
M - METRIC PART
R - REMFG PART MAY BE AVAILABLE
Y - SEPARATE ILLUSTRATION

322-0598 **PUMP GP-FUEL INJECTION (*contd.*)** **i03888817**

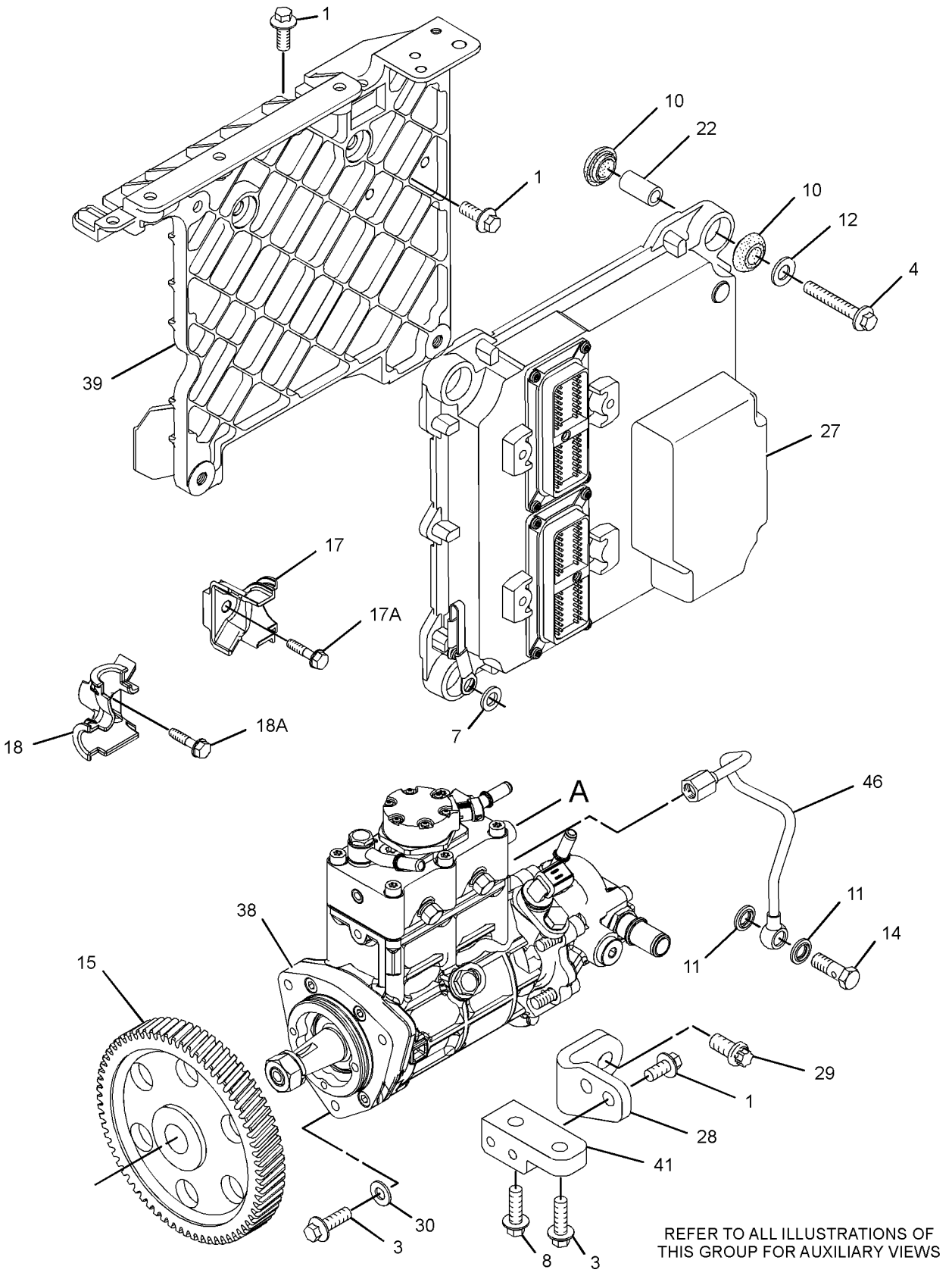

GRAPHIC #1

g01766153

322-0598 **PUMP GP-FUEL INJECTION (*contd.*)** **i03888817**

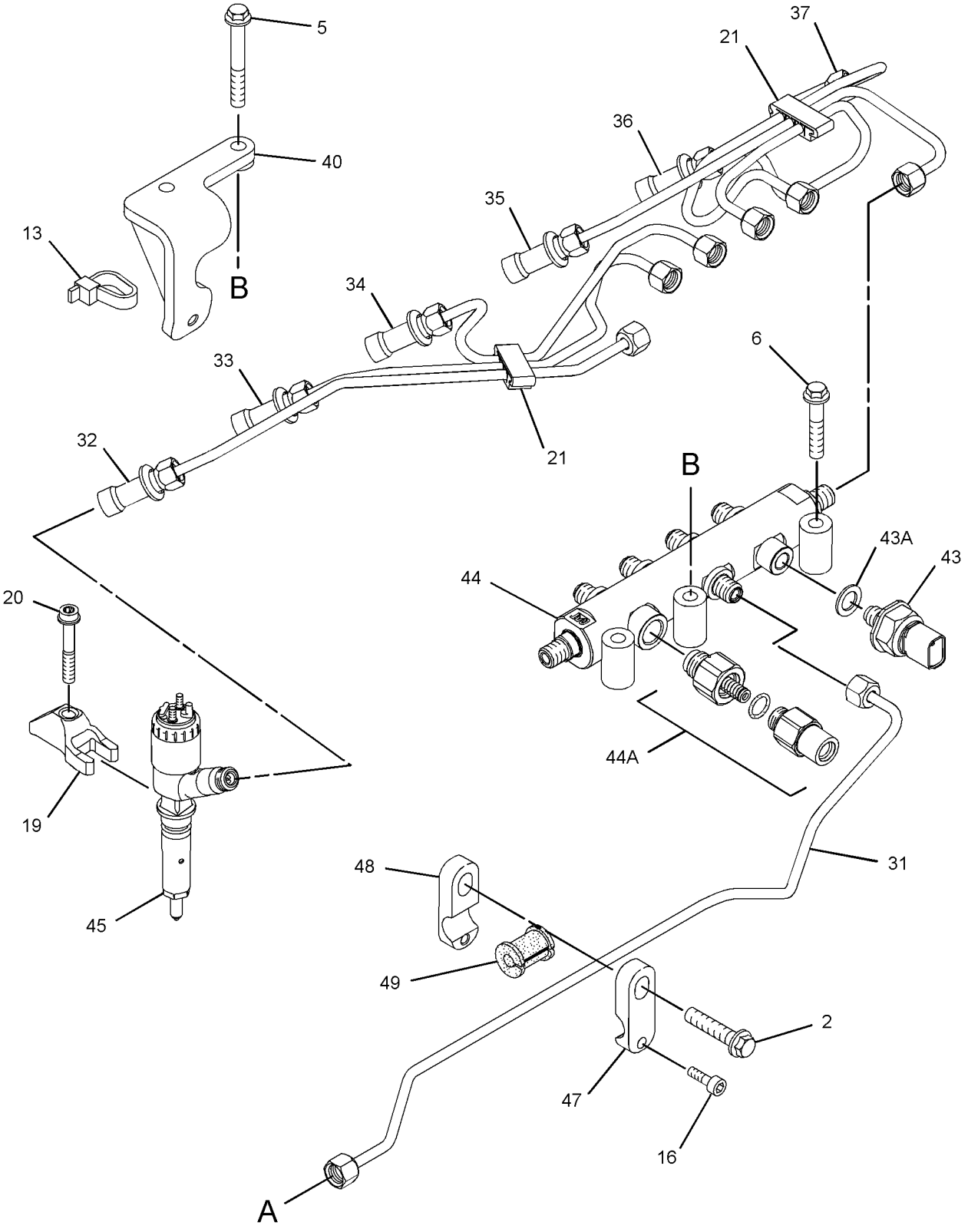

GRAPHIC #2 g01908940

322-0598 **PUMP GP-FUEL INJECTION (*contd.*)** **i03888817**

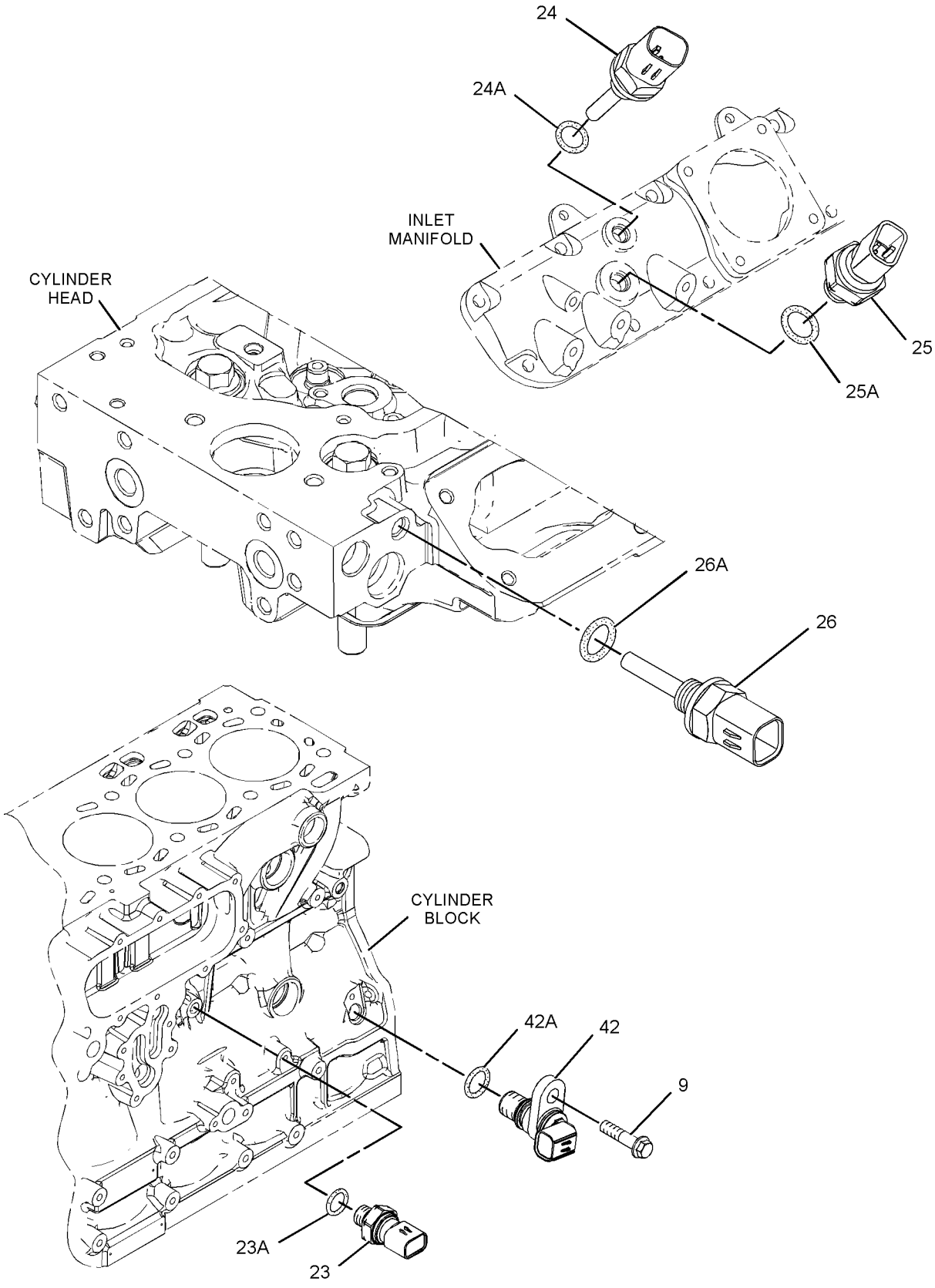

GRAPHIC #3 **<END>** g01766155

322-0598 PUMP GP-FUEL INJECTION

S/N: C6E1-22184
PART OF 319-7201 ENGINE AR-PRIMARY
TYPE 2

SMCS-1251, 1290 **i03987220**

NOTE	REF NO	GRAPHIC REF	PART NUMBER	QTY	PART NAME 1 2 3 4 5 6 (PRODUCT LEVEL)	SEE PAGE
M	1	1	**6I-0217**	6	BOLT (M8X1.25X20-MM)	
M	2	2	**6I-0254**	4	BOLT (M8X1.25X30-MM)	
M	3	1	**6I-0260**	4	BOLT (M8X1.25X25-MM)	
	4	1	**6I-0456**	4	BOLT (M8X1.25X45-MM)	
	5	2	**6I-4374**	2	BOLT (M8X1.25X60-MM)	
	6	2	**6I-4793**	1	BOLT (M8X1.25X50-MM)	
	7	1	**7W-2632**	1	WASHER (8.5X16.8X1.6-MM THK)	
M	8	1	**101-3895**	1	BOLT (M8X1.25X35-MM)	
M	9	3	**124-3815**	1	BOLT (M8X1.25X16-MM)	
	10	1	**155-0576**	8	MOUNT-ISOLATION	
	11	1	**160-0162**	2	WASHER	
	12	1	**217-0099**	4	SPACER (8.2X25X2-MM THK)	
	13	2	**217-9039**	1	STRAP-CABLE	
	14	1	**225-8524**	1	BOLT-SPECIAL (BANJO)	
	15	1	**230-8989**	1	GEAR-FUEL PUMP (68-TEETH)	
	16	2	**241-4291**	4	SCREW	
	17	1	**268-6677**	1	BRACKET AS	
	17A	1	**260-3939**	1	SCREW-HEX HEAD	
	18	1	**268-6678**	1	BRACKET AS	
	18A	1	**260-3939**	1	SCREW-HEX HEAD	
	19	2	**278-5168**	6	CLAMP-INJECTOR	
	20	2	**278-5170**	6	BOLT	
	21	2	**278-5180**	2	CLIP	
	22	1	**278-5203**	4	SPACER	
	23	3	**278-5225**	1	KIT-SENSOR (ENGINE OIL PRESSURE)	
	23A	3	**199-9267**	1	SEAL-O-RING	
	24	3	**278-5272**	1	KIT-SENSOR (INTAKE AIR TEMPERATURE)	
	24A	3	**278-5226**	1	SEAL-O-RING	
	25	3	**278-5273**	1	KIT-SENSOR (INTAKE AIR MANIFOLD)	
	25A	3	**199-9252**	1	SEAL-O-RING	
	26	3	**278-5307**	1	KIT-SENSOR (COOLANT TEMPERATURE)	
	26A	3	**199-9267**	1	SEAL-O-RING	
R	27	1	**331-7540**	1	CONTROL GP-UNPROGRAMMED	
	28	1	**287-6838**	1	BRACKET	
	29	1	**287-6839**	2	BOLT	
	30	1	**232-3149**	3	WASHER (8.35X16.85X1.55-MM THK)	
	31	2	**336-8180**	1	LINE-FUEL INJECTION	
	32	2	**336-8174**	1	LINE-FUEL INJECTION (CYL NO. 1)	
	33	2	**336-8175**	1	LINE-FUEL INJECTION (CYL NO. 2)	
	34	2	**336-8176**	1	LINE-FUEL INJECTION (CYL NO. 3)	
	35	2	**336-8177**	1	LINE-FUEL INJECTION (CYL NO. 4)	
	36	2	**336-8178**	1	LINE-FUEL INJECTION (CYL NO. 5)	
	37	2	**336-8179**	1	LINE-FUEL INJECTION (CYL NO. 6)	
CYR	38	1	**351-0973**	1	PUMP GP-FUEL INJECTION	123
	39	1	**293-9901**	1	BRACKET	
	40	2	**300-2940**	1	BRACKET	
	41	1	**310-7918**	1	BRACKET-SUPPORT	
	42	3	**311-3858**	1	KIT-SENSOR (ENGINE SPEED)	
	42A	3	**274-1639**	1	SEAL	
	43	2	**311-6342**	1	SENSOR-PRESSURE (FUEL RAIL)	
	43A	2	**309-8006**	1	WASHER	
	44	2	**318-2396**	1	RAIL AS-FUEL	
	44A	2	**305-5291**	1	VALVE AS-RELIEF (FUEL RAIL)	
		2	**228-7102**	1	SEAL-O-RING	
YR	45	2	**320-0690**	6	INJECTOR GP-FUEL	89
	46	1	**321-1270**	1	TUBE-OIL	

322-0598 **PUMP GP-FUEL INJECTION (*contd.*)** **i03987220**

NOTE	REF NO	GRAPHIC REF	PART NUMBER	QTY	PART NAME 1 2 3 4 5 6 (PRODUCT LEVEL)	SEE PAGE
	47	2	**330-3685**	4	CLAMP	
	48	2	**330-3687**	4	CLAMP	
	49	2	**330-5467**	4	ISOLATOR	
F			**278-4138**	4	PROTECTION GP-FUEL SYSTEM	

C - CHANGE FROM PREVIOUS TYPE
F - NOT SHOWN
M - METRIC PART
R - REMFG PART MAY BE AVAILABLE
Y - SEPARATE ILLUSTRATION

322-0598 **PUMP GP-FUEL INJECTION (*contd.*)** **i03987220**

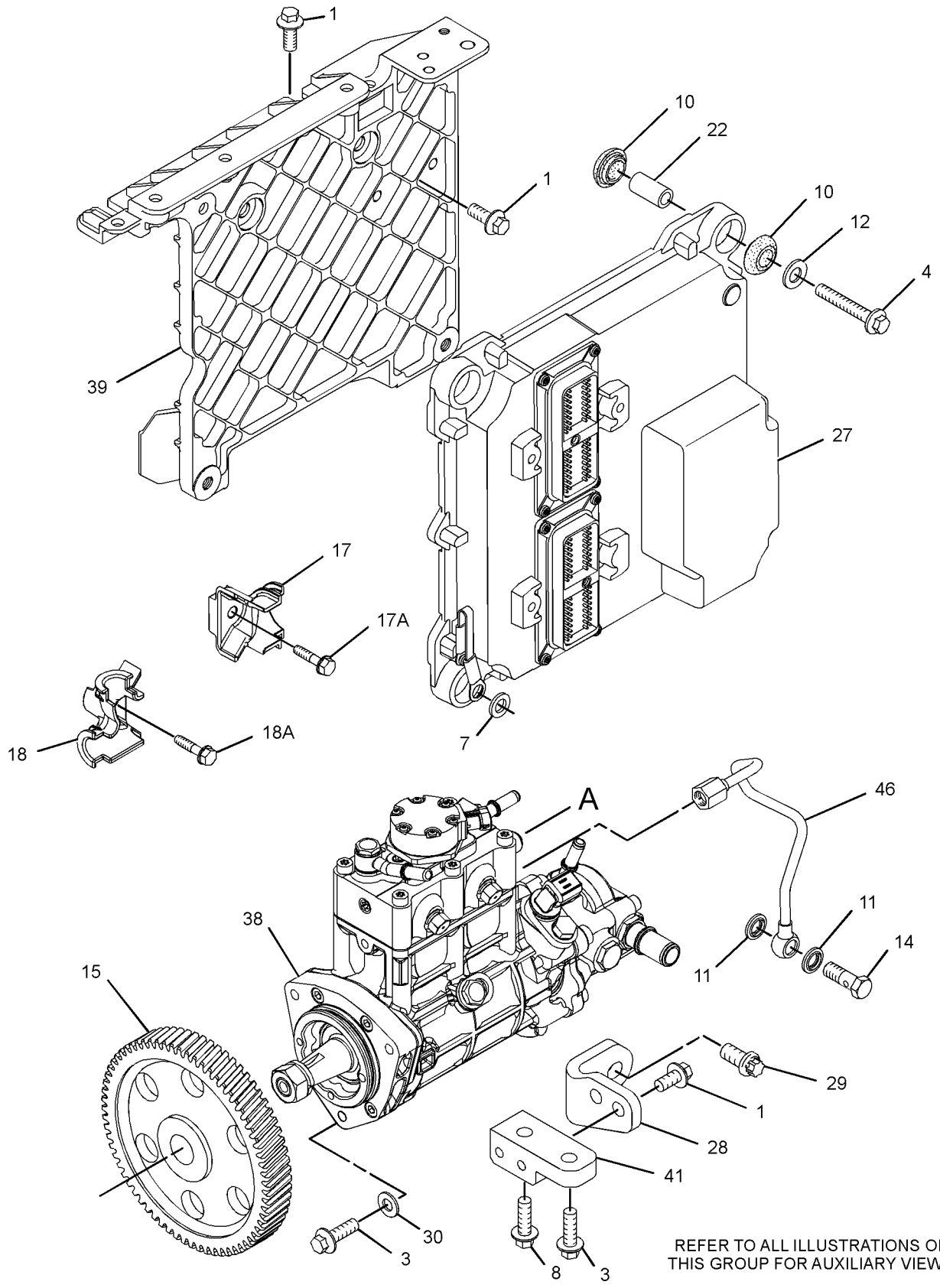

GRAPHIC #1 g02215414

322-0598 **PUMP GP-FUEL INJECTION (*contd.*)** **i03987220**

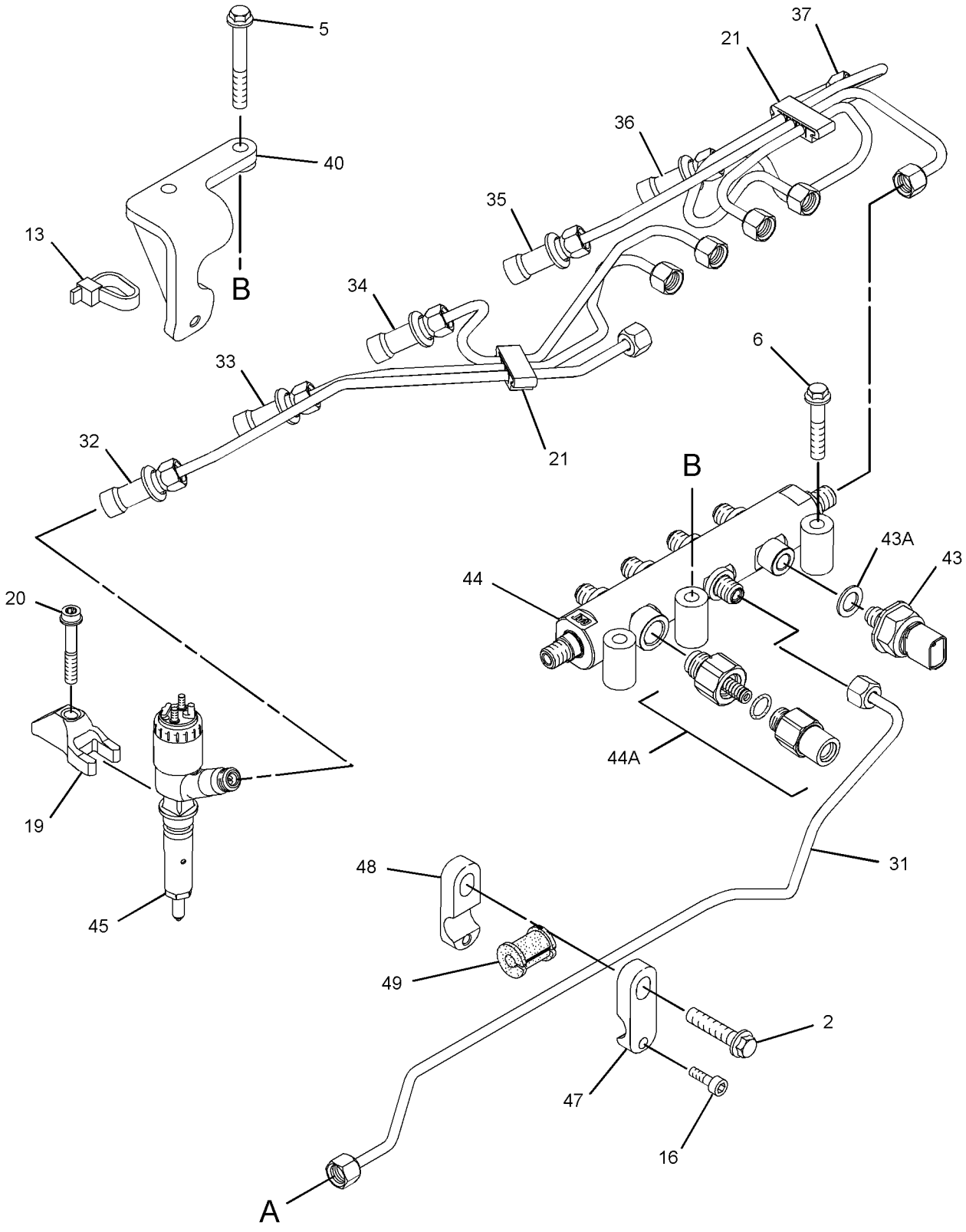

GRAPHIC #2 g01908940

322-0598 **PUMP GP-FUEL INJECTION (*contd.*)** **i03987220**

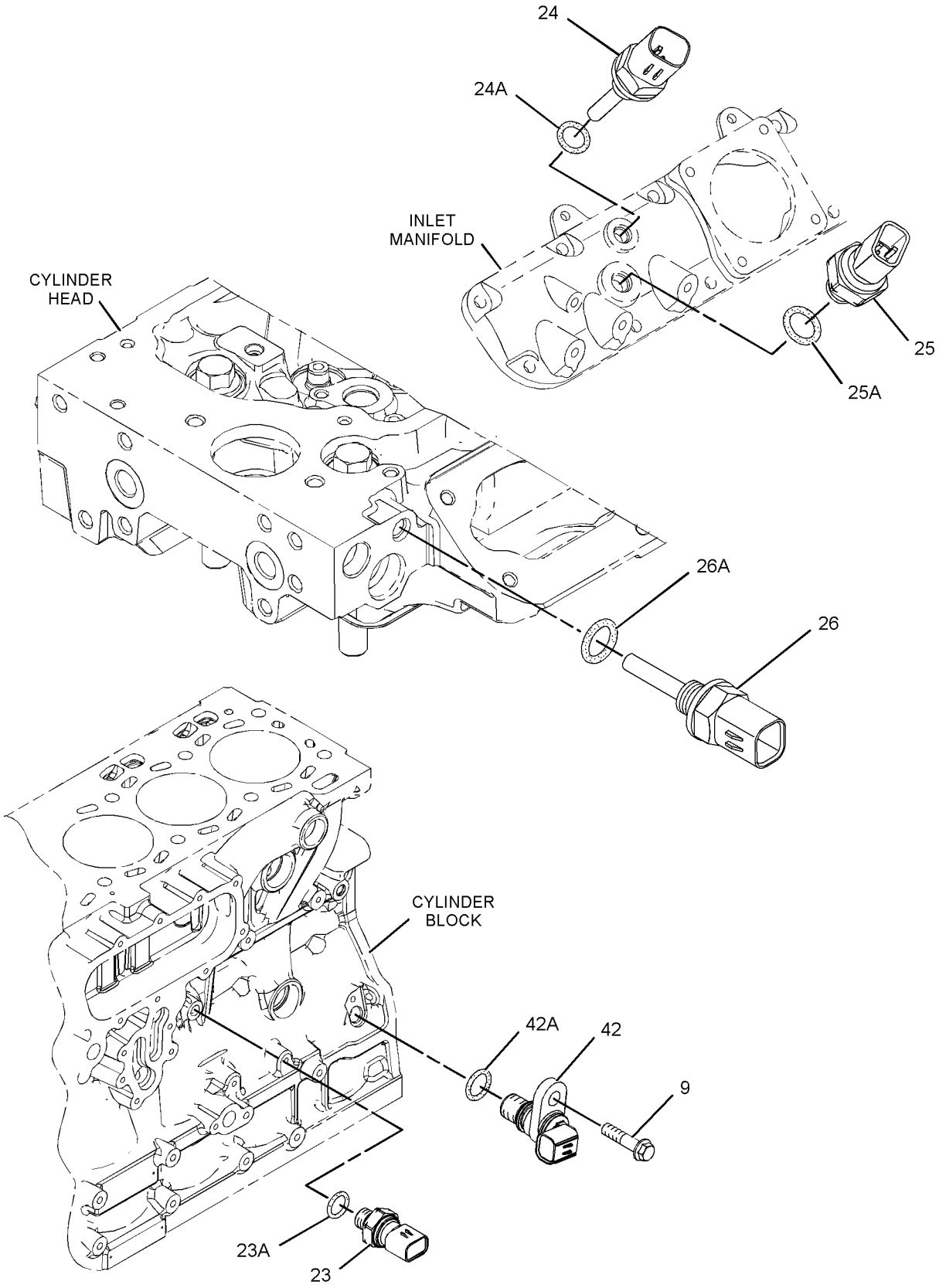

GRAPHIC #3 **<END>** g01766155

322-0598 PUMP GP-FUEL INJECTION

S/N: C6E22185-39023

PART OF 319-7201 ENGINE AR-PRIMARY

SMCS-1251, 1290 **i04562045**

NOTE	REF NO	GRAPHIC REF	PART NUMBER	QTY	PART NAME 1 2 3 4 5 6 (PRODUCT LEVEL)	SEE PAGE
M	1	1	**6I-0217**	6	BOLT (M8X1.25X20-MM)	
CM	2	2	**6I-0254**	3	BOLT (M8X1.25X30-MM)	
M	3	1	**6I-0260**	4	BOLT (M8X1.25X25-MM)	
	4	1	**6I-0456**	4	BOLT (M8X1.25X45-MM)	
C	6	2	**6I-4793**	3	BOLT (M8X1.25X50-MM)	
	7	1	**7W-2632**	1	WASHER (8.5X16.8X1.6-MM THK)	
M	8	1	**101-3895**	1	BOLT (M8X1.25X35-MM)	
M	9	3	**124-3815**	1	BOLT (M8X1.25X16-MM)	
	10	1	**155-0576**	8	MOUNT-ISOLATION	
	11	1	**160-0162**	2	WASHER	
	12	1	**217-0099**	4	SPACER (8.2X25X2-MM THK)	
	14	1	**225-8524**	1	BOLT-SPECIAL (BANJO)	
	15	1	**230-8989**	1	GEAR-FUEL PUMP (68-TEETH)	
	17	1	**268-6677**	1	BRACKET AS	
	17A	1	**260-3939**	1	SCREW-HEX HEAD	
	18	1	**268-6678**	1	BRACKET AS	
	18A	1	**260-3939**	1	SCREW-HEX HEAD	
	19	2	**278-5168**	6	CLAMP-INJECTOR	
	20	2	**278-5170**	6	BOLT	
	21	2	**278-5180**	2	CLIP	
	22	1	**278-5203**	4	SPACER	
	23	3	**278-5225**	1	KIT-SENSOR (ENGINE OIL PRESSURE)	
	23A	3	**199-9267**	1	SEAL-O-RING	
	24	3	**278-5272**	1	KIT-SENSOR (INTAKE AIR TEMPERATURE)	
	24A	3	**278-5226**	1	SEAL-O-RING	
	25	3	**278-5273**	1	KIT-SENSOR (INTAKE AIR MANIFOLD)	
	25A	3	**199-9252**	1	SEAL-O-RING	
	26	3	**278-5307**	1	KIT-SENSOR (COOLANT TEMPERATURE)	
	26A	3	**199-9267**	1	SEAL-O-RING	
R	27	1	**331-7540**	1	CONTROL GP-UNPROGRAMMED	
	28	1	**287-6838**	1	BRACKET	
	29	1	**287-6839**	2	BOLT	
	30	1	**232-3149**	3	WASHER (8.35X16.85X1.55-MM THK)	
C	31	2	**355-1582**	1	TUBE AS	
	32	2	**336-8174**	1	LINE-FUEL INJECTION (CYL NO. 1)	
	33	2	**336-8175**	1	LINE-FUEL INJECTION (CYL NO. 2)	
	34	2	**336-8176**	1	LINE-FUEL INJECTION (CYL NO. 3)	
	35	2	**336-8177**	1	LINE-FUEL INJECTION (CYL NO. 4)	
	36	2	**336-8178**	1	LINE-FUEL INJECTION (CYL NO. 5)	
	37	2	**336-8179**	1	LINE-FUEL INJECTION (CYL NO. 6)	
YR	38	1	**317-8021**	1	PUMP GP-FUEL INJECTION	102
	39	1	**293-9901**	1	BRACKET	
	41	1	**310-7918**	1	BRACKET-SUPPORT	
	42	3	**311-3858**	1	KIT-SENSOR (ENGINE SPEED)	
	42A	3	**274-1639**	1	SEAL	
	43	2	**311-6342**	1	SENSOR-PRESSURE (FUEL RAIL)	
	43A	2	**309-8006**	1	WASHER	
	44	2	**358-6634**	1	RAIL GP-FUEL	
	44A	2	**305-5291**	1	VALVE AS-RELIEF (FUEL RAIL)	
		2	**228-7102**	1	SEAL-O-RING	
YR	45	2	**320-0690**	6	INJECTOR GP-FUEL	89
	46	1	**321-1270**	1	TUBE-OIL	
C	47	2	**330-3685**	3	CLAMP	
C	48	2	**330-3687**	3	CLAMP	
C	49	2	**330-5467**	3	ISOLATOR	
C	50	2	**280-1892**	3	BOLT	
C	51	2	**1N-3361**	1	SPACER	

322-0598 **PUMP GP-FUEL INJECTION (*contd.*)** **i04562045**

NOTE	REF NO	GRAPHIC REF	PART NUMBER	QTY	PART NAME 1 2 3 4 5 6 (PRODUCT LEVEL)	SEE PAGE
F			**278-4138**	4	PROTECTION GP-FUEL SYSTEM	

C - CHANGE FROM PREVIOUS TYPE
F - NOT SHOWN
M - METRIC PART
R - REMFG PART MAY BE AVAILABLE
Y - SEPARATE ILLUSTRATION

322-0598 **PUMP GP-FUEL INJECTION (*contd.*)** **i04562045**

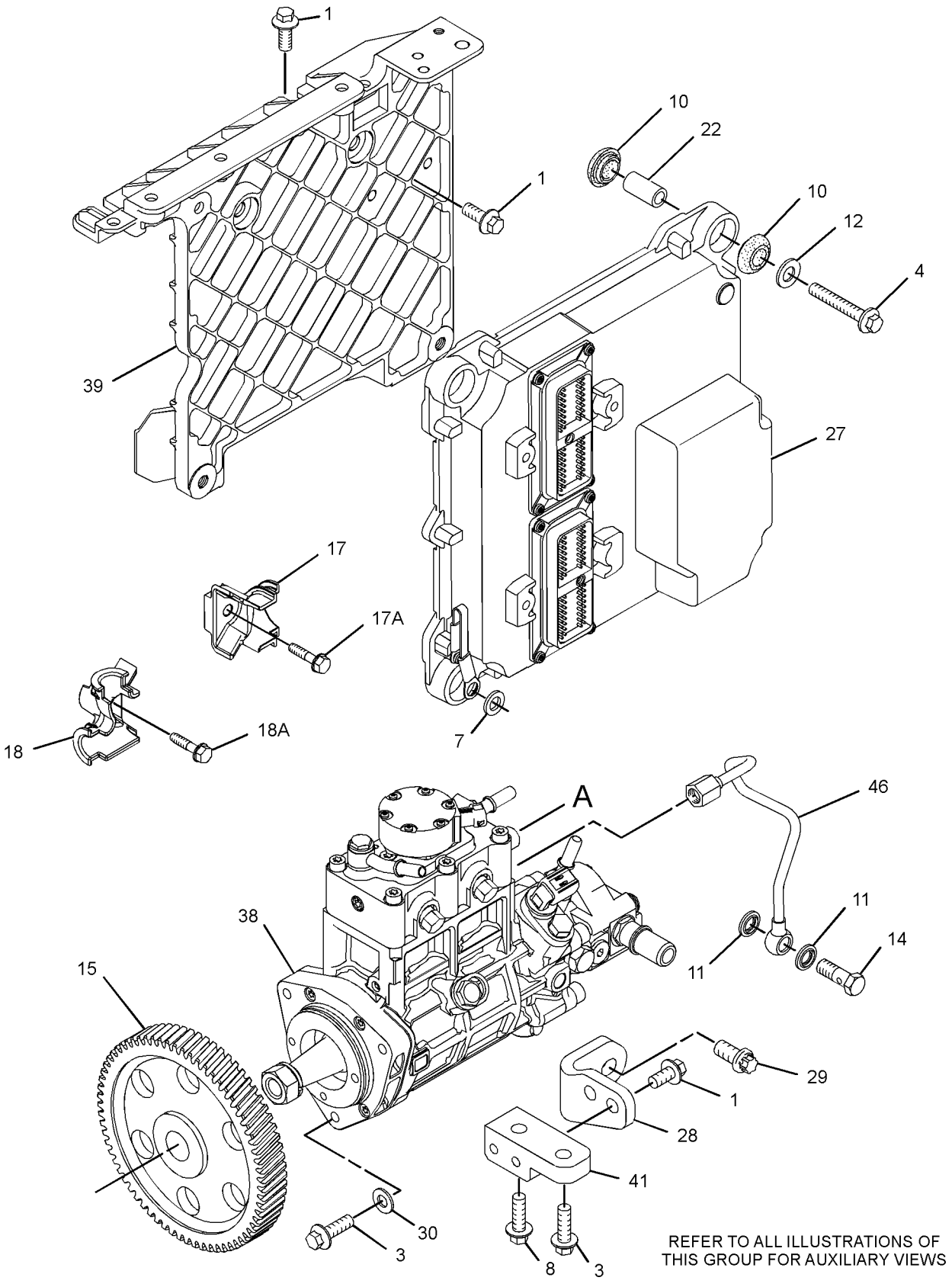

GRAPHIC #1

g02729048

322-0598 **PUMP GP-FUEL INJECTION (*contd.*)** **i04562045**

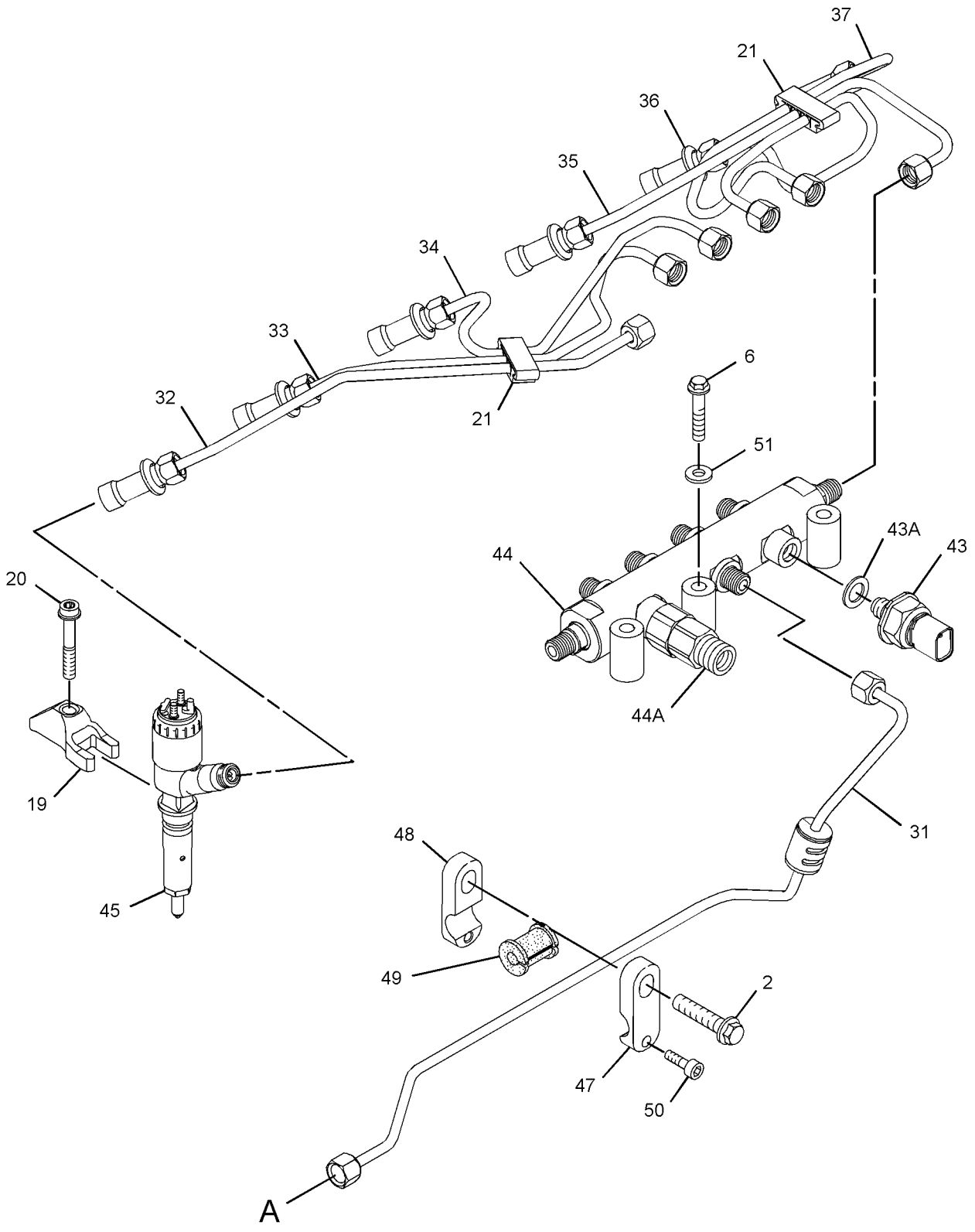

GRAPHIC #2 g02729047

322-0598 **PUMP GP-FUEL INJECTION (*contd.*)** **i04562045**

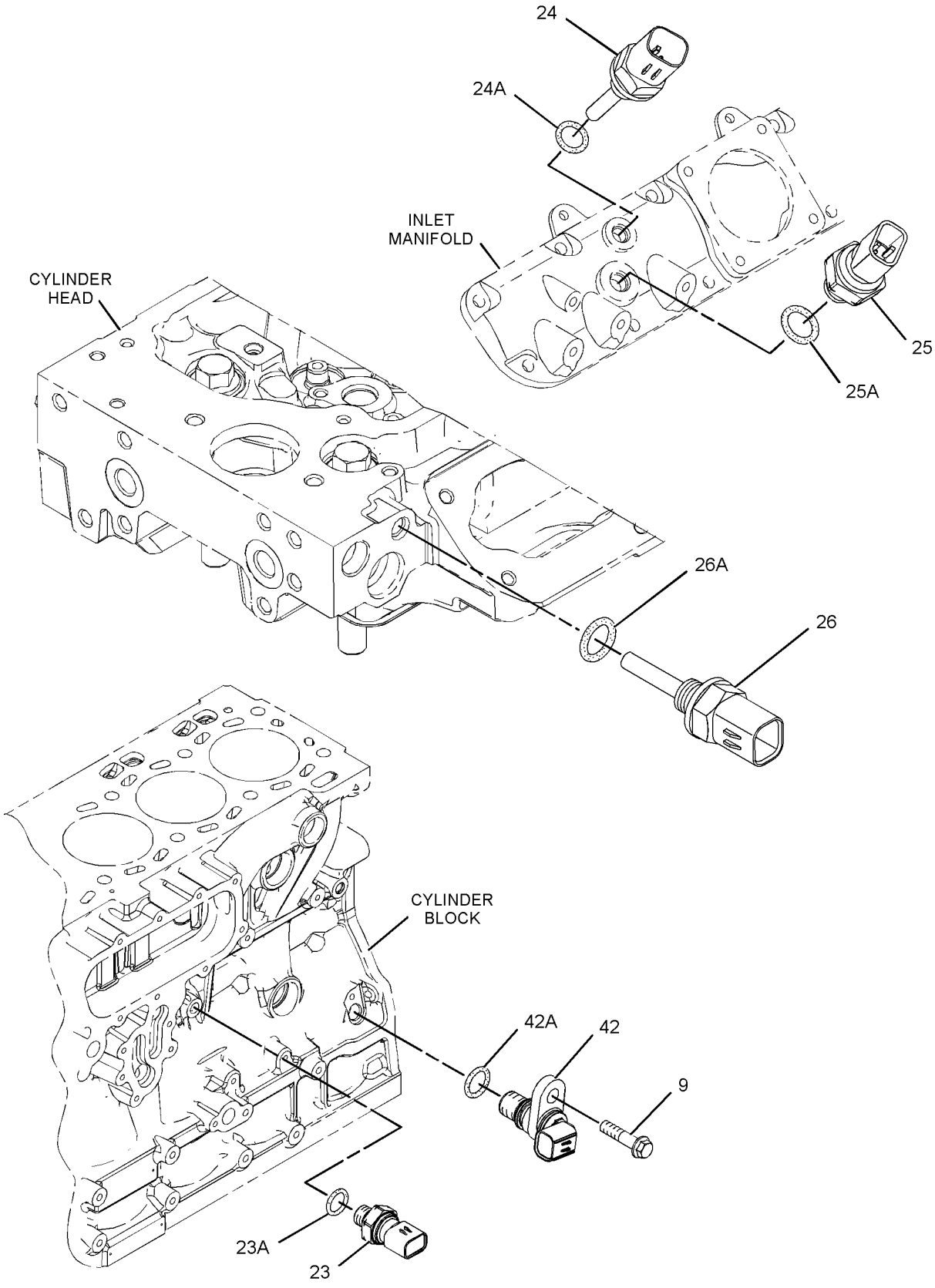

GRAPHIC #3 **<END>** g01766155

322-0598 PUMP GP-FUEL INJECTION

S/N: C6E39024-UP

PART OF 319-7201 ENGINE AR-PRIMARY

SMCS-1251, 1290 **i05203962**

NOTE	REF NO	GRAPHIC REF	PART NUMBER	QTY	PART NAME 1 2 3 4 5 6 (PRODUCT LEVEL)	SEE PAGE
M	1	1	**6I-0217**	6	BOLT (M8X1.25X20-MM)	
M	2	2	**6I-0254**	3	BOLT (M8X1.25X30-MM)	
M	3	1	**6I-0260**	4	BOLT (M8X1.25X25-MM)	
	4	1	**6I-0456**	4	BOLT (M8X1.25X45-MM)	
	6	2	**6I-4793**	3	BOLT (M8X1.25X50-MM)	
	7	1	**7W-2632**	1	WASHER (8.5X16.8X1.6-MM THK)	
M	8	1	**101-3895**	1	BOLT (M8X1.25X35-MM)	
M	9	3	**124-3815**	1	BOLT (M8X1.25X16-MM)	
	10	1	**155-0576**	8	MOUNT-ISOLATION	
	11	1	**160-0162**	2	WASHER	
	12	1	**217-0099**	4	SPACER (8.2X25X2-MM THK)	
	14	1	**225-8524**	1	BOLT-SPECIAL (BANJO)	
	15	1	**230-8989**	1	GEAR-FUEL PUMP (68-TEETH)	
	17	1	**268-6677**	1	BRACKET AS	
	17A	1	**260-3939**	1	SCREW-HEX HEAD	
	18	1	**268-6678**	1	BRACKET AS	
	18A	1	**260-3939**	1	SCREW-HEX HEAD	
	19	2	**278-5168**	6	CLAMP-INJECTOR	
	20	2	**278-5170**	6	BOLT	
	21	2	**278-5180**	2	CLIP	
	22	1	**278-5203**	4	SPACER	
	23	3	**278-5225**	1	KIT-SENSOR (ENGINE OIL PRESSURE)	
	23A	3	**199-9267**	1	SEAL-O-RING	
	24	3	**278-5272**	1	KIT-SENSOR (INTAKE AIR TEMPERATURE)	
	24A	3	**278-5226**	1	SEAL-O-RING	
	25	3	**278-5273**	1	KIT-SENSOR (INTAKE AIR MANIFOLD)	
	25A	3	**199-9252**	1	SEAL-O-RING	
	26	3	**278-5307**	1	KIT-SENSOR (COOLANT TEMPERATURE)	
	26A	3	**199-9267**	1	SEAL-O-RING	
R	27	1	**331-7540**	1	CONTROL GP-UNPROGRAMMED	
	28	1	**287-6838**	1	BRACKET	
	29	1	**287-6839**	2	BOLT	
	30	1	**232-3149**	3	WASHER (8.35X16.85X1.55-MM THK)	
	31	2	**355-1582**	1	TUBE AS	
	32	2	**336-8174**	1	LINE-FUEL INJECTION (CYL NO. 1)	
	33	2	**336-8175**	1	LINE-FUEL INJECTION (CYL NO. 2)	
	34	2	**336-8176**	1	LINE-FUEL INJECTION (CYL NO. 3)	
	35	2	**336-8177**	1	LINE-FUEL INJECTION (CYL NO. 4)	
	36	2	**336-8178**	1	LINE-FUEL INJECTION (CYL NO. 5)	
	37	2	**336-8179**	1	LINE-FUEL INJECTION (CYL NO. 6)	
CY	38	1	**368-9171**	1	PUMP GP-FUEL INJECTION	124
	39	1	**293-9901**	1	BRACKET	
	41	1	**310-7918**	1	BRACKET-SUPPORT	
	42	3	**311-3858**	1	KIT-SENSOR (ENGINE SPEED)	
	42A	3	**274-1639**	1	SEAL	
	43	2	**311-6342**	1	SENSOR-PRESSURE (FUEL RAIL)	
	43A	2	**309-8006**	1	WASHER	
	44	2	**358-6634**	1	RAIL GP-FUEL	
	44A	2	**305-5291**	1	VALVE AS-RELIEF (FUEL RAIL)	
		2	**228-7102**	1	SEAL-O-RING	
YR	45	2	**320-0690**	6	INJECTOR GP-FUEL	89
	46	1	**321-1270**	1	TUBE-OIL	
	47	2	**330-3685**	3	CLAMP	
	48	2	**330-3687**	3	CLAMP	
	49	2	**330-5467**	3	ISOLATOR	
	50	2	**280-1892**	3	BOLT	
	51	2	**1N-3361**	1	SPACER	

322-0598 **PUMP GP-FUEL INJECTION (*contd.*)** **i05203962**

NOTE	REF NO	GRAPHIC REF	PART NUMBER	QTY	PART NAME 1 2 3 4 5 6 (PRODUCT LEVEL)	SEE PAGE
F			**278-4138**	4	PROTECTION GP-FUEL SYSTEM	

C - CHANGE FROM PREVIOUS TYPE
F - NOT SHOWN
M - METRIC PART
R - REMFG PART MAY BE AVAILABLE
Y - SEPARATE ILLUSTRATION

322-0598 **PUMP GP-FUEL INJECTION (*contd.*)** **i05203962**

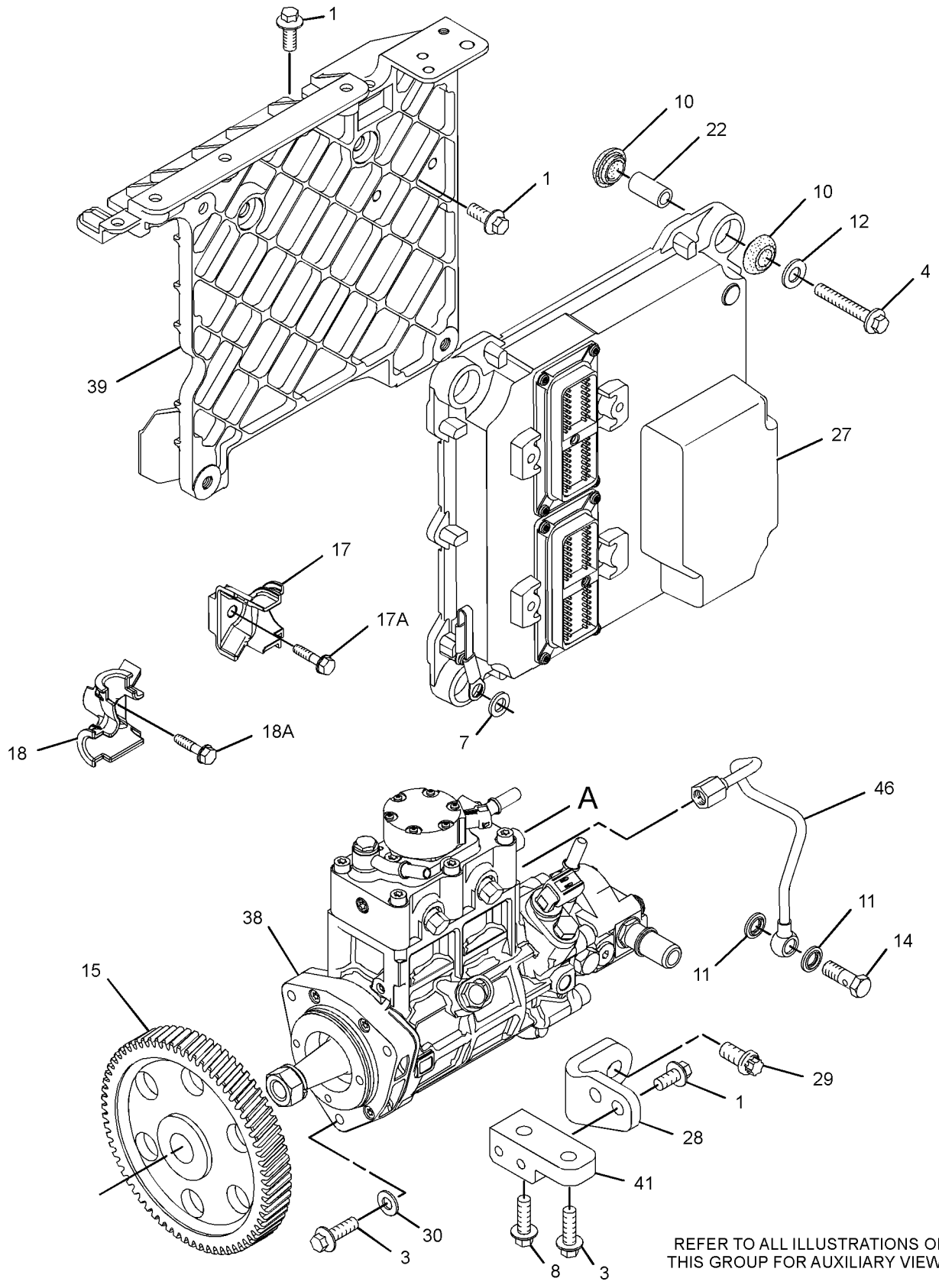

GRAPHIC #1

g02729048

322-0598 **PUMP GP-FUEL INJECTION (*contd.*)** **i05203962**

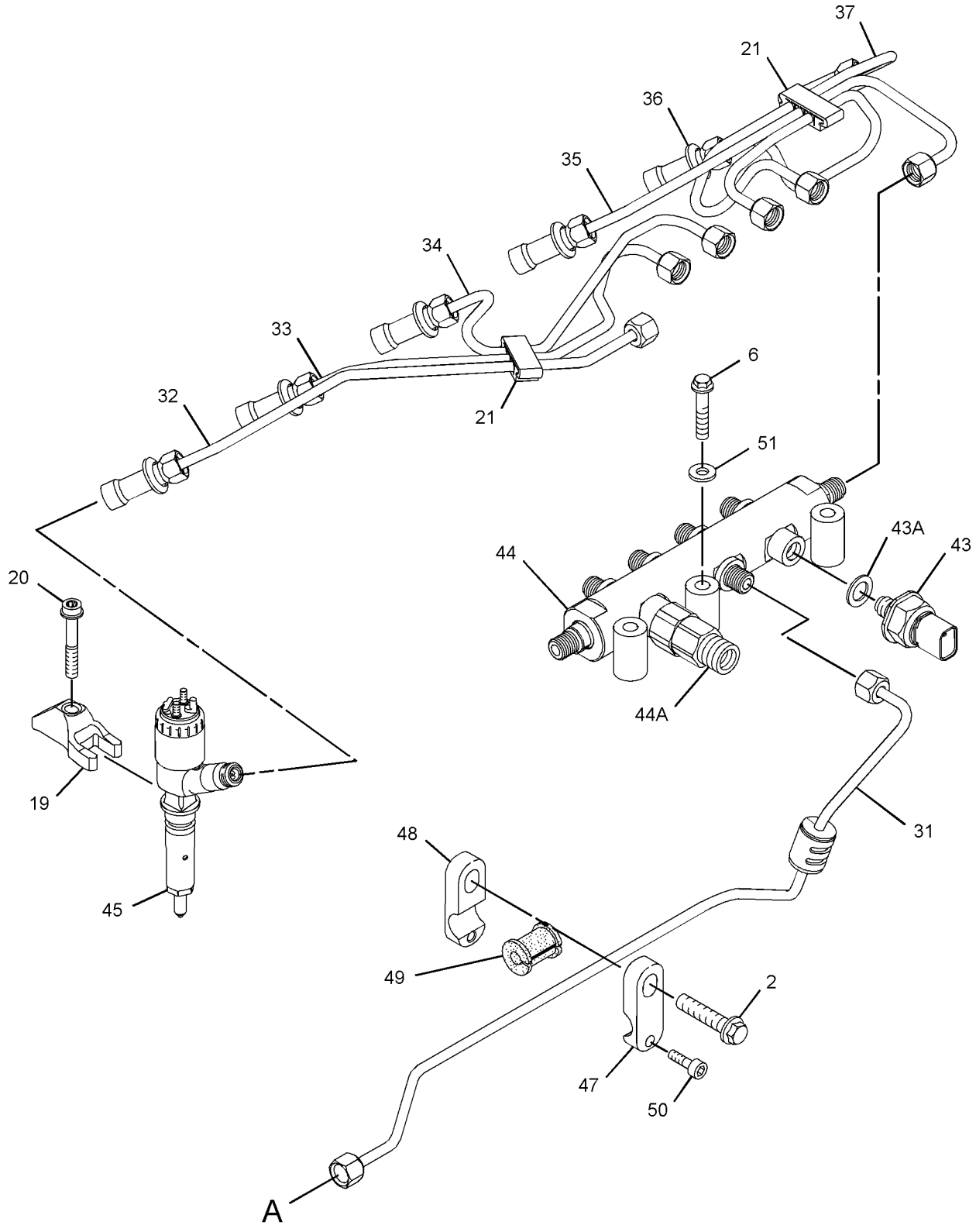

GRAPHIC #2 g02729047

322-0598 **PUMP GP-FUEL INJECTION (*contd.*)** **i05203962**

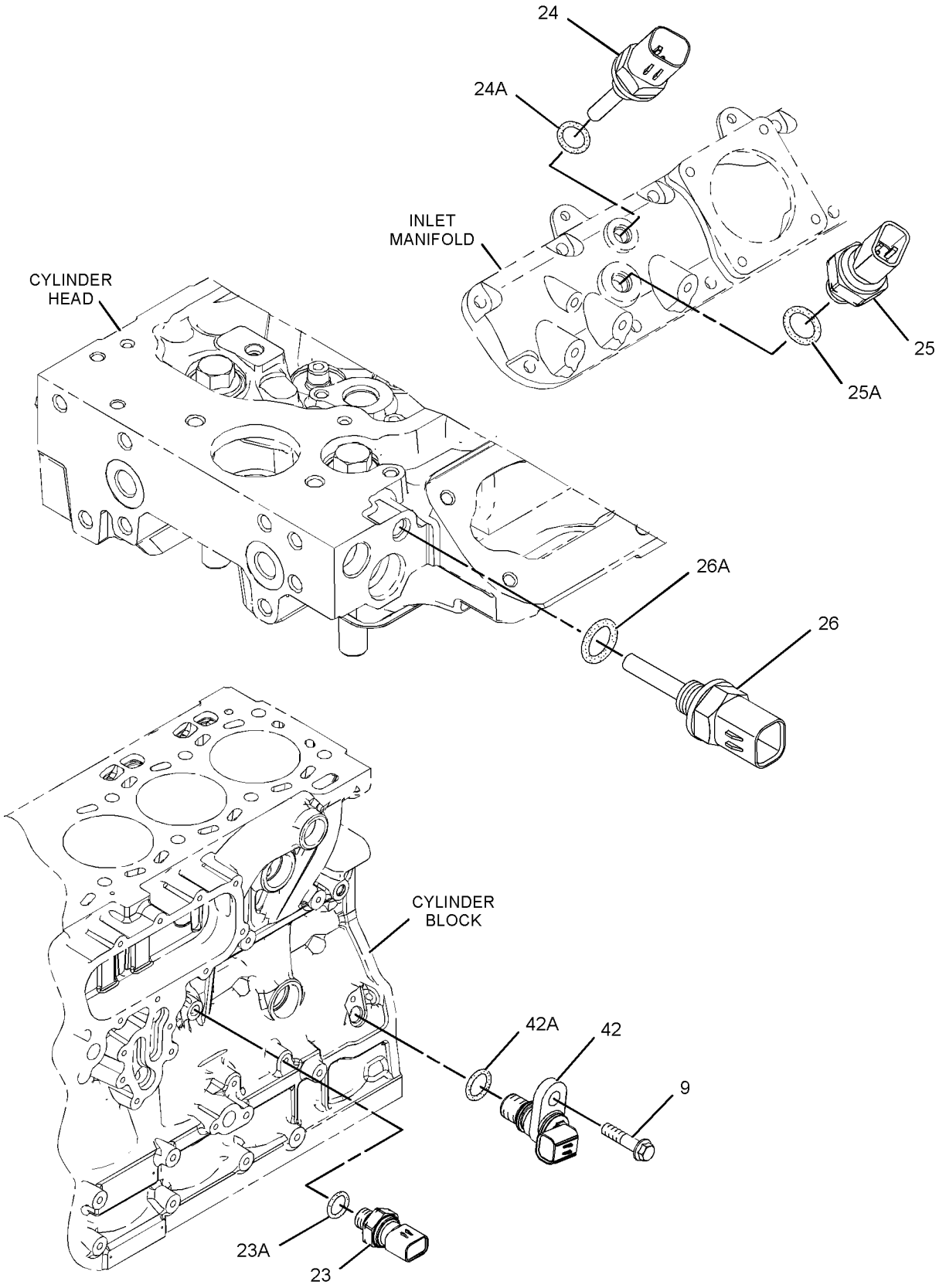

GRAPHIC #3 **<END>** g01766155

351-0973 PUMP GP-FUEL INJECTION*R

S/N: C6E1-22184

PART OF 322-0598 PUMP GP-FUEL INJECTION

SMCS-1251, 1290 **i03983111**

NOTE	REF NO	GRAPHIC REF	PART NUMBER	QTY	PART NAME 1 2 3 4 5 6 (PRODUCT LEVEL)	SEE PAGE
	1	1	**228-0172**	1	FITTING-FUEL	
	2	1	**228-7100**	3	SEAL-O-RING	
	3	1	**238-0120**	1	SENSOR GP-SPEED (SECONDARY, TIMING)	
	4	1	**248-1066**	1	FITTING-FUEL	
	5	1	**257-2381**	2	PIN	
	6	1	**257-2382**	2	PLUG	
	7	1	**258-8149**	2	SPRING	
	8	1	**294-3031**	1	BOLT-SPECIAL	
	9	1	**294-3032**	1	WASHER-SPECIAL	
	10	1	**295-4801**	1	NUT (M14X1.5-THD)	
	11	1	**296-3542**	1	LOCKWASHER	
	12	1	**351-2799**	1	FITTING	
	13	1	**117-1385**	1	SEAL-O-RING	
	14	1	**334-2932**	1	SEAL-O-RING	
M	15	1	**5A-3604**	5	BOLT-SOCKET HEAD (M8X1.25X25-MM)	
M	16	1	**8T-4200**	1	BOLT (M8X1.25X16-MM)	
	17	1	**247-6019**	1	SEAL	
	18	1	**8L-2779**	1	SEAL-O-RING	

M - METRIC PART

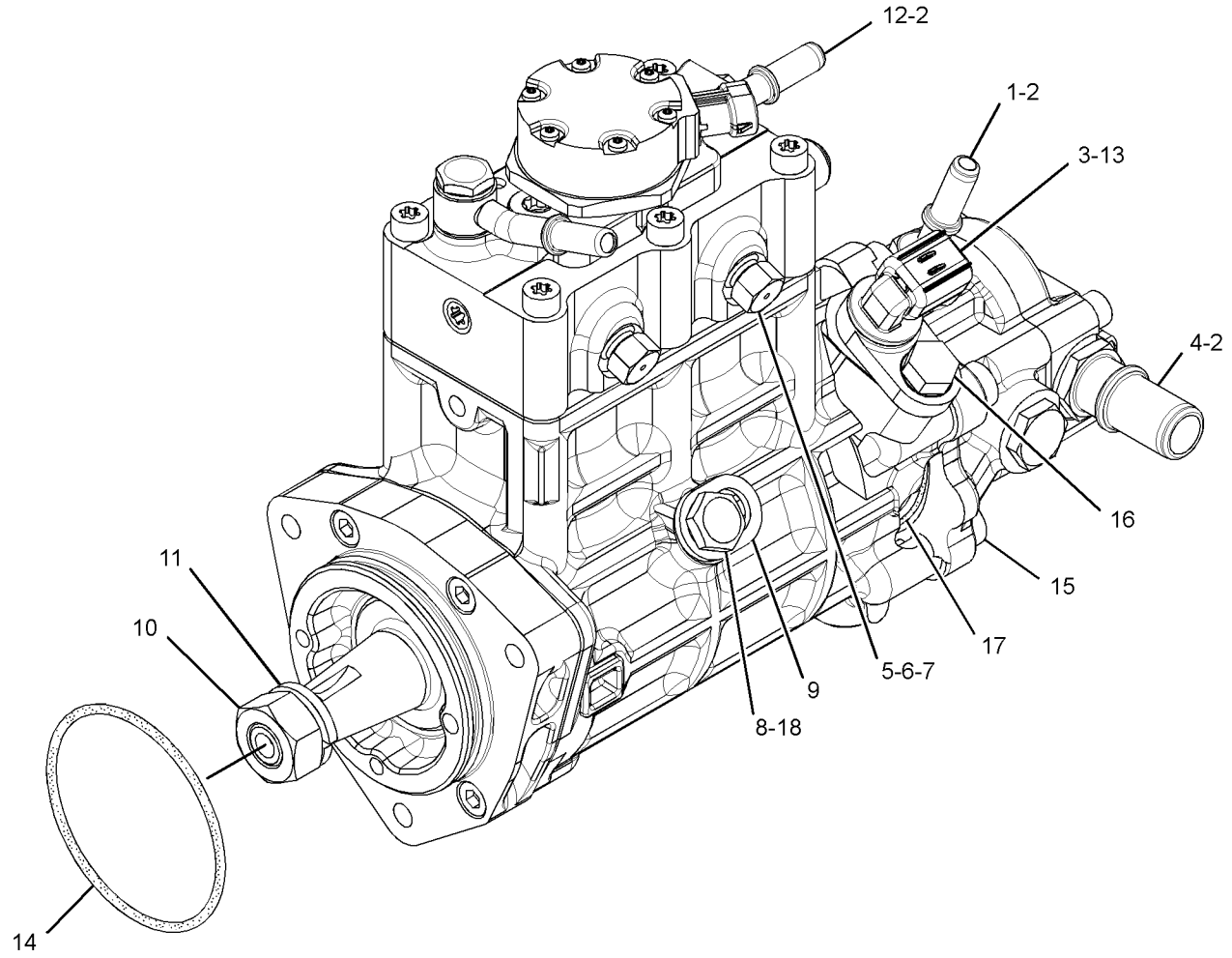

GRAPHIC #1 **<END>** g02177773

368-9171 PUMP GP-FUEL INJECTION

S/N: C6E39024-UP

PART OF 322-0598 PUMP GP-FUEL INJECTION

SMCS-1251, 1290 **i04559685**

NOTE	REF NO	GRAPHIC REF	PART NUMBER	QTY	PART NAME 1 2 3 4 5 6 (PRODUCT LEVEL)	SEE PAGE
	1	1	**228-0172**	1	FITTING-FUEL	
	2	1	**228-7100**	3	SEAL-O-RING	
	3	1	**238-0120**	1	SENSOR GP-SPEED (ENGINE)	
	4	1	**248-1066**	1	FITTING-FUEL	
	5	1	**257-2381**	2	PIN	
	6	1	**257-2382**	2	PLUG	
	7	1	**258-8149**	2	SPRING	
	8	1	**293-0249**	1	PUMP GP-FUEL TRANSFER	
	9	1	**294-3031**	1	BOLT-SPECIAL	
	10	1	**294-3032**	1	WASHER-SPECIAL	
	11	1	**295-4801**	1	NUT (M14X1.5-THD)	
	12	1	**296-3542**	1	LOCKWASHER	
	13	1	**117-1385**	1	SEAL-O-RING	
	14	1	**334-2932**	1	SEAL-O-RING	
M	15	1	**5A-3604**	5	BOLT-SOCKET HEAD (M8X1.25X25-MM)	
M	16	1	**8T-4200**	1	BOLT (M8X1.25X16-MM)	
	17	1	**247-6019**	1	SEAL	
	18	1	**8L-2779**	1	SEAL-O-RING	

PARTS SHOWN IN GRAPHIC(S) WITHOUT A REFERENCE NUMBER ARE NOT SERVICED SEPARATELY

M - METRIC PART

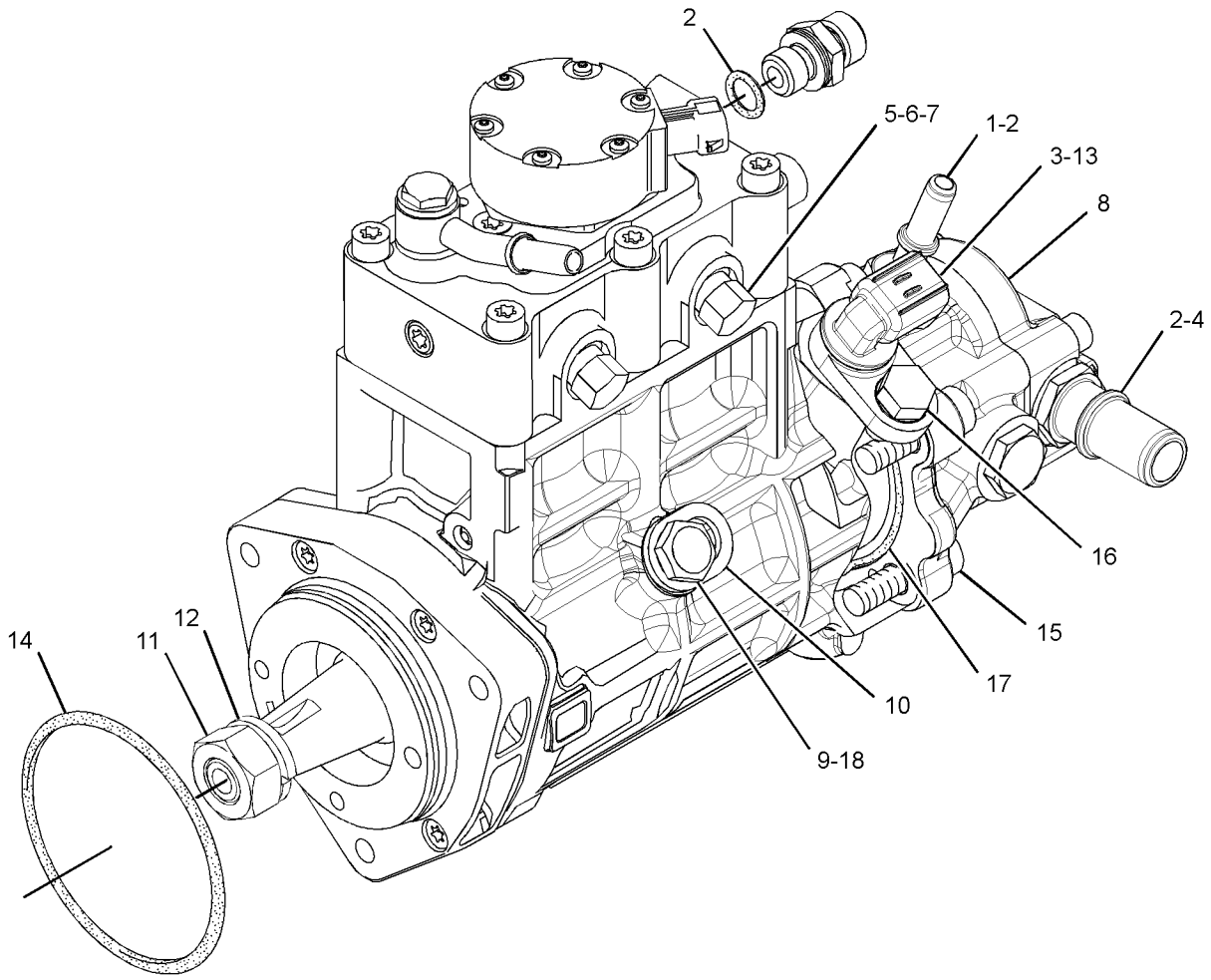

GRAPHIC #1 **<END>** g02731907

212-3657 PUMP GP-FUEL PRM & WATER SEP–ELECTRIC

S/N: LJR1-UP

PART OF 301-2710, 362-1096 PUMP GP-FUEL PRM & WATER SEP

SMCS-1258, 1261, 1263 **i02259296**

NOTE	REF NO	GRAPHIC REF	PART NUMBER	QTY	PART NAME 1 2 3 4 5 6 (PRODUCT LEVEL)	SEE PAGE
Y	1	1	*174-9570*	1	FILTER GP-WATER SEP & FUEL	88
	2	1	**217-8339**	1	PUMP AS-FUEL PRIMING (24-VOLT)	

Y - SEPARATE ILLUSTRATION

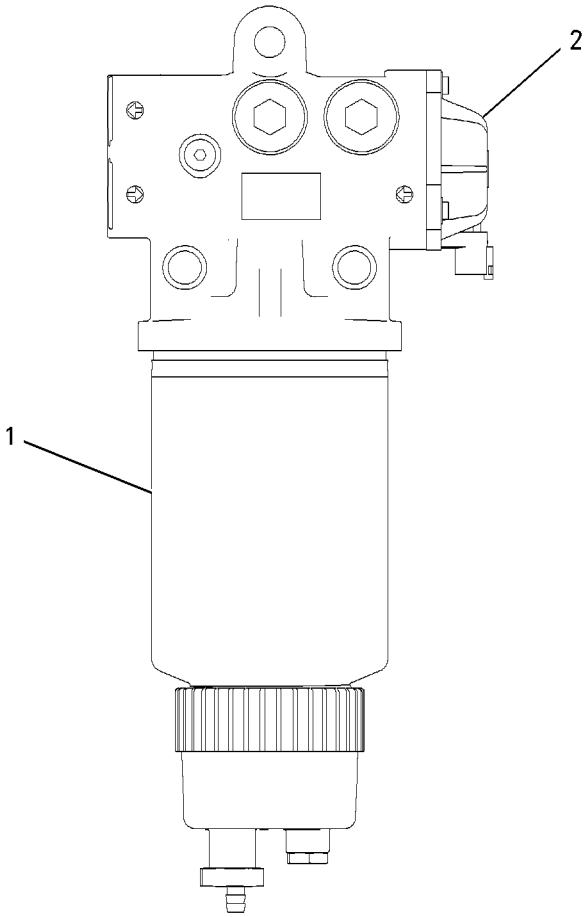

GRAPHIC #1 **<END>** g00875466

301-2710 PUMP GP-FUEL PRM & WATER SEP—ELECTRIC

S/N: LJR1-314

PART OF 318-0768 INSTALLATION AR-ENGINE

SMCS-1258, 1261, 1263 **i03907274**

NOTE	REF NO	GRAPHIC REF	PART NUMBER	QTY	PART NAME 1 2 3 4 5 6 (PRODUCT LEVEL)	SEE PAGE
	1	1	**3S-2093**	3	STRAP-CABLE	
	2	1	**7K-1181**	6	STRAP-CABLE	
	3	1	**8T-9655**	8	MOUNT-ISOLATION	
	4	1	**9L-6331**	1	BRACKET	
Y	5	1	**102-2240**	1	SENSOR GP-TEMPERATURE (FUEL)	207
	6	1	*161-9916*	1	ADAPTER AS	
		1	**6V-7420**	1	ADAPTER	
		1	**2M-9780**	1	SEAL-O-RING	
Y	7	1	**165-5970**	1	SWITCH GP-TOGGLE (FUEL PRIMING PUMP)	222
Y	8	1	**178-2345**	1	SENSOR GP-LIQUID LEVEL (WATER SEPARATOR)	199
	9	1	**191-1782**	1	SPACER (8.5X12.7X38.2-MM THK)	
	10	1	**206-2423**	1	SADDLE	
	11	1	**209-7659**	1	PLATE-INFORMATION (FUEL PRIMING PUMP ON, OFF)	
Y	12	1	**212-3657**	1	PUMP GP-FUEL PRM & WATER SEP (ELECTRIC)	125
	13	1	**232-1374**	1	BRACKET	
	14	1	**232-1376**	2	SPACER (8.5X12.7X139.1-MM THK)	
	15	1	**254-7864**	1	HOSE AS	
	16	1	**256-3454**	1	CONNECTOR	
	17	1	*268-1563*	1	TEE AS	
		1	**268-1562**	1	TEE	
		1	**2M-9780**	1	SEAL-O-RING	
	18	1	**315-5494**	1	BOLT (M8X1.25X180-MM)	
	19	1	**322-3696**	1	HARNESS AS-PUMP	
		1	**144-1636**	2	PIN-CONNECTOR (14-GA TO 18-GA)	
		1	**230-4012**	1	RECEPTACLE AS-CONNECTOR (2-PIN)	
	20	1	*155-3624*	1	PLUG AS	
		1	**9S-4182**	1	PLUG-O-RING	
		1	**3J-7354**	1	SEAL-O-RING	
	21	1	**198-4776**	3	WASHER-HARD (8.8X20X8-MM THK)	
	22	1	**1P-4278**	1	CLAMP-HOSE	
	23	1	**3K-0360**	1	SEAL-O-RING	
	24	1	**4P-7581**	1	CLIP	
	25	1	**4P-8134**	1	CLIP	
M	26	1	**5C-7261**	1	NUT (M8X1.25-THD)	
	27	1	**5P-4116**	4	WASHER-HARD (8.8X20.5X2-MM THK)	
	28	1	**6D-3479**	3	CLIP	
	29	1	**6V-4589**	2	SEAL-O-RING	
	30	1	**7X-0579**	3	WASHER-HARD (8.8X25.5X2-MM THK)	
	31	1	**8T-4121**	2	WASHER-HARD (11X21X2.5-MM THK)	
M	32	1	**8T-4133**	1	NUT (M10X1.5-THD)	
M	33	1	**8T-4189**	1	BOLT (M8X1.25X20-MM)	
M	34	1	**8T-4195**	1	BOLT (M10X1.5X30-MM)	
M	35	1	**8T-6869**	1	BOLT (M8X1.25X60-MM)	
M	36	1	**8T-7352**	1	BOLT (M8X1.25X160-MM)	
	37	1	**9S-8006**	1	PLUG-O-RING	
E	38	1	**7I-7439**		GUARD (20-CM)	
D	39	1	**5P-5991**		HOSE (0.5-M)	

D - ORDER BY THE METER
E - ORDER BY THE CENTIMETER
M - METRIC PART
Y - SEPARATE ILLUSTRATION

301-2710 **PUMP GP-FUEL PRM & WATER SEP (*contd.*)** **i03907274**

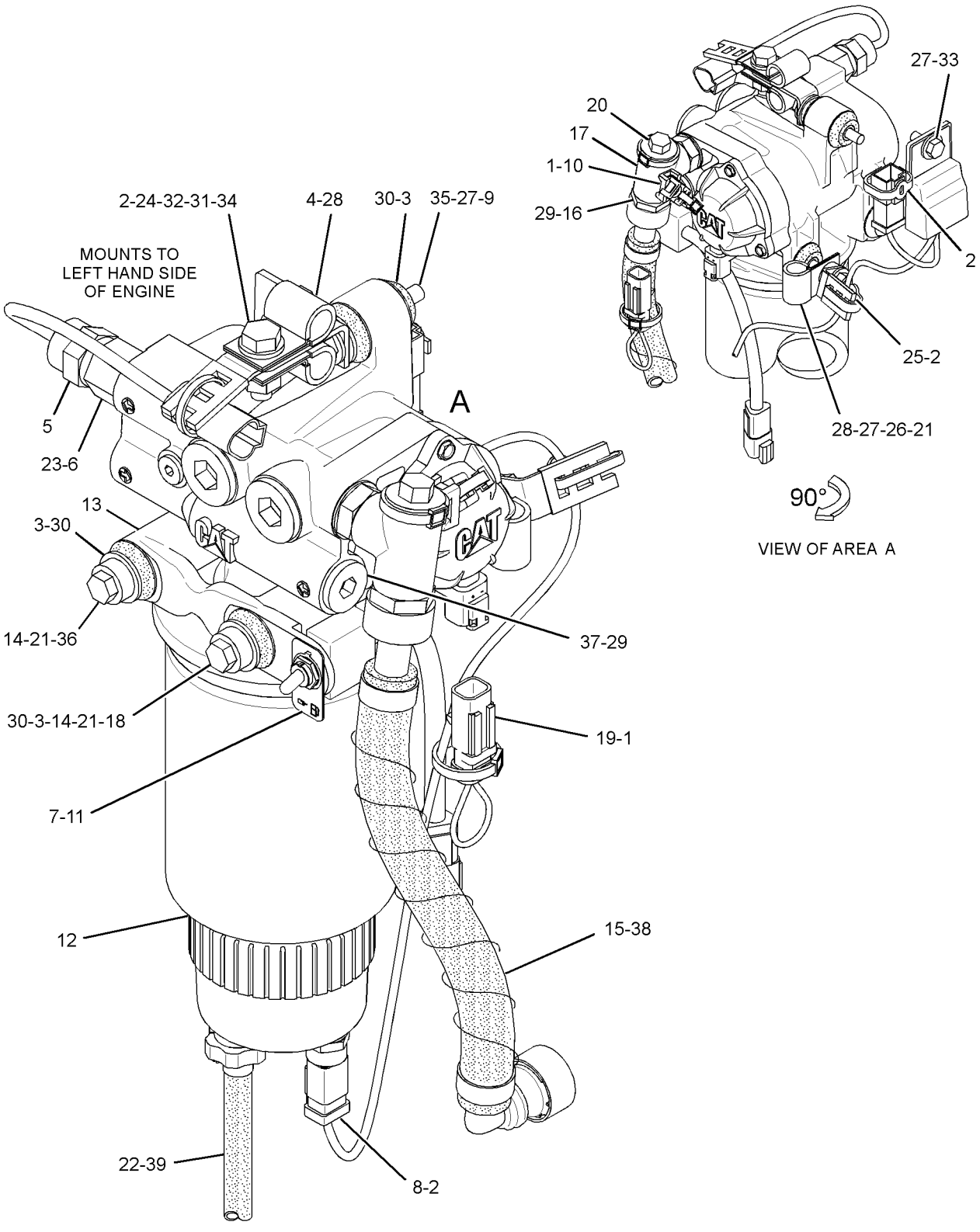

GRAPHIC #1 **<END>** g02109681

362-1096 PUMP GP-FUEL PRM & WATER SEP—ELECTRIC

S/N: LJR315-UP

PART OF 318-0768 INSTALLATION AR-ENGINE

SMCS-1258, 1261, 1263 **i05011634**

NOTE	REF NO	GRAPHIC REF	PART NUMBER	QTY	PART NAME 1 2 3 4 5 6 (PRODUCT LEVEL)	SEE PAGE
	1	1	**3S-2093**	3	STRAP-CABLE	
	2	1	**7K-1181**	1	STRAP-CABLE	
	3	1	**8T-9655**	8	MOUNT-ISOLATION	
	4	1	**9L-6331**	1	BRACKET	
Y	5	1	**165-5970**	1	SWITCH GP-TOGGLE (FUEL PRIMING PUMP)	222
	6	1	**191-1782**	1	SPACER (8.5X12.7X38.2-MM THK)	
	7	1	**206-2423**	1	SADDLE	
	8	1	**209-7659**	1	PLATE-INFORMATION (FUEL PRIMING PUMP ON, OFF)	
Y	9	1	**212-3657**	1	PUMP GP-FUEL PRM & WATER SEP (ELECTRIC)	125
	10	1	**232-1374**	1	BRACKET	
	11	1	**232-1376**	2	SPACER (8.5X12.7X139.1-MM THK)	
	12	1	**322-3696**	1	HARNESS AS-PUMP	
		1	**9X-3401**	2	PIN-CONNECTOR (16-GA TO 18-GA)	
					—OR—	
		1	**126-1767**	2	PIN-CONNECTOR (14-GA TO 16-GA)	
		1	**230-4012**	1	RECEPTACLE AS-CONNECTOR (2-PIN)	
	13	1	**362-1099**	1	HOSE AS	
	14	1	*148-8390*	1	ELBOW AS	
		1	**2M-9780**	1	SEAL-O-RING	
		1	**6V-8626**	1	ELBOW	
		1	**7J-9108**	1	SEAL-O-RING	
	15	1	**198-4776**	2	WASHER-HARD (8.8X20X8-MM THK)	
	16	1	**1P-4278**	1	CLAMP-HOSE	
	17	1	**315-5494**	2	BOLT (M8X1.25X180-MM)	
M	18	1	**5C-7261**	1	NUT (M8X1.25-THD)	
	19	1	**5P-4116**	2	WASHER-HARD (8.8X20.5X2-MM THK)	
	20	1	**6D-3479**	3	CLIP	
	21	1	**6V-4589**	2	SEAL-O-RING	
	22	1	**7X-0579**	6	WASHER-HARD (8.8X25.5X2-MM THK)	
	23	1	**8T-4121**	2	WASHER-HARD (11X21X2.5-MM THK)	
M	24	1	**8T-4133**	1	NUT (M10X1.5-THD)	
M	25	1	**8T-4195**	1	BOLT (M10X1.5X30-MM)	
M	26	1	**8T-6869**	1	BOLT (M8X1.25X60-MM)	
	27	1	**9S-8006**	2	PLUG-O-RING	
E	28	1	**7I-7439**		GUARD (20-CM)	
D	29	1	**5P-5991**		HOSE (0.5-M)	

D - ORDER BY THE METER
E - ORDER BY THE CENTIMETER
M - METRIC PART
Y - SEPARATE ILLUSTRATION

362-1096 **PUMP GP-FUEL PRM & WATER SEP (*contd.*)** **i05011634**

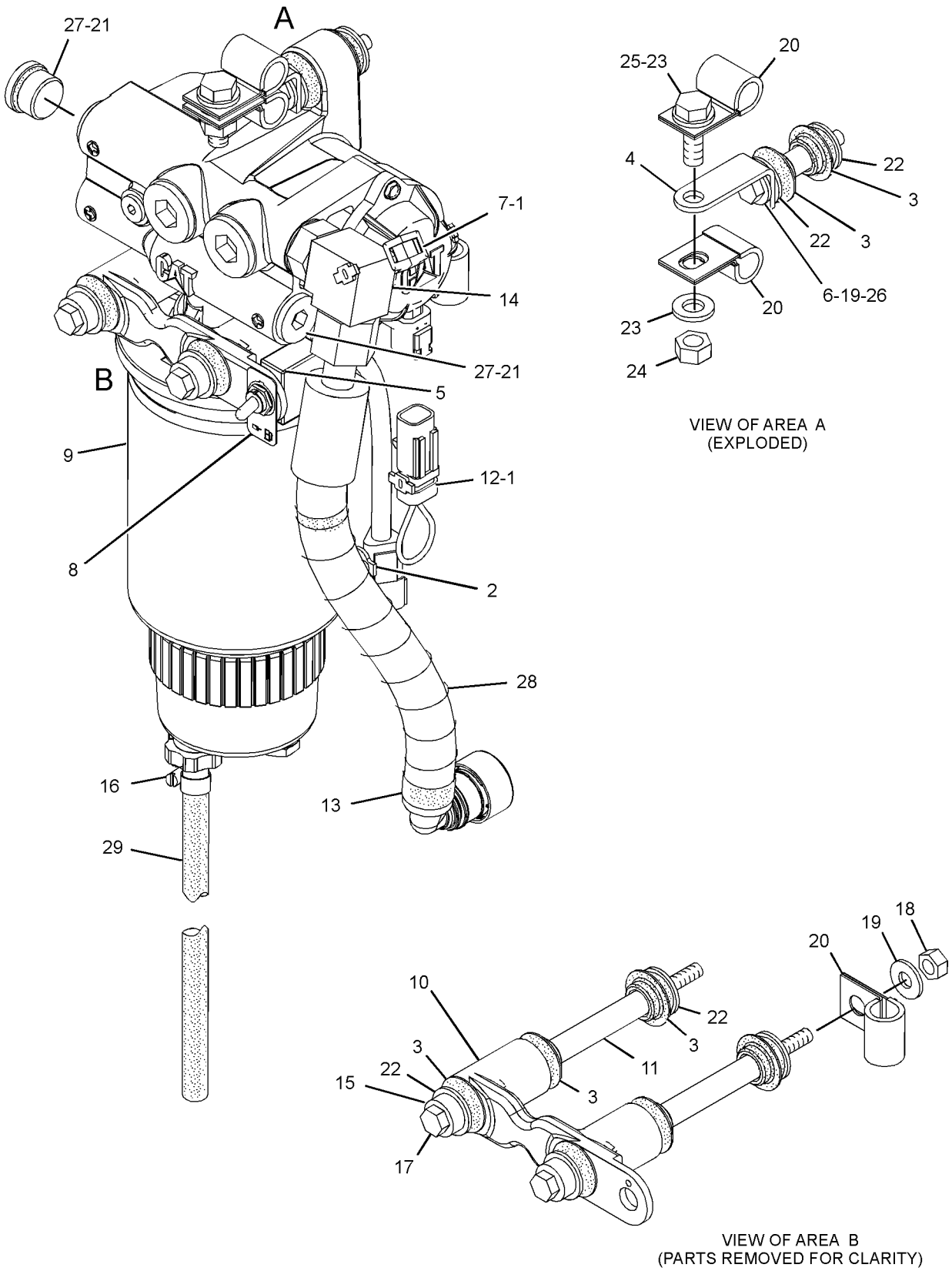

GRAPHIC #1 **<END>** g02582302

358-6634 RAIL GP-FUEL–6-CYLINDER ENGINE

S/N: LJR1-UP

AN ATTACHMENT

SMCS-1288 **i04022674**

NOTE	REF NO	GRAPHIC REF	PART NUMBER	QTY	PART NAME 1 2 3 4 5 6 (PRODUCT LEVEL)	SEE PAGE
	1	1	**305-5291**	1	VALVE AS-RELIEF (FUEL RAIL)	

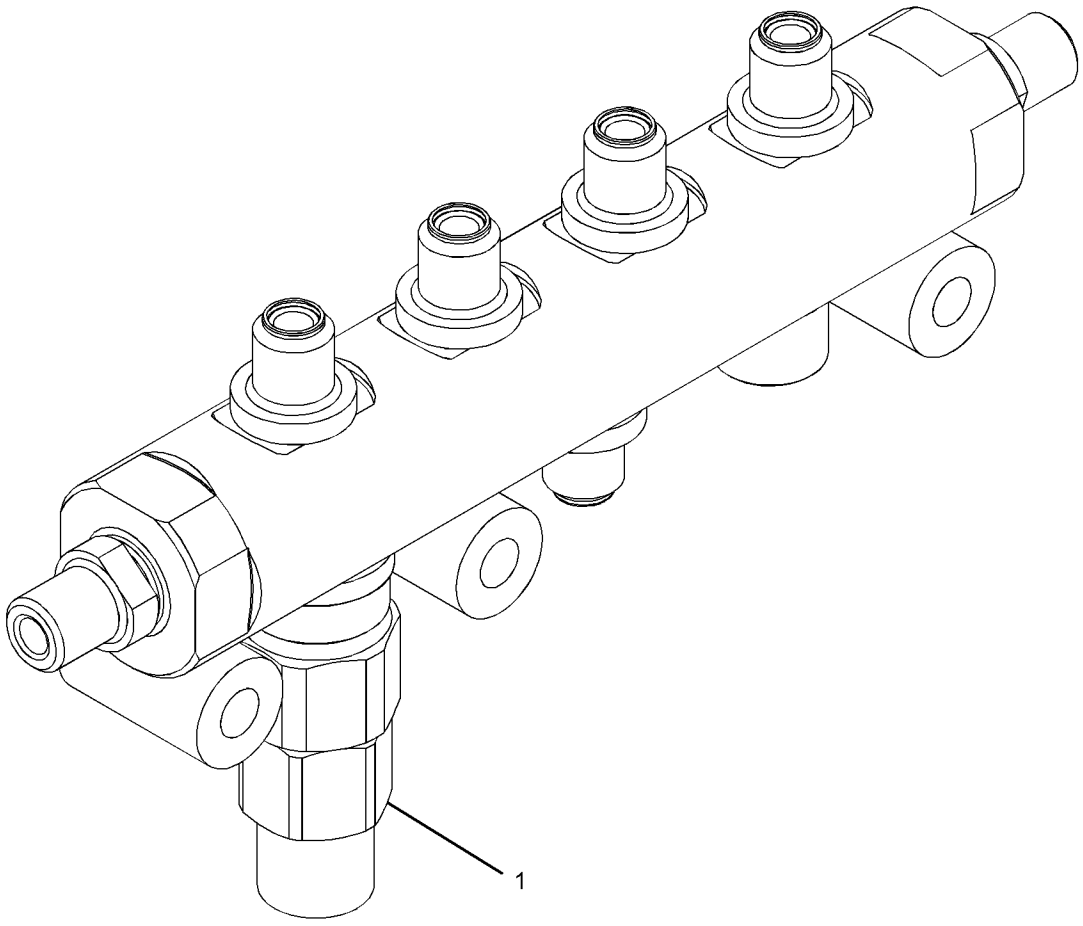

GRAPHIC #1 **<END>** g02204655

288-0449 TANK GP-FUEL

S/N: LJR113-238
324-L (85.6-US GAL)
PART OF 315-2948 CHASSIS AR

SMCS-1273 **i04286109**

NOTE	REF NO	GRAPHIC REF	PART NUMBER	QTY	PART NAME 1 2 3 4 5 6 (PRODUCT LEVEL)	SEE PAGE
	1	1	**7P-9131**	1	HANDRAIL	
	2	1	**9P-3066**	8	MOUNTING	
	3	1	**9P-7121**	1	STRAINER-FUEL (TANK)	
C	4	1	**155-7714**	1	HANDHOLD	
	5	1	**229-8315**	1	SENDER AS-FUEL LEVEL	
		1	**102-8802**	1	KIT-RECEPTACLE (2-PIN)	
					(INCLUDES RECEPTACLE AS & WEDGE)	
		1	**186-3735**	2	PIN-CONNECTOR (16-GA TO 18-GA)	
J	6	1	**349-7059**	1	CAP GP-FUEL FILLER	
		1	**9X-8600**	1	SEAL-O-RING	
		1	**350-7735**	1	KIT-CAP FILTER (FUEL TANK)	
					(INCLUDES BREATHER, GASKET, SCREWS & WASHERS)	
C	7	1	**338-0280**	1	HANDHOLD AS	
C	8	1	**339-5891**	1	TANK AS-FUEL	
	9	1	**148-8410**	1	PLUG AS	
		1	**9S-4190**	1	PLUG-O-RING	
		1	**2M-9780**	1	SEAL-O-RING	
M	10	1	**5C-9553**	5	BOLT (M6X1X16-MM)	
	11	1	**5P-1076**	6	WASHER-HARD (13.5X30X4-MM THK)	
	12	1	**6P-8269**	4	WASHER (20.5X88X6-MM THK)	
M	13	1	**7X-2555**	4	BOLT (M16X2X80-MM)	
M	14	1	**8T-4139**	6	BOLT (M12X1.75X30-MM)	
	15	1	**8T-4205**	5	WASHER-HARD (7.2X14.5X2-MM THK)	
	16	1	**9X-8257**	4	WASHER (17.5X30X3.5-MM THK)	
B	17	1	**1U-8846**		SEALANT-GASKET	

B - USE AS REQUIRED
C - CHANGE FROM PREVIOUS TYPE
J - REQUIRES CORPORATE KEY
M - METRIC PART

288-0449 **TANK GP-FUEL (*contd.*)** **i04286109**

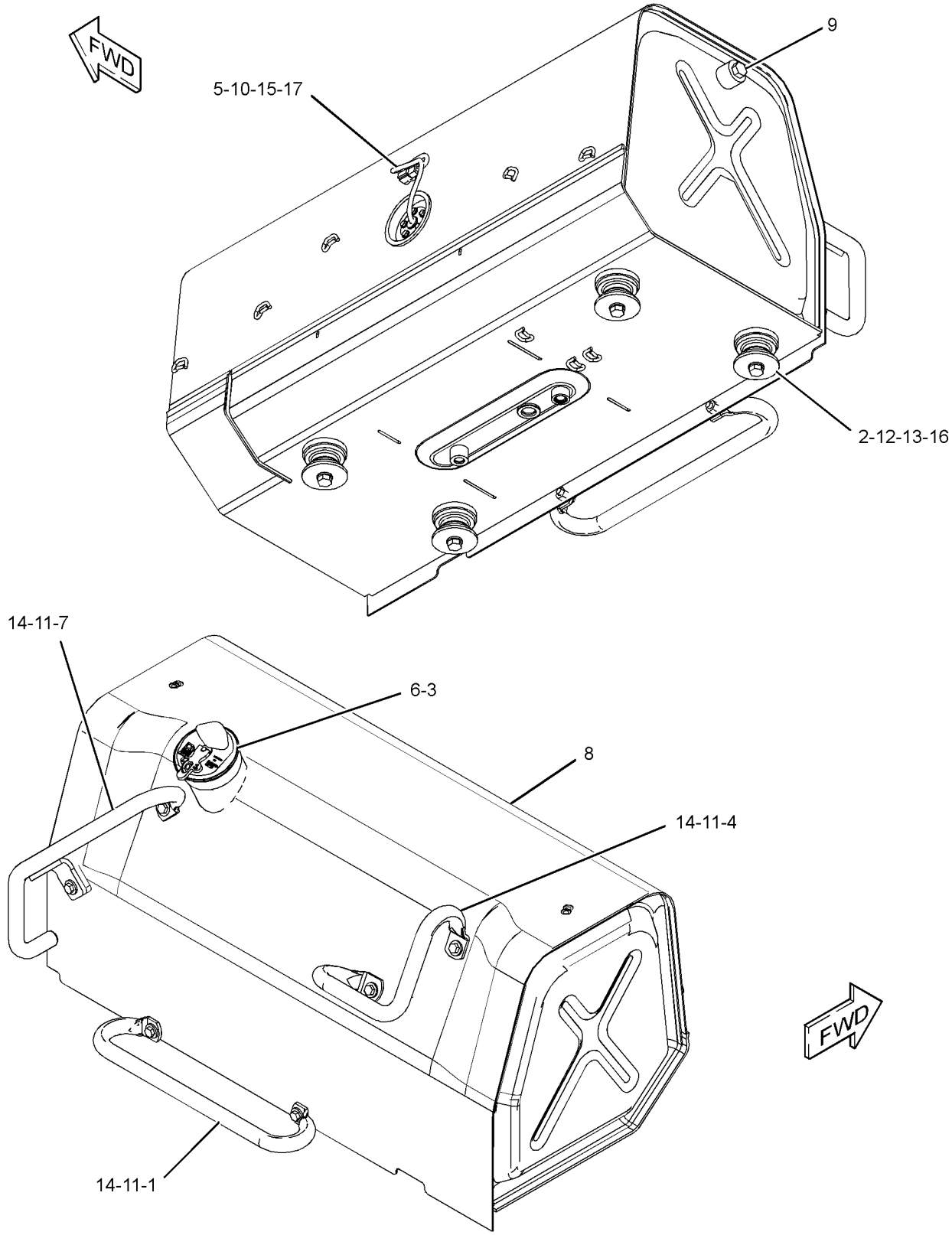

GRAPHIC #1 **<END>** g02451076

288-0449 TANK GP-FUEL

S/N: LJR239-UP
324-L (85.6-US GAL)
PART OF 315-2948 CHASSIS AR

SMCS-1273 **i05192028**

NOTE	REF NO	GRAPHIC REF	PART NUMBER	QTY	PART NAME 1 2 3 4 5 6 (PRODUCT LEVEL)	SEE PAGE
B	1	1	**1U-8846**		SEALANT-GASKET	
	2	1	**9P-3066**	8	MOUNTING	
	3	1	**9P-7121**	1	STRAINER-FUEL (TANK)	
	4	1	**155-7714**	1	HANDHOLD	
	5	1	**229-8315**	1	SENDER AS-FUEL LEVEL	
		1	**102-8802**	1	KIT-RECEPTACLE (2-PIN)	
					(INCLUDES RECEPTACLE AS & WEDGE)	
		1	**186-3735**	2	PIN-CONNECTOR (16-GA TO 18-GA)	
J	6	1	**349-7059**	1	CAP GP-FUEL FILLER	
		1	**9X-8600**	1	SEAL-O-RING	
		1	**350-7735**	1	KIT-CAP FILTER (FUEL TANK)	
					(INCLUDES BREATHER, GASKET, SCREWS & WASHERS)	
	7	1	**338-0280**	1	HANDHOLD AS	
	8	1	**339-5891**	1	TANK AS-FUEL	
C	9	1	**4H-9027**	1	PLUG-PIPE	
M	10	1	**5C-9553**	5	BOLT (M6X1X16-MM)	
	11	1	**5P-1076**	4	WASHER-HARD (13.5X30X4-MM THK)	
	12	1	**6P-8269**	4	WASHER (20.5X88X6-MM THK)	
M	13	1	**7X-2555**	4	BOLT (M16X2X80-MM)	
M	14	1	**8T-4139**	4	BOLT (M12X1.75X30-MM)	
	15	1	**8T-4205**	5	WASHER-HARD (7.2X14.5X2-MM THK)	
	16	1	**9X-8257**	4	WASHER (17.5X30X3.5-MM THK)	

B - USE AS REQUIRED
C - CHANGE FROM PREVIOUS TYPE
J - REQUIRES CORPORATE KEY
M - METRIC PART

288-0449 **TANK GP-FUEL (*contd.*)** **i05192028**

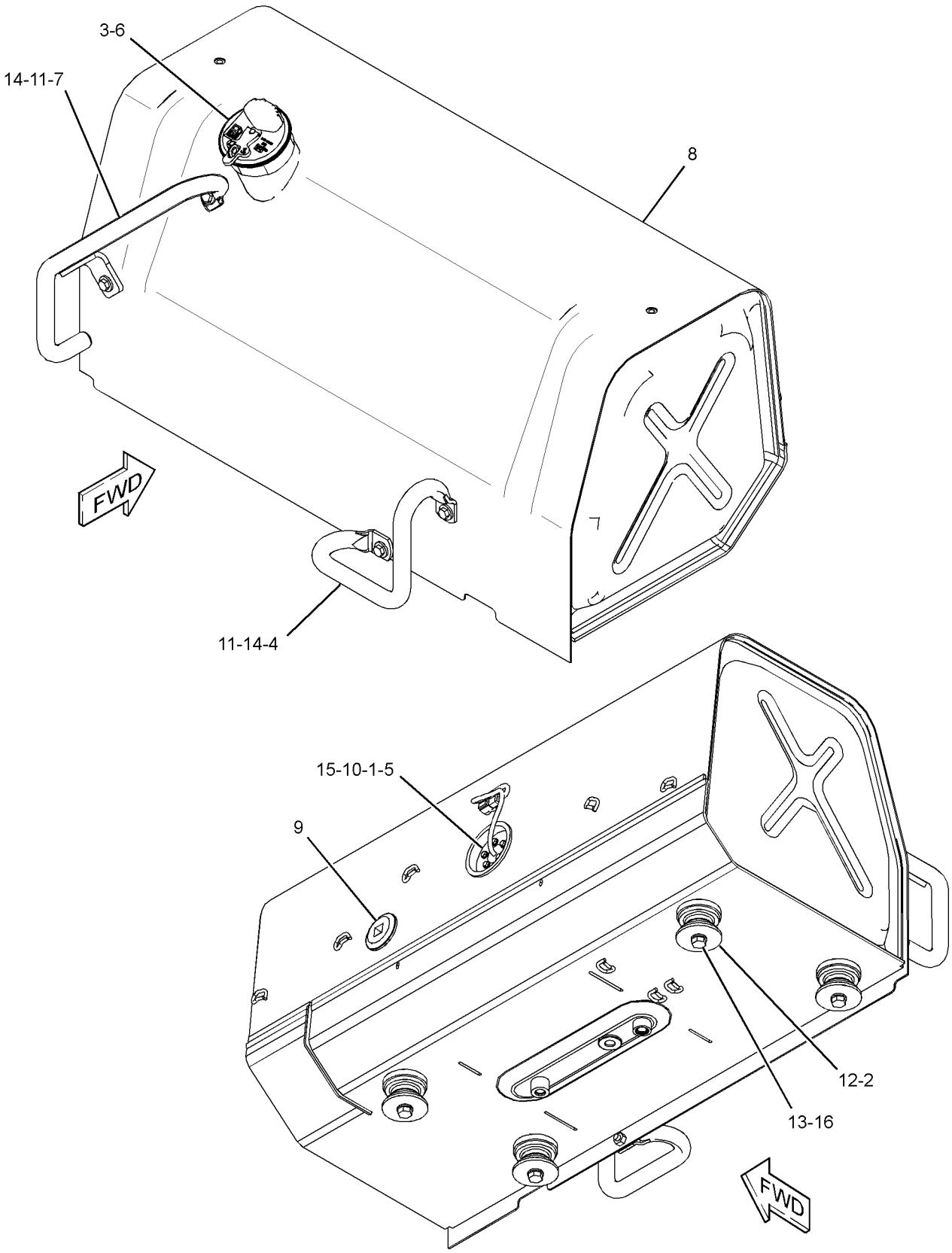

GRAPHIC #1 **<END>** g03342846

288-6277 TANK GP-FUEL–FAST FILL

S/N: LJR1-UP
312-L (82.4-US GAL)
CANNOT BE USED WITH FORESTRY AR
PART OF 338-2594 OPTION AR-SERVICE
AN ATTACHMENT

SMCS-1273 **i05223972**

NOTE	REF NO	GRAPHIC REF	PART NUMBER	QTY	PART NAME 1 2 3 4 5 6 (PRODUCT LEVEL)	SEE PAGE
C	1	1	**338-0280**	1	HANDHOLD AS	
J	2	1	**349-7059**	1	CAP GP-FUEL FILLER	
		1	**9X-2206**	1	ADAPTER AS-FUEL	
		1	**350-7735**	1	KIT-CAP FILTER (FUEL TANK)	
					(INCLUDES BODY, GASKET, SCREWS & GASKET)	
	3	1	**9P-3066**	8	MOUNTING	
	4	1	**9P-7121**	1	STRAINER-FUEL (TANK)	
C	5	1	**155-7714**	1	HANDHOLD	
C	6	1	**339-5892**	1	TANK AS-FUEL	
	7	1	*148-8307*	1	ADAPTER AS	
		1	**5P-8874**	1	ADAPTER	
		1	**3J-1907**	1	SEAL-O-RING	
	8	1	*183-7263*	1	PLUG AS	
		1	**9S-8002**	1	PLUG-O-RING	
		1	**3J-7354**	1	SEAL-O-RING	
	9	1	**229-8315**	1	SENDER AS-FUEL LEVEL	
		1	**102-8802**	1	KIT-RECEPTACLE (2-PIN)	
					(INCLUDES RECEPTACLE AS & WEDGE)	
		1	**186-3735**	2	PIN-CONNECTOR (16-GA TO 18-GA)	
	10	1	**4H-9027**	2	PLUG-PIPE	
M	11	1	**5C-9553**	5	BOLT (M6X1X16-MM)	
	12	1	**6P-8269**	4	WASHER (20.5X88X6-MM THK)	
M	13	1	**7X-2555**	4	BOLT (M16X2X80-MM)	
M	14	1	**8T-4139**	4	BOLT (M12X1.75X30-MM)	
	15	1	**8T-4205**	5	WASHER-HARD (7.2X14.5X2-MM THK)	
	16	1	**8T-4223**	4	WASHER-HARD (13.5X25.5X3-MM THK)	
	17	1	**9X-8257**	4	WASHER (17.5X30X3.5-MM THK)	
B	18	1	**1U-8846**		SEALANT-GASKET	

B - USE AS REQUIRED
C - CHANGE FROM PREVIOUS TYPE
J - REQUIRES CORPORATE KEY
M - METRIC PART

288-6277 **TANK GP-FUEL (*contd.*)** **i05223972**

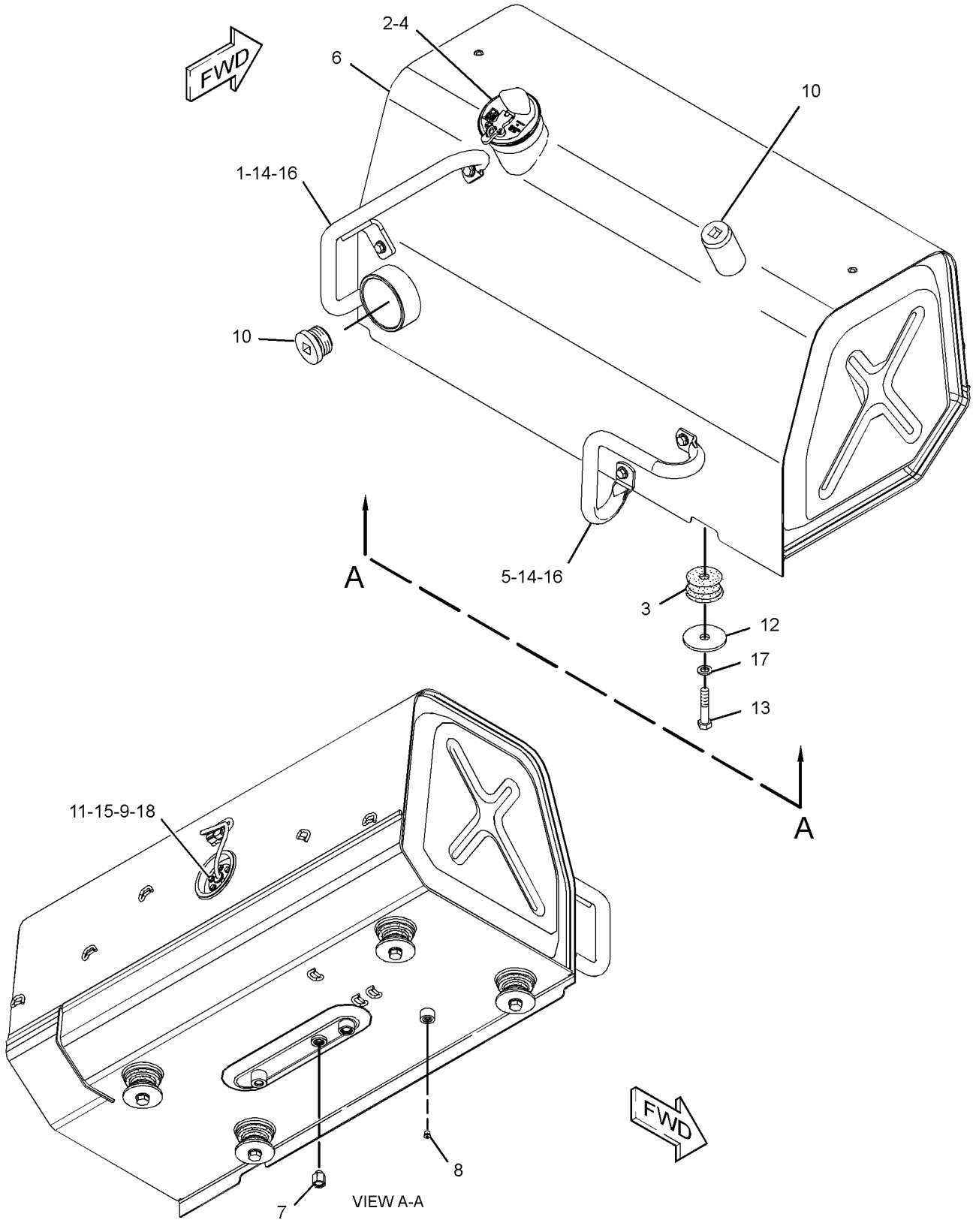

GRAPHIC #1 **<END>** g03052552

3E-6328 ALARM GP

S/N: LJR1-UP
24-VOLT
PART OF 310-1543, 392-3202 WIRING GP-PLATFORM
ALSO AN ATTACHMENT

SMCS-7400, 7402, 7407

i02942905

NOTE	REF NO	GRAPHIC REF	PART NUMBER	QTY	PART NAME 1 2 3 4 5 6 (PRODUCT LEVEL)	SEE PAGE
	1	1	**102-8802**	1	KIT-RECEPTACLE (2-PIN)	
					(INCLUDES RECEPTACLE AS & WEDGE)	
	2	1	**186-3735**	2	PIN-CONNECTOR (16-GA TO 18-GA)	

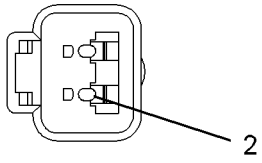

VIEW A–A

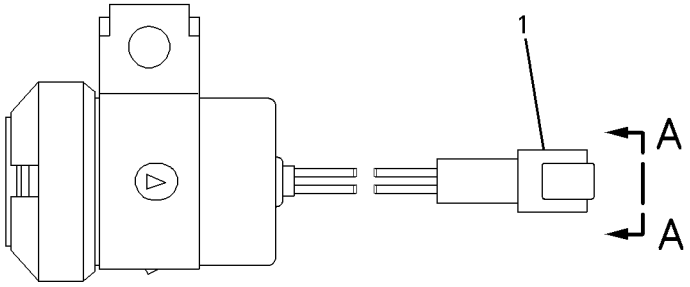

GRAPHIC #1

<END>

g00697818

226-7683 ALTERNATOR GP-CHARGING*R

S/N: C6E1-UP
24-VOLT, 95-AMPERE
PART OF 277-6080 ALTERNATOR GP-CHARGING

SMCS-1405 **i02160631**

NOTE	REF NO	GRAPHIC REF	PART NUMBER	QTY	PART NAME 1 2 3 4 5 6 (PRODUCT LEVEL)	SEE PAGE
	1	1	**228-9656**	1	FRAME AS-DRIVE END	
	2	1	**5S-7349**	1	BOLT (1/4-20X0.5-IN)	
	3	1	**185-2639**	1	FAN AS	
	4	1	**1H-3244**	1	LOCKWASHER	
	5	1	**228-9655**	1	FRAME AS-ALTERNATOR	
	6	1	**2K-4821**	1	LOCKNUT (5/8-18-THD)	
	7	1	**5P-8247**	1	WASHER-HARD (17X32X3.5-MM THK)	
	8	1	**228-9657**	1	COVER AS	
	9	1	**8T-4205**	1	WASHER-HARD (7.2X14.5X2-MM THK)	
	10	1	**185-2647**	1	GROMMET	
	11	1	**9L-6770**	1	CAP-DUST	
	12	1	**205-0626**	1	STATOR AS-ALTERNATOR	
	13	1	**185-2638**	2	COLLAR	
	14	1	**185-2654**	1	PLATE	
	15	1	**185-2650**	1	ROTOR AS	
	16	1	**185-2644**	1	COIL AS	
	17	1	**185-2648**	1	REGULATOR AS-VOLTAGE (24-VOLT) (ALTERNATOR)	
	18	1	**6V-8189**	1	NUT (5/16-18-THD)	
	19	1	**8T-4224**	1	WASHER-HARD (8.8X16X2-MM THK)	
	20	1	**3F-9556**	1	LOCKWASHER	
					AVAILABLE REPAIR KIT(S):	
			185-2655	1	KIT-BEARING	
					(INCLUDES BEARINGS)	
			185-2658	1	KIT-HARDWARE (ALTERNATOR AIR)	
					(INCLUDES BOLTS)	
			199-8436	1	KIT-TERMINAL (ALTERNATOR AIR)	
					(INCLUDES HOLDER AS, PLATE, INSULATOR, PIN, BOLT KIT, GROMMET, AND NUT)	
			199-7891	1	KIT-TERMINAL (ALTERNATOR AIR)	
					(INCLUDES INSULATORS, WASHERS, NUT AND STEP NUT)	

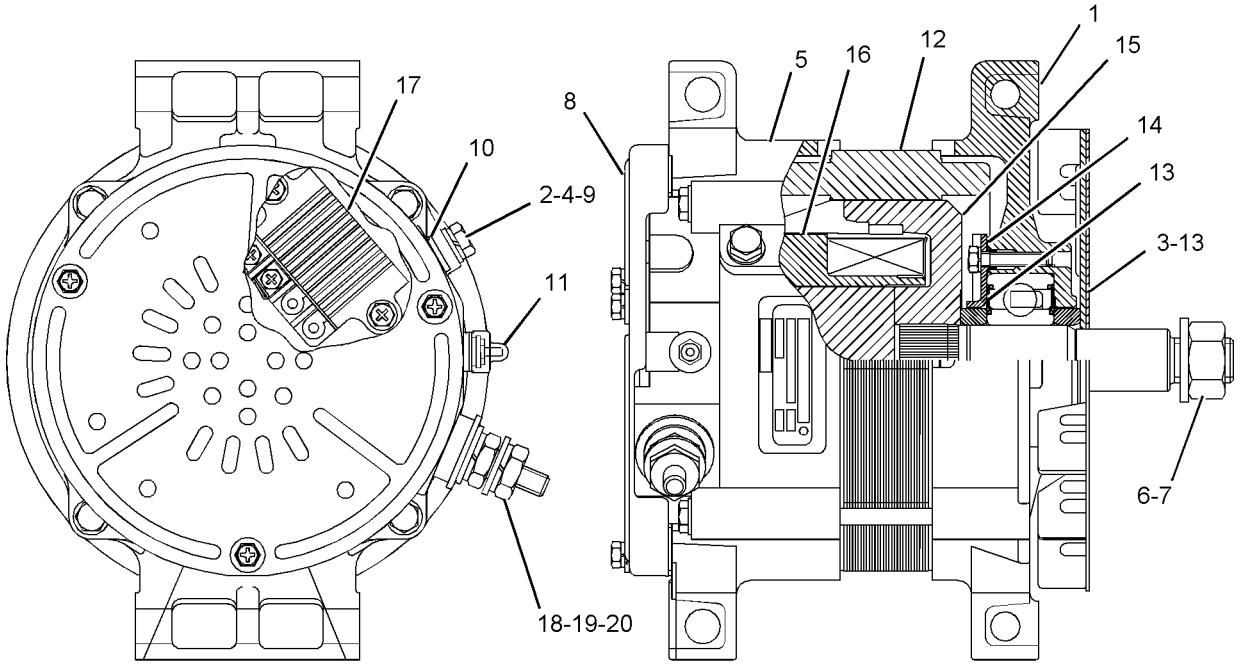

GRAPHIC #1 **<END>** g01088551

277-6080 ALTERNATOR GP-CHARGING

S/N: C6E1-UP
24-VOLT, 95-AMPERE
PART OF 319-7201 ENGINE AR-PRIMARY

SMCS-1405 **i04829122**

NOTE	REF NO	GRAPHIC REF	PART NUMBER	QTY	PART NAME 1 2 3 4 5 6 (PRODUCT LEVEL)	SEE PAGE
M	1	1	**6I-0593**	5	BOLT (M10X1.5X30-MM)	
M	2	1	**6I-0654**	3	BOLT (M10X1.5X25-MM)	
	3	1	**6I-4200**	1	BOLT (M10X1.5X16-MM)	
	4	1	**7X-0591**	2	WASHER-HARD (17X29X3-MM THK)	
	5	1	**164-7468**	4	BOLT (M10X1.5X95-MM) (M10X1.5X95-MM)	
	6	1	**377-9087**	1	BELT TENSIONER	
YR	7	1	**226-7683**	1	ALTERNATOR GP-CHARGING (24-VOLT, 95-AMPERE)	138
	8	1	**320-2868**	1	BRACKET	
	9	1	**277-6073**	1	PULLEY-ALTERNATOR	
	10	1	**277-6075**	2	BOLT	
	11	1	**277-6078**	1	BRACKET	
	12	1	**295-0585**	1	STRAP	

M - METRIC PART
R - REMFG PART MAY BE AVAILABLE
Y - SEPARATE ILLUSTRATION

277-6080 **ALTERNATOR GP-CHARGING (*contd.*)** **i04829122**

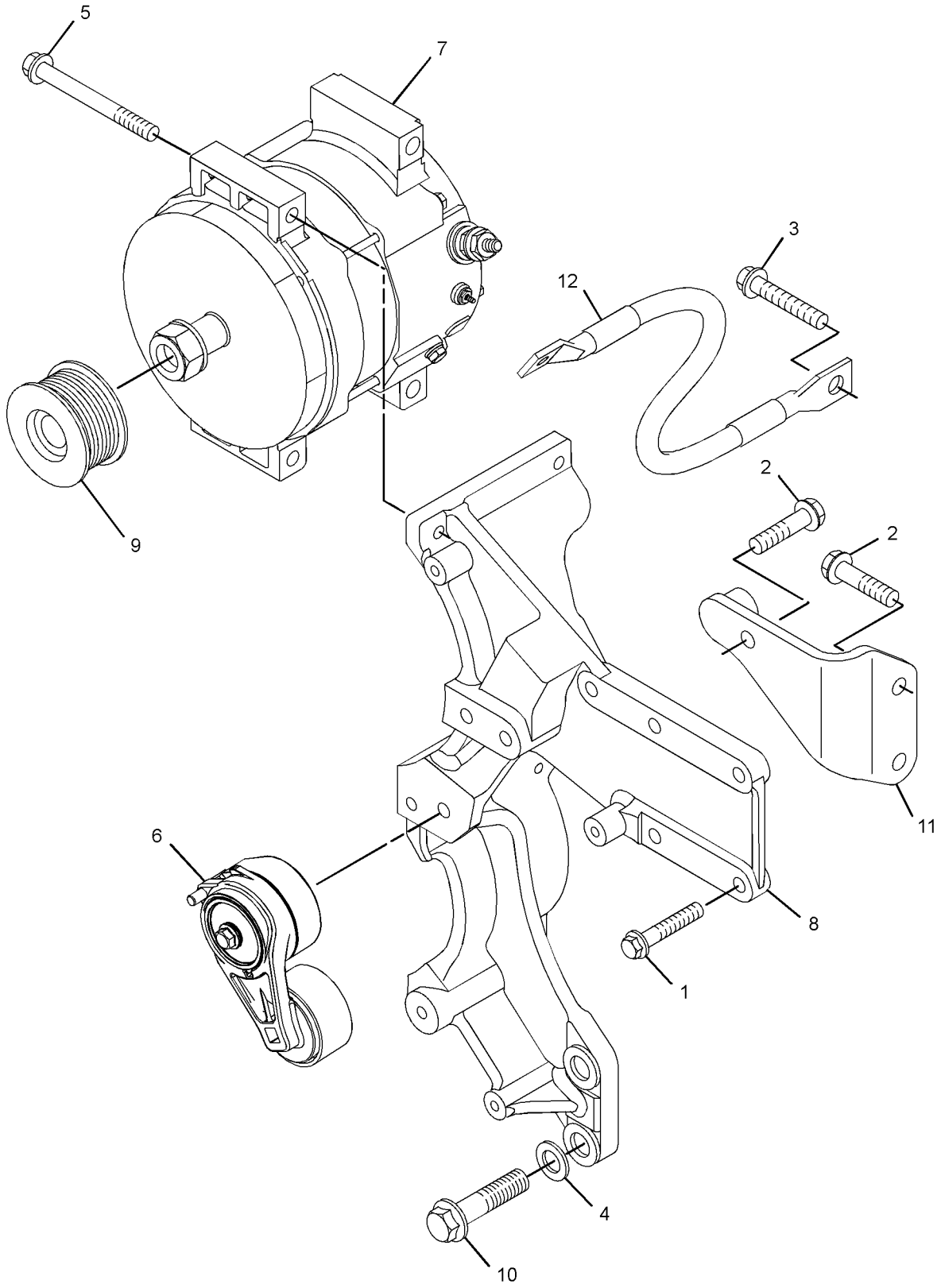

GRAPHIC #1 **<END>** g02972257

310-1547 BATTERY & WIRING GP

S/N: LJR1-443

PART OF 310-9946 ELECTRONICS AR-MACHINE

SMCS-1401, 1402, 1408

i04894456

NOTE	REF NO	GRAPHIC REF	PART NUMBER	QTY	PART NAME 1 2 3 4 5 6 (PRODUCT LEVEL)	SEE PAGE
	1	4	**3E-5169**	1	GUARD-SWITCH	
	2	1	**3S-2093**	1	STRAP-CABLE	
	3	3	**5I-8270**	1	COVER-BATTERY	
	4	3	**5I-8304**	1	ROD	
	5	3	**6I-1418**	4	SPACER (8.2X12.7X28.7-MM THK)	
	6	3	**6W-6005**	1	HOLD-DOWN-BATTERY	
	7	1,2,3,4	**7K-1181**	70	STRAP-CABLE	
Y	8	4	**7N-0718**	1	SWITCH GP-DISCONNECT (BATTERY)	217
	9	3	**7W-3447**	1	SPACER (10.2X19.05X10.2-MM THK)	
	10	3	**8T-9655**	8	MOUNT-ISOLATION	
	11	2	**111-0484**	3	SPACER (10.7X17.1X30-MM THK)	
	12	4	**129-3108**	1	BRACKET AS	
	13	4	**131-0359**	1	PLATE-IDENTIFICATION (ENGINE STOP, RUN)	
Y	14	4	**158-6634**	1	SWITCH GP-TOGGLE (GROUND LEVEL SHUTDOWN)	221
	15	3	**160-2182**	1	CABLE AS	
E		3	**5P-0761**		CABLE (00-GA, RED) (33-CM)	
		3	**9G-0002**	1	COVER AS-TERMINAL (RED)	
		3	**9G-0005**	1	COVER AS-TERMINAL (BLACK)	
					(EACH COVER-TERMINAL INCLUDES)	
		3	**8L-8413**	1	STRAP-CABLE	
		3	**8C-5917**	1	TERMINAL AS-BATTERY (POSITIVE)	
		3	**8T-9757**	1	TERMINAL AS-BATTERY (NEGATIVE)	
					(EACH TERMINAL AS INCLUDES)	
		3	**1M-6119**	1	BOLT (5/16-18X1.375-IN)	
		3	**1M-6120**	1	NUT (5/16-18-THD)	
	16	2	**163-1201**	1	HORN AS (24-VOLT, LOW TONE)	
	17	4	**193-3973**	4	STRAP-CABLE	
	18	1	**195-1117**	2	BRACKET	
Y	19	1	**195-2150**	1	SENSOR GP-TEMPERATURE (TRANSMISSION)	209
	20	1	**203-3847**	1	BRACKET AS	
Y	21	1	**204-6204**	1	SENSOR GP-SPEED (STEERING MOTOR)	204
	22	4	**211-0686**	1	FILM-INSTRUCTION (BATTERY DISCONNECT)	
	23	1	**214-7568**	1	SEAL-O-RING	
	24	2,4	**220-5946**	2	CLIP	
	25	3	**225-0313**	1	FILM-WARNING (JUMP START, READ OMM, U.S.)	
Y	26	2	**225-5075**	2	LAMP GP-FLOOD (24-VOLT)	185
Y	27	4	*292-4189*	1	CONTROL GP-UNPROGRAMMED (IMPLEMENT)	160
	28	1	**310-1548**	1	HARNESS AS-VALVE (RIPPER)	
		1	**102-8802**	2	KIT-RECEPTACLE (2-PIN)	
					(INCLUDES RECEPTACLE AS & WEDGE)	
		1	**8T-8737**	47	PLUG-SEAL	
		1	**9X-6772**	2	STRAP-CABLE	
E		1	**119-3662**		TUBE-HEAT SHRINK (10.85-MM DIA) (13-CM)	
E		1	**125-7874**		TUBE-HEAT SHRINK (5.72-MM DIA) (15-CM)	
		1	**9X-3402**	72	SOCKET-CONNECTOR (16-GA TO 18-GA)	
		1	**126-1774**	1	COVER-CONNECTOR	
		1	**134-2540**	1	RESISTOR AS-CONNECTION (3-PIN)	
		1	**144-1636**	2	PIN-CONNECTOR (14-GA TO 18-GA)	
		1	**155-2270**	11	KIT-CONNECTING PLUG (2-PIN)	
		1	**174-0503**	1	KIT-CONNECTING PLUG (3-PIN)	
					(EACH PLUG KIT INCLUDES PLUG AS, WEDGE & INTERFACE SEAL)	
		1	**160-7689**	1	PLUG AS-CONNECTOR (70-PIN)	
		1	**159-9322**	1	SEAL-O-RING	
		1	**230-4009**	1	PLUG AS-CONNECTOR (12-PIN)	
		1	**264-7034**		SEAL-CONNECTOR	
		1	**230-4012**	1	RECEPTACLE AS-CONNECTOR (2-PIN)	

310-1547 **BATTERY & WIRING GP (*contd.*)** **i04894456**

NOTE	REF NO	GRAPHIC REF	PART NUMBER	QTY	PART NAME 1 2 3 4 5 6 (PRODUCT LEVEL)	SEE PAGE
		1	**231-2295**	1	PLUG AS-CONNECTOR (8-PIN)	
		1	**264-7033**	1	SEAL-CONNECTOR	
	29	1	**310-1549**	1	HARNESS AS-VALVE (BRAKE)	
		1	**8T-8737**	6	PLUG-SEAL	
		1	**9X-3402**	20	SOCKET-CONNECTOR (16-GA TO 18-GA)	
		1	**155-2270**	1	KIT-CONNECTING PLUG (2-PIN)	
		1	**155-2271**	3	KIT-CONNECTING PLUG (4-PIN)	
					(EACH PLUG KIT INCLUDES PLUG AS, WEDGE & INTERFACE SEAL)	
		1	**239-7356**	1	PLUG AS-CONNECTOR (12-PIN)	
		1	**264-7034**	1	SEAL-CONNECTOR	
	30	4	**311-1874**	1	PLATE AS	
M		4	**8T-3612**	2	NUT-WELD (M8X1.25-THD)	
	31	1	**312-1673**	1	HARNESS AS-SENSOR (FUEL LEVEL)	
		1	**9X-3402**	4	SOCKET-CONNECTOR (16-GA TO 18-GA)	
		1	**155-2270**	1	KIT-CONNECTING PLUG (2-PIN)	
					(INCLUDES PLUG AS, WEDGE & INTERFACE SEAL)	
		1	**230-4011**	1	PLUG AS-CONNECTOR (2-PIN)	
		1	**264-7029**	1	SEAL-CONNECTOR	
	32	1	**312-2567**	1	HARNESS AS-FRONT	
		1	**8T-8737**	9	PLUG-SEAL	
E		1	**125-7874**		TUBE-HEAT SHRINK (5.72-MM DIA) (20-CM)	
		1	**9X-3402**	15	SOCKET-CONNECTOR (16-GA TO 18-GA)	
		1	**144-1636**	10	PIN-CONNECTOR (14-GA TO 18-GA)	
		1	**155-2270**	5	KIT-CONNECTING PLUG (2-PIN)	
					(EACH PLUG KIT INCLUDES PLUG AS, WEDGE & INTERFACE SEAL)	
		1	**226-0936**	1	RESISTOR AS	
		1	**230-4010**	1	RECEPTACLE AS-CONNECTOR (12-PIN)	
		1	**239-7352**	1	PLUG AS-CONNECTOR (6-PIN)	
		1	**264-7032**	1	SEAL-CONNECTOR	
		1	**239-7353**	1	RECEPTACLE AS-CONNECTOR (6-PIN)	
	33	2	**313-3353**	1	BRACKET AS	
	34	4	**320-1114**	1	BRACKET AS	
	35	3	**320-9118**	1	CABLE AS	
E		3	**5P-0747**		CABLE (00-GA, BLACK) (91-CM)	
		3	**7N-5274**	1	COVER AS-TERMINAL (BLACK)	
		3	**8L-8413**	1	STRAP-CABLE	
		3	**8S-3020**	1	TERMINAL-CABLE (00-GA, 3/8-IN SCREW)	
		3	**3S-6050**	1	TERMINAL AS-BATTERY (NEGATIVE)	
		3	**1M-6119**	1	BOLT (5/16-18X1.375-IN)	
		3	**1M-6120**	1	NUT (5/16-18-THD)	
		3	**9X-5699**	1	BOOT	
	36	1	**320-9131**	1	CABLE AS	
E		1	**5P-0747**		CABLE (00-GA, BLACK) (64-CM)	
		1	**1S-7251**	1	TERMINAL-CABLE (00-GA, 1/2-IN SCREW)	
		1	**8S-3020**	1	TERMINAL-CABLE (00-GA, 3/8-IN SCREW)	
	37	3	**320-9163**	1	CABLE AS	
E		3	**5P-0761**		CABLE (00-GA, RED) (187-CM)	
		3	**1S-4915**	2	LINER (CONDUIT)	
		3	**1S-7251**	2	TERMINAL-CABLE (00-GA, 1/2-IN SCREW)	
E		3	**5P-0695**		CONDUIT (168-CM)	
E		3	**8T-2225**		TUBE-HEAT SHRINK (25.4-MM DIA) (16-CM)	
		3	**8T-8827**	2	BOOT (RED)	
	38	3	**320-9831**	1	CABLE AS	
E		3	**5P-0761**		CABLE (00-GA, RED) (102-CM)	
		3	**1S-4915**	2	LINER (CONDUIT)	
		3	**1S-7251**	1	TERMINAL-CABLE (00-GA, 1/2-IN SCREW)	
E		3	**5P-0695**		CONDUIT (79-CM)	
		3	**8N-1725**	1	COVER AS-TERMINAL (RED)	
		3	**8L-8413**	1	STRAP-CABLE	

310-1547 **BATTERY & WIRING GP (*contd.*)** **i04894456**

NOTE	REF NO	GRAPHIC REF	PART NUMBER	QTY	PART NAME 1 2 3 4 5 6 (PRODUCT LEVEL)	SEE PAGE
E		3	**8T-2225**		TUBE-HEAT SHRINK (25.4-MM DIA) (16-CM)	
		3	**8T-8827**	1	BOOT (RED)	
		3	**3S-6049**	1	TERMINAL AS-BATTERY (POSITIVE)	
		3	**1M-6119**	1	BOLT (5/16-18X1.375-IN)	
		3	**1M-6120**	1	NUT (5/16-18-THD)	
	39	1	**320-9844**	1	BRACKET AS	
	40	3	**330-6134**	1	HARNESS AS-SWITCH (GROUND LEVEL SHUTDOWN)	
		3	**102-8803**	1	KIT-RECEPTACLE (3-PIN)	
					(INCLUDES RECEPTACLE AS & WEDGE)	
		3	**8T-8737**	1	PLUG-SEAL	
		3	**144-1636**	3	PIN-CONNECTOR (14-GA TO 18-GA)	
		3	**9X-3402**	3	SOCKET-CONNECTOR (16-GA TO 18-GA)	
		3	**155-2271**	2	KIT-CONNECTING PLUG (4-PIN)	
					(INCLUDES PLUG AS, WEDGE & INTERFACE SEAL)	
M	41	3	**095-0723**	4	SCREW-SPECIAL	
M	42	3	**101-3129**	1	STUD (M10X1.5-THD)	
	43	3	**132-5789**	1	CLIP	
	44	1	*148-8313*	1	ADAPTER AS	
		1	**3K-0360**	1	SEAL-O-RING	
		1	**5P-6944**	1	ADAPTER	
	45	3	**198-4776**	4	WASHER-HARD (8.8X20X8-MM THK)	
	46	3	**198-4777**	3	WASHER-HARD (11X25X10-MM THK)	
	47	3	**1S-0994**	3	CLIP	
	48	4	**204-8000**	4	MOUNTING-CABLE TIE	
	49	3	**4K-8864**	2	CLIP	
	50	1,2,3	**4P-7581**	8	CLIP	
	51	1,2,3,4	**4P-8134**	14	CLIP	
M	52	3	**5C-7261**	3	NUT (M8X1.25-THD)	
	53	4	**5P-6025**	1	LOCKWIRE	
	54	1	**5P-4116**	2	WASHER-HARD (8.8X20.5X2-MM THK)	
	55	3	**5P-7464**	1	CLIP (SLOT)	
	56	3	**5P-7465**	1	CLIP (TAB)	
	57	3	**6V-0826**	2	GROMMET	
	58	3	**6V-1249**	1	GROMMET (22-MM ID)	
	59	3	**7X-0579**	8	WASHER-HARD (8.8X25.5X2-MM THK)	
	60	4	**8S-8158**	1	SEAL-WIRE	
M	61	1	**8T-0267**	2	BOLT-SOCKET HEAD (M6X1X12-MM)	
M	62	3	**8T-0389**	1	LOCKNUT (M10X1.5-THD)	
	63	1,3	**8T-1889**	1	CLIP (SLOT)	
	64	1,3	**8T-1890**	1	CLIP (TAB)	
	65	1,2,3,4	**8T-4121**	28	WASHER-HARD (11X21X2.5-MM THK)	
M	66	1,3,4	**8T-4133**	14	NUT (M10X1.5-THD)	
M	67	1,2,3	**8T-4136**	6	BOLT (M10X1.5X25-MM)	
M	68	1,2,3,4	**8T-4137**	5	BOLT (M10X1.5X20-MM)	
M	69	1	**8T-4189**	2	BOLT (M8X1.25X20-MM)	
M	70	1,3	**8T-4195**	2	BOLT (M10X1.5X30-MM)	
M	71	4	**8T-4200**	1	BOLT (M8X1.25X16-MM)	
	72	3,4	**8T-4224**	2	WASHER-HARD (8.8X16X2-MM THK)	
	73	3	**8T-4226**	1	WASHER-PLATED (10.5X45X3-MM THK)	
M	74	2	**8T-6466**	3	BOLT (M10X1.5X60-MM)	
M	75	3	**8T-6869**	2	BOLT (M8X1.25X60-MM)	
	76	4	**9M-8406**	1	CLIP	
Y	77	3	**9W-0742**	1	BLOCK GP-JUNCTION (BATTERY)	158
	78	3	**9X-2130**	1	KNOB	
	79	3	**9X-3404**	2	BATTERY (12-VOLT, MAINTENANCE FREE, WET)	
	80	1	**321-4070**	1	STRAP AS-GROUND	
	81	3	**6D-4244**	1	CLIP	

E - ORDER BY THE CENTIMETER
M - METRIC PART
Y - SEPARATE ILLUSTRATION

310-1547 **BATTERY & WIRING GP (*contd.*)** **i04894456**

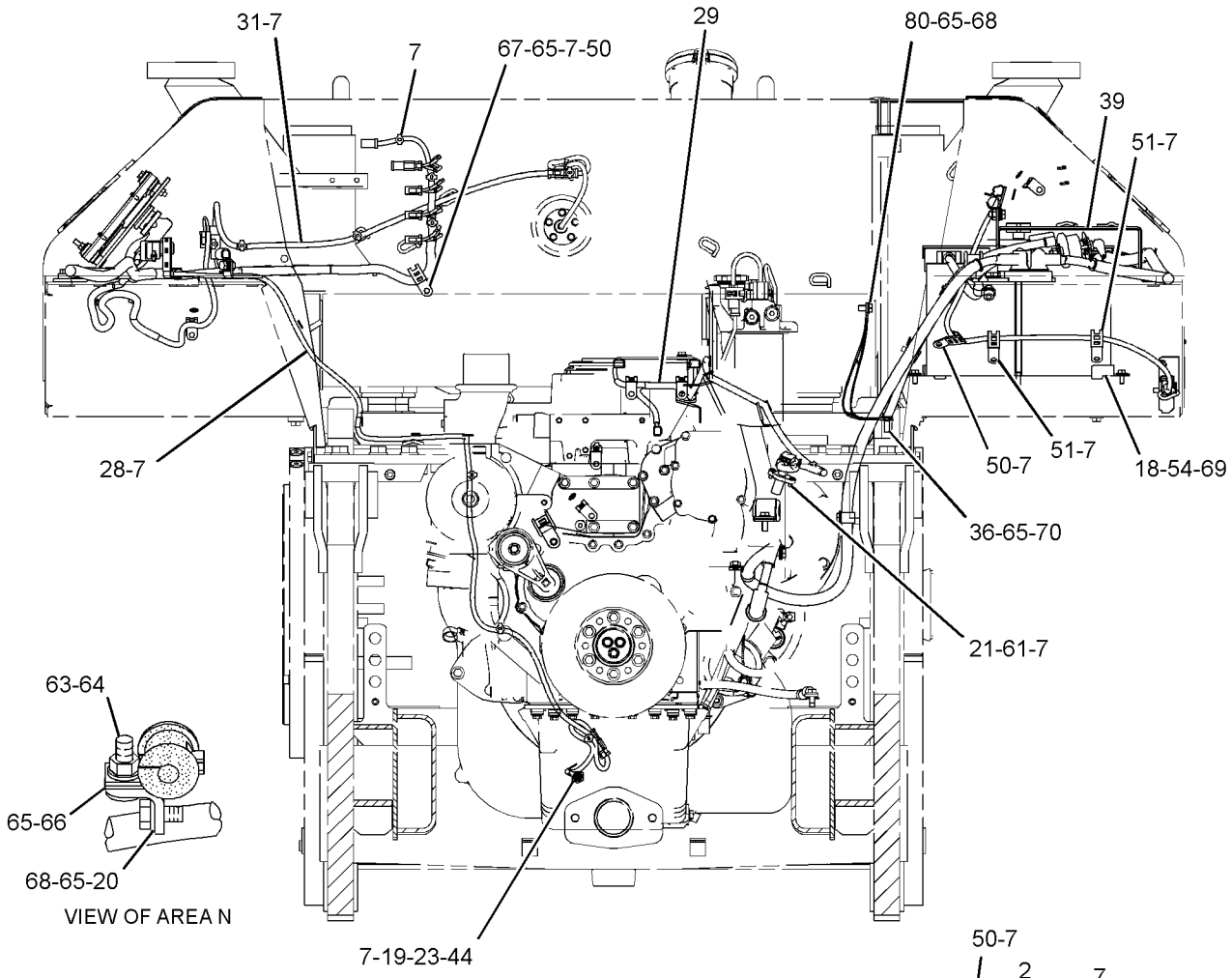

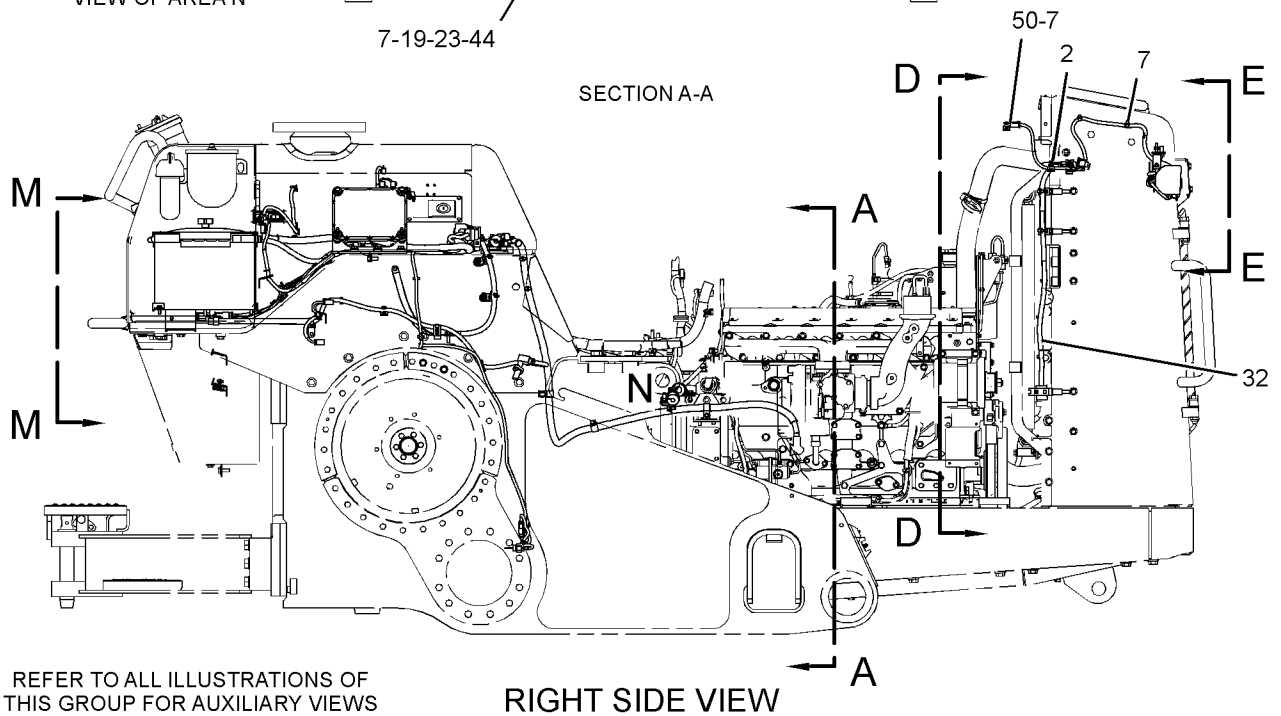

REFER TO ALL ILLUSTRATIONS OF THIS GROUP FOR AUXILIARY VIEWS

RIGHT SIDE VIEW

GRAPHIC #1

g01899394

310-1547 **BATTERY & WIRING GP (*contd.*)** **i04894456**

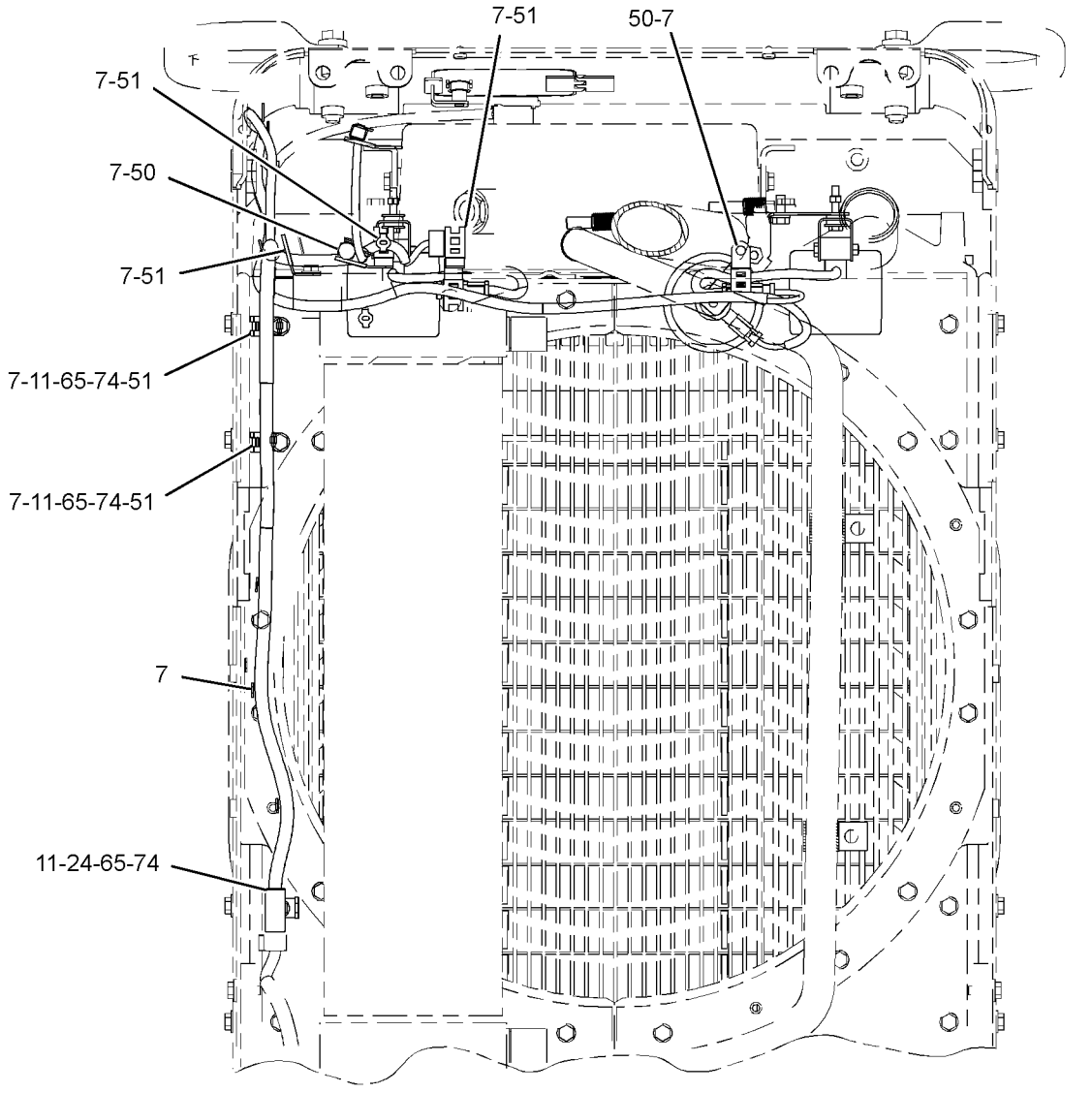

SECTION D-D

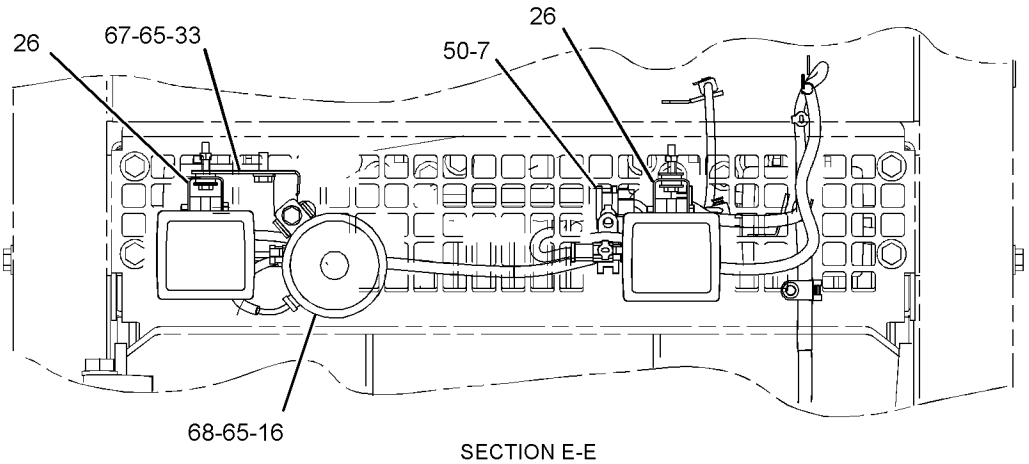

SECTION E-E

GRAPHIC #2 g01899395

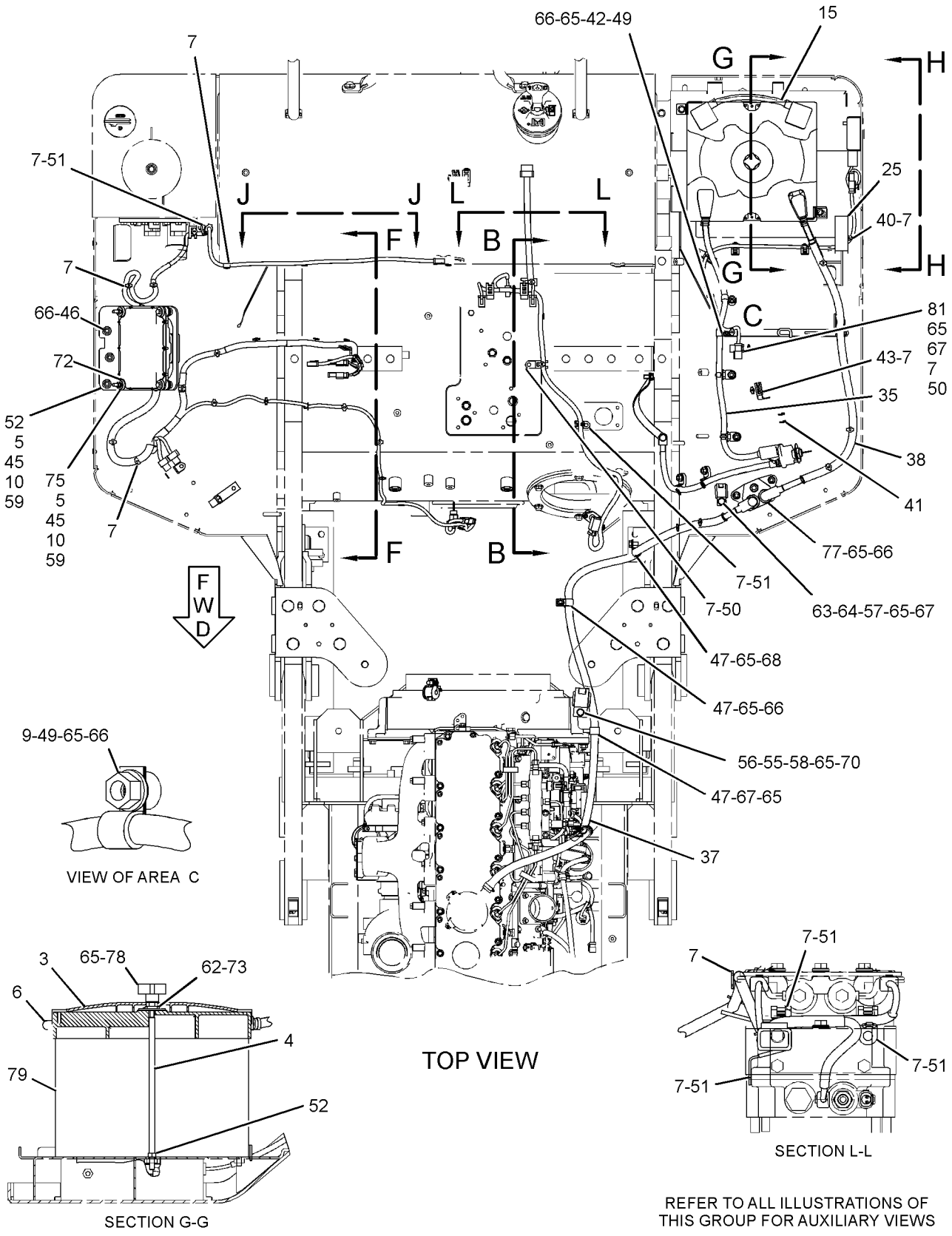

GRAPHIC #3

g01948076

310-1547 **BATTERY & WIRING GP (*contd.*)** **i04894456**

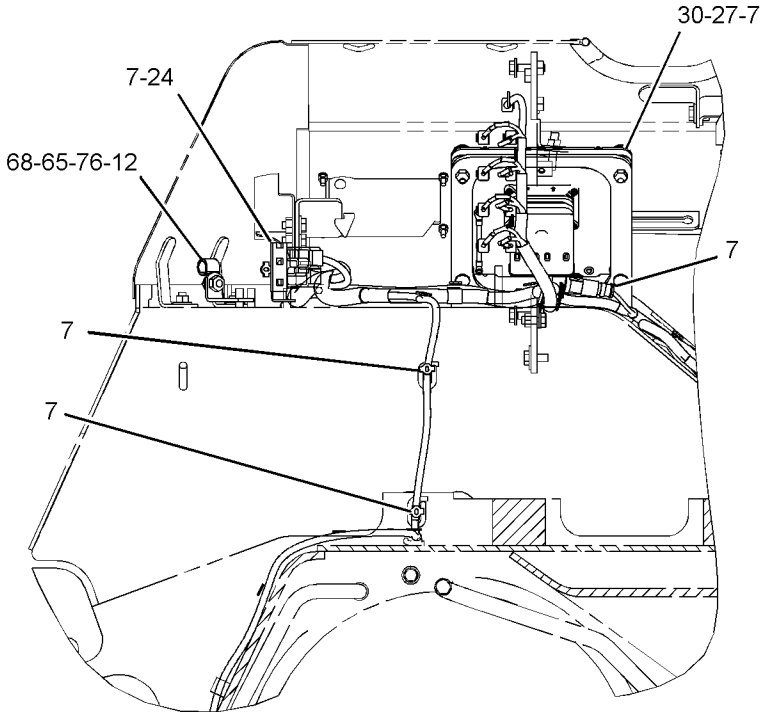

SECTION F-F

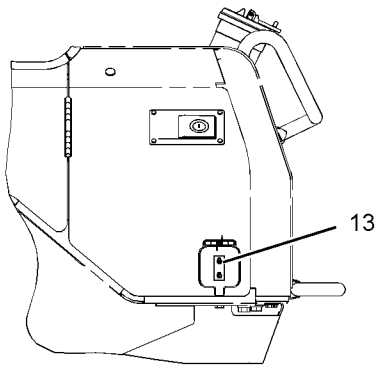

LEFT HAND ENCLOSURE

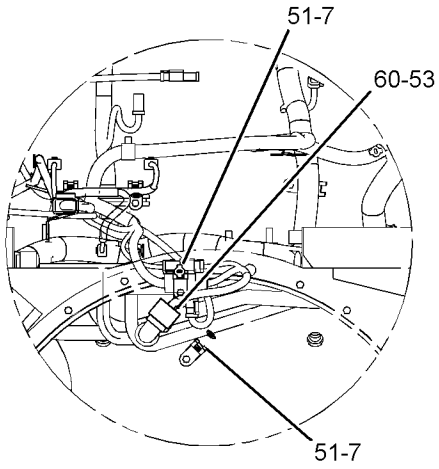

SECTION M-M

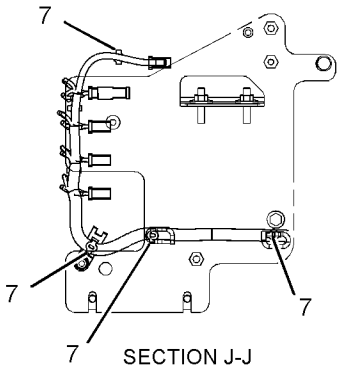

SECTION J-J

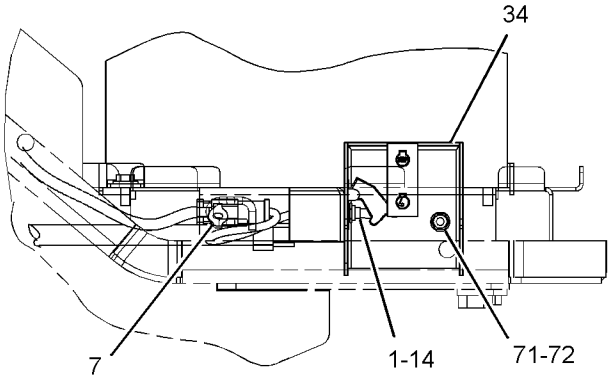

VIEW H-H

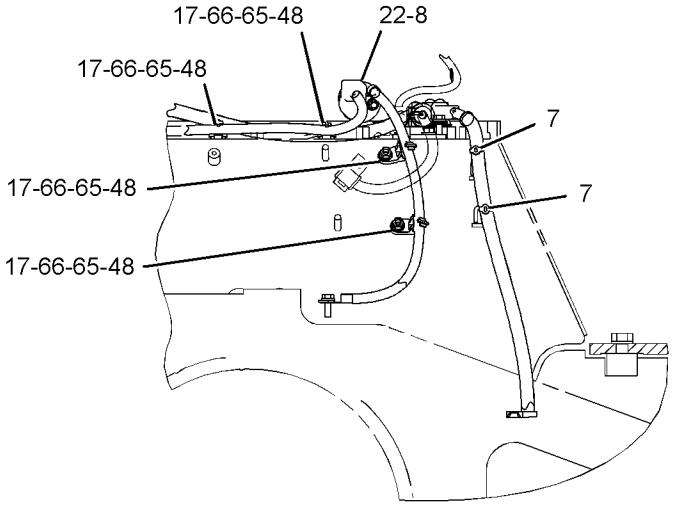

SECTION B-B

GRAPHIC #4 **<END>** g01899397

310-1547 BATTERY & WIRING GP

S/N: LJR444-850

PART OF 310-9946 ELECTRONICS AR-MACHINE

SMCS-1401, 1402, 1408 **i04894470**

NOTE	REF NO	GRAPHIC REF	PART NUMBER	QTY	PART NAME 1 2 3 4 5 6 (PRODUCT LEVEL)	SEE PAGE
	1	4	**3E-5169**	1	GUARD-SWITCH	
	2	1	**3S-2093**	1	STRAP-CABLE	
C	3	3	**252-6922**	1	COVER (BATTERY)	
	4	3	**5I-8304**	1	ROD	
	5	3	**6I-1418**	4	SPACER (8.2X12.7X28.7-MM THK)	
	6	3	**6W-6005**	1	HOLD-DOWN-BATTERY	
	7	1,2,3,4	**7K-1181**	70	STRAP-CABLE	
Y	8	4	**7N-0718**	1	SWITCH GP-DISCONNECT (BATTERY)	217
	9	3	**7W-3447**	1	SPACER (10.2X19.05X10.2-MM THK)	
	10	3	**8T-9655**	8	MOUNT-ISOLATION	
	11	2	**111-0484**	3	SPACER (10.7X17.1X30-MM THK)	
	12	4	**129-3108**	1	BRACKET AS	
	13	4	**131-0359**	1	PLATE-IDENTIFICATION (ENGINE STOP, RUN)	
Y	14	4	**158-6634**	1	SWITCH GP-TOGGLE (GROUND LEVEL SHUTDOWN)	221
	15	3	**160-2182**	1	CABLE AS	
E		3	**5P-0761**		CABLE (00-GA, RED) (33-CM)	
		3	**9G-0002**	1	COVER AS-TERMINAL (RED)	
		3	**9G-0005**	1	COVER AS-TERMINAL (BLACK)	
					(EACH COVER-TERMINAL INCLUDES)	
		3	**8L-8413**	1	STRAP-CABLE	
		3	**8C-5917**	1	TERMINAL AS-BATTERY (POSITIVE)	
		3	**8T-9757**	1	TERMINAL AS-BATTERY (NEGATIVE)	
					(EACH TERMINAL AS INCLUDES)	
		3	**1M-6119**	1	BOLT (5/16-18X1.375-IN)	
		3	**1M-6120**	1	NUT (5/16-18-THD)	
	16	2	**163-1201**	1	HORN AS (24-VOLT, LOW TONE)	
	17	4	**193-3973**	4	STRAP-CABLE	
	18	1	**195-1117**	2	BRACKET	
Y	19	1	**195-2150**	1	SENSOR GP-TEMPERATURE (TRANSMISSION)	209
	20	1	**203-3847**	1	BRACKET AS	
Y	21	1	**204-6204**	1	SENSOR GP-SPEED (STEERING MOTOR)	204
	22	4	**211-0686**	1	FILM-INSTRUCTION (BATTERY DISCONNECT)	
	23	1	**214-7568**	1	SEAL-O-RING	
	24	2,4	**220-5946**	2	CLIP	
	25	3	**225-0313**	1	FILM-WARNING (JUMP START, READ OMM, U.S.)	
Y	26	2	**225-5075**	2	LAMP GP-FLOOD (24-VOLT)	185
Y	27	4	*292-4189*	1	CONTROL GP-UNPROGRAMMED (IMPLEMENT)	160
C	28	1	**363-7710**	1	HARNESS AS-VALVE (RIPPER)	
		1	**102-8802**	2	KIT-RECEPTACLE (2-PIN)	
					(EACH INCLUDES RECEPTACLE AS & WEDGE)	
		1	**8T-8737**	47	PLUG-SEAL	
		1	**9X-6772**	2	STRAP-CABLE	
E		1	**119-3662**		TUBE-HEAT SHRINK (10.85-MM DIA) (13-CM)	
E		1	**125-7874**		TUBE-HEAT SHRINK (5.72-MM DIA) (15-CM)	
		1	**9X-3402**	72	SOCKET-CONNECTOR (16-GA TO 18-GA)	
					—OR—	
		1	**126-1768**	72	SOCKET-CONNECTOR (14-GA TO 16-GA)	
		1	**126-1774**	1	COVER-CONNECTOR	
		1	**134-2540**	1	RESISTOR AS-CONNECTION (3-PIN)	
		1	**9X-3401**	2	PIN-CONNECTOR (16-GA TO 18-GA)	
		1	**155-2270**	10	KIT-CONNECTING PLUG (2-PIN)	
		1	**174-0503**	1	KIT-CONNECTING PLUG (3-PIN)	
					(EACH PLUG KIT INCLUDES PLUG AS, WEDGE & INTERFACE SEAL)	
		1	**160-7689**	1	PLUG AS-CONNECTOR (70-PIN)	
		1	**159-9322**	1	SEAL-O-RING	
		1	**230-4009**	1	PLUG AS-CONNECTOR (12-PIN)	

310-1547 **BATTERY & WIRING GP (*contd.*)** **i04894470**

NOTE	REF NO	GRAPHIC REF	PART NUMBER	QTY	PART NAME 1 2 3 4 5 6 (PRODUCT LEVEL)	SEE PAGE
		1	**264-7034**	1	SEAL-CONNECTOR	
		1	**230-4011**	1	PLUG AS-CONNECTOR (2-PIN)	
		1	**264-7029**	1	SEAL-CONNECTOR	
		1	**230-4012**	1	RECEPTACLE AS-CONNECTOR (2-PIN)	
		1	**231-2295**	1	PLUG AS-CONNECTOR (8-PIN)	
		1	**264-7033**	1	SEAL-CONNECTOR	
	29	1	**310-1549**	1	HARNESS AS-VALVE (BRAKE)	
		1	**8T-8737**	6	PLUG-SEAL	
		1	**9X-3402**	20	SOCKET-CONNECTOR (16-GA TO 18-GA)	
		1	**155-2270**	1	KIT-CONNECTING PLUG (2-PIN)	
		1	**155-2271**	3	KIT-CONNECTING PLUG (4-PIN)	
					(EACH PLUG KIT INCLUDES PLUG AS, WEDGE & INTERFACE SEAL)	
		1	**239-7356**	1	PLUG AS-CONNECTOR (12-PIN)	
		1	**264-7034**	1	SEAL-CONNECTOR	
	30	4	**311-1874**	1	PLATE AS	
M		4	**8T-3612**	2	NUT-WELD (M8X1.25-THD)	
	31	1	**312-1673**	1	HARNESS AS-SENSOR (FUEL LEVEL)	
		1	**9X-3402**	4	SOCKET-CONNECTOR (16-GA TO 18-GA)	
		1	**155-2270**	1	KIT-CONNECTING PLUG (2-PIN)	
					(INCLUDES PLUG AS, WEDGE & INTERFACE SEAL)	
		1	**230-4011**	1	PLUG AS-CONNECTOR (2-PIN)	
		1	**264-7029**	1	SEAL-CONNECTOR	
	32	1	**312-2567**	1	HARNESS AS-FRONT	
		1	**8T-8737**	9	PLUG-SEAL	
E		1	**125-7874**		TUBE-HEAT SHRINK (5.72-MM DIA) (20-CM)	
		1	**9X-3402**	15	SOCKET-CONNECTOR (16-GA TO 18-GA)	
		1	**144-1636**	10	PIN-CONNECTOR (14-GA TO 18-GA)	
		1	**155-2270**	5	KIT-CONNECTING PLUG (2-PIN)	
					(EACH PLUG KIT INCLUDES PLUG AS, WEDGE & INTERFACE SEAL)	
		1	**226-0936**	1	RESISTOR AS	
		1	**230-4010**	1	RECEPTACLE AS-CONNECTOR (12-PIN)	
		1	**239-7352**	1	PLUG AS-CONNECTOR (6-PIN)	
		1	**264-7032**	1	SEAL-CONNECTOR	
		1	**239-7353**	1	RECEPTACLE AS-CONNECTOR (6-PIN)	
	33	2	**313-3353**	1	BRACKET AS	
	34	4	**320-1114**	1	BRACKET AS	
	35	3	**320-9118**	1	CABLE AS	
E		3	**5P-0747**		CABLE (00-GA, BLACK) (91-CM)	
		3	**7N-5274**	1	COVER AS-TERMINAL (BLACK)	
		3	**8L-8413**	1	STRAP-CABLE	
		3	**8S-3020**	1	TERMINAL-CABLE (00-GA, 3/8-IN SCREW)	
		3	**3S-6050**	1	TERMINAL AS-BATTERY (NEGATIVE)	
		3	**1M-6119**	1	BOLT (5/16-18X1.375-IN)	
		3	**1M-6120**	1	NUT (5/16-18-THD)	
		3	**9X-5699**	1	BOOT	
	36	1	**320-9131**	1	CABLE AS	
E		1	**5P-0747**		CABLE (00-GA, BLACK) (64-CM)	
		1	**1S-7251**	1	TERMINAL-CABLE (00-GA, 1/2-IN SCREW)	
		1	**8S-3020**	1	TERMINAL-CABLE (00-GA, 3/8-IN SCREW)	
	37	3	**320-9163**	1	CABLE AS	
E		3	**5P-0761**		CABLE (00-GA, RED) (187-CM)	
		3	**1S-4915**	2	LINER (CONDUIT)	
		3	**1S-7251**	2	TERMINAL-CABLE (00-GA, 1/2-IN SCREW)	
E		3	**5P-0695**		CONDUIT (168-CM)	
E		3	**8T-2225**		TUBE-HEAT SHRINK (25.4-MM DIA) (16-CM)	
		3	**8T-8827**	2	BOOT (RED)	
	38	3	**320-9831**	1	CABLE AS	
E		3	**5P-0761**		CABLE (00-GA, RED) (102-CM)	
		3	**1S-4915**	2	LINER (CONDUIT)	

310-1547 **BATTERY & WIRING GP (*contd.*)** **i04894470**

NOTE	REF NO	GRAPHIC REF	PART NUMBER	QTY	PART NAME 1 2 3 4 5 6 (PRODUCT LEVEL)	SEE PAGE
		3	**1S-7251**	1	TERMINAL-CABLE (00-GA, 1/2-IN SCREW)	
E		3	**5P-0695**		CONDUIT (79-CM)	
		3	**8N-1725**	1	COVER AS-TERMINAL (RED)	
		3	**8L-8413**	1	STRAP-CABLE	
E		3	**8T-2225**		TUBE-HEAT SHRINK (25.4-MM DIA) (16-CM)	
		3	**8T-8827**	1	BOOT (RED)	
		3	**3S-6049**	1	TERMINAL AS-BATTERY (POSITIVE)	
		3	**1M-6119**	1	BOLT (5/16-18X1.375-IN)	
		3	**1M-6120**	1	NUT (5/16-18-THD)	
	39	1	**320-9844**	1	BRACKET AS	
	40	3	**330-6134**	1	HARNESS AS-SWITCH (GROUND LEVEL SHUTDOWN)	
		3	**102-8803**	1	KIT-RECEPTACLE (3-PIN)	
					(INCLUDES RECEPTACLE AS & WEDGE)	
		3	**8T-8737**	1	PLUG-SEAL	
		3	**144-1636**	3	PIN-CONNECTOR (14-GA TO 18-GA)	
		3	**9X-3402**	3	SOCKET-CONNECTOR (16-GA TO 18-GA)	
		3	**155-2271**	2	KIT-CONNECTING PLUG (4-PIN)	
					(INCLUDES PLUG AS, WEDGE & INTERFACE SEAL)	
M	41	3	**095-0723**	4	SCREW-SPECIAL	
M	42	3	**101-3129**	1	STUD (M10X1.5-THD)	
	43	3	**132-5789**	1	CLIP	
	44	1	*148-8313*	1	ADAPTER AS	
		1	**3K-0360**	1	SEAL-O-RING	
		1	**5P-6944**	1	ADAPTER	
	45	3	**198-4776**	4	WASHER-HARD (8.8X20X8-MM THK)	
	46	3	**198-4777**	3	WASHER-HARD (11X25X10-MM THK)	
	47	3	**1S-0994**	3	CLIP	
	48	4	**204-8000**	4	MOUNTING-CABLE TIE	
	49	3	**4K-8864**	2	CLIP	
	50	1,2,3	**4P-7581**	8	CLIP	
	51	1,2,3,4	**4P-8134**	14	CLIP	
M	52	3	**5C-7261**	3	NUT (M8X1.25-THD)	
	53	4	**5P-6025**	1	LOCKWIRE	
C	54	1	**5P-4116**	3	WASHER-HARD (8.8X20.5X2-MM THK)	
	55	3	**5P-7464**	1	CLIP (SLOT)	
	56	3	**5P-7465**	1	CLIP (TAB)	
	57	3	**6V-0826**	2	GROMMET	
	58	3	**6V-1249**	1	GROMMET (22-MM ID)	
	59	3	**7X-0579**	8	WASHER-HARD (8.8X25.5X2-MM THK)	
	60	4	**8S-8158**	1	SEAL-WIRE	
M	61	1	**8T-0267**	2	BOLT-SOCKET HEAD (M6X1X12-MM)	
M	62	3	**8T-0389**	1	LOCKNUT (M10X1.5-THD)	
	63	1,3	**8T-1889**	1	CLIP (SLOT)	
	64	1,3	**8T-1890**	1	CLIP (TAB)	
	65	1,2,3,4	**8T-4121**	28	WASHER-HARD (11X21X2.5-MM THK)	
M	66	1,3,4	**8T-4133**	14	NUT (M10X1.5-THD)	
M	67	1,2,3	**8T-4136**	6	BOLT (M10X1.5X25-MM)	
M	68	1,2,3,4	**8T-4137**	5	BOLT (M10X1.5X20-MM)	
CM	69	1	**8T-4189**	3	BOLT (M8X1.25X20-MM)	
M	70	1,3	**8T-4195**	2	BOLT (M10X1.5X30-MM)	
M	71	4	**8T-4200**	1	BOLT (M8X1.25X16-MM)	
	72	3,4	**8T-4224**	2	WASHER-HARD (8.8X16X2-MM THK)	
C	73	3	**8T-4226**	2	WASHER-PLATED (10.5X45X3-MM THK)	
M	74	2	**8T-6466**	3	BOLT (M10X1.5X60-MM)	
M	75	3	**8T-6869**	2	BOLT (M8X1.25X60-MM)	
	76	4	**9M-8406**	1	CLIP	
Y	77	3	**9W-0742**	1	BLOCK GP-JUNCTION (BATTERY)	158
C	78	1	**117-1385**	1	SEAL-O-RING	
	79	3	**9X-3404**	2	BATTERY (12-VOLT, MAINTENANCE FREE, WET)	
	80	1	**321-4070**	1	STRAP AS-GROUND	
	81	3	**6D-4244**	1	CLIP	

310-1547 **BATTERY & WIRING GP (*contd.*)** **i04894470**

NOTE	REF NO	GRAPHIC REF	PART NUMBER	QTY	PART NAME 1 2 3 4 5 6 (PRODUCT LEVEL)	SEE PAGE

C - CHANGE FROM PREVIOUS TYPE
E - ORDER BY THE CENTIMETER
M - METRIC PART
Y - SEPARATE ILLUSTRATION

310-1547 **BATTERY & WIRING GP (*contd.*)** **i04894470**

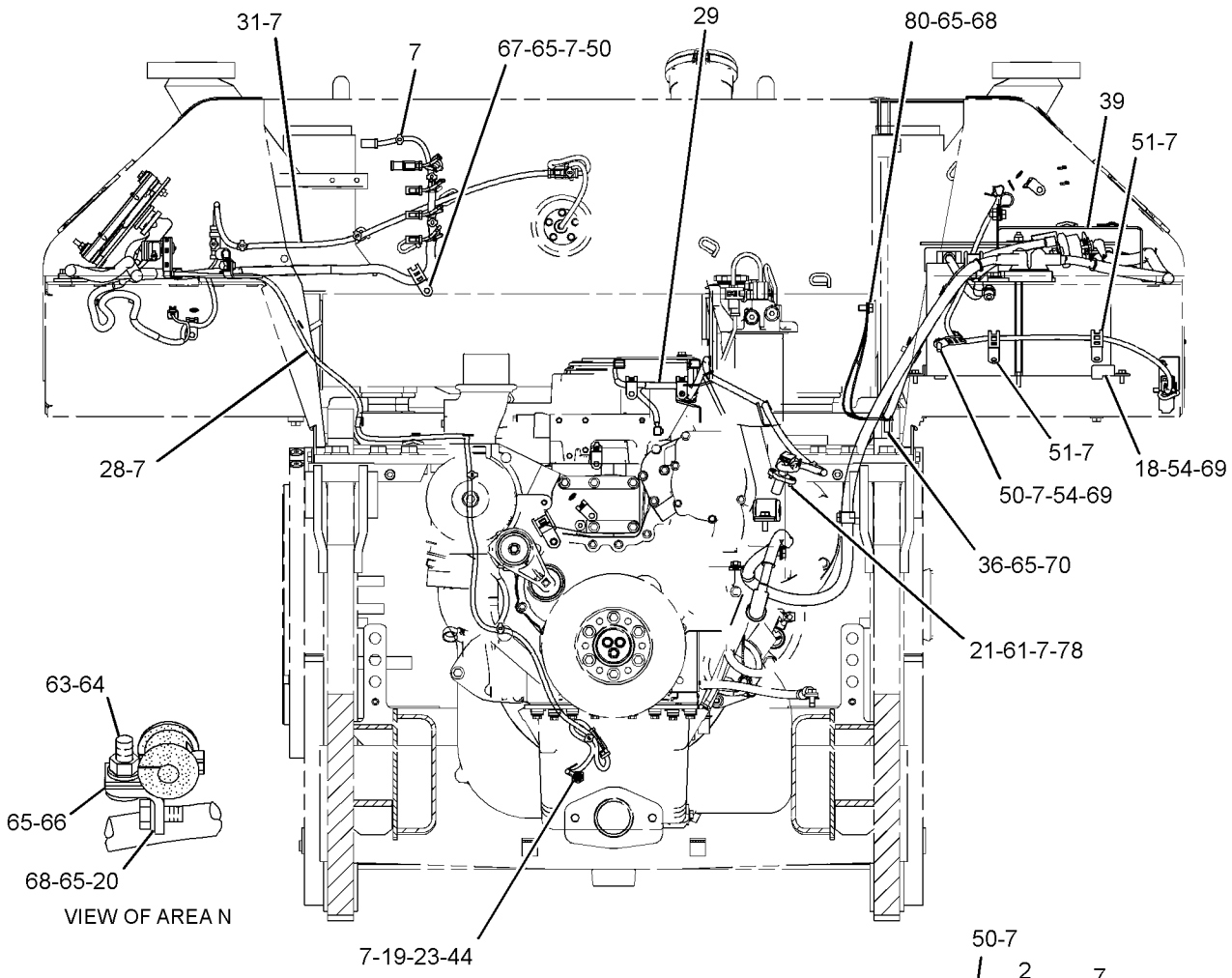

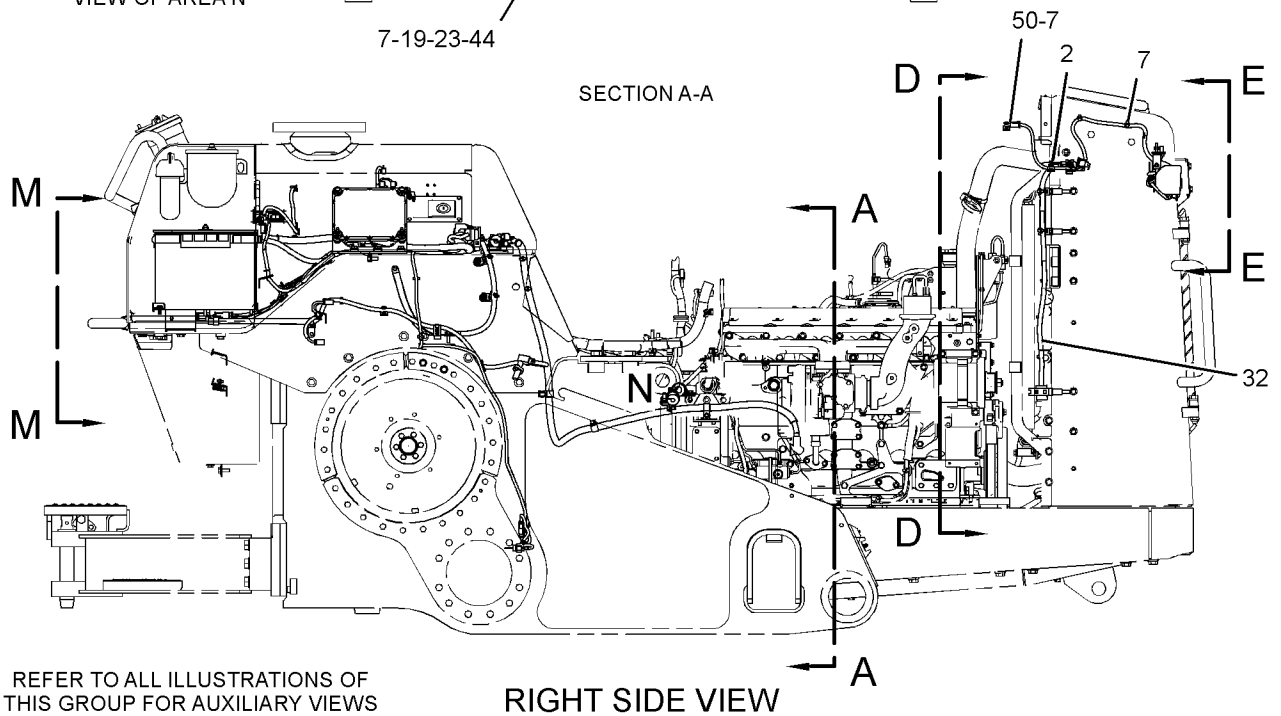

GRAPHIC #1 g02982796

310-1547 **BATTERY & WIRING GP (*contd.*)** **i04894470**

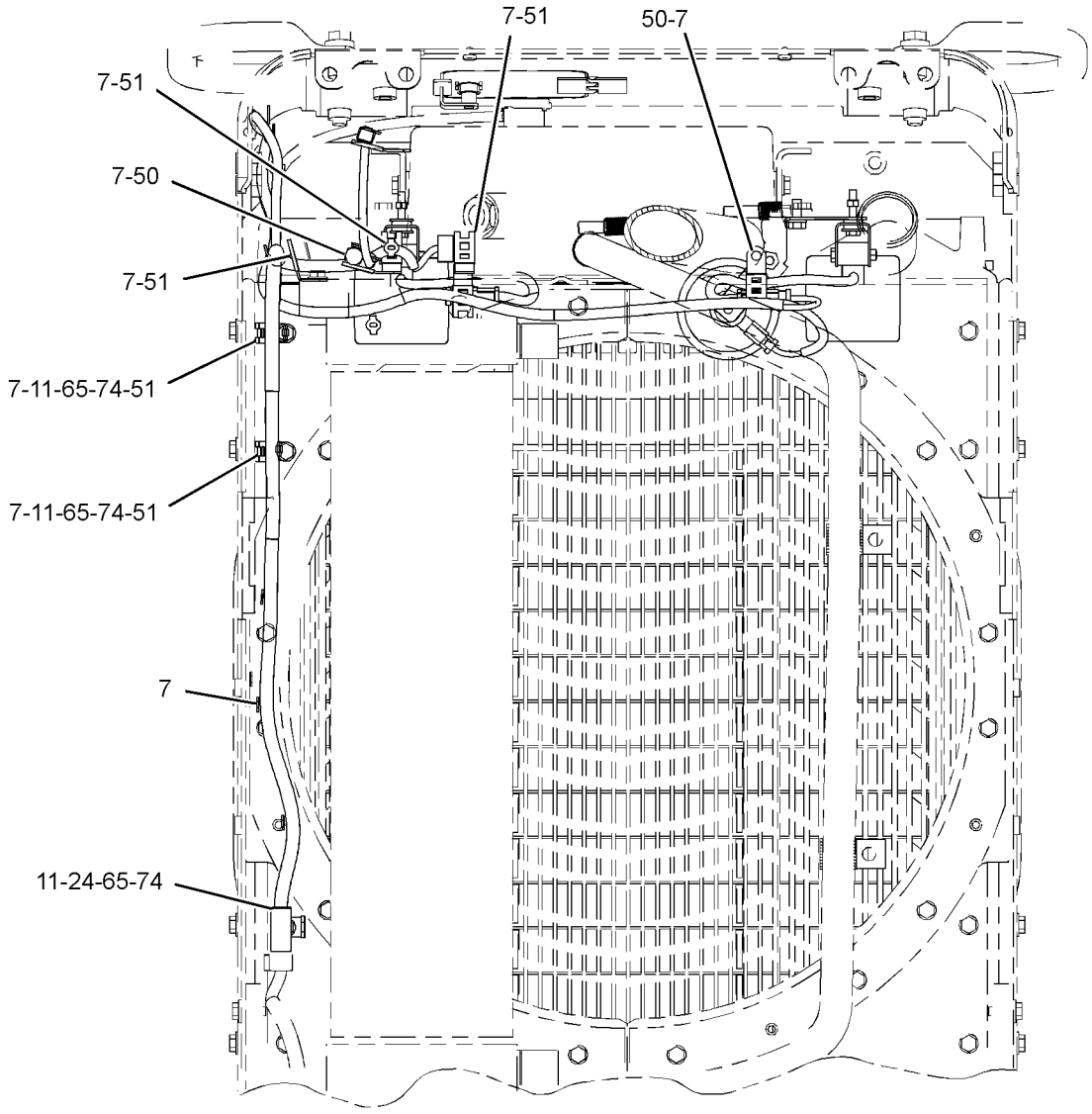

SECTION D-D

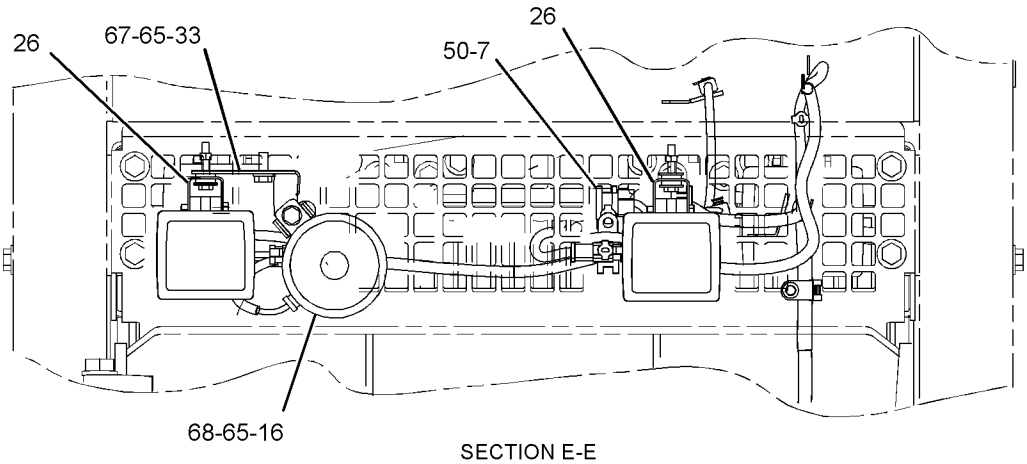

SECTION E-E

GRAPHIC #2 g02982797

310-1547 **BATTERY & WIRING GP (*contd.*)** **i04894470**

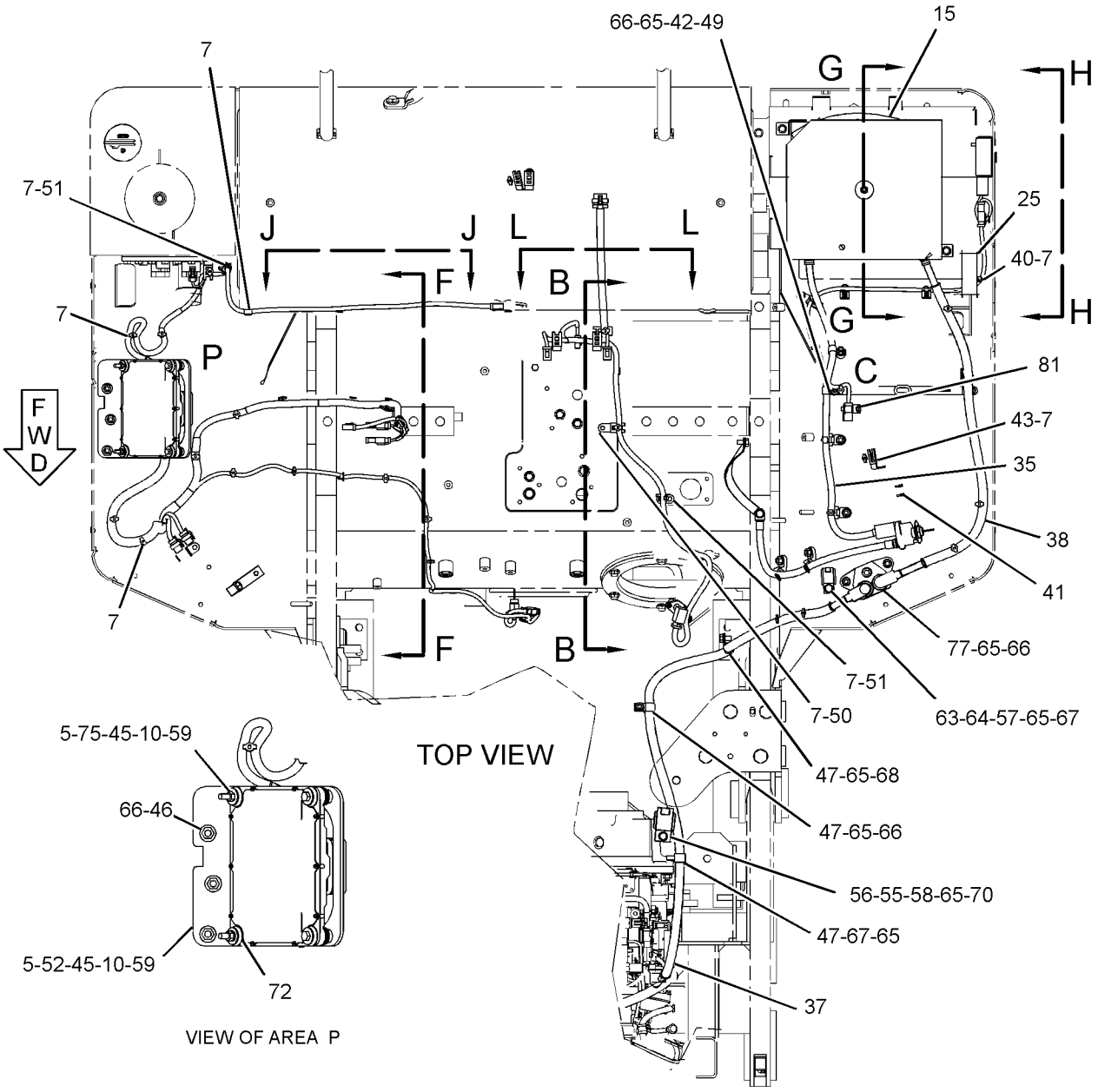

VIEW OF AREA P

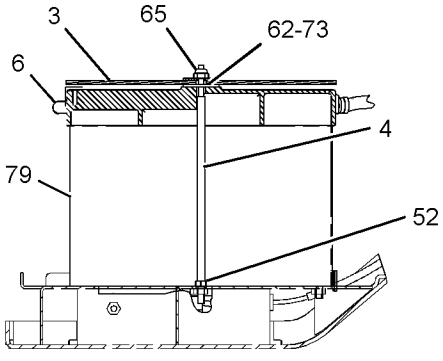

SECTION G-G

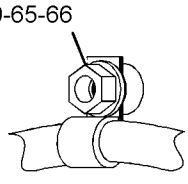

VIEW OF AREA C

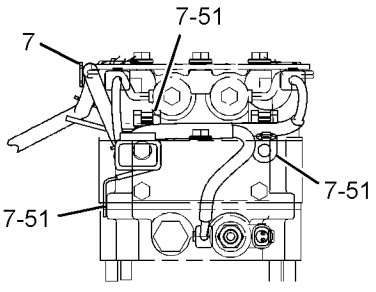

SECTION L-L

REFER TO ALL ILLUSTRATIONS OF THIS GROUP FOR AUXILIARY VIEWS

GRAPHIC #3

g02982801

310-1547 **BATTERY & WIRING GP (*contd.*)** **i04894470**

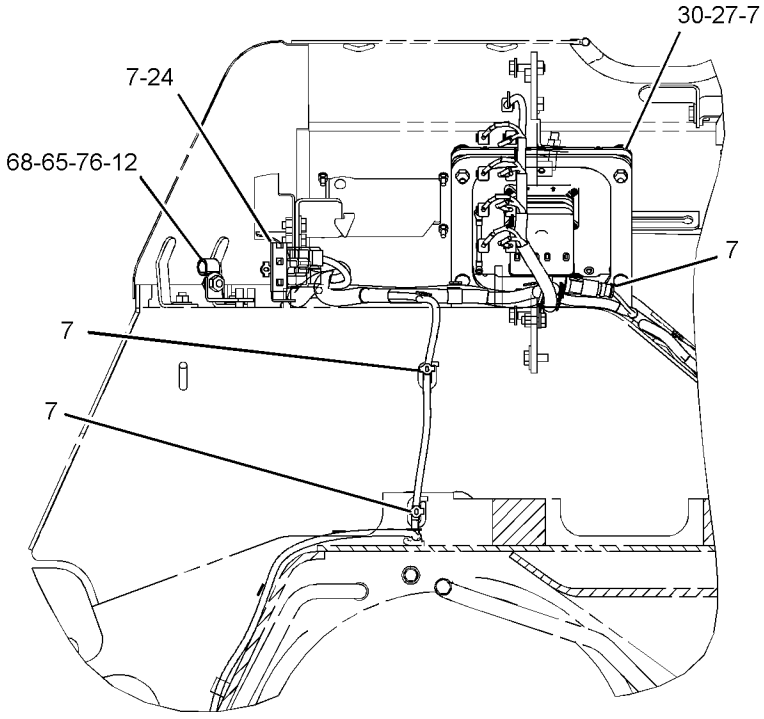

SECTION F-F

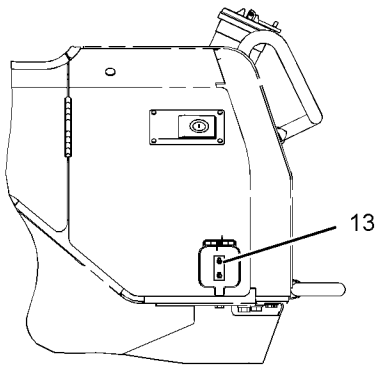

LEFT HAND ENCLOSURE

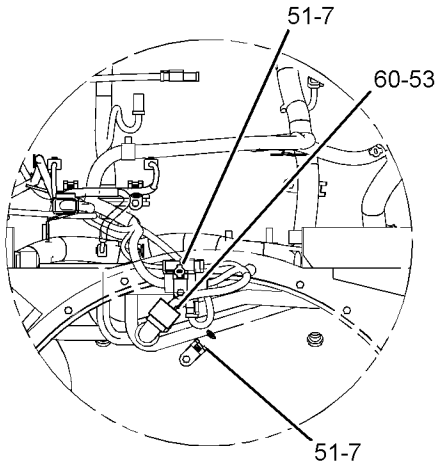

SECTION M-M

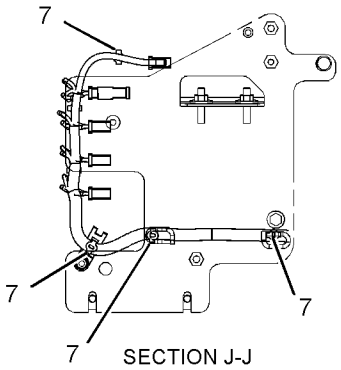

SECTION J-J

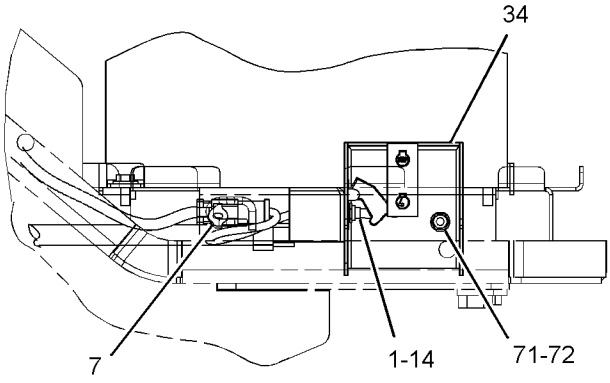

VIEW H-H

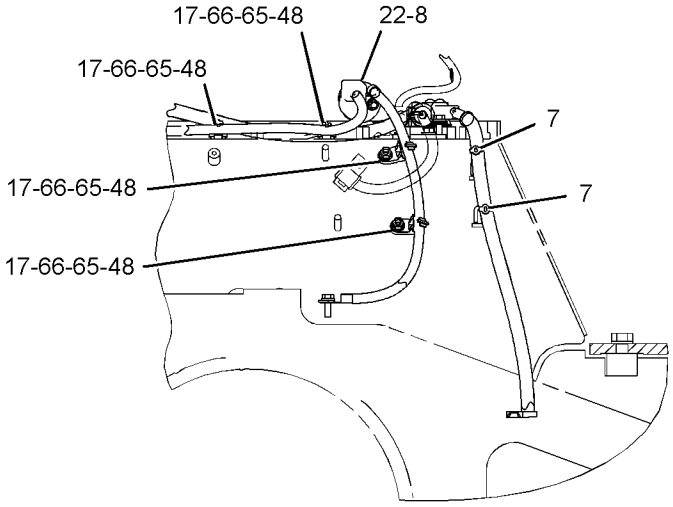

SECTION B-B

GRAPHIC #4 **<END>** g02982800

321-1276 BATTERY & WIRING GP–HEAVY DUTY

S/N: LJR1-UP

PART OF 338-2597, 338-2598 OPTION AR-COLD WEATHER

AN ATTACHMENT

SMCS-1401, 1402, 1408 **i05221022**

NOTE	REF NO	GRAPHIC REF	PART NUMBER	QTY	PART NAME 1 2 3 4 5 6 (PRODUCT LEVEL)	SEE PAGE
	1	1	**5I-8304**	1	ROD	
	2	1	**7K-1181**	7	STRAP-CABLE	
	3	1	**8V-0622**	1	CABLE AS-BATTERY	
		1	**8C-5917**	1	TERMINAL AS-BATTERY (POSITIVE) (RH)	
E		1	**5P-0761**		CABLE (00-GA, RED) (14-CM)	
		1	**8T-9757**	1	TERMINAL AS-BATTERY (NEGATIVE) (LH)	
		1	**9G-0003**	1	COVER AS-TERMINAL (BLACK)	
		1	**9G-0004**	1	COVER AS-TERMINAL (RED)	
	4	1	**153-5710**	2	BATTERY (12-VOLT, MAINTENANCE FREE, WET) (MAINTENANCE FREE, WET)	
	5	1	**193-3973**	2	STRAP-CABLE	
	6	1	**321-1275**	1	CABLE AS	
		1	**1S-4915**	2	LINER (CONDUIT)	
		1	**1S-7251**	1	TERMINAL-CABLE (00-GA, 1/2-IN SCREW)	
E		1	**5P-0695**		CONDUIT (112-CM)	
E		1	**5P-0761**		CABLE (00-GA, RED) (140-CM)	
		1	**8N-1725**	1	COVER AS-TERMINAL (RED)	
E		1	**8T-2225**		TUBE-HEAT SHRINK (25.4-MM DIA) (16-CM)	
		1	**8T-8827**	1	BOOT (RED)	
		1	**3S-6049**	1	TERMINAL AS-BATTERY (POSITIVE)	
		1	**1M-6119**	1	BOLT (5/16-18X1.375-IN)	
		1	**1M-6120**	1	NUT (5/16-18-THD)	
	7	1	**321-1280**	1	CABLE AS	
E		1	**5P-0747**		CABLE (00-GA, BLACK) (114-CM)	
		1	**7N-5274**	1	COVER AS-TERMINAL (BLACK)	
		1	**8S-3020**	1	TERMINAL-CABLE (00-GA, 3/8-IN SCREW)	
		1	**3S-6050**	1	TERMINAL AS-BATTERY (NEGATIVE)	
		1	**1M-6119**	1	BOLT (5/16-18X1.375-IN)	
		1	**1M-6120**	1	NUT (5/16-18-THD)	
	8	1	**321-1291**	1	HOLD-DOWN AS	
M		1	**8T-3490**	1	NUT-WELD (M10X1.5-THD)	
	9	1	**204-8000**	1	MOUNTING-CABLE TIE	
	10	1	**4K-8864**	2	CLIP	
	11	1	**4P-8134**	1	CLIP	
M	12	1	**5C-7261**	1	NUT (M8X1.25-THD)	
	13	1	**7X-0575**	2	WASHER-HARD (10.2X22.5X5-MM THK)	
M	14	1	**8T-0389**	1	LOCKNUT (M10X1.5-THD)	
	15	1	**8T-4121**	5	WASHER-HARD (11X21X2.5-MM THK)	
M	16	1	**8T-4133**	1	NUT (M10X1.5-THD)	
M	17	1	**8T-4136**	1	BOLT (M10X1.5X25-MM)	
M	18	1	**8T-4137**	1	BOLT (M10X1.5X20-MM)	
	19	1	**206-2423**	1	SADDLE	

E - ORDER BY THE CENTIMETER
M - METRIC PART

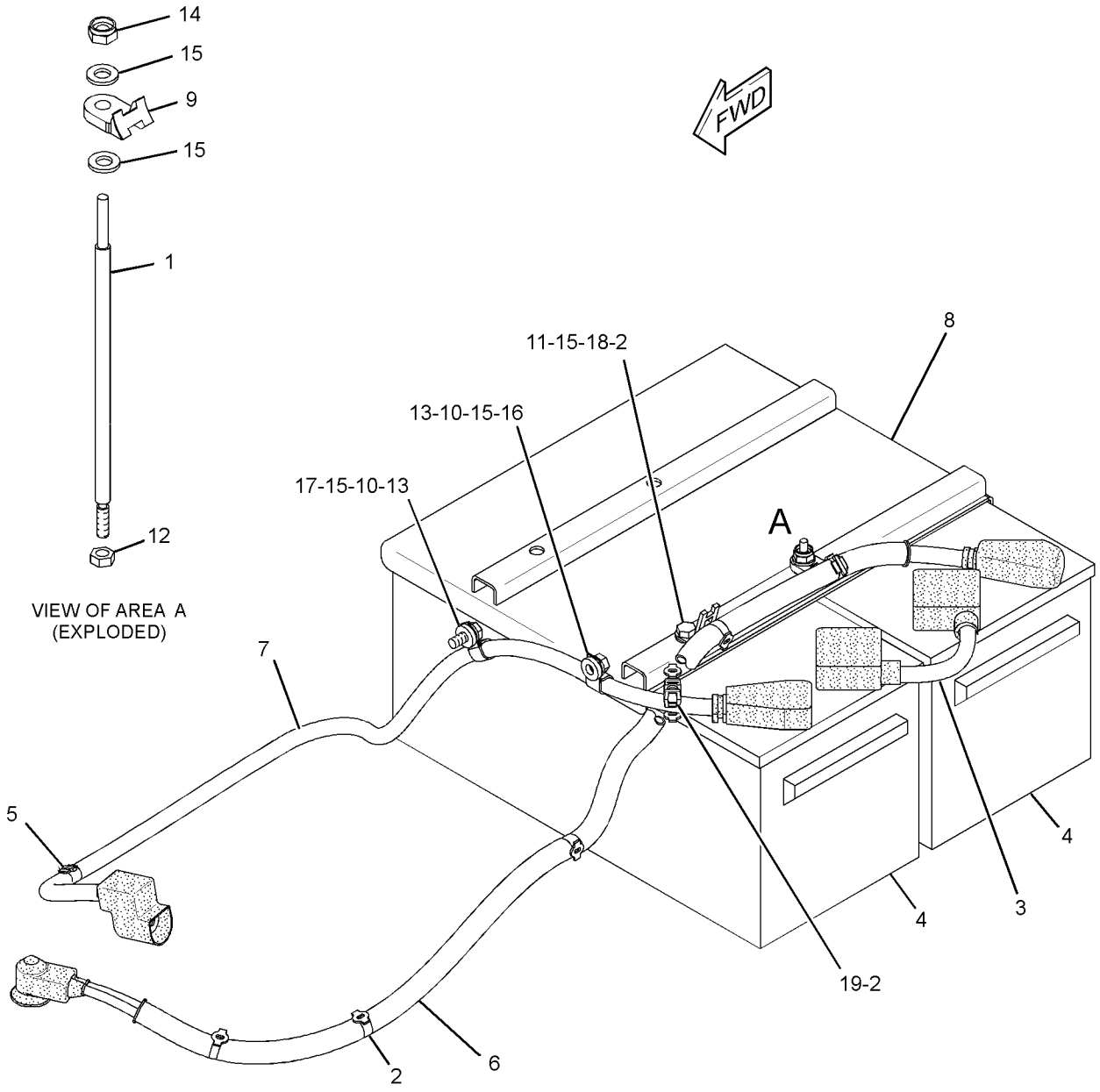

GRAPHIC #1 **<END>** g03074696

9W-0742 BLOCK GP-JUNCTION–BATTERY

S/N: LJR1-UP

PART OF 310-1547 BATTERY & WIRING GP, 310-1550 WIRING GP-ENGINE

SMCS-1408, 7426 **i03869709**

NOTE	REF NO	GRAPHIC REF	PART NUMBER	QTY	PART NAME 1 2 3 4 5 6 (PRODUCT LEVEL)	SEE PAGE
	1	1	**8C-6358**	1	BLOCK AS-JUNCTION (BATTERY)	
	1A	1	**8T-3519**	3	BOLT-BRONZE (1/2-13X2-IN)	
	1B	1	**1D-5117**	3	NUT-JAM (1/2-13-THD)	
	2	1	**7F-0560**	6	WASHER (0.516X0.938X0.101-IN THK)	
D	3	1	**6V-2722**		TUBE-HEAT SHRINK (0.06-M)	
	4	1	**8T-3518**	6	NUT-FULL (1/2-13-THD)	

D - ORDER BY THE METER

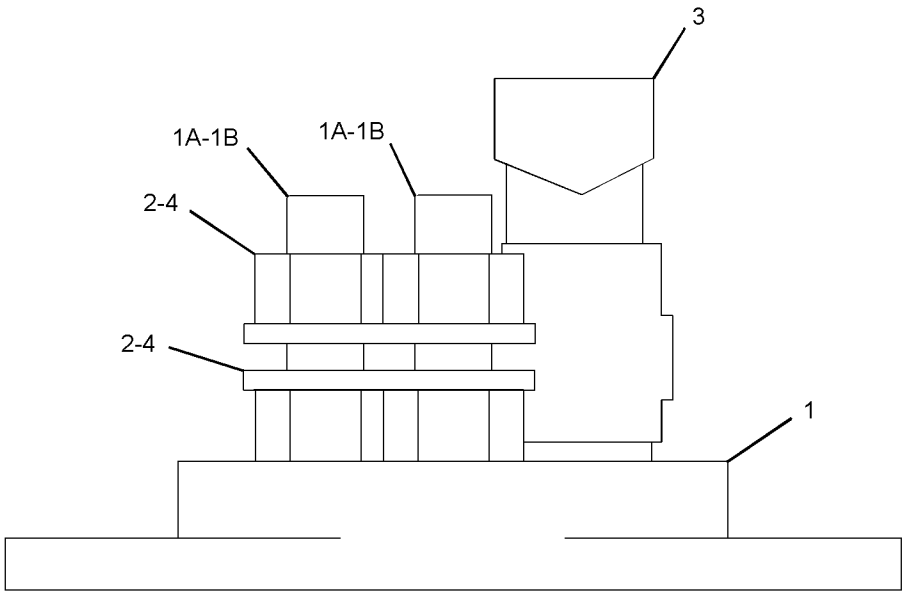

GRAPHIC #1 **<END>** g02116313

239-9954 CONTROL GP-UNPROGRAMMED–PRODUCT LINK 300

S/N: LJR1-UP

PART OF 320-5953, 320-5955, 362-6150 INSTALLATION GP-COMMUNICATION AN ATTACHMENT

SMCS-7610 **i02941986**

NOTE	REF NO	GRAPHIC REF	PART NUMBER	QTY	PART NAME 1 2 3 4 5 6 (PRODUCT LEVEL)	SEE PAGE
	1	1	**285-1133**	1	CONTROL GP-UNPROGRAMMED (PRODUCT LINK 300)	
	1A	1	**7X-6315**	1	STRAP AS-GROUND	
	1B	1	**126-7574**	1	SCREW-PAN HEAD (8-32X9.52-MM)	
	1C	1	**134-4126**	1	WASHER (4.52X8.28X0.76-MM THK)	

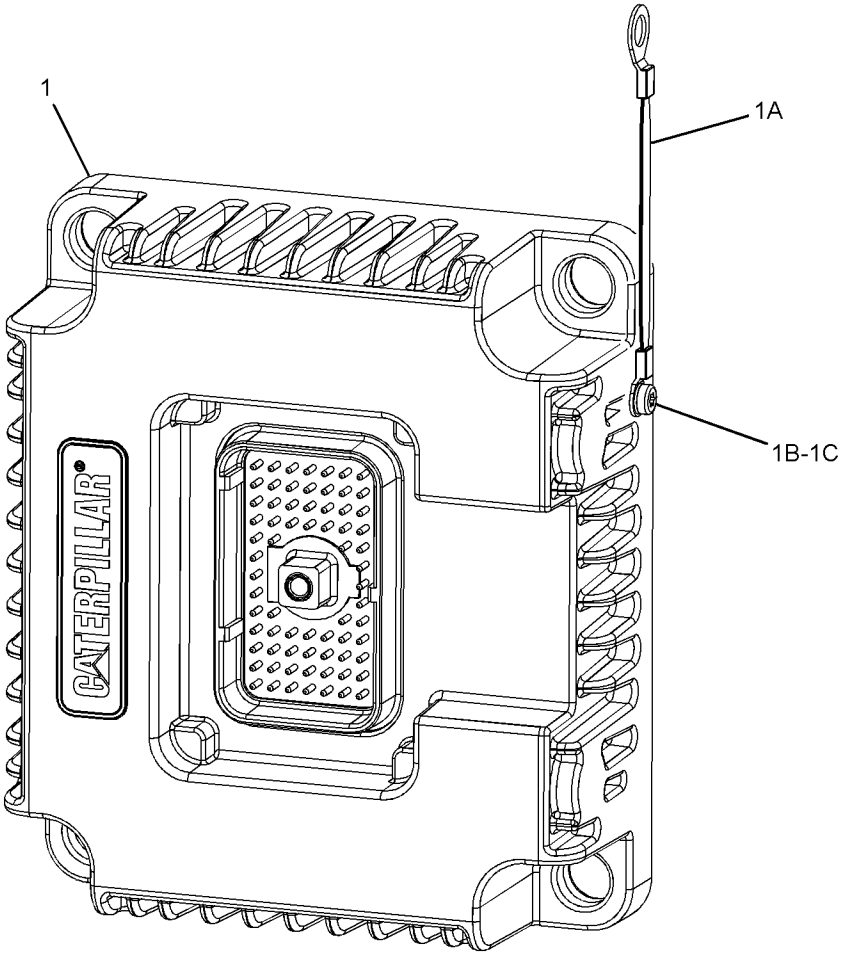

GRAPHIC #1 **<END>** g01400203

292-4189 CONTROL GP-UNPROGRAMMED–IMPLEMENT

S/N: LJR1-UP

PART OF 310-1547 BATTERY & WIRING GP

SMCS-7610 **i05059030**

NOTE	REF NO	GRAPHIC REF	PART NUMBER	QTY	PART NAME 1 2 3 4 5 6 (PRODUCT LEVEL)	SEE PAGE
	1	1	**377-4710**	1	CONTROL GP-UNPROGRAMMED	

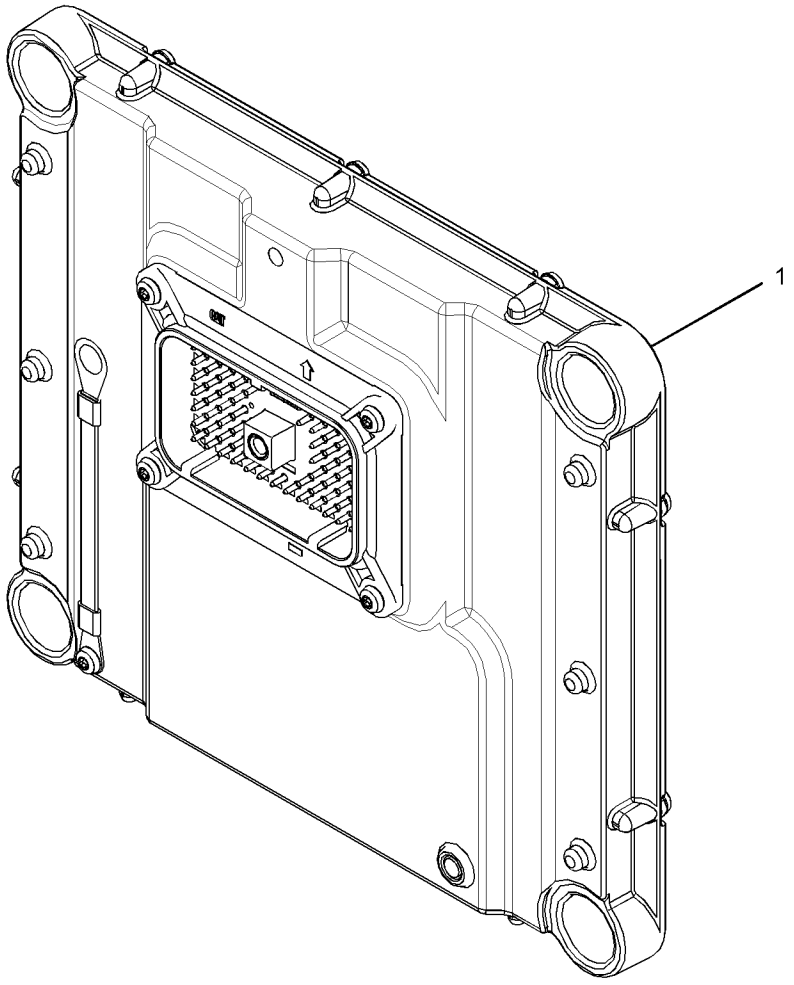

GRAPHIC #1 **<END>** g03042539

351-8490 CONTROL GP-UNPROGRAMMED–PRODUCT LINK 522

S/N: LJR1-UP

PART OF 351-1715 INSTALLATION GP-COMMUNICATION

AN ATTACHMENT

SMCS-7610 **i04925968**

NOTE	REF NO	GRAPHIC REF	PART NUMBER	QTY	PART NAME 1 2 3 4 5 6 (PRODUCT LEVEL)	SEE PAGE
	1	1	**346-7763**	1	COVER AS	
	2	1	**351-8488**	1	CARD-MEMORY (SUBSCRIBER IDENTITY MODULE)	
	3	1	**7X-6315**	1	STRAP AS-GROUND	
	4	1	**342-9022**	4	SCREW-PAN HEAD (M2.5X0.45-THD)	
	5	1	**342-9290**	1	SCREW-PAN HEAD (M4X0.7-THD)	
	6	1	**134-4126**	1	WASHER (4.52X8.28X0.76-MM THK)	
F			**382-5982**	1	SOFTWARE GP-ELECTRONIC	

F - NOT SHOWN

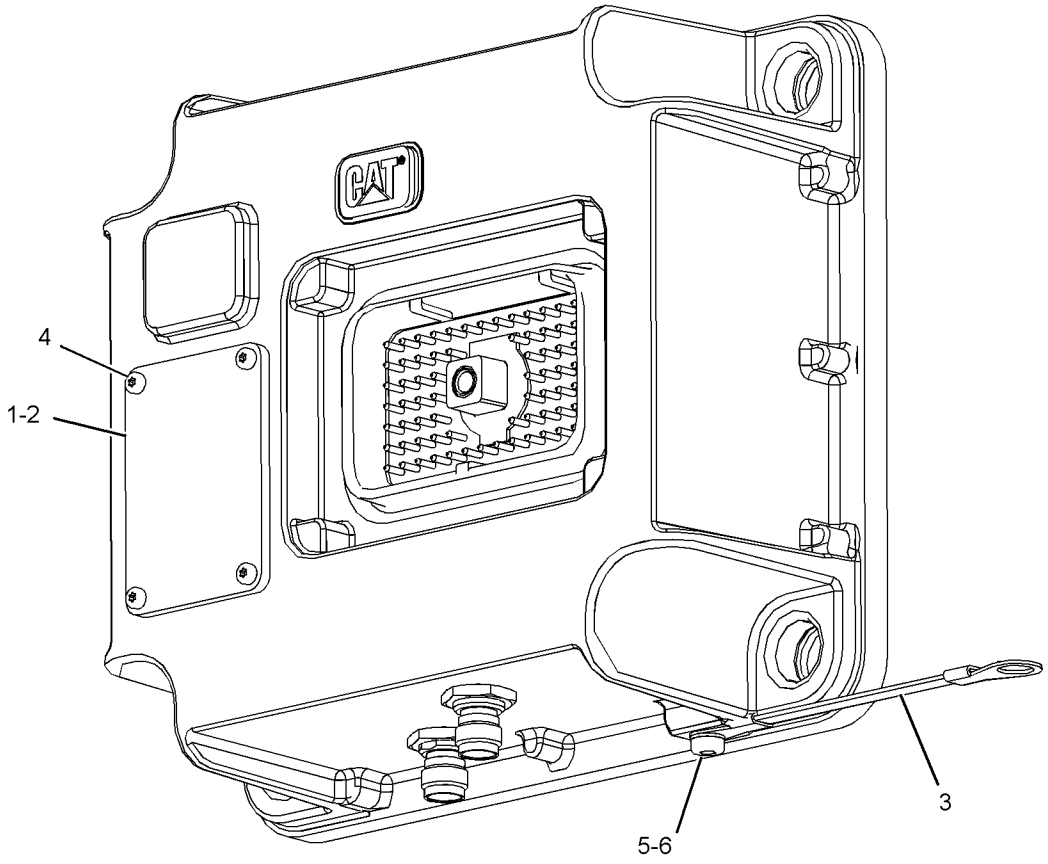

GRAPHIC #1 **<END>** g02330133

310-9946 ELECTRONICS AR-MACHINE

S/N: LJR1-UP

PART OF 310-9903 GENERAL AR

SMCS-7610, 7620 **i03892409**

NOTE	PART NUMBER	QTY	PART NAME 1 2 3 4 5 6 (PRODUCT LEVEL)	SEE PAGE
Y	*310-1547*	1	BATTERY & WIRING GP	141
Y	*312-0309*	1	ELECTRONICS GP-MACHINE (IMPLEMENT 2)	162
Y	*355-2796*	1	ELECTRONICS GP-MONITOR (SOFTWARE ONLY)	163
Y	*312-4633*	1	ELECTRONICS GP-MACHINE (LASER, OPEN ROPS)	162
Y	*310-1550*	1	WIRING GP-ENGINE	228

Y - SEPARATE ILLUSTRATION

<END>

262-2043 ELECTRONICS GP-COMMUNICATION–PRODUCT LINK 300

S/N: LJR1-UP

PART OF 320-5953, 320-5955, 351-1715, 362-6150 INSTALLATION GP-COMMUNICATION AN ATTACHMENT

SMCS-7606, 7610, 7620 **i03894361**

NOTE	PART NUMBER	QTY	PART NAME 1 2 3 4 5 6 (PRODUCT LEVEL)	SEE PAGE
	355-5105	1	SOFTWARE GP-COMMUNICATION	
			-OR-	
	355-9764	1	SERVICE GP-COMMUNICATION	
			(OPTIONAL SERVICE REPLACEMENT) (INCLUDES CONTROL GP & SOFTWARE)	
	7X-6315	1	STRAP AS-GROUND	
	126-7574	1	SCREW-PAN HEAD (8-32X9.52-MM)	
	134-4126	1	WASHER (4.52X8.28X0.76-MM THK)	

<END>

312-0309 ELECTRONICS GP-MACHINE

S/N: LJR1-UP

PART OF 310-9946 ELECTRONICS AR-MACHINE

SMCS-7610, 7620 **i03801832**

NOTE	PART NUMBER	QTY	PART NAME 1 2 3 4 5 6 (PRODUCT LEVEL)	SEE PAGE
	348-8084	1	SOFTWARE GP-MACHINE (IMPLEMENT 2)	

<END>

312-4633 ELECTRONICS GP-MACHINE–LASER, OPEN ROPS

S/N: LJR1-UP

PART OF 310-9946 ELECTRONICS AR-MACHINE

SMCS-7610, 7620 **i04892877**

NOTE	PART NUMBER	QTY	PART NAME 1 2 3 4 5 6 (PRODUCT LEVEL)	SEE PAGE
	393-0598	1	SOFTWARE GP-MACHINE	

<END>

354-0746 ELECTRONICS GP-MONITOR—PRODUCT LINK

S/N: LJR1-UP

PART OF 351-1715 INSTALLATION GP-COMMUNICATION

AN ATTACHMENT

SMCS-7490, 7601, 7603, 7610, 7620 **i05221010**

NOTE	PART NUMBER	QTY	PART NAME 1 2 3 4 5 6 (PRODUCT LEVEL)	SEE PAGE
	380-9732	1	SOFTWARE GP-COMMUNICATION (PRODUCT LINK 522)	
	386-3969	1	SOFTWARE GP-MONITOR (VIMS MAIN, PROGRAM)	

<END>

355-2796 ELECTRONICS GP-MONITOR

S/N: LJR1-UP

PART OF 310-9946 ELECTRONICS AR-MACHINE

SMCS-7490, 7601, 7603, 7610, 7620 **i03892411**

NOTE	PART NUMBER	QTY	PART NAME 1 2 3 4 5 6 (PRODUCT LEVEL)	SEE PAGE
	342-5788	1	SOFTWARE GP-MONITOR	

<END>

299-6957 GLOW PLUG GP

S/N: C6E1-UP

PART OF 319-7201 ENGINE AR-PRIMARY

SMCS-1412 **i02854731**

NOTE	REF NO	GRAPHIC REF	PART NUMBER	QTY	PART NAME 1 2 3 4 5 6 (PRODUCT LEVEL)	SEE PAGE
	1	1	**299-6953**	6	GLOW PLUG	

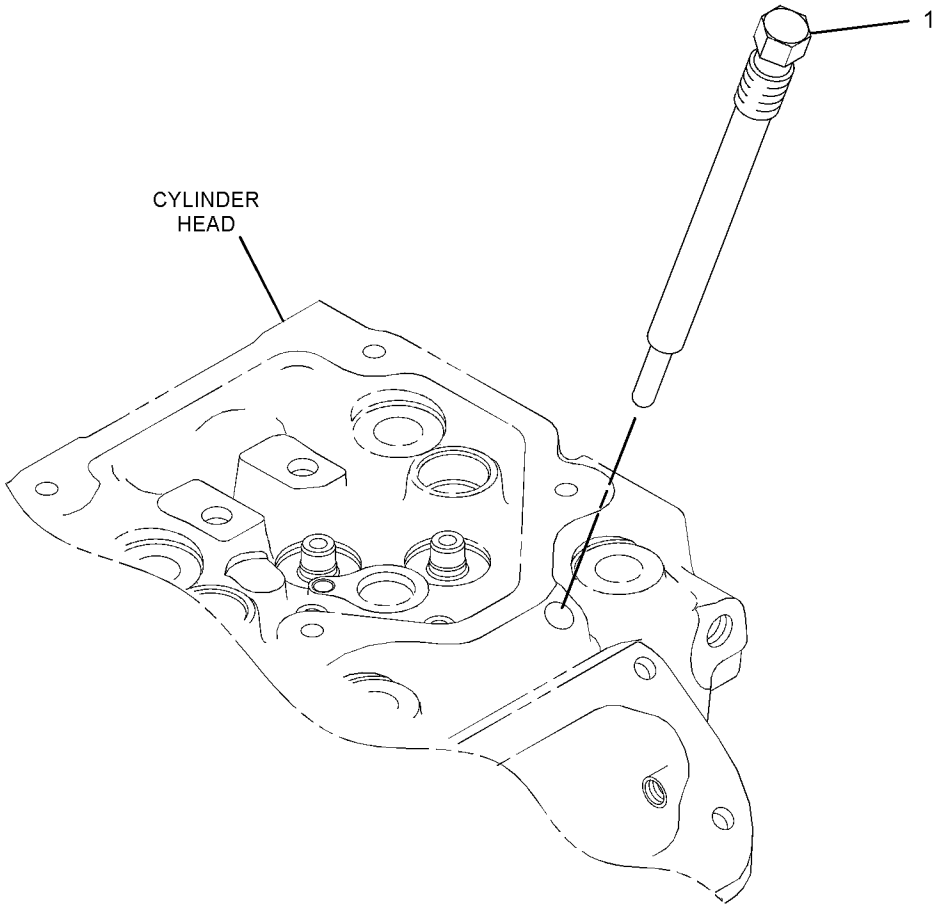

GRAPHIC #1 **<END>** g01313044

321-7767 GRADE CONTROL AR–ACCUGRADE

S/N: LJR1-UP
ENCLOSED ROPS
FOR USE WITH CAB
CANNOT BE USED WITH SEMI-UNIVERSAL BULLDOZER, FORESTRY AR
AN ATTACHMENT

SMCS-7220 **i05154312**

NOTE	PART NUMBER	QTY	PART NAME 1 2 3 4 5 6 (PRODUCT LEVEL)	SEE PAGE
Y	*319-5953*	1	GRADE CONTROL GP	166
			S/N: LJR1-859	
Y	*342-7165*	1	GRADE CONTROL GP	168
			S/N: LJR860-UP	
Y	*312-3140*	1	WIRING GP-GRADE CONTROL	234

Y - SEPARATE ILLUSTRATION

<END>

321-7768 GRADE CONTROL AR–ACCUGRADE

S/N: LJR1-UP
OPEN ROPS
FOR USE WITH CANOPY
CANNOT BE USED WITH SEMI-UNIVERSAL BULLDOZER
AN ATTACHMENT

SMCS-7220 **i04775758**

NOTE	PART NUMBER	QTY	PART NAME 1 2 3 4 5 6 (PRODUCT LEVEL)	SEE PAGE
Y	*319-5954*	1	MOUNTING GP-GRADE CONTROL	193
Y	*312-3140*	1	WIRING GP-GRADE CONTROL	234

Y - SEPARATE ILLUSTRATION

<END>

319-5953 GRADE CONTROL GP

S/N: LJR1-859
ENCLOSED ROPS
PART OF 321-7767 GRADE CONTROL AR
AN ATTACHMENT

SMCS-7220 **i03626826**

NOTE	REF NO	GRAPHIC REF	PART NUMBER	QTY	PART NAME 1 2 3 4 5 6 (PRODUCT LEVEL)	SEE PAGE
	1	1	**7K-1181**	2	STRAP-CABLE	
	2	1	**167-1192**	1	CLIP	
	3	1	**167-8712**	1	ALARM	
	4	1	**167-8713**	1	BAFFLE AS	
	5	1	**222-9151**	2	WASHER-HARD (11X32X5-MM THK)	
	6	1	**245-8334**	2	KNOB	
	7	1	**258-6385**	1	BRACKET (ANTENNA)	
	8	1	**293-8252**	1	HARNESS AS-MONITOR (GPS)	
		1	**8T-8737**	15	PLUG-SEAL	
E		1	**119-3662**		TUBE-HEAT SHRINK (10.85-MM DIA) (7-CM)	
E		1	**125-7874**		TUBE-HEAT SHRINK (5.72-MM DIA) (5-CM)	
		1	**9X-3402**	16	SOCKET-CONNECTOR (16-GA TO 18-GA)	
		1	**167-3693**	1	PLUG AS-CONNECTOR (31-PIN)	
		1	**248-5358**	1	PLUG AS-CONNECTOR (39-PIN)	
	9	1	**293-8253**	1	HARNESS AS-MONITOR (LASER)	
		1	**5P-2766**	2	TERMINAL-RING (18-GA TO 22-GA, NO. 6 SCREW)	
		1	**144-1636**	2	PIN-CONNECTOR (14-GA TO 18-GA)	
		1	**230-4011**	1	PLUG AS-CONNECTOR (2-PIN)	
		1	**264-7029**	1	SEAL-CONNECTOR	
		1	**230-4012**	1	RECEPTACLE AS-CONNECTOR (2-PIN)	
		1	**8T-8737**	70	PLUG-SEAL	
		1	**9X-3402**	34	SOCKET-CONNECTOR (16-GA TO 18-GA)	
E		1	**125-7874**		TUBE-HEAT SHRINK (5.72-MM DIA) (15-CM)	
		1	**147-1444**	1	PLUG AS-CONNECTOR (70-PIN)	
		1	**159-9322**	1	SEAL-O-RING	
		1	**155-2260**	1	KIT-CONNECTING PLUG (3-PIN)	
					(INCLUDES PLUG AS, WEDGE & INTERFACE SEAL)	
		1	**167-3693**	1	PLUG AS-CONNECTOR (31-PIN)	
	10	1	**293-8281**	1	BRACKET	
	11	1	**293-8282**	1	BRACKET AS	
	12	1	**293-8283**	1	BRACKET AS	
	13	1	**294-1983**	1	PLATE AS	
	14	1	**297-0693**	1	FILM-IDENTIFICATION (JOYSTICK) (GRADE CONTROL)	
	15	1	**4P-7581**	1	CLIP	
	16	1	**7X-7729**	5	WASHER (11X25X3-MM THK)	
M	17	1	**8T-0325**	1	BOLT (M5X0.8X14-MM)	
	18	1	**8T-0328**	1	WASHER-HARD (5.5X10X1-MM THK)	
	19	1	**8T-4121**	2	WASHER-HARD (11X21X2.5-MM THK)	
M	20	1	**8T-4136**	2	BOLT (M10X1.5X25-MM)	
M	21	1	**8T-4137**	6	BOLT (M10X1.5X20-MM)	
	22	1	**9D-8508**	3	GROMMET	

E - ORDER BY THE CENTIMETER
M - METRIC PART

319-5953 **GRADE CONTROL GP (*contd.*)** **i03626826**

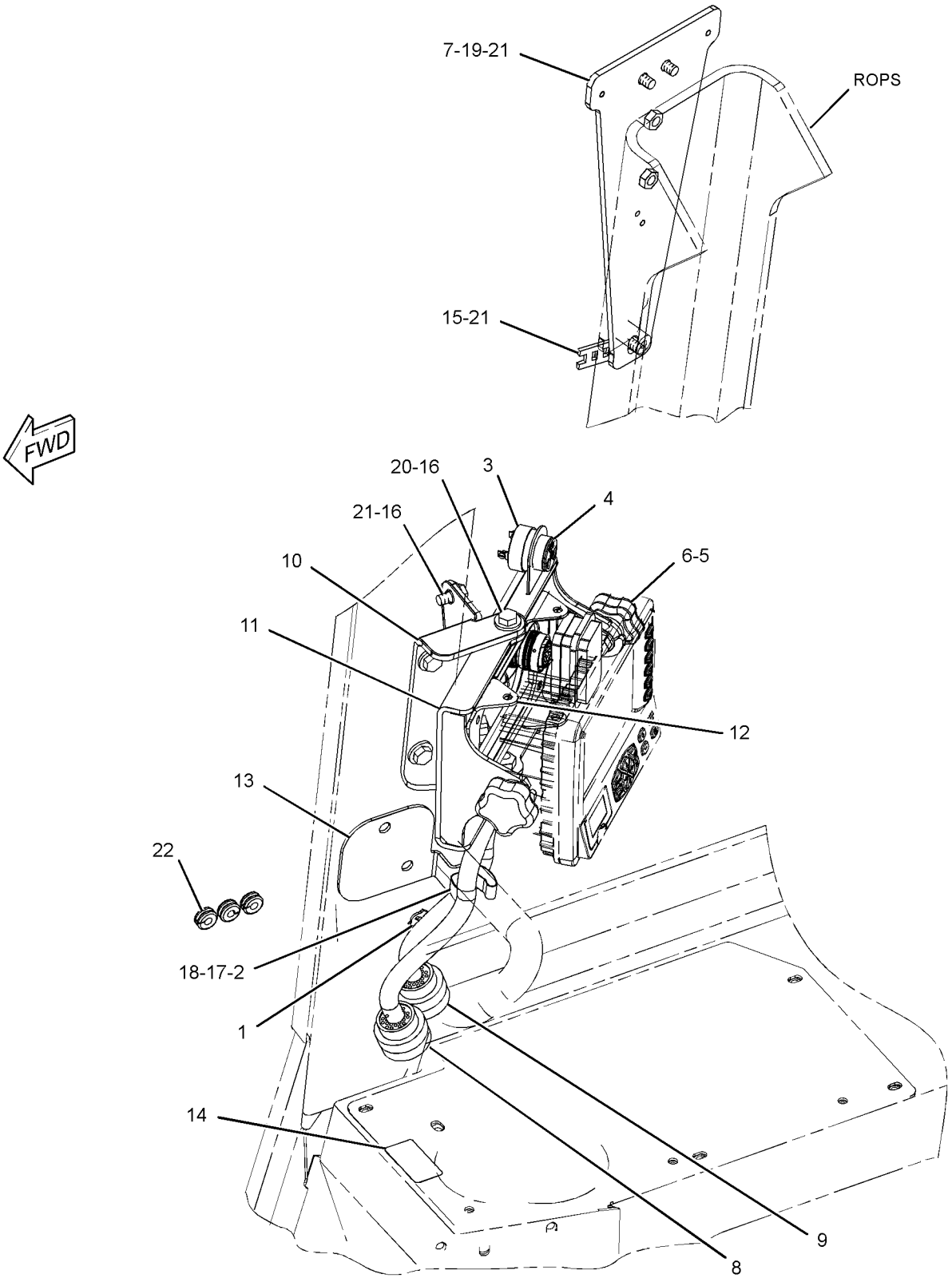

GRAPHIC #1 **<END>** g01908333

342-7165 GRADE CONTROL GP

S/N: LJR860-UP
PART OF 321-7767 GRADE CONTROL AR
AN ATTACHMENT

SMCS-7220 **i05154331**

NOTE	REF NO	GRAPHIC REF	PART NUMBER	QTY	PART NAME 1 2 3 4 5 6 (PRODUCT LEVEL)	SEE PAGE
	1	1	**167-1192**	1	CLIP	
	2	1	**253-8798**	2	KNOB	
	3	1	**258-6385**	1	BRACKET (ANTENNA)	
M		1	**6V-8224**	2	NUT-WELD (M10X1.5-THD)	
	4	1	**293-8252**	1	HARNESS AS-MONITOR	
		1	**8T-8737**	15	PLUG-SEAL	
E		1	**119-3662**		TUBE-HEAT SHRINK (10.85-MM DIA) (7-CM)	
E		1	**125-7874**		TUBE-HEAT SHRINK (5.72-MM DIA) (5-CM)	
		1	**9X-3402**	16	SOCKET-CONNECTOR (16-GA TO 18-GA)	
		1	**167-3693**	1	PLUG AS-CONNECTOR (31-PIN)	
		1	**248-5358**	1	PLUG AS-CONNECTOR (39-PIN)	
	5	1	**294-1983**	1	PLATE AS	
	6	1	**297-0693**	1	FILM-IDENTIFICATION (JOYSTICK) (BLADE CONTROL)	
	7	1	**342-7166**	1	BRACKET AS	
	8	1	**350-6195**	1	PLATE AS	
	9	1	**350-8781**	2	LATCH AS	
	10	1	**357-8930**	2	PAWL	
	11	1	**372-0777**	1	PLATE AS	
	12	1	**4P-7581**	1	CLIP	
	13	1	**7X-0578**	2	WASHER-HARD (10.2X32X2.5-MM THK)	
	14	1	**7X-7729**	3	WASHER (11X25X3-MM THK)	
M	15	1	**8T-0325**	1	BOLT (M5X0.8X14-MM)	
	16	1	**8T-0328**	1	WASHER-HARD (5.5X10X1-MM THK)	
	17	1	**8T-4121**	2	WASHER-HARD (11X21X2.5-MM THK)	
M	18	1	**8T-4137**	6	BOLT (M10X1.5X20-MM)	
D	20	1	**6V-8109**		SEAL (0.2-M)	
D	21	1	**5P-5673**		SEAL (0.2-M EACH)	

D - ORDER BY THE METER
E - ORDER BY THE CENTIMETER
M - METRIC PART

342-7165 **GRADE CONTROL GP (*contd.*)** **i05154331**

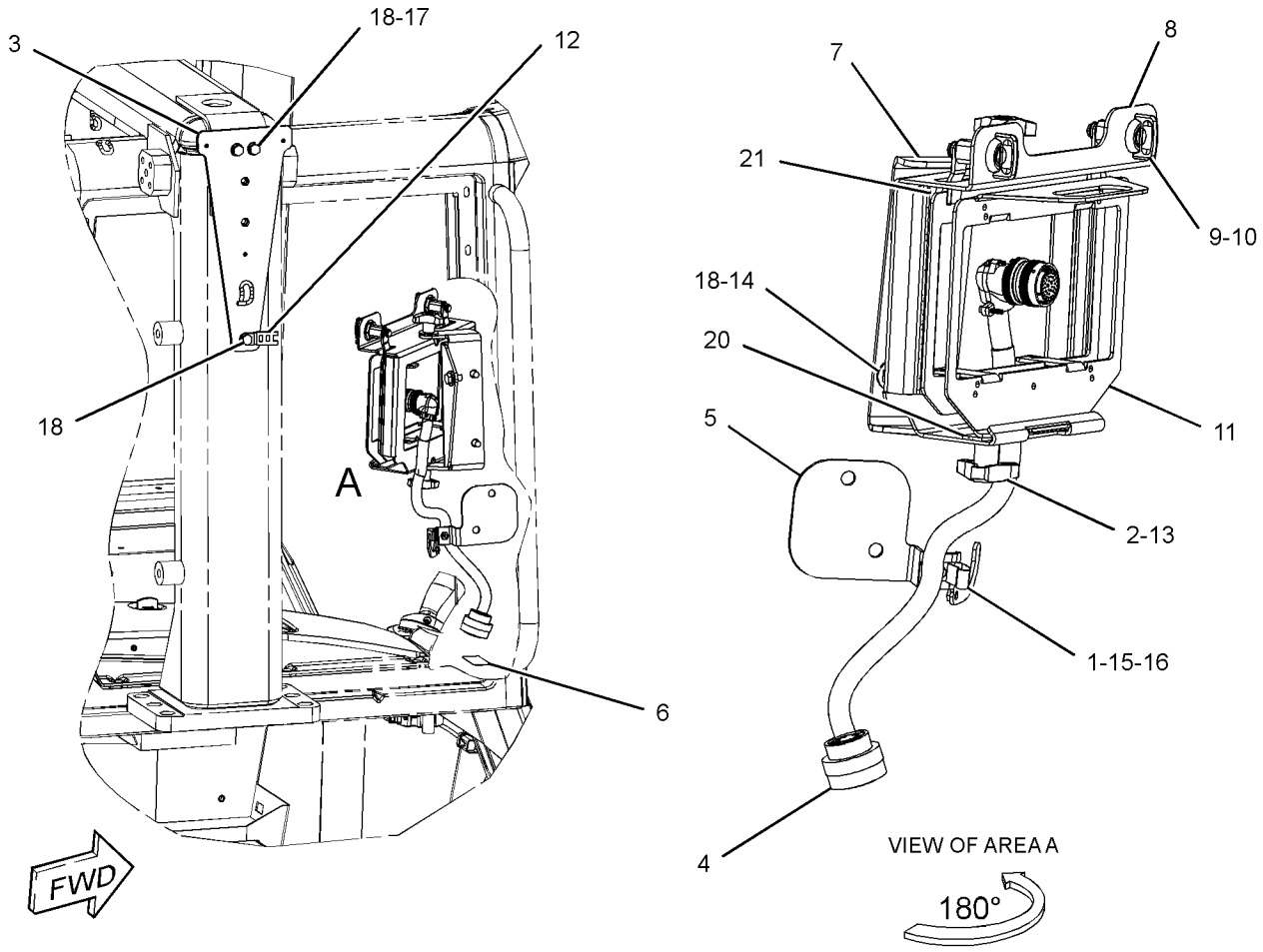

GRAPHIC #1 **<END>** g02803337

267-6437 GUARD GP-ALTERNATOR

S/N: LJR1-UP

PART OF 318-0768 INSTALLATION AR-ENGINE

SMCS-7168 **i02788614**

NOTE	REF NO	GRAPHIC REF	PART NUMBER	QTY	PART NAME 1 2 3 4 5 6 (PRODUCT LEVEL)	SEE PAGE
	1	1	**267-6438**	1	GUARD AS-ALTERNATOR	
M	2	1	**5C-7261**	1	NUT (M8X1.25-THD)	
	3	1	**8T-4224**	2	WASHER-HARD (8.8X16X2-MM THK)	
M	4	1	**8T-7547**	1	BOLT (M8X1.25X30-MM)	

M - METRIC PART

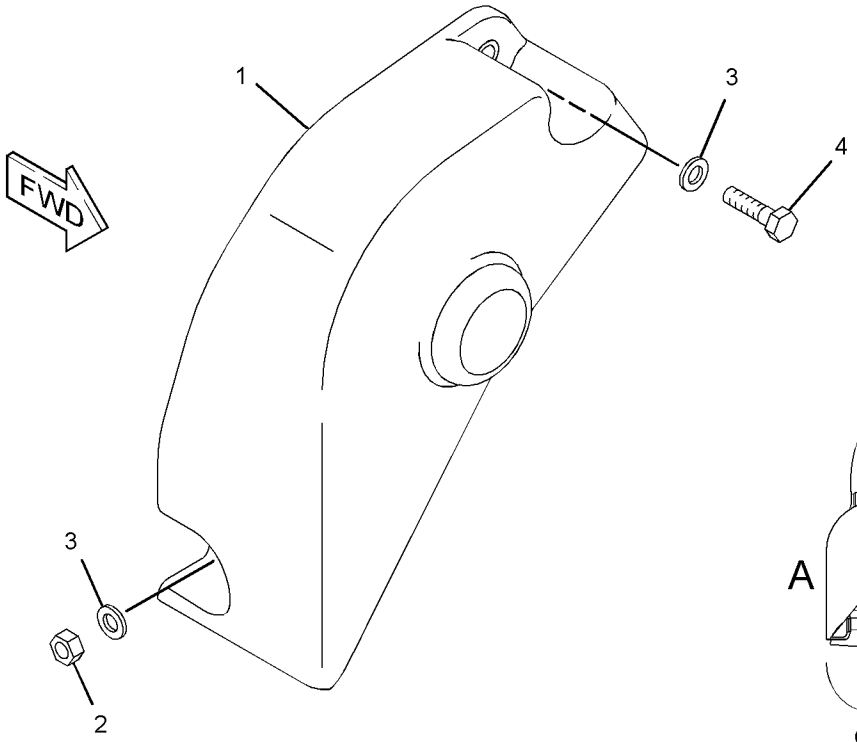

VIEW OF AREA A

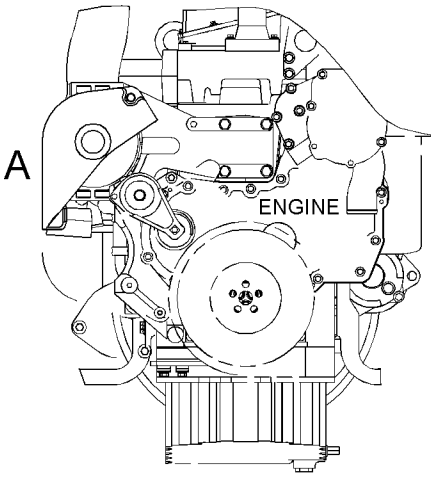

FRONT VIEW

GRAPHIC #1 **<END>** g01288465

256-3468 HEATER GP-JACKET WATER

S/N: LJR1-UP
120-VOLT, 1000-WATT
CANNOT BE USED WITH 256-3469—PAGE: 172
PART OF 338-2597 OPTION AR-COLD WEATHER
AN ATTACHMENT

SMCS-1383 **i03942551**

NOTE	REF NO	GRAPHIC REF	PART NUMBER	QTY	PART NAME 1 2 3 4 5 6 (PRODUCT LEVEL)	SEE PAGE
	1	1	**3S-2093**	9	STRAP-CABLE	
	2	1	**260-1555**	1	ELEMENT AS-JACKET WATER HEATER (120-VOLT, 1000-WATT)	
		1	**4D-9986**	1	SEAL-O-RING	
	3	1	**260-1566**	1	CORD AS-HEATER	
	4	1	**302-1266**	1	COVER-PROTECTION	
	5	1	**198-4778**	1	WASHER-HARD (13.5X30X12-MM THK)	
	6	1	**4P-8134**	1	CLIP	
M	7	1	**8T-4200**	1	BOLT (M8X1.25X16-MM)	
	8	1	**8T-4224**	1	WASHER-HARD (8.8X16X2-MM THK)	
M	9	1	**8T-7547**	1	BOLT (M8X1.25X30-MM)	

M - METRIC PART

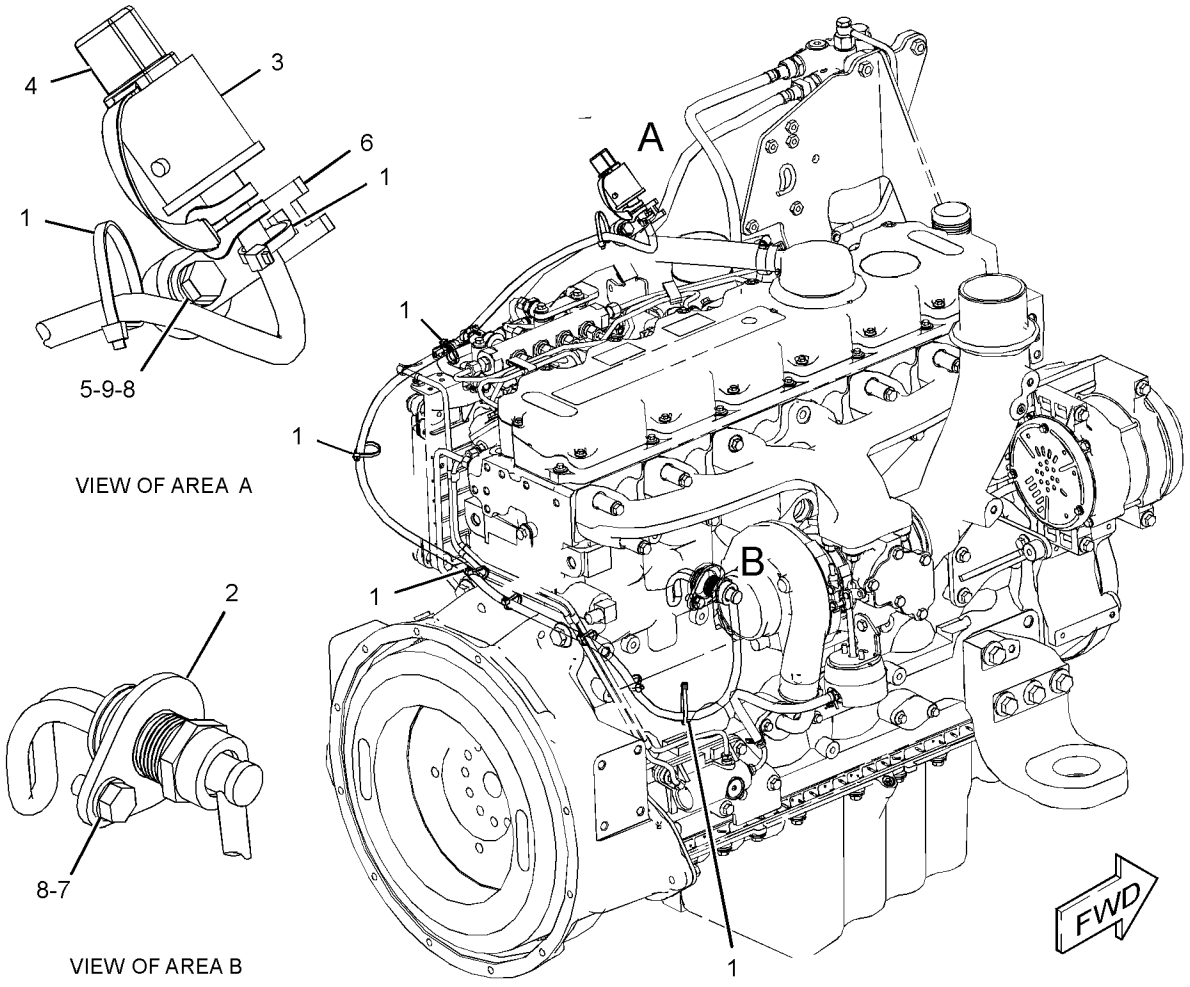

GRAPHIC #1 **<END>** g02393417

256-3469 HEATER GP-JACKET WATER

S/N: LJR1-UP
240-VOLT, 1000-WATT
CANNOT BE USED WITH 256-3468—PAGE: 171
PART OF 338-2598 OPTION AR-COLD WEATHER
AN ATTACHMENT

SMCS-1383 **i03942549**

NOTE	REF NO	GRAPHIC REF	PART NUMBER	QTY	PART NAME 1 2 3 4 5 6 (PRODUCT LEVEL)	SEE PAGE
	1	1	**3S-2093**	9	STRAP-CABLE	
	2	1	**260-1556**	1	ELEMENT AS-JACKET WATER HEATER (240-VOLT, 1000-WATT)	
		1	**4D-9986**	1	SEAL-O-RING	
	3	1	**260-1569**	1	CORD AS-HEATER	
	4	1	**302-1266**	1	COVER-PROTECTION	
M	5	1	**8T-4200**	1	BOLT (M8X1.25X16-MM)	
	6	1	**8T-4224**	2	WASHER-HARD (8.8X16X2-MM THK)	
	7	1	**4P-8134**	1	CLIP	
M	8	1	**8T-7547**	1	BOLT (M8X1.25X30-MM)	
	9	1	**198-4778**	1	WASHER-HARD (13.5X30X12-MM THK)	

M - METRIC PART

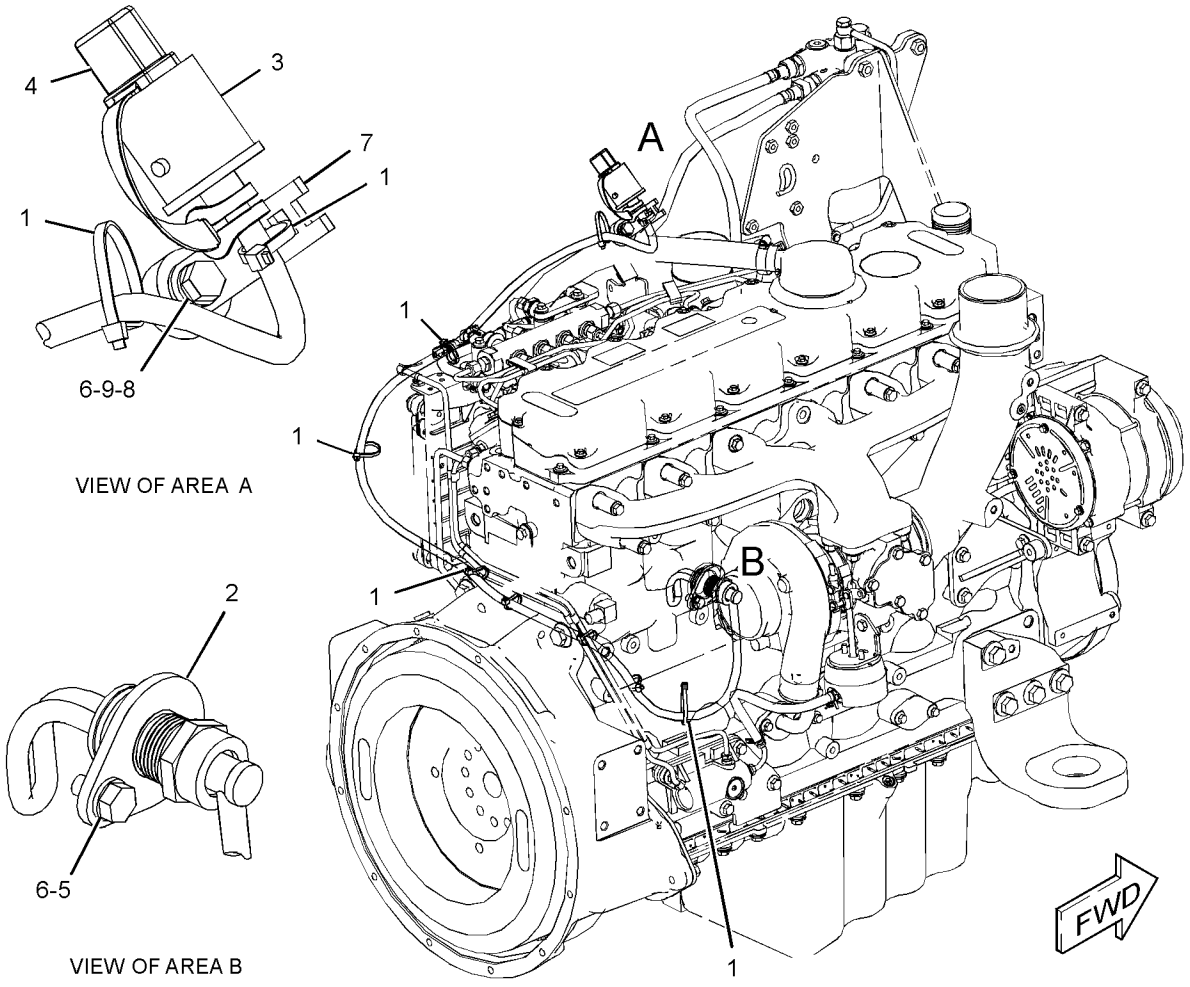

GRAPHIC #1 **<END>** g02394258

320-5953 INSTALLATION GP-COMMUNICATION–PRODUCT LINK

321SR
S/N: LJR1-UP
FOR USE WITH CAB
AN ATTACHMENT

SMCS-7606 **i03970958**

NOTE	REF NO	GRAPHIC REF	PART NUMBER	QTY	PART NAME 1 2 3 4 5 6 (PRODUCT LEVEL)	SEE PAGE
	1	1	**7K-1181**	16	STRAP-CABLE	
	2	1	**8C-5607**	8	MOUNT-ISOLATION	
	3	1	**8C-5608**	4	SPACER (6.5X9.5X25.4-MM THK)	
Y	4	1	*239-9954*	1	CONTROL GP-UNPROGRAMMED (PRODUCT LINK 300)	159
	5	1	**260-7652**	1	FILM-WARNING (PRODUCT LINK 300, U.S.)	
Y	6	1	**336-3545**	1	RADIO GP-COMMUNICATION (PRODUCT LINK 121SR)	198
	7	1	**284-8532**	1	ANTENNA AS (ROOF)	
		1	**301-0589**	1	ANTENNA (FLEXIBLE)	
	8	1	**307-0047**	1	FILM-INFORMATION (PRODUCT LINK, READ OMM)	
	9	1	**335-2106**	1	HARNESS AS-CONTROL	
		1	**8T-8737**	60	PLUG-SEAL	
		1	**9X-6772**	2	STRAP-CABLE	
E		1	**125-7874**		TUBE-HEAT SHRINK (5.72-MM DIA) (20-CM)	
		1	**9X-3402**	22	SOCKET-CONNECTOR (16-GA TO 18-GA)	
		1	**126-1774**	2	COVER-CONNECTOR	
		1	**144-1636**	8	PIN-CONNECTOR (14-GA TO 18-GA)	
		1	**155-2255**	1	KIT-CONNECTING PLUG (12-PIN)	
					(INCLUDES PLUG AS, WEDGE & INTERFACE SEAL)	
		1	**160-7690**	1	PLUG AS-CONNECTOR (70-PIN)	
		1	**159-9322**	1	SEAL-O-RING	
		1	**231-2300**	1	RECEPTACLE AS-CONNECTOR (8-PIN)	
	10	1	**339-1763**	1	PANEL AS	
		1	**5D-9629**	1	ROD	
		1	**7Y-1099**	4	LINK	
	11	1	**339-7723**	1	BRACKET	
	12	1	**132-5789**	1	CLIP	
	13	1	**6P-0699**	1	GROMMET	
	14	1	**7X-0613**	2	WASHER-HARD (8.8X25.5X5-MM THK)	
M	15	1	**8C-8451**	4	BOLT (M6X1X40-MM)	
M	16	1	**8T-4136**	3	BOLT (M10X1.5X25-MM)	
M	17	1	**8T-4181**	4	BOLT (M6X1X20-MM)	
M	18	1	**8T-4189**	2	BOLT (M8X1.25X20-MM)	
	19	1	**8T-7934**	3	WASHER-HARD (11X21X5-MM THK)	
	20	1	**9X-6165**	4	WASHER (6.5X22X2.5-MM THK)	
	21	1	**9X-8256**	4	WASHER (6.6X12X2-MM THK)	
Y	22	1	*262-2043*	1	ELECTRONICS GP-COMMUNICATION (PRODUCT LINK 300)	162

E - ORDER BY THE CENTIMETER
M - METRIC PART
Y - SEPARATE ILLUSTRATION

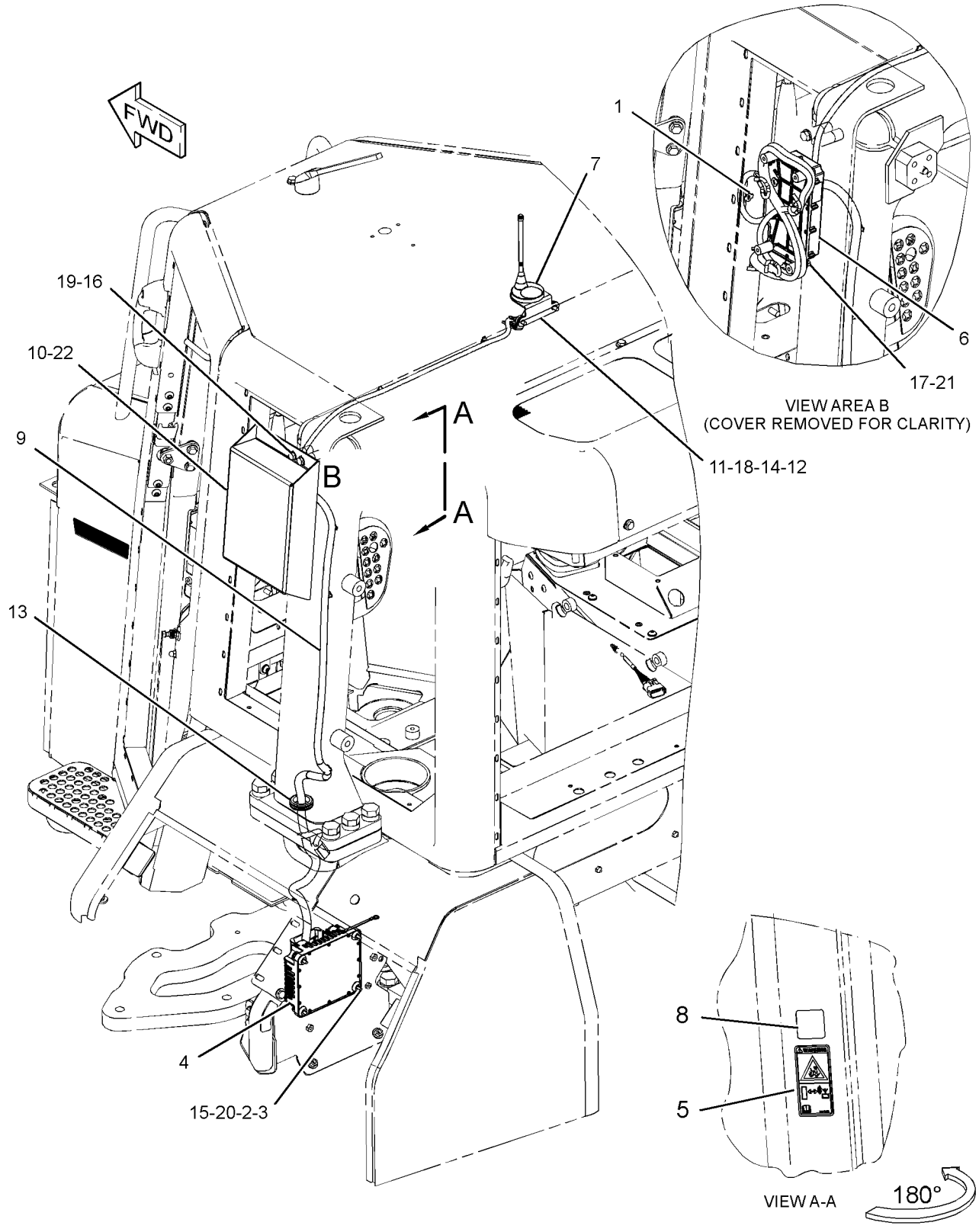

GRAPHIC #1 **<END>** g01906534

320-5955 INSTALLATION GP-COMMUNICATION–PRODUCT LINK

321SR
S/N: LJR1-UP
FOR USE WITH CANOPY
AN ATTACHMENT

SMCS-7606 **i03971164**

NOTE	REF NO	GRAPHIC REF	PART NUMBER	QTY	PART NAME 1 2 3 4 5 6 (PRODUCT LEVEL)	SEE PAGE
	1	1	**7K-1181**	15	STRAP-CABLE	
	2	1	**8C-5607**	8	MOUNT-ISOLATION	
	3	1	**8C-5608**	4	SPACER (6.5X9.5X25.4-MM THK)	
Y	4	1	*239-9954*	1	CONTROL GP-UNPROGRAMMED (PRODUCT LINK 300)	159
	5	1	**260-7652**	1	FILM-WARNING (PRODUCT LINK 300, U.S.)	
Y	6	1	**336-3545**	1	RADIO GP-COMMUNICATION (PRODUCT LINK 121SR)	198
	7	1	**284-8532**	1	ANTENNA AS (ROOF)	
		1	**301-0589**	1	ANTENNA (FLEXIBLE)	
	8	1	**307-0047**	1	FILM-INFORMATION (PRODUCT LINK, READ OMM)	
	9	1	**317-8428**	1	BRACKET	
	10	1	**335-2106**	1	HARNESS AS-CONTROL	
		1	**8T-8737**	60	PLUG-SEAL	
		1	**9X-6772**	2	STRAP-CABLE	
E		1	**125-7874**		TUBE-HEAT SHRINK (5.72-MM DIA) (20-CM)	
		1	**126-1774**	2	COVER-CONNECTOR	
		1	**9X-3402**	22	SOCKET-CONNECTOR (16-GA TO 18-GA)	
		1	**144-1636**	8	PIN-CONNECTOR (14-GA TO 18-GA)	
		1	**155-2255**	1	KIT-CONNECTING PLUG (12-PIN)	
					(INCLUDES PLUG AS, WEDGE & INTERFACE SEAL)	
		1	**160-7690**	1	PLUG AS-CONNECTOR (70-PIN)	
		1	**159-9322**	1	SEAL-O-RING	
		1	**231-2300**	1	RECEPTACLE AS-CONNECTOR (8-PIN)	
	11	1	**341-4071**	1	BOX AS	
		1	**5D-9629**	1	ROD	
		1	**7T-1099**	4	LINK	
	12	1	**4P-7581**	1	CLIP	
	13	1	**6P-0699**	1	GROMMET	
M	14	1	**8C-8451**	4	BOLT (M6X1X40-MM)	
	15	1	**8T-4121**	2	WASHER-HARD (11X21X2.5-MM THK)	
M	16	1	**8T-4136**	3	BOLT (M10X1.5X25-MM)	
M	17	1	**8T-4137**	2	BOLT (M10X1.5X20-MM)	
M	18	1	**8T-4181**	4	BOLT (M6X1X20-MM)	
	19	1	**8T-7934**	3	WASHER-HARD (11X21X5-MM THK)	
	20	1	**9X-6165**	4	WASHER (6.5X22X2.5-MM THK)	
	21	1	**9X-8256**	4	WASHER (6.6X12X2-MM THK)	
Y	22	1	*262-2043*	1	ELECTRONICS GP-COMMUNICATION (PRODUCT LINK 300)	162

E - ORDER BY THE CENTIMETER
M - METRIC PART
Y - SEPARATE ILLUSTRATION

320-5955 **INSTALLATION GP-COMMUNICATION (*contd.*)** **i03971164**

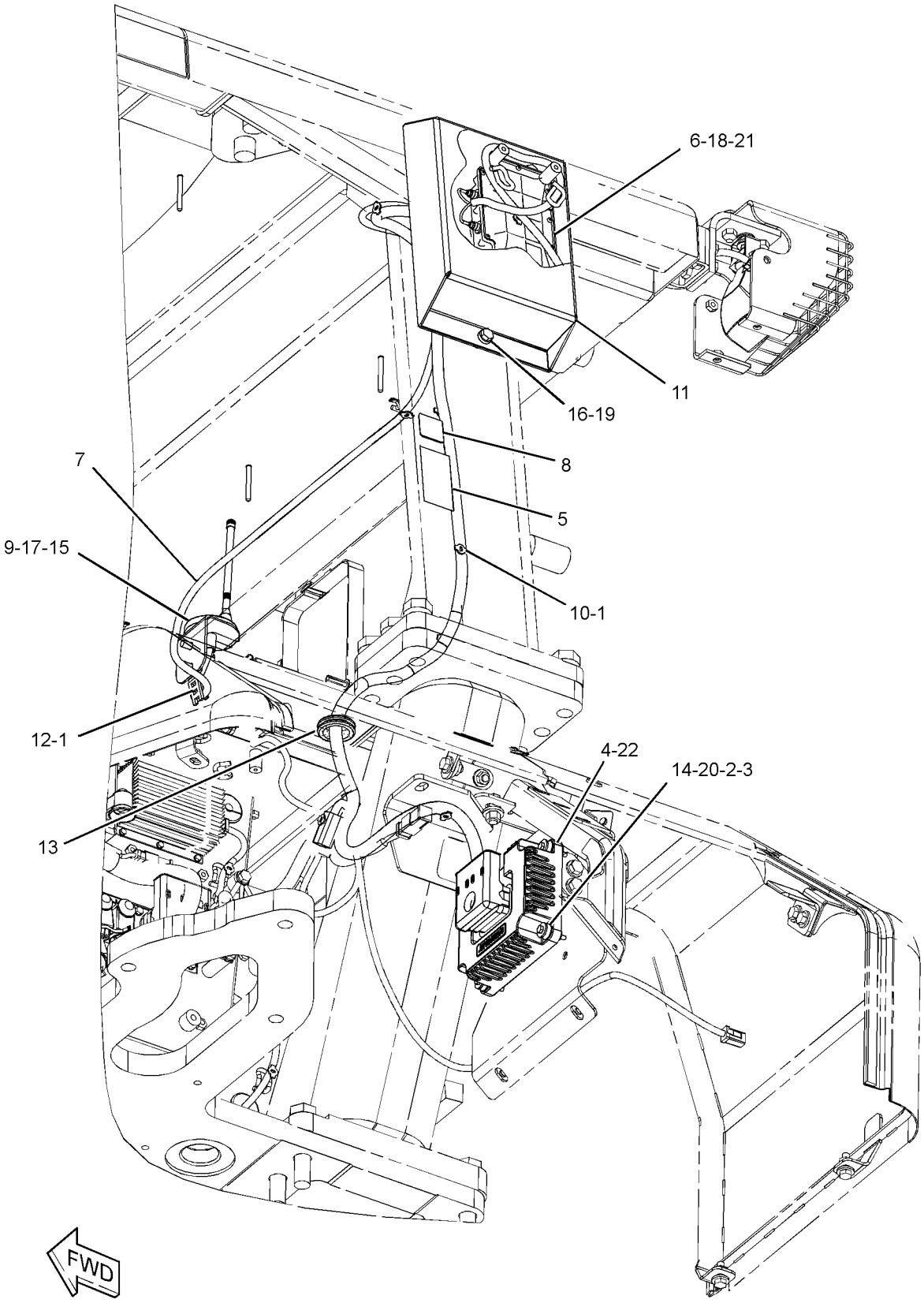

GRAPHIC #1 **<END>** g01901560

351-1715 INSTALLATION GP-COMMUNICATION–PRODUCT LINK CELLULAR

S/N: LJR1-UP
AN ATTACHMENT
TYPE 1

SMCS-7606 **i05018709**

NOTE	REF NO	GRAPHIC REF	PART NUMBER	QTY	PART NAME 1 2 3 4 5 6 (PRODUCT LEVEL)	SEE PAGE
	1	1	**3S-2093**	11	STRAP-CABLE	
	2	1	**7K-1181**	10	STRAP-CABLE	
	3	1	**8C-5607**	8	MOUNT-ISOLATION	
	4	1	**8C-5608**	4	SPACER (6.5X9.5X25.4-MM THK)	
	5	1	**307-0047**	1	FILM-INFORMATION (PRODUCT LINK, READ OMM)	
	6	1	**339-7723**	1	BRACKET	
	7	1	**346-9376**	1	ANTENNA AS	
		1	**355-1213**	1	PLUG	
		1	**361-1045**	1	NUT-SPECIAL (5/8-18-THD)	
Y	8	1	**351-8490**	1	CONTROL GP-UNPROGRAMMED (PRODUCT LINK 522)	161
	9	1	**352-9678**	1	HARNESS AS-CONTROL	
		1	**102-8801**	1	KIT-RECEPTACLE (12-PIN)	
					(INCLUDES RECEPTACLE AS & WEDGE)	
		1	**8T-8737**	72	PLUG-SEAL	
		1	**9X-6772**	2	STRAP-CABLE	
E		1	**125-7874**		TUBE-HEAT SHRINK (5.72-MM DIA) (20-CM)	
		1	**9X-3402**	22	SOCKET-CONNECTOR (16-GA TO 18-GA)	
					–OR–	
		1	**126-1768**	22	SOCKET-CONNECTOR (14-GA TO 16-GA)	
		1	**126-1774**	1	COVER-CONNECTOR	
		1	**9X-3401**	8	PIN-CONNECTOR (16-GA TO 18-GA)	
					–OR–	
		1	**126-1767**	8	PIN-CONNECTOR (14-GA TO 16-GA)	
		1	**155-2255**	1	KIT-CONNECTING PLUG (12-PIN)	
					(INCLUDES PLUG AS, WEDGE & INTERFACE SEAL)	
		1	**160-7690**	1	PLUG AS-CONNECTOR (70-PIN)	
		1	**159-9322**	1	SEAL-O-RING	
		1	**231-2300**	1	RECEPTACLE AS-CONNECTOR (8-PIN)	
	10	1	**365-6510**	1	CABLE AS-ANTENNA	
	11	1	**132-5789**	1	CLIP	
	12	1	**156-6175**	1	CLIP	
	13	1	**6P-0699**	1	GROMMET	
	14	1	**7X-0613**	2	WASHER-HARD (8.8X25.5X5-MM THK)	
M	15	1	**8C-8451**	4	BOLT (M6X1X40-MM)	
M	16	1	**8T-4138**	1	BOLT (M6X1X20-MM)	
M	17	1	**8T-4189**	2	BOLT (M8X1.25X20-MM)	
	18	1	**8T-4205**	1	WASHER-HARD (7.2X14.5X2-MM THK)	
	19	1	**9X-6165**	4	WASHER (6.5X22X2.5-MM THK)	
	20	1	**9X-8256**	1	WASHER (6.6X12X2-MM THK)	
Y	21	1	*262-2043*	1	ELECTRONICS GP-COMMUNICATION (PRODUCT LINK 300)	162

E - ORDER BY THE CENTIMETER
M - METRIC PART
Y - SEPARATE ILLUSTRATION

351-1715 **INSTALLATION GP-COMMUNICATION (*contd.*)** **i05018709**

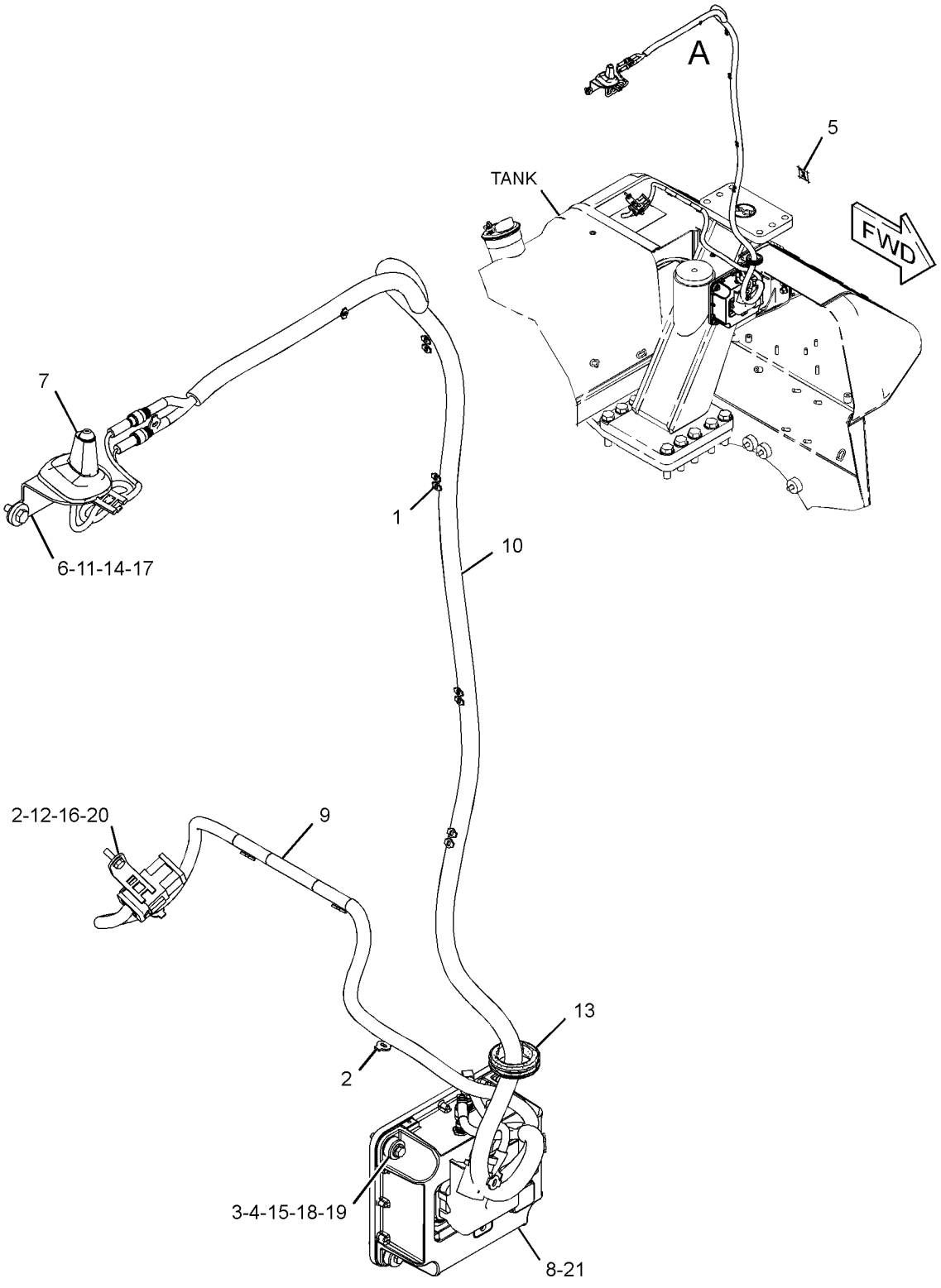

VIEW OF AREA A

GRAPHIC #1 **<END>** g02801516

351-1715 INSTALLATION GP-COMMUNICATION–PRODUCT LINK CELLULAR

S/N: LJR1-UP
AN ATTACHMENT
TYPE 2

SMCS-7606 **i05220997**

NOTE	REF NO	GRAPHIC REF	PART NUMBER	QTY	PART NAME 1 2 3 4 5 6 (PRODUCT LEVEL)	SEE PAGE
	1	1	**3S-2093**	11	STRAP-CABLE	
	2	1	**7K-1181**	10	STRAP-CABLE	
	3	1	**8C-5607**	8	MOUNT-ISOLATION	
	4	1	**8C-5608**	4	SPACER (6.5X9.5X25.4-MM THK)	
	5	1	**307-0047**	1	FILM-INFORMATION (PRODUCT LINK, READ OMM)	
	6	1	**339-7723**	1	BRACKET	
	7	1	**346-9376**	1	ANTENNA AS	
		1	**355-1213**	1	PLUG	
		1	**361-1045**	1	NUT-SPECIAL (5/8-18-THD)	
Y	8	1	**351-8490**	1	CONTROL GP-UNPROGRAMMED (PRODUCT LINK 522)	161
	9	1	**352-9678**	1	HARNESS AS-CONTROL	
		1	**102-8801**	1	KIT-RECEPTACLE (12-PIN)	
					(INCLUDES RECEPTACLE AS & WEDGE)	
		1	**8T-8737**	72	PLUG-SEAL	
		1	**9X-6772**	2	STRAP-CABLE	
E		1	**125-7874**		TUBE-HEAT SHRINK (5.72-MM DIA) (20-CM)	
		1	**9X-3402**	22	SOCKET-CONNECTOR (16-GA TO 18-GA)	
					–OR–	
		1	**126-1768**	22	SOCKET-CONNECTOR (14-GA TO 16-GA)	
		1	**126-1774**	1	COVER-CONNECTOR	
		1	**9X-3401**	8	PIN-CONNECTOR (16-GA TO 18-GA)	
					–OR–	
		1	**126-1767**	8	PIN-CONNECTOR (14-GA TO 16-GA)	
		1	**155-2255**	1	KIT-CONNECTING PLUG (12-PIN)	
					(INCLUDES PLUG AS, WEDGE & INTERFACE SEAL)	
		1	**160-7690**	1	PLUG AS-CONNECTOR (70-PIN)	
		1	**159-9322**	1	SEAL-O-RING	
		1	**231-2300**	1	RECEPTACLE AS-CONNECTOR (8-PIN)	
	10	1	**365-6510**	1	CABLE AS-ANTENNA	
	11	1	**132-5789**	1	CLIP	
	12	1	**156-6175**	1	CLIP	
	13	1	**6P-0699**	1	GROMMET	
	14	1	**7X-0613**	2	WASHER-HARD (8.8X25.5X5-MM THK)	
M	15	1	**8C-8451**	4	BOLT (M6X1X40-MM)	
M	16	1	**8T-4138**	1	BOLT (M6X1X20-MM)	
M	17	1	**8T-4189**	2	BOLT (M8X1.25X20-MM)	
	18	1	**8T-4205**	1	WASHER-HARD (7.2X14.5X2-MM THK)	
	19	1	**9X-6165**	4	WASHER (6.5X22X2.5-MM THK)	
	20	1	**9X-8256**	1	WASHER (6.6X12X2-MM THK)	
CY	21	1	*354-0746*	1	ELECTRONICS GP-MONITOR (PRODUCT LINK)	163

C - CHANGE FROM PREVIOUS TYPE
E - ORDER BY THE CENTIMETER
M - METRIC PART
Y - SEPARATE ILLUSTRATION

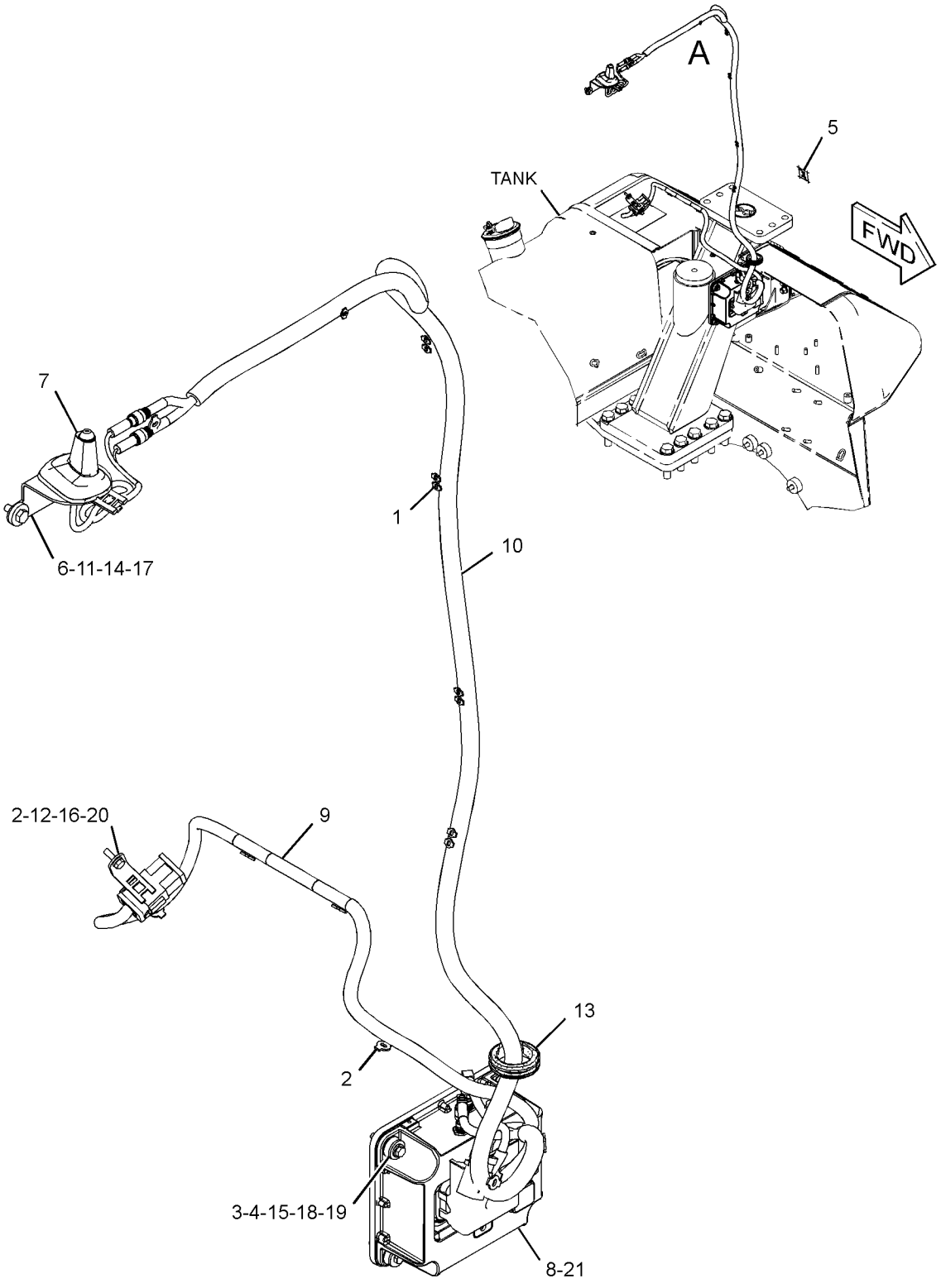

VIEW OF AREA A

GRAPHIC #1 **<END>** g02801516

362-6150 INSTALLATION GP-COMMUNICATION–PRODUCT LINK

S/N: LJR1-UP
FOR USE WITH CAB
PART OF 431-7088 FORESTRY AR
AN ATTACHMENT

SMCS-7606 **i05268315**

NOTE	REF NO	GRAPHIC REF	PART NUMBER	QTY	PART NAME 1 2 3 4 5 6 (PRODUCT LEVEL)	SEE PAGE
	1	1	**7K-1181**	18	STRAP-CABLE	
	2	1	**8C-5607**	8	MOUNT-ISOLATION	
	3	1	**8C-5608**	4	SPACER (6.5X9.5X25.4-MM THK)	
Y	4	1	**239-9954**	1	CONTROL GP-UNPROGRAMMED (PRODUCT LINK 300)	159
	5	1	**260-7652**	1	FILM-WARNING (PRODUCT LINK 300, U.S.)	
	6	1	**284-8532**	1	ANTENNA AS (ROOF)	
		1	**301-0589**	1	ANTENNA (FLEXIBLE)	
		1	**355-0598**	1	NUT-SPECIAL	
	7	1	**307-0047**	1	FILM-INFORMATION (PRODUCT LINK, READ OMM)	
	8	1	**335-2106**	1	HARNESS AS-CONTROL	
		1	**8T-8737**	60	PLUG-SEAL	
		1	**7K-1181**	2	STRAP-CABLE	
E		1	**125-7874**		TUBE-HEAT SHRINK (5.72-MM DIA) (20-CM)	
		1	**9X-3402**	22	SOCKET-CONNECTOR (16-GA TO 18-GA)	
					–OR–	
		1	**126-1768**	22	SOCKET-CONNECTOR (14-GA TO 16-GA)	
		1	**126-1774**	2	COVER-CONNECTOR	
		1	**9X-3401**	8	PIN-CONNECTOR (16-GA TO 18-GA)	
					–OR–	
		1	**126-1767**	8	PIN-CONNECTOR (14-GA TO 16-GA)	
		1	**155-2255**	1	KIT-CONNECTING PLUG (12-PIN)	
					(INCLUDES PLUG AS, WEDGE, & INTERFACE SEAL)	
		1	**160-7690**	1	PLUG AS-CONNECTOR (70-PIN)	
		1	**159-9322**	1	SEAL-O-RING	
		1	**231-2300**	1	RECEPTACLE AS-CONNECTOR (8-PIN)	
Y	9	1	**336-3545**	1	RADIO GP-COMMUNICATION (PRODUCT LINK 121SR)	198
	10	1	**339-7723**	1	BRACKET	
	11	1	**362-6149**	1	PANEL AS	
	12	1	**132-5789**	1	CLIP	
	13	1	**6P-0699**	1	GROMMET	
	14	1	**7X-0613**	2	WASHER-HARD (8.8X25.5X5-MM THK)	
M	15	1	**8C-8451**	4	BOLT (M6X1X40-MM)	
M	16	1	**8T-4136**	3	BOLT (M10X1.5X25-MM)	
M	17	1	**8T-4181**	4	BOLT (M6X1X20-MM)	
M	18	1	**8T-4189**	2	BOLT (M8X1.25X20-MM)	
	19	1	**8T-7934**	3	WASHER-HARD (11X21X5-MM THK)	
	20	1	**9X-6165**	4	WASHER (6.5X22X2.5-MM THK)	
	21	1	**9X-8256**	4	WASHER (6.6X12X2-MM THK)	
Y	22	1	*262-2043*	1	ELECTRONICS GP-COMMUNICATION (PRODUCT LINK 300)	162

E - ORDER BY THE CENTIMETER
M - METRIC PART
Y - SEPARATE ILLUSTRATION

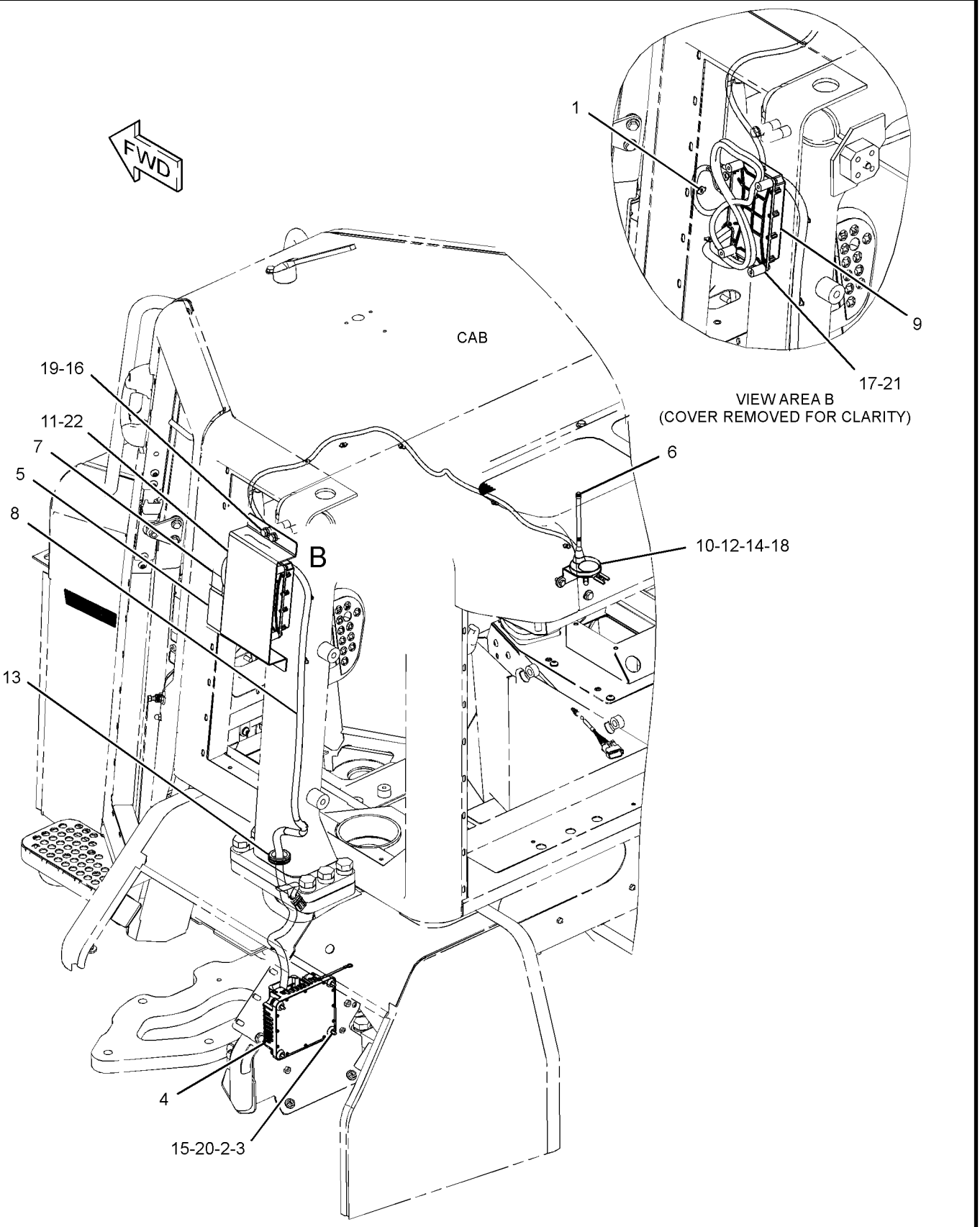

GRAPHIC #1 **<END>** g03360505

219-6487 LAMP GP-FLOOD

S/N: LJR1-UP
24-VOLT, 70-WATT
PART OF 243-4799, 301-7805, 350-7630 LIGHTING GP-FLOOD
ALSO AN ATTACHMENT

SMCS-1434 **i04461956**

NOTE	REF NO	GRAPHIC REF	PART NUMBER	QTY	PART NAME 1 2 3 4 5 6 (PRODUCT LEVEL)	SEE PAGE
	1	1	**351-9918**	1	LAMP-HALOGEN (24-VOLT, 70-WATT)	
M	2	1	**8T-6912**	1	BOLT (M8X1.25X50-MM)	
M	3	1	**6V-9189**	1	LOCKNUT (M8X1.25-THD)	
	4	1	**8T-4224**	2	WASHER-HARD (8.8X16X2-MM THK)	
	5	1	**9X-4244**	2	SCREW-SPECIAL (M4X1.79X25-MM)	
	6	1	**202-6614**	1	LENS AS (FLOODLIGHT)	
	7	1	**175-4292**	1	BODY AS	
	8	1	**164-7556**	1	BRACKET (LAMP RETAINING)	
	9	1	**175-4291**	1	BRACKET AS	

M - METRIC PART

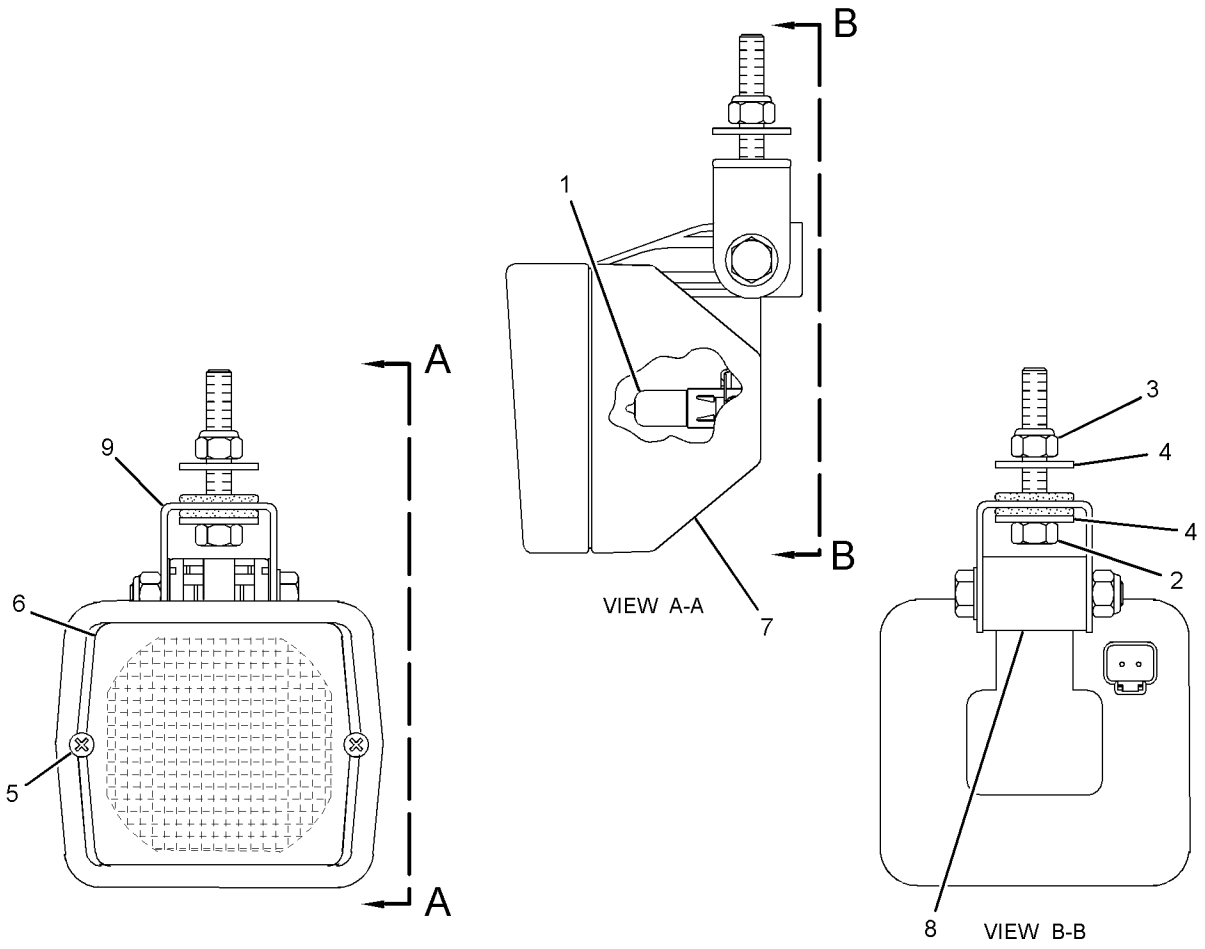

GRAPHIC #1 **<END>** g01453913

219-6488 LAMP GP-FLOOD—CAB ROOF, FRONT

S/N: LJR1-UP
24-VOLT
PART OF 243-4799, 301-7805, 350-7630 LIGHTING GP-FLOOD
ALSO AN ATTACHMENT

SMCS-1434 **i04321906**

NOTE	REF NO	GRAPHIC REF	PART NUMBER	QTY	PART NAME 1 2 3 4 5 6 (PRODUCT LEVEL)	SEE PAGE
	1	1	**351-9918**	1	LAMP-HALOGEN (24-VOLT, 70-WATT)	
M	2	1	**8T-6912**	1	BOLT (M8X1.25X50-MM)	
M	3	1	**6V-9189**	1	LOCKNUT (M8X1.25-THD)	
	4	1	**8T-4224**	2	WASHER-HARD (8.8X16X2-MM THK)	
	5	1	**9X-4244**	2	SCREW-SPECIAL (M4X1.79X25-MM)	
	6	1	**202-6611**	1	LENS AS (FLOODLIGHT)	
	7	1	**175-4292**	1	BODY AS	
	8	1	**164-7556**	1	BRACKET (LAMP RETAINING)	
	9	1	**175-4291**	1	BRACKET AS	

M - METRIC PART

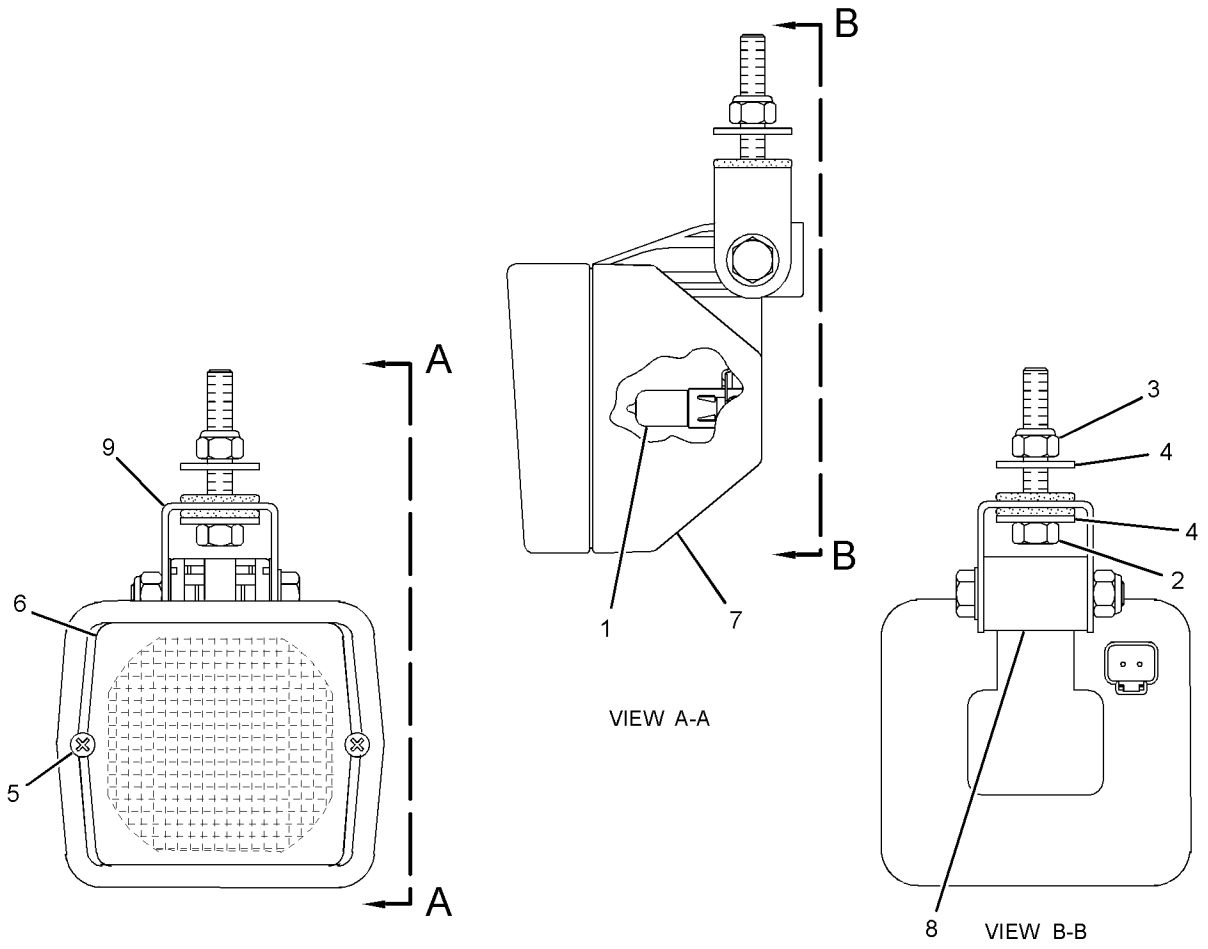

GRAPHIC #1 **<END>** g01454045

225-5075 LAMP GP-FLOOD

S/N: LJR1-UP
24-VOLT
PART OF 310-1547 BATTERY & WIRING GP

SMCS-1434 **i04321973**

NOTE	REF NO	GRAPHIC REF	PART NUMBER	QTY	PART NAME 1 2 3 4 5 6 (PRODUCT LEVEL)	SEE PAGE
	1	1	**351-9918**	1	LAMP-HALOGEN (24-VOLT, 70-WATT)	
M	2	1	**8T-6912**	1	BOLT (M8X1.25X50-MM)	
M	3	1	**5C-7261**	1	NUT (M8X1.25-THD)	
	4	1	**8T-4224**	2	WASHER-HARD (8.8X16X2-MM THK)	
	5	1	**9X-4244**	2	SCREW-SPECIAL (M4X1.79X25-MM)	
	6	1	**202-6611**	1	LENS AS	
	7	1	**175-4292**	1	BODY AS	
	8	1	**164-7556**	1	BRACKET (LAMP RETAINING)	
	9	1	**175-4291**	1	BRACKET AS	
	10	1	**102-8802**	1	KIT-RECEPTACLE (2-PIN)	
					(INCLUDES RECEPTACLE AS & WEDGE)	
	11	1	**8T-8729**	2	PIN-CONNECTOR (16-GA TO 18-GA)	

M - METRIC PART

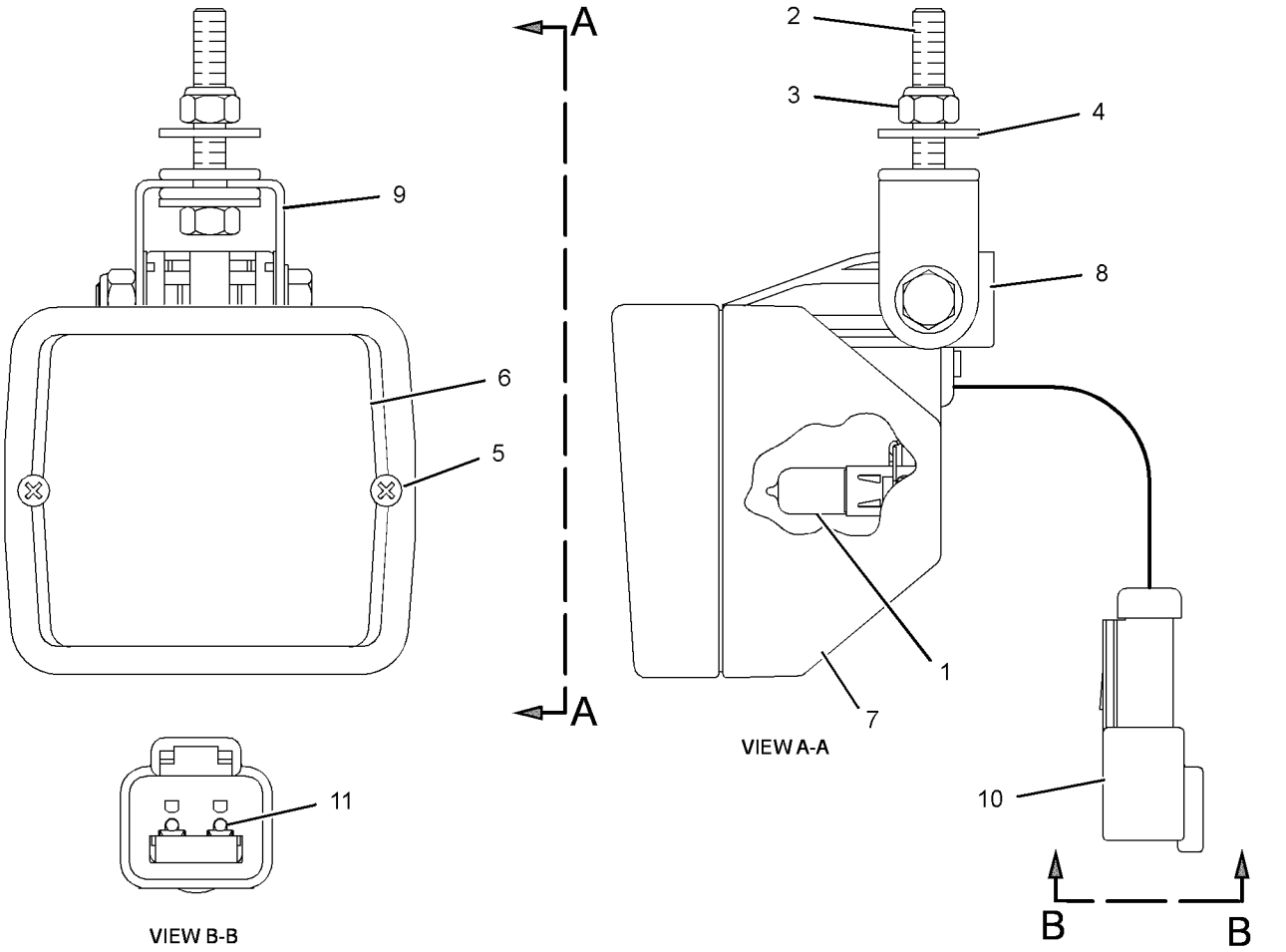

GRAPHIC #1 **<END>** g02478800

302-4254 LAMP GP-WARNING BEACON

S/N: LJR1-UP
24-VOLT, 70-WATT
PART OF 301-7806 LIGHTING GP-WARNING BEACON
AN ATTACHMENT

SMCS-1431 **i04432692**

NOTE	REF NO	GRAPHIC REF	PART NUMBER	QTY	PART NAME 1 2 3 4 5 6 (PRODUCT LEVEL)	SEE PAGE
	1	1	**9X-8121**	1	LENS (AMBER, WARNING BEACON)	
	2	1	**9X-7849**	1	LAMP (24-VOLT, 70-WATT)	
	3	1	**9X-8139**	1	BELT-DRIVE	
	4	1	**102-8802**	1	KIT-RECEPTACLE (2-PIN)	
					(INCLUDES RECEPTACLE AS & WEDGE)	
	5	1	**8T-8729**	2	PIN-CONNECTOR (16-GA TO 18-GA)	

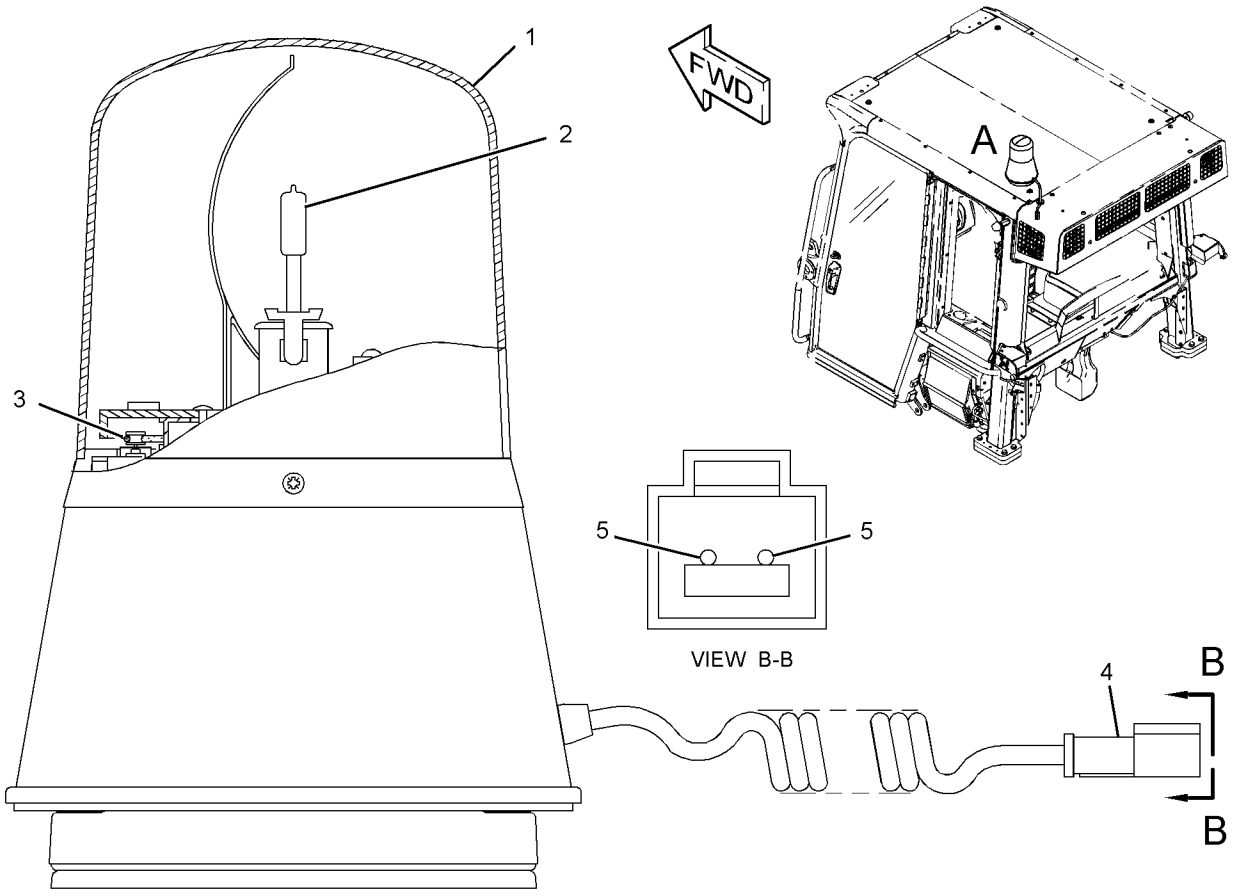

SECTION VIEW OF AREA A

GRAPHIC #1 **<END>** g01345196

243-4799 LIGHTING GP-FLOOD—OPEN ROPS

S/N: LJR1-UP
PART OF 320-1082 CANOPY AR
AN ATTACHMENT
TYPE 1

SMCS-1434 **i02942068**

NOTE	REF NO	GRAPHIC REF	PART NUMBER	QTY	PART NAME 1 2 3 4 5 6 (PRODUCT LEVEL)	SEE PAGE
	1	1	**7K-1181**	4	STRAP-CABLE	
	2	1	**197-6587**	4	BRACKET AS	
Y	3	1	**219-6487**	2	LAMP GP-FLOOD (24-VOLT, 70-WATT) (ROPS, REAR)	183
Y	4	1	**219-6488**	2	LAMP GP-FLOOD (24-VOLT) (ROPS, FRONT)	184
	5	1	**266-8983**	4	GUARD AS	
	6	1	**198-4777**	8	WASHER-HARD (11X25X10-MM THK)	
	7	1	**4P-7581**	4	CLIP	
	8	1	**5P-4116**	4	WASHER-HARD (8.8X20.5X2-MM THK)	
	9	1	**8T-4121**	10	WASHER-HARD (11X21X2.5-MM THK)	
M	10	1	**8T-4186**	8	BOLT (M10X1.5X40-MM)	
M	11	1	**8T-4195**	4	BOLT (M10X1.5X30-MM)	
M	12	1	**8T-4196**	6	BOLT (M10X1.5X35-MM)	

M - METRIC PART
Y - SEPARATE ILLUSTRATION

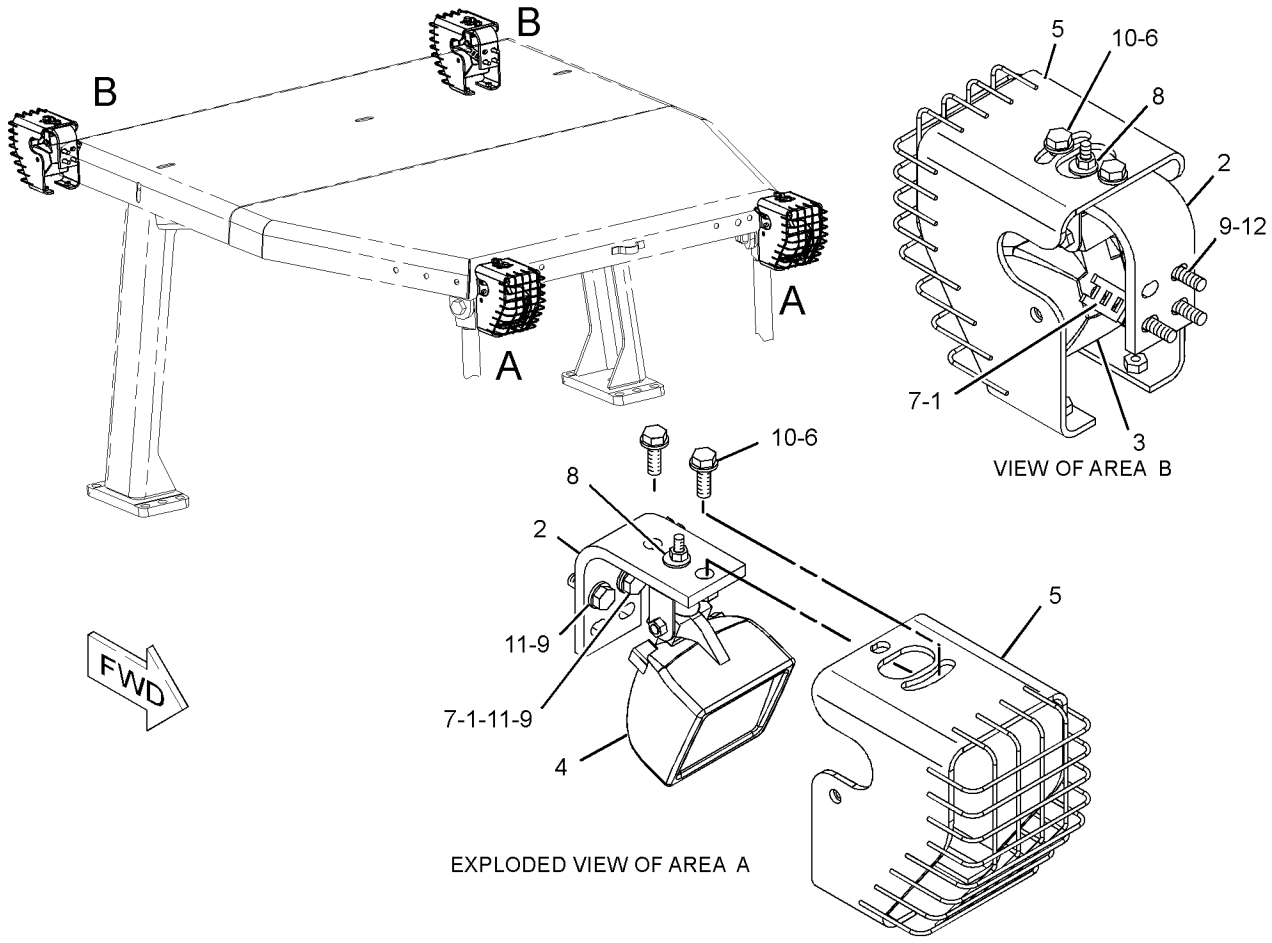

GRAPHIC #1 **<END>** g01398794

243-4799 LIGHTING GP-FLOOD—OPEN ROPS

S/N: LJR1-UP
PART OF 320-1082 CANOPY AR
AN ATTACHMENT
TYPE 2

SMCS-1434 **i05088779**

NOTE	REF NO	GRAPHIC REF	PART NUMBER	QTY	PART NAME 1 2 3 4 5 6 (PRODUCT LEVEL)	SEE PAGE
	1	1	**7K-1181**	4	STRAP-CABLE	
	2	1	**197-6587**	4	BRACKET AS	
Y	3	1	**219-6487**	2	LAMP GP-FLOOD (24-VOLT, 70-WATT)	183
Y	4	1	**219-6488**	2	LAMP GP-FLOOD (24-VOLT)	184
C	5	1	**361-7474**	4	GUARD AS-LIGHTING	
C	6	1	**7X-7729**	4	WASHER (11X25X3-MM THK)	
CM	7	1	**8T-4196**	4	BOLT (M10X1.5X35-MM)	
	8	1	**5P-4116**	4	WASHER-HARD (8.8X20.5X2-MM THK)	
C	9	1	**8T-4121**	8	WASHER-HARD (11X21X2.5-MM THK)	
CM	10	1	**8T-4195**	8	BOLT (M10X1.5X30-MM)	

C - CHANGE FROM PREVIOUS TYPE
M - METRIC PART
Y - SEPARATE ILLUSTRATION

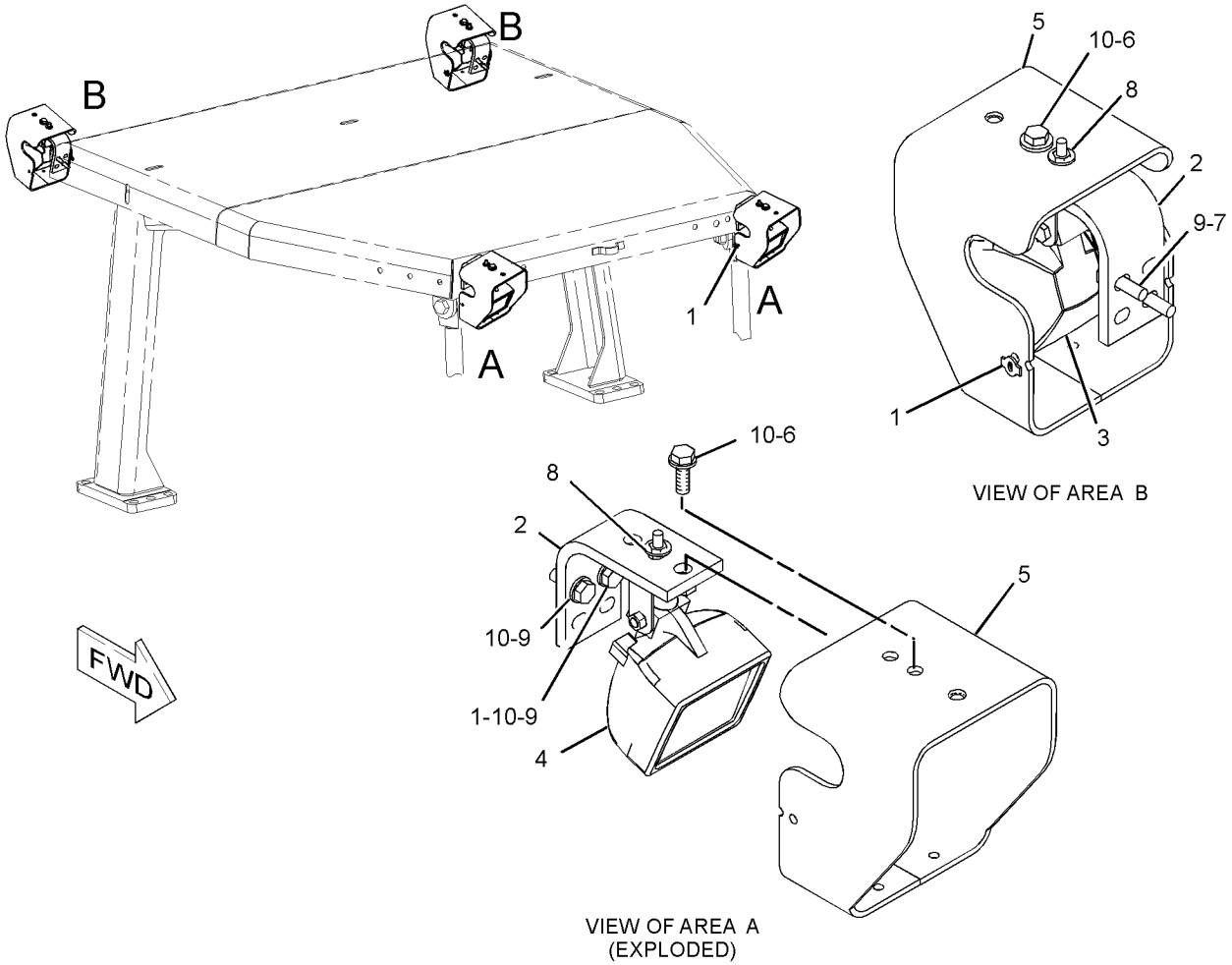

GRAPHIC #1 **<END>** g03326274

301-7805 LIGHTING GP-FLOOD—ENCLOSED ROPS

S/N: LJR1-UP
CANNOT BE USED WITH CANOPY
PART OF 310-9971 CAB AR
TYPE 1

SMCS-1434 **i03508926**

NOTE	REF NO	GRAPHIC REF	PART NUMBER	QTY	PART NAME 1 2 3 4 5 6 (PRODUCT LEVEL)	SEE PAGE
	1	1	**7K-1181**	6	STRAP-CABLE	
Y	2	1	**219-6487**	2	LAMP GP-FLOOD (24-VOLT, 70-WATT) (ROPS, REAR)	183
Y	3	1	**219-6488**	2	LAMP GP-FLOOD (24-VOLT) (ROPS, FRONT)	184
	4	1	**266-8904**	1	SCREEN AS (LH)	
	5	1	**266-8905**	1	SCREEN AS (RH)	
	6	1	**266-8983**	4	GUARD AS	
	7	1	**301-7809**	2	BRACKET AS	
	8	1	**301-7810**	2	BRACKET AS	
	9	1	**198-4777**	8	WASHER-HARD (11X25X10-MM THK)	
	10	1	**198-4778**	16	WASHER-HARD (13.5X30X12-MM THK)	
	11	1	**4P-7428**	6	CLIP	
	12	1	**5P-4116**	4	WASHER-HARD (8.8X20.5X2-MM THK)	
M	13	1	**8T-4183**	16	BOLT (M12X1.75X40-MM)	
M	14	1	**8T-4186**	8	BOLT (M10X1.5X40-MM)	
	15	1	**8T-4224**	6	WASHER-HARD (8.8X16X2-MM THK)	
M	16	1	**8T-4908**	6	BOLT (M8X1.25X25-MM)	

M - METRIC PART
Y - SEPARATE ILLUSTRATION

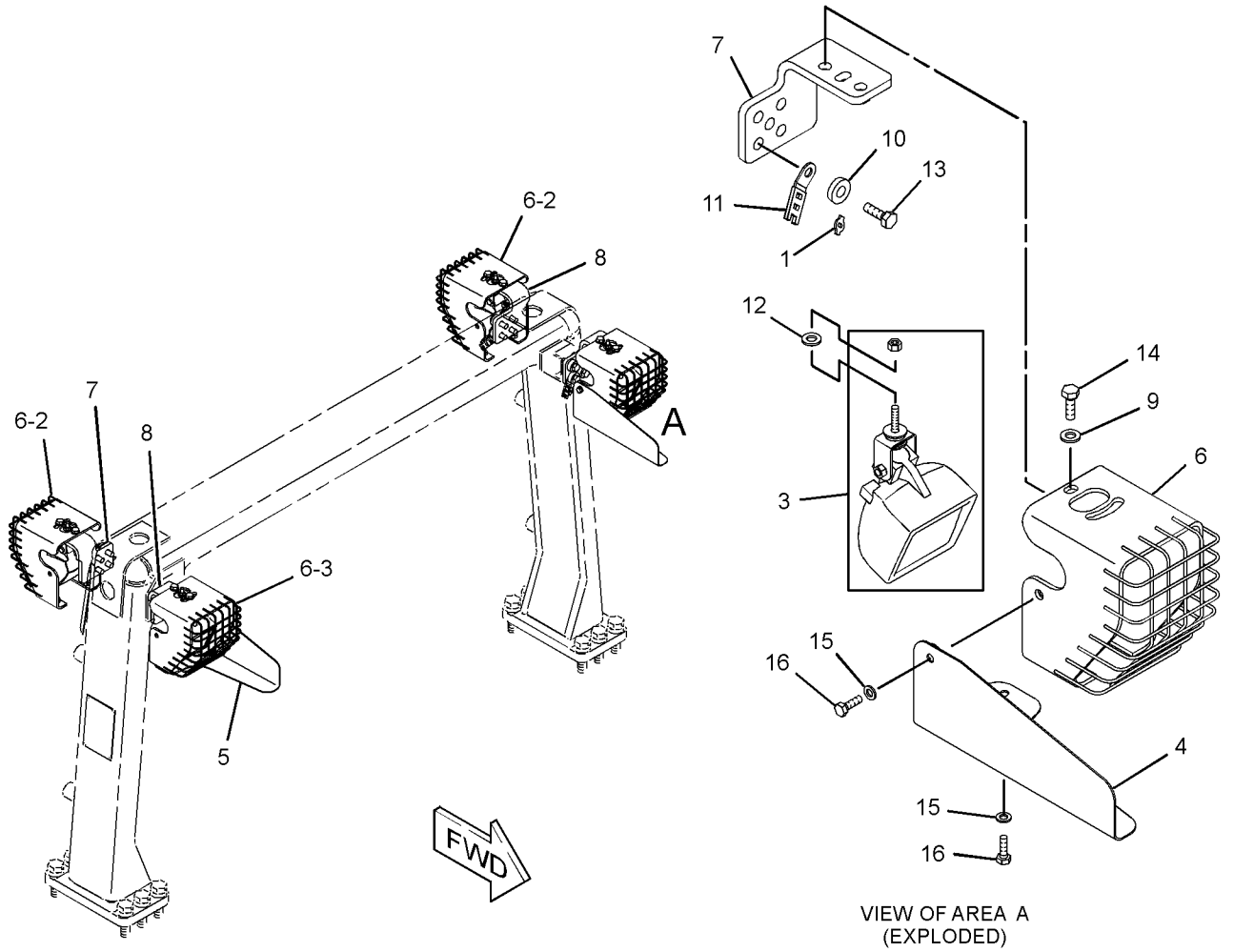

VIEW OF AREA A
(EXPLODED)

GRAPHIC #1 **<END>** g01408264

301-7805 LIGHTING GP-FLOOD—ENCLOSED ROPS

S/N: LJR1-UP
CANNOT BE USED WITH CANOPY
PART OF 310-9971 CAB AR
TYPE 2

SMCS-1434 **i04709989**

NOTE	REF NO	GRAPHIC REF	PART NUMBER	QTY	PART NAME 1 2 3 4 5 6 (PRODUCT LEVEL)	SEE PAGE
	1	1	**7K-1181**	4	STRAP-CABLE	
Y	2	1	**219-6487**	2	LAMP GP-FLOOD (24-VOLT, 70-WATT) (ROPS, REAR)	183
Y	3	1	**219-6488**	2	LAMP GP-FLOOD (24-VOLT) (ROPS, FRONT)	184
C	4	1	**361-7474**	4	GUARD AS-LIGHTING	
C	5	1	**362-0439**	2	BRACKET AS	
C	6	1	**362-0442**	2	BRACKET AS	
C	7	1	**198-4778**	8	WASHER-HARD (13.5X30X12-MM THK)	
	8	1	**5P-4116**	4	WASHER-HARD (8.8X20.5X2-MM THK)	
C	9	1	**7X-7729**	4	WASHER (11X25X3-MM THK)	
CM	10	1	**8T-4183**	4	BOLT (M12X1.75X40-MM)	
CM	11	1	**8T-4195**	4	BOLT (M10X1.5X30-MM)	

C - CHANGE FROM PREVIOUS TYPE
M - METRIC PART
Y - SEPARATE ILLUSTRATION

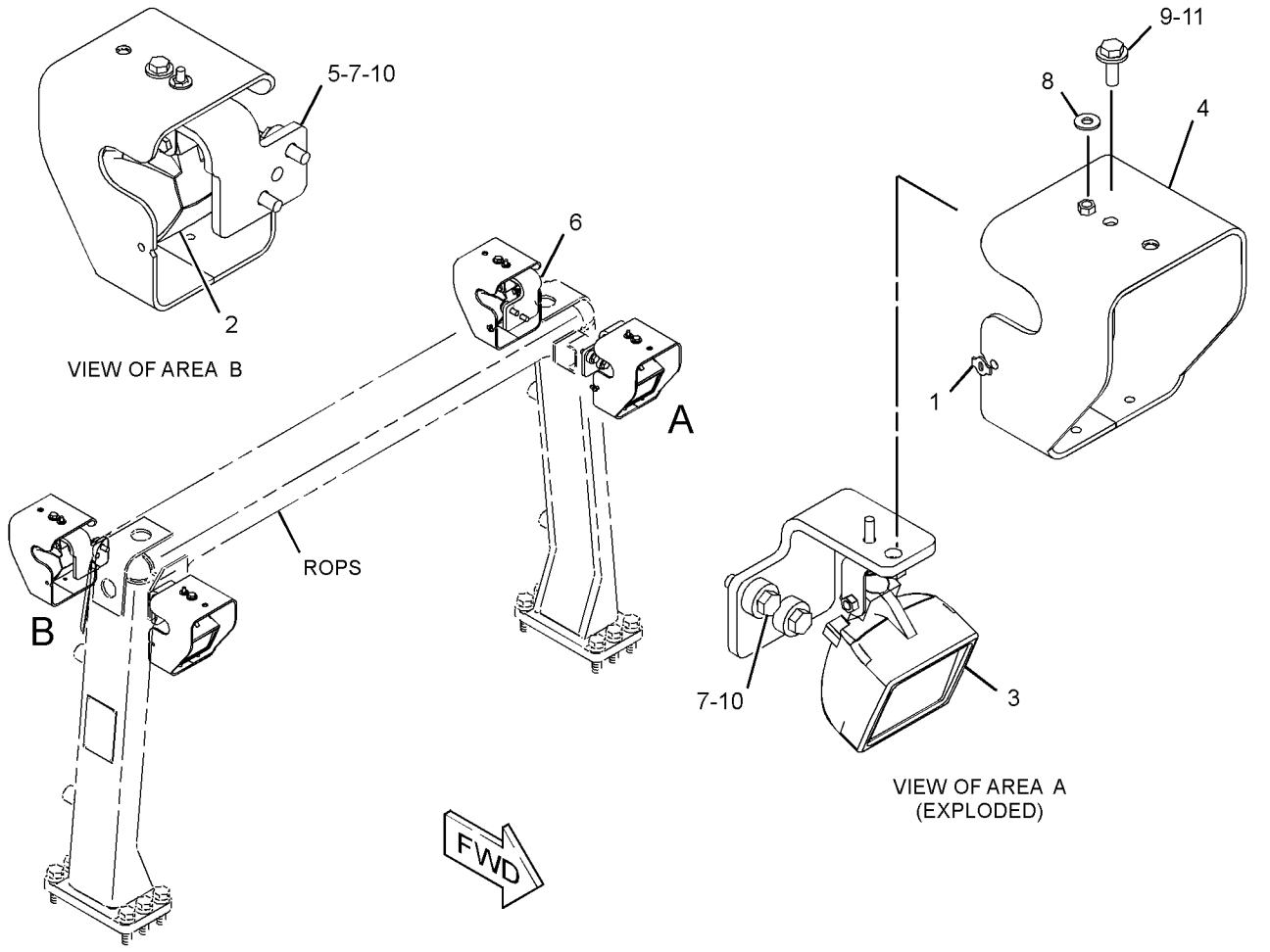

GRAPHIC #1 **<END>** g02917876

350-7630 LIGHTING GP-FLOOD

S/N: LJR1-UP
PART OF 431-7088 FORESTRY AR
AN ATTACHMENT

SMCS-1434 **i05268302**

NOTE	REF NO	GRAPHIC REF	PART NUMBER	QTY	PART NAME 1 2 3 4 5 6 (PRODUCT LEVEL)	SEE PAGE
	1	1	**7K-1181**	2	STRAP-CABLE	
Y	2	1	**219-6487**	2	LAMP GP-FLOOD (24-VOLT, 70-WATT)	183
Y	3	1	**219-6488**	2	LAMP GP-FLOOD (24-VOLT)	184
	4	1	**301-2823**	4	BRACKET	
	5	1	**198-4778**	12	WASHER-HARD (13.5X30X12-MM THK)	
	6	1	**4P-7428**	2	CLIP	
M	7	1	**8T-4194**	12	BOLT (M12X1.75X50-MM)	

M - METRIC PART
Y - SEPARATE ILLUSTRATION

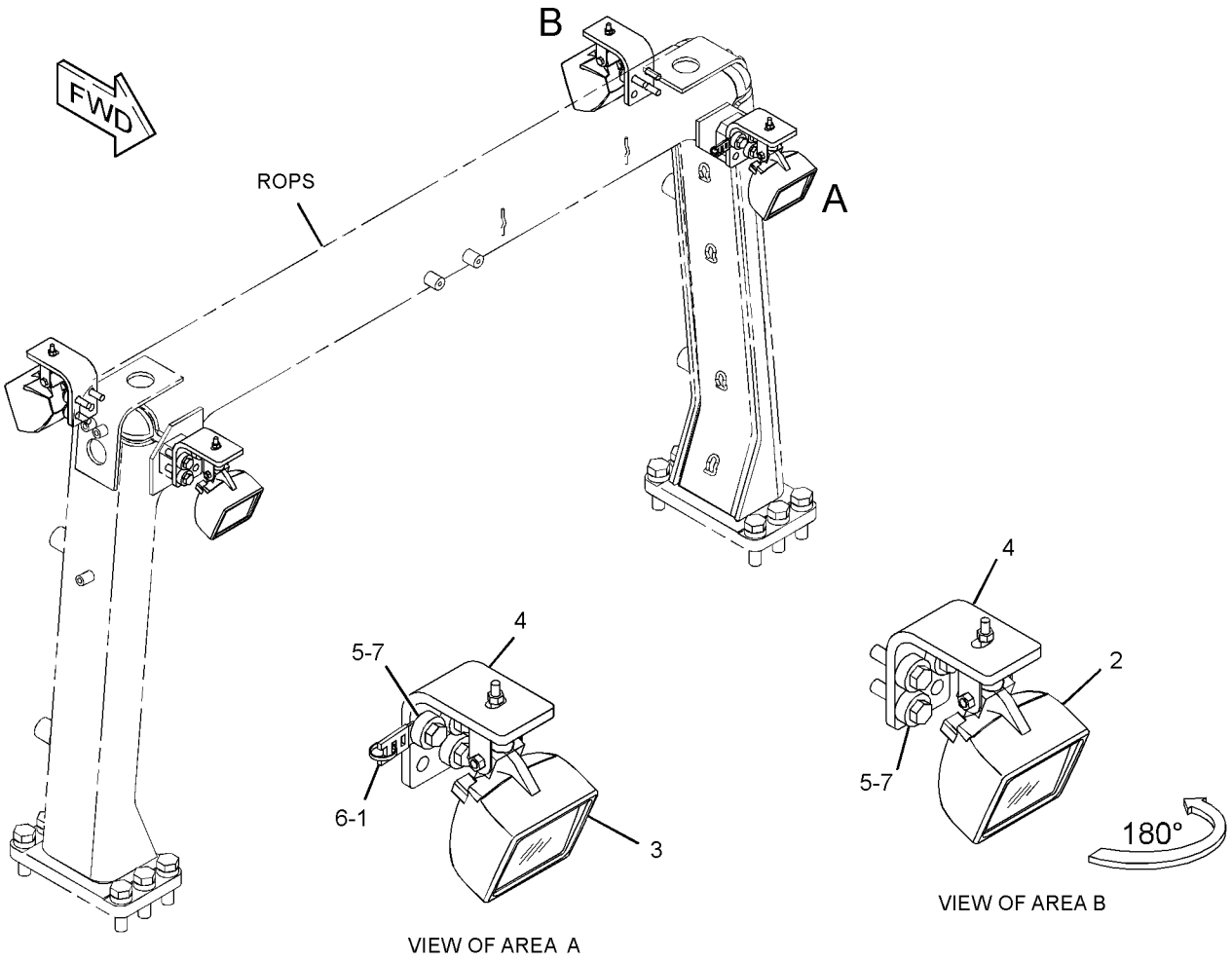

GRAPHIC #1 **<END>** g03356374

301-7806 LIGHTING GP-WARNING BEACON–ENCLOSED ROPS

S/N: LJR1-UP
CANNOT BE USED WITH CANOPY
AN ATTACHMENT

SMCS-1431 **i02926977**

NOTE	REF NO	GRAPHIC REF	PART NUMBER	QTY	PART NAME 1 2 3 4 5 6 (PRODUCT LEVEL)	SEE PAGE
	1	1	**3S-2093**	1	STRAP-CABLE	
	2	1	**237-9736**	1	SWITCH AS-ROCKER (WARNING BEACON)	
Y	3	1	**302-4254**	1	LAMP GP-WARNING BEACON (24-VOLT)	186

Y - SEPARATE ILLUSTRATION

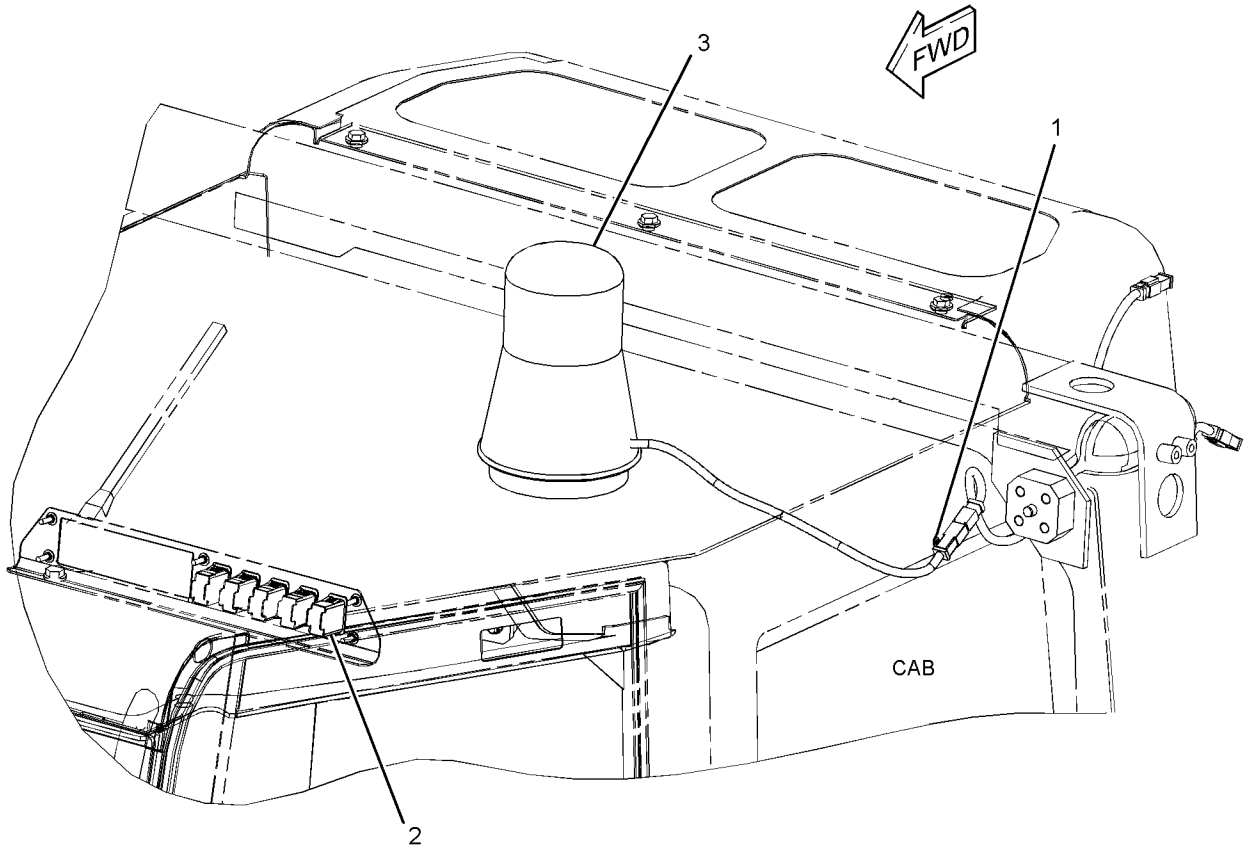

GRAPHIC #1 **<END>** g01447735

319-5954 MOUNTING GP-GRADE CONTROL

S/N: LJR1-UP
OPEN ROPS
PART OF 321-7768 GRADE CONTROL AR
AN ATTACHMENT

SMCS-7220 **i03626900**

NOTE	REF NO	GRAPHIC REF	PART NUMBER	QTY	PART NAME 1 2 3 4 5 6 (PRODUCT LEVEL)	SEE PAGE
	1	1	**7K-1181**	12	STRAP-CABLE	
	2	1	**167-8712**	1	ALARM	
	3	1	**167-8713**	1	BAFFLE AS	
	4	1	**222-9151**	2	WASHER-HARD (11X32X5-MM THK)	
	5	1	**245-8334**	2	KNOB	
	6	1	**258-6386**	1	BRACKET (ANTENNA)	
	7	1	**293-8252**	1	HARNESS AS-MONITOR (GPS)	
		1	**8T-8737**	15	PLUG-SEAL	
E		1	**119-3662**		TUBE-HEAT SHRINK (10.85-MM DIA) (7-CM)	
E		1	**125-7874**		TUBE-HEAT SHRINK (5.72-MM DIA) (5-CM)	
		1	**9X-3402**	16	SOCKET-CONNECTOR (16-GA TO 18-GA)	
		1	**167-3693**	1	PLUG AS-CONNECTOR (31-PIN)	
		1	**248-5358**	1	PLUG AS-CONNECTOR (39-PIN)	
	8	1	**293-8253**	1	HARNESS AS-MONITOR (LASER)	
		1	**5P-2766**	2	TERMINAL-RING (18-GA TO 22-GA, NO. 6 SCREW)	
		1	**8T-8737**	70	PLUG-SEAL	
		1	**9X-3402**	36	SOCKET-CONNECTOR (16-GA TO 18-GA)	
		1	**144-1636**	2	PIN-CONNECTOR (14-GA TO 18-GA)	
		1	**147-1444**	1	PLUG AS-CONNECTOR (70-PIN)	
		1	**159-9322**	1	SEAL-O-RING	
		1	**155-2260**	1	KIT-CONNECTING PLUG (3-PIN)	
					(INCLUDES PLUG AS, WEDGE & INTERFACE SEAL)	
		1	**167-3693**	1	PLUG AS-CONNECTOR (31-PIN)	
		1	**230-4011**	1	PLUG AS-CONNECTOR (2-PIN)	
		1	**264-7029**	1	SEAL-CONNECTOR	
		1	**230-4012**	1	RECEPTACLE AS-CONNECTOR (2-PIN)	
	9	1	**293-8282**	1	BRACKET AS	
	10	1	**293-8283**	1	BRACKET AS	
	11	1	**293-8284**	1	BRACKET AS	
	12	1	**297-0693**	1	FILM-IDENTIFICATION (JOYSTICK) (GRADE CONTROL)	
	13	1	**302-8146**	1	HARNESS AS-CONTROL	
		1	**8T-8737**	19	PLUG-SEAL	
		1	**9X-3402**	21	SOCKET-CONNECTOR (16-GA TO 18-GA)	
		1	**128-4249**	1	LOCKWASHER	
		1	**144-1636**	22	PIN-CONNECTOR (14-GA TO 18-GA)	
		1	**167-3692**	1	RECEPTACLE AS-CONNECTOR (31-PIN)	
		1	**167-3693**	1	PLUG AS-CONNECTOR (31-PIN)	
		1	**211-0052**	1	NUT (1-11/16-18-THD)	
	14	1	**4P-7581**	1	CLIP	
	15	1	**4P-8134**	3	CLIP	
	16	1	**7X-7729**	5	WASHER (11X25X3-MM THK)	
	17	1	**8T-4121**	2	WASHER-HARD (11X21X2.5-MM THK)	
M	18	1	**8T-4136**	6	BOLT (M10X1.5X25-MM)	
M	19	1	**8T-4137**	3	BOLT (M10X1.5X20-MM)	
	20	1	**9D-8508**	3	GROMMET	

E - ORDER BY THE CENTIMETER
M - METRIC PART

319-5954 **MOUNTING GP-GRADE CONTROL (*contd.*)** **i03626900**

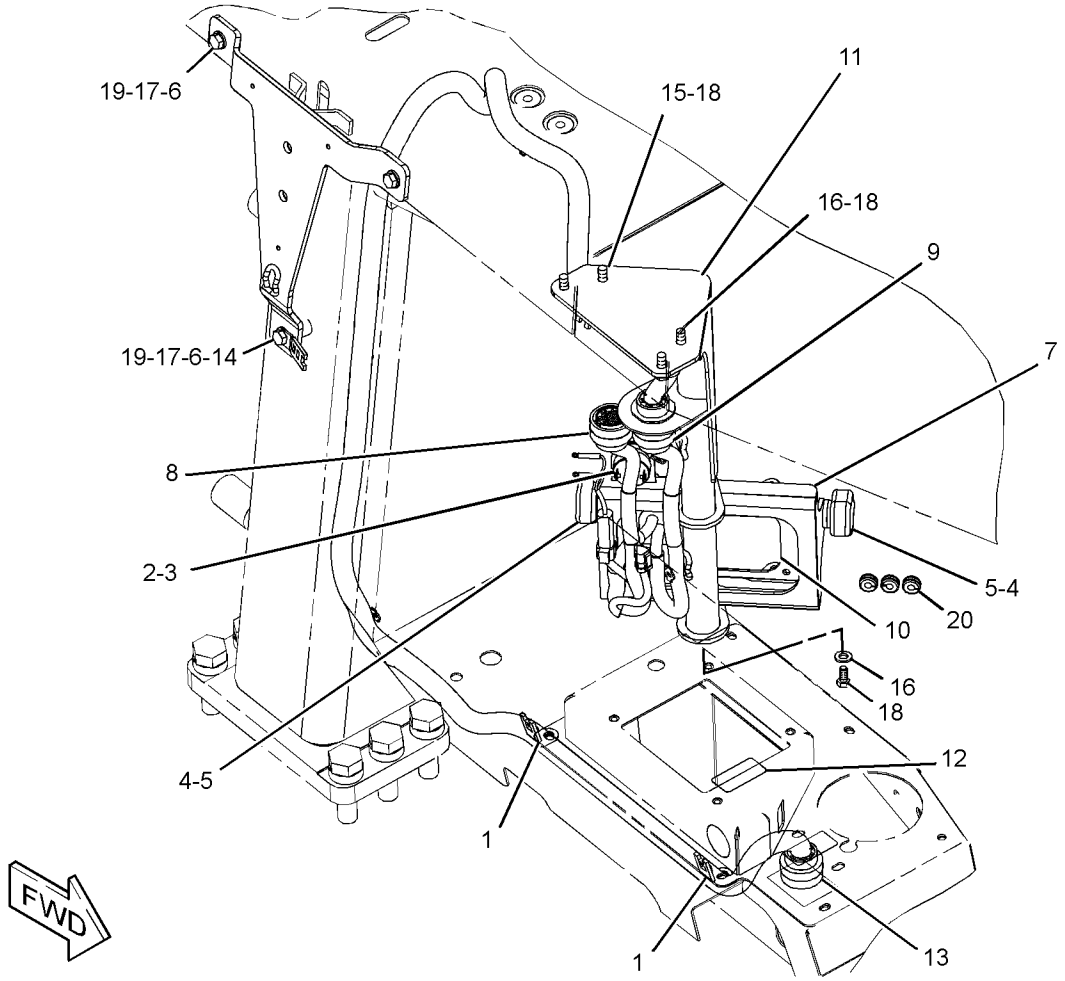

GRAPHIC #1 **<END>** g01907374

310-1535 PANEL GP-CIRCUIT BREAKER

S/N: LJR1-UP

PART OF 310-1543, 392-3202 WIRING GP-PLATFORM

ALSO AN ATTACHMENT

SMCS-1417, 1420

i05158412

NOTE	REF NO	GRAPHIC REF	PART NUMBER	QTY	PART NAME 1 2 3 4 5 6 (PRODUCT LEVEL)	SEE PAGE
	1	1	**7K-1181**	3	STRAP-CABLE	
	2	1	**116-7471**	1	PULLER-MINIFUSE	
	3	1	**149-9818**	1	PLATE	
	4	1	**171-2212**	2	CIRCUIT BREAKER AS (105-AMPERE) (MAIN, ALTERNATOR)	
					(EACH INCLUDES)	
		1	**6V-8187**	2	NUT (1/4-28-THD)	
		1	**8T-4205**	2	WASHER-HARD (7.2X14.5X2-MM THK)	
		1	**253-2111**	2	LOCKWASHER	
	5	1	**172-4863**	1	JUNCTION BLOCK	
Y	6	1	**241-8368**	1	SWITCH GP-MAGNETIC (24-VOLT) (MAIN POWER RELAY)	218
	7	1	**252-4927**	1	STRIP	
	8	1	**264-5425**	1	CAP AS-PROTECTION	
	9	1	**280-2709**	4	CIRCUIT BREAKER AS (15-AMPERE, MANUAL RESET) (BLOWER, CONDENSER, ENGINE ECM)	
	10	1	**310-1536**	1	PANEL AS	
M		1	**6V-9632**	7	NUT-WELD (M6X1-THD)	
		1	**7T-1099**	2	LINK	
	11	1	**310-1538**	1	STRIP	
	12	1	**310-1539**	1	STRIP	
	13	1	**311-8470**	1	CABLE AS	
D		1	**6V-2369**		CABLE (4-GA, BLACK) (0.3-M)	
		1	**128-4158**	1	TERMINAL AS	
		1	**9G-4343**	1	TERMINAL-RING (4-GA, 1/4-IN SCREW)	
	14	1	**335-2097**	1	HARNESS AS-PANEL	
		1	**264-5425**	1	CAP AS-PROTECTION	
		1	**8C-6354**	1	CAP-RECEPTACLE (ET CONNECTOR)	
E		1	**125-7875**		TUBE-HEAT SHRINK (7.44-MM DIA) (3-CM)	
		1	**5P-5677**		WIRE (18-GA, BLACK) (0.2-M)	
		1	**248-2841**	2	RELAY AS (24-VOLT)	
		1	**245-7434**	2	KIT-CONNECTING PLUG (10-PIN)	
					(EACH INCLUDES PLUG CONNECTOR,WIRE ASSEMBLIES & PLUGS)	
		1	**214-4208**	1	RECEPTACLE AS-CONNECTOR (70-PIN)	
		1	**202-5397**	3	PLUG	
		1	**185-1861**	15	SEAL-WIRE	
		1	**155-2274**	2	KIT-CONNECTING PLUG (6-PIN)	
		1	**155-2271**	1	KIT-CONNECTING PLUG (4-PIN)	
		1	**155-2265**	1	KIT-CONNECTING PLUG (8-PIN)	
		1	**155-2255**	1	KIT-CONNECTING PLUG (12-PIN)	
					(EACH KIT INCLUDES PLUG AS,WEDGE & INTERFACE SEAL)	
		1	**144-1636**	75	PIN-CONNECTOR (14-GA TO 18-GA)	
		1	**9X-3402**	29	SOCKET-CONNECTOR (16-GA TO 18-GA)	
E		1	**125-7875**		TUBE-HEAT SHRINK (7.44-MM DIA) (25-CM)	
E		1	**125-7874**		TUBE-HEAT SHRINK (5.72-MM DIA) (25-CM)	
		1	**113-8491**	20	FUSE (15-AMPERE)	
		1	**113-8490**	12	FUSE (10-AMPERE)	
		1	**9W-1951**	1	RECEPTACLE-CONNECTOR (9-PIN)	
		1	**8T-8737**	13	PLUG-SEAL	
		1	**3S-2093**	6	STRAP-CABLE	
		1	**7K-1181**	1	STRAP-CABLE	
		1	**102-8802**	1	KIT-RECEPTACLE (2-PIN)	
					(INCLUDES RECEPTACLE AS & WEDGE)	
	15	1	**2S-9255**	4	BOLT-SOCKET HEAD (4-40X0.375-IN)	
	16	1	**319-9402**	1	FILM-IDENTIFICATION (FUSE PANEL)	

310-1535 **PANEL GP-CIRCUIT BREAKER (*contd.*)** **i05158412**

NOTE	REF NO	GRAPHIC REF	PART NUMBER	QTY	PART NAME 1 2 3 4 5 6 (PRODUCT LEVEL)	SEE PAGE
	17	1	**4P-8134**	1	CLIP	
M	18	1	**5C-9553**	2	BOLT (M6X1X16-MM)	
M	19	1	**6V-5683**	3	BOLT (M6X1X16-MM)	
	20	1	**6V-7978**	4	SCREW-MACHINE (10-32X0.375-IN)	
M	21	1	**7X-2548**	1	BOLT (M12X1.75X16-MM)	
	22	1	**8T-4121**	1	WASHER-HARD (11X21X2.5-MM THK)	
M	23	1	**8T-4138**	6	BOLT (M6X1X20-MM)	
M	24	1	**8T-4191**	1	BOLT (M10X1.5X16-MM)	
	25	1	**8T-4205**	2	WASHER-HARD (7.2X14.5X2-MM THK)	
	26	1	**8T-4223**	1	WASHER-HARD (13.5X25.5X3-MM THK)	
	27	1	**9X-8256**	6	WASHER (6.6X12X2-MM THK)	
D	28	1	**8T-5372**		SEAL (0.8-M)	

D - ORDER BY THE METER
E - ORDER BY THE CENTIMETER
M - METRIC PART
Y - SEPARATE ILLUSTRATION

310-1535 **PANEL GP-CIRCUIT BREAKER (*contd.*)** **i05158412**

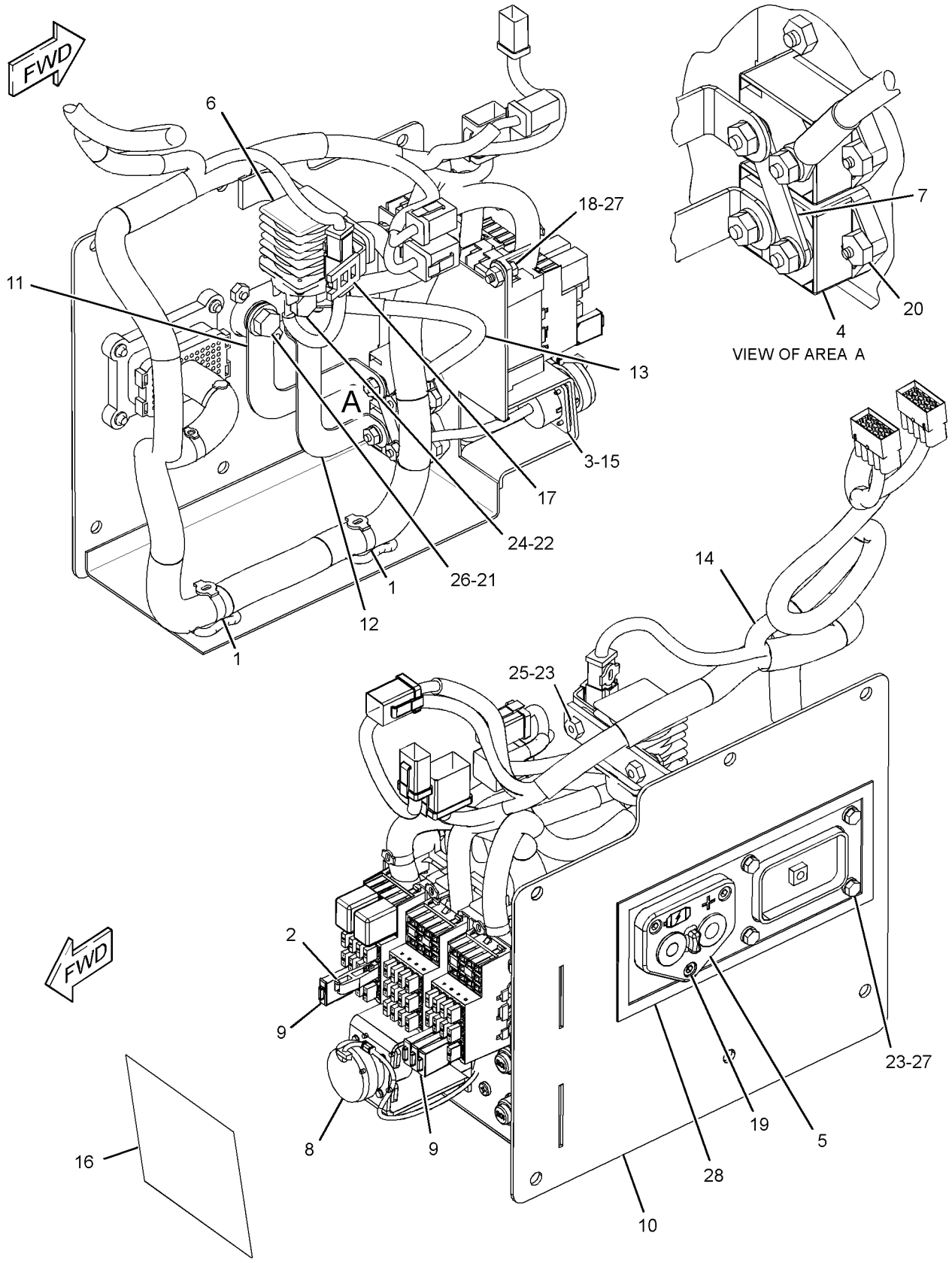

GRAPHIC #1 **<END>** g01885752

336-3545 RADIO GP-COMMUNICATION–PRODUCT LINK 121SR

S/N: LJR1-UP

PART OF 320-5953, 320-5955, 362-6150 INSTALLATION GP-COMMUNICATION

AN ATTACHMENT

SMCS-733T **i04515790**

NOTE	PART NUMBER	QTY	PART NAME 1 2 3 4 5 6 (PRODUCT LEVEL)	SEE PAGE
	377-4844	1	SOFTWARE GP-COMMUNICATION (PRODUCT LINK 121SR)	

<END>

178-2345 SENSOR GP-LIQUID LEVEL

S/N: LJR1-314

PART OF 301-2710 PUMP GP-FUEL PRM & WATER SEP

SMCS-7422 **i03423327**

NOTE	REF NO	GRAPHIC REF	PART NUMBER	QTY	PART NAME 1 2 3 4 5 6 (PRODUCT LEVEL)	SEE PAGE
	1	1	**178-2334**	1	PROBE AS-LIQUID LEVEL (WATER SEPARATOR)	
	1A	1	**3J-1907**	1	SEAL-O-RING	
	2	1	**178-2335**	1	SENSOR AS-LIQUID LEVEL (WATER SEPARATOR)	
		1	**102-8804**	1	KIT-RECEPTACLE (4-PIN)	
					(INCLUDES RECEPTACLE AS & WEDGE)	
		1	**155-2270**	1	KIT-CONNECTING PLUG (2-PIN)	
					(INCLUDES PLUG AS, WEDGE, & INTERFACE SEAL)	
		1	**186-3735**	4	PIN-CONNECTOR (16-GA TO 18-GA)	
		1	**186-3736**	2	SOCKET-CONNECTOR (16-GA TO 18-GA)	

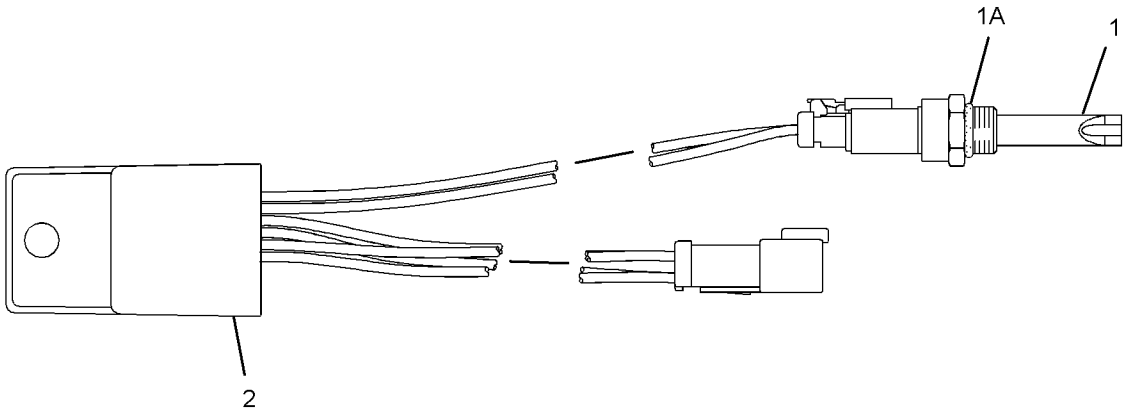

GRAPHIC #1 **<END>** g01285011

266-1467 SENSOR GP-POSITION

S/N: LJR1-UP
PART OF 320-1197 CONTROL GP-PEDAL
ALSO AN ATTACHMENT

SMCS-1905, 1911, 430S

i04947036

NOTE	REF NO	GRAPHIC REF	PART NUMBER	QTY	PART NAME 1 2 3 4 5 6 (PRODUCT LEVEL)	SEE PAGE
	1	1	**9X-3401**	3	PIN-CONNECTOR (16-GA TO 18-GA)	
					–OR–	
		1	**126-1767**	3	PIN-CONNECTOR (14-GA TO 16-GA)	
	2	1	**102-8803**	1	KIT-RECEPTACLE (3-PIN)	
					(INCLUDES RECEPTACLE AS & WEDGE)	

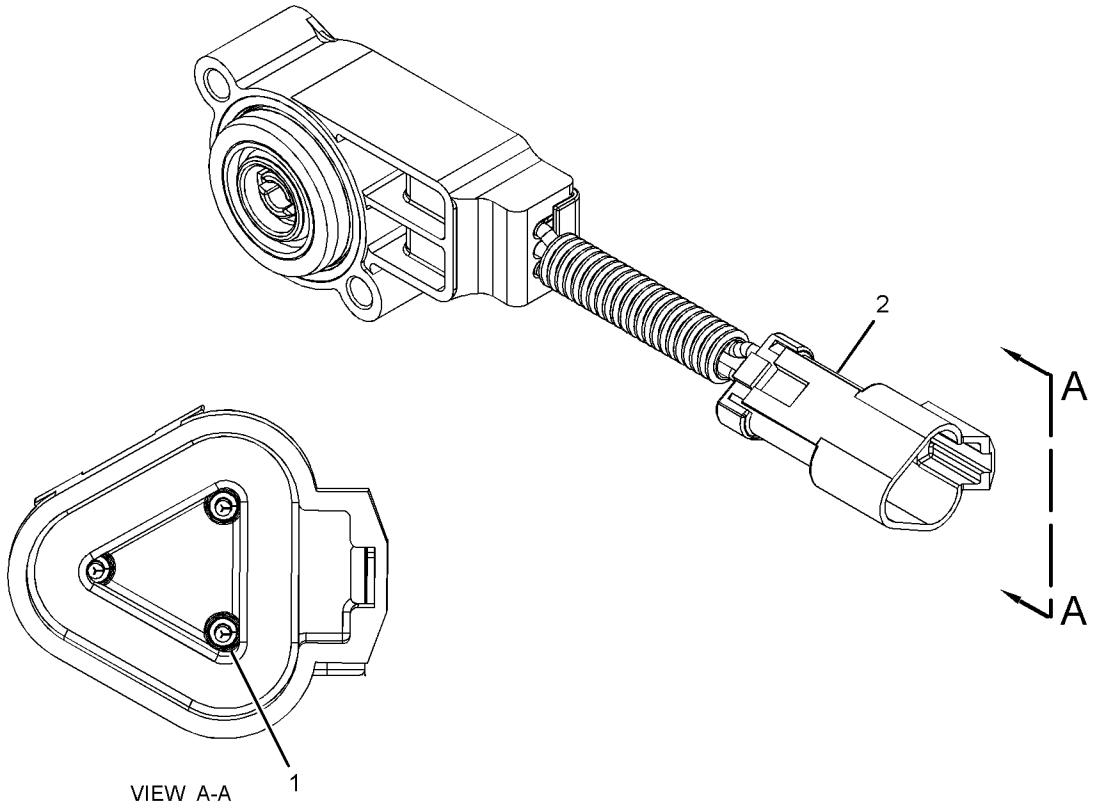

VIEW A-A

GRAPHIC #1

<END>

g03134617

276-5312 SENSOR GP-POSITION

S/N: LJR1-UP
PART OF 312-9089 CONTROL GP-JOYSTICK
ALSO AN ATTACHMENT

SMCS-1905, 1911, 430S

i04165215

NOTE	REF NO	GRAPHIC REF	PART NUMBER	QTY	PART NAME 1 2 3 4 5 6 (PRODUCT LEVEL)	SEE PAGE
	1	1	**1P-2624**	1	BEARING AS-NEEDLE	
	2	1	**7P-4190**	1	BEARING-ROLLER	
	3	1	**216-1696**	1	SENSOR AS	
	4	1	**219-5803**	1	HOUSING	
	5	1	**219-5804**	1	HOUSING	
	6	1	**225-3202**	1	GASKET	
	7	1	**237-0145**	1	SPACER (19.5X58X3.5-MM THK)	
	9	1	**269-7050**	1	SPRING	
	10	1	**276-5311**	1	CAM AS	
		1	**3H-0702**	1	DOWEL	
	11	1	**286-5841**	2	SCREW-PAN HEAD (6-19X0.625-IN)	
	12	1	**1W-6448**	2	DOWEL	
	13	1	**2H-9445**	1	PIN-SPRING	
	14	1	**2J-6356**	2	RING-RETAINING	
	15	1	**5M-1179**	1	PIN-SPRING	
	16	1	**6F-4855**	2	SEAL-O-RING	
	17	1	**8F-7702**	1	SEAL-LIP TYPE	
	18	1	**8T-4994**	1	WASHER-HARD (20X36.5X3.5-MM THK)	
M	19	1	**9X-2480**	4	BOLT (M6X1X45-MM)	
	20	1	**9X-8256**	4	WASHER (6.6X12X2-MM THK)	

M - METRIC PART

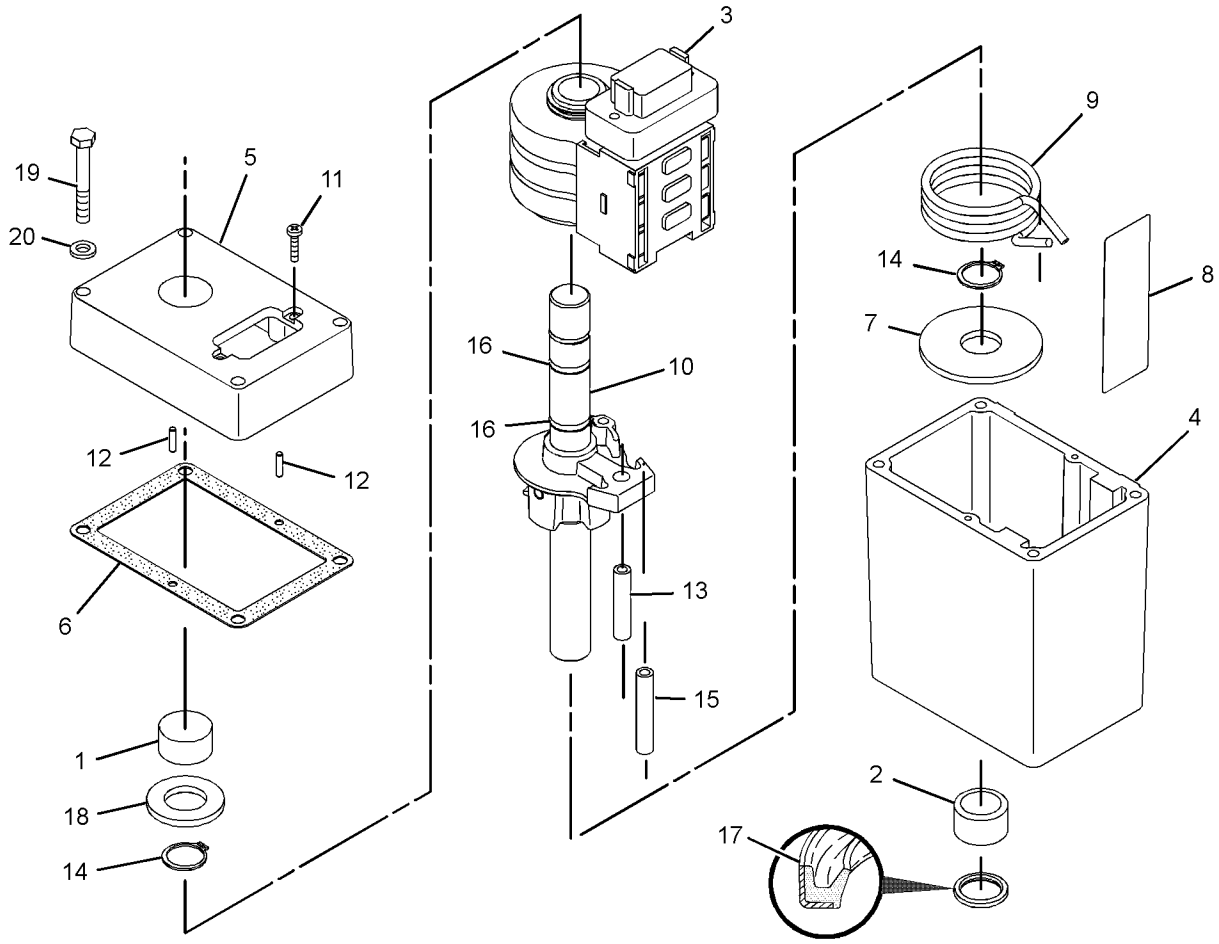

GRAPHIC #1

<END>

g02358689

356-5425 SENSOR GP-POSITION

S/N: LJR706-UP
PART OF 312-9089 CONTROL GP-JOYSTICK
ALSO AN ATTACHMENT

SMCS-1905, 1911, 430S

i04889048

NOTE	REF NO	GRAPHIC REF	PART NUMBER	QTY	PART NAME 1 2 3 4 5 6 (PRODUCT LEVEL)	SEE PAGE
	1	1	**7P-4190**	2	BEARING-ROLLER	
	2	1	**237-0145**	1	SPACER (19.5X58X3.5-MM THK)	
	3	1	**269-7050**	1	SPRING	
	4	1	**356-5426**	1	CAM AS	
		1	**3H-0702**	1	DOWEL	
	5	1	**356-5428**	1	HOUSING	
	6	1	**356-5429**	1	HOUSING	
	7	1	**1B-8706**	1	KEY-WOODRUFF	
	8	1	**1W-6448**	3	DOWEL	
	9	1	**2H-9445**	1	PIN-SPRING	
	10	1	**2J-6356**	2	RING-RETAINING	
	11	1	**5M-1179**	1	PIN-SPRING	
	12	1	**8F-7702**	2	SEAL-LIP TYPE	
M	13	1	**8T-0640**	4	BOLT (M6X1X30-MM)	
	14	1	**8T-4994**	1	WASHER-HARD (20X36.5X3.5-MM THK)	
	15	1	**9X-8256**	4	WASHER (6.6X12X2-MM THK)	

M - METRIC PART

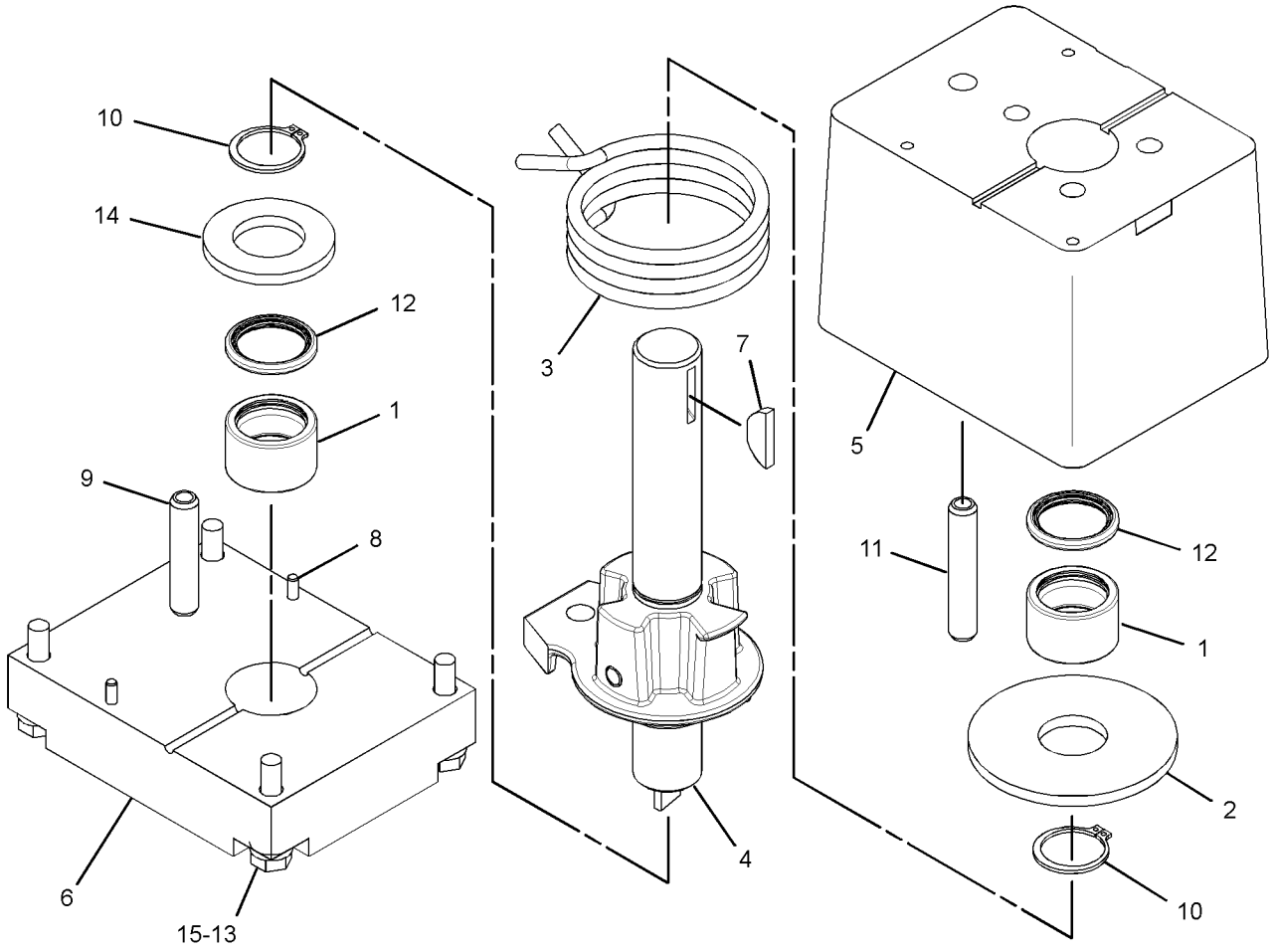

GRAPHIC #1

<END>

g02872602

193-2550 SENSOR GP-SPEED—MAGNETIC, HIGH OUTPUT

S/N: LJR1-UP

FIELD REPLACEMENT ORDER 318-1178—PAGE: 206

PART OF 310-1550 WIRING GP-ENGINE

SMCS-1907 **i04747951**

NOTE	REF NO	GRAPHIC REF	PART NUMBER	QTY	PART NAME 1 2 3 4 5 6 (PRODUCT LEVEL)	SEE PAGE
	1	1	**171-5349**	1	STRAP-MARKER	
	2	1	**102-8802**	1	KIT-RECEPTACLE (2-PIN)	
					(INCLUDES RECEPTACLE AS & WEDGE)	
	3	1	**9X-3401**	2	PIN-CONNECTOR (16-GA TO 18-GA)	
E	4	1	**9X-1813**		SLEEVE (14-CM)	

E - ORDER BY THE CENTIMETER

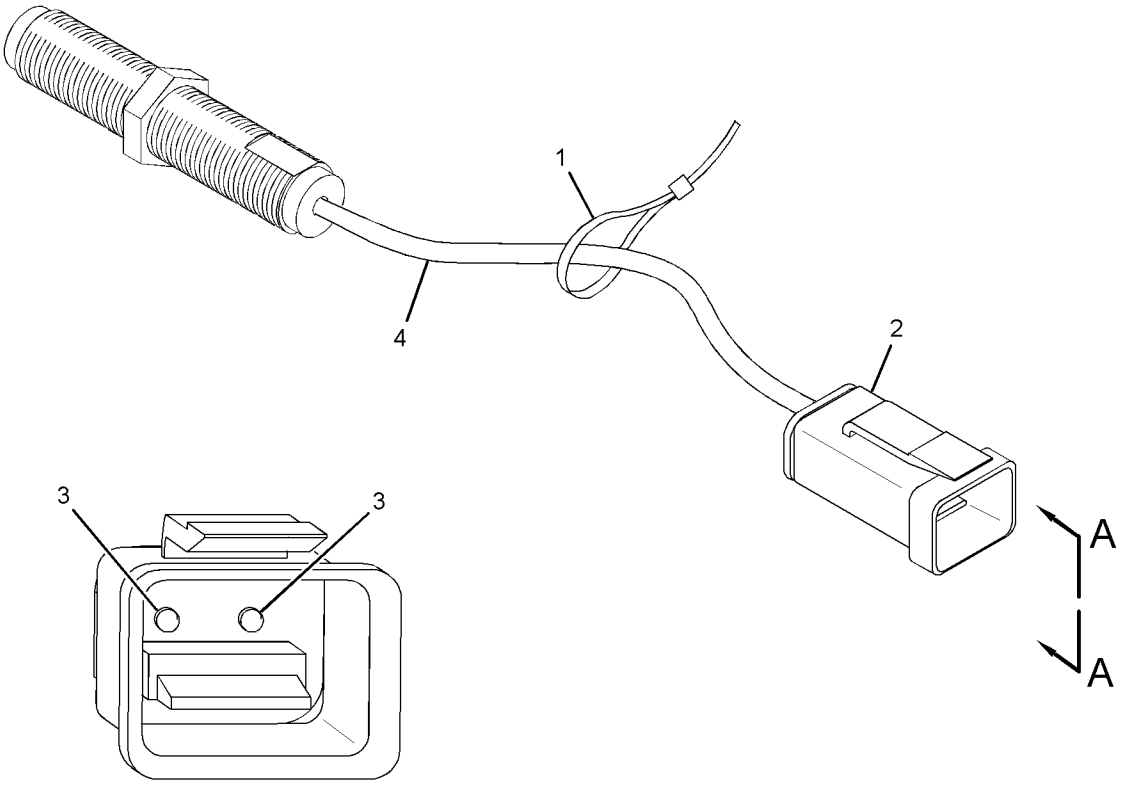

VIEW A-A

GRAPHIC #1 **<END>** g01454055

204-6204 SENSOR GP-SPEED

S/N: LJR1-UP

PART OF 310-1547 BATTERY & WIRING GP

SMCS-1907 **i02232794**

NOTE	REF NO	GRAPHIC REF	PART NUMBER	QTY	PART NAME 1 2 3 4 5 6 (PRODUCT LEVEL)	SEE PAGE
	1	1	**6J-2245**	1	SEAL-O-RING	

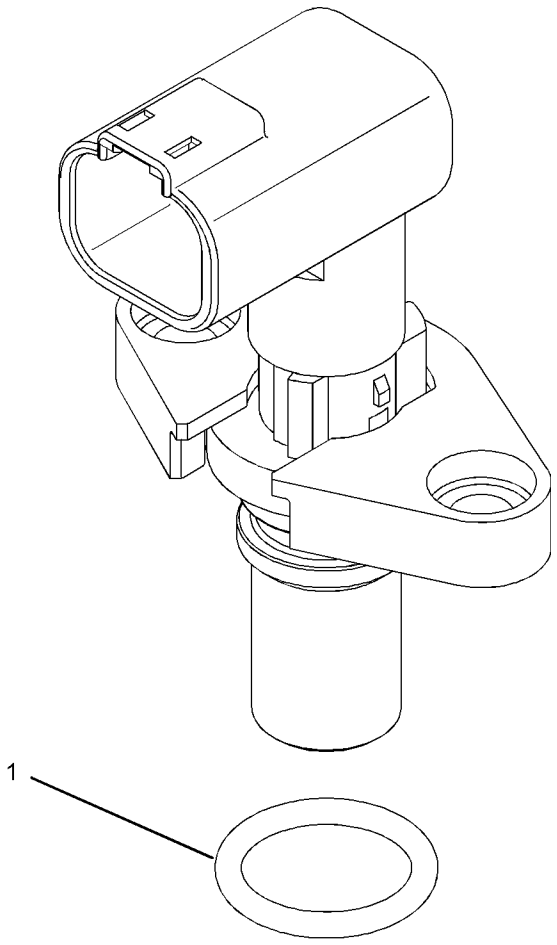

GRAPHIC #1 **<END>** g01038825

262-4806 SENSOR GP-SPEED

S/N: LJR1-UP

PART OF 310-1550 WIRING GP-ENGINE

SMCS-1907 **i02837105**

NOTE	REF NO	GRAPHIC REF	PART NUMBER	QTY	PART NAME 1 2 3 4 5 6 (PRODUCT LEVEL)	SEE PAGE
	1	1	**171-5349**	1	STRAP-MARKER	
	2	1	**230-4012**	1	RECEPTACLE AS-CONNECTOR (2-PIN)	
	3	1	**9X-3401**	2	PIN-CONNECTOR (16-GA TO 18-GA)	
E	4	1	**9X-1386**		SLEEVE (14-CM)	

E - ORDER BY THE CENTIMETER

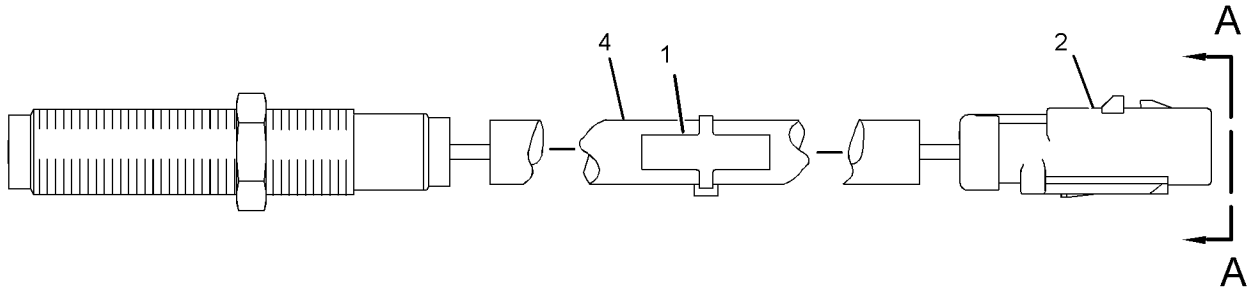

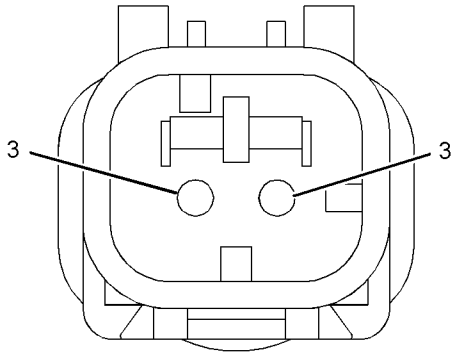

VIEW A-A

GRAPHIC #1 **<END>** g01395142

318-1178 SENSOR GP-SPEED—MAGNETIC, HIGH OUTPUT

S/N: LJR1-UP

FIELD REPLACEMENT FOR 193-2550—PAGE: 203

PART OF 310-1550 WIRING GP-ENGINE

SMCS-1907 **i04748009**

NOTE	REF NO	GRAPHIC REF	PART NUMBER	QTY	PART NAME 1 2 3 4 5 6 (PRODUCT LEVEL)	SEE PAGE
	1	1	**171-5349**	1	STRAP-MARKER	
	2	1	**102-8802**	1	KIT-RECEPTACLE (2-PIN)	
					(INCLUDES RECEPTACLE AS & WEDGE)	
	3	1	**9X-3401**	2	PIN-CONNECTOR (16-GA TO 18-GA)	
E	4	1	**9X-1813**		SLEEVE (14-CM)	

E - ORDER BY THE CENTIMETER

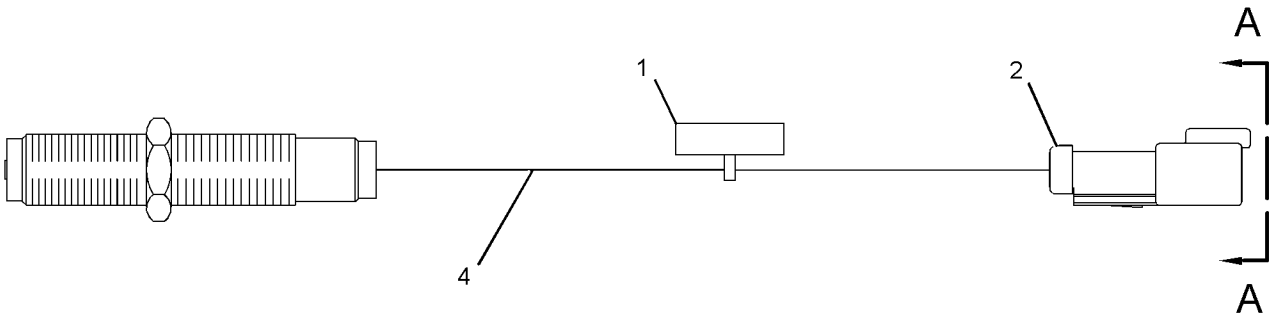

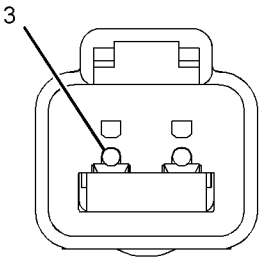

VIEW A-A

GRAPHIC #1 **<END>** g01490456

102-2240 SENSOR GP-TEMPERATURE

S/N: LJR1-314

PART OF 301-2710 PUMP GP-FUEL PRM & WATER SEP

SMCS-1906, 1919, 1921, 1922, 1928, 1929 **i02046465**

NOTE	REF NO	GRAPHIC REF	PART NUMBER	QTY	PART NAME 1 2 3 4 5 6 (PRODUCT LEVEL)	SEE PAGE
BE	2	1	**9X-1813**		SLEEVE	
	3	1	**102-8803**	1	KIT-RECEPTACLE (3-PIN)	
					(KIT INCLUDES RECEPTACLE AS AND WEDGE)	
	4	1	**186-3735**	3	PIN-CONNECTOR (16-GA TO 18-GA)	
	5	1	**3E-3371**	1	WEDGE-RECEPTACLE LOCK (3-PIN)	

B - USE AS REQUIRED
E - ORDER BY THE CENTIMETER

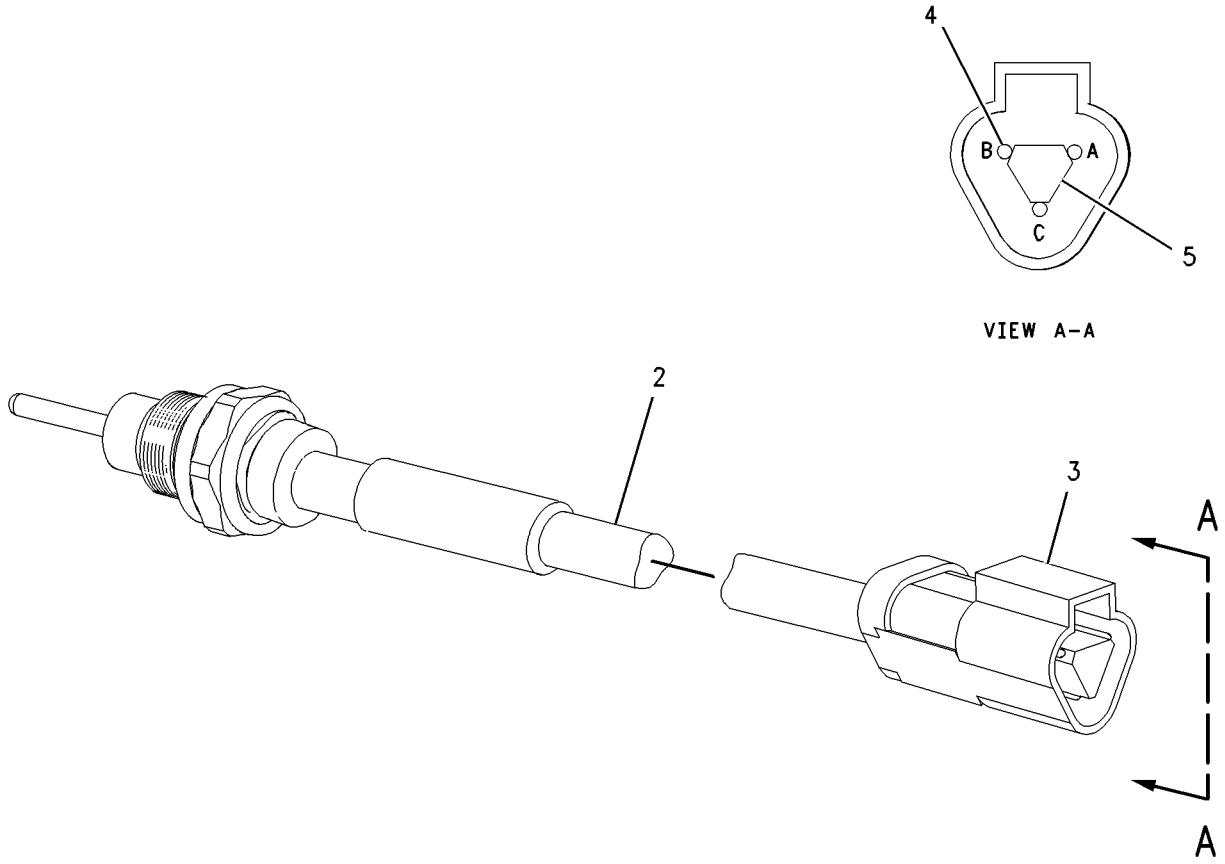

GRAPHIC #1 **<END>** g00790343

145-7028 SENSOR GP-TEMPERATURE

S/N: LJR1-UP

PART OF 230-9131 TANK & FILTER GP-HYDRAULIC, 310-1550 WIRING GP-ENGINE

SMCS-1906, 1919, 1921, 1922, 1928, 1929 **i01828633**

NOTE	REF NO	GRAPHIC REF	PART NUMBER	QTY	PART NAME 1 2 3 4 5 6 (PRODUCT LEVEL)	SEE PAGE
	1	1	**102-8802**	1	KIT-RECEPTACLE (2-PIN)	
					(INCLUDES RECEPTACLE AS & WEDGE)	
BJ	2	1	**153-5043**		SLEEVE	
	3	1	**8T-8729**	2	PIN-CONNECTOR (16-GA TO 18-GA)	
	4	1	**3E-3365**	1	WEDGE-RECEPTACLE LOCK (2-PIN)	

B - USE AS REQUIRED
J - ORDER BY THE DECIMETER

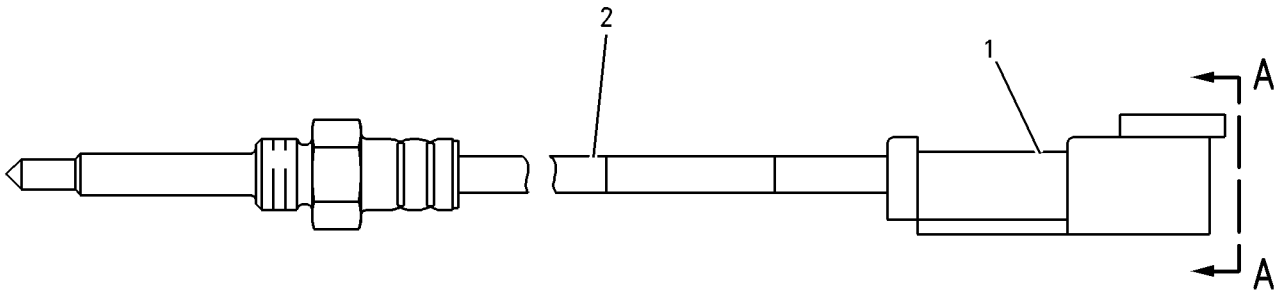

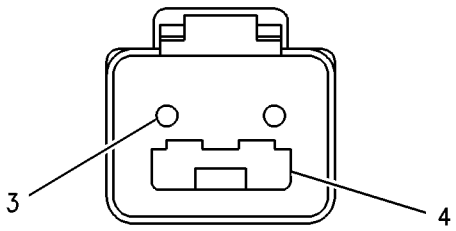

VIEW A-A

GRAPHIC #1 **<END>** g00917620

195-2150 SENSOR GP-TEMPERATURE

S/N: LJR1-UP

PART OF 310-1547 BATTERY & WIRING GP

SMCS-1906, 1919, 1921, 1922, 1928, 1929 **i03627268**

NOTE	REF NO	GRAPHIC REF	PART NUMBER	QTY	PART NAME 1 2 3 4 5 6 (PRODUCT LEVEL)	SEE PAGE
H	1	1	**153-5043**		SLEEVE (4-DM)	
	2	1	**102-8802**	1	KIT-RECEPTACLE (2-PIN)	
					(INCLUDES RECEPTACLE AS AND WEDGE)	
	3	1	**186-3735**	2	PIN-CONNECTOR (16-GA TO 18-GA)	

H - ORDER BY THE DECIMETER

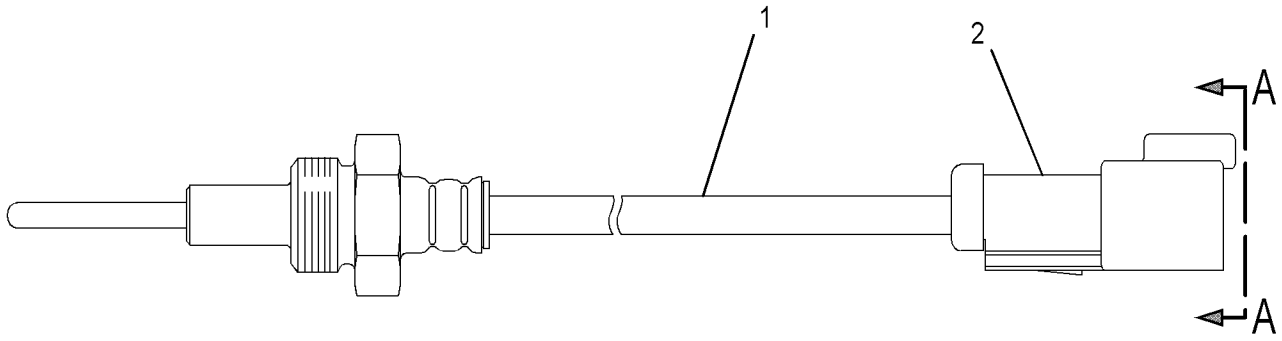

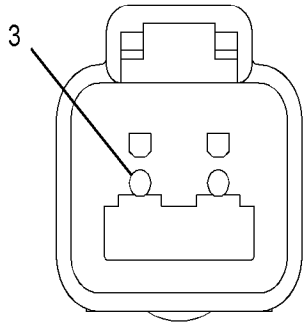

VIEW A-A

GRAPHIC #1 **<END>** g01880504

234-5013 SENSOR GP-TEMPERATURE

S/N: LJR444-UP

AMPSEAL CONNECTOR

PART OF 230-9131 TANK & FILTER GP-HYDRAULIC, 310-1550 WIRING GP-ENGINE

SMCS-1906, 1919, 1921, 1922, 1928, 1929 **i03645027**

NOTE	REF NO	GRAPHIC REF	PART NUMBER	QTY	PART NAME 1 2 3 4 5 6 (PRODUCT LEVEL)	SEE PAGE
	1	1	**256-6453**	1	SENSOR-TEMPERATURE	
	2	1	**238-5080**	1	SEAL-O-RING	

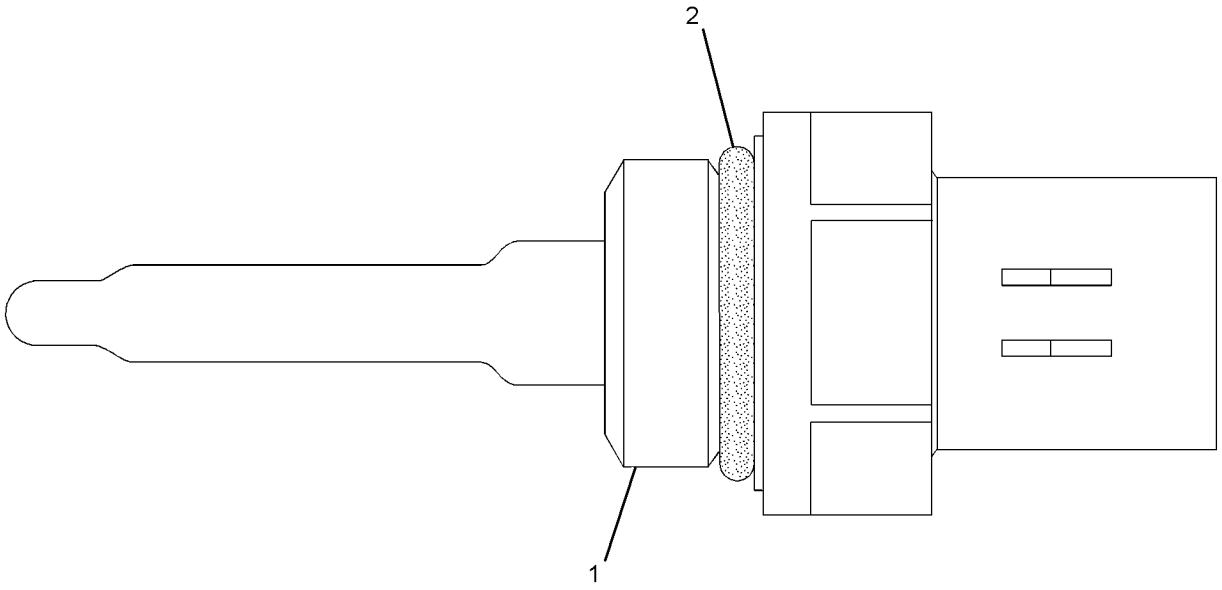

GRAPHIC #1 **<END>** g01164268

252-1590 STARTING AID GP-ETHER

S/N: LJR1-UP

PART OF 277-8701 STARTING AID GP-ETHER

SMCS-1456 **i02788697**

NOTE	REF NO	GRAPHIC REF	PART NUMBER	QTY	PART NAME 1 2 3 4 5 6 (PRODUCT LEVEL)	SEE PAGE
Y	1	1	**239-1134**	1	VALVE GP-ETHER STARTING (24-VOLT)	223
	2	1	**276-6596**	1	CLAMP	
	3	1	**303-2179**	1	MOUNTING PLATE	
M	4	1	**5C-7261**	2	NUT (M8X1.25-THD)	
M	5	1	**8T-4200**	2	BOLT (M8X1.25X16-MM)	
	6	1	**8T-4224**	4	WASHER-HARD (8.8X16X2-MM THK)	

M - METRIC PART
Y - SEPARATE ILLUSTRATION

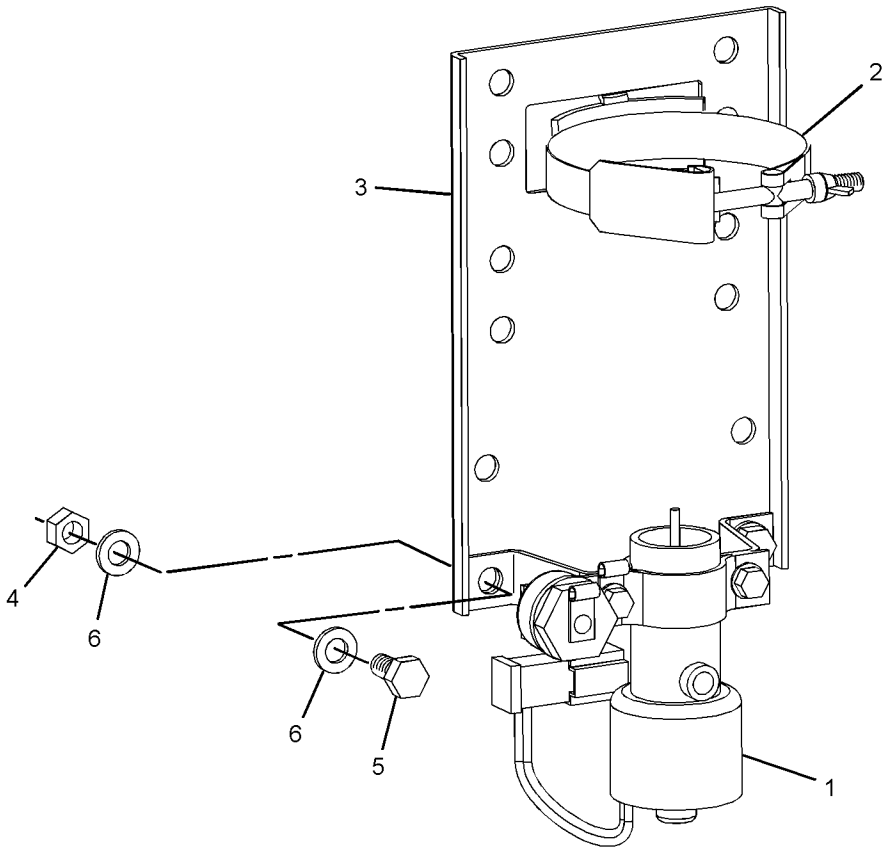

GRAPHIC #1 **<END>** g01346248

277-8701 STARTING AID GP-ETHER

S/N: LJR1-144

PART OF 318-0768 INSTALLATION AR-ENGINE

SMCS-1456 **i03630411**

NOTE	REF NO	GRAPHIC REF	PART NUMBER	QTY	PART NAME 1 2 3 4 5 6 (PRODUCT LEVEL)	SEE PAGE
	1	1	**3S-2093**	1	STRAP-CABLE	
	2	1	**7K-1181**	1	STRAP-CABLE	
	3	1	**127-7443**	1	ATOMIZER AS (ETHER)	
		1	**236-4545**	1	NUT-SLEEVE (5/16-24-THD)	
Y	4	1	**252-1590**	1	STARTING AID GP-ETHER	211
	5	1	**276-5438**	1	FITTING AS	
		1	**236-4545**	1	NUT-SLEEVE (5/16-24-THD)	
	6	1	**290-5649**	1	TUBE	
	7	1	**198-4776**	1	WASHER-HARD (8.8X20X8-MM THK)	
	8	1	**4P-8134**	2	CLIP	
	9	1	**6V-2686**	1	CLIP	
M	10	1	**8T-4200**	4	BOLT (M8X1.25X16-MM)	
	11	1	**8T-4224**	5	WASHER-HARD (8.8X16X2-MM THK)	
M	12	1	**8T-7547**	1	BOLT (M8X1.25X30-MM)	
A			**7N-0296**	1	CYLINDER AS-ETHER	
					(MUST BE PROCURED LOCALLY FROM YOUR CATERPILLAR DEALER)	
A			**187-4851**	1	CYLINDER AS-ETHER (EAME)	
					(MUST BE PROCURED LOCALLY FROM YOUR CATERPILLAR DEALER)	

A - NOT PART OF THIS GROUP
M - METRIC PART
Y - SEPARATE ILLUSTRATION

277-8701 **STARTING AID GP-ETHER (*contd.*)** **i03630411**

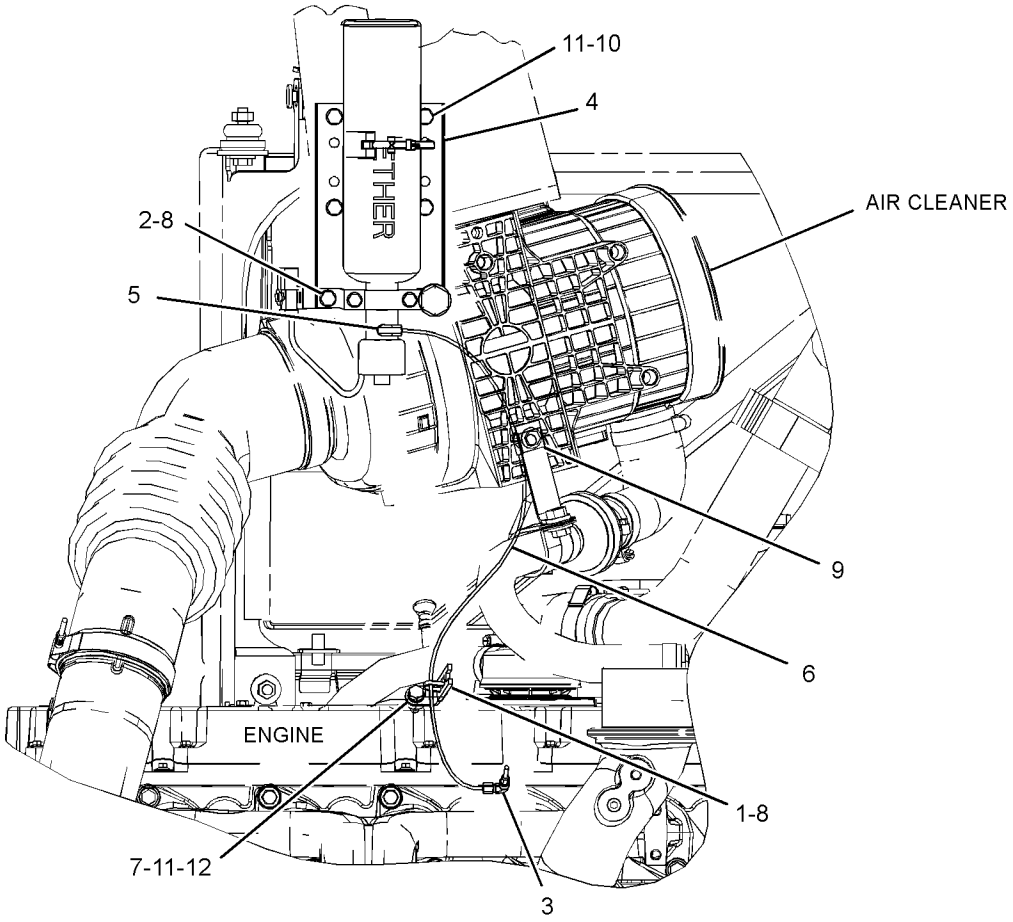

RIGHT SIDE VIEW

GRAPHIC #1 **<END>** g01909657

277-8701 STARTING AID GP-ETHER

S/N: LJR145-UP

PART OF 318-0768 INSTALLATION AR-ENGINE

SMCS-1456 **i03894590**

NOTE	REF NO	GRAPHIC REF	PART NUMBER	QTY	PART NAME 1 2 3 4 5 6 (PRODUCT LEVEL)	SEE PAGE
	1	1	**3S-2093**	1	STRAP-CABLE	
	2	1	**7K-1181**	1	STRAP-CABLE	
	3	1	**127-7443**	1	ATOMIZER AS (ETHER)	
		1	**236-4545**	1	NUT-SLEEVE (5/16-24-THD)	
Y	4	1	**252-1590**	1	STARTING AID GP-ETHER	211
C	5	1	**276-5436**	1	FITTING AS	
		1	**236-4545**	1	NUT-SLEEVE (5/16-24-THD)	
	6	1	**290-5649**	1	TUBE	
	7	1	**198-4776**	1	WASHER-HARD (8.8X20X8-MM THK)	
	8	1	**4P-8134**	2	CLIP	
	9	1	**6V-2686**	1	CLIP	
M	10	1	**8T-4200**	4	BOLT (M8X1.25X16-MM)	
	11	1	**8T-4224**	5	WASHER-HARD (8.8X16X2-MM THK)	
M	12	1	**8T-7547**	1	BOLT (M8X1.25X30-MM)	
A			**7N-0296**	1	CYLINDER AS-ETHER	
					(MUST BE PROCURED LOCALLY FROM YOUR CATERPILLAR DEALER)	

A - NOT PART OF THIS GROUP
C - CHANGE FROM PREVIOUS TYPE
M - METRIC PART
Y - SEPARATE ILLUSTRATION

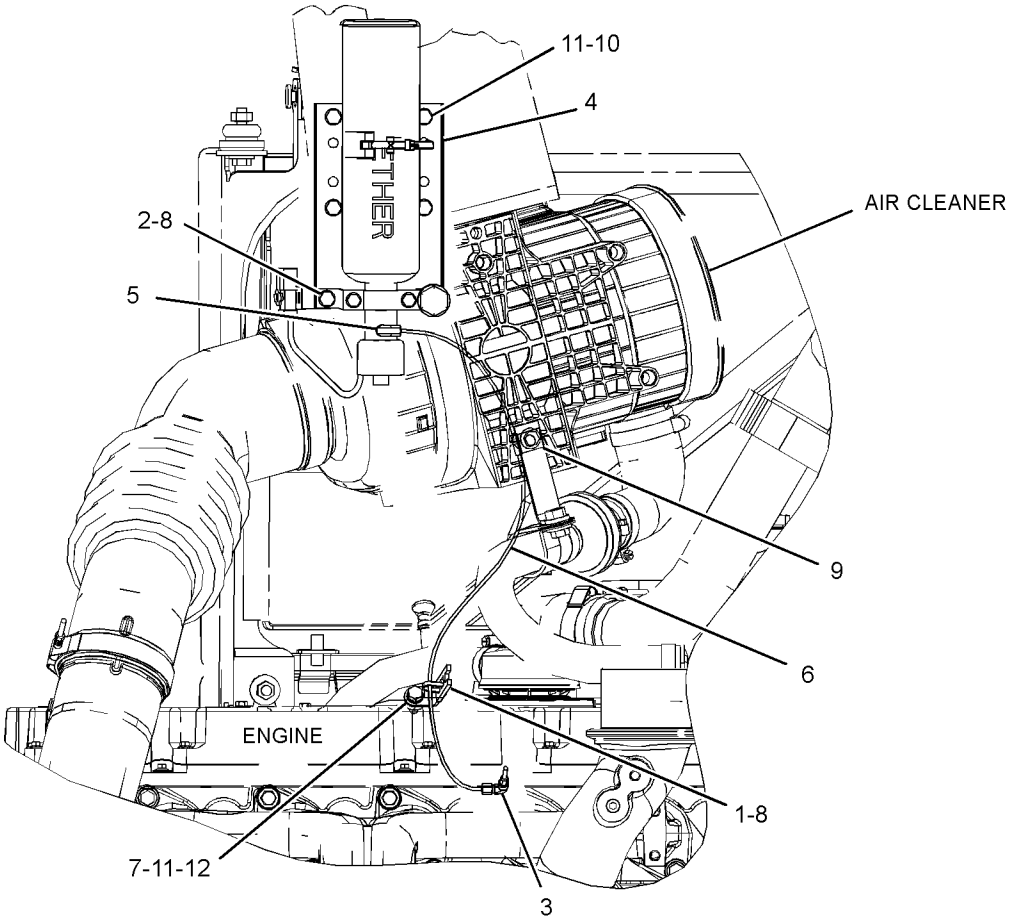

RIGHT SIDE VIEW

GRAPHIC #1 **<END>** g01909657

301-2768 STARTING MOTOR GP-ELECTRIC

S/N: LJR1-UP

PART OF 318-0768 INSTALLATION AR-ENGINE

SMCS-1453 **i03566196**

NOTE	REF NO	GRAPHIC REF	PART NUMBER	QTY	PART NAME 1 2 3 4 5 6 (PRODUCT LEVEL)	SEE PAGE
M	1	1	**6I-0233**	3	NUT (M12X1.75-THD)	
	2	1	**183-1343**	3	STUD	
	3	1	**290-5728**	1	GASKET	
	4	1	**330-3123**	1	STARTING MOTOR GP-ELECTRIC	
		1	**102-8802**	1	KIT-RECEPTACLE (2-PIN)	
					(INCLUDES RECEPTACLE AS & WEDGE)	

M - METRIC PART

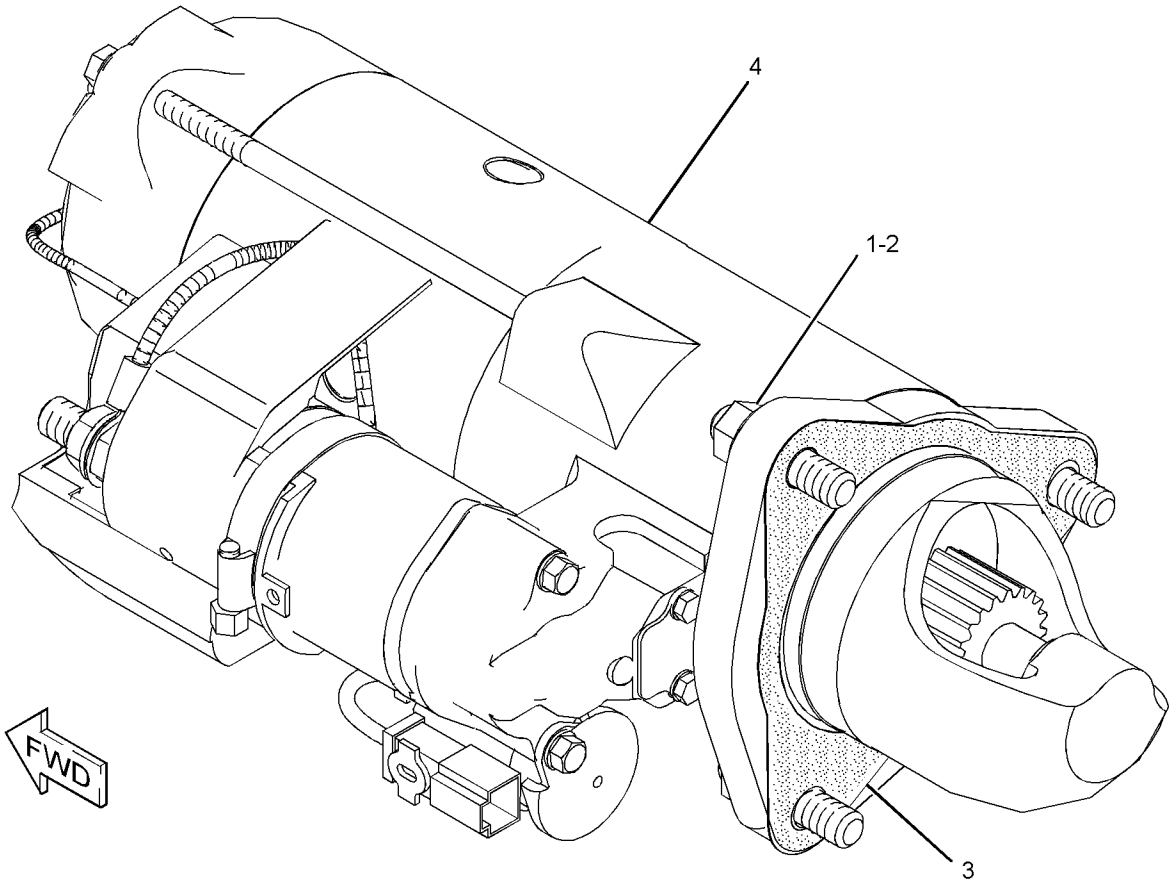

GRAPHIC #1 **<END>** g01832174

164-7577 SWITCH GP-BYPASS—POWER TRAIN OIL

S/N: LJR1-UP

PART OF 333-9308 BASE GP-OIL FILTER

SMCS-1408, 1435 **i02891455**

NOTE	REF NO	GRAPHIC REF	PART NUMBER	QTY	PART NAME 1 2 3 4 5 6 (PRODUCT LEVEL)	SEE PAGE
BE	1	1	**9X-1813**		SLEEVE	
	2	1	**102-8802**	1	KIT-RECEPTACLE (2-PIN)	
					(INCLUDES RECEPTACLE AS & WEDGE)	
	3	1	**186-3735**	2	PIN-CONNECTOR (16-GA TO 18-GA)	
	4	1	**3E-3365**	1	WEDGE-RECEPTACLE LOCK (2-PIN)	
	5	1	**3D-2824**	1	SEAL-O-RING	
Z	6	1		1	SWITCH AS	

B - USE AS REQUIRED
E - ORDER BY THE CENTIMETER
Z - NOT SERVICED SEPARATELY

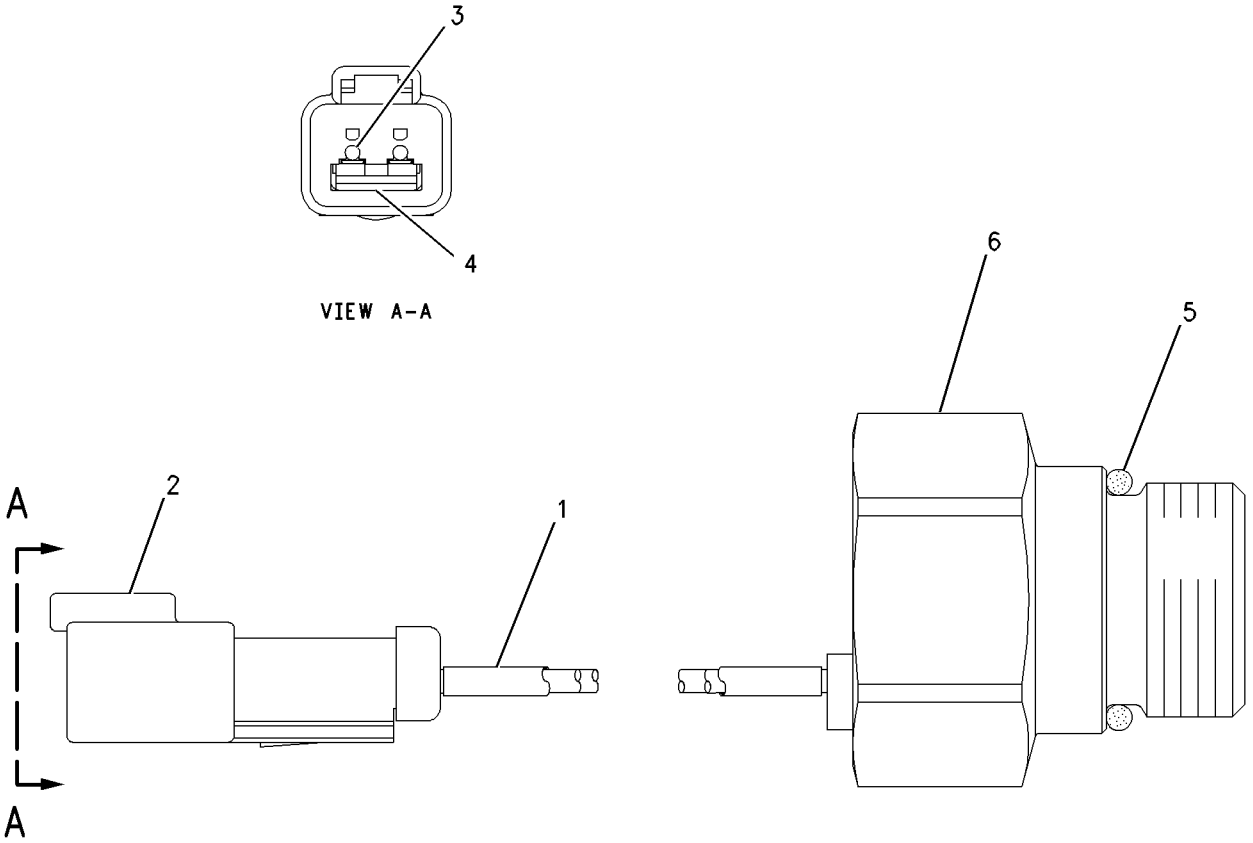

GRAPHIC #1 **<END>** g00750019

7N-0718 SWITCH GP-DISCONNECT–BATTERY

S/N: LJR1-UP
12-VOLT
PART OF 310-1547 BATTERY & WIRING GP

SMCS-1411 **i02587657**

NOTE	REF NO	GRAPHIC REF	PART NUMBER	QTY	PART NAME 1 2 3 4 5 6 (PRODUCT LEVEL)	SEE PAGE
	1	1	**8H-5306**	1	KEY (BATTERY DISCONNECT)	
	2	1	**8H-5303**	1	NUT (3/4-16-THD)	
	3	1	**2H-3922**	2	LOCKWASHER	
	4	1	**9F-5644**	2	LOCKWASHER	
	5	1	**6F-7045**	2	NUT-FULL (3/8-24-THD)	

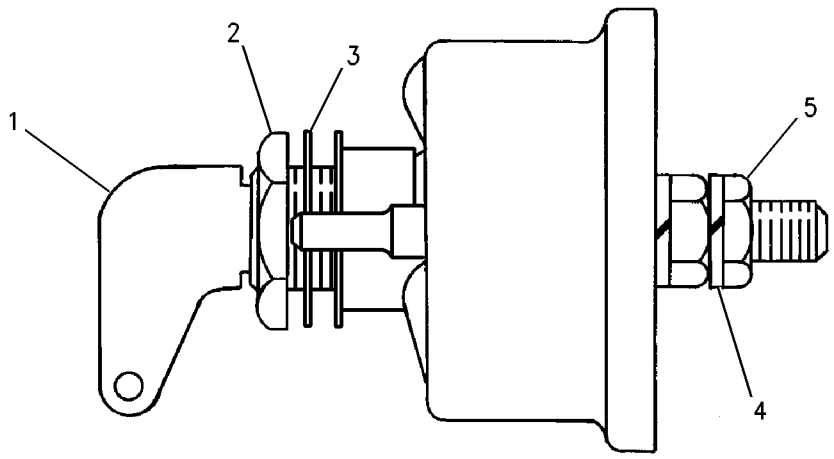

GRAPHIC #1 **<END>** g00715584

241-8368 SWITCH GP-MAGNETIC—MAIN POWER RELAY

S/N: LJR1-UP
24-VOLT
PART OF 310-1535 PANEL GP-CIRCUIT BREAKER
ALSO AN ATTACHMENT

SMCS-7499 **i04842710**

NOTE	REF NO	GRAPHIC REF	PART NUMBER	QTY	PART NAME 1 2 3 4 5 6 (PRODUCT LEVEL)	SEE PAGE
	1	1	**155-2270**	1	KIT-CONNECTING PLUG (2-PIN)	
					(INCLUDES PLUG AS, WEDGE & INTERFACE SEAL)	
	2	1	**4F-2294**	2	NUT-JAM (5/16-24-THD)	
	3	1	**8T-8730**	2	SOCKET-CONNECTOR (16-GA TO 18-GA)	

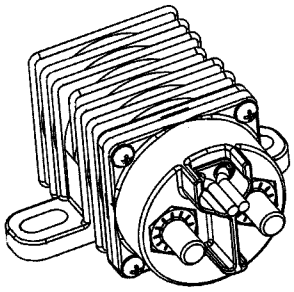

ISOMETRIC VIEW

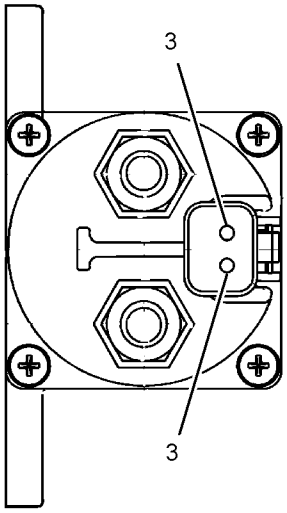

VIEW A-A

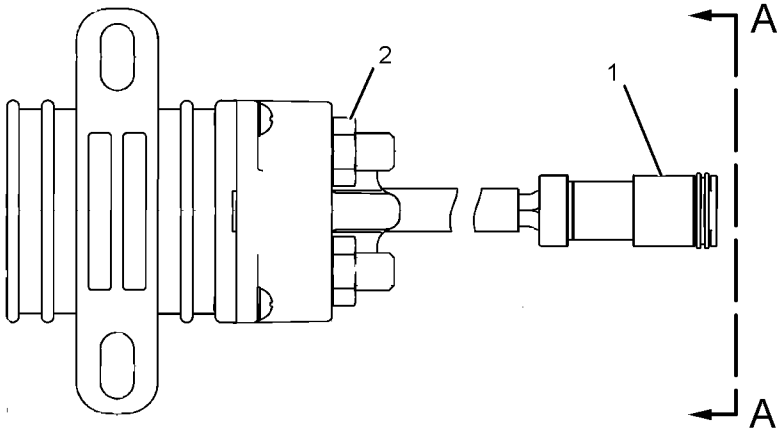

GRAPHIC #1 **<END>** g01077362

258-0883 SWITCH GP-PRESSURE–FUEL FILTER

S/N: C6E1-UP

PART OF 305-7294 FILTER GP-FUEL

SMCS-7400, 7421 **i05093344**

NOTE	REF NO	GRAPHIC REF	PART NUMBER	QTY	PART NAME 1 2 3 4 5 6 (PRODUCT LEVEL)	SEE PAGE
	1	1	**102-8802**	1	KIT-RECEPTACLE (2-PIN)	
					(INCLUDES RECEPTACLE AS & WEDGE)	
	2	1	**9X-7737**	1	SEAL-O-RING	
	3	1	**8T-8729**	2	PIN-CONNECTOR (16-GA TO 18-GA)	
E	4	1	**9X-1813**		SLEEVE (14-CM)	
	5	1	**6V-4589**	1	SEAL-O-RING	

E - ORDER BY THE CENTIMETER

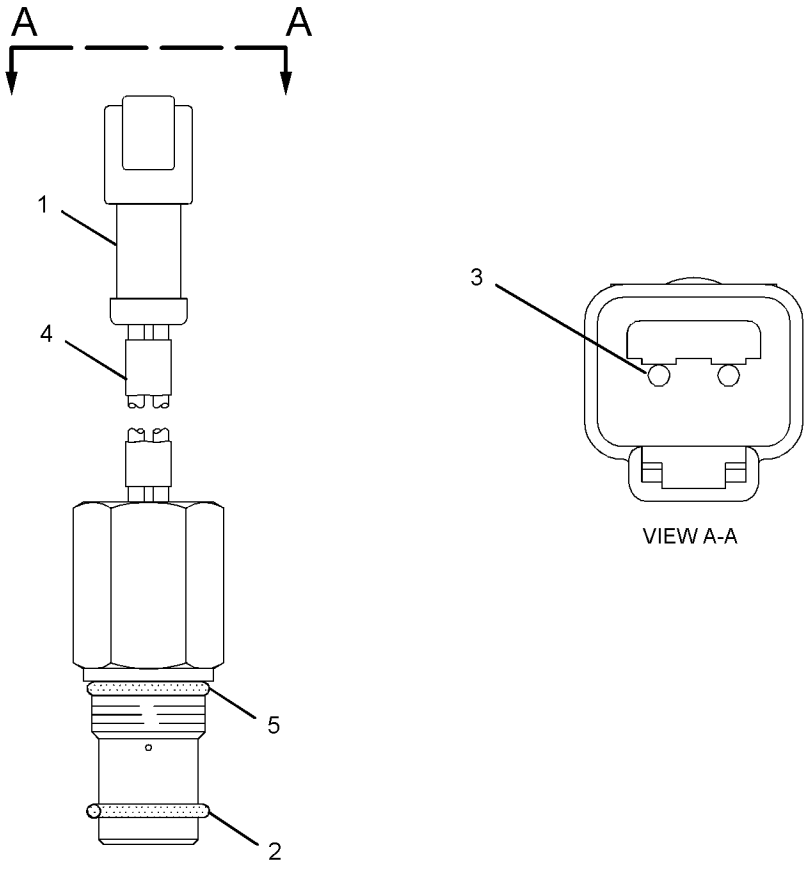

GRAPHIC #1 **<END>** g01960393

158-6632 SWITCH GP-PUSH BUTTON–HORN

S/N: LJR1-UP

PART OF 298-4392 COVER GP-CONSOLE, 320-1160 MOUNTING GP-PLATFORM

ALSO AN ATTACHMENT

SMCS-1435, 7332 **i01837970**

NOTE	REF NO	GRAPHIC REF	PART NUMBER	QTY	PART NAME 1 2 3 4 5 6 (PRODUCT LEVEL)	SEE PAGE
	1	1	**9X-0199**	1	BOOT-SWITCH	
	2	1	**7T-9515**	1	KNOB-HORN	
	3	1	**5L-7200**	1	SCREW (8-32X0.375-IN)	
	4	1	**3B-4501**	1	LOCKWASHER	
	5	1	**6V-8370**	1	NUT-HEX (3/4-32-THD)	
	6	1	**2H-3922**	1	LOCKWASHER	
	7	1	**102-8802**	1	KIT-RECEPTACLE (2-PIN)	
					(INCLUDES RECEPTACLE AS & WEDGE)	
	8	1	**9X-3401**	2	PIN-CONNECTOR (16-GA TO 18-GA)	
	9	1	**3E-3365**	1	WEDGE-RECEPTACLE LOCK (2-PIN)	

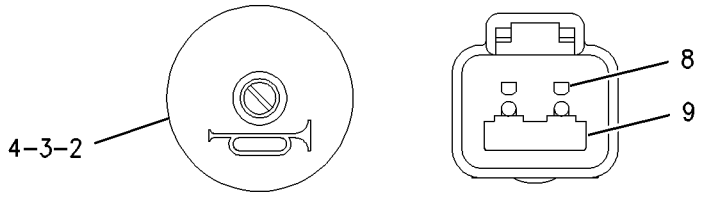

VIEW A–A VIEW B–B

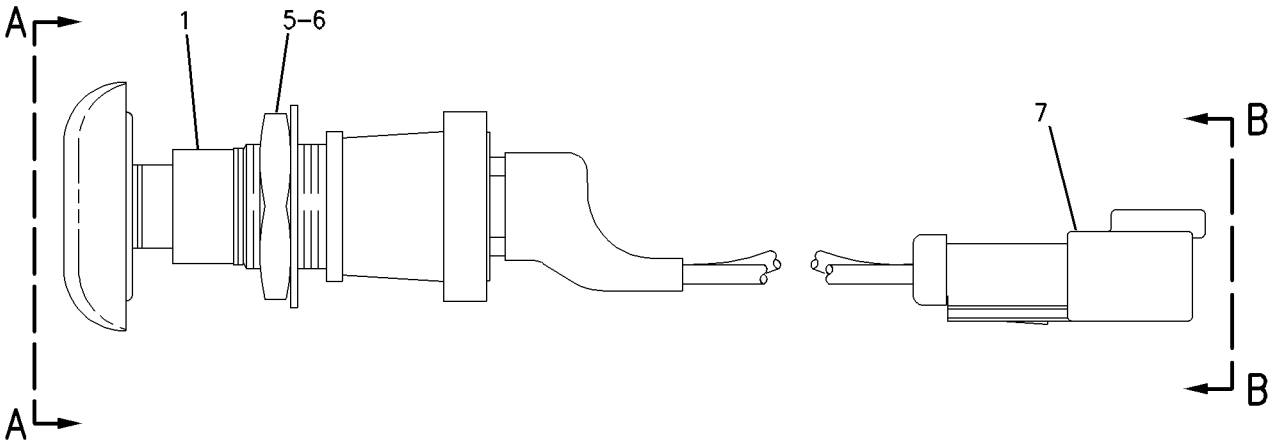

GRAPHIC #1 **<END>** g00942674

158-6634 SWITCH GP-TOGGLE—GROUND LEVEL SHUTDOWN

S/N: LJR1-UP

PART OF 310-1547 BATTERY & WIRING GP

SMCS-7332 **i05181798**

NOTE	REF NO	GRAPHIC REF	PART NUMBER	QTY	PART NAME 1 2 3 4 5 6 (PRODUCT LEVEL)	SEE PAGE
	1	1	**6T-3631**	2	NUT-HEX (15/32-32-THD)	
	2	1	**6T-3632**	1	LOCKWASHER	
	3	1	**6T-3633**	1	RING-LOCKING	
	4	1	**102-8804**	1	KIT-RECEPTACLE (4-PIN)	
					(INCLUDES RECEPTACLE AS & WEDGE)	
	5	1	**8T-8729**	3	PIN-CONNECTOR (16-GA TO 18-GA)	
	6	1	**9G-3695**	1	PLUG-SEAL	

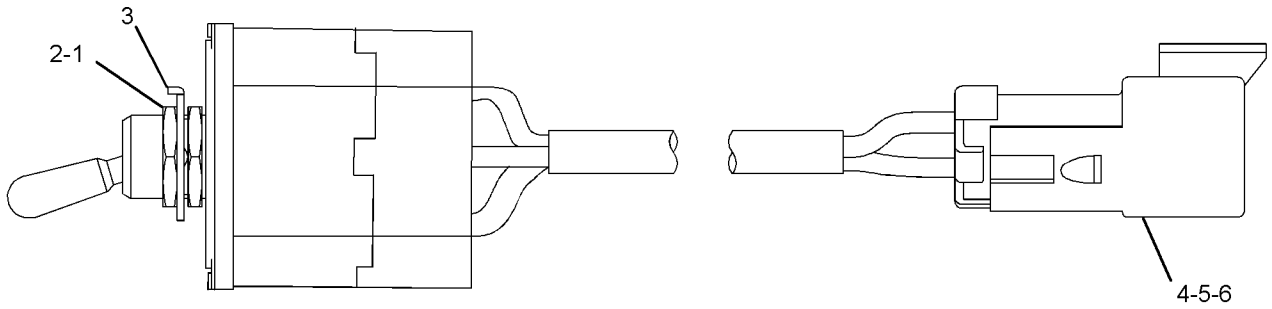

GRAPHIC #1 **<END>** g01618710

165-5970 SWITCH GP-TOGGLE–FUEL PRIMING PUMP

S/N: LJR1-UP

PART OF 301-2710, 362-1096 PUMP GP-FUEL PRM & WATER SEP

SMCS-7332 **i04946998**

NOTE	REF NO	GRAPHIC REF	PART NUMBER	QTY	PART NAME 1 2 3 4 5 6 (PRODUCT LEVEL)	SEE PAGE
	1	1	**6T-3631**	2	NUT-HEX (15/32-32-THD)	
	2	1	**6T-3632**	1	LOCKWASHER	
	3	1	**6T-3633**	1	RING-LOCKING	
	4	1	**102-8803**	1	KIT-RECEPTACLE (3-PIN)	
					(INCLUDES RECEPTACLE AS & WEDGE)	
	5	1	**8T-8729**	3	PIN-CONNECTOR (16-GA TO 18-GA)	

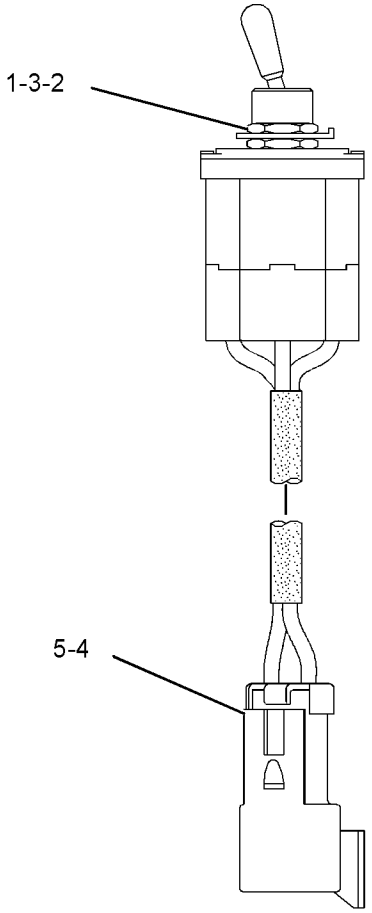

GRAPHIC #1 **<END>** g03132718

239-1134 VALVE GP-ETHER STARTING

S/N: LJR1-UP
24-VOLT
PART OF 252-1590 STARTING AID GP-ETHER

SMCS-1456 **i03907816**

NOTE	REF NO	GRAPHIC REF	PART NUMBER	QTY	PART NAME 1 2 3 4 5 6 (PRODUCT LEVEL)	SEE PAGE
	1	1	**7N-9801**	1	GASKET	
	2	1	**102-8802**	1	KIT-RECEPTACLE (2-PIN)	
					(INCLUDES RECEPTACLE AS & WEDGE)	
	3	1	**8T-8729**	2	PIN-CONNECTOR (16-GA TO 18-GA)	
	4	1	**358-4889**	1	FILTER (ETHER START)	

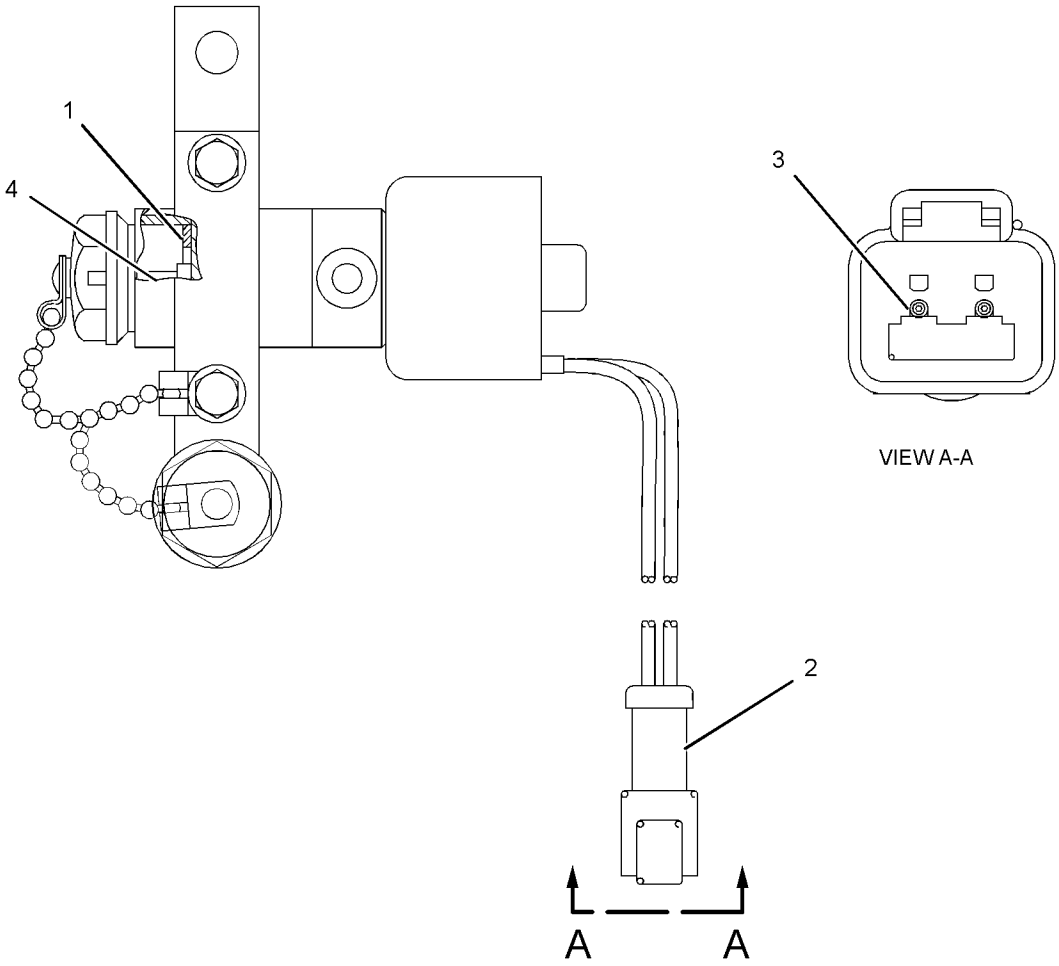

GRAPHIC #1 **<END>** g02138138

310-7462 WIRING GP-CAB

S/N: LJR1-UP
PART OF 311-6400 CAB GP
ALSO AN ATTACHMENT

SMCS-1408, 7301

i03627526

NOTE	REF NO	GRAPHIC REF	PART NUMBER	QTY	PART NAME 1 2 3 4 5 6 (PRODUCT LEVEL)	SEE PAGE
	1	1	**7K-1181**	29	STRAP-CABLE	
	2	1	**7T-8895**	1	GROMMET	
	3	1	**107-6032**	1	LAMP GP-DOME (24-VOLT)	
		1	**259-1286**	1	LAMP (24-VOLT, 10-WATT)	
	4	1	**228-6089**	1	PLUG (ROCKER SWITCH)	
	5	1	**251-1192**	1	SWITCH AS-ROCKER (WIPER, WASHER, LH DOOR)	
	6	1	**312-4535**	1	HARNESS AS-CAB	
		1	**2L-8069**	2	TERMINAL-RING (2-GA TO 10-GA, 3/8-IN SCREW)	
		1	**2L-8079**	1	TERMINAL-RING (14-GA TO 16-GA, 3/8-IN SCREW)	
		1	**5P-4571**	2	TERMINAL-BLADE (14-GA TO 16-GA)	
		1	**097-7234**	4	TERMINAL-BLADE (18-GA TO 22-GA)	
		1	**202-5397**	18	PLUG	
		1	**144-1636**	23	PIN-CONNECTOR (14-GA TO 18-GA)	
		1	**155-2265**	1	KIT-CONNECTING PLUG (8-PIN)	
		1	**155-2270**	6	KIT-CONNECTING PLUG (2-PIN)	
		1	**155-2274**	3	KIT-CONNECTING PLUG (6-PIN)	
		1	**245-7434**	5	KIT-CONNECTING PLUG (10-PIN)	
					(EACH KIT INCLUDES PLUG AS, WEDGE & INTERFACE SEAL)	
		1	**8T-8737**	17	PLUG-SEAL	
		1	**102-8802**	1	KIT-RECEPTACLE (2-PIN)	
		1	**102-8806**	1	KIT-RECEPTACLE (8-PIN)	
					(EACH KIT INCLUDES RECEPTACLE AS & WEDGE)	
		1	**230-4010**	1	RECEPTACLE AS-CONNECTOR (12-PIN)	
		1	**239-7357**	1	RECEPTACLE AS-CONNECTOR (12-PIN)	
		1	**185-1861**	32	SEAL-WIRE	
		1	**9X-3402**	32	SOCKET-CONNECTOR (16-GA TO 18-GA)	
E		1	**119-3662**		TUBE-HEAT SHRINK (10.85-MM DIA) (33-CM)	
E		1	**125-7874**		TUBE-HEAT SHRINK (5.72-MM DIA) (10-CM)	
E		1	**125-7875**		TUBE-HEAT SHRINK (7.44-MM DIA) (5-CM)	
	7	1	**251-1191**	1	SWITCH AS-ROCKER (WIPER, WASHER, FRONT)	
	8	1	**251-1193**	1	SWITCH AS-ROCKER (WIPER, WASHER, RH DOOR)	
	9	1	**251-1194**	1	SWITCH AS-ROCKER (WIPER, WASHER, REAR)	
	10	1	**2V-8259**	1	GROMMET	
	11	1	**4H-2558**	1	GROMMET	
	12	1	**5P-8439**	1	GROMMET	
	13	1	**8T-4121**	1	WASHER-HARD (11X21X2.5-MM THK)	
M	14	1	**8T-4137**	1	BOLT (M10X1.5X20-MM)	

E - ORDER BY THE CENTIMETER
M - METRIC PART

310-7462 **WIRING GP-CAB (*contd.*)** **i03627526**

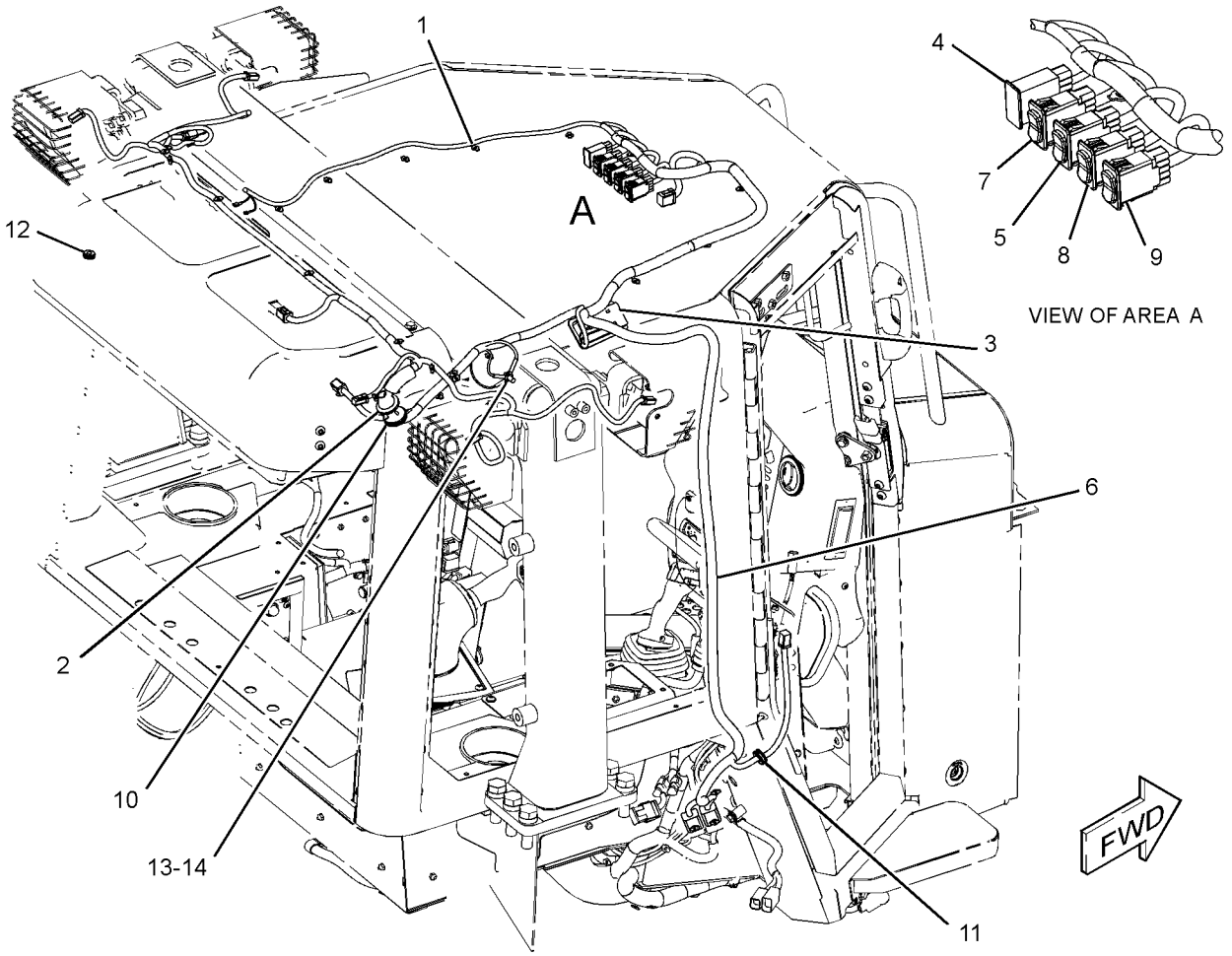

GRAPHIC #1 **<END>** g01899974

305-8977 WIRING GP-ENGINE

S/N: C6E1-UP

PART OF 319-7201 ENGINE AR-PRIMARY

SMCS-1000, 1408

i04831409

NOTE	REF NO	GRAPHIC REF	PART NUMBER	QTY	PART NAME 1 2 3 4 5 6 (PRODUCT LEVEL)	SEE PAGE
	1	1	**217-9039**	2	STRAP-CABLE	
	2	1	**348-4637**	1	BOLT	
	3	1	**293-1880**	1	BRACKET	
	4	1	**304-5166**	1	HARNESS AS-ENGINE	
	5	1	**304-5167**	1	HARNESS AS-ENGINE	
	6	1	**305-8978**	1	BRACKET	
	7	1	**305-8979**	1	BRACKET	
	8	1	**363-1172**	1	BRACKET	
	9	1	**311-2752**	1	RIVET	
	10	1	**311-2732**	4	TIE-CABLE	

305-8977 **WIRING GP-ENGINE (*contd.*)** **i04831409**

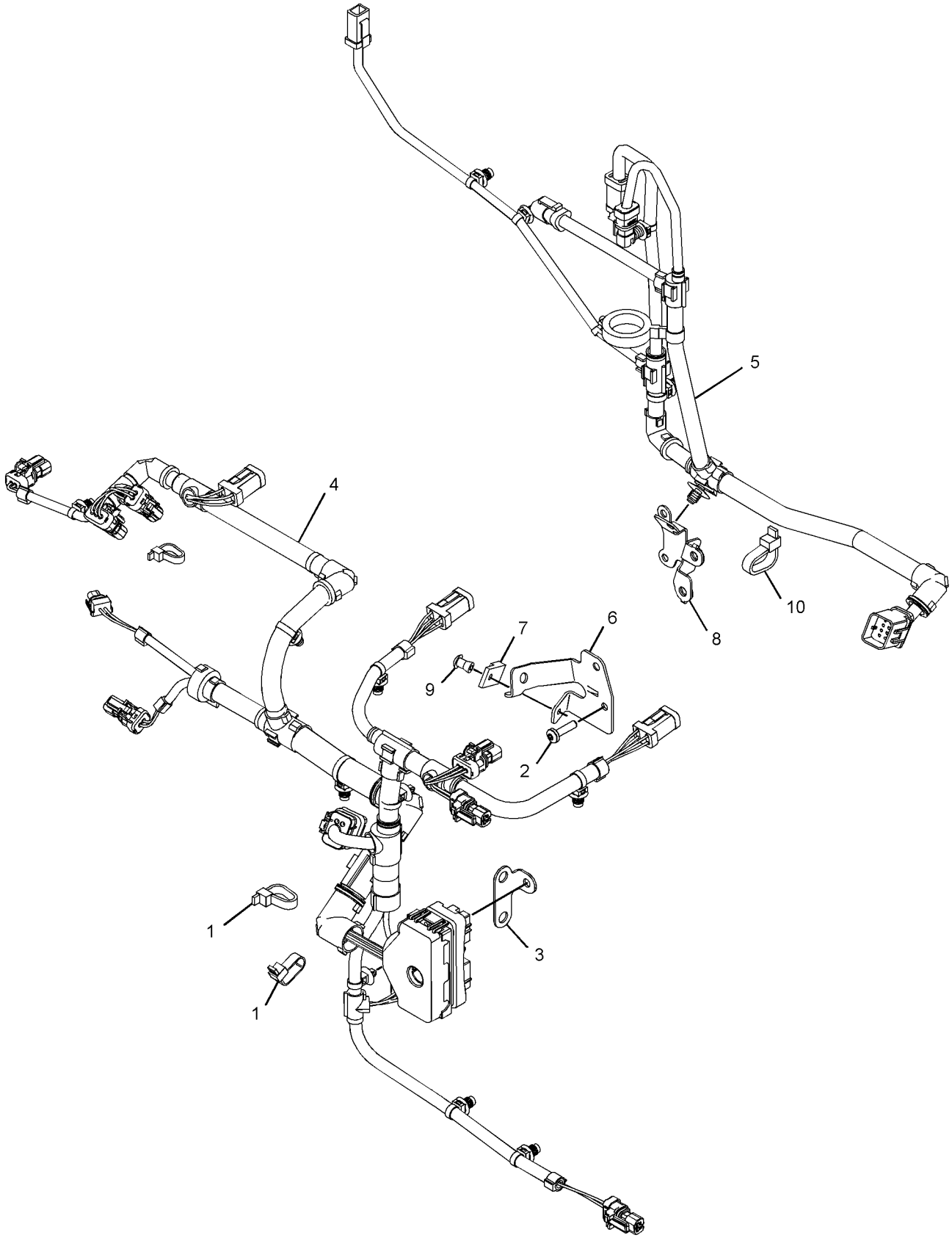

GRAPHIC #1 **<END>** g02972177

310-1550 WIRING GP-ENGINE

S/N: LJR1-443

PART OF 310-9946 ELECTRONICS AR-MACHINE

SMCS-1000, 1408 **i03827234**

NOTE	REF NO	GRAPHIC REF	PART NUMBER	QTY	PART NAME 1 2 3 4 5 6 (PRODUCT LEVEL)	SEE PAGE
	1	1	**3S-2093**	1	STRAP-CABLE	
	2	1	**7K-1181**	41	STRAP-CABLE	
	3	1	**127-0724**	1	SPACER (10.5X16X20-MM THK)	
	4	1	**133-6934**	1	SPACER (11X20X25-MM THK)	
	5	1	**141-3983**	1	SPACER (11X19X48-MM THK)	
Y	6	1	**145-7028**	1	SENSOR GP-TEMPERATURE (TORQUE CONVERTER OUTLET)	208
	7	1	**164-3651**	1	ADAPTER	
M	8	1	**176-9237**	2	BOLT-SPECIAL	
Y	9	1	**193-2550**	1	SENSOR GP-SPEED (MAGNETIC, HIGH OUTPUT) (TORQUE CONVERTER)	203
	10	1	**206-2423**	1	SADDLE	
	11	1	**220-5946**	5	CLIP	
Y	12	1	**262-4806**	1	SENSOR GP-SPEED (ENGINE OUTPUT)	205
	13	1	**274-4223**	1	BRACKET AS	
	14	1	**287-3890**	1	PLATE AS	
		1	**7T-1099**	4	LINK	
	15	1	**294-8548**	1	CABLE AS	
E		1	**5P-0747**		CABLE (00-GA, BLACK) (58-CM)	
		1	**1S-7251**	1	TERMINAL-CABLE (00-GA, 1/2-IN SCREW)	
		1	**9X-9825**	1	TERMINAL-CABLE (00-GA, 1/2-IN SCREW)	
	16	1	**306-6687**	1	STRAP AS	
	17	1	**317-5517**	1	HARNESS AS-POWER	
		1	**3L-6513**	1	TERMINAL-RING (1-GA TO 2-GA, 1/2-IN SCREW)	
		1	**6T-5598**	1	TERMINAL-RING (1-GA TO 2-GA, 5/16-IN SCREW)	
E		1	**8C-3056**		CABLE (2-GA, RED) (130-CM)	
		1	**8T-8827**	1	BOOT (RED)	
E		1	**174-1712**		INSULATION (30-CM)	
		1	**311-8086**	2	STRAP-CABLE	
	18	1	**322-1377**	1	BRACKET AS	
	19	1	**335-2094**	1	HARNESS AS-ENGINE	
		1	**102-8802**	4	KIT-RECEPTACLE (2-PIN)	
		1	**102-8805**	1	KIT-RECEPTACLE (6-PIN)	
					(EACH KIT INCLUDES RECEPTACLE AS & WEDGE)	
		1	**8T-8737**	13	PLUG-SEAL	
E		1	**119-3662**		TUBE-HEAT SHRINK (10.85-MM DIA) (20-CM)	
E		1	**125-7874**		TUBE-HEAT SHRINK (5.72-MM DIA) (30-CM)	
E		1	**125-7875**		TUBE-HEAT SHRINK (7.44-MM DIA) (5-CM)	
		1	**9X-3402**	40	SOCKET-CONNECTOR (16-GA TO 18-GA)	
		1	**2L-8069**	1	TERMINAL-RING (2-GA TO 10-GA, 3/8-IN SCREW)	
		1	**2L-8079**	2	TERMINAL-RING (14-GA TO 16-GA, 3/8-IN SCREW)	
		1	**134-2540**	1	RESISTOR AS-CONNECTION (3-PIN)	
		1	**144-1636**	36	PIN-CONNECTOR (14-GA TO 18-GA)	
		1	**155-2270**	11	KIT-CONNECTING PLUG (2-PIN)	
		1	**155-2260**	1	KIT-CONNECTING PLUG (3-PIN)	
		1	**174-0503**	1	KIT-CONNECTING PLUG (3-PIN)	
					(EACH KIT INCLUDES PLUG AS, WEDGE & INTERFACE SEAL)	
		1	**167-3692**	1	RECEPTACLE AS-CONNECTOR (31-PIN)	
		1	**230-4009**	1	PLUG AS-CONNECTOR (12-PIN)	
		1	**264-7034**	1	SEAL-CONNECTOR	
		1	**230-4011**	2	PLUG AS-CONNECTOR (2-PIN)	
		1	**264-7029**	1	SEAL-CONNECTOR	
		1	**245-1042**	1	PLUG AS-CONNECTOR (64-PIN)	
M		1	**267-7207**	1	BOLT-SPECIAL	
		1	**267-7208**	1	RING-RETAINING	
		1	**274-4990**	1	SEAL	

310-1550 **WIRING GP-ENGINE (*contd.*)** **i03827234**

NOTE	REF NO	GRAPHIC REF	PART NUMBER	QTY	PART NAME 1 2 3 4 5 6 (PRODUCT LEVEL)	SEE PAGE
		1	**245-1044**	2	LOCK-CONNECTOR	
		1	**245-1045**	1	COVER	
		1	**245-1047**	30	SOCKET-CONNECTOR	
		1	**245-1048**	34	PLUG-CONNECTOR	
	20	1	**124-9633**	1	CLIP	
	21	1	**132-5789**	1	CLIP	
	22	1	**194-9625**	1	WASHER-HARD (13.5X18X4-MM THK)	
	23	1	**272-1777**	1	WASHER-HARD (11X18.5X15-MM THK)	
	24	1	**3J-1907**	1	SEAL-O-RING	
	25	1	**4K-8864**	1	CLIP	
	26	1	**4P-7428**	2	CLIP	
	27	1	**4P-7581**	8	CLIP	
	28	1	**4P-8134**	4	CLIP	
	29	1	**5P-4116**	1	WASHER-HARD (8.8X20.5X2-MM THK)	
	30	1	**5P-9297**	1	CLIP	
	31	1	**6D-3479**	3	CLIP	
	32	1	**7J-0204**	1	SEAL-O-RING	
	33	1	**8T-4121**	24	WASHER-HARD (11X21X2.5-MM THK)	
M	34	1	**8T-4136**	5	BOLT (M10X1.5X25-MM)	
M	35	1	**8T-4137**	11	BOLT (M10X1.5X20-MM)	
M	36	1	**8T-4182**	1	BOLT (M10X1.5X45-MM)	
M	37	1	**8T-4186**	3	BOLT (M10X1.5X40-MM)	
M	38	1	**8T-4191**	2	BOLT (M10X1.5X16-MM)	
M	39	1	**8T-4192**	1	BOLT (M12X1.75X25-MM)	
M	41	1	**8T-4196**	1	BOLT (M10X1.5X35-MM)	
M	42	1	**8T-6466**	2	BOLT (M10X1.5X60-MM)	
M	43	1	**8T-6870**	1	BOLT (M8X1.25X70-MM)	
	44	1	**8T-7934**	3	WASHER-HARD (11X21X5-MM THK)	
Y	45	1	**9W-0742**	1	BLOCK GP-JUNCTION (BATTERY)	158

E - ORDER BY THE CENTIMETER
M - METRIC PART
Y - SEPARATE ILLUSTRATION

310-1550 **WIRING GP-ENGINE (*contd.*)** **i03827234**

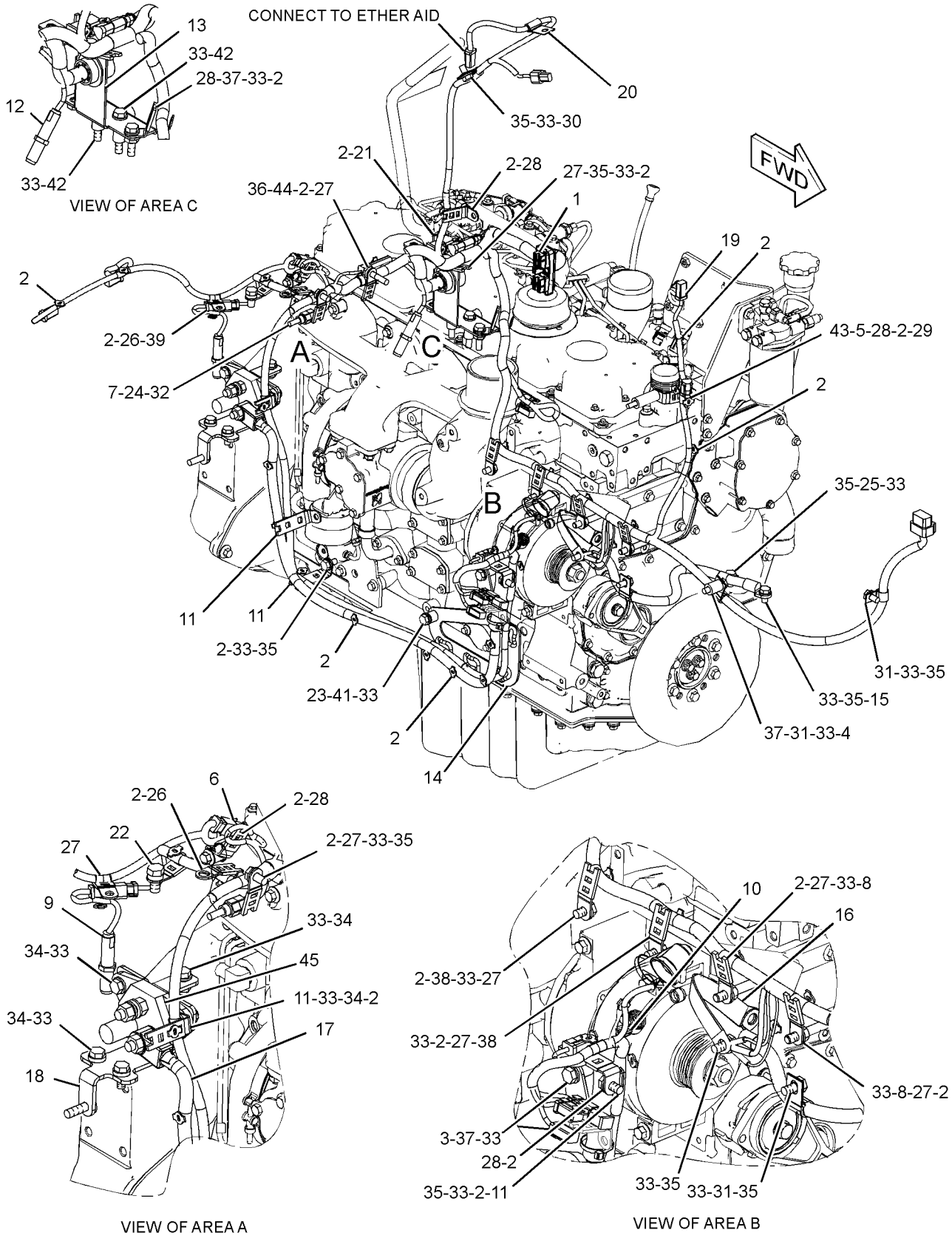

GRAPHIC #1 **<END>** g02055057

310-1550 WIRING GP-ENGINE

S/N: LJR444-UP

PART OF 310-9946 ELECTRONICS AR-MACHINE

SMCS-1000, 1408 **i04789977**

NOTE	REF NO	GRAPHIC REF	PART NUMBER	QTY	PART NAME 1 2 3 4 5 6 (PRODUCT LEVEL)	SEE PAGE
	1	1	**3S-2093**	1	STRAP-CABLE	
	2	1	**7K-1181**	41	STRAP-CABLE	
C	3	1	**2B-0941**	1	SPACER (10.5X19X19-MM THK)	
C	4	1	**7C-8246**	1	SPACER (10.5X20X24-MM THK)	
	5	1	**141-3983**	1	SPACER (11X19X48-MM THK)	
CY	6	1	*234-5013*	1	SENSOR GP-TEMPERATURE (TORQUE CONVERTER OUTLET)	210
C	7	1	*148-8307*	1	ADAPTER AS	
		1	**3J-1907**	1	SEAL-O-RING	
		1	**5P-8874**	1	ADAPTER	
M	8	1	**176-9237**	2	BOLT-SPECIAL	
Y	9	1	**193-2550**	1	SENSOR GP-SPEED (MAGNETIC, HIGH OUTPUT) (TORQUE CONVERTER)	203
	10	1	**206-2423**	1	SADDLE	
	11	1	**220-5946**	5	CLIP	
Y	12	1	**262-4806**	1	SENSOR GP-SPEED (ENGINE OUTPUT)	205
	13	1	**274-4223**	1	BRACKET AS	
	14	1	**287-3890**	1	PLATE AS	
		1	**7T-1099**	4	LINK	
	15	1	**294-8548**	1	CABLE AS	
E		1	**5P-0747**		CABLE (00-GA, BLACK) (58-CM)	
		1	**1S-7251**	1	TERMINAL-CABLE (00-GA, 1/2-IN SCREW)	
		1	**9X-9825**	1	TERMINAL-CABLE (00-GA, 1/2-IN SCREW)	
	16	1	**306-6687**	1	STRAP AS	
	17	1	**317-5517**	1	HARNESS AS-POWER	
		1	**3L-6513**	1	TERMINAL-RING (1-GA TO 2-GA, 1/2-IN SCREW)	
		1	**6T-5598**	1	TERMINAL-RING (1-GA TO 2-GA, 5/16-IN SCREW)	
E		1	**8C-3056**		CABLE (2-GA, RED) (130-CM)	
		1	**8T-8827**	1	BOOT (RED)	
E		1	**174-1712**		INSULATION (30-CM)	
		1	**311-8086**	2	STRAP-CABLE	
	18	1	**322-1377**	1	BRACKET AS	
C	19	1	**363-7709**	1	HARNESS AS-ENGINE	
		1	**102-8802**	4	KIT-RECEPTACLE (2-PIN)	
		1	**102-8805**	1	KIT-RECEPTACLE (6-PIN)	
					(EACH KIT INCLUDES RECEPTACLE AS & WEDGE)	
		1	**8T-8737**	13	PLUG-SEAL	
E		1	**119-3662**		TUBE-HEAT SHRINK (10.85-MM DIA) (13-CM)	
E		1	**125-7874**		TUBE-HEAT SHRINK (5.72-MM DIA) (30-CM)	
E		1	**125-7875**		TUBE-HEAT SHRINK (7.44-MM DIA) (10-CM)	
		1	**9X-3402**	40	SOCKET-CONNECTOR (16-GA TO 18-GA)	
		1	**2L-8069**	1	TERMINAL-RING (2-GA TO 10-GA, 3/8-IN SCREW)	
		1	**2L-8079**	2	TERMINAL-RING (14-GA TO 16-GA, 3/8-IN SCREW)	
		1	**128-4249**	1	LOCKWASHER	
		1	**134-2540**	1	RESISTOR AS-CONNECTION (3-PIN)	
		1	**144-1636**	36	PIN-CONNECTOR (14-GA TO 18-GA)	
		1	**155-2270**	10	KIT-CONNECTING PLUG (2-PIN)	
		1	**155-2260**	1	KIT-CONNECTING PLUG (3-PIN)	
		1	**174-0503**	1	KIT-CONNECTING PLUG (3-PIN)	
					(EACH KIT INCLUDES PLUG AS, WEDGE & INTERFACE SEAL)	
		1	**167-3692**	1	RECEPTACLE AS-CONNECTOR (31-PIN)	
		1	**211-0052**	1	NUT (1-11/16-18-THD)	
		1	**230-4009**	1	PLUG AS-CONNECTOR (12-PIN)	
		1	**264-7034**	1	SEAL-CONNECTOR	
		1	**230-4011**	3	PLUG AS-CONNECTOR (2-PIN)	
					(EACH INCLUDES)	

310-1550 **WIRING GP-ENGINE (*contd.*)** **i04789977**

NOTE	REF NO	GRAPHIC REF	PART NUMBER	QTY	PART NAME 1 2 3 4 5 6 (PRODUCT LEVEL)	SEE PAGE
		1	**264-7029**	1	SEAL-CONNECTOR	
		1	**245-1042**	1	PLUG AS-CONNECTOR (64-PIN)	
M		1	**267-7207**	1	BOLT-SPECIAL	
		1	**267-7208**	1	RING-RETAINING	
		1	**274-4990**	1	SEAL	
		1	**245-1044**	2	LOCK-CONNECTOR	
		1	**245-1045**	1	COVER	
		1	**267-9572**	30	SOCKET-CONNECTION (18-GA)	
		1	**245-1048**	34	PLUG-CONNECTOR	
	20	1	**124-9633**	1	CLIP	
	21	1	**132-5789**	1	CLIP	
C	22	1	**8T-4223**	1	WASHER-HARD (13.5X25.5X3-MM THK)	
	23	1	**272-1777**	1	WASHER-HARD (11X18.5X15-MM THK)	
	25	1	**4K-8864**	1	CLIP	
	26	1	**4P-7428**	2	CLIP	
	27	1	**4P-7581**	8	CLIP	
	28	1	**4P-8134**	4	CLIP	
	29	1	**5P-4116**	1	WASHER-HARD (8.8X20.5X2-MM THK)	
	30	1	**5P-9297**	1	CLIP	
	31	1	**6D-3479**	3	CLIP	
	33	1	**8T-4121**	24	WASHER-HARD (11X21X2.5-MM THK)	
M	34	1	**8T-4136**	5	BOLT (M10X1.5X25-MM)	
M	35	1	**8T-4137**	11	BOLT (M10X1.5X20-MM)	
M	36	1	**8T-4182**	1	BOLT (M10X1.5X45-MM)	
M	37	1	**8T-4186**	3	BOLT (M10X1.5X40-MM)	
M	38	1	**8T-4191**	2	BOLT (M10X1.5X16-MM)	
M	39	1	**8T-4192**	1	BOLT (M12X1.75X25-MM)	
M	41	1	**8T-4196**	1	BOLT (M10X1.5X35-MM)	
M	42	1	**8T-6466**	2	BOLT (M10X1.5X60-MM)	
M	43	1	**8T-6870**	1	BOLT (M8X1.25X70-MM)	
	44	1	**8T-7934**	3	WASHER-HARD (11X21X5-MM THK)	
Y	45	1	**9W-0742**	1	BLOCK GP-JUNCTION (BATTERY)	158

C - CHANGE FROM PREVIOUS TYPE
E - ORDER BY THE CENTIMETER
M - METRIC PART
Y - SEPARATE ILLUSTRATION

310-1550 **WIRING GP-ENGINE (*contd.*)** **i04789977**

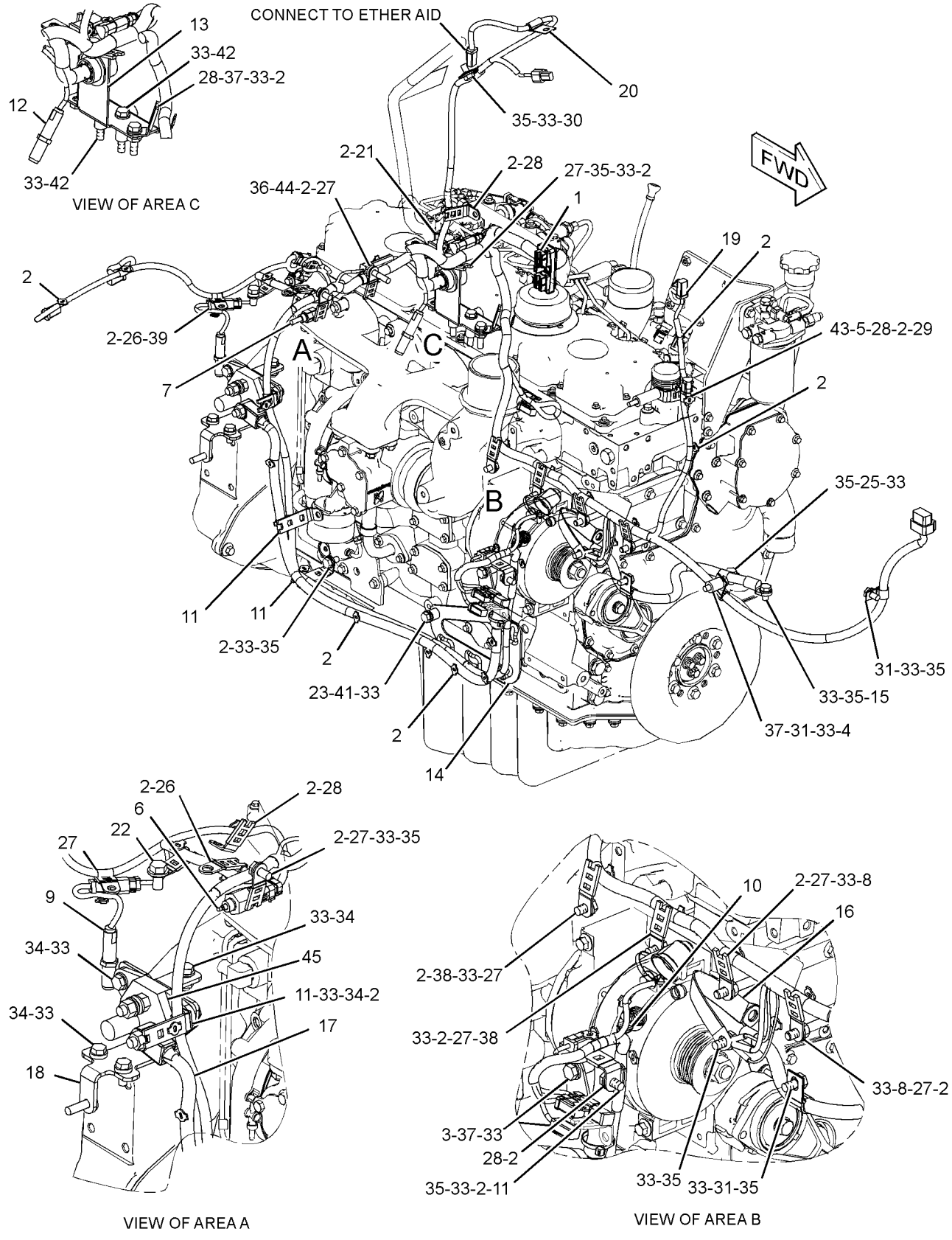

GRAPHIC #1 **<END>** g03002670

312-3140 WIRING GP-GRADE CONTROL

S/N: LJR1-333
PART OF 321-7767, 321-7768 GRADE CONTROL AR
AN ATTACHMENT

SMCS-1408 **i03659021**

NOTE	REF NO	GRAPHIC REF	PART NUMBER	QTY	PART NAME 1 2 3 4 5 6 (PRODUCT LEVEL)	SEE PAGE
	1	1	**6D-3033**	12	SCREW-SOCKET HEAD (4-40X0.5-IN)	
	2	1	**7K-1181**	30	STRAP-CABLE	
	3	1	**132-8487**	3	NUT-RING	
	4	1	**226-9169**	1	MODULE AS-POWER SUPPLY (ELECTRICAL ENCLOSURE)	
	5	1	**258-4819**	3	BOSS	
	6	1	**277-1801**	1	HARNESS AS-WIRING (POWER SUPPLY MODULE)	
		1	**3R-9965**	1	PLUG AS-CONNECTOR (8-PIN)	
		1	**6D-5257**	1	PLUG AS-CONNECTOR (8-PIN)	
		1	**8T-8737**	2	PLUG-SEAL	
		1	**144-1636**	10	PIN-CONNECTOR (14-GA TO 18-GA)	
		1	**230-4010**	1	RECEPTACLE AS-CONNECTOR (12-PIN)	
	7	2	**293-9310**	1	CAP-CONNECTOR	
	8	1	**323-3268**	1	HARNESS AS-WIRING (ANGLE)	
		1	**228-3323**	1	CLIP-SPRING	
		1	**230-5009**	1	RECEPTACLE AS-CONNECTOR (4-PIN)	
	9	1	**323-6948**	1	HARNESS AS-WIRING (LASER ANTENNA)	
		1	**102-8801**	1	KIT-RECEPTACLE (12-PIN)	
					(INCLUDES RECEPTACLE AS & WEDGE)	
		1	**8T-8737**	4	PLUG-SEAL	
		1	**144-1636**	8	PIN-CONNECTOR (14-GA TO 18-GA)	
		1	**167-8987**	1	PLUG AS-CONNECTOR (8-PIN)	
	10	1	**335-2102**	1	HARNESS AS-CAB	
		1	**9X-3402**	8	SOCKET-CONNECTOR (16-GA TO 18-GA)	
		1	**144-1636**	8	PIN-CONNECTOR (14-GA TO 18-GA)	
		1	**231-2295**	1	PLUG AS-CONNECTOR (8-PIN)	
		1	**264-7033**	1	SEAL-CONNECTOR	
		1	**231-2300**	1	RECEPTACLE AS-CONNECTOR (8-PIN)	
	11	1	**335-2103**	1	HARNESS AS-CONTROL (MACHINE)	
		1	**8C-6354**	1	CAP-RECEPTACLE (ET CONNECTOR)	
		1	**8T-8736**	1	RECEPTACLE-CONNECTOR (9-PIN)	
		1	**8T-8737**	11	PLUG-SEAL	
E		1	**119-3662**		TUBE-HEAT SHRINK (10.85-MM DIA) (7-CM)	
E		1	**125-7874**		TUBE-HEAT SHRINK (5.72-MM DIA) (70-CM)	
E		1	**125-7875**		TUBE-HEAT SHRINK (7.44-MM DIA) (5-CM)	
		1	**9X-3402**	27	SOCKET-CONNECTOR (16-GA TO 18-GA)	
		1	**134-2540**	3	RESISTOR AS-CONNECTION (3-PIN)	
		1	**144-1636**	12	PIN-CONNECTOR (14-GA TO 18-GA)	
		1	**174-0503**	3	KIT-CONNECTING PLUG (3-PIN)	
					(EACH INCLUDES PLUG AS, WEDGE & INTERFACE SEAL)	
		1	**230-4009**	1	PLUG AS-CONNECTOR (12-PIN)	
		1	**264-7034**	1	SEAL-CONNECTOR	
		1	**230-5008**	1	PLUG AS-CONNECTOR (4-PIN)	
		1	**264-7031**	1	SEAL-CONNECTOR	
		1	**231-2295**	1	PLUG AS-CONNECTOR (8-PIN)	
		1	**264-7033**	1	SEAL-CONNECTOR	
		1	**231-2300**	1	RECEPTACLE AS-CONNECTOR (8-PIN)	
	12	1	**335-2104**	1	HARNESS AS-SWITCH (MAST, LH)	
		1	**8T-8737**	9	PLUG-SEAL	
		1	**228-3323**	1	CLIP-SPRING	
		1	**230-2566**	1	PLUG AS	
	13	1	**335-2105**	1	HARNESS AS-SWITCH (MAST, RH)	
		1	**8T-8737**	3	PLUG-SEAL	
		1	**144-1636**	9	PIN-CONNECTOR (14-GA TO 18-GA)	
		1	**228-3323**	1	CLIP-SPRING	
		1	**230-4010**	1	RECEPTACLE AS-CONNECTOR (12-PIN)	

312-3140 **WIRING GP-GRADE CONTROL (*contd.*)** **i03659021**

NOTE	REF NO	GRAPHIC REF	PART NUMBER	QTY	PART NAME 1 2 3 4 5 6 (PRODUCT LEVEL)	SEE PAGE
	14	1	**342-3831**	1	BRACKET AS	
M		1	**6V-8224**	2	NUT-WELD (M10X1.5-THD)	
	15	1	**344-2141**	1	GRILL AS	
M		1	**8T-3612**	3	NUT-WELD (M8X1.25-THD)	
	16	1	**344-2542**	1	BRACKET	
M	17	1	**179-7262**	3	SCREW-FLAT HEAD (M8X1.25X40-MM)	
	18	2	**4B-4863**	1	WASHER (4.7X11X1.2-MM THK)	
	19	1	**4P-8134**	2	CLIP	
	20	1	**5P-4116**	2	WASHER-HARD (8.8X20.5X2-MM THK)	
	21	1	**6P-0699**	1	GROMMET	
	22	1	**7R-3029**	3	CAP-DUST	
	23	1	**8M-2770**	1	CLIP	
	24	1	**8T-4121**	2	WASHER-HARD (11X21X2.5-MM THK)	
M	25	1	**8T-4136**	2	BOLT (M10X1.5X25-MM)	
M	26	1	**8T-4138**	4	BOLT (M6X1X20-MM)	
M	27	1	**8T-7547**	2	BOLT (M8X1.25X30-MM)	
M	28	2	**8T-7852**	1	BOLT (M4X0.7X10-MM)	
	29	1	**5P-4115**	4	WASHER-HARD (7.2X19X2-MM THK)	
	30	1	**4D-9517**	1	CLIP	

E - ORDER BY THE CENTIMETER
M - METRIC PART

312-3140 **WIRING GP-GRADE CONTROL (*contd.*)** **i03659021**

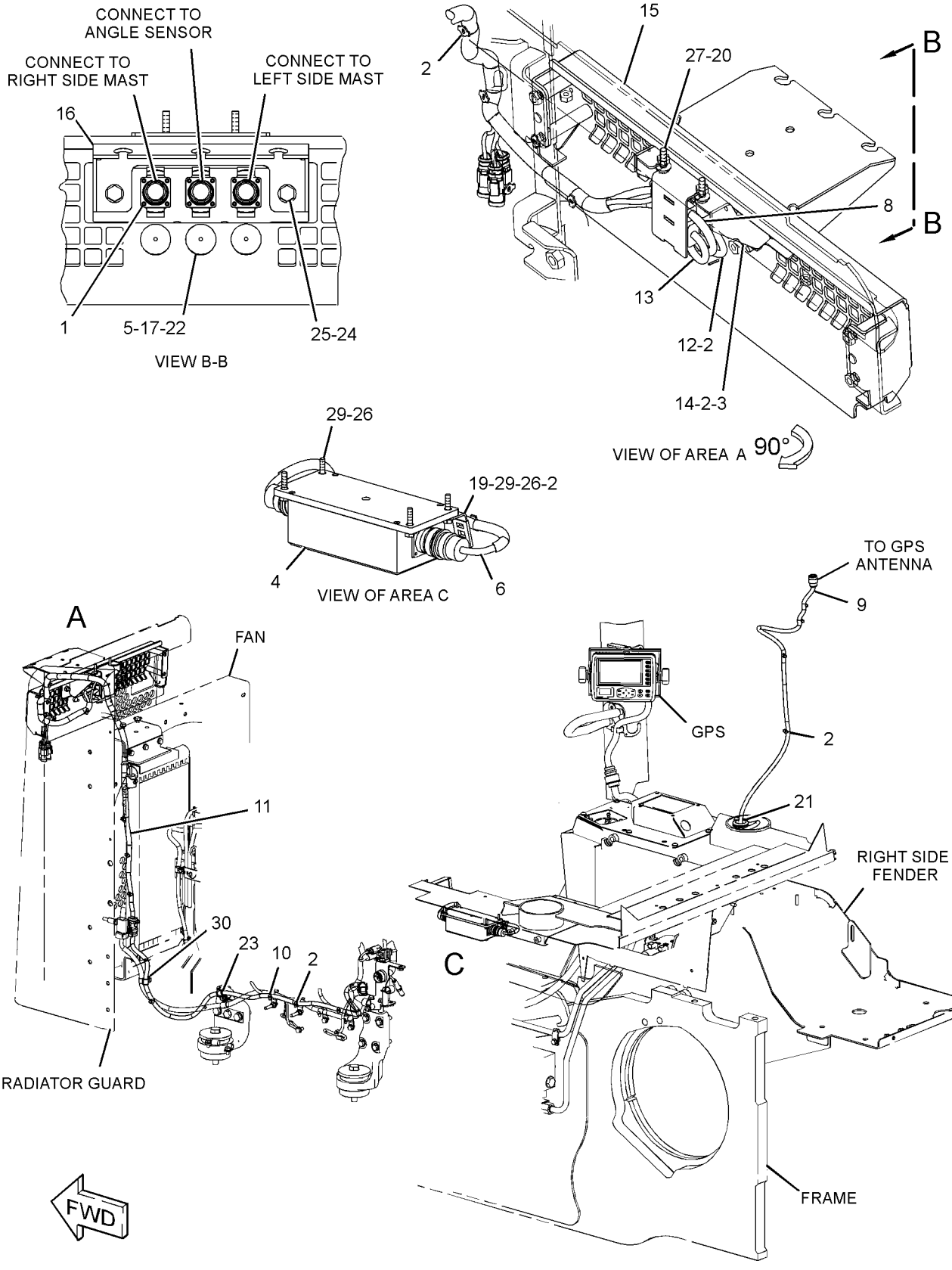

GRAPHIC #1 g01963183

312-3140 **WIRING GP-GRADE CONTROL (*contd.*)** **i03659021**

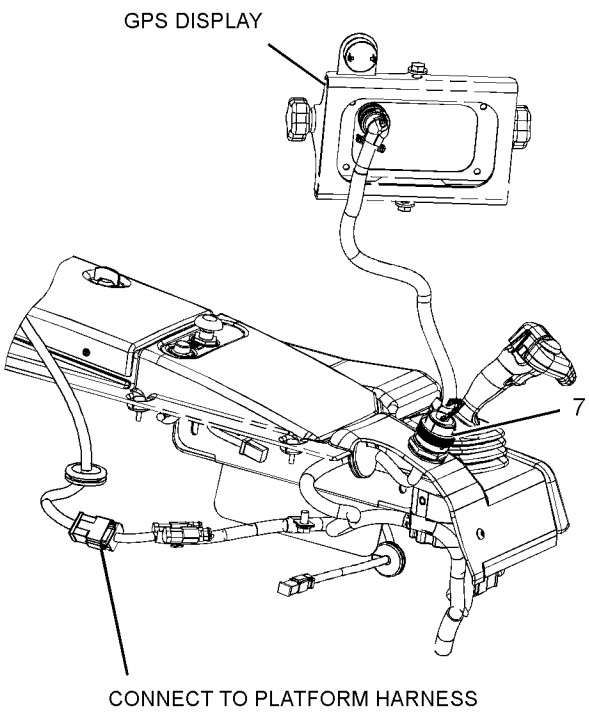

RIGHT SIDE CONSOLE
(GPS HARNESS ROUTING)

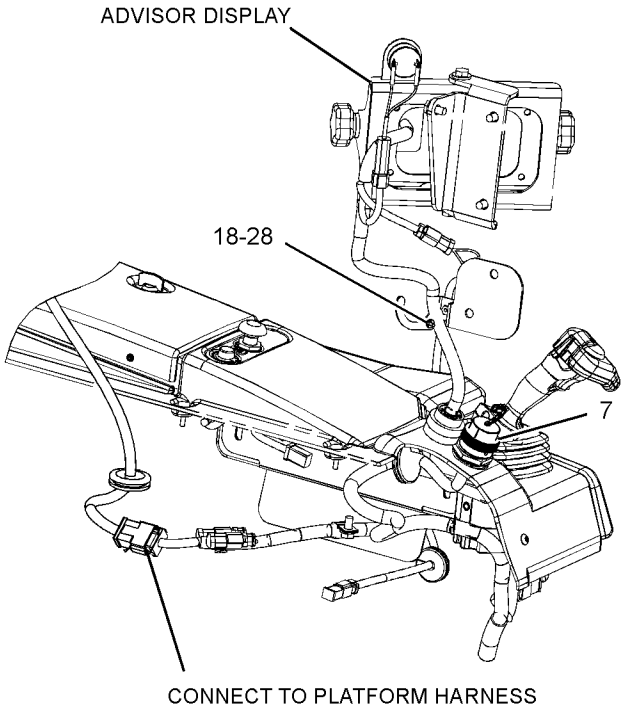

RIGHT SIDE CONSOLE
(ADVISOR DISPLAY HARNESS ROUTING)

GRAPHIC #2 **<END>** g01905953

312-3140 WIRING GP-GRADE CONTROL

S/N: LJR334-UP

PART OF 321-7767, 321-7768 GRADE CONTROL AR

AN ATTACHMENT

SMCS-1408 **i04775730**

NOTE	REF NO	GRAPHIC REF	PART NUMBER	QTY	PART NAME 1 2 3 4 5 6 (PRODUCT LEVEL)	SEE PAGE
	1	1	**6D-3033**	12	SCREW-SOCKET HEAD (4-40X0.5-IN)	
	2	1	**7K-1181**	30	STRAP-CABLE	
	3	1	**132-8487**	3	NUT-RING	
	4	1	**226-9169**	1	MODULE AS-POWER SUPPLY (ELECTRICAL ENCLOSURE)	
	5	1	**258-4819**	3	BOSS	
	6	1	**277-1801**	1	HARNESS AS-WIRING (POWER SUPPLY MODULE)	
		1	**3R-9965**	1	PLUG AS-CONNECTOR (8-PIN)	
		1	**6D-5257**	1	PLUG AS-CONNECTOR (8-PIN)	
		1	**8T-8737**	2	PLUG-SEAL	
		1	**9X-3401**	10	PIN-CONNECTOR (16-GA TO 18-GA)	
					—OR—	
		1	**126-1767**	10	PIN-CONNECTOR (14-GA TO 16-GA)	
		1	**230-4010**	1	RECEPTACLE AS-CONNECTOR (12-PIN)	
Y	7	1	*321-9011*	1	WIRING GP-GRADE CONTROL (CAB)	242
	8	1	**323-3268**	1	HARNESS AS-WIRING (ANGLE)	
		1	**228-3323**	1	CLIP-SPRING	
		1	**230-5009**	1	RECEPTACLE AS-CONNECTOR (4-PIN)	
	9	1	**323-6948**	1	HARNESS AS-WIRING (LASER ANTENNA)	
		1	**102-8801**	1	KIT-RECEPTACLE (12-PIN)	
					(INCLUDES RECEPTACLE AS & WEDGE)	
		1	**8T-8737**	4	PLUG-SEAL	
		1	**9X-3401**	8	PIN-CONNECTOR (16-GA TO 18-GA)	
					—OR—	
		1	**126-1767**		PIN-CONNECTOR (14-GA TO 16-GA)	
		1	**167-8987**	1	PLUG AS-CONNECTOR (8-PIN)	
	10	1	**335-2102**	1	HARNESS AS-CAB	
		1	**9X-3402**	8	SOCKET-CONNECTOR (16-GA TO 18-GA)	
		1	**9X-3401**	8	PIN-CONNECTOR (16-GA TO 18-GA)	
					—OR—	
		1	**126-1767**	8	PIN-CONNECTOR (14-GA TO 16-GA)	
		1	**231-2295**	1	PLUG AS-CONNECTOR (8-PIN)	
		1	**264-7033**	1	SEAL-CONNECTOR	
		1	**231-2300**	1	RECEPTACLE AS-CONNECTOR (8-PIN)	
	11	1	**335-2103**	1	HARNESS AS-CONTROL (MACHINE)	
		1	**8C-6354**	1	CAP-RECEPTACLE (ET CONNECTOR)	
		1	**8T-8736**	1	RECEPTACLE-CONNECTOR (9-PIN)	
		1	**8T-8737**	11	PLUG-SEAL	
E		1	**119-3662**		TUBE-HEAT SHRINK (10.85-MM DIA) (7-CM)	
E		1	**125-7874**		TUBE-HEAT SHRINK (5.72-MM DIA) (70-CM)	
E		1	**125-7875**		TUBE-HEAT SHRINK (7.44-MM DIA) (5-CM)	
		1	**9X-3402**	27	SOCKET-CONNECTOR (16-GA TO 18-GA)	
		1	**134-2540**	3	RESISTOR AS-CONNECTION (3-PIN)	
		1	**9X-3401**	12	PIN-CONNECTOR (16-GA TO 18-GA)	
					—OR—	
		1	**126-1767**	12	PIN-CONNECTOR (14-GA TO 16-GA)	
		1	**174-0503**	3	KIT-CONNECTING PLUG (3-PIN)	
					(EACH INCLUDES PLUG AS, WEDGE & INTERFACE SEAL)	
		1	**230-4009**	1	PLUG AS-CONNECTOR (12-PIN)	
		1	**264-7034**	1	SEAL-CONNECTOR	
		1	**230-5008**	1	PLUG AS-CONNECTOR (4-PIN)	
		1	**264-7031**	1	SEAL-CONNECTOR	
		1	**231-2295**	1	PLUG AS-CONNECTOR (8-PIN)	
		1	**264-7033**	1	SEAL-CONNECTOR	
		1	**231-2300**	1	RECEPTACLE AS-CONNECTOR (8-PIN)	
	12	1	**335-2104**	1	HARNESS AS-SWITCH (MAST, LH)	

312-3140 **WIRING GP-GRADE CONTROL (*contd.*)** **i04775730**

NOTE	REF NO	GRAPHIC REF	PART NUMBER	QTY	PART NAME 1 2 3 4 5 6 (PRODUCT LEVEL)	SEE PAGE
		1	**8T-8737**	9	PLUG-SEAL	
		1	**228-3323**	1	CLIP-SPRING	
		1	**230-2566**	1	PLUG AS	
		1	**231-2300**	1	RECEPTACLE AS-CONNECTOR (8-PIN)	
	13	1	**335-2105**	1	HARNESS AS-SWITCH (MAST, RH)	
		1	**8T-8737**	3	PLUG-SEAL	
		1	**9X-3401**	9	PIN-CONNECTOR (16-GA TO 18-GA)	
					—OR—	
		1	**126-1767**	9	PIN-CONNECTOR (14-GA TO 16-GA)	
		1	**228-3323**	1	CLIP-SPRING	
		1	**230-4010**	1	RECEPTACLE AS-CONNECTOR (12-PIN)	
	14	1	**342-3831**	1	BRACKET AS	
	15	1	**344-2141**	1	GRILL AS	
	16	1	**344-2542**	1	BRACKET	
M	17	1	**179-7262**	3	SCREW-FLAT HEAD (M8X1.25X40-MM)	
	18	2	**4B-4863**	1	WASHER (4.7X11X1.2-MM THK)	
	19	1	**4P-8134**	2	CLIP	
	20	1	**5P-4116**	2	WASHER-HARD (8.8X20.5X2-MM THK)	
	21	1	**6P-0699**	1	GROMMET	
	22	1	**7R-3029**	3	CAP-DUST	
	23	1	**8M-2770**	1	CLIP	
	24	1	**8T-4121**	2	WASHER-HARD (11X21X2.5-MM THK)	
M	25	1	**8T-4136**	2	BOLT (M10X1.5X25-MM)	
M	26	1	**8T-4138**	4	BOLT (M6X1X20-MM)	
M	27	1	**8T-7547**	2	BOLT (M8X1.25X30-MM)	
M	28	2	**8T-7852**	1	BOLT (M4X0.7X10-MM)	
	29	1	**5P-4115**	4	WASHER-HARD (7.2X19X2-MM THK)	
	30	1	**4D-9517**	1	CLIP	

E - ORDER BY THE CENTIMETER
M - METRIC PART
Y - SEPARATE ILLUSTRATION

312-3140 **WIRING GP-GRADE CONTROL (*contd.*)** **i04775730**

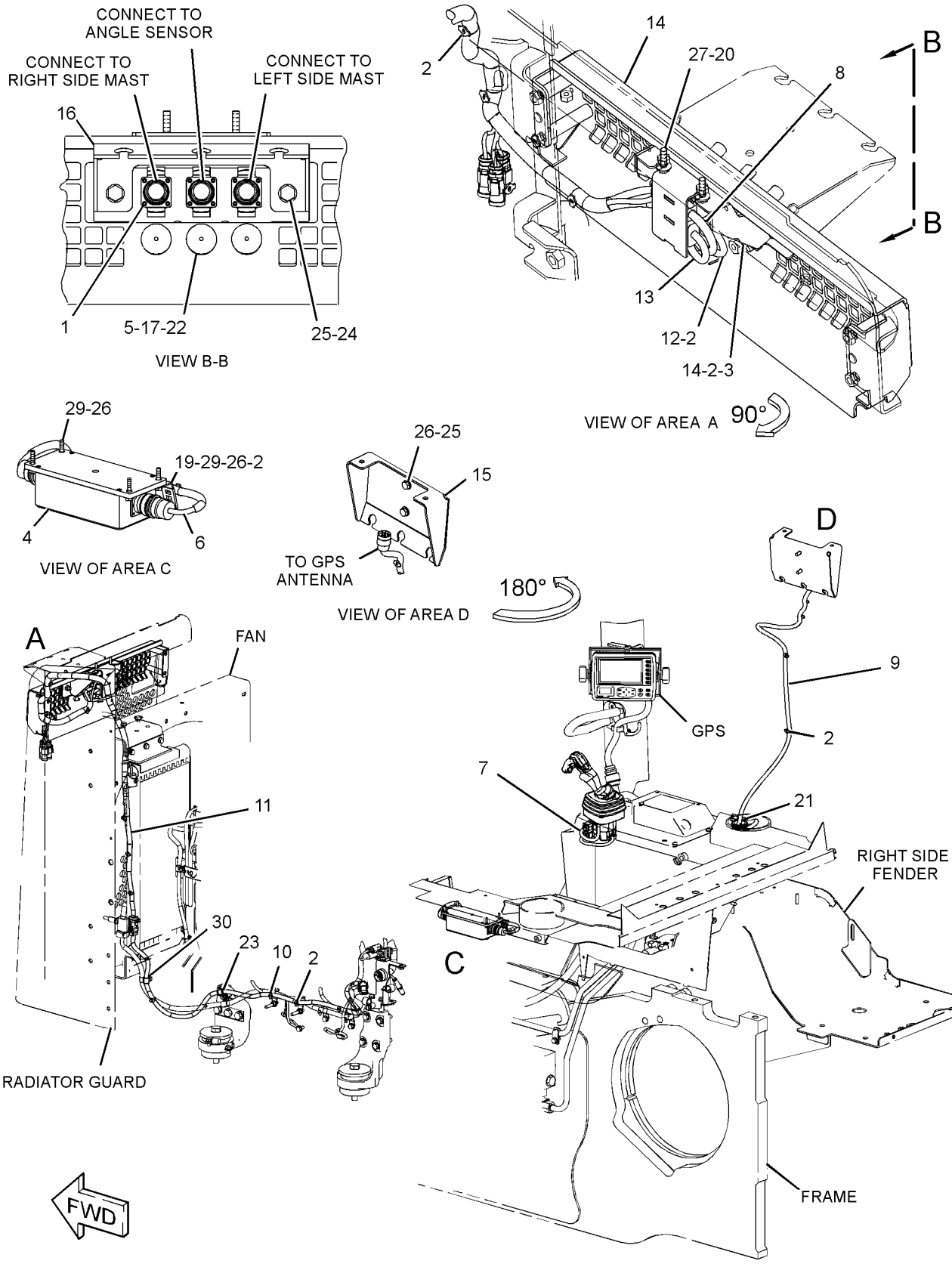

GRAPHIC #1 g02925737

312-3140 **WIRING GP-GRADE CONTROL (*contd.*)** **i04775730**

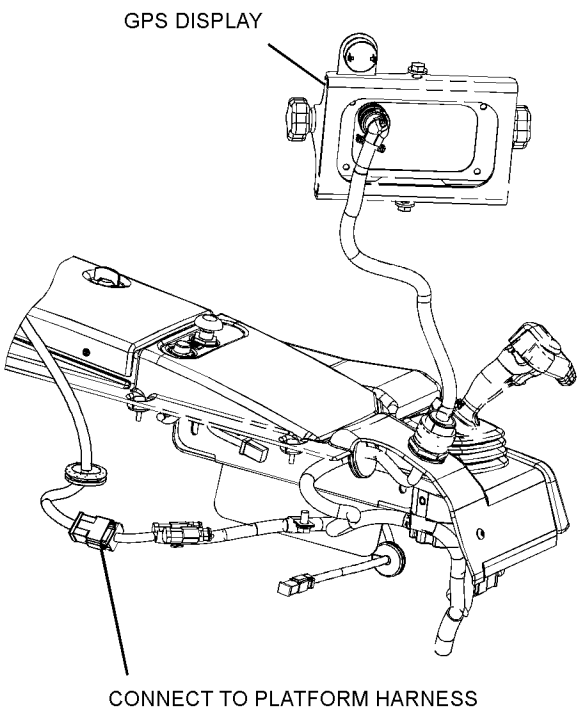

RIGHT SIDE CONSOLE
(GPS HARNESS ROUTING)

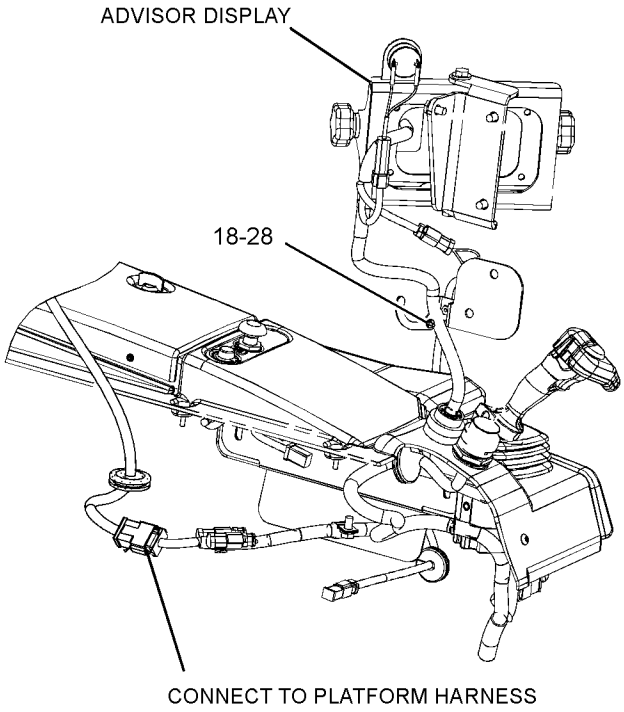

RIGHT SIDE CONSOLE
(ADVISOR DISPLAY HARNESS ROUTING)

GRAPHIC #2 **<END>** g02402980

321-9011 WIRING GP-GRADE CONTROL–CAB

S/N: LJR1-UP

PART OF 312-3140 WIRING GP-GRADE CONTROL

AN ATTACHMENT

SMCS-1408 **i03626830**

NOTE	REF NO	GRAPHIC REF	PART NUMBER	QTY	PART NAME 1 2 3 4 5 6 (PRODUCT LEVEL)	SEE PAGE
Y	1	1	**318-1471**	1	CONTROL GP-JOYSTICK (BULLDOZER)	618

Y - SEPARATE ILLUSTRATION

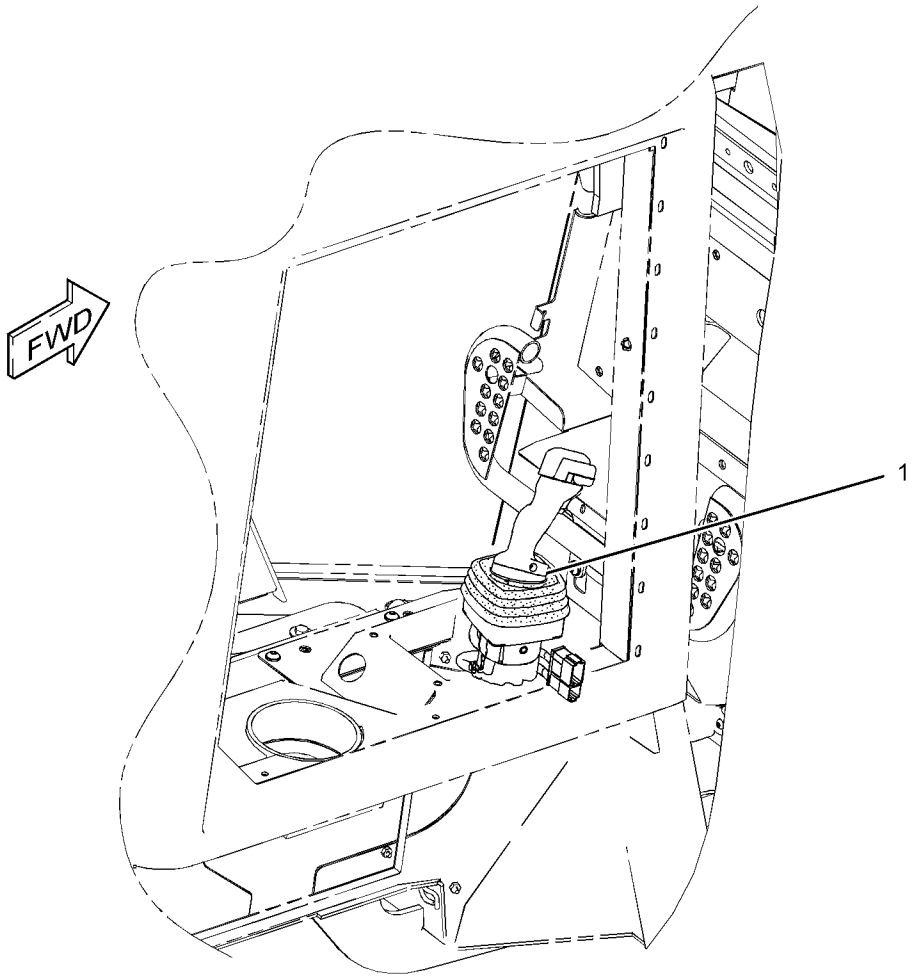

GRAPHIC #1 **<END>** g01903753

319-5608 WIRING GP-LIGHTING

S/N: LJR1-UP
PART OF 320-1210 ROPS GP
AN ATTACHMENT

SMCS-1408, 1429

i03626576

NOTE	REF NO	GRAPHIC REF	PART NUMBER	QTY	PART NAME 1 2 3 4 5 6 (PRODUCT LEVEL)	SEE PAGE
	1	1	**3S-2093**	22	STRAP-CABLE	
	2	1	**319-5801**	1	HARNESS AS-CAB (ROPS)	
E		1	**125-7874**		TUBE-HEAT SHRINK (5.72-MM DIA) (10-CM)	
E		1	**125-7875**		TUBE-HEAT SHRINK (7.44-MM DIA) (5-CM)	
		1	**9X-3402**	14	SOCKET-CONNECTOR (16-GA TO 18-GA)	
		1	**2L-8079**	1	TERMINAL-RING (14-GA TO 16-GA, 3/8-IN SCREW)	
		1	**155-2270**	5	KIT-CONNECTING PLUG (2-PIN)	
					(EACH INCLUDES PLUG AS, WEDGE & INTERFACE SEAL)	
		1	**230-5008**	1	PLUG AS-CONNECTOR (4-PIN)	
		1	**264-7031**	1	SEAL-CONNECTOR	
	3	1	**319-5802**	1	HARNESS AS-CAB (EXTENSION)	
		1	**8T-8737**	8	PLUG-SEAL	
		1	**144-1636**	8	PIN-CONNECTOR (14-GA TO 18-GA)	
		1	**230-5009**	1	RECEPTACLE AS-CONNECTOR (4-PIN)	
		1	**239-7357**	1	RECEPTACLE AS-CONNECTOR (12-PIN)	
	4	1	**1V-6688**	1	GROMMET	
	5	1	**5P-8439**	4	GROMMET	
	6	1	**8T-4121**	1	WASHER-HARD (11X21X2.5-MM THK)	
M	7	1	**8T-4137**	1	BOLT (M10X1.5X20-MM)	

E - ORDER BY THE CENTIMETER
M - METRIC PART

319-5608 **WIRING GP-LIGHTING (*contd.*)** **i03626576**

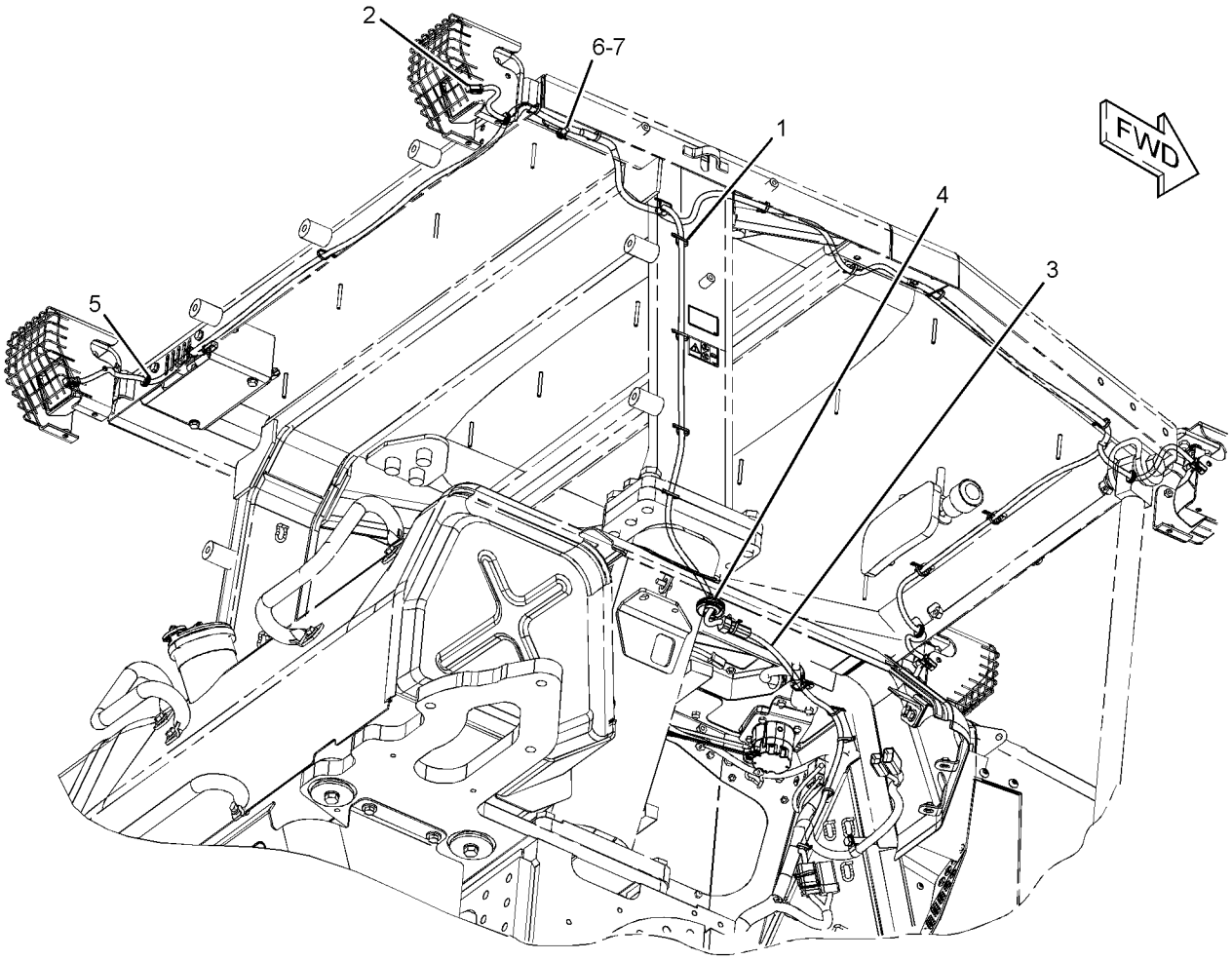

GRAPHIC #1 **<END>** g01906193

310-1543 WIRING GP-PLATFORM

S/N: LJR1-UP

PART OF 311-6400 CAB GP, 320-1200 PLATFORM GP-OPERATOR

ALSO AN ATTACHMENT

SMCS-1408 **i05142650**

NOTE	REF NO	GRAPHIC REF	PART NUMBER	QTY	PART NAME 1 2 3 4 5 6 (PRODUCT LEVEL)	SEE PAGE
Y	1	4	**3E-6328**	1	ALARM GP (24-VOLT)	137
	2	1,2	**3S-2093**	7	STRAP-CABLE	
	3	3	**9X-6165**	1	WASHER (6.5X22X2.5-MM THK)	
	4	4	**6C-9130**	4	WASHER (6X18X1-MM THK)	
	5	3	**6I-1418**	4	SPACER (8.2X12.7X28.7-MM THK)	
	6	1,2,3,4	**7K-1181**	76	STRAP-CABLE	
	7	3	**8T-9655**	8	MOUNT-ISOLATION	
	8	2	**9C-5344**	1	SPACER (10.5X20X18-MM THK)	
	9	3	**101-3121**	4	SPACER (10.5X25X25-MM THK)	
	10	4	**110-7887**	1	SWITCH AS-START (KEY)	
		4	**7T-6799**	1	NUT-MOUNTING (1-32-THD)	
		4	**102-8804**	1	KIT-RECEPTACLE (4-PIN)	
					(INCLUDES RECEPTACLE AS & WEDGE)	
		4	**186-3735**	4	PIN-CONNECTOR (16-GA TO 18-GA)	
	11	1	**117-2311**	1	SOCKET-AUXILIARY POWER (12-VOLT)	
	12	4	**220-4081**	1	CAP	
	13	1	**169-2876**	1	FILM-IDENTIFICATION (POWER RECEPTACLE, 12-VOLT)	
	14	1	**173-1614**	1	FILM-IDENTIFICATION (ALTERNATOR AIR)	
	15	1	**193-3973**	1	STRAP-CABLE	
	16	1	**201-2733**	1	FILM-INFORMATION (INPUT/OUTPUT)	
	17	4	**206-5203**	1	COIL AS (EXCITER)	
		4	**102-8802**	1	KIT-RECEPTACLE (2-PIN)	
					(INCLUDES RECEPTACLE AS & WEDGE)	
		4	**198-5389**	1	FILM-IDENTIFICATION (IGNITION SWITCH)	
		4	**205-8257**	1	COIL AS (EXCITER)	
D		4	**5P-5677**		WIRE (18-GA, BLACK) (0.4-M)	
		4	**8T-8729**	2	PIN-CONNECTOR (16-GA TO 18-GA)	
		4	**207-5271**	1	WASHER (27X60.5X0.36-MM THK)	
	18	1	**340-7161**	1	CONVERTER-POWER (24-VOLT TO 12-VOLT)	
	19	1	**220-5946**	1	CLIP	
	20	2	**224-9222**	1	BRACKET	
	21	4	**228-6089**	1	PLUG (ROCKER SWITCH)	
	22	4	**232-7305**	2	CLIP	
	23	1	**245-8823**	1	FILM-IDENTIFICATION (GENERATOR, ELECTRICAL POWER)	
	24	2	**249-5052**	2	GROMMET	
	25	1	**249-5481**	1	SWITCH AS-ROCKER (THROTTLE)	
	26	4	**249-5495**	1	SWITCH AS-ROCKER (AUTO KICKDOWN)	
	27	1	**284-3623**	1	SWITCH AS-ROCKER (HYDRAULIC LOCKOUT)	
	28	4	**251-5848**	1	SWITCH AS-ROCKER (FRONT, REAR FLOODLIGHTS)	
	29	4	**293-9139**	1	SWITCH AS-ROCKER (AUTOSHIFT)	
	30	3	**296-2649**	1	BRACKET AS	
	31	3	**304-5682**	1	CONTROL GP-UNPROGRAMMED (POWER TRAIN)	
Y	32	1	*310-1535*	1	PANEL GP-CIRCUIT BREAKER	195
	33	2	**310-5772**	1	HARNESS AS-TRANSMISSION	
		2	**4W-4293**	1	PLUG AS-CONNECTOR (17-PIN)	
		2	**8T-8737**	1	PLUG-SEAL	
		2	**9X-3402**	11	SOCKET-CONNECTOR (16-GA TO 18-GA)	
		2	**230-4009**	1	PLUG AS-CONNECTOR (12-PIN)	
		2	**264-7034**	1	SEAL-CONNECTOR	
	34	1	**312-8652**	1	PLATE	
	35	4	**317-3880**	1	MODULE GP-DISPLAY	
	36	2	**335-2095**	1	HARNESS AS-PLATFORM	
		2	**2L-8069**	5	TERMINAL-RING (2-GA TO 10-GA, 3/8-IN SCREW)	
		2	**5P-4571**	4	TERMINAL-BLADE (14-GA TO 16-GA)	

310-1543 **WIRING GP-PLATFORM (*contd.*)** **i05142650**

NOTE	REF NO	GRAPHIC REF	PART NUMBER	QTY	PART NAME 1 2 3 4 5 6 (PRODUCT LEVEL)	SEE PAGE
		2	**2L-8079**	3	TERMINAL-RING (14-GA TO 16-GA, 3/8-IN SCREW)	
		2	**126-1774**	3	COVER-CONNECTOR	
		2	**310-9997**	1	PLUG GP (DUST)	
		2	**211-0052**	1	NUT (1-11/16-18-THD)	
		2	**9X-3401**	91	PIN-CONNECTOR (16-GA TO 18-GA)	
					—OR—	
		2	**126-1767**	91	PIN-CONNECTOR (14-GA TO 16-GA)	
		2	**155-2255**	2	KIT-CONNECTING PLUG (12-PIN)	
		2	**155-2270**	7	KIT-CONNECTING PLUG (2-PIN)	
		2	**155-2271**	2	KIT-CONNECTING PLUG (4-PIN)	
		2	**174-0503**	1	KIT-CONNECTING PLUG (3-PIN)	
		2	**155-2265**	1	KIT-CONNECTING PLUG (8-PIN)	
		2	**155-2260**	5	KIT-CONNECTING PLUG (3-PIN)	
		2	**155-2274**	7	KIT-CONNECTING PLUG (6-PIN)	
					(EACH KIT INCLUDES PLUG AS, WEDGE & INTERFACE SEAL)	
		2	**147-1445**	1	PLUG AS-CONNECTOR (70-PIN)	
		2	**159-9322**	1	SEAL-O-RING	
		2	**147-1446**	1	PLUG AS-CONNECTOR (70-PIN)	
		2	**159-9322**	1	SEAL-O-RING	
		2	**160-7689**	1	PLUG AS-CONNECTOR (70-PIN)	
		2	**159-9322**	1	SEAL-O-RING	
		2	**230-4009**	2	PLUG AS-CONNECTOR (12-PIN)	
					(EACH INCLUDES)	
		2	**264-7034**	1	SEAL-CONNECTOR	
		2	**230-4011**	3	PLUG AS-CONNECTOR (2-PIN)	
					(EACH INCLUDES)	
		2	**264-7029**	1	SEAL-CONNECTOR	
		2	**230-4013**	1	PLUG AS-CONNECTOR (3-PIN)	
		2	**264-7030**	1	SEAL-CONNECTOR	
		2	**231-2295**	2	PLUG AS-CONNECTOR (8-PIN)	
					(EACH INCLUDES)	
		2	**264-7033**	1	SEAL-CONNECTOR	
		2	**239-7356**	1	PLUG AS-CONNECTOR (12-PIN)	
		2	**264-7034**	1	SEAL-CONNECTOR	
		2	**167-3693**	2	PLUG AS-CONNECTOR (31-PIN)	
		2	**8T-8737**	229	PLUG-SEAL	
		2	**102-8802**	2	KIT-RECEPTACLE (2-PIN)	
		2	**102-8803**	1	KIT-RECEPTACLE (3-PIN)	
		2	**102-8804**	1	KIT-RECEPTACLE (4-PIN)	
		2	**102-8806**	1	KIT-RECEPTACLE (8-PIN)	
		2	**102-8801**	2	KIT-RECEPTACLE (12-PIN)	
		2	**102-8805**	3	KIT-RECEPTACLE (6-PIN)	
					(EACH KIT INCLUDES RECEPTACLE AS & WEDGE)	
		2	**134-2540**	1	RESISTOR AS-CONNECTION (3-PIN)	
		2	**140-7684**	1	RECEPTACLE AS-CONNECTOR (3-PIN)	
		2	**167-3692**	1	RECEPTACLE AS-CONNECTOR (31-PIN)	
		2	**230-4010**	5	RECEPTACLE AS-CONNECTOR (12-PIN)	
		2	**230-4014**	1	RECEPTACLE AS-CONNECTOR (3-PIN)	
		2	**231-2300**	3	RECEPTACLE AS-CONNECTOR (8-PIN)	
		2	**239-7357**	2	RECEPTACLE AS-CONNECTOR (12-PIN)	
		2	**9X-3402**	336	SOCKET-CONNECTOR (16-GA TO 18-GA)	
		2	**3S-2093**	2	STRAP-CABLE	
		2	**9X-6772**	4	STRAP-CABLE	
		2	**9X-0194**	2	TERMINAL AS	
		2	**128-4249**	1	LOCKWASHER	
	37	4	**335-2096**	1	HARNESS AS-PANEL	
		4	**8T-8737**	41	PLUG-SEAL	
E		4	**125-7874**		TUBE-HEAT SHRINK (5.72-MM DIA) (35-CM)	
E		4	**125-7875**		TUBE-HEAT SHRINK (7.44-MM DIA) (10-CM)	
		4	**9X-3402**	65	SOCKET-CONNECTOR (16-GA TO 18-GA)	

310-1543 **WIRING GP-PLATFORM (*contd.*)** **i05142650**

NOTE	REF NO	GRAPHIC REF	PART NUMBER	QTY	PART NAME 1 2 3 4 5 6 (PRODUCT LEVEL)	SEE PAGE
					—OR—	
		4	**126-1768**	65	SOCKET-CONNECTOR (14-GA TO 16-GA)	
		4	**155-2255**	3	KIT-CONNECTING PLUG (12-PIN)	
		4	**155-2271**	1	KIT-CONNECTING PLUG (4-PIN)	
					(EACH PLUG KIT INCLUDES PLUG AS, WEDGE & INTERFACE SEAL)	
		4	**185-1861**	22	SEAL-WIRE	
		4	**204-1297**	20	TERMINAL AS-BLADE (18-GA TO 20-GA)	
		4	**245-7434**	4	KIT-CONNECTING PLUG (10-PIN)	
					(INCLUDES WIRE AS & PLUGS)	
		4	**230-4009**	1	PLUG AS-CONNECTOR (12-PIN)	
		4	**264-7034**	1	SEAL-CONNECTOR	
		4	**230-5008**	3	PLUG AS-CONNECTOR (4-PIN)	
					(EACH INCLUDES)	
		4	**264-7031**	1	SEAL-CONNECTOR	
		4	**230-5009**	3	RECEPTACLE AS-CONNECTOR (4-PIN)	
					(EACH KIT INCLUDES RECEPTACLE AS & WEDGE)	
		4	**239-7356**	1	PLUG AS-CONNECTOR (12-PIN)	
		4	**264-7034**	1	SEAL-CONNECTOR	
	38	2	**335-6246**	1	HARNESS AS-POWER	
		2	**3L-6513**	1	TERMINAL-RING (1-GA TO 2-GA, 1/2-IN SCREW)	
		2	**8T-8827**	2	BOOT (RED)	
		2	**311-6184**	1	TERMINAL-RING (2-GA, 3/8-IN SCREW)	
	39	1	**335-6247**	1	CABLE AS	
E		1	**8C-3056**		CABLE (2-GA, RED) (58-CM)	
		1	**8T-8827**	2	BOOT (RED)	
		1	**3L-6513**	2	TERMINAL-RING (1-GA TO 2-GA, 1/2-IN SCREW)	
	40	4	**335-6248**	1	HARNESS AS-WIRING (MACHINE SECURITY SYSTEM)	
		4	**102-8802**	1	KIT-RECEPTACLE (2-PIN)	
					(INCLUDES RECEPTACLE AS & WEDGE)	
		4	**8T-8737**	3	PLUG-SEAL	
		4	**9X-3402**	2	SOCKET-CONNECTOR (16-GA TO 18-GA)	
		4	**140-7684**	1	RECEPTACLE AS-CONNECTOR (3-PIN)	
		4	**9X-3401**	2	PIN-CONNECTOR (16-GA TO 18-GA)	
		4	**155-2270**	1	KIT-CONNECTING PLUG (2-PIN)	
					(INCLUDES PLUG AS, WEDGE & INTERFACE SEAL)	
	41	1	**204-8000**	1	MOUNTING-CABLE TIE	
	42	2	**3E-6754**	1	GROMMET	
	43	2,3	**4P-7581**	5	CLIP	
	44	1,3,4	**4P-8134**	11	CLIP	
M	45	3	**5C-9553**	1	BOLT (M6X1X16-MM)	
	46	2	**6D-3479**	3	CLIP	
	47	2	**6D-4244**	1	CLIP	
	48	1	**6V-0826**	1	GROMMET	
M	49	4	**7I-2272**	8	BOLT (M5X0.8X12-MM)	
	50	3	**7X-0579**	2	WASHER-HARD (8.8X25.5X2-MM THK)	
M	51	1	**7X-2548**	1	BOLT (M12X1.75X16-MM)	
	52	2	**8G-6557**	1	SPACER (10.5X25X40-MM THK)	
	53	1	**8M-2773**	1	CLIP	
	54	2,3	**8P-8540**	1	GROMMET	
	55	1	**8T-0328**	6	WASHER-HARD (5.5X10X1-MM THK)	
	56	1	**8T-1889**	1	CLIP (SLOT)	
	57	1	**8T-1890**	1	CLIP (TAB)	
	58	1,2,3,4	**8T-4121**	24	WASHER-HARD (11X21X2.5-MM THK)	
M	59	4	**8T-4133**	2	NUT (M10X1.5-THD)	
M	60	1,3	**8T-4136**	3	BOLT (M10X1.5X25-MM)	
M	61	1,2,3,4	**8T-4137**	14	BOLT (M10X1.5X20-MM)	
M	62	2	**8T-4185**	1	BOLT (M10X1.5X50-MM)	
M	63	1	**8T-4191**	2	BOLT (M10X1.5X16-MM)	
M	64	1	**8T-4195**	1	BOLT (M10X1.5X30-MM)	
M	65	1	**8T-4200**	6	BOLT (M8X1.25X16-MM)	

310-1543 **WIRING GP-PLATFORM (*contd.*)** **i05142650**

NOTE	REF NO	GRAPHIC REF	PART NUMBER	QTY	PART NAME 1 2 3 4 5 6 (PRODUCT LEVEL)	SEE PAGE
	66	1	**8T-4223**	1	WASHER-HARD (13.5X25.5X3-MM THK)	
	67	1,3	**8T-4224**	8	WASHER-HARD (8.8X16X2-MM THK)	
M	68	2	**8T-5005**	1	BOLT (M10X1.5X70-MM)	
M	69	3	**8T-6870**	4	BOLT (M8X1.25X70-MM)	
M	70	2,3	**8T-7852**	4	BOLT (M4X0.7X10-MM)	
	71	1	**8T-9471**	1	GROMMET	
	72	1	**9M-8406**	1	CLIP	
M	73	1	**8T-0289**	2	BOLT (M5X0.8X20-MM)	
M	74	1	**9X-2044**	3	SCREW-TRUSS HEAD (M6X1X16-MM)	

D - ORDER BY THE METER
E - ORDER BY THE CENTIMETER
M - METRIC PART
Y - SEPARATE ILLUSTRATION

310-1543 **WIRING GP-PLATFORM (*contd.*)** **i05142650**

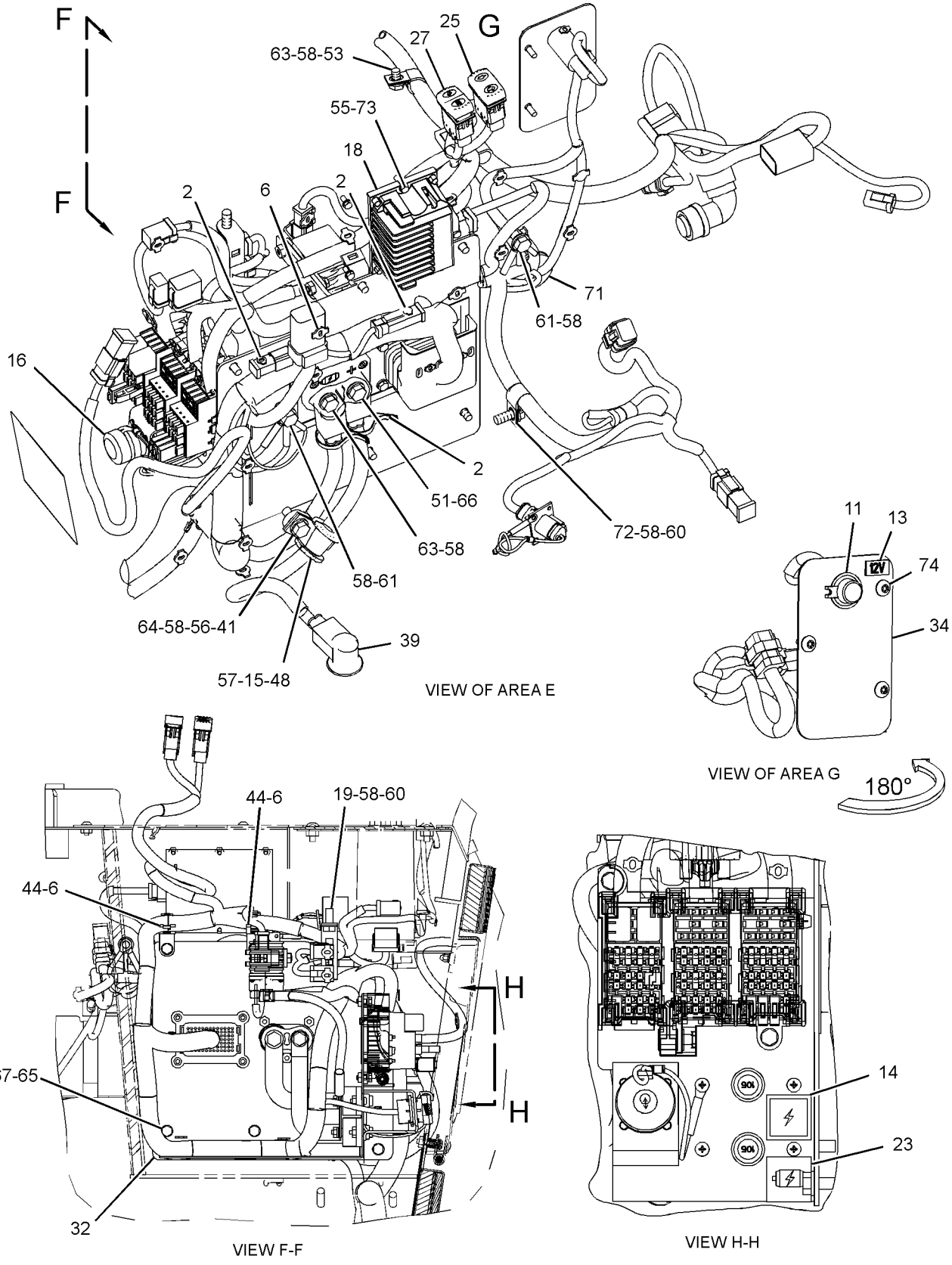

GRAPHIC #1 g03072258

310-1543 **WIRING GP-PLATFORM (*contd.*)** **i05142650**

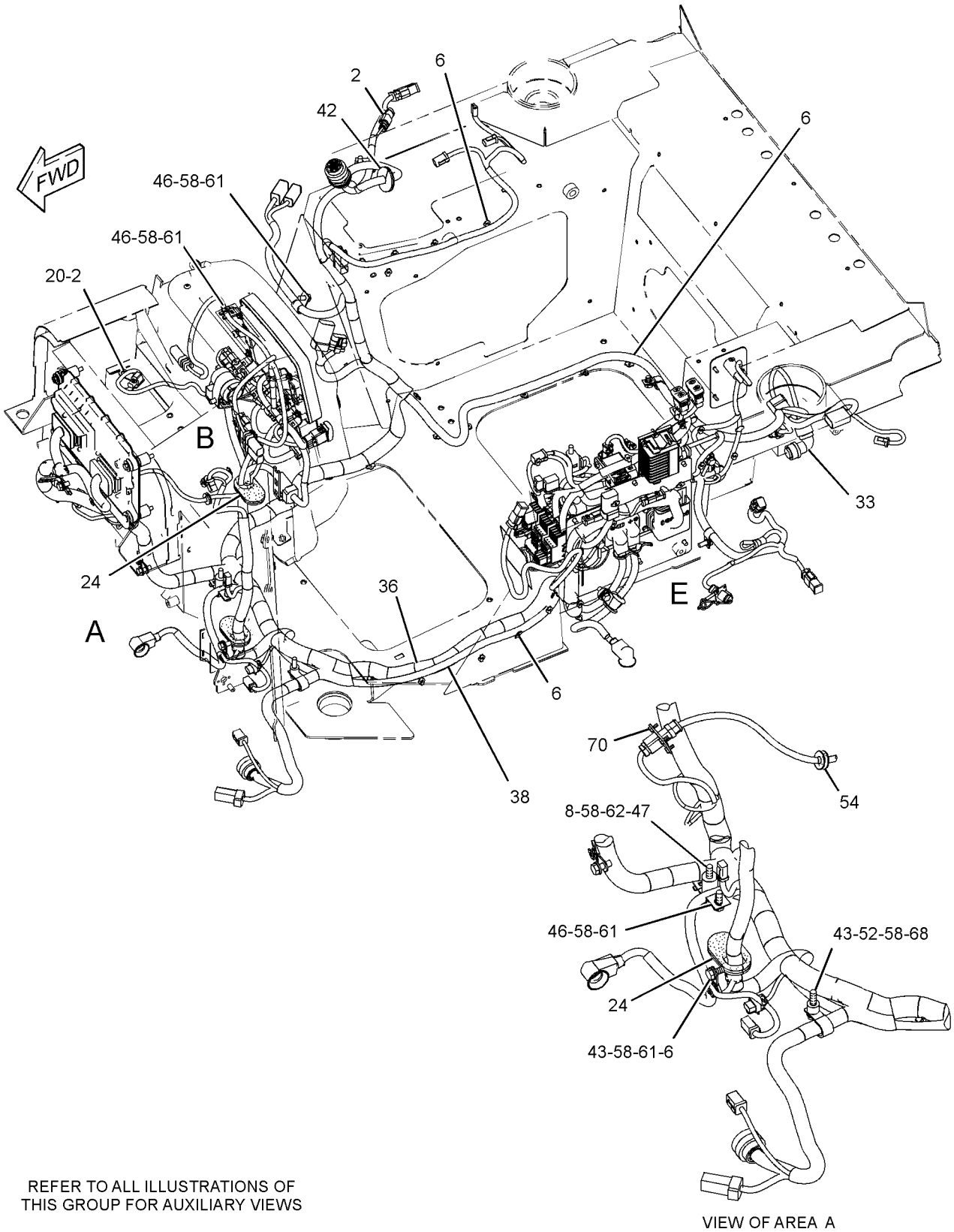

GRAPHIC #2

g03072561

310-1543 **WIRING GP-PLATFORM (*contd.*)** **i05142650**

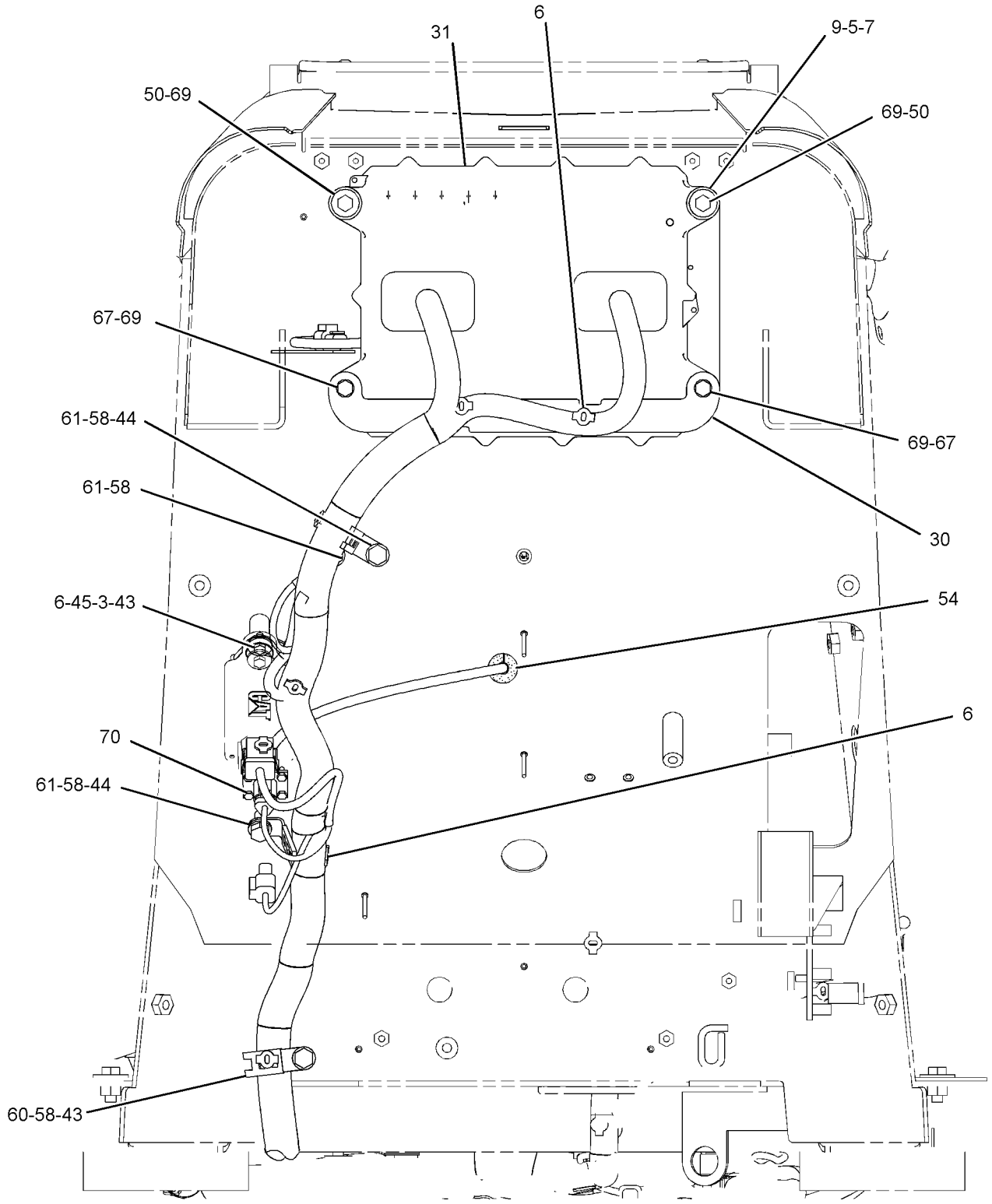

FRONT VIEW

GRAPHIC #3 g01963678

310-1543 **WIRING GP-PLATFORM (*contd.*)** **i05142650**

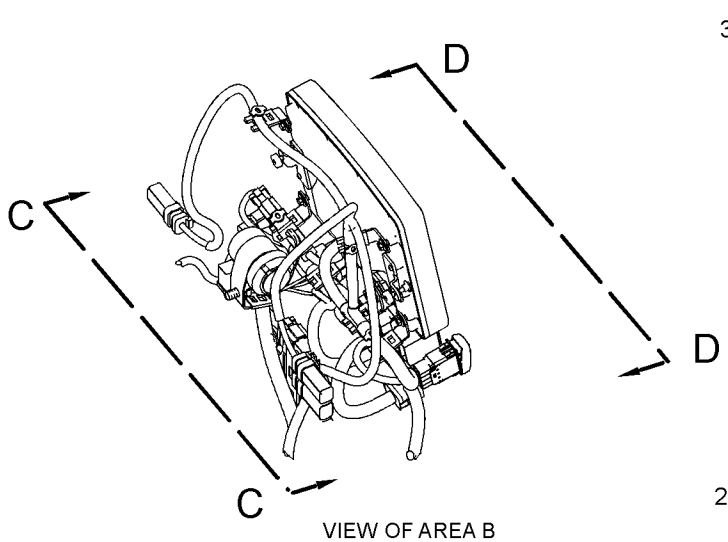

VIEW OF AREA B

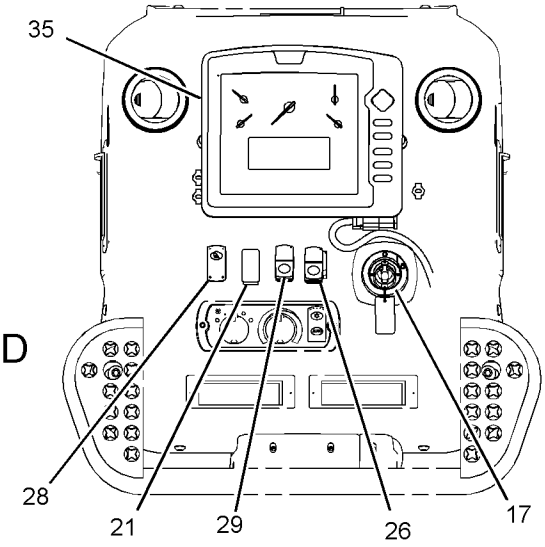

VIEW D-D

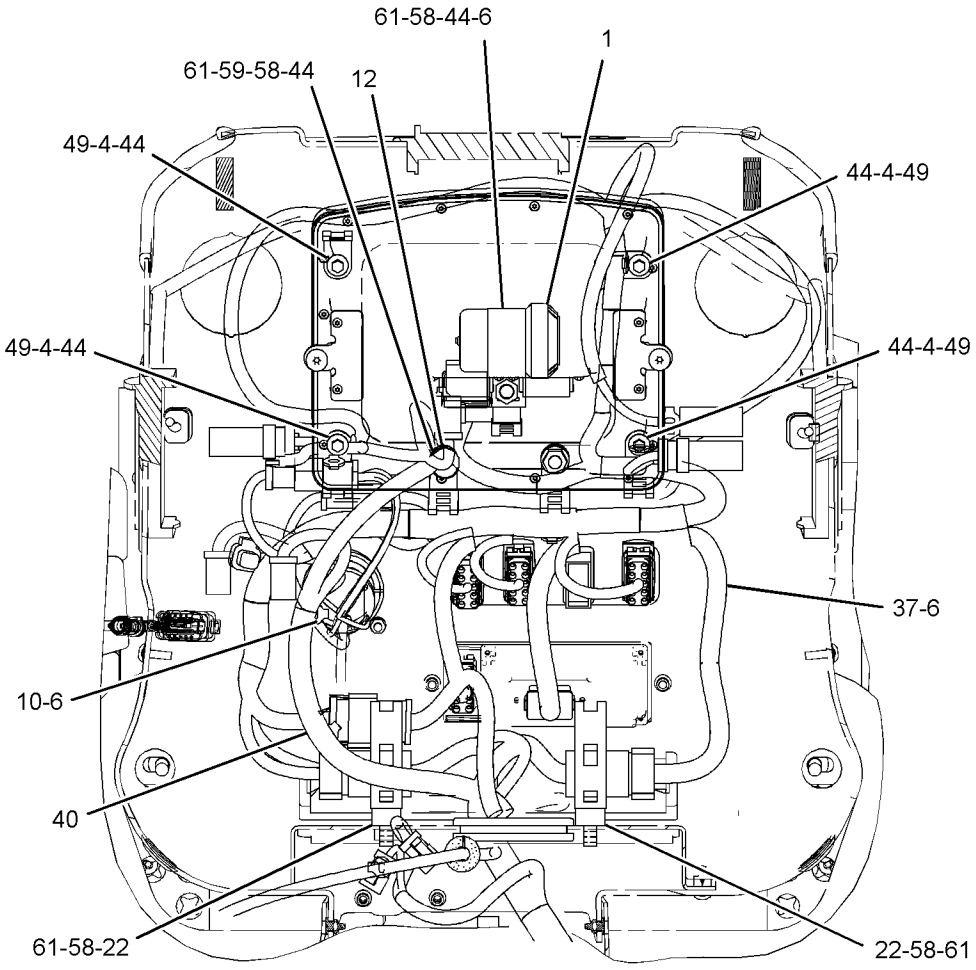

VIEW C-C

GRAPHIC #4 **<END>** g01905055

392-3202 WIRING GP-PLATFORM

S/N: LJR693-UP

PART OF 311-6400 CAB GP, 320-1200 PLATFORM GP-OPERATOR

ALSO AN ATTACHMENT

SMCS-1408 **i05167620**

NOTE	REF NO	GRAPHIC REF	PART NUMBER	QTY	PART NAME 1 2 3 4 5 6 (PRODUCT LEVEL)	SEE PAGE
Y	1	2	**3E-6328**	1	ALARM GP (24-VOLT)	137
	2	1,2,3	**3S-2093**	7	STRAP-CABLE	
	3	2	**6C-9130**	4	WASHER (6X18X1-MM THK)	
	4	1	**6I-1418**	4	SPACER (8.2X12.7X28.7-MM THK)	
	5	1,2	**7K-1181**	76	STRAP-CABLE	
	6	1	**8T-9655**	8	MOUNT-ISOLATION	
	7	2	**9C-5344**	1	SPACER (10.5X20X18-MM THK)	
	8	1	**101-3121**	4	SPACER (10.5X25X25-MM THK)	
	9	2	**110-7887**	1	SWITCH AS-START (KEY)	
		2	**7T-6799**	1	NUT-MOUNTING (1-32-THD)	
		2	**8T-8729**	4	PIN-CONNECTOR (16-GA TO 18-GA)	
		2	**102-8804**	1	KIT-RECEPTACLE (4-PIN)	
					(INCLUDES RECEPTACLE AS & WEDGE)	
	10	3	**117-2311**	1	SOCKET-AUXILIARY POWER (12-VOLT)	
	11	3	**169-2876**	1	FILM-IDENTIFICATION (POWER RECEPTACLE, 12-VOLT)	
	12	3	**173-1614**	1	FILM-IDENTIFICATION (ALTERNATOR AIR)	
	13	3	**193-3973**	1	STRAP-CABLE	
	14	3	**201-2733**	1	FILM-INFORMATION (INPUT/OUTPUT)	
	15	2	**205-8257**	1	COIL AS (EXCITER)	
D		2	**5P-5677**		WIRE (18-GA, BLACK) (0.4-M)	
		2	**8T-8729**	2	PIN-CONNECTOR (16-GA TO 18-GA)	
		2	**207-5271**	1	WASHER (27X60.5X0.36-MM THK)	
	16	2	**220-4081**	1	CAP	
	17	3	**220-5946**	1	CLIP	
	18	2	**224-9222**	1	BRACKET	
	19	2	**228-6089**	1	PLUG (ROCKER SWITCH)	
	20	2	**232-7305**	2	CLIP	
	21	3	**245-8823**	1	FILM-IDENTIFICATION (GENERATOR, ELECTRICAL POWER)	
	22	2	**249-5052**	2	GROMMET	
	23	3	**249-5481**	1	SWITCH AS-ROCKER (THROTTLE)	
	24	2	**249-5495**	1	SWITCH AS-ROCKER (AUTOMATIC KICKDOWN)	
	25	2	**251-5848**	1	SWITCH AS-ROCKER (FRONT, REAR FLOODLIGHTS)	
	26	2	**293-9139**	1	SWITCH AS-ROCKER (AUTOSHIFT)	
	27	1	**296-2649**	1	BRACKET AS	
R	28	1	**304-5687**	1	CONTROL GP-UNPROGRAMMED (POWER TRAIN)	
Y	29	3	*310-1535*	1	PANEL GP-CIRCUIT BREAKER	195
	30	3	**312-8652**	1	PLATE	
	31	2	**317-3880**	1	MODULE GP-DISPLAY	
	32	1	**335-2095**	1	HARNESS AS-PLATFORM	
		1	**102-8802**	2	KIT-RECEPTACLE (2-PIN)	
		1	**102-8803**	1	KIT-RECEPTACLE (3-PIN)	
		1	**102-8804**	1	KIT-RECEPTACLE (4-PIN)	
		1	**102-8805**	1	KIT-RECEPTACLE (6-PIN)	
		1	**102-8806**	1	KIT-RECEPTACLE (8-PIN)	
		1	**102-8801**	2	KIT-RECEPTACLE (12-PIN)	
					(EACH INCLUDES RECEPTACLE AS & WEDGE)	
		1	**3S-2093**	2	STRAP-CABLE	
		1	**9X-0194**	2	TERMINAL AS	
					(EACH INCLUDES)	
		1	**5P-4571**	4	TERMINAL-BLADE (14-GA TO 16-GA)	
		1	**8T-8737**	229	PLUG-SEAL	
		1	**9X-6772**	4	STRAP-CABLE	
E		1	**119-3662**		TUBE-HEAT SHRINK (10.85-MM DIA) (20-CM)	
E		1	**125-7874**		TUBE-HEAT SHRINK (5.72-MM DIA) (190-CM)	

392-3202 **WIRING GP-PLATFORM (*contd.*)** **i05167620**

NOTE	REF NO	GRAPHIC REF	PART NUMBER	QTY	PART NAME 1 2 3 4 5 6 (PRODUCT LEVEL)	SEE PAGE
E		1	**125-7875**		TUBE-HEAT SHRINK (7.44-MM DIA) (50-CM)	
		1	**9X-3402**	336	SOCKET-CONNECTOR (16-GA TO 18-GA)	
					—OR—	
		1	**126-1768**	336	SOCKET-CONNECTOR (14-GA TO 16-GA)	
		1	**126-1774**	3	COVER-CONNECTOR	
		1	**2L-8069**	5	TERMINAL-RING (2-GA TO 10-GA, 3/8-IN SCREW)	
		1	**128-4249**	1	LOCKWASHER	
		1	**2L-8079**	3	TERMINAL-RING (14-GA TO 16-GA, 3/8-IN SCREW)	
		1	**134-2540**	1	RESISTOR AS-CONNECTION (3-PIN)	
		1	**140-7684**	1	RECEPTACLE AS-CONNECTOR (3-PIN)	
		1	**9X-3401**	91	PIN-CONNECTOR (16-GA TO 18-GA)	
					—OR—	
		1	**126-1767**	91	PIN-CONNECTOR (14-GA TO 16-GA)	
		1	**147-1445**	1	PLUG AS-CONNECTOR (70-PIN)	
		1	**159-9322**	1	SEAL-O-RING	
		1	**147-1446**	1	PLUG AS-CONNECTOR (70-PIN)	
		1	**159-9322**	1	SEAL-O-RING	
		1	**155-2255**	2	KIT-CONNECTING PLUG (12-PIN)	
		1	**155-2270**	1	KIT-CONNECTING PLUG (2-PIN)	
		1	**155-2271**	1	KIT-CONNECTING PLUG (4-PIN)	
		1	**155-2274**	7	KIT-CONNECTING PLUG (6-PIN)	
		1	**155-2265**	1	KIT-CONNECTING PLUG (8-PIN)	
		1	**174-0503**	1	KIT-CONNECTING PLUG (3-PIN)	
		1	**174-0503**	1	KIT-CONNECTING PLUG (3-PIN)	
		1	**155-2260**	5	KIT-CONNECTING PLUG (3-PIN)	
					(EACH INCLUDES PLUG AS, WEDGE & INTERFACE SEAL)	
		1	**160-7689**	1	PLUG AS-CONNECTOR (70-PIN)	
		1	**159-9322**	1	SEAL-O-RING	
		1	**167-3692**	1	RECEPTACLE AS-CONNECTOR (31-PIN)	
		1	**167-3693**	2	PLUG AS-CONNECTOR (31-PIN)	
		1	**211-0052**	1	NUT (1-11/16-18-THD)	
		1	**230-4009**	2	PLUG AS-CONNECTOR (12-PIN)	
					(EACH INCLUDES)	
		1	**264-7034**	1	SEAL-CONNECTOR	
		1	**230-4010**	5	RECEPTACLE AS-CONNECTOR (12-PIN)	
		1	**230-4011**	3	PLUG AS-CONNECTOR (2-PIN)	
					(EACH INCLUDES)	
		1	**264-7029**	1	SEAL-CONNECTOR	
		1	**230-4013**	1	PLUG AS-CONNECTOR (3-PIN)	
		1	**264-7030**	1	SEAL-CONNECTOR	
		1	**230-4014**	1	RECEPTACLE AS-CONNECTOR (3-PIN)	
		1	**231-2295**	2	PLUG AS-CONNECTOR (8-PIN)	
					(EACH INCLUDES)	
		1	**264-7033**	1	SEAL-CONNECTOR	
		1	**231-2300**	3	RECEPTACLE AS-CONNECTOR (8-PIN)	
		1	**239-7356**	1	PLUG AS-CONNECTOR (12-PIN)	
		1	**264-7034**	1	SEAL-CONNECTOR	
		1	**239-7357**	2	RECEPTACLE AS-CONNECTOR (12-PIN)	
		1	**310-9997**	1	PLUG GP (DUST)	
		1	**8T-8737**	2	PLUG-SEAL	
E		1	**125-7875**		TUBE-HEAT SHRINK (7.44-MM DIA) (6-CM)	
		1	**2L-8076**	1	TERMINAL-RING (14-GA TO 16-GA, NO. 10 SCREW)	
	33	2	**335-2096**	1	HARNESS AS-PANEL	
		2	**8T-8737**	41	PLUG-SEAL	
E		2	**125-7874**		TUBE-HEAT SHRINK (5.72-MM DIA) (35-CM)	
E		2	**125-7875**		TUBE-HEAT SHRINK (7.44-MM DIA) (10-CM)	
		2	**9X-3402**	65	SOCKET-CONNECTOR (16-GA TO 18-GA)	
					—OR—	
		2	**126-1768**	65	SOCKET-CONNECTOR (14-GA TO 16-GA)	

392-3202 **WIRING GP-PLATFORM (*contd.*)** **i05167620**

NOTE	REF NO	GRAPHIC REF	PART NUMBER	QTY	PART NAME 1 2 3 4 5 6 (PRODUCT LEVEL)	SEE PAGE
		2	**155-2255**	3	KIT-CONNECTING PLUG (12-PIN)	
		2	**155-2271**	1	KIT-CONNECTING PLUG (4-PIN)	
					(EACH INCLUDES PLUG AS, WEDGE & INTERFACE SEAL)	
		2	**185-1861**	22	SEAL-WIRE	
		2	**204-1297**	20	TERMINAL AS-BLADE (18-GA TO 20-GA)	
					(EACH INCLUDES)	
		2	**235-4123**	1	TERMINAL (18-GA TO 20-GA)	
		2	**245-7434**	4	KIT-CONNECTING PLUG (10-PIN)	
					(EACH INCLUDES WIRE AS & PLUGS)	
		2	**230-4009**	1	PLUG AS-CONNECTOR (12-PIN)	
		2	**264-7034**	1	SEAL-CONNECTOR	
		2	**230-5008**	3	PLUG AS-CONNECTOR (4-PIN)	
					(EACH INCLUDES)	
		2	**264-7031**	1	SEAL-CONNECTOR	
		2	**230-5009**	3	RECEPTACLE AS-CONNECTOR (4-PIN)	
		2	**239-7356**	1	PLUG AS-CONNECTOR (12-PIN)	
		2	**264-7034**	1	SEAL-CONNECTOR	
	34	1	**335-6246**	1	HARNESS AS-POWER	
		1	**3L-6513**	1	TERMINAL-RING (1-GA TO 2-GA, 1/2-IN SCREW)	
		1	**8T-8827**	2	BOOT (RED)	
		1	**311-6184**	1	TERMINAL-RING (2-GA, 3/8-IN SCREW)	
	35	3	**335-6247**	1	CABLE AS	
		3	**3L-6513**	2	TERMINAL-RING (1-GA TO 2-GA, 1/2-IN SCREW)	
E		3	**8C-3056**		CABLE (2-GA, RED) (58-CM)	
		3	**8T-8827**	2	BOOT (RED)	
	36	1	**335-6248**	1	HARNESS AS-WIRING (MACHINE SECURITY SYSTEM)	
		1	**102-8802**	1	KIT-RECEPTACLE (2-PIN)	
					(INCLUDES RECEPTACLE AS & WEDGE)	
		1	**8T-8737**	3	PLUG-SEAL	
		1	**9X-3402**	2	SOCKET-CONNECTOR (16-GA TO 18-GA)	
					—OR—	
		1	**126-1768**	2	SOCKET-CONNECTOR (14-GA TO 16-GA)	
		1	**140-7684**	1	RECEPTACLE AS-CONNECTOR (3-PIN)	
		1	**9X-3401**	2	PIN-CONNECTOR (16-GA TO 18-GA)	
					—OR—	
		1	**126-1767**	2	PIN-CONNECTOR (14-GA TO 16-GA)	
		1	**155-2270**	1	KIT-CONNECTING PLUG (2-PIN)	
					(INCLUDES PLUG AS, WEDGE & INTERFACE SEAL)	
	37	3	**340-7161**	1	CONVERTER-POWER (24-VOLT TO 12-VOLT)	
	38	1	**352-5908**	1	HARNESS AS-TRANSMISSION	
		1	**8T-8737**	1	PLUG-SEAL	
		1	**9X-3402**	11	SOCKET-CONNECTOR (16-GA TO 18-GA)	
					—OR—	
		1	**126-1768**	11	SOCKET-CONNECTOR (14-GA TO 16-GA)	
		1	**154-3172**	1	PLUG AS (14-PIN)	
		1	**230-4009**	1	PLUG AS-CONNECTOR (12-PIN)	
		1	**264-7034**	1	SEAL-CONNECTOR	
M	39	1	**116-6952**	4	BOLT (M4X0.7X10-MM)	
	40	3	**204-8000**	1	MOUNTING-CABLE TIE	
	41	3	**284-3623**	1	SWITCH AS-ROCKER (HYDRAULIC LOCKOUT)	
	42	1	**3E-6754**	1	GROMMET	
	43	1,2	**4P-7581**	5	CLIP	
	44	1,2,3	**4P-8134**	11	CLIP	
M	45	1	**5C-9553**	1	BOLT (M6X1X16-MM)	
	46	1,2	**6D-3479**	3	CLIP	
	47	2	**6D-4244**	1	CLIP	
	48	3	**6V-0826**	1	GROMMET	
M	49	2,3	**7I-2272**	8	BOLT (M5X0.8X12-MM)	
	50	1	**7X-0579**	2	WASHER-HARD (8.8X25.5X2-MM THK)	
M	51	3	**7X-2548**	1	BOLT (M12X1.75X16-MM)	

392-3202 **WIRING GP-PLATFORM (*contd.*)** **i05167620**

NOTE	REF NO	GRAPHIC REF	PART NUMBER	QTY	PART NAME 1 2 3 4 5 6 (PRODUCT LEVEL)	SEE PAGE
	52	2	**8G-6557**	1	SPACER (10.5X25X40-MM THK)	
	53	1	**8M-2773**	1	CLIP	
	54	1	**8P-8540**	1	GROMMET	
M	55	3	**8T-0289**	2	BOLT (M5X0.8X20-MM)	
	56	3	**8T-0328**	6	WASHER-HARD (5.5X10X1-MM THK)	
	57	3	**8T-1889**	1	CLIP (SLOT)	
	58	3	**8T-1890**	1	CLIP (TAB)	
	59	1,2,3	**8T-4121**	24	WASHER-HARD (11X21X2.5-MM THK)	
M	60	2	**8T-4133**	2	NUT (M10X1.5-THD)	
M	61	1,3	**8T-4136**	3	BOLT (M10X1.5X25-MM)	
M	62	1,2,3	**8T-4137**	14	BOLT (M10X1.5X20-MM)	
M	63	2	**8T-4185**	1	BOLT (M10X1.5X50-MM)	
M	64	1,3	**8T-4191**	2	BOLT (M10X1.5X16-MM)	
M	65	3	**8T-4195**	1	BOLT (M10X1.5X30-MM)	
M	66	3	**8T-4200**	6	BOLT (M8X1.25X16-MM)	
	67	3	**8T-4223**	1	WASHER-HARD (13.5X25.5X3-MM THK)	
	68	1,3	**8T-4224**	8	WASHER-HARD (8.8X16X2-MM THK)	
M	69	2	**8T-5005**	1	BOLT (M10X1.5X70-MM)	
M	70	1	**8T-6870**	4	BOLT (M8X1.25X70-MM)	
	71	3	**8T-9471**	1	GROMMET	
	72	3	**9M-8406**	1	CLIP	
M	73	3	**9X-2044**	3	SCREW-TRUSS HEAD (M6X1X16-MM)	
	74	1	**9X-6165**	1	WASHER (6.5X22X2.5-MM THK)	

D - ORDER BY THE METER
E - ORDER BY THE CENTIMETER
M - METRIC PART
R - REMFG PART MAY BE AVAILABLE
Y - SEPARATE ILLUSTRATION

392-3202 **WIRING GP-PLATFORM (*contd.*)** **i05167620**

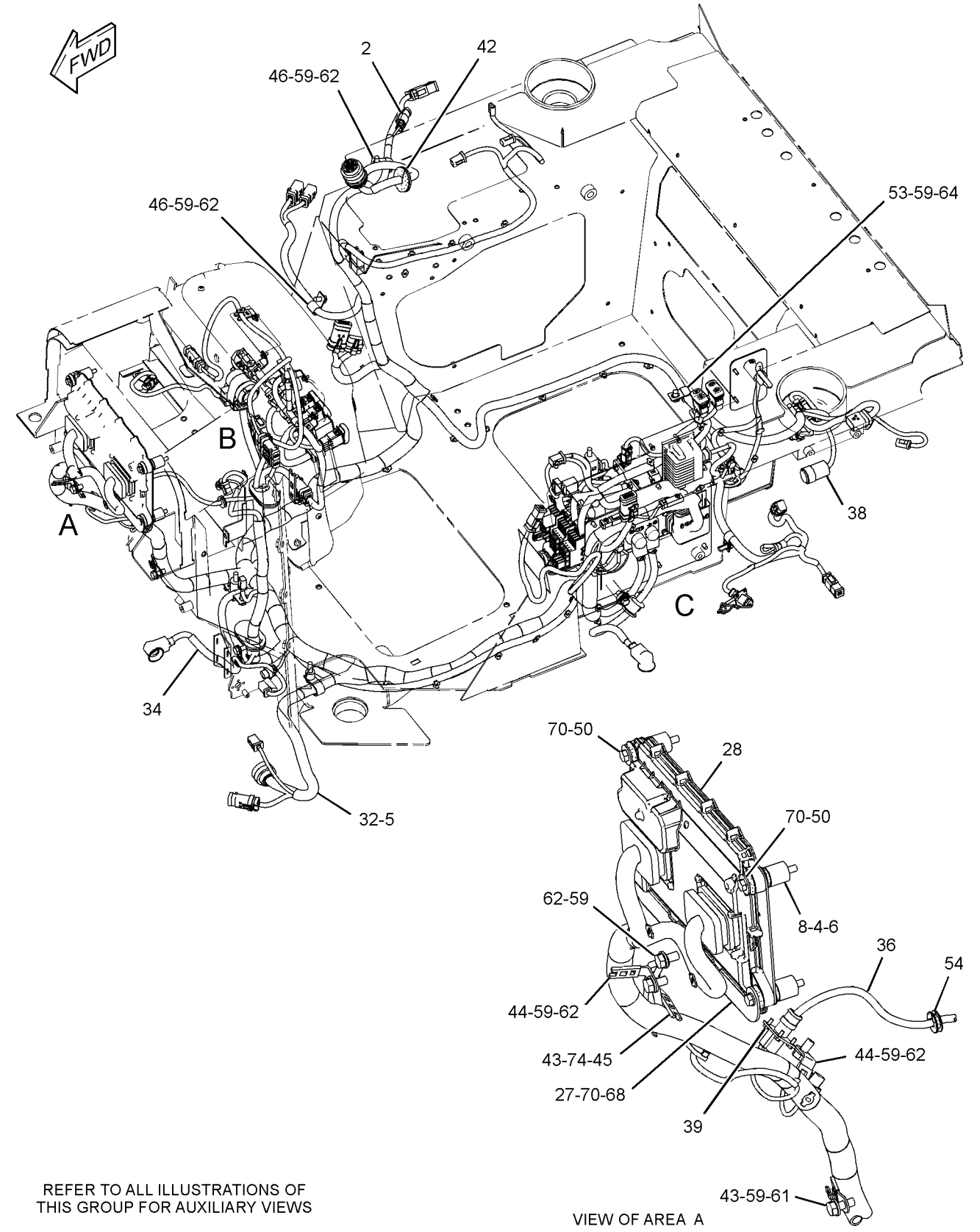

392-3202 **WIRING GP-PLATFORM (*contd.*)** **i05167620**

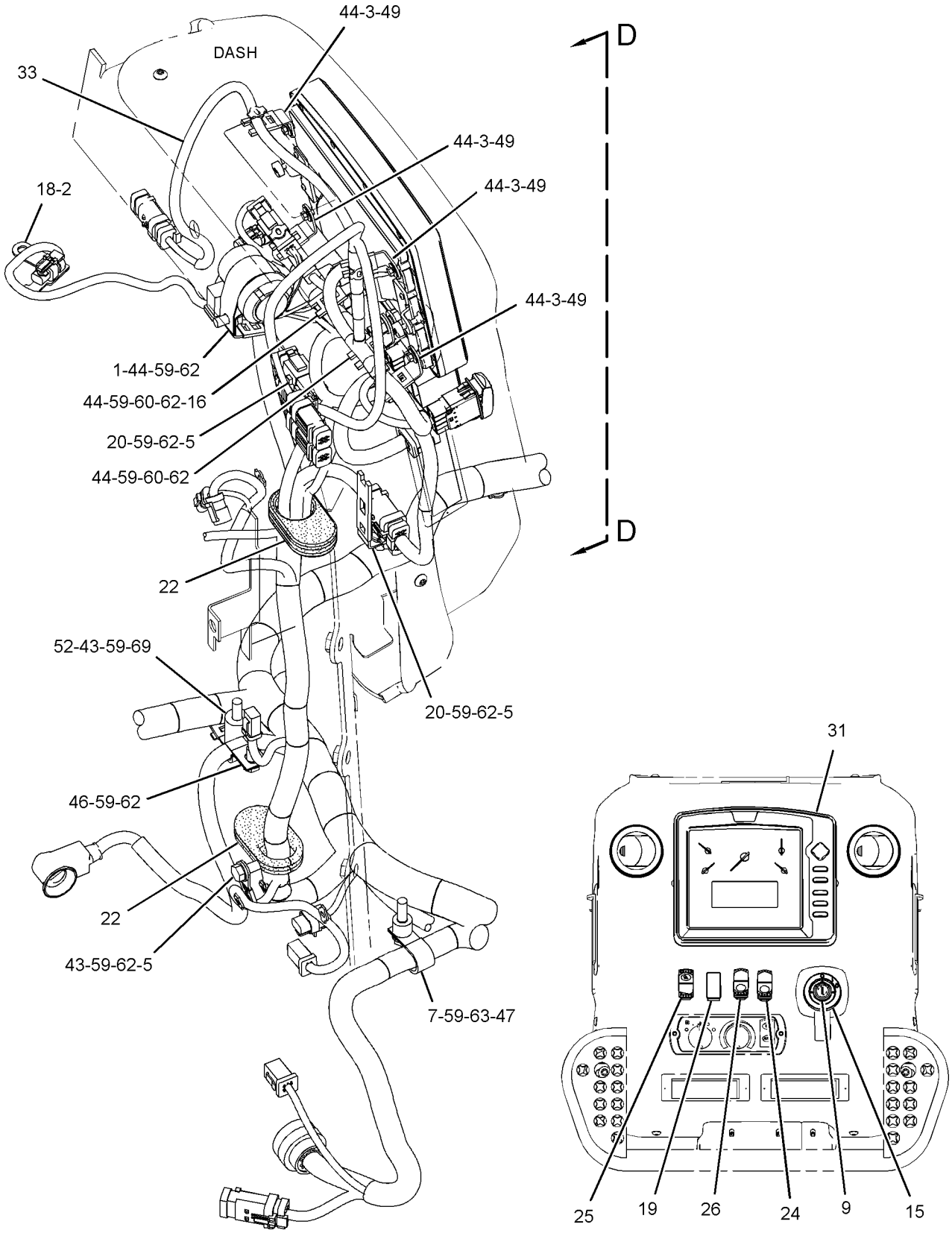

VIEW OF AREA B

VIEW D-D

GRAPHIC #2

g03044876

392-3202 **WIRING GP-PLATFORM (*contd.*)** **i05167620**

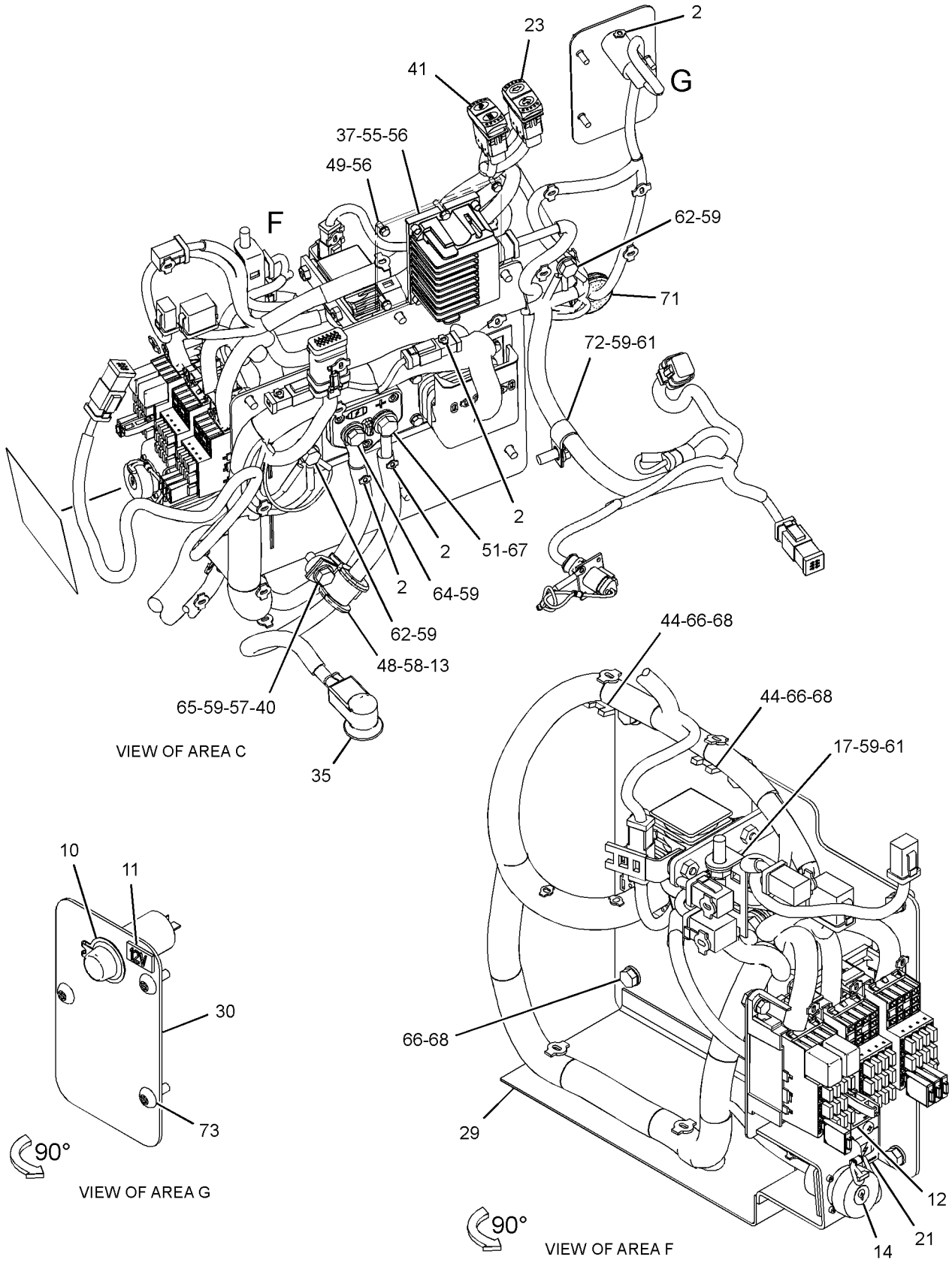

GRAPHIC #3

<END>

g03044883

250-0393 ACCUMULATOR GP–UNCHARGED

S/N: LJR1-UP

PART OF 321-5651 LINES GP-POWER TRAIN OIL

SMCS-5077 **i04024728**

NOTE	REF NO	GRAPHIC REF	PART NUMBER	QTY	PART NAME 1 2 3 4 5 6 (PRODUCT LEVEL)	SEE PAGE
	1	1	**241-0037**	1	FILM-WARNING (HIGH PRESSURE, READ OMM)	
	2	1	**224-5152**	1	VALVE-GAS	
	3	1	**224-5132**	1	CAP (GAS VALVE)	
	4	1	**3J-7354**	1	SEAL-O-RING	
	5	1	**1J-9671**	1	SEAL-O-RING	

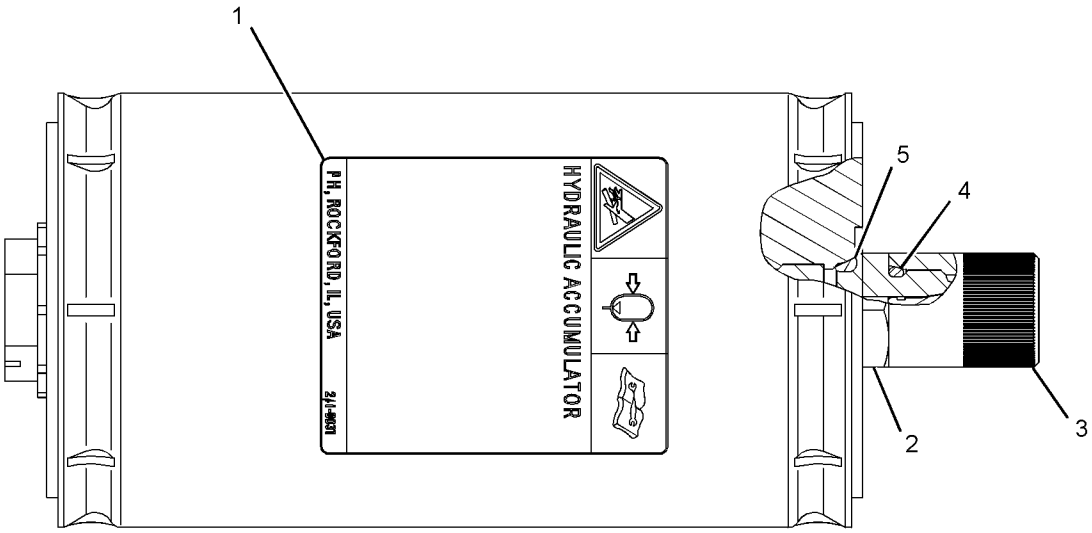

GRAPHIC #1 **<END>** g02207893

193-7361 AXLE GP

S/N: LJR1-UP

PART OF 321-3122 POWER TRAIN AR

SMCS-3282 **i04236563**

NOTE	REF NO	GRAPHIC REF	PART NUMBER	QTY	PART NAME 1 2 3 4 5 6 (PRODUCT LEVEL)	SEE PAGE
	1	1	**191-4916**	1	SHAFT-SUN GEAR	
	2	1	**193-7365**	1	SHAFT	
	3	1	**193-7366**	1	SHAFT-SUN GEAR	

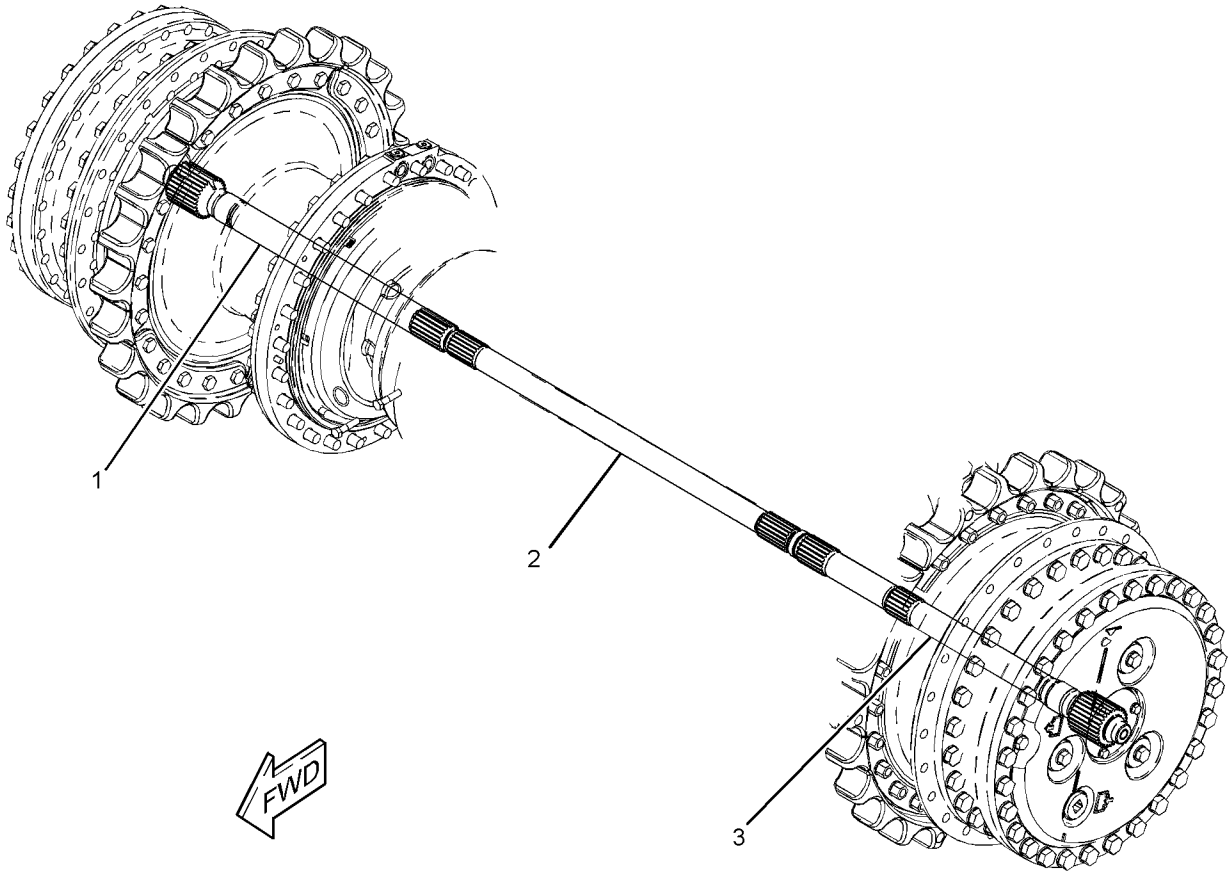

GRAPHIC #1 **<END>** g02410477

333-9308 BASE GP-OIL FILTER—POWER TRAIN

S/N: LJR1-UP

PART OF 333-6437 FILTER GP-OIL

SMCS-3004 **i03630674**

NOTE	REF NO	GRAPHIC REF	PART NUMBER	QTY	PART NAME 1 2 3 4 5 6 (PRODUCT LEVEL)	SEE PAGE
	1	1	**3T-9549**	1	ADAPTER	
	2	1	**7G-4998**	1	SPOOL-BYPASS	
Y	3	1	**164-7577**	1	SWITCH GP-BYPASS (POWER TRAIN OIL FILTER)	216
	4	1	**334-2679**	1	SPRING	
	5	1	**334-2680**	1	SPRING	
	6	1	**5P-7815**	1	SEAL-O-RING	
	7	1	**6V-5050**	1	SEAL-O-RING	
	8	1	**9S-8008**	1	PLUG-O-RING	

PARTS SHOWN IN GRAPHIC(S) WITHOUT A REFERENCE NUMBER ARE NOT SERVICED SEPARATELY

Y - SEPARATE ILLUSTRATION

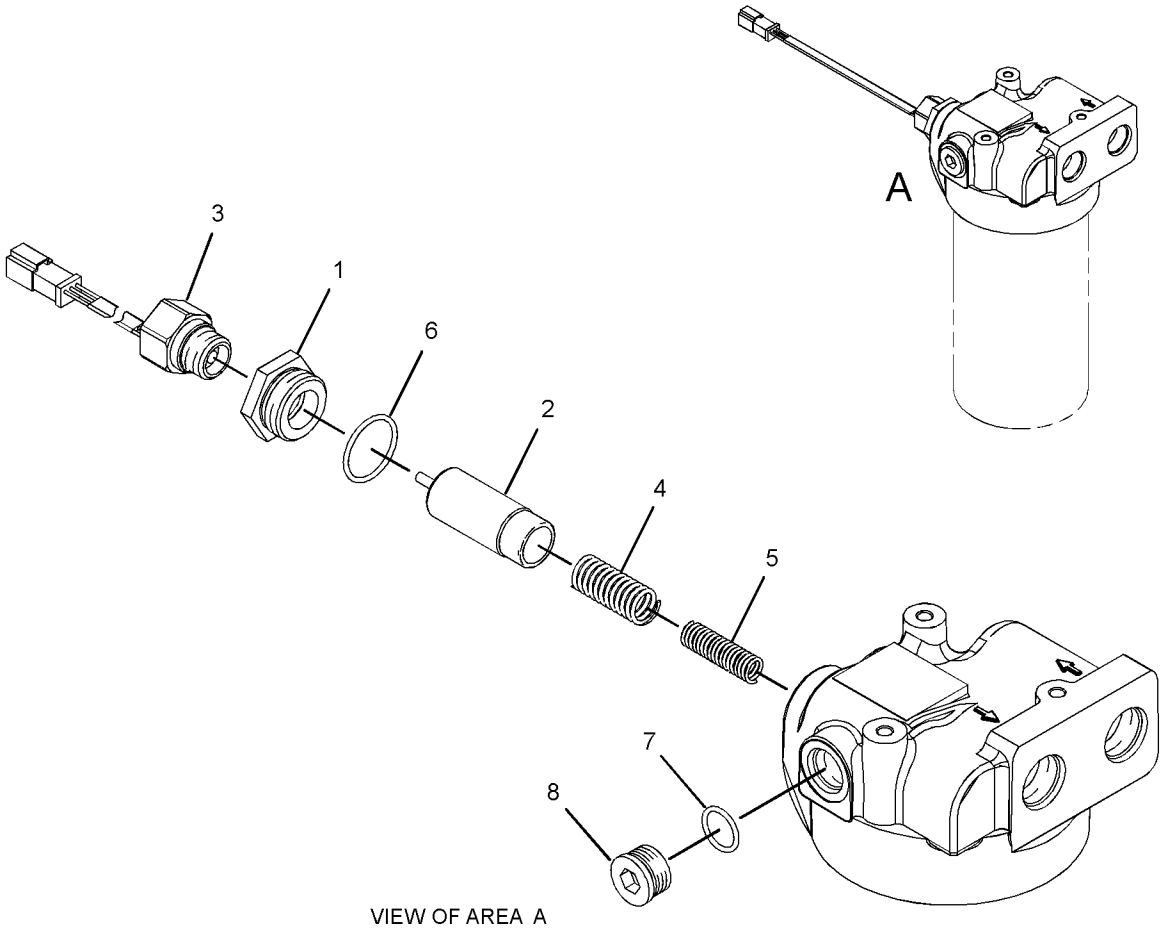

VIEW OF AREA A
(EXPLODED)

GRAPHIC #1 **<END>** g01863853

227-8361 BRAKE & DIFFERENTIAL DRIVE GP

S/N: LJR1-UP

PART OF 195-0644 BRAKE GP-STEERING

SMCS-4131 **i02640199**

NOTE	REF NO	GRAPHIC REF	PART NUMBER	QTY	PART NAME 1 2 3 4 5 6 (PRODUCT LEVEL)	SEE PAGE
	1	1	**2K-5069**	1	CUP-BEARING (TAPERED ROLLER)	
	2	1	**2K-9295**	1	BEARING AS-TAPERED ROLLER	
	3	1	**3B-4124**	1	CUP-BEARING (TAPERED ROLLER)	
	4	1	**3S-2708**	7	PIN-SPRING	
	5	1	**3T-4568**	3	SHAFT-PLANETARY	
	6	1	**3T-4824**	4	GEAR-PLANETARY (30-TEETH)	
	7	1	**3T-6963**	1	SEAL-RING	
B	8	1	**3T-9272**	1	SHIM PACK (INCLUDES 8-SHIMS)	
	9	1	**5M-0578**	3	BEARING AS-ROLLER	
	10	1	**5M-7925**	4	BEARING AS-ROLLER	
	11	1	**6I-8724**	1	RING-LOCK	
	12	1	**6P-1735**	1	LOCKWASHER	
	13	1	**6P-1736**	1	WASHER (55.17X76.2X2.67-MM THK)	
	14	1	**6T-0062**	1	PLATE	
	15	1	**6T-0064**	4	SHAFT-PLANETARY	
	16	1	**6T-0850**	2	WASHER-THRUST (255X287.25X2.75-MM THK)	
	17	1	**6V-0855**	1	BEARING AS-TAPERED ROLLER	
	18	2	**6V-7646**	3	WASHER-HARD (7.2X25X2-MM THK)	
	19	1	**6Y-0926**	3	GEAR-PLANETARY (23-TEETH)	
	20	1	**6Y-0984**	1	GEAR-RING (75-TEETH)	
	21	1	**6Y-2704**	1	SPRING-DISC	
	22	1	**6Y-9373**	4	DISC-FRICTION	
	23	1	**7G-1596**	1	RING-RETAINING	
	24	1	**7H-4566**	2	CUP-BEARING (TAPERED ROLLER)	
	25	1	**7T-1885**	1	RING	
	26	1	**7T-6994**	3	PLATE-CLUTCH & BRAKE	
	27	1	**7T-8130**	1	RING-RETAINING	
	28	1	**7T-9832**	1	RETAINER	
	29	1	**7T-9837**	1	PLATE	
	30	1	**8E-5277**	1	RETAINER	
	31	1	**8E-5279**	1	PISTON	
	32	1	**8E-8307**	6	DISC-THRUST	
	33	1	**8E-8310**	8	DISC-THRUST	
	34	1	**9B-0576**	1	LOCKNUT-BEARING	
	35	1	**9W-1571**	1	SLINGER	
	39	1	**9W-6102**	1	GEAR-RING (84-TEETH)	
	40	1	**9W-6103**	1	RING-THRUST	
	41	1	**005-4834**	2	BEARING AS-TAPERED ROLLER	
	42	1	**136-1595**	1	HOUSING-ROTATING	
	43	1	**191-0938**	1	CARRIER-PLANETARY	
	44	1	**191-0940**	1	CARRIER-PLANETARY	
	45	1	**292-2017**	1	GEAR AS-SUN (30, 24-TEETH)	
	46	1	**193-7405**	1	HUB	
	47	1	**216-6371**	1	CARRIER	
	48	1	**226-4462**	1	GEAR-BEVEL (74-TEETH)	
	49	1	**226-4464**	1	PINION-BEVEL (15-TEETH)	
	50	1	**227-2451**	1	HOUSING AS (BRAKE)	
B	50A	1	**9W-2853**	1	SHIM PACK (INCLUDES 21-SHIMS)	
		1	**1A-1460**	12	BOLT (1/2-13X2-IN)	
		1	**1A-2223**	2	DOWEL	
		1	**5P-8245**	12	WASHER-HARD (13.5X25.5X3-MM THK)	
	51	2	**030-2135**	4	BOLT-LOCKING (5/16-18X0.625-IN)	
	52	2	**0L-1143**	21	BOLT (3/8-16X2.5-IN)	
	53	1	**0S-1585**	6	BOLT (1/2-13X1.5-IN)	
	54	2	**0S-1614**	3	BOLT (1/4-20X0.5-IN)	
	55	1	**1A-2029**	6	BOLT (3/8-16X1.125-IN)	
	56	2	**2A-4639**	1	BOLT (3/8-16X1.625-IN)	
	57	2	**3K-0360**	2	SEAL-O-RING	

227-8361 **BRAKE & DIFFERENTIAL DRIVE GP (*contd.*)** **i02640199**

NOTE	REF NO	GRAPHIC REF	PART NUMBER	QTY	PART NAME 1 2 3 4 5 6 (PRODUCT LEVEL)	SEE PAGE
	58	1	**5K-9107**	3	BOLT-LOCKING (3/8-16X0.75-IN)	
	59	1,2	**5M-2894**	7	WASHER-HARD (10.2X18.5X2.5-MM THK)	
	60	1	**5P-8245**	6	WASHER-HARD (13.5X25.5X3-MM THK)	
	61	2	**6F-6673**	2	SEAL-O-RING	
	62	1	**6P-5317**	1	RING-SEAL (EXTERNAL)	
	63	1	**6Y-4003**	1	RING-SEAL	
	64	2	**7W-6534**	4	PLUG-PIPE	
	65	1	**8D-4771**	1	SEAL-O-RING	
	66	2	**8M-4438**	1	SEAL-O-RING	
M	67	2	**8T-2223**	2	BOLT-SOCKET HEAD (M10X1.5X45-MM)	
	68	2	**9L-9132**	3	WASHER (10.2X25.5X2.5-MM THK)	
	69	2	**9S-8005**	2	PLUG-O-RING	
	70	2	**9X-2027**	2	WASHER (11X18X2-MM THK)	
B	71	1	**1U-8846**		SEALANT-GASKET	

B - USE AS REQUIRED
M - METRIC PART

227-8361 **BRAKE & DIFFERENTIAL DRIVE GP (*contd.*)** **i02640199**

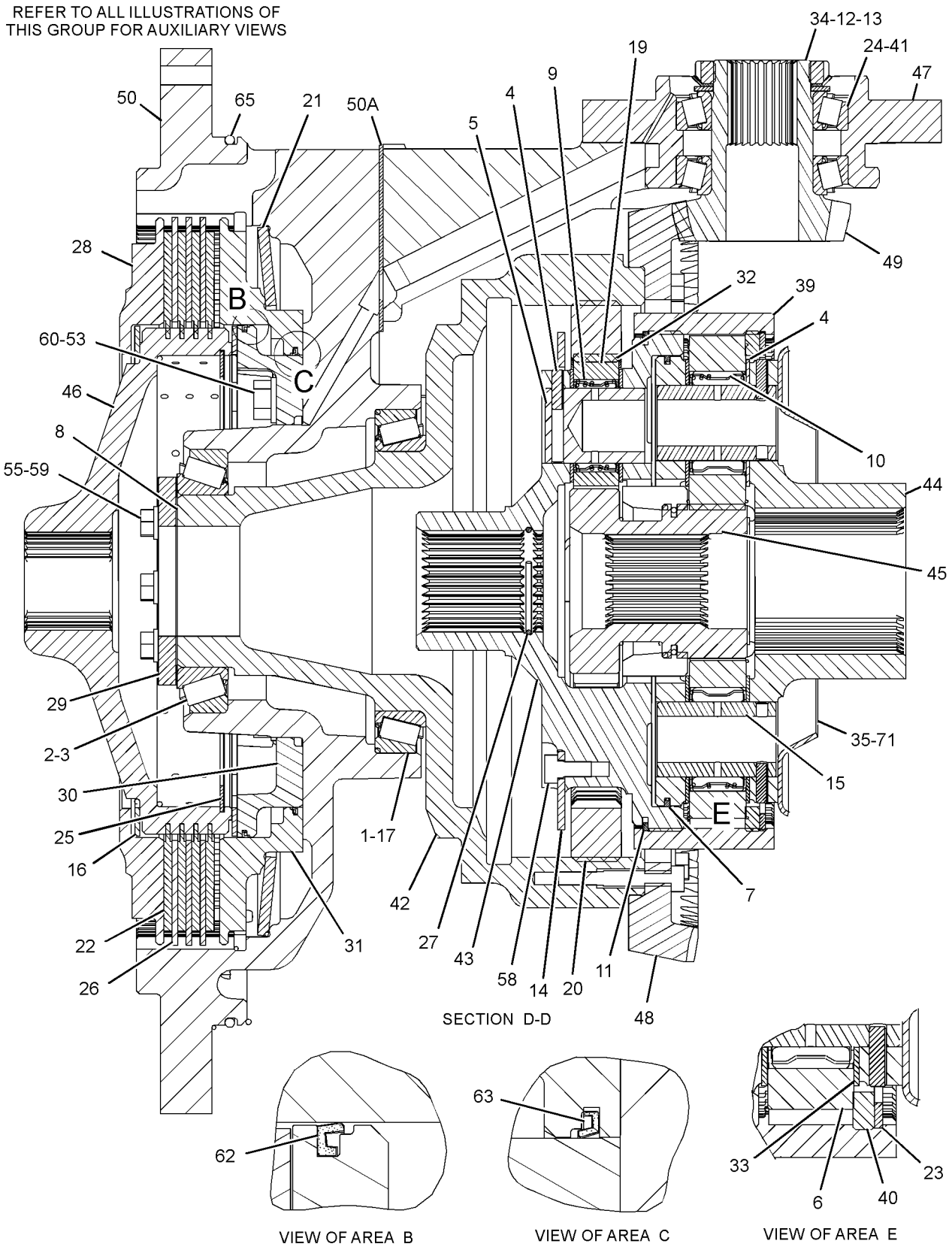

GRAPHIC #1 g01324662

227-8361 **BRAKE & DIFFERENTIAL DRIVE GP (*contd.*)** **i02640199**

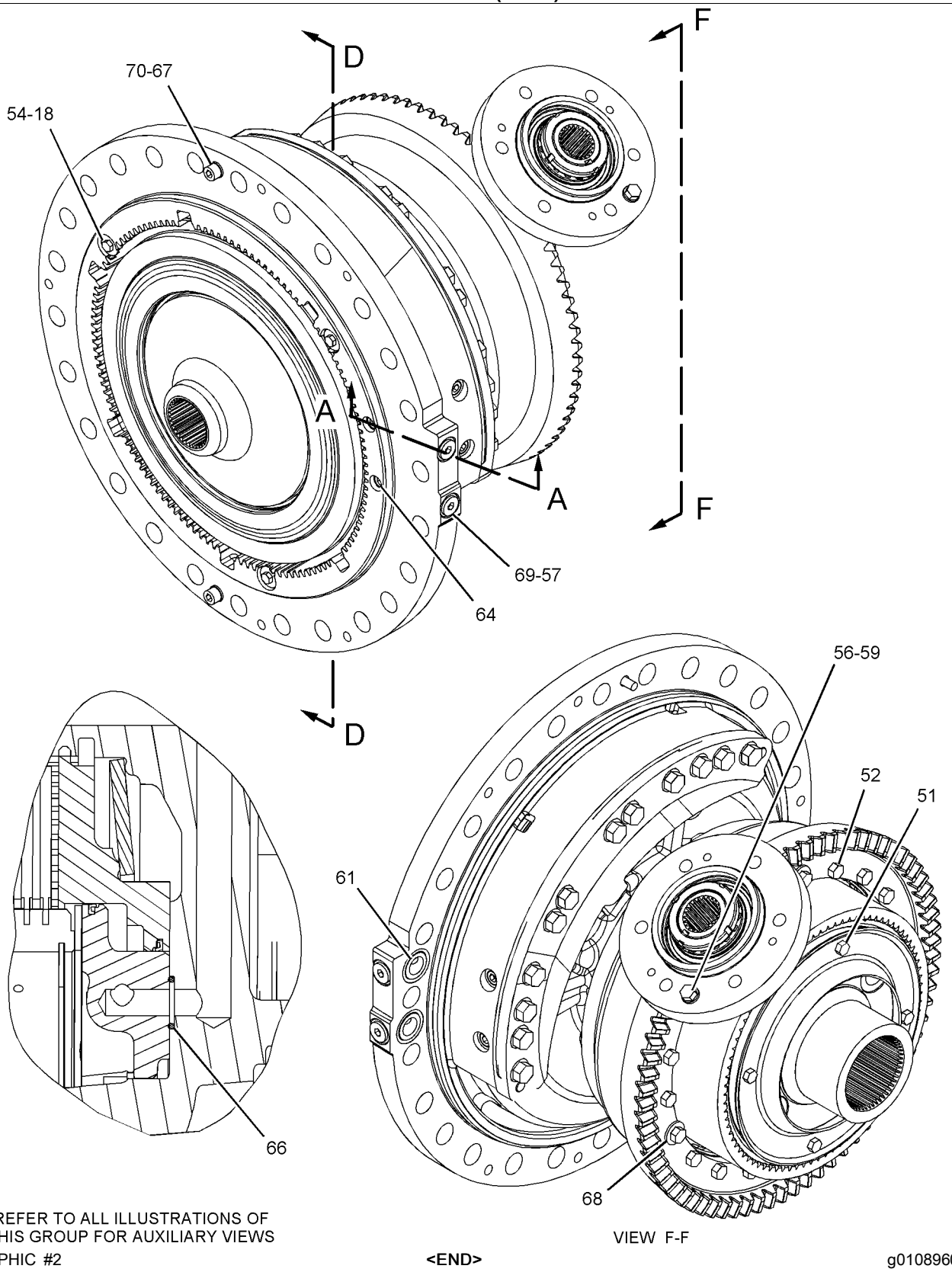

REFER TO ALL ILLUSTRATIONS OF THIS GROUP FOR AUXILIARY VIEWS

VIEW F-F

GRAPHIC #2

<END>

g01089609

193-4120 BRAKE & PLANETARY GP

S/N: LJR1-UP

PART OF 195-0644 BRAKE GP-STEERING

SMCS-4011, 4255

i02917549

NOTE	REF NO	GRAPHIC REF	PART NUMBER	QTY	PART NAME 1 2 3 4 5 6 (PRODUCT LEVEL)	SEE PAGE
	1	1	**3S-2708**	3	PIN-SPRING	
B	2	1	**1U-8846**		SEALANT-GASKET	
	3	1	**3T-5807**	1	SLINGER	
	4	1	**5M-0578**	6	BEARING AS-ROLLER	
	5	1	**6Y-2704**	1	SPRING-DISC	
	6	1	**6Y-9373**	4	DISC-FRICTION	
	7	1	**7T-1885**	1	RING	
	8	1	**7T-6994**	3	PLATE-CLUTCH & BRAKE	
	9	1	**7T-8136**	3	SHAFT-PLANETARY	
	10	1	**7T-9031**	1	GEAR-RING (75-TEETH)	
	11	1	**7T-9837**	1	PLATE	
	12	1	**8E-5278**	1	RETAINER AS	
	12A	1	**8S-0527**	1	PLUG-CUP	
	13	1	**8E-5279**	1	PISTON	
	14	1	**8E-8307**	6	DISC-THRUST	
	15	1	**205-5314**	1	HOUSING	
	16	1	**244-2310**	3	GEAR-PLANETARY (23-TEETH)	
	17	1	**9W-7925**	2	BEARING AS-TAPERED ROLLER	
	18	1	**9W-7926**	2	CUP-BEARING	
	19	1	**305-2419**	1	CARRIER-PLANETARY	
	20	1	**305-2418**	1	GEAR AS-SUN (30-TEETH)	
		1	**3E-4354**	2	BALL	
	21	1	**0S-1585**	18	BOLT (1/2-13X1.5-IN)	
	22	1	**1A-2029**	6	BOLT (3/8-16X1.125-IN)	
	23	1	**1C-0569**	6	BOLT (5/16-18X0.5-IN)	
	24	1	**3K-0360**	2	SEAL-O-RING	
	25	1	**5M-2894**	6	WASHER-HARD (10.2X18.5X2.5-MM THK)	
	26	1	**5P-8245**	18	WASHER-HARD (13.5X25.5X3-MM THK)	
	27	1	**6F-6673**	2	SEAL-O-RING	
	28	1	**6P-5317**	1	RING-SEAL (EXTERNAL)	
	29	1	**6Y-4003**	1	RING-SEAL	
	30	1	**8D-4771**	1	SEAL-O-RING	
	31	1	**8M-4438**	1	SEAL-O-RING	
M	32	1	**8T-2223**	2	BOLT-SOCKET HEAD (M10X1.5X45-MM)	
	33	1	**9S-8005**	2	PLUG-O-RING	
	34	1	**9X-2027**	2	WASHER (11X18X2-MM THK)	

B - USE AS REQUIRED
M - METRIC PART

193-4120 **BRAKE & PLANETARY GP (*contd.*)** **i02917549**

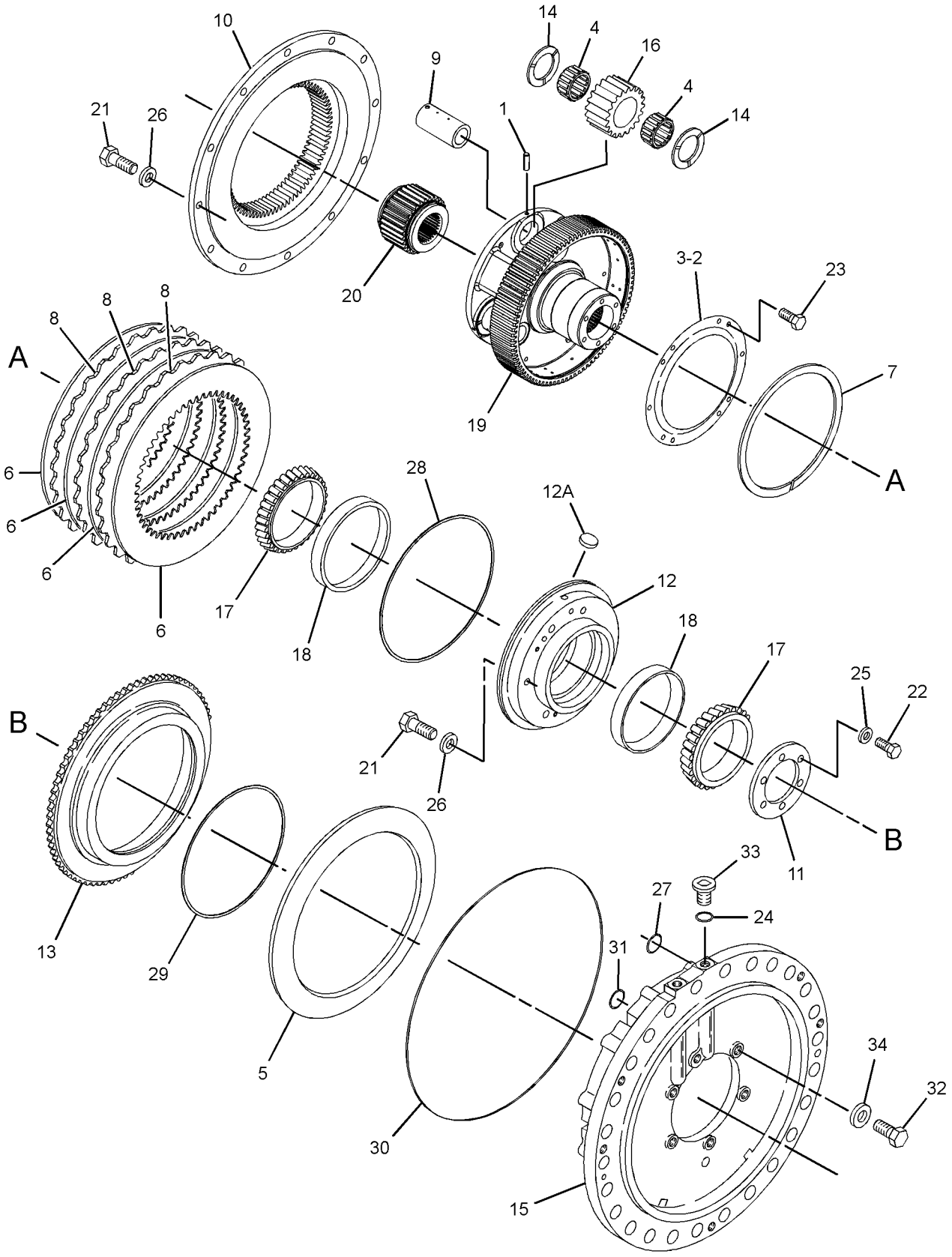

GRAPHIC #1 **<END>** g01405741

320-6128 CASE AS-TRANSMISSION

S/N: T6K1-UP

PART OF 318-2545 DIFFERENTIAL & BEVEL GEAR GP

SMCS-3064 **i03630560**

NOTE	REF NO	GRAPHIC REF	PART NUMBER	QTY	PART NAME 1 2 3 4 5 6 (PRODUCT LEVEL)	SEE PAGE
	1	1	**7T-9356**	1	PLUG-CUP	
	2	1	**320-6129**	1	CASE AS-TRANSMISSION	
		1	**0S-1585**	18	BOLT (1/2-13X1.5-IN)	
		1	**5H-6202**	2	PIN	
	3	1	**2A-3576**	1	PIN	

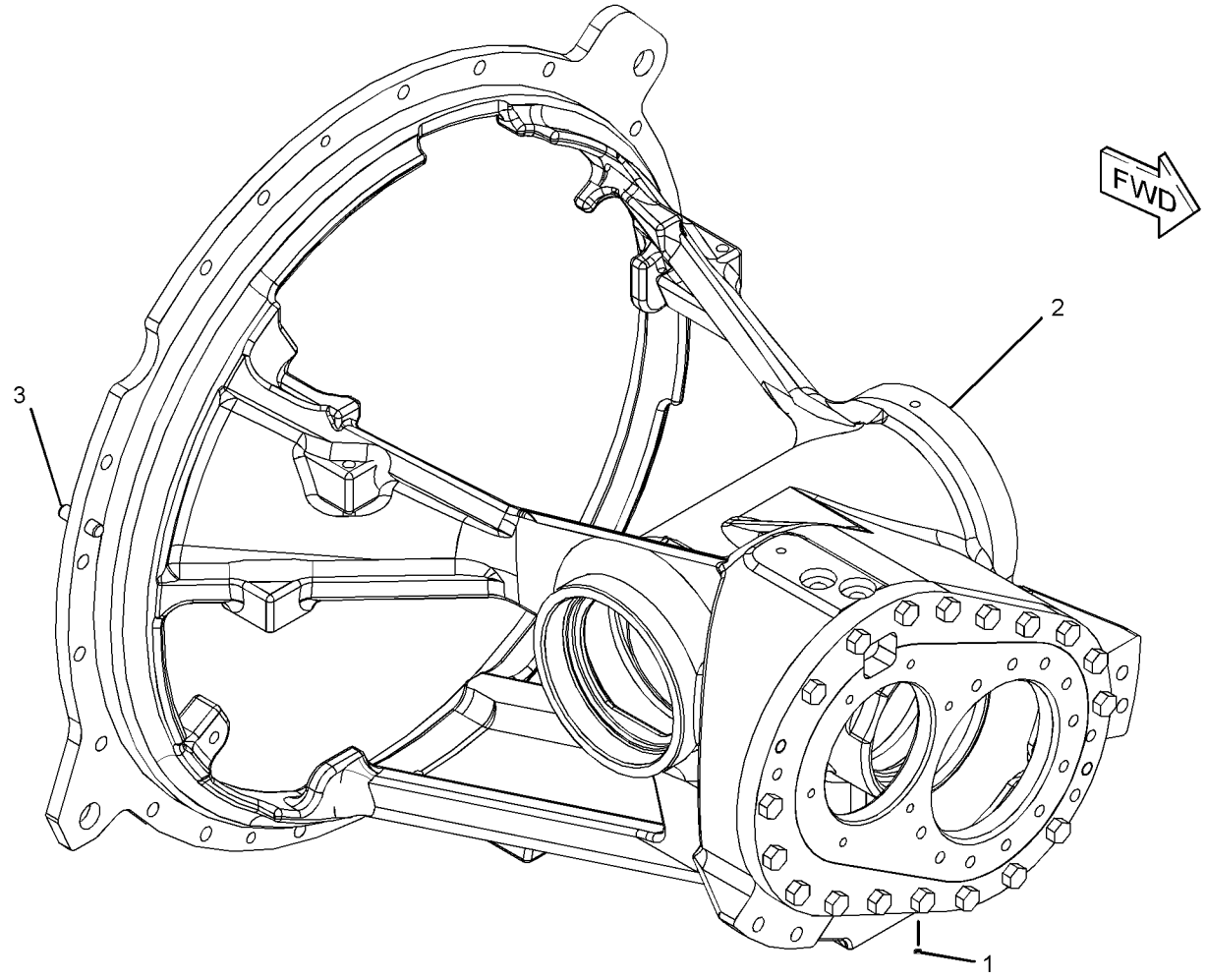

GRAPHIC #1 **<END>** g01904179

205-3603 CONTROL GP-TRANSMISSION HYD

S/N: T6K1-UP

PART OF 320-6127 TRANSMISSION AR

SMCS-3073, 3167 **i02630106**

NOTE	REF NO	GRAPHIC REF	PART NUMBER	QTY	PART NAME 1 2 3 4 5 6 (PRODUCT LEVEL)	SEE PAGE
	1	1	**6Y-0775**	5	SLEEVE	
	2	1	**104-6729**	1	RETAINER	
	3	1	**104-6730**	1	GASKET	
	4	1	**108-2097**	1	PLATE	
	5	1	**110-2049**	2	SLEEVE	
	6	1	**110-2860**	1	CLIP AS-CONNECTING	
	7	1	**204-8982**	1	GROMMET	
Y	8	1	**205-3602**	1	VALVE GP-RELIEF (TRANSMISSION CONTROL)	316
Y	9	1	*220-4324*	5	VALVE GP-MODULATING (TRANSMISSION CLUTCH)	313
C	10	1	**278-4563**	1	HARNESS AS-TRANSMISSION	
		1	**3S-2093**	5	STRAP-CABLE	
		1	**4P-7581**	5	CLIP	
		1	**155-2270**	7	KIT-CONNECTING PLUG (2-PIN)	
					(EACH INCLUDES PLUG AS, WEDGE, & INTERFACE SEAL)	
	11	1	**0T-0102**	5	BOLT (3/8-16X0.625-IN)	
	12	1	**1D-4540**	10	BOLT (5/16-18X2.75-IN)	
	13	1	**5M-2894**	4	WASHER-HARD (10.2X18.5X2.5-MM THK)	
	14	1	**6V-4365**	10	SEAL-O-RING	
	15	1	**8M-4432**	4	SEAL-O-RING	
	16	1	**8S-9191**	4	BOLT (3/8-16X4-IN)	
M	17	1	**8T-4136**	2	BOLT (M10X1.5X25-MM)	
	18	1	**9M-1974**	10	WASHER-HARD (8.8X16X2-MM THK)	

C - CHANGE FROM PREVIOUS TYPE
M - METRIC PART
Y - SEPARATE ILLUSTRATION

205-3603 **CONTROL GP-TRANSMISSION HYD (*contd.*)** **i02630106**

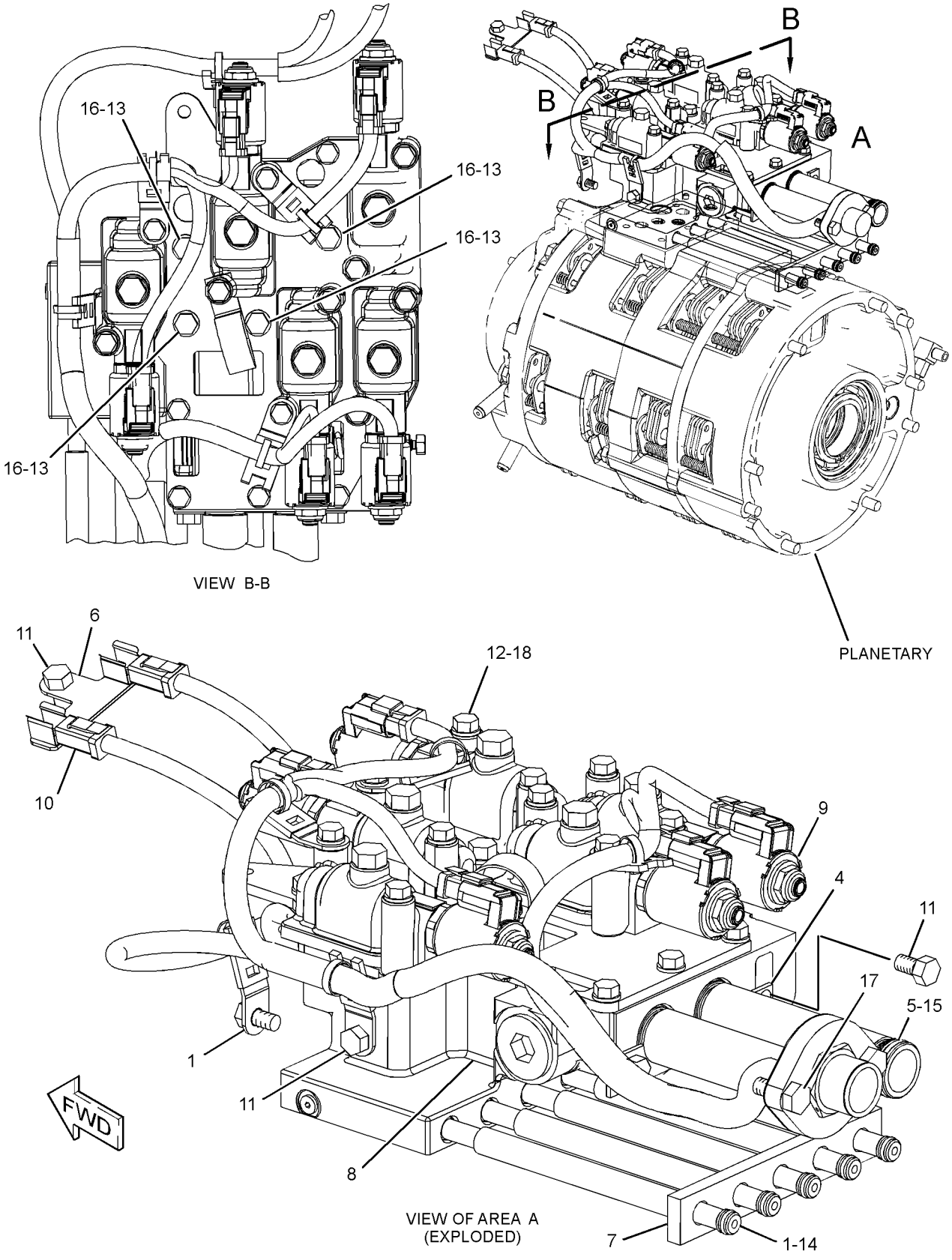

GRAPHIC #1 **<END>** g01337888

318-2545 DIFFERENTIAL & BEVEL GEAR GP

S/N: T6K1-UP

PART OF 320-6127 TRANSMISSION AR

SMCS-3256, 3258 **i03630520**

NOTE	REF NO	GRAPHIC REF	PART NUMBER	QTY	PART NAME 1 2 3 4 5 6 (PRODUCT LEVEL)	SEE PAGE
	1	2	**205-4138**	3	CONE-BEARING	
	2	2	**205-7397**	1	CONE-BEARING (TAPERED ROLLER)	
	3	2	**205-7398**	1	CUP-BEARING (TAPERED ROLLER)	
	4	2	**205-7396**	1	CONE-BEARING (TAPERED ROLLER)	
	5	2	**2J-6362**	1	BEARING	
	6	2	**5P-4920**	1	RACE & ROLLER AS	
	7	2	**5P-4921**	1	RACE-BEARING OUTER	
	8	2	**6V-1864**	1	CUP-BEARING	
	9	2	**7T-8859**	1	CUP-BEARING	
	10	2	**1L-6957**	1	LOCKNUT-BEARING	
	11	2	**2D-8009**	1	SEAL-O-RING	
	12	2	**2S-8983**	2	RING-SEAL	
	13	2	**3L-9410**	1	CONE-BEARING	
B	14	2	**3T-9819**	1	SHIM PACK (INCLUDES 19-SHIMS)	
	15	1	**6T-7995**	1	TUBE AS	
	16	1	**6T-7996**	1	TUBE AS	
	17	2	**6V-2404**	1	LOCKWASHER-BEARING	
	18	1	**8D-0071**	1	TEE-FLARED	
	19	2	**9P-7072**	1	WASHER (90.6X115X2.5-MM THK)	
	20	2	**108-8250**	1	CARRIER-SEAL	
	21	2	**196-1185**	2	SENSOR GP-SPEED (TRANSMISSION OUTPUT)	
					(EACH INCLUDES)	
		2	**102-8802**	1	KIT-RECEPTACLE (2-PIN)	
					(INCLUDES RECEPTACLE AS & WEDGE)	
		2	**186-3735**	2	PIN-CONNECTOR (16-GA TO 18-GA)	
E		2	**9X-1813**		SLEEVE (14-CM)	
		2	**171-5349**	1	STRAP-MARKER	
	22	1	**198-9162**	1	TUBE AS	
	23	1	**198-9163**	1	TUBE AS	
B	24	2	**200-8644**	2	SHIM PACK (INCLUDES 24-SHIMS)	
	25	2	**201-1281**	1	COVER	
	26	2	**203-4786**	1	CARRIER	
	27	1	**204-5341**	1	TEE	
	28	2	**204-9092**	1	SHAFT	
	29	2	**204-9096**	1	CAGE AS	
		2	**204-8981**	1	CAGE-BEARING	
		2	**124-6657**	1	ORIFICE	
	30	2	**205-4137**	3	CUP-BEARING	
	31	1	**206-2080**	1	TUBE AS	
	32	1	**206-2963**	1	TUBE AS	
	33	2	**225-4315**	1	GEAR (TRANSFER, 28-TEETH)	
	34	2	**225-4316**	1	GEAR (TRANSFER, 31-TEETH)	
	35	2	**265-2109**	1	SET-BEVEL GEAR (31, 14-TEETH)	
	36	2	**317-8261**	1	CAGE-BEARING	
	37	2	**318-0106**	1	SEAL-LIP TYPE	
Y	38	2	*320-6128*	1	CASE AS-TRANSMISSION	269
	39	1	**032-1267**	1	CONNECTOR	
	40	1	**032-1268**	1	CONNECTOR	
	41	1	**052-0572**	1	TEE-SWIVEL	
	42	1	**0S-0509**	1	BOLT (3/8-16X0.75-IN)	
	43	2	**0S-1595**	19	BOLT (1/2-13X1.25-IN)	
	44	2	**0S-1599**	1	BOLT (1/2-20X2.75-IN)	
	45	1	**0S-1614**	2	BOLT (1/4-20X0.5-IN)	
	46	1	**1A-5350**	2	CLIP	
	47	1	**1T-0720**	3	BOLT-12 POINT HEAD (3/8-16X1.25-IN)	
B	48	2	**201-1282**	1	SHIM PACK (INCLUDES 25-SHIMS)	
	49	1	**2B-2404**	1	CLIP	
	50	1	**2N-1287**	1	ELBOW-FLARED	

318-2545 **DIFFERENTIAL & BEVEL GEAR GP (*contd.*)** **i03630520**

NOTE	REF NO	GRAPHIC REF	PART NUMBER	QTY	PART NAME 1 2 3 4 5 6 (PRODUCT LEVEL)	SEE PAGE
	51	2	**3B-1915**	6	BOLT (3/8-16X1.375-IN)	
	52	2	**3T-9674**	1	RETAINER	
	53	2	**5B-0841**	20	BOLT (5/8-18X1.75-IN)	
	54	1	**5M-2894**	1	WASHER-HARD (10.2X18.5X2.5-MM THK)	
	55	1	**5P-0537**	2	WASHER-HARD (7.2X14.5X2-MM THK)	
	56	1	**8L-6557**	1	CONNECTOR	
M	57	2	**8T-4136**	4	BOLT (M10X1.5X25-MM)	

B - USE AS REQUIRED
E - ORDER BY THE CENTIMETER
M - METRIC PART
Y - SEPARATE ILLUSTRATION

318-2545 **DIFFERENTIAL & BEVEL GEAR GP (*contd.*)** **i03630520**

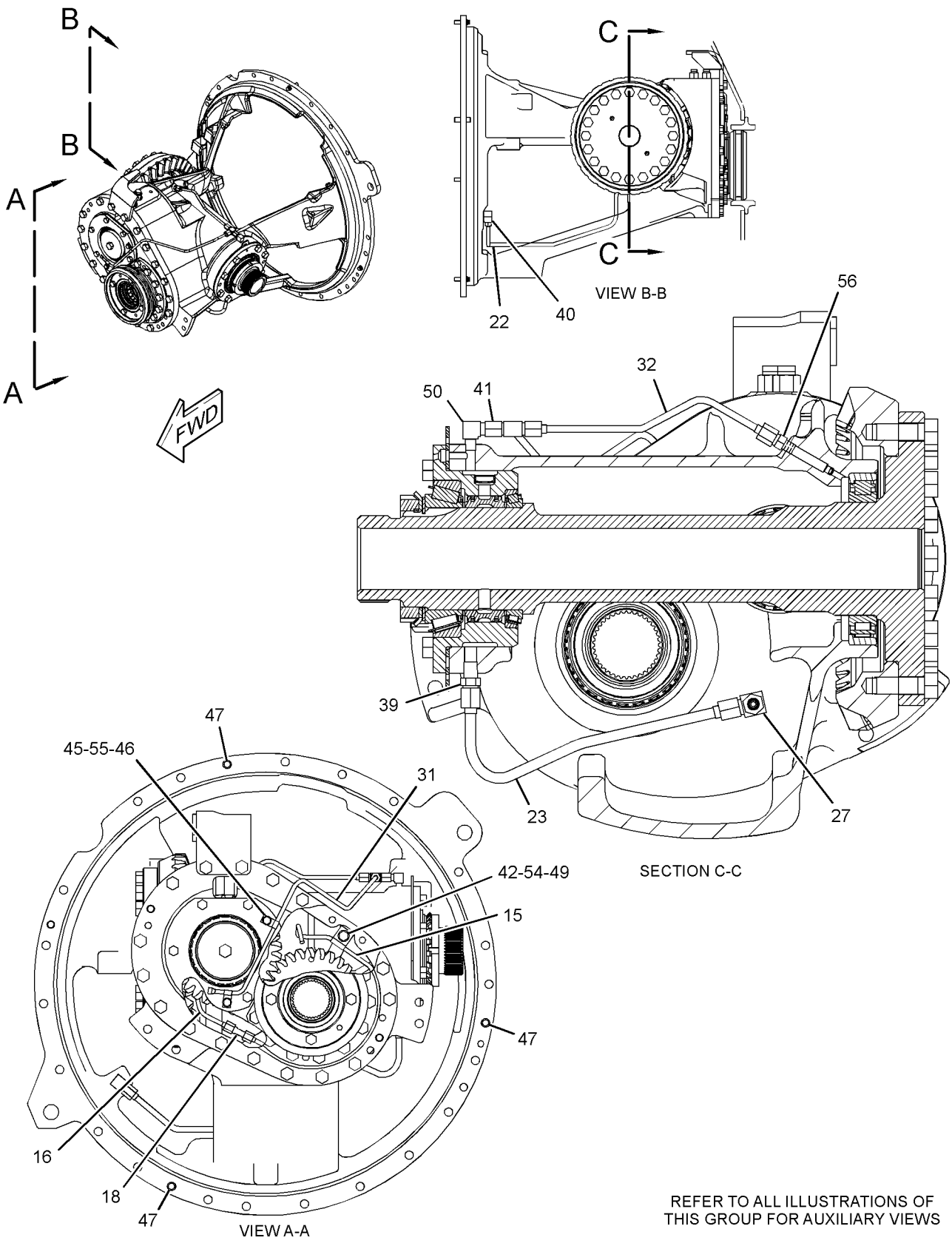

REFER TO ALL ILLUSTRATIONS OF THIS GROUP FOR AUXILIARY VIEWS

GRAPHIC #1

g01900694

318-2545 **DIFFERENTIAL & BEVEL GEAR GP (*contd.*)** **i03630520**

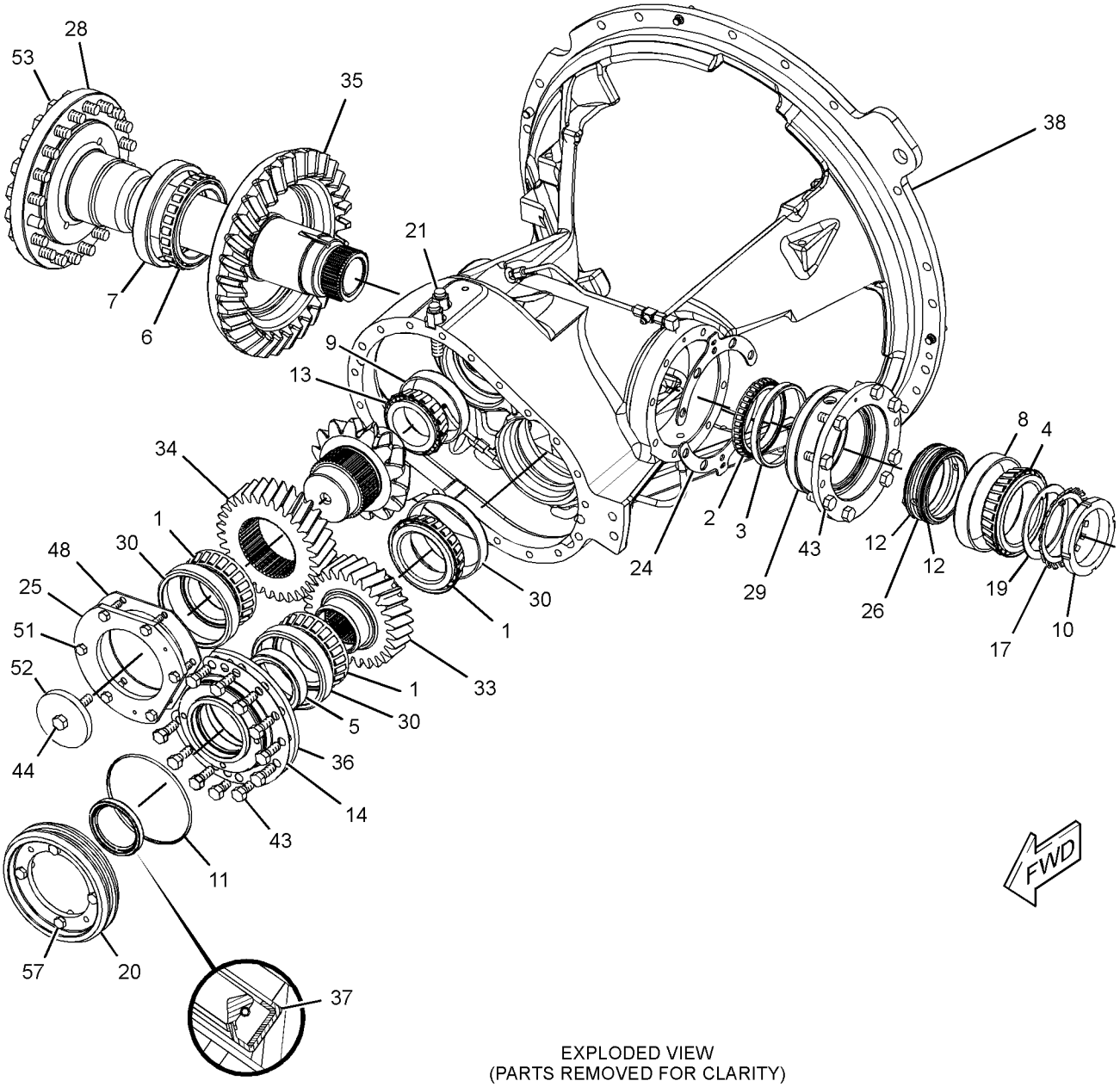

EXPLODED VIEW
(PARTS REMOVED FOR CLARITY)

GRAPHIC #2 **<END>** g01900695

191-4931 DRIVE GP-FINAL

S/N: LJR1-UP

PART OF 321-3122 POWER TRAIN AR

SMCS-4050 **i03659099**

NOTE	REF NO	GRAPHIC REF	PART NUMBER	QTY	PART NAME 1 2 3 4 5 6 (PRODUCT LEVEL)	SEE PAGE
	1	1	**1B-3978**	6	CUP-BEARING (TAPERED ROLLER)	
	2	1	**1B-3980**	6	CONE-BEARING (TAPERED ROLLER)	
	3	1	**6V-0327**	1	CUP-BEARING (TAPERED ROLLER)	
	4	1	**6V-0328**	1	CONE-BEARING (TAPERED ROLLER)	
	5	1	**6V-0329**	1	CONE-BEARING (TAPERED ROLLER)	
	6	1	**6V-0330**	1	CUP-BEARING (TAPERED ROLLER)	
	7	1	**6V-0439**	1	PLUG-MAGNETIC (FINAL DRIVE, OIL FILL, CHECK)	
	8	1	**6Y-0859**	1	SEAL GP-DUO-CONE	
	8A	1	**1M-9011**	2	RING-TORIC	
Z	8B	1		2	SEAL-RING	
	9	1	**8E-3075**	3	RETAINER	
	10	1	**8G-4565**	3	GEAR-PLANETARY (30-TEETH)	
	11	1	**8G-4566**	1	PLATE	
	12	1	**8G-4568**	1	GEAR-RING (74-TEETH)	
	13	1	**8G-4569**	1	RING	
	14	1	**9G-4876**	1	RETAINER	
	15	1	**106-0713**	1	CARRIER	
	16	1	**107-1763**	1	HUB-SPROCKET	
	17	1	**178-6854**	1	HUB-RING GEAR	
	18	1	**179-6707**	3	SHAFT	
	19	1	**191-4922**	1	BUSHING	
	20	1	**191-4923**	1	SPINDLE	
	21	1	**214-9394**	1	SEAL-LIP TYPE	
	22	1	**1H-8128**	1	SEAL-O-RING	
	23	1	**1H-9696**	3	SEAL-O-RING	
	24	1	**2R-0098**	1	SEAL-O-RING	
	25	1	**2S-4078**	1	SEAL-O-RING	
	26	1	**3K-0360**	1	SEAL-O-RING	
M	27	1	**7X-2563**	28	BOLT (M20X2.5X60-MM)	
M	28	1	**8C-8729**	9	BOLT-SOCKET HEAD (M12X1.75X80-MM)	
	29	1	**8D-4771**	1	SEAL-O-RING	
	30	1	**8T-4121**	3	WASHER-HARD (11X21X2.5-MM THK)	
	31	1	**8T-4123**	54	WASHER (22X35X3.5-MM THK)	
M	32	1	**8T-4136**	3	BOLT (M10X1.5X25-MM)	
M	33	1	**8T-4141**	26	BOLT (M20X2.5X70-MM)	
M	34	1	**8T-4193**	3	BOLT (M16X2X50-MM)	
	35	1	**8T-4223**	11	WASHER-HARD (13.5X25.5X3-MM THK)	
	36	1	**8T-8919**	2	BOLT (1/2-13X1.75-IN)	
	37	1	**9S-4185**	1	PLUG-O-RING (FINAL DRIVE, OIL DRAIN)	
	38	1	**9X-8257**	3	WASHER (17.5X30X3.5-MM THK)	

M - METRIC PART
Z - NOT SERVICED SEPARATELY

191-4931 **DRIVE GP-FINAL (*contd.*)** **i03659099**

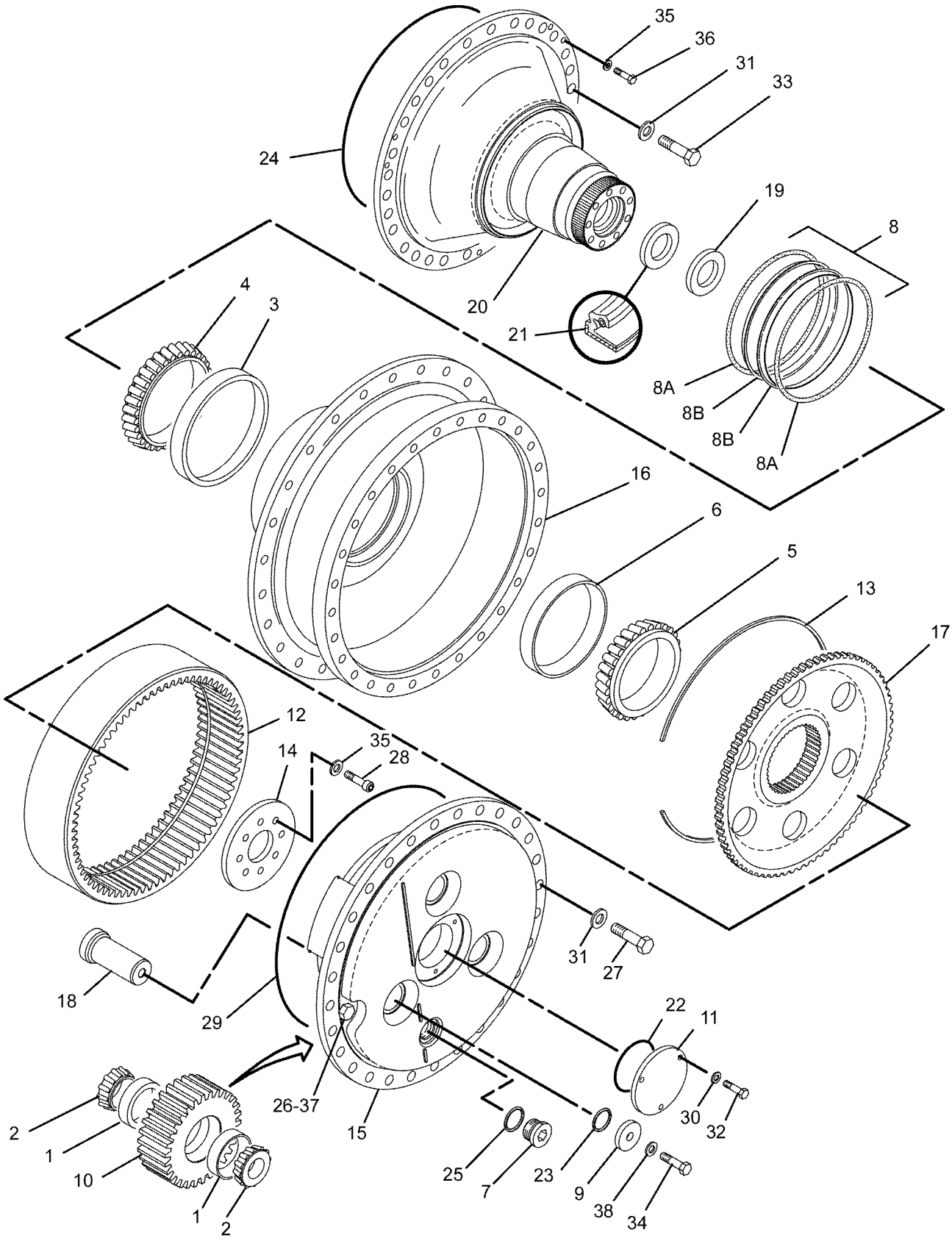

GRAPHIC #1 **<END>** g01075876

226-1415 DRIVE GP-FINAL—WASTE HANDLING

S/N: LJR1-UP

PART OF 331-5318 GUARD AR-FINAL DRIVE

AN ATTACHMENT

SMCS-4050 **i03659100**

NOTE	REF NO	GRAPHIC REF	PART NUMBER	QTY	PART NAME 1 2 3 4 5 6 (PRODUCT LEVEL)	SEE PAGE
	1	1	**1B-3978**	6	CUP-BEARING (TAPERED ROLLER)	
	2	1	**1B-3980**	6	CONE-BEARING (TAPERED ROLLER)	
	3	1	**5Q-7578**	1	HUB AS	
		1	**1Q-4230**	1	GUARD	
		1	**5Q-7579**	1	HUB-SPROCKET	
	4	1	**6V-0327**	1	CUP-BEARING (TAPERED ROLLER)	
	5	1	**6V-0328**	1	CONE-BEARING (TAPERED ROLLER)	
	6	1	**6V-0329**	1	CONE-BEARING (TAPERED ROLLER)	
	7	1	**6V-0330**	1	CUP-BEARING (TAPERED ROLLER)	
	8	1	**6V-0439**	1	PLUG-MAGNETIC (FINAL DRIVE, OIL FILL, CHECK)	
	9	1	**6Y-0859**	1	SEAL GP-DUO-CONE	
	9A	1	**1M-9011**	2	RING-TORIC	
Z	9B	1		2	SEAL-RING	
	10	1	**8E-3075**	3	RETAINER	
	11	1	**8G-4565**	3	GEAR-PLANETARY (30-TEETH)	
	12	1	**8G-4566**	1	PLATE	
	13	1	**8G-4568**	1	GEAR-RING (74-TEETH)	
	14	1	**8G-4569**	1	RING	
	15	1	**9G-4876**	1	RETAINER	
	16	1	**106-0713**	1	CARRIER	
	17	1	**178-6854**	1	HUB-RING GEAR	
	18	1	**179-6707**	3	SHAFT	
	19	1	**191-4922**	1	BUSHING	
	20	1	**214-9394**	1	SEAL-LIP TYPE	
	21	1	**226-1416**	1	SPINDLE AS	
	22	1	**1H-8128**	1	SEAL-O-RING	
	23	1	**1H-9696**	3	SEAL-O-RING	
	24	1	**2R-0098**	1	SEAL-O-RING	
	25	1	**2S-4078**	1	SEAL-O-RING	
	26	1	**3K-0360**	1	SEAL-O-RING	
M	27	1	**7X-2563**	28	BOLT (M20X2.5X60-MM)	
M	28	1	**8C-8729**	9	BOLT-SOCKET HEAD (M12X1.75X80-MM)	
	29	1	**8D-4771**	1	SEAL-O-RING	
	30	1	**8T-4121**	3	WASHER-HARD (11X21X2.5-MM THK)	
	31	1	**8T-4123**	54	WASHER (22X35X3.5-MM THK)	
M	32	1	**8T-4136**	3	BOLT (M10X1.5X25-MM)	
M	33	1	**8T-4141**	26	BOLT (M20X2.5X70-MM)	
M	34	1	**8T-4193**	3	BOLT (M16X2X50-MM)	
	35	1	**8T-4223**	11	WASHER-HARD (13.5X25.5X3-MM THK)	
	36	1	**8T-8919**	2	BOLT (1/2-13X1.75-IN)	
	37	1	**9S-4185**	1	PLUG-O-RING (FINAL DRIVE, OIL DRAIN)	
	38	1	**9X-8257**	3	WASHER (17.5X30X3.5-MM THK)	

M - METRIC PART
Z - NOT SERVICED SEPARATELY

226-1415 **DRIVE GP-FINAL (*contd.*)** **i03659100**

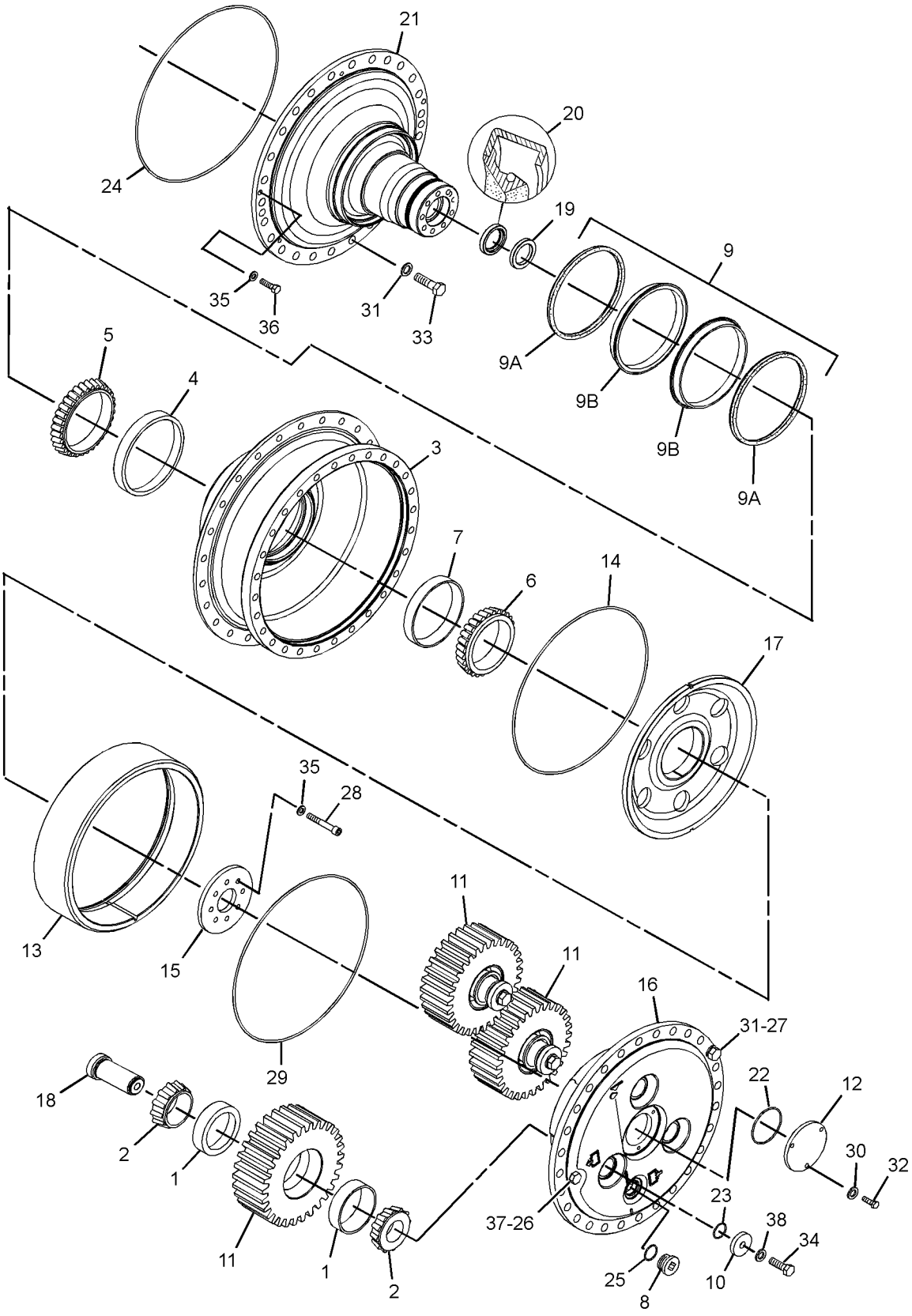

GRAPHIC #1 **<END>** g01285845

195-0652 FASTENER GP-VALVE

S/N: LJR1-UP

PART OF 195-0644 BRAKE GP-STEERING

SMCS-3073, 4265, 4282 **i02785248**

NOTE	REF NO	GRAPHIC REF	PART NUMBER	QTY	PART NAME 1 2 3 4 5 6 (PRODUCT LEVEL)	SEE PAGE
M	1	1	**7X-2543**	3	BOLT (M10X1.5X120-MM)	
	2	1	**8M-5254**	4	SEAL-O-RING	
	3	1	**8T-4121**	4	WASHER-HARD (11X21X2.5-MM THK)	
M	4	1	**4Y-6353**	1	BOLT (M10X1.5X130-MM)	

M - METRIC PART

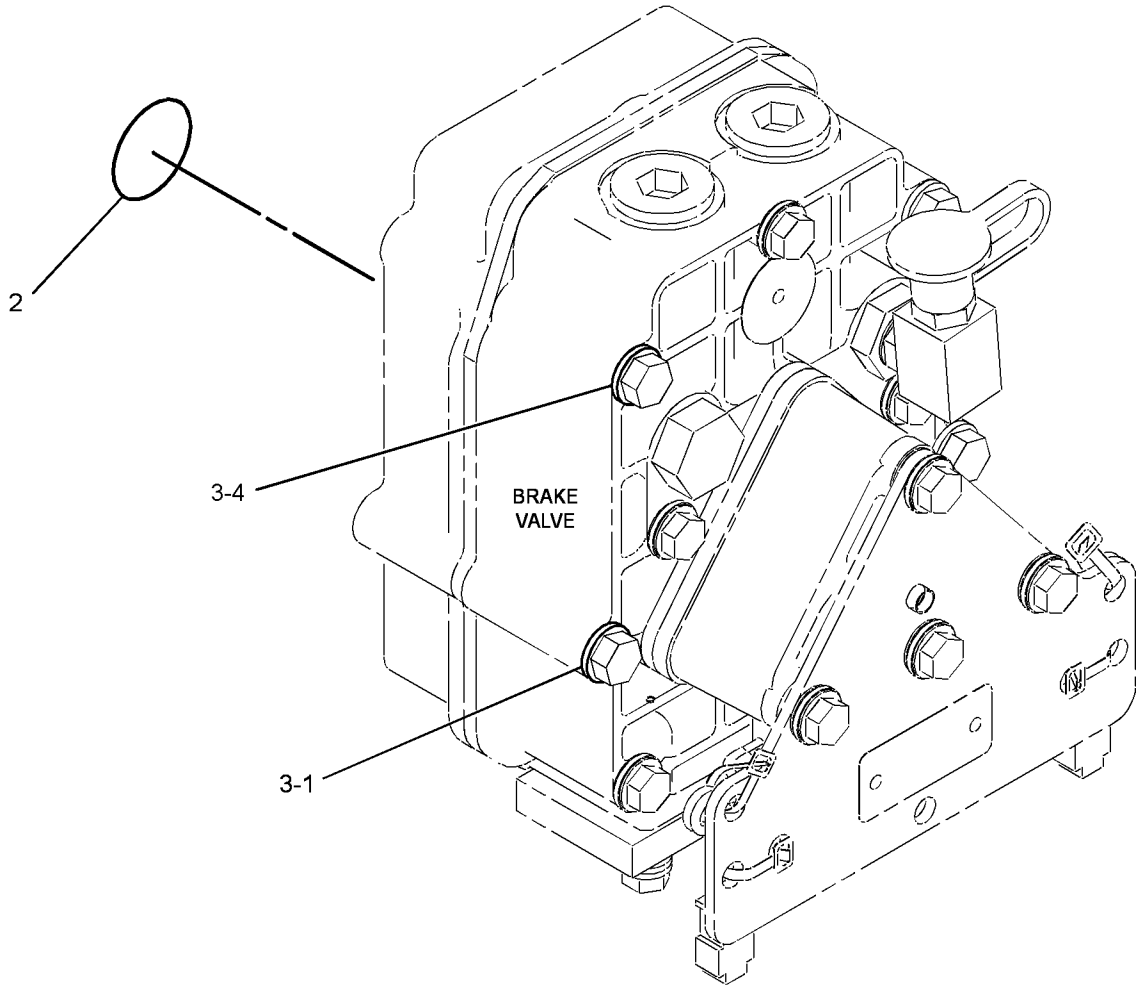

GRAPHIC #1 **<END>** g01390435

277-4994 FILTER & LINES GP-POWER TRAIN

S/N: LJR1-UP
FOR USE WITH WINCH
PART OF 273-3763 WINCH AR
AN ATTACHMENT

SMCS-3004, 3016 **i04826644**

NOTE	REF NO	GRAPHIC REF	PART NUMBER	QTY	PART NAME 1 2 3 4 5 6 (PRODUCT LEVEL)	SEE PAGE
C	1	1	**3S-2093**	6	STRAP-CABLE	
	2	1	**196-2695**	1	HARNESS AS-WIRING (OIL FILTER BYPASS)	
		1	**102-8802**	1	KIT-RECEPTACLE (2-PIN)	
					(INCLUDES RECEPTACLE AS & WEDGE)	
		1	**186-3735**	2	PIN-CONNECTOR (16-GA TO 18-GA)	
		1	**186-3736**	2	SOCKET-CONNECTOR (16-GA TO 18-GA)	
		1	**155-2270**	1	KIT-CONNECTING PLUG (2-PIN)	
					(INCLUDES PLUG AS,WEDGE & INTERFACE SEAL)	
C	3	1	**206-2423**	2	SADDLE	
I	4	1	**243-2245**	1	HOSE AS	
I	5	1	**243-2247**	1	HOSE AS	
	6	1	**265-2685**	1	BRACKET AS	
	7	1	**266-9602**	1	BRACKET	
	8	1	*357-4497*	1	ELBOW AS	
		1	**6V-9005**	1	ELBOW	
		1	**5K-9090**	1	SEAL-O-RING	
		1	**7M-8485**	1	SEAL-O-RING	
	9	1	*357-4478*	2	ELBOW AS	
					(EACH INCLUDES)	
		1	**6V-8984**	1	ELBOW	
		1	**5K-9090**	2	SEAL-O-RING	
	10	1	**4P-7428**	1	CLIP	
	11	1	**6V-9172**	2	NUT (1-7/16-12-THD)	
C	12	1	**8T-4121**	4	WASHER-HARD (11X21X2.5-MM THK)	
CM	13	1	**8T-4133**	1	NUT (M10X1.5-THD)	
M	14	1	**8T-4195**	3	BOLT (M10X1.5X30-MM)	
	15	1	**8T-4223**	3	WASHER-HARD (13.5X25.5X3-MM THK)	
M	16	1	**8T-4910**	3	BOLT (M12X1.75X60-MM)	

C - CHANGE FROM PREVIOUS TYPE
I - REFER TO HYDRAULIC INFORMATION SYSTEM
M - METRIC PART

277-4994 **FILTER & LINES GP-POWER TRAIN (*contd.*)** **i04826644**

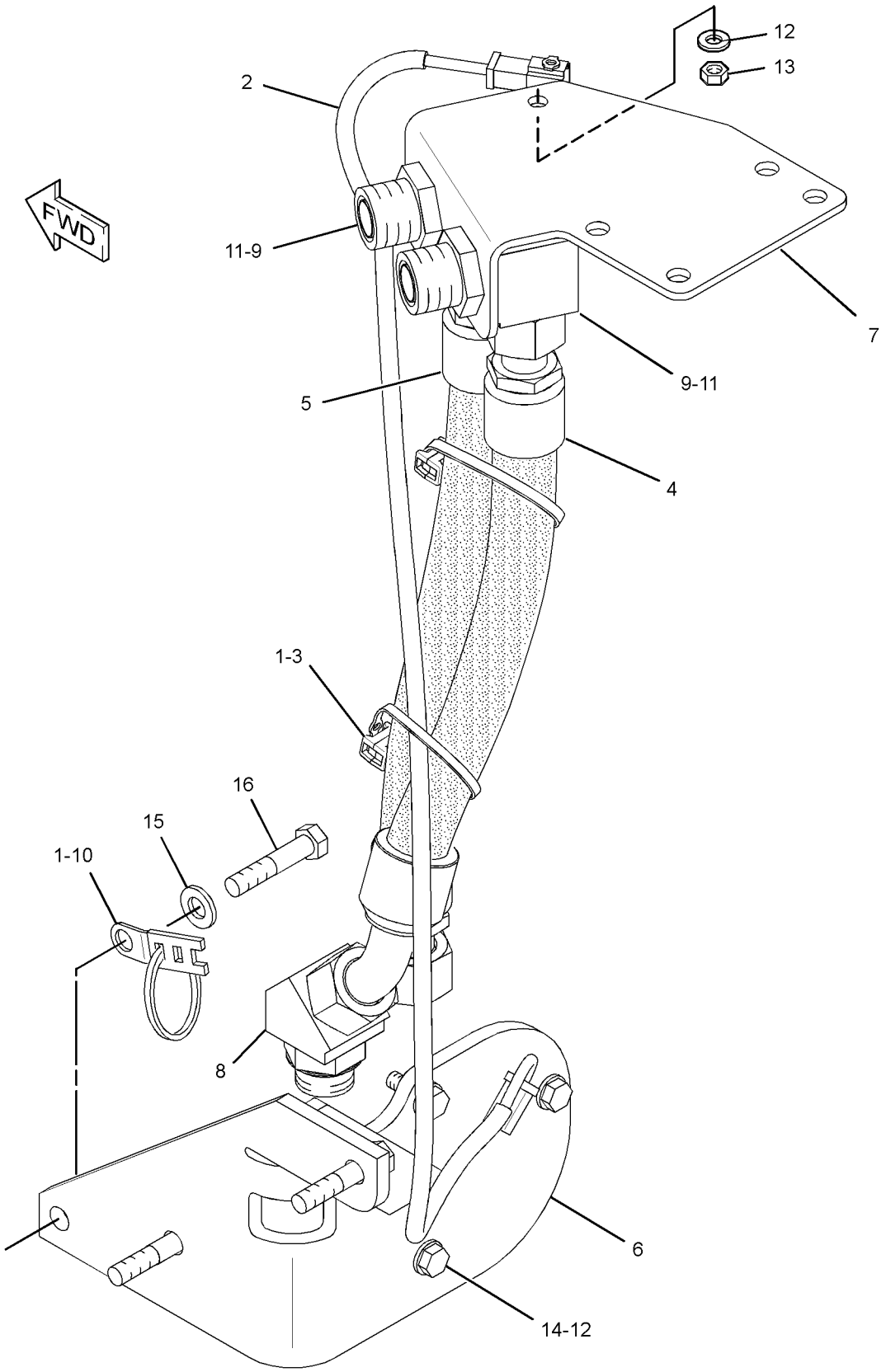

GRAPHIC #1 **<END>** g01890875

333-6437 FILTER GP-OIL—POWER TRAIN

S/N: LJR1-UP

PART OF 321-5651 LINES GP-POWER TRAIN OIL

SMCS-3004, 3067 **i03630673**

NOTE	REF NO	GRAPHIC REF	PART NUMBER	QTY	PART NAME 1 2 3 4 5 6 (PRODUCT LEVEL)	SEE PAGE
	1	1	**6V-0852**	1	CAP-DUST	
	2	1	**8C-3447**	1	CAP-DUST	
	3	1	**321-5967**	1	HOUSING GP-FILTER	
		1	**214-7568**	1	SEAL-O-RING	
		1	**9S-8004**	1	PLUG-O-RING	
	4	1	**328-3655**	1	FILTER ELEMENT AS-OIL (ADVANCED EFFICIENCY)	
Y	5	1	**333-9308**	1	BASE GP-OIL FILTER	262
	6	1	**214-7568**	1	SEAL-O-RING	
	7	1	**6V-5048**	1	SEAL-O-RING	
	8	1	**6V-3965**	1	FITTING (QUICK DISCONNECT)	
	9	1	**8C-3446**	1	VALVE-FLUID SAMPLING	
	10	1	**130-0229**	1	SEAL-O-RING	
	11	1	**8L-2786**	1	SEAL-O-RING	
	12	1	**3P-1932**	1	ADAPTER	

Y - SEPARATE ILLUSTRATION

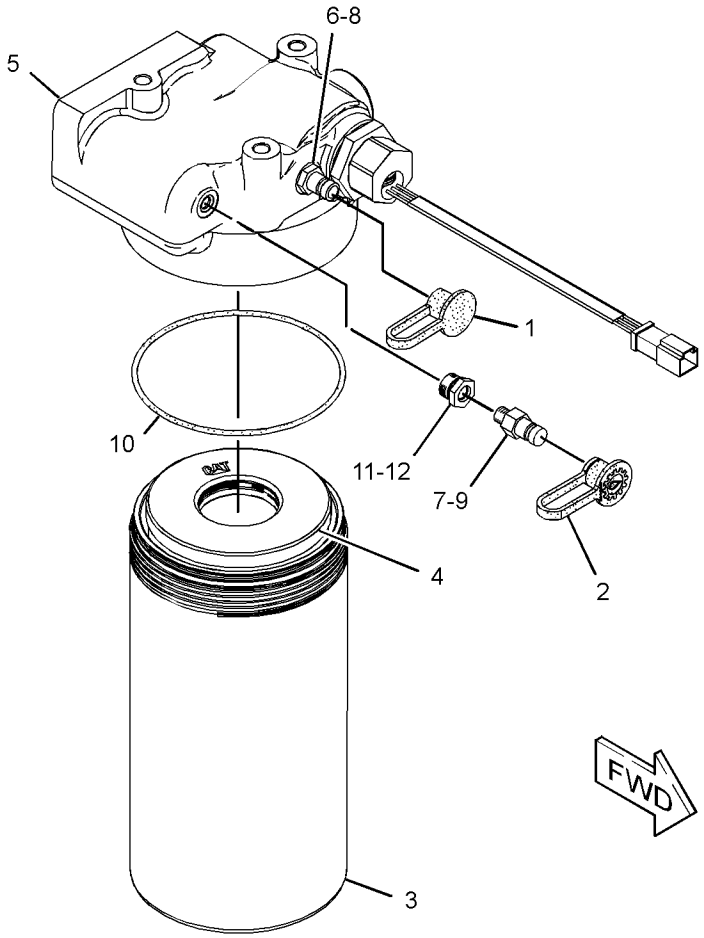

GRAPHIC #1 **<END>** g01888573

321-5651 LINES GP-POWER TRAIN OIL

S/N: LJR1-UP

PART OF 321-3122 POWER TRAIN AR

SMCS-3016 **i05218831**

NOTE	REF NO	GRAPHIC REF	PART NUMBER	QTY	PART NAME 1 2 3 4 5 6 (PRODUCT LEVEL)	SEE PAGE
	1	3	**2W-6225**	1	CAP AS-OIL FILLER (POWER TRAIN)	
	2	2	**4W-3277**	1	BRACKET	
	3	1	**5P-4961**	4	CLAMP-HOSE	
	5	2	**6B-2882**	3	SPACER (0.406X0.75X0.312-IN THK)	
	6	1	**6V-1230**	1	ELBOW	
Y	7	2	**6Y-8473**	1	VALVE GP-RELIEF (TORQUE CONVERTER OUTLET)	315
	8	2	**8G-5551**	1	FLANGE	
	9	3	**8G-5654**	1	GASKET	
	10	2	**8G-8589**	1	HOUSING-SCREEN	
	11	2	**8G-9560**	1	TUBE AS	
	12	2	**8S-9129**	1	FILTER-MAGNETIC (POWER TRAIN OIL)	
	13	2	**8S-9130**	1	SCREEN-SUCTION (TORQUE CONVERTER SCAVENGE)	
	14	1	**8T-6703**	2	CLAMP-HOSE	
	15	3	**8T-9905**	1	PLATE-IDENTIFICATION (TRANSMISSION OIL FILL TUBE)	
	16	2	**9X-8402**	1	CLIP	
	17	2	**114-2312**	1	COVER AS	
	18	1	**139-1398**	1	CLIP	
	19	1	**148-1928**	1	VALVE-RELIEF	
	20	1	*150-3026*	1	ELBOW AS	
		1	**6V-4292**	1	ELBOW	
		1	**3K-0360**	1	SEAL-O-RING	
	21	1	**162-6966**	1	TUBE AS	
	22	3	**177-3382**	1	MANIFOLD	
	23	2	**183-3873**	1	BREATHER (POWER TRAIN OIL FILLER)	
	24	2,3	*195-2037*	2	FITTING AS	
					(EACH INCLUDES)	
		2,3	**034-3679**	1	FITTING	
		2,3	**3K-0360**	1	SEAL-O-RING	
	25	1	**197-3295**	4	FLANGE-HALF	
	26	3	**199-1222**	1	GAUGE (OIL LEVEL) (POWER TRAIN)	
Y	27	2	**202-4365**	1	PUMP GP-GEAR (POWER TRAIN OIL)	301
	28	1,2	**203-3847**	3	BRACKET AS	
					(EACH INCLUDES)	
M		1,2	**171-2419**	1	STUD-WELD (M10X1.5X35-MM)	
	29	1	**203-4600**	1	HOSE	
I	30	1	**207-2524**	1	HOSE AS	
	31	1	**214-3927**	1	TUBE AS	
	32	1	**220-0907**	1	HOSE	
	33	2	**222-1206**	1	SPACER (11X25X83-MM THK)	
	34	1	**235-8026**	1	FILM-INFORMATION (TRANSMISSION OIL LEVEL)	
I	35	1	**236-4987**	1	HOSE AS	
I	36	2	**238-3417**	1	HOSE AS	
I	37	1	**243-2246**	1	HOSE AS	
	38	1	**243-2739**	1	REGULATOR-OIL TEMPERATURE (THERMOSTAT, POWER TRAIN)	
Y	39	1	**258-7335**	1	MANIFOLD GP-TRANSMISSION	290
I	40	1	**262-1759**	1	HOSE AS	
	41	3	**266-8569**	1	PLATE	
	42	3	**322-4933**	1	TUBE AS	
	43	2	**329-9730**	1	TUBE AS	
I	44	2	**331-0063**	1	HOSE AS	
Y	46	3	**333-6437**	1	FILTER GP-OIL (POWER TRAIN)	283
	47	1	**343-7072**	1	MANIFOLD	
M	48	1	**101-3129**	1	STUD (M10X1.5-THD)	
	49	2	**104-3173**	1	CLIP	
	50	1,2	*357-4378*	4	CONNECTOR AS	
					(EACH INCLUDES)	

321-5651 **LINES GP-POWER TRAIN OIL (*contd.*)** **i05218831**

NOTE	REF NO	GRAPHIC REF	PART NUMBER	QTY	PART NAME 1 2 3 4 5 6 (PRODUCT LEVEL)	SEE PAGE
		1,2	**6V-8637**	1	CONNECTOR	
		1,2	**3D-2824**	1	SEAL-O-RING	
		1,2	**6V-9746**	1	SEAL-O-RING	
	51	2	*357-4381*	2	CONNECTOR AS	
					(EACH INCLUDES)	
		2	**6V-8635**	1	CONNECTOR	
		2	**5K-9090**	1	SEAL-O-RING	
		2	**7M-8485**	1	SEAL-O-RING	
	52	1	*357-4371*	1	CONNECTOR AS	
		1	**6V-8639**	1	CONNECTOR	
		1	**3K-0360**	1	SEAL-O-RING	
		1	**6V-8398**	1	SEAL-O-RING	
	53	1	*357-4444*	1	ELBOW AS	
		1	**6V-9007**	1	ELBOW	
		1	**3D-2824**	1	SEAL-O-RING	
		1	**6V-9746**	1	SEAL-O-RING	
	54	3	*148-8408*	1	PLUG AS	
		3	**9S-4183**	1	PLUG	
		3	**3D-2824**	1	SEAL-O-RING	
	55	2	*357-4493*	2	ELBOW AS	
					(EACH INCLUDES)	
		2	**8T-4149**	1	ELBOW	
		2	**6V-9746**	1	SEAL-O-RING	
		2	**7M-8485**	1	SEAL-O-RING	
I	56	1	**257-8498**	2	HOSE AS	
	57	1	*171-6728*	1	ELBOW AS	
		1	**8T-0249**	1	ELBOW	
		1	**3K-0360**	1	SEAL-O-RING	
	58	2	**1P-3708**	1	SEAL-RECTANGULAR	
Y	59	2	*250-0393*	1	ACCUMULATOR GP (UNCHARGED)	260
	60	1	**3K-0360**	1	SEAL-O-RING	
	61	1,2	**4D-7388**	2	CLIP	
	62	1,2	**4J-0520**	4	SEAL-O-RING	
	63	1,2	**4J-0522**	3	SEAL-O-RING	
	64	2	**4P-7581**	3	CLIP	
	65	1	**5D-0718**	1	CLIP	
	66	2	**5K-1770**	1	SEAL-O-RING	
	67	2	**5K-9090**	1	SEAL-O-RING	
	68	2	**5P-1076**	2	WASHER-HARD (13.5X30X4-MM THK)	
	69	3	**5P-8066**	1	SEAL-O-RING	
	70	2	**6H-3977**	1	SEAL-O-RING	
	71	1	**6L-1651**	1	SEAL-O-RING	
	72	2	**6L-5359**	1	SEAL-O-RING	
	73	1	**6V-1889**	4	CLIP	
	74	3	**6V-2235**	1	CLIP	
	75	1	**7X-3392**	8	WASHER-HARD (13.5X22.5X3-MM THK)	
	76	1	**7X-7729**	5	WASHER (11X25X3-MM THK)	
	77	3	**8C-3205**	2	FLANGE-HALF	
	78	1,3	**8C-3206**	6	FLANGE-HALF	
	79	2	**8G-6557**	2	SPACER (10.5X25X40-MM THK)	
	80	1	**8M-4988**	1	SEAL-O-RING	
	81	1	**8M-5249**	1	SEAL-O-RING	
	82	1	**8M-5254**	4	SEAL-O-RING	
	83	2	**8T-1889**	1	CLIP (SLOT)	
	84	2	**8T-1890**	1	CLIP (TAB)	
	85	1,2,3	**8T-4121**	56	WASHER-HARD (11X21X2.5-MM THK)	
M	86	1,2	**8T-4133**	4	NUT (M10X1.5-THD)	
M	87	1,3	**8T-4136**	4	BOLT (M10X1.5X25-MM)	
M	88	2	**8T-4137**	2	BOLT (M10X1.5X20-MM)	
M	89	2,3	**8T-4139**	5	BOLT (M12X1.75X30-MM)	
M	90	2	**8T-4172**	3	BOLT (M10X1.5X80-MM)	
M	91	2	**8T-4178**	6	BOLT (M10X1.5X90-MM)	
M	92	1	**8T-4183**	4	BOLT (M12X1.75X40-MM)	

321-5651 **LINES GP-POWER TRAIN OIL (*contd.*)** **i05218831**

NOTE	REF NO	GRAPHIC REF	PART NUMBER	QTY	PART NAME 1 2 3 4 5 6 (PRODUCT LEVEL)	SEE PAGE
M	93	2	**8T-4184**	3	BOLT (M12X1.75X45-MM)	
M	94	2	**8T-4194**	5	BOLT (M12X1.75X50-MM)	
M	95	1,2	**8T-4195**	6	BOLT (M10X1.5X30-MM)	
M	96	1,2,3	**8T-4196**	29	BOLT (M10X1.5X35-MM)	
M	97	1,2	**8T-4198**	3	BOLT (M10X1.5X100-MM)	
	98	2,3	**8T-4223**	13	WASHER-HARD (13.5X25.5X3-MM THK)	
M	99	1	**8T-4956**	4	BOLT (M12X1.75X35-MM)	
M	100	3	**8T-6466**	6	BOLT (M10X1.5X60-MM)	
	101	3	**9F-6656**	1	RING-RETAINING	
	102	3	**9M-4218**	1	SEAL-O-RING	
	103	1	**9X-4609**	1	SEAL-O-RING	
E	105	1	**145-8495**		GUARD-HOSE (45-CM)	
	106	1	**335-1035**	1	FILM-INFORMATION (TRANSMISSION FILTER)	

E - ORDER BY THE CENTIMETER
I - REFER TO HYDRAULIC INFORMATION SYSTEM
M - METRIC PART
Y - SEPARATE ILLUSTRATION

321-5651 **LINES GP-POWER TRAIN OIL (*contd.*)** **i05218831**

REFER TO ALL ILLUSTRATIONS OF THIS GROUP FOR AUXILIARY VIEWS

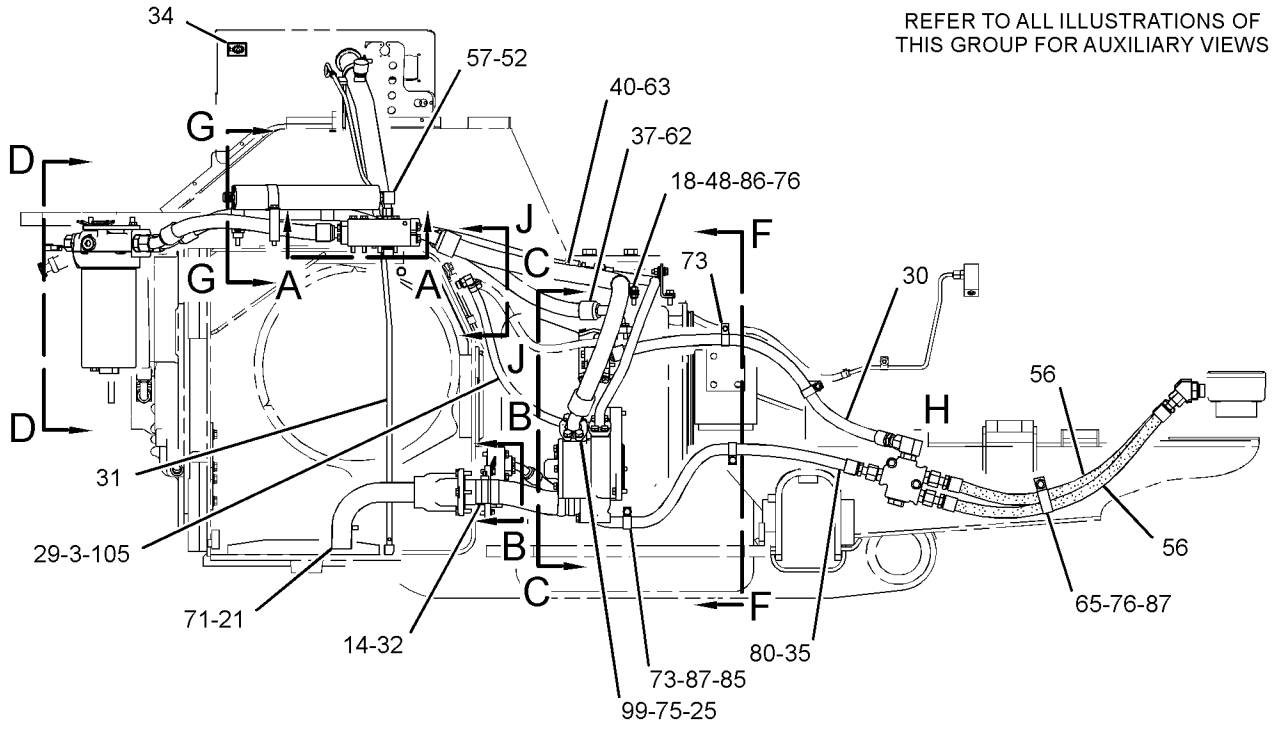

RIGHT SIDE VIEW

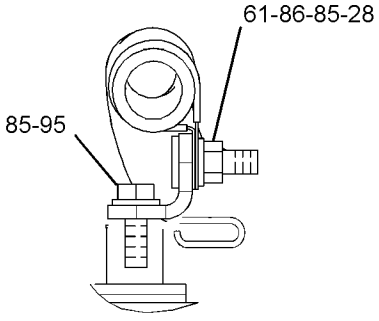

SECTION G-G

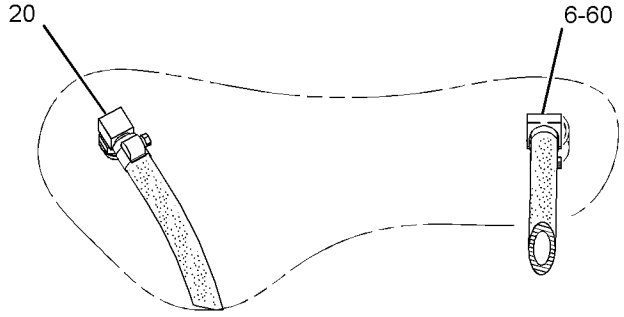

SECTION J-J

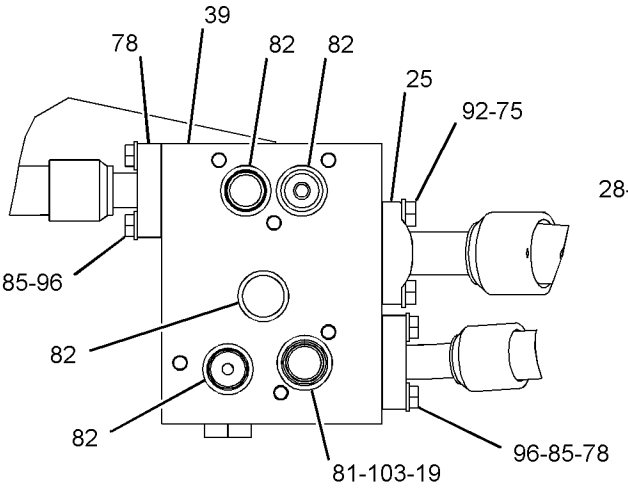

SECTION A-A

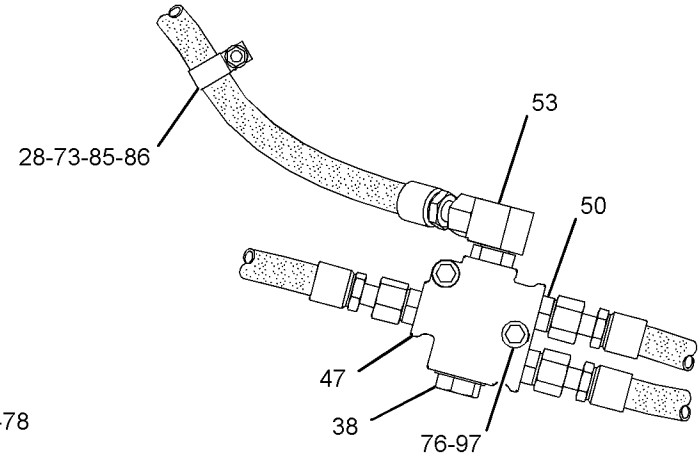

VIEW OF AREA H

GRAPHIC #1

g01911436

321-5651 **LINES GP-POWER TRAIN OIL (*contd.*)** **i05218831**

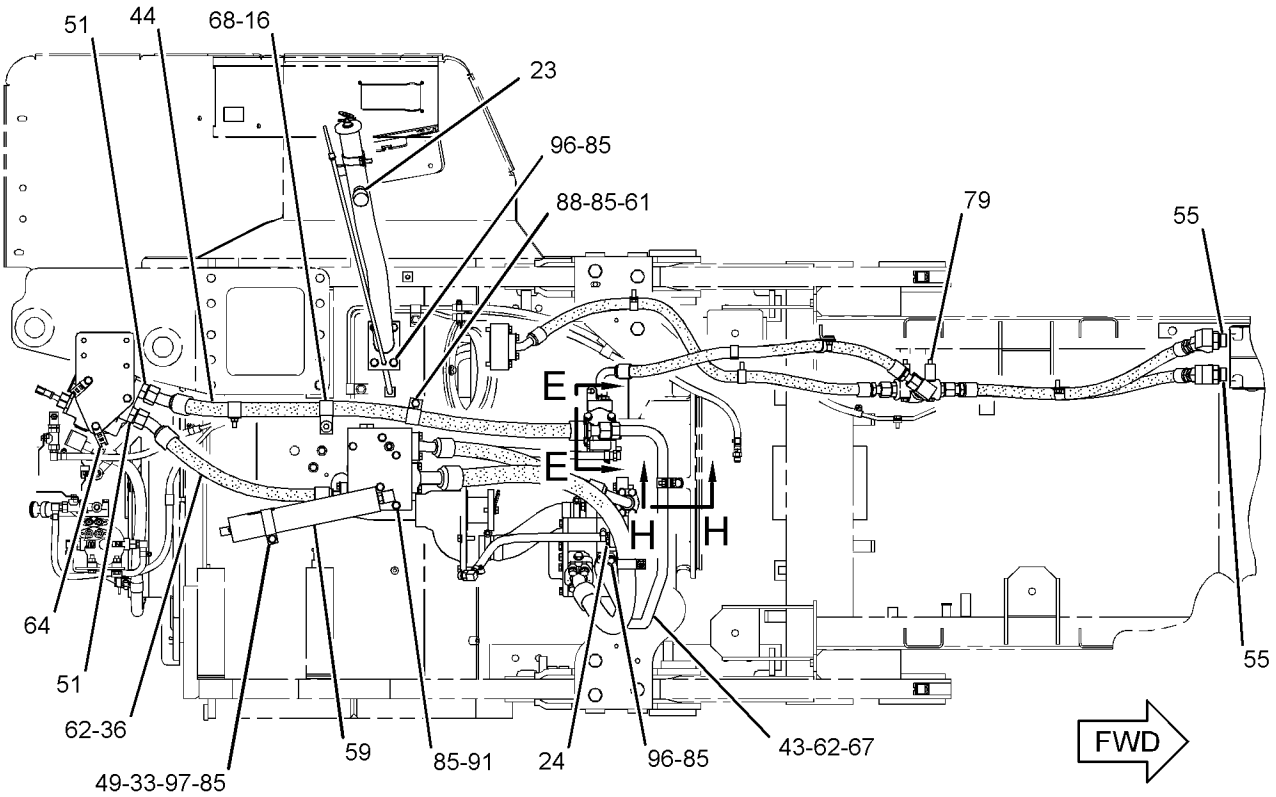

TOP VIEW

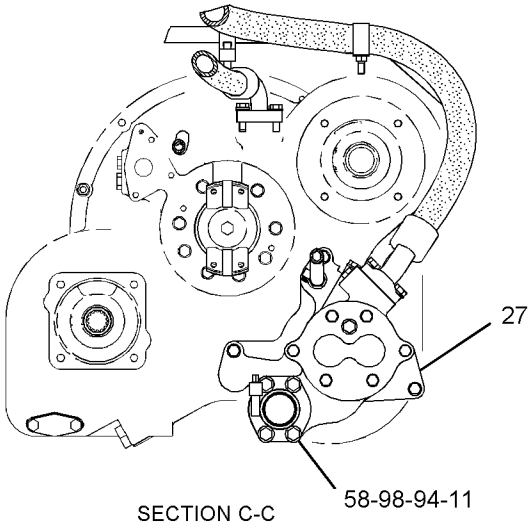

SECTION C-C

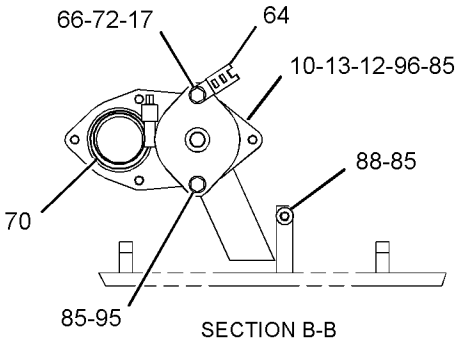

SECTION B-B

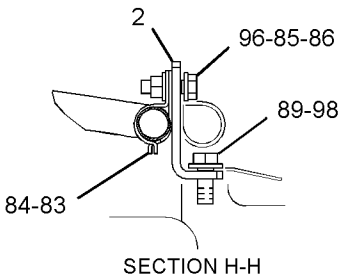

SECTION H-H

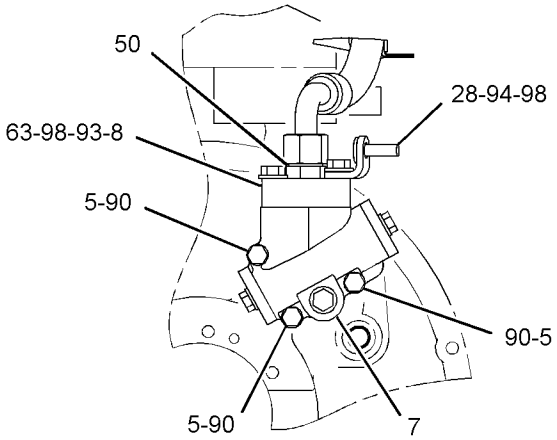

SECTION E-E

GRAPHIC #2

g03338480

321-5651 **LINES GP-POWER TRAIN OIL (*contd.*)** **i05218831**

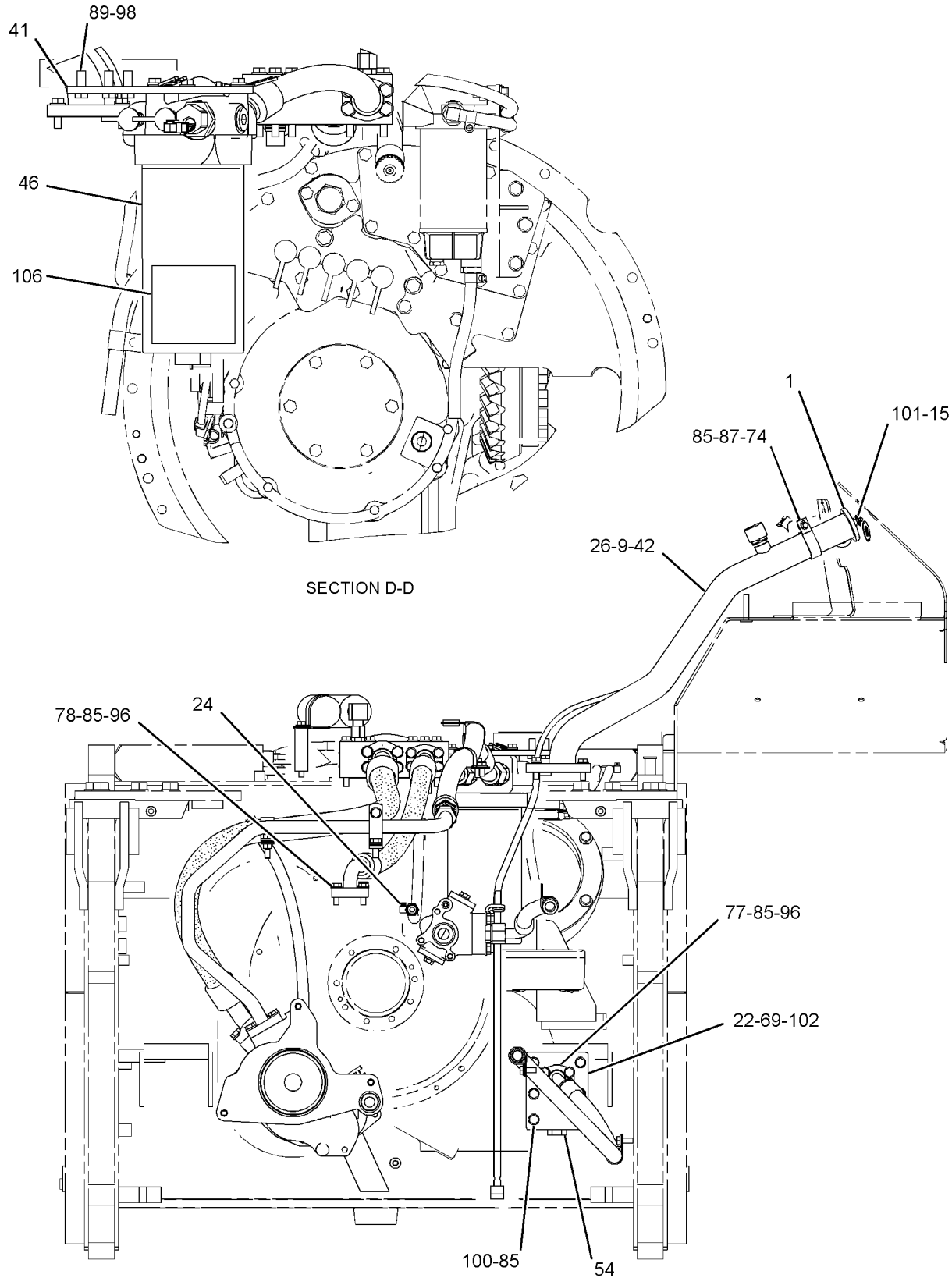

GRAPHIC #3 **<END>** g02043133

258-7335 MANIFOLD GP-TRANSMISSION

S/N: LJR1-UP

PART OF 321-5651 LINES GP-POWER TRAIN OIL

SMCS-5264 **i02574009**

NOTE	REF NO	GRAPHIC REF	PART NUMBER	QTY	PART NAME 1 2 3 4 5 6 (PRODUCT LEVEL)	SEE PAGE
	1	1	**217-2730**	1	ORIFICE	
Z	2	1			MANIFOLD	
	3	1	**4K-1388**	1	SEAL-O-RING	
	4	1	**9S-4188**	1	PLUG	

Z - NOT SERVICED SEPARATELY

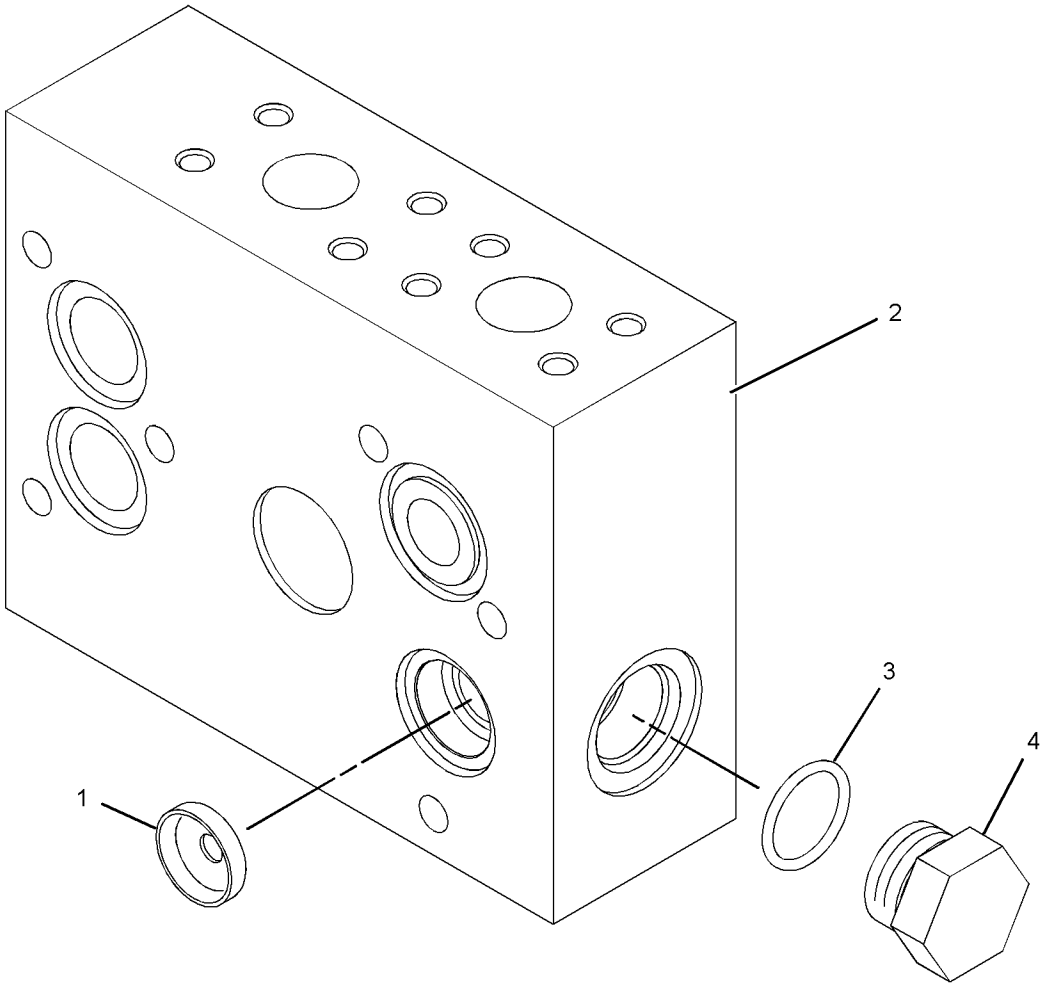

GRAPHIC #1 **<END>** g01254039

266-9179 MOUNTING GP-TORQUE CONVERTER

S/N: LJR1-UP

PART OF 321-3122 POWER TRAIN AR

SMCS-3101 **i02776836**

NOTE	REF NO	GRAPHIC REF	PART NUMBER	QTY	PART NAME 1 2 3 4 5 6 (PRODUCT LEVEL)	SEE PAGE
	1	1	**4B-7739**	1	PLUG-DRAIN (TORQUE CONVERTER OIL)	
	2	1	**8H-9819**	1	ADAPTER-PLUG	
	3	1	**266-9180**	1	ADAPTER	
	4	1	**242-1583**	8	STUD (M10X1.5X75-MM)	
	5	1	**5P-9806**	1	SEAL-O-RING	
	6	1	**8H-9818**	1	GASKET	
M	7	1	**8T-4133**	8	NUT (M10X1.5-THD)	
M	8	1	**8T-4136**	2	BOLT (M10X1.5X25-MM)	
M	9	1	**8T-6466**	4	BOLT (M10X1.5X60-MM)	
	10	1	**8T-6762**	1	PLUG-PIPE	

M - METRIC PART

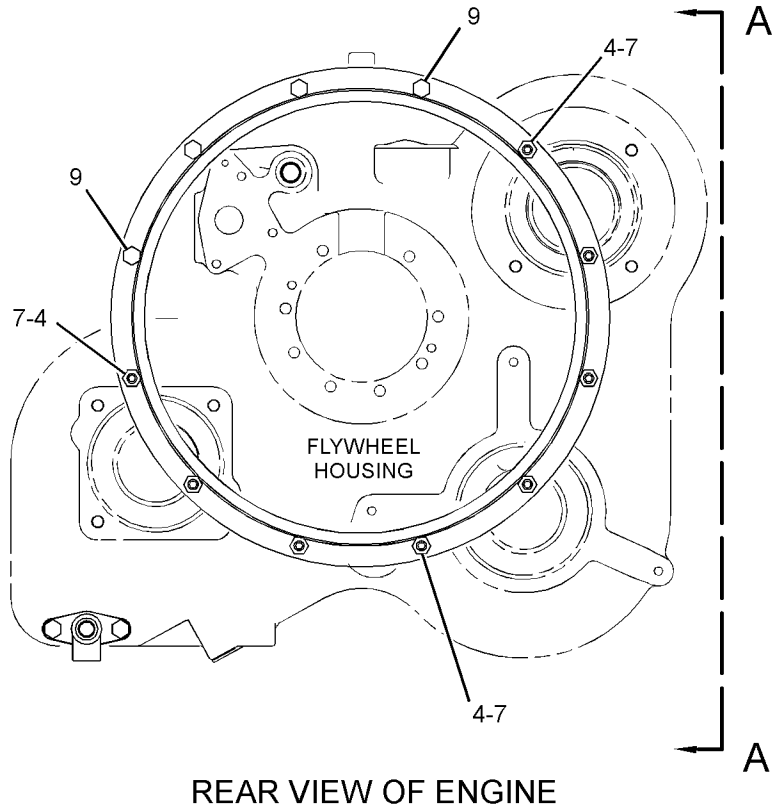

REAR VIEW OF ENGINE

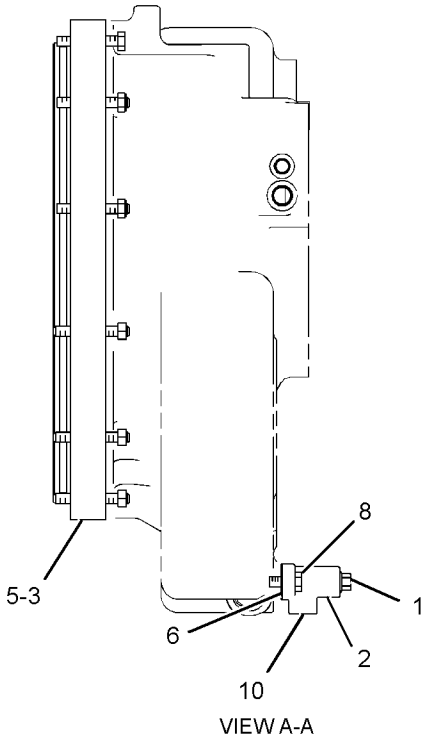

VIEW A-A

GRAPHIC #1 **<END>** g01289507

108-7039 MOUNTING GP-TRANSMISSION

S/N: LJR1-UP

PART OF 321-3122 POWER TRAIN AR

SMCS-3082 **i00821657**

NOTE	REF NO	GRAPHIC REF	PART NUMBER	QTY	PART NAME 1 2 3 4 5 6 (PRODUCT LEVEL)	SEE PAGE
	1	1	**7M-0475**	1	RING-SEALING	
	2	1	**8T-4223**	6	WASHER-HARD (13.5X25.5X3-MM THK)	
M	3	1	**8T-4244**	2	NUT (M12X1.75-THD)	
M	4	1	**8T-4184**	4	BOLT (M12X1.75X45-MM)	
	5	1	**112-5057**	1	BRACKET AS	
M	6	1	**8T-4194**	23	BOLT (M12X1.75X50-MM)	
	7	1	**3T-9315**	2	SPACER (13.5X19.05X29-MM THK)	
	8	1	**5V-0564**	2	SPACER (20X28.5X28-MM THK)	
	9	1	**5D-7523**	1	SEAL-O-RING	
	10	1	**112-5056**	1	BRACKET	
	11	1	**8M-5254**	2	SEAL-O-RING	

M - METRIC PART

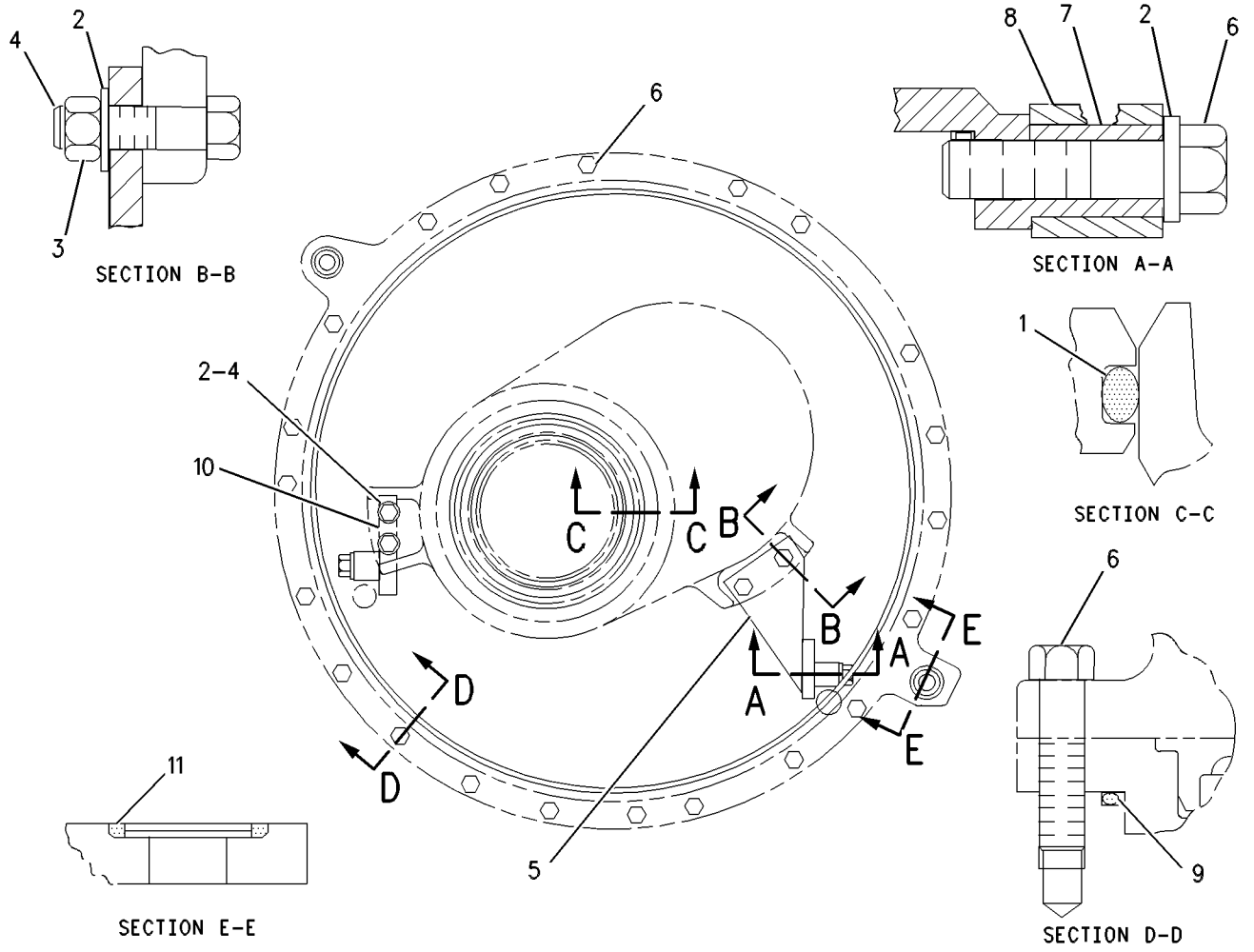

GRAPHIC #1 **<END>** g00402358

321-5724 PLANETARY GP-TRANSMISSION

S/N: T6K1-UP

PART OF 320-6127 TRANSMISSION AR

SMCS-3160 **i04690631**

NOTE	REF NO	GRAPHIC REF	PART NUMBER	QTY	PART NAME 1 2 3 4 5 6 (PRODUCT LEVEL)	SEE PAGE
	1	1	**3K-1432**	2	RING-METAL SEAL	
	2	1	**3P-7019**	2	SEAL-METAL	
	3	2	**3S-8109**	11	PIN-SPRING	
	4	2	**3T-0810**	1	SLEEVE	
	5	1	**3T-3447**	1	GEAR AS-SUN (44-TEETH)	
		1	**8S-0527**	2	PLUG-CUP	
	6	1	**3T-4629**	1	GEAR-RING (80-TEETH)	
	7	2	**3T-6769**	4	GEAR-PLANETARY (24-TEETH)	
	8	2	**3T-7584**	4	SPRING	
	9	1	**3T-9960**	4	DISC-FRICTION	
	10	2	**5P-3131**	3	BEARING AS-ROLLER	
	11	2	**5P-3930**	8	BEARING AS-ROLLER	
	12	2	**5P-8245**	9	WASHER-HARD (13.5X25.5X3-MM THK)	
	13	1	**6I-8488**	1	GEAR-RING (82-TEETH)	
	14	2	**6P-2233**	3	GEAR-PLANETARY (20-TEETH)	
	15	2	**6P-7742**	4	SHAFT-PLANETARY	
	16	2	**6P-7743**	4	SHAFT-PLANETARY	
	17	1	**6P-7968**	3	PLATE-CLUTCH	
	18	1	**6P-7983**	1	RING-RETAINING	
	19	1	*6T-0097*	1	HOUSING AS-CLUTCH	
		1	**4K-8603**	1	PLUG-CUP	
		1	**6B-6863**	1	PIN-SPRING	
		1	**9G-1488**	1	HOUSING-CLUTCH	
	20	2	**6V-0835**	1	RING-RETAINING	
	21	2	**6V-0852**	6	CAP-DUST	
	22	1	**6V-1586**	1	RING-RETAINING	
	23	2	**6V-1720**	1	PLATE-SERIAL NUMBER (TRANSMISSION)	
	24	1	**6Y-5352**	15	DISC-FRICTION	
	25	1	**7G-0437**	15	PLATE-CLUTCH	
	26	1	**7G-4302**	1	HOUSING-CLUTCH	
	27	2	**7G-5614**	3	SHAFT-PLANETARY	
	28	1	**7G-5674**	1	RING-SEAL	
	29	1	**7G-5675**	3	RING-SEAL	
	30	1	**7G-6060**	1	PLATE-CENTER	
	31	1	**7G-6061**	1	COUPLING	
	32	2	**363-4541**	8	SPRING	
	33	1,2	**7G-8121**	2	RING-LOCK	
	34	1	**7X-7608**	1	RING-RETAINING	
	35	1	**8E-1484**	1	HOUSING AS-CLUTCH	
		1	**3S-8109**	1	PIN-SPRING	
		1	**4S-8537**	1	DOWEL	
	36	1	**8E-1666**	1	PLATE-RETAINER	
	37	1	**8E-8115**	1	SHAFT AS-OUTPUT	
	37A	1	**6Y-0306**	2	BUSHING	
		1	**8S-3426**	1	DOWEL	
	38	1	**8E-8117**	1	GEAR-SUN (32-TEETH)	
	39	1	**8E-8118**	1	CARRIER-RING	
	40	2	**8E-8297**	6	DISC-THRUST	
	41	2	**8E-8299**	24	DISC-THRUST	
	42	2	**5P-8210**	4	SEAL-O-RING	
	43	2	**8P-1916**	8	GEAR-PLANETARY (20-TEETH)	
	44	2	**8P-8950**	2	RING-METAL SEAL	
	45	1	**9G-1233**	1	COUPLING	
	46	1	**9G-8615**	1	COVER	
	47	2	**9M-1503**	1	RING-METAL SEAL	
	48	2	**9P-5558**	1	RING-RETAINING	
	49	1	**108-2470**	1	HOUSING-SUPPORT	
	50	2	**108-2472**	1	COVER-TRANSMISSION	
	51	2	**108-3055**	1	GASKET	

321-5724 **PLANETARY GP-TRANSMISSION (*contd.*)** **i04690631**

NOTE	REF NO	GRAPHIC REF	PART NUMBER	QTY	PART NAME 1 2 3 4 5 6 (PRODUCT LEVEL)	SEE PAGE
	52	1	**108-5618**	1	GEAR-SUN (33-TEETH)	
	53	1	**108-5619**	1	GEAR-SUN (33-TEETH)	
	54	2	**108-5620**	1	CARRIER-PLANETARY	
	55	2	**108-5621**	1	CARRIER-PLANETARY	
	56	1	**108-5623**	1	GEAR-RING (71-TEETH)	
	57	2	**113-9212**	1	DISC-THRUST	
	58	2	**138-4086**	1	GASKET	
	59	2	**144-0761**	1	CARRIER-PLANETARY	
	60	1	**177-4487**	1	GEAR-RING (71-TEETH)	
	61	2	**180-4165**	1	COVER AS	
		2	**138-4087**	1	COVER	
	62	2	**353-9079**	1	COVER	
	63	1	**202-2380**	1	SHAFT AS-INPUT	
		1	**156-4406**	1	PLUG-PIPE	
	64	1	**204-7875**	1	HOUSING AS	
		1	**108-2468**	1	HOUSING-CLUTCH	
		1	**204-7876**	1	ORIFICE	
	65	1	**213-3719**	1	PLATE-REACTION	
	66	1	**321-5712**	1	PISTON	
	67	1	**321-5713**	1	PISTON	
	68	1	**321-5714**	2	PISTON	
	69	1	**321-5715**	1	PISTON	
	70	1	**035-3360**	1	RING-RETAINING	
	71	2	*244-3712*	1	PLUG AS	
		2	**9S-4191**	1	PLUG-O-RING	
		2	**214-7568**	1	SEAL-O-RING	
	72	2	*319-6231*	1	PLUG AS	
		2	**9S-4183**	1	PLUG	
		2	**238-5082**	1	SEAL-O-RING	
	73	2	*313-3492*	2	PLUG AS (TRANSMISSION DRAIN)	
					(EACH INCLUDES)	
		2	**9S-4190**	1	PLUG-O-RING	
		2	**238-5081**	1	SEAL-O-RING	
	74	2	*309-5130*	1	PLUG AS	
		2	**9S-4182**	1	PLUG-O-RING	
		2	**214-7566**	1	SEAL-O-RING	
	75	2	*164-5567*	6	COUPLER AS-QUICK DISCONNECT (MALE)	
					(EACH INCLUDES)	
		2	**6V-3965**	1	FITTING (QUICK DISCONNECT)	
		2	**214-7568**	1	SEAL-O-RING	
	76	1	**1M-8649**	1	RING-RETAINING	
	77	2	*326-0319*	1	PLUG AS	
		2	**9S-4188**	1	PLUG	
		2	**238-5083**	1	SEAL-O-RING	
	78	2	**2D-0516**	3	BOLT (1/2-13X8.75-IN)	
	79	1	**3P-3441**	1	RING-RETAINING	
	80	1	**5J-3864**	1	RING-LOCK	
	81	1	**5K-9106**	1	RING-RETAINING	
	82	2	**5P-9186**	2	SEAL-O-RING	
	83	1	**6P-7772**	1	RING-SEAL	
	84	1	**6P-7773**	3	RING-SEAL	
	85	1	**6P-7985**	2	RING-SEAL	
	86	1	**6V-0834**	1	RING-RETAINING	
	87	2	**6V-1649**	2	BALL BEARING	
	88	2	**6V-7568**	6	BOLT (1/2-13X14.86-IN)	
	89	1	**6Y-3484**	1	BALL BEARING	
	90	1	**7B-7515**	1	BALL BEARING	
	91	2	**7G-3710**	4	ROD	
	92	1	**7G-5730**	1	RING-SEAL	
	93	1	**7G-9224**	1	RING-SEAL	
	94	2	**7S-4534**	4	BEARING-CAGED	
	95	2	**8D-5096**	1	SEAL-O-RING	
	96	1	**8P-0058**	1	GASKET-COVER	

321-5724 **PLANETARY GP-TRANSMISSION (*contd.*)** **i04690631**

NOTE	REF NO	GRAPHIC REF	PART NUMBER	QTY	PART NAME 1 2 3 4 5 6 (PRODUCT LEVEL)	SEE PAGE
M	97	2	**8T-4136**	4	BOLT (M10X1.5X25-MM)	
M	98	2	**8T-4186**	6	BOLT (M10X1.5X40-MM)	
M	99	2	**8T-5005**	8	BOLT (M10X1.5X70-MM)	
	100	1	**9G-1234**	5	SPRING-DISC	
	101	1	**9H-5604**	1	RING-RETAINING	
M	102	1	**9X-2125**	6	BOLT-LOCKING (M10X1.5X25-MM)	

M - METRIC PART

321-5724 **PLANETARY GP-TRANSMISSION (*contd.*)** **i04690631**

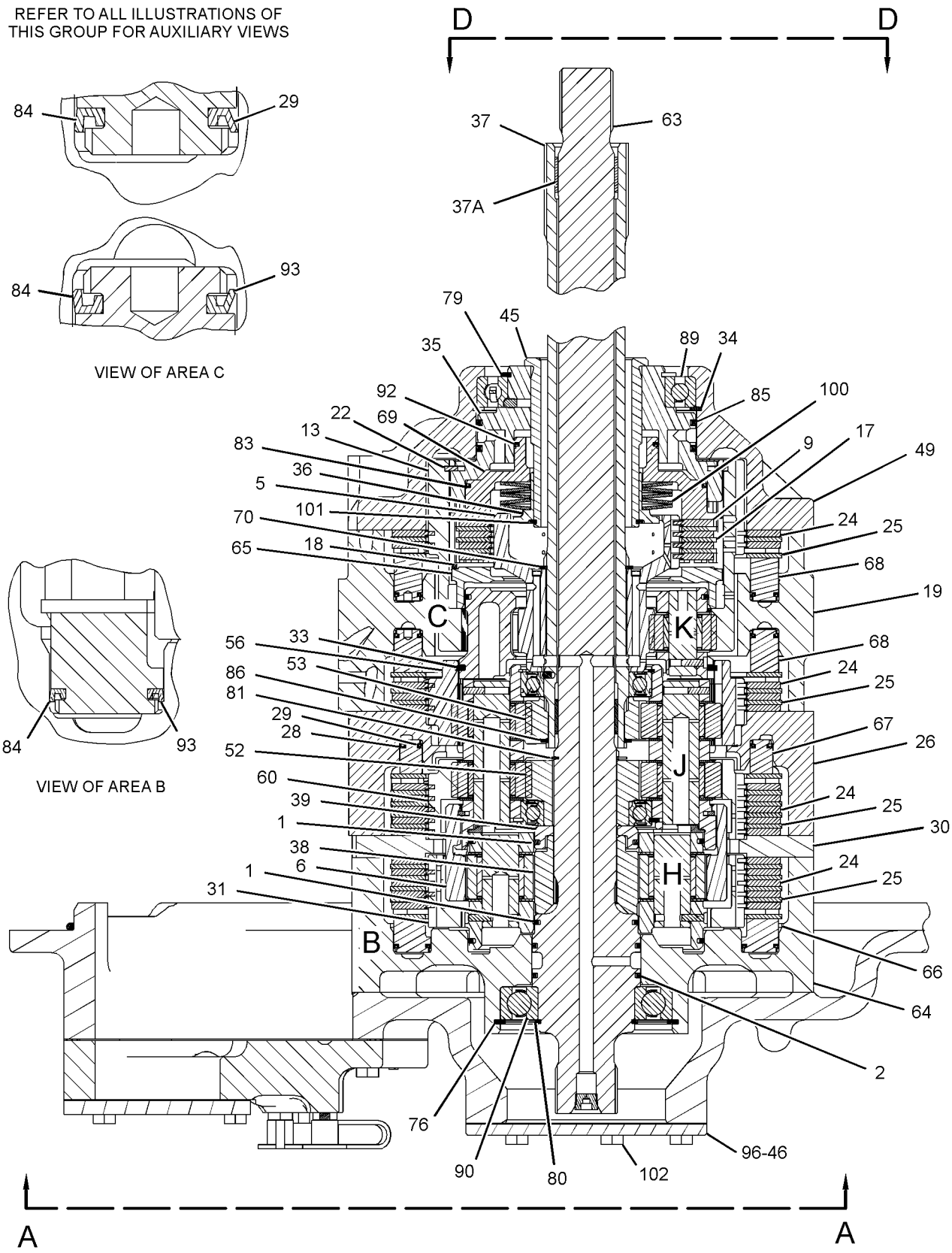

GRAPHIC #1 g02803504

321-5724 **PLANETARY GP-TRANSMISSION (*contd.*)** **i04690631**

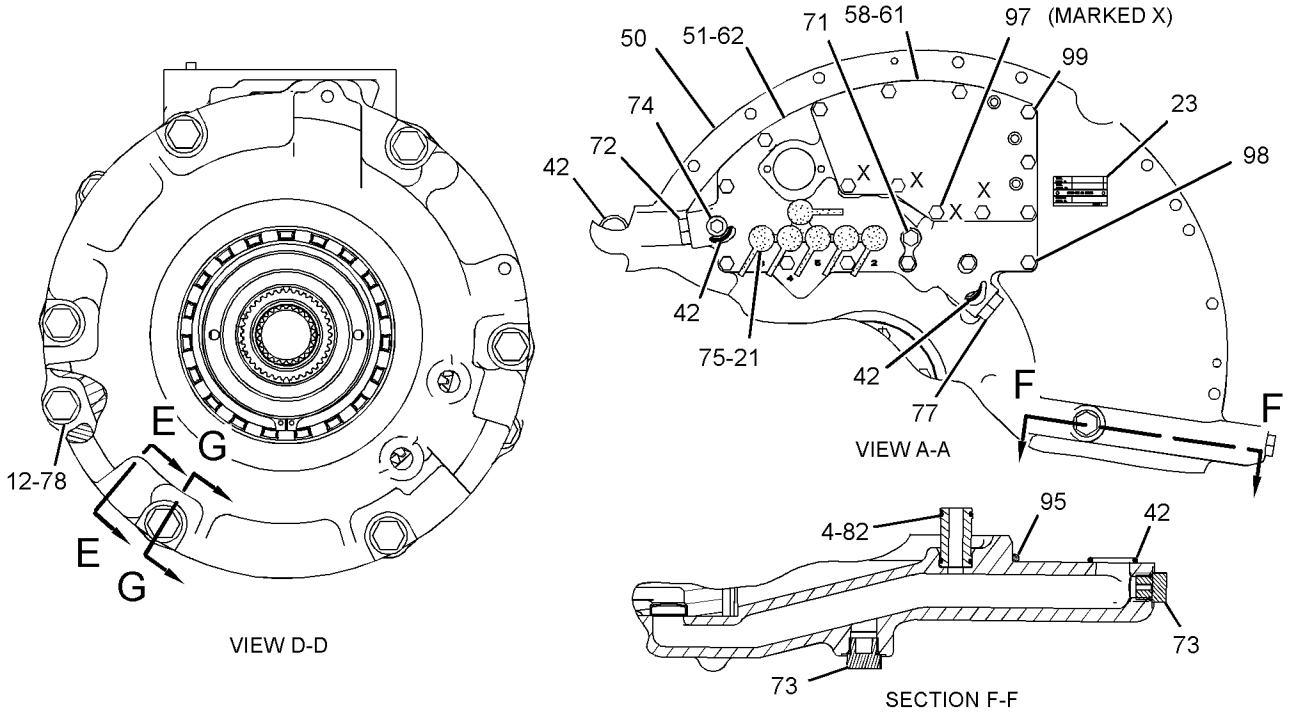

GRAPHIC #2

<END>

g01906196

321-3122 POWER TRAIN AR

S/N: LJR1-UP

PART OF 310-9903 GENERAL AR

SMCS-3000, 4000

i03630448

NOTE	PART NUMBER	QTY	PART NAME 1 2 3 4 5 6 (PRODUCT LEVEL)	SEE PAGE
Y	**320-6127**	1	TRANSMISSION AR	310
Y	*193-7361*	1	AXLE GP	261
Y	*195-0644*	1	BRAKE GP-STEERING	445
Y	**191-4931**	2	DRIVE GP-FINAL	276
Y	*321-5651*	1	LINES GP-POWER TRAIN OIL	284
Y	*266-9179*	1	MOUNTING GP-TORQUE CONVERTER	291
Y	*108-7039*	1	MOUNTING GP-TRANSMISSION	292
Y	*321-3124*	1	PLATE & FILM GP	753
Y	*258-9811*	2	SEGMENT GP-SPROCKET	302
Y	*178-6690*	1	SHAFT GP-DRIVE	303
Y	*265-7360*	1	TORQUE CONVERTER GP	308

Y - SEPARATE ILLUSTRATION

<END>

202-4364 PUMP GP-GEAR—POWER TRAIN OIL

S/N: LJR1-UP
3 SECTION
PART OF 202-4365 PUMP GP-GEAR

SMCS-3066, 3115, 5073 **i05091130**

NOTE	REF NO	GRAPHIC REF	PART NUMBER	QTY	PART NAME 1 2 3 4 5 6 (PRODUCT LEVEL)	SEE PAGE
	1	1	**202-6488**	1	BODY-OIL PUMP (CONVERTER SCAVENGE)	
	2	1	**178-9041**	1	BODY AS-OIL PUMP (TRANSMISSION CHARGING)	
	2A	1	**5M-3320**	2	BUSHING	
	2B	1	**8M-8489**	4	DOWEL	
	3	1	**202-0552**	1	BODY AS-OIL PUMP (CONVERTER/COOLER LUBRICATION)	
	3A	1	**131-0167**	2	BUSHING	
	3B	1	**8M-8489**	2	DOWEL	
M	4	1	**8T-5030**	2	BOLT (M10X1.5X120-MM)	
	5	1	**3S-0004**	6	WASHER (0.406X0.728X0.09-IN THK)	
	6	1	**1B-8736**	1	KEY-WOODRUFF	
	7	1	**133-1222**	1	COVER AS-OIL PUMP	
	7A	1	**131-0167**	2	BUSHING	
	8	1	**2D-8009**	3	SEAL-O-RING	
	9	1	**202-0551**	2	GEAR (12-TEETH)	
	10	1	**202-0549**	1	GEAR (12-TEETH)	
	11	1	**3T-8757**	2	GEAR (12-TEETH)	
	12	1	**202-0550**	1	GEAR (12-TEETH)	
	13	1	**1B-8705**	1	KEY-WOODRUFF	
	14	1	**3H-1461**	1	SEAL-O-RING	
	15	1	**9S-4191**	2	PLUG-O-RING	
	16	1	**3J-1907**	2	SEAL-O-RING	
M	17	1	**8T-0356**	4	BOLT (M10X1.5X160-MM)	
	18	1	**6Y-5010**	8	WASHER (10.16X19X0.84-MM THK)	

M - METRIC PART

202-4364 **PUMP GP-GEAR (*contd.*)** **i05091130**

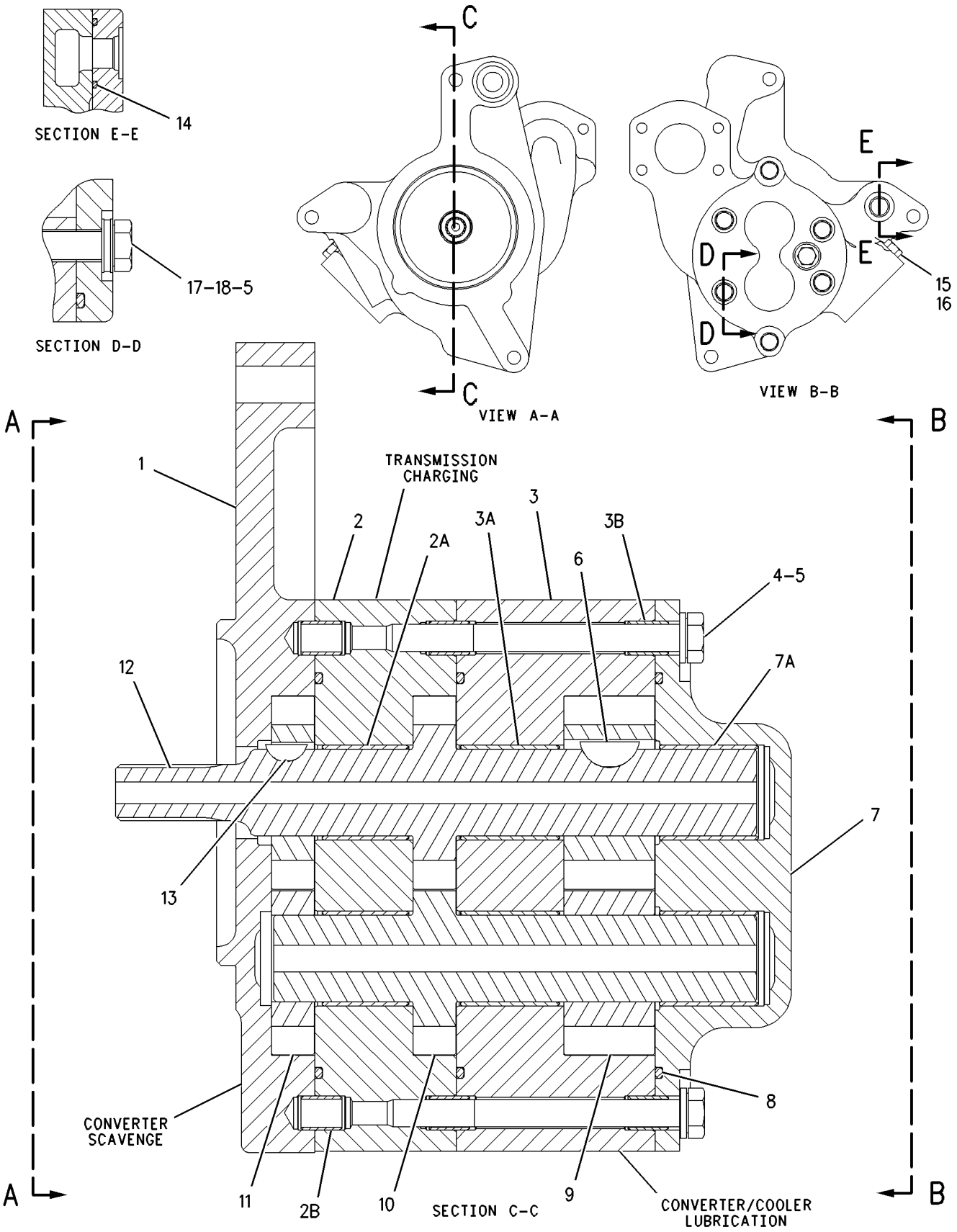

GRAPHIC #1 **<END>** g00778277

202-4365 PUMP GP-GEAR–POWER TRAIN OIL

S/N: LJR1-UP
3 SECTION
PART OF 321-5651 LINES GP-POWER TRAIN OIL

SMCS-3066, 3115, 5073 **i02944500**

NOTE	REF NO	GRAPHIC REF	PART NUMBER	QTY	PART NAME 1 2 3 4 5 6 (PRODUCT LEVEL)	SEE PAGE
Y	1	1	**202-4364**	1	PUMP GP-GEAR (POWER TRAIN OIL)	299
	2	1	**5F-3106**	1	SEAL-O-RING	
M	3	1	**8T-4182**	1	BOLT (M10X1.5X45-MM)	
	4	1	**8T-4121**	3	WASHER-HARD (11X21X2.5-MM THK)	
M	5	1	**8T-6466**	1	BOLT (M10X1.5X60-MM)	
M	6	1	**8T-4195**	1	BOLT (M10X1.5X30-MM)	
	7	1	**3H-1461**	1	SEAL-O-RING	

M - METRIC PART
Y - SEPARATE ILLUSTRATION

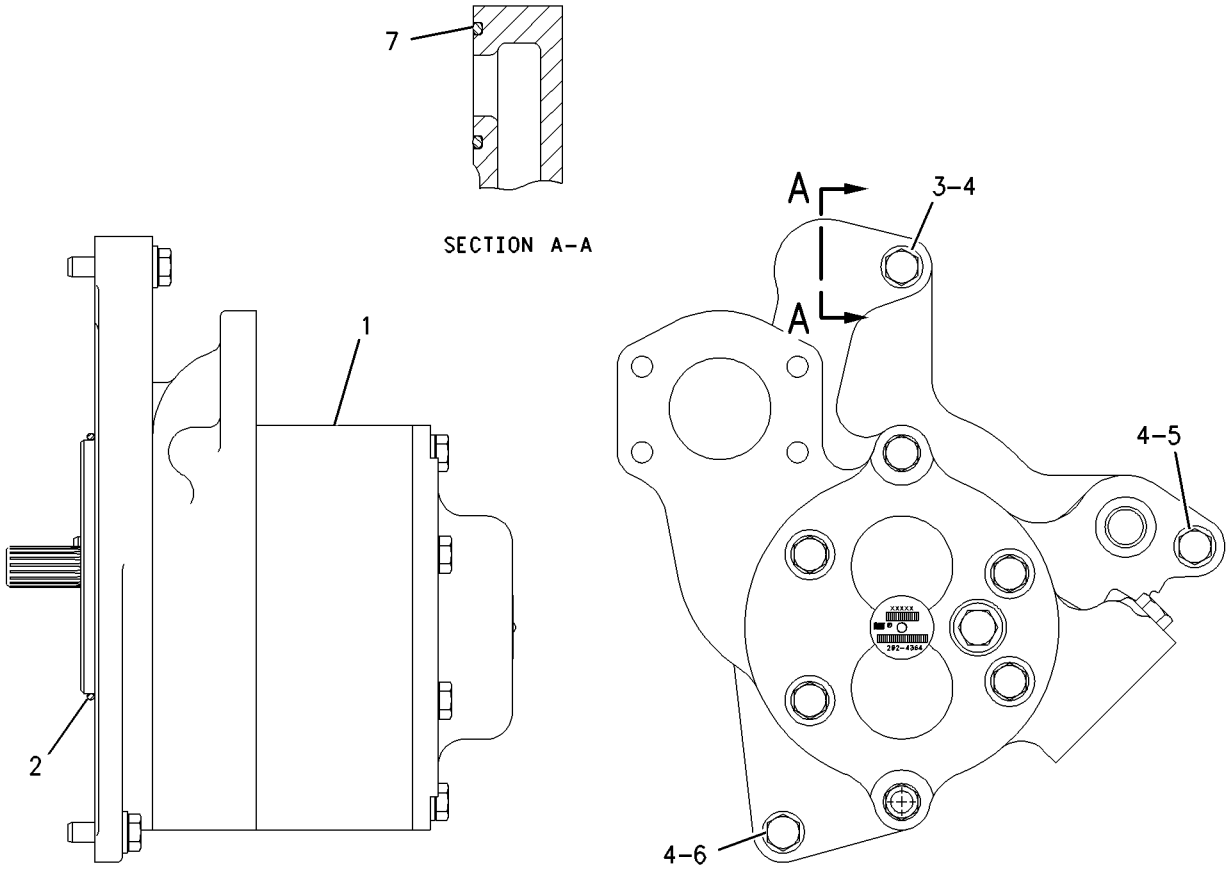

GRAPHIC #1 **<END>** g00942888

258-9811 SEGMENT GP-SPROCKET

S/N: LJR1-UP

190-MM (7.5-IN) PITCH . SOUND SUPPRESSION

PART OF 321-3122 POWER TRAIN AR

SMCS-4155 **i02776831**

NOTE	REF NO	GRAPHIC REF	PART NUMBER	QTY	PART NAME 1 2 3 4 5 6 (PRODUCT LEVEL)	SEE PAGE
	1	1	**6V-0937**	25	BOLT (5/8-18X2.1-IN)	
	2	1	**252-0546**	5	SEGMENT-SPROCKET	
	3	1	**2S-5658**	25	WASHER-HARD (17X29X3-MM THK)	
	4	1	**7H-3607**	25	NUT (5/8-18-THD)	

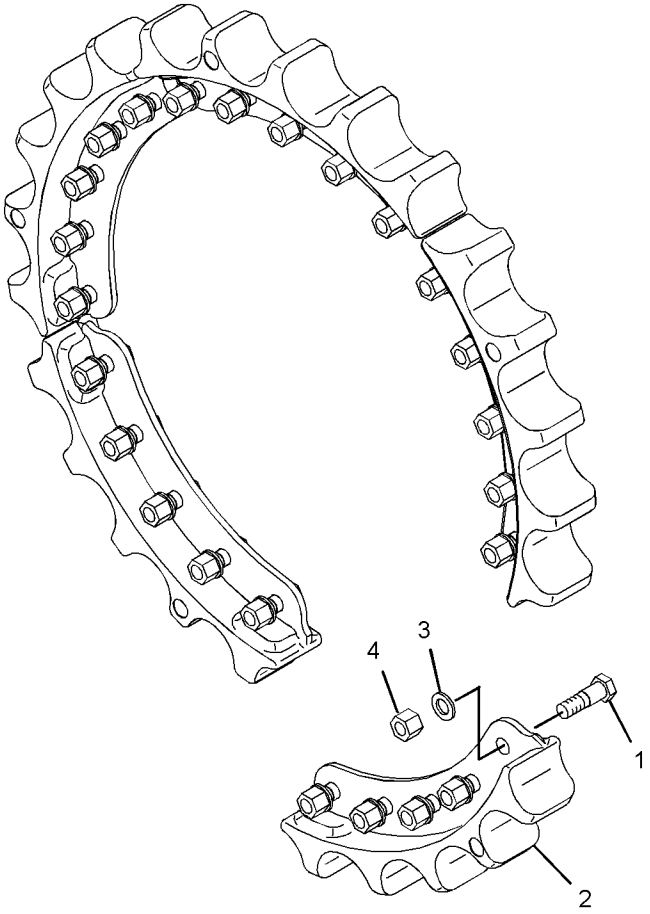

GRAPHIC #1 **<END>** g01288726

178-6690 SHAFT GP-DRIVE

S/N: LJR1-UP

PART OF 321-3122 POWER TRAIN AR

SMCS-3253 **i03709934**

NOTE	REF NO	GRAPHIC REF	PART NUMBER	QTY	PART NAME 1 2 3 4 5 6 (PRODUCT LEVEL)	SEE PAGE
	1	1	**108-8296**	1	YOKE AS	
		1	**4B-4098**	1	PLUG-CUP	
		1	**7F-6935**	1	RACE-BEARING INNER	
Y	2	1	**222-3351**	1	UNIVERSAL JOINT GP	311
M	3	1	**8T-4182**	8	BOLT (M10X1.5X45-MM)	
	4	1	**9X-2027**	8	WASHER (11X18X2-MM THK)	

M - METRIC PART
Y - SEPARATE ILLUSTRATION

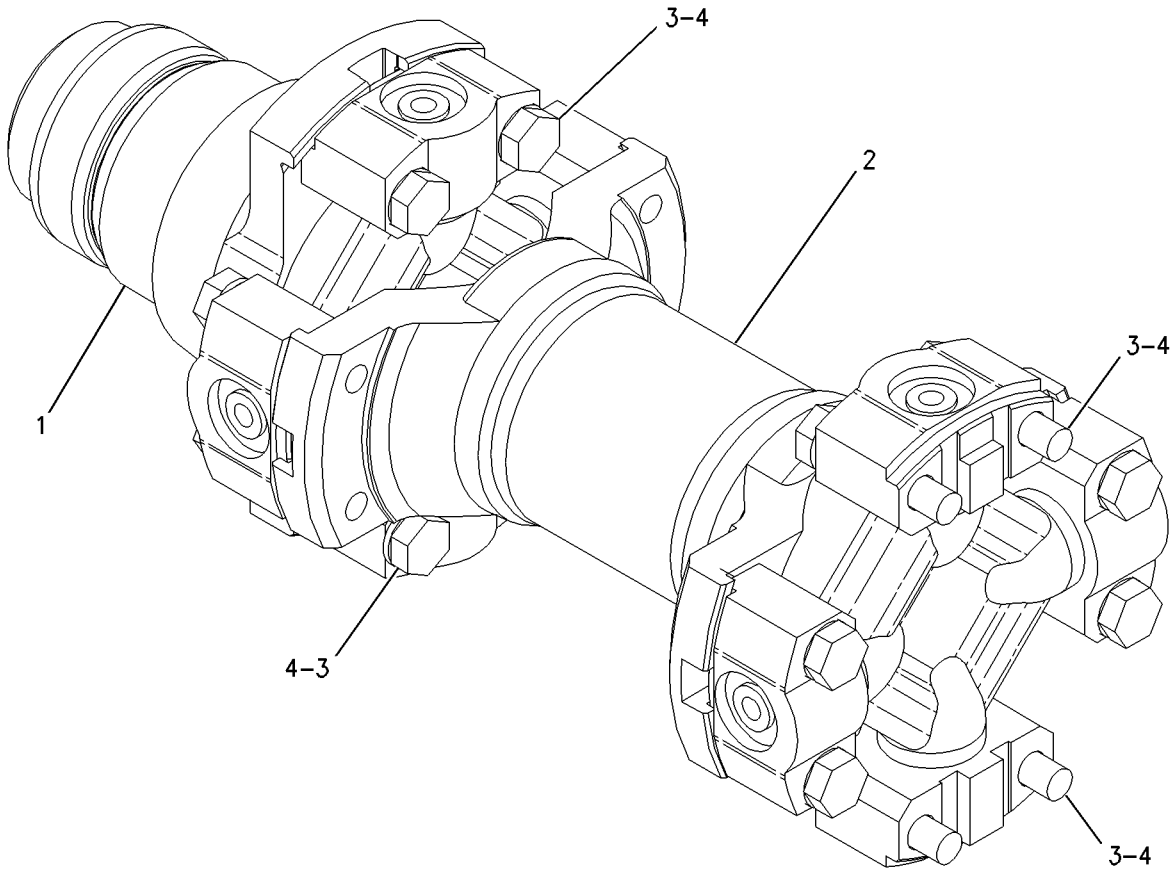

GRAPHIC #1 **<END>** g00932307

175-2296 TORQUE CONVERTER GP

S/N: BZA1-333

PART OF 265-7360 TORQUE CONVERTER GP

SMCS-3101 **i01829878**

NOTE	REF NO	GRAPHIC REF	PART NUMBER	QTY	PART NAME 1 2 3 4 5 6 (PRODUCT LEVEL)	SEE PAGE
	1	1	**6Y-3159**	1	SHAFT-OUTPUT	
	2	1	**1T-0043**	1	BALL BEARING	
	3	1	**1J-6472**	1	RING-RETAINING	
	4	1	**129-1262**	1	CARRIER AS	
		1	**4S-8541**	1	DOWEL	
	5	1	**129-2380**	1	BALL BEARING	
	6	1	**6Y-3167**	1	GEAR-PUMP DRIVE (77-TEETH)	
	7	1	**8E-6647**	1	SPACER (64.8X85X11-MM THK)	
	8	1	**6Y-1084**	1	IMPELLER-CONVERTER	
	9	1	**6Y-3151**	1	STATOR-CONVERTER	
	10	1	**218-3598**	1	HOUSING	
	11	1	**6Y-3149**	1	TURBINE-CONVERTER	
M	12	1	**6V-1820**	34	BOLT (M10X1.5X30-MM)	
	13	1	**6V-5839**	34	WASHER (11X21X2.5-MM THK)	
	14	1	**8E-6539**	1	HUB AS	
		1	**4S-8541**	1	DOWEL	
	15	1	**8E-5247**	1	BALL BEARING	
	16	1	**8E-6648**	1	SPACER (60.2X80X3-MM THK)	
	17	1	**064-3843**	1	RING-SNAP	
	18	1	**6Y-1087**	1	COVER-END	
	19	1	**6V-8128**	2	RING-RETAINING	
	20	1	**6Y-1093**	1	ADAPTER-SPLINED	
	21	1	**5K-9065**	1	RING-RETAINING	
	22	1	**3E-6799**	1	SEAL-O-RING	
	23	1	**5P-6414**	2	RING-RETAINING	
M	24	1	**6V-7673**	8	BOLT (M12X1.75X50-MM)	
	25	1	**1T-1621**	1	RING-SEAL	
	26	1	**1T-0234**	1	RING-METAL SEAL	

M - METRIC PART

175-2296 **TORQUE CONVERTER GP (*contd.*)** **i01829878**

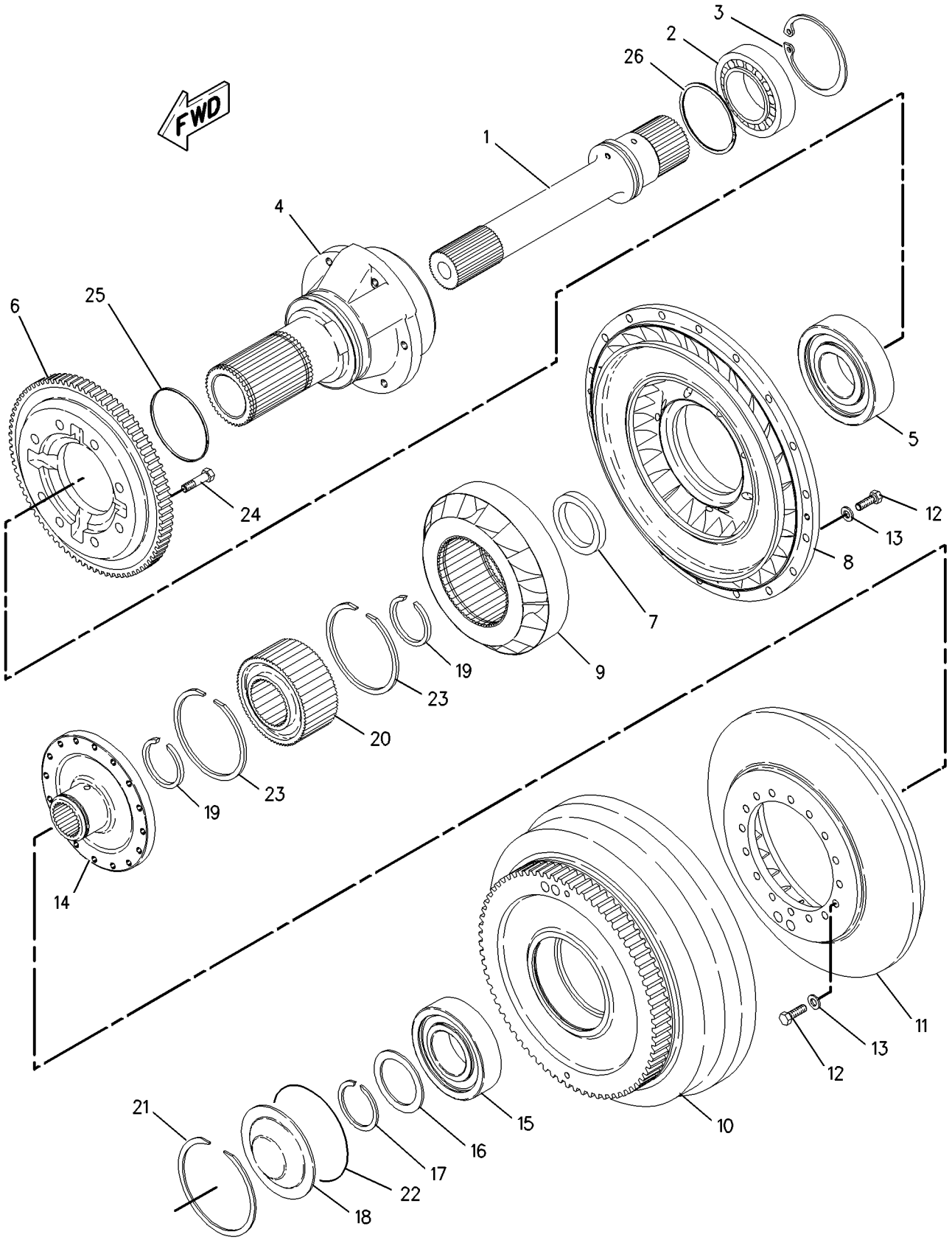

GRAPHIC #1 **<END>** g00773718

175-2296 TORQUE CONVERTER GP

S/N: BZA334-UP

PART OF 265-7360 TORQUE CONVERTER GP

SMCS-3101 **i04744910**

NOTE	REF NO	GRAPHIC REF	PART NUMBER	QTY	PART NAME 1 2 3 4 5 6 (PRODUCT LEVEL)	SEE PAGE
	1	1	**6Y-3159**	1	SHAFT-OUTPUT	
	2	1	**1T-0043**	1	BALL BEARING	
	3	1	**1J-6472**	1	RING-RETAINING	
	4	1	**129-1262**	1	CARRIER AS	
		1	**4S-8541**	1	DOWEL	
	5	1	**129-2380**	1	BALL BEARING	
	6	1	**6Y-3167**	1	GEAR-PUMP DRIVE (77-TEETH)	
	7	1	**8E-6647**	1	SPACER (64.8X85X11-MM THK)	
	8	1	**6Y-1084**	1	IMPELLER-CONVERTER	
C	9	1	**351-8434**	1	STATOR	
	10	1	**218-3598**	1	HOUSING	
	11	1	**6Y-3149**	1	TURBINE-CONVERTER	
M	12	1	**6V-1820**	34	BOLT (M10X1.5X30-MM)	
	13	1	**6V-5839**	34	WASHER (11X21X2.5-MM THK)	
	14	1	**8E-6539**	1	HUB AS	
		1	**4S-8541**	1	DOWEL	
	15	1	**8E-5247**	1	BALL BEARING	
	16	1	**8E-6648**	1	SPACER (60.2X80X3-MM THK)	
	17	1	**064-3843**	1	RING-SNAP	
	18	1	**6Y-1087**	1	COVER-END	
	19	1	**6V-8128**	1	RING-RETAINING	
	21	1	**5K-9065**	1	RING-RETAINING	
	22	1	**3E-6799**	1	SEAL-O-RING	
M	24	1	**6V-7673**	8	BOLT (M12X1.75X50-MM)	
	25	1	**1T-1621**	1	RING-SEAL	
	26	1	**1T-0234**	1	RING-METAL SEAL	

C - CHANGE FROM PREVIOUS TYPE
M - METRIC PART

175-2296 **TORQUE CONVERTER GP (*contd.*)** **i04744910**

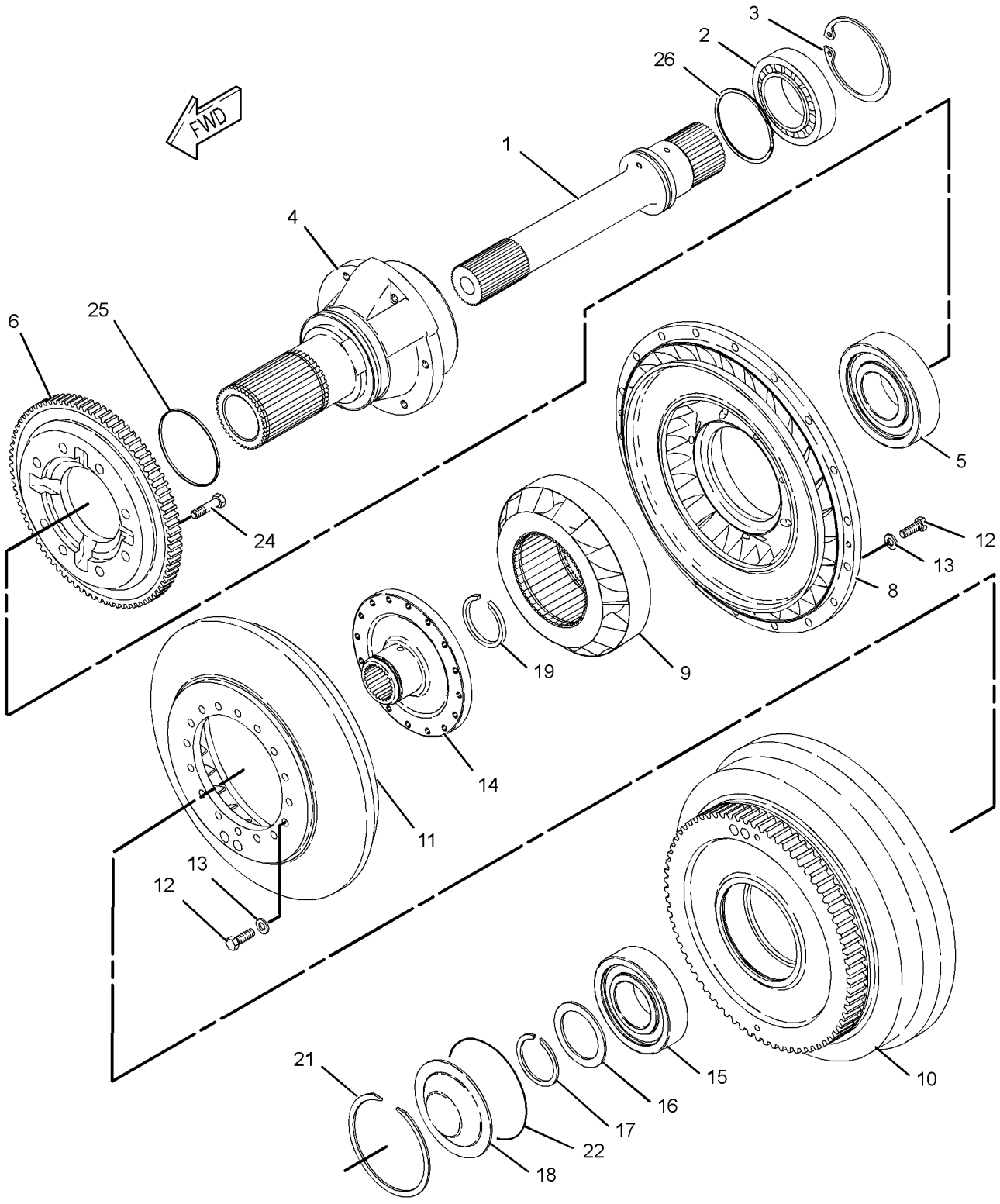

GRAPHIC #1 **<END>** g02900218

265-7360 TORQUE CONVERTER GP

S/N: LJR1-UP

PART OF 321-3122 POWER TRAIN AR

SMCS-3101 **i02990006**

NOTE	REF NO	GRAPHIC REF	PART NUMBER	QTY	PART NAME 1 2 3 4 5 6 (PRODUCT LEVEL)	SEE PAGE
	1	1	**1T-0034**	2	RING-LOCK	
	2	1	**1T-0205**	1	RING-SNAP	
	3	1	**1T-0933**	2	RING-RETAINING	
	4	1	**3T-6471**	1	SCREEN AS (TORQUE CONVERTER SCAVENGE)	
		1	**3T-6469**	1	WASHER (19X26X1.6-MM THK)	
	5	1	**6Y-3164**	1	GEAR-PUMP DRIVE (77-TEETH)	
	6	1	**7G-3496**	1	RETAINER	
	7	1	**7X-7816**	1	PLATE-SERIAL NUMBER (TORQUE CONVERTER)	
	8	1	**9J-0461**	1	SPRING	
	9	1	**106-0721**	1	YOKE	
	10	1	**110-1211**	1	GEAR-PUMP DRIVE (77-TEETH)	
Y	11	1	**175-2296**	1	TORQUE CONVERTER GP	304
	12	1	**225-4286**	1	GEAR-PUMP DRIVE (68-TEETH)	
	13	1	**265-7356**	1	HOUSING-TORQUE CONVERTER	
	14	1	**1T-0043**	1	BALL BEARING	
	15	1	**1T-1639**	1	RING	
	16	1	**3K-0360**	2	SEAL-O-RING	
	17	1	**4B-3665**	2	BALL BEARING	
	18	1	**4K-1388**	1	SEAL-O-RING	
	19	1	**5P-5846**	1	SEAL-O-RING	
	20	1	**5P-9806**	1	SEAL-O-RING	
	21	1	**8C-3229**	1	RING-RETAINING	
	22	1	**8T-4121**	8	WASHER-HARD (11X21X2.5-MM THK)	
M	23	1	**8T-4195**	8	BOLT (M10X1.5X30-MM)	
M	24	1	**8T-4910**	1	BOLT (M12X1.75X60-MM)	
	25	1	**9F-1399**	1	SEAL-O-RING	
	26	1	**9S-4185**	2	PLUG-O-RING	
	27	1	**9S-4188**	1	PLUG (TORQUE CONVERTER OIL)	
	28	1	**9X-7719**	1	SEAL-LIP TYPE	

M - METRIC PART
Y - SEPARATE ILLUSTRATION

265-7360 **TORQUE CONVERTER GP (*contd.*)** **i02990006**

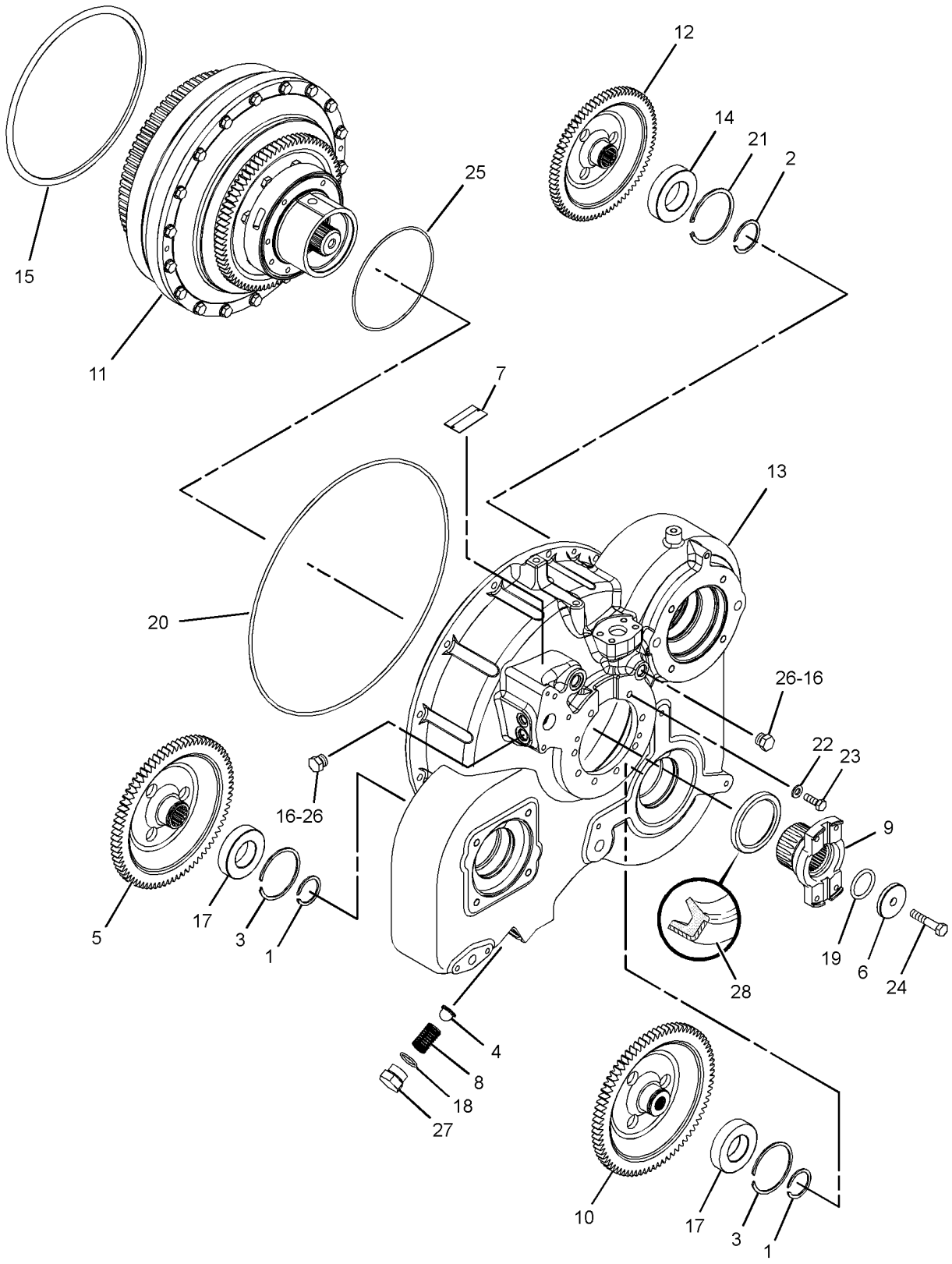

GRAPHIC #1 **<END>** g01253893

320-6127 TRANSMISSION AR

S/N: T6K1-UP

PART OF 321-3122 POWER TRAIN AR

SMCS-3030 **i03630489**

NOTE	REF NO	GRAPHIC REF	PART NUMBER	QTY	PART NAME 1 2 3 4 5 6 (PRODUCT LEVEL)	SEE PAGE
Y	1	1	*205-3603*	1	CONTROL GP-TRANSMISSION HYD	270
Y	2	1	*318-2545*	1	DIFFERENTIAL & BEVEL GEAR GP	272
Y	3	1	*321-5724*	1	PLANETARY GP-TRANSMISSION	293

Y - SEPARATE ILLUSTRATION

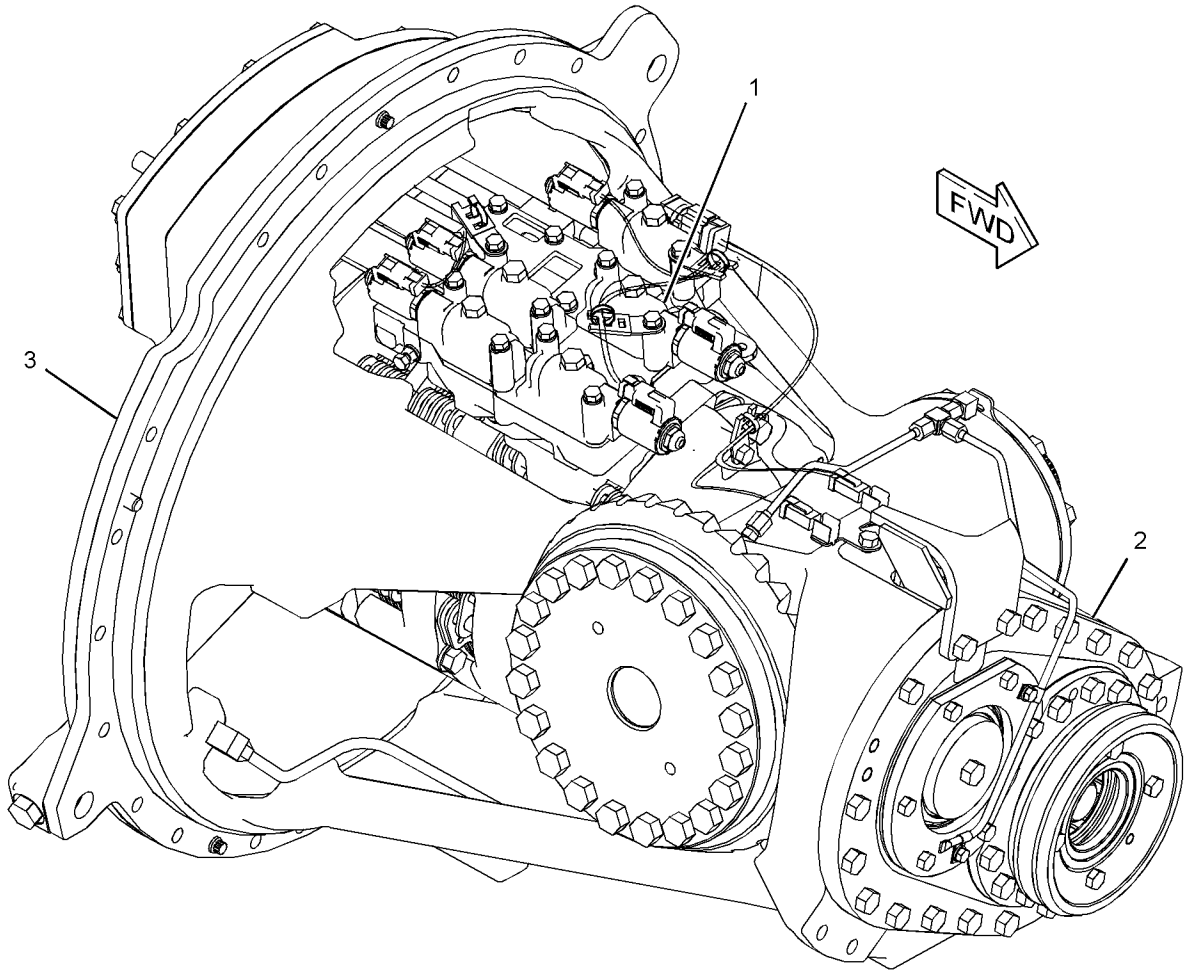

GRAPHIC #1 **<END>** g01907042

222-3351 UNIVERSAL JOINT GP

S/N: LJR1-UP

PART OF 178-6690 SHAFT GP-DRIVE

SMCS-3251, 3253

i01829885

NOTE	REF NO	GRAPHIC REF	PART NUMBER	QTY	PART NAME 1 2 3 4 5 6 (PRODUCT LEVEL)	SEE PAGE
	1	1	**108-6587**	2	BEARING	
	2	1	**222-3352**	1	TUBE	
M	3	1	**6V-5843**	8	BOLT (M10X1.50X45MM)	
	4	1	**9X-2027**	8	WASHER (11X18X2MM THK)	

M - METRIC PART

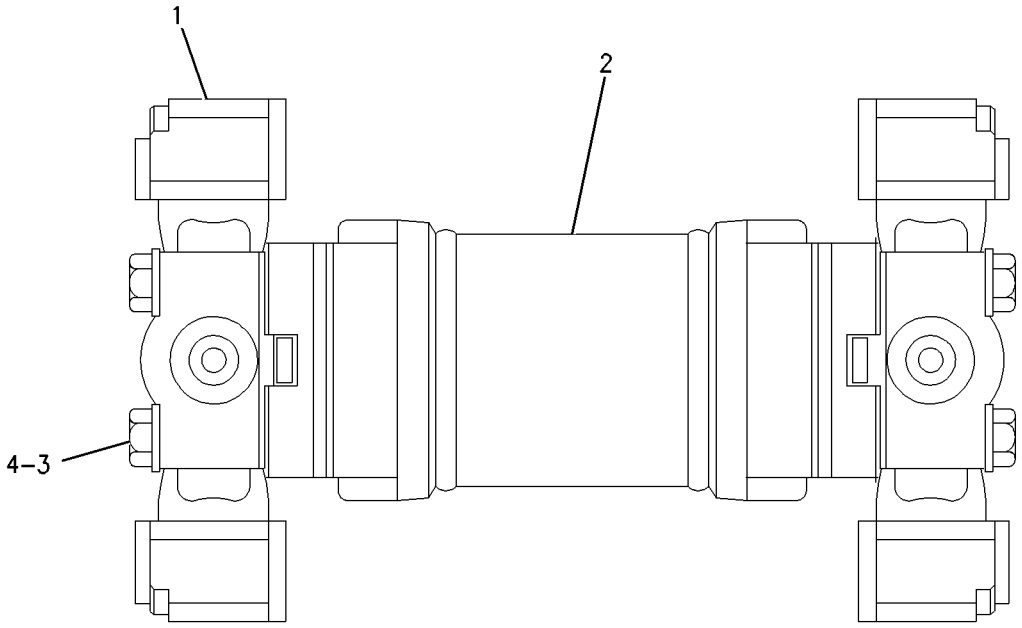

GRAPHIC #1

<END>

g00938014

266-2579 VALVE & MTG GP-SOLENOID–OUTLET

S/N: LJR1-UP

PART OF 309-1573 VALVE GP-BANK 3, 309-1574 VALVE GP-BANK 4

ALSO AN ATTACHMENT

SMCS-5479 **i03626456**

NOTE	REF NO	GRAPHIC REF	PART NUMBER	QTY	PART NAME 1 2 3 4 5 6 (PRODUCT LEVEL)	SEE PAGE
J	1	1	**221-4486**	1	VALVE GP-SOLENOID (HYDRAULIC LOCKOUT)	
		1	**212-0061**	1	FLANGE	
	2	1	**227-1192**	2	KIT-VALVE (SHUTTLE) (OUTLET MANIFOLD)	
M	3	1	**8T-1158**	1	BOLT-SOCKET HEAD (M8X1.25X20-MM)	
					AVAILABLE REPAIR KIT(S):	
J			**200-2371**	1	KIT-SEAL (SOLENOID VALVE)	
					(INCLUDES SEAL-O-RINGS)	

J - (KIT MARKED J SERVICES PART(S) MARKED J)
M - METRIC PART

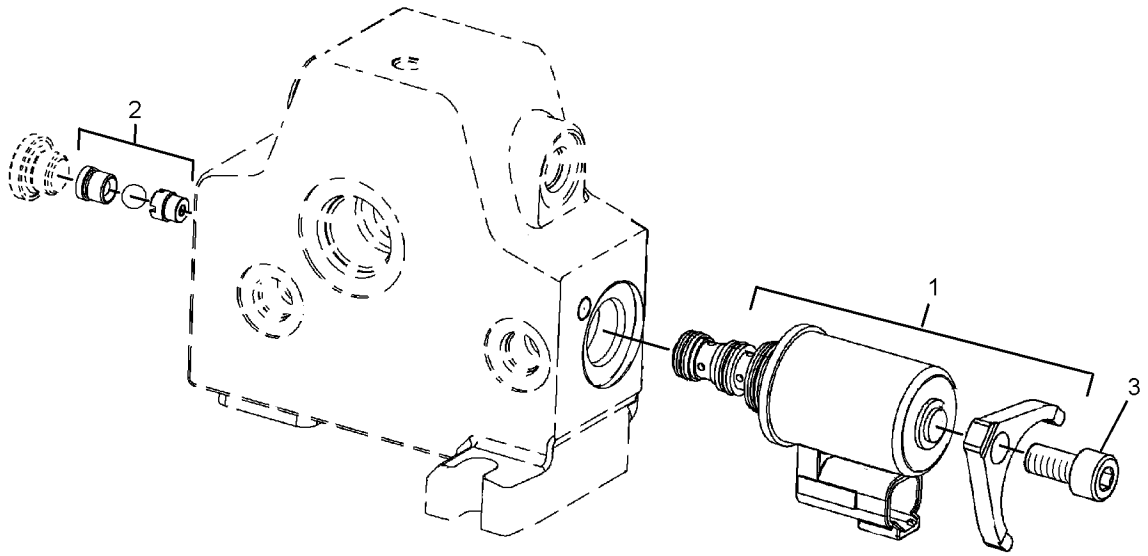

GRAPHIC #1 **<END>** g01303128

220-4324 VALVE GP-MODULATING—TRANSMISSION CLUTCH

S/N: T6K1-UP
24-VOLT
FIELD REPLACEMENT ORDER 244-3114—PAGE: 314
PART OF 205-3603 CONTROL GP-TRANSMISSION HYD

SMCS-3139 **i03630500**

NOTE	REF NO	GRAPHIC REF	PART NUMBER	QTY	PART NAME 1 2 3 4 5 6 (PRODUCT LEVEL)	SEE PAGE
	1	1	**164-2108**	1	WASHER (13.03X25.4X2.38-MM THK)	
	2	1	**218-2373**	1	NUT (1/2-28-THD)	
	3	1	**323-9531**	1	COIL AS (24-VOLT)	
	4	1	**214-7568**	1	SEAL-O-RING	
	5	1	**9S-4191**	1	PLUG-O-RING	
					PARTS SHOWN IN GRAPHIC(S) WITHOUT A REFERENCE NUMBER ARE NOT SERVICED SEPARATELY	

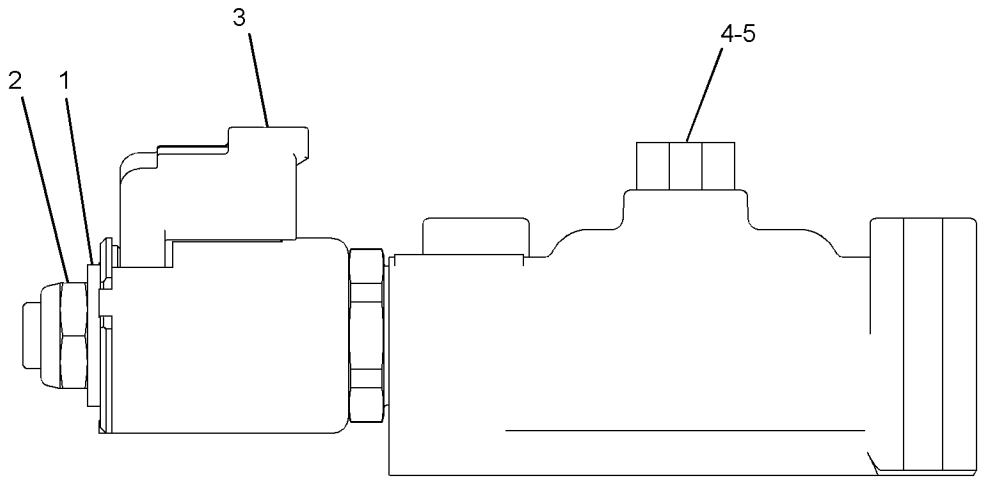

GRAPHIC #1 **<END>** g01533133

244-3114 VALVE GP-MODULATING—TRANSMISSION CLUTCH

S/N: T6K1-UP

24-VOLT

FIELD REPLACEMENT FOR 220-4324—PAGE: 313

SMCS-3139 **i05135333**

NOTE	REF NO	GRAPHIC REF	PART NUMBER	QTY	PART NAME 1 2 3 4 5 6 (PRODUCT LEVEL)	SEE PAGE
	1	1	**6V-3965**	1	FITTING (QUICK DISCONNECT)	
	2	1	**323-9531**	1	COIL AS (24-VOLT)	
	3	1	**214-7568**	1	SEAL-O-RING	
	4	1	**164-2108**	1	WASHER (13.03X25.4X2.38-MM THK)	
	5	1	**218-2373**	1	NUT (1/2-28-THD)	
					PARTS SHOWN IN GRAPHIC(S) WITHOUT A REFERENCE NUMBER ARE NOT SERVICED SEPARATELY	

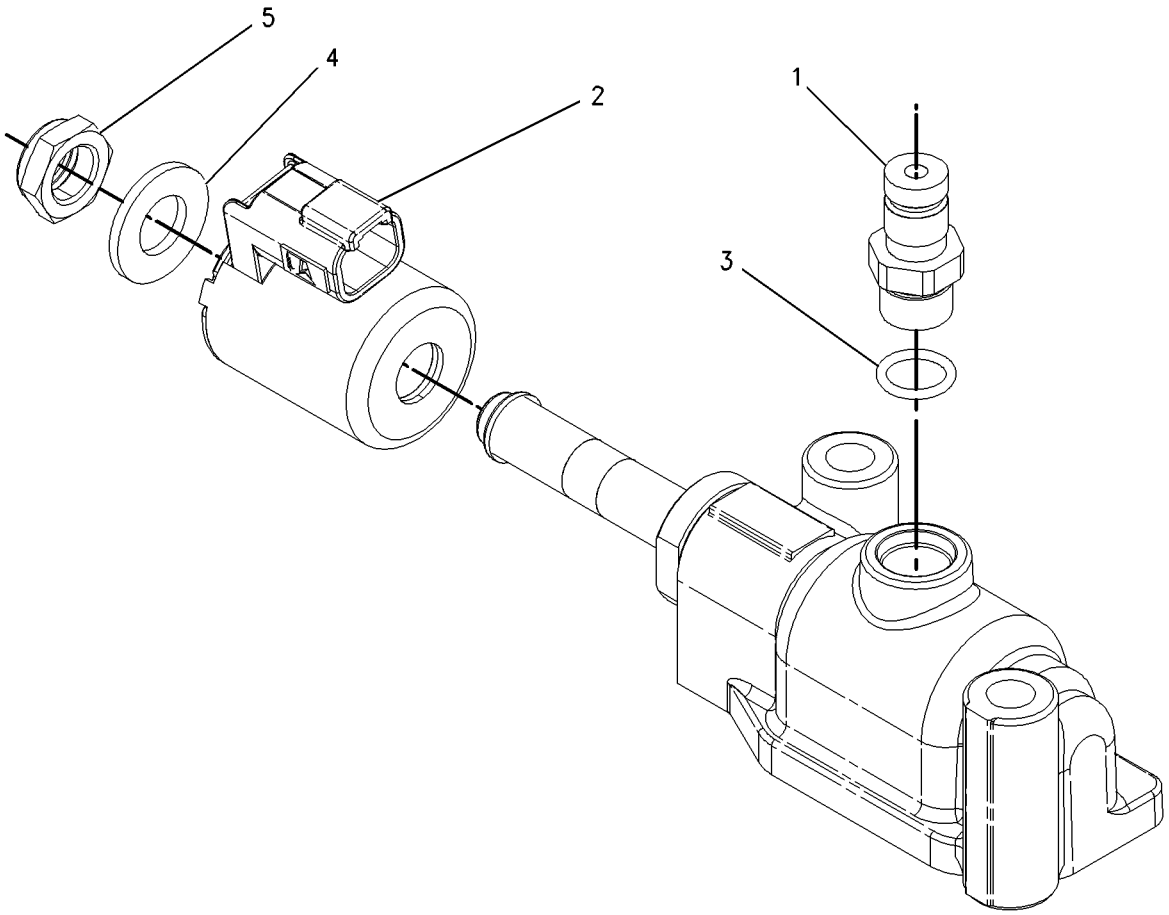

GRAPHIC #1 **<END>** g00919065

6Y-8473 VALVE GP-RELIEF–TORQUE CONVERTER OUTLET

S/N: LJR1-UP

PART OF 321-5651 LINES GP-POWER TRAIN OIL

SMCS-3133, 3182 **i04839650**

NOTE	REF NO	GRAPHIC REF	PART NUMBER	QTY	PART NAME 1 2 3 4 5 6 (PRODUCT LEVEL)	SEE PAGE
	1	1	**4D-2886**	1	CLIP	
M	3	1	**8T-4136**	4	BOLT (M10X1.5X25-MM)	
	4	1	**9X-2027**	4	WASHER (11X18X2-MM THK)	
	5	1	**3J-1907**	1	SEAL-O-RING	
	6	1	**6V-3965**	1	FITTING (QUICK DISCONNECT)	
B	7	1	**4M-1751**	3	SPACER (15.09X0.4-MM THK)	
B	8	1	**5S-7001**	5	SPACER (7.54X14.15X0.9-MM THK)	
	9	1	**8M-4986**	3	SEAL-O-RING	
	10	1	**2S-1382**	1	SPRING	
	11	1	**2S-1384**	1	SPOOL AS-RELIEF	
		1	**2S-1385**	1	SPOOL-RELIEF VALVE	
		1	**5M-9548**	1	SPRING	
		1	**7M-8592**	1	RING-RETAINING	
		1	**8M-2538**	1	POPPET	
		1	**8M-4409**	1	RETAINER	
	12	1	**6V-4365**	1	SEAL-O-RING	
	13	1	**4M-8239**	2	COVER	
	14	1	**6Y-8475**	1	HOUSING-VALVE	
M	15	1	**8T-0643**	3	BOLT (M10X1.5X80-MM)	
	16	1	**6V-5839**	3	WASHER (11X21X2.5-MM THK)	

B - USE AS REQUIRED
M - METRIC PART

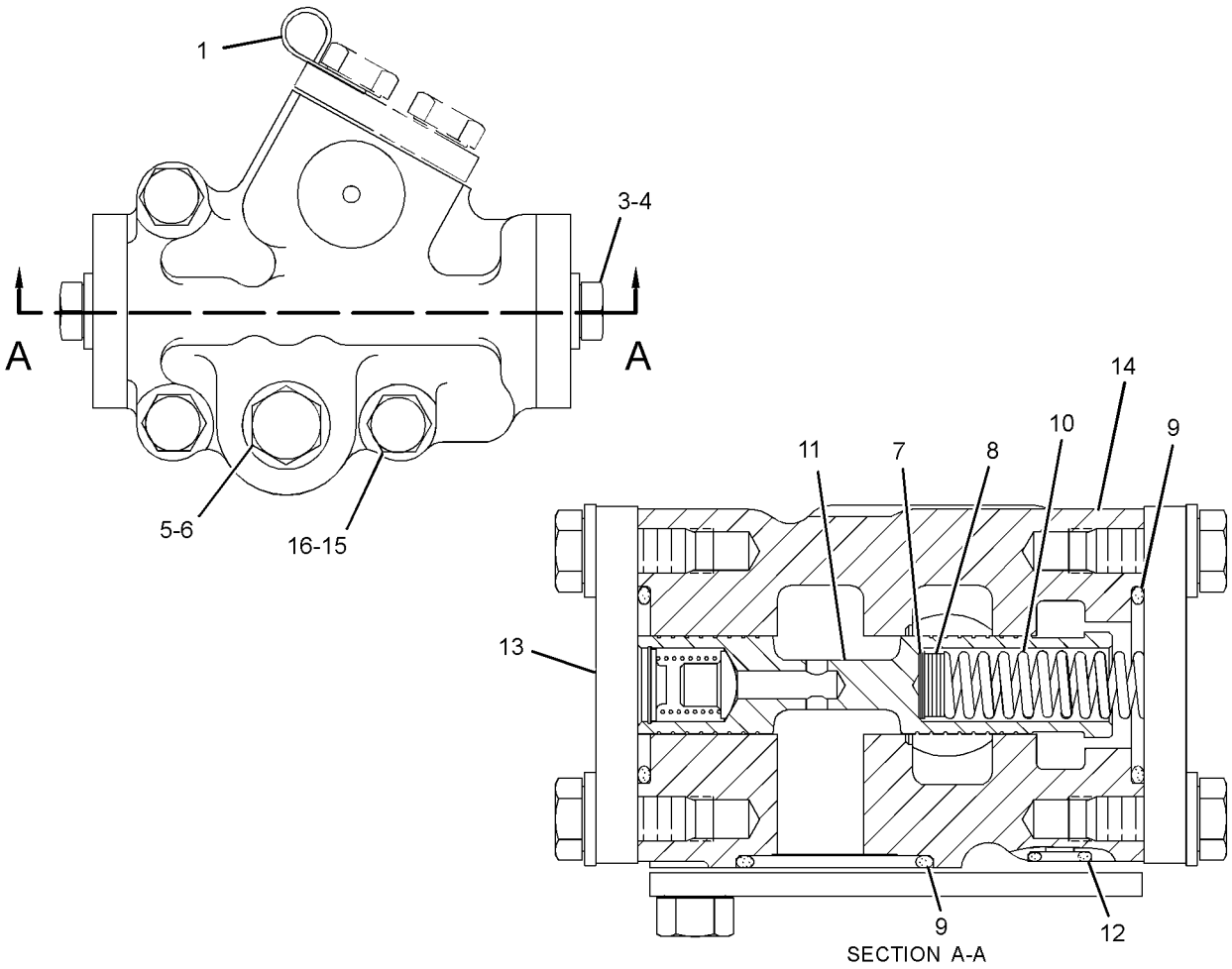

GRAPHIC #1 **<END>** g01455997

205-3602 VALVE GP-RELIEF—TRANSMISSION CONTROL

S/N: T6K1-UP

PART OF 205-3603 CONTROL GP-TRANSMISSION HYD

SMCS-3133, 3182

i03954955

NOTE	REF NO	GRAPHIC REF	PART NUMBER	QTY	PART NAME 1 2 3 4 5 6 (PRODUCT LEVEL)	SEE PAGE
	1	1	**2M-7041**	1	SLUG	
	2	1	**4M-5905**	1	SCREW-ADJUSTMENT (5/16-18X1-IN)	
	3	1	**5B-3180**	1	NUT (5/16-18-THD)	
	4	1	*321-8641*	7	PLUG AS	
					(EACH INCLUDES)	
		1	**9S-8001**	1	PLUG-O-RING	
		1	**238-5078**	1	SEAL-O-RING	
	5	1	**106-9212**	1	SPRING	
	6	1	**106-9214**	1	PLATE	
	7	1	**109-3968**	1	SPOOL AS-RELIEF	
	8	1	**109-3969**	1	STOP	
	9	1	**200-8498**	1	MANIFOLD	
	10	1	**9M-1974**	7	WASHER-HARD (8.8X16X2-MM THK)	
	11	1	*309-2996*	1	PLUG AS	
		1	**6Y-4638**	1	PLUG-HEX SOCKET (1-5/16-12-THD)	
		1	**7M-8485**	1	SEAL-O-RING	
	12	1	**2B-2695**	6	BOLT (5/16-18X0.875-IN)	

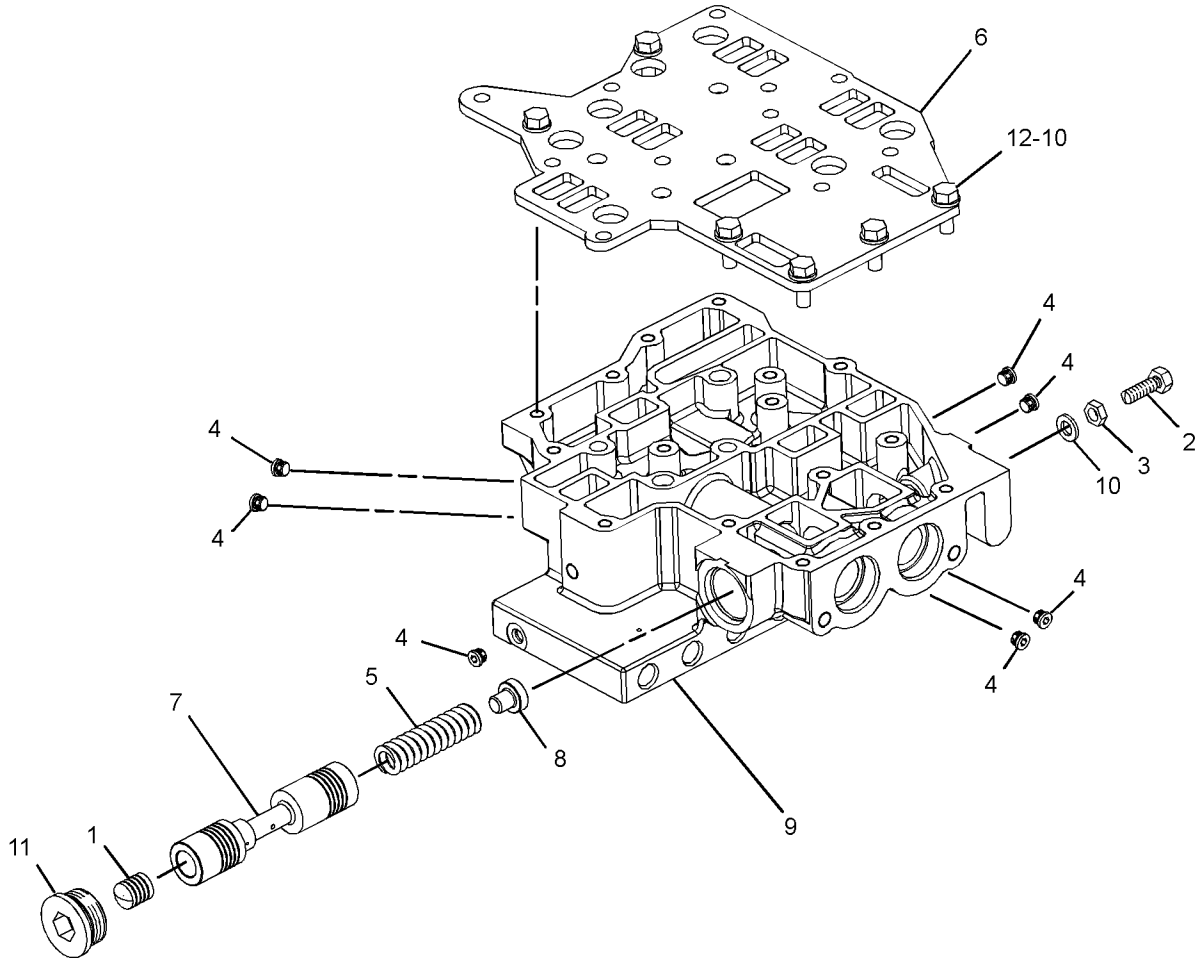

GRAPHIC #1

<END>

g02350276

273-8739 BAR GP-RADIATOR GUARD

S/N: LJR1-UP
PART OF 322-6353, 333-3450 CHASSIS AR
AN ATTACHMENT

SMCS-7155 **i03637466**

NOTE	REF NO	GRAPHIC REF	PART NUMBER	QTY	PART NAME 1 2 3 4 5 6 (PRODUCT LEVEL)	SEE PAGE
	1	1	**265-6518**	1	BAR (RH)	
	2	1	**265-6519**	1	BAR (LH)	
	3	1	**8T-4121**	4	WASHER-HARD (11X21X2.5-MM THK)	
M	4	1	**8T-4195**	4	BOLT (M10X1.5X30-MM)	

M - METRIC PART

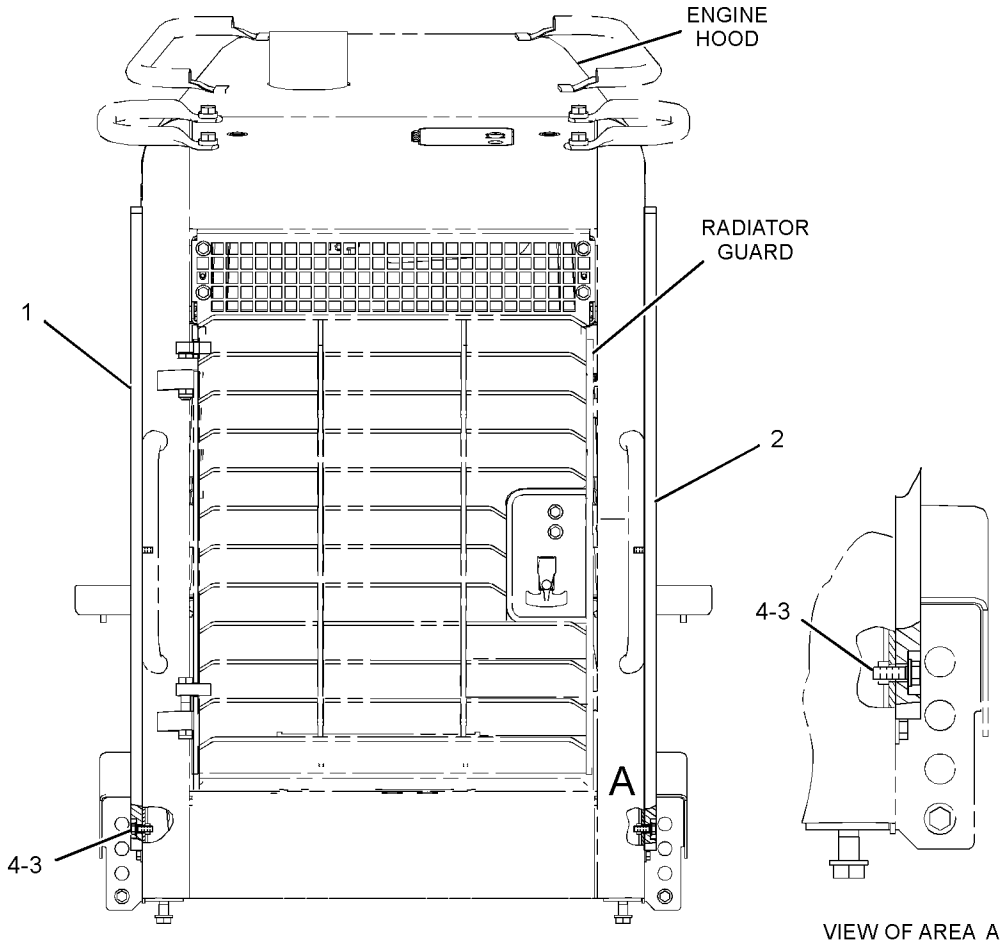

FRONT VIEW

GRAPHIC #1 **<END>** g01290030

271-6172 CASE & FRAME GP

S/N: LJR1-UP

PART OF 315-2948 CHASSIS AR

SMCS-7051 **i04641772**

NOTE	REF NO	GRAPHIC REF	PART NUMBER	QTY	PART NAME 1 2 3 4 5 6 (PRODUCT LEVEL)	SEE PAGE
	1	1	**3B-8486**	2	FITTING-GREASE	
	2	1	**8G-6683**	1	RAIL AS	
	3	1	**8G-6684**	1	RAIL AS	
	4	1	**106-8186**	1	VALVE AS-DRAIN (ECOLOGY)	
		1	**077-3241**	1	SEAL-O-RING	
	5	1	**106-8187**	1	PLUG-DRAIN (CASE, FRAME)	
	6	1	**191-1734**	1	RING	
	7	1	**192-4089**	1	PLATE AS	
M		1	**9R-2672**	1	BOSS-THREADED (M10X1.5-THD)	
	8	1	**195-2709**	1	PLATE AS	
M		1	**9R-2672**	1	BOSS-THREADED (M10X1.5-THD)	
	9	1	**271-6171**	1	CASE & FRAME AS	
	10	1	**1A-2223**	4	DOWEL	
	11	1	**2D-9572**	1	SEAL-O-RING	
	12	1	**6F-0711**	1	SEAL-O-RING	
	13	1	**7X-7729**	6	WASHER (11X25X3-MM THK)	
M	14	1	**8C-8992**	4	BOLT-LOCKING (M12X1.75X30-MM)	
	15	1	**8T-4123**	8	WASHER (22X35X3.5-MM THK)	
M	16	1	**8T-4136**	4	BOLT (M10X1.5X25-MM)	
	17	1	**8T-4223**	4	WASHER-HARD (13.5X25.5X3-MM THK)	
M	18	1	**8T-6430**	8	BOLT (M20X2.5X50-MM)	
M	19	1	**8T-4195**	2	BOLT (M10X1.5X30-MM)	

M - METRIC PART

271-6172 **CASE & FRAME GP (*contd.*)** **i04641772**

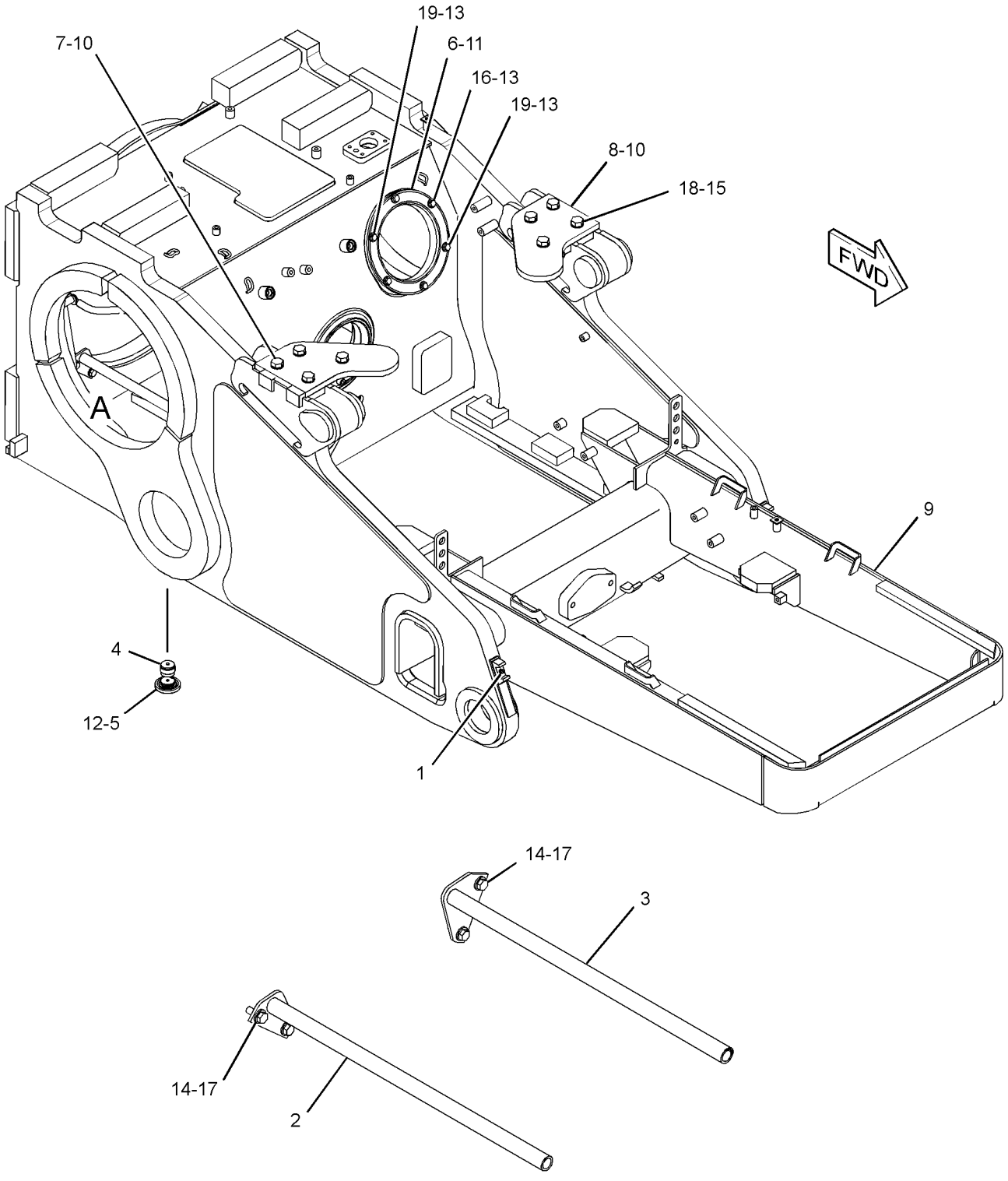

VIEW OF AREA A
(CASE REMOVED FOR CLARITY)

GRAPHIC #1 **<END>** g02928399

317-8258 COVER GP-ACCESS—HEAVY-DUTY, RH

S/N: LJR1-UP

PART OF 322-6357 ENCLOSURE GP-PLATFORM

AN ATTACHMENT

SMCS-726A **i05108409**

NOTE	REF NO	GRAPHIC REF	PART NUMBER	QTY	PART NAME 1 2 3 4 5 6 (PRODUCT LEVEL)	SEE PAGE
	1	1	**184-8874**	1	ROD	
B	2	1	**216-0143**	1	SHIM (1-MM THK)	
	3	1	**267-9928**	1	BRACKET	
J	4	1	**358-0921**	1	LATCH AS	
	5	1	**317-8259**	1	COVER AS (RH)	
		1	**5Q-9270**	1	HINGE AS	
		1	**7T-1099**	5	LINK	
M		1	**8T-3597**	5	NUT-WELD (M12X1.75-THD)	
M		1	**9R-2821**	2	BOSS (M10X1.5X15-MM)	
M	6	1	**5C-2890**	4	NUT (M6X1-THD)	
	7	1	**8T-4121**	2	WASHER-HARD (11X21X2.5-MM THK)	
M	8	1	**8T-4195**	2	BOLT (M10X1.5X30-MM)	
	9	1	**9X-8256**	4	WASHER (6.6X12X2-MM THK)	

B - USE AS REQUIRED
J - REQUIRES CORPORATE KEY
M - METRIC PART

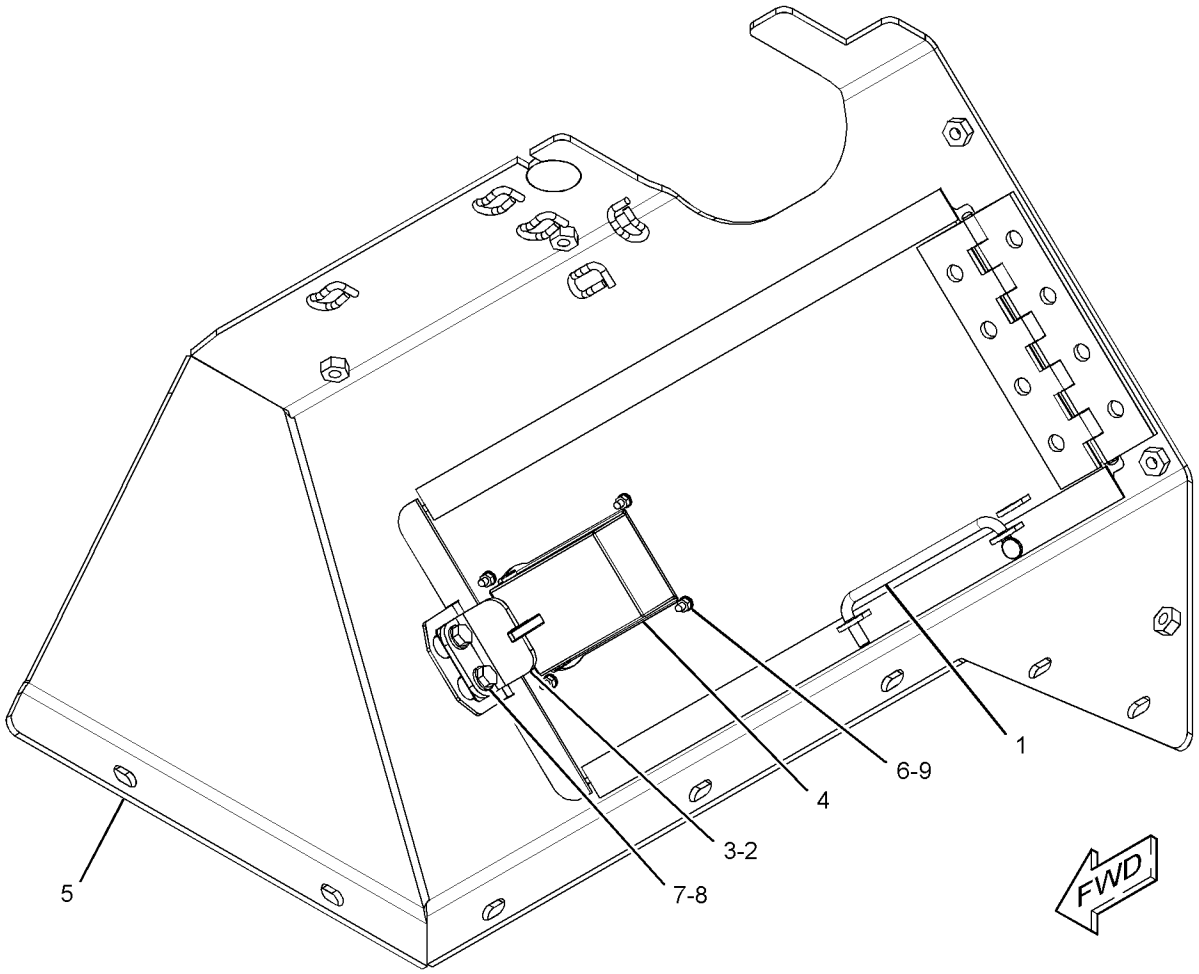

GRAPHIC #1 **<END>** g01904235

323-3328 COVER GP-ACCESS—HEAVY-DUTY, LH

S/N: LJR1-UP
PART OF 322-6357 ENCLOSURE GP-PLATFORM
AN ATTACHMENT

SMCS-726A **i04775690**

NOTE	REF NO	GRAPHIC REF	PART NUMBER	QTY	PART NAME 1 2 3 4 5 6 (PRODUCT LEVEL)	SEE PAGE
	1	1	**184-8874**	1	ROD	
B	2	1	**216-0143**	1	SHIM (1-MM THK)	
J	3	1	**358-0921**	1	LATCH AS	
	4	1	**323-3326**	1	BRACKET	
	5	1	**323-3327**	1	COVER AS (LH)	
M	6	1	**5C-2890**	4	NUT (M6X1-THD)	
	7	1	**8T-4121**	2	WASHER-HARD (11X21X2.5-MM THK)	
M	8	1	**8T-4195**	2	BOLT (M10X1.5X30-MM)	
	9	1	**9X-8256**	4	WASHER (6.6X12X2-MM THK)	

B - USE AS REQUIRED
J - REQUIRES CORPORATE KEY
M - METRIC PART

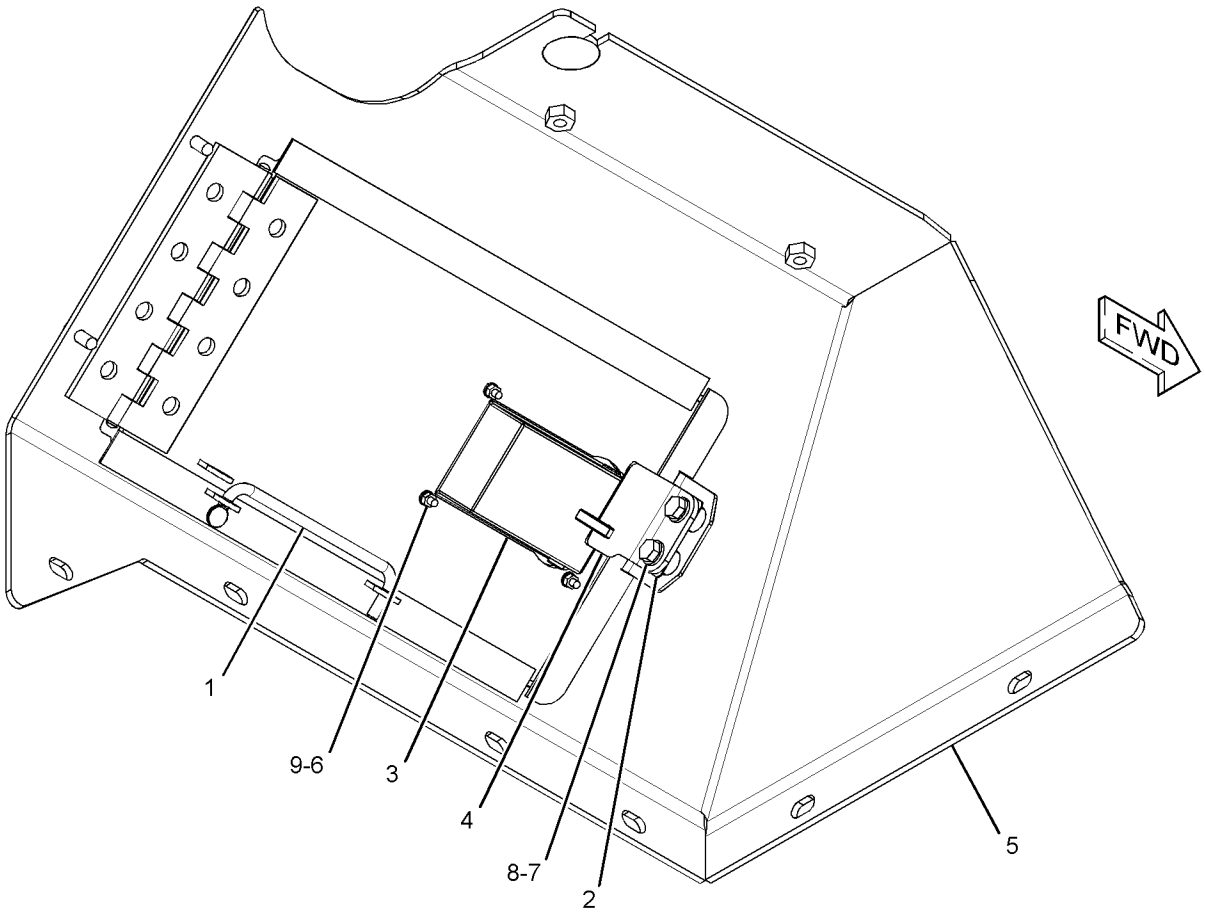

GRAPHIC #1 **<END>** g01902042

322-6359 COVER GP-BATTERY—HEAVY-DUTY

S/N: LJR1-UP

PART OF 322-6357 ENCLOSURE GP-PLATFORM

AN ATTACHMENT

SMCS-1401 **i05108450**

NOTE	REF NO	GRAPHIC REF	PART NUMBER	QTY	PART NAME 1 2 3 4 5 6 (PRODUCT LEVEL)	SEE PAGE
	1	1	**184-8874**	1	ROD	
B	2	1	**216-0143**	1	SHIM (1-MM THK)	
	3	1	**240-6240**	1	PLATE AS	
	4	1	**267-9928**	1	BRACKET	
J	5	1	**358-0921**	1	LATCH AS	
	6	1	**288-9574**	1	PLATE AS	
	7	1	**288-9575**	1	HINGE-SPRING	
	8	1	**322-6358**	1	COVER AS-BATTERY	
M	9	1	**5C-2890**	4	NUT (M6X1-THD)	
M	10	1	**5C-7261**	4	NUT (M8X1.25-THD)	
	11	1	**8T-4121**	2	WASHER-HARD (11X21X2.5-MM THK)	
M	12	1	**8T-4138**	3	BOLT (M6X1X20-MM)	
M	13	1	**8T-4195**	2	BOLT (M10X1.5X30-MM)	
	14	1	**8T-4224**	4	WASHER-HARD (8.8X16X2-MM THK)	
	15	1	**9X-8256**	7	WASHER (6.6X12X2-MM THK)	

B - USE AS REQUIRED
J - REQUIRES CORPORATE KEY
M - METRIC PART

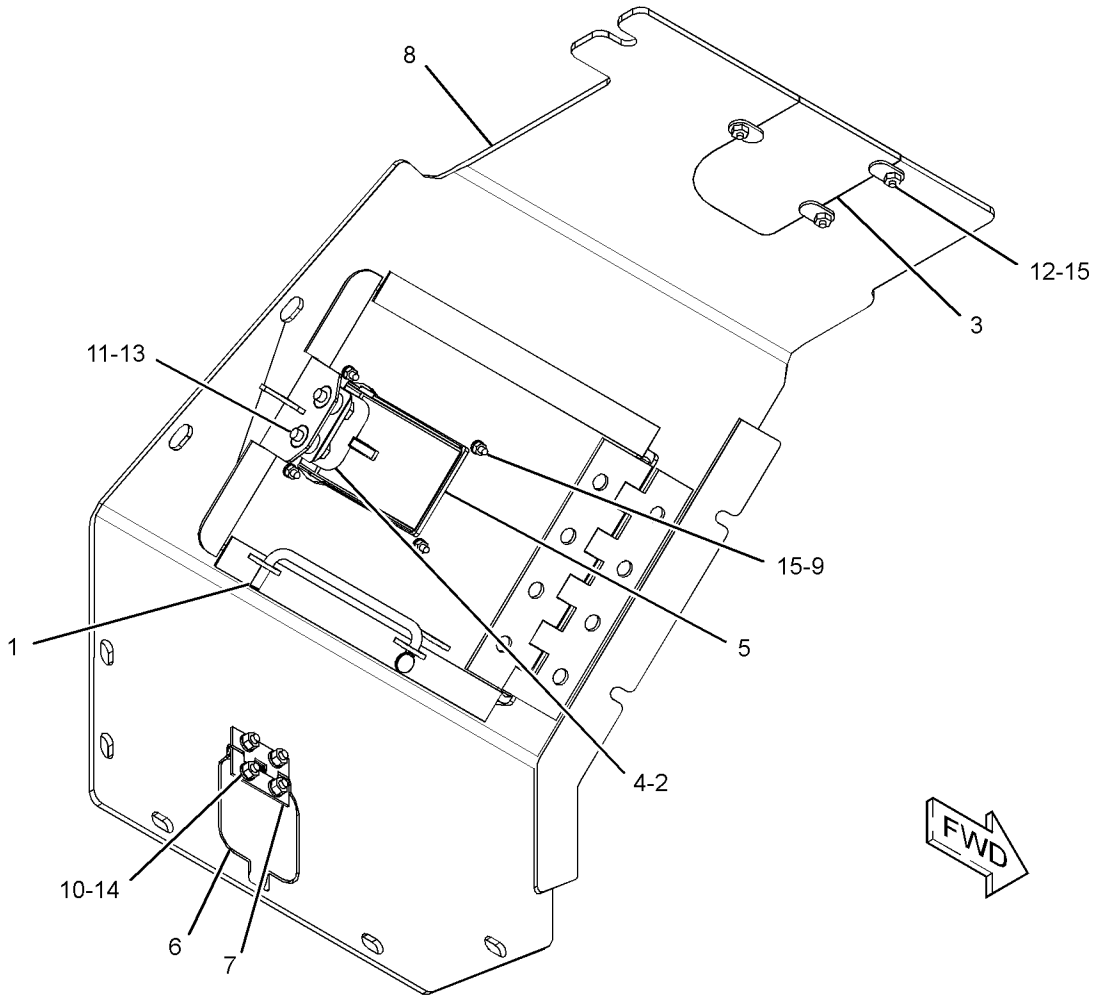

GRAPHIC #1 **<END>** g01903733

273-9749 DOOR GP-ACCESS–RH

S/N: LJR1-UP

PART OF 319-6464 ENCLOSURE GP-FENDER

SMCS-7273 **i04749311**

NOTE	REF NO	GRAPHIC REF	PART NUMBER	QTY	PART NAME 1 2 3 4 5 6 (PRODUCT LEVEL)	SEE PAGE
	1	1	**273-9750**	1	DOOR AS (RH)	
		1	**155-7769**	1	HINGE AS (RH)	
J	2	1	**358-0921**	1	LATCH AS	
M	3	1	**5C-2890**	4	NUT (M6X1-THD)	
	4	1	**9X-8256**	4	WASHER (6.6X12X2-MM THK)	

J - REQUIRES CORPORATE KEY
M - METRIC PART

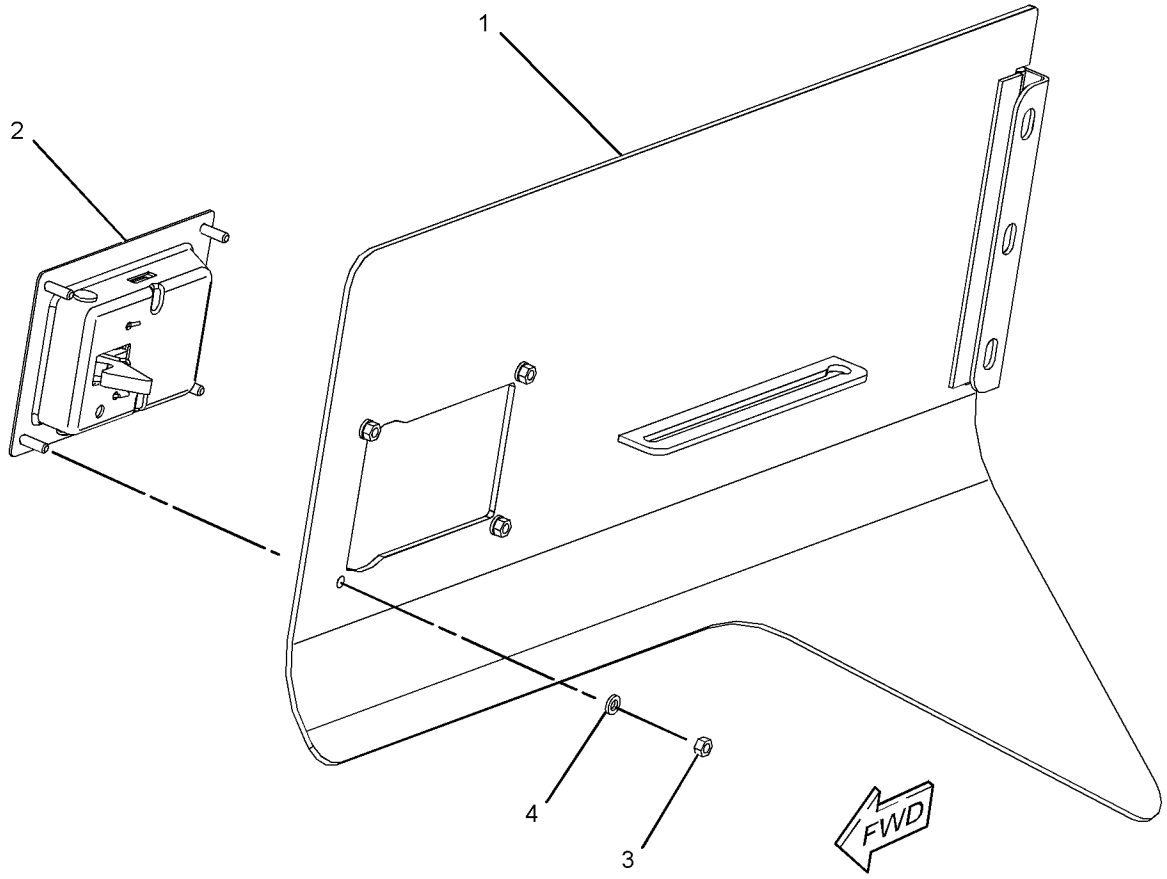

GRAPHIC #1 **<END>** g02792186

319-7218 DOOR GP-ACCESS–LH

S/N: LJR1-UP

PART OF 319-6464 ENCLOSURE GP-FENDER

SMCS-7273 **i04749270**

NOTE	REF NO	GRAPHIC REF	PART NUMBER	QTY	PART NAME 1 2 3 4 5 6 (PRODUCT LEVEL)	SEE PAGE
J	1	1	**358-0921**	2	LATCH AS	
	2	1	**288-9574**	1	PLATE AS	
	3	1	**288-9575**	1	HINGE-SPRING	
	4	1	**319-7219**	1	DOOR AS	
		1	**155-7772**	1	HINGE AS (LH)	
M	5	1	**5C-2890**	8	NUT (M6X1-THD)	
M	6	1	**5C-7261**	4	NUT (M8X1.25-THD)	
	7	1	**8T-4224**	4	WASHER-HARD (8.8X16X2-MM THK)	
	8	1	**9X-8256**	8	WASHER (6.6X12X2-MM THK)	

J - REQUIRES CORPORATE KEY
M - METRIC PART

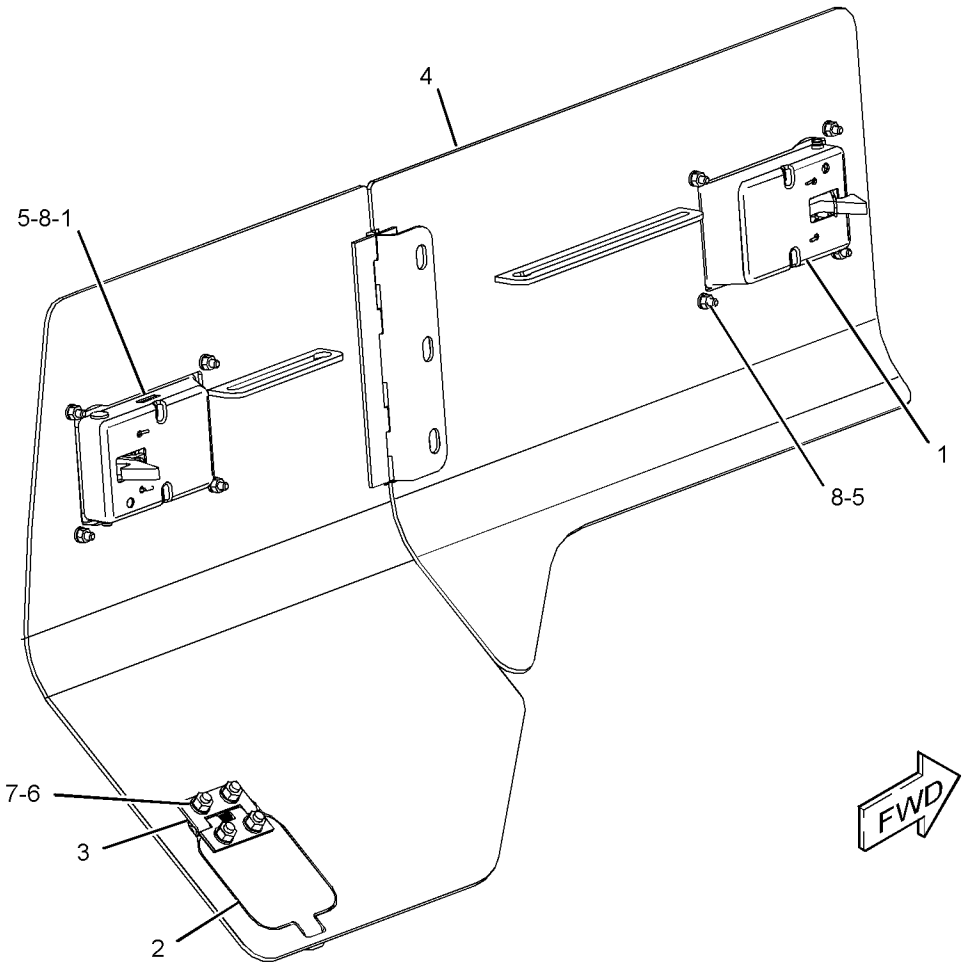

GRAPHIC #1 **<END>** g02799916

273-9852 DOOR GP-HOOD

S/N: LJR1-UP
FOR USE WITH SEMI-UNIVERSAL BULLDOZER
CANNOT BE USED WITH VPAT BULLDOZER
AN ATTACHMENT

SMCS-7273 **i05017435**

NOTE	REF NO	GRAPHIC REF	PART NUMBER	QTY	PART NAME 1 2 3 4 5 6 (PRODUCT LEVEL)	SEE PAGE
	1	1	**278-5131**	1	BRACKET AS (RH)	
	2	1	**278-5132**	1	BRACKET AS (LH)	
Y	3	1	*290-2555*	1	DOOR GP-HOOD (RH)	328
Y	4	1	*290-2557*	1	DOOR GP-HOOD (LH)	329

Y - SEPARATE ILLUSTRATION

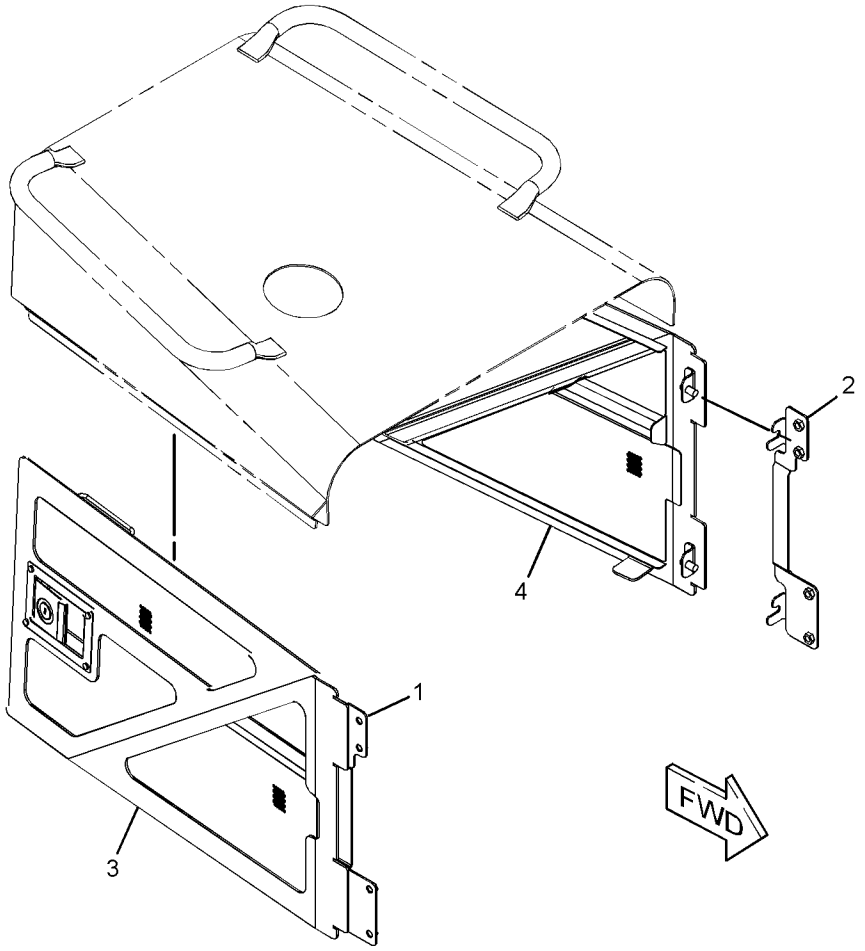

GRAPHIC #1 **<END>** g01291402

287-5388 DOOR GP-HOOD–RH

S/N: LJR1-UP

PART OF 270-4317 HOOD GP

SMCS-7273 **i04749229**

NOTE	REF NO	GRAPHIC REF	PART NUMBER	QTY	PART NAME 1 2 3 4 5 6 (PRODUCT LEVEL)	SEE PAGE
	1	1	**273-9813**	1	HINGE AS	
	2	1	**273-9814**	1	HINGE AS	
J	3	1	**358-0921**	1	LATCH AS	
	4	1	**287-5389**	1	DOOR AS-HOOD (RH)	
	5	1	**288-0455**	2	SHIM (1-MM THK)	
M	6	1	**5C-2890**	4	NUT (M6X1-THD)	
	7	1	**7X-7729**	4	WASHER (11X25X3-MM THK)	
M	8	1	**8T-4133**	4	NUT (M10X1.5-THD)	
	9	1	**9X-8256**	4	WASHER (6.6X12X2-MM THK)	

J - REQUIRES CORPORATE KEY
M - METRIC PART

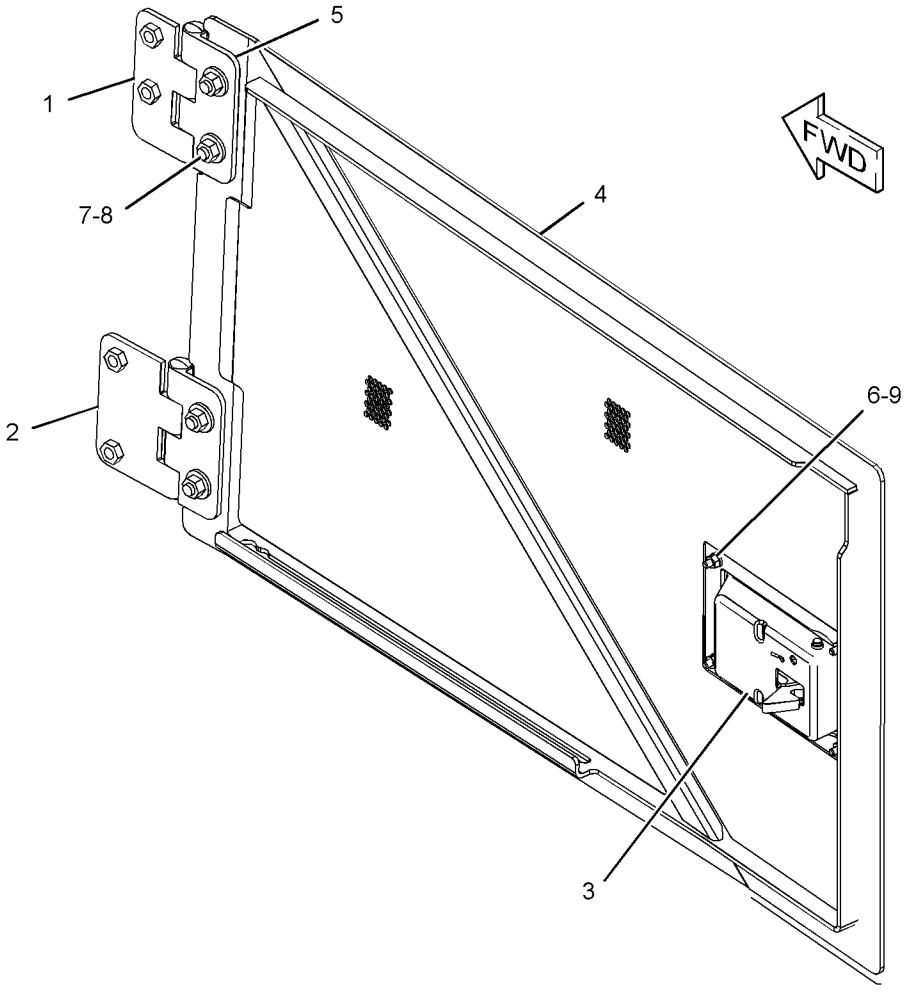

GRAPHIC #1 **<END>** g02792211

287-5390 DOOR GP-HOOD–LH

S/N: LJR1-UP

PART OF 270-4317 HOOD GP

SMCS-7273 **i04749269**

NOTE	REF NO	GRAPHIC REF	PART NUMBER	QTY	PART NAME 1 2 3 4 5 6 (PRODUCT LEVEL)	SEE PAGE
	1	1	**273-9814**	1	HINGE AS	
J	2	1	**358-0921**	1	LATCH AS	
	3	1	**287-5391**	1	DOOR AS-HOOD (LH)	
	4	1	**288-0455**	2	SHIM (1-MM THK)	
	5	1	**288-0452**	1	HINGE AS	
M	6	1	**5C-2890**	4	NUT (M6X1-THD)	
	7	1	**7X-7729**	4	WASHER (11X25X3-MM THK)	
M	8	1	**8T-4133**	4	NUT (M10X1.5-THD)	
	9	1	**9X-8256**	4	WASHER (6.6X12X2-MM THK)	

J - REQUIRES CORPORATE KEY
M - METRIC PART

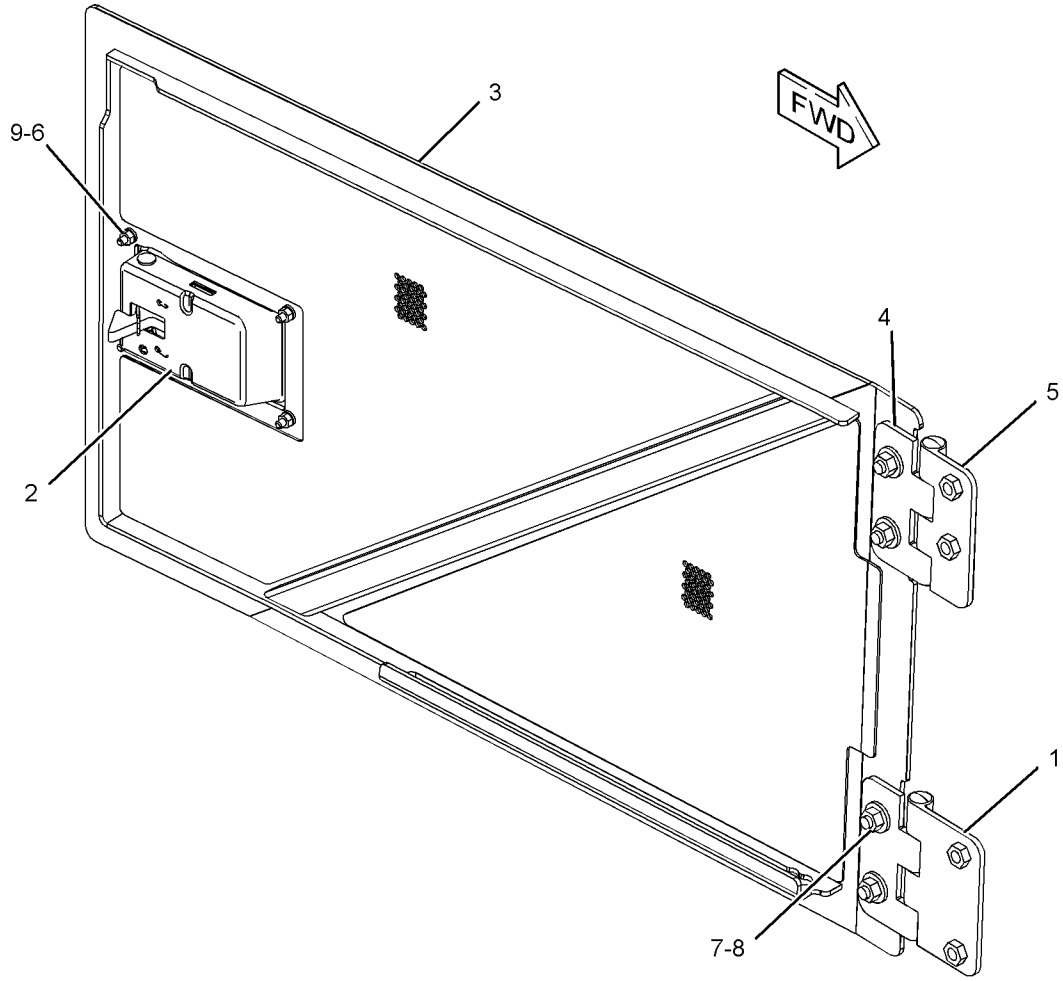

GRAPHIC #1 **<END>** g02792213

290-2555 DOOR GP-HOOD–RH

S/N: LJR1-UP
PART OF 273-9852 DOOR GP-HOOD, 274-5590 HOOD GP
AN ATTACHMENT

SMCS-7273 **i04783061**

NOTE	REF NO	GRAPHIC REF	PART NUMBER	QTY	PART NAME 1 2 3 4 5 6 (PRODUCT LEVEL)	SEE PAGE
J	1	1	**358-0921**	1	LATCH AS	
	2	1	**290-2556**	1	DOOR AS-HOOD (RH)	
M	3	1	**5C-2890**	4	NUT (M6X1-THD)	
	4	1	**9X-8256**	4	WASHER (6.6X12X2-MM THK)	

J - REQUIRES CORPORATE KEY
M - METRIC PART

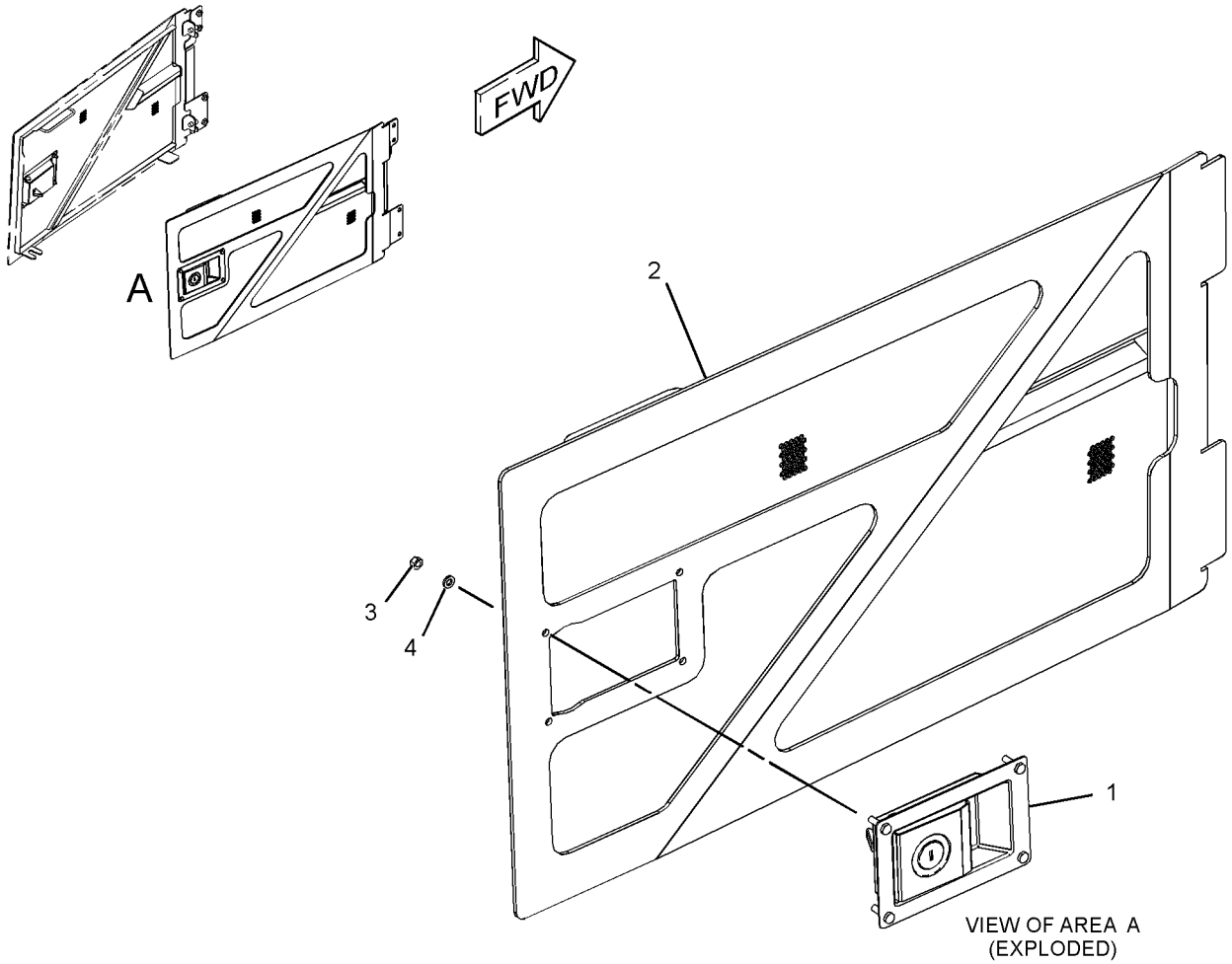

GRAPHIC #1 **<END>** g01963408

290-2557 DOOR GP-HOOD—LH

S/N: LJR1-UP
PART OF 273-9852 DOOR GP-HOOD, 274-5590 HOOD GP
AN ATTACHMENT

SMCS-7273 **i04783062**

NOTE	REF NO	GRAPHIC REF	PART NUMBER	QTY	PART NAME 1 2 3 4 5 6 (PRODUCT LEVEL)	SEE PAGE
J	1	1	**358-0921**	1	LATCH AS	
	2	1	**290-2558**	1	DOOR AS-HOOD (LH)	
M	3	1	**5C-2890**	4	NUT (M6X1-THD)	
	4	1	**9X-8256**	4	WASHER (6.6X12X2-MM THK)	

J - REQUIRES CORPORATE KEY
M - METRIC PART

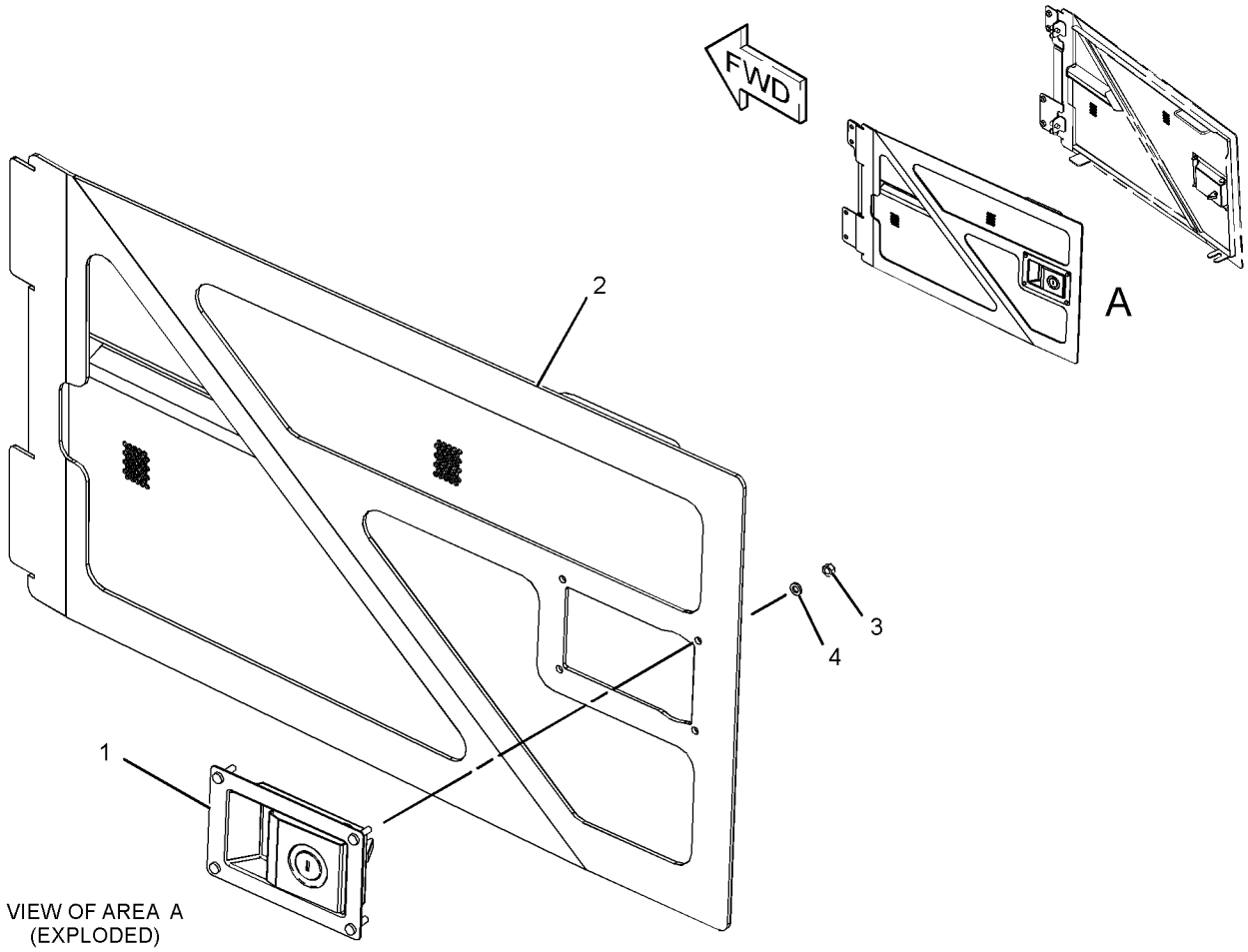

GRAPHIC #1 **<END>** g01963398

107-4068 DRAWBAR GP

S/N: LJR1-UP

PART OF 315-2948 CHASSIS AR

SMCS-7105, 7119 **i03794115**

NOTE	REF NO	GRAPHIC REF	PART NUMBER	QTY	PART NAME 1 2 3 4 5 6 (PRODUCT LEVEL)	SEE PAGE
M	1	1	**7X-2565**	12	BOLT (M20X2.5X100-MM)	
	2	1	**8T-4123**	12	WASHER (22X35X3.5-MM THK)	
	3	1	**7B-0863**	1	LATCH-PIN	
	4	1	**8G-7085**	1	PIN AS	
	5	1	**7F-9543**	1	COLLAR	
M	6	1	**8T-4140**	1	BOLT (M16X2X60-MM)	
M	7	1	**8T-4778**	1	LOCKNUT (M16X2-THD)	
	8	1	**130-9764**	1	DRAWBAR AS	

M - METRIC PART

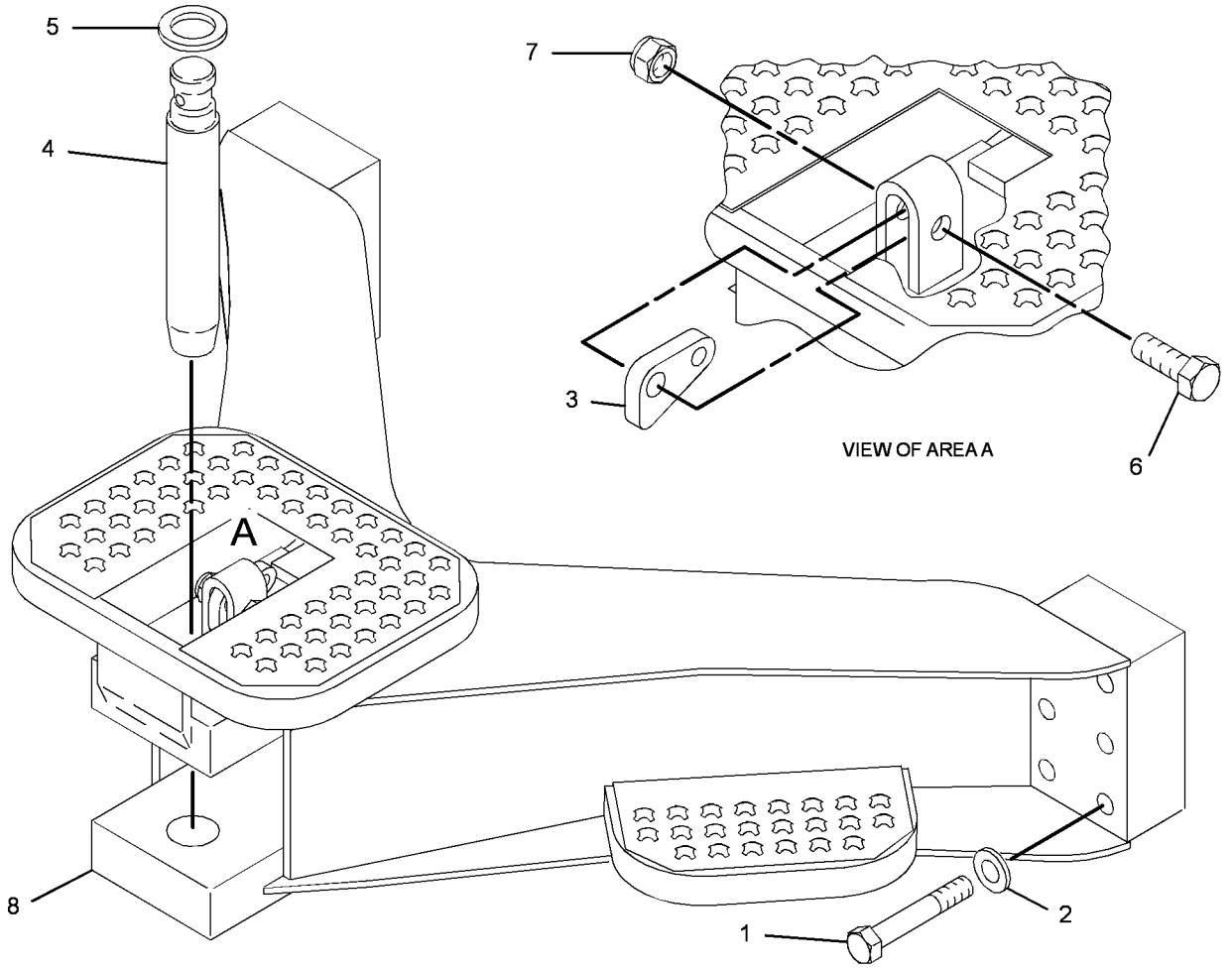

GRAPHIC #1 **<END>** g02051553

319-6464 ENCLOSURE GP-FENDER

S/N: LJR1-UP

PART OF 315-2948 CHASSIS AR

SMCS-7267 **i04639191**

NOTE	REF NO	GRAPHIC REF	PART NUMBER	QTY	PART NAME 1 2 3 4 5 6 (PRODUCT LEVEL)	SEE PAGE
	1	1,2	**6V-9197**	3	LOCK PIN	
	2	1,2	**128-6107**	2	BRACKET	
	3	2	**155-7738**	1	BRACKET AS	
	4	1	**155-7739**	1	PLATE AS	
	5	1,2	**213-9689**	2	BRACKET	
	6	2	**214-0997**	1	BRACKET AS (LH)	
	7	1	**214-0998**	1	BRACKET AS (RH)	
	8	1,2	**221-6887**	2	BRACKET	
	9	2	**240-6123**	1	BRACKET AS	
	10	1,2	**240-6124**	2	ROD AS	
	11	2	**240-6125**	1	ROD AS	
	12	1,2	**240-6130**	2	BRACKET	
	13	2	**273-9744**	1	COVER AS-BATTERY	
	14	1	**273-9746**	1	COVER AS (RH)	
Y	15	1	*273-9749*	1	DOOR GP-ACCESS (RH)	323
B	16	1,2	**283-5568**	3	SHIM (1-MM THK)	
Y	17	1	*294-3211*	1	GUARD GP-REAR	365
	18	1	**294-3212**	1	BRACKET AS	
Y	19	2	*319-7218*	1	DOOR GP-ACCESS (LH)	324
	20	2	**321-4084**	1	COVER AS (LH)	
	21	2	**323-4813**	1	BRACKET	
	22	2	**369-7436**	1	PLATE AS	
	23	2	**369-7437**	1	BRACKET	
	24	1,2	**099-3600**	6	WASHER (12.7X30X4-MM THK)	
	25	1	**5P-1076**	4	WASHER-HARD (13.5X30X4-MM THK)	
	26	1,2	**7X-7729**	41	WASHER (11X25X3-MM THK)	
M	27	1,2	**8T-4133**	9	NUT (M10X1.5-THD)	
M	28	1,2	**8T-4136**	25	BOLT (M10X1.5X25-MM)	
M	29	1,2	**8T-4139**	8	BOLT (M12X1.75X30-MM)	
M	30	1,2	**8T-4195**	4	BOLT (M10X1.5X30-MM)	
	31	1,2	**8T-4223**	8	WASHER-HARD (13.5X25.5X3-MM THK)	
M	32	1,2	**8T-4244**	7	NUT (M12X1.75-THD)	
M	33	1,2	**8T-4956**	3	BOLT (M12X1.75X35-MM)	
H	34	1	**201-4065**		SEAL (9.2-DM)	
H	34A	1	**201-4065**		SEAL (9.9-DM)	
H	35	1	**201-4066**		SEAL (5-DM)	
H	35A	1	**201-4066**		SEAL (4.7-DM)	
H	36	2	**202-5293**		SEAL (5.6-DM EACH)	
H	36A	1,2	**202-5293**		SEAL (3-DM EACH)	
H	36B	2	**202-5293**		SEAL (3.7-DM)	
H	36C	1	**202-5293**		SEAL (6.7-DM)	

B - USE AS REQUIRED
H - ORDER BY THE DECIMETER
M - METRIC PART
Y - SEPARATE ILLUSTRATION

319-6464 **ENCLOSURE GP-FENDER (*contd.*)** **i04639191**

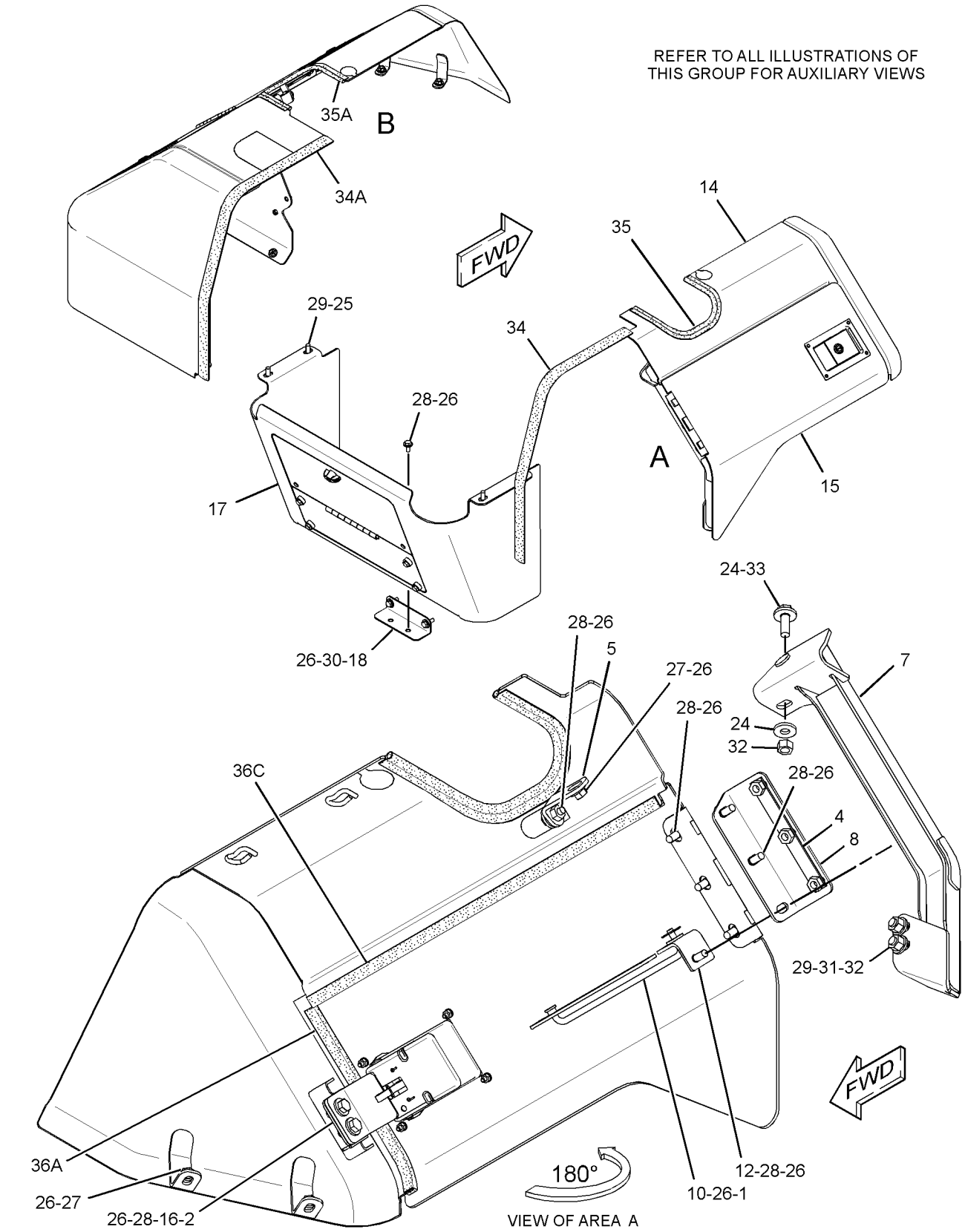

GRAPHIC #1 g02877863

319-6464 **ENCLOSURE GP-FENDER (*contd.*)** **i04639191**

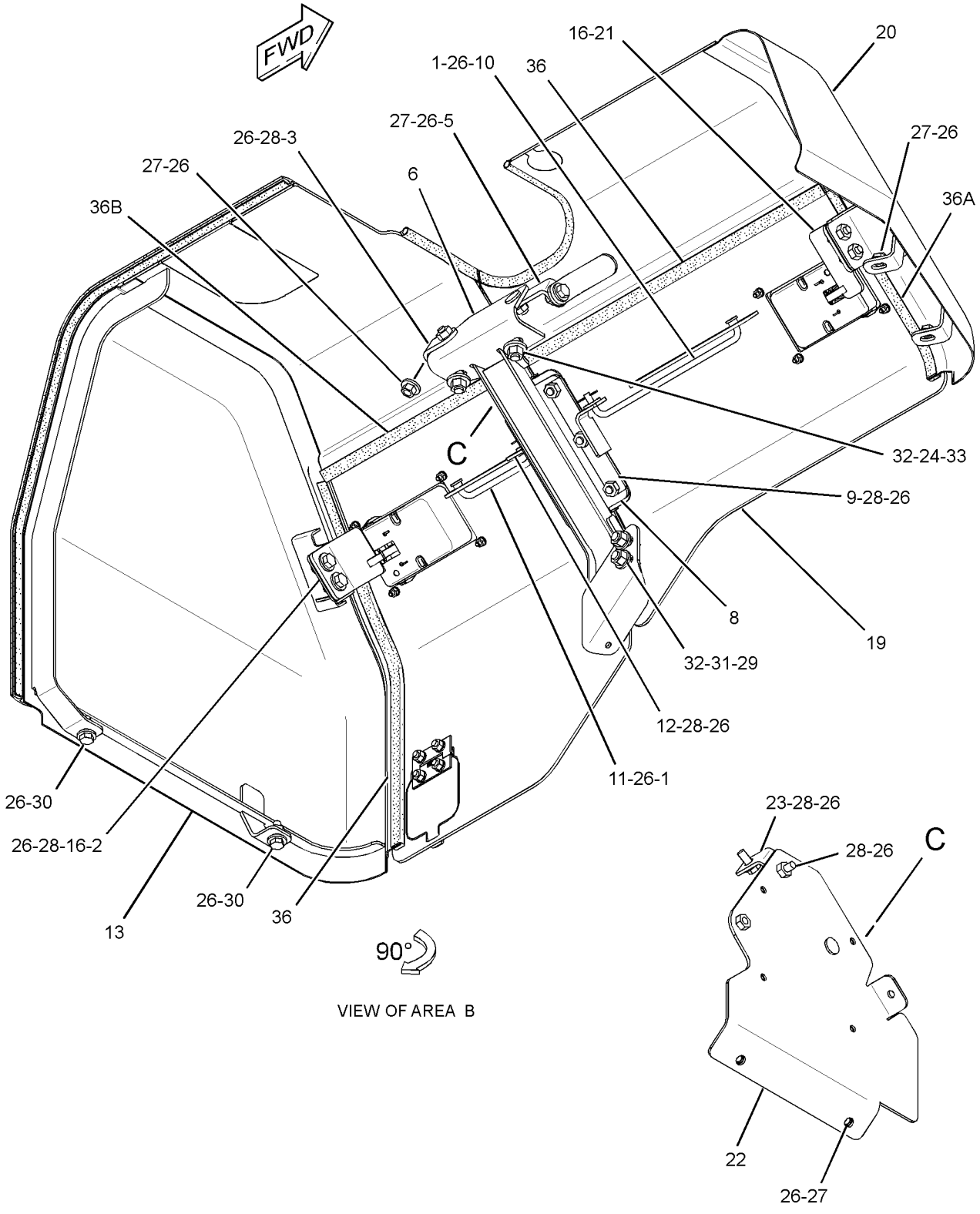

GRAPHIC #2 **<END>** g02877864

322-6357 ENCLOSURE GP-PLATFORM–HEAVY-DUTY–FORESTRY–WASTE HANDLING

S/N: LJR1-UP

PART OF 322-6353, 333-3450 CHASSIS AR

AN ATTACHMENT

SMCS-7253, 7301 **i04639119**

NOTE	REF NO	GRAPHIC REF	PART NUMBER	QTY	PART NAME 1 2 3 4 5 6 (PRODUCT LEVEL)	SEE PAGE
	1	1	**135-5001**	1	ROD	
	2	1	**230-4758**	1	COVER AS	
	3	1	**234-9388**	1	PLATE	
Y	4	1	*317-8258*	1	COVER GP-ACCESS (RH)	320
Y	5	1	*294-3211*	1	GUARD GP-REAR	365
	6	1	**294-3212**	1	BRACKET AS	
	7	1	**369-7436**	1	PLATE AS	
Y	8	1	*322-6359*	1	COVER GP-BATTERY	322
Y	9	1	*323-3328*	1	COVER GP-ACCESS (LH)	321
	10	1	**3B-4605**	1	PIN-COTTER	
	11	1	**4V-5091**	3	GROMMET	
	12	1	**5K-3546**	4	PLUG-BUTTON	
	13	1	**7X-7729**	11	WASHER (11X25X3-MM THK)	
	14	1	**8T-4121**	2	WASHER-HARD (11X21X2.5-MM THK)	
M	15	1	**8T-4133**	4	NUT (M10X1.5-THD)	
M	16	1	**8T-4136**	7	BOLT (M10X1.5X25-MM)	
M	17	1	**8T-4139**	4	BOLT (M12X1.75X30-MM)	
M	18	1	**8T-4183**	8	BOLT (M12X1.75X40-MM)	
M	19	1	**8T-4195**	2	BOLT (M10X1.5X30-MM)	
	20	1	**8T-4223**	31	WASHER-HARD (13.5X25.5X3-MM THK)	
M	21	1	**8T-4956**	19	BOLT (M12X1.75X35-MM)	
E	22	1	**221-8310**		SEAL (49.2-CM EACH)	
D	23	1	**8T-5372**		SEAL (0.5-M EACH)	
D	23A	1	**8T-5372**		SEAL (0.4-M EACH)	
D	23B	1	**8T-5372**		SEAL (0.7-M EACH)	
D	23C	1	**8T-5372**		SEAL (0.3-M EACH)	
	24	1	**369-7437**	1	BRACKET	

D - ORDER BY THE METER
E - ORDER BY THE CENTIMETER
M - METRIC PART
Y - SEPARATE ILLUSTRATION

322-6357 **ENCLOSURE GP-PLATFORM (*contd.*)** **i04639119**

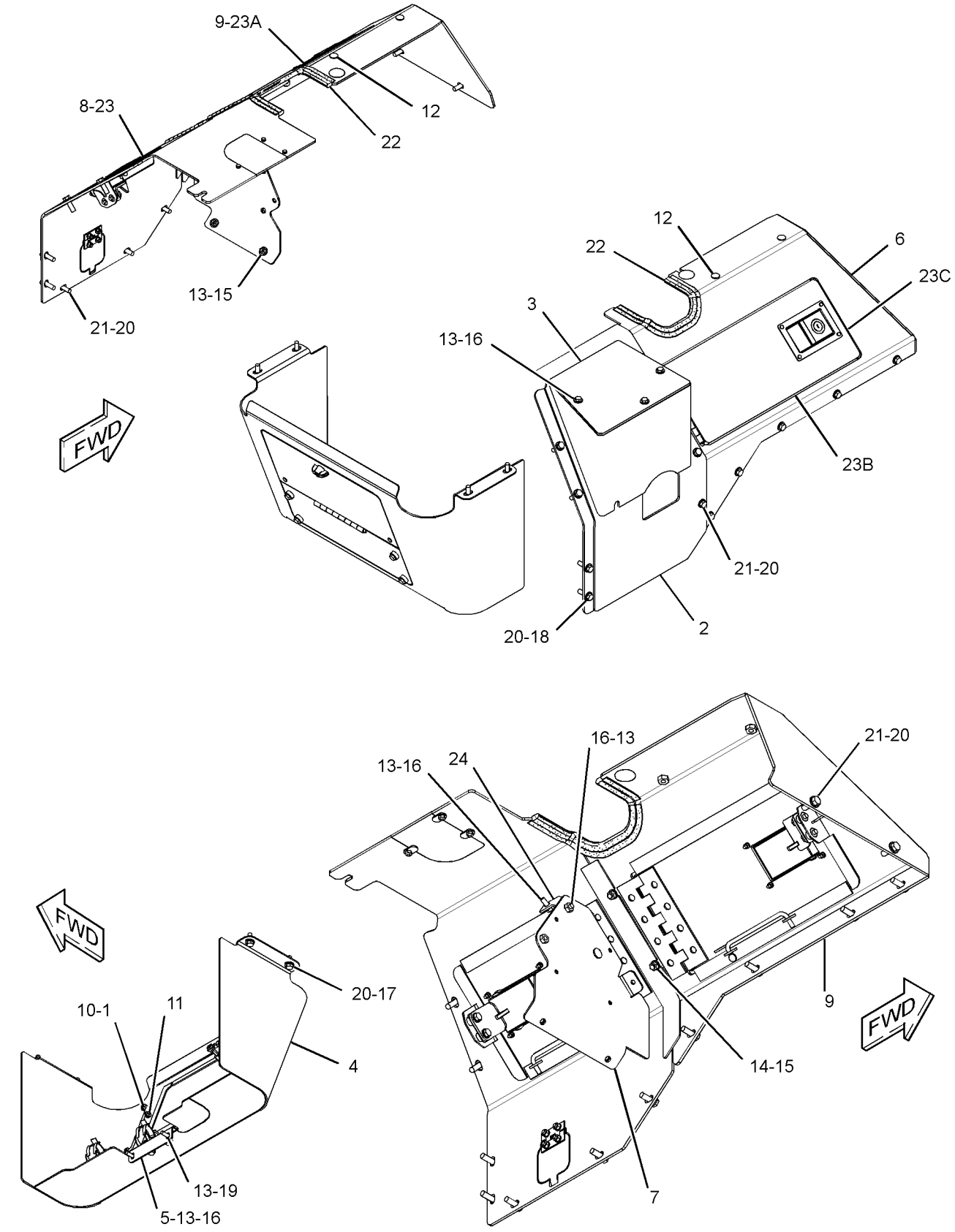

GRAPHIC #1

<END>

g02878101

315-2942 FENDER GP

S/N: LJR1-850

PART OF 315-2948 CHASSIS AR

SMCS-7252 **i03628548**

NOTE	REF NO	GRAPHIC REF	PART NUMBER	QTY	PART NAME 1 2 3 4 5 6 (PRODUCT LEVEL)	SEE PAGE
	1	1	**3W-2647**	2	SPACER (13.5X30X10-MM THK)	
	2	1	**221-2718**	6	BUMPER	
	3	1	**315-2943**	1	FENDER AS (RH)	
	4	1	**315-2944**	1	FENDER AS (LH)	
	5	1	**5P-1076**	12	WASHER-HARD (13.5X30X4-MM THK)	
	6	1	**7X-0513**	2	WASHER-HARD (17X30X5-MM THK)	
M	7	1	**8T-4193**	2	BOLT (M16X2X50-MM)	
M	8	1	**8T-4194**	12	BOLT (M12X1.75X50-MM)	
M	9	1	**8T-4956**	2	BOLT (M12X1.75X35-MM)	

M - METRIC PART

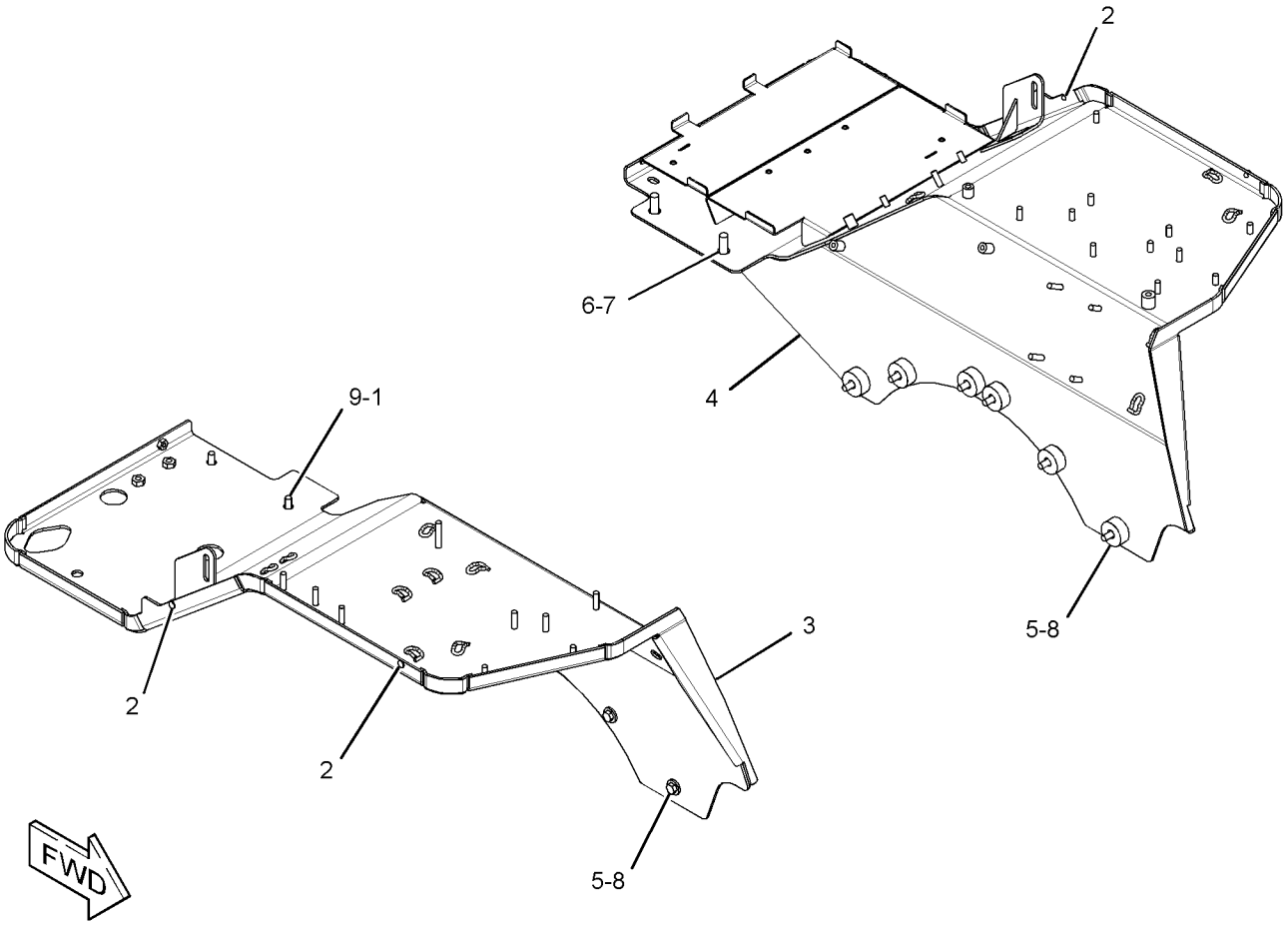

GRAPHIC #1 **<END>** g01900913

322-6354 FENDER GP–HEAVY-DUTY–FORESTRY–WASTE HANDLING

S/N: LJR1-UP

PART OF 322-6353, 333-3450 CHASSIS AR

AN ATTACHMENT

SMCS-7252 **i03637470**

NOTE	REF NO	GRAPHIC REF	PART NUMBER	QTY	PART NAME 1 2 3 4 5 6 (PRODUCT LEVEL)	SEE PAGE
	1	1	**3W-2647**	2	SPACER (13.5X30X10-MM THK)	
	2	1	**322-6355**	1	FENDER AS (LH)	
	3	1	**322-6356**	1	FENDER AS (RH)	
	4	1	**5P-1076**	12	WASHER-HARD (13.5X30X4-MM THK)	
	5	1	**7X-0513**	2	WASHER-HARD (17X30X5-MM THK)	
M	6	1	**8T-4140**	2	BOLT (M16X2X60-MM)	
M	7	1	**8T-4183**	2	BOLT (M12X1.75X40-MM)	
M	8	1	**8T-4910**	12	BOLT (M12X1.75X60-MM)	

M - METRIC PART

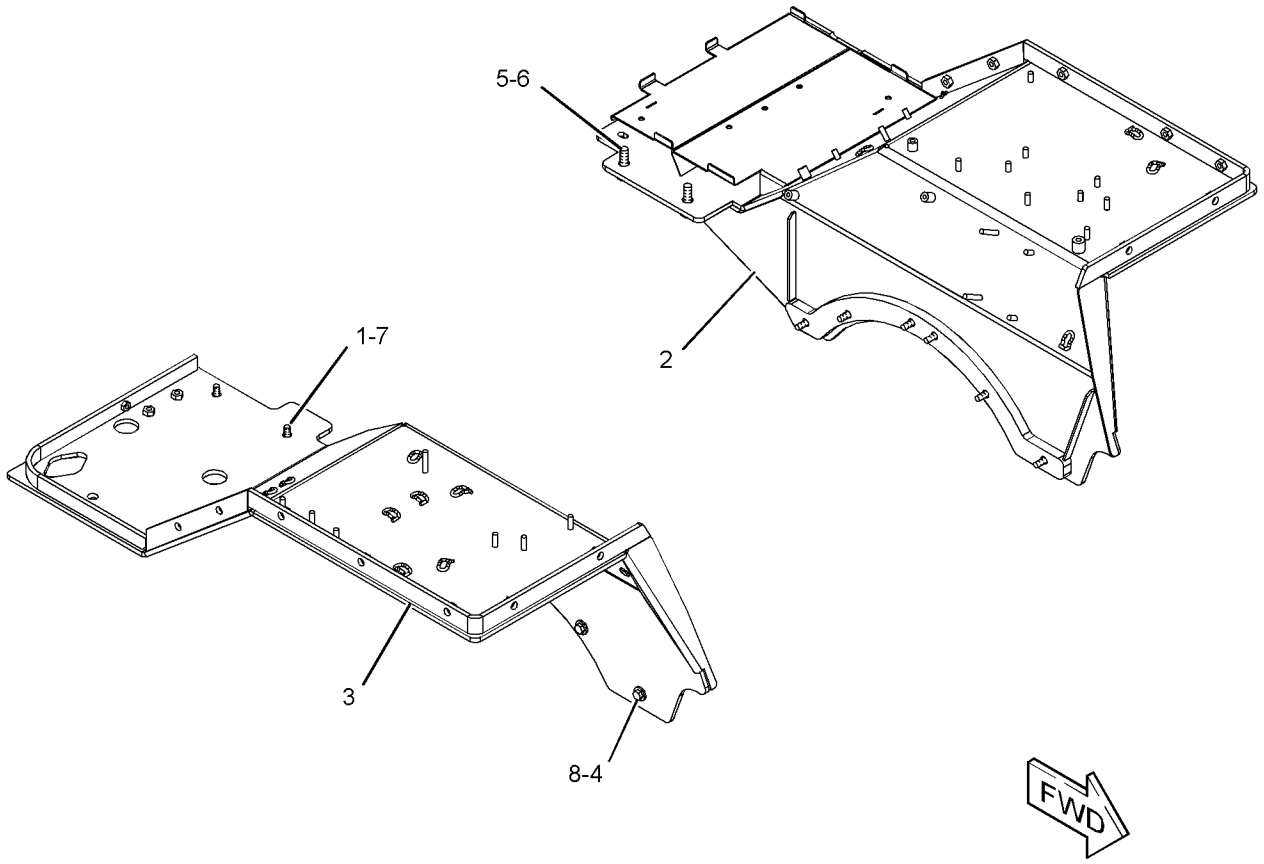

GRAPHIC #1 **<END>** g01905894

329-1213 FENDER GP

S/N: LJR851-UP

PART OF 315-2948 CHASSIS AR

SMCS-7252 **i05182685**

NOTE	REF NO	GRAPHIC REF	PART NUMBER	QTY	PART NAME 1 2 3 4 5 6 (PRODUCT LEVEL)	SEE PAGE
	1	1	**3W-2647**	2	SPACER (13.5X30X10-MM THK)	
	2	1	**214-0997**	1	BRACKET AS (LH)	
	3	1	**214-0998**	1	BRACKET AS (RH)	
	4	1	**221-2718**	12	BUMPER	
	5	1	**369-7291**	1	FENDER AS (RH)	
	6	1	**369-7292**	1	FENDER AS (LH)	
	7	1	**372-5859**	1	PLATE AS	
	8	1	**372-5860**	1	BRACKET	
	9	1	**099-3600**	6	WASHER (12.7X30X4-MM THK)	
	10	1	**5P-1076**	12	WASHER-HARD (13.5X30X4-MM THK)	
	11	1	**7X-0513**	2	WASHER-HARD (17X30X5-MM THK)	
	12	1	**7X-7729**	4	WASHER (11X25X3-MM THK)	
M	13	1	**8T-4133**	2	NUT (M10X1.5-THD)	
M	14	1	**8T-4136**	2	BOLT (M10X1.5X25-MM)	
M	15	1	**8T-4139**	4	BOLT (M12X1.75X30-MM)	
M	16	1	**8T-4193**	2	BOLT (M16X2X50-MM)	
M	17	1	**8T-4194**	12	BOLT (M12X1.75X50-MM)	
	18	1	**8T-4223**	8	WASHER-HARD (13.5X25.5X3-MM THK)	
M	19	1	**8T-4244**	7	NUT (M12X1.75-THD)	
M	20	1	**8T-4956**	5	BOLT (M12X1.75X35-MM)	

M - METRIC PART

329-1213 **FENDER GP (*contd.*)** **i05182685**

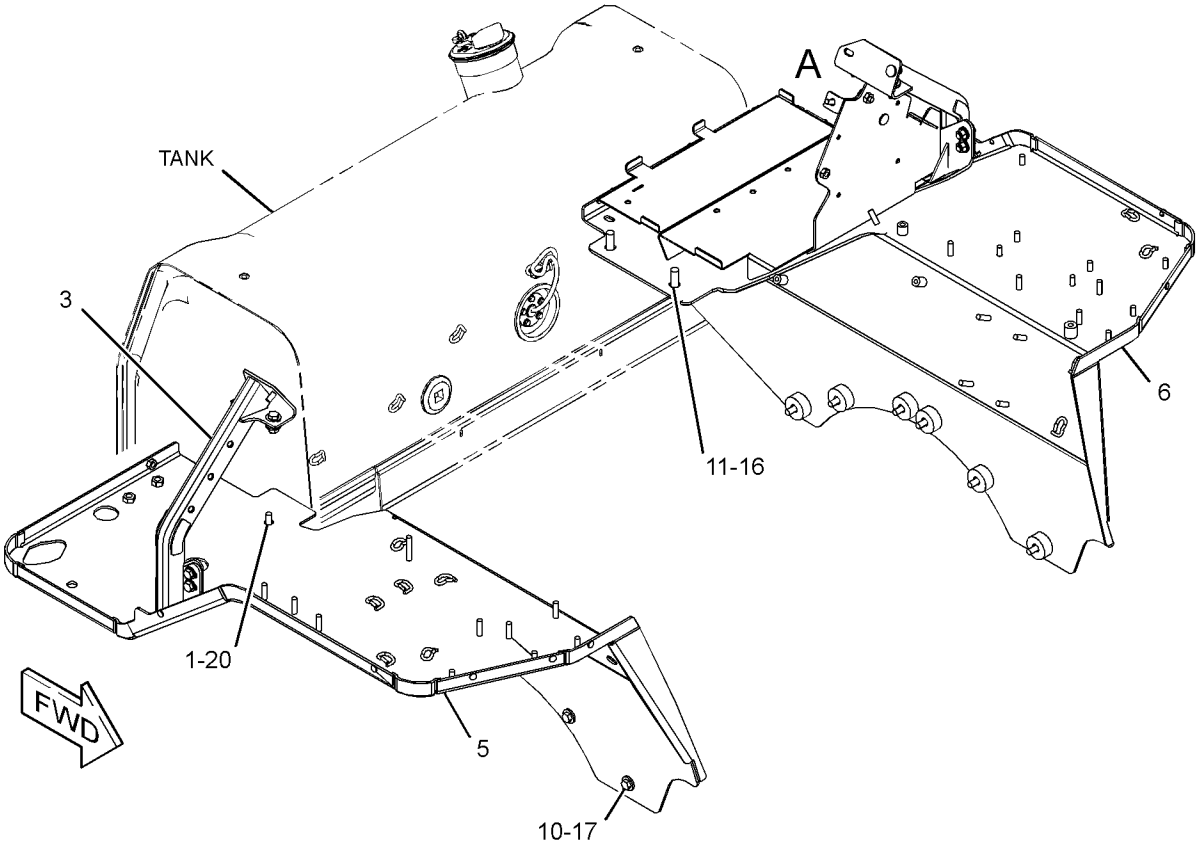

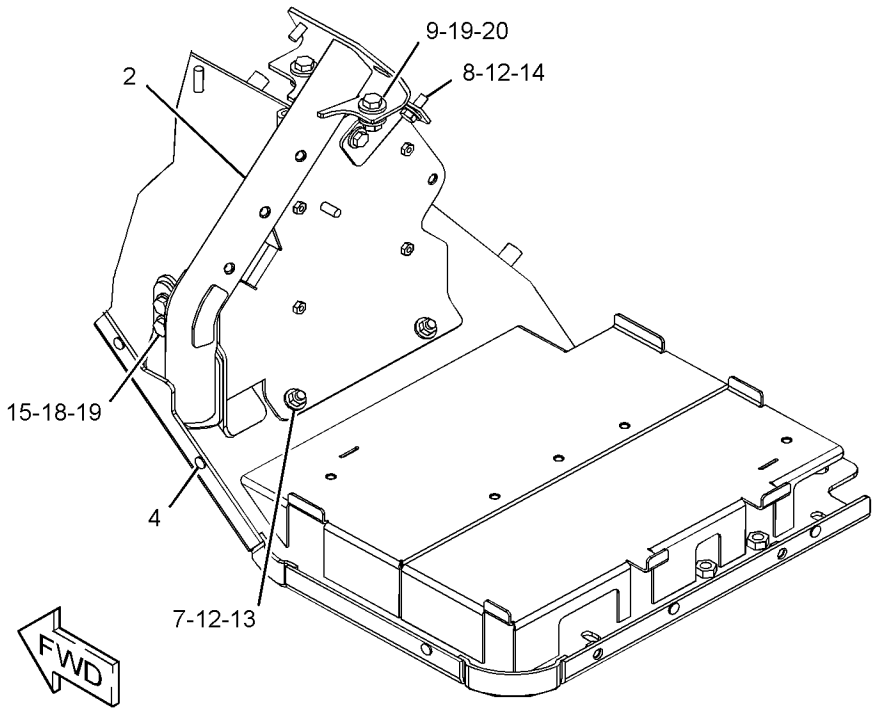

VIEW OF AREA A

GRAPHIC #1 **<END>** g02797105

271-6145 FRAME AS–SYSTEMONE, FRONT

S/N: LJR1-214

PART OF 271-6128 FRAME GP-TRACK ROLLER

SMCS-7051 **i03630784**

NOTE	PART NUMBER	QTY	PART NAME 1 2 3 4 5 6 (PRODUCT LEVEL)	SEE PAGE
Y	*271-6146*	1	FRAME AS (SYSTEMONE, FRONT)	341

Y - SEPARATE ILLUSTRATION

<END>

271-6146 FRAME AS—SYSTEMONE, FRONT

S/N: LJR1-214

PART OF 271-6145 FRAME AS

SMCS-7051 **i03630788**

NOTE	REF NO	GRAPHIC REF	PART NUMBER	QTY	PART NAME 1 2 3 4 5 6 (PRODUCT LEVEL)	SEE PAGE
	1	1	**8G-3202**	1	BEARING-SLEEVE	
	2	1	**8T-9530**	2	TACK-FASTENER	
	3	1	**239-4989**	1	PLATE-WARNING (RECOIL SPRING)	
	4	1	*271-6147*	1	FRAME AS	
		1	**340-7463**	1	GUARD AS (RH)	
		1	**340-7464**	1	GUARD AS (LH)	
M		1	**8T-3597**	4	NUT-WELD (M12X1.75-THD)	
	5	1	**8K-0589**	2	DOWEL	

M - METRIC PART

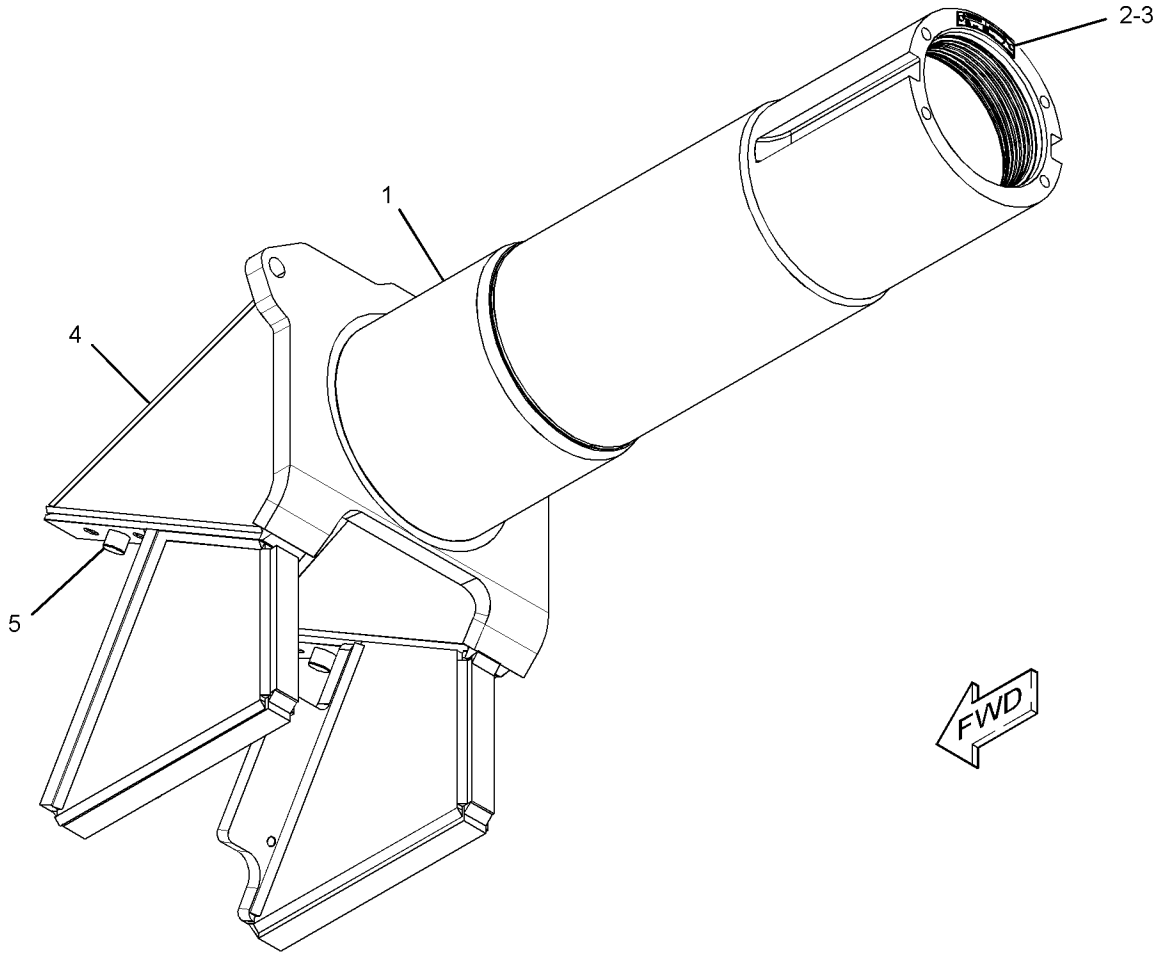

GRAPHIC #1 **<END>** g01902795

274-4857 GRID GP-SAND BLAST ERODING

S/N: LJR1-UP
CANNOT BE USED WITH FAN GP-REVERSIBLE
AN ATTACHMENT

SMCS-7179 **i02795068**

NOTE	REF NO	GRAPHIC REF	PART NUMBER	QTY	PART NAME 1 2 3 4 5 6 (PRODUCT LEVEL)	SEE PAGE
	1	1	**3S-2093**	1	STRAP-CABLE	
	2	1	**274-4858**	1	GRID AS-SAND BLAST ERODING	
	3	1	**8T-4121**	4	WASHER-HARD (11X21X2.5-MM THK)	
M	4	1	**8T-4195**	4	BOLT (M10X1.5X30-MM)	

M - METRIC PART

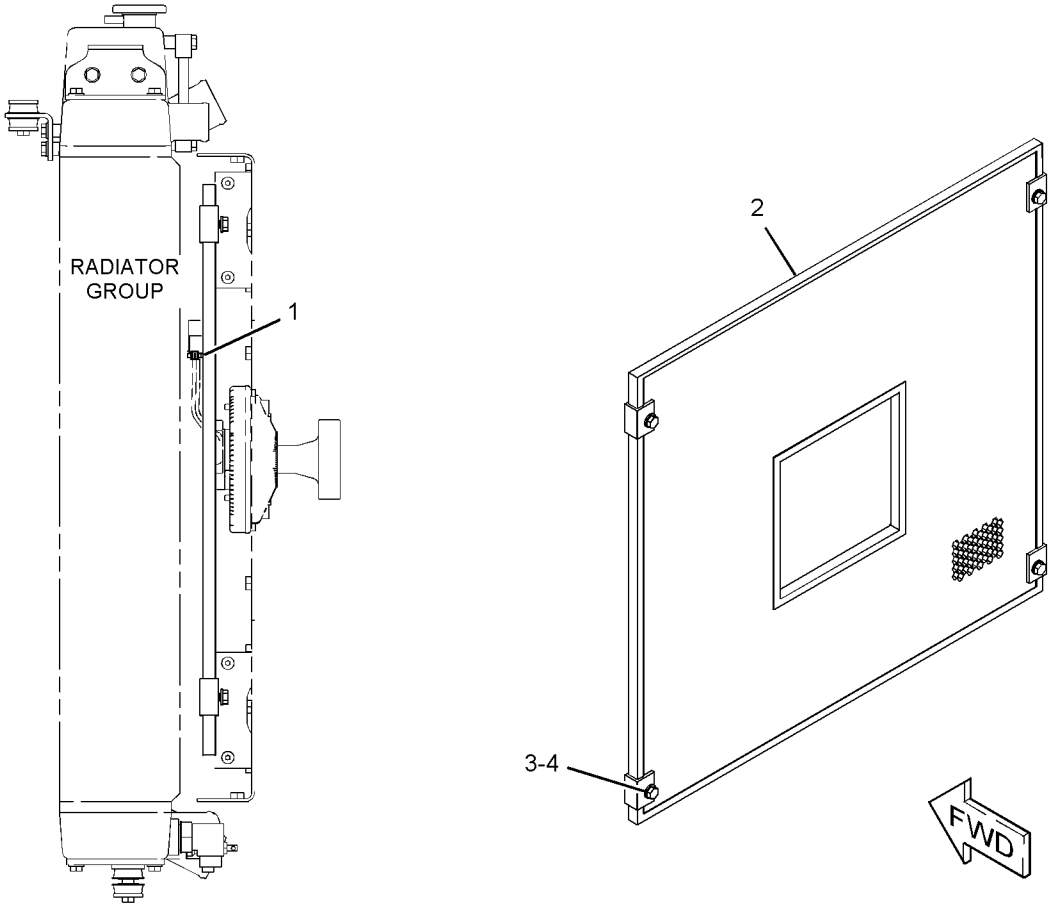

LEFT SIDE VIEW

GRAPHIC #1 **<END>** g01291442

287-5400 GRILL GP-RADIATOR—HEAVY-DUTY—FORESTRY—WASTE HANDLING

S/N: LJR1-UP

FOR USE WITH BULLDOZER AR-SEMI UNIVERSAL

PART OF 322-6353, 333-3450 CHASSIS AR, 422-4402 GUARD AR-BOTTOM, 338-2600 OPTION AR-GUARD

AN ATTACHMENT

SMCS-7170 **i05018692**

NOTE	REF NO	GRAPHIC REF	PART NUMBER	QTY	PART NAME 1 2 3 4 5 6 (PRODUCT LEVEL)	SEE PAGE
	1	1	**284-7445**	1	BRACKET AS	
Y	2	1	*287-5401*	1	GRILL GP-RADIATOR	344
	3	1	**288-0453**	1	SPACER (17.5X22X35-MM THK)	
	4	1	**5P-1076**	1	WASHER-HARD (13.5X30X4-MM THK)	
	5	1	**7X-7729**	2	WASHER (11X25X3-MM THK)	
M	6	1	**8T-4196**	2	BOLT (M10X1.5X35-MM)	
M	7	1	**8T-4910**	1	BOLT (M12X1.75X60-MM)	
D	8	1	**8T-5372**		SEAL (0.05-M EACH)	

D - ORDER BY THE METER
M - METRIC PART
Y - SEPARATE ILLUSTRATION

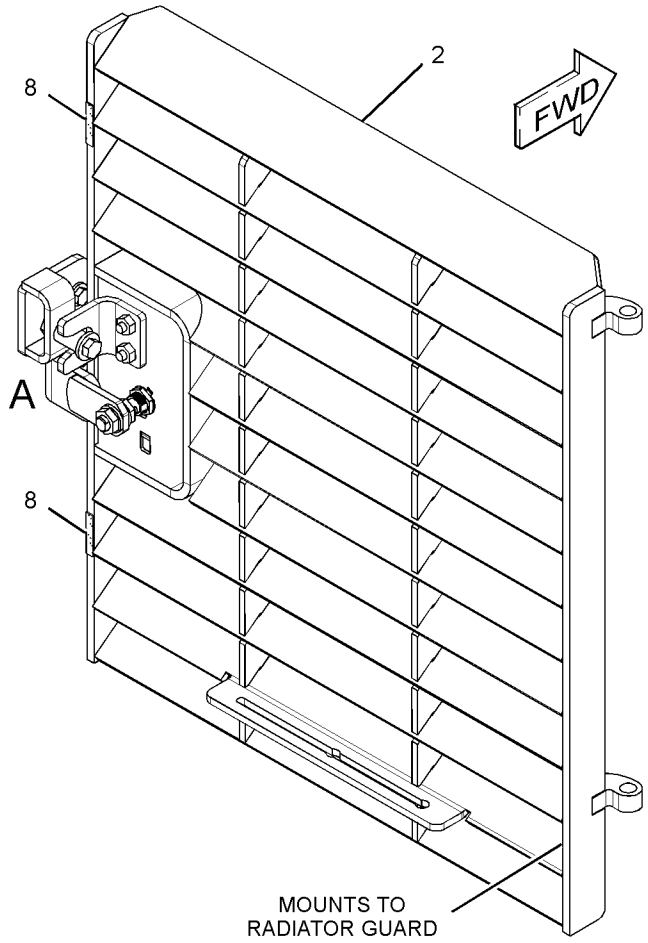

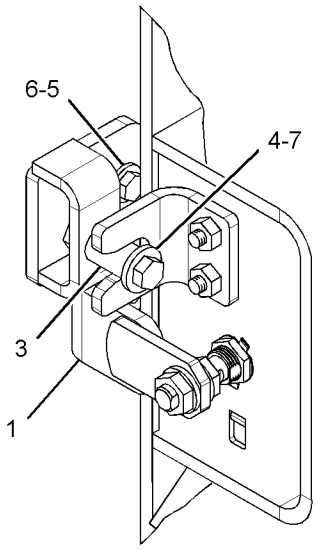

VIEW OF AREA A

GRAPHIC #1 **<END>** g01502577

287-5401 GRILL GP-RADIATOR—HEAVY-DUTY

S/N: LJR1-UP

PART OF 287-5400 GRILL GP-RADIATOR

AN ATTACHMENT

SMCS-7170 **i02796745**

NOTE	REF NO	GRAPHIC REF	PART NUMBER	QTY	PART NAME 1 2 3 4 5 6 (PRODUCT LEVEL)	SEE PAGE
	1	1	**284-7446**	1	CAM-LATCH	
J	2	1	**296-6499**	1	LATCH AS	
		1	**9X-8257**	2	WASHER (17.5X30X3.5-MM THK)	
M		1	**098-5747**	2	NUT (M16X2-THD)	
M		1	**161-7615**	1	NUT (M22X1.5-THD)	
	3	1	**287-5402**	1	GRILL AS	
	4	1	**288-0454**	1	BRACKET AS	
	5	1	**7X-7729**	2	WASHER (11X25X3-MM THK)	
M	6	1	**8T-4195**	2	BOLT (M10X1.5X30-MM)	

J - REQUIRES CORPORATE KEY
M - METRIC PART

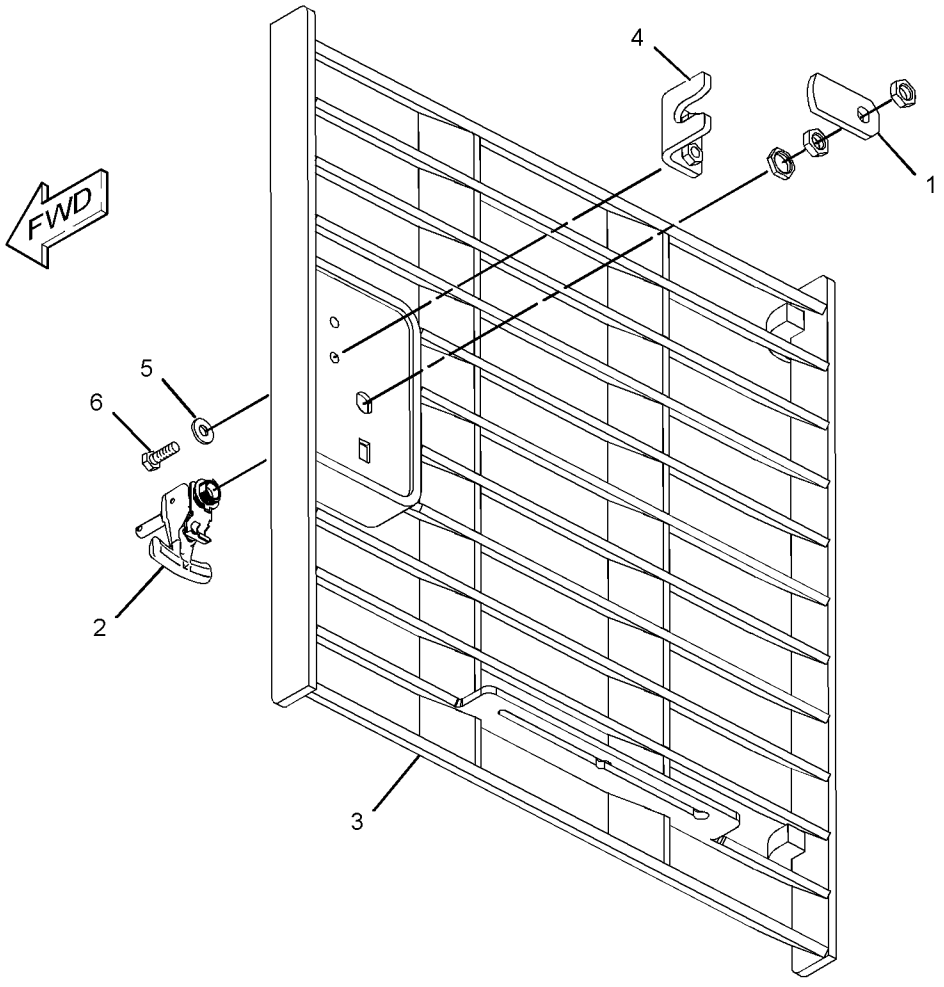

GRAPHIC #1 **<END>** g01290799

422-4402 GUARD AR-BOTTOM

S/N: LJR1-UP
FOR USE WITH GUARD GP-FUEL TANK
AN ATTACHMENT

SMCS-7153 **i05259896**

NOTE	PART NUMBER	QTY	PART NAME 1 2 3 4 5 6 (PRODUCT LEVEL)	SEE PAGE
Y	*287-5400*	1	GRILL GP-RADIATOR	343
Y	*273-3726*	1	GUARD GP-BOTTOM	347

Y - SEPARATE ILLUSTRATION

<END>

331-5318 GUARD AR-FINAL DRIVE

S/N: LJR1-UP
PART OF 338-1768, 419-3405 WASTE HANDLING AR
AN ATTACHMENT

SMCS-7172 **i03637443**

NOTE	PART NUMBER	QTY	PART NAME 1 2 3 4 5 6 (PRODUCT LEVEL)	SEE PAGE
Y	*226-1415*	2	DRIVE GP-FINAL	278
Y	*339-7803*	4	IDLER GP-TRACK	408

Y - SEPARATE ILLUSTRATION

<END>

270-4339 GUARD GP-BOTTOM

S/N: LJR1-UP

PART OF 315-2948 CHASSIS AR

SMCS-7153 **i02921395**

NOTE	REF NO	GRAPHIC REF	PART NUMBER	QTY	PART NAME 1 2 3 4 5 6 (PRODUCT LEVEL)	SEE PAGE
	1	1	**186-9980**	1	GUARD AS	
Y	2	1	*285-5019*	1	GUARD GP-BOTTOM (FRONT)	349
Y	3	1	*285-5020*	1	GUARD GP-BOTTOM	350
	4	1	**6C-9149**	12	WASHER (22X50X10-MM THK)	
	5	1	**7X-0515**	13	WASHER-HARD (17X35X5-MM THK)	
M	6	1	**7X-2553**	13	BOLT (M16X2X40-MM)	
M	7	1	**213-5007**	12	BOLT (M20X2.5X80-MM)	

M - METRIC PART
Y - SEPARATE ILLUSTRATION

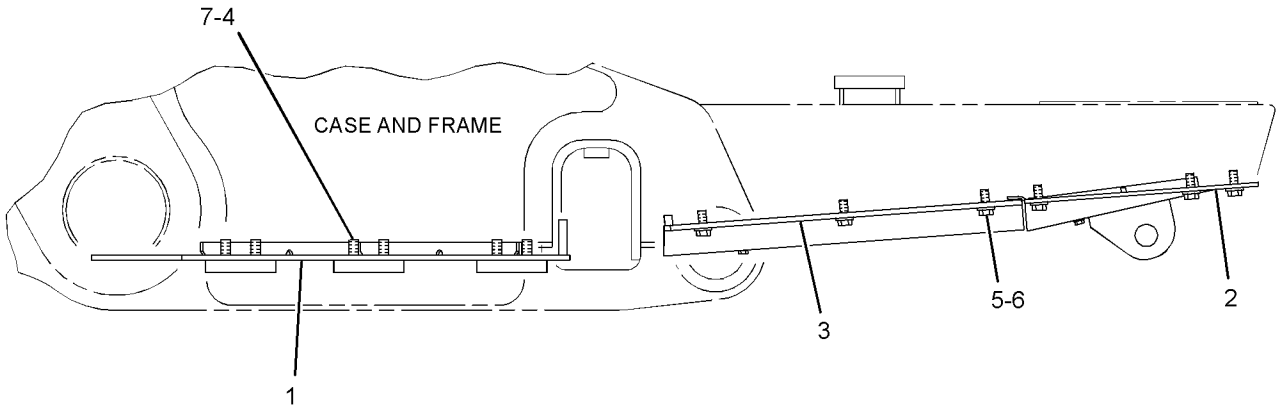

RIGHT SIDE VIEW

GRAPHIC #1 **<END>** g01288816

273-3726 GUARD GP-BOTTOM—HEAVY-DUTY—FORESTRY—WASTE HANDLING

S/N: LJR1-UP

CANNOT BE USED WITH 270-4339—PAGE: 346

PART OF 322-6353, 333-3450 CHASSIS AR, 422-4402 GUARD AR-BOTTOM, 338-2600 OPTION AR-GUARD

AN ATTACHMENT

SMCS-7153 **i02990032**

NOTE	REF NO	GRAPHIC REF	PART NUMBER	QTY	PART NAME 1 2 3 4 5 6 (PRODUCT LEVEL)	SEE PAGE
	1	1	**186-9981**	1	GUARD AS	
Y	2	1	*285-5017*	1	GUARD GP-BOTTOM	348
Y	3	1	*285-5019*	1	GUARD GP-BOTTOM (FRONT)	349
M	4	1	**112-3927**	12	BOLT (M20X2.5X90-MM)	
	5	1	**6C-9149**	12	WASHER (22X50X10-MM THK)	
	6	1	**7X-0515**	13	WASHER-HARD (17X35X5-MM THK)	
M	7	1	**7X-2553**	7	BOLT (M16X2X40-MM)	
M	8	1	**8T-7338**	6	BOLT (M16X2X45-MM)	

M - METRIC PART
Y - SEPARATE ILLUSTRATION

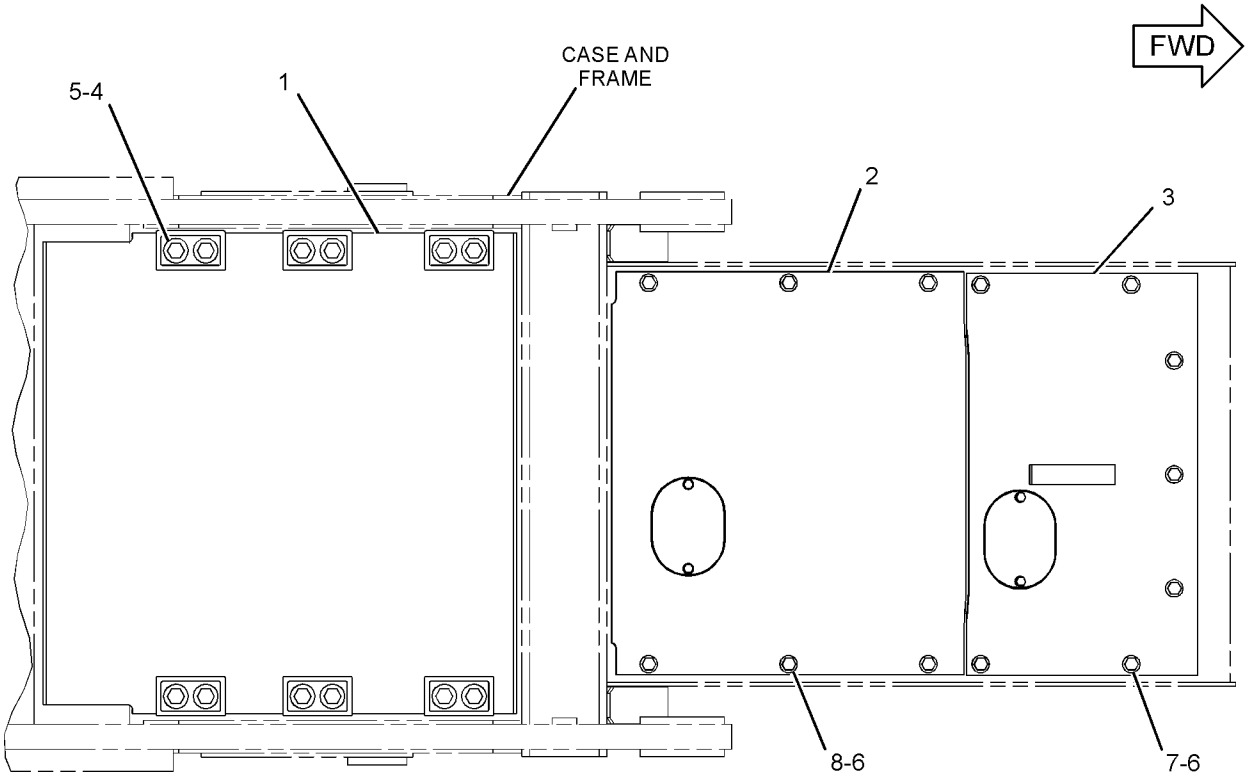

BOTTOM VIEW

GRAPHIC #1 **<END>** g01290048

285-5017 GUARD GP-BOTTOM–HEAVY-DUTY

S/N: LJR1-UP
PART OF 273-3726 GUARD GP-BOTTOM
AN ATTACHMENT

SMCS-7153 **i02795789**

NOTE	REF NO	GRAPHIC REF	PART NUMBER	QTY	PART NAME 1 2 3 4 5 6 (PRODUCT LEVEL)	SEE PAGE
	1	1	**273-3728**	1	GUARD AS	
	2	1	**285-3413**	1	PLATE	
	3	1	**8T-4121**	2	WASHER-HARD (11X21X2.5-MM THK)	
M	4	1	**8T-4186**	2	BOLT (M10X1.5X40-MM)	

M - METRIC PART

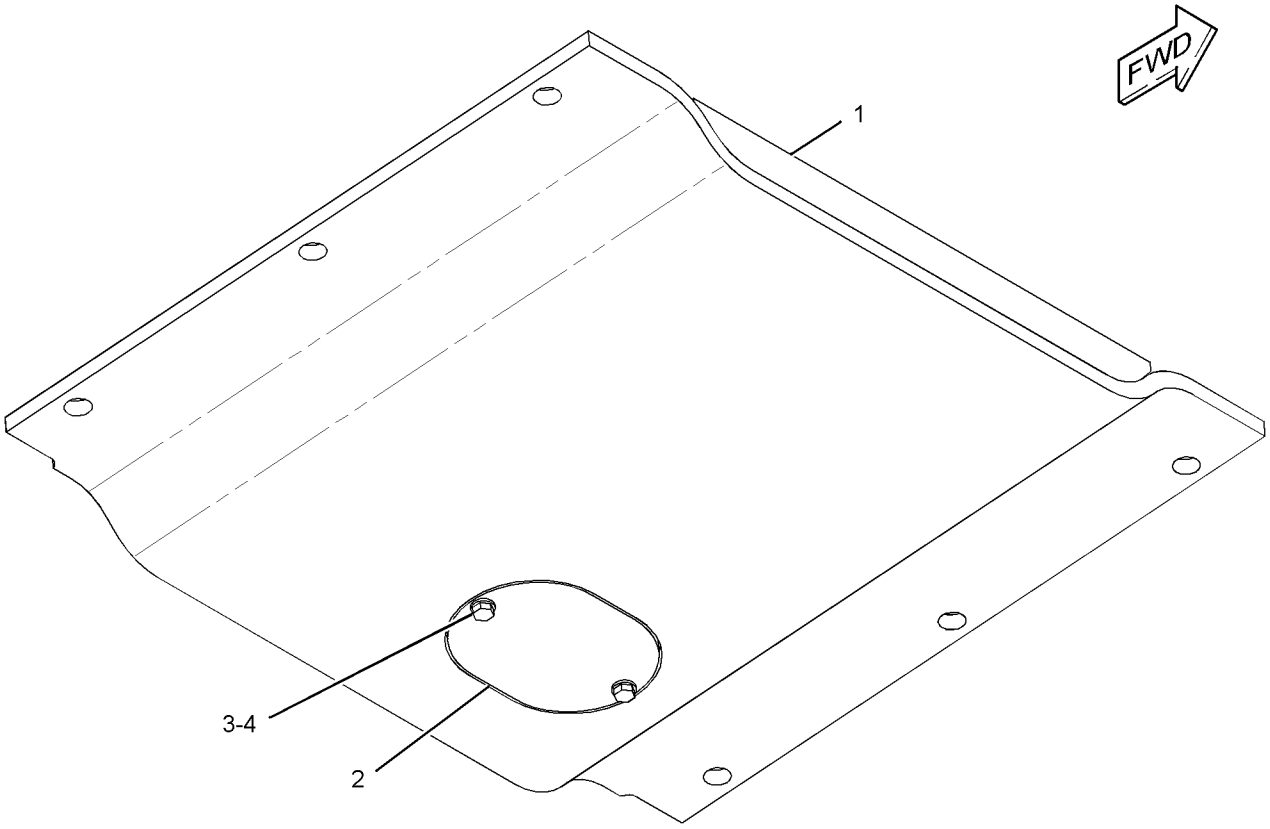

GRAPHIC #1 **<END>** g01291415

285-5019 GUARD GP-BOTTOM–FRONT

S/N: LJR1-UP
PART OF 270-4339, 273-3726 GUARD GP-BOTTOM
ALSO AN ATTACHMENT

SMCS-7153 **i02789967**

NOTE	REF NO	GRAPHIC REF	PART NUMBER	QTY	PART NAME 1 2 3 4 5 6 (PRODUCT LEVEL)	SEE PAGE
	1	1	**110-3162**	1	GUARD AS	
M	1A	1	**8T-4133**	2	NUT (M10X1.5-THD)	
	2	1	**278-7048**	1	PLATE	
	3	1	**8T-4121**	2	WASHER-HARD (11X21X2.5-MM THK)	
M	4	1	**8T-4195**	2	BOLT (M10X1.5X30-MM)	

M - METRIC PART

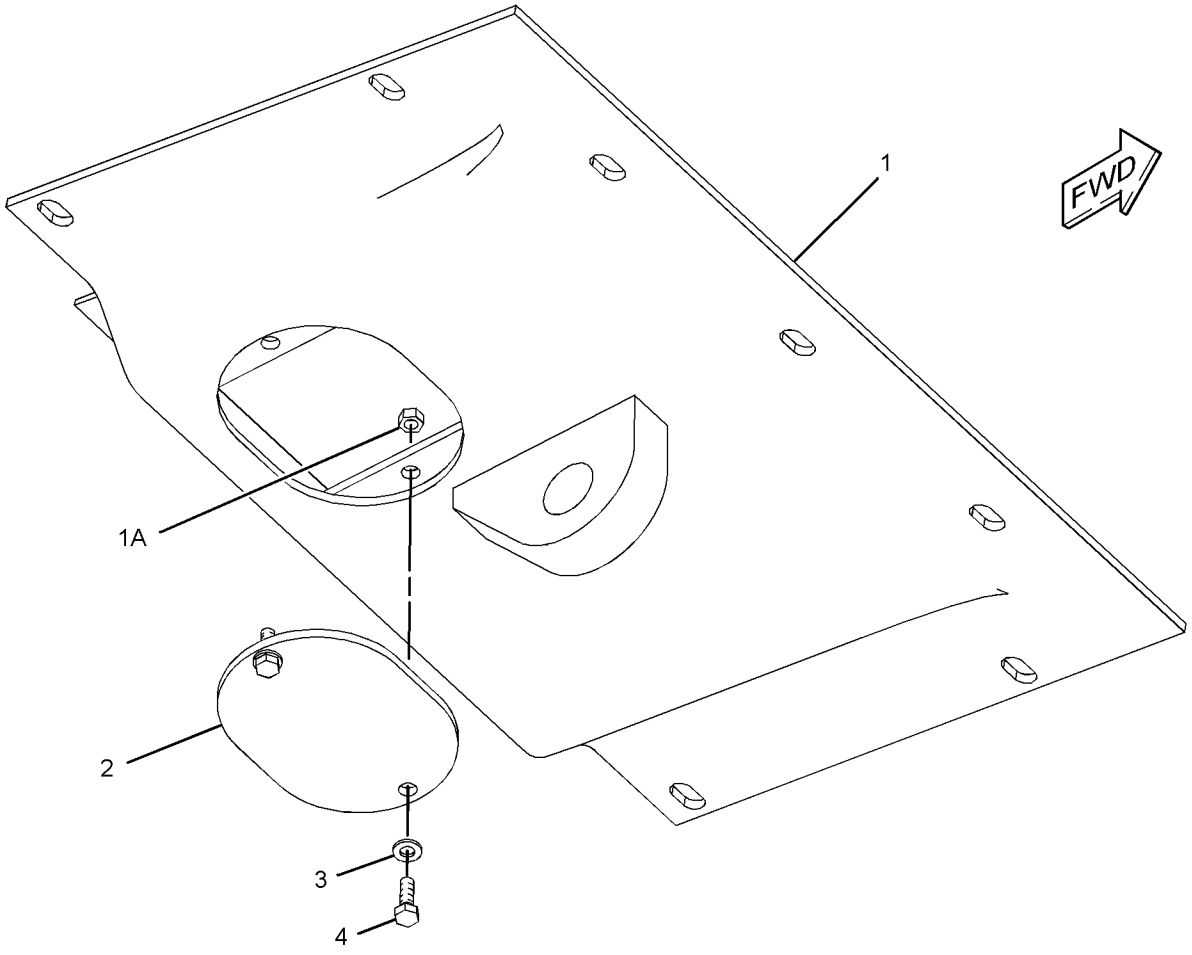

GRAPHIC #1 **<END>** g01291096

285-5020 GUARD GP-BOTTOM

S/N: LJR1-UP

PART OF 270-4339 GUARD GP-BOTTOM

SMCS-7153 **i02789969**

NOTE	REF NO	GRAPHIC REF	PART NUMBER	QTY	PART NAME 1 2 3 4 5 6 (PRODUCT LEVEL)	SEE PAGE
	1	1	**273-3714**	1	GUARD AS	
M	1A	1	**8T-4133**	2	NUT (M10X1.5-THD)	
	2	1	**278-7048**	1	PLATE	
	3	1	**8T-4121**	2	WASHER-HARD (11X21X2.5-MM THK)	
M	4	1	**8T-4195**	2	BOLT (M10X1.5X30-MM)	

M - METRIC PART

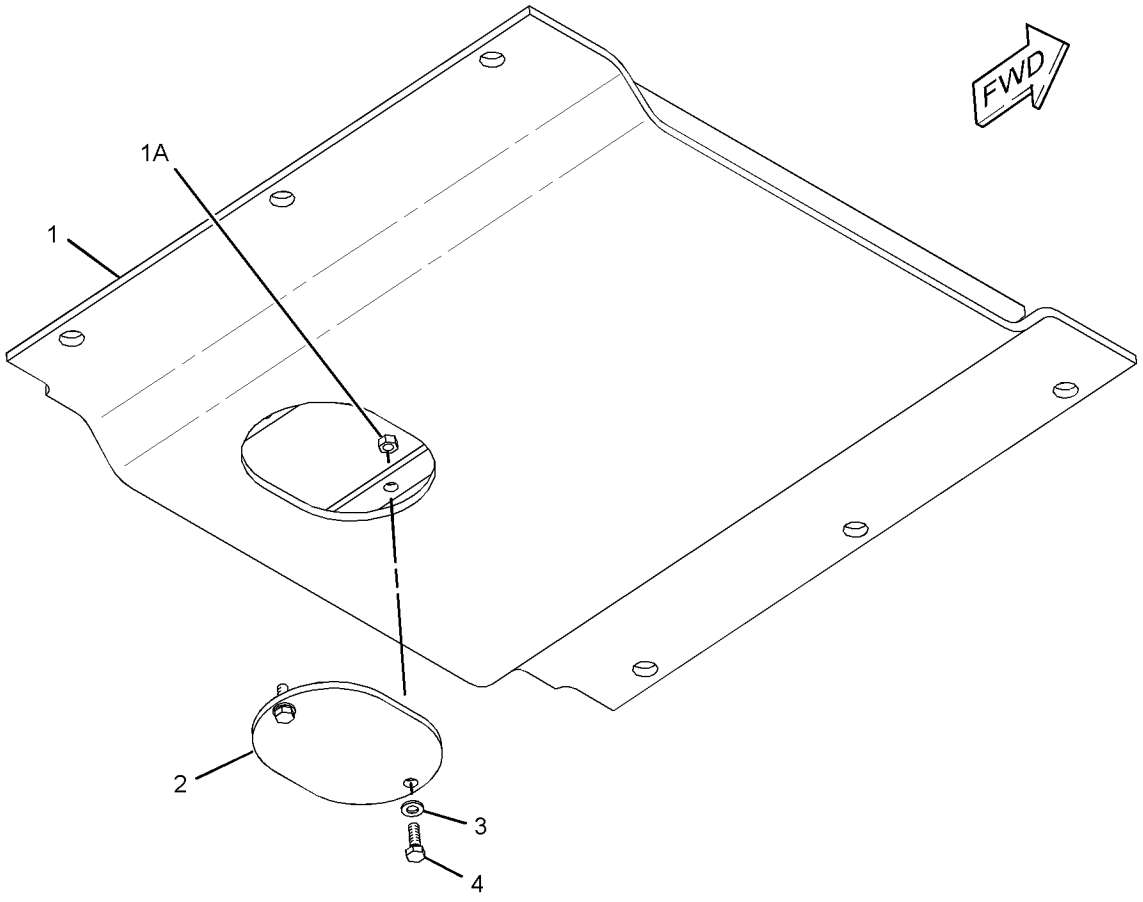

GRAPHIC #1 **<END>** g01291099

349-1141 GUARD GP-CAB—FORESTRY

S/N: LJR1-UP
PART OF 431-7088 FORESTRY AR
AN ATTACHMENT

SMCS-7158 **i05268291**

NOTE	REF NO	GRAPHIC REF	PART NUMBER	QTY	PART NAME 1 2 3 4 5 6 (PRODUCT LEVEL)	SEE PAGE
	1	1,2	**1P-2772**	24	SPACER (1.031X1.219X0.75-IN THK)	
	2	1	**3B-4610**	6	PIN-COTTER	
	3	1,2	**3W-2647**	17	SPACER (13.5X30X10-MM THK)	
	4	2	**3W-3896**	2	HANDHOLD	
	5	1	**4E-1384**	4	BUMPER-CONICAL	
	6	1	**5V-8780**	2	KNOB	
	7	1,2	**9S-5187**	12	MOUNTING	
	8	1	**112-5344**	1	LATCH AS-DOOR	
	9	1	**112-5345**	1	LATCH AS-DOOR	
	10	1	**209-5528**	2	STRIKER	
	11	1	**275-4236**	6	SCREW-WING (M12X1.75X40-MM)	
	12	2	**287-6916**	1	SUPPORT AS (RH)	
	13	2	**287-6917**	1	PLATE	
	14	2	**287-6918**	1	SUPPORT AS (LH)	
	15	2	**287-6919**	1	PLATE	
	16	1	**340-2560**	1	SUPPORT AS	
M		1	**8T-3597**	1	NUT-WELD (M12X1.75-THD)	
	17	1	**341-4034**	1	GUARD GP-WINDOW	
M		1	**8T-3597**	2	NUT-WELD (M12X1.75-THD)	
M		1	**8T-3612**	2	NUT-WELD (M8X1.25-THD)	
	18	1	**341-4035**	1	GUARD GP-WINDOW	
M		1	**8T-3597**	4	NUT-WELD (M12X1.75-THD)	
M		1	**8T-3612**	2	NUT-WELD (M8X1.25-THD)	
	19	2	**341-4036**	1	FRAME AS	
	20	1	**341-4037**	1	PLATE AS	
	21	1	**341-4039**	1	SUPPORT AS	
	22	2	**341-4040**	2	TUBE AS	
	23	2	**342-8503**	1	SCREEN AS (FRONT, LOWER)	
	24	1	**344-4755**	1	PLATE AS	
	25	1	**349-4275**	1	PLATE	
	26	1	**349-4276**	1	PLATE	
	27	1	**349-4277**	1	PLATE AS	
	28	2	**349-4279**	1	SCREEN AS (FRONT, UPPER)	
	29	2	**366-0262**	1	PLATE AS	
	30	2	**366-0263**	1	PLATE AS	
	31	1	**249-2844**	6	WASHER (12.7X31.7X1-MM THK)	
M	32	1	**5C-2890**	8	NUT (M6X1-THD)	
M	33	1	**5C-7261**	4	NUT (M8X1.25-THD)	
	34	1	**7X-0618**	3	WASHER-HARD (13.5X40X5-MM THK)	
M	35	1	**7X-2577**	8	BOLT (M24X3X90-MM)	
	36	1,2	**7X-3391**	50	WASHER-HARD (13.5X32X6-MM THK)	
	37	1	**7X-7729**	2	WASHER (11X25X3-MM THK)	
	38	2	**8E-1050**	10	PLATE	
	39	1,2	**8P-5244**	24	WASHER (33.3X69.8X6.35-MM THK)	
M	40	1,2	**8T-0363**	12	BOLT (M24X3X120-MM)	
M	41	1,2	**8T-4001**	12	NUT (M24X3-THD)	
M	42	2	**8T-4140**	10	BOLT (M16X2X60-MM)	
	43	1,2	**8T-4167**	24	WASHER-HARD (26X44X4-MM THK)	
M	44	2	**8T-4183**	4	BOLT (M12X1.75X40-MM)	
M	45	1,2	**8T-4184**	35	BOLT (M12X1.75X45-MM)	
M	46	1	**8T-4194**	4	BOLT (M12X1.75X50-MM)	
M	47	1	**8T-4195**	2	BOLT (M10X1.5X30-MM)	
	48	1,2	**8T-4223**	8	WASHER-HARD (13.5X25.5X3-MM THK)	
M	49	1	**8T-4956**	18	BOLT (M12X1.75X35-MM)	
	50	1	**9X-8256**	8	WASHER (6.6X12X2-MM THK)	
D	51	2	**5P-5755**		SEAL (0.3-M EACH)	

349-1141 **GUARD GP-CAB (*contd.*)** **i05268291**

NOTE	REF NO	GRAPHIC REF	PART NUMBER	QTY	PART NAME 1 2 3 4 5 6 (PRODUCT LEVEL)	SEE PAGE
D	51A	2	**5P-5755**		SEAL (0.5-M EACH)	
D	51B	2	**5P-5755**		SEAL (0.7-M EACH)	
D	51C	2	**5P-5755**		SEAL (0.1-M EACH)	
D	51D	2	**5P-5755**		SEAL (0.8-M EACH)	
D	51E	2	**5P-5755**		SEAL (0.2-M EACH)	
D	51F	2	**5P-5755**		SEAL (1.3-M EACH)	

D - ORDER BY THE METER
M - METRIC PART

REFER TO ALL ILLUSTRATIONS OF THIS GROUP FOR AUXILIARY VIEWS

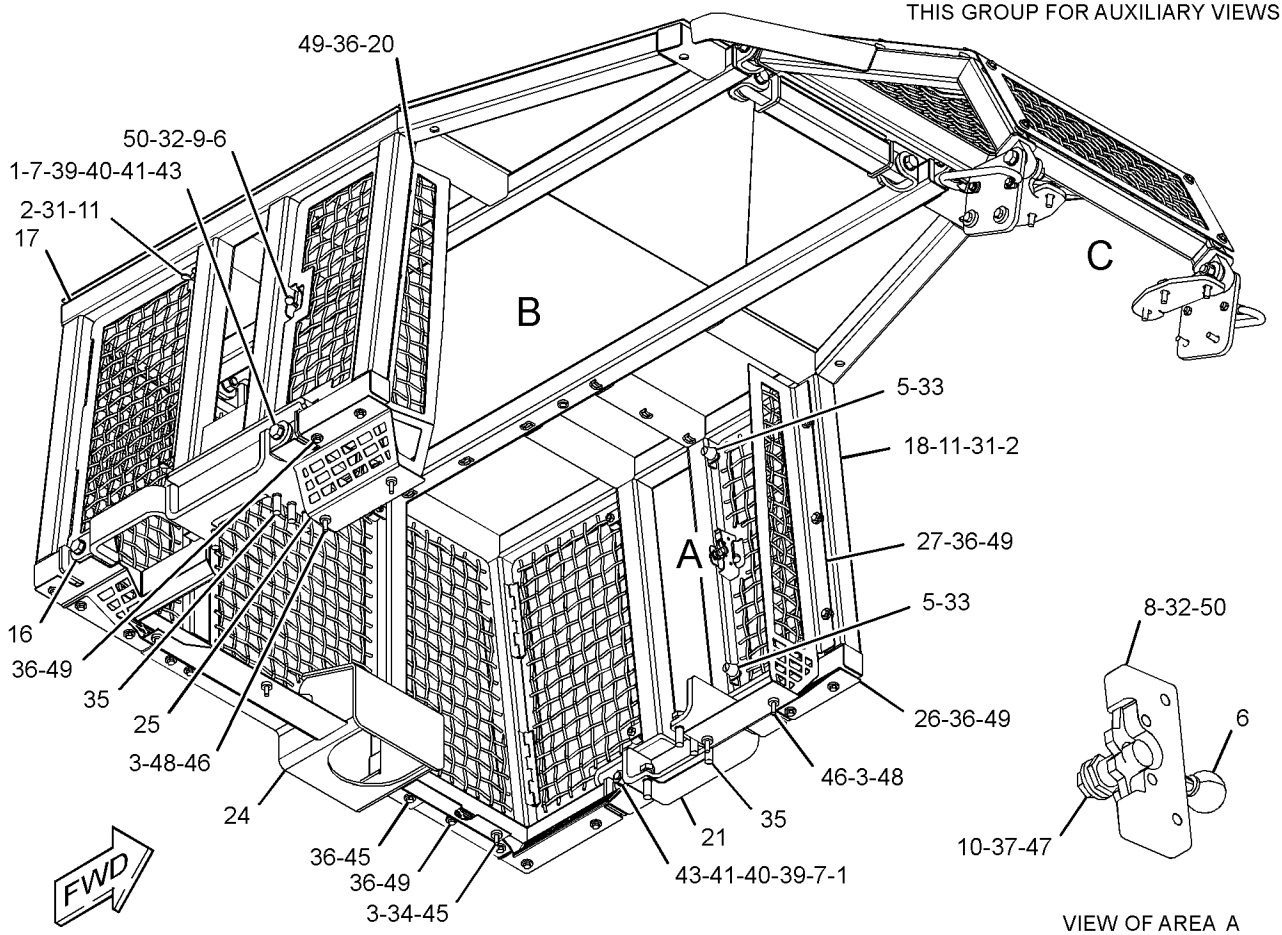

GRAPHIC #1

g03360135

349-1141 **GUARD GP-CAB (*contd.*)** **i05268291**

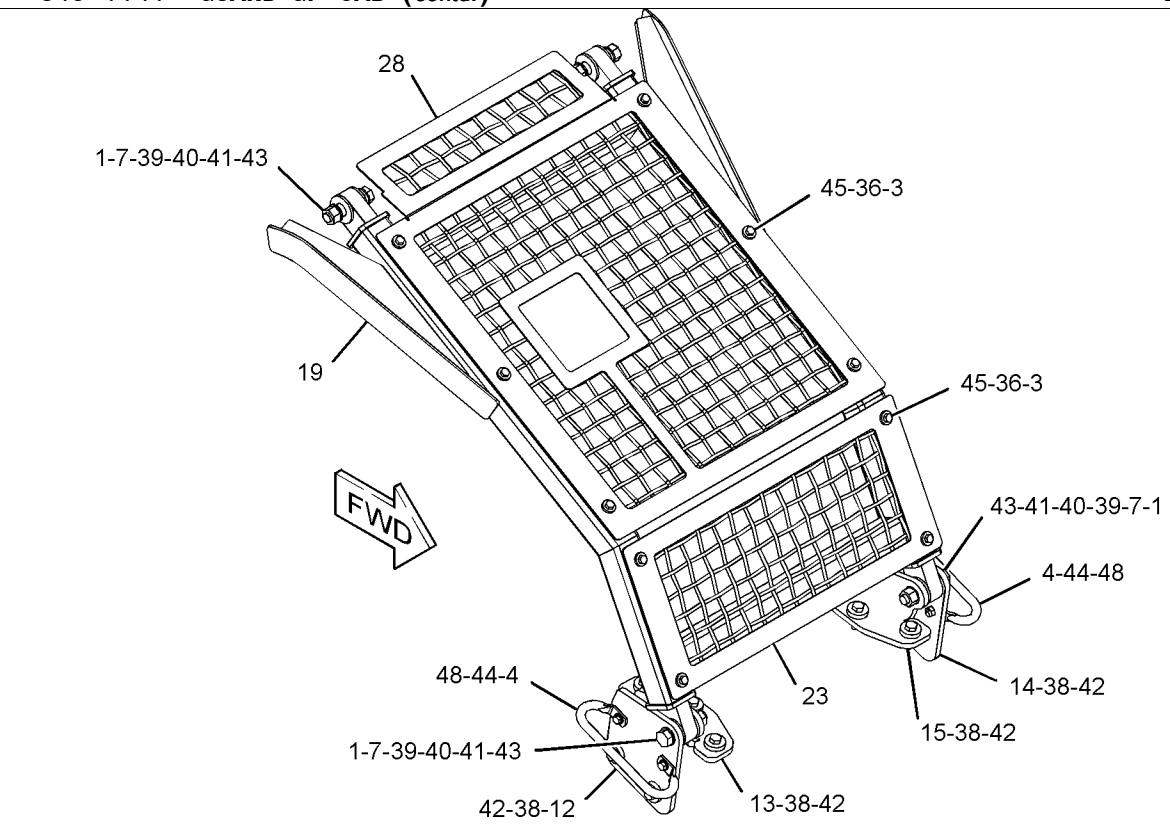

VIEW OF AREA C

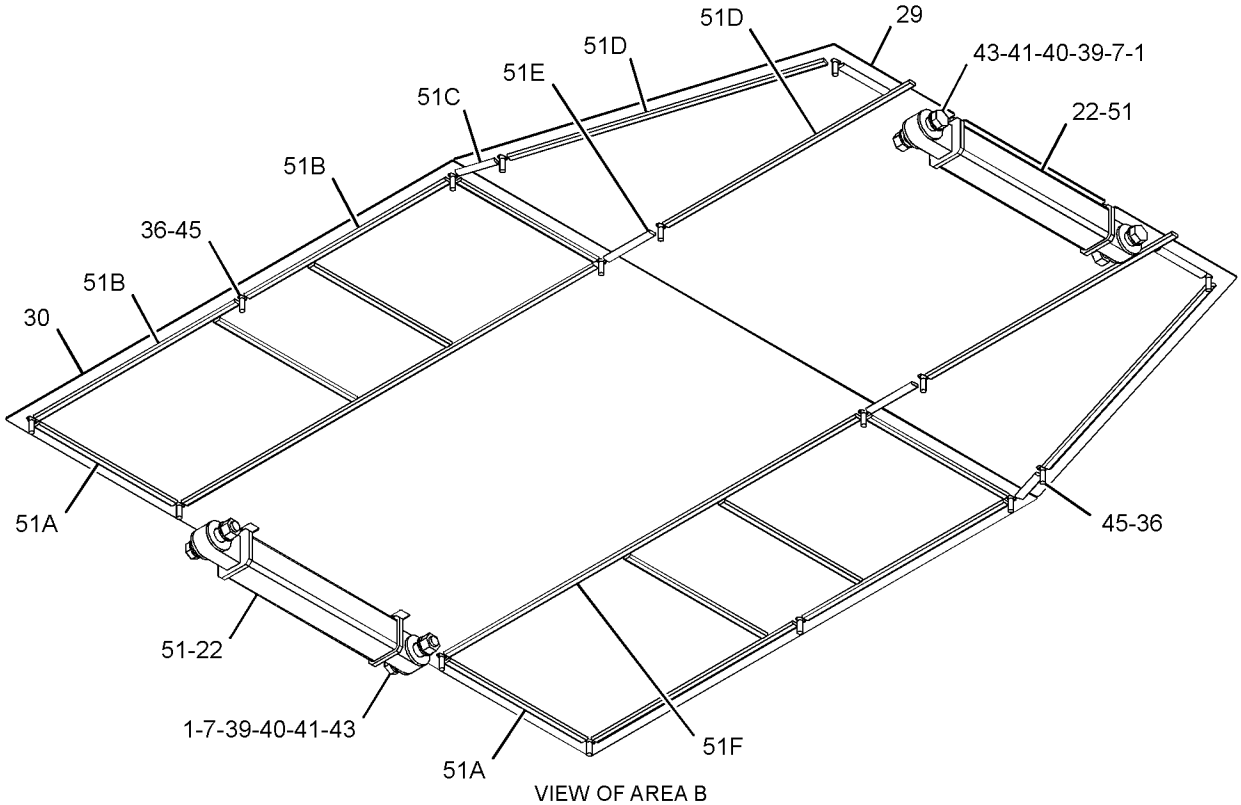

VIEW OF AREA B
(PARTS REMOVED FOR CLARITY)

GRAPHIC #2 **<END>** g03360136

271-6205 GUARD GP-FRONT

S/N: LJR1-UP
AN ATTACHMENT

SMCS-7167 **i03653310**

NOTE	REF NO	GRAPHIC REF	PART NUMBER	QTY	PART NAME 1 2 3 4 5 6 (PRODUCT LEVEL)	SEE PAGE
	1	1	**271-6206**	2	GUARD AS (RH)	
	2	1	**271-6207**	2	GUARD AS (LH)	
	3	1	**198-4778**	8	WASHER-HARD (13.5X30X12-MM THK)	
	4	1	**198-4780**	4	WASHER-HARD (17.5X32X8-MM THK)	
M	5	1	**8T-4140**	4	BOLT (M16X2X60-MM)	
M	6	1	**8T-4194**	8	BOLT (M12X1.75X50-MM)	

M - METRIC PART

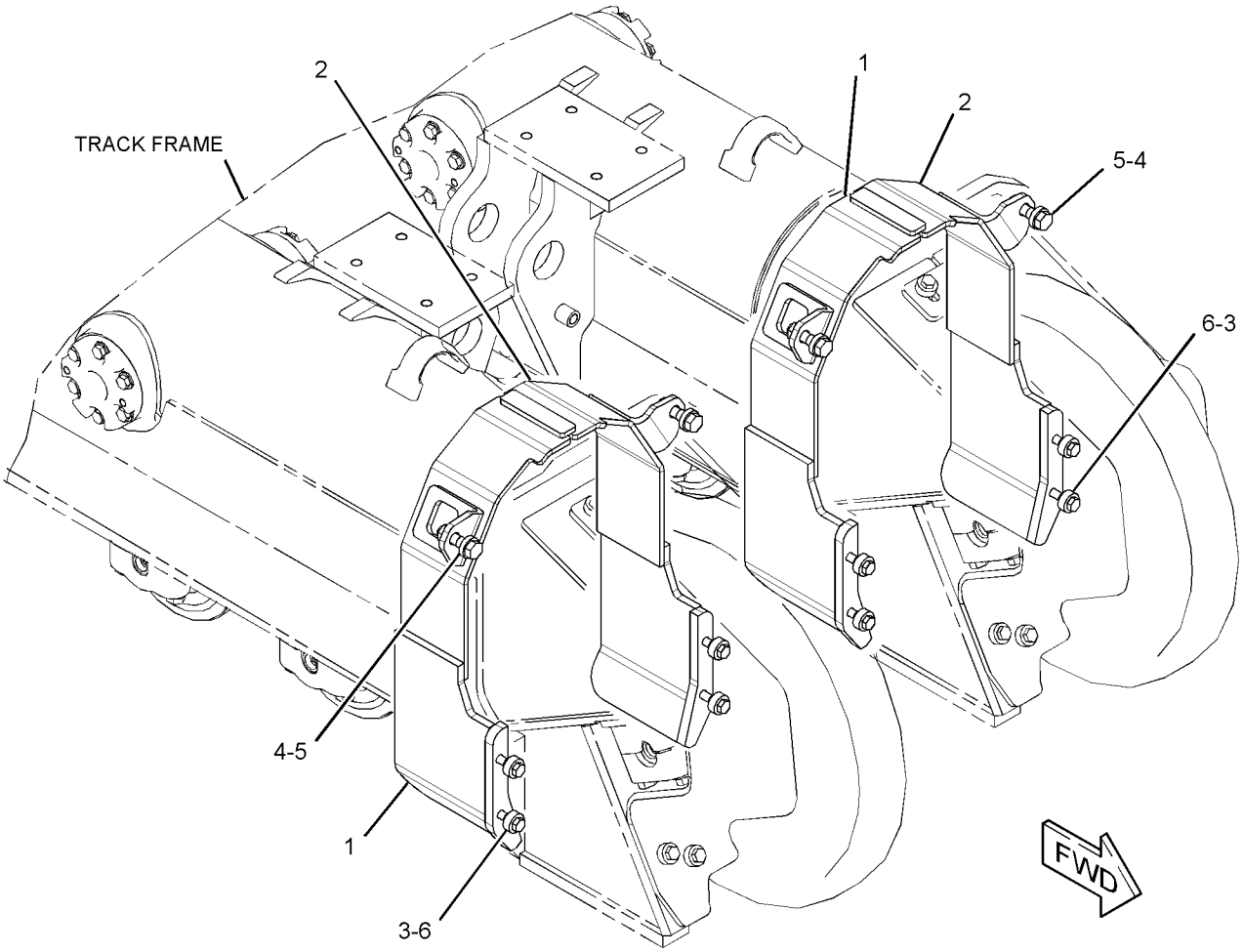

GRAPHIC #1 **<END>** g01961205

288-6278 GUARD GP-FUEL TANK

S/N: LJR1-UP
PART OF 338-2600 OPTION AR-GUARD
AN ATTACHMENT

SMCS-1273, 7150 **i05173189**

NOTE	REF NO	GRAPHIC REF	PART NUMBER	QTY	PART NAME 1 2 3 4 5 6 (PRODUCT LEVEL)	SEE PAGE
	1	1	**3W-2647**	4	SPACER (13.5X30X10-MM THK)	
	2	1	**339-5893**	1	GUARD AS-FUEL TANK	
M		1	**8T-3597**	6	NUT-WELD (M12X1.75-THD)	
M	3	1	**7X-2577**	4	BOLT (M24X3X90-MM)	
	4	1	**8T-1482**	4	WASHER-HARD (26X50X8-MM THK)	
M	5	1	**8T-4183**	4	BOLT (M12X1.75X40-MM)	

M - METRIC PART

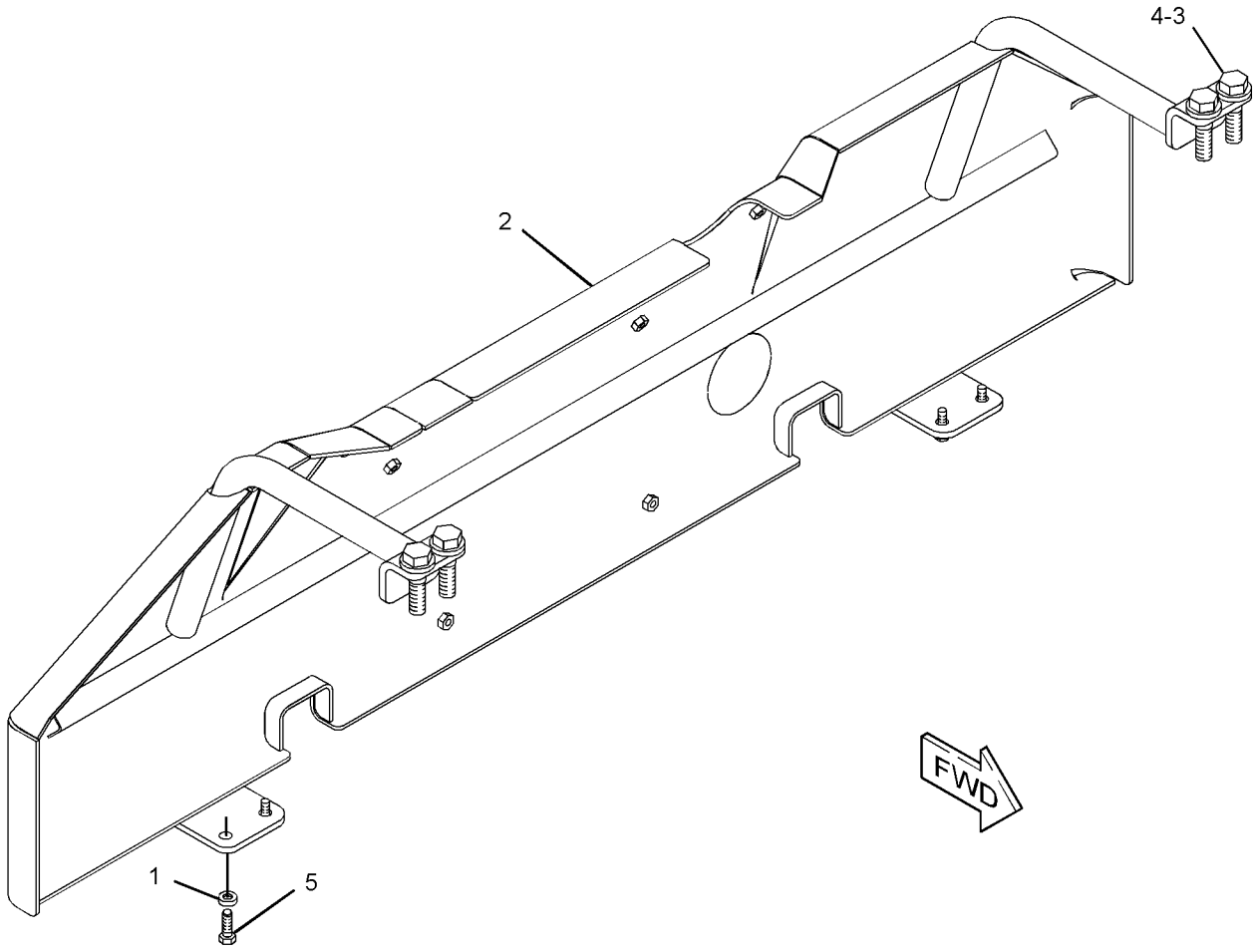

GRAPHIC #1 **<END>** g01290685

333-2679 GUARD GP-FUEL TANK–HEAVY-DUTY–FORESTRY–WASTE HANDLING

S/N: LJR1-UP

PART OF 322-6353, 333-3450 CHASSIS AR

AN ATTACHMENT

SMCS-1273, 7150 **i05221892**

NOTE	REF NO	GRAPHIC REF	PART NUMBER	QTY	PART NAME 1 2 3 4 5 6 (PRODUCT LEVEL)	SEE PAGE
	1	1	**3W-2647**	4	SPACER (13.5X30X10-MM THK)	
	2	1	**155-7714**	1	HANDHOLD	
B	3	1	**245-4517**	4	SHIM (3-MM THK)	
B	4	1	**245-4518**	4	SHIM (3-MM THK)	
	5	1	**333-2680**	1	GUARD AS-FUEL TANK	
	6	1	**198-4778**	1	WASHER-HARD (13.5X30X12-MM THK)	
M	7	1	**7X-2577**	4	BOLT (M24X3X90-MM)	
	8	1	**8T-1482**	4	WASHER-HARD (26X50X8-MM THK)	
M	9	1	**8T-4139**	2	BOLT (M12X1.75X30-MM)	
M	10	1	**8T-4184**	1	BOLT (M12X1.75X45-MM)	
M	11	1	**8T-4194**	4	BOLT (M12X1.75X50-MM)	
	12	1	**8T-4223**	4	WASHER-HARD (13.5X25.5X3-MM THK)	
M	13	1	**8T-4244**	1	NUT (M12X1.75-THD)	

B - USE AS REQUIRED
M - METRIC PART

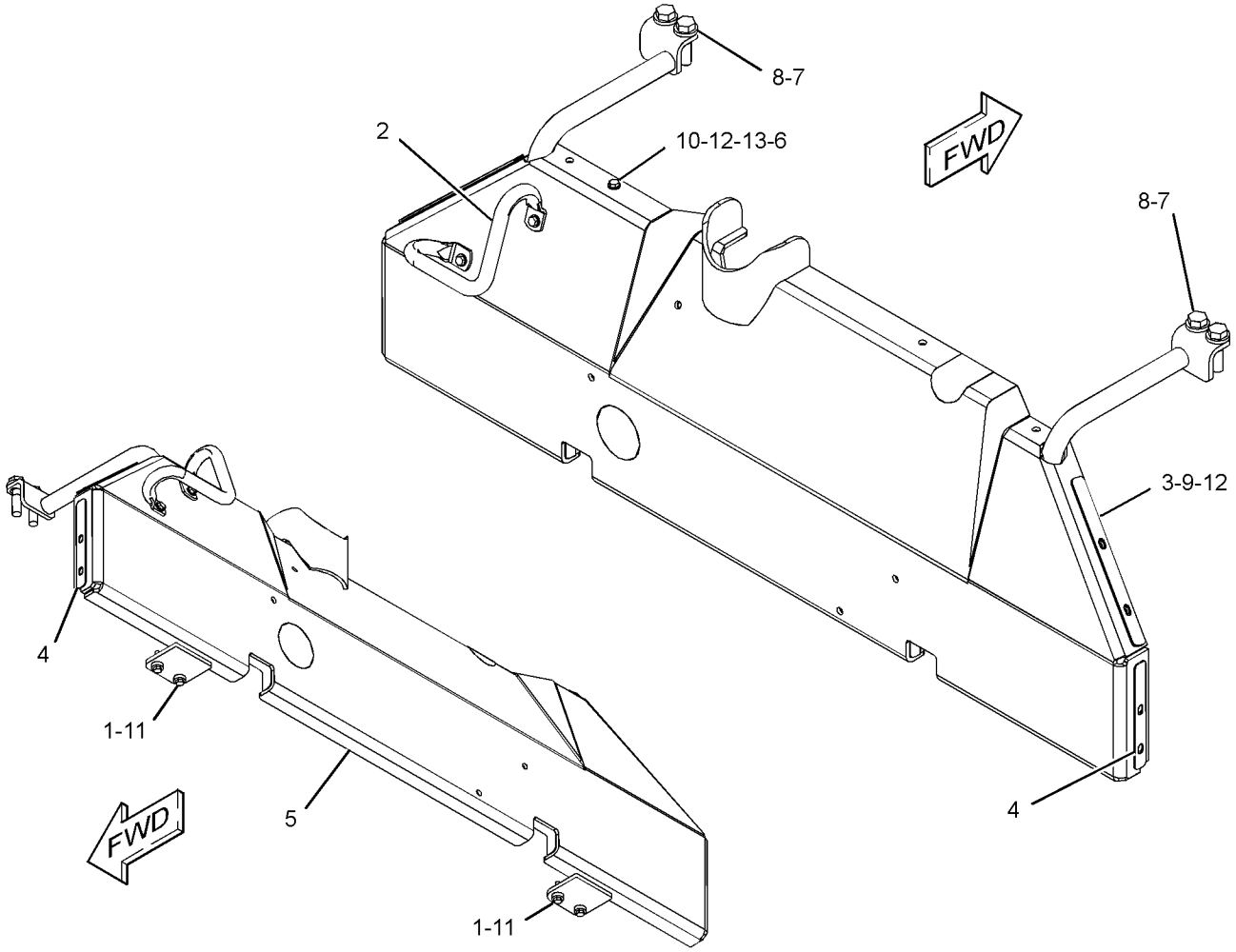

GRAPHIC #1 **<END>** g03175716

419-3878 GUARD GP-FUEL TANK

S/N: LJR1-UP
FOR USE WITH HEAVY-DUTY GUARD PACKAGE
CANNOT BE USED WITH FAST FILL FUEL TANK
AN ATTACHMENT

SMCS-1273, 7150 **i05259894**

NOTE	REF NO	GRAPHIC REF	PART NUMBER	QTY	PART NAME 1 2 3 4 5 6 (PRODUCT LEVEL)	SEE PAGE
	1	1	**3W-2647**	4	SPACER (13.5X30X10-MM THK)	
	2	1	**398-1052**	1	GUARD AS-FUEL TANK	
M	3	1	**7X-2577**	4	BOLT (M24X3X90-MM)	
	4	1	**8T-1482**	4	WASHER-HARD (26X50X8-MM THK)	
M	5	1	**8T-4183**	4	BOLT (M12X1.75X40-MM)	

M - METRIC PART

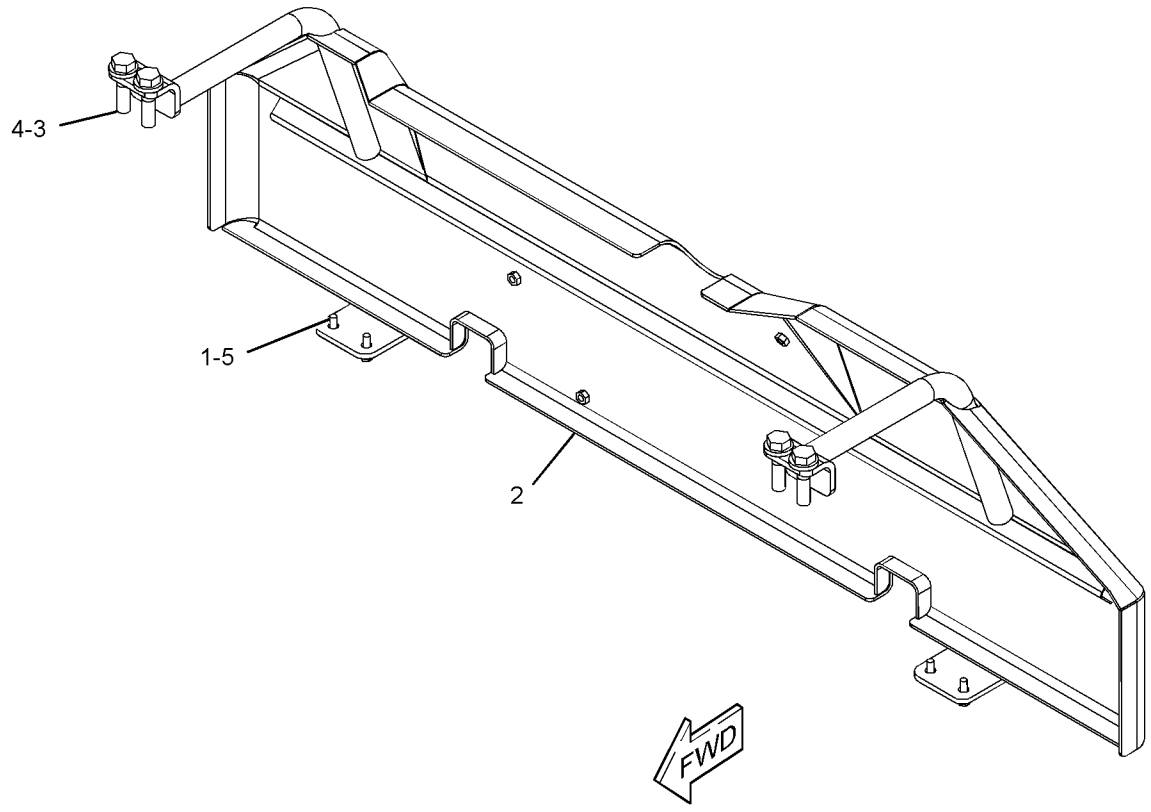

GRAPHIC #1 **<END>** g03341318

426-2627 GUARD GP-FUEL TANK

S/N: LJR1-UP
FOR USE WITH HEAVY-DUTY GUARD PKG
CANNOT BE USED WITH FORESTRY AR, WASTE HANDLING AR
AN ATTACHMENT

SMCS-1273, 7150 **i05247186**

NOTE	REF NO	GRAPHIC REF	PART NUMBER	QTY	PART NAME 1 2 3 4 5 6 (PRODUCT LEVEL)	SEE PAGE
	1	1	**3W-2647**	4	SPACER (13.5X30X10-MM THK)	
	2	1	**398-1055**	1	GUARD AS-FUEL TANK	
M	3	1	**7X-2577**	4	BOLT (M24X3X90-MM)	
	4	1	**8T-1482**	4	WASHER-HARD (26X50X8-MM THK)	
M	5	1	**8T-4183**	4	BOLT (M12X1.75X40-MM)	

M - METRIC PART

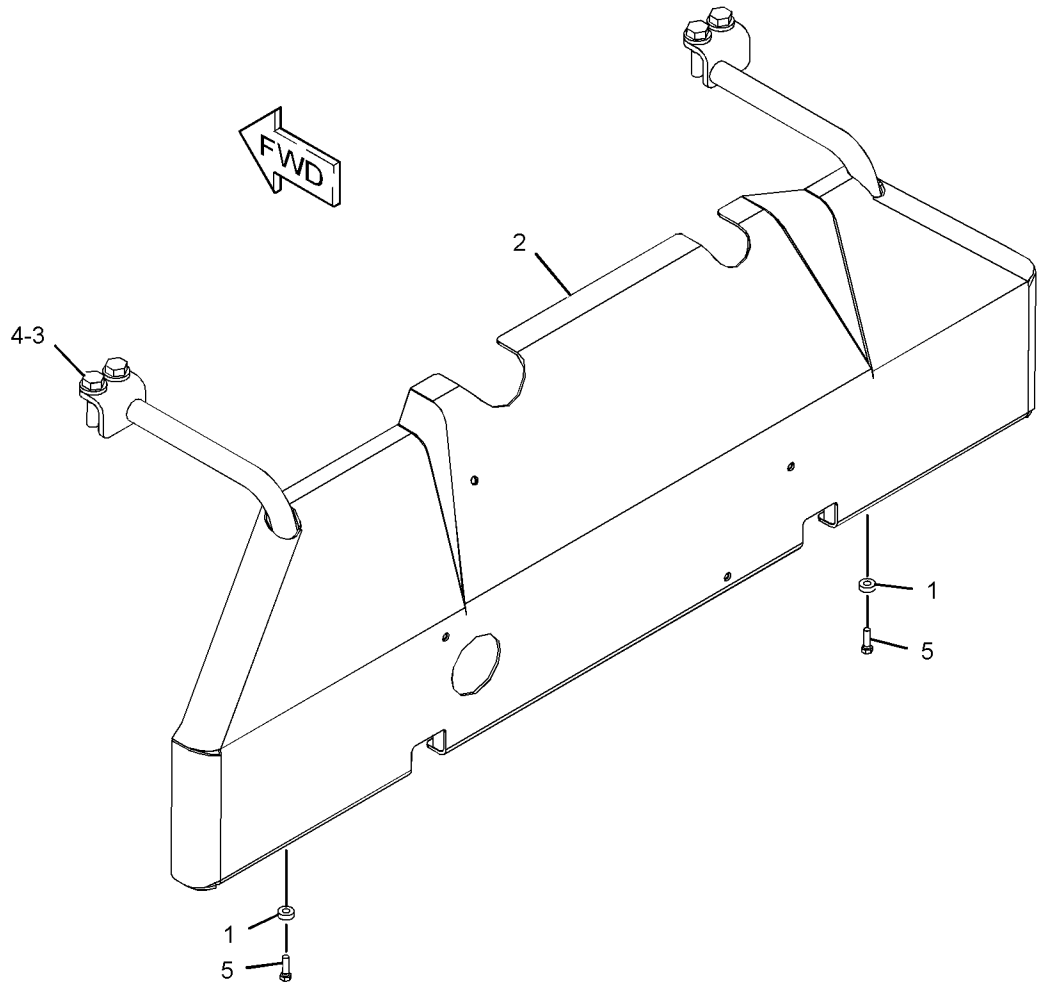

GRAPHIC #1 **<END>** g03345774

426-2628 GUARD GP-FUEL TANK

S/N: LJR1-UP
CANNOT BE USED WITH FORESTRY AR
AN ATTACHMENT

SMCS-1273, 7150 **i05247187**

NOTE	REF NO	GRAPHIC REF	PART NUMBER	QTY	PART NAME 1 2 3 4 5 6 (PRODUCT LEVEL)	SEE PAGE
	1	1	**3W-2647**	4	SPACER (13.5X30X10-MM THK)	
	2	1	**155-7714**	1	HANDHOLD	
	3	1	**245-4517**	4	SHIM (3-MM THK)	
	4	1	**245-4518**	4	SHIM (3-MM THK)	
	5	1	**398-0897**	1	GUARD AS-FUEL TANK	
	6	1	**198-4778**	1	WASHER-HARD (13.5X30X12-MM THK)	
M	7	1	**7X-2577**	4	BOLT (M24X3X90-MM)	
	8	1	**8T-1482**	4	WASHER-HARD (26X50X8-MM THK)	
M	9	1	**8T-4139**	2	BOLT (M12X1.75X30-MM)	
M	10	1	**8T-4184**	1	BOLT (M12X1.75X45-MM)	
M	11	1	**8T-4194**	4	BOLT (M12X1.75X50-MM)	
	12	1	**8T-4223**	4	WASHER-HARD (13.5X25.5X3-MM THK)	
M	13	1	**8T-4244**	1	NUT (M12X1.75-THD)	

M - METRIC PART

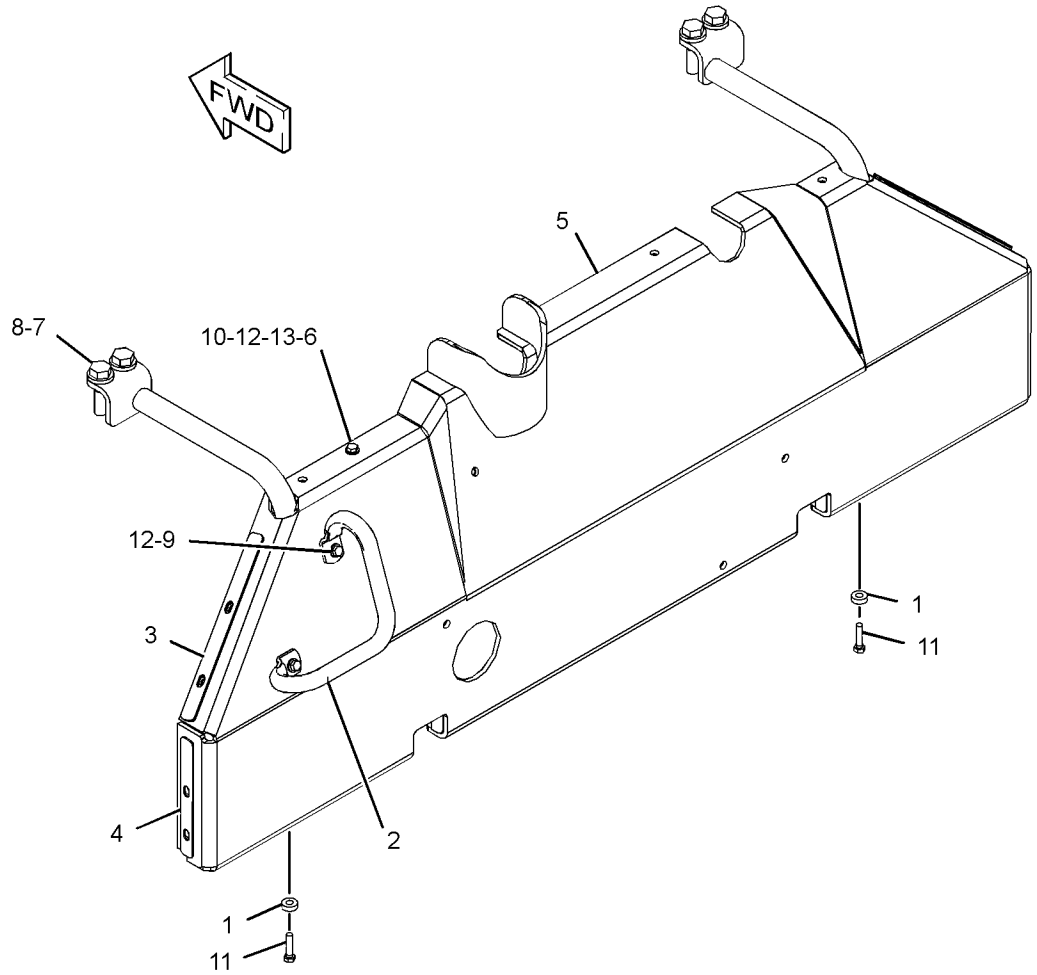

GRAPHIC #1 **<END>** g03345762

426-2629 GUARD GP-FUEL TANK

S/N: LJR1-UP
CANNOT BE USED WITH FAST FILL FUEL TANK
AN ATTACHMENT

SMCS-1273, 7150

i05247189

NOTE	REF NO	GRAPHIC REF	PART NUMBER	QTY	PART NAME 1 2 3 4 5 6 (PRODUCT LEVEL)	SEE PAGE
	1	1	**3W-2647**	4	SPACER (13.5X30X10-MM THK)	
	2	1	**155-7714**	1	HANDHOLD	
B	3	1	**245-4517**	4	SHIM (3-MM THK)	
B	4	1	**245-4518**	4	SHIM (3-MM THK)	
	5	1	**398-0896**	1	GUARD AS-FUEL TANK	
	6	1	**198-4778**	1	WASHER-HARD (13.5X30X12-MM THK)	
M	7	1	**7X-2577**	4	BOLT (M24X3X90-MM)	
	8	1	**8T-1482**	4	WASHER-HARD (26X50X8-MM THK)	
M	9	1	**8T-4139**	2	BOLT (M12X1.75X30-MM)	
M	10	1	**8T-4184**	1	BOLT (M12X1.75X45-MM)	
M	11	1	**8T-4194**	4	BOLT (M12X1.75X50-MM)	
	12	1	**8T-4223**	4	WASHER-HARD (13.5X25.5X3-MM THK)	
M	13	1	**8T-4244**	1	NUT (M12X1.75-THD)	

B - USE AS REQUIRED
M - METRIC PART

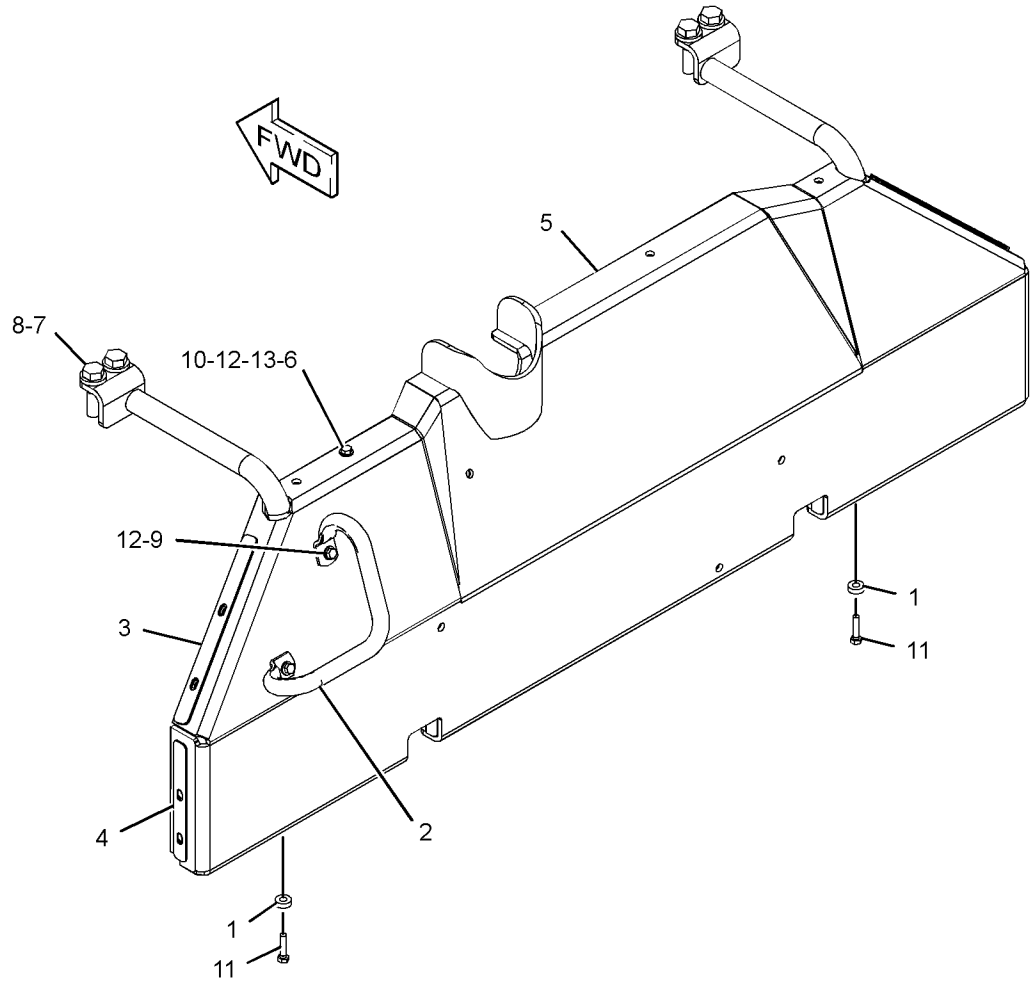

GRAPHIC #1

<END>

g03345747

273-3783 GUARD GP-LINES—LIFT CYLINDER—FORESTRY—WASTE HANDLING

S/N: LJR1-UP
CANNOT BE USED WITH BULLDOZER AR-SEMI-UNIVERSAL
PART OF 322-6353, 333-3450 CHASSIS AR
AN ATTACHMENT

SMCS-7167 **i03637462**

NOTE	REF NO	GRAPHIC REF	PART NUMBER	QTY	PART NAME 1 2 3 4 5 6 (PRODUCT LEVEL)	SEE PAGE
	1	1	**263-5746**	1	GUARD AS (LH)	
	2	1	**263-5747**	1	GUARD AS (RH)	
	3	1	**311-8552**	4	COLLAR AS	
	4	1	**311-8553**	2	COLLAR AS (RH)	
	5	1	**311-8554**	2	COLLAR AS (LH)	
					(EACH COLLAR AS INCLUDES)	
M		1	**8T-3490**	2	NUT-WELD (M10X1.5-THD)	
	6	1	**7X-7729**	16	WASHER (11X25X3-MM THK)	
	7	1	**8T-4121**	12	WASHER-HARD (11X21X2.5-MM THK)	
M	8	1	**8T-4133**	6	NUT (M10X1.5-THD)	
M	9	1	**8T-4136**	16	BOLT (M10X1.5X25-MM)	
M	10	1	**8T-4195**	6	BOLT (M10X1.5X30-MM)	
	11	1	**8T-7934**	6	WASHER-HARD (11X21X5-MM THK)	

M - METRIC PART

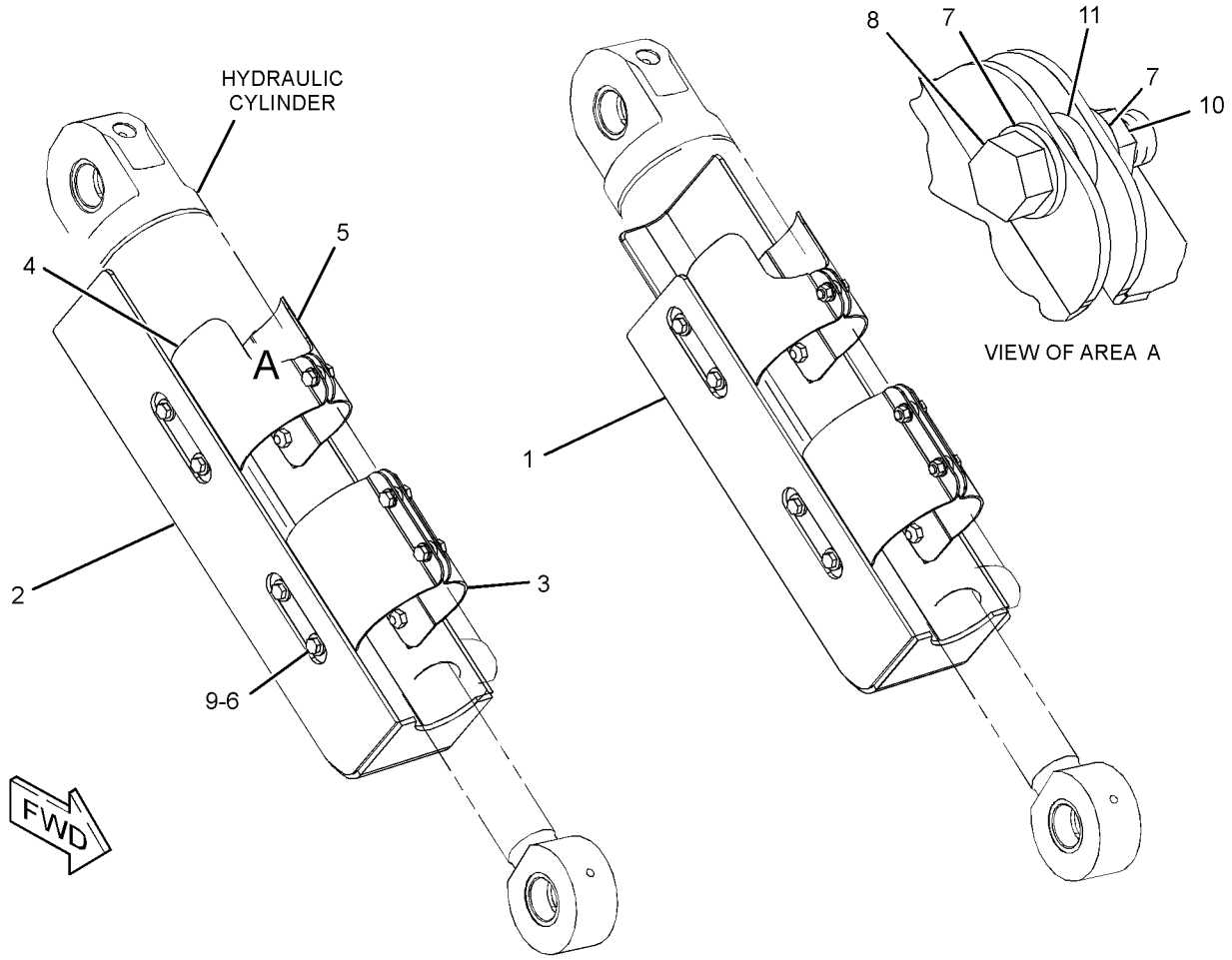

GRAPHIC #1 **<END>** g01406696

323-9294 GUARD GP-LINES

S/N: LJR1-UP

FOR USE WITH 6VPAT XL BULLDOZER, FOLDABLE 6VPAT XL BULLDOZER

CANNOT BE USED WITH FINE GRADING BULLDOZER, FOLDABLE FINE GRADING BULLDOZER

AN ATTACHMENT

SMCS-7167 **i03626936**

NOTE	PART NUMBER	QTY	PART NAME 1 2 3 4 5 6 (PRODUCT LEVEL)	SEE PAGE
Y	*324-0558*	1	LINES GP-ANGLE & TILT	511

Y - SEPARATE ILLUSTRATION

<END>

315-2941 GUARD GP-RADIATOR

S/N: LJR1-UP

PART OF 315-2948 CHASSIS AR

SMCS-7155 **i05097133**

NOTE	REF NO	GRAPHIC REF	PART NUMBER	QTY	PART NAME 1 2 3 4 5 6 (PRODUCT LEVEL)	SEE PAGE
	1	1	**6V-9197**	2	LOCK PIN	
	2	1	**226-0294**	1	LOCK AS	
	3	1	**155-9321**	1	CAP AS	
	4	1	**221-2719**	4	BUMPER	
	5	1	**240-6328**	1	BRACKET AS (RADIATOR, LH)	
	6	1	**240-6329**	1	BRACKET AS (RADIATOR, RH)	
	7	1	**286-3462**	1	CAM-LATCH	
	8	1	**287-5383**	1	GRILL AS-RADIATOR	
	9	1	**287-5384**	2	HANDHOLD	
	10	1	**287-5386**	1	GRILL AS	
	11	1	**306-7458**	1	ROD AS	
	12	1	**313-3351**	1	GUARD AS-RADIATOR	
		1	**357-1509**	2	HANDLE	
M	13	1	**096-4885**	2	LOCKNUT (M16X2-THD)	
	14	1	**198-4780**	6	WASHER-HARD (17.5X32X8-MM THK)	
M	15	1	**3E-4320**	4	SCREW (M3X0.5X10-MM)	
	16	1	**4F-8711**	2	PLUG-BUTTON	
	17	1	**6K-2660**	4	PLUG-BUTTON	
	18	1	**6K-6361**	2	BUTTON-PLUG	
M	19	1	**7X-2554**	2	BOLT (M16X2X70-MM)	
M	20	1	**7X-2555**	2	BOLT (M16X2X80-MM)	
	21	1	**7X-7729**	12	WASHER (11X25X3-MM THK)	
M	22	1	**8T-4140**	6	BOLT (M16X2X60-MM)	
M	23	1	**8T-4195**	6	BOLT (M10X1.5X30-MM)	
M	24	1	**8T-4198**	4	BOLT (M10X1.5X100-MM)	
M	25	1	**8T-7338**	4	BOLT (M16X2X45-MM)	
	26	1	**9X-8257**	10	WASHER (17.5X30X3.5-MM THK)	

M - METRIC PART

315-2941 **GUARD GP-RADIATOR (*contd.*)** **i05097133**

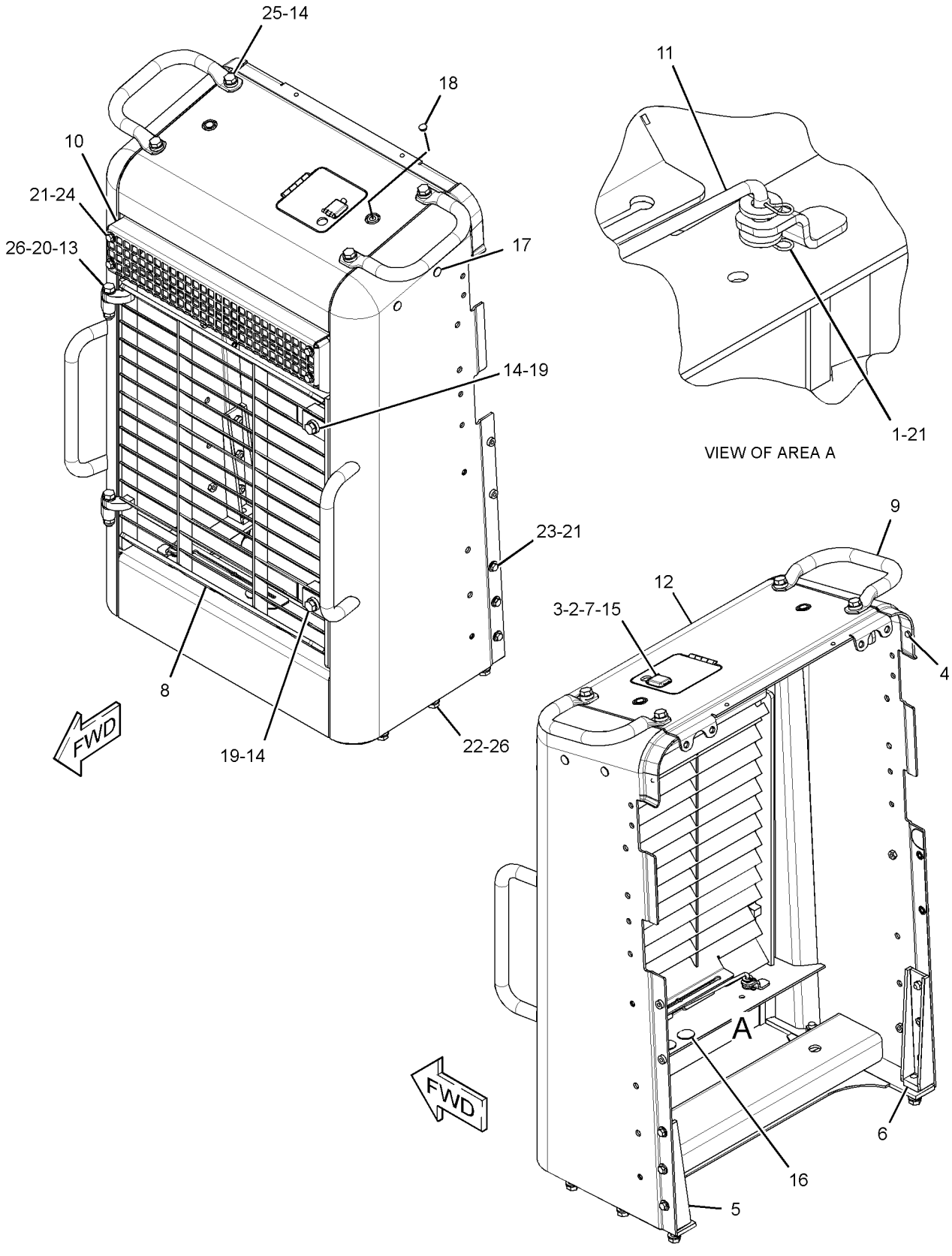

GRAPHIC #1 **<END>** g01593737

294-3211 GUARD GP-REAR

S/N: LJR1-UP

PART OF 319-6464 ENCLOSURE GP-FENDER, 322-6357 ENCLOSURE GP-PLATFORM

ALSO AN ATTACHMENT

SMCS-7187 **i03741561**

NOTE	REF NO	GRAPHIC REF	PART NUMBER	QTY	PART NAME 1 2 3 4 5 6 (PRODUCT LEVEL)	SEE PAGE
C	1	1	**221-2718**	2	BUMPER	
CJ	2	1	**260-3568**	1	LATCH AS (LOCKABLE)	
C	3	1	**206-6969**	1	PAWL	
C	4	1	**338-1456**	1	GUARD AS	
M		1	**8T-3490**	4	NUT-WELD (M10X1.5-THD)	
M		1	**9R-9866**	2	BOSS-THREADED (M10X1.5-THD)	
C	5	1	**338-1457**	1	DOOR AS-ACCESS	
C	6	1	**198-4777**	4	WASHER-HARD (11X25X10-MM THK)	
	7	1	**1U-7684**	2	HOLDER AS (GREASE GUN)	
	8	1	**7X-7729**	2	WASHER (11X25X3-MM THK)	
M	9	1	**8T-4191**	2	BOLT (M10X1.5X16-MM)	
CM	10	1	**8T-4196**	4	BOLT (M10X1.5X35-MM)	

C - CHANGE FROM PREVIOUS TYPE
J - REQUIRES COPORATE KEY
M - METRIC PART

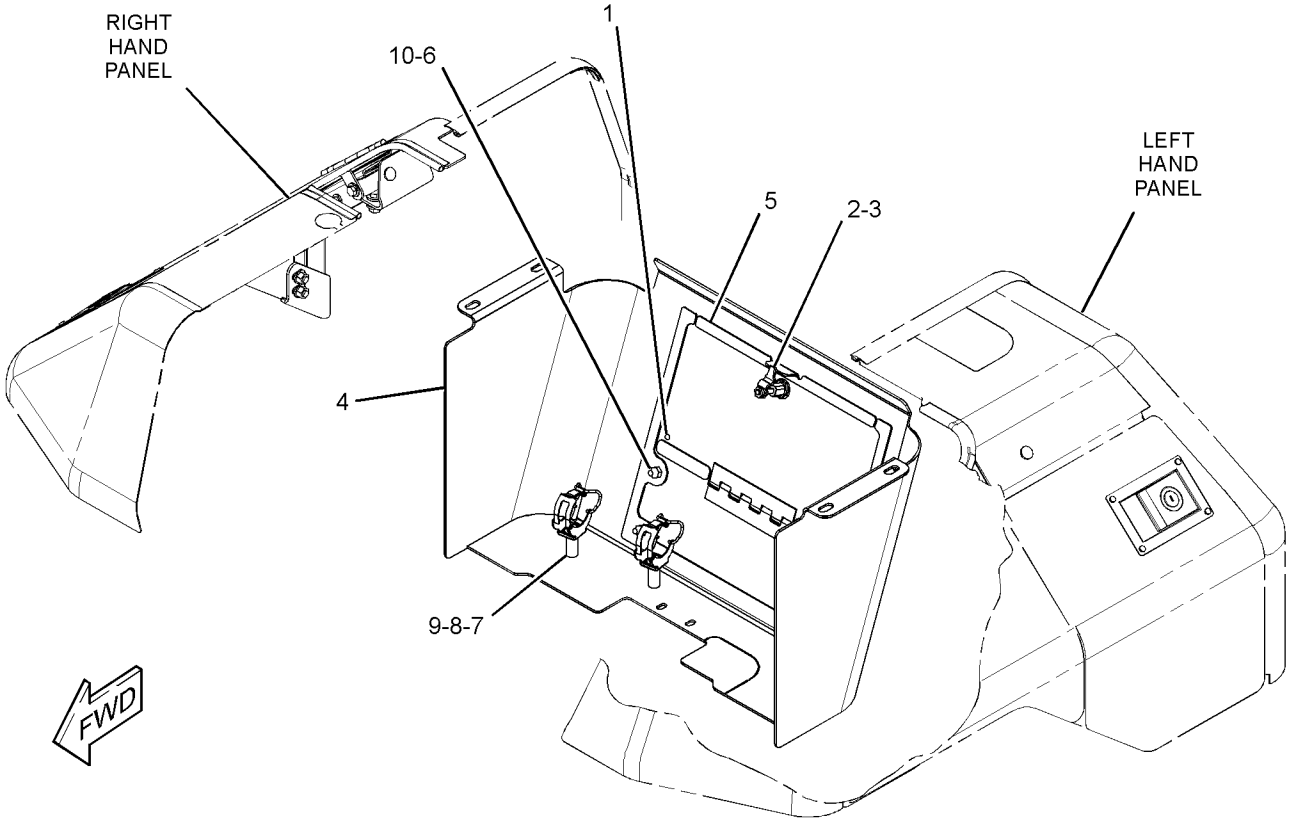

GRAPHIC #1 **<END>** g01911513

294-3233 GUARD GP-REAR—HEAVY-DUTY

S/N: LJR1-UP

CANNOT BE USED WITH WINCH AR, STRIKER GP-REAR, TRACTOR WINCH AR AN ATTACHMENT

SMCS-7187 **i02796953**

NOTE	PART NUMBER	QTY	PART NAME 1 2 3 4 5 6 (PRODUCT LEVEL)	SEE PAGE
Y	*300-5331*	1	GUARD GP-REAR	367

Y - SEPARATE ILLUSTRATION

<END>

300-5331 GUARD GP-REAR–HEAVY-DUTY

S/N: LJR1-UP
PART OF 294-3233 GUARD GP-REAR
AN ATTACHMENT

SMCS-7187 **i03753228**

NOTE	REF NO	GRAPHIC REF	PART NUMBER	QTY	PART NAME 1 2 3 4 5 6 (PRODUCT LEVEL)	SEE PAGE
C	1	1	**221-2718**	1	BUMPER	
CJ	2	1	**260-3568**	1	LATCH AS	
C	3	1	**206-6969**	1	PAWL	
C	4	1	**340-5775**	1	GUARD AS-REAR	
M		1	**8T-3490**	4	NUT-WELD (M10X1.5-THD)	
M		1	**9R-9866**	2	BOSS-THREADED (M10X1.5-THD)	
C	5	1	**340-5777**	1	DOOR AS-ACCESS	
C	6	1	**198-4777**	4	WASHER-HARD (11X25X10-MM THK)	
	7	1	**1U-7684**	2	HOLDER AS (GREASE GUN)	
	8	1	**7X-7729**	2	WASHER (11X25X3-MM THK)	
CM	9	1	**8T-4196**	6	BOLT (M10X1.5X35-MM)	

C - CHANGE FROM PREVIOUS TYPE
J - REQUIRES CORPORATE KEY
M - METRIC PART

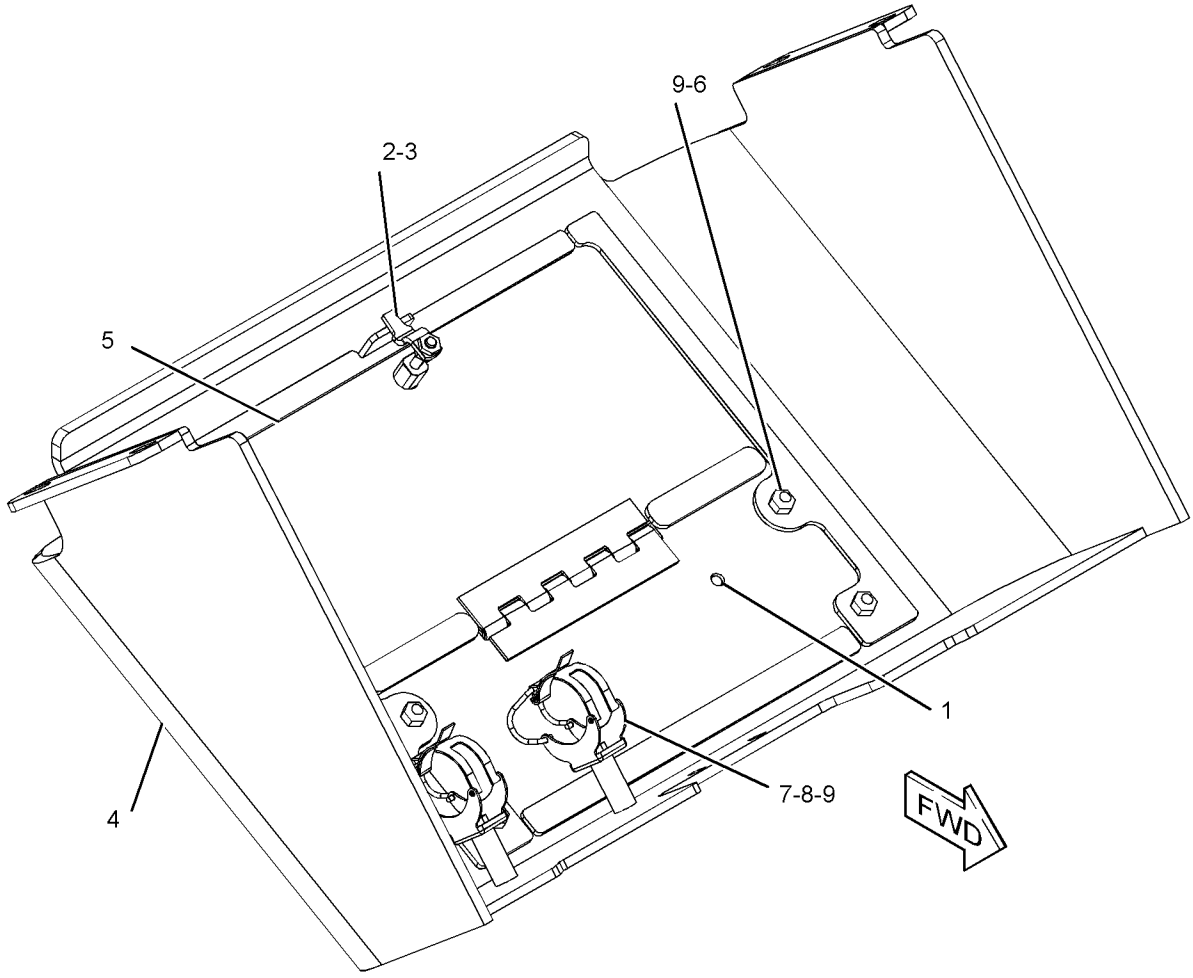

GRAPHIC #1 **<END>** g01904233

270-4317 HOOD GP

S/N: LJR1-397

PART OF 315-2948 CHASSIS AR

SMCS-7251 **i03731340**

NOTE	REF NO	GRAPHIC REF	PART NUMBER	QTY	PART NAME 1 2 3 4 5 6 (PRODUCT LEVEL)	SEE PAGE
	1	1	**4B-4279**	4	WASHER (12X23.5X1.6-MM THK)	
	3	1	**6S-6251**	2	MOUNT	
	4	1	**6S-6646**	2	PIN-COTTER	
	5	1	**6V-9197**	2	LOCK PIN	
	6	1	**111-4643**	2	PLATE	
	7	1	**155-9301**	1	PLATE AS (RH)	
	8	1	**155-9302**	1	PLATE AS (LH)	
	9	1	**155-9331**	1	SUPPORT AS (RH)	
	10	1	**155-9332**	1	SUPPORT AS (LH)	
	11	1	**201-4033**	2	PLATE AS	
					(EACH INCLUDES)	
		1	**3H-8726**	1	MOUNT AS	
	12	1	**201-5349**	2	SHAFT AS	
	13	1	**222-6239**	1	SHEET (RH)	
	14	1	**222-6240**	1	SHEET (LH)	
	15	1	**224-0687**	1	BRACKET (LH)	
	16	1	**224-0688**	1	BRACKET (RH)	
	17	1	**266-9744**	1	SHEET AS (LH)	
	18	1	**273-9736**	1	BRACKET AS (RH)	
M		1	**8T-3490**	2	NUT-WELD (M10X1.5-THD)	
	19	1	**273-9737**	1	BRACKET AS (LH)	
	20	1	**287-5387**	1	HOOD AS	
Y	21	1	*287-5388*	1	DOOR GP-HOOD (RH)	326
Y	22	1	*287-5390*	1	DOOR GP-HOOD (LH)	327
	23	1	**287-5392**	1	SHEET AS (LH)	
	24	1	**287-5397**	1	PANEL AS (RH)	
	25	1	**287-5398**	1	SHEET AS (RH)	
	26	1	**287-5399**	2	ROD AS	
	27	1	**287-5411**	2	BRACKET	
	28	1	**287-5417**	1	SHEET AS (LH)	
	29	1	**291-9502**	4	SPACER (10.5X20.1X5-MM THK)	
	30	1	**6V-8513**	6	WASHER-HARD (11X35X2.5-MM THK)	
	31	1	**146-2282**	2	COLLAR	
	32	1	**5P-4116**	2	WASHER-HARD (8.8X20.5X2-MM THK)	
	33	1	**7X-7729**	40	WASHER (11X25X3-MM THK)	
	34	1	**7Y-2854**	6	SPACER (24X38X3-MM THK)	
M	35	1	**8T-4133**	4	NUT (M10X1.5-THD)	
M	36	1	**8T-4136**	4	BOLT (M10X1.5X25-MM)	
M	37	1	**8T-4137**	8	BOLT (M10X1.5X20-MM)	
M	38	1	**8T-4185**	2	BOLT (M10X1.5X50-MM)	
M	39	1	**8T-4195**	30	BOLT (M10X1.5X30-MM)	
J	40	1	**202-5293**		SEAL (4.4-DM EACH)	
J	40A	1	**202-5293**		SEAL (8.0-DM EACH)	
J	40B	1	**202-5293**		SEAL (7.9-DM EACH)	
J	40C	1	**202-5293**		SEAL (6.7-DM EACH)	
	41	1	**3P-9900**	2	WASHER (10.5X30X3-MM THK)	

J - ORDER BY THE DECIMETER
M - METRIC PART
Y - SEPARATE ILLUSTRATION

270-4317 **HOOD GP (*contd.*)** **i03731340**

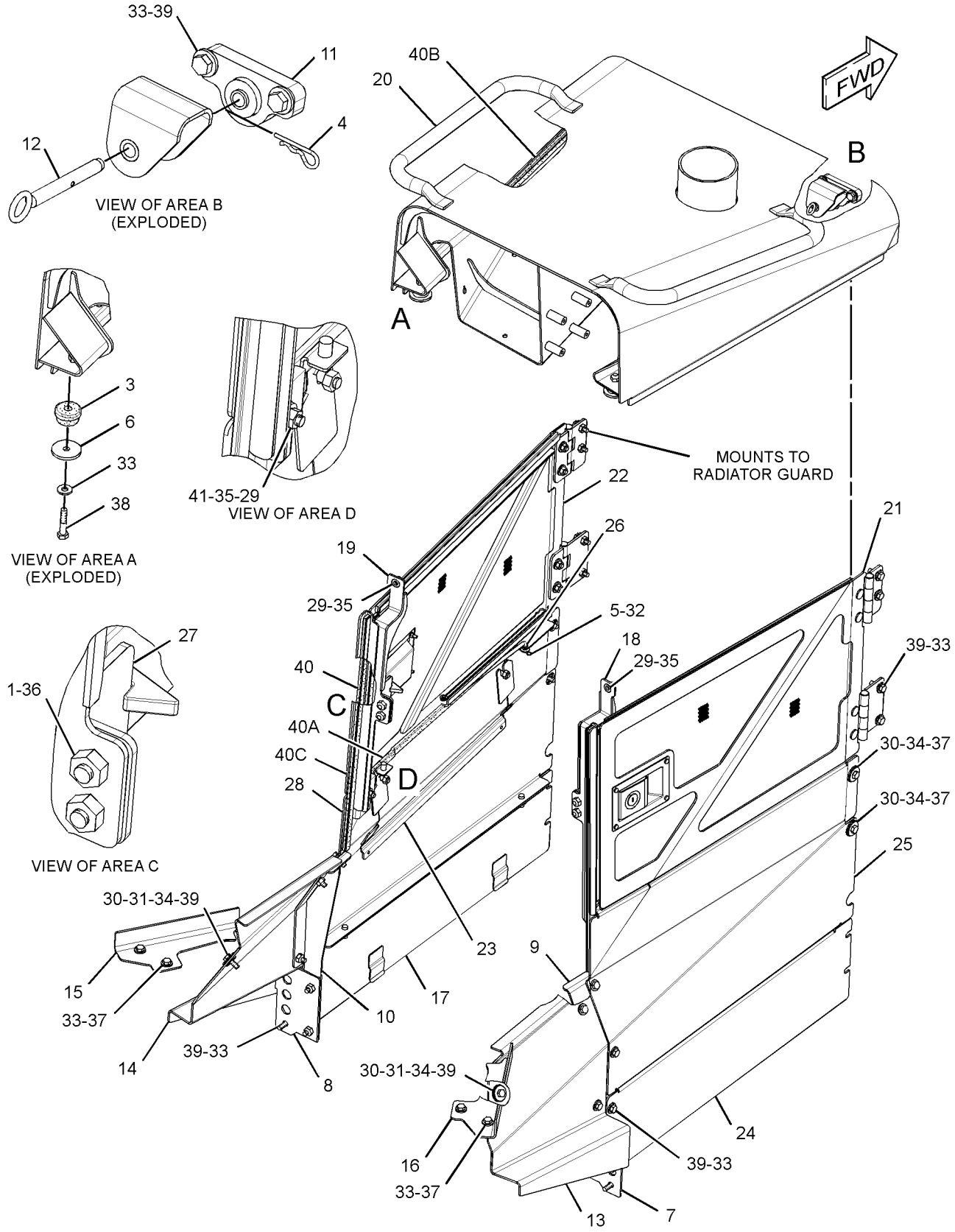

GRAPHIC #1 **<END>** g02013875

270-4317 HOOD GP

S/N: LJR398-UP

PART OF 315-2948 CHASSIS AR

SMCS-7251 **i05160273**

NOTE	REF NO	GRAPHIC REF	PART NUMBER	QTY	PART NAME 1 2 3 4 5 6 (PRODUCT LEVEL)	SEE PAGE
	1	1	**4B-4279**	4	WASHER (12X23.5X1.6-MM THK)	
	3	1	**6S-6251**	2	MOUNT	
	4	1	**6S-6646**	2	PIN-COTTER	
	5	1	**6V-9197**	2	LOCK PIN	
C	6	1	**183-6121**	2	WASHER (10.31X38.1X4.78-MM THK)	
	7	1	**155-9301**	1	PLATE AS (RH)	
	8	1	**155-9302**	1	PLATE AS (LH)	
	9	1	**155-9331**	1	SUPPORT AS (RH)	
	10	1	**155-9332**	1	SUPPORT AS (LH)	
	11	1	**201-4033**	2	PLATE AS	
					(EACH INCLUDES)	
		1	**3H-8726**	1	MOUNT AS	
	12	1	**201-5349**	2	SHAFT AS	
	13	1	**222-6239**	1	SHEET (RH)	
	14	1	**222-6240**	1	SHEET (LH)	
	15	1	**224-0687**	1	BRACKET (LH)	
	16	1	**224-0688**	1	BRACKET (RH)	
	17	1	**266-9744**	1	SHEET AS (LH)	
	18	1	**273-9736**	1	BRACKET AS (RH)	
	19	1	**273-9737**	1	BRACKET AS (LH)	
	20	1	**287-5387**	1	HOOD AS	
Y	21	1	*287-5388*	1	DOOR GP-HOOD (RH)	326
Y	22	1	*287-5390*	1	DOOR GP-HOOD (LH)	327
	23	1	**287-5392**	1	SHEET AS (LH)	
	24	1	**287-5397**	1	PANEL AS (RH)	
	25	1	**287-5398**	1	SHEET AS (RH)	
	26	1	**287-5399**	2	ROD AS	
	27	1	**287-5411**	2	BRACKET	
	28	1	**287-5417**	1	SHEET AS (LH)	
	29	1	**291-9502**	4	SPACER (10.5X20.1X5-MM THK)	
	30	1	**6V-8513**	6	WASHER-HARD (11X35X2.5-MM THK)	
	31	1	**146-2282**	2	COLLAR	
	32	1	**5P-4116**	2	WASHER-HARD (8.8X20.5X2-MM THK)	
C	33	1	**7X-7729**	38	WASHER (11X25X3-MM THK)	
	34	1	**7Y-2854**	6	SPACER (24X38X3-MM THK)	
CM	35	1	**8T-4133**	8	NUT (M10X1.5-THD)	
M	36	1	**8T-4136**	4	BOLT (M10X1.5X25-MM)	
M	37	1	**8T-4137**	8	BOLT (M10X1.5X20-MM)	
C	38	1	**242-1583**	2	STUD (M10X1.5X75-MM)	
M	39	1	**8T-4195**	30	BOLT (M10X1.5X30-MM)	
J	40	1	**202-5293**		SEAL (4.4-DM EACH)	
J	40A	1	**202-5293**		SEAL (8.0-DM EACH)	
J	40B	1	**202-5293**		SEAL (7.9-DM EACH)	
J	40C	1	**202-5293**		SEAL (6.7-DM EACH)	
	41	1	**3P-9900**	2	WASHER (10.5X30X3-MM THK)	

C - CHANGE FROM PREVIOUS TYPE
J - ORDER BY THE DECIMETER
M - METRIC PART
Y - SEPARATE ILLUSTRATION

270-4317 **HOOD GP** (*contd.*) **i05160273**

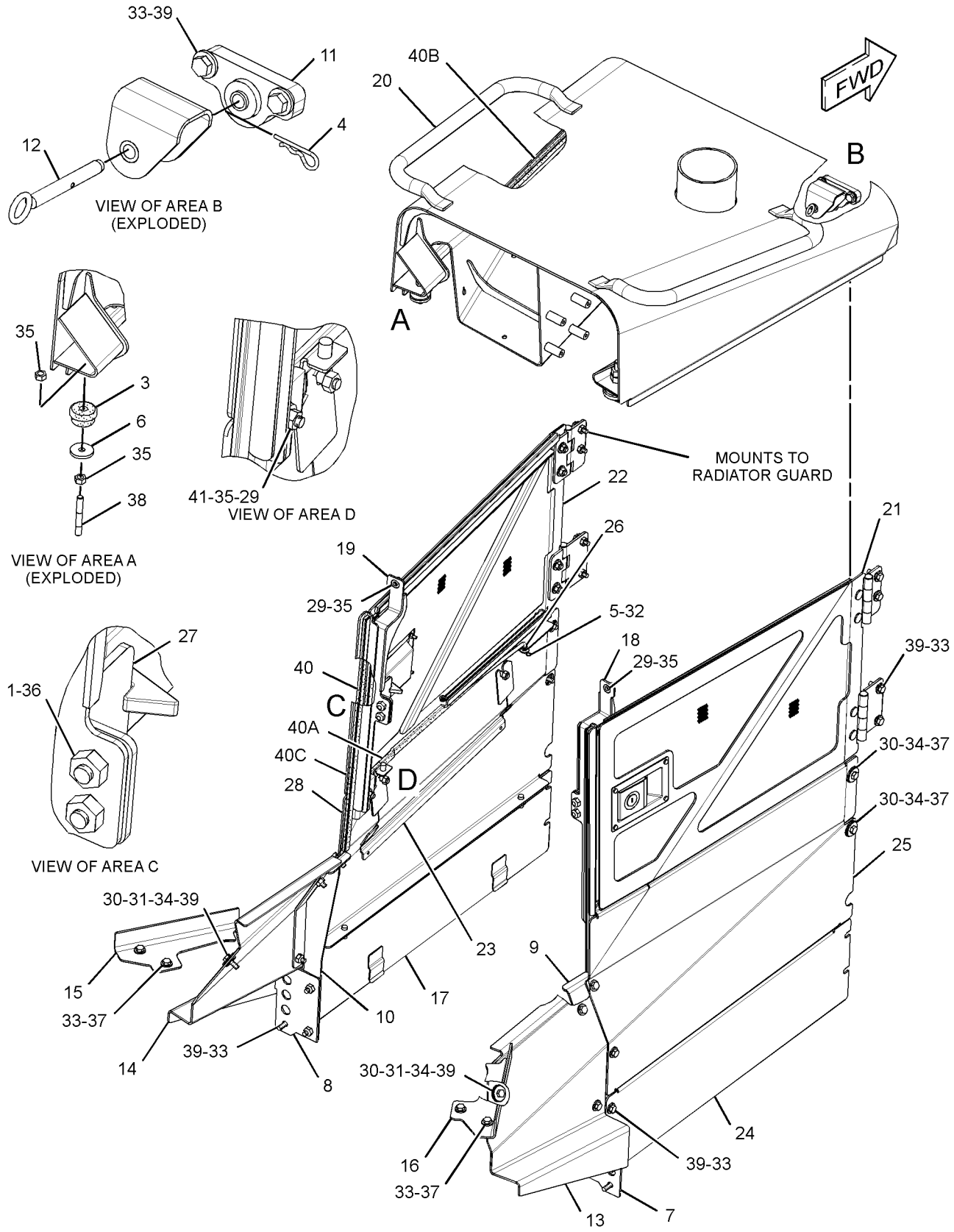

GRAPHIC #1 **<END>** g02880819

274-5589 HOOD GP–PERFORATED

S/N: LJR1-UP
FOR USE WITH VPAT BULLDOZER
CANNOT BE USED WITH SEMI-UNIVERSAL BULLDOZER
AN ATTACHMENT

SMCS-7251 **i05017436**

NOTE	REF NO	GRAPHIC REF	PART NUMBER	QTY	PART NAME 1 2 3 4 5 6 (PRODUCT LEVEL)	SEE PAGE
	1	1	**287-5403**	1	HOOD AS	
M		1	**8T-3490**		NUT-WELD (M10X1.5-THD)	
M		1	**8T-5413**		STUD-WELD (M10X1.5X25-MM)	
	2	1	**256-3467**	1	CLAMP	
	3	1	**267-6434**	1	SHIELD	
	4	1	**274-3488**	1	SCREEN (HOOD TOP)	
M	5	1	**5C-7261**	4	NUT (M8X1.25-THD)	
	6	1	**5P-4116**	4	WASHER-HARD (8.8X20.5X2-MM THK)	

M - METRIC PART

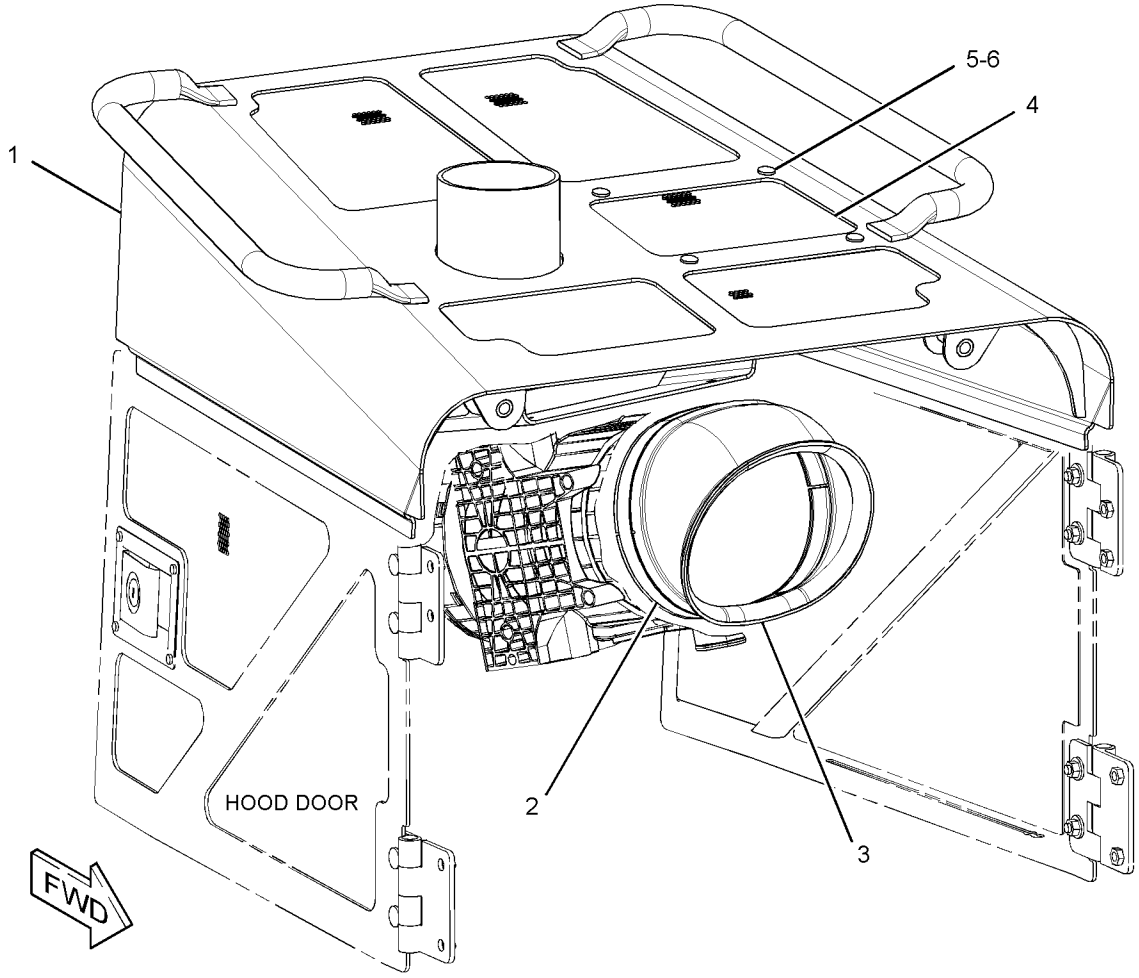

GRAPHIC #1 **<END>** g01640900

274-5590 HOOD GP–PERFORATED

S/N: LJR1-UP
FOR USE WITH SEMI-UNIVERSAL BULLDOZER
CANNOT BE USED WITH VPAT BULLDOZER
AN ATTACHMENT

SMCS-7251 **i05017437**

NOTE	REF NO	GRAPHIC REF	PART NUMBER	QTY	PART NAME 1 2 3 4 5 6 (PRODUCT LEVEL)	SEE PAGE
	1	1	**287-5403**	1	HOOD AS	
Y	2	1	*290-2555*	1	DOOR GP-HOOD (RH)	328
Y	3	1	*290-2557*	1	DOOR GP-HOOD (LH)	329
	4	1	**256-3467**	1	CLAMP	
M	5	1	**5C-7261**	4	NUT (M8X1.25-THD)	
	6	1	**267-6434**	1	SHIELD	
	7	1	**274-3488**	1	SCREEN (HOOD TOP)	
	8	1	**278-5131**	1	BRACKET AS (RH)	
	9	1	**278-5132**	1	BRACKET AS (LH)	
	10	1	**5P-4116**	4	WASHER-HARD (8.8X20.5X2-MM THK)	

M - METRIC PART
Y - SEPARATE ILLUSTRATION

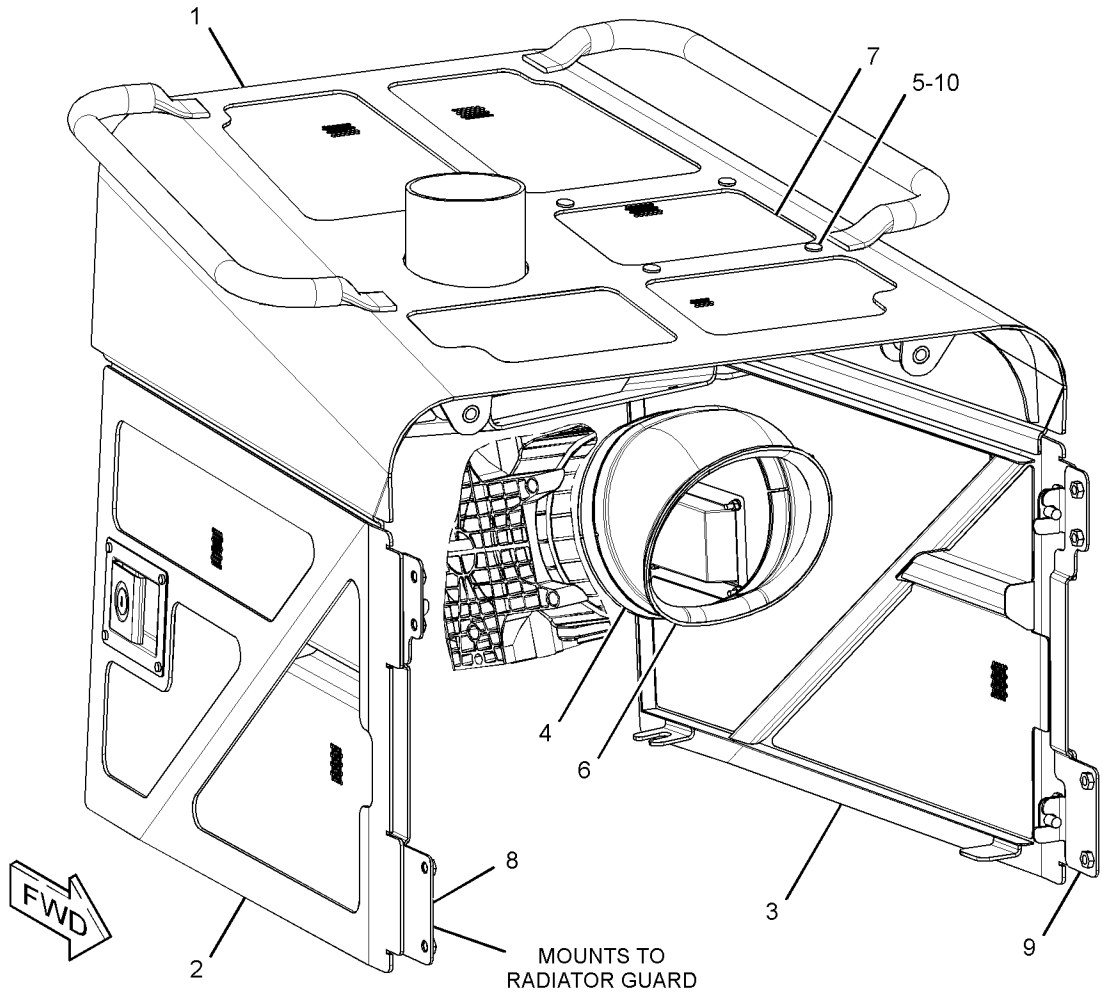

GRAPHIC #1

<END>

g01643717

257-8158 SEAL GP-WASTE HANDLING

S/N: LJR1-UP
PART OF 333-3450 CHASSIS AR
AN ATTACHMENT

SMCS-7555 **i04775712**

NOTE	REF NO	GRAPHIC REF	PART NUMBER	QTY	PART NAME 1 2 3 4 5 6 (PRODUCT LEVEL)	SEE PAGE
	1	1	**320-5944**	1	PLATE	
M	2	1	**8T-4194**	1	BOLT (M12X1.75X50-MM)	
	3	1	**8T-4223**	2	WASHER-HARD (13.5X25.5X3-MM THK)	
M	4	1	**8T-4956**	1	BOLT (M12X1.75X35-MM)	
D	5	1	**6V-2496**		SEAL (1.1-M)	
D	5A	1	**6V-2496**		SEAL (0.3-M EACH)	
E	6	1	**238-9166**		SEAL (15-CM EACH)	
E	7	1	**222-5097**		SEAL (17.3-CM EACH)	
E	8	1	**233-6832**		SEAL (45.9-CM)	
E	9	1	**140-1320**		SEAL (39.7-CM)	
E	9A	1	**140-1320**		SEAL (15.6-CM EACH)	
E	10	1	**221-8310**		SEAL (19.5-CM EACH)	
E	11	1	**149-5933**		SEAL (469.4-CM)	
E	11A	1	**149-5933**		SEAL (19-CM EACH)	

D - ORDER BY THE METER
E - ORDER BY THE CENTIMETER
M - METRIC PART

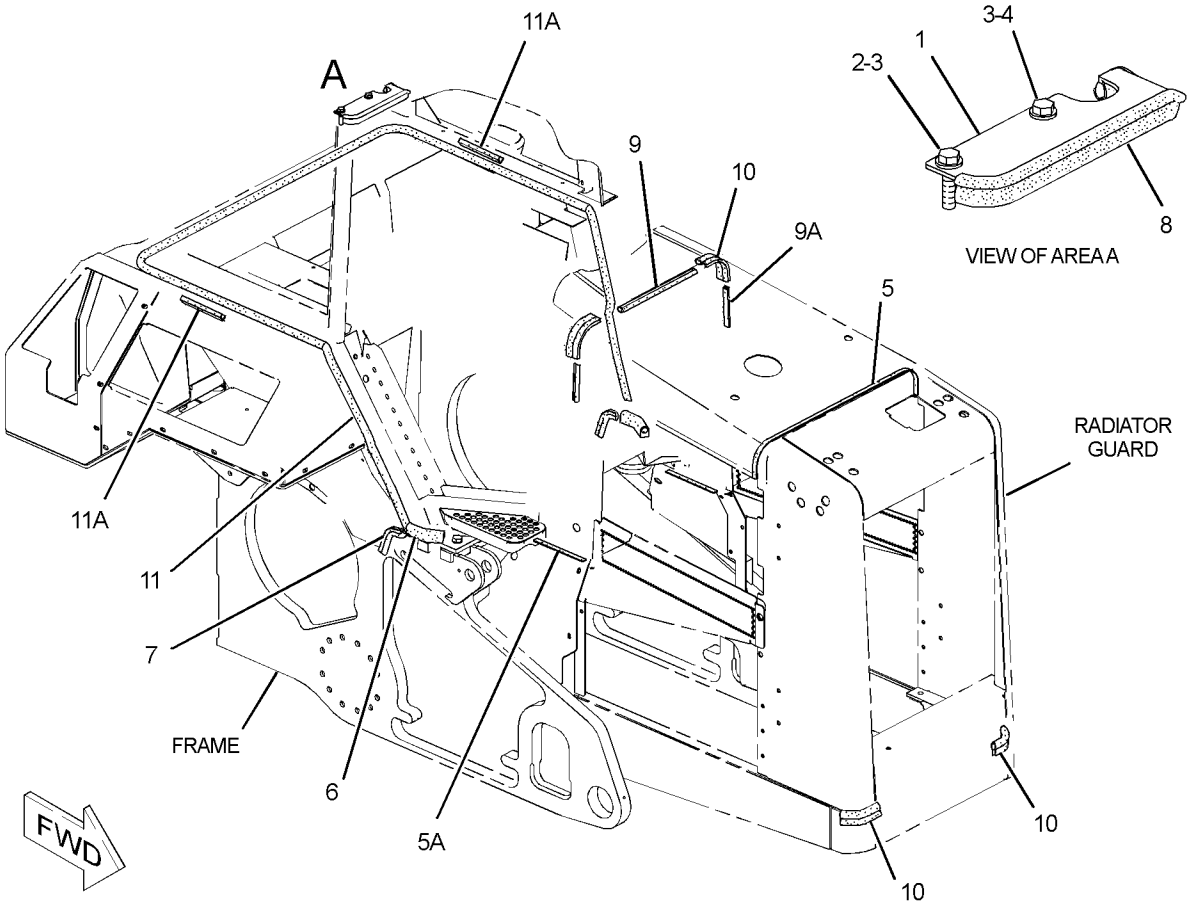

GRAPHIC #1 **<END>** g02912697

177-3852 STEP GP

S/N: LJR1-UP
PART OF 311-6420 CAB GP
ALSO AN ATTACHMENT

SMCS-7254 **i02793308**

NOTE	REF NO	GRAPHIC REF	PART NUMBER	QTY	PART NAME 1 2 3 4 5 6 (PRODUCT LEVEL)	SEE PAGE
C	1	1	**294-3226**	1	STEP AS	
C	2	1	**294-3225**	1	STEP AS	
	3	1	**7X-7729**	8	WASHER (11X25X3-MM THK)	
M	4	1	**8T-4137**	8	BOLT (M10X1.5X20-MM)	

C - CHANGE FROM PREVIOUS TYPE
M - METRIC PART

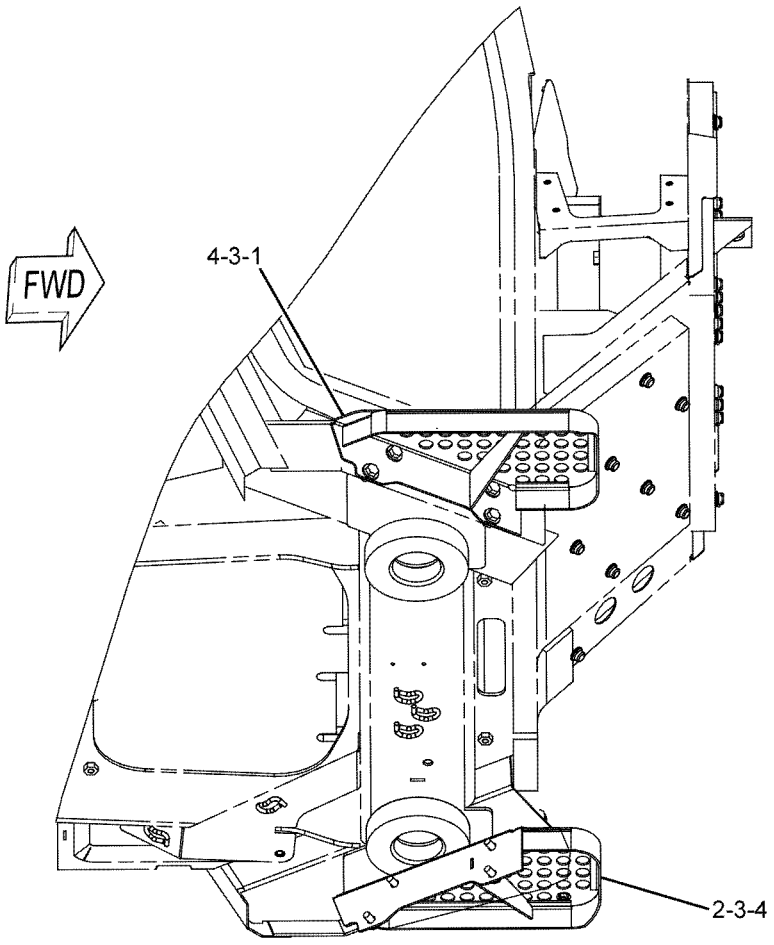

GRAPHIC #1 **<END>** g01061503

274-1300 SWEEP GP

S/N: LJR1-UP
CANNOT BE USED WITH CANOPY AR
PART OF 338-2602 OPTION AR-SWEEP
AN ATTACHMENT

SMCS-7162 **i04915677**

NOTE	REF NO	GRAPHIC REF	PART NUMBER	QTY	PART NAME 1 2 3 4 5 6 (PRODUCT LEVEL)	SEE PAGE
	1	1	**3W-3896**	2	HANDHOLD	
	2	1	**9S-5187**	4	MOUNTING	
	3	1	**285-5031**	1	SWEEP AS (RH)	
	4	1	**285-5032**	1	SWEEP AS (LH)	
	5	1	**285-5681**	8	SLEEVE	
	6	1	**287-0289**	1	SWEEP AS	
	7	1	**287-6916**	1	SUPPORT AS (RH)	
	8	1	**287-6917**	1	PLATE	
	9	1	**287-6918**	1	SUPPORT AS (LH)	
	10	1	**287-6919**	1	PLATE	
	11	1	**287-6920**	1	BRACKET AS (LH)	
	12	1	**287-6948**	1	BRACKET AS (RH)	
	13	1	**288-4524**	1	BRACKET AS (RH)	
	14	1	**288-4525**	1	BRACKET AS (LH)	
	15	1	**068-6405**	8	WASHER (26X63.5X6-MM THK)	
M	16	1	**096-4884**	4	LOCKNUT (M12X1.75-THD)	
M	18	1	**6V-7676**	4	NUT (M24X3-THD)	
	19	1	**7X-0515**	4	WASHER-HARD (17X35X5-MM THK)	
	20	1	**7X-3391**	8	WASHER-HARD (13.5X32X6-MM THK)	
	22	1	**8E-1050**	6	PLATE	
	23	1	**8P-5244**	8	WASHER (33.3X69.8X6.35-MM THK)	
M	25	1	**8T-4140**	10	BOLT (M16X2X60-MM)	
M	26	1	**8T-4183**	4	BOLT (M12X1.75X40-MM)	
	30	1	**8T-4223**	4	WASHER-HARD (13.5X25.5X3-MM THK)	
M	31	1	**8T-4649**	4	BOLT (M24X3X140-MM)	
M	32	1	**8T-5041**	4	BOLT (M12X1.75X120-MM)	
M	34	1	**8T-4194**	16	BOLT (M12X1.75X50-MM)	
M	35	1	**8T-4184**	8	BOLT (M12X1.75X45-MM)	
	36	1	**198-4778**	24	WASHER-HARD (13.5X30X12-MM THK)	
	37	1	**7X-7729**	4	WASHER (11X25X3-MM THK)	
M	38	1	**8T-4136**	4	BOLT (M10X1.5X25-MM)	
	39	1	**361-7475**	4	GUARD AS-GRID	
	40	1	**301-7809**	2	BRACKET AS	
	41	1	**301-7810**	2	BRACKET AS	

M - METRIC PART

274-1300 **SWEEP GP (*contd.*)** **i04915677**

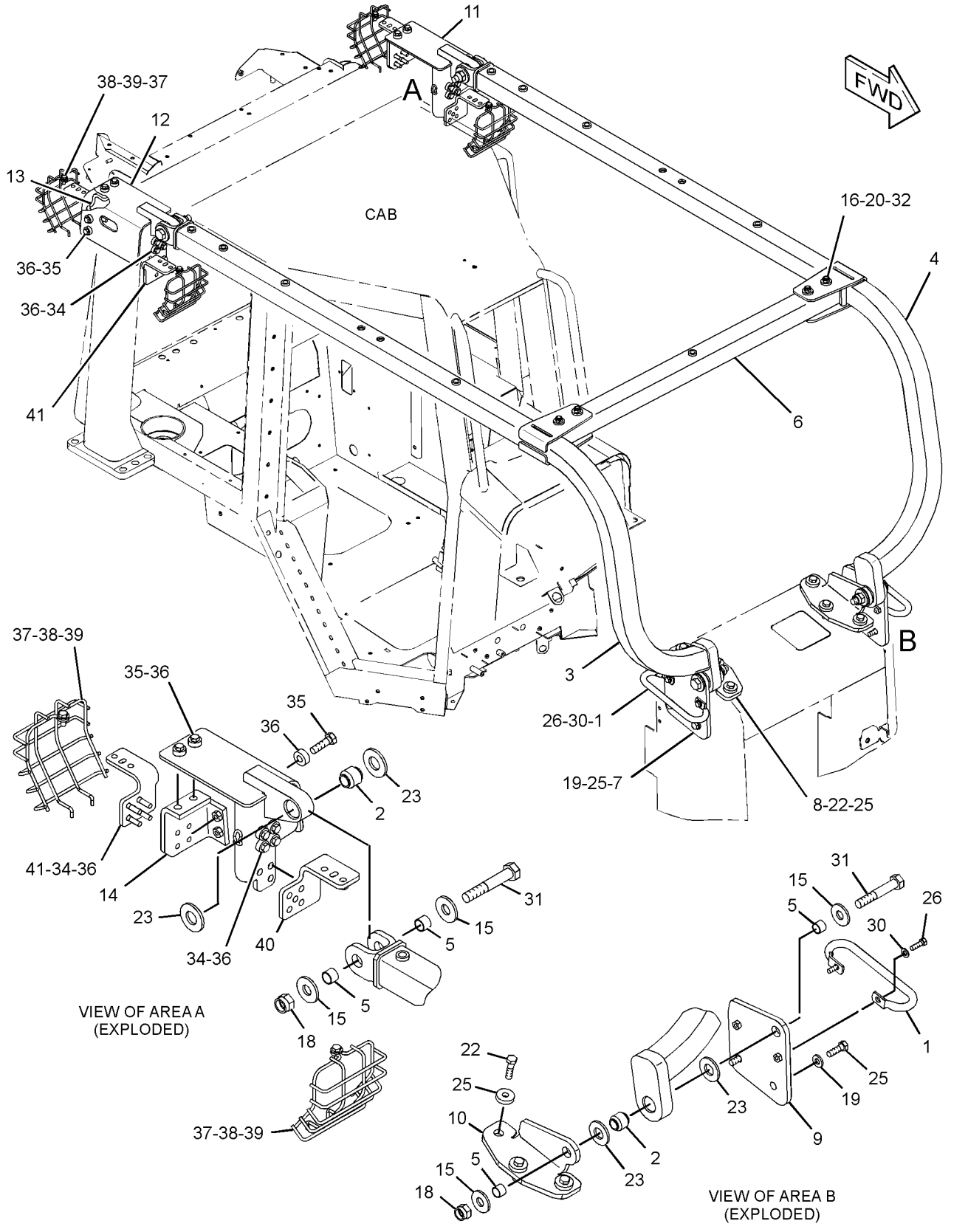

GRAPHIC #1 **<END>** g02887452

287-3322 SWEEP GP

S/N: LJR1-UP
FOR USE WITH CANOPY AR
PART OF 338-2604 OPTION AR-SWEEP
AN ATTACHMENT

SMCS-7162 **i04915678**

NOTE	REF NO	GRAPHIC REF	PART NUMBER	QTY	PART NAME 1 2 3 4 5 6 (PRODUCT LEVEL)	SEE PAGE
	1	1	**3W-3896**	2	HANDHOLD	
	2	1	**9S-5187**	4	MOUNTING	
	3	1	**285-5031**	1	SWEEP AS (RH)	
	4	1	**285-5032**	1	SWEEP AS (LH)	
	5	1	**285-5681**	8	SLEEVE	
	6	1	**287-0289**	1	SWEEP AS	
	7	1	**287-6813**	2	PLATE AS	
	8	1	**287-6916**	1	SUPPORT AS (RH)	
	9	1	**287-6917**	1	PLATE	
	10	1	**287-6918**	1	SUPPORT AS (LH)	
	11	1	**287-6919**	1	PLATE	
	12	1	**068-6405**	8	WASHER (26X63.5X6-MM THK)	
M	13	1	**096-4884**	4	LOCKNUT (M12X1.75-THD)	
M	14	1	**6V-7676**	4	NUT (M24X3-THD)	
	15	1	**7X-0515**	4	WASHER-HARD (17X35X5-MM THK)	
	16	1	**7X-3391**	14	WASHER-HARD (13.5X32X6-MM THK)	
	17	1	**8E-1050**	6	PLATE	
	18	1	**8P-5244**	8	WASHER (33.3X69.8X6.35-MM THK)	
M	19	1	**8T-4140**	10	BOLT (M16X2X60-MM)	
M	20	1	**8T-4183**	10	BOLT (M12X1.75X40-MM)	
	22	1	**8T-4223**	4	WASHER-HARD (13.5X25.5X3-MM THK)	
M	23	1	**8T-4649**	4	BOLT (M24X3X140-MM)	
M	24	1	**8T-5041**	4	BOLT (M12X1.75X120-MM)	
	25	1	**7X-7729**	4	WASHER (11X25X3-MM THK)	
M	26	1	**8T-4136**	4	BOLT (M10X1.5X25-MM)	
	27	1	**361-7475**	4	GUARD AS-GRID	

M - METRIC PART

287-3322 **SWEEP GP (*contd.*)** **i04915678**

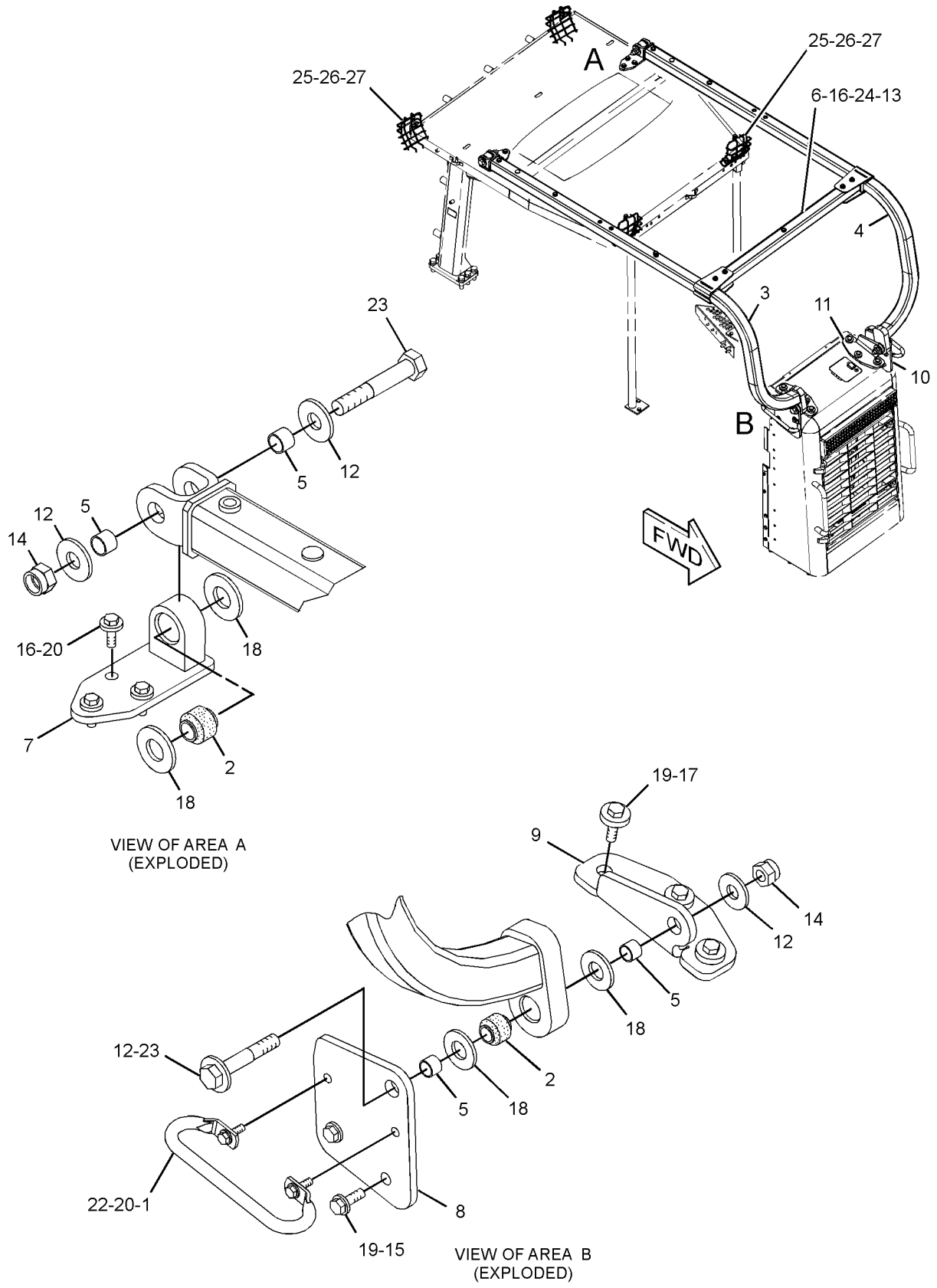

GRAPHIC #1 **<END>** g02887782

172-9872 BAR GP-EQUALIZER

S/N: LJR1-788

PART OF 322-4635 UNDERCARRIAGE AR

SMCS-7206 **i04801401**

NOTE	REF NO	GRAPHIC REF	PART NUMBER	QTY	PART NAME 1 2 3 4 5 6 (PRODUCT LEVEL)	SEE PAGE
	1	1	**8G-8316**	2	SPACER (64.7X85X7-MM THK)	
	2	1	**109-0367**	1	PIN	
	3	1	**340-7503**	2	PIN AS	
	4	1	**109-3478**	1	COVER	
	5	1	**261-2099**	1	COVER	
Y	6	1	**346-2864**	1	BAR GP-EQUALIZER	384
Y	7	1	*349-2450*	1	LINES GP-GREASE	583
	8	1	**7X-0587**	2	WASHER-HARD (17X54X3-MM THK)	
M	9	1	**8T-4190**	2	BOLT (M16X2X25-MM)	
M	10	1	**8T-7338**	4	BOLT (M16X2X45-MM)	
	11	1	**9X-8257**	4	WASHER (17.5X30X3.5-MM THK)	
	12	1	**3B-8489**	2	FITTING-GREASE	

M - METRIC PART
Y - SEPARATE ILLUSTRATION

172-9872 **BAR GP-EQUALIZER (*contd.*)** **i04801401**

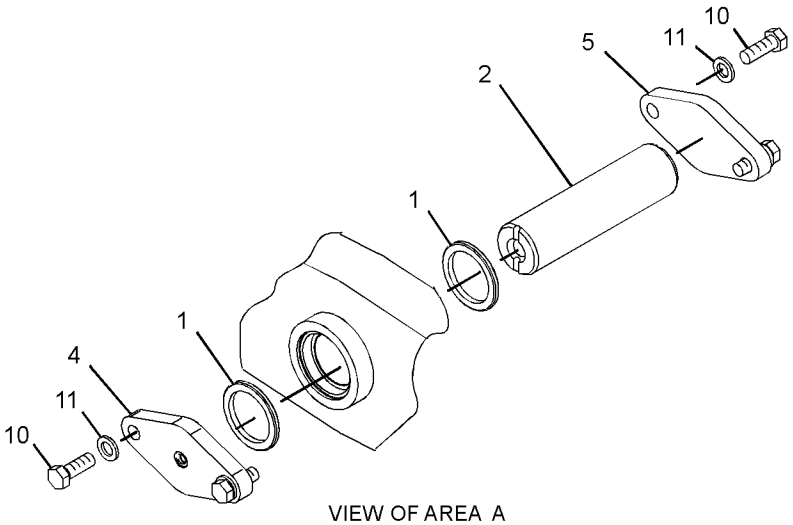

VIEW OF AREA A
(EXPLODED)

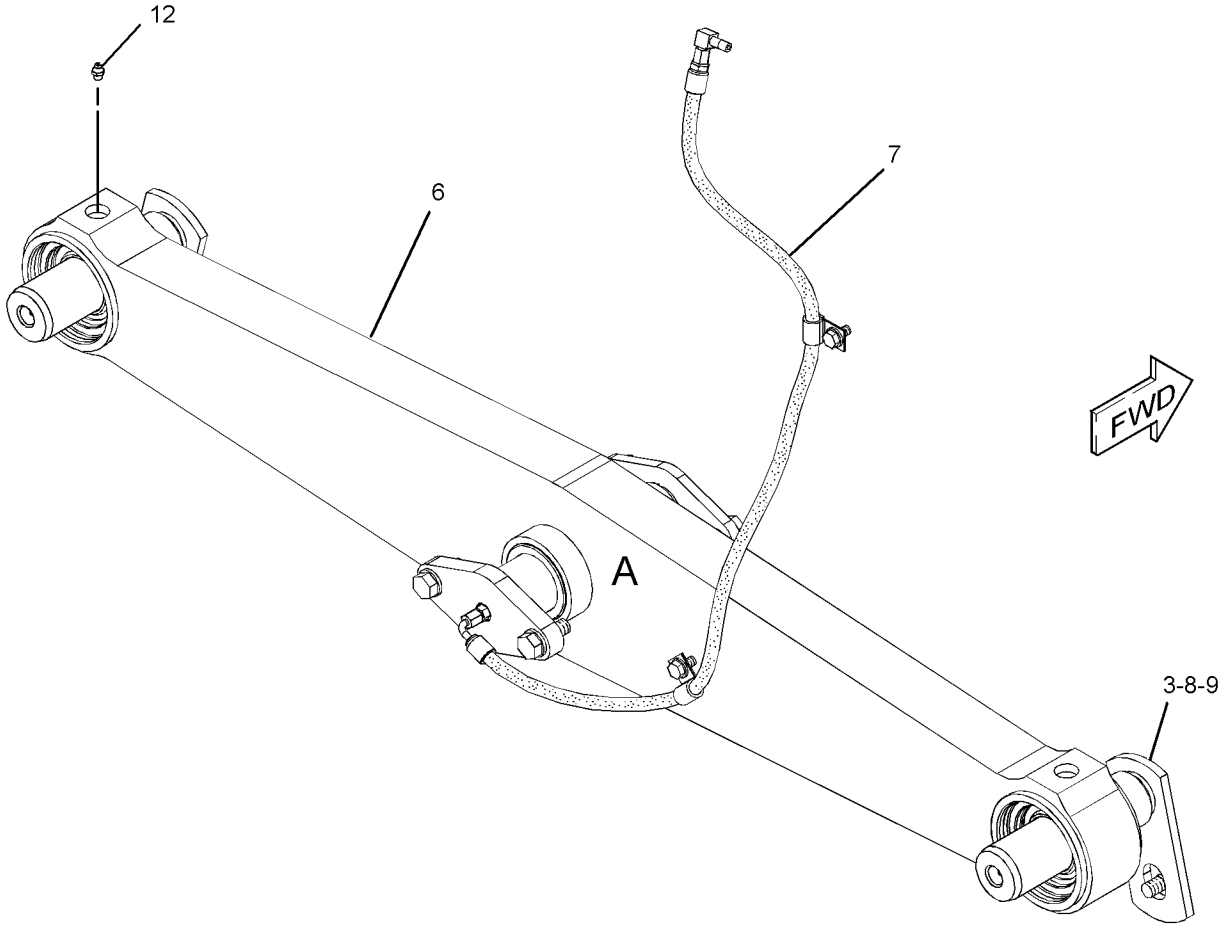

GRAPHIC #1 **<END>** g02957759

172-9872 BAR GP-EQUALIZER

S/N: LJR789-UP

PART OF 322-4635 UNDERCARRIAGE AR

SMCS-7206 **i05128270**

NOTE	REF NO	GRAPHIC REF	PART NUMBER	QTY	PART NAME 1 2 3 4 5 6 (PRODUCT LEVEL)	SEE PAGE
	1	1	**8G-8316**	2	SPACER (64.7X85X7-MM THK)	
	2	1	**109-0367**	1	PIN	
	3	1	**340-7503**	2	PIN AS	
	4	1	**109-3478**	1	COVER	
	5	1	**261-2099**	1	COVER	
CY	6	1	**340-7499**	1	BAR GP-EQUALIZER	383
Y	7	1	*349-2450*	1	LINES GP-GREASE	583
	8	1	**7X-0587**	2	WASHER-HARD (17X54X3-MM THK)	
M	9	1	**8T-4190**	2	BOLT (M16X2X25-MM)	
M	10	1	**8T-7338**	4	BOLT (M16X2X45-MM)	
	11	1	**9X-8257**	4	WASHER (17.5X30X3.5-MM THK)	
	12	1	**3B-8489**	2	FITTING-GREASE	

C - CHANGE FROM PREVIOUS TYPE
M - METRIC PART
Y - SEPARATE ILLUSTRATION

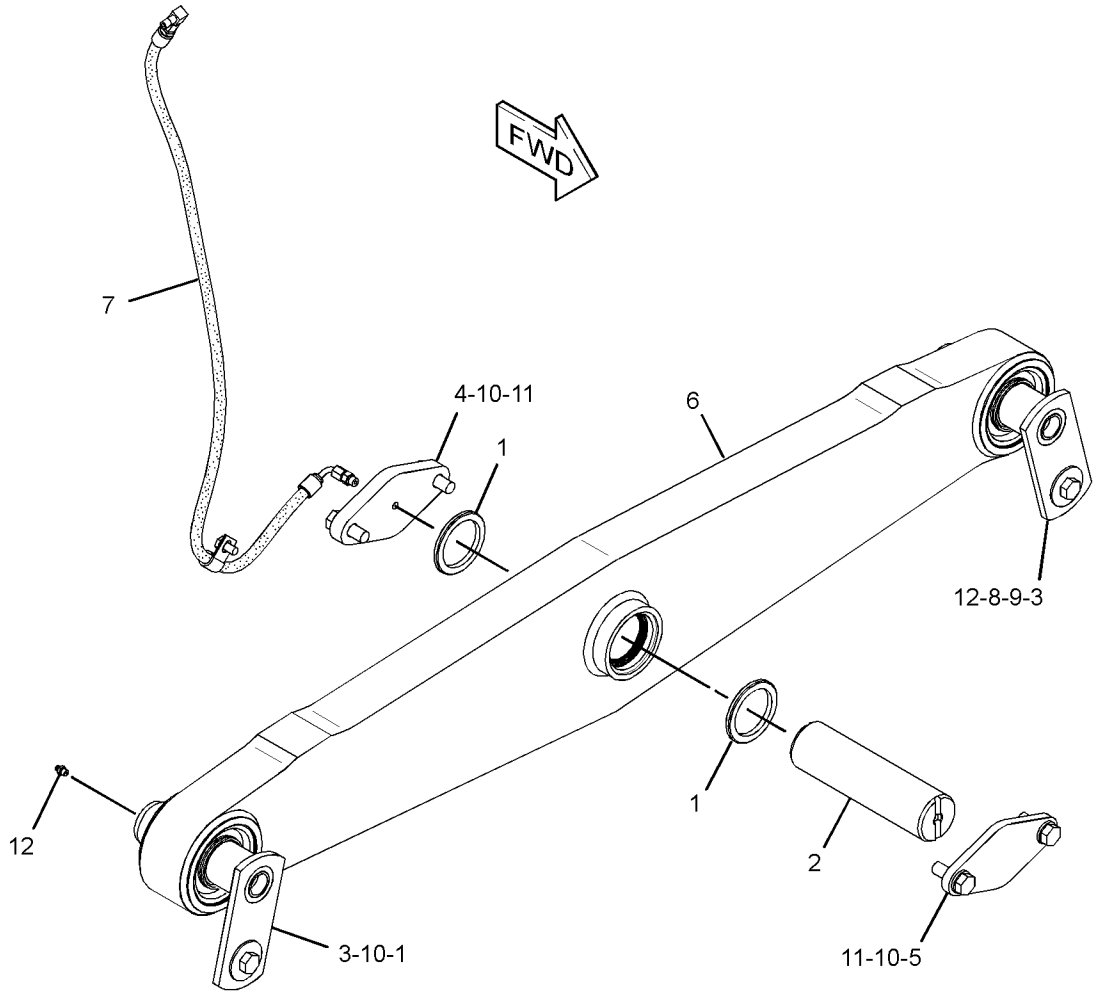

GRAPHIC #1 **<END>** g03053919

340-7499 BAR GP-EQUALIZER

S/N: LJR789-UP

PART OF 172-9872 BAR GP-EQUALIZER

SMCS-7206 **i05128331**

NOTE	REF NO	GRAPHIC REF	PART NUMBER	QTY	PART NAME 1 2 3 4 5 6 (PRODUCT LEVEL)	SEE PAGE
	1	1	**8G-4189**	2	BEARING-SELF-ALIGNING	
	2	1	**8G-4190**	4	SEAL	
	3	1	**1J-6472**	4	RING-RETAINING	
	4	1	**7K-9205**	2	SEAL-LIP TYPE	
	5	1	**7P-6596**	2	BUSHING	

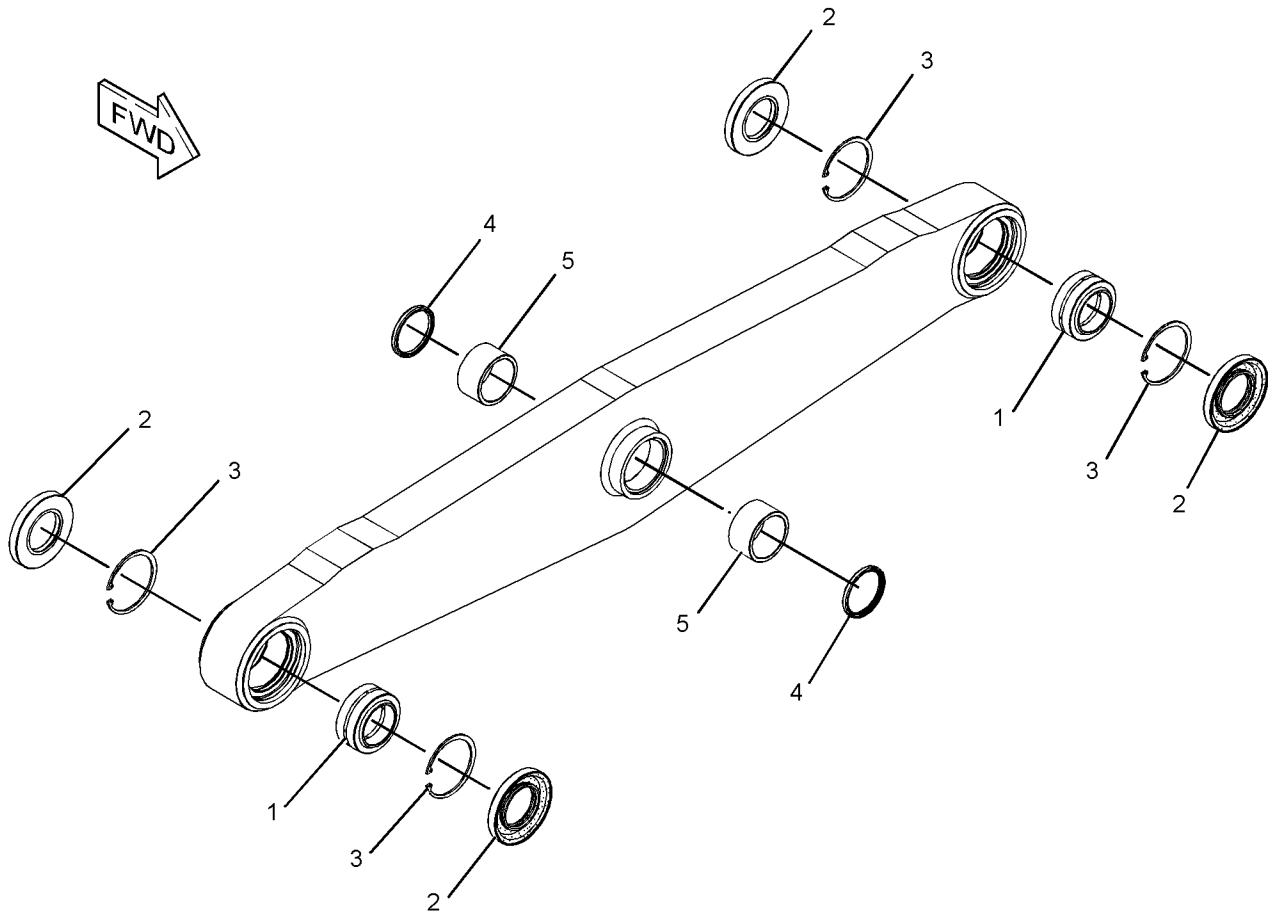

GRAPHIC #1 **<END>** g02793476

346-2864 BAR GP-EQUALIZER

S/N: LJR1-788

PART OF 172-9872 BAR GP-EQUALIZER

SMCS-7206 **i03630774**

NOTE	REF NO	GRAPHIC REF	PART NUMBER	QTY	PART NAME 1 2 3 4 5 6 (PRODUCT LEVEL)	SEE PAGE
	1	1	**3B-8489**	2	FITTING-GREASE	
	2	1	**8E-8789**	1	BAR AS	
	2A	1	**7P-6596**	2	BUSHING	
	3	1	**8G-4189**	2	BEARING-SELF-ALIGNING	
	4	1	**1J-6472**	4	RING-RETAINING	
	5	1	**7K-9205**	2	SEAL-LIP TYPE	
	6	1	**8G-4190**	4	SEAL	

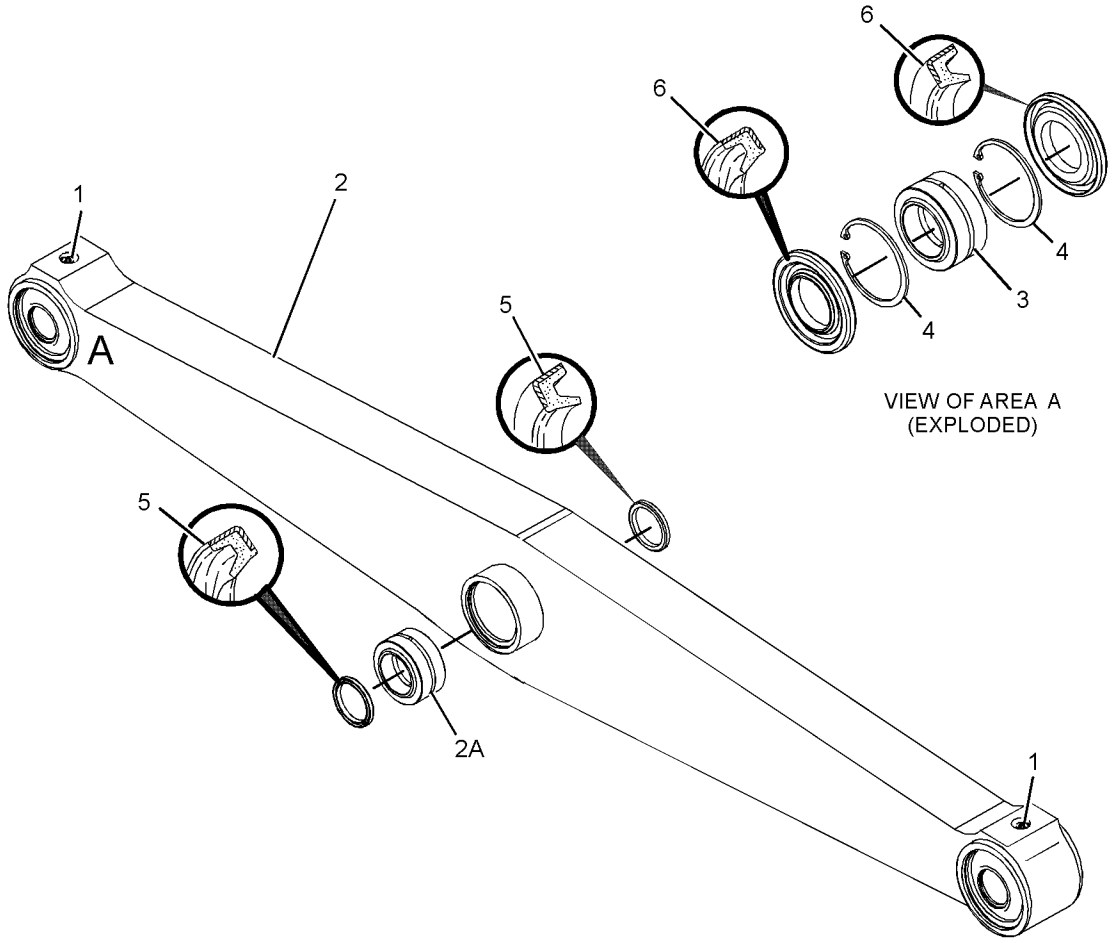

GRAPHIC #1 **<END>** g01949024

233-0367 CAP GP-TRACK IDLER–FRONT, RH

S/N: LJR1-UP

PART OF 350-6986 FRAME GP-UNDERCARRIAGE

AN ATTACHMENT

SMCS-4159 **i02302262**

NOTE	REF NO	GRAPHIC REF	PART NUMBER	QTY	PART NAME 1 2 3 4 5 6 (PRODUCT LEVEL)	SEE PAGE
	1	1	**233-0368**	1	CAP AS	
	2	1	**254-3927**	1	BLOCK-TRACK IDLER	
B	3	1	**254-3929**	1	SHIM (10-MM THK)	
	4	1	**5P-8247**	2	WASHER-HARD (17X32X3.5-MM THK)	
M	5	1	**8T-0359**	2	BOLT (M16X2X130-MM)	

B - USE AS REQUIRED
M - METRIC PART

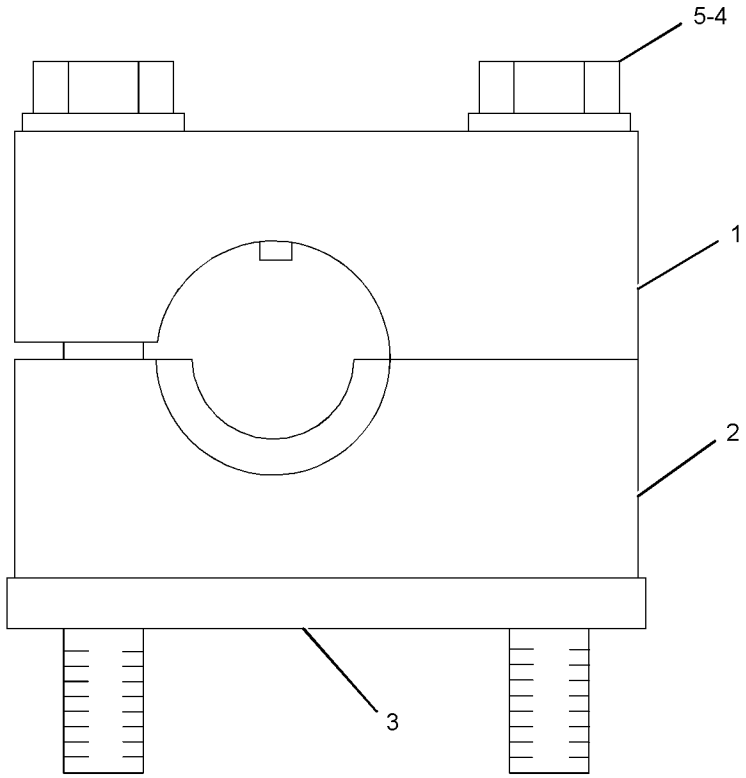

GRAPHIC #1 **<END>** g01240617

233-0854 CAP GP-TRACK IDLER–FRONT, LH

S/N: LJR1-UP

PART OF 350-6986 FRAME GP-UNDERCARRIAGE

AN ATTACHMENT

SMCS-4159 **i02302263**

NOTE	REF NO	GRAPHIC REF	PART NUMBER	QTY	PART NAME 1 2 3 4 5 6 (PRODUCT LEVEL)	SEE PAGE
	1	1	**233-0372**	1	CAP AS	
		1	**6B-6863**	1	PIN-SPRING	
	2	1	**254-3928**	1	BLOCK-TRACK IDLER	
B	3	1	**254-3929**	1	SHIM (10-MM THK)	
	4	1	**5P-8247**	2	WASHER-HARD (17X32X3.5-MM THK)	
M	5	1	**8T-0359**	2	BOLT (M16X2X130-MM)	

B - USE AS REQUIRED
M - METRIC PART

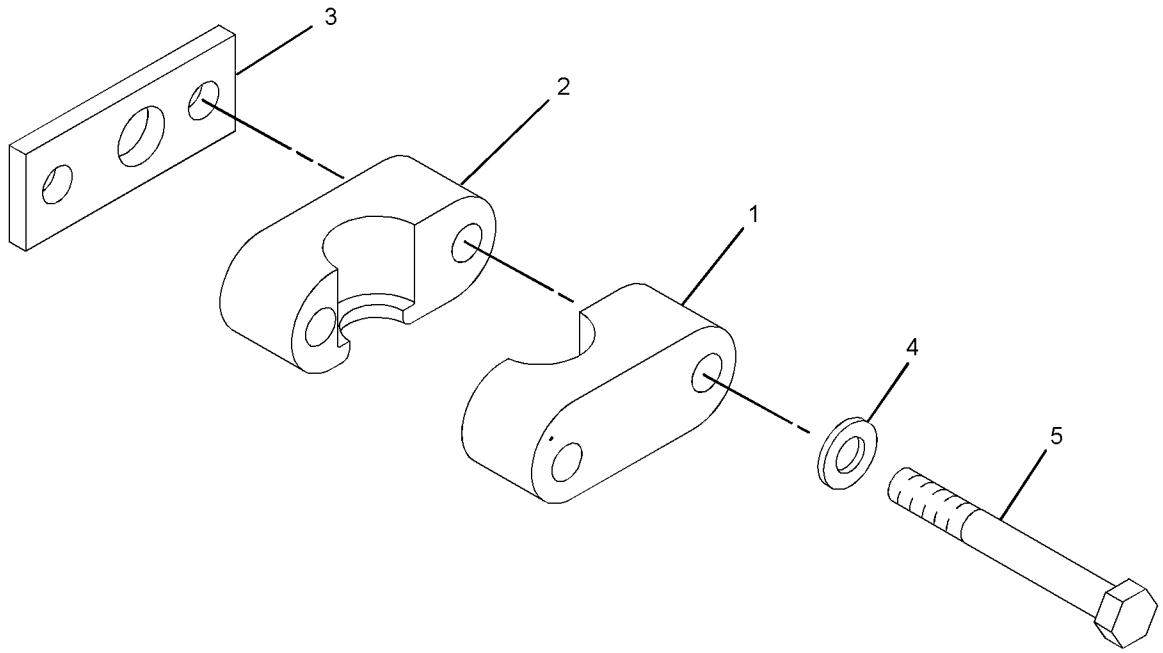

GRAPHIC #1 **<END>** g01239189

255-0045 CAP GP-TRACK IDLER–REAR, RH

S/N: LJR1-UP

PART OF 350-6986 FRAME GP-UNDERCARRIAGE

AN ATTACHMENT

SMCS-4159 **i02302260**

NOTE	REF NO	GRAPHIC REF	PART NUMBER	QTY	PART NAME 1 2 3 4 5 6 (PRODUCT LEVEL)	SEE PAGE
	1	1	**233-0372**	1	CAP AS	
		1	**6B-6863**	1	PIN-SPRING	
	2	1	**239-8090**	1	BLOCK-TRACK IDLER	
	3	1	**5P-8247**	2	WASHER-HARD (17X32X3.5-MM THK)	
M	4	1	**8T-0282**	2	BOLT (M16X2X120-MM)	

M - METRIC PART

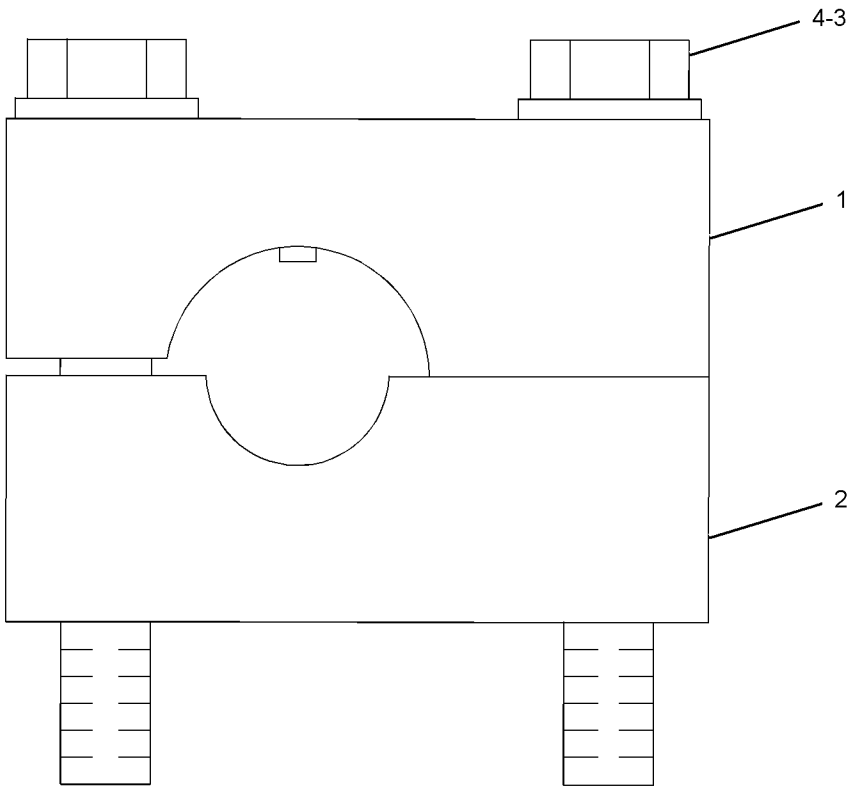

GRAPHIC #1 **<END>** g01294307

255-0046 CAP GP-TRACK IDLER–REAR, LH

S/N: LJR1-UP

PART OF 350-6986 FRAME GP-UNDERCARRIAGE

AN ATTACHMENT

SMCS-4159 **i02302261**

NOTE	REF NO	GRAPHIC REF	PART NUMBER	QTY	PART NAME 1 2 3 4 5 6 (PRODUCT LEVEL)	SEE PAGE
	1	1	**233-0368**	1	CAP AS	
		1	**6B-6863**	1	PIN-SPRING	
	2	1	**239-8091**	1	BLOCK-TRACK IDLER	
	3	1	**5P-8247**	2	WASHER-HARD (17X32X3.5-MM THK)	
M	4	1	**8T-0282**	2	BOLT (M16X2X120-MM)	

M - METRIC PART

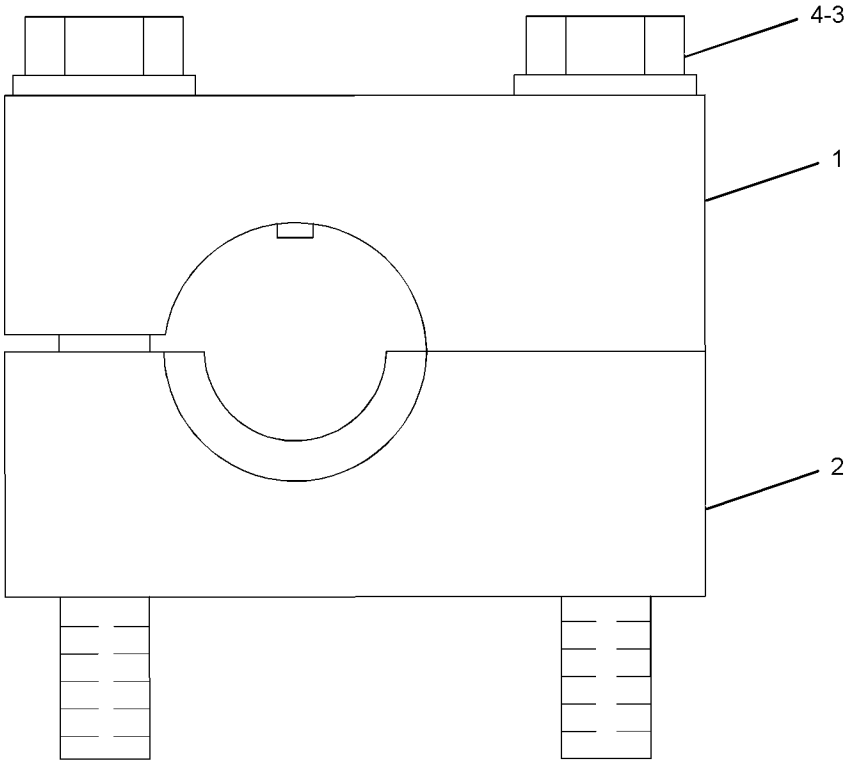

GRAPHIC #1 **<END>** g01294304

339-3093 CAP GP-TRACK IDLER–SYSTEMONE

S/N: LJR1-UP

PART OF 271-6182, 350-6983 UNDERCARRIAGE GP

SMCS-4159 **i03630794**

NOTE	REF NO	GRAPHIC REF	PART NUMBER	QTY	PART NAME 1 2 3 4 5 6 (PRODUCT LEVEL)	SEE PAGE
B	1	1	**233-0375**	1	SHIM (12-MM THK)	
	2	1	**283-5746**	1	CAP AS-TRACK IDLER	
	2A	1	**6B-6863**	1	PIN-SPRING	
	3	1	**283-5748**	1	BLOCK-TRACK IDLER	
	4	1	**5P-8247**	2	WASHER-HARD (17X32X3.5-MM THK)	
M	5	1	**9X-8916**	2	BOLT (M16X2X140-MM)	

B - USE AS REQUIRED
M - METRIC PART

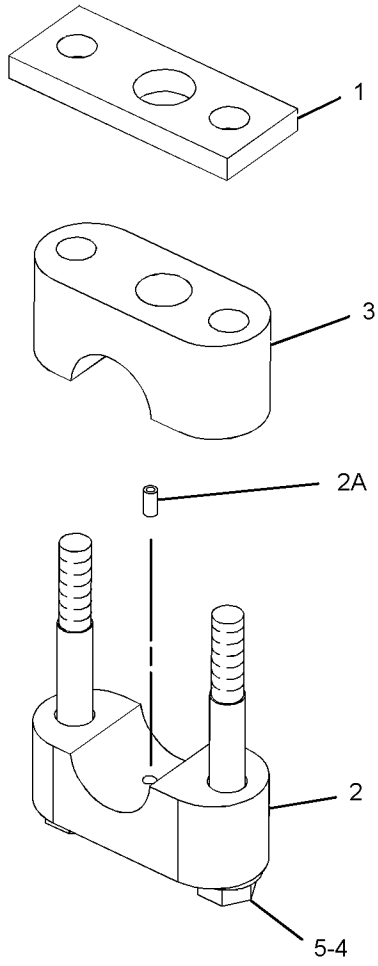

GRAPHIC #1 **<END>** g01909734

339-3094 CAP GP-TRACK IDLER–SYSTEMONE

S/N: LJR1-UP

PART OF 271-6182, 350-6983 UNDERCARRIAGE GP

SMCS-4159 **i03630797**

NOTE	REF NO	GRAPHIC REF	PART NUMBER	QTY	PART NAME 1 2 3 4 5 6 (PRODUCT LEVEL)	SEE PAGE
B	1	1	**233-0375**	1	SHIM (12-MM THK)	
	2	1	**283-5750**	1	CAP AS-TRACK IDLER	
	2A	1	**6B-6863**	1	PIN-SPRING	
	3	1	**283-5752**	1	BLOCK-TRACK IDLER	
	4	1	**5P-8247**	2	WASHER-HARD (17X32X3.5-MM THK)	
M	5	1	**9X-8916**	2	BOLT (M16X2X140-MM)	

B - USE AS REQUIRED
M - METRIC PART

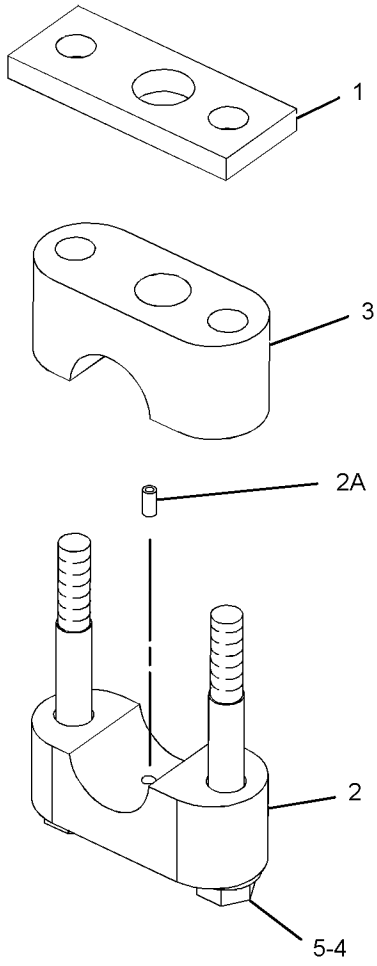

GRAPHIC #1 **<END>** g01909734

271-6128 FRAME GP-TRACK ROLLER–SYSTEMONE

S/N: LJR1-214

PART OF 271-6182 UNDERCARRIAGE GP

SMCS-4151 **i03630782**

NOTE	REF NO	GRAPHIC REF	PART NUMBER	QTY	PART NAME 1 2 3 4 5 6 (PRODUCT LEVEL)	SEE PAGE
	1	1	**8E-1212**	2	COVER AS	
					(EACH INCLUDES)	
		1	**5P-9891**	1	PLATE-WARNING (HIGH PRESSURE CYLINDER)	
		1	**7B-3028**	4	SCREW-DRIVE (NO 4X 3/16-IN)	
		1	**8E-1211**	1	COVER	
	2	1	**110-5692**	4	RETAINER AS	
					(EACH INCLUDES)	
		1	**241-3720**	1	FILM-WARNING (RECOIL SPRING)	
	3	1	**271-6141**	1	FRAME AS (RH, SYSTEMONE)	
	3A	1	**221-3197**	1	BUSHING	
	3B	1	**221-3202**	1	BUSHING	
	3C	1	**8K-0589**	2	DOWEL	
	4	1	**271-6142**	1	FRAME AS (LH, SYSTEMONE)	
	4A	1	**221-3197**	1	BUSHING	
	4B	1	**221-3202**	1	BUSHING	
	4C	1	**8K-0589**	2	DOWEL	
Y	5	1	**271-6145**	2	FRAME AS (SYSTEMONE, FRONT)	340
Y	6	1	*271-6184*	2	TRACK ADJUSTER & RECOIL GP	430
	7	1	**1B-5174**	4	PLUG-PIPE	
	8	1	**3W-2025**	2	RING-RETAINING	
	9	1	**5H-6734**	2	SEAL-O-RING	
	10	1	**8T-4121**	8	WASHER-HARD (11X21X2.5-MM THK)	
M	11	1	**8T-4136**	8	BOLT (M10X1.5X25-MM)	
	12	1	**8T-4223**	24	WASHER-HARD (13.5X25.5X3-MM THK)	
	13	1	**9P-8899**	2	BEARING	
	14	1	**9X-4580**	2	SEAL AS	
					(EACH INCLUDES)	
		1	**8T-5071**	1	GUARD-SEAL	
M	15	1	**8T-4139**	24	BOLT (M12X1.75X30-MM)	

M - METRIC PART
Y - SEPARATE ILLUSTRATION

271-6128 **FRAME GP-TRACK ROLLER (*contd.*)** **i03630782**

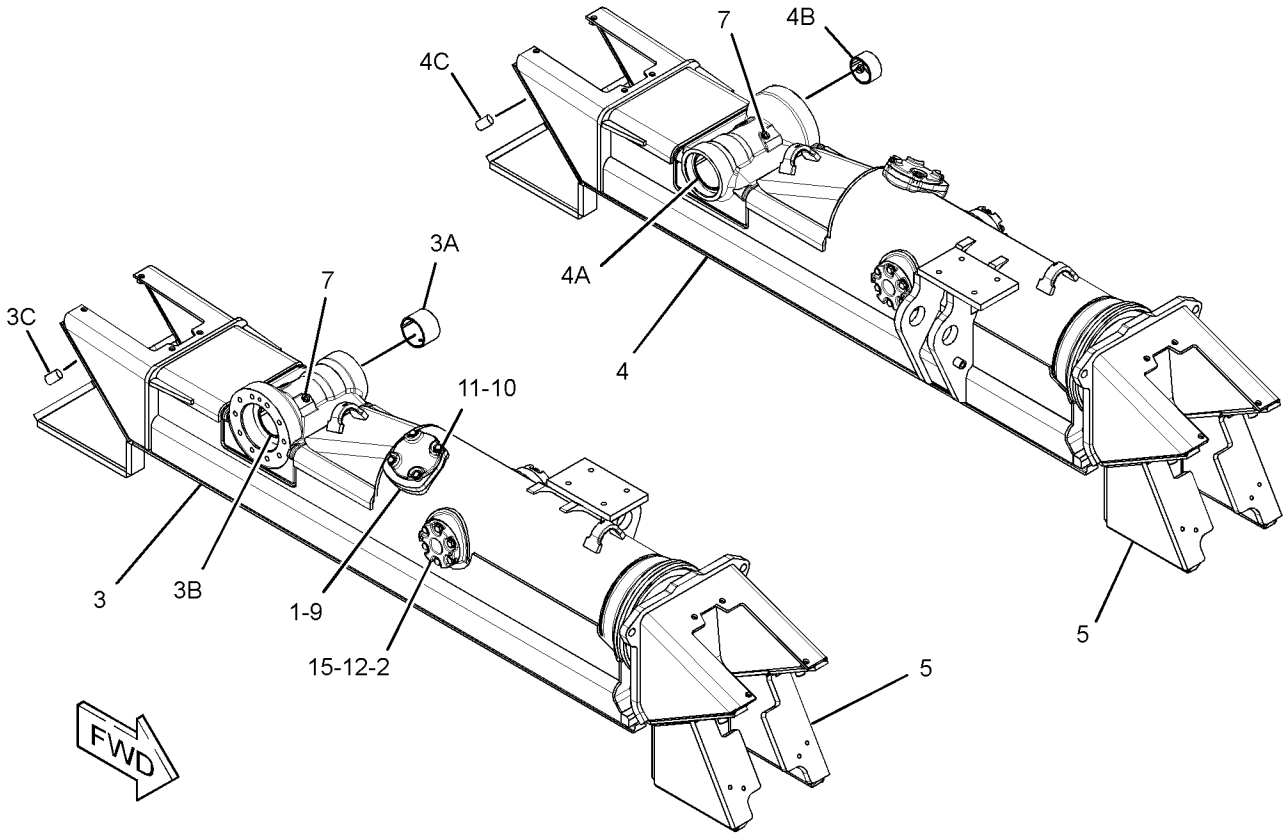

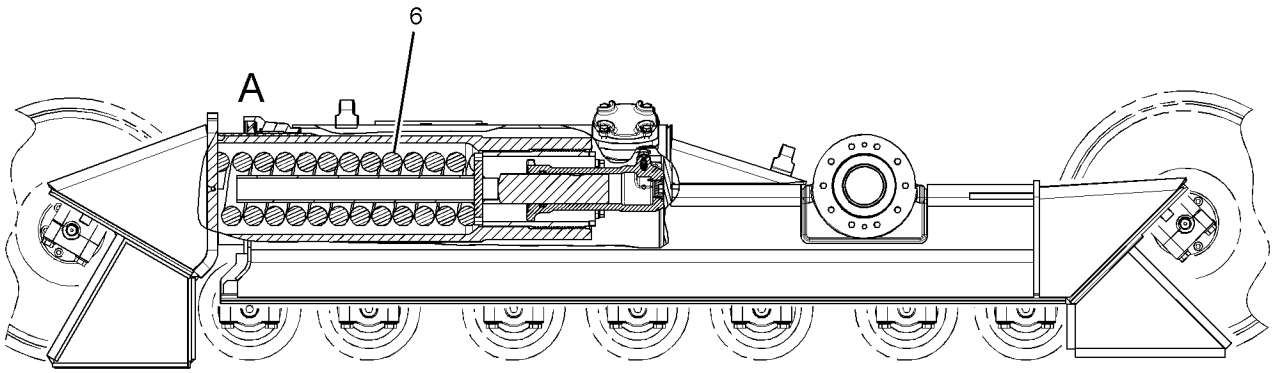

LEFT SIDE VIEW

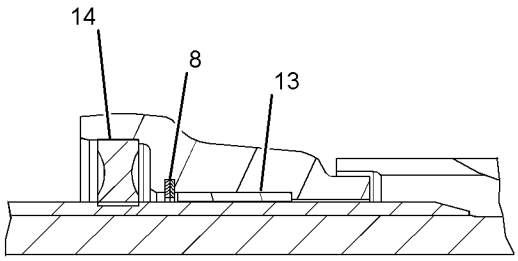

VIEW OF AREA A

GRAPHIC #1 **<END>** g01906513

351-5113 FRAME GP-TRACK ROLLER

S/N: LJR215-UP
FOR USE WITH SYSTEMONE & HEAVY-DUTY UNDERCARRIAGE
PART OF 350-6986 FRAME GP-UNDERCARRIAGE, 350-6983 UNDERCARRIAGE GP
ALSO AN ATTACHMENT

SMCS-4151 **i04011773**

NOTE	REF NO	GRAPHIC REF	PART NUMBER	QTY	PART NAME 1 2 3 4 5 6 (PRODUCT LEVEL)	SEE PAGE
	1	1	**8E-1212**	2	COVER AS	
					(EACH INCLUDES)	
		1	**5P-9891**	1	PLATE-WARNING (HIGH PRESSURE CYLINDER)	
		1	**7B-3028**	4	SCREW-DRIVE (NO 4X 3/16-IN)	
		1	**8E-1211**	1	COVER	
	2	1	**110-5692**	4	RETAINER AS	
Y	3	1	*271-6184*	2	TRACK ADJUSTER & RECOIL GP	430
	4	1	**351-5115**	1	FRAME AS (RH)	
		1	**8K-0589**	2	DOWEL	
		1	**221-3197**	1	BUSHING	
		1	**221-3202**	1	BUSHING	
	5	1	**351-5116**	1	FRAME AS (LH)	
		1	**8K-0589**	2	DOWEL	
		1	**221-3197**	1	BUSHING	
		1	**221-3202**	1	BUSHING	
	6	1	**353-2166**	2	FRAME AS-FRONT	
					(EACH INCLUDES)	
		1	**8G-3202**	1	BUSHING	
		1	**8K-0589**	2	DOWEL	
		1	**8T-9530**	2	TACK-FASTENER	
		1	**239-4989**	1	PLATE-WARNING (RECOIL SPRING)	
	7	1	**1B-5174**	4	PLUG-PIPE	
	8	1	**3W-2025**	2	RING-RETAINING	
	9	1	**5H-6734**	2	SEAL-O-RING	
	10	1	**8T-4121**	8	WASHER-HARD (11X21X2.5-MM THK)	
M	11	1	**8T-4136**	8	BOLT (M10X1.5X25-MM)	
	12	1	**8T-4223**	24	WASHER-HARD (13.5X25.5X3-MM THK)	
	13	1	**9P-8899**	2	BEARING	
	14	1	**9X-4580**	2	SEAL AS	
M	15	1	**8T-4139**	24	BOLT (M12X1.75X30-MM)	

M - METRIC PART
Y - SEPARATE ILLUSTRATION

351-5113 **FRAME GP-TRACK ROLLER (*contd.*)** **i04011773**

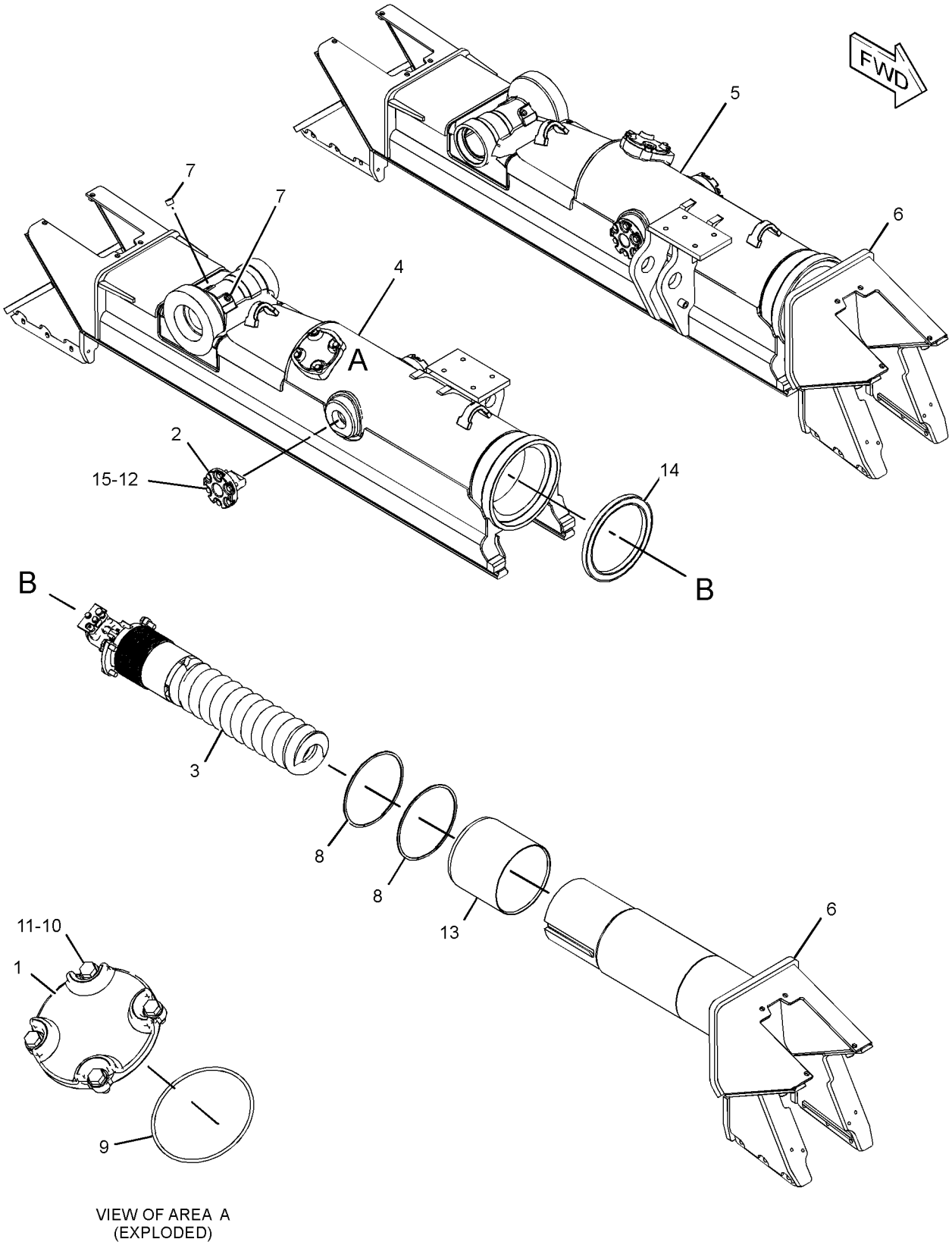

VIEW OF AREA A
(EXPLODED)

GRAPHIC #1 **<END>** g02393121

350-6986 FRAME GP-UNDERCARRIAGE–HEAVY-DUTY

S/N: LJR1-UP
PART OF 356-2925 UNDERCARRIAGE AR
AN ATTACHMENT

SMCS-4150 **i04286122**

NOTE	REF NO	GRAPHIC REF	PART NUMBER	QTY	PART NAME 1 2 3 4 5 6 (PRODUCT LEVEL)	SEE PAGE
Y	1	1	**190-1546**	4	IDLER GP-TRACK	406
	2	1	**196-7074**	4	STRIP-WEAR (REAR)	
	3	1	**196-7078**	4	STRIP-WEAR (FRONT)	
Y	4	1	*233-0367*	2	CAP GP-TRACK IDLER	385
Y	5	1	*233-0854*	2	CAP GP-TRACK IDLER	386
	6	1	**251-8601**	2	SCRAPER	
Y	7	1	*255-0045*	2	CAP GP-TRACK IDLER	387
Y	8	1	*351-5113*	1	FRAME GP-TRACK ROLLER (HEAVY-DUTY, SYSTEMONE)	393
Y	9	1	*358-7239*	8	ROLLER GP-TRACK-SINGLE FLANGE	427
Y	10	1	*358-8583*	6	ROLLER GP-TRACK-DOUBLE FLANGE	423
Y	11	1	*255-0046*	2	CAP GP-TRACK IDLER	388
M	12	1	**8T-4183**	4	BOLT (M12X1.75X40-MM)	
M	13	1	**8T-4192**	24	BOLT (M12X1.75X25-MM)	
	14	1	**8T-4223**	28	WASHER-HARD (13.5X25.5X3-MM THK)	

M - METRIC PART
Y - SEPARATE ILLUSTRATION

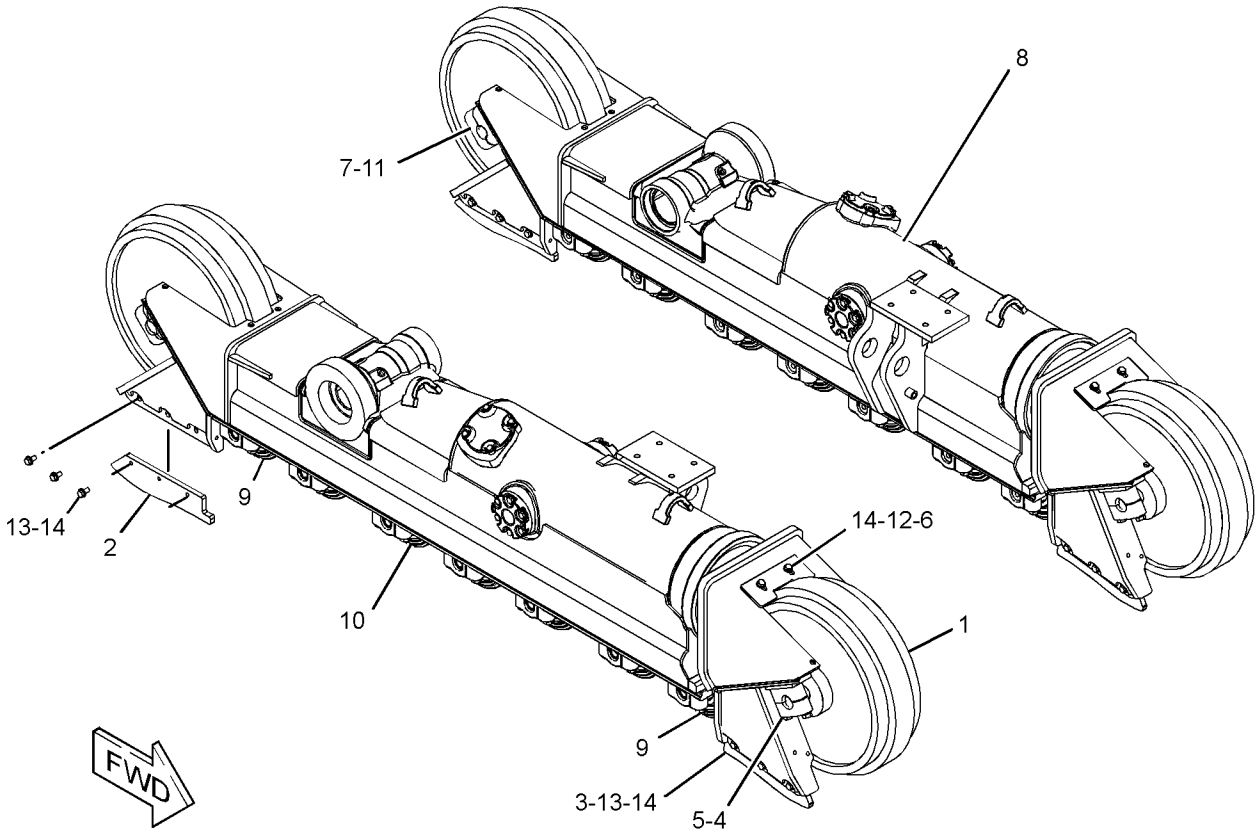

GRAPHIC #1 **<END>** g02396144

205-6127 GUARD GP-TRACK GUIDE–EXTRA LONG

S/N: LJR1-UP

AN ATTACHMENT

SMCS-4177 **i01830997**

NOTE	REF NO	GRAPHIC REF	PART NUMBER	QTY	PART NAME 1 2 3 4 5 6 (PRODUCT LEVEL)	SEE PAGE
	1	1	**204-6365**	16	SPACER	
	2	1	**205-6160**	4	GUIDE AS	
M	3	1	**8T-4140**	16	BOLT (M16X2X60-MM)	

M - METRIC PART

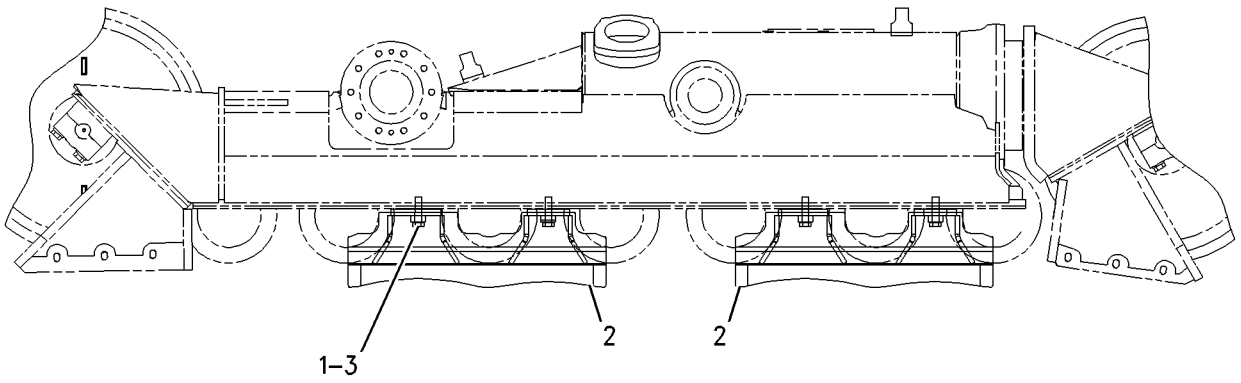

RIGHT SIDE VIEW

GRAPHIC #1 **<END>** g00899177

234-4163 GUARD GP-TRACK GUIDE—HEAVY-DUTY

S/N: LJR1-UP
CENTER
FOR USE WITH HEAVY-DUTY UNDERCARRIAGE
CANNOT BE USED WITH 205-6127—PAGE: 396, 205-6128—PAGE: 401
AN ATTACHMENT

SMCS-4177 **i02062292**

NOTE	REF NO	GRAPHIC REF	PART NUMBER	QTY	PART NAME 1 2 3 4 5 6 (PRODUCT LEVEL)	SEE PAGE
	1	1	**108-0812**	2	GUARD AS	
	2	1	**204-6365**	8	SPACER (0.8X35X15-MM THK)	
M	3	1	**8T-4140**	8	BOLT (M16X2X60-MM)	

M - METRIC PART
QUANTITIES SHOWN ARE THOSE REQUIRED FOR BOTH LH AND RH SIDES

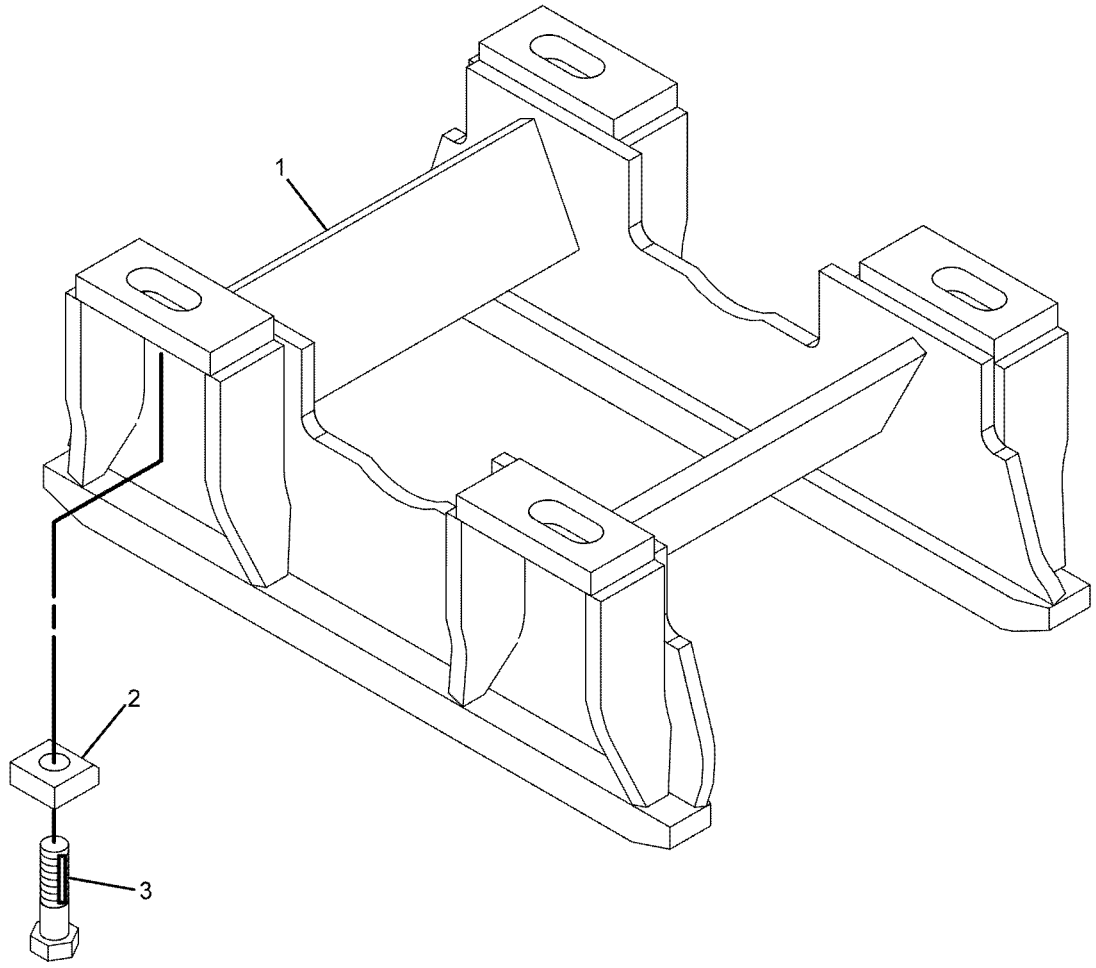

GRAPHIC #1 **<END>** g01059280

251-8569 GUARD GP-TRACK GUIDE–SYSTEMONE

S/N: LJR1-UP

PART OF 251-8616, 271-6164 GUARD GP-TRACK GUIDE

AN ATTACHMENT

SMCS-4177 **i03659573**

NOTE	REF NO	GRAPHIC REF	PART NUMBER	QTY	PART NAME 1 2 3 4 5 6 (PRODUCT LEVEL)	SEE PAGE
	1	1	**204-6365**	4	SPACER (15-MM THK)	
	2	1	**251-8570**	1	GUIDE AS	
M	3	1	**8T-4140**	4	BOLT (M16X2X60-MM)	

M - METRIC PART

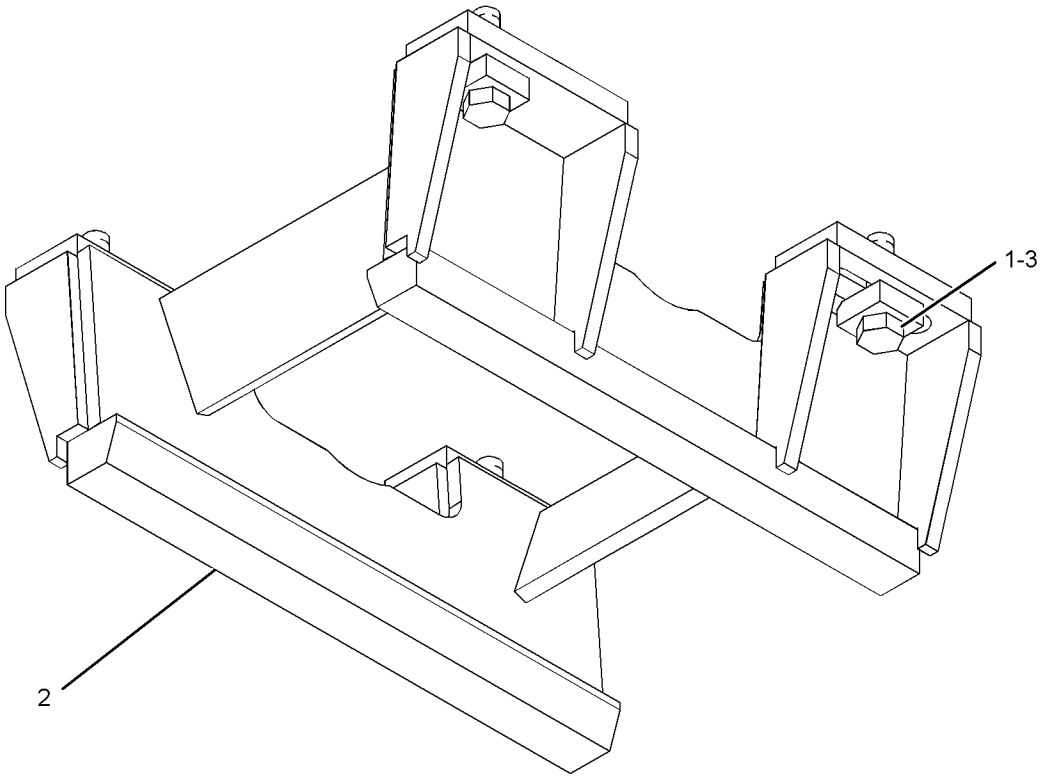

GRAPHIC #1 **<END>** g01943275

251-8616 GUARD GP-TRACK GUIDE–SYSTEMONE

S/N: LJR1-UP

MODERATE SERVICE, ALIGNS TO THE TRACK CHAIN RAILS INSTEAD OF TRACK CHAIN PIN BOSSES

CANNOT BE USED WITH 234-4163–PAGE: 397, 205-6127–PAGE: 396, 205-6128–PAGE: 401, 251-8619–PAGE: 404

AN ATTACHMENT

SMCS-4177 **i05017434**

NOTE	REF NO	GRAPHIC REF	PART NUMBER	QTY	PART NAME 1 2 3 4 5 6 (PRODUCT LEVEL)	SEE PAGE
Y	1	1	*251-8569*	4	GUARD GP-TRACK GUIDE (SYSTEMONE)	398

Y - SEPARATE ILLUSTRATION

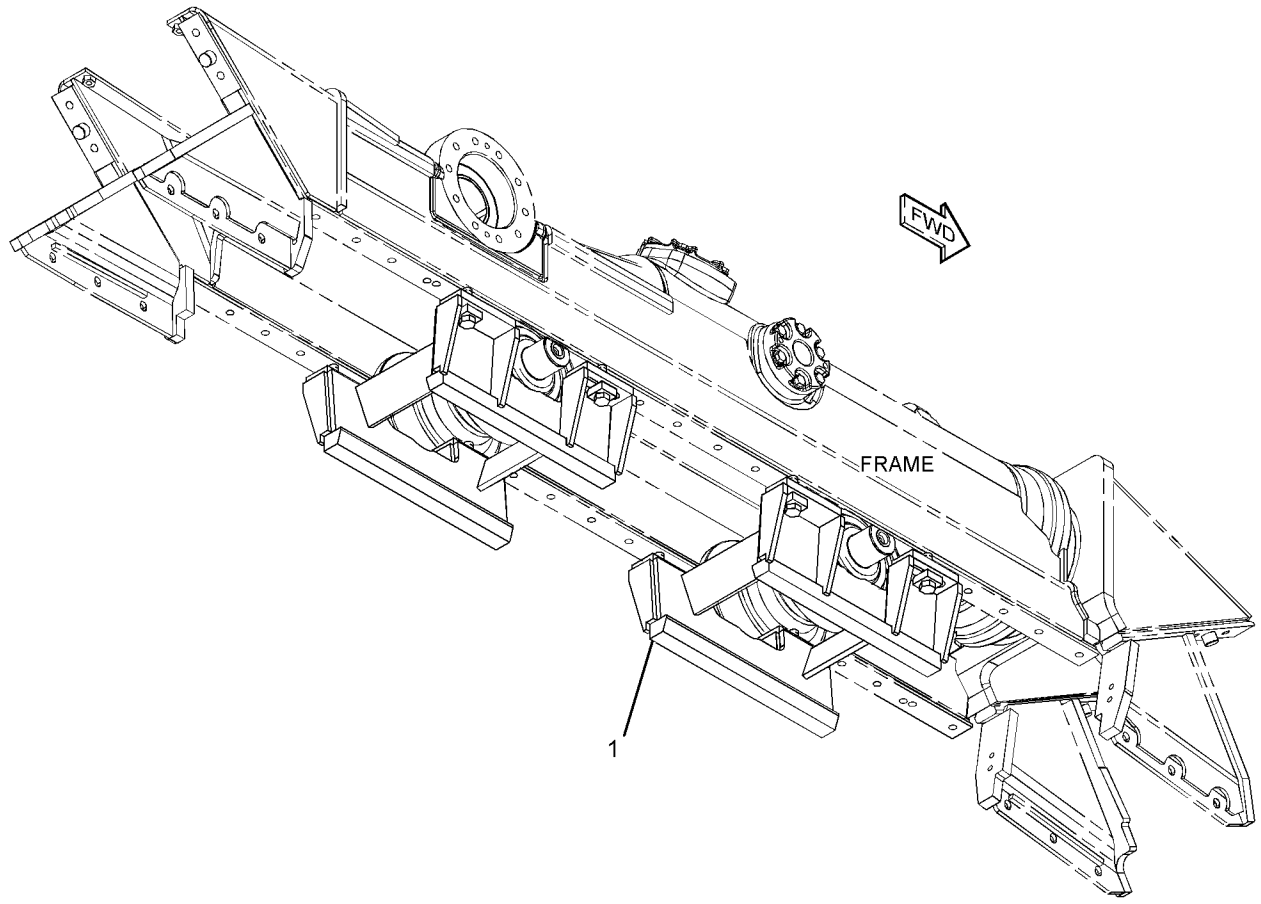

GRAPHIC #1 **<END>** g01287973

271-6164 GUARD GP-TRACK GUIDE–SYSTEMONE

S/N: LJR1-UP

MODERATE SERVICE, CENTER GUIDES THAT ALIGN WITH TRACK CHAIN RAILS

AN ATTACHMENT

SMCS-4177 **i03626242**

NOTE	PART NUMBER	QTY	PART NAME 1 2 3 4 5 6 (PRODUCT LEVEL)	SEE PAGE
Y	*251-8569*	2	GUARD GP-TRACK GUIDE (SYSTEMONE)	398

Y - SEPARATE ILLUSTRATION

<END>

205-6128 GUARD GP-TRACK ROLLER–HEAVY-DUTY

S/N: LJR1-198
AN ATTACHMENT

SMCS-7152 **i01831007**

NOTE	REF NO	GRAPHIC REF	PART NUMBER	QTY	PART NAME 1 2 3 4 5 6 (PRODUCT LEVEL)	SEE PAGE
	1	1	**204-6365**	24	SPACER	
	2	1	**205-6141**	8	TUBE	
	3	1	**205-6148**	2	BRACKET AS (RH)	
	4	1	**205-6149**	2	BRACKET AS (LH)	
	5	1	**205-6162**	2	GUARD AS (RH)	
	6	1	**205-6163**	2	GUARD AS (LH)	
M	7	1	**110-6969**	8	BOLT (M16X2X300-MM)	
	8	1	**7X-0550**	12	WASHER-HARD (13.5X32X5-MM THK)	
	9	1	**7X-0605**	4	WASHER-HARD (13X28X1.6-MM THK)	
M	10	1	**8T-4140**	24	BOLT (M16X2X60-MM)	
M	11	1	**8T-4956**	8	BOLT (M12X1.75X35-MM)	
M	12	1	**8T-4194**	4	BOLT (M12X1.75X50-MM)	
M	13	1	**8T-4778**	8	LOCKNUT (M16X2-THD)	
	14	1	**9X-8257**	16	WASHER (17.5X30X3.5-MM THK)	

M - METRIC PART

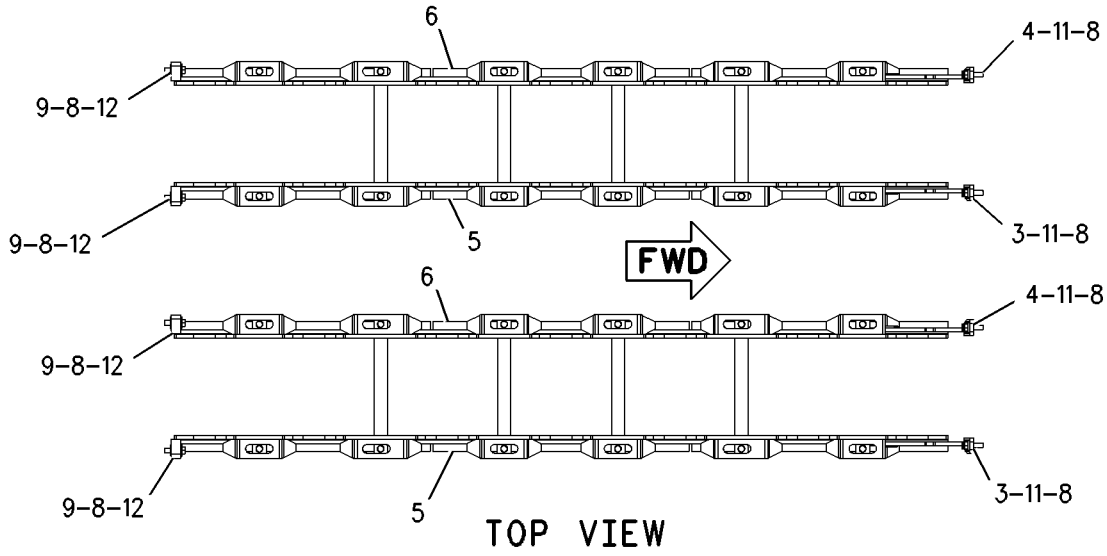

TOP VIEW

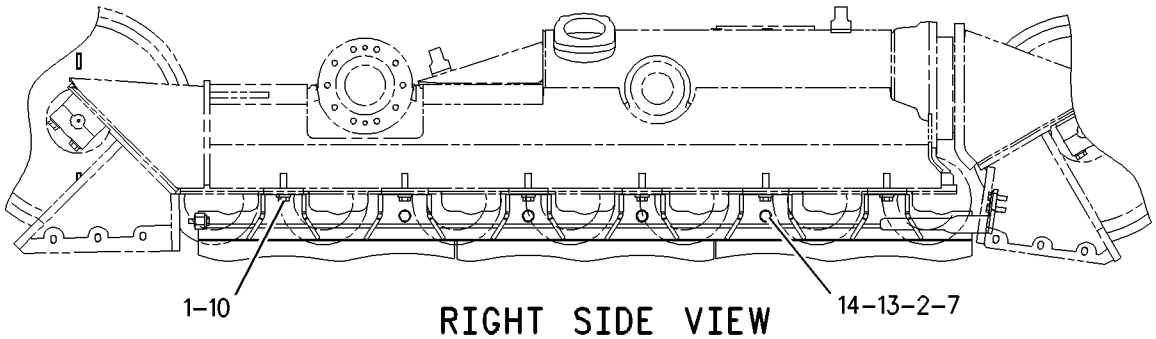

RIGHT SIDE VIEW

GRAPHIC #1

<END>

g00899167

205-6128 GUARD GP-TRACK ROLLER–HEAVY-DUTY

S/N: LJR199-700

AN ATTACHMENT

SMCS-7152 **i04003696**

NOTE	REF NO	GRAPHIC REF	PART NUMBER	QTY	PART NAME 1 2 3 4 5 6 (PRODUCT LEVEL)	SEE PAGE
	1	1	**204-6365**	24	SPACER (15-MM THK)	
	2	1	**205-6141**	8	TUBE	
C	3	1	**357-2853**	2	BRACKET AS	
C	4	1	**357-2858**	2	BRACKET AS	
	5	1	**205-6162**	2	GUARD AS (RH)	
	6	1	**205-6163**	2	GUARD AS (LH)	
M	7	1	**110-6969**	8	BOLT (M16X2X300-MM)	
	8	1	**7X-0550**	12	WASHER-HARD (13.5X32X5-MM THK)	
	9	1	**7X-0605**	4	WASHER-HARD (13X28X1.6-MM THK)	
M	10	1	**8T-4140**	24	BOLT (M16X2X60-MM)	
M	11	1	**8T-4956**	8	BOLT (M12X1.75X35-MM)	
M	12	1	**8T-4194**	4	BOLT (M12X1.75X50-MM)	
M	13	1	**8T-4778**	8	LOCKNUT (M16X2-THD)	
	14	1	**9X-8257**	16	WASHER (17.5X30X3.5-MM THK)	

C - CHANGE FROM PREVIOUS TYPE
M - METRIC PART

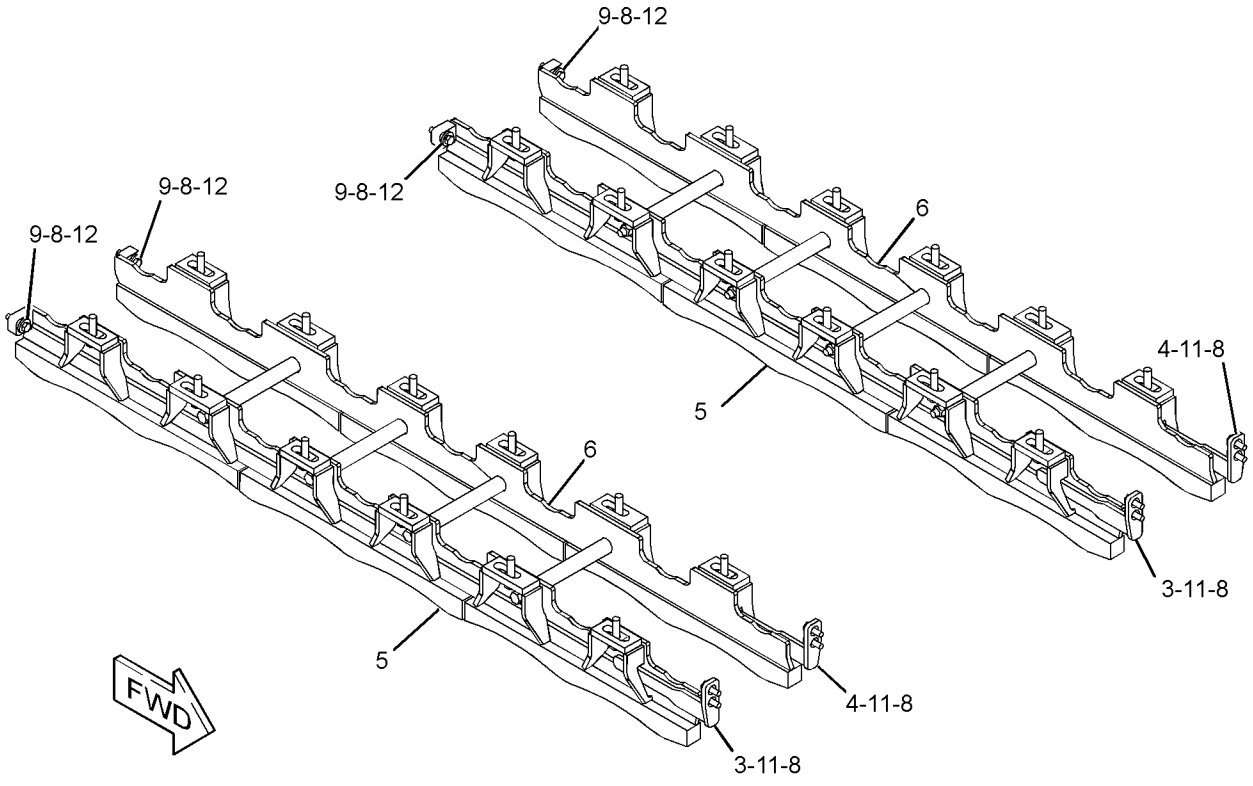

GRAPHIC #1 **<END>** g02400737

205-6128 GUARD GP-TRACK ROLLER–HEAVY-DUTY

S/N: LJR701-UP

AN ATTACHMENT

SMCS-7152 **i04840549**

NOTE	REF NO	GRAPHIC REF	PART NUMBER	QTY	PART NAME 1 2 3 4 5 6 (PRODUCT LEVEL)	SEE PAGE
	1	1	**204-6365**	24	SPACER (15-MM THK)	
	2	1	**205-6141**	8	TUBE	
	3	1	**205-6162**	2	GUARD AS (RH)	
	4	1	**205-6163**	2	GUARD AS (LH)	
M	5	1	**110-6969**	8	BOLT (M16X2X300-MM)	
C	6	1	**7X-0550**	4	WASHER-HARD (13.5X32X5-MM THK)	
B	7	1	**7X-0605**	4	WASHER-HARD (13X28X1.6-MM THK)	
M	8	1	**8T-4140**	24	BOLT (M16X2X60-MM)	
M	9	1	**8T-4194**	4	BOLT (M12X1.75X50-MM)	
M	10	1	**8T-4778**	8	LOCKNUT (M16X2-THD)	
	11	1	**9X-8257**	16	WASHER (17.5X30X3.5-MM THK)	

B - USE AS REQUIRED
C - CHANGE FROM PREVIOUS TYPE
M - METRIC PART

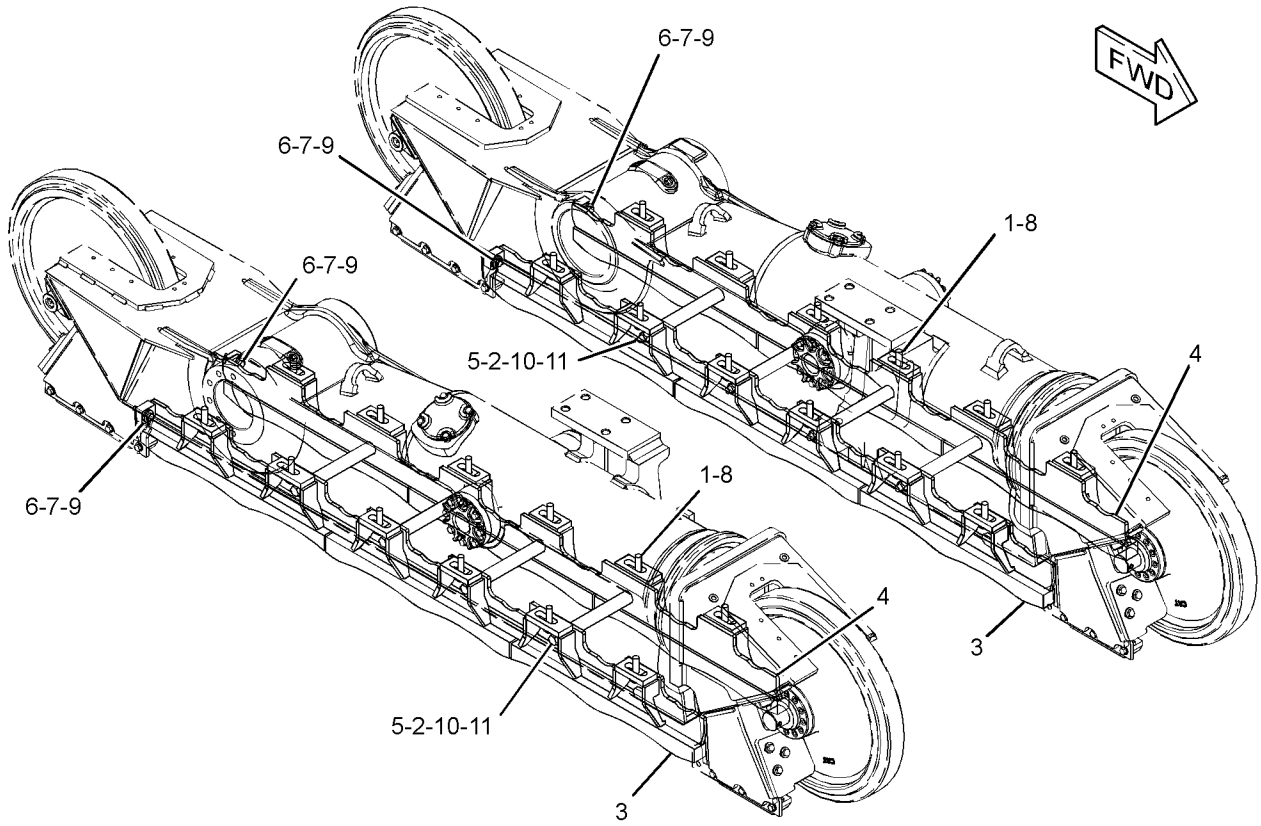

GRAPHIC #1 **<END>** g02915657

251-8619 GUARD GP-TRACK ROLLER–SYSTEMONE

S/N: LJR1-UP

CANNOT BE USED WITH 234-4163–PAGE: 397, 205-6127–PAGE: 396, 205-6128–PAGE: 401, 251-8616–PAGE: 399

AN ATTACHMENT

SMCS-7152 **i02795798**

NOTE	REF NO	GRAPHIC REF	PART NUMBER	QTY	PART NAME 1 2 3 4 5 6 (PRODUCT LEVEL)	SEE PAGE
	1	1	**204-6365**	24	SPACER	
	2	1	**205-6141**	12	TUBE	
	3	1	**261-2044**	4	GUARD AS	
M	4	1	**110-6969**	12	BOLT (M16X2X300-MM)	
M	5	1	**8T-4140**	24	BOLT (M16X2X60-MM)	
M	6	1	**8T-4778**	12	LOCKNUT (M16X2-THD)	
	7	1	**9X-8257**	24	WASHER (17.5X30X3.5-MM THK)	

M - METRIC PART

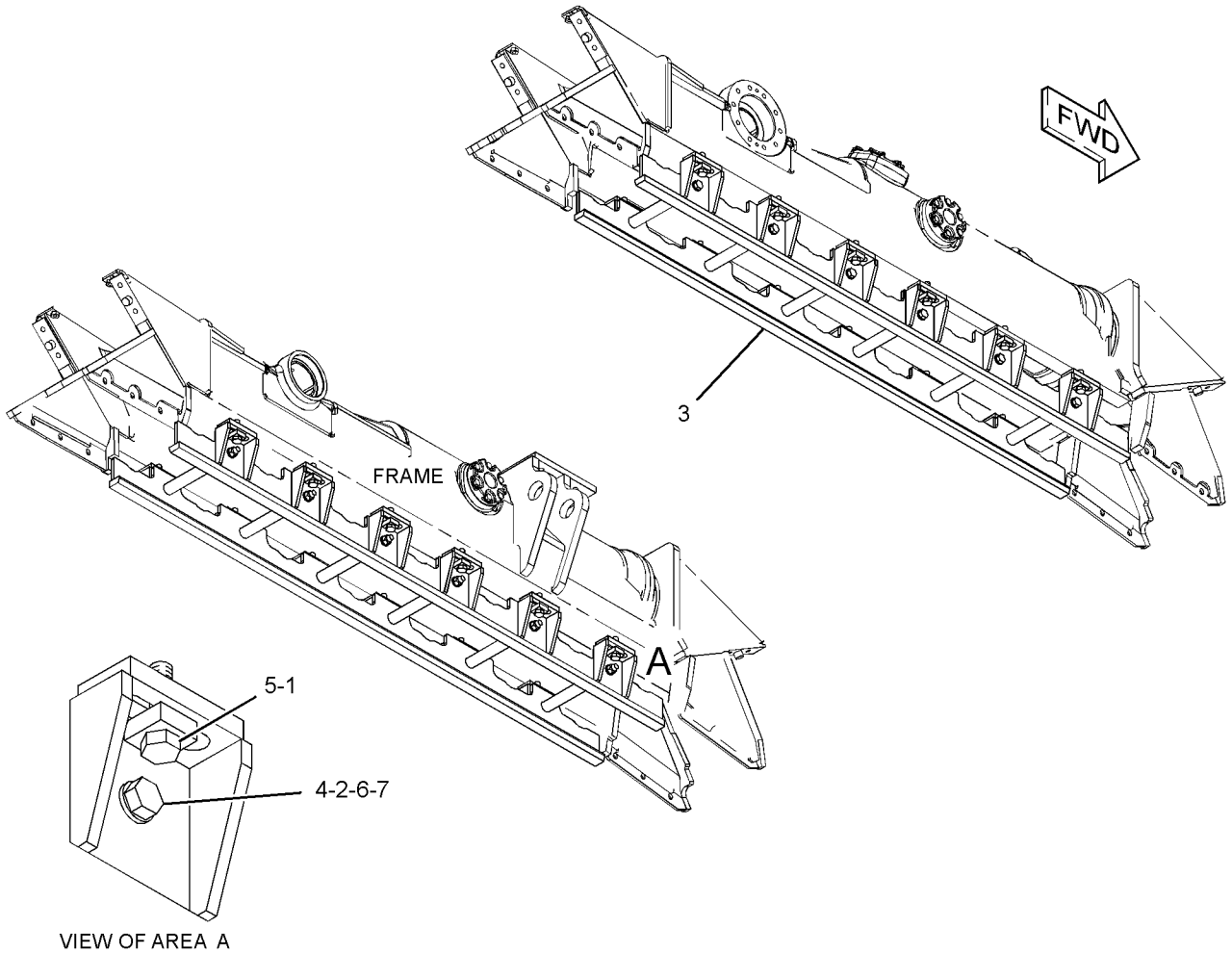

GRAPHIC #1 **<END>** g01287985

251-8620 GUARD GP-TRACK ROLLER–SYSTEMONE

S/N: LJR1-UP

FOR USE WITH 47-SECTION TRACK, FINE GRADING AR

AN ATTACHMENT

SMCS-7152 **i03626193**

NOTE	REF NO	GRAPHIC REF	PART NUMBER	QTY	PART NAME 1 2 3 4 5 6 (PRODUCT LEVEL)	SEE PAGE
	1	1	**204-6365**	28	SPACER (15-MM THK)	
	2	1	**205-6141**	12	TUBE	
	3	1	**261-2046**	2	GUARD AS (RH)	
	4	1	**261-2047**	2	GUARD AS (LH)	
M	5	1	**110-6969**	12	BOLT (M16X2X300-MM)	
M	6	1	**8T-4140**	28	BOLT (M16X2X60-MM)	
M	7	1	**8T-4778**	12	LOCKNUT (M16X2-THD)	
	8	1	**9X-8257**	24	WASHER (17.5X30X3.5-MM THK)	

M - METRIC PART

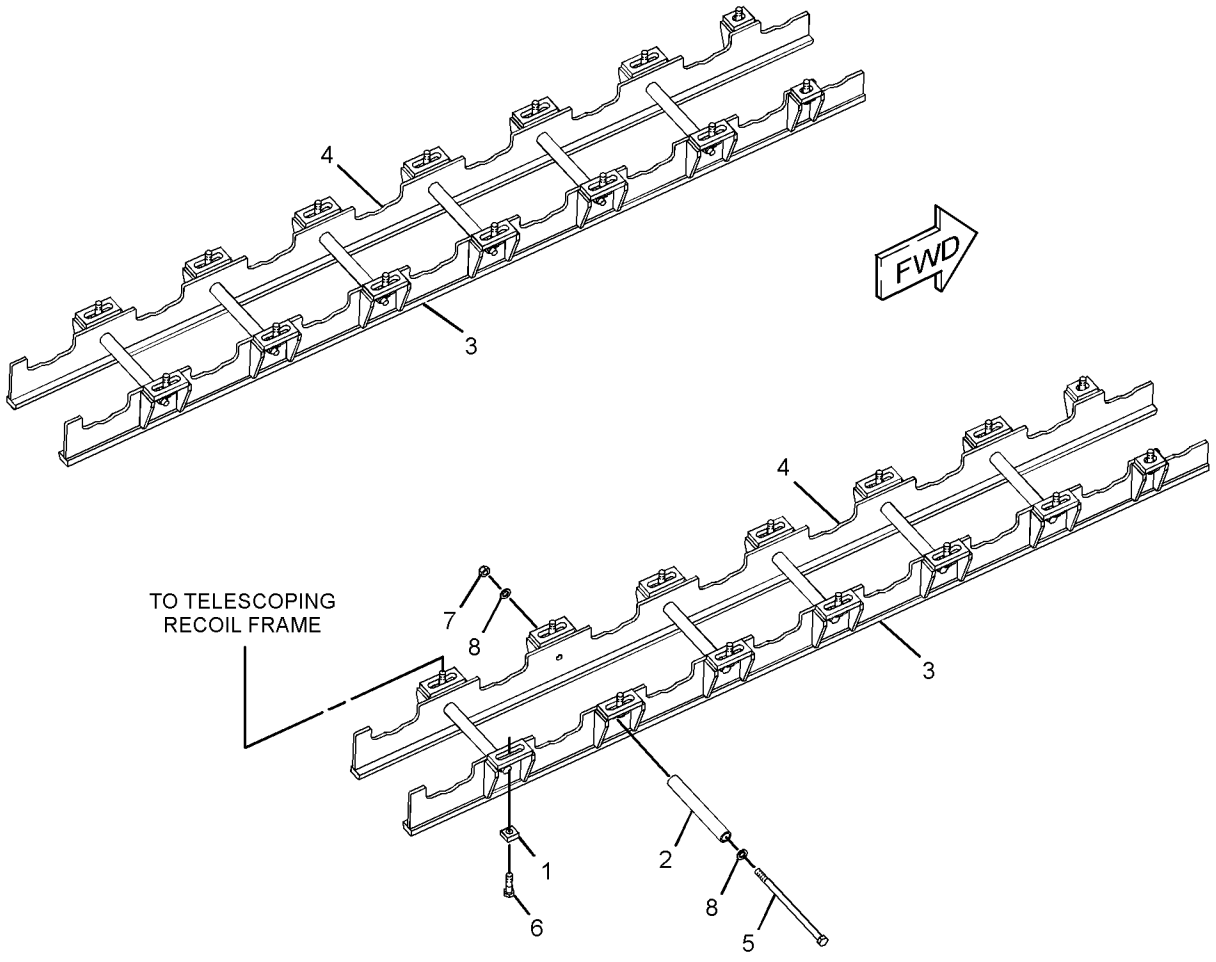

GRAPHIC #1 **<END>** g01273790

190-1546 IDLER GP-TRACK

S/N: LJR1-UP
PART OF 350-6986 FRAME GP-UNDERCARRIAGE
AN ATTACHMENT

SMCS-4159 **i01581537**

NOTE	REF NO	GRAPHIC REF	PART NUMBER	QTY	PART NAME 1 2 3 4 5 6 (PRODUCT LEVEL)	SEE PAGE
	1	1	**1H-8128**	2	SEAL-O-RING	
	2	1	**3T-9536**	1	STOPPER-RUBBER	
	3	1	**5K-0216**	2	SEAL-O-RING	
	4	1	**6Y-0473**	1	PLUG-CLEAR	
	5	1	**110-3362**	2	WASHER-THRUST (74X101.65X4.52-MM THK)	
	6	1	**160-9756**	2	COLLAR	
	7	1	**161-7247**	2	SEAL GP-DUO-CONE	
		1	**161-7249**	2	RING-TORIC	
	8	1	**161-7350**	1	SHAFT-TRACK IDLER	
	9	1	**161-7550**	2	RETAINER	
	10	1	**190-1547**	1	IDLER & BEARING AS	
		1	**9P-1360**	2	BEARING-SLEEVE	
	11	1	**053-2294**	12	BOLT-12 POINT HEAD (3/8-16X1.75-IN)	
	12	1	**5M-2894**	12	WASHER-HARD (10.2X18.5X2.5-MM THK)	

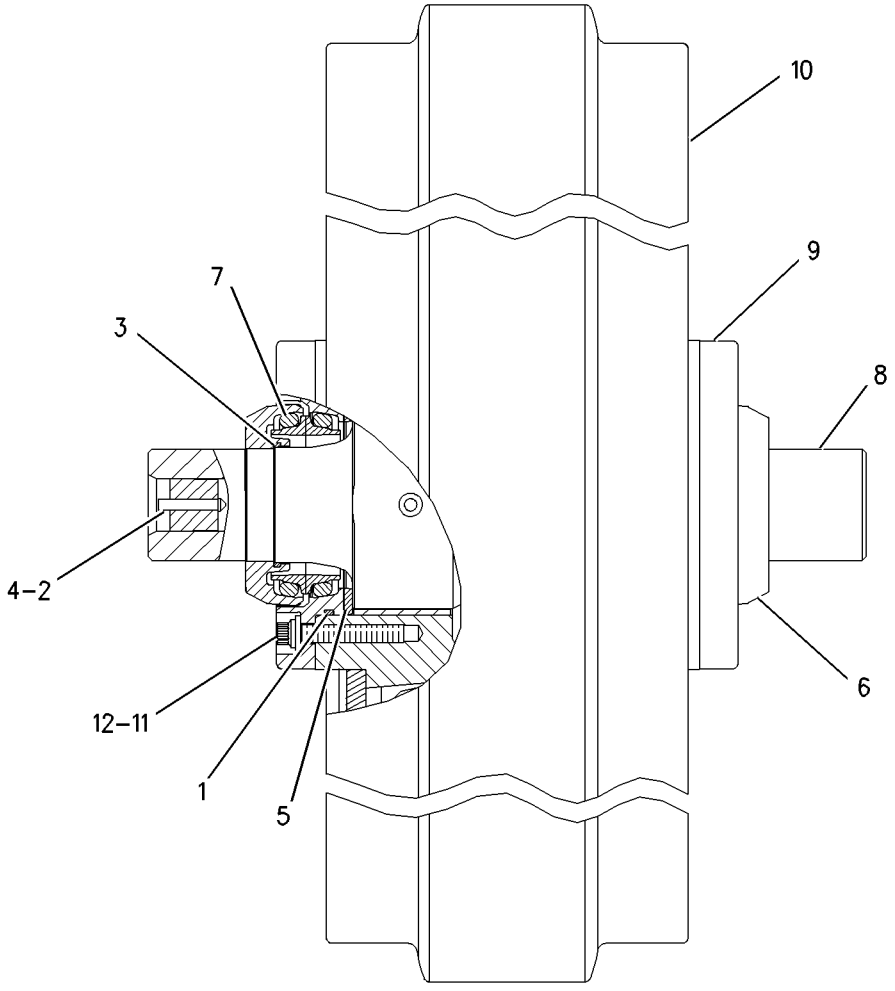

GRAPHIC #1 **<END>** g00838811

323-1168 IDLER GP-TRACK—SYSTEMONE

S/N: LJR1-UP

PART OF 271-6182, 350-6983 UNDERCARRIAGE GP

SMCS-4159 **i03630790**

NOTE	REF NO	GRAPHIC REF	PART NUMBER	QTY	PART NAME 1 2 3 4 5 6 (PRODUCT LEVEL)	SEE PAGE
	1	1	**1H-8128**	2	SEAL-O-RING	
	2	1	**3T-9536**	1	STOPPER-RUBBER	
	3	1	**5K-0216**	2	SEAL-O-RING	
	4	1	**6Y-0473**	1	PLUG-CLEAR	
	5	1	**9X-2327**	12	WASHER (11X18.5X2.5-MM THK)	
	6	1	**110-3362**	2	WASHER-THRUST (74X101.65X4.52-MM THK)	
	7	1	**160-9756**	2	COLLAR	
	8	1	**161-7247**	2	SEAL GP-DUO-CONE	
					(EACH INCLUDES)	
	8A	1	**161-7249**	2	RING-TORIC	
	9	1	**161-7350**	1	SHAFT-TRACK IDLER	
	10	1	**161-7550**	2	RETAINER	
	11	1	**323-1169**	1	IDLER & BEARING AS	
	11A	1	**9P-1360**	2	BEARING-SLEEVE	
M	12	1	**9X-8271**	12	BOLT-12 POINT HEAD (M10X1.5X45-MM)	

M - METRIC PART

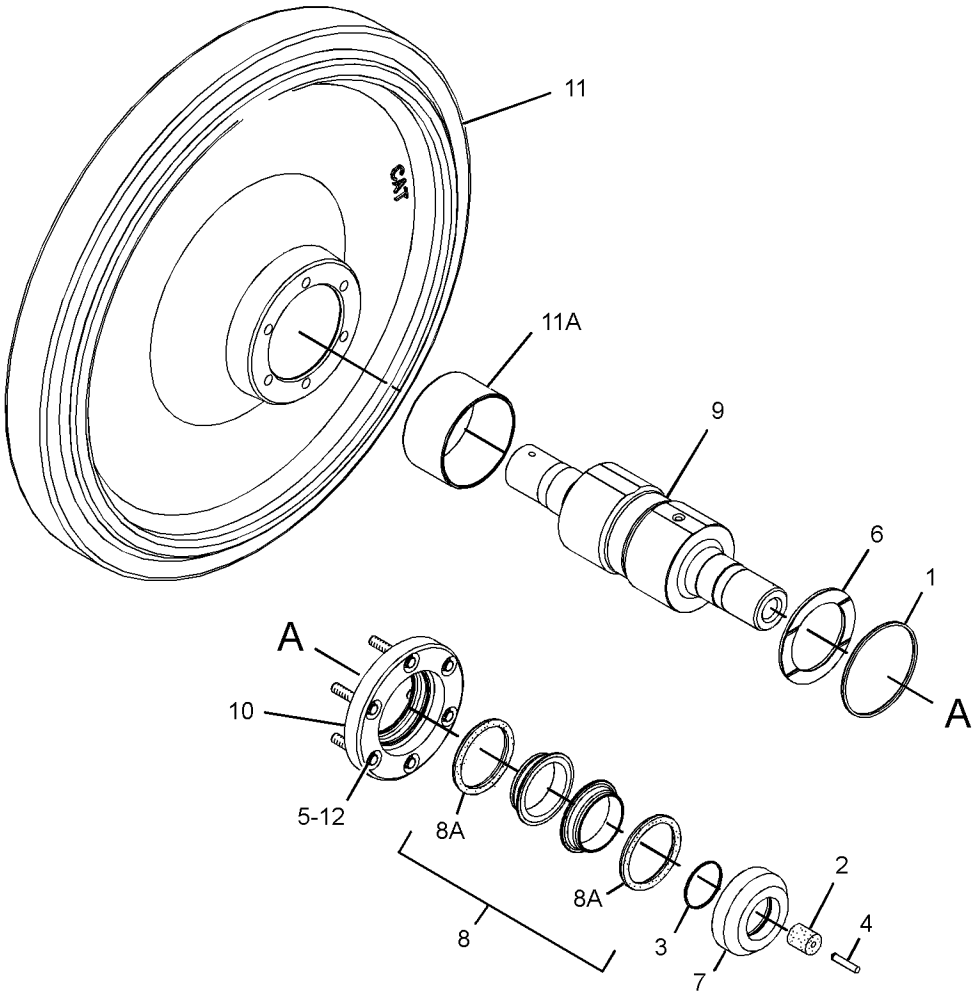

GRAPHIC #1 **<END>** g01909859

339-7803 IDLER GP-TRACK—WASTE HANDLING

S/N: LJR1-UP

PART OF 331-5318 GUARD AR-FINAL DRIVE

AN ATTACHMENT

SMCS-4159 **i03637454**

NOTE	REF NO	GRAPHIC REF	PART NUMBER	QTY	PART NAME 1 2 3 4 5 6 (PRODUCT LEVEL)	SEE PAGE
	1	1	**1H-8128**	2	SEAL-O-RING	
	2	1	**3T-9536**	1	STOPPER-RUBBER	
	3	1	**5K-0216**	2	SEAL-O-RING	
	4	1	**6Y-0473**	1	PLUG-CLEAR	
	5	1	**110-3362**	2	WASHER-THRUST (74X101.65X4.52-MM THK)	
	6	1	**161-7247**	2	SEAL GP-DUO-CONE	
					(EACH INCLUDES)	
	6A	1	**161-7249**	2	RING-TORIC	
	7	1	**161-7350**	1	SHAFT-TRACK IDLER	
	8	1	**189-2164**	2	RETAINER	
	9	1	**189-2165**	2	RING	
	10	1	**189-2170**	2	COLLAR	
	11	1	**189-2171**	2	SEAL	
	12	1	**261-9436**	12	BOLT-12 POINT HEAD (M10X1.5X50-MM)	
	13	1	**323-1169**	1	IDLER & BEARING AS	
	13A	1	**9P-1360**	2	BEARING-SLEEVE	
	14	1	**9X-2327**	12	WASHER (11X18.5X2.5-MM THK)	
					PARTS SHOWN IN GRAPHIC(S) WITHOUT A REFERENCE NUMBER ARE NOT SERVICED SEPARATELY	

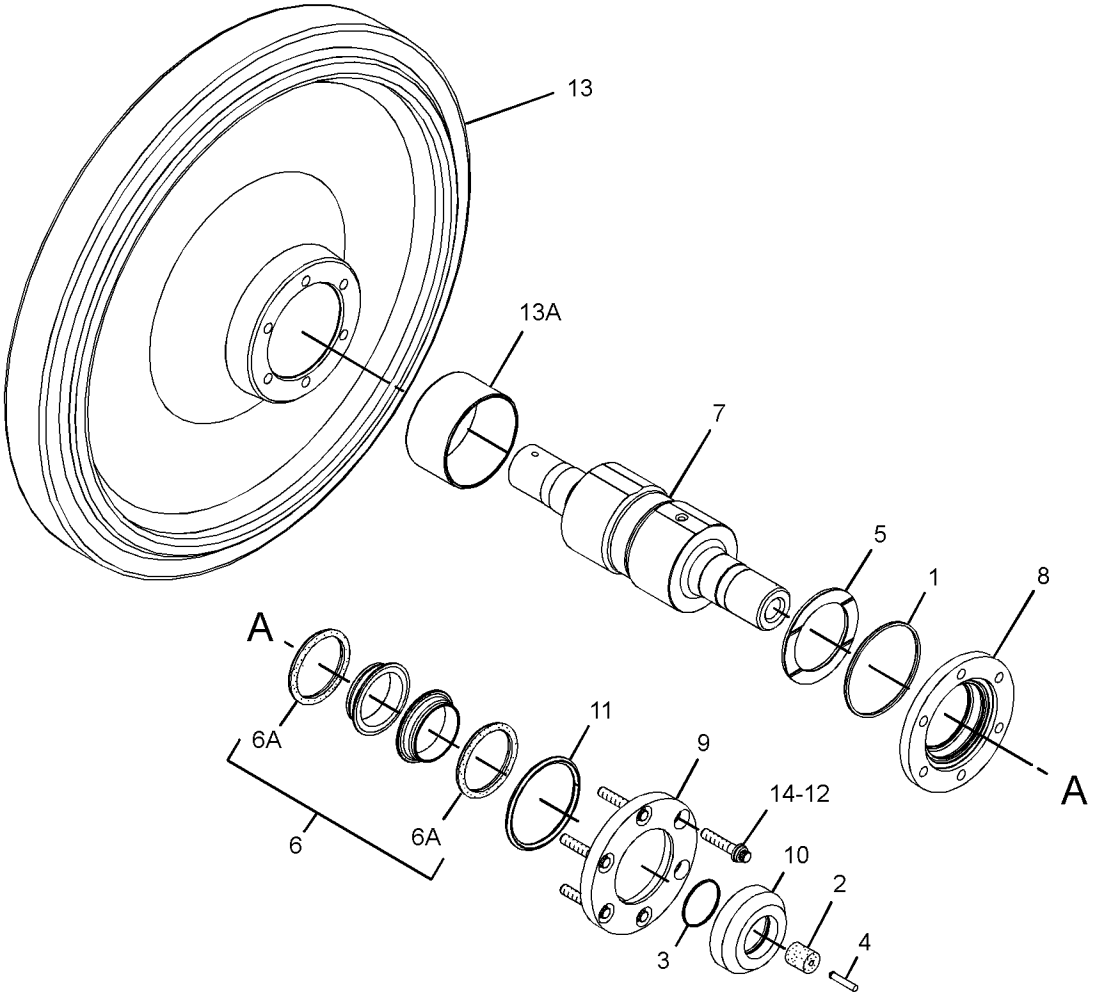

GRAPHIC #1 **<END>** g01953317

110-2976 LINK AS-TRACK

S/N: LJR1-UP
SEALED, LUBRICATED, HEAVY DUTY
PART OF 110-2980, 356-3434, 356-3435, 358-8882 TRACK GP
AN ATTACHMENT

SMCS-4169, 4171

i02308499

NOTE	REF NO	GRAPHIC REF	PART NUMBER	QTY	PART NAME 1 2 3 4 5 6 (PRODUCT LEVEL)	SEE PAGE
	1	1	**6Y-0473**	40	PLUG-CLEAR	
			5G-2247	40	STOPPER-RUBBER	
	2	1	**152-8070**	80	RING-THRUST	
	3	1	**250-3988**	80	SEAL AS	
	4	1	**106-1626**	39	LINK-TRACK (LH)	
	5	1	**106-1625**	39	LINK-TRACK (RH)	
	6	1	**106-1628**	1	LINK-MASTER (PIN END, LH)	
	7	1	**106-1627**	1	LINK-MASTER (PIN END, RH)	
	8	1	**106-1630**	1	LINK-TRACK MASTER (BUSHING END, LH)	
	9	1	**106-1629**	1	LINK-TRACK MASTER (BUSHING END, RH)	
	10	1	**106-1618**	40	BUSHING-TRACK	
	11	1	**179-0126**	40	PIN-TRACK	

110-2976 **LINK AS-TRACK (*contd.*)** **i02308499**

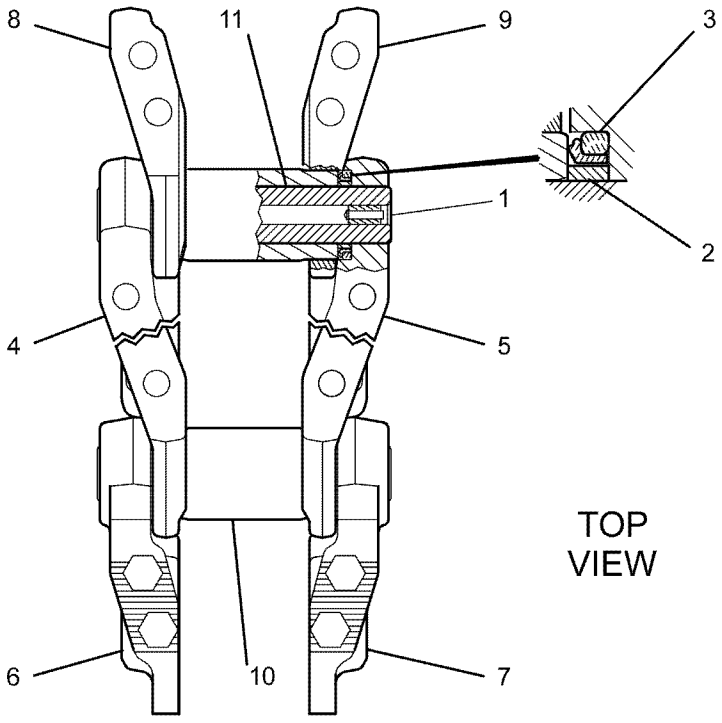

GRAPHIC #1 **<END>** g01088373

235-2511 LINK AS-TRACK—SYSTEMONE

S/N: LJR1-UP
40-JOINTS. SEALED, LUBRICATED
FOR USE WITH SYSTEMONE ROLLERS, GUARDS, GUIDESTRIPS, & SHOES
PART OF 235-2513, 246-5759, 256-4873, 289-5211 TRACK GP
ALSO AN ATTACHMENT

SMCS-4169, 4171 **i03675362**

NOTE	REF NO	GRAPHIC REF	PART NUMBER	QTY	PART NAME 1 2 3 4 5 6 (PRODUCT LEVEL)	SEE PAGE
	1	1	**235-2501**	38	LINK-TRACK	
Y	2	1	**235-2509**	20	LINK AS-TRACK BOX (LINK BOX)	412

Y - SEPARATE ILLUSTRATION

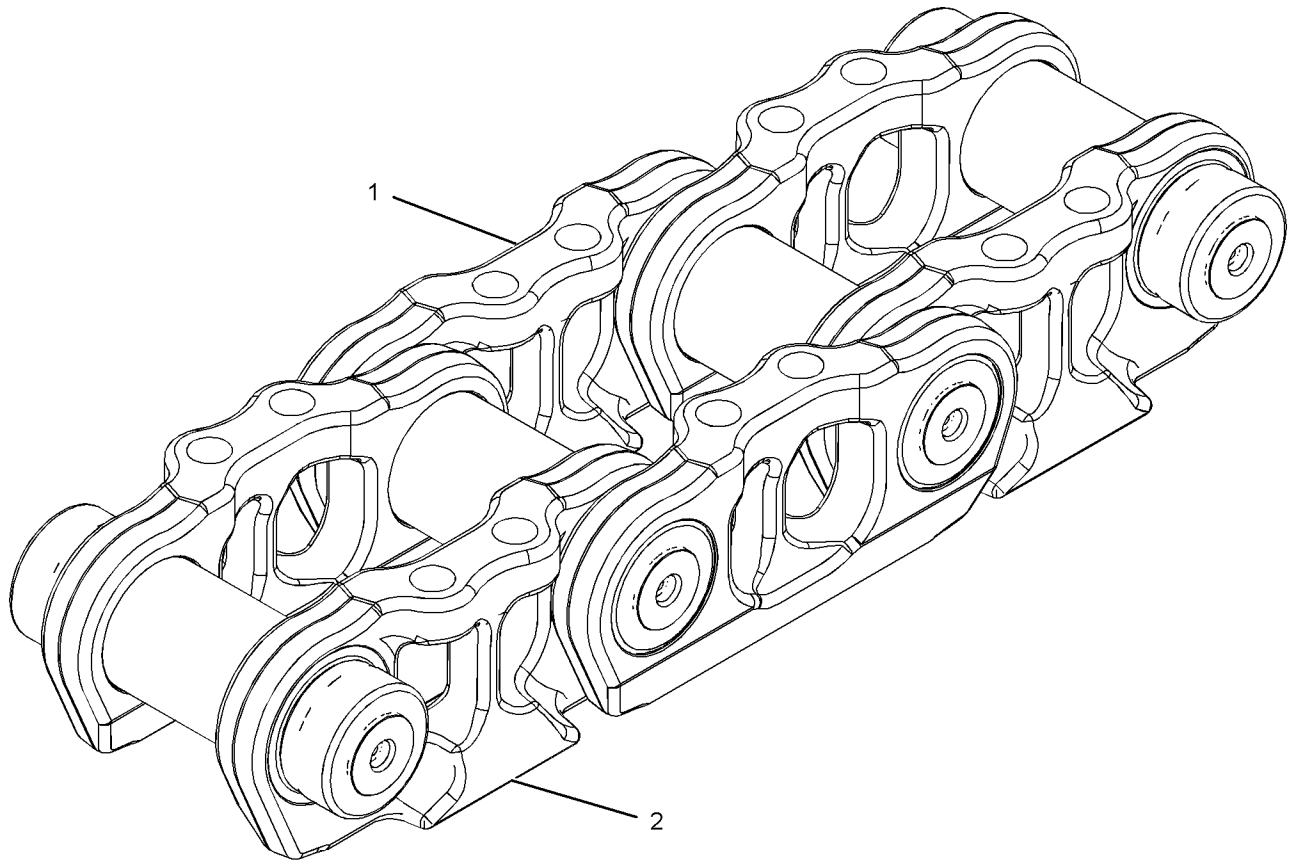

GRAPHIC #1 **<END>** g01193467

235-2509 LINK AS-TRACK BOX–SYSTEMONE

S/N: LJR1-UP

SEALED, LUBRICATED, FOR FIELD REPLACEMENT OF LINK BOX THAT IS MORE THAN 40% WORN, ORDER 264-9764 LINK AS, FOR FIELD REPLACEMENT OF LINK BOX THAT IS LESS THAN 40% WORN, ORDER 298-2723 LINK AS, FOR FIELD REPLACEMENT OF LINK BOX THAT IS MORE THAN 40% WORN, ORDER 339-0264 LINK AS, FOR FIELD REPLACEMENT OF LINK BOX THAT IS LESS THAN 40% WORN, ORDER 351-0959 LINK AS

PART OF 235-2511 LINK AS-TRACK

ALSO AN ATTACHMENT

SMCS-4169 **i02837996**

NOTE	REF NO	GRAPHIC REF	PART NUMBER	QTY	PART NAME 1 2 3 4 5 6 (PRODUCT LEVEL)	SEE PAGE
	1	1	**235-2501**	2	LINK-TRACK	
	2	1	*235-2507*	2	CARTRIDGE AS-TRACK LINK	
					(EACH INCLUDES)	
		1	**6Y-0473**	2	PLUG-CLEAR	
		1	**9G-1642**	2	STOPPER-RUBBER	

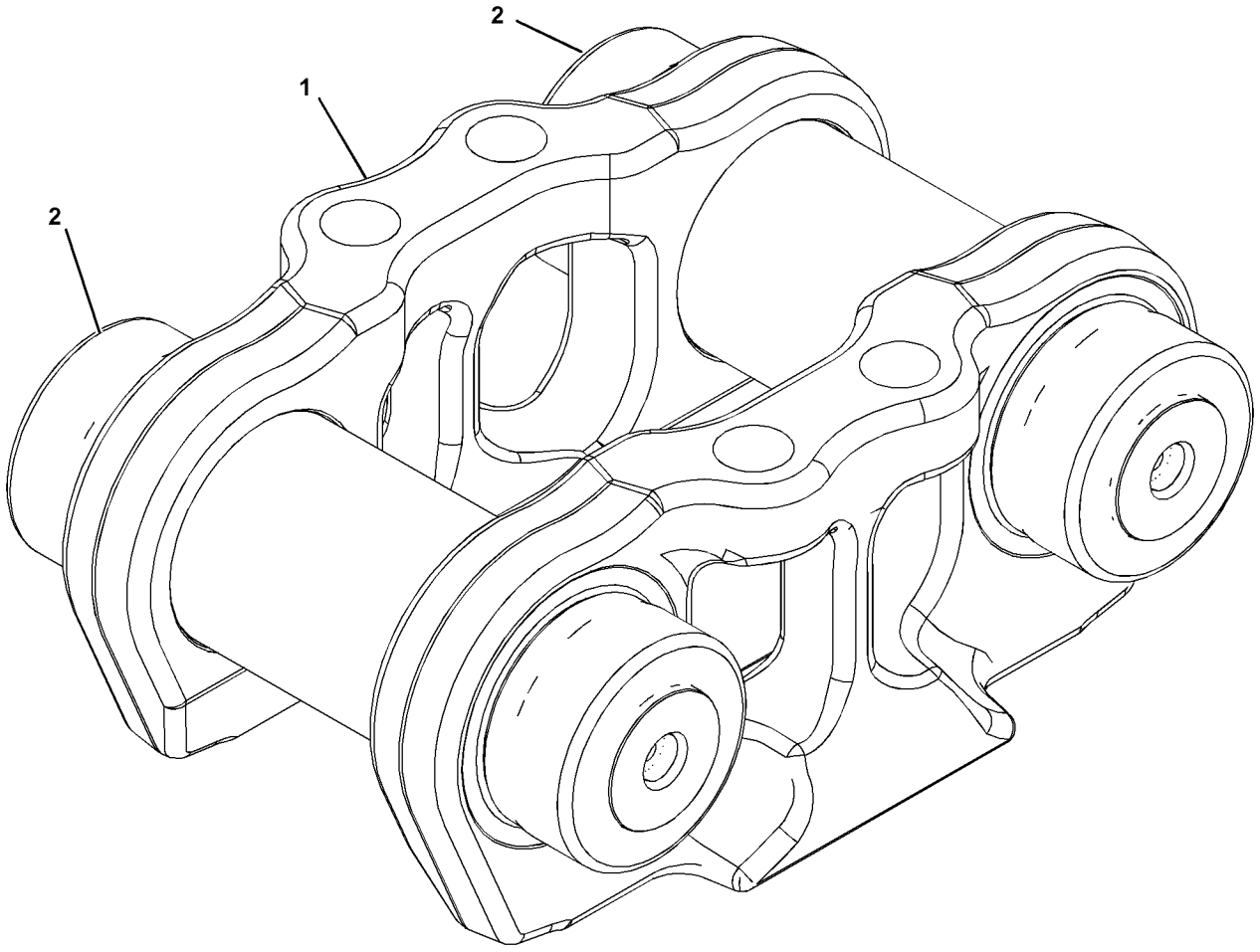

GRAPHIC #1 **<END>** g01378067

264-9764 LINK AS-TRACK BOX—LINK BOX

S/N: LJR1-UP
70% WORN. SEALED, LUBRICATED
FIELD REPLACEMENT FOR 235-2509—PAGE: 412, LINK AS THAT IS MORE THAN 40% WORN: FOR 298-2723—PAGE: 415, LINK AS THAT IS MORE THAN 40% WORN
FIELD INSTALLATION

SMCS-4169 **i02844341**

NOTE	REF NO	GRAPHIC REF	PART NUMBER	QTY	PART NAME 1 2 3 4 5 6 (PRODUCT LEVEL)	SEE PAGE
	1	1	*298-2722*	2	CARTRIDGE AS-TRACK LINK	
					(EACH INCLUDES)	
		1	**6Y-0473**	2	PLUG-CLEAR	
		1	**9G-1642**	2	STOPPER-RUBBER	
					PARTS SHOWN IN GRAPHIC(S) WITHOUT A REFERENCE NUMBER ARE NOT SERVICED SEPARATELY	

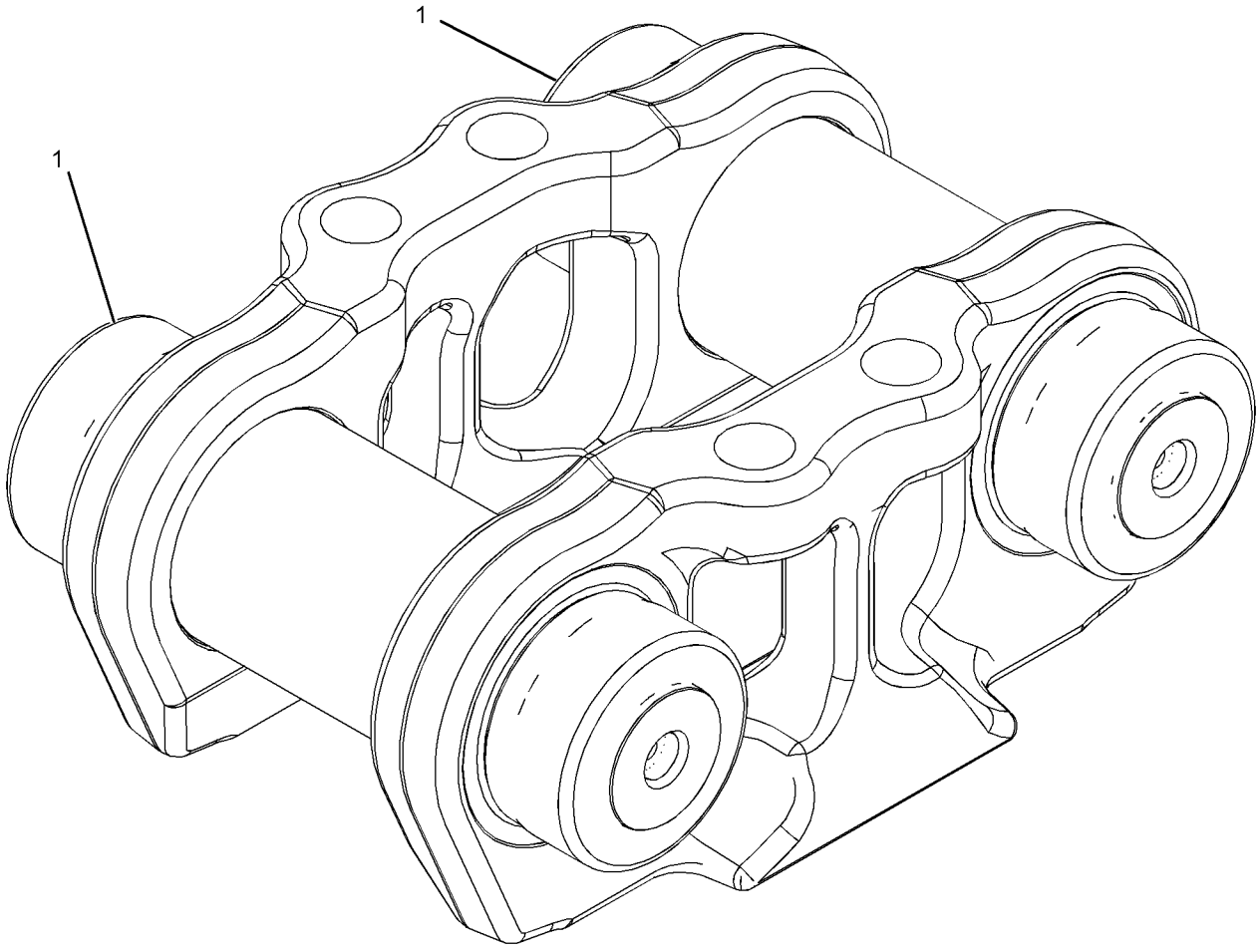

GRAPHIC #1 **<END>** g01416784

264-9769 LINK AS-TRACK BOX—LINK BOX, OFFSET

S/N: LJR1-UP

70% WORN. SEALED, LUBRICATED

FIELD REPLACEMENT FOR 298-2724—PAGE: 416, LINK AS THAT IS MORE THAN 40% WORN

FIELD INSTALLATION

SMCS-4169 **i02841192**

NOTE	REF NO	GRAPHIC REF	PART NUMBER	QTY	PART NAME 1 2 3 4 5 6 (PRODUCT LEVEL)	SEE PAGE
	1	1	*298-2722*	1	CARTRIDGE AS-TRACK LINK	
		1	**6Y-0473**	2	PLUG-CLEAR	
		1	**9G-1642**	2	STOPPER-RUBBER	
					PARTS SHOWN IN GRAPHIC(S) WITHOUT A REFERENCE NUMBER ARE NOT SERVICED SEPARATELY	

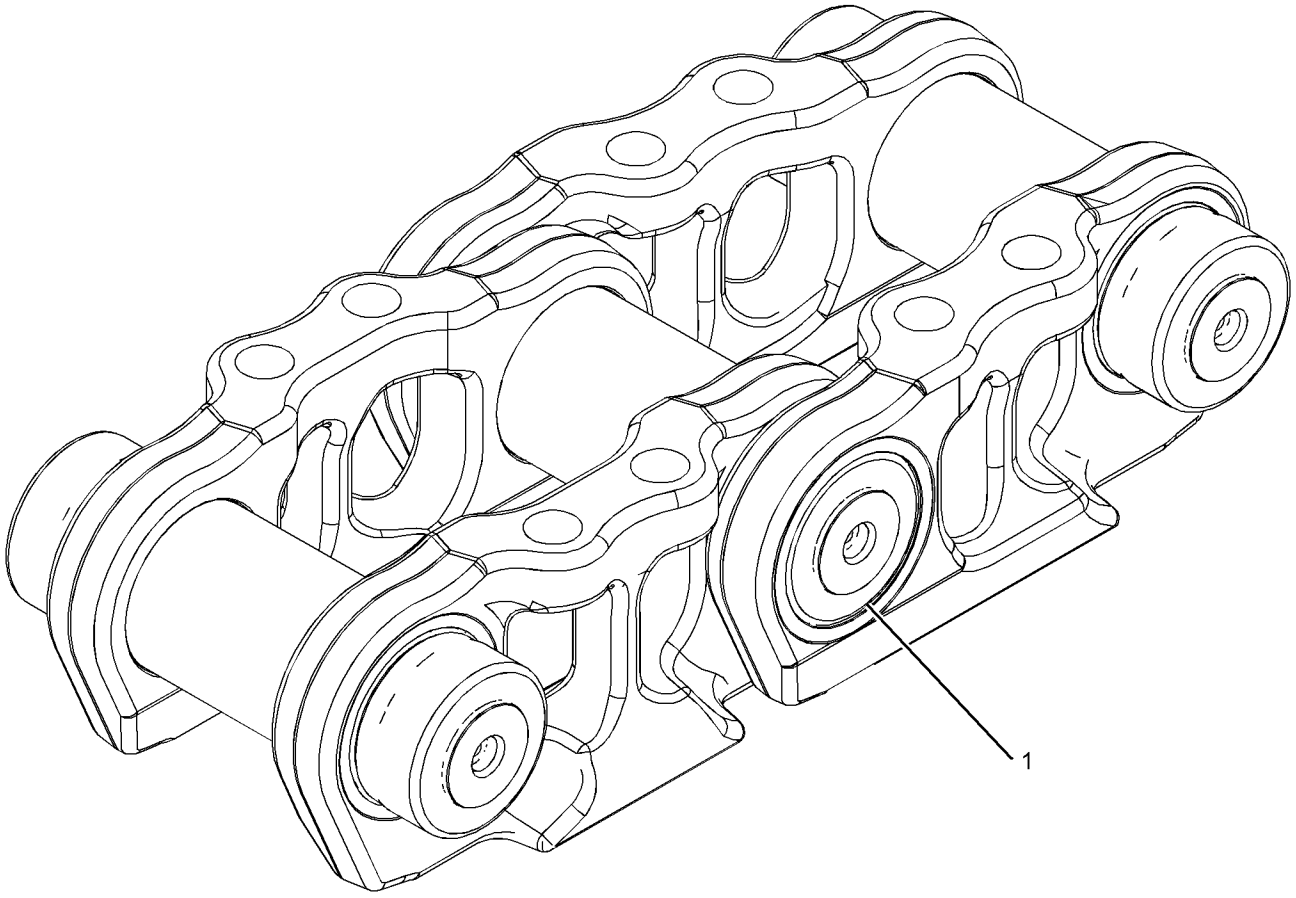

GRAPHIC #1 **<END>** g01416892

298-2723 LINK AS-TRACK BOX—LINK BOX

S/N: LJR1-UP

SEALED, LUBRICATED, FOR FIELD REPLACEMENT OF LINK BOX THAT IS MORE THAN 40% WORN, ORDER 264-9764 LINK AS

FIELD REPLACEMENT FOR 235-2509—PAGE: 412, LINK AS THAT IS LESS THAN 40% WORN

PART OF 298-2724 LINK AS-TRACK BOX

FIELD INSTALLATION

SMCS-4169 **i02797289**

NOTE	REF NO	GRAPHIC REF	PART NUMBER	QTY	PART NAME 1 2 3 4 5 6 (PRODUCT LEVEL)	SEE PAGE
	1	1	**235-2501**	2	LINK-TRACK	
	2	1	*298-2722*	2	CARTRIDGE AS-TRACK LINK	
					(EACH INCLUDES)	
		1	**6Y-0473**	2	PLUG-CLEAR	
		1	**9G-1642**	2	STOPPER-RUBBER	

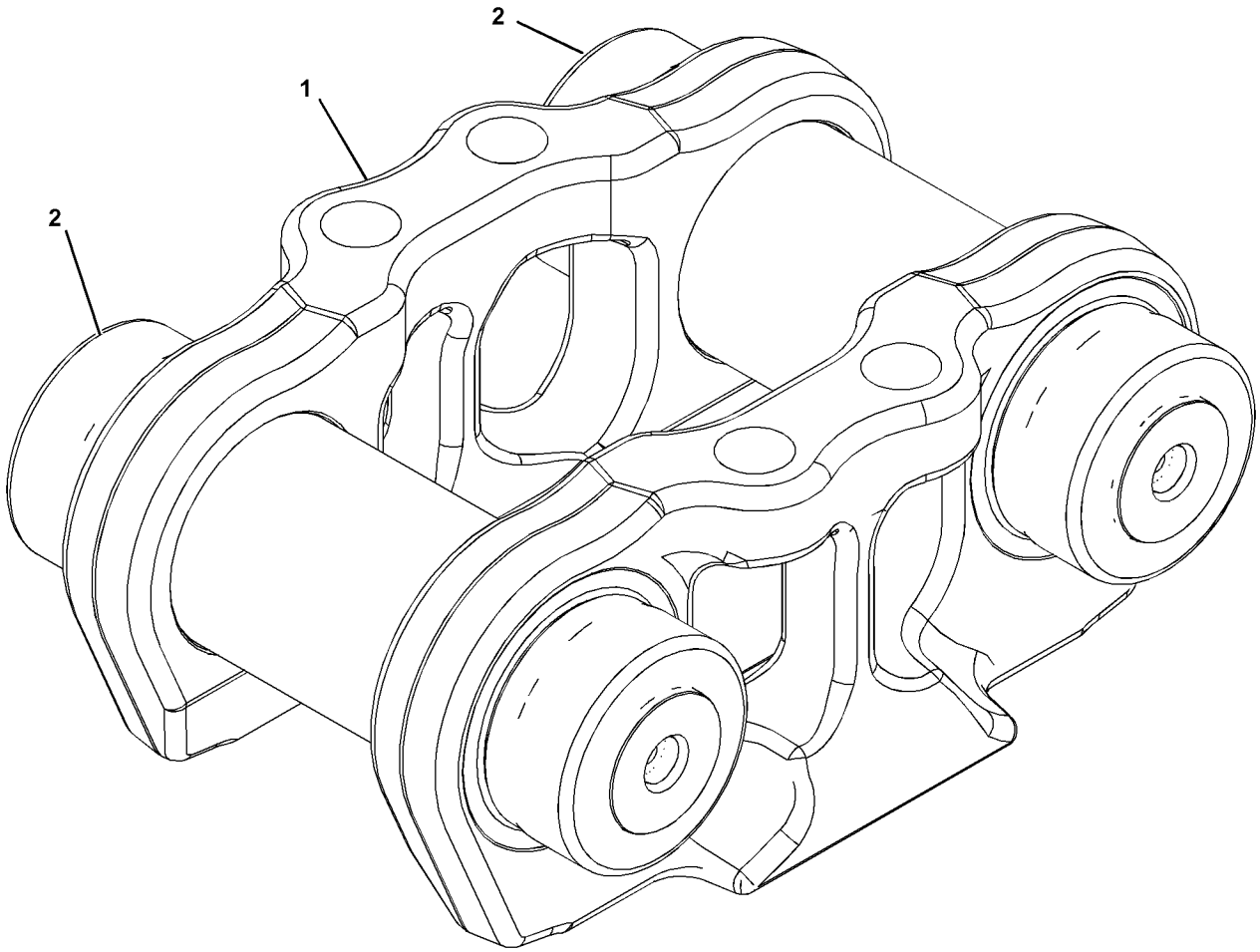

GRAPHIC #1 **<END>** g01378067

298-2724 LINK AS-TRACK BOX—LINK BOX, OFFSET

S/N: LJR1-UP

SEALED, LUBRICATED, FOR FIELD REPLACEMENT OF LINK BOX THAT IS MORE THAN 40% WORN, ORDER 264-9769 LINK AS

FIELD INSTALLATION

SMCS-4169 **i02797269**

NOTE	REF NO	GRAPHIC REF	PART NUMBER	QTY	PART NAME 1 2 3 4 5 6 (PRODUCT LEVEL)	SEE PAGE
Y	1	1	**298-2723**	1	LINK AS-TRACK BOX	415
	2	1	*298-2722*	1	CARTRIDGE AS-TRACK LINK	
		1	**6Y-0473**	2	PLUG-CLEAR	
		1	**9G-1642**	2	STOPPER-RUBBER	
					PARTS SHOWN IN GRAPHIC(S) WITHOUT A REFERENCE NUMBER ARE NOT SERVICED SEPARATELY	

Y - SEPARATE ILLUSTRATION

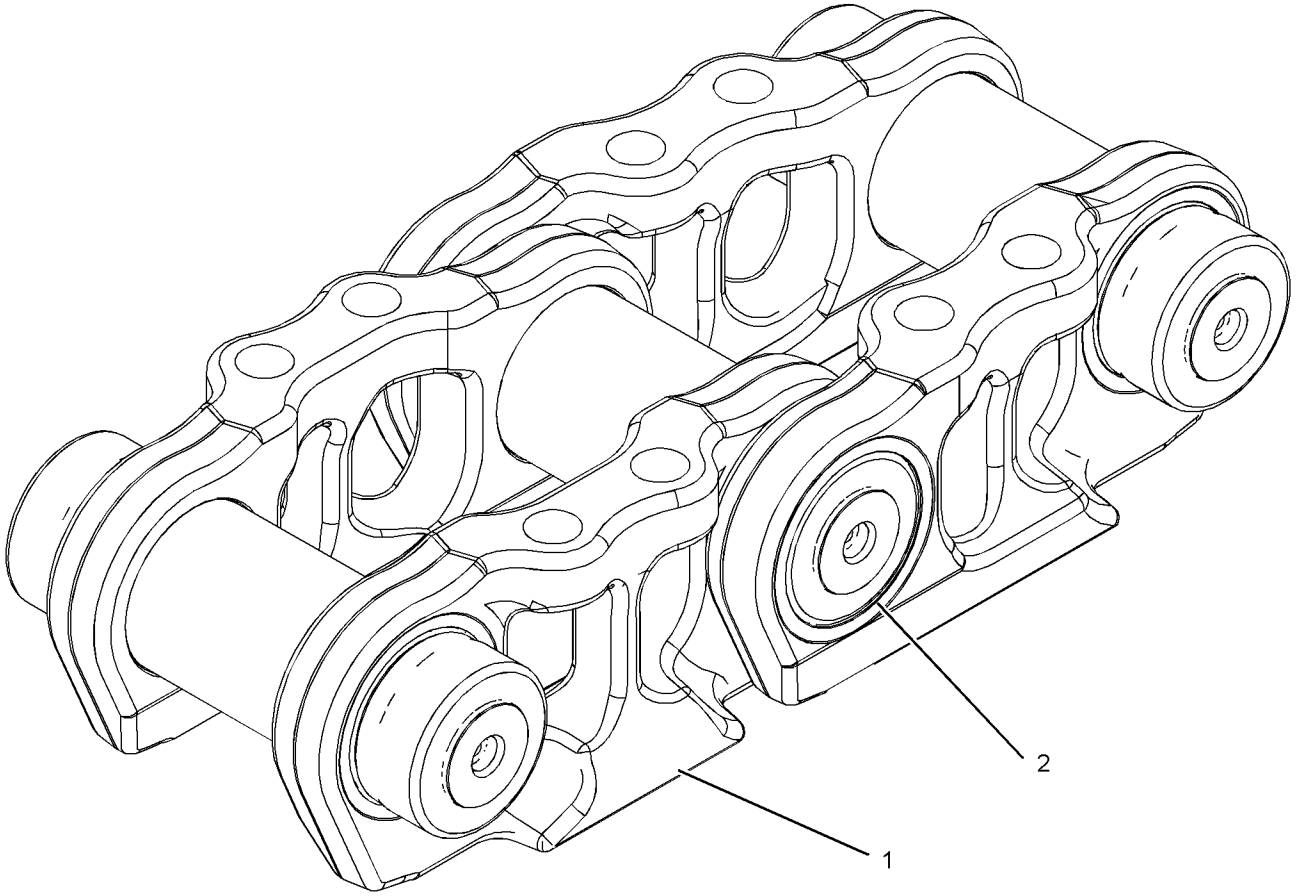

GRAPHIC #1 **<END>** g01415180

339-0264 LINK AS-TRACK BOX—LINK BOX

S/N: LJR1-UP
70% WORN. SEALED, LUBRICATED
FIELD REPLACEMENT FOR 235-2509—PAGE: 412, LINK AS THAT IS MORE THAN 40% WORN: FOR 351-0959—PAGE: 418, LINK AS THAT IS MORE THAN 40% WORN
FIELD INSTALLATION

SMCS-4169 **i04885929**

NOTE	REF NO	GRAPHIC REF	PART NUMBER	QTY	PART NAME 1 2 3 4 5 6 (PRODUCT LEVEL)	SEE PAGE
	1	1	*339-0260*	2	CARTRIDGE AS	
					(EACH INCLUDES)	
		1	**6Y-0473**	2	PLUG-CLEAR	
		1	**9G-1642**	2	STOPPER-RUBBER	
					PARTS SHOWN IN GRAPHIC(S) WITHOUT A REFERENCE NUMBER ARE NOT SERVICED SEPARATELY	

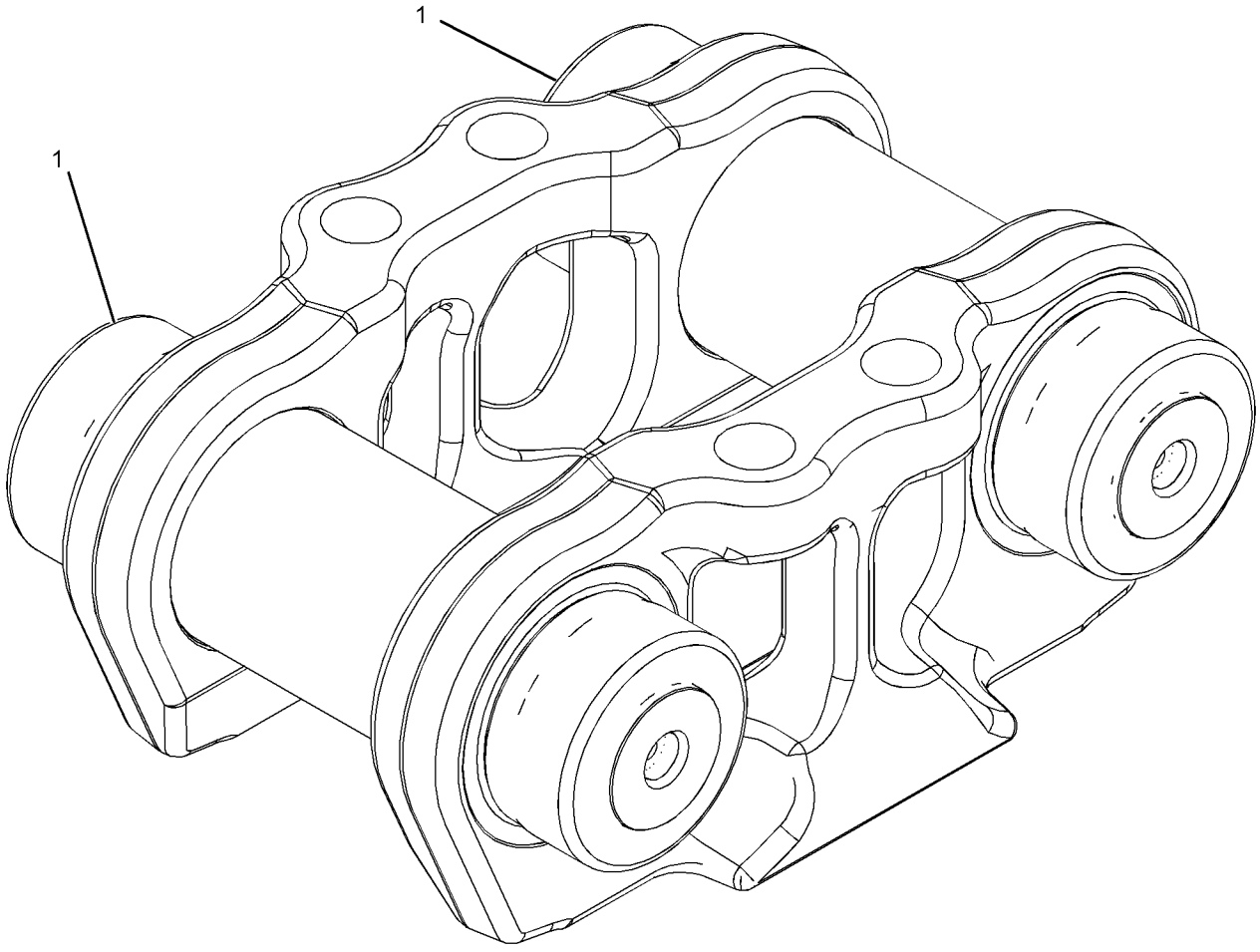

GRAPHIC #1 **<END>** g01416784

351-0959 LINK AS-TRACK BOX—LINK BOX

S/N: LJR1-UP

SEALED, LUBRICATED, FOR FIELD REPLACEMENT OF LINK BOX THAT IS MORE THAN 40% WORN, ORDER 339-0264 LINK AS

FIELD REPLACEMENT FOR 235-2509—PAGE: 412, LINK AS THAT IS LESS THAN 40% WORN

FIELD INSTALLATION

SMCS-4169 **i04885895**

NOTE	REF NO	GRAPHIC REF	PART NUMBER	QTY	PART NAME 1 2 3 4 5 6 (PRODUCT LEVEL)	SEE PAGE
	1	1	**235-2501**	2	LINK-TRACK	
	2	1	*339-0260*	2	CARTRIDGE AS	
					(EACH INCLUDES)	
		1	**6Y-0473**	2	PLUG-CLEAR	
		1	**9G-1642**	2	STOPPER-RUBBER	

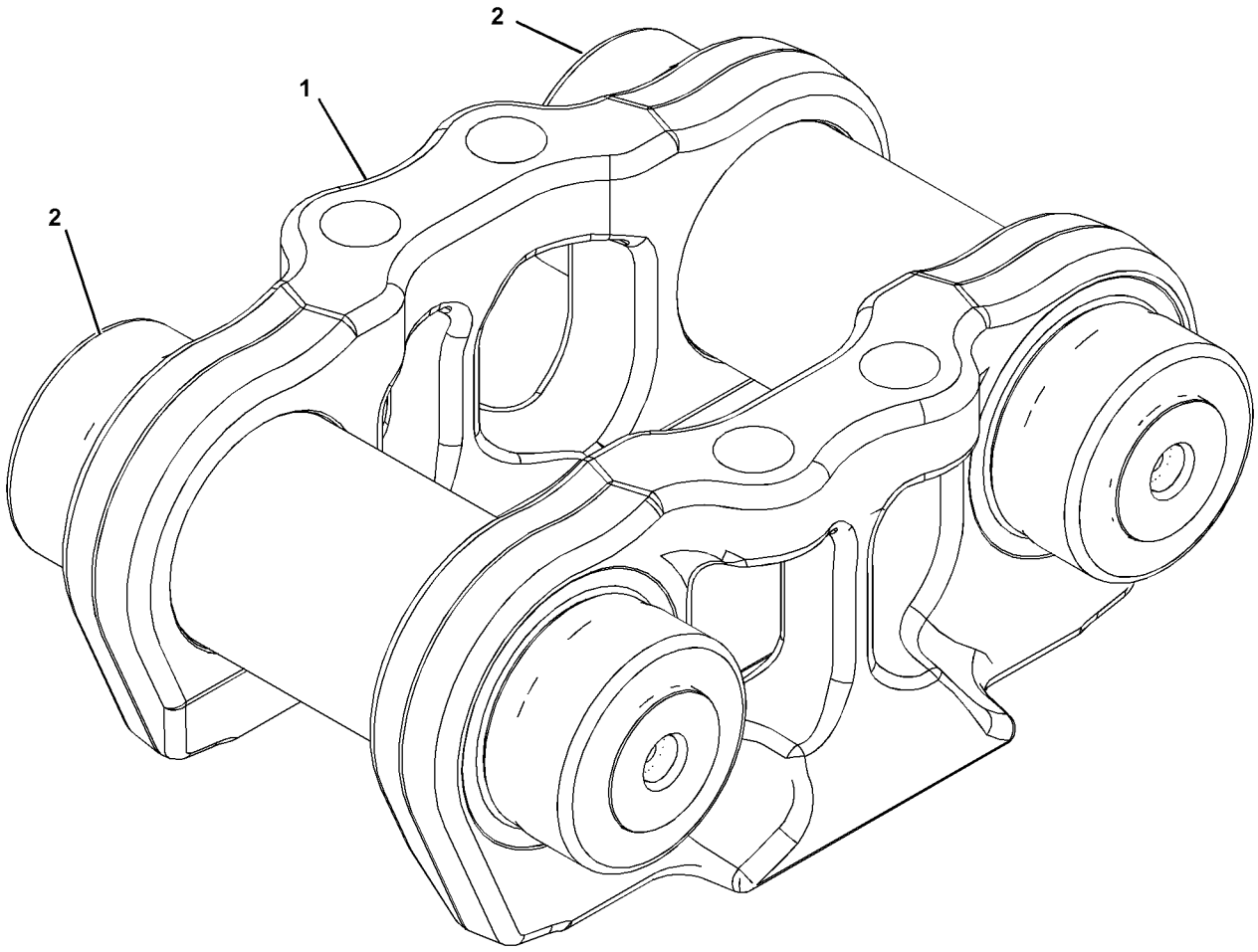

GRAPHIC #1 **<END>** g01378067

118-6345 MOUNTING GP-CARRIER ROLLER

S/N: LJR1-UP

PART OF 322-4635 UNDERCARRIAGE AR

SMCS-4154 **i03659663**

NOTE	REF NO	GRAPHIC REF	PART NUMBER	QTY	PART NAME 1 2 3 4 5 6 (PRODUCT LEVEL)	SEE PAGE
	1	1	**6Y-3125**	2	BRACKET AS	
M	2	1	**7X-2532**	4	BOLT (M20X2.5X130-MM)	
	3	1	**8T-4123**	8	WASHER (22X35X3.5-MM THK)	
M	4	1	**8T-4131**	4	NUT (M20X2.5-THD)	
M	5	1	**8T-7338**	8	BOLT (M16X2X45-MM)	
	6	1	**9X-8257**	8	WASHER (17.5X30X3.5-MM THK)	

M - METRIC PART

QUANTITIES SHOWN ARE THOSE REQUIRED FOR BOTH LH AND RH SIDES

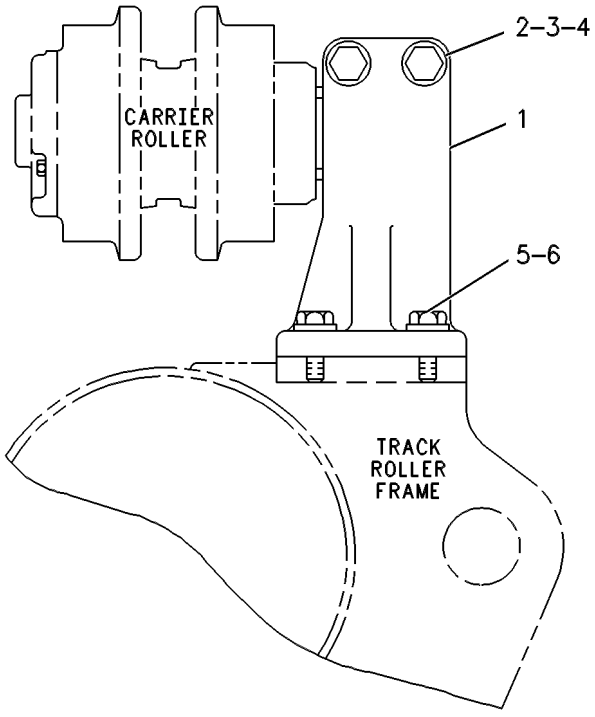

GRAPHIC #1 **<END>** g00252461

107-4098 PIVOT BAR GP

S/N: LJR1-UP

PART OF 322-4635 UNDERCARRIAGE AR

SMCS-4153 **i04550411**

NOTE	REF NO	GRAPHIC REF	PART NUMBER	QTY	PART NAME 1 2 3 4 5 6 (PRODUCT LEVEL)	SEE PAGE
	1	1	**8G-2943**	2	SEAL	
	2	1	**8G-4107**	2	PLATE	
	3	1	**108-0802**	2	COVER	
	4	1	**108-0803**	2	SHAFT AS	
					(EACH INCLUDES)	
		1	**8G-5799**	1	RING	
	5	1	**126-8928**	24	WASHER-HARD (26X40X8-MM THK)	
M	6	1	**7X-2576**	24	BOLT (M24X3X70-MM)	
					–OR–	
M		1	**8T-5878**	24	BOLT (M24X3X80-MM)	
M	7	1	**160-8510**	6	BOLT-SELF-LOCKING (M20X2.5X60-MM)	
M	8	1	**8T-4193**	20	BOLT (M16X2X50-MM)	
	9	1	**9X-8257**	20	WASHER (17.5X30X3.5-MM THK)	
	10	1	**5P-1979**	2	SEAL-O-RING	

M - METRIC PART

QUANTITIES SHOWN ARE THOSE REQUIRED FOR BOTH LH AND RH SIDES

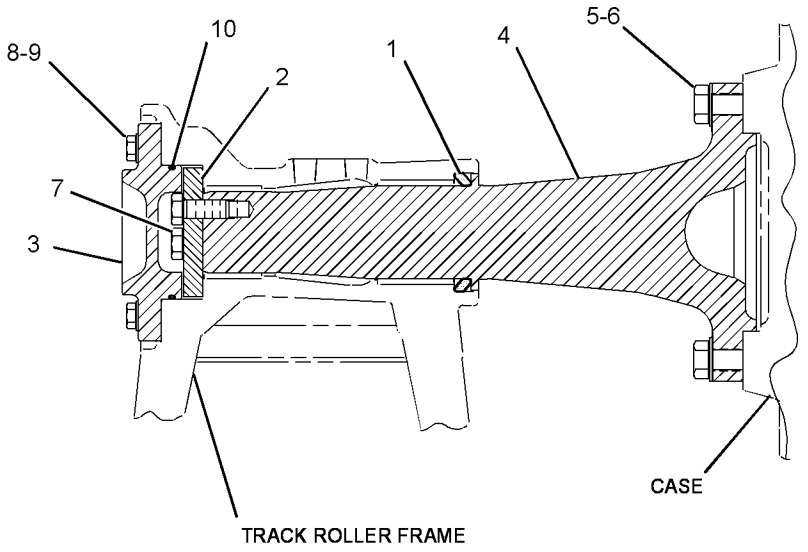

GRAPHIC #1 **<END>** g01948056

229-5446 ROLLER GP-TRACK CARRIER–SYSTEMONE

S/N: LJR1-UP

PART OF 322-4635 UNDERCARRIAGE AR

SMCS-4154 **i04536648**

NOTE	REF NO	GRAPHIC REF	PART NUMBER	QTY	PART NAME 1 2 3 4 5 6 (PRODUCT LEVEL)	SEE PAGE
					(INDIVIDUAL PARTS ARE NOT SERVICED SEPARATELY)	

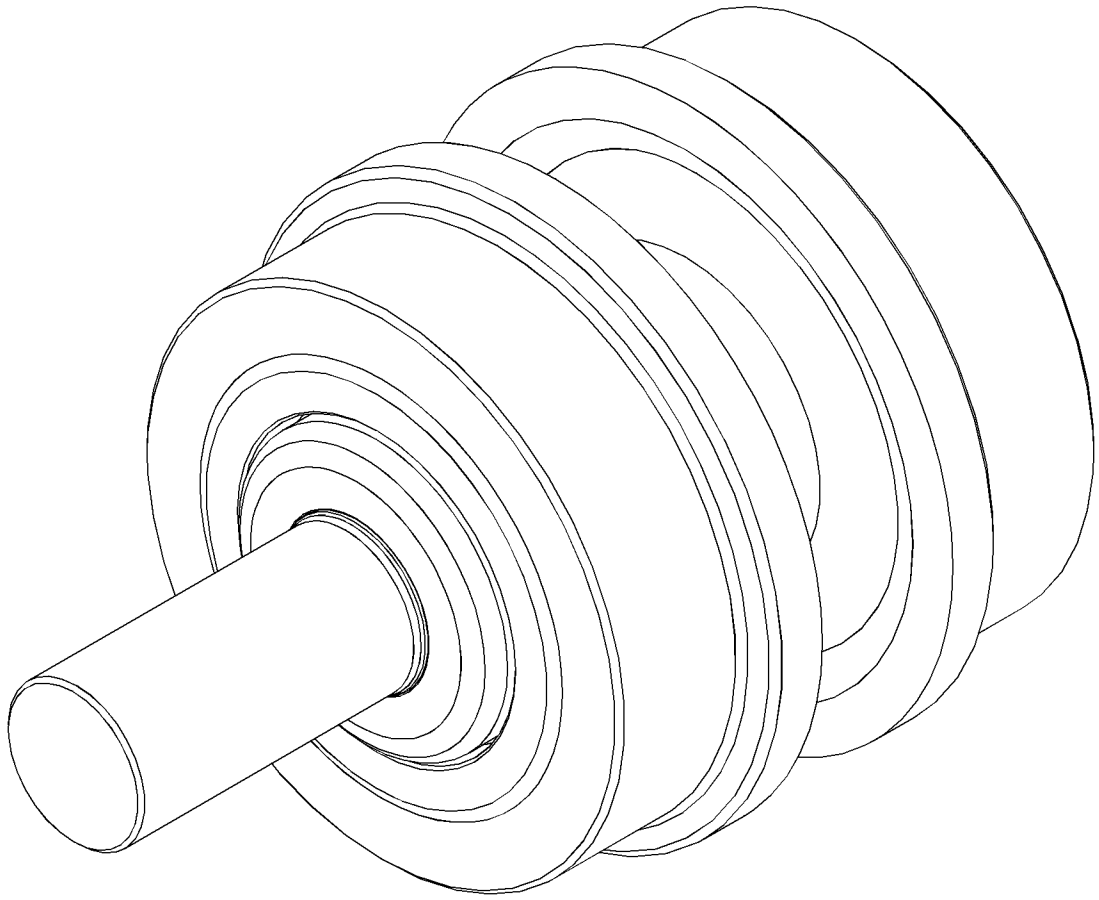

GRAPHIC #1 **<END>** g01395978

310-4915 ROLLER GP-TRACK-DOUBLE FLANGE–HEAVY-DUTY

S/N: LJR1-UP

PART OF 358-8583 ROLLER GP-TRACK-DOUBLE FLANGE

AN ATTACHMENT

SMCS-4180 **i04011993**

NOTE	REF NO	GRAPHIC REF	PART NUMBER	QTY	PART NAME 1 2 3 4 5 6 (PRODUCT LEVEL)	SEE PAGE
	1	1	**121-0834**	2	BUSHING AS	
	2	1	**121-1257**	2	RING-RETAINING	
R	3	1	**2M-2858**	2	SEAL GP-DUO-CONE	
					(EACH INCLUDES)	
	3A	1	**1M-3097**	2	RING-SEALING	
	4	1	**1H-6227**	2	SEAL-O-RING	
	5	1	*6Y-0454*	1	STOPPER AS	
	5A	1	**6Y-0473**	1	PLUG-CLEAR	
	5B	1	**7G-4332**	1	STOPPER	

R - REMFG PART MAY BE AVAILABLE

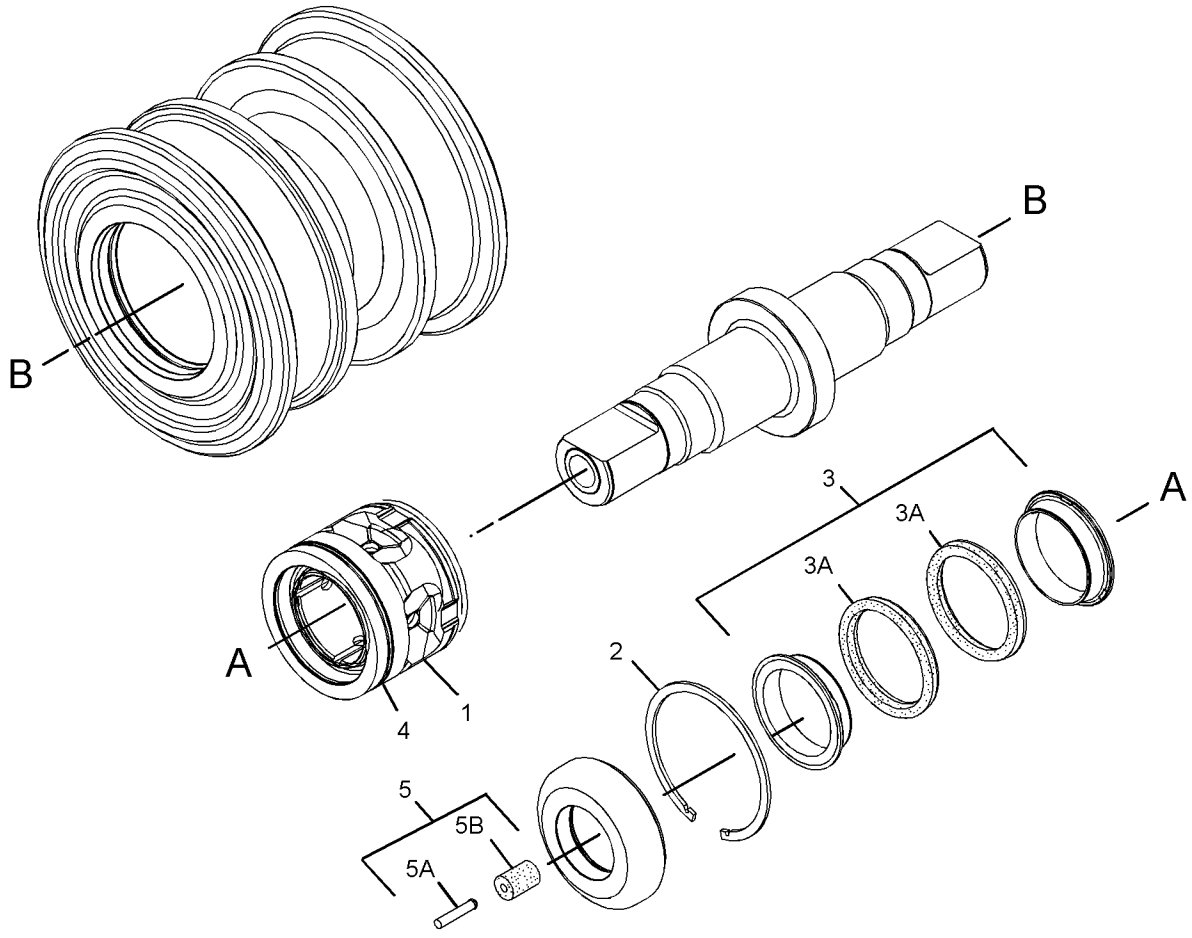

GRAPHIC #1 **<END>** g02393501

358-8583 ROLLER GP-TRACK-DOUBLE FLANGE–HEAVY-DUTY

S/N: LJR1-UP

PART OF 350-6986 FRAME GP-UNDERCARRIAGE

AN ATTACHMENT

SMCS-4180 **i04286130**

NOTE	REF NO	GRAPHIC REF	PART NUMBER	QTY	PART NAME 1 2 3 4 5 6 (PRODUCT LEVEL)	SEE PAGE
	1	1	**223-9110**	2	CAP-TRACK ROLLER	
Y	2	1	**310-4915**	1	ROLLER GP-TRACK-DOUBLE FLANGE	422
M	3	1	**8T-0281**	4	BOLT (M16X2X80-MM)	
	4	1	**9X-8268**	4	WASHER (17.5X30X3.5-MM THK)	

M - METRIC PART
Y - SEPARATE ILLUSTRATION

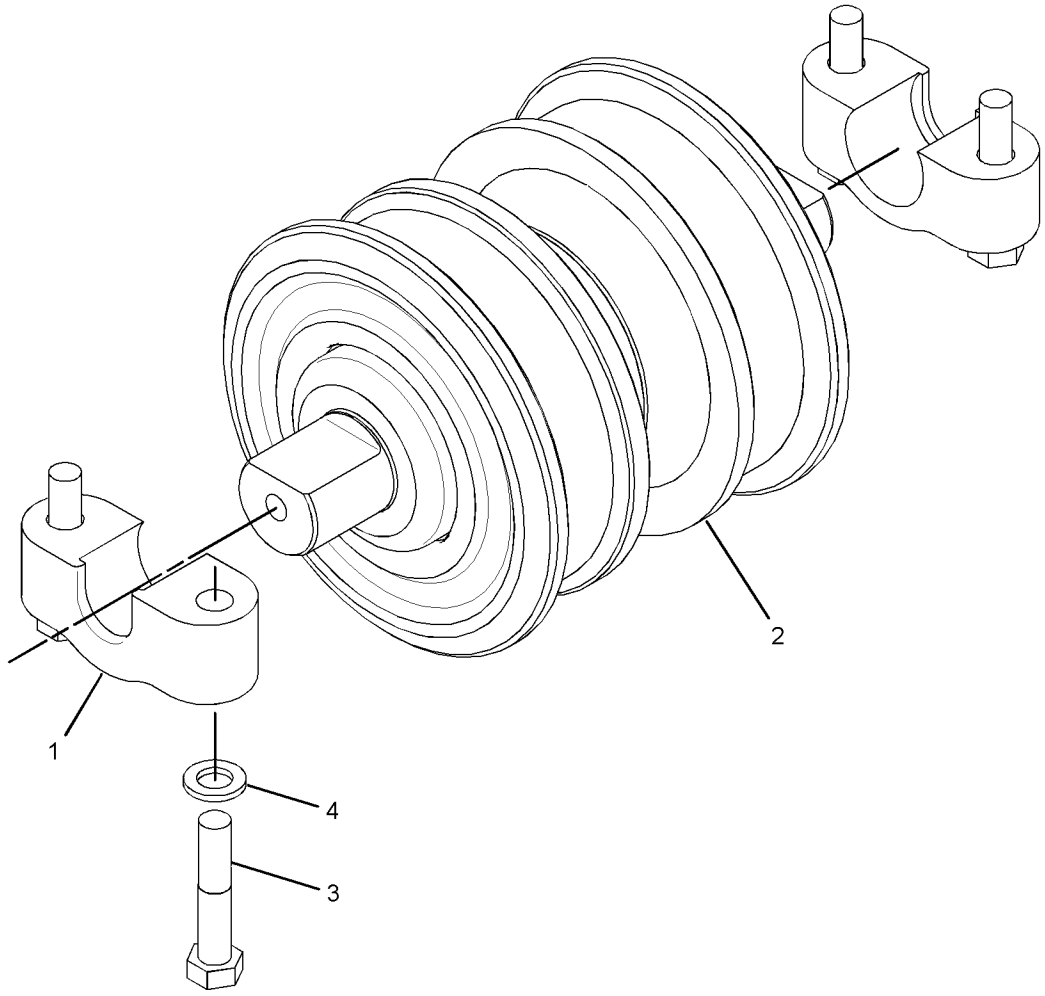

GRAPHIC #1 **<END>** g02323534

240-9557 ROLLER GP-TRACK-SINGLE FLANGE—SYSTEMONE

S/N: LJR1-UP

PART OF 273-3989 ROLLER GP-TRACK-SINGLE FLANGE

SMCS-4180 **i02777459**

NOTE	REF NO	GRAPHIC REF	PART NUMBER	QTY	PART NAME 1 2 3 4 5 6 (PRODUCT LEVEL)	SEE PAGE
					(INDIVIDUAL PARTS ARE NOT SERVICED SEPARATELY)	

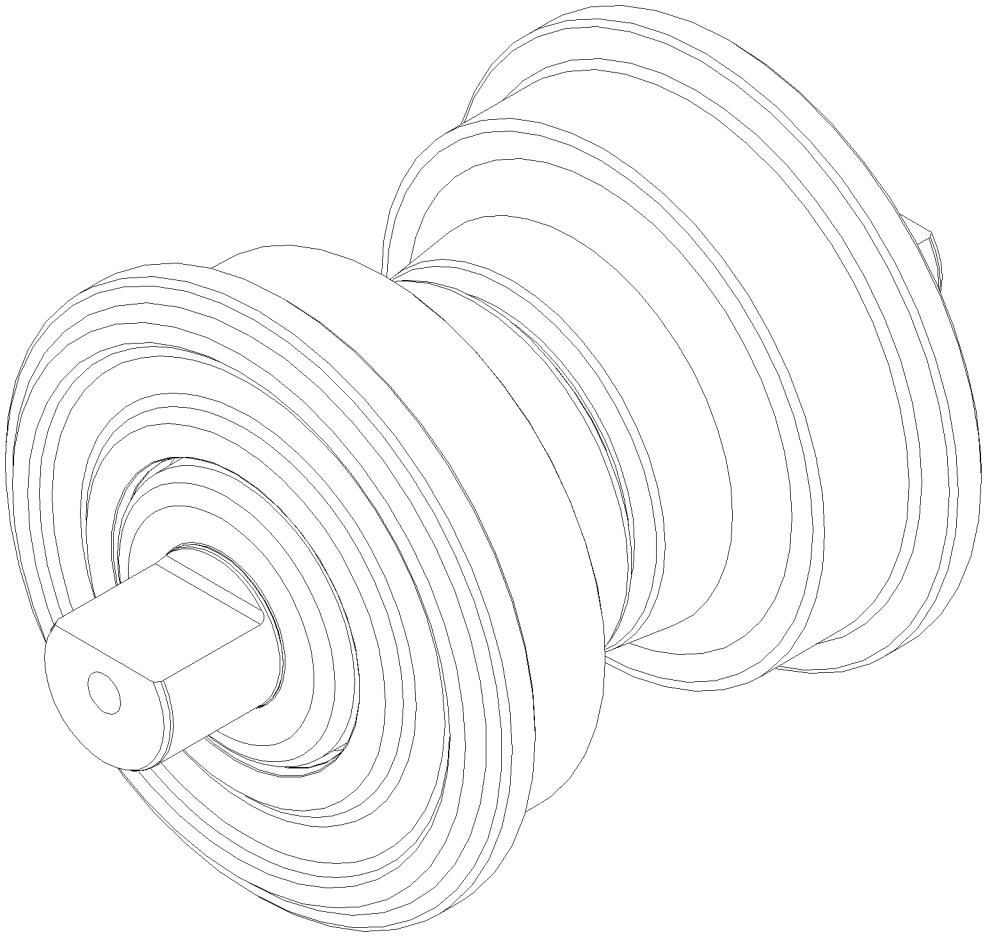

GRAPHIC #1 **<END>** g01395989

273-3989 ROLLER GP-TRACK-SINGLE FLANGE—SYSTEMONE

S/N: LJR1-UP

PART OF 271-6182, 350-6983 UNDERCARRIAGE GP

SMCS-4180 **i02798997**

NOTE	PART NUMBER	QTY	PART NAME 1 2 3 4 5 6 (PRODUCT LEVEL)	SEE PAGE
Y	**240-9557**	1	ROLLER GP-TRACK-SINGLE FLANGE (SYSTEMONE)	424
M	**8T-0281**	4	BOLT (M16X2X80-MM)	
	223-9110	2	CAP-TRACK ROLLER	
	9X-8268	4	WASHER (17.5X30X3.5-MM THK)	

M - METRIC PART
Y - SEPARATE ILLUSTRATION

<END>

310-4912 ROLLER GP-TRACK-SINGLE FLANGE

S/N: LJR1-UP

PART OF 358-7239 ROLLER GP-TRACK-SINGLE FLANGE

AN ATTACHMENT

SMCS-4180 **i04011813**

NOTE	REF NO	GRAPHIC REF	PART NUMBER	QTY	PART NAME 1 2 3 4 5 6 (PRODUCT LEVEL)	SEE PAGE
	1	1	**121-0834**	2	BUSHING AS	
	2	1	**121-1257**	2	RING-RETAINING	
R	3	1	**2M-2858**	2	SEAL GP-DUO-CONE	
					(EACH INCLUDES)	
	3A	1	**1M-3097**	2	RING-SEALING	
	4	1	**1H-6227**	2	SEAL-O-RING	
	5	1	*6Y-0454*	1	STOPPER AS	
	5A	1	**6Y-0473**	1	PLUG-CLEAR	
	5B	1	**7G-4332**	1	STOPPER	

R - REMFG PART MAY BE AVAILABLE

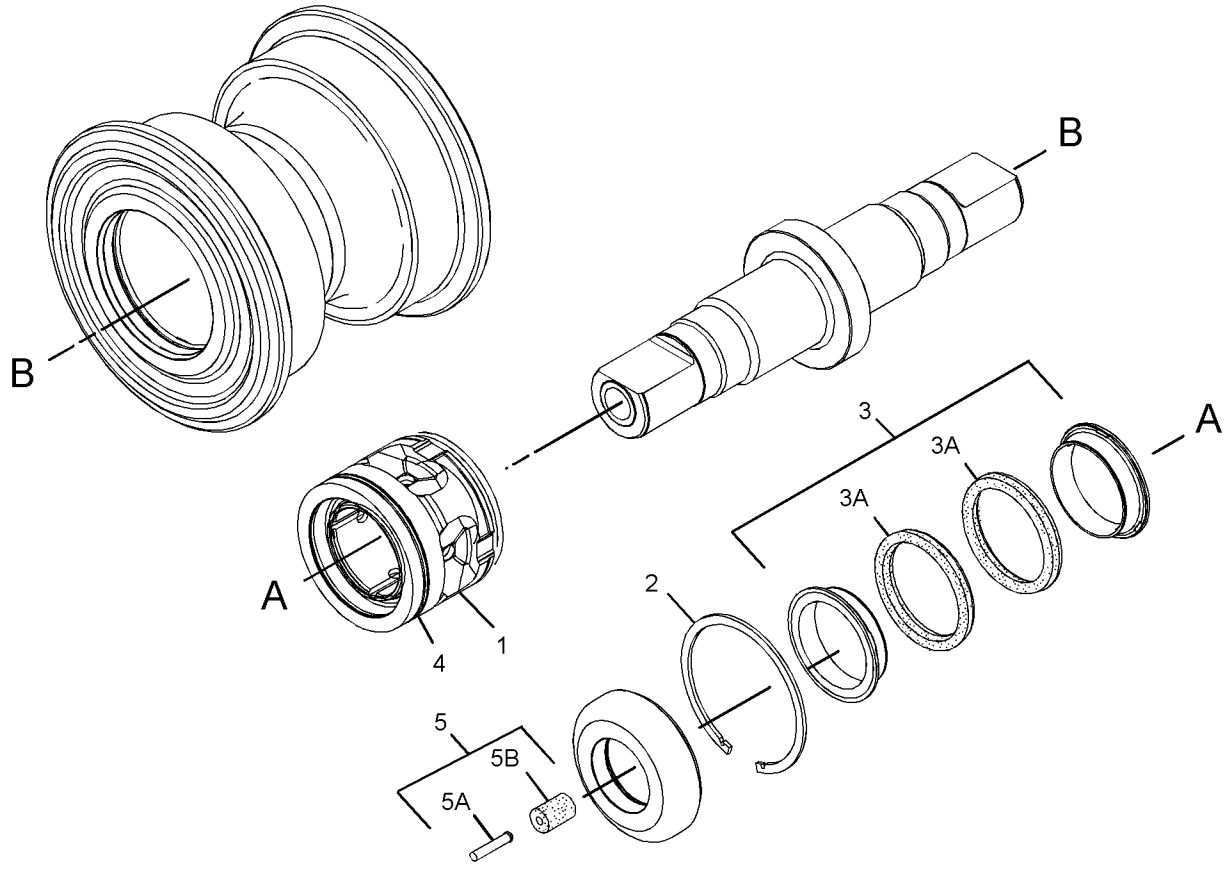

GRAPHIC #1 **<END>** g02394297

358-7239 ROLLER GP-TRACK-SINGLE FLANGE–HEAVY-DUTY

S/N: LJR1-UP

PART OF 350-6986 FRAME GP-UNDERCARRIAGE

AN ATTACHMENT

SMCS-4180 **i04286128**

NOTE	REF NO	GRAPHIC REF	PART NUMBER	QTY	PART NAME 1 2 3 4 5 6 (PRODUCT LEVEL)	SEE PAGE
	1	1	**223-9110**	2	CAP-TRACK ROLLER	
Y	2	1	**310-4912**	1	ROLLER GP-TRACK-SINGLE FLANGE	426
M	3	1	**8T-0281**	4	BOLT (M16X2X80-MM)	
	4	1	**9X-8268**	4	WASHER (17.5X30X3.5-MM THK)	

M - METRIC PART
Y - SEPARATE ILLUSTRATION

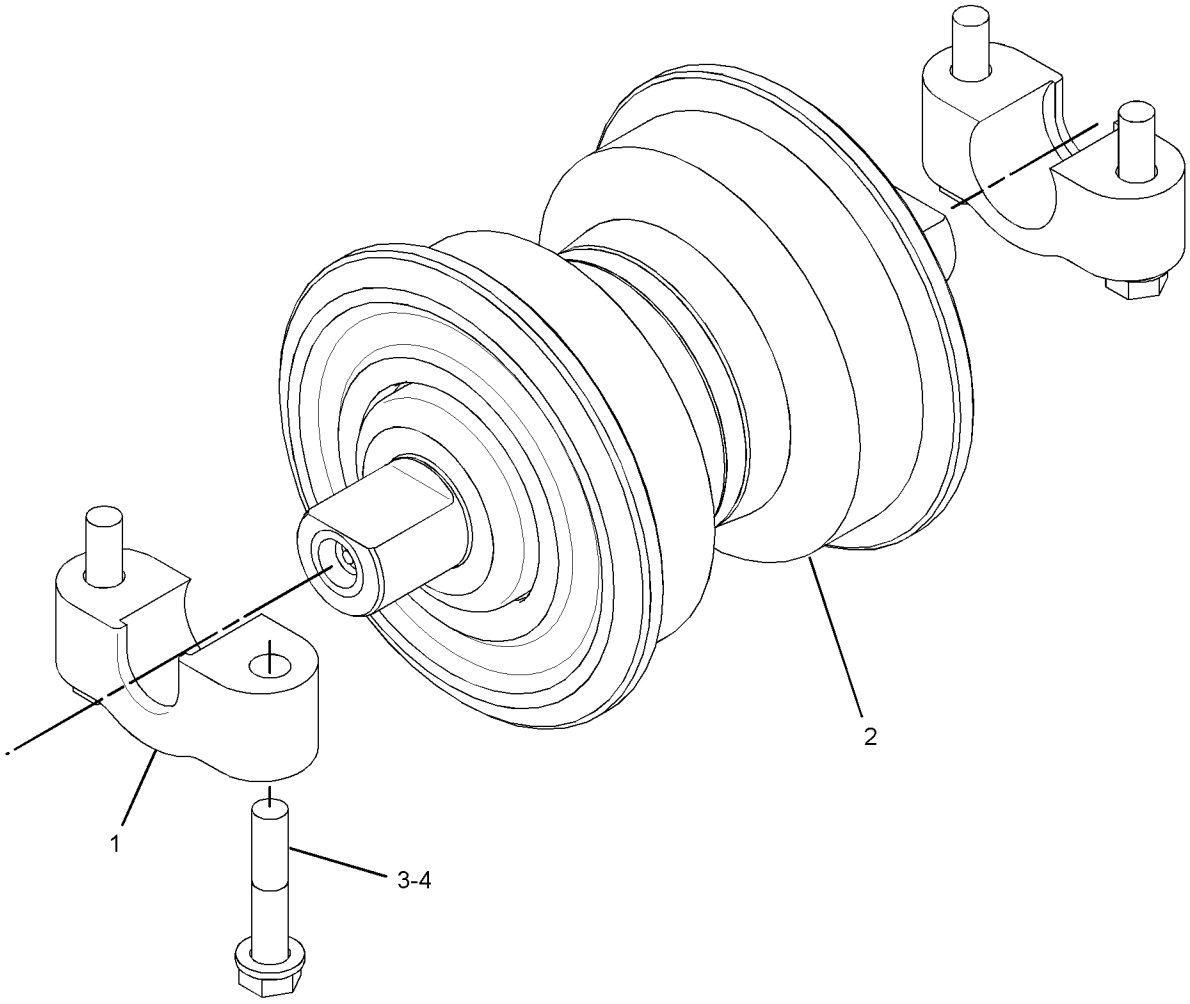

GRAPHIC #1 **<END>** g02323593

339-1746 SCRAPER GP-IDLER—SYSTEMONE

S/N: LJR1-UP

PART OF 271-6182, 350-6983 UNDERCARRIAGE GP

SMCS-4152 **i03630793**

NOTE	REF NO	GRAPHIC REF	PART NUMBER	QTY	PART NAME 1 2 3 4 5 6 (PRODUCT LEVEL)	SEE PAGE
	1	1	**271-6192**	2	SCRAPER	
	2	1	**271-6193**	2	SCRAPER	
	3	1	**271-6194**	2	SCRAPER	
	4	1	**271-6195**	2	SCRAPER	
	5	1	**271-6196**	2	PLATE	
	6	1	**271-6197**	2	PLATE	
	7	1	**198-4778**	32	WASHER-HARD (13.5X30X12-MM THK)	
M	8	1	**8T-4194**	24	BOLT (M12X1.75X50-MM)	
M	9	1	**8T-4910**	8	BOLT (M12X1.75X60-MM)	

M - METRIC PART

339-1746 **SCRAPER GP-IDLER (*contd.*)** **i03630793**

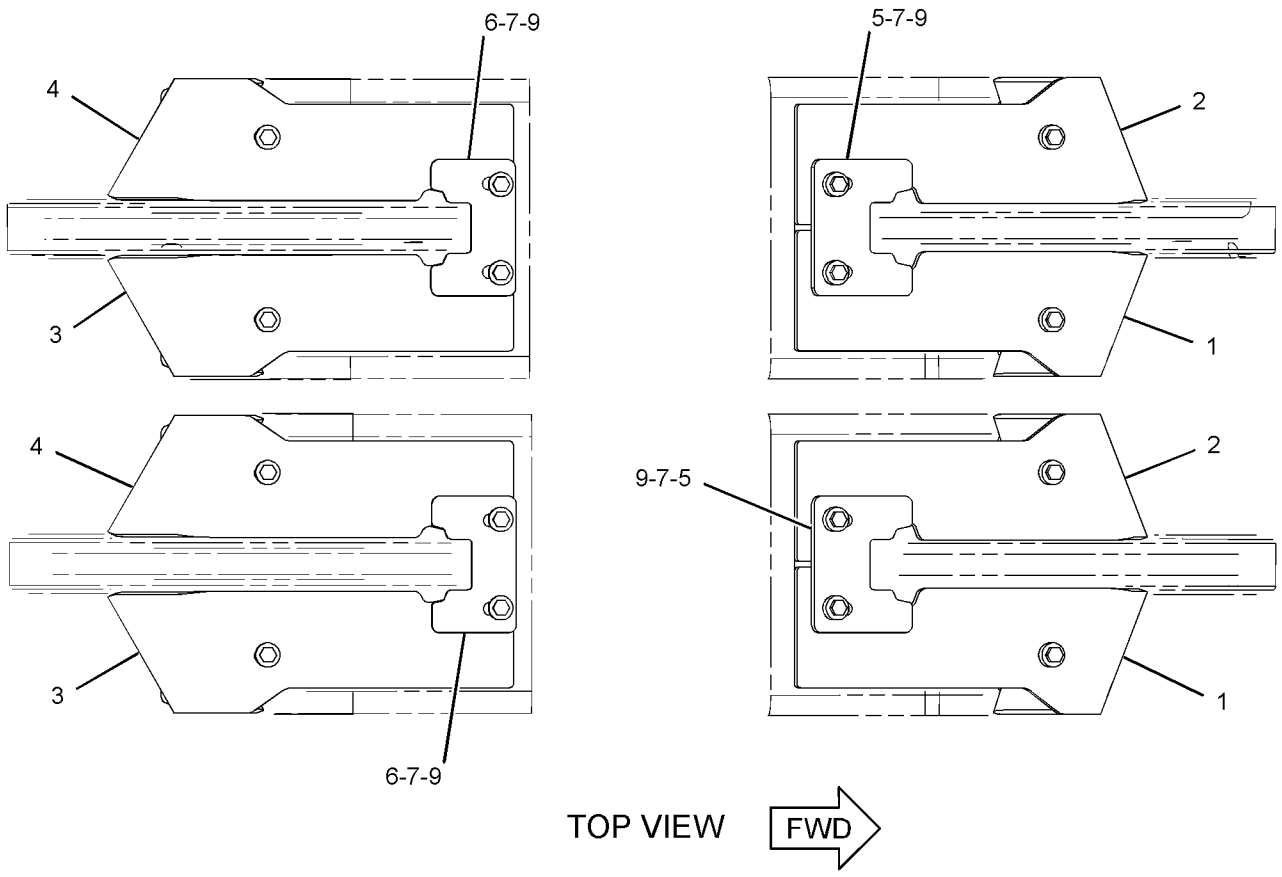

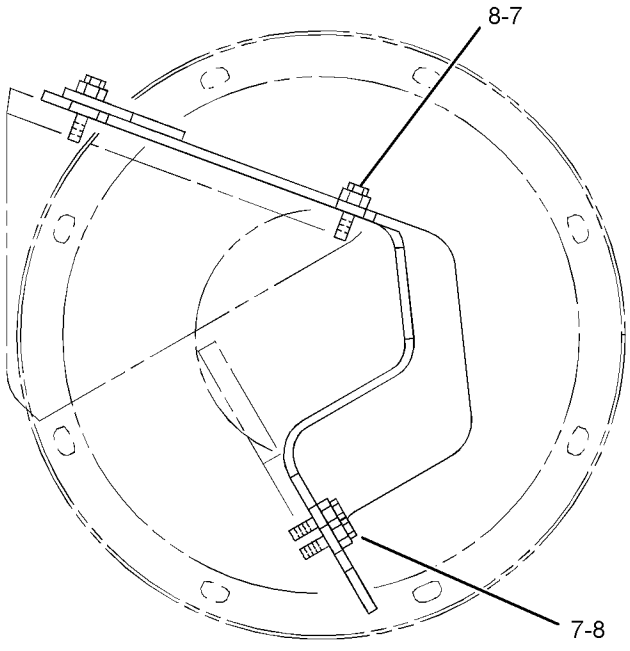

RIGHT SIDE VIEW

GRAPHIC #1 **<END>** g01902639

271-6184 TRACK ADJUSTER & RECOIL GP

S/N: LJR1-UP

PART OF 271-6128, 351-5113 FRAME GP-TRACK ROLLER

ALSO AN ATTACHMENT

SMCS-4157, 4158 **i03630792**

NOTE	REF NO	GRAPHIC REF	PART NUMBER	QTY	PART NAME 1 2 3 4 5 6 (PRODUCT LEVEL)	SEE PAGE
	1	1	**2S-5926**	1	VALVE-RELIEF (RECOIL SPRING OIL)	
	2	1	**3W-2369**	1	PLATE AS	
	3	1	**8E-4092**	2	RETAINER	
	4	1	**8G-3102**	1	PISTON	
	5	1	**8G-4945**	1	SEAL AS	
	6	1	**108-0801**	1	CYLINDER	
	7	1	**190-8609**	1	VALVE-FILL (RECOIL SPRING OIL)	
	8	1	**271-6185**	1	SPRING	
	9	1	**331-2427**	1	TUBE AS	
	10	1	**331-2430**	1	RETAINER	
	11	1	**2J-6274**	1	SEAL-O-RING	
	12	1	**2S-4078**	1	SEAL-O-RING	
M	13	1	**8T-0375**	4	BOLT (M16X2X45-MM)	
	14	1	**8T-4121**	2	WASHER-HARD (11X21X2.5-MM THK)	
M	15	1	**8T-4182**	2	BOLT (M10X1.5X45-MM)	
	16	1	**9S-8010**	1	PLUG	
	17	1	**9X-8268**	4	WASHER (17.5X30X3.5-MM THK)	

M - METRIC PART

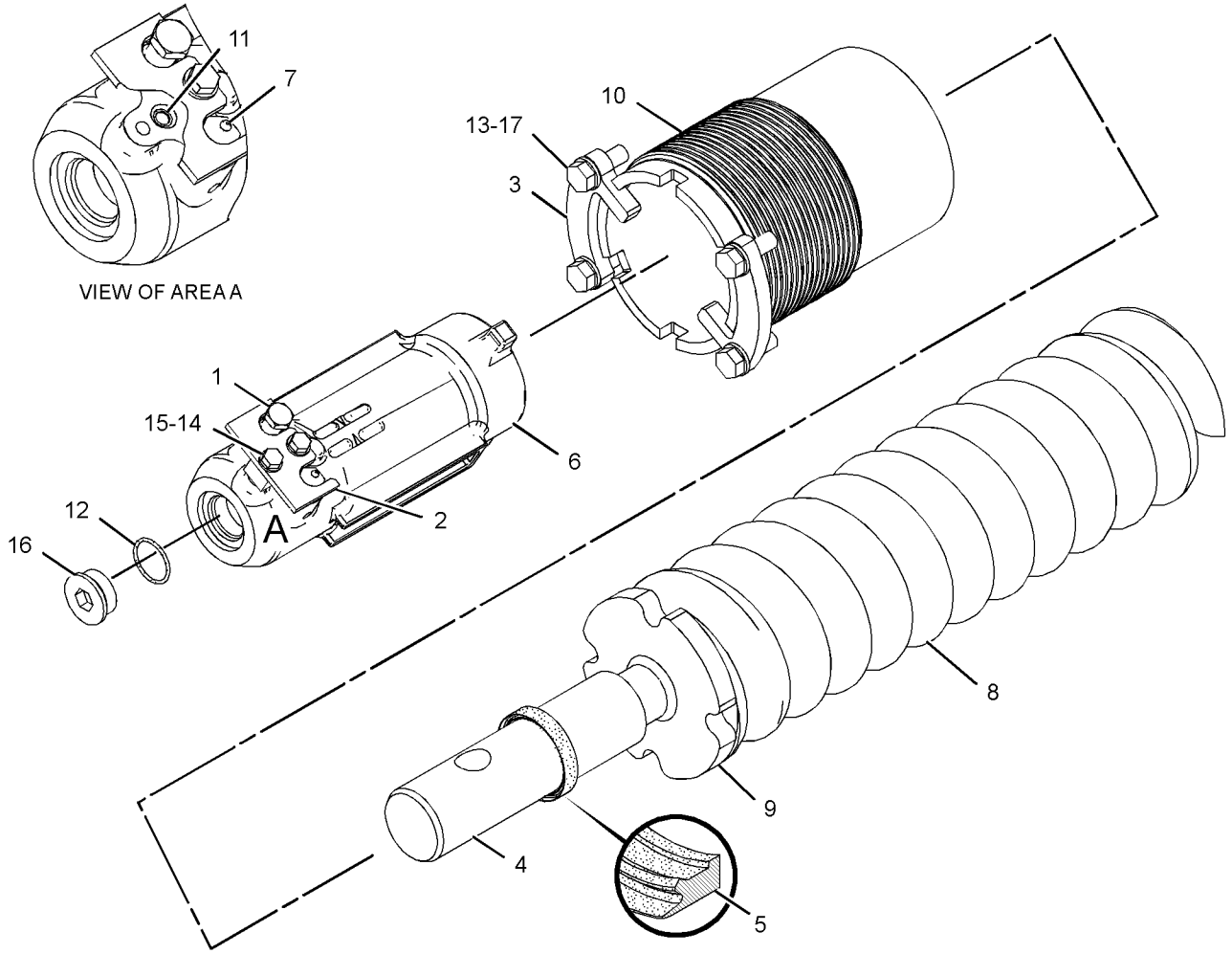

GRAPHIC #1 **<END>** g01903581

110-2980 TRACK GP–2-REQUIRED

S/N: LJR1-UP
560-MM (22-IN) GROUSER SHOE. SEALED, LUBRICATED, EXTREME SERVICE, HEAVY DUTY
FOR USE WITH HEAVY-DUTY ROLLERS, GUARD, GUIDESTRIPS, & CONVENTIONAL IDLERS, 356-2925–
PAGE: 440
AN ATTACHMENT

SMCS-4170 **i01321601**

NOTE	PART NUMBER	QTY	PART NAME 1 2 3 4 5 6 (PRODUCT LEVEL)	SEE PAGE
Y	**110-2976**	1	LINK AS-TRACK	409
	6V-1792	156	BOLT-TRACK (3/4-16X2.4-IN)	
	106-1642	2	BOLT-TRACK MASTER (3/4-16X2.9-IN)	
	107-0719	2	BOLT-TRACK MASTER (3/4-16X3.9-IN)	
	1S-1860	156	NUT-TRACK (3/4-16-THD)	
	107-0714	1	SHOE-MASTER TRACK	
	107-0713	39	SHOE-TRACK	

Y - SEPARATE ILLUSTRATION

<END>

235-2513 TRACK GP–2-REQUIRED, SYSTEMONE

S/N: LJR1-UP
610-MM (24-IN) GROUSER SHOE. SEALED, LUBRICATED, MODERATE SERVICE
FOR USE WITH SYSTEMONE ROLLERS, CARRIER ROLLERS, GUIDESTRIPS
AN ATTACHMENT

SMCS-4170 **i04711429**

NOTE	PART NUMBER	QTY	PART NAME 1 2 3 4 5 6 (PRODUCT LEVEL)	SEE PAGE
Y	**235-2511**	1	LINK AS-TRACK (SYSTEMONE)	411
M	**6Y-0846**	156	BOLT-TRACK (M20X1.5X63-MM)	
M	**254-0225**	4	BOLT-TRACK MASTER (M20X1.5X101-MM)	
	318-2375	2	LINK-TRACK MASTER	
M	**9W-3361**	156	NUT-TRACK (M20X1.5-THD)	
	235-2504	39	SHOE-TRACK	
	254-9049	1	SHOE-TRACK MASTER	

M - METRIC PART
Y - SEPARATE ILLUSTRATION

<END>

246-5759 TRACK GP–2-REQUIRED, SYSTEMONE

S/N: LJR1-UP

560-MM (22-IN) GROUSER SHOE. SEALED, LUBRICATED. EXTREME SERVICE

FOR USE WITH SYSTEMONE ROLLERS, GUARDS, GUIDESTRIPS

AN ATTACHMENT

SMCS-4170 **i05017433**

NOTE	PART NUMBER	QTY	PART NAME 1 2 3 4 5 6 (PRODUCT LEVEL)	SEE PAGE
Y	**235-2511**	1	LINK AS-TRACK (SYSTEMONE)	411
M	**6Y-0846**	156	BOLT-TRACK (M20X1.5X63-MM)	
M	**254-0225**	4	BOLT-TRACK MASTER (M20X1.5X101-MM)	
	318-2375	2	LINK-TRACK MASTER	
M	**9W-3361**	156	NUT-TRACK (M20X1.5-THD)	
	246-5748	39	SHOE-TRACK	
	254-9052	1	SHOE-TRACK MASTER	

M - METRIC PART
Y - SEPARATE ILLUSTRATION

<END>

256-4873 TRACK GP–2-REQUIRED, SYSTEMONE

S/N: LJR1-UP

610-MM (24-IN) GROUSER SHOE. SEALED, LUBRICATED. EXTREME SERVICE. CLAMP MASTER FOR USE WITH SYSTEMONE ROLLERS, GUARDS, GUIDESTRIPS

PART OF 322-4635 UNDERCARRIAGE AR

SMCS-4170 **i04747954**

NOTE	REF NO	GRAPHIC REF	PART NUMBER	QTY	PART NAME 1 2 3 4 5 6 (PRODUCT LEVEL)	SEE PAGE
	1	1	**246-5747**	39	SHOE-TRACK	
Y	2	1	**235-2511**	1	LINK AS-TRACK (SYSTEMONE)	411
	3	1	**254-9050**	1	SHOE-TRACK MASTER	
	4	1	**318-2375**	2	LINK-TRACK MASTER	
M	5	1	**254-0225**	4	BOLT-TRACK MASTER (M20X1.5X101-MM)	
M	6	1	**6Y-0846**	156	BOLT-TRACK (M20X1.5X63-MM)	
M	7	1	**9W-3361**	156	NUT-TRACK (M20X1.5-THD)	

M - METRIC PART
Y - SEPARATE ILLUSTRATION

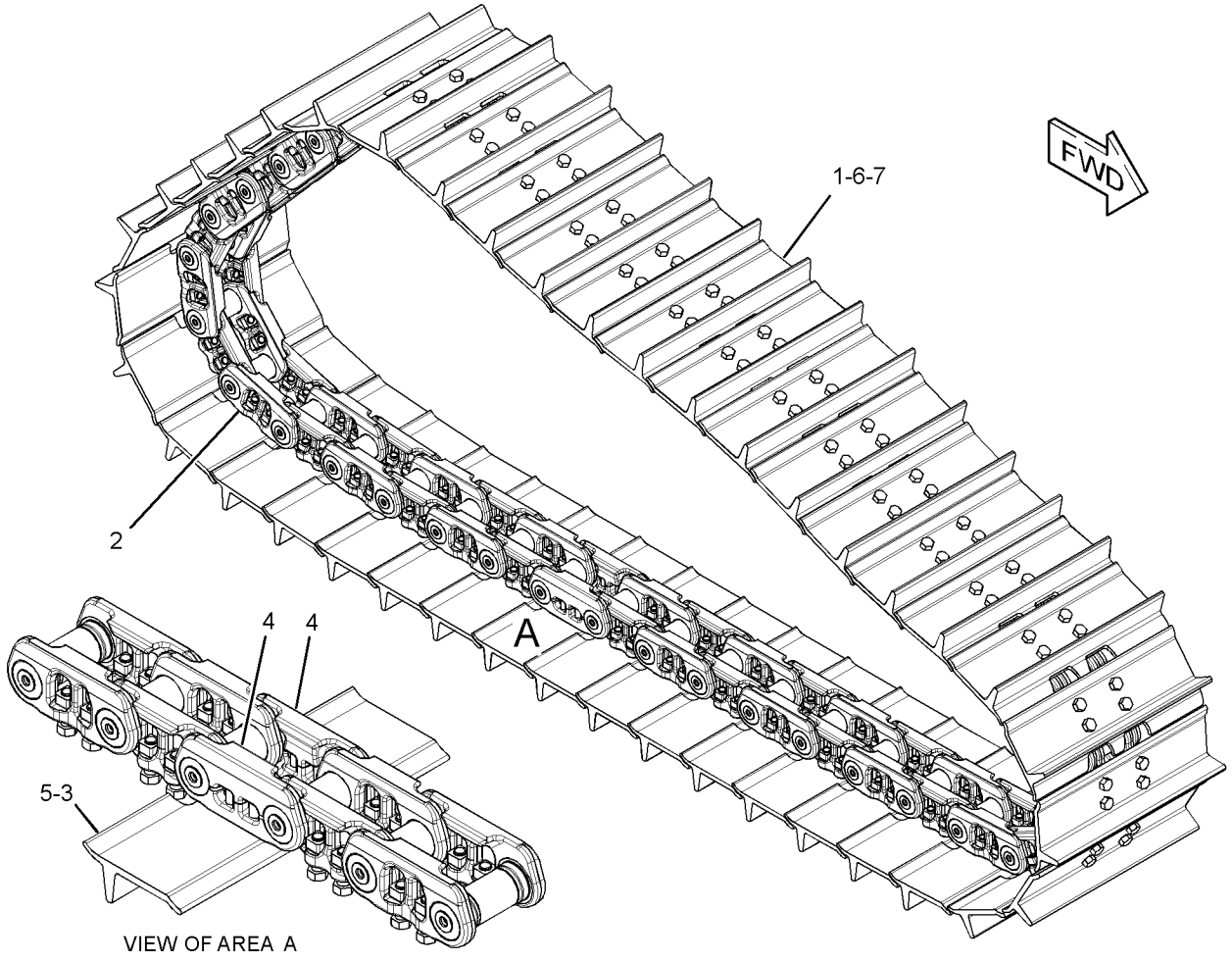

VIEW OF AREA A

GRAPHIC #1 **<END>** g02912678

289-5211 TRACK GP–2-REQUIRED, SYSTEMONE

S/N: LJR1-UP

610-MM (24-IN) GROUSER SHOE. SEALED, LUBRICATED, EXTREME SERVICE, CENTER HOLE

FOR USE WITH SYSTEMONE ROLLERS, GUARDS, GUIDESTRIPS

AN ATTACHMENT

SMCS-4170 **i05017438**

NOTE	PART NUMBER	QTY	PART NAME 1 2 3 4 5 6 (PRODUCT LEVEL)	SEE PAGE
Y	**235-2511**	1	LINK AS-TRACK (SYSTEMONE)	411
M	**6Y-0846**	156	BOLT-TRACK (M20X1.5X63-MM)	
M	**254-0225**	4	BOLT-TRACK MASTER (M20X1.5X101-MM)	
	318-2375	2	LINK-TRACK MASTER	
M	**9W-3361**	156	NUT-TRACK (M20X1.5-THD)	
	289-5210	39	SHOE-TRACK	
	355-3337	1	SHOE-TRACK MASTER	

M - METRIC PART
Y - SEPARATE ILLUSTRATION

<END>

356-3434 TRACK GP–2 REQUIRED

S/N: LJR1-UP

600-MM (23.6-IN) GROUSER SHOE. SEALED, LUBRICATED, EXTREME SERVICE, HEAVY DUTY FOR USE WITH HEAVY DUTY UNDERCARRIAGE AR & ROLLERS, GUARDS, GUIDESTRIPS & CONVENTIAL IDLERS

AN ATTACHMENT

SMCS-4170 **i05098900**

NOTE	REF NO	GRAPHIC REF	PART NUMBER	QTY	PART NAME 1 2 3 4 5 6 (PRODUCT LEVEL)	SEE PAGE
	1	1	**132-1334**	39	SHOE-TRACK	
	2	1	**132-1336**	1	SHOE-TRACK MASTER	
Y	3	1	**110-2976**	1	LINK AS-TRACK	409
	4	1	**106-1642**	2	BOLT-TRACK MASTER (3/4-16X2.9-IN)	
	5	1	**107-0719**	2	BOLT-TRACK MASTER (3/4-16X3.9-IN)	
	6	1	**1S-1860**	156	NUT-TRACK (3/4-16-THD)	
	7	1	**6V-1792**	156	BOLT-TRACK (3/4-16X2.4-IN)	

Y - SEPARATE ILLUSTRATION

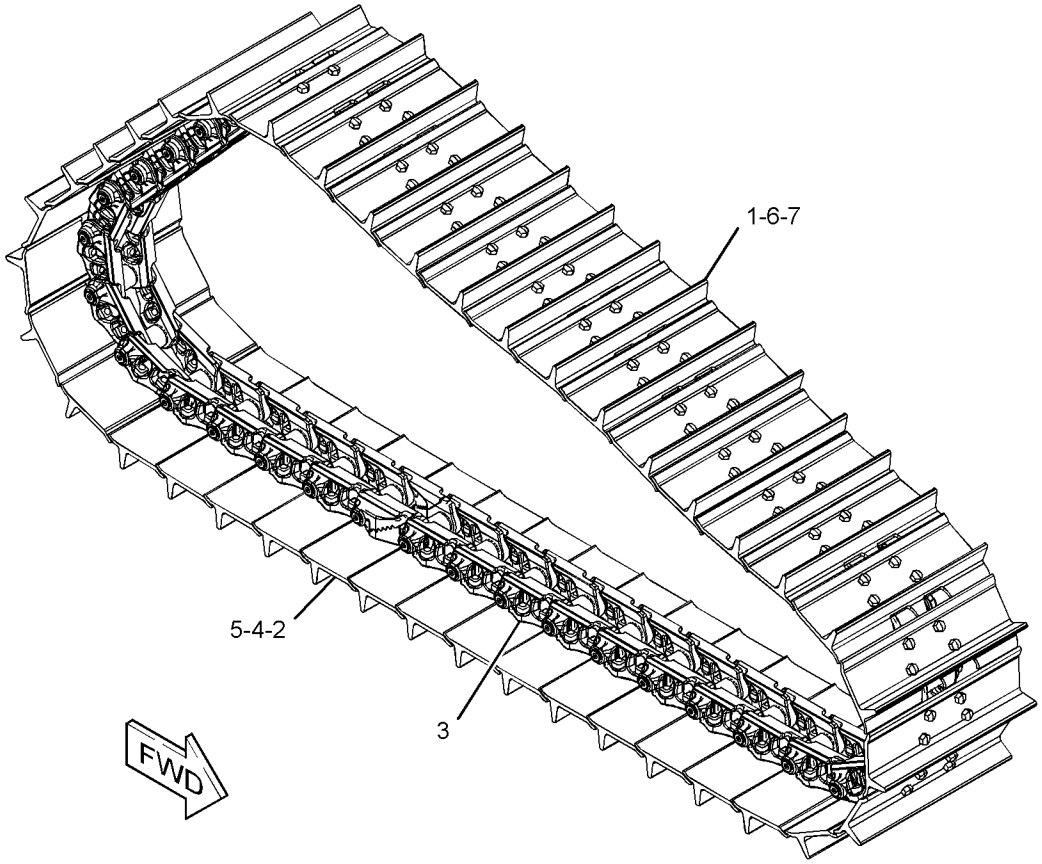

GRAPHIC #1 **<END>** g03324085

356-3435 TRACK GP–2 REQUIRED

S/N: LJR1-UP

600-MM (23.6-INCH) GROUSER SHOE. SEALED, LUBRICATED, EXTREME SERVICE, HEAVY DUTY, TRAPEZOIDAL

FOR USE WITH HEAVY DUTY UNDERCARRIAGE AR, HEAVY DUTY ROLLERS, GUARDS GUIDESTRIPS & CONVENTIONAL IDLERS

AN ATTACHMENT

SMCS-4170 **i05098896**

NOTE	REF NO	GRAPHIC REF	PART NUMBER	QTY	PART NAME 1 2 3 4 5 6 (PRODUCT LEVEL)	SEE PAGE
Y	1	1	**110-2976**	1	LINK AS-TRACK	409
	2	1	**356-3427**	39	SHOE-TRACK	
	3	1	**356-3428**	1	SHOE-TRACK MASTER	
	4	1	**106-1642**	2	BOLT-TRACK MASTER (3/4-16X2.9-IN)	
	5	1	**107-0719**	2	BOLT-TRACK MASTER (3/4-16X3.9-IN)	
	6	1	**1S-1860**	156	NUT-TRACK (3/4-16-THD)	
	7	1	**6V-1792**	156	BOLT-TRACK (3/4-16X2.4-IN)	

Y - SEPARATE ILLUSTRATION

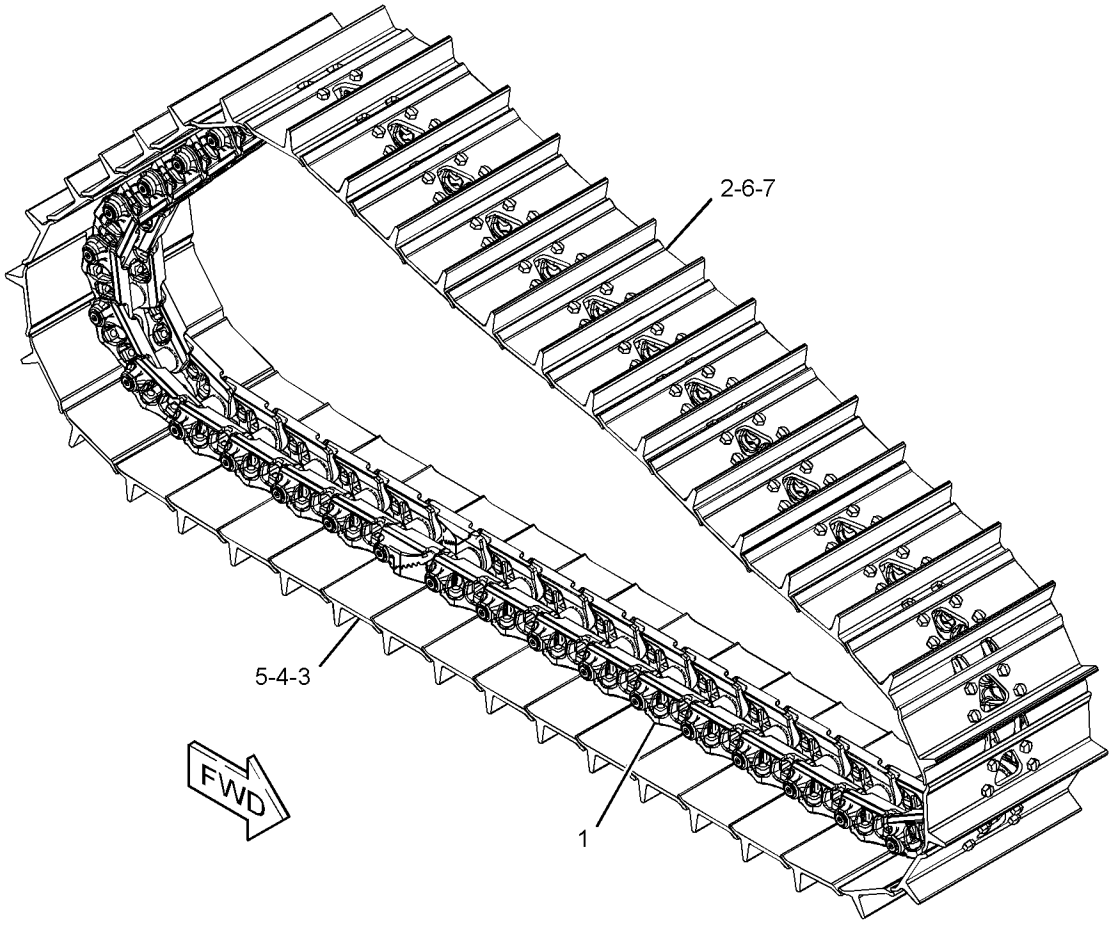

GRAPHIC #1 **<END>** g03324095

358-8882 TRACK GP—2-REQUIRED

S/N: LJR1-UP

560-MM (22-IN) GROUSER SHOE. SEALED, LUBRICATED. MODERATE SERVICE. HEAVY-DUTY. TRAPEZOIDAL

FOR USE WITH 356-2925—PAGE: 440, HEAVY-DUTY ROLLERS, GUARDS, GUIDESTRIPS, CONVENTIONAL IDLERS

AN ATTACHMENT

SMCS-4170 **i05247229**

NOTE	PART NUMBER	QTY	PART NAME 1 2 3 4 5 6 (PRODUCT LEVEL)	SEE PAGE
Y	**110-2976**	1	LINK AS-TRACK	409
	6V-1792	156	BOLT-TRACK (3/4-16X2.4-IN)	
	106-1642	2	BOLT-TRACK MASTER (3/4-16X2.9-IN)	
	107-0719	2	BOLT-TRACK MASTER (3/4-16X3.9-IN)	
	1S-1860	156	NUT-TRACK (3/4-16-THD)	
	145-4430	39	SHOE-TRACK	
	145-4431	1	SHOE-TRACK (MASTER)	

Y - SEPARATE ILLUSTRATION

<END>

322-4635 UNDERCARRIAGE AR

S/N: LJR1-214
DEBRIS RESISTANT
PART OF 310-9903 GENERAL AR

SMCS-4150 **i03664742**

NOTE	REF NO	GRAPHIC REF	PART NUMBER	QTY	PART NAME 1 2 3 4 5 6 (PRODUCT LEVEL)	SEE PAGE
Y	1	1	*107-4098*	1	PIVOT BAR GP	420
Y	2	1	*118-6345*	1	MOUNTING GP-CARRIER ROLLER	419
Y	3	1	*172-9872*	1	BAR GP-EQUALIZER	380
Y	4	1	**229-5446**	2	ROLLER GP-TRACK CARRIER (SYSTEMONE)	421
Y	5	1	*256-4873*	2	TRACK GP	433
Y	6	1	*271-6182*	1	UNDERCARRIAGE GP (SYSTEMONE)	441

Y - SEPARATE ILLUSTRATION

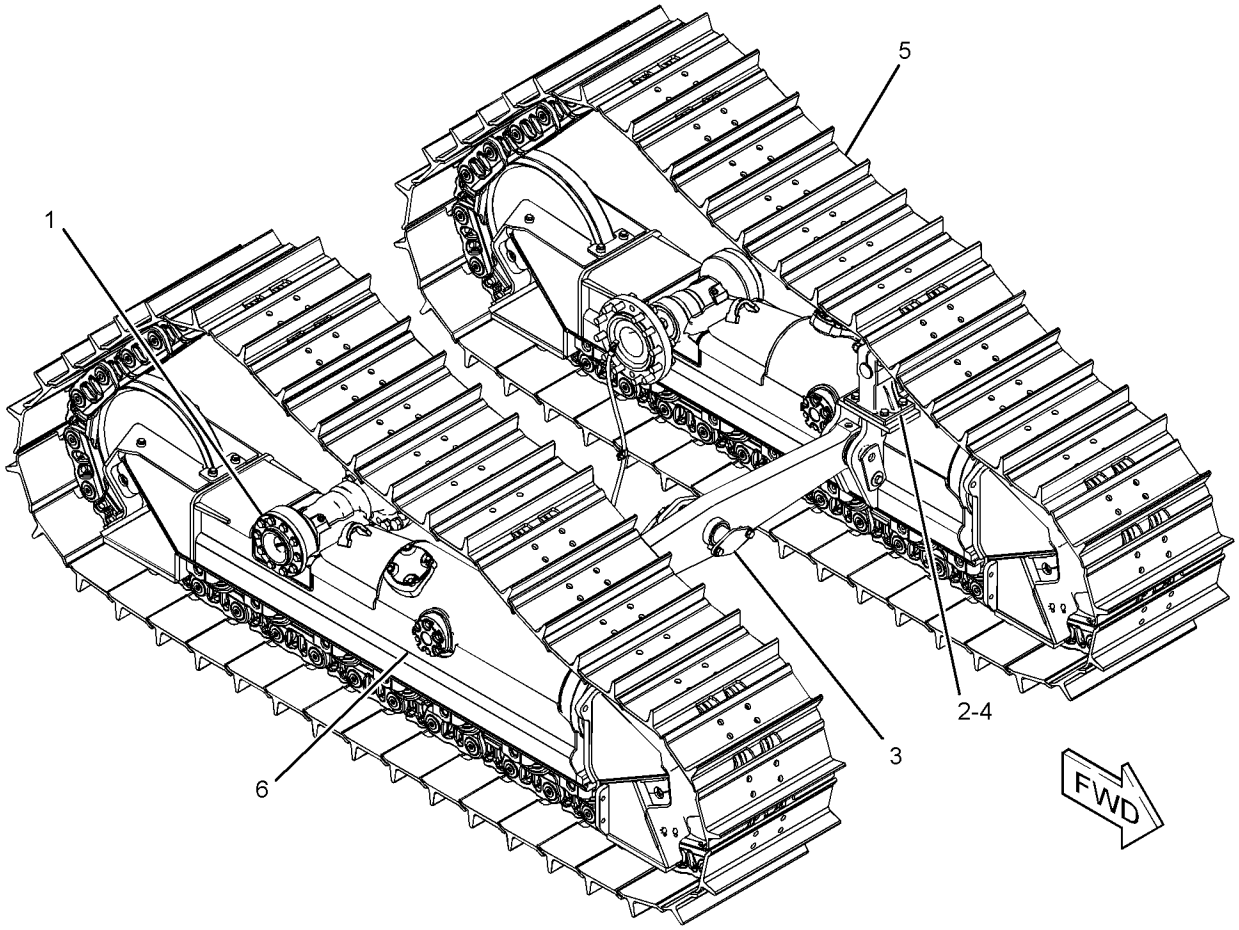

GRAPHIC #1 **<END>** g01902933

322-4635 UNDERCARRIAGE AR

S/N: LJR215-UP
DEBRIS RESISTANT
PART OF 310-9903 GENERAL AR

SMCS-4150 **i04289510**

NOTE	REF NO	GRAPHIC REF	PART NUMBER	QTY	PART NAME 1 2 3 4 5 6 (PRODUCT LEVEL)	SEE PAGE
Y	1	1	*107-4098*	1	PIVOT BAR GP	420
Y	2	1	*118-6345*	1	MOUNTING GP-CARRIER ROLLER	419
Y	3	1	*172-9872*	1	BAR GP-EQUALIZER	380
Y	4	1	**229-5446**	2	ROLLER GP-TRACK CARRIER (SYSTEMONE)	421
Y	5	1	*256-4873*	2	TRACK GP	433
CY	6	1	*350-6983*	1	UNDERCARRIAGE GP (SYSTEMONE)	442

C - CHANGE FROM PREVIOUS TYPE
Y - SEPARATE ILLUSTRATION

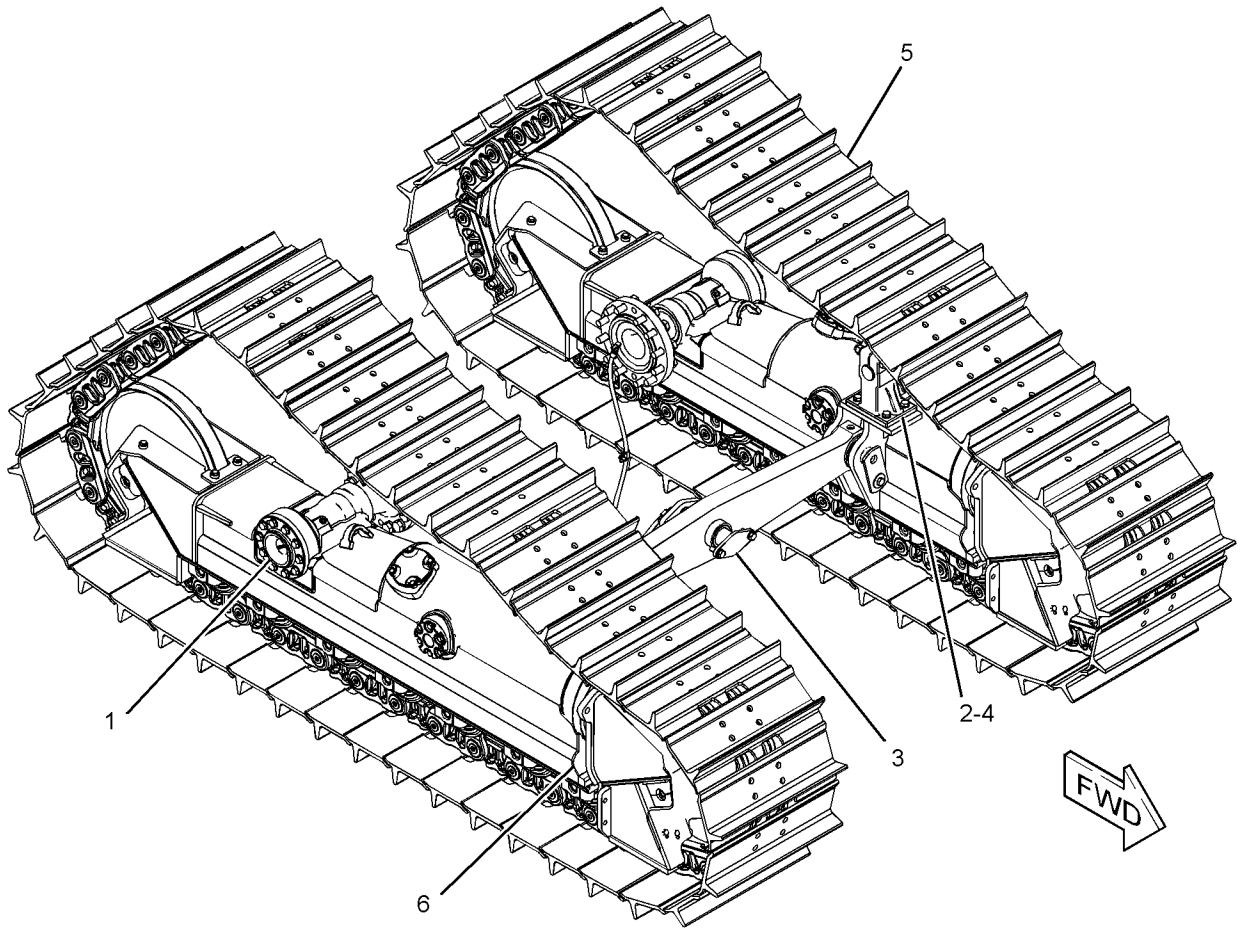

GRAPHIC #1 **<END>** g02228614

356-2925 UNDERCARRIAGE AR–HEAVY-DUTY

S/N: LJR1-UP

FOR USE WITH HEAVY-DUTY TRACK, HEAVY-DUTY GUARD GP-TRACK ROLLER, HEAVY-DUTY GUIDING AR

CANNOT BE USED WITH FINE GRADING AR, GUIDING AR-SYSTEMONE AN ATTACHMENT

SMCS-4150 **i04010170**

NOTE	REF NO	GRAPHIC REF	PART NUMBER	QTY	PART NAME 1 2 3 4 5 6 (PRODUCT LEVEL)	SEE PAGE
Y	1	1	*350-6986*	1	FRAME GP-UNDERCARRIAGE (HEAVY-DUTY)	395

Y - SEPARATE ILLUSTRATION

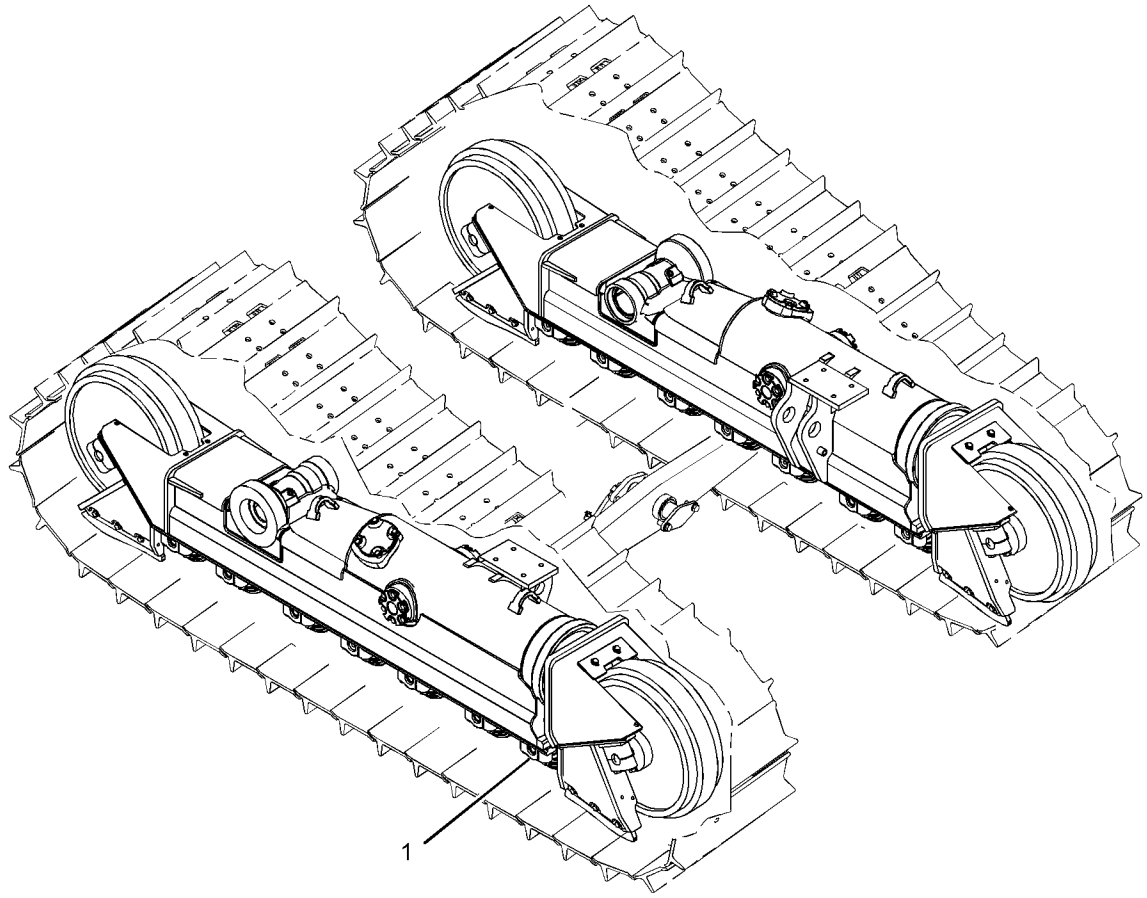

GRAPHIC #1 **<END>** g02163154

271-6182 UNDERCARRIAGE GP–SYSTEMONE

S/N: LJR1-214

PART OF 322-4635 UNDERCARRIAGE AR

SMCS-4150 **i03664780**

NOTE	REF NO	GRAPHIC REF	PART NUMBER	QTY	PART NAME 1 2 3 4 5 6 (PRODUCT LEVEL)	SEE PAGE
Y	1	1	*271-6128*	1	FRAME GP-TRACK ROLLER (SYSTEMONE)	391
Y	2	1	**323-1168**	4	IDLER GP-TRACK (SYSTEMONE)	407
Y	3	1	*339-1746*	1	SCRAPER GP-IDLER (SYSTEMONE)	428
Y	4	1	*339-3093*	4	CAP GP-TRACK IDLER (SYSTEMONE) (FRONT, LH; REAR, RH)	389
Y	5	1	*339-3094*	4	CAP GP-TRACK IDLER (SYSTEMONE) (FRONT, RH; REAR, LH)	390
Y	6	1	*273-3989*	14	ROLLER GP-TRACK-SINGLE FLANGE (SYSTEMONE)	425

Y - SEPARATE ILLUSTRATION

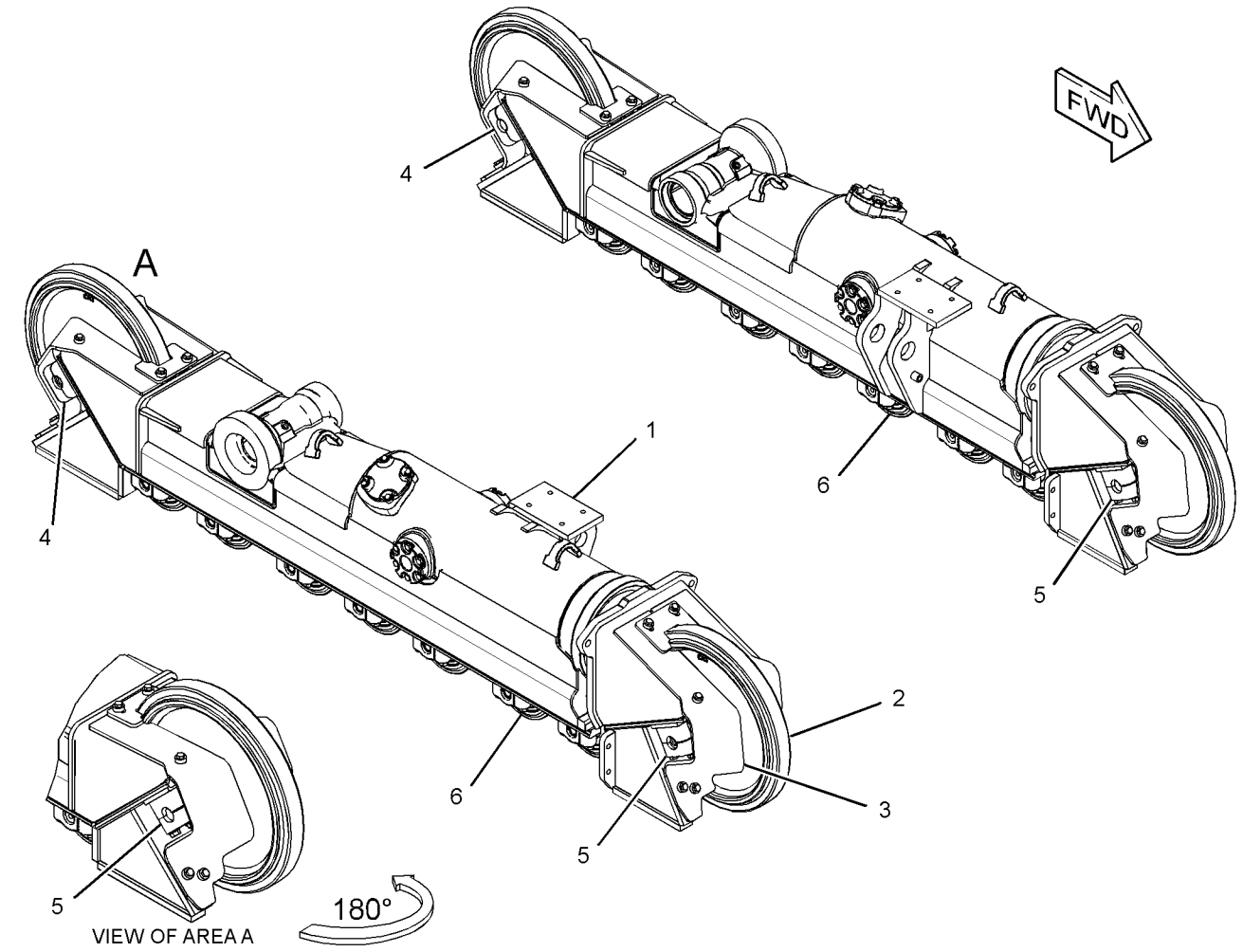

GRAPHIC #1 **<END>** g01966777

350-6983 UNDERCARRIAGE GP–SYSTEMONE

S/N: LJR215-UP

PART OF 322-4635 UNDERCARRIAGE AR

SMCS-4150 **i04289511**

NOTE	REF NO	GRAPHIC REF	PART NUMBER	QTY	PART NAME 1 2 3 4 5 6 (PRODUCT LEVEL)	SEE PAGE
Y	1	1	**323-1168**	4	IDLER GP-TRACK (SYSTEMONE)	407
Y	2	1	*339-1746*	1	SCRAPER GP-IDLER	428
Y	3	1	*339-3093*	4	CAP GP-TRACK IDLER (SYSTEMONE)	389
Y	4	1	*339-3094*	4	CAP GP-TRACK IDLER (SYSTEMONE)	390
Y	5	1	*351-5113*	1	FRAME GP-TRACK ROLLER	393
	6	1	**353-2186**	4	PLATE-WEAR	
	7	1	**353-2187**	4	PLATE-WEAR	
M	8	1	**8T-4192**	24	BOLT (M12X1.75X25-MM)	
	9	1	**8T-4223**	24	WASHER-HARD (13.5X25.5X3-MM THK)	
Y	10	1	*273-3989*	14	ROLLER GP-TRACK-SINGLE FLANGE (SYSTEMONE)	425

M - METRIC PART
Y - SEPARATE ILLUSTRATION

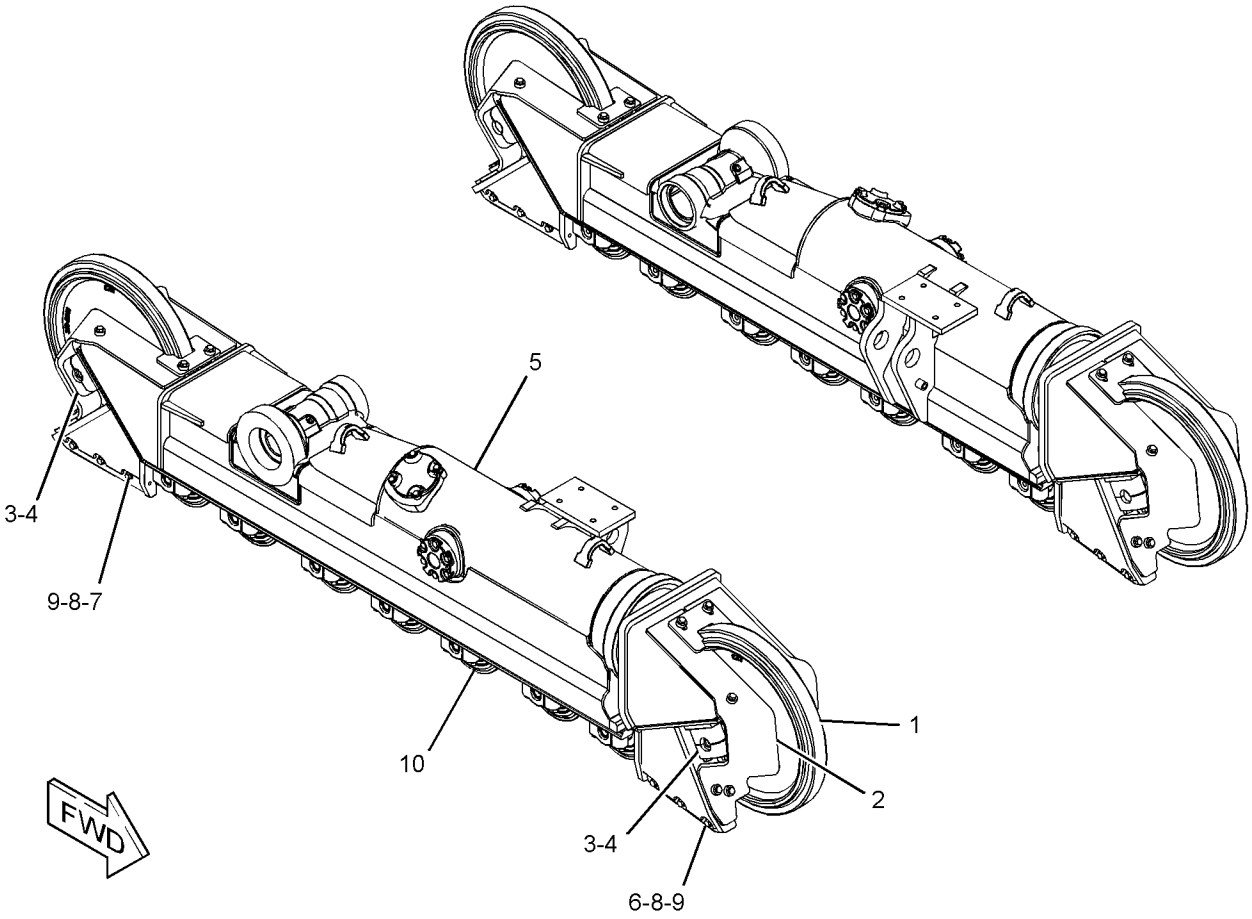

GRAPHIC #1 **<END>** g02291593

177-6949 ACTUATOR GP-PUMP–STEERING

S/N: LJR1-UP

PART OF 320-8637 PUMP GP-PISTON

SMCS-5078 **i03997921**

NOTE	REF NO	GRAPHIC REF	PART NUMBER	QTY	PART NAME 1 2 3 4 5 6 (PRODUCT LEVEL)	SEE PAGE
	1	1	**145-3811**	1	COVER	
	2	1	**117-7273**	2	SEAL-O-RING	
	3	1	**145-3812**	2	RING (9.5-MM)	
	4	1	**145-3813**	2	RING-SEAL (2.93-MM)	
	5	1	**177-7783**	1	PISTON	
	6	1	**145-3810**	1	COVER	
M	7	1	**160-8499**	1	NUT (M12X1.5-THD)	
	8	1	**5W-1437**	8	LOCKWASHER	
M	9	1	**8T-1158**	8	BOLT-SOCKET HEAD (M8X1.25X20-MM)	

M - METRIC PART

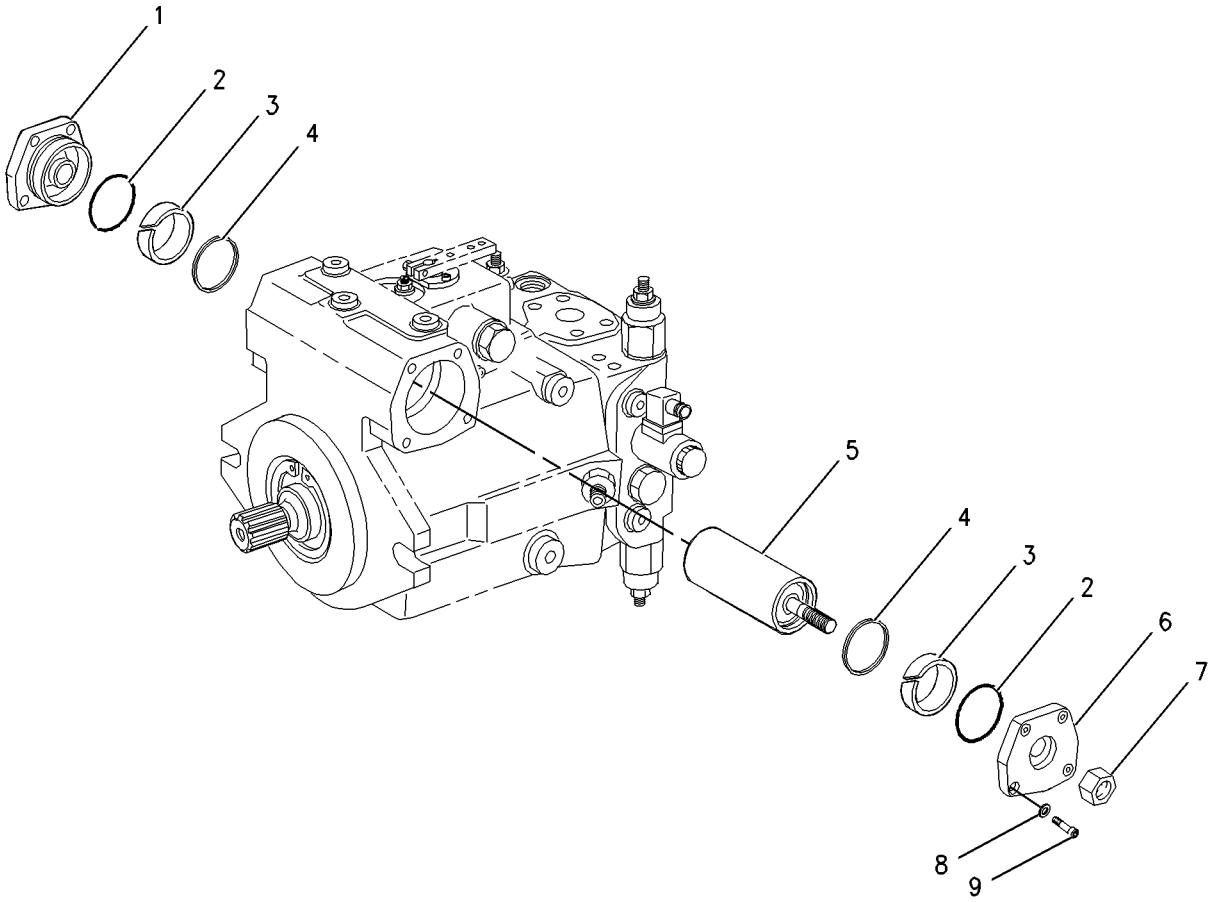

GRAPHIC #1 **<END>** g00648257

310-7794 BARREL GP-MOTOR—STEERING

S/N: LJR1-UP

PART OF 340-7751 ROTATING GP-MOTOR

SMCS-5058 **i03627374**

NOTE	REF NO	GRAPHIC REF	PART NUMBER	QTY	PART NAME 1 2 3 4 5 6 (PRODUCT LEVEL)	SEE PAGE
	1	1	**111-8287**	1	BARREL	
	2	1	**123-3299**	1	PLATE-RETAINING	
B	3	1	**141-0247**	1	SHIM (3.5-MM THK)	
B	4	1	**141-0248**	1	SHIM (3.6-MM THK)	
B	5	1	**141-0249**	1	SHIM (3.7-MM THK)	
B	6	1	**141-0250**	1	SHIM (3.8-MM THK)	
B	7	1	**141-0251**	1	SHIM (3.9-MM THK)	
B	8	1	**141-0252**	1	SHIM (4-MM THK)	
	9	1	**165-6968**	7	PISTON AS	
	10	1	**166-7409**	1	PIN-CENTER	
	11	1	**166-7410**	1	SPRING	
Y	12	1	**111-7346**	1	VALVE GP-FLUSHING (STEERING MOTOR)	473
	13	1	**9T-2559**	1	DISC-RETAINING	
M	14	1	**113-4417**	7	SCREW (M6X1X16-MM)	
	15	1	**202-0972**	1	PLATE	

B - USE AS REQUIRED
M - METRIC PART
Y - SEPARATE ILLUSTRATION

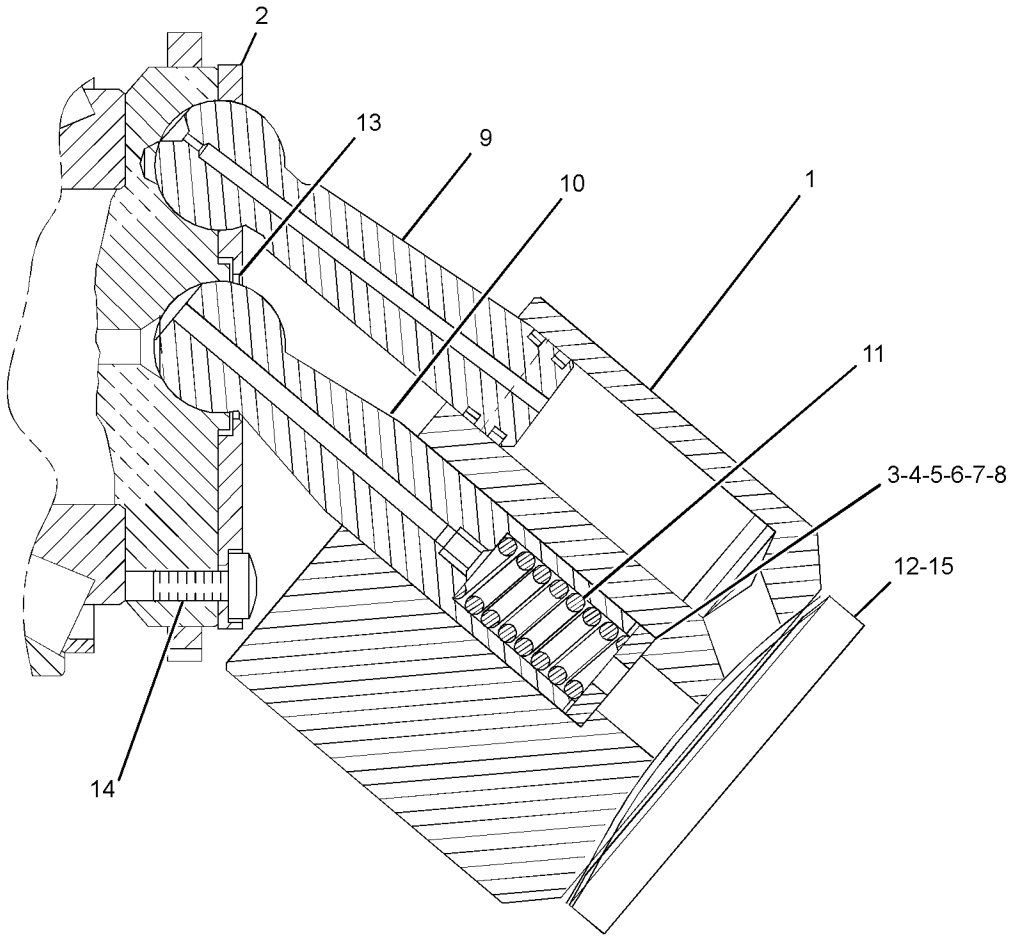

GRAPHIC #1 **<END>** g01885795

195-0644 BRAKE GP-STEERING

S/N: LJR1-UP

PART OF 321-3122 POWER TRAIN AR

SMCS-4269 **i02990075**

NOTE	PART NUMBER	QTY	PART NAME 1 2 3 4 5 6 (PRODUCT LEVEL)	SEE PAGE
Y	*227-8361*	1	BRAKE & DIFFERENTIAL DRIVE GP	263
Y	*193-4120*	1	BRAKE & PLANETARY GP	267
Y	*195-0652*	1	FASTENER GP-VALVE	280
Y	**201-7274**	1	VALVE GP-BRAKE CONTROL	471

Y - SEPARATE ILLUSTRATION

<END>

223-2115 CONTROL GP-PARKING BRAKE

S/N: LJR1-UP
PART OF 337-6853 CONTROL GP-HANDLE
ALSO AN ATTACHMENT

SMCS-4267, 4284

i04342809

NOTE	REF NO	GRAPHIC REF	PART NUMBER	QTY	PART NAME 1 2 3 4 5 6 (PRODUCT LEVEL)	SEE PAGE
	1	1	**2R-5001**	1	DOWEL	
	2	1	**3B-4605**	2	PIN-COTTER	
	3	1	**7H-9737**	1	PIN-COTTER	
	4	1	**9S-1305**	2	PIN-CLEVIS	
	5	1	**242-5206**	1	SPACER (6.4X12.5X0.76-MM THK)	
	6	1	**1W-6448**	1	DOWEL	
	7	1	**4V-6981**	2	SCREW-BUTTON HEAD (1/4-20X0.75-IN)	
	8	1	**6V-8185**	2	NUT (1/4-20-THD)	
	9	1	**8T-0328**	2	WASHER-HARD (5.5X10X1-MM THK)	
	10	1	**8T-4205**	1	WASHER-HARD (7.2X14.5X2-MM THK)	
					PARTS SHOWN IN GRAPHIC(S) WITHOUT A REFERENCE NUMBER ARE NOT SERVICED SEPARATELY	

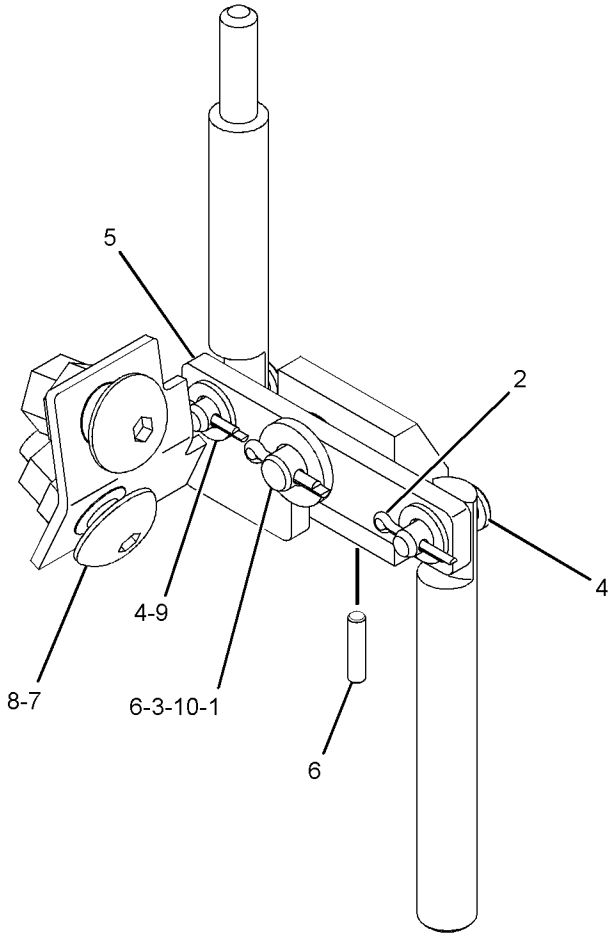

GRAPHIC #1

<END>

g01150038

311-6405 CONTROL GP-STEERING & XMSN

S/N: LJR1-UP

PART OF 310-9971 CAB AR

SMCS-3033 **i03628496**

NOTE	REF NO	GRAPHIC REF	PART NUMBER	QTY	PART NAME 1 2 3 4 5 6 (PRODUCT LEVEL)	SEE PAGE
	1	1	**241-4167**	1	FILM-INSTRUCTION (READ OMM, STEERING)	
	2	1	**311-6397**	1	CONSOLE AS	
	3	1	**311-6398**	1	COVER	
	4	1	*311-6401*	1	COVER AS	
		1	**6V-2491**	2	RIVET-POP	
		1	**185-9464**	1	LATCH AS	
		1	**311-6392**	1	COVER	
		1	**311-6399**	1	HINGE AS	
Y	5	1	**312-9089**	1	CONTROL GP-JOYSTICK (STEERING, TRANSMISSION)	615
	6	1	**117-8929**	4	WASHER (6.6X22X2-MM THK)	
M	7	1	**127-2170**	4	SCREW-TRUSS HEAD (M8X1.25X20-MM)	
M	8	1	**9X-2043**	13	SCREW-TRUSS HEAD (M6X1X14-MM)	
	9	1	**9X-8256**	2	WASHER (6.6X12X2-MM THK)	

M - METRIC PART
Y - SEPARATE ILLUSTRATION

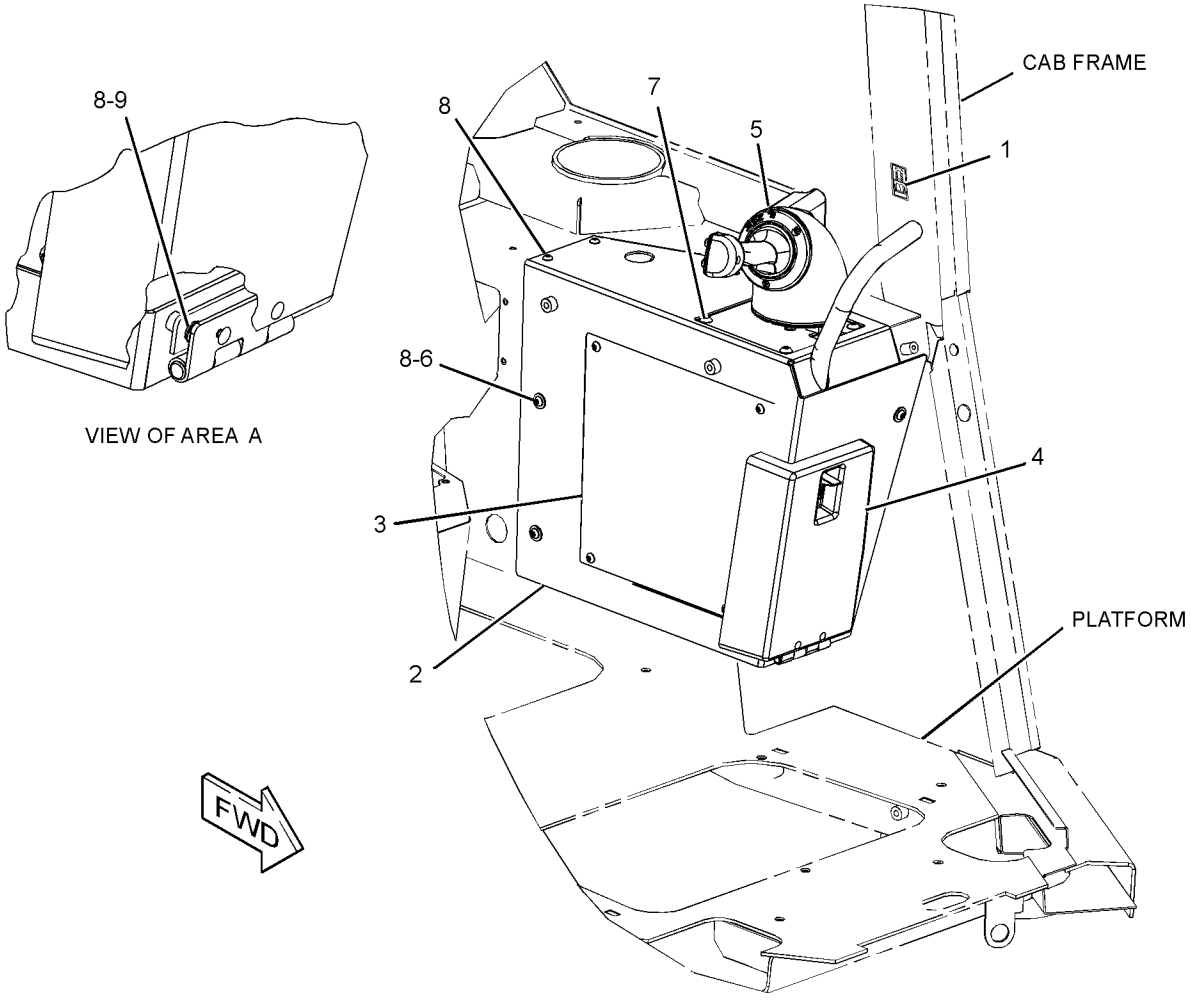

GRAPHIC #1 **<END>** g01884376

335-0718 CONTROL GP-STEERING & XMSN

S/N: LJR1-UP
PART OF 320-1082 CANOPY AR
AN ATTACHMENT

SMCS-3033 **i03626581**

NOTE	REF NO	GRAPHIC REF	PART NUMBER	QTY	PART NAME 1 2 3 4 5 6 (PRODUCT LEVEL)	SEE PAGE
	1	1	**241-4167**	1	FILM-INSTRUCTION (READ OMM, STEERING)	
	2	1	**311-6397**	1	CONSOLE AS	
	3	1	**311-6398**	1	COVER	
Y	4	1	**312-9089**	1	CONTROL GP-JOYSTICK (STEERING, TRANSMISSION)	615
	5	1	**336-2167**	1	RUBBER	
	6	1	*339-2972*	1	COVER GP-ACCESS	
	6A	1	**185-9464**	1	LATCH AS (COMPARTMENT)	
	6B	1	**336-2166**	1	COVER AS	
		1	**311-6399**	1	HINGE AS	
H	6C	1	**244-9631**		SEAL (0.2-DM EACH)	
	7	1	**117-8929**	4	WASHER (6.6X22X2-MM THK)	
M	8	1	**127-2170**	4	SCREW-TRUSS HEAD (M8X1.25X20-MM)	
M	9	1	**9X-2043**	13	SCREW-TRUSS HEAD (M6X1X14-MM)	
	10	1	**9X-8256**	4	WASHER (6.6X12X2-MM THK)	

H - ORDER BY THE DECIMETER
M - METRIC PART
Y - SEPARATE ILLUSTRATION

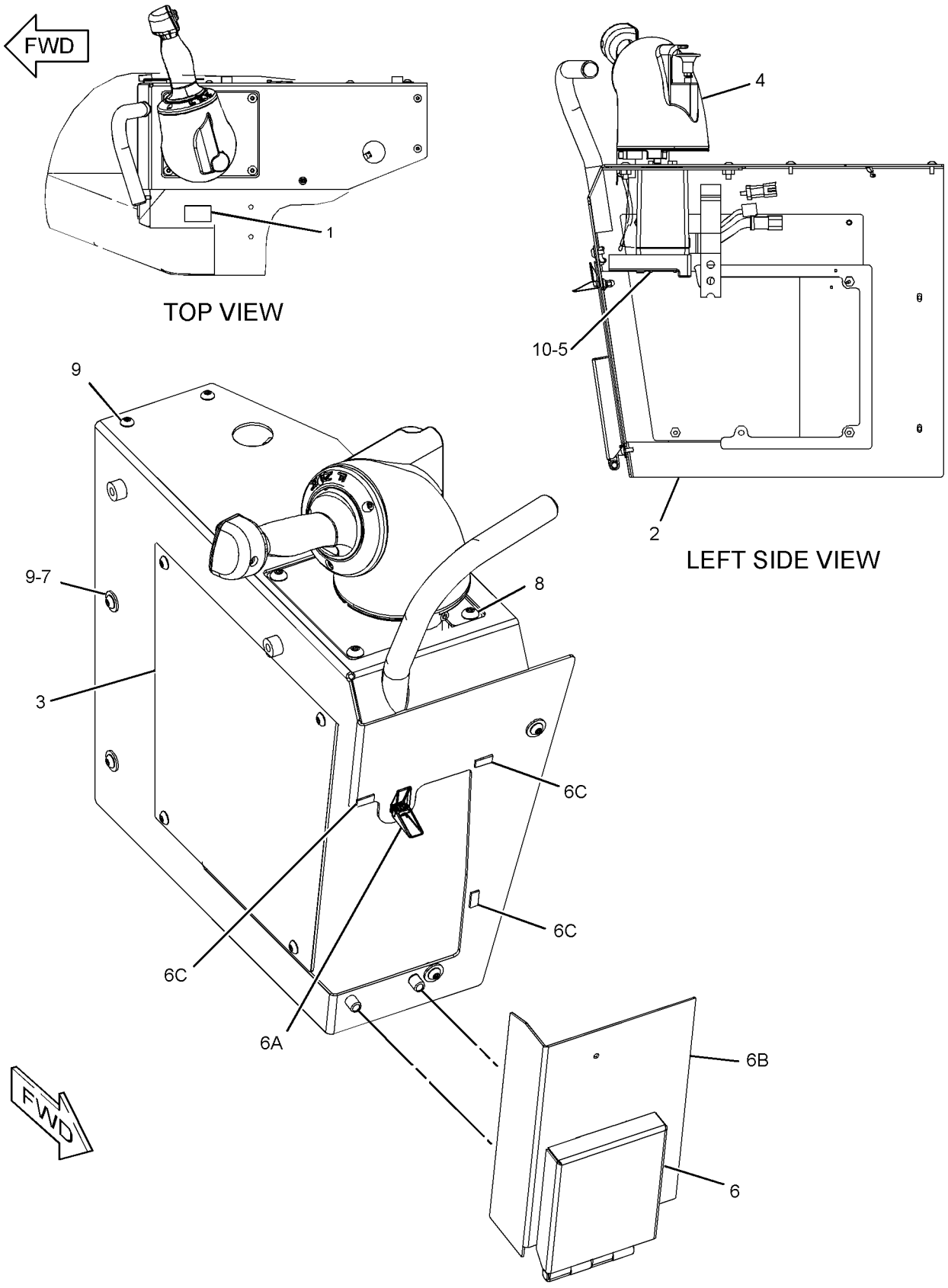

GRAPHIC #1 **<END>** g01890933

345-3076 FILTER GP-OIL—STEERING CHARGE

S/N: LJR1-UP

PART OF 311-1992 LINES GP-STEERING

SMCS-5068 **i03627482**

NOTE	REF NO	GRAPHIC REF	PART NUMBER	QTY	PART NAME 1 2 3 4 5 6 (PRODUCT LEVEL)	SEE PAGE
	1	1	**1G-8878**	1	FILTER-OIL (ADVANCED EFFICIENCY) (HYDRAULIC)	
	2	1	**6V-0852**	1	CAP-DUST	
	3	1	**8C-3451**	1	CAP-DUST	
	4	1	**227-6744**	1	SWITCH GP-PRESSURE (FILTER BYPASS)	
		1	**102-8802**	1	KIT-RECEPTACLE (2-PIN)	
					(INCLUDES RECEPTACLE AS & WEDGE)	
		1	**3J-1907**	1	SEAL-O-RING	
		1	**5F-9144**	1	SEAL-O-RING	
		1	**186-3735**	2	PIN-CONNECTOR (16-GA TO 18-GA)	
E		1	**9X-1813**		SLEEVE (14-CM)	
	5	1	**3J-1907**	2	SEAL-O-RING	
	6	1	**3J-7354**	1	SEAL-O-RING	
	7	1	**6V-0484**	1	ELBOW	
	8	1	**6V-3965**	1	FITTING (QUICK DISCONNECT)	
	9	1	**8C-3446**	1	VALVE-FLUID SAMPLING	

E - ORDER BY THE CENTIMETER

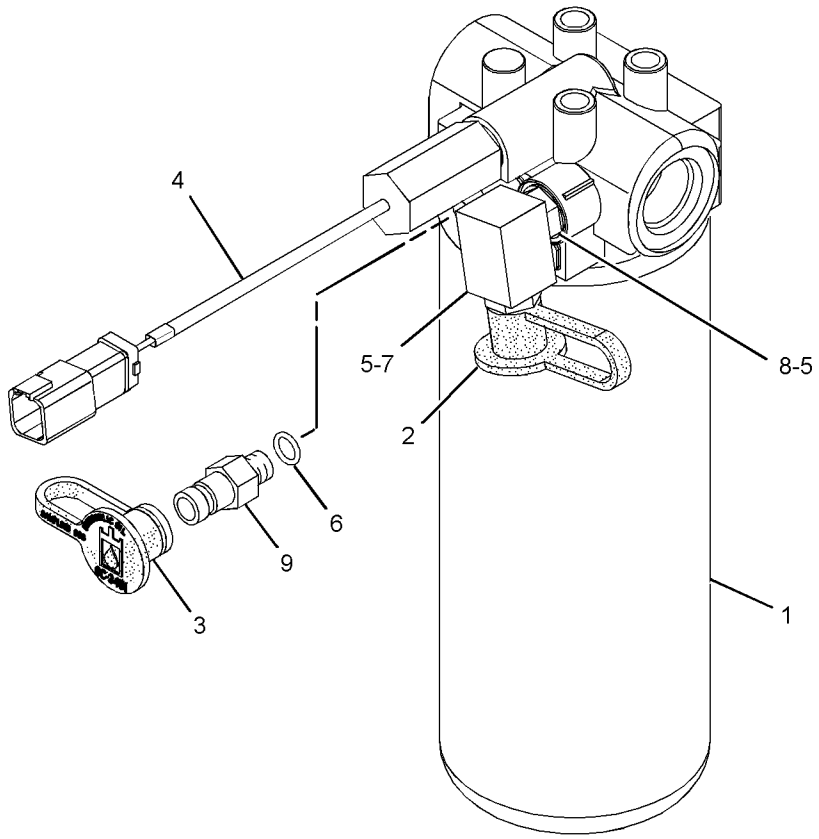

GRAPHIC #1 **<END>** g01884848

341-1510 HEAD GP-PUMP—STEERING

S/N: LJR1-UP

PART OF 320-8637 PUMP GP-PISTON

SMCS-5070 **i03627495**

NOTE	REF NO	GRAPHIC REF	PART NUMBER	QTY	PART NAME 1 2 3 4 5 6 (PRODUCT LEVEL)	SEE PAGE
	1	1	**117-7280**	1	BUSHING (INTERNAL)	
	2	1	**117-7282**	1	SEAL-O-RING	
	3	1	**117-7279**	1	BUSHING (EXTERNAL)	
	4	1	**6V-8397**	1	SEAL-O-RING	
	5	1	**5W-1250**	2	PIN	
	6	1	**087-4772**	2	PLUG-O-RING	
Y	7	1	**152-1811**	1	VALVE GP-RELIEF	476
M	8	1	**8C-4365**	4	BOLT (M14X2X80-MM)	
	9	1	**117-7278**	1	BUSHING	
	10	1	**120-4394**	3	PLUG-BREAK OFF	
	11	1	**9S-4182**	2	PLUG-O-RING	
	12	1	**6V-8978**	1	SEAL-O-RING	
	13	1	**123-7575**	1	SCREW-LOCK	
	14	1	**212-6679**	1	VALVE GP-RELIEF (CHARGE PRESSURE)	
		1	**6V-8352**	1	SEAL-O-RING	
	15	1	**9S-8002**	1	PLUG-O-RING	
	16	1	**123-7583**	1	ORIFICE	
	17	1	**177-6854**	1	PLUG-PIN	
Y	18	1	**277-6679**	2	VALVE GP-RELIEF (CROSSOVER)	477
	19	1	**3J-7354**	2	SEAL-O-RING	

PARTS SHOWN IN GRAPHIC(S) WITHOUT A REFERENCE NUMBER ARE NOT SERVICED SEPARATELY

M - METRIC PART
Y - SEPARATE ILLUSTRATION

341-1510 **HEAD GP-PUMP (*contd.*)** **i03627495**

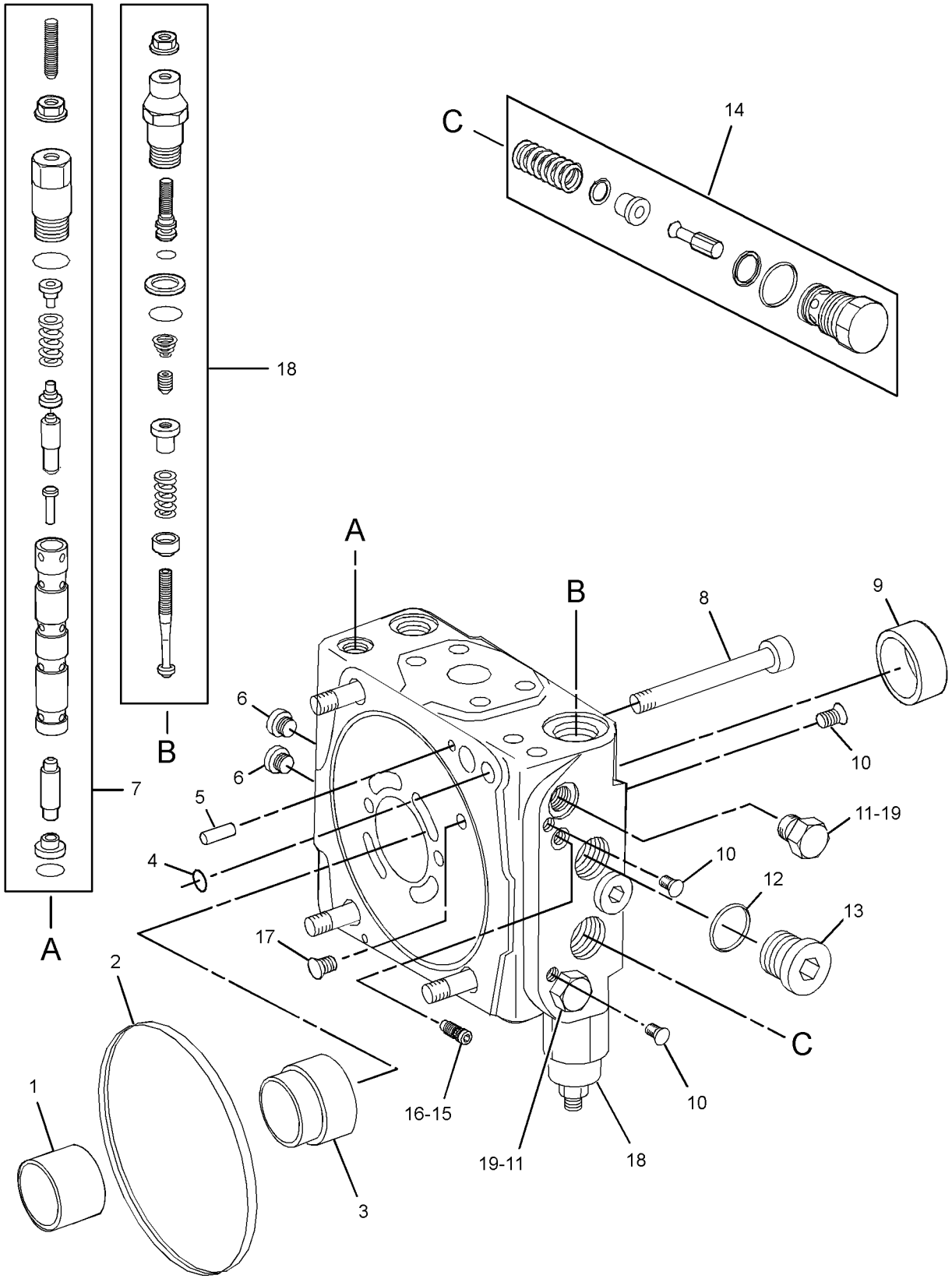

GRAPHIC #1 **<END>** g01886360

311-1992 LINES GP-STEERING

S/N: LJR1-UP

PART OF 310-9950 HYDRAULIC AR-3 VALVE

SMCS-4104, 4133, 4304 **i04790802**

NOTE	REF NO	GRAPHIC REF	PART NUMBER	QTY	PART NAME 1 2 3 4 5 6 (PRODUCT LEVEL)	SEE PAGE
	1	1	**7K-1181**	1	STRAP-CABLE	
M	2	2	**101-3129**	2	STUD (M10X1.5-THD)	
Y	3	1	**126-0747**	1	VALVE GP-BYPASS (HYDRAULIC OIL COOLER)	561
	4	2	**177-2215**	3	STRAP-DUAL CLAMP	
	5	2	**180-2658**	1	SPACER (12X22X85.8-MM THK)	
	6	1	**200-6345**	2	MOUNT (DUAL SWIVEL)	
	7	1	**203-3847**	1	BRACKET AS	
	8	1	**204-2281**	4	STRAP-CABLE	
	9	2	**209-4912**	1	BRACKET AS	
	10	2	**223-1395**	1	BRACKET AS	
M		1	**8T-5413**	1	STUD-WELD (M10X1.5X25-MM)	
	11	1	**232-2303**	1	ADAPTER	
	12	2	*260-9174*	1	CONNECTOR AS	
		2	**109-5815**	1	CONNECTOR	
		2	**3D-2824**	1	SEAL-O-RING	
		2	**7J-9108**	1	SEAL-O-RING	
I	13	1	**262-0349**	1	HOSE AS	
I	14	2	**273-9510**	1	HOSE AS	
I	15	2	**273-9511**	1	HOSE AS	
	16	2	**274-7187**	1	COVER	
	17	1	*148-8359*	1	ELBOW AS	
		1	**6V-9877**	1	ELBOW	
		1	**6V-9746**	1	SEAL-O-RING	
		1	**3K-0360**	1	SEAL-O-RING	
I	18	1	**322-1441**	1	HOSE AS	
I	19	1	**323-4260**	1	HOSE AS	
Y	20	2	**345-3076**	1	FILTER GP-OIL (HYDRAULIC) (STEERING CHARGE)	450
I	21	1	**345-4116**	1	HOSE AS	
I	22	2	**345-4118**	1	HOSE AS	
	23	2	*357-4379*	2	CONNECTOR AS	
					(EACH INCLUDES)	
		2	**6V-8640**	1	CONNECTOR	
		2	**2M-9780**	1	SEAL-O-RING	
		2	**6V-9746**	1	SEAL-O-RING	
	24	1	*148-8342*	1	CONNECTOR AS	
		1	**6V-8632**	1	CONNECTOR	
		1	**3K-0360**	1	SEAL-O-RING	
		1	**7J-9108**	1	SEAL-O-RING	
	25	1	*357-4443*	3	ELBOW AS	
					(EACH INCLUDES)	
		1	**6V-9182**	1	ELBOW	
		1	**6V-9746**	1	SEAL-O-RING	
		1	**7M-8485**	1	SEAL-O-RING	
	26	2	*357-4440*	1	ELBOW AS	
		2	**8T-0404**	1	ELBOW	
		2	**3D-2824**	1	SEAL-O-RING	
		2	**7J-9108**	1	SEAL-O-RING	
	27	1	*357-4493*	1	ELBOW AS	
		1	**8T-4149**	1	ELBOW	
		1	**6V-9746**	1	SEAL-O-RING	
		1	**7M-8485**	1	SEAL-O-RING	
	29	1	**198-4780**	2	WASHER-HARD (17.5X32X8-MM THK)	
	30	1	**1P-3702**	2	SEAL-RECTANGULAR	
	31	1	**1P-3703**	2	SEAL-RECTANGULAR	
	32	1	**2K-2939**	1	SEAL-O-RING	
	33	1	**3N-0759**	1	RING-SEALING	
	34	1	**4P-7581**	1	CLIP	
	35	1	**5F-3106**	1	SEAL-O-RING	
	36	1	**5P-7466**	1	CLIP (SLOT)	

311-1992 **LINES GP-STEERING (*contd.*)** **i04790802**

NOTE	REF NO	GRAPHIC REF	PART NUMBER	QTY	PART NAME 1 2 3 4 5 6 (PRODUCT LEVEL)	SEE PAGE
	37	1	**5P-7467**	1	CLIP (TAB)	
	38	1	**5P-8112**	1	GROMMET	
	39	1,2	**6D-1641**	7	CLIP	
	40	1	**6V-0400**	4	FLANGE-HALF	
	41	1	**7K-6058**	6	BOLT-12 POINT HEAD (1/2-13X2.5-IN)	
M	42	1	**7X-2563**	2	BOLT (M20X2.5X60-MM)	
	43	2	**7X-7729**	1	WASHER (11X25X3-MM THK)	
M	44	1	**8T-0348**	2	BOLT-SOCKET HEAD (M16X2X50-MM)	
	45	1,2	**8T-4121**	30	WASHER-HARD (11X21X2.5-MM THK)	
	46	1	**8T-4123**	2	WASHER (22X35X3.5-MM THK)	
M	47	1,2	**8T-4133**	7	NUT (M10X1.5-THD)	
M	48	2	**8T-4136**	4	BOLT (M10X1.5X25-MM)	
M	49	1,2	**8T-4137**	2	BOLT (M10X1.5X20-MM)	
M	50	2	**8T-4172**	3	BOLT (M10X1.5X80-MM)	
M	51	1	**8T-4182**	8	BOLT (M10X1.5X45-MM)	
M	52	1	**8T-4184**	8	BOLT (M12X1.75X45-MM)	
M	53	2	**8T-4186**	2	BOLT (M10X1.5X40-MM)	
M	54	1	**8T-4195**	2	BOLT (M10X1.5X30-MM)	
M	55	1	**8T-4200**	2	BOLT (M8X1.25X16-MM)	
	56	1	**8T-4223**	8	WASHER-HARD (13.5X25.5X3-MM THK)	
	57	1	**8T-4224**	2	WASHER-HARD (8.8X16X2-MM THK)	
M	58	2	**8T-6685**	1	BOLT (M10X1.5X110-MM)	
	59	1	**8T-9403**	4	FLANGE-HALF	
	60	1	**9X-8250**	1	CLIP	

I - REFER TO HYDRAULIC INFORMATION SYSTEM
M - METRIC PART
Y - SEPARATE ILLUSTRATION

REFER TO ALL ILLUSTRATIONS OF
THIS GROUP FOR AUXILIARY VIEWS

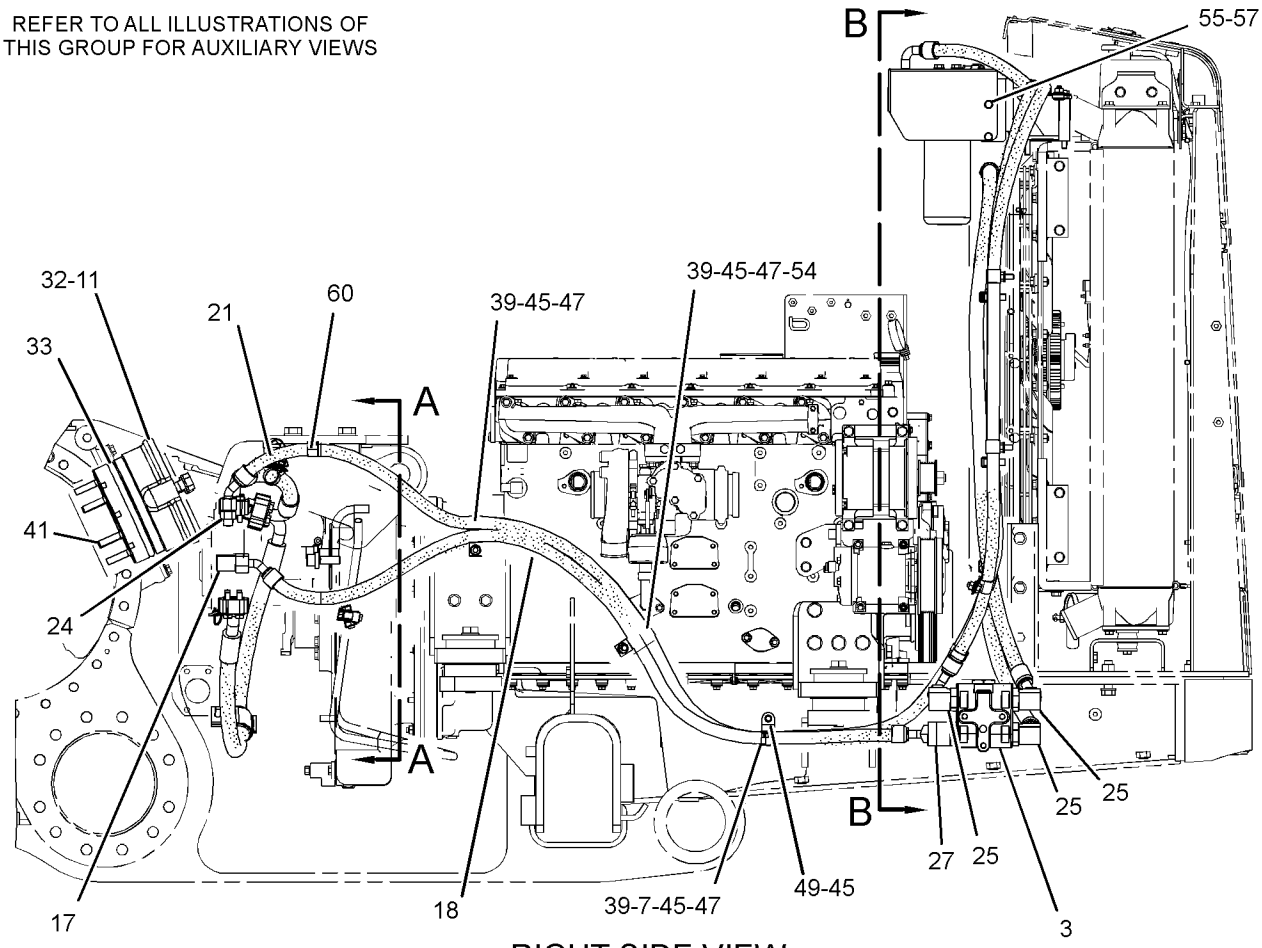

RIGHT SIDE VIEW

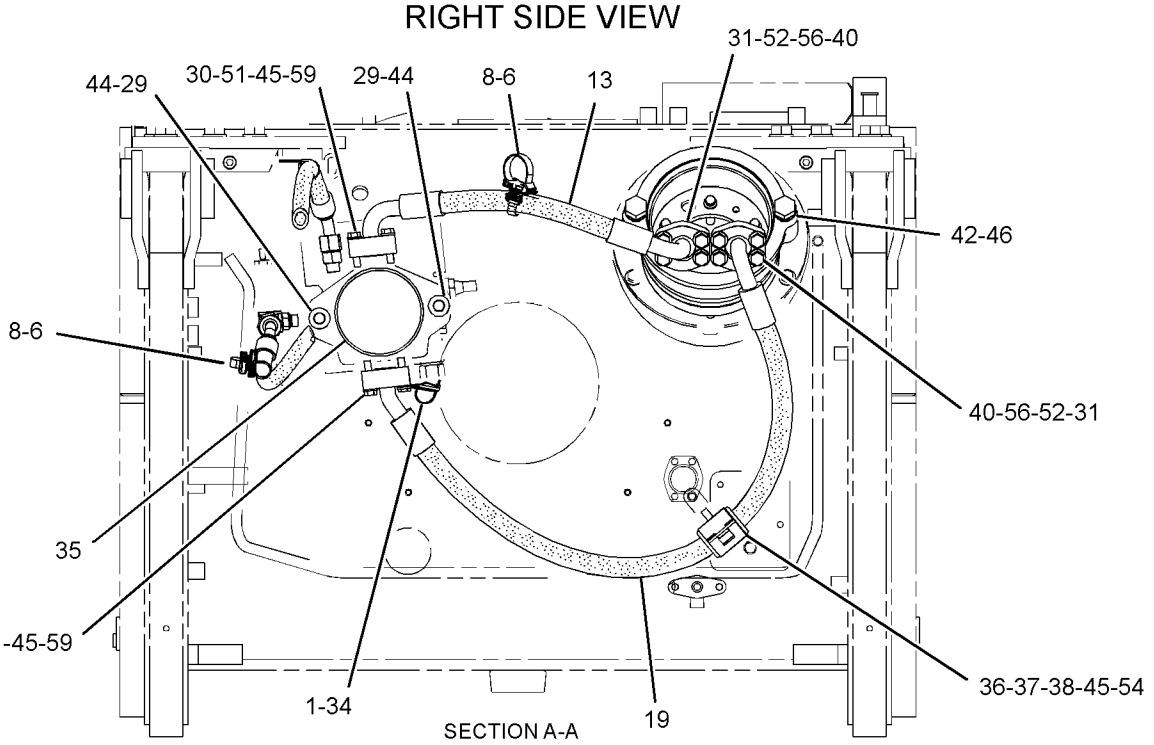

SECTION A-A

GRAPHIC #1

g01954581

311-1992 **LINES GP-STEERING (*contd.*)** **i04790802**

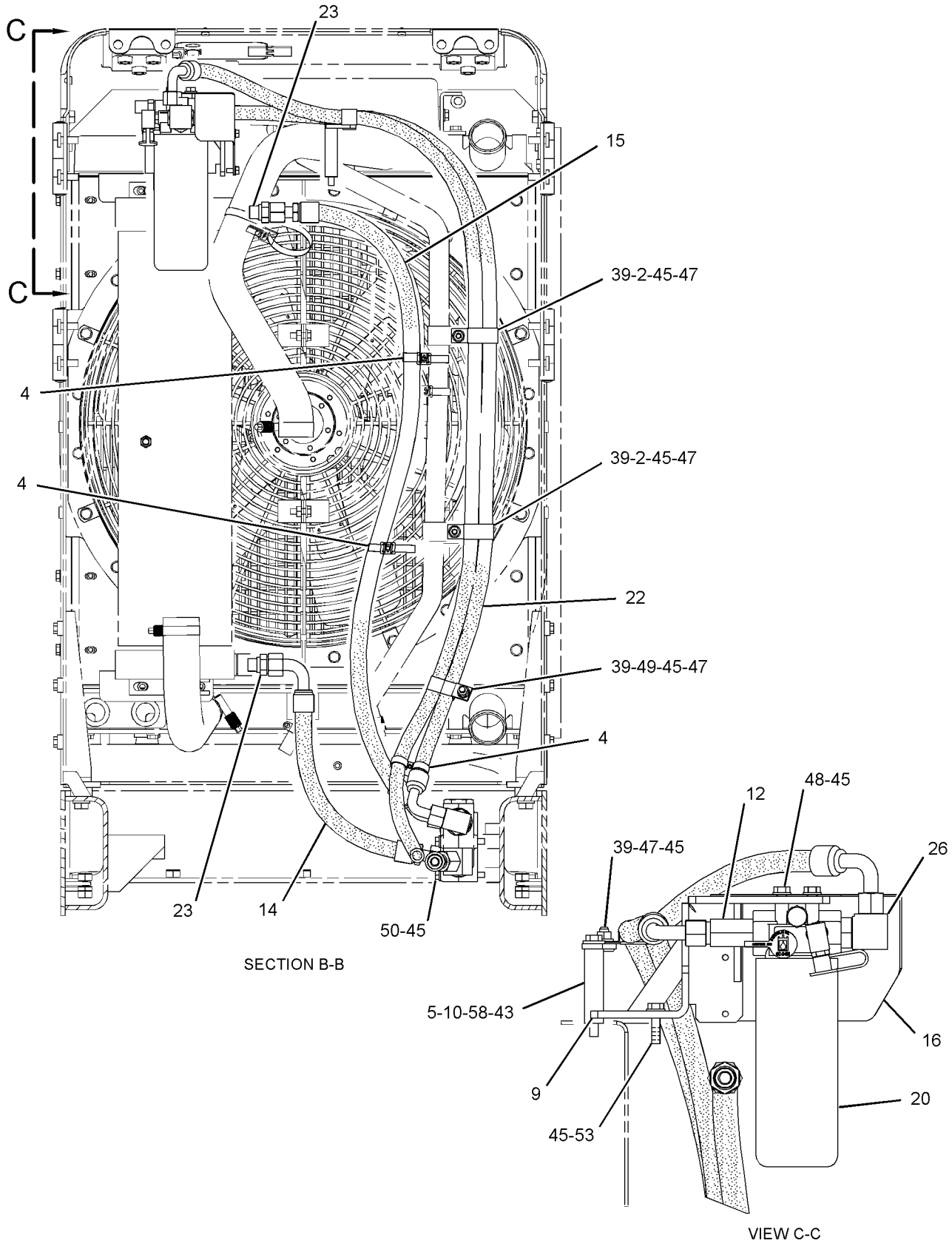

GRAPHIC #2 **<END>** g01954582

162-5357 MANIFOLD & VALVE GP–BRAKE

S/N: LJR1-UP

PART OF 201-7274 VALVE GP-BRAKE CONTROL

SMCS-3206, 5479 **i03659750**

NOTE	REF NO	GRAPHIC REF	PART NUMBER	QTY	PART NAME 1 2 3 4 5 6 (PRODUCT LEVEL)	SEE PAGE
	1	1	**137-8794**	1	SPOOL AS	
	1A	1	**5L-4758**	1	SEAL-O-RING	
	1B	1	**137-8793**	1	SPRING	
	1C	1	**3D-7943**	1	RING-RETAINING	
	2	1	**148-8410**	1	PLUG AS	
	3	1	**162-5358**	1	MANIFOLD	
Y	4	1	**174-4909**	1	VALVE GP-SOLENOID (BRAKE)	480
	5	1	**1P-1744**	1	DOWEL	

Y - SEPARATE ILLUSTRATION

162-5357 **MANIFOLD & VALVE GP (*contd.*)** **i03659750**

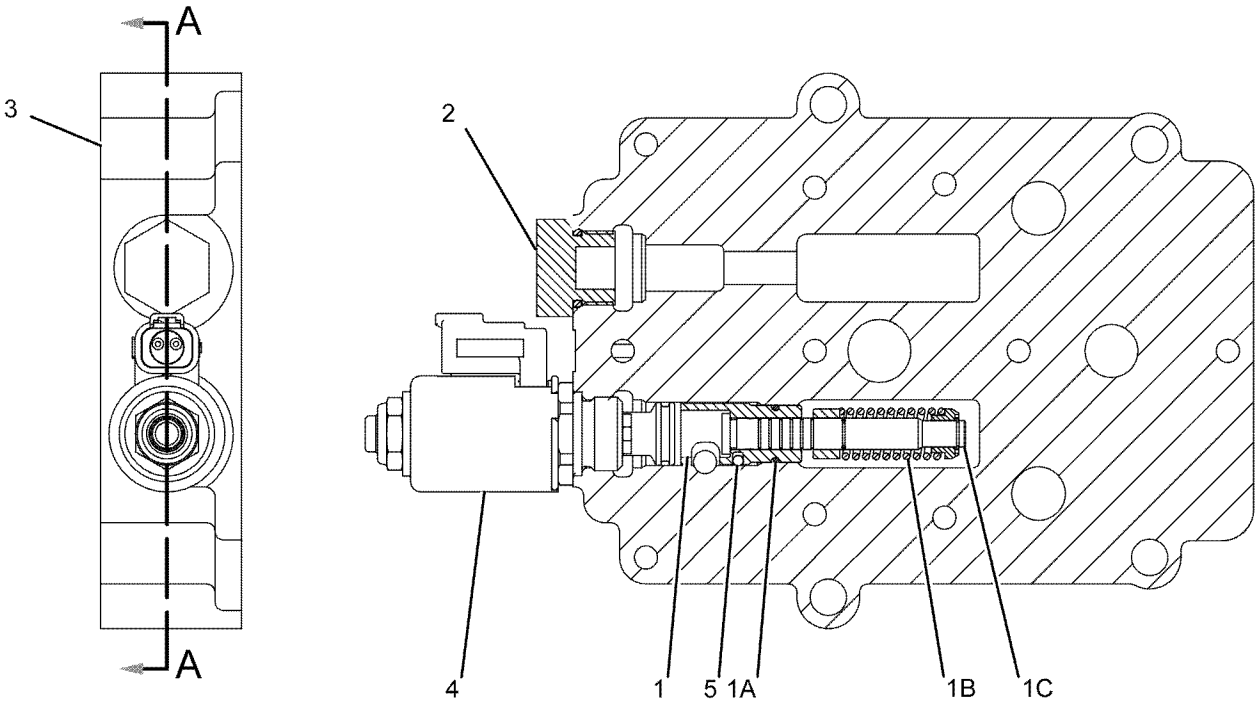

SECTION A-A

GRAPHIC #1 **<END>** g01129384

175-4972 MANIFOLD & VALVE GP–PARKING, SECONDARY BRAKE

S/N: LJR1-UP

PART OF 201-7274 VALVE GP-BRAKE CONTROL

TYPE 1

SMCS-3206, 5479

i04144431

NOTE	REF NO	GRAPHIC REF	PART NUMBER	QTY	PART NAME 1 2 3 4 5 6 (PRODUCT LEVEL)	SEE PAGE
	1	1	**132-9455**	1	MANIFOLD	
Y	2	1	**172-2392**	2	VALVE GP-SOLENOID (PARKING, SECONDARY BRAKE)	479

Y - SEPARATE ILLUSTRATION

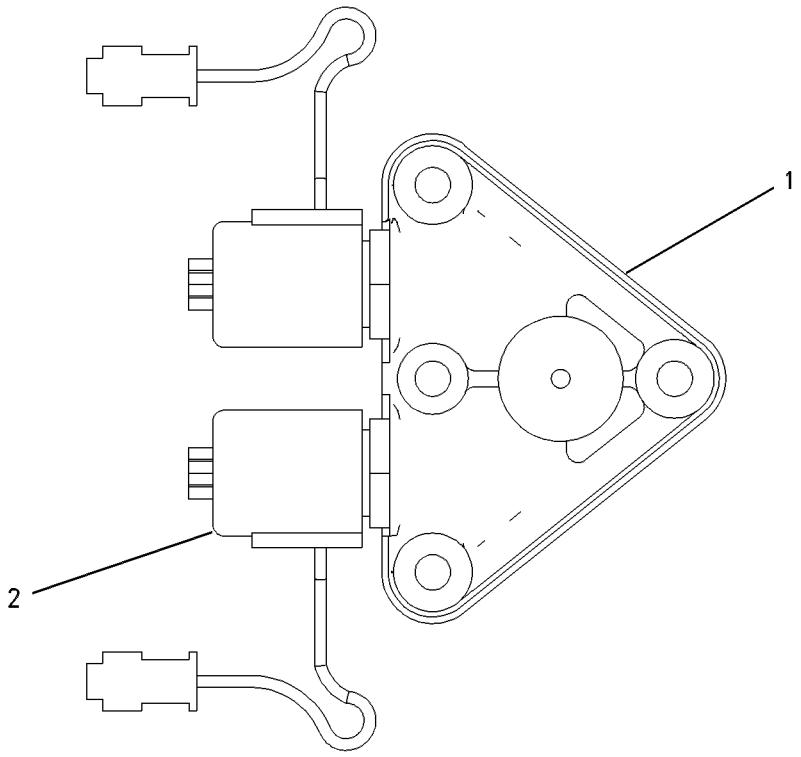

GRAPHIC #1

<END>

g00653425

175-4972 MANIFOLD & VALVE GP—PARKING, SECONDARY BRAKE

S/N: LJR1-UP

PART OF 201-7274 VALVE GP-BRAKE CONTROL

TYPE 2

SMCS-3206, 5479

i05294274

NOTE	REF NO	GRAPHIC REF	PART NUMBER	QTY	PART NAME 1 2 3 4 5 6 (PRODUCT LEVEL)	SEE PAGE
	1	1	**132-9455**	1	MANIFOLD	
CY	2	1	**380-9849**	2	VALVE GP-SOLENOID (PARKING, SECONDARY BRAKE)	481

C - CHANGE FROM PREVIOUS TYPE
Y - SEPARATE ILLUSTRATION

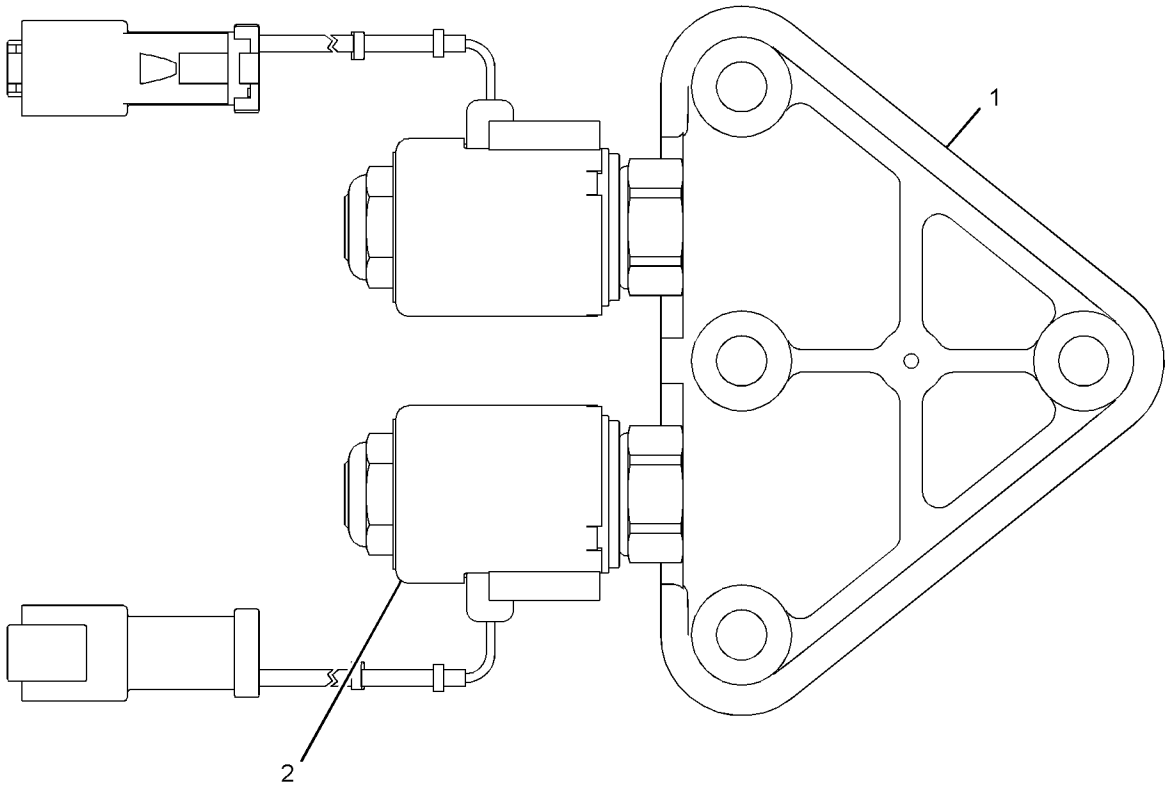

GRAPHIC #1 **<END>** g03340049

309-1916 MOTOR GP-PISTON—STEERING*R

S/N: LJR1-UP

PART OF 310-9950 HYDRAULIC AR-3 VALVE

SMCS-5058 **i03659760**

NOTE	REF NO	GRAPHIC REF	PART NUMBER	QTY	PART NAME 1 2 3 4 5 6 (PRODUCT LEVEL)	SEE PAGE
Y	1	1	**340-7751**	1	ROTATING GP-MOTOR	465
	2	1	**9S-8006**	1	PLUG-O-RING	
	3	1	**137-5524**	1	HEAD	
	4	1	**8T-4231**	1	DOWEL	
	5	1	**2M-9780**	1	SEAL-O-RING	
	6	1	**6R-0365**	1	SEAL-O-RING	
M	7	1	**8T-3957**	6	BOLT-SOCKET HEAD (M12X1.75X30-MM)	

M - METRIC PART
Y - SEPARATE ILLUSTRATION

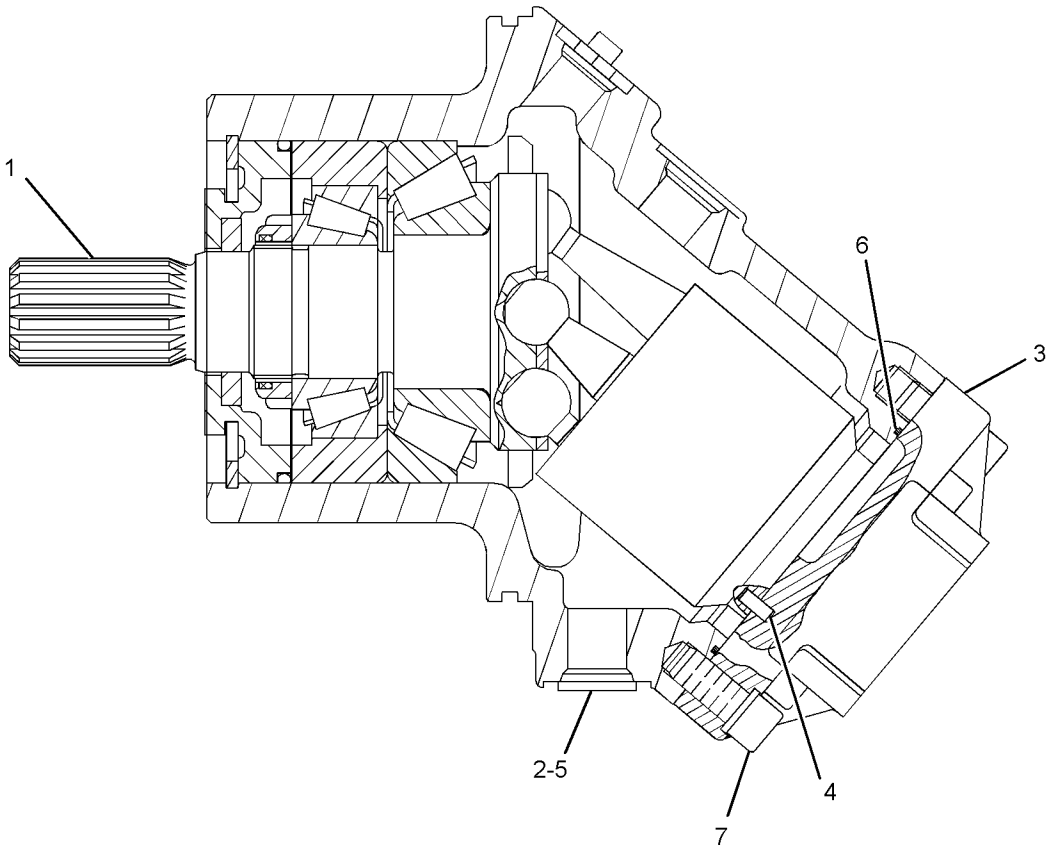

GRAPHIC #1 **<END>** g01884574

293-5440 PUMP GP-CHARGE–STEERING

S/N: LJR1-UP

PART OF 320-8637 PUMP GP-PISTON

SMCS-3204 **i03627491**

NOTE	REF NO	GRAPHIC REF	PART NUMBER	QTY	PART NAME 1 2 3 4 5 6 (PRODUCT LEVEL)	SEE PAGE
M	1	1	**096-0001**	4	BOLT-SOCKET HEAD (M8X1.25X40-MM)	
	2	1	**123-7598**	4	SEAL-BONDED	
	3	1	**117-7278**	1	BUSHING (BEARING)	
	4	1	**117-7322**	2	SEAL-RING	
	5	1	**277-6624**	1	PLATE-WEAR	
	6	1	**246-5804**	2	PLUG	

M - METRIC PART

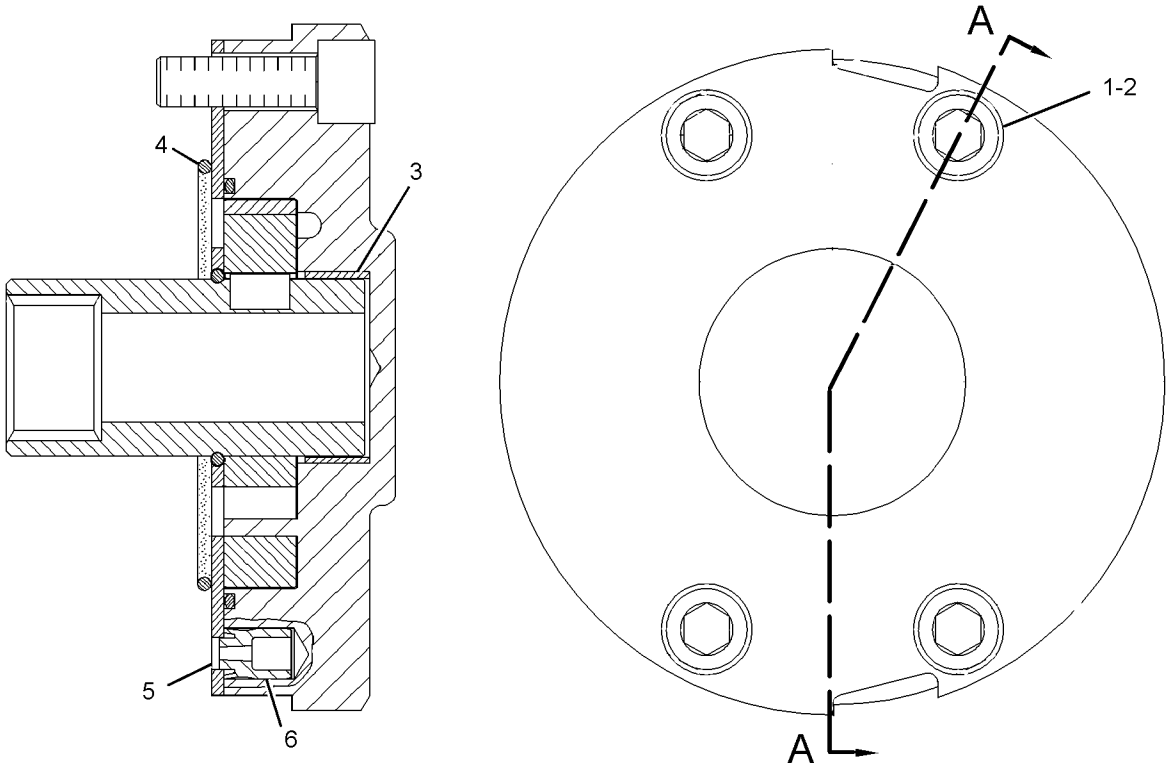

SECTION A-A

GRAPHIC #1 **<END>** g01377495

320-8637 PUMP GP-PISTON—STEERING

S/N: LJR1-UP

PART OF 310-9950 HYDRAULIC AR-3 VALVE

SMCS-5070 **i03838149**

NOTE	REF NO	GRAPHIC REF	PART NUMBER	QTY	PART NAME 1 2 3 4 5 6 (PRODUCT LEVEL)	SEE PAGE
	1	1	**9T-3928**	1	PLUG AS	
	1A	1	**187-8001**	1	SEAL	
	3	1	**122-9718**	1	PIN	
	4	1	**1G-3180**	1	SCREW-ECCENTRIC	
M	5	1	**6E-4240**	1	NUT-SEALING (M10X1-THD)	
	6	1	**9S-8002**	5	PLUG-O-RING	
	7	1	**3J-7354**	5	SEAL-O-RING	
Y	8	1	**341-1511**	1	VALVE GP-PUMP CONTROL	474
	9	1	**167-6805**	2	PIN	
Y	10	1	**279-4414**	1	ROTATING GP-PUMP	467
	11	1	**281-5598**	1	PIN-ECCENTRIC	
	12	1	**9T-3726**	1	PLUG	
	13	1	**112-4629**	1	SCREW	
	14	1	**202-7704**	1	PLUG	
Y	15	1	**341-1510**	1	HEAD GP-PUMP	451
	16	1	**9S-8008**	1	PLUG-O-RING	
	17	1	**6V-8978**	1	SEAL-O-RING	
	18	1	**123-7575**	1	SCREW-LOCK	
	20	1	**123-7583**	1	ORIFICE	
	21	1	**087-4772**	1	PLUG-O-RING	
M	22	1	**1G-3176**	1	SCREW-LOCK	
	23	1	**9S-8004**	2	PLUG-O-RING	
	24	1	**3J-1907**	3	SEAL-O-RING	
Y	25	1	**177-6949**	1	ACTUATOR GP-PUMP	443
Y	26	1	**293-5440**	1	PUMP GP-CHARGE	462
	27	1	**3D-2824**	1	SEAL-O-RING	
	28	1	**6V-8636**	1	CONNECTOR	
	29	1	**6V-8397**	1	SEAL-O-RING	
Y	30	1	**341-3186**	1	VALVE GP-RELIEF (COLD START)	478

M - METRIC PART
Y - SEPARATE ILLUSTRATION

320-8637 **PUMP GP-PISTON (*contd.*)** **i03838149**

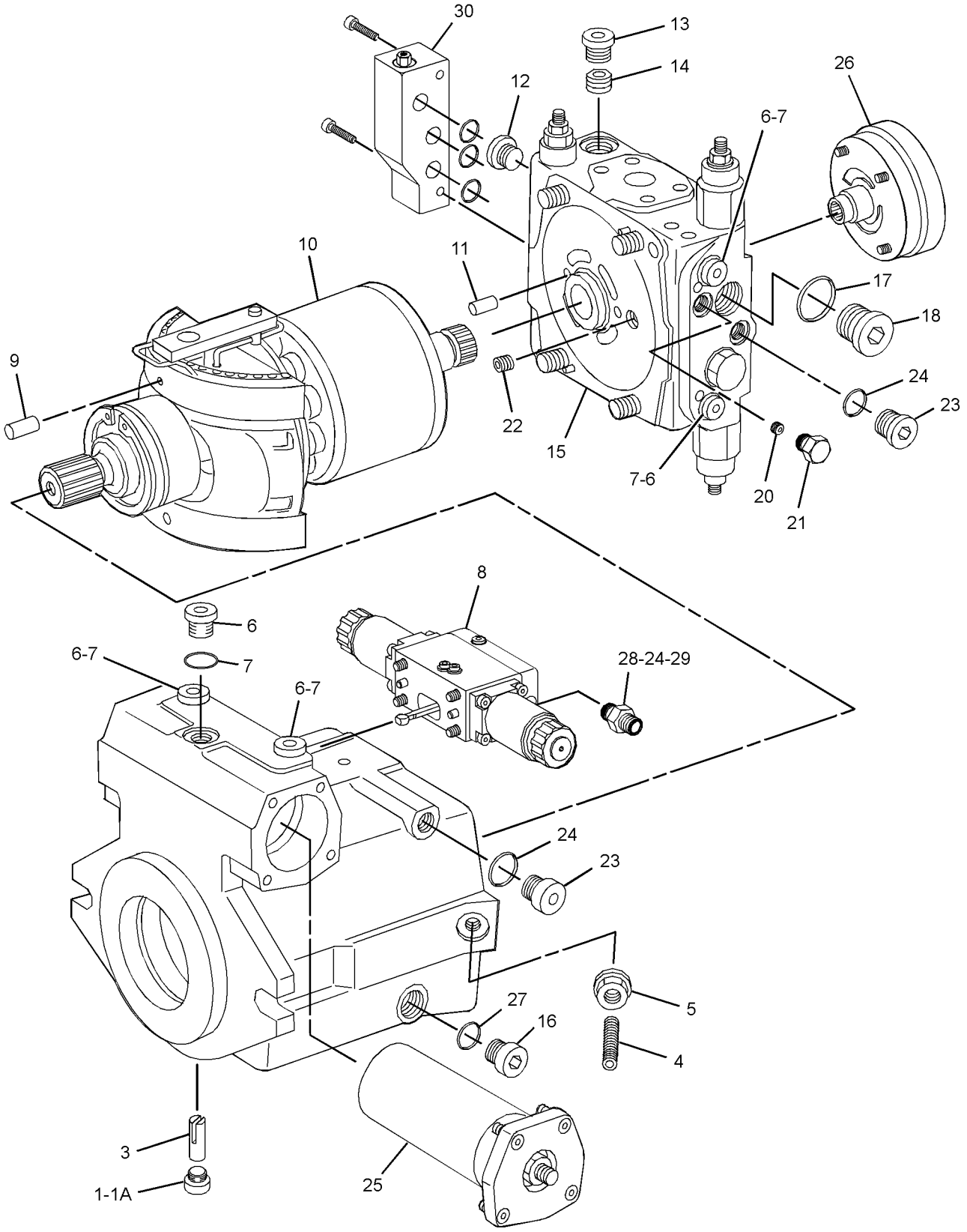

GRAPHIC #1 **<END>** g02117813

340-7751 ROTATING GP-MOTOR—STEERING

S/N: LJR1-UP

PART OF 309-1916 MOTOR GP-PISTON

SMCS-5058 **i03627368**

NOTE	REF NO	GRAPHIC REF	PART NUMBER	QTY	PART NAME 1 2 3 4 5 6 (PRODUCT LEVEL)	SEE PAGE
J	1	1	**340-7766**	1	SHAFT & BEARING AS	
	2	1	**9T-2560**	1	COVER	
		1	**7X-1553**	1	SEAL-LIP TYPE	
	3	1	**9T-2584**	1	RING-RETAINING (INTERNAL)	
	4	1	**133-8739**	1	SEAL-LIP TYPE	
	5	1	**2H-3928**	1	SEAL-O-RING	
B	6	1	**9T-2581**	2	SHIM (0.1-MM THK)	
B	7	1	**9T-2582**	1	SHIM (0.3-MM THK)	
Y	8	1	**310-7794**	1	BARREL GP-MOTOR	444
B	9	1	**141-0250**	1	SHIM (3.8-MM THK)	
B	10	1	**141-0252**	1	SHIM (4-MM THK)	
B	11	1	**141-0249**	1	SHIM (3.7-MM THK)	
B	12	1	**141-0248**	1	SHIM (3.6-MM THK)	
B	13	1	**141-0247**	1	SHIM (3.5-MM THK)	
B	14	1	**141-0251**	1	SHIM (3.9-MM THK)	
	15	1	**123-3299**	1	PLATE-RETAINING	
M	16	1	**113-4417**	7	SCREW (M6X1X16-MM)	
					PARTS SHOWN IN GRAPHIC(S) WITHOUT A REFERENCE NUMBER ARE NOT SERVICED SEPARATELY	
					AVAILABLE REPAIR KIT(S):	
J			**171-5990**	1	KIT-BEARING	

B - USE AS REQUIRED
J - KIT MARKED J SERVICES PART MARKED J
M - METRIC PART
Y - SEPARATE ILLUSTRATION

340-7751 **ROTATING GP-MOTOR (*contd.*)** **i03627368**

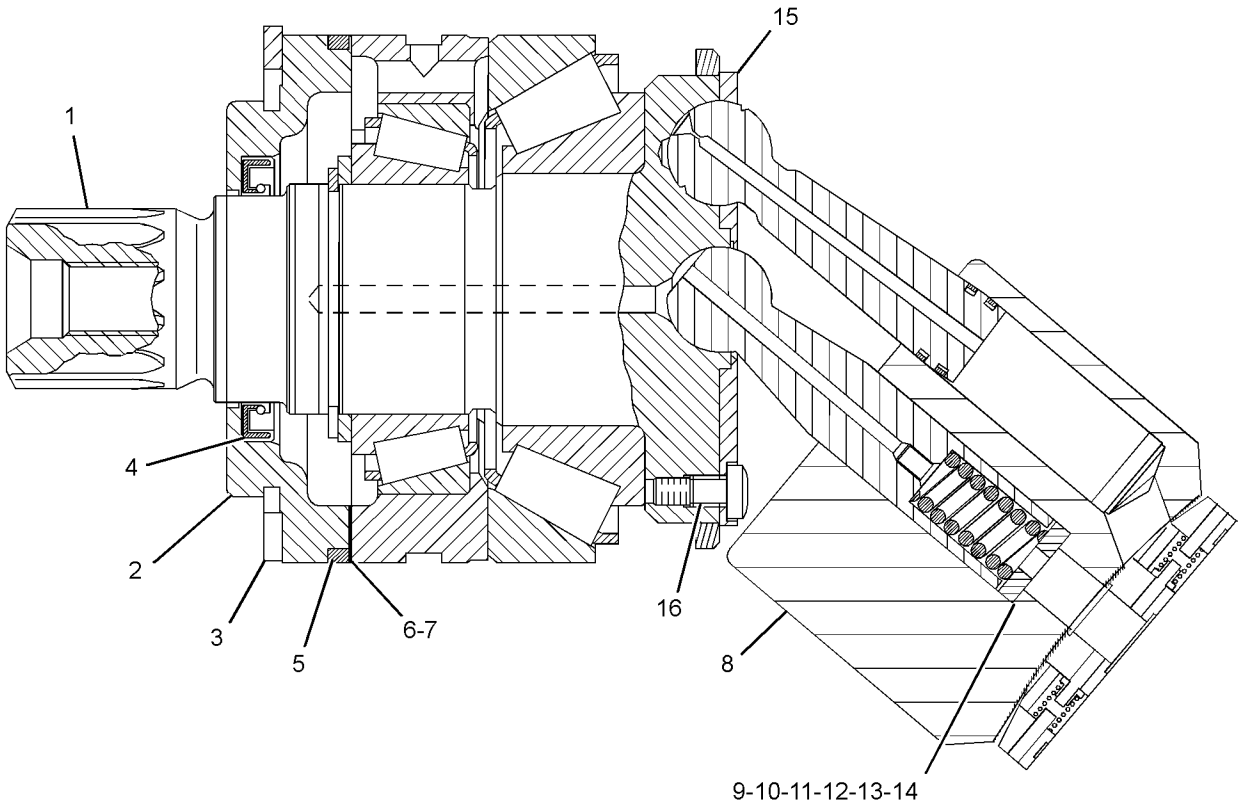

GRAPHIC #1 **<END>** g01891733

279-4414 ROTATING GP-PUMP–STEERING

S/N: LJR1-UP

PART OF 320-8637 PUMP GP-PISTON

SMCS-5070 **i02573601**

NOTE	REF NO	GRAPHIC REF	PART NUMBER	QTY	PART NAME 1 2 3 4 5 6 (PRODUCT LEVEL)	SEE PAGE
	1	1	**212-4483**	1	RING-RETAINING	
	2	1	**194-1983**	1	SEAL-SHAFT	
	3	1	**126-9587**	1	RING-RETAINING	
	4	1	**126-8901**	1	SHAFT	
	5	1	**117-7251**	1	BEARING	
	6	1	**108-3565**	1	CLIP	
	7	1	**125-9134**	1	BEARING	
	8	1	**122-9068**	1	WIRE	
	9	1	**117-7252**	1	CAGE	
	10	1	**112-4657**	1	PIN	
	11	1	**117-7241**	1	PLATE	
	12	1	**117-7240**	1	CRADLE	
	13	1	**1G-3410**	1	WIRE	
J	14	1	**126-8842**	1	RING-SNAP	
J	15	1	**122-9070**	2	SHIM (3-MM THK)	
J	16	1	**122-9071**	1	SPRING	
J	17	1	**117-7239**	1	SPRING SET	
BJ	18	1	**117-7245**	1	SHIM (1.2-MM THK)	
BJ	19	1	**117-7246**	1	SHIM (1-MM THK)	
BJ	20	1	**117-7247**	1	SHIM (0.8-MM THK)	
BJ	21	1	**117-7248**	1	SHIM (0.6-MM THK)	
J	22	1	**117-7250**	1	RETAINER	
J	23	1	**117-7249**	1	PLATE-RETAINER	
J	24	1	**117-7238**	9	PISTON	
J	25	1	**177-6915**	1	CYLINDER	
	26	1	**6E-0725**	2	ROLLER	
	27	1	**279-4418**	1	PLATE	
J	28	1	**251-1752**	1	KIT-PUMP ROTATING GROUP	

B - USE AS REQUIRED
J - KIT MARKED J SERVICES PART(S) MARKED J

279-4414 **ROTATING GP-PUMP (*contd.*)** **i02573601**

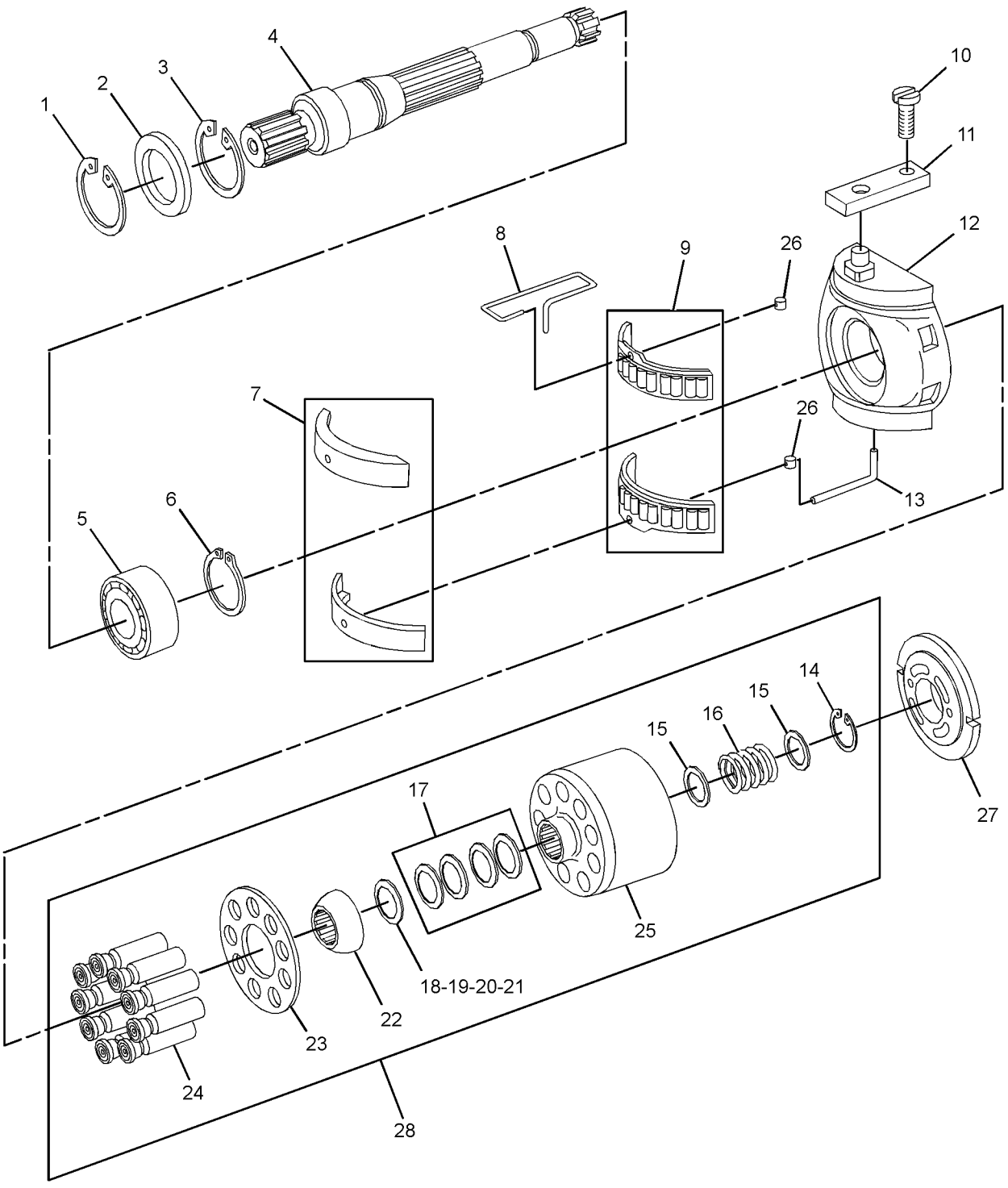

GRAPHIC #1 **<END>** g01298172

201-7269 VALVE GP-BRAKE CONTROL

S/N: LJR1-UP

PART OF 201-7274 VALVE GP-BRAKE CONTROL

SMCS-4265, 4282 **i02777465**

NOTE	REF NO	GRAPHIC REF	PART NUMBER	QTY	PART NAME 1 2 3 4 5 6 (PRODUCT LEVEL)	SEE PAGE
	1	1	**293-2851**	1	STOP	
	2	1	**188-7067**	2	SPRING	
	3	1	**188-7068**	2	RETAINER	
	4	1	**188-7069**	2	PISTON-LOAD	
	5	1	**108-4430**	2	SPRING	
	6	1	**110-2842**	1	PLATE-END	
	7	1	**137-6603**	2	SPOOL	
	8	1	*148-8410*	2	PLUG AS	
					(EACH INCLUDES)	
		1	**2M-9780**	1	SEAL-O-RING	
		1	**9S-4190**	1	PLUG-O-RING	
	9	1	*148-8409*	2	PLUG AS	
					(EACH INCLUDES)	
		1	**3D-2824**	1	SEAL-O-RING	
		1	**9S-8008**	1	PLUG-O-RING	
	10	1	**6J-2419**	2	SEAL-O-RING	
M	11	1	**7X-2537**	2	BOLT (M8X1.25X35-MM)	
	12	1	**8T-4224**	2	WASHER-HARD (8.8X16X2-MM THK)	
M	13	1	**8T-7547**	2	BOLT (M8X1.25X30-MM)	
					PARTS SHOWN IN GRAPHIC(S) WITHOUT A REFERENCE NUMBER ARE NOT SERVICED SEPARATELY	

M - METRIC PART

201-7269 **VALVE GP-BRAKE CONTROL (*contd.*)** **i02777465**

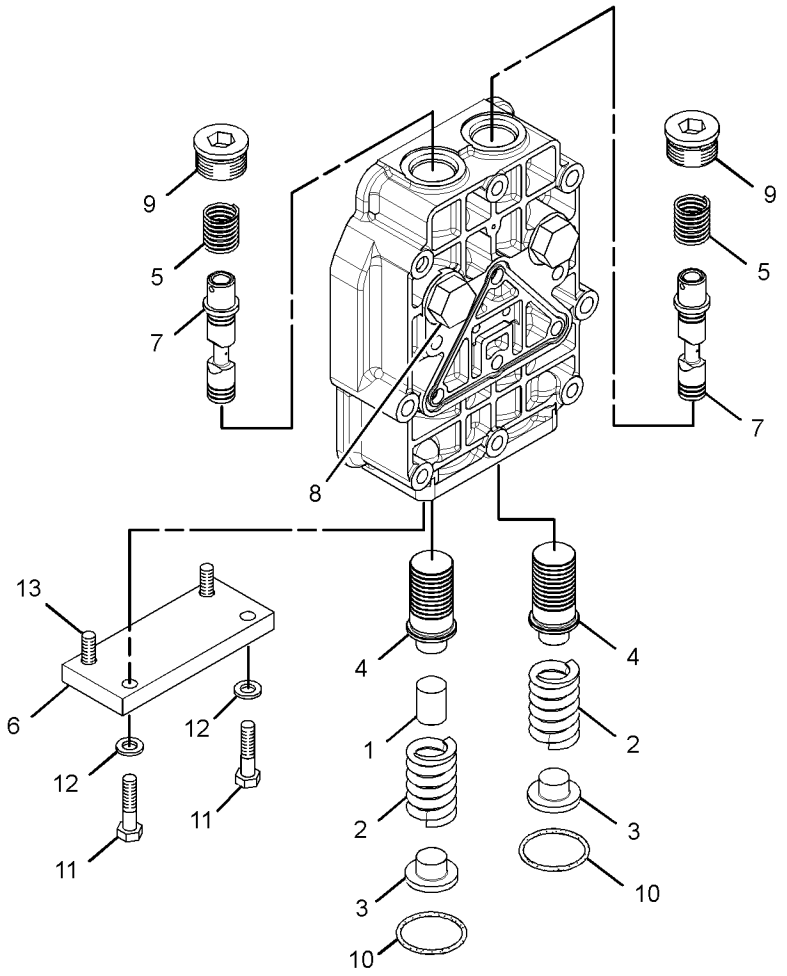

GRAPHIC #1 **<END>** g01393299

201-7274 VALVE GP-BRAKE CONTROL

S/N: LJR1-UP

PART OF 195-0644 BRAKE GP-STEERING

SMCS-4265, 4282

i04144493

NOTE	REF NO	GRAPHIC REF	PART NUMBER	QTY	PART NAME 1 2 3 4 5 6 (PRODUCT LEVEL)	SEE PAGE
	1	1	**9L-9068**	4	DOWEL	
Y	2	1	*162-5357*	1	MANIFOLD & VALVE GP (BRAKE)	457
Y	3	1	*175-4972*	1	MANIFOLD & VALVE GP (PARKING, SECONDARY BRAKE)	459
	4	1	**325-1385**	1	PLUG AS-ORIFICE (WITH SCREEN)	
		1	**4J-7533**	1	SEAL-O-RING	
M	5	1	**8T-4177**	2	BOLT (M8X1.25X90-MM)	
Y	6	1	**201-7269**	1	VALVE GP-BRAKE CONTROL	469
	7	1	**122-3771**	2	SEAL-O-RING	
	8	1	**132-9899**	1	PLATE	
	9	1	**132-9900**	1	PLATE	
	10	1	**134-1251**	1	PLATE-SEPARATOR	
	11	1	**185-3503**	2	SEAL-O-RING	
	12	1	**1T-0738**	10	WASHER (8.4X19X1.83-MM THK)	
	13	1	**3S-2093**	4	STRAP-CABLE	
M	15	1	**7X-2541**	4	BOLT (M8X1.25X140-MM)	
M	16	1	**8T-3647**	4	BOLT (M8X1.25X80-MM)	
	17	1	**9P-9150**	24	WASHER (8.25X18X0.84-MM THK)	

M - METRIC PART
Y - SEPARATE ILLUSTRATION

201-7274 **VALVE GP-BRAKE CONTROL (*contd.*)** **i04144493**

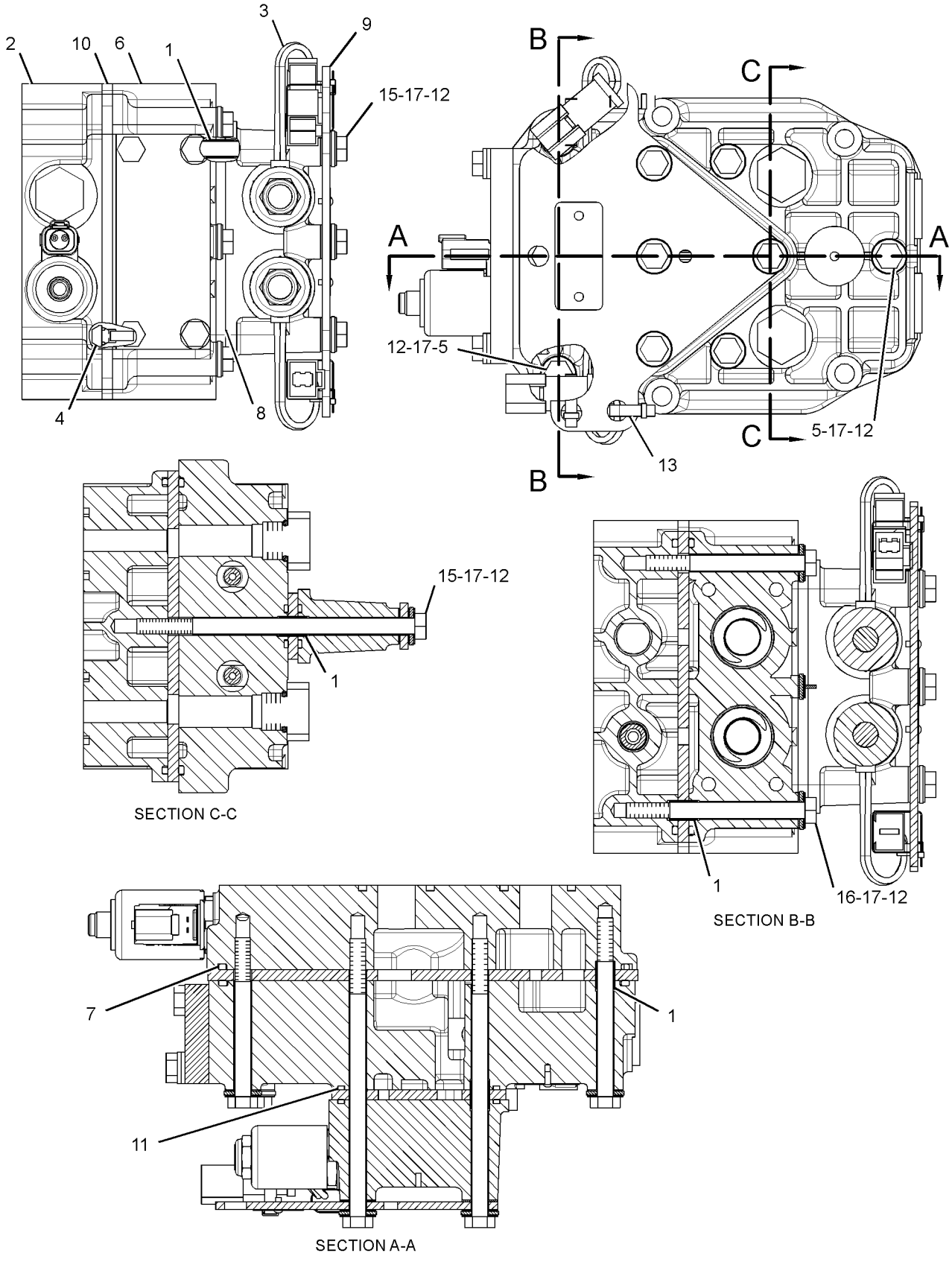

GRAPHIC #1 **<END>** g01788561

111-7346 VALVE GP-FLUSHING—STEERING

S/N: LJR1-UP

PART OF 310-7794 BARREL GP-MOTOR

SMCS-5066 **i01834298**

NOTE	REF NO	GRAPHIC REF	PART NUMBER	QTY	PART NAME 1 2 3 4 5 6 (PRODUCT LEVEL)	SEE PAGE
	1	1	**111-8288**	1	PLATE	
	2	1	**111-8289**	1	ROD	
	3	1	**119-6110**	2	RETAINER	
	4	1	**6E-4102**	2	SPRING	
	5	1	**112-9327**	2	DOWEL	

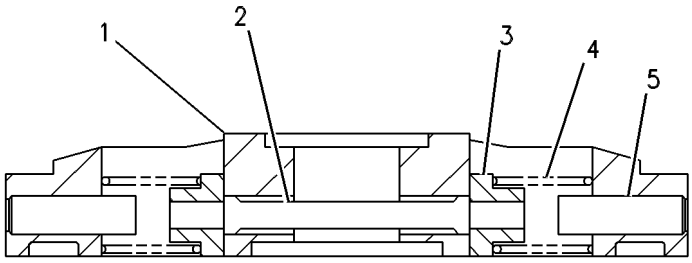

GRAPHIC #1 **<END>** g00115015

341-1511 VALVE GP-PUMP CONTROL—STEERING

S/N: LJR1-UP

PART OF 320-8637 PUMP GP-PISTON

SMCS-5455 **i03627502**

NOTE	REF NO	GRAPHIC REF	PART NUMBER	QTY	PART NAME 1 2 3 4 5 6 (PRODUCT LEVEL)	SEE PAGE
	1	1	**316-5999**	2	SOLENOID AS (PUMP CONTROL VALVE)	
	2	1	**202-6535**	2	PIN	
M	3	1	**8T-2922**	4	BOLT-SOCKET HEAD (M6X1X65-MM)	
	4	1	**301-3424**	1	KIT-COVER	
					(INCLUDES SEALS, FILTER, COVER, & RING)	
	5	1	**196-4253**	1	GASKET	
	6	1	**215-8014**	1	KIT-LEVER	
	7	1	**277-6631**	1	SPRING	
B	8	1	**216-4551**	1	SHIM (0.8-MM THK)	
B			**216-4552**	1	SHIM (1-MM THK)	
B			**216-4553**	1	SHIM (1.2-MM THK)	
B			**216-4554**	1	SHIM (1.4-MM THK)	
B			**216-4555**	1	SHIM (1.6-MM THK)	
B			**233-9808**	1	SHIM (0.6-MM THK)	
	14	1	**209-3565**	1	SEAL	
M	15	1	**196-9445**	1	BOLT-SOCKET HEAD (M6X1X45-MM)	
	16	1	**215-8008**	1	LEVER	
	17	1	**215-8012**	1	PIN	
	18	1	**6H-9691**	1	SEAL-O-RING	
	19	1	**215-8011**	1	BOLT-SPECIAL	
	20	1	**215-8010**	1	SHIM (3-MM THK)	
	21	1	**215-8015**	2	PIN	

B - USE AS REQUIRED
M - METRIC PART

341-1511 **VALVE GP-PUMP CONTROL (*contd.*)** **i03627502**

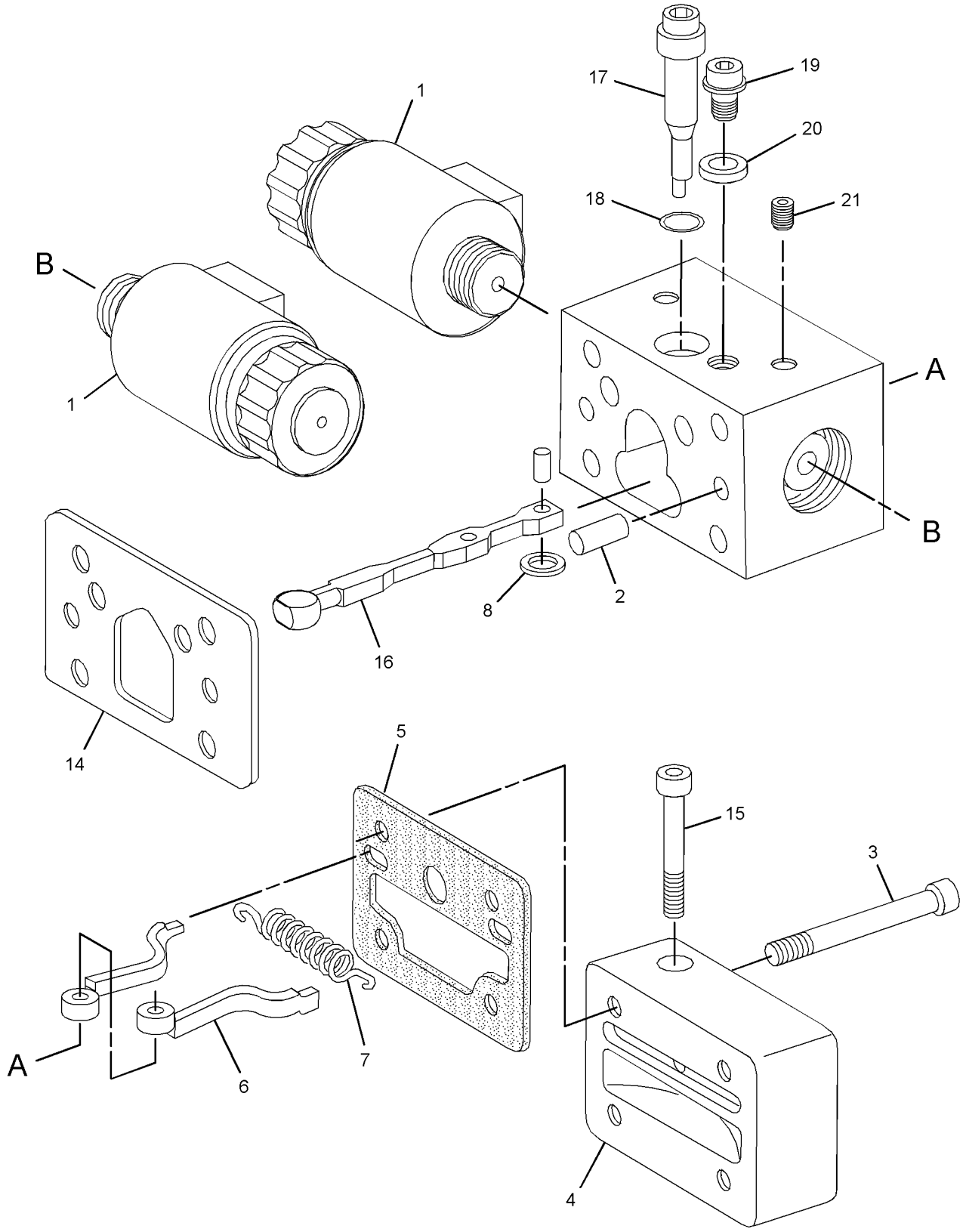

GRAPHIC #1 **<END>** g01884516

152-1811 VALVE GP-RELIEF–PRESSURE OVERRIDE

S/N: LJR1-UP

PART OF 341-1510 HEAD GP-PUMP

SMCS-4307 **i02992819**

NOTE	REF NO	GRAPHIC REF	PART NUMBER	QTY	PART NAME 1 2 3 4 5 6 (PRODUCT LEVEL)	SEE PAGE
J	1	1	**7Y-5219**	1	SEAL-O-RING	
J	2	1	**6V-5586**	1	SEAL-O-RING	
JM	3	1	**6E-1607**	1	LOCKNUT-SEALING	
					AVAILABLE REPAIR KIT(S):	
J			**122-9363**	1	KIT-SEAL (RELIEF VALVE)	

J - KIT MARKED J SERVICES PART(S) MARKED J
M - METRIC PART

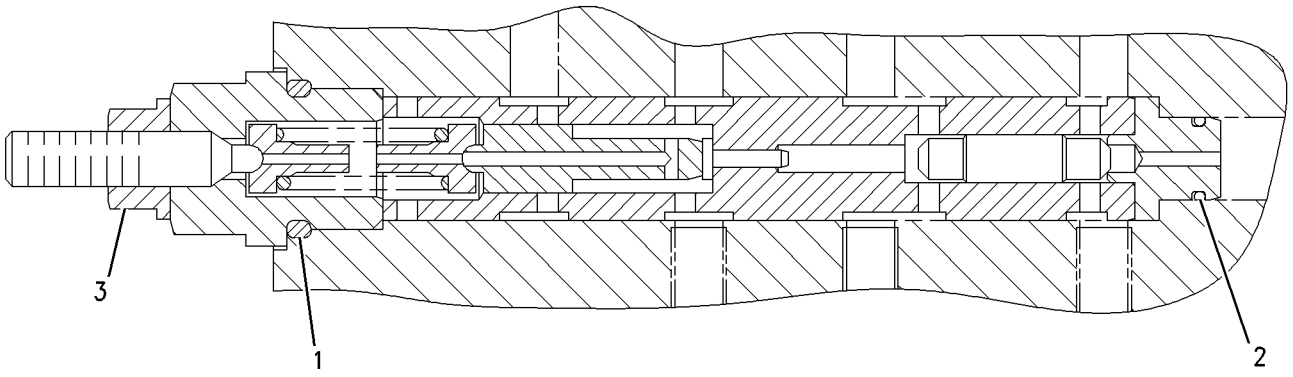

GRAPHIC #1 **<END>** g00813622

277-6679 VALVE GP-RELIEF–CROSSOVER, STEERING

S/N: LJR1-UP

PART OF 341-1510 HEAD GP-PUMP

SMCS-4307 **i02573667**

NOTE	REF NO	GRAPHIC REF	PART NUMBER	QTY	PART NAME 1 2 3 4 5 6 (PRODUCT LEVEL)	SEE PAGE
	1	1	**6V-5326**	1	SEAL-O-RING	
	2	1	**167-7713**	1	RING-BACKUP	

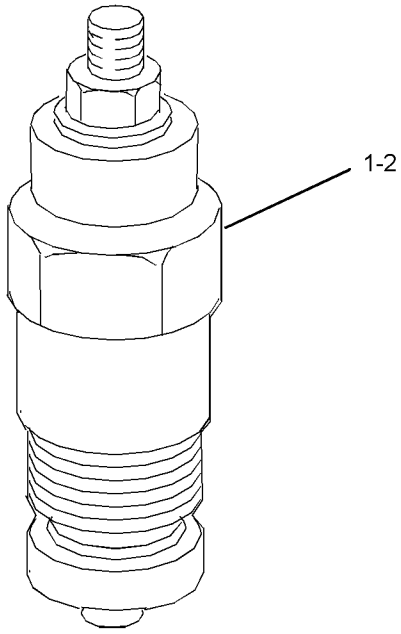

GRAPHIC #1 **<END>** g01203296

341-3186 VALVE GP-RELIEF–COLD START

S/N: LJR1-UP

PART OF 320-8637 PUMP GP-PISTON

SMCS-4307 **i03627503**

NOTE	REF NO	GRAPHIC REF	PART NUMBER	QTY	PART NAME 1 2 3 4 5 6 (PRODUCT LEVEL)	SEE PAGE
	1	1	**109-3203**	4	SEAL-O-RING	
M	2	1	**136-4184**	2	BOLT-SOCKET HEAD (M8X1.25X40-MM)	
	3	1	**095-0934**	1	RING-RETAINING (INTERNAL)	
	4	1	**033-6041**	1	SEAL-O-RING	
	5	1	**9T-3929**	1	PLUG AS	
		1	**6E-5479**	1	SEAL	

M - METRIC PART

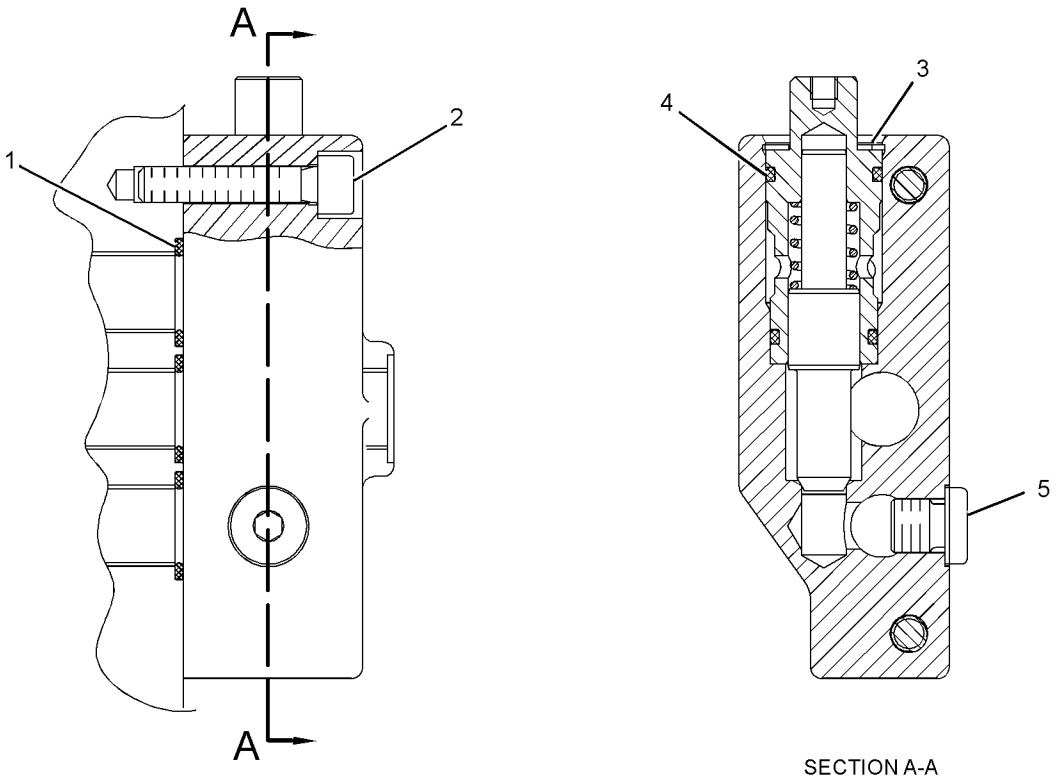

SECTION A-A

GRAPHIC #1 **<END>** g01946488

172-2392 VALVE GP-SOLENOID

S/N: LJR1-UP
24-VOLT
PART OF 175-4972 MANIFOLD & VALVE GP

SMCS-4804 **i04079615**

NOTE	REF NO	GRAPHIC REF	PART NUMBER	QTY	PART NAME 1 2 3 4 5 6 (PRODUCT LEVEL)	SEE PAGE
	1	1	**133-2249**	1	COIL AS	
		1	**1S-9593**	2	STRAP-CABLE	
		1	**8T-8729**	2	PIN-CONNECTOR (16-GA TO 18-GA)	
		1	**8T-8737**	2	PLUG-SEAL	
		1	**102-8804**	1	KIT-RECEPTACLE (4-PIN)	
					(INCLUDES RECEPTACLE AS & WEDGE)	
	2	1	**172-2391**	1	SPOOL AS	
	2A	1	**156-5970**	1	NUT (1/2-20-THD)	
					AVAILABLE REPAIR KIT(S):	
			365-8611	1	KIT-SEAL (SOLENOID VALVE)	
					(INCLUDES O-RING SEALS & BACK UP RING)	

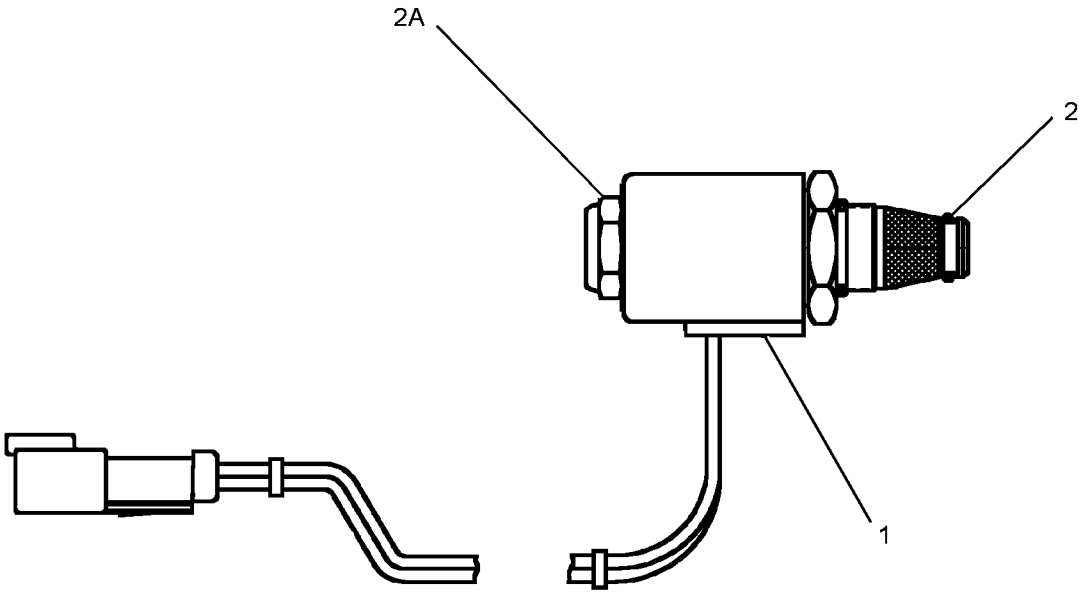

GRAPHIC #1 **<END>** g02288793

174-4909 VALVE GP-SOLENOID

S/N: LJR1-UP
24-VOLT
PART OF 162-5357 MANIFOLD & VALVE GP

SMCS-4804 **i03506725**

NOTE	REF NO	GRAPHIC REF	PART NUMBER	QTY	PART NAME 1 2 3 4 5 6 (PRODUCT LEVEL)	SEE PAGE
	1	1	**226-9622**	1	COIL AS-SOLENOID (24-VOLT)	
	2	1	**164-2108**	1	WASHER (13.03X25.4X2.38-MM THK)	
	3	1	**218-2373**	1	NUT (1/2-28-THD)	
F			**6V-4589**	1	SEAL-O-RING	
F			**8L-2746**	1	SEAL-O-RING	

F - NOT SHOWN

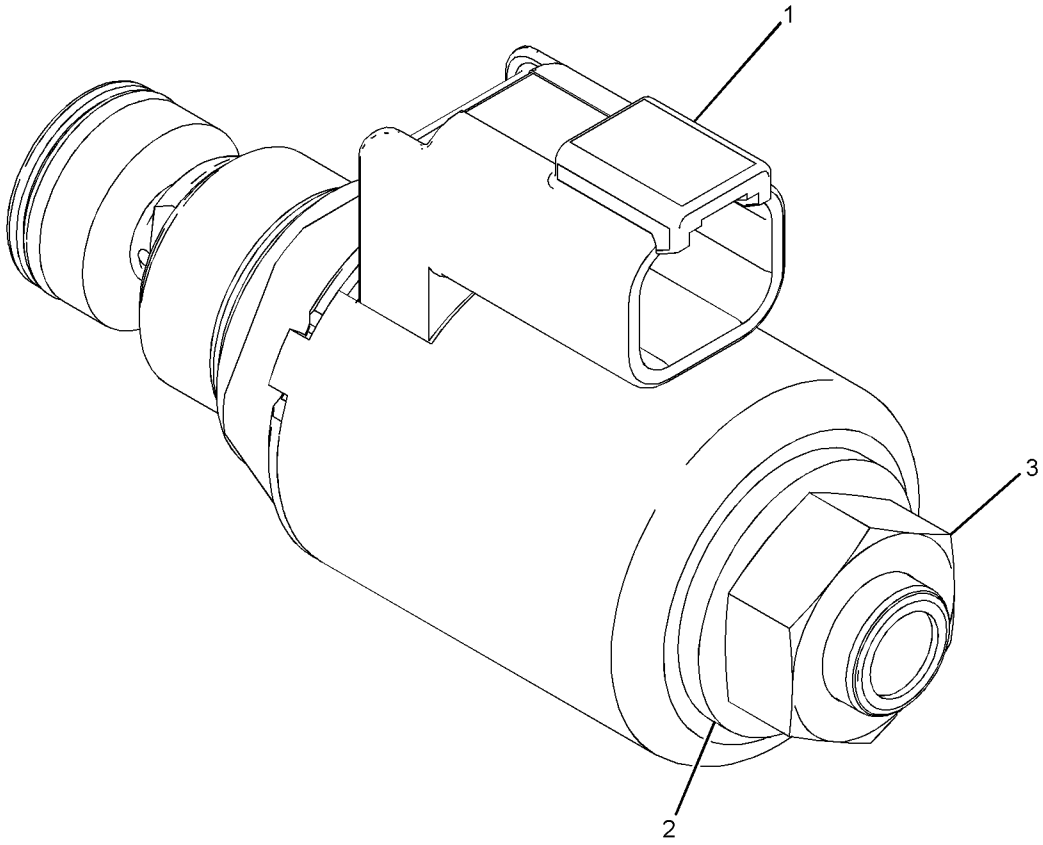

GRAPHIC #1 **<END>** g01139934

380-9849 VALVE GP-SOLENOID

S/N: LJR1-UP

PART OF 175-4972 MANIFOLD & VALVE GP

SMCS-4804 **i05294281**

NOTE	REF NO	GRAPHIC REF	PART NUMBER	QTY	PART NAME 1 2 3 4 5 6 (PRODUCT LEVEL)	SEE PAGE
	1	1	**133-2249**	1	COIL AS	
		1	**1S-9593**	2	STRAP-CABLE	
		1	**8T-8729**	2	PIN-CONNECTOR (16-GA TO 18-GA)	
		1	**8T-8737**	2	PLUG-SEAL	
		1	**102-8804**	1	KIT-RECEPTACLE (4-PIN)	
					(INCLUDES RECEPTACLE AS & WEDGE)	
	2	1	**365-8611**	1	KIT-SEAL	
					(INCLUDES RINGS)	
	3	1	**156-5970**	1	NUT (1/2-20-THD)	

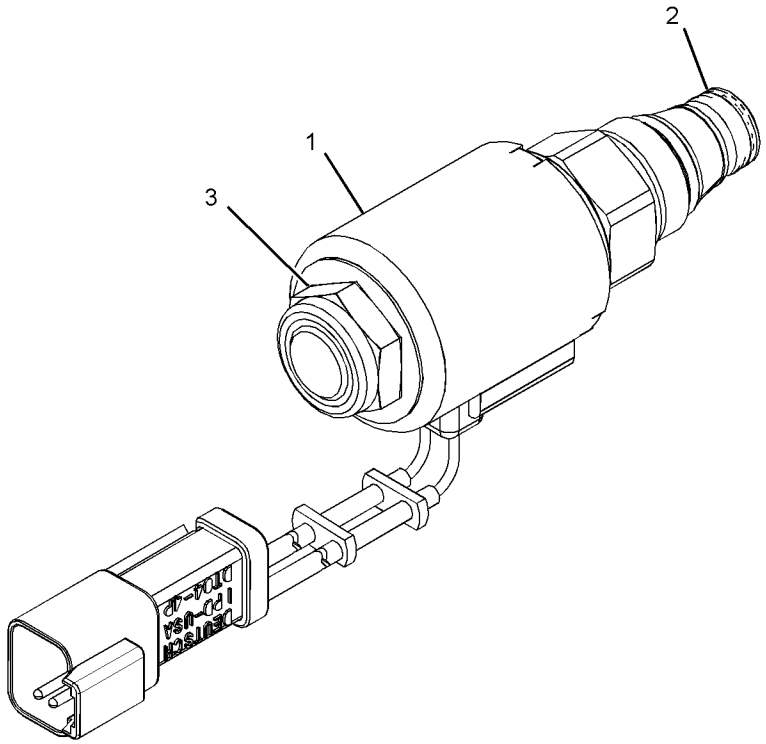

GRAPHIC #1 **<END>** g03340105

160-2669 ACCUMULATOR GP-HYDRAULIC—CHARGED

S/N: LJR168-UP
FIELD REPLACEMENT ORDER 180-9419—PAGE: 483
PART OF 311-2848, 317-7820 LINES GP-PILOT
ALSO AN ATTACHMENT

SMCS-5077 **i03922049**

NOTE	PART NUMBER	QTY	PART NAME 1 2 3 4 5 6 (PRODUCT LEVEL)	SEE PAGE
Y	*180-9419*	1	ACCUMULATOR GP-HYDRAULIC (UNCHARGED)	483
	204-8758	1	FILM-WARNING (HIGH PRESSURE CYLINDER)	

Y - SEPARATE ILLUSTRATION

<END>

180-9419 ACCUMULATOR GP-HYDRAULIC—UNCHARGED

S/N: LJR168-UP
FIELD REPLACEMENT FOR 160-2669—PAGE: 482
PART OF 160-2669 ACCUMULATOR GP-HYDRAULIC
ALSO AN ATTACHMENT

SMCS-5077 **i03922093**

NOTE	REF NO	GRAPHIC REF	PART NUMBER	QTY	PART NAME 1 2 3 4 5 6 (PRODUCT LEVEL)	SEE PAGE
	1	1	**161-6879**	1	CAP	
	2	1	**159-4700**	1	FILM-WARNING (HIGH PRESSURE CYLINDER)	
	3	1	**161-6880**	1	CORE	

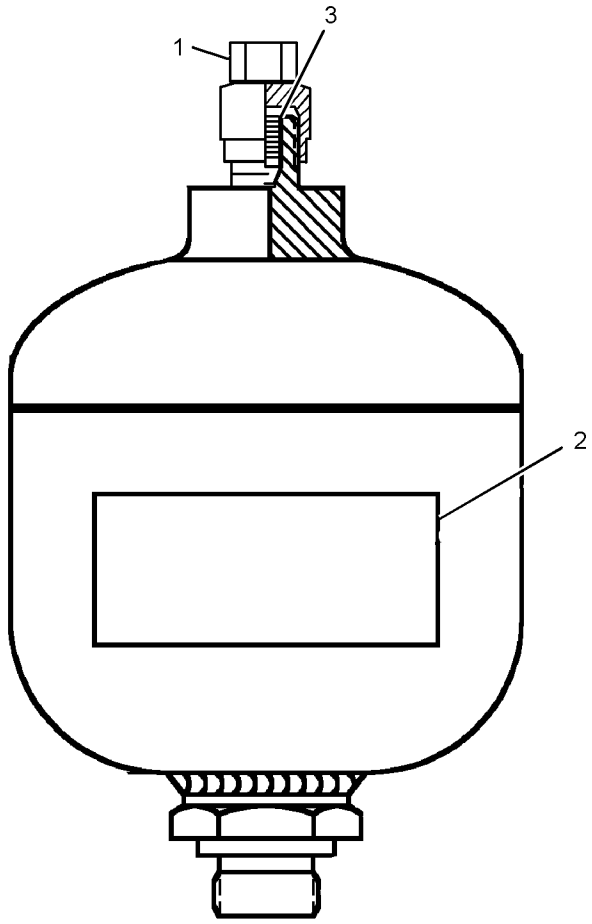

GRAPHIC #1 **<END>** g03053799

226-0420 ACCUMULATOR GP-PILOT OIL–CHARGED

S/N: LJR1-167
FIELD REPLACEMENT ORDER 230-3489–PAGE: 485
PART OF 311-2848, 317-7820 LINES GP-PILOT
ALSO AN ATTACHMENT

SMCS-5077 **i03626512**

NOTE	REF NO	GRAPHIC REF	PART NUMBER	QTY	PART NAME 1 2 3 4 5 6 (PRODUCT LEVEL)	SEE PAGE
					(NO SERVICED PARTS)	

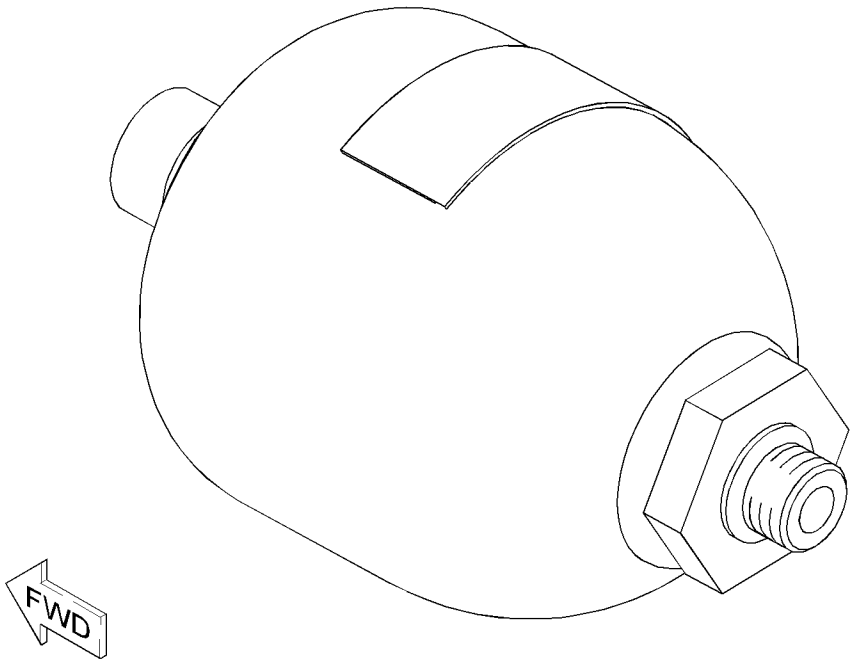

GRAPHIC #1 **<END>** g01197342

230-3489 ACCUMULATOR GP-PILOT OIL—UNCHARGED

S/N: LJR1-UP

FIELD REPLACEMENT FOR 226-0420—PAGE: 484

SMCS-5077 **i03638158**

NOTE	REF NO	GRAPHIC REF	PART NUMBER	QTY	PART NAME 1 2 3 4 5 6 (PRODUCT LEVEL)	SEE PAGE
					(NO SERVICED PARTS)	

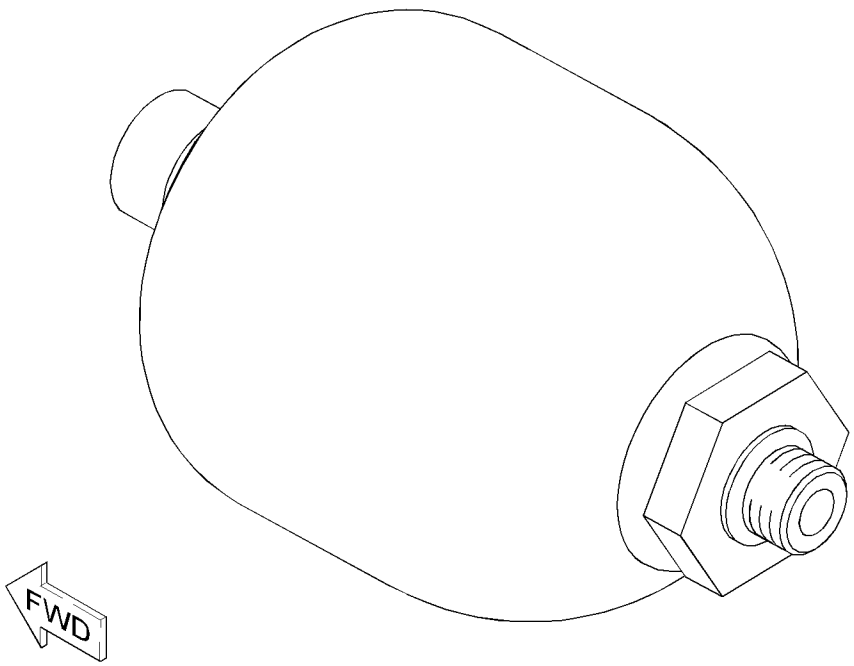

GRAPHIC #1 **<END>** g01527032

302-8157 ACTUATOR GP-HYDRAULIC

S/N: LJR1-UP

PART OF 318-8145, 318-8146, 318-8147, 318-8148 VALVE GP-CONTROL

ALSO AN ATTACHMENT

SMCS-5078 **i03659984**

NOTE	REF NO	GRAPHIC REF	PART NUMBER	QTY	PART NAME 1 2 3 4 5 6 (PRODUCT LEVEL)	SEE PAGE
	1	1	**302-8149**	1	VALVE GP-SOLENOID (IMPLEMENT)	
	1A	1	**302-8149**	1	VALVE GP-SOLENOID (IMPLEMENT)	
	2	1	**5F-9144**	3	SEAL-O-RING	
	3	1	**5D-6543**	1	SEAL-O-RING	
	4	1	**211-5255**	4	BOLT-SOCKET HEAD (M5X0.8X55-MM)	
M	5	1	**8T-5433**	3	BOLT-SOCKET HEAD (M3X0.5X1.5-MM)	

M - METRIC PART

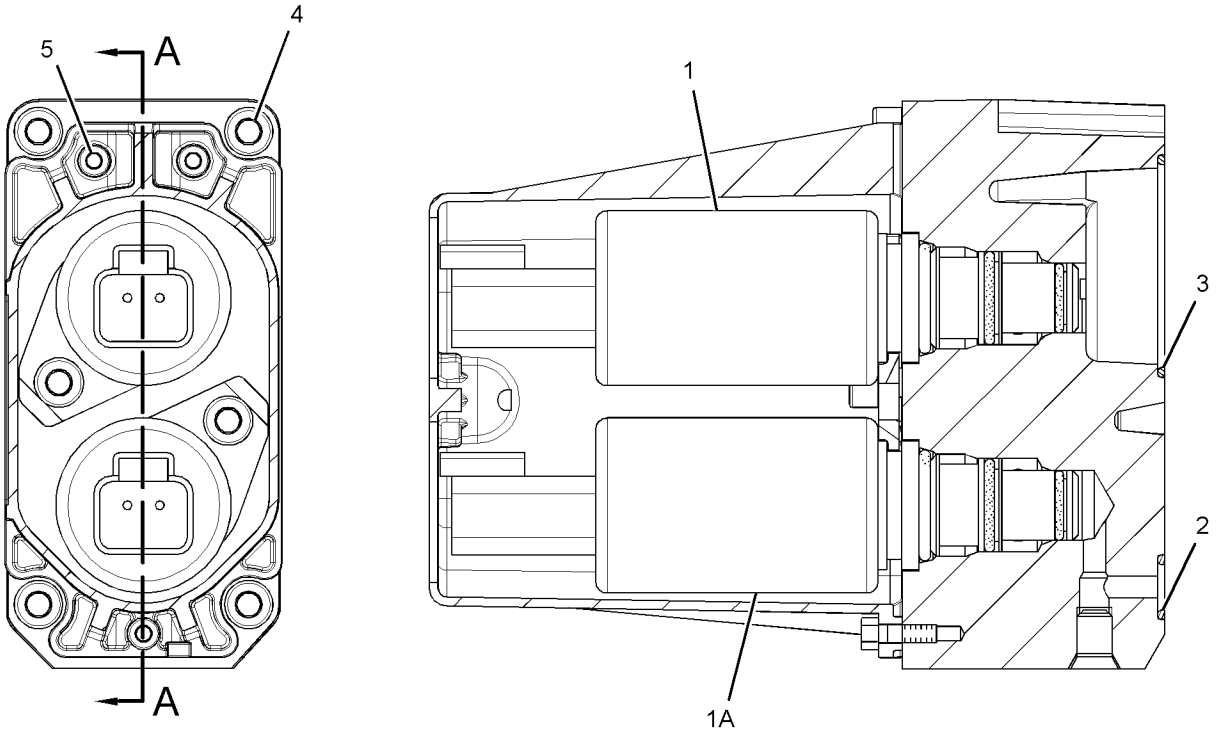

SECTION A-A

GRAPHIC #1 **<END>** g01561635

273-2024 COOLER GP-HYDRAULIC OIL

S/N: LJR1-UP

PART OF 318-0768 INSTALLATION AR-ENGINE

SMCS-1374 **i03630409**

NOTE	REF NO	GRAPHIC REF	PART NUMBER	QTY	PART NAME 1 2 3 4 5 6 (PRODUCT LEVEL)	SEE PAGE
	1	1	**273-2025**	1	BRACKET AS	
M		1	**8T-3490**	4	NUT-WELD (M10X1.5-THD)	
	2	1	**273-2026**	1	BRACKET AS	
	3	1	**340-2520**	1	CORE AS-OIL COOLER (HYDRAULIC OIL)	
	4	1	**7X-7729**	4	WASHER (11X25X3-MM THK)	
	5	1	**8T-4121**	6	WASHER-HARD (11X21X2.5-MM THK)	
M	6	1	**8T-4186**	3	BOLT (M10X1.5X40-MM)	
M	7	1	**8T-4195**	7	BOLT (M10X1.5X30-MM)	

M - METRIC PART

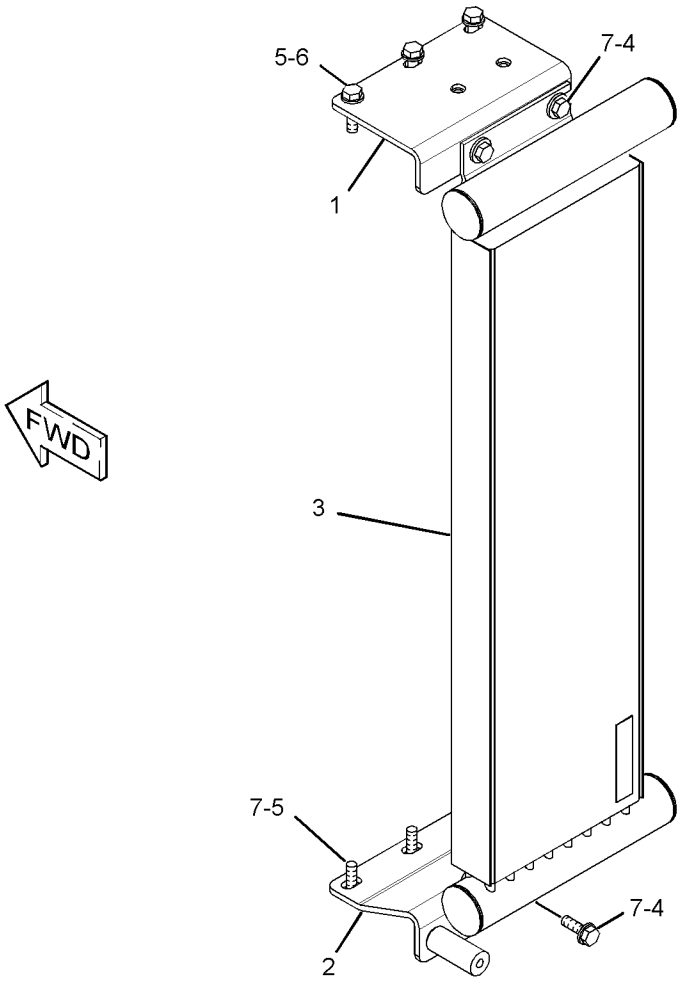

GRAPHIC #1 **<END>** g01864736

308-1317 COOLER GP-HYDRAULIC OIL

S/N: LJR1-UP

PART OF 318-0755 LINES GP-RADIATOR

SMCS-1374 **i02992852**

NOTE	REF NO	GRAPHIC REF	PART NUMBER	QTY	PART NAME 1 2 3 4 5 6 (PRODUCT LEVEL)	SEE PAGE
	1	1	**233-2116**	1	BRACKET	
	2	1	**233-2118**	2	BRACKET	
	3	1	**233-6825**	4	MOUNT AS	
	4	1	**257-5003**	1	CORE AS-OIL COOLER (POWER TRAIN OIL)	
	5	1	**285-6410**	1	BRACKET	
	6	1	**308-1224**	1	CORE AS-AFTERCOOLER	
Y	7	1	*308-1225*	1	RADIATOR GP	70
	8	1	**308-1227**	1	PLATE AS	
	9	1	**198-4777**	8	WASHER-HARD (11X25X10-MM THK)	
	10	1	**8T-4121**	20	WASHER-HARD (11X21X2.5-MM THK)	
M	11	1	**8T-4137**	20	BOLT (M10X1.5X20-MM)	
M	12	1	**8T-4196**	8	BOLT (M10X1.5X35-MM)	

M - METRIC PART
Y - SEPARATE ILLUSTRATION

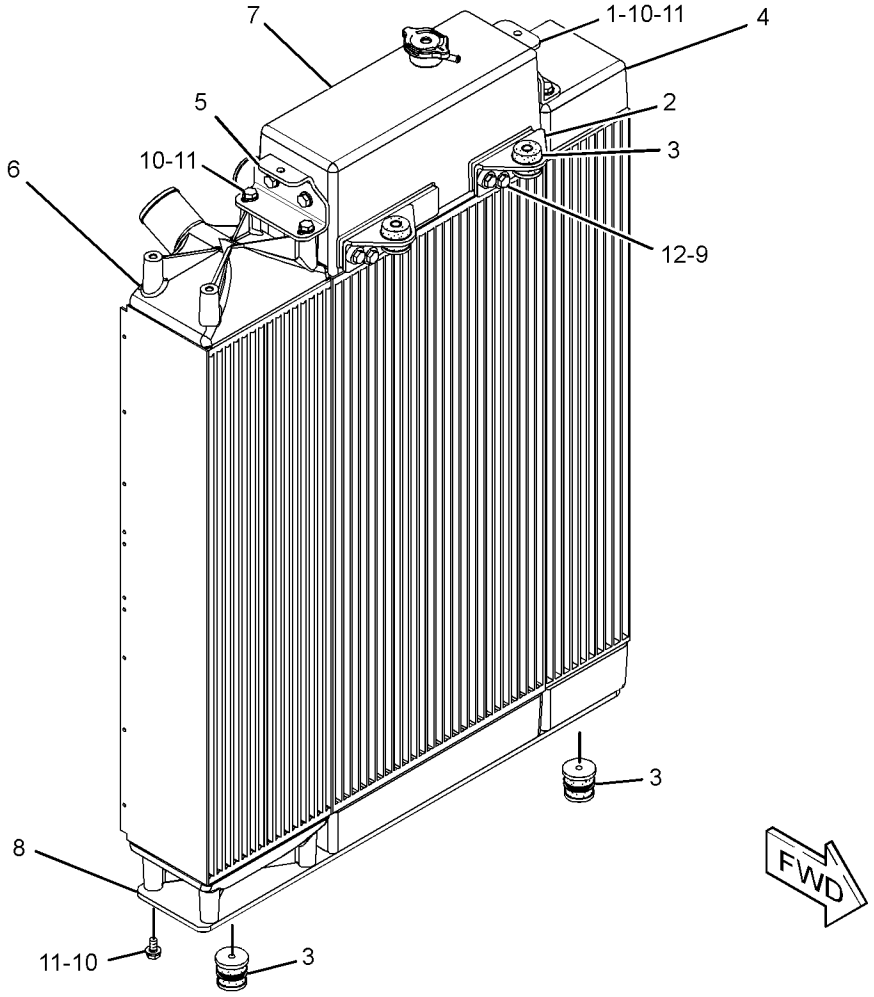

GRAPHIC #1 **<END>** g01458201

303-2250 COVER GP-HYDRAULIC TANK CAP

S/N: LJR1-UP

PART OF 230-9131 TANK & FILTER GP-HYDRAULIC

SMCS-5056, 7315

i02787509

NOTE	REF NO	GRAPHIC REF	PART NUMBER	QTY	PART NAME 1 2 3 4 5 6 (PRODUCT LEVEL)	SEE PAGE
	1	1	**2D-4202**	1	PLATE	
	2	1	**5D-1911**	1	COVER-HYDRAULIC CAP	
	3	1	**7H-1447**	1	CAP-FILLER (HYDRAULIC TANK FILL)	
	4	1	**9M-7394**	1	LEVER	
	5	1	**1L-5072**	1	DOWEL	
	6	1	**2J-7761**	1	RING-RETAINING	
	7	1	**8T-2275**	1	BALL	
	8	1	**9H-6454**	1	GASKET	

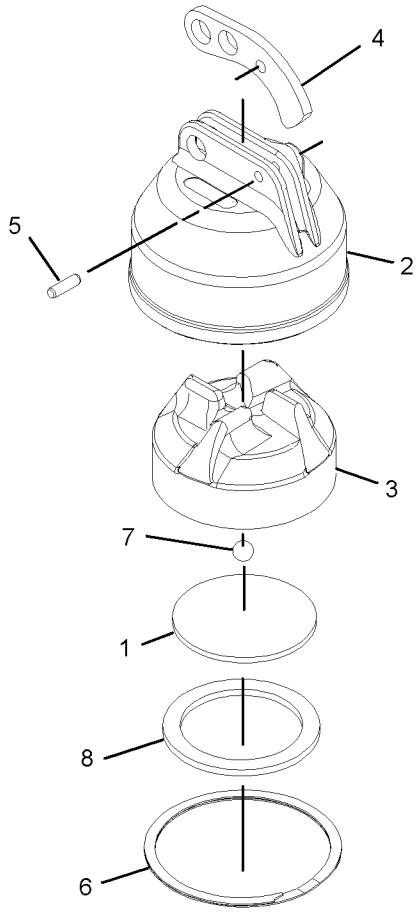

GRAPHIC #1

<END>

g01394800

321-7048 CYLINDER GP-ANGLING—BULLDOZER

S/N: LPC1-UP; LJR1-363

101.6-MM (4-IN) BORE X 472-MM (18.6-IN) STROKE

PART OF 321-5600 BULLDOZER AR-PWR ANGLE & TILT, 338-3521 C-FRAME GP-POWER ANGLING ALSO AN ATTACHMENT

SMCS-5101 **i03042220**

NOTE	REF NO	GRAPHIC REF	PART NUMBER	QTY	PART NAME 1 2 3 4 5 6 (PRODUCT LEVEL)	SEE PAGE
	1	1	**321-7046**	1	CYLINDER AS-HYDRAULIC	
	1A	1	**2H-5549**	2	RING-RETAINING	
	1B	1	**4D-4431**	1	BEARING-ALIGNING	
	2	1	**321-7044**	1	ROD AS-HYDRAULIC CYLINDER	
	3	1	**122-9921**	1	PISTON AS	
	3A	1	**8C-9160**	1	SEAL AS	
	3B	1	**8N-5083**	1	SPRING	
	3C	1	**112-6142**	1	PLUNGER	
	3D	1	**122-9918**	1	SPACER (8X14.07X28.67-MM THK)	
	3E	1	**122-9919**	1	PLUNGER	
	4	1	**110-6501**	1	WASHER-HARD (31X57X6-MM THK)	
	5	1	**135-7393**	1	HEAD AS	
		1	**229-9382**	1	SEAL-WIPER	
	6	1	**1J-2175**	1	BOLT (1-1/8-7X3.5-IN)	
	7	1	**6J-2797**	1	RING-WEAR	
	8	1	**9X-4611**	1	SEAL-O-RING	
	9	1	**2K-6830**	1	RING-BACKUP	
	10	1	**229-9382**	1	SEAL-WIPER	
	11	1	**167-2304**	1	SEAL-U-CUP	
	12	1	**167-2195**	1	SEAL AS-BUFFER	
	13	1	**4T-5613**	1	RING-WEAR	

321-7048 **CYLINDER GP-ANGLING (*contd.*)** **i03042220**

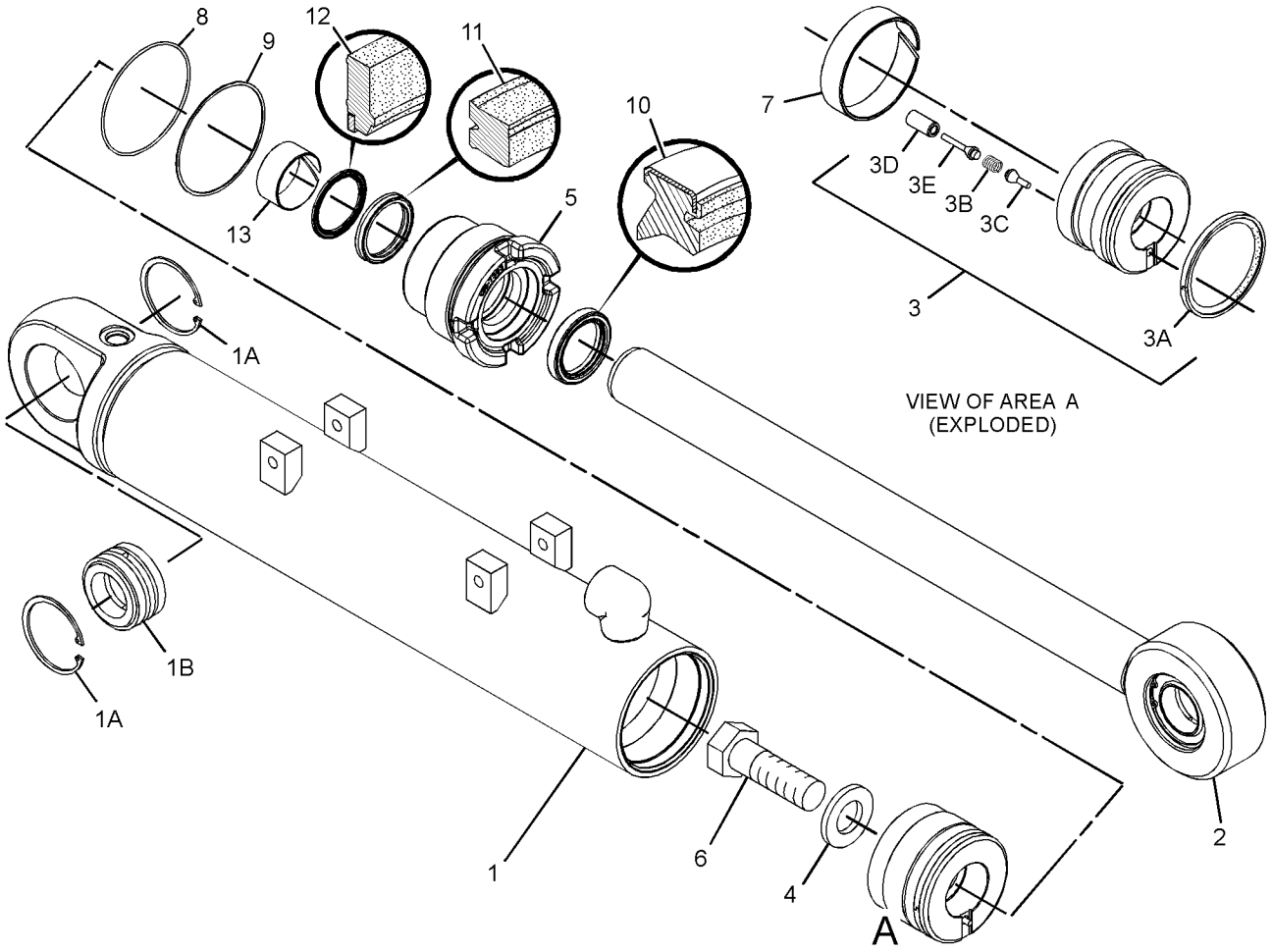

GRAPHIC #1 **<END>** g01582375

358-6503 CYLINDER GP-ANGLING

S/N: LJR364-UP

PART OF 338-3521 C-FRAME GP-POWER ANGLING

SMCS-5101 **i05139792**

NOTE	REF NO	GRAPHIC REF	PART NUMBER	QTY	PART NAME 1 2 3 4 5 6 (PRODUCT LEVEL)	SEE PAGE
	1	1	**135-7393**	1	HEAD AS	
		1	**308-1845**	1	SEAL-WIPER	
J	2	1	**289-2935**	1	SEAL AS	
	3	1	**358-6490**	1	PISTON AS	
J		1	**8C-9160**	1	SEAL AS	
		1	**8N-5083**	1	SPRING	
	4	1	**358-6494**	1	WASHER	
	5	1	**358-6495**	1	CYLINDER AS-HYDRAULIC	
	5A	1	**9T-7045**	1	ELBOW	
	5B	1	**2H-5549**	2	RING-RETAINING	
	5C	1	**4D-4431**	1	BEARING-ALIGNING	
	6	1	**358-6499**	1	ROD AS	
	6A	1	**2H-5549**	2	RING-RETAINING	
	6B	1	**4D-4431**	1	BEARING-ALIGNING	
J	7	1	**289-2946**	1	SEAL-U-CUP	
	8	1	**2J-6384**	1	NUT-SELF-LOCKING (1-1/4-12-THD)	
J	9	1	**2K-6830**	1	RING-BACKUP	
J	10	1	**308-1845**	1	SEAL-WIPER	
J	11	1	**4T-5613**	1	RING-WEAR	
J	12	1	**6J-2797**	1	RING-WEAR	
J	13	1	**9X-4611**	1	SEAL-O-RING	
					AVAILABLE REPAIR KIT(S):	
J			**261-8566**	1	KIT-HYD CYLINDER SEAL	

J - KIT MARKED J SERVICES PARTS MARKED J

358-6503 **CYLINDER GP-ANGLING (*contd.*)** **i05139792**

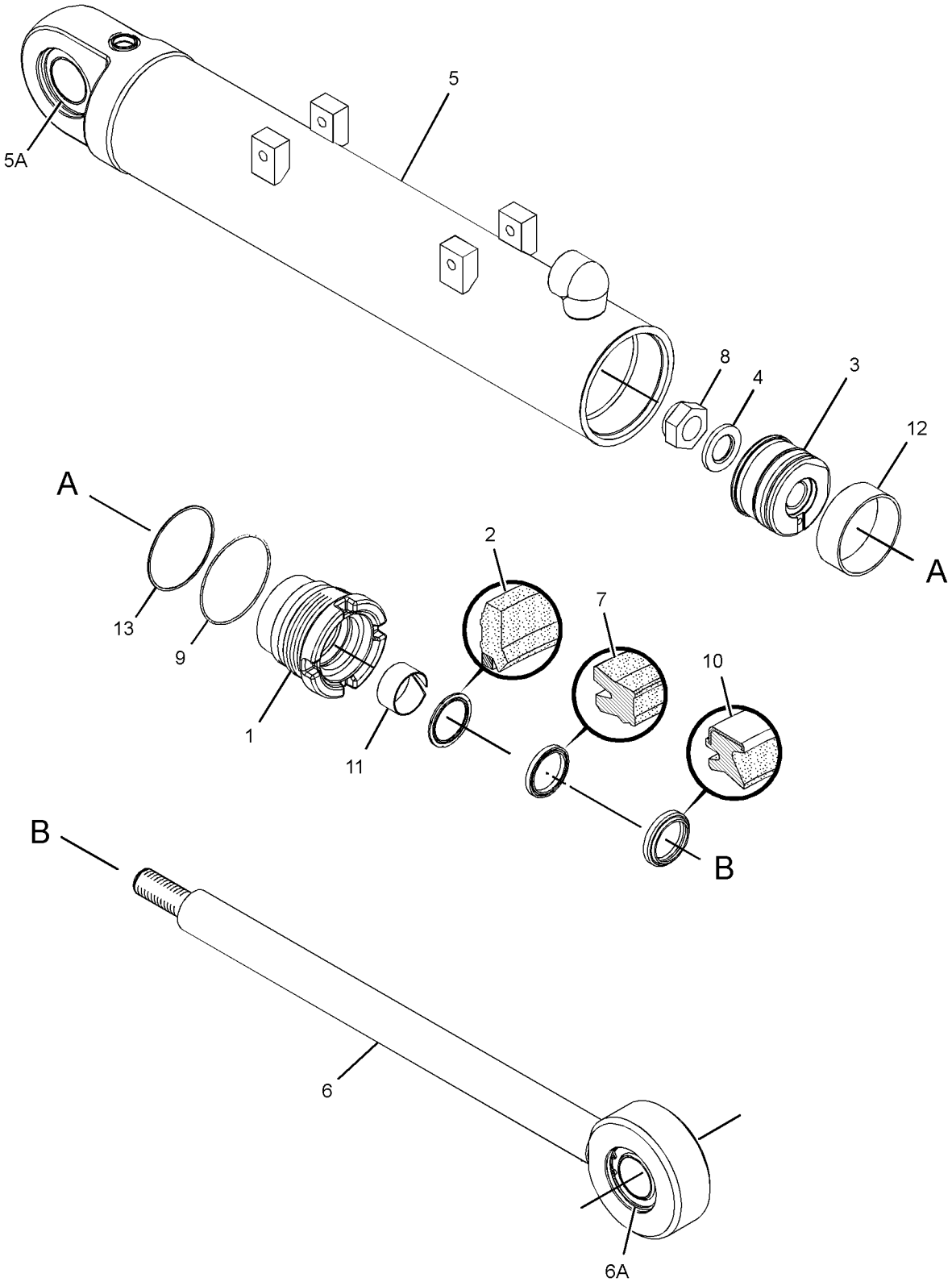

GRAPHIC #1 **<END>** g02597543

110-3269 CYLINDER GP-BULLDOZER LIFT

S/N: LPC1-UP; LJR1-UP
114.3-MM (4.5-IN) BORE X 430-MM (17-IN) STROKE
PART OF 321-5600 BULLDOZER AR-PWR ANGLE & TILT, 338-3521 C-FRAME GP-POWER ANGLING ALSO AN ATTACHMENT

SMCS-5102 **i02781321**

NOTE	REF NO	GRAPHIC REF	PART NUMBER	QTY	PART NAME 1 2 3 4 5 6 (PRODUCT LEVEL)	SEE PAGE
R	1	1	**110-3270**	1	CYLINDER AS	
	1A	1	**6E-5449**	1	BEARING	
CM	2	1	**173-9683**	1	BOLT (M30X3.5X90-MM)	
	3	1	**9X-8399**	1	WASHER (33X56X6-MM THK)	
	4	1	**9X-7269**	1	SEAL AS	
	5	1	**4J-3745**	1	RING-WEAR	
	6	1	**6E-3569**	1	PISTON	
C	7	1	**175-7902**	1	SEAL-O-RING	
	8	1	**1K-7095**	1	RING-BACKUP	
	9	1	**6E-3570**	1	HEAD	
R	10	1	**110-3271**	1	ROD AS	
	10A	1	**6E-5449**	1	BEARING	
C	11	1	**231-3538**	1	SEAL-WIPER	
C	12	1	**167-2307**	1	SEAL-U-CUP	
C	13	1	**167-2200**	1	SEAL AS	
	14	1	**8T-4958**	1	RING-WEAR	

C - CHANGE FROM PREVIOUS TYPE
M - METRIC PART
R - REMFG PART MAY BE AVAILABLE

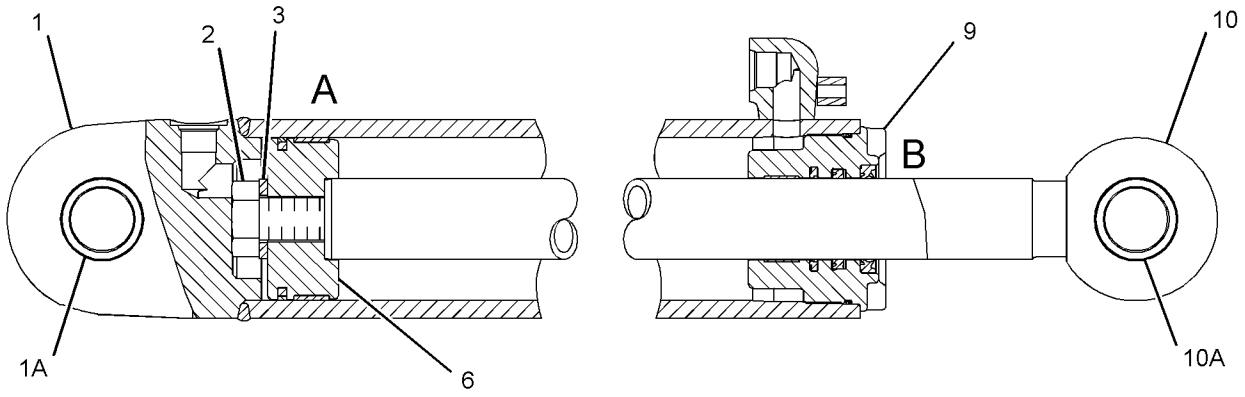

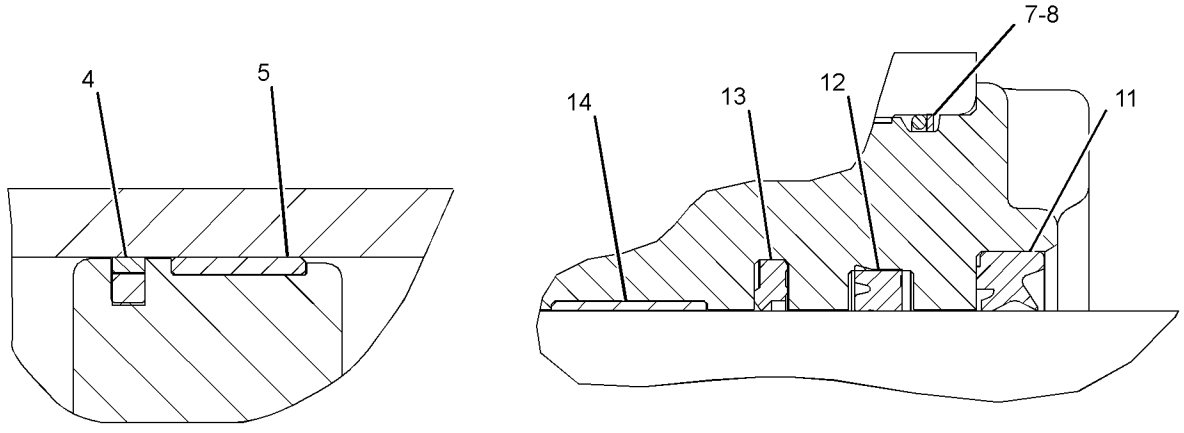

VIEW OF AREA A

VIEW OF AREA B

GRAPHIC #1 **<END>** g01435760

275-8416 CYLINDER GP-BULLDOZER LIFT

S/N: D1Y1-UP
95.25-MM (3.75-IN) BORE X 720-MM (28.4-IN) STROKE
PART OF 273-0030 BULLDOZER AR-SEMI-UNIVERSAL
AN ATTACHMENT

SMCS-5102 **i02796275**

NOTE	REF NO	GRAPHIC REF	PART NUMBER	QTY	PART NAME 1 2 3 4 5 6 (PRODUCT LEVEL)	SEE PAGE
	1	1	**3B-8489**	1	FITTING-GREASE	
	2	1	**4J-0121**	1	CAP AS-BEARING	
		1	**8E-9212**	14	SHIM (0.8-MM THK)	
	3	1	**6E-1410**	1	HEAD	
	4	1	**8E-5703**	16	SHIM (0.8-MM THK)	
	5	1	**8J-6020**	1	CROWN	
	6	1	**115-8219**	1	ROD AS	
	7	1	**115-8225**	1	PISTON	
	8	1	**275-8417**	1	CYLINDER AS (LIFT)	
		1	**1K-6985**	2	RING-RETAINING	
		1	**7J-9288**	2	BOSS	
		1	**9J-7964**	1	BEARING-SPHERICAL	
		1	**117-8721**	1	LUG (M10X1.5-THD)	
	9	1	**167-2200**	1	SEAL AS	
	10	1	**167-2307**	1	SEAL-U-CUP	
M	11	1	**173-9683**	1	BOLT (M30X3.5X90-MM)	
	12	1	**1S-0669**	1	RING (BACKUP)	
	13	1	**231-3538**	1	SEAL-WIPER	
	14	1	**2H-4145**	1	SEAL-O-RING	
	15	1	**5J-8011**	1	SEAL AS	
M	16	1	**6V-7742**	4	NUT-FULL (M20X2.5-THD)	
	17	1	**8J-6245**	1	RING-WEAR	
M	18	1	**8T-0070**	4	BOLT (M20X2.5X120-MM)	
	19	1	**8T-4958**	1	RING-WEAR	
	20	1	**9X-8399**	1	WASHER (33X56X6-MM THK)	

M - METRIC PART

275-8416 **CYLINDER GP-BULLDOZER LIFT (*contd.*)** **i02796275**

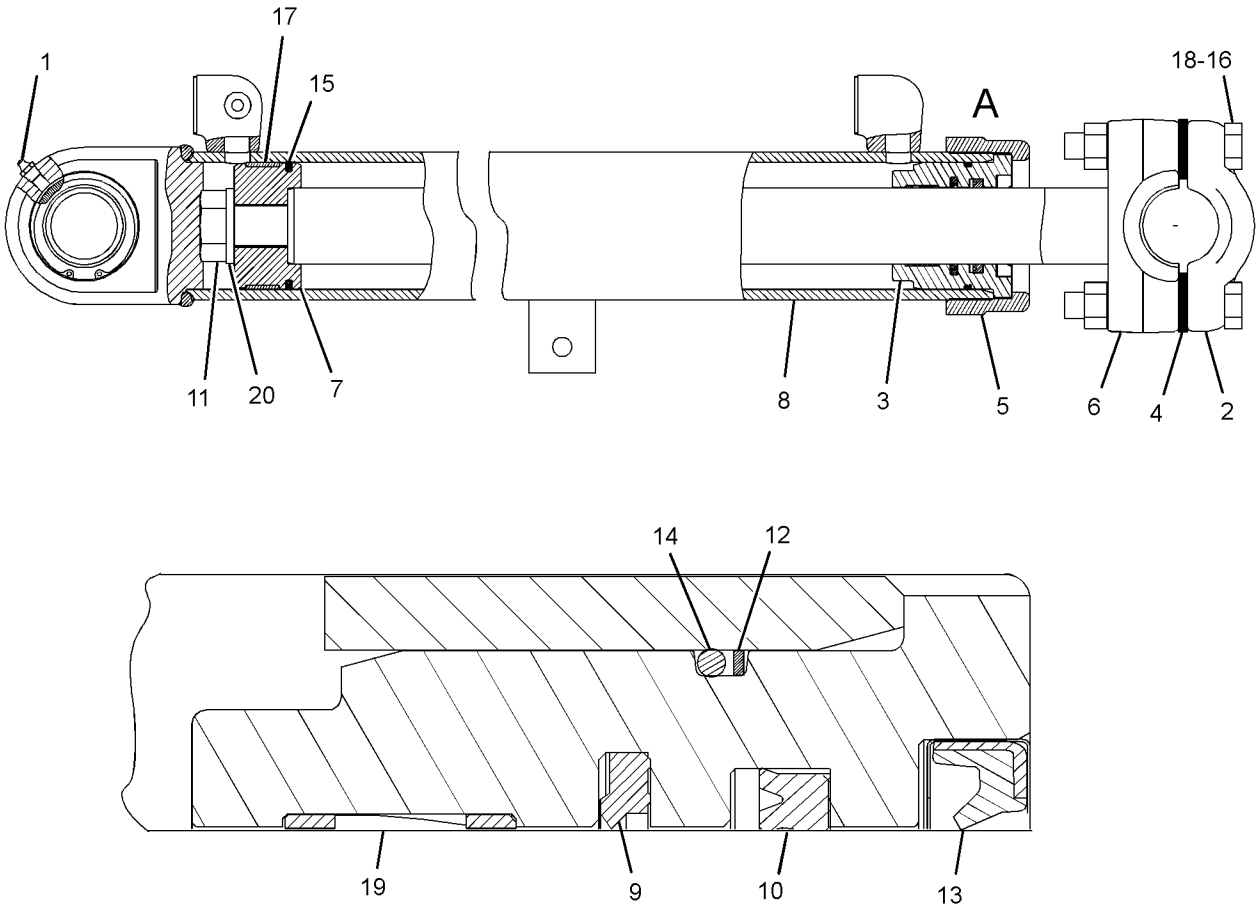

VIEW OF AREA A

GRAPHIC #1 **<END>** g01290486

325-5723 CYLINDER GP-RIPPER—LIFT

S/N: RPP1-UP
127-MM (5-IN) BORE X 362-MM (14.25-IN) STROKE
PART OF 321-5607 RIPPER AR
AN ATTACHMENT

SMCS-5352, 5356 **i05118250**

NOTE	REF NO	GRAPHIC REF	PART NUMBER	QTY	PART NAME 1 2 3 4 5 6 (PRODUCT LEVEL)	SEE PAGE
	1	1	**2K-4507**	1	BUSHING	
	3	1	**4J-3420**	1	RING-WEAR	
	4	1	**4K-3128**	2	BUSHING	
J	5	1	**328-2293**	1	CYLINDER AS-HYDRAULIC	
	6	1	**328-2294**	1	ROD AS	
	7	1	**328-2295**	1	HEAD	
	8	1	**328-2296**	1	PISTON	
	9	1	**334-6074**	1	SPACER	
	10	1	**167-2201**	1	SEAL AS-BUFFER	
	11	1	**167-2312**	1	SEAL-U-CUP	
	12	1	**1P-4576**	4	FLANGE-HALF	
J	13	1	**225-3281**	1	SEAL-WIPER	
	14	1	**2F-5325**	2	SETSCREW (3/8-16-THD)	
J	15	1	**2K-4096**	1	RING-BACKUP	
	16	1	**2L-0041**	13	BOLT (1/2-13X2.25-IN)	
J	17	1	**310-2189**	1	SEAL-O-RING	
	18	1	**4J-5267**	2	SEAL-O-RING	
	19	1	**5H-4018**	2	COVER	
	20	1	**8T-4121**	8	WASHER-HARD (11X21X2.5-MM THK)	
M	21	1	**8T-4196**	8	BOLT (M10X1.5X35-MM)	
J	22	1	**8T-5668**	1	RING-WEAR	
J	23	1	**9X-7264**	1	SEAL AS	
					AVAILABLE REPAIR KIT(S):	
			393-3604	1	KIT-HYD CYLINDER SEAL	
					(INCLUDES RINGS & SEALS)	

J - KIT MARKED J INCLUDE PARTS MARKED J
M - METRIC PART

325-5723 **CYLINDER GP-RIPPER (*contd.*)** **i05118250**

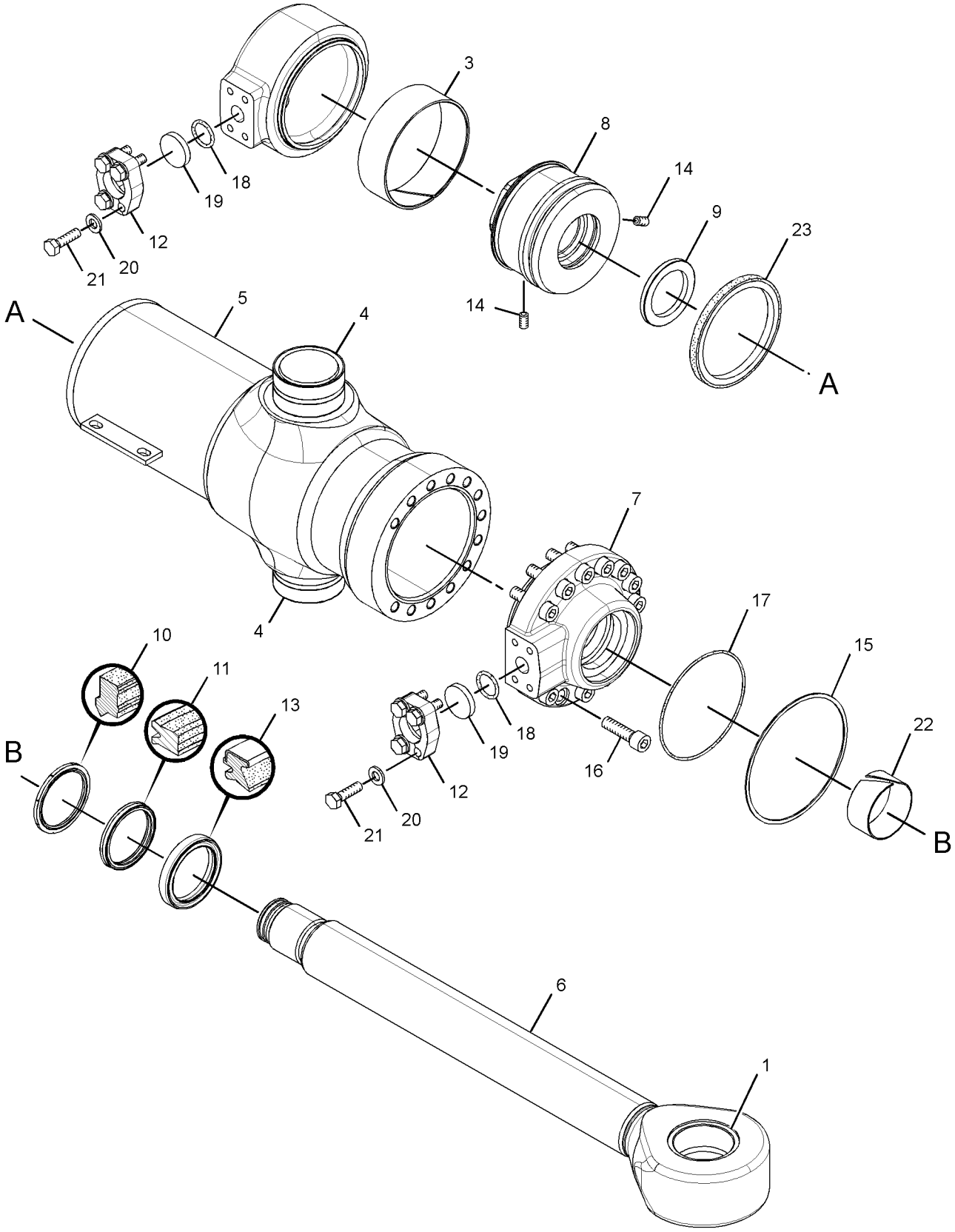

GRAPHIC #1 **<END>** g01852097

160-0054 CYLINDER GP-TILT–BULLDOZER

S/N: LPC1-UP
139.7-MM (5.5-IN) BORE X 114-MM (4.5-IN) STROKE
PART OF 321-5600 BULLDOZER AR-PWR ANGLE & TILT
AN ATTACHMENT

SMCS-5104 **i03385136**

NOTE	REF NO	GRAPHIC REF	PART NUMBER	QTY	PART NAME 1 2 3 4 5 6 (PRODUCT LEVEL)	SEE PAGE
	1	1	**160-0055**	1	CYLINDER AS	
	1A	1	**8T-7567**	1	RING	
	1B	1	**160-0305**	1	BEARING	
	1C	1	**9T-7045**	2	ELBOW	
	2	1	**3J-9545**	1	LOCKNUT (2-12-THD)	
	3	1	**1U-4049**	1	WASHER (51X73X12.7-MM THK)	
	4	1	**160-0060**	1	PISTON	
	5	1	**6E-0465**	1	SEAL AS	
	6	1	**4J-4606**	1	RING-WEAR	
	7	1	**2H-9247**	1	SEAL-O-RING	
	8	1	**2K-2961**	1	RING-BACKUP	
	9	1	**329-5398**	1	CROWN	
	10	1	**110-4771**	1	HEAD	
	11	1	**204-9542**	1	ROD AS	
	11A	1	**1S-3311**	1	RING-RETAINING	
	11B	1	**7J-1309**	1	BEARING	
	12	1	**225-3281**	1	SEAL-WIPER	
	13	1	**167-2312**	1	SEAL-U-CUP	
	14	1	**167-2201**	1	SEAL AS-BUFFER	
	15	1	**8T-5668**	1	RING-WEAR	

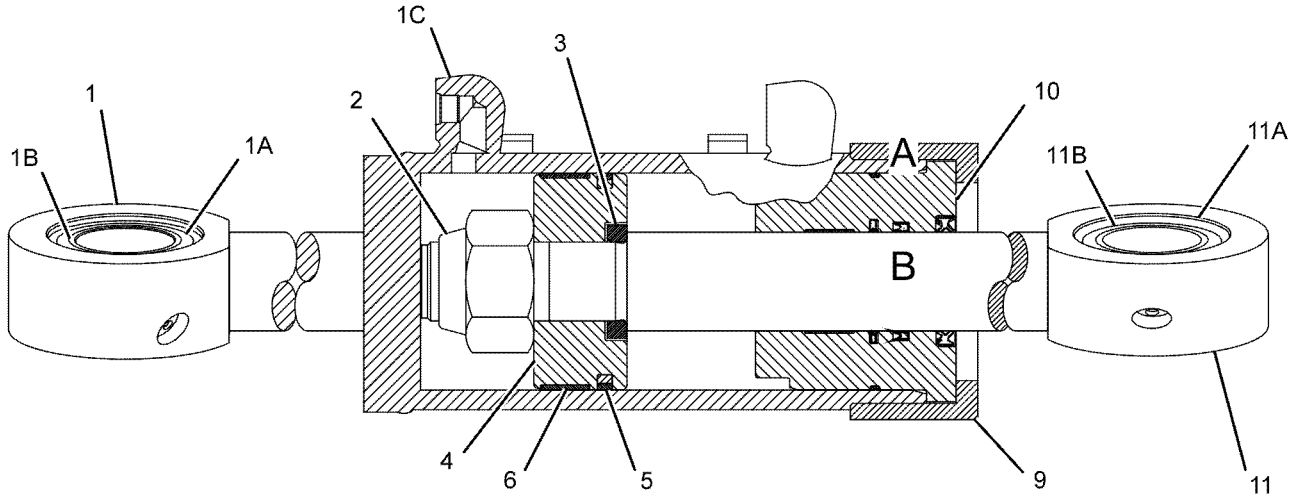

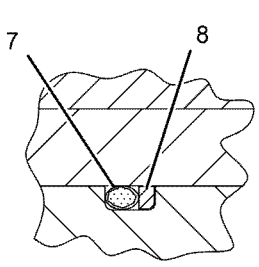

VIEW OF AREA A

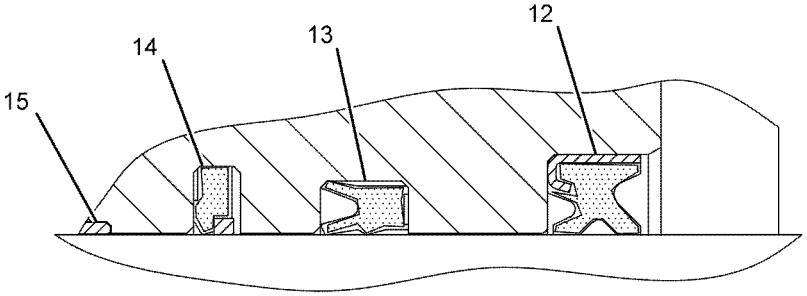

VIEW OF AREA B

GRAPHIC #1 **<END>** g01056478

233-9134 CYLINDER GP-TILT

S/N: D1Y1-UP
165-MM (6.5-IN) BORE X 128-MM (5-IN) STROKE
PART OF 320-5056 PUSH ARM GP
AN ATTACHMENT

SMCS-5104 **i02454961**

NOTE	REF NO	GRAPHIC REF	PART NUMBER	QTY	PART NAME 1 2 3 4 5 6 (PRODUCT LEVEL)	SEE PAGE
R	1	1	**1U-4069**	1	ROD AS	
	2	1	**4T-0259**	1	PISTON	
B	3	1	**8E-5703**	24	SHIM (0.8-MM THK)	
	4	1	**8J-2880**	1	CAP-BEARING	
	5	1	**225-3284**	1	SEAL-WIPER	
	6	1	**233-9135**	1	CYLINDER AS	
	6A	1	**2J-8489**	1	BEARING	
	7	1	**233-9138**	1	HEAD-CYLINDER	
	8	1	**167-2208**	1	SEAL AS-BUFFER	
	9	1	**167-2319**	1	SEAL-U-CUP	
	10	1	**1J-2921**	1	BOLT (1-1/2-12X3.75-IN)	
	11	1	**3J-9703**	1	RING-WEAR	
	12	1	**3S-6162**	1	WASHER-HARD (40.5X67X6-MM THK)	
	13	1	**5J-4991**	1	SEAL AS	
M	14	1	**6V-7742**	4	NUT-FULL (M20X2.5-THD)	
M	15	1	**6V-8133**	4	BOLT (M24X3X80-MM)	
	16	1	**6V-8237**	4	WASHER (26X44X4-MM THK)	
M	17	1	**6V-9167**	4	BOLT (M20X2.5X140-MM)	
	18	1	**7J-8955**	1	RING-BACKUP	
	19	1	**7J-8956**	1	SEAL-O-RING	
	20	1	**8T-8379**	1	SEAL-HEAD	
	21	1	**9T-0094**	1	RING-WEAR	

B - USE AS REQUIRED
M - METRIC PART
R - REMFG PART MAY BE AVAILABLE

233-9134 **CYLINDER GP-TILT (*contd.*)** **i02454961**

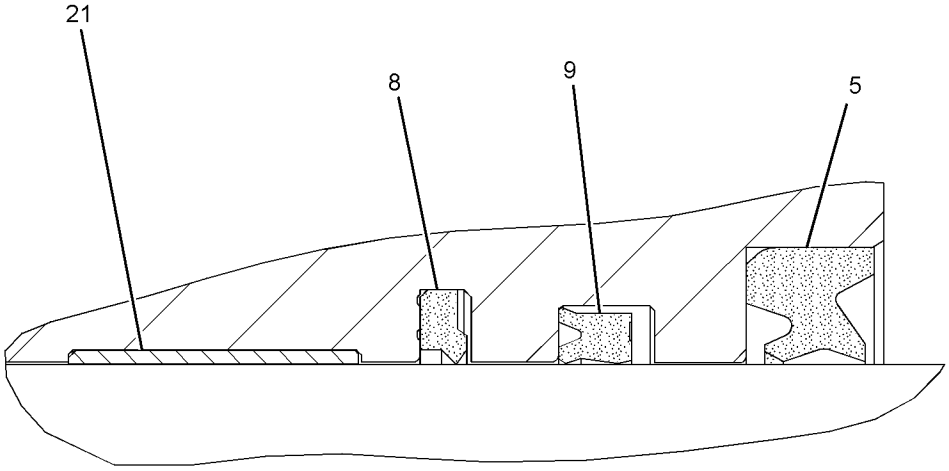

VIEW OF AREA A

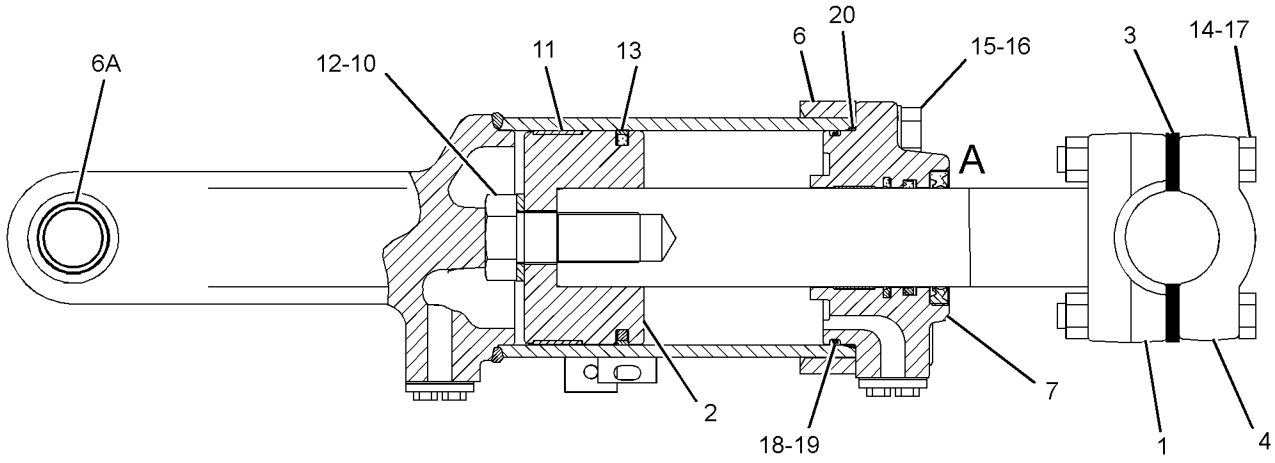

GRAPHIC #1 **<END>** g01209219

328-4267 CYLINDER GP-TILT–BULLDOZER

S/N: LJR1-UP
139.7-MM (5.5-IN) BORE X 114-MM (4.5-IN) STROKE
PART OF 338-3521 C-FRAME GP-POWER ANGLING

SMCS-5104 **i04775903**

NOTE	REF NO	GRAPHIC REF	PART NUMBER	QTY	PART NAME 1 2 3 4 5 6 (PRODUCT LEVEL)	SEE PAGE
	1	1	**3B-8489**	3	FITTING-GREASE	
	2	1	**3J-9545**	1	LOCKNUT (2-12-THD)	
	3	1	**1U-4049**	1	WASHER (51X73X12.7-MM THK)	
	4	1	**160-0060**	1	PISTON	
	5	1	**6E-0465**	1	SEAL AS	
	6	1	**4J-4606**	1	RING-WEAR	
	7	1	**2H-9247**	1	SEAL-O-RING	
	8	1	**2K-2961**	1	RING-BACKUP	
	9	1	**204-9542**	1	ROD AS	
	9A	1	**1S-3311**	1	RING-RETAINING	
	9B	1	**7J-1309**	1	BEARING	
	10	1	**110-4771**	1	HEAD	
	11	1	**328-4266**	1	CYLINDER AS-HYDRAULIC	
	11A	1	**9T-7045**	2	ELBOW	
	11B	1	**8T-7567**	1	RING	
	11C	1	**160-0305**	1	BEARING	
	12	1	**225-3281**	1	SEAL-WIPER	
	13	1	**167-2312**	1	SEAL-U-CUP	
	14	1	**167-2201**	1	SEAL AS-BUFFER	
	15	1	**8T-5668**	1	RING-WEAR	
	16	1	**329-5398**	1	CROWN	

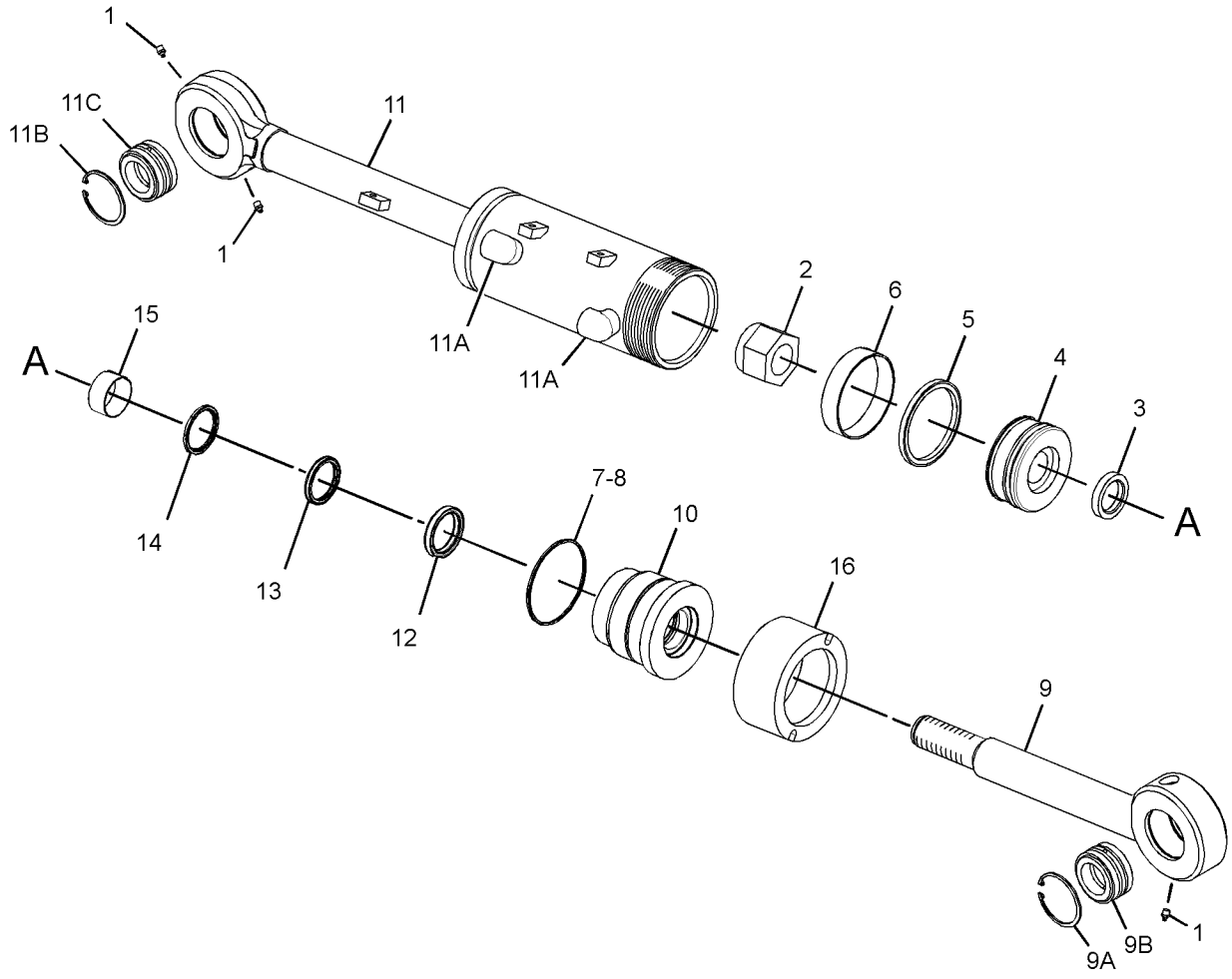

GRAPHIC #1 **<END>** g02800096

169-4019 FILTER GP-OIL—CASE DRAIN—IMPLEMENT

S/N: LJR1-UP

PART OF 311-1991 LINES GP-PUMP

SMCS-5068 **i02819858**

NOTE	REF NO	GRAPHIC REF	PART NUMBER	QTY	PART NAME 1 2 3 4 5 6 (PRODUCT LEVEL)	SEE PAGE
	1	1	**9T-8578**	1	FILTER-OIL (ADVANCED EFFICIENCY) (HYDRAULIC)	
					—OR—	
		1	**144-0832**	1	FILTER-OIL (ULTRA HIGH EFFICIENCY) (HYDRAULIC)	

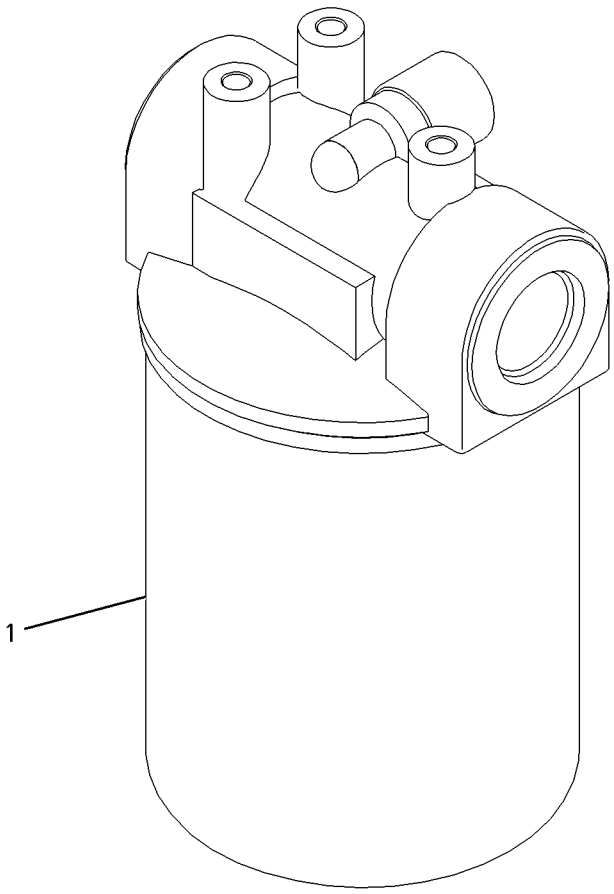

GRAPHIC #1 **<END>** g00932693

310-9950 HYDRAULIC AR-3 VALVE

S/N: LJR1-UP

PART OF 310-9903 GENERAL AR

SMCS-5051 **i03627285**

NOTE	PART NUMBER	QTY	PART NAME 1 2 3 4 5 6 (PRODUCT LEVEL)	SEE PAGE
Y	*310-4288*	1	LINES GP-ANGLE & TILT	506
Y	*310-6370*	1	LINES GP-DIAGNOSTIC (REMOTE PRESSURE TAPS)	747
Y	*310-4600*	1	LINES GP-LIFT CYLINDER	518
Y	*317-7820*	1	LINES GP-PILOT	524
Y	*311-1991*	1	LINES GP-PUMP	528
Y	*311-1992*	1	LINES GP-STEERING	453
Y	**309-1916**	1	MOTOR GP-PISTON (STEERING)	461
Y	*311-1993*	1	PLATE GP-MOUNTING	546
Y	**320-8637**	1	PUMP GP-PISTON (STEERING)	463
Y	*230-9131*	1	TANK & FILTER GP-HYDRAULIC	553
Y	**309-1573**	1	VALVE GP-BANK 3 (BULLDOZER)	559

Y - SEPARATE ILLUSTRATION

<END>

317-4192 HYDRAULIC AR-4 VALVE

S/N: LJR1-UP

FOR USE WITH COVER GP-CONSOLE (RIPPER), RIPPER, COVER GP-CONSOLE (RIPPER, WINCH)

CANNOT BE USED WITH COVER GP-CONSOLE (WINCH)

PART OF 338-2570 OPTION AR-HYDRAULIC

AN ATTACHMENT

SMCS-5051 **i03626443**

NOTE	PART NUMBER	QTY	PART NAME 1 2 3 4 5 6 (PRODUCT LEVEL)	SEE PAGE
Y	*298-4372*	1	CONTROL GP-JOYSTICK (RIPPER)	614
Y	*311-2848*	1	LINES GP-PILOT	520
Y	*311-0225*	1	LINES GP-RIPPER	536
Y	**309-1574**	1	VALVE GP-BANK 4 (BULLDOZER, RIPPER)	560

Y - SEPARATE ILLUSTRATION

<END>

321-8161 HYDRAULIC AR-4 VALVE

S/N: LJR1-UP

FOR USE WITH SEMI-UNIVERSAL BULLDOZER, COVER GP-CONSOLE (RIPPER), COVER GP-CONSOLE (RIPPER, WINCH)

CANNOT BE USED WITH COVER GP-CONSOLE (WINCH)

PART OF 342-2615 OPTION AR-BULLDOZER

AN ATTACHMENT

SMCS-5051 **i03659065**

NOTE	PART NUMBER	QTY	PART NAME 1 2 3 4 5 6 (PRODUCT LEVEL)	SEE PAGE
Y	*319-5955*	1	CONTROL GP-JOYSTICK (BULLDOZER)	619
Y	*298-4372*	1	CONTROL GP-JOYSTICK (RIPPER)	614
Y	*311-2848*	1	LINES GP-PILOT	520
Y	*311-0225*	1	LINES GP-RIPPER	536
Y	*346-1738*	1	LINES GP-TILT CYLINDER	541
Y	**309-1574**	1	VALVE GP-BANK 4 (BULLDOZER, RIPPER)	560
	148-8408	2	PLUG AS	
			(EACH INCLUDES)	
	3D-2824	1	SEAL-O-RING	
	9S-4183	1	PLUG	

Y - SEPARATE ILLUSTRATION

<END>

310-4288 LINES GP-ANGLE & TILT

S/N: LJR1-UP

PART OF 310-9950 HYDRAULIC AR-3 VALVE

SMCS-5057, 5101, 5104 **i05268218**

NOTE	REF NO	GRAPHIC REF	PART NUMBER	QTY	PART NAME 1 2 3 4 5 6 (PRODUCT LEVEL)	SEE PAGE
	1	1	**273-8326**	1	TUBE AS	
	2	1	**273-8327**	1	TUBE AS	
	3	1	**273-8328**	1	TUBE AS	
	4	1	**273-8329**	1	TUBE AS	
	5	1	**273-8330**	1	TUBE AS	
	6	1	**273-8331**	1	TUBE AS	
	7	1	**310-4284**	1	TUBE AS	
	8	1	**310-4285**	1	TUBE AS	
	9	1	**310-4286**	1	TUBE AS	
	10	1	**310-4287**	1	TUBE AS	
	11	1	*357-4378*	2	CONNECTOR AS	
					(EACH INCLUDES)	
		1	**3D-2824**	1	SEAL-O-RING	
		1	**6V-8637**	1	CONNECTOR	
		1	**6V-9746**	1	SEAL-O-RING	
	12	1	*360-3556*	2	CONNECTOR AS	
					(EACH INCLUDES)	
		1	**3D-2824**	1	SEAL-O-RING	
		1	**6V-9162**	1	CONNECTOR	
		1	**6V-9746**	1	SEAL-O-RING	
	13	1	**5K-2697**	4	CLIP	
	14	1	**6V-8398**	6	SEAL-O-RING	
	15	1	**6V-9169**	6	NUT (13/16-16-THD)	
	16	1	**6V-9746**	2	SEAL-O-RING	
	17	1	**7J-9108**	4	SEAL-O-RING	
	18	1	**7W-0534**	2	WASHER (10.3X22.2X4-MM THK)	
	19	1	**8T-4121**	10	WASHER-HARD (11X21X2.5-MM THK)	
M	20	1	**8T-4133**	3	NUT (M10X1.5-THD)	
M	21	1	**8T-4136**	5	BOLT (M10X1.5X25-MM)	
M	22	1	**8T-4196**	2	BOLT (M10X1.5X35-MM)	
	23	1	**9M-8406**	5	CLIP	
	24	1	**9R-1004**	2	CLIP (TAB)	
	25	1	**9R-1005**	2	CLIP (SLOT)	
	26	1	**6K-8178**	1	CLIP	

M - METRIC PART

310-4288 **LINES GP-ANGLE & TILT (*contd.*)** **i05268218**

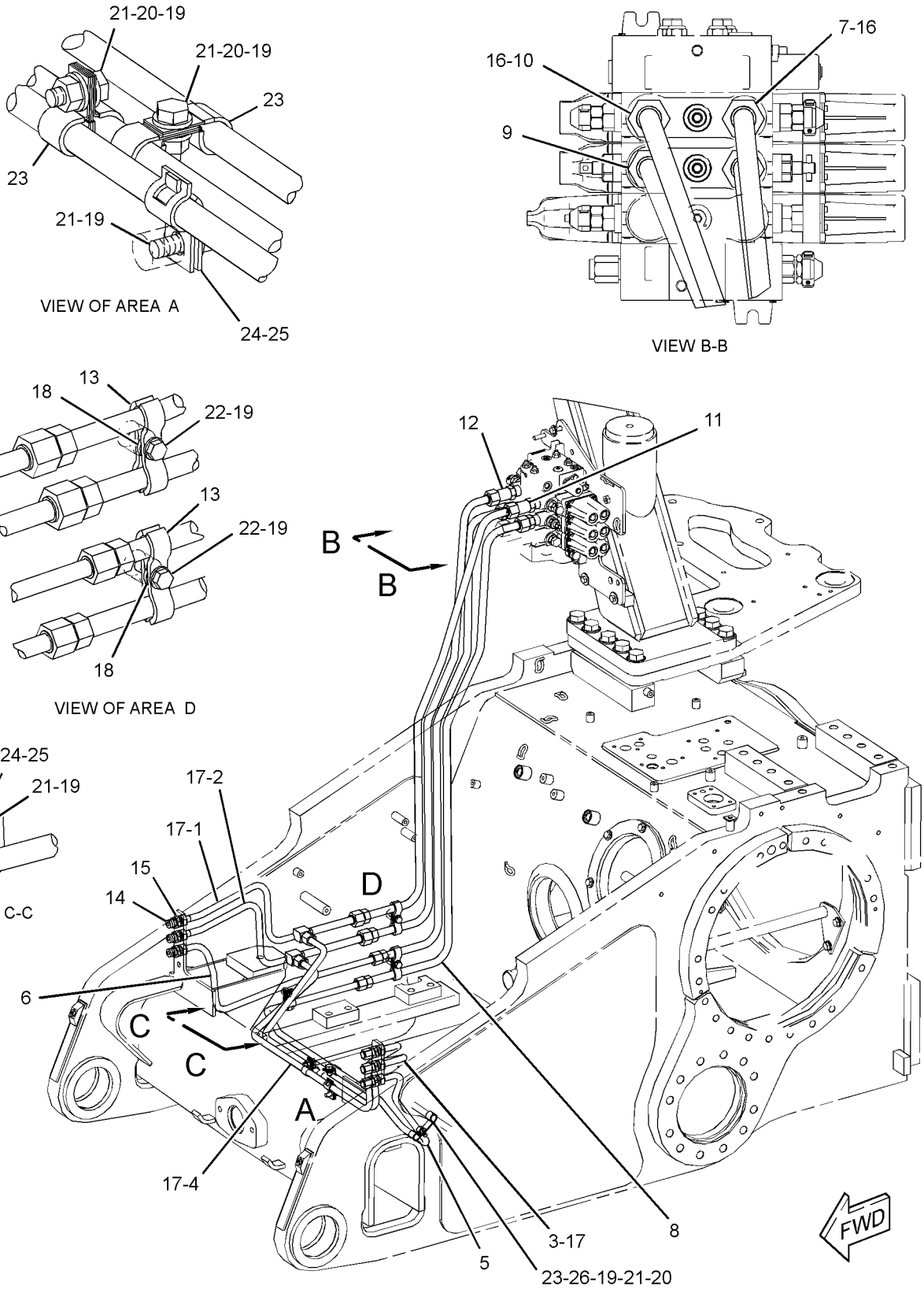

GRAPHIC #1 **<END>** g03278756

322-9584 LINES GP-ANGLE & TILT

S/N: LPC1-UP; LJR1-UP

PART OF 321-5600 BULLDOZER AR-PWR ANGLE & TILT, 338-3521 C-FRAME GP-POWER ANGLING ALSO AN ATTACHMENT

SMCS-5057, 5101, 5104 **i05093970**

NOTE	REF NO	GRAPHIC REF	PART NUMBER	QTY	PART NAME 1 2 3 4 5 6 (PRODUCT LEVEL)	SEE PAGE
I	1	2	**112-7455**	2	HOSE AS	
	2	1	**197-2477**	2	PIN	
I	3	2	**262-0649**	2	HOSE AS	
	4	2	**292-9380**	1	GUARD AS	
	5	2	**294-5374**	2	PLATE	
	6	1,2	**294-7277**	2	GUARD AS	
	7	1,2	**294-7278**	2	PLATE	
	8	2	**295-2151**	1	CHANNEL AS (RH)	
	9	1	**295-2152**	1	CHANNEL AS (LH)	
	10	1,2	**306-8866**	2	BAFFLE AS	
					(EACH INCLUDES)	
		1,2	**7G-5186**	4	SPACER (13X19X4.5-MM THK)	
	11	1,2	**324-0566**	2	PLATE	
	12	2	**096-7033**	2	PIN-COTTER	
	13	2	*357-4371*	4	CONNECTOR AS	
					(EACH INCLUDES)	
		2	**3K-0360**	1	SEAL-O-RING	
		2	**6V-8398**	1	SEAL-O-RING	
		2	**6V-8639**	1	CONNECTOR	
	14	2	*357-4437*	2	ELBOW AS	
					(EACH INCLUDES)	
		2	**3K-0360**	1	SEAL-O-RING	
		2	**6V-8398**	1	SEAL-O-RING	
		2	**6V-8625**	1	ELBOW	
	15	2	**3B-6552**	2	ELBOW-PIPE	
	16	1	**3B-8489**	10	FITTING-GREASE	
	17	1,2	**5P-7464**	2	CLIP (SLOT)	
	18	1,2	**5P-7465**	2	CLIP (TAB)	
	19	1,2	**5P-7466**	6	CLIP (SLOT)	
	20	1,2	**5P-7467**	6	CLIP (TAB)	
	21	1,2	**5P-8112**	6	GROMMET	
	22	1,2	**6V-1249**	2	GROMMET	
M	23	1,2	**6V-7687**	6	LOCKNUT (M12X1.75-THD)	
	24	2	**6V-8398**	6	SEAL-O-RING	
	25	1,2	**7G-3832**	2	GROMMET	
	26	1,2	**7G-3833**	2	CLIP (TAB)	
	27	1,2	**7G-3834**	2	CLIP (SLOT)	
	28	1,2	**7X-7729**	4	WASHER (11X25X3-MM THK)	
	29	1	**7Y-1858**	2	WASHER (21X37X3-MM THK)	
	30	1,2	**8T-4121**	8	WASHER-HARD (11X21X2.5-MM THK)	
M	31	1,2	**8T-4133**	4	NUT (M10X1.5-THD)	
M	32	1,2	**8T-4136**	8	BOLT (M10X1.5X25-MM)	
M	33	1,2	**8T-4139**	10	BOLT (M12X1.75X30-MM)	
M	34	1,2	**8T-4183**	2	BOLT (M12X1.75X40-MM)	
M	35	1,2	**8T-4184**	6	BOLT (M12X1.75X45-MM)	
M	36	2	**8T-4192**	2	BOLT (M12X1.75X25-MM)	
M	37	1	**8T-4194**	1	BOLT (M12X1.75X50-MM)	
	38	1,2	**8T-4223**	23	WASHER-HARD (13.5X25.5X3-MM THK)	
M	39	1,2	**8T-4244**	2	NUT (M12X1.75-THD)	
I	40	2	**197-2479**	2	HOSE AS-GREASE	
I	41	2	**310-1502**	2	HOSE AS	

I - REFER TO HYDRAULIC INFORMATION SYSTEM
M - METRIC PART

322-9584 **LINES GP-ANGLE & TILT (*contd.*)** **i05093970**

REFER TO ALL ILLUSTRATIONS OF
THIS GROUP FOR AUXILIARY VIEWS

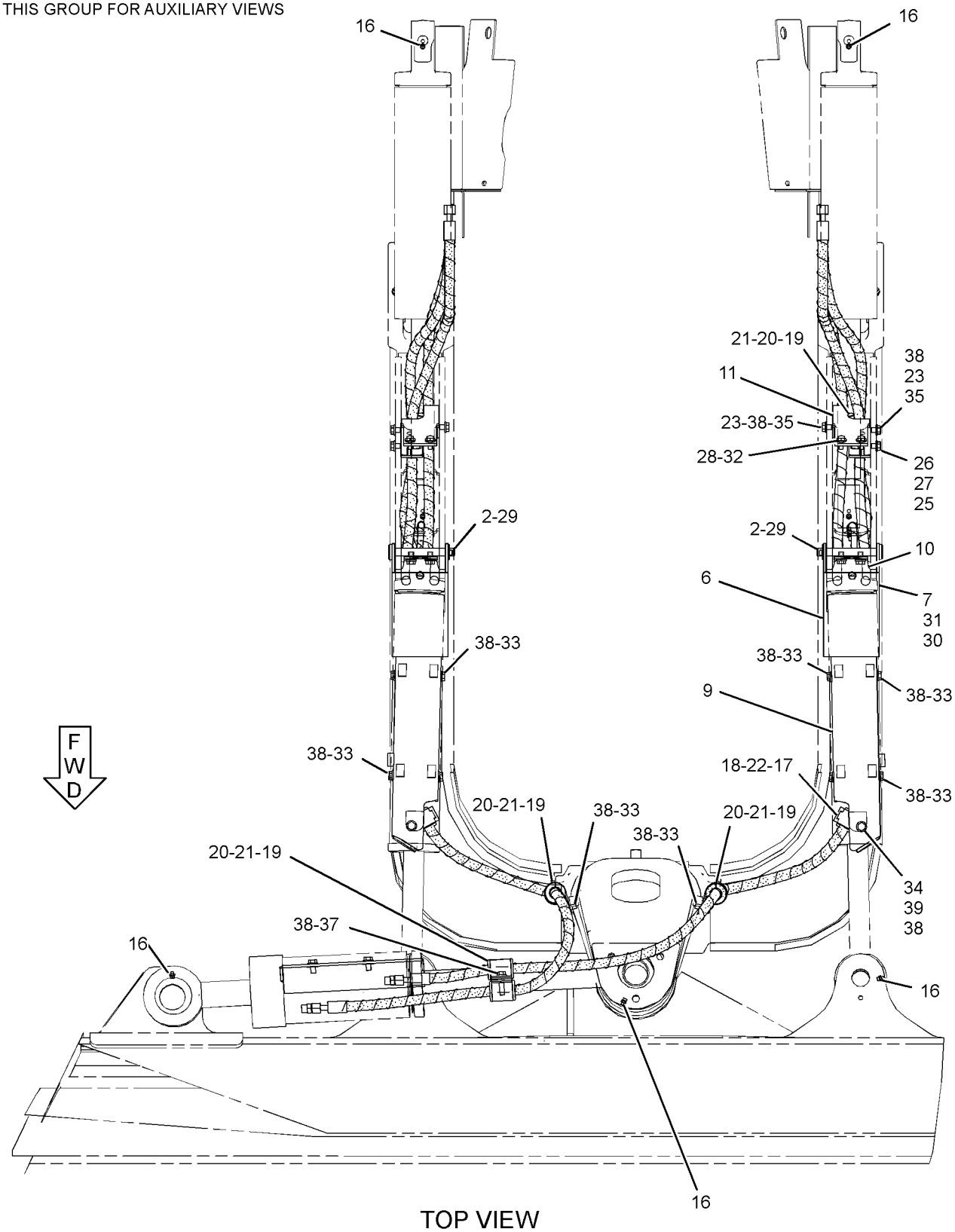

TOP VIEW

GRAPHIC #1

g01901814

322-9584 **LINES GP-ANGLE & TILT (*contd.*)** **i05093970**

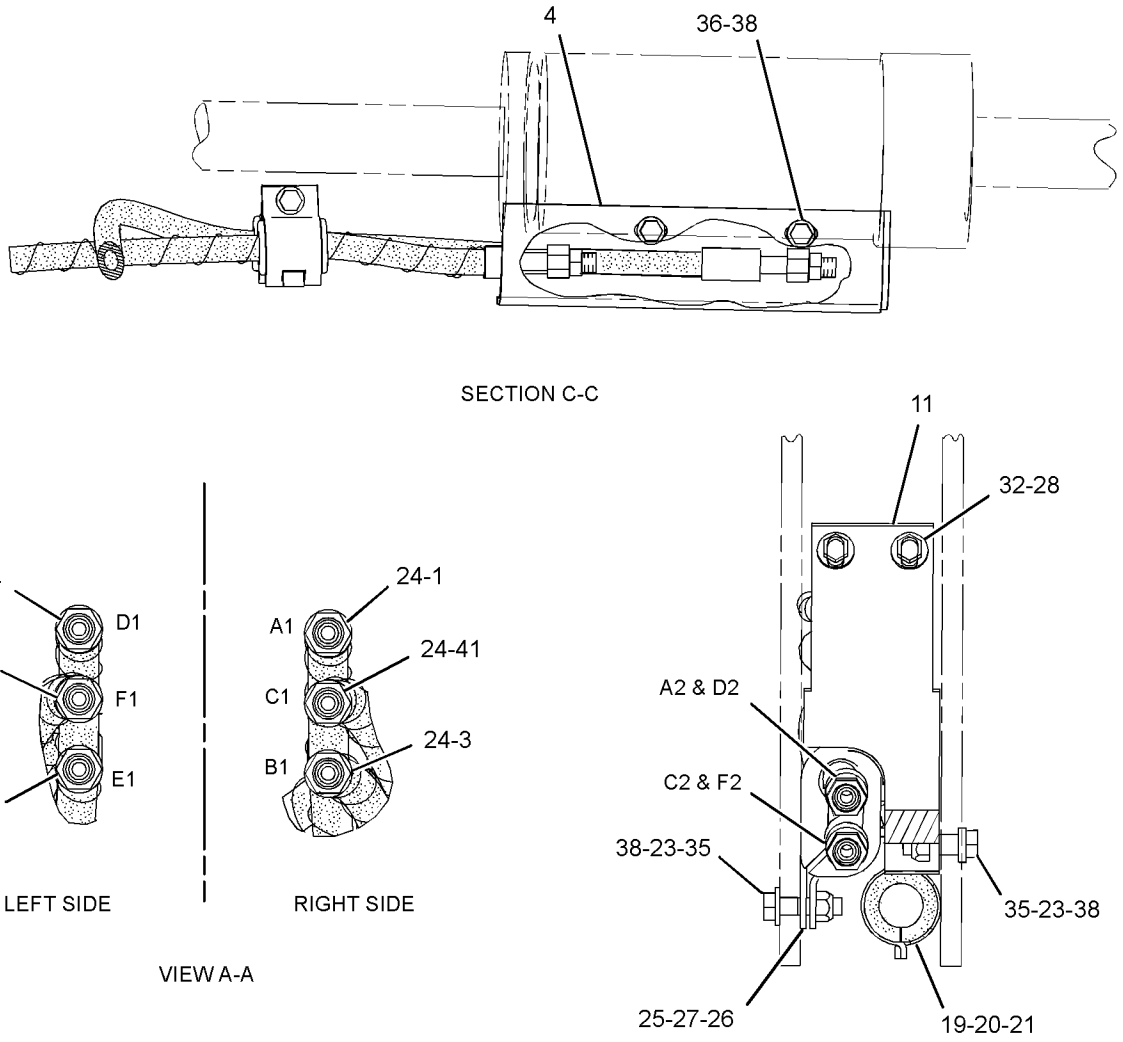

RIGHT SIDE VIEW

GRAPHIC #2 **<END>** g01902493

324-0558 LINES GP-ANGLE & TILT

S/N: LJR1-UP
PART OF 323-9294 GUARD GP-LINES
AN ATTACHMENT

SMCS-5057, 5101, 5104 **i05093971**

NOTE	REF NO	GRAPHIC REF	PART NUMBER	QTY	PART NAME 1 2 3 4 5 6 (PRODUCT LEVEL)	SEE PAGE
	1	1	**3B-8489**	10	FITTING-GREASE	
I	2	1	**112-7455**	2	HOSE AS	
	3	1	**197-2477**	4	PIN	
	4	1	**271-2038**	2	TUBE AS	
	5	1	**273-3776**	1	CHANNEL AS (RH)	
	6	1	**273-3777**	1	CHANNEL AS (LH)	
	7	1	**274-3484**	1	PLATE (LH)	
	8	1	**274-3485**	1	PLATE (RH)	
	9	1	**292-9380**	1	GUARD AS	
	10	1	**294-5374**	4	PLATE	
	11	1	**294-7277**	2	GUARD AS	
	12	1	**294-7278**	4	PLATE	
	13	1	**306-8866**	4	BAFFLE AS	
					(EACH INCLUDES)	
		1	**7G-5186**	4	SPACER (13X19X4.5-MM THK)	
I	14	1	**310-1502**	2	HOSE AS	
	15	1	**322-9605**	1	COVER AS (RH)	
	16	1	**322-9606**	1	COVER AS (RH)	
	17	1	**322-9607**	1	COVER AS (LH)	
	18	1	**322-9608**	1	COVER AS (LH)	
	19	1	**096-7033**	4	PIN-COTTER	
	20	1	*357-4371*	4	CONNECTOR AS	
					(EACH INCLUDES)	
		1	**3K-0360**	1	SEAL-O-RING	
		1	**6V-8398**	1	SEAL-O-RING	
		1	**6V-8639**	1	CONNECTOR	
	21	1	*357-4437*	2	ELBOW AS	
					(EACH INCLUDES)	
		1	**3K-0360**	1	SEAL-O-RING	
		1	**6V-8398**	1	SEAL-O-RING	
		1	**6V-8625**	1	ELBOW	
	22	1	**198-4778**	4	WASHER-HARD (13.5X30X12-MM THK)	
	23	1	**3B-6552**	2	ELBOW-PIPE	
	24	1	**5P-7466**	4	CLIP (SLOT)	
	25	1	**5P-7467**	4	CLIP (TAB)	
	26	1	**5P-8112**	4	GROMMET	
M	27	1	**6V-7687**	4	LOCKNUT (M12X1.75-THD)	
	28	1	**6V-8398**	10	SEAL-O-RING	
	29	1	**7G-3832**	2	GROMMET	
	30	1	**7G-3833**	2	CLIP (TAB)	
	31	1	**7G-3834**	2	CLIP (SLOT)	
	32	1	**7X-7729**	8	WASHER (11X25X3-MM THK)	
	33	1	**7Y-1858**	6	WASHER (21X37X3-MM THK)	
	34	1	**8T-1887**	8	CLIP (SLOT)	
	35	1	**8T-1888**	8	CLIP (TAB)	
	36	1	**8T-4121**	20	WASHER-HARD (11X21X2.5-MM THK)	
M	37	1	**8T-4133**	8	NUT (M10X1.5-THD)	
M	38	1	**8T-4136**	16	BOLT (M10X1.5X25-MM)	
M	39	1	**8T-4137**	4	BOLT (M10X1.5X20-MM)	
M	40	1	**8T-4139**	14	BOLT (M12X1.75X30-MM)	
M	41	1	**8T-4184**	4	BOLT (M12X1.75X45-MM)	
M	42	1	**8T-4192**	2	BOLT (M12X1.75X25-MM)	
M	43	1	**8T-4194**	1	BOLT (M12X1.75X50-MM)	
	44	1	**8T-4223**	17	WASHER-HARD (13.5X25.5X3-MM THK)	
I	45	1	**197-2479**	2	HOSE AS-GREASE	
I	46	1	**271-2039**	2	HOSE AS	

324-0558 **LINES GP-ANGLE & TILT (*contd.*)** **i05093971**

NOTE	REF NO	GRAPHIC REF	PART NUMBER	QTY	PART NAME 1 2 3 4 5 6 (PRODUCT LEVEL)	SEE PAGE
I	47	1	**271-2040**	2	HOSE AS	
H	48	1	**202-5293**		SEAL (4-DM EACH)	

H - SOLD BY THE DECIMETER
I - REFER TO HYDRAULIC INFORMATION SYSTEM
M - METRIC PART

324-0558 **LINES GP-ANGLE & TILT (*contd.*)** **i05093971**

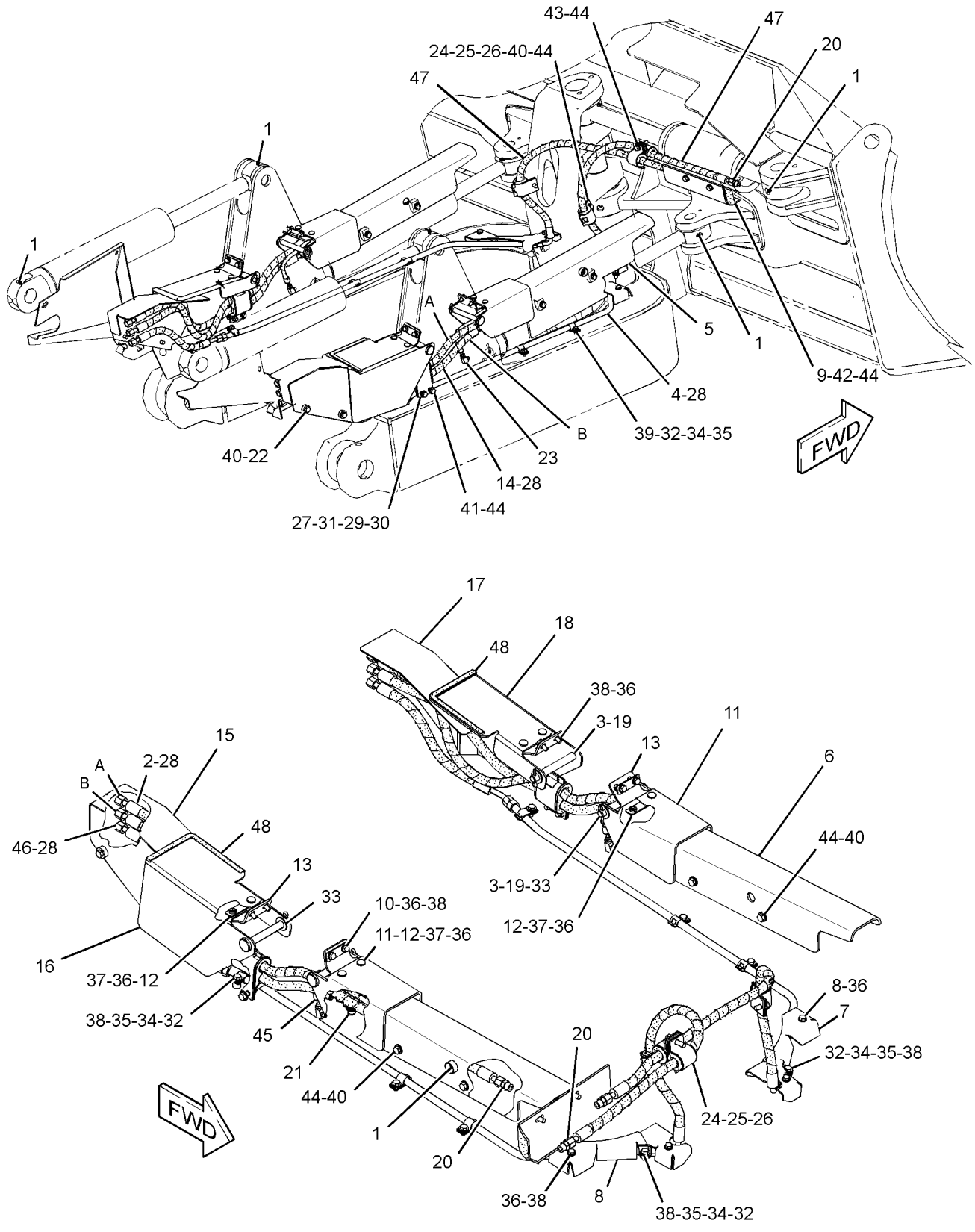

GRAPHIC #1 **<END>** g01907357

220-0897 LINES GP-LIFT CYLINDER

S/N: LPC1-UP; LJR1-UP

PART OF 321-5600 BULLDOZER AR-PWR ANGLE & TILT, 338-3521 C-FRAME GP-POWER ANGLING ALSO AN ATTACHMENT

SMCS-5057, 5102 **i04849615**

NOTE	REF NO	GRAPHIC REF	PART NUMBER	QTY	PART NAME 1 2 3 4 5 6 (PRODUCT LEVEL)	SEE PAGE
	1	1	**294-9969**	2	BRACKET AS	
C	2	1	**314-9391**	2	TUBE AS	
CI	3	1	**314-9392**	2	HOSE AS	
	4	1	*357-4375*	2	CONNECTOR AS	
					(EACH INCLUDES)	
		1	**6V-8713**	1	CONNECTOR	
		1	**3D-2824**	1	SEAL-O-RING	
		1	**7J-9108**	1	SEAL-O-RING	
	5	1	*357-4444*	2	ELBOW AS	
					(EACH INCLUDES)	
		1	**6V-9007**	1	ELBOW	
		1	**3D-2824**	1	SEAL-O-RING	
		1	**6V-9746**	1	SEAL-O-RING	
CI	6	1	**220-0906**	2	HOSE AS	
C	7	1	**6V-9746**	2	SEAL-O-RING	
	8	1	**8T-1887**	2	CLIP (SLOT)	
	9	1	**8T-1888**	2	CLIP (TAB)	
	10	1	**8T-4121**	4	WASHER-HARD (11X21X2.5-MM THK)	
M	11	1	**8T-4133**	2	NUT (M10X1.5-THD)	
M	12	1	**8T-4136**	2	BOLT (M10X1.5X25-MM)	

C - CHANGE FROM PREVIOUS TYPE
I - REFER TO HYDRAULIC INFORMATION SYSTEM
M - METRIC PART

220-0897 **LINES GP-LIFT CYLINDER (*contd.*)** **i04849615**

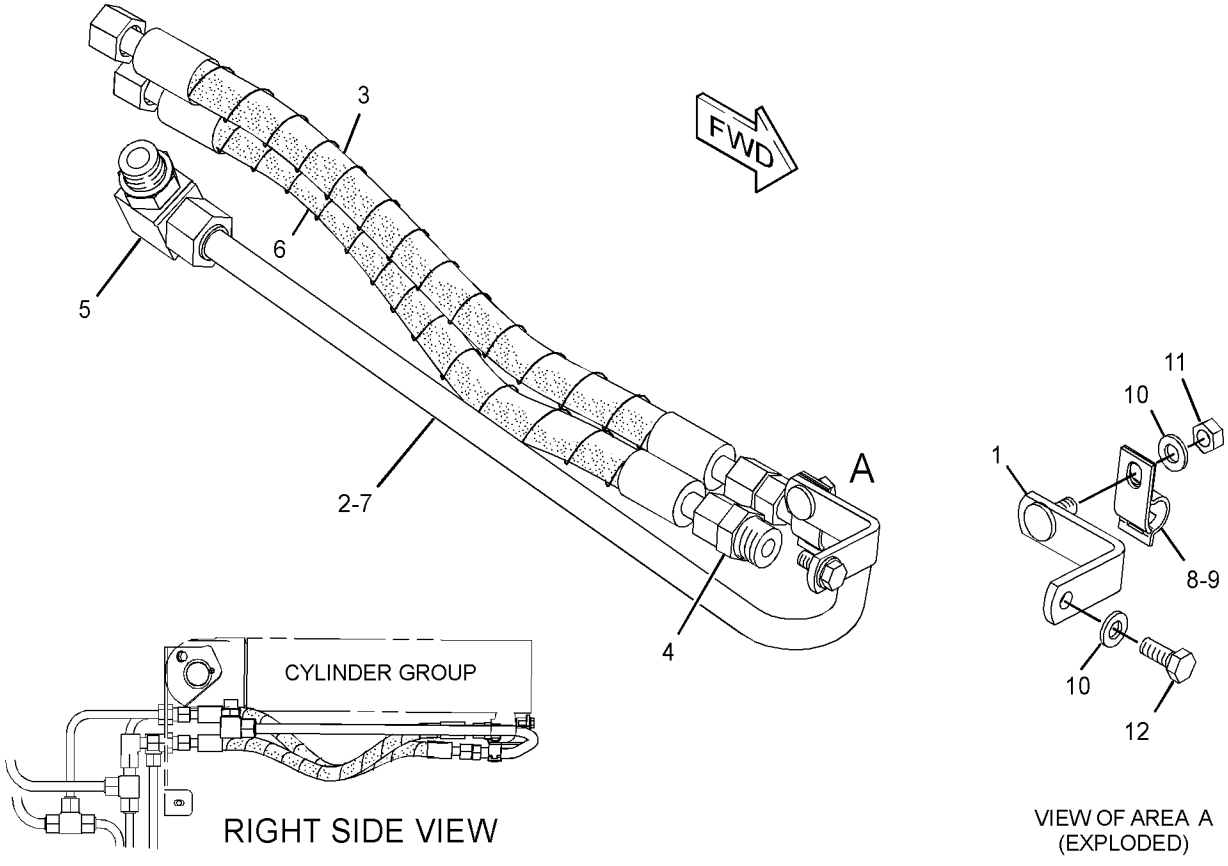

GRAPHIC #1 **<END>** g01675136

271-8871 LINES GP-LIFT CYLINDER

S/N: D1Y1-UP

PART OF 273-0030 BULLDOZER AR-SEMI-UNIVERSAL

AN ATTACHMENT

SMCS-5057, 5102 **i05094503**

NOTE	REF NO	GRAPHIC REF	PART NUMBER	QTY	PART NAME 1 2 3 4 5 6 (PRODUCT LEVEL)	SEE PAGE
	1	1	*357-4375*	4	CONNECTOR AS	
					(EACH INCLUDES)	
		1	**6V-8713**	1	CONNECTOR	
		1	**3D-2824**	1	SEAL-O-RING	
		1	**7J-9108**	1	SEAL-O-RING	
I	2	1	**272-1387**	2	HOSE AS	
I	3	1	**272-1388**	2	HOSE AS	
	4	1	**5P-7464**	4	CLIP (SLOT)	
	5	1	**5P-7465**	4	CLIP (TAB)	
	6	1	**5P-7468**	2	CLIP (SLOT)	
	7	1	**5P-7469**	2	CLIP (TAB)	
	8	1	**6V-7359**	4	GROMMET	
	9	1	**7G-3833**	2	CLIP (TAB)	
	10	1	**7G-3834**	2	CLIP (SLOT)	
	11	1	**8C-3174**	2	GROMMET	
	12	1	**8T-4121**	4	WASHER-HARD (11X21X2.5-MM THK)	
M	13	1	**8T-4136**	4	BOLT (M10X1.5X25-MM)	
M	14	1	**8T-4139**	4	BOLT (M12X1.75X30-MM)	
M	15	1	**8T-4244**	4	NUT (M12X1.75-THD)	

I - REFER TO HYDRAULIC INFORMATION SYSTEM
M - METRIC PART

271-8871 **LINES GP-LIFT CYLINDER (*contd.*)** **i05094503**

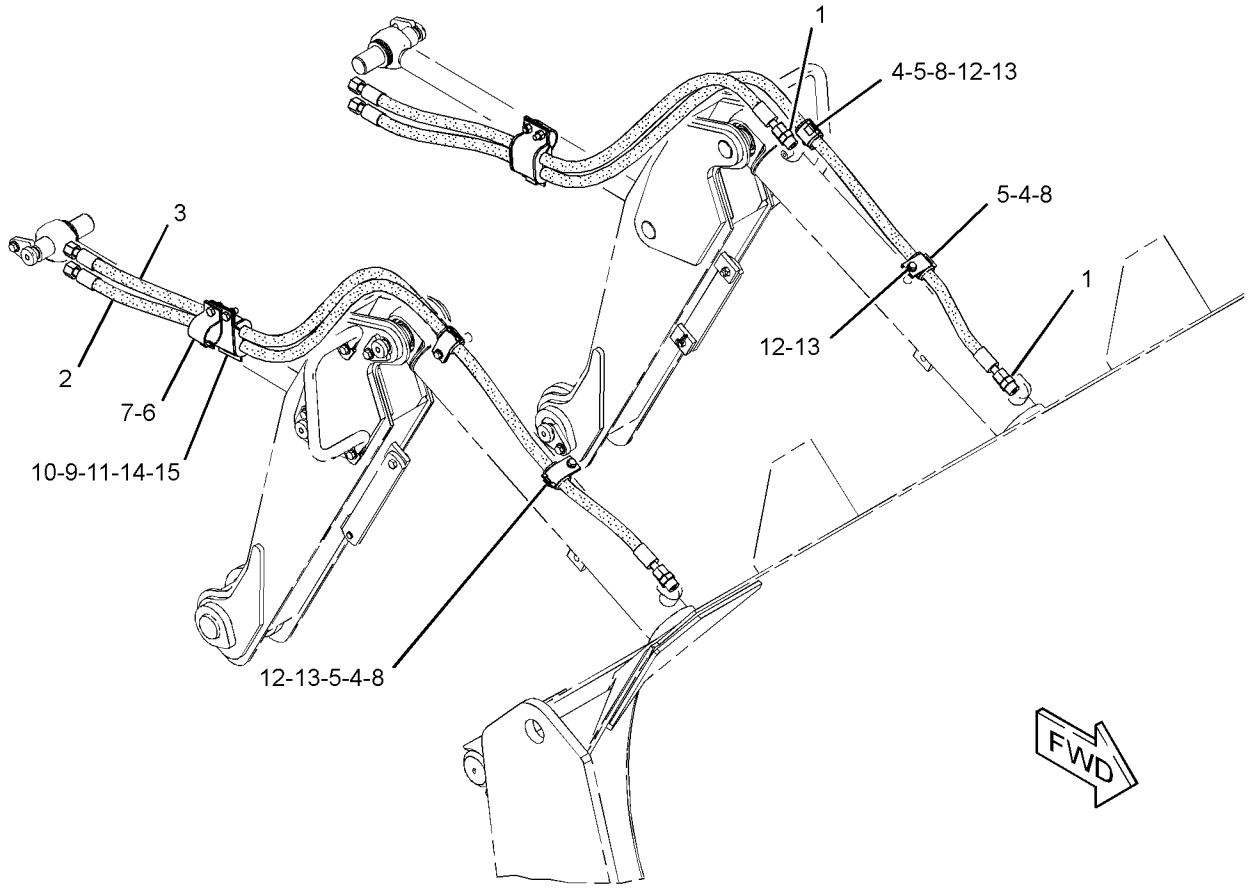

GRAPHIC #1 **<END>** g01306939

310-4600 LINES GP-LIFT CYLINDER

S/N: LJR1-UP

PART OF 310-9950 HYDRAULIC AR-3 VALVE

SMCS-5057, 5102 **i05268217**

NOTE	REF NO	GRAPHIC REF	PART NUMBER	QTY	PART NAME 1 2 3 4 5 6 (PRODUCT LEVEL)	SEE PAGE
	1	1	**237-2100**	1	BRACKET AS (RH)	
	2	1	**237-2102**	1	BRACKET AS (LH)	
	3	1	**310-4601**	1	TUBE AS	
	4	1	**310-4602**	1	TUBE AS	
	5	1	**343-3402**	1	TUBE AS	
	6	1	**343-3403**	1	TUBE AS	
	7	1	*357-4378*	2	CONNECTOR AS	
					(EACH INCLUDES)	
		1	**3D-2824**	1	SEAL-O-RING	
		1	**6V-8637**	1	CONNECTOR	
		1	**6V-9746**	1	SEAL-O-RING	
	8	1	*357-4476*	1	ELBOW AS	
		1	**6V-8982**	1	ELBOW	
		1	**7J-9108**	2	SEAL-O-RING	
	10	1	**6V-9170**	4	NUT-BULKHEAD (1-14-THD)	
	11	1	**6V-9746**	2	SEAL-O-RING	
	12	1	**7J-9108**	3	SEAL-O-RING	
	13	1	**7X-7729**	4	WASHER (11X25X3-MM THK)	
	14	1	**8T-1887**	2	CLIP (SLOT)	
	15	1	**8T-1888**	2	CLIP (TAB)	
	16	1	**8T-4121**	6	WASHER-HARD (11X21X2.5-MM THK)	
M	17	1	**8T-4133**	2	NUT (M10X1.5-THD)	
M	18	1	**8T-4136**	4	BOLT (M10X1.5X25-MM)	
M	19	1	**8T-4137**	4	BOLT (M10X1.5X20-MM)	
	20	1	**9M-8406**	4	CLIP	

M - METRIC PART

310-4600 **LINES GP-LIFT CYLINDER (*contd.*)** **i05268217**

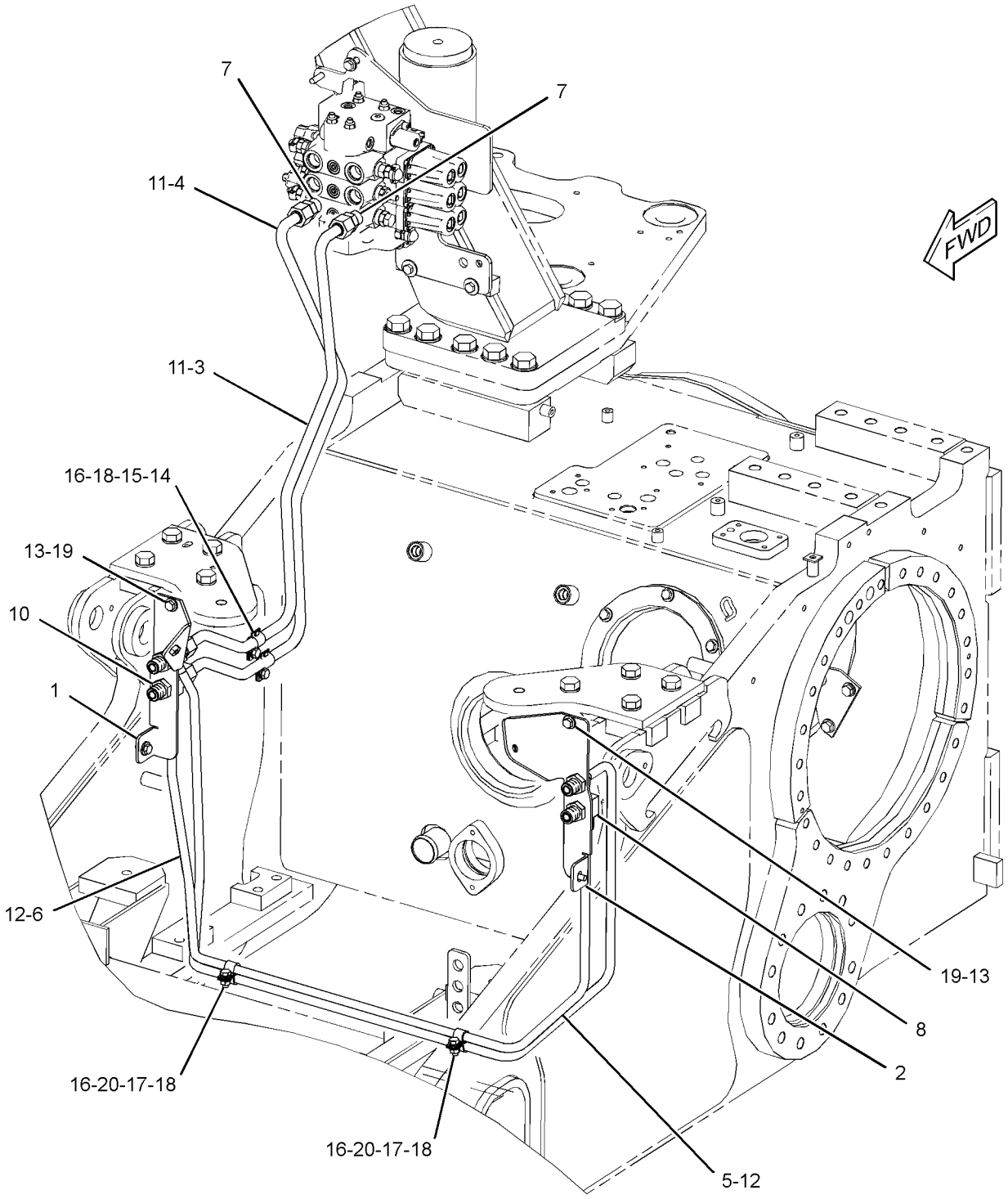

GRAPHIC #1 **<END>** g03306416

311-2848 LINES GP-PILOT

S/N: LJR1-167
PART OF 317-4192, 321-8161 HYDRAULIC AR-4 VALVE
AN ATTACHMENT

SMCS-5057 **i03626507**

NOTE	REF NO	GRAPHIC REF	PART NUMBER	QTY	PART NAME 1 2 3 4 5 6 (PRODUCT LEVEL)	SEE PAGE
	1	1	**177-2215**	1	STRAP-DUAL CLAMP	
I	2	1	**198-7669**	1	HOSE AS	
I	3	1	**201-9122**	1	HOSE AS	
	4	1	**277-8716**	1	BRACKET AS	
I	5	1	**311-2849**	1	HOSE AS	
	6	1	**317-5558**	1	TUBE AS	
	7	1	**067-2551**	2	CLIP	
	8	1	*148-8336*	1	CONNECTOR AS	
		1	**3J-1907**	1	SEAL-O-RING	
		1	**6V-8397**	1	SEAL-O-RING	
		1	**6V-8636**	1	CONNECTOR	
	9	1	*148-8365*	1	ELBOW AS	
		1	**3J-1907**	1	SEAL-O-RING	
		1	**6V-8398**	1	SEAL-O-RING	
		1	**8T-6876**	1	ELBOW	
	10	1	*148-8367*	1	ELBOW AS	
		1	**6V-8397**	1	SEAL-O-RING	
		1	**6V-9850**	1	ELBOW	
	11	1	*148-8378*	2	ELBOW AS	
					(EACH INCLUDES)	
		1	**3J-1907**	1	SEAL-O-RING	
		1	**6V-8397**	1	SEAL-O-RING	
		1	**6V-8724**	1	ELBOW	
	12	1	*174-3181*	1	ELBOW AS	
		1	**8T-7521**	1	ELBOW	
		1	**6V-8398**	1	SEAL-O-RING	
		1	**3J-1907**	1	SEAL-O-RING	
	15	1	*184-2420*	1	ADAPTER AS	
		1	**3E-7401**	1	ADAPTER	
		1	**6V-8397**	1	SEAL-O-RING	
Y	16	1	*226-0420*	1	ACCUMULATOR GP-HYDRAULIC (CHARGED)	484
	17	1	**3K-0360**	1	SEAL-O-RING	
	18	1	**6V-8398**	1	SEAL-O-RING	
	19	1	**6V-9168**	1	NUT (11/16-16-THD)	
	20	1	**8T-1885**	1	CLIP (SLOT)	
	21	1	**8T-1886**	1	CLIP (TAB)	
	22	1	**8T-2561**	1	WASHER-HARD (10.5X28.5X5-MM THK)	
	23	1	**8T-4121**	3	WASHER-HARD (11X21X2.5-MM THK)	
M	24	1	**8T-4136**	4	BOLT (M10X1.5X25-MM)	
	25	1	**9X-8250**	2	CLIP	

I - REFER TO HYDRAULIC INFORMATION SYSTEM
M - METRIC PART
Y - SEPARATE ILLUSTRATION

311-2848 **LINES GP-PILOT (*contd.*)** **i03626507**

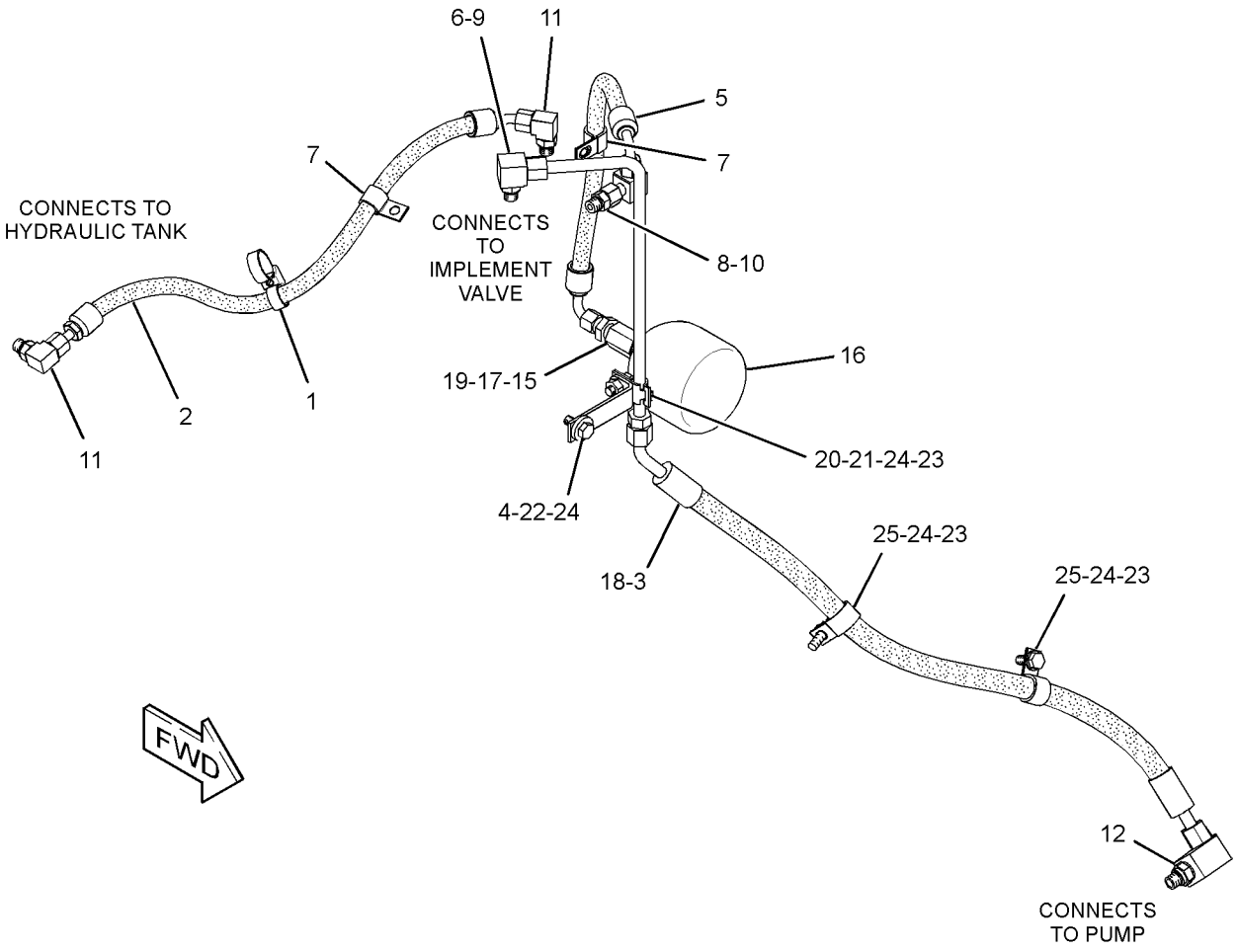

GRAPHIC #1 **<END>** g01947065

311-2848 LINES GP-PILOT

S/N: LJR168-UP

PART OF 317-4192, 321-8161 HYDRAULIC AR-4 VALVE AN ATTACHMENT

SMCS-5057 **i05093972**

NOTE	REF NO	GRAPHIC REF	PART NUMBER	QTY	PART NAME 1 2 3 4 5 6 (PRODUCT LEVEL)	SEE PAGE
	1	1	**177-2215**	1	STRAP-DUAL CLAMP	
I	2	1	**198-7669**	1	HOSE AS	
I	3	1	**201-9122**	1	HOSE AS	
	4	1	**277-8716**	1	BRACKET AS	
I	5	1	**311-2849**	1	HOSE AS	
	6	1	**317-5558**	1	TUBE AS	
	7	1	**067-2551**	2	CLIP	
	8	1	*357-4366*	1	CONNECTOR AS	
		1	**3J-1907**	1	SEAL-O-RING	
		1	**6V-8397**	1	SEAL-O-RING	
		1	**6V-8636**	1	CONNECTOR	
	9	1	*357-4439*	1	ELBOW AS	
		1	**3J-1907**	1	SEAL-O-RING	
		1	**6V-8398**	1	SEAL-O-RING	
		1	**8T-6876**	1	ELBOW	
	10	1	*357-4459*	1	ELBOW AS	
		1	**6V-8397**	1	SEAL-O-RING	
		1	**6V-9850**	1	ELBOW	
	11	1	*357-4432*	2	ELBOW AS	
					(EACH INCLUDES)	
		1	**3J-1907**	1	SEAL-O-RING	
		1	**6V-8397**	1	SEAL-O-RING	
		1	**6V-8724**	1	ELBOW	
	12	1	*174-3181*	1	ELBOW AS	
		1	**8T-7521**	1	ELBOW	
		1	**6V-8398**	1	SEAL-O-RING	
		1	**3J-1907**	1	SEAL-O-RING	
	15	1	*184-2420*	1	ADAPTER AS	
		1	**3E-7401**	1	ADAPTER	
		1	**6V-8397**	1	SEAL-O-RING	
CY	16	1	*160-2669*	1	ACCUMULATOR GP-HYDRAULIC (CHARGED)	482
	17	1	**3K-0360**	1	SEAL-O-RING	
	18	1	**6V-8398**	1	SEAL-O-RING	
	19	1	**6V-9168**	1	NUT (11/16-16-THD)	
	20	1	**8T-1885**	1	CLIP (SLOT)	
	21	1	**8T-1886**	1	CLIP (TAB)	
	22	1	**8T-2561**	1	WASHER-HARD (10.5X28.5X5-MM THK)	
	23	1	**8T-4121**	3	WASHER-HARD (11X21X2.5-MM THK)	
M	24	1	**8T-4136**	4	BOLT (M10X1.5X25-MM)	
	25	1	**9X-8250**	2	CLIP	

C - CHANGE FROM PREVIOUS TYPE
I - REFER TO HYDRAULIC INFORMATION SYSTEM
M - METRIC PART
Y - SEPARATE ILLUSTRATION

311-2848 **LINES GP-PILOT (*contd.*)** **i05093972**

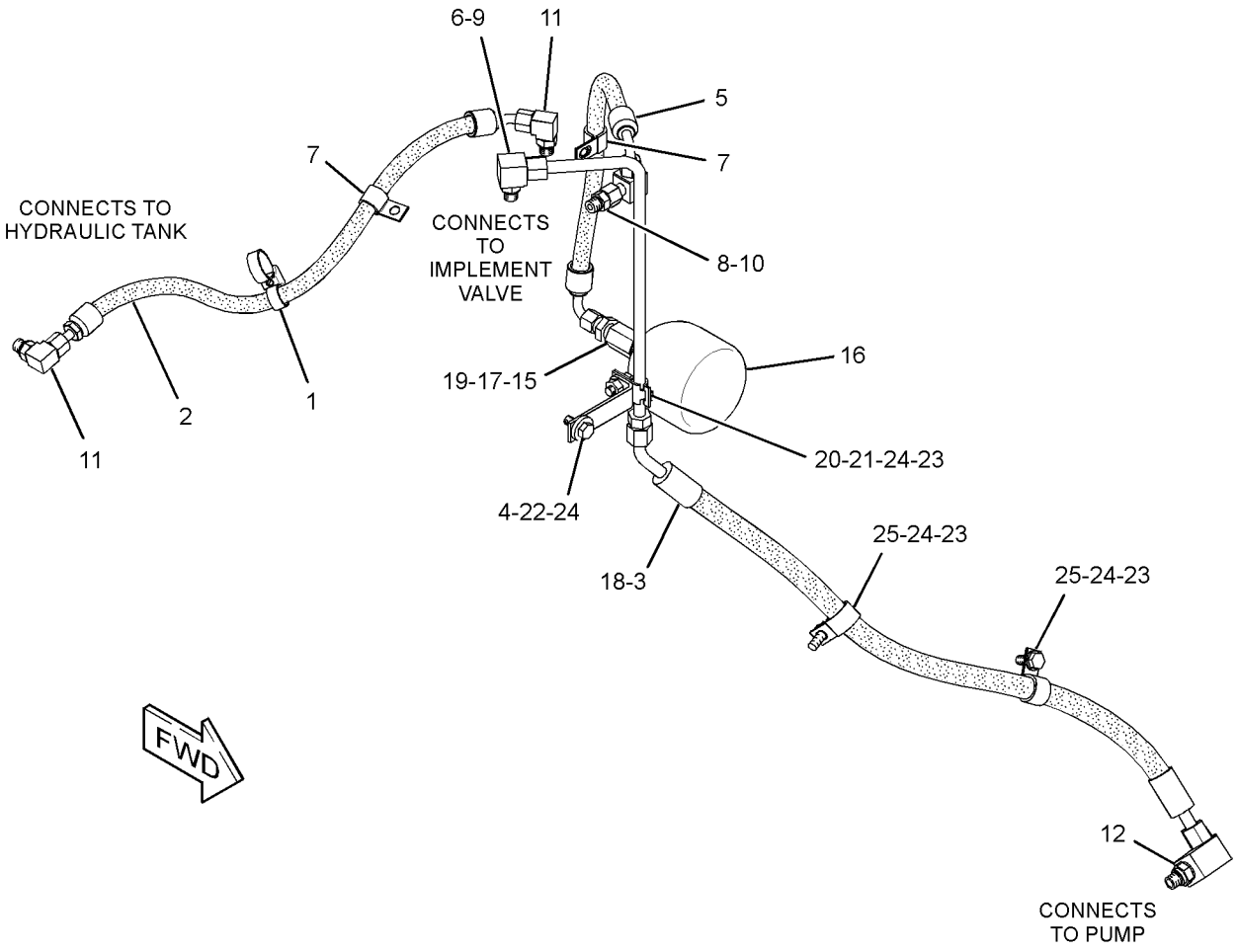

GRAPHIC #1 **<END>** g01947065

317-7820 LINES GP-PILOT

S/N: LJR1-167

PART OF 310-9950 HYDRAULIC AR-3 VALVE

SMCS-5057 **i03659022**

NOTE	REF NO	GRAPHIC REF	PART NUMBER	QTY	PART NAME 1 2 3 4 5 6 (PRODUCT LEVEL)	SEE PAGE
	1	1	**177-2215**	1	STRAP-DUAL CLAMP	
I	2	1	**198-7669**	1	HOSE AS	
I	3	1	**201-9122**	1	HOSE AS	
	4	1	**277-8716**	1	BRACKET AS	
M		1	**8T-3490**	1	NUT-WELD (M10X1.5-THD)	
	5	1	**317-5558**	1	TUBE AS	
I	6	1	**318-0296**	1	HOSE AS	
	7	1	**067-2551**	2	CLIP	
	8	1	*148-8336*	1	CONNECTOR AS	
		1	**3J-1907**	1	SEAL-O-RING	
		1	**6V-8397**	1	SEAL-O-RING	
		1	**6V-8636**	1	CONNECTOR	
	9	1	*148-8367*	1	ELBOW AS	
		1	**6V-8397**	1	SEAL-O-RING	
		1	**6V-9850**	1	ELBOW	
	10	1	*148-8378*	1	ELBOW AS	
		1	**3J-1907**	1	SEAL-O-RING	
		1	**6V-8397**	1	SEAL-O-RING	
		1	**6V-8724**	1	ELBOW	
	13	1	*150-3036*	1	ELBOW AS	
		1	**3J-1907**	1	SEAL-O-RING	
		1	**6V-8397**	1	SEAL-O-RING	
		1	**8T-1905**	1	ELBOW	
	15	1	*174-3181*	2	ELBOW AS	
					(EACH INCLUDES)	
		1	**3J-1907**	1	SEAL-O-RING	
		1	**6V-8398**	1	SEAL-O-RING	
		1	**8T-7521**	1	ELBOW	
	16	1	*184-2420*	1	ADAPTER AS	
		1	**3E-7401**	1	ADAPTER	
		1	**6V-8397**	1	SEAL-O-RING	
Y	17	1	*226-0420*	1	ACCUMULATOR GP-HYDRAULIC (CHARGED)	484
	18	1	**3K-0360**	1	SEAL-O-RING	
	19	1	**6V-8398**	1	SEAL-O-RING	
	20	1	**6V-9168**	1	NUT (11/16-16-THD)	
	21	1	**8T-1885**	1	CLIP (SLOT)	
	22	1	**8T-1886**	1	CLIP (TAB)	
	23	1	**8T-2561**	1	WASHER-HARD (10.5X28.5X5-MM THK)	
	24	1	**8T-4121**	3	WASHER-HARD (11X21X2.5-MM THK)	
M	25	1	**8T-4136**	4	BOLT (M10X1.5X25-MM)	
	26	1	**9X-8250**	2	CLIP	

I - REFER TO HYDRAULIC INFORMATION SYSTEM
M - METRIC PART
Y - SEPARATE ILLUSTRATION

317-7820 **LINES GP-PILOT (*contd.*)** **i03659022**

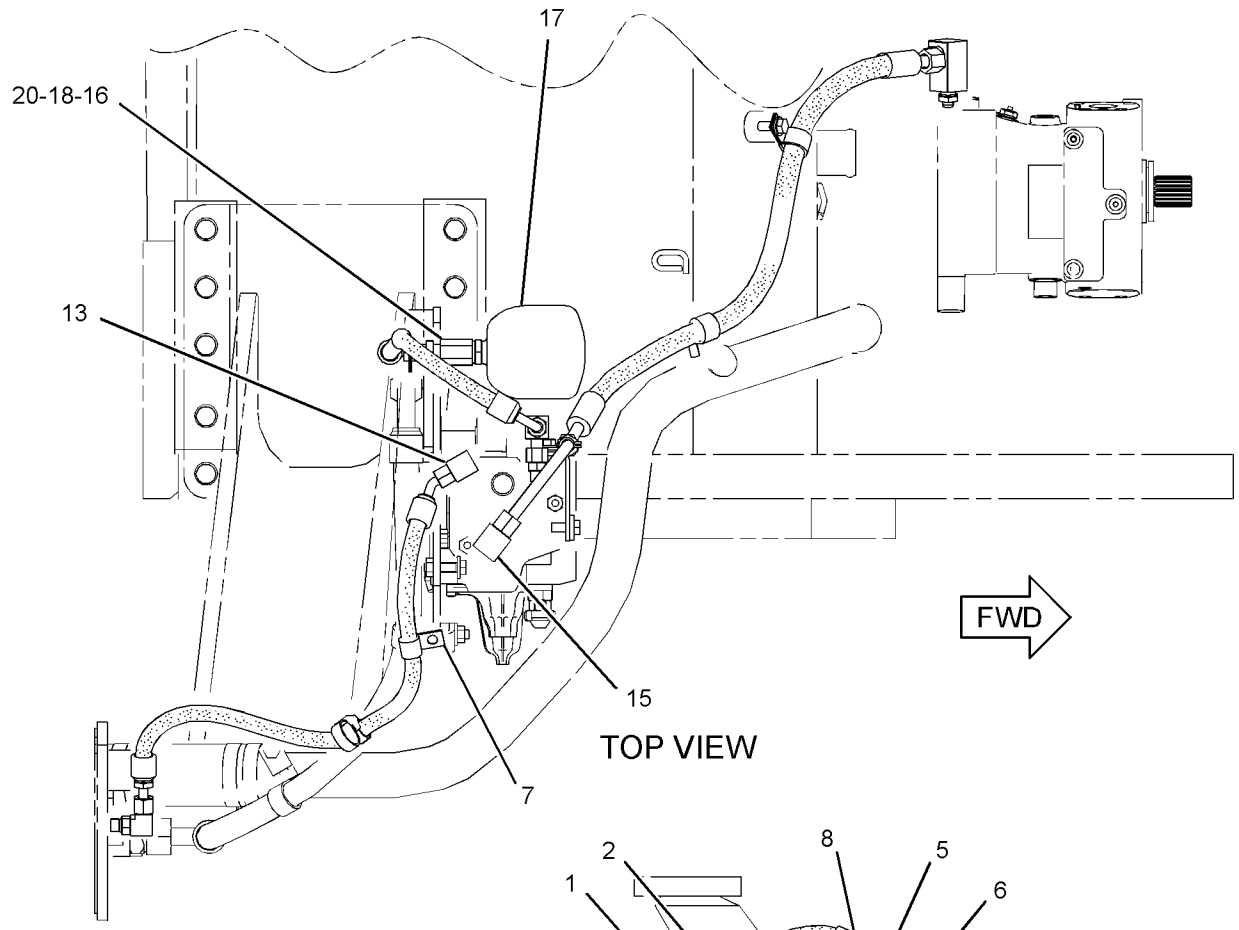

TOP VIEW

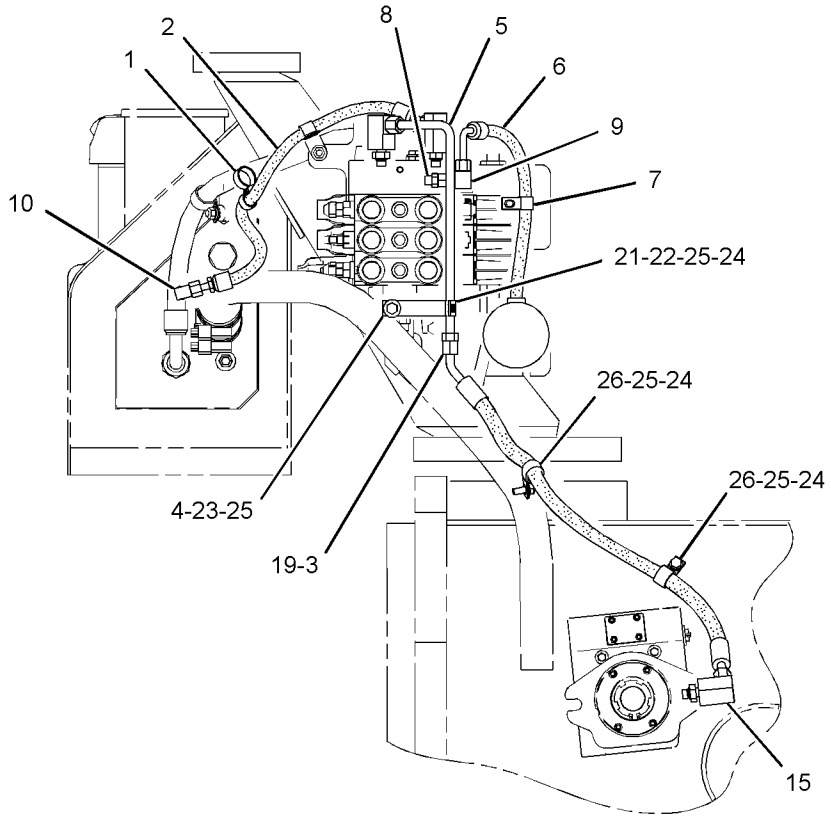

FRONT VIEW

GRAPHIC #1 **<END>** g01963190

317-7820 LINES GP-PILOT

S/N: LJR168-UP

PART OF 310-9950 HYDRAULIC AR-3 VALVE

SMCS-5057 **i05077857**

NOTE	REF NO	GRAPHIC REF	PART NUMBER	QTY	PART NAME 1 2 3 4 5 6 (PRODUCT LEVEL)	SEE PAGE
	1	1	**177-2215**	1	STRAP-DUAL CLAMP	
I	2	1	**198-7669**	1	HOSE AS	
I	3	1	**201-9122**	1	HOSE AS	
	4	1	**277-8716**	1	BRACKET AS	
	5	1	**317-5558**	1	TUBE AS	
I	6	1	**318-0296**	1	HOSE AS	
	7	1	**067-2551**	2	CLIP	
	8	1	*357-4366*	1	CONNECTOR AS	
		1	**3J-1907**	1	SEAL-O-RING	
		1	**6V-8397**	1	SEAL-O-RING	
		1	**6V-8636**	1	CONNECTOR	
	9	1	*357-4459*	1	ELBOW AS	
		1	**6V-8397**	1	SEAL-O-RING	
		1	**6V-9850**	1	ELBOW	
	10	1	*357-4432*	1	ELBOW AS	
		1	**3J-1907**	1	SEAL-O-RING	
		1	**6V-8397**	1	SEAL-O-RING	
		1	**6V-8724**	1	ELBOW	
	13	1	*360-3597*	1	ADAPTER AS	
		1	**3J-1907**	1	SEAL-O-RING	
		1	**6V-8397**	1	SEAL-O-RING	
		1	**8T-1905**	1	ELBOW	
	15	1	*174-3181*	2	ELBOW AS	
					(EACH INCLUDES)	
		1	**3J-1907**	1	SEAL-O-RING	
		1	**6V-8398**	1	SEAL-O-RING	
		1	**8T-7521**	1	ELBOW	
	16	1	*184-2420*	1	ADAPTER AS	
		1	**3E-7401**	1	ADAPTER	
		1	**6V-8397**	1	SEAL-O-RING	
CY	17	1	*160-2669*	1	ACCUMULATOR GP-HYDRAULIC (CHARGED)	482
	18	1	**3K-0360**	1	SEAL-O-RING	
	19	1	**6V-8398**	1	SEAL-O-RING	
	20	1	**6V-9168**	1	NUT (11/16-16-THD)	
	21	1	**8T-1885**	1	CLIP (SLOT)	
	22	1	**8T-1886**	1	CLIP (TAB)	
	23	1	**8T-2561**	1	WASHER-HARD (10.5X28.5X5-MM THK)	
	24	1	**8T-4121**	3	WASHER-HARD (11X21X2.5-MM THK)	
M	25	1	**8T-4136**	4	BOLT (M10X1.5X25-MM)	
	26	1	**9X-8250**	2	CLIP	

C - CHANGE FROM PREVIOUS TYPE
I - REFER TO HYDRAULIC INFORMATION SYSTEM
M - METRIC PART
Y - SEPARATE ILLUSTRATION

317-7820 **LINES GP-PILOT (*contd.*)** **i05077857**

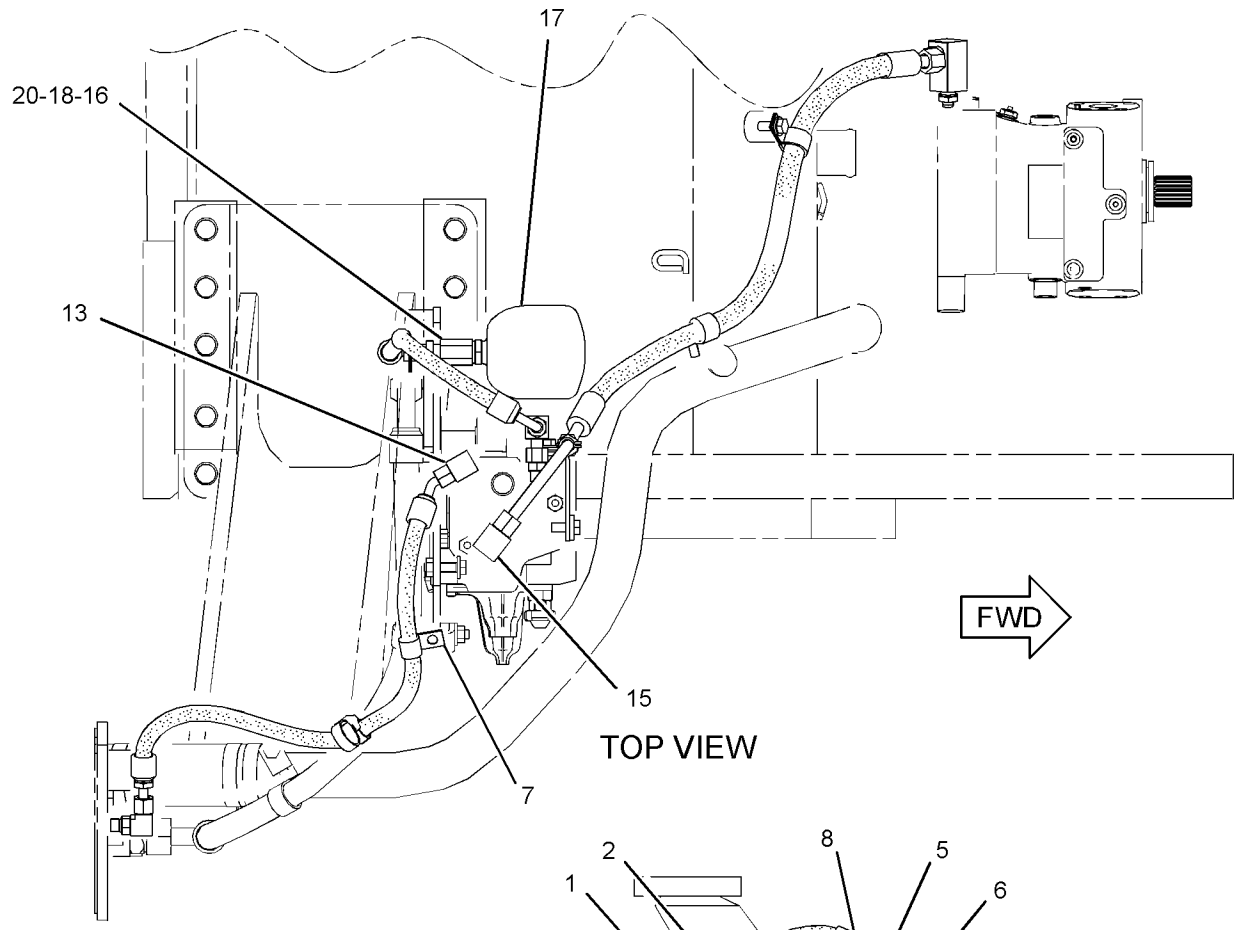

TOP VIEW

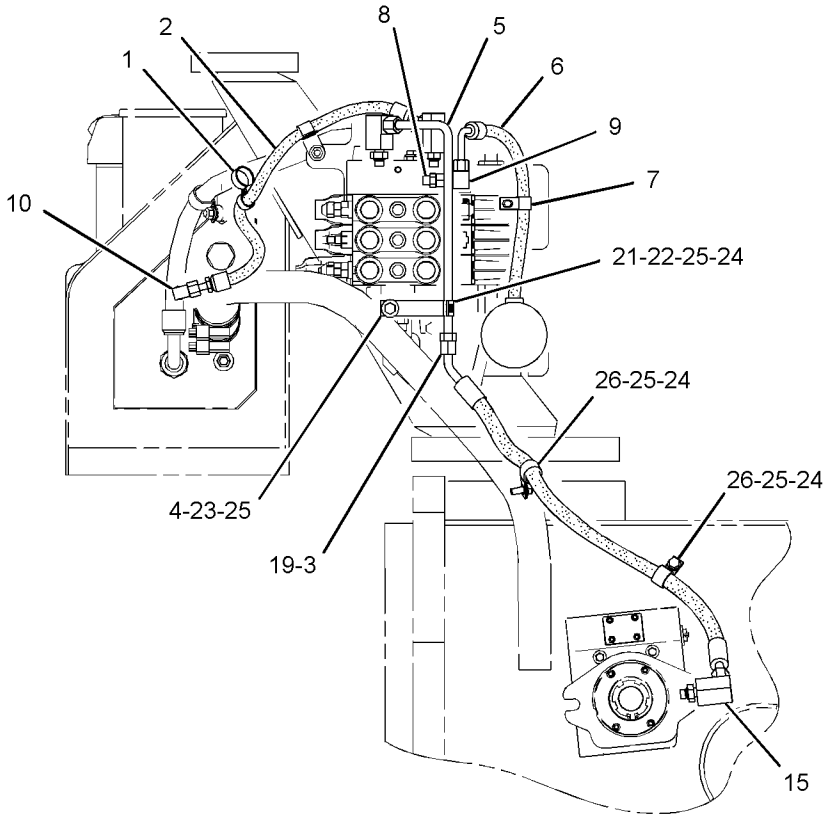

FRONT VIEW

GRAPHIC #1 **<END>** g01963190

311-1991 LINES GP-PUMP

S/N: LJR1-UP

PART OF 310-9950 HYDRAULIC AR-3 VALVE

TYPE 1

SMCS-5057 **i03627402**

NOTE	REF NO	GRAPHIC REF	PART NUMBER	QTY	PART NAME 1 2 3 4 5 6 (PRODUCT LEVEL)	SEE PAGE
	1	2	**6V-0852**	1	CAP-DUST	
I	2	1	**8E-5407**	1	HOSE AS	
	3	1,2	**8T-4984**	8	CLAMP-HOSE	
	4	2	**9J-3866**	1	ADAPTER	
	5	1	**125-7484**	1	SPACER (11X25X36-MM THK)	
	6	1	**133-6934**	1	SPACER (11X20X25-MM THK)	
	7	2	*164-5567*	1	COUPLER AS-QUICK DISCONNECT (MALE)	
		2	**6V-3965**	1	FITTING (QUICK DISCONNECT)	
		2	**214-7568**	1	SEAL-O-RING	
	8	1	**169-0314**	3	RING	
Y	9	1	**169-4019**	1	FILTER GP-OIL (CASE DRAIN)	503
M	10	2	**176-9237**	2	BOLT-SPECIAL	
	11	1	**177-2215**	2	STRAP-DUAL CLAMP	
	12	2	**191-1422**	1	BRACKET AS	
M		2	**8T-3490**	1	NUT-WELD (M10X1.5-THD)	
	13	1,2	**194-6478**	2	HOSE	
	14	2	**196-1747**	1	BRACKET AS	
M		2	**8T-3490**	1	NUT-WELD (M10X1.5-THD)	
	15	2	**196-2244**	1	ELBOW	
	16	1	**196-3929**	1	TUBE AS	
	17	2	**200-6345**	1	MOUNT (DUAL SWIVEL)	
	18	1	**203-2789**	1	BRACKET AS	
	19	1,2	**203-3847**	1	BRACKET AS	
	20	2	**204-2281**	2	STRAP-CABLE	
	21	1	**214-4659**	1	BRACKET	
	22	2	**223-1395**	1	BRACKET AS	
M		2	**8T-5413**	1	STUD-WELD (M10X1.5X25-MM)	
I	23	1	**268-1151**	1	HOSE AS	
	24	1	**292-8012**	1	VALVE GP-CHECK	
		1	**5K-9090**	1	SEAL-O-RING	
		1	**7M-8485**	1	SEAL-O-RING	
I	25	1	**311-2383**	1	HOSE AS	
I	26	1	**311-2384**	1	HOSE AS	
I	27	1	**311-2385**	1	HOSE AS	
	28	1	**317-4277**	1	TUBE AS	
	29	1	**317-7277**	1	TUBE	
YR	30	2	**318-8481**	1	PUMP GP-PISTON (IMPLEMENT)	548
I	31	1	**322-1562**	1	HOSE AS	
I	32	1	**329-3778**	1	HOSE AS	
	33	1	*330-8105*	1	TEE AS	
		1	**6V-9746**	1	SEAL-O-RING	
		1	**7M-8485**	1	SEAL-O-RING	
I	34	1	**330-8220**	1	HOSE AS	
	35	2	*148-8326*	1	CONNECTOR AS	
		2	**3J-7354**	1	SEAL-O-RING	
		2	**6V-8397**	1	SEAL-O-RING	
		2	**6V-9872**	1	CONNECTOR	
	36	2	*148-8327*	3	CONNECTOR AS	
					(EACH INCLUDES)	
		2	**3D-2824**	1	SEAL-O-RING	
		2	**6V-8637**	1	CONNECTOR	
		2	**6V-9746**	1	SEAL-O-RING	
	37	1	*148-8333*	2	CONNECTOR AS	
					(EACH INCLUDES)	
		1	**6V-8400**	1	SEAL-O-RING	
		1	**7M-8485**	1	SEAL-O-RING	
		1	**8T-7927**	1	CONNECTOR	

311-1991 **LINES GP-PUMP (*contd.*)** **i03627402**

NOTE	REF NO	GRAPHIC REF	PART NUMBER	QTY	PART NAME 1 2 3 4 5 6 (PRODUCT LEVEL)	SEE PAGE
	38	2	*148-8335*	2	CONNECTOR AS	
					(EACH INCLUDES)	
		2	**5K-9090**	1	SEAL-O-RING	
		2	**6V-8635**	1	CONNECTOR	
		2	**7M-8485**	1	SEAL-O-RING	
	39	2	*148-8336*	1	CONNECTOR AS	
		2	**3J-1907**	1	SEAL-O-RING	
		2	**6V-8397**	1	SEAL-O-RING	
		2	**6V-8636**	1	CONNECTOR	
	40	1	*148-8390*	1	ELBOW AS	
		1	**2M-9780**	1	SEAL-O-RING	
		1	**6V-8626**	1	ELBOW	
		1	**7J-9108**	1	SEAL-O-RING	
	42	2	*150-4046*	1	ADAPTER AS	
		2	**2M-9780**	1	SEAL-O-RING	
		2	**5P-1404**	1	ADAPTER	
	43	2	*153-6237*	1	ELBOW AS	
		2	**3D-2824**	1	SEAL-O-RING	
		2	**6V-9004**	1	ELBOW	
		2	**6V-9746**	1	SEAL-O-RING	
	45	2	*172-4621*	1	ADAPTER AS	
		2	**6V-0301**	1	ADAPTER	
		2	**7M-8485**	1	SEAL-O-RING	
	46	1,2	**198-4777**	2	WASHER-HARD (11X25X10-MM THK)	
	47	2	**1P-3708**	1	SEAL-RECTANGULAR	
	48	2	**1P-4577**	2	FLANGE-HALF	
	49	2	**1P-5763**	2	FLANGE-HALF	
	50	1,2	**1S-0994**	2	CLIP	
	51	2	**4J-0520**	2	SEAL-O-RING	
	52	2	**4J-0527**	1	SEAL-O-RING	
	53	2	**5F-3106**	1	SEAL-O-RING	
	54	2	**5P-7466**	2	CLIP (SLOT)	
	55	2	**5P-7467**	2	CLIP (TAB)	
	56	1,2	**5P-7468**	2	CLIP (SLOT)	
	57	1,2	**5P-7469**	2	CLIP (TAB)	
	58	2	**5P-8112**	2	GROMMET	
	59	1,2	**6V-1889**	6	CLIP	
	60	1	**6V-9746**	1	SEAL-O-RING	
M	61	2	**7X-2549**	2	BOLT (M12X1.75X100-MM)	
	62	1	**7X-7729**	3	WASHER (11X25X3-MM THK)	
	63	2	**8D-9671**	1	CLIP	
	64	1	**8T-1887**	1	CLIP (SLOT)	
	65	1	**8T-1888**	1	CLIP (TAB)	
	66	1,2	**8T-4121**	20	WASHER-HARD (11X21X2.5-MM THK)	
M	67	1,2	**8T-4133**	11	NUT (M10X1.5-THD)	
M	68	1,2	**8T-4136**	5	BOLT (M10X1.5X25-MM)	
M	69	1,2	**8T-4137**	2	BOLT (M10X1.5X20-MM)	
M	70	2	**8T-4172**	1	BOLT (M10X1.5X80-MM)	
M	71	2	**8T-4194**	4	BOLT (M12X1.75X50-MM)	
M	72	2	**8T-4195**	1	BOLT (M10X1.5X30-MM)	
M	73	1	**8T-4196**	1	BOLT (M10X1.5X35-MM)	
	74	2	**8T-4223**	12	WASHER-HARD (13.5X25.5X3-MM THK)	
M	75	1	**8T-4648**	3	BOLT (M12X1.75X70-MM)	
M	76	2	**8T-4910**	2	BOLT (M12X1.75X60-MM)	
M	77	2	**8T-4956**	4	BOLT (M12X1.75X35-MM)	
M	78	2	**8T-5005**	3	BOLT (M10X1.5X70-MM)	
	79	2	**8T-7934**	3	WASHER-HARD (11X21X5-MM THK)	

I - REFER TO HYDRAULIC INFORMATION SYSTEM
M - METRIC PART
R - REMFG PART MAY BE AVAILABLE
Y - SEPARATE ILLUSTRATION

311-1991 **LINES GP-PUMP (*contd.*)** **i03627402**

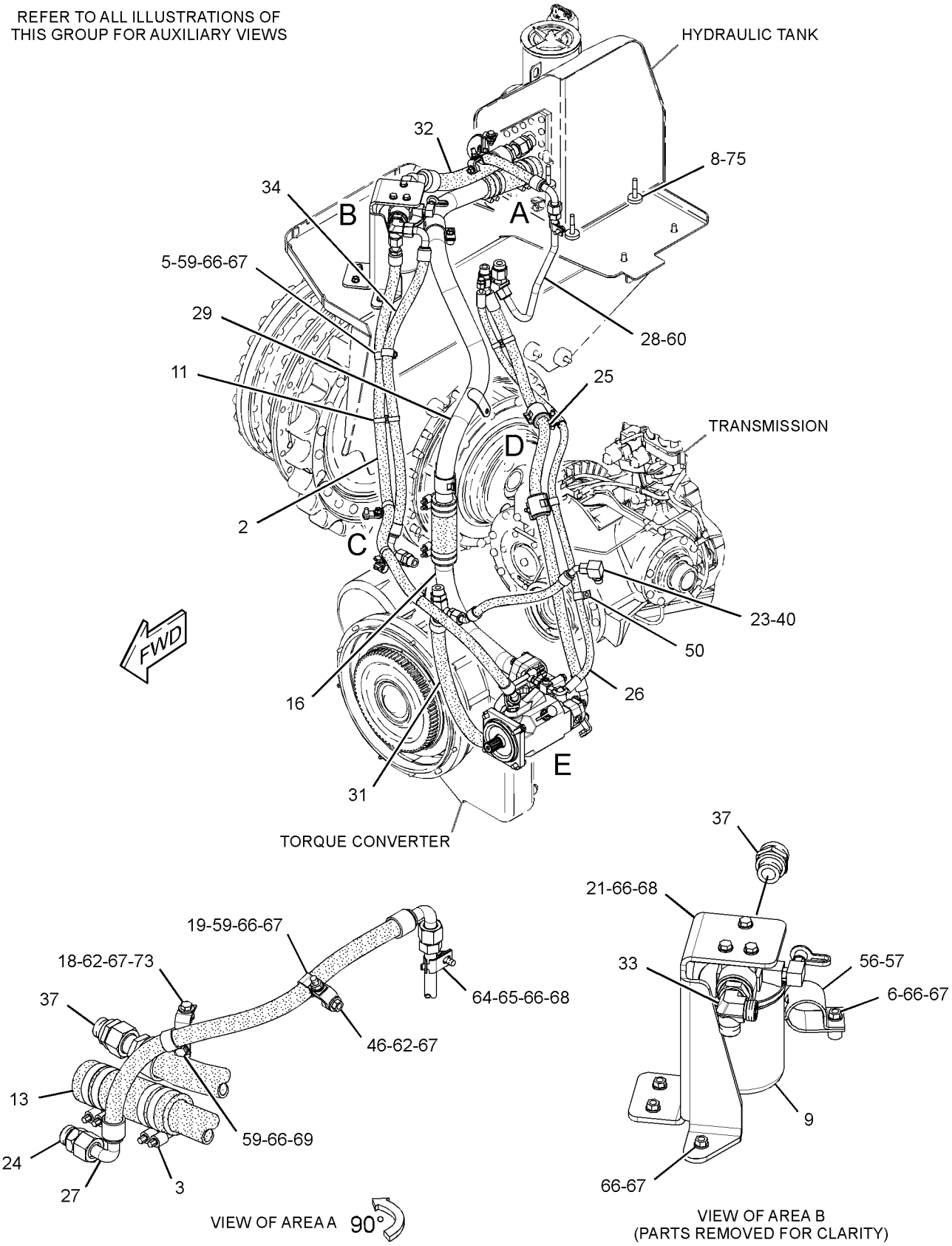

GRAPHIC #1 g01913478

311-1991 **LINES GP-PUMP (*contd.*)** **i03627402**

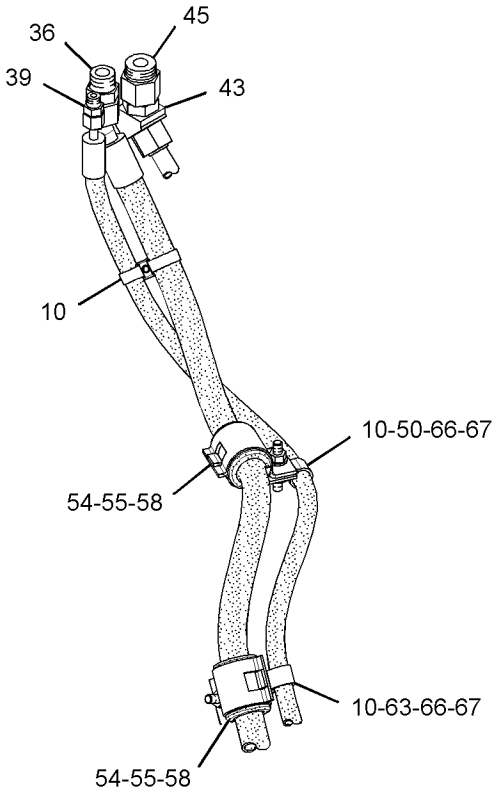

VIEW OF AREA D

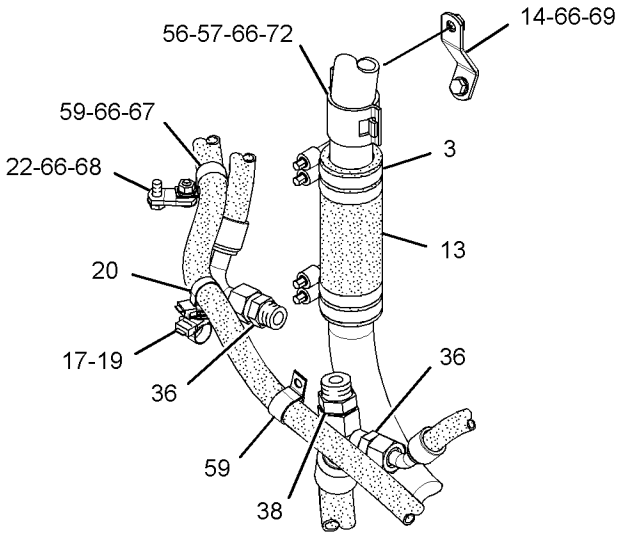

VIEW OF AREA C

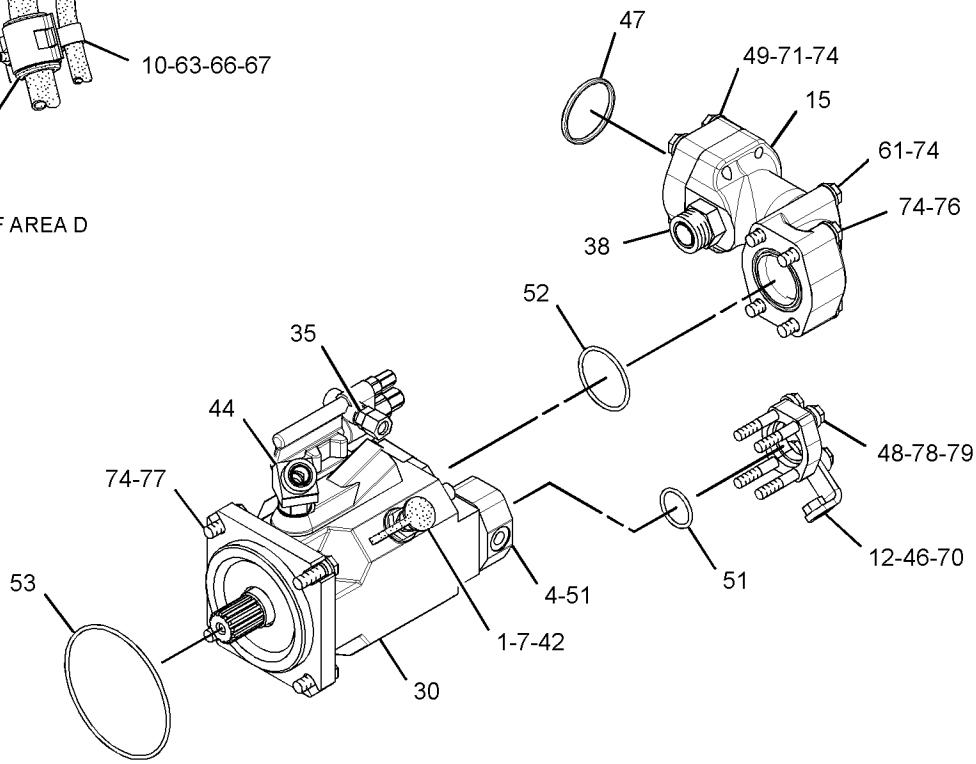

VIEW OF AREA E
(EXPLODED)

GRAPHIC #2 **<END>** g01954032

HYDRAULIC SYSTEM

311-1991 LINES GP-PUMP

S/N: LJR1-UP

PART OF 310-9950 HYDRAULIC AR-3 VALVE

TYPE 2

SMCS-5057 **i05102269**

NOTE	REF NO	GRAPHIC REF	PART NUMBER	QTY	PART NAME 1 2 3 4 5 6 (PRODUCT LEVEL)	SEE PAGE
	1	1	**6V-0852**	1	CAP-DUST	
I	2	2	**8E-5407**	1	HOSE AS	
	3	1,2	**8T-4984**	8	CLAMP-HOSE	
	4	1	**9J-3866**	1	ADAPTER	
	5	2	**125-7484**	1	SPACER (11X25X36-MM THK)	
	6	2	**133-6934**	1	SPACER (11X20X25-MM THK)	
	7	1	*164-5567*	1	COUPLER AS-QUICK DISCONNECT (MALE)	
		1	**6V-3965**	1	FITTING (QUICK DISCONNECT)	
		1	**214-7568**	1	SEAL-O-RING	
	8	2	**169-0314**	3	RING	
Y	9	2	**169-4019**	1	FILTER GP-OIL (CASE DRAIN)	503
M	10	1	**176-9237**	2	BOLT-SPECIAL	
	11	2	**177-2215**	2	STRAP-DUAL CLAMP	
	12	1	**191-1422**	1	BRACKET AS	
M		1	**8T-3490**	1	NUT-WELD (M10X1.5-THD)	
	13	1,2	**194-6478**	2	HOSE	
	14	1	**196-1747**	1	BRACKET AS	
C	16	2	**321-8941**	1	TUBE AS	
	17	1	**200-6345**	1	MOUNT (DUAL SWIVEL)	
	18	2	**203-2789**	1	BRACKET AS	
	19	1,2	**203-3847**	1	BRACKET AS	
	20	1	**204-2281**	2	STRAP-CABLE	
	21	2	**214-4659**	1	BRACKET	
	22	1	**223-1395**	1	BRACKET AS	
M		1	**8T-5413**	1	STUD-WELD (M10X1.5X25-MM)	
I	23	2	**268-1151**	1	HOSE AS	
	24	2	**292-8012**	1	VALVE GP-CHECK	
		2	**5K-9090**	1	SEAL-O-RING	
		2	**7M-8485**	1	SEAL-O-RING	
I	25	2	**311-2383**	1	HOSE AS	
CI	26	2	**374-3442**	1	HOSE AS	
I	27	2	**311-2385**	1	HOSE AS	
	28	2	**317-4277**	1	TUBE AS	
	29	2	**317-7277**	1	TUBE	
YR	30	1	**318-8481**	1	PUMP GP-PISTON (IMPLEMENT)	548
I	31	2	**322-1562**	1	HOSE AS	
I	32	2	**329-3778**	1	HOSE AS	
	33	2	**330-8105**	1	TEE AS	
		2	**6V-9746**	2	SEAL-O-RING	
		2	**7M-8485**	1	SEAL-O-RING	
I	34	2	**330-8220**	1	HOSE AS	
C	35	1	*148-8316*	1	CONNECTOR AS	
		1	**4J-5477**	1	SEAL-O-RING	
		1	**3J-7354**	1	SEAL-O-RING	
		1	**6V-8647**	1	CONNECTOR	
C	36	1	*357-4378*	3	CONNECTOR AS	
					(EACH INCLUDES)	
		1	**6V-8637**	1	CONNECTOR	
		1	**3D-2824**	1	SEAL-O-RING	
		1	**6V-9746**	1	SEAL-O-RING	
	37	2	*148-8333*	2	CONNECTOR AS	
					(EACH INCLUDES)	
		2	**8T-7927**	1	CONNECTOR	
		2	**6V-8400**	1	SEAL-O-RING	
		2	**7M-8485**	1	SEAL-O-RING	
C	38	1	*357-4381*	2	CONNECTOR AS	
					(EACH INCLUDES)	

311-1991 **LINES GP-PUMP (*contd.*)** **i05102269**

NOTE	REF NO	GRAPHIC REF	PART NUMBER	QTY	PART NAME 1 2 3 4 5 6 (PRODUCT LEVEL)	SEE PAGE
		1	**6V-8635**	1	CONNECTOR	
		1	**5K-9090**	1	SEAL-O-RING	
		1	**7M-8485**	1	SEAL-O-RING	
C	39	1	*148-8325*	1	CONNECTOR AS	
		1	**6V-8641**	1	CONNECTOR	
		1	**3J-1907**	1	SEAL-O-RING	
		1	**4J-5477**	1	SEAL-O-RING	
C	40	2	*357-4441*	1	ADAPTER AS	
		2	**6V-8626**	1	ELBOW	
		2	**2M-9780**	1	SEAL-O-RING	
		2	**7J-9108**	1	SEAL-O-RING	
	42	1	*150-4046*	1	ADAPTER AS	
		1	**5P-1404**	1	ADAPTER	
		1	**2M-9780**	1	SEAL-O-RING	
C	43	1	*357-4494*	1	ELBOW AS	
		1	**6V-9004**	1	ELBOW	
		1	**3D-2824**	1	SEAL-O-RING	
		1	**6V-9746**	1	SEAL-O-RING	
	45	1	*172-4621*	1	ADAPTER AS	
		1	**6V-0301**	1	ADAPTER	
		1	**7M-8485**	1	SEAL-O-RING	
	46	1,2	**198-4777**	2	WASHER-HARD (11X25X10-MM THK)	
	48	1	**1P-4577**	2	FLANGE-HALF	
C	50	1,2	**6D-3479**	2	CLIP	
	51	1	**4J-0520**	2	SEAL-O-RING	
	52	1	**4J-0527**	1	SEAL-O-RING	
	53	1	**5F-3106**	1	SEAL-O-RING	
	54	1	**5P-7466**	2	CLIP (SLOT)	
	55	1	**5P-7467**	2	CLIP (TAB)	
	56	1,2	**5P-7468**	2	CLIP (SLOT)	
	57	1,2	**5P-7469**	2	CLIP (TAB)	
	58	1	**5P-8112**	2	GROMMET	
	59	1,2	**6V-1889**	6	CLIP	
	60	2	**6V-9746**	1	SEAL-O-RING	
CM	61	1	**7X-2549**	4	BOLT (M12X1.75X100-MM)	
	62	2	**7X-7729**	3	WASHER (11X25X3-MM THK)	
C	63	1	**5K-4778**	1	CLIP	
	64	2	**8T-1887**	1	CLIP (SLOT)	
	65	2	**8T-1888**	1	CLIP (TAB)	
	66	1,2	**8T-4121**	20	WASHER-HARD (11X21X2.5-MM THK)	
M	67	1,2	**8T-4133**	11	NUT (M10X1.5-THD)	
M	68	1,2	**8T-4136**	5	BOLT (M10X1.5X25-MM)	
M	69	1,2	**8T-4137**	2	BOLT (M10X1.5X20-MM)	
M	70	1	**8T-4172**	1	BOLT (M10X1.5X80-MM)	
M	72	1	**8T-4195**	1	BOLT (M10X1.5X30-MM)	
M	73	2	**8T-4196**	1	BOLT (M10X1.5X35-MM)	
C	74	1	**8T-4223**	8	WASHER-HARD (13.5X25.5X3-MM THK)	
M	75	2	**8T-4648**	3	BOLT (M12X1.75X70-MM)	
M	77	1	**8T-4956**	4	BOLT (M12X1.75X35-MM)	
M	78	1	**8T-5005**	3	BOLT (M10X1.5X70-MM)	
	79	1	**8T-7934**	3	WASHER-HARD (11X21X5-MM THK)	

C - CHANGE FROM PREVIOUS TYPE
I - REFER TO HYDRAULIC INFORMATION SYSTEM
M - METRIC PART
R - REMFG PART MAY BE AVAILABLE
Y - SEPARATE ILLUSTRATION

311-1991 **LINES GP-PUMP (*contd.*)** **i05102269**

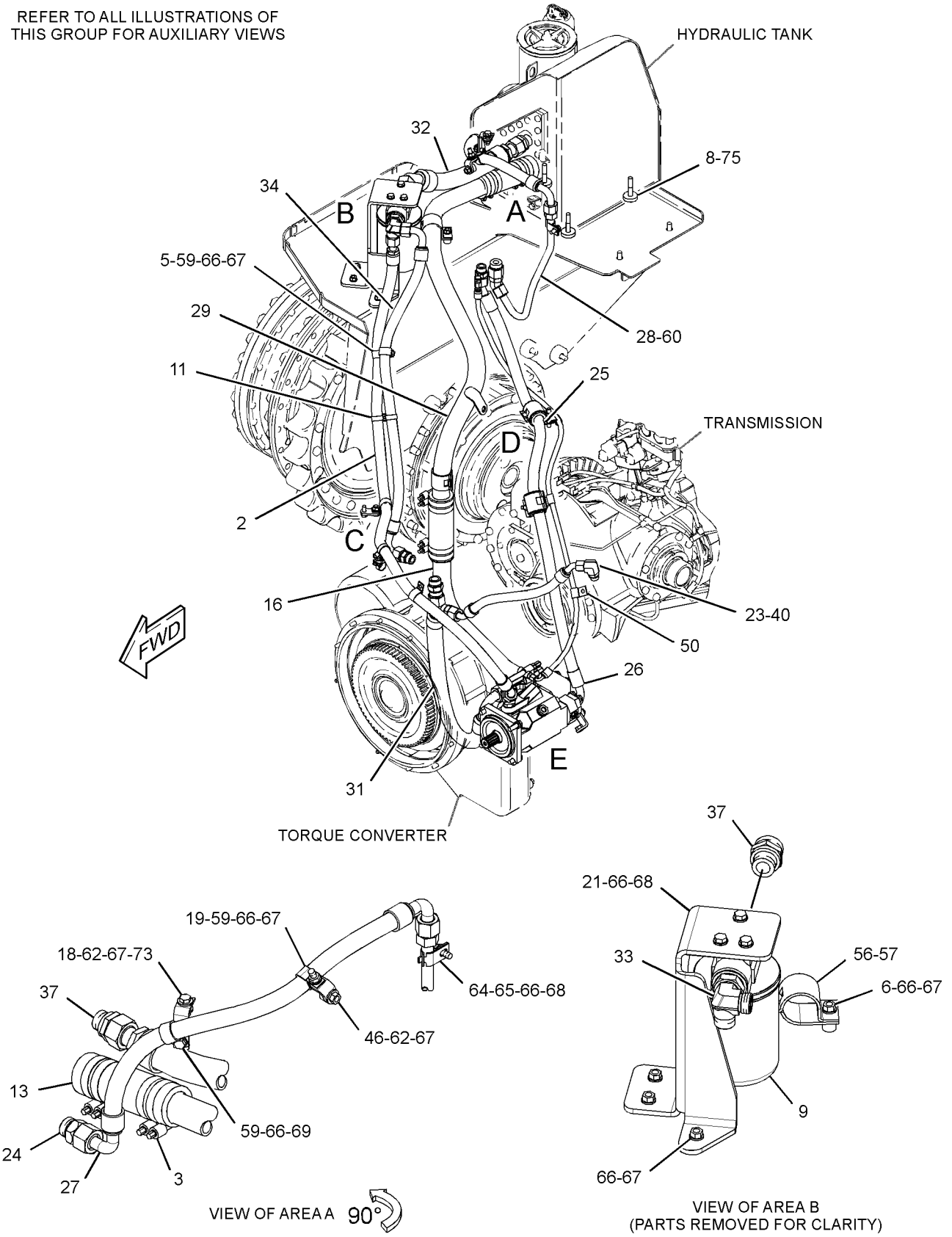

GRAPHIC #1 g03354876

311-1991 **LINES GP-PUMP (*contd.*)** **i05102269**

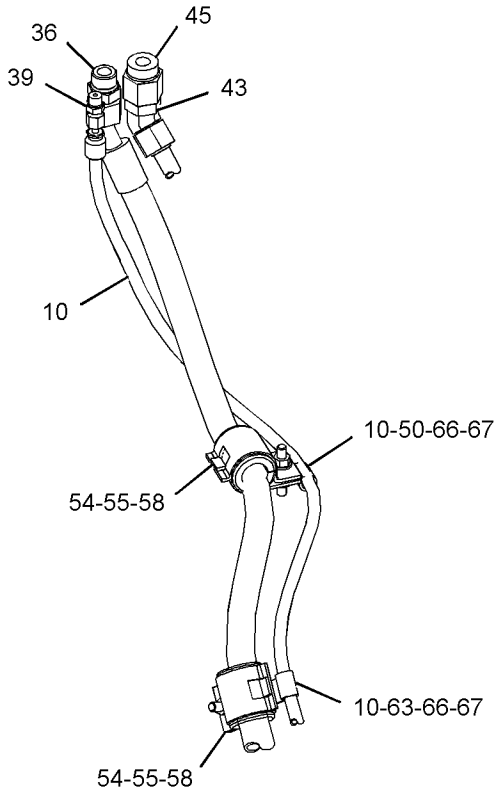

VIEW OF AREA D

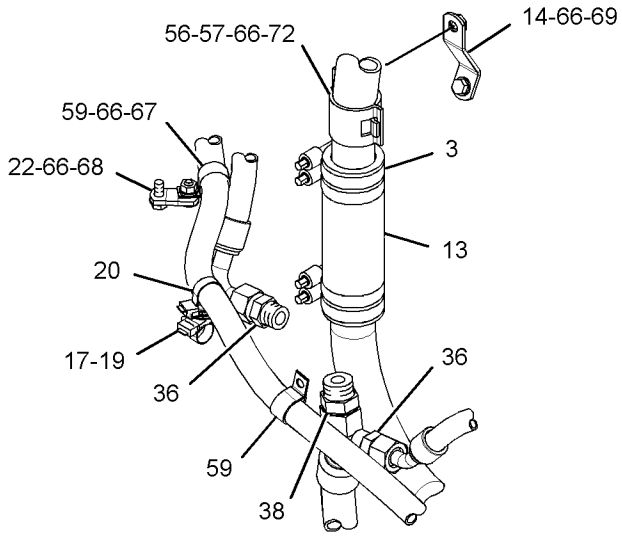

VIEW OF AREA C

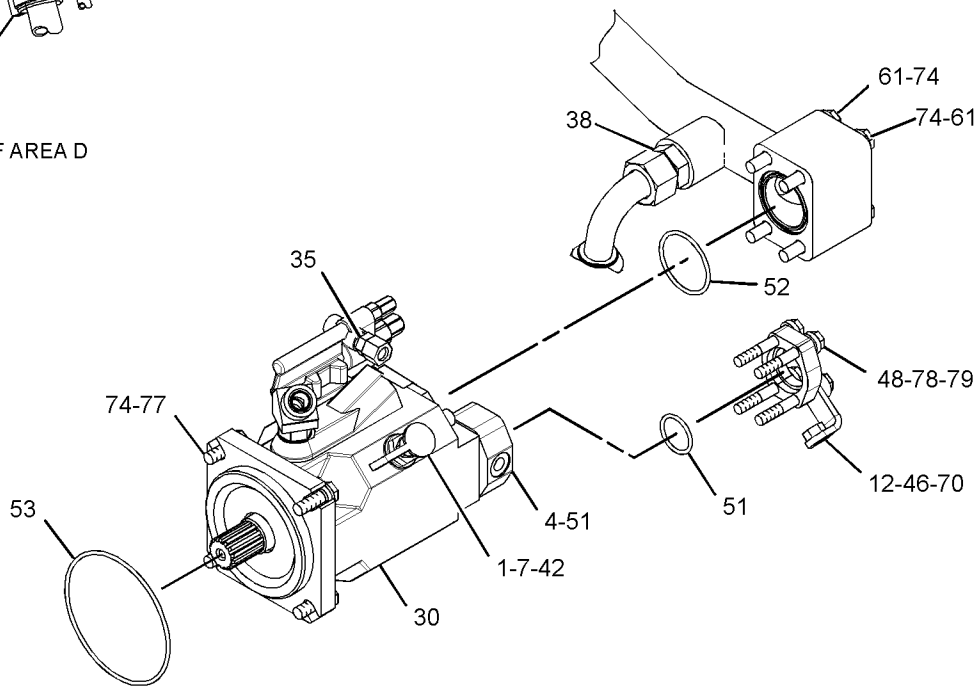

VIEW OF AREA E
(EXPLODED)

GRAPHIC #2 **<END>** g03354804

311-0225 LINES GP-RIPPER

S/N: LJR1-UP

PART OF 317-4192, 321-8161 HYDRAULIC AR-4 VALVE

AN ATTACHMENT

SMCS-5057, 5352, 5356 **i05200516**

NOTE	REF NO	GRAPHIC REF	PART NUMBER	QTY	PART NAME 1 2 3 4 5 6 (PRODUCT LEVEL)	SEE PAGE
	1	1	*106-8715*	1	ELBOW AS	
		1	**3D-2824**	1	SEAL-O-RING	
		1	**6V-9746**	1	SEAL-O-RING	
		1	**8C-8400**	1	ELBOW	
	2	1	**311-0226**	1	TUBE AS	
	3	1	**311-0227**	1	TUBE AS	
	4	1	*357-4444*	1	ELBOW AS	
		1	**3D-2824**	1	SEAL-O-RING	
		1	**6V-9007**	1	ELBOW	
		1	**6V-9746**	1	SEAL-O-RING	
	5	1	**2B-0941**	2	SPACER (10.5X19X19-MM THK)	
	6	1	**5R-0939**	4	CLIP (TAB)	
	7	1	**5R-0940**	4	CLIP (SLOT)	
	8	1	**6V-8398**	2	SEAL-O-RING	
	9	1	**8T-4121**	3	WASHER-HARD (11X21X2.5-MM THK)	
M	10	1	**8T-4182**	2	BOLT (M10X1.5X45-MM)	
M	11	1	**8T-4195**	1	BOLT (M10X1.5X30-MM)	

M - METRIC PART

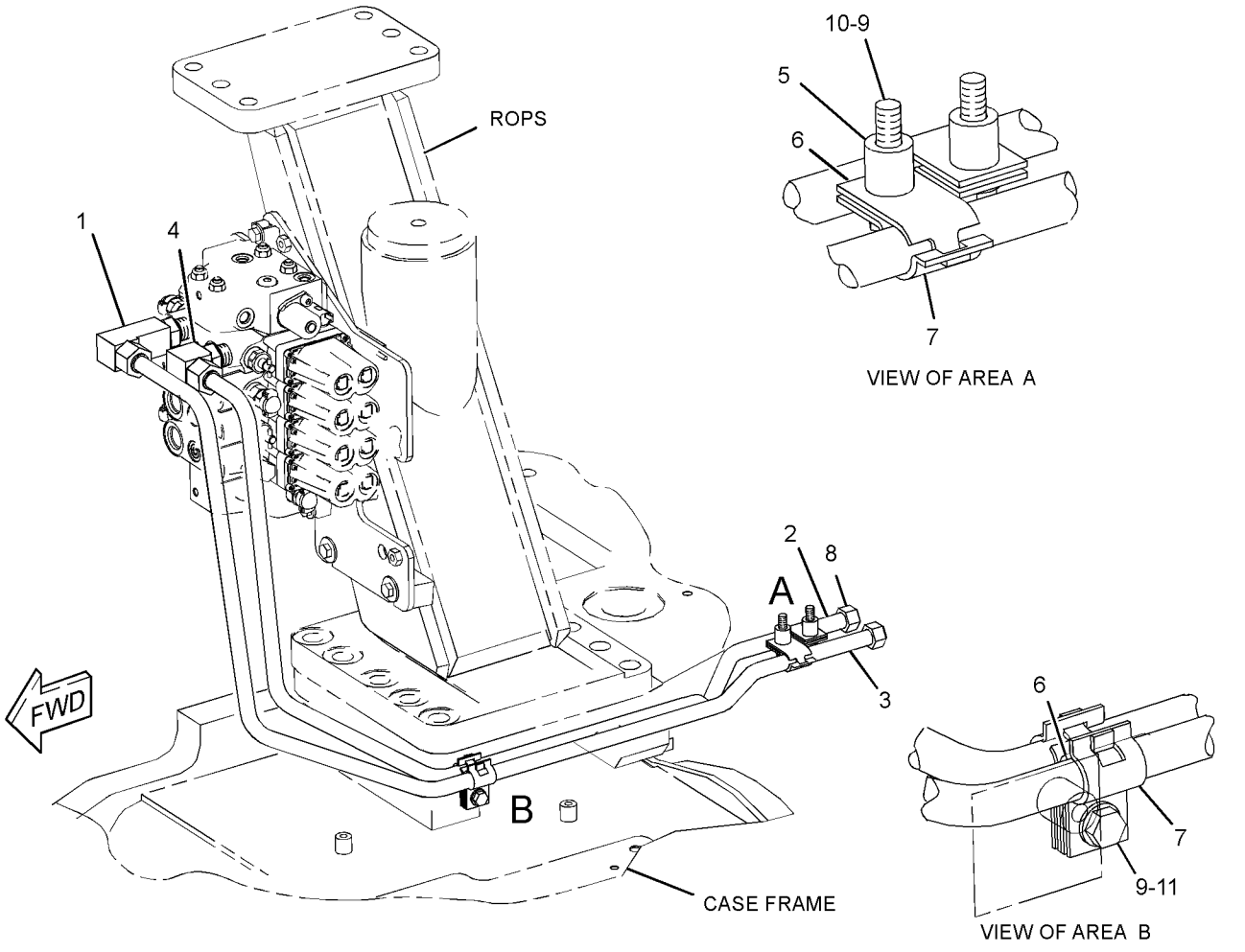

GRAPHIC #1 **<END>** g03331922

322-4932 LINES GP-RIPPER

S/N: RPP1-UP
PART OF 321-5607 RIPPER AR
AN ATTACHMENT

SMCS-5057, 5352, 5356

i03626807

NOTE	REF NO	GRAPHIC REF	PART NUMBER	QTY	PART NAME 1 2 3 4 5 6 (PRODUCT LEVEL)	SEE PAGE
	1	1	**1L-5081**	1	SPACER (0.41X0.75X0.56-IN THK)	
	2	1	**9M-2904**	4	CLAMP-HOSE	
	3	1	**112-4368**	4	SHIELD	
	4	1	**130-1977**	4	SHIELD	
	5	1	**130-9192**	4	GROMMET	
I	6	1	**340-8408**	1	HOSE AS	
I	7	1	**340-8409**	1	HOSE AS	
	8	1	**4J-5267**	2	SEAL-O-RING	
	9	1	**5P-7466**	1	CLIP (SLOT)	
	10	1	**5P-7467**	1	CLIP (TAB)	
	11	1	**5P-8112**	1	GROMMET	
	12	1	**8T-4121**	8	WASHER-HARD (11X21X2.5-MM THK)	
M	13	1	**8T-4186**	7	BOLT (M10X1.5X40-MM)	
M	14	1	**8T-6466**	1	BOLT (M10X1.5X60-MM)	

I - REFER TO HYDRAULIC INFORMATION SYSTEM
M - METRIC PART

322-4932 **LINES GP-RIPPER (*contd.*)** **i03626807**

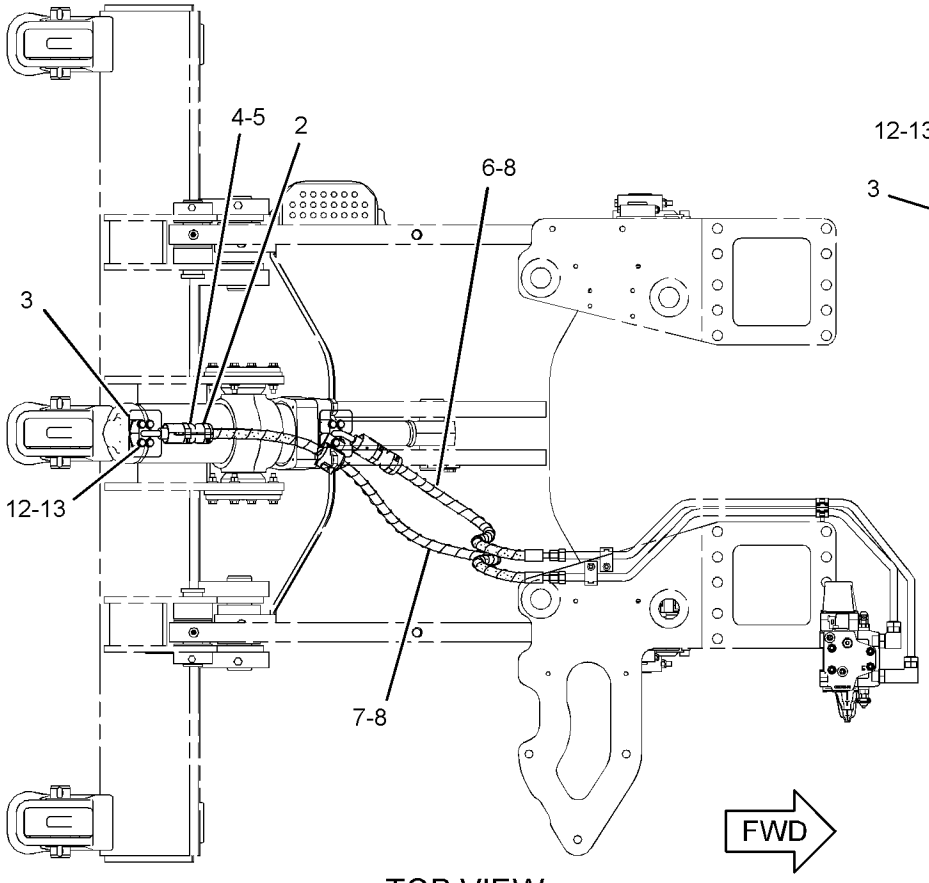

TOP VIEW

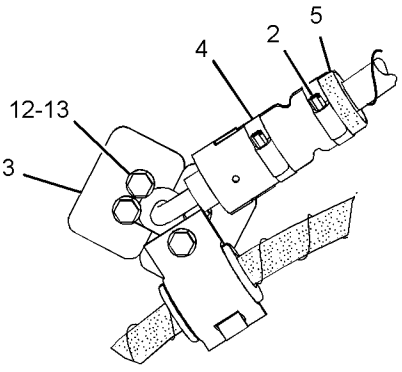

VIEW B-B

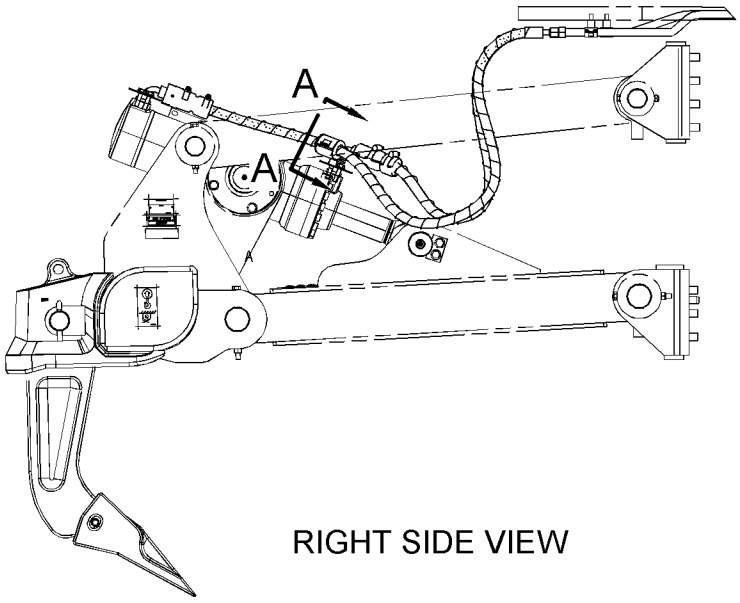

RIGHT SIDE VIEW

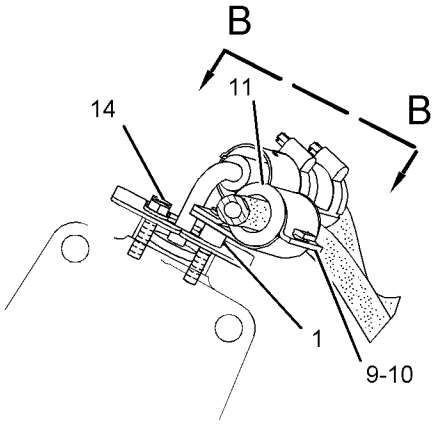

VIEW A-A

GRAPHIC #1 **<END>** g01895133

346-1721 LINES GP-TILT CYLINDER

S/N: D1Y1-UP

PART OF 273-0030 BULLDOZER AR-SEMI-UNIVERSAL

AN ATTACHMENT

SMCS-5057, 5104

i05099690

NOTE	REF NO	GRAPHIC REF	PART NUMBER	QTY	PART NAME 1 2 3 4 5 6 (PRODUCT LEVEL)	SEE PAGE
	1	1	**3Y-5405**	2	RUBBER	
	2	1	**4T-3521**	1	GUARD	
I	3	1	**7T-6934**	1	HOSE AS	
	4	1	**289-4638**	1	GUARD AS	
I	5	1	**311-9054**	1	HOSE AS	
I	6	1	**346-1724**	1	HOSE AS	
I	7	1	**346-1725**	1	HOSE AS	
	8	1	*357-4475*	2	ELBOW AS	
					(EACH INCLUDES)	
		1	**6V-8398**	2	SEAL-O-RING	
		1	**6V-8981**	1	ELBOW	
	9	1	**198-4778**	2	WASHER-HARD (13.5X30X12-MM THK)	
	10	1	**4J-5267**	2	SEAL-O-RING	
	11	1	**6V-9169**	2	NUT (13/16-16-THD)	
	12	1	**8C-3205**	4	FLANGE-HALF	
	13	1	**8T-4121**	8	WASHER-HARD (11X21X2.5-MM THK)	
M	14	1	**8T-4139**	2	BOLT (M12X1.75X30-MM)	
M	15	1	**8T-4183**	2	BOLT (M12X1.75X40-MM)	
M	16	1	**8T-4192**	3	BOLT (M12X1.75X25-MM)	
M	17	1	**8T-4196**	8	BOLT (M10X1.5X35-MM)	
	18	1	**8T-4223**	5	WASHER-HARD (13.5X25.5X3-MM THK)	

I - REFER TO HYDRAULIC INFORMATION SYSTEM
M - METRIC PART

346-1721 **LINES GP-TILT CYLINDER (*contd.*)** **i05099690**

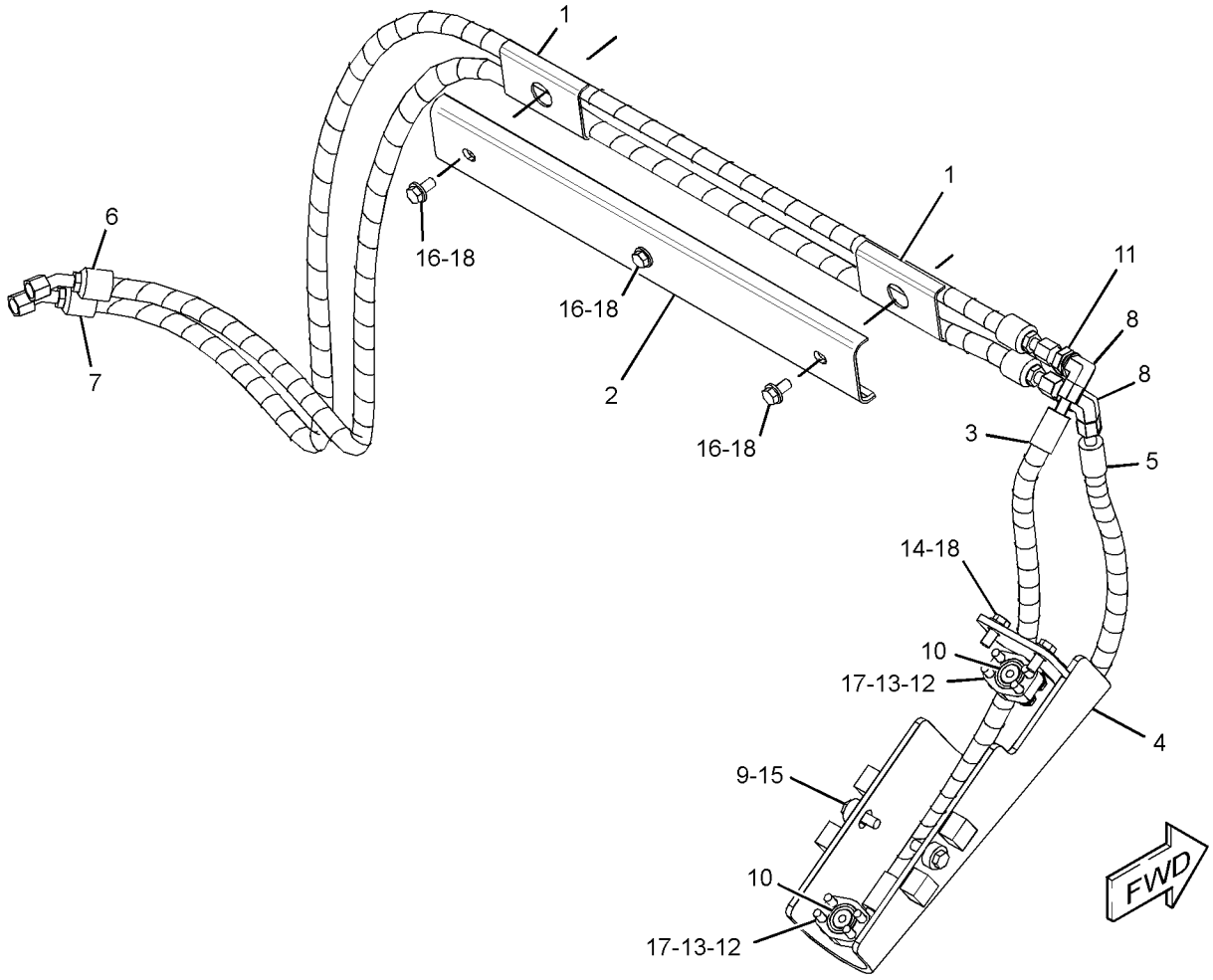

GRAPHIC #1 **<END>** g02820057

346-1738 LINES GP-TILT CYLINDER

S/N: LJR1-UP
PART OF 321-8161 HYDRAULIC AR-4 VALVE
AN ATTACHMENT

SMCS-5057, 5104 **i05124330**

NOTE	REF NO	GRAPHIC REF	PART NUMBER	QTY	PART NAME 1 2 3 4 5 6 (PRODUCT LEVEL)	SEE PAGE
	1	1	**5K-2697**	2	CLIP	
	2	1	**9M-9162**	4	CLAMP	
	3	1	**228-2880**	1	TUBE AS	
	4	1	**228-2881**	1	TUBE AS	
	5	1	**271-8884**	1	TUBE AS	
	6	1	**271-8885**	1	TUBE AS	
	7	1	**310-4285**	1	TUBE AS	
	8	1	**310-4286**	1	TUBE AS	
	9	1	**346-1722**	1	TUBE AS	
	10	1	**346-1723**	1	TUBE AS	
	11	1	**346-1726**	1	BRACKET	
	12	1	**348-2513**	1	GRILL AS-RADIATOR	
	13	1	*357-4378*	2	CONNECTOR AS	
					(EACH INCLUDES)	
		1	**3D-2824**	1	SEAL-O-RING	
		1	**6V-8637**	1	CONNECTOR	
		1	**6V-9746**	1	SEAL-O-RING	
	14	1	**265-9590**	2	WASHER-HARD (21X37X2-MM THK)	
	15	1	**4B-9302**	1	CLIP	
	16	1	**6D-3479**	1	CLIP	
	17	1	**6V-8398**	2	SEAL-O-RING	
	18	1	**6V-9169**	2	NUT (13/16-16-THD)	
	19	1	**7J-9108**	6	SEAL-O-RING	
	20	1	**7M-3361**	2	GROMMET	
	21	1	**7X-7729**	5	WASHER (11X25X3-MM THK)	
	22	1	**8T-4121**	4	WASHER-HARD (11X21X2.5-MM THK)	
M	23	1	**8T-4133**	1	NUT (M10X1.5-THD)	
M	24	1	**8T-4137**	1	BOLT (M10X1.5X20-MM)	
M	25	1	**8T-4195**	2	BOLT (M10X1.5X30-MM)	
M	26	1	**8T-4196**	3	BOLT (M10X1.5X35-MM)	

M - METRIC PART

346-1738 **LINES GP-TILT CYLINDER (*contd.*)** **i05124330**

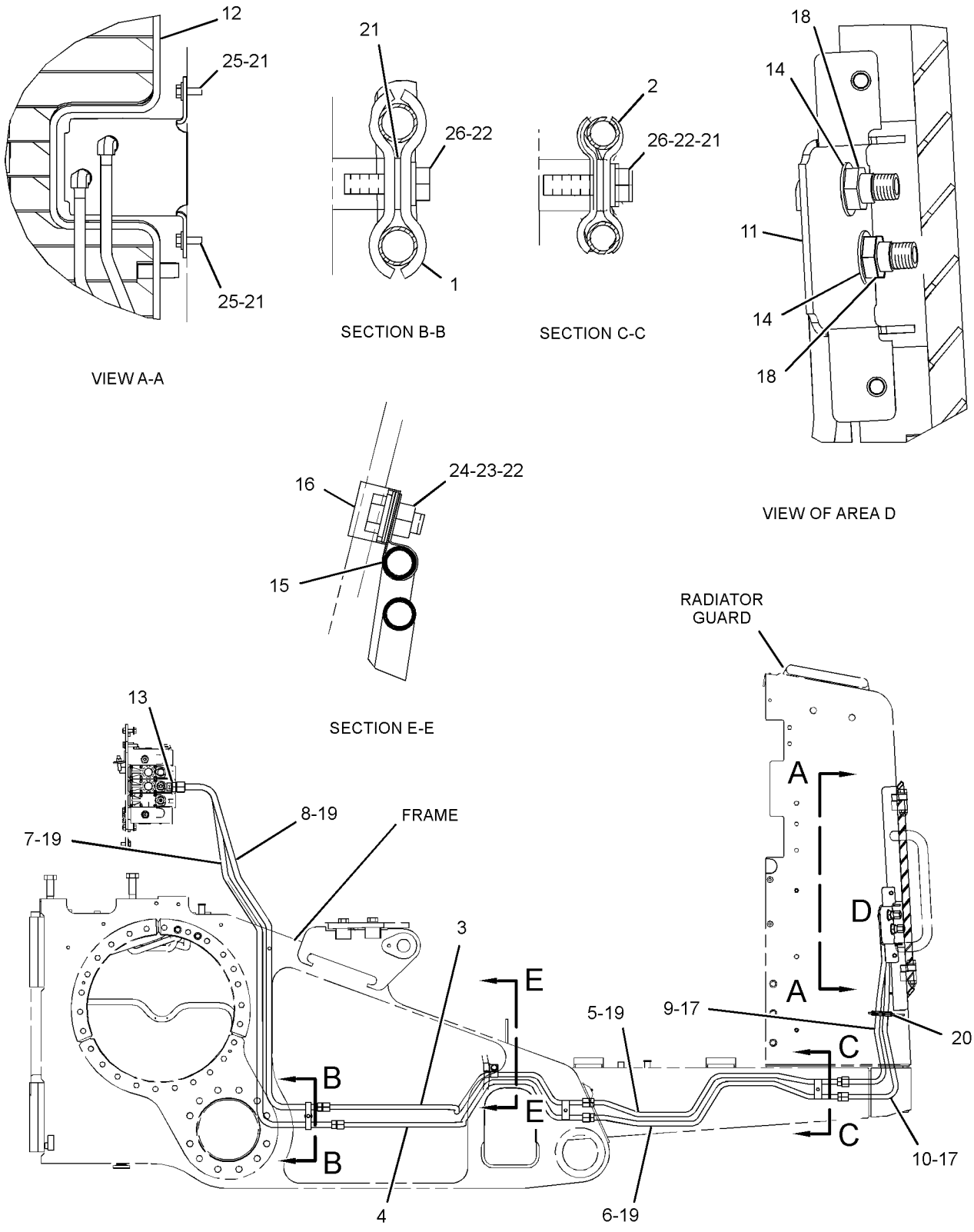

RIGHT SIDE VIEW

GRAPHIC #1 **<END>** g01963333

325-6422 MANIFOLD GP-VALVE–INLET

S/N: LJR1-UP

PART OF 309-1573 VALVE GP-BANK 3, 309-1574 VALVE GP-BANK 4

ALSO AN ATTACHMENT

SMCS-5264 **i03675904**

NOTE	REF NO	GRAPHIC REF	PART NUMBER	QTY	PART NAME 1 2 3 4 5 6 (PRODUCT LEVEL)	SEE PAGE
	1	1	**227-1184**	1	VALVE GP-RELIEF (INLET MANIFOLD)	
	2	1	**227-1185**	1	VALVE GP-FLOW CONTROL (AUXILIARY, INLET)	
		1	**227-1198**	1	KIT-SEAL (FLOW CONTROL VALVE)	
					(INCLUDES SEAL O-RINGS & BACKUP RING)	
	3	1	**227-1197**	1	FILTER-OIL (FLOW REGULATOR) (INLET MANIFOLD)	
	4	1	**227-1198**	1	KIT-SEAL (FLOW CONTROL VALVE)	
					(INCLUDES SEAL O-RINGS & BACKUP RING)	
	5	1	**227-1199**	1	KIT-SEAL	
					(INCLUDES SEAL O-RINGS & BACKUP RING)	
	6	1	**257-0468**	1	CAP-PROTECTION	

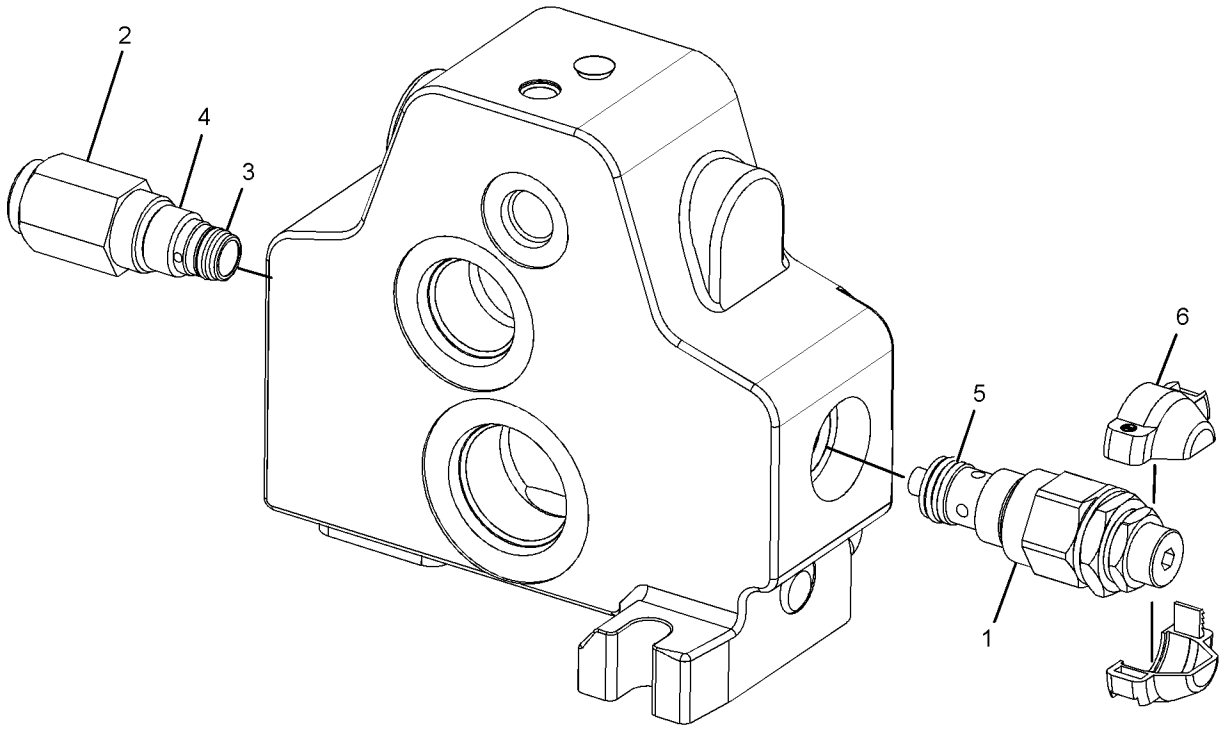

GRAPHIC #1 **<END>** g01889253

138-7033 MOUNTING GP-CYLINDER—BULLDOZER

S/N: D1Y1-UP

PART OF 273-0030 BULLDOZER AR-SEMI-UNIVERSAL

AN ATTACHMENT

SMCS-7562 **i05255407**

NOTE	REF NO	GRAPHIC REF	PART NUMBER	QTY	PART NAME 1 2 3 4 5 6 (PRODUCT LEVEL)	SEE PAGE
	1	1	**3G-8891**	4	SPACER (45X50X18-MM THK)	
	2	1	**4J-0805**	34	WASHER (1.781X2.5X0.12-IN THK)	
	3	1	**4T-0231**	8	RETAINER	
	4	1	**6S-6646**	2	PIN-COTTER	
	5	1	**8G-5428**	2	PIN	
	6	1	**8G-5501**	1	HANDHOLD	
	7	1	**8G-5502**	1	HANDHOLD	
	8	1	**9W-9996**	2	BAR	
	9	1	**115-4561**	2	BUSHING	
	10	1	**115-4581**	1	SUPPORT AS	
	11	1	**115-4591**	1	SUPPORT AS	
	12	1	**115-4592**	2	LINK AS	
	13	1	**149-6309**	6	PIN	
	14	1	**0S-0175**	2	PIN-CLEVIS	
M	15	1	**6V-7687**	2	LOCKNUT (M12X1.75-THD)	
M	16	1	**8T-4139**	12	BOLT (M12X1.75X30-MM)	
M	17	1	**8T-4183**	2	BOLT (M12X1.75X40-MM)	
	18	1	**8T-4223**	12	WASHER-HARD (13.5X25.5X3-MM THK)	

M - METRIC PART

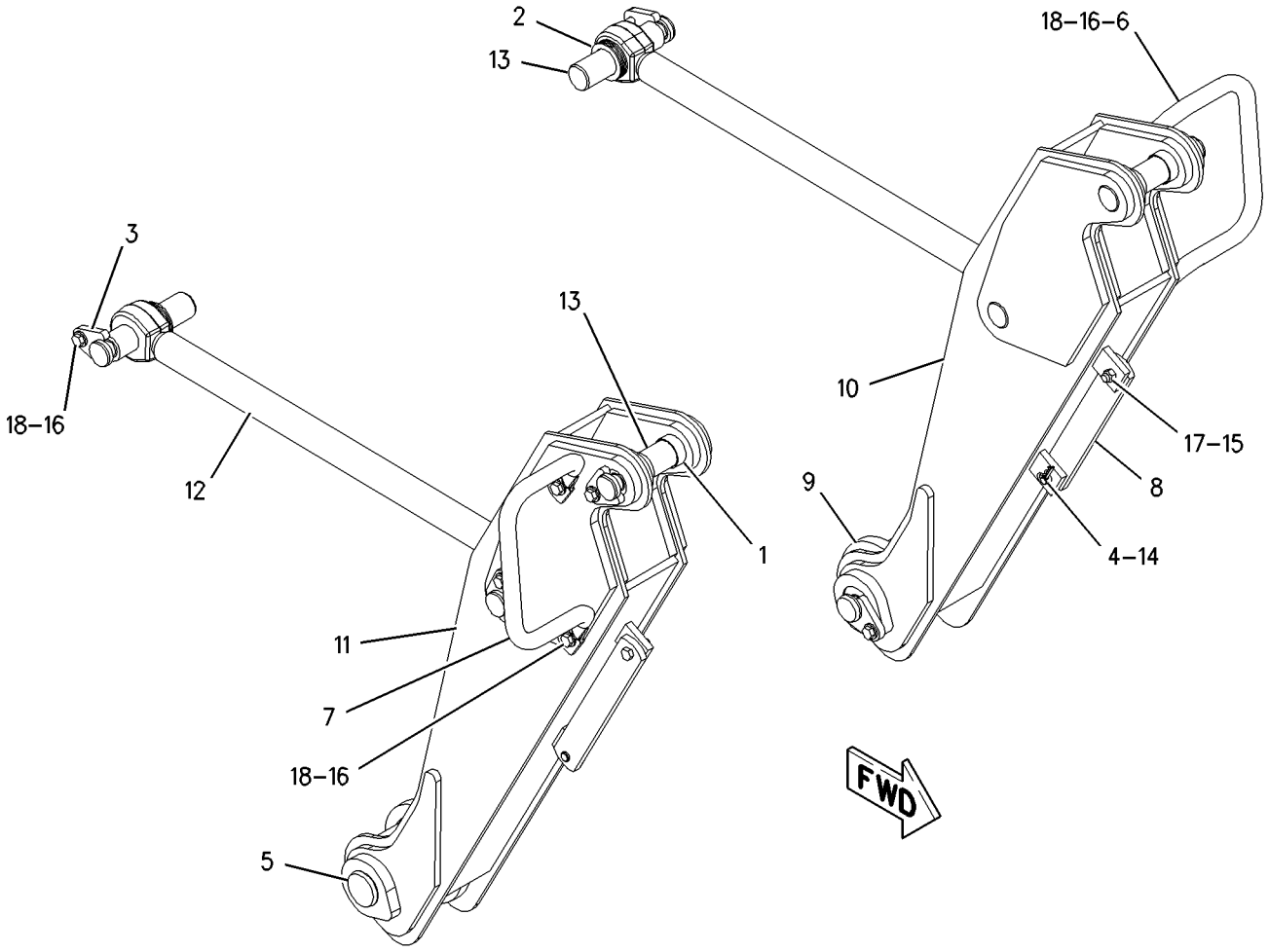

GRAPHIC #1 **<END>** g00776976

134-6775 PIN GP-CYLINDER

S/N: LPC1-UP; LJR1-UP

PART OF 321-5600 BULLDOZER AR-PWR ANGLE & TILT, 338-3521 C-FRAME GP-POWER ANGLING ALSO AN ATTACHMENT

SMCS-6068 **i00598343**

NOTE	REF NO	GRAPHIC REF	PART NUMBER	QTY	PART NAME 1 2 3 4 5 6 (PRODUCT LEVEL)	SEE PAGE
	1	1	**3G-8932**	2	PIN	
	2	1	**4T-0231**	2	RETAINER	
M	3	1	**8T-4956**	2	BOLT (M12X1.75X35-MM)	
B	4	1	**4J-0805**	6	WASHER (1.781X2.5X0.12-IN THK)	
	5	1	**8T-4223**	2	WASHER-HARD (13.5X25.5X3-MM THK)	

B - USE AS REQUIRED
M - METRIC PART

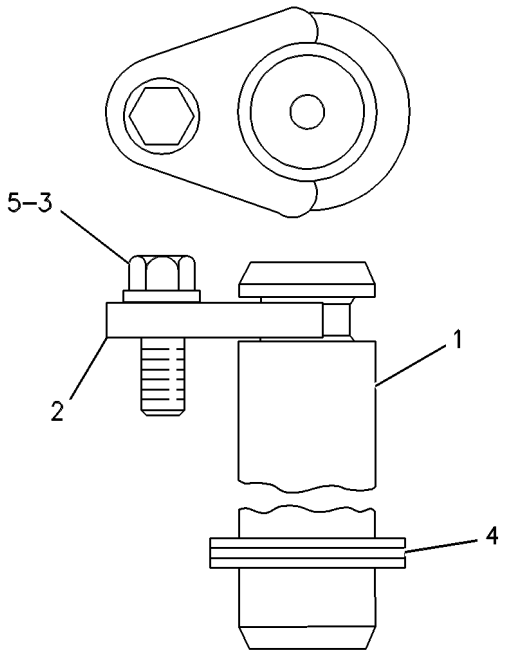

GRAPHIC #1 **<END>** g00263201

311-1993 PLATE GP-MOUNTING

S/N: LJR1-UP

PART OF 310-9950 HYDRAULIC AR-3 VALVE

SMCS-5059 **i04558910**

NOTE	REF NO	GRAPHIC REF	PART NUMBER	QTY	PART NAME 1 2 3 4 5 6 (PRODUCT LEVEL)	SEE PAGE
	1	1	**311-1994**	1	PLATE AS	
		1	**5D-9629**	1	ROD	
		1	**7T-1099**	3	LINK	
M		1	**8T-3490**	5	NUT-WELD (M10X1.5-THD)	
M		1	**9R-2672**	1	BOSS-THREADED (M10X1.5-THD)	
	2	1	**198-4777**	2	WASHER-HARD (11X25X10-MM THK)	
	3	1	**171-7077**	2	ROD-THREADED	
	4	1	**7X-7729**	1	WASHER (11X25X3-MM THK)	
M	5	1	**8T-4133**	2	NUT (M10X1.5-THD)	
M	6	1	**8T-4136**	3	BOLT (M10X1.5X25-MM)	
M	7	1	**8T-4185**	2	BOLT (M10X1.5X50-MM)	
	8	1	**8T-4222**	4	WASHER-PLATED (11X32X2.5-MM THK)	

M - METRIC PART

311-1993 **PLATE GP-MOUNTING (*contd.*)** **i04558910**

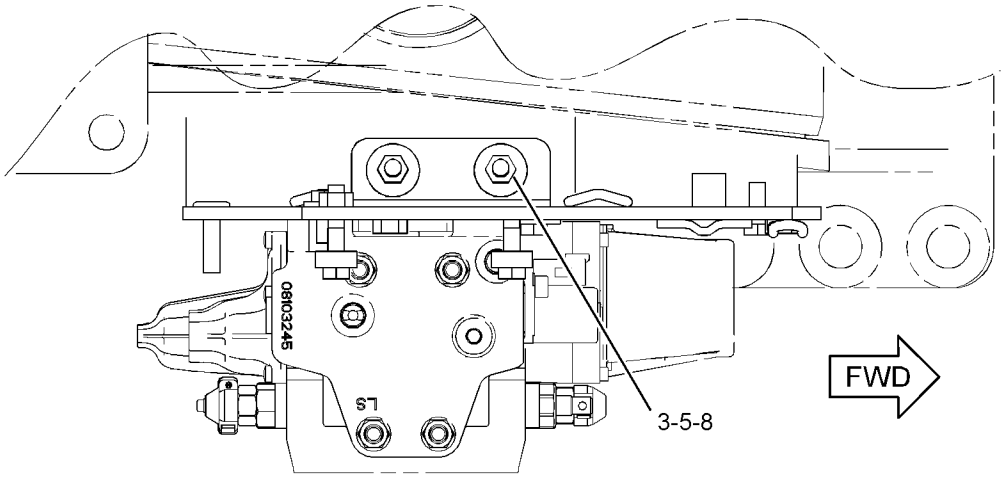

TOP VIEW

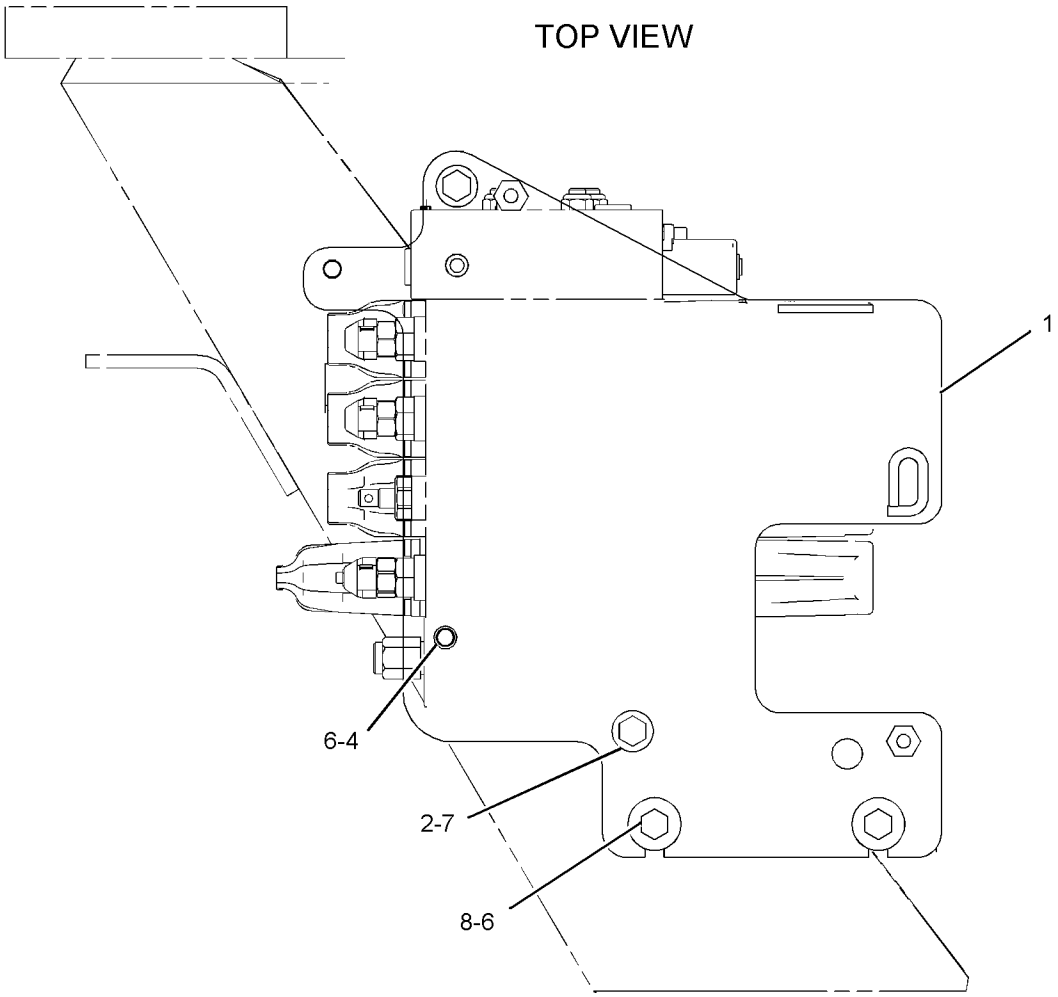

RIGHT SIDE VIEW

GRAPHIC #1 **<END>** g01895377

318-8481 PUMP GP-PISTON—IMPLEMENT

S/N: LJR1-UP

PART OF 311-1991 LINES GP-PUMP

TYPE 1

SMCS-5070 **i03627420**

NOTE	REF NO	GRAPHIC REF	PART NUMBER	QTY	PART NAME 1 2 3 4 5 6 (PRODUCT LEVEL)	SEE PAGE
	1	1	**180-6213**	1	RING-RETAINING	
	2	1	**168-7319**	1	SEAL-SHAFT	
M	3	1	**6R-7943**	2	SCREW (M5X0.8X15-MM)	
	4	1	**168-2197**	1	SPRING	
	5	1	**168-2198**	1	LINK-CONTROL	
	6	1	**174-9994**	1	PISTON-CONTROL	
	7	1	**8T-7525**	1	SEAL-O-RING	
	8	1	**198-5351**	1	PLUG	
	9	1	**185-0296**	1	BEARING	
	10	1	**3J-7354**	1	SEAL-O-RING	
	11	1	**198-5361**	4	BOLT (M14X2X45-MM)	
	12	1	**9X-8979**	1	DOWEL	
	13	1	**192-7470**	1	SEAL-O-RING	
	14	1	**168-2203**	1	SHIM-SHAFT	
Y	15	1	**197-2849**	1	ROTATING GP-PUMP	552
	16	1	**168-7317**	1	SWASHPLATE-PUMP	
	17	1	**168-2206**	2	BEARING-CRADLE	
	18	1	**185-0295**	1	BEARING	
M	19	1	**8T-8442**	4	BOLT-SOCKET HEAD (M6X1X30-MM)	
	20	1	**190-6507**	1	STOP	
	21	1	**197-2850**	1	SHAFT	
	22	1	**120-4394**	2	PLUG-BREAK OFF	
	23	1	**168-3504**	2	SEAL	
	24	1	**9X-7680**	3	SEAL-O-RING	
	25	1	**9S-8002**	1	PLUG-O-RING	
Y	26	1	**168-2210**	1	VALVE GP-PUMP CONTROL (PRESSURE, FLOW COMPENSATOR)	570

M - METRIC PART
Y - SEPARATE ILLUSTRATION

318-8481 **PUMP GP-PISTON (*contd.*)** **i03627420**

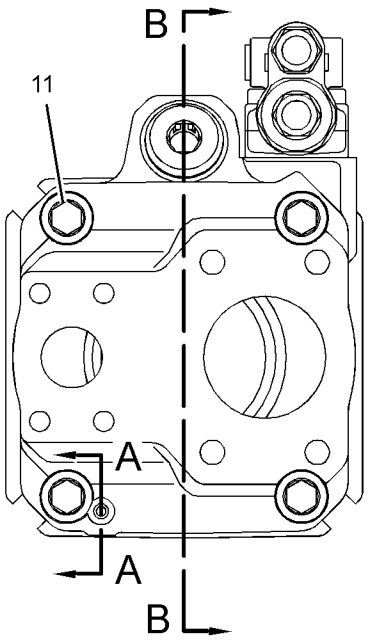

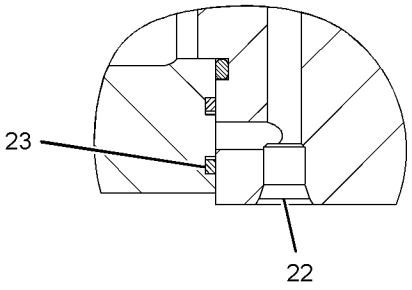

SECTION A-A

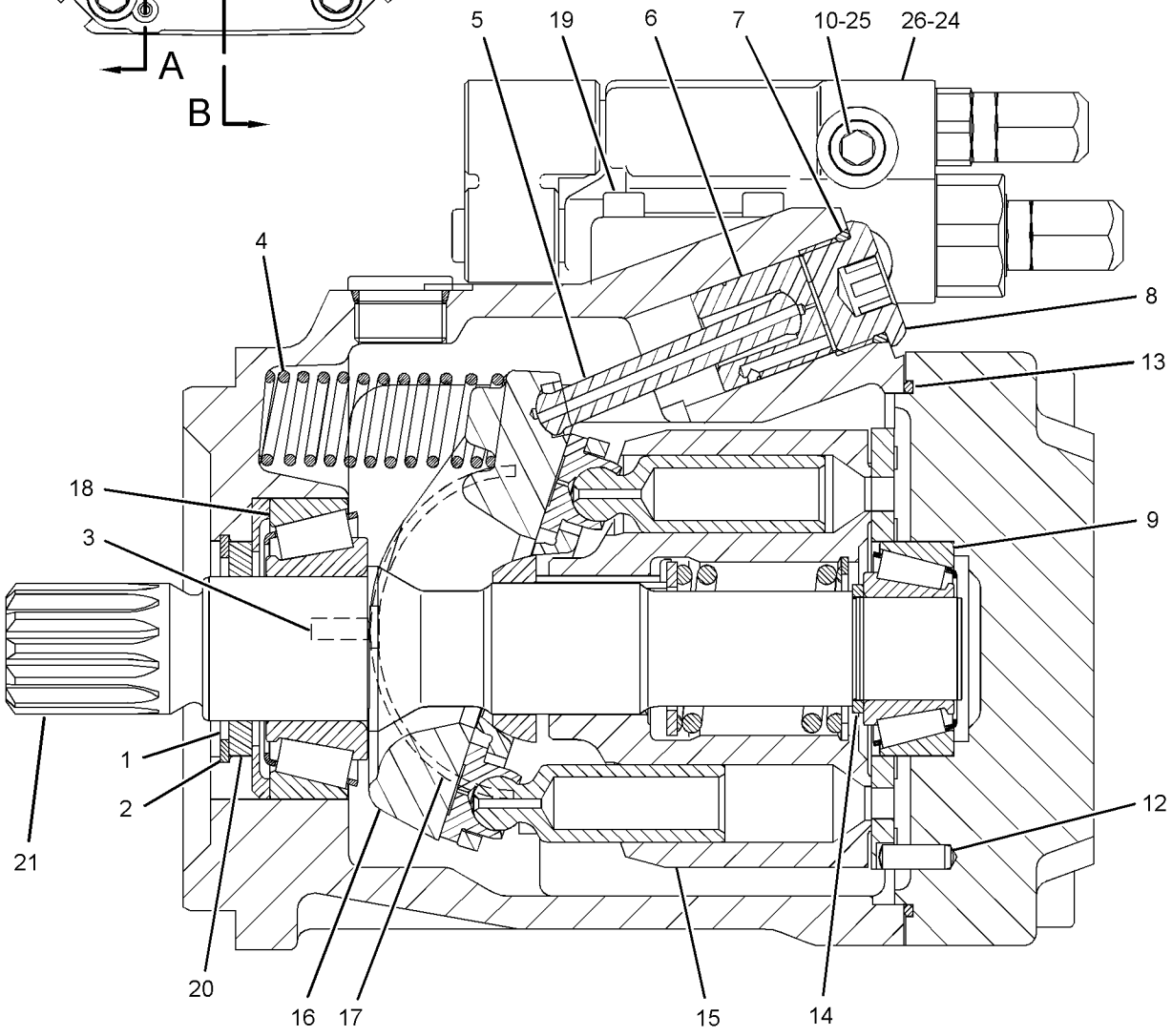

SECTION B-B

GRAPHIC #1 **<END>** g01892973

318-8481 PUMP GP-PISTON—IMPLEMENT*R

S/N: LJR1-UP

PART OF 311-1991 LINES GP-PUMP

TYPE 2

SMCS-5070 **i04715530**

NOTE	REF NO	GRAPHIC REF	PART NUMBER	QTY	PART NAME 1 2 3 4 5 6 (PRODUCT LEVEL)	SEE PAGE
	1	1	**180-6213**	1	RING-RETAINING	
	2	1	**168-7319**	1	SEAL-SHAFT	
M	3	1	**6R-7943**	2	SCREW (M5X0.8X15-MM)	
	4	1	**168-2197**	1	SPRING	
	5	1	**168-2198**	1	LINK-CONTROL	
	6	1	**174-9994**	1	PISTON-CONTROL	
	7	1	**8T-7525**	1	SEAL-O-RING	
	8	1	**198-5351**	1	PLUG	
	9	1	**185-0296**	1	BEARING	
	10	1	**3J-7354**	1	SEAL-O-RING	
	11	1	**198-5361**	4	BOLT (M14X2X45-MM)	
	12	1	**9X-8979**	1	DOWEL	
	13	1	**192-7470**	1	SEAL-O-RING	
	14	1	**168-2203**	1	SHIM-SHAFT	
Y	15	1	**197-2849**	1	ROTATING GP-PUMP	552
	16	1	**168-7317**	1	SWASHPLATE-PUMP	
	17	1	**168-2206**	2	BEARING-CRADLE	
	18	1	**185-0295**	1	BEARING	
M	19	1	**8T-8442**	4	BOLT-SOCKET HEAD (M6X1X30-MM)	
	20	1	**190-6507**	1	STOP	
	21	1	**197-2850**	1	SHAFT	
	22	1	**120-4394**	2	PLUG-BREAK OFF	
	23	1	**168-3504**	2	SEAL	
C	24	1	**280-7870**	1	GASKET	
	25	1	**9S-8002**	1	PLUG-O-RING	
CJY	26	1	**285-5240**	1	VALVE GP-PUMP CONTROL (PRESSURE, FLOW COMPENSATOR)	572
					AVAILABLE REPAIR KIT(S):	
J			**293-8350**	1	KIT-SEAL	
					(INCLUDES RINGS)	

C - CHANGE FROM PREVIOUS TYPE
J - KIT MARKED J SERVICES PART MARKED J
M - METRIC PART
Y - SEPARATE ILLUSTRATION

318-8481 **PUMP GP-PISTON (*contd.*)** **i04715530**

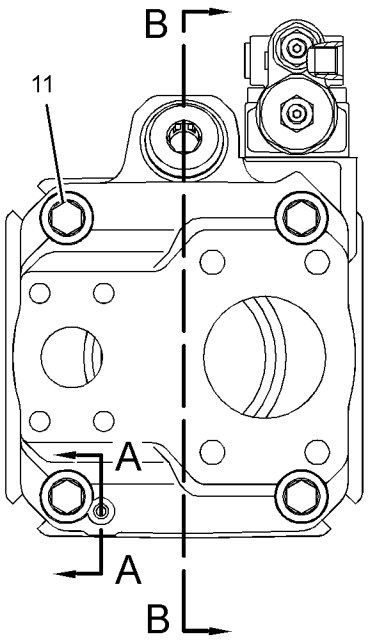

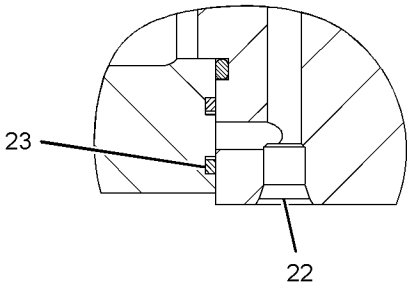

SECTION A-A

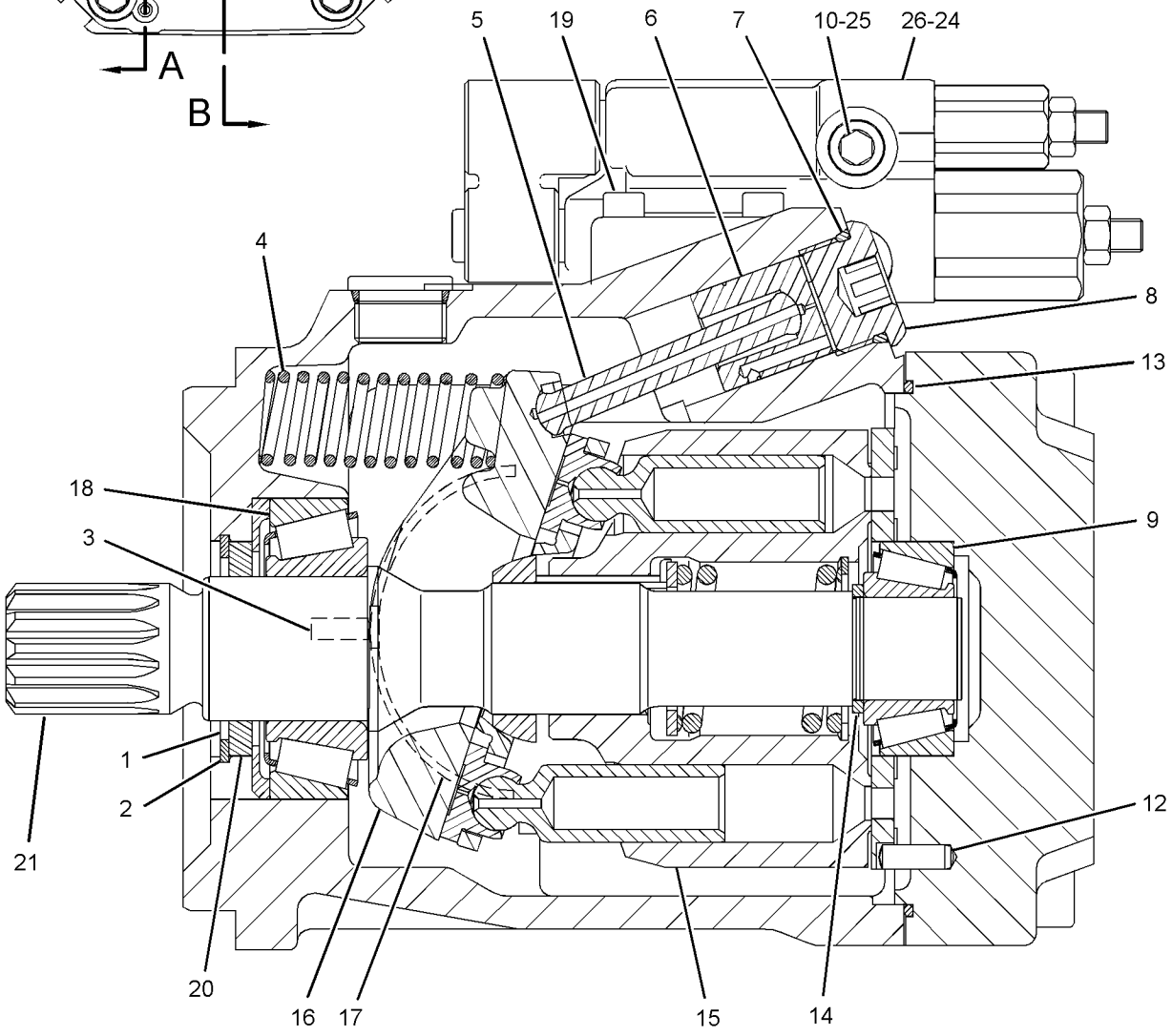

SECTION B-B

GRAPHIC #1 **<END>** g02777296

197-2849 ROTATING GP-PUMP–IMPLEMENT

S/N: LJR1-UP

PART OF 318-8481 PUMP GP-PISTON

SMCS-5070 **i02917919**

NOTE	REF NO	GRAPHIC REF	PART NUMBER	QTY	PART NAME 1 2 3 4 5 6 (PRODUCT LEVEL)	SEE PAGE
	1	1	**168-3384**	9	PISTON AS-PUMP	
	2	1	**197-2851**	1	BARREL	
	3	1	**168-3385**	1	PLATE-RETRACTION	
	4	1	**313-2060**	1	PLATE-PORT	
	5	1	**168-3378**	1	BEARING-SPHERICAL	
	6	1	**168-3381**	1	SPRING	
	7	1	**168-3379**	3	PIN	
	8	1	**6V-7723**	1	RING-RETAINING	
	9	1	**168-3382**	1	WASHER (42-MM ODX2.7-MM THK)	

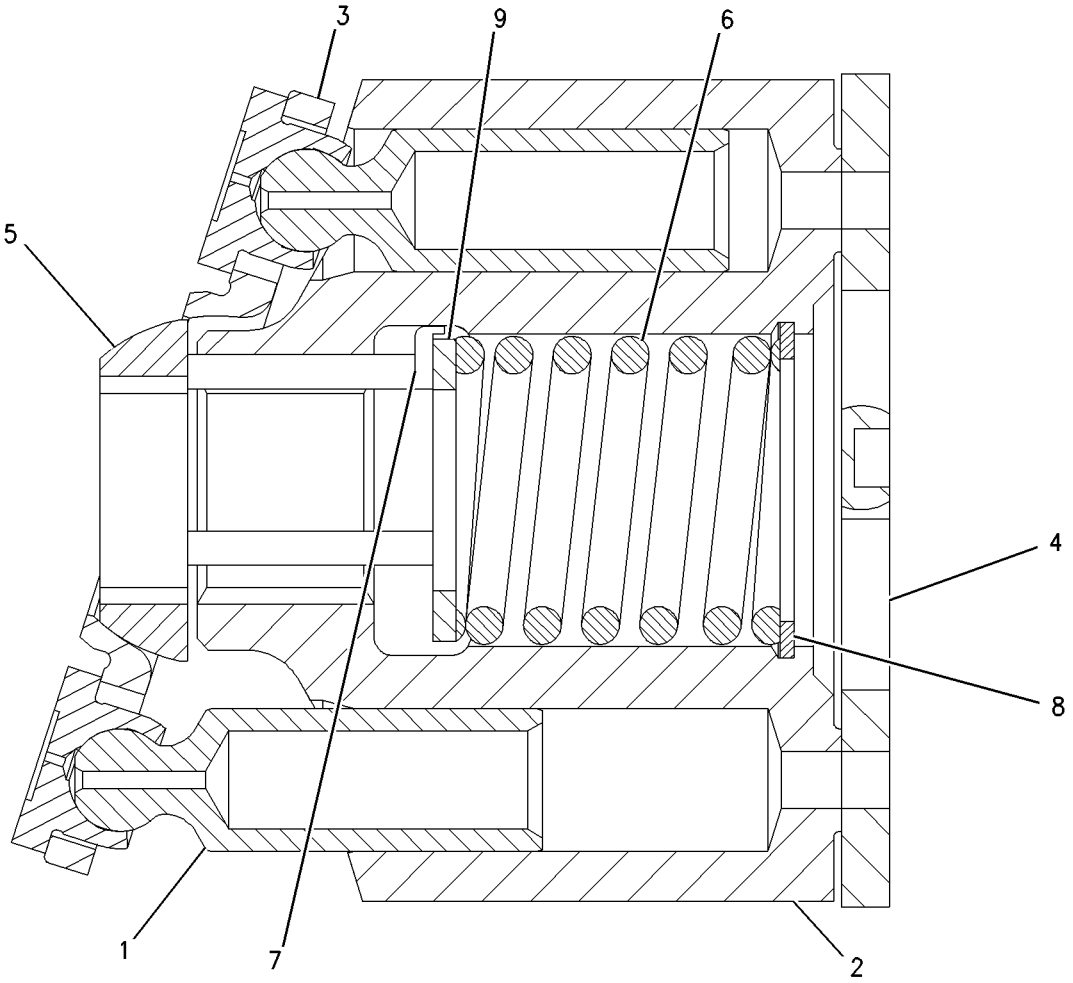

GRAPHIC #1 **<END>** g00719942

230-9131 TANK & FILTER GP-HYDRAULIC

S/N: LJR1-443

PART OF 310-9950 HYDRAULIC AR-3 VALVE

SMCS-5056, 5068 **i05210021**

NOTE	REF NO	GRAPHIC REF	PART NUMBER	QTY	PART NAME 1 2 3 4 5 6 (PRODUCT LEVEL)	SEE PAGE
	1	1	**1U-2827**	1	GUIDE-VALVE	
	3	2	**4J-8251**	1	GROMMET	
	4	2	**4J-8252**	1	GAUGE-SIGHT (HYDRAULIC TANK OIL)	
	5	1	**4T-0521**	1	BOLT (5/8-11X17.1-IN)	
	6	1	**7B-3039**	1	SPRING	
	8	2	**7K-1181**	1	STRAP-CABLE	
	9	2	**8J-6913**	1	RETAINER-SIGHT GLASS	
	10	1	**8J-8443**	1	SPRING	
	11	1	**8J-8782**	1	BODY-DRAIN VALVE	
	12	1	**8J-8783**	1	VALVE	
	13	1	**9J-3047**	1	STRAINER (HYDRAULIC TANK FILL)	
	14	1	**9J-7031**	1	PLUG-DRAIN (HYDRAULIC TANK)	
Y	16	2	**145-7028**	1	SENSOR GP-TEMPERATURE (HYDRAULIC OIL)	208
	17	2	**152-6649**	1	BASE	
	18	2	**164-3651**	1	ADAPTER	
	19	2	**166-9147**	1	TANK AS	
	20	2	**166-9171**	1	GASKET	
	21	2	**175-7407**	1	SPACER	
	22	2	**187-9194**	1	PLATE (SIGHT GLASS)	
	23	2	**231-2064**	1	COVER AS	
	25	1	**1R-0777**	1	FILTER ELEMENT AS-OIL (ADVANCED EFFICIENCY)	
					—OR—	
		1	**104-6931**	1	FILTER ELEMENT AS-OIL (FIRE RESISTANT FLUID)	
	27	1	**3G-0361**	1	GASKET	
	28	1	**3G-3267**	1	SCREEN AS (HYDRAULIC TANK OIL)	
	29	2	**3J-1907**	1	SEAL-O-RING	
	30	2	**4J-0519**	2	SEAL-O-RING	
	31	1	**4K-0367**	1	NUT-FULL (5/8-11-THD)	
	32	2	**4P-8134**	1	CLIP	
	34	1	**5M-2057**	1	SEAL-O-RING	
	35	2	**5P-3108**	6	SEAL-O-RING	
M	36	2	**8T-4195**	21	BOLT (M10X1.5X30-MM)	
	37	1,2	**6V-5839**	6	WASHER (11X21X2.5-MM THK)	
M	38	1,2	**6V-7744**	6	LOCKNUT (M10X1.5-THD)	
	39	1	**6V-9633**	1	GASKET	
	40	2	**7J-0204**	1	SEAL-O-RING	
	41	1	**8F-9206**	1	SEAL-O-RING	
	42	1	**8J-8322**	1	RING-RETAINING	
	43	1	**8J-8436**	1	TUBE AS	
	44	1	**8J-8468**	1	VALVE	
	46	1	**8T-3298**	1	SEAL-RECTANGULAR	
	47	1	**8T-9389**	3	BOLT (1/2-13X2.75-IN)	
	49	1	**9J-2914**	1	SPACER	
	50	1	**9T-3264**	1	COVER	
	51	2	**4P-7581**	1	CLIP (LADDER)	
	52	2	**3S-2093**	1	STRAP-CABLE (PLASTIC)	
Y	53	1	*303-2250*	1	COVER GP-HYDRAULIC TANK CAP	489

M - METRIC PART
Y - SEPARATE ILLUSTRATION

230-9131 **TANK & FILTER GP-HYDRAULIC (*contd.*)** **i05210021**

REFER TO ALL ILLUSTRATIONS OF
THIS GROUP FOR AUXILIARY VIEWS

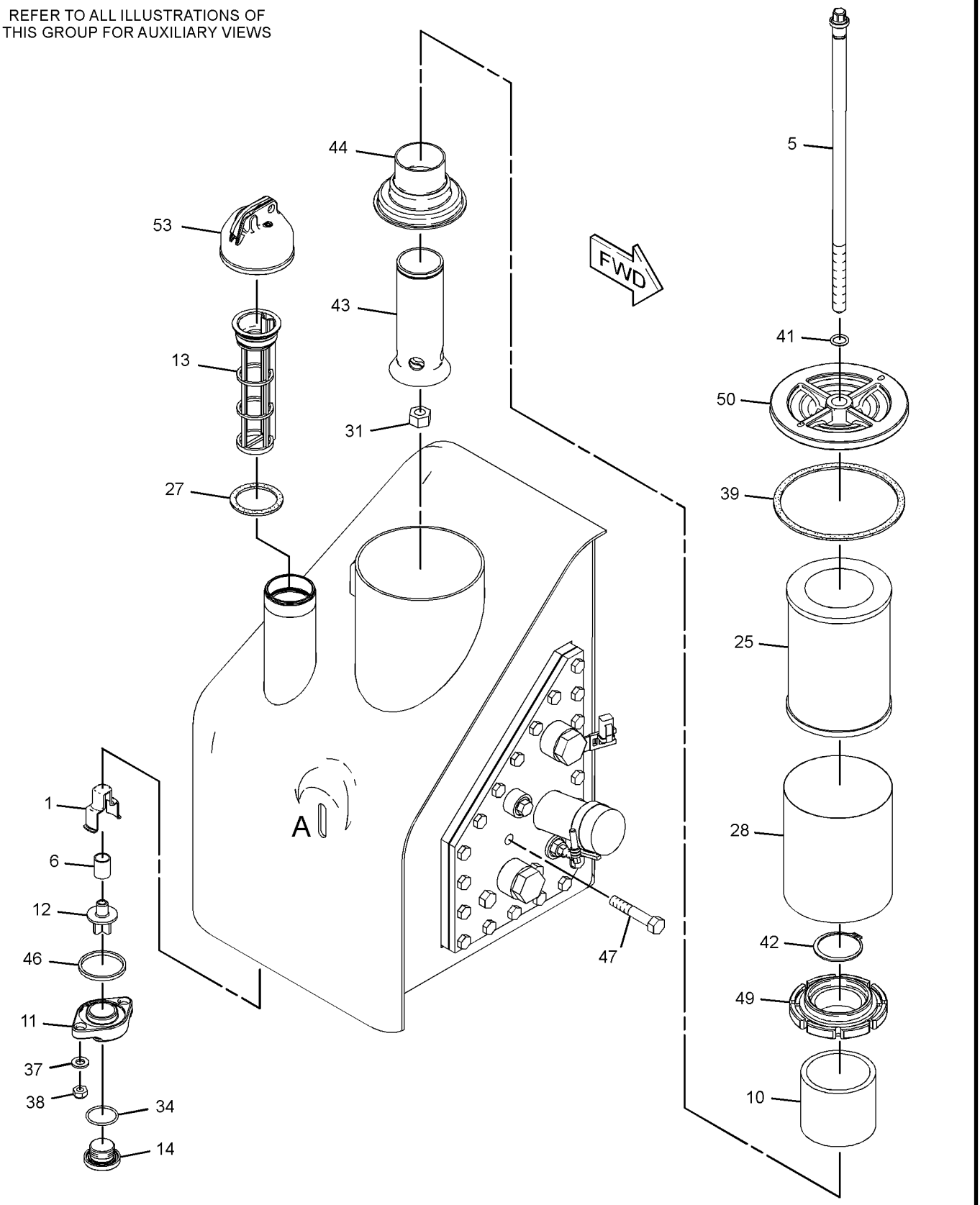

GRAPHIC #1 g01395141

230-9131 **TANK & FILTER GP-HYDRAULIC (*contd.*)** **i05210021**

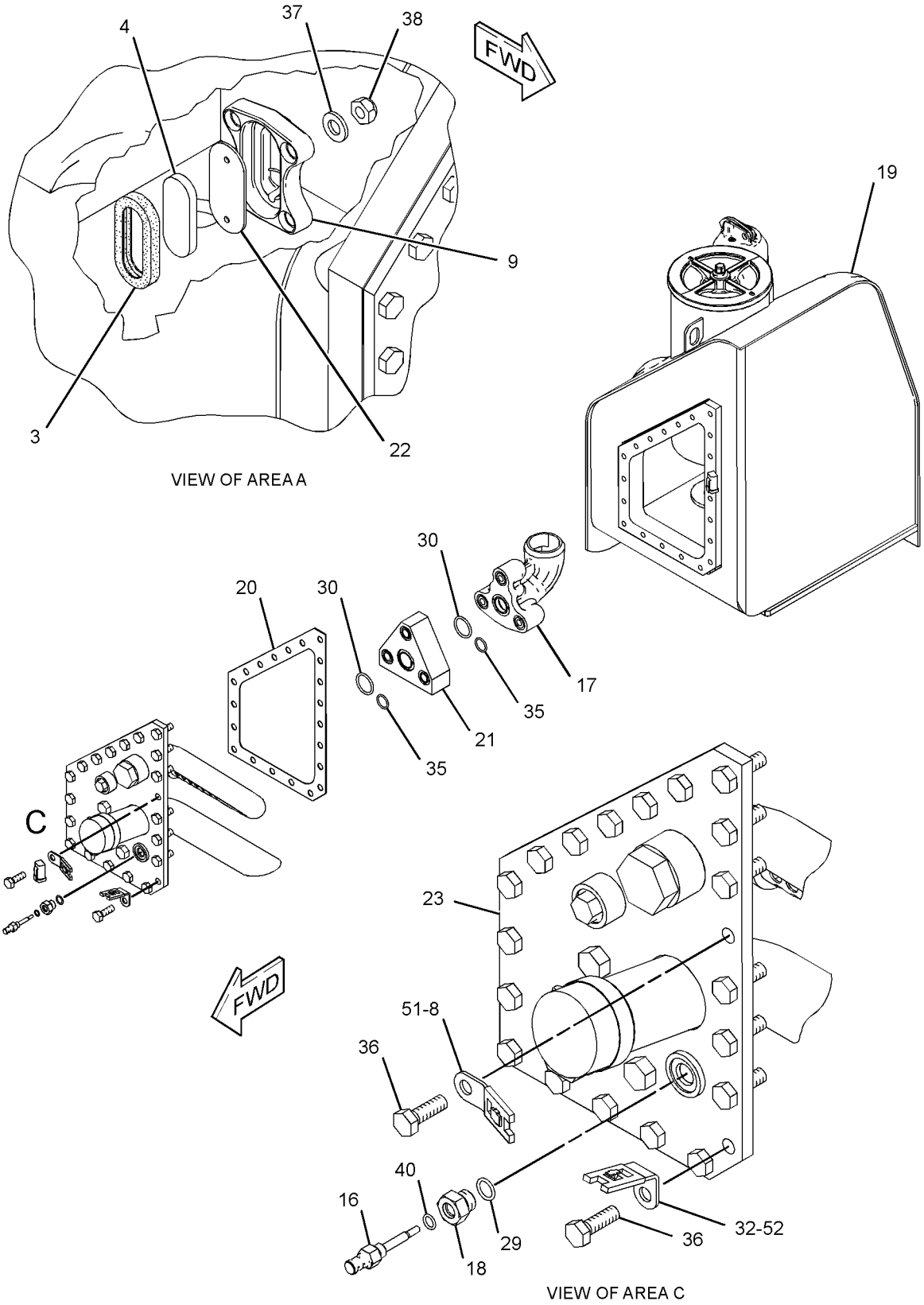

GRAPHIC #2 **<END>** g01395140

230-9131 TANK & FILTER GP-HYDRAULIC

S/N: LJR444-UP

PART OF 310-9950 HYDRAULIC AR-3 VALVE

SMCS-5056, 5068 **i05255471**

NOTE	REF NO	GRAPHIC REF	PART NUMBER	QTY	PART NAME 1 2 3 4 5 6 (PRODUCT LEVEL)	SEE PAGE
	1	1	**1U-2827**	1	GUIDE-VALVE	
Y	2	1	*303-2250*	1	COVER GP-HYDRAULIC TANK CAP	489
	3	2	**4J-8251**	1	GROMMET	
	4	2	**4J-8252**	1	GAUGE-SIGHT (HYDRAULIC TANK OIL)	
	5	1	**4T-0521**	1	BOLT (5/8-11X17.1-IN)	
	6	1	**7B-3039**	1	SPRING	
	9	2	**8J-6913**	1	RETAINER-SIGHT GLASS	
	10	1	**8J-8443**	1	SPRING	
	11	1	**8J-8782**	1	BODY-DRAIN VALVE	
	12	1	**8J-8783**	1	VALVE	
	13	1	**9J-3047**	1	STRAINER (HYDRAULIC TANK FILL)	
	14	1	**9J-7031**	1	PLUG-DRAIN (HYDRAULIC TANK)	
CY	16	2	*234-5013*	1	SENSOR GP-TEMPERATURE (HYDRAULIC OIL)	210
	17	2	**152-6649**	1	BASE	
	19	1	**166-9147**	1	TANK AS	
	20	2	**166-9171**	1	GASKET	
	21	2	**175-7407**	1	SPACER	
	22	2	**187-9194**	1	PLATE (SIGHT GLASS)	
	23	2	**231-2064**	1	COVER AS	
	25	1	**1R-0777**	1	FILTER ELEMENT AS-OIL (ADVANCED EFFICIENCY)	
					—OR—	
AF			**139-1537**	1	FILTER ELEMENT AS-OIL (ULTRA HIGH EFFICIENCY)	
					—OR—	
AF			**104-6931**	1	FILTER ELEMENT AS-OIL (FIRE RESISTANT FLUID)	
	27	1	**3G-0361**	1	GASKET	
	28	1	**3G-3267**	1	SCREEN AS (HYDRAULIC TANK OIL)	
	30	2	**4J-0519**	2	SEAL-O-RING	
	31	1	**4K-0367**	1	NUT-FULL (5/8-11-THD)	
	32	2	**4P-8134**	1	CLIP	
	34	1	**5M-2057**	1	SEAL-O-RING	
	35	2	**5P-3108**	6	SEAL-O-RING	
M	36	2	**8T-4195**	21	BOLT (M10X1.5X30-MM)	
	37	2	**6V-5839**	4	WASHER (11X21X2.5-MM THK)	
M	38	1,2	**6V-7744**	6	LOCKNUT (M10X1.5-THD)	
	39	1	**6V-9633**	1	GASKET	
	41	1	**8F-9206**	1	SEAL-O-RING	
	42	1	**8J-8322**	1	RING-RETAINING	
	43	1	**8J-8436**	1	TUBE AS	
	44	1	**8J-8468**	1	VALVE	
	46	1	**8T-3298**	1	SEAL-RECTANGULAR	
	47	1	**8T-9389**	3	BOLT (1/2-13X2.75-IN)	
	49	1	**9J-2914**	1	SPACER	
	50	1	**9T-3264**	1	COVER	
	51	2	**4P-7581**	1	CLIP	
	52	1,2	**8T-4121**	21	WASHER-HARD (11X21X2.5-MM THK)	

A - NOT PART OF THIS GROUP
C - CHANGE FROM PREVIOUS TYPE
F - NOT SHOWN
M - METRIC PART
Y - SEPARATE ILLUSTRATION

230-9131 **TANK & FILTER GP-HYDRAULIC (*contd.*)** **i05255471**

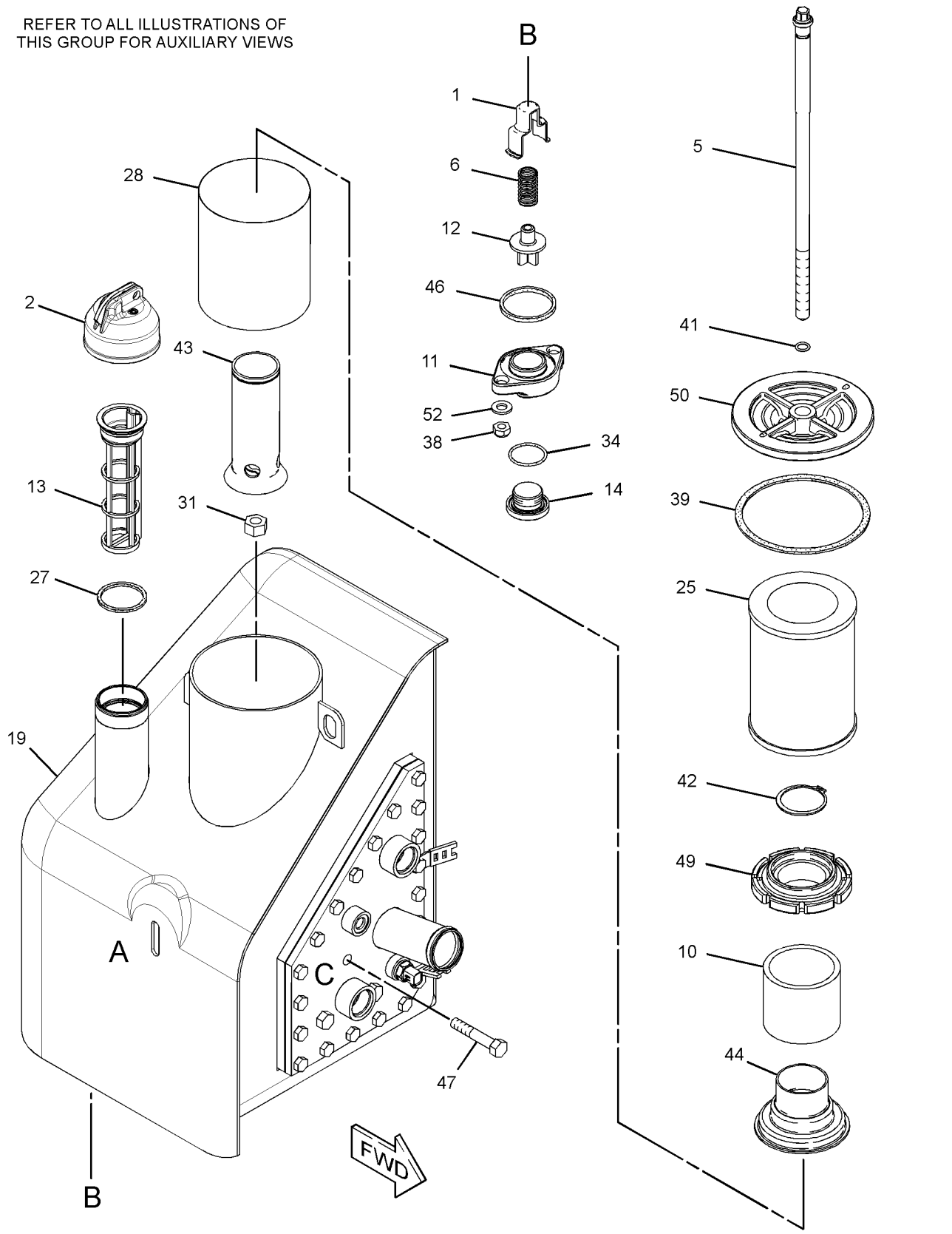

GRAPHIC #1

g03347506

230-9131 **TANK & FILTER GP-HYDRAULIC (*contd.*)** **i05255471**

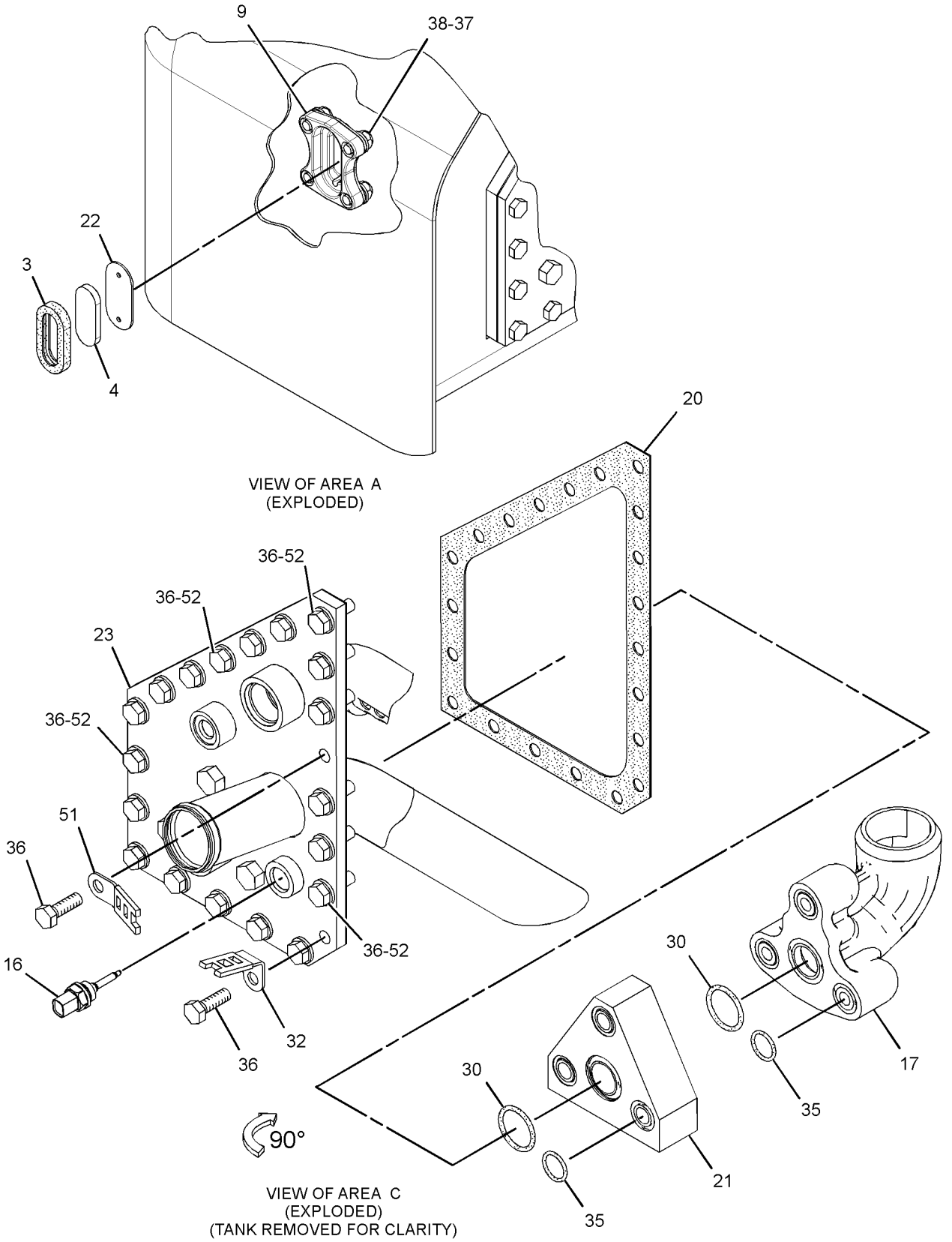

GRAPHIC #2 **<END>** g03347737

309-1573 VALVE GP-BANK 3—BULLDOZER

S/N: LJR1-UP

PART OF 310-9950 HYDRAULIC AR-3 VALVE

SMCS-5051 **i03627291**

NOTE	REF NO	GRAPHIC REF	PART NUMBER	QTY	PART NAME 1 2 3 4 5 6 (PRODUCT LEVEL)	SEE PAGE
Y	1	1	**325-6422**	1	MANIFOLD GP-VALVE (INLET)	543
Y	2	1	**318-8145**	1	VALVE GP-CONTROL (BULLDOZER LIFT)	563
Y	3	1	**318-8146**	1	VALVE GP-CONTROL (BULLDOZER TILT)	564
Y	4	1	**318-8147**	1	VALVE GP-CONTROL (BLADE ANGLE)	565
Y	5	1	**266-2579**	1	VALVE & MTG GP-SOLENOID (OUTLET)	312
	6	1	**257-0450**	1	KIT-FASTENER (BANK VALVE)	
					(INCLUDES LOCKNUTS & TIE RODS)	
	7	1	**4J-5309**	16	SEAL-O-RING	
	8	1	**6V-5326**	4	SEAL-O-RING	
	9	1	**6V-8978**	4	SEAL-O-RING	

Y - SEPARATE ILLUSTRATION

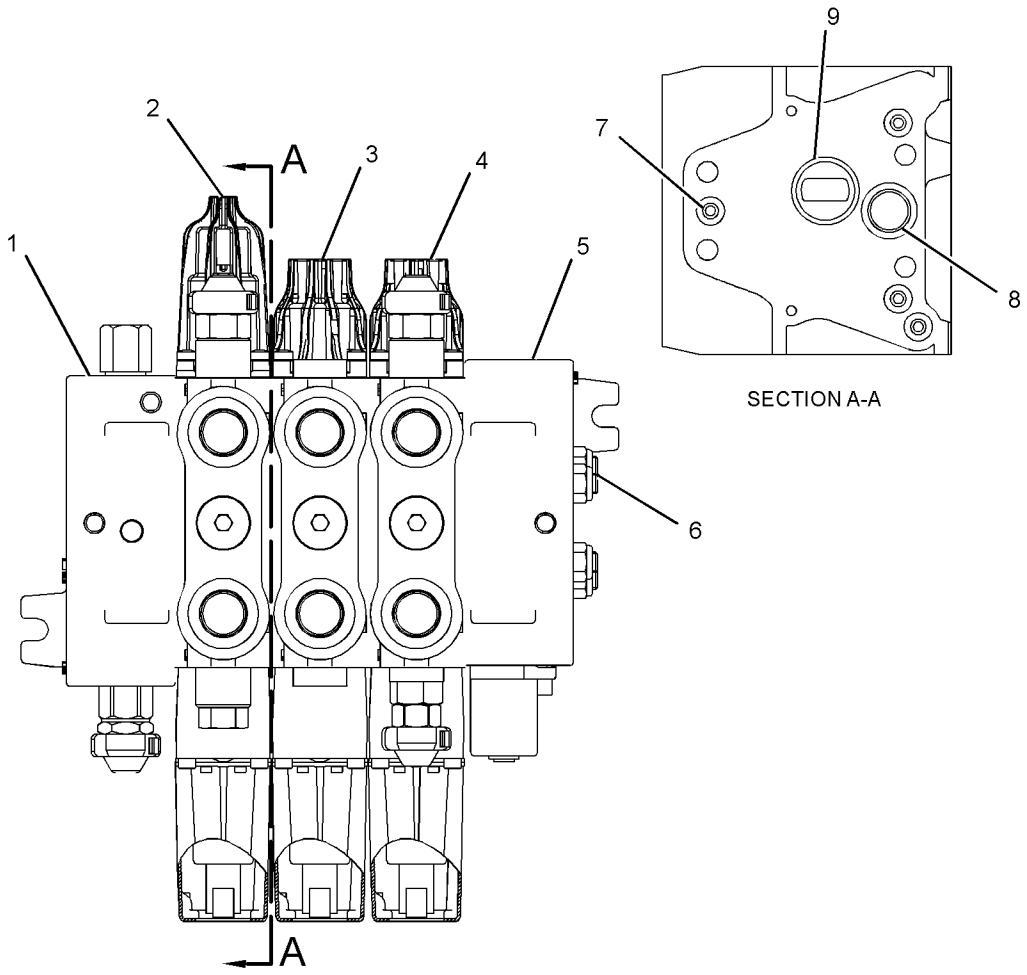

SECTION A-A

GRAPHIC #1 **<END>** g01884953

309-1574 VALVE GP-BANK 4—BULLDOZER, RIPPER

S/N: LJR1-UP

PART OF 317-4192, 321-8161 HYDRAULIC AR-4 VALVE

AN ATTACHMENT

SMCS-5051 **i03626452**

NOTE	REF NO	GRAPHIC REF	PART NUMBER	QTY	PART NAME 1 2 3 4 5 6 (PRODUCT LEVEL)	SEE PAGE
Y	1	1	**325-6422**	1	MANIFOLD GP-VALVE (INLET)	543
Y	2	1	**318-8145**	1	VALVE GP-CONTROL (BULLDOZER LIFT)	563
Y	3	1	**318-8146**	1	VALVE GP-CONTROL (BULLDOZER TILT)	564
Y	4	1	**318-8147**	1	VALVE GP-CONTROL (BLADE ANGLE)	565
Y	5	1	**318-8148**	1	VALVE GP-CONTROL (RIPPER)	567
Y	6	1	**266-2579**	1	VALVE & MTG GP-SOLENOID (OUTLET)	312
	7	1	**227-1201**	1	KIT-FASTENER	
					(INCLUDES LOCKNUTS & TIE RODS)	
	8	1	**4J-5309**	20	SEAL-O-RING	
	9	1	**6V-5326**	5	SEAL-O-RING	
	10	1	**6V-8978**	5	SEAL-O-RING	

Y - SEPARATE ILLUSTRATION

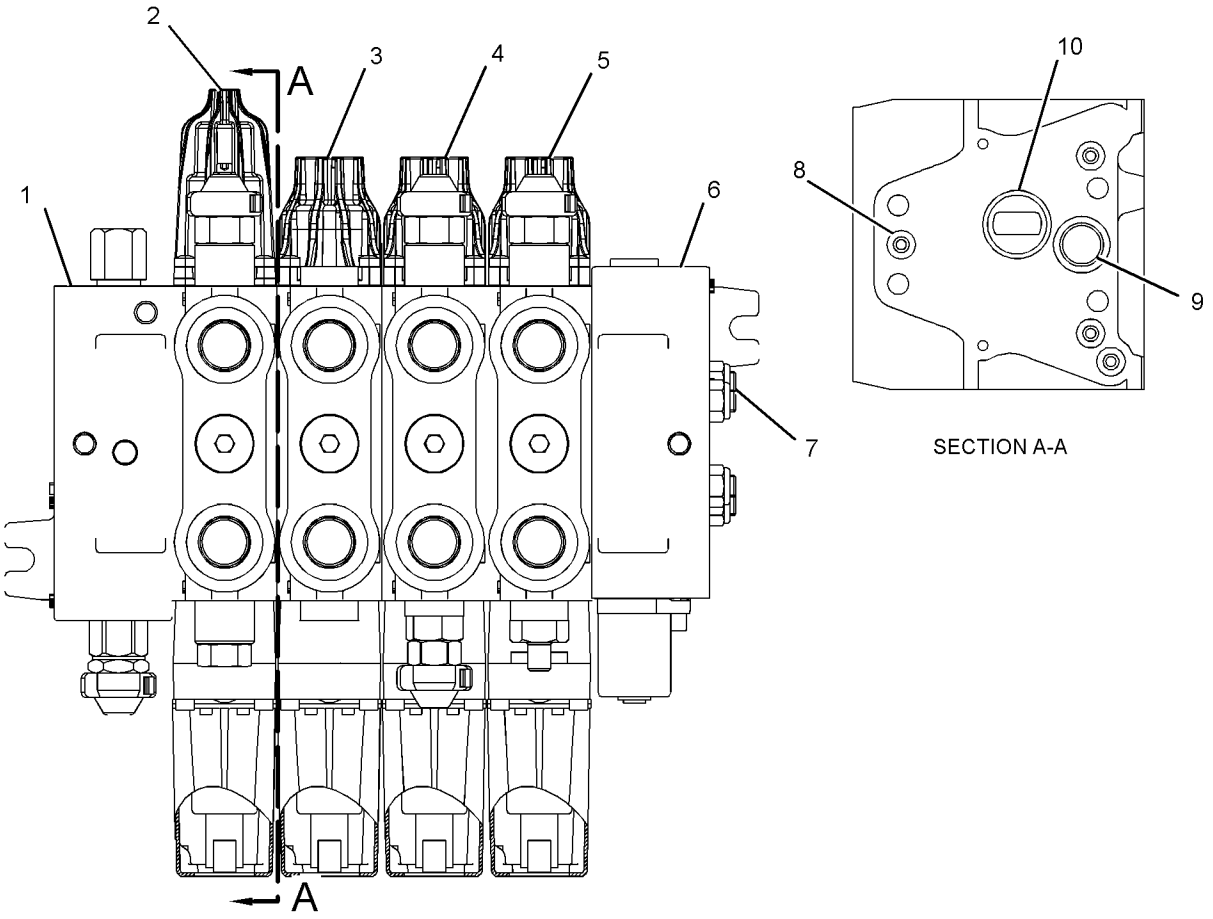

GRAPHIC #1 **<END>** g01902793

126-0747 VALVE GP-BYPASS–HYDRAULIC OIL COOLER

S/N: LJR1-UP

PART OF 311-1992 LINES GP-STEERING

SMCS-5076 **i02252561**

NOTE	REF NO	GRAPHIC REF	PART NUMBER	QTY	PART NAME 1 2 3 4 5 6 (PRODUCT LEVEL)	SEE PAGE
	1	1	**124-8335**	1	VALVE AS-CONTROL	
	2	1	**126-0748**	1	BODY	
	3	1	*148-8407*	1	PLUG AS	
		1	**9S-4191**	1	PLUG-O-RING	
		1	**3J-1907**	1	SEAL-O-RING	
	4	1	**6V-8218**	1	SEAL-O-RING	

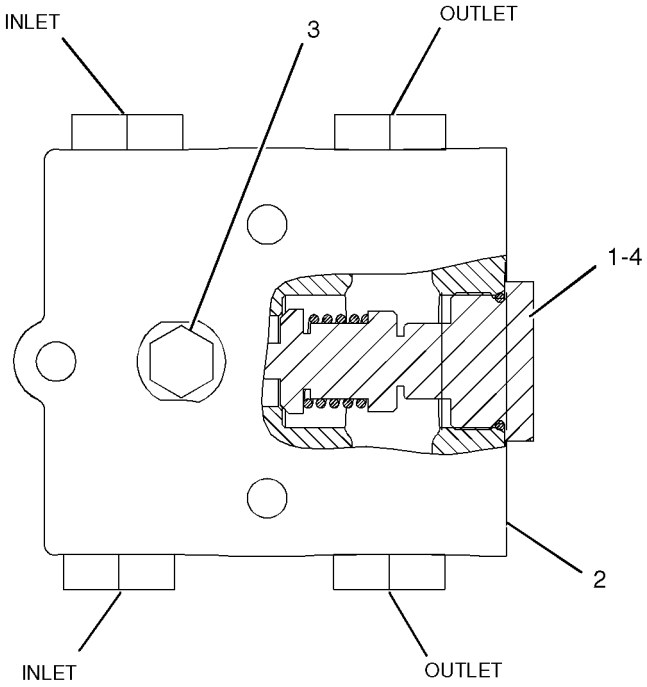

GRAPHIC #1 **<END>** g01044349

257-7736 VALVE GP-CHECK

S/N: LJR1-UP
PART OF 318-8148 VALVE GP-CONTROL
AN ATTACHMENT

SMCS-5067 **i03626493**

NOTE	REF NO	GRAPHIC REF	PART NUMBER	QTY	PART NAME 1 2 3 4 5 6 (PRODUCT LEVEL)	SEE PAGE
	1	1	**8F-9206**	1	SEAL-O-RING	
	2	1	**8J-2413**	1	SEAL-O-RING	
	3	1	**251-9585**	1	SEAL-O-RING	

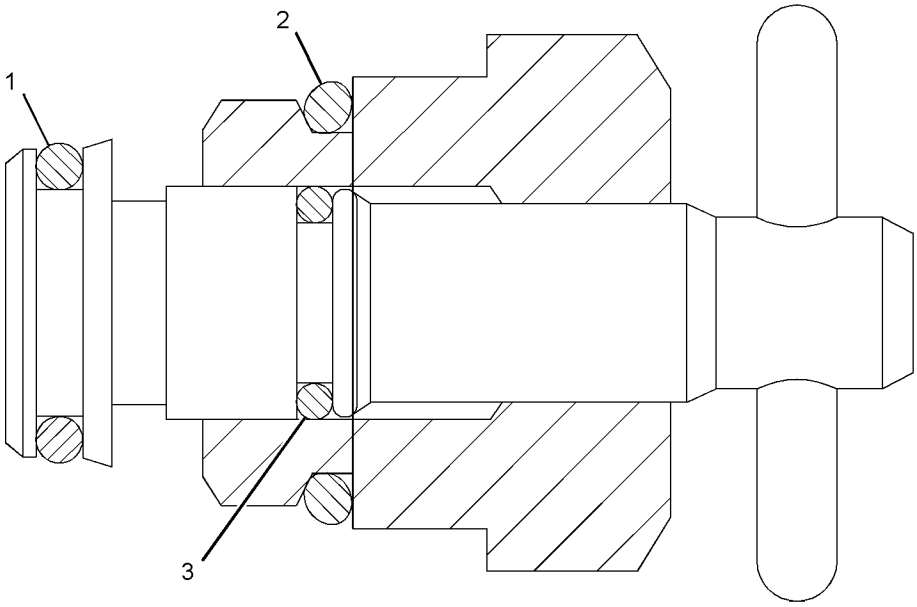

GRAPHIC #1 **<END>** g01303068

318-8145 VALVE GP-CONTROL–BULLDOZER LIFT

S/N: LJR1-UP

PART OF 309-1573 VALVE GP-BANK 3, 309-1574 VALVE GP-BANK 4

ALSO AN ATTACHMENT

SMCS-5051 **i03675970**

NOTE	REF NO	GRAPHIC REF	PART NUMBER	QTY	PART NAME 1 2 3 4 5 6 (PRODUCT LEVEL)	SEE PAGE
	1	1	**257-7735**	1	KIT-COVER (CONTROL VALVE)	
					(ALSO INCLUDES COVER,PLUG,SPRING & RETAINERS)	
M		1	**8C-8580**	6	BOLT-SOCKET HEAD (M5X0.8X16-MM)	
		1	**219-1897**	1	SEAL-O-RING	
	2	1	**257-7722**	1	KIT-COMPENSATOR (CONTROL VALVE)	
					(ALSO INCLUDES PLUG, SEAL & COMPENSATOR)	
		1	**6V-7970**	1	SEAL-O-RING	
	3	1	**227-1186**	2	VALVE AS-CHECK	
Y	4	1	**302-8157**	1	ACTUATOR GP-HYDRAULIC	486
Y	5	1	**257-7732**	1	VALVE GP-MAKEUP (BULLDOZER LOWER)	569
Y	6	1	**257-7726**	1	VALVE GP-RELIEF (BULLDOZER LIFT)	573
	7	1	**257-0466**	1	CAP-PROTECTION	

M - METRIC PART
Y - SEPARATE ILLUSTRATION

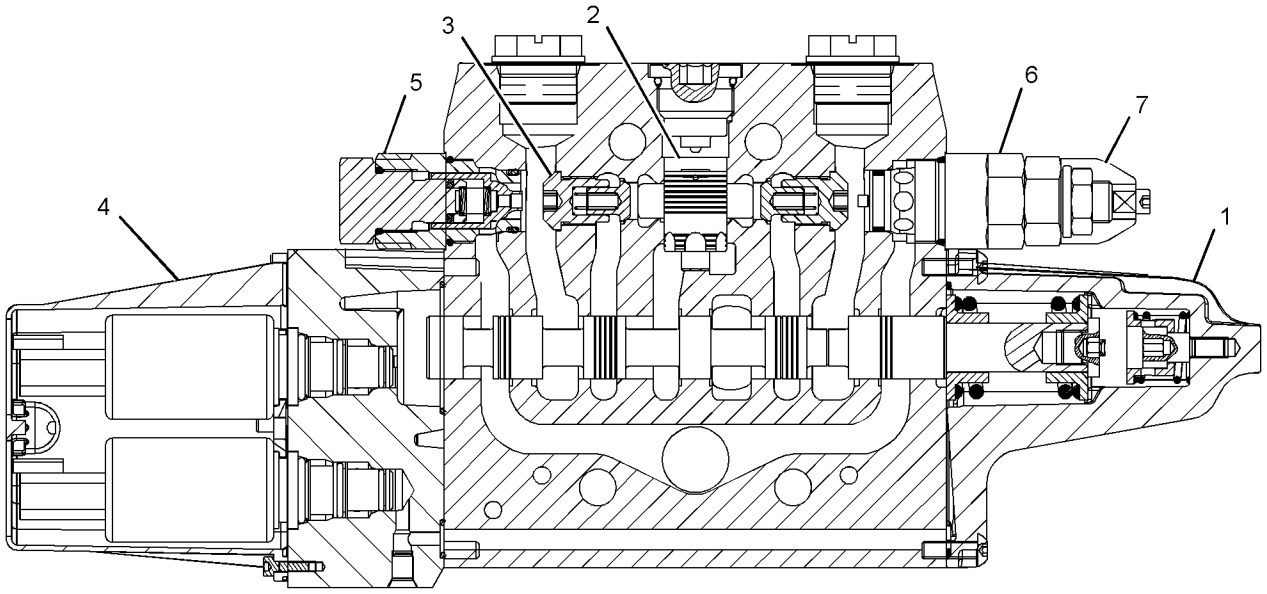

GRAPHIC #1 **<END>** g01887415

318-8146 VALVE GP-CONTROL—BULLDOZER TILT

S/N: LJR1-UP

PART OF 309-1573 VALVE GP-BANK 3, 309-1574 VALVE GP-BANK 4

ALSO AN ATTACHMENT

SMCS-5051 **i03626480**

NOTE	REF NO	GRAPHIC REF	PART NUMBER	QTY	PART NAME 1 2 3 4 5 6 (PRODUCT LEVEL)	SEE PAGE
	1	1	**257-7734**	1	KIT-COVER (CONTROL VALVE)	
					(ALSO INCLUDES COVER, PLUG, SPRING & RETAINERS)	
M		1	**8C-8580**	6	BOLT-SOCKET HEAD (M5X0.8X16-MM)	
		1	**219-1897**	1	SEAL-O-RING	
	2	1	**257-7722**	1	KIT-COMPENSATOR (CONTROL VALVE)	
					(ALSO INCLUDES PLUG, SEAL & COMPENSATOR)	
		1	**6V-7970**	1	SEAL-O-RING	
	3	1	**227-1186**	2	VALVE AS-CHECK	
Y	4	1	**302-8157**	1	ACTUATOR GP-HYDRAULIC	486
	5	1	**227-1191**	2	PLUG AS	
					(EACH INCLUDES)	
		1	**8J-2413**	1	SEAL-O-RING	
		1	**095-1751**		SEAL-O-RING	
		1	**169-1616**	1	RING-BACKUP	

M - METRIC PART
Y - SEPARATE ILLUSTRATION

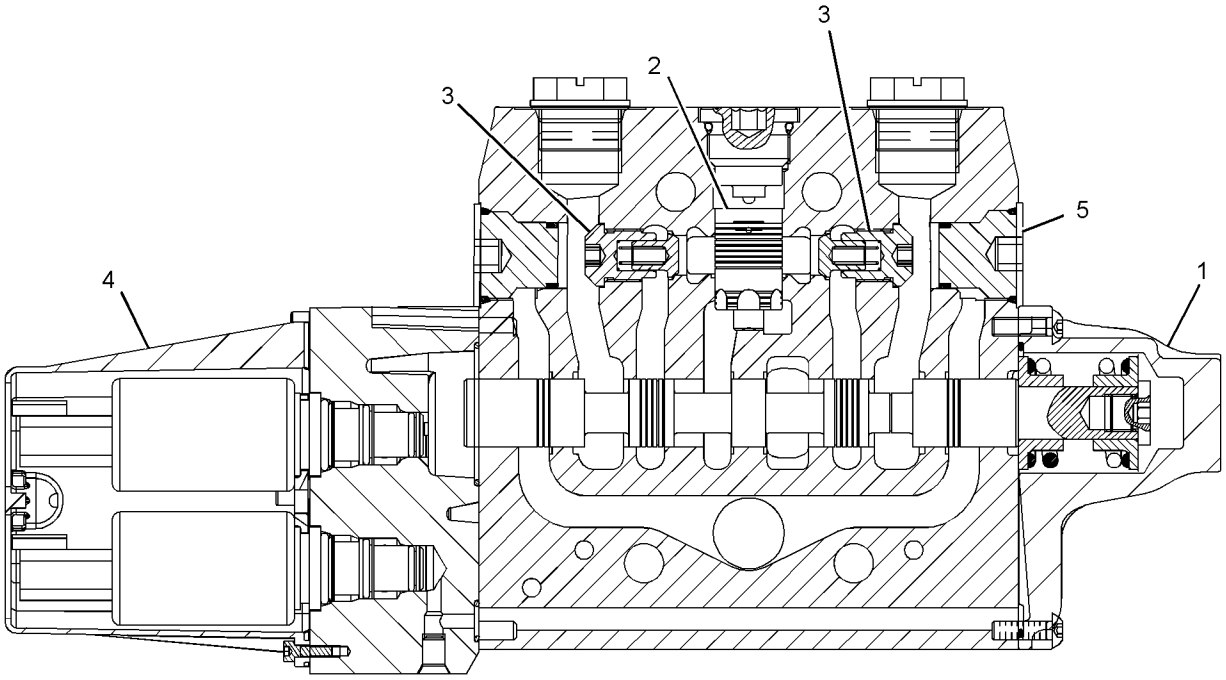

GRAPHIC #1 **<END>** g01897422

318-8147 VALVE GP-CONTROL–BLADE ANGLE

S/N: LJR1-UP
PART OF 309-1573 VALVE GP-BANK 3, 309-1574 VALVE GP-BANK 4
ALSO AN ATTACHMENT
TYPE 1

SMCS-5051 **i03675974**

NOTE	REF NO	GRAPHIC REF	PART NUMBER	QTY	PART NAME 1 2 3 4 5 6 (PRODUCT LEVEL)	SEE PAGE
	1	1	**257-7734**	1	KIT-COVER (CONTROL VALVE)	
					(ALSO INCLUDES COVER, PLUG, SPRING & RETAINERS)	
M		1	**8C-8580**	6	BOLT-SOCKET HEAD (M5X0.8X16-MM)	
		1	**219-1897**	1	SEAL-O-RING	
	2	1	**257-7722**	1	KIT-COMPENSATOR (CONTROL VALVE)	
					(ALSO INCLUDES PLUG, SEAL & COMPENSATOR)	
		1	**6V-7970**	1	SEAL-O-RING	
	3	1	**227-1186**	2	VALVE AS-CHECK	
Y	4	1	**302-8157**	1	ACTUATOR GP-HYDRAULIC	486
Y	5	1	**266-3593**	2	VALVE GP-RELIEF (BLADE ANGLE)	574
	6	1	**257-0468**	2	CAP-PROTECTION	

M - METRIC PART
Y - SEPARATE ILLUSTRATION

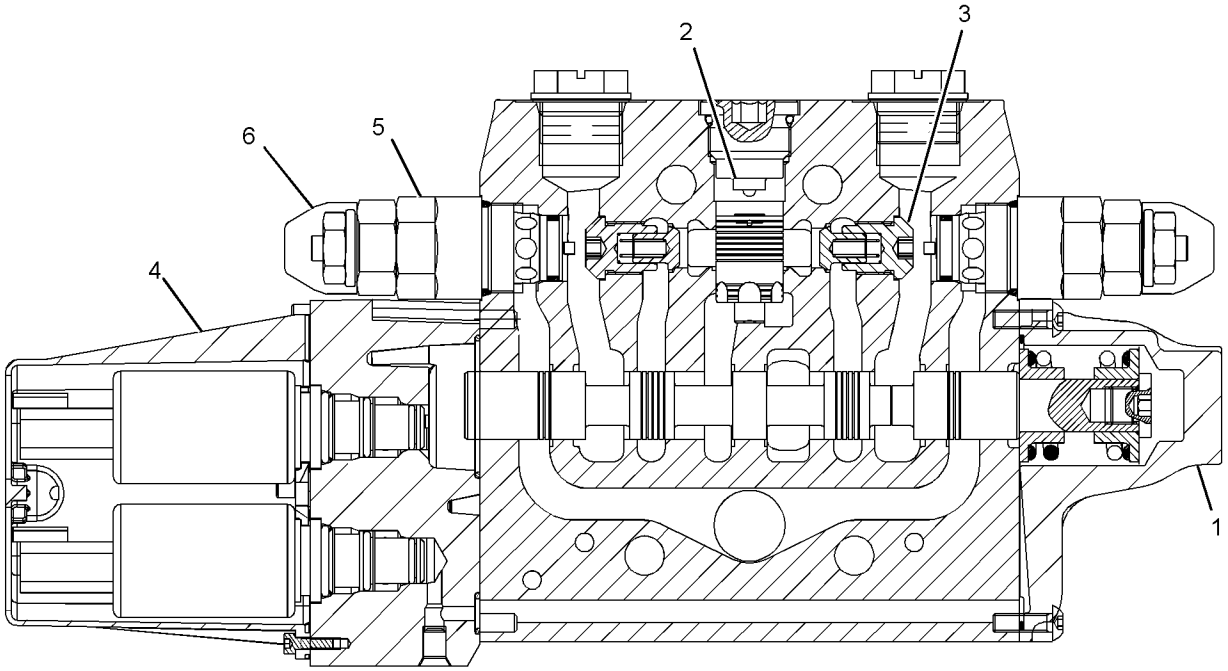

GRAPHIC #1 **<END>** g01886754

318-8147 VALVE GP-CONTROL–BLADE ANGLE

S/N: LJR1-UP
PART OF 309-1573 VALVE GP-BANK 3, 309-1574 VALVE GP-BANK 4
ALSO AN ATTACHMENT
TYPE 2

SMCS-5051 **i04179810**

NOTE	REF NO	GRAPHIC REF	PART NUMBER	QTY	PART NAME 1 2 3 4 5 6 (PRODUCT LEVEL)	SEE PAGE
	1	1	**257-7734**	1	KIT-COVER (CONTROL VALVE)	
					(INCLUDES BOLTS, SEAL RING, COVER, PLUG, SPRING & RETAINERS)	
	2	1	**257-7722**	1	KIT-COMPENSATOR (CONTROL VALVE)	
					(INCLUDES O-RING, PLUG & COMPENSATOR)	
	3	1	**227-1186**	2	VALVE AS-CHECK	
Y	4	1	**302-8157**	1	ACTUATOR GP-HYDRAULIC	486
CY	5	1	**348-9774**	2	VALVE GP-RELIEF (BLADE ANGLE)	575
	6	1	**257-0468**	2	CAP-PROTECTION	

C - CHANGE FROM PREVIOUS TYPE
Y - SEPARATE ILLUSTRATION

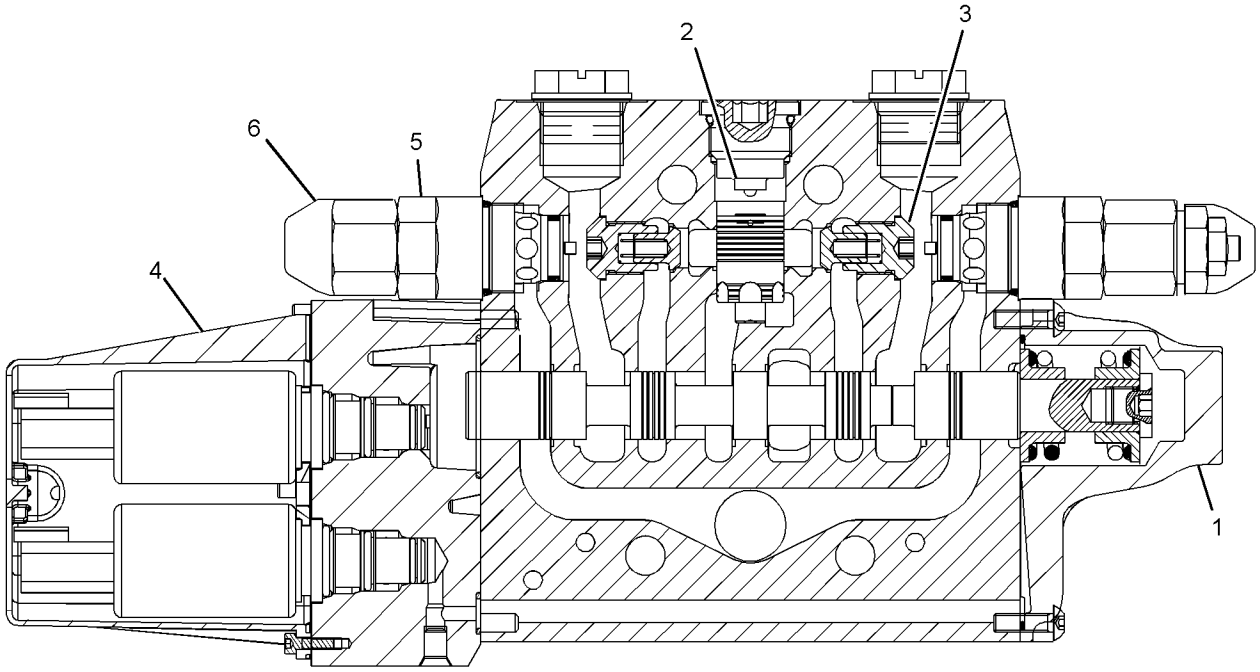

GRAPHIC #1 **<END>** g02140933

318-8148 VALVE GP-CONTROL–RIPPER

S/N: LJR1-UP
PART OF 309-1574 VALVE GP-BANK 4
AN ATTACHMENT
TYPE 1

SMCS-5051 **i03676001**

NOTE	REF NO	GRAPHIC REF	PART NUMBER	QTY	PART NAME 1 2 3 4 5 6 (PRODUCT LEVEL)	SEE PAGE
	1	1	**257-7734**	1	KIT-COVER (CONTROL VALVE)	
					(ALSO INCLUDES COVER, PLUG, SPRING, & RETAINERS)	
M		1	**8C-8580**	6	BOLT-SOCKET HEAD (M5X0.8X16-MM)	
		1	**219-1897**	1	SEAL-O-RING	
	2	1	**257-7722**	1	KIT-COMPENSATOR (CONTROL VALVE)	
					(ALSO INCLUDES PLUG, SEAL, & COMPENSATOR)	
		1	**6V-7970**	1	SEAL-O-RING	
	3	1	**227-1186**	2	VALVE AS-CHECK	
Y	4	1	**302-8157**	1	ACTUATOR GP-HYDRAULIC	486
Y	5	1	**257-7736**	1	VALVE GP-CHECK (DEAD ENGINE, RIPPER LIFT)	562
Y	6	1	**266-3593**	1	VALVE GP-RELIEF (RIPPER LOWER)	574
	7	1	**257-0468**	1	CAP-PROTECTION	

M - METRIC PART
Y - SEPARATE ILLUSTRATION

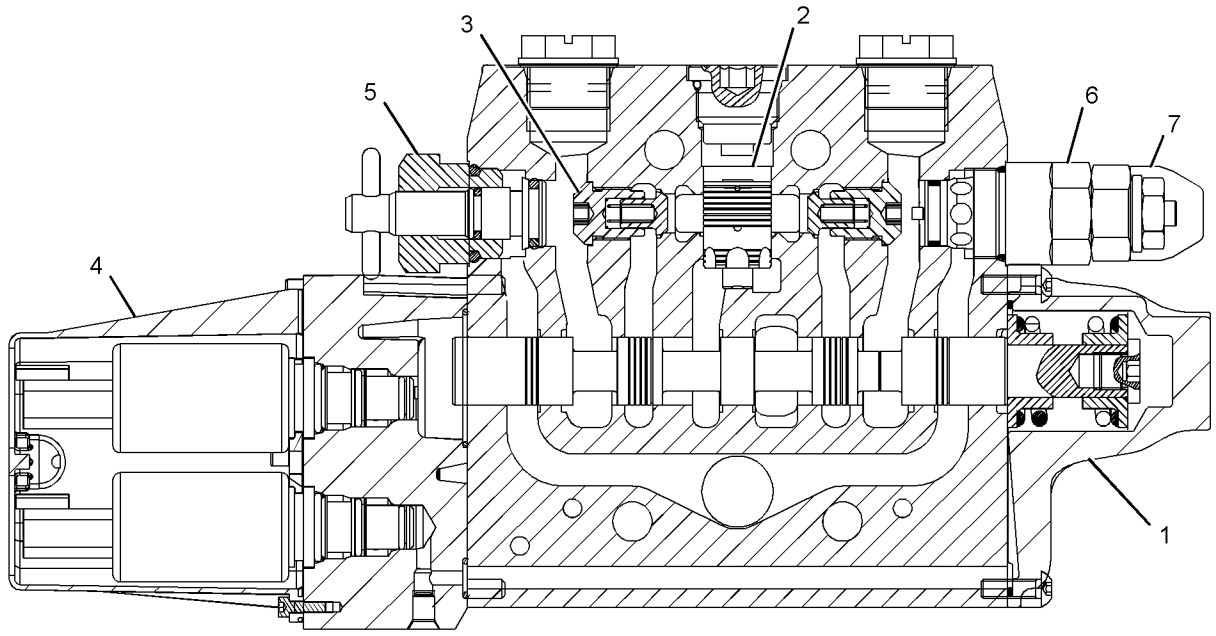

GRAPHIC #1 **<END>** g01902980

318-8148 VALVE GP-CONTROL–RIPPER

S/N: LJR1-UP
PART OF 309-1574 VALVE GP-BANK 4
AN ATTACHMENT
TYPE 2

SMCS-5051 **i04180050**

NOTE	REF NO	GRAPHIC REF	PART NUMBER	QTY	PART NAME 1 2 3 4 5 6 (PRODUCT LEVEL)	SEE PAGE
	1	1	**257-7734**	1	KIT-COVER (CONTROL VALVE)	
					(ALSO INCLUDES COVER, PLUG, SPRING, & RETAINER)	
M		1	**8C-8580**	6	BOLT-SOCKET HEAD (M5X0.8X16-MM)	
		1	**219-1897**	1	SEAL-O-RING	
	2	1	**257-7722**	1	KIT-COMPENSATOR (CONTROL VALVE)	
					(ALSO INCLUDES PLUG, SEAL, & COMPENSATOR)	
		1	**6V-7970**	1	SEAL-O-RING	
	3	1	**227-1186**	2	VALVE AS-CHECK	
Y	4	1	**302-8157**	1	ACTUATOR GP-HYDRAULIC	486
Y	5	1	**257-7736**	1	VALVE GP-CHECK (DEAD ENGINE, RIPPER LIFT)	562
CY	6	1	**348-9774**	1	VALVE GP-RELIEF (RIPPER LOWER)	575
	7	1	**257-0468**	1	CAP-PROTECTION	

C - CHANGE FROM PREVIOUS TYPE
M - METRIC PART
Y - SEPARATE ILLUSTRATION

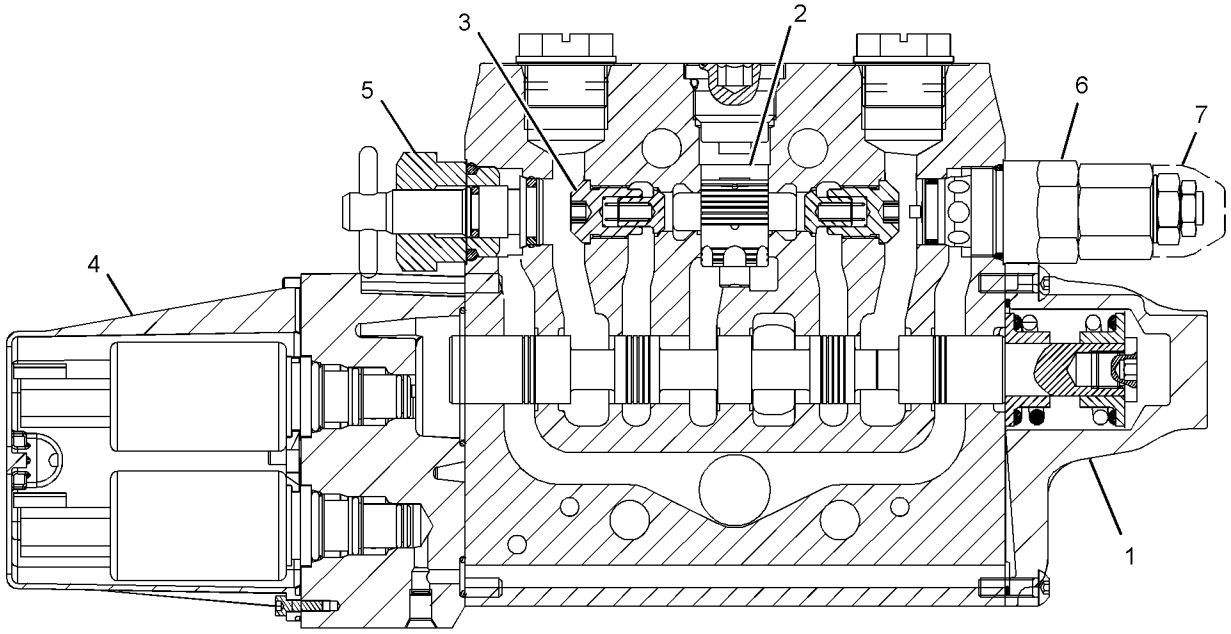

GRAPHIC #1 **<END>** g02158897

257-7732 VALVE GP-MAKEUP–BULLDOZER LOWER

S/N: LJR1-UP
PART OF 318-8145 VALVE GP-CONTROL
ALSO AN ATTACHMENT

SMCS-5080 **i03637966**

NOTE	REF NO	GRAPHIC REF	PART NUMBER	QTY	PART NAME 1 2 3 4 5 6 (PRODUCT LEVEL)	SEE PAGE
	1	1	**169-1616**	1	RING-BACKUP	
	2	1	**095-1751**	1	SEAL-O-RING	
	3	1	**8J-2413**	1	SEAL-O-RING	

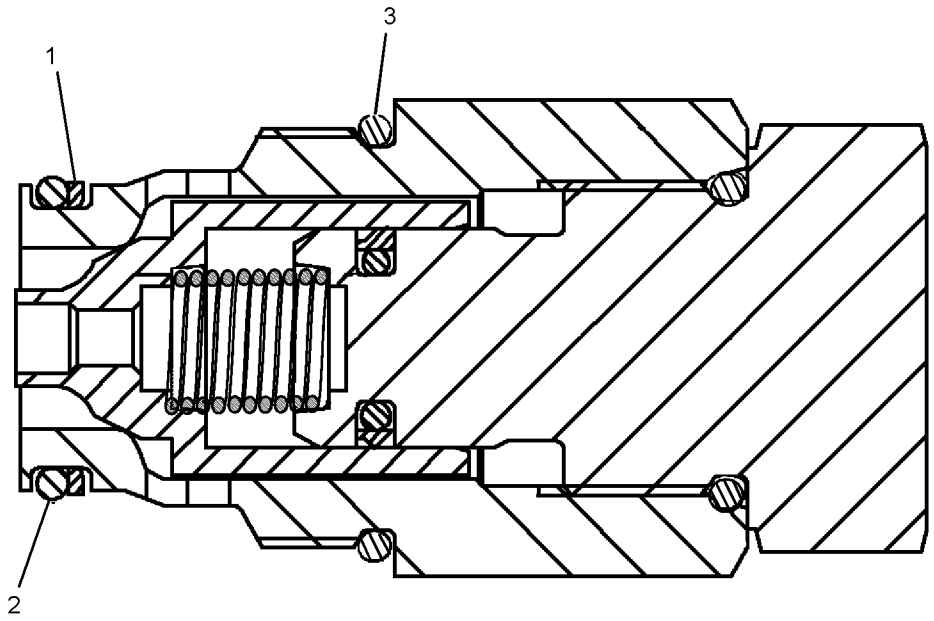

GRAPHIC #1 **<END>** g01296837

168-2210 VALVE GP-PUMP CONTROL–PRESSURE, FLOW COMPENSATOR

S/N: LJR1-UP

PART OF 318-8481 PUMP GP-PISTON

SMCS-5455 **i01828585**

NOTE	REF NO	GRAPHIC REF	PART NUMBER	QTY	PART NAME 1 2 3 4 5 6 (PRODUCT LEVEL)	SEE PAGE
	1	1	**6E-6527**	2	PLUG	
	2	1	**6E-6528**	6	SEAL	
	3	1	**9S-8002**	1	PLUG-O-RING	
	4	1	**9X-7680**	3	SEAL-O-RING	
	5	1	**5P-9262**	1	SEAL-O-RING	
	6	1	**105-2145**	1	VALVE-ORIFICE	
	7	1	**6E-3268**	1	RETAINER-SPRING	
	8	1	**6E-3269**	1	RETAINER-SPRING	
M	9	1	**8T-8442**	4	BOLT-SOCKET HEAD (M6X1X30-MM)	
	10	1	**6E-3273**	1	SEAT	
	11	1	**6V-8352**	1	SEAL-O-RING	
	12	1	**6E-6536**	1	PLUG	
M	13	1	**6E-6537**	2	SCREW-ADJUSTMENT (M8X1X28-MM)	
M	14	1	**6E-6538**	2	NUT-ADJUSTMENT (M8X1-THD)	
M	15	1	**6E-6539**	2	NUT-CAP (M8X1-THD)	
	16	1	**6E-6540**	1	PLUG	
	17	1	**033-6043**	1	SEAL-O-RING	
	18	1	**6E-3272**	1	SEAT	
	19	1	**6E-3274**	1	SPRING	
	20	1	**6E-3275**	1	SPRING	
	21	1	**3J-7354**	1	SEAL-O-RING	
	22	1	**201-0780**	1	ORIFICE	
	23	1	**193-1036**	1	SPRING	
	24	1	**6E-3276**	1	SPRING	
Z	25	1		1	STEM	
Z	26	1		1	STEM	
Z	27	1		1	BODY	

M - METRIC PART
Z - NOT SERVICED SEPARATELY

168-2210 **VALVE GP-PUMP CONTROL (*contd.*)** **i01828585**

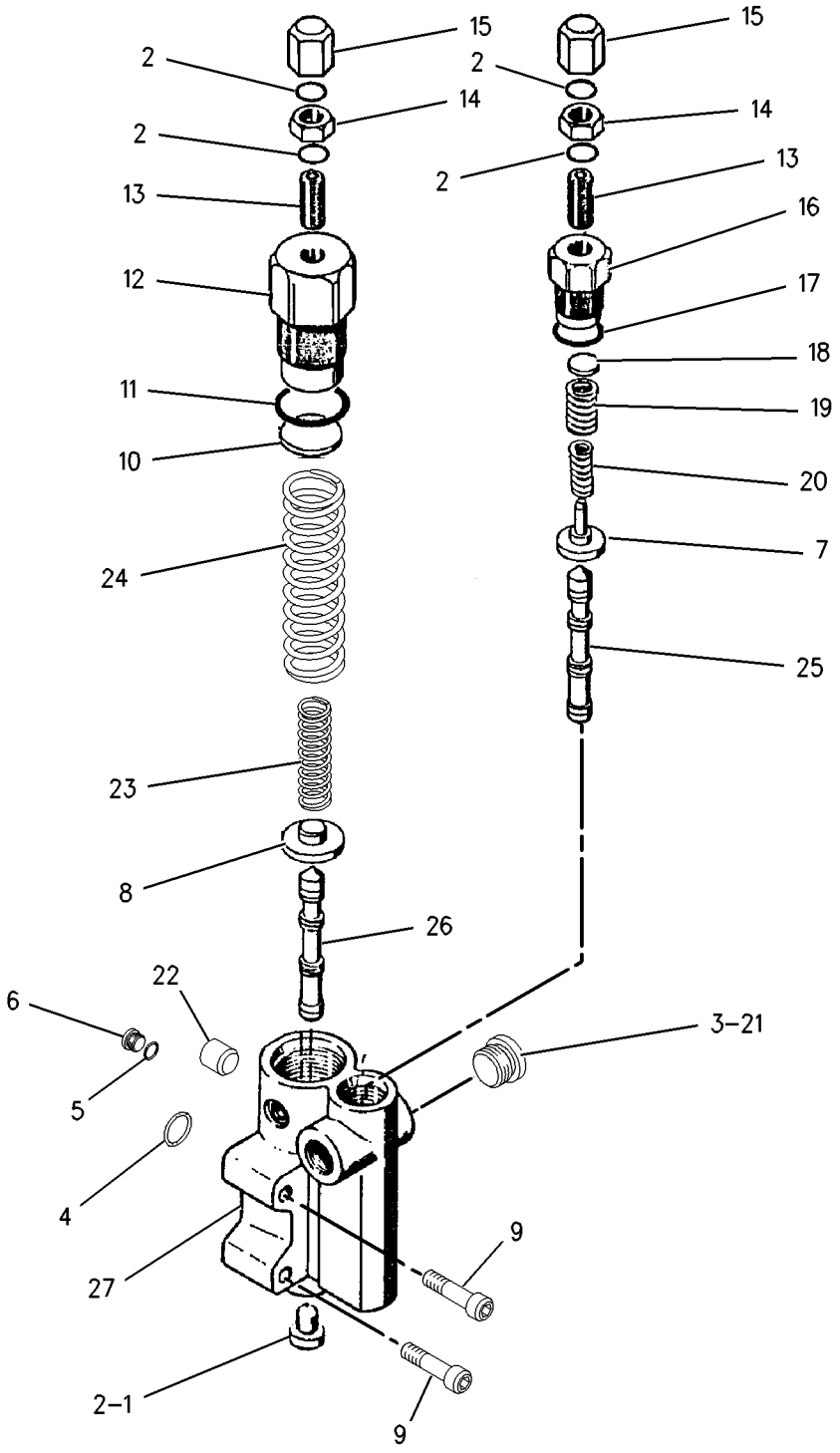

GRAPHIC #1 **<END>** g00918518

285-5240 VALVE GP-PUMP CONTROL–PRESSURE, FLOW COMPENSATOR

S/N: LJR1-UP

PART OF 318-8481 PUMP GP-PISTON

SMCS-5455 **i03996598**

NOTE	REF NO	GRAPHIC REF	PART NUMBER	QTY	PART NAME 1 2 3 4 5 6 (PRODUCT LEVEL)	SEE PAGE
M	1	1	**8T-8442**	4	BOLT-SOCKET HEAD (M6X1X30-MM)	
	2	1	**280-7870**	1	GASKET	
J	3	1	**6E-6528**	2	SEAL	
	4	1	**9S-8002**	1	PLUG-O-RING	
	5	1	**3J-7354**	1	SEAL-O-RING	
J	6	1	**033-6043**	1	SEAL-O-RING	
J	7	1	**6V-6339**	1	SEAL-O-RING	
					AVAILABLE REPAIR KIT(S):	
J			**293-8350**	1	KIT-SEAL (FLOW COMPENSATOR)	
					(INCLUDES SEAL-O-RINGS & BACK-UP RINGS)	

J - KIT MARKED J SERVICES PARTS MARKED J
M - METRIC PART

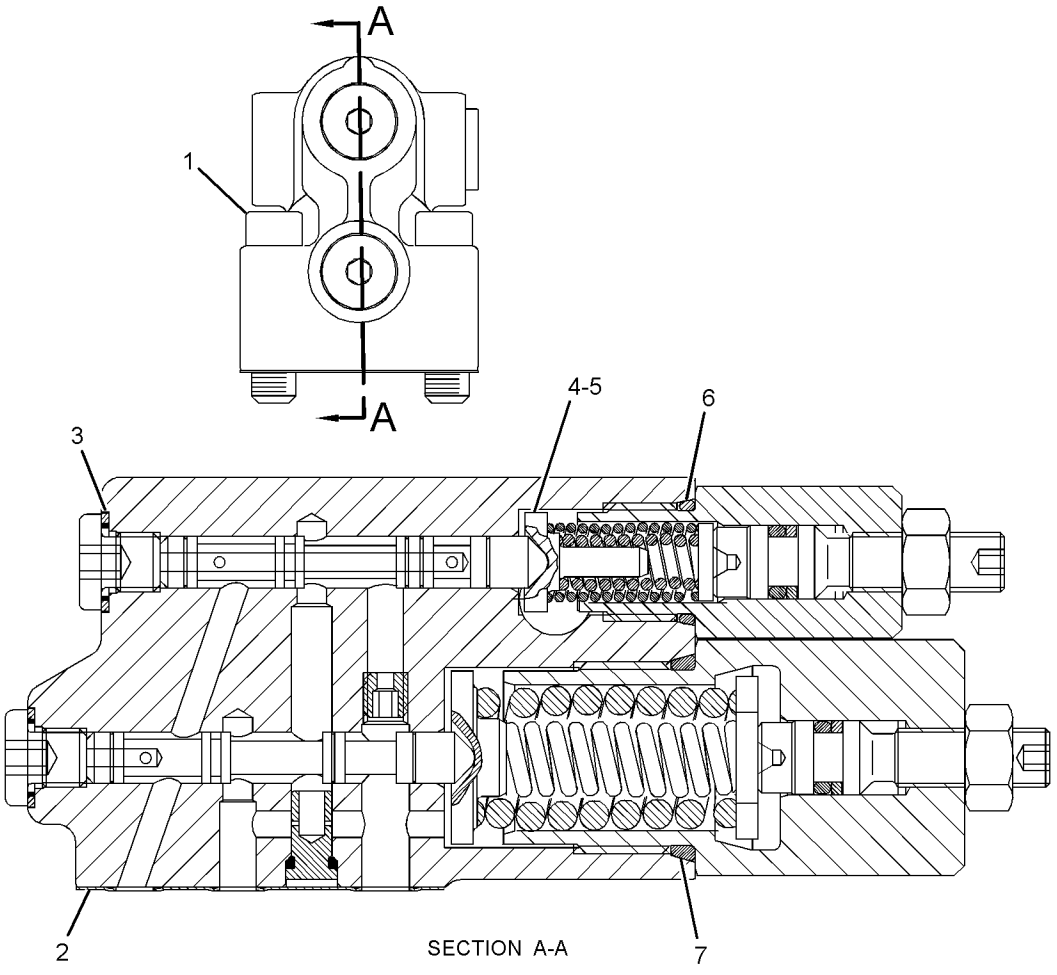

GRAPHIC #1 **<END>** g01297140

257-7726 VALVE GP-RELIEF–BULLDOZER LIFT

S/N: LJR1-UP
PART OF 318-8145 VALVE GP-CONTROL
ALSO AN ATTACHMENT

SMCS-5069, 5117

i03626460

NOTE	REF NO	GRAPHIC REF	PART NUMBER	QTY	PART NAME 1 2 3 4 5 6 (PRODUCT LEVEL)	SEE PAGE
	1	1	**169-1616**	1	RING-BACKUP	
	2	1	**095-1751**	1	SEAL-O-RING	
	3	1	**8J-2413**	1	SEAL-O-RING	

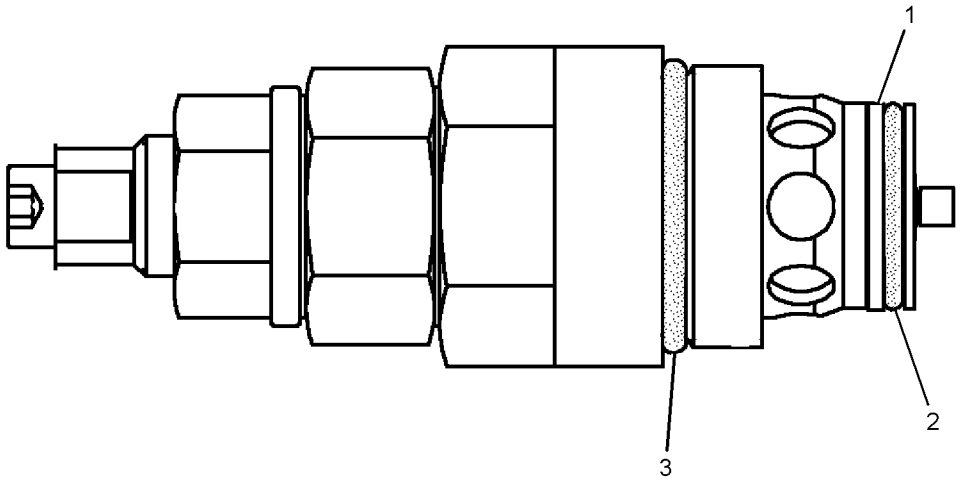

GRAPHIC #1

<END>

g01296819

266-3593 VALVE GP-RELIEF–BLADE ANGLE–RIPPER LOWER

S/N: LJR1-UP

PART OF 318-8147, 318-8148 VALVE GP-CONTROL

ALSO AN ATTACHMENT

SMCS-5069, 5117

i03626488

NOTE	REF NO	GRAPHIC REF	PART NUMBER	QTY	PART NAME 1 2 3 4 5 6 (PRODUCT LEVEL)	SEE PAGE
	1	1	**169-1616**	1	RING-BACKUP	
	2	1	**095-1751**	1	SEAL-O-RING	
	3	1	**8J-2413**	1	SEAL-O-RING	

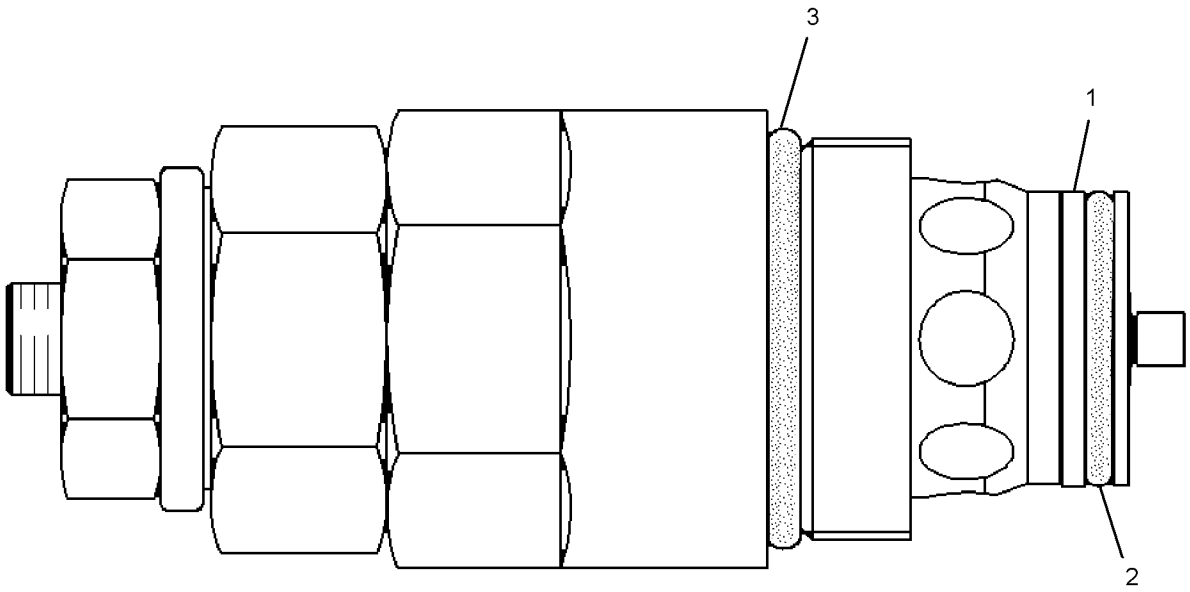

GRAPHIC #1

<END>

g01303317

348-9774 VALVE GP-RELIEF

S/N: LJR1-UP
PART OF 318-8147, 318-8148 VALVE GP-CONTROL
ALSO AN ATTACHMENT

SMCS-5069, 5117

i04180029

NOTE	REF NO	GRAPHIC REF	PART NUMBER	QTY	PART NAME 1 2 3 4 5 6 (PRODUCT LEVEL)	SEE PAGE
	1	1	**169-1616**	1	RING-BACKUP	
	2	1	**095-1751**	1	SEAL-O-RING	
	3	1	**8J-2413**	1	SEAL-O-RING	

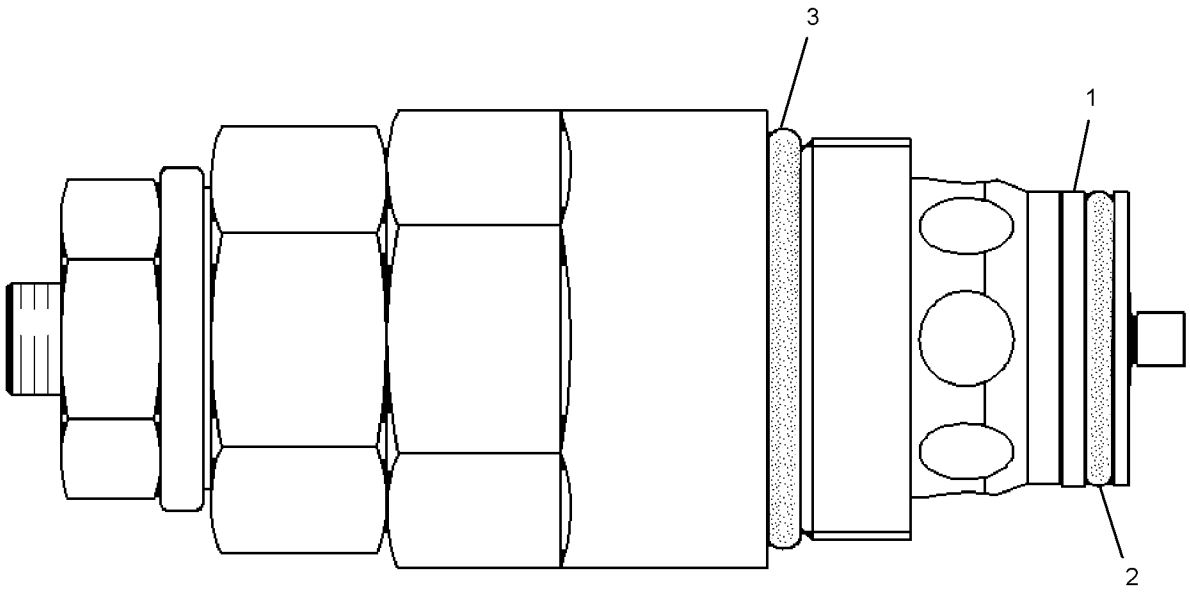

GRAPHIC #1

<END>

g01303317

338-8038 BULLDOZER AR

S/N: LJR1-UP

PART OF 310-9903 GENERAL AR

SMCS-6050 **i03630423**

NOTE	PART NUMBER	QTY	PART NAME 1 2 3 4 5 6 (PRODUCT LEVEL)	SEE PAGE
Y	*338-3521*	1	C-FRAME GP-POWER ANGLING	581

Y - SEPARATE ILLUSTRATION

<END>

321-5600 BULLDOZER AR-PWR ANGLE & TILT

S/N: LPC1-UP

AN ATTACHMENT

SMCS-6050, 6052 **i03660056**

NOTE	REF NO	GRAPHIC REF	PART NUMBER	QTY	PART NAME 1 2 3 4 5 6 (PRODUCT LEVEL)	SEE PAGE
J	1	1	**107-8126**	2	BEARING	
Y	2	1	**110-3269**	2	CYLINDER GP-BULLDOZER LIFT	494
Y	3	1	*134-6775*	1	PIN GP-CYLINDER	545
Y	4	1	**160-0054**	1	CYLINDER GP-TILT (BULLDOZER)	499
Y	5	1	**190-5328**	1	LINK GP-PITCH	584
Y	6	1	*220-0897*	1	LINES GP-LIFT CYLINDER (POWER ANGLE, TILT BLADE)	514
Y	7	1	*235-5000*	1	BLADE GP-ANGLING	721
	8	1	**2Y-9790**	1	PLATE-SERIAL NUMBER (BULLDOZER)	
	8A	1	**4B-4158**	2	SCREW-DRIVE (NO 4X0.25-IN)	
	9	1	**242-5055**	2	FILM-WARNING (NO STEP)	
Y	10	1	*321-5602*	1	C-FRAME GP-POWER ANGLING	579
Y	11	1	**321-7048**	2	CYLINDER GP-ANGLING (BULLDOZER)	490
J	12	1	**109-0959**	4	RING	
Y	13	1	*322-9584*	1	LINES GP-ANGLE & TILT	508

J - PRESS INTO C-FRAME MOUNTING BORE IN TRACTOR MAIN FRAME
Y - SEPARATE ILLUSTRATION

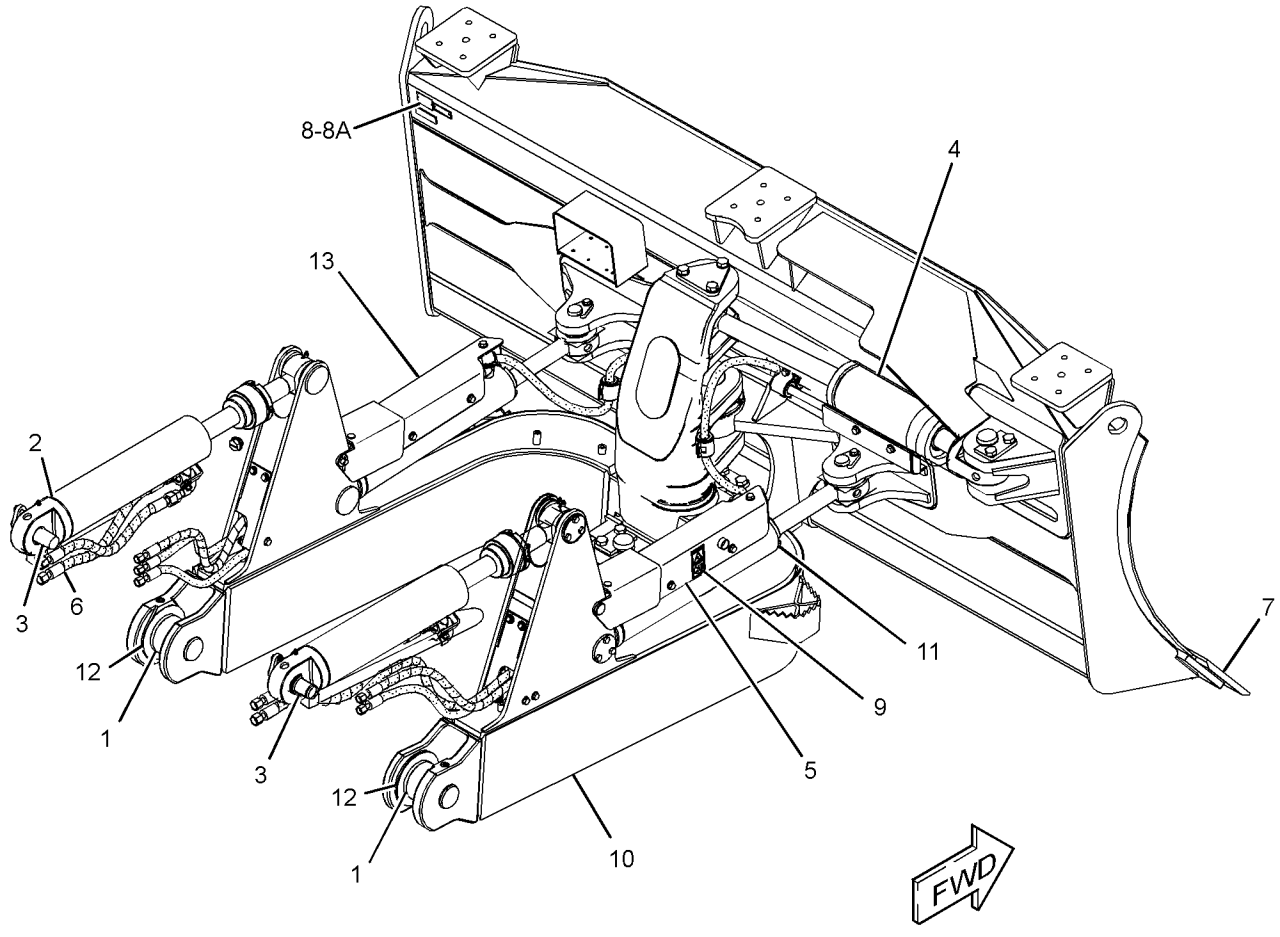

GRAPHIC #1 **<END>** g01947115

273-0030 BULLDOZER AR-SEMI-UNIVERSAL

S/N: D1Y1-UP

FOR USE WITH ENCLOSURE GP-ENGINE WHEN SOUND SUPPRESSION IS NOT ORDERED, ENCLOSURE GP-ENGINE (SOUND SUPPRESSION) WHEN SOUND SUPPRESSION IS ORDERED

PART OF 342-2615 OPTION AR-BULLDOZER

AN ATTACHMENT

SMCS-6050, 6078 **i03663322**

NOTE	REF NO	GRAPHIC REF	PART NUMBER	QTY	PART NAME 1 2 3 4 5 6 (PRODUCT LEVEL)	SEE PAGE
Y	1	1	*320-5056*	1	PUSH ARM GP	585
Y	2	1	*115-4594*	1	BLADE & EDGE GP-SEMI-UNIVERSAL	718
Y	3	1	*138-7033*	1	MOUNTING GP-CYLINDER	544
Y	4	1	*319-7125*	1	TRUNNION GP-BULLDOZER	587
Y	5	1	*271-8871*	1	LINES GP-LIFT CYLINDER	516
Y	6	1	*346-1721*	1	LINES GP-TILT CYLINDER	539
Y	7	1	**275-8416**	2	CYLINDER GP-BULLDOZER LIFT	495
F		1	**2Y-9790**	1	PLATE-SERIAL NUMBER (BULLDOZER)	
					(ON UPPER RH CORNER OF BLADE)	
F		1	**4B-4158**	2	SCREW-DRIVE (NO 4X0.25-IN)	

F - NOT SHOWN
Y - SEPARATE ILLUSTRATION

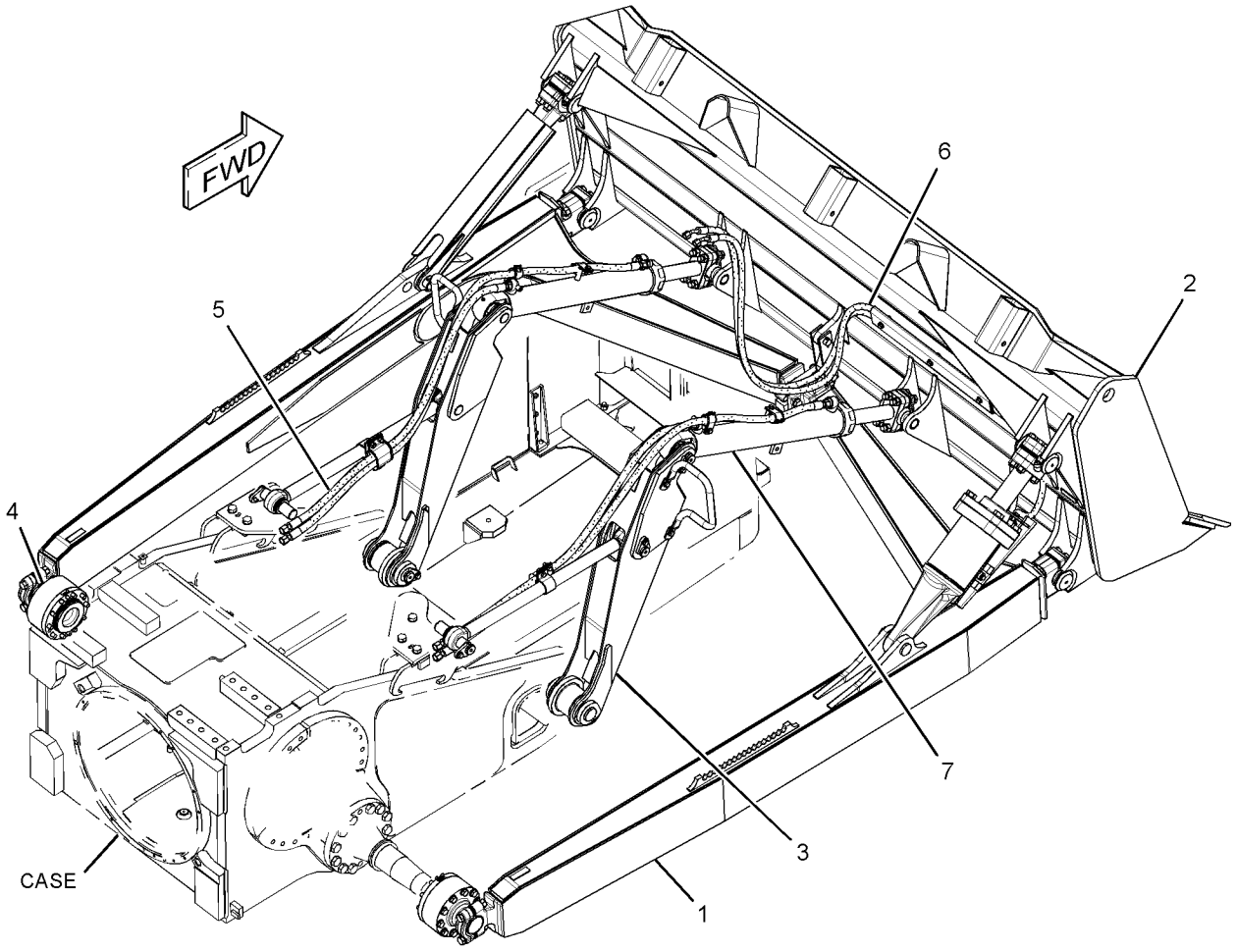

GRAPHIC #1 **<END>** g01966873

321-5602 C-FRAME GP-POWER ANGLING

S/N: LPC1-UP; LJR1-UP

PART OF 321-5600 BULLDOZER AR-PWR ANGLE & TILT, 338-3521 C-FRAME GP-POWER ANGLING ALSO AN ATTACHMENT

SMCS-6063 **i03793551**

NOTE	REF NO	GRAPHIC REF	PART NUMBER	QTY	PART NAME 1 2 3 4 5 6 (PRODUCT LEVEL)	SEE PAGE
B	1	1	**4Y-4905**	6	WASHER (79X175X2-MM THK)	
	2	1	**8G-5747**	6	SPACER (45X50X15-MM THK)	
	3	1	**8T-1482**	4	WASHER-HARD (26X50X8-MM THK)	
	4	1	**089-8249**	2	SPACER (64X72X13-MM THK)	
	5	1	**104-4817**	1	PIN	
	6	1	**104-7391**	1	CAP	
	7	1	**104-7434**	1	RETAINER	
	8	1	**105-2058**	1	BRACKET AS	
	9	1	**110-5217**	2	PLATE	
	10	1	**104-7498**	2	RETAINER	
	11	1	**124-5234**	4	RETAINER	
B	12	1	**124-5235**	6	SHIM (0.8-MM THK)	
	13	1	**124-5741**	4	PIN	
	14	1	**145-0803**	1	PIN	
	15	1	**160-5691**	1	PIN	
	16	1	**161-2113**	1	SPACER (60X89.8X231-MM THK)	
M	17	1	**298-2764**	4	BOLT (M24X3X190-MM)	
	18	1	**321-5604**	1	FRAME AS	
	19	1	**104-4746**	2	DOWEL	
	20	1	**108-5794**	4	PLUG-PIPE	
	21	1	**109-0958**	2	PIN	
M	22	1	**7X-2562**	5	BOLT (M20X2.5X45-MM)	
	23	1	**8T-4123**	3	WASHER (22X35X3.5-MM THK)	
M	24	1	**8T-4139**	12	BOLT (M12X1.75X30-MM)	

B - USE AS REQUIRED
M - METRIC PART

321-5602 **C-FRAME GP-POWER ANGLING (*contd.*)** **i03793551**

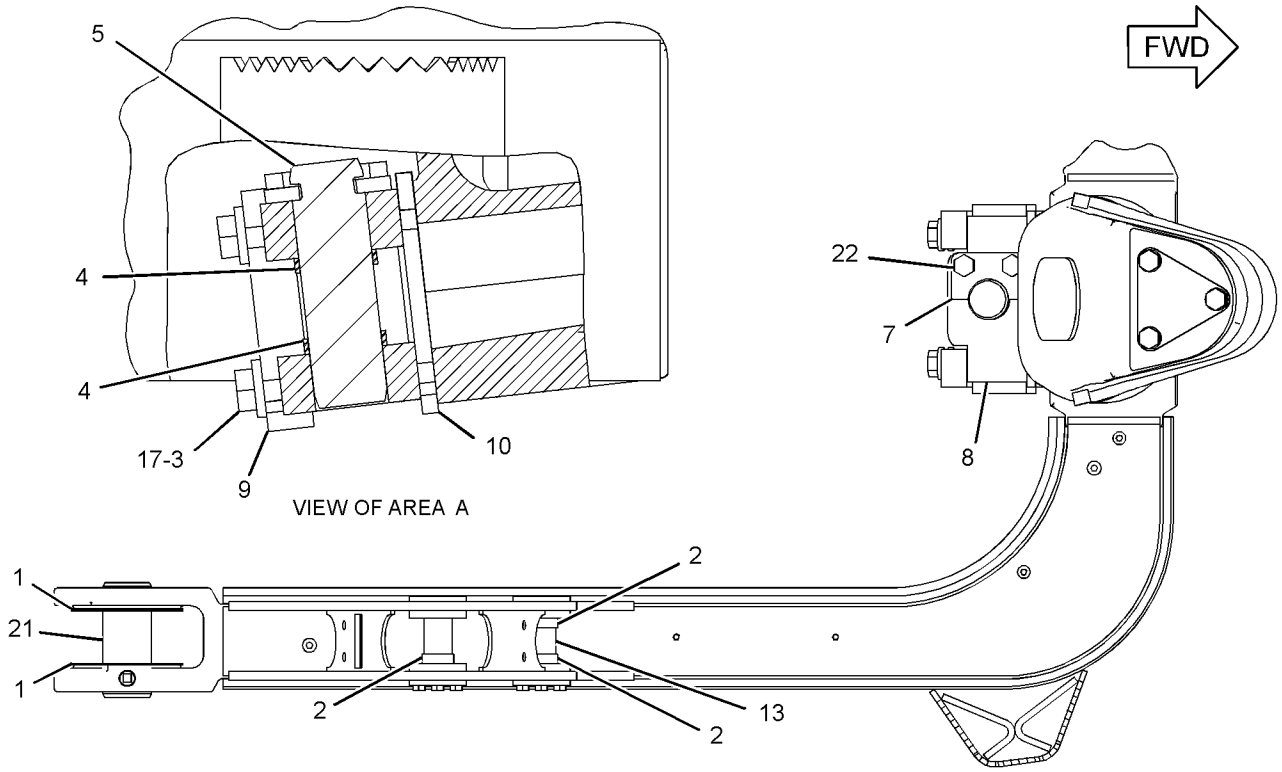

TOP VIEW

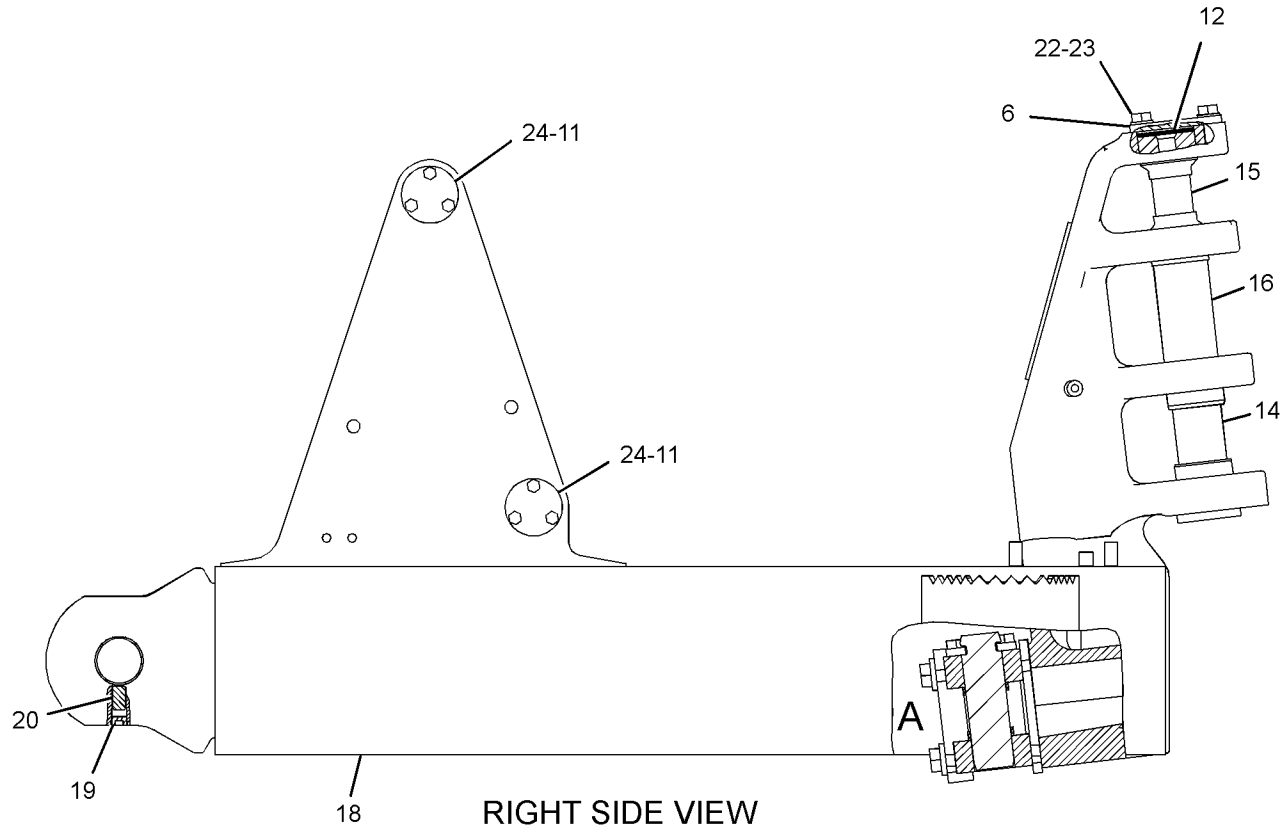

RIGHT SIDE VIEW

GRAPHIC #1 **<END>** g01910595

338-3521 C-FRAME GP-POWER ANGLING

S/N: LJR1-363

PART OF 338-8038 BULLDOZER AR

SMCS-6063 **i03630435**

NOTE	REF NO	GRAPHIC REF	PART NUMBER	QTY	PART NAME 1 2 3 4 5 6 (PRODUCT LEVEL)	SEE PAGE
	1	1	**107-8126**	2	BEARING	
Y	2	1	**110-3269**	2	CYLINDER GP-BULLDOZER LIFT	494
Y	3	1	*134-6775*	1	PIN GP-CYLINDER (BULLDOZER)	545
Y	4	1	**190-5328**	1	LINK GP-PITCH	584
Y	5	1	*220-0897*	1	LINES GP-LIFT CYLINDER (POWER ANGLE, TILT BLADE)	514
	6	1	**242-5055**	2	FILM-WARNING (NO STEP)	
Y	7	1	*321-5602*	1	C-FRAME GP-POWER ANGLING	579
Y	8	1	**321-7048**	2	CYLINDER GP-ANGLING (BULLDOZER)	490
Y	9	1	*322-9584*	1	LINES GP-ANGLE & TILT	508
Y	10	1	**328-4267**	1	CYLINDER GP-TILT (BULLDOZER)	502
	11	1	**109-0959**	4	RING	

Y - SEPARATE ILLUSTRATION

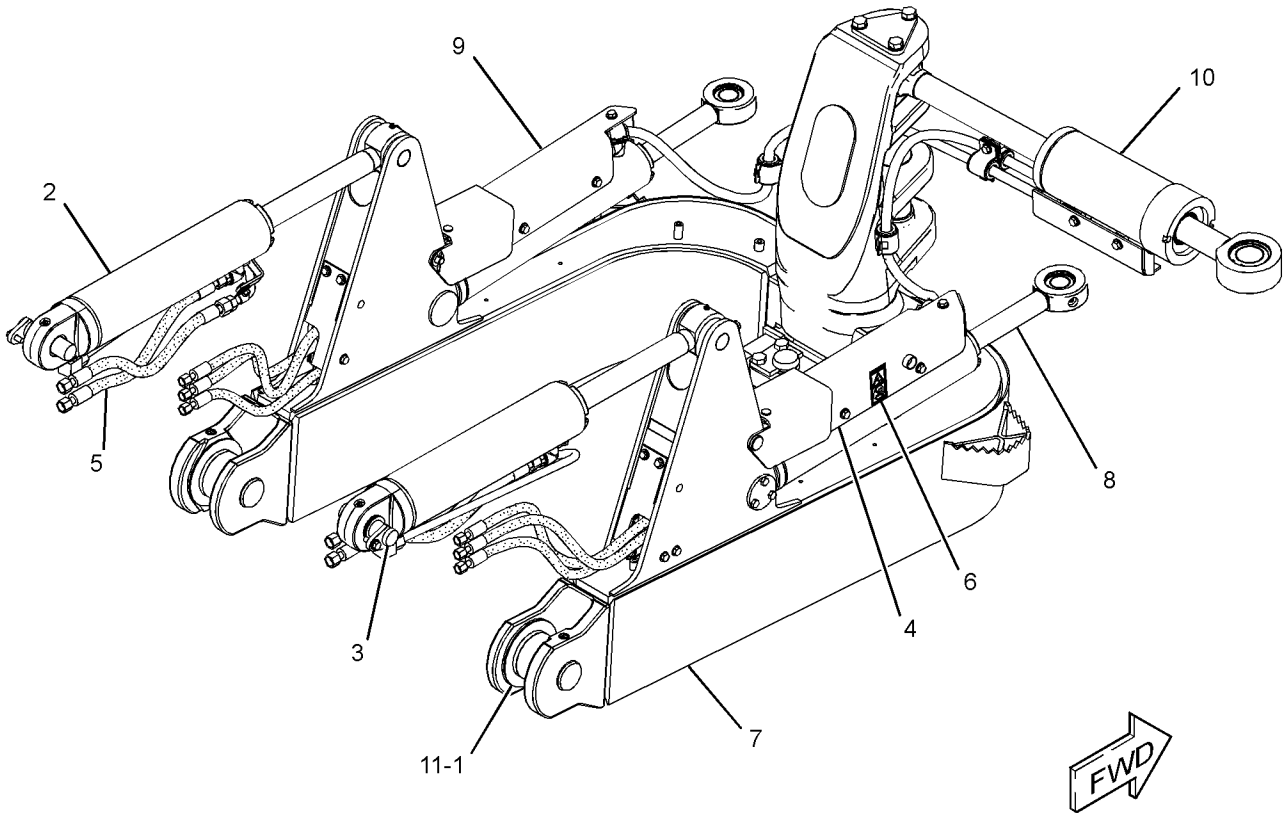

GRAPHIC #1 **<END>** g01906214

338-3521 C-FRAME GP-POWER ANGLING

S/N: LJR364-UP

PART OF 338-8038 BULLDOZER AR

SMCS-6063 **i04397746**

NOTE	REF NO	GRAPHIC REF	PART NUMBER	QTY	PART NAME 1 2 3 4 5 6 (PRODUCT LEVEL)	SEE PAGE
	1	1	**107-8126**	2	BEARING	
Y	2	1	**110-3269**	2	CYLINDER GP-BULLDOZER LIFT	494
Y	3	1	*134-6775*	1	PIN GP-CYLINDER (BULLDOZER)	545
Y	4	1	**190-5328**	1	LINK GP-PITCH	584
Y	5	1	*220-0897*	1	LINES GP-LIFT CYLINDER (POWER ANGLE, TILT BLADE)	514
	6	1	**242-5055**	2	FILM-WARNING (NO STEP)	
Y	7	1	*321-5602*	1	C-FRAME GP-POWER ANGLING	579
Y	8	1	**358-6503**	2	CYLINDER GP-ANGLING	492
Y	9	1	*322-9584*	1	LINES GP-ANGLE & TILT	508
Y	10	1	**328-4267**	1	CYLINDER GP-TILT (BULLDOZER)	502
	11	1	**109-0959**	4	RING	

Y - SEPARATE ILLUSTRATION

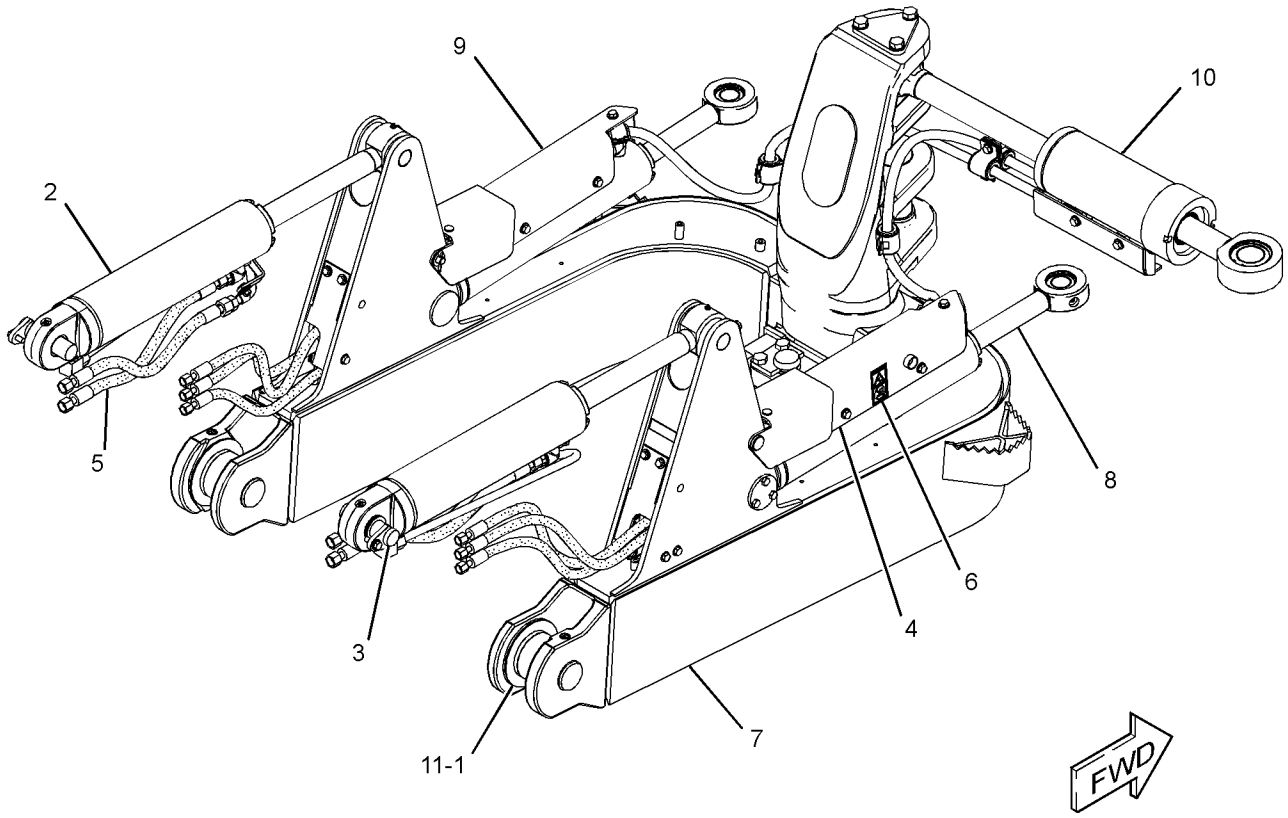

GRAPHIC #1 **<END>** g01906214

349-2450 LINES GP-GREASE

S/N: LJR1-UP

PART OF 172-9872 BAR GP-EQUALIZER

SMCS-7510 **i03940136**

NOTE	REF NO	GRAPHIC REF	PART NUMBER	QTY	PART NAME 1 2 3 4 5 6 (PRODUCT LEVEL)	SEE PAGE
	1	1	**7K-1181**	1	STRAP-CABLE	
I	2	1	**173-3660**	1	HOSE AS	
	3	1	*169-7393*	1	CONNECTOR AS	
		1	**3J-7352**	1	CONNECTOR	
		1	**3J-7354**	1	SEAL-O-RING	
	4	1	**5P-4479**	1	ELBOW (FLARED-LONG)	
	5	1	**6D-3479**	1	CLIP	
	6	1	**8T-4121**	1	WASHER-HARD (11X21X2.5-MM THK)	
M	7	1	**8T-4137**	1	BOLT (M10X1.5X20-MM)	

I - REFER TO HYDRAULIC INFORMATION SYSTEM
M - METRIC PART

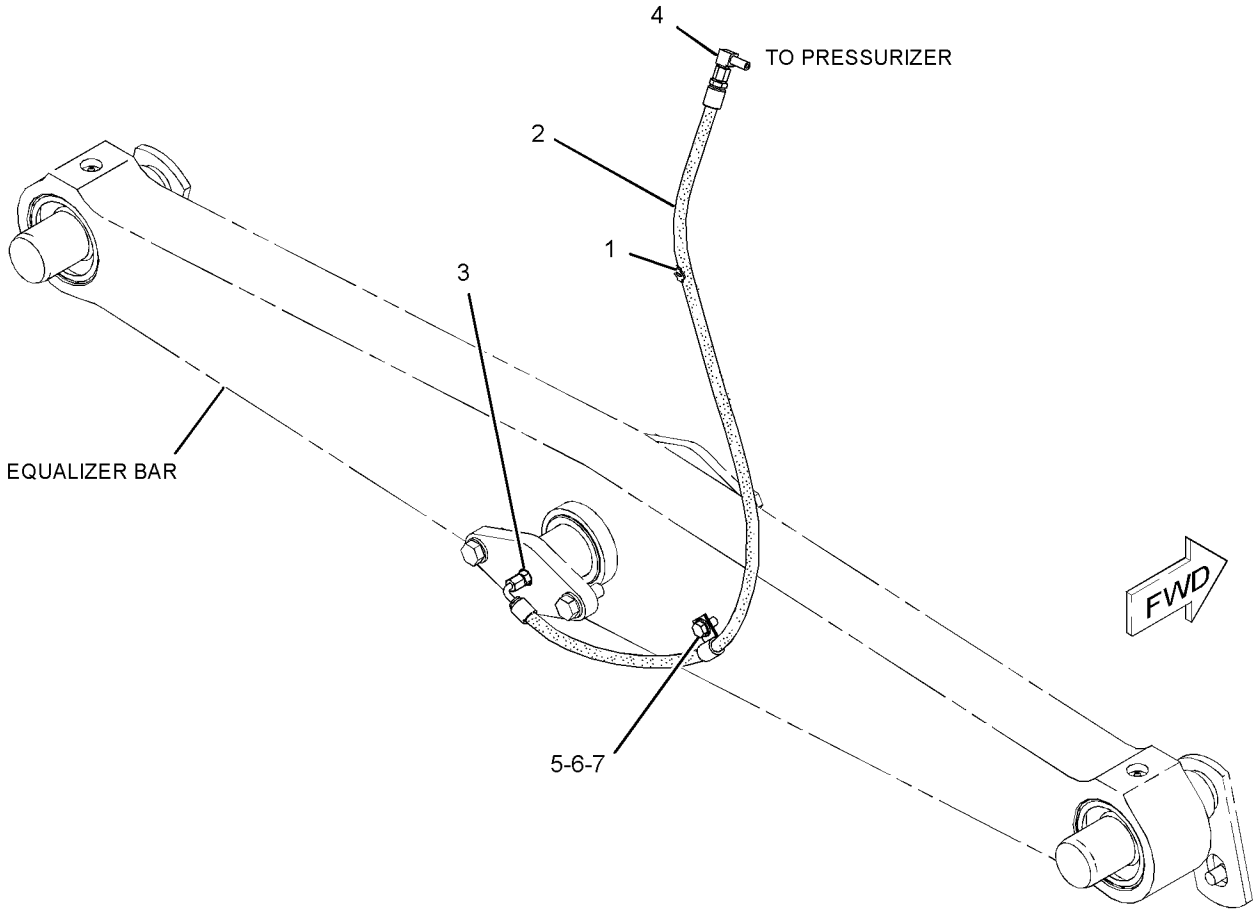

GRAPHIC #1 **<END>** g02023544

190-5328 LINK GP-PITCH

S/N: LPC1-UP; LJR1-UP

PART OF 321-5600 BULLDOZER AR-PWR ANGLE & TILT, 338-3521 C-FRAME GP-POWER ANGLING ALSO AN ATTACHMENT

SMCS-6079, 6081

i01883724

NOTE	REF NO	GRAPHIC REF	PART NUMBER	QTY	PART NAME 1 2 3 4 5 6 (PRODUCT LEVEL)	SEE PAGE
	1	1	**3B-8489**	2	FITTING-GREASE (PITCH LINK)	
	2	1	**7J-1309**	2	BEARING	
	3	1	**188-3757**	1	LINK	
	4	1	**1S-3311**	2	RING-RETAINING	

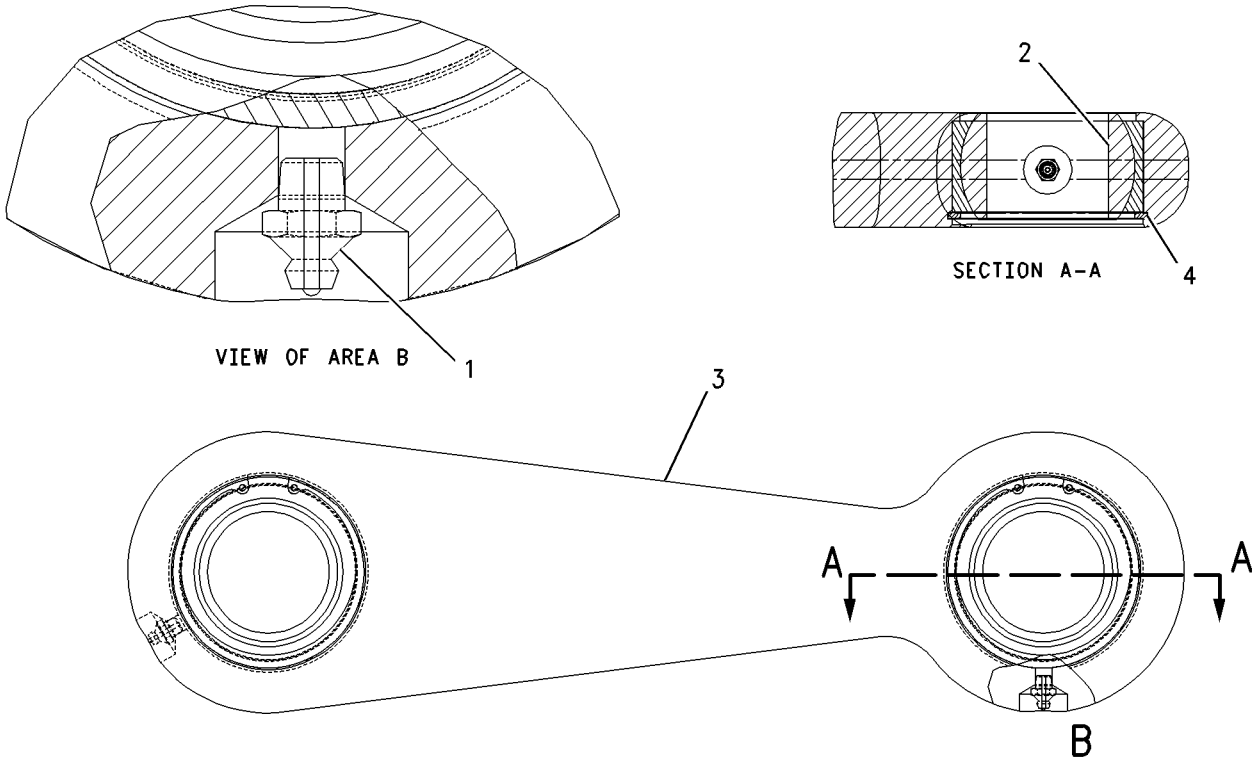

GRAPHIC #1 **<END>** g00827872

320-5056 PUSH ARM GP

S/N: D1Y1-UP

PART OF 273-0030 BULLDOZER AR-SEMI-UNIVERSAL

AN ATTACHMENT

SMCS-6061 **i02921238**

NOTE	REF NO	GRAPHIC REF	PART NUMBER	QTY	PART NAME 1 2 3 4 5 6 (PRODUCT LEVEL)	SEE PAGE
	1	1	**4F-0255**	2	PIN	
	2	1	**4T-1520**	1	CAGE AS	
		1	**6J-5383**	1	BEARING	
B	3	1	**8E-5701**	52	SHIM (0.8-MM THK)	
B	4	1	**8E-5703**	78	SHIM (0.8-MM THK)	
	5	1	**8J-2880**	3	CAP-BEARING	
	6	1	**115-4473**	1	ARM AS (RH)	
		1	**1U-2533**	1	BAR	
		1	**3G-6313**	1	BEARING	
		1	**4T-0732**	1	BRACKET	
		1	**8P-9770**	1	PLATE	
		1	**179-6153**	1	BEARING	
	7	1	**115-4474**	1	ARM AS (LH)	
		1	**1U-2533**	1	BAR	
		1	**3G-6313**	1	BEARING	
		1	**4T-0780**	1	TRUNNION	
		1	**8P-9770**	1	PLATE	
		1	**115-4522**	1	BRACKET	
		1	**179-6153**	1	BEARING	
	8	1	**124-9672**	1	BRACE AS-TILT	
		1	**8E-2887**	1	YOKE	
		1	**8P-9770**	1	PLATE	
	9	1	**160-6306**	2	CAP-BEARING	
Y	10	1	**233-9134**	1	CYLINDER GP-TILT	500
	11	1	**3B-4627**	2	PIN-COTTER	
	12	1	**3F-6185**	2	PIN	
M	13	1	**6V-9167**	8	BOLT (M20X2.5X140-MM)	
M	14	1	**7X-2566**	6	BOLT (M20X2.5X110-MM)	
M	15	1	**8C-8478**	4	BOLT (M20X2.5X140-MM)	
	16	1	**8T-4123**	6	WASHER (22X35X3.5-MM THK)	
M	17	1	**8T-4131**	22	NUT (M20X2.5-THD)	
	18	1	**8T-5439**	6	WASHER-HARD (21.5X45X6-MM THK)	
M	19	1	**8T-6381**	4	BOLT (M20X2.5X120-MM)	

B - USE AS REQUIRED
M - METRIC PART
Y - SEPARATE ILLUSTRATION

320-5056 **PUSH ARM GP (*contd.*)** **i02921238**

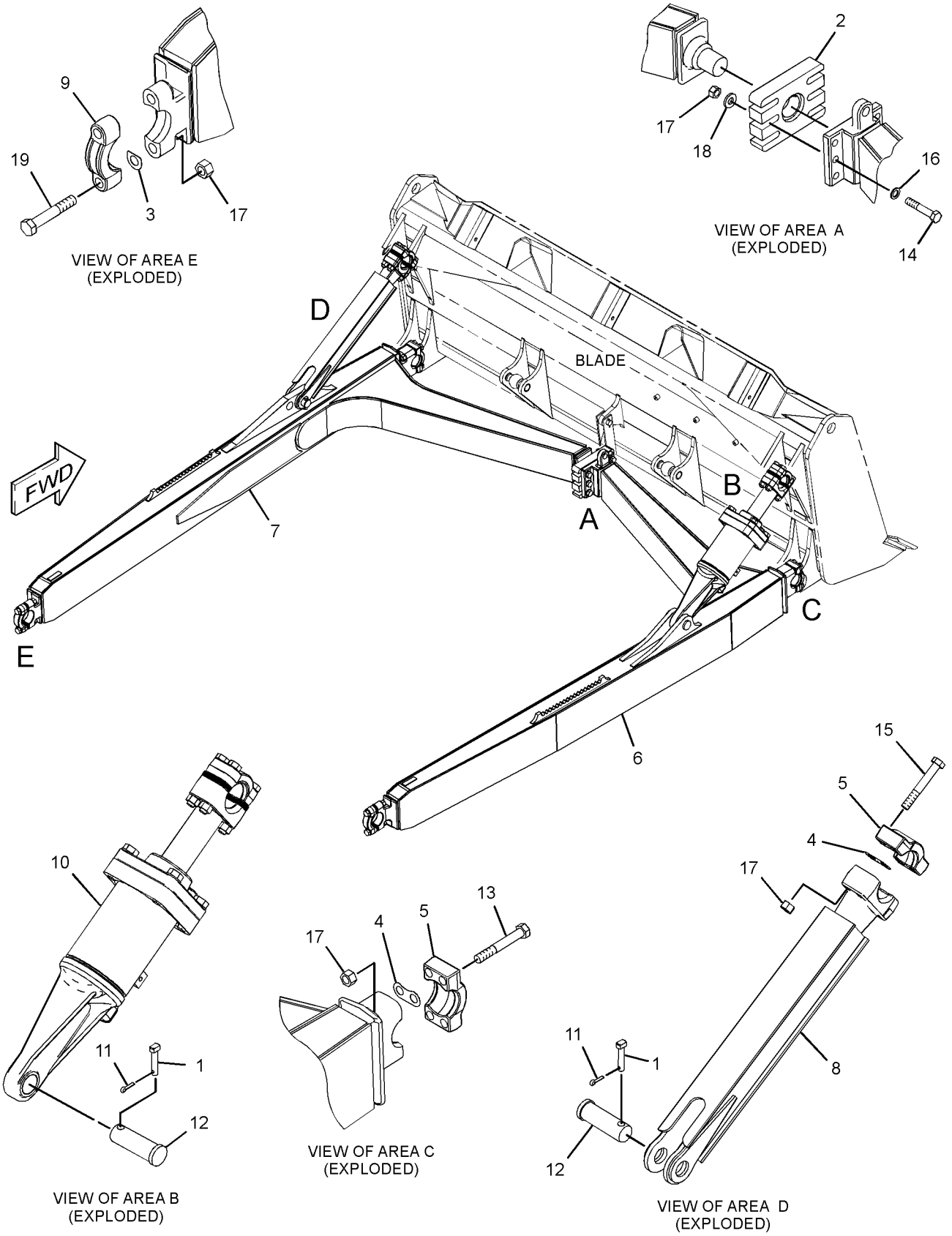

GRAPHIC #1 **<END>** g01457905

319-7125 TRUNNION GP-BULLDOZER

S/N: D1Y1-UP

PART OF 273-0030 BULLDOZER AR-SEMI-UNIVERSAL

AN ATTACHMENT

SMCS-6069 **i02921230**

NOTE	REF NO	GRAPHIC REF	PART NUMBER	QTY	PART NAME 1 2 3 4 5 6 (PRODUCT LEVEL)	SEE PAGE
	1	1	**143-3148**	2	COVER	
	2	1	**287-5751**	2	TRUNNION	
	3	1	**5P-1979**	2	SEAL-O-RING	
M	4	1	**7X-2475**	20	BOLT (M16X2X130-MM)	
	5	1	**8T-4122**	20	WASHER-HARD (17X32X3.5-MM THK)	
M	6	1	**8T-4192**	4	BOLT (M12X1.75X25-MM)	
	7	1	**8T-4223**	4	WASHER-HARD (13.5X25.5X3-MM THK)	

M - METRIC PART

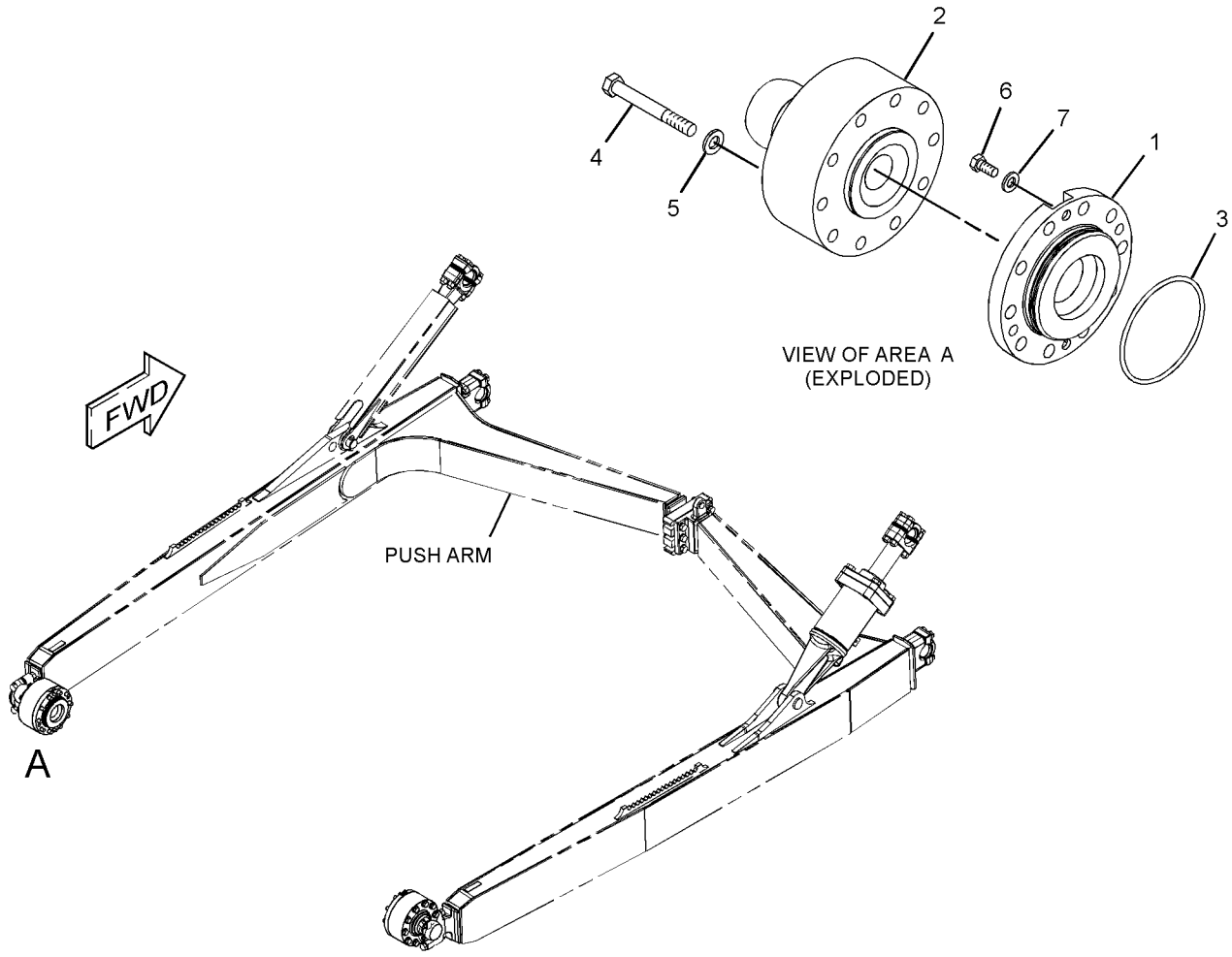

GRAPHIC #1 **<END>** g01457919

173-1028 ADJUSTER GP-SEAT

S/N: LJR1-UP
PART OF 178-0603, 180-7304 SEAT GP
ALSO AN ATTACHMENT

SMCS-7321 **i01582195**

NOTE	REF NO	GRAPHIC REF	PART NUMBER	QTY	PART NAME 1 2 3 4 5 6 (PRODUCT LEVEL)	SEE PAGE
	1	1	**4V-8256**	4	SPRING	
	2	1	**117-4492**	1	ROD	
	3	1	**136-1544**	1	LATCH AS (LH)	
	4	1	**156-5545**	1	LATCH AS (RH)	
	5	1	**164-4531**	1	ROD	
	6	1	**170-1112**	1	PLATE AS	
	7	1	**170-1114**	1	HANDLE (SLIDE ADJUSTMENT)	
	8	1	**170-1115**	1	HANDLE (TILT ADJUSTMENT)	
	9	1	**132-0338**	2	WASHER-PLASTIC (13X31.7X0.8-MM THK)	
	10	1	**2K-4973**	2	LOCKNUT (3/8-16-THD)	
	11	1	**7X-0608**	2	WASHER-HARD (10.2X16X2-MM THK)	

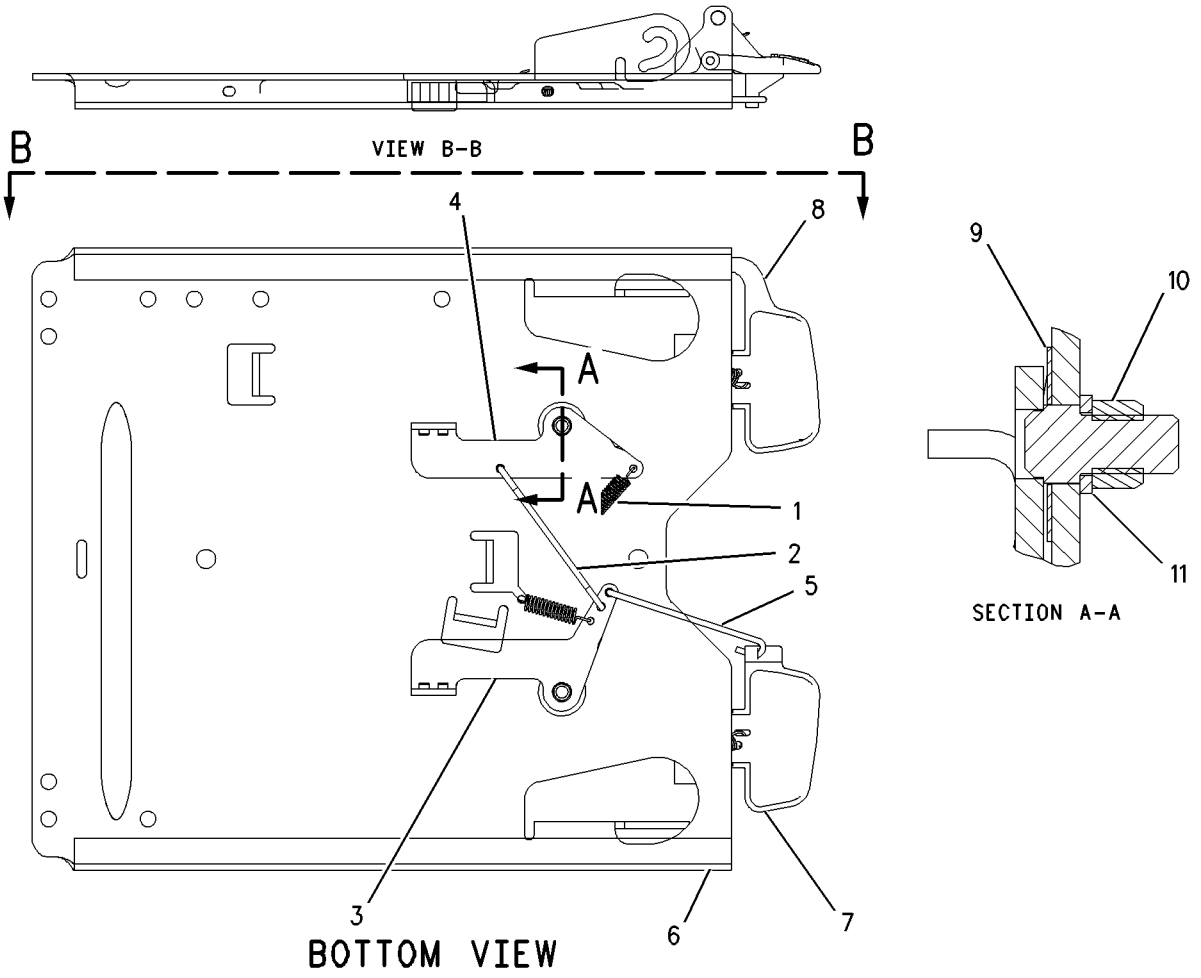

GRAPHIC #1 **<END>** g00816460

311-6384 AIR CONDITIONER GP

S/N: LJR1-UP
PART OF 311-6400 CAB GP
ALSO AN ATTACHMENT

SMCS-7320 **i03627536**

NOTE	REF NO	GRAPHIC REF	PART NUMBER	QTY	PART NAME 1 2 3 4 5 6 (PRODUCT LEVEL)	SEE PAGE
	1	1	**256-6454**	1	SENSOR-TEMPERATURE (RECIRCULATION)	
Y	2	2	**287-0554**	1	CONDENSER GP-REFRIGERANT	602
Y	3	1	*331-5406*	1	LINES GP-AIR CONDITIONER	651
	4	2	**109-6406**	1	COIL AS	
	5	1	**308-2525**	1	SENSOR GP-TEMPERATURE (EVAPORATOR)	
H		1	**153-5043**		SLEEVE (1-DM)	
		1	**230-4012**	1	RECEPTACLE AS-CONNECTOR (2-PIN)	
		1	**144-1636**	2	PIN-CONNECTOR (14-GA TO 18-GA)	
	6	2	**8T-4121**	2	WASHER-HARD (11X21X2.5-MM THK)	
	7	1	**7X-7729**	4	WASHER (11X25X3-MM THK)	
M	8	2	**8T-4191**	2	BOLT (M10X1.5X16-MM)	
M	9	1	**8T-4195**	4	BOLT (M10X1.5X30-MM)	
	10	2	**9X-7373**	1	GROMMET	
D	11	1	**5P-5643**		SEAL (0.4-M)	

D - ORDER BY THE METER
H - ORDER BY THE DECIMETER
M - METRIC PART
Y - SEPARATE ILLUSTRATION

311-6384 **AIR CONDITIONER GP (*contd.*)** **i03627536**

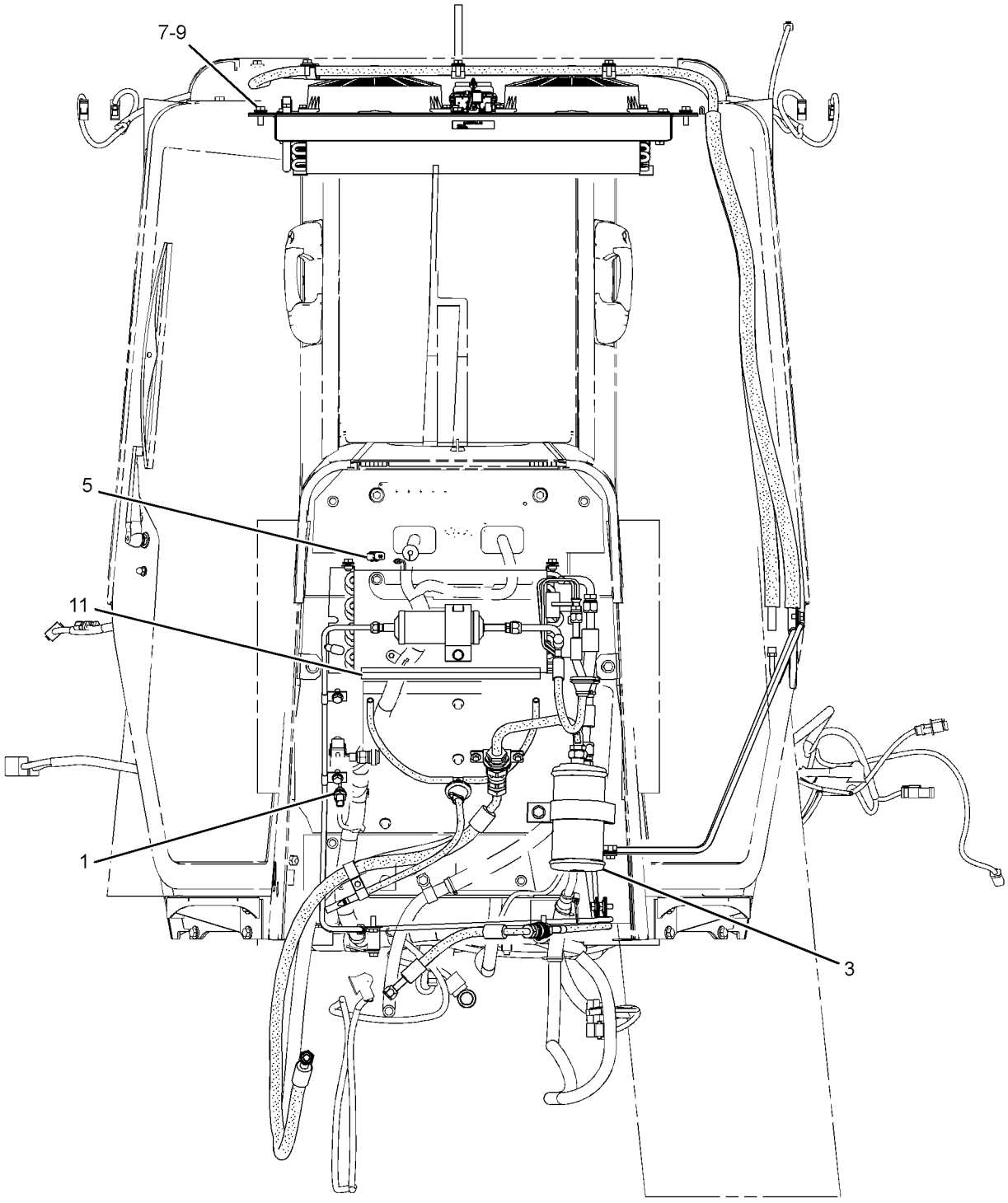

FRONT VIEW

GRAPHIC #1 g01888615

311-6384 **AIR CONDITIONER GP (*contd.*)** **i03627536**

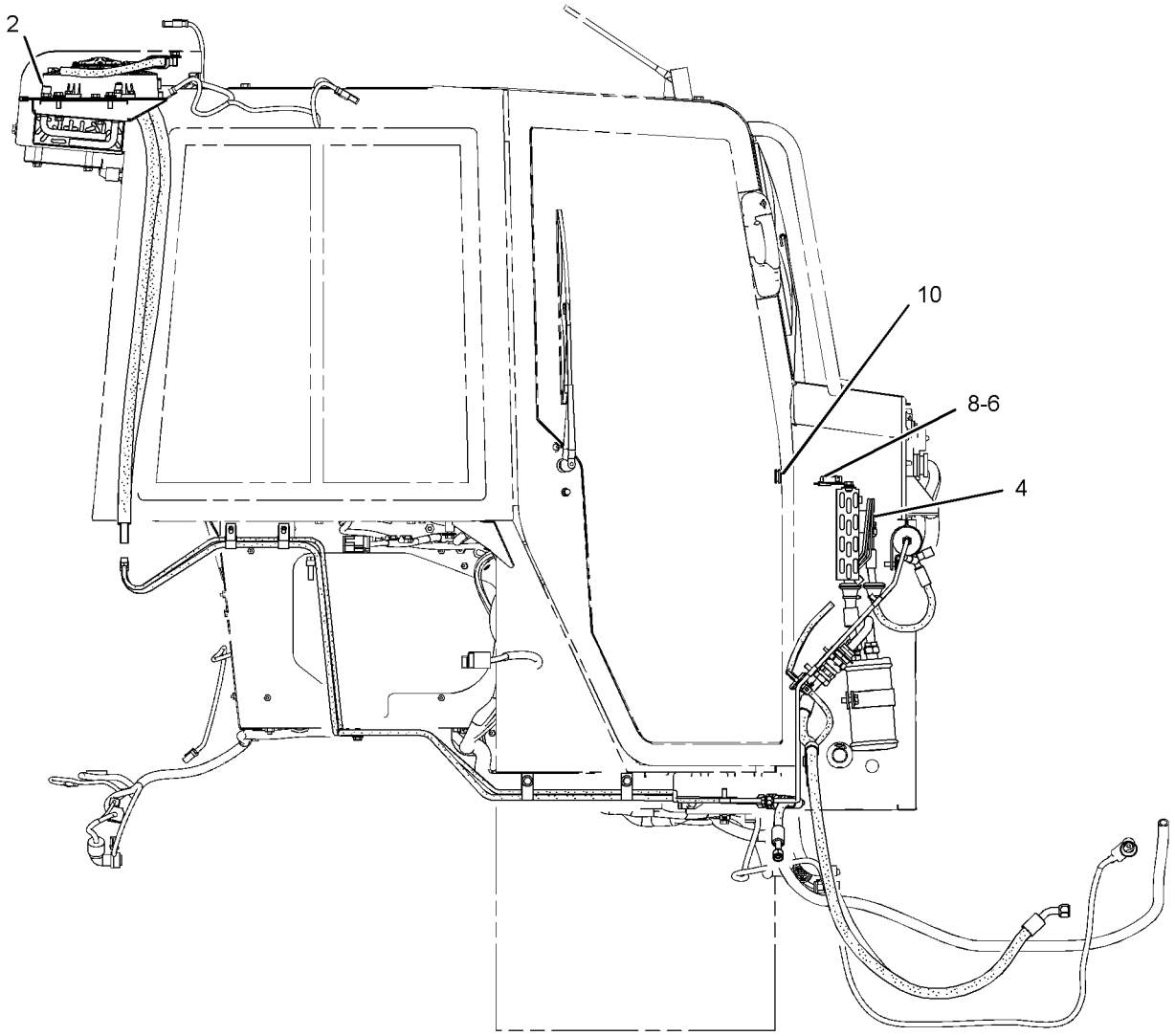

RIGHT SIDE VIEW

GRAPHIC #2 **<END>** g01888616

308-5073 BLOWER GP-CAB

S/N: LJR1-UP

PART OF 311-6387 PRESSURIZER GP-CAB

ALSO AN ATTACHMENT

SMCS-7316 **i04025368**

NOTE	REF NO	GRAPHIC REF	PART NUMBER	QTY	PART NAME 1 2 3 4 5 6 (PRODUCT LEVEL)	SEE PAGE
	1	1	**1M-1230**	4	NUT & LOCK AS (10-32-THD)	
	2	1	**3S-2093**	1	STRAP-CABLE	
	3	1	**6T-6708**	2	WASHER (7X28.6X4.1-MM THK)	
	4	1	**7G-0942**	2	PLATE-ORIFICE	
	5	1	**8C-3756**	1	FILM-IDENTIFICATION (GROUP NO., SEQUENCE NO.) (GROUP NUMBER)	
	6	1	**125-9740**	1	RESISTOR	
	7	1	**174-1504**		MOTOR AS-BLOWER (24-VOLT, A/C, HEATER) (CLOCKWISE, LEAD END)	
		1	**9W-0852**	2	PIN-CONNECTOR (14-GA TO 16-GA)	
		1	**102-8802**	1	KIT-RECEPTACLE (2-PIN)	
					(INCLUDES RECEPTACLE AS & WEDGE)	
	8	1	**174-1505**	1	MOTOR AS-BLOWER (24-VOLT, A/C, HEATER) (COUNTERCLOCKWISE, LEAD END)	
		1	**9W-0844**	2	SOCKET-CONNECTOR (14-GA TO 16-GA)	
		1	**155-2270**	1	KIT-CONNECTING PLUG (2-PIN)	
					(INCLUDES PLUG AS, WEDGE & INTERFACE SEAL)	
	9	1	**175-0070**	4	BRACKET	
	10	1	**198-7284**	1	GASKET	
	11	1	**256-0622**	1	WHEEL-BLOWER (CCW)	
	12	1	**256-0623**	1	WHEEL-BLOWER (CW)	
	13	1	**256-6454**	1	SENSOR-TEMPERATURE (AIR TEMPERATURE CONTROL)	
	14	1	**2V-8260**	1	GROMMET	
	15	1	**310-6057**	1	HARNESS AS-MOTOR (TEMPERATURE CONTROL)	
		1	**102-8802**	1	KIT-RECEPTACLE (2-PIN)	
		1	**102-8805**		KIT-RECEPTACLE (6-PIN)	
					(EACH KIT INCLUDES RECEPTACLE AS & WEDGE)	
		1	**8T-8737**	1	PLUG-SEAL	
E		1	**125-7874**		TUBE-HEAT SHRINK (5.72-MM DIA) (5-CM)	
E		1	**125-7875**		TUBE-HEAT SHRINK (7.44-MM DIA) (5-CM)	
		1	**9X-3402**	2	SOCKET-CONNECTOR (16-GA TO 18-GA)	
		1	**5P-4571**	4	TERMINAL-BLADE (14-GA TO 16-GA)	
		1	**144-1636**	7	PIN-CONNECTOR (14-GA TO 18-GA)	
		1	**155-2270**	1	KIT-CONNECTING PLUG (2-PIN)	
					(INCLUDES PLUG AS, WEDGE & INTERFACE SEAL)	
E		1	**1P-0810**		TAPE-ELECTRICAL (59-CM)	
	16	1	**310-6058**	1	CASE AS	
		1	**1F-0750**	1	NUT-WELD (3/8-16-THD)	
		1	**7T-1099**	4	LINK	
		1	**7T-4567**	1	BRACKET	
	17	1	**130-5300**	2	CLIP	
	18	1	**3E-9865**	7	LOCKNUT (1/4-20-THD)	
	19	1	**4B-4274**	4	WASHER (5.5X13X1.2-MM THK)	
	20	1	**5P-4115**	6	WASHER-HARD (7.2X19X2-MM THK)	
	21	1	**5P-8167**	1	BOLT (3/8-16X0.625-IN)	
	22	1	**5P-9085**	1	CLIP	
	23	1	**6V-1668**	2	WASHER (6.5X29.1X3-MM THK)	
	24	1	**6V-3320**	1	SCREW-MACHINE (1/4-20X7.5-IN)	
	25	1	**8T-4896**	1	WASHER-HARD (10.2X18.5X2.5-MM THK)	

E - ORDER BY THE CENTIMETER

308-5073 **BLOWER GP-CAB (*contd.*)** **i04025368**

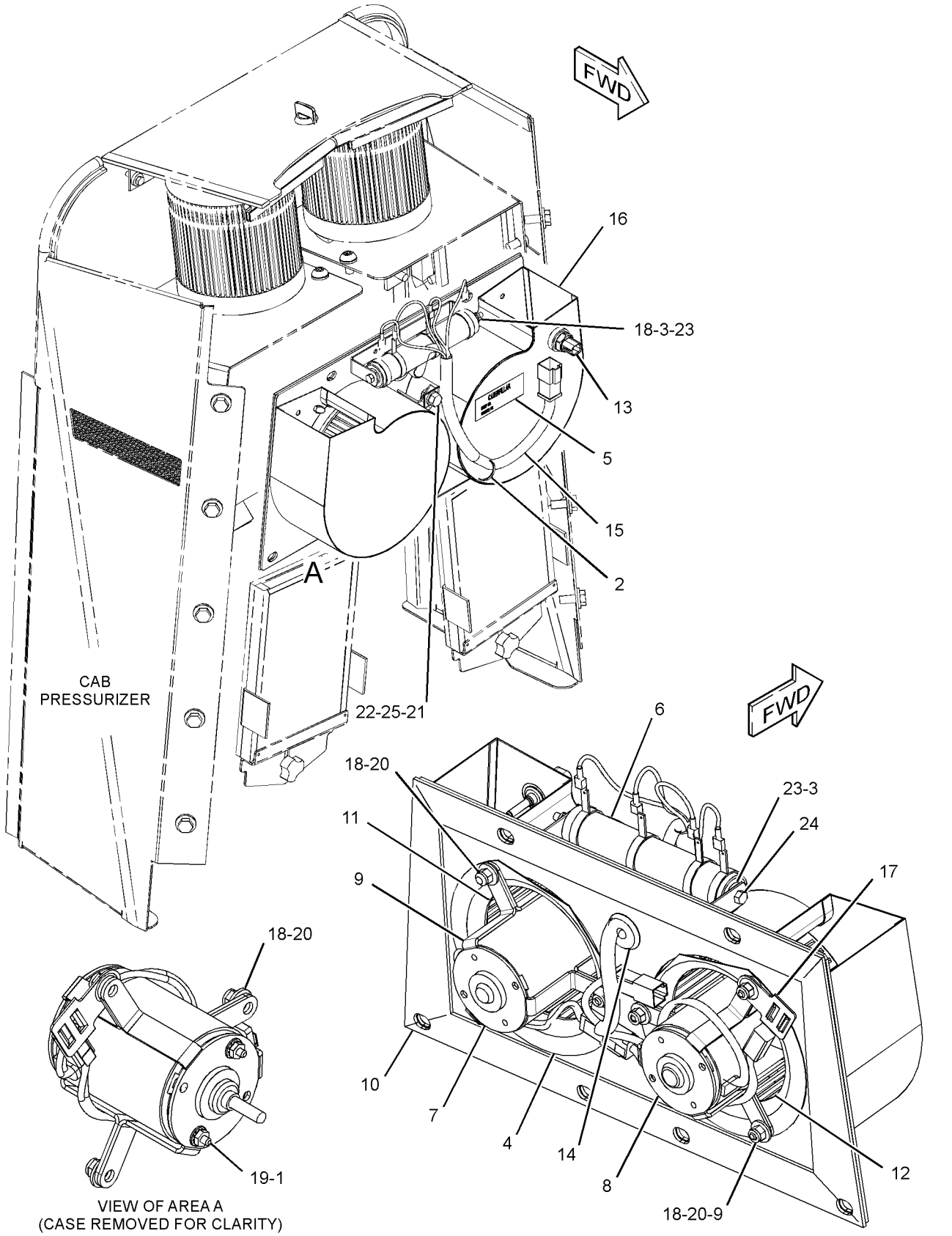

GRAPHIC #1 **<END>** g01895013

OPERATOR STATION

310-9971 CAB AR

S/N: LJR1-UP

PART OF 310-9903 GENERAL AR

SMCS-7301 **i05076956**

NOTE	PART NUMBER	QTY	PART NAME 1 2 3 4 5 6 (PRODUCT LEVEL)	SEE PAGE
Y	*311-6400*	1	CAB GP	596
Y	**321-8288**	1	CONTROL GP-JOYSTICK (BULLDOZER)	620
Y	*311-6405*	1	CONTROL GP-STEERING & XMSN	447
Y	*298-4392*	1	COVER GP-CONSOLE	626
Y	*301-7805*	1	LIGHTING GP-FLOOD	189
Y	*270-4807*	1	LINES GP-AIR CONDITIONER	649
Y	*156-8915*	1	MOUNTING GP-CAB	660
Y	*331-5408*	1	MOUNTING GP-LINES	661
Y	*301-1027*	1	ROPS GP-ENCLOSED	689
Y	*320-1201*	1	SEAT GP-SUSPENSION (CLOTH, AIR)	705
Y	*311-6390*	1	TANK GP-WINDOW WASHER	709

Y - SEPARATE ILLUSTRATION

<END>

OPERATOR STATION

339-2970 CAB AS

S/N: LJR1-UP
PART OF 311-6420 CAB GP
ALSO AN ATTACHMENT

SMCS-7301 **i03628491**

NOTE	REF NO	GRAPHIC REF	PART NUMBER	QTY	PART NAME 1 2 3 4 5 6 (PRODUCT LEVEL)	SEE PAGE
	1	1	**311-6410**	1	CAB AS	

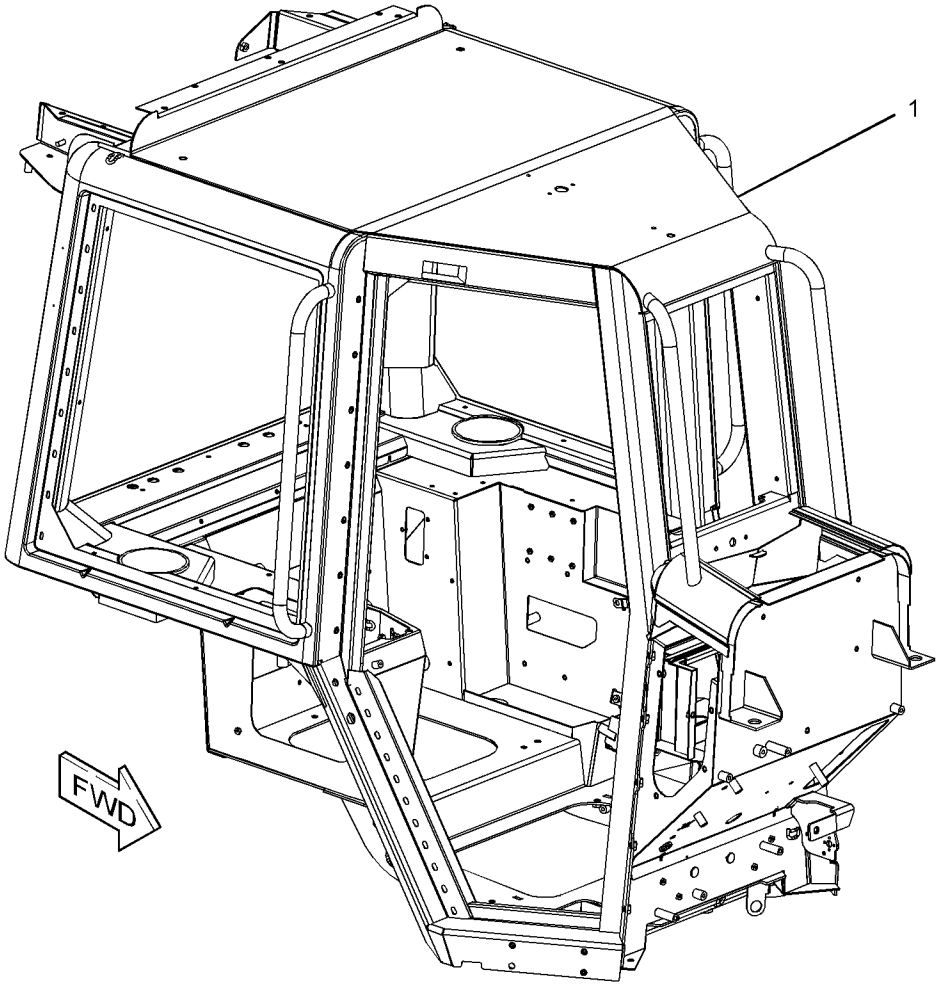

GRAPHIC #1 **<END>** g01885813

311-6400 CAB GP

S/N: LJR1-UP
PART OF 310-9971 CAB AR, 322-6360 CAB GP
ALSO AN ATTACHMENT

SMCS-7301 **i05182642**

NOTE	PART NUMBER	QTY	PART NAME 1 2 3 4 5 6 (PRODUCT LEVEL)	SEE PAGE
Y	*311-6384*	1	AIR CONDITIONER GP	589
Y	*311-6420*	1	CAB GP	597
Y	*311-6395*	1	PANEL GP-INSTRUMENT	668
Y	**320-1198**	1	PEDAL GP-GOVERNOR & BRAKE	670
Y	*310-7462*	1	WIRING GP-CAB	224
Y	*310-1543*	1	WIRING GP-PLATFORM	245
			S/N: LJR1-692	
Y	*392-3202*	1	WIRING GP-PLATFORM	253
			S/N: LJR693-UP	
	220-0229	1	ALARM AS (BACKUP)	
	102-8802	1	KIT-RECEPTACLE (2-PIN)	
			(INCLUDES RECEPTACLE AS & WEDGE)	
	186-3735	2	PIN-CONNECTOR (16-GA TO 18-GA)	
E	**9X-1813**		SLEEVE (29-CM)	

E - ORDER BY THE CENTIMETER
Y - SEPARATE ILLUSTRATION

<END>

311-6420 CAB GP

S/N: LJR1-UP
PART OF 311-6400 CAB GP
ALSO AN ATTACHMENT

SMCS-7301 **i03627544**

NOTE	REF NO	GRAPHIC REF	PART NUMBER	QTY	PART NAME 1 2 3 4 5 6 (PRODUCT LEVEL)	SEE PAGE
	1	1	**6V-8928**	1	HOOK-COAT	
Y	2	1	*156-8916*	1	WINDOW GP-CAB	713
Y	3	1	*167-1451*	1	DOOR GP-CAB (RH)	632
Y	4	1	*167-1453*	1	DOOR GP-CAB (LH)	634
	5	1	**168-8929**	2	STRIKER AS	
					(EACH INCLUDES)	
M		1	**8T-4244**	1	NUT (M12X1.75-THD)	
		1	**129-3737**	1	STRIKER BOLT-CAB (M12X1.75X17.8-MM)	
	6	1	**170-2062**	1	GRID	
Y	7	1	*177-3851*	1	INSULATION GP-WEATHER	644
Y	8	1	*177-3852*	1	STEP GP	375
Y	9	1	*194-3315*	1	LATCH GP	646
Y	10	1	**194-3333**	1	INSTALLATION GP-RADIO	642
	11	1	**196-7553**	1	HANDLE AS	
	12	1	**224-2669**	5	PLUG-PLASTIC	
	13	1	**228-2903**	1	BRACKET AS	
	14	1	**229-2530**	1	PLUG-PLASTIC	
	15	1	**229-2531**	1	SEAL (DOOR, LH)	
	16	1	**229-2532**	1	SEAL (DOOR, RH)	
	17	1	**231-3075**	1	FILM-IDENTIFICATION (LUBE POINT)	
	18	1	**233-5153**	1	PLATE AS	
	19	1	**294-7160**	1	GUARD AS	
Y	20	1	*311-6385*	1	COVER GP-CONSOLE	628
Y	21	1	*311-6386*	1	HEATER GP-CAB	636
Y	22	1	*311-6387*	1	PRESSURIZER GP-CAB	674
Y	23	1	*311-6407*	1	LINER GP-CAB	648
Y	24	1	*311-6408*	1	WIPER GP-WINDOW	716
Y	25	1	**339-2970**	1	CAB AS	595
	26	1	**4H-2558**	2	GROMMET	
	27	1	**7X-7729**	23	WASHER (11X25X3-MM THK)	
Y	28	1	*8E-8706*	1	MIRROR GP-REAR VIEW	655
	29	1	**8T-4121**	11	WASHER-HARD (11X21X2.5-MM THK)	
M	30	1	**8T-4133**	2	NUT (M10X1.5-THD)	
M	31	1	**8T-4137**	12	BOLT (M10X1.5X20-MM)	
M	32	1	**8T-4179**	3	BOLT (M12X1.75X20-MM)	
M	33	1	**8T-4195**	8	BOLT (M10X1.5X30-MM)	
	34	1	**8T-4223**	3	WASHER-HARD (13.5X25.5X3-MM THK)	
	35	1	**9D-8508**	1	GROMMET	
M	36	1	**9X-2040**	2	SCREW-TRUSS HEAD (M10X1.5X25-MM)	
M	37	1	**9X-2044**	1	SCREW-TRUSS HEAD (M6X1X16-MM)	
D	38	1	**5P-5952**		SEAL (1-M)	

D - ORDER BY THE METER
M - METRIC PART
Y - SEPARATE ILLUSTRATION

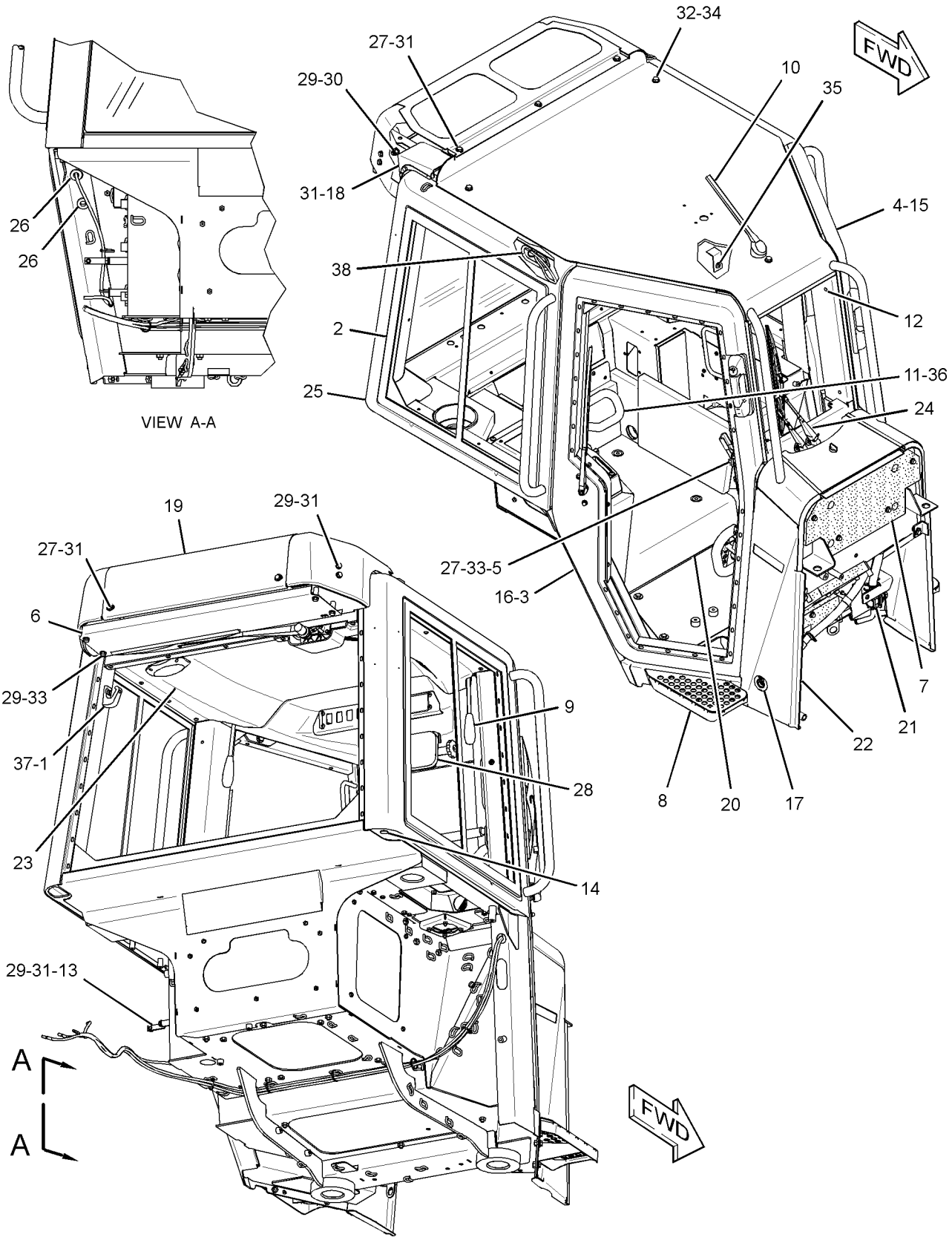

GRAPHIC #1 **<END>** g01887779

OPERATOR STATION

322-6360 CAB GP–FORESTRY

S/N: LJR1-UP
PART OF 431-7088 FORESTRY AR
AN ATTACHMENT

SMCS-7301 **i03973834**

NOTE	PART NUMBER	QTY	PART NAME 1 2 3 4 5 6 (PRODUCT LEVEL)	SEE PAGE
Y	*311-6400*	1	CAB GP	596
	311-6410	1	CAB AS	
	301-6915	1	DOOR AS (RH)	
	301-6916	1	DOOR AS (LH)	
	240-6241	1	GUARD AS (RH)	
	240-6243	1	GUARD AS (LH)	
	236-3930	2	HARNESS AS-CAB	
			(EACH INCLUDES)	
	102-8802	1	KIT-RECEPTACLE (2-PIN)	
			(INCLUDES RECEPTACLE AS & WEDGE)	
	8T-8729	2	PIN-CONNECTOR (16-GA TO 18-GA)	
	186-3736	2	SOCKET-CONNECTOR (16-GA TO 18-GA)	
	155-2270	1	KIT-CONNECTING PLUG (2-PIN)	
			(INCLUDES PLUG AS, WEDGE, & INTERFACE SEAL)	
	223-9818	1	FILM-INSTRUCTION (WINDOW CLEANING, READ OMM)	
	197-8774	1	GLASS-FRONT	
	358-9938	4	KNOB	
M	**6V-7744**	4	LOCKNUT (M10X1.5-THD)	
	7X-7729	8	WASHER (11X25X3-MM THK)	

M - METRIC PART
Y - SEPARATE ILLUSTRATION

<END>

320-1082 CANOPY AR

S/N: LJR1-UP
CANNOT BE USED WITH COVER GP-CONSOLE
AN ATTACHMENT

SMCS-7302 **i05017439**

NOTE	PART NUMBER	QTY	PART NAME 1 2 3 4 5 6 (PRODUCT LEVEL)	SEE PAGE
Y	*335-0718*	1	CONTROL GP-STEERING & XMSN	448
Y	*267-6440*	1	DRIVE GP-FAN	24
Y	*243-4799*	1	LIGHTING GP-FLOOD (ROPS)	187
Y	*320-1160*	1	MOUNTING GP-PLATFORM	662
Y	*320-1200*	1	PLATFORM GP-OPERATOR	673
Y	*320-1210*	1	ROPS GP	687
Y	*320-1204*	1	SEAT GP-SUSPENSION (VINYL)	705
	126-3701	1	ARMREST AS (LH)	
M	**8T-4137**	2	BOLT (M10X1.5X20-MM)	
	8T-4121	2	WASHER-HARD (11X21X2.5-MM THK)	

M - METRIC PART
Y - SEPARATE ILLUSTRATION

<END>

183-5106 COMPRESSOR GP-REFRIGERANT

S/N: LJR1-UP

PART OF 243-2156 COMPRESSOR GP-REFRIGERANT

SMCS-1802 **i03437060**

NOTE	REF NO	GRAPHIC REF	PART NUMBER	QTY	PART NAME 1 2 3 4 5 6 (PRODUCT LEVEL)	SEE PAGE
	1	1	**180-9339**	2	PIN-CONNECTOR (14-GA TO 18-GA)	
	2	1	**102-8802**	1	KIT-RECEPTACLE (2-PIN)	
					(INCLUDES RECEPTACLE AS & WEDGE)	
	3	1	**314-4018**	1	VALVE AS-PRESSURE RELIEF (REFRIGERANT COMPRESSOR)	
		1	**9X-7378**	1	SEAL-O-RING	
	4	1	**7T-4532**	1	PLUG AS	
	5	1	**9X-7385**	2	SEAL-O-RING	

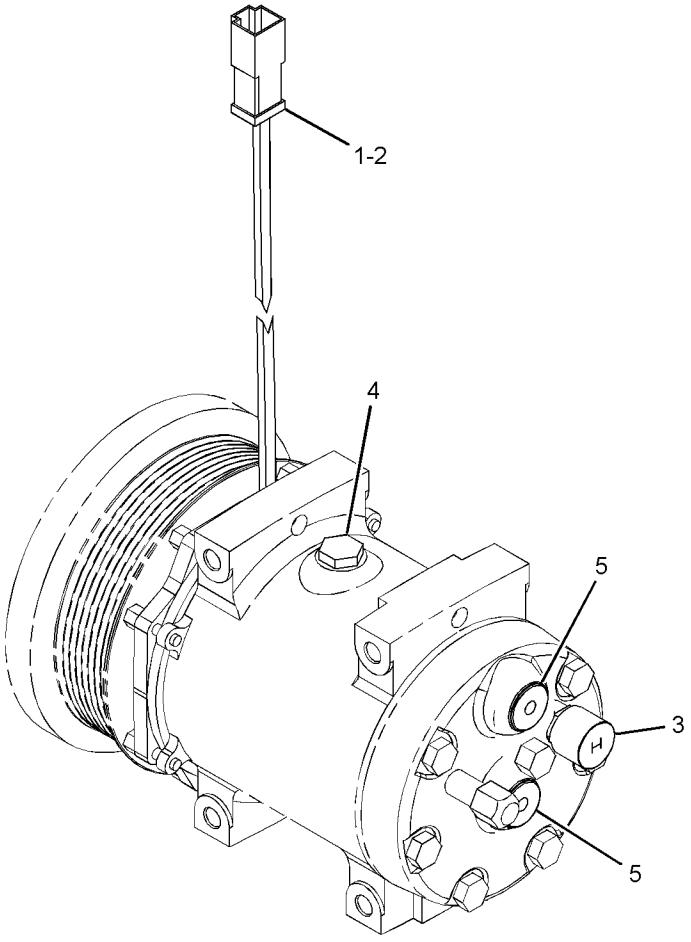

GRAPHIC #1 **<END>** g01419732

243-2156 COMPRESSOR GP-REFRIGERANT

S/N: LJR1-UP

PART OF 318-0768 INSTALLATION AR-ENGINE

SMCS-1802 **i02788141**

NOTE	REF NO	GRAPHIC REF	PART NUMBER	QTY	PART NAME 1 2 3 4 5 6 (PRODUCT LEVEL)	SEE PAGE
	1	1	**3S-2093**	2	STRAP-CABLE	
Y	2	1	**183-5106**	1	COMPRESSOR GP-REFRIGERANT	600
M	3	1	**255-1281**	2	BOLT-FLANGE HEAD (M8X1.25X100-MM)	
M	4	1	**315-5492**	2	STUD (M8X1.25X130-MM)	
	5	1	**4P-7581**	1	CLIP	
	6	1	**4P-8134**	1	CLIP	
	7	1	**8T-4224**	2	WASHER-HARD (8.8X16X2-MM THK)	
H	8	1	**310-8320**		CONDUIT (1-DM)	

H - ORDER BY THE DECIMETER
M - METRIC PART
Y - SEPARATE ILLUSTRATION

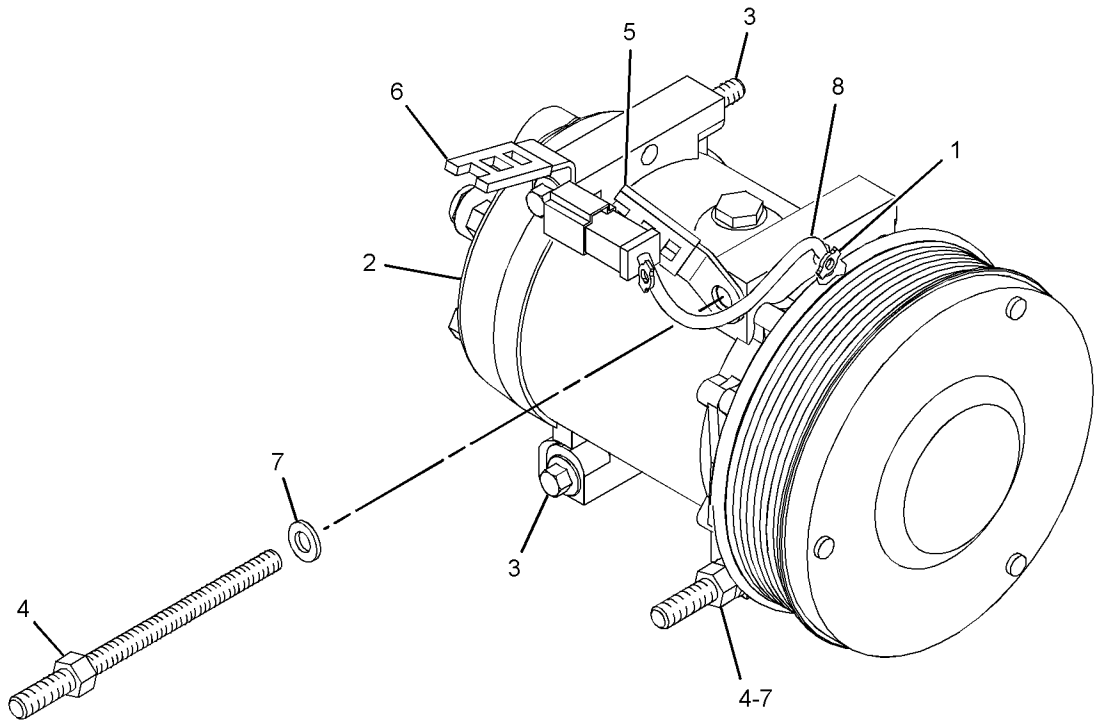

GRAPHIC #1 **<END>** g01423503

287-0554 CONDENSER GP-REFRIGERANT

S/N: LJR1-UP

PART OF 311-6384 AIR CONDITIONER GP

ALSO AN ATTACHMENT

SMCS-1805 **i03627537**

NOTE	REF NO	GRAPHIC REF	PART NUMBER	QTY	PART NAME 1 2 3 4 5 6 (PRODUCT LEVEL)	SEE PAGE
	1	1	**3E-5239**	2	RELAY AS (24-VOLT) (CONDENSER BLOWER MOTOR)	
	2	1	**3S-2093**	2	STRAP-CABLE	
	3	1	**8C-3756**	1	FILM-IDENTIFICATION (GROUP NO., SEQUENCE NO.) (REFRIGERANT CONDENSER)	
	4	1	**304-3715**	2	FAN AS-CONDENSER (24-VOLT, 5-BLADE)	
	5	1	**175-2539**	1	CASE AS	
	6	1	**199-7698**	1	COIL AS (CONDENSER)	
	7	1	**287-0553**	1	HARNESS AS-HEATER & AIR COND	
		1	**9G-3695**	1	PLUG-SEAL	
		1	**9W-0844**	4	SOCKET-CONNECTOR (14-GA TO 16-GA)	
		1	**9W-0852**	5	PIN-CONNECTOR (14-GA TO 16-GA)	
		1	**9X-1056**	8	TERMINAL-RECEPTACLE (14-GA TO 16-GA)	
E		1	**119-3662**		TUBE-HEAT SHRINK (10.85-MM DIA) (20-CM)	
		1	**9X-1054**	2	PLUG AS-CONNECTOR (4-PIN)	
		1	**155-2270**	2	KIT-CONNECTING PLUG (2-PIN)	
					(EACH INCLUDES PLUG AS, WEDGE, & INTERFACE SEAL)	
		1	**102-8805**	1	KIT-RECEPTACLE (6-PIN)	
					(INCLUDES RECEPTACLE AS & WEDGE)	
	8	1	**4P-8134**	1	CLIP	
M	9	1	**5C-2890**	1	NUT (M6X1-THD)	
	10	1	**8T-4121**	8	WASHER-HARD (11X21X2.5-MM THK)	
M	11	1	**8T-4137**	8	BOLT (M10X1.5X20-MM)	
M	12	1	**8T-4138**	1	BOLT (M6X1X20-MM)	
	13	1	**8T-4205**	2	WASHER-HARD (7.2X14.5X2-MM THK)	
	14	1	**8T-4224**	8	WASHER-HARD (8.8X16X2-MM THK)	
M	15	1	**8T-4908**	8	BOLT (M8X1.25X25-MM)	
E	16	1	**126-8472**		SEAL (79-CM)	
D	17	1	**5P-5673**		SEAL (0.8-M EACH)	
D	17A	1	**5P-5673**		SEAL (0.2-M EACH)	

D - ORDER BY THE METER
E - ORDER BY THE CENTIMETER
M - METRIC PART

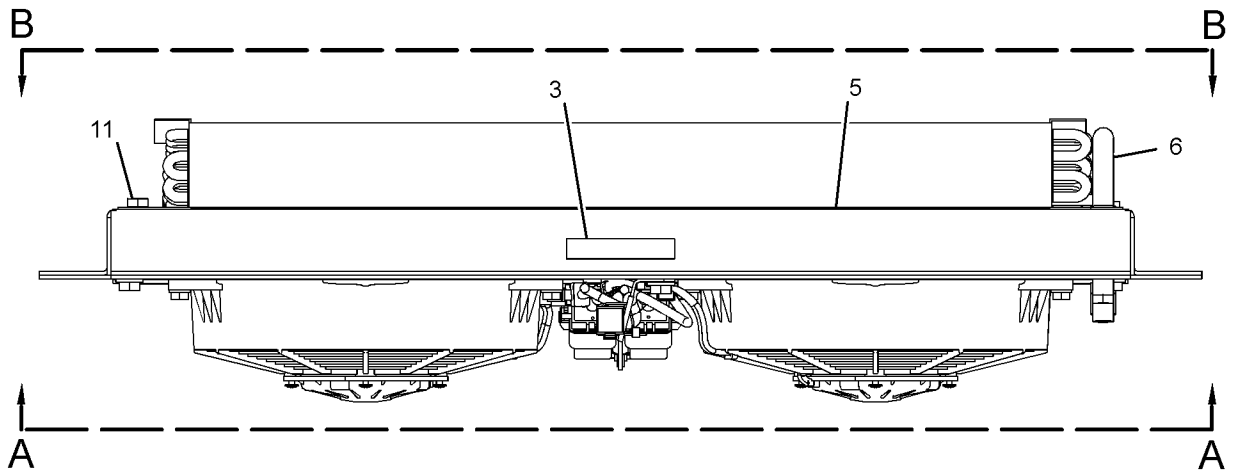

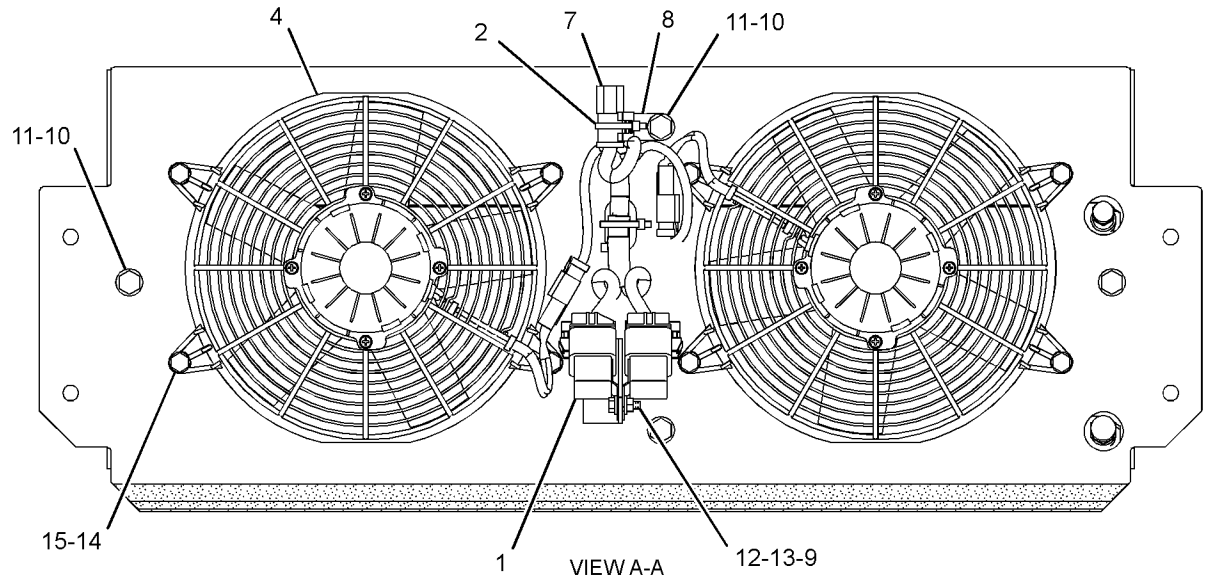

VIEW A-A

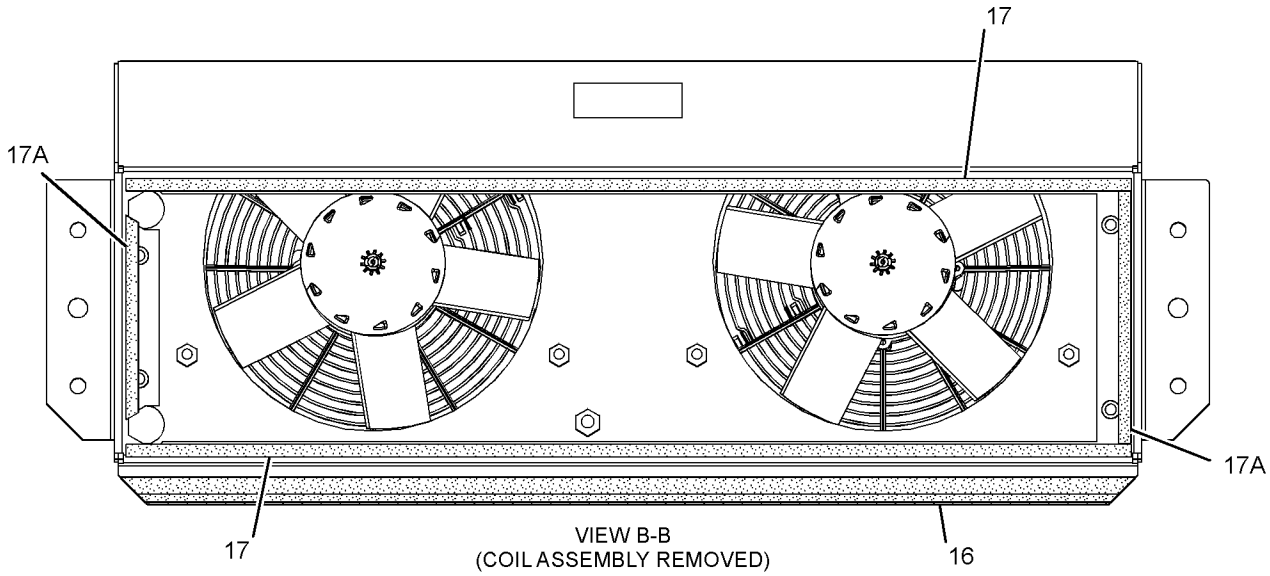

VIEW B-B
(COIL ASSEMBLY REMOVED)

GRAPHIC #1 **<END>** g01338300

231-2222 CONTROL GP-HANDLE—WINCH

S/N: LJR1-UP
PART OF 238-5466 CONTROL GP-HANDLE
AN ATTACHMENT

SMCS-5063, 5705

i03099121

NOTE	REF NO	GRAPHIC REF	PART NUMBER	QTY	PART NAME 1 2 3 4 5 6 (PRODUCT LEVEL)	SEE PAGE
	1	1	**285-8465**	1	SWITCH (WINCH CONTROL)	
	2	1	**285-8466**	1	BOOT	
	3	1	**155-2274**	1	KIT-CONNECTING PLUG (6-PIN)	
					(INCLUDES RECEPTACLE AS, INTERFACE SEAL, & WEDGE)	
	4	1	**9W-0844**	5	SOCKET-CONNECTOR (14-GA TO 16-GA)	
	5	1	**8T-8737**	1	PLUG-SEAL	

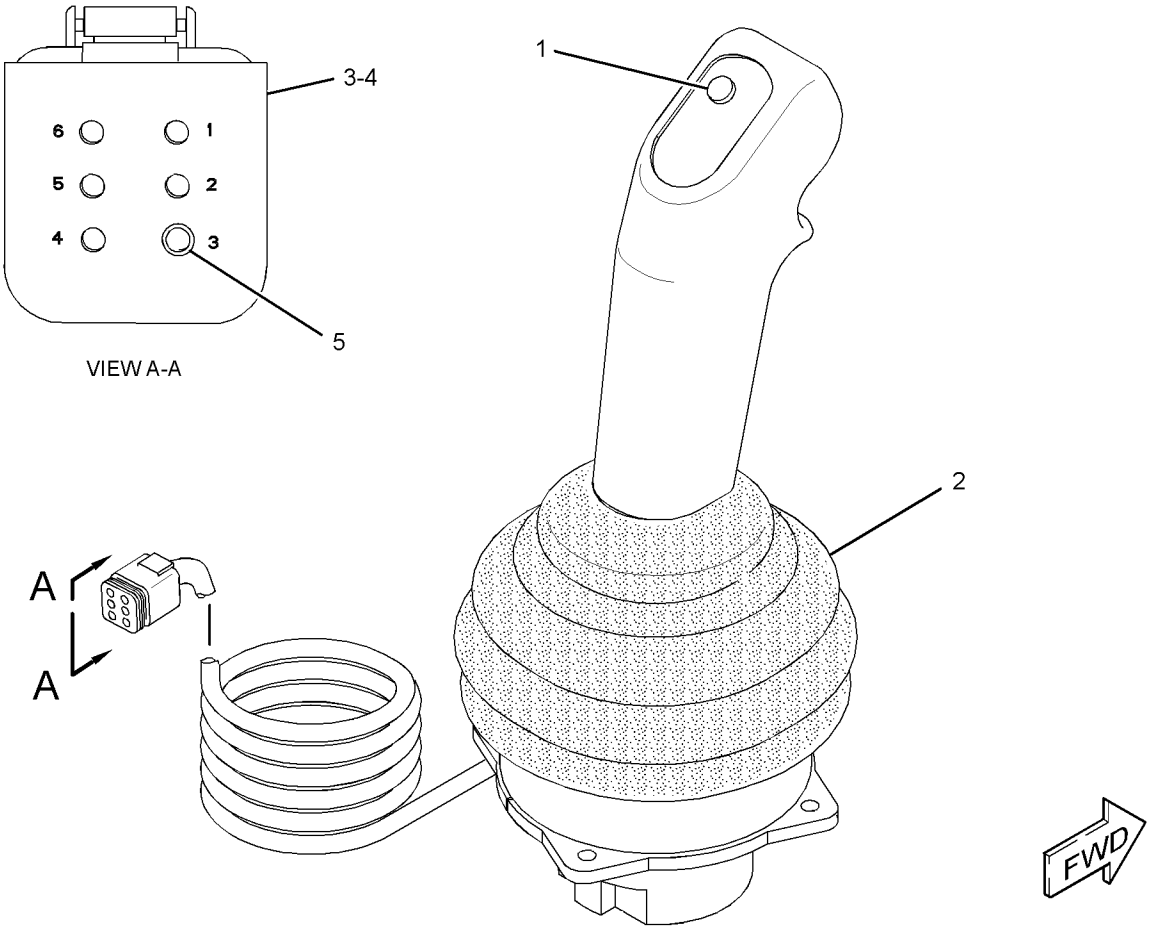

GRAPHIC #1

<END>

g01590040

238-5466 CONTROL GP-HANDLE–WINCH

S/N: LJR1-UP
PART OF 273-3763 WINCH AR
AN ATTACHMENT

SMCS-5063, 5705 **i03660196**

NOTE	REF NO	GRAPHIC REF	PART NUMBER	QTY	PART NAME 1 2 3 4 5 6 (PRODUCT LEVEL)	SEE PAGE
	1	1	**138-2434**	1	LAMP (24-VOLT)	
	2	1	**138-2435**	1	FILM-IDENTIFICATION (WINCH CONTROL)	
	3	1	**173-8938**	1	FILM-IDENTIFICATION (WINCH FILTER)	
Y	4	1	**231-2222**	1	CONTROL GP-HANDLE (WINCH)	604
	5	1	**237-2831**	1	BRACKET AS	
	6	1	**238-5465**	1	GASKET	
M	7	1	**127-2170**	4	SCREW-TRUSS HEAD (M8X1.25X20-MM)	
	8	1	**8T-9394**	4	BOLT-SOCKET HEAD (10-24X0.5-IN)	

M - METRIC PART
Y - SEPARATE ILLUSTRATION

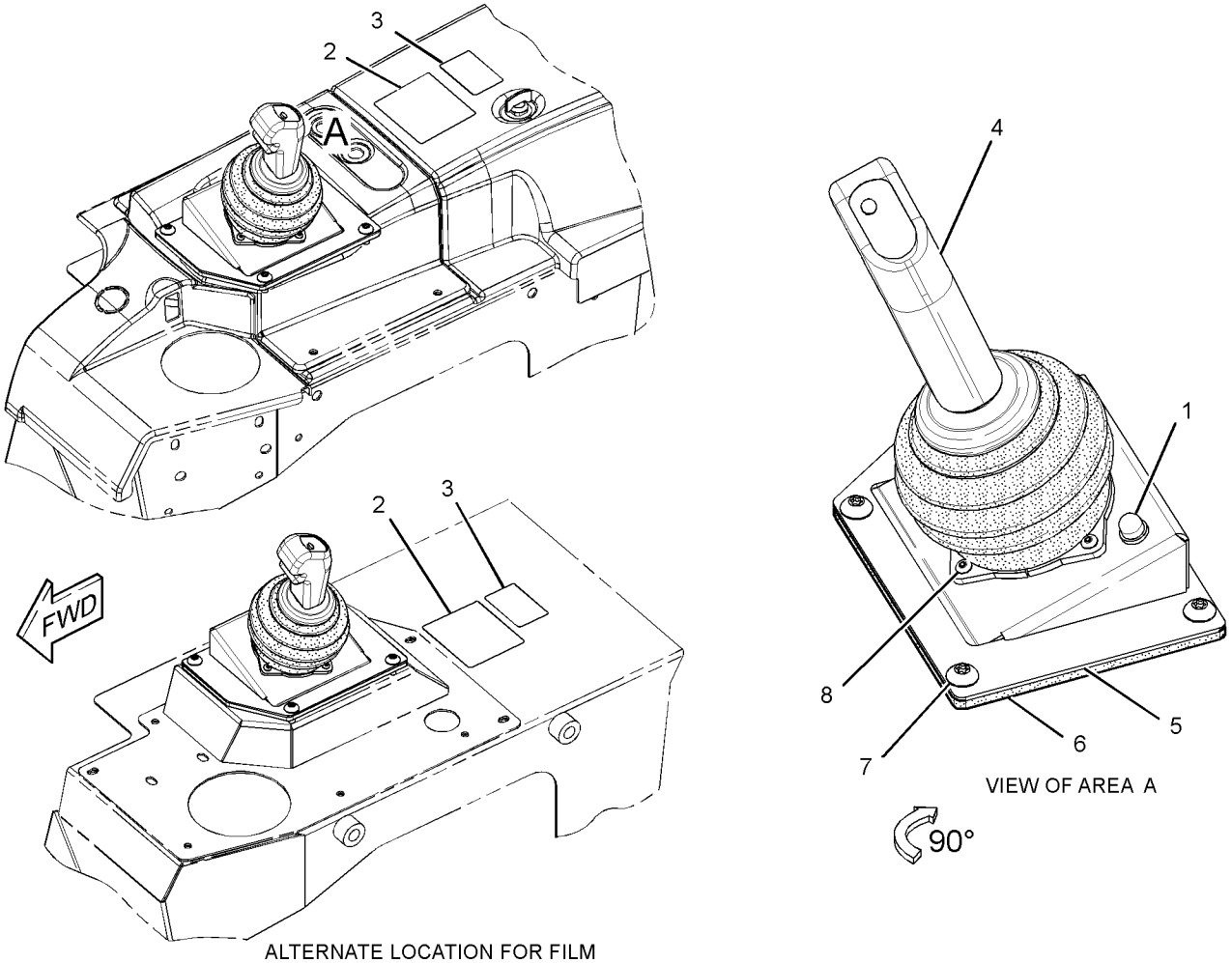

ALTERNATE LOCATION FOR FILM

GRAPHIC #1 **<END>** g01592200

307-4673 CONTROL GP-HANDLE–RIPPER

S/N: LJR1-UP

PART OF 298-4372 CONTROL GP-JOYSTICK

AN ATTACHMENT

SMCS-5063, 5705 **i03626451**

NOTE	REF NO	GRAPHIC REF	PART NUMBER	QTY	PART NAME 1 2 3 4 5 6 (PRODUCT LEVEL)	SEE PAGE
	1	1	**151-9274**	1	KIT-RECEPTACLE (4-PIN)	
					(INCLUDES RECEPTACLE AS & WEDGE)	
	2	1	**278-8974**	1	KNOB	
	3	1	**278-8965**	1	BOOT	
	4	1	**278-8967**	1	RETAINER-BOOT	
M	5	1	**278-8970**	4	SCREW (M3X0.5X6-MM)	

M - METRIC PART

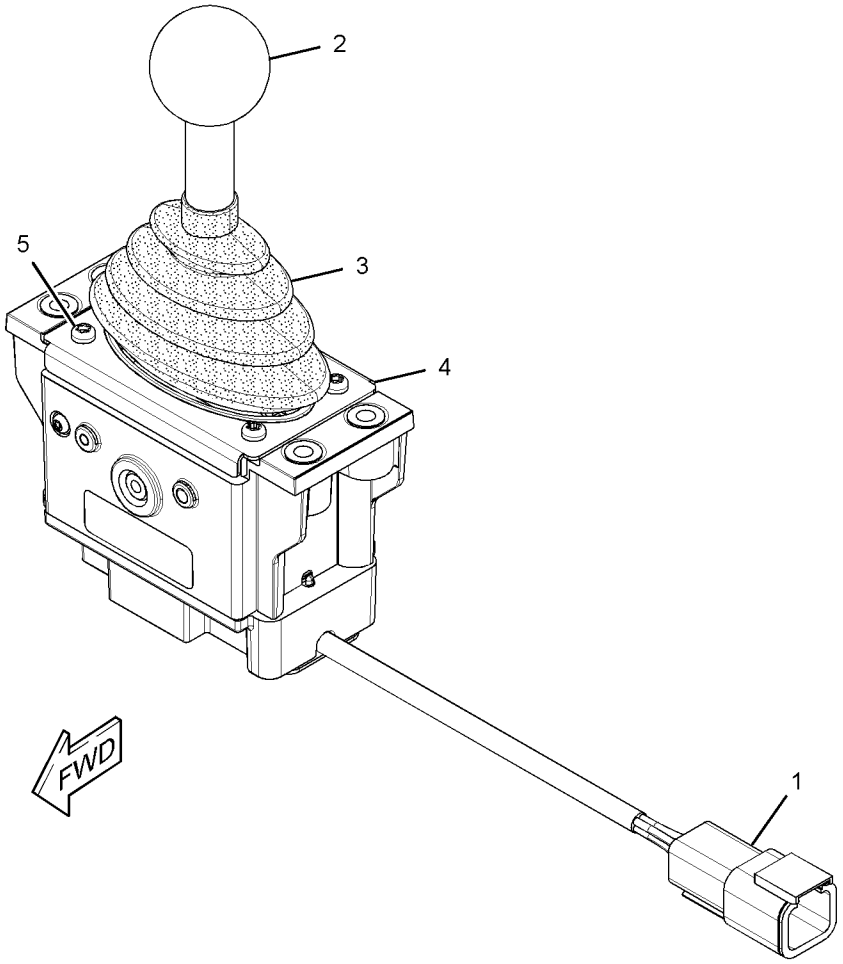

GRAPHIC #1 **<END>** g01416075

318-1473 CONTROL GP-HANDLE–BULLDOZER–GRADE CONTROL

S/N: LJR1-UP
PART OF 318-1471 CONTROL GP-JOYSTICK
AN ATTACHMENT

SMCS-5063, 5705 **i03660207**

NOTE	REF NO	GRAPHIC REF	PART NUMBER	QTY	PART NAME 1 2 3 4 5 6 (PRODUCT LEVEL)	SEE PAGE
	1	1	**162-8387**	1	LEVER-TRIGGER	
	2	1	**162-8389**	1	PLATE (SWITCH)	
	3	1	**175-4165**	2	SCREW-PAN HEAD (4-20X0.5-IN)	
	4	1	**179-7376**	1	SWITCH AS-PUSH BUTTON (IMPLEMENT)	
		1	**162-8378**	1	SWITCH AS-PUSH BUTTON (IMPLEMENT)	
		1	**144-0331**	1	CAP-PUSH BUTTON (YELLOW)	
	5	1	**175-4170**	2	SCREW-PAN HEAD (6-19X1.625-IN)	
	6	1	**144-0331**	2	CAP-PUSH BUTTON (YELLOW)	
	7	1	**9B-1117**	2	LOCKWASHER	
	8	1	**1S-9593**	2	STRAP-CABLE	
	9	1	**232-3870**	1	HOUSING AS	
	10	1	**8T-8737**	1	PLUG-SEAL	
	11	1	**102-8801**	1	KIT-RECEPTACLE (12-PIN)	
					(INCLUDES RECEPTACLE AS & WEDGE)	
	12	1	**218-7136**		SLEEVE (63-CM)	
					PARTS SHOWN IN GRAPHIC(S) WITHOUT A REFERENCE NUMBER ARE NOT SERVICED SEPARATELY	

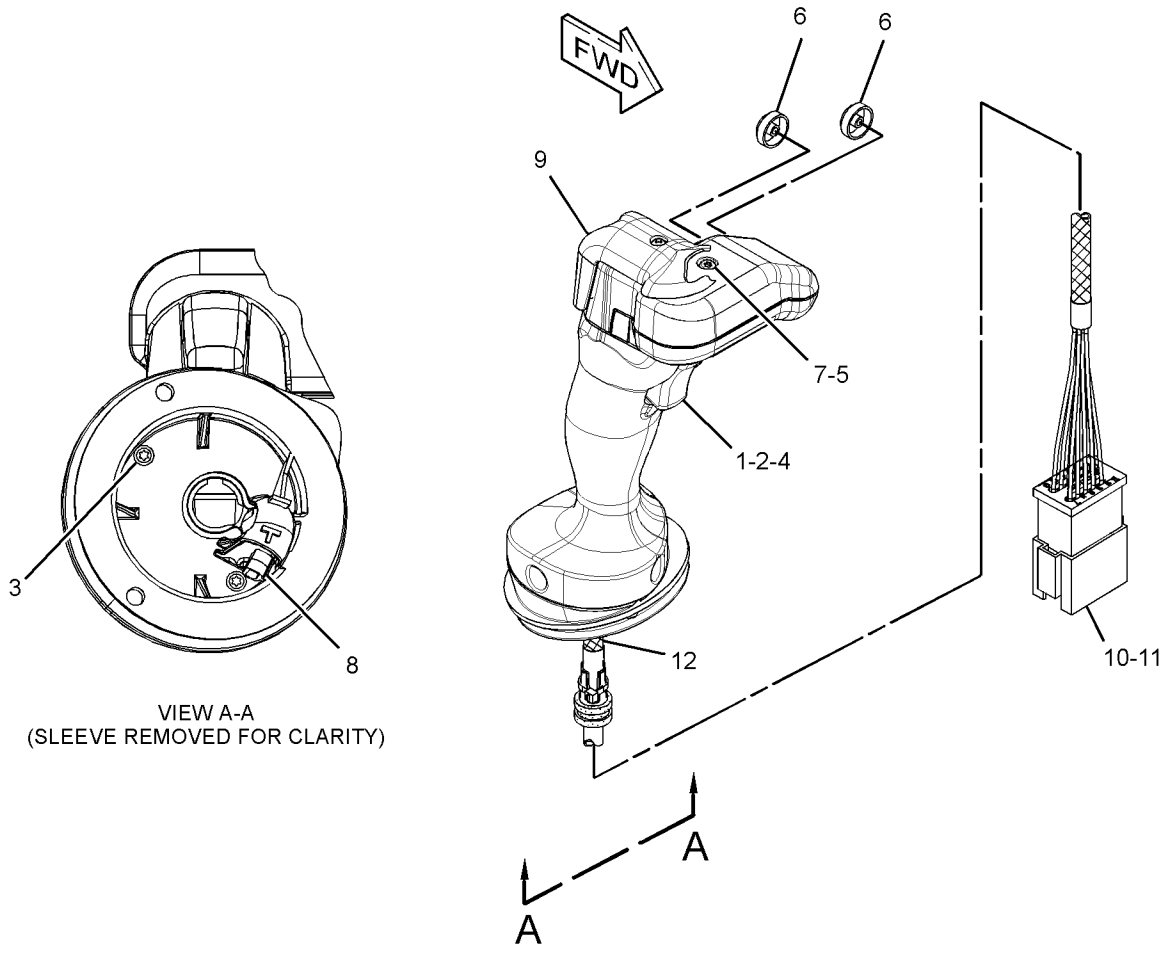

GRAPHIC #1 **<END>** g01945877

321-8290 CONTROL GP-HANDLE–BULLDOZER

S/N: LJR1-UP

PART OF 321-8288 CONTROL GP-JOYSTICK

SMCS-5063, 5705 **i03874729**

NOTE	REF NO	GRAPHIC REF	PART NUMBER	QTY	PART NAME 1 2 3 4 5 6 (PRODUCT LEVEL)	SEE PAGE
	1	1	**162-8387**	1	LEVER-TRIGGER	
	2	1	**162-8389**	1	PLATE (SWITCH)	
	3	1	**175-4165**	2	SCREW-PAN HEAD (4-20X0.5-IN)	
	4	1	**179-7376**	1	SWITCH AS-PUSH BUTTON (IMPLEMENT)	
	4A	1	**162-8378**	1	SWITCH AS-PUSH BUTTON (IMPLEMENT)	
	4B	1	**144-0331**	1	CAP-PUSH BUTTON (YELLOW)	
	5	1	**175-4170**	2	SCREW-PAN HEAD (6-19X1.625-IN)	
	6	1	**9B-1117**	2	LOCKWASHER	
	7	1	**1S-9593**	2	STRAP-CABLE	
	8	1	**232-3831**	1	HOUSING AS	
	9	1	**174-3091**	1	KIT-RECEPTACLE (12-PIN)	
					(INCLUDES RECEPTACLE AS & WEDGE)	
	10	1	**8T-8737**	1	PLUG-SEAL	
	11	1	**102-8801**	1	KIT-RECEPTACLE (12-PIN)	
					(INCLUDES RECEPTACLE AS & WEDGE)	
	12	1	**8T-8729**	11	PIN-CONNECTOR (16-GA TO 18-GA)	
E	13	1	**218-7136**		SLEEVE (63-CM)	
	14	1	**276-4878**	1	GROMMET	
					PARTS SHOWN IN GRAPHIC(S) WITHOUT A REFERENCE NUMBER ARE NOT SERVICED SEPARATELY	

E - ORDER BY THE CENTIMETER

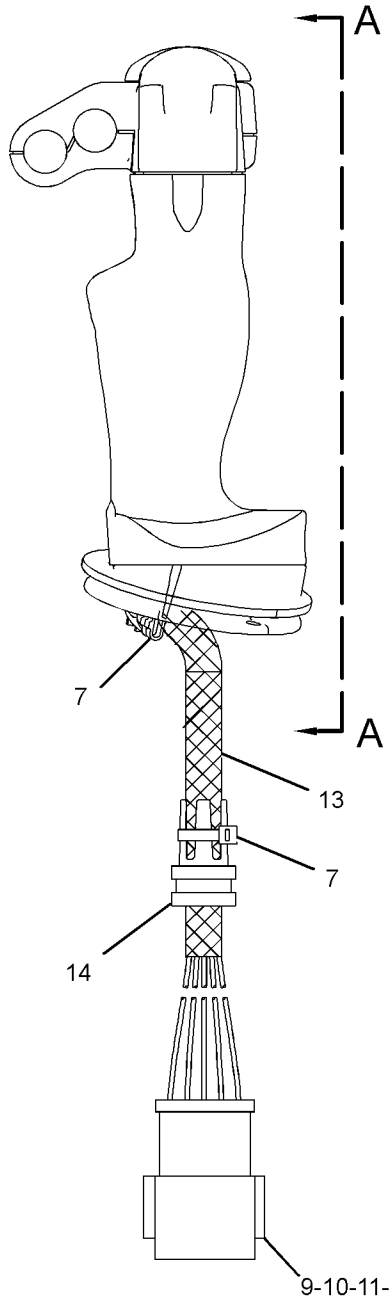

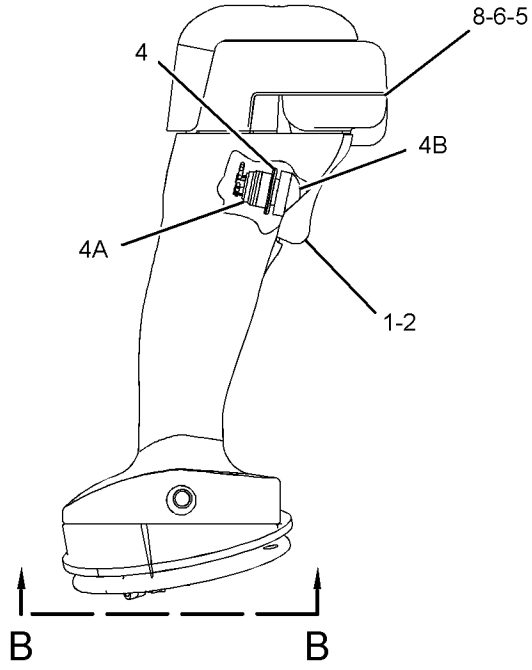

VIEW A-A

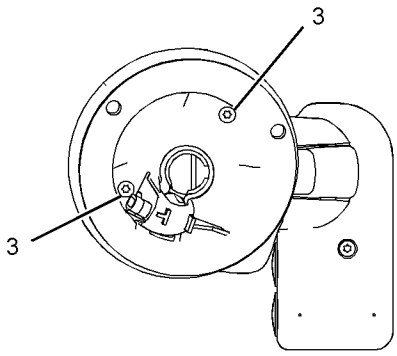

VIEW B-B

GRAPHIC #1 **<END>** g02121395

337-6853 CONTROL GP-HANDLE–STEERING, TRANSMISSION

S/N: LJR1-UP
PART OF 312-9089 CONTROL GP-JOYSTICK
ALSO AN ATTACHMENT

SMCS-5063, 5705

i03659052

NOTE	REF NO	GRAPHIC REF	PART NUMBER	QTY	PART NAME 1 2 3 4 5 6 (PRODUCT LEVEL)	SEE PAGE
	1	1	**1N-5724**	2	BOLT (6-32X0.5-IN)	
	2	1	**112-0858**	2	BEARING	
	3	1	**208-9647**	1	KNOB (PARKING BRAKE)	
	4	1	**214-1962**	1	HOUSING	
	5	1	**216-0380**	1	PLATE	
Y	6	1	**223-2115**	1	CONTROL GP-PARKING BRAKE	446
	7	1	**225-3195**	1	GASKET	
	8	1	**257-7285**	1	SWITCH AS-ROCKER (PARKING BRAKE ON, OFF)	
		1	**102-8806**	1	KIT-RECEPTACLE (8-PIN)	
					(INCLUDES RECEPTACLE AS & WEDGE)	
		1	**8T-8737**	2	PLUG-SEAL	
		1	**9X-3401**	6	PIN-CONNECTOR (16-GA TO 18-GA)	
Y	9	1	**337-6855**	1	CONTROL GP-HANDLE (STEERING, TRANSMISSION)	612
M	10	1	**166-3777**	3	SCREW-BUTTON HEAD (M6X1X28-MM)	
M	11	1	**5C-2890**	1	NUT (M6X1-THD)	
M	12	1	**8T-4138**	2	BOLT (M6X1X20-MM)	
	13	1	**8T-5410**	1	SEAL-LIP TYPE	
E	14	1	**307-2338**		SLEEVE (47-CM)	
E	15	1	**339-6185**		TAPE (18-CM EACH)	

E - ORDER BY THE CENTIMETER
M - METRIC PART
Y - SEPARATE ILLUSTRATION

337-6853 **CONTROL GP-HANDLE (*contd.*)** **i03659052**

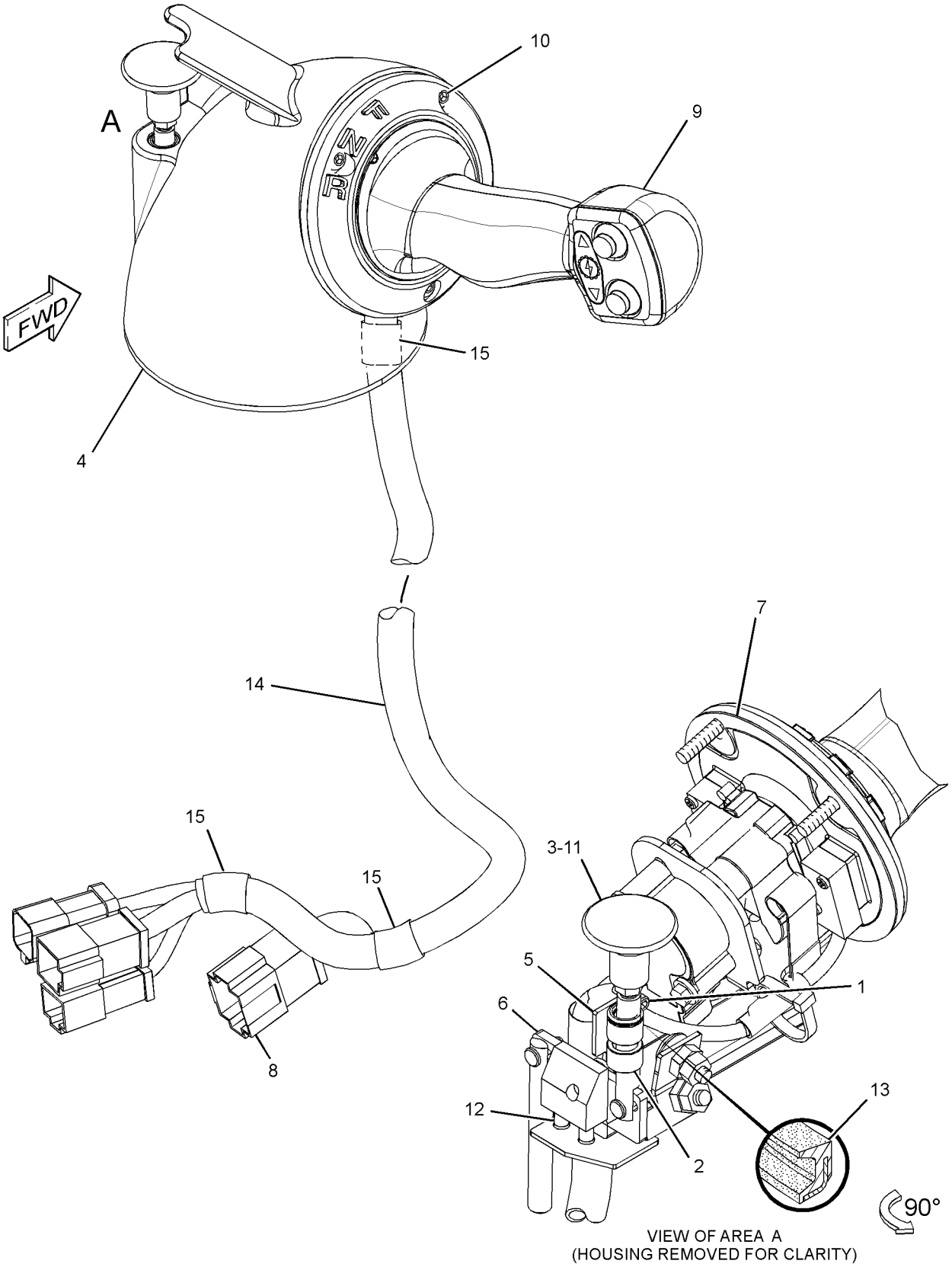

VIEW OF AREA A
(HOUSING REMOVED FOR CLARITY)

GRAPHIC #1 **<END>** g01963159

337-6855 CONTROL GP-HANDLE—STEERING, TRANSMISSION

S/N: LJR1-UP

PART OF 337-6853 CONTROL GP-HANDLE

ALSO AN ATTACHMENT

SMCS-5063, 5705

i03652466

NOTE	REF NO	GRAPHIC REF	PART NUMBER	QTY	PART NAME 1 2 3 4 5 6 (PRODUCT LEVEL)	SEE PAGE
	1	1	**151-9275**	1	KIT-RECEPTACLE (6-PIN)	
					(INCLUDES RECEPTACLE AS & WEDGE)	
	2	1	**3S-2093**	2	STRAP-CABLE	
	3	1	**6V-3545**	1	BEARING-ROLLER	
	4	1	**186-3735**	6	PIN-CONNECTOR (16-GA TO 18-GA)	
	5	1	**9W-1464**	2	SCREW (1/4-20X1-IN)	
	6	1	**9X-4610**	1	SEAL-V-RING	
M	7	1	**130-3265**	1	SCREW (M6X1X20-MM)	
	8	1	**131-0447**	2	NUT-SPECIAL	
	9	1	**132-7419**	1	SWITCH AS-PUSH BUTTON (DOWNSHIFT)	
		1	**144-0331**	1	CAP-PUSH BUTTON (YELLOW)	
	10	1	**132-7450**	1	SWITCH AS-PUSH BUTTON (UPSHIFT)	
		1	**144-0331**	1	CAP-PUSH BUTTON (YELLOW)	
	12	1	**158-2734**	2	SPRING	
	13	1	**158-2735**	1	BASE	
	17	1	**242-5202**	1	FILM-IDENTIFICATION (JOYSTICK CONTROL)	
	18	1	**226-9423**	2	SPRING	
	19	1	**266-1476**	1	SENSOR GP-POSITION (FORWARD, NEUTRAL, REVERSE)	
		1	**102-8804**	1	KIT-RECEPTACLE (4-PIN)	
					(INCLUDES RECEPTACLE AS & WEDGE)	
		1	**8T-8737**	1	PLUG-SEAL	
		1	**180-9339**	3	PIN-CONNECTOR (14-GA TO 18-GA)	
	20	1	**334-1953**	1	ANGLE	
	21	1	**337-9001**	1	SWITCH GP-LIMIT (FORWARD, REVERSE)	
		1	**102-8805**	1	KIT-RECEPTACLE (6-PIN)	
					(INCLUDES RECEPTACLE AS & WEDGE)	
D		1	**6V-2689**		TUBE-HEAT SHRINK (6.35-MM DIA) (0.1-M)	
		1	**186-3735**	6	PIN-CONNECTOR (16-GA TO 18-GA)	
	22	1	**103-6262**	4	SCREW-MACHINE (4-40X0.63-IN)	
	23	1	**5H-9899**	1	RING-RETAINING (EXTERNAL)	
	24	1	**6V-1051**	1	SCREW-BUTTON HEAD (10-24X19.05-MM)	
	25	1	**6V-1232**	2	SCREW-BUTTON HEAD (8-32X9.52-MM)	
M	26	1	**6V-2314**	2	BOLT (M5X0.8X35-MM)	
	27	1	**7X-0584**	1	WASHER-HARD (13.5X20.5X2-MM THK)	
M	28	1	**7Y-5226**	2	NUT (M5X0.8-THD)	
	29	1	**8T-4205**	2	WASHER-HARD (7.2X14.5X2-MM THK)	
	30	1	**9X-8256**	5	WASHER (6.6X12X2-MM THK)	
D	31	1	**6V-2689**		TUBE-HEAT SHRINK (6.35-MM DIA) (0.2-M)	

D - ORDER BY THE METER
M - METRIC PART

337-6855 **CONTROL GP-HANDLE (*contd.*)** **i03652466**

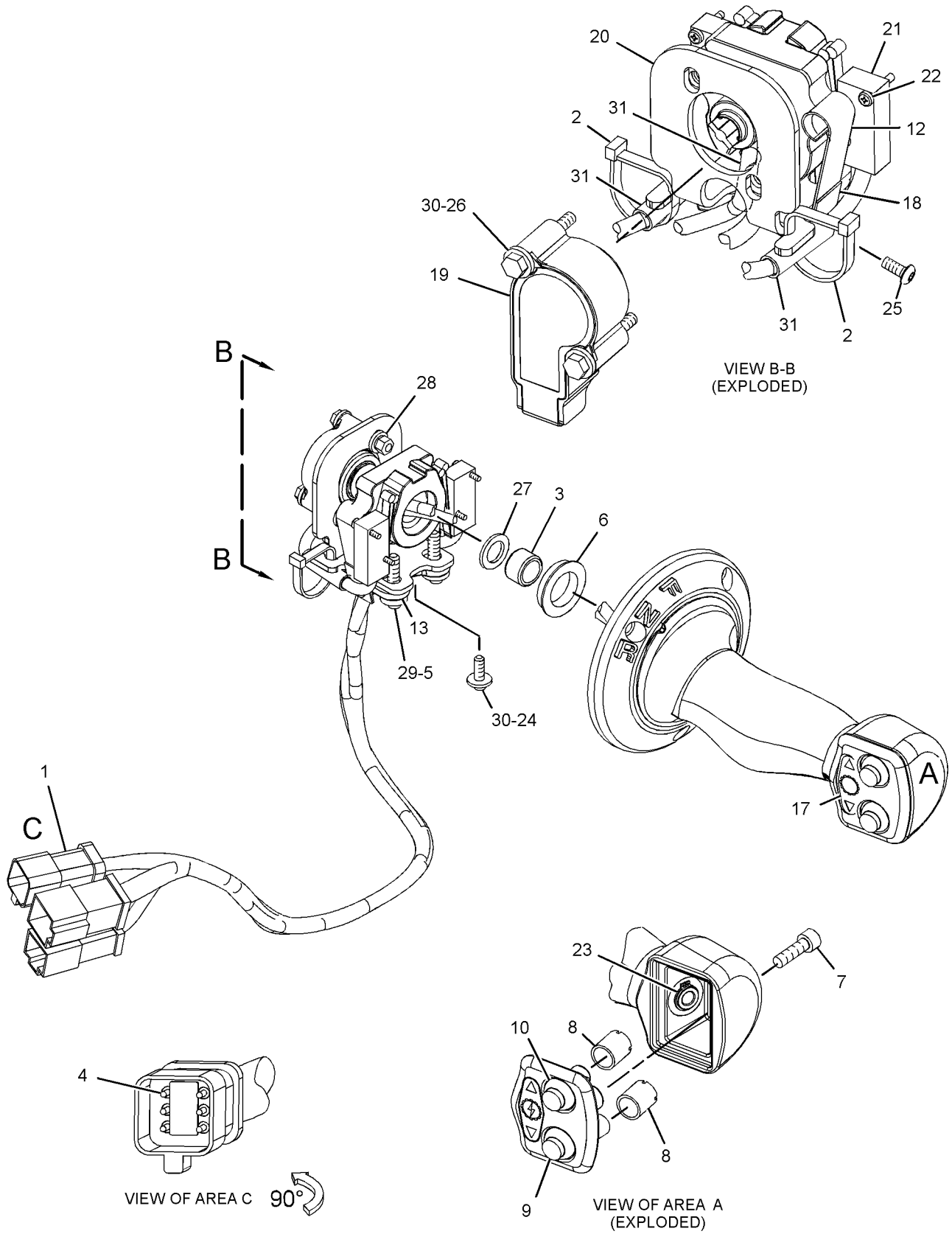

GRAPHIC #1 **<END>** g01959977

298-4372 CONTROL GP-JOYSTICK–RIPPER

S/N: LJR1-UP

PART OF 317-4192, 321-8161 HYDRAULIC AR-4 VALVE AN ATTACHMENT

SMCS-5705 **i03626447**

NOTE	REF NO	GRAPHIC REF	PART NUMBER	QTY	PART NAME 1 2 3 4 5 6 (PRODUCT LEVEL)	SEE PAGE
	1	1	**298-4373**	1	PLATE AS	
Y	2	1	**307-4673**	1	CONTROL GP-HANDLE (RIPPER)	606
M	3	1	**127-2170**	4	SCREW-TRUSS HEAD (M8X1.25X20-MM)	
M	4	1	**9X-2045**	4	SCREW-TRUSS HEAD (M6X1X20-MM)	
F			**102-9478**	1	FILM-INSTRUCTION (RIPPER CONTROL)	
					(ON PLASTIC COVER WHEN USED ON CAB & ON SHEET METAL WHEN USED ON CANOPY)	

F - NOT SHOWN
M - METRIC PART
Y - SEPARATE ILLUSTRATION

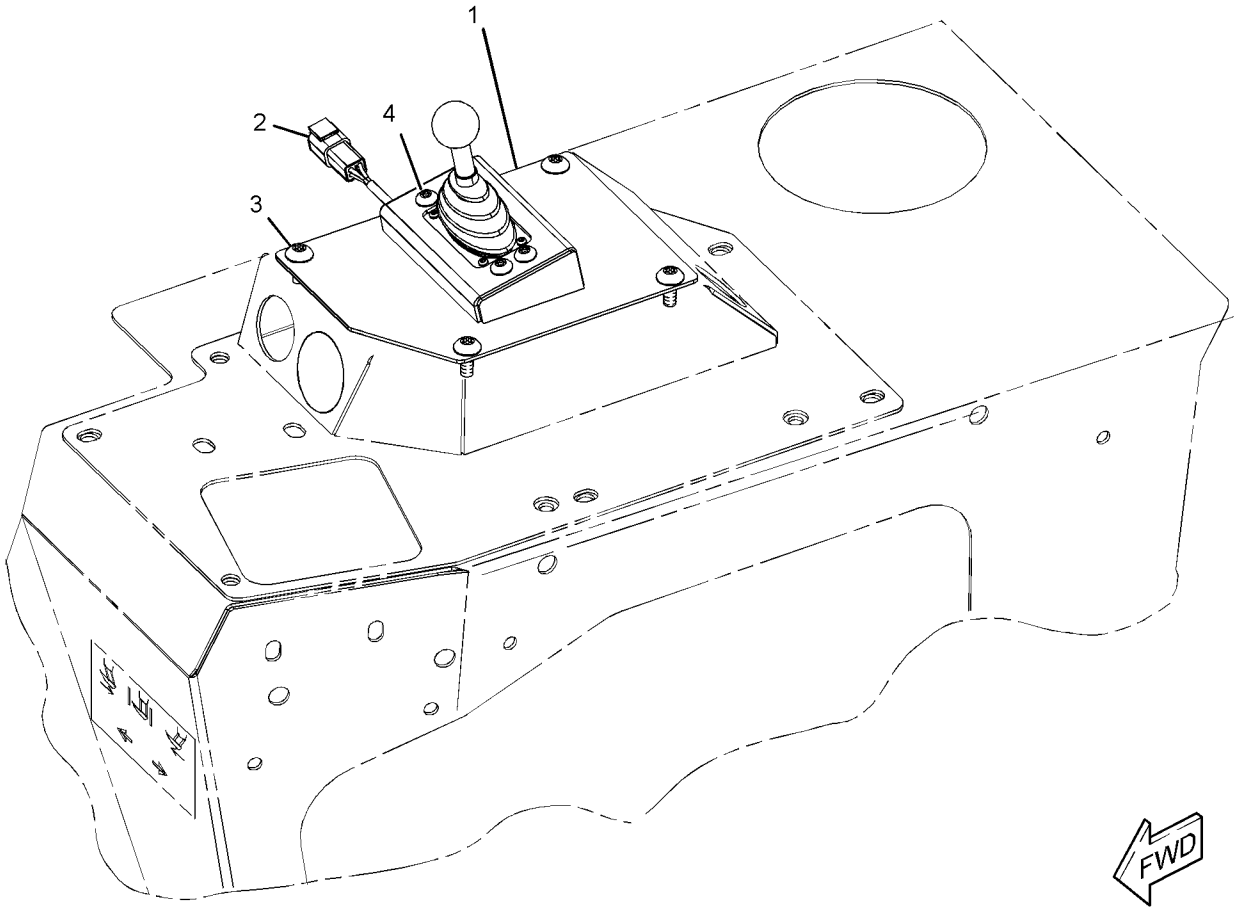

GRAPHIC #1 **<END>** g01887053

312-9089 CONTROL GP-JOYSTICK–STEERING, TRANSMISSION

S/N: LJR1-705

PART OF 311-6405, 335-0718 CONTROL GP-STEERING & XMSN

ALSO AN ATTACHMENT

SMCS-5705 **i03626591**

NOTE	REF NO	GRAPHIC REF	PART NUMBER	QTY	PART NAME 1 2 3 4 5 6 (PRODUCT LEVEL)	SEE PAGE
	1	1	**268-4737**	1	COVER AS	
	2	1	**312-9088**	1	PLATE	
Y	3	1	*337-6853*	1	CONTROL GP-HANDLE (STEERING, TRANSMISSION)	610
	4	1	**338-2845**	4	GROMMET	
	5	1	**1B-8706**	1	KEY-WOODRUFF	
Y	6	1	**276-5312**	1	SENSOR GP-POSITION (STEERING)	201
	7	1	**8T-4121**	2	WASHER-HARD (11X21X2.5-MM THK)	
M	8	1	**8T-4186**	1	BOLT (M10X1.5X40-MM)	
M	9	1	**8T-4189**	3	BOLT (M8X1.25X20-MM)	
M	10	1	**8T-4195**	2	BOLT (M10X1.5X30-MM)	
	11	1	**8T-4224**	3	WASHER-HARD (8.8X16X2-MM THK)	

M - METRIC PART
Y - SEPARATE ILLUSTRATION

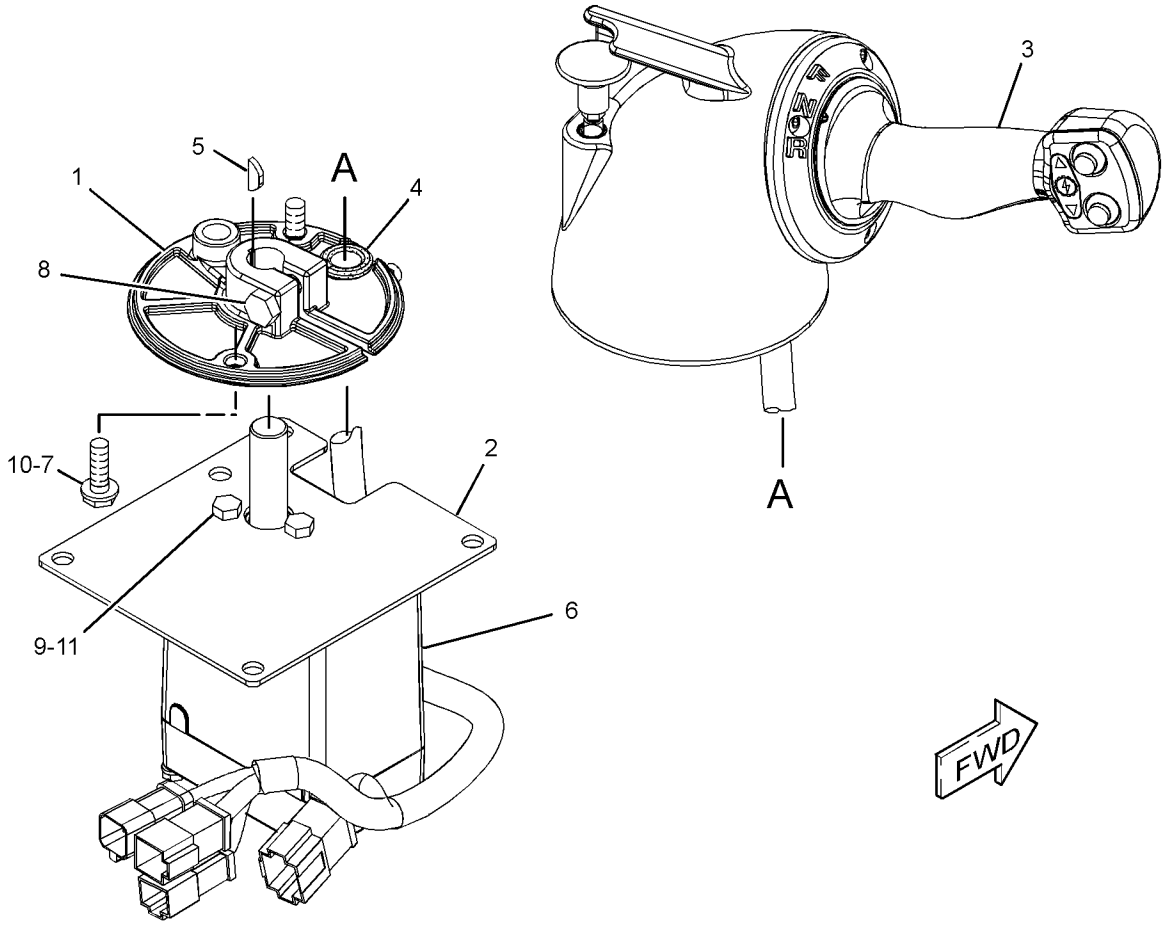

GRAPHIC #1 **<END>** g01885933

312-9089 CONTROL GP-JOYSTICK—STEERING, TRANSMISSION

S/N: LJR706-UP

PART OF 311-6405, 335-0718 CONTROL GP-STEERING & XMSN

ALSO AN ATTACHMENT

SMCS-5705 **i04889041**

NOTE	REF NO	GRAPHIC REF	PART NUMBER	QTY	PART NAME 1 2 3 4 5 6 (PRODUCT LEVEL)	SEE PAGE
	1	1	**268-4737**	1	COVER AS	
	2	1	**312-9088**	1	PLATE	
Y	3	1	*337-6853*	1	CONTROL GP-HANDLE (STEERING, TRANSMISSION)	610
	4	1	**338-2845**	4	GROMMET	
C	5	1	**358-6190**	1	SENSOR GP-POSITION (STEERING)	
CY	6	1	**356-5425**	1	SENSOR GP-POSITION (STEERING)	202
	7	1	**8T-4121**	2	WASHER-HARD (11X21X2.5-MM THK)	
M	8	1	**8T-4186**	1	BOLT (M10X1.5X40-MM)	
M	9	1	**8T-4189**	3	BOLT (M8X1.25X20-MM)	
M	10	1	**8T-4195**	2	BOLT (M10X1.5X30-MM)	
	11	1	**8T-4224**	3	WASHER-HARD (8.8X16X2-MM THK)	
CM	12	1	**6V-2314**	2	BOLT (M5X0.8X35-MM)	
C	13	1	**9X-8256**	2	WASHER (6.6X12X2-MM THK)	
C	14	1	**365-1205**	1	HARNESS AS-WIRING	
		1	**102-8801**	1	KIT-RECEPTACLE (12-PIN)	
					(INCLUDES RECEPTACLE AS & WEDGE)	
		1	**8T-8737**	6	PLUG-SEAL	
		1	**9X-3401**	6	PIN-CONNECTOR (16-GA TO 18-GA)	
		1	**9X-3402**	6	SOCKET-CONNECTOR (16-GA TO 18-GA)	
		1	**155-2274**	1	KIT-CONNECTING PLUG (6-PIN)	
					(INCLUDES PLUG AS, WEDGE & INTERFACE SEAL)	

C - CHANGE FROM PREVIOUS TYPE
M - METRIC PART
Y - SEPARATE ILLUSTRATION

312-9089 **CONTROL GP-JOYSTICK (*contd.*)** **i04889041**

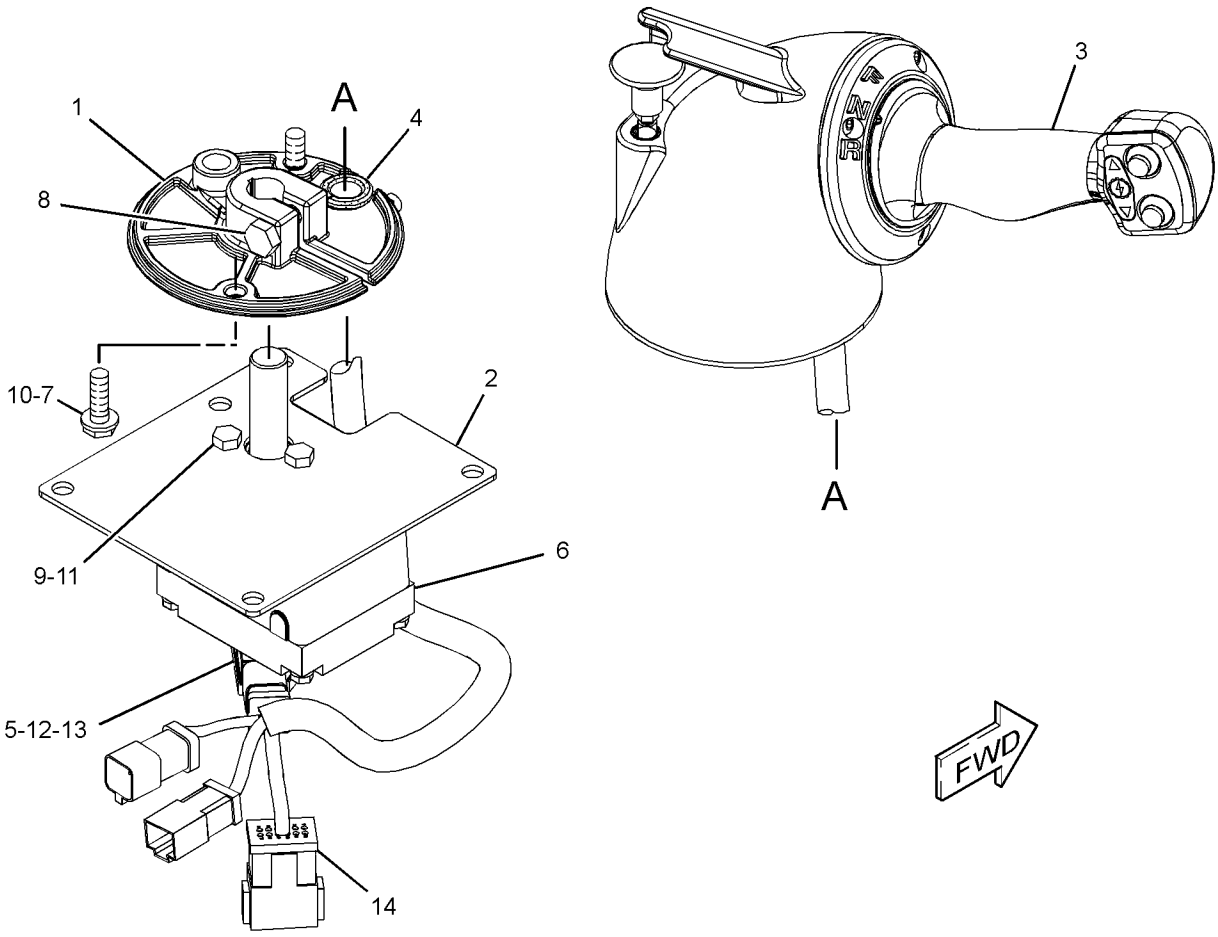

GRAPHIC #1 **<END>** g02963103

318-1471 CONTROL GP-JOYSTICK–GRADE CONTROL

S/N: LJR1-UP

PART OF 321-9011 WIRING GP-GRADE CONTROL

AN ATTACHMENT

SMCS-5705 **i03830220**

NOTE	REF NO	GRAPHIC REF	PART NUMBER	QTY	PART NAME 1 2 3 4 5 6 (PRODUCT LEVEL)	SEE PAGE
Y	1	1	**318-1473**	1	CONTROL GP-HANDLE (BULLDOZER)	607
	2	1	**271-0475**	1	SENSOR AS-POSITION (JOYSTICK) (BULLDOZER CONTROL HANDLE)	
		1	**102-8805**	1	KIT-RECEPTACLE (6-PIN)	
					(INCLUDES RECEPTACLE AS & WEDGE)	
	3	1	**285-0150**	1	BOOT	
	4	1	**4B-9808**	2	SETSCREW (1/4-20X0.5-IN)	
	6	1	**102-8805**	1	KIT-RECEPTACLE (6-PIN)	
					(INCLUDES RECEPTACLE AS & WEDGE)	
	7	1	**8T-8729**	6	PIN-CONNECTOR (16-GA TO 18-GA)	

Y - SEPARATE ILLUSTRATION

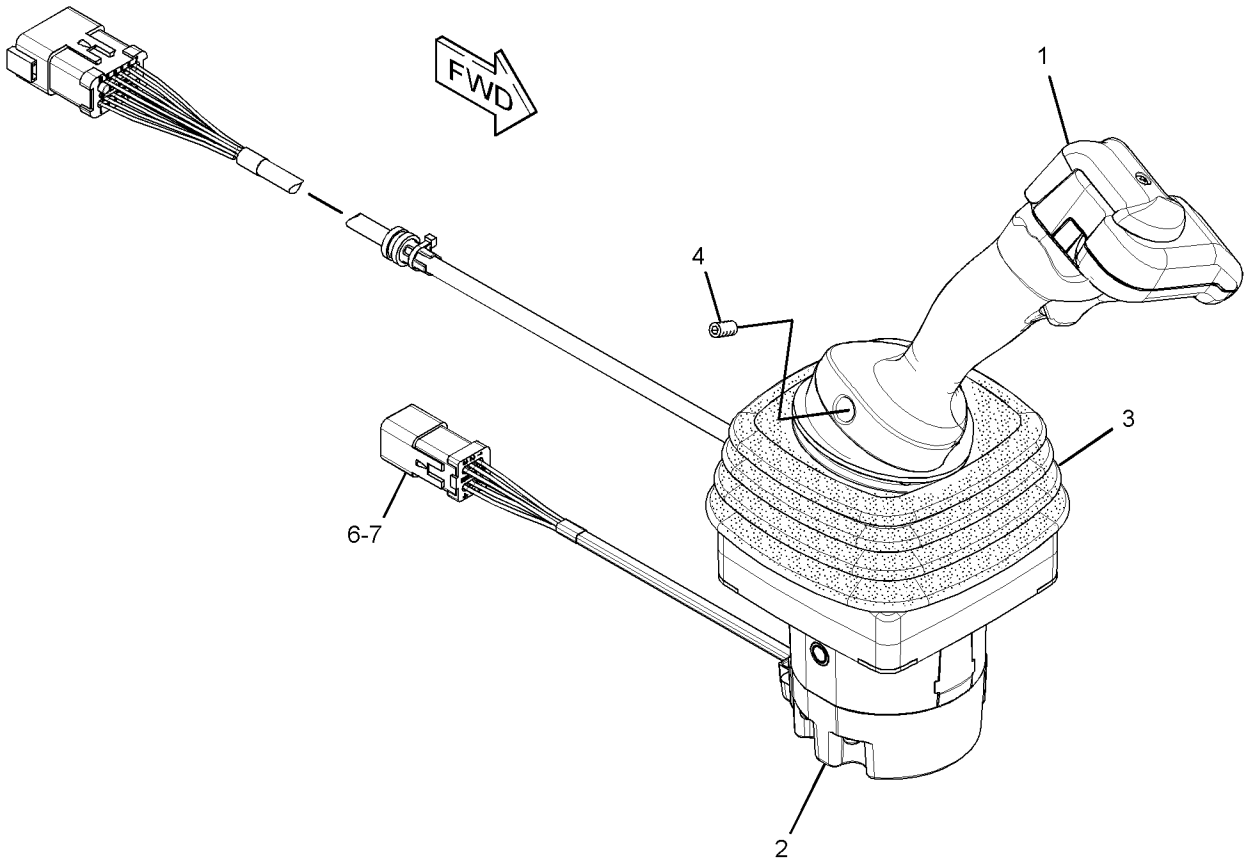

GRAPHIC #1 **<END>** g02080034

319-5955 CONTROL GP-JOYSTICK–BULLDOZER

S/N: LJR1-UP

PART OF 321-8161 HYDRAULIC AR-4 VALVE

AN ATTACHMENT

SMCS-5705 **i03626927**

NOTE	REF NO	GRAPHIC REF	PART NUMBER	QTY	PART NAME 1 2 3 4 5 6 (PRODUCT LEVEL)	SEE PAGE
Y	1	1	**323-8848**	1	CONTROL GP-JOYSTICK (BULLDOZER)	621

Y - SEPARATE ILLUSTRATION

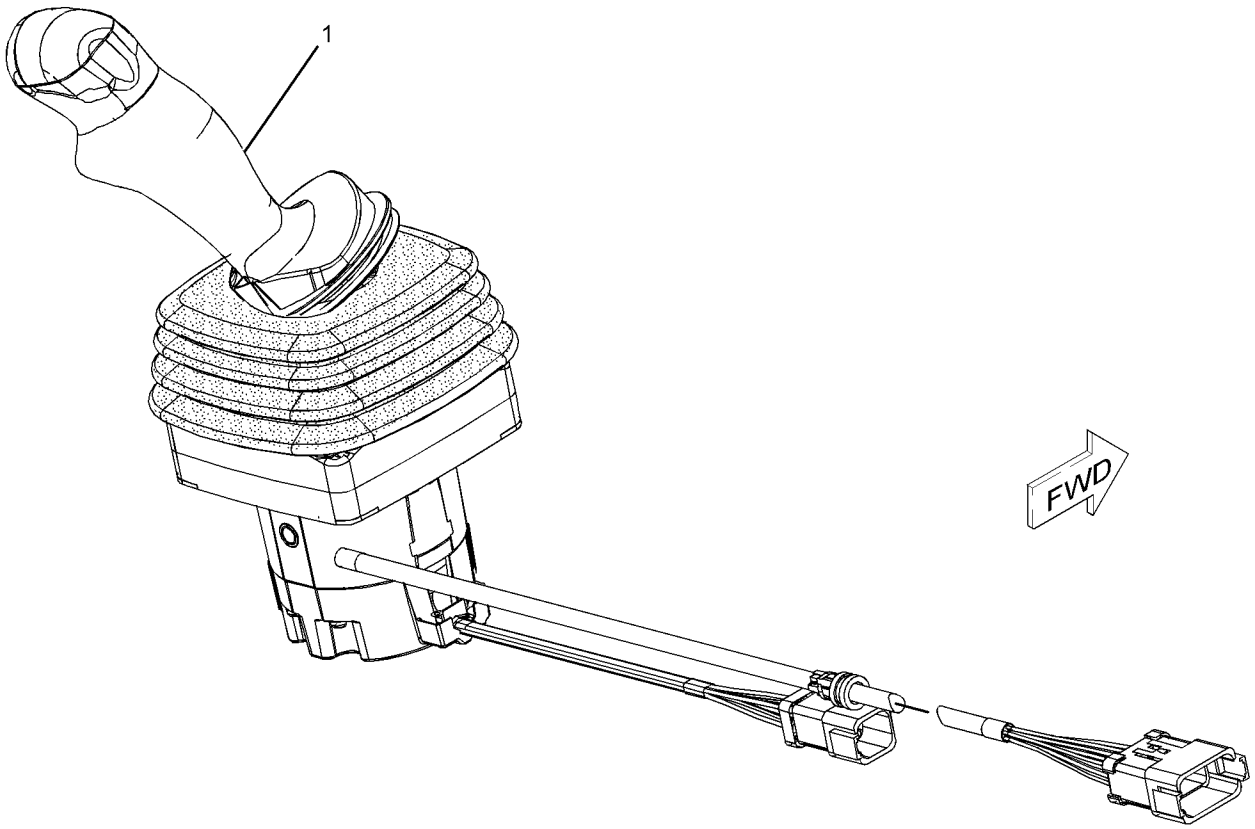

GRAPHIC #1 **<END>** g01900998

321-8288 CONTROL GP-JOYSTICK–BULLDOZER

S/N: LJR1-UP

PART OF 310-9971 CAB AR

SMCS-5705 **i03628524**

NOTE	REF NO	GRAPHIC REF	PART NUMBER	QTY	PART NAME 1 2 3 4 5 6 (PRODUCT LEVEL)	SEE PAGE
Y	1	1	**321-8290**	1	CONTROL GP-HANDLE (BULLDOZER)	608
	2	1	**271-0475**	1	SENSOR AS-POSITION (JOYSTICK) (BULLDOZER CONTROL HANDLE)	
	2A	1	**102-8805**	1	KIT-RECEPTACLE (6-PIN)	
					(INCLUDES RECEPTACLE AS & WEDGE)	
	2B	1	**186-3735**	6	PIN-CONNECTOR (16-GA TO 18-GA)	
	3	1	**285-0150**	1	BOOT	
	4	1	**4B-9808**	2	SETSCREW (1/4-20X0.5-IN)	
	5	1	**174-3091**	1	KIT-RECEPTACLE (12-PIN)	
					(INCLUDES RECEPTACLE AS & WEDGE)	
	6	1	**186-3735**	11	PIN-CONNECTOR (16-GA TO 18-GA)	
	7	1	**8T-8737**	1	PLUG-SEAL	

Y - SEPARATE ILLUSTRATION

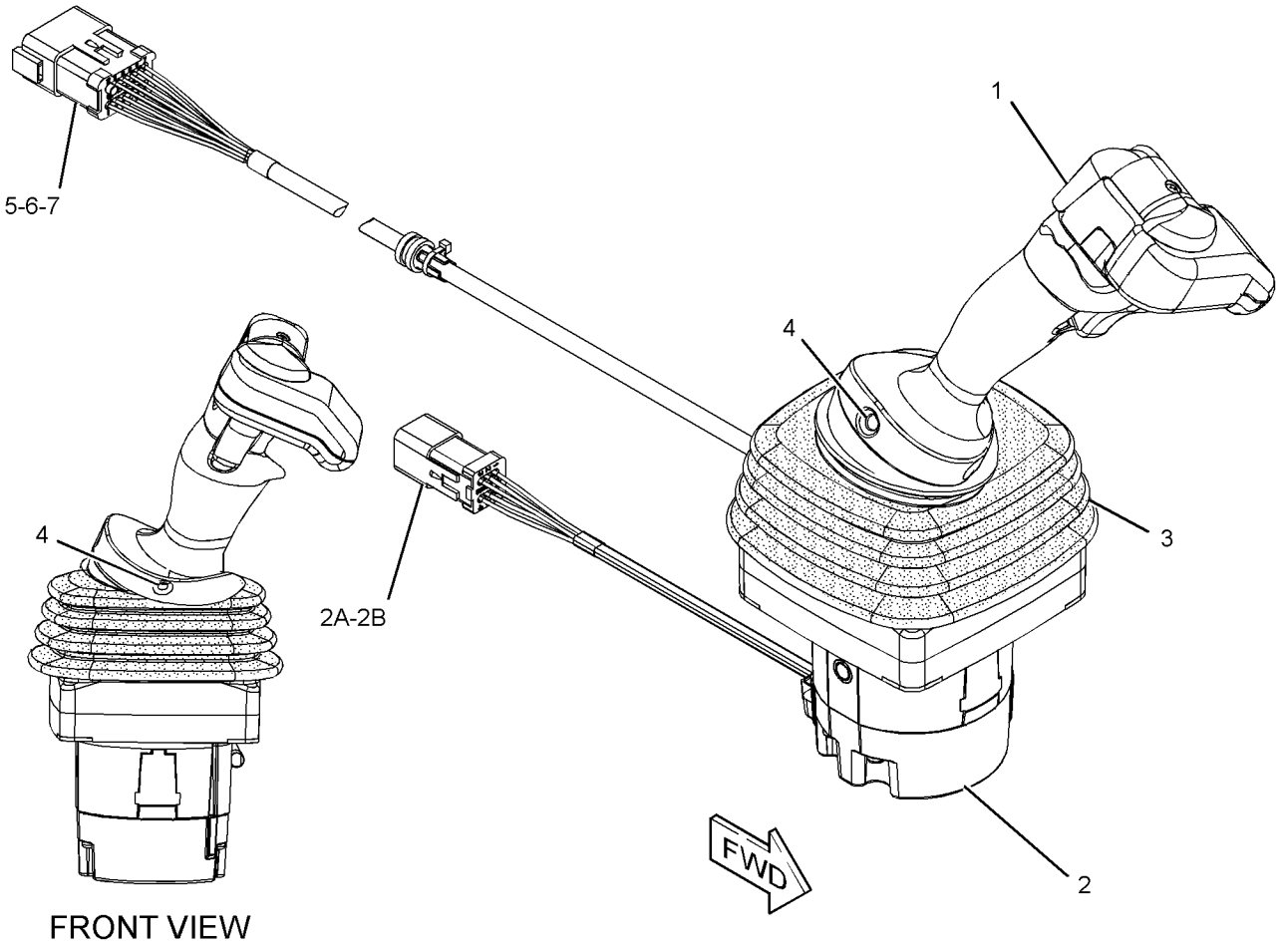

GRAPHIC #1 **<END>** g01896090

323-8848 CONTROL GP-JOYSTICK–BULLDOZER

S/N: LJR1-UP
PART OF 319-5955 CONTROL GP-JOYSTICK
AN ATTACHMENT

SMCS-5705 **i03940776**

NOTE	REF NO	GRAPHIC REF	PART NUMBER	QTY	PART NAME 1 2 3 4 5 6 (PRODUCT LEVEL)	SEE PAGE
	1	1	**323-8854**	1	CONTROL GP-HANDLE (BULLDOZER)	
		1	**175-4165**	2	SCREW-PAN HEAD (4-20X0.5-IN)	
	2	1	**271-0475**	1	SENSOR AS-POSITION (JOYSTICK)	
	2A	1	**102-8805**	1	KIT-RECEPTACLE (6-PIN)	
					(INCLUDES RECEPTACLE AS & WEDGE)	
	2B	1	**8T-8729**	6	PIN-CONNECTOR (16-GA TO 18-GA)	
	3	1	**285-0150**	1	BOOT	
	4	1	**4B-9808**	2	SETSCREW (1/4-20X0.5-IN)	

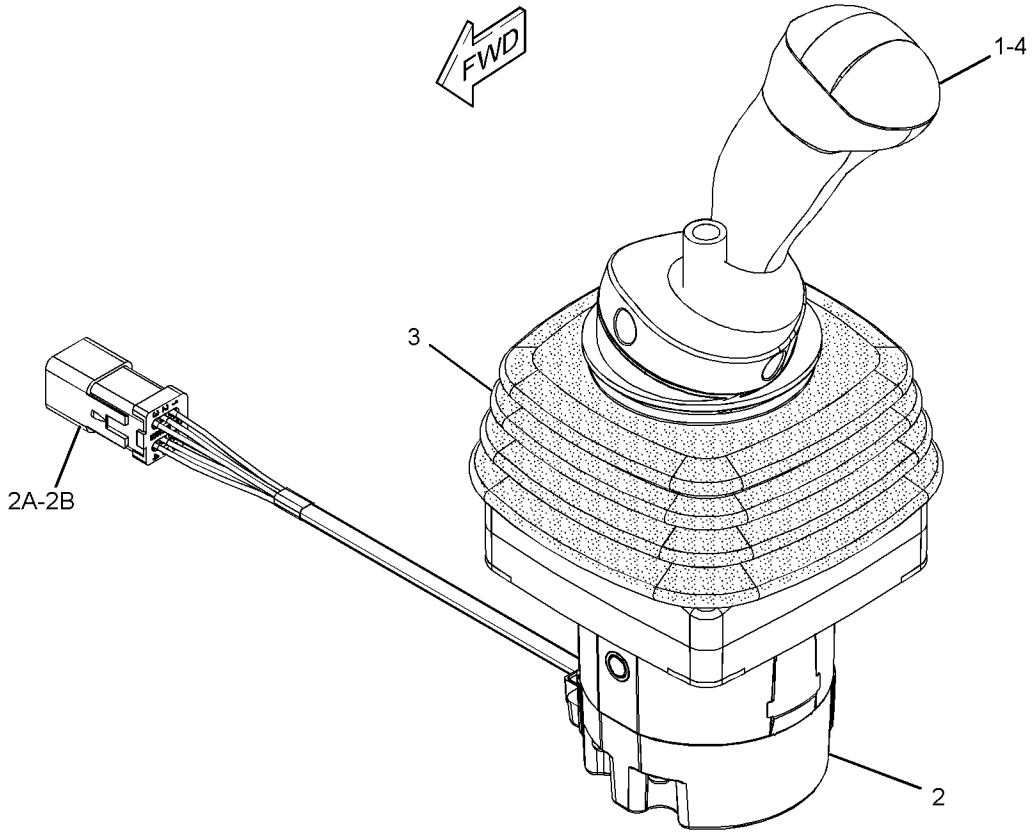

GRAPHIC #1 **<END>** g01906675

320-1197 CONTROL GP-PEDAL

S/N: LJR1-UP

PART OF 320-1198 PEDAL GP-GOVERNOR & BRAKE

ALSO AN ATTACHMENT

SMCS-4343, 5910 **i03626559**

NOTE	REF NO	GRAPHIC REF	PART NUMBER	QTY	PART NAME 1 2 3 4 5 6 (PRODUCT LEVEL)	SEE PAGE
	1	1	**199-4787**	1	PIN	
	2	1	**200-8575**	1	PEDAL AS (DECELERATOR)	
	3	1	**206-1487**	1	SWITCH AS-ROLLER (BRAKE PEDAL)	
		1	**2H-3922**	1	LOCKWASHER	
		1	**102-8802**	1	KIT-RECEPTACLE (2-PIN)	
					(INCLUDES RECEPTACLE AS & WEDGE)	
		1	**6V-8370**	1	NUT-HEX (3/4-32-THD)	
		1	**9X-0199**	1	BOOT-SWITCH	
		1	**186-3735**	2	PIN-CONNECTOR (16-GA TO 18-GA)	
	4	1	**214-1606**	1	BOSS	
	5	1	**248-0758**	1	ARM AS (DECELERATOR)	
	6	1	**248-0790**	1	PEDAL AS-BRAKE (SERVICE)	
	7	1	**248-2749**	1	SHAFT	
	8	1	**248-2750**	1	SHAFT	
Y	9	1	**266-1467**	2	SENSOR GP-POSITION (ROTARY) (GOVERNOR, BRAKE PEDAL)	200
	10	1	**297-8643**	2	SPRING	
	11	1	**297-8644**	1	SPRING	
	12	1	**297-8647**	1	SUPPORT AS	
	13	1	**095-0916**	1	RING-RETAINING	
	14	1	**138-1645**	1	PIN-SPRING	
	15	1	**2K-9183**	1	PIN-SPRING	
	16	1	**3K-6662**	4	BEARING	
	17	1	**5P-4116**	2	WASHER-HARD (8.8X20.5X2-MM THK)	
	18	1	**6V-0894**	2	SEAL-O-RING	
	19	1	**6V-4447**	2	SEAL-LIP TYPE	
	20	1	**8T-0328**	4	WASHER-HARD (5.5X10X1-MM THK)	
	21	1	**8T-4121**	1	WASHER-HARD (11X21X2.5-MM THK)	
M	22	1	**8T-4136**	1	BOLT (M10X1.5X25-MM)	
M	23	1	**8T-4908**	2	BOLT (M8X1.25X25-MM)	
M	24	1	**8T-6699**	4	BOLT-SOCKET HEAD (M5X0.8X35-MM)	

M - METRIC PART
Y - SEPARATE ILLUSTRATION

320-1197 **CONTROL GP-PEDAL (*contd.*)** **i03626559**

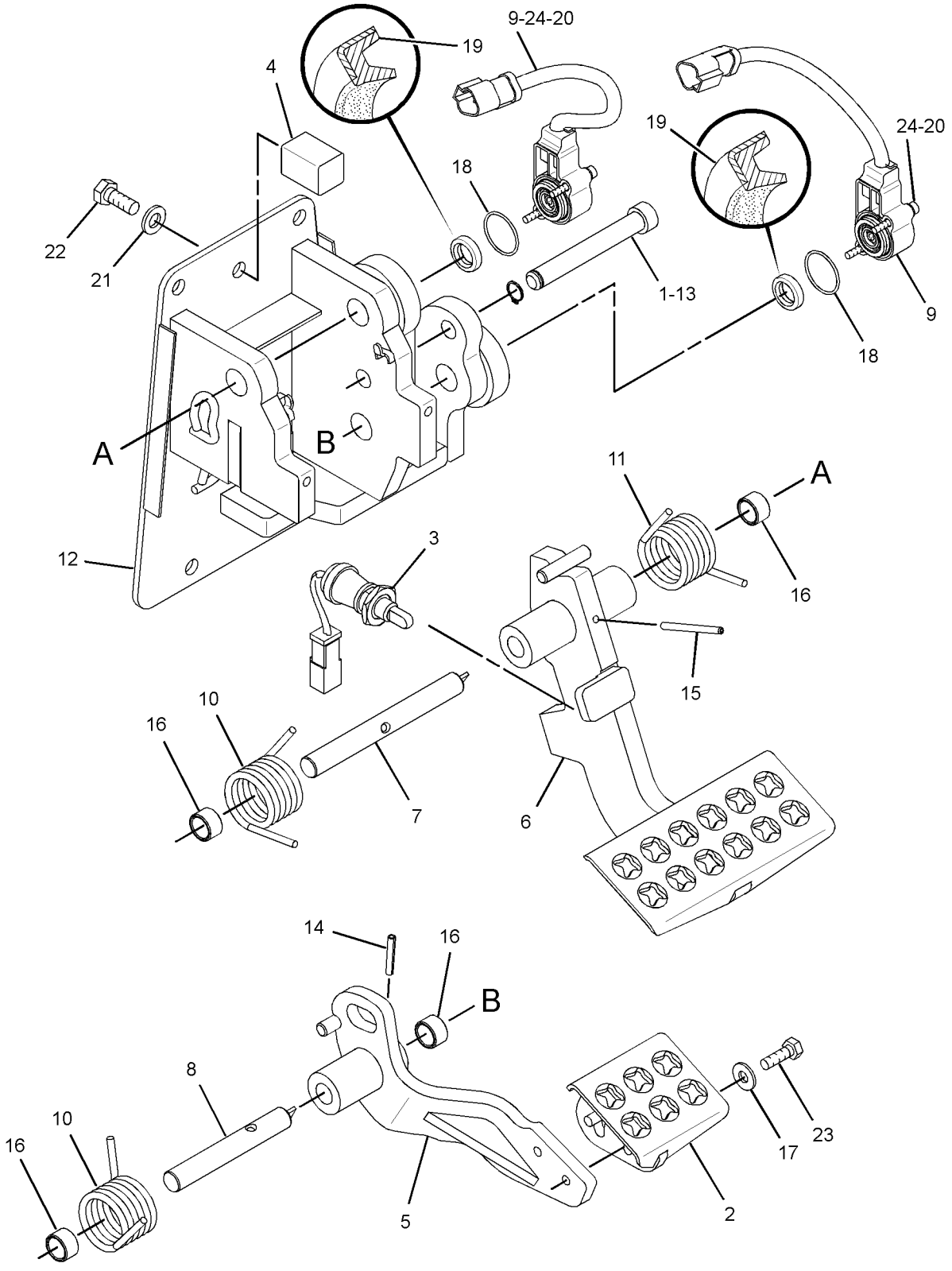

GRAPHIC #1 **<END>** g01886587

298-4382 COVER GP-CONSOLE–RIPPER

S/N: LJR1-UP
FOR USE WITH HYDRAULIC AR-4 VALVE
CANNOT BE USED WITH CANOPY AR, WINCH AR-TOWING, COVER GP-CONSOLE (WINCH), INSTALLATION AR-WINCH
PART OF 342-2615 OPTION AR-BULLDOZER, 338-2570 OPTION AR-HYDRAULIC
AN ATTACHMENT

SMCS-5258 **i03626402**

NOTE	REF NO	GRAPHIC REF	PART NUMBER	QTY	PART NAME 1 2 3 4 5 6 (PRODUCT LEVEL)	SEE PAGE
	1	1	**298-4374**	1	CONSOLE AS	
	1A	1	**9M-5733**	7	RIVET-POP	
	1B	1	**178-0266**	1	HINGE AS	
	1C	1	**188-8846**	1	LATCH AS	
	1D	1	**205-7048**	2	INSERT-THREADED (M6X1-THD)	
	1E	1	**3H-0240**	7	WASHER (5X9.7X0.8-MM THK)	
	1F	1	**339-2971**	1	DOOR-RH	

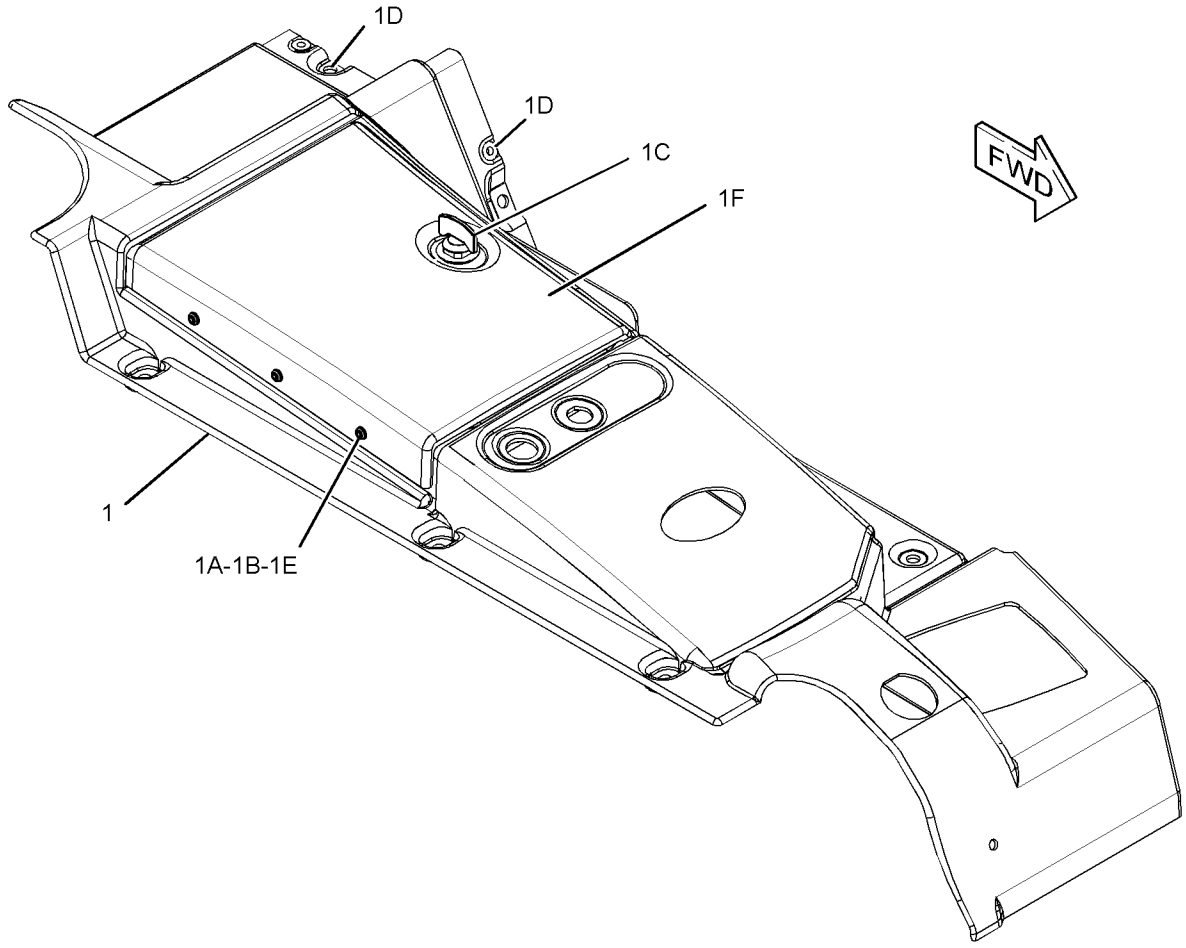

GRAPHIC #1 **<END>** g01889495

298-4383 COVER GP-CONSOLE—WINCH

S/N: LJR1-UP
FOR USE WITH WINCH AR-TOWING, INSTALLATION AR-WINCH
CANNOT BE USED WITH CANOPY AR, COVER GP-CONSOLE (RIPPER), RIPPER AR, HYDRAULIC AR-4 VALVE
PART OF 338-2590 OPTION AR-WORK TOOL
AN ATTACHMENT

SMCS-5258 **i03626435**

NOTE	REF NO	GRAPHIC REF	PART NUMBER	QTY	PART NAME 1 2 3 4 5 6 (PRODUCT LEVEL)	SEE PAGE
	1	1	**298-4375**	1	CONSOLE AS	
	1A	1	**3H-0240**	7	WASHER (5X9.7X0.8-MM THK)	
	1B	1	**9M-5733**	7	RIVET-POP	
	1C	1	**178-0266**	1	HINGE AS	
	1D	1	**188-8846**	1	LATCH AS	
	1E	1	**205-7048**	2	INSERT-THREADED (M6X1-THD)	
	1F	1	**339-2971**	1	DOOR-RH	
	2	1	**336-2173**	1	COVER-WINCH	
M	3	1	**9X-2046**	4	SCREW-TRUSS HEAD (M6X1X35-MM)	

M - METRIC PART

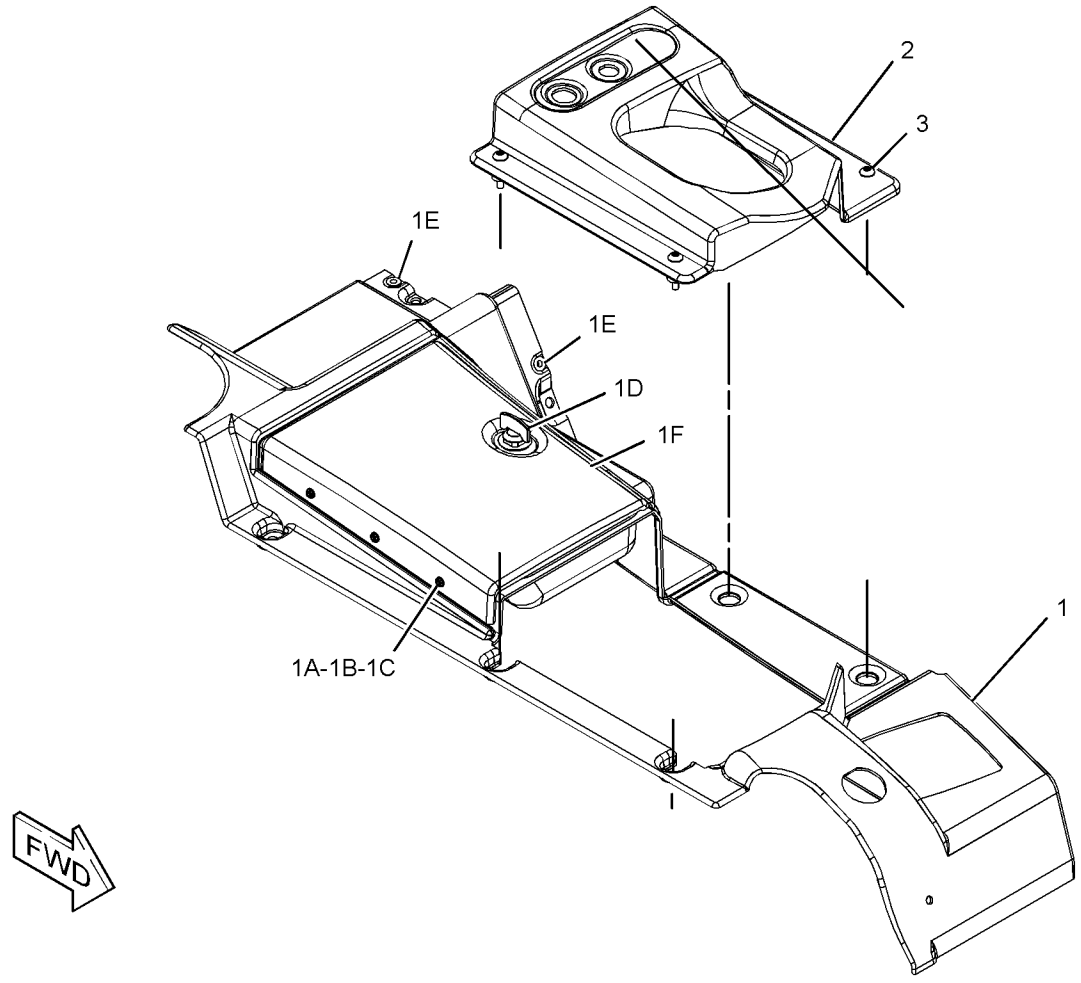

GRAPHIC #1 **<END>** g01945998

298-4392 COVER GP-CONSOLE

S/N: LJR1-UP

PART OF 310-9971 CAB AR

SMCS-5258 **i05160272**

NOTE	REF NO	GRAPHIC REF	PART NUMBER	QTY	PART NAME 1 2 3 4 5 6 (PRODUCT LEVEL)	SEE PAGE
	1	1	**7G-4824**	1	STRAP	
	2	1	**8E-7791**	2	STRAP	
	3	1	**117-2311**	1	SOCKET-AUXILIARY POWER (12-VOLT)	
	4	1	**126-3701**	1	ARMREST AS (LH)	
Y	5	1	**158-6632**	1	SWITCH GP-PUSH BUTTON (HORN)	220
	6	1	**169-2876**	2	FILM-IDENTIFICATION (POWER RECEPTACLE, 12-VOLT)	
	7	1	**197-4871**	4	CLIP	
	8	1	**219-0305**	2	FILM-WARNING (NO WELD, NO DRILL, READ OMM)	
	9	1	**224-7717**	1	FILM-WARNING (SEAT BELT, U.S.)	
	10	1	**225-3305**	1	FILM-WARNING (UNIVERSAL, READ OMM)	
	11	1	**237-2816**	1	PLATE	
	12	1	**240-0488**	1	ARMREST	
	13	1	**241-2841**	1	FILM-IDENTIFICATION (D6N XL, D6N LGP)	
	14	1	**243-3125**	1	PAD AS	
	15	1	**243-3126**	1	BRACKET	
	16	1	**250-2189**	1	FLOOR MAT	
	17	1	**252-7229**	1	PLATE	
	18	1	**298-4394**	1	CONSOLE AS (RH)	
		1	**339-2971**	1	DOOR-RH	
		1	**3H-0240**	7	WASHER (5X9.7X0.8-MM THK)	
		1	**9M-5733**	7	RIVET-POP	
		1	**178-0266**	1	HINGE AS	
		1	**188-8846**	1	LATCH AS	
		1	**205-7048**	2	INSERT-THREADED (M6X1-THD)	
	19	1	**311-6372**	1	COVER AS	
		1	**114-9125**	1	HOLDER-CUP	
		1	**205-7048**	4	INSERT-THREADED (M6X1-THD)	
	20	1	**311-6373**	1	PLATE	
	21	1	**320-1193**	1	COVER-FRONT	
	22	1	**336-2171**	1	CONSOLE GP (LH)	
		1	**336-2175**	1	DOOR-ACCESS	
		1	**3H-0240**	7	WASHER (5X9.7X0.8-MM THK)	
		1	**9M-5733**	7	RIVET-POP	
		1	**178-0266**	1	HINGE AS	
		1	**188-8846**	1	LATCH AS	
		1	**205-7048**	3	INSERT-THREADED (M6X1-THD)	
	23	1	**336-2172**	1	COVER AS (REAR)	
		1	**205-7048**	8	INSERT-THREADED (M6X1-THD)	
M	24	1	**127-2170**	4	SCREW-TRUSS HEAD (M8X1.25X20-MM)	
	25	1	**323-2867**	1	FILM-INSTRUCTION (BULLDOZER CONTROL)	
	26	1	**7X-7729**	10	WASHER (11X25X3-MM THK)	
M	28	1	**8T-4137**	8	BOLT (M10X1.5X20-MM)	
M	29	1	**8T-4185**	2	BOLT (M10X1.5X50-MM)	
M	30	1	**8T-4189**	2	BOLT (M8X1.25X20-MM)	
	31	1	**8T-4224**	2	WASHER-HARD (8.8X16X2-MM THK)	
	32	1	**8T-9471**	1	GROMMET	
M	34	1	**9X-2045**	35	SCREW-TRUSS HEAD (M6X1X20-MM)	
	35	1	**9X-2038**	25	WASHER (7X19X2-MM THK)	
	36	1	**320-1152**	1	INSULATION AS (RH)	
	37	1	**320-1153**	1	INSULATION AS (RH)	
	38	1	**342-2319**	1	FILM-ROPS (ROPS, READ OMM)	
	39	1	**224-0688**	1	BRACKET (RH)	
	40	1	**224-0687**	1	BRACKET (LH)	
	41	1	**5P-4116**	4	WASHER-HARD (8.8X20.5X2-MM THK)	

M - METRIC PART
Y - SEPARATE ILLUSTRATION

298-4392 **COVER GP-CONSOLE (*contd.*)** **i05160272**

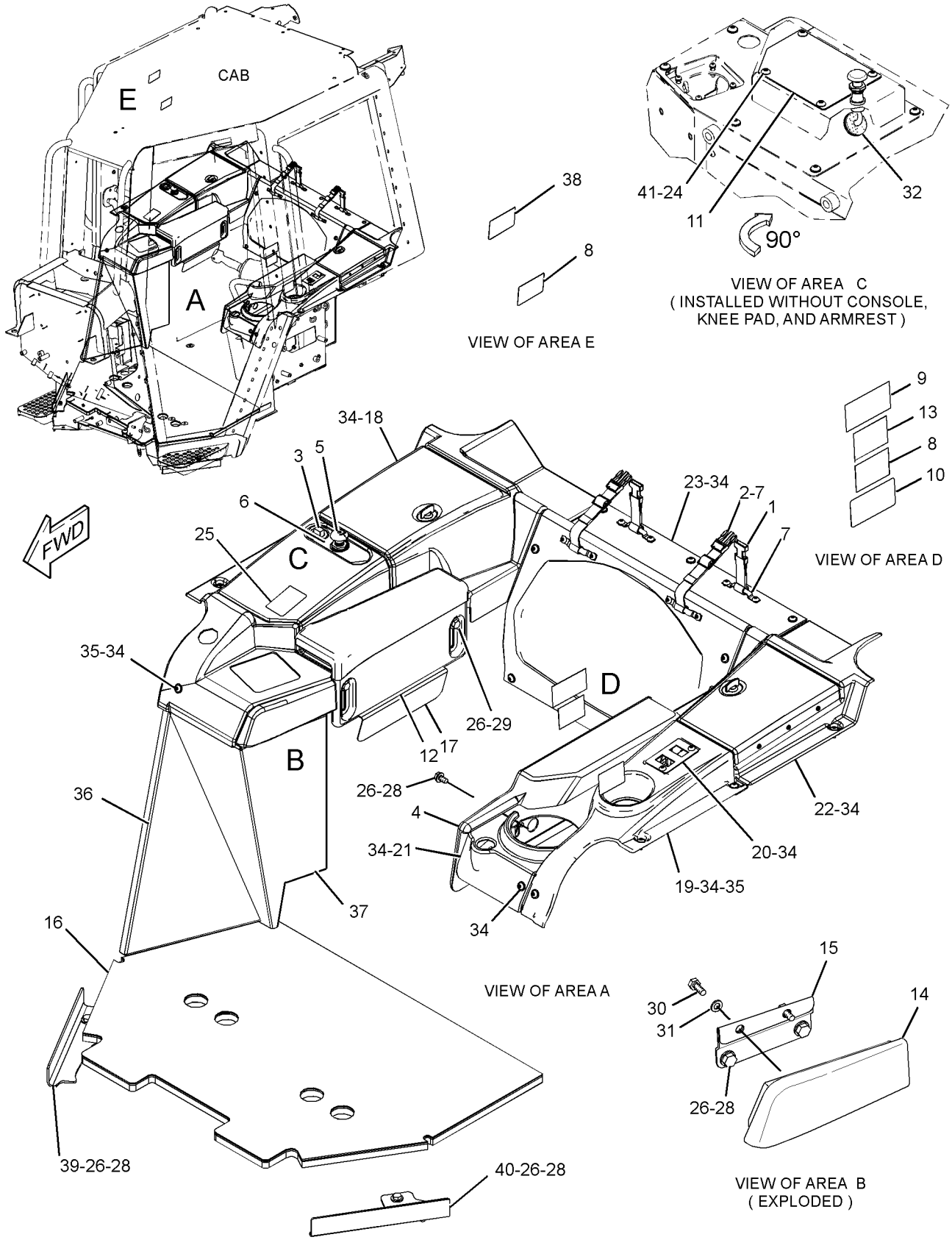

GRAPHIC #1 **<END>** g03345318

311-6385 COVER GP-CONSOLE

S/N: LJR1-UP
PART OF 311-6420 CAB GP
ALSO AN ATTACHMENT

SMCS-5258 **i03795171**

NOTE	REF NO	GRAPHIC REF	PART NUMBER	QTY	PART NAME 1 2 3 4 5 6 (PRODUCT LEVEL)	SEE PAGE
	1	2	**169-9108**	1	COVER AS	
		2	**178-8844**	4	SPACER (11X28X20-MM THK)	
		2	**178-9002**	1	COVER	
	2	1	**171-9616**	1	FLOOR MAT (REAR)	
	3	1	**177-3846**	1	PANEL (SOUND)	
	4	1	**224-2466**	1	FOAM	
	5	1	**224-2467**	1	FOAM	
	6	1	**224-2468**	2	FOAM	
	7	2	**247-6854**	3	PLUG	
	8	1	**249-0037**	1	FOOTREST AS	
	9	2	**249-1157**	1	COVER	
	10	1	**249-8087**	1	COVER (PEDAL, RH)	
	11	1	**249-8088**	1	COVER (PEDAL, LH)	
	12	1	**250-1150**	1	FLOORPLATE AS	
	13	1	*298-4386*	1	PLATE AS	
		1	**298-4384**	1	SEAL	
		1	**298-4385**	1	PLATE AS	
M		1	**6V-9632**	4	NUT-WELD (M6X1-THD)	
M		1	**8T-3612**	4	NUT-WELD (M8X1.25-THD)	
	14	1	**311-6402**	1	INSULATION AS (LH)	
	15	1	**311-6404**	1	INSULATION AS (LH)	
	16	2	**320-1152**	1	INSULATION AS (RH)	
	17	2	**320-1153**	1	INSULATION AS (RH)	
	18	2	**320-1154**	1	INSULATION AS (RH)	
	19	1	**320-1155**	1	INSULATION AS (REAR)	
	20	1	**320-1156**	1	INSULATION AS (LH)	
	21	1	**320-1157**	1	INSULATION AS (LH)	
	22	1	**330-9200**	1	PLATE	
M	23	1	**127-2170**	8	SCREW-TRUSS HEAD (M8X1.25X20-MM)	
M	24	1	**166-3777**	4	SCREW-BUTTON HEAD (M6X1X28-MM)	
	25	1	**3E-4352**	2	WASHER-HARD (8.8X20.5X2.5-MM THK)	
	26	1	**5P-4116**	6	WASHER-HARD (8.8X20.5X2-MM THK)	
	27	2	**7X-7729**	5	WASHER (11X25X3-MM THK)	
M	28	1,2	**8T-4136**	10	BOLT (M10X1.5X25-MM)	
	29	1	**8T-4222**	5	WASHER-PLATED (11X32X2.5-MM THK)	
M	30	1	**9X-2040**	2	SCREW-TRUSS HEAD (M10X1.5X25-MM)	
M	31	1,2	**9X-2044**	14	SCREW-TRUSS HEAD (M6X1X16-MM)	
	32	1	**9X-8256**	4	WASHER (6.6X12X2-MM THK)	
D	33	2	**5P-5643**		SEAL (0.2-M)	

D - ORDER BY THE METER
M - METRIC PART

311-6385 **COVER GP-CONSOLE (*contd.*)** **i03795171**

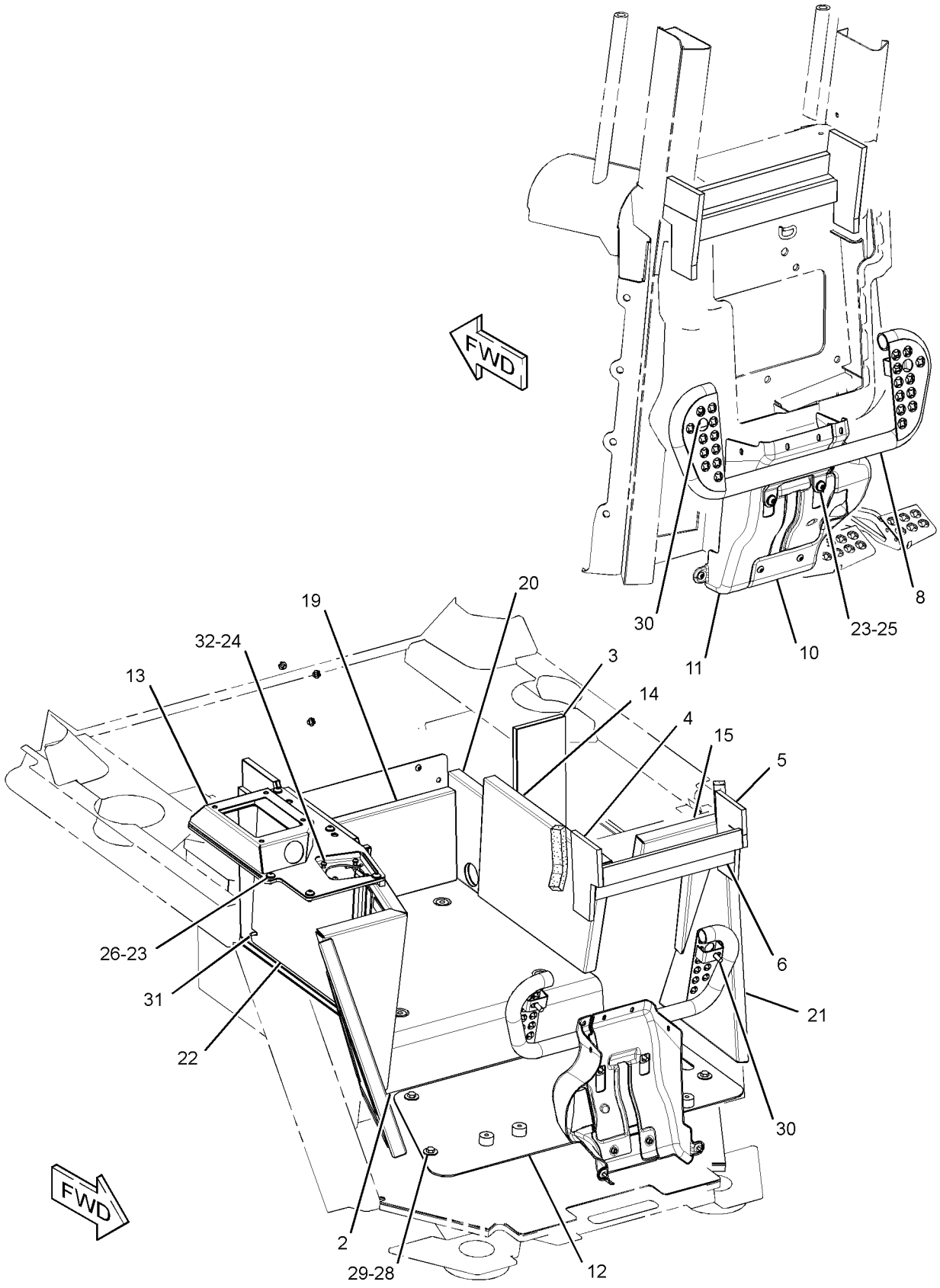

GRAPHIC #1 g02052375

311-6385 **COVER GP-CONSOLE (*contd.*)** **i03795171**

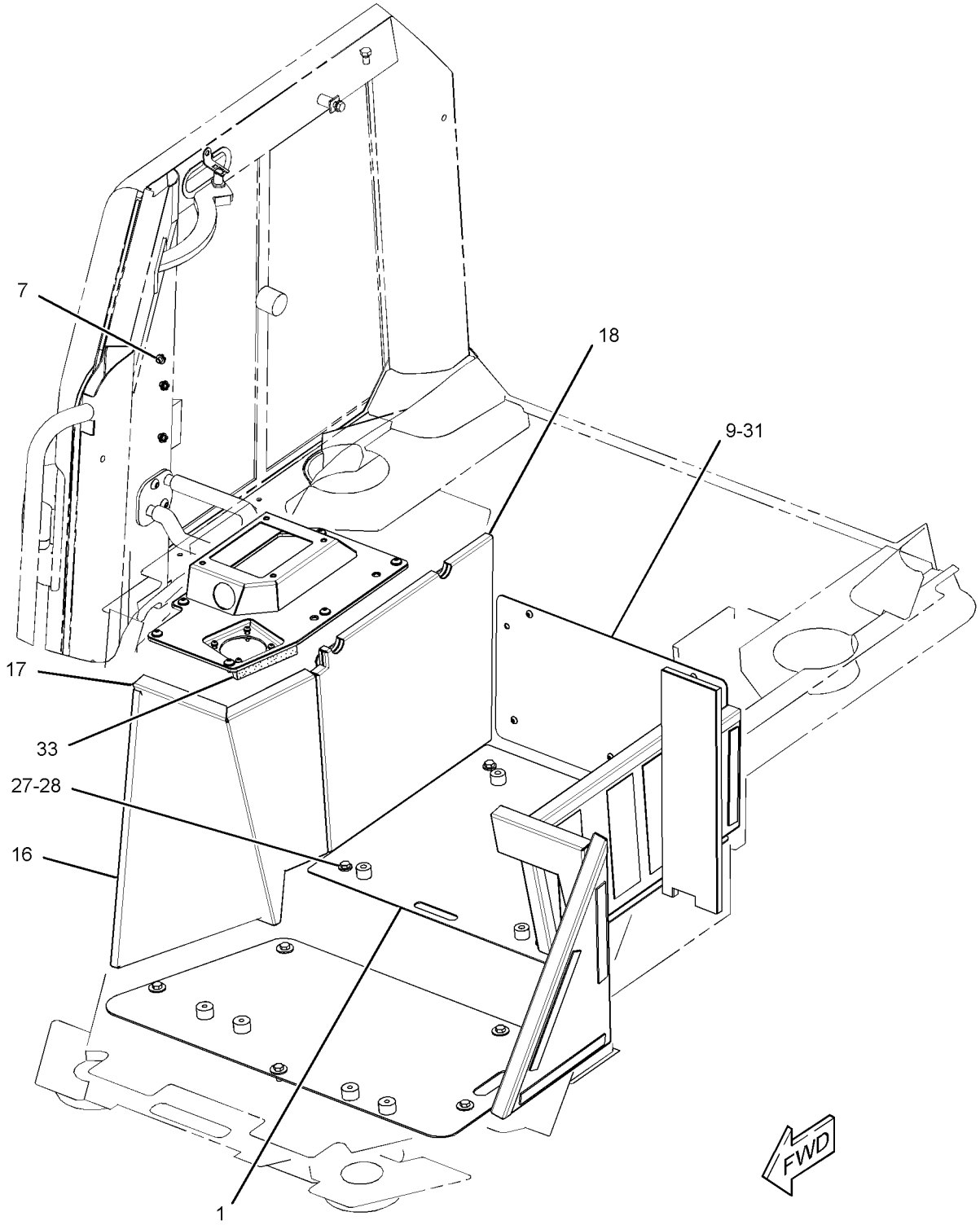

GRAPHIC #2 **<END>** g01904547

320-1190 DASH GP–OPEN ROPS

S/N: LJR1-UP
PART OF 320-1200 PLATFORM GP-OPERATOR
AN ATTACHMENT

SMCS-7314 **i03894357**

NOTE	REF NO	GRAPHIC REF	PART NUMBER	QTY	PART NAME 1 2 3 4 5 6 (PRODUCT LEVEL)	SEE PAGE
J	1	1	**5P-9000**	1	LOCK AS-CYLINDER	
	2	1	**226-0326**	1	CAM-LOCK	
	3	1	**311-6388**	1	DASH AS	
E	3A	1	**155-7688**		SEAL (4-CM EACH)	
	3B	1	**205-7048**	2	INSERT-THREADED (M6X1-THD)	
	4	1	**311-6389**	1	PLATE AS	
M	5	1	**129-3178**	4	LOCKNUT (M6X1-THD)	
M	6	1	**9X-2044**	4	SCREW-TRUSS HEAD (M6X1X16-MM)	
	7	1	**9X-8256**	4	WASHER (6.6X12X2-MM THK)	
					PARTS SHOWN IN GRAPHIC(S) WITHOUT A REFERENCE NUMBER ARE NOT SERVICED SEPARATELY	

E - ORDER BY THE CENTIMETER
J - REQUIRES CORPORATE KEY
M - METRIC PART

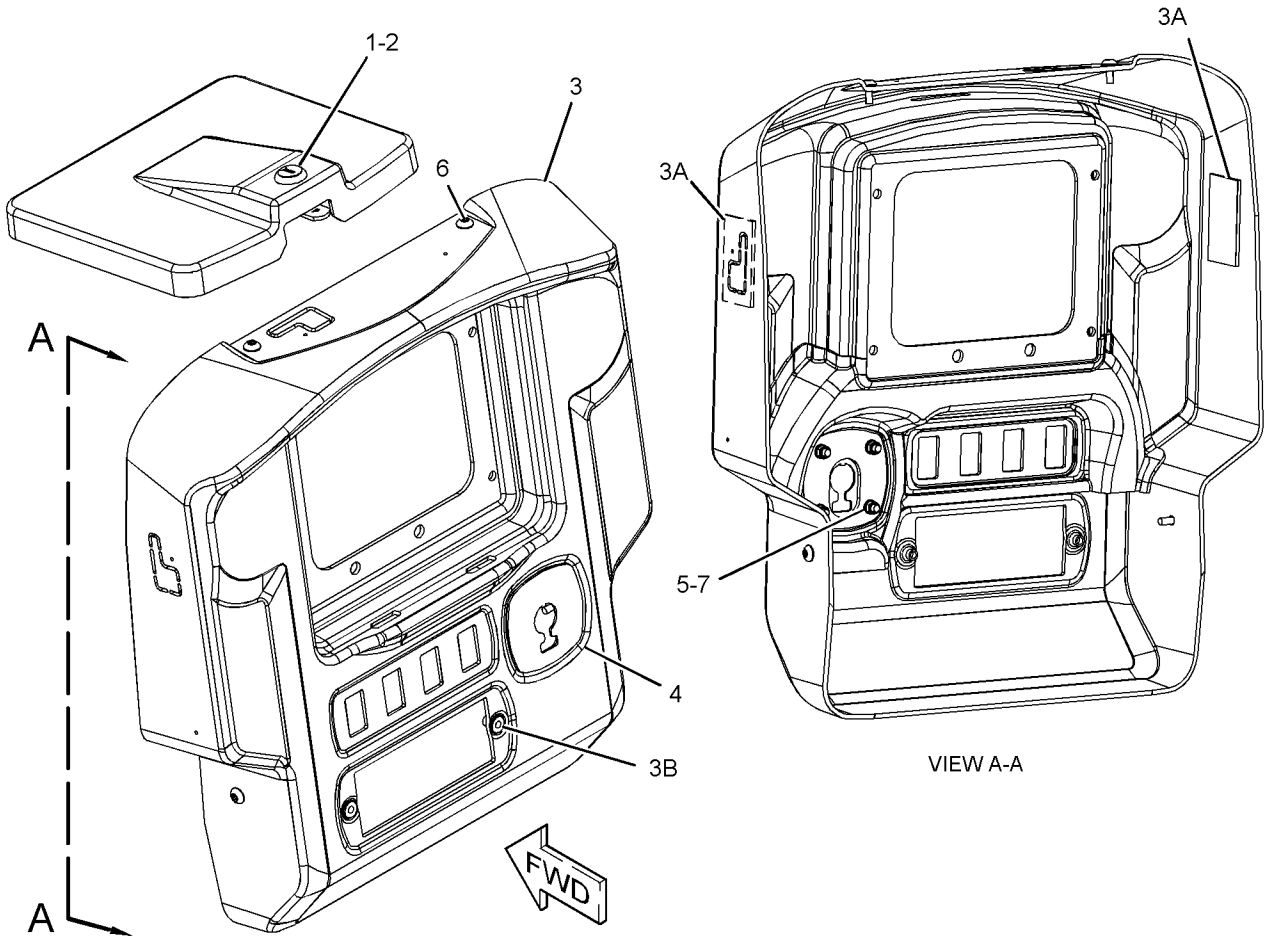

GRAPHIC #1 **<END>** g01889758

167-1451 DOOR GP-CAB—RH

S/N: LJR1-UP
PART OF 311-6420 CAB GP
ALSO AN ATTACHMENT

SMCS-7308 **i03666182**

NOTE	REF NO	GRAPHIC REF	PART NUMBER	QTY	PART NAME 1 2 3 4 5 6 (PRODUCT LEVEL)	SEE PAGE
	1	1	**6V-7636**	2	PIN AS-SPRING	
	2	1	**7K-1181**	1	STRAP-CABLE	
	3	1	**125-8175**	1	BLADE AS-WIPER (450-MM) (DOOR, RH)	
	4	1	**133-9123**	2	PLUG	
	5	1	**294-3224**	1	FRAME AS	
	6	1	**167-1452**	1	WINDOW	
Y	7	1	**304-4505**	1	MOTOR GP-WINDOW WIPER (DOOR, RH)	656
	8	1	**172-2381**	1	LINKAGE AS	
	9	1	**221-2858**	1	LINK AS	
	10	1	**172-2384**	1	LATCH AS-ROTARY	
	11	1	**294-5361**	1	COVER (WIPER)	
	12	1	**173-6807**	1	PLATE-COVER	
	13	1	**266-3701**	1	ARM GP-WINDOW WIPER (DOOR, RH)	
		1	**136-3194**	1	NOZZLE AS-WASHER	
E		1	**194-5171**		HOSE (50-CM)	
	14	1	**193-4577**	1	PLATE AS-MOUNTING (DOOR, RH)	
M		1	**8T-3490**	4	NUT-WELD (M10X1.5-THD)	
Y	15	1	*194-3313*	1	RETAINER GP-DOOR	686
	16	1	**200-7836**	1	HANDLE AS	
	17	1	**218-7119**	1	GASKET	
	18	1	**224-2669**	4	PLUG-PLASTIC	
M	19	1	**3T-0849**	4	BOLT-SOCKET HEAD (M6X1X25-MM)	
	20	1	**7X-7729**	7	WASHER (11X25X3-MM THK)	
M	21	1	**8T-4138**	4	BOLT (M6X1X20-MM)	
M	22	1	**8T-4195**	7	BOLT (M10X1.5X30-MM)	
	23	1	**8T-5400**	1	CONNECTOR AS	
	24	1	**9D-3768**	2	GROMMET	
	25	1	**9D-8508**	2	GROMMET	
M	26	1	**9X-2040**	4	SCREW-TRUSS HEAD (M10X1.5X25-MM)	
M	27	1	**9X-2045**	7	SCREW-TRUSS HEAD (M6X1X20-MM)	

E - ORDER BY THE CENTIMETER
M - METRIC PART
Y - SEPARATE ILLUSTRATION

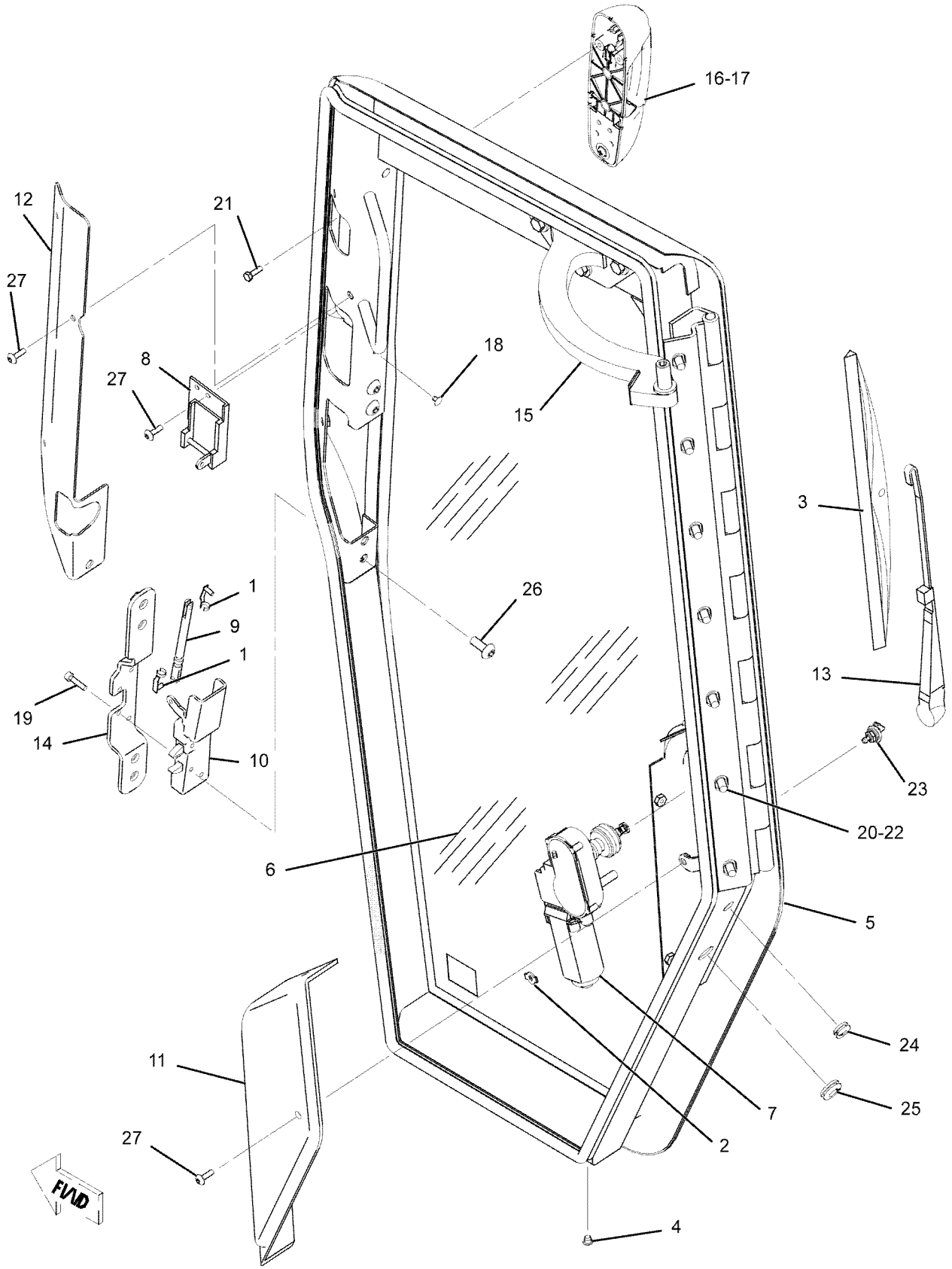

GRAPHIC #1 **<END>** g01075615

167-1453 DOOR GP-CAB—LH

S/N: LJR1-UP
PART OF 311-6420 CAB GP
ALSO AN ATTACHMENT

SMCS-7308 **i04008471**

NOTE	REF NO	GRAPHIC REF	PART NUMBER	QTY	PART NAME 1 2 3 4 5 6 (PRODUCT LEVEL)	SEE PAGE
	1	1	**6V-7636**	2	PIN AS-SPRING	
	2	1	**7K-1181**	1	STRAP-CABLE	
	3	1	**125-8175**	1	BLADE AS-WIPER (450-MM) (DOOR, LH)	
	4	1	**133-9123**	2	PLUG	
	5	1	**294-3223**	1	FRAME AS (DOOR, LH)	
	6	1	**167-1454**	1	WINDOW	
CY	7	1	**304-4506**	1	MOTOR GP-WINDOW WIPER (DOOR, LH)	657
	8	1	**172-2382**	1	LINKAGE AS	
	9	1	**221-2858**	1	LINK AS	
	10	1	**172-2385**	1	LATCH AS-ROTARY	
	11	1	**294-5360**	1	COVER (WIPER)	
	12	1	**266-3700**	1	ARM GP-WINDOW WIPER (DOOR, LH)	
		1	**305-9191**	1	NOZZLE AS-WASHER	
E		1	**194-5171**		HOSE (50-CM)	
	13	1	**183-4690**	1	COVER	
	14	1	**193-4578**	1	PLATE AS-MOUNTING (LH, DOOR)	
M		1	**8T-3490**	4	NUT-WELD (M10X1.5-THD)	
Y	15	1	*194-3309*	1	RETAINER GP-DOOR	685
	16	1	**200-7836**	1	HANDLE AS	
	17	1	**224-2669**	4	PLUG-PLASTIC	
M	18	1	**3T-0849**	4	BOLT-SOCKET HEAD (M6X1X25-MM)	
	19	1	**7X-7729**	7	WASHER (11X25X3-MM THK)	
M	20	1	**8T-4195**	7	BOLT (M10X1.5X30-MM)	
M	21	1	**8T-4138**	4	BOLT (M6X1X20-MM)	
	22	1	**8T-5400**	1	CONNECTOR AS	
	23	1	**9D-3768**	2	GROMMET	
	24	1	**9D-8508**	2	GROMMET	
M	25	1	**9X-2040**	4	SCREW-TRUSS HEAD (M10X1.5X25-MM)	
M	26	1	**9X-2045**	7	SCREW-TRUSS HEAD (M6X1X20-MM)	
	27	1	**218-7119**	1	GASKET	

C - CHANGE FROM PREVIOUS TYPE
E - ORDER BY THE CENTIMETER
M - METRIC PART
Y - SEPARATE ILLUSTRATION

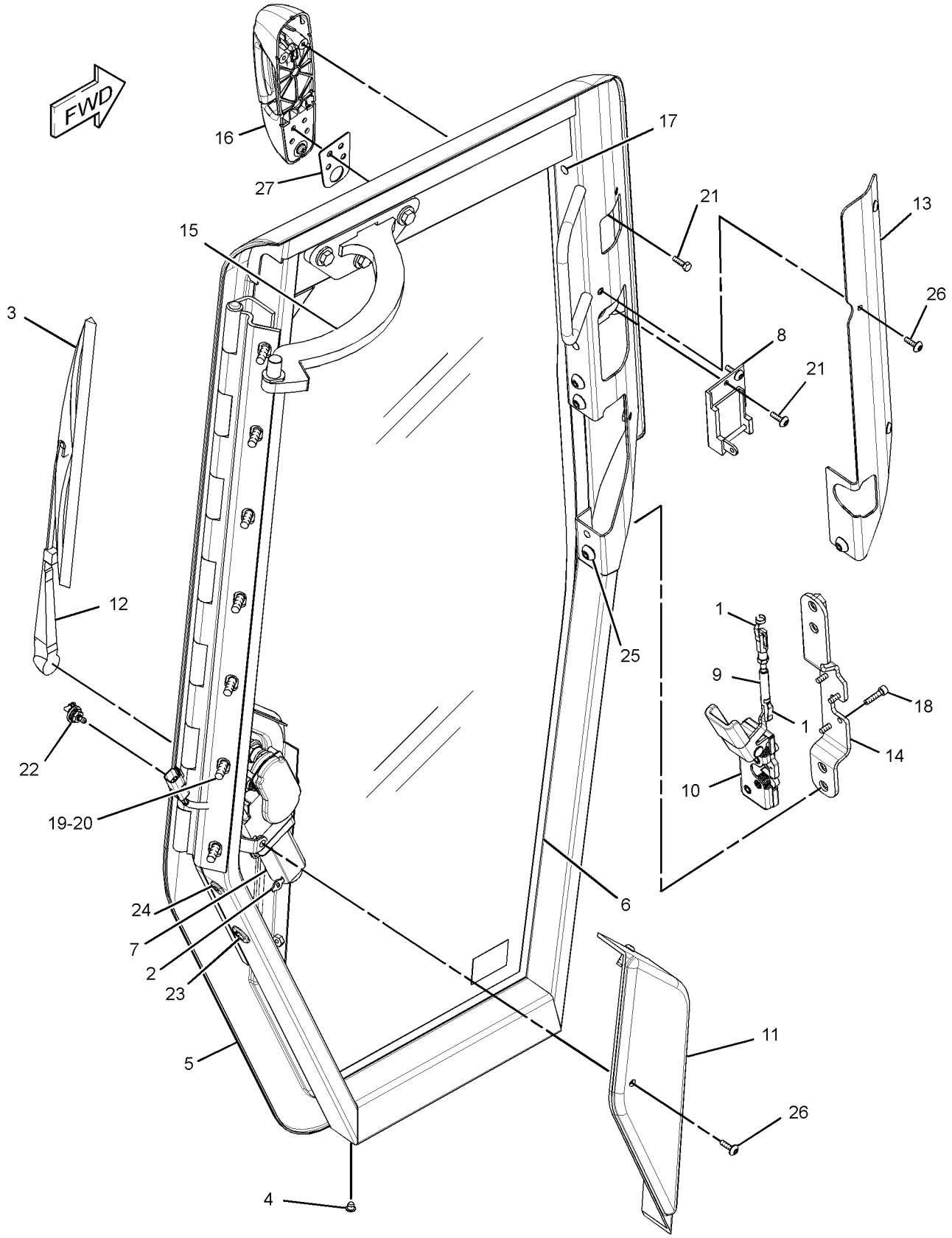

GRAPHIC #1 **<END>** g01431182

311-6386 HEATER GP-CAB

S/N: LJR1-UP
PART OF 311-6420 CAB GP
ALSO AN ATTACHMENT

SMCS-7304 **i03628459**

NOTE	REF NO	GRAPHIC REF	PART NUMBER	QTY	PART NAME 1 2 3 4 5 6 (PRODUCT LEVEL)	SEE PAGE
	1	1	**8T-0154**	3	CLAMP-HOSE	
	2	1	**3S-2093**	6	STRAP-CABLE	
	3	1	**7T-8894**	2	GROMMET	
	4	1	**131-3093**	1	BUSHING	
	5	1	**212-3416**	4	SCREW-PAN HEAD (8-16X0.5-IN)	
	6	1	**246-2167**	1	CORE AS-HEATER	
	7	1	**248-0319**	1	PLATE	
	8	1	**279-0850**	1	ACTUATOR (ELECTRONIC)	
	9	1	**321-5972**	1	VALVE GP-CAB HEATER	
		1	**4M-6582**	2	SEAL-O-RING	
		1	**238-8841**	1	VALVE AS-CONTROL	
		1	**248-6772**	8	SCREW-MACHINE (8-16X7.75-IN)	
	10	1	**099-3001**	3	CLIP	
	11	1	**7X-7729**	3	WASHER (11X25X3-MM THK)	
	12	1	**8T-0328**	4	WASHER-HARD (5.5X10X1-MM THK)	
M	13	1	**8T-0337**	3	SCREW-MACHINE (M4X0.7X12-MM)	
	14	1	**8T-4121**	5	WASHER-HARD (11X21X2.5-MM THK)	
M	15	1	**8T-4133**	1	NUT (M10X1.5-THD)	
M	16	1	**8T-4137**	3	BOLT (M10X1.5X20-MM)	
M	17	1	**8T-4191**	2	BOLT (M10X1.5X16-MM)	
M	18	1	**8T-4195**	2	BOLT (M10X1.5X30-MM)	
	19	1	**9X-8250**	1	CLIP	
E	20	1	**7X-7702**		CONDUIT-FLEXIBLE (23.35-MM ID, SPLIT) (52-CM)	
E	20A	1	**7X-7702**		CONDUIT-FLEXIBLE (23.35-MM ID, SPLIT) (24-CM)	
E	21	1	**5P-0767**		HOSE (50-CM)	
E	21A	1	**5P-0767**		HOSE (95-CM)	
D	22	1	**5P-5643**		SEAL (0.2-M EACH)	
D	23	1	**5P-5639**		SEAL (0.4-M EACH)	

D - ORDER BY THE METER
E - ORDER BY THE CENTIMETER
M - METRIC PART

311-6386 **HEATER GP-CAB (*contd.*)** **i03628459**

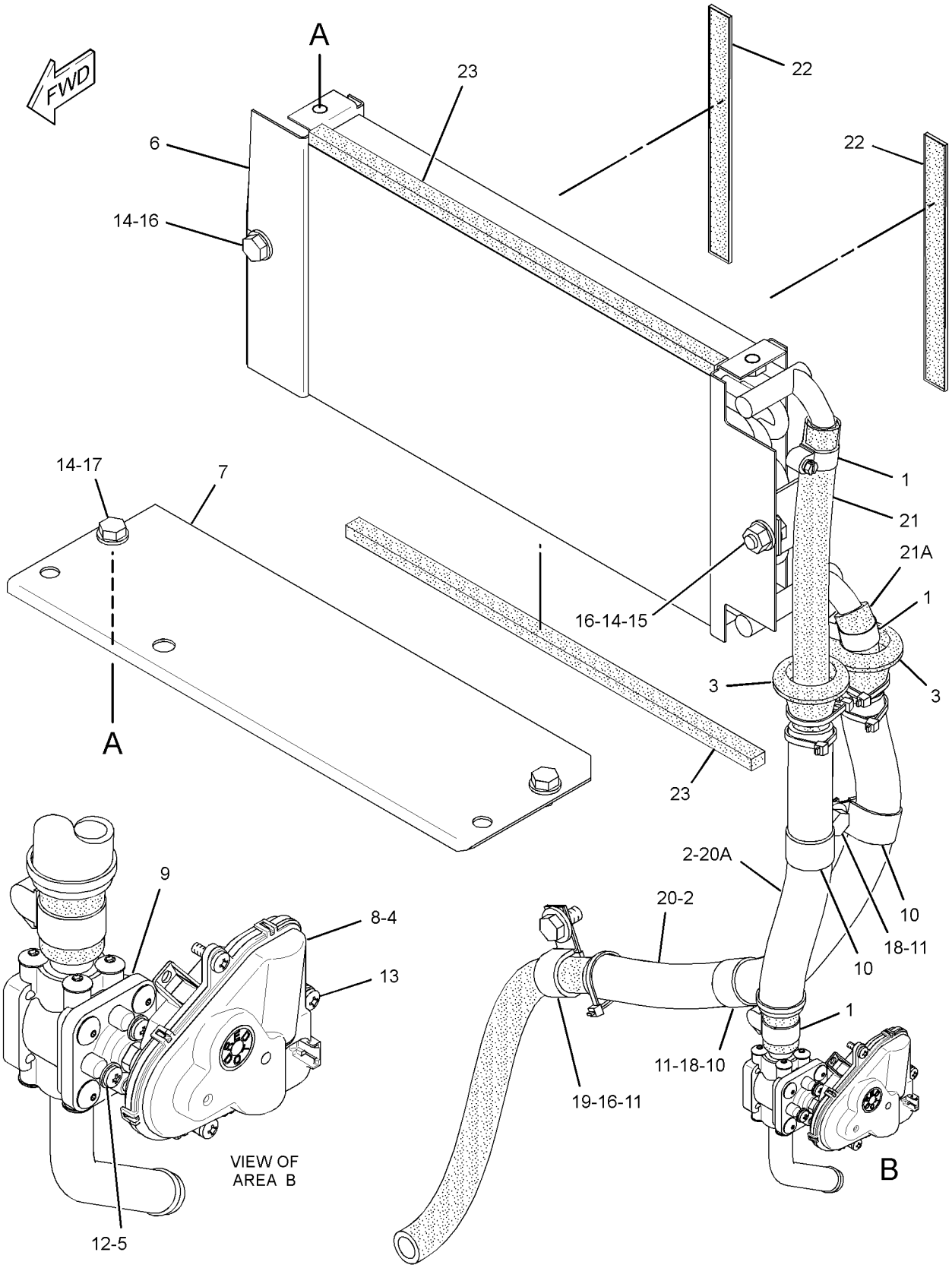

GRAPHIC #1 **<END>** g01888537

320-1165 HEATER GP-CAB—OPEN ROPS

S/N: LJR1-UP

PART OF 320-1200 PLATFORM GP-OPERATOR

AN ATTACHMENT

SMCS-7304 **i04639114**

NOTE	REF NO	GRAPHIC REF	PART NUMBER	QTY	PART NAME 1 2 3 4 5 6 (PRODUCT LEVEL)	SEE PAGE
	1	1	**7K-1181**	2	STRAP-CABLE	
	2	1	**7T-8894**	4	GROMMET	
	3	1	**8T-0154**	3	CLAMP-HOSE	
	4	1	**171-4046**	4	LOUVER AS	
	5	1	**131-3093**	1	BUSHING	
	6	1	**368-9045**	4	SCREW-PAN HEAD	
	7	1	**228-6089**	1	PLUG (ROCKER SWITCH)	
	8	1	**267-5243**	1	PANEL AS	
	8A	1	**271-7312**	1	KNOB (TEMPERATURE CONTROL)	
	8B	1	**285-7415**	1	KNOB (BLOWER FAN SPEED)	
	9	1	**279-0850**	1	ACTUATOR (ELECTRONIC)	
	10	1	**320-1159**	1	BRACKET AS	
	11	1	**321-5972**	1	VALVE GP-CAB HEATER	
		1	**4M-6582**	2	SEAL-O-RING	
		1	**238-8841**	1	VALVE AS-CONTROL	
		1	**248-6772**	8	SCREW-MACHINE (8-16X7.75-IN)	
Y	12	1	**322-3156**	1	HEATER GP-CAB	640
	13	1	**104-2091**	16	SCREW-FLAT HEAD (6-20X0.5-IN)	
	14	1	**7X-7729**	5	WASHER (11X25X3-MM THK)	
M	16	1	**8T-0337**	3	SCREW-MACHINE (M4X0.7X12-MM)	
	17	1	**8T-4121**	2	WASHER-HARD (11X21X2.5-MM THK)	
M	18	1	**8T-4137**	5	BOLT (M10X1.5X20-MM)	
M	19	1	**8T-4196**	2	BOLT (M10X1.5X35-MM)	
M	20	1	**9X-2045**	2	SCREW-TRUSS HEAD (M6X1X20-MM)	
	21	1	**9X-8250**	1	CLIP	
E	22	1	**5P-0767**		HOSE (104-CM)	
E	22A	1	**5P-0767**		HOSE (66-CM)	

E - ORDER BY THE CENTIMETER
M - METRIC PART
Y - SEPARATE ILLUSTRATION

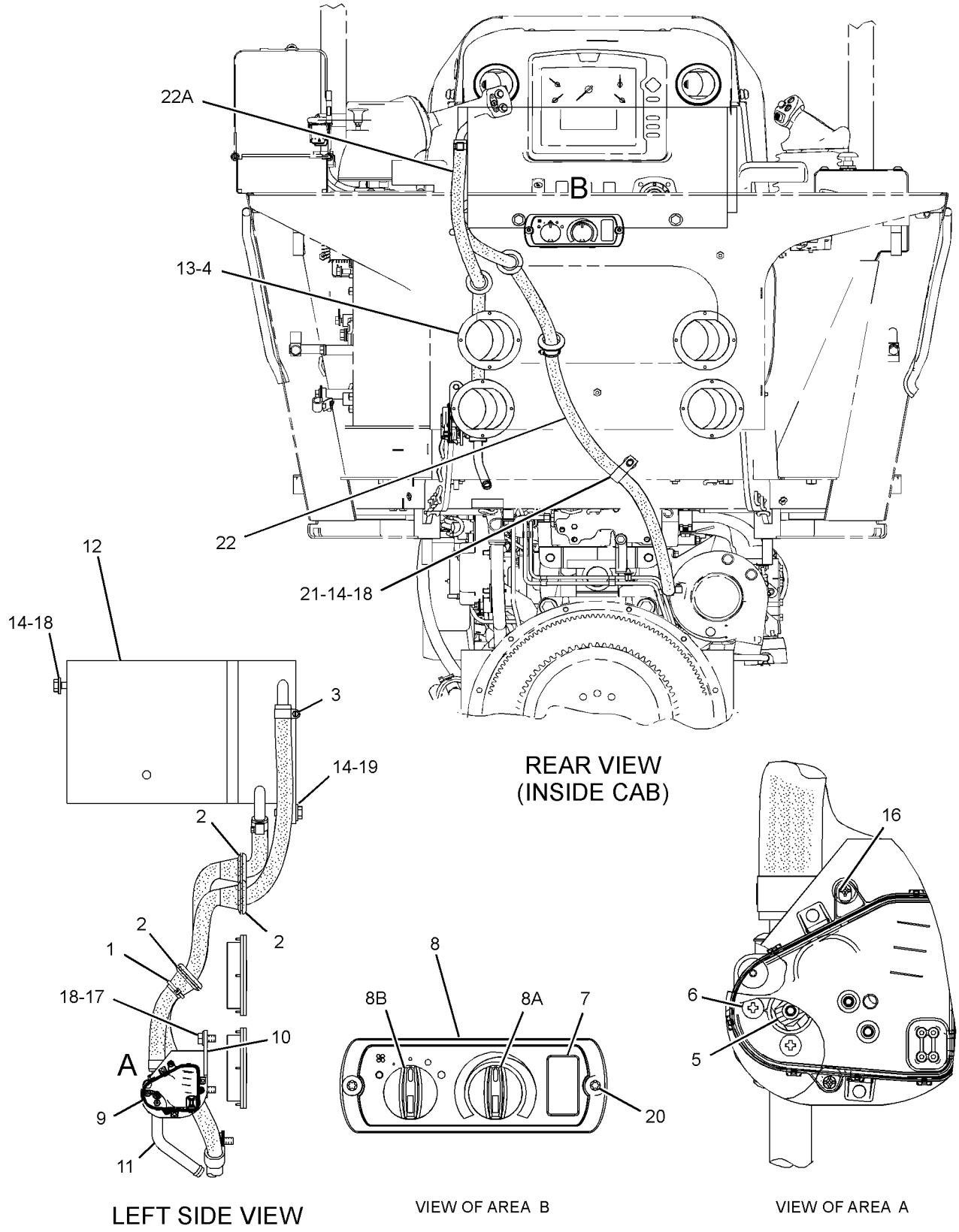

GRAPHIC #1

<END>

g02788926

322-3156 HEATER GP-CAB—OPEN ROPS

S/N: LJR1-UP

PART OF 320-1165 HEATER GP-CAB

AN ATTACHMENT

SMCS-7304 **i03626549**

NOTE	REF NO	GRAPHIC REF	PART NUMBER	QTY	PART NAME 1 2 3 4 5 6 (PRODUCT LEVEL)	SEE PAGE
	1	1	**3S-2093**	1	STRAP-CABLE	
	2	1	**129-1336**	1	PLATE	
	3	1	**129-1368**	1	PLATE	
	4	1	**129-1371**	1	GASKET	
	5	1	**133-9399**	1	GROMMET	
	6	1	**153-6932**	1	GASKET	
	7	1	**177-6858**	1	COIL AS-HEATER	
	8	1	**322-7209**	1	CASE AS	
		1	**5P-4115**	4	WASHER-HARD (7.2X19X2-MM THK)	
M		1	**6V-9632**	9	NUT-WELD (M6X1-THD)	
		1	**7T-1099**	1	LINK	
M		1	**8T-3490**	2	NUT-WELD (M10X1.5-THD)	
M		1	**9X-2032**	8	NUT-WELD (M4X0.7-THD)	
	9	1	**322-7211**	1	GASKET	
	10	1	**322-7212**	1	BLOWER AS	
		1	**5W-1992**	4	TERMINAL	
		1	**5W-2005**	1	HOUSING	
		1	**115-3519**	2	PIN-CONNECTOR (12-GA TO 14-GA)	
		1	**177-9645**	1	KIT-RECEPTACLE (2-PIN)	
					(INCLUDES RECEPTACLE AS & WEDGE)	
	11	1	**322-7213**	1	HARNESS AS-MOTOR	
		1	**6V-0491**	4	TERMINAL-BLADE (14-GA TO 18-GA)	
		1	**102-8805**	1	KIT-RECEPTACLE (6-PIN)	
					(INCLUDES RECEPTACLE AS & WEDGE)	
		1	**6A-5277**	1	CONNECTOR	
		1	**8T-8737**	1	PLUG-SEAL	
E		1	**119-3662**		TUBE-HEAT SHRINK (10.85-MM DIA) (7-CM)	
		1	**9X-3402**	2	SOCKET-CONNECTOR (16-GA TO 18-GA)	
		1	**144-1636**	5	PIN-CONNECTOR (14-GA TO 18-GA)	
		1	**155-2270**	1	KIT-CONNECTING PLUG (2-PIN)	
					(INCLUDES PLUG AS,WEDGE & INTERFACE SEAL)	
M	12	1	**129-3178**	4	LOCKNUT (M6X1-THD)	
M	13	1	**8T-0337**	8	SCREW-MACHINE (M4X0.7X12-MM)	
M	14	1	**8T-4171**	9	BOLT (M6X1X12-MM)	
	15	1	**8T-4205**	13	WASHER-HARD (7.2X14.5X2-MM THK)	
D	16	1	**6V-2496**		SEAL (1-M)	
D	16A	1	**6V-2496**		SEAL (0.5-M EACH)	

D - ORDER BY THE METER
E - ORDER BY THE CENTIMETER
M - METRIC PART

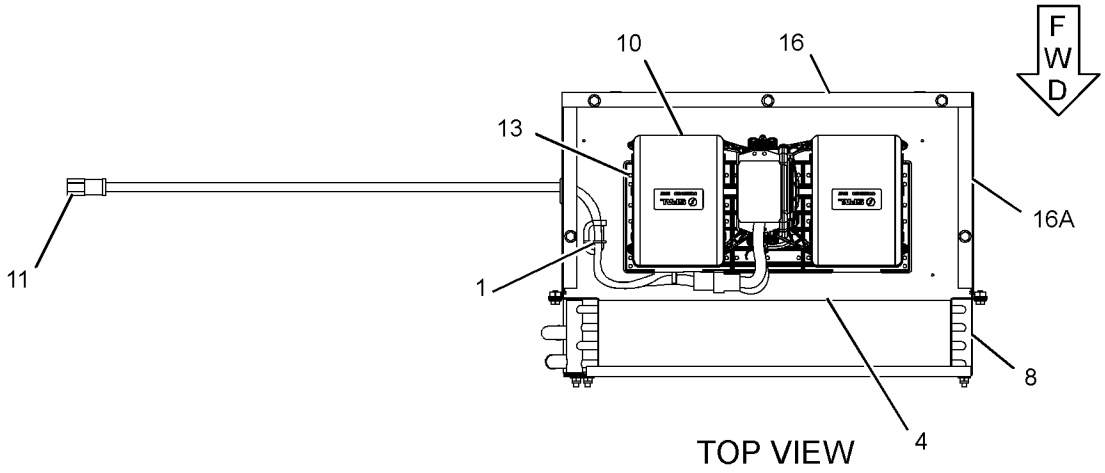

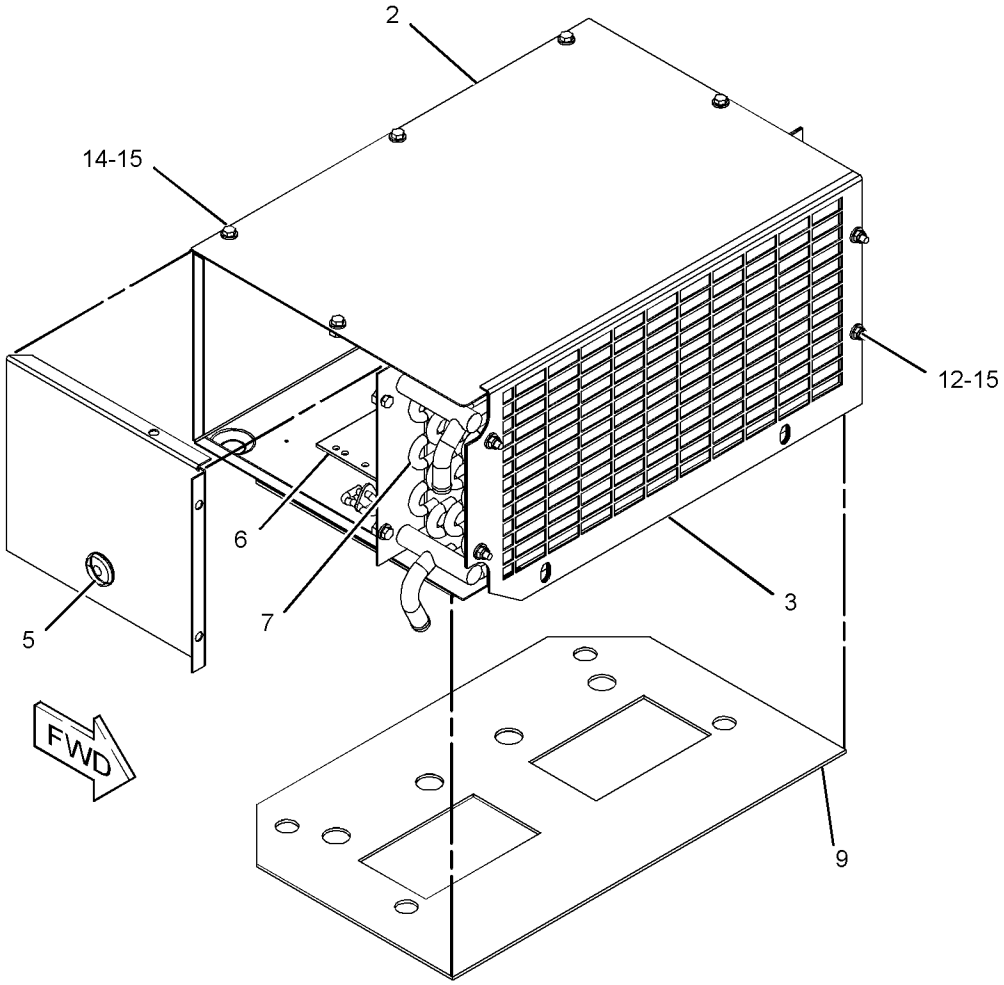

GRAPHIC #1 **<END>** g01891913

194-3333 INSTALLATION GP-RADIO

S/N: LJR1-UP
PART OF 311-6420 CAB GP
ALSO AN ATTACHMENT

SMCS-7338 **i03628452**

NOTE	REF NO	GRAPHIC REF	PART NUMBER	QTY	PART NAME 1 2 3 4 5 6 (PRODUCT LEVEL)	SEE PAGE
	1	1	**6C-3431**	1	ANTENNA	
	2	1	**6T-7695**	2	SPEAKER AS-RADIO	
	3	1	**7K-1181**	2	STRAP-CABLE	
	4	1	**9U-8263**	1	COVER	
	5	1	**145-4509**	8	SCREW (M4X0.7X16-MM)	
	6	1	**226-0150**	1	WASHER-RUBBER	
	7	1	**226-0151**	1	SPACER	
	8	1	**6C-9081**	2	LOCKWASHER	
M	9	1	**5C-2874**	1	NUT (M5X0.8-THD)	
M	10	1	**160-8754**	1	BOLT (M5X0.8X40-MM)	
	11	1	**140-4722**	1	NUT (M5X0.8-THD)	
					PARTS SHOWN IN GRAPHIC(S) WITHOUT A REFERENCE NUMBER ARE NOT SERVICED SEPARATELY	

M - METRIC PART

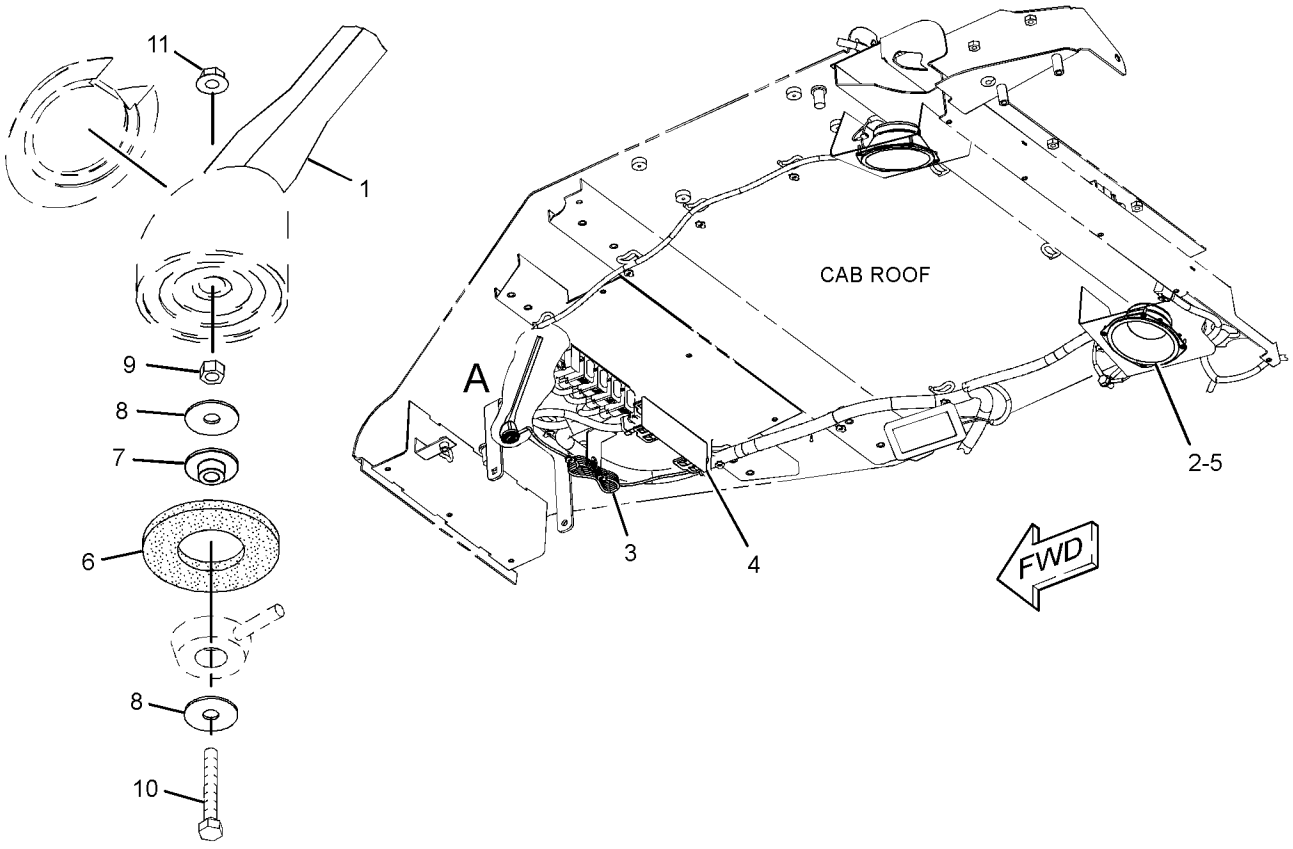

VIEW OF AREA A
(EXPLODED)

GRAPHIC #1 **<END>** g01948453

294-2007 INSTALLATION GP-RADIO—XM SATELLITE

S/N: LJR1-UP
NACD MARKET
CANNOT BE USED WITH CANOPY AR
AN ATTACHMENT

SMCS-7338 **i03626380**

NOTE	PART NUMBER	QTY	PART NAME 1 2 3 4 5 6 (PRODUCT LEVEL)	SEE PAGE
Y	**284-8954**	1	RADIO GP (AM/FM/WB/CD/XM)	678
	284-9055	1	ANTENNA AS	
	200-5728	1	HARNESS AS-RADIO	
	8T-8737	1	PLUG-SEAL	
	186-3735	7	PIN-CONNECTOR (16-GA TO 18-GA)	
	160-3518	1	KIT-RECEPTACLE (8-PIN)	
			(INCLUDES RECEPTACLE AS & WEDGE)	
	172-8037	1	CONNECTOR (RADIO)	
	172-8039	11	TERMINAL (RADIO)	
M	**8T-4137**	2	BOLT (M10X1.5X20-MM)	
	137-8165	1	BUMPER	
	295-4533	1	PLATE	
	8T-8557	2	RIVET-POP	
	8T-4121	2	WASHER-HARD (11X21X2.5-MM THK)	

M - METRIC PART
Y - SEPARATE ILLUSTRATION

<END>

294-2008 INSTALLATION GP-RADIO—SIRIUS SATELLITE

S/N: LJR1-UP
NACD MARKET
CANNOT BE USED WITH CANOPY AR
AN ATTACHMENT

SMCS-7338 **i03626394**

NOTE	PART NUMBER	QTY	PART NAME 1 2 3 4 5 6 (PRODUCT LEVEL)	SEE PAGE
Y	**284-8955**	1	RADIO GP (AM/FM/WB/CD/SIRIUS)	679
	284-9055	1	ANTENNA AS	
	200-5728	1	HARNESS AS-RADIO	
	8T-8737	1	PLUG-SEAL	
	160-3518	1	KIT-RECEPTACLE (8-PIN)	
			(INCLUDES RECEPTACLE AS & WEDGE)	
	172-8037	1	CONNECTOR (RADIO)	
	172-8039	1	TERMINAL (RADIO)	
	186-3735	7	PIN-CONNECTOR (16-GA TO 18-GA)	
M	**8T-4137**	2	BOLT (M10X1.5X20-MM)	
	137-8165	1	BUMPER	
	295-4533	1	PLATE	
	8T-8557	2	RIVET-POP	
	8T-4121	2	WASHER-HARD (11X21X2.5-MM THK)	

M - METRIC PART
Y - SEPARATE ILLUSTRATION

<END>

177-3851 INSULATION GP-WEATHER

S/N: LJR1-UP
PART OF 311-6420 CAB GP
ALSO AN ATTACHMENT

SMCS-7329 **i03628447**

NOTE	REF NO	GRAPHIC REF	PART NUMBER	QTY	PART NAME 1 2 3 4 5 6 (PRODUCT LEVEL)	SEE PAGE
	1	1	**6P-2216**	12	CAP	
	2	1	**223-4127**	1	INSULATION	
	3	1	**223-4128**	1	INSULATION	
	4	1	**223-4129**	1	INSULATION	
	5	1	**248-8866**	4	CAP	
	6	1	**321-3105**	1	INSULATION	

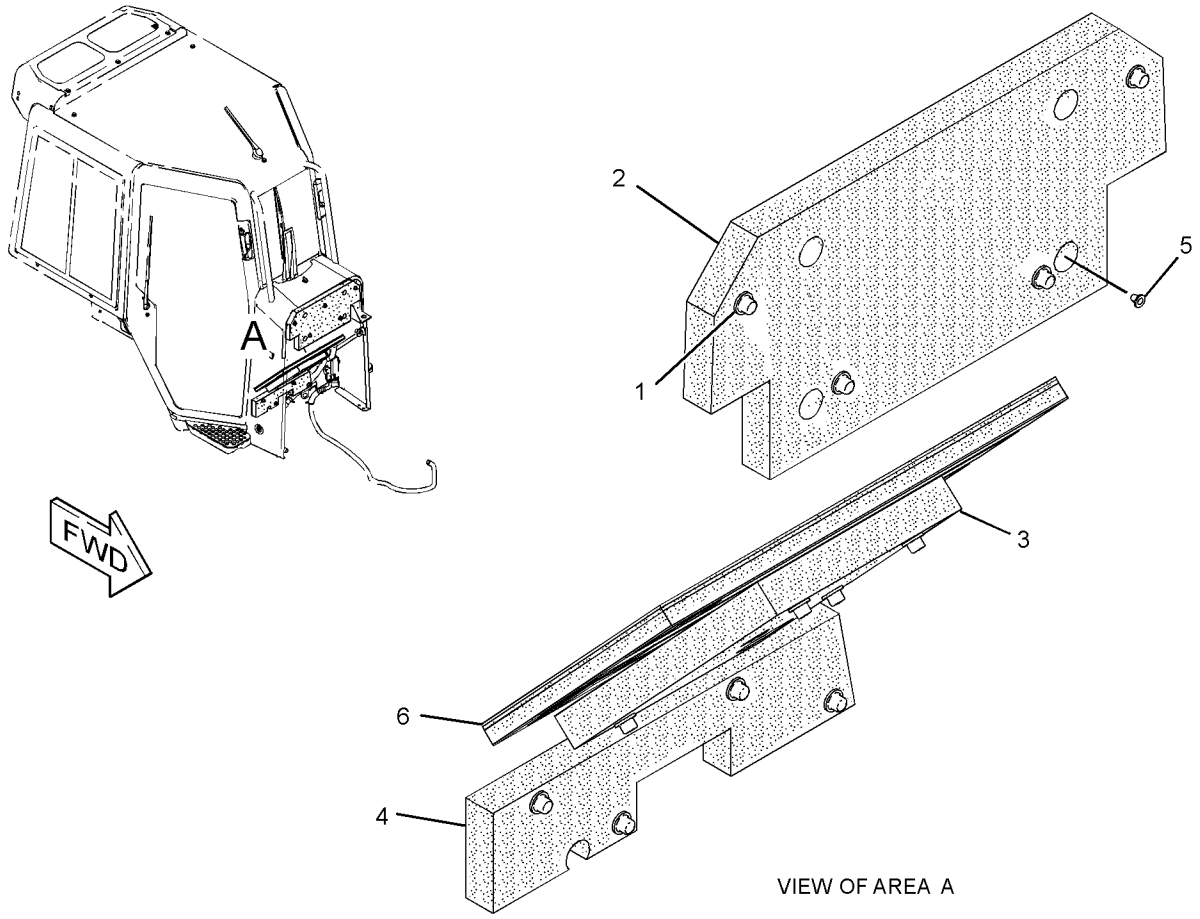

VIEW OF AREA A

GRAPHIC #1 **<END>** g01831781

292-6404 KIT-SEAT CUSHION—CLOTH, HEATED

S/N: LJR1-UP
24-VOLT
CANNOT BE USED WITH CANOPY AR
AN ATTACHMENT

SMCS-7312 **i03878117**

NOTE	REF NO	GRAPHIC REF	PART NUMBER	QTY	PART NAME 1 2 3 4 5 6 (PRODUCT LEVEL)	SEE PAGE
					(NO SERVICED PARTS)	

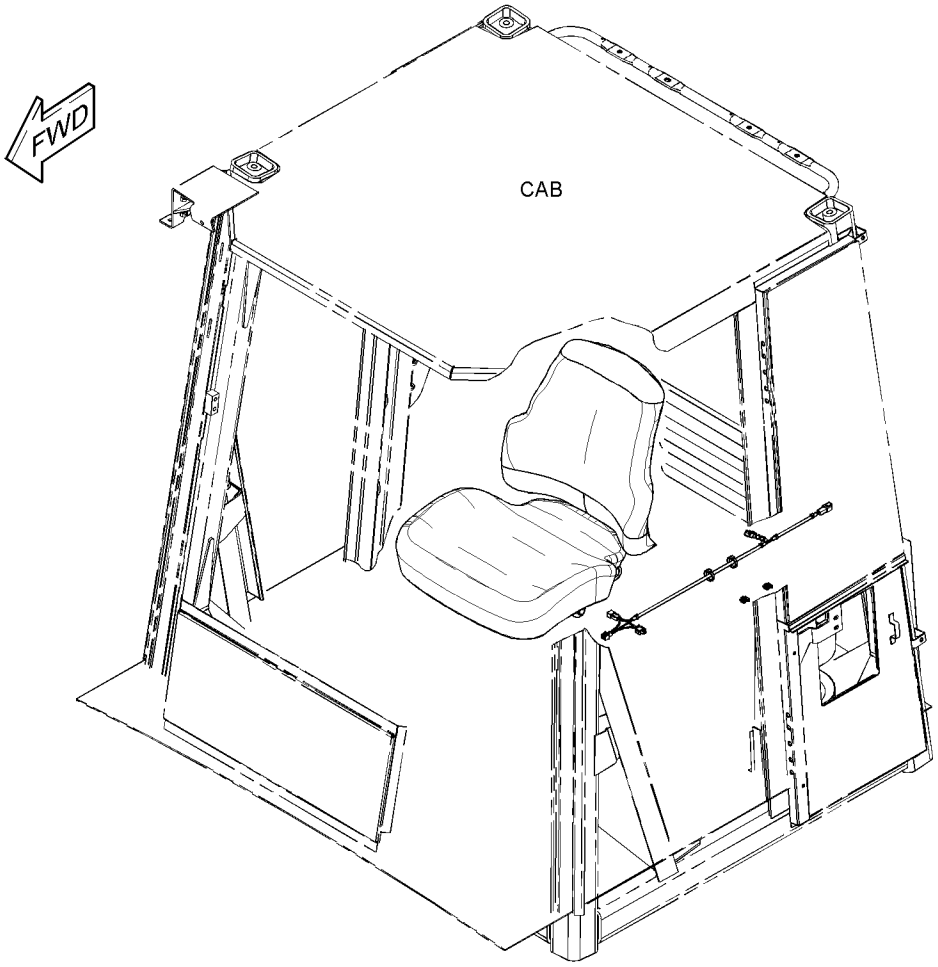

GRAPHIC #1 **<END>** g02132558

194-3315 LATCH GP

S/N: LJR1-UP
PART OF 311-6420 CAB GP
ALSO AN ATTACHMENT
TYPE 1

SMCS-7308 **i03628451**

NOTE	REF NO	GRAPHIC REF	PART NUMBER	QTY	PART NAME 1 2 3 4 5 6 (PRODUCT LEVEL)	SEE PAGE
	1	1	**4M-8799**	2	SPRING	
	2	1	**109-5008**	2	BUMPER-CONICAL	
	3	1	**110-5602**	2	KNOB (LATCH)	
	4	1	**196-3700**	1	LATCH AS (RH) (ROTARY)	
	5	1	**196-3701**	1	LATCH AS (LH) (ROTARY)	
	6	1	**224-8445**	1	LATCH AS (RH)	
	7	1	**224-8446**	1	LATCH AS (LH)	
	8	1	**224-8448**	1	ROD AS (LH)	
	9	1	**224-8449**	1	ROD AS (RH)	
M	10	1	**131-3540**	2	LOCKNUT (M8X1.25-THD)	
M	11	1	**6V-7357**	8	BOLT (M6X1X25-MM)	
	12	1	**8T-4121**	10	WASHER-HARD (11X21X2.5-MM THK)	
M	13	1	**8T-4136**	10	BOLT (M10X1.5X25-MM)	
	14	1	**8T-4205**	8	WASHER-HARD (7.2X14.5X2-MM THK)	
	15	1	**8T-4224**	6	WASHER-HARD (8.8X16X2-MM THK)	
	16	1	**8T-7839**	2	WASHER (SPECIAL)	

M - METRIC PART

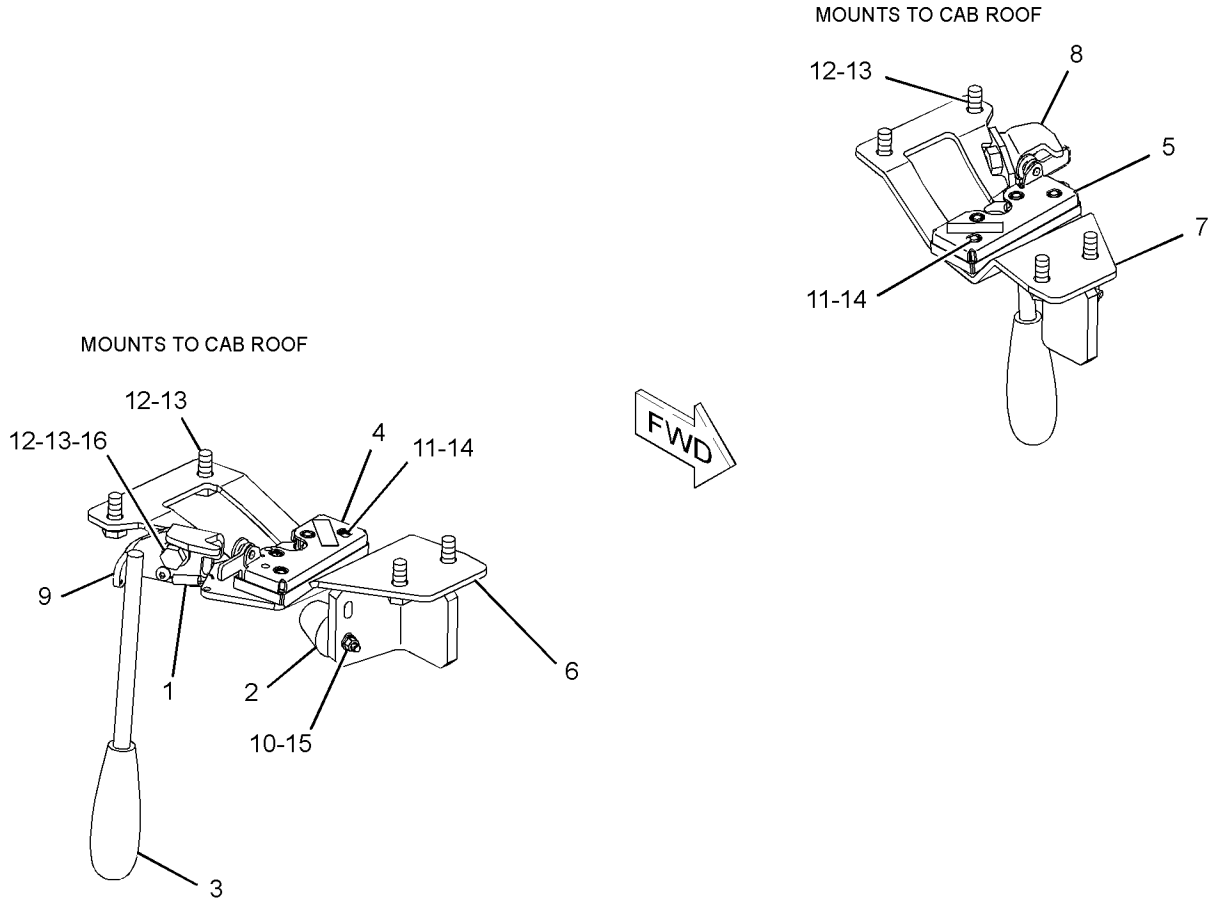

GRAPHIC #1 **<END>** g01882994

194-3315 LATCH GP

S/N: LJR1-UP
PART OF 311-6420 CAB GP
ALSO AN ATTACHMENT
TYPE 2

SMCS-7308 **i03909223**

NOTE	REF NO	GRAPHIC REF	PART NUMBER	QTY	PART NAME 1 2 3 4 5 6 (PRODUCT LEVEL)	SEE PAGE
C	1	1	**5M-9708**	2	SPRING	
	2	1	**8T-7839**	2	WASHER (SPECIAL)	
	3	1	**109-5008**	2	BUMPER-CONICAL	
	4	1	**110-5602**	2	KNOB (LATCH)	
	5	1	**196-3700**	1	LATCH AS (RH) (ROTARY)	
	6	1	**196-3701**	1	LATCH AS (LH) (ROTARY)	
	7	1	**224-8445**	1	LATCH AS (RH)	
	8	1	**224-8446**	1	LATCH AS (LH)	
	9	1	**224-8448**	1	ROD AS (LH)	
	10	1	**224-8449**	1	ROD AS (RH)	
M	11	1	**131-3540**	2	LOCKNUT (M8X1.25-THD)	
M	12	1	**6V-7357**	8	BOLT (M6X1X25-MM)	
	13	1	**8T-4121**	10	WASHER-HARD (11X21X2.5-MM THK)	
M	14	1	**8T-4136**	10	BOLT (M10X1.5X25-MM)	
	15	1	**8T-4205**	8	WASHER-HARD (7.2X14.5X2-MM THK)	
	16	1	**8T-4224**	6	WASHER-HARD (8.8X16X2-MM THK)	

C - CHANGE FROM PREVIOUS TYPE
M - METRIC PART

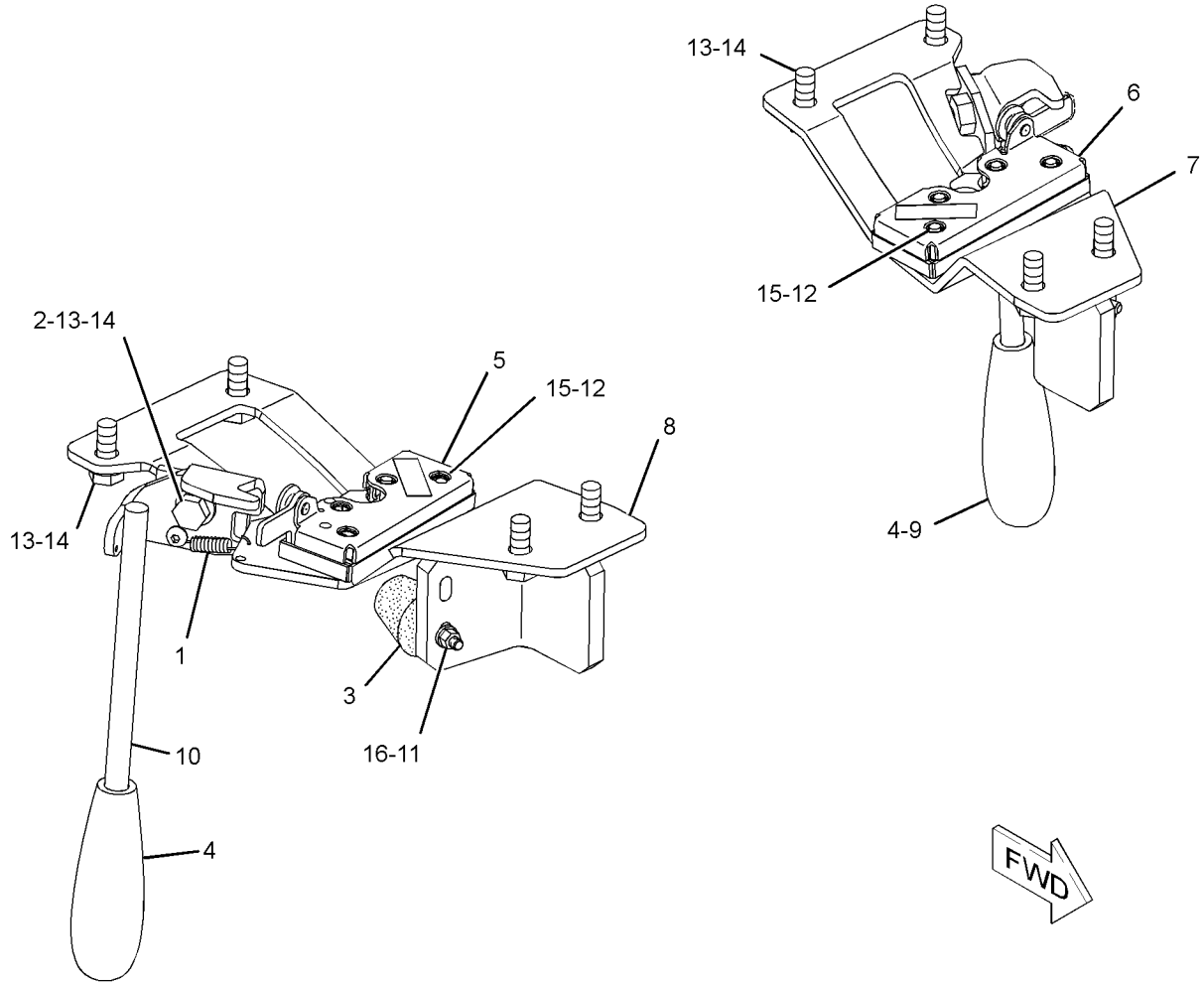

GRAPHIC #1 **<END>** g01905135

311-6407 LINER GP-CAB

S/N: LJR1-UP
PART OF 311-6420 CAB GP
ALSO AN ATTACHMENT

SMCS-7329 **i03628468**

NOTE	REF NO	GRAPHIC REF	PART NUMBER	QTY	PART NAME 1 2 3 4 5 6 (PRODUCT LEVEL)	SEE PAGE
	1	1	**171-9601**	1	LINER-CAB	
	2	1	**171-9603**	1	COVER	
	3	1	**238-3250**	1	HEADLINER AS	
		1	**336-2165**	1	INSULATION	
M		1	**150-4086**	8	SCREW (M4X0.7X16-MM)	
		1	**173-9164**	2	GRILL-SPEAKER	
M	4	1	**9X-2044**	16	SCREW-TRUSS HEAD (M6X1X16-MM)	

M - METRIC PART

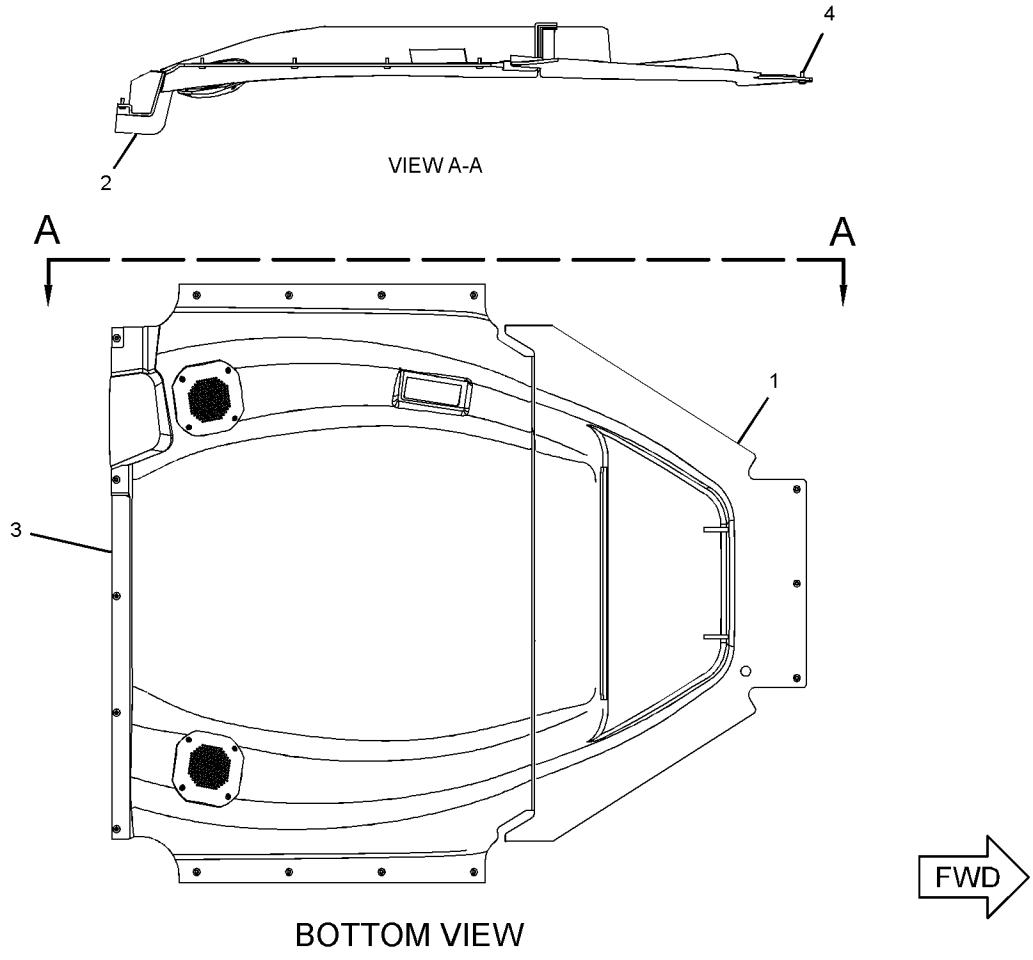

BOTTOM VIEW

GRAPHIC #1 **<END>** g01886133

270-4807 LINES GP-AIR CONDITIONER

S/N: LJR1-UP

PART OF 310-9971 CAB AR

SMCS-1808 **i04701142**

NOTE	REF NO	GRAPHIC REF	PART NUMBER	QTY	PART NAME 1 2 3 4 5 6 (PRODUCT LEVEL)	SEE PAGE
	1	1	**9X-7378**	2	SEAL-O-RING	
	2	1	**110-6393**	1	PLATE-INSTRUCTION (AIR CONDITIONER)	
	3	1	**355-3148**	1	SWITCH AS-PRESSURE (AIR COMPRESSOR HIGH SIDE)	
		1	**102-8802**	1	KIT-RECEPTACLE (2-PIN)	
					(INCLUDES RECEPTACLE AS & WEDGE)	
		1	**8T-8729**	2	PIN-CONNECTOR (16-GA TO 18-GA)	
	4	1	**149-6371**	1	SWITCH AS-PRESSURE (AIR COMPRESSOR LOW SIDE)	
		1	**102-8802**	1	KIT-RECEPTACLE (2-PIN)	
					(INLCUDES RECEPTACLE AS & WEDGE)	
		1	**186-3735**	2	PIN-CONNECTOR (16-GA TO 18-GA)	
	6	1	**203-3847**	1	BRACKET AS	
M		1	**170-7491**	1	STUD-WELD (M10X1.5X35-MM)	
	8	1	**240-7193**	1	RESISTOR AS (500-OHM, 2-WATT)	
		1	**102-8802**	1	KIT-RECEPTACLE (2-PIN)	
					(INCLUDES RECEPTACLE AS & WEDGE)	
		1	**9X-3401**	2	PIN-CONNECTOR (16-GA TO 18-GA)	
	9	1	**270-3233**	1	TUBE AS	
	10	1	**286-3689**	1	FITTING AS-AIR CONDITIONER (HIGH PRESSURE)	
	11	1	**1B-3057**	2	CLIP	
	12	1	**1P-6356**	1	PLATE	
	13	1	**320-4868**	1	FITTING AS-AIR CONDITIONER (LOW PRESSURE)	
		1	**180-7180**	1	CORE-VALVE	
		1	**221-2389**	1	CAP-SEAL	
	14	1	**4B-0418**	1	CLIP	
	15	1	**6D-4244**	3	CLIP	
	16	1	**8T-4121**	4	WASHER-HARD (11X21X2.5-MM THK)	
M	17	1	**8T-4133**	2	NUT (M10X1.5-THD)	
M	18	1	**8T-4137**	1	BOLT (M10X1.5X20-MM)	
M	19	1	**8T-6466**	1	BOLT (M10X1.5X60-MM)	
	20	1	**8T-7934**	2	WASHER-HARD (11X21X5-MM THK)	
	21	1	**9X-7381**	1	SEAL-O-RING	
	22	1	**9X-7382**	1	SEAL-O-RING	
	23	1	**9X-7385**	2	SEAL-O-RING	
M	24	1	**8T-4186**	1	BOLT (M10X1.5X40-MM)	
	25	1	**200-6345**	1	MOUNT (DUAL SWIVEL)	
	26	1	**7K-1181**	2	STRAP-CABLE	

M - METRIC PART

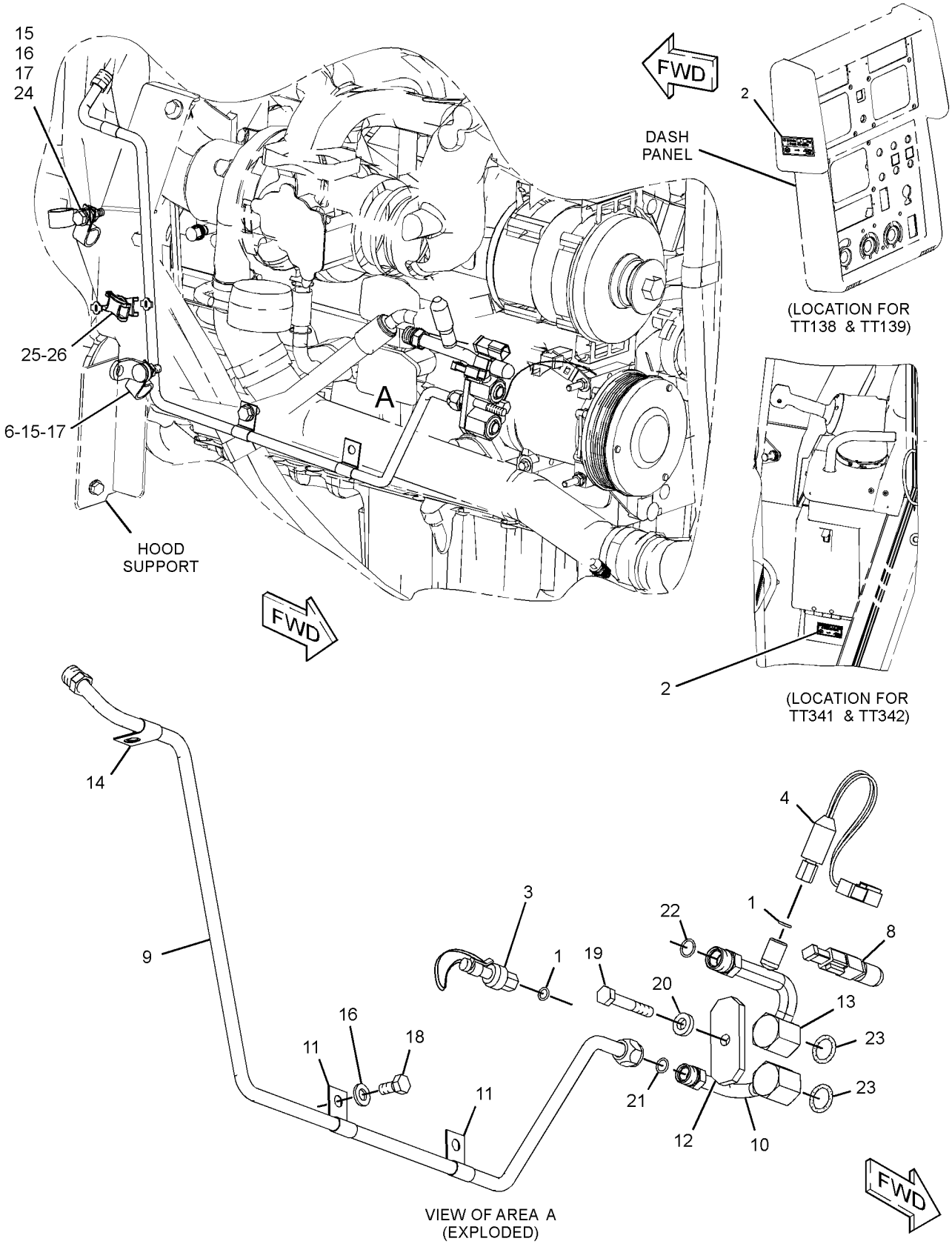

GRAPHIC #1

<END>

g02221393

331-5406 LINES GP-AIR CONDITIONER

S/N: LJR1-UP

PART OF 311-6384 AIR CONDITIONER GP

ALSO AN ATTACHMENT

SMCS-1808 **i03627539**

NOTE	REF NO	GRAPHIC REF	PART NUMBER	QTY	PART NAME 1 2 3 4 5 6 (PRODUCT LEVEL)	SEE PAGE
	1	2	**3S-2093**	3	STRAP-CABLE	
	2	1	**5P-3929**	1	COUPLING AS-REFRIGERANT (SELF-SEALING)	
		1	**8F-9206**	1	SEAL-O-RING	
		1	**107-4397**	1	VALVE AS	
	3	1	**5P-3948**	1	COUPLING AS-REFRIGERANT (SELF-SEALING)	
		1	**7F-8607**	1	SEAL-O-RING	
		1	**107-4399**	1	VALVE AS	
	4	1	**5P-4106**	1	NUT (1-7/16-16-THD)	
	5	1	**7K-3304**	1	NUT-JAM (1-20-THD)	
	6	2	**7T-8894**	1	GROMMET	
	7	2	**7T-8895**	1	GROMMET	
	8	1	**7T-9426**	1	GROMMET	
	9	1	**7T-9793**	1	VALVE-CHECK	
	10	1	**8C-5682**	1	TEE	
I	11	1	**175-7656**	1	HOSE AS	
I	12	1	**175-7657**	1	HOSE AS	
	13	2	**221-5165**	1	TUBE AS	
	14	1	**257-3227**	1	DRYER AS-REFRIGERANT	
I	15	1	**270-3230**	1	HOSE AS	
I	16	1	**270-3231**	1	HOSE AS	
	17	1,2	**274-5909**	1	ACCUMULATOR-REFRIGERANT	
	18	2	**286-0111**	1	TUBE AS	
	19	1	**309-1489**	1	TUBE AS	
I	20	2	**309-1490**	1	HOSE AS	
I	21	2	**309-1492**	1	HOSE AS	
	22	1	**320-1168**	1	PLATE	
	23	2	**331-5407**	1	TUBE AS	
	24	1	**099-3001**	1	CLIP	
	25	1	**109-1633**	1	CLIP (SLOT)	
	26	1	**109-1634**	1	CLIP (TAB)	
	27	1	**4D-9517**	3	CLIP	
	28	2	**4M-5942**	3	CLIP	
M	29	1	**5C-9553**	2	BOLT (M6X1X16-MM)	
	30	1	**5P-3928**	1	COUPLING AS-REFRIGERANT (SELF-SEALING)	
		1	**107-4395**	1	VALVE AS	
		1	**107-4396**	1	GASKET	
	31	1	**5P-4115**	2	WASHER-HARD (7.2X19X2-MM THK)	
	32	1	**5P-9297**	3	CLIP	
	33	1	**6D-1641**	2	CLIP	
	34	1,2	**6V-6782**	1	CLIP (SLOT)	
	35	2	**6V-6783**	1	CLIP (TAB)	
	36	1	**7K-3176**	1	COUPLING AS-REFRIGERANT (SELF-SEALING)	
		1	**107-4393**	1	VALVE AS	
		1	**107-4394**	1	GASKET	
	37	1,2	**7X-7729**	5	WASHER (11X25X3-MM THK)	
	38	1,2	**8T-4121**	8	WASHER-HARD (11X21X2.5-MM THK)	
M	39	1,2	**8T-4136**	5	BOLT (M10X1.5X25-MM)	
M	40	1,2	**8T-4137**	5	BOLT (M10X1.5X20-MM)	
M	41	1	**8T-4139**	1	BOLT (M12X1.75X30-MM)	
M	42	1	**8T-4191**	2	BOLT (M10X1.5X16-MM)	
M	43	1	**8T-4195**	1	BOLT (M10X1.5X30-MM)	
	44	1	**8T-4223**	1	WASHER-HARD (13.5X25.5X3-MM THK)	
	45	1	**8T-7934**	1	WASHER-HARD (11X21X5-MM THK)	
	46	1	**9M-8406**	1	CLIP	
	47	2	**9S-1310**	5	CLIP	
	48	1,2	**9X-7380**	4	SEAL-O-RING	
	49	1,2	**9X-7381**	4	SEAL-O-RING	

331-5406 **LINES GP-AIR CONDITIONER (*contd.*)** **i03627539**

NOTE	REF NO	GRAPHIC REF	PART NUMBER	QTY	PART NAME 1 2 3 4 5 6 (PRODUCT LEVEL)	SEE PAGE
	50	2	**9X-7382**	1	SEAL-O-RING	
	51	1,2	**9X-7383**	4	SEAL-O-RING	
	52	1	**9X-7384**	2	SEAL-O-RING	
	53	1	**9X-8250**	1	CLIP	
E	54	1	**7X-7702**		CONDUIT-FLEXIBLE (23.35-MM ID, SPLIT) (101-CM)	
E	54A	1	**7X-7702**		CONDUIT-FLEXIBLE (23.35-MM ID, SPLIT) (99-CM)	
E	55	1	**223-0118**		SEAL (10-CM)	
D	56	1	**5P-6129**		TUBE (0.5-M)	
D	56A	1	**5P-6129**		TUBE (0.3-M EACH)	

D - ORDER BY THE METER
E - ORDER BY THE CENTIMETER
I - REFER TO HYDRAULIC INFORMATION SYSTEM
M - METRIC PART

331-5406 **LINES GP-AIR CONDITIONER (*contd.*)** **i03627539**

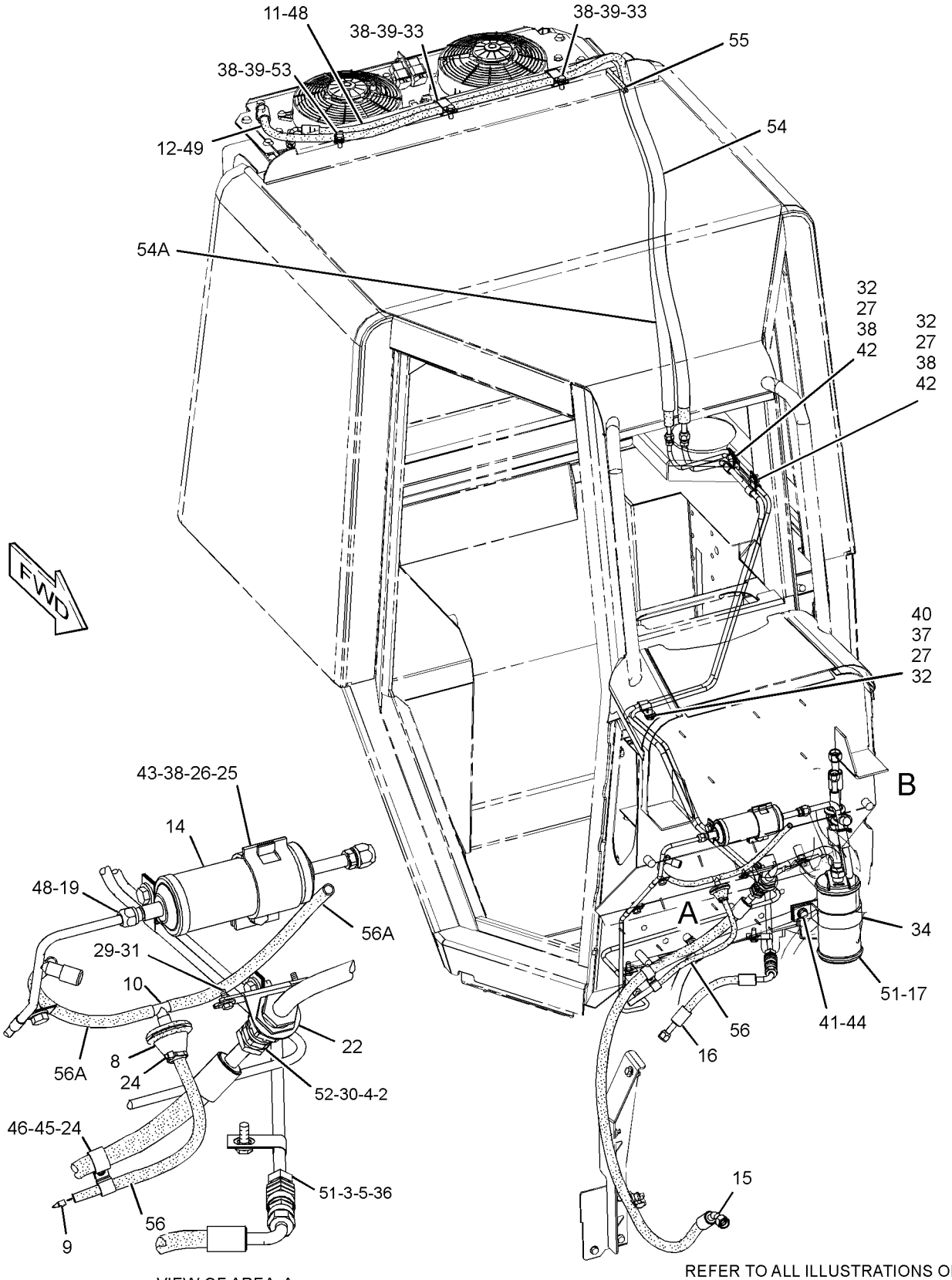

GRAPHIC #1

g01905957

331-5406 **LINES GP-AIR CONDITIONER (*contd.*)** **i03627539**

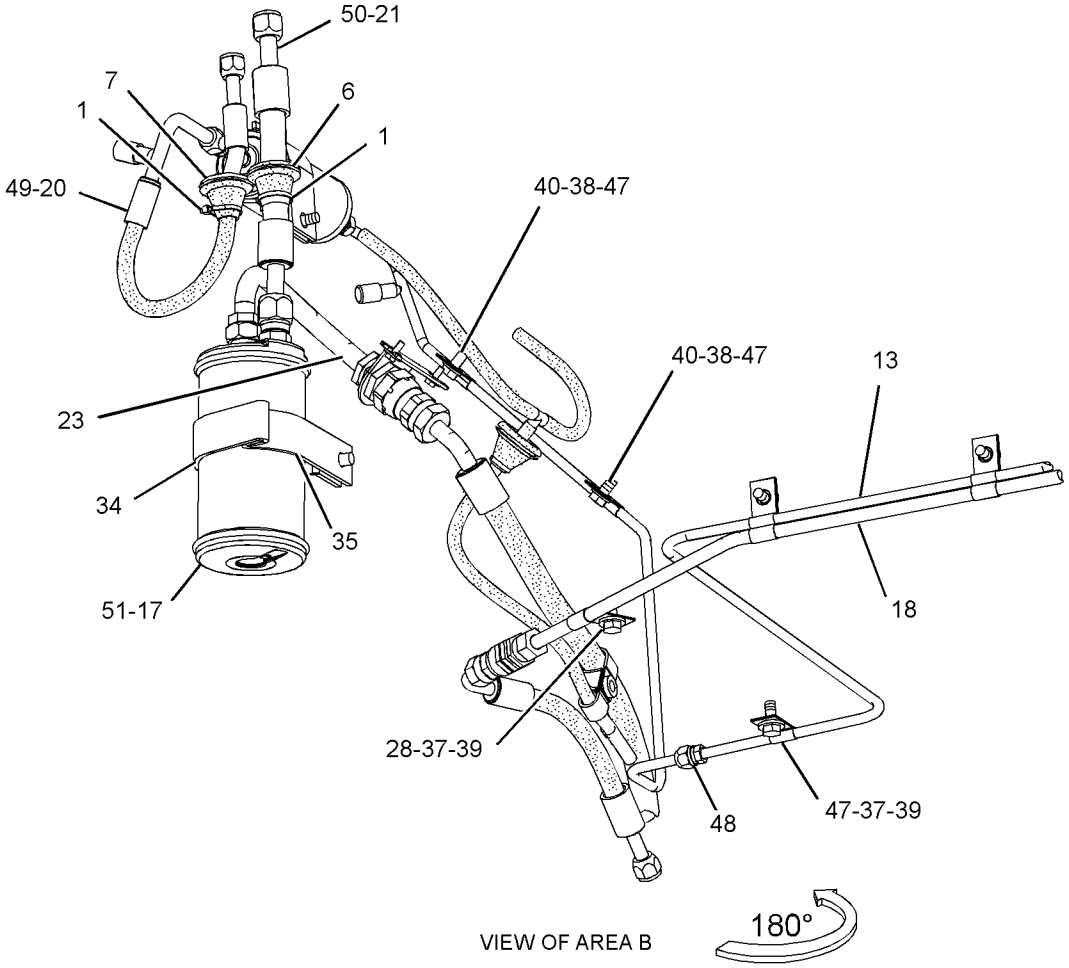

GRAPHIC #2 **<END>** g01905958

8E-8706 MIRROR GP-REAR VIEW

S/N: LJR1-UP
PART OF 311-6420 CAB GP
ALSO AN ATTACHMENT

SMCS-7319 **i01895760**

NOTE	REF NO	GRAPHIC REF	PART NUMBER	QTY	PART NAME 1 2 3 4 5 6 (PRODUCT LEVEL)	SEE PAGE
	1	1	**9P-9388**	1	KNOB (MIRROR)	
	2	1	**5P-6874**	1	MIRROR (REAR VIEW)	
	3	1	**5K-9179**	1	BOLT-ROUND HEAD (3/8-16X11-IN)	

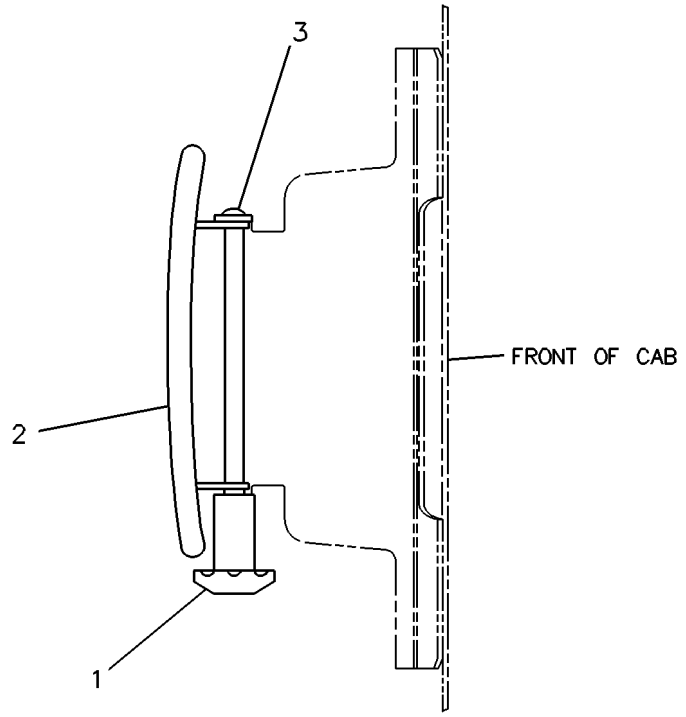

GRAPHIC #1 **<END>** g00223660

304-4505 MOTOR GP-WINDOW WIPER–DOOR, RH

S/N: LJR1-UP
PART OF 167-1451 DOOR GP-CAB
ALSO AN ATTACHMENT

SMCS-7305 **i02822174**

NOTE	REF NO	GRAPHIC REF	PART NUMBER	QTY	PART NAME 1 2 3 4 5 6 (PRODUCT LEVEL)	SEE PAGE
	1	1	**102-8805**	1	KIT-RECEPTACLE (6-PIN)	
					(INCLUDES RECEPTACLE AS & WEDGE)	
	2	1	**263-3823**	1	CAP-WIPER	
	3	1	**3F-9556**	1	LOCKWASHER	
M	4	1	**5C-7261**	1	NUT (M8X1.25-THD)	
	5	1	**186-3735**	5	PIN-CONNECTOR (16-GA TO 18-GA)	
	6	1	**8T-8737**	1	PLUG-SEAL	

M - METRIC PART

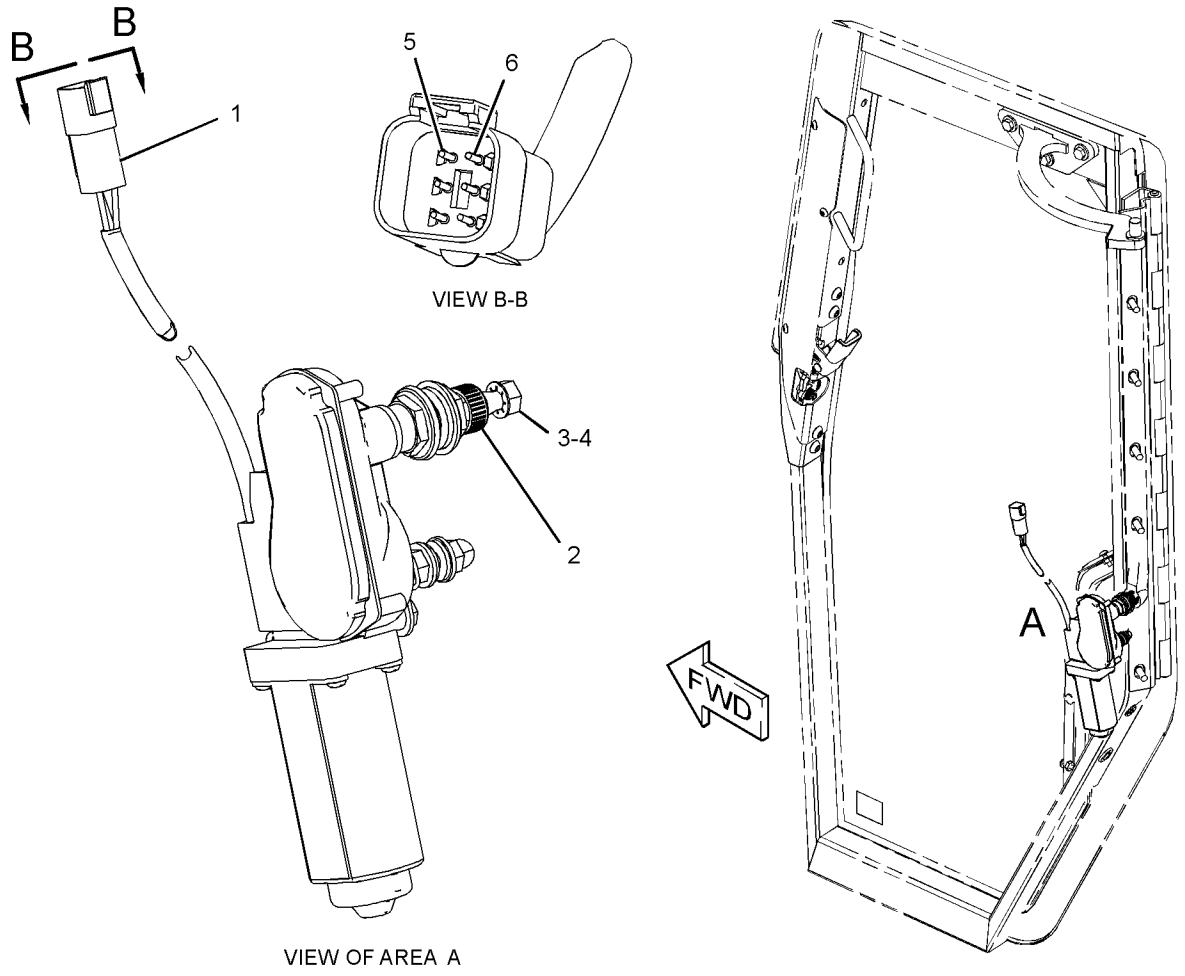

GRAPHIC #1 **<END>** g01443612

304-4506 MOTOR GP-WINDOW WIPER—DOOR, LH

S/N: LJR1-UP
PART OF 167-1453 DOOR GP-CAB
ALSO AN ATTACHMENT

SMCS-7305 **i02793564**

NOTE	REF NO	GRAPHIC REF	PART NUMBER	QTY	PART NAME 1 2 3 4 5 6 (PRODUCT LEVEL)	SEE PAGE
	1	1	**102-8805**	1	KIT-RECEPTACLE (6-PIN)	
					(INCLUDES RECEPTACLE AS & WEDGE)	
	2	1	**263-3823**	1	CAP-WIPER	
	3	1	**3F-9556**	1	LOCKWASHER	
M	4	1	**5C-7261**	1	NUT (M8X1.25-THD)	
	5	1	**186-3735**	5	PIN-CONNECTOR (16-GA TO 18-GA)	
	6	1	**8T-8737**	1	PLUG-SEAL	

M - METRIC PART

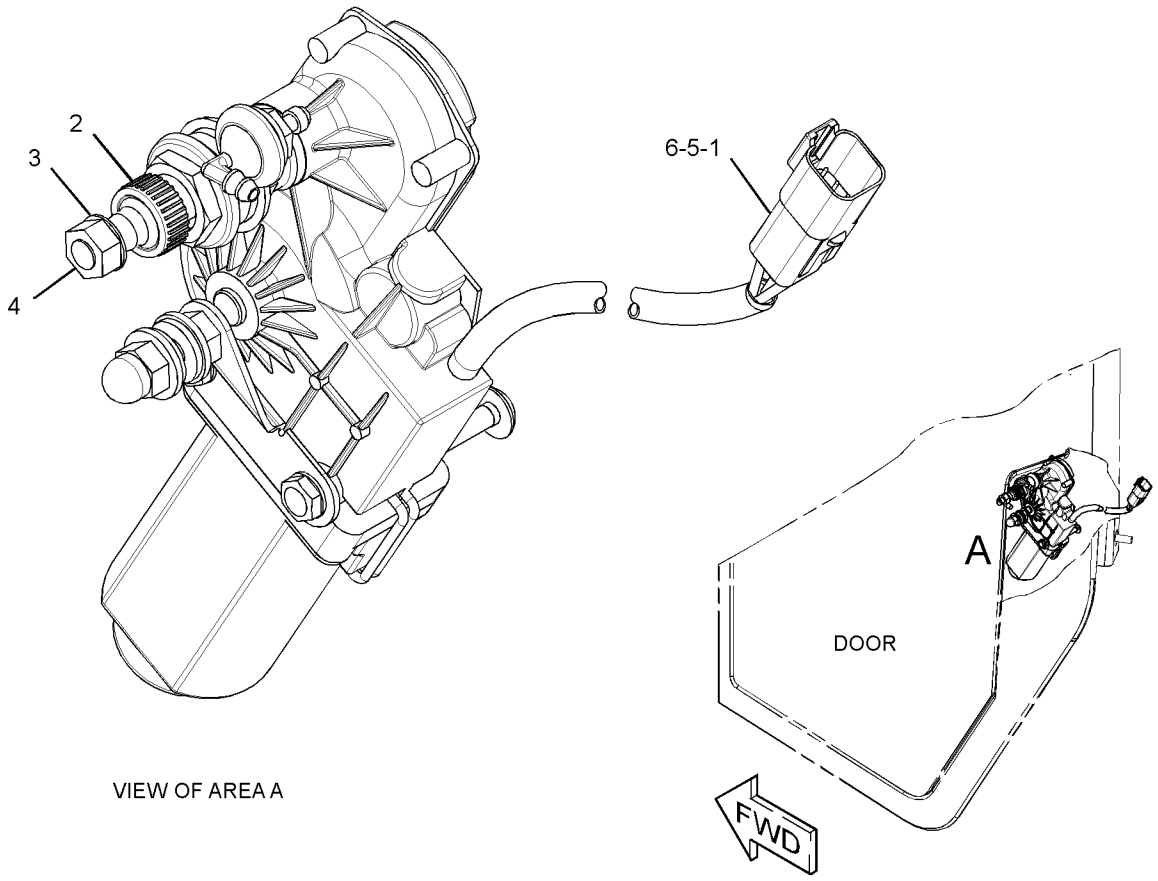

VIEW OF AREA A

GRAPHIC #1 **<END>** g01397032

322-1492 MOTOR GP-WINDOW WIPER

S/N: LJR1-UP
PART OF 311-6408 WIPER GP-WINDOW
ALSO AN ATTACHMENT

SMCS-7305 **i03628474**

NOTE	REF NO	GRAPHIC REF	PART NUMBER	QTY	PART NAME 1 2 3 4 5 6 (PRODUCT LEVEL)	SEE PAGE
	1	1	**102-8805**	1	KIT-RECEPTACLE (6-PIN)	
					(INCLUDES RECEPTACLE AS & WEDGE)	
	2	1	**263-3823**	1	CAP-WIPER	
	3	1	**3F-9556**	1	LOCKWASHER	
M	4	1	**5C-7261**	1	NUT (M8X1.25-THD)	
	5	1	**186-3735**	5	PIN-CONNECTOR (16-GA TO 18-GA)	
	6	1	**8T-8737**	1	PLUG-SEAL	

M - METRIC PART

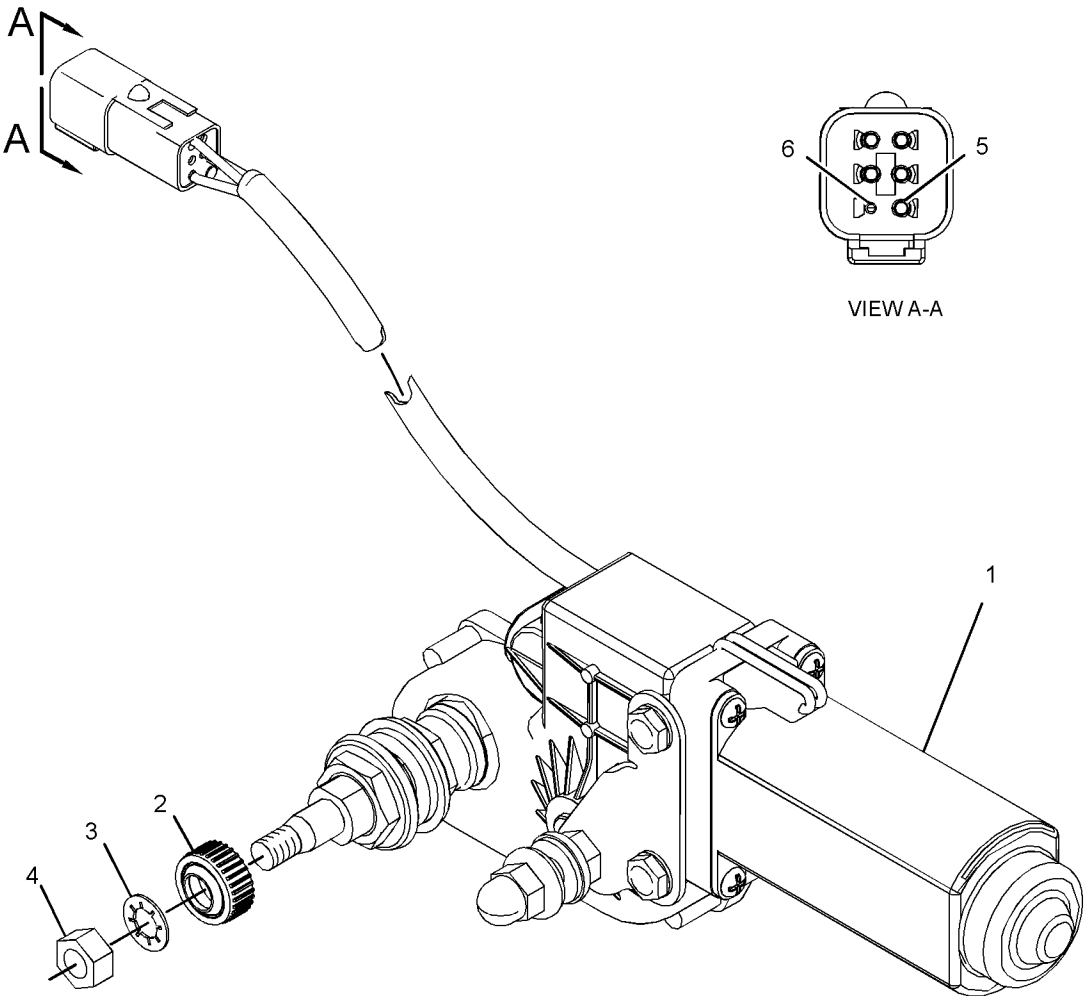

GRAPHIC #1 **<END>** g01887609

322-1494 MOTOR GP-WINDOW WIPER–REAR

S/N: LJR1-UP
PART OF 311-6408 WIPER GP-WINDOW
ALSO AN ATTACHMENT

SMCS-7305 **i03628475**

NOTE	REF NO	GRAPHIC REF	PART NUMBER	QTY	PART NAME 1 2 3 4 5 6 (PRODUCT LEVEL)	SEE PAGE
	1	1	**102-8805**	1	KIT-RECEPTACLE (6-PIN)	
					(INCLUDES RECEPTACLE AS & WEDGE)	
	2	1	**263-3823**	1	CAP-WIPER	
	3	1	**3F-9556**	1	LOCKWASHER	
M	4	1	**5C-7261**	1	NUT (M8X1.25-THD)	
	5	1	**186-3735**	5	PIN-CONNECTOR (16-GA TO 18-GA)	
	6	1	**8T-8737**	1	PLUG-SEAL	

M - METRIC PART

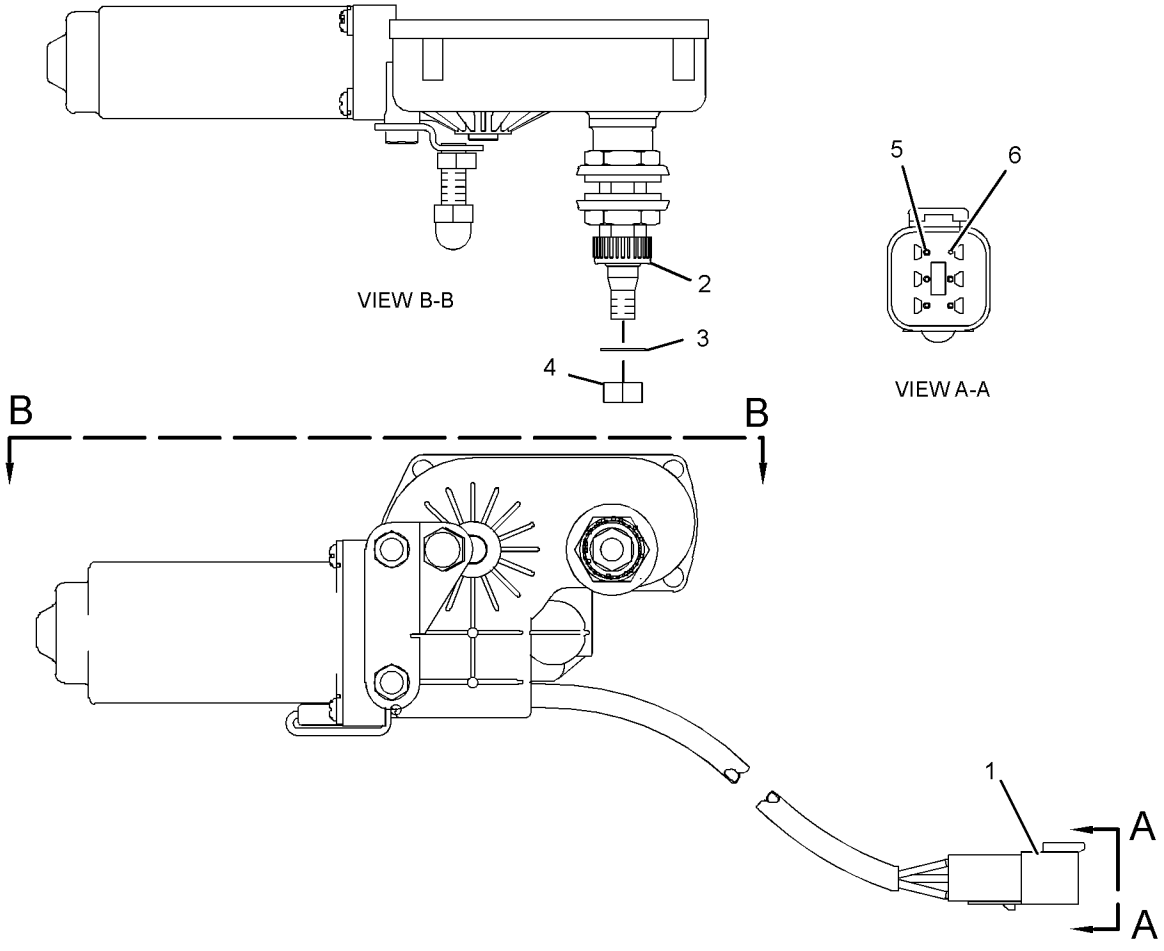

GRAPHIC #1 **<END>** g01887653

OPERATOR STATION

156-8915 MOUNTING GP-CAB

S/N: LJR1-UP

PART OF 310-9971 CAB AR

SMCS-7266, 7301 **i02789958**

NOTE	REF NO	GRAPHIC REF	PART NUMBER	QTY	PART NAME 1 2 3 4 5 6 (PRODUCT LEVEL)	SEE PAGE
C	1	1	**9W-9027**	4	PLATE	
	2	1	**117-8131**	8	MOUNT AS	
	3	1	**171-2133**	4	SLEEVE	
	4	1	**188-1845**	1	COVER	
	5	1	**212-4023**	1	SUPPORT AS (FOOT)	
	6	1	**212-4024**	1	SUPPORT AS (FOOT)	
M	7	1	**8C-8478**	4	BOLT (M20X2.5X140-MM)	
	8	1	**8T-4123**	4	WASHER (22X35X3.5-MM THK)	
M	9	1	**8T-4136**	2	BOLT (M10X1.5X25-MM)	
M	10	1	**8T-4137**	4	BOLT (M10X1.5X20-MM)	
	11	1	**8T-4222**	6	WASHER-PLATED (11X32X2.5-MM THK)	

C - CHANGE FROM PREVIOUS TYPE
M - METRIC PART

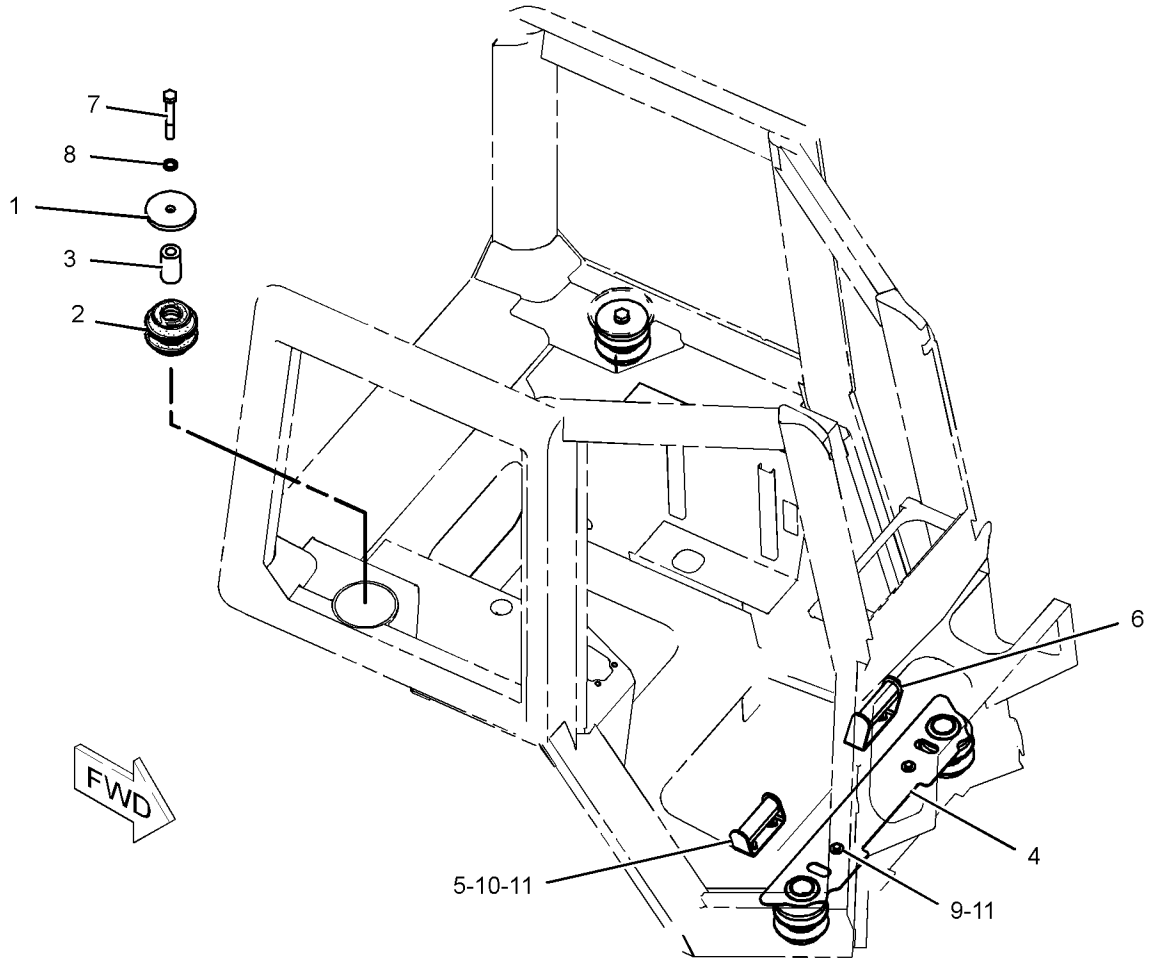

GRAPHIC #1 **<END>** g01234221

331-5408 MOUNTING GP-LINES

S/N: LJR1-UP

PART OF 310-9971 CAB AR

SMCS-1812 **i03628528**

NOTE	REF NO	GRAPHIC REF	PART NUMBER	QTY	PART NAME 1 2 3 4 5 6 (PRODUCT LEVEL)	SEE PAGE
	1	1	**3S-2093**	2	STRAP-CABLE	
	2	1	**7K-1181**	2	STRAP-CABLE	
	3	1	**8T-0154**	3	CLAMP-HOSE	
	4	1	**200-6345**	1	MOUNT (DUAL SWIVEL)	
	5	1	**5P-4116**	1	WASHER-HARD (8.8X20.5X2-MM THK)	
	6	1	**6V-1228**	3	CLIP	
	7	1	**8T-4121**	1	WASHER-HARD (11X21X2.5-MM THK)	
M	8	1	**8T-4136**	1	BOLT (M10X1.5X25-MM)	
M	9	1	**8T-4200**	1	BOLT (M8X1.25X16-MM)	
	10	1	**9X-8250**	2	CLIP	
E	11	1	**7X-7702**		CONDUIT-FLEXIBLE (23.35-MM ID, SPLIT) (13-CM)	
E	12	1	**5P-0767**		HOSE (143-CM)	

E - ORDER BY THE CENTIMETER
M - METRIC PART

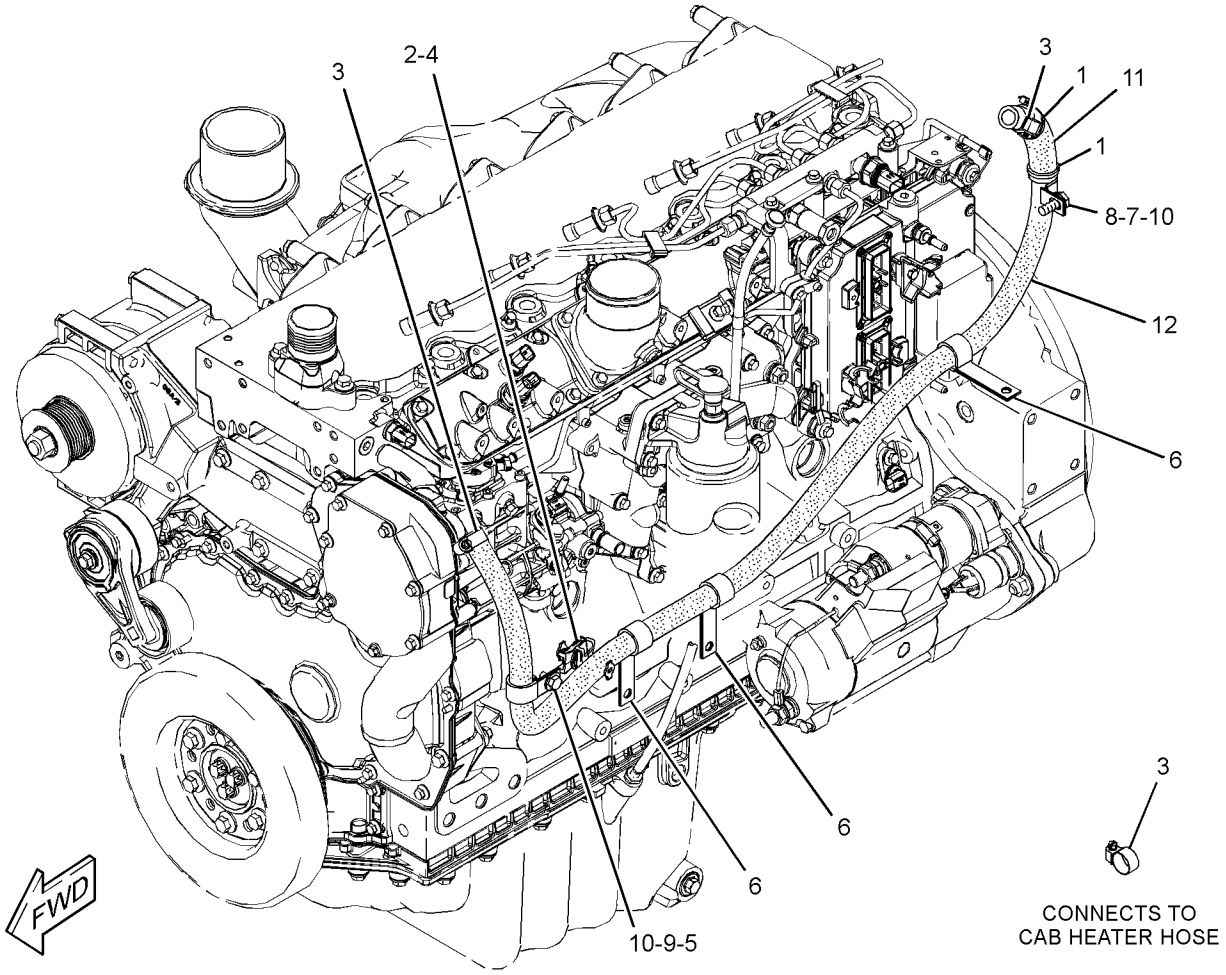

GRAPHIC #1 **<END>** g01949458

320-1160 MOUNTING GP-PLATFORM

S/N: LJR1-UP
PART OF 320-1082 CANOPY AR
AN ATTACHMENT

SMCS-7253 **i05160291**

NOTE	REF NO	GRAPHIC REF	PART NUMBER	QTY	PART NAME 1 2 3 4 5 6 (PRODUCT LEVEL)	SEE PAGE
	1	1	**4B-4276**	4	WASHER (7X16X1.6-MM THK)	
	2	1	**7G-4823**	1	STRAP	
	3	1	**7G-4824**	1	STRAP	
Y	4	1	**158-6632**	1	SWITCH GP-PUSH BUTTON (HORN)	220
	5	1	**224-7717**	1	FILM-WARNING (SEAT BELT, U.S.)	
	6	1	**225-3305**	1	FILM-WARNING (UNIVERSAL, READ OMM)	
	7	1	**237-2816**	1	PLATE	
	8	1	**240-0488**	1	ARMREST	
	9	1	**243-3125**	1	PAD AS	
M		1	**8T-3612**	2	NUT-WELD (M8X1.25-THD)	
	10	1	**243-3126**	1	BRACKET	
	11	1	**252-7229**	1	PLATE	
	12	1	**294-0856**	1	RETAINER AS	
M	13	1	**127-2170**	4	SCREW-TRUSS HEAD (M8X1.25X20-MM)	
	14	1	**2D-6235**	2	LOCKNUT (1/4-20-THD)	
	15	1	**323-2867**	1	FILM-INSTRUCTION (BULLDOZER CONTROL)	
	16	1	**5P-4115**	4	WASHER-HARD (7.2X19X2-MM THK)	
M	17	1	**7X-2488**	2	BOLT (M20X2.5X160-MM)	
M	18	1	**7X-2566**	2	BOLT (M20X2.5X110-MM)	
	19	1	**7X-7729**	6	WASHER (11X25X3-MM THK)	
M	20	1	**8C-3210**	4	BOLT (M6X1X16-MM)	
	21	1	**8T-4121**	2	WASHER-HARD (11X21X2.5-MM THK)	
	22	1	**8T-4123**	4	WASHER (22X35X3.5-MM THK)	
M	23	1	**8T-4137**	6	BOLT (M10X1.5X20-MM)	
M	24	1	**8T-4185**	2	BOLT (M10X1.5X50-MM)	
M	25	1	**8T-4189**	2	BOLT (M8X1.25X20-MM)	
	26	1	**8T-4224**	2	WASHER-HARD (8.8X16X2-MM THK)	
E	27	1	**124-3243**		SEAL (85-CM EACH)	
E	28	1	**140-1320**		SEAL (110-CM)	
	29	1	**219-0305**	1	FILM-WARNING (NO WELD, NO DRILL, READ OMM)	
	30	1	**227-4468**	1	CORNER (RH)	
	31	1	**227-4469**	1	CORNER (LH)	
	32	1	**241-2842**	1	FILM-WARNING (ROPS, FOPS, READ OMM)	

E - ORDER BY THE CENTIMETER
M - METRIC PART
Y - SEPARATE ILLUSTRATION

320-1160 **MOUNTING GP-PLATFORM (*contd.*)** **i05160291**

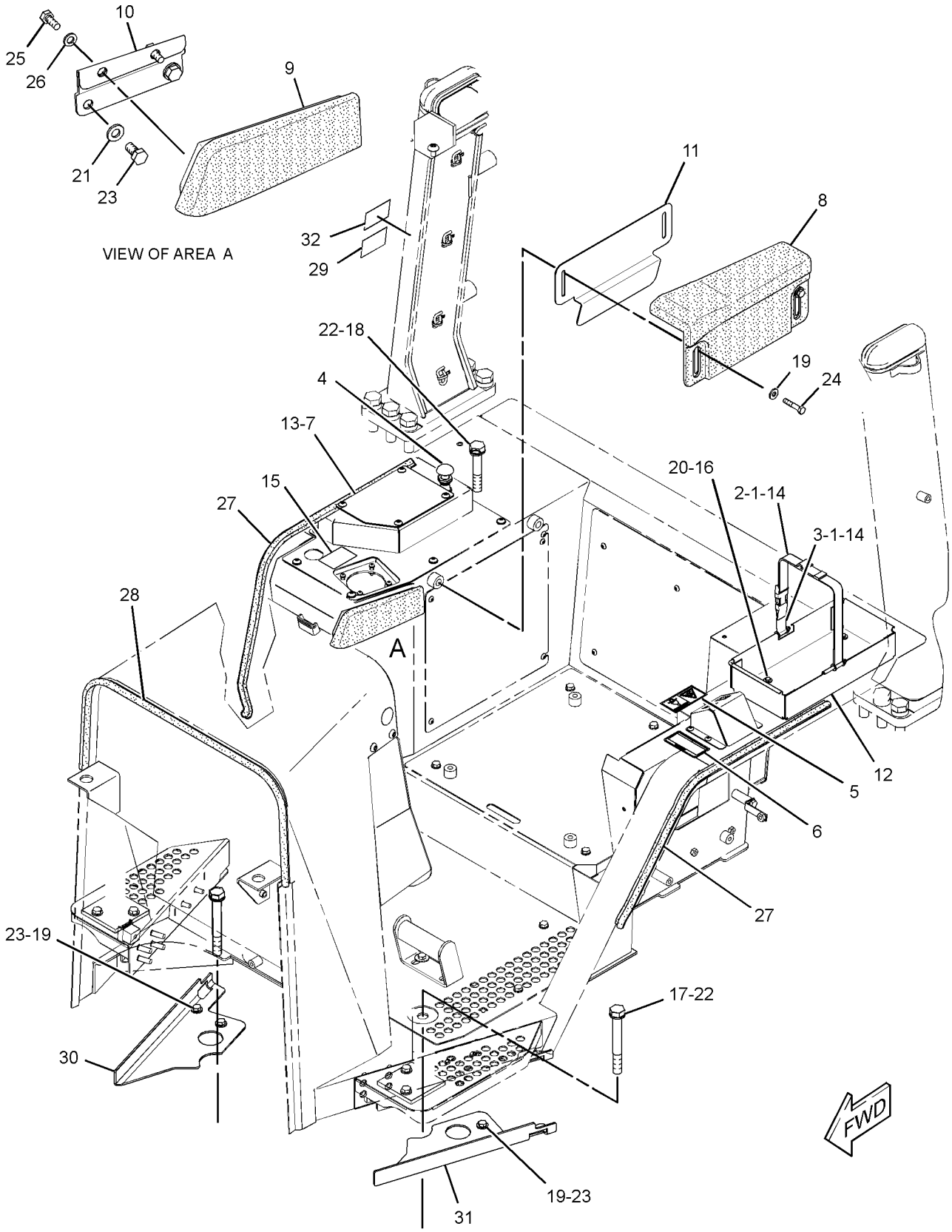

GRAPHIC #1

<END>

g03096737

271-6175 MOUNTING GP-ROPS

S/N: LJR1-UP

PART OF 315-2948 CHASSIS AR

SMCS-7266 **i03628538**

NOTE	REF NO	GRAPHIC REF	PART NUMBER	QTY	PART NAME 1 2 3 4 5 6 (PRODUCT LEVEL)	SEE PAGE
	1	1	**8T-7038**	2	FILM-WARNING (DO NOT LIFT)	
	2	1	**193-6931**	1	SUPPORT AS (RH)	
	3	1	**193-6939**	1	PLATE	
	4	1	**193-6940**	1	SUPPORT AS (LH)	
	5	1	**271-6176**	1	PLATE	
M	6	1	**7X-2454**	20	BOLT (M24X3X110-MM)	
	7	1	**8T-4167**	20	WASHER-HARD (26X44X4-MM THK)	

M - METRIC PART

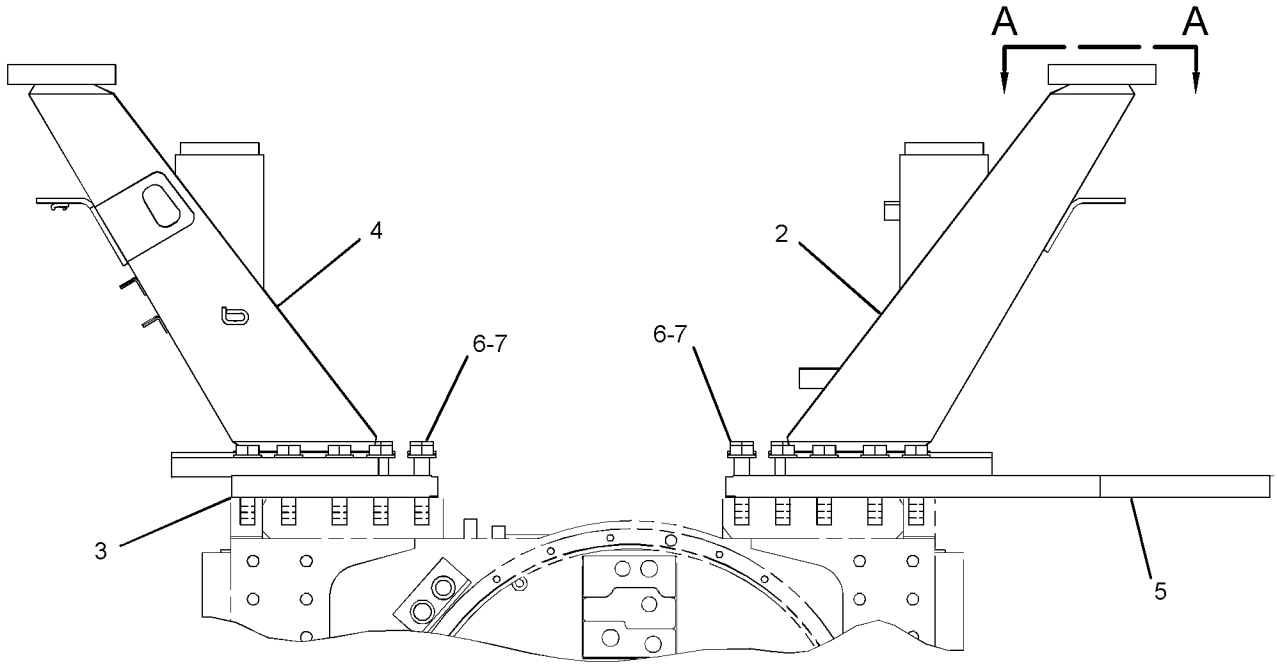

REAR VIEW

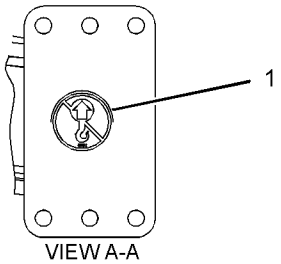

VIEW A-A

GRAPHIC #1 **<END>** g01900594

292-6402 PAN GP-BACKREST–LUMBAR

S/N: LJR1-UP

PART OF 292-9237, 292-9238 PAN GP-BACKREST, 318-7095 SEAT GP

ALSO AN ATTACHMENT

SMCS-7312 **i03095782**

NOTE	REF NO	GRAPHIC REF	PART NUMBER	QTY	PART NAME 1 2 3 4 5 6 (PRODUCT LEVEL)	SEE PAGE
	1	1	**5P-7957**	1	LANYARD	
	2	1	**136-1543**	1	PLATE AS-LUMBAR	
	3	1	**173-2052**	1	RETAINER	
	4	1	**178-7907**	1	HOLDER	
	5	1	**261-5694**	1	PAN AS-BACKREST	
	6	1	**322-3161**	1	SPRING	
	7	1	**4K-9429**	8	RIVET-POP	

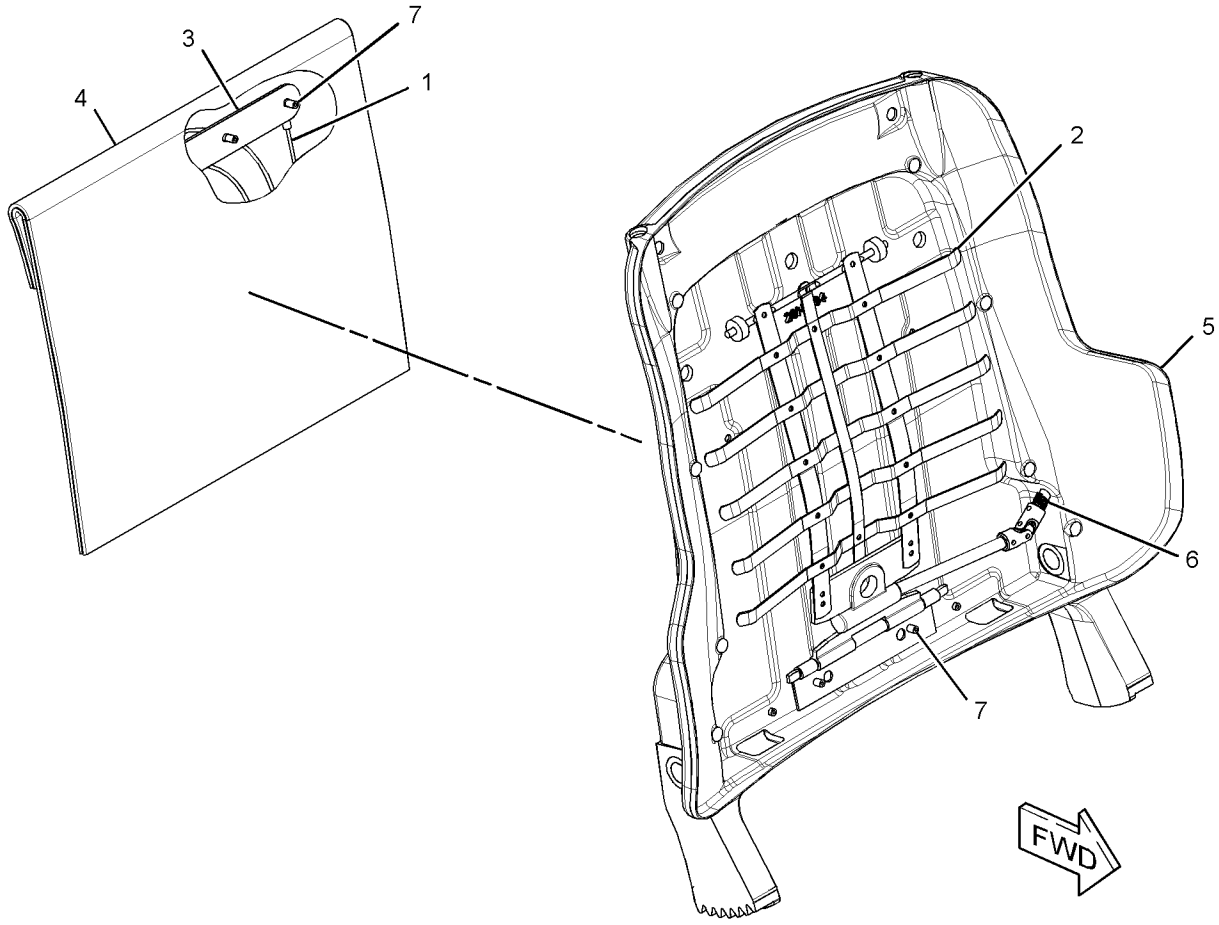

GRAPHIC #1 **<END>** g01577333

292-9237 PAN GP-BACKREST–CLOTH

S/N: LJR1-UP

PART OF 178-0603 SEAT GP

SMCS-7312 **i03093580**

NOTE	REF NO	GRAPHIC REF	PART NUMBER	QTY	PART NAME 1 2 3 4 5 6 (PRODUCT LEVEL)	SEE PAGE
	1	1	**164-4883**	1	KNOB-LUMBAR	
	2	1	**250-4628**	3	PLUG	
	3	1	**292-6097**	1	CUSHION AS-BACK	
Y	4	1	**292-6402**	1	PAN GP-BACKREST (LUMBAR)	665
	5	1	**5P-0537**	2	WASHER-HARD (7.2X14.5X2-MM THK)	
	6	1	**6V-8969**	2	SCREW-BUTTON HEAD (1/4-20X0.5-IN)	
	7	1	**8T-7566**	1	PIN-SPRING	

Y - SEPARATE ILLUSTRATION

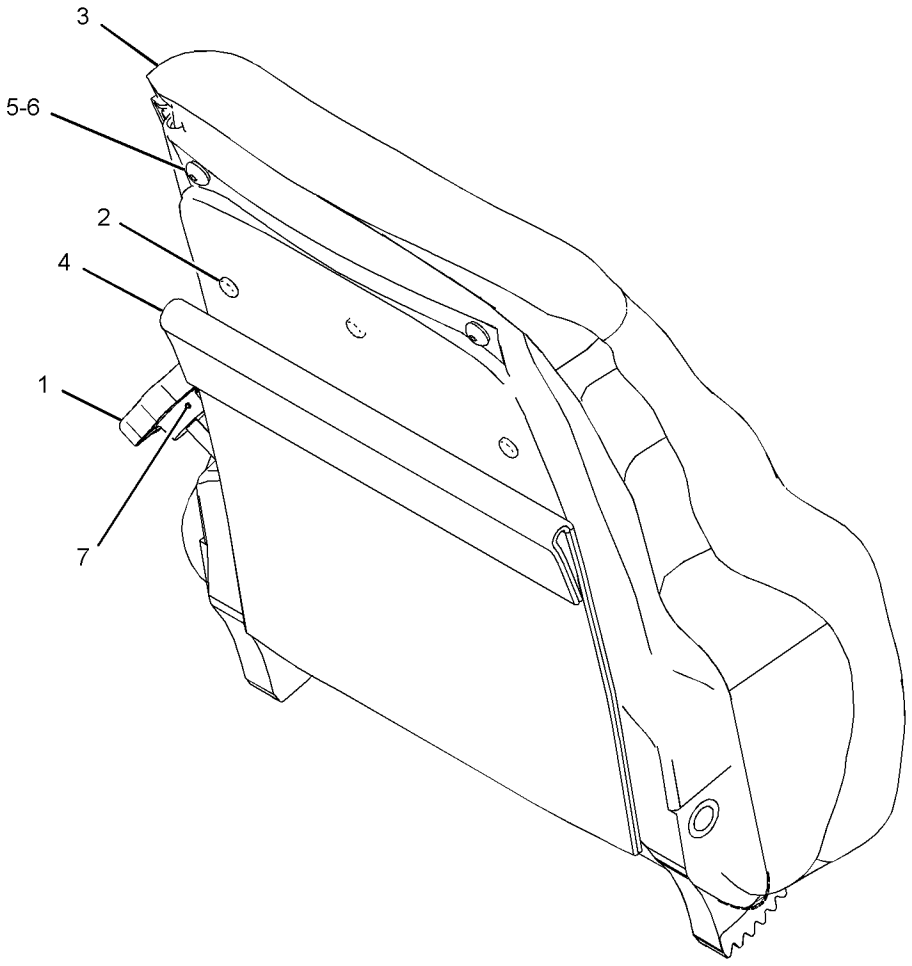

GRAPHIC #1 **<END>** g01336870

292-9238 PAN GP-BACKREST–VINYL

S/N: LJR1-UP
PART OF 180-7304 SEAT GP
AN ATTACHMENT

SMCS-7312 **i02925498**

NOTE	REF NO	GRAPHIC REF	PART NUMBER	QTY	PART NAME 1 2 3 4 5 6 (PRODUCT LEVEL)	SEE PAGE
	1	1	**164-4883**	1	KNOB-LUMBAR	
	2	1	**250-4628**	3	PLUG	
	3	1	**292-6098**	1	CUSHION AS (VINYL)	
Y	4	1	*292-6402*	1	PAN GP-BACKREST (LUMBAR)	665
	5	1	**5P-0537**	2	WASHER-HARD (7.2X14.5X2-MM THK)	
	6	1	**6V-8969**	2	SCREW-BUTTON HEAD (1/4-20X0.5-IN)	
	7	1	**8T-7566**	1	PIN-SPRING	

Y - SEPARATE ILLUSTRATION

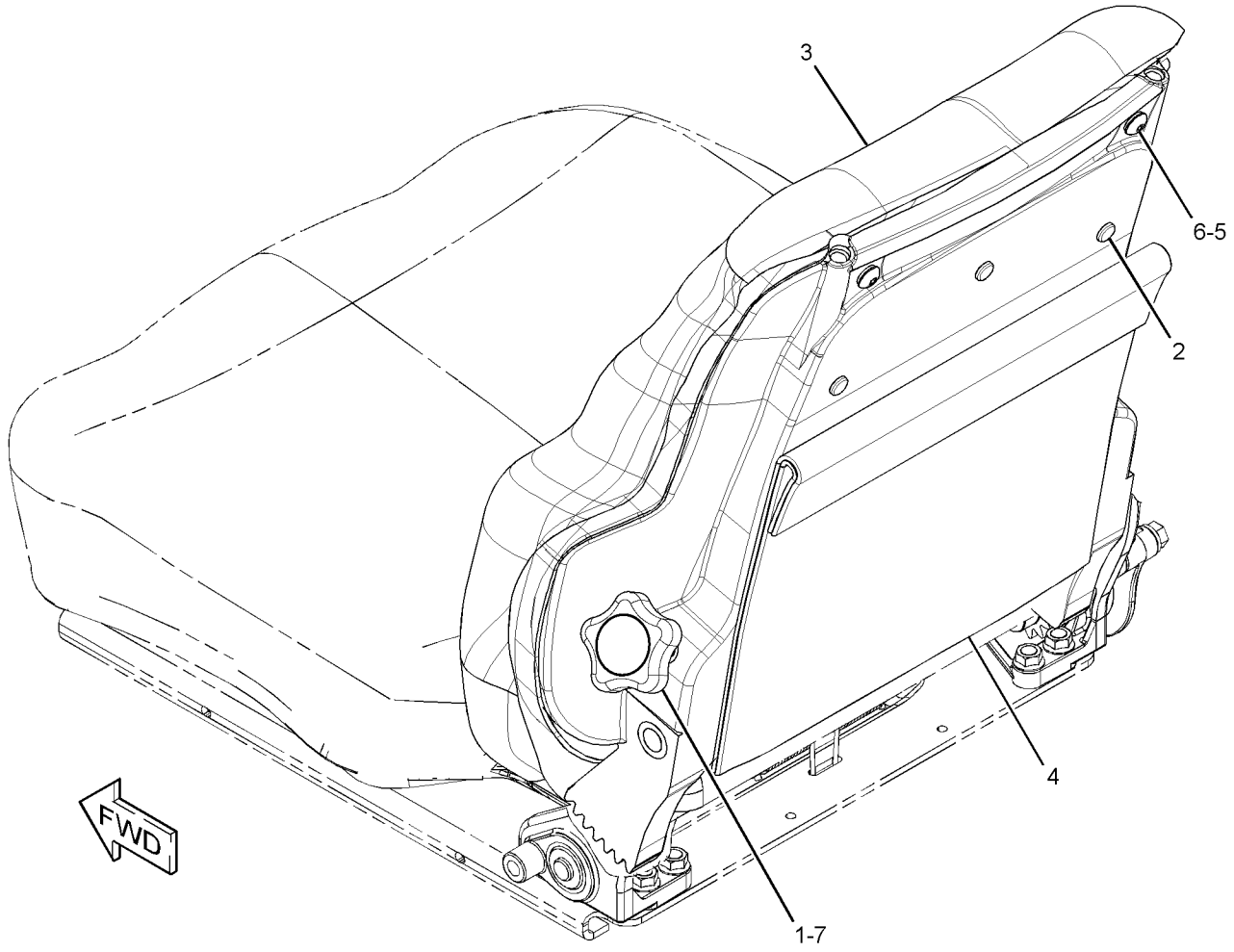

GRAPHIC #1 **<END>** g01341782

311-6395 PANEL GP-INSTRUMENT–ENCLOSED ROPS

S/N: LJR1-UP
PART OF 311-6400 CAB GP
ALSO AN ATTACHMENT

SMCS-7450, 7451

i03865220

NOTE	REF NO	GRAPHIC REF	PART NUMBER	QTY	PART NAME 1 2 3 4 5 6 (PRODUCT LEVEL)	SEE PAGE
	1	1	**8Y-6388**	5	LOUVER AS-VENT	
	2	1	**139-6039**	2	NUT-RETAINER (U-TYPE)	
	3	1	**164-8474**	2	LOUVER AS-VENT	
	4	1	**265-7981**	1	SWITCH AS-ROCKER (AIR CONDITIONER CONTROL)	
	5	1	**267-5243**	1	PANEL AS	
	5A	1	**285-7415**	1	KNOB (BLOWER FAN SPEED)	
	5B	1	**271-7312**	1	KNOB (TEMPERATURE CONTROL)	
	6	1	**310-3911**	1	DASH AS	
E	6A	1	**155-7688**		SEAL (4-CM EACH)	
	6B	1	**205-7048**	7	INSERT-THREADED (M6X1-THD)	
	7	1	**311-6389**	1	PLATE AS	
M		1	**8T-4130**	4	STUD (M6X1X18-MM)	
	8	1	**104-2091**	10	SCREW-FLAT HEAD (6-20X0.5-IN)	
M	9	1	**129-3178**	4	LOCKNUT (M6X1-THD)	
M	10	1	**9X-2045**	10	SCREW-TRUSS HEAD (M6X1X20-MM)	
	11	1	**9X-8256**	4	WASHER (6.6X12X2-MM THK)	
E	12	1	**311-6409**		SEAL (27-CM)	
E	13	1	**223-0118**		SEAL (183-CM)	

E - ORDER BY THE CENTIMETER
M - METRIC PART

311-6395 **PANEL GP-INSTRUMENT (*contd.*)** **i03865220**

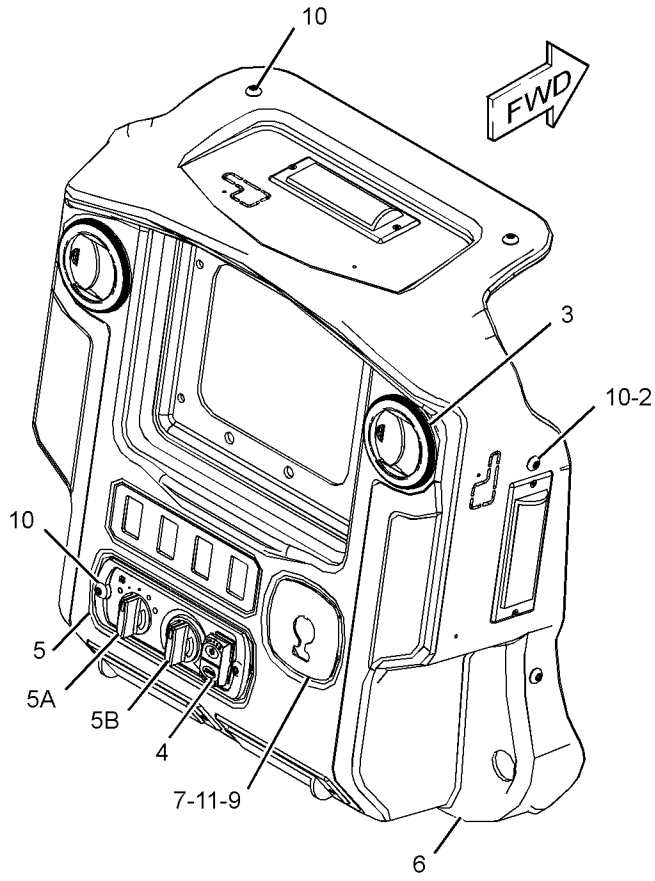

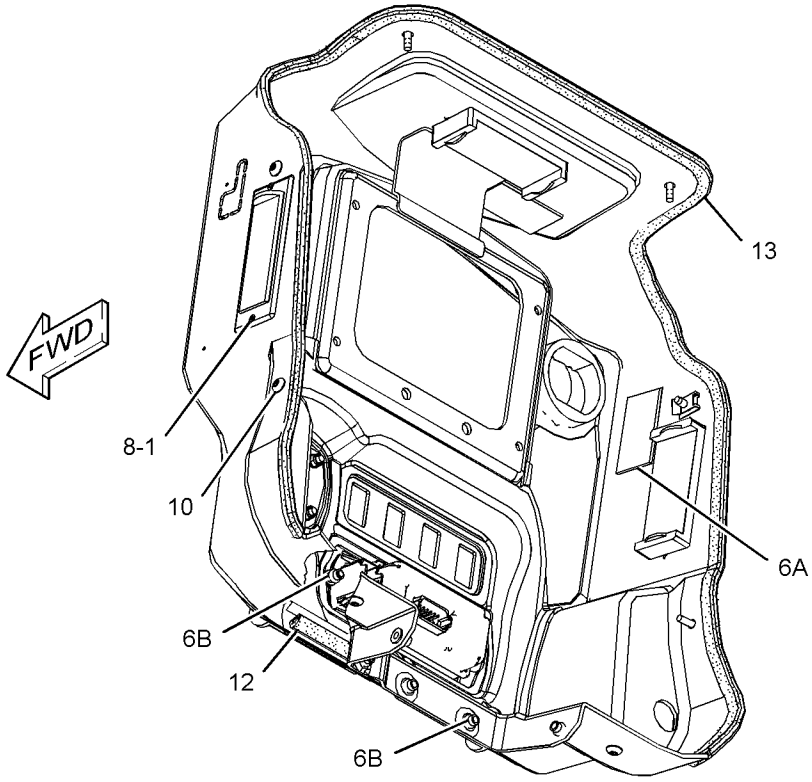

GRAPHIC #1 **<END>** g02213053

320-1198 PEDAL GP-GOVERNOR & BRAKE

S/N: LJR1-UP

PART OF 311-6400 CAB GP, 320-1200 PLATFORM GP-OPERATOR

ALSO AN ATTACHMENT

SMCS-4122 **i03626557**

NOTE	REF NO	GRAPHIC REF	PART NUMBER	QTY	PART NAME 1 2 3 4 5 6 (PRODUCT LEVEL)	SEE PAGE
	1	1	**7K-1181**	2	STRAP-CABLE	
	2	1	**220-4081**	1	CAP (NUT)	
Y	3	1	*320-1197*	1	CONTROL GP-PEDAL	622
	4	1	**4P-8134**	2	CLIP	
	5	1	**8T-4121**	4	WASHER-HARD (11X21X2.5-MM THK)	
M	6	1	**8T-4133**	4	NUT (M10X1.5-THD)	

M - METRIC PART
Y - SEPARATE ILLUSTRATION

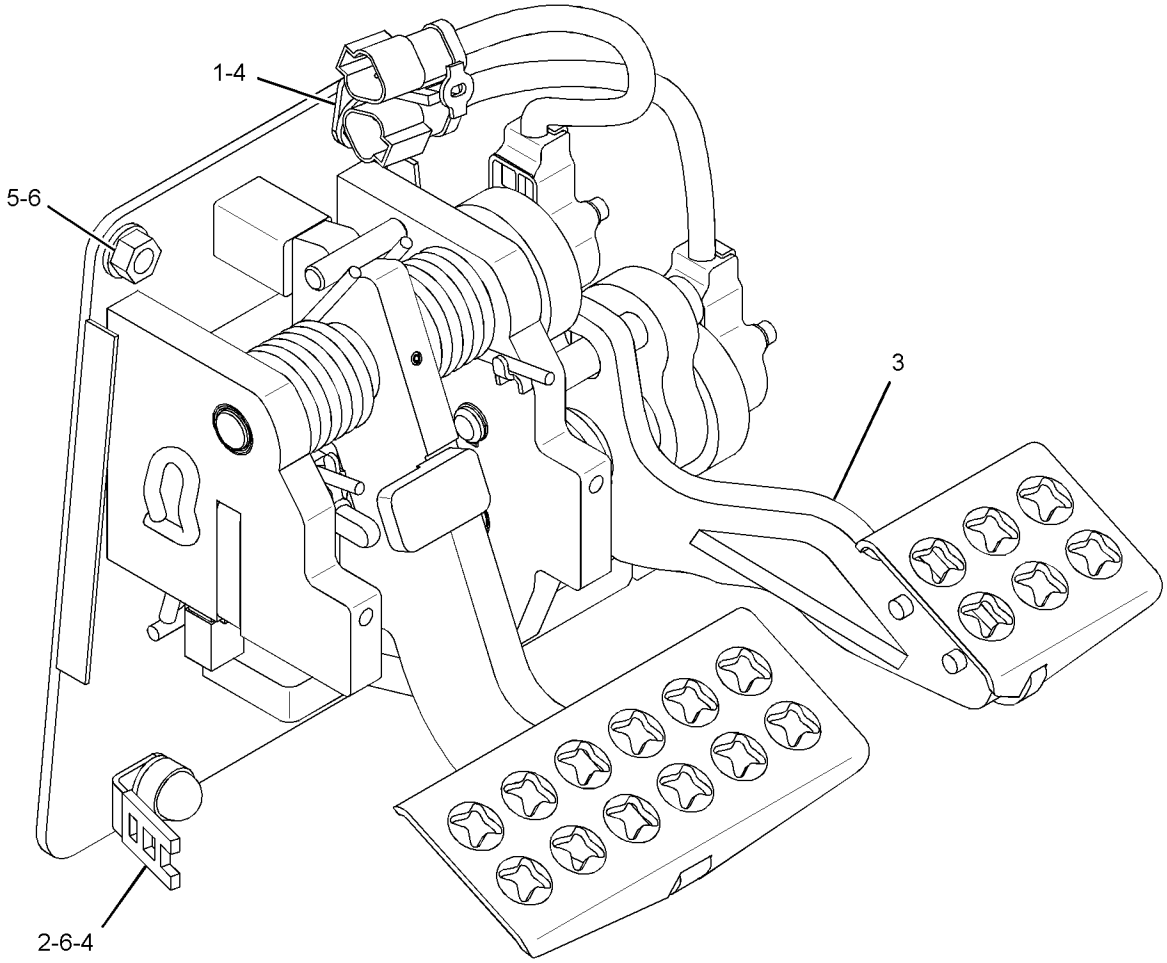

GRAPHIC #1 **<END>** g01886520

320-1170 PLATFORM GP-OPERATOR

S/N: LJR1-UP

PART OF 320-1200 PLATFORM GP-OPERATOR

AN ATTACHMENT

SMCS-7253 **i03626551**

NOTE	REF NO	GRAPHIC REF	PART NUMBER	QTY	PART NAME 1 2 3 4 5 6 (PRODUCT LEVEL)	SEE PAGE
	1	1	**3B-8489**	1	FITTING-GREASE	
	2	1	**169-9108**	1	COVER AS	
		1	**178-8844**	4	SPACER (11X28X20-MM THK)	
		1	**178-9002**	1	COVER	
	3	1	**178-9013**	1	COVER	
	4	1	**212-4022**	1	SUPPORT AS (FOOT) (LH)	
	5	1	**228-2903**	1	BRACKET AS	
	6	1	**231-3075**	1	FILM-IDENTIFICATION (LUBE POINT)	
	7	1	**249-8087**	1	COVER (PEDAL, RH)	
	8	1	**249-8088**	1	COVER (PEDAL, LH)	
	9	1	**287-0548**	1	STICKER-DOOR SEAL	
	10	1	**287-3862**	1	FLOORPLATE AS	
	11	1	**287-4618**	1	SUPPORT AS (FOOT) (RH)	
	12	1	**320-1161**	1	PLATE AS	
	13	1	**320-1180**	1	PLATFORM AS	
	14	1	**320-1185**	1	PLATE	
	15	1	**320-1192**	1	FOOTREST AS	
	16	1	**330-9200**	1	PLATE	
M	17	1	**127-2170**	6	SCREW-TRUSS HEAD (M8X1.25X20-MM)	
M	18	1	**166-3777**	4	SCREW-BUTTON HEAD (M6X1X28-MM)	
	19	1	**5P-4116**	6	WASHER-HARD (8.8X20.5X2-MM THK)	
	20	1	**8T-4121**	13	WASHER-HARD (11X21X2.5-MM THK)	
M	21	1	**8T-4136**	4	BOLT (M10X1.5X25-MM)	
M	22	1	**8T-4137**	13	BOLT (M10X1.5X20-MM)	
	23	1	**8T-4222**	4	WASHER-PLATED (11X32X2.5-MM THK)	
	24	1	**8T-9471**	2	GROMMET	
M	25	1	**9X-2040**	8	SCREW-TRUSS HEAD (M10X1.5X25-MM)	
M	26	1	**9X-2044**	24	SCREW-TRUSS HEAD (M6X1X16-MM)	
	27	1	**9X-8256**	4	WASHER (6.6X12X2-MM THK)	

M - METRIC PART

320-1170 **PLATFORM GP-OPERATOR (*contd.*)** **i03626551**

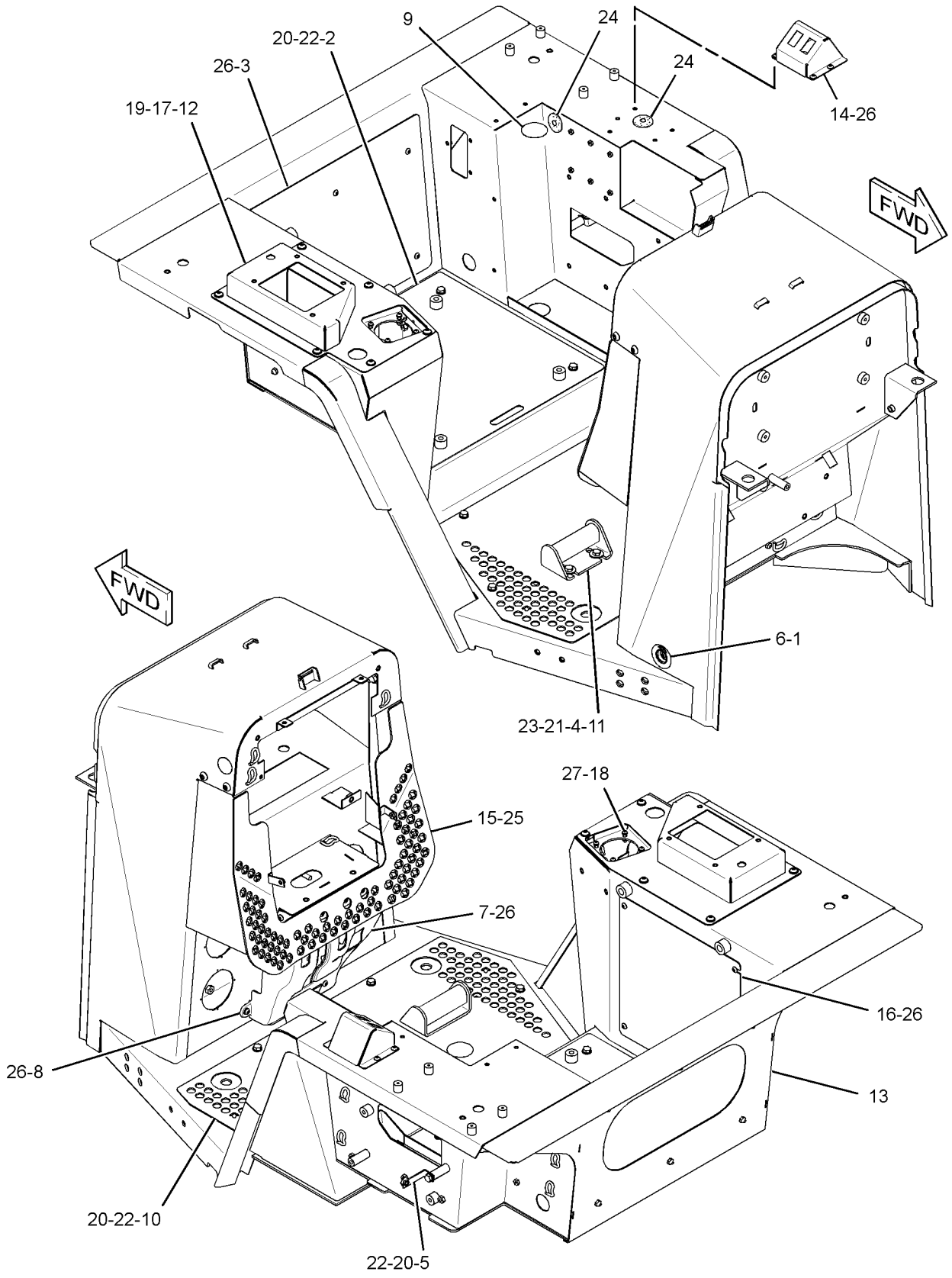

GRAPHIC #1 **<END>** g01889756

320-1200 PLATFORM GP-OPERATOR

S/N: LJR1-UP
PART OF 320-1082 CANOPY AR
AN ATTACHMENT

SMCS-7253 **i05167615**

NOTE	PART NUMBER	QTY	PART NAME 1 2 3 4 5 6 (PRODUCT LEVEL)	SEE PAGE
Y	*320-1190*	1	DASH GP	631
Y	*320-1165*	1	HEATER GP-CAB (OPEN ROPS)	638
Y	**320-1198**	1	PEDAL GP-GOVERNOR & BRAKE	670
Y	*320-1170*	1	PLATFORM GP-OPERATOR	671
Y	*310-1543*	1	WIRING GP-PLATFORM	245
			S/N: LJR1-692	
Y	*392-3202*	1	WIRING GP-PLATFORM	253
			S/N: LJR693-UP	

Y - SEPARATE ILLUSTRATION

<END>

311-6387 PRESSURIZER GP-CAB

S/N: LJR1-UP
PART OF 311-6420 CAB GP
ALSO AN ATTACHMENT

SMCS-7311 **i03660433**

NOTE	REF NO	GRAPHIC REF	PART NUMBER	QTY	PART NAME 1 2 3 4 5 6 (PRODUCT LEVEL)	SEE PAGE
	1	1	**3B-8489**	1	FITTING-GREASE	
	2	1	**3W-6756**	2	KNOB (ACCESS DOOR, AIR FILTER)	
	3	1	**7G-8116**	2	FILTER ELEMENT-CAB AIR (STANDARD EFFICIENCY) (FRESH AIR)	
	4	1	**117-9988**	1	PANEL	
	5	1	**194-0675**	2	PLATE	
	6	1	**220-0122**	1	LATCH AS	
	7	1	**229-2604**	2	ROD AS	
	8	1	**229-2605**	1	PLATE AS	
	9	1	**229-2606**	1	PLATE AS	
	10	1	**285-6318**	1	COVER AS (RH)	
	11	1	**285-6319**	1	COVER AS (LH)	
	12	1	**290-0243**	1	COVER AS	
Y	13	1	**308-5073**	1	BLOWER GP-CAB	592
	14	1	**329-3243**	2	FILTER ELEMENT-CAB AIR (RECIRCULATION)	
	15	1	**4V-1029**	4	SPACER (6.5X16.75X4.25-MM THK)	
	16	1	**7X-7729**	18	WASHER (11X25X3-MM THK)	
	17	1	**8T-4121**	12	WASHER-HARD (11X21X2.5-MM THK)	
M	18	1	**8T-4136**	18	BOLT (M10X1.5X25-MM)	
M	19	1	**8T-4138**	4	BOLT (M6X1X20-MM)	
M	20	1	**9X-2041**	12	SCREW-TRUSS HEAD (M10X1.5X20-MM)	
D	21	1	**5P-5755**		SEAL (0.7-M EACH)	
D	22	1	**5P-5639**		SEAL (0.3-M)	
D	23	1	**201-4066**		SEAL (0.4-M)	
E	24	1	**153-2681**		SEAL (35-CM EACH)	
E	25	1	**237-5586**		SEAL (140-CM EACH)	
E	25A	1	**237-5586**		SEAL (25-CM EACH)	

D - ORDER BY THE METER
E - ORDER BY THE CENTIMETER
M - METRIC PART
Y - SEPARATE ILLUSTRATION

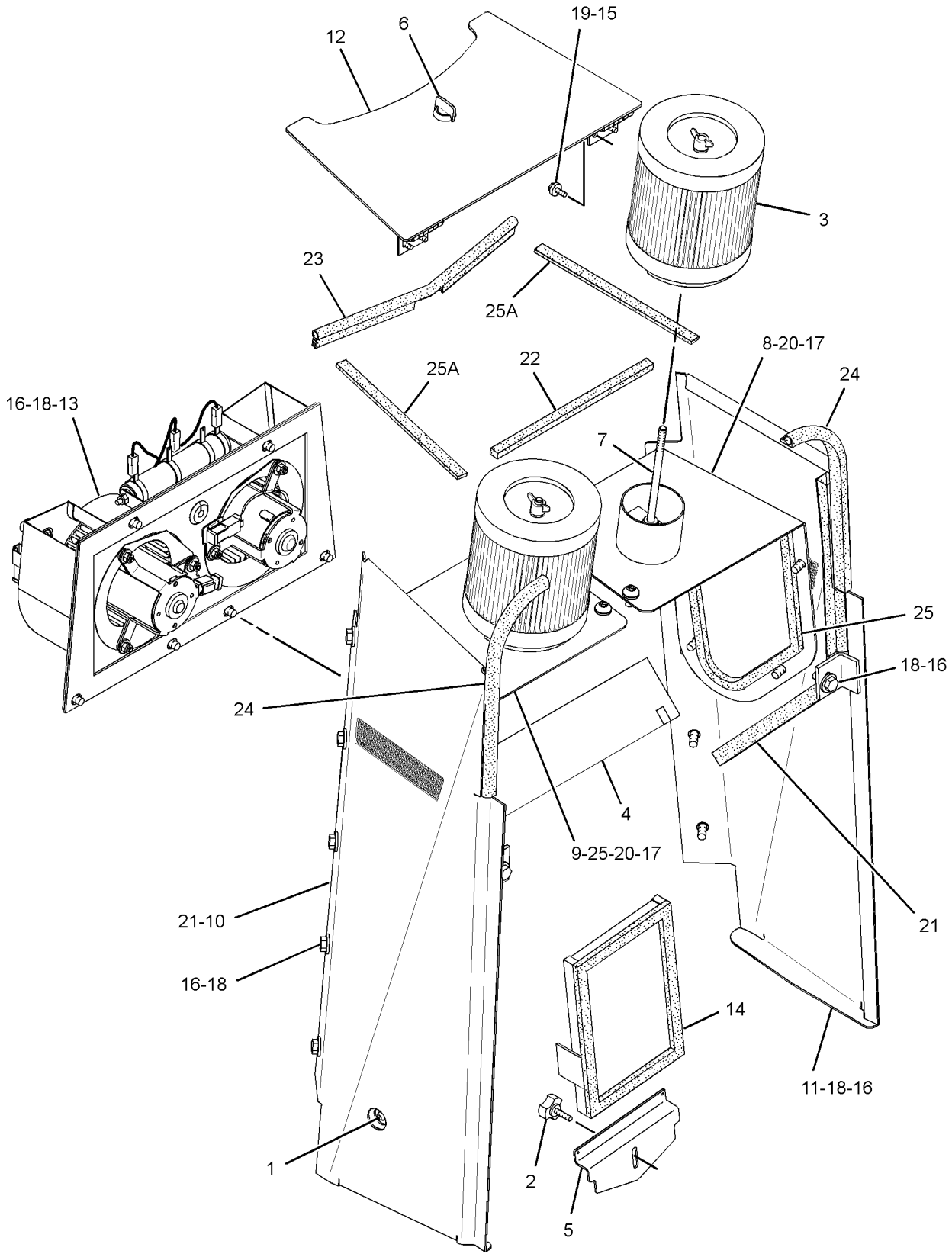

GRAPHIC #1 **<END>** g01889255

OPERATOR STATION

250-3794 RADIO GP–AM/FM/WB

S/N: LJR1-UP
EAME
CANNOT BE USED WITH CANOPY AR
AN ATTACHMENT

SMCS-7338 **i03664741**

NOTE	PART NUMBER	QTY	PART NAME 1 2 3 4 5 6 (PRODUCT LEVEL)	SEE PAGE
Y	**331-5292**	1	RADIO GP (AM/FM/WB)	683
	200-5728	1	HARNESS AS-RADIO (AM, FM)	
	160-3518	1	KIT-RECEPTACLE (8-PIN)	
			(INCLUDES RECEPTACLE AS & WEDGE)	
	8T-8737	1	PLUG-SEAL	
	172-8037	1	CONNECTOR (RADIO)	
	172-8039	11	TERMINAL (RADIO)	
	186-3735	7	PIN-CONNECTOR (16-GA TO 18-GA)	
	137-8165	1	BUMPER	

Y - SEPARATE ILLUSTRATION

<END>

284-8953 RADIO GP–AM/FM/WB/CD PLAYER

S/N: LJR1-376
PART OF 294-2006 RADIO GP
AN ATTACHMENT

SMCS-7338 **i03480560**

NOTE	REF NO	GRAPHIC REF	PART NUMBER	QTY	PART NAME 1 2 3 4 5 6 (PRODUCT LEVEL)	SEE PAGE
	1	1	**192-7054**	1	SLEEVE	

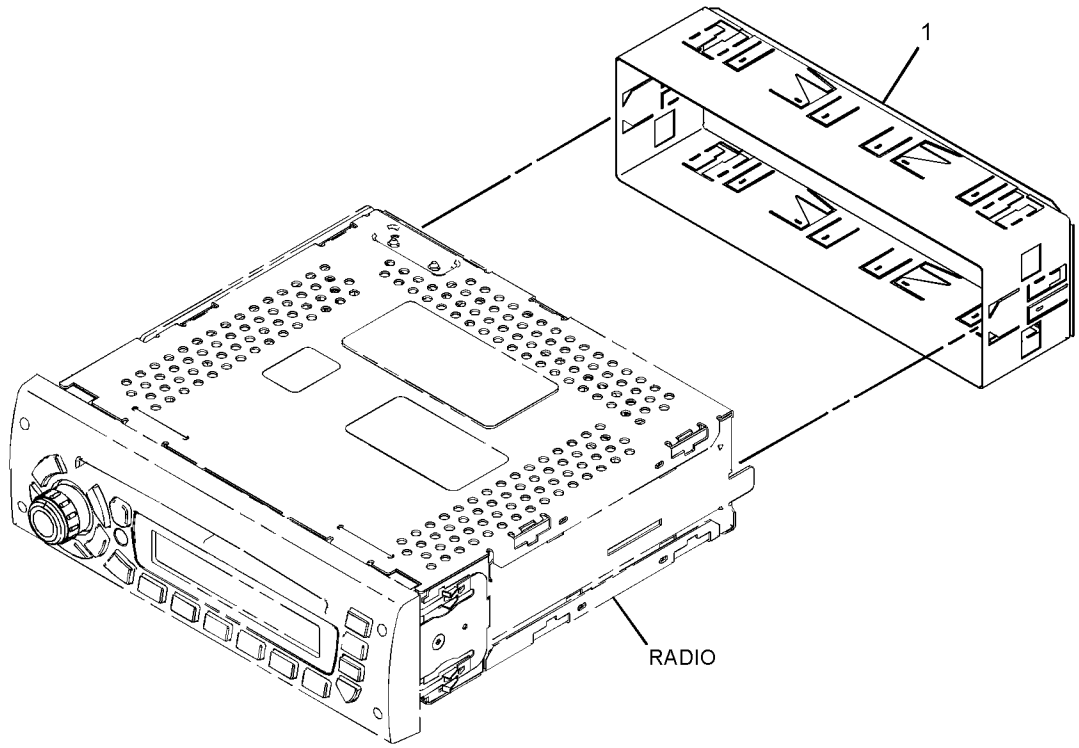

GRAPHIC #1 **<END>** g01820163

OPERATOR STATION

284-8954 RADIO GP–AM/FM/WB/XM/CD PLAYER

S/N: LJR1-UP

PART OF 294-2007 INSTALLATION GP-RADIO

AN ATTACHMENT

SMCS-7338 **i03626387**

NOTE	REF NO	GRAPHIC REF	PART NUMBER	QTY	PART NAME 1 2 3 4 5 6 (PRODUCT LEVEL)	SEE PAGE
	1	1	**192-7054**	1	SLEEVE	

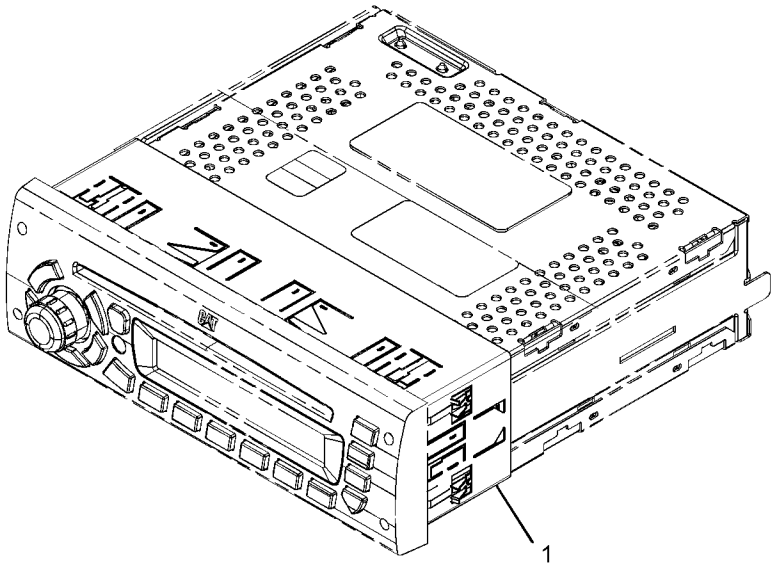

GRAPHIC #1 **<END>** g01813914

284-8955 RADIO GP–AM/FM/WB/SIRIUS/CD PLAYER

S/N: LJR1-UP
PART OF 294-2008 INSTALLATION GP-RADIO
AN ATTACHMENT

SMCS-7338 **i03555417**

NOTE	REF NO	GRAPHIC REF	PART NUMBER	QTY	PART NAME 1 2 3 4 5 6 (PRODUCT LEVEL)	SEE PAGE
	1	1	**192-7054**	1	SLEEVE	

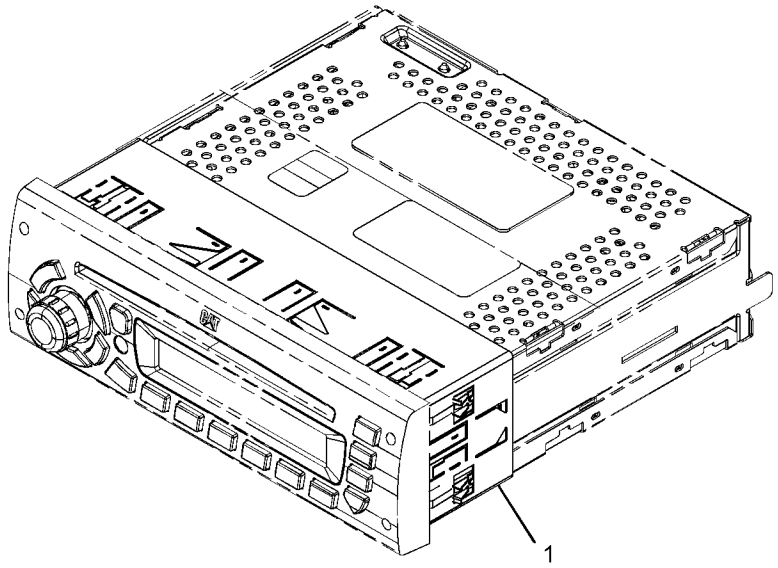

GRAPHIC #1 **<END>** g01813795

294-2006 RADIO GP–AM/FM/WB/CD PLAYER

S/N: LJR1-376
CANNOT BE USED WITH CANOPY AR
AN ATTACHMENT

SMCS-7338 **i02926933**

NOTE	REF NO	GRAPHIC REF	PART NUMBER	QTY	PART NAME 1 2 3 4 5 6 (PRODUCT LEVEL)	SEE PAGE
	1	1	**137-8165**	1	BUMPER	
	2	1	**200-5728**	1	HARNESS AS-RADIO	
		1	**172-8039**	1	TERMINAL (RADIO)	
		1	**172-8037**	1	CONNECTOR (RADIO)	
		1	**160-3518**	1	KIT-RECEPTACLE (8-PIN)	
					(INCLUDES RECEPTACLE AS & WEDGE)	
Y	3	1	**284-8953**	1	RADIO GP (AM/FM/WB/CD PLAYER)	677

Y - SEPARATE ILLUSTRATION

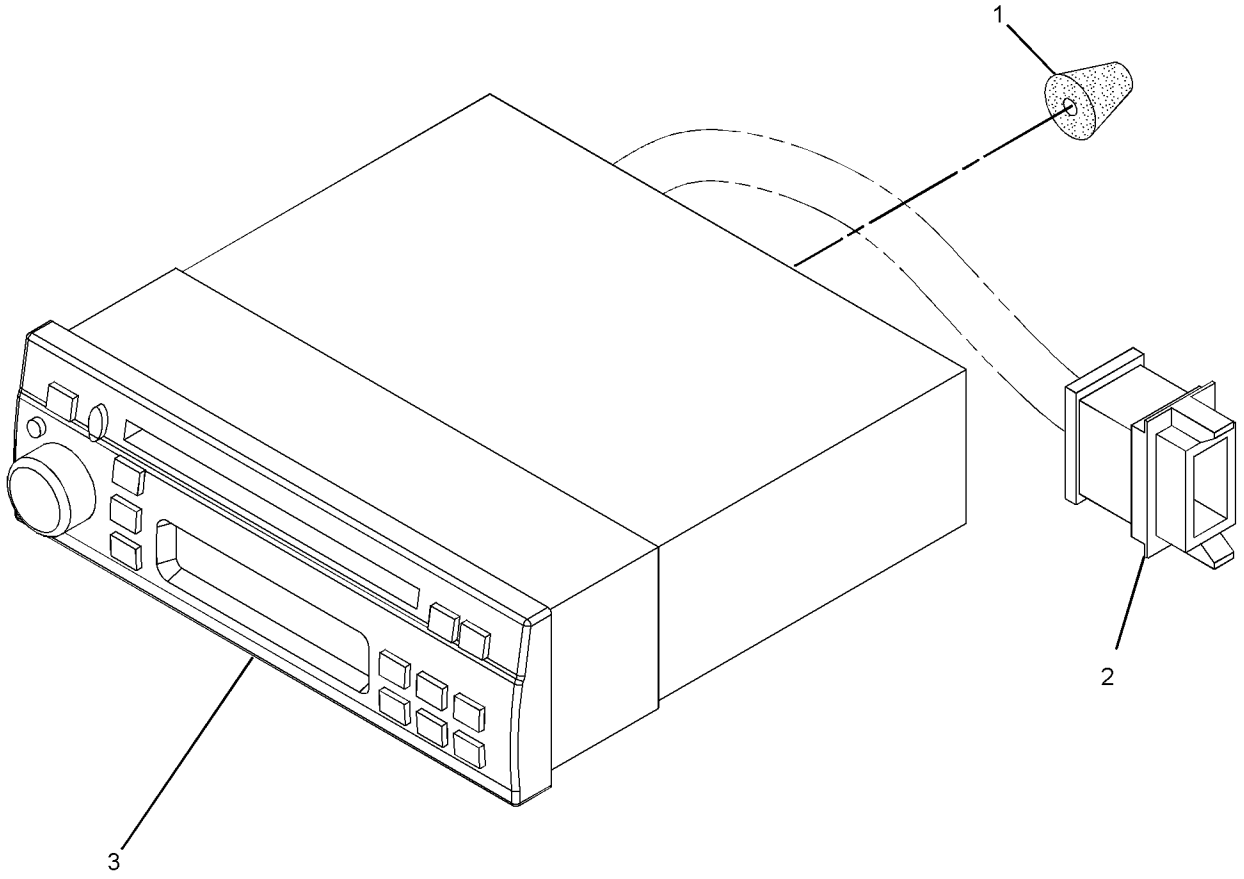

GRAPHIC #1 **<END>** g01290559

294-2006 RADIO GP–AM/FM/WB/CD PLAYER

S/N: LJR377-UP
CANNOT BE USED WITH CANOPY AR
AN ATTACHMENT

SMCS-7338 **i04775704**

NOTE	REF NO	GRAPHIC REF	PART NUMBER	QTY	PART NAME 1 2 3 4 5 6 (PRODUCT LEVEL)	SEE PAGE
	1	1	**137-8165**	1	BUMPER	
	2	1	**200-5728**	1	HARNESS AS-RADIO	
		1	**172-8039**	1	TERMINAL (RADIO)	
		1	**172-8037**	1	CONNECTOR (RADIO)	
		1	**160-3518**	1	KIT-RECEPTACLE (8-PIN)	
					(INCLUDES RECEPTACLE AS & WEDGE)	
C	3	1	**349-7701**	1	RADIO GP (AM/FM/WB CD PLAYER)	

C - CHANGE FROM PREVIOUS TYPE

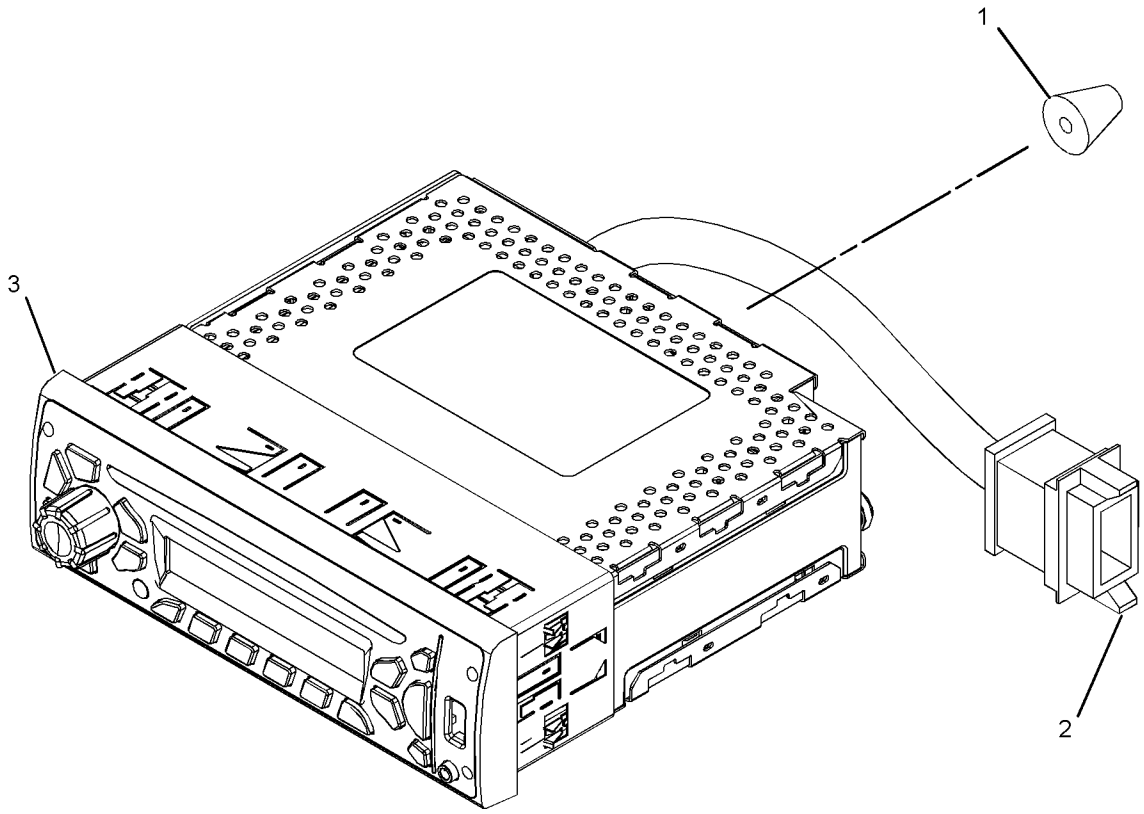

GRAPHIC #1 **<END>** g02342481

OPERATOR STATION

331-5291 RADIO GP–AM/FM/WB/CD PLAYER

S/N: LJR1-UP

FIELD REPLACEMENT FOR 331-5292–PAGE: 683

FIELD INSTALLATION

SMCS-7338 **i04543413**

NOTE	REF NO	GRAPHIC REF	PART NUMBER	QTY	PART NAME 1 2 3 4 5 6 (PRODUCT LEVEL)	SEE PAGE
					(NO SERVICED PARTS)	

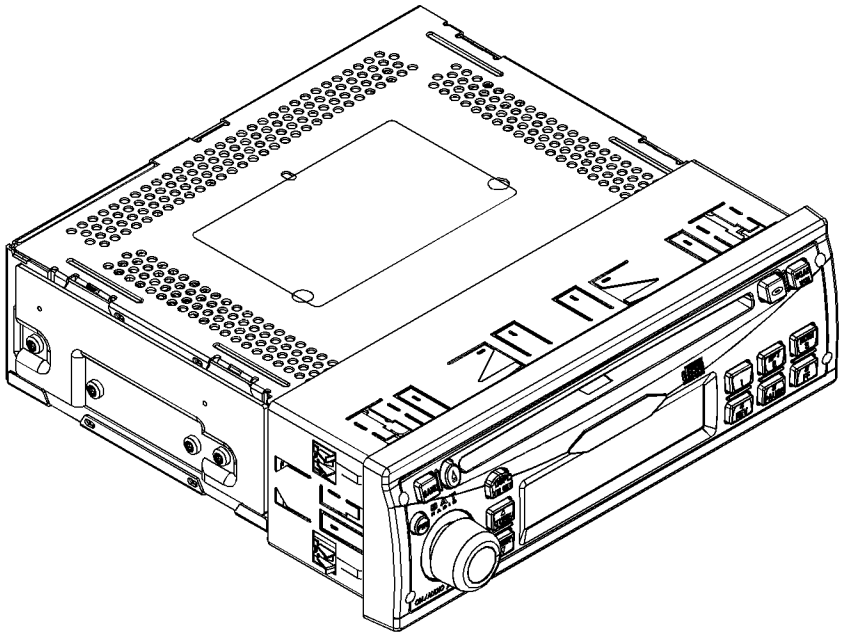

GRAPHIC #1 **<END>** g02581056

331-5292 RADIO GP–AM/FM/WB

S/N: LJR1-UP
OPTIONAL FIELD REPLACEMENT ORDER 331-5291–PAGE: 682
PART OF 250-3794 RADIO GP
AN ATTACHMENT

SMCS-7338 **i03626185**

NOTE	REF NO	GRAPHIC REF	PART NUMBER	QTY	PART NAME 1 2 3 4 5 6 (PRODUCT LEVEL)	SEE PAGE
	1	1	**192-7054**	1	SLEEVE	

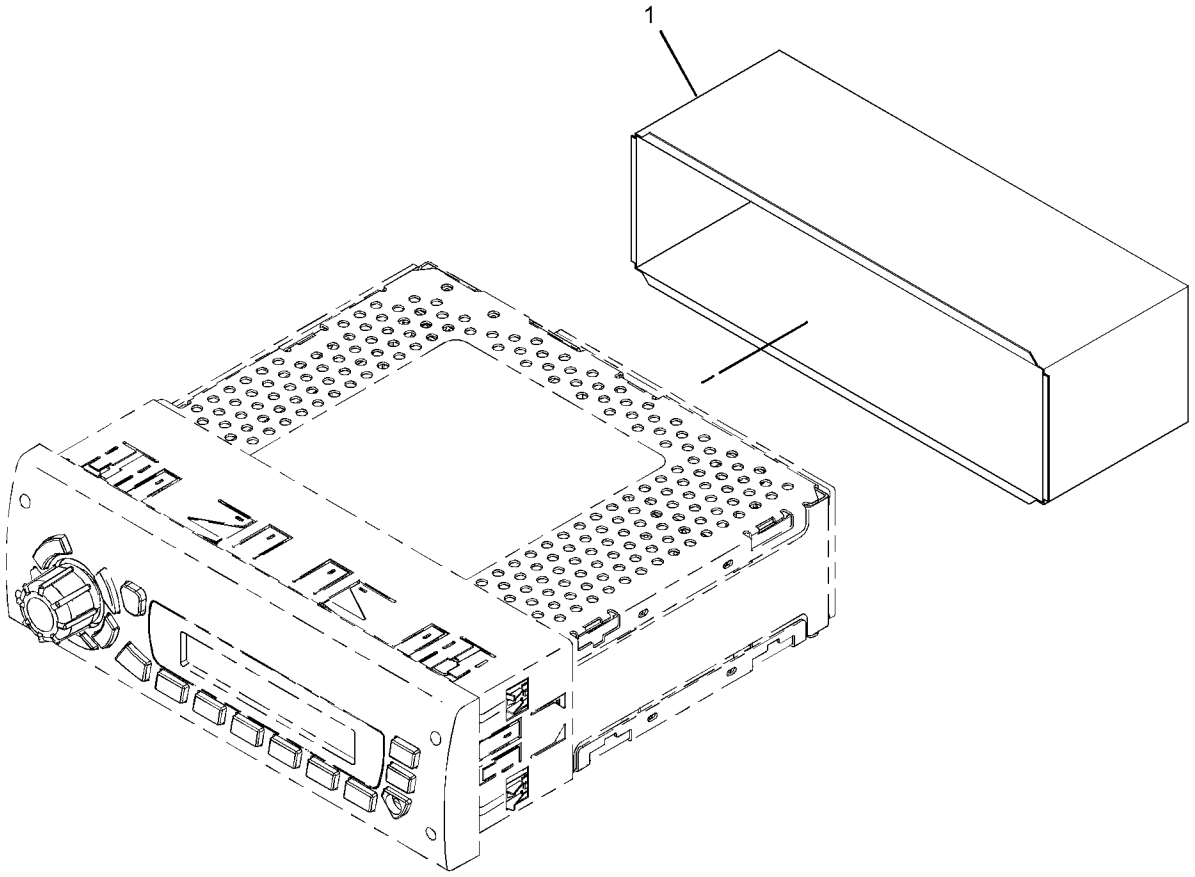

GRAPHIC #1 **<END>** g01864594

210-2270 RECLINER GP-SEAT

S/N: LJR1-UP
PART OF 178-0603, 180-7304 SEAT GP
ALSO AN ATTACHMENT

SMCS-7312 **i03643750**

NOTE	REF NO	GRAPHIC REF	PART NUMBER	QTY	PART NAME 1 2 3 4 5 6 (PRODUCT LEVEL)	SEE PAGE
	1	1	**177-1862**	1	BRACKET (SEAT BELT)	
	2	1	**210-2262**	1	BRACKET AS (LH)	
	3	1	**210-2263**	1	BRACKET AS (RH)	
	4	1	**210-2266**	1	GEAR-LOCK (14-TEETH)	
	5	1	**293-2911**	1	SHAFT AS	
		1	**2L-5893**	2	PIN-SPRING	
		1	**170-8590**	1	SPRING	
	6	1	**217-7933**	1	LATCH	
	7	1	**236-5197**	1	SPRING	
	8	1	**031-0214**	1	BOLT-LOCKING (1/4-20X0.5-IN)	
	9	1	**101-2867**	1	WASHER-HARD (7.2X25X2-MM THK)	
	10	1	**4M-6425**	1	BOLT (5/16-18X1-IN)	
	11	1	**5M-2894**	1	WASHER-HARD (10.2X18.5X2.5-MM THK)	
	12	1	**5S-7383**	1	BOLT (3/8-16X1.75-IN)	
	13	1	**8T-4224**	1	WASHER-HARD (8.8X16X2-MM THK)	

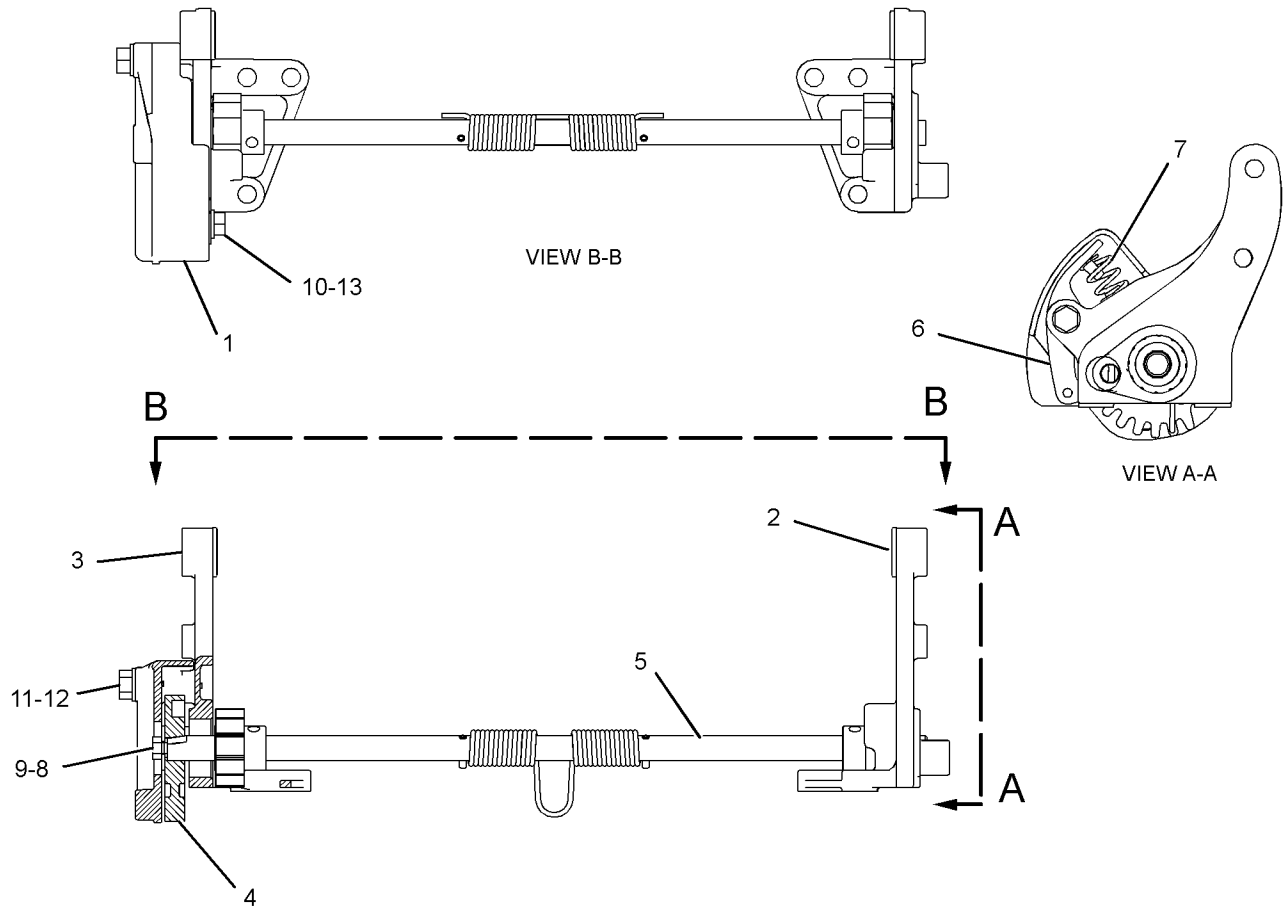

GRAPHIC #1 **<END>** g01296294

194-3309 RETAINER GP-DOOR–LH

S/N: LJR1-UP
PART OF 167-1453 DOOR GP-CAB
ALSO AN ATTACHMENT

SMCS-7308 **i02885792**

NOTE	REF NO	GRAPHIC REF	PART NUMBER	QTY	PART NAME 1 2 3 4 5 6 (PRODUCT LEVEL)	SEE PAGE
	1	1	**194-3310**	1	RETAINER AS	
	2	1	**196-3773**	1	STRIKER	
M	3	1	**8T-4195**	3	BOLT (M10X1.5X30-MM)	
	4	1	**8T-4223**	3	WASHER-HARD (13.5X25.5X3-MM THK)	

M - METRIC PART

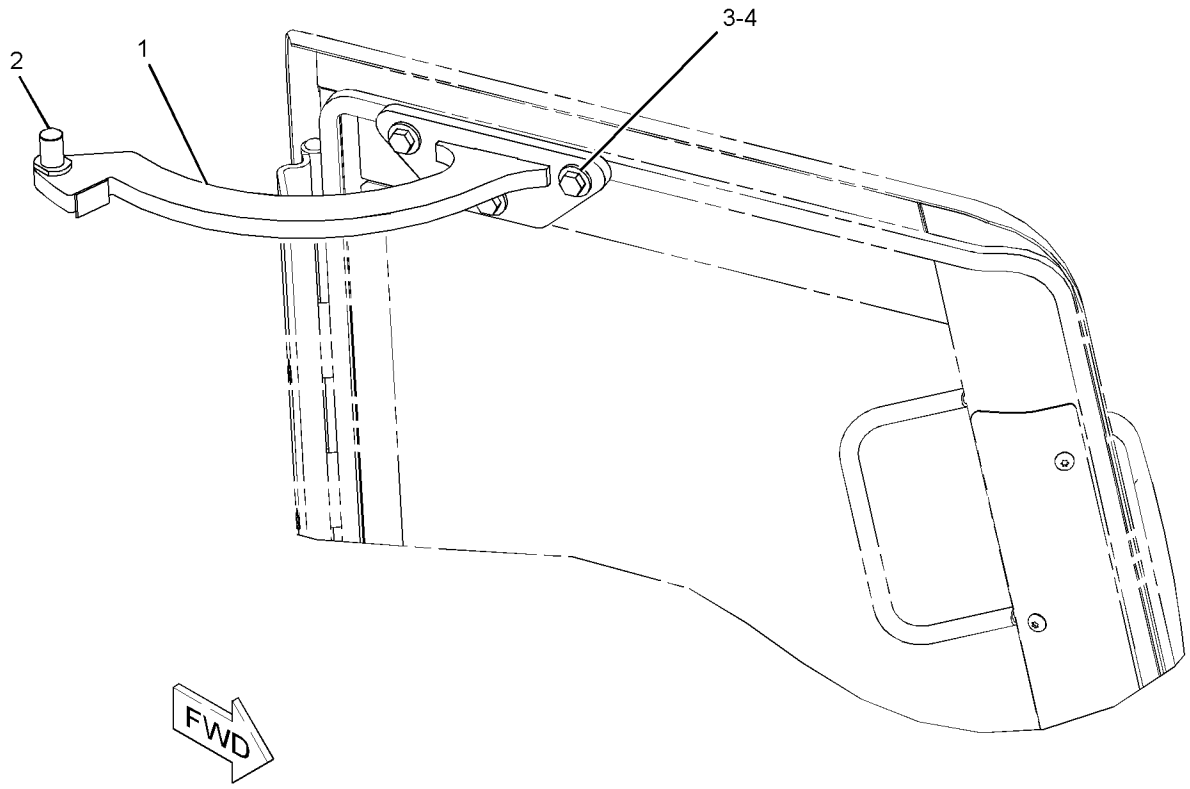

GRAPHIC #1 **<END>** g01184837

194-3313 RETAINER GP-DOOR—RH

S/N: LJR1-UP
PART OF 167-1451 DOOR GP-CAB
ALSO AN ATTACHMENT

SMCS-7308 **i02822195**

NOTE	REF NO	GRAPHIC REF	PART NUMBER	QTY	PART NAME 1 2 3 4 5 6 (PRODUCT LEVEL)	SEE PAGE
	1	1	**194-3314**	1	RETAINER AS	
	2	1	**196-3773**	1	STRIKER	
M	3	1	**8T-4195**	3	BOLT (M10X1.5X30-MM)	
	4	1	**8T-4223**	3	WASHER-HARD (13.5X25.5X3-MM THK)	

M - METRIC PART

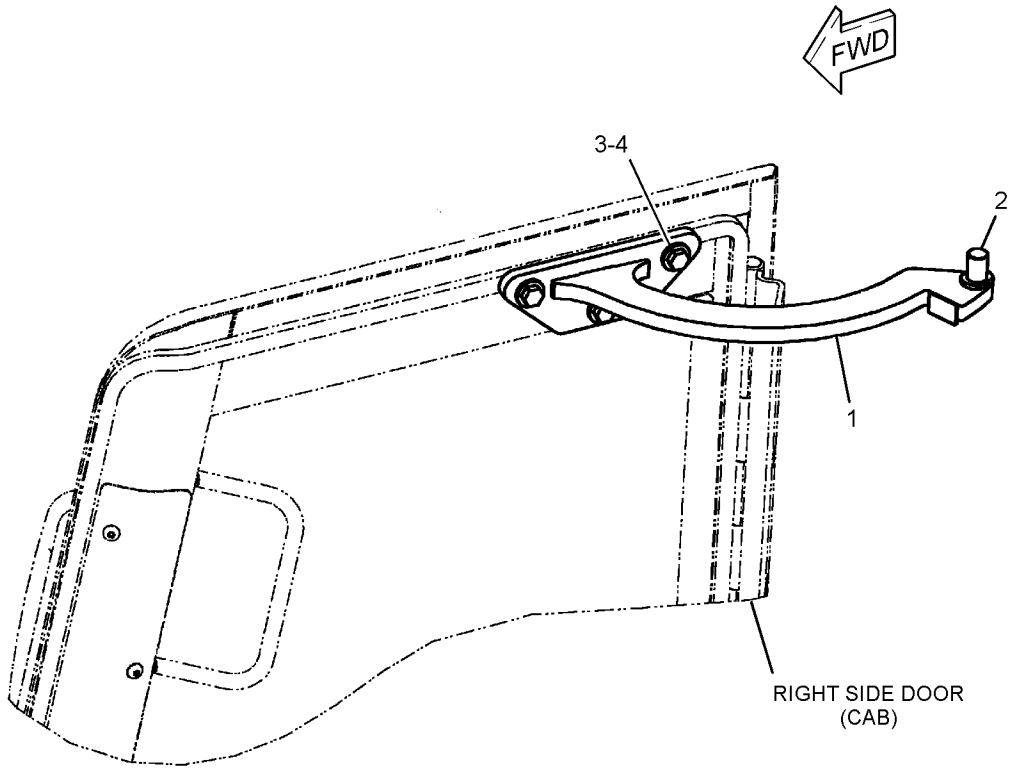

GRAPHIC #1 **<END>** g01289629

OPERATOR STATION

320-1210 ROPS GP

S/N: LJR1-UP
PART OF 320-1082 CANOPY AR
AN ATTACHMENT

SMCS-7177, 7301 **i05160290**

NOTE	REF NO	GRAPHIC REF	PART NUMBER	QTY	PART NAME 1 2 3 4 5 6 (PRODUCT LEVEL)	SEE PAGE
	1	1	**1P-2772**	4	SPACER (1.031X1.219X0.75-IN THK)	
	2	1	**5P-6874**	1	MIRROR	
M	3	1	**8T-4220**	1	BOLT-SQUARE NECK (M10X1.5X280-MM)	
	4	1	**9S-5187**	2	MOUNTING	
	5	1	**145-4115**	12	SPACER (26X40X12-MM THK)	
	6	1	**197-3522**	1	COVER AS	
	7	1	**198-6574**	14	WASHER (16X75X3.5-MM THK)	
	8	1	**198-6575**	14	BUTTON	
	9	1	**211-2354**	1	BRACKET	
	11	1	**220-0229**	1	ALARM AS (BACKUP)	
D		1	**5P-5623**		WIRE-ELECTRICAL (16-GA, BLACK) (0.4-M EACH)	
		1	**102-8802**	1	KIT-RECEPTACLE (2-PIN)	
					(INCLUDES RECEPTACLE AS & WEDGE)	
		1	**8T-8729**	2	PIN-CONNECTOR (16-GA TO 18-GA)	
E		1	**9X-1813**		SLEEVE (29-CM)	
	15	1	**253-9521**	16	SCREW-TRUSS HEAD (M12X1.75X20-MM)	
	16	1	**287-5666**	1	HEADLINER	
	17	1	**294-0851**	1	STABILIZER AS	
	18	1	**294-0852**	1	STABILIZER AS	
	19	1	**294-0854**	1	STEP AS	
	20	1	**294-0855**	1	STEP AS	
Y	21	1	*319-5608*	1	WIRING GP-LIGHTING	243
	22	1	**336-2168**	1	ROPS AS	
	23	1	**339-2969**	2	INSULATION	
	24	1	**6K-3632**	2	LOCKNUT (1-8-THD)	
	25	1	**8C-8843**	2	BOLT (1-8X4.5-IN)	
	26	1	**8P-5244**	4	WASHER (33.3X69.8X6.35-MM THK)	
	27	1	**8T-4121**	12	WASHER-HARD (11X21X2.5-MM THK)	
M	28	1	**8T-4137**	6	BOLT (M10X1.5X20-MM)	
M	29	1	**8T-4139**	4	BOLT (M12X1.75X30-MM)	
	30	1	**8T-4161**	1	KNOB	
M	31	1	**8T-4194**	8	BOLT (M12X1.75X50-MM)	
	32	1	**8T-4223**	12	WASHER-HARD (13.5X25.5X3-MM THK)	
M	33	1	**8T-5878**	12	BOLT (M24X3X80-MM)	
M	34	1	**8T-6685**	2	BOLT (M10X1.5X110-MM)	
M	35	1	**8T-4136**	4	BOLT (M10X1.5X25-MM)	

D - ORDER BY THE METER
E - ORDER BY THE CENTIMETER
M - METRIC PART
Y - SEPARATE ILLUSTRATION

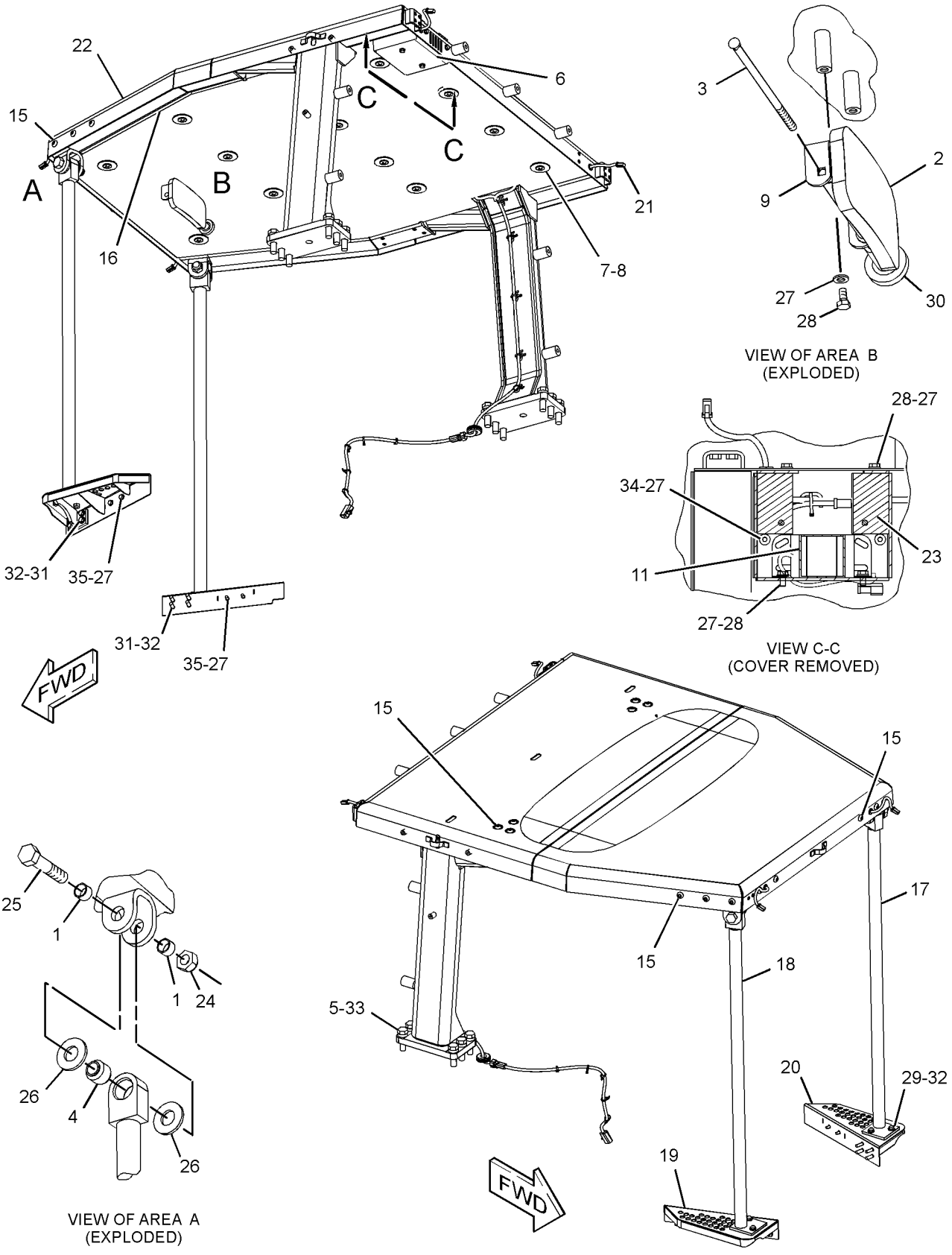

GRAPHIC #1 **<END>** g03096616

301-1027 ROPS GP-ENCLOSED

S/N: LJR1-UP

PART OF 310-9971 CAB AR

SMCS-7323 **i05160271**

NOTE	REF NO	GRAPHIC REF	PART NUMBER	QTY	PART NAME 1 2 3 4 5 6 (PRODUCT LEVEL)	SEE PAGE
	1	1	**145-4115**	12	SPACER (26X40X12-MM THK)	
	2	1	**301-1025**	1	ROPS AS	
M	3	1	**8T-5878**	12	BOLT (M24X3X80-MM)	
	4	1	**1A-2223**	4	DOWEL	

M - METRIC PART

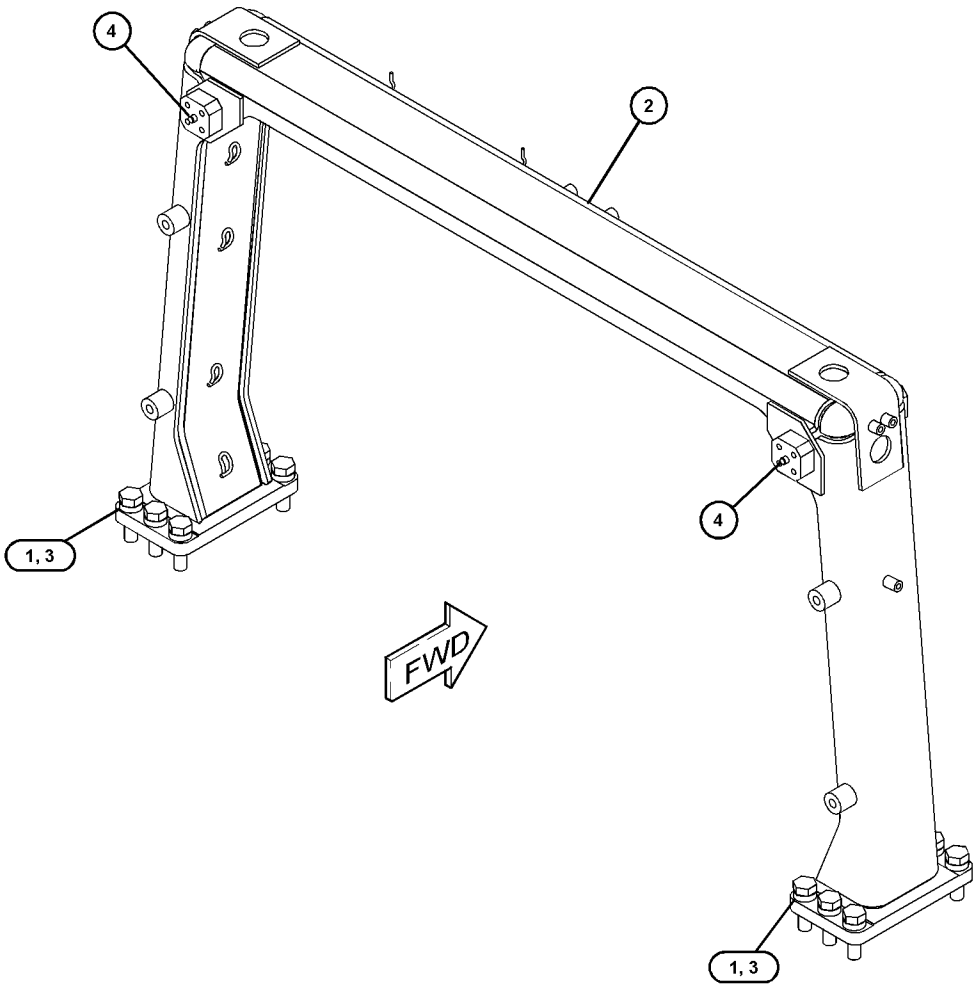

GRAPHIC #1 **<END>** g03321102

167-1466 SCREEN GP-PROTECTION–REAR

S/N: LJR1-UP
ENCLOSED ROPS
FOR USE WITH CAB AR
CANNOT BE USED WITH FORESTRY AR
PART OF 338-2602 OPTION AR-SWEEP
AN ATTACHMENT

SMCS-7165 **i01830557**

NOTE	REF NO	GRAPHIC REF	PART NUMBER	QTY	PART NAME 1 2 3 4 5 6 (PRODUCT LEVEL)	SEE PAGE
	1	1	**8G-5258**	4	SPACER (17X35X20-MM THK)	
	2	1	**195-8421**	1	BRACKET AS (LH)	
	3	1	**195-8422**	1	BRACKET AS (RH)	
					(EACH BRACKET AS INCLUDES)	
M		1	**8T-3597**	4	NUT-WELD (M12X1.75-THD)	
	4	1	**195-8430**	1	SCREEN AS	
M	5	1	**118-4977**	4	BOLT (M16X2X65-MM)	
M	6	1	**8T-4139**	8	BOLT (M12X1.75X30-MM)	
	7	1	**8T-4223**	8	WASHER-HARD (13.5X25.5X3-MM THK)	

M - METRIC PART

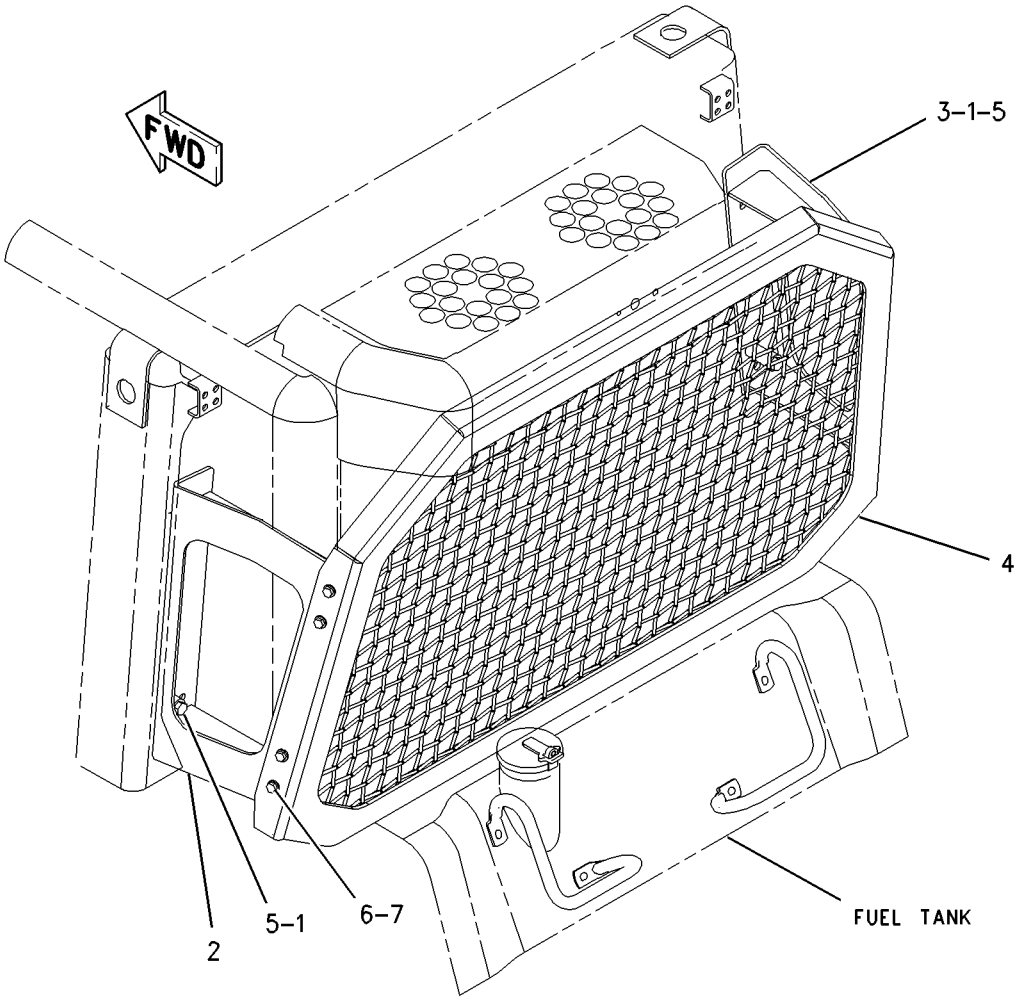

GRAPHIC #1 **<END>** g00776698

175-7225 SCREEN GP-PROTECTION–REAR

S/N: LJR1-UP
OPEN ROPS
FOR USE WITH CANOPY AR
PART OF 338-2604 OPTION AR-SWEEP
AN ATTACHMENT

SMCS-7165 **i02331612**

NOTE	REF NO	GRAPHIC REF	PART NUMBER	QTY	PART NAME 1 2 3 4 5 6 (PRODUCT LEVEL)	SEE PAGE
	1	1	**175-7223**	1	SCREEN AS	
	2	1	**175-7227**	1	CHANNEL AS	
M		1	**8T-3490**	4	NUT-WELD (M10X1.5-THD)	
	3	1	**176-7453**	1	CHANNEL AS	
M		1	**8T-3490**	4	NUT-WELD (M10X1.5-THD)	
	4	1	**199-2998**	1	SCREEN AS	
		1	**3W-3240**	1	SCREEN	
	5	1	**7X-0583**	3	WASHER-HARD (17X45X6-MM THK)	
	6	1	**8T-4121**	18	WASHER-HARD (11X21X2.5-MM THK)	
M	7	1	**8T-4133**	5	NUT (M10X1.5-THD)	
M	8	1	**8T-4193**	4	BOLT (M16X2X50-MM)	
M	9	1	**8T-4195**	5	BOLT (M10X1.5X30-MM)	
M	10	1	**8T-4196**	8	BOLT (M10X1.5X35-MM)	
M	11	1	**8T-4779**	3	BOLT (M16X2X35-MM)	
	12	1	**9X-8257**	4	WASHER (17.5X30X3.5-MM THK)	

M - METRIC PART

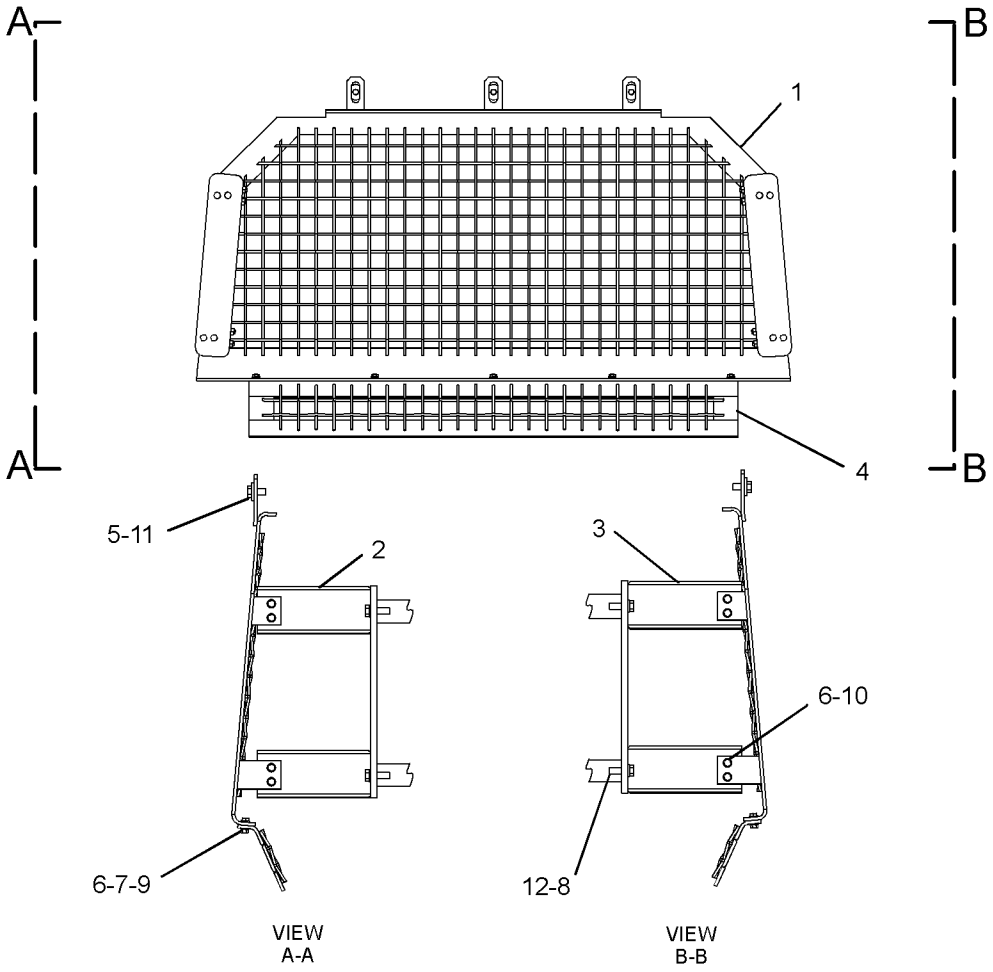

GRAPHIC #1 **<END>** g01173685

272-2272 SEAT BELT GP–RETRACTABLE

S/N: LJR1-UP
PART OF 318-7091 SEAT GP-SUSPENSION
AN ATTACHMENT

SMCS-7327 **i03653555**

NOTE	REF NO	GRAPHIC REF	PART NUMBER	QTY	PART NAME 1 2 3 4 5 6 (PRODUCT LEVEL)	SEE PAGE
	1	1	**275-7803**	1	SPACER (11.7X19.8X25.4-MM THK)	
	2	1	**0T-0489**	2	BOLT (7/16-20X2-IN)	
	3	1	**8T-5360**	2	WASHER (12X22.5X2.5-MM THK)	

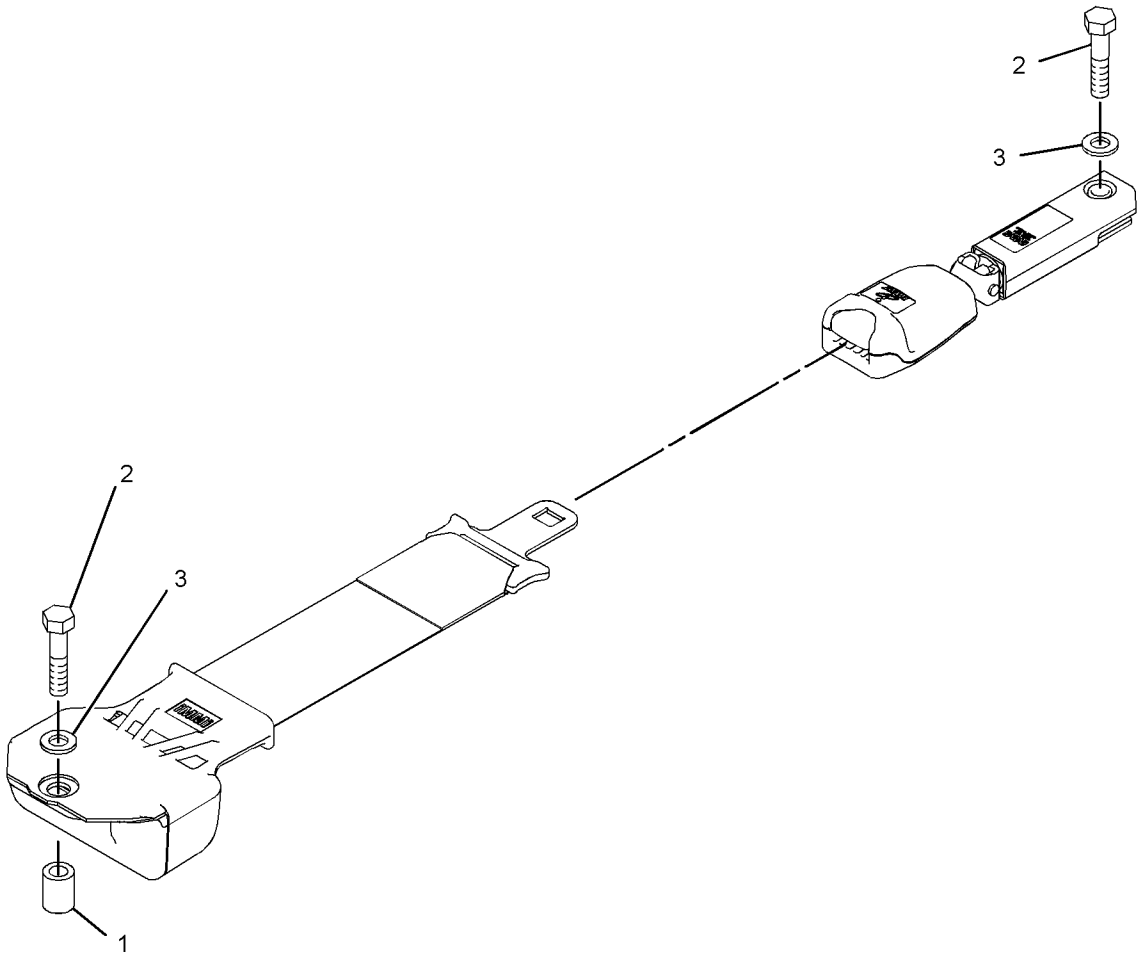

GRAPHIC #1 **<END>** g01382730

178-0603 SEAT GP–CLOTH

S/N: LJR1-UP

PART OF 178-0606 SEAT GP

SMCS-7312 **i02679176**

NOTE	REF NO	GRAPHIC REF	PART NUMBER	QTY	PART NAME 1 2 3 4 5 6 (PRODUCT LEVEL)	SEE PAGE
	1	1	**218-0861**	1	PAN AS	
		1	**8T-9082**	5	RIVET-POP	
		1	**217-9049**	1	CUSHION AS	
	2	1	**143-1288**	8	LOCKNUT-FLANGE (3/8-16-THD)	
	3	1	**171-1230**	6	SCREW-BUTTON HEAD (3/8-16X1-IN)	
	4	1	**171-6682**	1	BAR	
	5	1	**172-2416**	2	PIN	
Y	6	1	*173-1028*	1	ADJUSTER GP-SEAT	588
	7	1	**177-1863**	2	BOLT-PIVOT (3/8-16X2.89-IN)	
Y	8	1	*210-2270*	1	RECLINER GP-SEAT	684
CY	9	1	*292-9237*	1	PAN GP-BACKREST	666
	10	1	**184-2298**	1	ROD	
	11	1	**184-2299**	4	WASHER (7X25.4X2.54-MM THK)	
	12	1	**095-0843**	2	PIN-COTTER	
	13	1	**5V-1496**	2	RETAINER	
	14	1	**6V-7646**	2	WASHER-HARD (7.2X25X2-MM THK)	
	15	1	**8T-0328**	1	WASHER-HARD (5.5X10X1-MM THK)	
	16	1	**8T-4205**	1	WASHER-HARD (7.2X14.5X2-MM THK)	
C	17	1	**294-5042**	2	SPACER (11.1X19.5X9.67-MM THK)	

C - CHANGE FROM PREVIOUS TYPE
Y - SEPARATE ILLUSTRATION

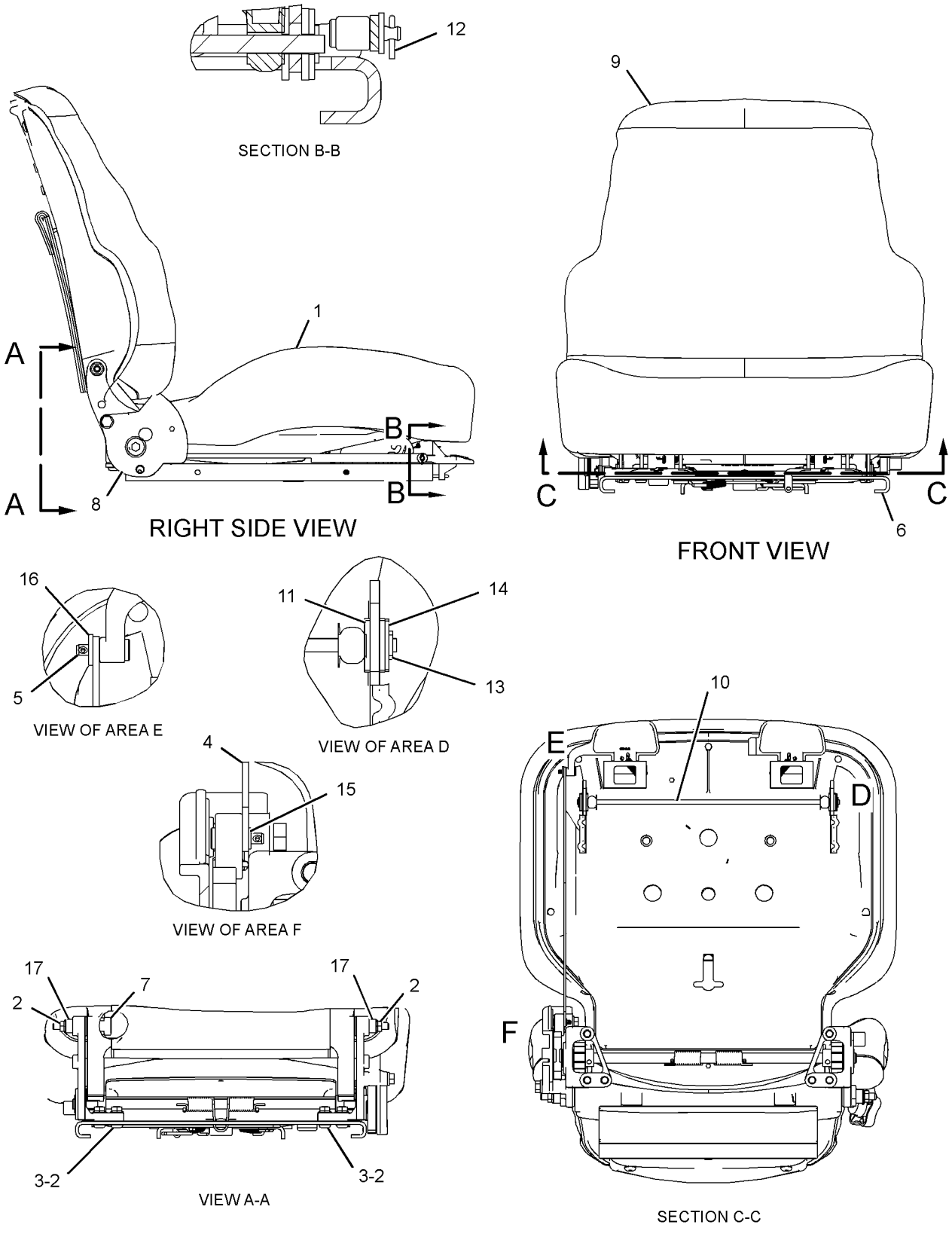

GRAPHIC #1 **<END>** g01336990

178-0606 SEAT GP–CLOTH

S/N: LJR1-UP

PART OF 200-3174 SEAT GP-SUSPENSION

SMCS-7312 **i02123119**

NOTE	REF NO	GRAPHIC REF	PART NUMBER	QTY	PART NAME 1 2 3 4 5 6 (PRODUCT LEVEL)	SEE PAGE
	1	1	**177-4937**	1	SPACER (11.7X19.8X20.3-MM THK)	
Y	2	1	**178-0603**	1	SEAT GP (CLOTH)	693
	3	1	**222-0345**	1	SEAT BELT GP (RETRACTABLE, 3-IN)	
C	4	1	**229-1494**	1	EXTENSION GP-BACKREST (CLOTH)	
	5	1	**0T-0244**	1	BOLT (7/16-20X1.25-IN)	
	6	1	**205-6388**	1	BOLT (7/16-20X1.75-IN)	

C - CHANGE FROM PREVIOUS TYPE
Y - SEPARATE ILLUSTRATION

178-0606 **SEAT GP (*contd.*)** **i02123119**

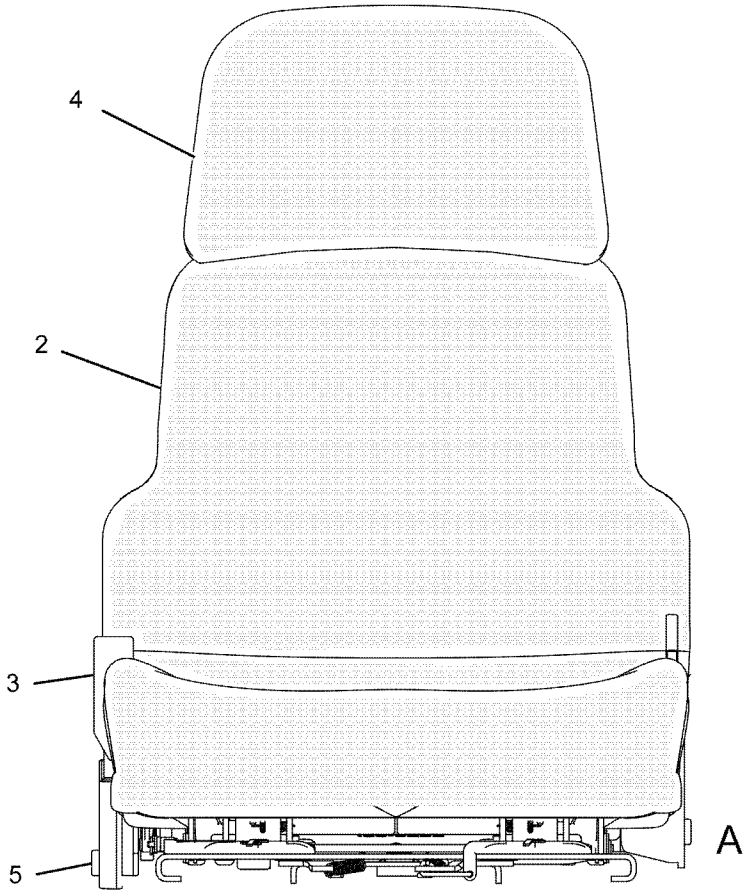

FRONT VIEW

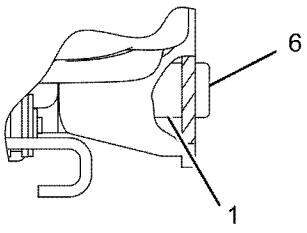

VIEW A

GRAPHIC #1 **<END>** g01084230

180-7304 SEAT GP–VINYL

S/N: LJR1-UP
PART OF 184-6011 SEAT GP
AN ATTACHMENT

SMCS-7312 **i02762440**

NOTE	REF NO	GRAPHIC REF	PART NUMBER	QTY	PART NAME 1 2 3 4 5 6 (PRODUCT LEVEL)	SEE PAGE
	1	1	**143-1288**	8	LOCKNUT-FLANGE (3/8-16-THD)	
	2	1	**171-1230**	6	SCREW-BUTTON HEAD (3/8-16X1-IN)	
	3	1	**171-6682**	1	BAR	
	4	1	**172-2416**	2	PIN	
Y	5	1	*173-1028*	1	ADJUSTER GP-SEAT	588
	6	1	**173-3283**	1	PAN AS (VINYL)	
		1	**169-1026**	1	CUSHION AS	
		1	**6K-3273**	5	RIVET-POP	
	7	1	**177-1863**	2	BOLT-PIVOT (3/8-16X2.89-IN)	
	8	1	**184-2298**	1	ROD	
	9	1	**184-2299**	4	WASHER (7X25.4X2.54-MM THK)	
Y	10	1	*210-2270*	1	RECLINER GP-SEAT	684
CY	11	1	*292-9238*	1	PAN GP-BACKREST (VINYL)	667
C	12	1	**294-5042**	2	SPACER (11.1X19.5X9.67-MM THK)	
	13	1	**095-0843**	2	PIN-COTTER	
	14	1	**5V-1496**	2	RETAINER	
	15	1	**6V-7646**	2	WASHER-HARD (7.2X25X2-MM THK)	
	16	1	**8T-0328**	1	WASHER-HARD (5.5X10X1-MM THK)	
	17	1	**8T-4205**	1	WASHER-HARD (7.2X14.5X2-MM THK)	

C - CHANGE FROM PREVIOUS TYPE
Y - SEPARATE ILLUSTRATION

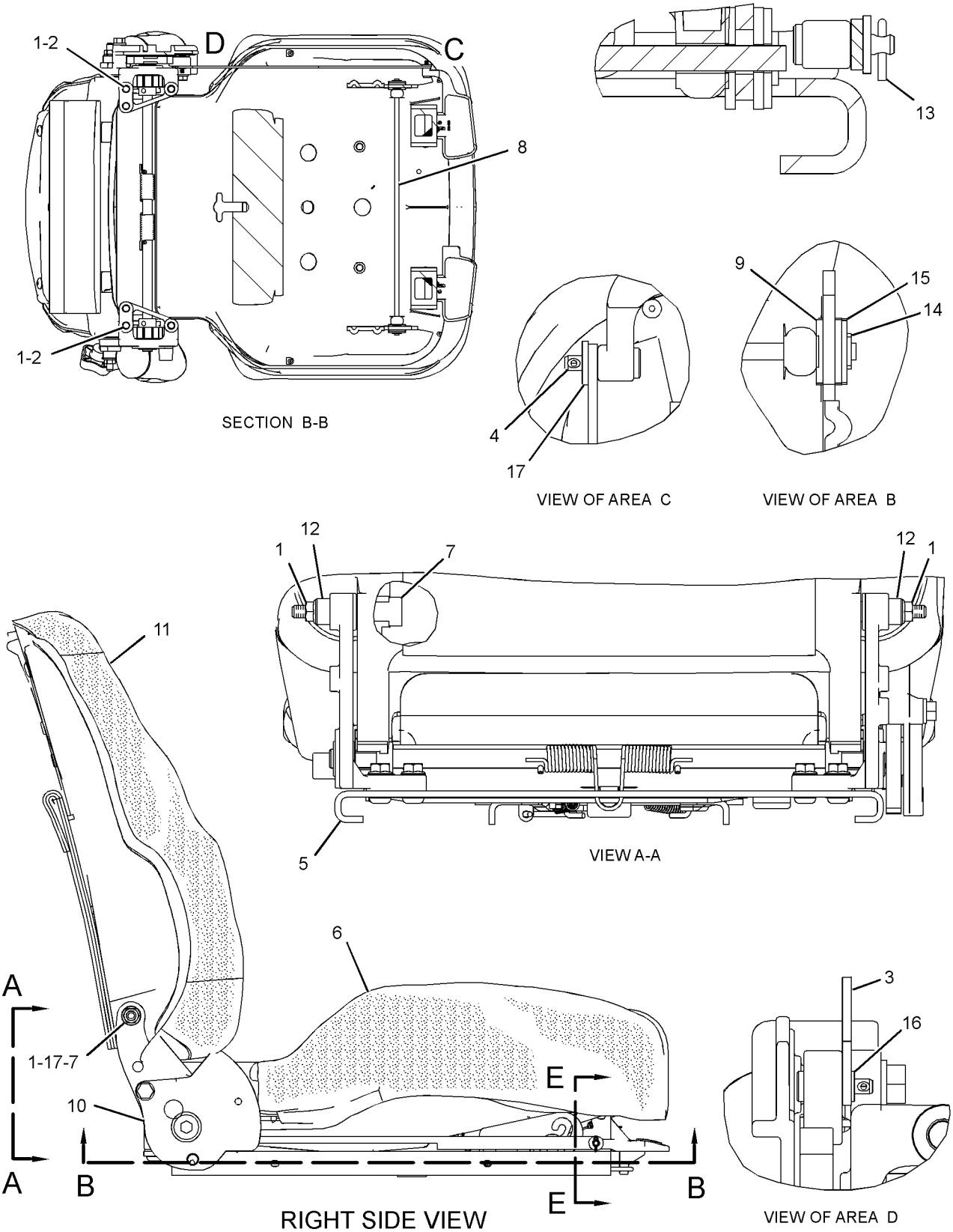

GRAPHIC #1 **<END>** g01393648

184-6011 SEAT GP–VINYL

S/N: LJR1-UP
PART OF 344-1085 SEAT GP-SUSPENSION
AN ATTACHMENT

SMCS-7312 **i02994880**

NOTE	REF NO	GRAPHIC REF	PART NUMBER	QTY	PART NAME 1 2 3 4 5 6 (PRODUCT LEVEL)	SEE PAGE
	1	1	**173-3083**	1	EXTENSION GP-BACKREST (VINYL)	
		1	**117-4491**	1	ROD	
	2	1	**177-4937**	1	SPACER (11.7X19.8X20.3-MM THK)	
	3	1	**205-6388**	1	BOLT (7/16-20X1.75-IN)	
	4	1	**0T-0244**	1	BOLT (7/16-20X1.25-IN)	
Y	5	1	**180-7304**	1	SEAT GP (VINYL)	697
	6	1	**222-0345**	1	SEAT BELT GP (RETRACTABLE, 3-IN)	

Y - SEPARATE ILLUSTRATION

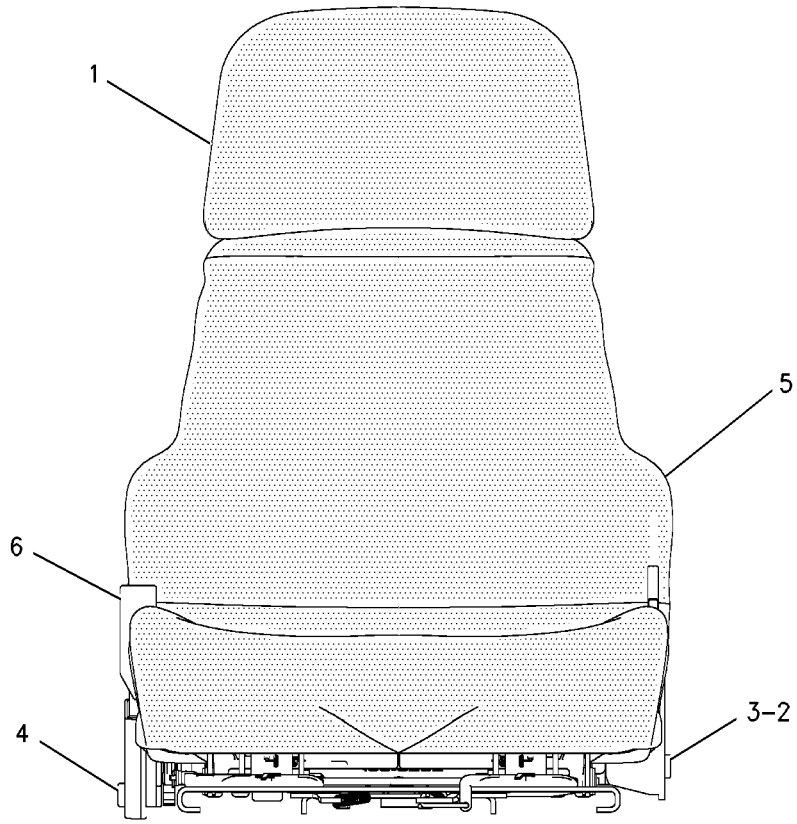

FRONT VIEW

GRAPHIC #1 **<END>** g00683843

318-7095 SEAT GP—VINYL

S/N: LJR1-UP

PART OF 318-7091 SEAT GP-SUSPENSION

AN ATTACHMENT

SMCS-7312 **i05096334**

NOTE	REF NO	GRAPHIC REF	PART NUMBER	QTY	PART NAME 1 2 3 4 5 6 (PRODUCT LEVEL)	SEE PAGE
	1	1	**4V-8256**	2	SPRING	
	2	2	**132-0338**	4	WASHER-PLASTIC (13X31.7X0.8-MM THK)	
	3	1	**143-1288**	8	LOCKNUT-FLANGE (3/8-16-THD)	
	4	1	**164-4883**	1	KNOB-LUMBAR	
	5	1	**171-1230**	6	SCREW-BUTTON HEAD (3/8-16X1-IN)	
	6	1	**173-3083**	1	EXTENSION GP-BACKREST (VINYL)	
		1	**117-4491**	1	ROD	
	7	1	**177-1863**	2	BOLT-PIVOT (3/8-16X2.89-IN)	
	8	1	**218-2529**	3	PLUG	
	9	2	**249-2844**	2	WASHER (12.7X31.7X1-MM THK)	
	10	1	**262-0767**	1	BRACKET AS (LH)	
	11	1	**314-5162**	1	BRACKET AS (RH)	
	12	2	**262-0772**	1	SHAFT GP-RECLINER	
		2	**2K-9111**	2	PIN-SPRING	
		2	**3E-4333**	1	KEY-WOODRUFF	
		2	**8T-0277**	1	PIN-SPRING	
		2	**256-4959**	1	SLIDER AS	
		2	**262-0789**	1	CABLE AS	
	13	1	**262-0779**	1	LATCH (LH)	
	14	1	**262-0780**	1	LATCH (RH)	
	15	1	**262-0781**	1	ROD	
	16	2	**262-0785**	1	LEVER (RH)	
	17	2	**262-0786**	2	BOLT-SPECIAL	
	18	2	**262-0787**	1	ROD	
	19	1	**267-9319**	1	STOP	
	20	2	**277-8103**	1	PLUG	
	21	1	**278-6935**	1	CUSHION AS-BACKREST (VINYL)	
Y	22	1	*292-6402*	1	PAN GP-BACKREST (LUMBAR)	665
	23	2	**293-2915**	1	LEVER (LH)	
	24	2	**293-9379**	1	ROD	
	25	1	**293-9380**	1	ROD	
	26	1	**293-9381**	1	PLATE AS	
	27	2	**293-9665**	2	SPRING	
	28	2	**294-7139**	1	PAN GP-SEAT	
M		2	**127-2170**	6	SCREW-TRUSS HEAD (M8X1.25X20-MM)	
M		2	**5C-7261**	6	NUT (M8X1.25-THD)	
		2	**8T-4224**	6	WASHER-HARD (8.8X16X2-MM THK)	
	29	2	**295-6472**	4	WASHER (7X19X2-MM THK)	
	34	1	**031-0214**	1	BOLT-LOCKING (1/4-20X0.5-IN)	
	35	1	**101-2867**	1	WASHER-HARD (7.2X25X2-MM THK)	
	36	1	**5P-0537**	2	WASHER-HARD (7.2X14.5X2-MM THK)	
	37	2	**5T-7486**	2	RETAINER-SPRING	
	38	2	**5V-1496**	2	RETAINER	
	39	1	**6V-8969**	2	SCREW-BUTTON HEAD (1/4-20X0.5-IN)	
	40	2	**7Y-0468**	2	PIN-SPRING	
M	41	2	**7Y-7388**	6	SCREW-BUTTON HEAD (M5X0.8X12-MM)	
	42	1	**8T-7566**	1	PIN-SPRING	
	43	1	**294-5042**	2	SPACER (11.1X19.5X9.67-MM THK)	
	44	2	**9F-5975**	1	BOLT (5/16-18X0.75-IN)	
	45	2	**9T-5241**	4	WASHER (9.53X18X1-MM THK)	

M - METRIC PART
Y - SEPARATE ILLUSTRATION

318-7095 **SEAT GP (*contd.*)** **i05096334**

REFER TO ALL ILLUSTRATIONS OF
THIS GROUP FOR AUXILIARY VIEWS

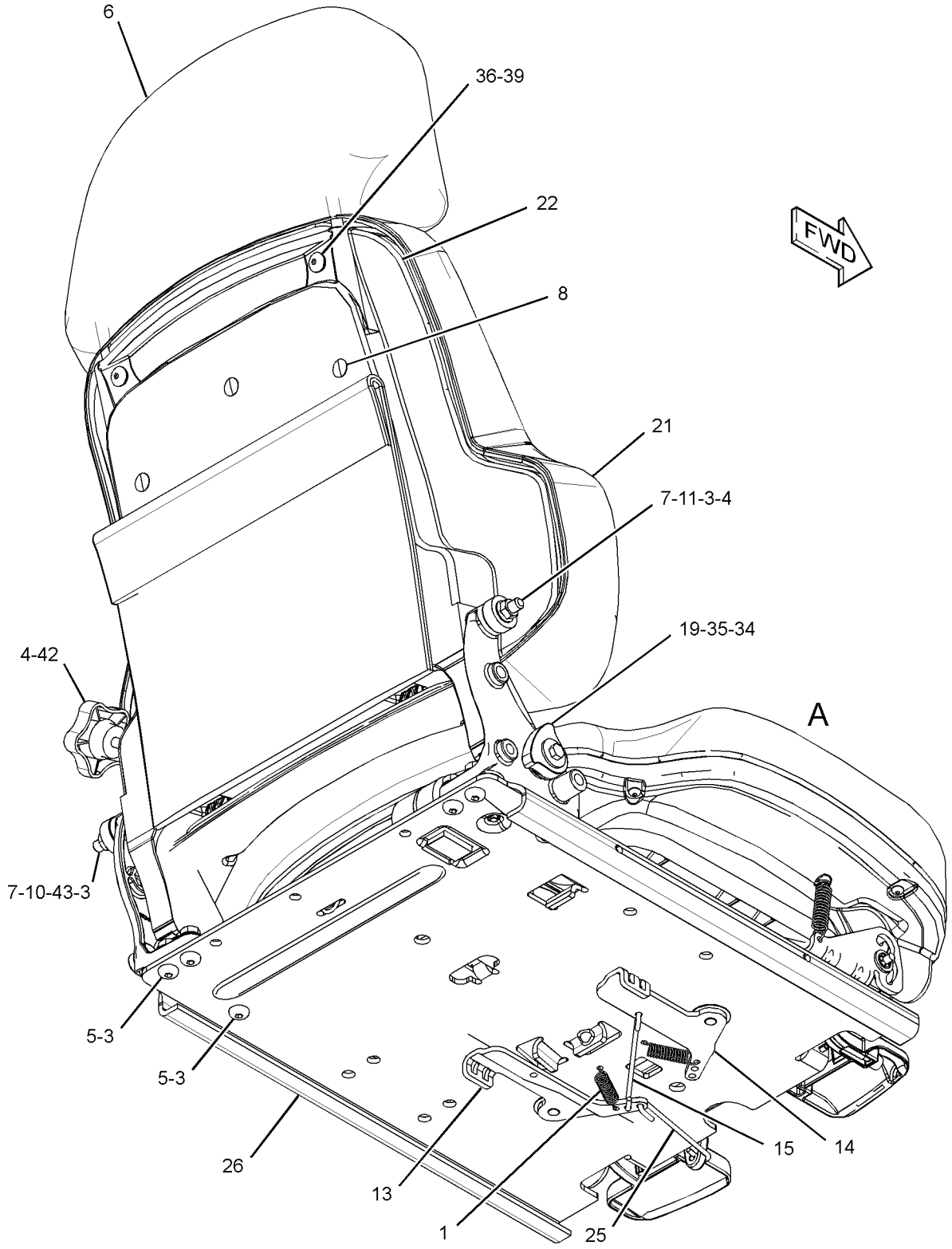

GRAPHIC #1

g01961168

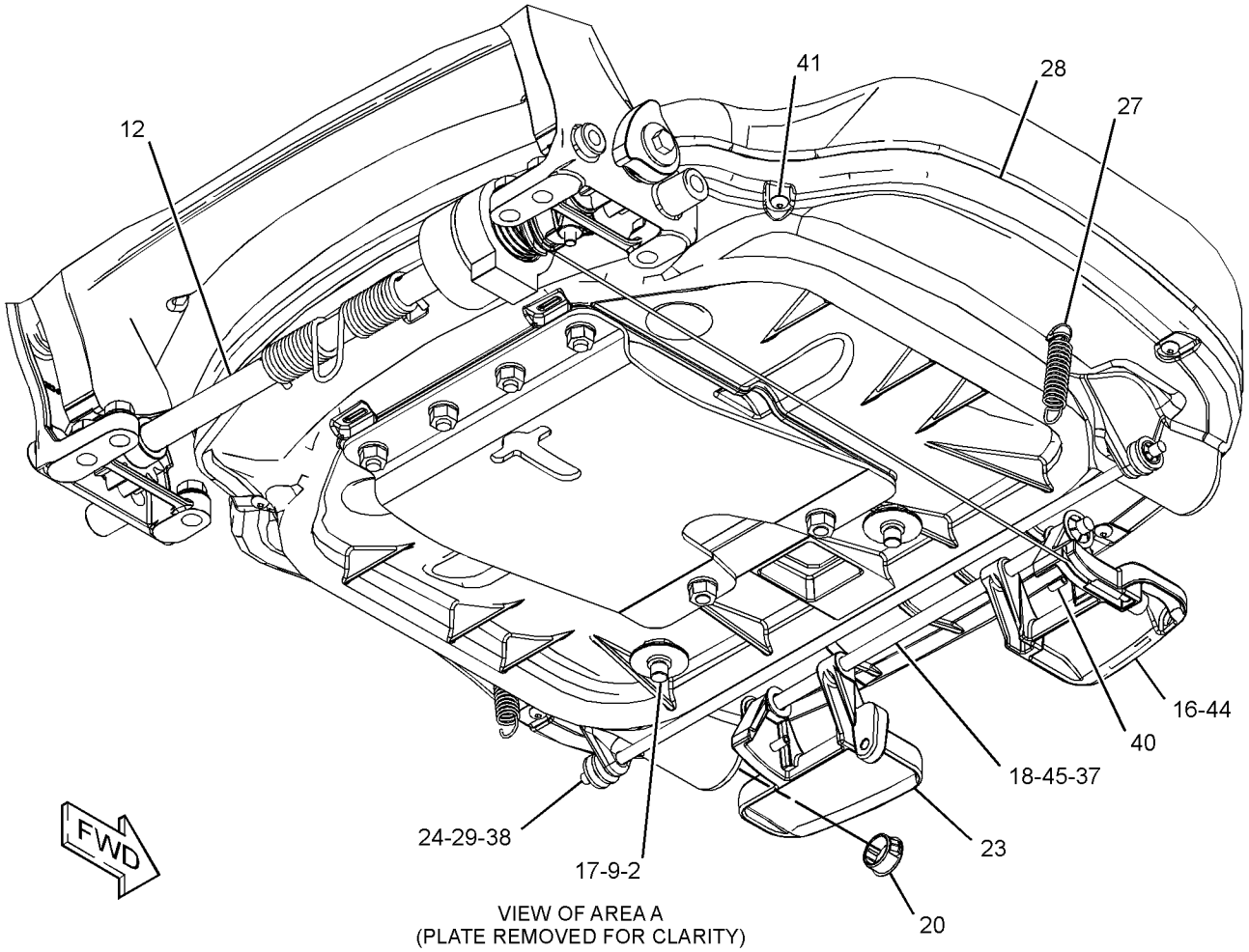

VIEW OF AREA A
(PLATE REMOVED FOR CLARITY)

GRAPHIC #2

<END>

g01961169

200-3174 SEAT GP-SUSPENSION—CLOTH, AIR

S/N: LJR1-UP

PART OF 320-1201 SEAT GP-SUSPENSION

SMCS-7321, 7324, 7336 **i02946557**

NOTE	REF NO	GRAPHIC REF	PART NUMBER	QTY	PART NAME 1 2 3 4 5 6 (PRODUCT LEVEL)	SEE PAGE
J	1	1	**161-9289**	4	BLOCK-SLIDER	
J	2	1	**173-5787**	4	SETSCREW (1/4-20-THD)	
Y	3	1	**178-0606**	1	SEAT GP (CLOTH)	695
Y	4	1	**191-2933**	1	SUSPENSION GP-SEAT (AIR)	707
J	5	1	**203-7703**	2	WASHER-HARD (10.2X22.22X2.38-MM THK)	
J	6	1	**4F-4879**	1	BOLT (3/8-16X0.5-IN)	
					AVAILABLE REPAIR KIT(S):	
J			**173-7035**	1	KIT-SLIDER BLOCK (SUSPENSION SEAT)	

J - KIT MARKED J INCLUDES PARTS MARKED J
Y - SEPARATE ILLUSTRATION

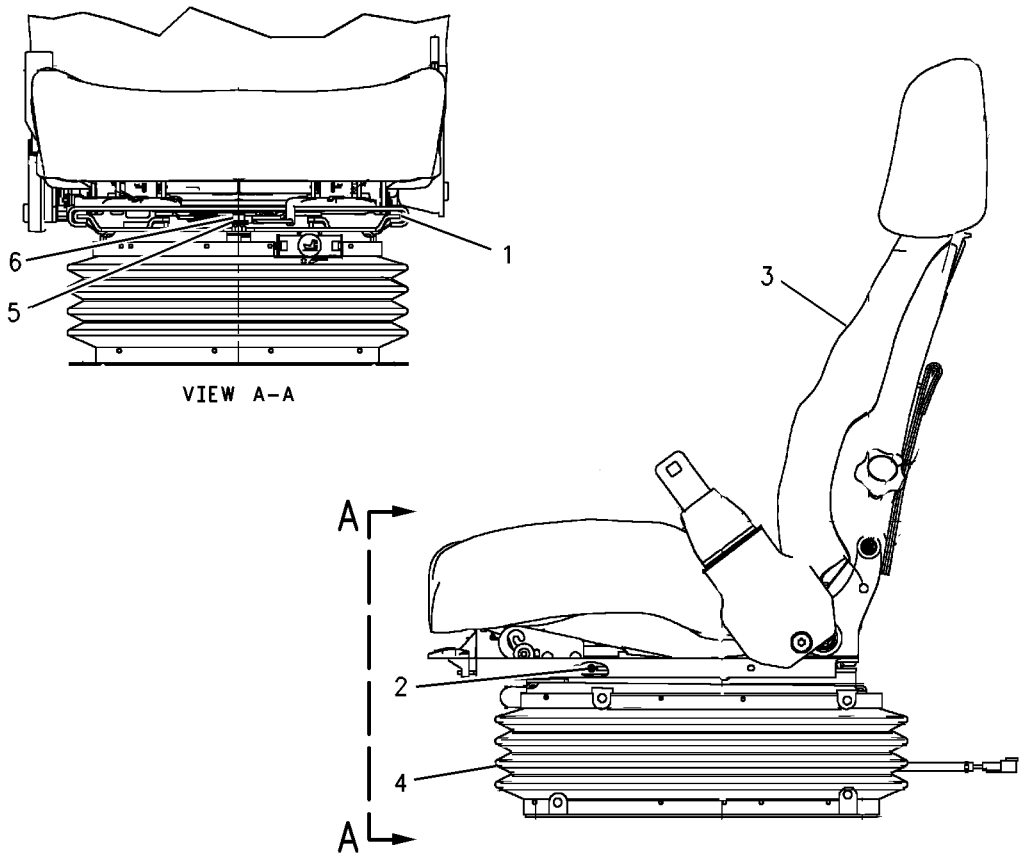

GRAPHIC #1 **<END>** g00933544

318-7091 SEAT GP-SUSPENSION–VINYL

S/N: LJR1-UP
24-VOLT
PART OF 320-1203 SEAT GP-SUSPENSION
AN ATTACHMENT

SMCS-7321, 7324, 7336 **i03653554**

NOTE	REF NO	GRAPHIC REF	PART NUMBER	QTY	PART NAME 1 2 3 4 5 6 (PRODUCT LEVEL)	SEE PAGE
J	1	1	**4F-4879**	1	BOLT (3/8-16X0.5-IN)	
J	2	1	**173-5787**	4	SETSCREW (1/4-20-THD)	
Y	3	1	**191-2933**	1	SUSPENSION GP-SEAT (AIR)	707
J	4	1	**203-7703**	2	WASHER-HARD (10.2X22.22X2.38-MM THK)	
Y	5	1	**272-2272**	1	SEAT BELT GP (RETRACTABLE, 3-IN)	692
Y	6	1	*318-7095*	1	SEAT GP (VINYL)	700
					AVAILABLE REPAIR KIT(S):	
J			**173-7035**	1	KIT-SLIDER BLOCK (SUSPENSION SEAT)	
					(INCLUDES SLIDER BLOCKS)	

J - KIT MARKED J SERVICES PART(S) MARKED J
Y - SEPARATE ILLUSTRATION

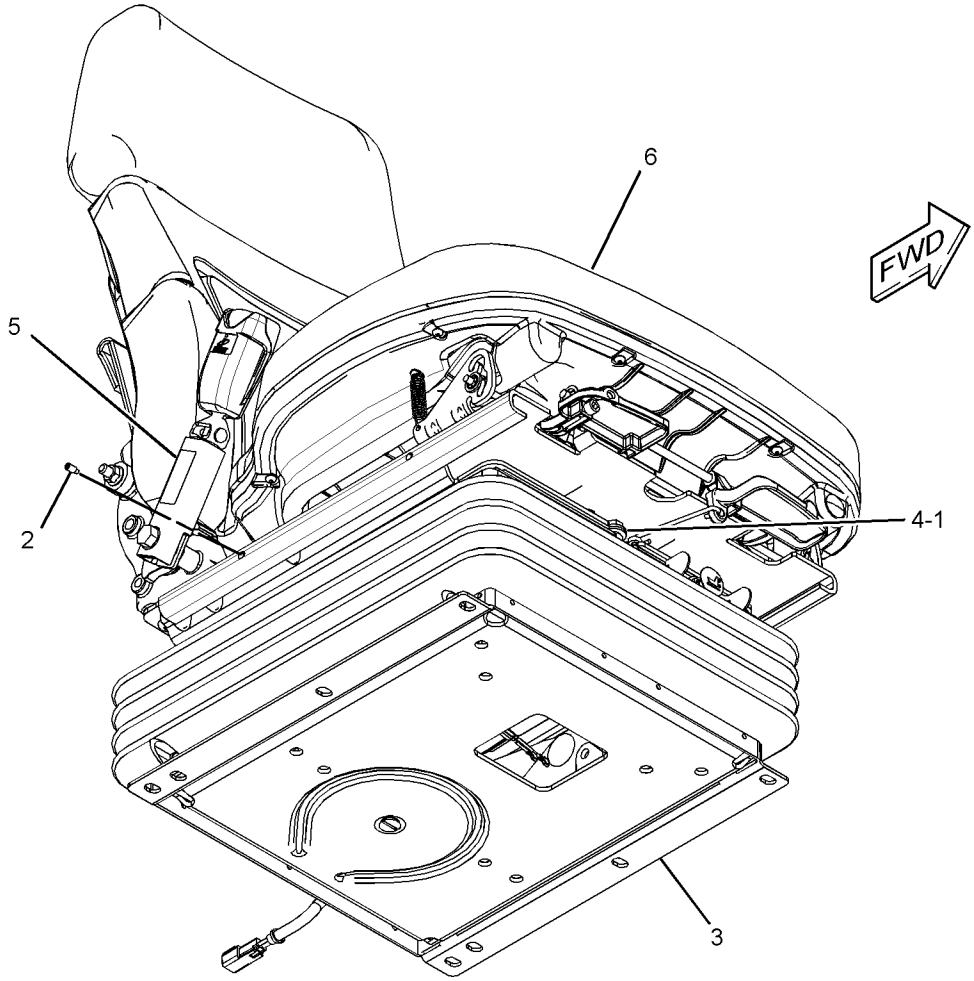

GRAPHIC #1 **<END>** g01961193

320-1201 SEAT GP-SUSPENSION—CLOTH, AIR

S/N: LJR1-UP
PART OF 310-9971 CAB AR

SMCS-7321, 7324, 7336 **i03628499**

NOTE	PART NUMBER	QTY	PART NAME 1 2 3 4 5 6 (PRODUCT LEVEL)	SEE PAGE
Y	**200-3174**	1	SEAT GP-SUSPENSION (CLOTH, AIR)	703
M	**6V-5843**	4	BOLT (M10X1.5X45-MM)	
	8T-4121	4	WASHER-HARD (11X21X2.5-MM THK)	

M - METRIC PART
Y - SEPARATE ILLUSTRATION

<END>

320-1203 SEAT GP-SUSPENSION—VINYL

S/N: LJR1-UP
AN ATTACHMENT

SMCS-7321, 7324, 7336 **i03653553**

NOTE	PART NUMBER	QTY	PART NAME 1 2 3 4 5 6 (PRODUCT LEVEL)	SEE PAGE
Y	**318-7091**	1	SEAT GP-SUSPENSION (VINYL)	704
M	**6V-5843**	4	BOLT (M10X1.5X45-MM)	
	8T-4121	4	WASHER-HARD (11X21X2.5-MM THK)	

M - METRIC PART
Y - SEPARATE ILLUSTRATION

<END>

320-1204 SEAT GP-SUSPENSION—VINYL

S/N: LJR1-UP
PART OF 320-1082 CANOPY AR
AN ATTACHMENT

SMCS-7321, 7324, 7336 **i03626563**

NOTE	PART NUMBER	QTY	PART NAME 1 2 3 4 5 6 (PRODUCT LEVEL)	SEE PAGE
Y	**344-1085**	1	SEAT GP-SUSPENSION (VINYL, AIR)	706
M	**6V-5843**	4	BOLT (M10X1.5X45-MM)	
	8T-4121	4	WASHER-HARD (11X21X2.5-MM THK)	

M - METRIC PART
Y - SEPARATE ILLUSTRATION

<END>

344-1085 SEAT GP-SUSPENSION–VINYL, AIR

S/N: LJR1-UP
24-VOLT
PART OF 320-1204 SEAT GP-SUSPENSION
AN ATTACHMENT

SMCS-7321, 7324, 7336 **i03626571**

NOTE	REF NO	GRAPHIC REF	PART NUMBER	QTY	PART NAME 1 2 3 4 5 6 (PRODUCT LEVEL)	SEE PAGE
J	1	1	**173-5787**	4	SETSCREW (1/4-20-THD)	
Y	2	1	**184-6011**	1	SEAT GP (VINYL)	699
Y	3	1	**191-2933**	1	SUSPENSION GP-SEAT (AIR)	707
J	4	1	**203-7703**	2	WASHER-HARD (10.2X22.22X2.38-MM THK)	
J	5	1	**4F-4879**	1	BOLT (3/8-16X0.5-IN)	
					AVAILABLE REPAIR KIT(S):	
J			**173-7035**	1	KIT-SLIDER BLOCK (SUSPENSION SEAT)	
					(INCLUDES BOLT,WASHERS,SLIDER BLOCKS & SETSCREWS)	

J - KIT MARKED J INCLUDES PARTS MARKED J
Y - SEPARATE ILLUSTRATION

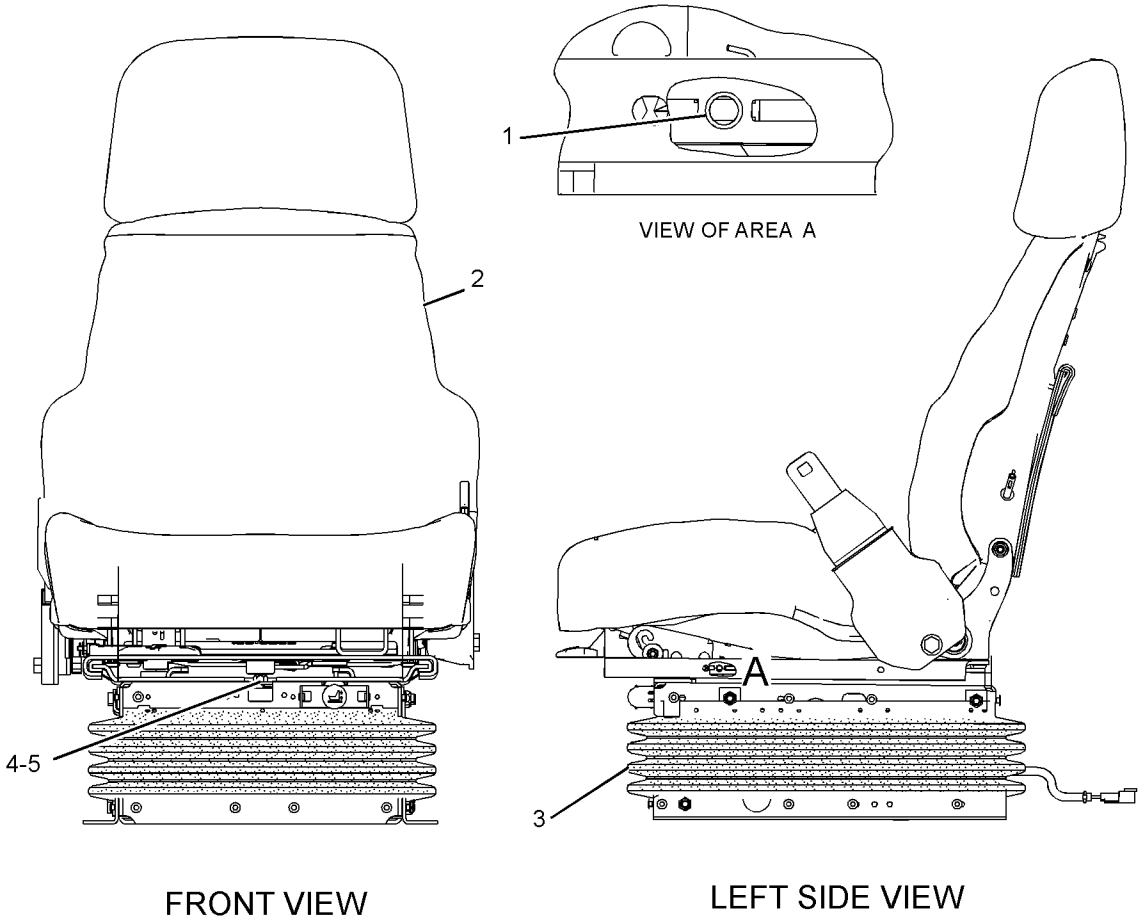

GRAPHIC #1 **<END>** g01890515

191-2933 SUSPENSION GP-SEAT–AIR

S/N: LJR1-UP

PART OF 200-3174, 318-7091, 344-1085 SEAT GP-SUSPENSION

ALSO AN ATTACHMENT

SMCS-7324 **i04997729**

NOTE	REF NO	GRAPHIC REF	PART NUMBER	QTY	PART NAME 1 2 3 4 5 6 (PRODUCT LEVEL)	SEE PAGE
	1	1	**3P-9900**	5	WASHER (10.5X30X3-MM THK)	
	2	1	**4B-4278**	2	WASHER (10.2X20.5X1.6-MM THK)	
	3	1	**4V-8577**	12	BEARING	
	4	1	**8L-8413**	1	STRAP-CABLE	
	5	1	**145-0326**	1	FILM-INSTRUCTION (SEAT ADJUSTMENT)	
	6	1	**164-1234**	1	PLATE	
	7	1	**101-0003**	26	FASTENER	
	8	1	**169-7380**	1	BOLT-SOCKET HEAD (3/8-16X0.375-IN)	
	9	1	**186-5107**	2	SCREW-DRIVE (NO 8-16X1.25-IN)	
	10	1	**192-7752**	4	SHAFT AS	
	11	1	**192-7755**	1	HOUSING AS (LOWER)	
	12	1	**314-5274**	1	SHAFT (INNER)	
	13	1	**192-7767**	1	SCISSORS AS	
	14	1	**192-7783**	1	TOGGLE AS (WIDE)	
	15	1	**192-7787**	1	TOGGLE AS (NARROW)	
	16	1	**192-7790**	1	HOUSING AS (UPPER)	
	17	1	**192-7795**	1	BOOT	
	18	1	**192-7805**	1	HARNESS AS-VALVE (SEAT AIR COMPRESSOR)	
		1	**8T-8729**	2	PIN-CONNECTOR (16-GA TO 18-GA)	
		1	**5P-4571**	2	TERMINAL-BLADE (14-GA TO 16-GA)	
		1	**102-8802**	1	KIT-RECEPTACLE (2-PIN)	
					(INCLUDES RECEPTACLE AS & WEDGE)	
E		1	**211-5358**		CONDUIT-FLEXIBLE (64-CM)	
	19	1	**192-7810**	1	SPRING AS-AIR	
		1	**5P-4423**	1	ELBOW	
		1	**163-1135**	1	SPRING	
	20	1	**192-7812**	1	BOLT-SPECIAL	
	21	1	**192-7820**	3	BUMPER	
	22	1	**314-5275**	1	SHAFT (OUTER)	
	23	1	**372-2158**	1	BRACKET-MOUNTING	
	24	1	**370-9894**	1	COMPRESSOR AS	
	25	1	**108-4311**	1	SCREW-MACHINE (3/8-16X0.75-IN)	
	26	1	**2K-4973**	8	LOCKNUT (3/8-16-THD)	
	27	1	**3J-4818**	1	LOCKWASHER	
M	28	1	**5C-2890**	3	NUT (M6X1-THD)	
	29	1	**8T-9371**	1	BOLT (3/8-16X0.5-IN)	
E	30	1	**211-5358**		CONDUIT-FLEXIBLE (26.7-CM)	
E	30A	1	**211-5358**		CONDUIT-FLEXIBLE (35.6-CM)	
D	31	1	**5P-6010**		TUBE (0.27-M)	
D	31A	1	**5P-6010**		TUBE (0.36-M)	
	32	1	**387-0314**	1	WIRE AS (16-GA, ORANGE)	
	33	1	**387-0317**	1	WIRE AS (16-GA, BLACK)	
					AVAILABLE REPAIR KIT(S):	
			192-7799	1	KIT-AIR VALVE (SUSPENSION SEAT)	
					(INCLUDES KNOB AS, NUT, VALVE, LOCKWASHER & FITTING)	
			192-7848	1	KIT-SHOCK ABSORBER (SUSPENSION SEAT)	
					(INCLUDES LOCKNUT, LOCKWASHER, SHOCK ABSORBER, BEARINGS, WASHER & BOLTS)	
			211-9294	1	KIT-TETHER (SUSPENSION SEAT)	
					(INCLUDES TETHERS)	

D - ORDER BY THE METER
E - ORDER BY THE CENTIMETER
M - METRIC PART

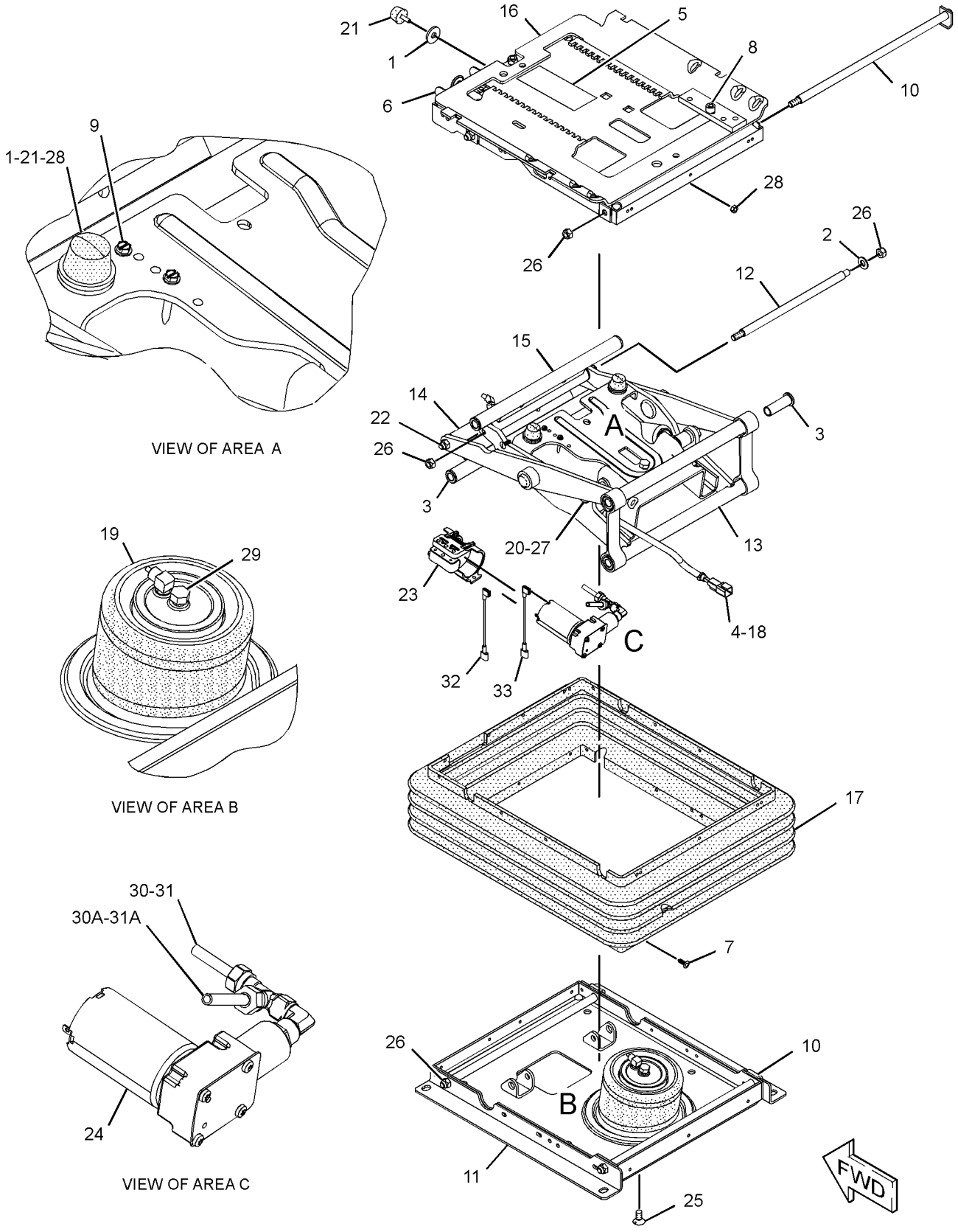

GRAPHIC #1 **<END>** g02883008

311-6390 TANK GP-WINDOW WASHER

S/N: LJR1-112

PART OF 310-9971 CAB AR

SMCS-7306 **i03627513**

NOTE	REF NO	GRAPHIC REF	PART NUMBER	QTY	PART NAME 1 2 3 4 5 6 (PRODUCT LEVEL)	SEE PAGE
	1	1	**3S-2093**	6	STRAP-CABLE	
	2	1	**133-3260**	1	SPACER (11X19X10-MM THK)	
	3	1	**204-2581**	4	VALVE AS-CHECK (WINDOW WASHER)	
	4	1	**219-7737**	1	TANK AS-WINDOW WASHER	
		1	**209-4482**	1	CAP-VENTED (WINDOW WASHER TANK)	
		1	**223-3383**	4	PUMP AS-WASHER (24-VOLT)	
	5	1	**332-4258**	1	HARNESS AS-WINDOW WIPER	
		1	**102-8805**	1	KIT-RECEPTACLE (6-PIN)	
					(INCLUDES RECEPTACLE AS & WEDGE)	
		1	**9X-0194**	4	TERMINAL AS	
		1	**5P-4571**	8	TERMINAL-BLADE (14-GA TO 16-GA)	
		1	**8T-8737**	1	PLUG-SEAL	
E		1	**119-3662**		TUBE-HEAT SHRINK (10.85-MM DIA) (7-CM)	
		1	**126-1767**	1	PIN-CONNECTOR (14-GA TO 16-GA)	
		1	**144-1636**	4	PIN-CONNECTOR (14-GA TO 18-GA)	
		1	**155-2270**	4	KIT-CONNECTING PLUG (2-PIN)	
					(EACH KIT INCLUDES PLUG AS, WEDGE & INTERFACE SEAL)	
	6	1	**1S-0994**	3	CLIP	
	7	1	**5P-4116**	3	WASHER-HARD (8.8X20.5X2-MM THK)	
M	8	1	**8T-4189**	3	BOLT (M8X1.25X20-MM)	
E	9	1	**144-0195**		HOSE (8-CM EACH)	
D	10	1	**6V-2496**		SEAL (0.3-M EACH)	
D	10A	1	**6V-2496**		SEAL (0.5-M)	

D - ORDER BY THE METER
E - ORDER BY THE CENTIMETER
M - METRIC PART

311-6390 **TANK GP-WINDOW WASHER (*contd.*)** **i03627513**

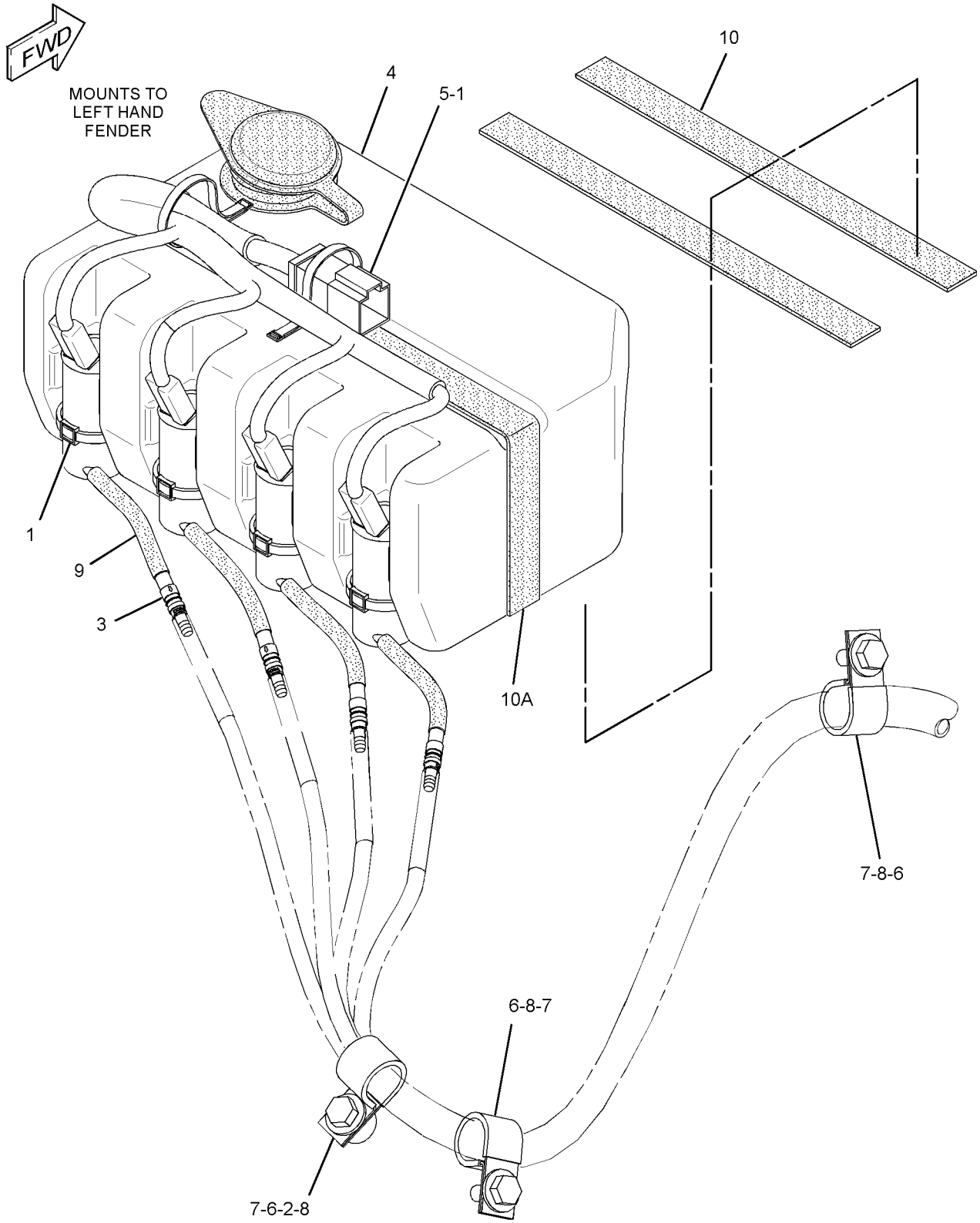

GRAPHIC #1 **<END>** g01887935

311-6390 TANK GP-WINDOW WASHER

S/N: LJR113-UP

PART OF 310-9971 CAB AR

SMCS-7306 **i03795172**

NOTE	REF NO	GRAPHIC REF	PART NUMBER	QTY	PART NAME 1 2 3 4 5 6 (PRODUCT LEVEL)	SEE PAGE
	1	1	**3S-2093**	6	STRAP-CABLE	
	2	1	**204-2581**	4	VALVE AS-CHECK (WINDOW WASHER)	
	3	1	**219-7737**	1	TANK AS-WINDOW WASHER	
		1	**209-4482**	1	CAP-VENTED (WINDOW WASHER TANK)	
		1	**223-3383**	4	PUMP AS-WASHER (24-VOLT)	
	4	1	**332-4258**	1	HARNESS AS-WINDOW WIPER	
		1	**102-8805**	1	KIT-RECEPTACLE (6-PIN)	
					(INCLUDES RECEPTACLE AS & WEDGE)	
		1	**9X-0194**	4	TERMINAL AS	
		1	**5P-4571**	8	TERMINAL-BLADE (14-GA TO 16-GA)	
		1	**8T-8737**	1	PLUG-SEAL	
E		1	**119-3662**		TUBE-HEAT SHRINK (10.85-MM DIA) (7-CM)	
		1	**126-1767**	1	PIN-CONNECTOR (14-GA TO 16-GA)	
		1	**144-1636**	4	PIN-CONNECTOR (14-GA TO 18-GA)	
		1	**155-2270**	4	KIT-CONNECTING PLUG (2-PIN)	
					(EACH KIT INCLUDES PLUG AS, WEDGE & INTERFACE SEAL)	
C	5	1	**1S-0994**	2	CLIP	
C	6	1	**5P-4116**	1	WASHER-HARD (8.8X20.5X2-MM THK)	
CM	7	1	**8T-4189**	1	BOLT (M8X1.25X20-MM)	
CE	8	1	**144-0195**		HOSE (31-CM)	
CE	8A	1	**144-0195**		HOSE (23-CM)	
CE	8B	1	**144-0195**		HOSE (18-CM)	
CE	8C	1	**144-0195**		HOSE (10-CM)	
D	9	1	**6V-2496**		SEAL (0.3-M EACH)	
D	9A	1	**6V-2496**		SEAL (0.5-M)	

C - CHANGE FROM PREVIOUS TYPE
D - ORDER BY THE METER
E - ORDER BY THE CENTIMETER
M - METRIC PART

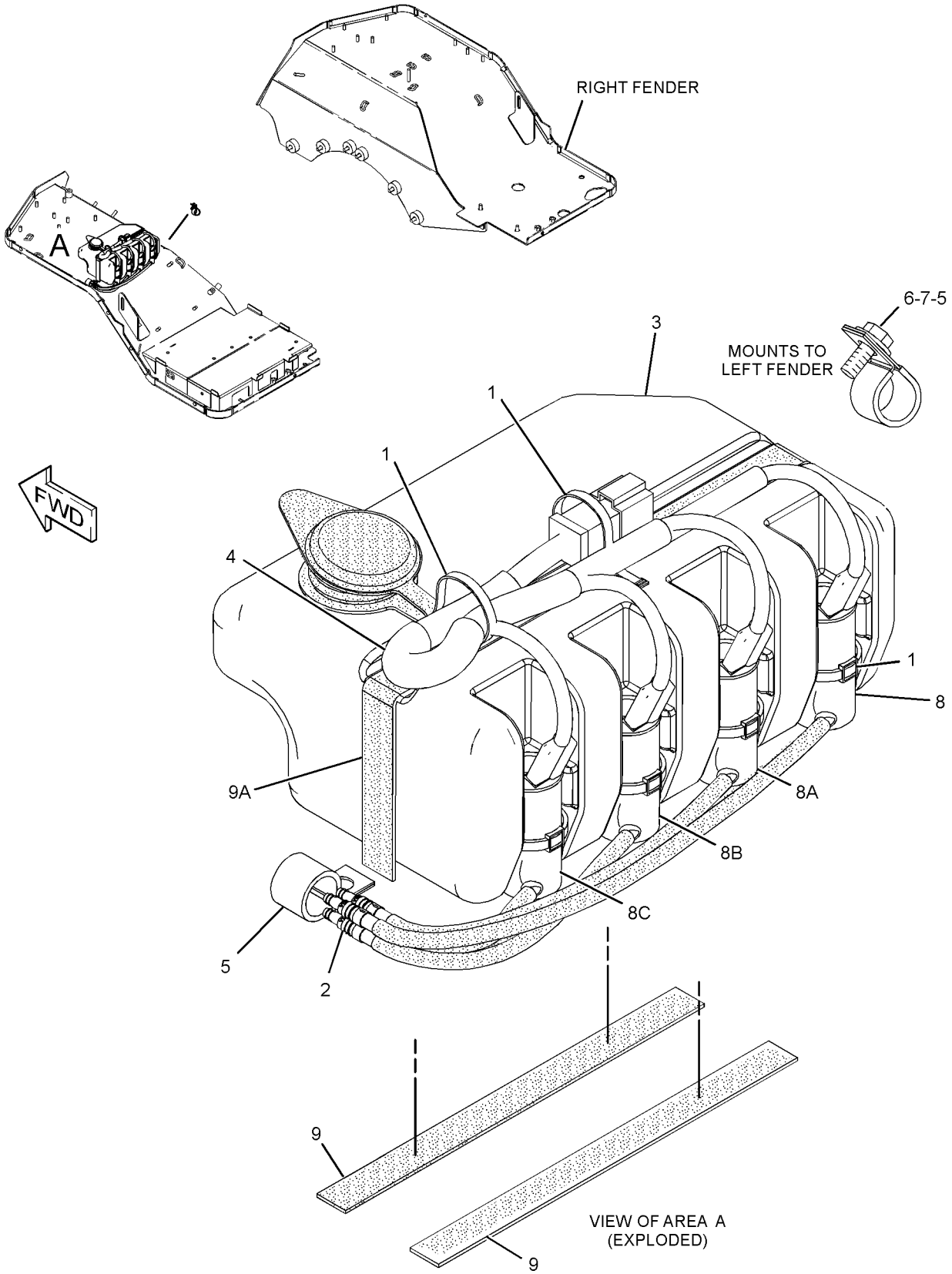

GRAPHIC #1 **<END>** g02111612

156-8916 WINDOW GP-CAB

S/N: LJR1-UP
PART OF 311-6420 CAB GP
ALSO AN ATTACHMENT

SMCS-7310 **i04432291**

NOTE	REF NO	GRAPHIC REF	PART NUMBER	QTY	PART NAME 1 2 3 4 5 6 (PRODUCT LEVEL)	SEE PAGE
Y	1	1	**166-2103**	1	WINDOW GP-CAB (LH)	714
Y	2	1	**166-2104**	1	WINDOW GP-CAB (RH)	715
	3	1	**365-8937**	1	GLASS-FRONT	
	4	1	**170-2070**	1	GLASS (REAR)	

Y - SEPARATE ILLUSTRATION

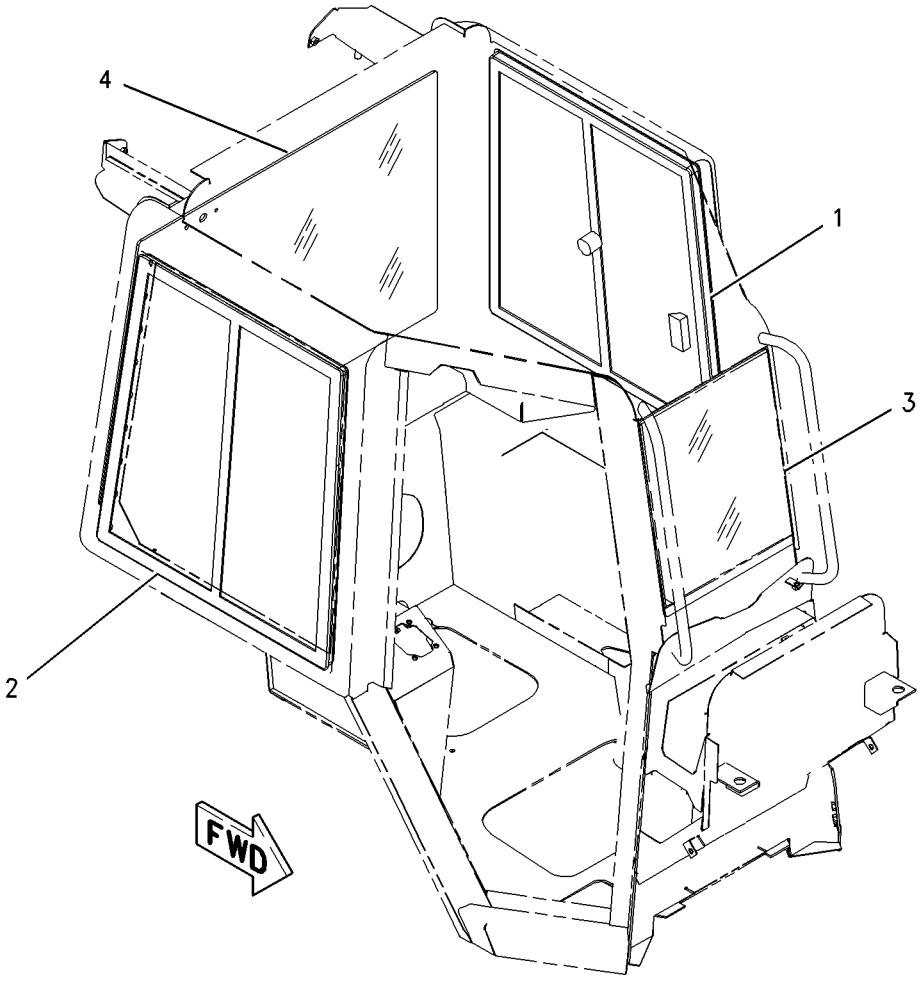

GRAPHIC #1 **<END>** g00911598

166-2103 WINDOW GP-CAB—LH

S/N: LJR1-UP
PART OF 156-8916 WINDOW GP-CAB
ALSO AN ATTACHMENT

SMCS-7310 **i02776456**

NOTE	REF NO	GRAPHIC REF	PART NUMBER	QTY	PART NAME 1 2 3 4 5 6 (PRODUCT LEVEL)	SEE PAGE
	1	1	**201-9820**	1	LATCH AS	
	2	1	**201-9821**	1	CATCH	
	3	1	**203-7738**	1	GLASS (FIXED)	
	4	1	**203-7740**	1	GLASS (SLIDING)	
E	5	1	**226-4872**		SEAL (31.5-CM)	
E	5A	1	**226-4872**		SEAL (67-CM)	
E	5B	1	**226-4872**		SEAL (84.5-CM EACH)	
	6	1	**201-9824**	1	STOP AS	

E - ORDER BY THE CENTIMETER

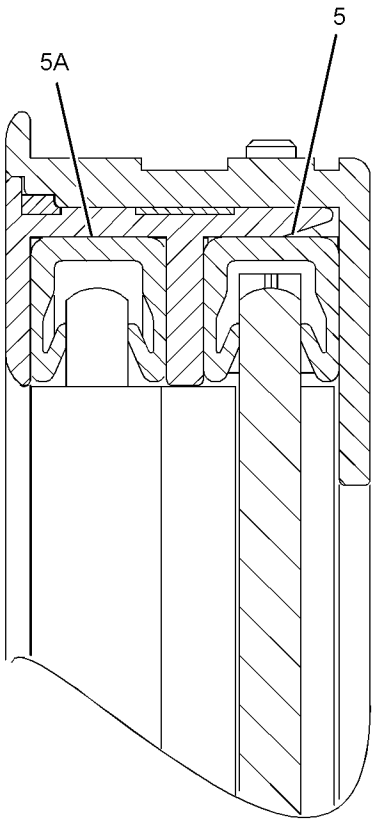

SECTION A-A

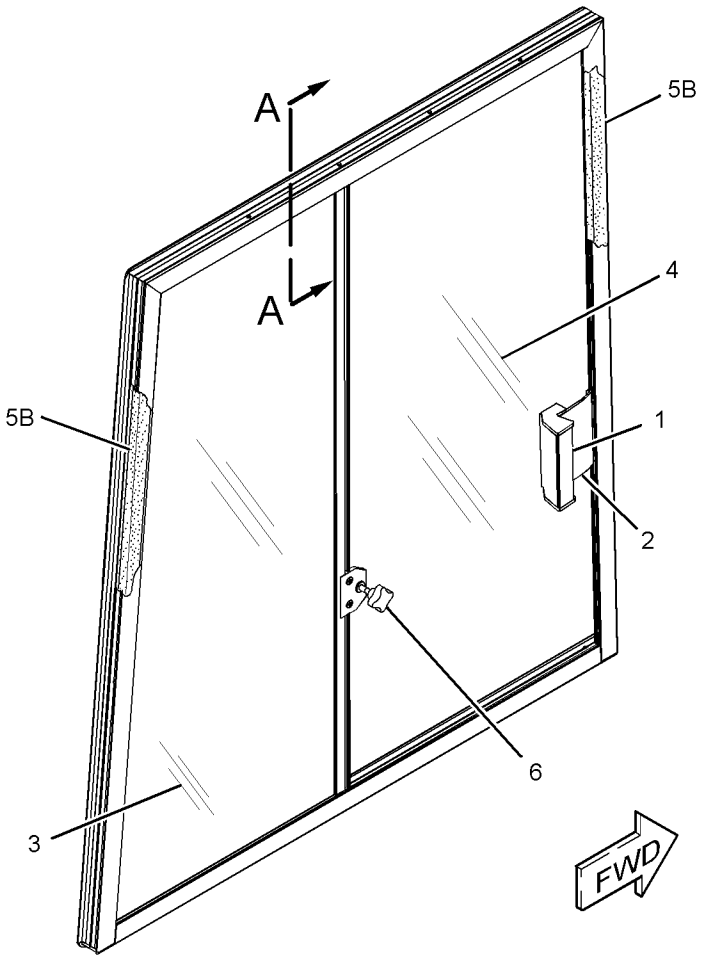

GRAPHIC #1 **<END>** g01424499

166-2104 WINDOW GP-CAB–RH

S/N: LJR1-UP
PART OF 156-8916 WINDOW GP-CAB
ALSO AN ATTACHMENT

SMCS-7310 **i02776457**

NOTE	REF NO	GRAPHIC REF	PART NUMBER	QTY	PART NAME 1 2 3 4 5 6 (PRODUCT LEVEL)	SEE PAGE
	1	1	**201-9820**	1	LATCH AS	
	2	1	**201-9821**	1	CATCH	
	3	1	**203-7741**	1	GLASS (FIXED)	
	4	1	**203-7742**	1	GLASS (SLIDING)	
E	5	1	**226-4872**		SEAL (31.5-CM)	
E	5A	1	**226-4872**		SEAL (67-CM)	
E	5B	1	**226-4872**		SEAL (84.5-CM EACH)	
	6	1	**201-9824**	1	STOP AS	

E - ORDER BY THE CENTIMETER

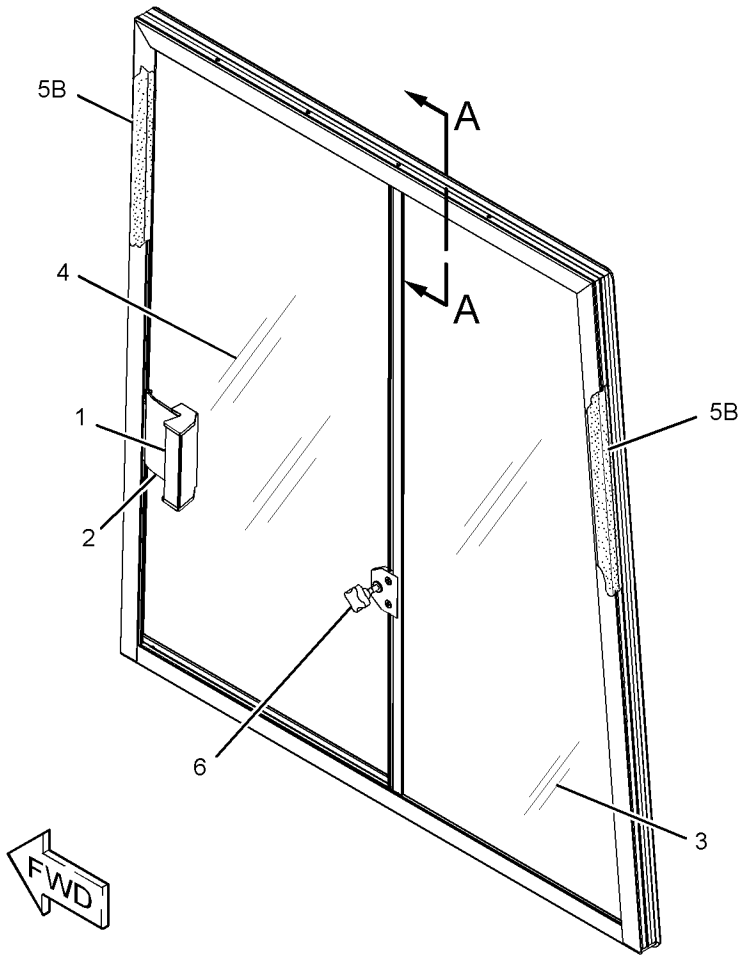

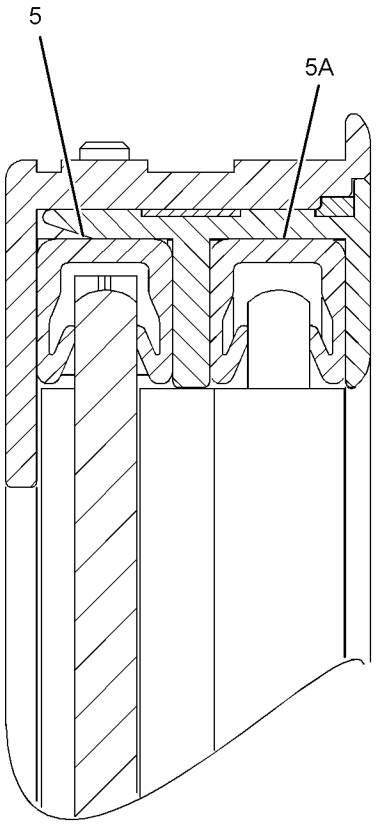

SECTION A-A

GRAPHIC #1 **<END>** g01424426

311-6408 WIPER GP-WINDOW

S/N: LJR1-112
PART OF 311-6420 CAB GP
ALSO AN ATTACHMENT

SMCS-7305 **i03628470**

NOTE	REF NO	GRAPHIC REF	PART NUMBER	QTY	PART NAME 1 2 3 4 5 6 (PRODUCT LEVEL)	SEE PAGE
	1	1	**3S-2093**	18	STRAP-CABLE	
	2	1	**5C-8811**	1	BLADE AS-WIPER (500-MM) (REAR)	
E	3	1	**7X-7927**		TAPE-IDENTIFICATION (LETTER A) (1-CM)	
E	4	1	**7X-7928**		TAPE-IDENTIFICATION (LETTER B) (1-CM)	
E	5	1	**7X-7929**		TAPE-IDENTIFICATION (LETTER C) (1-CM)	
E	6	1	**7X-7930**		TAPE-IDENTIFICATION (LETTER D) (1-CM)	
	7	1	**127-6509**	1	ARM AS (REAR)	
	8	1	**175-3761**	1	ARM GP-WINDOW WIPER (FRONT)	
	9	1	**238-0954**	1	PANEL	
	10	1	**125-8175**	1	BLADE AS-WIPER (450-MM) (FRONT)	
Y	11	1	**322-1492**	1	MOTOR GP-WINDOW WIPER	658
Y	12	1	**322-1494**	1	MOTOR GP-WINDOW WIPER	659
	13	1	**4D-8123**	1	CLIP	
	14	1	**4H-2558**	2	GROMMET	
	15	1	**9D-8508**	2	GROMMET	
M	16	1	**9X-2045**	6	SCREW-TRUSS HEAD (M6X1X20-MM)	
E	17	1	**144-0195**		HOSE (432-CM)	
E	17A	1	**144-0195**		HOSE (579-CM)	
E	17B	1	**144-0195**		HOSE (168-CM)	
E	17C	1	**144-0195**		HOSE (268-CM)	

E - ORDER BY THE CENTIMETER
M - METRIC PART
Y - SEPARATE ILLUSTRATION

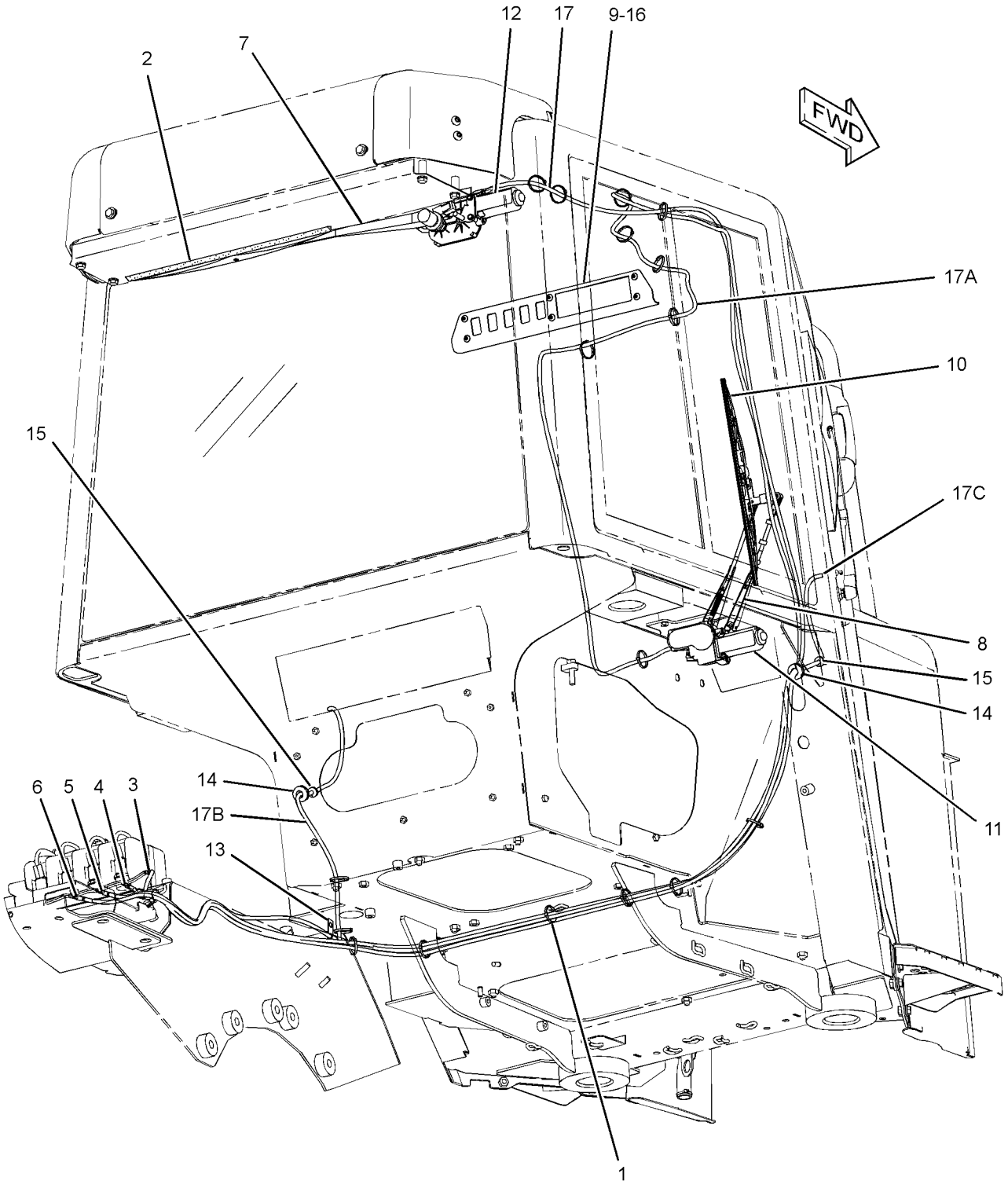

GRAPHIC #1 **<END>** g01893733

115-4594 BLADE & EDGE GP-SEMI-UNIVERSAL

S/N: D1Y1-UP
CANNOT BE USED WITH GRADE CONTROL AR
PART OF 273-0030 BULLDOZER AR-SEMI-UNIVERSAL
AN ATTACHMENT

SMCS-6060 **i01876964**

NOTE	REF NO	GRAPHIC REF	PART NUMBER	QTY	PART NAME 1 2 3 4 5 6 (PRODUCT LEVEL)	SEE PAGE
	1	1	**8H-8898**	2	PIN	
Y	2	1	*9U-8079*	1	EDGE GP-BIT & CUTTING	733
	3	1	**3B-4630**	2	PIN-COTTER	
	4	1	**4T-1481**	1	LINK AS	
	5	1	**115-4595**	1	BLADE AS-SEMI-UNIVERSAL	
	6	1	**1U-0183**	2	DEFLECTOR	
	7	1	**6I-9420**	2	BRACKET AS	
					(EACH INCLUDES)	
		1	**7J-5131**	1	TRUNNION	
	8	1	**8E-5192**	2	BRACKET AS	
					(EACH INCLUDES)	
		1	**4J-1641**	1	TRUNNION	
	9	1	**8E-5194**	1	BRACKET	
	10	1	**8P-9770**	1	PLATE	
M	11	1	**9R-3572**	3	BOSS (M12X1.75X20-MM)	
	12	1	**9U-8506**	2	BRACKET AS	
					(EACH INCLUDES)	
		1	**4T-1504**	1	TRUNNION	
	13	1	**9W-6381**	1	PLATE	
	14	1	**6I-9461**	1	PLATE (LH)	
	15	1	**6I-9462**	1	PLATE (RH)	

M - METRIC PART
Y - SEPARATE ILLUSTRATION

115-4594 **BLADE & EDGE GP-SEMI-UNIVERSAL (*contd.*)** **i01876964**

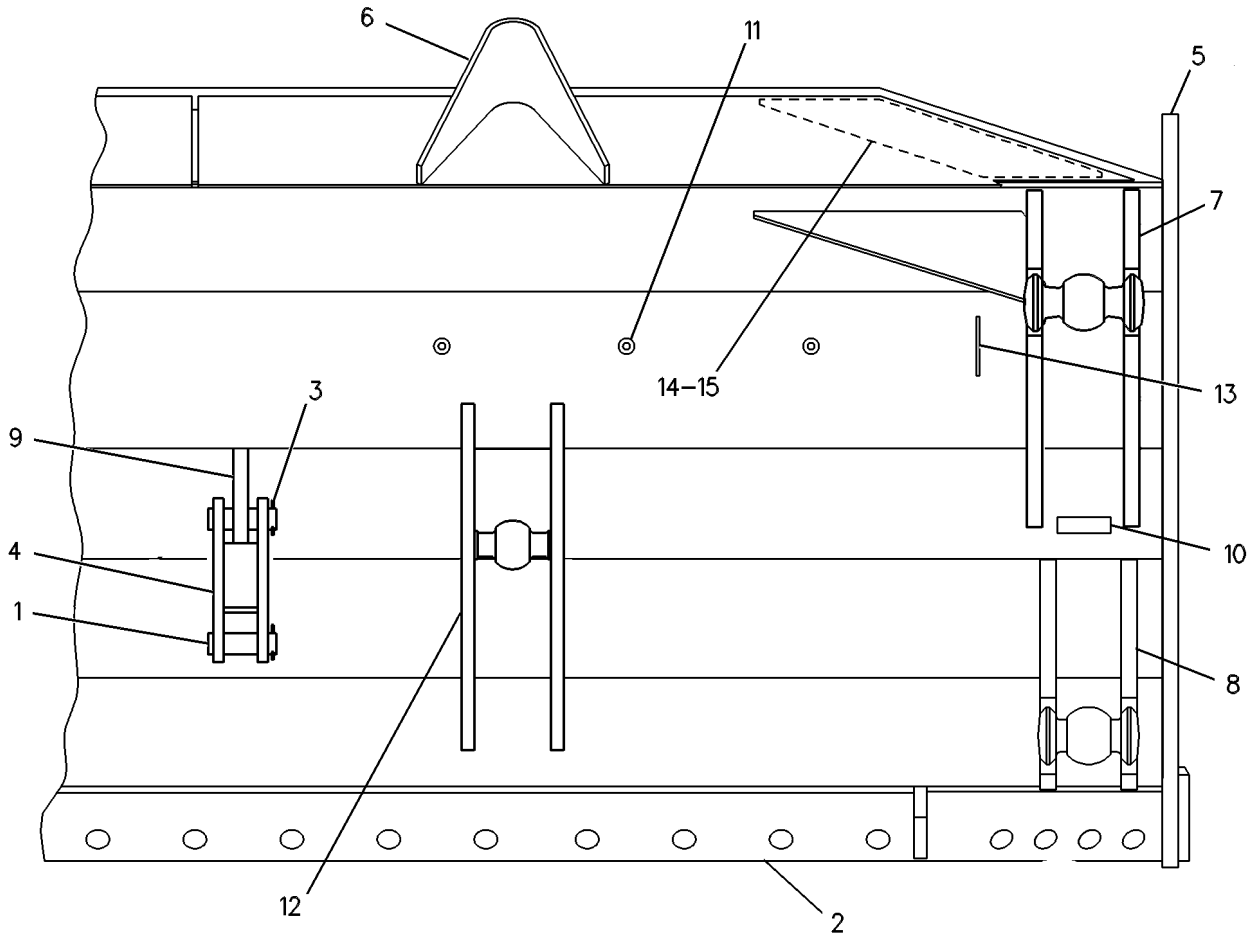

GRAPHIC #1 **<END>** g00253649

296-5099 BLADE AS-ANGLING—LASER APPLICATION

S/N: B7J1-UP

PART OF 235-5000 BLADE GP-ANGLING

AN ATTACHMENT

SMCS-6060 **i02812457**

NOTE	REF NO	GRAPHIC REF	PART NUMBER	QTY	PART NAME 1 2 3 4 5 6 (PRODUCT LEVEL)	SEE PAGE
	1	1	**240-1557**	1	BRACKET AS	
	2	1	**282-9379**	1	BRACKET AS (LH)	
	3	1	**282-9380**	1	BRACKET AS (RH)	
	4	1	**295-8752**	1	BLADE AS-ANGLING	
	5	1	**307-6074**	1	BRACKET AS (CTR)	

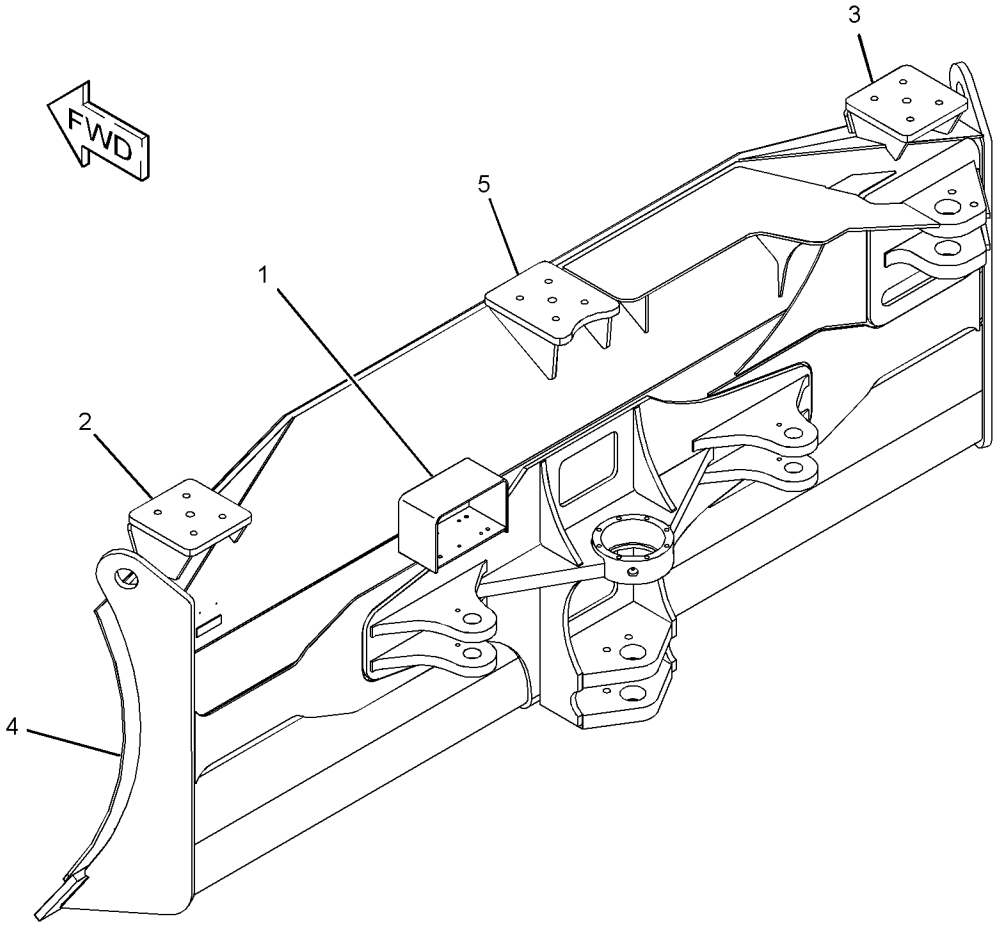

GRAPHIC #1 **<END>** g01405790

235-5000 BLADE GP-ANGLING

S/N: B7J1-UP
FOR USE WITH GRADE CONTROL AR, XL
PART OF 321-5600 BULLDOZER AR-PWR ANGLE & TILT
AN ATTACHMENT
TYPE 1

SMCS-6052, 6060, 6701 **i03660435**

NOTE	REF NO	GRAPHIC REF	PART NUMBER	QTY	PART NAME 1 2 3 4 5 6 (PRODUCT LEVEL)	SEE PAGE
	1	1	**3B-8489**	2	FITTING-GREASE	
	2	1	**3G-8932**	2	PIN	
	3	1	**4T-0231**	2	RETAINER	
Y	4	1	*8E-9380*	1	EDGE GP-BIT & CUTTING	732
	5	1	**8G-5747**	4	SPACER (45X50X15-MM THK)	
	6	1	**089-8249**	4	SPACER (64X72X13-MM THK)	
	7	1	**104-4817**	2	PIN	
	8	1	**104-7434**	2	RETAINER	
	9	1	**197-6440**	1	BEARING	
C	10	1	**266-9599**	1	RETAINER	
CY	11	1	**296-5099**	1	BLADE AS-ANGLING	720
CM	12	1	**9X-8271**	8	BOLT-12 POINT HEAD (M10X1.5X45-MM)	
M	13	1	**7X-2562**	4	BOLT (M20X2.5X45-MM)	
	14	1	**8T-4223**	2	WASHER-HARD (13.5X25.5X3-MM THK)	
M	15	1	**8T-4956**	2	BOLT (M12X1.75X35-MM)	
F		1	**2Y-9790**	1	PLATE-SERIAL NUMBER (BLADE)	
					(ON THE LEFT TOP CORNER OF STRAIGHT VPAT BLADE)	
F		1	**4B-4158**	2	SCREW-DRIVE (NO 4X0.25-IN)	

C - CHANGE FROM PREVIOUS TYPE
F - NOT SHOWN
M - METRIC PART
Y - SEPARATE ILLUSTRATION

235-5000 **BLADE GP-ANGLING (*contd.*)** **i03660435**

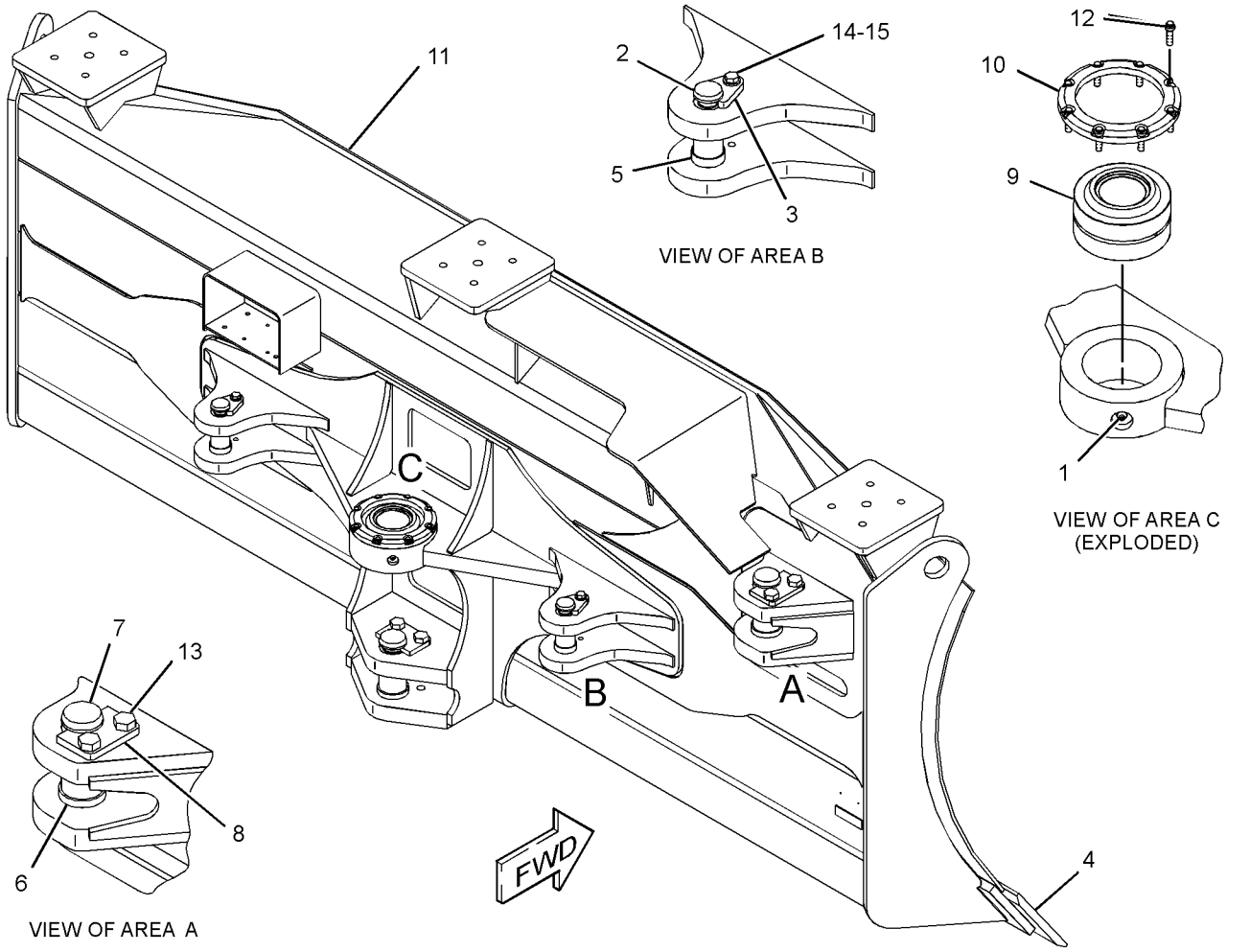

GRAPHIC #1 **<END>** g01430239

235-5000 BLADE GP-ANGLING

S/N: B7J1-UP
FOR USE WITH GRADE CONTROL AR, XL
PART OF 321-5600 BULLDOZER AR-PWR ANGLE & TILT
AN ATTACHMENT
TYPE 2

SMCS-6052, 6060, 6701 **i05017432**

NOTE	REF NO	GRAPHIC REF	PART NUMBER	QTY	PART NAME 1 2 3 4 5 6 (PRODUCT LEVEL)	SEE PAGE
C	1	1	**3B-8489**	1	FITTING-GREASE	
	2	1	**3G-8932**	2	PIN	
	3	1	**4T-0231**	2	RETAINER	
Y	4	1	*8E-9380*	1	EDGE GP-BIT & CUTTING	732
	5	1	**8G-5747**	4	SPACER (45X50X15-MM THK)	
	6	1	**089-8249**	4	SPACER (64X72X13-MM THK)	
	7	1	**104-4817**	2	PIN	
	8	1	**104-7434**	2	RETAINER	
	9	1	**197-6440**	1	BEARING	
	10	1	**266-9599**	1	RETAINER	
Y	11	1	**296-5099**	1	BLADE AS-ANGLING	720
CM	12	1	**9X-8271**	10	BOLT-12 POINT HEAD (M10X1.5X45-MM)	
M	13	1	**7X-2562**	4	BOLT (M20X2.5X45-MM)	
	14	1	**8T-4223**	2	WASHER-HARD (13.5X25.5X3-MM THK)	
M	15	1	**8T-4956**	2	BOLT (M12X1.75X35-MM)	
	16	1	**2Y-9790**	1	PLATE-SERIAL NUMBER (BLADE)	
	16A	1	**4B-4158**	2	SCREW-DRIVE (NO 4X0.25-IN)	

C - CHANGE FROM PREVIOUS TYPE
M - METRIC PART
Y - SEPARATE ILLUSTRATION

235-5000 **BLADE GP-ANGLING (*contd.*)** **i05017432**

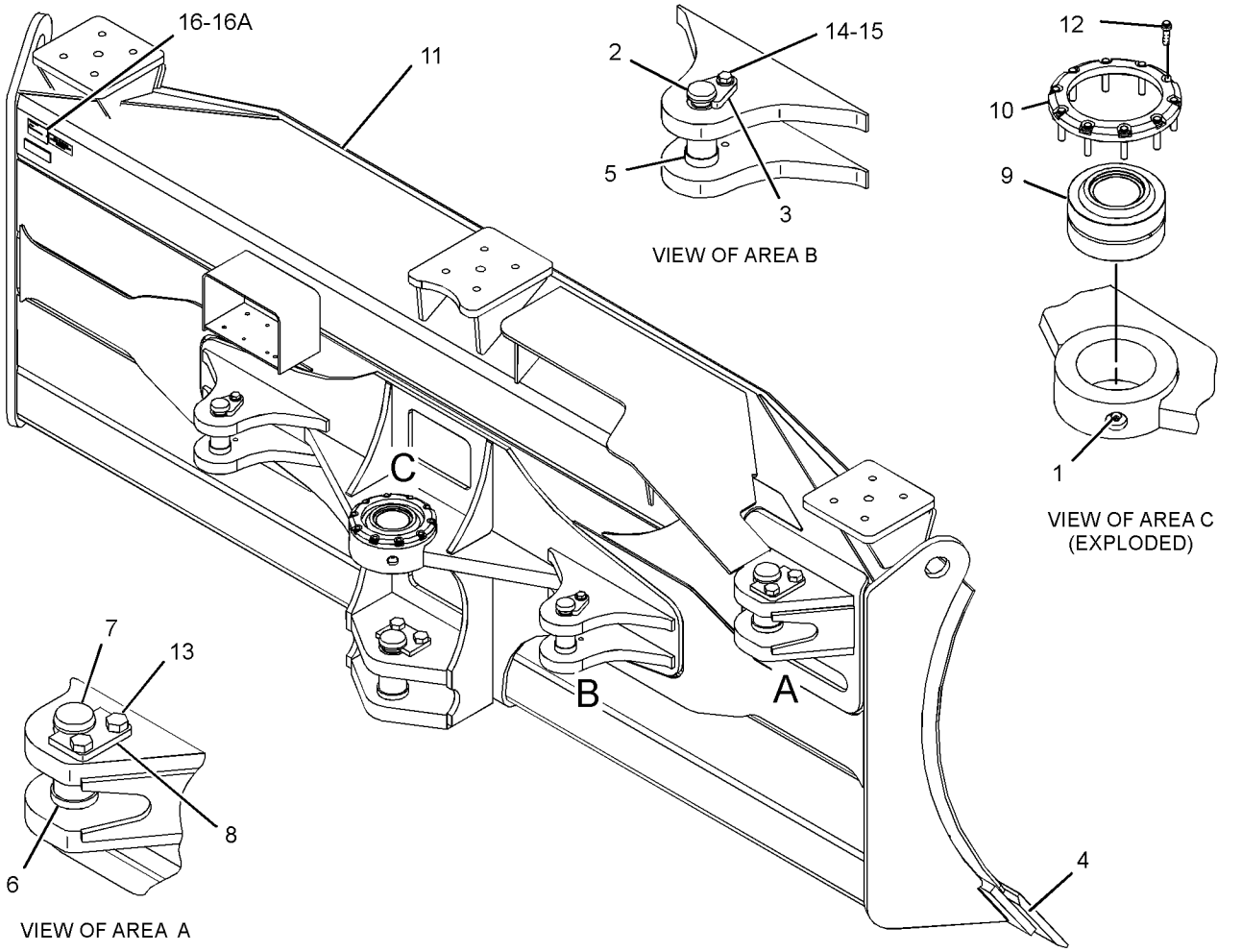

VIEW OF AREA B

VIEW OF AREA C (EXPLODED)

VIEW OF AREA A

GRAPHIC #1 **<END>** g02814637

257-0201 BLADE GP-ANGLING—LASER APPLICATION

S/N: ECC1-UP
FOLDABLE
PART OF 257-0210 BLADE GP-ANGLING
AN ATTACHMENT

SMCS-6052, 6060, 6701 **i03626232**

NOTE	REF NO	GRAPHIC REF	PART NUMBER	QTY	PART NAME 1 2 3 4 5 6 (PRODUCT LEVEL)	SEE PAGE
	1	1	**8D-3791**	4	PIN	
	2	1	**8V-7659**	2	PIN AS	
	3	1	**257-0203**	1	BLADE AS (LH)	
	4	1	**257-0204**	1	SUPPORT-ARM	
	5	1	**257-0205**	2	PIN-DOWEL	
	6	1	**296-9833**	1	BLADE AS (RH)	
	7	1	**5P-1076**	2	WASHER-HARD (13.5X30X4-MM THK)	
	8	1	**7G-8839**	2	SPACER (13.5X57X6-MM THK)	
M	9	1	**8T-4183**	2	BOLT (M12X1.75X40-MM)	

M - METRIC PART

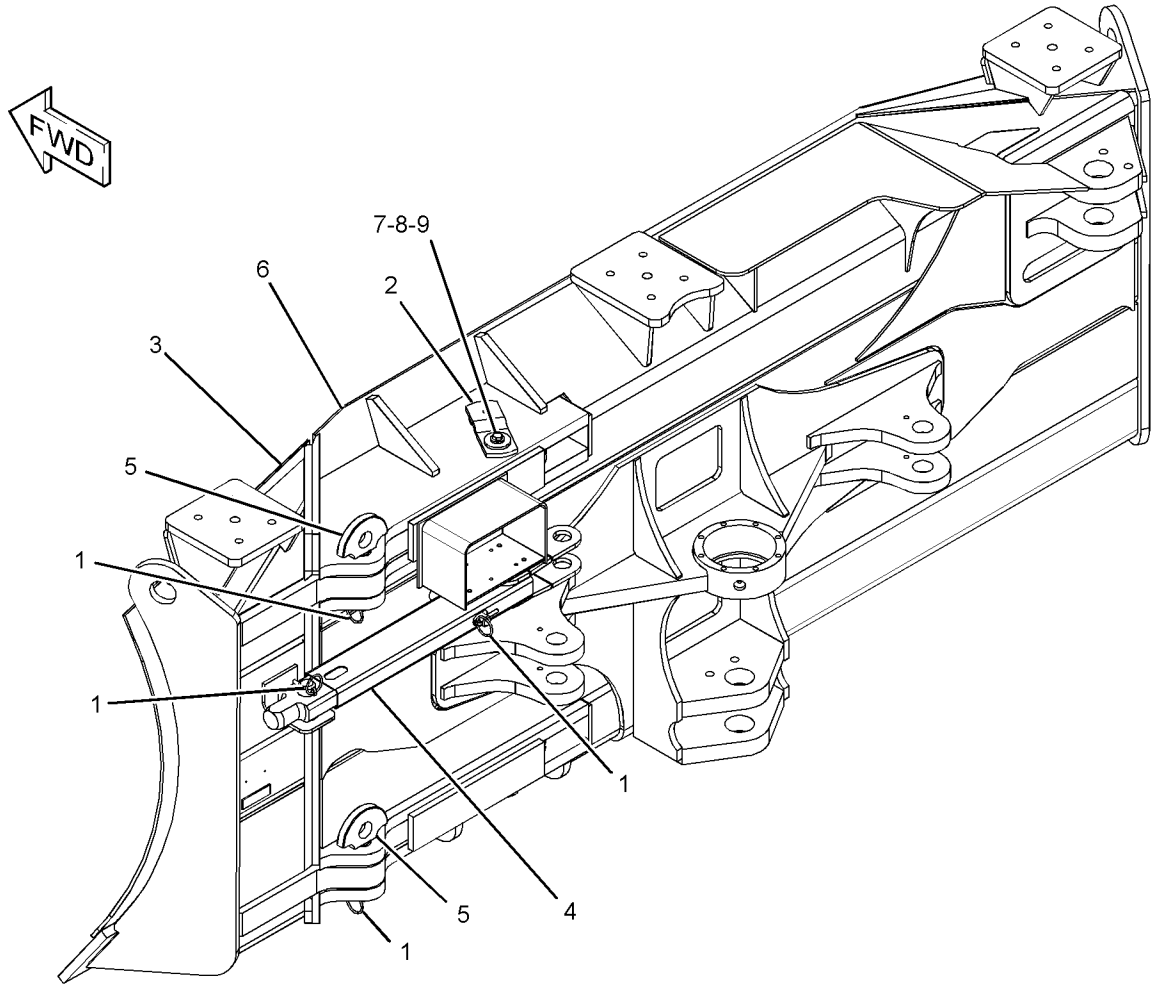

GRAPHIC #1 **<END>** g01849434

257-0210 BLADE GP-ANGLING

S/N: ECC1-UP
FOLDABLE
FOR USE WITH GRADE CONTROL AR, XL
AN ATTACHMENT
TYPE 1

SMCS-6052, 6060, 6701 **i03660437**

NOTE	REF NO	GRAPHIC REF	PART NUMBER	QTY	PART NAME 1 2 3 4 5 6 (PRODUCT LEVEL)	SEE PAGE
	1	1	**3B-8489**	2	FITTING-GREASE	
	2	1	**3G-8932**	2	PIN	
	3	1	**4T-0231**	2	RETAINER	
	4	1	**8G-5747**	4	SPACER (45X50X15-MM THK)	
	5	1	**089-8249**	4	SPACER (64X72X13-MM THK)	
	6	1	**104-4817**	2	PIN	
	7	1	**104-7434**	2	RETAINER	
	8	1	**197-6440**	1	BEARING	
Y	9	1	*257-0201*	1	BLADE GP-ANGLING	725
Y	10	1	*257-0207*	1	EDGE GP-BIT & CUTTING	734
	11	1	**266-9599**	1	RETAINER	
M	12	1	**9X-8271**	8	BOLT-12 POINT HEAD (M10X1.5X45-MM)	
M	13	1	**7X-2562**	4	BOLT (M20X2.5X45-MM)	
	14	1	**8T-4223**	2	WASHER-HARD (13.5X25.5X3-MM THK)	
M	15	1	**8T-4956**	2	BOLT (M12X1.75X35-MM)	
	16	1	**2Y-9790**	1	PLATE-SERIAL NUMBER (BLADE)	
	16A	1	**4B-4158**	2	SCREW-DRIVE (NO 4X0.25-IN)	

M - METRIC PART
Y - SEPARATE ILLUSTRATION

257-0210 **BLADE GP-ANGLING (*contd.*)** **i03660437**

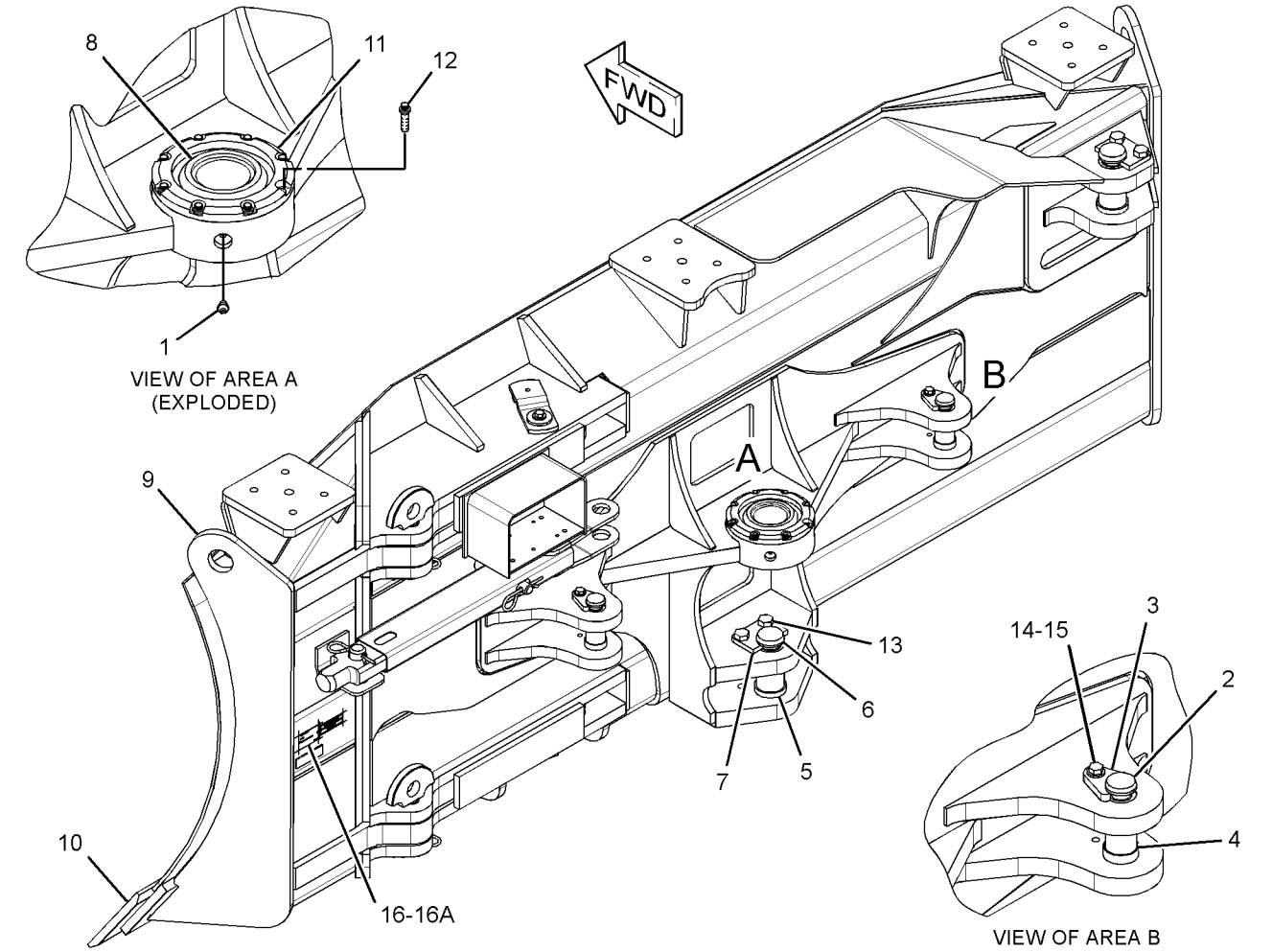

GRAPHIC #1 **<END>** g01852096

257-0210 BLADE GP-ANGLING

S/N: ECC1-UP
FOLDABLE
FOR USE WITH GRADE CONTROL AR, XL
AN ATTACHMENT
TYPE 2

SMCS-6052, 6060, 6701 **i04659009**

NOTE	REF NO	GRAPHIC REF	PART NUMBER	QTY	PART NAME 1 2 3 4 5 6 (PRODUCT LEVEL)	SEE PAGE
C	1	1	**3B-8489**	1	FITTING-GREASE	
	2	1	**3G-8932**	2	PIN	
	3	1	**4T-0231**	2	RETAINER	
	4	1	**8G-5747**	4	SPACER (45X50X15-MM THK)	
	5	1	**089-8249**	4	SPACER (64X72X13-MM THK)	
	6	1	**104-4817**	2	PIN	
	7	1	**104-7434**	2	RETAINER	
	8	1	**197-6440**	1	BEARING	
Y	9	1	*257-0201*	1	BLADE GP-ANGLING	725
Y	10	1	*257-0207*	1	EDGE GP-BIT & CUTTING	734
C	11	1	**376-6434**	1	RETAINER	
CM	12	1	**9X-8271**	10	BOLT-12 POINT HEAD (M10X1.5X45-MM)	
M	13	1	**7X-2562**	4	BOLT (M20X2.5X45-MM)	
	14	1	**8T-4223**	2	WASHER-HARD (13.5X25.5X3-MM THK)	
M	15	1	**8T-4956**	2	BOLT (M12X1.75X35-MM)	
	16	1	**2Y-9790**	1	PLATE-SERIAL NUMBER (BLADE)	
	16A	1	**4B-4158**	2	SCREW-DRIVE (NO 4X0.25-IN)	

C - CHANGE FROM PREVIOUS TYPE
M - METRIC PART
Y - SEPARATE ILLUSTRATION

257-0210 **BLADE GP-ANGLING (*contd.*)** **i04659009**

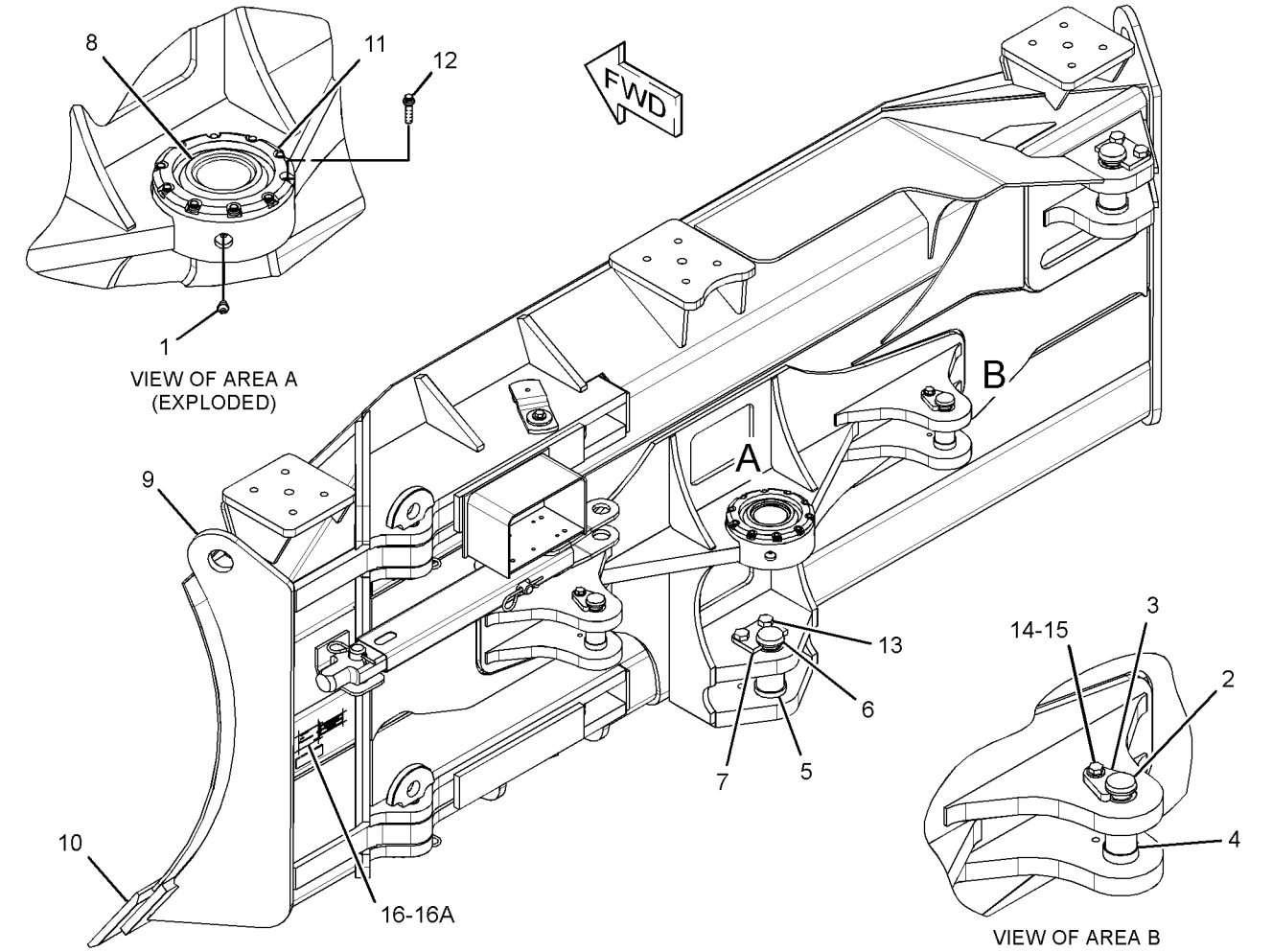

GRAPHIC #1 **<END>** g02827255

303-9230 BLADE GP-ANGLING—LANDFILL

S/N: B7K1-UP

AN ATTACHMENT

SMCS-6052, 6060, 6701 **i03660438**

NOTE	REF NO	GRAPHIC REF	PART NUMBER	QTY	PART NAME 1 2 3 4 5 6 (PRODUCT LEVEL)	SEE PAGE
	1	1	**3B-8489**	2	FITTING-GREASE	
	2	1	**3G-8932**	2	PIN	
	3	1	**4T-0231**	2	RETAINER	
Y	4	1	*8E-9380*	1	EDGE GP-BIT & CUTTING	732
	5	1	**8G-5747**	4	SPACER (45X50X15-MM THK)	
	6	1	**104-4817**	2	PIN	
	7	1	**104-7434**	2	RETAINER	
	8	1	**197-6440**	1	BEARING	
	9	1	**266-9599**	1	RETAINER	
	10	1	**303-9231**	1	BLADE AS-ANGLING	
	11	1	**089-8249**	4	SPACER (64X72X13-MM THK)	
M	12	1	**9X-8271**	8	BOLT-12 POINT HEAD (M10X1.5X45-MM)	
M	13	1	**7X-2562**	4	BOLT (M20X2.5X45-MM)	
	14	1	**8T-4223**	2	WASHER-HARD (13.5X25.5X3-MM THK)	
M	15	1	**8T-4956**	2	BOLT (M12X1.75X35-MM)	
F			**2Y-9790**	1	PLATE-SERIAL NUMBER (BLADE)	
					(ON THE LEFT TOP CORNER OF STRAIGHT VPAT BLADE)	
F			**4B-4158**	2	SCREW-DRIVE (NO 4X0.25-IN)	

F - NOT SHOWN
M - METRIC PART
Y - SEPARATE ILLUSTRATION

303-9230 **BLADE GP-ANGLING (*contd.*)** **i03660438**

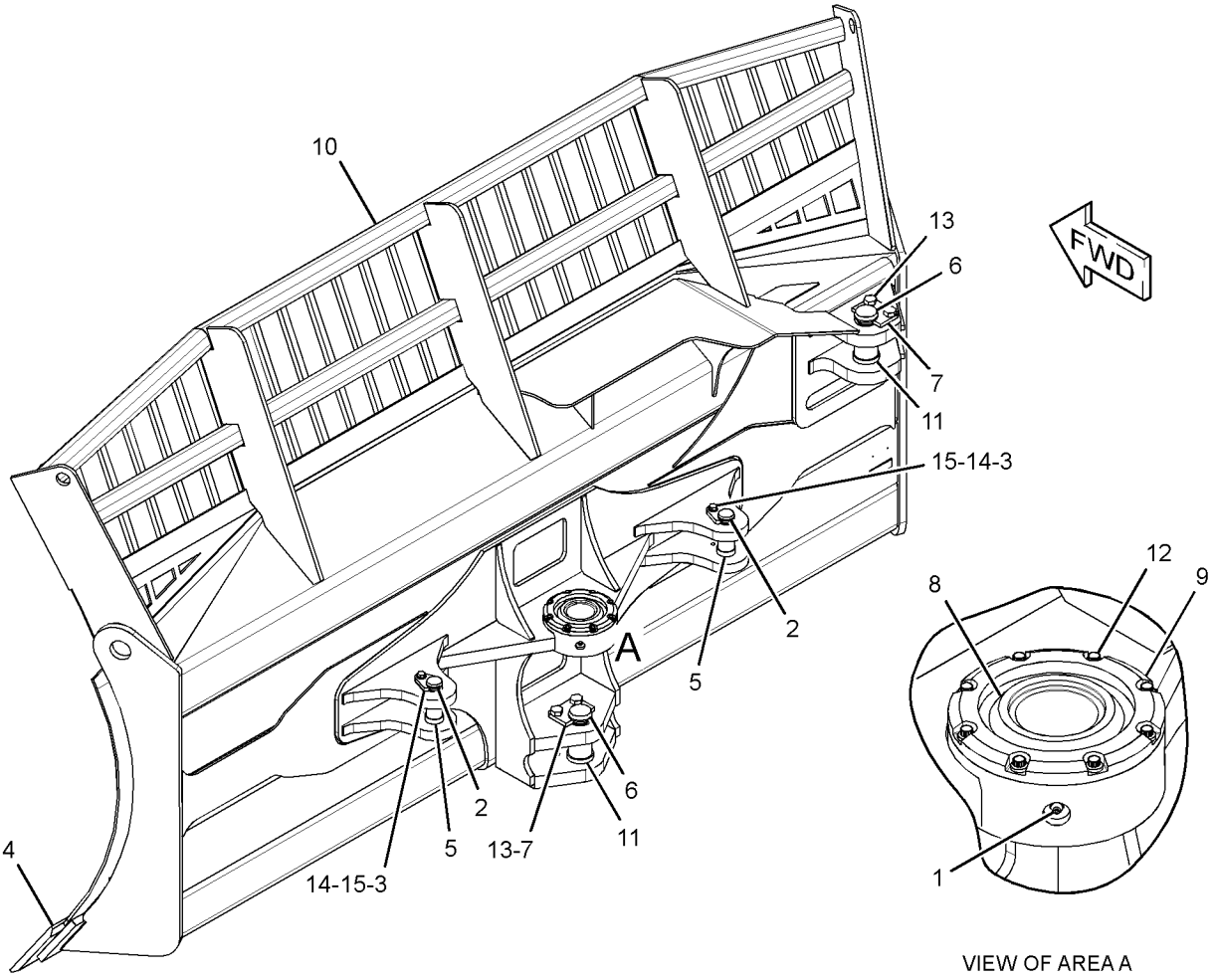

GRAPHIC #1 **<END>** g01367370

8E-9380 EDGE GP-BIT & CUTTING

S/N: B7J1-UP; B7K1-UP
PART OF 235-5000, 303-9230 BLADE GP-ANGLING
AN ATTACHMENT

SMCS-6801, 6804

i00599768

NOTE	REF NO	GRAPHIC REF	PART NUMBER	QTY	PART NAME 1 2 3 4 5 6 (PRODUCT LEVEL)	SEE PAGE
	1	1	**8E-9378**	1	BIT-END	
		1	**8E-9379**	1	BIT-END	
	2	1	**3G-4282**	2	EDGE-CUTTING	
	3	1	**5J-4773**	22	BOLT-PLOW (3/4-10X2.5-IN)	
	4	1	**5P-8248**	22	WASHER-HARD (20X36.5X3.5-MM THK)	
	5	1	**2J-3506**	22	NUT-FULL (3/4-10-THD)	

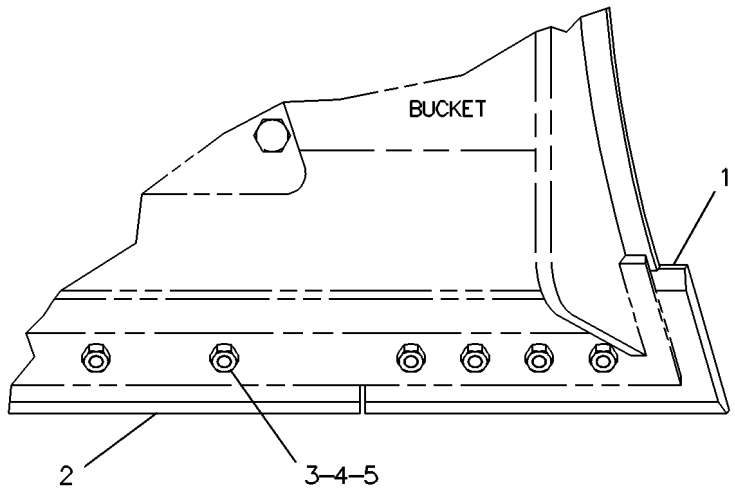

GRAPHIC #1

<END>

g00223481

9U-8079 EDGE GP-BIT & CUTTING

S/N: D1Y1-UP

PART OF 115-4594 BLADE & EDGE GP-SEMI-UNIVERSAL

AN ATTACHMENT

SMCS-6801, 6804

i01877671

NOTE	REF NO	GRAPHIC REF	PART NUMBER	QTY	PART NAME 1 2 3 4 5 6 (PRODUCT LEVEL)	SEE PAGE
	1	1	**8E-9378**	1	BIT-END	
		1	**8E-9379**	1	BIT-END	
	2	1	**4T-6659**	1	EDGE-CUTTING	
	3	1	**9U-8057**	2	EDGE-CUTTING	
	4	1	**5J-4773**	23	BOLT-PLOW (3/4-10X2.5-IN)	
	5	1	**5P-8248**	23	WASHER-HARD (20X36.5X3.5-MM THK)	
	6	1	**2J-3506**	23	NUT-FULL (3/4-10-THD)	

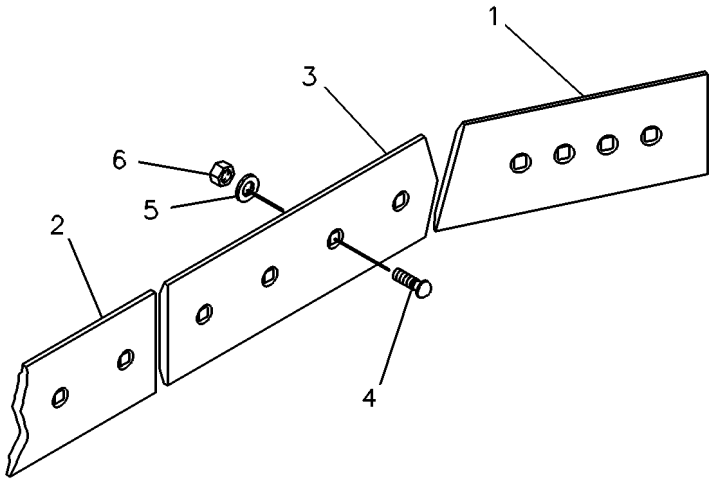

GRAPHIC #1

<END>

g00223834

257-0207 EDGE GP-BIT & CUTTING

S/N: ECC1-UP
FOR USE WITH FOLDABLE BLADE
PART OF 257-0210 BLADE GP-ANGLING
AN ATTACHMENT

SMCS-6801, 6804

i03626238

NOTE	PART NUMBER	QTY	PART NAME 1 2 3 4 5 6 (PRODUCT LEVEL)	SEE PAGE
	8E-9379	1	BIT-END	
	5J-4773	22	BOLT-PLOW (3/4-10X2.5-IN)	
	3G-4282	1	EDGE-CUTTING	
	257-0264	1	EDGE-CUTTING	
	257-0265	1	EDGE-CUTTING	
	2J-3506	22	NUT-FULL (3/4-10-THD)	
	5P-8248	22	WASHER-HARD (20X36.5X3.5-MM THK)	

<END>

292-7949 GUARD GP-WINCH

S/N: LJR1-UP
PART OF 273-3763 WINCH AR
AN ATTACHMENT

SMCS-5163 **i03626967**

NOTE	REF NO	GRAPHIC REF	PART NUMBER	QTY	PART NAME 1 2 3 4 5 6 (PRODUCT LEVEL)	SEE PAGE
	1	1	**292-7897**	1	COVER	
	2	1	**292-7898**	1	COVER	
	3	1	**5P-8439**	1	GROMMET	
	4	1	**7X-7729**	8	WASHER (11X25X3-MM THK)	
M	5	1	**8T-4195**	4	BOLT (M10X1.5X30-MM)	
M	6	1	**8T-4196**	4	BOLT (M10X1.5X35-MM)	

M - METRIC PART

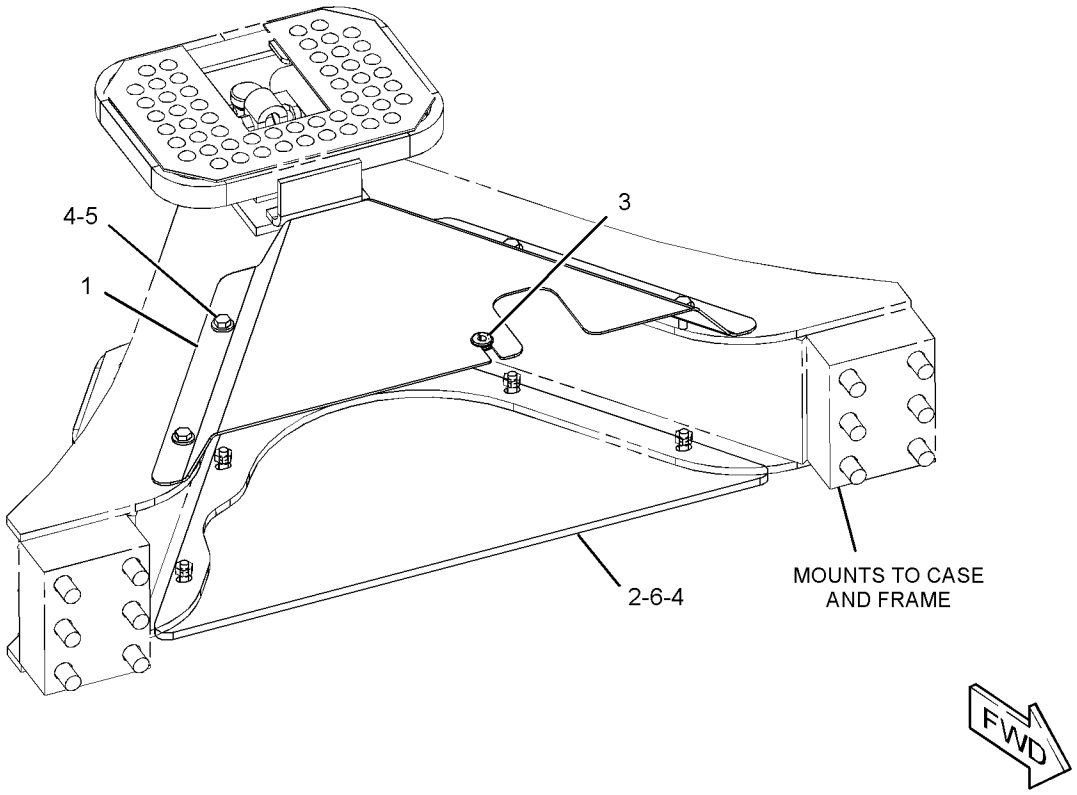

GRAPHIC #1 **<END>** g01863397

3A-8609 MOUNTING GP-RIPPER

S/N: RPP1-UP
PART OF 321-5607 RIPPER AR
AN ATTACHMENT

SMCS-6165, 6310, 6324

i02993190

NOTE	REF NO	GRAPHIC REF	PART NUMBER	QTY	PART NAME 1 2 3 4 5 6 (PRODUCT LEVEL)	SEE PAGE
	1	1	**1U-0063**	2	PIN	
	2	1	**3A-8613**	1	BRACKET AS (LH)	
	3	1	**3A-8614**	1	BRACKET AS (RH)	
B	4	1	**193-3074**	6	SPACER (52X120X5-MM THK)	
B	5	1	**9N-4450**	12	SPACER (68X120X5-MM THK)	
	6	1	**114-5671**	1	PLATE AS (RH)	
	7	1	**114-5672**	1	PLATE AS (LH)	
	8	1	**1U-0159**	2	PIN	
	9	1	**6K-8987**	2	DOWEL	
M	10	1	**6V-7687**	2	LOCKNUT (M12X1.75-THD)	
M	11	1	**6V-7744**	2	LOCKNUT (M10X1.5-THD)	
	12	1	**8T-4123**	26	WASHER (22X35X3.5-MM THK)	
M	13	1	**8T-4198**	2	BOLT (M10X1.5X100-MM)	
M	14	1	**8T-5412**	2	BOLT (M12X1.75X140-MM)	
M	15	1	**8T-6430**	26	BOLT (M20X2.5X50-MM)	
B	16	1	**193-3075**	6	SPACER (52X121X1.5-MM THK)	
B	17	1	**9N-4449**	6	SPACER (68X121X1.5-MM THK)	

B - USE AS REQUIRED
M - METRIC PART

3A-8609 **MOUNTING GP-RIPPER (*contd.*)** **i02993190**

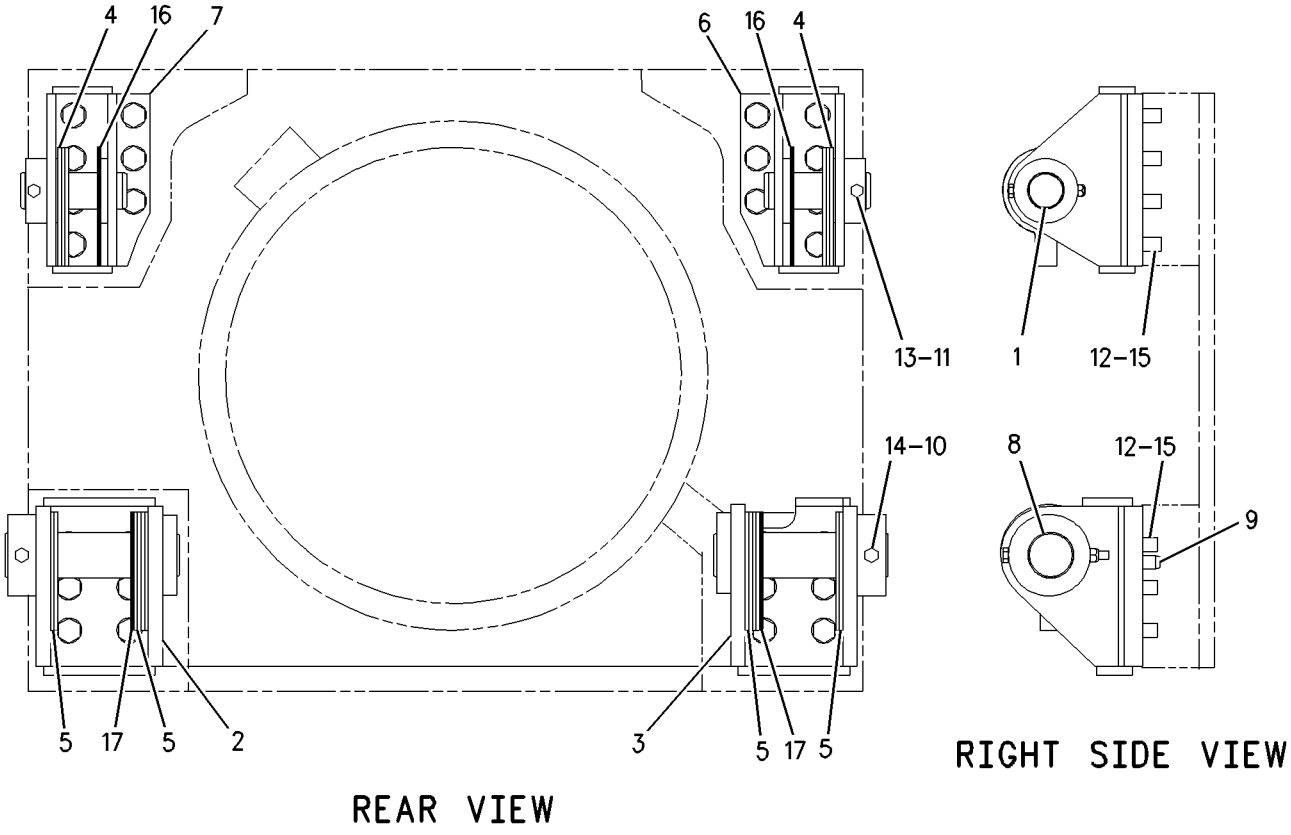

GRAPHIC #1 **<END>** g00921215

321-5607 RIPPER AR

S/N: RPP1-UP

FOR USE WITH VALVE GP-BANK 4, TOOTH GP, HYDRAULIC AR-4 VALVE, COVER GP-CONSOLE (RIPPER), COVER GP-CONSOLE (RIPPER, WINCH)

CANNOT BE USED WITH WINCH AR OR DRAWBAR

AN ATTACHMENT

SMCS-6310 **i05017440**

NOTE	REF NO	GRAPHIC REF	PART NUMBER	QTY	PART NAME 1 2 3 4 5 6 (PRODUCT LEVEL)	SEE PAGE
Y	1	1	*3A-8609*	1	MOUNTING GP-RIPPER	736
	2	1	**8M-3494**	1	PLATE-SERIAL NUMBER (RIPPER)	
	2A	1	**4B-4158**	2	SCREW-DRIVE (NO 4X0.25-IN)	
	2B	1	**7X-7644**	2	FILM-INFORMATION (TIE-DOWN)	
Y	3	1	*322-3351*	1	RIPPER GP	739
Y	4	1	*322-4932*	1	LINES GP-RIPPER	537
Y	5	1	**325-5723**	1	CYLINDER GP-RIPPER	497

Y - SEPARATE ILLUSTRATION

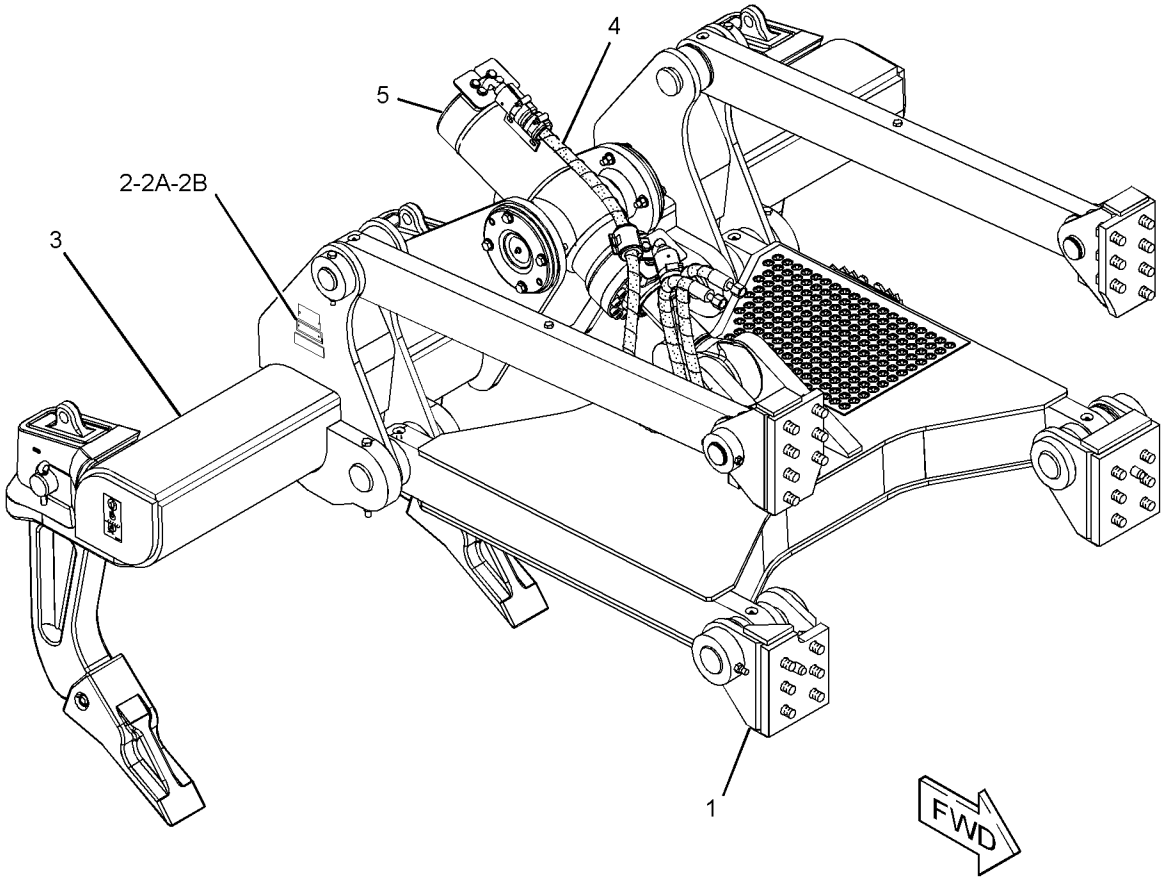

GRAPHIC #1 **<END>** g01886766

322-3351 RIPPER GP

S/N: RPP1-UP
PART OF 321-5607 RIPPER AR
AN ATTACHMENT

SMCS-6310, 6325

i03793510

NOTE	REF NO	GRAPHIC REF	PART NUMBER	QTY	PART NAME 1 2 3 4 5 6 (PRODUCT LEVEL)	SEE PAGE
	1	1	**2K-0703**	1	BAR	
	2	1	**3A-8612**	2	LINK AS	
					(EACH INCLUDES)	
	2A	1	**7J-9682**	2	BUSHING	
	3	1	**3B-8489**	11	FITTING-GREASE	
	4	1	**3K-8510**	1	PIN	
	5	1	**4K-3004**	2	BEARING-TRUNNION SUPPLEMENTARY	
	6	1	**6H-3616**	4	PLUG-PROTECTION	
Y	7	1	*8J-2189*	3	TOOTH GP-RIPPER	741
B	8	1	**9T-5900**	6	WASHER (51.2X98X4.76-MM THK)	
	9	1	**322-3353**	1	CARRIAGE AS	
		1	**8P-9770**	1	PLATE	
	10	1	**322-3354**	1	LINK AS	
	10A	1	**9W-0099**	4	BUSHING	
	10B	1	**322-3355**	1	LINK AS-LOWER	
		1	**6Y-3376**	1	PLATE	
		1	**6Y-3385**	1	PLATE	
		1	**8P-9770**	1	PLATE	
	11	1	**1U-0159**	2	PIN	
M	12	1	**6V-7744**	2	LOCKNUT (M10X1.5-THD)	
M	13	1	**7X-2543**	2	BOLT (M10X1.5X120-MM)	
M	14	1	**7X-2621**	2	BOLT (M10X1.5X12-MM)	
M	15	1	**8T-4139**	2	BOLT (M12X1.75X30-MM)	
	16	1	**8T-4223**	18	WASHER-HARD (13.5X25.5X3-MM THK)	
M	17	1	**8T-4244**	8	NUT (M12X1.75-THD)	
M	18	1	**8T-4648**	8	BOLT (M12X1.75X70-MM)	
M	19	1	**8T-7929**	2	BOLT (M12X1.75X180-MM)	
	20	1	**9J-9598**	2	PIN	
M	21	1	**6V-7687**	2	LOCKNUT (M12X1.75-THD)	

B - USE AS REQUIRED
M - METRIC PART
Y - SEPARATE ILLUSTRATION

322-3351 **RIPPER GP (*contd.*)** **i03793510**

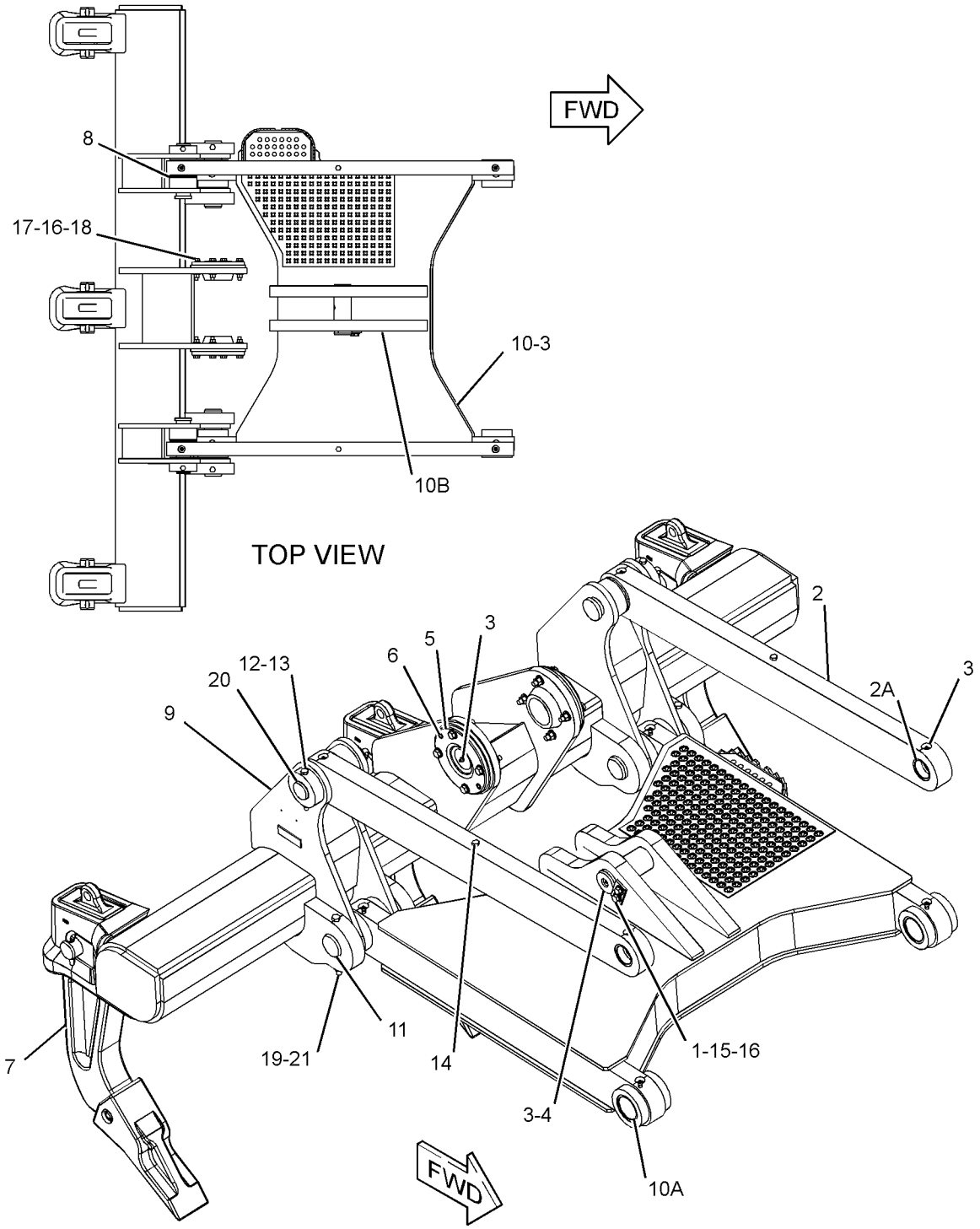

GRAPHIC #1 **<END>** g02025905

8J-2189 TOOTH GP-RIPPER–STRAIGHT

S/N: RPP1-UP
PART OF 322-3351 RIPPER GP
AN ATTACHMENT

SMCS-6808, 6810

i01893140

NOTE	REF NO	GRAPHIC REF	PART NUMBER	QTY	PART NAME 1 2 3 4 5 6 (PRODUCT LEVEL)	SEE PAGE
	1	1	**3B-5325**	2	PIN-COTTER	
	2	1	**8J-2190**	1	PIN	
	3	1	**9J-3139**	1	SHANK-RIPPER	
C	4	1	**114-0358**	1	PIN	
C		1	**114-0359**	1	RETAINER AS	
	5	1	**6Y-0359**	1	TIP-RIPPER	

C - CHANGE FROM PREVIOUS TYPE

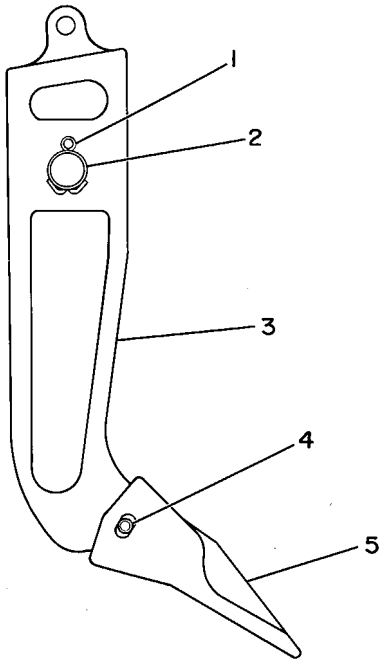

GRAPHIC #1

<END>

g00081660

9J-8926 TOOTH GP-RIPPER—CURVED

S/N: LJR1-UP

PART OF 135-9795 TOOTH GP-RIPPER

AN ATTACHMENT

SMCS-6808, 6810

i01095060

NOTE	REF NO	GRAPHIC REF	PART NUMBER	QTY	PART NAME 1 2 3 4 5 6 (PRODUCT LEVEL)	SEE PAGE
	1	1	**3B-5325**	2	PIN-COTTER	
	2	1	**8J-2190**	1	PIN	
	3	1	**9J-8923**	1	SHANK-RIPPER	
	4	1	**114-0358**	1	PIN	
	5	1	**6Y-0352**	1	TIP-RIPPER	
	6	1	**114-0359**	1	RETAINER AS	

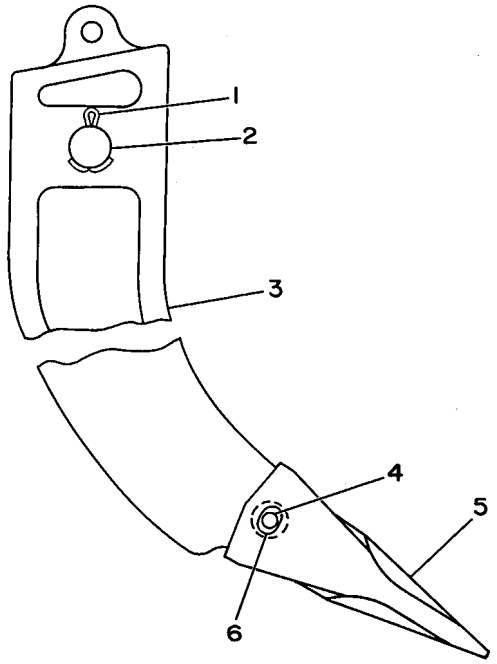

GRAPHIC #1

<END>

g00174183

135-9795 TOOTH GP-RIPPER—CURVED

S/N: LJR1-UP
AN ATTACHMENT

SMCS-6808, 6810 **i01053123**

NOTE	PART NUMBER	QTY	PART NAME 1 2 3 4 5 6 (PRODUCT LEVEL)	SEE PAGE
Y	*9J-8926*	3	TOOTH GP-RIPPER	742

Y - SEPARATE ILLUSTRATION

<END>

273-3763 WINCH AR

S/N: LJR1-UP
FOR USE WITH COVER GP-CONSOLE (WINCH), WINCH AR-TOWING
PART OF 338-2590 OPTION AR-WORK TOOL
AN ATTACHMENT

SMCS-5163 **i03098964**

NOTE	PART NUMBER	QTY	PART NAME 1 2 3 4 5 6 (PRODUCT LEVEL)	SEE PAGE
Y	*238-5466*	1	CONTROL GP-HANDLE (WINCH)	605
Y	*277-4994*	1	FILTER & LINES GP-POWER TRAIN	281
Y	*292-7949*	1	GUARD GP-WINCH	735
Y	*239-7134*	1	WINCH GP	744

Y - SEPARATE ILLUSTRATION

<END>

239-7134 WINCH GP

S/N: LJR1-UP
PART OF 273-3763 WINCH AR
AN ATTACHMENT

SMCS-5163 **i03660445**

NOTE	REF NO	GRAPHIC REF	PART NUMBER	QTY	PART NAME 1 2 3 4 5 6 (PRODUCT LEVEL)	SEE PAGE
	1	1	**7K-1181**	18	STRAP-CABLE	
	2	1	**249-2804**	1	HARNESS AS-WIRING (JOYSTICK) (WINCH)	
	3	1	**4P-7581**	1	CLIP	
	4	1	**8T-4121**	1	WASHER-HARD (11X21X2.5-MM THK)	
M	5	1	**8T-4137**	1	BOLT (M10X1.5X20-MM)	

M - METRIC PART

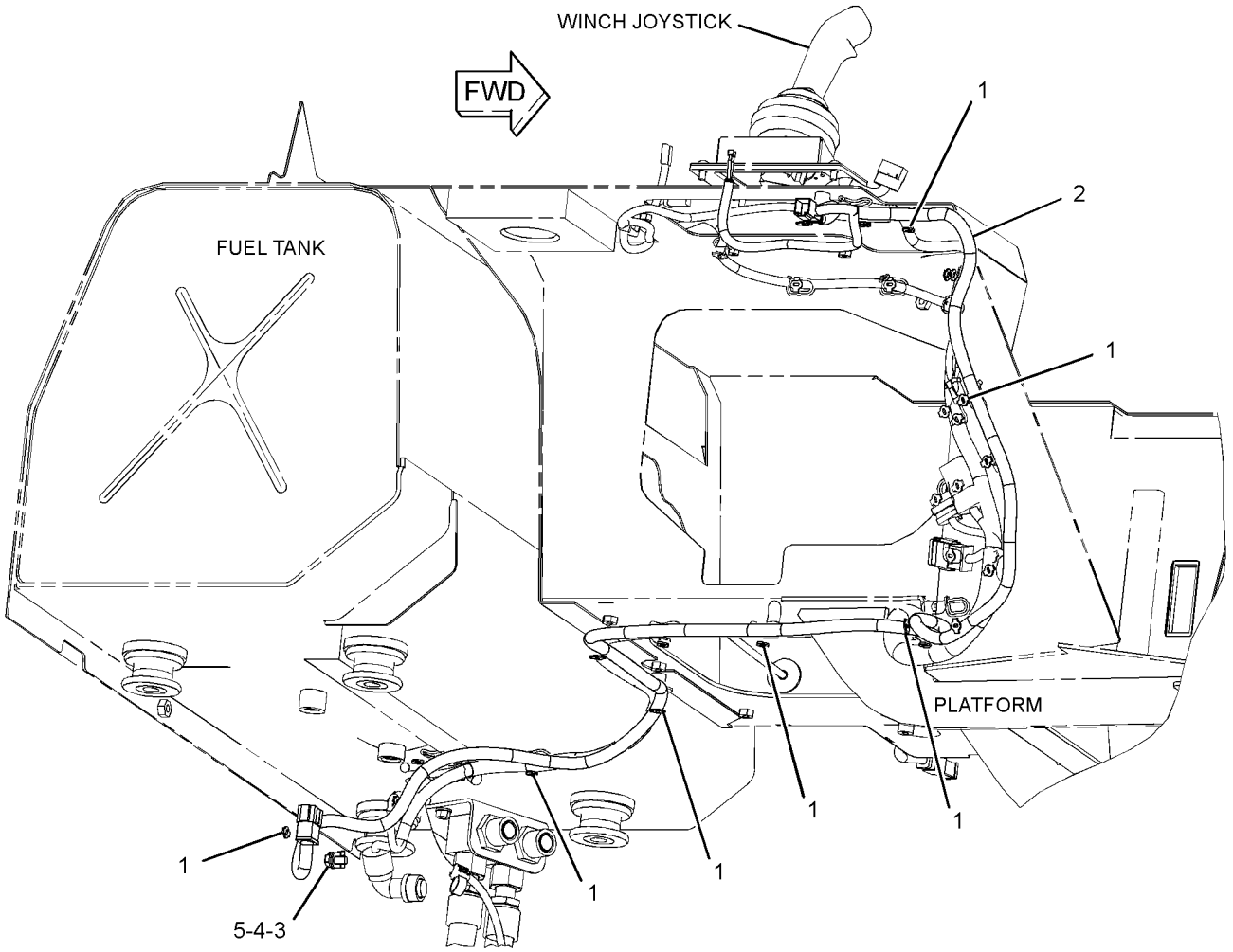

GRAPHIC #1 **<END>** g01592436

285-8035 FILM GP

S/N: LJR1-UP

PART OF 321-3124 PLATE & FILM GP

SMCS-7000 **i04780318**

NOTE	REF NO	GRAPHIC REF	PART NUMBER	QTY	PART NAME 1 2 3 4 5 6 (PRODUCT LEVEL)	SEE PAGE
	1	1	**312-0136**	1	FILM-IDENTIFICATION (CAT, RH)	
	2	1	**312-1082**	1	FILM-STRIPE (LH)	
	3	1	**312-0137**	1	FILM-IDENTIFICATION (CAT, LH)	
	4	1	**312-0133**	1	FILM-IDENTIFICATION (D6N XL, RH)	
	5	1	**312-0132**	1	FILM-IDENTIFICATION (D6N XL, LH)	
	6	1	**288-4215**	1	FILM-IDENTIFICATION (CAT, REAR)	
	7	1	**292-3471**	1	FILM-IDENTIFICATION (CAT, FRONT)	
	8	1	**253-0861**	2	FILM-INFORMATION (CAT POWER, ACERT TECHNOLOGY)	

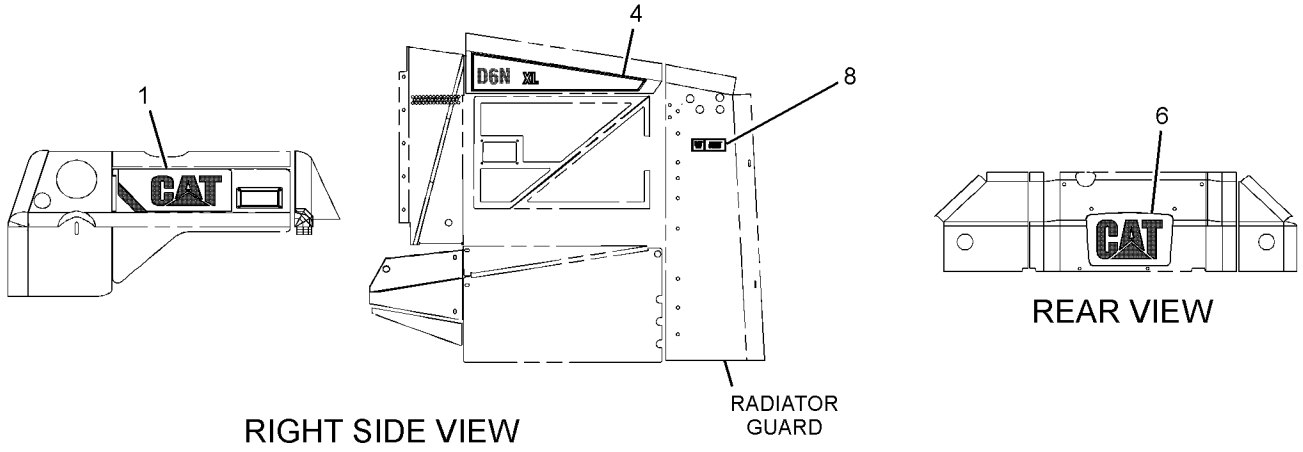

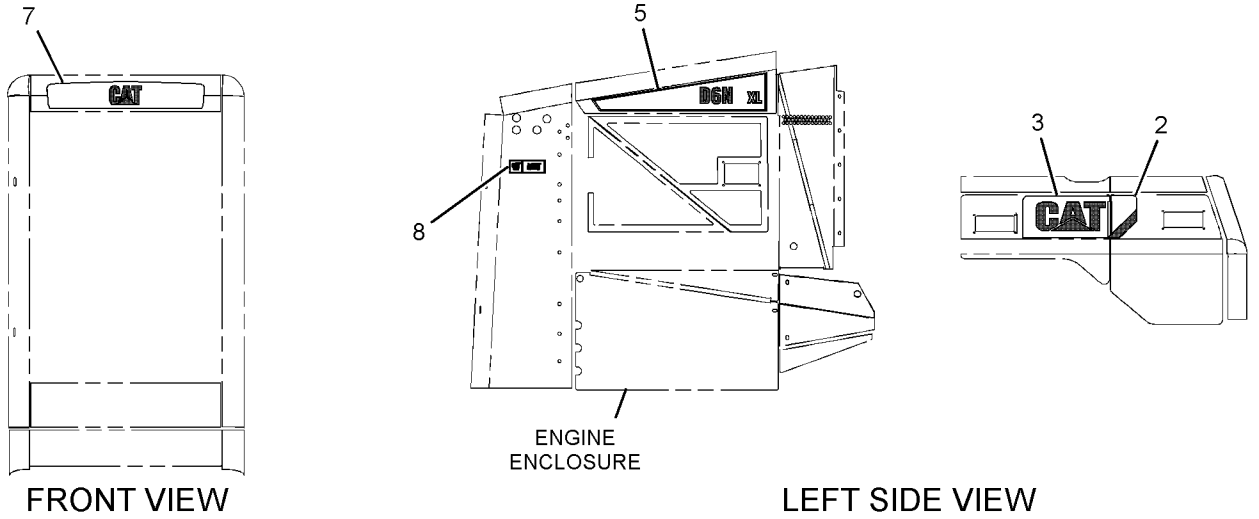

GRAPHIC #1

<END>

g03054780

294-4613 FILM GP–TANK GUARD

S/N: LJR1-UP

PART OF 431-7088 FORESTRY AR, 338-1768, 419-3405 WASTE HANDLING AR

AN ATTACHMENT

SMCS-7000 **i03637436**

NOTE	REF NO	GRAPHIC REF	PART NUMBER	QTY	PART NAME 1 2 3 4 5 6 (PRODUCT LEVEL)	SEE PAGE
	1	1	**294-4614**	1	FILM-STRIPE (CAT, RH)	
	2	1	**294-4615**	1	FILM-STRIPE (CAT, LH)	

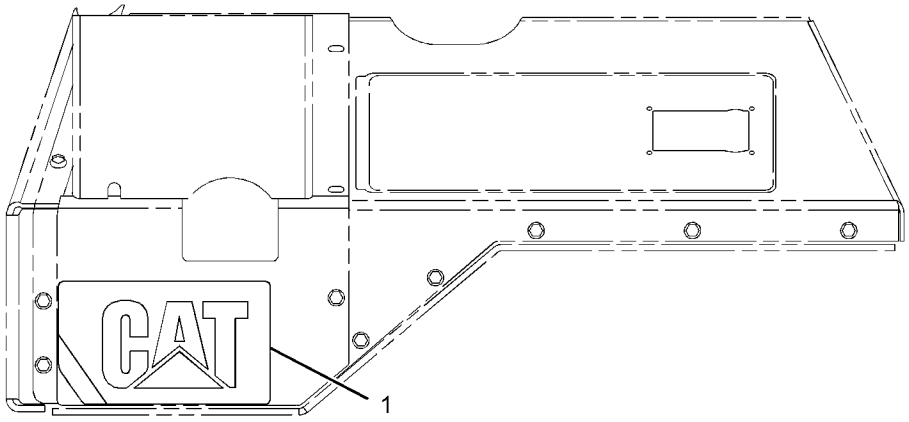

RIGHT SIDE VIEW

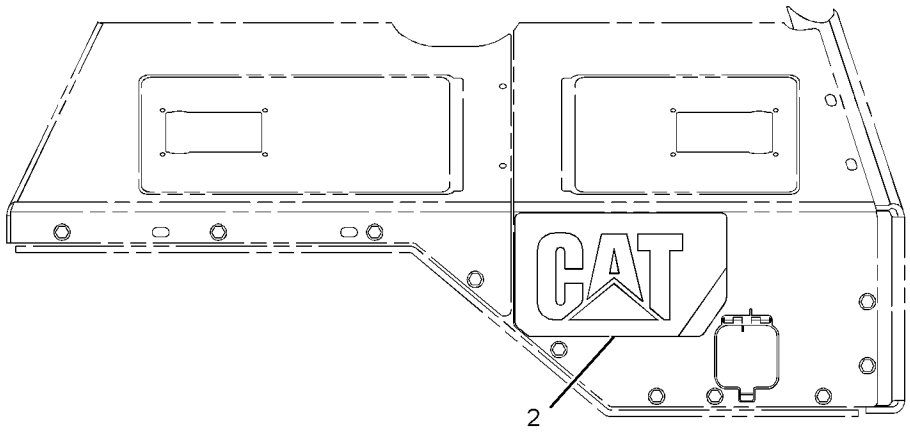

LEFT SIDE VIEW

GRAPHIC #1 **<END>** g01620850

310-6370 LINES GP-DIAGNOSTIC—REMOTE PRESSURE TAPS

S/N: LJR1-297

PART OF 310-9950 HYDRAULIC AR-3 VALVE

SMCS-7554 **i03659079**

NOTE	REF NO	GRAPHIC REF	PART NUMBER	QTY	PART NAME 1 2 3 4 5 6 (PRODUCT LEVEL)	SEE PAGE
	1	1	**4I-9532**	2	BAND-MARKER (YELLOW)	
	2	1	**4I-9535**	2	BAND-MARKER (ORANGE)	
	3	1	**5G-7817**	2	BOSS (11X25X18-MM THK)	
	4	1	**6V-0852**	6	CAP-DUST	
	5	1	**120-4162**	6	WASHER (19X34X3-MM THK)	
	6	1	**121-0530**	6	FITTING GP-HYDRAULIC (QUICK DISCONNECT)	
					(EACH INCLUDES)	
		1	**6V-8397**	1	SEAL-O-RING	
	7	1	**187-9008**	2	CAP-DUST	
	8	1	**203-3847**	1	BRACKET AS	
	9	1	**204-5380**	1	HOSE AS	
	10	1	**214-4645**	2	TAG-IDENTIFICATION (NUMBER FIVE)	
	11	1	**214-4646**	2	TAG-IDENTIFICATION (NUMBER SIX)	
	12	1	**214-4647**	2	TAG-IDENTIFICATION (NUMBER EIGHT)	
	13	1	**214-4653**	2	TAG-IDENTIFICATION (NUMBER TWO)	
	14	1	**254-1254**	1	HOSE AS	
	15	1	**254-1255**	1	HOSE AS	
	16	1	**257-8240**	1	HOSE AS	
	17	1	**263-1244**	1	HOSE AS	
	18	1	**291-5280**	2	TAG-IDENTIFICATION (NUMBER ONE)	
	19	1	**310-6966**	1	HOSE AS	
I	20	1	**311-0202**	1	HOSE AS	
I	21	1	**311-0215**	1	HOSE AS	
	22	1	**330-6976**	1	MANIFOLD	
	23	1	**347-1115**	2	TAG-IDENTIFICATION (NUMBER SEVEN)	
	24	1	*148-8326*	1	CONNECTOR AS	
		1	**6V-9872**	1	CONNECTOR	
		1	**3J-7354**	1	SEAL-O-RING	
		1	**6V-8397**	1	SEAL-O-RING	
	25	1	*148-8336*	1	CONNECTOR AS	
		1	**6V-8636**	1	CONNECTOR	
		1	**3J-1907**	1	SEAL-O-RING	
		1	**6V-8397**	1	SEAL-O-RING	
	26	1	*148-8343*	1	CONNECTOR AS	
		1	**9X-6550**	1	CONNECTOR	
		1	**2M-9780**	1	SEAL-O-RING	
		1	**6V-8397**	1	SEAL-O-RING	
	27	1	*148-8353*	1	ELBOW AS	
		1	**6V-9001**	1	ELBOW	
		1	**3J-1907**	1	SEAL-O-RING	
		1	**6V-8397**	1	SEAL-O-RING	
	28	1	*148-8361*	1	ELBOW AS	
		1	**6V-9200**	1	ELBOW	
		1	**3J-7354**	1	SEAL-O-RING	
		1	**6V-8397**	1	SEAL-O-RING	
	29	1	*148-8367*	1	ELBOW AS	
		1	**6V-9850**	1	ELBOW	
		1	**6V-8397**	1	SEAL-O-RING	
	30	1	*148-8378*	1	ELBOW AS	
		1	**6V-8724**	1	ELBOW	
		1	**6V-8397**	1	SEAL-O-RING	
		1	**3J-1907**	1	SEAL-O-RING	
	31	1	*164-7908*	2	ELBOW AS	
					(EACH INCLUDES)	
		1	**8T-7546**	1	ELBOW	
		1	**3J-7354**	1	SEAL-O-RING	
		1	**6V-8397**	1	SEAL-O-RING	
	32	1	**187-3547**	2	COUPLER AS-QUICK DISCONNECT	
					(EACH INCLUDES)	

310-6370 **LINES GP-DIAGNOSTIC (*contd.*)** **i03659079**

NOTE	REF NO	GRAPHIC REF	PART NUMBER	QTY	PART NAME 1 2 3 4 5 6 (PRODUCT LEVEL)	SEE PAGE
		1	**3J-1907**	1	SEAL-O-RING	
	33	1	**3S-2093**	13	STRAP-CABLE	
	34	1	**4D-7388**	1	CLIP	
	35	1	**4P-8134**	1	CLIP	
	36	1	**5P-7854**	4	CLIP	
	37	1	**6K-8178**	1	CLIP	
	38	1	**6V-8397**	2	SEAL-O-RING	
	39	1	**6V-9168**	6	NUT (11/16-16-THD)	
	40	1	**7X-7729**	4	WASHER (11X25X3-MM THK)	
	41	1	**8T-4121**	6	WASHER-HARD (11X21X2.5-MM THK)	
M	42	1	**8T-4133**	8	NUT (M10X1.5-THD)	
M	43	1	**8T-4195**	2	BOLT (M10X1.5X30-MM)	
E	44	1	**9X-8705**		CONDUIT-FLEXIBLE (31.29-MM ID, SPLIT) (120-CM)	
	45	1	**311-0037**	1	FILM-IDENTIFICATION (DIAGNOSTICS PANEL)	

E - ORDER BY THE CENTIMETER
I - REFER TO HYDRAULIC INFORMATION SYSTEM
M - METRIC PART

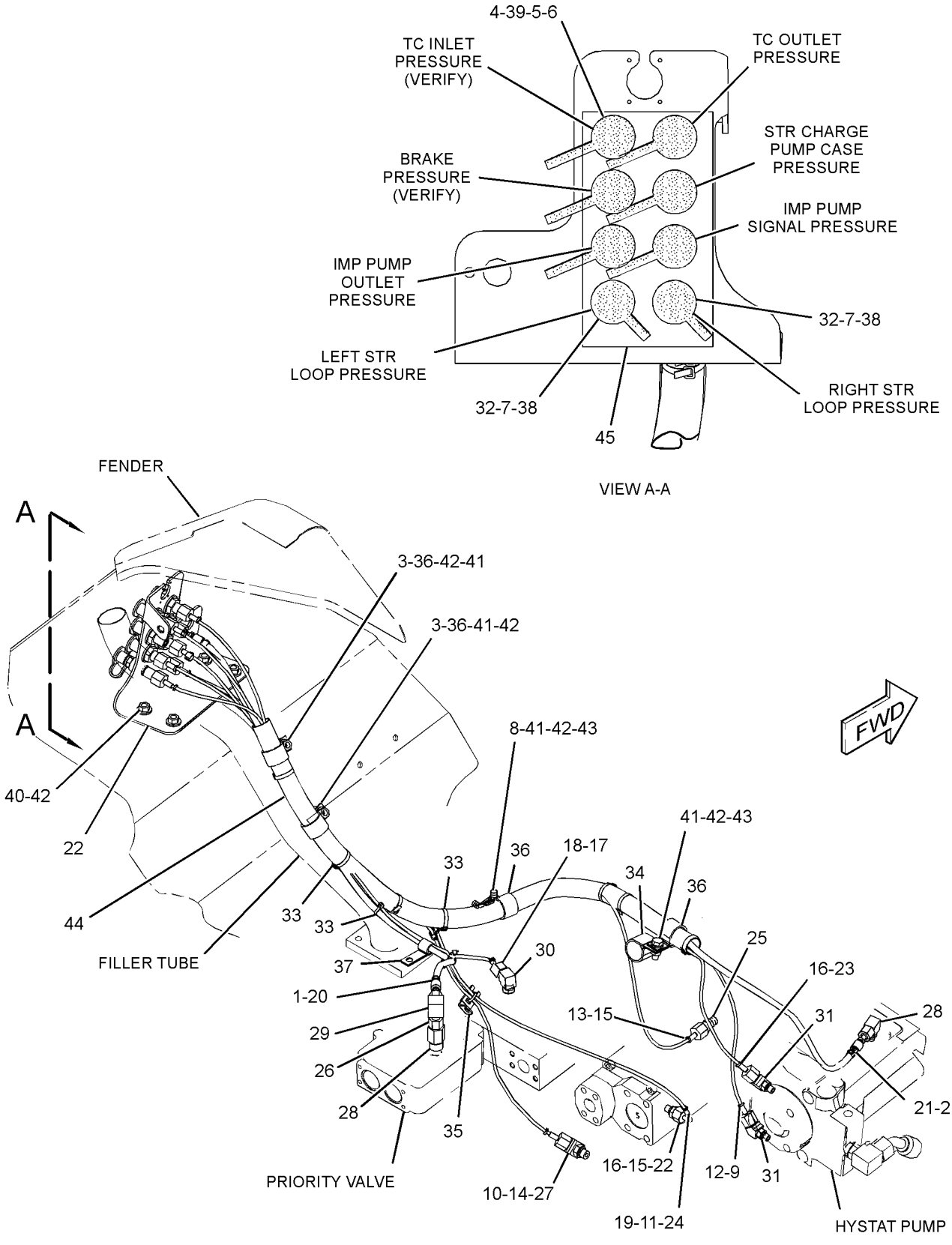

GRAPHIC #1 **<END>** g01963633

310-6370 LINES GP-DIAGNOSTIC—REMOTE PRESSURE TAPS

S/N: LJR298-UP

PART OF 310-9950 HYDRAULIC AR-3 VALVE

SMCS-7554 **i04744472**

NOTE	REF NO	GRAPHIC REF	PART NUMBER	QTY	PART NAME 1 2 3 4 5 6 (PRODUCT LEVEL)	SEE PAGE
C	1	1	**3S-2093**	10	STRAP-CABLE	
	2	1	**4I-9532**	2	BAND-MARKER (YELLOW)	
	3	1	**4I-9535**	2	BAND-MARKER (ORANGE)	
	4	1	**6V-0852**	6	CAP-DUST	
C	5	1	**7K-1181**	4	STRAP-CABLE	
	6	1	**120-4162**	6	WASHER (19X34X3-MM THK)	
	7	1	**121-0530**	6	FITTING GP-HYDRAULIC (QUICK DISCONNECT)	
					(EACH INCLUDES)	
		1	**6V-8397**	1	SEAL-O-RING	
	8	1	**187-9008**	2	CAP-DUST	
C	9	1	**193-3973**	2	STRAP-CABLE	
C	10	1	**206-2423**	1	SADDLE	
	11	1	**214-4645**	2	TAG-IDENTIFICATION (NUMBER FIVE)	
	12	1	**214-4646**	2	TAG-IDENTIFICATION (NUMBER SIX)	
	13	1	**214-4647**	2	TAG-IDENTIFICATION (NUMBER EIGHT)	
	14	1	**214-4653**	2	TAG-IDENTIFICATION (NUMBER TWO)	
C	15	1	**254-1254**	3	HOSE AS	
	16	1	**254-1255**	1	HOSE AS	
	17	1	**263-1244**	1	HOSE AS	
	18	1	**291-5280**	2	TAG-IDENTIFICATION (NUMBER ONE)	
	19	1	**310-6966**	1	HOSE AS	
	20	1	**311-0037**	1	FILM-IDENTIFICATION (DIAGNOSTICS PANEL)	
I	21	1	**311-0202**	1	HOSE AS	
	22	1	**330-6976**	1	MANIFOLD	
	23	1	**347-1115**	2	TAG-IDENTIFICATION (NUMBER SEVEN)	
CI	24	1	**352-8160**	1	HOSE AS	
C	25	1	*357-4368*	3	CONNECTOR AS	
					(EACH INCLUDES)	
		1	**6V-9872**	1	CONNECTOR	
		1	**3J-7354**	1	SEAL-O-RING	
		1	**6V-8397**	1	SEAL-O-RING	
	26	1	*357-4432*	1	ELBOW AS	
		1	**6V-8724**	1	ELBOW	
		1	**6V-8397**	1	SEAL-O-RING	
		1	**3J-1907**	1	SEAL-O-RING	
	27	1	*357-4459*	1	ELBOW AS	
		1	**6V-9850**	1	ELBOW	
		1	**6V-8397**	1	SEAL-O-RING	
C	28	1	*357-4484*	2	ELBOW AS	
					(EACH INCLUDES)	
		1	**6V-9001**	1	ELBOW	
		1	**3J-1907**	1	SEAL-O-RING	
		1	**6V-8397**	1	SEAL-O-RING	
C	29	1	*357-4485*	1	ADAPTER AS	
		1	**8T-7546**	1	ELBOW	
		1	**3J-7354**	1	SEAL-O-RING	
		1	**6V-8397**	1	SEAL-O-RING	
C	30	1	*148-8319*	1	CONNECTOR AS	
		1	**6V-8715**	1	CONNECTOR	
		1	**2M-9780**	1	SEAL-O-RING	
		1	**6V-8397**	1	SEAL-O-RING	
	31	1	**187-3547**	2	COUPLER AS-QUICK DISCONNECT	
					(EACH INCLUDES)	
		1	**3J-1907**	1	SEAL-O-RING	
C	32	1	**204-8000**	2	MOUNTING-CABLE TIE	
C	33	1	**4P-7581**	2	CLIP	
C	34	1	**4P-8134**	2	CLIP	
	35	1	**6V-8397**	2	SEAL-O-RING	
	36	1	**6V-9168**	6	NUT (11/16-16-THD)	

310-6370 **LINES GP-DIAGNOSTIC (*contd.*)** **i04744472**

NOTE	REF NO	GRAPHIC REF	PART NUMBER	QTY	PART NAME 1 2 3 4 5 6 (PRODUCT LEVEL)	SEE PAGE
	37	1	**7X-7729**	4	WASHER (11X25X3-MM THK)	
C	38	1	**8T-4121**	2	WASHER-HARD (11X21X2.5-MM THK)	
CM	39	1	**8T-4133**	6	NUT (M10X1.5-THD)	

C - CHANGE FROM PREVIOUS TYPE
I - REFER TO HYDRAULIC INFORMATION SYSTEM
M - METRIC PART

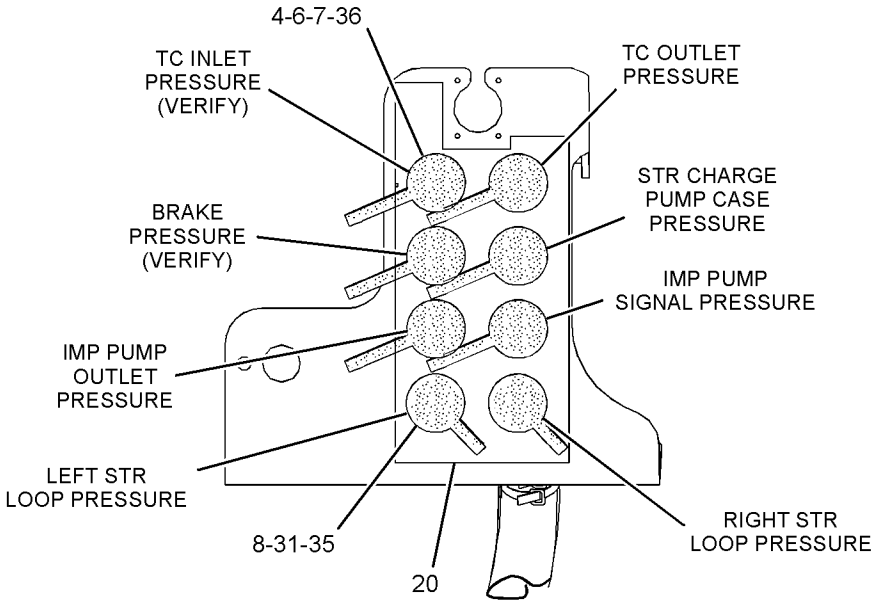

VIEW A-A

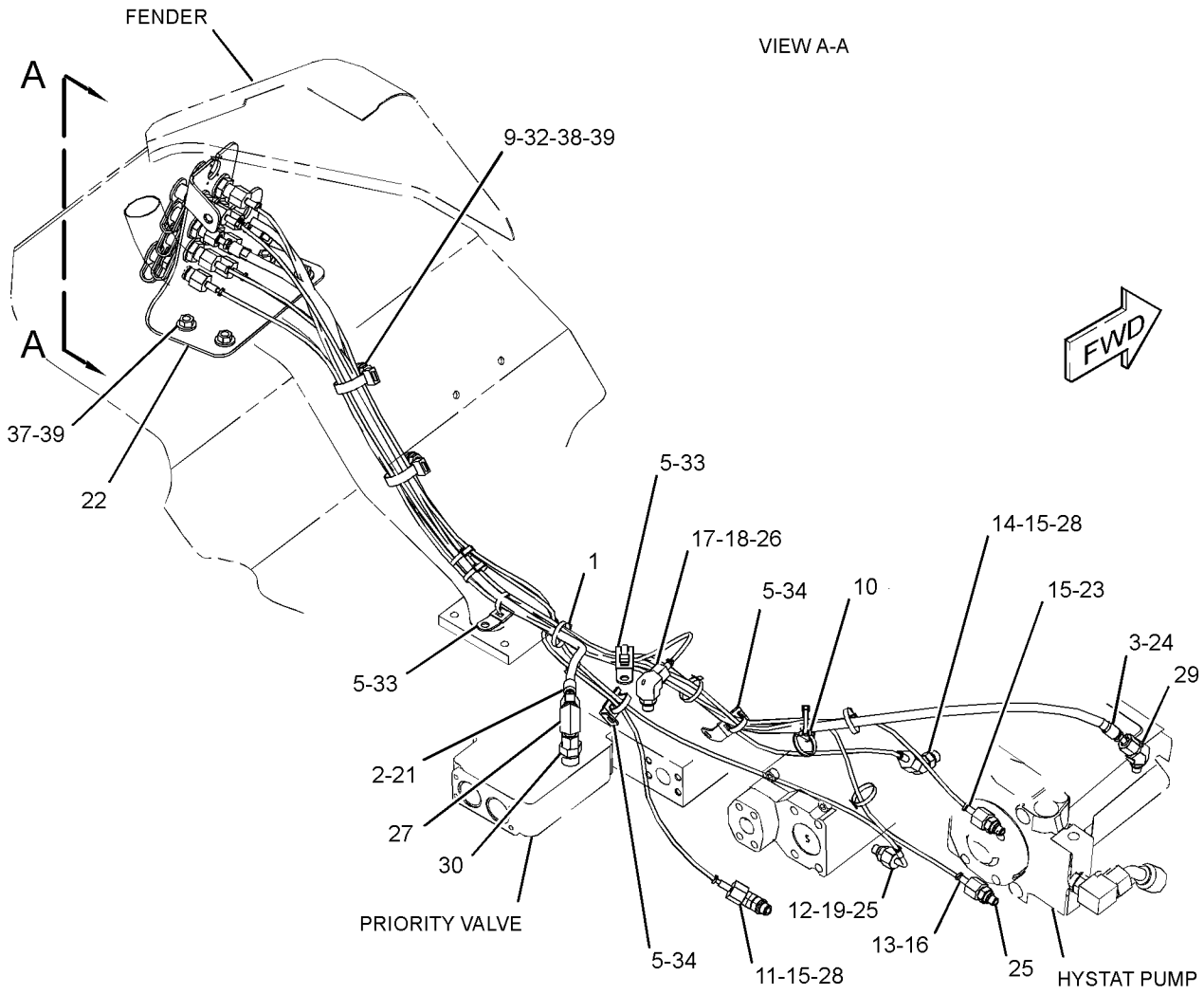

GRAPHIC #1 **<END>** g02957141

321-3124 PLATE & FILM GP

S/N: LJR1-UP

PART OF 321-3122 POWER TRAIN AR

SMCS-7557, 7563 **i04582510**

NOTE	PART NUMBER	QTY	PART NAME 1 2 3 4 5 6 (PRODUCT LEVEL)	SEE PAGE
Y	*285-8035*	1	FILM GP	745
	239-6986	1	PLATE-SERIAL NUMBER (MACHINE)	
			(ON LH REAR OF CASE)	
	174-4590	1	PLATE-INFORMATION (SERVICE INFORMATION NUMBERS)	
			(FOR A CANOPY-SERVICE INFORMATION PLATE ON LH DASH BOARD SHEET METAL)	
			(FOR A CAB-SERVICE INFORMATION PLATE ON LH SIDE POST, ABOVE FILM WARNING)	
	251-7360	1	FILM-IDENTIFICATION (LUBRICATION POINTS)	
			(RH SIDE OF MACHINE ON INSIDE COVER OF HYDRAULIC VALVE ACCESS)	
	7X-7644	4	FILM-INFORMATION (TIE-DOWN)	
			(EACH SIDE OF TRACK FRAME CENTERED BETWEEN FRONT & REAR IDLER)	
	134-7258	2	FILM-INFORMATION (EXTENDED LIFE COOLANT)	
			(1 - UNDERSIDE OF DOOR TO RADIATOR FILL, TOP OF DECAL UNDERNEATH LOCK)	
			(1-OUTSIDE TRAP OF FRONT GUARD BOTTOM)	
	7X-3229	4	FILM-IDENTIFICATION (LIFT EYE, TIE-DOWN LOCATION)	
			(WITHOUT RIPPER - EACH SIDE OF TRACK ROLLER FRAME, BETWEEN FRONT IDLER & ROLLER & BETWEEN REAR IDLER & ROLLER)	
			(WITH RIPPER - EACH SIDE OF TRACK ROLLER FRAME, BETWEEN FRONT IDLER & ROLLER & ON RIPPER BEAM AS)	
	9X-6340	1	FILM-INSTRUCTION (ENGINE OIL)	
			(ON OR NEAR ENGINE OIL FILL TUBE)	
	307-6202	1	FILM-INSTRUCTION (AIR FILTER SERVICE, READ OMM)	
			(LH SIDE, ON AIR CLEANER END COVER ASSEMBLY)	
	367-0844	1	FILM-INSTRUCTION (FUEL, READ OMM)	
			(ON RH SIDE PANEL - UPPER LH CORNER, BELOW RH ENGINE ENCLOSURE)	
	190-5386	2	FILM-STRIPE (ROUND RED REFLECTIVE)	
			(ON LH & RH SIDES OF FUEL TANK)	
	288-0661	2	FILM-WARNING (HOT FLUID UND PRESS, READ OMM)	
			(1 - UNDERSIDE OF DOOR TO RADIATOR FILL, TOP OF DECAL UNDERNEATH LOCK)	
			(1 - OUTSIDE TRAP OF FRONT GUARD BOTTOM)	
	299-7883	1	FILM-WARNING (DO NOT USE ETHER, READ OMM)	
			(NEXT TO AIR CLEANER FILM)	

Y - SEPARATE ILLUSTRATION

<END>

321-3126 PLATE & FILM GP—INTERNATIONAL

S/N: LJR1-UP

AN ATTACHMENT

SMCS-7557, 7563 **i03626739**

NOTE	PART NUMBER	QTY	PART NAME 1 2 3 4 5 6 (PRODUCT LEVEL)	SEE PAGE
	202-1032	2	PLATE-WARNING (HIGH PRESSURE CYLINDER)	
			(ON FRAME GP TRACK ROLLER)	
	221-8045	1	FILM-WARNING (SEAT BELT, INTERNATIONAL)	
			(INSIDE CAB ON LH SIDE POST)	
	224-0554	1	FILM-WARNING (UNIVERSAL, READ OMM)	
			(INSIDE CAB ON LH SIDE POST)	
	225-0312	1	FILM-WARNING (JUMP START, READ OMM, INTL)	
			(ON WIRING GP BATTERY)	
	288-0662	2	FILM-WARNING (HOT FLUID UND PRESS, READ OMM)	
			(1-ON UNDERSIDE OF DOOR TO RADIATOR FILL, ON THE TOP OF THE DECAL UNDERNEATH THE LOCK)	
			(1-ON THE OUTSIDE OF THE TRAP OF THE FRONT GUARD BOTTOM)	
	242-5054	3	FILM-WARNING (NO STEP)	
			(1-FILM FOR INTERNATIONAL MACHINE WITH WINCH)	
			(2-FILM FOR INTERNATIONAL MACHINE)	
	260-7653	1	FILM-WARNING (PRODUCT LINK 300, INTL)	
			(ON COMPONENT OF INSTALATION GP PRODUCT LINK)	
	293-6468	1	FILM-WARNING (HIGH PRESSURE, READ OMM)	
			(ON THE FUEL MANIFOLD)	
	293-6467	2	FILM-WARNING (DO NOT USE ETHER, READ OMM)	
			(1-ON THE FRONT OF THE INDUCTED ELBOW)	
			(1-NEXT TO THE FILM AIR CLEANER)	
	293-9659	2	FILM-WARNING (UNIVERSAL, READ OMM)	
			(1-ON THE LH SIDE OF THE BASE SECTION AT THE FRONT OF THE ENGINE ON THE LH SIDE OF TOP COVER)	
			(1-ON RH SIDE OF THE LID SECTON AT THE FRONT OF THE ENGINE ON THE RH SIDE OF THE TOP COVER)	
			<END>	

PART NUMBER INDEX

Part	Page
0	
0L-1143	263
0S-0175	544
0S-0509	272
0S-1585	263
	267
	269
0S-1595	272
0S-1599	272
0S-1614	263
	272
0T-0102	270
0T-0244	695
	699
0T-0489	692
1	
1A-1460	263
1A-2029	263
	267
1A-2223	263
	318
	689
1A-5350	272
1B-3057	649
1B-3978	276
	278
1B-3980	276
	278
1B-5174	391
	393
1B-8705	299
1B-8706	202
	615
1B-8736	8
	12
	13
	35
	299
1C-0569	267
1D-4540	270
1D-5117	158
1F-0750	592
1G-3176	463
1G-3180	463
1G-3410	467
1G-8878	450
1H-3244	138
1H-6227	422
	426
1H-8128	276
	278
	406
	407
	408
1H-9696	276
	278
1J-2175	490
1J-2921	500
1J-6472	304
	306
	383
	384
1J-9671	260
1K-6985	495
1K-7095	494
1L-5072	489
1L-5081	537
1L-6957	272
1M-1230	592
1M-3097	422
	426
1M-6119	141
	142
	143
	148
	149
	150
	156
1M-6120	141
	142
	143
	148
	149
	150
	156
1M-8649	294
1M-9011	276
	278
1N-3361	113
	118
1N-5724	610
1P-0810	592
1P-1744	457
1P-2624	201
1P-2772	351
	687
1P-3702	64
	453
1P-3703	453
1P-3708	285
	529
1P-4278	126
	128
1P-4576	497
1P-4577	529
	533
1P-5763	529
1P-6356	649
1Q-4230	278
1R-0777	553
	556
1S-0669	495
1S-0994	143
	150
	529
	709
	711
1S-1860	431
	435
	436
	437
1S-3311	499
	502
	584
1S-4915	142
	149
	156
1S-7251	142
	149
	150
	156
	228
	231
1S-9593	479
	481
	607
	608
1T-0034	308
1T-0043	304
	306
	308
1T-0205	308
1T-0234	304
	306
1T-0720	272
1T-0738	471
1T-0933	308
1T-1621	304
	306
1T-1639	308
1U-0063	736
1U-0159	736
	739
1U-0183	718
1U-2533	585
1U-2827	553
	556
1U-4049	499
	502
1U-4069	500
1U-7684	365
	367
1U-8846	131
	133
	135
	264
	267
1V-6688	243
1W-6448	201
	202
	446
2	
2A-3576	269
2A-4639	263
2B-0858	17
	19
	62
2B-0941	90
	92
	231
	536
2B-2404	272
2B-2695	316
2D-0516	294
2D-4202	489
2D-6235	662
2D-8009	272
	299
2D-9572	318
2F-5325	497
2H-3922	217
	220
	622
2H-3928	465
2H-4145	495
2H-5549	490
	492
2H-9247	499
	502
2H-9445	201
	202
2J-3506	732
	733
	734
2J-6274	430
2J-6356	201
	202
2J-6362	272
2J-6384	492
2J-6540	76
2J-7761	489
2J-8489	500
2K-0703	739
2K-2939	453
2K-2961	499
	502
2K-4096	497
2K-4507	497
2K-4821	138
2K-4973	588
	707
2K-5069	263
2K-6830	490
	492
2K-9111	700
2K-9183	622
2K-9295	263
2L-0041	497
2L-5893	684
2L-6726	64
2L-8069	224
	228
	231
	245
	254
2L-8076	254
2L-8079	224
	228
	231
	243
	246
	254
2M-2858	422
	426
2M-7041	316
2M-9780	64
	90
	92
	126
	128
	131
	453
	461
	469
	529
	533
	747
	750
2N-1287	272
2P-1293	54
2R-0098	276
	278
2R-5001	446
2S-1382	315
2S-1384	315
2S-1385	315
2S-3440	76
2S-4078	276
	278
	430
2S-5658	302
2S-5926	430
2S-8983	272
2S-9255	195
2V-8259	224
2V-8260	592
2W-6225	284
2Y-9790	577
	578
	721
	723
	726
	728
	730

► **PRIMARY REFERENCE**

PART NUMBER INDEX

Part	Page
3	
3A-8609	►736
	738
3A-8612	739
3A-8613	736
3A-8614	736
3B-1915	273
3B-4124	263
3B-4501	220
3B-4605	334
	446
3B-4610	351
3B-4627	585
3B-4630	718
3B-5325	741
	742
3B-6552	508
	511
3B-7255	64
3B-8486	318
3B-8489	380
	382
	384
	495
	502
	508
	511
	584
	671
	674
	721
	723
	726
	728
	730
	739
3D-2824	54
	90
	216
	285
	453
	463
	469
	505
	506
	514
	516
	518
	528
	529
	532
	533
	536
	541
3D-7943	457
3E-3365	208
	216
	220
3E-3371	207
3E-3377	10
3E-4320	363
3E-4333	700
3E-4352	628
3E-4354	267
3E-5169	141
	148
3E-5239	82
	602
3E-6328	►137
	245
	253
3E-6754	247
	255
3E-6799	304
	306
3E-7401	520
	522
	524
	526
3E-7404	82
3E-7430	54
3E-9865	592
3F-6185	585
3F-9556	138
	656
	657
	658
	659
3G-0361	553
	556
3G-3267	553
	556
3G-4282	732
	734
3G-6313	585
3G-8891	544
3G-8932	545
	721
	723
	726
	728
	730
3H-0240	624
	625
	626
3H-0702	201
	202
3H-1461	299
	301
3H-8726	368
	370
3J-1907	64
	88
	135
	199
	229
	231
	299
	315
	450
	463
	520
	522
	524
	526
	529
	533
	553
	561
	747
	748
	750
3J-4818	707
3J-7352	583
3J-7354	126
	135
	260
	450
	451
	463
	528
	532
	548
	550
	570
	572
	583
	747
	750
3J-9545	499
	502
3J-9703	500
3K-0360	66
	90
	92
	126
	143
	150
	263
	267
	276
	278
	284
	285
	308
	453
	508
	511
	520
	522
	524
	526
3K-1432	293
3K-6662	622
3K-8510	739
3L-6513	228
	231
	247
	255
3L-9410	272
3N-0759	453
3P-1932	283
3P-3441	294
3P-7019	293
3P-9900	368
	370
	707
3R-9965	234
	238
3S-0004	299
3S-2093	126
	128
	141
	148
	171
	172
	177
	179
	192
	195
	212
	214
	228
	231
	243
	245
	246
	253
	270
	281
	342
	471
	553
	592
	601
	602
	612
	636
	640
	651
	661
	709
	711
	716
	748
	750
3S-2708	263
	267
3S-6049	143
	150
	156
3S-6050	142
	149
	156
3S-6162	500
3S-8109	293
3T-0810	293
3T-0849	632
	634
3T-3447	293
3T-4568	263
3T-4629	293
3T-4824	263
3T-5807	267
3T-6469	308
3T-6471	308
3T-6769	293
3T-6963	263
3T-7584	293
3T-8757	299
3T-9272	263
3T-9315	292
3T-9536	406
	407
	408
3T-9549	262
3T-9674	273
3T-9819	272
3T-9960	293
3W-2025	391
	393
3W-2369	430
3W-2647	336
	337
	338
	351
	355
	356
	357
	358
	359
	360
3W-3240	691
3W-3896	351
	376
	378
3W-6756	674
3Y-5405	539
4	
4B-0418	649
4B-3665	308
4B-4098	303
4B-4158	577
	578
	721
	723
	726
	728
	730
	738
4B-4274	592

PART NUMBER INDEX

Part	Page
4B-4276	662
4B-4278	707
4B-4279	368
	370
4B-4863	235
	239
4B-7739	291
4B-8774	84
4B-9302	541
4B-9808	618
	620
	621
4D-2886	315
4D-4431	490
	492
4D-7388	285
	748
4D-8123	716
4D-9517	235
	239
	651
4D-9986	171
	172
4E-1384	351
4F-0255	585
4F-2294	218
4F-4879	703
	704
	706
4F-8711	363
4H-2558	224
	597
	716
4H-9027	133
	135
4I-9532	747
	750
4I-9535	747
	750
4J-0121	495
4J-0519	553
	556
4J-0520	285
	529
	533
4J-0522	285
4J-0527	529
	533
4J-0805	544
	545
4J-1641	718
4J-3420	497
4J-3745	494
4J-4606	499
	502
4J-5267	497
	537
	539
4J-5309	559
	560
4J-5477	532
	533
4J-7533	471
4J-8251	553
	556
4J-8252	553
	556
4K-0367	553
	556
4K-1388	290
	308
4K-3004	739
4K-3128	497
4K-8302	90
	92
4K-8603	293
4K-8864	143
	150
	156
	229
	232
4K-9429	665
4M-1751	315
4M-5905	316
4M-5942	651
4M-6425	684
4M-6582	636
	638
4M-8239	315
4M-8799	646
4N-7431	76
4P-7428	189
	191
	229
	232
	281
4P-7581	82
	126
	143
	150
	166
	168
	175
	187
	193
	229
	232
	247
	255
	270
	285
	453
	553
	556
	601
	744
	750
4P-8134	126
	143
	150
	156
	171
	172
	193
	196
	212
	214
	229
	232
	235
	239
	247
	255
	553
	556
	601
	602
	670
	748
	750
4S-4456	90
	92
4S-8537	293
4S-8541	304
	306
4T-0231	544
	545
	721
	723
	726
	728
	730
4T-0259	500
4T-0521	553
	556
4T-0732	585
4T-0780	585
4T-1481	718
4T-1504	718
4T-1520	585
4T-3521	539
4T-5613	490
	492
4T-6659	733
4V-1029	674
4V-5091	334
4V-6981	446
4V-8256	588
	700
4V-8577	707
4W-1203	23
4W-1204	23
4W-2042	23
4W-3277	284
4W-4293	245
4Y-4905	579
4Y-6353	280
	135
	196
	247
	255
	651
5D-0718	285
5D-1026	64
	66
5D-1911	489
5D-6543	486
5D-7523	292
5D-9629	64
	66
	173
	175
	546
5F-3106	301
	453
	529
	533
5F-9144	88
	450
	486
5G-2247	409
5G-7817	747
5H-4018	497
5H-6202	269
5H-6734	391
	393
5H-9899	612
5I-8270	141
5I-8304	141
	148
	156
5J-3864	294
5J-4773	732
	733
	734
5J-4991	500
5J-8011	495
5K-0216	406
	407
	408
5K-1770	285
5K-2697	506
	541
5K-3546	334
5K-4778	533
5K-8451	90
	92
5K-9065	304
	306
5K-9090	281
	285
	528
	529
	532
	533
5K-9106	294
5K-9107	264
5K-9179	655
5L-4758	457
5L-7200	220
5M-0578	263
	267
5M-1179	201
	202
5M-2057	553
	556
5M-2894	264
	267
	270
	273
	406
5A-3604	102
	123
	124
5B-0841	273
5B-3180	316
5C-2874	642
5C-2890	320
	321
	322
	323
	324
	326
	327
	328
	329
	351
	602
	610
	707
5C-7261	126
	128
	143
	150
	156
	170
	185
	211
	322
	324
	351
	372
	373
	656
	657
	658
	659
	700
5C-8811	716
5C-9553	131
	133

5

► **PRIMARY REFERENCE**

PART NUMBER INDEX

Part	Page
	684
5M-3320	299
5M-7925	263
5M-9548	315
5M-9708	647
5P-0537	273
	666
	667
	700
5P-0695	142
	149
	150
	156
5P-0747	142
	149
	156
	228
	231
5P-0761	141
	142
	148
	149
	156
5P-0767	64
	66
	636
	638
	661
5P-1076	131
	133
	285
	331
	336
	337
	338
	343
	725
5P-1404	529
	533
5P-1979	420
	587
5P-2230	76
5P-2766	166
	193
5P-3108	553
	556
5P-3131	293
5P-3928	651
5P-3929	651
5P-3930	293
5P-3948	651
5P-4106	651
5P-4115	235
	239
	592
	640
	651
	662
5P-4116	76
	126
	128
	143
	150
	187
	188
	189
	190
	229
	232
	235
	239
	368
	370
	372
	373
	622
	626
	628
	661
	671
	709
	711
5P-4295	90
	92
5P-4423	707
5P-4479	583
5P-4571	224
	245
	253
	592
	707
	709
	711
5P-4920	272
5P-4921	272
5P-4961	64
	90
	92
	284
5P-5623	687
5P-5639	636
	674
5P-5643	589
	628
	636
5P-5673	168
	602
5P-5677	195
	245
	253
5P-5755	351
	352
	674
5P-5846	308
5P-5952	597
5P-5991	126
	128
5P-6010	707
5P-6025	143
	150
5P-6129	652
5P-6414	304
5P-6874	655
	687
5P-6944	143
	150
5P-7464	143
	150
	508
	516
5P-7465	143
	150
	508
	516
5P-7466	453
	508
	511
	529
	533
	537
5P-7467	454
	508
	511
	529
	533
	537
5P-7468	516
	529
	533
5P-7469	516
	529
	533
5P-7815	262
5P-7854	748
5P-7957	665
5P-7958	1
5P-8066	285
5P-8112	454
	508
	511
	529
	533
	537
5P-8167	592
5P-8210	293
5P-8245	25
	263
	264
	267
	293
5P-8247	138
	385
	386
	387
	388
	389
	390
5P-8248	732
	733
	734
5P-8439	224
	243
	735
5P-8500	1
	90
5P-8874	135
	231
5P-9000	631
5P-9085	592
5P-9186	294
5P-9262	570
5P-9297	229
	232
	651
5P-9806	291
	308
5P-9891	391
	393
5Q-7578	278
5Q-7579	278
5Q-9270	320
5R-0939	536
5R-0940	536
5S-7001	315
5S-7349	138
5S-7383	684
5S-9062	23
5T-7486	700
5V-0564	292
5V-1496	693
	697
	700
5V-8780	351
5W-1250	451
5W-1437	443
5W-1992	640
5W-2005	640

6

Part	Page
6A-5277	640
6B-2882	284
6B-6863	293
	386
	387
	388
	389
	390
6C-3431	642
6C-9081	642
6C-9130	245
	253
6C-9149	346
	347
6D-1641	454
	651
6D-3033	234
	238
6D-3479	126
	128
	229
	232
	247
	255
	533
	541
	583
6D-4244	143
	150
	247
	255
	649
6D-5257	234
	238
6E-0465	499
	502
6E-0725	467
6E-1410	495
6E-1607	476
6E-3268	570
6E-3269	570
6E-3272	570
6E-3273	570
6E-3274	570
6E-3275	570
6E-3276	570
6E-3569	494
6E-3570	494
6E-4102	473
6E-4240	463
6E-5449	494
6E-5479	478
6E-6527	570
6E-6528	570
	572
6E-6536	570
6E-6537	570
6E-6538	570
6E-6539	570
6E-6540	570
6F-0711	318
6F-4855	201
6F-6673	264
	267
6F-7045	217
6H-3616	739
6H-3977	285
6H-9691	474
6I-0217	30
	32
	39
	50

PART NUMBER INDEX

Part	Page
	51
	57
	68
	84
	103
	108
	113
	118
6I-0233	215
6I-0254	50
	51
	68
	103
	108
	113
	118
6I-0260	39
	57
	94
	98
	103
	108
	113
	118
6I-0291	10
	39
6I-0456	94
	98
	103
	108
	113
	118
6I-0563	84
6I-0572	39
6I-0593	139
6I-0594	57
6I-0645	30
	32
	78
6I-0650	30
	32
6I-0654	36
	39
	84
	94
	98
	139
6I-0817	84
6I-0839	68
6I-1090	55
6I-1418	141
	148
	245
	253
6I-1497	39
6I-4200	98
	139
6I-4374	50
	51
	103
	108
6I-4681	39
6I-4709	57
6I-4793	103
	108
	113
	118
6I-8488	293
6I-8724	263
6I-9420	718
6I-9461	718
6I-9462	718
6J-2245	204
6J-2419	469
6J-2797	490
	492
6J-5383	585
6K-2660	363
6K-3273	697
6K-3632	687
6K-6361	363
6K-8178	506
	748
6K-8987	736
6L-1651	285
6L-5359	285
6P-0699	173
	175
	177
	179
	181
	235
	239
6P-1735	263
6P-1736	263
6P-2216	644
6P-2233	293
6P-5317	264
	267
6P-5560	61
6P-7742	293
6P-7743	293
6P-7772	294
6P-7773	294
6P-7968	293
6P-7983	293
6P-7985	294
6P-8269	131
	133
	135
6R-0365	461
6R-7943	548
	550
6S-6251	368
	370
6S-6646	368
	370
	544
6T-0062	263
6T-0064	263
6T-0097	293
6T-0850	263
6T-3631	221
	222
6T-3632	221
	222
6T-3633	221
	222
6T-5598	228
	231
6T-6708	592
6T-7695	642
6T-7995	272
6T-7996	272
6V-0301	529
	533
6V-0327	276
	278
6V-0328	276
	278
6V-0329	276
	278
6V-0330	276
	278
6V-0400	454
6V-0439	276
	278
6V-0484	450
6V-0491	640
6V-0826	143
	150
	247
	255
6V-0834	294
6V-0835	293
6V-0852	283
	293
	450
	528
	532
	747
	750
6V-0855	263
6V-0894	622
6V-0937	302
6V-1051	612
6V-1228	661
6V-1230	90
	92
	284
6V-1232	612
6V-1249	143
	150
	508
6V-1581	76
6V-1582	76
6V-1586	293
6V-1649	294
6V-1668	592
6V-1720	293
6V-1722	90
6V-1792	431
	435
	436
	437
6V-1820	304
	306
6V-1864	272
6V-1889	285
	529
	533
6V-1971	1
6V-2235	285
6V-2314	612
	616
6V-2369	195
6V-2370	64
	66
6V-2404	272
6V-2491	447
6V-2496	374
	640
	709
	711
6V-2686	212
	214
6V-2689	612
6V-2722	158
6V-3320	592
6V-3545	612
6V-3965	283
	294
	314
	315
	450
	528
	532
6V-4292	284
6V-4365	270
	315
6V-4447	622
6V-4589	126
	128
	219
	480
6V-5048	283
6V-5050	262
6V-5326	477
	559
	560
6V-5586	476
6V-5683	196
6V-5839	304
	306
	315
	553
	556
6V-5843	311
	705
6V-6339	572
6V-6604	82
6V-6782	651
6V-6783	651
6V-7238	66
6V-7357	646
	647
6V-7359	516
6V-7420	126
6V-7568	294
6V-7636	632
	634
6V-7646	263
	693
	697
6V-7673	304
	306
6V-7676	376
	378
6V-7687	508
	511
	544
	736
	739
6V-7723	552
6V-7742	495
	500
6V-7744	553
	556
	599
	736
	739
6V-7970	563
	564
	565
	567
	568
6V-7978	196
6V-8004	23
6V-8109	168
6V-8128	304
	306
6V-8133	500
6V-8185	446
6V-8187	195
6V-8189	138
6V-8218	561
6V-8224	168
	235
6V-8237	500
6V-8352	451
	570
6V-8370	220
	622
6V-8397	451
	463
	520

► **PRIMARY REFERENCE**

PART NUMBER INDEX

Part	Page
	522
	524
	526
	528
	529
	747
	748
	750
6V-8398	285
	506
	508
	511
	520
	522
	524
	526
	536
	539
	541
6V-8400	528
	532
6V-8513	368
	370
6V-8523	64
6V-8625	508
	511
6V-8626	128
	529
	533
6V-8632	453
6V-8635	285
	529
	533
6V-8636	463
	520
	522
	524
	526
	529
	747
6V-8637	285
	506
	518
	528
	532
	541
6V-8639	285
	508
	511
6V-8640	453
6V-8641	533
6V-8647	532
6V-8713	514
	516
6V-8715	750
6V-8724	520
	522
	524
	526
	747
	750
6V-8928	597
6V-8969	666
	667
	700
6V-8978	451
	463
	559
	560
6V-8981	539
6V-8982	518
6V-8984	281
6V-9001	747
	750
6V-9004	529
	533
6V-9005	281
6V-9007	54
	285
	514
	536
6V-9027	34
6V-9162	506
6V-9167	500
	585
6V-9168	520
	522
	524
	526
	748
	750
6V-9169	506
	539
	541
6V-9170	518
6V-9172	281
6V-9182	453
6V-9189	183
	184
6V-9197	331
	363
	368
	370
6V-9200	747
6V-9208	64
6V-9632	195
	628
	640
6V-9633	553
	556
6V-9746	54
	285
	453
	506
	514
	518
	528
	529
	532
	533
	536
	541
6V-9748	23
6V-9850	520
	522
	524
	526
	747
	750
6V-9872	528
	747
	750
6V-9877	453
6W-6005	141
	148
6Y-0306	293
6Y-0352	742
6Y-0359	741
6Y-0454	422
	426
6Y-0473	406
	407
	408
	409
	412
	413
	414
	415
	416
	417
	418
	422
	426
6Y-0775	270
6Y-0846	431
	432
	433
	434
6Y-0859	276
	278
6Y-0926	263
6Y-0984	263
6Y-1084	304
	306
6Y-1087	304
	306
6Y-1093	304
6Y-2704	263
	267
6Y-3125	419
6Y-3149	304
	306
6Y-3151	304
6Y-3159	304
	306
6Y-3164	308
6Y-3167	304
	306
6Y-3376	739
6Y-3385	739
6Y-3484	294
6Y-4003	264
	267
6Y-4638	316
6Y-5010	299
6Y-5352	293
6Y-8473	284
	315
6Y-8475	315
6Y-9373	263
	267
7B-0863	330
7B-3028	391
	393
7B-3039	553
	556
7B-7515	294
7C-1281	10
7C-4616	30
	32
7C-8246	231
7C-8370	23
7C-8634	23
7F-0560	158
7F-6935	303
7F-8607	651
7F-9543	330
7G-0437	293
7G-0942	592
7G-1596	263
7G-3496	308
7G-3710	294
7G-3832	508
	511
7G-3833	508
	511
	516
7G-3834	508
	511
	516
7G-4302	293
7G-4332	422
	426
7G-4823	662
7G-4824	626
	662
7G-4998	262
7G-5186	64
	66
	508
	511
7G-5614	293
7G-5674	293
7G-5675	293
7G-5730	294
7G-6060	293
7G-6061	293
7G-8116	674
7G-8121	293
7G-8839	725
7G-9224	294
7H-1447	489
7H-3607	302
7H-4566	263
7H-9737	446
7I-2272	247
	255
7I-7439	126
	128
7J-0204	229
	553
7J-1309	499
	502
	584
7J-5131	718
7J-8955	500
7J-8956	500
7J-9108	128
	453
	506
	514
	516
	518
	529
	533
	541
7J-9288	495
7J-9682	739
7K-1181	64
	66
	82
	90
	92
	126
	128
	141
	148
	156
	166
	173
	175
	177
	179
	181
	187
	188
	189
	190
	191
	193
	195

7

PART NUMBER INDEX

Part	Page
	212
	214
	224
	228
	231
	234
	238
	245
	253
	453
	553
	583
	632
	634
	638
	642
	649
	661
	670
	744
	750
7K-3176	651
7K-3304	651
7K-6058	454
7K-9205	383
	384
7L-6463	24
7M-0475	292
7M-3361	541
7M-8485	70
	71
	281
	285
	316
	453
	528
	529
	532
	533
7M-8592	315
7N-0296	212
	214
7N-0718	141
	148
	217
7N-5274	142
	149
	156
7N-9801	223
7P-4190	201
	202
7P-6596	383
	384
7P-9131	131
7R-3029	235
	239
7S-4534	294
7T-1099	175
	195
	228
	231
	320
	546
	592
	640
7T-1885	263
	267
7T-4532	600
7T-4567	592
7T-6799	245
	253
7T-6934	539
7T-6994	263
	267
7T-8130	263
7T-8136	267
7T-8859	272
7T-8894	636
	638
	651
7T-8895	224
	651
7T-9031	267
7T-9356	269
7T-9426	651
7T-9515	220
7T-9793	651
7T-9832	263
7T-9837	263
	267
7W-0534	506
7W-2632	103
	108
	113
	118
7W-3447	141
	148
7W-6534	264
7X-0513	336
	337
	338
7X-0515	346
	347
	376
	378
7X-0550	401
	402
	403
7X-0575	156
7X-0578	168
7X-0579	64
	66
	126
	128
	143
	150
	247
	255
7X-0583	691
7X-0584	612
7X-0587	380
	382
7X-0591	139
7X-0605	401
	402
	403
7X-0608	588
7X-0613	173
	177
	179
	181
7X-0618	351
7X-0818	60
7X-1448	64
7X-1553	465
7X-2454	664
7X-2475	587
7X-2488	662
7X-2532	419
7X-2537	64
	469
7X-2541	471
7X-2543	280
	739
7X-2548	90
	92
	196
	247
	255
7X-2549	529
	533
7X-2553	346
	347
7X-2554	363
7X-2555	131
	133
	135
	363
7X-2562	579
	721
	723
	726
	728
	730
7X-2563	276
	278
	454
7X-2565	330
7X-2566	585
	662
7X-2576	420
7X-2577	351
	355
	356
	357
	358
	359
	360
7X-2621	739
7X-3229	753
7X-3391	351
	376
	378
7X-3392	285
7X-6315	159
	161
	162
7X-7608	293
7X-7644	738
	753
7X-7702	636
	652
	661
7X-7729	64
	66
	76
	90
	92
	166
	168
	188
	190
	193
	285
	318
	326
	327
	331
	334
	338
	343
	344
	351
	361
	363
	365
	367
	368
	370
	375
	376
	378
	454
	487
	508
	511
	518
	529
	533
	541
	546
	589
	597
	599
	626
	628
	632
	634
	636
	638
	651
	662
	674
	735
	748
	751
7X-7816	308
7X-7927	716
7X-7928	716
7X-7929	716
7X-7930	716
7X-7958	64
	66
7Y-0468	700
7Y-1099	173
7Y-1858	508
	511
7Y-2854	368
	370
7Y-5219	476
7Y-5226	612
7Y-7388	700

8

Part	Page
8C-3056	228
	231
	247
	255
8C-3174	516
8C-3205	285
	539
8C-3206	285
8C-3210	662
8C-3229	308
8C-3445	56
8C-3446	283
	450
8C-3447	283
8C-3451	450
8C-3681	64
	66
8C-3756	592
	602
8C-4365	451
8C-5607	173
	175
	177
	179
	181
8C-5608	173
	175
	177
	179

► **PRIMARY REFERENCE**

PART NUMBER INDEX

Part	Page
	181
8C-5682	651
8C-5917	141
	148
	156
8C-6354	195
	234
	238
8C-6358	158
8C-7534	64
	66
8C-8400	536
8C-8451	173
	175
	177
	179
	181
8C-8478	585
	660
8C-8580	563
	564
	565
	567
	568
8C-8729	276
	278
8C-8843	687
8C-8992	318
8C-9160	490
	492
8D-0071	272
8D-3791	725
8D-4771	264
	267
	276
	278
8D-5096	294
8D-9671	529
8E-1050	351
	376
	378
8E-1211	391
	393
8E-1212	391
	393
8E-1484	293
8E-1666	293
8E-2887	585
8E-3075	276
	278
8E-4092	430
8E-5192	718
8E-5194	718
8E-5247	304
	306
8E-5277	263
8E-5278	267
8E-5279	263
	267
8E-5407	528
	532
8E-5701	585
8E-5703	495
	500
	585
8E-6539	304
	306
8E-6647	304
	306
8E-6648	304
	306
8E-7791	626
8E-8115	293
8E-8117	293
8E-8118	293
8E-8297	293
8E-8299	293
8E-8307	263
	267
8E-8310	263
8E-8706	597
	655
8E-8789	384
8E-9212	495
8E-9378	732
	733
8E-9379	732
	733
	734
8E-9380	721
	723
	730
	732
8F-7219	88
8F-7702	201
	202
8F-9206	553
	556
	562
	651
8G-2943	420
8G-3102	430
8G-3202	341
	393
8G-4107	420
8G-4189	383
	384
8G-4190	383
	384
8G-4565	276
	278
8G-4566	276
	278
8G-4568	276
	278
8G-4569	276
	278
8G-4945	430
8G-5258	690
8G-5428	544
8G-5501	544
8G-5502	544
8G-5551	284
8G-5654	284
8G-5747	579
	721
	723
	726
	728
	730
8G-5799	420
8G-6557	247
	256
	285
8G-6683	318
8G-6684	318
8G-7085	330
8G-8316	380
	382
8G-8589	284
8G-9560	284
8H-5303	217
8H-5306	217
8H-8898	718
8H-9818	291
8H-9819	291
8J-2189	739
	741
8J-2190	741
	742
8J-2413	562
	564
	569
	573
	574
	575
8J-2880	500
	585
8J-6020	495
8J-6245	495
8J-6913	553
	556
8J-8322	553
	556
8J-8436	553
	556
8J-8443	553
	556
8J-8468	553
	556
8J-8782	553
	556
8J-8783	553
	556
8K-0589	341
	391
	393
8L-2746	480
8L-2779	102
	123
	124
8L-2786	283
8L-6557	273
8L-8413	141
	142
	148
	149
	150
	707
8M-2538	315
8M-2770	235
	239
8M-2773	247
	256
8M-3494	738
8M-4409	315
8M-4432	270
8M-4438	264
	267
8M-4986	315
8M-4988	285
8M-5249	285
8M-5254	280
	285
	292
8M-8489	299
8N-1725	142
	150
	156
8N-5083	490
	492
8P-0058	294
8P-1916	293
8P-5244	351
	376
	378
	687
8P-8540	247
	256
8P-8950	293
8P-9770	585
	718
	739
8S-0527	267
	293
8S-3020	142
	149
	156
8S-3426	293
8S-8158	143
	150
8S-9129	284
8S-9130	284
8S-9191	270
8T-0070	495
8T-0119	90
8T-0154	636
	638
	661
8T-0249	285
8T-0267	143
	150
8T-0277	700
8T-0281	423
	425
	427
8T-0282	387
	388
8T-0289	248
	256
8T-0325	166
	168
8T-0328	166
	168
	247
	256
	446
	622
	636
	693
	697
8T-0337	636
	638
	640
8T-0348	454
8T-0356	299
8T-0359	385
	386
8T-0363	351
8T-0375	430
8T-0389	143
	150
	156
8T-0404	453
8T-0640	202
8T-0643	315
8T-1158	312
	443
8T-1482	355
	356
	357
	358
	359
	360
	579
8T-1885	520
	522
	524
	526
8T-1886	520
	522
	524
	526
8T-1887	511
	514
	518

PART NUMBER INDEX

Part	Page
	529
	533
8T-1888	511
	514
	518
	529
	533
8T-1889	143
	150
	247
	256
	285
8T-1890	143
	150
	247
	256
	285
8T-1905	524
	526
8T-2223	264
	267
8T-2225	142
	143
	149
	150
	156
8T-2275	489
8T-2561	520
	522
	524
	526
8T-2922	474
8T-3298	553
	556
8T-3490	61
	64
	66
	156
	361
	365
	367
	368
	372
	487
	524
	528
	532
	546
	632
	634
	640
	691
8T-3518	158
8T-3519	158
8T-3597	320
	341
	351
	355
	690
8T-3612	142
	149
	235
	351
	628
	662
8T-3647	471
8T-3957	461
8T-4001	351
8T-4121	22
	37
	54
	60
	61
	64
	66
	71
	76
	82
	126
	128
	143
	150
	156
	166
	168
	175
	187
	188
	193
	196
	224
	229
	232
	235
	239
	243
	247
	256
	276
	278
	280
	281
	285
	301
	308
	317
	320
	321
	322
	334
	342
	348
	349
	350
	361
	391
	393
	430
	454
	487
	488
	497
	506
	508
	511
	514
	516
	518
	520
	522
	524
	526
	529
	533
	536
	537
	539
	541
	556
	583
	589
	597
	599
	602
	615
	616
	622
	636
	638
	643
	646
	647
	649
	651
	661
	662
	670
	671
	674
	687
	691
	705
	744
	748
	751
8T-4122	587
8T-4123	38
	276
	278
	318
	330
	419
	454
	579
	585
	660
	662
	736
8T-4130	668
8T-4131	419
	585
8T-4133	90
	92
	126
	128
	143
	150
	156
	247
	256
	281
	285
	291
	326
	327
	331
	334
	338
	349
	350
	361
	368
	370
	454
	506
	508
	511
	514
	516
	518
	529
	533
	541
	546
	597
	636
	649
	670
	691
	748
	751
8T-4136	54
	64
	66
	143
	150
	156
	166
	173
	175
	181
	193
	229
	232
	235
	239
	247
	256
	270
	273
	276
	278
	285
	291
	295
	315
	318
	331
	334
	338
	361
	368
	370
	376
	378
	391
	393
	454
	506
	508
	511
	514
	516
	518
	520
	522
	524
	526
	529
	533
	546
	622
	628
	646
	647
	651
	660
	661
	671
	674
	687
8T-4137	71
	76
	90
	92
	143
	150
	156
	166
	168
	175
	193
	224
	229
	232
	243
	247

► **PRIMARY REFERENCE**

PART NUMBER INDEX

Part	Page
	256
	285
	368
	370
	375
	454
	488
	511
	518
	529
	533
	541
	583
	597
	599
	602
	626
	636
	638
	643
	649
	651
	660
	662
	671
	687
	744
8T-4138	82
	177
	179
	196
	235
	239
	322
	602
	610
	632
	634
	674
8T-4139	131
	133
	135
	285
	331
	334
	338
	356
	359
	360
	391
	393
	508
	511
	516
	539
	544
	579
	651
	687
	690
	739
8T-4140	38
	330
	337
	351
	354
	363
	376
	378
	396
	397
	398
	401
	402
	403
	404
	405
8T-4141	276
	278
8T-4149	285
	453
8T-4161	687
8T-4167	351
	664
8T-4171	640
8T-4172	285
	454
	529
	533
8T-4177	471
8T-4178	285
8T-4179	597
8T-4181	173
	175
	181
8T-4182	22
	229
	232
	301
	303
	430
	454
	536
8T-4183	189
	190
	285
	334
	337
	351
	355
	357
	358
	376
	378
	395
	508
	539
	544
	725
8T-4184	286
	292
	351
	356
	359
	360
	376
	454
	508
	511
8T-4185	64
	66
	247
	256
	368
	546
	626
	662
8T-4186	22
	37
	61
	76
	79
	187
	189
	229
	232
	295
	348
	454
	487
	537
	615
	616
	649
8T-4189	75
	76
	126
	143
	150
	173
	177
	179
	181
	615
	616
	626
	662
	709
	711
8T-4190	380
	382
8T-4191	82
	196
	229
	232
	247
	256
	365
	589
	636
	651
8T-4192	229
	232
	395
	442
	508
	511
	539
	587
8T-4193	38
	276
	278
	336
	338
	420
	691
8T-4194	191
	286
	292
	336
	338
	351
	354
	356
	359
	360
	374
	376
	401
	402
	403
	428
	508
	511
	529
	687
8T-4195	60
	61
	64
	66
	76
	126
	128
	143
	150
	187
	188
	190
	247
	256
	281
	286
	301
	308
	317
	318
	320
	321
	322
	331
	334
	342
	344
	349
	350
	351
	361
	363
	368
	370
	454
	487
	529
	533
	536
	541
	553
	556
	589
	597
	615
	616
	632
	634
	636
	651
	685
	686
	691
	735
	748
8T-4196	71
	187
	188
	229
	232
	286
	343
	365
	367
	488
	497
	506
	529
	533
	539
	541
	638
	691
	735
8T-4198	286
	363
	736
8T-4200	102
	123
	124

PART NUMBER INDEX

Part	Page
	143
	150
	171
	172
	211
	212
	214
	247
	256
	454
	661
8T-4205	131
	133
	135
	138
	177
	179
	195
	196
	446
	602
	612
	640
	646
	647
	693
	697
8T-4220	687
8T-4222	546
	628
	660
	671
8T-4223	38
	90
	92
	135
	196
	232
	248
	256
	276
	278
	281
	286
	292
	318
	331
	334
	338
	351
	356
	359
	360
	374
	376
	378
	391
	393
	395
	442
	454
	508
	511
	529
	533
	539
	544
	545
	587
	597
	651
	685
	686
	687
	690
	721
	723
	726
	728
	730
	739
8T-4224	24
	75
	138
	143
	150
	170
	171
	172
	183
	184
	185
	189
	211
	212
	214
	248
	256
	322
	324
	454
	469
	601
	602
	615
	616
	626
	646
	647
	662
	684
	700
8T-4226	143
	150
8T-4231	461
8T-4244	292
	331
	338
	356
	359
	360
	508
	516
	597
	739
8T-4648	529
	533
	739
8T-4649	376
	378
8T-4778	330
	401
	402
	403
	404
	405
8T-4779	691
8T-4896	592
8T-4908	60
	61
	189
	602
	622
8T-4910	38
	281
	308
	337
	343
	428
	529
8T-4956	286
	331
	334
	336
	338
	351
	374
	401
	402
	529
	533
	545
	721
	723
	726
	728
	730
8T-4958	494
	495
8T-4984	64
	66
	528
	532
8T-4994	201
	202
8T-5005	248
	256
	295
	529
	533
8T-5030	299
8T-5041	376
	378
8T-5071	391
8T-5360	692
8T-5372	196
	334
	343
8T-5373	54
8T-5400	632
	634
8T-5410	610
8T-5412	736
8T-5413	372
	453
	528
	532
8T-5433	486
8T-5439	585
8T-5668	497
	499
	502
8T-5878	420
	687
	689
8T-6381	38
	585
8T-6430	318
	736
8T-6466	64
	66
	76
	143
	150
	229
	232
	286
	291
	301
	537
	649
8T-6685	454
	687
8T-6699	622
8T-6703	284
8T-6724	90
8T-6762	291
8T-6868	38
8T-6869	126
	128
	143
	150
8T-6870	229
	232
	248
	256
8T-6876	520
	522
8T-6912	183
	184
	185
8T-7038	664
8T-7338	347
	363
	380
	382
	419
8T-7352	126
8T-7521	520
	522
	524
	526
8T-7525	548
	550
8T-7546	747
	750
8T-7547	170
	171
	172
	212
	214
	235
	239
	469
8T-7566	666
	667
	700
8T-7567	499
	502
8T-7839	646
	647
8T-7852	235
	239
	248
8T-7927	528
	532
8T-7929	739
8T-7934	173
	175
	181
	229
	232
	361
	529
	533
	649
	651
8T-8379	500
8T-8442	548
	550
	570
	572
8T-8557	643
8T-8729	185
	186
	208

► **PRIMARY REFERENCE**

PART NUMBER INDEX

Part	Page
	219
	221
	222
	223
	245
	253
	479
	481
	599
	608
	618
	621
	649
	687
	707
8T-8730	218
8T-8736	234
	238
8T-8737	82
	141
	142
	143
	148
	149
	150
	166
	168
	173
	175
	177
	179
	181
	193
	195
	224
	228
	231
	234
	238
	239
	243
	245
	246
	247
	253
	254
	255
	479
	481
	592
	604
	607
	608
	610
	612
	616
	620
	640
	643
	656
	657
	658
	659
	676
	709
	711
8T-8827	142
	143
	149
	150
	156
	228
	231
	247
	255
8T-8919	276
	278
8T-9082	693
8T-9371	707
8T-9389	553
	556
8T-9394	605
8T-9403	454
8T-9471	248
	256
	626
	671
8T-9530	341
	393
8T-9655	126
	128
	141
	148
	245
	253
8T-9757	141
	148
	156
8T-9905	284
8V-0622	156
8V-7659	725
8W-3214	54
8Y-6388	668
8Y-8503	76

9

Part	Page
9B-0576	263
9B-1117	607
	608
9C-5344	245
	253
9D-3768	632
	634
9D-8508	166
	193
	597
	632
	634
	716
9F-1399	308
9F-5644	217
9F-5975	700
9F-6656	286
9G-0002	141
	148
9G-0003	156
9G-0004	156
9G-0005	141
	148
9G-1233	293
9G-1234	295
9G-1488	293
9G-1642	412
	413
	414
	415
	416
	417
	418
9G-3695	221
	602
9G-4343	195
9G-4876	276
	278
9G-8615	293
9H-5604	295
9H-6454	489
9J-0461	308
9J-2914	553
	556
9J-3047	553
	556
9J-3139	741
9J-3866	528
	532
9J-7031	553
	556
9J-7964	495
9J-8923	742
9J-8926	▶742
	743
9J-9598	739
9L-6331	126
	128
9L-6770	138
9L-9068	471
9L-9132	264
9M-1503	293
9M-1974	270
	316
9M-2904	537
9M-4218	286
9M-5733	624
	625
	626
9M-7394	489
9M-8406	143
	150
	248
	256
	506
	518
	651
9M-9162	541
9N-4449	736
9N-4450	736
9P-1360	406
	407
	408
9P-3066	131
	133
	135
9P-5558	293
9P-7072	272
9P-7121	131
	133
	135
9P-8899	391
	393
9P-9150	471
9P-9388	655
9R-1004	506
9R-1005	506
9R-2672	318
	546
9R-2821	320
9R-3572	718
9R-9866	365
	367
9S-1305	446
9S-1310	651
9S-4182	126
	294
	451
9S-4183	285
	294
	505
9S-4185	276
	278
	308
9S-4188	290
	294
	308
9S-4190	131
	294
	469
9S-4191	294
	299
	313
	561
9S-5187	351
	376
	378
	687
9S-8001	316
9S-8002	135
	451
	463
	548
	550
	570
	572
9S-8004	88
	283
	463
9S-8005	264
	267
9S-8006	126
	128
	461
9S-8008	262
	463
	469
9S-8010	430
9T-0094	500
9T-2559	444
9T-2560	465
9T-2581	465
9T-2582	465
9T-2584	465
9T-3264	553
	556
9T-3726	463
9T-3928	463
9T-3929	478
9T-5241	700
9T-5900	739
9T-7045	492
	499
	502
9T-8578	503
9U-8057	733
9U-8079	718
	733
9U-8263	642
9U-8506	718
9W-0099	739
9W-0742	143
	150
	158
	229
	232
9W-0844	592
	602
	604
9W-0852	82
	592
	602
9W-1464	612
9W-1571	263
9W-1951	195
9W-2853	263
9W-3361	431

► PRIMARY REFERENCE

PART NUMBER INDEX

Part	Page
	432
	433
	434
9W-6102	263
9W-6103	263
9W-6381	718
9W-6582	38
9W-6584	38
9W-7925	267
9W-7926	267
9W-9027	660
9W-9930	38
9W-9996	544
9X-0194	246
	253
	709
	711
9X-0199	220
	622
9X-1054	82
	602
9X-1056	82
	602
9X-1386	205
9X-1813	203
	206
	207
	216
	219
	272
	450
	596
	687
9X-2027	264
	267
	303
	311
	315
9X-2032	640
9X-2038	626
9X-2040	597
	628
	632
	634
	671
9X-2041	674
9X-2043	447
	448
9X-2044	248
	256
	597
	628
	631
	648
	671
9X-2045	614
	626
	632
	634
	638
	668
	716
9X-2046	625
9X-2125	295
9X-2130	143
9X-2206	135
9X-2327	407
	408
9X-2480	201
9X-3401	10
	128
	148
	177
	179
	181
	200
	203
	205
	206
	220
	238
	239
	246
	247
	254
	255
	610
	616
	649
9X-3402	141
	142
	143
	148
	149
	150
	166
	168
	173
	175
	177
	179
	181
	193
	195
	224
	228
	231
	234
	238
	243
	245
	246
	247
	254
	255
	592
	616
	640
9X-3404	143
	150
9X-4244	183
	184
	185
9X-4580	391
	393
9X-4609	286
9X-4610	612
9X-4611	490
	492
9X-5699	142
	149
9X-6165	82
	173
	175
	177
	179
	181
	245
	256
9X-6340	753
9X-6550	747
9X-6772	141
	148
	173
	175
	177
	179
	246
	253
9X-7264	497
9X-7269	494
9X-7373	589
9X-7378	600
	649
9X-7380	651
9X-7381	649
	651
9X-7382	649
	652
9X-7383	652
9X-7384	652
9X-7385	600
	649
9X-7680	548
	570
9X-7719	308
9X-7737	219
9X-7849	186
9X-8121	186
9X-8139	186
9X-8250	454
	520
	522
	524
	526
	636
	638
	652
	661
9X-8256	173
	175
	177
	179
	181
	196
	201
	202
	320
	321
	322
	323
	324
	326
	327
	328
	329
	351
	447
	448
	612
	616
	628
	631
	668
	671
9X-8257	38
	131
	133
	135
	276
	278
	344
	363
	380
	382
	401
	402
	403
	404
	405
	419
	420
	691
9X-8268	423
	425
	427
	430
9X-8271	407
	721
	723
	726
	728
	730
9X-8399	494
	495
9X-8402	284
9X-8600	131
	133
9X-8705	748
9X-8916	389
	390
9X-8979	548
	550
9X-9825	228
	231
9Y-8315	79
9Y-9381	84
	0
005-4834	263
006-6586	64
030-2135	263
031-0214	684
	700
032-1267	272
032-1268	272
032-8047	84
032-9020	10
033-6041	478
033-6043	570
	572
034-3679	284
035-3360	294
035-8014	84
052-0572	272
053-2294	406
064-3843	304
	306
067-2551	520
	522
	524
	526
067-6007	84
067-6043	15
	17
067-6135	30
067-6179	30
	32
067-6823	15
068-6405	376
	378
077-3241	318
087-4772	451
	463
089-8249	579
	721
	723
	726
	728
	730
095-0723	143
	150
095-0843	693

► **PRIMARY REFERENCE**

PART NUMBER INDEX

Part	Page
	697
095-0916	622
095-0934	478
095-1751	564
	569
	573
	574
	575
096-0001	462
096-4884	376
	378
096-4885	363
096-7033	508
	511
097-7234	224
098-5747	344
099-3001	636
	651
099-3600	331
	338
099-3649	61
1	
100-3751	30
	32
	57
	94
	98
100-4830	9
	30
	84
100-4841	17
101-0003	707
101-2867	684
	700
101-3121	245
	253
101-3129	143
	150
	284
	453
101-3895	30
	32
	103
	108
	113
	118
101-3917	57
101-7547	57
102-2240	126
	▶207
102-8801	177
	179
	234
	238
	246
	253
	607
	608
	616
102-8802	82
	131
	133
	135
	137
	141
	148
	185
	186
	195
	203
	206
	208
	209
	215
	216
	219
	220
	223
	224
	228
	231
	245
	246
	247
	253
	255
	272
	281
	450
	592
	596
	599
	600
	622
	649
	687
	707
102-8803	143
	150
	200
	207
	222
	246
	253
102-8804	199
	221
	245
	246
	253
	479
	481
	612
102-8805	228
	231
	246
	253
	592
	602
	612
	618
	620
	621
	640
	656
	657
	658
	659
	709
	711
102-8806	224
	246
	253
	610
102-9478	614
102-9690	39
102-9941	26
103-6262	612
104-2091	638
	668
104-3173	284
104-4746	579
104-4817	579
	721
	723
	726
	728
	730
104-6729	270
104-6730	270
104-6931	553
	556
104-7391	579
104-7434	579
	721
	723
	726
	728
	730
104-7498	579
105-2058	579
105-2145	570
106-0713	276
	278
106-0721	308
106-1618	409
106-1625	409
106-1626	409
106-1627	409
106-1628	409
106-1629	409
106-1630	409
106-1642	431
	435
	436
	437
106-8186	318
106-8187	318
106-8715	536
106-9212	316
106-9214	316
107-0713	431
107-0714	431
107-0719	431
	435
	436
	437
107-1763	276
107-2348	84
107-4068	1
	▶330
107-4098	▶420
	438
	439
107-4393	651
107-4394	651
107-4395	651
107-4396	651
107-4397	651
107-4399	651
107-6032	224
107-8126	577
	581
	582
108-0801	430
108-0802	420
108-0803	420
108-0812	397
108-2097	270
108-2468	294
108-2470	293
108-2472	293
108-3055	293
108-3565	467
108-4311	707
108-4430	469
108-5618	294
108-5619	294
108-5620	294
108-5621	294
108-5623	294
108-5794	579
108-6587	311
108-7039	▶292
	298
108-8250	272
108-8296	303
109-0367	380
	382
109-0958	579
109-0959	577
	581
	582
109-1633	651
109-1634	651
109-3203	478
109-3478	380
	382
109-3968	316
109-3969	316
109-5008	646
	647
109-5815	453
109-6406	589
110-1211	308
110-2049	270
110-2842	469
110-2860	270
110-2976	▶409
	431
	435
	436
	437
110-2980	▶431
110-3162	349
110-3269	▶494
	577
	581
	582
110-3270	494
110-3271	494
110-3362	406
	407
	408
110-4771	499
	502
110-5217	579
110-5602	646
	647
110-5692	391
	393
110-6393	649
110-6501	490
110-6969	401
	402
	403
	404
	405
110-7887	245
	253
111-0484	141
	148
111-0859	94
	98
111-4643	368
111-7346	444
	▶473
111-8222	9
111-8287	444
111-8288	473
111-8289	473
112-0858	610
112-3927	347

PART NUMBER INDEX

Part	Page
112-4368	537
112-4629	463
112-4657	467
112-5056	292
112-5057	292
112-5344	351
112-5345	351
112-6142	490
112-7455	508
	511
112-9327	473
113-1504	50
	51
113-4417	444
	465
113-4630	10
113-8129	68
113-8490	195
113-8491	195
113-9212	294
114-0358	741
	742
114-0359	741
	742
114-2312	284
114-5671	736
114-5672	736
114-9125	626
115-3519	640
115-4473	585
115-4474	585
115-4522	585
115-4561	544
115-4581	544
115-4591	544
115-4592	544
115-4594	578
	▶718
115-4595	718
115-8219	495
115-8225	495
116-6952	255
116-7471	195
117-1385	102
	123
	124
	150
117-2311	245
	253
	626
117-4491	699
	700
117-4492	588
117-7238	467
117-7239	467
117-7240	467
117-7241	467
117-7245	467
117-7246	467
117-7247	467
117-7248	467
117-7249	467
117-7250	467
117-7251	467
117-7252	467
117-7273	443
117-7278	451
	462
117-7279	451
117-7280	451
117-7282	451
117-7322	462
117-8131	660
117-8721	495
117-8929	447
	448
117-9988	674
118-4977	690
118-6345	▶419
	438
	439
119-3662	141
	148
	166
	168
	193
	224
	228
	231
	234
	238
	253
	602
	640
	709
	711
119-6110	473
120-4162	747
	750
120-4394	451
	548
	550
121-0530	747
	750
121-0834	422
	426
121-1257	422
	426
122-3771	471
122-9068	467
122-9070	467
122-9071	467
122-9363	476
122-9718	463
122-9918	490
122-9919	490
122-9921	490
123-2899	72
123-3299	444
	465
123-7575	451
	463
123-7583	451
	463
123-7598	462
124-3243	662
124-3536	41
	42
124-3815	10
	30
	32
	50
	51
	94
	98
	103
	108
	113
	118
124-5234	579
124-5235	579
124-5741	579
124-6657	272
124-8335	561
124-9633	229
	232
124-9672	585
125-7484	528
	532
125-7874	141
	142
	148
	149
	166
	168
	173
	175
	177
	179
	181
	193
	195
	224
	228
	231
	234
	238
	243
	246
	253
	254
	592
125-7875	82
	195
	224
	228
	231
	234
	238
	243
	246
	254
	592
125-8175	632
	634
	716
125-9134	467
125-9740	592
126-0747	453
	▶561
126-0748	561
126-1766	82
126-1767	10
	128
	177
	179
	181
	200
	238
	239
	246
	254
	255
	709
	711
126-1768	148
	177
	179
	181
	247
	254
	255
126-1774	141
	148
	173
	175
	177
	179
	181
	246
	254
126-3701	599
	626
126-7574	159
	162
126-8472	602
126-8842	467
126-8901	467
126-8928	420
126-9587	467
127-0724	228
127-2170	447
	448
	605
	614
	626
	628
	662
	671
	700
127-6509	716
127-7443	212
	214
127-8281	10
128-4158	195
128-4249	193
	231
	246
	254
128-6107	331
129-1262	304
	306
129-1336	640
129-1368	640
129-1371	640
129-2380	304
	306
129-3108	141
	148
129-3178	631
	640
	668
129-3179	24
129-3737	597
130-0229	283
130-1977	537
130-3265	612
130-5300	592
130-9192	537
130-9764	330
130-9888	50
	51
131-0167	299
131-0359	141
	148
131-0447	612
131-3093	636
	638
131-3540	646
	647
132-0338	588
	700
132-1334	435
132-1336	435
132-5789	143
	150
	173
	177
	179
	181
	229
	232
132-7419	612
132-7450	612
132-8487	234
	238

▶ **PRIMARY REFERENCE**

PART NUMBER INDEX

Part	Page
132-9455	459
	460
132-9899	471
132-9900	471
133-1011	30
	32
133-1222	299
133-2249	479
	481
133-3260	709
133-6934	228
	528
	532
133-8739	465
133-9123	632
	634
133-9399	640
134-1251	471
134-2540	141
	148
	228
	231
	234
	238
	246
	254
134-3856	62
134-4126	159
	161
	162
134-6775	▶545
	577
	581
	582
134-7258	753
135-5001	334
135-7393	490
	492
135-9795	▶743
136-0207	64
	66
136-1543	665
136-1544	588
136-1595	263
136-3194	632
136-4184	478
137-5524	461
137-6603	469
137-8165	643
	676
	680
	681
137-8793	457
137-8794	457
138-1645	622
138-2434	605
138-2435	605
138-4086	294
138-4087	294
138-7033	▶544
	578
139-1398	76
	284
139-1537	556
139-6039	668
140-1320	374
	662
140-4722	642
140-7684	246
	247
	254
	255
141-0247	444
	465
141-0248	444
	465
141-0249	444
	465
141-0250	444
	465
141-0251	444
	465
141-0252	444
	465
141-3983	228
	231
141-8589	84
143-1288	693
	697
	700
143-3148	587
144-0195	709
	711
	716
144-0331	607
	608
	612
144-0761	294
144-0832	503
144-1636	82
	126
	141
	142
	143
	149
	150
	166
	173
	175
	193
	195
	224
	228
	231
	234
	243
	589
	592
	640
	709
	711
144-5611	34
145-0326	707
145-0803	579
145-2901	34
145-3810	443
145-3811	443
145-3812	443
145-3813	443
145-4115	687
	689
145-4430	437
145-4431	437
145-4509	642
145-7028	▶208
	228
	553
145-8495	286
146-2282	368
	370
147-1444	166
	193
147-1445	246
	254
147-1446	246
	254
148-1928	284
148-8307	135
	231
148-8313	143
	150
148-8316	532
148-8319	750
148-8325	533
148-8326	528
	747
148-8327	528
148-8333	528
	532
148-8335	529
148-8336	520
	524
	529
	747
148-8342	453
148-8343	747
148-8347	54
148-8353	747
148-8359	453
148-8361	747
148-8365	520
148-8367	520
	524
	747
148-8378	520
	524
	747
148-8390	128
	529
148-8407	561
148-8408	285
	505
148-8409	469
148-8410	131
	457
	469
149-5933	374
149-6309	544
149-6371	649
149-9818	195
150-3026	284
150-3030	64
150-3036	524
150-4046	529
	533
150-4086	648
151-2898	34
151-2900	24
	34
151-9274	606
151-9275	612
152-1811	451
	▶476
152-6649	553
	556
152-8070	409
153-2681	674
153-5043	208
	209
	589
153-5710	156
153-6237	529
153-6932	640
154-3172	255
154-9024	64
155-0576	103
	108
	113
	118
155-2255	173
	175
	177
	179
	181
	195
	246
	247
	254
	255
155-2260	166
	193
	228
	231
	246
	254
155-2265	195
	224
	246
	254
155-2270	82
	141
	142
	148
	149
	199
	218
	224
	228
	231
	243
	246
	247
	254
	255
	270
	281
	592
	599
	602
	640
	709
	711
155-2271	142
	143
	149
	150
	195
	246
	247
	254
	255
155-2274	195
	224
	246
	254
	604
	616
155-3624	126
155-7321	90
155-7688	631
	668
155-7714	131
	133
	135
	356
	359
	360
155-7738	331
155-7739	331
155-7769	323
155-7772	324
155-9301	368
	370
155-9302	368
	370
155-9321	363

▶ **PRIMARY REFERENCE**

PART NUMBER INDEX

Part	Page
155-9331	368
	370
155-9332	368
	370
156-2525	92
156-4406	294
156-5545	588
156-5970	479
	481
156-6175	177
	179
156-8915	594
	▶660
156-8916	597
	▶713
157-0670	64
158-2734	612
158-2735	612
158-6632	▶220
	626
	662
158-6634	141
	148
	▶221
159-4700	483
159-9322	141
	148
	166
	173
	175
	177
	179
	181
	193
	246
	254
160-0054	▶499
	577
160-0055	499
160-0060	499
	502
160-0162	103
	108
	113
	118
160-0305	499
	502
160-2182	141
	148
160-2669	▶482
	522
	526
160-3518	643
	676
	680
	681
160-5691	579
160-6306	585
160-7689	141
	148
	246
	254
160-7690	173
	175
	177
	179
	181
160-8499	443
160-8510	420
160-8754	642
160-9756	406
	407
161-2113	579
161-6879	483
161-6880	483
161-7247	406
	407
	408
161-7249	406
	407
	408
161-7350	406
	407
	408
161-7550	406
	407
161-7615	344
161-9289	703
161-9916	126
162-1565	10
162-5357	▶457
	471
162-5358	457
162-6966	284
162-8378	607
	608
162-8387	607
	608
162-8389	607
	608
163-1135	707
163-1201	141
	148
164-1234	707
164-2108	313
	314
	480
164-3651	228
	553
164-4531	588
164-4883	666
	667
	700
164-5567	294
	528
	532
164-7468	139
164-7556	183
	184
	185
164-7577	▶216
	262
164-7908	747
164-8474	668
165-2273	66
165-5970	126
	128
	▶222
165-6968	444
166-2103	713
	▶714
166-2104	713
	▶715
166-3777	610
	628
	671
166-6358	24
166-7409	444
166-7410	444
166-9147	553
	556
166-9171	553
	556
167-1192	166
	168
167-1451	597
	▶632
167-1452	632
167-1453	597
	▶634
167-1454	634
167-1466	4
	▶690
167-2195	490
167-2200	494
	495
167-2201	497
	499
	502
167-2208	500
167-2304	490
167-2307	494
	495
167-2312	497
	499
	502
167-2319	500
167-3692	193
	228
	231
	246
	254
167-3693	166
	168
	193
	246
	254
167-6805	463
167-7713	477
167-8712	166
	193
167-8713	166
	193
167-8987	234
	238
168-2197	548
	550
168-2198	548
	550
168-2203	548
	550
168-2206	548
	550
168-2210	548
	▶570
168-3378	552
168-3379	552
168-3381	552
168-3382	552
168-3384	552
168-3385	552
168-3504	548
	550
168-7317	548
	550
168-7319	548
	550
168-8929	597
169-0314	528
	532
169-1026	697
169-1616	564
	569
	573
	574
	575
169-2876	245
	253
	626
169-4019	▶503
	528
	532
169-7380	707
169-7393	583
169-9108	628
	671
170-1112	588
170-1114	588
170-1115	588
170-2062	597
170-2070	713
170-7491	90
	92
	649
170-8590	684
171-1230	693
	697
	700
171-2133	660
171-2212	195
171-2419	284
171-4046	638
171-5349	203
	205
	206
	272
171-5990	465
171-6682	693
	697
171-6728	285
171-7077	546
171-9601	648
171-9603	648
171-9616	628
172-2381	632
172-2382	634
172-2384	632
172-2385	634
172-2391	479
172-2392	459
	▶479
172-2416	693
	697
172-4621	529
	533
172-4863	195
172-8037	643
	676
	680
	681
172-8039	643
	676
	680
	681
172-9872	▶380
	▶382
	438
	439
173-1028	▶588
	693
	697
173-1498	24
173-1614	245
	253
173-2052	665
173-3083	699
	700
173-3283	697
173-3660	583
173-5787	703
	704
173-6807	632
173-7035	703
	704
	706

▶ **PRIMARY REFERENCE**

PART NUMBER INDEX

Part	Page
173-8938	605
173-9164	648
173-9683	494
	495
174-0503	141
	148
	228
	231
	234
	238
	246
	254
174-1504	592
174-1505	592
174-1712	228
	231
174-3091	608
	620
174-3181	520
	522
	524
	526
174-4590	753
174-4909	457
	▶480
174-5415	81
174-9570	▶88
	125
174-9994	548
	550
175-0070	592
175-2296	▶304
	▶306
	308
175-2539	602
175-3761	716
175-4165	607
	608
	621
175-4170	607
	608
175-4291	183
	184
	185
175-4292	183
	184
	185
175-4972	▶459
	▶460
	471
175-7223	691
175-7225	4
	▶691
175-7227	691
175-7407	553
	556
175-7656	651
175-7657	651
175-7902	494
176-3141	21
176-7453	691
176-8234	81
176-9237	228
	231
	528
	532
177-1862	684
177-1863	693
	697
	700
177-2215	64
	453
	520
	522
	524
	526
	528
	532
177-3382	284
177-3846	628
177-3851	597
	▶644
177-3852	▶375
	597
177-4487	294
177-4937	695
	699
177-6854	451
177-6858	640
177-6915	467
177-6949	▶443
	463
177-7783	443
177-9645	640
178-0266	624
	625
	626
178-0603	▶693
	695
178-0606	▶695
	703
178-2334	199
178-2335	199
178-2345	126
	▶199
178-6690	298
	▶303
178-6854	276
	278
178-7907	665
178-8844	628
	671
178-9002	628
	671
178-9013	671
178-9041	299
179-0126	409
179-6153	585
179-6707	276
	278
179-7262	235
	239
179-7376	607
	608
180-2658	453
180-4165	294
180-6213	548
	550
180-7180	649
180-7304	▶697
	699
180-9339	600
	612
180-9419	482
	▶483
183-1343	215
183-3873	284
183-4690	634
183-5106	▶600
	601
183-6121	370
183-7263	135
184-2298	693
	697
184-2299	693
	697
184-2420	520
	522
	524
	526
184-6011	▶699
	706
184-8874	320
	321
	322
185-0295	548
	550
185-0296	548
	550
185-0884	15
	17
185-1861	195
	224
	247
	255
185-2638	138
185-2639	138
185-2644	138
185-2647	138
185-2648	138
185-2650	138
185-2654	138
185-2655	138
185-2658	138
185-3503	471
185-9464	447
	448
186-3735	131
	133
	135
	137
	199
	207
	209
	216
	245
	272
	281
	450
	596
	612
	620
	622
	643
	649
	656
	657
	658
	659
	676
186-3736	199
	281
	599
186-5107	707
186-9980	346
186-9981	347
187-0555	39
187-3547	747
	750
187-4851	212
187-8001	463
187-9008	747
	750
187-9194	553
	556
188-1845	660
188-3757	584
188-7067	469
188-7068	469
188-7069	469
188-8846	624
	625
	626
188-8954	61
189-2164	408
189-2165	408
189-2170	408
189-2171	408
190-1546	395
	▶406
190-1547	406
190-5328	577
	581
	582
	▶584
190-5386	753
190-6507	548
	550
190-8609	430
191-0938	263
191-0940	263
191-1422	528
	532
191-1734	318
191-1782	126
	128
191-2933	703
	704
	706
	▶707
191-4916	261
191-4922	276
	278
191-4923	276
191-4931	▶276
	298
192-1563	22
	▶34
192-4089	318
192-7054	677
	678
	679
	683
192-7470	548
	550
192-7752	707
192-7755	707
192-7767	707
192-7783	707
192-7787	707
192-7790	707
192-7795	707
192-7799	707
192-7805	707
192-7810	707
192-7812	707
192-7820	707
192-7848	707
193-1036	570
193-2550	▶203
	228
	231
193-3074	736
193-3075	736
193-3973	54
	64
	90
	92
	141
	148
	156
	245
	253
	750
193-4120	▶267
	445

▶ PRIMARY REFERENCE

PART NUMBER INDEX

Part	Page
193-4577	632
193-4578	634
193-6931	664
193-6939	664
193-6940	664
193-7361	▶261
	298
193-7365	261
193-7366	261
193-7405	263
194-0675	674
194-1983	467
194-2903	90
194-3309	634
	▶685
194-3310	685
194-3313	632
	▶686
194-3314	686
194-3315	597
	▶646
	▶647
194-3333	597
	▶642
194-5171	632
	634
194-6478	528
	532
194-9625	229
195-0644	298
	▶445
195-0652	▶280
	445
195-1117	141
	148
195-2037	284
195-2150	141
	148
	▶209
195-2709	318
195-8421	690
195-8422	690
195-8430	690
196-1185	272
196-1747	528
	532
196-2244	528
196-2695	281
196-3700	646
	647
196-3701	646
	647
196-3773	685
	686
196-3929	528
196-4253	474
196-7074	395
196-7078	395
196-7553	597
196-9445	474
197-1932	82
197-2477	508
	511
197-2479	508
	511
197-2849	548
	550
	▶552
197-2850	548
	550
197-2851	552
197-3295	284
197-3522	687
197-4871	626
197-6440	721
	723
	726
	728
	730
197-6587	187
	188
197-8774	599
198-4776	64
	126
	128
	143
	150
	212
	214
198-4777	71
	76
	79
	143
	150
	187
	189
	365
	367
	488
	529
	533
	546
198-4778	171
	172
	189
	190
	191
	354
	356
	359
	360
	376
	428
	511
	539
198-4780	354
	363
	453
198-5351	548
	550
198-5361	548
	550
198-5389	245
198-6574	687
198-6575	687
198-7284	592
198-7424	2
198-7669	520
	522
	524
	526
198-9162	272
198-9163	272
199-1222	284
199-2998	691
199-4787	622
199-7698	602
199-7891	138
199-8436	138
199-9252	103
	108
	113
	118
199-9267	56
	103
	108
	113
	118
199-9751	19

2

Part	Page
200-0928	60
	61
200-2371	312
200-3174	▶703
	705
200-5728	643
	676
	680
	681
200-6345	54
	64
	66
	90
	92
	453
	528
	532
	649
	661
200-7836	632
	634
200-8498	316
200-8575	622
200-8644	272
201-0780	570
201-1281	272
201-1282	272
201-2733	245
	253
201-4033	368
	370
201-4065	331
201-4066	331
	674
201-5349	368
	370
201-7269	▶469
	471
201-7274	445
	▶471
201-9122	520
	522
	524
	526
201-9820	714
	715
201-9821	714
	715
201-9824	714
	715
202-0549	299
202-0550	299
202-0551	299
202-0552	299
202-0972	444
202-1032	754
202-2380	294
202-4364	▶299
	301
202-4365	284
	▶301
202-5293	331
	368
	370
	512
202-5397	195
	224
202-6488	299
202-6535	474
202-6611	184
	185
202-6614	183
202-7704	463
203-2789	528
	532
203-3847	90
	92
	141
	148
	284
	453
	528
	532
	649
	747
203-4600	284
203-4786	272
203-7607	76
203-7703	703
	704
	706
203-7738	714
203-7740	714
203-7741	715
203-7742	715
204-1297	247
	255
204-2281	453
	528
	532
204-2581	709
	711
204-5341	272
204-5380	747
204-6204	141
	148
	▶204
204-6365	396
	397
	398
	401
	402
	403
	404
	405
204-7875	294
204-7876	294
204-8000	143
	150
	156
	247
	255
	750
204-8758	482
204-8981	272
204-8982	270
204-9092	272
204-9096	272
204-9542	499
	502
205-0626	138
205-3602	270
	▶316
205-3603	▶270
	310
205-4137	272
205-4138	272
205-5314	267
205-6127	▶396
205-6128	▶401
	402
	403

PART NUMBER INDEX

Part	Page
205-6141	401
	402
	403
	404
	405
205-6148	401
205-6149	401
205-6160	396
205-6162	401
	402
	403
205-6163	401
	402
	403
205-6388	695
	699
205-7048	624
	625
	626
	631
	668
205-7396	272
205-7397	272
205-7398	272
205-8257	245
	253
206-1487	622
206-2080	272
206-2423	90
	92
	126
	128
	156
	228
	231
	281
	750
206-2963	272
206-5203	245
206-6969	365
	367
207-2524	284
207-5271	245
	253
208-7448	76
208-9647	610
209-3565	474
209-4482	709
	711
209-4573	76
209-4581	76
209-4912	453
209-5528	351
209-7659	126
	128
209-9219	16
210-2262	684
210-2263	684
210-2266	684
210-2270	▶684
	693
	697
210-6842	84
211-0052	193
	231
	246
	254
211-0686	141
	148
211-2354	687
211-5255	486
211-5358	707
211-9294	707
212-0061	312
212-3416	636
212-3657	▶125
	126
	128
212-4022	671
212-4023	660
212-4024	660
212-4483	467
212-6679	451
213-3719	294
213-5007	346
213-9689	331
214-0997	331
	338
214-0998	331
	338
214-1606	622
214-1962	610
214-3927	284
214-4208	195
214-4645	747
	750
214-4646	747
	750
214-4647	747
	750
214-4653	747
	750
214-4659	528
	532
214-7566	294
214-7568	141
	148
	283
	294
	313
	314
	528
	532
214-9394	276
	278
215-4012	76
215-8008	474
215-8010	474
215-8011	474
215-8012	474
215-8014	474
215-8015	474
216-0067	76
216-0143	320
	321
	322
216-0380	610
216-1696	201
216-4551	474
216-4552	474
216-4553	474
216-4554	474
216-4555	474
216-4983	76
216-6371	263
216-8634	30
	32
216-9633	56
217-0099	103
	108
	113
	118
217-2730	290
217-7933	684
217-8339	125
217-9039	10
	103
	108
	226
217-9049	693
218-0861	693
218-2373	313
	314
	480
218-2529	700
218-3598	304
	306
218-7119	632
	634
218-7136	607
	608
219-0305	626
	662
219-1897	563
	564
	565
	567
	568
219-5803	201
219-5804	201
219-6487	▶183
	187
	188
	189
	190
	191
219-6488	▶184
	187
	188
	189
	190
	191
219-7737	709
	711
220-0122	82
	674
220-0229	596
	687
220-0897	▶514
	577
	581
	582
220-0906	514
220-0907	284
220-4081	245
	253
	670
220-4324	270
	▶313
220-5946	141
	148
	228
	231
	245
	253
220-8678	88
221-2389	649
221-2718	336
	338
	365
	367
221-2719	363
221-2858	632
	634
221-3197	391
	393
221-3202	391
	393
221-4486	312
221-5165	651
221-6887	331
221-8045	754
221-8310	64
	66
	334
	374
222-0345	695
	699
222-1206	284
222-3351	303
	▶311
222-3352	311
222-5097	374
222-6239	368
	370
222-6240	368
	370
222-9151	166
	193
223-0118	652
	668
223-1395	453
	528
	532
223-2115	▶446
	610
223-3383	709
	711
223-4127	644
223-4128	644
223-4129	644
223-9110	423
	425
	427
223-9818	599
224-0554	754
224-0687	368
	370
	626
224-0688	368
	370
	626
224-2466	628
224-2467	628
224-2468	628
224-2669	597
	632
	634
224-5132	260
224-5152	260
224-7717	626
	662
224-8445	646
	647
224-8446	646
	647
224-8448	646
	647
224-8449	646
	647
224-9222	245
	253
225-0312	754
225-0313	141
	148
225-3195	610
225-3202	201
225-3281	497
	499
	502
225-3284	500
225-3305	626
	662
225-4286	308
225-4315	272
225-4316	272

▶ PRIMARY REFERENCE

PART NUMBER INDEX

Part	Page
225-5075	141
	148
	▶185
225-5439	41
225-6524	51
225-7738	68
225-7944	57
225-8019	68
225-8287	32
225-8524	103
	108
	113
	118
225-8839	12
225-8858	15
	17
226-0150	642
226-0151	642
226-0294	363
226-0326	631
226-0420	▶484
	520
	524
226-0936	142
	149
226-1415	▶278
	345
226-1416	278
226-2261	60
226-4462	263
226-4464	263
226-4872	714
	715
226-7683	▶138
	139
226-8766	30
226-8767	30
226-9169	234
	238
226-9423	612
226-9622	480
227-1184	543
227-1185	543
227-1186	563
	564
	565
	566
	567
	568
227-1191	564
227-1192	312
227-1197	543
227-1198	543
227-1199	543
227-1201	560
227-2451	263
227-4468	662
227-4469	662
227-6744	450
227-8361	▶263
	445
228-0172	102
	123
	124
228-2880	541
228-2881	541
228-2903	597
	671
228-3323	234
	238
	239
228-6089	224
	245
	253
	638
228-7100	102
	123
	124
228-7102	103
	108
	113
	118
228-9655	138
228-9656	138
228-9657	138
229-1494	695
229-2530	597
229-2531	597
229-2532	597
229-2604	674
229-2605	674
229-2606	674
229-5446	▶421
	438
	439
229-8315	131
	133
	135
229-9382	490
230-2566	234
	239
230-3489	▶485
230-4009	141
	148
	228
	231
	234
	238
230-4010	142
	149
	224
	234
	238
	239
	246
	254
230-4011	142
	149
	166
	193
	228
	231
	246
	254
230-4012	126
	128
	141
	149
	166
	193
	205
	589
230-4013	246
	254
230-4014	82
	246
	254
230-4758	334
230-5008	234
	238
	243
	247
	255
230-5009	234
	238
	243
	247
	255
230-8989	103
	108
	113
	118
230-9131	504
	▶553
	▶556
231-1455	57
231-2064	553
	556
231-2222	▶604
	605
231-2295	142
	149
	234
	238
	239
	246
	254
231-2300	173
	175
	177
	179
	181
	234
	238
	239
	246
	254
231-3075	597
	671
231-3538	494
	495
232-1115	94
	98
232-1322	17
	19
232-1374	126
	128
232-1376	126
	128
232-2303	453
232-3149	103
	108
	113
	118
232-3583	82
232-3657	32
232-3666	30
	32
232-3751	57
232-3831	608
232-3861	56
232-3870	607
232-7305	245
	253
232-7596	15
	17
232-7597	15
	17
232-7599	15
	17
233-0367	▶385
	395
233-0368	385
	388
233-0372	386
	387
233-0375	389
	390
233-0854	▶386
	395
233-2116	71
	488
233-2118	71
	488
233-2123	64
	66
233-5153	597
233-6818	64
	66
233-6825	71
	488
233-6832	64
	66
	374
233-9134	▶500
	585
233-9135	500
233-9138	500
233-9808	474
234-4163	▶397
234-5013	▶210
	231
	556
234-9388	334
235-0320	82
235-2501	411
	412
	415
	418
235-2504	431
235-2507	412
235-2509	411
	▶412
235-2511	▶411
	431
	432
	433
	434
235-2513	▶431
235-4123	255
235-5000	577
	▶721
	▶723
235-8026	284
236-3930	599
236-4545	212
	214
236-4987	284
236-5197	684
236-5511	39
237-0145	201
	202
237-2100	518
237-2102	518
237-2816	626
	662
237-2831	605
237-5586	674
237-9736	192
238-0120	102
	123
	124
238-0954	716
238-3250	648
238-3417	284
238-5078	316
238-5080	210
238-5081	294
238-5082	294
238-5083	294
238-5465	605
238-5466	▶605

▶ **PRIMARY REFERENCE**

PART NUMBER INDEX

Part	Page
	743
238-8028	94
	98
238-8288	78
238-8292	84
238-8841	636
	638
238-9166	374
239-1134	211
	▶223
239-4989	341
	393
239-6986	753
239-7134	743
	▶744
239-7352	142
	149
239-7353	142
	149
239-7356	142
	149
	246
	247
	254
	255
239-7357	224
	243
	246
	254
239-8090	387
239-8091	388
239-9954	▶159
	173
	175
	181
240-0488	626
	662
240-1557	720
240-6123	331
240-6124	331
240-6125	331
240-6130	331
240-6240	322
240-6241	599
240-6243	599
240-6328	363
240-6329	363
240-7193	649
240-8540	61
240-8552	▶73
	75
240-9557	▶424
	425
241-0037	260
241-2841	626
241-2842	662
241-3720	391
241-4167	447
	448
241-4291	103
	108
241-8368	195
	▶218
242-1583	291
	370
242-5054	754
242-5055	577
	581
	582
242-5202	612
242-5206	446
243-2156	7
	▶601
243-2157	7
	▶80
243-2158	80
243-2245	281
243-2246	284
243-2247	281
243-2739	284
243-3125	626
	662
243-3126	626
	662
243-4799	▶187
	▶188
	599
244-1432	73
	74
244-2310	267
244-3114	▶314
244-3712	294
244-9631	448
245-1042	228
	232
245-1044	229
	232
245-1045	229
	232
245-1047	229
245-1048	229
	232
245-4517	356
	359
	360
245-4518	356
	359
	360
245-7434	195
	224
	247
	255
245-8334	166
	193
245-8823	245
	253
246-2167	636
246-2641	1
	90
246-5747	433
246-5748	432
246-5759	▶432
246-5804	462
247-1925	76
247-6019	102
	123
	124
247-6854	628
247-9730	76
248-0319	636
248-0758	622
248-0790	622
248-1066	102
	123
	124
248-2749	622
248-2750	622
248-2841	195
248-5358	166
	168
	193
248-6772	636
	638
248-8866	644
249-0037	628
249-1157	628
249-2804	744
249-2844	351
	700
249-3096	61
249-5052	245
	253
249-5481	245
	253
249-5495	245
	253
249-5512	81
249-8087	628
	671
249-8088	628
	671
250-0393	▶260
	285
250-1150	628
250-2189	626
250-3794	▶676
250-3988	409
250-4628	666
	667
251-1191	224
251-1192	224
251-1193	224
251-1194	224
251-1752	467
251-4336	30
251-5848	245
	253
251-7360	753
251-8569	▶398
	399
	400
251-8570	398
251-8601	395
251-8616	▶399
251-8619	▶404
251-8620	▶405
251-9585	562
252-0546	302
252-1577	76
252-1590	▶211
	212
	214
252-4927	195
252-5001	73
	74
252-5002	73
	74
252-5003	73
	74
252-5004	73
	74
252-6922	148
252-7229	626
	662
253-0861	745
253-2111	195
253-4531	60
	61
253-8798	168
253-9521	687
254-0225	431
	432
	433
	434
254-1254	747
	750
254-1255	747
	750
254-3927	385
254-3928	386
254-3929	385
	386
254-7864	126
254-9049	431
254-9050	433
254-9052	432
255-0045	▶387
	395
255-0046	▶388
	395
255-1281	601
256-0622	592
256-0623	592
256-1028	90
	92
256-3454	126
256-3464	7
256-3467	81
	372
	373
256-3468	3
	▶171
256-3469	3
	▶172
256-4873	▶433
	438
	439
256-4959	700
256-6453	210
256-6454	589
	592
257-0201	▶725
	726
	728
257-0203	725
257-0204	725
257-0205	725
257-0207	726
	728
	▶734
257-0210	▶726
	▶728
257-0264	734
257-0265	734
257-0450	559
257-0466	563
257-0468	543
	565
	566
	567
	568
257-2381	102
	123
	124
257-2382	102
	123
	124
257-3227	651
257-5003	488
257-7285	610
257-7722	563
	564
	565
	566
	567
	568
257-7726	563
	▶573
257-7732	563
	▶569
257-7734	564
	565
	566
	567
	568
257-7735	563

▶ PRIMARY REFERENCE

PART NUMBER INDEX

Part	Page
257-7736	▶562
	567
	568
257-8158	2
	▶374
257-8240	747
257-8498	285
258-0883	87
	▶219
258-4819	234
	238
258-6385	166
	168
258-6386	193
258-7335	284
	▶290
258-8149	102
	123
	124
258-8527	81
258-9811	298
	▶302
259-1286	224
260-0634	76
260-1555	171
260-1556	172
260-1566	171
260-1569	172
260-3568	365
	367
260-3939	103
	108
	113
	118
260-7652	173
	175
	181
260-7653	754
260-9174	453
261-2044	404
261-2046	405
261-2047	405
261-2099	380
	382
261-2145	7
	▶38
261-2153	7
	▶22
261-5694	665
261-8566	492
261-9436	408
262-0349	453
262-0649	508
262-0767	700
262-0772	700
262-0779	700
262-0780	700
262-0781	700
262-0785	700
262-0786	700
262-0787	700
262-0789	700
262-1759	284
262-2043	▶162
	173
	175
	177
	181
262-4806	▶205
	228
	231
263-1244	747
	750
263-3823	656
	657
	658
	659
263-5746	361
263-5747	361
264-5425	195
264-7029	142
	149
	166
	193
	228
	232
	246
	254
264-7030	246
	254
264-7031	234
	238
	243
	247
	255
264-7032	142
	149
264-7033	142
	149
	234
	238
	246
	254
264-7034	141
	142
	149
	228
	231
	234
	238
	245
	246
	247
	254
	255
264-9764	▶413
264-9769	▶414
265-2109	272
265-2685	281
265-6518	317
265-6519	317
265-7356	308
265-7360	298
	▶308
265-7981	668
265-9590	541
266-1467	▶200
	622
266-1476	612
266-2579	▶312
	559
	560
266-3593	565
	567
	▶574
266-3700	634
266-3701	632
266-8569	284
266-8904	189
266-8905	189
266-8983	187
	189
266-9179	▶291
	298
266-9180	291
266-9247	▶74
266-9599	721
	723
	726
	730
266-9602	281
266-9744	368
	370
267-5243	638
	668
267-6404	76
267-6411	81
267-6417	90
	92
267-6420	7
	▶90
	▶92
267-6421	7
	▶75
267-6422	38
267-6424	90
	92
267-6425	90
267-6428	▶61
267-6429	7
	▶60
267-6431	22
	▶23
267-6433	38
267-6434	372
	373
267-6435	▶81
267-6437	7
	▶170
267-6438	170
267-6440	▶24
	599
267-7207	228
	232
267-7208	228
	232
267-9319	700
267-9572	232
267-9928	320
	322
268-1151	528
	532
268-1530	90
	92
268-1531	90
	92
268-1562	126
268-1563	126
268-4737	615
	616
268-6677	103
	108
	113
	118
268-6678	103
	108
	113
	118
269-7050	201
	202
269-8325	53
270-3230	651
270-3231	651
270-3233	649
270-4317	1
	▶368
	▶370
270-4339	1
	▶346
270-4807	594
	▶649
271-0475	618
	620
	621
271-2038	511
271-2039	511
271-2040	512
271-6128	▶391
	441
271-6141	391
271-6142	391
271-6145	▶340
	391
271-6146	340
	▶341
271-6147	341
271-6164	▶400
271-6171	318
271-6172	1
	▶318
271-6175	1
	▶664
271-6176	664
271-6182	438
	▶441
271-6184	391
	393
	▶430
271-6185	430
271-6192	428
271-6193	428
271-6194	428
271-6195	428
271-6196	428
271-6197	428
271-6205	▶354
271-6206	354
271-6207	354
271-7312	638
	668
271-8871	▶516
	578
271-8884	541
271-8885	541
272-1387	516
272-1388	516
272-1777	229
	232
272-2272	▶692
	704
273-0030	3
	▶578
273-2019	64
	66
273-2024	7
	▶487
273-2025	487
273-2026	487
273-3714	350
273-3726	1
	2
	3
	345
	▶347
273-3728	348
273-3763	5
	▶743
273-3776	511
273-3777	511
273-3783	1
	2
	▶361
273-3989	▶425
	441
	442
273-8326	506

▶ **PRIMARY REFERENCE**

PART NUMBER INDEX

Part	Page
273-8327	506
273-8328	506
273-8329	506
273-8330	506
273-8331	506
273-8739	1
	2
	▶317
273-9510	453
273-9511	453
273-9736	368
	370
273-9737	368
	370
273-9744	331
273-9746	331
273-9749	▶323
	331
273-9750	323
273-9813	326
273-9814	326
	327
273-9852	▶325
274-1300	4
	▶376
274-1639	89
	103
	108
	113
	118
274-1929	6
	▶44
	▶45
274-1930	44
	45
274-1931	44
	45
274-1933	44
274-1934	44
274-1935	44
	45
274-3484	511
274-3485	511
274-3488	372
	373
274-4223	228
	231
274-4857	▶342
274-4858	342
274-4990	228
	232
274-5589	▶372
274-5590	▶373
274-5909	651
274-7187	453
275-4236	351
275-7803	692
275-8416	▶495
	578
275-8417	495
275-9884	39
275-9888	39
275-9889	39
275-9891	39
275-9897	39
276-0142	39
276-2344	4
	▶54
276-4878	608
276-5311	201
276-5312	▶201
	615
276-5436	214
276-5438	212
276-5600	17
276-5601	17
276-5602	15
	17
276-5603	17
276-5604	15
	17
276-5605	17
276-6596	211
276-7387	12
	13
276-7388	12
276-7389	12
	13
276-7390	12
276-7391	12
	13
	35
276-7393	12
276-7394	12
	13
	14
276-7475	41
	42
276-7476	41
	42
276-7478	41
	42
276-7479	41
276-7481	41
276-7483	41
276-8116	19
276-8117	19
276-8123	19
276-8132	19
276-8133	19
276-8134	21
276-9200	46
276-9201	46
276-9206	46
276-9207	46
276-9230	46
277-0116	26
	28
277-0118	26
	28
277-0121	26
	28
277-0122	26
277-0124	6
	▶26
	▶28
277-0588	25
277-1801	234
	238
277-1974	50
	51
277-1975	50
	51
277-2500	57
277-2502	57
277-2503	57
277-2504	6
	▶57
277-2525	57
277-2526	57
277-2537	57
277-2538	57
277-2912	6
	▶53
277-2923	68
277-2925	68
277-2939	6
	▶68
277-2976	6
	▶72
277-3012	30
	32
277-3013	30
	32
277-3014	6
	▶30
277-4223	9
	43
277-4224	6
	▶9
277-4262	6
	▶55
277-4302	78
277-4694	6
	▶56
277-4994	▶281
	743
277-5031	10
277-5064	10
277-5065	10
277-5067	10
277-5307	46
277-6073	139
277-6075	139
277-6078	139
277-6080	6
	▶139
277-6165	94
	98
277-6624	462
277-6631	474
277-6679	451
	▶477
277-6990	6
277-8103	700
277-8701	7
	▶212
	▶214
277-8716	76
	520
	522
	524
	526
277-9602	84
277-9603	84
277-9938	84
277-9940	84
278-0016	84
278-0017	84
278-0310	84
278-0314	94
278-4138	87
	94
	98
	104
	109
	114
	119
278-4563	270
278-5111	46
278-5112	46
278-5113	46
278-5125	8
278-5128	78
278-5131	325
	373
278-5132	325
	373
278-5168	103
	108
	113
	118
278-5170	103
	108
	113
	118
278-5180	103
	108
	113
	118
278-5203	103
	108
	113
	118
278-5225	103
	108
	113
	118
278-5226	103
	108
	113
	118
278-5272	103
	108
	113
	118
278-5273	103
	108
	113
	118
278-5307	103
	108
	113
	118
278-6935	700
278-7048	349
	350
278-8965	606
278-8967	606
278-8970	606
278-8974	606
279-0850	636
	638
279-4414	463
	▶467
279-4418	467
279-9254	25
279-9361	84
279-9651	36
279-9652	36
279-9653	6
	▶36
280-1292	6
	▶78
280-1384	39
280-1385	39
280-1428	6
	▶50
280-1430	50
	51
280-1892	113
	118
280-1911	▶46
	48
280-1912	46
280-1913	46
280-1914	46
280-2420	84
280-2424	84
280-2443	84
280-2709	195
280-7870	550
	572
281-5598	463
281-5882	90
	92

PART NUMBER INDEX

Part	Page
281-8744	72
282-9379	720
282-9380	720
283-4662	26
	28
283-5568	331
283-5746	389
283-5748	389
283-5750	390
283-5752	390
284-0071	26
284-3623	245
	255
284-7445	343
284-7446	344
284-8532	173
	175
	181
284-8953	▶677
	680
284-8954	643
	▶678
284-8955	643
	▶679
284-9055	643
285-0150	618
	620
	621
285-1133	159
285-1975	10
285-3413	348
285-3429	64
285-3555	94
	98
285-5017	347
	▶348
285-5019	346
	347
	▶349
285-5020	346
	▶350
285-5031	376
	378
285-5032	376
	378
285-5240	550
	▶572
285-5681	376
	378
285-6318	674
285-6319	674
285-6410	71
	488
285-6414	64
	66
285-7415	638
	668
285-8035	▶745
	753
285-8465	604
285-8466	604
286-0035	6
	▶32
286-0039	6
	▶43
286-0111	651
286-2890	94
	98
286-3462	363
286-3689	649
286-5841	201
286-6942	64
	66
286-7847	39
286-7851	84
287-0289	376
	378
287-0548	671
287-0553	602
287-0554	589
	▶602
287-3322	4
	▶378
287-3862	671
287-3890	228
	231
287-4618	671
287-5256	70
	71
287-5383	363
287-5384	363
287-5386	363
287-5387	368
	370
287-5388	▶326
	368
	370
287-5389	326
287-5390	▶327
	368
	370
287-5391	327
287-5392	368
	370
287-5397	368
	370
287-5398	368
	370
287-5399	368
	370
287-5400	1
	2
	3
	▶343
	345
287-5401	343
	▶344
287-5402	344
287-5403	372
	373
287-5411	368
	370
287-5417	368
	370
287-5666	687
287-5751	587
287-6813	378
287-6838	103
	108
	113
	118
287-6839	103
	108
	113
	118
287-6916	351
	376
	378
287-6917	351
	376
	378
287-6918	351
	376
	378
287-6919	351
	376
	378
287-6920	376
287-6948	376
287-7637	89
287-8597	26
	28
288-0449	1
	▶131
	▶133
288-0452	327
288-0453	343
288-0454	344
288-0455	326
	327
288-0535	70
	71
288-0661	753
288-0662	754
288-4011	6
	▶62
288-4215	745
288-4524	376
288-4525	376
288-6277	4
	▶135
288-6278	3
	▶355
288-6974	26
	28
288-6975	26
	28
288-9574	322
	324
288-9575	322
	324
289-2935	492
289-2946	492
289-4638	539
289-5210	434
289-5211	▶434
289-8725	39
290-0243	674
290-2555	325
	▶328
	373
290-2556	328
290-2557	325
	▶329
	373
290-2558	329
290-4288	▶82
290-4289	82
290-4290	82
290-4291	82
290-5620	90
	92
290-5623	37
290-5624	37
290-5626	76
290-5628	81
290-5635	76
290-5638	79
290-5644	76
290-5649	212
	214
290-5650	7
	▶37
290-5654	37
290-5655	37
290-5728	26
	215
291-3791	25
291-3792	6
	▶25
291-5280	747
	750
291-9502	368
	370
292-0886	16
292-2017	263
292-3462	78
292-3471	745
292-4189	141
	148
	▶160
292-5856	6
	▶16
292-5857	6
	▶41
	▶42
292-5859	6
	▶12
	13
	14
292-5860	6
	▶21
292-5865	6
	▶48
292-5867	6
	▶8
292-6097	666
292-6098	667
292-6402	▶665
	666
	667
	700
292-6404	▶645
292-7897	735
292-7898	735
292-7949	▶735
	743
292-8012	528
	532
292-9237	▶666
	693
292-9238	▶667
	697
292-9380	508
	511
293-0249	102
	124
293-1880	226
293-2851	469
293-2911	684
293-2915	700
293-5440	▶462
	463
293-6467	754
293-6468	754
293-8252	166
	168
	193
293-8253	166
	193
293-8281	166
293-8282	166
	193
293-8283	166
	193
293-8284	193
293-8350	550
	572
293-9139	245
	253
293-9310	234
293-9379	700
293-9380	700
293-9381	700
293-9659	754
293-9665	700

▶ **PRIMARY REFERENCE**

PART NUMBER INDEX

Part	Page
293-9804	2
293-9820	94
	98
293-9901	103
	108
	113
	118
294-0286	32
294-0851	687
294-0852	687
294-0854	687
294-0855	687
294-0856	662
294-1983	166
	168
294-2006	▶680
	▶681
294-2007	▶643
294-2008	▶643
294-3031	102
	123
	124
294-3032	102
	123
	124
294-3211	331
	334
	▶365
294-3212	331
	334
294-3223	634
294-3224	632
294-3225	375
294-3226	375
294-3233	▶366
294-4613	2
	5
	▶746
294-4614	746
294-4615	746
294-5042	693
	697
	700
294-5360	634
294-5361	632
294-5374	508
	511
294-7139	700
294-7160	597
294-7277	508
	511
294-7278	508
	511
294-8548	228
	231
294-8576	39
294-9969	514
295-0585	139
295-0912	78
295-1711	30
295-2151	508
295-2152	508
295-4533	643
295-4670	94
	98
295-4801	102
	123
	124
295-5423	84
295-6472	700
295-6661	19
295-8610	57
295-8613	57
295-8615	57
295-8752	720
296-2649	245
	253
296-2735	75
296-3542	102
	123
	124
296-5099	▶720
	721
	723
296-6499	344
296-9833	725
297-0693	166
	168
	193
297-8643	622
297-8644	622
297-8647	622
297-8682	60
	61
298-2722	413
	414
	415
	416
298-2723	▶415
	416
298-2724	▶416
298-2764	579
298-4372	504
	505
	▶614
298-4373	614
298-4374	624
298-4375	625
298-4382	3
	4
	▶624
298-4383	5
	▶625
298-4384	628
298-4385	628
298-4386	628
298-4392	594
	▶626
298-4394	626
298-4550	10
298-4576	94
299-5511	19
299-6953	164
299-6957	6
	▶164
299-7883	753

3

Part	Page
300-2940	103
	108
300-5331	366
	▶367
300-6520	84
301-0589	173
	175
	181
301-1025	689
301-1027	594
	▶689
301-2710	7
	▶126
301-2719	54
301-2734	22
301-2745	76
301-2768	7
	▶215
301-2823	191
301-3424	474
301-6915	599
301-6916	599
301-7805	▶189
	▶190
	594
301-7806	▶192
301-7809	189
	376
301-7810	189
	376
302-1266	171
	172
302-4254	▶186
	192
302-5535	39
302-5695	94
302-6112	26
	28
302-8146	193
302-8149	486
302-8157	▶486
	563
	564
	565
	566
	567
	568
303-2116	84
303-2179	211
303-2250	▶489
	553
	556
303-9230	▶730
303-9231	730
304-3715	602
304-4505	632
	▶656
304-4506	634
	▶657
304-5166	226
304-5167	226
304-5682	245
304-5687	253
305-2418	267
305-2419	267
305-5291	103
	108
	113
	118
	130
305-5970	6
	▶84
305-7294	6
	▶87
305-7299	6
	▶94
	▶98
305-7300	6
	▶39
305-7304	94
305-7306	94
	98
305-7307	94
	98
305-7308	94
	98
305-7309	94
	98
305-7396	50
	51
305-7397	50
	51
305-7398	50
	51
305-8963	6
	▶10
305-8977	6
	▶226
305-8978	226
305-8979	226
305-9191	634
306-2337	50
	51
306-6687	228
	231
306-6845	16
	▶17
306-7458	363
306-8866	508
	511
306-9199	87
307-0047	173
	175
	177
	179
	181
307-2338	610
307-4673	▶606
	614
307-6074	720
307-6202	753
307-8645	81
308-1224	71
	488
308-1225	▶70
	488
308-1226	70
308-1227	71
	488
308-1228	71
308-1229	71
308-1317	64
	66
	▶488
308-1318	59
	▶71
308-1845	492
308-2525	589
308-5073	▶592
	674
309-0572	76
309-1489	651
309-1490	651
309-1492	651
309-1573	504
	▶559
309-1574	504
	505
	▶560
309-1916	▶461
	504
309-2996	316
309-5130	294
309-6663	▶19
	21
309-6664	10
309-6678	19
309-8006	103
	108
	113
	118
309-8995	64
	66
309-8999	64
	66

PART NUMBER INDEX

Part	Page
310-1502	508
	511
310-1535	▶195
	245
	253
310-1536	195
310-1538	195
310-1539	195
310-1543	▶245
	596
	673
310-1547	▶141
	▶148
	162
310-1548	141
310-1549	142
	149
310-1550	162
	▶228
	▶231
310-2189	497
310-3911	668
310-4284	506
310-4285	506
	541
310-4286	506
	541
310-4287	506
310-4288	504
	▶506
310-4600	504
	▶518
310-4601	518
310-4602	518
310-4912	▶426
	427
310-4915	▶422
	423
310-5772	245
310-6057	592
310-6058	592
310-6370	504
	▶747
	▶750
310-6966	747
	750
310-7462	▶224
	596
310-7794	▶444
	465
310-7918	103
	108
	113
	118
310-8320	601
310-9903	▶2
310-9946	2
	▶162
310-9950	2
	▶504
310-9971	2
	▶594
310-9997	246
	254
311-0037	748
	750
311-0202	747
	750
311-0215	747
311-0225	504
	505
	▶536
311-0226	536
311-0227	536
311-1874	142
	149
311-1991	504
	▶528
	▶532
311-1992	▶453
	504
311-1993	504
	▶546
311-1994	546
311-2383	528
	532
311-2384	528
311-2385	528
	532
311-2732	226
311-2752	226
311-2848	504
	505
	▶520
	▶522
311-2849	520
	522
311-3858	103
	108
	113
	118
311-6184	247
	255
311-6342	103
	108
	113
	118
311-6372	626
311-6373	626
311-6384	▶589
	596
311-6385	597
	▶628
311-6386	597
	▶636
311-6387	597
	▶674
311-6388	631
311-6389	631
	668
311-6390	594
	▶709
	▶711
311-6392	447
311-6395	596
	▶668
311-6397	447
	448
311-6398	447
	448
311-6399	447
	448
311-6400	594
	▶596
	599
311-6401	447
311-6402	628
311-6404	628
311-6405	▶447
	594
311-6407	597
	▶648
311-6408	597
	▶716
311-6409	668
311-6410	595
	599
311-6420	596
	▶597
311-8023	64
	66
311-8024	64
	66
311-8086	228
	231
311-8470	195
311-8552	361
311-8553	361
311-8554	361
311-9054	539
312-0132	745
312-0133	745
312-0136	745
312-0137	745
312-0309	▶162
312-1082	745
312-1673	142
	149
312-2567	142
	149
312-3140	165
	▶234
	▶238
312-4535	224
312-4633	▶162
312-8652	245
	253
312-9088	615
	616
312-9089	447
	448
	▶615
	▶616
313-2060	552
313-3351	363
313-3353	142
	149
313-3492	294
314-4018	600
314-5162	700
314-5274	707
314-5275	707
314-6007	▶59
314-9391	514
314-9392	514
315-2941	1
	▶363
315-2942	1
	▶336
315-2943	336
315-2944	336
315-2948	▶1
	2
315-5492	601
315-5494	126
	128
315-9810	84
316-5999	474
316-9351	10
317-2684	78
317-2717	10
317-3064	10
317-3065	10
317-3775	50
	51
317-3880	245
	253
317-4192	4
	▶504
317-4277	528
	532
317-5517	228
	231
317-5558	520
	522
	524
	526
317-7147	94
	98
317-7277	528
	532
317-7820	504
	▶524
	▶526
317-8021	▶102
	103
	113
317-8258	▶320
	334
317-8259	320
317-8261	272
317-8428	175
317-9299	50
318-0106	272
318-0296	524
	526
318-0755	7
	▶64
	▶66
318-0768	2
	▶7
318-1178	▶206
318-1471	242
	▶618
318-1473	▶607
	618
318-2375	431
	432
	433
	434
318-2396	103
	108
318-2545	▶272
	310
318-7091	▶704
	705
318-7095	▶700
	704
318-8145	559
	560
	▶563
318-8146	559
	560
	▶564
318-8147	559
	560
	▶565
	▶566
318-8148	560
	▶567
	▶568
318-8481	528
	532
	▶548
	▶550
319-0844	87
319-1605	60
319-1606	60
319-5608	▶243
	687
319-5801	243
319-5802	243
319-5953	165
	▶166
319-5954	165

▶ **PRIMARY REFERENCE**

PART NUMBER INDEX

Part	Page
	▶193
319-5955	505
	▶619
319-6231	294
319-6464	1
	▶331
319-7125	578
	▶587
319-7201	2
	▶6
319-7218	▶324
	331
319-7219	324
319-8426	8
319-9402	195
320-0690	▶89
	103
	108
	113
	118
320-1082	▶599
320-1114	142
	149
320-1152	626
	628
320-1153	626
	628
320-1154	628
320-1155	628
320-1156	628
320-1157	628
320-1159	638
320-1160	599
	▶662
320-1161	671
320-1165	▶638
	673
320-1168	651
320-1170	▶671
	673
320-1180	671
320-1185	671
320-1190	▶631
	673
320-1192	671
320-1193	626
320-1197	▶622
	670
320-1198	596
	▶670
	673
320-1200	599
	▶673
320-1201	594
	▶705
320-1203	▶705
320-1204	599
	▶705
320-1210	599
	▶687
320-2345	84
320-2868	139
320-4729	94
	98
320-4868	649
320-5056	578
	▶585
320-5944	374
320-5953	▶173
320-5955	▶175
320-6127	298
	▶310
320-6128	▶269
	272
320-6129	269
320-8637	▶463
	504
320-9118	142
	149
320-9131	142
	149
320-9163	142
	149
320-9831	142
	149
320-9844	143
	150
320-9921	10
321-1270	103
	108
	113
	118
321-1275	156
321-1276	3
	▶156
321-1280	156
321-1291	156
321-3105	644
321-3122	2
	▶298
321-3124	298
	▶753
321-3126	▶754
321-4070	143
	150
321-4084	331
321-5600	▶577
321-5602	577
	▶579
	581
	582
321-5604	579
321-5607	▶738
321-5651	▶284
	298
321-5712	294
321-5713	294
321-5714	294
321-5715	294
321-5724	▶293
	310
321-5967	283
321-5972	636
	638
321-7044	490
321-7046	490
321-7048	▶490
	577
	581
321-7767	▶165
321-7768	▶165
321-8161	3
	▶505
321-8288	594
	▶620
321-8290	▶608
	620
321-8641	316
321-8941	532
321-9011	238
	▶242
322-0598	6
	▶103
	▶108
	▶113
	▶118
322-0599	6
322-0600	7
	▶79
322-0617	7
	▶76
322-1377	228
	231
322-1441	453
322-1492	▶658
	716
322-1494	▶659
	716
322-1562	528
	532
322-3156	638
	▶640
322-3161	665
322-3351	738
	▶739
322-3353	739
322-3354	739
322-3355	739
322-3696	126
	128
322-4635	2
	▶438
	▶439
322-4932	▶537
	738
322-4933	284
322-6353	▶1
	2
322-6354	1
	2
	▶337
322-6355	337
322-6356	337
322-6357	1
	2
	▶334
322-6358	322
322-6359	▶322
	334
322-6360	2
	▶599
322-7209	640
322-7211	640
322-7212	640
322-7213	640
322-9584	▶508
	577
	581
	582
322-9605	511
322-9606	511
322-9607	511
322-9608	511
323-1168	▶407
	441
	442
323-1169	407
	408
323-2867	626
	662
323-3268	234
	238
323-3326	321
323-3327	321
323-3328	▶321
	334
323-4260	453
323-4813	331
323-6948	234
	238
323-8848	619
	▶621
323-8854	621
323-9294	▶362
323-9312	42
323-9531	313
	314
324-0444	30
	32
324-0558	362
	▶511
324-0566	508
325-1385	471
325-5723	▶497
	738
325-6422	▶543
	559
	560
326-0319	294
326-1015	39
326-1644	88
326-5054	39
326-5063	30
328-2293	497
328-2294	497
328-2295	497
328-2296	497
328-3655	283
328-4266	502
328-4267	▶502
	581
	582
328-8709	84
329-0060	94
	98
329-0061	94
	98
329-0062	94
	98
329-0063	94
	98
329-0064	94
	98
329-1213	1
	▶338
329-3243	674
329-3778	528
	532
329-5398	499
	502
329-7854	9
329-7856	9
329-9730	284
330-3123	215
330-3685	104
	109
	113
	118
330-3687	104
	109
	113
	118
330-5467	104
	109
	113
	118
330-6134	143
	150
330-6976	747
	750
330-8105	528
	532
330-8220	528
	532
330-9200	628
	671

▶ PRIMARY REFERENCE

PART NUMBER INDEX

Part	Page
330-9599	84
331-0063	284
331-0290	42
331-0291	42
331-0292	42
331-2427	430
331-2430	430
331-4400	39
331-5291	▶682
331-5292	676
	▶683
331-5318	5
	▶345
331-5406	589
	▶651
331-5407	651
331-5408	594
	▶661
331-7540	103
	108
	113
	118
332-4258	709
	711
333-2679	1
	2
	▶356
333-2680	356
333-3450	▶2
	5
333-6437	▶283
	284
333-9308	▶262
	283
334-1953	612
334-2679	262
334-2680	262
334-2932	102
	123
	124
334-6074	497
335-0718	▶448
	599
335-1035	286
335-2094	228
335-2095	245
	253
335-2096	246
	254
335-2097	195
335-2102	234
	238
335-2103	234
	238
335-2104	234
	238
335-2105	234
	239
335-2106	173
	175
	181
335-6246	247
	255
335-6247	247
	255
335-6248	247
	255
336-2165	648
336-2166	448
336-2167	448
336-2168	687
336-2171	626
336-2172	626
336-2173	625
336-2175	626
336-3545	173
	175
	181
	▶198
336-8174	103
	108
	113
	118
336-8175	103
	108
	113
	118
336-8176	103
	108
	113
	118
336-8177	103
	108
	113
	118
336-8178	103
	108
	113
	118
336-8179	103
	108
	113
	118
336-8180	103
	108
337-6853	▶610
	615
	616
337-6855	610
	▶612
337-9001	612
337-9558	94
	98
338-0280	131
	133
	135
338-1456	365
338-1457	365
338-1768	▶5
338-2570	▶4
338-2590	▶5
338-2594	▶4
338-2597	▶3
338-2598	▶3
338-2600	▶3
338-2602	▶4
338-2604	▶4
338-2845	615
	616
338-3521	576
	▶581
	▶582
338-8038	2
	▶576
339-0260	417
	418
339-0264	▶417
339-1746	▶428
	441
	442
339-1763	173
339-2969	687
339-2970	▶595
	597
339-2971	624
	625
	626
339-2972	448
339-3093	▶389
	441
	442
339-3094	▶390
	441
	442
339-5891	131
	133
339-5892	135
339-5893	355
339-6185	610
339-7723	173
	177
	179
	181
339-7803	345
	▶408
339-8780	13
	35
339-8785	94
	98
339-9637	19
340-2520	487
340-2560	351
340-5775	367
340-5777	367
340-7161	245
	255
340-7463	341
340-7464	341
340-7499	382
	▶383
340-7503	380
	382
340-7751	461
	▶465
340-7766	465
340-8408	537
340-8409	537
341-1510	▶451
	463
341-1511	463
	▶474
341-3186	463
	▶478
341-4034	351
341-4035	351
341-4036	351
341-4037	351
341-4039	351
341-4040	351
341-4071	175
342-2319	626
342-2615	▶3
342-3831	235
	239
342-5788	163
342-6502	45
342-6507	35
342-6508	35
342-6510	45
342-7165	165
	▶168
342-7166	168
342-8503	351
342-9022	161
342-9290	161
343-3402	518
343-3403	518
343-5527	88
343-5937	87
343-5938	87
343-7072	284
344-1085	705
	▶706
344-2141	235
	239
344-2542	235
	239
344-4755	351
345-3076	▶450
	453
345-4116	453
345-4118	453
346-0407	32
346-0408	32
346-1721	▶539
	578
346-1722	541
346-1723	541
346-1724	539
346-1725	539
346-1726	541
346-1738	505
	▶541
346-2864	380
	▶384
346-4709	48
346-7763	161
346-9376	177
	179
347-0063	35
347-1115	747
	750
347-1133	8
348-2513	541
348-4637	226
348-5027	23
348-7732	54
348-8084	162
348-9328	13
	14
348-9774	566
	568
	▶575
349-1141	2
	▶351
349-2450	380
	382
	▶583
349-4275	351
349-4276	351
349-4277	351
349-4279	351
349-7059	131
	133
	135
349-7701	681
350-6195	168
350-6983	439
	▶442
350-6986	▶395
	440
350-7630	2
	▶191
350-7735	131
	133
	135
350-8781	168
351-0959	▶418
351-0973	108
	▶123
351-1715	▶177
	▶179
351-2799	123
351-5113	▶393
	395
	442

▶ **PRIMARY REFERENCE**

PART NUMBER INDEX

Part	Page
351-5115	393
351-5116	393
351-8434	306
351-8488	161
351-8490	▶161
	177
	179
351-9778	44
351-9918	183
	184
	185
352-5908	255
352-8160	750
352-9678	177
	179
353-2166	393
353-2186	442
353-2187	442
353-9079	294
354-0746	▶163
	179
354-4754	68
355-0598	181
355-1213	177
	179
355-1582	113
	118
355-2796	162
	▶163
355-3148	649
355-3337	434
355-4757	23
355-5105	162
355-9764	162
356-2925	▶440
356-3427	436
356-3428	436
356-3434	▶435
356-3435	▶436
356-5425	▶202
	616
356-5426	202
356-5428	202
356-5429	202
356-8335	98
357-1509	363
357-2853	402
357-2858	402
357-4366	522
	526
357-4368	750
357-4371	285
	508
	511
357-4375	514
	516
357-4378	284
	506
	518
	532
	541
357-4379	453
357-4381	285
	532
357-4432	522
	526
	750
357-4437	508
	511
357-4439	522
357-4440	453
357-4441	533
357-4443	453
357-4444	285
	514
	536
357-4459	522
	526
	750
357-4475	539
357-4476	518
357-4478	281
357-4484	750
357-4485	750
357-4493	285
	453
357-4494	533
357-4497	281
357-8930	168
358-0921	320
	321
	322
	323
	324
	326
	327
	328
	329
358-4889	223
358-6190	616
358-6490	492
358-6494	492
358-6495	492
358-6499	492
358-6503	▶492
	582
358-6634	113
	118
	▶130
358-7239	395
	▶427
358-8583	395
	▶423
358-8882	▶437
358-9938	599
360-1564	35
360-1978	13
	35
360-3556	506
360-3597	526
361-1045	177
	179
361-7474	188
	190
361-7475	376
	378
362-0439	190
362-0442	190
362-1096	7
	▶128
362-1099	128
362-6149	181
362-6150	2
	▶181
363-0559	13
	35
363-1172	226
363-4541	293
363-7709	231
363-7710	148
365-1205	616
365-5823	84
365-6510	177
	179
365-8611	479
	481
365-8937	713
366-0262	351
366-0263	351
366-0613	6
	▶51
366-6614	28
366-7426	98
367-0844	753
367-1819	72
367-3340	84
368-8557	84
368-9045	638
368-9171	118
	▶124
369-7291	338
369-7292	338
369-7436	331
	334
369-7437	331
	334
370-9894	707
372-0777	168
372-2158	707
372-5859	338
372-5860	338
373-8014	55
374-3442	532
374-9163	14
	▶35
376-6434	728
377-0399	19
377-0400	19
377-4710	160
377-4844	198
377-6092	76
377-9087	139
380-2062	41
	42
380-2065	41
	42
380-2073	19
380-3572	6
380-9732	163
380-9849	460
	▶481
382-5982	161
385-9003	92
386-3969	163
387-0314	707
387-0317	707
388-9525	80
392-3202	▶253
	596
	673
393-0598	162
393-3604	497
398-0896	360
398-0897	359
398-1052	357
398-1055	358

4

Part	Page
419-3405	▶5
419-3878	▶357
420-5231	▶15
	17
422-4402	▶345
426-2627	▶358
426-2628	▶359
426-2629	▶360
431-7088	▶2



©2013 Caterpillar
All Rights Reserved

CAT, CATERPILLAR, their respective logos, “Caterpillar Yellow”, and the POWER EDGE trade dress as well as corporate and product identity used herein, are trademarks of Caterpillar and may not be used without permission.